TEREX®

Master Part Manual

Skid Steer Loader

TSR50/60

Part Number: 7000-567
Printed (12-10)

(*Revision 5/21/2013*)

Table of Contents

1. **Open R.O.P.S. (Cab) Assembly**
Serial # SR050/60 00101-Current* **1-A**

2. **Open R.O.P.S. (Cab) Interior**
Serial # SR050/60 00101-Current* **2-A**

3. **Open R.O.P.S. (Cab) Dash Panel**
Serial # SR050/60 00101-Current* **3-A**

4. **R.O.P.S. (Cab) Assembly**
Serial # SR050/60 00101-Current* **4-A**

5. **R.O.P.S. (Cab) Interior**
Serial # SR050/60 00101-Current* **5-A**

6. **R.O.P.S. (Cab) Headliner/Dash Panel**
Serial # SR050/60 00101-Current* **6-A**

7. **R.O.P.S. (Cab) Door/Windows (Optional)**
Serial # SR050/60 00101-Current* **7-A**

8. **Windshield Wiper (Optional)**
Serial # SR050/60 00101-Current* **8-A**

9. **Chassis Assembly**
Serial # SR050/60 00101-Current* **9-A**

10. **Hood Assembly**
Serial # SR050/60 00101-Current* **10-A**

11. **Radiator/Oil Cooler Assembly**
Serial # SR050/60 00101-Current* **11-A**

12. **Hydraulic Resevoir Assembly**
Serial # SR050/60 00101-Current* **12-A**

13. **Hydraulic Control Assembly-Two Speed**
Serial # SR050/60 00101-Current* **13-A**

14. **Hydraulic Control Assembly-Single Speed**
Serial # SR050/60 00101-Current* **14-A**

15. **Lift arm Control Valve Assembly**
Serial # SR050/60 00101-Current* **15-A**

16. **Hydraulic Drive/Auxillary Assembly**
Serial # SR050/60 00101-Current* **16-A**

17. **Solenoid Blocks**
Serial # SR050/60 00101-Current* **17-A**

18. **Engine Assembly TSR50**
Serial # SR050 00101-Current* **18-A**

19. **Engine Assembly TSR60**
Serial # SR060 00101-Current* **19-A**

20. **Fuse Panel Assembly**
Serial # SR050/60 00101-Current* **20-A**

21. **Final Drive Assembly (RT)**
Serial # SR050/60 00101-Current* **21-A**

22. **Final Drive Assembly (LT)**
Serial # SR050/60 00101-Current* **22-A**

23. **Lift Arm Assembly**
Serial # SR050/60 00101-Current* **23-A**

24. **Lift Arm Tubes and Fittings**
Serial # SR050/60 00101-Current* **24-A**

25. **Manual Quick Attach Assembly**
Serial # SR050/60 00101-Current* **25-A**

26. **Power Quick Attach Assembly (Optional)**
Serial # SR050/60 00101-Current* **26-A**

27. **Air Conditioning/Heating (Optional)**
Serial # SR050/60 00101-Current* **27-A**

28. **Cab Heater (Optional)**
Serial # SR050/60 00101-Current* **28-A**

29. **Air Conditioning/Heating Unit (Optional)**
Serial # SR050/60 00101-Current* **29-A**

30. **Safety Decals-US (ANSI)**
Serial # SR050/60 00101-Current* **30-A**

31. **Safety Decals-ROW (ISO)**
Serial # SR050/60 00101-Current* **31-A**

32. **Machine Graphics TSR50**
Serial # SR050 00101-Current* **32-A**

33. **Machine Graphics TSR60**
Serial # SR060 00101-Current* **33-A**

* Current refers to the machines being produced at the time this manual was printed. See manual cover for print date.

GENERAL SERVICE ITEMS & LUBRICANTS

ITEM	DESCRIPTION	PART NUMBER
-Engine Oil Filter	FIlter, Engine Oil	0200-377
-Primary Air Filter	Filter, Primary Air	0200-339
-Secondary Air Filter	Filter, Secondary Air	0200-340
-Fuel Filter	Filter, Fuel	0200-213
-Fan Belt For: TSR-50 Serials 00001 - 00337 TSR-60 Serials 00001 - 00221	Belt, Fan	7000-106
-Fan Belt For: TSR-50 Serials 00338 - Current TSR-60 Serials 00222 - Current	Belt, Fan	2030-632
-Antifreeze/Coolant (1 gal.)	Ethylene Glycol (long life)	0300-766
-Antifreeze/Coolant (Case/6 gal.)	Ethylene Glycol (long life)	0402-841
-Engine Oil (1 qt.)	Multi-Grade 10W-30	0300-767
-Engine Oil (Case/12 qt.)	Multi-Grade 10W-30	0402-838
-Engine Oil (1 gal.)	Multi-Grade 10W-30	0402-839
-Engine Oil (Case/6 gal.)	Multi-Grade 10W-30	0402-840
-Grease (1 Tube)	Multi-Purpose Lithium	0300-769
-Grease (Box/10 Tubes)	Multi-Purpose Lithium	0402-844
-Grease (Case/40 Tubes)	Multi-Purpose Lithium	0402-834

HYDRAULIC SERVICE ITEMS & LUBRICANTS

ITEM	DESCRIPTION	PART NUMBER
-Hydraulic Charge Oil Filter	Filter, Hydraulic Charge	0404-161

O-RING	PART NUMBER
-# 4, Flat Face Type	2055-196
-# 6, Flat Face Type	0310-285
-# 8, Flat Face Type	0310-286
-# 10, Flat Face Type	0310-287
-# 12, Flat Face Type	0310-288
-# 16, Flat Face Type	0310-289
-# 20, Flat Face Type	0310-290
-# 24, Flat Face Type	0201-479
-# 4, ORB Type	0314-366
-# 6, ORB Type	0310-619
-# 8, ORB Type	0307-353
-# 10, ORB Type	0310-620
-# 12, ORB Type	0310-621
-# 16, ORB Type	0307-354
-# 20, ORB Type	0310-832

CYLINDER SERVICE ITEMS
TSR-50/60

Current Hydraulic Cylinders

- RH-Bucket/Tilt P/N: 7000-209
- LH-Bucket/Tilt P/N: 7000-208
- Lift-Arm P/N: 2030-577
- RH-Q/A P/N: 2046-317
- LH-Q/A P/N: 2046-316

ITEM	DESCRIPTION
1	WELDMENT, ROD
2	END GLAND
3	SEAL KIT
4	WELDMENT, TUBE
5	PISTON
6	LOCKNUT
7	BLOCK, STROKE
8	BUSHING, TUBE PIVOT
9	BUSHING, ROD PIVOT
10	ZERO–LEAK PLUG

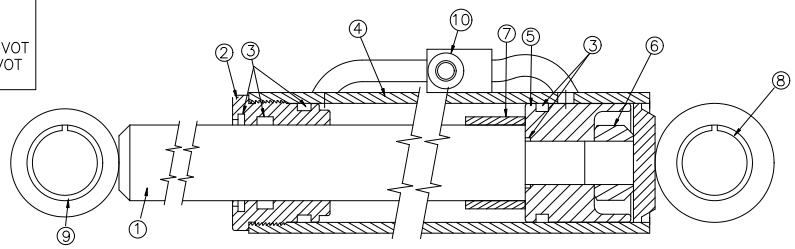

ITEM	MANUFACTURER/DESCRIPTION	PART NUMBER
-Kit,Seal,Bucket/Tilt Cylinder	Fits Cylinder (P/N:7000-208/209 All)	7000-636
-Nut,Bucket/Tilt Cylinder	Fits Cylinder (P/N:7000-208/209 All)	7000-637
-Bushing,Tube Pivot	Fits Cylinder (P/N:7000-208/209 All)	7000-802
-Bushing,Rod Pivot	Fits Cylinder (P/N:7000-208/209 All)	7000-644
-Kit,Seal,Lift Arm Cylinder	Fits Cylinder (P/N:2030-577)	2030-651
-Rod,Lift Arm Cylinder	Fits Cylinder (P/N:2030-577)	2030-659
-End Gland,Lift Arm Cylinder	Fits Cylinder (P/N:2030-577)	2030-658
-Nut,Lift Arm Cylinder	Fits Cylinder (P/N:2030-577)	2030-656
-Kit,Seal,Q/A Cylinder	Fits Cylinder (P/N:2046-316/317)	2076-292
	Fits Cylinder (P/N:0201-970/971)	0003-063

Note: There have been running changes made to the tilt cylinders on TSR 50/60 machines that affect the fit of certain replacement parts. Cylinders are marked by the original manufacturer with a date code as shown below. Tilt cylinders made on or before H1106218 are considered “Early production”. Tilt cylinders made afterward are to be considered “Current production”. Parts on this page are labeled as such to ensure proper fit.

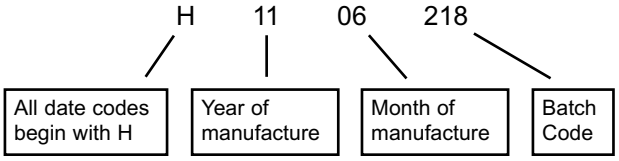

ITEM	MANUFACTURER/DESCRIPTION	PART NUMBER
-Rod,Bucket/Tilt Cylinder	FIts Cylinder (P/N:7000-208/209 early production)	7000-638
-End Gland,Bucket/Tilt Cylinder	FIts Cylinder (P/N:7000-208/209 early production)	7000-642
-Piston,Bucket/Tilt Cylinder	FIts Cylinder (P/N:7000-208/209 early production)	7000-639
-Wlmt,Tube,Bucket/Tilt Cylinder	FIts Cylinder (P/N:7000-208 early production)	7000-640
-Wlmt,Tube,Bucket/Tilt Cylinder	FIts Cylinder (P/N:7000-209 early production)	7000-641

ITEM	MANUFACTURER/DESCRIPTION	PART NUMBER
-Rod,Bucket/Tilt Cylinder	FIts Cylinder (P/N:7000-208/209 Current production)	7000-944
-End Gland,Bucket/Tilt Cylinder	FIts Cylinder (P/N:7000-208/209 Current production)	7000-945
-Piston,Bucket/Tilt Cylinder	FIts Cylinder (P/N:7000-208/209 Current production)	7000-946
-Wlmt,Tube,Bucket/Tilt Cylinder	FIts Cylinder (P/N:7000-208 Current production)	7000-947
-Wlmt,Tube,Bucket/Tilt Cylinder	FIts Cylinder (P/N:7000-209 Current production)	7000-948

COMPONENT SERVICE ITEMS / HARNESSES
TSR-50/60

Drive Motors

ITEM	MANUFACTURER/DESCRIPTION	PART NUMBER
-Kit, Seal, Drive Motor	MCR3 Drive Motor (P/N:7000-222)	7000-616
-Kit, Seal, Drive Motor	MCR3 Drive Motor (P/N:7000-221)	7000-617

HARNESSES, Standard Upgradeable

ITEM	LOCATION	PART NUMBER
Left Pillar Harness	Cab Interior, Left Side	7005-968
Right Pillar Harness	Cab Interior, Right Side	7005-967
Main Harness	Chassis (throughout machine)	7005-969
Serial # TSR50 - 00109-Current TSR60 - 00116-Current		
Left Pillar Harness	Cab Interior, Left Side	7005-152
Right Pillar Harness	Cab Interior, Right Side	7005-153
Main Harness	Chassis (throughout machine)	7005-154
Serial # TSR50 - 00101-00108 TSR60 - 00101-00115		
Loader Harness	Lift Arm	7000-117
Condenser Harness	Rear of Cab, A/C Fans	2076-034
Rear Lights Harness	Rear Hood, Lights	7005-619
4 Unit Gauge Harness	Dash Panel	7005-882
Serial # TSR50 - 00373-Current TSR60 - 00309-Current		
4 Unit Gauge Harness	Dash Panel	2030-276
Serial # TSR50 - 00101-00372 TSR60 - 00101-00308		

*HARNESSES, Open ROPS, NU (Non-Upradeable)

ITEM	LOCATION	PART NUMBER
Rear Lights Harness	Rear Hood, Lights	7005-619
Chassis Harness	Chassis (throughout machine)	7000-741
4 Unit Gauge Harness	Dash Panel	7006-393
Serial # TSR50 - 00373-Current TSR60 - 00309-Current		
4 Unit Gauge Harness	Dash Panel	7005-978
Serial # TSR50 - 00101-00372 TSR60 - 00101-00308		

***NU (Non-Upgradeable) refers to an open R.O.P.S. machine equiped with a harness that does not accept field install accesories or attachments.**

*NU OPEN R.O.P.S. (CAB) ASSEMBLY (Serial #: SR050/60 00101-Current)

REF. NO.	PART NUMBER	QTY.	DESCRIPTION
1	8040-366	12	NUT,HEX,NYLOCK,1/4-20 UNC,ZN
2	2076-015	1	COVER ROPS FIREWALL
3	7006-011	1	RETAINER WIRING HARNESS
4	8051-212	2	WASHER,SPRING LOCK,1/4,ZN
5	8102-040	2	CAPSCREW,HH,1/4-20 UNCx.75,GD8 ZN
6	8050-222	8	WASHER,WROUGHT,1/4,STD,ZN
7	7000-468	1	CLAMP PILOT LINE SMALL
8	7000-469	2	CLAMP PILOT LINE SMALL
9	7005-175	1	ROPS (3P Cab)
10	7005-820	2	LIGHT WORK CE APPROVED
11	2075-638	2	GROMMET WEB
12	0090-370	8	CAPSCREW HH 1/4-20 UNCx.75 GD5 BLK ZN
13	0090-372	8	WASHER WROUGHT 1/4 STD BLK ZN
14	7005-530	2	INSERT SIDE SCREEN
15	8102-228	1	CAPSCREW,HH,3/8-16UNCX2.25"GR8
16	8050-262	2	WASHER,WROUGHT,5/16,STD,ZN
17	2076-147	1	SPACER GUARD FAN
18	8041-500	1	NUT,HEX,NYLOCK,3/8-16 UNC,THIN
19	7000-807	2	SPRING GAS 1400N
20	8102-140	1	CAPSCREW,HH,5/16-18UNCx2.75 GR8
21	8040-426	1	NUT,HEX,NYLOCK,5/16-18 UNC,ZN

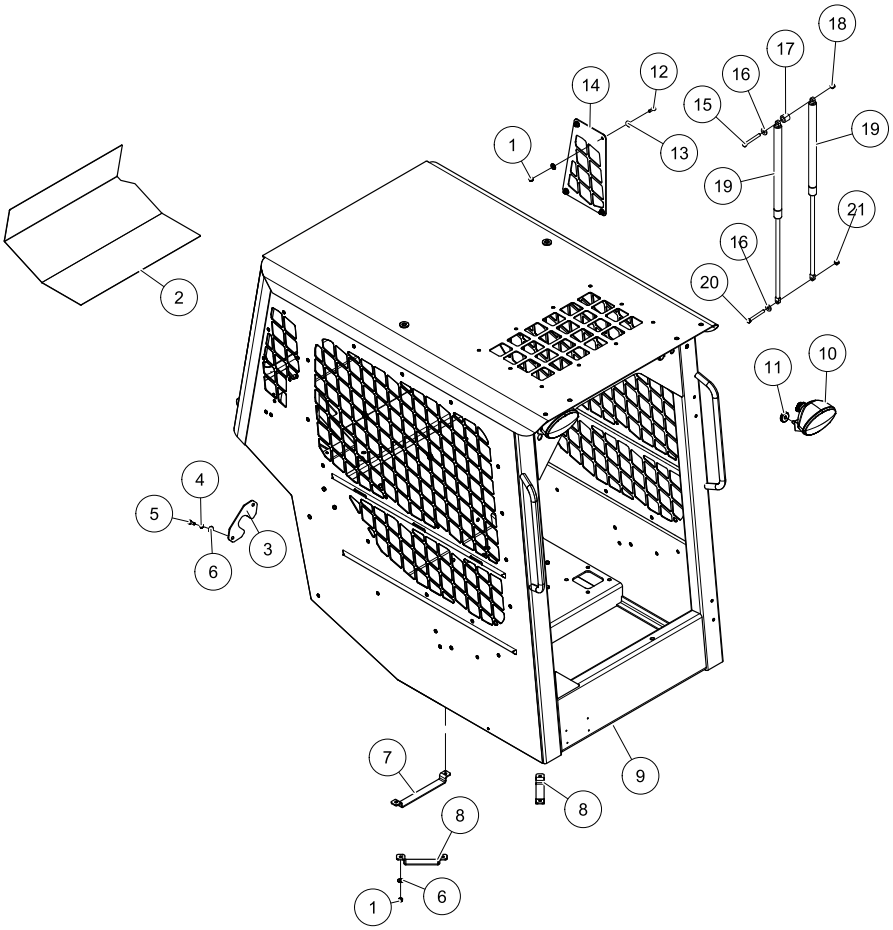

*See Page IV

*NU OPEN R.O.P.S. (CAB) INTERIOR (Serial #: SR050/60 00101-Current)

REF. NO.	PART NUMBER	QTY.	DESCRIPTION
1	0304-045	1	SEAT S673052AB XB 180 SEAT WITH
2	7005-469	4	SPACER - 1.00 OD X .5 OD. X 1.125
3	8050-222	8	WASHER,WROUGHT,1/4,STD,ZN
4	8051-212	4	WASHER,SPRING LOCK,1/4,ZN
5	8102-046	4	CAPSCREW,HH,1/4-20UNCx1.75,GD8
6	8102-402	8	CAPSCREW,HH 1/2-13 UNCx1.0 GD8
7	8051-332	4	WASHER,SPRING LOCK,1/2,ZN
8	2075-163	2	MOUNT SEAT BELT LOWER
9	0304-248	1	BELT,SEAT 2" RETRACTABLE
10	8040-606	6	NUT,HEX,NYLOCK,1/2-13 UNC,ZN
11	0200-600	2	MNTS JOYSTICK
12	0314-269	6	NUT,FLANGE,TOPLK,3/8-16UNC,GDG,ZN
13	8102-040	8	CAPSCREW,HH,1/4-20 UNCx.75,GD8 ZN
14	8040-366	12	NUT,HEX,NYLOCK,1/4-20 UNC,ZN
15	8102-222	6	CAPSCREW,HH,3/8-16 UNCx1.0,GD8,ZN
16	7005-454	1	CONSOLE SIDE RH
17	7005-453	1	CONSOLE SIDE LH
18	0200-265	1	CAP,HOUSING,POWER SOURCE
19	0200-264	1	HOUSING,POWER SOURCE
20	0090-117	4	CAPSCREW TH PH 10-24 X .75 SS
21	0304-019	1	ASSY,LAP BAR
22	2075-939	1	STOP LAPBAR RH
23	0200-321	2	PAD,RUBBER,W/ADHESIVE
24	8060-648	2	RIVET,BLIND,3/16 x .575
25	8102-404	4	CAPSCREW,HH 1/2-13UNCx1.25 GD8 ZN
26	7005-192	1	LAPBAR STOP, LH
27	2010-127	1	SWITCH,SEAT (NEW STYLE)
28	2075-810	1	COVER FUSE PANEL
29	0090-239	2	KNOB 1/5-4-20 UNC 2B
30	0090-261	1	FOAM MEMORY 1.00 x 1.00 x 54"
31	0304-473	1	SENSOR,SWITCH,LAPBAR S17040

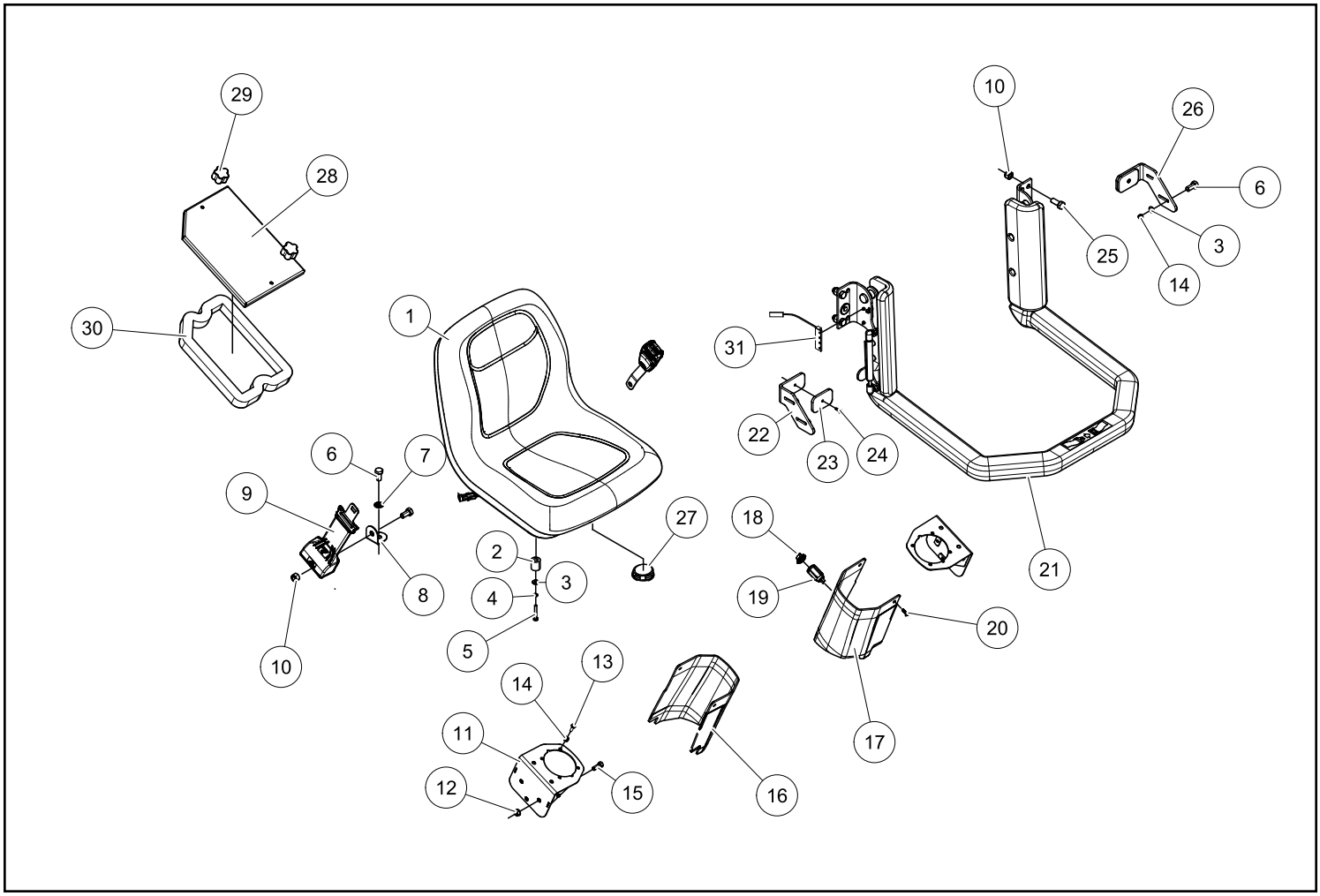

*See Page IV

*NU OPEN R.O.P.S. (CAB) DASH PANEL (Serial #: SR050/60 00101-Current)

REF. NO.	PART NUMBER	QTY.	DESCRIPTION
1	0310-138	2	PLUG VHP-01 INDEX # 390-09002-001
2	2045-413	1	SWITCH LOCKING PARK
3	0310-126	1	SWITCH,LIGHT VAD2BNOC-A9C45-100-XAS1
4	0200-252	1	SWITCH,3 POSITION,LOCKING
5	0310-136	2	FRAME END VME-01
6	0310-137	3	FRAME MID IMM-01
7	2030-245	1	LIGHT DOME
8	4030-127	1	*GAUGE FUEL W WARNINGS
9	4030-128	1	*GAUGE TACHOMETER 2"
10	4030-129	1	*GAUGE WARNING INDICATION
11	4030-130	1	*GAUGE WATER TEMP 2"
12	2045-792	1	COVER KEY IGNITION
13	2045-432	2	KEY IGNITION
14	0304-028	1	SWITCH,IGNITION,RC 154-3197
15	0090-370	4	CAPSCREW HH 1/4-20 UNCx.75 GD5 BLK ZN
16	0090-371	4	WASHER SPRING LOCK 1/4 BLK ZN
17	0090-372	4	WASHER WROUGHT 1/4 STD BLK ZN
18	7005-956	1	POD GAUGE BASE
19	2030-397	1	PLATE MOUNT HOUR METER
20	2045-502	1	METER HOUR
21	8008-217	2	SCREW,MACH#6-32x0.5,PH,PAN
22	2075-749	1	* INDICATOR RABBIT/GLOW PLUG

REF. NO.	PART NUMBER	QTY.	DESCRIPTION

*Serial # TSR50 - 00101-00372
TSR60 - 00101-00308

ITEM	Part Number	Qty.	Description
8	4010-014	1	GAUGE FUEL W WARNINGS
9	4010-017	1	GAUGE TACHOMETER 2"
10	2030-244	1	GAUGE WARNING INDICATION
11	4010-013	1	GAUGE WATER TEMP 2"
*22	2075-749		Not Available on these machines

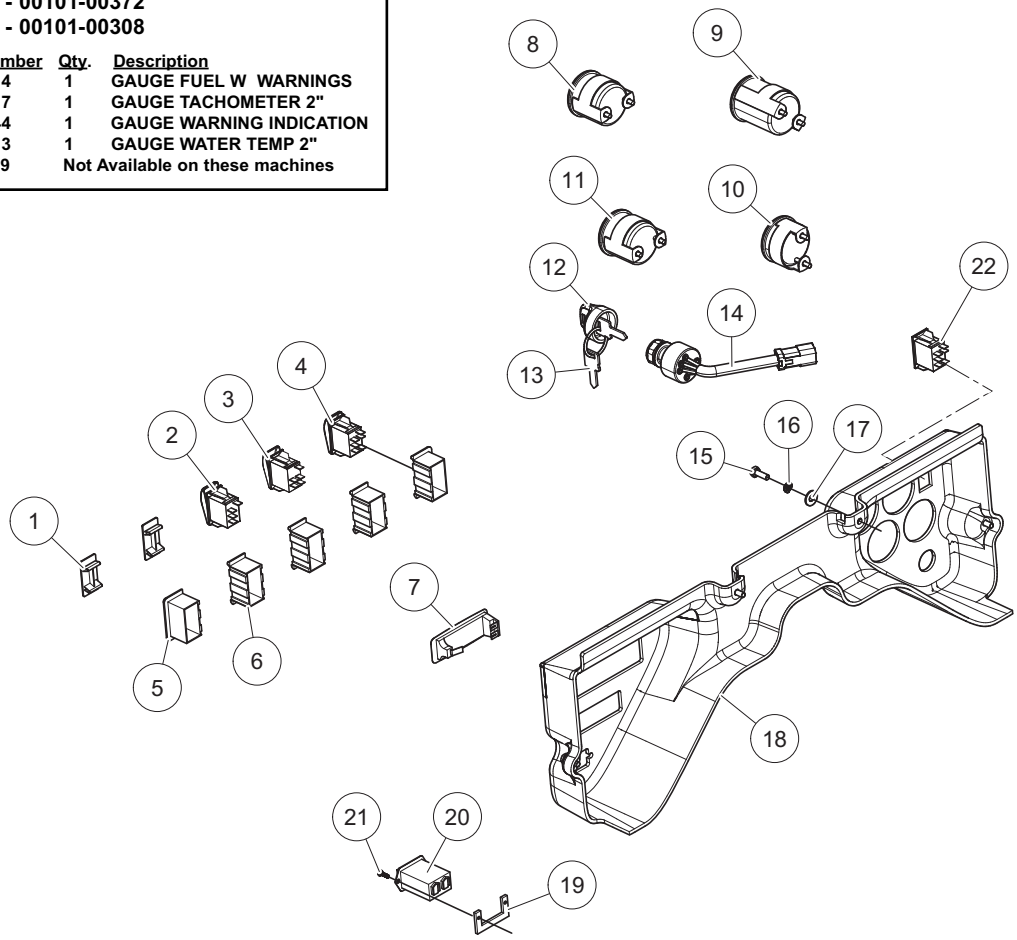

*See Page IV

R.O.P.S (CAB) ASSEMBLY (Serial #: SR050/60 00101-Current)

REF. NO.	PART NUMBER	QTY.	DESCRIPTION
1	7005-175	1	ROPS (3P Cab)
2	7005-568	1	GLASS SIDE PANEL
3	0090-300	7	INSERT THREADED FLHD 1/4-20
4	7005-569	1	SEAL GLASS SIDE PANEL
5	0201-748	1	ASSY,TAG,EMERGENCY EXIT
6	2075-822	1	WINDOW REAR 16.25 X 23.25
7	0090-347	10	SCREW TH PH 1/4-20 X 1.25 ZN
8	0090-325	10	WASHER 1/4" 3/4" RUBBER BONDED GALVANIZE
9	2030-671	1	FRAME WINDOW TOP
10	0200-606	1	PANEL ROOF LEXAN
11	0200-607	1	SEAL PANEL ROOF
12	8102-039	2	CAPSCREW,HH,1/4-20UNCx.625,GD8
13	8051-212	10	WASHER,SPRING LOCK,1/4,ZN
14	8050-222	21	WASHER,WROUGHT,1/4,STD,ZN
15	7006-011	1	RETAINER WIRING HARNESS
16	8040-366	24	NUT,HEX,NYLOCK,1/4-20 UNC,ZN
17	8050-222	24	WASHER,WROUGHT,1/4,STD,ZN
18	0090-403	14	CAPSCREW,HH,1/4-20 UNCx.75,GD8 ZN
19	7000-468	3	CLAMP PILOT LINE SMALL
20	7000-469	2	CLAMP PILOT LINE SMALL
21	7005-820	2	LIGHT WORK CE APPROVED
22	0090-368	2	WASHER,WROUGHT,1/2,STD,ZN
23	8051-332	2	WASHER,SPRING LOCK,1/2,ZN
24	8102-405	2	CAPSCREW,HH,1/2-13 UNCx1.5,GD8
25	8011-132	2	BOLT,CARRIAGE,5/16-18 UNCx1.0
26	8051-242	2	WASHER,SPRING LOCK,5/16,ZN
27	8042-363	2	NUT,HEX 5-16-18 UNC ZN
28	0090-113	7ft	SEAL .125 OFFSET WINDOW LOCKING W/ZIPPER
29	0090-114	7ft	SEAL FILLER STRIP
30	8102-228	1	CAPSCREW,HH,3/8-16UNCX2.25"GR8
31	8050-262	2	WASHER,WROUGHT,5/16,STD,ZN
32	2076-147	1	SPACER GUARD FAN
33	8041-500	1	NUT,HEX,NYLOCK,3/8-16 UNC,THIN
34	7001-145	2	SPRING GAS 2200N
35	8102-140	1	CAPSCREW,HH,5/16-18UNCx2.75 GR8
36	8040-426	1	NUT,HEX,NYLOCK,5/16-18 UNC,ZN

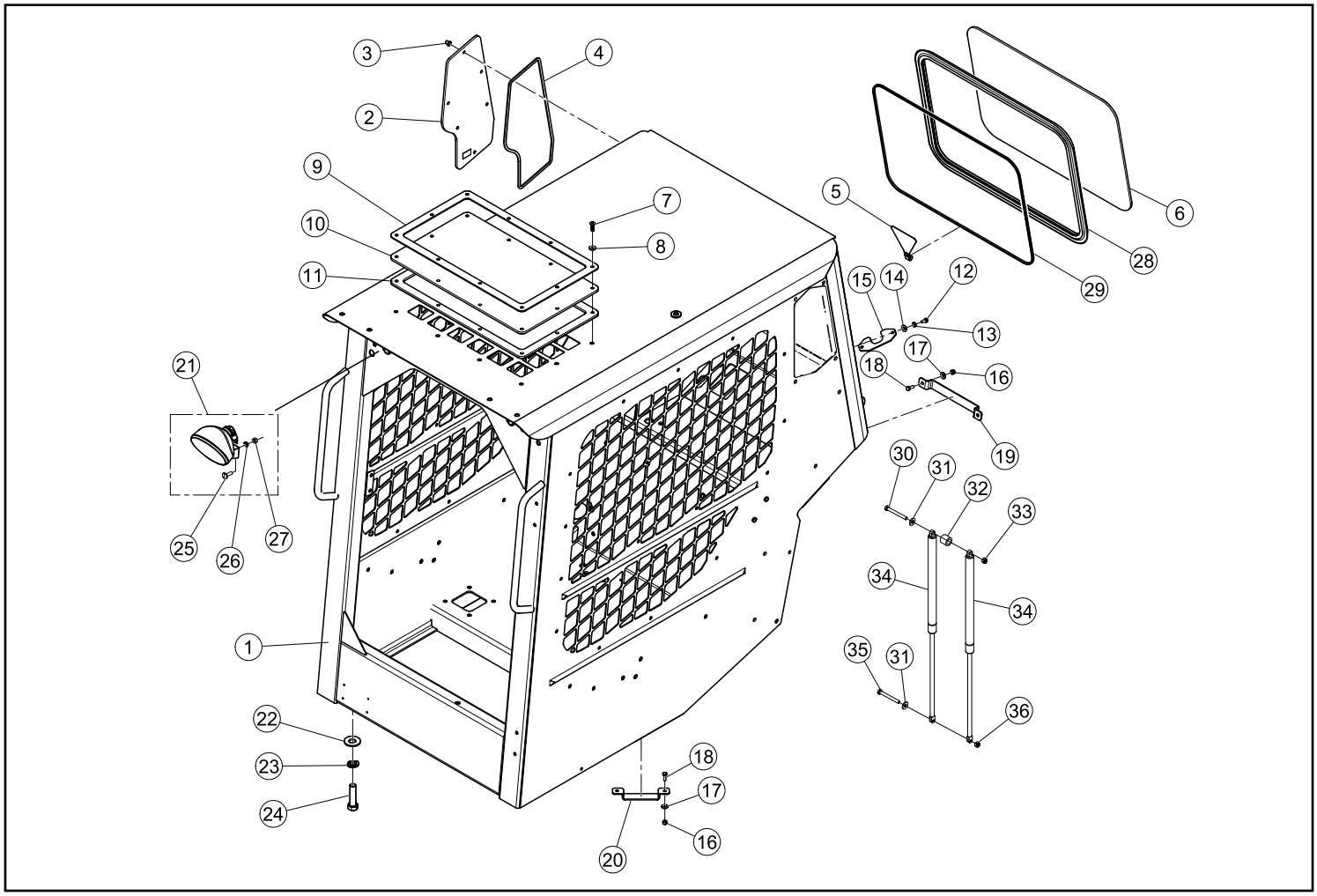

R.O.P.S (CAB) INTERIOR (Serial #: SR050/60 00101-Current)

REF. NO.	PART NUMBER	QTY.	DESCRIPTION
1	2075-832	1	BIN STORAGE
2	2045-636	3	NET CARGO
3	7005-780	1	PANEL FRONT LH
4	2076-054	1	CUPHOLDER
5	0090-305	8	RETAINER PUSH TYPE .250 DIA
6	7005-779	1	PANEL REAR RH
7	2075-102	1	COVER FUSE PANEL
8	7005-782	1	PANEL FRONT LH WASHER TANK
9	7005-778	1	PANEL REAR LH
10	0304-019	1	ASSY,LAP BAR
11	7005-192	2	LAPBAR STOP, LH
12	2045-452	1	SEAT,SUSP,60MM
13	0200-264	1	HOUSING,POWER SOURCE
14	0200-265	1	CAP,HOUSING,POWER SOURCE
15	8040-606	4	NUT,HEX,NYLOCK,1/2-13 UNC,ZN
16	8102-404	4	CAPSCREW,HH 1/2-13UNCx1.25 GD8 ZN
17	8102-040	4	CAPSCREW,HH,1/4-20 UNCx.75,GD8 ZN
18	8060-648	2	RIVET,BLIND,3/16 x .575
19	2075-939	1	STOP LAPBAR RH
20	8050-222	4	WASHER,WROUGHT,1/4,STD,ZN
21	8040-366	4	NUT,HEX,NYLOCK,1/4-20 UNC,ZN
22	8040-426	4	NUT,HEX,NYLOCK,5/16-18 UNC,ZN
23	8050-262	4	WASHER,WROUGHT,5/16,STD,ZN
24	0304-248	1	BELT,SEAT 2" RETRACTABLE
25	2045-481	2	TETHER,SEAT
26	0090-397	4	CAPSCREW HCS 7/16-14x1 Z8
27	8050-282	8	WASHER,WROUGHT,3/8,STD,ZN
28	8040-546	4	NUT,HEX,NYLOCK,7/16-14 UNC,ZN
29	0403-712	1	BOTTLE WASHER
30	0403-715	1	CAP WASHER RESERVOIR
31	0090-128	8	SCREW TH PH 10-24 x 5 SS
32	0090-117	13	CAPSCREW TH PH 10-24 X .75 SS
33	0304-515	1	SWITCH,SEAT (OLD STYLE)
34	0304-473	1	SENSOR,SWITCH,LAPBAR S17040
35	0310-307	2	SCREW,MACHINE,4-40x.50
36	0310-308	2	NUT,HEX,NYLOCK 4-40

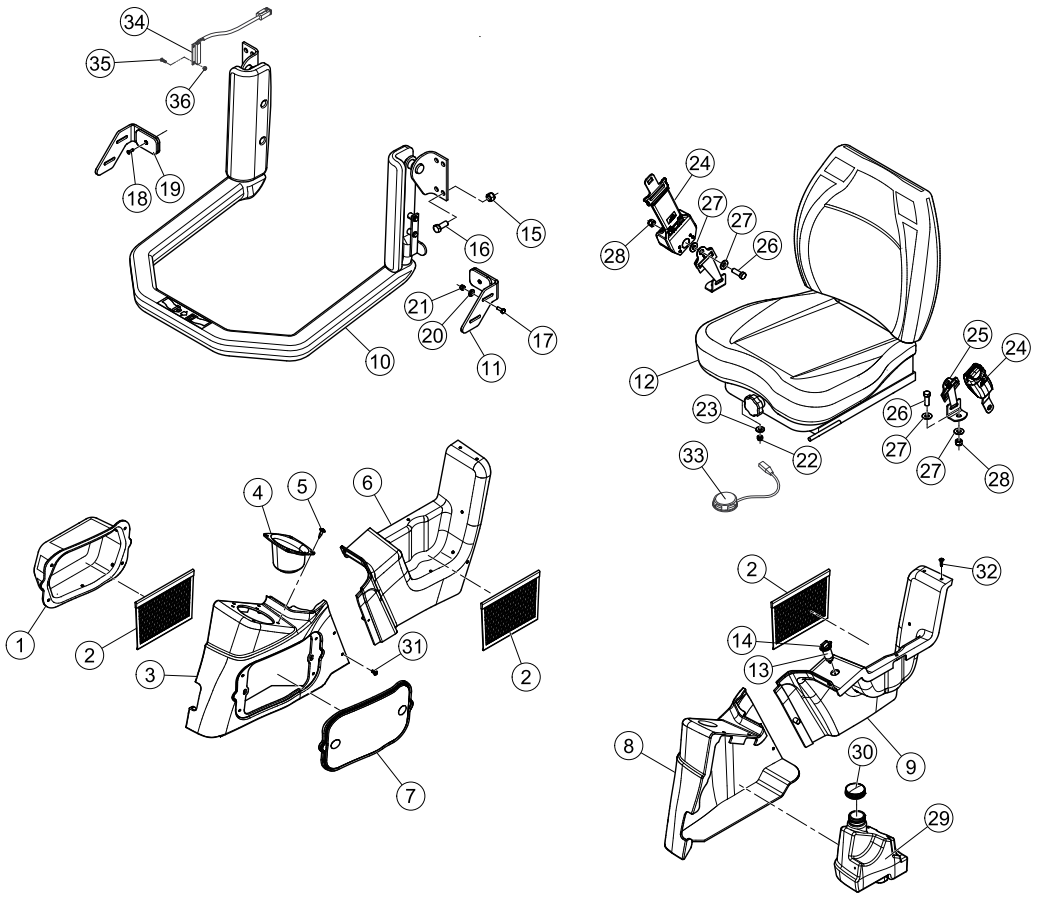

R.O.P.S. (CAB) HEADLINER / DASH PANEL (Serial #: SR050/60 00101-Current)

REF. NO.	PART NUMBER	QTY.	DESCRIPTION
1	2076-305	1	HEADLINER HEAT A/C
2	0090-305	16	RETAINER PUSH TYPE .250 DIA
3	2075-637	1	LIGHT DOME
4	2075-703	2	SPEAKER MINI 3.5" HEAVY DUTY
5	8008-222	8	SCREW MACH #6-32X1.0 PH PAN
6	0090-270	8	T-NUT 6-32 UNC ZN
7	2076-284	1	HVAC MOUNT PLATE
8	2076-241	1	SWITCH A/C
9	2045-896	2	KNOB CONTROL
10	2075-702	1	RADIO MINI WP AM/FM/WX BAND
11	2075-821	2	PLATE MOUNTING HVAC CONTROL
12	2076-047	1	MOUNT RADIO
13	8008-217	6	SCREW,MACH#6-32x0.5,PH,PAN
14	2045-477	1	SWITCH SELF LEVELER
15	0310-136	4	FRAME,END VME-01 INDEX # 536-11583-001
16	2045-413	1	SWITCH LOCKING PARK
17	0310-133	1	SWITCH,BEACON V1D2BNOC-A9C63-100-XAS1
18	0310-126	1	SWITCH,LIGHT VAD2BNOC-A9C45-100-XAS1
19	0310-137	3	FRAME,MID IMM-01
20	2045-725	1	SWITCH 2 POSITION LOCKING W/ RED BUTTON
21	0200-252	2	SWITCH,3 POSITION,LOCKING
22	2045-502	1	METER HOUR
23	0090-188	4	SCREW TH PH 10-24 x 1.5 ZNC
24	0090-189	2	SCREW TH PH 10-24 x 3.0 ZNC
25	4030-127	1	* GAUGE FUEL W WARNINGS
26	4030-128	1	* GAUGE RPM METER ELECTRIC
27	4030-130	1	* TEMP GAUGE ELECTRIC
28	4030-129	1	* GAUGE WARNING INDICATION
29	0304-028	1	SWITCH,IGNITION,RC 154-3197
30	2045-792	1	COVER KEY IGNITION
31	7000-094	1	COVER INSTRUMENT POD LH
32	2075-768	1	MOUNT INSTRUMENT POD
33	7000-095	1	COVER INSTRUMENT POD RH
34	2045-432	2	KEY IGNITION
35	8102-040	4	CAPSCREW,HH,1/4-20 UNCx.75,GD8 ZN
36	8050-222	6	WASHER,WROUGHT,1/4,STD,ZN
37	2030-409	1	MIRROR REAR VIEW 3X8
38	8040-366	1	NUT,HEX,NYLOCK,1/4-20 UNC,ZN
39	8102-039	1	CAPSCREW,HH,1/4-20UNCx.625,GD8
40	2075-704	1	ANTENNA 6" MINI
41	2075-816	1	CONTROLLER TEMP
42	7000-675	1	DECAL SWITCH POD STYLE DASH SSL
43	7000-674	1	DECAL POWER QUICK ATTACH SSL
44	7005-826	1	PANEL GAUGE
45	0090-370	4	CAPSCREW HH 1/4-20 UNCx.75 GD5 BLK
46	0090-371	4	WASHER SPRING LOCK 1/4 BLK ZN
47	0090-372	4	WASHER WROUGHT 1/4 STD BLK ZN
48	2076-285	1	HVAC DECAL
49	2045-899	1	SWITCH 3 SPEED
50	2075-749	1	*GLOW PLUG INDICATOR

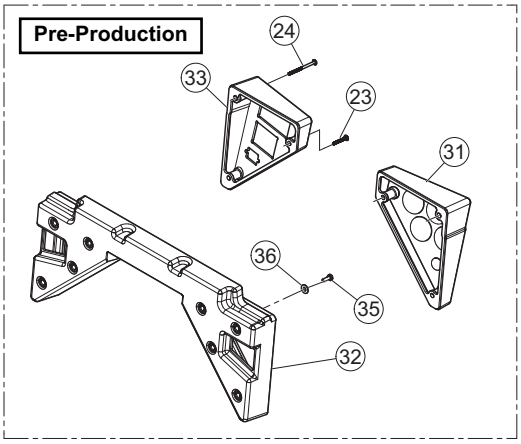

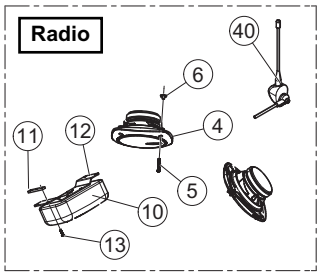

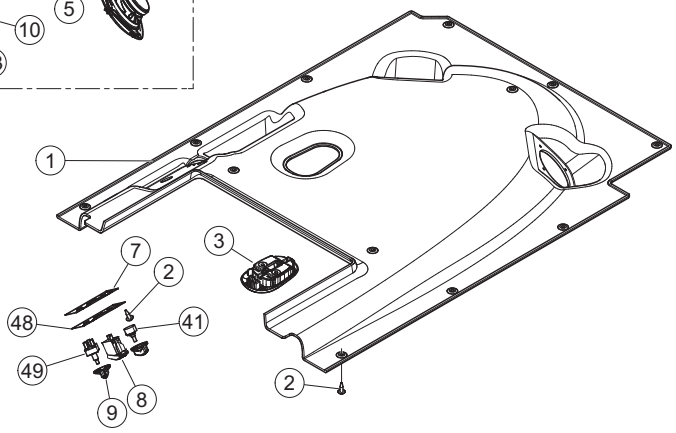

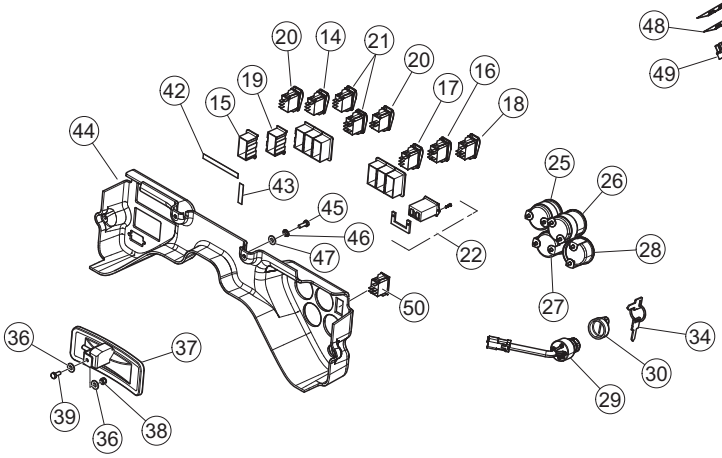

***Serial # TSR50 - 00101-00372**
TSR60 - 00101-00308

ITEM	Part Number	Qty.	Description
25	4010-014	1	GAUGE FUEL W WARNINGS
26	4010-017	1	GAUGE TACHOMETER 2"
28	2030-244	1	GAUGE WARNING INDICATION
27	4010-013	1	GAUGE WATER TEMP 2"
*50	2075-749		Not Available on these machines

CAB DOOR / WINDOWS (OPTIONAL) (Serial #: SR050/60 00101-Current)

REF. NO.	PART NUMBER	QTY.	DESCRIPTION
1	0404-344	1	WINDOW SIDE LH
2	0404-345	1	WINDOW SIDE RH
3	8050-222	26	WASHER,WROUGHT,1/4,STD,ZN
4	8102-040	28	CAPSCREW,HH,1/4-20 UNCx.75,GD8 ZN
5	0304-495	2	STUD,BALL,10MM STUD
6	0200-545	2	CLIP,SAFETY,GAS SPRING
7	0403-870	1	SPRING DAMPENED DOOR
8	0403-801	1	MOUNT DOOR SPRING
9	8040-426	9	NUT,HEX,NYLOCK,5/16-18 UNC,ZN
10	8040-366	2	NUT,HEX,NYLOCK,1/4-20 UNC,ZN
11	0090-123	10	TRIM EDGE WITH 3/8 BULB HD
12	0403-787	1	WLMT DOOR W/ HINGES
13	0201-748	1	ASSY,TAG,EMERGENCY EXIT
14	1059-015	9	SEAL,WINDOW AS1456
15	0310-495	9	STRIP,LOCK AS-937
16	0403-797	1	WINDOW DOOR TEMPERED GLASS
17	0304-486	1	CAPSCREW,HH,M6-1.0x14
18	8050-240	1	WASHER,STAINLESS,1/4",
19	0403-793	1	WLMT DOOR LATCH MOUNT
20	8051-242	2	WASHER,SPRING LOCK,5/16,ZN
21	2075-408	1	STRIKE
22	0090-368	2	WASHER,WROUGHT,1/2,STD,ZN
23	0090-135	1	NUT NYLOCK M12 X 1.0 ZC
24	2075-407	1	HANDLE INSIDE
25	0090-257	2	SCREW FH PH 5/16 x 1.75 ZN
26	2075-406	1	HANDLE PUSH BUTTON
27	0403-869	1	CATCH DOOR LATCH
28	8102-222	2	CAPSCREW,HH,3/8-16 UNCx1.0,GD8,ZN
29	0403-969	1	WLMT GRAB HANDLE - DOOR
30	8050-277	2	WASHER,WROUGHT,3/8,SAE,ZN
31	8040-486	2	NUT,HEX,NYLOCK,3/8-16 UNC,ZN
32	8011-132	4	BOLT,CARRIAGE,5/16-18 UNCx1.0,
33	8050-262	4	WASHER,WROUGHT,5/16,STD,ZN
34	0403-503	2	BUSHING HINGE 3-15/16 W/GRS ZRK
35	0403-481	2	ASSY HINGE DOOR CAST LH
36	0403-896	1	SWITCH DOOR PUSH BUTTON

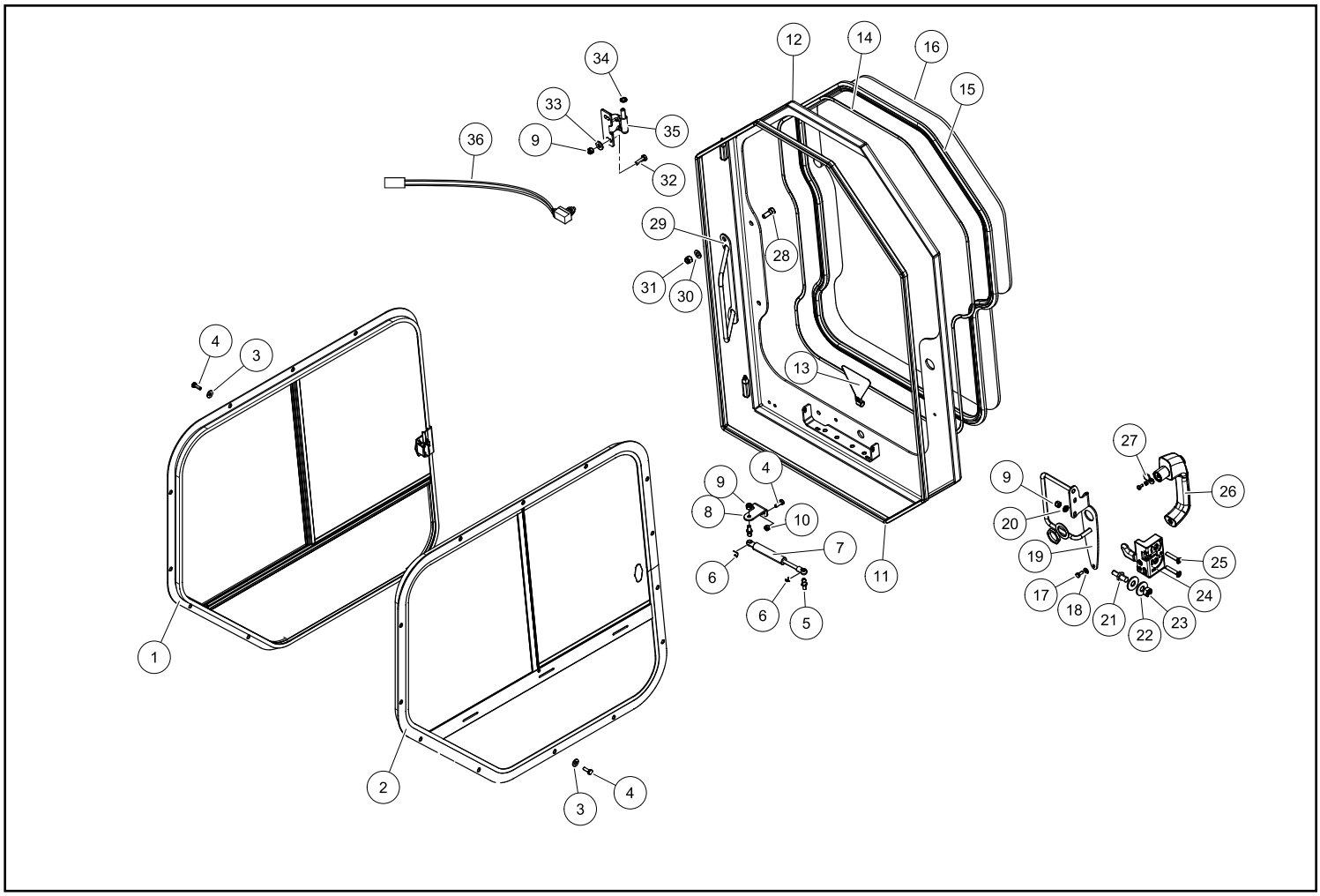

WINDSHIELD WIPER (OPTIONAL) (Serial #: SR050/60 00101-Current)

REF. NO.	PART NUMBER	QTY.	DESCRIPTION
1	0403-986	1	SWITCH WIPER - 2 SPEED
2	0403-985	1	COVER, WIPER
3	0090-117	2	CAPSCREW TH PH 10-24 X .75 SS
4	0403-995	1	MOTOR WIPER 45 PANTOGRAPH
5	0403-996	1	ARM WIPER 550 MM PANTOGRAPH WET
6	0403-997	1	BLADE WIPER 650 MM
7	0403-998	1	CONNECTOR 90^ ELBOW METAL
8	0090-252	4	TUBING PVC 6MM OD x 4MM ID
9	0403-757	1	COUPLER FEMALE WASHER LINE
10	0403-756	1	COUPLER MALE WASHER LINE
11	0403-715	1	CAP WASHER RESERVOIR
12	0403-682	1	SWITCH WINDSHIELD WASHER
13	0403-712	1	BOTTLE WASHER
14	0403-713	1	PUMP WASHER RESERVOIR
15	0090-128	6	SCREW TH PH 10-24 x 5 SS
16	0090-163	2	NUT U 10-24 UNC
17	2075-642	1	PANEL FRONT LH E/H W/ WASHER TANK

Wiper Kit: 7000-770

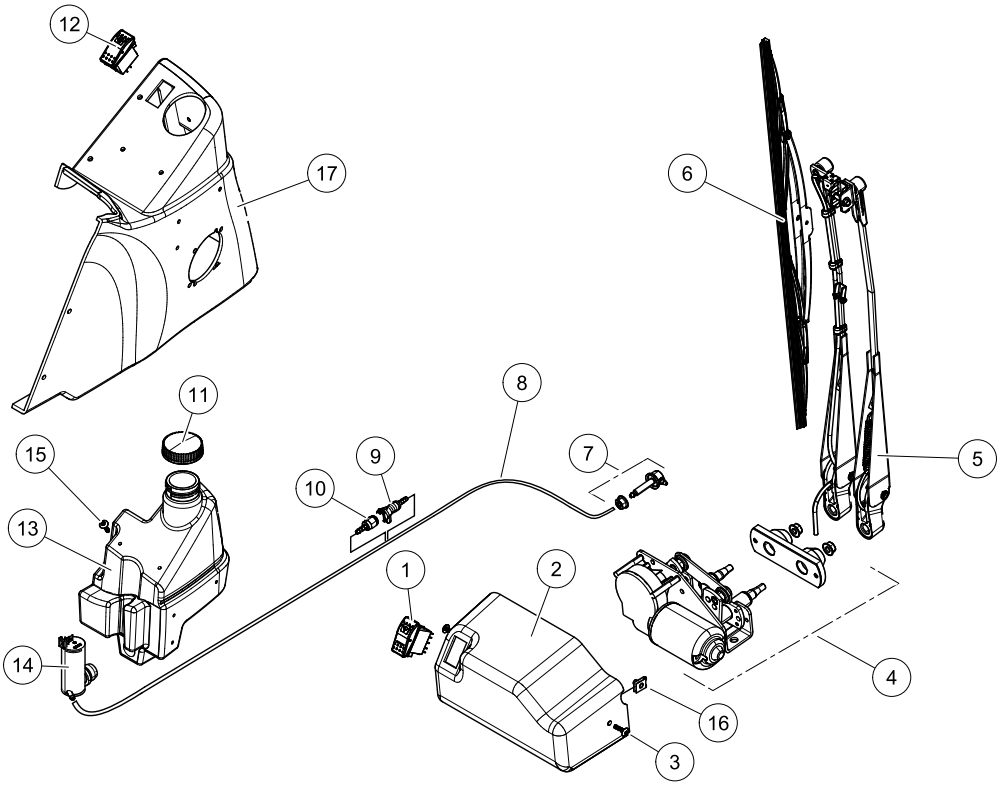

CHASSIS ASSEMBLY (Serial #: SR050/60 00101-Current)

REF. NO.	PART NUMBER	QTY.	DESCRIPTION
1	7000-001	1	WLMT CHASSIS RADIAL MF
2	7000-015	3	SSL, MF, CHAIN CASE, COVER
3	8102-222	24	CAPSCREW,HH,3/8-16 UNCx1.0,GD8,ZN
4	8051-272	28	WASHER,SPRING LOCK,3/8,ZN
5	8050-282	23	WASHER,WROUGHT,3/8,STD,ZN
6	8050-222	2	WASHER,WROUGHT,1/4,STD,ZN
7	7000-109	3	BRACKET FUEL TANK
8	8102-220	6	CAPSCREW,HH,3/8-16x0.75",GD8
9	7000-455	1	FUEL TANK (Includes items-12,13,29,30,31,32)
10	4046-088	1	CAP FUEL YELLOW - SHAW DEV P/N "910-006
11	2075-953	1	NECK FILLER FUEL ALUMINUM
12	0090-102	2	ADAPTER INSERT 1/2" 90*
13	0090-336	2	GROMMET 1/2" VINTON LARGE
14	7000-013	1	SSL, MF, FLOOR PAN
15	7000-563	1	MAT FLOOR MID FRAME
16	2045-571	1	WLMT PEDAL THROTTLE
17	2045-666	1	COVER THROTTLE PEDAL MACHINED
18	8102-042	4	CAPSCREW, HH 1/4-20UNC 1" GD8
19	8102-040	6	CAPSCREW,HH,1/4-20 UNCx.75,GD8 ZN
20	8051-212	6	WASHER,SPRING LOCK,1/4,ZN
21	2030-357	2	WASHER COMPOSITE
22	2030-360	2	BELLEVILLE WASHER, 3/8" ID X 1-1/8 OD
23	8040-486	2	NUT,HEX,NYLOCK,3/8-16 UNC,ZN
24	8040-366	2	NUT,HEX,NYLOCK,1/4-20 UNC,ZN
25	8102-136	2	CAPSCREW,HH,5/16-18x1.75 ZN GD8
26	8050-262	2	WASHER,WROUGHT,5/16,STD,ZN
27	8041-457	2	NUT,NYLOCK,5/16 - 18,THIN
28	7000-751	1	LATCH, DOOR
29	0090-334	3	GROMMET, VITON,SMALL
30	0090-332	1	90 elbow, 1/4" hose
31	0090-335	1	BALL VALVE,180 DEG.
32	0090-333	1	90 elbow 5/16 hose
33	4046-060	2	LIGHT WORK REAR MODULE 70
34	7000-017	1	WEIGHT REAR
35	8102-686	4	GD8 CAPSCREW,HH,3/4-10UNCx4.25
36	8050-440	10	WASHER,WROUGHT,3/4,STD,ZN
37	8040-786	4	NUT,HEX,NYLOCK,3/4-10 UNC,ZN
38	8051-440	2	WASHER,SPRING LOCK,3/4,ZN
39	8102-678	2	CAPSCREW,HH3/4-10 UNCx2.25,GD8
40	0400-964	1	ALARM, BACKUP - 107 db
41	8102-042	3	CAPSCREW, HH 1/4-20UNC 1"
42	8040-396	3	NUT,HEX,NYLOCK,1/4-28 UNF,ZN
43	0304-478	1	HORN - 164-9425
44	7001-113	1	LOCKOUT LOADER ARM
45	0201-477	2	PIN,LOCKING,D-RING,3.00"
46	7001-214	2	PADDING

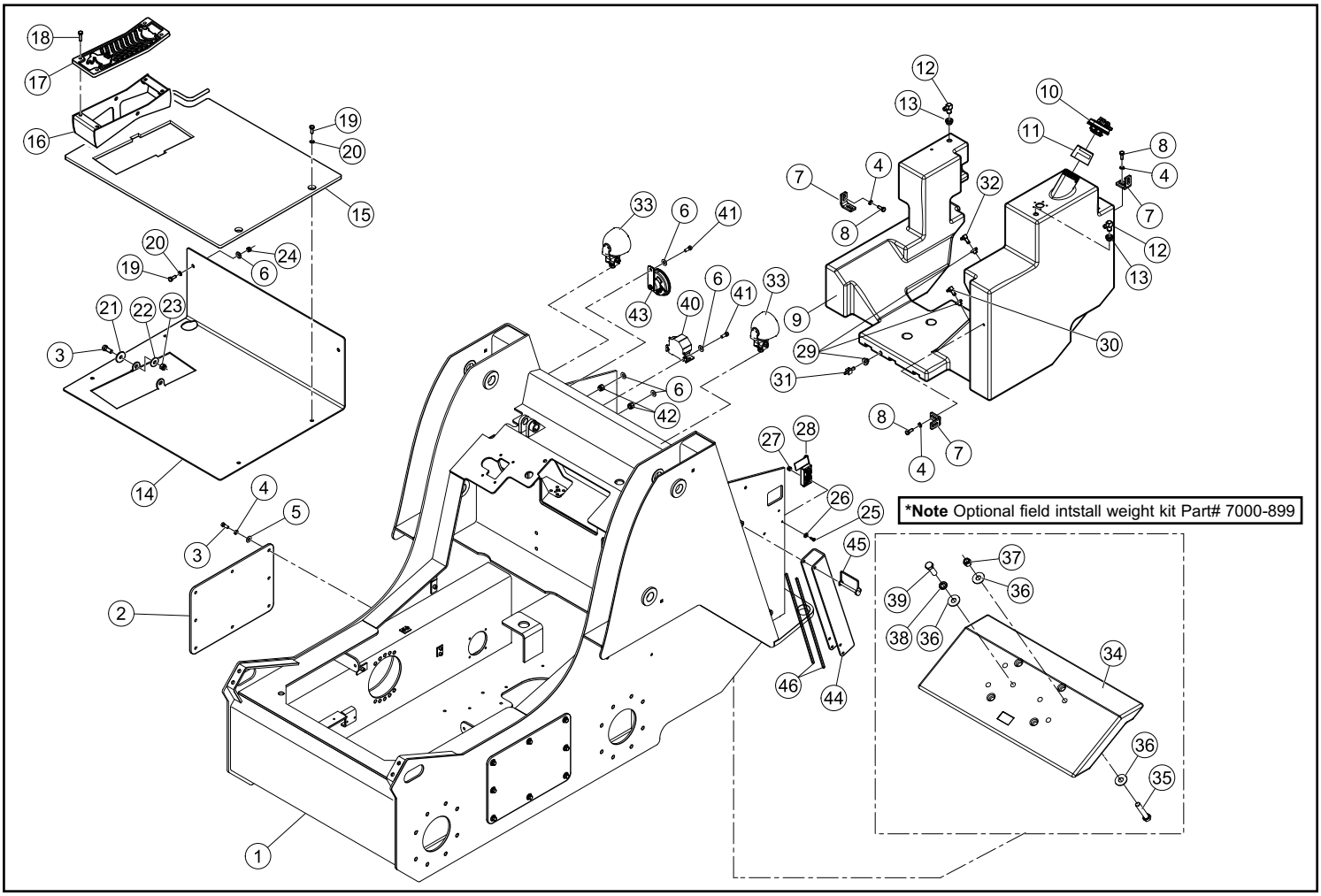

HOOD ASSEMBLY (Serial #: SR050/60 00101-Current)

REF. NO.	PART NUMBER	QTY.	DESCRIPTION
1	7000-072	1	BACK PANEL HOOD MIDFRAME
2	7000-116	1	SCREEN DOOR REAR
3	0090-351	14	WELD STUD 5/16"-18 x 5/8"
4	8050-262	14	WASHER,WROUGHT,5/16,STD,ZN
5	8040-426	14	NUT,HEX,NYLOCK,5/16-18 UNC,ZN
6	7000-079	1	WELDMENT, TOP HOOD
7	7000-107	1	BOLT STRIKER .675
8	8040-546	1	NUT,HEX,NYLOCK,7/16-14 UNC,ZN
9	8102-039	4	CAPSCREW,HH,1/4-20UNCx.625,GD8
10	8051-212	4	WASHER,SPRING LOCK,1/4,ZN
11	7000-389	2	PLATE, SCREEN SANDWICH, TOP HOOD
12	7001-128	1	TRIM EDGE WITH 3/8 BULB HD
13	7001-217	1	ROD PROP SLOTTED
14	0090-015	2	BOLT SHOULDER 3/8 x3 /8 GR 8
15	2040-056	2	PLATE HINGE
16	8111-224	4	BOLT,CARRIAGE,3/8-16UNCX1.25,G
17	8050-282	4	WASHER,WROUGHT,3/8,STD,ZN
18	8040-486	4	NUT,HEX,NYLOCK,3/8-16 UNC,ZN
19	7000-390	1	SCREEN, TOP HOOD

Hood Assembly Kit: 7000-771

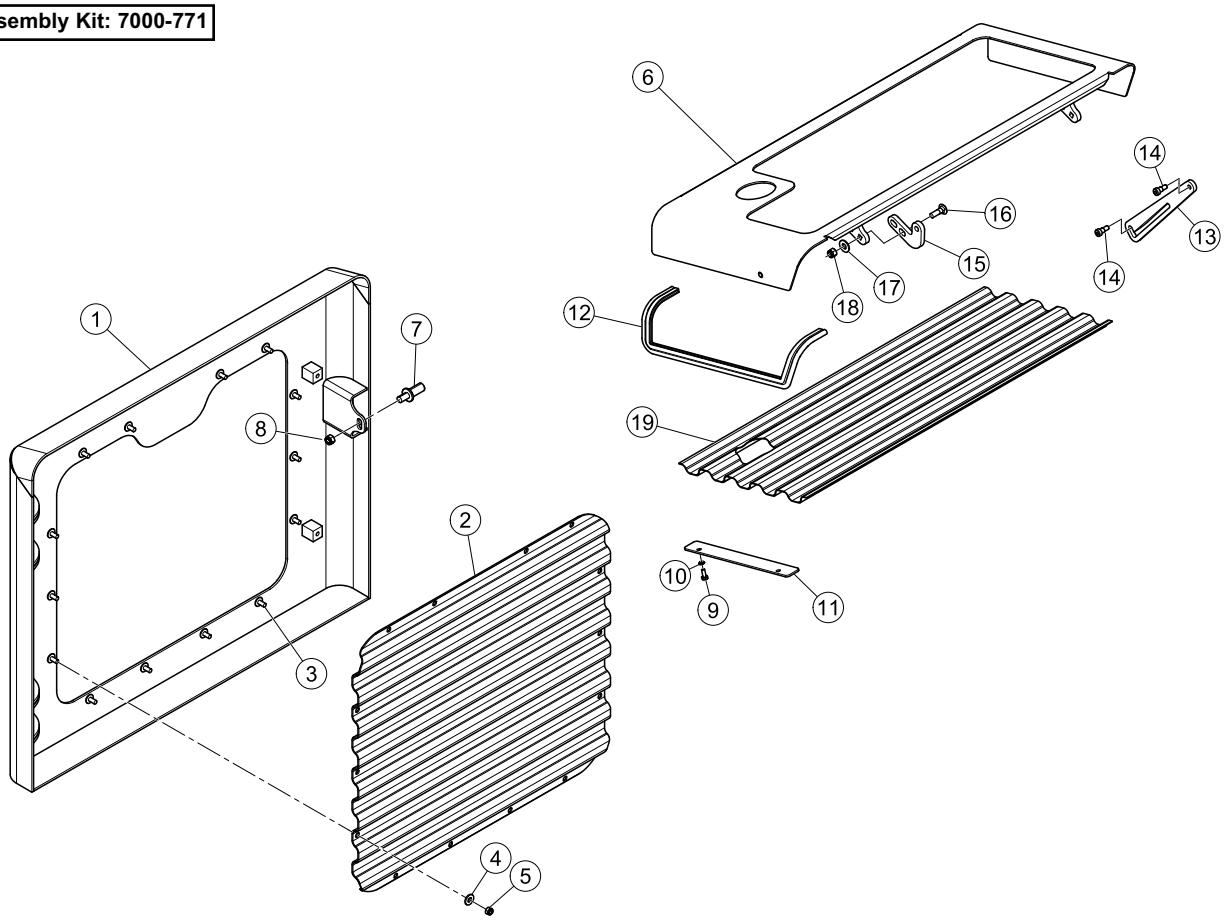

Service Kit: Door Prop Latch Assembly, Part# 7001-370

RADIATOR / OIL COOLER ASSEMBLY (Serial #: SR050/60 00101-Current)

REF. NO.	PART NUMBER	QTY.	DESCRIPTION
1	7000-080	1	SSL,MF,COOLER
2	0304-444	1	HOSE,7/16 x 5/16 POLY,3FT
3	7000-281	1	SHROUD,RADIATOR
4	7000-278	1	GUARD FAN FRONT
5	7000-280	1	WLMT,GUARD,FAN
6	0200-152	1	SPACER,FAN,3024C
7	7000-343	1	FAN,17.5/8-8/35/PAG
8	7000-105	1	CAGE FINGER GUARD REAR
9	8102-132	22	CAPSCREW,HH,5/16-18UNCx1.0 GD8 ,ZN
10	8051-242	30	WASHER,SPRING LOCK,5/16,ZN
11	8050-262	30	WASHER,WROUGHT,5/16,STD,ZN
12	8102-134	2	CAPSCREW,HH,5/16-18UNCx1.25GD8 ZN
13	8051-332	2	WASHER,SPRING LOCK,1/2,ZN
14	8102-405	2	CAPSCREW,HH,1/2-13 UNCx1.5,GD8
15	8102-040	4	CAPSCREW,HH,1/4-20 UNCx.75,GD8 ZN
16	0300-732	1	CLAMP,HOSE,#4 MM4
17	8102-222	2	CAPSCREW,HH,3/8-16 UNCx1.0,GD8,ZN
18	7000-733	1	HOSE RADIATOR LOWER
19	0300-686	6	CLAMP,HOSE,2.0,#32 H32
20	7000-495	1	HOSE -16 400PSI 16FFORX 16FFORX90S 64" (
21	7000-732	1	HOSE RADIATOR UPPER
22	7000-731	1	HOSE COOLER UPPER
23	0310-343	1	ADAPTER,16MFFOR-16MB-90^
24	7000-548	2	BRACKET COOLER MOUNT
25	8102-418	2	CAPSCREW,HH,1/2-13UNCx 6.0,GD8,ZN
26	8050-348	4	WASHER,1/2,SAE,ZN 1.06 OD x .531 ID x .0
27	7000-108	4	BUSHING
28	7000-780	2	SPACER TUBE
29	7000-537	2	BRACKET HINGE
30	8040-606	2	NUT,HEX,NYLOCK,1/2-13 UNC,ZN
31	8040-426	6	NUT,HEX,NYLOCK,5/16-18 UNC,ZN
32	0200-336	4	CAPSCREW,HH,M6x1.0x40
33	8102-225	4	CAPSCREW,HH,3/8-16 UNCx1.5,GD8,ZN
34	8050-282	8	WASHER,WROUGHT,3/8,STD,ZN
35	8040-486	4	NUT,HEX,NYLOCK,3/8-16 UNC,ZN
36	7000-514	1	WLMT FRAME MOUNT FINGER GUARD
37	7000-700	1	WLMT BRACKET FAN GUARD ADJ
38	0304-458	1	CAP RADIATOR
39	8102-130	4	CAPSCREW,HH 5/16-18x3/4,GR8
40	7000-110	1	BRACE FAN SHROUD
41	7000-133	1	TUBE COOLANT LOWER ENGINE
42	7001-379	1	HOSE 1.25" ID 3" WATER PUMP MF SSL

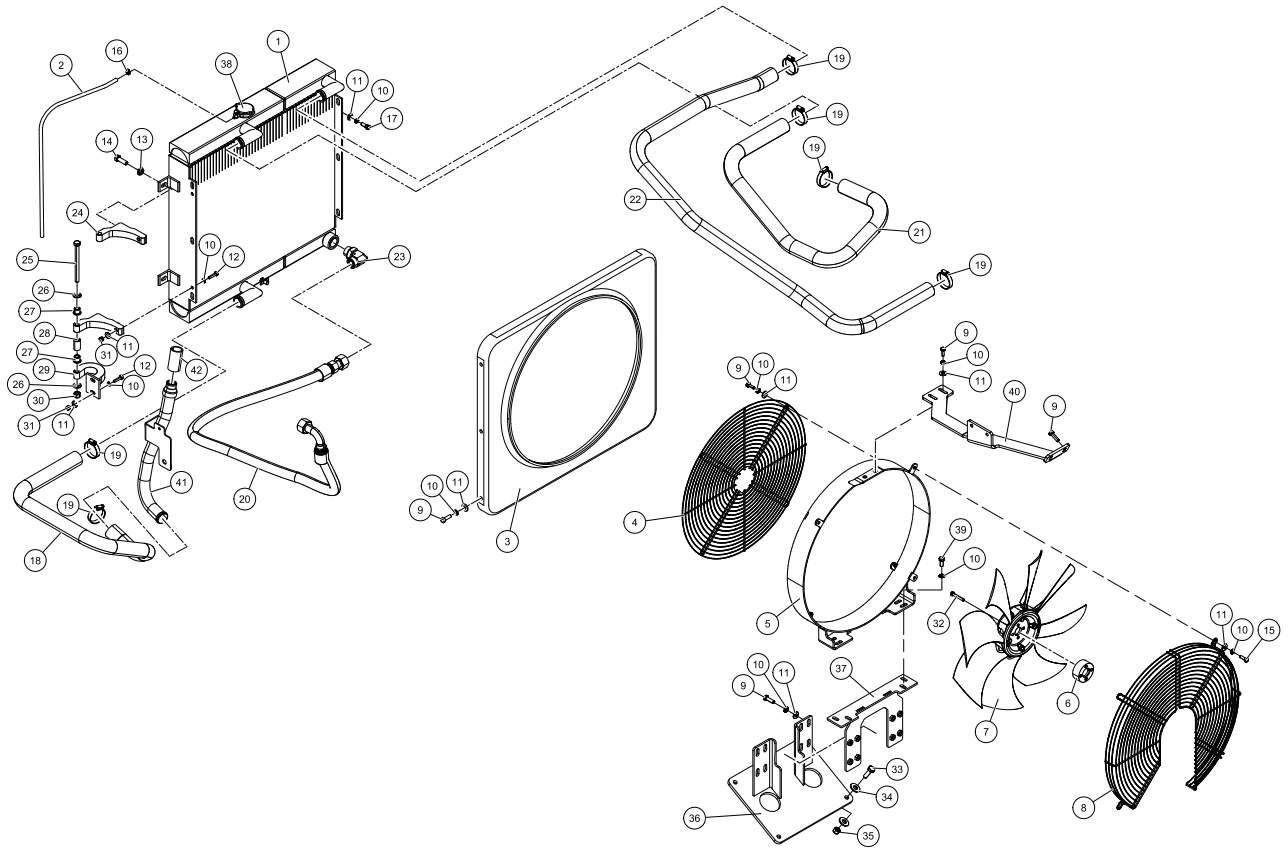

HYDRAULIC RESERVOIR ASSEMBLY (Serial #: SR050/60 00101-Current)

REF. NO.	PART NUMBER	QTY.	DESCRIPTION
1	7000-445	1	WLMT TANK HYDRAULIC
2	0201-151	1	SCREEN,SUCTION,2.5"
3	0090-336	2	GROMMET 1/2" VINTON LARGE
4	0090-102	2	ADAPTER INSERT 1/2" 90*
5	0300-732	2	CLAMP,HOSE,#4 MM4
6	8102-222	2	CAPSCREW,HH,3/8-16 UNCx1.0,GD8,ZN
7	8051-272	2	WASHER,SPRING LOCK,3/8,ZN
8	8050-282	2	WASHER,WROUGHT,3/8,STD,ZN
9	8102-225	1	CAPSCREW,HH,3/8-16 UNCx1.5,GD8,ZN
10	0304-452	1	ASSY,COVER,ACCESS
11	0310-400	2	NUT,WELD,HEX 1/2-13 UNC
12	0304-642	1	GAUGE,SIGHT 5"
13	7000-345	1	HYDRAULIC OIL FILL HOSE
14	2075-992	1	NECK FILLER OIL PLASTIC
15	7000-346	1	HYD OIL FILL BRKT
16	0307-879	1	SWITCH,TEMP,OIL,225^
17	2045-408	1	CAP OIL BLACK
18	8102-042	3	CAPSCREW, HH 1/4-20UNC 1" GD8
19	8051-212	3	WASHER,SPRING LOCK,1/4,ZN
20	8040-366	3	NUT,HEX,NYLOCK,1/4-20 UNC,ZN
21	8051-242	2	WASHER,SPRING LOCK,5/16,ZN
22	8102-129	2	CAPSCREW,HH,5/16-18UNCx5/8, GR

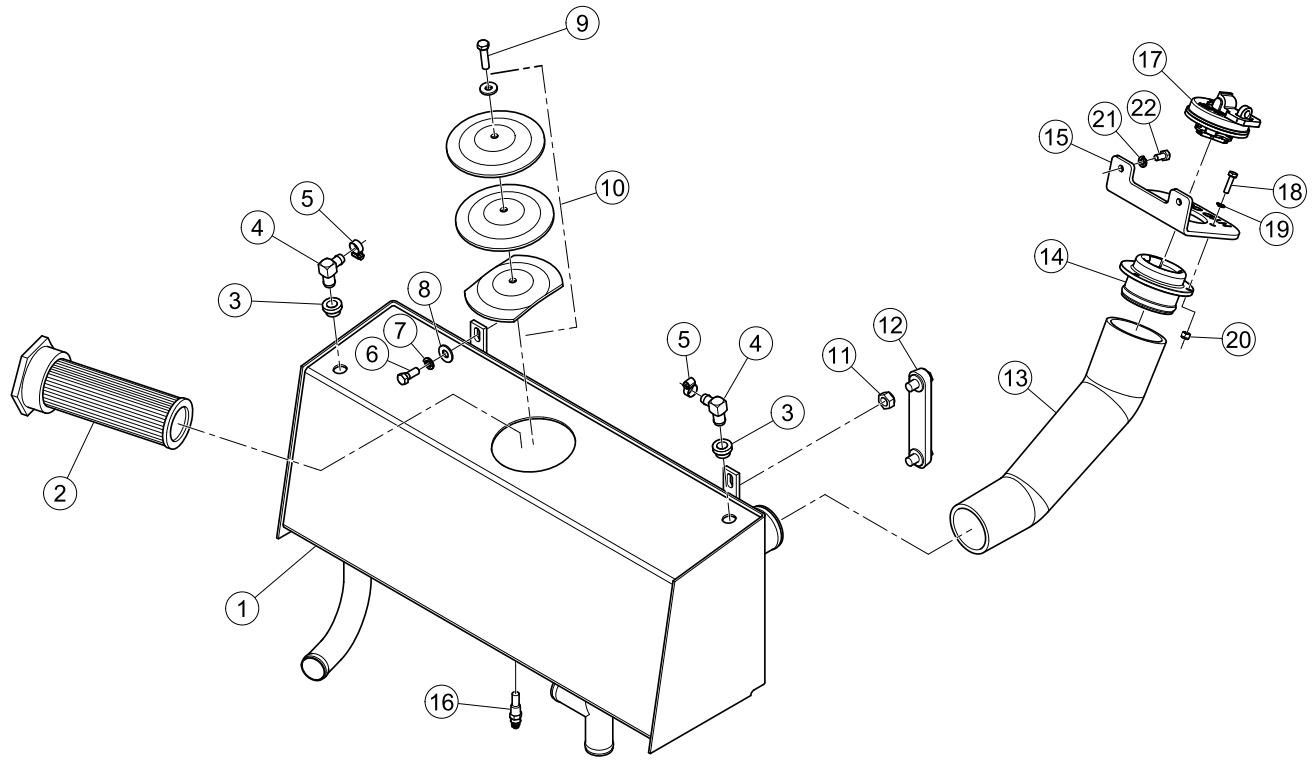

HYDRAULIC CONTROL ASSEMBLY - TWO SPEED (Serial #: SR050/60 00101-Current)

REF. NO.	PART NUMBER	QTY.	DESCRIPTION
1	7000-365	1	TUBE, 2 SPEED, RH 2 SPEED
2	7000-366	1	TUBE, 2 SPEED, LH 2 SPEED
3	0201-654	2	ADAPTER,FS,6400,04,06,SHORT
4	7000-361	2	TUBE, 2 SPEED, RH BRAKE
5	0310-313	4	ADAPTER,12MFFOR-12MB
6	0201-309	4	ADAPTER,FS6400-04-06-0
7	8102-406	20	CAPSCREW,HH,1/2-13UNCx1.75,GD8
8	8040-606	20	NUT,HEX,NYLOCK,1/2-13 UNC,ZN
9	0310-345	13	ADAPTER,8MFFOR--8MB
10	7000-300	1	TUBE 1 BOOM EMERGENCY
11	7000-120	1	ASSY TUBE HYD LOADER B
12	7000-289	1	TUBE 1 HYD QUICK
13	8102-134	9	CAPSCREW,HH,5/16-18UNCx1.25GD8 ZN
14	0310-584	9	PLATE,COVER TCP-T2 TCP-T2
15	0201-225	3	CLAMP,SET,T2038-PP
16	0310-831	6	CLAMP, SET, T2062-PP BEHRINGER
17	2045-580	5	CLAMP SET 1038-PP
18	2045-581	5	PLATE COVER COP-1
19	8102-044	12	CAPSCREW,HH,1/4-20UNCx1.25,GD8,ZN
20	7000-122	1	ASSY TUBE HYD CURL B MF
21	7000-290	1	HYDRAULIC QUICK TUBE 2
22	7000-324	1	HYDRAULIC QUICK TUBE 3
23	0310-329	8	ADAPTER,6MFFOR-6MB
24	2075-359	1	VALVE 2 POS 4 WAY SV08
25	7000-299	1	HYDRAULIC QUICK TUBE 3
26	7000-288	1	TUBE, LOADER, BOOM CYL, LH
27	7000-121	1	ASSY TUBE HYD LOADER A MF
28	7000-123	1	ASSY TUBE HYD CURL A MF
29	7000-316	1	TUBE HYD AUX A
30	7000-315	1	TUBE HYD AUX B
31	7000-127	1	TUBE CROSS LOADER VALVE HYD MF
32	0201-226	3	CLAMP,SET,T4100-PP
33	0201-227	3	CLAMP,COVER,TCP-T4
34	8102-137	3	CAPSCREW,HH,5/16-18UNCx2.0 GD8 ZN
35	0310-312	1	ADAPTER,16MFFOR-16MB
36	7000-274	1	TEE RETURN VALVE
37	8102-222	12	CAPSCREW,HH,3/8-16 UNCx1.0,GD8,ZN
38	8051-272	8	WASHER,SPRING LOCK,3/8,ZN
39	0201-402	1	CLAMP,SET,2050-PP
40	0201-224	1	COVER,CLAMP,COP-2
41	7000-291	1	BOOM CASE DRAIN TUBE
42	0404-161	1	FILTER SPIN-ON HYD
43	0201-403	1	HEAD,FILTER
44	7000-292	1	TUBE VALVE TO FILTER
45	7000-303	1	TUBE 1 VALVE TO TANK
46	7000-304	1	TUBE 2 VALVE TO TANK
47	7000-305	1	TUBE 1 VALVE PRESSURE
48	7000-297	1	TUBE, J2 TO VALVE PRESSURE
49	7000-310	1	J2 MF GEN BLOCK TUBE
50	0310-321	1	ADAPTER,12MFFOR-12MB90
51	7000-338	1	TUBE, VALVE, MAIN FEED
52	7000-364	1	TUBE, 2 SPEED, LH CASEDRAIN
53	7000-307	1	TUBE GEN BLOCK TO TANK #6
54	7000-363	1	TUBE, 2 SPEED, RH CASEDRAIN
55	7000-480	1	HOSE, -6, 3000 PSI, 6FFORX, 6FFORX, 73.4"
56	7000-308	1	2 SPEED TANK DUMP TUBE
57	8102-045	2	CAPSCREW,HH,1/4-20x1.5"ZN GD8
58	8051-212	2	WASHER,SPRING LOCK,1/4,ZN
59	7000-311	1	MF 2 SPEED PRESSURE TUBE
60	7000-222	1	MCR3 400cc Two speed
61	7000-367	2	HOSE, -12, 6000 PSI, 12FFORX, 12FFORX, "
62	7000-368	2	HOSE, -12, 6000 PSI, 12FFORX, 12FFORX, "
63	7000-358	2	TUBE, 2 SPEED, RH DRIVE BOTTOM
64	7000-357	2	TUBE, 2 SPEED, RH DRIVE TOP
65	7000-531	1	TUBE JOYSTICK BUCKET DUMP
66	7000-530	1	TUBE JOYSTICK BOOM DOWN

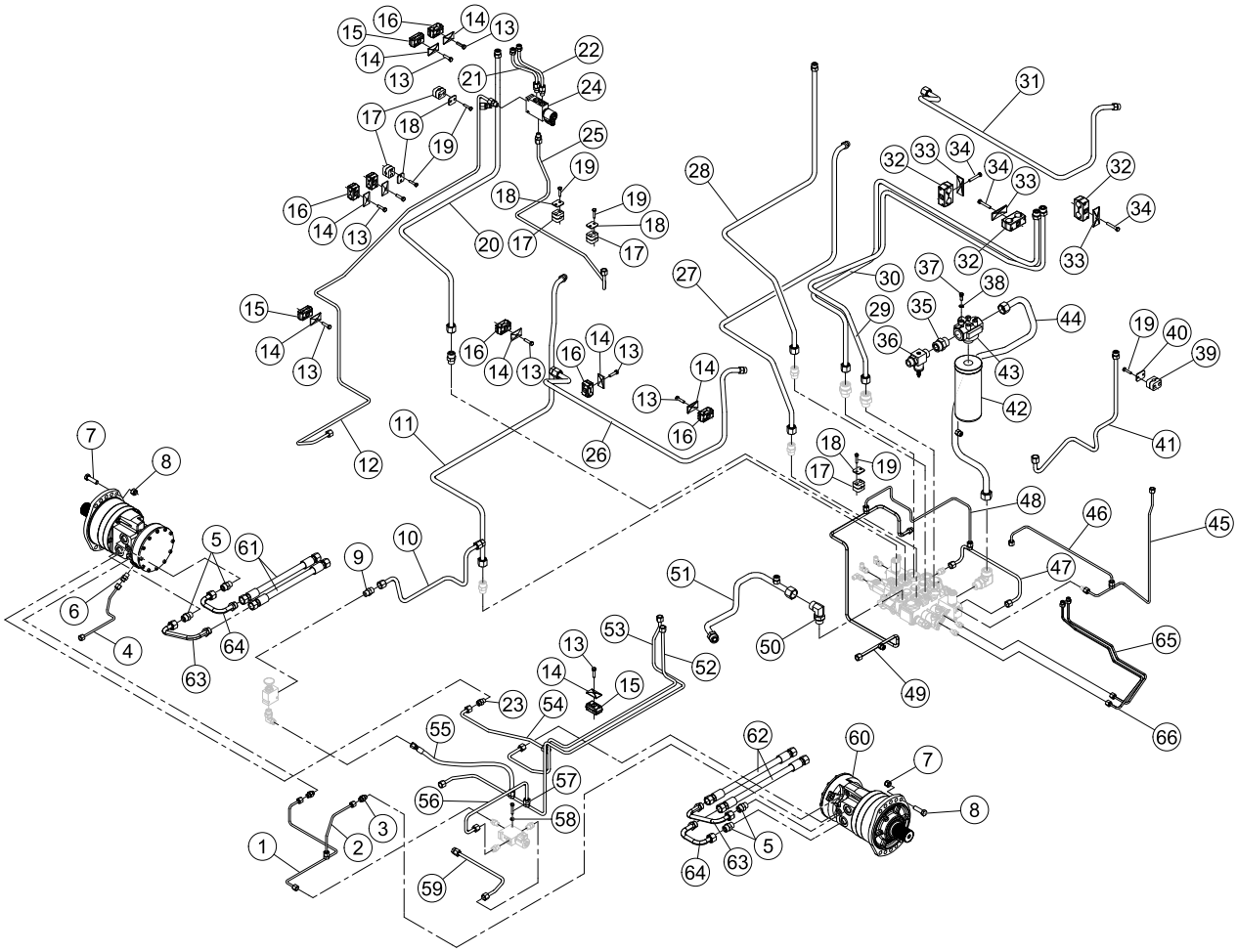

HYDRAULIC CONTROL ASSEMBLY - SINGLE SPEED (Serial #: SR050/60 00101-Current)

REF. NO.	PART NUMBER	QTY.	DESCRIPTION
1	7000-335	2	TUBE DRIVE 1 SPEED BTM RH MF
2	0310-319	4	ADAPTER,12MFFOR-10MB
3	7000-314	2	TUBE DRIVE TOP 1 SPEED RH MF
4	7000-370	2	HOSE, -12, 6000 PSI, 12FFORX, 12FFORX,17
5	7000-221	2	MOTOR SINGLE SPEED 400CC MCR3
6	0201-309	2	ADAPTER,FS6400-04-06-0
7	7000-312	1	TUBE BRAKE 1 SPEED RH MF
8	7000-313	1	TUBE BRAKE 1 SPEED LH MF
9	7000-289	1	TUBE 1 HYD QUICK
10	7000-299	1	HYDRAULIC QUICK TUBE 3
11	2075-359	1	VALVE 2 POS 4 WAY SV08
12	0310-329	10	ADAPTER,6MFFOR-6MB
13	8102-045	2	CAPSCREW,HH,1/4-20x1.5"ZN GD8
14	8051-212	2	WASHER,SPRING LOCK,1/4,ZN
15	7000-324	1	HYDRAULIC QUICK TUBE 3
16	7000-290	1	HYDRAULIC QUICK TUBE 2
17	7000-121	1	ASSY TUBE HYD LOADER A MF
18	7000-127	1	TUBE CROSS LOADER VALVE HYD MF
19	7000-120	1	ASSY TUBE HYD LOADER B
20	7000-300	1	TUBE 1 BOOM EMERGENCY
21	7000-288	1	TUBE, LOADER, BOOM CYL, LH
22	7000-122	1	ASSY TUBE HYD CURL B MF
23	7000-123	1	ASSY TUBE HYD CURL A MF
24	7000-315	1	TUBE HYD AUX B
25	7000-316	1	TUBE HYD AUX A
26	7000-332	1	TUBE, HIGH FLOW FEED
27	7000-338	1	TUBE, VALVE, MAIN FEED
28	7000-310	1	J2 MF GEN BLOCK TUBE
29	7000-297	1	TUBE, J2 TO VALVE PRESSURE
30	7000-305	1	TUBE 1 VALVE PRESSURE
31	7000-480	1	HOSE, -6, 3000 PSI, 6FFORX, 6FFORX, 73.4"
32	7000-307	1	TUBE GEN BLOCK TO TANK #6
33	7000-304	1	TUBE 2 VALVE TO TANK
34	7000-303	1	TUBE 1 VALVE TO TANK
35	7000-292	1	TUBE VALVE TO FILTER
36	0404-161	1	FILTER SPIN-ON HYD
37	0201-403	1	HEAD,FILTER
38	8102-222	4	CAPSCREW,HH,3/8-16 UNCx1.0,GD8,ZN
39	8051-272	4	WASHER,SPRING LOCK,3/8,ZN
40	7000-277	1	VALVE BYPASS 80 PSI
41	0310-312	1	ADAPTER,16MFFOR-16MB
42	8102-048	2	CAPSCREW,HH,1/4-20UNCx2.25,GD8
43	8050-222	2	WASHER,WROUGHT,1/4,STD,ZN
44	8102-134	9	CAPSCREW,HH,5/16-18UNCx1.25GD8 ZN
45	0310-584	9	PLATE,COVER TCP-T2 TCP-T2
46	0201-225	3	CLAMP,SET,T2038-PP
47	0310-831	7	CLAMP, SET, T2062-PP BEHRINGER
48	0201-227	2	CLAMP,COVER,TCP-T4
49	0201-226	2	CLAMP,SET,T4100-PP
50	8102-044	10	CAPSCREW,HH,1/4-20UNCx1.25,GD8,ZN
51	0201-224	1	COVER,CLAMP,COP-2
52	0201-402	1	CLAMP,SET,2050-PP
53	2045-581	3	PLATE COVER COP-1
54	2045-580	3	CLAMP SET 1038-PP
55	7000-369	2	HOSE, -12, 6000 PSI, 12FFORX, 12FFORX, 2
56	7000-319	1	TUBE 1 SPEED CASE DRAIN LH #6
57	7000-318	1	TUBE 1 SPEED CASE DRAIN RH #6
58	7000-531	1	TUBE JOYSTICK BUCKET DUMP
59	7000-530	1	TUBE JOYSTICK BOOM DOWN
60	8102-137	2	CAPSCREW,HH,5/16-18UNCx2.0 GD8 ZN

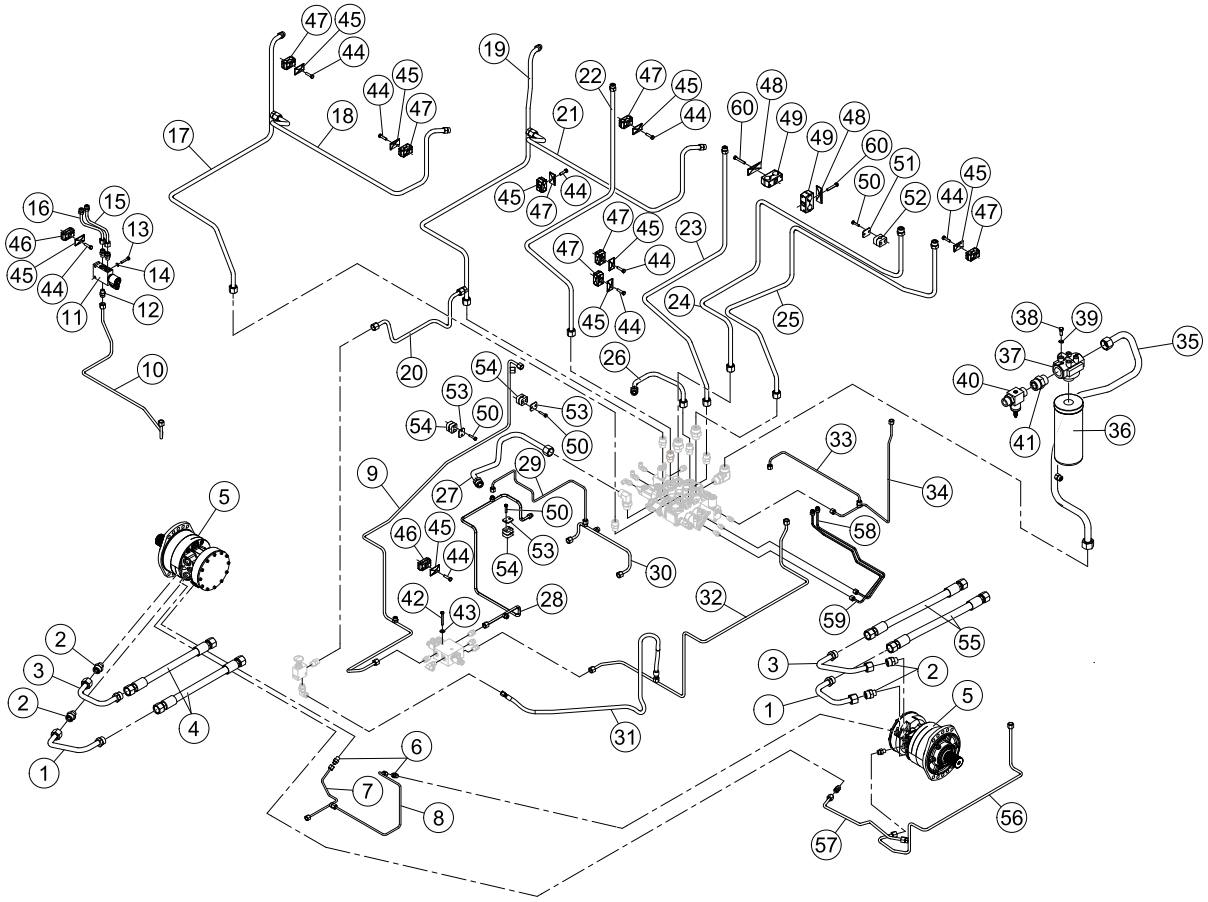

LIFT ARM CONTROL VALVE ASSEMBLY (Serial #: SR050/60 00101-Current)

REF. NO.	PART NUMBER	QTY.	DESCRIPTION
1	7005-094	1	VALVE LOADER 9610
2	0310-321	1	ADAPTER,12MFFOR-12MB90
3	0201-314	3	ADAPTER,FS6801-04-04-NW0
4	0310-318	4	ADAPTER,10MFFOR-10MB
5	0310-332	2	ADAPTER,10MFFOR-12MB
6	0310-329	1	ADAPTER,6MFFOR-6MB
7	0310-324	1	ADAPTER,16MFFOR-12MB-90
8	7001-141	2	ADAPTER,4MFFOR-4MB-45
9	7000-623	1	RELIEF VALVE

REF. NO.	PART NUMBER	QTY.	DESCRIPTION

Seal Kit: 7000-622

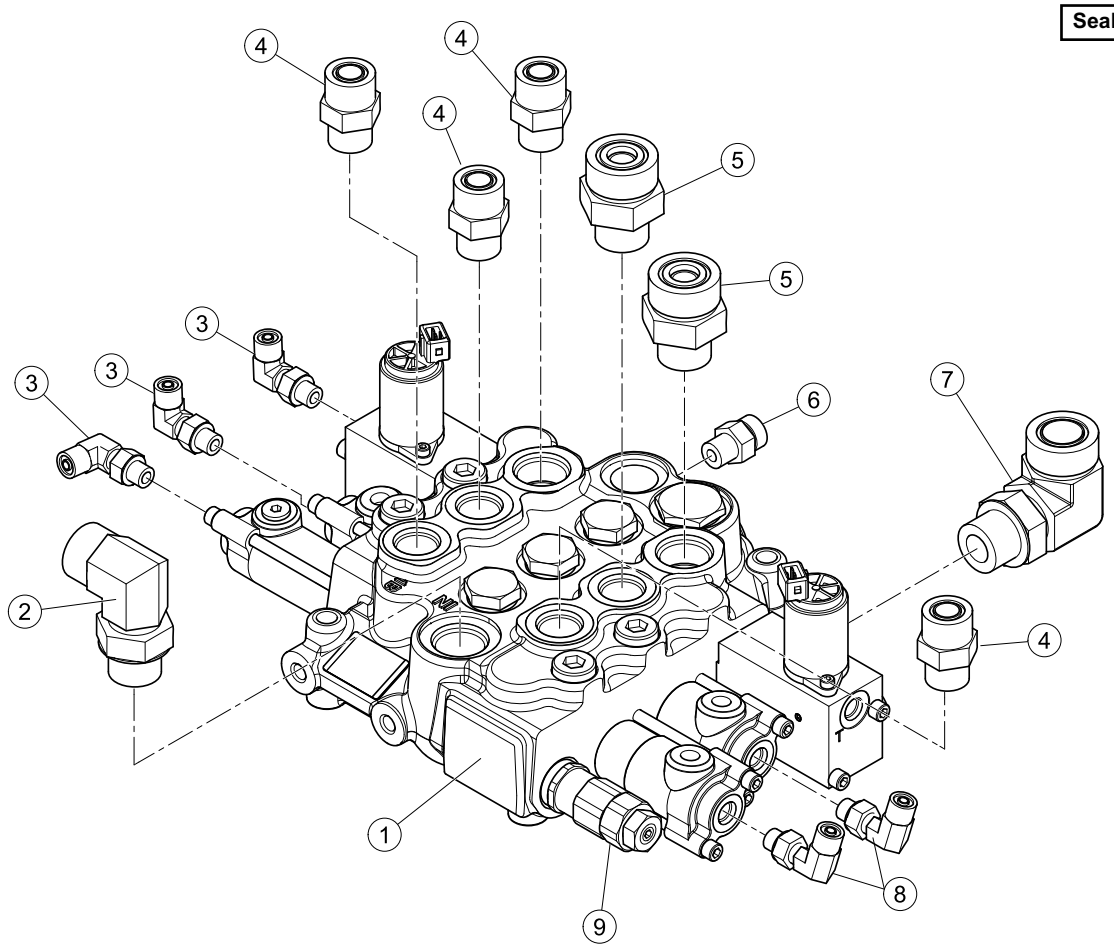

HYDRAULIC DRIVE / AUXILIARY ASSEMBLY (Serial #: SR050/60 00101-Current)

REF. NO.	PART NUMBER	QTY.	DESCRIPTION
1	7000-118	1	TUBE,INTAKE
2	0300-687	2	CLAMP,HOSE,1.5,#24 H24
3	0304-528	1	HOSE,RES,1.5x9
4	7000-561	1	HOSE -6 3000PSI 6FFORX 6FFORX 37"
5	0310-468	8	CAPSCREW,HH,M10x1.5x35,ZINC
6	0301-781	8	WASHER,SPLIT LOCK,10mm,ZN
7	0200-171	2	COUPLING,SPLIT,CODE 61,1.25"
8	0310-294	1	O-RING,#222,1.50x1.75x.13 (LUTZ)
9	0200-119	1	PUMP,HYD,AUX
10	0310-318	2	ADAPTER,10MFFOR-10MB
11	0200-172	2	COUPLING,SPLIT,CODE 61,0.75"
12	8102-222	2	CAPSCREW,HH,3/8-16 UNCx1.0,GD8,ZN
13	8051-332	2	WASHER,SPRING LOCK,1/2,ZN
14	----------	1	SEE LIST IN ILLUSTRATION
15	0310-329	2	ADAPTER,6MFFOR-6MB
16	0201-314	2	ADAPTER,FS6801-04-04-NW0
17	0201-575	2	CAPSCREW,HH,1/2-13x1.625,GD8
18	0090-148	2	WASHER SPRING LOCK 1/2 ZN
19	0304-404	2	WASHER,FLAT,1.125 OD x .5 ID x 1/4,ZN
20	0200-104	1	HUB,PUMP DRIVE,1 1/4" x 14
21	7000-496	1	HOSE -16 400PSI 10FFORX 10FFORX 22.6"
22	7000-562	1	HOSE -6 3000PSI 6FFORX 6FFORX90S 39.32"
23	7000-564	1	HOSE,-10,300PSI,10FFORX45S,10FFORX45S,19
24	0310-557	2	ADAPTER,6MFFOR-4MB-90
25	0310-332	1	ADAPTER,10MFFOR-12MB
26	0201-658	1	ADAPTER,10MFFOR-8MB-SV
27	0201-316	2	ADAPTER,FS6801-L-12-12-NW0
28	0310-321	2	ADAPTER,12MFFOR-12MB90
29	7000-739	1	HOSE, -12, 4000 PSI, 16FL, 12FFORX45, 25”
30	----------	1	SEE LIST IN ILLUSTRATION
31	7000-441	1	JOYSTICK CONTROL LH
32	7000-473	1	HOSE -6 3000 PSI 4FFFORX 6FFORX 135"
33	7000-472	1	HOSE -6 3000 PSI 4FFFORX 4FFORX 100"
34	7000-479	2	HOSE PILOT
35	7000-476	1	HOSE -6 3000 PSI 4FFFORX 6 FFORX 114"
36	7000-475	2	HOSE -6 3000 PSI 4FFFORX 4FFORX 115"
37	7000-477	2	HOSE PILOT
38	7000-474	1	HOSE -6 3000 PSI 4FFORX 6FFORX 95"
39	7000-480	1	HOSE -4 3000PSI 4FFFORX 4FFORX 56.8"
40	7000-478	1	HOSE -6 3000PSI 6FFFORX 6FFORX 95"
41	7000-528	1	TUBE JOYSTICK PRESSURE DRIVE
42	0304-516	1	HMAGNET,DETENT
43	8102-040	8	CAPSCREW,HH,1/4-20 UNCx.75,GD8 ZN
44	8040-366	8	NUT,HEX,NYLOCK,1/4-20 UNC,ZN
45	2010-138	1	KIT CARDAN RH
46	0307-882	2	TIE,CABLE,BLACK,18.1",W/STL INSERT
47	2045-735	2	BOOT CONTROLLER
48	0304-441	1	SWITCH,PRESSURE
49	0403-001	4	O-RING VALVE RELIEF
50	0403-002	4	O-RING BACK-UP VALVE RELIEF
51	0201-876	4	VALVE,RELIEF,5500 PSI
52	0307-169	1	O-RING,4.0" ID x 4-3/16" OD BUNA 2-155
53	7000-884	1	HOSE -12,3300PSI 12FFORX 12FFORX 15.5"

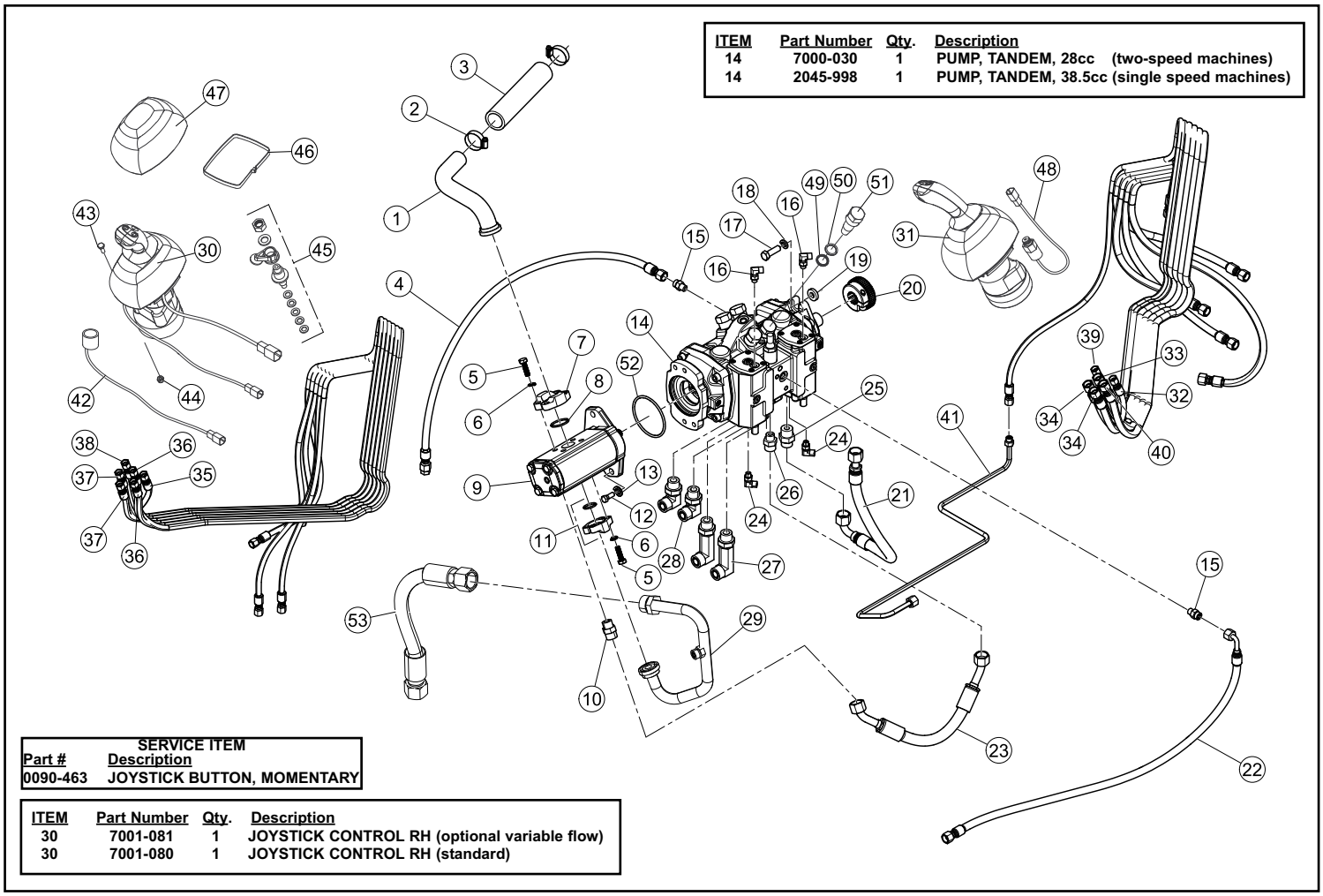

ITEM	Part Number	Qty.	Description
14	7000-030	1	PUMP, TANDEM, 28cc (two-speed machines)
14	2045-998	1	PUMP, TANDEM, 38.5cc (single speed machines)

SERVICE ITEM

Part #	Description
0090-463	JOYSTICK BUTTON, MOMENTARY

ITEM	Part Number	Qty.	Description
30	7001-081	1	JOYSTICK CONTROL RH (optional variable flow)
30	7001-080	1	JOYSTICK CONTROL RH (standard)

SOLENOID BLOCKS (Serial #: SR050/60 00101-Current)

REF. NO.	PART NUMBER	QTY.	DESCRIPTION
1	7000-294	1	ASSY VALVE BOOM MANUAL
2	0310-345	1	ADAPTER,8MFFOR--8MB
3	7000-471	1	ADAPTER 6MFFOR 8MB 90^
4	2051-615	1	BLOCK CONTROL
5	0310-329	7	ADAPTER,6MFFOR-6MB
6	0201-309	1	ADAPTER,FS6400-04-06-0
7	0200-364	1	COIL SOLENIOD 2 SPEED HYDRAULIC QA
8	7005-675	1	MANIFOLD PILOT GENERATION SIZE 6
9	2051-840	1	CARTRIDGE SOLENIOD 2 SPEED
10	7000-625	3	COIL PILOT GEN BLOCK
11	7000-624	3	CARTRIDGE PILOT GEN BLOCK
12	7000-293	1	PLUNGER VALVE
13	7000-295	1	BLOCK VALVE

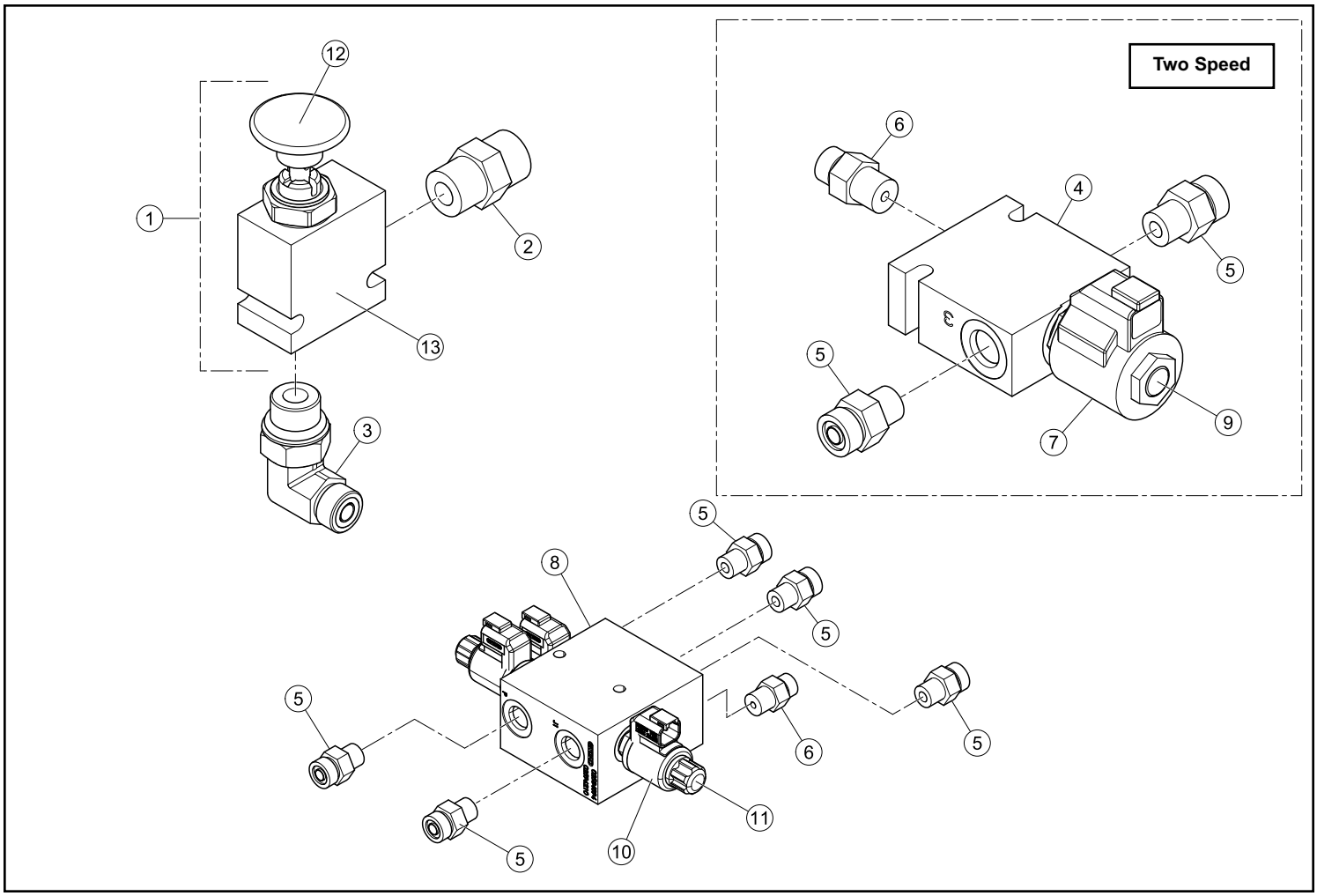

ENGINE ASSEMBLY - 50 (Serial #: SR050 00101-Current)

REF. NO.	PART NUMBER	QTY.	DESCRIPTION
1	8102-222	16	CAPSCREW,HH,3/8-16 UNCx1.0,GD8,ZN
2	8051-272	16	WASHER,SPRING LOCK,3/8,ZN
3	0304-900	1	MNT,PLATE,PUMP
4	8102-132	8	CAPSCREW,HH,5/16-18UNCx1.0 GD8 ,ZN
5	8051-242	17	WASHER,SPRING LOCK,5/16,ZN
6	0304-507	1	PLATE,FLYWHEEL 15375 KB42575
7	0200-611	1	ENGINE PERKINS 404D-22
8	7000-058	2	SSL, MF, MOTOR MOUNT, FRONT
9	0300-458	4	MOUNT,ENGINE
10	0304-948	4	LIMITER,MNT,MOTOR
11	8040-726	4	NUT,HEX,NYLOCK,5/8-11 UNC,ZN
12	8102-591	4	CAPSCREW,HH,5/8-11x3,YZ
13	2030-279	1	GUARD RAIN STARTER
14	7000-057	2	SSL, MF, MOTOR MOUNT, REAR, RH
15	2030-632*	1	BELT FAN
16	0200-377	1	FILTER,OIL,ENGINE
17	0200-352	1	HOSE,FUEL,5/16IDx17.00"
18	0300-732	12	CLAMP,HOSE,#4 MM4
19	8102-138	1	CAPSCREW,HH,5/16-18 X 2.25 GD8
20	0200-338	1	ASSY,FILTER,WATER
21	0200-178	1	WLMT,BRKT,MNT,FILTER
22	0200-329	2	CAPSCREW,HH,M8x1.25x16MM
23	0304-509	1	HOSE,FUEL,5/16x22"
24	7000-090	1	STRAP BATTERY
25	2045-142	2	HOOK BATTERY
26	0200-160	1	BATTERY,50 SERIES
27	7000-432	1	MUFFLER
28	0200-157	1	ASSY,CLEANER,AIR
29	0200-313	1	INDICATOR,AIRCLEANER
30	0200-340	1	FILTER,AIR,SECONDARY
31	0200-339	1	FILTER,AIR,PRIMARY
32	0200-560	1	CAP,AIR CLEANER
33	0304-503	1	VALVE,DUST #P522958
34	0304-511	1	GASKET,MUFFLER
35	0300-211	4	CAPSCREW,M8 x 1.25 x 25MM LG
36	0200-158	1	BAND,MNT,AIR CLEANER
37	8102-130	7	CAPSCREW,HH 5/16-18x3/4,GR8
38	8040-426	2	NUT,HEX,NYLOCK,5/16-18 UNC,ZN
39	0200-215	1	ASSY,FILTER,FUEL
40	2051-844	1	HOSE FUEL FILTER-ENGINE
41	0300-455	1	CABLE,THROTTLE
42	0310-465	1	CLAMP,WIRE,5/8,RBC-5/8
43	8040-366	2	NUT,HEX,NYLOCK,1/4-20 UNC,ZN
44	7000-460	1	HOSE INTAKE FORMED 50HP
45	0200-213	1	FILTER,FUEL,PERKINS,404C22
46	0300-581	1	W/NUTS,U-BOLT,1/4-20
47	7000-199	1	BRACKET THROTTLE
48	0304-835	1	BULB,PRIMER
49	0200-351	1	HOSE,FUEL,5/16IDx2.00"
50	7000-484	1	CABLE BATTERY POSITIVE
51	4046-090	1	CABLE BATTERY NEGATIVE
52	0201-336	1	TERMINAL,BATTERY (DOES NOT INCLUDE ITEM 53)
53	7000-730	1	BRACKET REMOTE TERMINAL
54	7000-785	1	CABLE BATTERY POSITIVE
55	0200-353	1	HOSE,FUEL,5/16IDx30.00"
56	0300-718	2	W/PIN,CLEVIS
57	7000-792	1	HOSE FUEL RETURN
58	0200-335	3	SPRING,TAILPIPE
59	7000-524	1	ASSY HEADER EXHAUST 50 HP

Item #	Part #	* Service Item	
15	7000-106	BELT HD GATES 9400 40 X 1/2"	For use in:
TSR50	Serial# 00001-00338		
TSR60	Serial# 00001-00222		

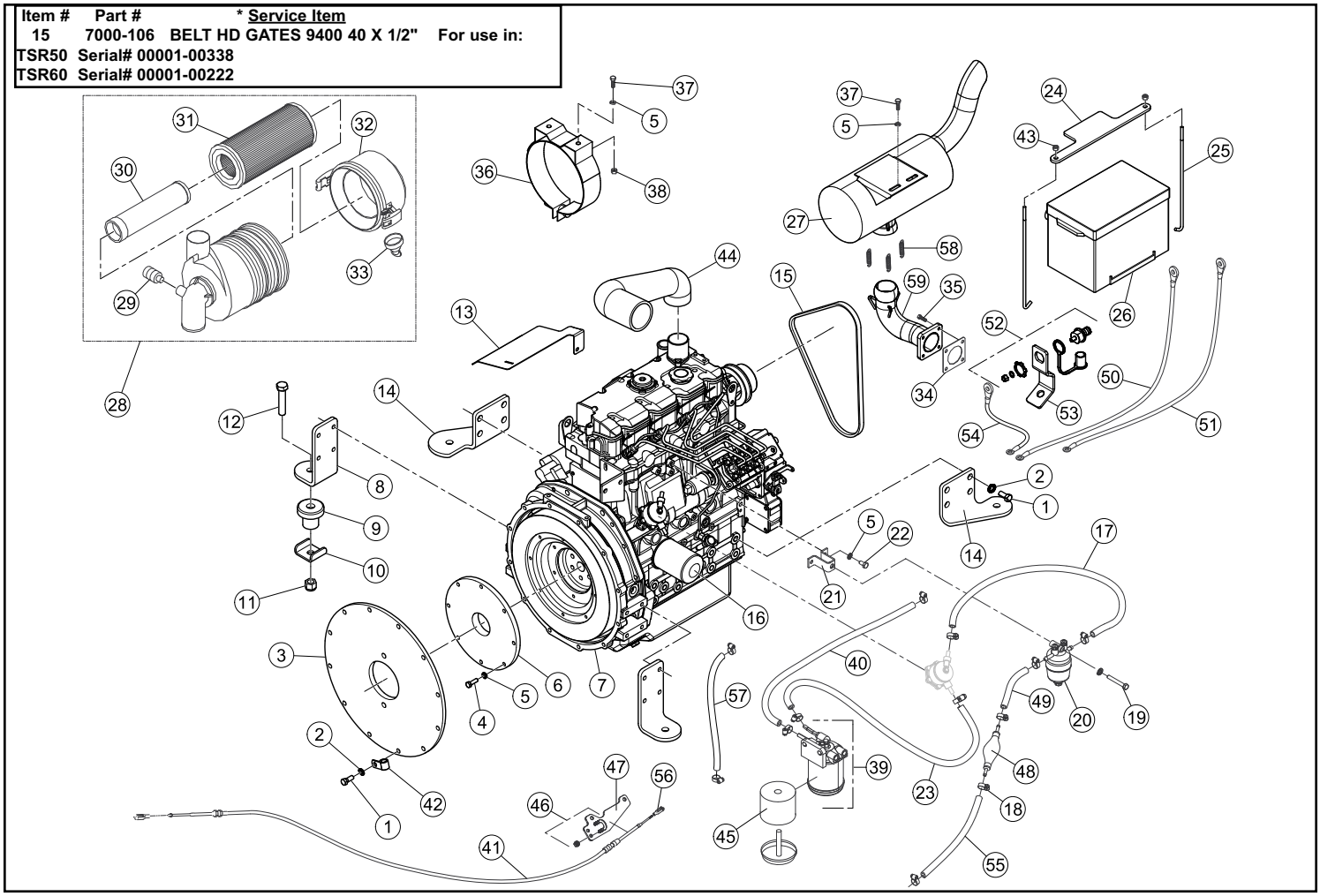

ENGINE ASSEMBLY - 60 (Serial #: SR060 00101-Current)

REF. NO.	PART NUMBER	QTY.	DESCRIPTION
1	8102-222	16	CAPSCREW,HH,3/8-16 UNCx1.0,GD8,ZN
2	8051-272	16	WASHER,SPRING LOCK,3/8,ZN
3	0304-900	1	MNT,PLATE,PUMP
4	8102-132	8	CAPSCREW,HH,5/16-18UNCx1.0 GD8 ,ZN
5	8051-242	17	WASHER,SPRING LOCK,5/16,ZN
6	0304-507	1	PLATE,FLYWHEEL 15375 KB42575
7	2030-329	1	ENGINE PERKINS 404D-22T
8	7000-058	2	SSL, MF, MOTOR MOUNT, FRONT
9	0300-458	4	MOUNT,ENGINE
10	0304-948	4	LIMITER,MNT,MOTOR
11	8040-726	4	NUT,HEX,NYLOCK,5/8-11 UNC,ZN
12	8102-591	4	CAPSCREW,HH,5/8-11x3,YZ
13	2030-279	1	GUARD RAIN STARTER
14	7000-057	2	SSL, MF, MOTOR MOUNT, REAR, RH
15	2030-632	1	BELT FAN
16	0200-377	1	FILTER,OIL,ENGINE
17	0200-352	1	HOSE,FUEL,5/16IDx17.00"
18	0300-732	12	CLAMP,HOSE,#4 MM4
19	8102-138	1	CAPSCREW,HH,5/16-18 X 2.25 GD8
20	0200-338	1	ASSY,FILTER,WATER
21	0200-178	1	WLMT,BRKT,MNT,FILTER
22	0200-329	2	CAPSCREW,HH,M8x1.25x16MM
23	0304-509	1	HOSE,FUEL,5/16x22"
24	7000-090	1	STRAP BATTERY
25	2045-142	2	HOOK BATTERY
26	0200-160	1	BATTERY,50 SERIES
27	7000-550	1	MUFFLER 60
28	0200-157	1	ASSY,CLEANER,AIR
29	0200-313	1	INDICATOR,AIRCLEANER
30	0200-340	1	FILTER,AIR,SECONDARY
31	0200-339	1	FILTER,AIR,PRIMARY
32	0200-560	1	CAP,AIR CLEANER
33	0304-503	1	VALVE,DUST #P522958
34	0304-511	1	GASKET,MUFFLER
35	0300-211	4	CAPSCREW,M8 x 1.25 x 25MM LG
36	0200-158	1	BAND,MNT,AIR CLEANER
37	8102-130	7	CAPSCREW,HH 5/16-18x3/4,GR8
38	8040-426	2	NUT,HEX,NYLOCK,5/16-18 UNC,ZN
39	0200-215	1	ASSY,FILTER,FUEL
40	2051-844	1	HOSE FUEL FILTER-ENGINE
41	0300-455	1	CABLE,THROTTLE
42	0310-465	1	CLAMP,WIRE,5/8,RBC-5/8
43	8040-366	2	NUT,HEX,NYLOCK,1/4-20 UNC,ZN
44	7000-045	1	HOSE INTAKE FORMED 60HP
45	0200-213	1	FILTER,FUEL,PERKINS,404C22
46	0300-581	1	W/NUTS,U-BOLT,1/4-20
47	7000-199	1	BRACKET THROTTLE
48	0304-835	1	BULB,PRIMER
49	0200-351	1	HOSE,FUEL,5/16IDx2.00"
50	7000-484	1	CABLE BATTERY POSITIVE
51	4046-090	1	CABLE BATTERY NEGATIVE
52	0201-336	1	TERMINAL,BATTERY (DOES NOT INCLUDE ITEM 53)
53	7000-730	1	BRACKET REMOTE TERMINAL
54	7000-785	1	CABLE BATTERY POSITIVE
55	0200-353	1	HOSE,FUEL,5/16IDx30.00"
56	0300-718	2	W/PIN,CLEVIS
57	7000-792	1	HOSE FUEL RETURN
58	0200-335	3	SPRING,TAILPIPE
59	7000-527	1	ASSY HEADER EXHAUST 60 HP
60	7000-552	1	WLMT ELBOW MUFFLER TS 60

Item #	Part #	* Service Item
15	7000-106	BELT HD GATES 9400 40 X 1/2" For use in:

TSR50 Serial# 00001-00338
TSR60 Serial# 00001-00222

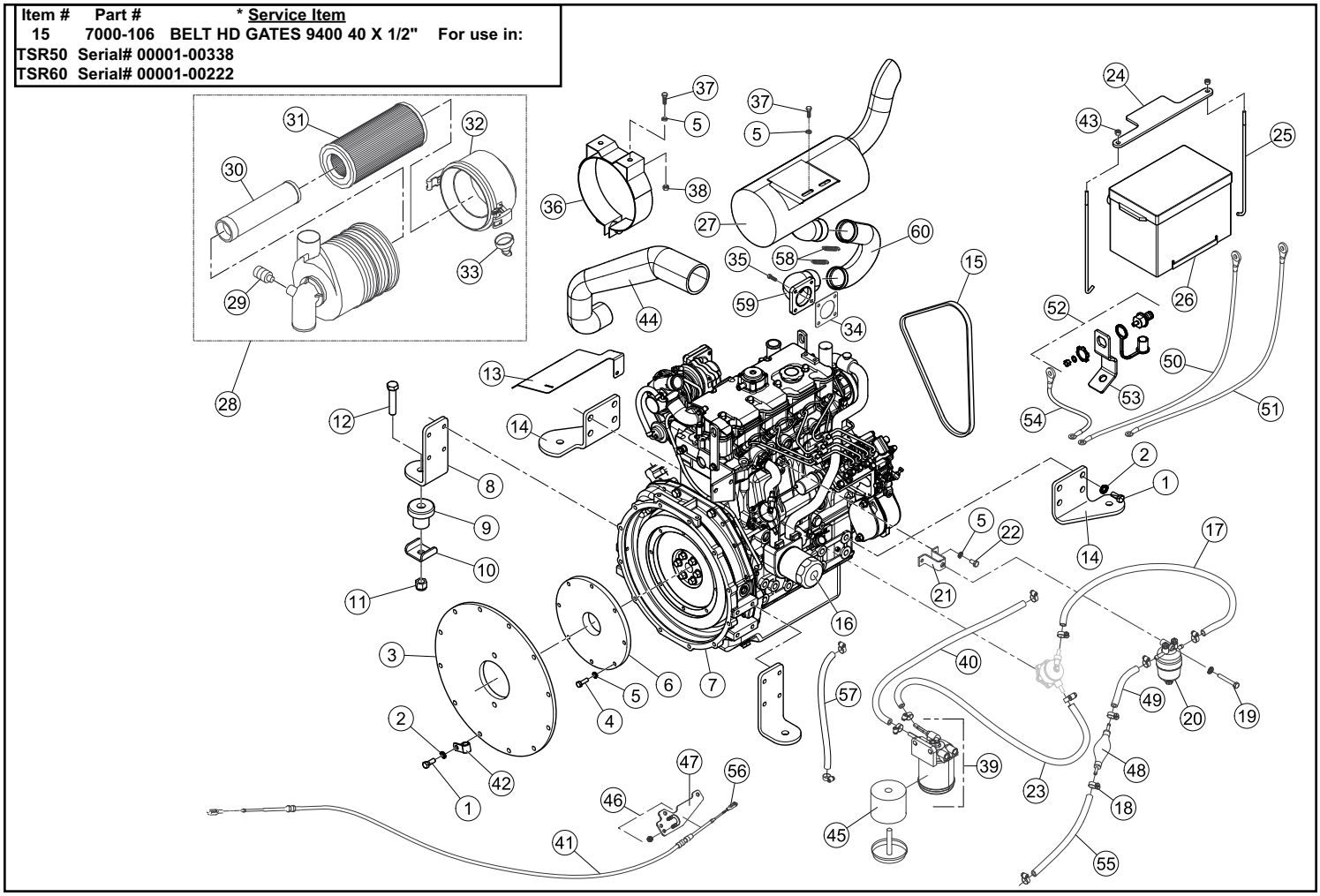

FUSE PANEL ASSEMBLY (Serial #: SR050/60 00101-Current)

REF. NO.	PART NUMBER	QTY.	DESCRIPTION
1	0304-519	5	RELAY,PLUG,GLOW
2	0310-807	5	RELAY,MINI, 35 AMP
3	0310-805	1	FUSE,MAXI,80 AMP 7460K51 - 80 AMP
4	0310-804	1	FUSE,MAXI,60 AMP 78505
5	0310-801	2	FUSE,MAXI,30 AMP 78502
6	0310-800	3	FUSE,MAXI,20 AMP 78501
7	0310-803	1	FUSE,MAXI,50 AMP 78504
8	0310-802	2	FUSE,MAXI,40 AMP 78503
9	0310-793	1	FUSE,MINI,2 AMP 77015
10	0310-796	1	FUSE,MINI,15 AMP 77155
11	0310-795	6	FUSE,MINI,10 AMP 77105
12	0310-794	5	FUSE,MINI, 5 AMP 77055
13	0310-811	1	DIODE, 3 AMP
14	0310-798	1	FUSE,MINI,25 AMP 77255
15	0310-779	1	PLUG,DTHD,1PIN DTHD-06-1-8-S
16	7005-969	1	*HARNESS MAIN
17	0090-239	2	KNOB 1/5-4-20 UNC 2B
18	2075-810	1	COVER FUSE PANEL

REF. NO.	PART NUMBER	QTY.	DESCRIPTION

***Serial # TSR50 - 00101-00108**
TSR60 - 00101-00115

ITEM	Part Number	Qty.	Description
16	7005-154	1	HARNESS MAIN

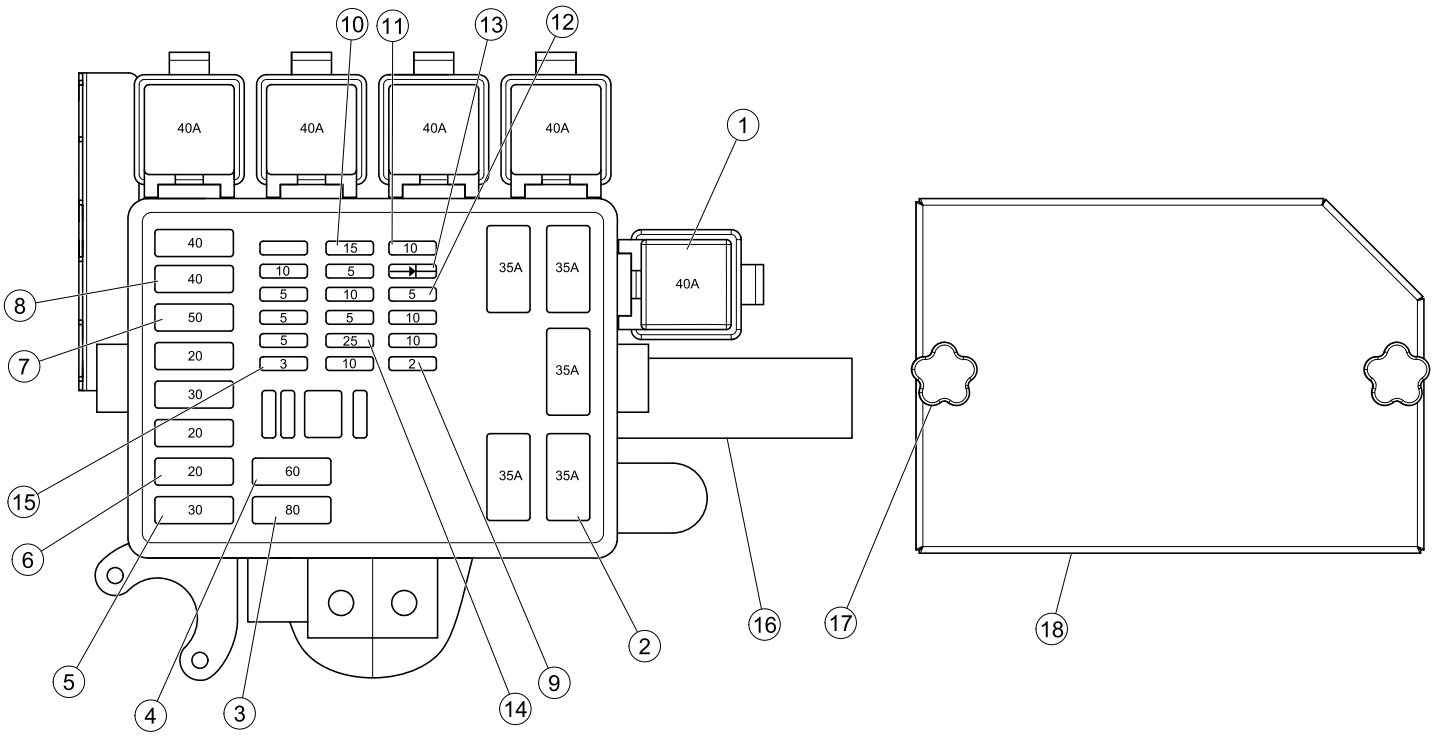

FINAL DRIVE ASSEMBLY, RT (Serial #: SR050/60 00101-Current)

REF. NO.	PART NUMBER	QTY.	DESCRIPTION
1	7000-215	2	CHAIN # 80
2	7000-217	2	WLMT SPROCKET DRIVEN 80 CHAIN
3	7000-069	2	SLEEVE HUB MID
4	7005-062	2	O-RING 2-366 N-70
5	7005-061	2	O-RING 2-139 N70
6	7005-060	2	SEAL LIP 70x100x10
7	7005-057	2	BEARING CONE 389
8	7005-055	4	BEARING CUP 382A
9	7000-260	2	HOUSING MACHINED MID
10	7005-058	2	SEAL FLOATING
11	7000-067	2	AXLE MACHINED MID
12	7000-034	2	RIM 16.5x8.25
13	7000-818	2	TIRE 10.00-16.5 R4 10 Ply SKS
14	7000-216	2	WLMT SPROCKET DRIVE # 80
15	0200-337	1	CAPSCREW,HH,M12x1.75x40MM,GR8.8
16	0090-302	16	Washer, M14 DIN6916 Structural
17	0090-303	16	NUT,HEX,9/16-18 UNF,ZN
18	8050-282	1	WASHER,WROUGHT,3/8,STD,ZN
19	PI0181-1.875C	32	STUD WHEEL
20	PH0181-2BP	32	NUT - 9/16-18NF, 90 DEG.TAPER, GR.5
21	SEE LIST	2	WHEEL/TIRE ASSEMBLY
22	7000-065	2	ASSY POD MID SIZE (INCLUDES LUG NUTS, ITEM 20)
23	7000-059	2	WASHER 1.060" x 2.5 x .25
24	0090-254	2	WCAPSCREW HH M16-2 x 55MM 10.9
25	7005-056	2	BEARING CONE 387A

ITEM 21

7000-816: Tire & Rim Assembly 16.5 X10 10 PLY (RH)
7000-818: Tire 10-16.5 10 Ply

Note: Wheel/tire assemblies (21) configured for right side installation are not interchangable with assemblies for left side installation.

Tires (13) are directional and spacing is different on the inside and outside of the wheels (2).

Order from this page when replacing tire/wheel assemblies for right side only.

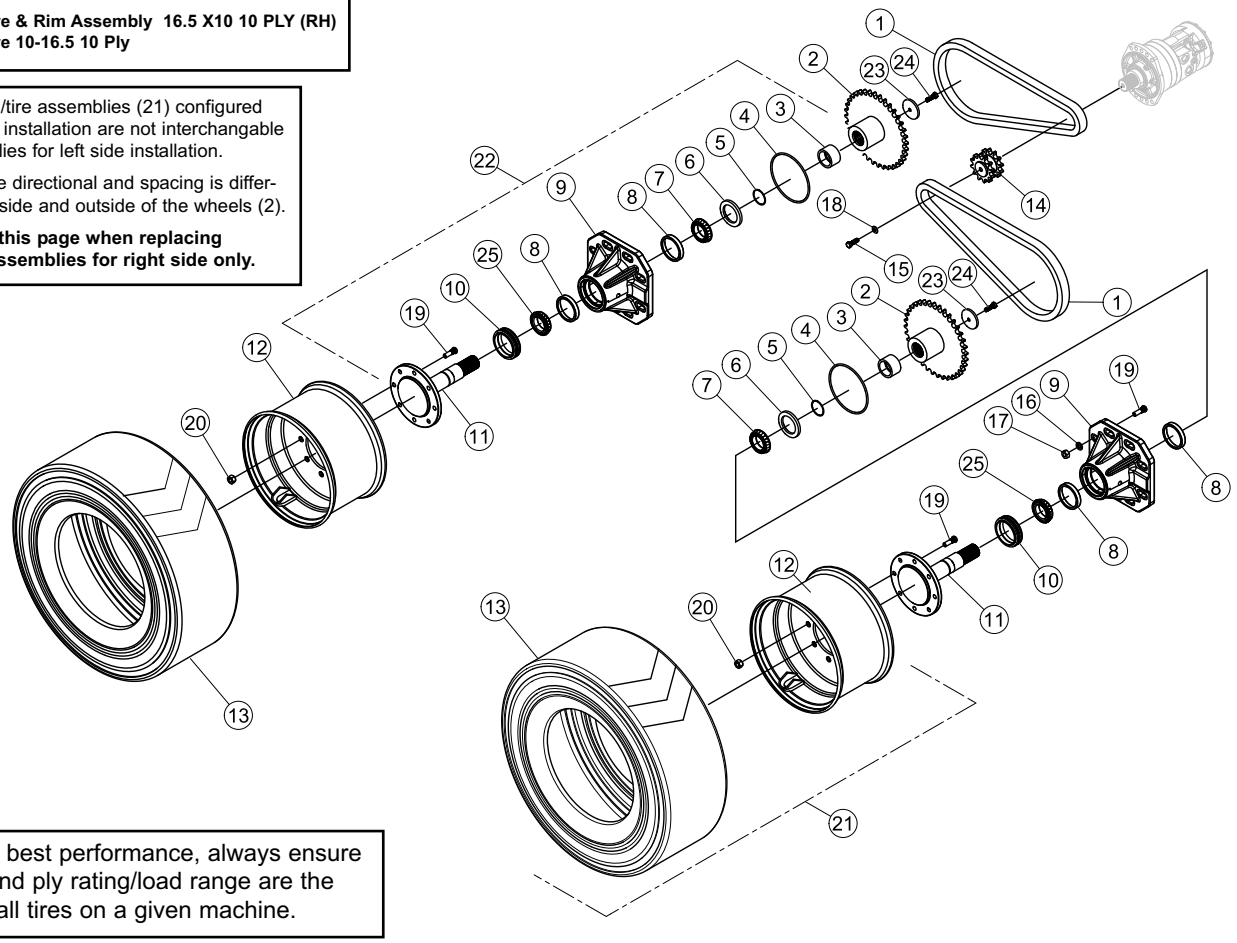

Note: For best performance, always ensure tire size and ply rating/load range are the same for all tires on a given machine.

FINAL DRIVE ASSEMBLY, LT (Serial #: SR050/60 00101-Current)

REF. NO.	PART NUMBER	QTY.	DESCRIPTION
1	7000-215	2	CHAIN # 80
2	7000-217	2	WLMT SPROCKET DRIVEN 80 CHAIN
3	7000-069	2	SLEEVE HUB MID
4	7005-062	2	O-RING 2-366 N-70
5	7005-061	2	O-RING 2-139 N70
6	7005-060	2	SEAL LIP 70x100x10
7	7005-057	2	BEARING CONE 389
8	7005-055	4	BEARING CUP 382A
9	7000-260	2	HOUSING MACHINED MID
10	7005-058	2	SEAL FLOATING
11	7000-067	2	AXLE MACHINED MID
12	7000-034	2	RIM 16.5x8.25
13	7000-818	2	TIRE 10.00-16.5 R4 10 Ply SKS
14	7000-216	2	WLMT SPROCKET DRIVE # 80
15	0200-337	1	CAPSCREW,HH,M12x1.75x40MM,GR8.8
16	0090-302	16	Washer, M14 DIN6916 Structural
17	0090-303	16	NUT,HEX,9/16-18 UNF,ZN
18	8050-282	1	WASHER,WROUGHT,3/8,STD,ZN
19	PI0181-1.875C	32	STUD WHEEL
20	PH0181-2BP	32	NUT - 9/16-18NF, 90 DEG.TAPER, GR.5
21	SEE LIST	2	WHEEL/TIRE ASSEMBLY
22	7000-065	2	ASSY POD MID SIZE (INCLUDES LUG NUTS, ITEM 20)
23	7000-059	2	WASHER 1.060" x 2.5 x .25
24	0090-254	2	WCAPSCREW HH M16-2 x 55MM 10.9
25	7005-056	2	BEARING CONE 387A

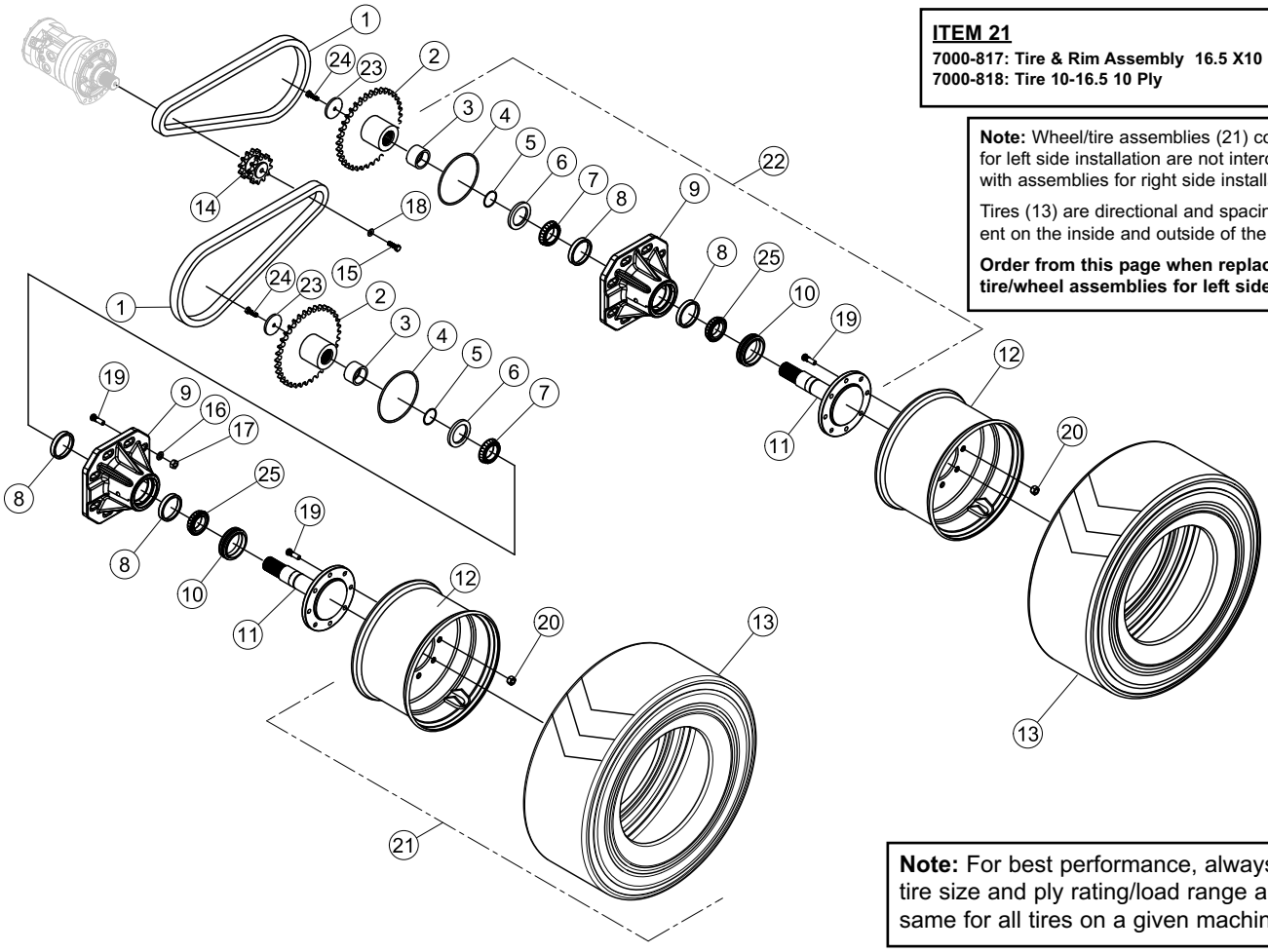

ITEM 21

7000-817: Tire & Rim Assembly 16.5 X10 10 PLY (LH)
7000-818: Tire 10-16.5 10 Ply

Note: Wheel/tire assemblies (21) configured for left side installation are not interchangable with assemblies for right side installation.

Tires (13) are directional and spacing is different on the inside and outside of the wheels (2).

Order from this page when replacing tire/wheel assemblies for left side only.

Note: For best performance, always ensure tire size and ply rating/load range are the same for all tires on a given machine.

LIFT ARM ASSEMBLY (Serial #: SR050/60 00101-Current)

REF. NO.	PART NUMBER	QTY.	DESCRIPTION
1	7000-003	1	WLMT LOADER RADIAL MF
2	2030-577	2	CYLINDER BOOM
3	0310-345	8	ADAPTER,8MFFOR--8MB
4	8011-222	4	BOLT,CARRIAGE,3/8-16 UNCx1.0,ZN
5	0314-269	6	NUT,FLANGE,TOPLK,3/8-16UNC,GDG,ZN
6	2030-562	2	WLMT PIN 1.5 X 4.51
7	0300-607	10	ZERK,GREASE,1/4-28 1103K21
8	0201-231	2	WLMT,PIN,5.50"
9	7000-341	2	BUSHING,SPRING, 1 3/4" X 1 1/2" X 3 7/8"
10	7000-342	2	BUSHING LOADER LOWER
11	0201-852	2	WLMT,PIN,6.00"
12	8102-224	4	CAPSCREW,HH,3/8-16UNCx1.25,GD8,ZN
13	0003-053	2	BUSHING CYLINDER BUCKET ROD END1.75 x 1.5 x 2.00
14	7000-284	2	WLMT PIN,CYLINDER,TILT
15	8040-366	2	NUT,HEX,NYLOCK,1/4-20 UNC,ZN
16	8102-050	2	CAPSCREW,HH,1/4-20,UNC,2.75ZN,GD8
17	7000-410	2	HOSE, -8, 4000 PSI, 8FFORX, 8FFORX, 17.8
18	7000-411	1	HOSE, -8, 4000 PSI, 8FFORX, 8FFORX, 16.1
19	7000-412	1	HOSE, -8, 4000 PSI, 8FFORX, 8FFORX, 19.3
20	7000-209	1	CYLINDER TILT RH
21	7000-208	1	CYLINDER TILT LH
22	2030-655	2	BUSHING 1.50ID x 3.00
23	0003-056	2	BUSHING BOOM ROD END 1.75 x 1.5 x 2.25
24	7000-161	2	BUSHING LOADER UPPER (WELD IN)
25	7000-156	2	TUBE BUSHING CYLINDER (WELD IN)
26	7000-162	2	BUSHING LOADER TILT CYLINDERS (WELD IN)
27	7000-802	2	BUSHING BASE END
28	7000-409	2	HOSE -10 4000 PSI 8FFORX 8FFORX 35.5"
29	7000-408	2	HOSE -10 4000 PSI 8FFORX 8FFORX 50.0"
30	2040-325	2	WLMT, PIN, QA TILT,6.00

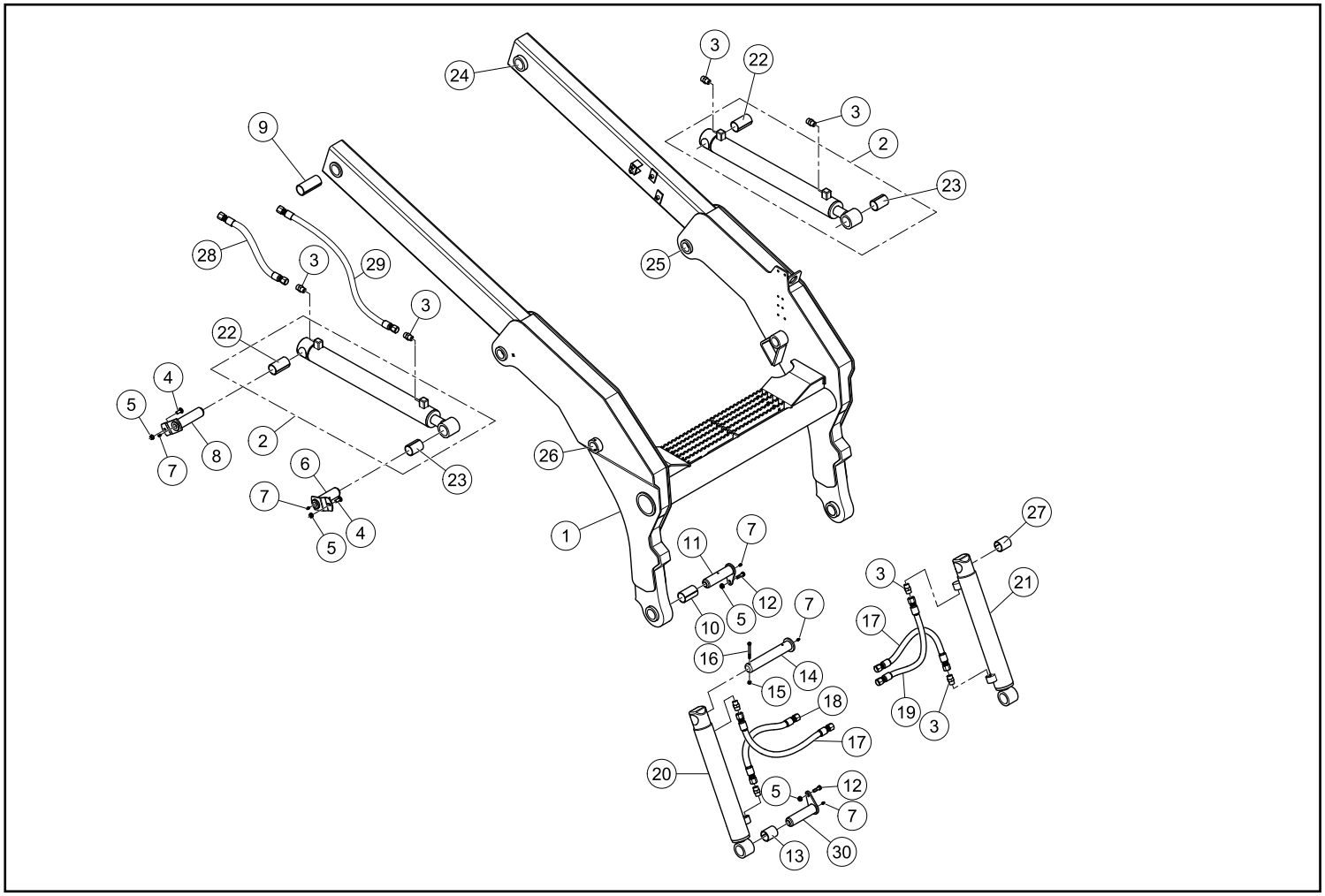

LIFT ARM TUBES AND FITTINGS (Serial #: SR050/60 00101-Current)

REF. NO.	PART NUMBER	QTY.	DESCRIPTION
1	7000-146	1	SSL, MF, HYD, BUCKET, DUMP,TUBE
2	7000-147	1	SSL, MF, HYD, BUCKET, CURL, TUBE
3	7000-149	1	SSL, MF, HYD, QUICK ATTACH B, TUBE
4	7000-148	1	SSL, MF, HYD, QUICK ATTACH A, TUBE
5	0201-225	4	CLAMP,SET,T2038-PP
6	0310-584	9	PLATE,COVER TCP-T2 TCP-T2
7	8102-044	4	CAPSCREW,HH,1/4-20UNCx1.25,GD8,ZN
8	0310-831	5	CLAMP, SET, T2062-PP BEHRINGER
9	8102-134	7	CAPSCREW,HH,5/16-18UNCx1.25GD8 ZN
10	7000-356	1	HOSE, -6, 4000 PSI, 6FFORX, 6FFORX, "
11	7000-355	1	HOSE, -6, 4000 PSI, 6FFORX, 6FFORX, "
12	7000-354	1	HOSE, -8, 4000 PSI, 8FFORX, 8FFORX, "
13	7000-353	1	HOSE, -8, 4000 PSI, 8FFORX, 8FFORX, "
14	7000-494	1	HOSE -6 4000 PSI 8FFORX 8FFORX 36"
15	7000-493	1	HOSE -10 4000PSI 10FFORX 10FFORX (AUX B)
16	7000-492	1	HOSE -10 4000PSI 10FFORX 10FFORX (AUX A)
17	7000-143	1	SSL, MF, HYD,AUX A,TUBE
18	7000-144	1	SSL, MF, HYD,AUX B,TUBE
19	7000-145	1	SSL, MF, HYD, AUX CASE DRAIN,TUBE
20	0310-567	1	ADAPTER,8MFFOR-6MB
21	0201-658	2	ADAPTER,10MFFOR-8MB-SV
22	8102-050	4	CAPSCREW,HH,1/4-20,UNC,2.75ZN,GD8
23	0304-188	1	PLUG, ORING6
24	0304-876	1	MANIFOLD,AUX,HYD INNOTEK 22255 QD
25	0200-296	2	ADAPTER,O-RING HEX NIPPLE,10-8
26	0310-077	1	COUPLER,QUICK,FF,MALE,
27	0310-076	1	COUPLER,QUICK,FF,
28	0201-224	1	COVER,CLAMP,COP-2
29	0201-402	1	CLAMP,SET,2050-PP
30	0201-838	1	SPOOL,VALVE,QD BLOCK

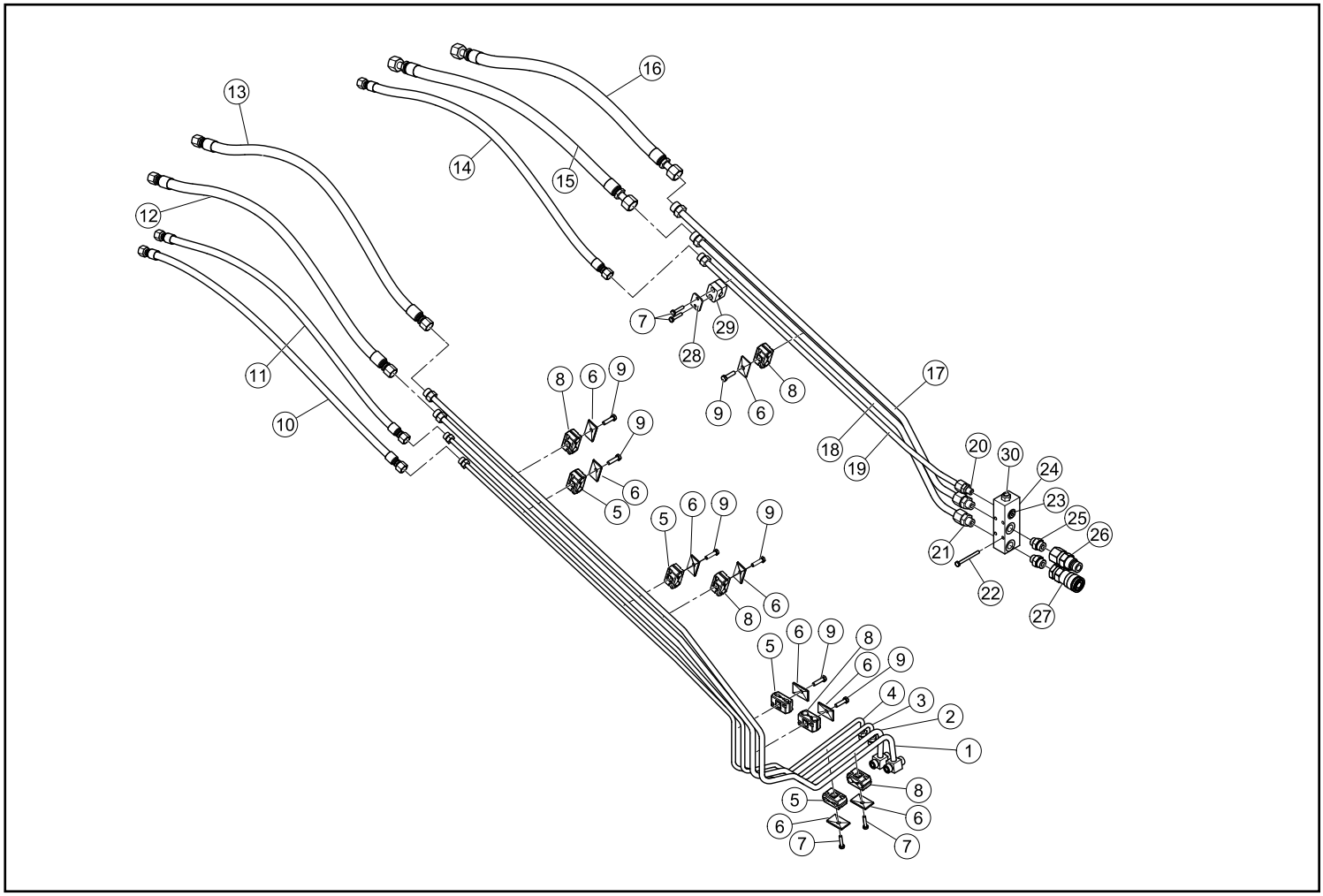

MANUAL QUICK ATTACH ASSEMBLY (Serial #: SR050/60 00101-Current)

REF. NO.	PART NUMBER	QTY.	DESCRIPTION
1	2045-359	1	WLMT,QUICK-ATTACH,MANUAL
2	2045-761	1	HANDLE,QA,LH
3	2045-762	1	HANDLE,QA,RH
4	2045-242	1	WLMT PIN RH
5	2045-243	1	WLMT PIN LH
6	2045-245	2	BLOCK LATCH
7	8102-418	2	CAPSCREW,HH,1/2-13UNCx 6.0,GD8
8	0090-002	2	BOLT,SHOULDER,5/8"x.625" GD 8
9	0090-368	8	WASHER,WROUGHT,1/2,STD,ZN
10	2015-018	2	WASHER,FENDER,1.75x0.53x0.125
11	8051-620	6	WASHER,SPRING LOCK,1.0,ZN
12	0400-621	2	SPOOL,PIVOT
13	0304-799	2	CAPSCREW,HH,1/2-13UNCx3.75,GD8
14	8040-606	2	NUT,HEX,NYLOCK,1/2-13 UNC,ZN
15	0400-651	2	SPRING,COMPRESSION
16	0300-607	2	ZERK,GREASE,1/4-28

Manual Quick Attach Assembly
P/N: 2040-159

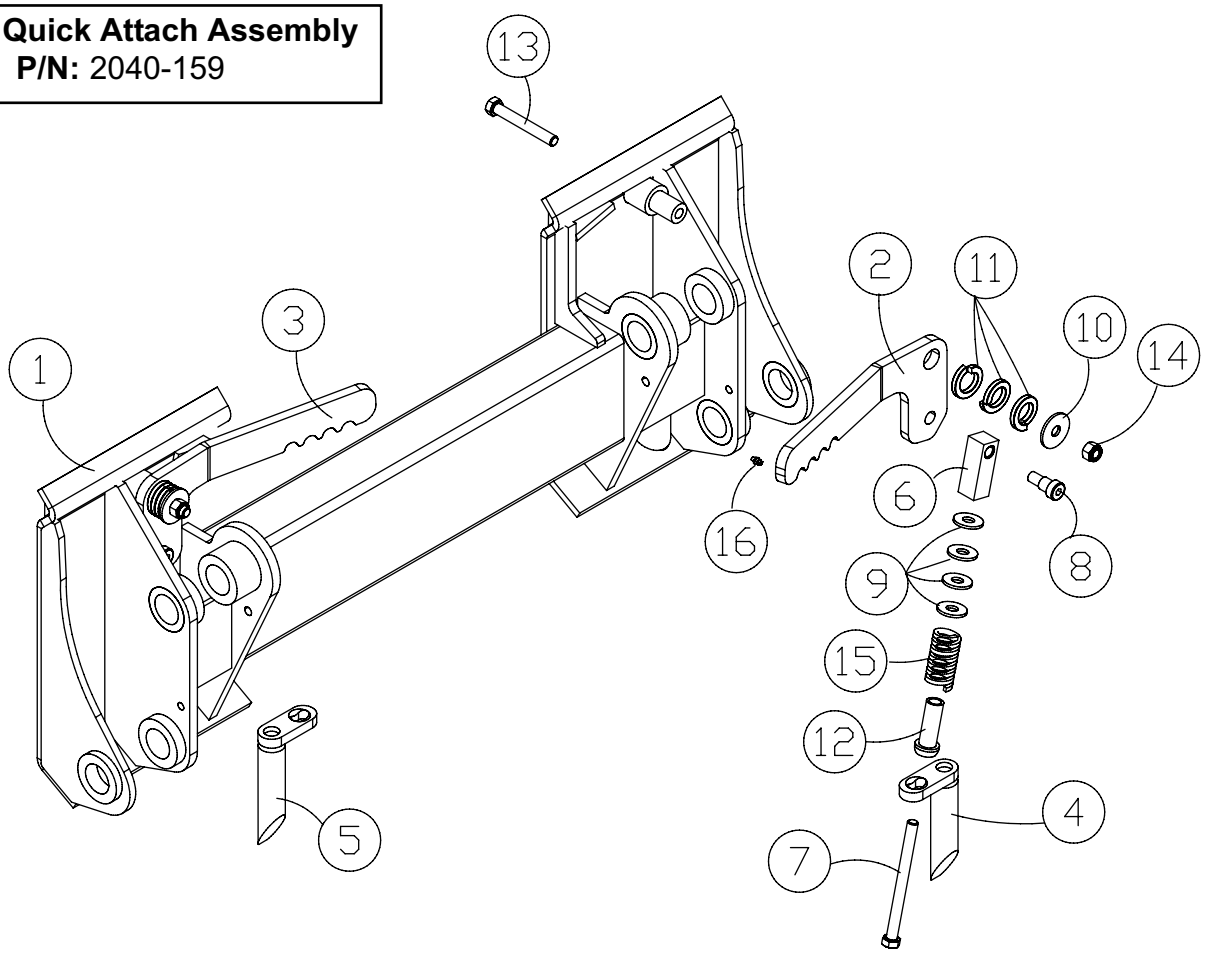

POWER QUICK ATTACH ASSEMBLY (Serial #: SR050/60 00101-Current)

REF. NO.	PART NUMBER	QTY.	DESCRIPTION
1	0201-637	1	WLMT,GUARD,QA
2	2046-316	1	*CYLINDER QA LH
3	2046-317	1	*CYLINDER QA RH
4	2045-235	1	WLMT QUICK-ATTACH HYD
5	0201-566	1	HOSE,6M4K-6FFORX90S-6FFORX-49.
6	0201-545	1	HOSE,6M4K-6FFORX-6FFORX90S-14.
7	0201-565	1	HOSE,6M4K-6FFORX90S-6FFORX-53.
8	0201-544	1	HOSE,6M4K-6FFORX-6FFORX90S-25.
9	0310-328	2	ADAPTER,6MFFOR-6MB-90
10	0201-542	2	ADAPTER,TEE,6FS-6FS-6NWO
11	8102-412	2	CAPSCREW,HH 1/2-13UNCx3.25 GD8
12	8102-686	1	CAPSCREW,HH,3/4-10UNCx4.25 GD8
13	8040-786	1	NUT,HEX,NYLOCK,3/4-10 UNC,ZN
14	2045-245	2	BLOCK LATCH
15	2045-246	2	LATCH QA
16	0090-001	2	BOLT,SHOULDER,5/8"x1.25" GD 8
17	8040-606	2	NUT,HEX,NYLOCK,1/2-13 UNC,ZN
18	0090-368	4	WASHER,WROUGHT,1/2,STD,ZN
19	0300-607	2	ZERK,GREASE,1/4-28
20	0400-651	2	SPRING,COMPRESSION PLATED
21	0400-621	2	SPOOL,PIVOT
22	2045-243	1	WLMT PIN LH
23	2045-242	1	WLMT PIN RH
24	8102-418	2	CAPSCREW,HH,1/2-13UNCx 6.0,GD8
25	0310-733	1	INSERT,CLAMP,TWIN.75" T3075-PP
26	0310-828	1	COVER, CLAMP, 3/4" TCP-T3
27	8102-136	1	CAPSCREW,HH,5/16-18x1.75 ZN GD
28	8050-348	2	WASHER,1/2,SAE,ZN 1.06 OD x .531 ID x .090

Power Q/A Kit: 7000-774

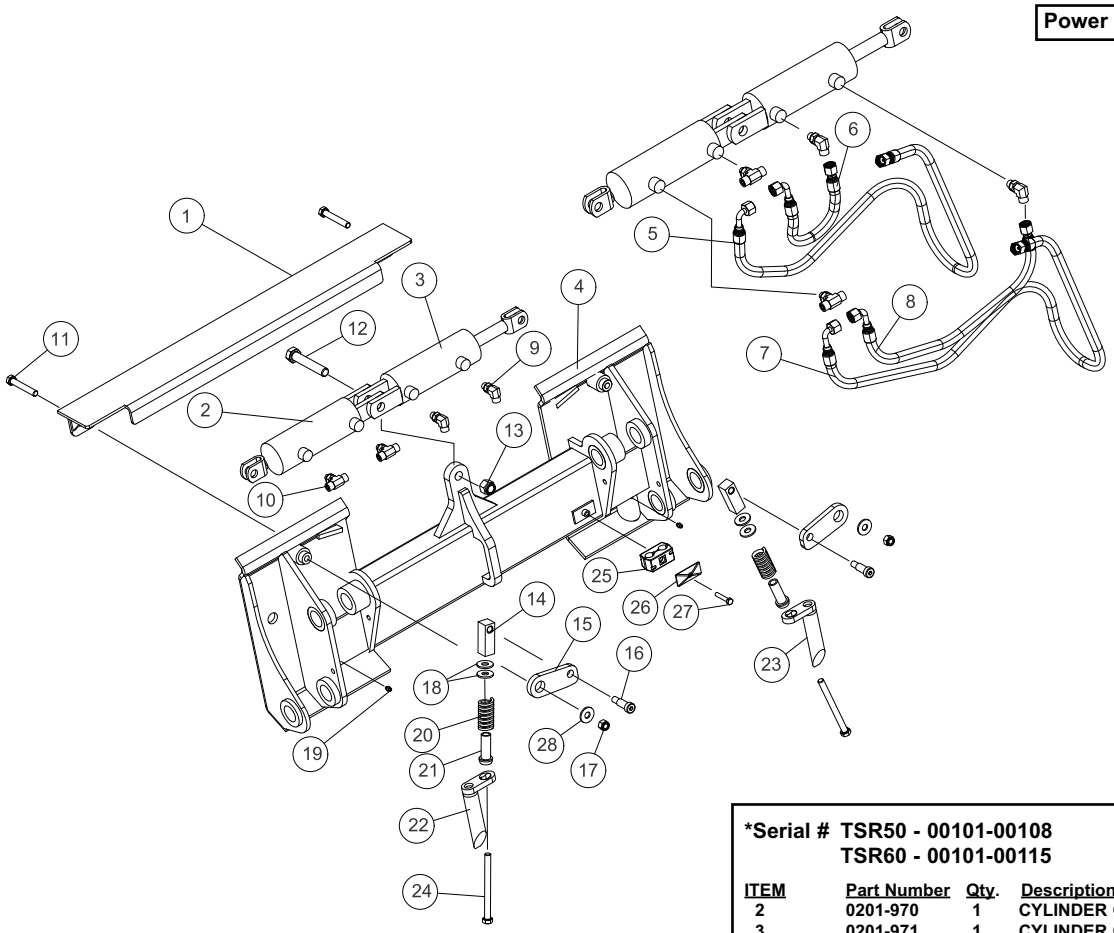

***Serial # TSR50 - 00101-00108**
TSR60 - 00101-00115

ITEM	Part Number	Qty.	Description
2	0201-970	1	CYLINDER QA LH
3	0201-971	1	CYLINDER QA RH

AIR CONDITIONING / HEATING (OPTIONAL) (Serial #: SR050/60 00101-Current)

REF. NO.	PART NUMBER	QTY.	DESCRIPTION
1	0090-346	0.25	DUCT 3" BULK (18 FT LENGTH)
2	0303-175	2	HOSE,CLAMP,2.75,HI-TORQUE
3	7000-340	1	DUCT
4	8060-209	4	RIVET BLIND ALUM .125 X .50
5	8050-091	4	WASHER,WROUGHT,#6,SAE,ZN
6	2075-794	1	PLENUM INLET HVAC
7	0090-253	8	SCREW TH PH 10-32 x 1.0 ZN
8	0090-109	4	SCREW TH PH 1/4-20 x 1.00 ZN
9	8102-039	2	CAPSCREW,HH,1/4-20UNCx.625,GD8
10	8051-212	2	WASHER,SPRING LOCK,1/4,ZN
11	8050-222	6	WASHER,WROUGHT,1/4,STD,ZN
12	2075-812	1	COVER FRESH AIR FILTER
13	7000-339	1	BOX FILTER
14	2075-978	1	ASSEMBLY HVAC
15	2045-895	4	LOUVER
16	2075-793	1	PLENUM OUTLET HVAC
17	0782-038	1	COMPRESSOR,AC,RC 8985
18	2075-981	1	ADAPTOR NO.6 90^
19	2075-980	1	ADAPTOR NO.10 90^
20	8040-366	4	NUT,HEX,NYLOCK,1/4-20 UNC,ZN
21	2075-985	1	ASSEMBLY TUBE NO 6 OUTLET
22	2076-018	1	TUBE ASSY INLET COND
23	2075-983	1	ASSEMBLY TUBE OUTLET CONDENSOR
24	2046-250	1	RECEIVER DRIER
25	8102-128	4	CAPSCREW,HH 5/16-18UNCx7/8 GR8 ZN
26	8051-242	4	WASHER,SPRING LOCK,5/16,ZN
27	8050-262	4	WASHER,WROUGHT,5/16,STD,ZN
28	2075-979	1	ASSEMBLY CONDENSOR
29	2075-982	1	ASSEMBLY DRIER BRACKET
30	8102-037	2	CAPSCREW,HH,1/4-20 UNCx.50,GD8
31	7000-538	1	HOSE AC # 8 48.5"
32	7000-539	1	HOSE AC # 10 68"
33	7000-423	1	BELT AC 12" X 33.75"
34	8102-236	1	CAPSCREW,HH,3/8-16UNCx5.0 GD8
35	7000-406	1	WLMT, TENSIONER, AC
36	0314-269	1	NUT,FLANGE,TOPLK,3/8-16UNC
37	7000-405	1	BLOCK,THREADED,AC
38	0090-015	2	BOLT SHOULDER 3/8 x3 /8 GR 8
39	8051-332	1	WASHER,SPRING LOCK,1/2,ZN
40	8042-602	1	NUT,HEX,1/2-13 UNC,ZN
41	8102-415	1	CAPSCREW,HH,1/2-13 UNCx4.5,GD8
42	8102-238	1	CAPSCREW,HH 3/8-16UNCx6.0,GD8,ZN
43	7000-400	1	WLMT, BRACKET, AC
44	0314-269	1	NUT,FLANGE,TOPLK,3/8-16UNC,GDG,ZN
45	0304-131	1	CAPSCREW,HH, M14-1.5 X30MM,GD8
46	8051-431	1	WASHER,SPRING LOCK,5/8,ZN
47	2045-889	1	SWITCH PRESSURE LOW

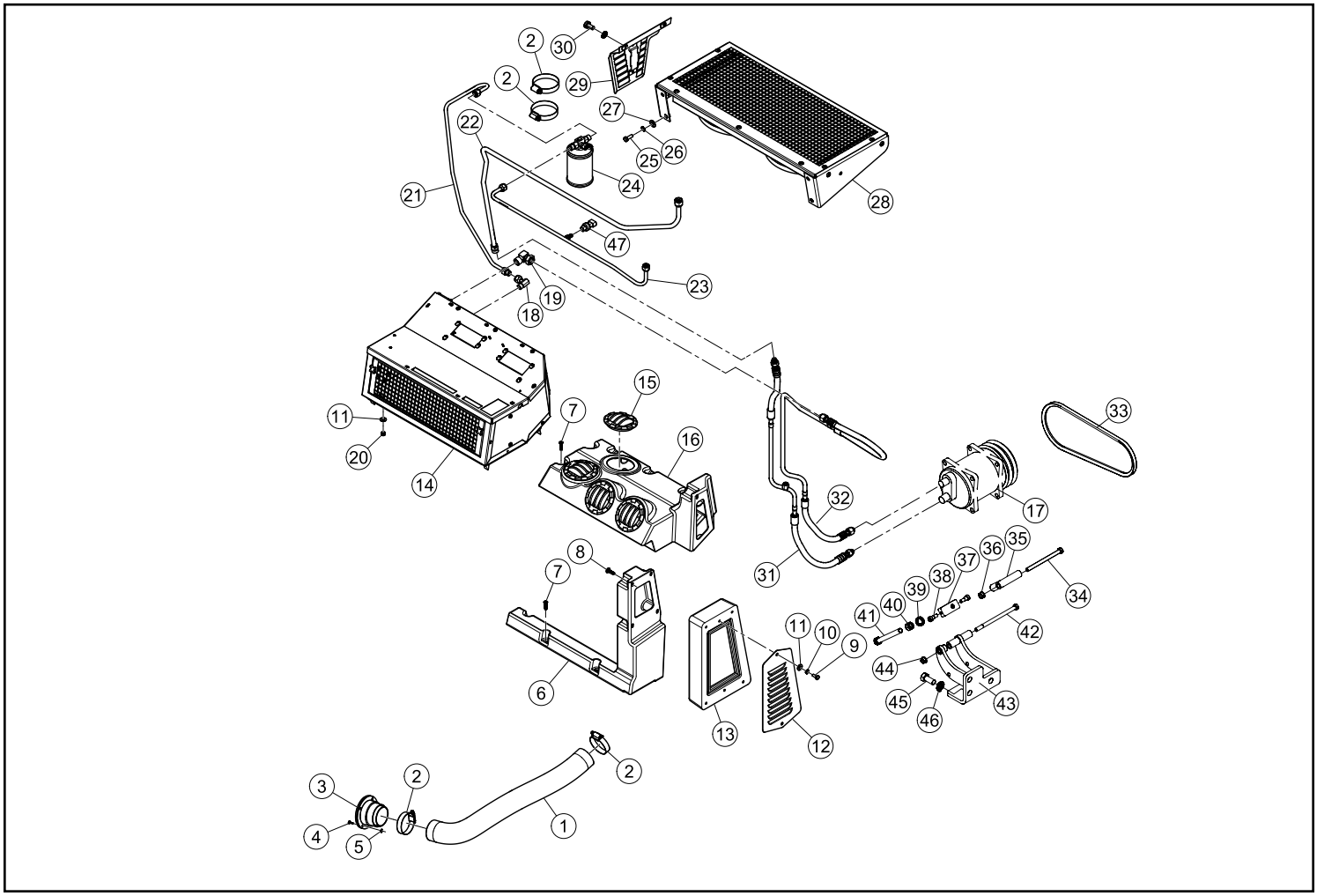

CAB HEATER (OPTIONAL) (Serial #: SR050/60 00101-Current)

REF. NO.	PART NUMBER	QTY.	DESCRIPTION
1	0090-346	0.25	DUCT 3" BULK (18 FT LENGTH)
2	0303-175	2	HOSE,CLAMP,2.75,HI-TORQUE
3	7000-340	1	DUCT
4	8060-209	4	RIVET BLIND ALUM .125 X .50
5	8050-091	4	WASHER,WROUGHT,#6,SAE,ZN
6	2075-794	1	PLENUM INLET HVAC
7	0090-253	8	SCREW TH PH 10-32 x 1.0 ZN
8	0090-109	4	SCREW TH PH 1/4-20 x 1.00 ZN
9	8102-039	2	CAPSCREW,HH,1/4-20UNCx.625,GD8
10	8051-212	2	WASHER,SPRING LOCK,1/4,ZN
11	8050-222	6	WASHER,WROUGHT,1/4,STD,ZN
12	2075-812	1	COVER FRESH AIR FILTER
13	7000-339	1	BOX FILTER
14	2075-978	1	ASSEMBLY HVAC
15	2045-895	4	LOUVER
16	2075-793	1	PLENUM OUTLET HVAC
17	8040-366	4	NUT,HEX,NYLOCK,1/4-20 UNC,ZN
18	0301-110	5	CLAMP,HOSE,#8
19	7000-790	1	HEAT, HOSE
20	7000-791	1	HEAT, HOSE
21	0304-670	1	ADAPTER,5/8BARB-3/8MPT-90^
22	7000-789	1	HEAT, HOSE
23	2075-987	1	VALVE WATER ELECTRONIC
24	8102-130	2	CAPSCREW,HH 5/16-18x3/4,GR8
25	8040-426	2	NUT,HEX,NYLOCK,5/16-18 UNC,ZN

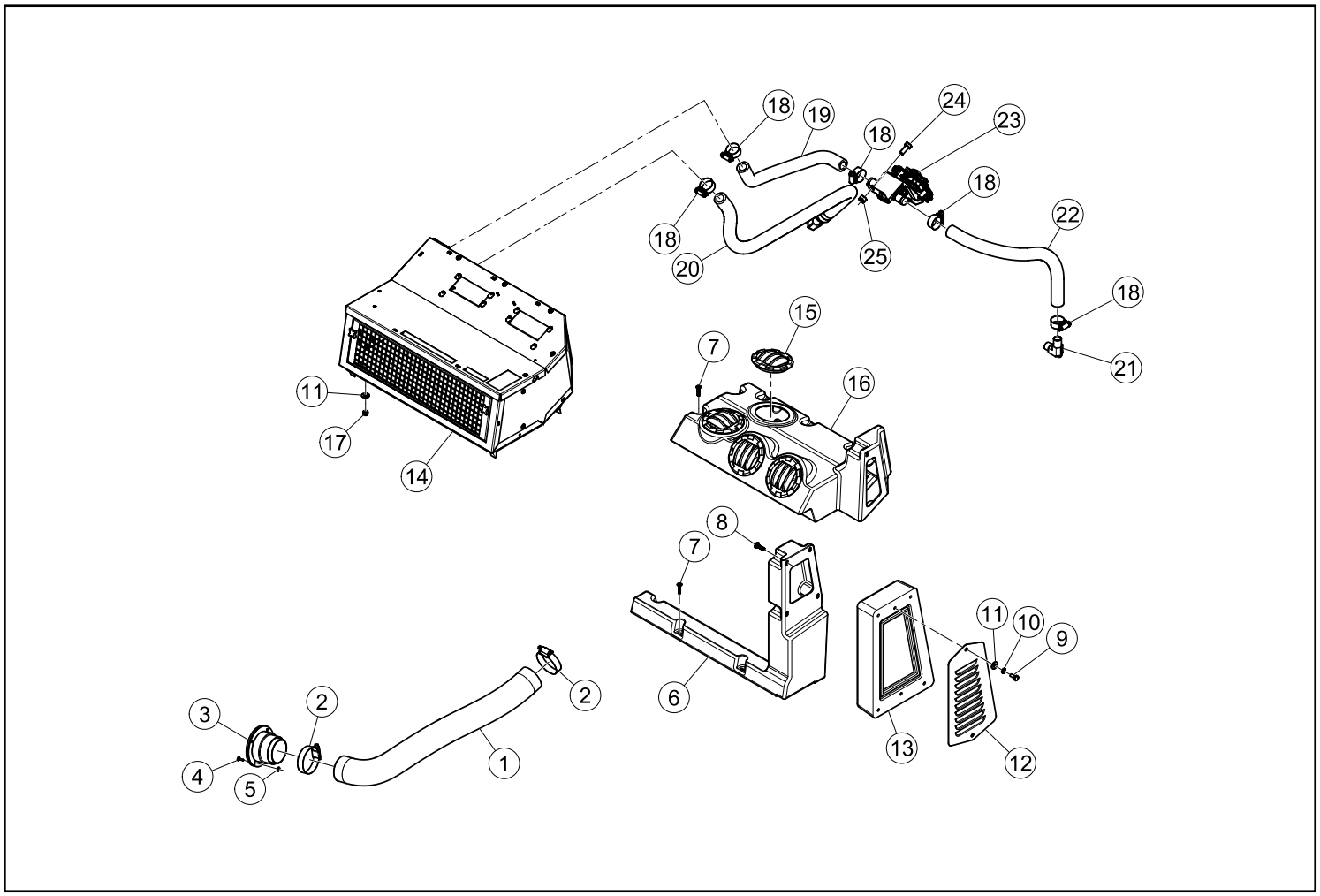

AIR CONDITIONING / HEATING UNIT (Serial #: SR050/60 00101-Current)

REF. NO.	PART NUMBER	QTY.	DESCRIPTION
1	2076-177	1	PLATE MOUNT LT CONDENSOR
2	2076-176	1	COVER CONDENSOR OUTLET
3	2076-178	1	PLATE MOUNT RT CONDENSOR
4	2076-175	1	CONDENSOR (10.7 X 24.4)
5	2076-170	2	FAN A/C CONDENSOR
6	2076-186	1	THERMOSTAT ELECTRONIC RANCO
7	2045-903	1	BLOWER
8	2076-182	1	ASSY HEATER CORE
9	2076-181	1	ASSY EVAPORATOR
10	2076-172	1	FILTER RECIRC
11	2076-180	1	COVER RECIRC FILTER
12	2076-183	2	KNOB THREADED M5 X 20
13	2076-187	1	VALVE EXPANSION R134a (2 ton)
14	2076-184	1	ASSY TUBE NO 10
15	2076-185	1	ASSY TUBE NO 6
16	0090-392	20	SCREW HVAC

REF. NO.	PART NUMBER	QTY.	DESCRIPTION

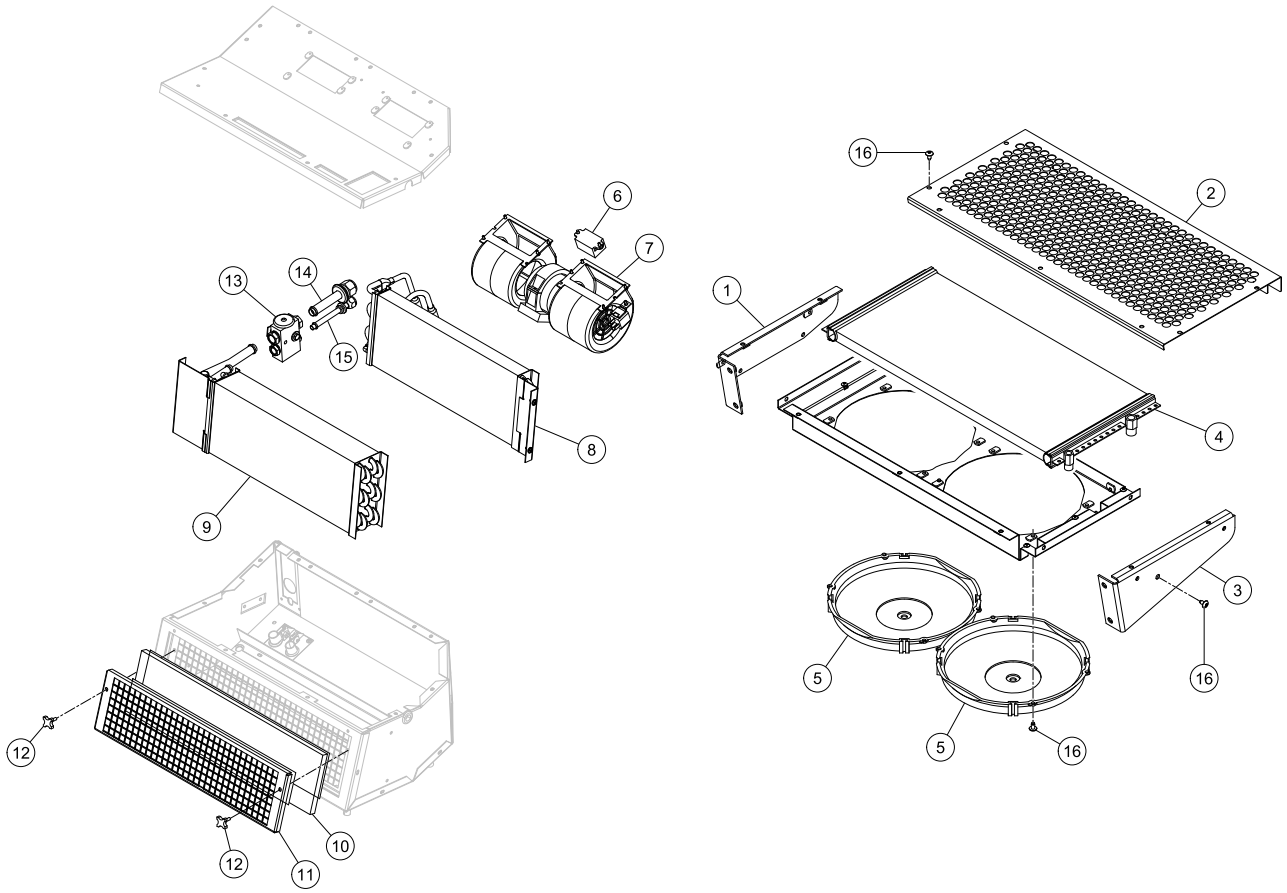

SAFETY DECALS-US (ANSI) (Serial #: SR050/60 00101-Current)

REF. NO.	PART NUMBER	QTY.	DESCRIPTION
1	0310-197	4	DECAL,TIE DOWN 156-5762
2	2030-592	2	DECAL ANSI LOADER CRUSH HAZARD
3	2030-602	2	DECAL ANSI SKIN INJECTION HAZARD
4	7005-813	2	DECAL ANSI RUN OVER SSL
5	2030-594	2	DECAL ANSI LIFT ARM BRACE
6	2030-597	1	DECAL ANSI FALL HAZARD (3 POINT ENTRY)
7	2046-299	1	DECAL ANSI O&M FALL FIRE HAZARD
8	7005-825	1	DECAL WARNING CAB MULTI -RT
9	4046-078	1	DECAL DIESEL FUEL ONLY
10	2030-595	1	DECAL ANSI RADIATOR HAZARD
11	2030-600	1	DECAL ANSI BELT FAN HAZARD
12	2030-603	1	DECAL ANSI BATTERY EXPLOSION HAZARD
13	0304-320	1	DECAL,OWNER'S MANUAL
14	4046-079	1	DECAL CE HYDRAULIC OIL ONLY
15	7001-231	1	DECAL, CONTROL DRIVE (2-SPD MACHINES ONLY)
16	2046-149	1	DECAL CONTROL DRIVE (1-SPD MACHINES ONLY)
17	7001-232	1	DECAL, CONTROL LIFT ARM SSL
18	2030-601	1	DECAL ANSI HOT SURFACES

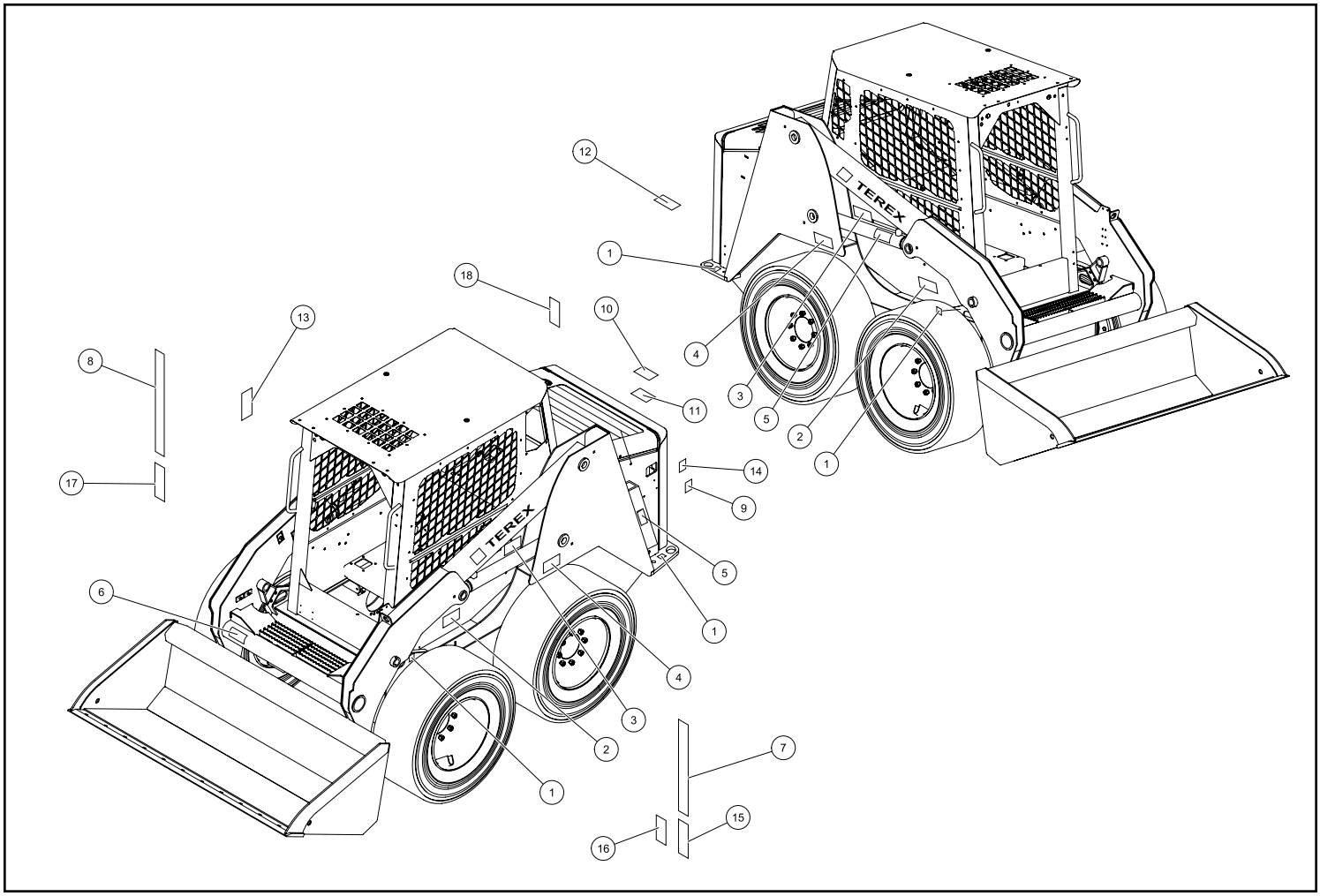

SAFETY DECALS-ROW (ISO) (Serial #: SR050/60 00101-Current)

REF. NO.	PART NUMBER	QTY.	DESCRIPTION
1	0310-197	4	DECAL,TIE DOWN 156-5762
2	2030-415	2	DECAL ISO LOADER CRUSH HAZARD
3	2030-553	2	DECAL ISO SKIN INJECTION HAZARD
4	7006-203	2	DECAL ISO RUN OVER SSL
5	2030-417	2	DECAL ISO LIFT ARM BRACE
6	2030-425	1	DECAL ISO FALL HAZARD (3 POINT ENTRY)
7	2046-146	1	DECAL ANSI O&M FALL FIRE HAZARD
8	7006-202	1	DECAL WARNING CAB MULTI -RT
9	4046-078	1	DECAL DIESEL FUEL ONLY
10	2030-418	1	DECAL ISO RADIATOR HAZARD
11	2030-551	1	DECAL ISO BELT FAN HAZARD
12	2030-565	1	DECAL ISO BATTERY EXPLOSION HAZARD
13	0304-320	1	DECAL,OWNER'S
14	4046-079	1	DECAL CE HYDRAULIC OIL ONLY
15	7001-231	1	DECAL, CONTROL DRIVE (2-SPD MACHINES ONLY)
16	2046-149	1	DECAL CONTROL DRIVE (1-SPD MACHINES ONLY)
17	7001-232	1	DECAL, CONTROL LIFT ARM SSL
18	2030-552	1	DECAL ISO SAFETY EXHAUST HOT

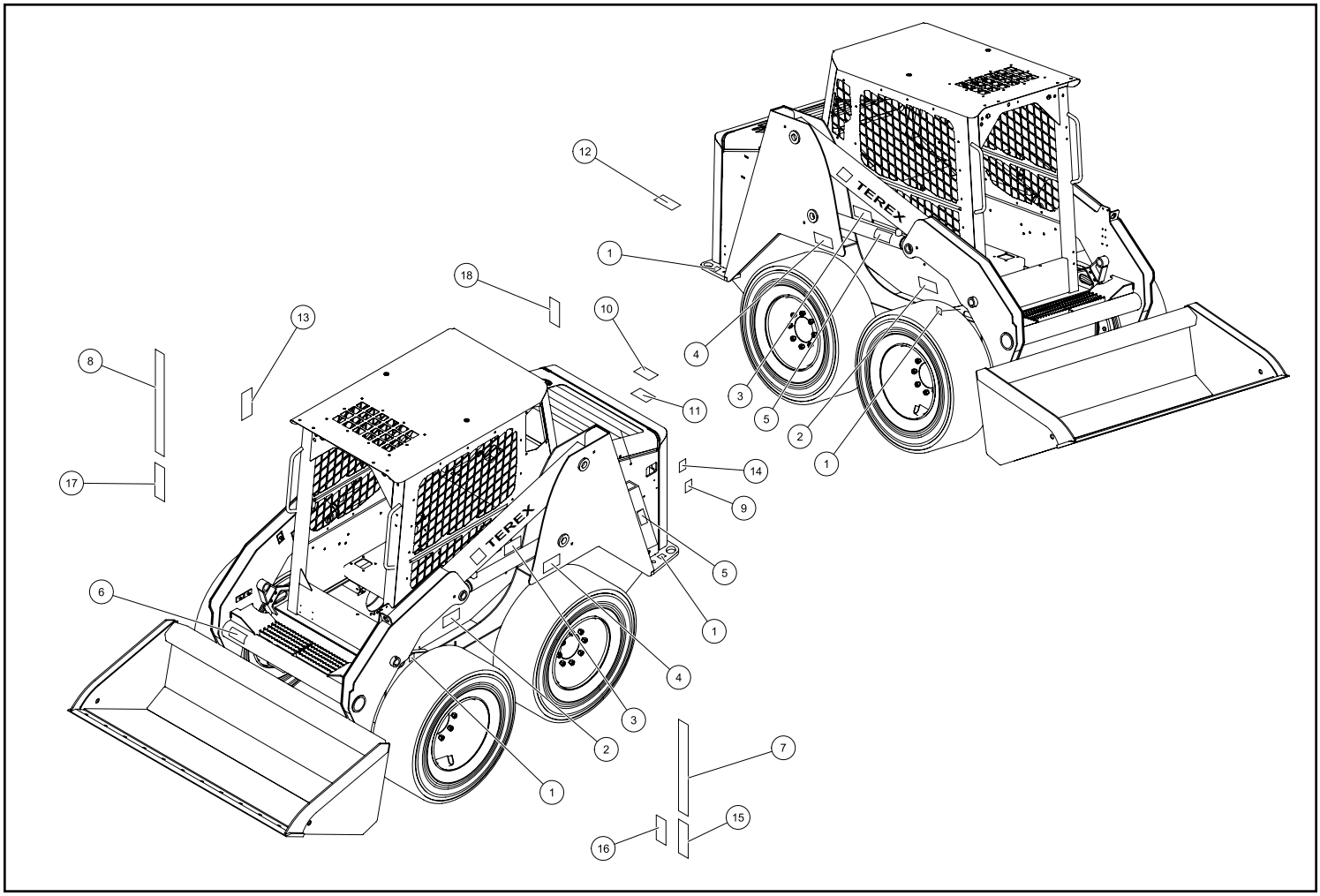

MACHINE GRAPHICS-50 (Serial #: SR050 00101-Current)

REF. NO.	PART NUMBER	QTY.	DESCRIPTION	REF. NO.	PART NUMBER	QTY.	DESCRIPTION
1	7000-586	1	DECAL TEREX 16" x 3.75"				
2	7000-545	1	DECAL CHASSIS RH REAR				
3	2075-965	3	DECAL LOADER LEFT/RIGHT REAR				
4	7000-542	1	DECAL LOADER LH TSR 50				
5	7000-541	1	DECAL LOADER RH TSR 50				
6	7000-546	1	DECAL CHASSIS LH REAR				

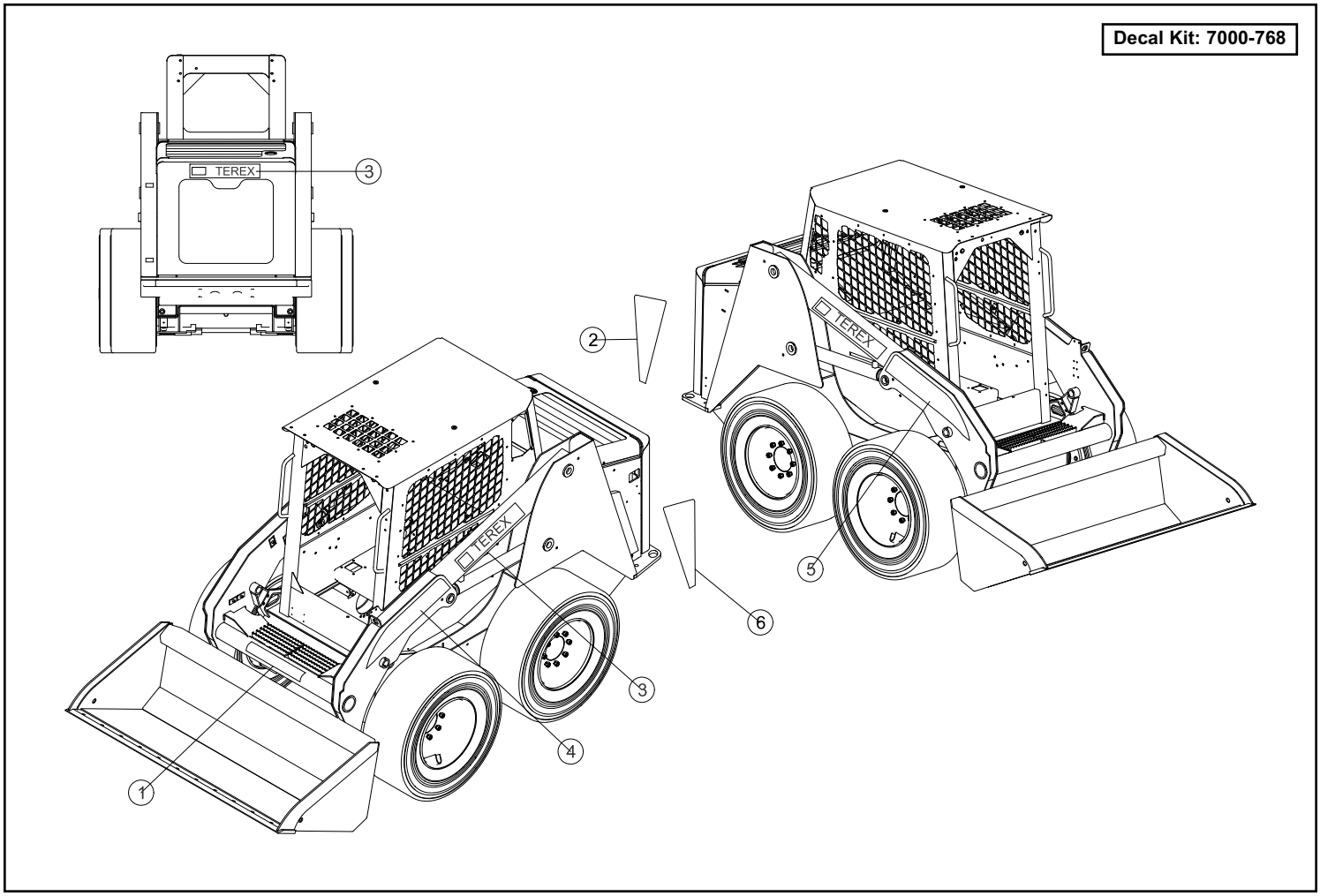

MACHINE GRAPHICS-60 (Serial #: SR060 00101-Current)

REF. NO.	PART NUMBER	QTY.	DESCRIPTION	REF. NO.	PART NUMBER	QTY.	DESCRIPTION
1	7000-586	1	DECAL TEREX 16" x 3.75"				
2	7000-545	1	DECAL CHASSIS RH REAR				
3	2075-965	3	DECAL LOADER LEFT/RIGHT REAR				
4	7000-544	1	DECAL LOADER LH TSR 60				
5	7000-543	1	DECAL LOADER RH TSR 60				
6	7000-546	1	DECAL CHASSIS LH REAR				

Decal Kit: 7000-769

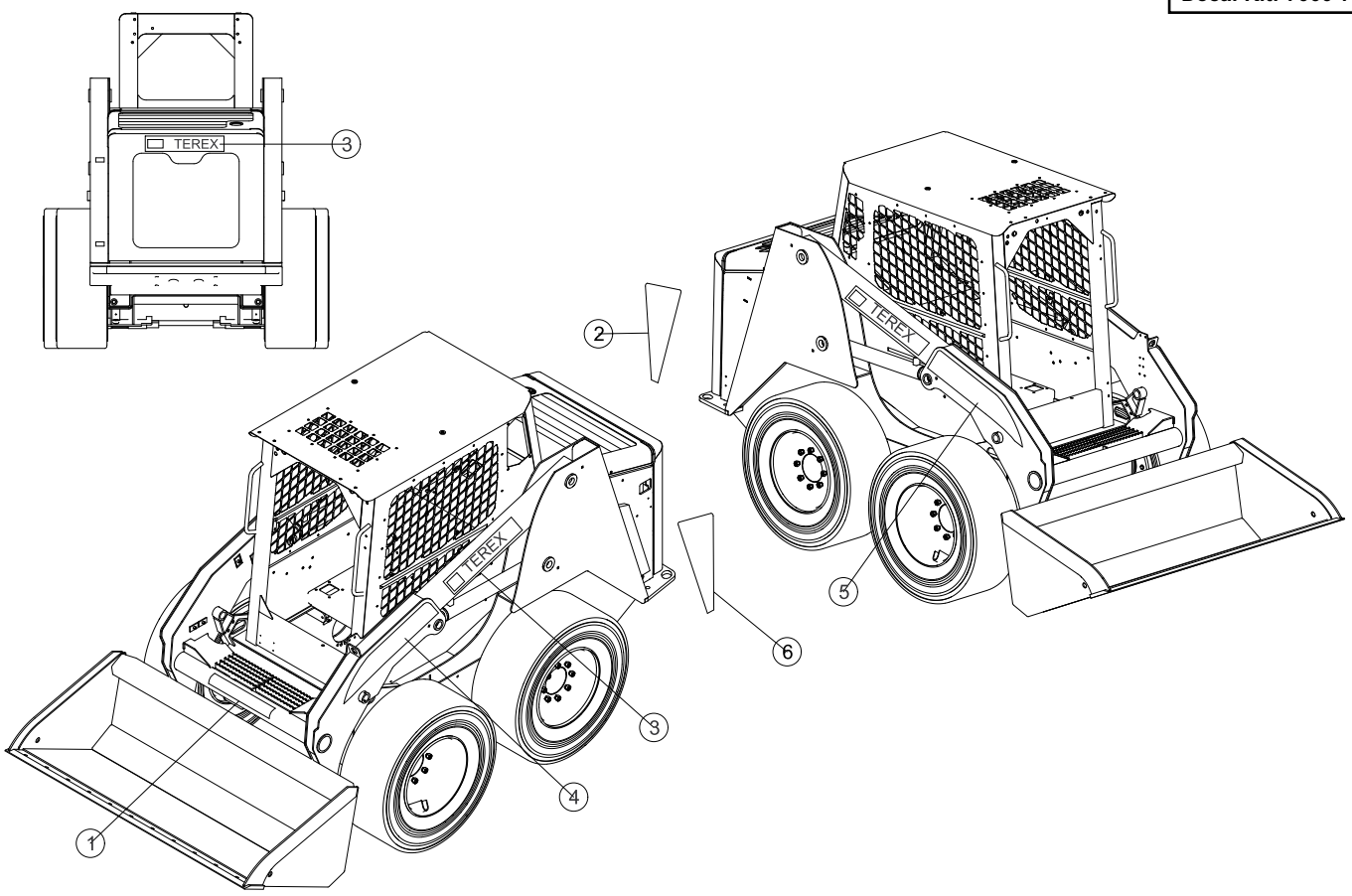

Terex Construction Americas
8800 Rostin Road
Southaven, MS 38671
(888)-201-6008
(662)-393-1800
www.terex.com