TEREX®

Master Part Manual

Skid Steer Loader

TSR70/80

Part Number: 7005-895
Printed (5-11)

(*Revision 6/10/2013*)

Table of Contents

1. **Open R.O.P.S. (Cab) Assembly**
Serial # SR070/080 00101-Current* **1-A**

2. **Open R.O.P.S. (Cab) Interior**
Serial # SR070/080 00101-Current* **2-A**

3. **Open R.O.P.S. (Cab) Dash Panel**
Serial # SR070/080 00101-Current* **3-A**

4. **R.O.P.S. (Cab) Assembly**
Serial # SR070/080 00101-Current* **4-A**

5. **R.O.P.S. (Cab) Interior**
Serial # SR070/080 00101-Current* **5-A**

6. **R.O.P.S. (Cab) Headliner/Dash Panel**
Serial # SR070/080 00101-Current* **6-A**

7. **R.O.P.S. (Cab) Door/Windows (Optional)**
Serial # SR070/080 00101-Current* **7-A**

8. **Windshield Wiper (Optional)**
Serial # SR070/080 00101-Current* **8-A**

9. **Chassis Assembly**
Serial # SR070/080 00101-Current* **9-A**

10. **Hood Assembly**
Serial # SR070/080 00101-Current* **10-A**

11. **Radiator/Oil Cooler Assembly**
Serial # SR070/080 00101-Current* **11-A**

12. **Hydraulic Resevoir Assembly**
Serial # SR070/080 00101-Current* **12-A**

13. **Hydraulic Control Assembly (Single Speed)**
Serial # SR070/080 00101-Current* **13-A**

14. **Hydraulic Control Assembly (Two Speed)**
Serial # SR070/080 00101-Current* **14-A**

15. **Lift arm Control Valve Assembly**
Serial # SR070/080 00101-Current* **15-A**

16. **Hydraulic Drive/Auxillary Assembly**
Serial # SR070/080 00101-Current* **16-A**

17. **Solenoid Blocks**
Serial # SR070/080 00101-Current* **17-A**

18. **Engine Assembly**
Serial # SR070 00101-Current* **18-A**

19. **Engine Assembly**
Serial # SR080 00101-Current* **19-A**

20. **Fuse Panel Assembly**
Serial # SR070/080 00101-Current* **20-A**

21. **Final Drive Assembly (RT)**
Serial # SR070/080 00101-Current* **21-A**

22. **Final Drive Assembly (LT)**
Serial # SR070/080 00101-Current* **22-A**

23. **Lift Arm Assembly**
Serial # SR070/080 00101-Current* **23-A**

24. **Lift Arm Tubes and Fittings**
Serial # SR070/080 00101-Current* **24-A**

25. **Manual Quick Attach Assembly**
Serial # SR070/080 00101-Current* **25-A**

26. **Power Quick Attach Assembly**
Serial # SR070/080 00101-Current* **26-A**

27. **Air Conditioning/Heating (Optional)**
Serial # SR070/080 00101-Current* **27-A**

28. **Cab Heater (Optional)**
Serial # SR070/080 00101-Current* **28-A**

29. **Air Conditioning/Heating Unit**
Serial # SR070/080 00101-Current* **29-A**

30. **Safety Decals US (ANSI)**
Serial # SR070/080 00101-Current* **30-A**

31. **Safety Decals ROW (ISO)**
Serial # SR070/080 00101-Current* **31-A**

32. **Machine Graphics**
Serial # SR070 00101-Current* **32-A**

33. **Machine Graphics**
Serial # SR080 00101-Current* **33-A**

* Current refers to the machines being produced at the time this manual was printed. See manual cover for print date.

GENERAL SERVICE ITEMS & LUBRICANTS

ITEM	DESCRIPTION	PART NUMBER
-Engine Oil Filter	FIlter, Engine Oil	0404-359
-Primary Air Filter	Filter, Primary Air	0201-510
-Secondary Air Filter	Filter, Secondary Air	0201-533
-Fuel Filter	Filter, Fuel	2045-218
-Fan Belt	Belt, Fan	2045-751
-A/C Belt	Belt, A/C	2045-793
-Antifreeze/Coolant (1 gal.)	Ethylene Glycol (long life)	0300-766
-Antifreeze/Coolant (Case/6 gal.)	Ethylene Glycol (long life)	0402-841
-Engine Oil (1 qt.)	Multi-Grade 10W-30	0300-767
-Engine Oil (Case/12 qt.)	Multi-Grade 10W-30	0402-838
-Engine Oil (1 gal.)	Multi-Grade 10W-30	0402-839
-Engine Oil (Case/6 gal.)	Multi-Grade 10W-30	0402-840
-Grease (1 Tube)	Multi-Purpose Lithium	0300-769
-Grease (Box/10 Tubes)	Multi-Purpose Lithium	0402-844
-Grease (Case/40 Tubes)	Multi-Purpose Lithium	0402-834

HYDRAULIC SERVICE ITEMS & LUBRICANTS

ITEM	DESCRIPTION	PART NUMBER
-Hydraulic Charge Oil Filter	Filter, Hydraulic Charge	0307-921
Case Drain Oil Filter	Filter, Hydraulic Case Drain	2046-286

O-RING	PART NUMBER
-# 4, Flat Face Type	2055-196
-# 6, Flat Face Type	0310-285
-# 8, Flat Face Type	0310-286
-# 10, Flat Face Type	0310-287
-# 12, Flat Face Type	0310-288
-# 16, Flat Face Type	0310-289
-# 20, Flat Face Type	0310-290
-# 24, Flat Face Type	0201-479
-# 4, ORB Type	0314-366
-# 6, ORB Type	0310-619
-# 8, ORB Type	0307-353
-# 10, ORB Type	0310-620
-# 12, ORB Type	0310-621
-# 16, ORB Type	0307-354
-# 20, ORB Type	0310-832

COMPONENT SERVICE ITEMS / HARNESSES
TSR 70/80

Current Hydraulic Cylinders

- Bucket/Tilt P/N: 7005-328
- Lift-Arm P/N: 2046-315
- RH-Q/A P/N: 2046-317
- LH-Q/A P/N: 2046-316

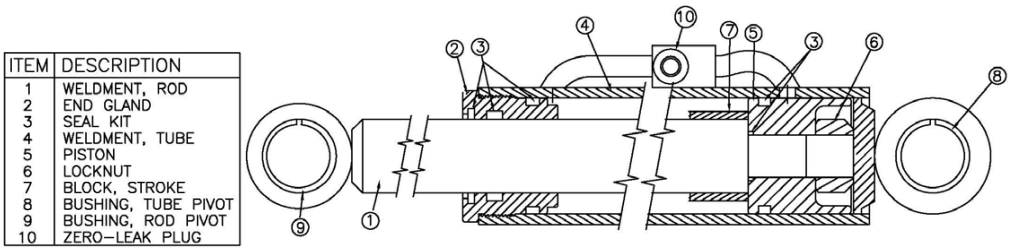

ITEM	MANUFACTURER/DESCRIPTION	PART NUMBER
-Kit,Seal,Bucket/Tilt Cylinder	Fits Cylinder (P/N:7005-328)	7000-651
-Rod,Bucket/Tilt Cylinder	Fits Cylinder (P/N:7005-328)	7000-646
-End Gland,Bucket/Tilt Cylinder	Fits Cylinder (P/N:7005-328)	7000-650
-Nut,Bucket/Tilt Cylinder	Fits Cylinder (P/N:7005-328)	7000-647
-Piston, Bucket/Tilt Cylinder	Fits Cylinder (P/N:7005-328)	7000-648
-Body, Bucket/Tilt Cylinder	Fits Cylinder (P/N:7005-328)	7000-649
-Kit,Seal,Lift Arm Cylinder	Fits Cylinder (P/N:2046-315)	2076-152
-End Gland,Lift Arm Cylinder	Fits Cylinder (P/N:2046-315)	2076-155
-Rod,Lift Arm Cylinder	Fits Cylinder (P/N:2046-315)	2046-320
-Piston	Fits Cylinder (P/N:2046-315)	7000-661
-Nut,Lift Arm Cylinder	Fits Cylinder (P/N:2046-315)	2076-159
-Kit,Seal,Q/A Cylinder	Fits Cylinder (P/N:2046-316/317)	2076-292

HARNESSES, Standard Upgradeable

ITEM	LOCATION	PART NUMBER
Left Pillar Harness	Cab Interior, Left Side	7005-968
Right Pillar Harness	Cab Interior, Right Side	7005-967
Main Harness	Chassis (throughout machine)	7005-600
Loader Harness	Lift Arm	7000-117
Condenser Harness	Rear of Cab, A/C Fans	2076-034
Rear Lights Harness	Rear Hood, Lights	7005-642
4 Unit Gauge Harness Serial # TSR70 - 00158-Current TSR80 - 00143-Current	Dash Panel	7005-882
4 Unit Gauge Harness Serial # TSR70 - 00101-00152 TSR80 - 00101-00135	Dash Panel	2030-276

*HARNESSES, Open ROPS, NU (Non-Upradeable)

ITEM	LOCATION	PART NUMBER
Main Harness	Chassis (throughout machine)	7006-100
4 Unit Gauge Harness Serial # TSR70 - 00157-Current TSR80 - 00141-Current	Dash Panel	7006-393
4 Unit Gauge Harness Serial # TSR70 - 00101-00156 TSR80 - 00101-00140	Dash Panel	7005-978

***NU (Non-Upgradeable) refers to an open R.O.P.S. machine equiped with a harness that does not accept field install accesories or attachments.**

*NU OPEN R.O.P.S. (CAB) ASSEMBLY (Serial #: SR070/080 00101-Current)

REF. NO.	PART NUMBER	QTY.	DESCRIPTION
1	8040-366	12	NUT,HEX,NYLOCK,1/4-20 UNC,ZN
2	2076-015	1	COVER ROPS FIREWALL
3	7006-011	1	RETAINER WIRING HARNESS
4	8051-212	2	WASHER,SPRING LOCK,1/4,ZN
5	8102-040	2	CAPSCREW,HH,1/4-20 UNCx.75,GD8 ZN
6	8050-222	8	WASHER,WROUGHT,1/4,STD,ZN
7	7000-468	1	CLAMP PILOT LINE SMALL
8	7000-469	2	CLAMP PILOT LINE SMALL
9	7005-175	1	ROPS (3P Cab)
10	7005-820	2	LIGHT WORK CE APPROVED
11	2075-638	2	GROMMET WEB
12	0090-370	8	CAPSCREW HH 1/4-20 UNCx.75 GD5 BLK ZN
13	0090-372	8	WASHER WROUGHT 1/4 STD BLK ZN
14	7005-530	2	INSERT SIDE SCREEN
15	8102-228	1	CAPSCREW,HH,3/8-16UNCX2.25"GR8
16	8050-262	2	WASHER,WROUGHT,5/16,STD,ZN
17	2076-147	1	SPACER GUARD FAN
18	8041-500	1	NUT,HEX,NYLOCK,3/8-16 UNC,THIN
19	7000-807	2	SPRING GAS 1400N
20	8102-140	1	CAPSCREW,HH,5/16-18UNCx2.75 GR8
21	8040-426	1	NUT,HEX,NYLOCK,5/16-18 UNC,ZN

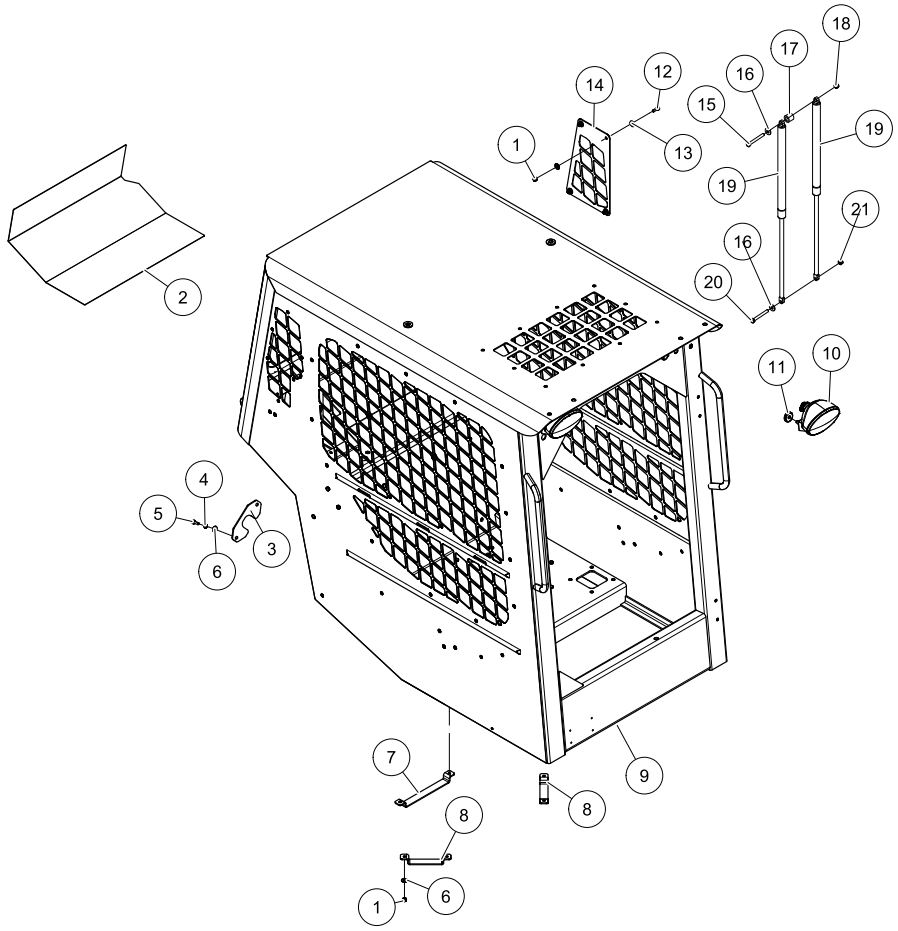

*See Page III

*NU OPEN R.O.P.S. (CAB) INTERIOR (Serial #: SR070/080 00101-Current)

REF. NO.	PART NUMBER	QTY.	DESCRIPTION
1	0304-045	1	SEAT S673052AB XB 180 SEAT WITH
2	7005-469	4	SPACER - 1.00 OD X .5 OD. X 1.125
3	8050-222	8	WASHER,WROUGHT,1/4,STD,ZN
4	8051-212	4	WASHER,SPRING LOCK,1/4,ZN
5	8102-046	4	CAPSCREW,HH,1/4-20UNCx1.75,GD8
6	8102-402	8	CAPSCREW,HH 1/2-13 UNCx1.0 GD8
7	8051-332	4	WASHER,SPRING LOCK,1/2,ZN
8	2075-163	2	MOUNT SEAT BELT LOWER
9	0304-248	1	BELT,SEAT 2" RETRACTABLE
10	8040-606	6	NUT,HEX,NYLOCK,1/2-13 UNC,ZN
11	0200-600	2	MNTS JOYSTICK
12	0314-269	6	NUT,FLANGE,TOPLK,3/8-16UNC,GDG,ZN
13	8102-040	8	CAPSCREW,HH,1/4-20 UNCx.75,GD8 ZN
14	8040-366	12	NUT,HEX,NYLOCK,1/4-20 UNC,ZN
15	8102-222	6	CAPSCREW,HH,3/8-16 UNCx1.0,GD8,ZN
16	7005-454	1	CONSOLE SIDE RH
17	7005-453	1	CONSOLE SIDE LH
18	0200-265	1	CAP,HOUSING,POWER SOURCE
19	0200-264	1	HOUSING,POWER SOURCE
20	0090-117	4	CAPSCREW TH PH 10-24 X .75 SS
21	0304-019	1	ASSY,LAP BAR
22	2075-939	1	STOP LAPBAR RH
23	0200-321	2	PAD,RUBBER,W/ADHESIVE
24	8060-648	2	RIVET,BLIND,3/16 x .575
25	8102-404	4	CAPSCREW,HH 1/2-13UNCx1.25 GD8 ZN
26	7005-192	1	LAPBAR STOP, LH
27	2010-127	1	SWITCH,SEAT (NEW STYLE)
28	2075-810	1	COVER FUSE PANEL
29	0090-239	2	KNOB 1/5-4-20 UNC 2B
30	0090-261	1	FOAM MEMORY 1.00 x 1.00 x 54"
31	0304-473	1	SENSOR,SWITCH,LAPBAR S17040

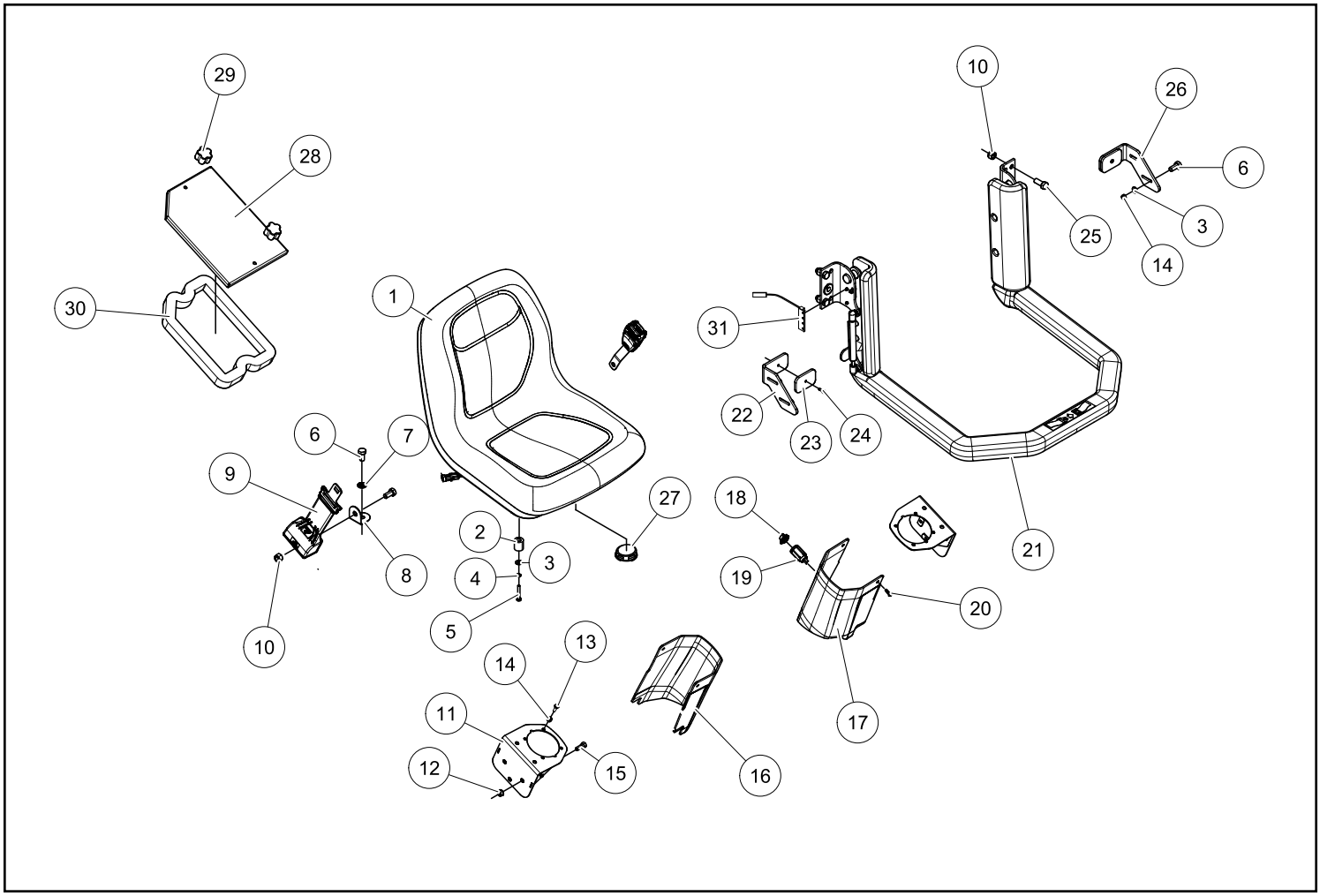

*See Page III

*NU OPEN R.O.P.S. (CAB) DASH PANEL (Serial #: SR070/80 00101-Current)

REF. NO.	PART NUMBER	QTY.	DESCRIPTION
1	0310-138	3	PLUG VHP-01 INDEX # 390-09002-001
2	2045-413	1	SWITCH LOCKING PARK
3	0310-126	1	SWITCH,LIGHT VAD2BNOC-A9C45-100-XAS1
4	0200-252	1	SWITCH,3 POSITION,LOCKING
5	0310-136	2	FRAME END VME-01
6	0310-137	3	FRAME MID IMM-01
7	2030-245	1	LIGHT DOME
8	4030-127	1	*GAUGE FUEL W WARNINGS
9	4030-128	1	*GAUGE TACHOMETER 2"
10	4030-129	1	*GAUGE WARNING INDICATION
11	4030-130	1	*GAUGE WATER TEMP 2"
12	2045-792	1	COVER KEY IGNITION
13	2045-432	2	KEY IGNITION
14	0304-028	1	SWITCH,IGNITION,RC 154-3197
15	0090-370	4	CAPSCREW HH 1/4-20 UNCx.75 GD5 BLK ZN
16	0090-371	4	WASHER SPRING LOCK 1/4 BLK ZN
17	0090-372	4	WASHER WROUGHT 1/4 STD BLK ZN
18	7005-956	1	POD GAUGE BASE
19	2030-397	1	PLATE MOUNT HOUR METER
20	2045-502	1	METER HOUR
21	8008-217	2	SCREW,MACH#6-32x0.5,PH,PAN
22	2075-749	1	*INDICATOR RABBIT/GLOW PLUG

REF. NO.	PART NUMBER	QTY.	DESCRIPTION

*Serial # TSR70 - 00101-00156
TSR80 - 00101-00140

ITEM	Part Number	Qty.	Description
8	4010-014	1	GAUGE FUEL W WARNINGS
9	4010-017	1	GAUGE TACHOMETER 2"
10	2030-244	1	GAUGE WARNING INDICATION
11	4010-013	1	GAUGE WATER TEMP 2"
*22	2075-749		Not Available on these machines

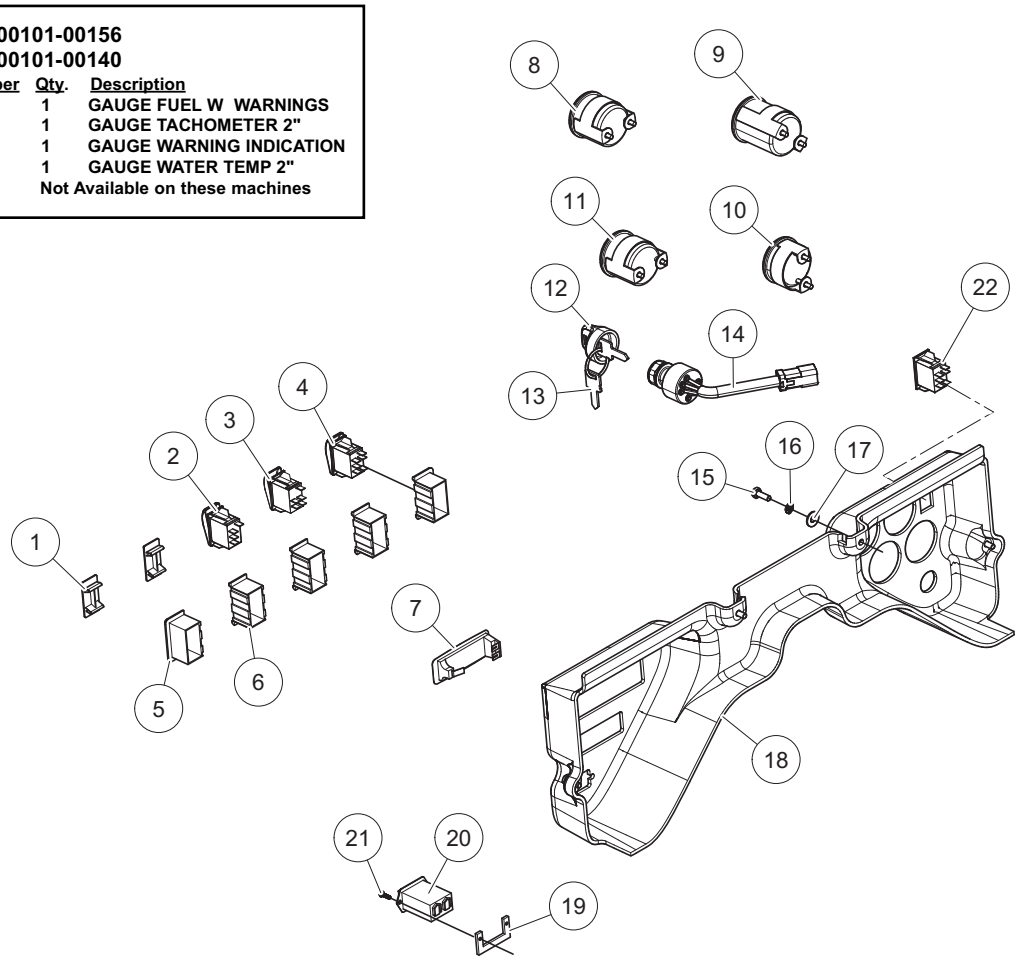

*See Page III

R.O.P.S. (CAB) ASSEMBLY (Serial #: SR070/080 00101-Current)

REF. NO.	PART NUMBER	QTY.	DESCRIPTION
1	7005-175	1	ROPS (3P Cab)
2	7005-568	1	GLASS SIDE PANEL
3	0090-300	7	INSERT THREADED FLHD 1/4-20
4	7005-569	1	SEAL GLASS SIDE PANEL
5	0201-748	1	ASSY,TAG,EMERGENCY EXIT
6	2075-822	1	WINDOW REAR 16.25 X 23.25
7	0090-347	10	SCREW TH PH 1/4-20 X 1.25 ZN
8	0090-325	10	WASHER 1/4" 3/4" RUBBER BONDED GALVANIZE
9	2030-741	1	FRAME WINDOW TOP-2PC
10	0200-606	1	PANEL ROOF LEXAN
11	0200-607	1	SEAL PANEL ROOF
12	8102-039	2	CAPSCREW,HH,1/4-20UNCx.625,GD8
13	8051-212	10	WASHER,SPRING LOCK,1/4,ZN
14	8050-222	21	WASHER,WROUGHT,1/4,STD,ZN
15	7006-011	1	RETAINER WIRING HARNESS
16	8040-366	24	NUT,HEX,NYLOCK,1/4-20 UNC,ZN
17	8050-222	24	WASHER,WROUGHT,1/4,STD,ZN
18	8102-040	14	CAPSCREW,HH,1/4-20 UNCx.75,GD8 ZN
19	7000-468	3	CLAMP PILOT LINE SMALL
20	7000-469	2	CLAMP PILOT LINE SMALL
21	7005-820	2	LIGHT WORK CE APPROVED
22	0090-368	2	WASHER HARDENED 1.375X.570X.250 ZN
23	8051-332	2	WASHER,SPRING LOCK,1/2,ZN
24	8102-405	2	CAPSCREW,HH,1/2-13 UNCx1.5,GD8
25	8011-132	2	BOLT,CARRIAGE,5/16-18 UNCx1.0
26	8051-242	2	WASHER,SPRING LOCK,5/16,ZN
27	8042-363	2	NUT,HEX 5-16-18 UNC ZN
28	0090-113	7ft	SEAL .125 OFFSET WINDOW LOCKING W/ZIPPER
29	0090-114	7ft	SEAL FILLER STRIP
30	8102-228	1	CAPSCREW,HH,3/8-16UNCX2.25"GR8
31	8050-262	2	WASHER,WROUGHT,5/16,STD,ZN
32	2076-147	1	SPACER GUARD FAN
33	8041-500	1	NUT,HEX,NYLOCK,3/8-16 UNC,THIN
34	7001-145	2	SPRING GAS 2200N
35	8102-140	1	CAPSCREW,HH,5/16-18UNCx2.75 GR8
36	8040-426	1	NUT,HEX,NYLOCK,5/16-18 UNC,ZN

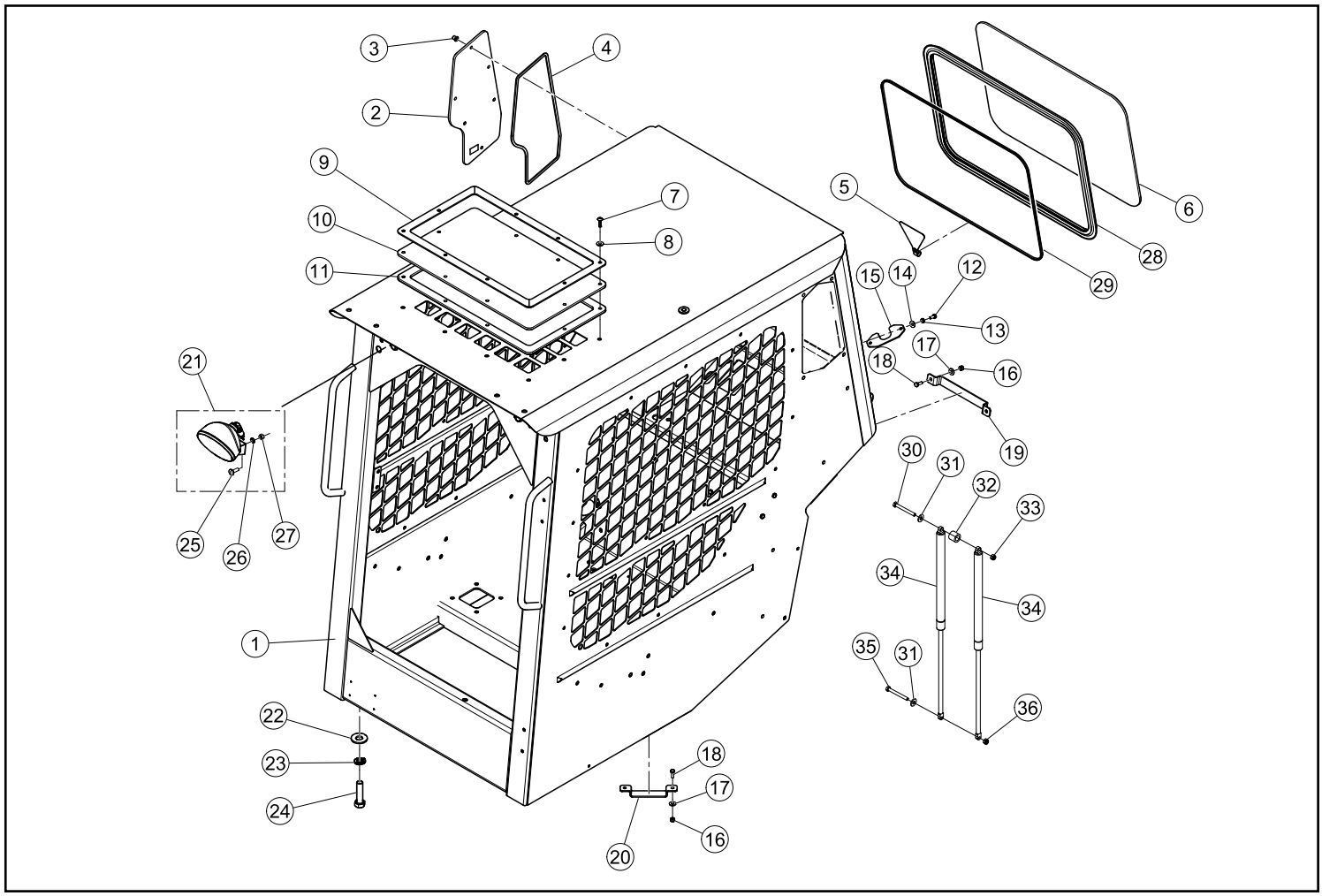

R.O.P.S. (CAB) INTERIOR (Serial #: SR070/080 00101-Current)

REF. NO.	PART NUMBER	QTY.	DESCRIPTION
1	2075-832	1	BIN STORAGE
2	2045-636	3	NET CARGO
3	7005-780	1	PANEL FRONT LH
4	2076-054	1	CUPHOLDER
5	0090-305	8	RETAINER PUSH TYPE .250 DIA
6	7005-779	1	PANEL REAR RH
7	2075-102	1	COVER FUSE PANEL
8	7005-782	1	PANEL FRONT LH WASHER TANK
9	7005-778	1	PANEL REAR LH
10	0304-019	1	ASSY,LAP BAR
11	7005-192	2	LAPBAR STOP, LH
12	2045-452	1	SEAT,SUSP,60MM
13	0200-264	1	HOUSING,POWER SOURCE
14	0200-265	1	CAP,HOUSING,POWER SOURCE
15	8040-606	4	NUT,HEX,NYLOCK,1/2-13 UNC,ZN
16	8102-404	4	CAPSCREW,HH 1/2-13UNCx1.25 GD8 ZN
17	8102-040	4	CAPSCREW,HH,1/4-20 UNCx.75,GD8 ZN
18	8060-648	2	RIVET,BLIND,3/16 x .575
19	2075-939	1	STOP LAPBAR RH
20	8050-222	4	WASHER,WROUGHT,1/4,STD,ZN
21	8040-366	4	NUT,HEX,NYLOCK,1/4-20 UNC,ZN
22	8040-426	4	NUT,HEX,NYLOCK,5/16-18 UNC,ZN
23	8050-262	4	WASHER,WROUGHT,5/16,STD,ZN
24	0304-248	1	BELT,SEAT 2" RETRACTABLE
25	2045-481	2	TETHER,SEAT
26	8102-314	4	CAPSCREW HH 7/16-14 UNC x1.25 GD8
27	8050-282	8	WASHER,WROUGHT,3/8,STD,ZN
28	8040-546	4	NUT,HEX,NYLOCK,7/16-14 UNC,ZN
29	0403-712	1	BOTTLE WASHER
30	0403-715	1	CAP WASHER RESERVOIR
31	0090-128	8	SCREW TH PH 10-24 x 5 SS
32	0090-117	13	CAPSCREW TH PH 10-24 X .75 SS
33	0304-515	1	SWITCH,SEAT (OLD STYLE)
34	0304-473	1	SENSOR,SWITCH,LAPBAR S17040
35	0310-307	2	SCREW,MACHINE,4-40x.50
36	0310-308	2	NUT,HEX,NYLOCK 4-40

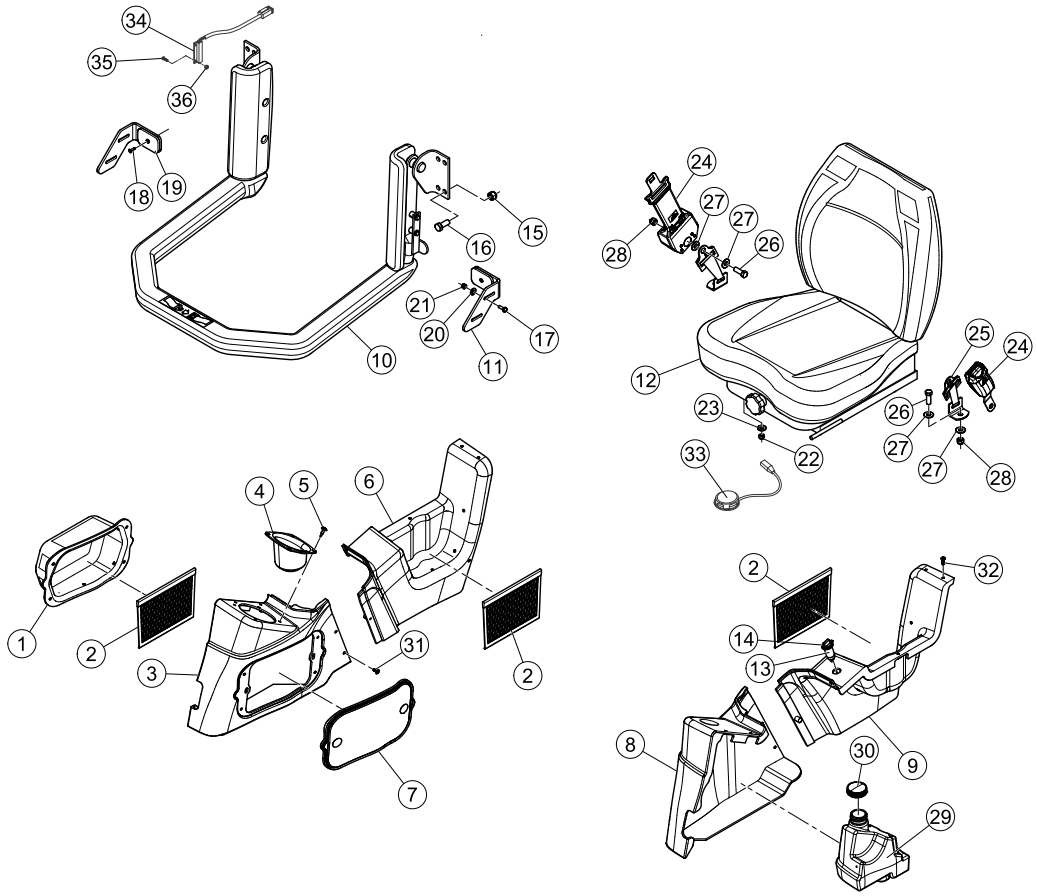

R.O.P.S. (CAB) HEADLINER / DASH PANEL (Serial #: SR070/080 00101-Current)

REF. NO.	PART NUMBER	QTY.	DESCRIPTION
1	2076-305	1	HEADLINER HEAT A/C
2	0090-305	16	RETAINER PUSH TYPE .250 DIA
3	2075-637	1	LIGHT DOME
4	2075-703	2	SPEAKER MINI 3.5" HEAVY DUTY
5	8008-222	8	SCREW MACH #6-32X1.0 PH PAN
6	0090-270	8	T-NUT 6-32 UNC ZN
7	2076-284	1	HVAC MOUNT PLATE
8	2076-241	1	SWITCH A/C
9	2045-896	2	KNOB CONTROL
10	2075-702	1	RADIO MINI WP AM/FM/WX BAND
11	2075-821	2	PLATE MOUNTING HVAC CONTROL
12	2076-047	1	MOUNT RADIO
13	8008-217	6	SCREW,MACH#6-32x0.5,PH,PAN
14	2045-477	1	SWITCH SELF LEVELER
15	0310-136	4	FRAME,END VME-01 INDEX # 536-11583-001
16	2045-413	1	SWITCH LOCKING PARK
17	0310-133	1	SWITCH,BEACON V1D2BNOC-A9C63-100-XAS1
18	0310-126	1	SWITCH,LIGHT VAD2BNOC-A9C45-100-XAS1
19	0310-137	3	FRAME,MID IMM-01
20	2045-725	1	SWITCH 2 POSITION LOCKING W/ RED BUTTON
21	0200-252	1	SWITCH,3 POSITION,LOCKING
22	2045-502	1	METER HOUR
23	0090-370	4	CAPSCREW HH 1/4-20 UNCx.75 GD5 BLK
24	0090-371	4	WASHER SPRING LOCK 1/4 BLK ZN
25	4030-127	1	*GAUGE FUEL WITH WARNINGS
26	4030-128	1	*GAUGE TACHOMETER 2"
27	4030-130	1	*GAUGE WATER TEMP 2"
28	4030-129	1	*GAUGE WARNING INDICATION
29	0304-028	1	SWITCH,IGNITION,RC 154-3197
30	2045-792	1	COVER KEY IGNITION
31	0090-372	4	WASHER WROUGHT 1/4 STD BLK ZN
32	2076-285	1	HVAC DECAL
33	2045-899	1	SWITCH 3 SPEED
34	2045-432	2	KEY IGNITION
35	2075-816	1	CONTROLLER TEMP
36	8050-222	6	WASHER,WROUGHT,1/4,STD,ZN
37	2030-409	1	MIRROR REAR VIEW 3X8
38	8040-366	1	NUT,HEX,NYLOCK,1/4-20 UNC,ZN
39	8102-039	1	CAPSCREW,HH,1/4-20UNCx.625,GD8
40	2075-704	1	ANTENNA 6" MINI
41	0310-138	1	PLUG VHP-01 INDEX # 390-09002-001
42	7000-675	1	DECAL SWITCH POD STYLE DASH SSL
43	7000-674	1	DECAL POWER QUICK ATTACH SSL
44	7005-826	1	PANEL GAUGE
45	2075-749	1	* INDICATOR RABBIT/GLOW PLUG

***Serial # TSR70 - 00101-00152**
TSR80 - 00101-00135

ITEM	Part Number	Qty.	Description
25	4010-014	1	GAUGE FUEL W WARNINGS
26	4010-017	1	GAUGE TACHOMETER 2"
27	4010-013	1	GAUGE WATER TEMP 2"
28	2030-244	1	GAUGE WARNING INDICATION
*45	2075-749		Not Available on these machines

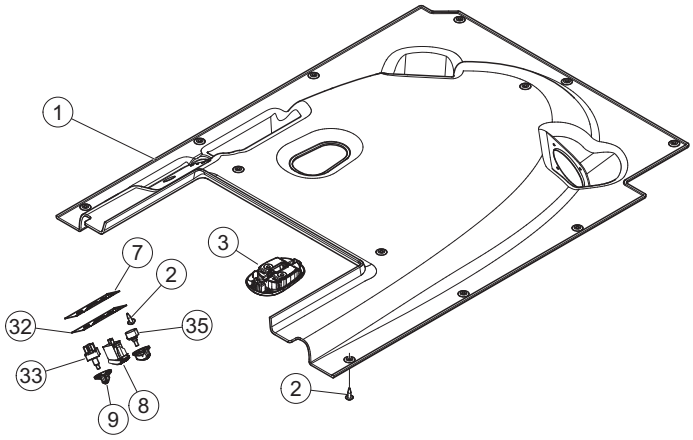

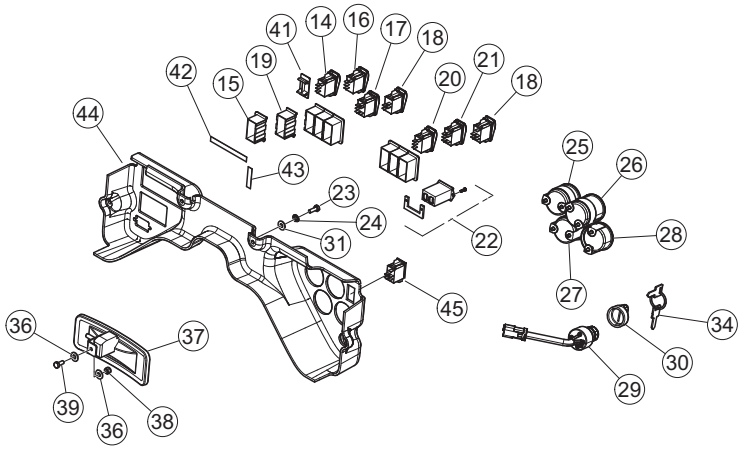

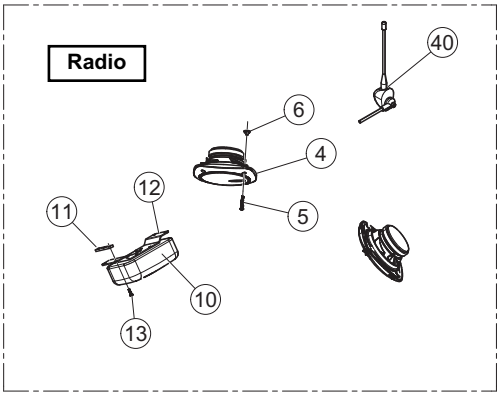

R.O.P.S. (CAB) DOOR / WINDOWS (OPTIONAL) (Serial #: SR070/080 00101-Current)

REF. NO.	PART NUMBER	QTY.	DESCRIPTION
1	0404-344	1	WINDOW SIDE LH
2	0404-345	1	WINDOW SIDE RH
3	8050-222	26	WASHER,WROUGHT,1/4,STD,ZN
4	8102-040	28	CAPSCREW,HH,1/4-20 UNCx.75,GD8 ZN
5	0304-495	2	STUD,BALL,10MM STUD
6	0200-545	2	CLIP,SAFETY,GAS SPRING
7	0403-870	1	SPRING DAMPENED DOOR
8	0403-801	0	MOUNT DOOR SPRING
9	8040-426	9	NUT,HEX,NYLOCK,5/16-18 UNC,ZN
10	8040-366	2	NUT,HEX,NYLOCK,1/4-20 UNC,ZN
11	0090-123	10	TRIM EDGE WITH 3/8 BULB HD
12	0403-787	1	WLMT DOOR W/ HINGES
13	0201-748	1	ASSY,TAG,EMERGENCY EXIT
14	1059-015	9'	SEAL,WINDOW AS1456
15	0310-495	9'	STRIP,LOCK AS-937
16	0403-797	1	WINDOW DOOR TEMPERED GLASS
17	0304-486	1	CAPSCREW,HH,M6-1.0x14
18	8050-240	1	WASHER,STAINLESS,1/4",
19	0403-793	1	WLMT DOOR LATCH MOUNT
20	8051-242	2	WASHER,SPRING LOCK,5/16,ZN
21	2075-408	1	STRIKE
22	8050-347	2	WASHER,WROUGHT,1/2,STD,ZN
23	0090-135	1	NUT NYLOCK M12 X 1.0 ZC
24	2075-407	1	HANDLE INSIDE
25	0090-257	2	SCREW FH PH 5/16 x 1.75 ZN
26	2075-406	1	HANDLE PUSH BUTTON
27	0403-869	1	CATCH DOOR LATCH
28	8102-222	2	CAPSCREW,HH,3/8-16 UNCx1.0,GD8,ZN
29	0403-969	1	WLMT GRAB HANDLE - DOOR
30	8050-277	2	WASHER,WROUGHT,3/8,SAE,ZN
31	8040-486	2	NUT,HEX,NYLOCK,3/8-16 UNC,ZN
32	8011-132	4	BOLT,CARRIAGE,5/16-18 UNCx1.0,
33	8050-262	4	WASHER,WROUGHT,5/16,STD,ZN
34	0403-503	2	BUSHING HINGE 3-15/16 W/GRS ZRK
35	0403-481	2	ASSY HINGE DOOR CAST LH
36	0403-896	1	SWITCH DOOR PUSH BUTTON

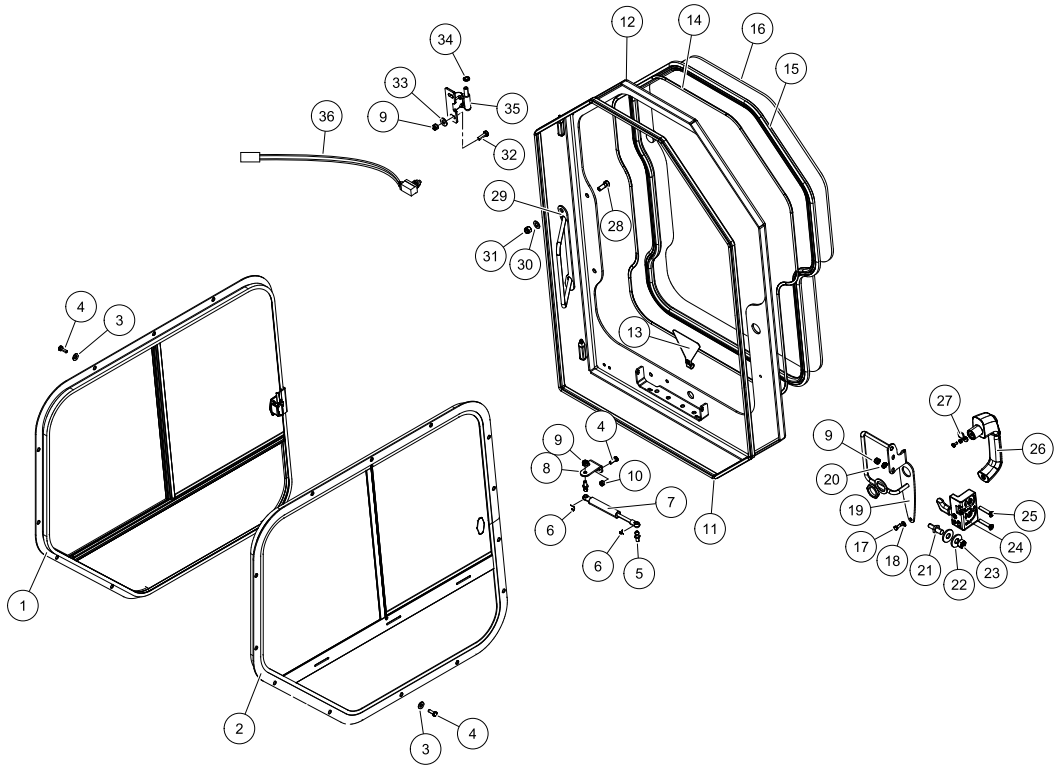

WINDSHIELD WIPER (OPTIONAL) (Serial #: SR070/080 00101-Current)

REF. NO.	PART NUMBER	QTY.	DESCRIPTION
1	0403-986	1	SWITCH WIPER - 2 SPEED
2	0403-985	1	COVER, WIPER
3	0090-117	2	CAPSCREW TH PH 10-24 X .75 SS
4	0403-995	1	MOTOR WIPER 45 PANTOGRAPH
5	0403-996	1	ARM WIPER 550 MM PANTOGRAPH WET
6	0403-997	1	BLADE WIPER 650 MM
7	0403-998	1	CONNECTOR 90^ ELBOW METAL
8	0090-252	4	TUBING PVC 6MM OD x 4MM ID
9	0403-757	1	COUPLER FEMALE WASHER LINE
10	0403-756	1	COUPLER MALE WASHER LINE
11	0403-715	1	CAP WASHER RESERVOIR
12	0403-682	1	SWITCH WINDSHIELD WASHER
13	0403-712	1	BOTTLE WASHER
14	0403-713	1	PUMP WASHER RESERVOIR
15	0090-128	6	SCREW TH PH 10-24 x 5 SS
16	0090-163	2	NUT U 10-24 UNC
17	2075-642	1	PANEL FRONT LH E/H W/ WASHER TANK

REF. NO.	PART NUMBER	QTY.	DESCRIPTION

Wiper Kit: 7000-770

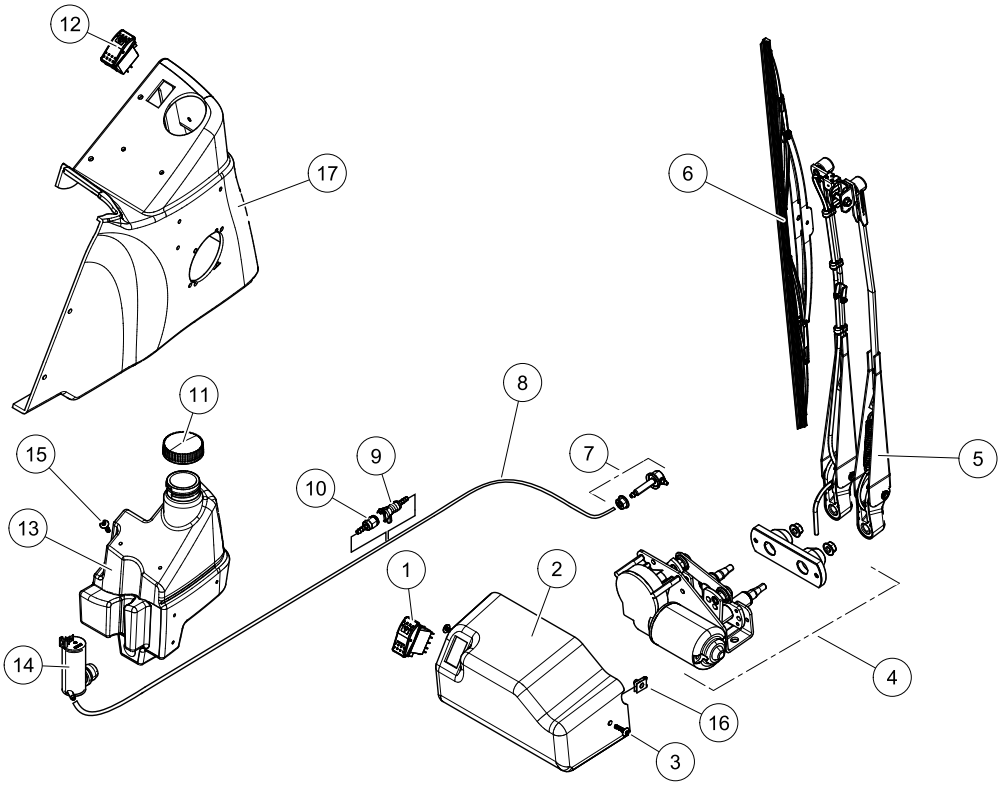

CHASSIS ASSEMBLY (Serial #: SR070/080 00101-Current)

REF. NO.	PART NUMBER	QTY.	DESCRIPTION
1	7005-002	1	WLMT SUB CHASSIS BOTTOM
2	4046-088	1	CAP FUEL YELLOW - SHAW DEV P/N "910-006
3	0090-250	1	ADAPTER DAPCO 1/2" STRAIGHT
4	0302-649	6	CLAMP,HOSE,#40
5	0090-101	1	GROMMET RUBBER LG 1/2" FUEL
6	7005-865	1	TUBE FUEL FILL HARD
7	7005-613	1	TANK FUEL ASM PLASTIC LOWER
8	7006-074	2	CLAMP PILOT LINE LARGE
9	0304-617	1	GASKET,TANK,FUEL AFP# 7521
10	0304-157	5	SCREW,ORING,3/16-32x1/2,STAINLESS R10-32
11	7006-187	1	ASSY,FUEL SENDING UNIT,RC100
12	7005-811	1	HOSE FORMED CONNECTOR TANK FUEL
13	7005-612	1	TANK FUEL ASM PLASTIC UPPER
14	0300-732	2	CLAMP,HOSE,#4 MM4
15	7005-955	1	HOSE FUEL BREATHER
16	7000-019	3	SSL, MF. ACCESS COVER PLATE
17	7005-147	1	PLATE OUTSIDE COVER
18	7005-868	1	MT, FUEL FILL
19	7005-027	1	WLMT FOOTWELL
20	7000-686	1	MAT FLOOR w/FOOT PEDAL
21	7005-942	5	CLIP MAT FLOOR
22	8102-040	6	CAPSCREW,HH,1/4-20 UNCx.75,GD8 ZN
23	2045-666	1	COVER THROTTLE PEDAL M ACHINED
24	8102-042	4	CAPSCREW, HH 1/4-20UNC 1" GD8
25	8102-037	3	CAPSCREW,HH,1/4-20 UNCx.50,GD8
26	2045-571	1	WLMT PEDAL THROTTLE
27	8102-222	28	CAPSCREW,HH,3/8-16 UNCx1.0,GD8,ZN
28	2030-357	2	WASHER COMPOSITE
29	2030-360	2	BELLEVILLE WASHER, 3/8" ID X 1-1/8 OD
30	8040-486	2	NUT,HEX,NYLOCK,3/8-16 UNC,ZN
31	0090-102	1	ADAPTER INSERT 1/2" 90*
32	0090-336	1	GROMMET 1/2" VINTON LARGE
33	8050-282	24	WASHER,WROUGHT,3/8,STD,ZN
34	8051-332	8	WASHER,SPRING LOCK,1/2,ZN
35	8102-222	22	CAPSCREW,HH,3/8-16 UNCx1.0,GD8,ZN
36	8050-277	2	WASHER,WROUGHT,3/8,SAE,ZN
37	8051-242	16	WASHER,SPRING LOCK,5/16,ZN
38	8102-409	8	CAPSCREW,HH,1/2-13 UNCx2.5,GD8
39	8050-272	2	WASHER,WROUGHT,3/8 x.744,ZN
40	0090-249	1	GROMMET DAPCO 3/8" NITRILE

REF. NO.	PART NUMBER	QTY.	DESCRIPTION
41	0090-251	1	ADAPTER DAPCO 3/8" STRAIGHT
42	2052-319	2	WEIGHT CAST & MACHINED 100LB
43	8050-347	8	WASHER,WROUGHT,1/2,STD,ZN
44	7005-937	1	WEIGHT COUNTER
45	8102-684	4	GD8,CAPSCREW,HH3/4-10 UNC 4"
46	8040-786	4	NUT,HEX,NYLOCK,3/4-10 UNC,ZN
47	0090-204	8	WASHER BEARING
48	7006-269	2	GASKET ACCESS PANEL LARGE LF SSL
49	7001-219	4	GASKET ACCESS PANEL SMALL
50	7000-859	1	DECAL LIFT ARM BYPASS VALVE
51	0307-439	2	ADAPTER,PLUG,8MB
52	8040-366	4	NUT,HEX,NYLOCK,1/4-20 UNC,ZN

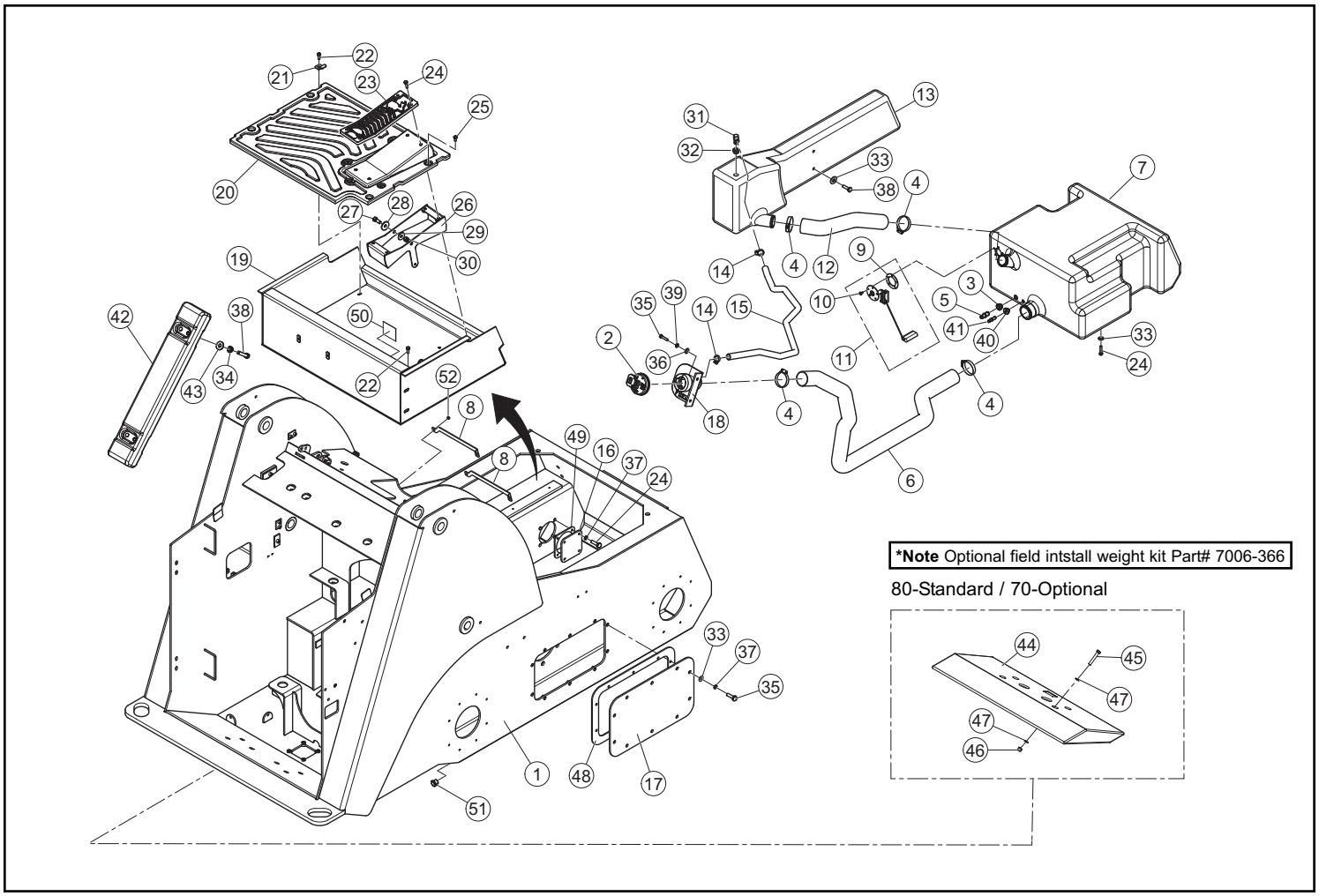

HOOD ASSEMBLY (Serial #: SR070/080 00101-Current)

REF. NO.	PART NUMBER	QTY.	DESCRIPTION
1	7005-472	1	WLMT, DOOR, REAR
2	8102-225	2	CAPSCREW,HH,3/8-16 UNCx1.5,GD8,ZN
3	8051-212	8	WASHER,SPRING LOCK,1/4,ZN
4	8040-486	8	NUT,HEX,NYLOCK,3/8-16 UNC,ZN
5	8102-224	4	CAPSCREW,HH,3/8-16UNCx1.25,GD8,ZN
6	8102-411	2	CAPSCREW,HH 1/2-13UNCx2.75 GD8
7	8050-348	4	WASHER,1/2,SAE,ZN 1.06 OD x .531 ID x .090
8	7000-108	2	BUSHING
9	8040-606	2	NUT,HEX,NYLOCK,1/2-13 UNC,ZN
10	7006-041	1	WLMT HINGE
11	7005-566	1	SCREEN, REAR
12	8050-262	17	WASHER,WROUGHT,5/16,STD,ZN
13	8040-426	20	NUT,HEX,NYLOCK,5/16-18 UNC,ZN
14	7006-052	1	WLMT COOLER BRACKET
15	8102-222	4	CAPSCREW,HH,3/8-16 UNCx1.0,GD8,ZN
16	8050-222	26	WASHER,WROUGHT,1/4,STD,ZN
17	8051-272	4	WASHER,SPRING LOCK,3/8,ZN
18	8102-132	4	CAPSCREW,HH,5/16-18UNCx1.0 GD8 ,ZN
19	7005-976	1	LATCH REAR DOOR
20	0090-015	2	BOLT SHOULDER 3/8 x3 /8 GR 8
21	7005-945	1	DOOR LATCH CATCH
22	7006-104	1	HOOD LATCH EXTENTION SPRING
23	0314-269	4	NUT,FLANGE,TOPLK,3/8-16UNC,GDG,ZN
24	7005-950	1	WLMT STRIKER
25	7006-029	2	TOP HOOD SCREEN HOLDER
26	8102-039	4	CAPSCREW,HH,1/4-20UNCx.625,GD8
27	7006-034	1	SCREEN TOP HOOD FIXED
28	7006-035	1	SCREEN TOP HOOD FLIP
29	4046-060	2	LIGHT WORK REAR MODULE 70
30	7006-237	1	TRIM FLIP HOOD TOP SMALL
31	2045-624	1	PROP ROD SLOTTED
32	7006-039	1	HOOD TOP FLIP
33	8102-226	2	CAPSCREW,HH 3/8-16UNCx1.75 GD8
34	2040-056	2	PLATE HINGE
35	7006-038	1	HOOD TOP FIXED
36	7006-238	1	TRIM FLIP HOOD TOP LARGE
37	2090-420	1	SCREW 5/16" SHLDR x 3/8" x 1/4"-20

Hood Assembly Kit: 7006-212

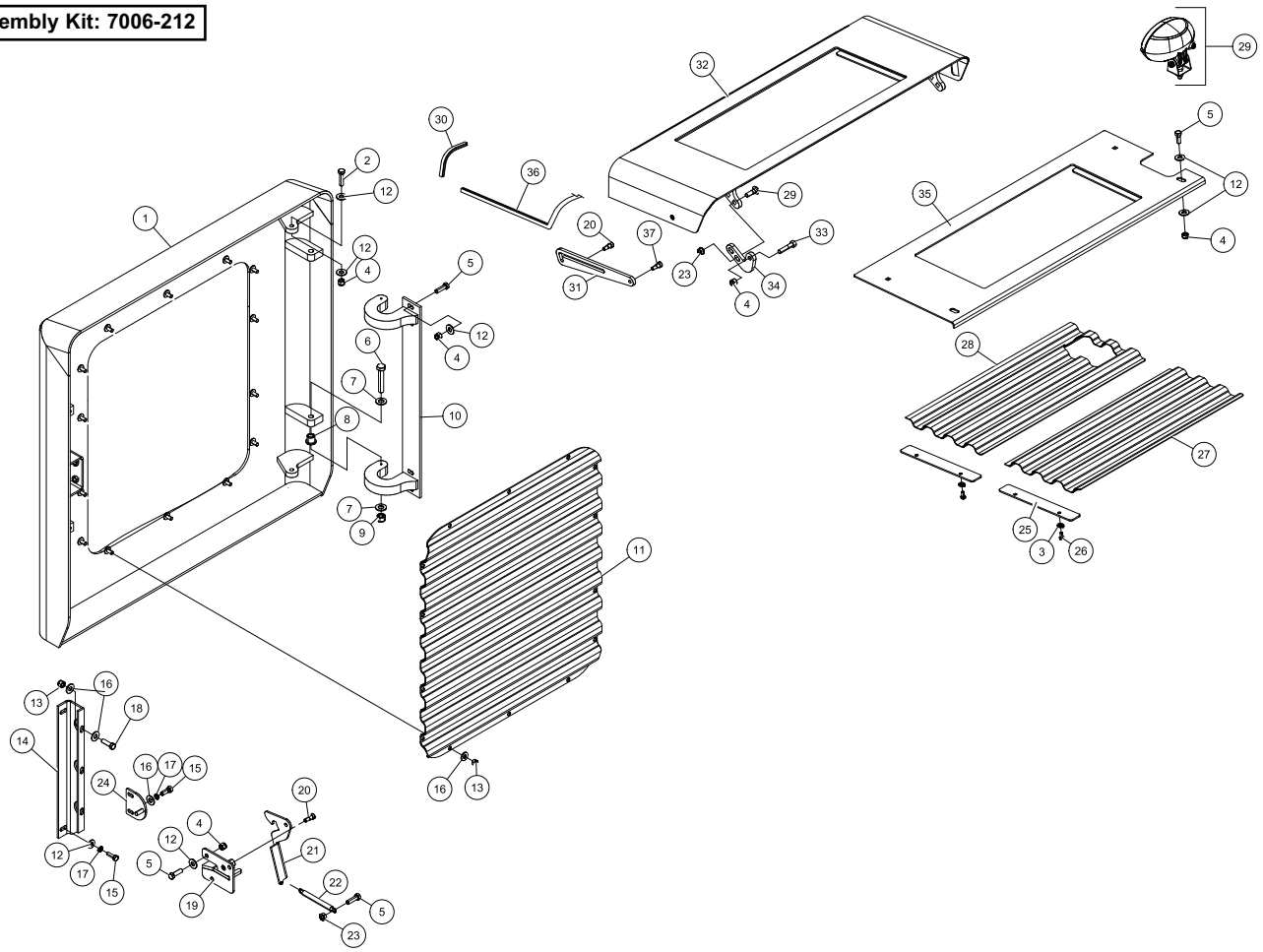

RADIATOR / OIL COOLER ASSEMBLY (Serial #: SR070/080 00101-Current)

REF. NO.	PART NUMBER	QTY.	DESCRIPTION
1	7005-053	1	COOLER
2	0300-687	6	CLAMP,HOSE,1.5,#24 H24
3	7005-963	1	HOSE HYD OIL RETURN PARKER FLEX
4	0304-444	1	HOSE,7/16 x 5/16 POLY,3FT
5	7005-960	1	HOSE COOLER RETURN PARKER FLEX
6	7006-291	1	HOSE WATER PUMP TO COOLER
7	0310-343	1	ADAPTER,16MFFOR-16MB-90
8	7005-319	1	HOSE FILLER TO COOLER
9	7005-122	1	SHROUD RADIATOR LARGE FRAME
10	7005-673	1	CAGE GUARD FINGER FRONT
11	7005-494	1	WLMT GUARD FINGER
12	7005-776	1	WLMT BRACKET BASE SIDE A
13	7005-777	1	WLMT BRACKET BASE SIDE B
14	7005-754	1	WLMT FRAME MOUNT FINGER GUARD
15	2045-067	1	RING BRUSH
16	7005-674	1	GUARD FINGER FAN REAR
17	8102-040	8	CAPSCREW,HH,1/4-20 UNCx.75,GD8 ZN
18	8050-222	14	WASHER,WROUGHT,1/4,STD,ZN
19	8102-132	11	CAPSCREW,HH,5/16-18UNCx1.0 GD8 ,ZN
20	8050-262	8	WASHER,WROUGHT,5/16,STD,ZN
21	8040-426	7	NUT,HEX,NYLOCK,5/16-18 UNC,ZN
22	8050-282	4	WASHER,WROUGHT,3/8,STD
23	7005-698	1	BRACKET, TOP MOUNT
24	0201-884	1	CAP,RADIATOR,13PSI
25	8102-225	4	CAPSCREW,HH,3/8-16 UNCx1.5,GD8,ZN
26	8040-486	4	NUT,HEX,NYLOCK,3/8-16 UNC,ZN
27	7005-871	1	SPACER
28	2045-885	1	FAN PUSHER 22" 5 BLADE
29	0090-389	4	CAPSCREW HH M8 x 1.25 x 60MM GD8.8
30	8051-242	4	WASHER,SPRING LOCK,5/16,ZN
31	0400-964	1	ALARM, BACKUP - 107 dB
32	0304-478	1	HORN
33	8102-042	2	CAPSCREW, HH 1/4-20
34	8040-396	2	NUT,HEX,NYLOCK,1/4-20

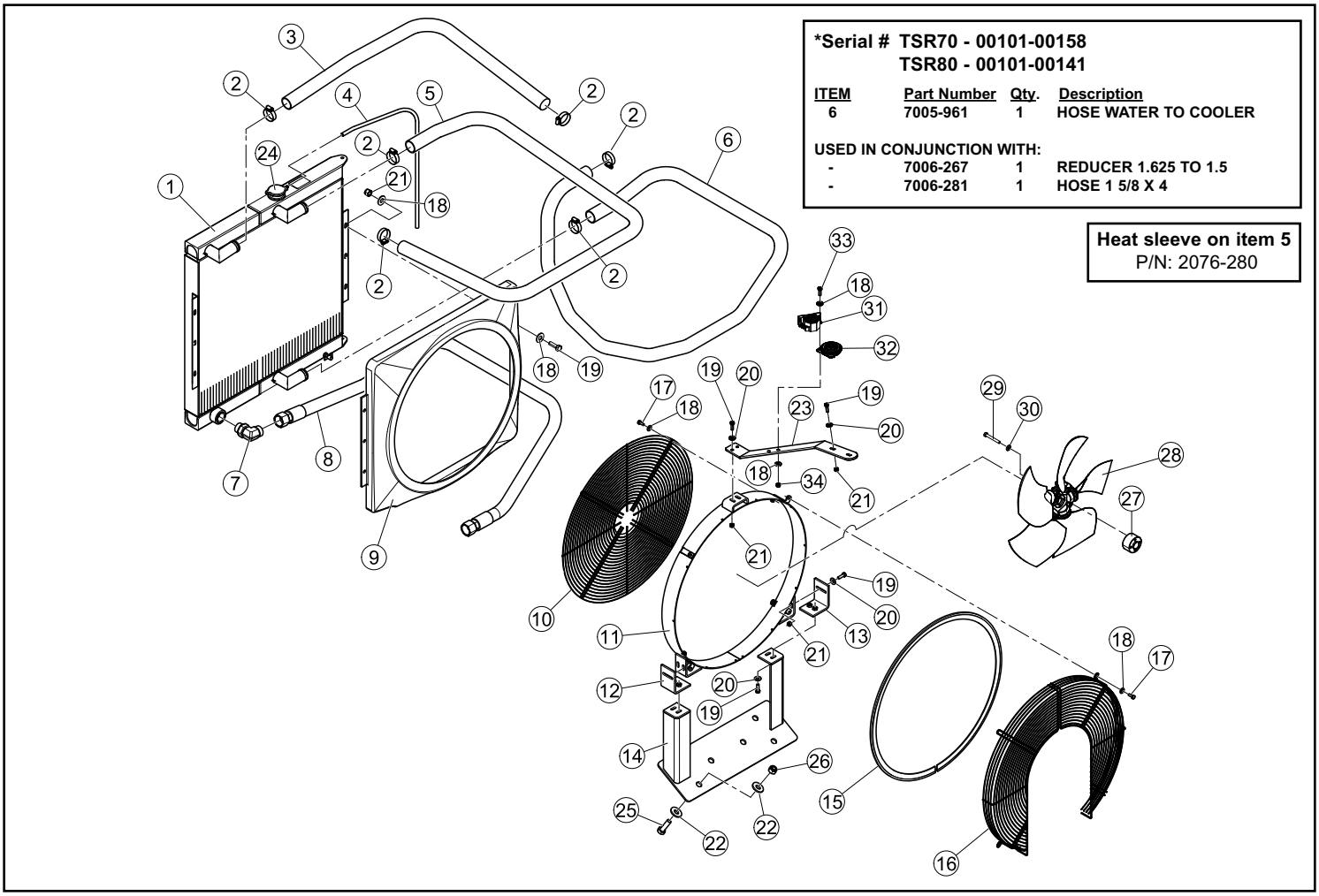

HYDRAULIC RESERVOIR ASSEMBLY (Serial #: SR070/080 00101-Current)

REF. NO.	PART NUMBER	QTY.	DESCRIPTION
1	7005-670	1	TANK HYDRAULIC LARGE
2	0201-151	1	SCREEN,SUCTION,2.5"
3	8102-225	1	CAPSCREW,HH,3/8-16 UNCx1.5,GD8,ZN
4	0304-452	1	ASSY,COVER,ACCESS
5	0201-153	1	RELIEF,TANK,O-RING,80-100 PSI
6	7005-926	1	TUBE CASE DRAIN TO TANK
7	7005-874	1	TUBE COOLER TO TANK
8	0310-345	2	ADAPTER,8MFFOR--8MB
9	0201-608	1	HEAD,FILTER
10	0302-853	1	ELEMENT,FILTER,SPIN-ON
11	7005-753	1	TUBE CASE DRAIN TO FILTER
12	0201-402	1	CLAMP,SET,2050-PP
13	0201-224	1	COVER,CLAMP,COP-2
14	8102-044	2	CAPSCREW,HH,1/4-20UNCx1.25,GD8,ZN
15	0201-223	1	CLAMP,SET,2062-PP
16	8102-042	5	CAPSCREW, HH 1/4-20UNC 1" GD8
17	8051-212	2	SWASHER,SPRING LOCK,1/4,ZN
18	8102-128	2	CAPSCREW,HH 5/16-18UNCx7/8 GR8 ZN
19	7005-892	1	BRACKET, FILTER
20	8051-242	2	WASHER,SPRING LOCK,5/16,ZN
21	8050-282	2	WASHER,WROUGHT,3/8,STD,ZN
22	8051-272	4	WASHER,SPRING LOCK,3/8,ZN
23	8102-222	4	CAPSCREW,HH,3/8-16 UNCx1.0,GD8,ZN
24	0304-642	1	GAUGE,SIGHT 5"
25	8040-366	3	NUT,HEX,NYLOCK,1/4-20 UNC,ZN
26	7006-107	1	HOSE, INLET
27	2045-408	1	CAP OIL BLACK
28	7005-765	1	BRKT OIL FILL HYD
29	2075-992	1	NECK FILLER OIL PLASTIC
30	7005-660	1	HOSE FORMED HYD TANK
31	0308-185	4	CLAMP,HOSE,#48
32	8050-277	2	WASHER,WROUGHT,3/8,SAE,ZN
33	8050-222	3	WASHER,WROUGHT,1/4,STD,ZN
34	2046-171	1	GROMMET RUBBER 5/8
35	2075-994	1	PLUG, DAPCO, .75

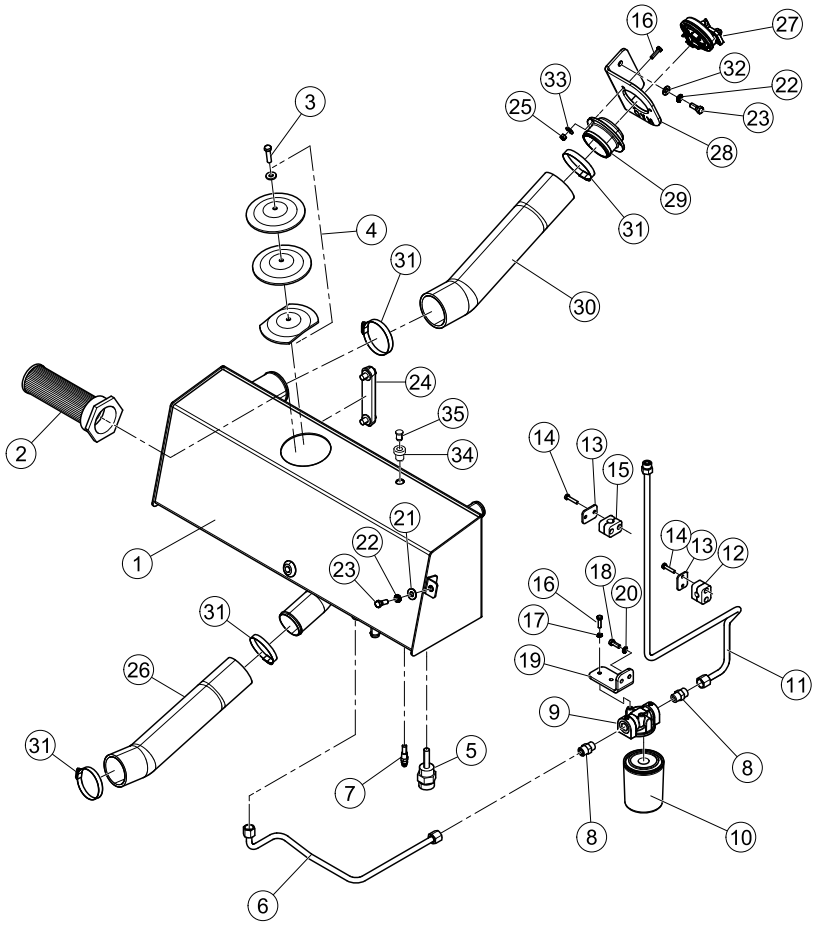

HYDRAULIC CONTROL ASSEMBLY-SINGLE SPEED (Serial #: SR070/080 00101-Current)

REF. NO.	PART NUMBER	QTY.	DESCRIPTION
1	7005-614	1	TUBE BRAKE 1
2	7005-744	1	TUBE BRAKE 2
3	0090-235	2	ADAPTER FS6400-04-08-O
4	7005-393	1	TUBE P1 PRESSURE
5	7005-394	1	TUBE J2 PRESSURE
6	7005-397	1	TUBE J2 PRESSURE TEE
7	7005-395	1	TUBE P2 PRESSURE
8	7005-389	1	TUBE CHARGE PRESSURE CHECK
9	7005-504	1	HOSE, -12, 6000 PSI, 12FFORX, 12FFORX135, 19.2"
10	7005-503	1	HOSE, -12, 6000 PSI, 12FFORX, 12FFORX135, 19.0"
11	7005-505	1	HOSE, -12, 6000 PSI, 12FFORX, 12FFORX135, 18.0"
12	7005-502	1	HOSE, -12, 6000 PSI,12FFORX, 12FFORX135, 16.7"
13	7005-399	1	TUBE #6 HYDRAULIC QUICK 2
14	7005-400	1	TUBE QA B
15	0201-634	1	ADAPTER,FS6804-04-04-04-NWO-FG
16	7005-392	1	TUBE PILOT VALVE
17	7005-391	1	TUBE TANK DRAIN
18	7005-390	1	TUBE TANK COLLECTOR
19	7005-322	2	DRIVE MOTOR 560 CC SINGLE SPEED
20	0090-388	12	NUT HEX M 18 X 1.5 ZN
21	7005-788	1	TUBE DRAIN CASE LH 1 SPD
22	0310-318	1	ADAPTER,10MFFOR-10MB
23	7005-789	1	TUBE DRAIN CASE RH 1 SPD
24	0201-223	1	CLAMP,SET,2062-PP
25	7005-076	1	TUBE VALVE TO FILTER
26	0201-314	1	ADAPTER,FS6801-04-04-NW0
27	0307-921	1	FILTER SPIN-ON HYD
28	0201-403	1	HEAD,FILTER
29	7005-108	1	PLATE FILTER MOUNT
30	8050-222	2	WASHER,WROUGHT,1/4,STD,ZN
31	8102-037	2	CAPSCREW,HH,1/4-20 UNCx.50,GD8
32	8102-222	4	CAPSCREW,HH,3/8-16 UNCx1.0,GD8,ZN
33	8051-272	4	WASHER,SPRING LOCK,3/8,ZN
34	0310-343	1	ADAPTER,16MFFOR-16MB-90^
35	7005-867	1	TUBE CHECK TO COOLER 1
36	7005-357	1	TUBE AUX FLOW FEMALE
37	7005-356	1	TUBE AUX FLOW MALE
38	7005-540	1	TUBE BOOM UP CROSS #10
39	7005-541	1	TUBE BOOM DOWN CROSS
40	7005-539	1	TUBE BOOM DOWN

REF. NO.	PART NUMBER	QTY.	DESCRIPTION
41	7005-352	1	TUBE TILT A
42	7005-353	1	TUBE TILT B
43	7005-537	1	TUBE BOOM UP
44	7005-762	1	TUBE TANK
45	8102-134	5	CAPSCREW,HH,5/16-18UNCx1.25GD8 ZN
46	0310-584	5	PLATE,COVER TCP-T2 TCP-T2
47	0310-831	2	CLAMP, SET, T2062-PP BEHRINGER
48	0201-225	3	CLAMP,SET,T2038-PP
49	8102-044	2	CAPSCREW,HH,1/4-20UNCx1.25,GD8,ZN
50	0201-224	1	COVER,CLAMP,COP-2
51	7006-086	1	TUBE, BOOM CYLINDER
52	7006-085	1	TUBETANK
53	7000-295	1	BLOCK VALVE
54	7000-293	1	PLUNGER VALVE
55	0310-992	2	ADAPTER,6MFFOR-8MB FS6400-06-08
56	7005-550	4	HOSE, -8, 4000 PSI, 8FFORX
57	7005-872	1	TUBE CHECK TO COOLER
58	0090-401	12	WASHER FLAT M18 X 34 ZINC

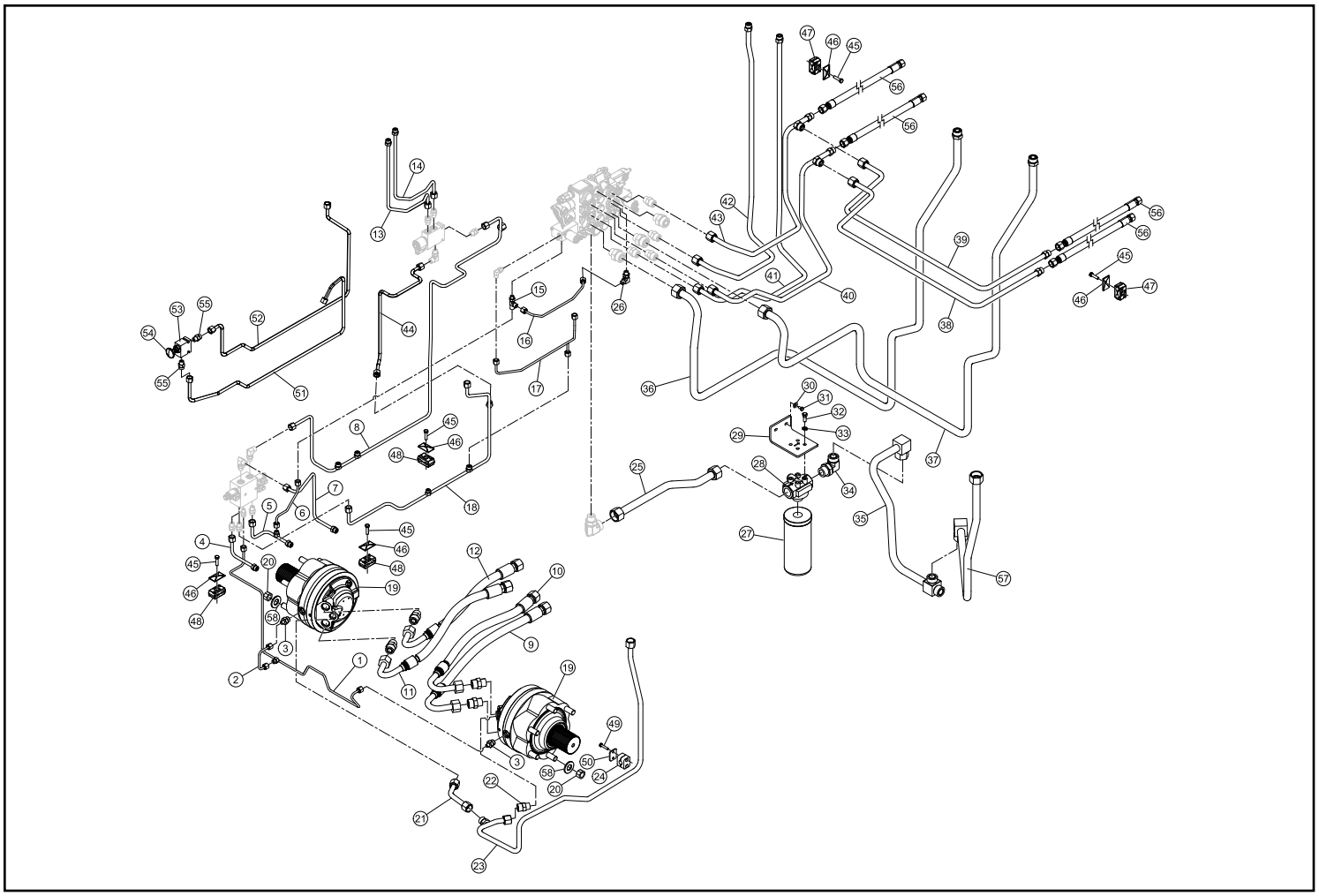

HYDRAULIC CONTROL ASSEMBLY -TWO SPEED (Serial #: SR070/080 00101-Current)

REF. NO.	PART NUMBER	QTY.	DESCRIPTION
1	7005-614	1	TUBE BRAKE 1
2	7005-744	1	TUBE BRAKE 2
3	7005-791	1	TUBE SHIFT TANK
4	7005-790	1	TUBE SHIFT
5	0310-992	2	ADAPTER,6MFFOR-8MB FS6400-06-08
6	0310-318	2	ADAPTER,10MFFOR-10MB
7	0090-235	2	ADAPTER FS6400-04-08-O
8	0310-313	4	ADAPTER,12MFFOR-12MB
9	7006-175	1	HOSE TUBE COMBO BOTTOM RH DRIVE MOTOR
10	7006-174	1	HOSE TUBE COMBO TOP RH DRIVE MOTOR
11	7006-176	1	HOSE TUBE COMBO TOP LH DRIVE MOTOR
12	7006-177	1	HOSE TUBE COMBO BOTTOM LH DRIVE MOTOR
13	7005-323	1	DRIVE MOTOR 560 TWO SPEED RH
14	0090-388	12	NUT HEX M 18 X 1.5 ZN
15	7005-327	1	DRIVE MOTOR 560 TWO SPEED LH
16	7005-770	1	TUBE RH 2 SPD CASE DRAIN
17	7005-769	1	TUBE LH 2 SPD CASE DRAIN
18	7005-944	1	TUBE, 2 SPD #3 PORT, TANK
19	7005-943	1	TUBE 2 SPD #2 PORT, PRESSURE
20	7005-393	1	TUBE P1 PRESSURE
21	7005-394	1	TUBE J2 PRESSURE
22	7005-397	1	TUBE J2 PRESSURE TEE
23	7005-395	1	TUBE P2 PRESSURE
24	7005-390	1	TUBE TANK COLLECTOR
25	7005-389	1	TUBE CHARGE PRESSURE CHECK
26	7005-762	1	TUBE TANK
27	7006-085	1	TUBE TANK
28	7000-295	1	BLOCK VALVE
29	7000-293	1	PLUNGER VALVE
30	7005-399	1	TUBE #6 HYDRAULIC QUICK 2
31	7005-400	1	TUBE QA B
32	7005-391	1	TUBE TANK DRAIN
33	7005-392	1	TUBE PILOT VALVE
34	0201-634	1	ADAPTER,FS6804-04-04-04-NWO-FG
35	0201-314	1	ADAPTER,FS6801-04-04-NW0
36	7005-076	1	TUBE VALVE TO FILTER
37	7005-357	1	TUBE AUX FLOW FEMALE
38	7005-356	1	TUBE AUX FLOW MALE
39	0307-921	1	FILTER SPIN-ON HYD
40	0201-403	1	HEAD,FILTER
41	0310-343	1	ADAPTER,16MFFOR-16MB-90^
42	7005-108	1	PLATE FILTER MOUNT
43	8051-272	4	WASHER,SPRING LOCK,3/8,ZN
44	8102-222	4	CAPSCREW,HH,3/8-16 UNCx1.0,GD8,ZN
45	8102-037	2	CAPSCREW,HH,1/4-20 UNCx.50,GD8
46	8050-222	2	WASHER,WROUGHT,1/4,STD,ZN
47	7005-867	1	TUBE CHECK TO COOLER 1
48	7005-539	1	TUBE BOOM DOWN
49	7005-352	1	TUBE TILT A
50	7005-353	1	TUBE TILT B
51	7005-537	1	TUBE BOOM UP
52	7005-540	1	TUBE BOOM UP CROSS #10
53	7005-541	1	TUBE BOOM DOWN CROSS
54	7006-086	1	TUBE BOOM CYLINDER
55	8102-134	5	CAPSCREW,HH,5/16-18UNCx1.25GD8 ZN
56	0310-584	5	PLATE,COVER TCP-T2 TCP-T2
57	0310-831	2	CLAMP, SET, T2062-PP BEHRINGER
58	0201-225	3	CLAMP,SET,T2038-PP
59	0201-223	1	CLAMP,SET,2062-PP
60	0201-224	1	COVER,CLAMP,COP-2
61	8102-044	2	CAPSCREW,HH,1/4-20UNCx1.25,GD8,ZN
62	0201-226	1	CLAMP,SET,T4100-PP
63	7005-872	1	TUBE CHECK TO COOLER 2
64	7005-550	4	HOSE, -8, 4000 PSI, 8FFORX
65	0090-401	12	WASHER FLAT M18 X 34 ZINC

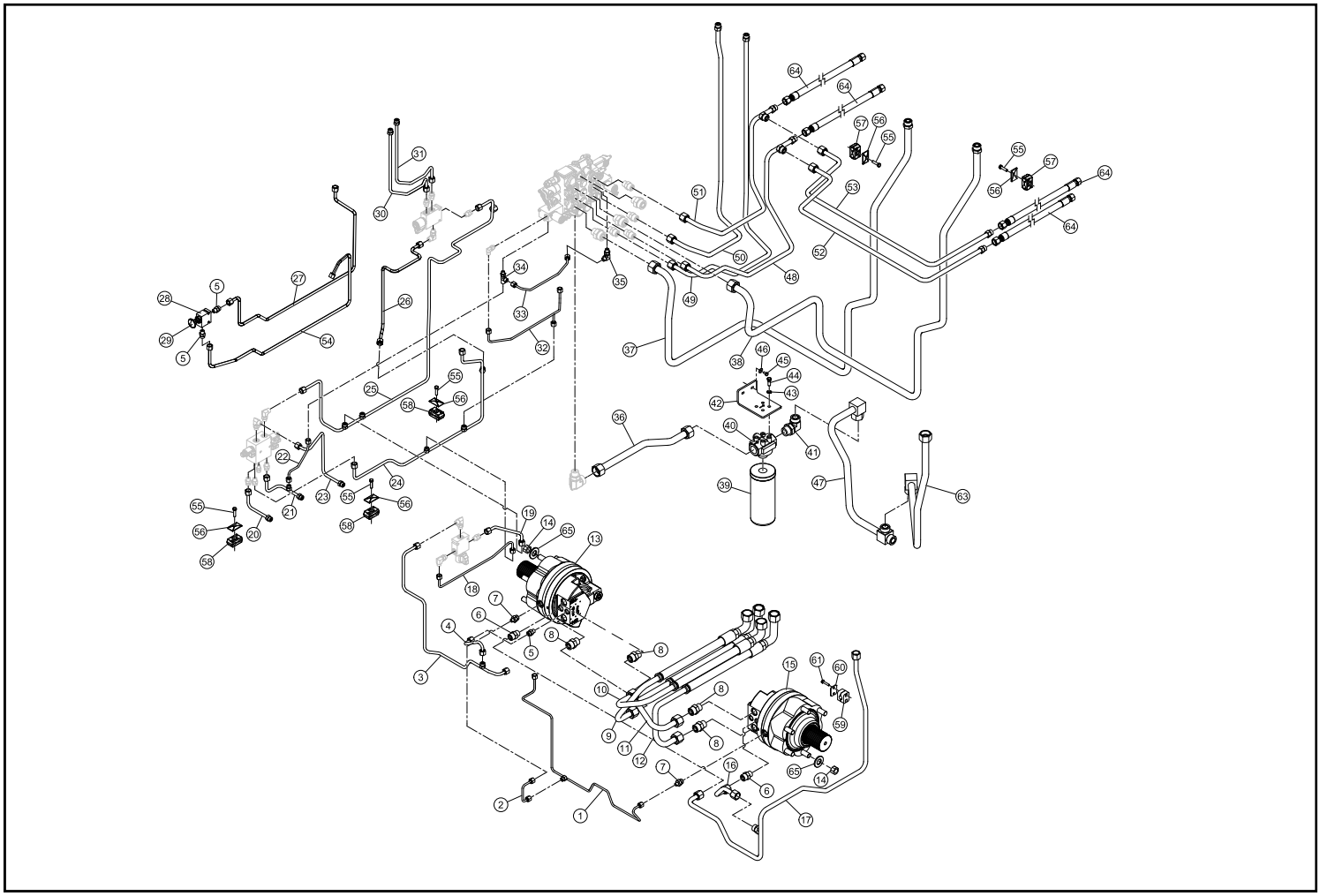

LIFT ARM CONTROL VALVE ASSEMBLY (Serial #: SR070/080 00101-Current)

REF. NO.	PART NUMBER	QTY.	DESCRIPTION
1	8102-230	3	CAPSCREW,HH 3/8-16UNCx2.75 GD8
2	8051-272	3	WASHER,SPRING LOCK,3/8,ZN
3	0201-314	5	ADAPTER,FS6801-04-04-NW0
4	0310-324	1	ADAPTER,16MFFOR-12MB-90
5	8040-486	3	NUT,HEX,NYLOCK,3/8-16 UNC,ZN
6	7005-094	1	VALVE LOADER 9610
7	0201-319	2	ADAPTER,FS6801-04-06-NW0
8	0310-318	4	ADAPTER,10MFFOR-10MB
9	0310-323	3	ADAPTER,16MFFOR-12MB

REF. NO.	PART NUMBER	QTY.	DESCRIPTION

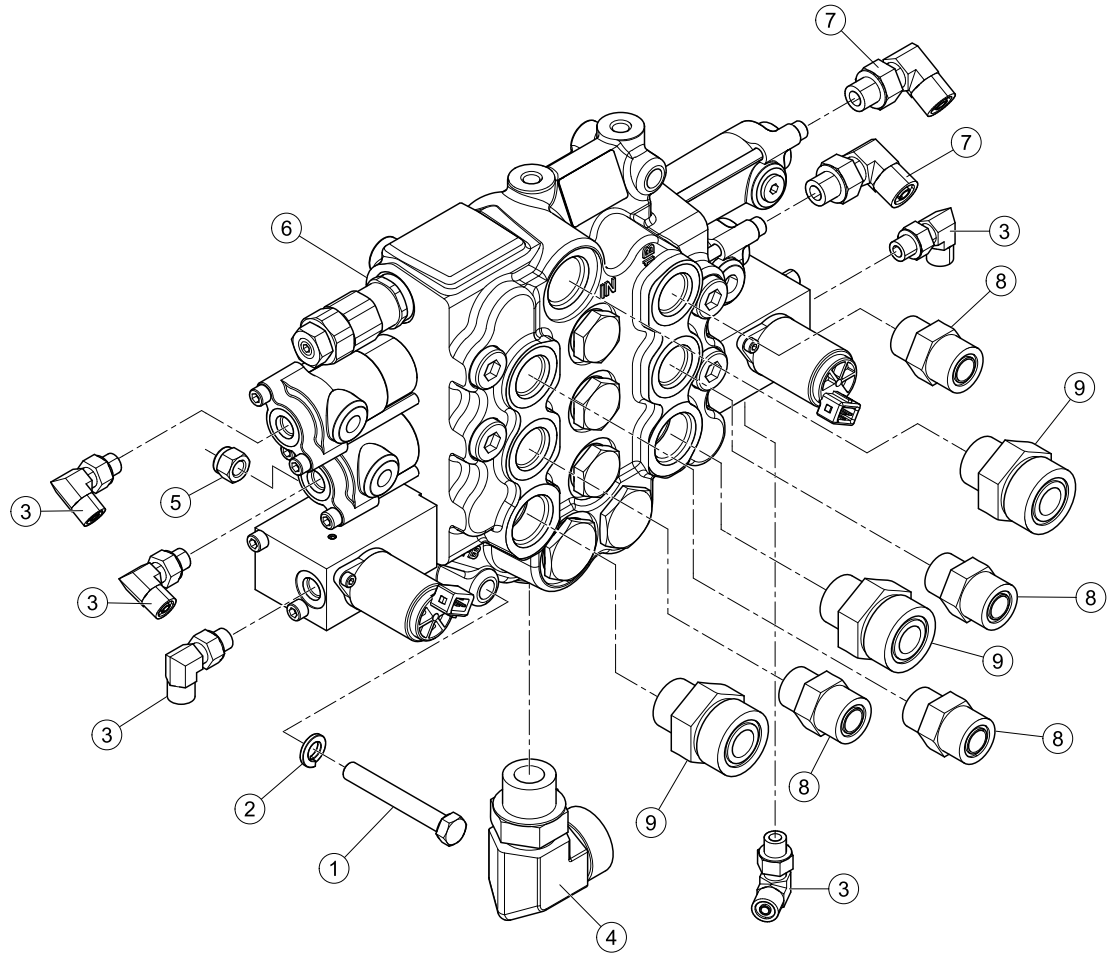

HYDRAULIC DRIVE / AUXILIARY ASSEMBLY (Serial #: SR070/080 00101-Current)

REF. NO.	PART NUMBER	QTY.	DESCRIPTION
1	2010-138	1	KIT CARDAN RH
2	----------	1	SEE LIST IN ILLUSTRATION
3	8102-040	8	CAPSCREW,HH,1/4-20 UNCx.75,GD8 ZN
4	2045-735	2	BOOT CONTROLLER
5	7005-958	1	HOSE -6 1000 PSI 6FFORX 6 FFORX90 P1
6	7005-806	1	MANIFOLD LOW FLOW INTAKE
7	0310-329	6	ADAPTER,6MFFOR-6MB
8	0201-314	4	ADAPTER,FS6801-04-04-NW0
9	8102-406	2	CAPSCREW,HH,1/2-13UNCx1.75,GD8
10	8051-332	4	WASHER,SPRING LOCK,1/2,ZN
11	0304-404	2	WASHER,FLAT,1.125 OD x .5 ID x 1/4,ZN
12	0201-876	4	VALVE,RELIEF,5500 PSI
13	0403-002	4	O-RING BACK-UP VALVE RELIEF
14	0403-001	4	O-RING VALVE RELIEF
15	----------	1	SEE LIST IN ILLUSTRATION
16	7000-441	1	JOYSTICK DRIVE LEFT
17	0304-441	1	SWITCH,PRESSURE NASON
18	0200-600	2	MNTS JOYSTICK
19	0310-329	2	ADAPTER,6MFFOR-6MB
20	0201-309	6	ADAPTER,FS6400-04-06-0
21	0314-269	6	NUT,FLANGE,TOPLK,3/8-16UNC,GDG,ZN
22	7006-012	1	HOSE -6 1000-PSI 78.3"
23	7006-022	1	HOSE, -6, 1000 PSI, 6FFORX, 6FFORX, 92.0
24	7006-021	1	HOSE, -6, 1000 PSI, 6FFORX, 6FFORX, 99.6
25	7006-020	1	HOSE, -6, 1000 PSI, 6FFORX, 6FFORX, 92.0
26	7006-019	1	HOSE, -6, 1000 PSI, 6FFORX, 6FFORX, 95.3
27	7006-018	1	HOSE, -4, 1000 PSI, 4FFORX, 6FFORX, 103.328
28	7005-959	1	HOSE -6 1000 PSI 6FFORX 6 FFORX90 16" P
29	8102-222	6	CAPSCREW,HH,3/8-16 UNCx1.0,GD8,ZN
30	0304-186	1	PLUG,12 ORING,ALLEN HEAD
31	0201-658	1	ADAPTER,10MFFOR-8MB-SV
32	0304-516	1	MAGNET,DETENT
33	0310-321	4	ADAPTER,12MFFOR-12MB90
34	8040-366	8	NUT,HEX,NYLOCK,1/4-20 UNC,ZN
35	8102-222	12	CAPSCREW,HH,3/8-16 UNCx1.0,GD8,ZN
36	0307-169	1	O-RING,4.0" ID x 4-3/16" OD BUNA 2-155
37	0200-171	1	COUPLING,SPLIT,CODE 61,1.25
38	0310-468	4	CAPSCREW,HH,M10x1.5x35,ZINC
39	0301-781	4	WASHER,SPLIT LOCK,10mm,ZN
40	0310-294	1	O-RING,#222,1.50x1.75x.13
41	7005-722	1	PUMP GEAR 31CC
42	7005-927	1	HOSE -16 90FFOPRX 90 SPLIT FLANGE 60"
43	7006-017	1	HOSE, -4, 1000 PSI, 4FFORX, 6FFORX, 103.9"
44	7006-016	1	HOSE, -4, 1000 PSI, 4FFORX, 4FFORX, 98.8"
45	7006-015	1	HOSE, -4, 1000 PSI, 4FFORX, 4FFORX, 98.1"
46	7006-014	1	HOSE, -4, 1000 PSI, 4FFORX, 4FFORX, 106.4"
47	7006-013	1	HOSE, -4, 1000 PSI, 4FFORX, 4FFORX, 104.9"
48	7006-012	1	HOSE -6 1000-PSI 78.3"
49	7005-965	1	HOSE FILTER TO TANDEM PUMP
50	7005-964	1	HOSE CHARGE PUMP TO FILTER
51	8051-272	4	WASHER,SPRING LOCK,3/8,ZN
52	8050-222	2	WASHER,WROUGHT,1/4,STD,ZN
53	8102-037	2	CAPSCREW,HH,1/4-20 UNCx.50,GD8
54	0307-921	1	FILTER SPIN-ON HYD
55	0201-317	2	ADAPTER,FS6801-12-16-NW0
56	7005-108	1	PLATE FILTER MOUNT
57	0201-403	1	HEAD,FILTER
58	7006-108	1	HOSE 1.5" MEGAVAC
59	0300-731	2	CLAMP,HOSE,#36
60	8051-242	2	WASHER,SPRING LOCK,5/16,ZN

ITEM	Part Number	Qty.	Description
15	2046-374	1	PUMP, TANDEM, 45cc (single speed machines)
15	2045-998	1	PUMP, TANDEM, 38.5cc (two-speed machines)

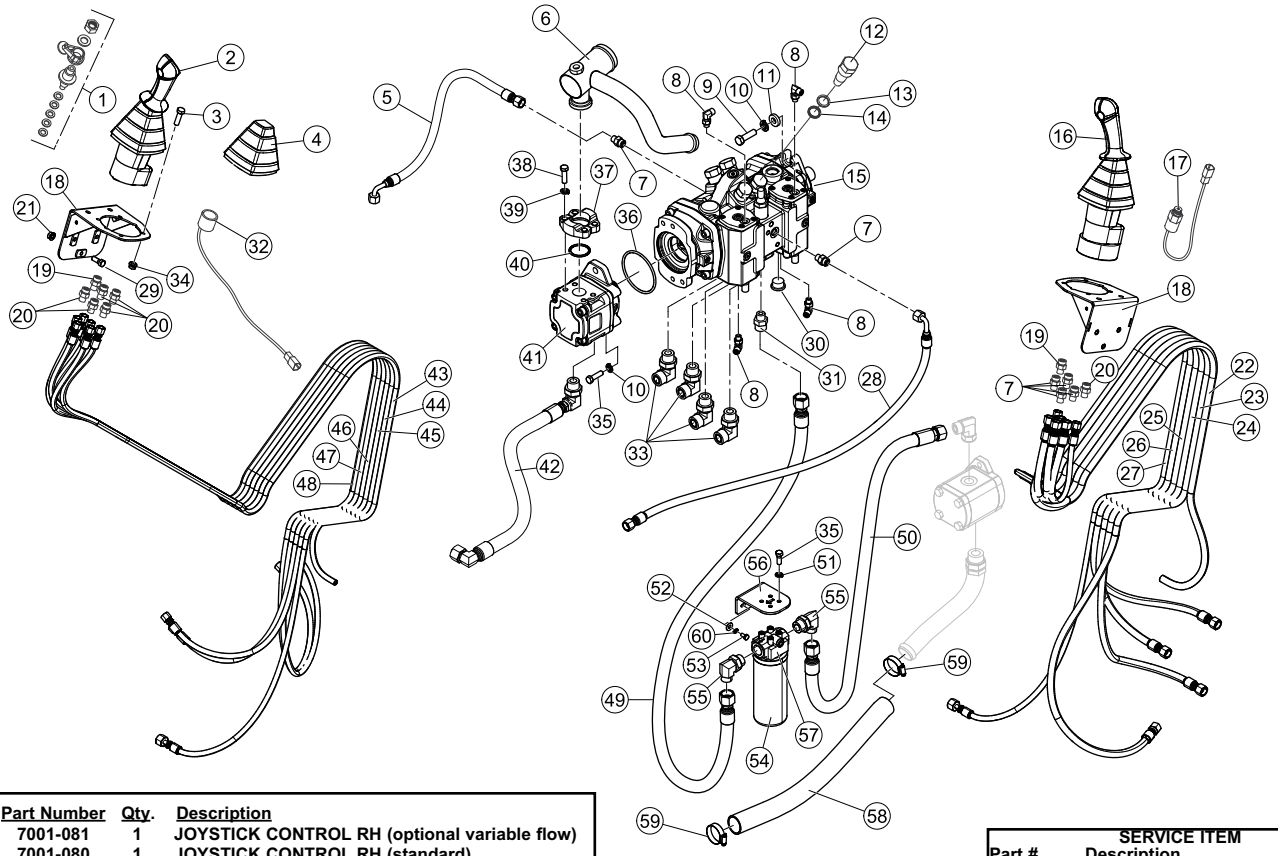

ITEM	Part Number	Qty.	Description
2	7001-081	1	JOYSTICK CONTROL RH (optional variable flow)
2	7001-080	1	JOYSTICK CONTROL RH (standard)

SERVICE ITEM	
Part #	Description
0090-463	JOYSTICK BUTTON, MOMENTARY

SOLENOID BLOCKS (Serial #: SR070/080 00101-Current)

REF. NO.	PART NUMBER	QTY.	DESCRIPTION
1	0310-329	5	ADAPTER,6MFFOR-6MB
2	0201-311	1	ADAPTER,FS6400-04-04-0
3	7005-675	1	MANIFOLD PILOT GENERATION SIZE 6
4	0310-328	3	ADAPTER,6MFFOR-6MB-90
5	2075-359	1	VALVE 2 POS 4 WAY SV08
6	8102-045	2	CAPSCREW,HH,1/4-20x1.5"ZN GD8
7	8051-212	2	WASHER,SPRING LOCK,1/4,ZN
8	0201-319	1	ADAPTER,FS6801-04-06-NW0
9	2051-615	1	BLOCK CONTROL

REF. NO.	PART NUMBER	QTY.	DESCRIPTION

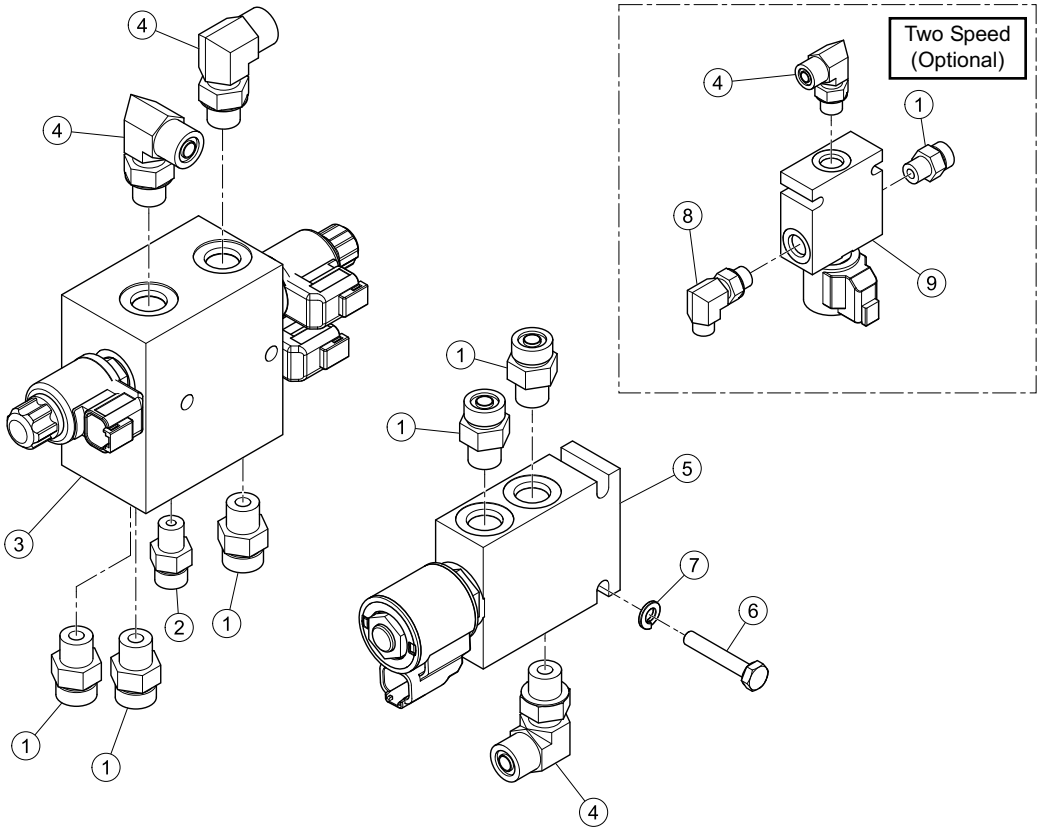

ENGINE ASSEMBLY (Serial #: SR070 00101-Current)

REF. NO.	PART NUMBER	QTY.	DESCRIPTION
1	2045-490	1	CABLE BATTERY POSITIVE
2	0301-389	12	CAPSCREW,HH,M10 x 1.50 x 30,ZN 91280A634
3	0301-781	28	WASHER,SPLIT LOCK,10mm,ZN
4	2045-489	1	CABLE BATTERY GROUND
5	0304-900	1	MNT,PLATE,PUMP
6	0303-095	8	CAPSCREW M10 x 1.5 x 25 HCS 10.9OZ
7	2045-247	1	COUPLING FLYWHEEL
8	8040-726	4	NUT,HEX,NYLOCK,5/8-11 UNC,ZN
9	0201-409	4	WASHER,MNT,MOTOR
10	0201-315	4	MOUNT,MOTOR,RUBBER
11	8102-561	4	CAPSCREW,HH,5/8-11UNCx3.00,GD8
12	2045-351	1	MOTOR MOUNT
13	8051-332	16	WASHER,SPRING LOCK,1/2,ZN
14	0310-523	16	CAPSCREW,HH M12 x 1.75 x 25mm,lg 91280A7MNT
15	2045-091	1	MOTOR MOUNT
16	2045-439	1	BRKT THROTTLE ENGINE
17	0304-465	2	CAPSCREW,HH,M6-1.0x16mm
18	2045-437	1	LEVER THROTTLE
19	0307-783	2	NUT,HEX,M6x1.0,NYLOCK,90576A115
20	8040-396	1	NUT,HEX,NYLOCK,1/4-28 UNF,ZN
21	8102-220	4	CAPSCREW,HH,3/8-16x0.75",GD8
22	8040-396	2	NUT,HEX,NYLOCK,1/4-28 UNF,ZN
23	2045-565	2	JOINT BALL SNAP CLIP
24	2045-564	1	CABLE THROTTLE SR
25	2045-566	1	KIT ADAPTERS PUMP FILTER FUEL
26	0201-510	1	FILTER,AIR,PRIMARY
27	0201-533	1	FILTER,AIR,SECONDARY
28	2045-614	1	TUBE ADAPTER 06-05-NWO-90
29	2045-613	1	ADAPTER 08-05-NWO-90L
30	2045-218	1	FILTER FUEL
31	2045-384	1	UNIT SENDING OIL PRESSURE 804C-33T
32	2046-071	1	ENGINE PERKINS 804D-33T
33	7006-268	1	CABLE BATTERY POSITIVE 22"
34	2045-489	1	CABLE BATTERY NEGATIVE
35	8050-282	4	WASHER,WROUGHT,3/8,STD,ZN
36	7005-070	1	MUFFLER
37	2045-505	1	GASKET EXHAUST 80433T
38	2045-777	6	SPRINGS
39	0201-532	1	AIR CLEANER BRACKET
40	2045-382	1	UNIT SENDING TEMP ENGINE 804C-33T
41	2045-458	2	CAPSCREW FERRY M10 x 1.5 x 25MM
42	0201-668	1	ADAPTER,FS6801-10-10NWO
43	2046-355	1	PUMP CHARGE GEAR
44	2045-087	1	FITTING INTAKE CHARGE
45	7005-922	1	MOTOR MOUNT
46	7005-069	1	MOTOR MOUNT
47	2045-985	1	KEEPER THROTTLE
48	0300-578	1	NUT,WELD,1/4-20 RN2113
49	0302-322	1	GASKET,PTO 68-G04
50	7005-796	1	EXHAUST PIPE
51	0201-458	1	ASSY, AIR, CLEANER
52	2051-439	1	BATTERY
53	7000-090	1	STRAP BATTERY
54	0200-313	1	INDICATOR,AIRCLEANER
55	0304-503	1	VALVE,DUST
56	0312-051	3	NUT,HEX,M8 x 1.25
57	8051-242	3	WASHER,SPRING LOCK,5/16,ZN
58	0404-359	1	FILTER ENGINE OIL
59	2045-751	1	BELT FAN

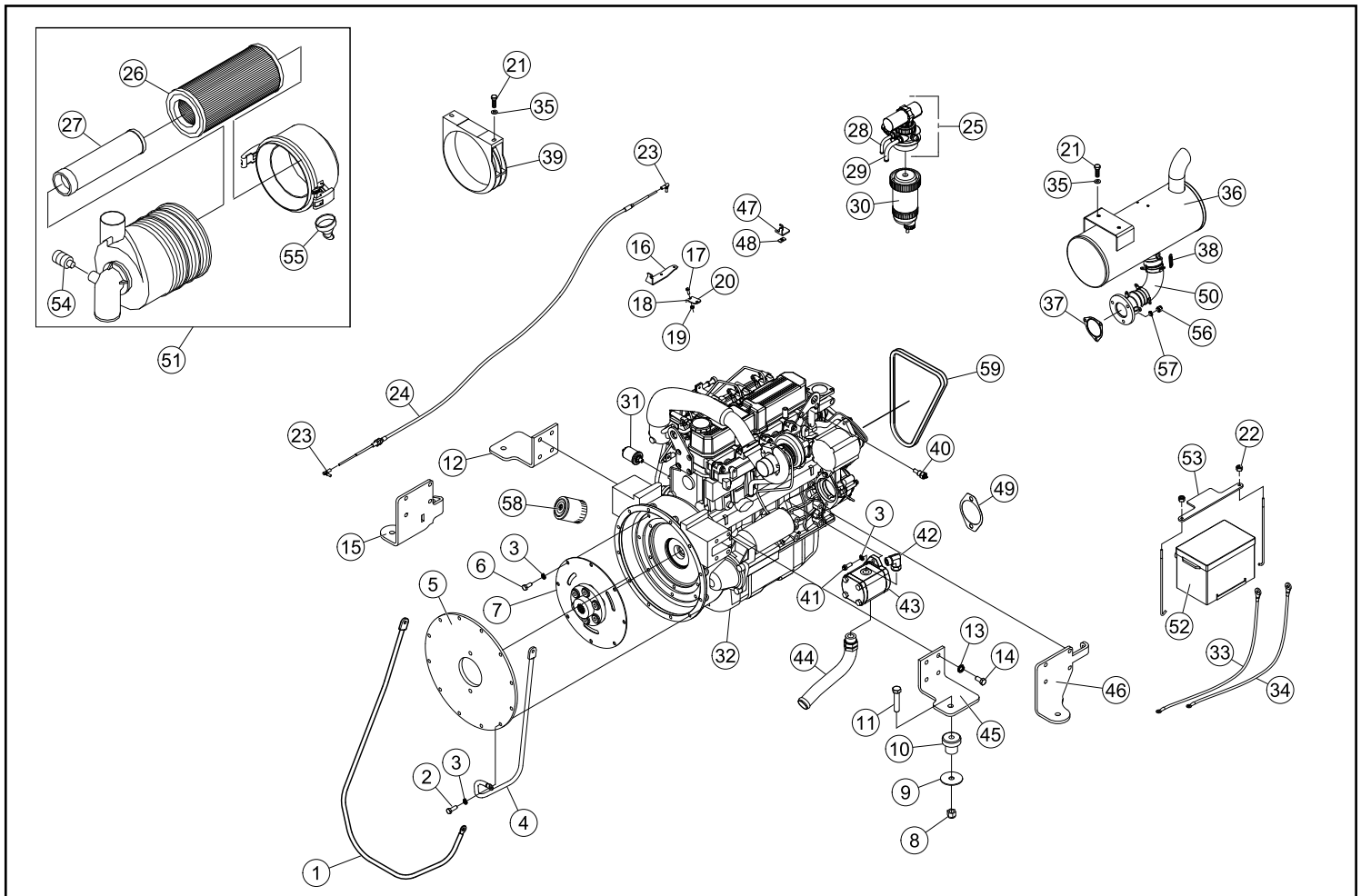

ENGINE ASSEMBLY (Serial #: SR080 00101-Current)

REF. NO.	PART NUMBER	QTY.	DESCRIPTION
1	2045-490	1	CABLE BATTERY POSITIVE
2	0301-389	12	CAPSCREW,HH,M10 x 1.50 x 30,ZN 91280A634
3	0301-781	28	WASHER,SPLIT LOCK,10mm,ZN
4	2045-489	1	CABLE BATTERY GROUND
5	0304-900	1	MNT,PLATE,PUMP
6	0303-095	8	CAPSCREW M10 x 1.5 x 25 HCS 10.9OZ
7	2045-247	1	COUPLING FLYWHEEL
8	8040-726	4	NUT,HEX,NYLOCK,5/8-11 UNC,ZN
9	0201-409	4	WASHER,MNT,MOTOR
10	0201-315	4	MOUNT,MOTOR,RUBBER
11	8102-561	4	CAPSCREW,HH,5/8-11UNCx3.00,GD8
12	2045-351	1	MOTOR MOUNT
13	8051-332	16	WASHER,SPRING LOCK,1/2,ZN
14	0310-523	16	CAPSCREW,HH M12 x 1.75 x 25mm,lg 91280A7MNT
15	2045-091	1	MOTOR MOUNT
16	2045-439	1	BRKT THROTTLE ENGINE
17	0304-465	2	CAPSCREW,HH,M6-1.0x16mm
18	2045-437	1	LEVER THROTTLE
19	0307-783	2	NUT,HEX,M6x1.0,NYLOCK,90576A115
20	8040-396	1	NUT,HEX,NYLOCK,1/4-28 UNF,ZN
21	8102-220	4	CAPSCREW,HH,3/8-16x0.75",GD8
22	8040-396	2	NUT,HEX,NYLOCK,1/4-28 UNF,ZN
23	2045-565	2	JOINT BALL SNAP CLIP
24	2045-564	1	CABLE THROTTLE SR
25	2045-566	1	KIT ADAPTERS PUMP FILTER FUEL
26	0201-510	1	FILTER,AIR,PRIMARY
27	0201-533	1	FILTER,AIR,SECONDARY
28	2045-614	1	TUBE ADAPTER 06-05-NWO-90
29	2045-613	1	ADAPTER 08-05-NWO-90L
30	2045-218	1	FILTER FUEL
31	2045-384	1	UNIT SENDING OIL PRESSURE 804C-33T
32	2046-080	1	ENGINE PERKINS 804D-33T
33	7006-268	1	CABLE BATTERY POSITIVE 22"
34	2045-489	1	CABLE BATTERY NEGATIVE
35	8050-282	4	WASHER,WROUGHT,3/8,STD,ZN
36	7005-070	1	MUFFLER
37	2045-505	1	GASKET EXHAUST 80433T
38	2045-777	6	SPRINGS
39	0201-532	1	AIR CLEANER BRACKET
40	2045-382	1	UNIT SENDING TEMP ENGINE 804C-33T
41	2045-458	2	CAPSCREW FERRY M10 x 1.5 x 25MM
42	0201-668	1	ADAPTER,FS6801-10-10NWO
43	2046-355	1	PUMP CHARGE GEAR
44	2045-087	1	FITTING INTAKE CHARGE
45	7005-922	1	MOTOR MOUNT
46	7005-069	1	MOTOR MOUNT
47	2045-985	1	KEEPER THROTTLE
48	0300-578	1	NUT,WELD,1/4-20 RN2113
49	0302-322	1	GASKET,PTO 68-G04
50	7005-796	1	EXHAUST PIPE
51	0201-458	1	ASSY, AIR, CLEANER
52	2051-439	1	BATTERY
53	7000-090	1	STRAP BATTERY
54	0200-313	1	INDICATOR,AIRCLEANER
55	0304-503	1	VALVE,DUST
56	0312-051	3	NUT,HEX,M8 x 1.25
57	8051-242	3	WASHER,SPRING LOCK,5/16,ZN
58	0404-359	1	FILTER ENGINE OIL
59	2045-751	1	BELT FAN

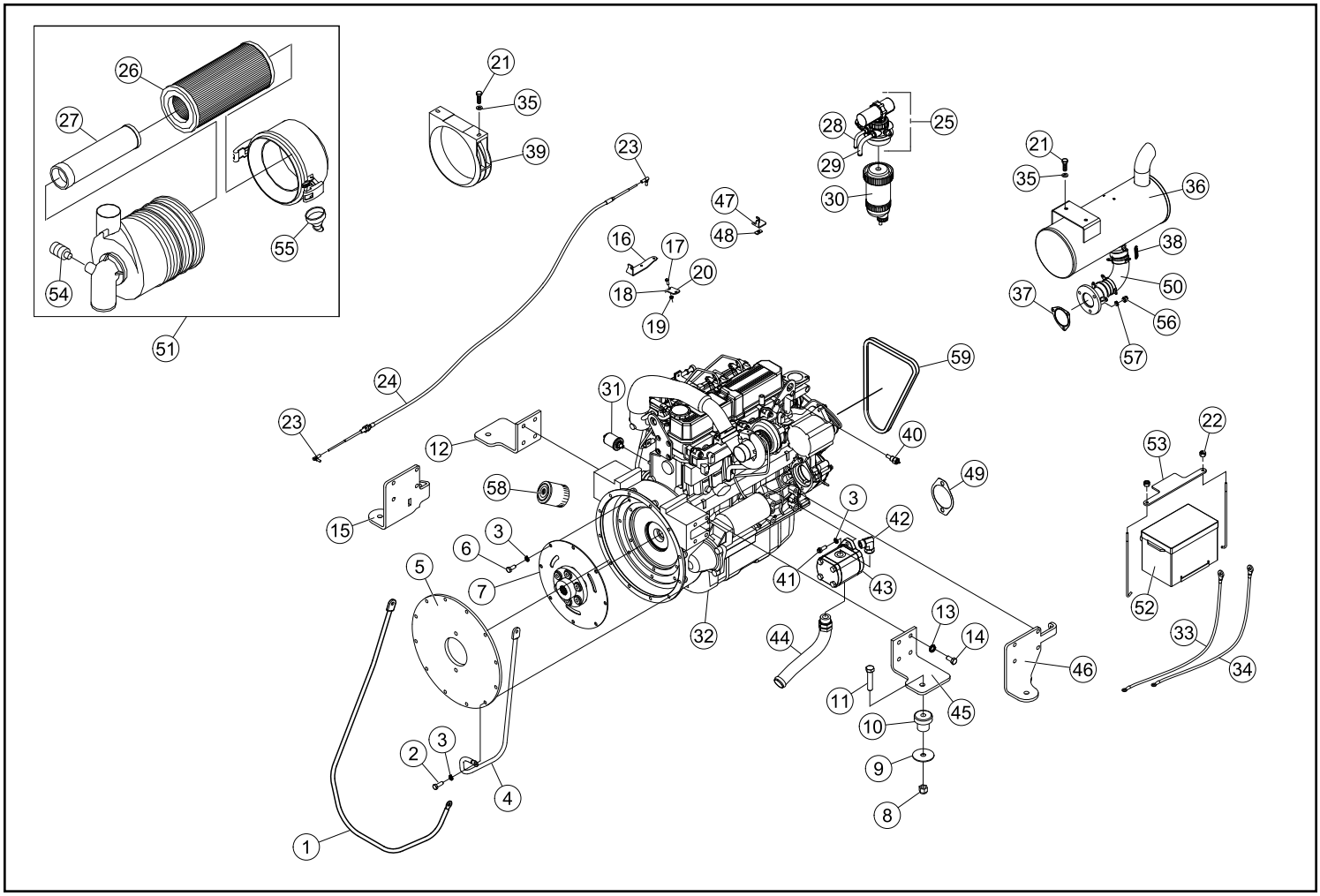

FUSE PANEL ASSEMBLY (Serial #: SR070/080 00101-Current)

REF. NO.	PART NUMBER	QTY.	DESCRIPTION
1	0304-519	5	RELAY,PLUG,GLOW
2	0310-807	5	RELAY,MINI, 35 AMP
3	0310-805	1	FUSE,MAXI,80 AMP 7460K51 - 80 AMP
4	0310-804	1	FUSE,MAXI,60 AMP 78505
5	0310-801	2	FUSE,MAXI,30 AMP 78502
6	0310-800	3	FUSE,MAXI,20 AMP 78501
7	0310-803	1	FUSE,MAXI,50 AMP 78504
8	0310-802	2	FUSE,MAXI,40 AMP 78503
9	0310-796	2	FUSE,MINI,15 AMP 77155
10	0310-795	6	FUSE,MINI,10 AMP 77105
11	0310-794	4	FUSE,MINI, 5 AMP 77055
12	0310-811	1	DIODE, 3 AMP
13	0310-798	1	FUSE,MINI,25 AMP 77255
14	0310-779	1	PLUG,DTHD,1PIN DTHD-06-1-8-S
15	7005-600	1	HARNESS MAIN
16	0090-239	2	KNOB 1/5-4-20 UNC 2B
17	2075-810	1	COVER FUSE PANEL

REF. NO.	PART NUMBER	QTY.	DESCRIPTION

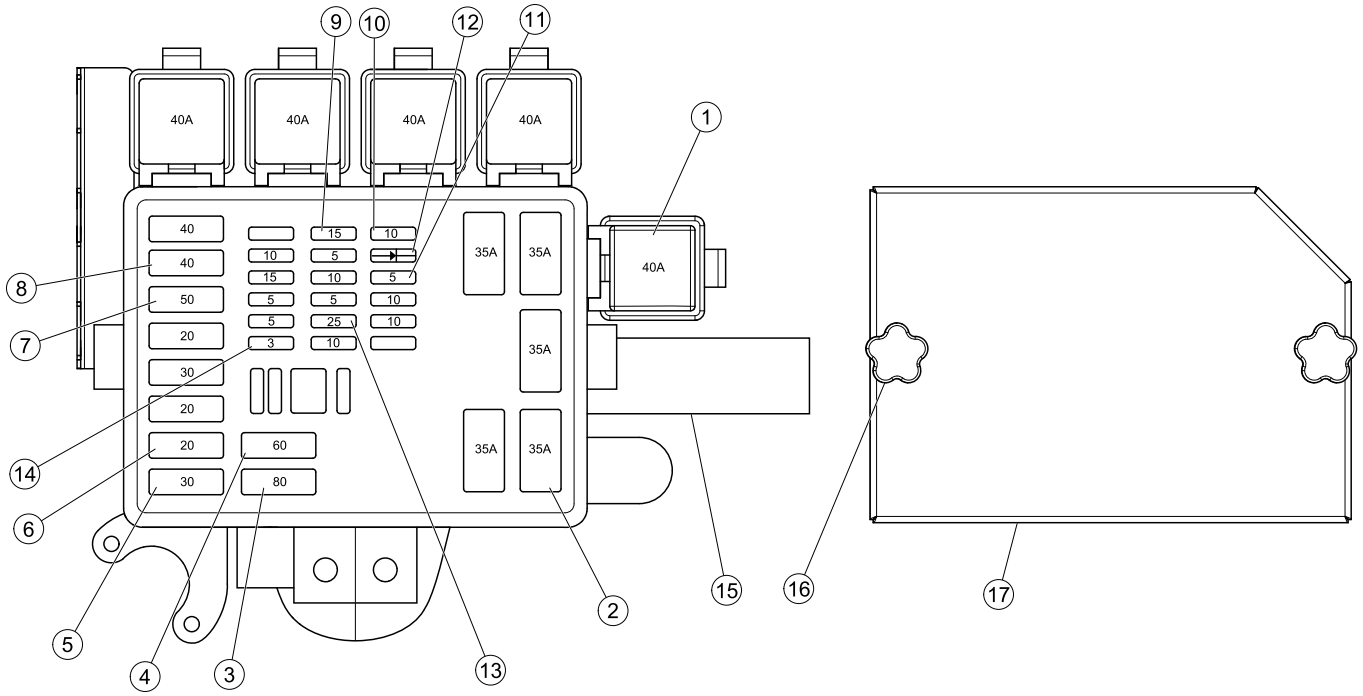

FINAL DRIVE ASSEMBLY, RT (Serial #: SR070/080 00101-Current)

REF. NO.	PART NUMBER	QTY.	DESCRIPTION
1	7005-039	2	AXLE MACHINED LARGE
2	7005-332	2	RIM 16.5 X 9.75
3	7005-058	2	SEAL FLOATING
4	7005-056	2	BEARING CONE 387A
5	7005-055	4	BEARING CUP 382A
6	0090-303	16	NUT,HEX,9/16-18 UNF,ZN
7	0090-302	16	Washer, M14 DIN6916 Structural
8	7005-194	2	HOUSING MACHINED LARGE
9	7005-062	2	O-RING 2-366 N-70
10	7005-060	2	SEAL LIP 70x100x10
11	7005-061	2	O-RING 2-139 N70
12	7005-059	2	SLEEVE HUB LARGE
13	7005-317	2	SPROCKET DRIVEN
14	7005-318	2	CHAIN #100
15	7005-316	2	SPROCKET DRIVE 100 CHAIN
17	0090-421	1	CAPSCREW M12-1.75 x 30mm
16	7005-721	2	SAPACER WASHER MOTOR
18	7006-210	2	TIRE 12.00-16.5-12 PLY SKS
19	PI0181-1.875C	32	STUD WHEEL
20	PH0181-2BP	32	NUT - 9/16-18NF, 90 DEG.TAPER, GR.5
21	7005-036	2	ASSY POD LARGE SIZE (INCLUDES LUG NUTS, ITEM 20)
22	SEE LIST	2	WHEEL/TIRE ASSEMBLY
23	0200-337	2	CAPSCREW,HH,M12X1.75X40MM,GR8.8
24	8050-282	2	WASHER,WROUGHT,3/8,STD,ZN
25	7005-056	2	BEARING CONE 389
26	7005-663	1	SPACER DRIVE SPROCKET

REF. NO.	PART NUMBER	QTY.	DESCRIPTION

ITEM 22 (ASSEMBLY)

PART #	DESCRIPTION
7006-208	16.5 X 12 / 12 PLY (RH)

SEPERATE ITEMS

TIRE	WHEEL
7006-210	7005-332

Note: Wheel/tire assemblies (22) configured for right side installation are not interchangable with assemblies for left side installation.

Tires (18) are directional and spacing is different on the inside and outside of the wheels (2).

Order from this page when replacing tire/wheel assemblies for right side only.

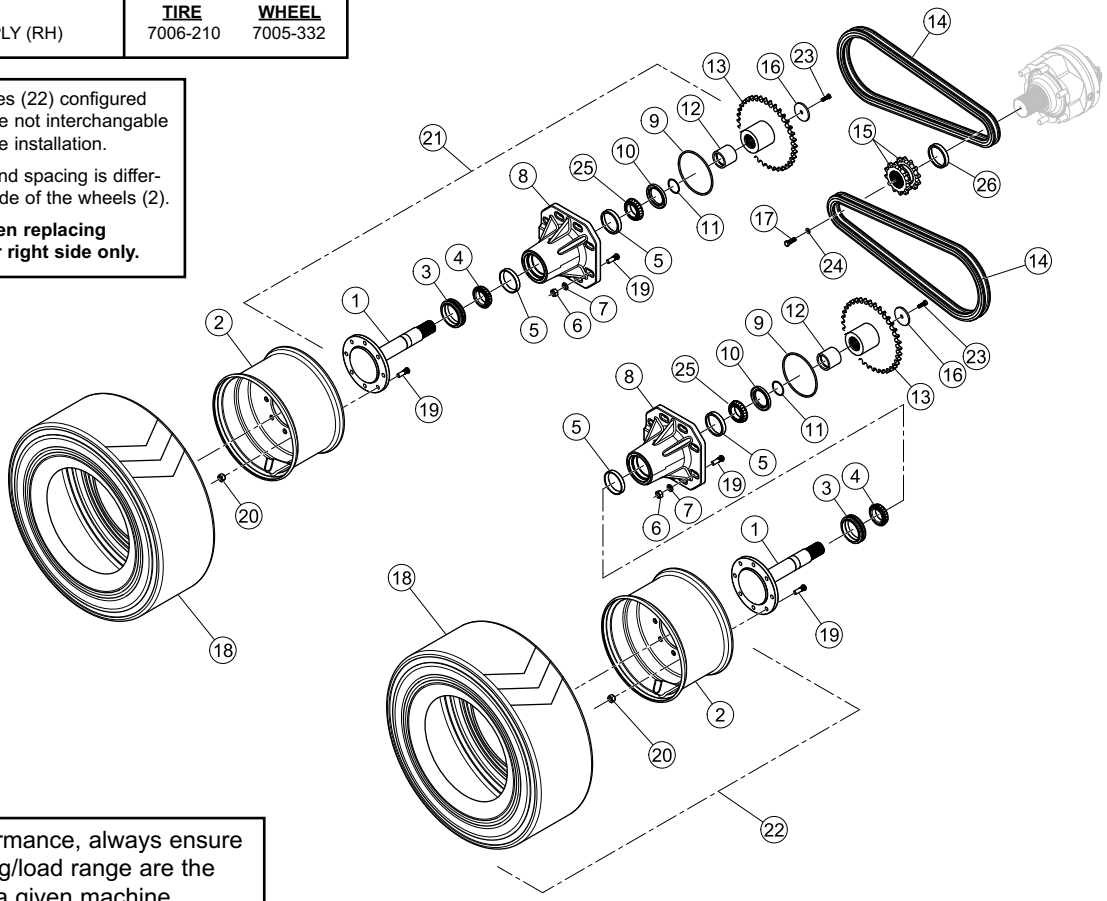

Note: For best performance, always ensure tire size and ply rating/load range are the same for all tires on a given machine.

FINAL DRIVE ASSEMBLY, LT (Serial #: SR070/080 00101-Current)

REF. NO.	PART NUMBER	QTY.	DESCRIPTION
1	7005-039	2	AXLE MACHINED LARGE
2	7005-332	2	RIM 16.5 X 9.75
3	7005-058	2	SEAL FLOATING
4	7005-056	2	BEARING CONE 387A
5	7005-055	4	BEARING CUP 382A
6	0090-303	16	NUT,HEX,9/16-18 UNF,ZN
7	0090-302	16	Washer, M14 DIN6916 Structural
8	7005-194	2	HOUSING MACHINED LARGE
9	7005-062	2	O-RING 2-366 N-70
10	7005-060	2	SEAL LIP 70x100x10
11	7005-061	2	O-RING 2-139 N70
12	7005-059	2	SLEEVE HUB LARGE
13	7005-317	2	SPROCKET DRIVEN
14	7005-318	2	CHAIN #100
15	7005-316	2	SPROCKET DRIVE 100 CHAIN
17	0090-421	1	CAPSCREW M12-1.75 x 30mm
16	7005-721	2	SAPACER WASHER MOTOR
18	7006-210	2	TIRE 12.00-16.5-12 PLY SKS
19	PI0181-1.875C	32	STUD WHEEL
20	PH0181-2BP	32	NUT - 9/16-18NF, 90 DEG.TAPER, GR.5
21	7005-036	2	ASSY POD LARGE SIZE (INCLUDES LUG NUTS, ITEM 20)
22	SEE LIST	2	WHEEL/TIRE ASSEMBLY
23	0200-337	2	CAPSCREW,HH,M12X1.75X40MM,GR8.8
24	8050-282	2	WASHER,WROUGHT,3/8,STD,ZN
25	7005-056	2	BEARING CONE 389
26	7005-663	1	SPACER DRIVE SPROCKET

ITEM 22 (ASSEMBLY)		SEPERATE ITEMS	
PART #	DESCRIPTION	TIRE	WHEEL
7006-209	16.5 X 12 / 12 PLY (LH)	7006-210	7005-332

Note: Wheel/tire assemblies (22) configured for left side installation are not interchangable with assemblies for right side installation.

Tires (18) are directional and spacing is different on the inside and outside of the wheels (2).

Order from this page when replacing tire/wheel assemblies for left side only.

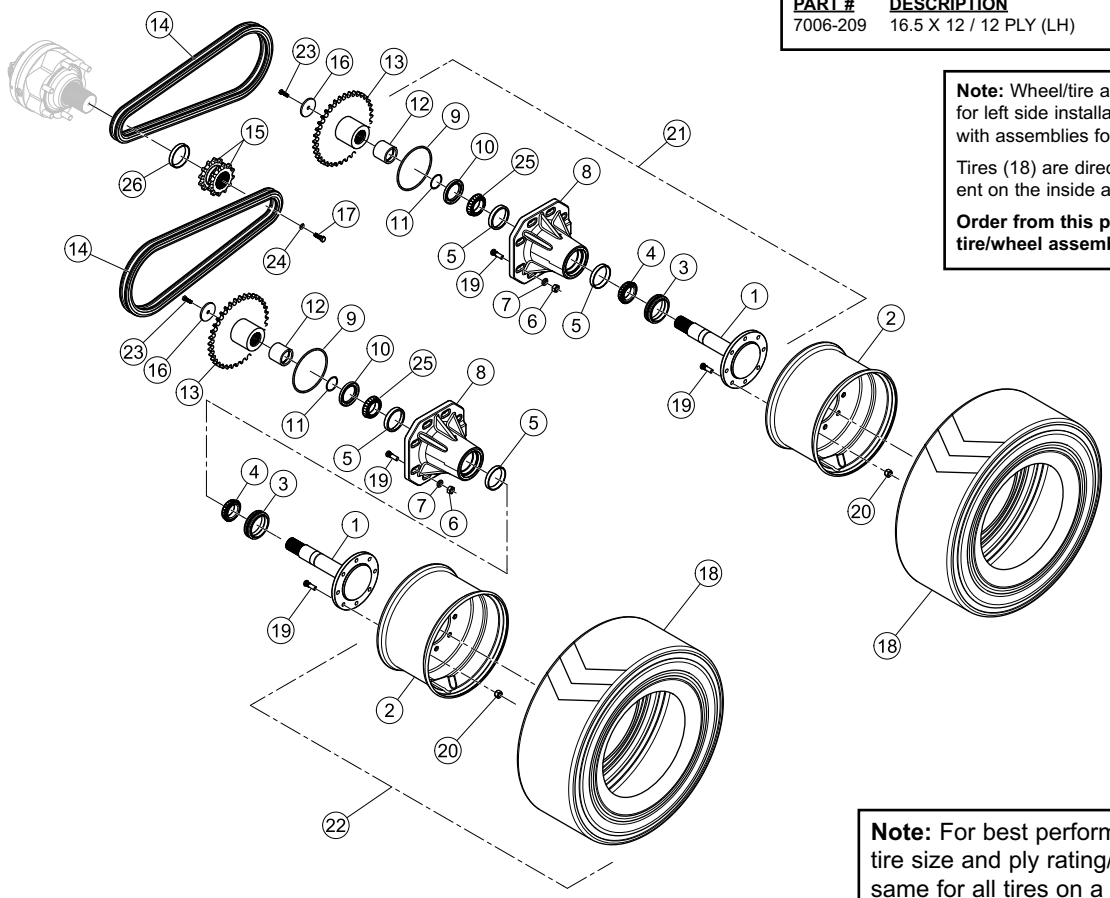

Note: For best performance, always ensure tire size and ply rating/load range are the same for all tires on a given machine.

LIFT ARM ASSEMBLY (Serial #: SR070/080 00101-Current)

REF. NO.	PART NUMBER	QTY.	DESCRIPTION
1	7006-053	1	ASSY RADIAL LF LOADER
2	8011-222	2	BOLT,CARRIAGE,3/8-16 UNCx1.0,ZN
3	2030-562	2	WLMT PIN 1.5 X 4.51
4	2046-315	2	CYLINDER BOOM
5	7005-856	4	PIN
6	0310-345	8	ADAPTER,8MFFOR--8MB
7	8102-411	2	CAPSCREW,HH,1/2-13 UNCx3.0,GD8
8	8040-606	2	NUT,HEX,NYLOCK,1/2-13 UNC,ZN
9	7006-184	2	WLMT PIN TOP CURL
10	7005-328	2	CYLINDER BUCKET
11	0314-269	6	NUT,FLANGE,TOPLK,3/8-16UNC,GDG,ZN
12	0300-607	12	ZERK,GREASE,1/4-28 1103K21 SHORT THD, SELF TAP
13	0201-488	2	HOSE,8M4K-8FFORX-8FFORX-23.5"
14	0201-489	2	HOSE,8M4K-8FFORX-8FFORX-17.5"
15	8051-282	4	WASHER,SPRING LOCK,7/16,ZN
16	7005-429	2	TUBE QUICK ATTACH
17	7005-430	2	BUSHING SPRING 1.5 X 1.75 X 3.75
18	2030-655	2	BUSHING 1.50ID x 3.00
19	0003-056	2	BUSHING CYLINDER BOOM ROD END
20	7005-971	1	PLATE BENT BL GUARD
21	7005-712	2	WLMT PIN 1.5 x 9.125
22	8102-224	2	CAPSCREW,HH,3/8-16UNCx1.25,GD8,ZN
23	8040-636	2	NUT,HEX,NYLOCK,1/2-20 UNF,ZN
24	7000-643	2	BUSHING BASE
25	0003-053	2	BUSHING CYLINDER BUCKET ROD END
26	7005-212	2	PIN TILT CYLINDER QT
27	8102-231	2	CAPSCREW,HH,3/8-16UNCx3.0,GD8,
28	8040-486	2	NUT,HEX,NYLOCK,3/8-16 UNC,ZN
29	8102-222	4	CAPSCREW,HH,3/8-16 UNCx1.0,GD8,ZN
30	7000-161	2	BUSHING LOADER
31	7005-519	4	BUSHING BOOM CYLINDER OUT
32	7000-341	2	BUSHING,SPRING, 1 3/4" X 1 1/2" X 3 7/8"

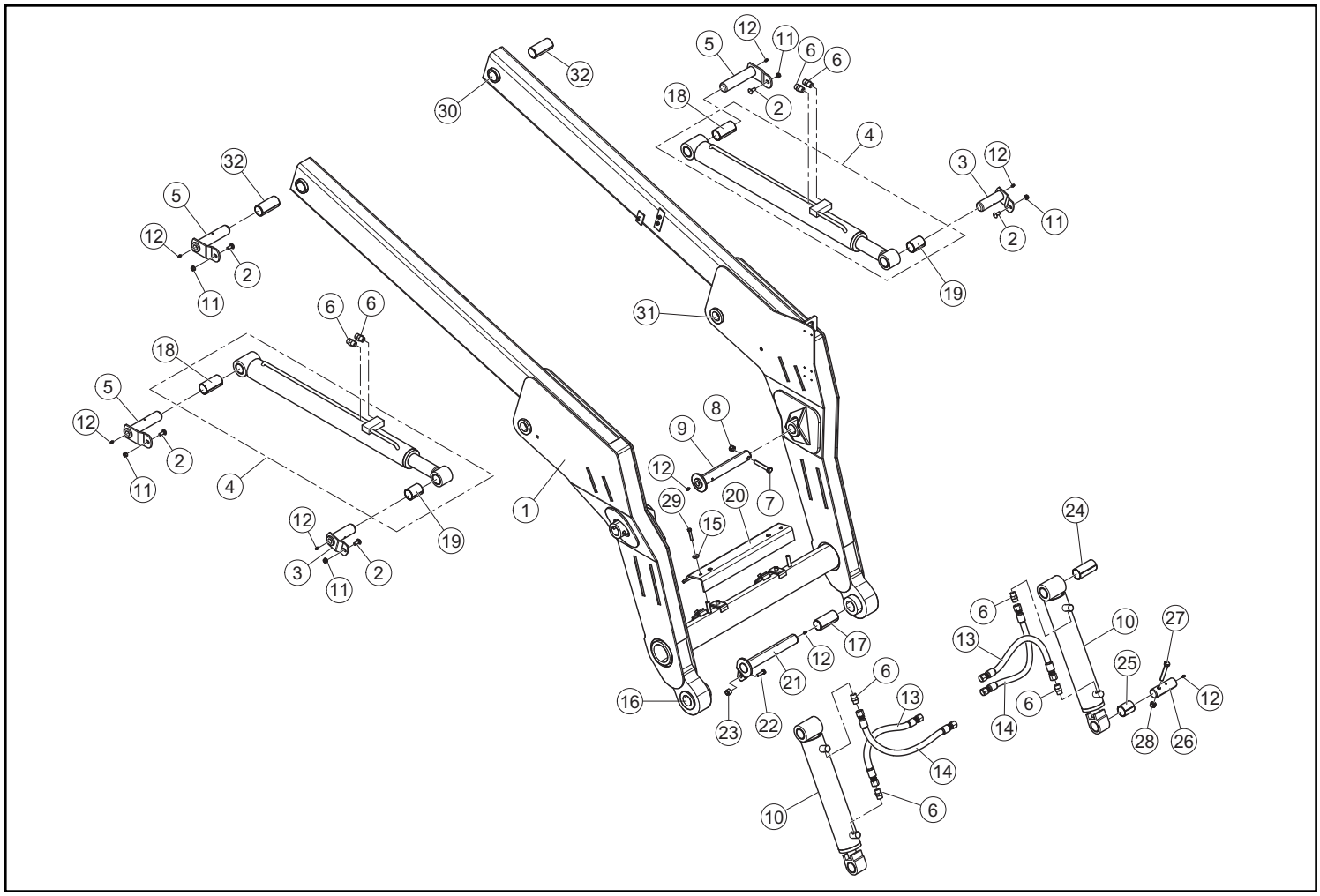

STANDARD LIFT ARM TUBES AND FITTINGS (Serial #: SR070/080 00101-Current)

REF. NO.	PART NUMBER	QTY.	DESCRIPTION
1	7006-096	1	TUBE LOADER TILT RH LOWER
2	7006-095	1	TUBE LOADER TILT RH UPPER
3	7005-732	1	TUBE QA BOTTOM
4	8102-134	6	CAPSCREW,HH,5/16-18UNCx1.25GD8 ZN
5	0310-584	2	PLATE,COVER TCP-T2 TCP-T2
6	0310-831	4	CLAMP, SET, T2062-PP BEHRINGER
7	0201-225	3	CLAMP,SET,T2038-PP
8	0090-312	1	CLAMP, TUBE, -16,-16,-8, HYDAC
9	7005-562	1	TUBE LOADER AUX CASE DRAIN
10	7005-561	1	TUBE LOADER AUX FEMALE
11	7005-560	1	TUBE LOADER AUX MALE
12	0310-345	1	ADAPTER,8MFFOR--8MB
13	0310-312	2	ADAPTER,16MFFOR-16MB
14	7005-385	1	BLOCK QD
15	8102-050	4	CAPSCREW,HH,1/4-20,UNC,2.75ZN,GD8
16	0201-603	2	ADAPTER,O-RING,HEX NIPPLE,16-12
17	0201-602	1	ADAPTER,O-RING,HEX NIPPLE,8-8
18	0310-078	1	COUPLER,QUICK,FF,FEMALE,
19	0314-143	1	COUPLER,QUICK,FF,MALE,
20	0314-142	1	COUPLER,QUICK,FF,FEMALE
21	7006-097	1	TUBE QA TOP
22	7006-098	1	TUBE QA BOTTOM
23	8051-242	4	WASHER,SPRING LOCK,5/16,ZN
24	7005-591	1	HOSE
25	7005-589	2	HOSE
26	7005-590	2	HOSE
27	7005-594	1	HOSE
28	0201-838	1	SPOOL,VALVE,QD BLOCK
29	7005-595	1	HOSE

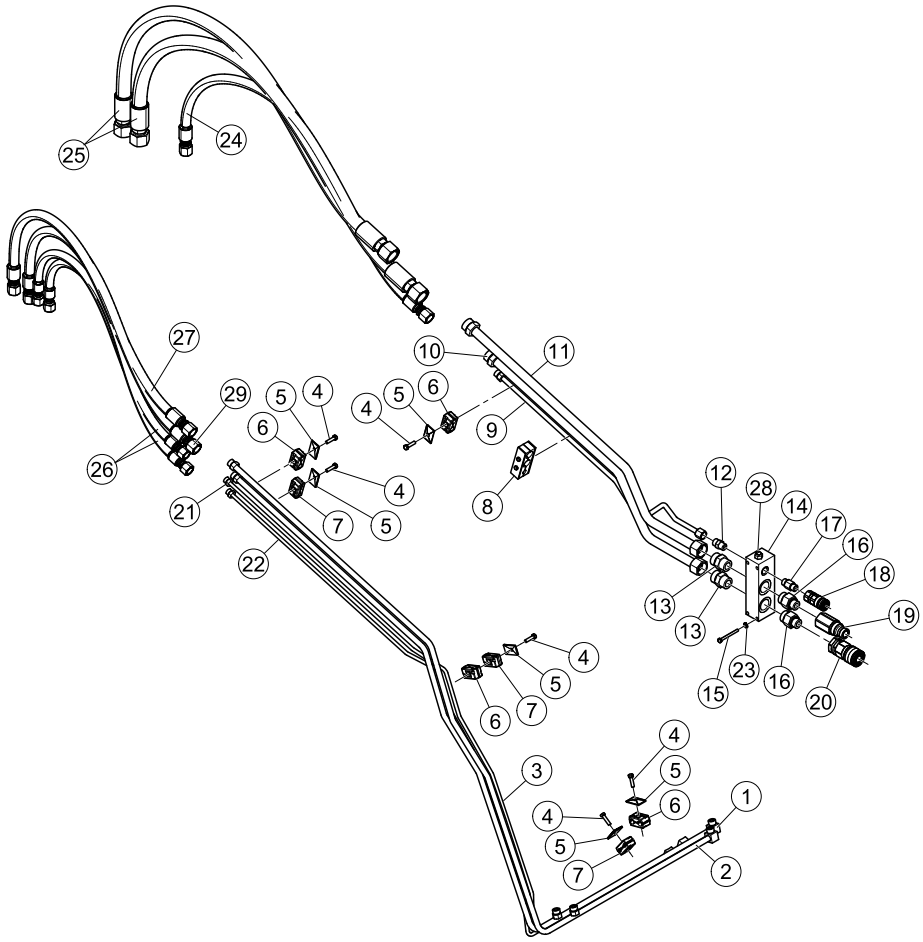

MANUAL QUICK ATTACH ASSEMBLY (Serial #: SR070/080 00101-Current)

REF. NO.	PART NUMBER	QTY.	DESCRIPTION
1	7006-300	1	ASSEMBLY, QUICKTACH
2	0304-799	2	CAPSCREW,HH,1/2-13UNCx3.75,GD8
3	2045-762	1	HANDLE QA LH
4	2045-245	2	BLOCK LATCH
5	8050-347	8	WASHER,WROUGHT,1/2,STD,ZN
6	0400-651	2	SPRING,COMPRESSION PLATED
7	0400-621	2	SPOOL,PIVOT
8	2045-242	1	WLMT PIN RH
9	8102-418	2	CAPSCREW,HH,1/2-13UNCx 6.0,GD8,ZN
10	8040-606	2	NUT,HEX,NYLOCK,1/2-13 UNC,ZN
11	2015-018	2	WASHER,FENDER,1.75x0.53x0.125
12	8051-620	6	WASHER,SPRING LOCK,1.0,ZN
13	0090-002	2	BOLT,SHOULDER,5/8"x.625" GD 8
14	2045-243	1	WLMT PIN LH
15	2045-761	1	HANDLE QA RH

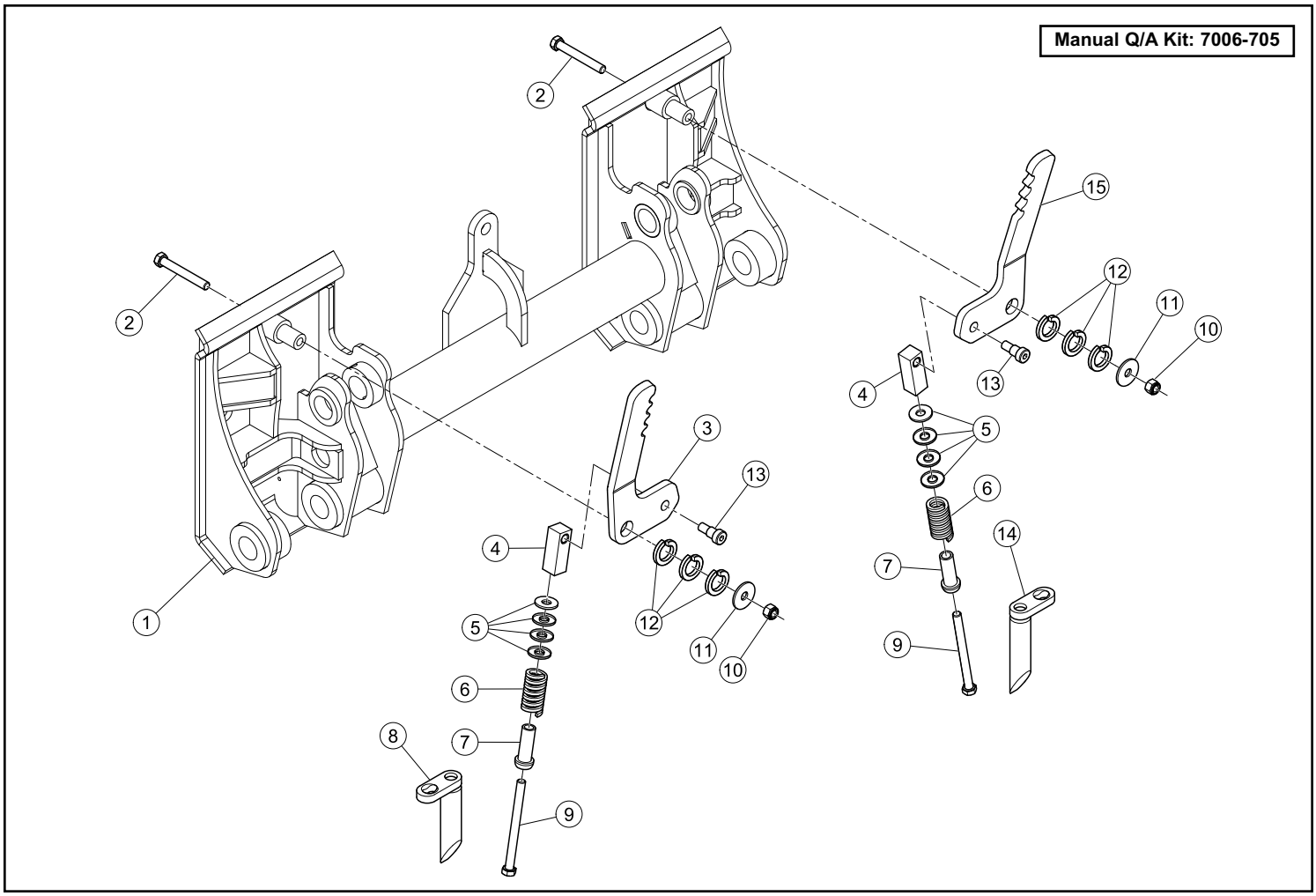

POWER QUICK ATTACH ASSEMBLY (Serial #: SR070/080 00101-Current)

REF. NO.	PART NUMBER	QTY.	DESCRIPTION
1	7006-300	1	ASSEMBLY, QUICKTACH
2	0304-799	2	CAPSCREW,HH,1/2-13UNCx3.75,GD8
3	8102-684	1	CAPSCREW,HH3/4-10 UNC 4" GD8,Z
4	2046-317	1	CYLINDER QA RH
5	2046-316	1	CYLINDER QA LH
6	8040-786	1	NUT,HEX,NYLOCK,3/4-10 UNC,ZN
7	2045-245	2	BLOCK LATCH
8	8050-347	8	WASHER,WROUGHT,1/2,STD,ZN
9	0400-651	2	SPRING,COMPRESSION PLATED
10	0400-621	2	SPOOL,PIVOT
11	8102-418	2	CAPSCREW,HH,1/2-13UNCx 6.0,GD8,ZN
12	2045-242	1	WLMT PIN RH
13	2045-246	2	LATCH QA
14	0090-002	2	BOLT,SHOULDER,5/8"x.625" GD 8
15	2045-243	1	WLMT PIN LH
16	7005-708	1	WLMT GUARD QA
17	8051-620	6	WASHER,SPRING LOCK,1.0,ZN
18	2015-018	2	WASHER,FENDER,1.75x0.53x0.125
19	8040-606	2	NUT,HEX,NYLOCK,1/2-13 UNC,ZN
20	0201-542	2	ADAPTER,TEE,6FS-6FS-6NWO
21	0201-544	1	HOSE,6M4K-6FFORX-6FFORX90S-25.00"
22	0201-545	1	HOSE,6M4K-6FFORX-6FFORX90S-14.00"
24	0310-328	2	ADAPTER,6MFFOR-6MB-90

Power Quick Attach Upgrade Kit Part # 7006-260

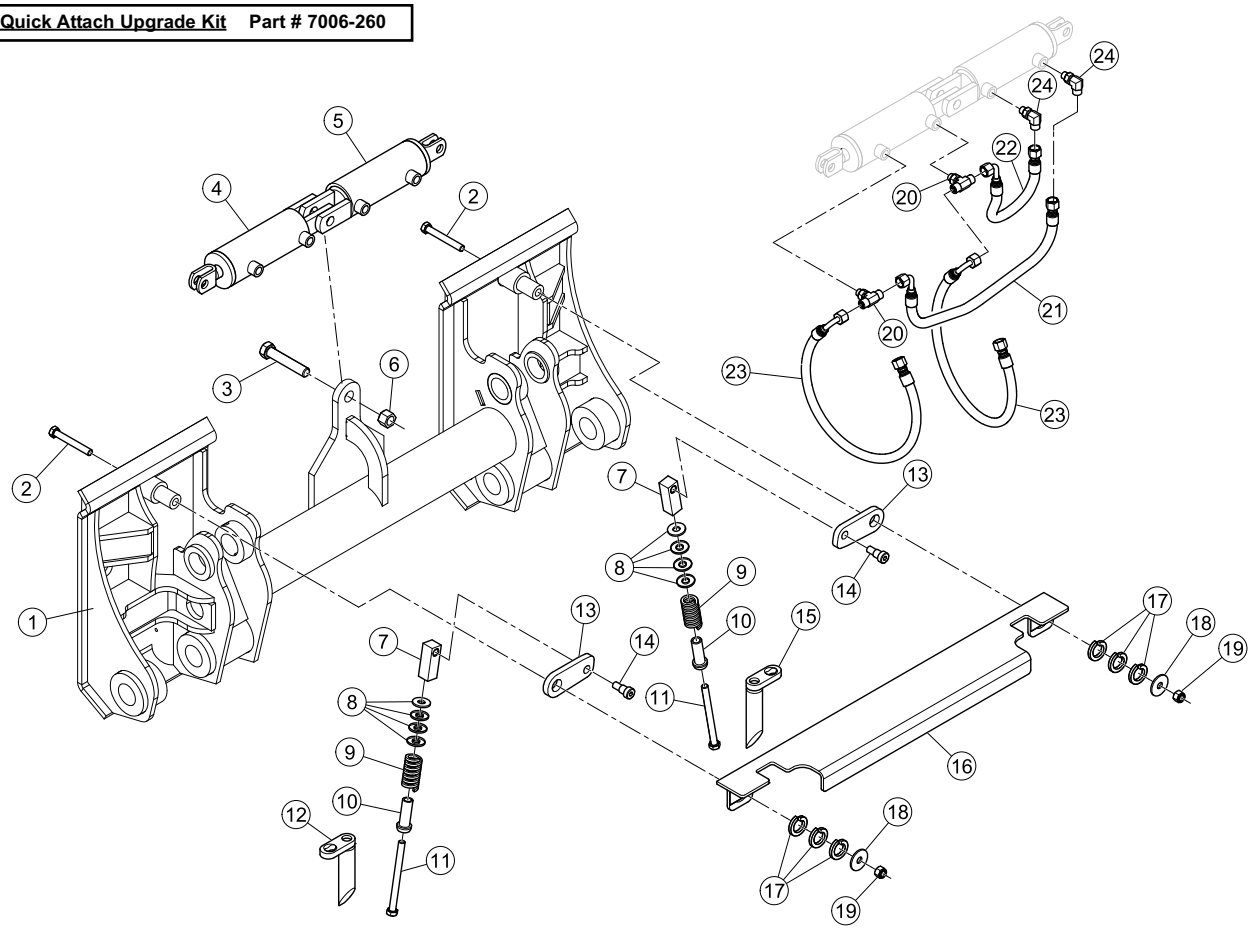

AIR CONDITIONING / HEATING (OPTIONAL) (Serial #: SR070/080 00101-Current)

REF. NO.	PART NUMBER	QTY.	DESCRIPTION
1	0090-346	0.25	DUCT 3" BULK (18 FT LENGTH)
2	0303-175	2	HOSE,CLAMP,2.75,HI-TORQUE
3	7000-340	1	DUCT
4	8060-209	4	RIVET BLIND ALUM .125 X .50
5	8050-091	4	WASHER,WROUGHT,#6,SAE,ZN
6	2075-794	1	PLENUM INLET HVAC
7	0090-253	8	SCREW TH PH 10-32 x 1.0 ZN
8	0090-109	4	SCREW TH PH 1/4-20 x 1.00 ZN
9	8102-039	2	CAPSCREW,HH,1/4-20UNCx.625,GD8
10	8051-212	2	WASHER,SPRING LOCK,1/4,ZN
11	8050-222	6	WASHER,WROUGHT,1/4,STD,ZN
12	2075-812	1	COVER FRESH AIR FILTER
13	7000-339	1	BOX FILTER
14	2075-978	1	ASSEMBLY HVAC
15	2045-895	4	LOUVER
16	2075-793	1	PLENUM OUTLET HVAC
17	0782-038	1	COMPRESSOR,AC,RC 8985
18	2075-981	1	ADAPTOR NO.6 90^
19	2075-980	1	ADAPTOR NO.10 90^
20	8040-366	4	NUT,HEX,NYLOCK,1/4-20 UNC,ZN
21	2075-985	1	ASSEMBLY TUBE NO 6 OUTLET
22	2076-018	1	TUBE ASSY INLET COND
23	2075-983	1	ASSEMBLY TUBE OUTLET CONDENSOR
24	2046-250	1	RECEIVER DRIER
25	8102-128	4	CAPSCREW,HH 5/16-18UNCx7/8 GR8 ZN
26	8051-242	4	WASHER,SPRING LOCK,5/16,ZN
27	8050-262	4	WASHER,WROUGHT,5/16,STD,ZN
28	2075-979	1	ASSEMBLY CONDENSOR
29	2075-982	1	ASSEMBLY DRIER BRACKET
30	8102-037	2	CAPSCREW,HH,1/4-20 UNCx.50,GD8
31	7005-975	1	AC LINE #10 83" 90 DEG W/SERVICE ST
32	7005-974	1	AC LINE #8 58" 90 DEG W/SERVICE ST
33	7000-423	1	BELT AC 12" X 33.75"
34	8104-225	1	CAPSCREW,HH 3/8-24UNFx1.5 GD8
35	2045-221	1	BRKT SLOT A/C
36	2035-344	2	NUT SERRATED FLANGE,3/8-16,UNC,WHIZLOCK,GD8
37	8051-242	1	WASHER,SPRING LOCK,5/16,ZN
38	0090-040	1	CAPSCREW HH M8 x 1.25 x 75MM GD8.8
39	0310-523	1	CAPSCREW,HH M12 x 1.75 x 25mm,lg 91280A714
40	8051-332	1	WASHER,SPRING LOCK,1/2,ZN
41	2045-220	1	WLMT MNT MOTOR A/C
42	8102-225	1	CAPSCREW,HH,3/8-16 UNCx1.5,GD8,ZN
43	2045-889	1	SWITCH PRESSURE LOW

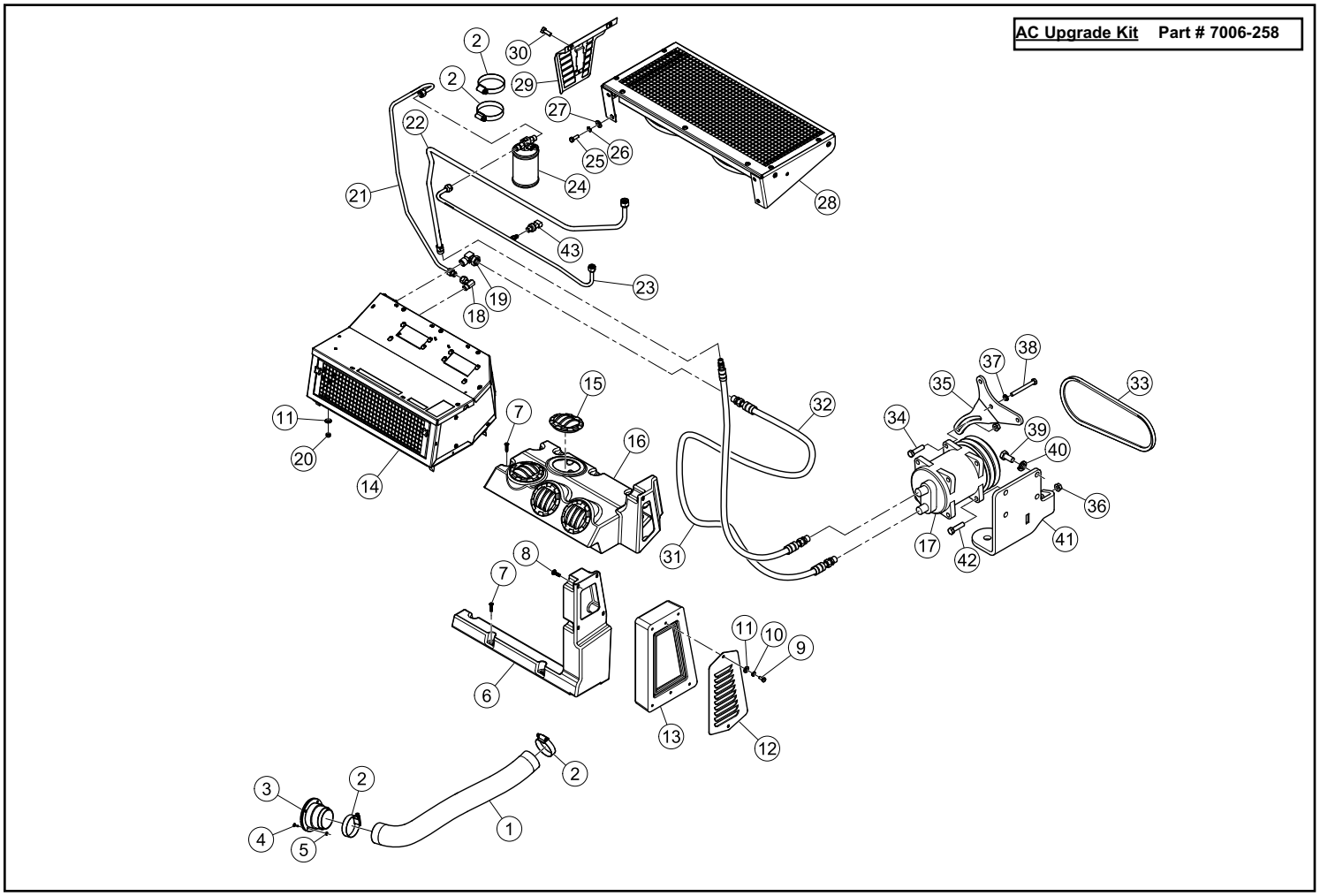

CAB HEATER (OPTIONAL) (Serial #: SR070/080 00101-Current)

REF. NO.	PART NUMBER	QTY.	DESCRIPTION
1	0090-346	0.25	DUCT 3" BULK (18 FT LENGTH)
2	0303-175	2	HOSE,CLAMP,2.75,HI-TORQUE
3	7000-340	1	DUCT
4	8060-209	4	RIVET BLIND ALUM .125 X .50
5	8050-091	4	WASHER,WROUGHT,#6,SAE,ZN
6	2075-794	1	PLENUM INLET HVAC
7	0090-253	8	SCREW TH PH 10-32 x 1.0 ZN
8	0090-109	4	SCREW TH PH 1/4-20 x 1.00 ZN
9	8102-039	2	CAPSCREW,HH,1/4-20UNCx.625,GD8
10	8051-212	2	WASHER,SPRING LOCK,1/4,ZN
11	8050-222	6	WASHER,WROUGHT,1/4,STD,ZN
12	2075-812	1	COVER FRESH AIR FILTER
13	7000-339	1	BOX FILTER
14	2075-978	1	ASSEMBLY HVAC
15	2045-895	4	LOUVER
16	2075-793	1	PLENUM OUTLET HVAC
17	8040-366	4	NUT,HEX,NYLOCK,1/4-20 UNC,ZN
18	0301-110	6	CLAMP,HOSE,#8
19	7006-116	1	HEAT, HOSE
20	7006-114	1	HEAT, HOSE
21	2045-598	1	ADAPTER M16 x 1.5 BARB 90*
22	7006-115	1	HEAT, HOSE
23	2075-987	1	VALVE WATER ELECTRONIC
24	8102-130	2	CAPSCREW,HH 5/16-18x3/4,GR8
25	8040-426	2	NUT,HEX,NYLOCK,5/16-18 UNC,ZN
26	2075-811	1	FILTER FRESH AIR
27	0304-670	1	ADAPTER,5/8BARB-3/8MPT-90^

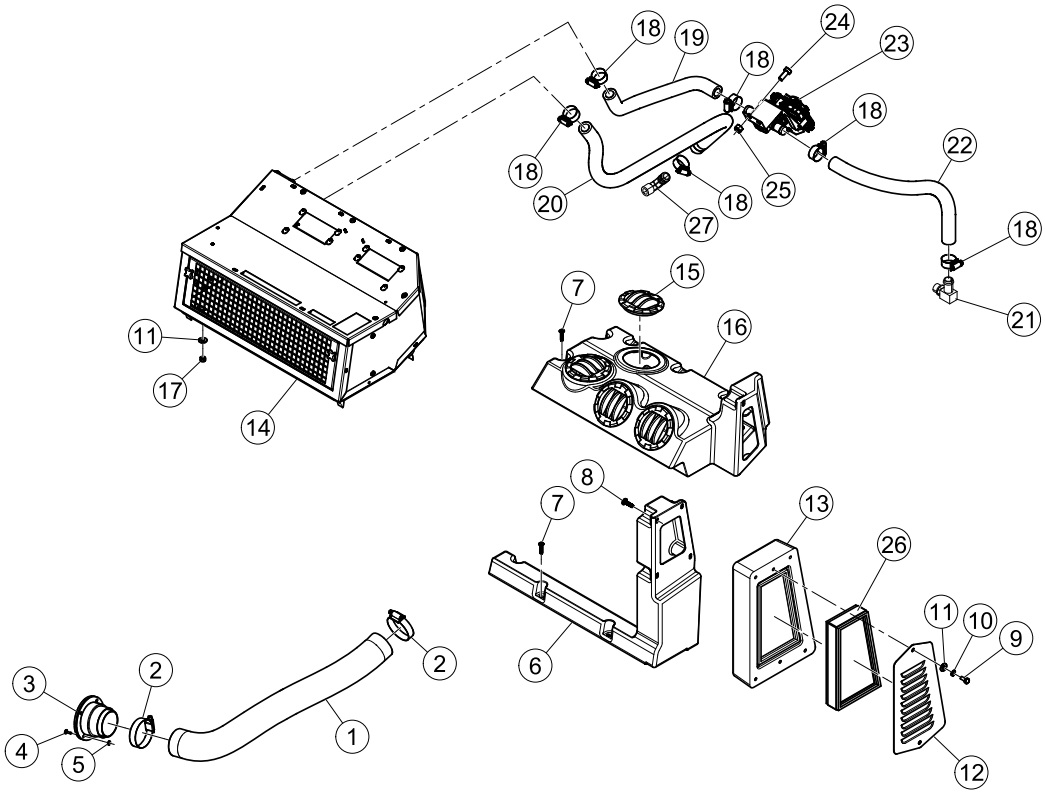

AIR CONDITIONING / HEATING UNIT (Serial #: SR070/080 00101-Current)

REF. NO.	PART NUMBER	QTY.	DESCRIPTION
1	2076-177	1	PLATE MOUNT LT CONDENSOR
2	2076-176	1	COVER CONDENSOR OUTLET
3	2076-178	1	PLATE MOUNT RT CONDENSOR
4	2076-175	1	CONDENSOR (10.7 X 24.4)
5	2076-170	2	FAN A/C CONDENSOR
6	2076-186	1	THERMOSTAT ELECTRONIC RANCO
7	2045-903	1	BLOWER
8	2076-182	1	ASSY HEATER CORE
9	2076-181	1	ASSY EVAPORATOR
10	2076-172	1	FILTER RECIRC
11	2076-180	1	COVER RECIRC FILTER
12	2076-183	2	KNOB THREADED M5 X 20
13	2076-187	1	VALVE EXPANSION R134a (2 ton)
14	2076-184	1	ASSY TUBE NO 10
15	2076-185	1	ASSY TUBE NO 6
16	0090-392	20	HVAC SCREW
17	7005-827	1	COVER CONDENSOR
18	0090-369	9	CAPSCREW HH 1/4-20 UNCx.625 GD5
19	0090-371	9	WASHER SPRING LOCK 1/4 BLK ZN
20	0090-372	7	WASHER WROUGHT 1/4 STD BLK ZN

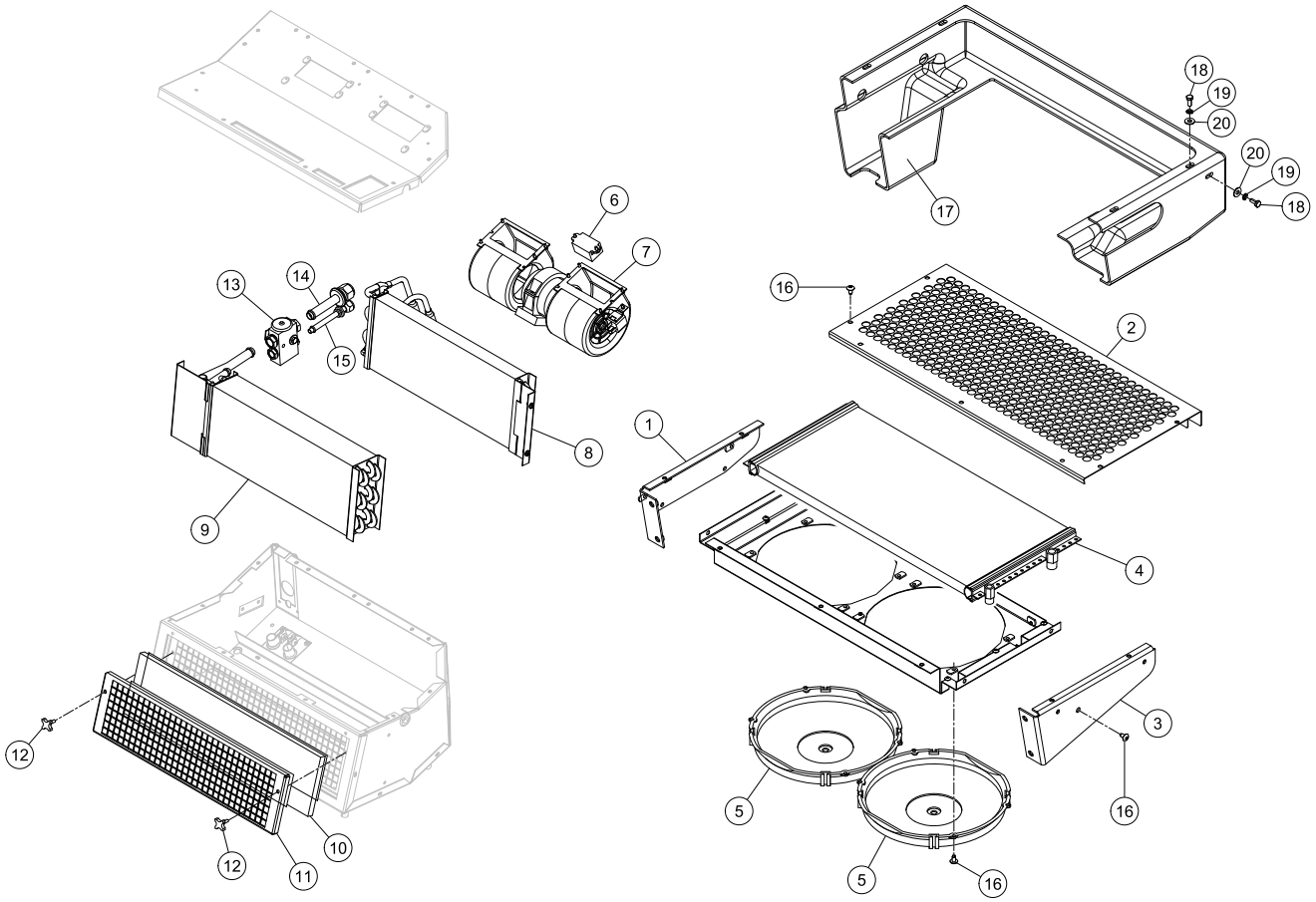

SAFETY DECALS US (ANSI) (Serial #: SR070/080 00101-Current)

REF. NO.	PART NUMBER	QTY.	DESCRIPTION
1	7005-825	1	DECAL WARNING CAB MULTI -RT
2	2046-299	1	DECAL ANSI O&M FALL FIRE HAZARD
3	2030-597	1	DECAL ANSI FALL HAZARD (3 POINT ENTRY)
4	0310-197	6	DECAL,TIE DOWN 156-5762
5	2030-592	2	DECAL ANSI LOADER CRUSH HAZARD
6	2030-603	1	DECAL ANSI BATTERY EXPLOSION HAZARD
7	7005-813	2	DECAL ANSI RUN OVER SSL
8	2030-594	2	DECAL ANSI LIFT ARM BRACE
9	2030-600	1	DECAL ANSI BELT FAN HAZARD
10	2030-595	1	DECAL ANSI RADIATOR HAZARD
11	2030-602	2	DECAL ANSI SKIN INJECTION HAZARD
12	4046-078	1	DECAL DIESEL FUEL ONLY
13	4046-079	1	DECAL HYDRAULIC OIL ONLY
14	2030-601	1	DECAL ANSI HOT SURFACES HAZARD
15	7001-231	1	DECAL, CONTROL DRIVE (2-SPD MACHINES ONLY)
16	2046-149	1	DECAL, CONTROL DRIVE (1-SPD MACHINES ONLY)
17	7001-232	1	DECAL, CONTROL LIFT ARM SSL

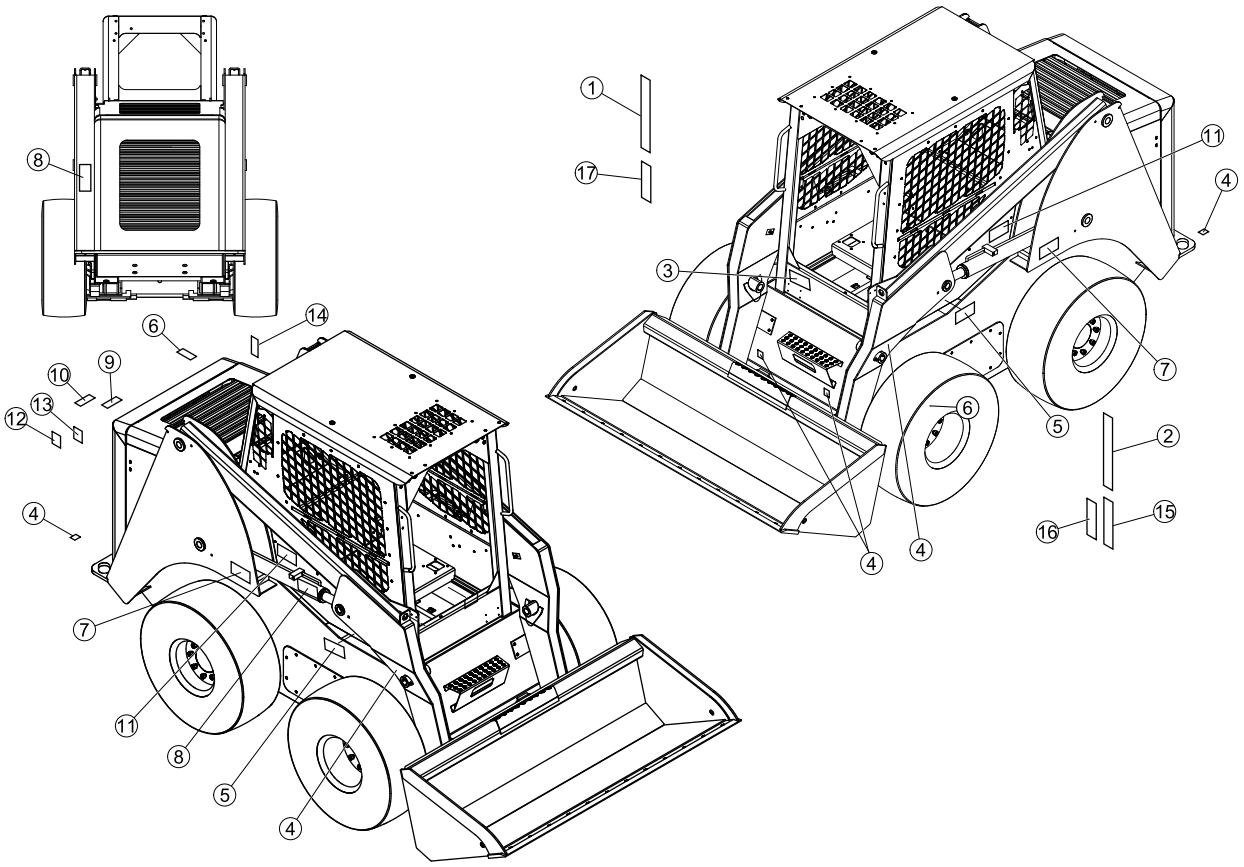

SAFETY DECALS ROW (ISO) (Serial #: SR070/080 00101-Current)

REF. NO.	PART NUMBER	QTY.	DESCRIPTION
1	7006-202	1	DECAL WARNING CAB MULTI -RT
2	2046-146	1	DECAL ISO O&M FALL FIRE HAZARD
3	2030-425	1	DECAL ISO FALL HAZARD (3 POINT ENTRY)
4	0310-197	4	DECAL,TIE DOWN 156-5762
5	2030-415	2	DECAL ISO LOADER CRUSH HAZARD
6	2030-565	1	DECAL ISO BATTERY EXPLOSION HAZARD
7	7006-203	2	DECAL ISO RUN OVER SSL
8	2030-417	2	DECAL ISO LIFT ARM BRACE
9	2030-551	1	DECAL ISO BELT FAN HAZARD
10	2030-418	1	DECAL ISO RADIATOR HAZARD
11	2030-553	2	DECAL ISO SKIN INJECTION HAZARD
12	4046-078	1	DECAL DIESEL FUEL ONLY
13	4046-079	1	DECAL HYDRAULIC OIL ONLY
14	2030-552	1	DECAL ISO HOT SURFACES HAZARD
15	7001-231	1	DECAL, CONTROL DRIVE (2-SPD MACHINES ONLY)
16	2046-149	1	DECAL, CONTROL DRIVE (1-SPD MACHINES ONLY)
17	7001-232	1	DECAL, CONTROL LIFT ARM SSL

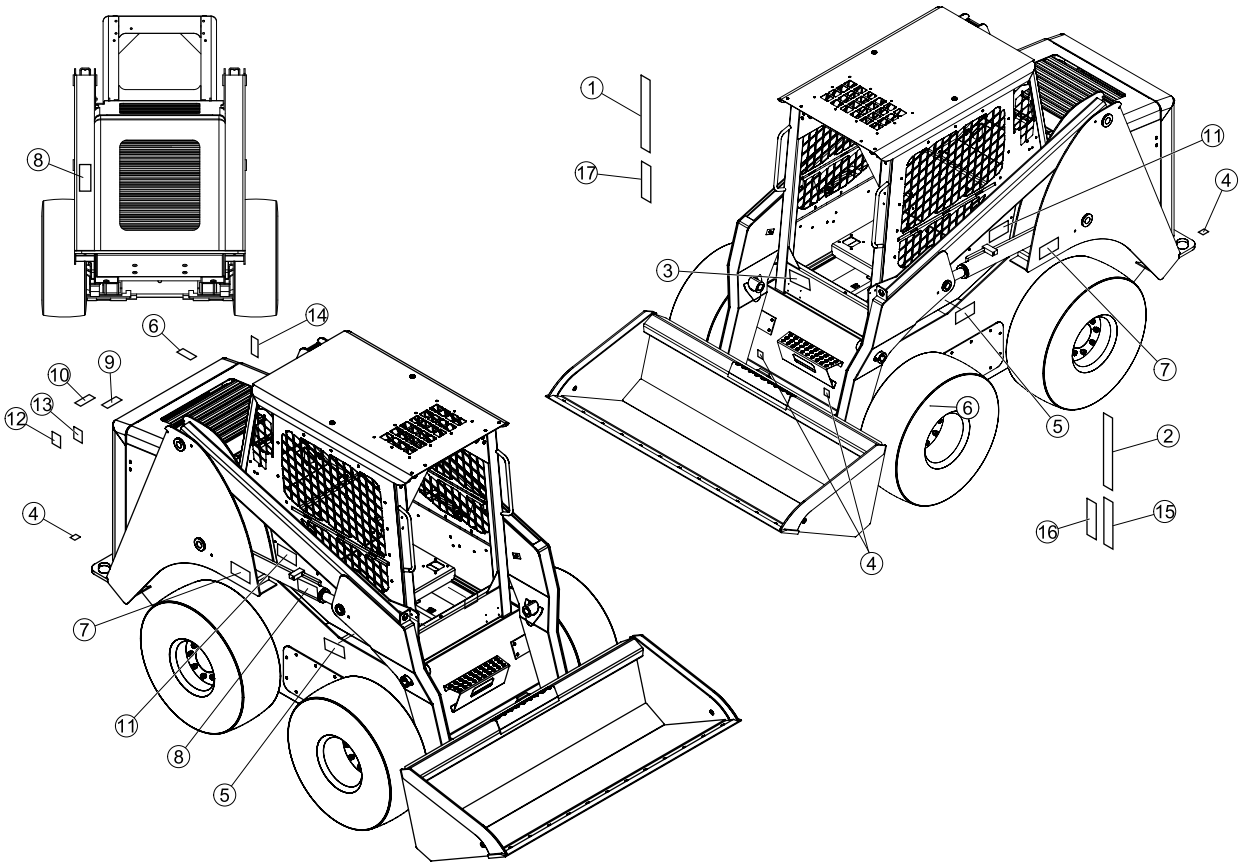

MACHINE GRAPHICS-70 (Serial #: SR070 00101-Current)

REF. NO.	PART NUMBER	QTY.	DESCRIPTION	REF. NO.	PART NUMBER	QTY.	DESCRIPTION
1	7000-583	1	DECAL CROWN TEREX REAR TSR-TSV				
2	7000-585	2	DECAL ARM TEREX TSR-TSV 70/80				
3	7000-573	1	DECAL LOADER LH TSR 70				
4	7000-574	1	DECAL LOADER RH TSR 70				
5	7000-582	1	DECAL HOOD RH TSR 70/80				
6	7000-581	1	DECAL HOOD LH TSR 70/80				

Decal Kit: 7006-101

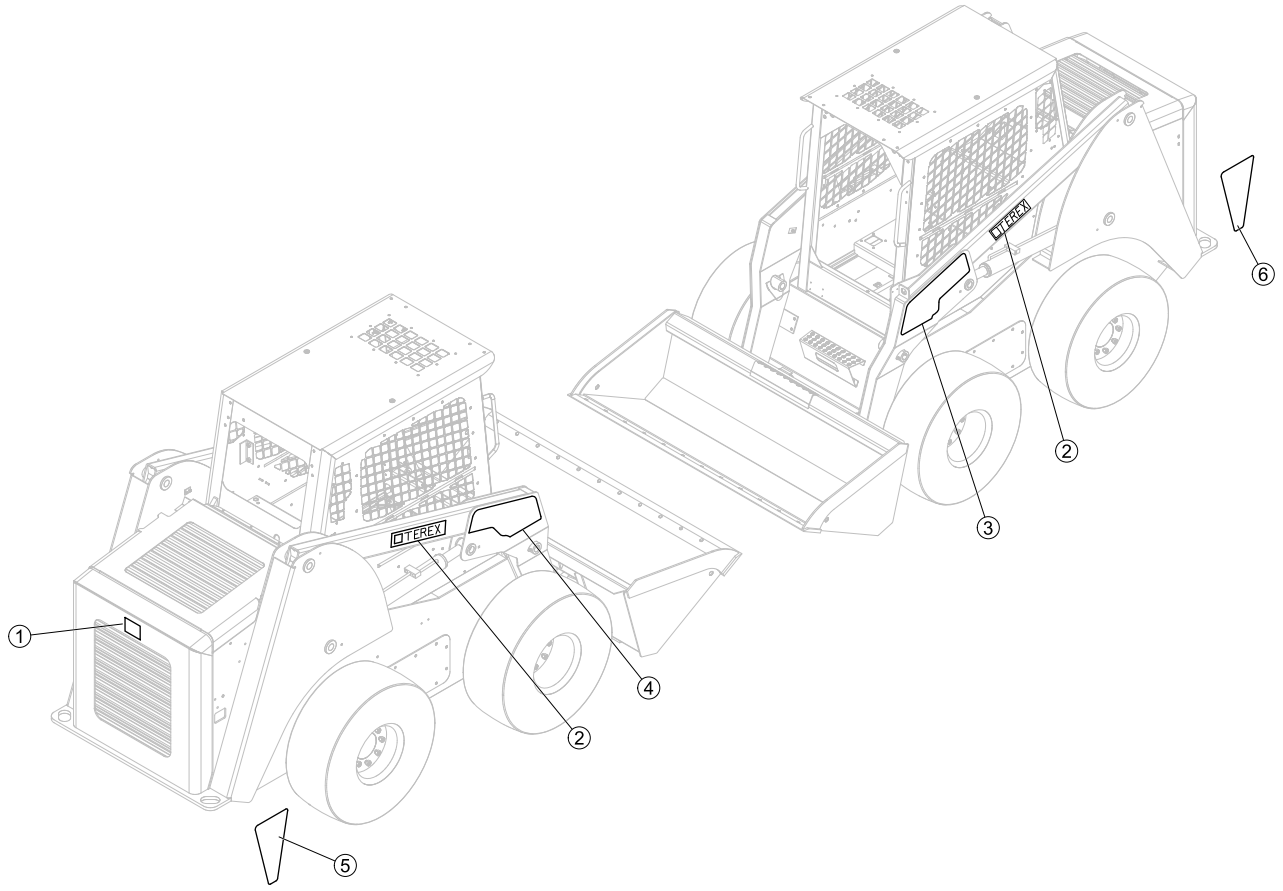

MACHINE GRAPHICS-80 (Serial #: SR080 00101-Current)

REF. NO.	PART NUMBER	QTY.	DESCRIPTION	REF. NO.	PART NUMBER	QTY.	DESCRIPTION
1	7000-583	1	DECAL CROWN TEREX REAR TSR-TSV				
2	7000-585	2	DECAL ARM TEREX TSR-TSV 70/80				
3	7000-575	1	DECAL LOADER LH TSR 80				
4	7000-576	1	DECAL LOADER RH TSR 80				
5	7000-582	1	DECAL HOOD RH TSR 70/80				
6	7000-581	1	DECAL HOOD LH TSR 70/80				

Decal Kit: 7006-102

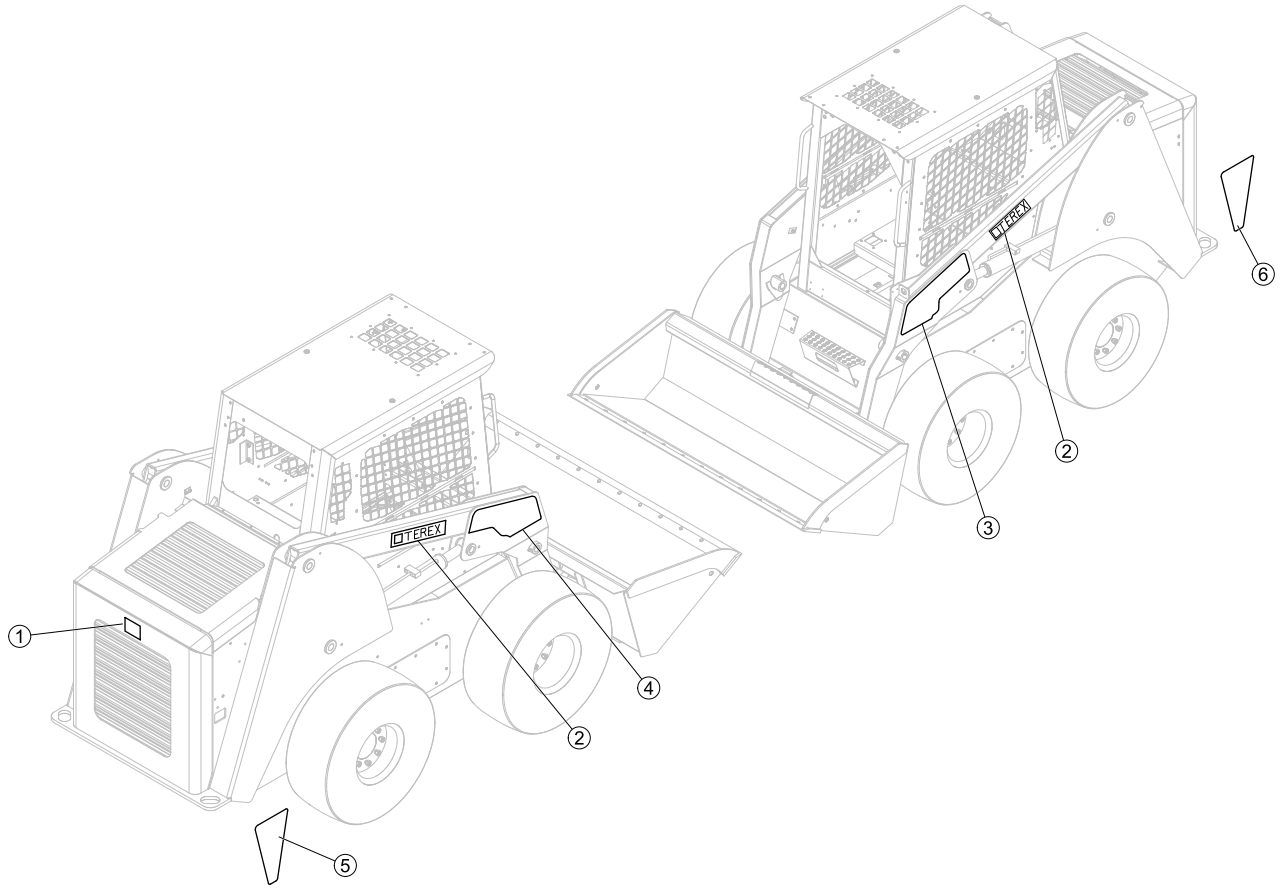

Terex Construction Americas
8800 Rostin Road
Southaven, MS 38671
(888)-201-6008
(662)-393-1800
www.terex.com