TEREX®

Master Part Manual

Compact Track Loader

PT-50

Part Number: 0200-682
Printed (7-12)
(Revision 10/31/2012)

Table of Contents

1. Cab (R.O.P.S.) Assembly
Serial # DTC 03056-03132 . . . . . **1-A**
Serial # DTC 03133-Current* **1-B**

2. Light Bar Assembly
Serial # DTC 03056-Current* **2-A**

3. Enclosed Cab (R.O.P.S.) Assembly
(Optional) Serial # DTC 03056-03132 . . . . . **3-A**
(Optional) Serial # DTC 03133-Current* . . . **3-B**

4. Chassis Assembly
Serial # DTC 03056-03132 . . . . . **4-A**
Serial # DTC 03133-Current* **4-B**

5. Hood Assembly
Serial # DTC 03056-Current* **5-A**

6. Radiator/Oil Cooler Assembly
Serial # DTC 03056-Current* **6-A**

7. Hydraulic Reservoir Assembly
Serial # DTC 03056-Current* **7-A**

8. Hydraulic Control Assembly
Serial # DTC 03056-03610 . . . . . **8-A**
Serial # DTC 03611-Current* **8-B**

9. Drive/Auxiliary Pump Assembly
Serial # DTC 03056-03610 . . . . . **9-A**
Serial # DTC 03611-Current* **9-B**

10. Engine Assembly
Serial # DTC 03056-Current* **10-A**

11. Fuse Panel Assembly
Serial # DTC 03056-Current* **11-A**

12. Torsion Axle Assembly
Serial # DTC 03056-03353 . . . . . **12-A**
Serial # DTC 03354-Current* **12-B**

13. Undercarriage Assembly (RT)
Serial # DTC 03056-03129 . . . . . **13-A**
Serial # DTC 03130-03356 . . . . . **13-B**
Serial # DTC 03357-Current* **13-C**

14. Undercarriage Assembly (LT)
Serial # DTC 03056-03129 . . . . . **14-A**
Serial # DTC 03130-03356 . . . . . **14-B**
Serial # DTC 03357-Current* **13-C**

15. Lift Arm Assembly
Serial # DTC 03056-03132 . . . . . **15-A**
Serial # DTC 03133-Current* **15-B**

16. Lift Arm Tubes and Fittings
Serial # DTC 03056-Current* **16-A**

17. Quick Attach Assembly
Serial # DTC 03056-Current* **17-A**

18. Hydraulic Quick Attach Assembly
(Optional) Serial # DTC 03056-Current* . . . **18-A**

19. Cab Heater Assembly
(Optional) Serial # DTC 03056-Current* . . . **19-A**

20. Heater/Air Conditioning Assembly
(Optional) Serial # DTC 03056-Current* . . . **20-A**

21. Track Installation Tool
(Tool) Serial # DTC 03056-Current* **21-A**

22. Safety Decals U.S. (ANSI)
Serial # DTC 03056-Current* **22-A**

23. Safety Decals ROW (ISO)
Serial # DTC 03056-Current* **23-A**

24. Machines Graphics
Serial # DTC 03056-Current* **24-A**

* Current refers to the machines being produced at the time this manual was printed. See manual cover for print date.

GENERAL SERVICE ITEMS & LUBRICANTS

ITEM	MANUFACTURER/DESCRIPTION	PART NUMBER
-Engine Oil Filter	Perkins	0200-377
-Primary Air Filter	Donaldson (P822768)	0200-339
-Secondary Air Filter	Donaldson (P822769)	0200-340
-Engine Fuel Filter	Perkins (26560017)	0200-213
-Fuel screen	Perkins (130366110)	0200-561
-Water Separator O-ring		0201-985
-Fan Belt (qty: 2 without A/C, 1 with A/C)	Gates	2045-793
-A/C Belt (qty: 1 with A/C)	Gates (A48K)	0201-645
-Antifreeze/Coolant (1 gal.)	Ethylene Glycol (long life)	0300-766
-Antifreeze/Coolant (Case/6 gal.)	Ethylene Glycol (long life)	0402-841
-Engine Oil (1 qt.)	Multi-Grade 10W-30	0300-767
-Engine Oil (Case/12 qt.)	Multi-Grade 10W-30	0402-838
-Engine Oil (1 gal.)	Multi-Grade 10W-30	0402-839
-Engine Oil (Case/6 gal.)	Multi-Grade 10W-30	0402-840
-Grease (1 Tube)	Multi-Purpose Lithium	0300-769
-Grease (Box/10 Tubes)	Multi-Purpose Lithium	0402-844
-Grease (Case/40 Tubes)	Multi-Purpose Lithium	0402-834

HYDRAULIC SERVICE ITEMS & LUBRICANTS

ITEM	DESCRIPTION	PART NUMBER
-Hydraulic Oil Filter	MP Filter (MF1003A10HB)	0200-204
-Kit,Seal,Loader Valve & Relief	Fits Loader Valve (P/N:0304-020)	2010-094

O-RING	PART NUMBER
# 4, ORB Type	0314-366
# 6, ORB Type	0310-619
# 8, ORB Type	0307-353
# 10, ORB Type	0310-620
# 12, ORB Type	0310-621
# 16, ORB Type	0307-354
# 20, ORB Type	0310-832

CYLINDER SERVICE ITEMS

Serial #: 03056-03133

- RH-Bucket/Tilt P/N: 2030-287
- LH-Bucket/Tilt P/N: 2030-286
- Lift-Arm P/N: 2030-285

ITEM	DESCRIPTION
1	WELDMENT, ROD
2	END GLAND
3	SEAL KIT
4	WELDMENT, TUBE
5	PISTON
6	LOCKNUT
7	BLOCK, STROKE
8	BUSHING, TUBE PIVOT
9	BUSHING, ROD PIVOT
10	ZERO–LEAK PLUG

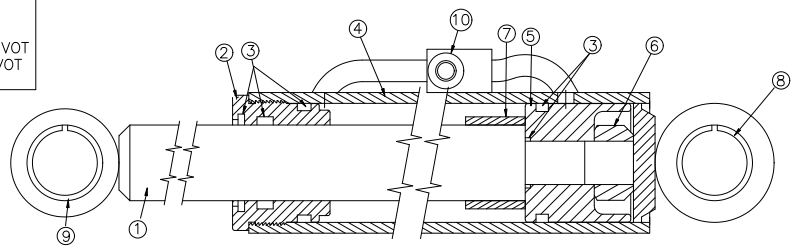

ITEM	MANUFACTURER/DESCRIPTION	PART NUMBER
-Kit,Seal,Bucket/Tilt Cylinder	Fits Cylinder (P/N:2030-286/287)	0081-030
-Rod,Bucket/Tilt Cylinder	Fits Cylinder (P/N:2030-286/287)	0003-044
-End Gland,Bucket/Tilt Cylinder	Fits Cylinder (P/N:2030-286/287)	0003-045
-Nut,Bucket/Tilt Cylinder	Fits Cylinder (P/N:2030-286/287)	0003-037
-Kit,Seal,Lift Arm Cylinder	Fits Cylinder (P/N:2030-285)	0081-031
-End Gland,Lift Arm Cylinder	Fits Cylinder (P/N:2030-285)	0003-045
-Rod,Lift Arm Cylinder	Fits Cylinder (P/N:2030-285)	0003-050
-Nut,Lift Arm Cylinder	Fits Cylinder (P/N:2030-285)	0003-037

Serial #: 03133-Current

- RH-Bucket/Tilt P/N: 2030-579
- LH-Bucket/Tilt P/N: 2030-578
- Lift-Arm P/N: 2030-577
- LH-Q/A P/N: 2046-316
- RH-Q/AP/N: 2046-317

ITEM	MANUFACTURER/DESCRIPTION	PART NUMBER
-Kit,Seal,Bucket/Tilt Cylinder	Fits Cylinder (P/N:2030-578/579)	2030-650
-Rod,Bucket/Tilt Cylinder	Fits Cylinder (P/N:2030-578/579)	2030-660
-End Gland,Bucket/Tilt Cylinder	Fits Cylinder (P/N:2030-578/579)	2030-658
-Nut,Bucket/Tilt Cylinder	Fits Cylinder (P/N:2030-578/579)	2030-656
-Kit,Seal,Lift Arm Cylinder	Fits Cylinder (P/N:2030-577)	2030-651
-End Gland,Lift Arm Cylinder	Fits Cylinder (P/N:2030-577)	2030-658
-Rod,Lift Arm Cylinder	Fits Cylinder (P/N:2030-577)	2030-659
-Nut,Lift Arm Cylinder	Fits Cylinder (P/N:2030-577)	2030-656
-Kit,Seal,Q/A Cylinder	Fits Cylinder (P/N:0201-970/971)	0003-063
	Fits Cylinder (P/N:2046-316/317)	2076-292

* Current refers to the machines being produced at the time this manual was printed. See manual cover for print date.

CAB (R.O.P.S.) ASSEMBLY (Serial #: DTC 03056-03132)

REF. NO.	PART NUMBER	QTY.	DESCRIPTION
1	0304-318	1	BOX,OWNERS MANUAL
2	2030-356	1	ROD, THREADED, 1/4-28 X 6.5"
3	8040-396	1	NUT,HEX,NYLOCK,1/4-28 UNF,ZN
4	8041-500	1	NUT,HEX,NYLOCK,3/8-16 UNC,THIN
5	0200-600	2	MNTS JOYSTICK
6	0304-496	1	PAD,SKID
7	0200-588	1	CONSOLE RH
8	0200-587	1	CONSOLE LH
9	0302-546	1	KNOB,PLASTIC,1-7/8 DIA,1/2-13
10	0314-269	6	NUT,FLANGE,TOPLK,3/8-16UNC,GDG,ZN
11	8050-157	1	WASHER,WROUGHT, #10 3/16,STD,ZN
12	8040-486	1	NUT,HEX,NYLOCK,3/8-16 UNC,ZN
13	2030-357	1	WASHER COMPOSITE
14	0304-485	5	SCREW,MACH,10-24x3/4,STAINLESS
15	0090-011	4	SCREW OH PH #10 x 1.25 SS
16	0090-010	4	NUT SPEED #10
17	8102-222	6	CAPSCREW,HH,3/8-16 UNCx1.0,GD8,ZN
18	0200-291	1	INSULATION,MIDDLE
19	0200-328	1	PLATE,FIREWALL
20	0200-264	1	HOUSING,POWER SOURCE
21	0304-579	6	PLUG,HOLE,PLASTIC,5/16
22	0201-912	1	LEVER,THROTTLE
23	0314-215	1	CONNECTOR,JOINT,BALL
24	0301-121	2	NUT,JAM,1/4-28 UNF
25	0090-012	8	WASHER FINISHING #10 SS
26	0307-606	4	PLUG,FINSISHING,STEEL,1-3/8"
27	0200-292	1	INSULATION,BOTTOM
28	0304-466	1	STOP,LAPBAR
29	8050-240	10	WASHER,STAINLESS,1/4",MS
30	0304-465	4	CAPSCREW,HH,M6-1.0x16mm
31	0304-467	1	BRKT,LAPBAR
32	8040-606	4	NUT,HEX,NYLOCK,1/2-13 UNC,ZN
33	0304-468	2	RING,SNAP,LAPBAR
34	8102-404	4	CAPSCREW,HH 1/2-13UNCx1.25 GD8
35	0304-469	1	LAPBAR
36	0304-470	1	MNT,LAPBAR
37	0304-477	2	SPACER,LAPBAR
38	0304-471	2	SPRING,GAS,ASSIST
39	0304-472	1	MNT,LAPBAR,SWITCH
40	0304-476	1	GROMMET,RUBBER
41	0304-473	1	SENSOR,SWITCH,LAPBAR
42	0310-307	1	SCREW,MACHINE,4-40x.50 92314A110
43	0412-036	1	BRACKET LAP BAR ACTIVATION SWITCH
44	8011-227	1	BOLT,CARRIAGE,3/8-16 UNC x 2.0
45	0304-019	1	ASSY,LAP BAR
46	0304-400	6	CLIP,FASTENER
47	2030-254	1	WLMT ROPS 30/50/60
48	0301-637	1	GROMMET (1840)
49	0304-247	1	LIGHT,REAR
50	2030-360	1	BELLEVILLE WASHER, 3/8" ID X 1-1/8 OD
51	0200-320	2	WLMT,STOP LAP BAR
52	0200-321	2	PAD,RUBBER,W/ADHESIVE
53	8102-044	5	CAPSCREW,HH,1/4-20UNCx1.25,GD8
54	8051-212	5	WASHER,SPRING LOCK,1/4,ZN
55	0200-290	1	INSULATION,TOP
56	0201-902	1	CLEVIS,1/4-28,W/PIN
57	0200-288	1	BULB,HALOGEN
58	0201-867	1	BUSHING
59	0310-308	1	NUT,HEX,NYLOCK 4-40,91831A005
60	0201-903	1	SPRING,1.75X0.48
61	0301-033	1	WASHER,FENDER,1/4 x 1 1/4,STL,
62	2030-358	1	BRACKET FOOT THROTTLE
63	8050-282	3	WASHER,WROUGHT,3/8,STD,ZN
64	8102-227	2	CAPSCREW,HH,3/8-16UNCx2.0 GD8
65	0201-865	1	BUSHING,FOOT PEDAL
66	0201-925	1	WLMT,PEDAL

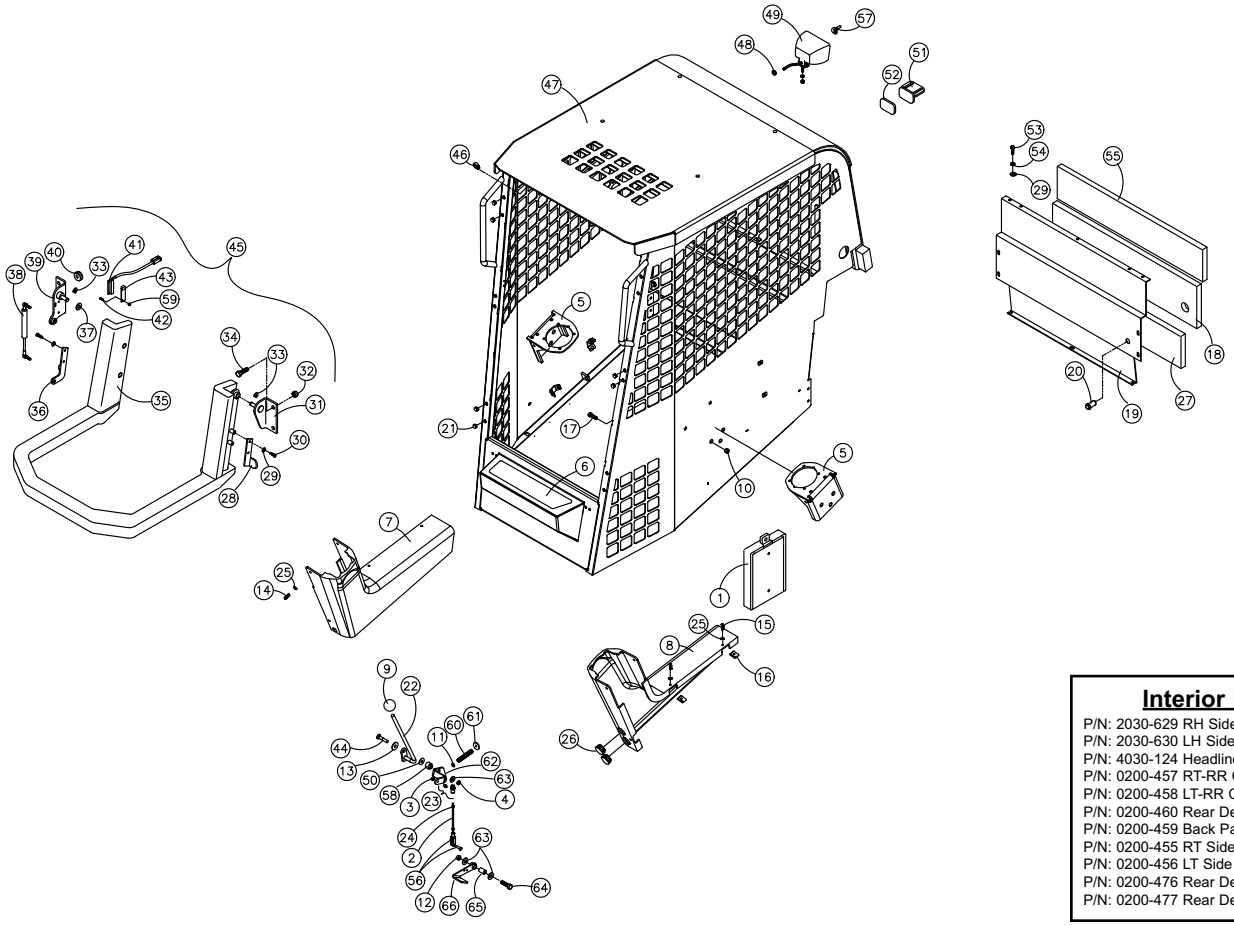

Interior Panels

P/N: 2030-629 RH Side Panel
P/N: 2030-630 LH Side Panel
P/N: 4030-124 Headliner
P/N: 0200-457 RT-RR Corner Panel
P/N: 0200-458 LT-RR Corner Panel
P/N: 0200-460 Rear Deck Panel (Top)
P/N: 0200-459 Back Panel (Firewall)
P/N: 0200-455 RT Side Console Mat
P/N: 0200-456 LT Side Console Mat
P/N: 0200-476 Rear Deck plug, RT
P/N: 0200-477 Rear Deck Plug, LT

CAB (R.O.P.S.) ASSEMBLY (Serial #: DTC 03133-Current)

REF. NO.	PART NUMBER	QTY.	DESCRIPTION
1	0304-318	1	BOX,OWNERS MANUAL
2	2030-356	1	ROD, THREADED, 1/4-28 X 6.5"
3	8040-396	1	NUT,HEX,NYLOCK,1/4-28 UNF,ZN
4	8041-500	1	NUT,HEX,NYLOCK,3/8-16 UNC,THIN
5	0200-600	2	MNTS JOYSTICK
6	0304-496	1	PAD,SKID
7	0200-588	1	CONSOLE RH
8	0200-587	1	CONSOLE LH
9	0302-546	1	KNOB,PLASTIC,1-7/8 DIA,1/2-13
10	0314-269	6	NUT,FLANGE,TOPLK,3/8-16UNC,GDG,ZN
11	8050-157	1	WASHER,WROUGHT, #10 3/16,STD,ZN
12	8040-486	1	NUT,HEX,NYLOCK,3/8-16 UNC,ZN
13	2030-357	1	WASHER COMPOSITE
14	0304-485	5	SCREW,MACH,10-24x3/4,STAINLESS
15	0090-011	4	SCREW OH PH #10 x 1.25 SS
16	0090-010	4	NUT SPEED #10
17	8102-222	6	CAPSCREW,HH,3/8-16 UNCx1.0,GD8,ZN
18	0200-291	1	INSULATION,MIDDLE
19	0200-328	1	PLATE,FIREWALL
20	0200-264	1	HOUSING,POWER SOURCE
21	0304-579	6	PLUG,HOLE,PLASTIC,5/16
22	0201-912	1	LEVER,THROTTLE
23	0314-215	1	CONNECTOR,JOINT,BALL
24	0301-121	2	NUT,JAM,1/4-28 UNF
25	0090-012	8	WASHER FINISHING #10 SS
26	0307-606	4	PLUG,FINSISHING,STEEL,1-3/8"
27	0200-292	1	INSULATION,BOTTOM
28	0304-466	1	STOP,LAPBAR
29	8050-240	10	WASHER,STAINLESS,1/4",MS
30	0304-465	4	CAPSCREW,HH,M6-1.0x16mm
31	0304-467	1	BRKT,LAPBAR
32	8040-606	4	NUT,HEX,NYLOCK,1/2-13 UNC,ZN
33	0304-468	2	RING,SNAP,LAPBAR
34	8102-404	4	CAPSCREW,HH 1/2-13UNCx1.25 GD8
35	0304-469	1	LAPBAR
36	0304-470	1	MNT,LAPBAR
37	0304-477	2	SPACER,LAPBAR
38	0304-471	2	SPRING,GAS,ASSIST
39	0304-472	1	MNT,LAPBAR,SWITCH
40	0304-476	1	GROMMET,RUBBER
41	0304-473	1	SENSOR,SWITCH,LAPBAR
42	0310-307	1	SCREW,MACHINE,4-40x.50 92314A110
43	0412-036	1	BRACKET LAP BAR ACTIVATION SWITCH
44	8011-227	1	BOLT,CARRIAGE,3/8-16 UNC x 2.0
45	0304-019	1	ASSY,LAP BAR
46	0304-400	6	CLIP,FASTENER
47	2030-511	1	WLMT ROPS 30/50/60
48	0301-637	1	GROMMET (1840)
49	0304-247	1	LIGHT,REAR
50	2030-360	1	BELLEVILLE WASHER, 3/8" ID X 1-1/8 OD
51	0200-320	2	WLMT,STOP LAP BAR
52	0200-321	2	PAD,RUBBER,W/ADHESIVE
53	8102-044	5	CAPSCREW,HH,1/4-20UNCx1.25,GD8
54	8051-212	5	WASHER,SPRING LOCK,1/4,ZN
55	0200-290	1	INSULATION,TOP
56	0201-902	1	CLEVIS,1/4-28,W/PIN
57	0200-288	1	BULB,HALOGEN
58	0201-867	1	BUSHING
59	0310-308	1	NUT,HEX,NYLOCK 4-40,91831A005
60	0201-903	1	SPRING,1.75X0.48
61	0301-033	1	WASHER,FENDER,1/4 x 1 1/4,STL,
62	2030-358	1	BRACKET FOOT THROTTLE
63	8050-282	3	WASHER,WROUGHT,3/8,STD,ZN
64	8102-227	2	CAPSCREW,HH,3/8-16UNCx2.0 GD8
65	0201-865	1	BUSHING,FOOT PEDAL
66	0201-925	1	WLMT,PEDAL

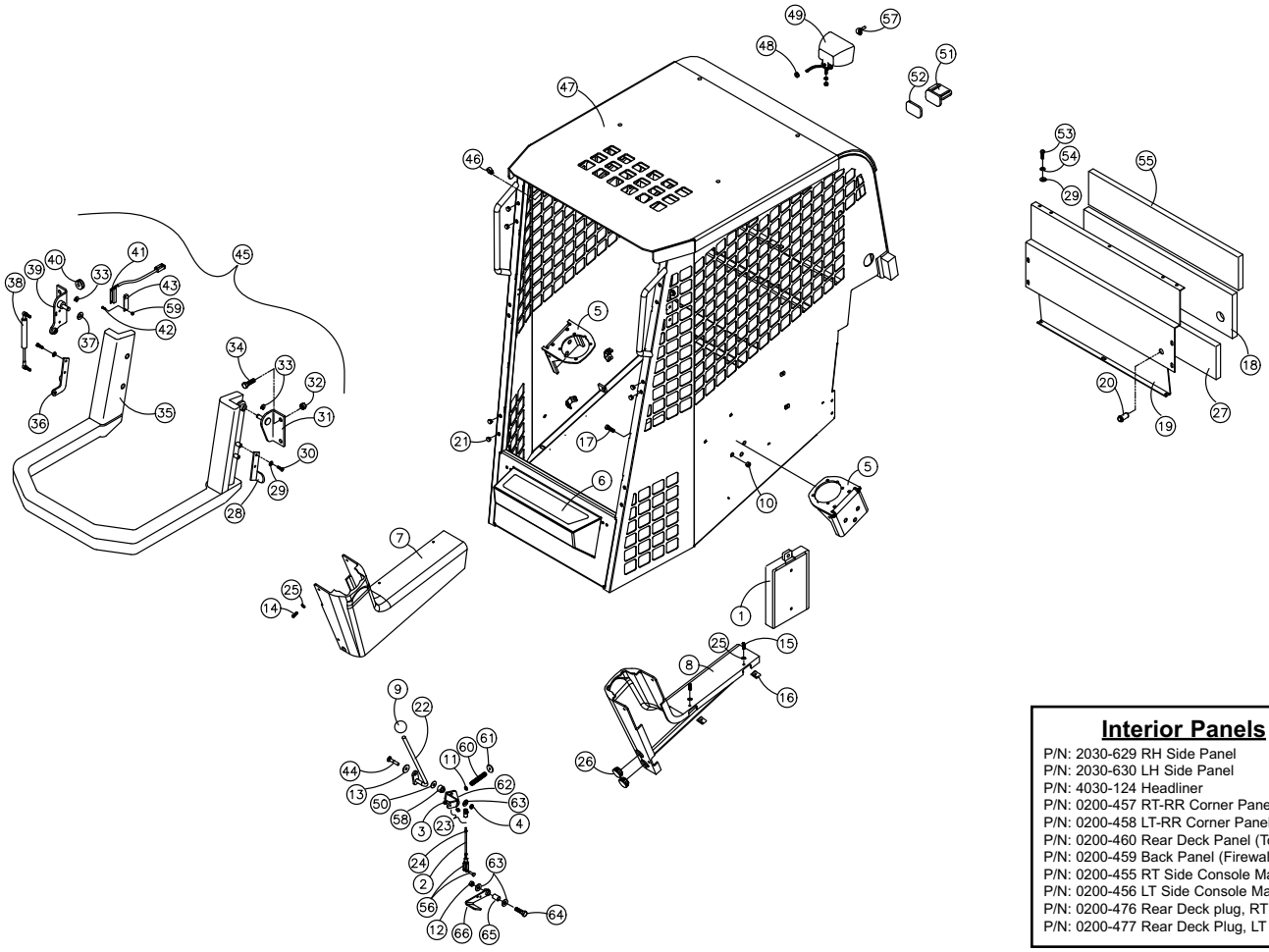

Interior Panels

P/N: 2030-629 RH Side Panel
P/N: 2030-630 LH Side Panel
P/N: 4030-124 Headliner
P/N: 0200-457 RT-RR Corner Panel
P/N: 0200-458 LT-RR Corner Panel
P/N: 0200-460 Rear Deck Panel (Top)
P/N: 0200-459 Back Panel (Firewall)
P/N: 0200-455 RT Side Console Mat
P/N: 0200-456 LT Side Console Mat
P/N: 0200-476 Rear Deck plug, RT
P/N: 0200-477 Rear Deck Plug, LT

LIGHT BAR ASSEMBLY (Serial #: DTC 03056-Current)

REF. NO.	PART NUMBER	QTY.	DESCRIPTION
1	2045-755	4	KIT LIGHTS 35W W/ HARNESS
2	2045-756	4	LIGHT 35W W/BEZEL
3	0201-595	2	HARNESS,LIGHT,DOUBLE
4	2030-331	1	DECAL DASH PANEL
5	2030-241	1	CONSOLE MACHINED
6	2030-245	1	LIGHT DOME
7	0304-411	1	PLUG, HOLE, 3/4", PLASTIC
8	0310-137	4	FRAME,MID
9	8102-142	2	CAPSCREW,HH,5/16-18x3.25,GD8
10	8051-242	2	WASHER,SPRING LOCK,5/16,ZN
11	8050-262	2	WASHER,WROUGHT,5/16,STD,ZN
12	8040-186	2	NUT,NYLOCK 8-32
13	2030-272	1	PLATE BACKING GAUGES
14	2045-502	1	METER HOUR
15	0304-028	1	SWITCH,IGNITION,RC
16	0310-138	6	PLUG
17	2045-725	1	SWITCH 2 POSITION LOCKING (OPTIONAL)
18	2045-477	1	SWITCH SELF LEVELER
19	0200-252	1	SWITCH,3 POSITION,LOCKING
20	2045-432	1	KEY IGNITION
21	2045-792	1	COVER KEY IGNITION
22	0304-551	1	RING,KEY
23	0090-038	2	SCREW MACHINE PH 8-32 x .625 SS
24	2030-244	1	GAUGE WARNING INDICATION
25	2030-243	1	GAUGE FUEL
26	2045-378	1	GAUGE,ENGINE,TEMP (OPTIONAL)
27	2030-242	1	TACHOMETER (OPTIONAL)
28	0310-133	1	SWITCH,BEACON
29	0304-123	1	SWITCH,ON/OFF,WIPER
30	0310-128	1	SWITCH,HEATER
31	0310-126	1	SWITCH,LIGHT
32	0310-136	4	FRAME,END

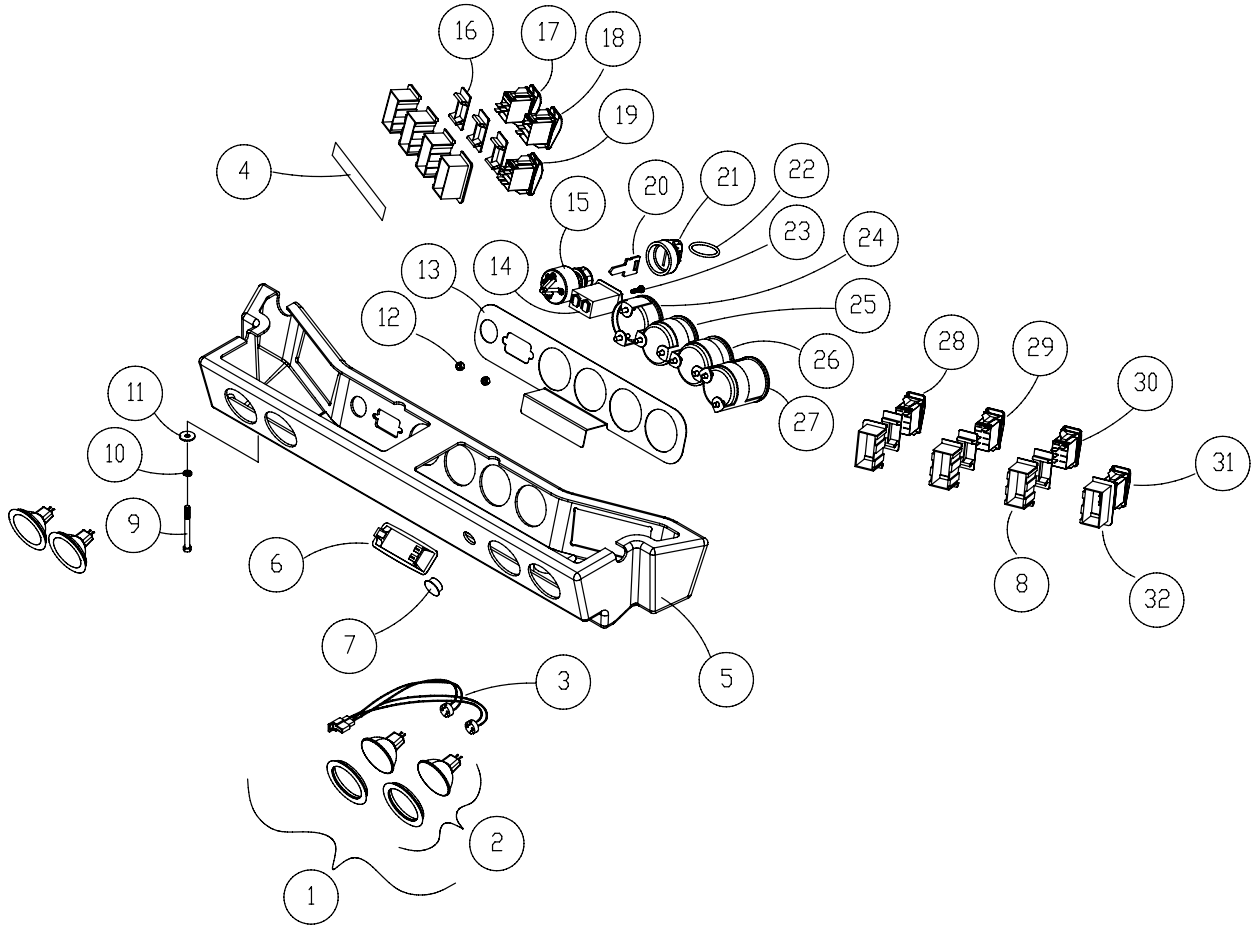

ENCLOSED CAB (R.O.P.S.) ASSEMBLY (Serial #: DTC 03056-03132)

REF. NO.	PART NUMBER	QTY.	DESCRIPTION
1	0402-760	1	GLASS,UPPER,RH
2	0402-769	1	GLASS,SLIDER,SINGLE,RH
3	0402-762	1	GLASS,LOWER,RH
4	2075-406	1	HANDLE PUSH BUTTON
5	0314-208	2	BUSHING,HINGE
6	2075-409	1	MOUNT DOOR LATCH
7	8040-426	8	NUT,HEX,NYLOCK,5/16-18 UNC,ZN
8	0304-619	1	MOTOR,WIPER,85^
9	0310-495	11'	STRIP,LOCK
10	0304-674	1	SEAL,WINDOW,10FT
11	0402-243	1	ARM,WIPER,15-19"
12	0402-244	1	BLADE,FLAT,18"
13	0402-881	1	WINDOW,DOOR,RC,LH,RH
14	8102-040	8	CAPSCREW,HH,1/4-20 UNCx.75,GD8
15	8050-222	4	WASHER,WROUGHT,1/4,STD,ZN
16	8040-366	4	NUT,HEX,NYLOCK,1/4-20 UNC,ZN
17	0304-495	2	STUD,BALL,10MM STUD
18	0304-484	11	TRIM,CAB RC-30
19	0304-491	1	MNT,SHOCK
20	8050-240	1	WASHER,STAINLESS,1/4",MS
21	0304-486	1	CAPSCREW,HH,M6-1.0x14
22	0314-209	2	HINGE,MALE
23	2075-408	1	STRIKE
24	0090-059	2	SCREW MACHINE #10 x .63 PH SELF DRILLING
25	8102-136	6	CAPSCREW,HH,5/16-18x1.75 ZN GD
26	0304-381	14	SCREW,MACH,PH PAN HD 10-24X0.5
27	2075-407	1	HANDLE INSIDE
28	2075-416	1	MOUNT STRIKE
29	0403-733	1	HARNESS,DOOR
30	0090-135	1	NUT NYLOCK M12 X 1.0 ZC
31	0304-573	1	HARNESS,WIPER,B
32	0403-630	1	SPRING DAMPENED DOOR
33	0310-587	2	CLAMP,WIRE,3/8,ADHESIVE
34	8102-135	2	CAPSCREW,HH,5/16-18X1.50ZN,GD8
35	0200-607	1	SEAL PANEL ROOF
36	0200-606	1	PANEL ROOF LEXAN
37	2030-254	1	ASSY,ROPS
39	0310-495	7'	STRIP,LOCK
38	0201-748	2	ASSY,TAG,EMERGENCY EXIT
40	1059-015	7	SEAL,WINDOW

REF. NO.	PART NUMBER	QTY.	DESCRIPTION
41	0200-298	1	WINDOW,REAR
42	0402-758	1	GLASS,SLIDER,SINGLE,LH
43	0402-761	1	GLASS,UPPER,LH
44	0402-763	1	GLASS,LOWER,LH
45	0402-826	24	KIT,RETAINER,WINDOW
46	8102-128	2	CAPSCREW,HH 5/16-18UNCx7/8 GR8
47	8051-242	2	WASHER,SPRING LOCK,5/16,ZN
48	8050-262	8	WASHER,WROUGHT,5/16,STD,ZN
49	0200-345	1	SEAL,WINDOW,76"
50	8040-246	8	NUT,HEX,NYLOCK,10-24 UNC,ZN
51	0200-324	1	STOP,WINDOW
52	0200-297	1	FRAME,WINDOW,REAR
53	0307-779	2	HINGE,DETACHABLE
54	0200-301	2	LATCH,COMPRESSION,1/4 TURN
55	8061-604	4	RIVET,ALUMINUM,3/16x.575
56	0310-641	1	MOUNT,SHOCK,90^
57	0200-232	2	SPRING,GAS ASSIST
58	0200-552	1	MNT,BRACKET,BALLSTUD
59	0200-545	2	CLIP,SAFETY,GAS SPRING
60	0090-109	10	SCREW TH PH 1/4-20 x 1.00 ZN
61	0403-478	1	WLMT,DOOR,W/HINGES
62	0090-167	2	TIE CABLE MOUNT

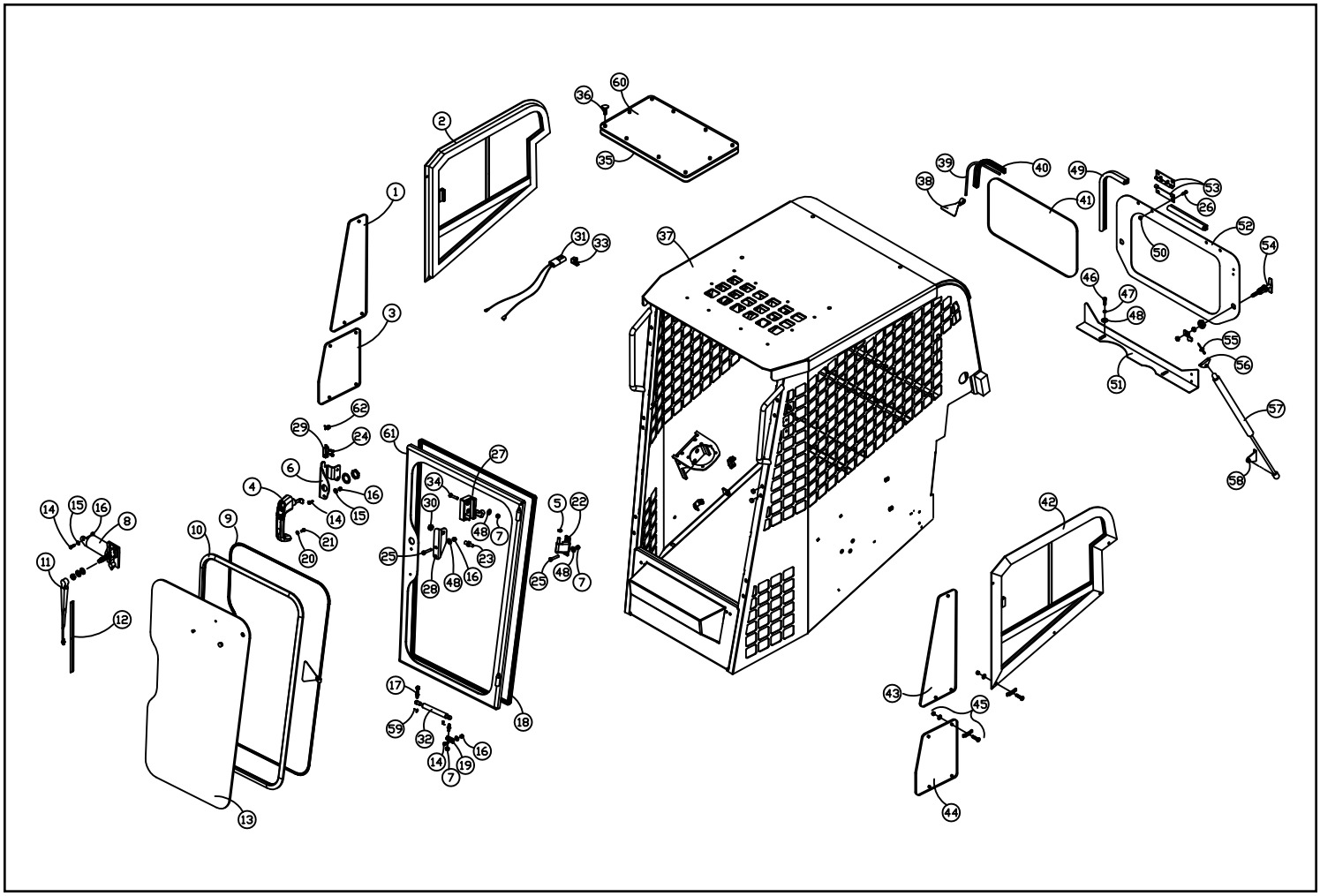

ENCLOSED CAB (R.O.P.S.) ASSEMBLY (Serial #: DTC 03133-Current)

REF. NO.	PART NUMBER	QTY.	DESCRIPTION
1	0403-762	2	WINDOW UPPER CORNER
2	0402-769	1	GLASS,SLIDER,SINGLE,RH
3	0403-763	2	WINDOW LOWER CORNER
4	2075-406	1	HANDLE PUSH BUTTON
5	0314-208	2	BUSHING,HINGE
6	2075-409	1	MOUNT DOOR LATCH
7	8040-426	8	NUT,HEX,NYLOCK,5/16-18 UNC,ZN
8	0304-619	1	MOTOR,WIPER,85^
9	0310-495	12'	STRIP,LOCK
10	0304-674	1	SEAL,WINDOW,10FT
11	0402-243	1	ARM,WIPER,15-19"
12	0402-244	1	BLADE,FLAT,18"
13	4030-106	1	WINDOW DOOR PT30/60 CE
14	8102-040	4	CAPSCREW,HH,1/4-20 UNCx.75,GD8
15	8050-222	4	WASHER,WROUGHT,1/4,STD,ZN
16	8040-426	2	NUT,HEX,NYLOCK,5/16-18 UNC,ZN
17	0304-495	2	STUD,BALL,10MM STUD
18	0304-484	11'	TRIM,CAB
19	2030-348	1	MOUNT SPRING
20	8050-240	1	WASHER,STAINLESS,1/4",MS
21	0304-486	1	CAPSCREW,HH,M6-1.0x14
22	0403-481	2	ASSY HINGE DOOR CAST LH
23	2075-408	1	STRIKE
24	0090-059	2	SCREW MACHINE #10 x .63 PH SELF DRILLING
25	8102-136	6	CAPSCREW,HH,5/16-18x1.75 ZN GD
26	0403-848	1	LATCH ARM RH
27	2075-407	1	HANDLE INSIDE
28	2075-416	1	MOUNT STRIKE
29	0403-733	1	HARNESS,DOOR
30	0090-135	1	NUT NYLOCK M12 X 1.0 ZC
31	0304-573	1	HARNESS,WIPER,B
32	0403-630	1	SPRING DAMPENED DOOR
33	0090-167	4	TIE CABLE MOUNT
34	8102-135	2	CAPSCREW,HH,5/16-18X1.50ZN,GD8
35	0200-607	1	SEAL PANEL ROOF
36	0090-109	32	SCREW TH PH 1/4-20 x 1.00 ZN P
37	2030-511	1	ROPS PT30/50/60
39	0310-495	5	STRIP,LOCK
38	0201-748	1	ASSY,TAG,EMERGENCY EXIT
40	1059-015	5	SEAL,WINDOW

REF. NO.	PART NUMBER	QTY.	DESCRIPTION
41	0403-842	1	WINDOW REAR
42	0402-758	1	GLASS,SLIDER,SINGLE,LH
43	0403-854	1	CATCH WINDOW RH
44	0090-304	1	KNOB STAR 1.75" RED M6 X 1.1 X 6MM
45	0403-767	1	SEAL RH UPPER WINDOW
46	8050-222	5	WASHER,WROUGHT,1/4,STD,ZN
47	8051-212	5	WASHER,SPRING LOCK,1/4,ZN
48	8050-262	8	WASHER,WROUGHT,5/16,STD,ZN
49	0090-272	7'	SEAL V-PROFILE 15MM X 16MM
50	0403-847	1	LATCH ARM LH
51	0403-913	1	T-HANDLE NON LOCKING
52	0403-845	1	WLMT FRAME WINDOW REAR
53	0403-850	2	HINGE REAR WINDOW MALE
54	0403-846	1	T-HANDLE LOCKING
55	8061-604	5	RIVET,ALUMINUM,3/16x.575
56	0310-641	1	MOUNT,SHOCK,90^
57	2045-503	1	SPRING GAS ASSIST
58	0200-552	1	MNT,BRACKET,BALLSTUD
59	0200-545	4	CLIP,SAFETY,GAS SPRING
60	0200-606	1	PANEL ROOF LEXAN
61	0403-478	1	WLMT,DOOR,W/HINGES
62	0403-766	1	SEAL LH UPPER WINDOW
63	0403-853	1	CATCH WINDOW LH
64	0403-764	1	SEAL LH UPPER WINDOW
65	0403-765	1	SEAL LH LOWER WINDOW
66	8102-039	5	CAPSCREW,HH,1/4-20UNCx.625,GD8
67	2010-592	1	DECAL EMERGENCY EXIT ANSI
68	0090-347	10	SCREW TH PH 1/4-20 X 1.25 ZN

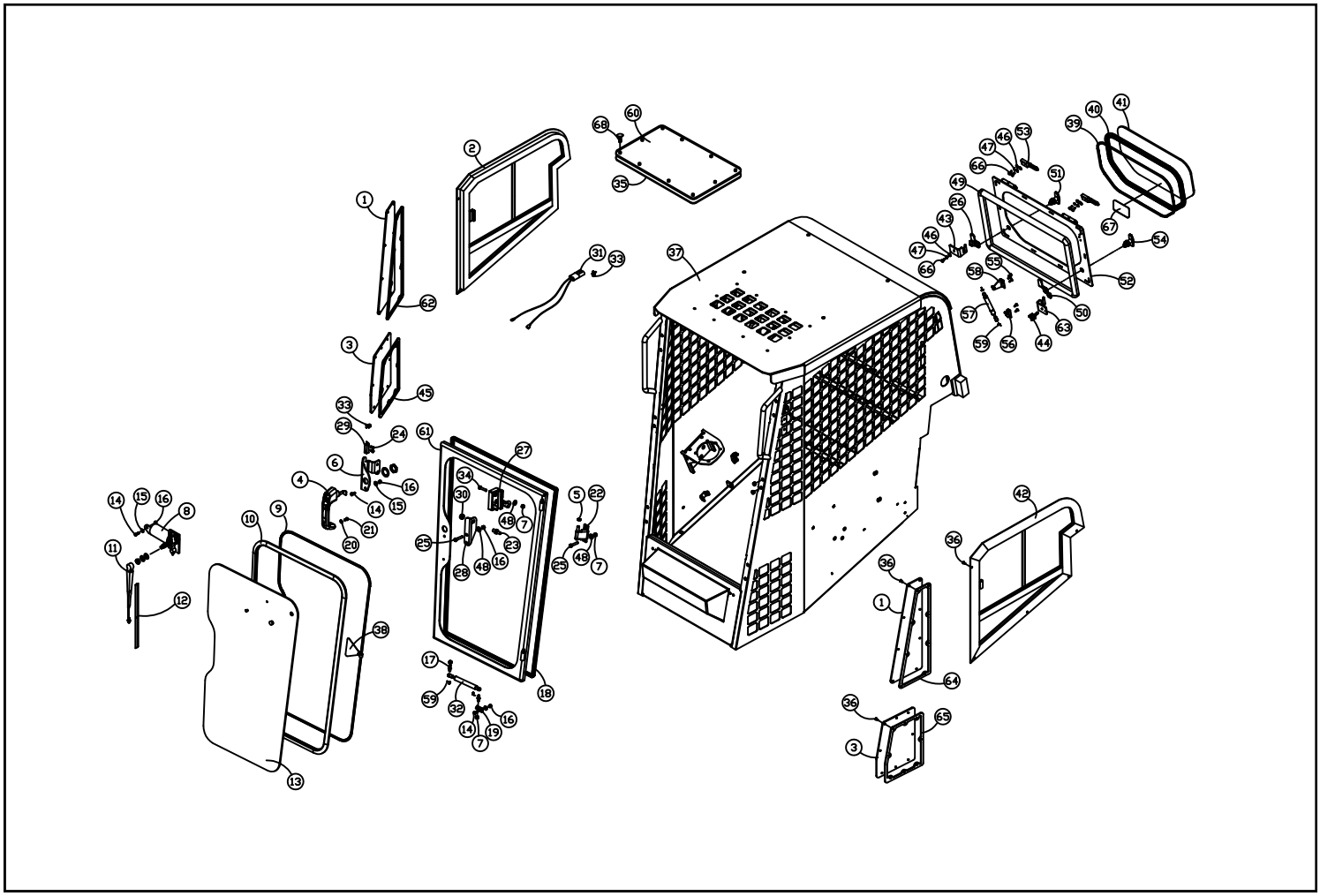

CHASSIS ASSEMBLY (Serial #: DTC 03056-03132)

REF. NO.	PART NUMBER	QTY.	DESCRIPTION
1	0200-217	1	MAT,FLOOR,50 SERIES.
2	0304-045	1	SEAT
3	0304-248	1	BELT,SEAT 2" RETRACTABLE
4	8050-222	5	WASHER,WROUGHT,1/4,STD,ZN
5	8102-404	10	CAPSCREW,HH 1/2-13UNCx1.25 GD8
6	8040-606	27	NUT,HEX,NYLOCK,1/2-13 UNC,ZN
7	8102-042	5	CAPSCREW, HH 1/4-20UNC 1" GD8
8	0304-206	1	WLMT,MNT,SEAT,REAR
9	8040-486	4	NUT,HEX,NYLOCK,3/8-16 UNC,ZN
10	0304-201	1	MNT,SEAT,FRAME
11	8102-130	4	CAPSCREW,HH 5/16-18x3/4,GR8
12	0300-732	6	CLAMP,HOSE,#4
13	0200-361	1	HOSE,FUEL,3/16IDx35.00"
14	0200-353	1	HOSE,FUEL,5/16IDx30.00"
15	2030-438	1	ASSY SENDING UNIT
16	0304-447	1	HOSE,7/16X5/16POLY,1.30FT
17	0301-375	1	WEIGHT,IN-TANK
18	0200-139	1	PLATE, SKID, REAR
19	8050-262	26	WASHER,WROUGHT,5/16,STD,ZN
20	0304-509	1	HOSE,FUEL,5/16x26"
21	0300-686	2	CLAMP,HOSE,2.0,#32
22	0304-037	1	HOSE,FILL,DIESEL,FUEL
23	2030-188	2	FOAM,LOADER LOCK,15 1/2"
24	2030-317	1	WLMT DOOR ARM
25	0090-003	2	NUT,WELD,HEX,5/16-18
26	0200-135	1	WLMT,TANK,FUEL
27	0200-307	1	PLATE,FILLER,FLOOR
28	0200-134	1	PLATE,SKID,FRONT
29	8102-222	24	CAPSCREW,HH,3/8-16 UNCx1.0,GD8
30	8051-272	24	WASHER,SPRING LOCK,3/8,ZN
31	2030-304	1	WLMT,CHASSIS,PT60
32	2030-154	1	LOCK,LOADER,REMOVABLE
33	0314-032	4	PLATE,LIFT,FRONT
34	0201-477	2	PIN,LOCKING,D-RING,3.00"
35	2030-109	2	WEIGHT,REAR,SIDE
36	0090-138	2	SCREW CAP HSFH 5/16-18 X .75 BLK ZC
37	0310-423	2	PLUG,STEEL,3.00"
38	8102-406	8	CAPSCREW,HH,1/2-13UNCx1.75,GD8
39	2030-316	1	BRACKET, FUEL DOOR
40	0201-066	2	PLATE,BOLT

REF. NO.	PART NUMBER	QTY.	DESCRIPTION
41	0201-483	4	BOLT,PLOW,1/2-13x2.00
42	0200-179	1	PLATE,SKID,CENTER
43	2030-320	1	SPRING EXTENSION 2.36"
44	0090-139	2	BUSHING PLASTIC .5 OD X .38 ID
45	0090-137	2	SCREW SHOULDER-HSH 5/16-18 X 1.00
46	8102-040	7	CAPSCREW,HH,1/4-20 UNCx.75,GD8
47	0200-140	1	SCREEN,BACK,CHASSIS
48	4046-088	1	CAP FUEL YELLOW
49	2030-320	1	SPRING EXTENSION
50	8102-410	4	CAPSCREW,HH 1/2-13UNCx2.75 GD8
51	8051-212	10	WASHER,SPRING LOCK,1/4,ZN
52	0200-105	1	PLATE,ENGINE,SURROUND
53	0200-235	1	WEIGHT,REAR
54	0200-167	4	WEIGHT
55	8102-416	4	CAPSCREW,HH,1/2-13 UNCx5.5,GD8
56	8050-347	24	WASHER,WROUGHT,1/2,STD,ZN
57	0090-139	2	BUSHING PLASTIC .5 OD X .38 ID
58	0304-157	6	SCREW,ORING,3/16-32x1/2,STAINL
59	0304-662	1	HARNESS,SWITCH,SEAT
60	2010-127	1	SWITCH,SEAT (NEW STYLE)
61	0304-617	1	GASKET,TANK,FUEL
62	0200-437	2	PLUG,HOLE,6"
63	0310-467	1	CLAMP,WIRE,1.0
64	0302-537	1	SCREW,SELF-TAPPING

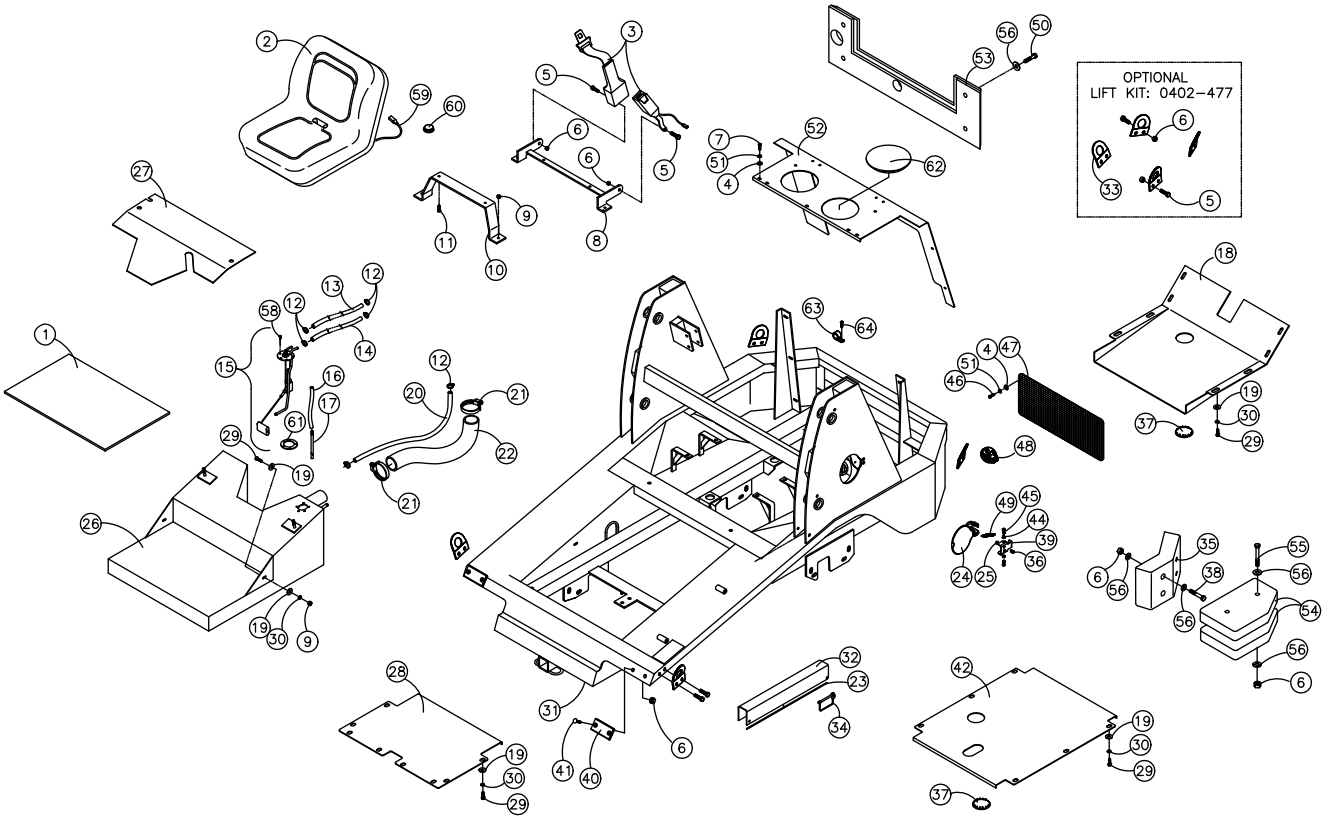

CHASSIS ASSEMBLY (Serial #: DTC 03133-Current)

REF. NO.	PART NUMBER	QTY.	DESCRIPTION
1	0200-217	1	MAT,FLOOR,50 SERIES.
2	0304-045	1	SEAT
3	0304-248	1	BELT,SEAT 2" RETRACTABLE
4	8050-222	5	WASHER,WROUGHT,1/4,STD,ZN
5	8102-404	10	CAPSCREW,HH 1/2-13UNCx1.25 GD8
6	8040-606	27	NUT,HEX,NYLOCK,1/2-13 UNC,ZN
7	8102-042	5	CAPSCREW, HH 1/4-20UNC 1" GD8
8	0304-206	1	WLMT,MNT,SEAT,REAR
9	8040-486	4	NUT,HEX,NYLOCK,3/8-16 UNC,ZN
10	0304-201	1	MNT,SEAT,FRAME
11	8102-130	4	CAPSCREW,HH 5/16-18x3/4,GR8
12	0300-732	6	CLAMP,HOSE,#4
13	0200-361	1	HOSE,FUEL,3/16IDx35.00"
14	0200-353	1	HOSE,FUEL,5/16IDx30.00"
15	2030-438	1	ASSY SENDING UNIT
16	0304-447	1	HOSE,7/16X5/16POLY,1.30FT
17	0301-375	1	WEIGHT,IN-TANK
18	0200-139	1	PLATE, SKID, REAR
19	8050-262	26	WASHER,WROUGHT,5/16,STD,ZN
20	0304-509	1	HOSE,FUEL,5/16x26"
21	0300-686	2	CLAMP,HOSE,2.0,#32
22	0304-037	1	HOSE,FILL,DIESEL,FUEL
23	2030-188	2	FOAM,LOADER LOCK,15 1/2"
24	0090-003	2	NUT,WELD,HEX,5/16-18
25	0090-138	2	SCREW CAP HSFH 5/16-18 X .75 BLK ZC
26	0200-135	1	WLMT,TANK,FUEL
27	0200-307	1	PLATE,FILLER,FLOOR
28	0200-134	1	PLATE,SKID,FRONT
29	8102-222	24	CAPSCREW,HH,3/8-16 UNCx1.0,GD8
30	8051-272	24	WASHER,SPRING LOCK,3/8,ZN
31	2030-554	1	WLMT CHASSIS PT50/60
32	2030-154	1	LOCK,LOADER,REMOVABLE
33	0314-032	4	PLATE,LIFT,FRONT
34	0201-477	2	PIN,LOCKING,D-RING,3.00"
35	2030-109	2	WEIGHT,REAR,SIDE
36	2030-316	1	BRACKET, FUEL DOOR
37	0310-423	2	PLUG,STEEL,3.00"
38	8102-406	8	CAPSCREW,HH,1/2-13UNCx1.75,GD8
39	0201-066	2	PLATE,BOLT
40	2030-317	1	WLMT DOOR ARM

REF. NO.	PART NUMBER	QTY.	DESCRIPTION
41	0201-483	4	BOLT,PLOW,1/2-13x2.00
42	0200-179	1	PLATE,SKID,CENTER
43	2030-320	1	SPRING EXTENSION 2.36"
44	0090-139	2	BUSHING PLASTIC .5 OD X .38 ID
45	0090-137	2	SCREW SHOULDER-HSH 5/16-18 X 1.00
46	8102-040	7	CAPSCREW,HH,1/4-20 UNCx.75,GD8
47	0200-140	1	SCREEN,BACK,CHASSIS
48	4046-088	1	CAP FUEL YELLOW
49	2030-320	1	SPRING EXTENSION
50	8102-410	4	CAPSCREW,HH 1/2-13UNCx2.75 GD8
51	8051-212	10	WASHER,SPRING LOCK,1/4,ZN
52	0200-105	1	PLATE,ENGINE,SURROUND
53	0200-235	1	WEIGHT,REAR
54	0200-167	4	WEIGHT
55	8102-416	4	CAPSCREW,HH,1/2-13 UNCx5.5,GD8
56	8050-347	24	WASHER,WROUGHT,1/2,STD,ZN
57	0090-139	2	BUSHING PLASTIC .5 OD X .38 ID
58	0304-157	6	SCREW,ORING,3/16-32x1/2,STAINL
59	0304-662	1	HARNESS,SWITCH,SEAT
60	2010-127	1	SWITCH,SEAT (NEW STYLE)
61	0304-617	1	GASKET,TANK,FUEL
62	0200-437	2	PLUG,HOLE,6"
63	0310-467	1	CLAMP,WIRE,1.0
64	0302-537	1	SCREW,SELF-TAPPING
65	8102-128	4	CAPSCREW,HH 5/16-18UNCx7/8 GR8 ZN
66	2030-584	1	FIREWALL
67	8051-242	4	WASHER,SPRING LOCK,5/16,ZN

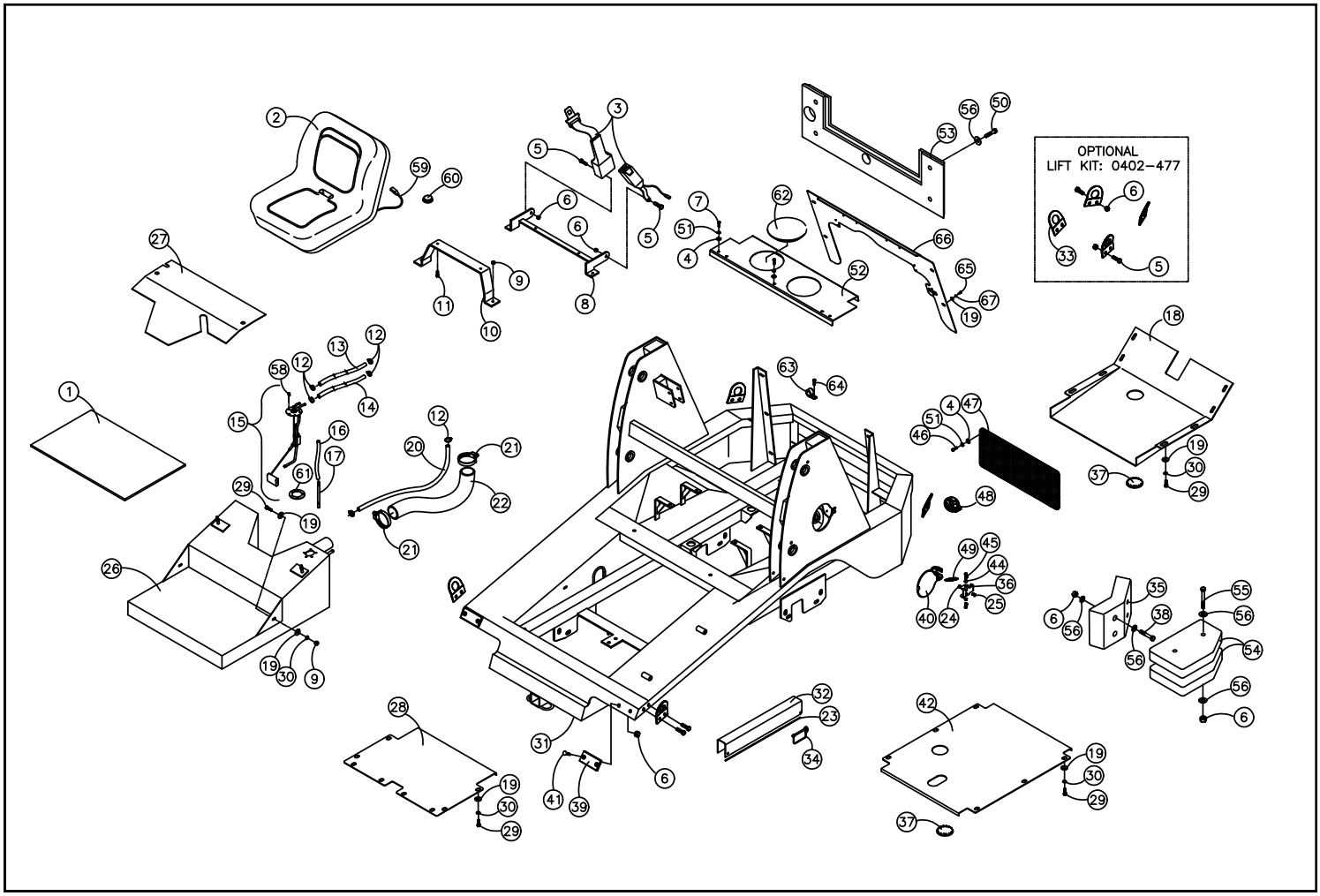

HOOD ASSEMBLY (Serial #: DTC 03056-Current)

REF. NO.	PART NUMBER	QTY.	DESCRIPTION
1	0302-042	2	LATCH,RUBBER,T-HANDLE
2	8060-731	4	RIVET,STAINLESS,3/16x.575
3	8060-688	4	RIVET,BLIND,3/16 x .375 ABA
4	0302-965	4	WASHER,RIVET,#7
5	2040-057	1	WLMT SCREEN REAR
6	8040-366	15	NUT,HEX,NYLOCK,1/4-20 UNC,ZN
7	8102-040	13	CAPSCREW,HH,1/4-20 UNCx.75,GD8
8	2030-444-wht	1	WLMT HOOD PT60 (WHITE)
9	2045-284	1	WLMT SCREEN TOP
10	2045-647	1	HANDLE LIFT HOOD
11	0310-648	2	SCREW,MACH,1/4-20UNCx1.25
12	2030-445-wht	1	WLMT COWL
13	8041-500	4	NUT,HEX,NYLOCK,3/8-16 UNC,THIN
14	2030-457	2	WLMT HINGE RH
15	8011-224	4	BOLT CARRAIGE 3/8-16 UNC X 1.0 ZN
16	8102-226	2	CAPSCREW,HH 3/8-16UNCx1.75 GD8
17	8040-486	2	NUT,HEX,NYLOCK,3/8-16 UNC,ZN
18	0304-495	4	STUD,BALL,10MM STUD
19	2040-110	2	SPRING GAS 100 LB
20	8040-426	5	NUT,HEX,NYLOCK,5/16-18 UNC,ZN
21	8050-262	5	WASHER,WROUGHT,5/16,STD,ZN
22	8051-242	5	WASHER,SPRING LOCK,5/16,ZN
23	8102-134	5	CAPSCREW,HH,5/16-18UNCx1.25GD8
24	2040-165	1	TRIM HOOD 140"
25	2030-458	2	WLMT HINGE LH
26	2030-389	1	HOOD LOCK HOOK
27	2030-388	1	PAWL SOUTHCO
27	2030-387	1	LOCK SOUTHCO

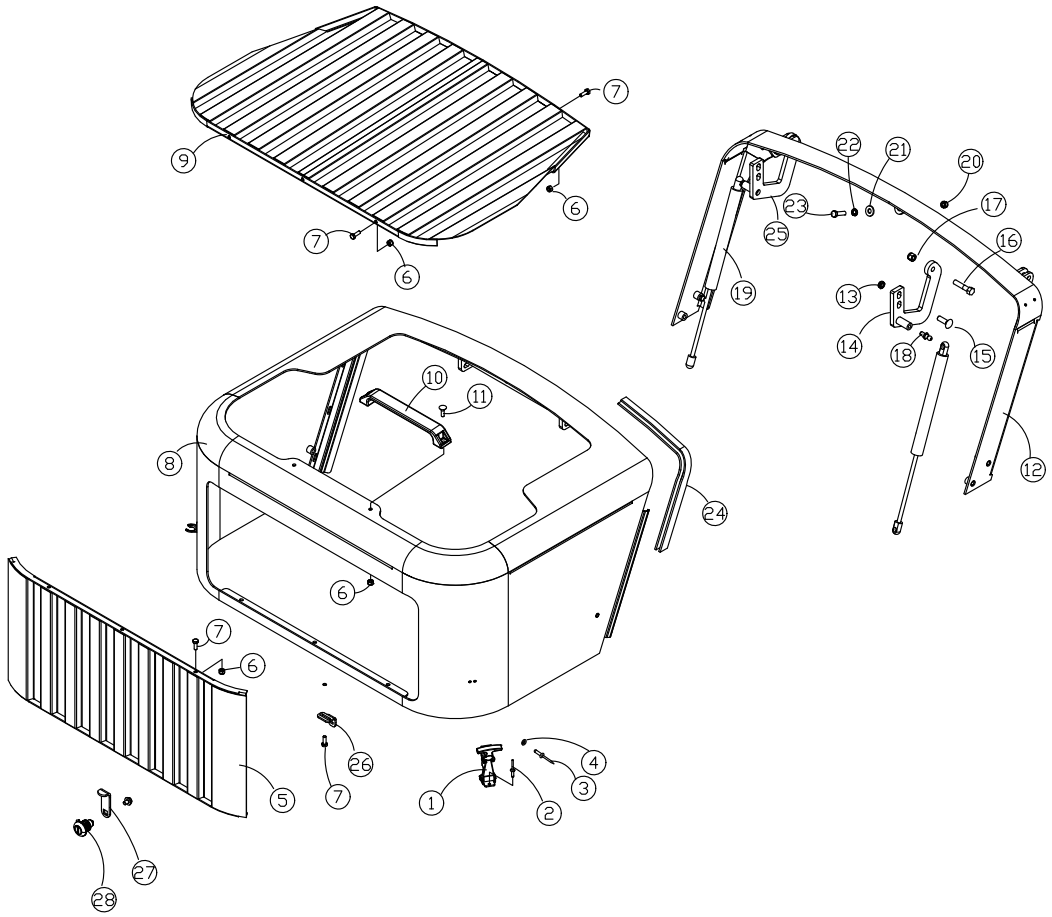

RADIATOR/OIL COOLER ASSEMBLY (Serial #: DTC 03056-Current)

REF. NO.	PART NUMBER	QTY.	DESCRIPTION
1	0200-336	4	CAPSCREW,HH,M6x1.0x40
2	8102-040	11	CAPSCREW,HH,1/4-20 UNCx.75,GD8
3	8051-212	11	WASHER,SPRING LOCK,1/4,ZN
4	8050-222	11	WASHER,WROUGHT,1/4,STD,ZN
5	0200-225	1	GUARD,FAN,LH
6	0200-226	1	GUARD,FAN,RH
7	0200-103	1	FAN,ENGINE,17"
8	0304-035	1	HOSE,RADIATOR,TOP
9	0300-686	4	CLAMP,HOSE,2.0,#32
10	8040-366	11	NUT,1/4-20UNC,NYLOK
11	8102-222	4	CAPSCREW,HH,3/8-16 UNCx1.0,GD8
12	0200-358	1	CAP,RADIATOR,7PSI
13	8060-728	8	RIVET,BLIND3/16X.550 1Y SSB66S
14	0304-444	1	HOSE,7/16 x 5/16 POLY,3FT
15	0200-492	1	ASSY,COOLER
16	2030-097	2	ADAPTER,FS6400-12-16-0
17	2030-040	1	SHROUD,3024cT
18	0304-036	1	HOSE,RADIATOR,BOTTOM
19	2030-117	1	MNT,SHROUD,RH
20	2030-116	1	MNT,SHROUD,LH
21	0200-152	1	SPACER,FAN,3024C
22	8102-224	6	CAPSCREW,HH,3/8-16UNCx1.25,GD8
23	8050-262	12	WASHER,WROUGHT,5/16,STD,ZN
24	8040-486	10	NUT,HEX,NYLOCK,3/8-16 UNC,ZN
25	0302-965	8	WASHER,RIVET,#7
26	0307-439	2	ADAPTER,PLUG,8MB
27	0200-360	1	SEAL,SHROUD,BOTTOM
28	0200-359	1	SEAL,SHROUD,TOP
29	2030-079	1	HOSE,12G1,12FFORX90S,12FFORX,6
30	2030-078	1	HOSE,12G1,12FFORX90S,12FFORX90
31	8051-272	4	WASHER,SPRING LOCK,3/8,ZN
32	2030-278	1	PLATE DAM AIR
33	8050-282	8	WASHER,WROUGHT,3/8,STD,ZN

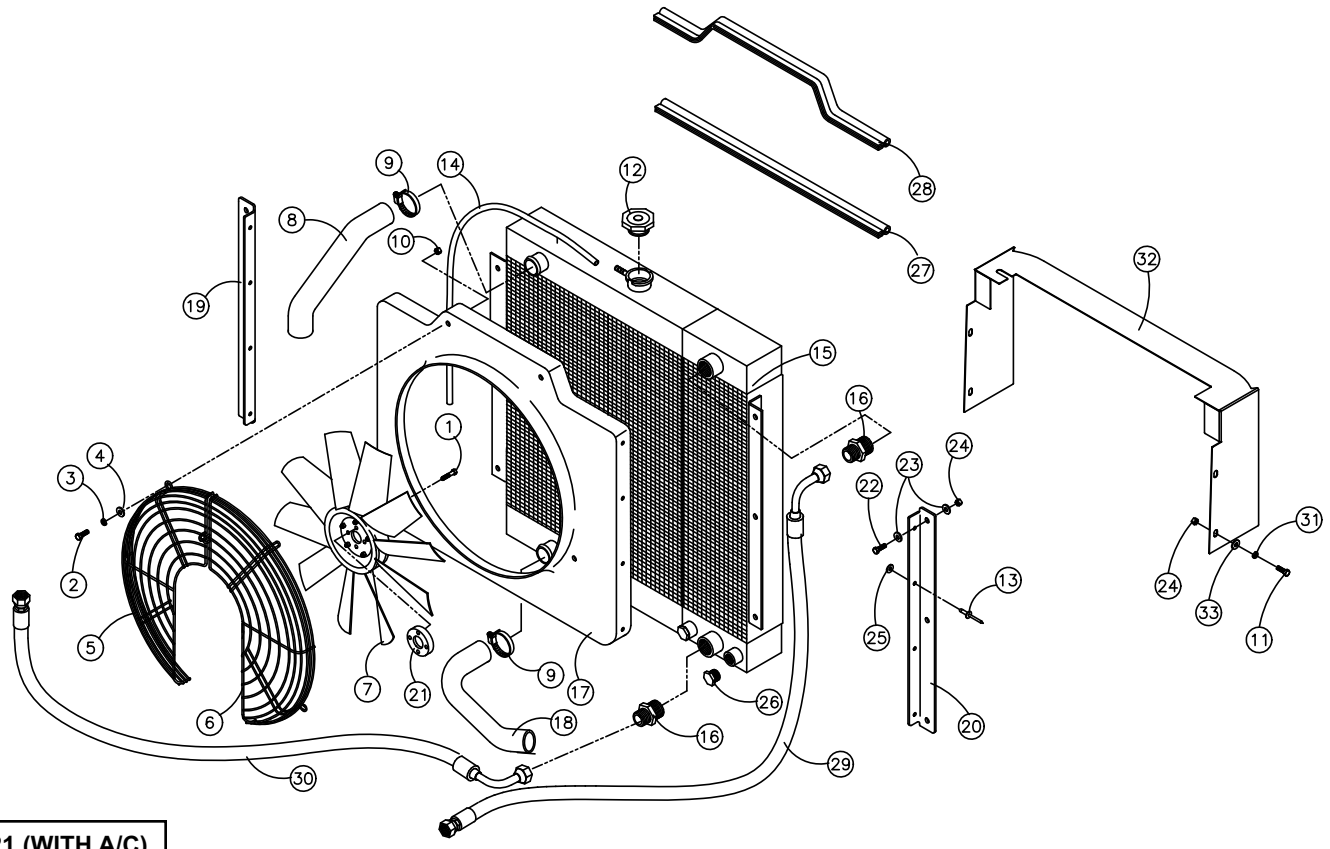

ITEM 21 (WITH A/C)
P/N: 0200-507

HYDRAULIC RESERVOIR ASSEMBLY (Serial #: DTC 03056-Current)

REF. NO.	PART NUMBER	QTY.	DESCRIPTION
1	0200-276	1	SCREEN,SUCTION
2	0304-450	1	VALVE,RELIEF,RES.
3	0304-832	1	CAP,SLOSH PROOF,0 PSI
4	0304-452	1	ASSY,COVER,ACCESS
5	0200-203	1	ASSY,FILTER,HYD,4-BOLT
6	0200-204	1	ELEMENT,FILTER,MP
7	0304-642	1	GAUGE,SIGHT 5"
8	0307-879	1	SWITCH,TEMP,OIL,225^ F
9	8102-134	1	CAPSCREW,HH,5/16-18UNCx1.25GD8
10	8102-132	3	CAPSCREW,HH,5/16-18UNCx1.0 GD8
11	8040-426	4	NUT,HEX,NYLOCK,5/16-18 UNC,ZN
12	0302-713	1	ADAPTER,O-RING TO FLARE (4-6)
13	2031-032	1	WLMT,RESERVOIR
14	0304-384	2	CLAMP,HOSE # 16
15	0304-442	1	HOSE,RES.
16	0200-325	1	O-RING,FILTER CAP
17	0304-621	1	ADAPTER,4MJ-6MB-4MJ
18	0200-221	1	GASKET,COVER,ACCESS
19	8104-132	4	CAPSCREW,HH 5/16-24UNFx 1 GD 8
20	0310-321	1	ADAPTER,12MFFOR-12MB90ADAPTER
21	0310-338	2	CADAPTER,CAP,8FFOR 8FNL-S

ITEM 16 INCLUDES ALL IDENTIFIED O-RINGS

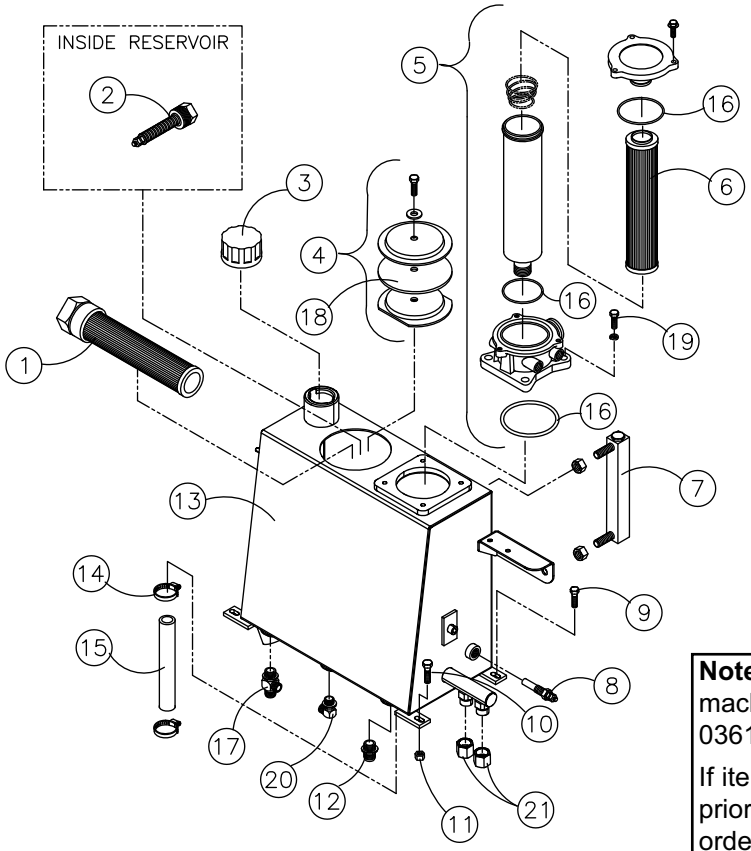

Note: Item(s) 21 are used only on machines prior to serial number: 03611

If item 13 is needed for machines prior to serial number: 03611, order service kit: 2031-046 which includes item(s) 21.

HYDRAULIC CONTROL ASSEMBLY (Serial #: DTC 03056-03610)

REF. NO.	PART NUMBER	QTY.	DESCRIPTION
1	0118-164	1	SPOOL,SOLENOID,3POSITION,4WAY
2	0201-263	1	ASSY,JOYSTICK,RH
3	0201-625	1	VALVE,SELF-LEVELING
4	2030-113	1	TUBE,LEVELER,FRONT
5	2030-111	1	TUBE,LEVELER,REAR
6	8104-040	8	CAPSCREW,HH 1/4-28UNFx .75 GD8
7	8040-396	8	NUT,HEX,NYLOCK,1/4-28 UNF,ZN
8	0307-882	2	TIE,CABLE,BLACK,18.1",W/STL IN
9	2030-062	1	ASSY,LINE,CONTROL,UP,LOADER
10	2030-059	1	ASSY,LINE,CONTROL,DUMP,BUCKET
11	2030-110	1	TUBE,BUCKET,LOWER,LEVELER
12	0201-311	8	ADAPTER,FS6400-04-04-0
13	0310-330	2	ADAPTER,10MFFOR-8MB-90
14	0201-658	2	ADAPTER,10MFFOR-8MB-S
15	0310-318	4	ADAPTER,10MFFOR-10MB
16	0310-313	1	ADAPTER,12MFFOR-12MB
17	0201-309	18	ADAPTER,FS6400-04-06-0
18	0201-319	1	ADAPTER,FS6801-04-06-NW0
19	0310-321	1	ADAPTER,12MFFOR-12MB90
20	0304-020	1	VALVE,LOADER
21	2030-067	1	ASSY,LINE,CONTROL,TOP,AUX
22	2030-057	1	ASSY,LINE,CONTROL,DOWN,LOADER
23	2030-055	1	ASSY,LINE,CONTROL,CURL,BUCKET
24	0200-330	1	BRACKET,FILTER
25	2030-064	1	ASSY,LINE,CONTROL,BOTTOM,AUX.
26	0201-264	1	ASSY,JOYSTICK,LH
27	0201-314	3	ADAPTER,FS6801-04-04-NW0
28	2030-004	1	TUBE,AUX,LOWER,VALVE
29	2030-003	1	TUBE,AUX,TOP,VALVE
30	0304-395	2	CLAMP,PILOT LINES
31	2030-052	1	HOSE,4G1,4FFORX90S,4FFORX,47.5
32	2030-050	1	HOSE,4G1,4FFORX,4FFORX,51.00"
33	2030-049	1	HOSE,4G1,4FFORX,4FFORX,47.00"
34	2030-054	1	HOSE,4G1,6FFORX90S,4FFORX,48.0
35	2030-053	2	HOSE,4G1,4FFORX90S,4FFORX,62.0
36	0310-339	2	ADAPTER,CAP,10FFOR
37	2030-048	1	HOSE,4G1,4FFORX90S,4FJX,52.00"
38	0310-329	2	ADAPTER,6MFFOR-6MB
39	0200-326	1	ADAPTER,TEST PORT,#4 BLK
40	0201-557	1	VALVE,RELIEF,PORT,3000PSI
41	2030-036	1	HOSE,4G1,4FFORX90M,6FFORX,36.0
42	0200-364	5	SOLENOID,W/DEUTSCH CONNECTOR
43	0118-165	2	SPOOL,SOLENOID,2POSITION,3WAY
44	2030-112	1	TUBE,BUCKET,UPPER,LEVELER
45	2030-051	1	HOSE,4G1,4FFORX90S,4FFORX,41.5
46	2030-071	2	HOSE,10M4K,10FFORX,10FFORX,22.
47	0304-441	1	SWITCH,PRESSURE
48	2030-103	1	TUBE,LEVELER,TOP
49	2030-118	1	TUBE,RETURN,VALVE
50	2030-005	1	TUBE,BOOM,LOWER,VALVE
51	2030-104	1	TUBE,BOOM,LEVELER
52	0201-668	2	ADAPTER,FF6801-10-10NWO
53	0201-152	2	GRIP,CONTROL
54	0201-775	1	BOOT,JOYSTICK,RH
55	0304-516	1	MAGNET,DETENT
56	0201-774	1	BOOT,JOYSTICK,LH
57	0304-842	1	VALVE,ANTI-VOID
58	2030-011	1	TUBE,BOOM,UPPER,VALVE

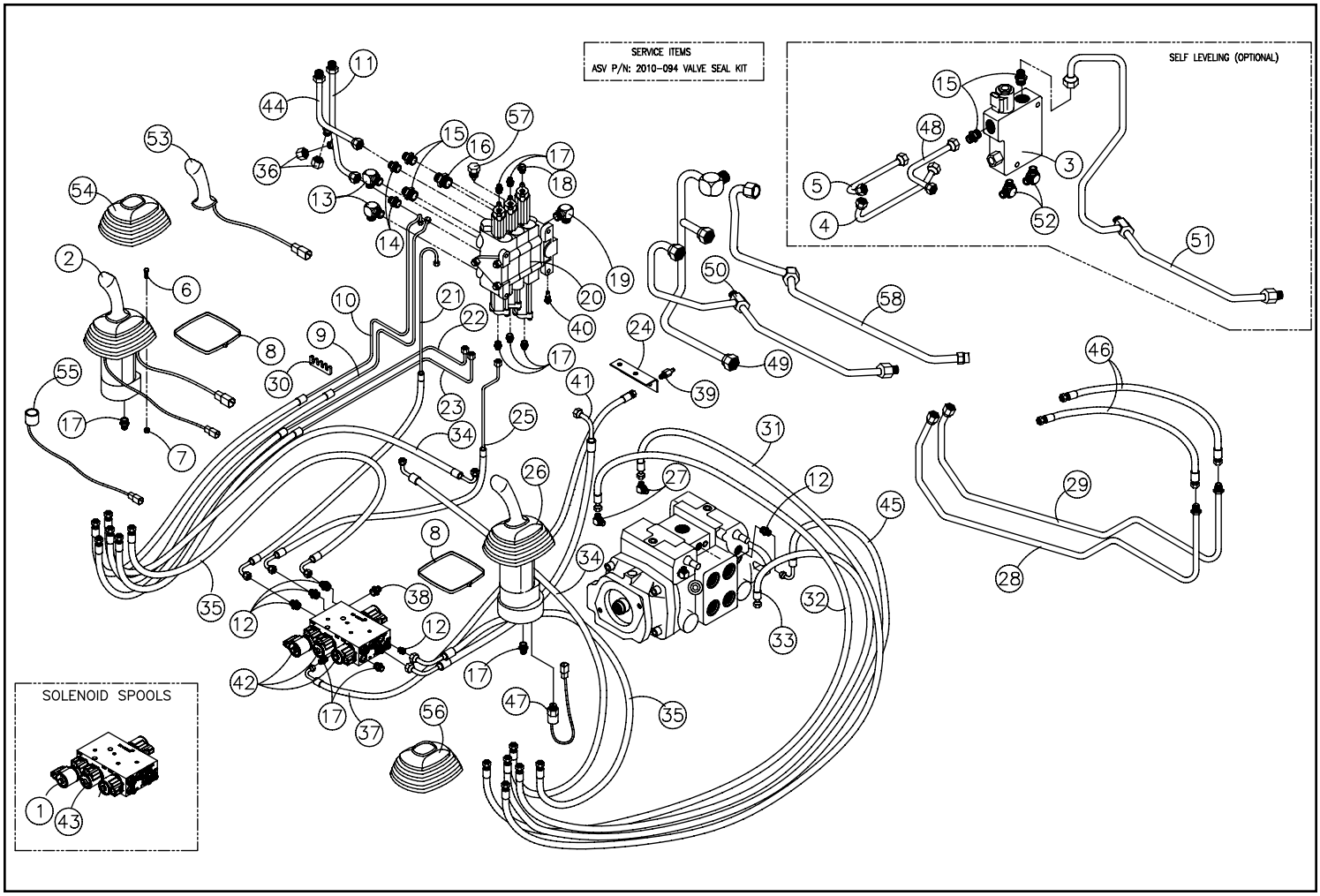

HYDRAULIC CONTROL ASSEMBLY (Serial #: DTC 03611-Current)

REF. NO.	PART NUMBER	QTY.	DESCRIPTION
1	2030-071	2	HOSE,10M4K,10FFORX,10FFORX,22.
2	2030-003	1	TUBE,AUX,TOP,VALVE
3	2030-004	1	TUBE,AUX,LOWER,VALVE
4	0310-328	1	ADAPTER,6MFFOR-6MB-90
5	2031-028	2	HOSE -6 1000PSI 6FFORX 6FFORX 41.75"
6	2031-029	1	HOSE -6 1000PSI 6FFORX 6FFORX 37.0"
7	0310-329	4	ADAPTER,6MFFOR-6MB
8	2031-027	1	HOSE -6 1000PSI 6FFORX 6FFORX 57.5"
9	0304-441	1	SWITCH,PRESSURE NASON
10	0201-309	18	ADAPTER,FS6400-04-06-0
11	0201-264	1	ASSY,JOYSTICK,LH
12	0307-882	2	TIE,CABLE,BLACK,18.1",W/STL INSERT BT-5LH-LO
13	2030-054	1	HOSE,4G1,6FFORX90S,4FFORX,48.00"
14	2030-053	2	HOSE,4G1,4FFORX90S
15	2030-036	1	HOSE,4G1,4FFORX90M,6FFORX,36.0
16	2030-048	1	HOSE,4G1,4FFORX90S,4FJX,52.00"
17	0201-311	8	ADAPTER,FS6400-04-04-0
18	0200-364	5	SOLENOID,W/DEUTSCH CONNECTOR
19	2030-064	1	ASSY,LINE,CONTROL,BOTTOM,AUX.
20	2030-067	1	ASSY,LINE,CONTROL,TOP,AUX
21	0118-164	1	SPOOL,SOLENOID,3POSITION,4WAY
22	0118-165	2	SPOOL,SOLENOID,2POSITION,3WAY
23	0304-516	1	MAGNET,DETENT
24	0201-263	1	ASSY,JOYSTICK,RH 08350893
25	0201-152	2	GRIP,CONTROL
26	0201-775	2	BOOT,JOYSTICK,RH
27	8104-040	8	CAPSCREW,HH 1/4-28UNFx .75 GD8
28	8040-396	8	NUT,HEX,NYLOCK,1/4-28 UNF,ZN
29	2030-055	1	ASSY,LINE,CONTROL,CURL,BUCKET
30	2030-057	1	ASSY,LINE,CONTROL,DOWN,LOADER
31	2030-059	1	ASSY,LINE,CONTROL,DUMP,BUCKET
32	2030-062	1	ASSY,LINE,CONTROL,UP,LOADER
33	0304-395	2	CLAMP,PILOT LINES
34	0310-330	2	ADAPTER,10MFFOR-8MB-90
35	0201-658	2	ADAPTER,10MFFOR-8MB-SV
36	0310-339	2	ADAPTER,CAP,10FFOR 6V9831(FS0304-C-10)
37	2030-112	1	TUBE,BUCKET,UPPER,LEVELER
38	2030-110	1	TUBE,BUCKET,LOWER,LEVELER
39	0310-318	4	ADAPTER,10MFFOR-10MB
40	0310-313	1	ADAPTER,12MFFOR-12MB
41	0304-842	1	VALVE,ANTI-VOID 5475
42	0201-319	1	ADAPTER,FS6801-04-06-NW0
43	0310-321	1	ADAPTER,12MFFOR-12MB90
44	0304-020	1	VALVE,LOADER HUSCO 5000-C368
45	0201-557	1	VALVE,RELIEF,PORT,3000PSI
46	0200-330	1	BRACKET,FILTER
47	0200-326	1	ADAPTER,TEST PORT,#4 BLK
48	2030-118	1	TUBE,RETURN,VALVE
49	2030-005	1	TUBE,BOOM,LOWER,VALVE
50	2030-011	1	TUBE,BOOM,UPPER,VALVE
51	2030-111	1	TUBE,LEVELER,REAR
52	2030-113	1	TUBE,LEVELER,FRONT
53	2030-103	1	TUBE,LEVELER,TOP
54	0201-668	2	ADAPTER,FS6801-10-10NWO
55	0201-625	1	VALVE,SELF-LEVELING
56	2030-104	1	TUBE,BOOM,LEVELER

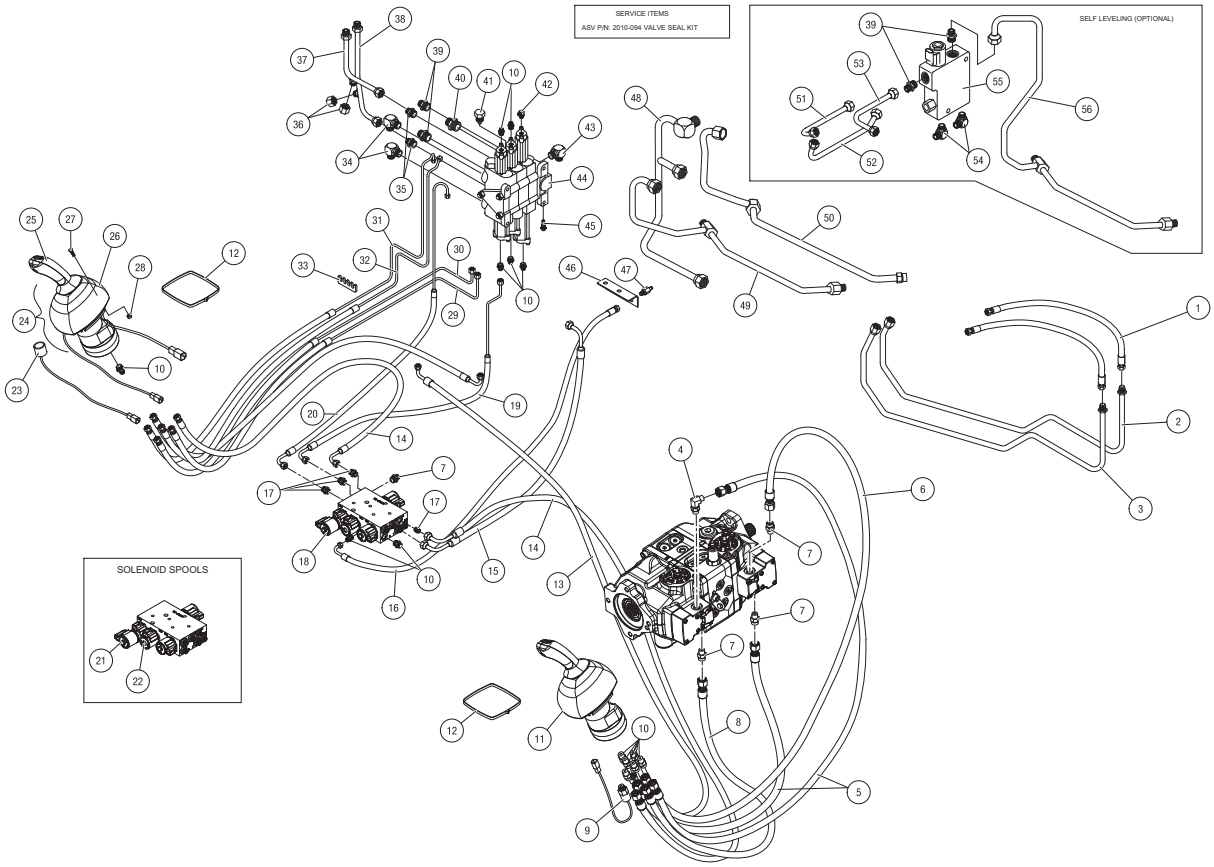

DRIVE/AUXILIARY PUMP ASSEMBLY (Serial #: DTC 03056-03610)

REF. NO.	PART NUMBER	QTY.	DESCRIPTION
1	2030-045	2	HOSE,4G1,4FFORX90S,4FFORX,32.5
2	2030-224	1	MANIFOLD,PILOT GENERATION
3	0201-311	3	ADAPTER,FS6400-04-04-0
4	8102-222	2	CAPSCREW,HH,3/8-16 UNCx1.0,GD8
5	2030-043	1	HOSE,12G6K,12FFORX90L,12FFORX,
6	2030-044	1	HOSE,12G6K,12FFORX90S,12FFORX,
7	2030-039	1	HOSE,8G1,8FFORX,8FFORX-45,41.0
8	0310-329	2	ADAPTER,6MFFOR-6MB
9	2030-038	1	HOSE,8G1,8FFORX,8FFORX-45,56.5
10	2030-091	1	TUBE,CHARGE,PRESSURE
11	2030-041	1	HOSE,12G6K,12FFORX90S,12FFORX
12	2030-042	1	HOSE,12G6K,12FFORX90L,12FFORX
13	0310-314	1	ADAPTER,10MFFOR-8MB
14	0200-172	1	COUPLING,SPLIT,CODE 61,0.75"
15	0201-658	1	ADAPTER,10MFFOR-8MB-S
16	0310-321	2	ADAPTER,12MFFOR-12MB90
17	0200-104	1	HUB,PUMP DRIVE,1 1/4" x 14 TOO
18	2045-998	1	PUMP,TANDEM,TRANSMISSION
19	0201-316	2	ADAPTER,FS6801-L-12-12-NW0
20	2030-072	1	MANIFOLD,DRAIN,CASE
21	2030-037	1	HOSE,12M4K,12FL90M,12FFORX,37.
22	2030-047	1	HOSE,6G1,6FFORX90S,6FFORX,41.5
23	0200-342	1	HOSE,RES,1.5”IDx10.5”
24	0300-687	4	CLAMP,HOSE,1.5,#24
25	0200-355	1	ADAPTER,SPLINE
26	0307-169	1	O-RING,AUXILIARY PUMP
27	0200-124	1	TUBE,INTAKE,RC 50
28	0200-171	1	COUPLING,SPLIT,CODE 61,1.25"
29	0200-119	1	PUMP,HYD,AUX
30	8051-272	2	WASHER,SPRING LOCK,3/8,ZN
31	2030-046	1	HOSE,6G1,6FFORX90S,6FFORX90L,2
32	0310-468	8	CAPSCREW,HH,M10x1.5x35,ZINC PL
33	0301-781	8	WASHER,SPLIT LOCK,10mm,ZN
34	0310-294	1	O-RING,#222,1.50x1.75x.13
35	0201-558	1	O-RING,0.984IDx0.139CS
36	0403-001	4	O-RING VALVE RELIEF
37	0403-002	4	O-RING BACK-UP VALVE RELIEF
38	0201-876	4	VALVE,RELIEF,5500 PSI
39	0403-100	1	RELIEF POSI POWER

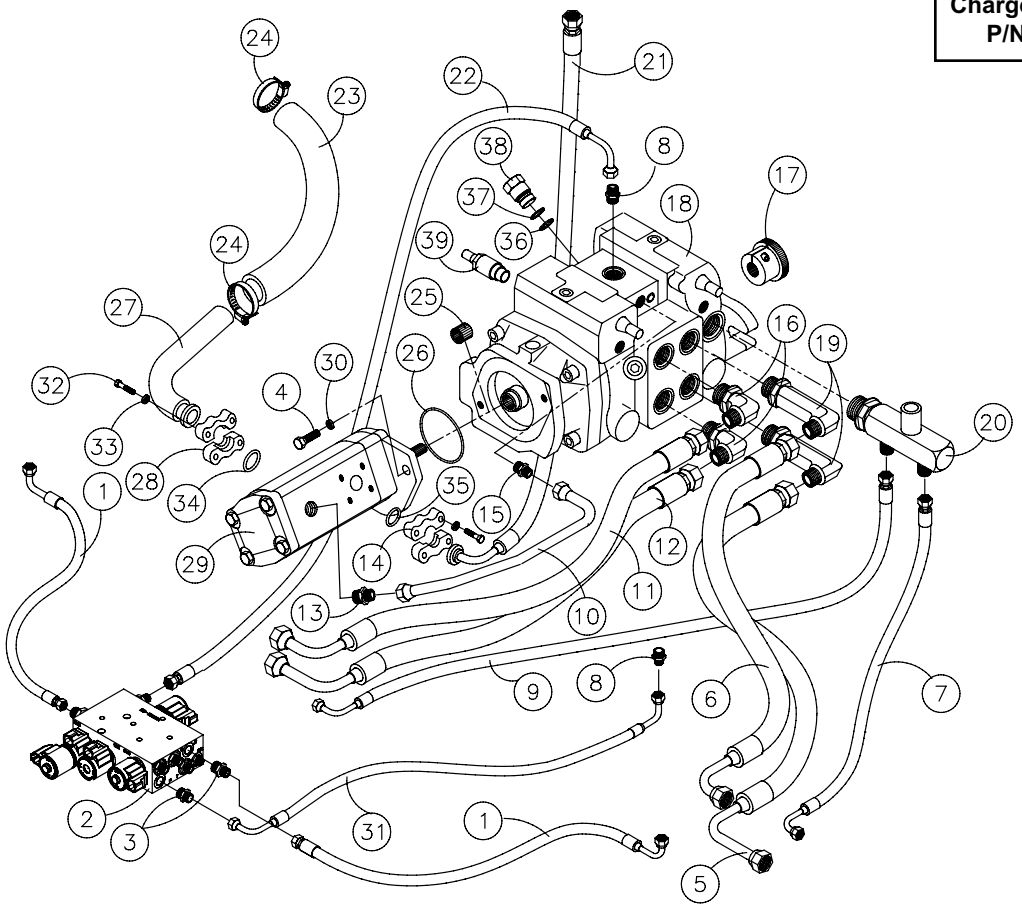

DRIVE/AUXILIARY PUMP ASSEMBLY (Serial #: DTC 03611-Current)

REF. NO.	PART NUMBER	QTY.	DESCRIPTION
1	2031-041	1	HOSE, 8G1, 8FFORX45,8FFORX,52.50
2	2031-042	1	HOSE, 8G1, 8FFORX45,8FFORX,61.50
3	2031-023	1	HOSE, CASE DRAIN TANDEM PUMP TO TANK
4	0090-423	1	ADAPTER 4601-16-12-NOW
5	2031-031	1	HOSE -6 1000PSI 6FFORX 6FFORX 28.5
6	0201-309	2	ADAPTER,FS6400-04-06-0
7	0310-345	2	ADAPTER,8MFFOR--8MB
8	0310-313	4	ADAPTER,12MFFOR-12MB
9	2031-034	1	HOSE, -12, 6000 PSI, 12FFORX90L, 12"
10	2031-033	1	HOSE, -12, 6000 PSI, 12FFORX90L, 12FFORX90M, 34.5
11	2030-263	2	HOSE 4GI4FFORX90S4FFORX, 32.25"
12	0201-311	2	ADAPTER,FS6400-04-04-0
13	2030-224	1	BLOCK PILOT GEN W/ QA PORTS
14	2031-030	1	HOSE -6 1000PSI 6FFORX 6FFORX 22.8
15	0404-370	1	KIT RELIEF VALVE CHARGE
16	2031-035	1	HOSE, -12, 6000 PSI, 12FFORX90L, 12FFORX90M, 34.5
17	2031-036	1	HOSE, -12, 6000 PSI, 12FFORX90L, 12FFORX90M, 30.25
18	0700-170	4	WASHER,21 x 22 x 2.5
19	0310-468	4	CAPSCREW,HH,M10x1.5x35,ZINC
20	2031-014	1	WLMT TUBE SUCTION AUX PUMP
21	0300-687	2	CLAMP,HOSE,1.5,#24 H24"
22	0304-528	1	HOSE,RES,1.5x9"
23	0403-100	1	RELIEF POSI POWER
24	0310-345	1	ADAPTER,8MFFOR--8MB
25	2031-021	1	TUBE DA BLOCK TO TANDEM HYD TUBE
26	2051-810	1	ADAPTER 8MFOR-10MB
27	0310-329	2	ADAPTER,6MFFOR-6MB
28	8102-230	4	CAPSCREW,HH 3/8-16UNCx2.75 GD8"
29	0090-234	1	ADAPTER 8FFOR-12MB FS6400-08-12-O
30	2031-022	1	TUBE CASE DRAIN DA BLK TO PMP HYD TUBE .0375" O.D.
31	0310-346	1	ADAPTER,8MFFOR-8MB-90
32	8040-486	4	NUT,HEX,NYLOCK,3/8-16 UNC,ZN
33	2030-037	1	HOSE,12M4K,12FL90M,12FFORX,37
34	0310-328	1	ADAPTER,6MFFOR-6MB-90
35	0200-104	1	HUB,PUMP DRIVE,1 1/4"" x 14
36	2031-004	1	PUMP TANDEM H1
37	0201-317	2	ADAPTER,FS6801-12-16-NW0
38	2030-097	2	ADAPTER,FS6400-12-16-0"
39	0200-172	2	COUPLING,SPLIT,CODE 61,0.75
40	0201-558	2	O-RING,0.984IDx0.139CS
41	2031-011	1	TUBE CHARGE PUMP TO DA HYD TUBE .05
42	0090-228	1	ADAPTER 8FFORX-10MB-90 NWO FS6801-08-10-NWO
43	0200-119	1	PUMP,HYD,AUX
44	8102-222	2	CAPSCREW,HH,3/8-16 UNCx1.0,GD8,ZN
45	8051-272	2	WASHER,SPRING LOCK,3/8,ZN
46	0307-169	1	O-RING,4.0"" ID x 4-3/16"" OD BUNA 2-
47	0200-355	1	ADAPTER,SPLINE
48	0200-171	2	COUPLING,SPLIT,CODE 61,1.25"
49	0404-368	4	ASSEMBLY PLUG VALVE SCR

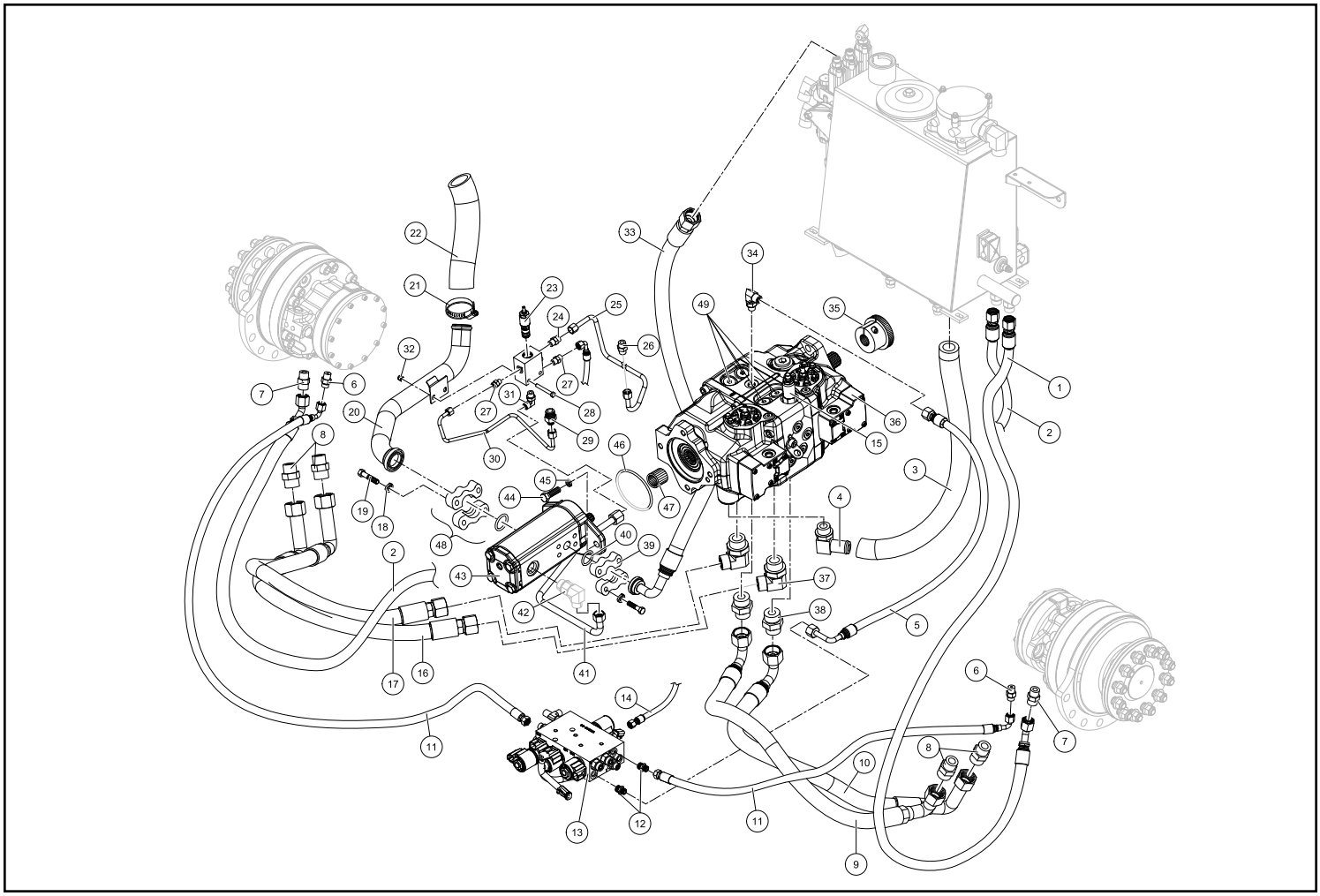

ENGINE ASSEMBLY (Serial #: DTC 03056-Current)

REF. NO.	PART NUMBER	QTY.	DESCRIPTION
1	8040-726	4	NUT,HEX,NYLOCK,5/8-11 UNC,ZN
2	0304-948	4	LIMITER,MNT,MOTOR
3	0300-458	4	MOUNT,ENGINE,REAR
4	0300-686	2	CLAMP,HOSE,2.0,#32
5	0200-156	1	ADAPTER,RUBBER,2.5X2.0
6	0200-157	1	ASSY,CLEANER,AIR
7	8102-591	4	CAPSCREW,HH,5/8-11x3,YZ
8	0200-165	1	WLMT,MNT,ENGINE,RH
9	0304-900	1	MNT,PLATE,PUMP
10	0304-507	1	PLATE,FLYWHEEL
11	0200-611	1	ENGINE,PERKINS,404D-22
12	0200-166	1	WLMT,MNT,ENGINE,LH
13	0200-562	1	STARTER (PERKINS #185086600)
14	0304-503	1	VALVE,DUST
15	0200-339	1	FILTER,AIR,PRIMARY
16	0200-340	1	FILTER,AIR,SECONDARY
17	0200-158	1	BAND,MNT,AIR CLEANER
18	0200-329	5	CAPSCREW,HH,M8x1.25x16MM
19	8051-242	17	WASHER,SPRING LOCK,5/16,ZN
20	0200-034	1	MNT,ENGINE,REAR,RH
21	8040-426	2	NUT,HEX,NYLOCK,5/16-18 UNC,ZN
22	8102-130	7	CAPSCREW,HH 5/16-18x3/4,GR8
23	8050-247	2	WASHER,WROUGHT,5/16,SAE,ZN
24	0300-211	4	CAPSCREW,M8 x 1.25 x 25MM LG
25	0304-511	1	GASKET,MUFFLER
26	0200-334	1	TAILPIPE, OUTLET
27	0300-263	1	CLAMP,MUFFLER,2"
28	0200-122	1	MUFFLER,50 SERIES
29	2030-632	1	BELT,FAN
30	8040-246	2	NUT,HEX,NYLOCK,10-24 UNC,ZN
31	0304-078	1	LEVER,THROTTLE
32	8105-429	2	CAPSCREW,SOC HD,10-24X5/8,BLZN
33	8051-431	8	WASHER,SPRING LOCK,5/8,ZN
34	0200-246	1	STRAP,HOLD-DOWN,BATTERY
35	0200-338	1	ASSY,FILTER,WATER
36	0200-160	1	BATTERY,50 SERIES
37	0304-335	2	BOLT,BATTERY,SIDEMOUNT
38	0200-219	1	WLMT,MNT,ENGINE,LH,REAR
39	0300-718	2	W/PIN,CLEVIS (THROTTLE CABLE)
40	0300-581	1	W/NUTS,U-BOLT,1/4-20

REF. NO.	PART NUMBER	QTY.	DESCRIPTION
41	0304-835	1	BULB,PRIMER
42	0300-455	1	CABLE,THROTTLE
43	0200-234	1	CABLE,BATTERY,NEGATIVE
44	0200-199	1	CABLE,BATTERY,POSITIVE
45	0304-131	8	CAPSCREW,HH, M14-1.5 X30MM,GD8
46	0200-178	1	WLMT,BRKT,MNT,FILTER
47	0200-377	1	FILTER,OIL,ENGINE (PERKINS #140517050)
48	0300-732	4	CLAMP,HOSE,#4
49	0304-509	1	HOSE,FUEL,5/16x26"
50	0304-510	1	HOSE,FUEL,5/16x34"
51	0200-215	1	ASSY,FILTER,FUEL,PERKINS,404C22
52	0200-213	1	FILTER,FUEL,PERKINS,404C22
53	8102-220	2	CAPSCREW,HH,3/8-16x0.75",GD8
54	0310-501	1	GUARD,BATTERY
55	8040-486	2	NUT,HEX,NYLOCK,3/8-16 UNC,ZN
56	8102-132	8	CAPSCREW,HH,5/16-18UNCx1.0 GD8
57	0300-546	1	CABLE,GROUND,ENGINE
58	0200-159	1	BRKT,MNT,AIR CLEANER
59	8051-272	21	WASHER,SPRING LOCK,3/8,ZN
60	8102-222	20	CAPSCREW,HH,3/8-16 UNCx1.0,GD8
61	8102-138	1	CAPSCREW,HH,5/16-18 X 2.25 GD8
62	0304-351	1	CHANNEL,TREAD,LOADER RC-30
63	0200-335	6	SPRING,TAILPIPE
64	0200-333	1	TAILPIPE,CENTER
65	0200-332	1	TAILPIPE,W/MTG FLANGE
66	0200-312	1	ASSY,TAILPIPE
67	0304-549	1	HEATER,BLOCK
68	0200-313	1	INDICATOR,AIRCLEANER
69	0200-617	1	SCREEN,FILTER,WATER
70	0200-560	1	CAP,AIR CLEANER
71	2030-279	1	GUARD,RAIN, STARTER

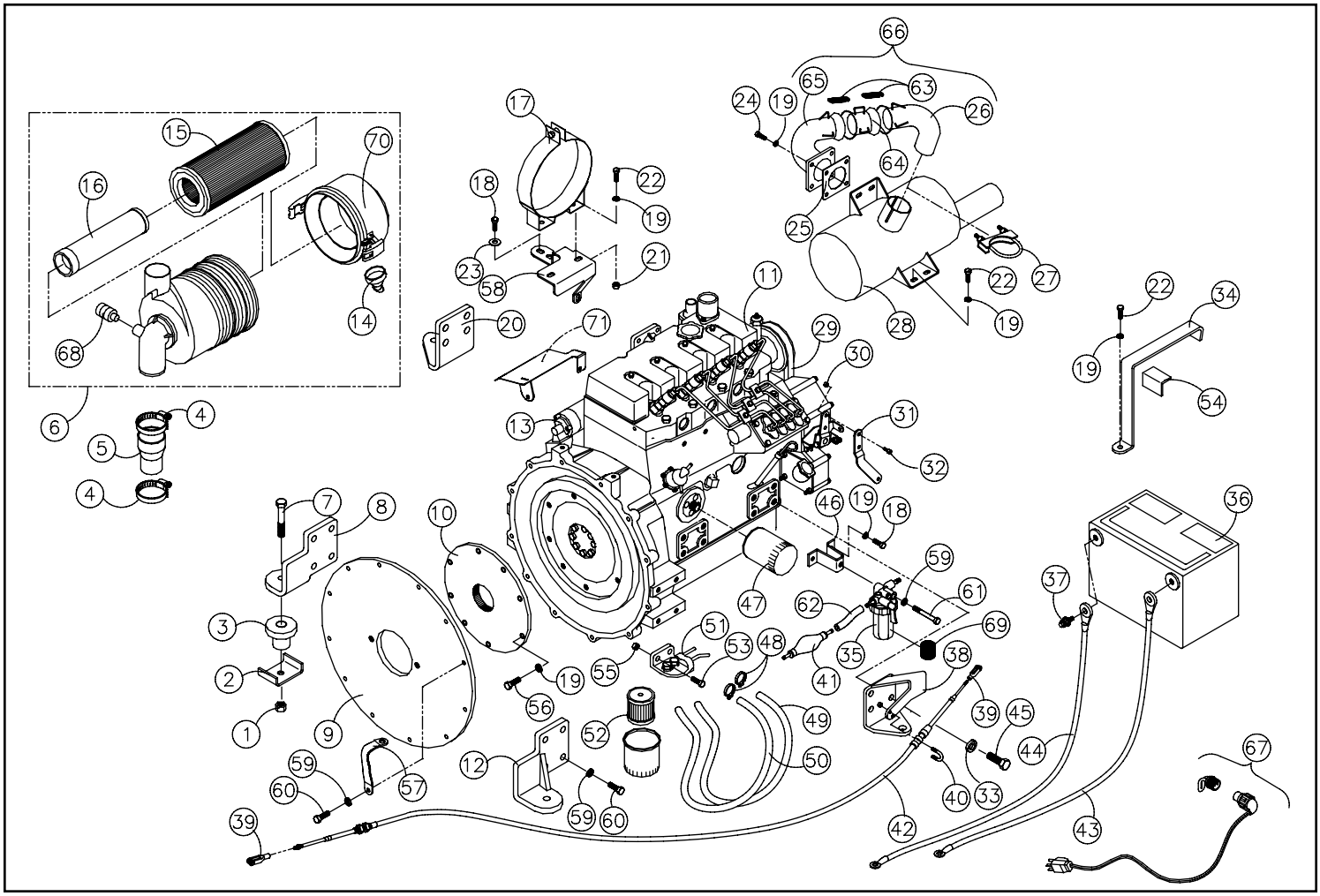

FUSE PANEL ASSEMBLY (Serial #: DTC 03056-Current)

REF. NO.	PART NUMBER	QTY.	DESCRIPTION
1	2030-273	1	HARNESS,W/FUSE PANEL
2	0310-807	2	RELAY,MINI, 35 AMP
3	0310-805	1	FUSE,MAXI, 80 AMP
4	0304-519	6	RELAY,PLUG,GLOW
5	0310-800	1	FUSE,MAXI,20 AMP
6	0310-803	2	FUSE,MAXI, 50 AMP
7	0310-802	2	FUSE,MAXI, 40 AMP
8	0310-794	5	FUSE,MINI, 5 AMP
9	0310-795	6	FUSE,MINI,10 AMP
10	0310-797	2	FUSE,MINI,20 AMP
11	0310-806	4	RELAY,MICRO, 20 AMP
12	0310-811	1	DIODE, 3 AMP
13	0310-796	1	FUSE,MINI,15 AMP
14	0310-801	1	FUSE,MAXI, 30 AMP
15	0310-798	1	FUSE,MINI,25 AMP
16	2030-196	1	COVER,PANEL,FUSE,W/DECALS,RC60
17	0200-510	1	RESISTOR,33OHM/3WATT,OHMITE43F
18	0310-799	1	FUSE,MINII, 30 AMP
19	0310-793	1	FUSE,MINI,2 AMP

REF. NO.	PART NUMBER	QTY.	DESCRIPTION

Wiring Harnesses

P/N: 2030-275 2 Gauges (standard)
P/N: 2030-276 4 Gauges (optional)

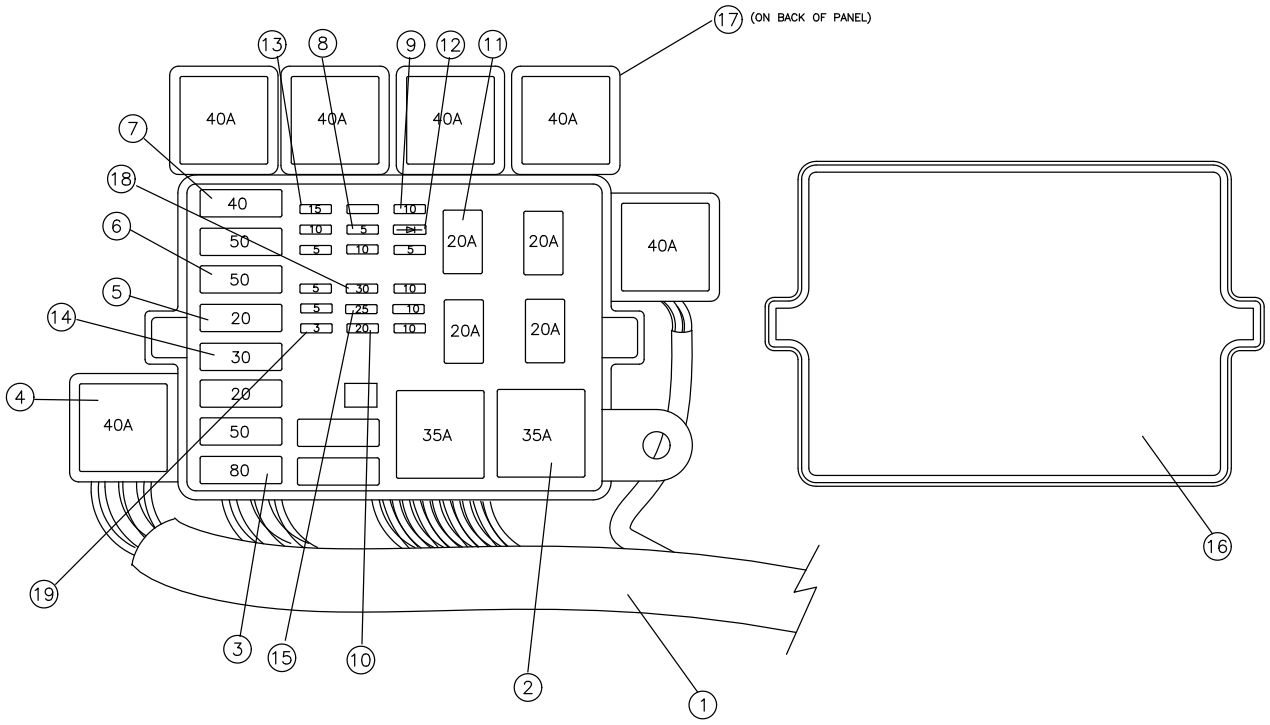

TORSION AXLE ASSEMBLY (Serial #: DTC 03056-03353)

REF. NO.	PART NUMBER	QTY.	DESCRIPTION
1	0702-441	2	TRACK,15 x 165.9
2	0200-162	1	AXLE,TORSION,FRONT
3	0200-163	1	AXLE,TORSION,REAR
4	8102-586	16	CAPSCREW,HH,5/8-11X1.75ZN,GD8
5	8040-726	16	NUT,HEX,NYLOCK,5/8-11 UNC,ZN
6	8050-408	32	WASHER,FLAT,5/8,THICK
7	8051-431	16	WASHER,SPRING LOCK,5/8,ZN
8	0200-341	4	CAPSCREW,HH,3/4-16x2.25,GD8
9	8051-440	4	WASHER,SPRING LOCK,3/4,ZN
10	0200-287	4	WASHER,1/2"THICK

REF. NO.	PART NUMBER	QTY.	DESCRIPTION

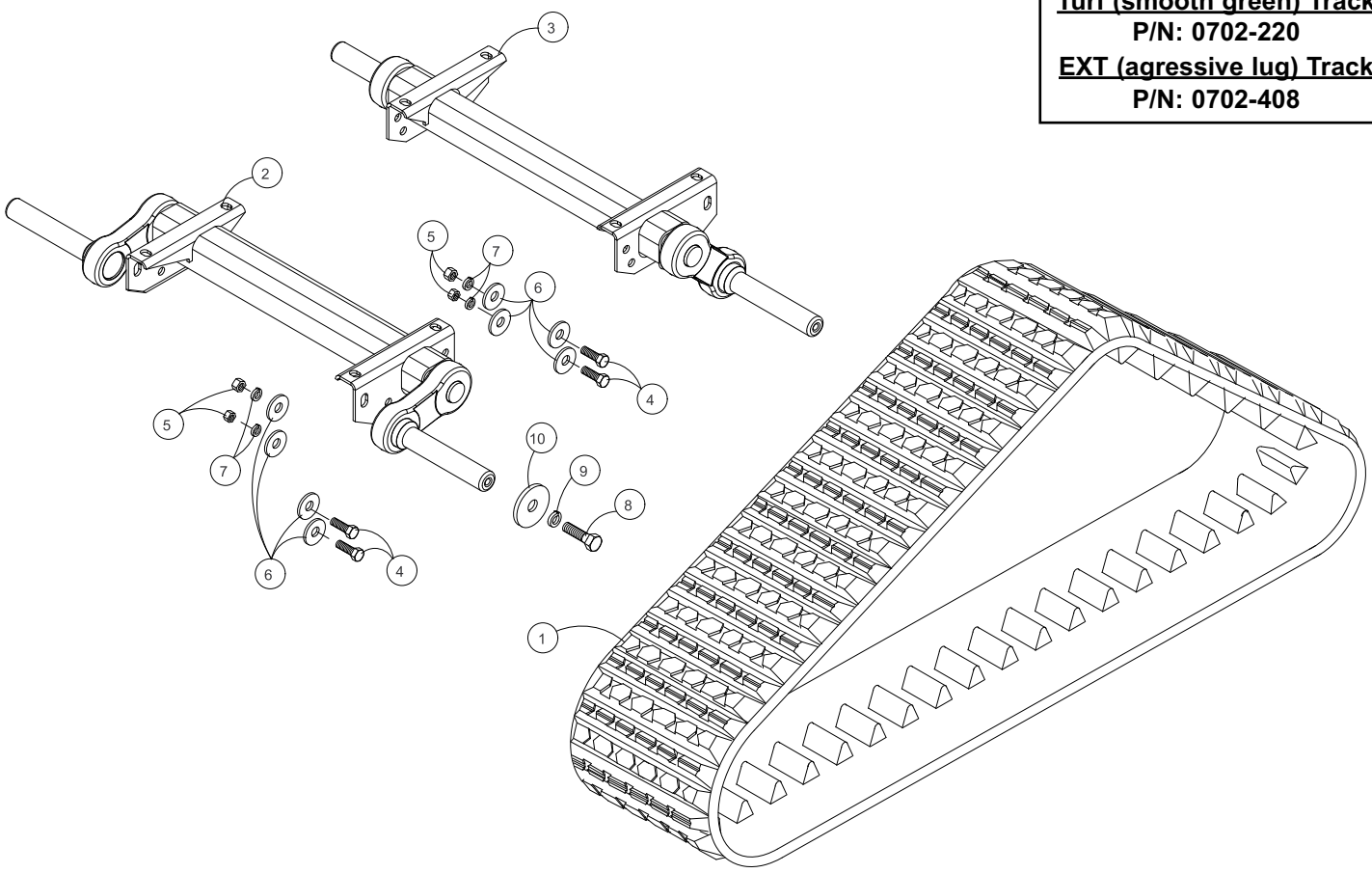

TORSION AXLE ASSEMBLY (Serial #: DTC 03354-Current)

REF. NO.	PART NUMBER	QTY.	DESCRIPTION
1	0702-441	2	TRACK,15 x 165.9
2	2030-646	1	AXLE TORSION FRONT PT50
3	2030-647	1	AXLE TORSION REAR PT50
4	8102-586	16	CAPSCREW,HH,5/8-11X1.75ZN,GD8
5	8040-726	16	NUT,HEX,NYLOCK,5/8-11 UNC,ZN
6	8050-408	32	WASHER,FLAT,5/8,THICK
7	8051-431	16	WASHER,SPRING LOCK,5/8,ZN
8	0200-341	4	CAPSCREW,HH,3/4-16x2.25,GD8
9	8051-440	4	WASHER,SPRING LOCK,3/4,ZN
10	0200-287	4	WASHER,1/2"THICK
11	0702-503	4	TUBE SPACER

REF. NO.	PART NUMBER	QTY.	DESCRIPTION

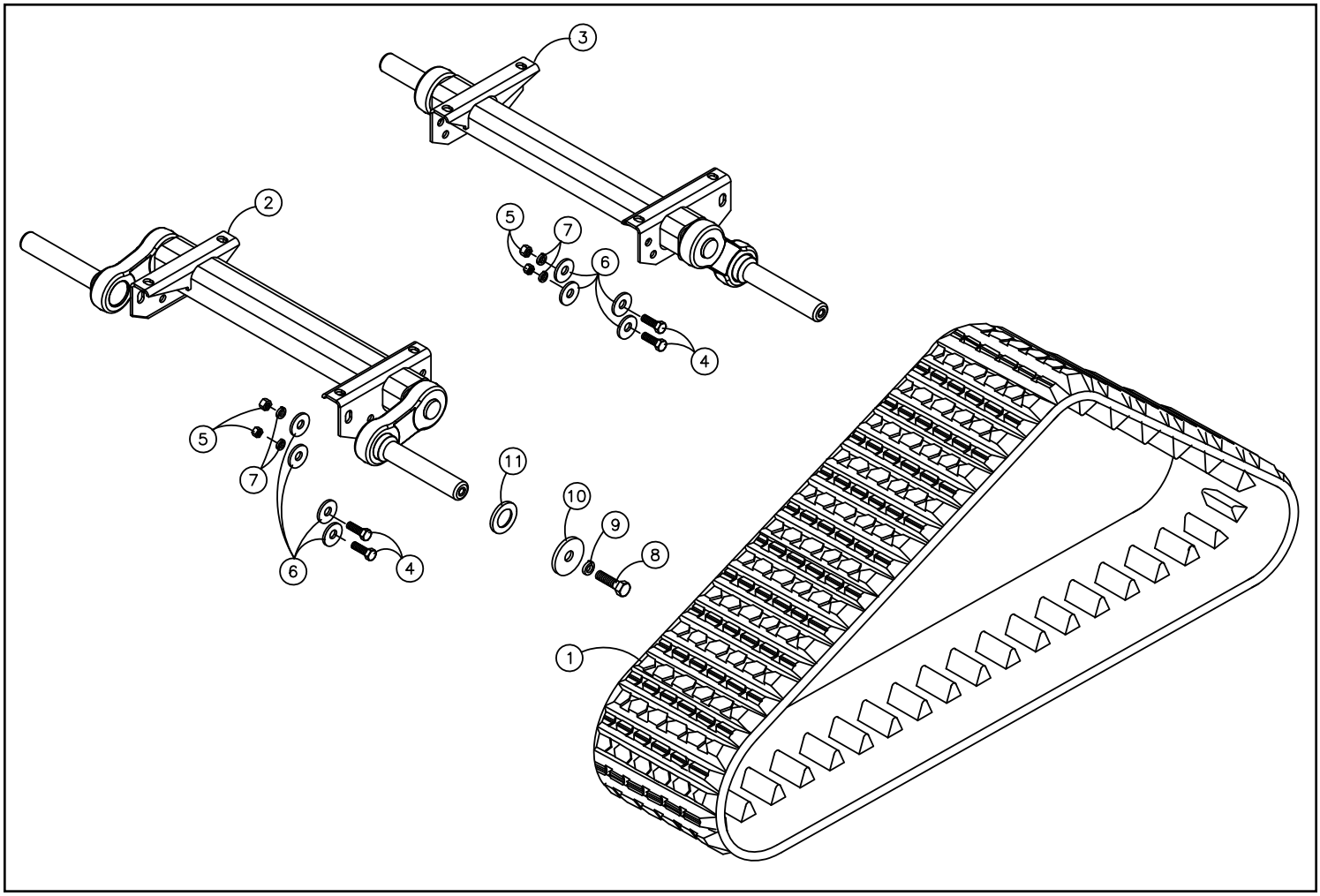

UNDERCARRIAGE ASSEMBLY RT (Serial #: DTC 03056-03129)

REF. NO.	PART NUMBER	QTY.	DESCRIPTION
1	0702-371	4	SNAP RING .093 x .3.25
2	0702-365	4	CAP HUB RUBBER BONDED
3	2035-595	4	NUT HEX JAM LOCKING 7/8-9 UNC
4	0702-364	4	WASHER HARD .25 x 2.125 x .935
5	2035-659	32	CAPSCREW HH 1/2-13 x 1.375 GR8
6	0090-136	32	WASHER HARD 1.0 X .531 X .197
7	0702-264	2	WHEEL 14" W/PLATE
8	0702-363	8	BEARING CONE
9	0702-362	8	BEARING CUP
10	0702-368	4	SEAL LIP
11	2035-479	1	PLUG 1/8" NPT HEX CS
12	0702-253	8	ASSY, WHEEL 10”
13	2035-391	4	RETAINER INNER 53MM
14	2035-438	4	SEAL EKK
15	0702-367	4	WLMT RETAINER 53MM
16	2035-596	4	O-RING 1/16 x 1.375 x 1.5 NITRILE, -028
17	2035-652	2	WHEEL 10" MACHINED 8 BOLT
18	0702-434	2	ASSY, WHEEL 10”
19	0302-435	2	FITTING,GREASE,1/8 NPT,90D
20	0702-141	8	RING,RETAINING,INTERNAL
21	0702-132	8	CAP,WHEEL
22	0304-722	10	NUT,HEX,JAM,LOCKING,3/4-10UNC,
23	0702-155	8	WASHER,BEARING
24	0702-075	16	BEARING,CONE
25	0702-076	16	BEARING,CUP
26	0702-057	1	WHEEL,10"
27	0304-118	8	SNAP,RING
28	0200-331	8	WASHER,4.05x2.1875x0.188
29	2035-214	4	BUSHING,SPRING,1.75x2.00x2.50
30	0702-317	2	WLMT AXLE WHEEL
31	0702-060	2	SPACER,AXLE
32	0300-946	2	FITTING,GREASE,1/8 NPT
33	8102-683	1	CAPSCREW,HH,3/4-10UNCx3.5 GD 8
34	0702-117	1	WLMT,ROD,LH
35	0304-117	8	GUARD,BEARING
36	0304-957	1	TENSIONER,TRACK
37	0304-077	1	NUT,HEX,JAM,1 1/4 - 7,RH
38	0702-118	1	WLMT,ROD,RH
39	8102-685	1	CAPSCREW,HH 3/4-10UNCx 4.5 GD8
40	0702-227	1	TABLE,MACHINED,RH

REF. NO.	PART NUMBER	QTY.	DESCRIPTION
41	8043-806	1	NUT,HEX,1-8 UNC,STEEL LOCK,ZN
42	8102-890	1	CAPSCREW,HH,1.0 x 8UNC x 10.0,
43	0314-304	1	WLMT,GUARD,SEAL
44	0303-217	1	SEAL,AP5,50x90x11.4
45	0307-039	1	BEARING (62092RS)
46	0700-143	1	HOUSING,SEAL,BEARING
47	0307-037	1	FLANGE,BEARING
48	8040-606	3	NUT,HEX,NYLOCK,1/2-13 UNC,ZN
49	8102-406	7	CAPSCREW,HH,1/2-13UNCx1.75,GD8
50	8051-332	7	WASHER,SPRING LOCK,1/2,ZN
51	0702-024	1	WLMT,PLATE,BEARING
52	0700-144	1	RING,SNAP,INT,85mm
53	0700-145	1	RING,SNAP,EXT,45mm
54	0307-074	1	PLUG,HOUSING,BEARING
55	0702-230	1	SPROCKET,CAST,MACHINED
56	0702-048	1	RING,SPROCKET,ALPHA
57	0200-004	12	TUBE,INNER
58	0200-003	12	TUBE,COVER
59	8102-423	12	CAPSCREW,HH,1/2-13UNCx7.25,GD8
60	8102-586	8	CAPSCREW,HH,5/8-11X1.75ZN,GD8
61	8051-431	8	WASHER,SPRING LOCK,5/8,ZN
62	0702-335	1	MOTOR HYD
63	0303-141	8	SEAL,APY,1.250x2.062x.450
64	2030-296	1	WLMT RAIL RC60
65	0210-001	12	STUD,WHEEL,M14x1.5 174862
66	0200-282	12	NUT,FLANGE,M14x1.5
67	0700-124	12	NUT,TOPLOCK,1/2-13UNC,ZN,GD8
68	0702-560	2	ASSY, HUB 10”
69	0702-374	2	ASSY, WHEEL 14”
70	0702-569	2	ASSY, HUB 14”

ITEM 62 SEAL KIT
P/N: 0403-871

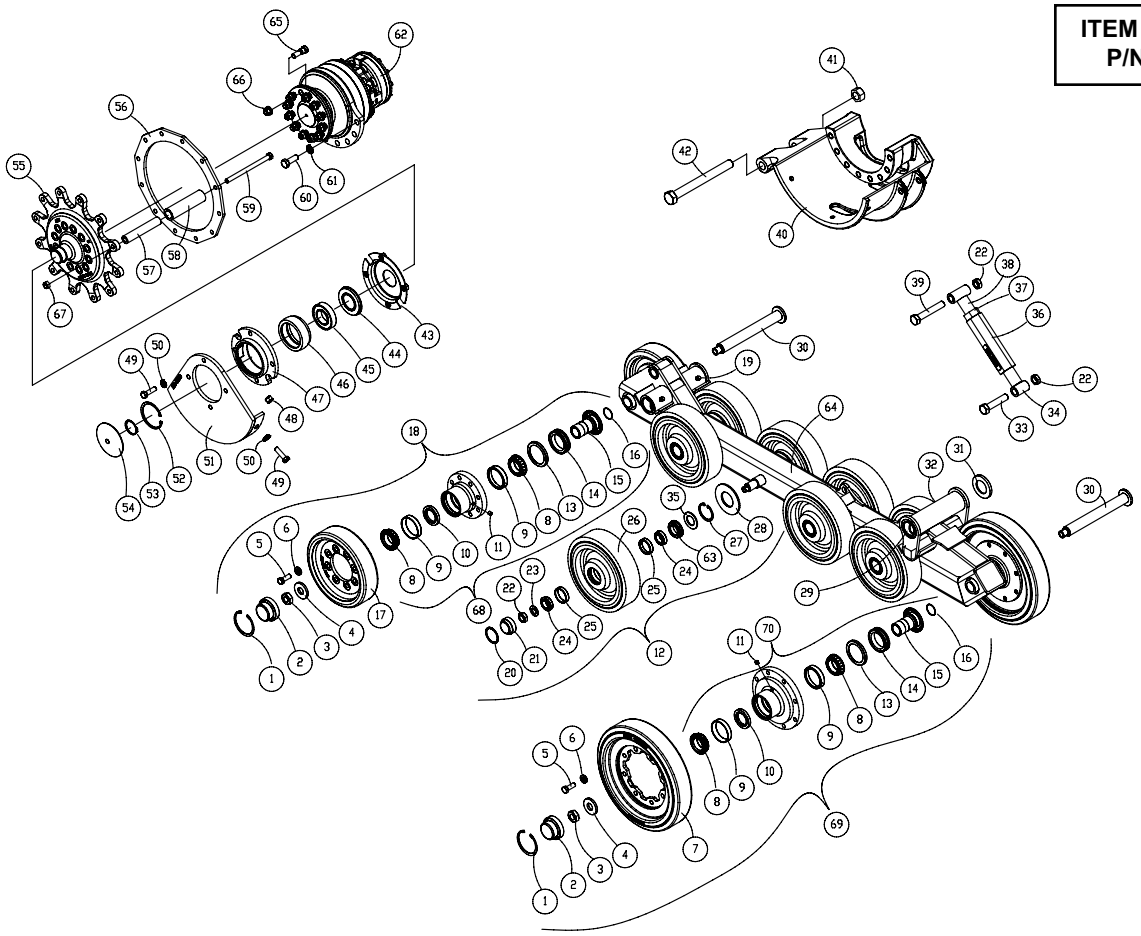

UNDERCARRIAGE ASSEMBLY RT (Serial #: DTC 03130-03356)

REF. NO.	PART NUMBER	QTY.	DESCRIPTION
1	0702-317	6	WLMT AXLE WHEEL
2	2035-596	12	O-RING 1/16 x 1.375 x 1.5 NITRILE, -028
3	0702-367	12	WLMT RETAINER 53MM
4	2035-438	12	SEAL EKK
5	2035-391	12	RETAINER INNER 53MM
6	0702-363	24	BEARING CONE
7	0702-362	24	BEARING CUP
8	0702-569	2	ASSY, HUB 14”
9	2035-479	12	PLUG 1/8" NPT HEX CS
10	0702-368	12	SEAL LIP
11	0702-264	2	WHEEL 14" W/PLATE
12	0702-371	10	SNAP RING .093 x .3.25
13	2035-644	10	WHEEL 10" ALPHA BOLT ON
14	0702-560	10	ASSY, HUB 10”
15	0702-373	10	ASSY WHEEL 10"
16	0090-136	96	WASHER HARD 1.0 X .531 X .197
17	2035-659	96	CAPSCREW HH 1/2-13 x 1.375 GR8
18	0700-144	4	RING,SNAP,INT,85mm
19	0702-365	12	CAP HUB RUBBER BONDED
20	2035-595	12	NUT HEX JAM LOCKING 7/8-9 UNC
21	0702-364	12	WASHER HARD .25 x 2.125 x .935
22	8051-332	4	WASHER,SPRING LOCK,1/2,ZN
23	8102-404	4	CAPSCREW,HH 1/2-13UNCx1.25 GD8
24	0702-294	1	END CAP 3.346 x .295
25	0700-145	1	RING,SNAP,EXT,45mm
26	0702-024	1	WLMT,PLATE,BEARING
27	0702-324	1	BEARING (6209)
28	2035-134	1	SEAL 1.975 x 3.370 x .763
29	0702-295	1	RETAINER SEAL
30	0702-293	1	HOUSING BEARING
31	0702-292	1	FLANGE BEARING
32	0702-230	1	SPROCKET,CAST,MACHINED
33	0700-124	12	NUT,TOPLOCK,1/2-13UNC,ZN,GD8
34	0200-003	12	TUBE,COVER
35	0200-004	12	TUBE,INNER
36	0702-048	1	RING,SPROCKET,ALPHA
37	8102-423	12	CAPSCREW,HH,1/2-13UNCx7.25,GD8
38	0210-001	12	STUD,WHEEL,M14x1.5 174862
39	0200-282	12	NUT,FLANGE,M14x1.5
40	0702-225	1	TABLE,MACHINED,RH

REF. NO.	PART NUMBER	QTY.	DESCRIPTION
41	8040-606	3	NUT,HEX,NYLOCK,1/2-13 UNC,ZN
42	8102-406	3	CAPSCREW,HH,1/2-13UNCx1.75,GD8
43	8043-806	1	NUT,HEX,1-8 UNC,STEEL LOCK,ZN
44	8102-685	1	CAPSCREW,HH 3/4-10UNCx 4.5 GD8
45	0702-308	1	WLMT RAIL ALPHA B SERIES 2
46	2035-308	1	PIN,TENSIONER,THREADED
47	2035-214	4	BUSHING,SPRING,1.75x2.00x2.50
48	0702-409	2	PLATE JOINT SWING
49	0304-077	1	NUT,HEX,JAM,1 1/4 - 7,RH
50	2035-471	1	CAPSCREW SOC HD 3/8-16 x 1
51	0702-401	1	ASSY TURNBUCKLE ALPHA
52	0304-722	1	NUT,HEX,JAM,LOCKING,3/4-10UNC,
53	8102-586	12	CAPSCREW,HH,5/8-11X1.75ZN,GD8
54	8051-431	12	WASHER,SPRING LOCK,5/8,ZN
55	0310-345	1	ADAPTER,8MFFOR--8MB
56	0201-309	1	ADAPTER,FS6400-04-06-0
57	0310-313	2	ADAPTER,12MFFOR-12MB
58	0702-335	1	MOTOR HYD
59	0702-374	2	ASSY WHEEL 14" RUBBER
60	8102-890	1	CAPSCREW,HH,1.0 x 8UNC x 10.0,
61	0702-402	1	WLMT ROD RH
62	0702-405	1	WLMT TENSIONER OPEN
63	2035-533	1	WLMT ROD TOP ALPHA
64	0702-196	1	ASSY,SPROCKET ALPHA/RC60/RC50
65	0403-674	1	ASSY HSG BEARING
66	0702-413	1	AXLE SWING JOINT
67	0702-410	1	TUBE MNT AXLE

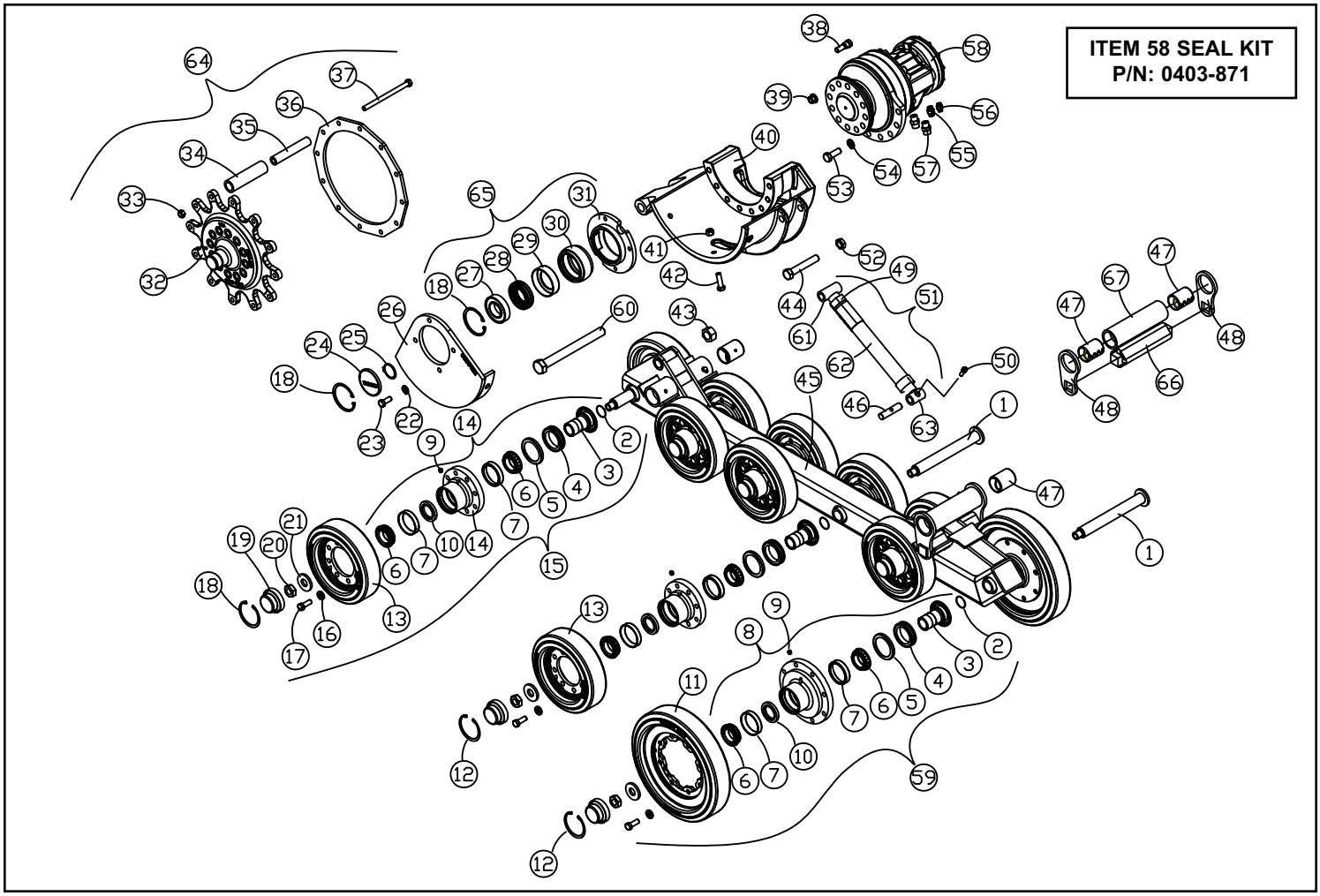

UNDERCARRIAGE ASSEMBLY RT (Serial #: DTC 03357-Current)

REF. NO.	PART NUMBER	QTY.	DESCRIPTION
1	0702-317	6	WLMT AXLE WHEEL
2	2035-596	12	O-RING 1/16 x 1.375 x 1.5 NITRILE, -028
3	0702-367	12	WLMT RETAINER 53MM
4	2035-438	12	SEAL EKK
5	2035-391	12	RETAINER INNER 53MM
6	0702-363	24	BEARING CONE
7	0702-362	24	BEARING CUP
8	0702-569	2	ASSY, HUB 14”
9	2035-479	12	PLUG 1/8" NPT HEX CS
10	0702-368	12	SEAL LIP
11	0702-264	2	WHEEL 14" W/PLATE
12	0702-371	10	SNAP RING .093 x .3.25
13	2035-644	10	WHEEL 10" ALPHA BOLT ON
14	0702-560	10	ASSY, HUB 10”
15	0702-373	10	ASSY WHEEL 10"
16	0090-136	96	WASHER HARD 1.0 X .531 X .197
17	2035-659	96	CAPSCREW HH 1/2-13 x 1.375 GR8
18	0700-144	4	RING,SNAP,INT,85mm
19	0702-365	12	CAP HUB RUBBER BONDED
20	2035-595	12	NUT HEX JAM LOCKING 7/8-9 UNC
21	0702-364	12	WASHER HARD .25 x 2.125 x .935
22	8051-332	4	WASHER,SPRING LOCK,1/2,ZN
23	8102-404	4	CAPSCREW,HH 1/2-13UNCx1.25 GD8
24	0702-294	1	END CAP 3.346 x .295
25	0700-145	1	RING,SNAP,EXT,45mm
26	0702-024	1	WLMT,PLATE,BEARING
27	0702-324	1	BEARING (6209)
28	2035-134	1	SEAL 1.975 x 3.370 x .763
29	0702-295	1	RETAINER SEAL
30	0702-293	1	HOUSING BEARING
31	0702-292	1	FLANGE BEARING
32	0702-230	1	SPROCKET,CAST,MACHINED
33	0700-124	12	NUT,TOPLOCK,1/2-13UNC,ZN,GD8
34	0200-003	12	TUBE,COVER
35	0200-004	12	TUBE,INNER
36	0702-048	1	RING,SPROCKET,ALPHA
37	8102-423	12	CAPSCREW,HH,1/2-13UNCx7.25,GD8
38	0210-001	12	STUD,WHEEL,M14x1.5 174862
39	0200-282	12	NUT,FLANGE,M14x1.5
40	0702-225	1	TABLE,MACHINED,RH
41	8040-606	3	NUT,HEX,NYLOCK,1/2-13 UNC,ZN
42	8102-406	3	CAPSCREW,HH,1/2-13UNCx1.75,GD8
43	8043-806	1	NUT,HEX,1-8 UNC,STEEL LOCK,ZN
44	8102-685	1	CAPSCREW,HH 3/4-10UNCx 4.5 GD8
45	0702-455	1	WLMT RAIL ALPHA BOLT-ON
46	2035-308	1	PIN,TENSIONER,THREADED
47	2035-214	4	BUSHING,SPRING,1.75x2.00x2.50
48	0702-409	2	PLATE JOINT SWING
49	0090-317	2	NUT HEX 1.25-7 UNC JAM ZINC
50	2035-471	1	CAPSCREW SOC HD 3/8-16 x 1
51	0702-521	1	ASSY TENSIONER
52	0304-722	1	NUT,HEX,JAM,LOCKING,3/4-10UNC,
53	8102-586	12	CAPSCREW,HH,5/8-11X1.75ZN,GD8
54	8051-431	12	WASHER,SPRING LOCK,5/8,ZN
55	0310-345	1	ADAPTER,8MFFOR--8MB
56	0201-309	1	ADAPTER,FS6400-04-06-0
57	0310-313	2	ADAPTER,12MFFOR-12MB
58	0702-335	1	MOTOR HYD
59	0702-374	2	ASSY WHEEL 14" RUBBER
60	8102-890	1	CAPSCREW,HH,1.0 x 8UNC x 10.0,
61	0702-507	1	WLMT TENSIONER THREADED
62	0702-473	1	WLMT TENSIONER TUBE
63	0090-262	1	WASHER SAFETY S33-1.25"
64	0702-196	1	ASSY,SPROCKET ALPHA/RC60/RC50
65	0403-674	1	ASSY HSG BEARING
66	0702-413	1	AXLE SWING JOINT
67	0702-410	1	TUBE MNT AXLE

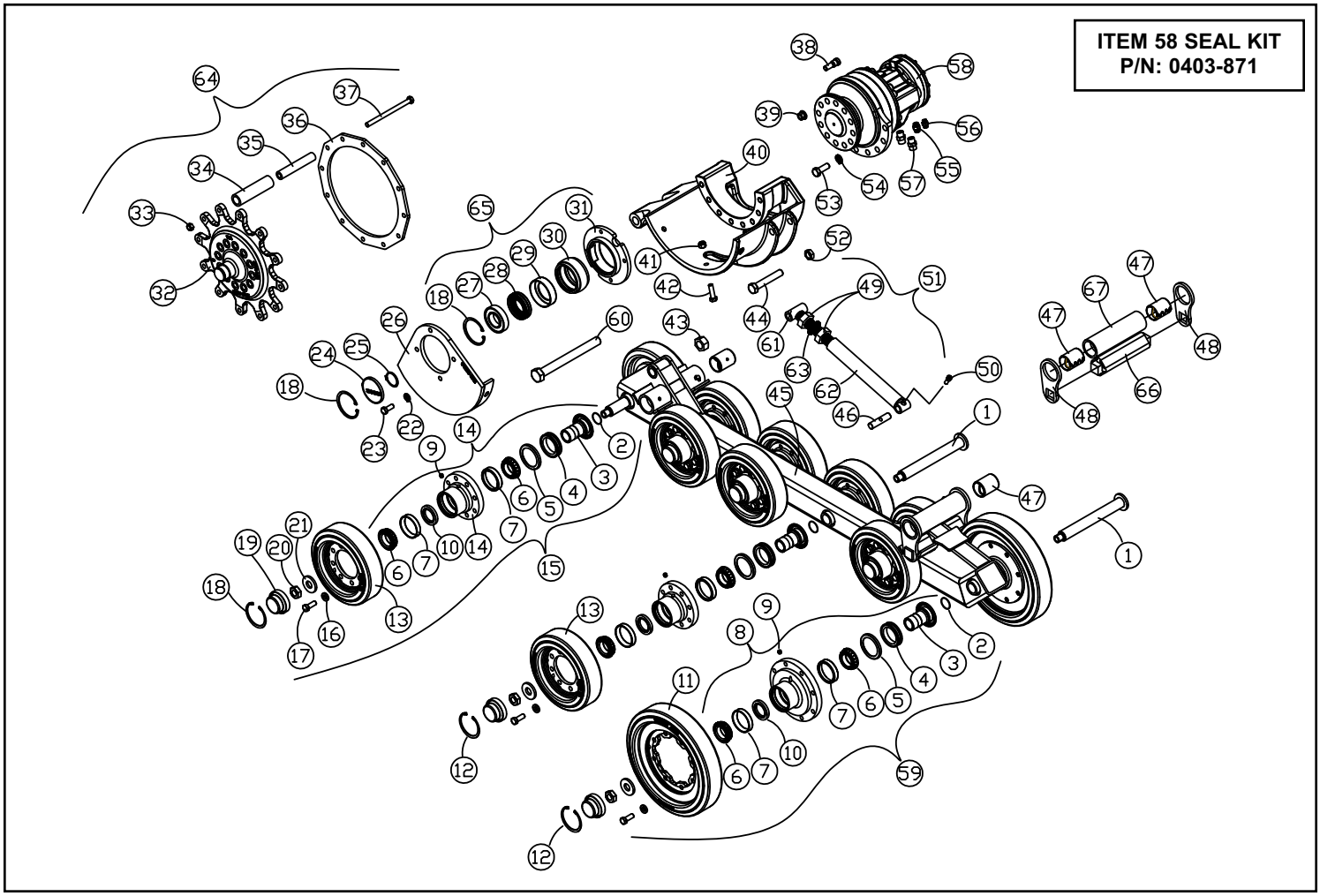

UNDERCARRIAGE ASSEMBLY LT (Serial #: DTC 03056-03129)

REF. NO.	PART NUMBER	QTY.	DESCRIPTION
1	0702-371	4	SNAP RING .093 x .3.25
2	0702-365	4	CAP HUB RUBBER BONDED
3	2035-595	4	NUT HEX JAM LOCKING 7/8-9 UNC
4	0702-364	4	WASHER HARD .25 x 2.125 x .935
5	2035-659	32	CAPSCREW HH 1/2-13 x 1.375 GR8
6	0090-136	32	WASHER HARD 1.0 X .531 X .197
7	0702-264	2	WHEEL 14" W/PLATE
8	0702-363	8	BEARING CONE
9	0702-362	8	BEARING CUP
10	0702-368	4	SEAL LIP
11	2035-479	1	PLUG 1/8" NPT HEX CS
12	0702-253	8	ASSY, WHEEL 10”
13	2035-391	4	RETAINER INNER 53MM
14	2035-438	4	SEAL EKK
15	0702-367	4	WLMT RETAINER 53MM
16	2035-596	4	O-RING 1/16 x 1.375 x 1.5 NITRILE, -028
17	2035-652	2	WHEEL 10" MACHINED 8 BOLT
18	0702-434	2	ASSY, WHEEL 10”
19	0302-435	2	FITTING,GREASE,1/8 NPT,90D
20	0702-141	8	RING,RETAINING,INTERNAL
21	0702-132	8	CAP,WHEEL
22	0304-722	10	NUT,HEX,JAM,LOCKING,3/4-10UNC,
23	0702-155	8	WASHER,BEARING
24	0702-075	16	BEARING,CONE
25	0702-076	16	BEARING,CUP
26	0702-057	1	WHEEL,10"
27	0304-118	8	SNAP,RING
28	0200-331	8	WASHER,4.05x2.1875x0.188
29	2035-214	4	BUSHING,SPRING,1.75x2.00x2.50
30	0702-317	2	WLMT AXLE WHEEL
31	0702-060	2	SPACER,AXLE
32	0300-946	2	FITTING,GREASE,1/8 NPT
33	8102-683	1	CAPSCREW,HH,3/4-10UNCx3.5 GD 8
34	0702-117	1	WLMT,ROD,LH
35	0304-117	8	GUARD,BEARING
36	0304-957	1	TENSIONER,TRACK
37	0304-077	1	NUT,HEX,JAM,1 1/4 - 7,RH
38	0702-118	1	WLMT,ROD,RH
39	8102-685	1	CAPSCREW,HH 3/4-10UNCx 4.5 GD8
40	0702-228	1	TABLE,MACHINED,LH
41	8043-806	1	NUT,HEX,1-8 UNC,STEEL LOCK,ZN
42	8102-890	1	CAPSCREW,HH,1.0 x 8UNC x 10.0,
43	0314-304	1	WLMT,GUARD,SEAL
44	0303-217	1	SEAL,AP5,50x90x11.4
45	0307-039	1	BEARING (62092RS)
46	0700-143	1	HOUSING,SEAL,BEARING
47	0307-037	1	FLANGE,BEARING
48	8040-606	3	NUT,HEX,NYLOCK,1/2-13 UNC,ZN
49	8102-406	7	CAPSCREW,HH,1/2-13UNCx1.75,GD8
50	8051-332	7	WASHER,SPRING LOCK,1/2,ZN
51	0702-024	1	WLMT,PLATE,BEARING
52	0700-144	1	RING,SNAP,INT,85mm
53	0700-145	1	RING,SNAP,EXT,45mm
54	0307-074	1	PLUG,HOUSING,BEARING
55	0702-230	1	SPROCKET,CAST,MACHINED
56	0702-048	1	RING,SPROCKET,ALPHA
57	0200-004	12	TUBE,INNER
58	0200-003	12	TUBE,COVER
59	8102-423	12	CAPSCREW,HH,1/2-13UNCx7.25,GD8
60	8102-586	8	CAPSCREW,HH,5/8-11X1.75ZN,GD8
61	8051-431	8	WASHER,SPRING LOCK,5/8,ZN
62	0702-335	1	MOTOR HYD
63	0303-141	8	SEAL,APY,1.250x2.062x.450
64	2030-296	1	WLMT RAIL RC60
65	0210-001	12	STUD,WHEEL,M14x1.5 174862
66	0200-282	12	NUT,FLANGE,M14x1.5
67	0700-124	12	NUT,TOPLOCK,1/2-13UNC,ZN,GD8
68	0702-560	2	ASSY, HUB 10”
69	0702-374	2	ASSY, WHEEL 14”
70	0702-569	2	ASSY, HUB 14”

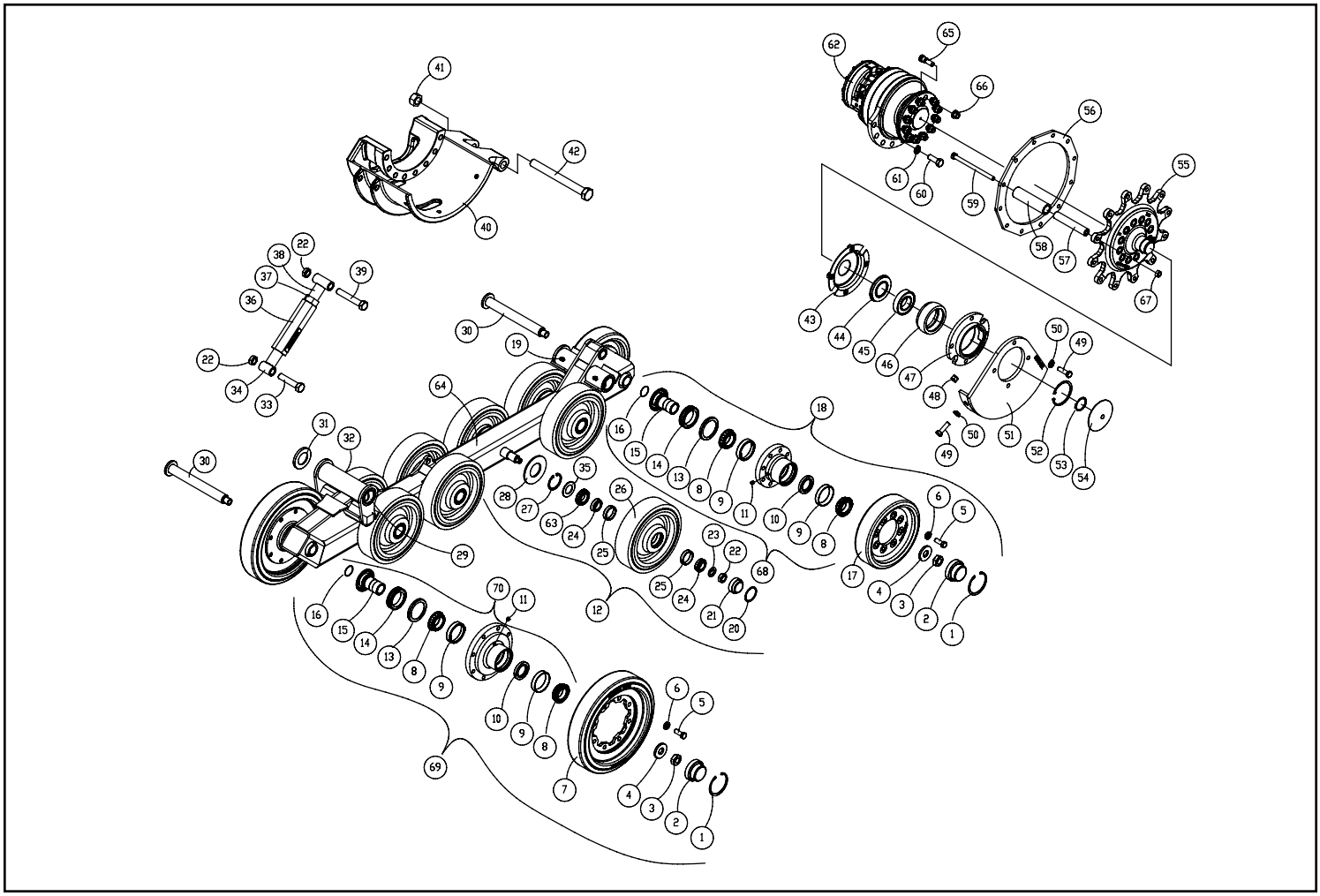

UNDERCARRIAGE ASSEMBLY LT (Serial #: DTC 03130-03356)

REF. NO.	PART NUMBER	QTY.	DESCRIPTION
1	0702-317	6	WLMT AXLE WHEEL
2	2035-596	12	O-RING 1/16 x 1.375 x 1.5 NITRILE, -028
3	0702-367	12	WLMT RETAINER 53MM
4	2035-438	12	SEAL EKK
5	2035-391	12	RETAINER INNER 53MM
6	0702-363	24	BEARING CONE
7	0702-362	24	BEARING CUP
8	0702-569	2	ASSY, HUB 14”
9	2035-479	12	PLUG 1/8" NPT HEX CS
10	0702-368	12	SEAL LIP
11	0702-264	2	WHEEL 14" W/PLATE
12	0702-371	10	SNAP RING .093 x .3.25
13	2035-644	10	WHEEL 10" ALPHA BOLT ON
14	0702-560	10	ASSY, HUB 10”
15	0702-373	10	ASSY WHEEL 10"
16	0090-136	96	WASHER HARD 1.0 X .531 X .197
17	2035-659	96	CAPSCREW HH 1/2-13 x 1.375 GR8
18	0700-144	4	RING,SNAP,INT,85mm
19	0702-365	12	CAP HUB RUBBER BONDED
20	2035-595	12	NUT HEX JAM LOCKING 7/8-9 UNC
21	0702-364	12	WASHER HARD .25 x 2.125 x .935
22	8051-332	4	WASHER,SPRING LOCK,1/2,ZN
23	8102-404	4	CAPSCREW,HH 1/2-13UNCx1.25 GD8
24	0702-294	1	END CAP 3.346 x .295
25	0700-145	1	RING,SNAP,EXT,45mm
26	0702-024	1	WLMT,PLATE,BEARING
27	0702-324	1	BEARING (6209)
28	2035-134	1	SEAL 1.975 x 3.370 x .763
29	0702-295	1	RETAINER SEAL
30	0702-293	1	HOUSING BEARING
31	0702-292	1	FLANGE BEARING
32	0702-230	1	SPROCKET,CAST,MACHINED
33	0700-124	12	NUT,TOPLOCK,1/2-13UNC,ZN,GD8
34	0200-003	12	TUBE,COVER
35	0200-004	12	TUBE,INNER
36	0702-048	1	RING,SPROCKET,ALPHA
37	8102-423	12	CAPSCREW,HH,1/2-13UNCx7.25,GD8
38	0210-001	12	STUD,WHEEL,M14x1.5 174862
39	0200-282	12	NUT,FLANGE,M14x1.5
40	0702-226	1	TABLE,MACHINED,LH
41	8040-606	3	NUT,HEX,NYLOCK,1/2-13 UNC,ZN
42	8102-406	3	CAPSCREW,HH,1/2-13UNCx1.75,GD8
43	8043-806	1	NUT,HEX,1-8 UNC,STEEL LOCK,ZN
44	8102-685	1	CAPSCREW,HH 3/4-10UNCx 4.5 GD8
45	0702-308	1	WLMT RAIL ALPHA B SERIES 2
46	2035-308	1	PIN,TENSIONER,THREADED
47	2035-214	4	BUSHING,SPRING,1.75x2.00x2.50
48	0702-409	2	PLATE JOINT SWING
49	0304-077	1	NUT,HEX,JAM,1 1/4 - 7,RH
50	2035-471	1	CAPSCREW SOC HD 3/8-16 x 1
51	0702-401	1	ASSY TURNBUCKLE ALPHA
52	0304-722	1	NUT,HEX,JAM,LOCKING,3/4-10UNC,
53	8102-586	12	CAPSCREW,HH,5/8-11X1.75ZN,GD8
54	8051-431	12	WASHER,SPRING LOCK,5/8,ZN
55	0310-345	1	ADAPTER,8MFFOR--8MB
56	0201-309	1	ADAPTER,FS6400-04-06-0
57	0310-313	2	ADAPTER,12MFFOR-12MB
58	0702-335	1	MOTOR HYD
59	0702-374	2	ASSY WHEEL 14" RUBBER
60	8102-890	1	CAPSCREW,HH,1.0 x 8UNC x 10.0,
61	0702-402	1	WLMT ROD RH
62	0702-405	1	WLMT TENSIONER OPEN
63	2035-533	1	WLMT ROD TOP ALPHA
64	0702-196	1	ASSY,SPROCKET ALPHA/RC60/RC50
65	0403-674	1	ASSY HSG BEARING
66	0702-413	1	AXLE SWING JOINT
67	0702-410	1	TUBE MNT AXLE

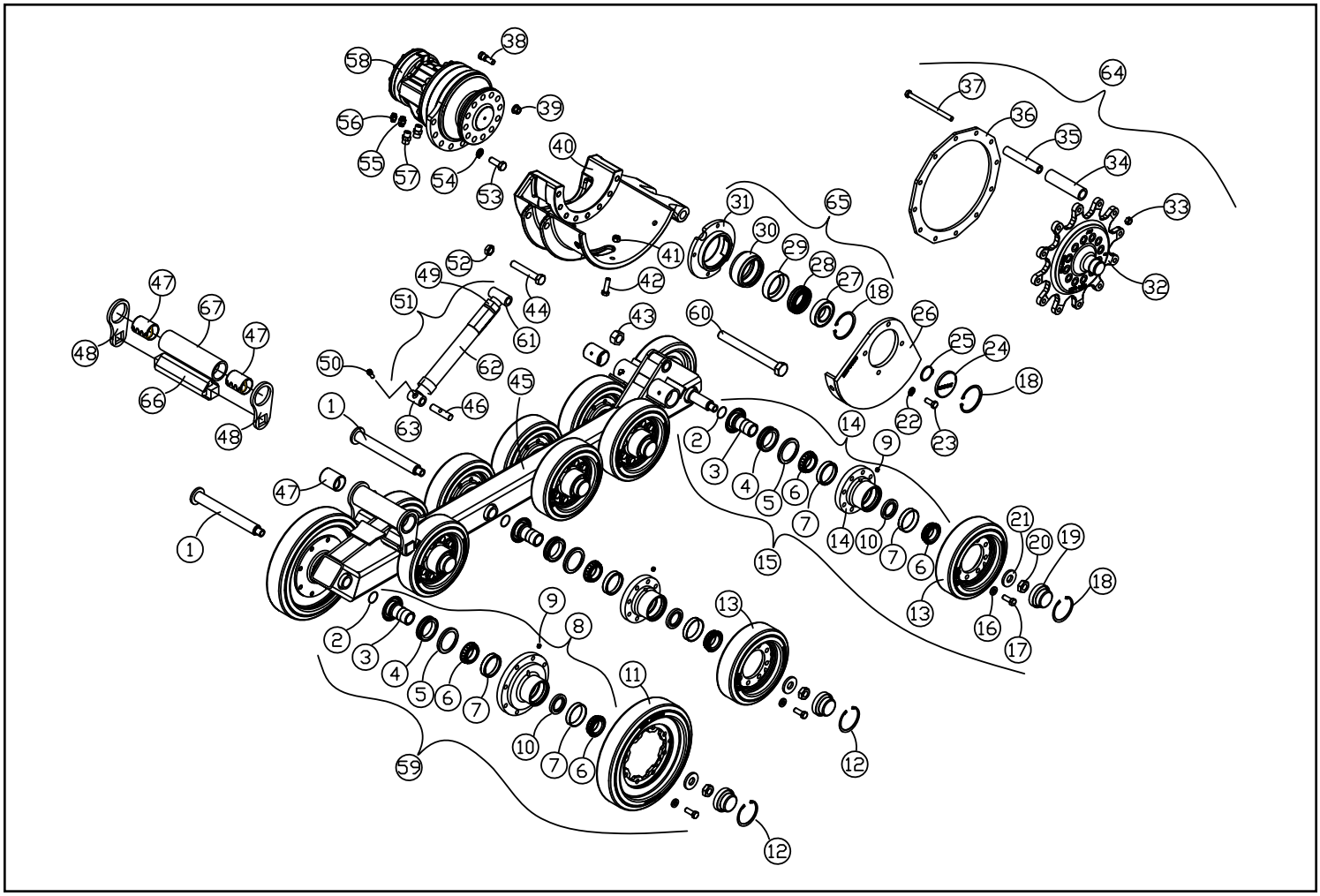

UNDERCARRIAGE ASSEMBLY LT (Serial #: DTC 03357-Current)

REF. NO.	PART NUMBER	QTY.	DESCRIPTION
1	0702-317	6	WLMT AXLE WHEEL
2	2035-596	12	O-RING 1/16 x 1.375 x 1.5 NITRILE, -028
3	0702-367	12	WLMT RETAINER 53MM
4	2035-438	12	SEAL EKK
5	2035-391	12	RETAINER INNER 53MM
6	0702-363	24	BEARING CONE
7	0702-362	24	BEARING CUP
8	0702-569	2	ASSY, HUB 14”
9	2035-479	12	PLUG 1/8" NPT HEX CS
10	0702-368	12	SEAL LIP
11	0702-264	2	WHEEL 14" W/PLATE
12	0702-371	10	SNAP RING .093 x .3.25
13	2035-644	10	WHEEL 10" ALPHA BOLT ON
14	0702-560	10	ASSY, HUB 10”
15	0702-373	10	ASSY WHEEL 10"
16	0090-136	96	WASHER HARD 1.0 X .531 X .197
17	2035-659	96	CAPSCREW HH 1/2-13 x 1.375 GR8
18	0700-144	4	RING,SNAP,INT,85mm
19	0702-365	12	CAP HUB RUBBER BONDED
20	2035-595	12	NUT HEX JAM LOCKING 7/8-9 UNC
21	0702-364	12	WASHER HARD .25 x 2.125 x .935
22	8051-332	4	WASHER,SPRING LOCK,1/2,ZN
23	8102-404	4	CAPSCREW,HH 1/2-13UNCx1.25 GD8
24	0702-294	1	END CAP 3.346 x .295
25	0700-145	1	RING,SNAP,EXT,45mm
26	0702-024	1	WLMT,PLATE,BEARING
27	0702-324	1	BEARING (6209)
28	2035-134	1	SEAL 1.975 x 3.370 x .763
29	0702-295	1	RETAINER SEAL
30	0702-293	1	HOUSING BEARING
31	0702-292	1	FLANGE BEARING
32	0702-230	1	SPROCKET,CAST,MACHINED
33	0700-124	12	NUT,TOPLOCK,1/2-13UNC,ZN,GD8
34	0200-003	12	TUBE,COVER
35	0200-004	12	TUBE,INNER
36	0702-048	1	RING,SPROCKET,ALPHA
37	8102-423	12	CAPSCREW,HH,1/2-13UNCx7.25,GD8
38	0210-001	12	STUD,WHEEL,M14x1.5 174862
39	0200-282	12	NUT,FLANGE,M14x1.5
40	0702-226	1	TABLE,MACHINED,LH
41	8040-606	3	NUT,HEX,NYLOCK,1/2-13 UNC,ZN
42	8102-406	3	CAPSCREW,HH,1/2-13UNCx1.75,GD8
43	8043-806	1	NUT,HEX,1-8 UNC,STEEL LOCK,ZN
44	8102-685	1	CAPSCREW,HH 3/4-10UNCx 4.5 GD8
45	0702-455	1	WLMT RAIL ALPHA BOLT-ON
46	2035-308	1	PIN,TENSIONER,THREADED
47	2035-214	4	BUSHING,SPRING,1.75x2.00x2.50
48	0702-409	2	PLATE JOINT SWING
49	0090-317	2	NUT HEX 1.25-7 UNC JAM ZINC
50	2035-471	1	CAPSCREW SOC HD 3/8-16 x 1
51	0702-521	1	ASSY TENSIONER
52	0304-722	1	NUT,HEX,JAM,LOCKING,3/4-10UNC,
53	8102-586	12	CAPSCREW,HH,5/8-11X1.75ZN,GD8
54	8051-431	12	WASHER,SPRING LOCK,5/8,ZN
55	0310-345	1	ADAPTER,8MFFOR--8MB
56	0201-309	1	ADAPTER,FS6400-04-06-0
57	0310-313	2	ADAPTER,12MFFOR-12MB
58	0702-335	1	MOTOR HYD
59	0702-374	2	ASSY WHEEL 14" RUBBER
60	8102-890	1	CAPSCREW,HH,1.0 x 8UNC x 10.0,
61	0702-507	1	WLMT TENSIONER THREADED
62	0702-473	1	WLMT TENSIONER TUBE
63	0090-262	1	WASHER SAFETY S33-1.25"
64	0702-196	1	ASSY,SPROCKET ALPHA/RC60/RC50
65	0403-674	1	ASSY HSG BEARING
66	0702-413	1	AXLE SWING JOINT
67	0702-410	1	TUBE MNT AXLE

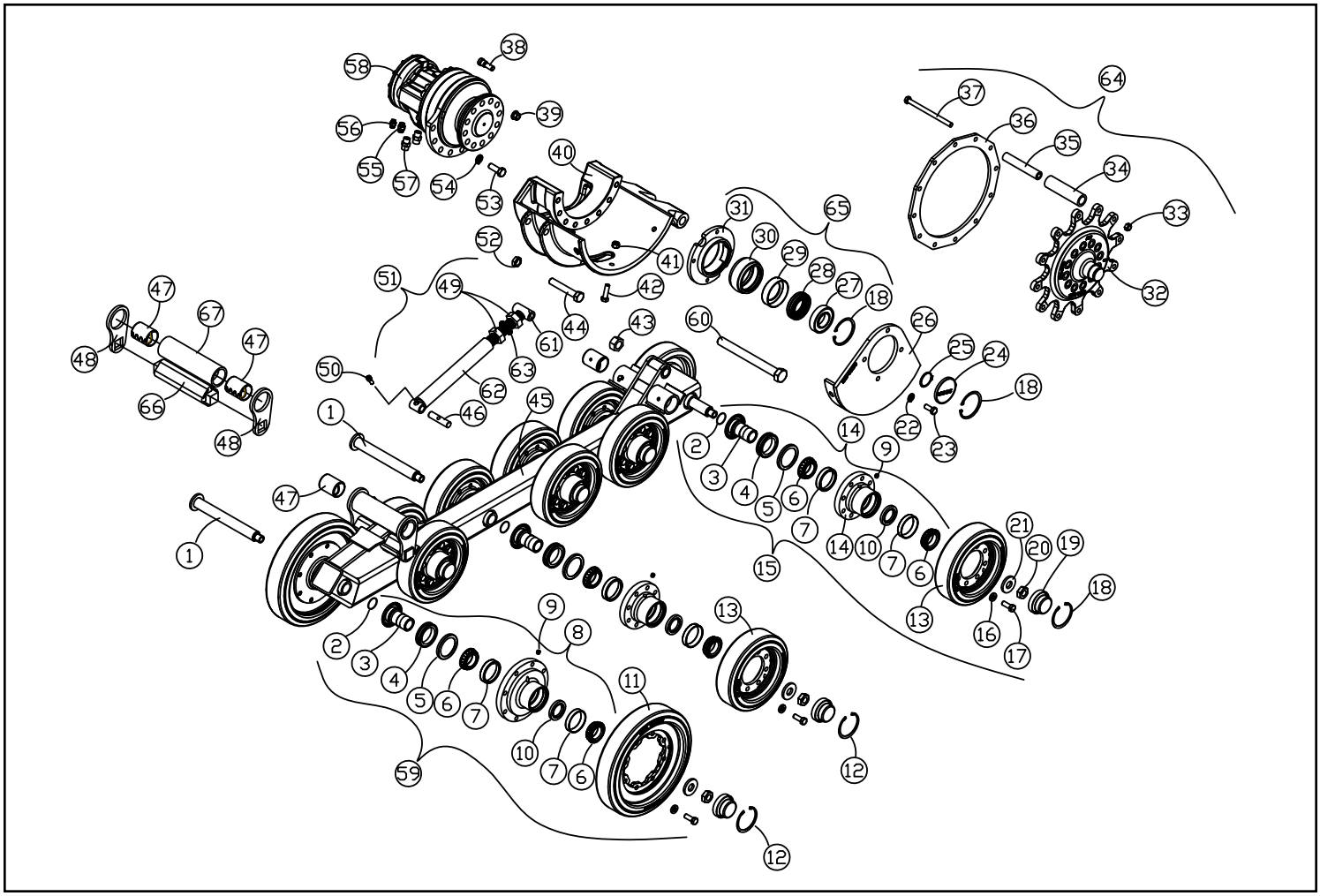

LIFT ARM ASSEMBLY (Serial #: DTC 03056-03132)

REF. NO.	PART NUMBER	QTY.	DESCRIPTION
1	0003-082	2	BUSHING CYLINDER BUCKET BASE END
2	0201-771	1	HARNESS,ELEC,AUX,RC100/85/60
3	0200-113	4	WLMT,PIN,1.00x4.51
4	0300-607	10	ZERK,GREASE,1/4-28
5	8011-222	4	BOLT,CARRIAGE,3/8-16 UNCx1.0,Z
6	0314-269	6	NUT,FLANGE,TOPLK,3/8-16UNC,GDG
7	2030-285	2	CYLINDER BOOM
8	0304-672	2	PIN,1.00"x3.91"
9	2030-069	2	HOSE,10M4K,10FFORX,10FFORX,28.
10	0201-770	1	CAP,W/CHAIN
11	2030-070	2	HOSE,10M4K,10FFORX,10FFORX,50.
12	0310-345	8	ADAPTER,8MFFOR--8MB
13	2030-035-wht	1	WLMT,LOADER,PT-60
14	0003-084	2	BUSHING CYLINDER BOOM ROD END
15	0201-392	1	HARNESS,AUXILIAR
16	8102-220	2	CAPSCREW,HH,3/8-16x0.75",GD8
17	0304-496	1	PAD,SKID
18	2030-081	2	WLMT,PIN
19	0201-852	4	WLMT,PIN,6.00"
20	2030-286	1	CYLINDER BUCKET LH
21	8102-222	4	CAPSCREW,HH,3/8-16 UNCx1.0,GD8
22	2030-287	1	CYLINDER BUCKET RH
23	2030-147	2	BUSHING,1.00IDX1.50ODX3.00
24	0003-083	2	BUSHING CYLINDER BOOM BASE END
25	0201-233	2	BUSHING,1.50IDx2.00ODx3.00L
26	0003-053	2	BUSHING CYLINDER BUCKET ROD END
27	0201-002	2	WLMT,PIN

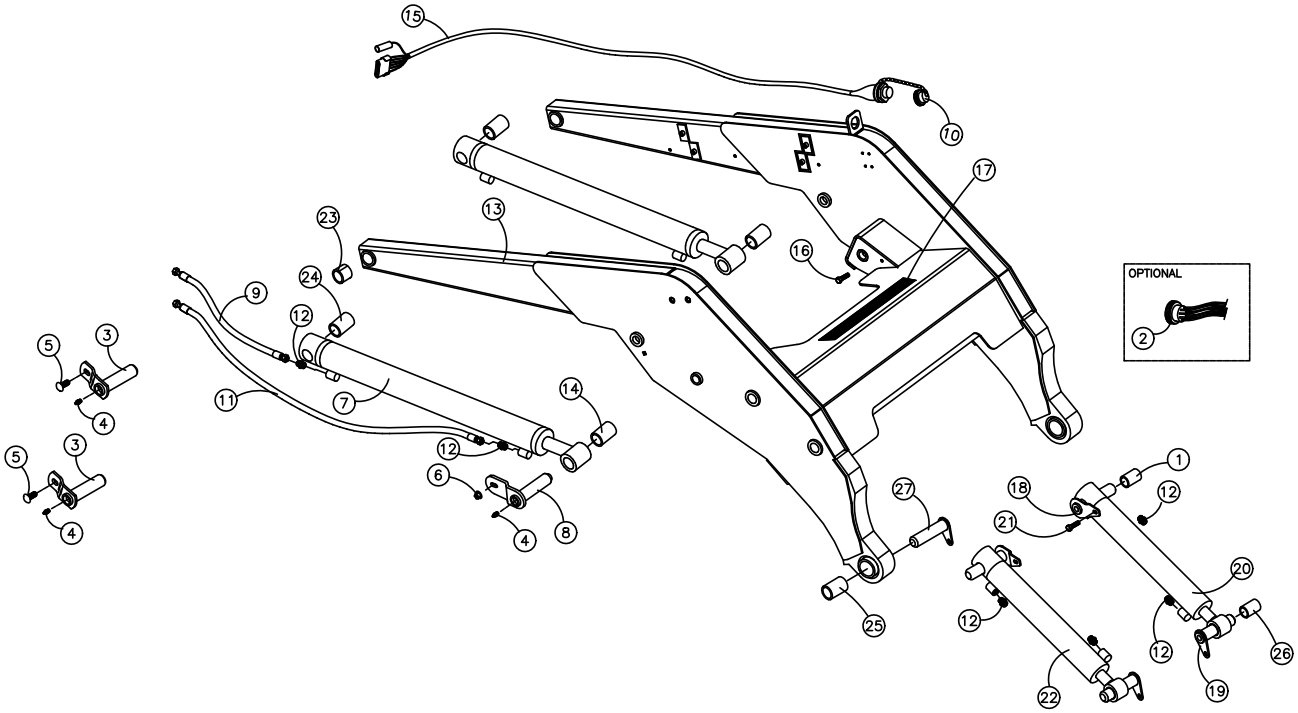

LIFT ARM ASSEMBLY (Serial #: DTC 03133-Current)

REF. NO.	PART NUMBER	QTY.	DESCRIPTION
1	0201-771	1	HARNESS,ELEC,AUX,RC100/85/60
2	0201-392	1	HARNESS,AUXILIARY
3	2030-562	4	WLMT PIN 1.5 X 4.51
4	0300-607	10	ZERK,GREASE,1/4-28
5	8011-222	4	BOLT,CARRIAGE,3/8-16 UNCx1.0,Z
6	0314-269	6	NUT,FLANGE,TOPLK,3/8-16UNC,GDG
7	2030-577	2	CYLINDER BOOM
8	2030-546	2	WLMT PIN BOOM
9	2030-069	2	HOSE,10M4K,10FFORX,10FFORX,28.
10	0201-770	1	CAP,W/CHAIN
11	2030-070	2	HOSE,10M4K,10FFORX,10FFORX,50.
12	0310-345	8	ADAPTER,8MFFOR--8MB
13	2030-535	1	WLMT LOADER PT50/60
14	0003-053	2	BUSHING Ø1.50IDx2.00
15	0304-496	1	PAD,SKID
16	8102-220	2	CAPSCREW,HH,3/8-16x0.75",GD8
17	2030-654	2	BUSHING Ø1.50IDx2.50
18	2030-550	2	WLMT PIN 1.5" x 5.375"
19	2040-115	4	WLMT PIN 6.00"
20	2030-578	1	CYLINDER BUCKET TILT LH
21	8102-222	4	CAPSCREW,HH,3/8-16 UNCx1.0,GD8
22	2030-579	1	CYLINDER BUCKET TILT RH
23	2030-573	4	BUSHING CONNEX 1.5ID X 1.75OD x 1 7/16L
24	2030-655	2	BUSHING Ø1.50IDx3.00
25	2030-580	4	BUSHING SPRING 1.5" ID x 2" OD
26	0003-056	2	BUSHING Ø1.50IDx2.375

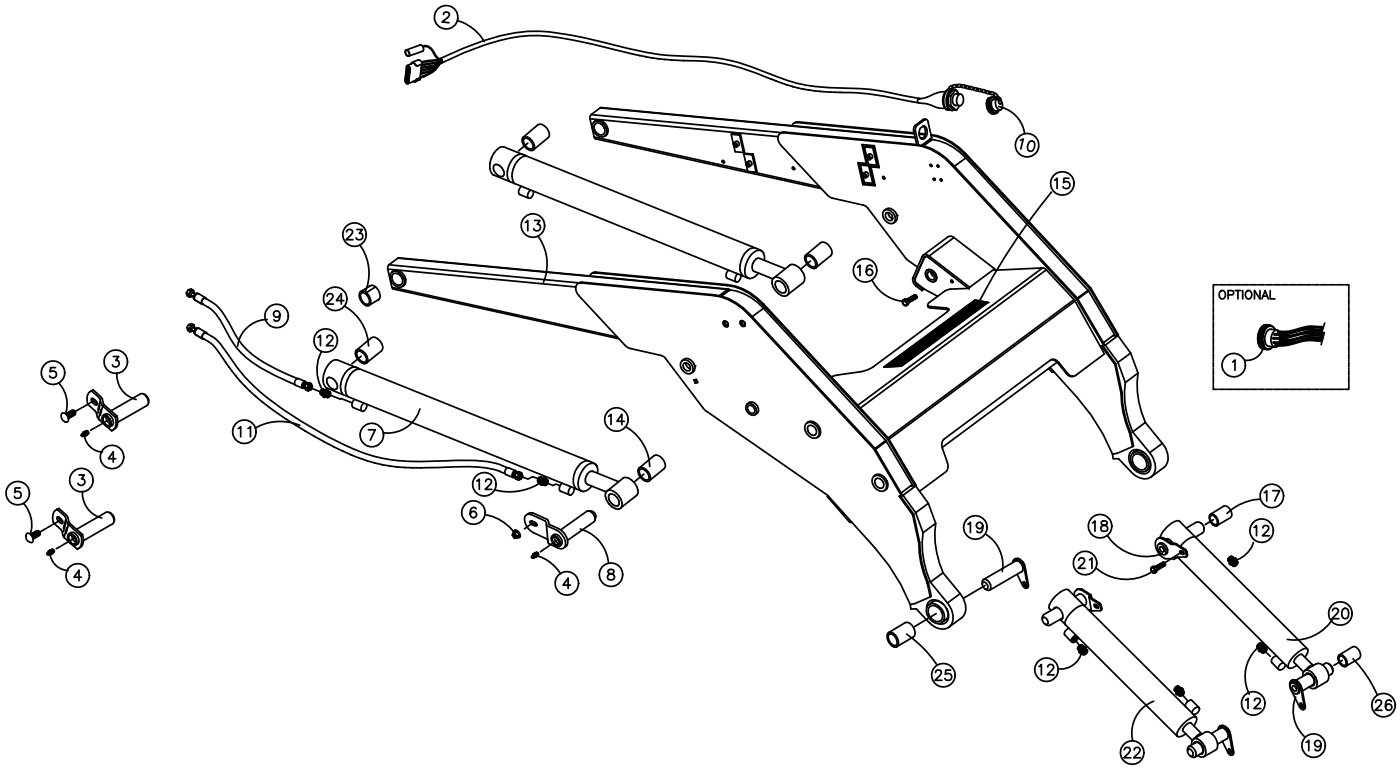

LIFT ARM TUBES AND FITTINGS (Serial #: DTC 03056-Current)

REF. NO.	PART NUMBER	QTY.	DESCRIPTION
1	2030-010	1	TUBE,BUCKET,LOWER
2	2030-009	1	TUBE,BUCKET,UPPER
3	2030-008	1	TUBE,CASE DRAIN,QD
4	2030-001	1	TUBE,AUX,UPPER,QD
5	2030-002	1	TUBE,AUX,LOWER,QD
6	0310-567	1	ADAPTER,8MFFOR-6MB
7	0310-831	4	CLAMP, SET, T2062-PP
8	0310-584	9	PLATE,COVER TCP-T2
9	8102-134	9	CAPSCREW,HH,5/16-18UNCx1.25GD8
10	0201-658	2	ADAPTER,10MFFOR-8MB-S
11	0304-876	1	MANIFOLD,AUX,HYD
12	8102-050	4	CAPSCREW,HH,1/4-20,UNC,2.75ZN,
13	0304-356	1	PLUG,9/16-18,LOADER RC-30
14	0200-296	2	ADAPTER,O-RING HEX NIPPLE,10-8
15	8040-366	4	NUT,HEX,NYLOCK,1/4-20 UNC,ZN
16	0310-076	1	COUPLER,QUICK,FF,FEMALE,7/8-14
17	0310-077	1	COUPLER,QUICK,FF,MALE,7/8-14UN
18	0310-241	1	COVER,DUST,1/2,F
19	0310-240	1	COVER,DUST,1/2,M
20	0201-402	5	CLAMP,SET,2050-PP
21	0201-224	7	COVER,CLAMP,COP-2
22	8102-044	14	CAPSCREW,HH,1/4-20UNCx1.25,GD8
23	0201-223	2	CLAMP,SET,2062-PP
24	0201-488	2	HOSE,8M4K,23.50"
25	0201-489	2	HOSE,8M4K,17.50"
26	0201-838	1	SPOOL,VALVE,QD BLOCK
27	0402-886	1	KIT,DUST,COVER,RC60/50

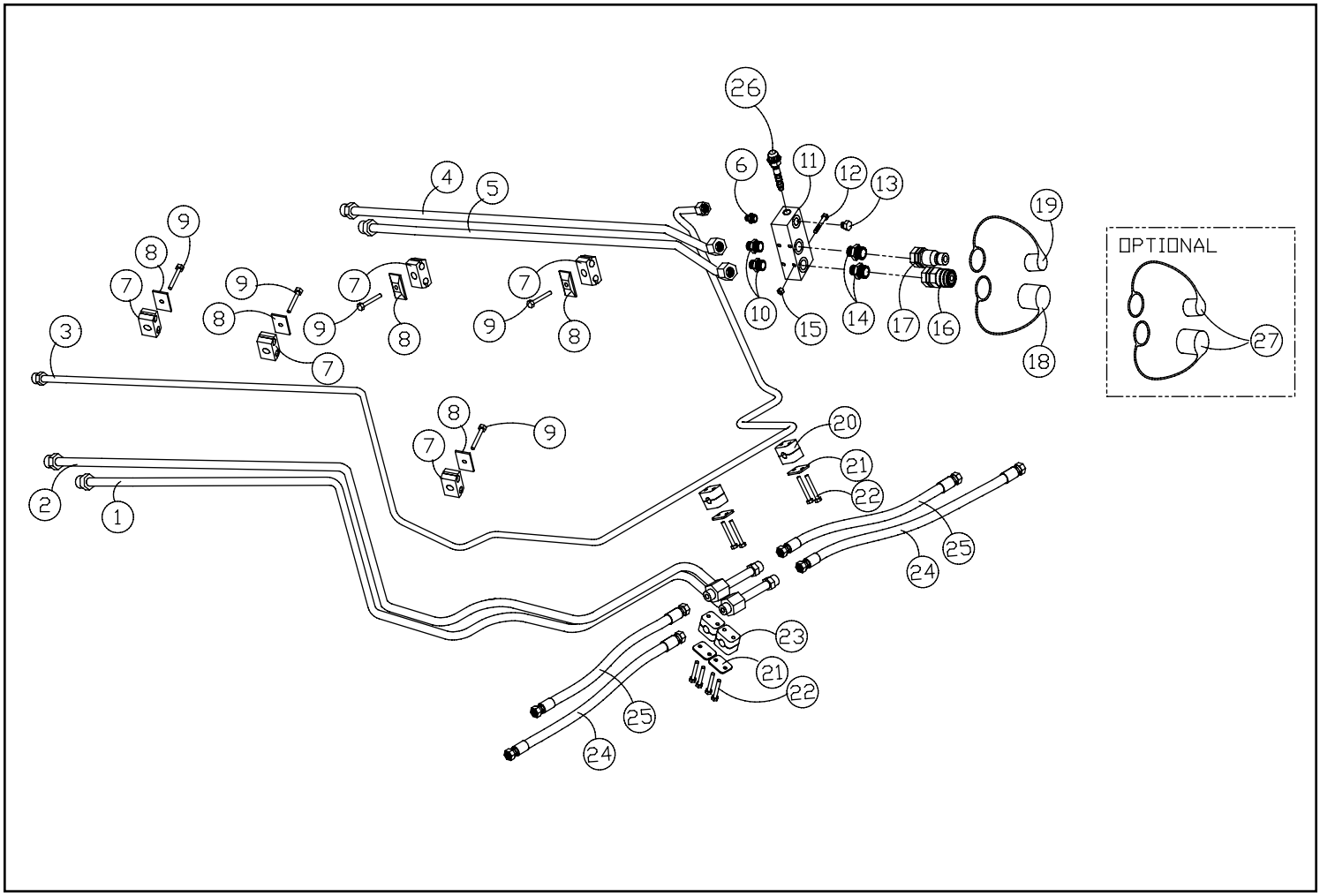

QUICK ATTACH ASSEMBLY (Serial #: DTC 03056-Current)

REF. NO.	PART NUMBER	QTY.	DESCRIPTION
1	2045-359	1	WLMT,QUICK-ATTACH,MANUAL
2	2045-761	1	HANDLE,QA,LH
3	2045-762	1	HANDLE,QA,RH
4	2045-242	1	WLMT PIN RH
5	2045-243	1	WLMT PIN LH
6	2045-245	2	BLOCK LATCH
7	8102-418	2	CAPSCREW,HH,1/2-13UNCx 6.0,GD8
8	0090-002	2	BOLT,SHOULDER,5/8"x.625" GD 8
9	8050-347	8	WASHER,WROUGHT,1/2,STD,ZN
10	2015-018	2	WASHER,FENDER,1.75x0.53x0.125
11	8051-620	6	WASHER,SPRING LOCK,1.0,ZN
12	0400-621	2	SPOOL,PIVOT
13	0304-799	2	CAPSCREW,HH,1/2-13UNCx3.75,GD8
14	8040-606	2	NUT,HEX,NYLOCK,1/2-13 UNC,ZN
15	0400-651	2	SPRING,COMPRESSION
16	0300-607	2	ZERK,GREASE,1/4-28

REF. NO.	PART NUMBER	QTY.	DESCRIPTION

Manual Quick Attach Assembly
P/N: 2045-457

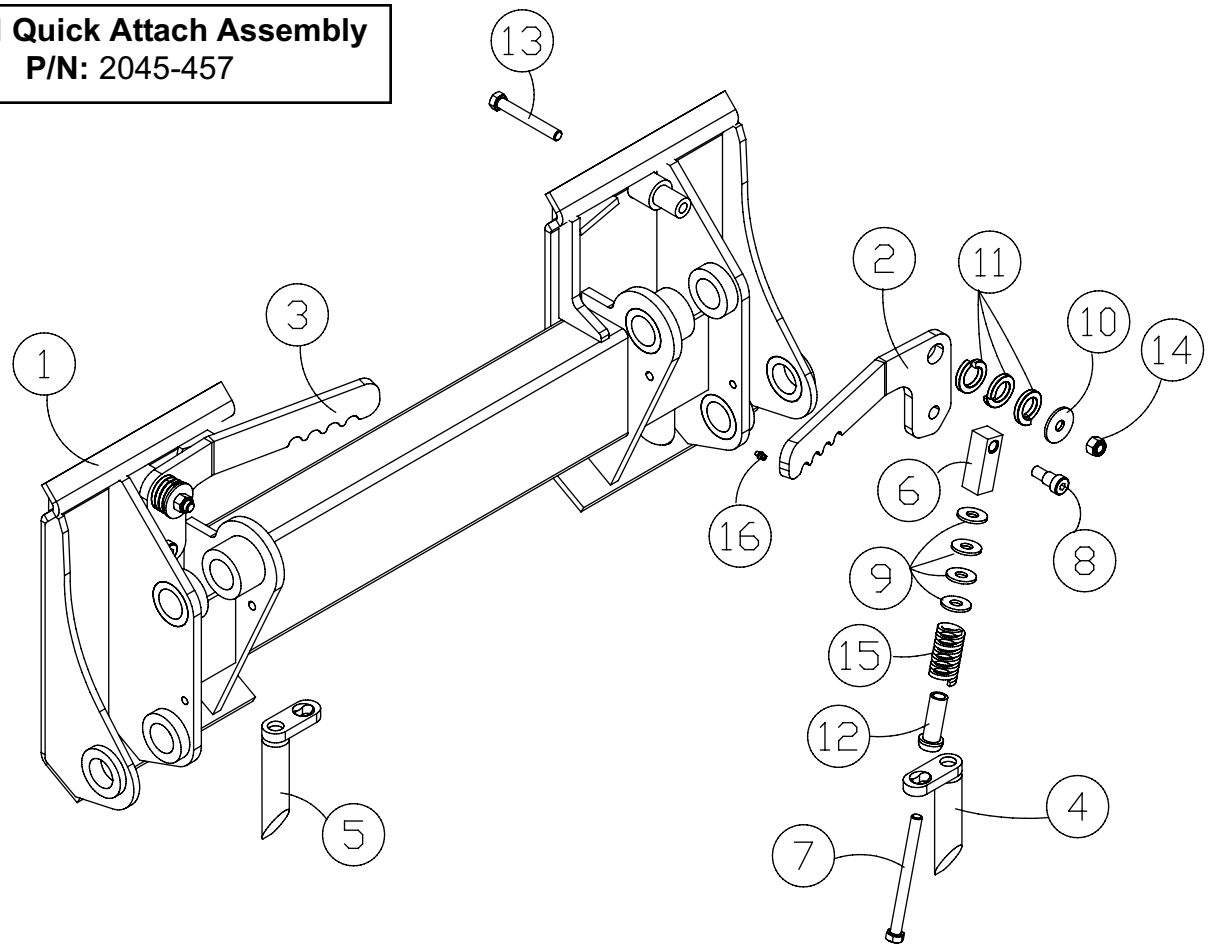

HYDRAULIC QUICK ATTACH ASSEMBLY (OPTIONAL) (Serial #: DTC 03056-Current)

REF. NO.	PART NUMBER	QTY.	DESCRIPTION
1	0201-637	1	WLMT,GUARD,QA
2	2046-316	1	CYLINDER QA LH
3	2046-317	1	CYLINDER QA RH
4	2045-235	1	WLMT QUICK-ATTACH HYD
5	0201-566	1	HOSE,6M4K-6FFORX90S-6FFORX-49.
6	0201-545	1	HOSE,6M4K-6FFORX-6FFORX90S-14.
7	0201-565	1	HOSE,6M4K-6FFORX90S-6FFORX-53.
8	0201-544	1	HOSE,6M4K-6FFORX-6FFORX90S-25.
9	0310-328	2	ADAPTER,6MFFOR-6MB-90
10	0201-542	2	ADAPTER,TEE,6FS-6FS-6NWO
11	8102-412	2	CAPSCREW,HH 1/2-13UNCx3.25 GD8
12	8102-686	1	CAPSCREW,HH,3/4-10UNCx4.25 GD8
13	8040-786	1	NUT,HEX,NYLOCK,3/4-10 UNC,ZN
14	2045-245	2	BLOCK LATCH
15	2045-246	2	LATCH QA
16	0090-001	2	BOLT,SHOULDER,5/8"x1.25" GD 8
17	8040-606	2	NUT,HEX,NYLOCK,1/2-13 UNC,ZN
18	8050-347	8	WASHER,WROUGHT,1/2,STD,ZN
19	0300-607	2	ZERK,GREASE,1/4-28
20	0400-651	2	SPRING,COMPRESSION PLATED
21	0400-621	2	SPOOL,PIVOT
22	2045-243	1	WLMT PIN LH
23	2045-242	1	WLMT PIN RH
24	8102-418	2	CAPSCREW,HH,1/2-13UNCx 6.0,GD8
25	0310-733	1	INSERT,CLAMP,TWIN.75" T3075-PP
26	0310-828	1	COVER, CLAMP, 3/4" TCP-T3
27	8102-136	1	CAPSCREW,HH,5/16-18x1.75 ZN GD

Note: The hydraulic quick attach assembly is available for field installation as P/N: 0403-542.

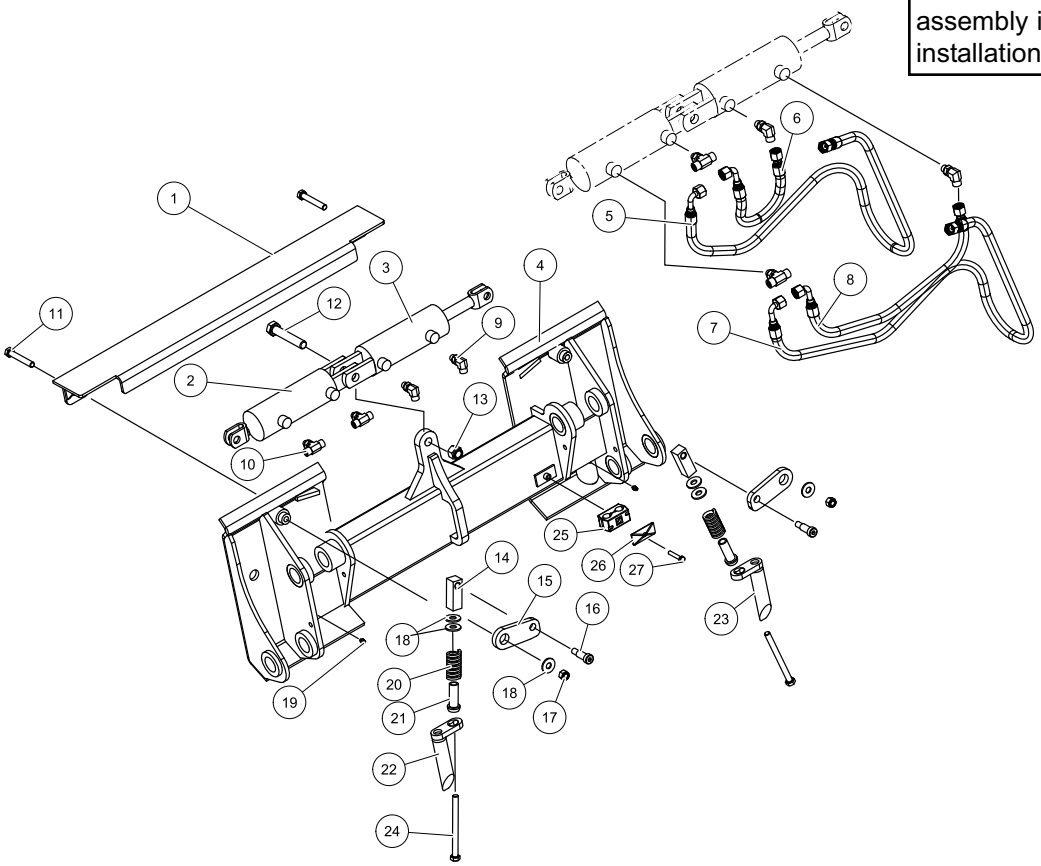

CAB HEATER ASSEMBLY (Serial #: DTC 03056-Current)

REF. NO.	PART NUMBER	QTY.	DESCRIPTION
1	0304-546	1	HEATER,CAB, RC-30
2	0304-548	2	MNT,HEATER
3	0305-214	1	HOSE,HEATER,5/8 x 33"
4	0304-553	1	HOSE,HEATER,5/8,72"
5	0304-554	1	HOSE,HEATER,5/8,38"
6	0301-558	1	VALVE,FLOW,HEATER
7	0401-975	1	CABLE,PUSH-PULL,HEATER
8	0301-514	1	KNOB,SWITCH,HEATER
9	8102-038	2	CAPSCREW,HH 1/4-20UNCx7/8 GRD8
10	8040-366	2	NUT,HEX,NYLOCK,1/4-20 UNC,ZN
11	0301-654	1	NUT,JAM,3/8-24 UNF
12	0301-110	6	CLAMP,HOSE,#8
13	0310-838	1	CLAMP,TUBE,DOUBLE,1.0
14	0304-670	1	ADAPTER,5/8BARB-3/8MPT-90^
15	0304-570	1	ADAPTER,6MP-10HOSE,BARB
16	0307-720	1	CAPSCREW,HH,M8x1.25x20
17	8051-242	1	WASHER,SPRING LOCK,5/16,ZN
18	8050-277	1	WASHER,WROUGHT,3/8,SAE,ZN
19	0304-575	1	HARNESS,HEATER
20	0304-122	1	SWITCH,ON/OFF,HEATER
21	0310-587	4	CLAMP,WIRE,3/8,ADHESIVE
22	2045-748	2	GROMMET 1 3/8" HOLE
23	8050-222	6	WASHER,WROUGHT,1/4,STD,ZN
24	0310-713	1	GASKET, SWITCH
25	8102-039	4	CAPSCREW,HH,1/4-20UNCx.625,GD8
26	8051-212	4	WASHER,SPRING LOCK,1/4,ZN

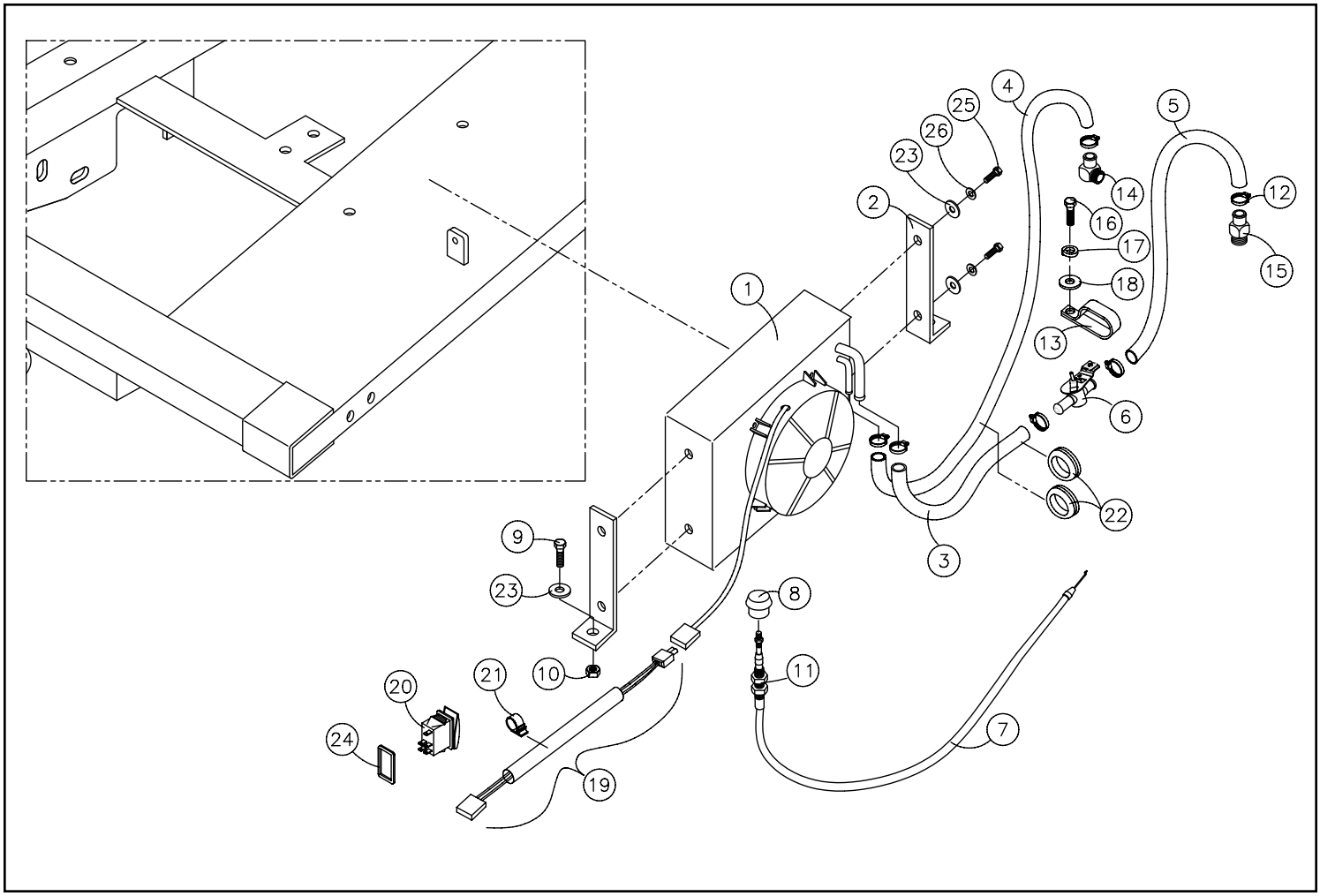

HEATER-AIR CONDITIONING ASSEMBLY (Serial #: DTC 03056-Current)

REF. NO.	PART NUMBER	QTY.	DESCRIPTION
1	8102-139	1	CAPSCREW,HH5/16-18UNCx2.50 GD8
2	8051-242	3	WASHER,SPRING LOCK,5/16,ZN
3	8050-222	1	WASHER,WROUGHT,1/4,STD,ZN
4	0201-573	1	SPACER,TUBE,.75x.5x1
5	0782-019	1	DRYER
6	0201-628	1	SPACER,CLAMP
7	0782-048	1	HOSE,A/C,#6,92.00"
8	0782-053	1	HOSE,A/C,#6,55.50"
9	0314-269	3	NUT,FLANGE,TOPLK,3/8-16UNC,GDG
10	8050-277	1	WASHER,WROUGHT,3/8,SAE,ZN
11	0782-064	1	WLMT,MNT,COMPRESSOR
12	8050-262	3	WASHER,WROUGHT,5/16,STD,ZN
13	8102-225	2	CAPSCREW,HH,3/8-16 UNCx1.5,GD8
14	8102-236	1	CAPSCREW,HH,3/8-16UNCx5.0 GD8,
15	8102-132	1	CAPSCREW,HH,5/16-18UNCx1.0 GD8
16	0200-507	1	SPACER,FAN,3024C,A/C
17	0200-508	1	PULLEY,ADDITIONAL,CRANKSHAFT,3
18	0304-670	1	ADAPTER,5/8BARB-3/8MPT-90
19	0782-049	1	HOSE,A/C,#10,98.50"
20	0782-052	1	HOSE,A/C,#8,64.80"
21	0782-038	1	COMPRESSOR,AC,RC
22	0201-645	1	BELT,V, A SERIES, 1/2 x 48.00
23	0782-088	1	RELAY,CONDENSER,12V
24	0782-078	1	COIL,CONDENSER
25	0782-070	1	MNT,CONDENSER,ROOFTOP
26	0301-558	1	VALVE,FLOW,HEATER
27	0782-066	1	VALVE,EXPANSION,905
28	0782-067	2	ASSY,BLOWER
29	0782-073	1	COVER,AC
30	0782-072	1	SWITCH,TOGGLE,AC
31	0782-082	2	KNOB
32	0782-075	1	CABLE,CONTROL
33	0782-037	3	LOUVER,A/C,PERRIN
34	0782-060	4	LOUVER,ROUND,AC,RC50
35	0782-085	1	ASSY,FAN
36	0782-069	2	RESISTOR
37	0782-068	1	THERMOSTAT,AC
38	0782-081	1	COVER,HOUSING
39	0782-089	1	ASSY,EVAPORATOR
40	0200-527	1	TEE,5/8,BARBED
41	0782-065	2	ARM,TENSION,COMPRESSOR

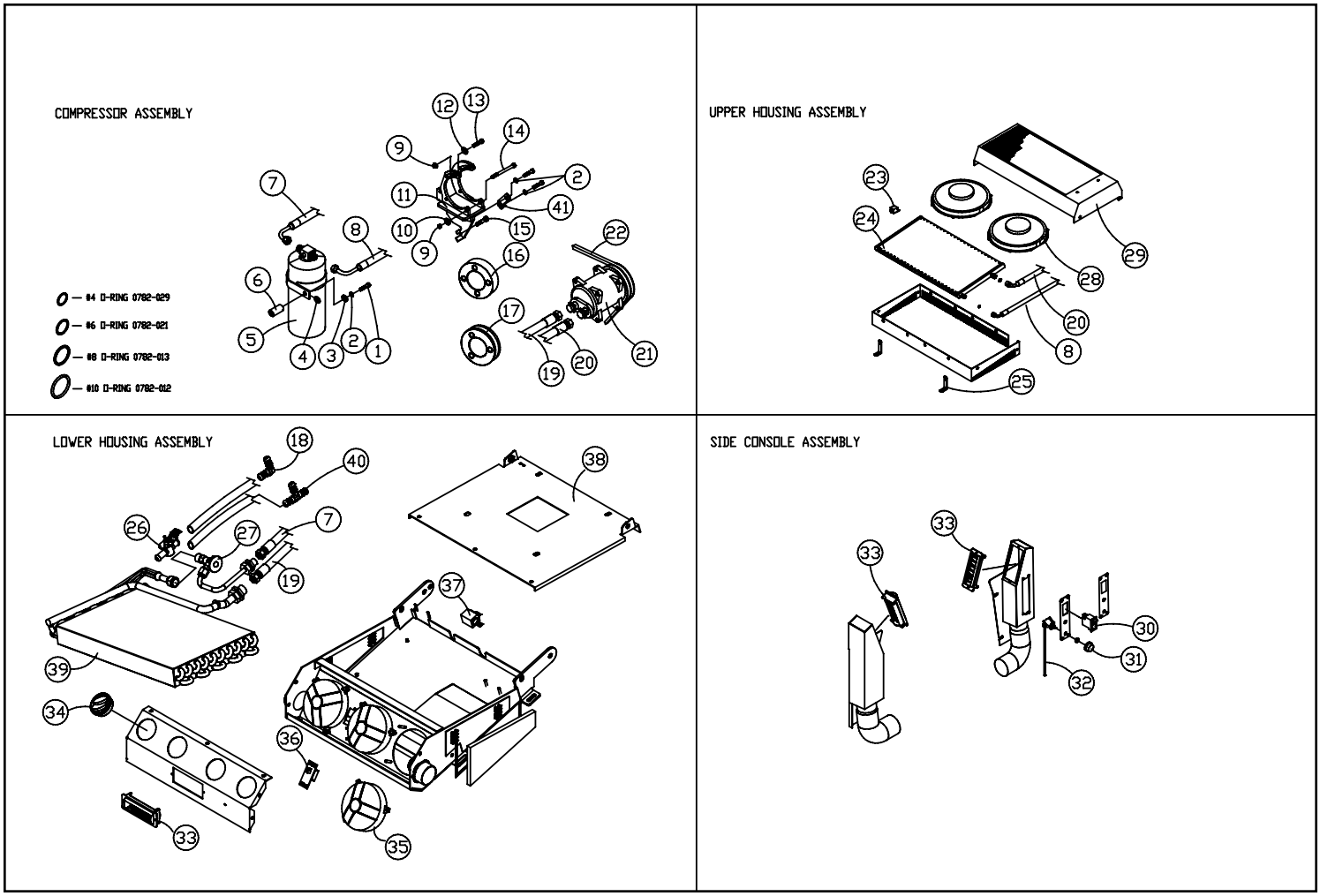

TRACK INSTALLATION TOOL (Serial #: DTC 03056-Current)

REF. NO.	PART NUMBER	QTY.	DESCRIPTION
1	0702-170	1	ASSY,INSTALLATION,TRACK
2	0702-171	1	WLMT,HOOK,TRACK
3	8102-235	1	CAPSCREW,HH,3/8-16UNCx4.5,GD8,
4	8102-232	1	CAPSCREW,HH,3/8-16,UNCx3.25,GD
5	0702-175	1	WLMT,TRACK,HANDLE
6	0702-143	1	CAP,3/4-10
7	0702-180	1	WLMT,CATCH,TRACK
8	8040-486	2	NUT,HEX,NYLOCK,3/8-16 UNC,ZN
9	0702-219	1	INSERT,WHEEL

REF. NO.	PART NUMBER	QTY.	DESCRIPTION

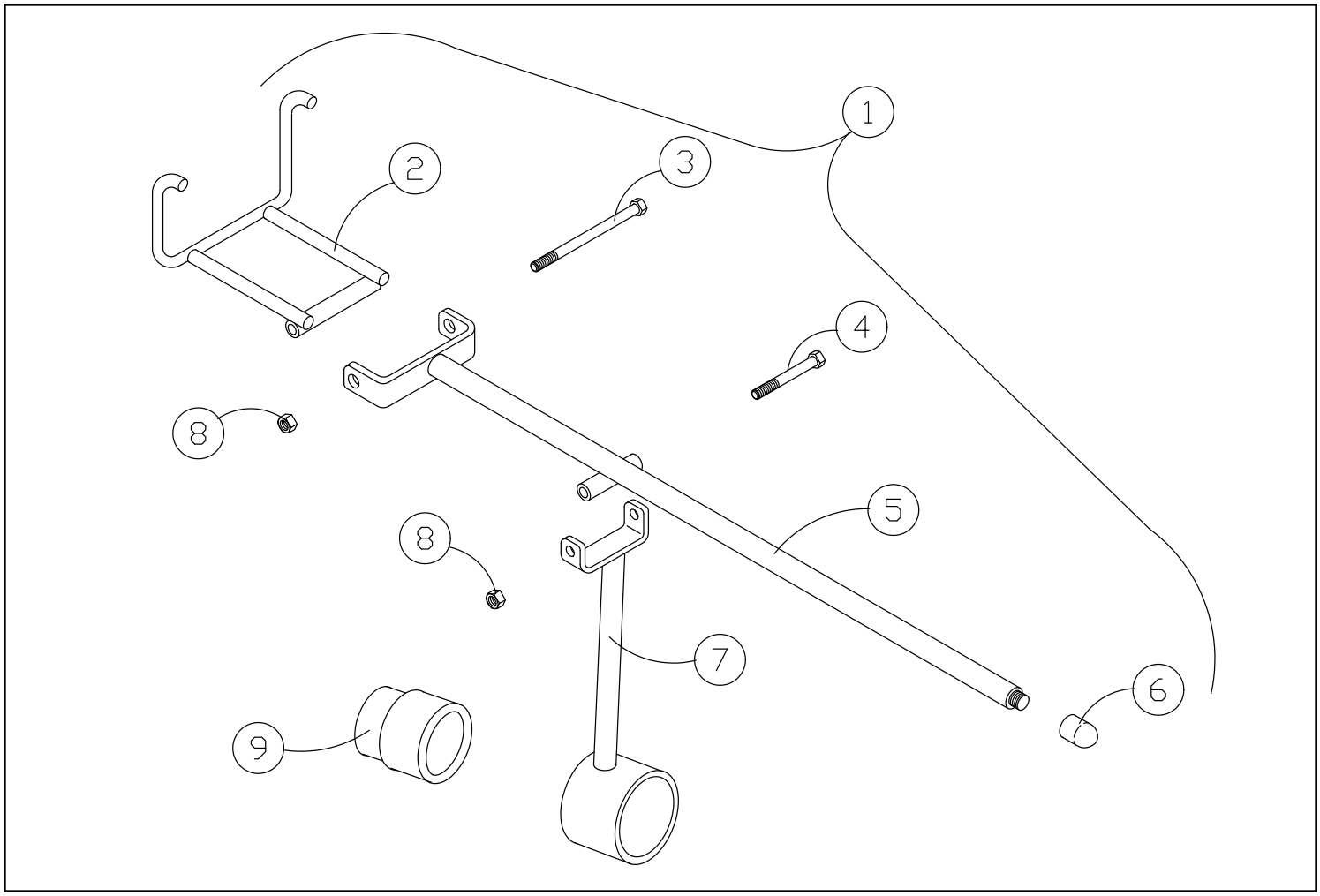

SAFTEY DECALS U.S. (ANSI) (Serial #: DTC 03056-Current)

REF. NO.	PART NUMBER	QTY.	DESCRIPTION
1	2030-599	1	DECAL ANSI FIRE HAZARD (BRUSHCUTTING)
2	0304-320	1	DECAL,OWNER'S MANUAL
3	2030-594	2	DECAL ANSI LIFT ARM BRACE
4	2030-602	2	DECAL ANSI SKIN INJECTION HAZARD
5	4046-078	1	DECAL DIESEL FUEL ONLY
6	2030-593	2	DECAL ANSI RUN OVER HAZARD
7	2085-253	2	DECAL ANSI CLEAN UNDERCARRAIGES NOTICE
8	2030-603	1	DECAL ANSI BATTERY EXPLOSION HAZARD
9	2030-595	1	DECAL ANSI RADIATOR HAZARD
10	2030-600	1	DECAL ANSI BELT FAN HAZARD
11	2030-601	1	DECAL ANSI HOT SURFACES HAZARD
12	4046-079	1	DECAL CE HYDRAULIC OIL ONLY
13	0310-197	4	DECAL,TIE DOWN 156-5762
14	0304-305	1	DECAL,THROTTLE
15	2030-628	1	DECAL ANSI 2 SPEED
16	2030-598	1	DECAL ANSI READ O&M ROLLOVER FALL HAZARD
17	2030-596	1	DECAL ANSI ROLLOVER FALL HAZARD
18	2030-424	1	DECAL CONTROLS RIGHT (NO TEXT)
19	2030-423	1	DECAL CONTROLS LEFT (NO TEXT)
20	2030-597	1	DECAL ANSI FALL HAZARD (3 POINT ENTRY)
21	2030-592	2	DECAL ANSI LOADER CRUSH HAZARD

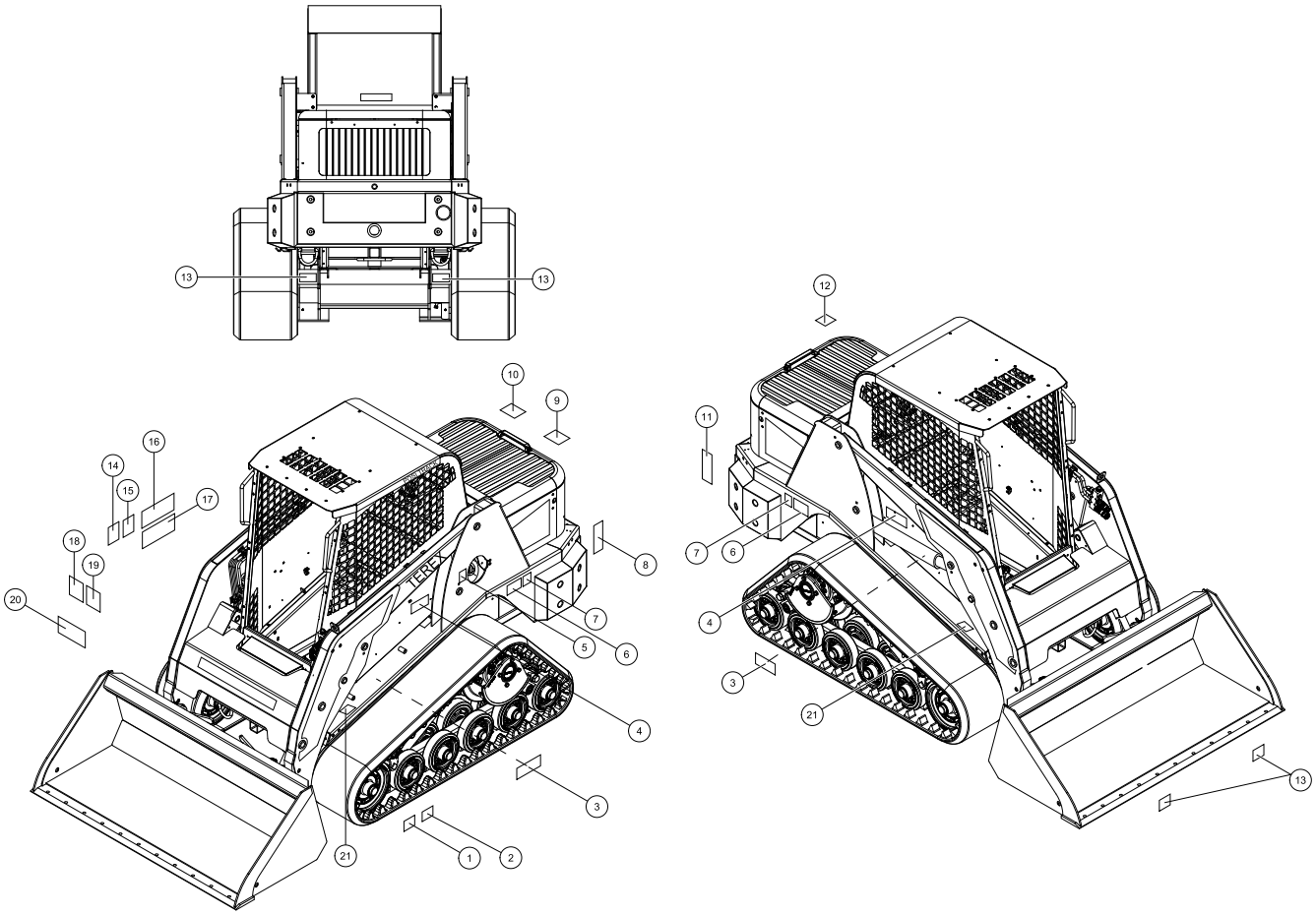

SAFETY DECALS ROW (ISO) (Serial #: DTC 03056-Current)

REF. NO.	PART NUMBER	QTY.	DESCRIPTION
1	2030-427	1	DECAL BRUSHCUTTING
2	2030-422	1	DECAL MANUAL BOX (NO TEXT)
3	2030-417	2	DECAL LOADER LOCK (NO TEXT)
4	2030-553	2	DECAL ISO SAFETY SKIN OIL INJECTION
5	4046-078	1	DECAL DIESEL FUEL ONLY
6	2030-416	2	DECAL MOVING PARTS (TRACK WARNING)
7	2030-415	2	DECAL BOOM CRUSH PT (NO TEXT)
8	2030-565	1	DECAL ISO SAFETY BATTERY
9	2030-418	1	DECAL ENGINE COMPARTMENT
10	2030-551	1	DECAL ISO SAFETY FAN AND BELT
11	2030-552	1	DECAL ISO SAFETY EXHAUST HOT
12	4046-079	1	DECAL CE HYDRAULIC OIL ONLY
13	0310-197	4	DECAL,TIE DOWN 156-5762
14	2030-419	1	DECAL THROTTLE (NO TEXT)
15	2030-428	1	DECAL 2 SPEED
16	2030-426	1	DECAL NO RIDERS/WORK PLATFORM
17	2030-420	1	DECAL CARRY LOADS/KEEP INSIDE
18	2030-424	1	DECAL CONTROLS RIGHT (NO TEXT)
19	2030-423	1	DECAL CONTROLS LEFT (NO TEXT)
20	2030-425	1	DECAL 3 POINT (NO TEXT)

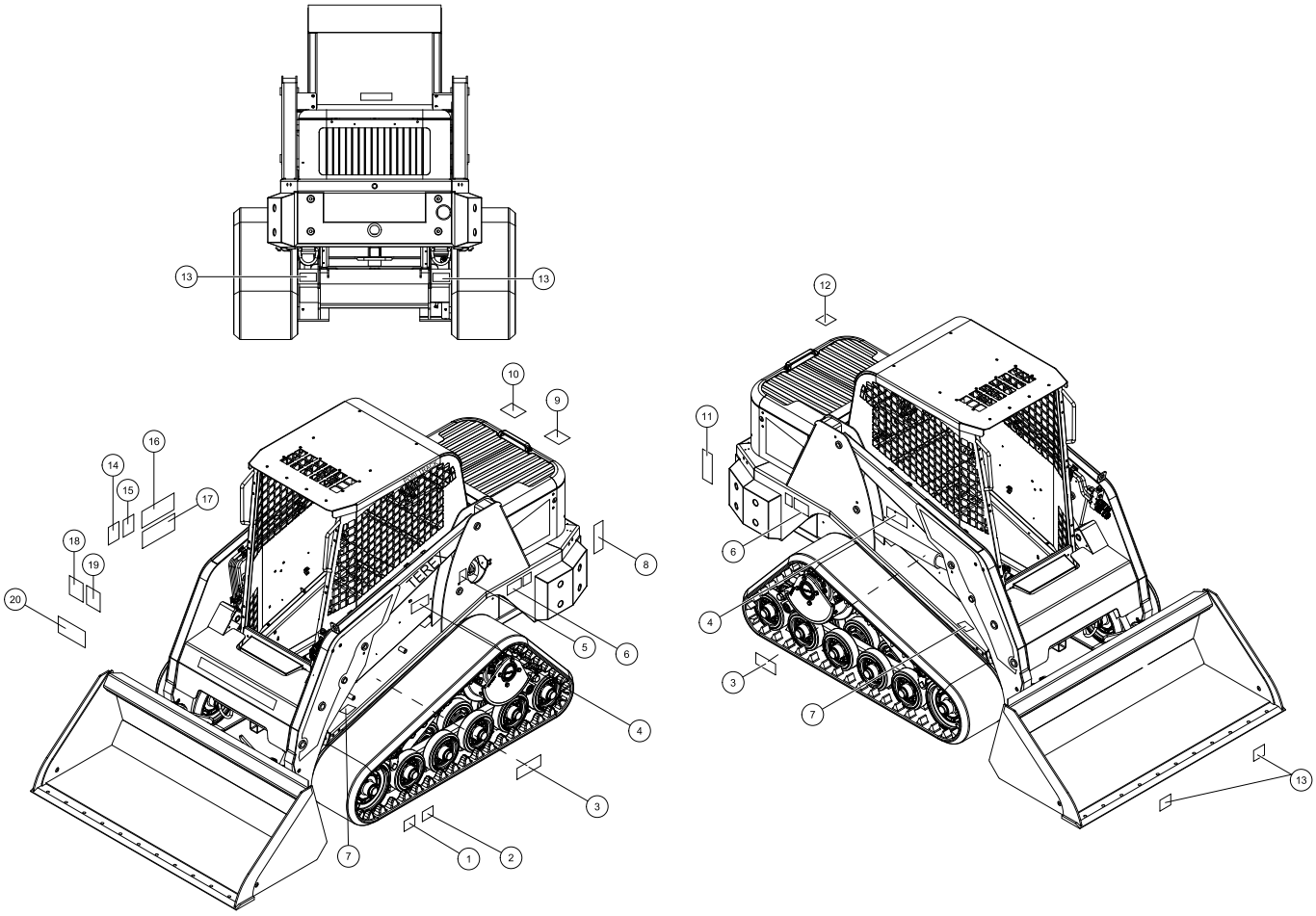

MACHINE GRAPHICS (Serial #: DTC 03056-Current)

REF. NO.	PART NUMBER	QTY.	DESCRIPTION
1	0200-661	1	DECAL LIFT ARM LEFT FRONT TEREX PT50
2	0200-660	1	DECAL RIGHT ARM LIFT FROM TEREX PT50
3	2030-334	2	DECAL POSI TRACK
4	2030-496	1	DECAL HOOD LEFT TEREX PT50/60/100
5	2030-495	1	DECAL HOOD RIGHT TEREX PT50/60/100
6	2030-492	1	DECAL CROSS MEMBER BLACK TEREX
7	2010-258	3	DECAL 2" TEREX

REF. NO.	PART NUMBER	QTY.	DESCRIPTION

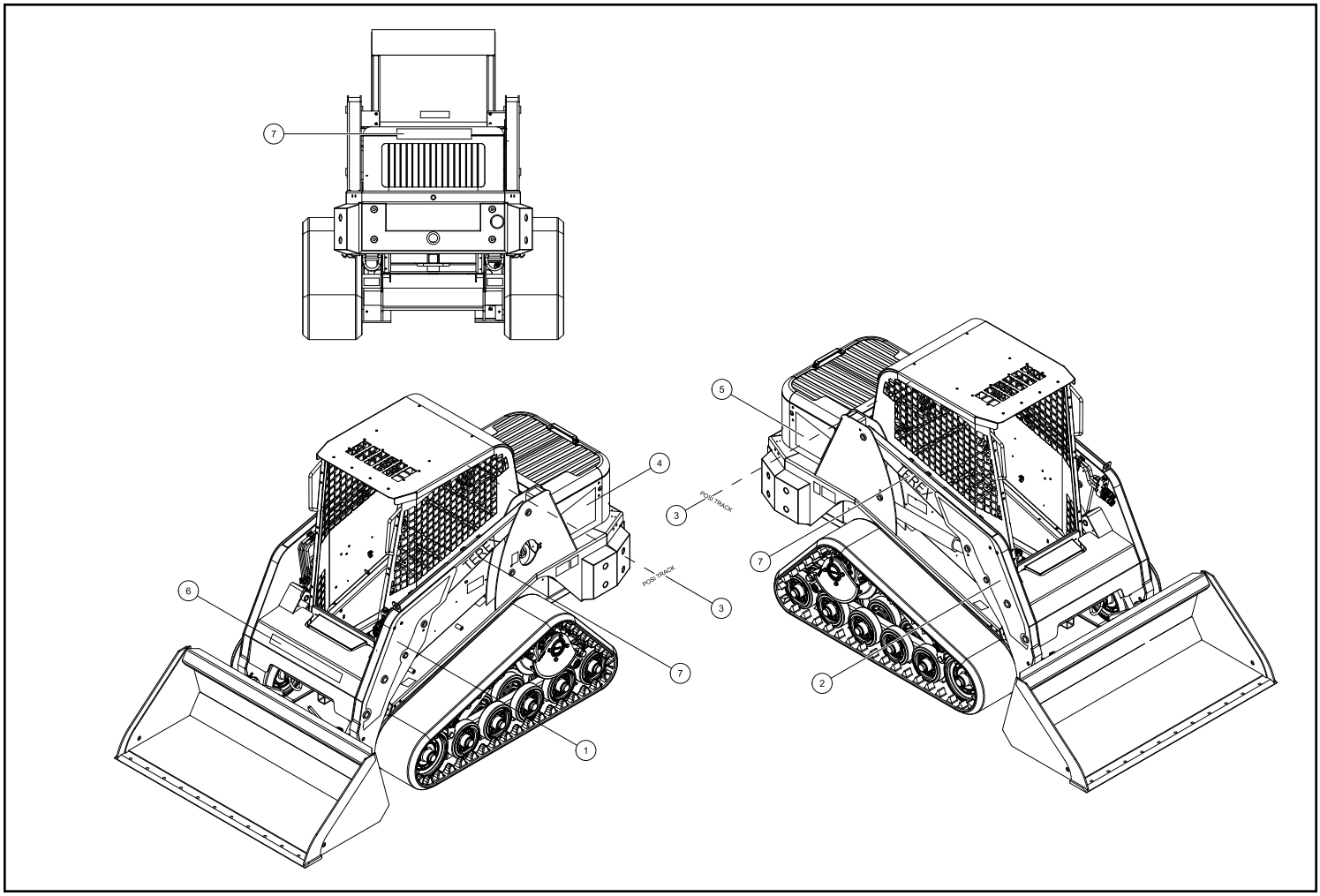

Terex Construction Americas
8800 Rostin Road
Southaven, MS 38671
(888)-201-6008
(662)-393-1800
www.terex.com