AIRMAN

PC

PARTS CATALOG

SCREW COMPRESSOR

PDS185S-5C2

silverhorn.co.uk

HOKUETSU INDUSTRIES CO., LTD.

ＦＯＲ　ＭＯＤＥＬ

ＭＯＤＥＬ	ＳＥＲ．ＮＯ．
ＰＤＳ１８５Ｓ－５Ｃ２	Ｂ４－５Ｃ２００５１～

silverhorn.co.uk

N O T I C E

1. This parts catalog contains all the parts and assemblies of "AIRMAN" brand products.
   The complete unit is divided into several parts groups,the details of which are clearly illustrated,and completely listed.
   So desired part number,name and quantity can be easily determined referring to Ref.No.

2. When you place order for service parts,please be sure to advise us of the following information.
   (1) Part number.
   (2) Quantity required.
   (3) Part name.
   (4) Model name and Serial number.

3. How to read parts catalog.
   (1) Ref.No.
   Reference number(Ref.No.)is to be used for locating the part number and name from the illustrations.(However some parts such as bolts and nuts etc.,are not illustrated but their reference numbers only listed.)
   Ref.No.1,1-1,1-2,……shows history of part modifications;namely ref.No.1 changed to No.1-1 and then 1-2.

Example: Ref.No.	Part No.
1.	21101 00101
1-1.	21101 00103

   (2) Part No.
   Every part has its own proper number. Even if a part has the same shape as an other part and if its number different,it is not interchangeable at all in many cases.

   (3) Interchangeability
   A.B.C.D.Q.X.Y.and Z.in column "Interchangeability" show the following.
   A : A new part is replaceable with an old part,but the old part is not replaceable with the new one.
   B : Not interchangeable.
   C : Disused.
   D : Newly added.
   Q : Quantity per unit changed.
   X : Included in this set of parts,this part is not used for this model.
   Y : Part to be selected.
   Z : This part can not be supplied as an individual part.

   (4) Part name
   Every part has its own proper name.

   (5) Q'ty
   The number shown in the column of Q'TY indicates the quantity of parts used per one unit machine.

silverhorn.co.uk

(6) Change column

M1,M2,M3,……Mn mentioned in the column indicate the change of part number and the serial number of the unit,the part of which was modified.
To check the serial number,refer to "LIST OF MACHINE SERIAL NUMBERS & CHANGED PART NUMBERS" mentioned in the front part of this book.

4. Abbreviations used in this catalog.

ass'y	assembly	L	Length
C/H	Change column	o & p	overrun & parking brake
Comp.	Compressor	OPT.	Option
Const.	Consisting of	Press.	Pressure
Cont.	Control	SPC/S.	Special specifications
Cyl.	Cylinder	STD.	Standards
Eng.	Engine	T or t	Thickness
EXP.	Export	w.	with
Incl.	Including	w/o	without

5. HOW TO READ MODELS

Example: P D S □ 1 2 5 S □ − 5 B 1
① ② ③ ④ ⑤ ⑥ ⑦ ⑧ ⑨

① PD :PORTABLE DIESEL ENGINE
SD :STATIONARY DIESEL ENGINE
SG :STATIONARY GAS ENGINE
SM :STATIONARY SNOW MACHINE

② R :SLIDING VANE
S :SCREW(OIL-INJECTION)
D :SCREW(OIL-FREE)

③ w/o :0.69MPa or 0.70MPa
E :0.86MPa
F :1.03MPa
G :1.18 to 1.37MPa
H :1.72MPa
J :2.07MPa
K :2.41 to 2.45MPa

④ 75 :ENGINE OUTPUT(kW)<SDD,SDSG ONLY>
125 :Free air delivery(cfm)

⑤ S :SILENT TYPE and PROPANE GAS ENGINE SILENT TYPE
T :CITY-GAS ENGINE SILENT TYPE
w/o :UNSILENCED TYPE

⑥ C :AFTERCOOLER TYPE
D :DRY AIR TYPE
R :IN LINE PUMP TYPE
W :WATER-COOLED TYPE
w/o :STANDARD TYPE

⑦ 3 :SKID-MOUNTED TYPE
4 :TRAILER-MOUNTED TYPE
5 :BOX
6 :WIDE BODY
w/o :OTHERS

⑧ MODEL CHANGE MARK

⑨ VARIATION MARK

NOTE : We are always engaged in improving our products.So there may be some changes of the product which are not yet mentioned in this parts catalog.
Therefore,in necessary case,we issue a revision in which such changes ars added.
When you have any question on the parts catalog,please ask your nearest dealer or directly us.

silvermorn.co.uk

LIST OF MACHINE SERIAL NUMBERS & CHANGED PART NUMBERS

MODEL NAME & SER.NO. OF THE UNIT,THE PART OF WHICH WAS CHANGED

C/H	PDS185S-5C2	C/H
M 1	0056～	
M 2	0080～	
M 3	0096～	
M 4	0110～	
M 5	0110～	
M 7	0054～	
M221	0067～	
M230	0106～	
M233	0106～	
M237	0106～	
M256	0151～	
M264	0157～	
M268	0151～	
M278	0220～	
M284	0229～	

silverhorn.co.uk

CONTENTS

FIG.NO.	FIG.NAME	PAGE
—COMPRESSOR PARTS—		
21 - 00	AIR END	21- 1～2
31 - 00	MOUNTING & INTAKE	31- 1～2
33 - 00	RECEIVER,SEPARATOR & SERVICE HEADER	33- 1～2
36 - 00	AIR LINE	36- 1～2
37 - 00	OIL LINE & COOLING	37- 1～2
39 - 00	NAME PLATE	39- 1～2
41 - 00	ENGINE,EXHAUST & FUEL LINE	41- 1～2
44 - 00	ELECTRIC	44- 1～2
51 - 00	FRAME & BONNET	51- 1～2
52 - 00	LINING	52- 1
—ENGINE PARTS—		
Fig.1.	CYLINDER BLOCK	Fig.1.
Fig.2.	GEAR HOUSING	Fig.2.
Fig.3.	MOUNTING FLANGE & OIL SUMP	Fig.3.
Fig.4.	CYLINDER HEAD & BONNET	Fig.4.
Fig.5.	SUCTION MANIFOLD	Fig.5.
Fig.6.	EXHAUST MANIFOLD	Fig.6.
Fig.7.	CAMSHAFT & DRIVING GEAR	Fig.7.
Fig.8.	CRANKSHAFT & PISTON	Fig.8.
Fig.9.	LUB.OIL SYSTEM	Fig.9.
Fig.10.	COOLING WATER SYSTEM	Fig.10.
Fig.11.	FUEL INJECTION PUMP	Fig.11.
Fig.12.	GOVERNOR	Fig.12.
Fig.13.	FUEL INJECTION VALVE	Fig.13.
Fig.14.	FUEL LINE	Fig.14.
Fig.15.	STARTING MOTOR	Fig.15.
Fig.16.	GENERATOR	Fig.16.
Fig.17.	GASKET SET	Fig.17.
Fig.18.	(15A)STARTING MOTOR	Fig.18.

silvernorn.co.uk

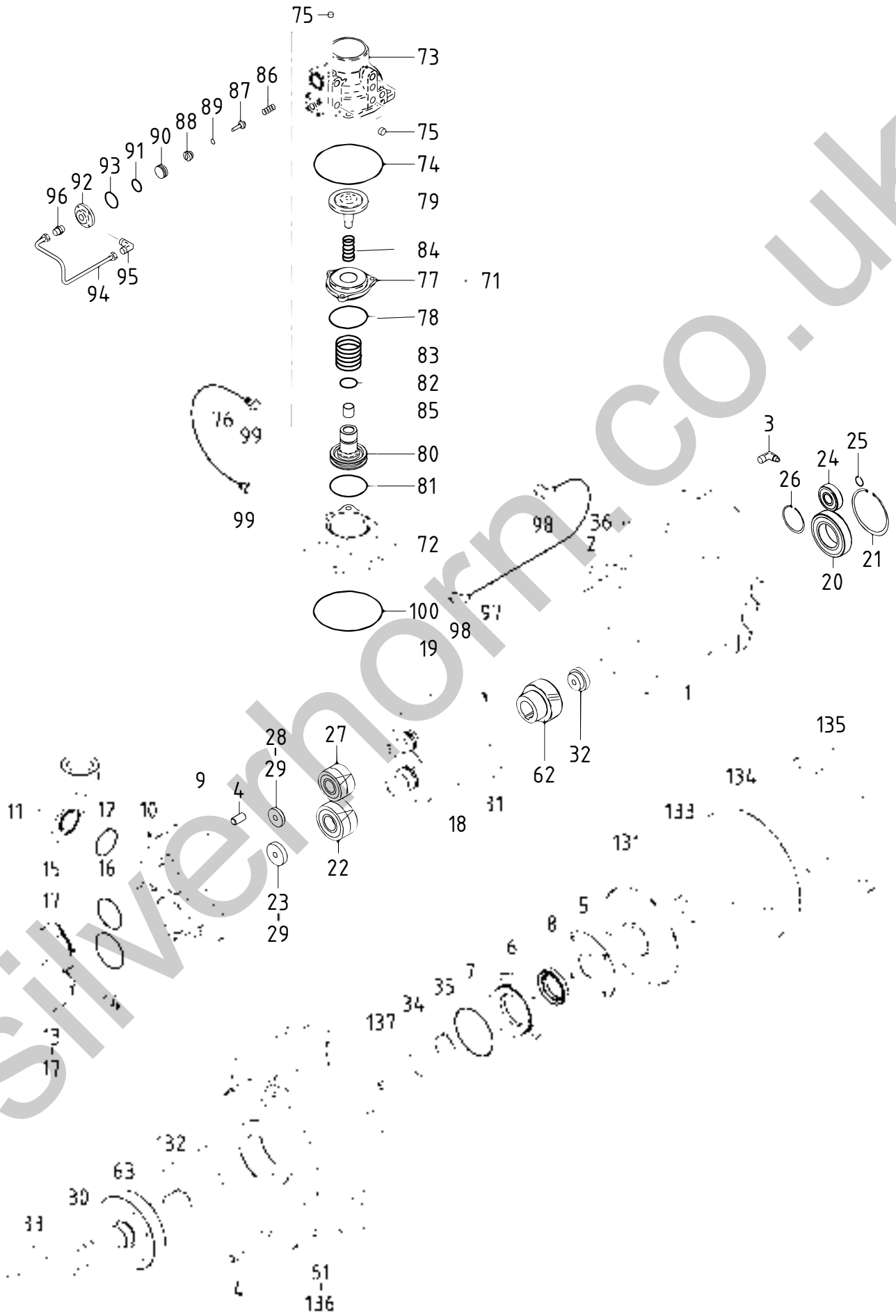

silverhorn.co.uk

21 - 00 AIR END

Ref.NO.	Part NO.	Inter-change ability	Part Name	Q'ty	C/H	Remarks
	21000 28110		COMPRESSION GROUP			Const.No.1～35
	21000 28510	B	COMPRESSION GROUP		M221	Const.No.1～10 & 13～35
	21000 30211	B	COMPRESSION GROUP		M233	Const.No.1～10 & 13～36
1	21201 41502		Cylinder,1st	1		
1 -1	21201 43900	B	Cylinder,1st	1	M233	
1 -2	21201 45100	B	Cylinder,1st	1	M278	
	02280 10030		Socket bolt	10		
	02280 10075		Socket bolt	2		
2	03620 60002		Plug	2		
2 -1	03620 60001	B	Plug	2	M278	
3	03734 21010		Nipple elbow	1		
4	03316 14028		Pin	4		
5	21212 18500		Cover,oil seal	1		
	22153 03400		Bolt	4		
6	21212 18300		Cover,oil seal	1		
7	03402 10095		O-ring	1		
8	21211 10800		Oil seal	1		
9	21217 33100		Casing,discharge	1		
9 -1	21217 33300	B	Casing,discharge	1	M221	
	02280 10030		Socket bolt	8		
	02280 10055		Socket bolt	2		
10	22314 06400		O-ring	2		
10 -1	03620 60001	B	Plug	2	M221	
11	22211 14500	C	Body,check valve	1	M221	
	02280 10030	C	Socket bolt	3	M221	
	03115 40010	C	Spring washer	3	M221	
12	03402 15050	C	O-ring	1	M221	
13	21218 33500		End cover	1		
14	22314 02500		O-ring	1		
15	21218 33400		End cover	1		
16	22314 06200		O-ring	1		
17	02280 08030		Socket bolt	6		
	03115 40008		Spring washer	6		
18	21461 31600		Rotor,male	1		
19	21462 22300		Rotor,female	1		
	A pair of rotor (male & female) should be ordered.					
20	21406 29900		Bearing,rotor	1		
21	03413 20090		Snap ring	1		
22	21470 14300		Bearing,complete	1		
23	21468 02700		Plate	1		
24	21406 28700		Bearing,rotor	1		
25	03413 40020		Snap ring	1		
26	03413 20052		Snap ring	1		
27	21470 14400		Bearing,complete	1		
28	21468 09200		Plate	1		
29	02280 10030		Socket bolt	2		
	03115 30010		Lock washer	2		
30	03410 06209		Bearing	1		
31	03307 10040		Key	1		
32	21468 19800		Plate	1		
	02280 10045		Socket bolt	1		
	03115 30010		Lock washer	1		
33	21222 09600		Washer	2		
34	03410 06211		Bearing	1		
35	03413 10055		Snap ring	1		
36	03620 60002	D	Plug	1	M233	
	21000 28310		COMPRESSION GROUP			Const.No.61～63
61	21214 18100		Casing,power side	1		
62	21467 40900		Gear,driven	1		
63	21469 31500		Gear,drive	1		
	22 - 00		VALVE GROUP			
71	22100 41202		Unloader ass'y	1		Const.No.72～99
	02280 10075		Socket bolt	4		
	03115 30010		Lock washer	4		
72	22111 28200		Body,unloader	1		
73	22115 12701		Cover,unloader	1		
74	03402 10125		O-ring	1		
75	03620 60002		Plug	2		
76	03890 20030		Nylon tube	1		
76 -1	03890 20020	B	Nylon tube	1	M230	
77	22115 11300		Cover,unloader	1		
	02282 08025		Socket bolt	3		
78	03402 10070		O-ring	1		
79	22150 13801		Valve	1		
80	22130 09500		Piston,unloader	1		
81	21441 04800		O-ring	1		
82	21441 04900		O-ring	1		
83	22144 16700		Spring	1		
84	22144 16600		Spring	1		
85	23124 15600		Bushing	1		
86	22144 10600		Spring	2		
87	36429 00801		Needle valve	2		
87 -1	36429 01300	A	Needle valve	2	M284	
88	36428 00700		Valve seat	2		
89	03402 25008		O-ring	2		
90	36623 00800		Piston,auto relief	2		
91	03402 25021		O-ring	2		
92	36621 01401		Cover,auto relief	2		
	02270 04012		Socket bolt,w/w	8		
93	21221 02100		O-ring	2		
94	36349 22400		Pipe	1		
94 -1	36349 22800	B	Pipe	1	M230	
95	03734 53021		Nipple elbow	1		
96	03734 52021		Nipple	1		
96 -1	03734 53021	B	Nipple elbow	1	M230	
97	03890 20020		Nylon tube	1		
98	03734 65020		Nipple elbow	2		
99	03734 64020		Nipple	2		
99 -1	03734 65020	B	Nipple elbow	2	M230	
100	03402 10125		O-ring	1		
	61 - 00		COUPLING GROUP			
131	21420 19500		Coupling,driven	1		
132	03307 14050		Key	1		
133	21468 04400		Plate	1		
	02282 10030		Socket bolt	1		
	03115 30010		Lock washer	1		
134	21412 05401		Gear,driven	1		
	02135 10045		Bolt	8		
	03115 02010		Spring washer	8		
	21414 06000		Washer,driven gear	8		
135	61111 13100		Gear,drive	1		
	02280 08030		Socket bolt	8		
	03115 30008		Lock washer	8		
136	02138 12030		Bolt	3		
	02138 12040		Bolt	5		
	03115 02012		Spring washer	8		
137	03316 08020		Pin	2		

silverhorn.co.uk

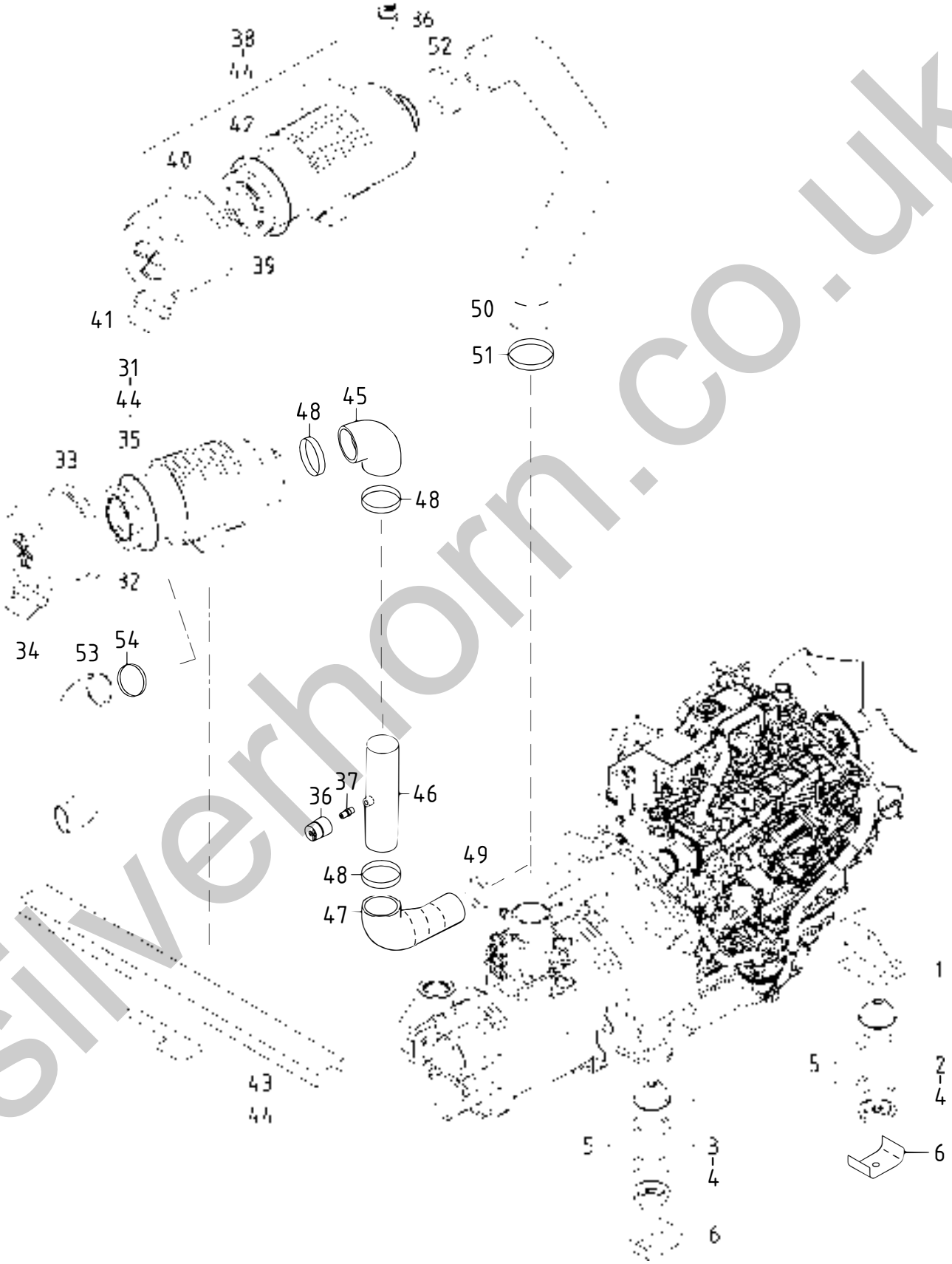

silverhorn.co.uk

31 - 00 MOUNTING & INTAKE

Ref.NO.	Part NO.	Inter-change ability	Part Name	Q'ty	C/H	Remarks	Ref.NO.	Part NO.	Inter-change ability	Part Name	Q'ty	C/H	Remarks
	31 - 00		MOUNTING GROUP										
1	31110 05010		Bracket	2									
	02135 10020		Bolt	8									
	03115 02010		Spring washer	8									
2	31130 26200		Vibration isolator ass'y	4									
3	31130 24300		Vibration isolator ass'y	4									
4	02135 12120		Bolt	4									
	03116 12012		Plain washer	8									
	03115 02012		Spring washer	4									
	02912 08012		Nut	4									
5	52728 16010		Cushion rubber	8									
6	31113 30300		Plate	4									
	32 - 00		INTAKE GROUP										
31	32100 38702		Air filter ass'y	1		Const.No.32～35							
32	32143 11700		Element	1									
33	32142 09700		Cup	1									
34	32151 01400		Vacuator valve	1									
35	32147 03500		O-ring	1									
36	32148 03000		Filter service indicator	2									
37	32262 00200		Nipple	1									
38	32100 40901		Air filter ass'y	1		Const.No.39～42							
38 -1	32100 44900	B	Air filter ass'y	1	M237	Const.No.39～42							
39	32143 11800		Element	1									
40	32142 11300		Cup	1									
41	32151 01600		Vacuator valve	1									
42	32147 03600		O-ring	1									
43	32240 41101		Bracket	1									
44	02201 08012		Flange bolt	8									
45	32331 77100		Hose	1									
46	32320 69400		Pipe	1									
47	32331 77200		Hose	1									
48	03511 20090		Hose clip	3									
49	03511 20070		Hose clip	1									
50	32331 77001		Hose	1									
51	03511 20100		Hose clip	1									
52	03511 20110		Hose clip	1									
53	32331 72700		Hose	1									
54	03511 20080		Hose clip	1									

silverhorn.co.uk

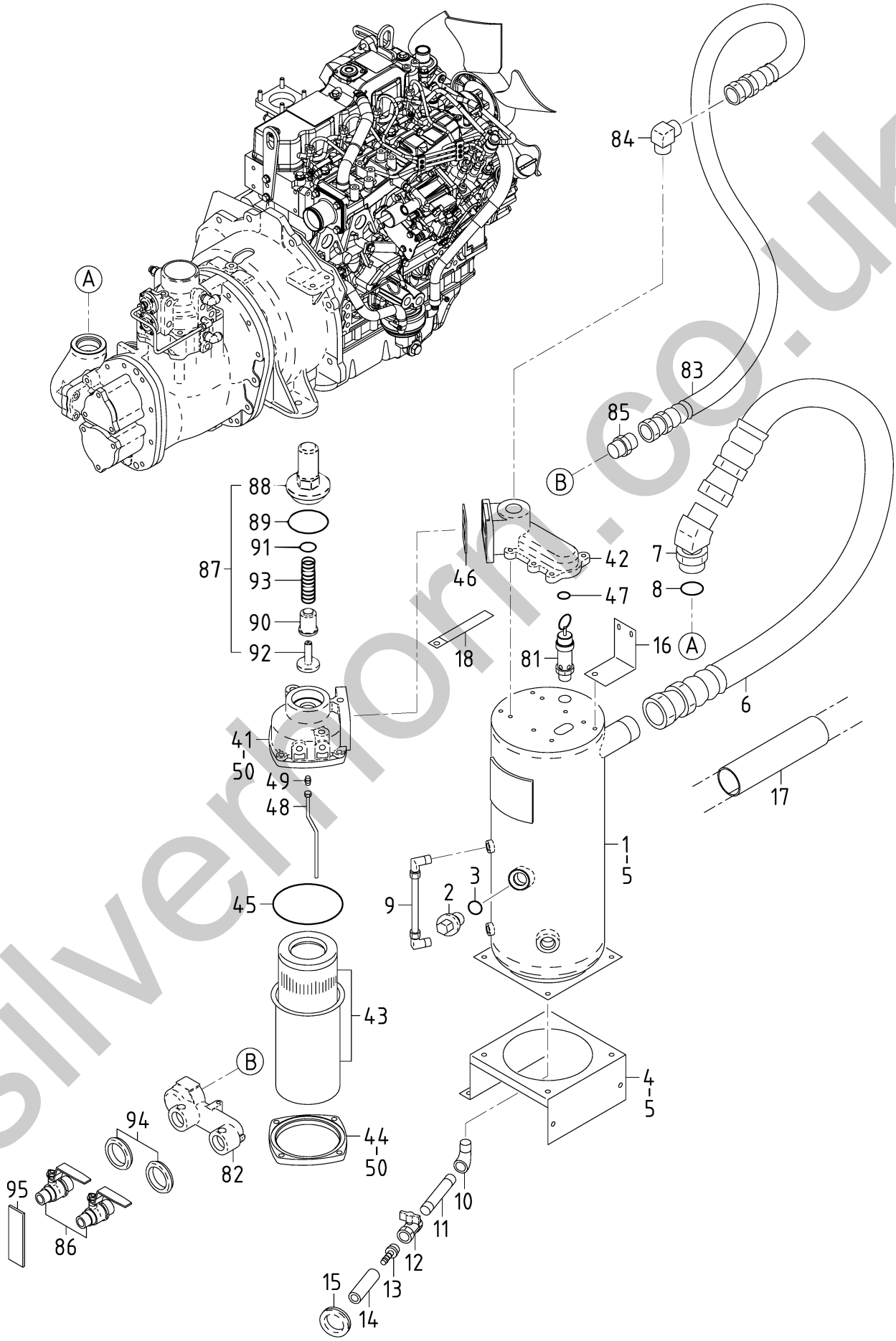

silverthorn.co.uk

Ref.NO.	Part NO.	Inter-change ability	Part Name	Q'ty	C/H	Remarks
	33 - 00		RECIVER GROUP			
1	33100 75610		Receiver tank	1		(ASME)
1	33100 74710		Receiver tank (Incl.No.2,3)	1		(ASME,SILVAN)
2	33231 03600		Cap,oil filler	1		
3	03402 25030		O-ring	1		
4	33260 07900		Bracket	1		
5	02201 08020		Flange bolt	8		
6	37160 93900		Pipe	1		
6 -1	37160 02210	B	Pipe	1	M221	
7	GD920 12600		Nipple	1		Incl.No.8
7 -1	03734 85140	B	Nipple elbow	1	M221	Incl.No.8
8	03402 25044		O-ring	1		
9	03841 30015		Nylon tube,w/n	1		
	03734 21030		Nipple elbow	2		
10	03731 21004		Elbow	1		
11	03730 04120		Gas pipe	1		
12	03735 13004		Valve	1		
13	03734 60144		Nipple	1		
14	03570 15009		Hose	1		
15	03403 00512		Grommet	1		
16	33260 08000		Bracket	1		
	02201 08012		Flange bolt	1		(receiver tank side)
	02201 06016		Flange bolt	2		(bracket side)
17	43322 04500		Cushion	4		
18	03424 80011		Clip	1		
	02201 08012		Flange bolt	1		
	34 - 00		SEPARATOR GROUP			
41	34210 30401		Casing	1		
42	34280 00900		Cover	1		
	02135 08030		Bolt	5		
	03115 02008		Spring washer	5		
	03116 12008		Plain washer	5		
43	34220 16101		Separator	1		
44	34250 18301		Cover,separator	1		
45	03402 15140		O-ring	1		
46	22314 06500		O-ring	1		
47	03402 25050		O-ring	1		
48	34260 07000		Pipe	1		
49	03734 70021		Nipple	1		
50	02283 10035		Socket bolt	8		
	03115 30010		Lock washer	8		
	35 - 00		SERVICE HEADER GROUP			
81	35200 14100		Safety valve ass'y	1		
82	35100 51001		Air manifold	1		
82 -1	35100 54400	B	Air manifold	1	M264	
	02201 08020		Flange bolt	1		
83	37160 25010		Pipe	1		
84	03734 44012		Nipple elbow	1		
85	03734 43120		Nipple	1		
86	35421 00105		Air valve	2		
87	35300 17000		Press.Cont.Vlv.ass'y	1		Const.No.88～93
88	35301 20200		Body	1		
89	03402 15075		O-ring	1		
90	35303 08400		Piston	1		
91	03402 25032		O-ring	1		
92	35303 03300		Piston	1		
93	22144 07700		Spring	1		
94	03402 00502		Eyelet ring	2		
94 -1	03402 00603	B	Eyelet ring	2	M264	
95	38465 18200	C	Cushion rubber	1	M264	

Ref.NO.	Part NO.	Inter-change ability	Part Name	Q'ty	C/H	Remarks

silverhorn.co.uk

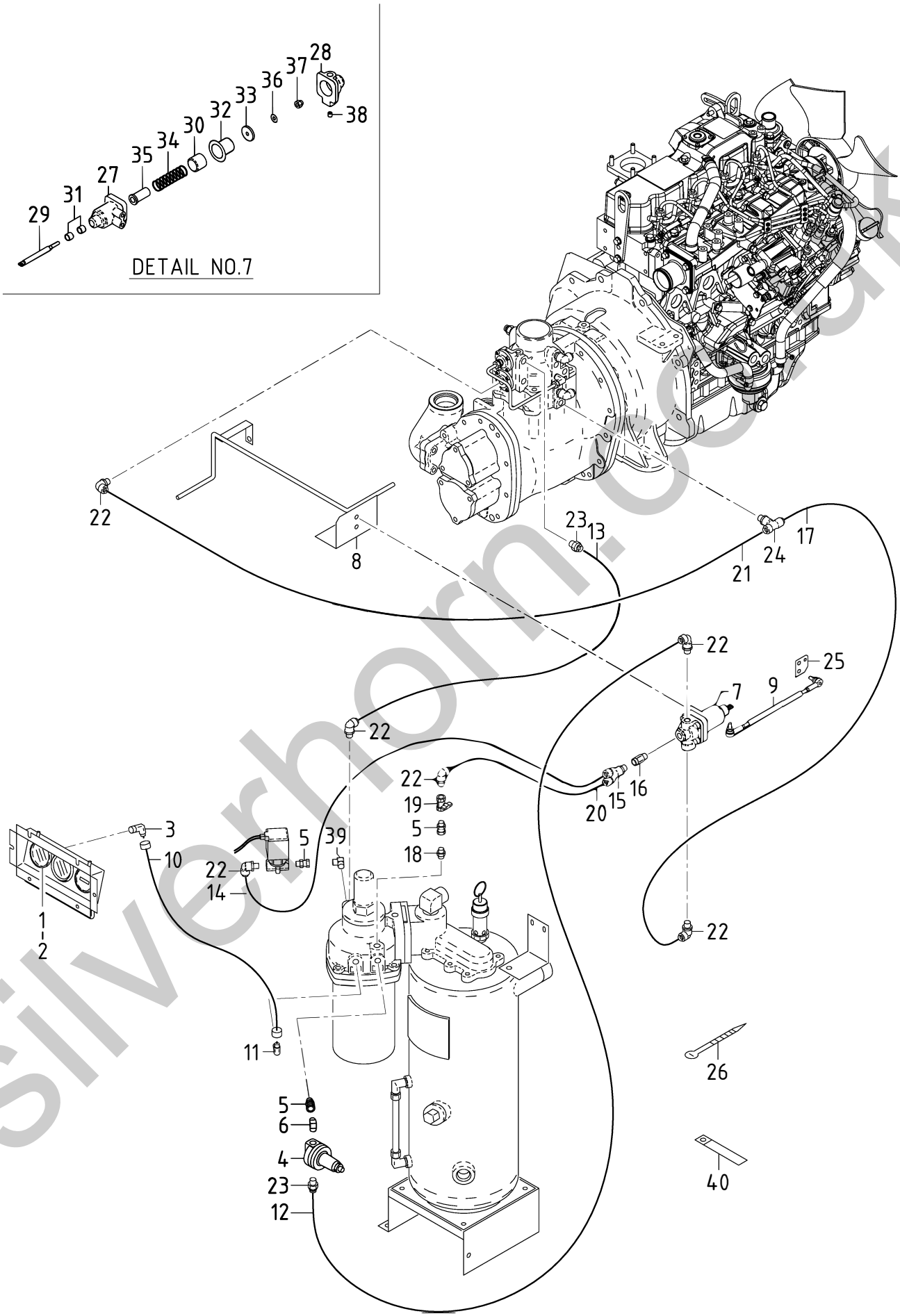

silverhorn.dk

36 - 00 AIR LINE

Ref.NO.	Part NO.	Inter-change ability	Part Name	Q'ty	C/H	Remarks
	36 - 00		CONTROL GROUP			
1	36141 18600		Gauge,air press.	1		
2	36131 03100		Cushion rubber	1		
3	03734 21151		Nipple elbow	1		
4	36400 19000		Regulator ass'y	1		
5	86183 01500		Joint	3		
6	03734 44002		Nipple elbow	1		
7	36400 21901		Regulator ass'y	1		Const.No.27～38
	02238 08020		Bolt,w/w	2		
8	36710 34900		Bracket	1		
	02248 10020		Bolt,w/w	2		
	02248 08020		Bolt,w/w	1		
9	36280 33301		Rod	1		
	02915 20006		Nut,w/w	2		
	03116 12006		Plain washer	3		
10	03840 15195		Nylon tube,w/n	1		
	06540 07185		Corrugated tube	1		
11	03734 21015		Nipple elbow	1		
12	03890 20070		Nylon tube	1		
13	03890 20061		Nylon tube	1		
14	03890 20075		Nylon tube	1		
15	03734 68020		Y-nipple	1		
16	22200 15601		Check valve ass'y	1		
17	03890 20027		Nylon tube	1		
18	03734 43020		Nipple	1		
19	03735 13002		Valve	1		
20	03890 20085		Nylon tube	1		
21	03890 20020		Nylon tube	1		
22	03734 65020		Nipple elbow	7		
23	03734 64020		Nipple	2		
24	03734 66020		Tee nipple	1		
25	36221 04500		Lever	1		
	02201 08020	C	Flange bolt	2	M268	
	02238 08020	D	Bolt,w/w	2	M268	
	02915 20008		Nut,w/w	2		
26	03425 00001		Vinyl clip	5		
27	36421 03600		Body	1		
28	36422 01900		Cap	1		
	02283 06025		Socket bolt	4		
	03115 40006		Spring washer	4		
29	22152 04900		Shaft	1		
30	22130 05500		Piston	1		
31	23124 10300		Bushing	2		
32	36437 01500		Diaphragm	1		
33	36435 01400		Washer	1		
34	22144 12800		Spring	1		
35	31144 14500		Spacer	1		
36	34232 00300		Gasket	1		
37	02914 60008		Locking nut	1		
38	22123 04400		Orifice	1		
39	03407 44002		Nipple elbow	1		
40	03424 80010		Clip	1		
	02201 08012		Flange bolt	1		

Ref.NO.	Part NO.	Inter-change ability	Part Name	Q'ty	C/H	Remarks

silverhorn.co.uk

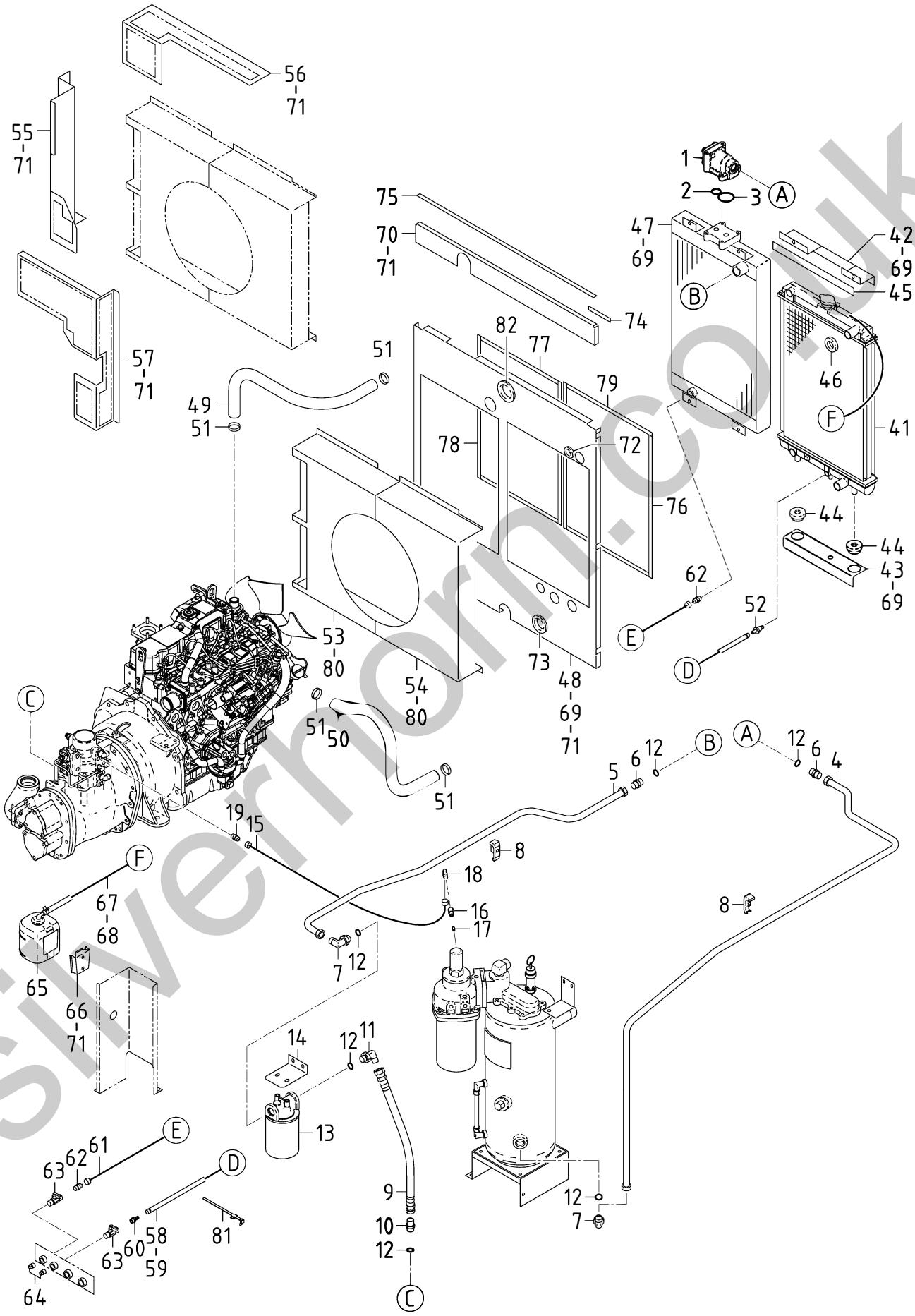

silverhorn.co.uk

Ref.NO.	Part NO.	Inter-change ability	Part Name	Q'ty	C/H	Remarks
	37 - 00		OIL LINE GROUP			
1	37200 11502		By-pass valve ass'y	1		Incl.pellet
	37231 02100		Pellet ass'y	1		& O-ring
	03402 25045		O-ring	1		
	02136 08035		Bolt	2		
	02136 08090		Bolt	2		
	03115 06008		Spring washer	4		
	03116 15008		Plain washer	4		
2	03402 15025		O-ring	1		
3	03402 15045		O-ring	1		
4	37111 21600		Pipe	1		
5	37114 24600		Pipe	1		
6	03734 75060		Nipple	2		Incl.No.12
7	03734 76060		Nipple	2		Incl.No.12
8	37530 26400		Bracket	2		
	02201 08040		Flange bolt	2		
	02915 00008		Hexagon flange nut	2		
9	37160 91100		Pipe	1		
10	GD920 14700		Nipple	1		Incl.No.12
11	GD920 13600		Nipple	1		Incl.No.12
12	03402 25024		O-ring	6		
13	37400 13600		Oil filter ass'y	1		
	37438 05501		Filter cartride	1		
	02201 10020		Flange bolt	2		
14	37510 37000		Bracket	1		
	02201 08020		Flange bolt	2		
15	03841 20053		Nylon tube,w/n	1		
	06540 07043		Corrugated tube	1		
16	37189 34400		Bushing	1		
17	37580 01900		Strainer	1		
18	03734 21020		Nipple elbow	1		
19	03734 20020		Nipple	1		
	38 - 00		COOLING GROUP			
41	38100 42700		Radiator	1		
	38410 05700		Cap	1		
42	38420 91200		Bracket	1		
43	38420 91800		Bracket	1		
44	31131 04900		Rubber,vibration isolator ass'y	2		
45	03407 67038		Seal rubber	1		
46	52728 18810		Cushion rubber	1		
47	38200 40500		Oil cooler	1		
48	52350 62222		Cover	1		
49	38524 69700		Hose(upper)	1		
50	38524 69600		Hose(lower)	1		
51	03511 20040		Hose clip	4		
52	38117 02300		Socket	1		
53	38440 07010		Shroud,fan	1		
54	38440 06910		Shroud,fan	1		
55	38450 83600		Guard,fan	1		
56	38450 83700		Guard,fan	1		
57	38450 83500		Guard,fan	1		
58	03611 08170		Hose	1		
59	03511 20016		Hose clip	2		
60	37170 12200		Joint	1		
61	03841 40155		Nylon tube,w/n	1		
62	03734 20043		Nipple	2		
63	35421 06800		Air valve	2		
64	03620 41003		Plug	2		
65	38590 01400		Reserve tank ass'y	1		Incl.No.66
66	38591 00400		Bracket	1		
67	38594 05400		Hose	1		
68	03511 40016		Hose clip	2		
69	02201 08020		Flange bolt	10		
70	52160 52900		Bracket	1		
70 -1	52160 59100	B	Bracket	1	M 1	
71	02201 06016		Flange bolt	29		
72	03403 00303		Grommet	2		
73	03403 00512		Grommet	1		
74	03407 67222		Seal rubber	4		
74 -1	03407 66948	B	Seal rubber	2	M 1	
75	03407 66905		Seal rubber	1		
76	03407 67404		Seal rubber	2		
77	03407 67409		Seal rubber	2		
78	03407 67402		Seal rubber	2		
79	03407 67414		Seal rubber	2		
80	02915 00006		Hexagon flange nut	8		
81	37181 03600		Clip	3		
82	03403 00512		Grommet	1		
82 -1	03403 00592	B	Grommet	1	M 1	

silverhorn.co.uk

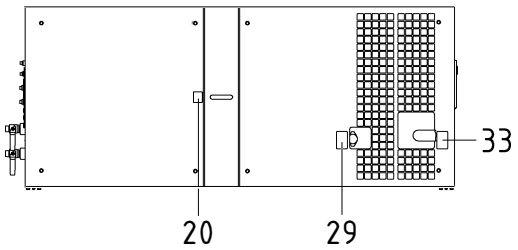

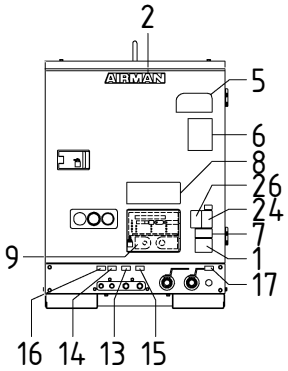

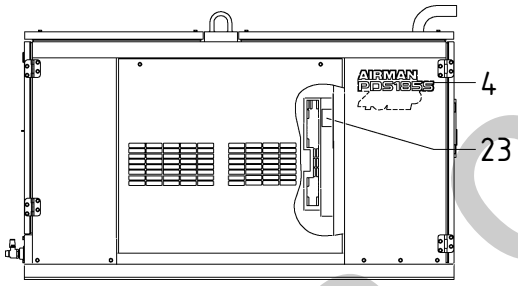

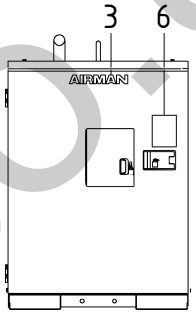

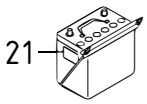

BATTERY

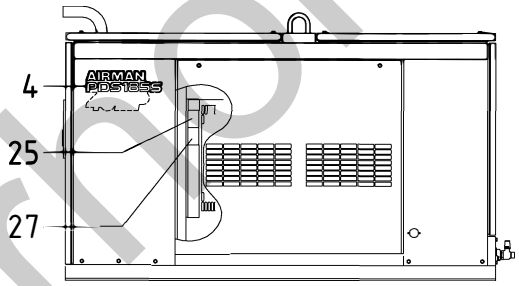

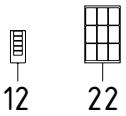

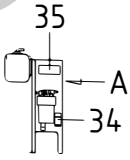

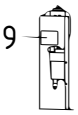

VIEW-A

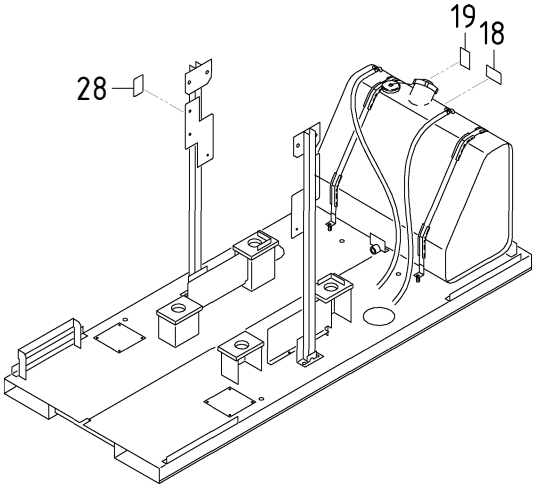

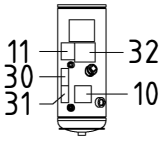

RESERVE TANK BRACKET

LIFTING BAIL & FUEL TANK

RECEIVER TANK

silverthorn.co.uk

39 - 00 NAME PLATE

Ref.NO.	Part NO.	Inter-change ability	Part Name	Q'ty	C/H	Remarks
	39 - 00		ACCESSORY GROUP			
	39600 09230		Instruction manual			
	39615 07700		Eng.Instruction manual			
	39616 05100	C	Eng.Parts catalog		M 5	
1	39103 10811		Plate(SER.NO.)	1		
	03260 03010		Blind rivet	4		
2	39170 02000		Mark (AIRMAN)	1		
3	39178 47510		Plate(AIRMAN)	1		
4	39178 56330		Plate(AIRMAN PDS185S)	2		
5	39178 12630		Plate(mark)	1		
6	39178 13330		Plate(mark)	2		
7	39178 43110		Plate(california)	1		
8	39153 66501		Plate(start-stop)	1		
9	39178 55630		Plate(in-pane)	1		
10	39147 02800		Plate(comp.oil)	1		
11	39176 00110		Plate(strainer)	1		
12	39173 02100		Plate,complete	1		Const.No.13～17
13	39189 17100	Z	Plate(fuel drain)	1		
14	39189 17200	Z	Plate(radiator drain)	1		
15	39189 17300	Z	Plate(eng.oil drain)	1		
16	39189 17400	Z	Plate (oil cooler drain)	1		
17	39189 19100	Z	Plate (receiver tank drain)	2		
18	39178 72500		Plate(diesel fuel)	1		
19	39176 35600		Plate(No fire)	1		
20	39176 69300		Plate(lift position)	1		
21	39176 50000		Plate(danger,battery)	1		
22	39173 04200		Plate,complete	1		Const.No.23～31
23	39176 73300	Z	Plate (warning,exhaust gases)	1		
24	39176 73400	Z	Plate (warning,compressed air)	1		
25	39176 73500	Z	Plate (warning,cooling fan)	1		
26	39176 73600	Z	Plate (danger,compressed air)	1		
27	39176 73800	Z	Plate(warning,V-belt)	1		
28	39176 69500	Z	Plate (caution,high temp.)	1		
29	39176 69600	Z	Plate (caution,radiator cap)	1		
30	39176 69700	Z	Plate(caution,fire)	1		
31	39176 69800	Z	Plate (warning,compressed air)	1		
32	39176 00510		Plate(notice)	1		
33	39176 73500		Plate (warning,cooling fan)	1		
34	39178 56130		Plate(oil level)	1		
35	39178 56230		Plate (caution,eng.oil)	1		
36	39178 00310		Plate(LLC)	1		

Ref.NO.	Part NO.	Inter-change ability	Part Name	Q'ty	C/H	Remarks

silvermorn.co.uk

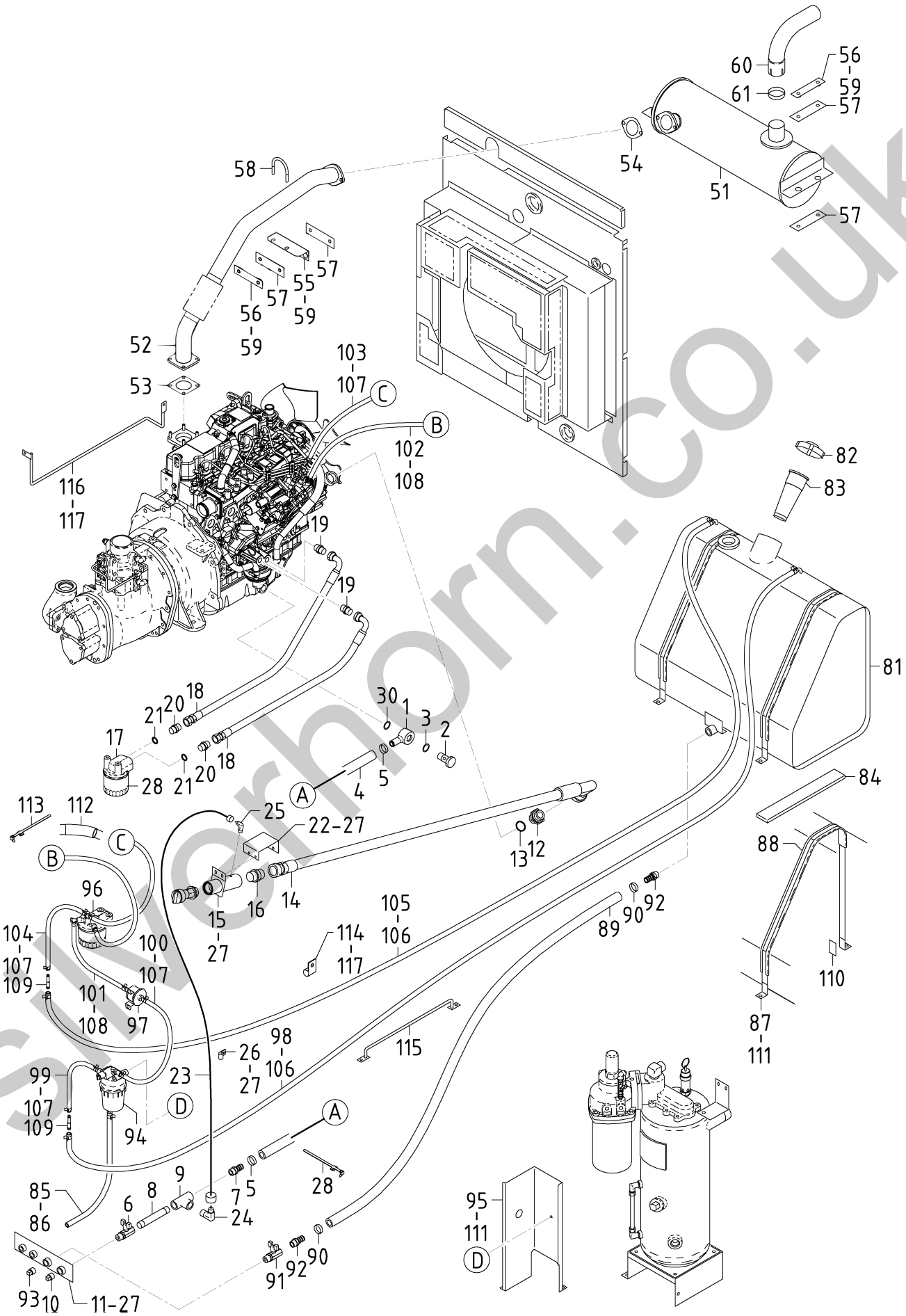

silverhorn.co.uk

Ref. NO.	Part NO.	Inter-change ability	Part Name	Q'ty	C/H	Remarks
	41 - 00		ENGINE GROUP			
1	43534 01702		Ring connector (Nipple)	1		
2	43532 05201		Nipple(Bolt)	1		
3	03407 16022		Gasket	1		
4	03580 19080		Hose	1		
5	03511 20035		Hose clip	2		
6	35421 07000		Valve	1		
7	37170 02900		Joint	1		
8	03728 04130		Pipe	1		
9	03731 30004		Tee	1		
10	03620 41004		Plug	1		
11	52160 53200		Bracket	1		
12	37731 12600		Nipple	1		
13	03402 25034		O-ring	1		
14	37110 03700		Hose	1		
14 -1	37110 06800	A	Hose	1	M 4	
15	37540 24700		Nipple	1		
16	03734 43080		Nipple	1		
17	37411 07300		Body	1		
	02201 08012		Flange bolt	2		
18	37110 03800		Pipe	2		
19	03734 43040		Nipple	2		
20	GD920 13900		Nipple	2		Incl. No. 21
21	03402 25018		O-ring	2		
22	52160 54400		Bracket	1		
23	41295 00700		Hose	1		
24	03734 21040		Nipple elbow	1		
25	03734 21042		Nipple elbow	1		
26	37181 06500		Clip	3		
27	02201 06016		Flange bolt	11		
28	41290 01000		Filter ass'y	1		See Engine parts
29	37181 03600		Clip	1		Fig. 9.
30	03407 16022		Gasket	1		
30 -1	41330 00700	B	Gasket	1	M256	
	42 - 00		EXHAUST GROUP			
51	42100 80800		Exhaust muffler	1		
52	42310 95800		Pipe, exhaust	1		
	02136 10035		Bolt	2		(for muffler)
	02912 06010		Nut	2		(for muffler)
	03115 06010		Spring washer	2		(for muffler)
	03116 15010		Plain washer	2		(for muffler)
	02915 01008		Hexagon flange nut	4		(for Eng.)
53	42324 14900		Gasket	1		
54	42324 13600		Gasket	1		
55	42240 30000		Bracket	1		
56	42160 01000		Cushion	3		
57	31130 26600		Vibration isolator ass'y	6		
58	03830 08004		U-bolt	1		
	02915 00008		Hexagon flange nut	2		
59	02201 08030		Flange bolt	6		
60	42310 95900		Pipe	1		
61	03511 20060		Hose clip	1		
	43 - 00		FUEL GROUP			
81	43100 71801		Fuel tank	1		
82	43220 01300		Cap	1		
83	43210 01301		Strainer	1		
84	38465 18100		Cushion rubber	2		
85	03600 06000		Hose	1		
86	03511 40007		Hose clip	1		
87	43310 30901		Belt	2		
	02138 08050	C	Bolt	2	M 2	
	02138 08040	D	Bolt	2	M 2	
	03115 02008		Spring washer	2		
	03116 12008		Plain washer	2		
	02915 00008		Hexagon flange nut	4		
88	43322 06700		Cushion	6		
88 -1	43322 05900	A	Cushion	2	M 1	
89	03570 19150		Hose	1		
90	03511 20035		Hose clip	2		
91	35421 07000		Air valve	1		
92	37170 02900		Joint	2		
93	03620 41004		Plug	1		
94	43550 02900		Sedimenter	1		See Engine parts
	02201 08070		Flange bolt	1		Fig. 14.
95	52160 57601		Bracket	1		
96	43540 08200		Fuel filter	1		See Engine parts
	43543 01800		Filter, cartridge	1		Fig. 14.
	02201 08030		Flange bolt	2		
97	43650 02700		Fuel pump	1		See Engine parts
	02248 06016		Bolt, w/w	2		Fig. 14.
98	03600 09200		Hose	1		
99	03600 08020		Hose	1		
	06540 15245		Corrugated tube	1		
100	03600 08025		Hose	1		
101	03570 08040		Hose	1		
102	03570 08130		Hose	1		
103	03600 08130		Hose	1		
104	03600 08058		Hose	1		
	06540 15190		Corrugated tube	1		
105	03600 09255		Hose	1		
106	03511 40020		Hose clip	4		
107	03511 40016		Hose clip	8		
108	03511 10017		Hose clip	4		
109	43525 01800		Pipe, connection	2		
110	03407 64526		Seal rubber	2		
111	02201 08020		Flange bolt	5		
112	43322 04100		Cushion	1		
113	37181 03600		Clip	1		
114	37181 05700		Clip	1		
115	44290 46700	D	Guide	4	M 1	
	02201 06016	D	Flange bolt	8	M 1	
116	44290 46801	D	Guide	1	M 1	
117	02201 06016		Flange bolt	1		
	02915 00006		Hexagon flange nut	1		
117 -1	02201 06016	Q	Flange bolt	3	M 1	
	02915 00006	Q	Hexagon flange nut	2	M 1	

silverhorn.co.uk

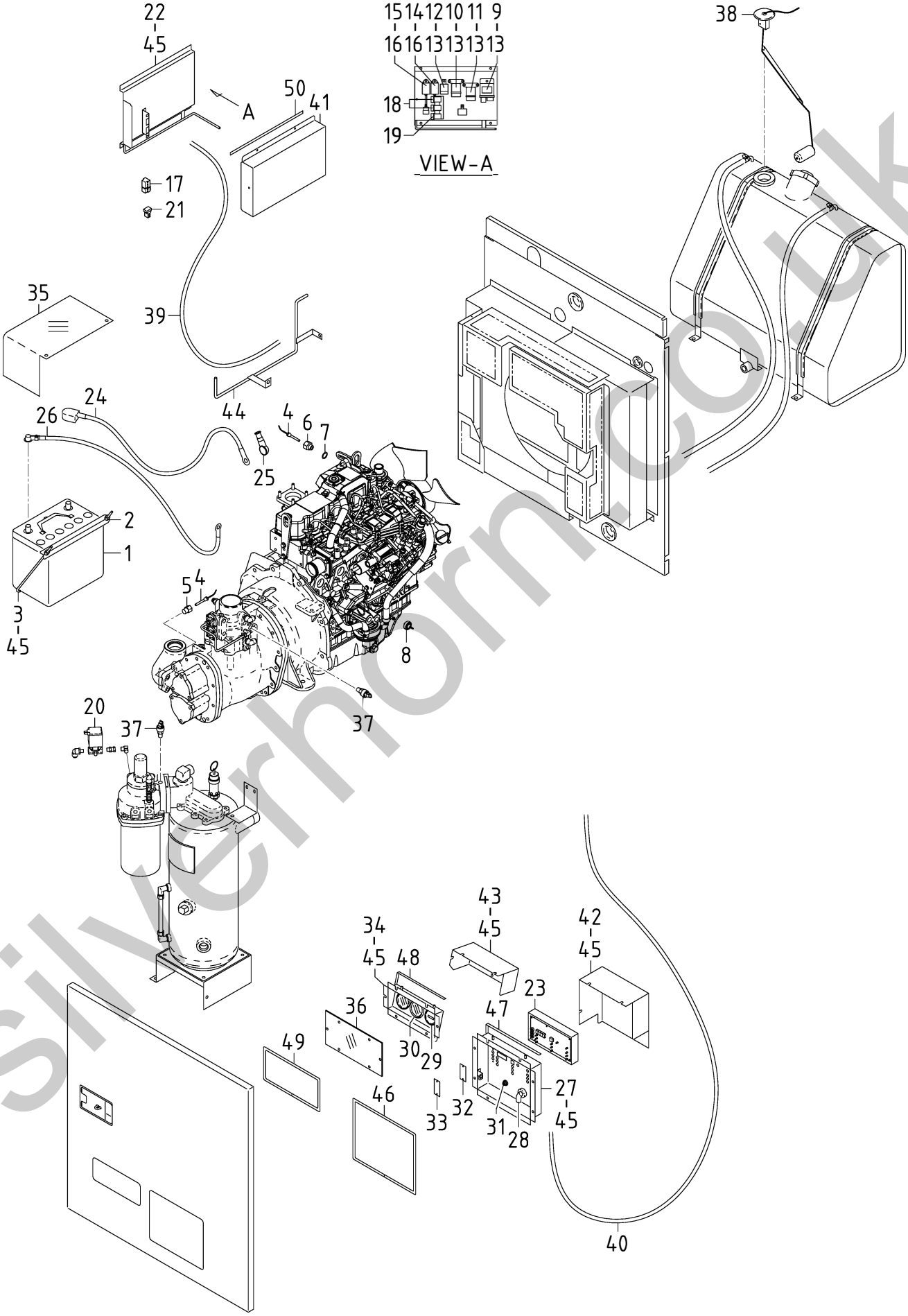

silverhorn.co.uk

Ref.NO.	Part NO.	Inter-change ability	Part Name	Q'ty	C/H	Remarks
	44 - 00		ELECTRIC GROUP			
1	44210 08200	Y	Battery(G&YU)	1		(85D26R)
1	44210 06600	Y	Battery(DELKOR)	1		(80D26R)
2	44220 19200		Cover	1		
3	44243 04300		Holder	2		
4	44364 06500		Thermo sensor	2		
5	37189 36000	C	Bushing	1	M221	
6	36331 15500		Nipple	1		
7	03407 20016		Gasket	1		
8	44328 21800		Pressure switch	1		(oil)
9	44346 16400		Relay	1		(safety)
			(YANMAR 119802-77200)			
10	44327 05000		Time relay	1		(solenoid)
			(YANMAR 119650-77910)			
11	44327 05000		Time relay	1		(glow)
			(YANMAR 119650-77910)			
12	44346 08300		Relay	1		(heater)
			(YANMAR 119247-77100)			
13	02248 06016		Bolt,w/w	6		
14	44327 06100		Time relay	1		(15S)
			(YANMAR 128300-77920)			
15	44327 08700		Time relay	1		(1S)
			(YANMAR 129211-77920)			
16	02415 65012		Bolt,w/w	2		
17	46921 02300		Silicon rectifier	2		
18	44470 02100		Fuse box	2		
	46934 05000		Fuse	2		(5A)
19	44470 02600		Fuse box	1		
	46934 05100		Fuse	1		(30A)
20	46811 24100		Solenoid valve	1		
21	44470 02900		Fuse box	1		(50A)
22	44250 36611		Bracket	1		
23	46879 52500		Controller complete	1		
24	07885 25100		Cable	1		(battery~starter)
	44462 05500		Insulator	1		(battery"+")
	06540 15090		Tube	1		(protector)
25	44462 00800		Insulator	1		(starter)
26	07888 51100		Cable	1		(earth)
	02248 10020		Bolt,w/w	1		
27	36110 03510		Instrument panel	1		
28	44322 07300		Starter switch	1		
	52739 00600		Key	2		
29	36149 02800		Hour meter	1		
30	36158 00500		Gauge,fuel	1		
31	46167 02900		Select switch	1		
32	46480 47300		Cover	1		
	02709 00410		Tapping screw	2		
33	52728 18210		Cushion rubber	1		
34	36110 03610		Instrument panel	1		(for gauge)
35	44220 24900		Cover	1		
36	52416 28000		Window glass	1		
37	44328 20600		Pressure switch	2		
38	36159 00300		Sending unit	1		
	GB990 00500		Gasket	1		
	02345 65012		Screw	5		
	03115 02005		Spring washer	5		
	03116 12005		Plain washer	5		
39	44490 75732		Wiring harness	1		(main)
39 -1	44490 84731	B	Wiring harness	1	M 3	(main)
40	44490 75833		Wiring harness	1		(in-pane)
	02201 06016		Flange bolt	1		(for rear cover)
41	44260 40400		Cover	1		
	52640 05600		Bolt	3		
42	44260 40501		Cover	1		
43	44260 40600		Cover	1		
44	44290 46000		Guide	1		
	02248 10020		Bolt,w/w	1		
	02201 08020		Flange bolt	1		
	02915 00008		Hexagon flange nut	1		
45	02915 00006		Hexagon flange nut	24		
46	03407 68090		Seal rubber	1		
47	03407 68045		Seal rubber	1		
48	03407 68030		Seal rubber	1		
49	03407 68060		Seal rubber	1		
50	03407 68033		Seal rubber	1		

Ref.NO.	Part NO.	Inter-change ability	Part Name	Q'ty	C/H	Remarks

silverhorn.co.uk

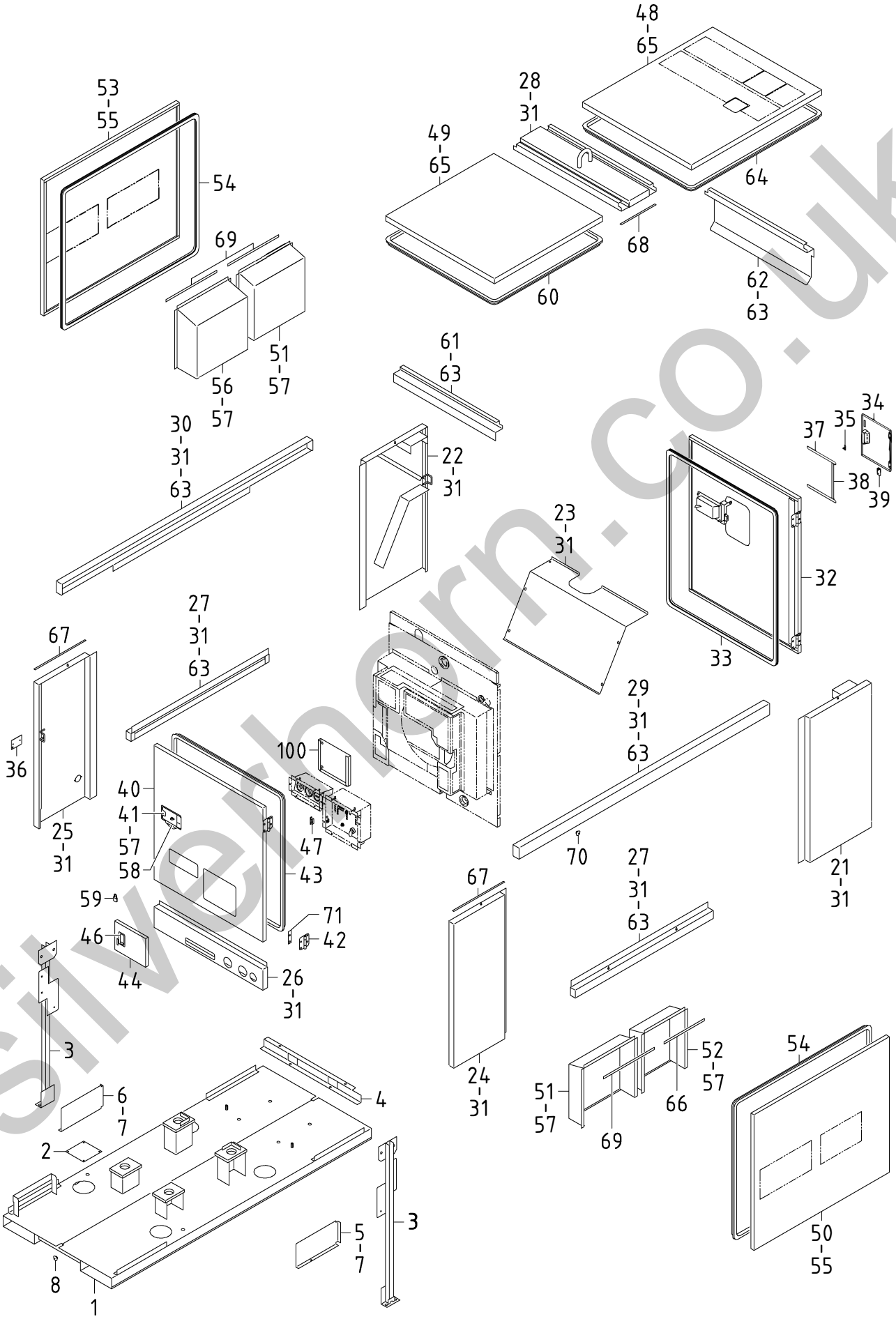

silverhorn.co.uk

51 - 00 FRAME & BONNET

Ref.NO.	Part NO.	Inter-change ability	Part Name	Q'ty	C/H	Remarks
	51 - 00		FRAME GROUP			
1	51100 25940		Frame	1		
1 -1	51100 32041	B	Frame	1	M 1	
2	51174 10900		Plate	2		
	52640 05100		Bolt	8		
3	52620 46700		Lifting bail	2		
	02135 10025		Bolt	4		
	03115 02010		Spring washer	4		
	03116 12010		Plain washer	4		
	02135 12035		Bolt	4		
	02912 08012		Nut	4		
	03115 02012		Spring washer	4		
	03116 12012		Plain washer	8		
4	52160 54700		Bracket	1		
	02201 08020		Flange bolt	2		
5	52160 55300		Plate	1		
5 -1	52160 58900	B	Plate	1	M 1	
6	52160 55400		Plate	1		
6 -1	52160 59000	B	Plate	1	M 1	
7	02201 06016		Flange bolt	6		
8	03403 10017		Grommet	4		
	52 - 00		BONNET GROUP			
21	52100 85520		Cover	1		
22	52100 85620		Cover	1		
23	52220 17800		Cover	1		
24	52100 85720		Cover	1		
25	52100 85820		Cover	1		
26	52100 86121		Cover	1		
26 -1	52100 12130	B	Cover	1	M264	
	02201 08050		Flange bolt	4		
27	52160 52500		Bracket	2		
28	51500 44200		Bracket	1		
29	52550 19510		Side plate	1		
29 -1	52550 19710	B	Side plate	1	M 1	
30	52550 19610		Side plate	1		
30 -1	52550 19810	B	Side plate	1	M 1	
31	02201 08020		Flange bolt	34		
32	52450 20430		Door	1		(front)
32 -1	52450 25630	B	Door	1	M 1	(front)
33	03407 64769		Seal rubber	1		
34	52400 16820		Side cover	1		
34 -1	52400 17920	B	Side cover	1	M 1	
35	52710 00700		Latch ass'y	1		
	02345 64010		Screw	2		
	03115 02004		Spring washer	2		
	03116 12004		Plain washer	2		
35 -1	52721 02600	B	Catch	1	M 1	
	02345 23008	B	Screw	4	M 1	
	03115 03003	B	Spring washer	4	M 1	
	03116 18003	B	Plain washer	4	M 1	
	02912 09003	D	Nut	4	M 1	
36	52350 68620		Cover	1		
	02401 45016		Screw	2		
	02915 00005		Hexagon flange nut	2		
37	03407 64216		Seal rubber	2		
38	03407 64227		Seal rubber	1		
39	52312 03300		Hinge	2		
	02305 64006		Screw	4		
	03116 12005		Plain washer	8		
	02305 64012		Screw	4		
40	52450 20530		Door	1		(rear)
41	52710 04800		Latch ass'y	2		
42	52480 14800		Hinge	4		
	02246 08025		Bolt,w/w	16		
43	03407 64751		Seal rubber	1		
44	52450 21230		Door	1		
45	52312 03300		Hinge	2		
	02305 64012		Screw	4		
46	52730 16400		Handle	2		
47	52721 02600		Catch	1		
	02345 23008		Screw	4		
	02912 09003		Nut	4		
	03115 03003		Spring washer	4		
	03116 18003		Plain washer	4		
48	52300 24020		Top cover	1		
49	52300 23920		Top cover	1		
50	52400 12520		Side cover	1		
50 -1	52400 18120	B	Side cover	1	M 1	
51	52800 13810		Duct	2		
52	52800 13910		Duct	1		
53	52400 12420		Side cover	1		
53 -1	52400 18020	B	Side cover	1	M 1	
54	03407 64741		Seal rubber	2		
55	02246 08050		Bolt,w/w	4		
56	52800 14410		Duct	1		
57	02915 00006		Hexagon flange nut	32		
58	03407 68051		Seal rubber	1		
59	52723 00100		Lock ass'y	4		
60	03407 64720		Seal rubber	1		
61	52160 52800		Bracket	1		
62	52160 54600		Bracket	1		
63	02201 06016		Flange bolt	16		
64	03407 64754		Seal rubber	1		
65	02246 08025		Bolt,w/w	8		
66	03407 66849		Seal rubber	1		
67	03407 68045		Seal rubber	2		
68	03407 68027		Seal rubber	2		
69	03407 66814		Seal rubber	3		
70	03403 10010		Grommet	4		
71	52481 02700	D	Plate	1	M 7	
	39 - 00		ACCESSORY GROUP			
100	39200 09600		Tool box	1		
	52640 05100		Screw	4		

sivernorn.co.uk

52 - 00 LINING

Ref. NO.	Part NO.	Inter-change ability	Part Name	Q'ty	C/H	Remarks
	52900 96710		URETHANE FOAM KIT			Const. No. 1～7
	52901 96710		URETHANE FOAM KIT			Const. No. 101～109
1	52959 64550		Lining	2		
2	52959 64650		Lining	2		
3	52931 83420		Lining	1		
4	52946 20000		Lining	1		
5	52946 20100		Lining	1		
6	52946 20200		Lining	1		
7	52946 20300		Lining	1		
101	52977 27700		Lining	1		
102	52977 27800		Lining	3		
103	52977 27900		Lining	1		
104	52978 12200		Lining	1		
105	52978 12300		Lining	2		
106	52977 28000		Lining	1		
107	52977 28100		Lining	1		
108	52977 28200		Lining	2		
109	52977 28300		Lining	1		

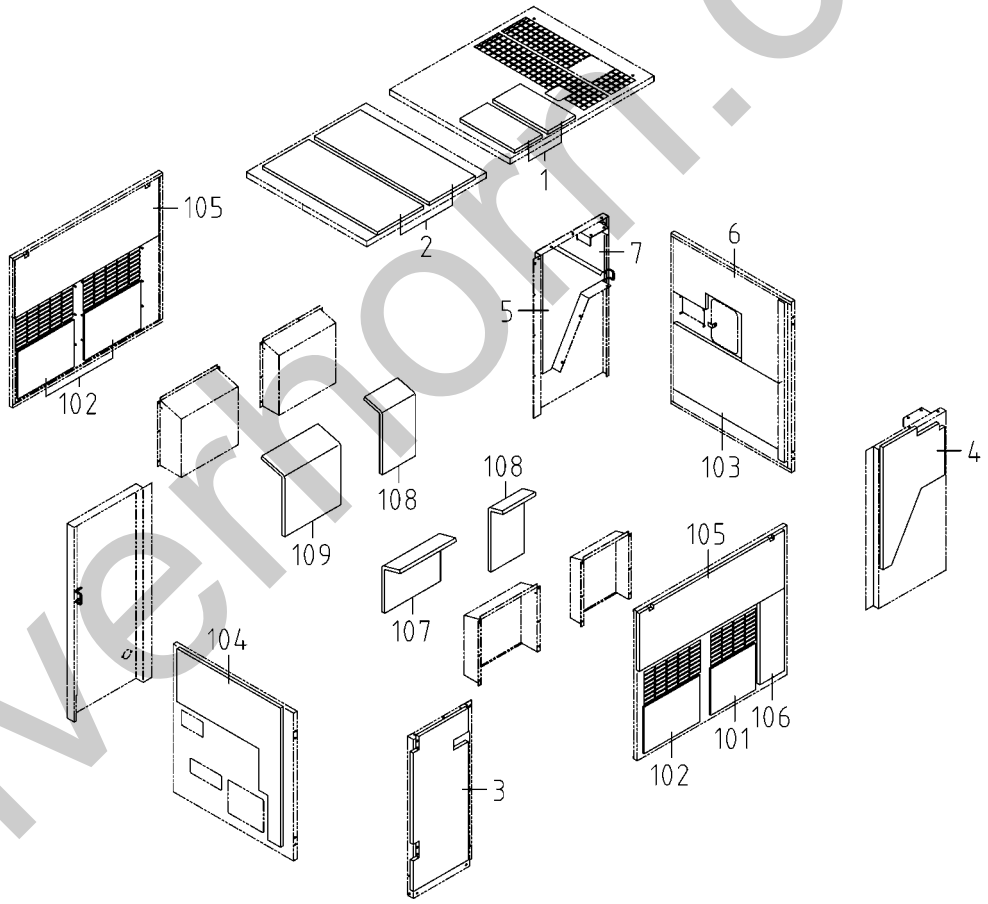

silverhorn.co.uk

I N D E X

PART NO.	PAGE	REF. NO.
02135 08030	33 - 2	42
02135 10020	31 - 2	1
02135 10025	51 - 2	3
02135 10045	21 - 2	134
02135 12035	51 - 2	3
02135 12120	31 - 2	4
02136 08035	37 - 2	1
02136 08090	37 - 2	1
02136 10035	41 - 2	52
02138 08040	41 - 2	87
02138 08050	41 - 2	87
02138 12030	21 - 2	136
02138 12040	21 - 2	136
02201 06016	33 - 2	16
02201 06016	37 - 2	71
02201 06016	41 - 2	27
02201 06016	41 - 2	115
02201 06016	41 - 2	117
02201 06016	41 - 2	117-1
02201 06016	44 - 2	40
02201 06016	51 - 2	7
02201 06016	51 - 2	63
02201 08012	31 - 2	44
02201 08012	33 - 2	16
02201 08012	33 - 2	18
02201 08012	36 - 2	40
02201 08012	41 - 2	17
02201 08020	33 - 2	5
02201 08020	33 - 2	82-1
02201 08020	36 - 2	25
02201 08020	37 - 2	14
02201 08020	37 - 2	69
02201 08020	41 - 2	111
02201 08020	44 - 2	44
02201 08020	51 - 2	4
02201 08020	51 - 2	31
02201 08030	41 - 2	59
02201 08030	41 - 2	96
02201 08040	37 - 2	8
02201 08050	51 - 2	26-1
02201 08070	41 - 2	94
02201 10020	37 - 2	13
02238 08020	36 - 2	7
02238 08020	36 - 2	25
02246 08025	51 - 2	42
02246 08025	51 - 2	65
02246 08050	51 - 2	55
02248 06016	41 - 2	97
02248 06016	44 - 2	13
02248 08020	36 - 2	8
02248 10020	36 - 2	8
02248 10020	44 - 2	26
02248 10020	44 - 2	44
02270 04012	21 - 2	92
02280 08030	21 - 2	17
02280 08030	21 - 2	135
02280 10030	21 - 2	1-2
02280 10030	21 - 2	9-1
02280 10030	21 - 2	11
02280 10030	21 - 2	29
02280 10045	21 - 2	32
02280 10055	21 - 2	9-1
02280 10075	21 - 2	1-2
02280 10075	21 - 2	71
02282 08025	21 - 2	77
02282 10030	21 - 2	133
02283 06025	36 - 2	28
02283 10035	33 - 2	50
02305 64006	51 - 2	39
02305 64012	51 - 2	39
02305 64012	51 - 2	45
02345 23008	51 - 2	35-1
02345 23008	51 - 2	47
02345 64010	51 - 2	35
02345 65012	44 - 2	38
02401 45016	51 - 2	36
02415 65012	44 - 2	16
02709 00410	44 - 2	32
02912 06010	41 - 2	52
02912 08012	31 - 2	4
02912 08012	51 - 2	3
02912 09003	51 - 2	35-1
02912 09003	51 - 2	47
02914 60008	36 - 2	37
02915 00005	51 - 2	36
02915 00006	37 - 2	80
02915 00006	41 - 2	117
02915 00006	41 - 2	117-1
02915 00006	44 - 2	45
02915 00006	51 - 2	57
02915 00008	37 - 2	8
02915 00008	41 - 2	58
02915 00008	41 - 2	87
02915 00008	44 - 2	44
02915 01008	41 - 2	52
02915 20006	36 - 2	9
02915 20008	36 - 2	25
03115 02004	51 - 2	35
03115 02005	44 - 2	38
03115 02008	33 - 2	42
03115 02008	41 - 2	87
03115 02010	21 - 2	134
03115 02010	31 - 2	1
03115 02010	51 - 2	3
03115 02012	21 - 2	136
03115 02012	31 - 2	4
03115 02012	51 - 2	3
03115 03003	51 - 2	35-1
03115 03003	51 - 2	47
03115 06008	37 - 2	1
03115 06010	41 - 2	52
03115 30008	21 - 2	135
03115 30010	21 - 2	29
03115 30010	21 - 2	32
03115 30010	21 - 2	71
03115 30010	21 - 2	133
03115 30010	33 - 2	50
03115 40006	36 - 2	28
03115 40008	21 - 2	17
03115 40010	21 - 2	11
03116 12004	51 - 2	35
03116 12005	44 - 2	38
03116 12005	51 - 2	39
03116 12006	36 - 2	9
03116 12008	33 - 2	42
03116 12008	41 - 2	87
03116 12010	51 - 2	3
03116 12012	31 - 2	4
03116 12012	51 - 2	3
03116 15008	37 - 2	1
03116 15010	41 - 2	52
03116 18003	51 - 2	35-1
03116 18003	51 - 2	47
03260 03010	39 - 2	1
03307 10040	21 - 2	31
03307 14050	21 - 2	132
03316 08020	21 - 2	137
03316 14028	21 - 2	4
03402 00502	33 - 2	94
03402 00603	33 - 2	94-1
03402 10070	21 - 2	78
03402 10095	21 - 2	7
03402 10125	21 - 2	74
03402 10125	21 - 2	100
03402 15025	37 - 2	2
03402 15045	37 - 2	3
03402 15050	21 - 2	12
03402 15075	33 - 2	89
03402 15140	33 - 2	45
03402 25008	21 - 2	89

silverhorn.co.uk

I N D E X

PART NO.	PAGE	REF. NO.
03402 25018	41 - 2	21
03402 25021	21 - 2	91
03402 25024	37 - 2	12
03402 25030	33 - 2	3
03402 25032	33 - 2	91
03402 25034	41 - 2	13
03402 25044	33 - 2	8
03402 25045	37 - 2	1
03402 25050	33 - 2	47
03403 00303	37 - 2	72
03403 00512	33 - 2	15
03403 00512	37 - 2	73
03403 00512	37 - 2	82
03403 00592	37 - 2	82-1
03403 10010	51 - 2	70
03403 10017	51 - 2	8
03407 16022	41 - 2	3
03407 16022	41 - 2	30
03407 20016	44 - 2	7
03407 44002	36 - 2	39
03407 64216	51 - 2	37
03407 64227	51 - 2	38
03407 64526	41 - 2	110
03407 64720	51 - 2	60
03407 64741	51 - 2	54
03407 64751	51 - 2	43
03407 64754	51 - 2	64
03407 64769	51 - 2	33
03407 66814	51 - 2	69
03407 66849	51 - 2	66
03407 66905	37 - 2	75
03407 66948	37 - 2	74-1
03407 67038	37 - 2	45
03407 67222	37 - 2	74
03407 67402	37 - 2	78
03407 67404	37 - 2	76
03407 67409	37 - 2	77
03407 67414	37 - 2	79
03407 68027	51 - 2	68
03407 68030	44 - 2	48
03407 68033	44 - 2	50
03407 68045	44 - 2	47
03407 68045	51 - 2	67
03407 68051	51 - 2	58
03407 68060	44 - 2	49
03407 68090	44 - 2	46
03410 06209	21 - 2	30
03410 06211	21 - 2	34
03413 10055	21 - 2	35
03413 20052	21 - 2	26
03413 20090	21 - 2	21
03413 40020	21 - 2	25
03424 80010	36 - 2	40
03424 80011	33 - 2	18
03425 00001	36 - 2	26
03511 10017	41 - 2	108
03511 20016	37 - 2	59
03511 20035	41 - 2	5
03511 20035	41 - 2	90
03511 20040	37 - 2	51
03511 20060	41 - 2	61
03511 20070	31 - 2	49
03511 20080	31 - 2	54
03511 20090	31 - 2	48
03511 20100	31 - 2	51
03511 20110	31 - 2	52
03511 40007	41 - 2	86
03511 40016	37 - 2	68
03511 40016	41 - 2	107
03511 40020	41 - 2	106
03570 08040	41 - 2	101
03570 08130	41 - 2	102
03570 15009	33 - 2	14
03570 19150	41 - 2	89
03580 19080	41 - 2	4
03600 06000	41 - 2	85
03600 08020	41 - 2	99
03600 08025	41 - 2	100
03600 08058	41 - 2	104
03600 08130	41 - 2	103
03600 09200	41 - 2	98
03600 09255	41 - 2	105
03611 08170	37 - 2	58
03620 41003	37 - 2	64
03620 41004	41 - 2	10
03620 41004	41 - 2	93
03620 60001	21 - 2	2-1
03620 60001	21 - 2	10-1
03620 60002	21 - 2	2
03620 60002	21 - 2	36
03620 60002	21 - 2	75
03728 04130	41 - 2	8
03730 04120	33 - 2	11
03731 21004	33 - 2	10
03731 30004	41 - 2	9
03734 20020	37 - 2	19
03734 20043	37 - 2	62
03734 21010	21 - 2	3
03734 21015	36 - 2	11
03734 21020	37 - 2	18
03734 21030	33 - 2	9
03734 21040	41 - 2	24
03734 21042	41 - 2	25
03734 21151	36 - 2	3
03734 43020	36 - 2	18
03734 43040	41 - 2	19
03734 43080	41 - 2	16
03734 43120	33 - 2	85
03734 44002	36 - 2	6
03734 44012	33 - 2	84
03734 52021	21 - 2	96
03734 53021	21 - 2	95
03734 53021	21 - 2	96-1
03734 60144	33 - 2	13
03734 64020	21 - 2	99
03734 64020	36 - 2	23
03734 65020	21 - 2	98
03734 65020	21 - 2	99-1
03734 65020	36 - 2	22
03734 66020	36 - 2	24
03734 68020	36 - 2	15
03734 70021	33 - 2	49
03734 75060	37 - 2	6
03734 76060	37 - 2	7
03734 85140	33 - 2	7-1
03735 13002	36 - 2	19
03735 13004	33 - 2	12
03830 08004	41 - 2	58
03840 15195	36 - 2	10
03841 20053	37 - 2	15
03841 30015	33 - 2	9
03841 40155	37 - 2	61
03890 20020	21 - 2	76-1
03890 20020	21 - 2	97
03890 20020	36 - 2	21
03890 20027	36 - 2	17
03890 20030	21 - 2	76
03890 20061	36 - 2	13
03890 20070	36 - 2	12
03890 20075	36 - 2	14
03890 20085	36 - 2	20
06540 07043	37 - 2	15
06540 07185	36 - 2	10
06540 15090	44 - 2	24
06540 15190	41 - 2	104
06540 15245	41 - 2	99
07885 25100	44 - 2	24
07888 51100	44 - 2	26
21201 41502	21 - 2	1
21201 43900	21 - 2	1-1

silverhorn.co.uk

I N D E X

PART NO.	PAGE	REF. NO.
21201 45100	21 - 2	1-2
21211 10800	21 - 2	8
21212 18300	21 - 2	6
21212 18500	21 - 2	5
21214 18100	21 - 2	61
21217 33100	21 - 2	9
21217 33300	21 - 2	9-1
21218 33400	21 - 2	15
21218 33500	21 - 2	13
21221 02100	21 - 2	93
21222 09600	21 - 2	33
21406 28700	21 - 2	24
21406 29900	21 - 2	20
21412 05401	21 - 2	134
21414 06000	21 - 2	134
21420 19500	21 - 2	131
21441 04800	21 - 2	81
21441 04900	21 - 2	82
21461 31600	21 - 2	18
21462 22300	21 - 2	19
21467 40900	21 - 2	62
21468 02700	21 - 2	23
21468 04400	21 - 2	133
21468 09200	21 - 2	28
21468 19800	21 - 2	32
21469 31500	21 - 2	63
21470 14300	21 - 2	22
21470 14400	21 - 2	27
22100 41202	21 - 2	71
22111 28200	21 - 2	72
22115 11300	21 - 2	77
22115 12701	21 - 2	73
22123 04400	36 - 2	38
22130 05500	36 - 2	30
22130 09500	21 - 2	80
22144 07700	33 - 2	93
22144 10600	21 - 2	86
22144 12800	36 - 2	34
22144 16600	21 - 2	84
22144 16700	21 - 2	83
22150 13801	21 - 2	79
22152 04900	36 - 2	29
22153 03400	21 - 2	5
22200 15601	36 - 2	16
22211 14500	21 - 2	11
22314 02500	21 - 2	14
22314 06200	21 - 2	16
22314 06400	21 - 2	10
22314 06500	33 - 2	46
23124 10300	36 - 2	31
23124 15600	21 - 2	85
31110 05010	31 - 2	1
31113 30300	31 - 2	6
31130 24300	31 - 2	3
31130 26200	31 - 2	2
31130 26600	41 - 2	57
31131 04900	37 - 2	44
31144 14500	36 - 2	35
32100 38702	31 - 2	31
32100 40901	31 - 2	38
32100 44900	31 - 2	38-1
32142 09700	31 - 2	33
32142 11300	31 - 2	40
32143 11700	31 - 2	32
32143 11800	31 - 2	39
32147 03500	31 - 2	35
32147 03600	31 - 2	42
32148 03000	31 - 2	36
32151 01400	31 - 2	34
32151 01600	31 - 2	41
32240 41101	31 - 2	43
32262 00200	31 - 2	37
32320 69400	31 - 2	46
32331 72700	31 - 2	53
32331 77001	31 - 2	50
32331 77100	31 - 2	45
32331 77200	31 - 2	47
33100 74710	33 - 2	1
33100 75610	33 - 2	1
33231 03600	33 - 2	2
33260 07900	33 - 2	4
33260 08000	33 - 2	16
34210 30401	33 - 2	41
34220 16101	33 - 2	43
34232 00300	36 - 2	36
34250 18301	33 - 2	44
34260 07000	33 - 2	48
34280 00900	33 - 2	42
35100 51001	33 - 2	82
35100 54400	33 - 2	82-1
35200 14100	33 - 2	81
35300 17000	33 - 2	87
35301 20200	33 - 2	88
35303 03300	33 - 2	92
35303 08400	33 - 2	90
35421 00105	33 - 2	86
35421 06800	37 - 2	63
35421 07000	41 - 2	6
35421 07000	41 - 2	91
36110 03510	44 - 2	27
36110 03610	44 - 2	34
36131 03100	36 - 2	2
36141 18600	36 - 2	1
36149 02800	44 - 2	29
36158 00500	44 - 2	30
36159 00300	44 - 2	38
36221 04500	36 - 2	25
36280 33301	36 - 2	9
36331 15500	44 - 2	6
36349 22400	21 - 2	94
36349 22800	21 - 2	94-1
36400 19000	36 - 2	4
36400 21901	36 - 2	7
36421 03600	36 - 2	27
36422 01900	36 - 2	28
36428 00700	21 - 2	88
36429 00801	21 - 2	87
36429 01300	21 - 2	87-1
36435 01400	36 - 2	33
36437 01500	36 - 2	32
36621 01401	21 - 2	92
36623 00800	21 - 2	90
36710 34900	36 - 2	8
37110 03700	41 - 2	14
37110 03800	41 - 2	18
37110 06800	41 - 2	14-1
37111 21600	37 - 2	4
37114 24600	37 - 2	5
37160 02210	33 - 2	6-1
37160 25010	33 - 2	83
37160 91100	37 - 2	9
37160 93900	33 - 2	6
37170 02900	41 - 2	7
37170 02900	41 - 2	92
37170 12200	37 - 2	60
37181 03600	37 - 2	81
37181 03600	41 - 2	29
37181 03600	41 - 2	113
37181 05700	41 - 2	114
37181 06500	41 - 2	26
37189 34400	37 - 2	16
37189 36000	44 - 2	5
37200 11502	37 - 2	1
37231 02100	37 - 2	1
37400 13600	37 - 2	13
37411 07300	41 - 2	17
37438 05501	37 - 2	13
37510 37000	37 - 2	14
37530 26400	37 - 2	8
37540 24700	41 - 2	15

silverhorn.co.uk

I N D E X

PART NO.	PAGE	REF. NO.
37580 01900	37 - 2	17
37731 12600	41 - 2	12
38100 42700	37 - 2	41
38117 02300	37 - 2	52
38200 40500	37 - 2	47
38410 05700	37 - 2	41
38420 91200	37 - 2	42
38420 91800	37 - 2	43
38440 06910	37 - 2	54
38440 07010	37 - 2	53
38450 83500	37 - 2	57
38450 83600	37 - 2	55
38450 83700	37 - 2	56
38465 18100	41 - 2	84
38465 18200	33 - 2	95
38524 69600	37 - 2	50
38524 69700	37 - 2	49
38590 01400	37 - 2	65
38591 00400	37 - 2	66
38594 05400	37 - 2	67
39103 10811	39 - 2	1
39147 02800	39 - 2	10
39153 66501	39 - 2	8
39170 02000	39 - 2	2
39173 02100	39 - 2	12
39173 04200	39 - 2	22
39176 00110	39 - 2	11
39176 00510	39 - 2	32
39176 35600	39 - 2	19
39176 50000	39 - 2	21
39176 69300	39 - 2	20
39176 69500	39 - 2	28
39176 69600	39 - 2	29
39176 69700	39 - 2	30
39176 69800	39 - 2	31
39176 73300	39 - 2	23
39176 73400	39 - 2	24
39176 73500	39 - 2	25
39176 73500	39 - 2	33
39176 73600	39 - 2	26
39176 73800	39 - 2	27
39178 00310	39 - 2	36
39178 12630	39 - 2	5
39178 13330	39 - 2	6
39178 43110	39 - 2	7
39178 47510	39 - 2	3
39178 55630	39 - 2	9
39178 56130	39 - 2	34
39178 56230	39 - 2	35
39178 56330	39 - 2	4
39178 72500	39 - 2	18
39189 17100	39 - 2	13
39189 17200	39 - 2	14
39189 17300	39 - 2	15
39189 17400	39 - 2	16
39189 19100	39 - 2	17
39200 09600	51 - 2	100
41290 01000	41 - 2	28
41295 00700	41 - 2	23
41330 00700	41 - 2	30-1
42100 80800	41 - 2	51
42160 01000	41 - 2	56
42240 30000	41 - 2	55
42310 95800	41 - 2	52
42310 95900	41 - 2	60
42324 13600	41 - 2	54
42324 14900	41 - 2	53
43100 71801	41 - 2	81
43210 01301	41 - 2	83
43220 01300	41 - 2	82
43310 30901	41 - 2	87
43322 04100	41 - 2	112
43322 04500	33 - 2	17
43322 05900	41 - 2	88-1
43322 06700	41 - 2	88
43525 01800	41 - 2	109
43532 05201	41 - 2	2
43534 01702	41 - 2	1
43540 08200	41 - 2	96
43543 01800	41 - 2	96
43550 02900	41 - 2	94
43650 02700	41 - 2	97
44210 06600	44 - 2	1
44210 08200	44 - 2	1
44220 19200	44 - 2	2
44220 24900	44 - 2	35
44243 04300	44 - 2	3
44250 36611	44 - 2	22
44260 40400	44 - 2	41
44260 40501	44 - 2	42
44260 40600	44 - 2	43
44290 46000	44 - 2	44
44290 46700	41 - 2	115
44290 46801	41 - 2	116
44322 07300	44 - 2	28
44327 05000	44 - 2	10
44327 05000	44 - 2	11
44327 06100	44 - 2	14
44327 08700	44 - 2	15
44328 20600	44 - 2	37
44328 21800	44 - 2	8
44346 08300	44 - 2	12
44346 16400	44 - 2	9
44364 06500	44 - 2	4
44462 00800	44 - 2	25
44462 05500	44 - 2	24
44470 02100	44 - 2	18
44470 02600	44 - 2	19
44470 02900	44 - 2	21
44490 75732	44 - 2	39
44490 75833	44 - 2	40
44490 84731	44 - 2	39-1
46167 02900	44 - 2	31
46480 47300	44 - 2	32
46811 24100	44 - 2	20
46879 52500	44 - 2	23
46921 02300	44 - 2	17
46934 05000	44 - 2	18
46934 05100	44 - 2	19
51100 25940	51 - 2	1
51100 32041	51 - 2	1-1
51174 10900	51 - 2	2
51500 44200	51 - 2	28
52100 12130	51 - 2	26-1
52100 85520	51 - 2	21
52100 85620	51 - 2	22
52100 85720	51 - 2	24
52100 85820	51 - 2	25
52100 86121	51 - 2	26
52160 52500	51 - 2	27
52160 52800	51 - 2	61
52160 52900	37 - 2	70
52160 53200	41 - 2	11
52160 54400	41 - 2	22
52160 54600	51 - 2	62
52160 54700	51 - 2	4
52160 55300	51 - 2	5
52160 55400	51 - 2	6
52160 57601	41 - 2	95
52160 58900	51 - 2	5-1
52160 59000	51 - 2	6-1
52160 59100	37 - 2	70-1
52220 17800	51 - 2	23
52300 23920	51 - 2	49
52300 24020	51 - 2	48
52312 03300	51 - 2	39
52312 03300	51 - 2	45
52350 62222	37 - 2	48
52350 68620	51 - 2	36
52400 12420	51 - 2	53

silverhorn.co.uk

I N D E X

PART NO.	PAGE	REF. NO.
52400 12520	51 - 2	50
52400 16820	51 - 2	34
52400 17920	51 - 2	34-1
52400 18020	51 - 2	53-1
52400 18120	51 - 2	50-1
52416 28000	44 - 2	36
52450 20430	51 - 2	32
52450 20530	51 - 2	40
52450 21230	51 - 2	44
52450 25630	51 - 2	32-1
52480 14800	51 - 2	42
52481 02700	51 - 2	71
52550 19510	51 - 2	29
52550 19610	51 - 2	30
52550 19710	51 - 2	29-1
52550 19810	51 - 2	30-1
52620 46700	51 - 2	3
52640 05100	51 - 2	2
52640 05100	51 - 2	100
52640 05600	44 - 2	41
52710 00700	51 - 2	35
52710 04800	51 - 2	41
52721 02600	51 - 2	35-1
52721 02600	51 - 2	47
52723 00100	51 - 2	59
52728 16010	31 - 2	5
52728 18210	44 - 2	33
52728 18810	37 - 2	46
52730 16400	51 - 2	46
52739 00600	44 - 2	28
52800 13810	51 - 2	51
52800 13910	51 - 2	52
52800 14410	51 - 2	56
52931 83420	52 - 1	3
52946 20000	52 - 1	4
52946 20100	52 - 1	5
52946 20200	52 - 1	6
52946 20300	52 - 1	7
52959 64550	52 - 1	1
52959 64650	52 - 1	2
52977 27700	52 - 1	101
52977 27800	52 - 1	102
52977 27900	52 - 1	103
52977 28000	52 - 1	106
52977 28100	52 - 1	107
52977 28200	52 - 1	108
52977 28300	52 - 1	109
52978 12200	52 - 1	104
52978 12300	52 - 1	105
61111 13100	21 - 2	135
86183 01500	36 - 2	5
GB990 00500	44 - 2	38
GD920 12600	33 - 2	7
GD920 13600	37 - 2	11
GD920 13900	41 - 2	20
GD920 14700	37 - 2	10

silverhorn.co.uk