AIRMAN

PC

PARTS CATALOG

SCREW COMPRESSOR

PDS185S-6C1
PDS185S-6C1R

silverhorn.co.uk

HOKUETSU INDUSTRIES CO., LTD.

適　用　型　式
FOR　MODEL

型　　式 MODEL	適　用　号　機 SER. NO.
ＰＤＳ１８５Ｓ－６Ｃ１ (VE PUMP TYPE)	Ｂ４－６Ｃ１００５１～
ＰＤＳ１８５Ｓ－６Ｃ１Ｒ (IN LINE PUMP TYPE)	Ｂ４Ｒ６Ｃ１００５１～

silvernorn.co.uk

NOTICE

1. This parts catalog contains all the parts and assemblies of "AIRMAN" brand products. The complete unit is divided into several parts groups,the details of which are clearly illustrated,and completely listed.
   So desired part number,name and quantity can be easily determined referring to Ref.No.

2. When you place order for service parts,please be sure to advise us of the following information.
   (1) Part number.
   (2) Quantity required.
   (3) Part name.
   (4) Model name and Serial number.

3. How to read parts catalog.
   (1) Ref.No.
   Reference number(Ref.No.)is to be used for locating the part number and name from the illustrations.(However some parts such as bolts and nuts etc.,are not illustrated but their reference numbers only listed.)
   Ref.No.1,1-1,1-2,·····shows history of part modifications;namely ref.No.1 changed to No.1-1 and then 1-2.

Example: Ref.No.	Part No.
1.	21101 00101
1-1.	21101 00103

   (2) Part No.
   Every part has its own proper number.
   Even if a part has the same shape as an other part and if its number different,it is not interchangeable at all in many cases.

   (3) Interchangeability
   A.B.C.D.Q.X.Y.and Z.in column "Interchangeability" show the following.
   A：A new part is replaceable with an old part,but the old part is not replaceable with the new one.
   B：Not interchangeable.
   C： Disused.
   D：Newly added.
   Q：Quantity per unit changed.
   X：Included in this set of parts,this part is not used for this model.
   Y：Part to be selected.
   Z：This part can not be supplied as an individual part.

   (4) Part name
   Every part has its own proper name.

silverhorn.co.uk

(5) Q'ty

The number shown in the column of Q'TY indicates the quantity of parts used per one unit machine.

(6) Change column

M1,M2,M3,·····Mn mentioned in the column indicate the change of part number. and the serial number of the unit,the part of which was modified.
To check the serial number,refer to "LIST OF MACHINE SERIAL NUMBERS & CHANGED PART NUMBERS" mentioned in the front part of this book.

4. Abbreviations and marks used in this catalog.

ass'y	assembly	L	Length
C/H	Change column	o & p	overrun & parking brake
Comp.	Compressor	OPT.	Option
Const.	Consisting of	Press.	Pressure
Cont.	Control	SPC/S.	Special specifications
Cyl.	Cylinder	STD.	Standards
Eng.	Engine	T or t	Thickness
EXP.	Export	w.	with
Incl.	Including	w/o	without

5. HOW TO READ MODELS

Example: P D S □ 1 2 5 S □ − 5 B 1
① ② ③ ④ ⑤ ⑥ ⑦ ⑧ ⑨

① PD :PORTABLE DIESEL ENGINE
SD :STATIONARY DIESEL ENGINE
SG :STATIONARY GAS ENGINE
SM :STATIONARY SNOW MACHINE

② R :SLIDING VANE
S :SCREW(OIL-INJECTION)
D :SCREW(OIL-FREE)

③ w/o :0.69MPa(7.0kgf/cm^2) or 0.70MPa(7.1kgf/cm^2)
E :0.86MPa(8.8kgf/cm^2)
F :1.03MPa(10.5kgf/cm^2)
G :1.18 to 1.37MPa(12.0 to 14.0kgf/cm^2)
H :1.72MPa(17.5kgf/cm^2)
J :2.07MPa(21.1kgf/cm^2)
K :2.41MPa(24.6kgf/cm^2)

④ 75 :ENGINE OUTPUT(kW)<SDD,SDSG ONLY>
125 :Free air delivery(cfm)

⑤ S :SILENT TYPE and PROPANE GAS ENGINE SILENT TYPE
T :CITY-GAS ENGINE SILENT TYPE
w/o :UNSILENCED TYPE

⑥ C :AFTERCOOLER TYPE
D :DRY AIR TYPE
R :IN LINE PUMP TYPE
W :WATER-COOLED TYPE
w/o :STANDARD TYPE

⑦ 3 :SKID-MOUNTED TYPE
4 :TRAILER-MOUNTED TYPE
5 :BOX
6 :WIDE BODY
w/o :OTHERS

⑧ MODEL CHANGE MARK

⑨ VARIATION MARK

NOTE :

※ We are always engaged in improving our products.So there may be some changes of the product which are not yet mentioned in this parts catalog.
Therefore,in necessary case,we issue a revision in which such changes ars added.
When you have any question on the parts catalog,please ask your nearest dealer or directly us.

※ For engine parts,please refer to separate engine parts catalog.

silverform.co.uk

目　　次
CONTENTS

図番号 FIG. NO.	図名称 FIG. NAME		頁 PAGE
21 - 00	AIR END	ｴｱ ｴﾝﾄﾞ	21- 1～2
31 - 00	MOUNTING & INTAKE	ﾏｳﾝﾃｨﾝｸﾞ, ｲﾝﾃｰｸ	31- 1～2
33 - 00	RECEIVER, SEPARATOR & SERVICE HEADER	ﾚｼｰﾊﾞ, ｾﾊﾟﾚｰﾀ, ｻｰﾋﾞｽ ﾍｯﾀﾞ	33- 1～2
36 - 00	AIR LINE	ｴｱ ﾗｲﾝ	36- 1～2
36 - 01	REGULATOR (SPEED CONTROL)	ﾚｷﾞｭﾚｰﾀ (ｽﾋﾟｰﾄﾞ ｺﾝﾄﾛｰﾙ)	36- 3
37 - 00	OIL LINE & COOLING	ｵｲﾙ ﾗｲﾝ, ｸｰﾘﾝｸﾞ	37- 1～2
39 - 00	NAME PLATE	ﾈｰﾑ ﾌﾟﾚｰﾄ	39- 1～2
41 - 00	ENGINE, EXHAUST, FUEL LINE & ELECTRIC (VE PUMP TYPE)	ｴﾝｼﾞﾝ, ｴｷｿﾞｰｽﾄ, ﾌｭｴﾙ ﾗｲﾝ, ｴﾚｸﾄﾘｯｸ (VE型ﾎﾟﾝﾌﾟ仕様)	41- 1～2
41 - 01	ENGINE, EXHAUST, FUEL LINE & ELECTRIC (IN LINE PUMP TYPE)	ｴﾝｼﾞﾝ, ｴｷｿﾞｰｽﾄ, ﾌｭｴﾙ ﾗｲﾝ, ｴﾚｸﾄﾘｯｸ (列型ﾎﾟﾝﾌﾟ仕様)	41- 3～5
51 - 00	FRAME & BONNET	ﾌﾚｰﾑ, ﾎﾞﾝﾈｯﾄ	51- 1～2
52 - 00	LINING	ﾗｲﾆﾝｸﾞ	52- 1
54 - 00	AXLE & TIRE (EXP.)	ｱｸｽﾙ, ﾀｲﾔ (一般輸出仕様)	54- 1

部品番号変更時期一覧表
LIST OF MACHINE SERIAL NUMBERS & CHANGED PART NUMBERS

型式と実施号機
MODEL NAME & SER. NO. OF THE UNIT, THE PART OF WHICH WAS CHANGED

変更 C/H	PDS185S-6C1	PDS185S-6C1R		変更 C/H	PDS185S-6C1	PDS185S-6C1R	
M 1	0058～	0058～		M29	2058～	2058～	
M 2	0058～	0058～		M30	2032～	2032～	
M 2-1	0189～	0189～		M34	2100～	2100～	
M 3	0058～	0058～		M35	2156～	UNCONVERTED	
M 4	0142～	0142～		M37	2188～	UNCONVERTED	
M 8	0714～	0714～		M149	1799～	1799～	
M 8-1	0767～	0767～		M168	1653～	1653～	
M 8-2	1483～	1483～					
M 9	0459～	0459～					
M11	0503～	0503～					
M13	1162～	1456～					
M15	1881～	1881～					
M18	1382～	1382～					
M19	1382～	1382～					
M20	1382～	1382～					
M22	1810～	1810～					
M24	1779～	1779～					
M26	1971～	1971～					
M28	2048～	2048～					
M28-1	2073～	2073～					

silvernorn.co.uk

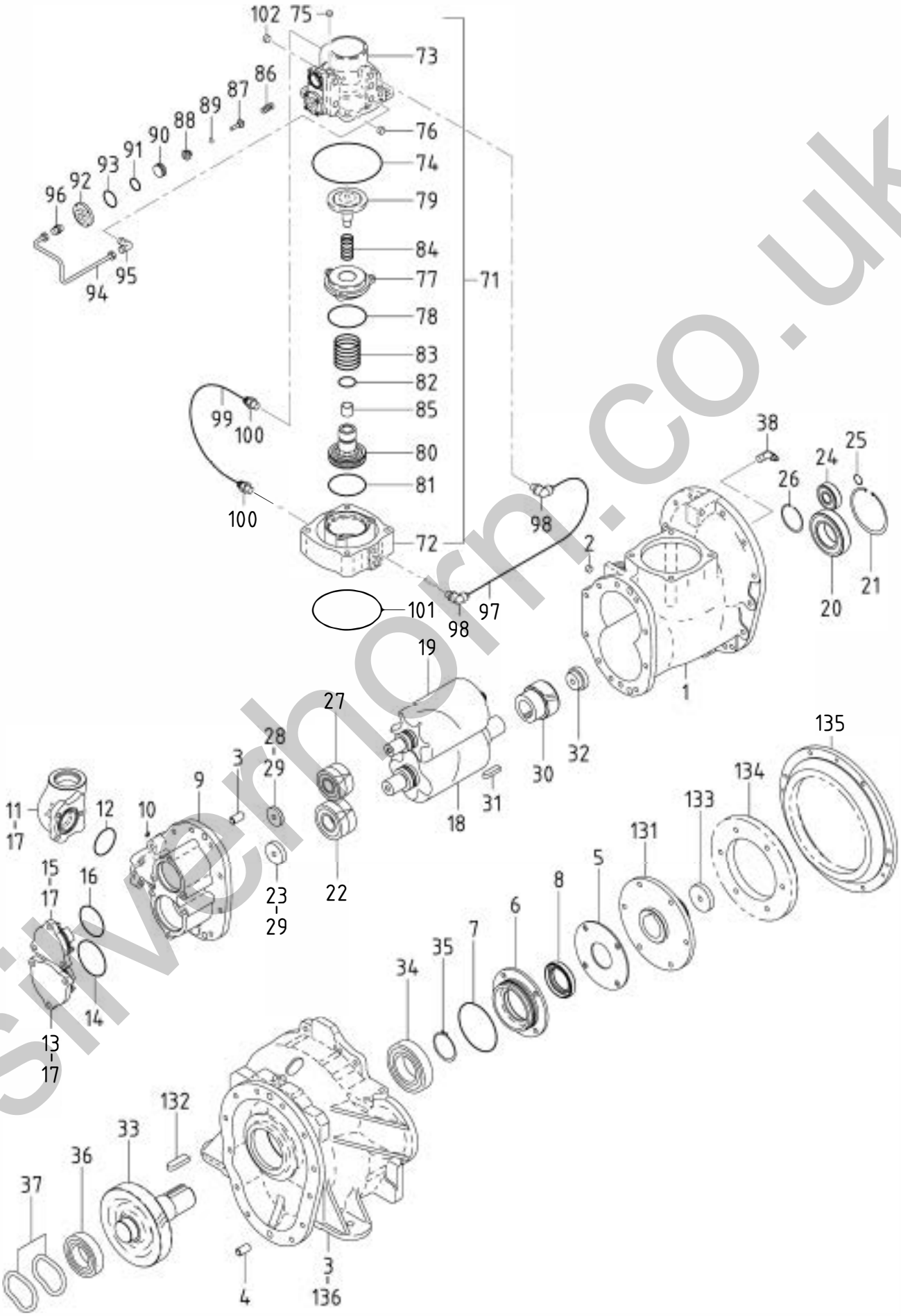

silverhorn.co.uk

Ref. NO.	Part NO.	Inter-change ability	Part Name	Q'ty	C/H	Remarks
	21000 18210		COMPRESSION GROUP			
1	21201 41500		Cylinder, 1st	1		
	02280 10030		Socket bolt	10		
	02280 10075		Socket bolt	2		
2	03620 60002		Plug	2		
3	21214 17000		Casing, power side	1		
4	03316 14028		Pin	4		
5	21212 18500		Cover, oil seal	1		
	22153 03400		Bolt	4		
6	21212 18300		Cover, oil seal	1		
7	03402 10095		O-ring	1		
8	21211 10800		Oil seal	1		
9	21217 31000		Casing, discharge	1		
	02280 10030		Socket bolt	8		
	02280 10055		Socket bolt	2		
10	22314 06400		O-ring	2		
11	22211 14100		Body, check valve	1		
12	03402 15050		O-ring	1		
13	21218 33600		End cover	1		
14	22314 02500		O-ring	1		
15	21218 33700		End cover	1		
16	22314 06200		O-ring	1		
17	02280 10030		Socket bolt	9		
	03115 40010		Spring washer	9		
18	21461 31600		Rotor, male	1		
19	21462 22300		Rotor, female	1		
	A pair of rotor (male & female) should be ordered.					
20	21406 29900		Bearing, rotor	1		
21	03413 20090		Snap ring	1		
22	21470 14300		Bearing, complete	1		
23	21468 02700		Plate	1		
24	21406 28700		Bearing, rotor	1		
25	03413 40020		Snap ring	1		
26	03413 20052		Snap ring	1		
27	21470 14400		Bearing, complete	1		
28	21468 09200		Plate	1		
29	02280 10030		Socket bolt	2		
	03115 30010		Lock washer	2		
30	21467 30800		Gear, driven	1		
31	03307 10040		Key	1		
32	21468 19800		Plate	1		
	02280 10045		Socket bolt	1		
	03115 30010		Lock washer	1		
33	21469 29100		Gear, drive	1		
34	03410 06211		Bearing	1		
35	03413 10055		Snap ring	1		
36	03410 06209		Bearing	1		
37	21222 09600		Washer	2		
38	03734 21010		Nipple elbow	1		
	22 - 00		VALVE GROUP			
71	22100 40300		Unloader ass'y	1		Const. No. 72～100 &102
71 -1	22100 40301	A	Unloader ass'y	1	M15	Const. No. 72～100
	02280 10075		Socket bolt	4		
	03115 30010		Lock washer	4		
72	22111 28100		Body, unloader	1		
72 -1	22111 28200	B	Body, unloader	1	M15	
73	22115 11400		Cover, unloader	1		
73 -1	22115 11600	B	Cover, unloader	1	M15	
74	03402 10125		O-ring	1		
75	03620 60001		Plug	1		
75 -1	03620 60002	B	Plug	1	M15	
76	03620 60002		Plug	1		
77	22115 11300		Cover, unloader	1		
	02282 08025		Socket bolt	3		
78	03402 10070		O-ring	1		
79	22150 13801		Valve	1		
80	22130 09500		Piston, unloader	1		
81	21441 04800		O-ring	1		
82	21441 04900		O-ring	1		
83	22144 16700		Spring	1		
84	22144 16600		Spring	1		
85	23124 15600		Bushing	1		
86	22144 10600		Spring	2		
87	36429 00800		Needle valve	2		
88	36428 00700		Valve seat	2		
89	03402 25008		O-ring	2		
90	36623 00800		Piston, auto relief	2		
91	03402 25021		O-ring	2		
92	36621 01401		Cover, auto relief	2		
	02270 04012		Socket bolt, w/w	8		
93	21221 02100		O-ring	2		
94	36349 22400		Pipe	1		
95	03734 53021		Nipple elbow	1		
96	03734 52021		Nipple	1		
97	03890 20020		Nylon tube	1		
98	03734 65020		Nipple elbow	2		
99	03890 20030		Nylon tube	1		
100	03734 64020		Nipple	2		
101	03402 10125		O-ring	1		
102	03620 60002	C	Plug	1	M15	
	61 - 00		COUPLING GROUP			
131	21420 18900		Coupling, driven	1		
132	03307 14050		Key	1		
133	21468 04400		Plate	1		
	02282 10030		Socket bolt	1		
	03115 30010		Lock washer	1		
134	21412 05002		Gear, driven	1		
	02135 10035		Bolt	6		
	03115 02010		Spring washer	6		
	21414 06000		Washer, driven gear	6		
135	61111 12600		Gear, drive	1		
	02135 08025		Bolt	6		
	03115 02008		Spring washer	6		
135 -1	61111 12800	B	Gear, drive	1	M29	
	02280 08020	B	Socket bolt	6	M29	
	03115 30008	B	Lock washer	6	M29	
136	02135 10040		Bolt	4		
	02138 10012		Bolt	2		
	03115 02010		Spring washer	6		

silverhorn.co.uk

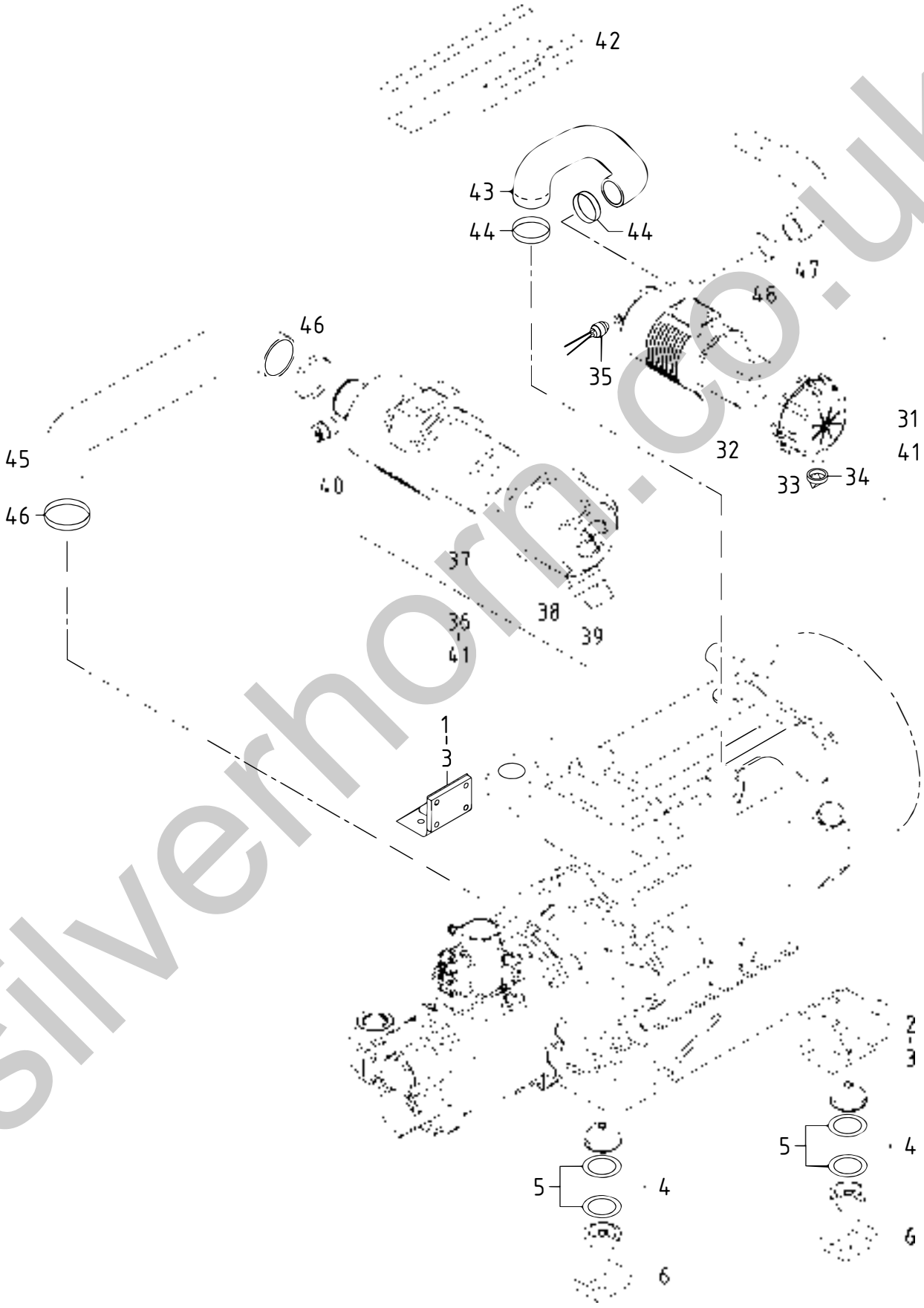

silverhorn.co.uk

Ref. NO.	Part NO.	Inter-change ability	Part Name	Q'ty	C/H	Remarks
	31 - 00		MOUNTING GROUP			
1	31110 99201		Bracket	1		
2	31110 01510		Bracket	1		(IN LINE PUMP TYPE)
2	31110 99201		Bracket	1		(VE PUMP TYPE)
3	02135 10035		Bolt	8		
	03115 02010		Spring washer	8		
4	31130 24300		Vibration isolator ass'y	8		
	02135 12120		Bolt	4		
	03116 12012		Plain washer	8		
	03115 02012		Spring washer	4		
	02912 08012		Nut	4		
5	52728 16010		Cushion rubber	8		
6	31113 30300		Plate	4		
	32 - 00		INTAKE GROUP			
31	32100 40500		Air filter ass'y	1		Const. No. 32～34
32	32143 11500		Element	1		
33	32142 11000		Cup	1		
34	32151 01400		Vacuator valve	1		
35	32148 02300		Filter service indicator	1		
36	32100 40900		Air filter ass'y	1		Const. No. 37～39
37	32143 11800		Element	1		
38	32142 08900		Cup	1		
39	32151 01600		Vacuator valve	1		
40	32148 03000		Filter service indicator	1		
41	02201 08012		Flange bolt	4		
42	32240 37900		Bracket	1		
	02915 00008		Hexagon flange nut	4		
43	32331 70000		Hose	1		
44	03511 20080		Hose clip	2		
45	32331 70400		Hose	1		
46	03511 20100		Hose clip	2		
47	32331 66501		Hose	1		
48	03511 10063		Hose clip	1		

silverhorn.co.uk

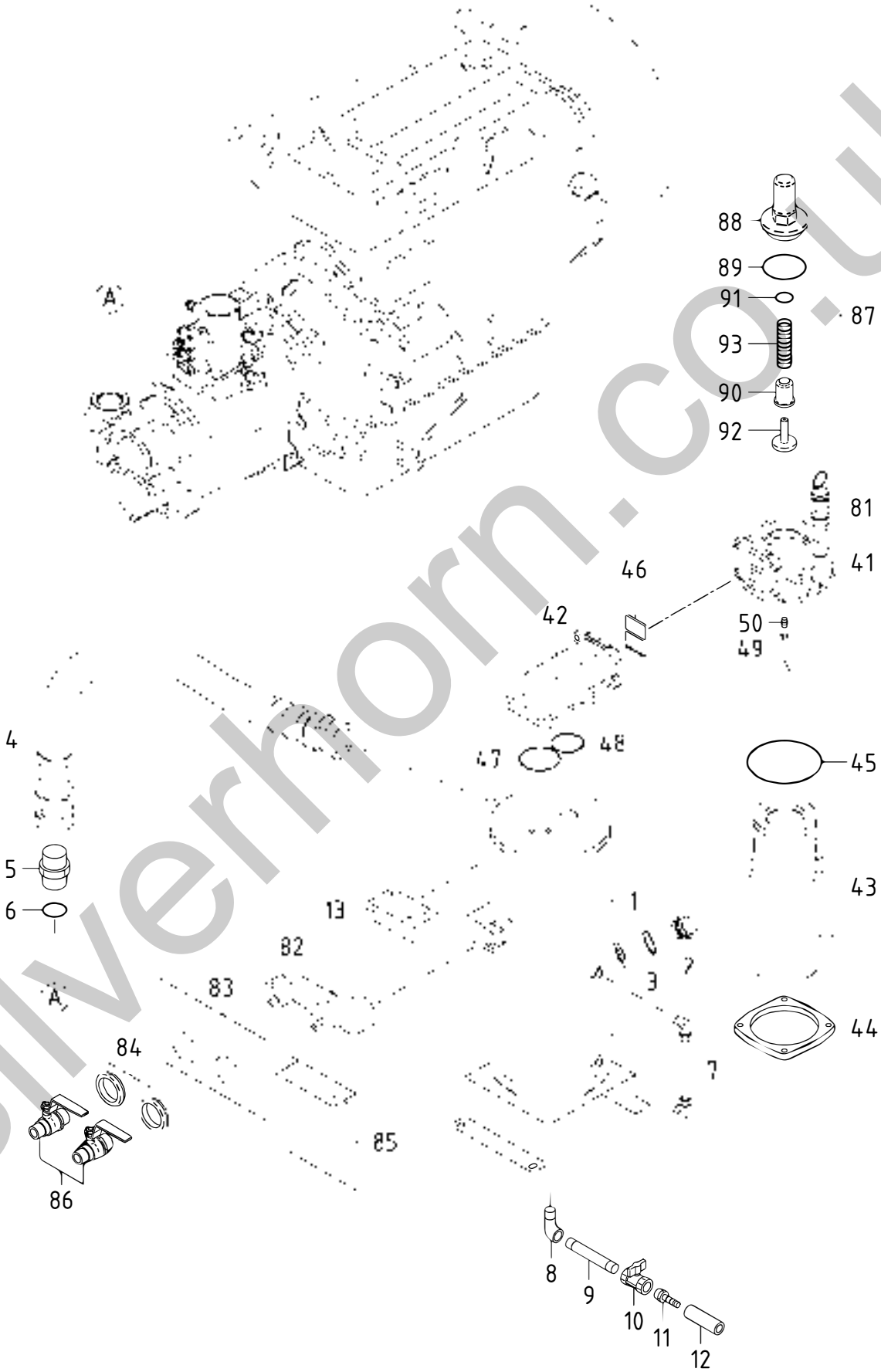

silverhorn.co.uk

33 - 00 RECEIVER, SEPARATOR & SERVICE HEADER

Ref. NO.	Part NO.	Inter-change ability	Part Name	Q'ty	C/H	Remarks
	33 - 00		RECIVER GROUP			
1	33100 40110		Receiver tank	1		(JIS)
1 -1	33100 43610	B	Receiver tank	1	M13	(JIS)
1	33100 42310		Receiver tank	1		(準ASME)
1 -1	33100 43710	B	Receiver tank	1	M13	(準ASME)
1	33100 39910		Receiver tank	1		(ASME)
1 -1	33100 43110	B	Receiver tank	1	M13	(ASME)
1	33100 42510		Receiver tank	1		(ASME, SILVAN)
1 -1	33100 43810	B	Receiver tank (Incl. No. 2, 3)	1	M13	(ASME, SILVAN)
	02201 08020		Flange bolt	4		
2	33231 02500		Cap, oil filler	1		(JIS/準ASME)
2	33231 03600		Cap, oil filler	1		(ASME)
3	03402 20030		O-ring	1		
4	37160 84000		Pipe	1		
5	GD920 12800		Nipple	1		Incl. No. 6
6	03402 25044		O-ring	1		
7	03841 30015		Nylon tube, w/n	1		
	03734 21030		Nipple elbow	2		
8	03731 21004		Elbow	1		
9	03730 04120		Gas pipe	1		
10	03735 13004		Valve	1		
11	03734 60144		Nipple	1		
12	03570 15009		Hose	1		
13	33260 07100		Bracket	1		
13 -1	33260 07700	B	Bracket	1	M13	
	02201 08012		Flange bolt	2		
	02201 06016		Flange bolt	2		
	34 - 00		SEPARATOR GROUP			
41	34210 30700		Casing	1		(EXP.)
41 -1	34210 31500	B	Casing	1	M28	(EXP.)
41	34210 30200		Casing	1		(US MODEL)
41 -1	34210 30400	B	Casing	1	M26	(US MODEL)
42	34280 00500		Cover	1		
42 -1	34280 00800	B	Cover	1	M13	
42 -2	34280 00600	A	Cover	1	M22	
	02283 10035		Socket bolt	2		(for casing)
	02283 10040		Socket bolt	2		(for casing)
	03115 30010		Lock washer	4		(for casing)
	02135 08030		Bolt	6		(for receiver tank)
	03115 02008		Spring washer	6		(for receiver tank)
	03116 12008		Plain washer	6		(for receiver tank)
	03620 41008	D	Plug	1	M13	
43	34220 16101		Separator	1		
44	34250 18301		Cover, separator	1		
	02283 10035		Socket bolt	1		
	02283 10040		Socket bolt	3		
	03115 30010		Lock washer	4		
45	03402 15140		O-ring	1		
46	22314 06500		O-ring	1		
47	03402 15070		O-ring	1		
47 -1	22314 06600	B	O-ring	1	M13	
48	03402 15055	C	O-ring	1	M13	
49	34260 06800		Pipe	1		(EXP.)
49 -1	34260 07000	B	Pipe	1	M28	(EXP.)
49	34260 06800		Pipe	1		(US MODEL)
49 -1	34260 07000	B	Pipe	1	M26	(US MODEL)
50	03734 70010		Nipple	1		(EXP.)
50 -1	03734 70021	B	Nipple	1	M28	(EXP.)
50	03734 70010		Nipple	1		(US MODEL)
50 -1	03734 70021	B	Nipple	1	M26	(US MODEL)
	35 - 00		SERVICE HEADER GROUP			
81	35200 15200		Safety valve ass'y	1		(EXP.)
81	35200 14100		Safety valve ass'y	1		(US MODEL)
82	35100 51001		Air manifold	1		
	02201 06016		Flange bolt	4		
83	35410 05800		Bracket	1		
84	03402 00502		Eyelet ring	2		
85	35410 05900		Bracket	1		
	02201 08020		Flange bolt	2		
86	35421 00105		Air valve	2		
87	35300 17000		Press. Cont. Vlv. ass'y	1		Const. No. 88～93
88	35301 20200		Body	1		
89	03402 15075		O-ring	1		
90	35303 08400		Piston	1		
91	03402 25032		O-ring	1		
92	35303 03300		Piston	1		
93	22144 07700		Spring	1		

silverhorn.co.uk

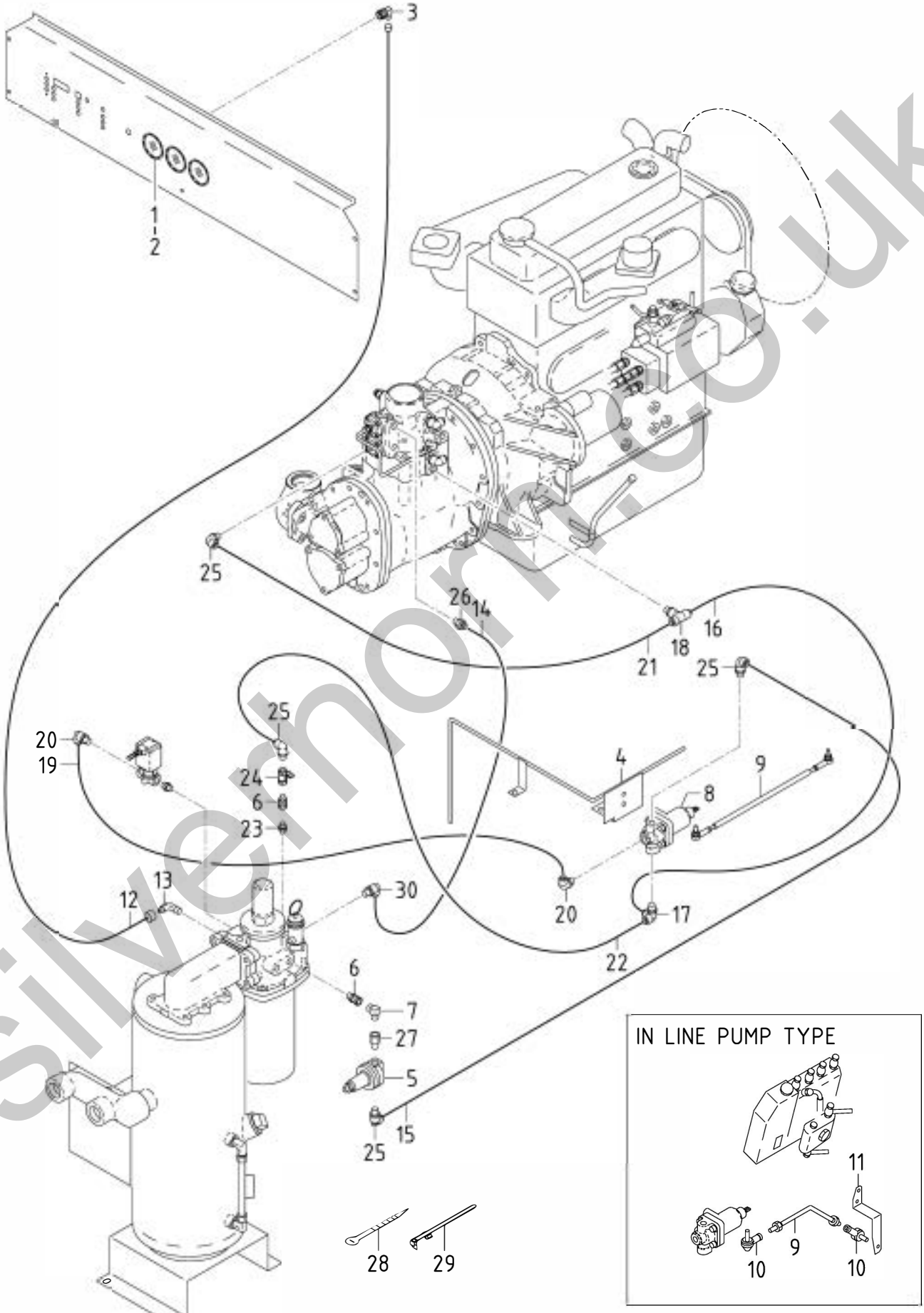

silvernorm.co.uk

Remarks
A:ASIAN MODEL(IN LINE PUMP)
B:US MODEL(49HP)
C:US MODEL(55HP)
D:EXP.(VE PUMP)

36 - 00 AIR LINE

Ref.NO.	Part NO.	Inter-change ability	Part Name	Q'ty	C/H	Remarks A	B	C	D
	36 - 00		CONTROL GROUP						
1	36141 15503		Gauge,air press.	1		◎			◎
1	36141 18300		Gauge,air press.	1			◎	◎	
1 -1	36141 18600	B	Gauge,air press.	1	M149		◎	◎	
2	36131 03100		Cushion rubber	1					
3	36152 02500		Bushing	1		◎			◎
3	36152 02500		Bushing	1			◎	◎	
3 -1	03734 21151	B	Nipple elbow	1	M149		◎	◎	
4	36710 33901		Bracket	1		◎			
4	36710 33501		Bracket	1			◎	◎	◎
	02201 10020	C	Flange bolt	3	M28-1				
	02248 10020	D	Bolt,w/w	3	M28-1				
5	36400 19000		Regulator ass'y	1		(PRESS.CONTROL)			
6	86183 01500		Joint	2		◎			◎
6	86183 01500	C	Joint	2	M26		◎	◎	
7	03734 44002		Nipple elbow	1		◎			◎
7	03734 44002	C	Nipple elbow	1	M26		◎	◎	
8	36400 21401		Regulator ass'y	1		◎		◎	◎
8 -1	36400 22300	A	Regulator ass'y	1	M34	◎		◎	◎
8	36400 21901		Regulator ass'y	1			◎		
	02238 08020		Bolt,w/w	2					
9	36280 32500		Rod	1		◎			
	02912 08008		Nut	2		◎			
9	36280 32200		Rod	1			◎	◎	◎
	02915 20006		Nut,w/w	2			◎	◎	◎
10	36230 00600		Rod end ass'y	2		◎			
	02915 20006		Nut,w/w	2		◎			
11	36260 13100		Lever	1		◎			
	02248 06016		Bolt,w/w	2		◎			
12	03840 15100		Nylon tube,w/n	1					
	06540 07090		Corrugated tube	1					
13	03734 21015		Nipple elbow	1					
14	03890 20065		Nylon tube	1					
15	03890 20038		Nylon tube	1		◎			◎
15	03890 20038		Nylon tube	1			◎	◎	
15 -1	03890 20052	B	Nylon tube	1	M26		◎	◎	
16	03890 20025		Nylon tube	1					
17	36331 15300		Nipple	1					
18	03734 66020		Tee nipple	1					
19	03890 30023		Nylon tube	1					
19 -1	03890 30027	A	Nylon tube	1	M35				
20	03734 65028		Nipple elbow	2					
21	03890 20020		Nylon tube	1					
22	03890 20060		Nylon tube	1					
22 -1	03891 20060	A	Nylon tube	1	M37				
23	03734 43020		Nipple	1		◎			◎
23	03734 43020		Nipple	1			◎	◎	
23 -1	03731 44002	B	Nipple	1	M26		◎	◎	
24	03735 13002		Valve	1					
25	03734 65020		Nipple elbow	4					
26	03734 64020		Nipple	1					
27	37189 06100		Bushing	1		◎			◎
27	37189 06100		Bushing	1			◎	◎	
27 -1	37731 12000	B	Nipple	1	M26		◎	◎	
28	03425 00001		Vinyl clip	5					
29	37181 03600		Clip	2					
30	03734 65020		Nipple elbow	1		◎			◎
30	03734 64020		Nipple	1			◎	◎	

silverhorn.co.uk

Remarks
A:ASIAN MODEL(IN LINE PUMP)
B:US MODEL(49HP)
C:US MODEL(55HP)
D:EXP.(VE PUMP)

36 - 01 REGULATOR (SPEED CONTROL)

Ref.NO.	Part NO.	Inter-change ability	Part Name	Q'ty	C/H	Remarks A	Remarks B	Remarks C	Remarks D
	36400 21401		REGULATOR ASS'Y			◎		◎	◎
	36400 22300	A	REGULATOR ASS'Y		M34	◎		◎	◎
	36400 21901		REGULATOR ASS'Y				◎		
1	36421 03600		Body	1					
2	36422 02000		Cap	1					
2 -1	36422 01900	A	Cap	1	M15				
	02283 06025		Socket bolt	4					
	03115 40006		Spring washer	4					
3	22152 04900		Shaft	1					
4	22130 05500		Piston	1					
5	23124 10300		Bushing	2					
6	36437 01500		Diaphragm	1					
7	36435 01400		Washer	1					
8	22144 12800		Spring	1					
9	31144 14400		Spacer	1		◎		◎	◎
9 -1	31144 12200	A	Spacer	1	M 4	◎		◎	◎
9 -2	31144 09600	B	Spacer	1	M34	◎		◎	◎
9	31144 14500		Spacer	1			◎		
10	34232 00300		Gasket	1					
11	02914 60008		Locking nut	1					
12	22123 04300		Orifice	1		◎		◎	◎
12	22123 04400		Orifice	1			◎		

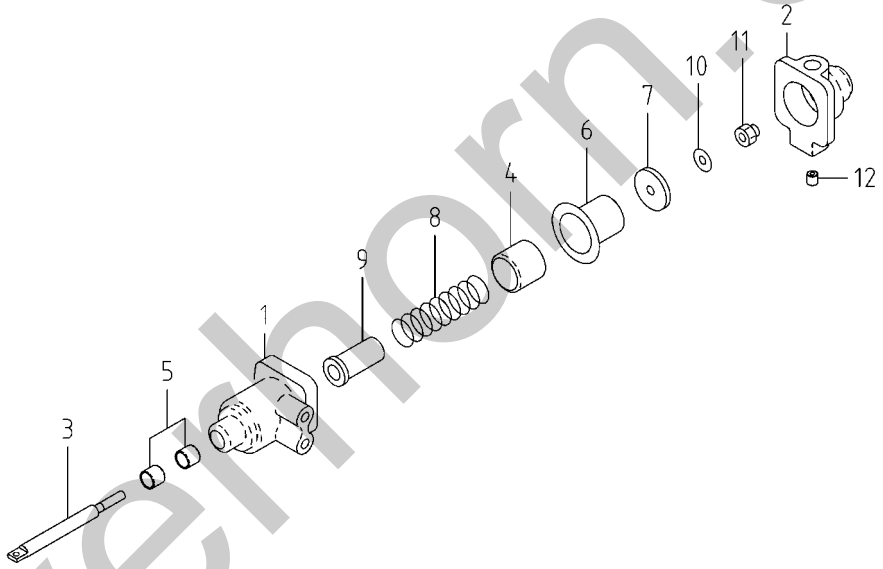

silverhorn.co.uk

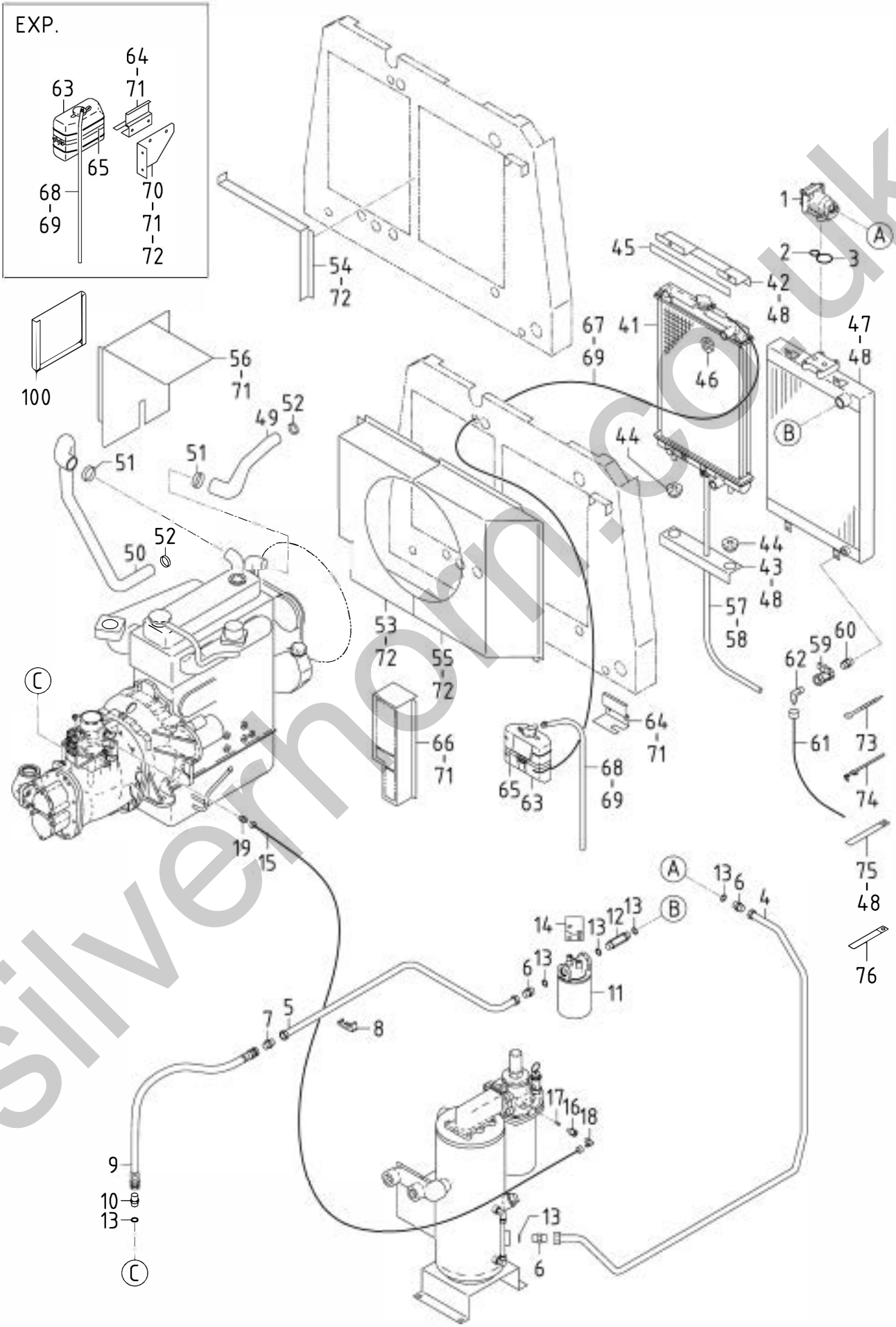

silverhorn.co.uk

37 - 00 OIL LINE & COOLING

Ref. NO.	Part NO.	Inter-change ability	Part Name	Q'ty	C/H	Remarks
	37 - 00		OIL LINE GROUP			
1	37200 11502		By-pass valve ass'y	1		
	37231 02100		Pellet ass'y	1		
	03402 25045		O-ring	1		
	02136 08035		Bolt	2		
	02136 08090		Bolt	2		
	03115 06008		Spring washer	4		
	03116 15008		Plain washer	4		
2	03402 15025		O-ring	1		
3	03402 15045		O-ring	1		
4	37111 20200		Pipe	1		
5	37123 07300		Pipe	1		
6	03734 75060		Nipple	3		Incl. No. 13
7	37731 11300		Nipple	1		
8	37530 26400		Bracket	1		
	02201 08040		Flange bolt	1		
	02915 00008		Hexagon flange nut	1		
9	37160 09710		Pipe	1		
10	GD920 14700		Nipple	1		Incl. No. 13
11	37400 13600		Oil filter ass'y	1		
	37438 05501		Filter cartride	1		
	02201 10020		Flange bolt	2		
12	37731 11200		Nipple	1		Incl. No. 13
13	03402 25024		O-ring	6		
14	37510 36100		Bracket	1		
	02201 08020		Flange bolt	2		
15	03841 20094		Nylon tube, w/n	1		
	44463 06200		Tube	1		
16	37189 34400		Bushing	1		
17	37580 01900		Strainer	1		
18	03734 21020		Nipple elbow	1		
19	03734 20020		Nipple	1		
	38 - 00		COOLING GROUP			
41	38100 42700		Radiator	1		
	38410 05700		Cap	1		
42	38420 91200		Bracket	1		
43	38420 91800		Bracket	1		
44	31131 04900		Rubber	2		
45	03407 67038		Seal rubber	1		
46	52728 18810		Cushion rubber	1		
47	38200 39100		Oil cooler	1		
48	02201 08020		Flange bolt	9		
49	38524 66600		Hose (upper)	1		
50	38524 67100		Hose (lower)	1		
51	03511 20060		Hose clip	2		
52	03511 20040		Hose clip	2		
53	38440 98400		Shroud, fan	1		
53 -1	38440 02210	B	Shroud, fan	1	M 2	
54	52354 45900		Plate	1		
55	38440 01210		Shroud, fan	1		(EXP.)
55	38440 98300		Shroud, fan	1		(US MODEL)
56	38450 75700		Guard, fan	1		
56 -1	38450 79500	B	Guard, fan	1	M 2	
57	03611 08100		Hose	1		
58	03511 40018		Hose clip	1		
59	03735 13003		Valve	1		
60	03731 42003		Nipple	1		
61	03851 30040		Nylon tube, w/n	1		
62	03734 21030		Nipple elbow	1		
63	38590 01200		Reserve tank ass'y	1		
64	38591 00800		Bracket	1		
65	03511 30155		Hose clip	1		
66	38450 78700		Guard, fan	1		(EXP.)
66	38450 75200		Guard, fan	1		(US MODEL)
67	38594 03300		Hose	1		(EXP.)
67	38594 02100		Hose	1		(US MODEL)
68	38594 03700		Hose	1		
69	03511 40016		Hose clip	3		
70	38591 00900		Bracket	1		(EXP.)
71	02201 06016		Flange bolt	14		(EXP.)
71	02201 06016		Flange bolt	12		(US MODEL)
72	02915 00006		Hexagon flange nut	19		(EXP.)
72	02915 00006		Hexagon flange nut	17		(US MODEL)
73	03425 00001		Vinyl clip	3		(EXP.)
74	37181 03600		Clip	2		(EXP.)
74	37181 03600		Clip	6		(US MODEL)
75	03424 80231		Clip	1		
76	03424 80011		Clip	1		(EXP.)
	39 - 00		ACCESSORY GROUP			
100	39200 09600		Tool box	1		
	03260 05013		Blind rivet	4		

silverhorn.co.uk

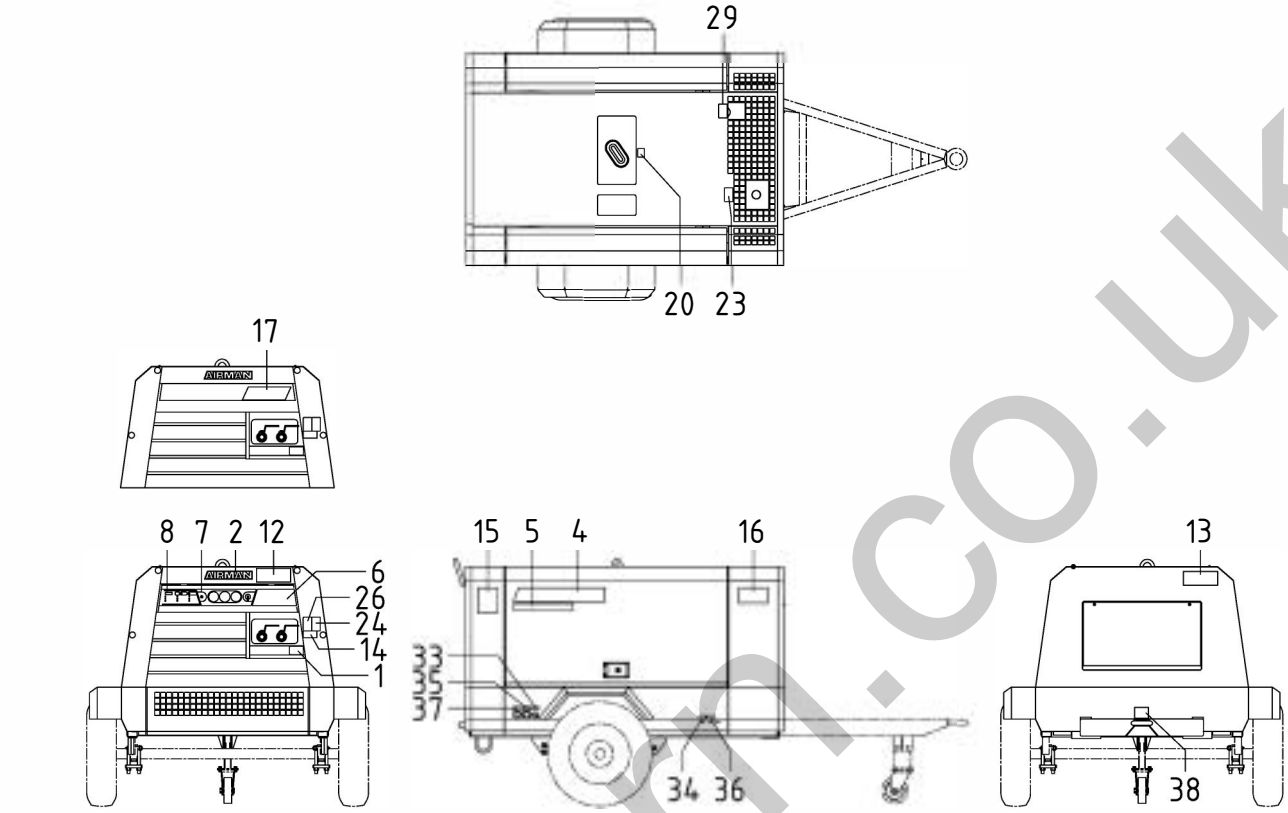

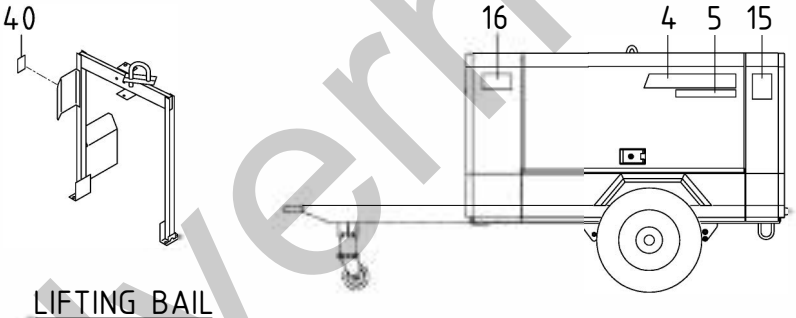

LIFTING BAIL

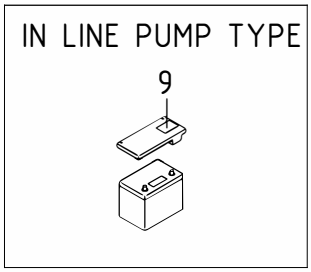

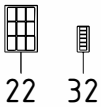

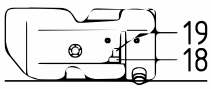

FUEL TANK

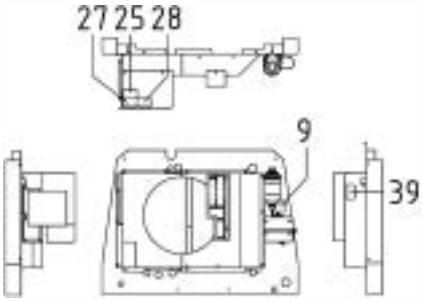

FAN SHROUD

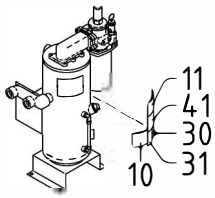

RECEIVER TANK

BATTERY

silverhorn.co.uk

Remarks
A:ASIAN MODEL(IN LINE PUMP)
B:US MODEL(49HP)
C:US MODEL(55HP)
D:EXP.(VE PUMP)

39 - 00 NAME PLATE

Ref.NO.	Part NO.	Inter-change ability	Part Name	Q'ty	C/H	Remarks A	B	C	D
	39 - 00		ACCESSORY GROUP						
	39600 79920		Instruction book			◎			
	39600 86720		Instruction book				◎	◎	
	39600 05630	B	Instruction book		M30		◎	◎	
	39600 02630		Instruction book						◎
	39600 05830	B	Instruction book		M30				◎
	39615 02000		Eng.Instruction book						
	39616 03500		Eng.Parts catalog						
1	39103 10810		Plate(SER.NO.)	1					
	03260 03010		Blind rivet	4					
2	39170 02000		Mark (AIRMAN)	1					
3	* * *								
4	39178 12430		Plate(AIRMAN)	2					
4 -1	39178 23930	A	Plate(AIRMAN)	2	M 8				
5	39178 12530		Plate(PDS185S)	2					
5 -1	39178 24030	A	Plate(PDS185S)	2	M 8-1				
6	39153 64200		Plate(start-stop)	1					
7	39178 08330		Plate(in-pane)	1					
8	39178 36330		Plate(in-pane)	1		◎			◎
8	39178 08230		Plate(in-pane)	1			◎	◎	
9	39178 25210		Plate(LLC)	1		◎			◎
9	39178 00310		Plate(LLC)	1			◎	◎	
10	39147 00602		Plate(comp.oil)	1		◎			◎
10	39147 02800		Plate(comp.oil)	1			◎	◎	
11	39176 00110		Plate(strainer)	1					
12	39178 63100		Plate(speed limit)	1		◎			◎
13	39178 63200		Plate(never exceed)	1		◎			◎
14	39178 43110		Plate(california)	1			◎	◎	
15	39178 13330	C	Plate(mark)	2	M168		◎	◎	
16	39178 12630		Plate(mark)	2			◎	◎	
17	39178 72410		Plate(mark)	1			◎		
18	39178 72500		Plate(diesel fuel)	1					
19	39176 35600		Plate(No fire)	1					
20	39176 69300		Plate(lift position)	1					
21	39176 50000		Plate(danger,battery)	1					
22	39173 04200		Plate,complete	1		Const.No.23～31			
23	39176 73300	Z	Plate (warning,exhaust gases)	1					
24	39176 73400	Z	Plate (warning,compressed air)	1					
25	39176 73500	Z	Plate (warning,cooling fan)	1					
26	39176 73600	Z	Plate (danger,compressed air)	1					
27	39176 73800	Z	Plate(warning,V-belt)	1					
28	39176 69500	Z	Plate (caution,high temp.)	1					
29	39176 69600	Z	Plate (caution,radiator cap)	1					
30	39176 69700	Z	Plate(caution,fire)	1					
31	39176 69800	Z	Plate (warning,compressed air)	1					
32	39173 02100		Plate,complete	1		Const.No.33～37			
33	39189 17100	Z	Plate(fuel drain)	1					
34	39189 17200	Z	Plate(radiator drain)	1					
35	39189 17300	Z	Plate(eng.oil drain)	1					
36	39189 17400	Z	Plate(oil cooler drain)	1					
37	39189 19100	Z	Plate (receiver tank drain)	2					
38	39178 37310		Plate (caution,tow machine)	1			◎	◎	
39	39176 73500		Plate (warning,cooling fan)	1					
40	39176 69500		Plate (caution,high temp.)	1			◎	◎	
41	39176 00510		Plate(notice)	1					

silverhorn.co.uk

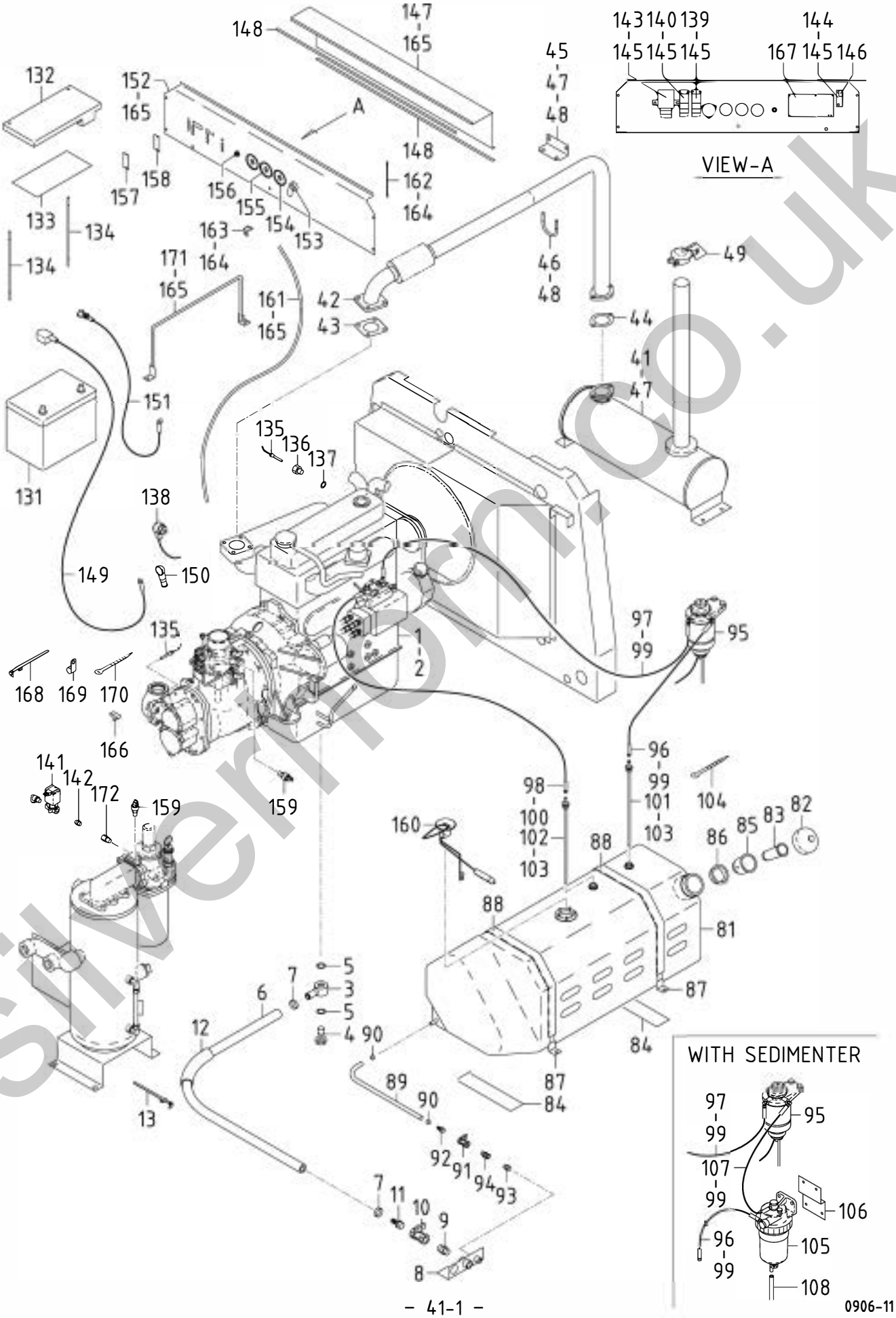

silverfern.co.uk

0906-11

Ref. NO.	Part NO.	Inter-change ability	Part Name	Q'ty	C/H	Remarks
	41 - 00		ENGINE GROUP			
1	* * *		Engine	1		(NISSAN DIEASEL TD27)
			(fan belt:NISSAN DIESEL 11720 43G01)			
	41290 00900		Filter ass'y	1		
			(NISSAN DIESEL 15208 43G0A)			
2	02135 10035		Bolt	2		(for starter)
	03116 12010		Plain washer	2		(for starter)
3	43534 01702		Ring connector (Nipple)	1		
4	43532 05201		Nipple (Bolt)	1		
5	03407 16022		Gasket	2		
6	03580 19100		Hose	1		
7	03511 20035		Hose clip	2		
8	41250 04500		Bracket	1		
	02201 06016		Flange bolt	2		
9	03731 44004		Nipple	1		
10	03735 13004		Valve	1		
11	37170 02900		Joint	1		
12	43322 04400		Felt	1		
13	37181 03600		Clip	1		
	42 - 00		EXHAUST GROUP			
41	42100 77600		Exhaust muffler	1		
42	42310 89100		Pipe, exhaust	1		
	02136 10030		Bolt	2		(for muffler)
	02912 06010		Nut	2		(for muffler)
	03115 06010		Spring washer	2		(for muffler)
	03116 15010		Plain washer	2		(for muffler)
	02135 10025		Bolt	4		(for Eng.)
	03115 02010		Spring washer	4		(for Eng.)
43	42324 07100		Gasket	1		
44	42324 13600		Gasket	1		
45	42240 22600		Bracket	1		
46	03830 08004		U-bolt	1		
47	02201 08020		Flange bolt	4		
48	02915 00008		Hexagon flange nut	4		
49	42210 02700		Cap, muffler	1		(EXP.)
	43 - 00		FUEL GROUP			
81	43100 66600		Fuel tank	1		
82	43220 02700		Cap	1		
83	43210 01700		Strainer	1		
84	38465 11900		Cushion rubber	2		
85	43240 06200		Holder	1		
86	43216 00500		Holder	1		
87	43310 27400		Belt	2		
	02201 08020		Flange bolt	4		
88	43322 06200		Cushion	4		
89	03600 09045		Hose	1		
	06540 15040		Corrugated tube	1		
90	03511 10015		Hose clip	2		
91	03735 13002		Air valve	1		
92	37170 14000		Joint	1		
92 -1	37170 21500	A	Joint	1	M11	
93	03734 43020		Nipple	1		
94	86183 01500		Joint	1		
95	43540 07400		Fuel filter	1		
	43543 01100		Filter	1		
			(NISSAN DIESEL 16403 59E0A)			
	02201 08030		Flange bolt	2		
96	03600 08044		Hose	1		
96	03600 08027		Hose	1		w. Sedimenter
97	03600 08070		Hose	1		
98	03600 06040		Hose	1		
99	03511 40016		Hose clip	4		
99	03511 40016		Hose clip	6		w. Sedimenter
100	03511 40006		Hose clip	2		
101	37160 49520		Pipe	1		
102	37160 49620		Pipe	1		
103	03116 17016		Plain washer	2		
	03402 25016		O-ring	2		
104	03425 00001		Vinyl clip	5		
105	43550 02800		Sedimenter	1		w. Sedimenter
	02248 08025		Bolt, w/w	2		w. Sedimenter
106	43340 33000		Bracket	1		w. Sedimenter
	02201 06016		Flange bolt	2		w. Sedimenter
107	03600 08034		Hose	1		w. Sedimenter
108	03600 08035		Hose	1		w. Sedimenter
	44 - 00		ELECTRIC GROUP			
131	44210 08200	Y	Battery (G&YU)	1		(85D26R)
131	44210 06600	Y	Battery (DELKOR)	1		(80D26R)
132	44220 23800		Cover	1		
133	52728 15910		Cushion rubber	1		
134	02832 06056		Rod	2		
134 -1	02832 06060	A	Rod	2	M 2-1	
	02912 80006		Wing nut	2		
135	44364 06500		Thermo sensor	2		
136	36331 07100		Nipple	1		
137	03407 14016		Gasket	1		
137 -1	03407 20016	A	Gasket	1	M 9	
138	44328 19100		Pressure switch	1		(oil)
139	44346 07200		Relay	1		(sterter)
			(NISSAN DIESEL 25230 18A00)			
140	44346 07200		Relay	1		(glow)
			(NISSAN DIESEL 25230 18A00)			
141	46811 24100		Solenoid valve	1		
142	03731 44002		Nipple	1		
143	44327 04100		Time relay	1		(QOS)
			(NISSAN DIESEL 11067 90063)			
144	44250 26710		Bracket	1		
145	02915 00006		Hexagon flange nut	8		
146	44470 01600		Fuse box	1		
	46934 03200		Fuse	1		(10A)
147	44250 23810		Bracket	1		
148	03407 68084		Seal rubber	2		
149	07885 25160		Cable	1		(battery～starter)
149 -1	07885 25140	A	Cable	1	M 8-2	(battery～starter)
	06540 15110		Tube	1		(protector)
150	44462 00800		Insulator	1		(starter)
	44462 05500		Insulator	1		(battery"+")
151	07888 51040		Cable	1		(earth)
	02201 10020		Flange bolt	1		
152	36110 96400		Instrument panel	1		
153	44322 07200		Starter switch	1		
	52739 00600		Key	2		
154	36149 02800		Hour meter	1		
155	36158 00500		Gauge, fuel	1		
156	46167 02900		Select switch	1		
157	46480 47300		Cover	1		
	02709 00410		Tapping screw	2		
158	52728 18210		Cushion rubber	1		
159	44328 20600		Pressure switch	2		
160	36159 04100		Sending unit	1		
	02915 00005		Hexagon flange nut	5		
161	44490 50432		Wiring harness	1		
	02201 08012		Flange bolt	1		(for Eng.)
	02201 06016		Flange bolt	1		(for rear cover)
	03116 12008		Plain washer	1		(for rear cover)
162	52660 04700		Hook	1		
163	52555 17800		Plate	1		
164	03260 03010		Blind rivet	3		
165	02201 06016		Flange bolt	11		(EXP.)
165	02201 06016		Flange bolt	9		(US MODEL)
166	44243 05500		Holder	4		(US MODEL)
167	46879 45700		Controller complete	1		(EXP.)
167	46879 41400		Controller complete	1		(US MODEL)
168	37181 03600		Clip	3		
169	37181 05000		Clip	4		
170	03425 00001		Vinyl clip	46		(EXP.)
170	03425 00001		Vinyl clip	50		(US MODEL)
171	44290 41700		Guide	1		(EXP.)
172	37189 09700	D	Bushing	1	M30	

silverhorn.co.uk

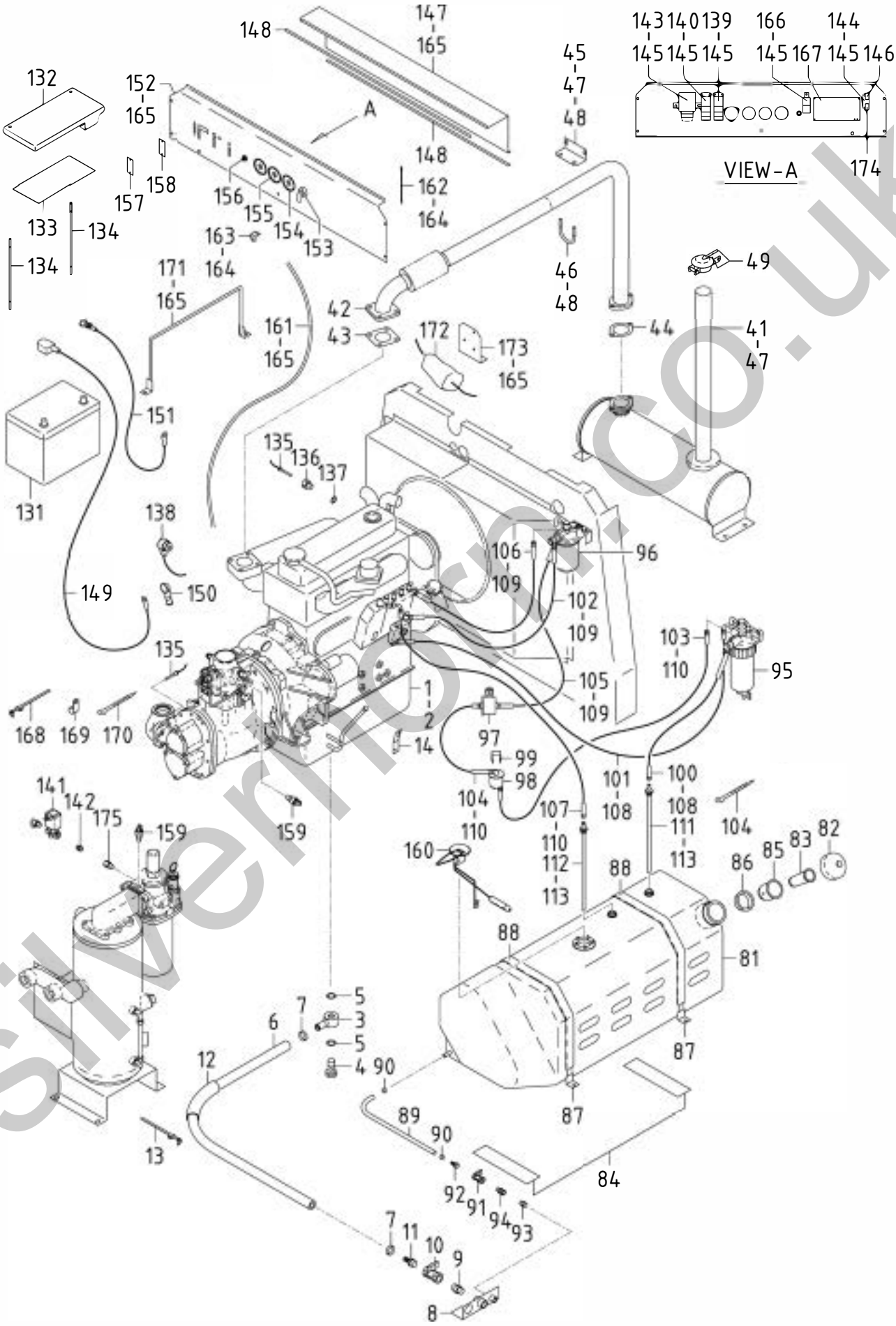

silvermoor.co.uk

41 - 01 ENGINE, EXHAUST, FUEL LINE & ELECTRIC (IN LINE PUMP TYPE)

Ref. NO.	Part NO.	Inter-change ability	Part Name	Q'ty	C/H	Remarks
	41 - 00		ENGINE GROUP			
1	* * *		Engine	1		(NISSAN DIEASEL TD27)
			(fan belt:NISSAN DIESEL 11720 43G01)			
	41290 00900		Filter ass'y	1		
			(NISSAN DIESEL 15208 43G0A)			
2	02135 10035		Bolt	2		(for starter)
	03116 12010		Plain washer	2		(for starter)
3	43534 01702		Ring connector (Nipple)	1		
4	43532 05201		Nipple (Bolt)	1		
5	03407 16022		Gasket	2		
6	03580 19100		Hose	1		
7	03511 20035		Hose clip	2		
8	41250 04500		Bracket	1		
	02201 06016		Flange bolt	2		
9	03731 44004		Nipple	1		
10	03735 13004		Valve	1		
11	37170 02900		Joint	1		
12	43322 04400		Felt	1		
13	37181 03600		Clip	1		
14	41250 05000		Bracket	1		
	02248 06012		Bolt, w/w	2		
	42 - 00		EXHAUST GROUP			
41	42100 77600		Exhaust muffler	1		
42	42310 89100		Pipe, exhaust	1		
	02136 10030		Bolt	2		(for muffler)
	02912 06010		Nut	2		(for muffler)
	03115 06010		Spring washer	2		(for muffler)
	03116 15010		Plain washer	2		(for muffler)
	02135 10025		Bolt	4		(for Eng.)
	03115 02010		Spring washer	4		(for Eng.)
43	42324 07100		Gasket	1		
44	42324 13600		Gasket	1		
45	42240 22600		Bracket	1		
46	03830 08004		U-bolt	1		
47	02201 08020		Flange bolt	4		
48	02915 00008		Hexagon flange nut	4		
49	42210 02700		Cap, muffler	1		
	43 - 00		FUEL GROUP			
81	43100 66600		Fuel tank	1		
82	43220 02700		Cap	1		
83	43210 01700		Strainer	1		
84	38465 11900		Cushion rubber	2		
85	43240 06200		Holder	1		
86	43216 00500		Holder	1		
87	43310 27400		Belt	2		
	02201 08020		Flange bolt	4		
88	43322 06200		Cushion	4		
89	03600 09045		Hose	1		
	06540 15040		Corrugated tube	1		
90	03511 10015		Hose clip	2		
91	03735 13002		Air valve	1		
92	37170 14000		Joint	1		
92 -1	37170 21500	A	Joint	1	M11	
93	03734 43020		Nipple	1		
94	86183 01500		Joint	1		
95	43550 01000		Sedimenter	1		
	02248 08030		Bolt, w/w	2		
96	43540 05500		Fuel filter	1		
	43541 00700		Element	1		
			(NISSAN DIESEL 16403 J5500)			
	02201 08030		Flange bolt	2		
97	43650 01900		Fuel pump	1		
	02248 06016		Bolt, w/w	2		
98	43540 05600		Fuel filter	1		
			(NISSAN DIESEL 16400 H8501)			
99	43340 20500		Bracket	1		
	02709 00410		Tapping screw	2		
100	03600 09038		Hose	1		
101	03600 08056		Hose	1		
102	03570 08068		Hose	1		
103	43510 08600		Hose	1		
104	43510 08700		Hose	1		
105	03570 08030		Hose	1		
106	03570 08072		Hose	1		
107	03600 09028		Hose	1		
108	03511 40016		Hose clip	4		
109	03511 10017		Hose clip	6		
110	03511 40020		Hose clip	6		
111	37160 49520		Pipe	1		
112	37160 53720		Pipe	1		
113	03116 17016		Plain washer	2		
	03402 25016		O-ring	2		
114	03425 00001		Vinyl clip	5		
	44 - 00		ELECTRIC GROUP			
131	44210 08200	Y	Battery (G&YU)	1		(85D26R)
131	44210 06600	Y	Battery (DELKOR)	1		(80D26R)
132	44220 23800		Cover	1		
133	52728 15910		Cushion rubber	1		
134	02832 06056		Rod	2		
134 -1	02832 06060	A	Rod	2	M 2-1	
	02912 80006		Wing nut	2		
135	44364 06500		Thermo sensor	2		
136	36331 07100		Nipple	1		
137	03407 14016		Gasket	1		
137 -1	03407 20016	A	Gasket	1	M 9	
138	44328 19100		Pressure switch	1		(oil)
139	44346 07200		Relay	1		(sterter)
			(NISSAN DIESEL 25230 18A00)			
140	44346 07200		Relay	1		(glow)
			(NISSAN DIESEL 25230 18A00)			
141	46811 24100		Solenoid valve	1		
142	03731 44002		Nipple	1		
143	44327 04100		Time relay	1		(QOS)
			(NISSAN DIESEL 11067 90063)			
144	44250 26710		Bracket	1		
145	02915 00006		Hexagon flange nut	9		
146	44470 01600		Fuse box	1		
	46934 03200		Fuse	1		(10A)
147	44250 23810		Bracket	1		
148	03407 68084		Seal rubber	2		
149	07885 25160		Cable	1		(battery～starter)
149 -1	07885 25140	A	Cable	1	M 8-2	(battery～starter)
	06540 15110		Tube	1		(protector)
150	44462 00800		Insulator	1		(starter)
	44462 05500		Insulator	1		(battery"+")
151	07888 51040		Cable	1		(earth)
	02201 10020		Flange bolt	1		
152	36110 96400		Instrument panel	1		
153	44322 07200		Starter switch	1		
	52739 00600		Key	2		
154	36149 02800		Hour meter	1		
155	36158 00500		Gauge, fuel	1		
156	46167 02900		Select switch	1		
157	46480 47300		Cover	1		
	02709 00410		Tapping screw	2		
158	52728 18210		Cushion rubber	1		
159	44328 20600		Pressure switch	2		
160	36159 04100		Sending unit	1		
	02915 00005		Hexagon flange nut	5		
161	44490 56032		Wiring harness	1		
	02201 08012		Flange bolt	1		(for Eng.)
	02201 06016		Flange bolt	1		(for rear cover)
	03116 12008		Plain washer	1		(for rear cover)
162	52660 04700		Hook	1		
163	52555 17800		Plate	1		
164	03260 03010		Blind rivet	3		
165	02201 06016		Flange bolt	16		
166	44346 07300		Relay	1		(Eng. stop)
			(NISSAN DIESEL 25230 C9900)			

silverhorn.co.uk

Ref.NO.	Part NO.	Inter-change ability	Part Name	Q'ty	C/H	Remarks
167	46879 45700		Controller complete	1		
168	37181 03600		Clip	3		
169	37181 05000		Clip	4		
170	03425 00001		Vinyl clip	50		
171	44290 41700		Guide	1		
172	44358 01200		Engine stopper (NISSAN DIESEL 19801 90011)	1		
173	44250 27810		Bracket	1		
174	44470 01700		Fuse box	1		
	46934 03300		Fuse	1		(20A)
175	37189 09700	D	Bushing	1	M30	

Ref.NO.	Part NO.	Inter-change ability	Part Name	Q'ty	C/H	Remarks

silverhorn.co.uk

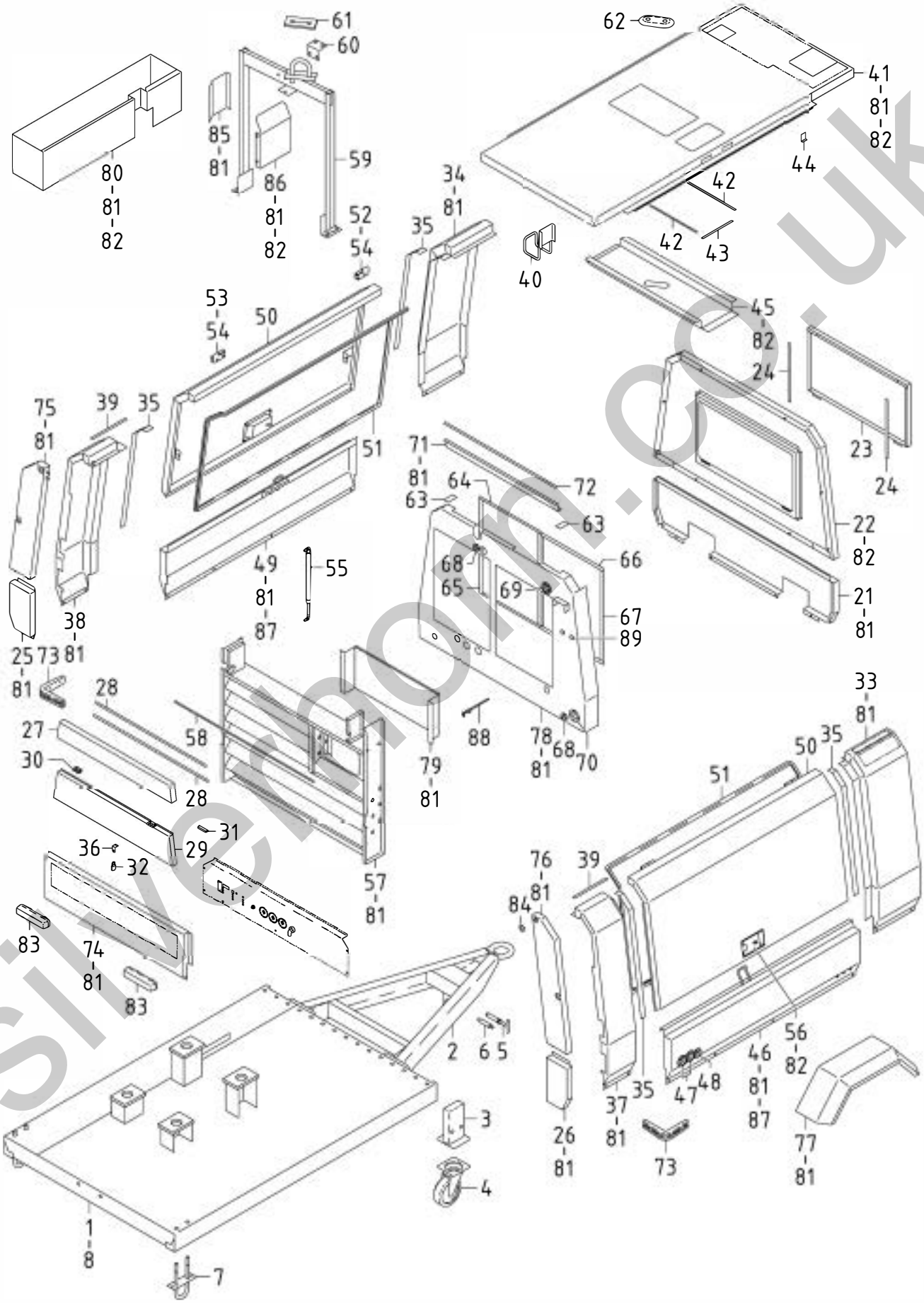

silverhorn.co.uk

Remarks
A:ASIAN MODEL(IN LINE PUMP)
B:US MODEL(49HP)
C:US MODEL(55HP)
D:EXP.(VE PUMP)

51 - 00 FRAME & BONNET

Ref.NO.	Part NO.	Interchange ability	Part Name	Q'ty	C/H	Remarks A	B	C	D
	51 - 00		FRAME GROUP						
1	51100 97630		Frame	1					
1 -1	51100 13840	B	Frame	1	-				
1 -2	51100 14941	B	Frame	1	M19				
2	51300 22201		Draw bar	1		◎			◎
	02135 16040		Bolt	8					
	03115 02016		Spring washer	8					
	03116 12016		Plain washer	8					
3	51410 22000		Stand	1		◎			◎
4	51460 02500		Wheel caster ass'y (w.caster)	1		◎			◎
4	51410 23400		Stand(w/o caster)	1		◎			◎
	02201 10020		Flange bolt	4		◎			◎
	02915 00010		Hexagon flange nut	4		◎			◎
5	51520 00100		Pin	1		◎			◎
	51420 01000		Chain	1		◎			◎
	51420 01100		Chain	1		◎			◎
6	51434 02400		Bolt	1		◎			◎
	02915 00012		Hexagon flange nut	2		◎			◎
7	51158 07800	C	Stand,rear	2	M18				
	02201 08020	C	Flange bolt	4	M18				
	02915 00008	C	Hexagon flange nut	4	M18				
	02912 08016	C	Nut	8	M18				
8	02102 14030		Bolt	8			◎	◎	
	03115 02014		Spring washer	8			◎	◎	
	52 - 00		BONNET GROUP						
21	52100 48820	C	Cover	1	M19				
22	52100 48720		Cover	1					
22 -1	52100 70320	B	Cover	1	M19				
23	52350 30120		Cover	1					
	02136 06035		Bolt	2					
	03115 06006		Spring washer	2					
	03116 15006		Plain washer	2					
24	03407 66839		Seal rubber	2					
25	52100 52620	C	Cover	1	M19				
26	52100 52720	C	Cover	1	M19				
27	52100 53820		Cover	1					
27 -1	52100 70920	B	Cover	1	M20				
	02201 08020	D	Flange bolt	2	M20				
	02915 00008	D	Hexagon flange nut	2	M20				
28	03407 66837		Seal rubber	2					
29	52450 87320		Door	1					
30	52480 14300		Hinge	2					
	02401 24012		Screw	8					
	02915 00004		Hexagon flange nut	4					
31	52710 04900		Latch ass'y	2					
32	52723 00100		Lock ass'y	3					
33	52100 49120		Cover	1					
33 -1	52100 70620	B	Cover	1	M19				
34	52100 49220		Cover	1					
34 -1	52100 70720	B	Cover	1	M19				
35	03407 67033		Seal rubber	4					
35 -1	03407 69065	A	Seal rubber	4	M 3				
36	52555 17701		Plate	1					
	03260 03010		Blind rivet	2					
37	52100 49320		Cover	1					
38	52100 49420		Cover	1					
39	03407 66851		Seal rubber	2					
40	52660 05100		Hook	1			◎	◎	
	02201 08020		Flange bolt	2			◎	◎	
41	52300 92810		Top cover	1					
41 -1	52300 06020	B	Top cover	1	M20				
	02248 06012	C	Bolt,w/w	2	M20				
	52652 00400	C	Nut	2	M20				
42	03407 68077		Seal rubber	2					
43	03407 68021		Seal rubber	2					
44	03407 67048	C	Seal rubber	2	M 1				
45	52310 03800		Cover	1					
	02401 26012		Screw	4					
46	52400 77810		Side cover	1					
47	03402 00322		Eyelet ring	2					
48	03402 00252		Eyelet ring	1					
49	52400 77910		Cover	1					
50	52450 86120		Door	2					
51	03407 64786		Seal rubber	2					
52	52480 13200		Hinge	2					
53	52480 13200		Hinge	2					
54	02136 08016		Bolt	16					
55	GE360 03000		Dumper	4					
	02915 00008		Hexagon flange nut	8					
56	52710 04800		Catch	2					
57	52370 58800		Duct	1					
57 -1	52370 67300	B	Duct	1	M19				
58	03407 68096		Seal rubber	1					
59	52620 44200		Lifting bail	1					
	02135 10025		Bolt	4					
	03115 02010		Spring washer	4					
	03116 12010		Plain washer	4					
60	52630 11800		Bracket	1					
	02201 08020		Flange bolt	2					
	52744 00900		Washer	2					
	02201 08040		Flange bolt	2					
	02915 00008		Hexagon flange nut	4					
61	52728 16110		Cushion rubber	1					
62	52746 01800		Cap	1					
63	03407 67043		Seal rubber	2					
63 -1	03407 69006	A	Seal rubber	2	M 3				
64	03407 66932		Seal rubber	2					
65	03407 67404		Seal rubber	2					
66	03407 67409		Seal rubber	2					
67	03407 67402		Seal rubber	2					
68	03403 00303		Grommet	2					
69	03402 00404		Eyelet ring	1					
70	03403 00512		Grommet	1					
71	52210 41701		Cover	1					
72	03407 66837		Seal rubber	1					
72 -1	03407 68086	B	Seal rubber	1	M 1				
73	52728 33800		Cushion rubber	2					
	02345 35025		Screw	6					
	03115 05005		Spring washer	6					
	03116 16005		Plain washer	6					
74	52100 62620		Cover	1		◎			◎
74 -1	52100 70520	B	Cover	1	M19	◎			◎
74	52100 52820		Cover	1			◎	◎	
74 -1	52100 69820	B	Cover	1	M19		◎	◎	
75	52100 62520		Cover	1		◎			◎
75 -1	52100 71320	B	Cover	1	M20	◎			◎
75	52100 53720		Cover	1			◎	◎	
75 -1	52100 71120	B	Cover	1	M20		◎	◎	
76	52100 62420		Cover	1		◎			◎
76 -1	52100 71220	B	Cover	1	M20	◎			◎
76	52100 53620		Cover	1			◎	◎	
76 -1	52100 71020	B	Cover	1	M20		◎	◎	
77	53220 69400		Fender	2		◎			◎
77	53220 69300		Fender	2			◎	◎	
78	52350 21921		Cover	1					
78 -1	52350 49720	B	Cover	1	M24				
79	52350 32120		Cover	1			◎	◎	
80	52750 26901		Tool box	1			◎	◎	
81	02201 06016		Flange bolt	86		◎			◎
81 -1	02201 06016	Q	Flange bolt	78	M19	◎			◎
81	02201 06016		Flange bolt	106			◎	◎	
81 -1	02201 06016	Q	Flange bolt	98	M19		◎	◎	
82	02915 00006		Hexagon flange nut	26		◎			◎
82 -1	02915 00006	Q	Hexagon flange nut	24	M19	◎			◎
82	02915 00006		Hexagon flange nut	33			◎	◎	
82 -1	02915 00006	Q	Hexagon flange nut	31	M19		◎	◎	
83	51435 00200		Cushion	2			◎	◎	
	02915 00010		Hexagon flange nut	4			◎	◎	
84	52746 02100		Grommet	4					
85	52350 38820		Cover	1			◎	◎	
86	52350 38921		Cover	1			◎	◎	
87	02401 26016		Screw	4					
88	37181 03600	D	Clip	1	M24	◎			◎
88	37181 03600	D	Clip	1	M 2		◎	◎	
89	37181 02600		Clip	2			◎	◎	

silverhorn.co.uk

52 - 00 LINING

Ref. NO.	Part NO.	Inter-change ability	Part Name	Q'ty	C/H	Remarks
	52900 81310		URETHANE FOAM KIT			(EXP.)
	52900 88410	B	URETHANE FOAM KIT		M19	(EXP.)
	52900 92510	B	URETHANE FOAM KIT		M26	(EXP.)
	52900 77610		URETHANE FOAM KIT			(US MODEL)
	52900 88510	B	URETHANE FOAM KIT		M19	(US MODEL)
	52900 92610	B	URETHANE FOAM KIT		M26	(US MODEL)
			(Const. No. 1～8)			
1	52919 78710		Lining	1		
2	52919 00630		Lining	1		
2 -1	52919 63310	B	Lining	1	M19	
3	52919 99620		Lining	1		
4	52939 03740		Lining	1		
5	52939 03840		Lining	1		
6	52919 00730		Lining	2		
7	52959 68730		Lining	2		
8	52959 38550		Lining	2		
9	52978 04700		Lining	1		
10	52977 10000		Lining	1		
11	52978 03800		Lining	2		
11 -1	52978 06700	B	Lining	2	M26	
12	52978 04900		Lining	2		
13	52977 09300		Lining	2		
14	52977 09400		Lining	3		
15	52977 09500		Lining	1		
16	52977 09100		Lining	1		(US MODEL)

Ref. NO.	Part NO.	Inter-change ability	Part Name	Q'ty	C/H	Remarks

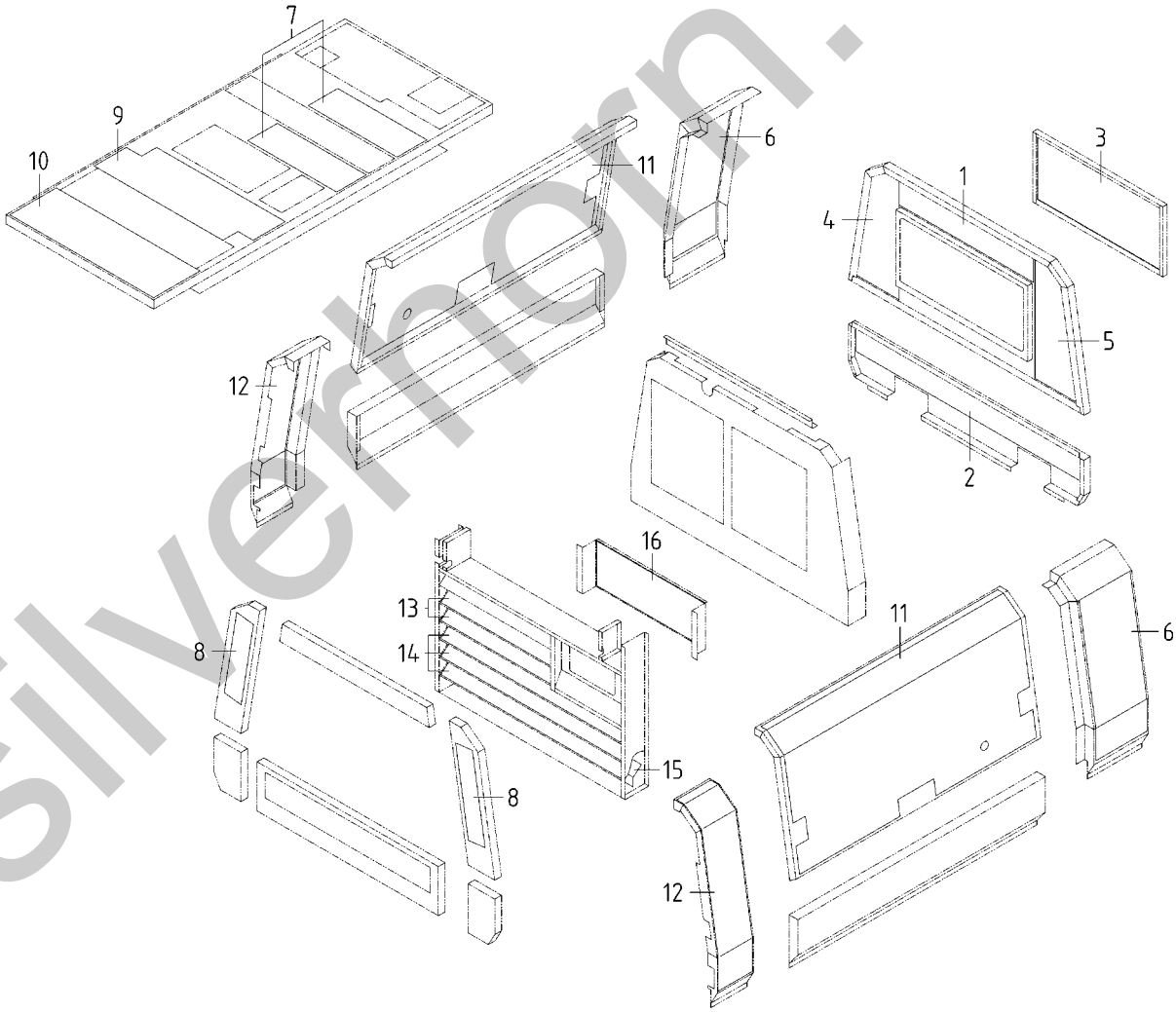

silverhorn.co.uk

54 - 00 AXLE & TIRE (EXP.)

Ref.NO.	Part NO.	Inter-change ability	Part Name	Q'ty	C/H	Remarks	Ref.NO.	Part NO.	Inter-change ability	Part Name	Q'ty	C/H	Remarks
	54 - 00		RUNNING GROUP										
1	54200 37800		Axle	1									
2	54341 03600		Hub	2									
	54343 01900		Bolt	8									
3	54342 00700		Cap	2									
4	03410 30207		Bearing	2									
5	03410 30204		Bearing	2									
6	54345 00100		Oil seal	2									
7	54420 04903		Tire ass'y	2									
	54431 00400		Cover,wheel	2									
	54344 01300		Nut	8									
8	54624 01600		Pin	4									
	03116 12014		Plain washer	4									
9	03408 10010		Grease nipple	4									
10	54622 00300		Bushing	2									
11	54627 05100		U-bolt	4									
12	02914 50014		Locking nut	8									
13	54628 01500		Pad	2									
14	54337 00500		Nut	2									
	03116 12018		Plain washer	10									
15	03322 12074		Pin	2									
	03116 12012		Plain washer	2									
	03310 30022		Split pin	2									
16	54500 02900		Leaf spring ass'y	2									
17	51244 00500		Bracket	2									
18	51244 00600		Bracket	2									
19	02102 14030		Bolt	8									
	03115 42014		Spring washer	8									

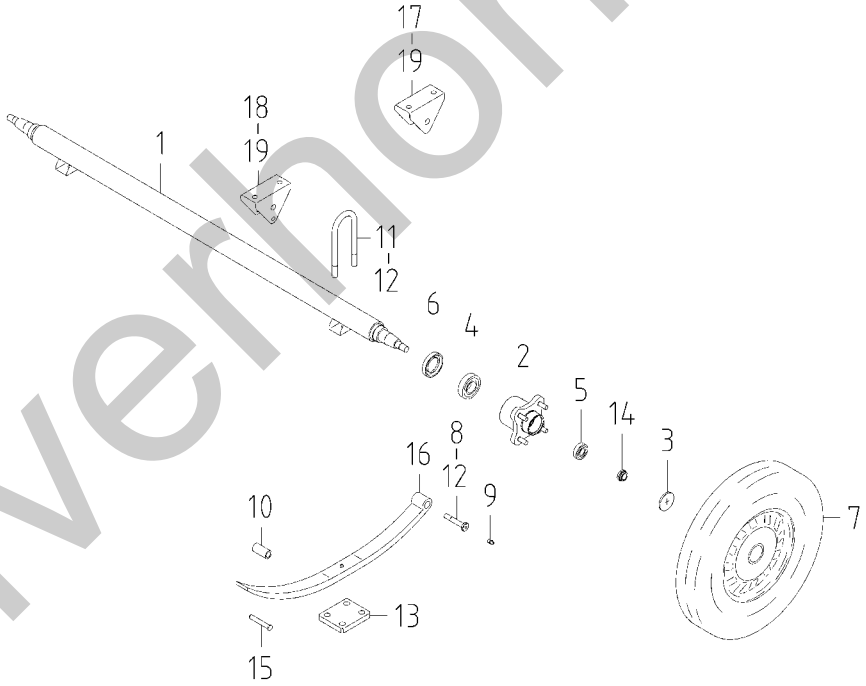

silverthorn.co.uk

I N D E X

PART NO.	PAGE	REF. NO.
02102 14030	51 - 2	8
02102 14030	54 - 1	19
02135 08025	21 - 2	135
02135 08030	33 - 2	42-2
02135 10025	41 - 2	42
02135 10025	41 - 4	42
02135 10025	51 - 2	59
02135 10035	21 - 2	134
02135 10035	31 - 2	3
02135 10035	41 - 2	2
02135 10035	41 - 4	2
02135 10040	21 - 2	136
02135 12120	31 - 2	4
02135 16040	51 - 2	2
02136 06035	51 - 2	23
02136 08016	51 - 2	54
02136 08035	37 - 2	1
02136 08090	37 - 2	1
02136 10030	41 - 2	42
02136 10030	41 - 4	42
02138 10012	21 - 2	136
02201 06016	33 - 2	13-1
02201 06016	33 - 2	82
02201 06016	37 - 2	71
02201 06016	37 - 2	71
02201 06016	41 - 2	8
02201 06016	41 - 2	106
02201 06016	41 - 2	161
02201 06016	41 - 2	165
02201 06016	41 - 2	165
02201 06016	41 - 4	8
02201 06016	41 - 4	161
02201 06016	41 - 4	165
02201 06016	51 - 2	81
02201 06016	51 - 2	81-1
02201 06016	51 - 2	81
02201 06016	51 - 2	81-1
02201 08012	31 - 2	41
02201 08012	33 - 2	13-1
02201 08012	41 - 2	161
02201 08012	41 - 4	161
02201 08020	33 - 2	1-1
02201 08020	33 - 2	85
02201 08020	37 - 2	14
02201 08020	37 - 2	48
02201 08020	41 - 2	47
02201 08020	41 - 2	87
02201 08020	41 - 4	47
02201 08020	41 - 4	87
02201 08020	51 - 2	7
02201 08020	51 - 2	27-1
02201 08020	51 - 2	40
02201 08020	51 - 2	60
02201 08030	41 - 2	95
02201 08030	41 - 4	96
02201 08040	37 - 2	8
02201 08040	51 - 2	60
02201 10020	36 - 2	4
02201 10020	37 - 2	11
02201 10020	41 - 2	151
02201 10020	41 - 4	151
02201 10020	51 - 2	4
02238 08020	36 - 2	8
02248 06012	41 - 4	14
02248 06012	51 - 2	41-1
02248 06016	36 - 2	11
02248 06016	41 - 4	97
02248 08025	41 - 2	105
02248 08030	41 - 4	95
02248 10020	36 - 2	4
02270 04012	21 - 2	92
02280 08020	21 - 2	135-1
02280 10030	21 - 2	1
02280 10030	21 - 2	9
02280 10030	21 - 2	17
02280 10030	21 - 2	29
02280 10045	21 - 2	32
02280 10055	21 - 2	9
02280 10075	21 - 2	1
02280 10075	21 - 2	71-1
02282 08025	21 - 2	77
02282 10030	21 - 2	133
02283 06025	36 - 3	2-1
02283 10035	33 - 2	42-2
02283 10035	33 - 2	44
02283 10040	33 - 2	42-2
02283 10040	33 - 2	44
02345 35025	51 - 2	73
02401 24012	51 - 2	30
02401 26012	51 - 2	45
02401 26016	51 - 2	87
02709 00410	41 - 2	157
02709 00410	41 - 4	99
02709 00410	41 - 4	157
02832 06056	41 - 2	134
02832 06056	41 - 4	134
02832 06060	41 - 2	134-1
02832 06060	41 - 4	134-1
02912 06010	41 - 2	42
02912 06010	41 - 4	42
02912 08008	36 - 2	9
02912 08012	31 - 2	4
02912 08016	51 - 2	7
02912 80006	41 - 2	134-1
02912 80006	41 - 4	134-1
02914 50014	54 - 1	12
02914 60008	36 - 3	11
02915 00004	51 - 2	30
02915 00005	41 - 2	160
02915 00005	41 - 4	160
02915 00006	37 - 2	72
02915 00006	37 - 2	72
02915 00006	41 - 2	145
02915 00006	41 - 4	145
02915 00006	51 - 2	82
02915 00006	51 - 2	82-1
02915 00006	51 - 2	82
02915 00006	51 - 2	82-1
02915 00008	31 - 2	42
02915 00008	37 - 2	8
02915 00008	41 - 2	48
02915 00008	41 - 4	48
02915 00008	51 - 2	7
02915 00008	51 - 2	27-1
02915 00008	51 - 2	55
02915 00008	51 - 2	60
02915 00010	51 - 2	4
02915 00010	51 - 2	83
02915 00012	51 - 2	6
02915 20006	36 - 2	9
02915 20006	36 - 2	10
03115 02008	21 - 2	135
03115 02008	33 - 2	42-2
03115 02010	21 - 2	134
03115 02010	21 - 2	136
03115 02010	31 - 2	3
03115 02010	41 - 2	42
03115 02010	41 - 4	42
03115 02010	51 - 2	59
03115 02012	31 - 2	4
03115 02014	51 - 2	8
03115 02016	51 - 2	2
03115 05005	51 - 2	73
03115 06006	51 - 2	23
03115 06008	37 - 2	1
03115 06010	41 - 2	42
03115 06010	41 - 4	42
03115 30008	21 - 2	135-1
03115 30010	21 - 2	29
03115 30010	21 - 2	32

silverhorn.co.uk

I N D E X

PART NO.	PAGE	REF. NO.
03115 30010	21 - 2	71-1
03115 30010	21 - 2	133
03115 30010	33 - 2	42-2
03115 30010	33 - 2	44
03115 40006	36 - 3	2-1
03115 40010	21 - 2	17
03115 42014	54 - 1	19
03116 12008	33 - 2	42-2
03116 12008	41 - 2	161
03116 12008	41 - 4	161
03116 12010	41 - 2	2
03116 12010	41 - 4	2
03116 12010	51 - 2	59
03116 12012	31 - 2	4
03116 12012	54 - 1	15
03116 12014	54 - 1	8
03116 12016	51 - 2	2
03116 12018	54 - 1	14
03116 15006	51 - 2	23
03116 15008	37 - 2	1
03116 15010	41 - 2	42
03116 15010	41 - 4	42
03116 16005	51 - 2	73
03116 17016	41 - 2	103
03116 17016	41 - 4	113
03260 03010	39 - 2	1
03260 03010	41 - 2	164
03260 03010	41 - 4	164
03260 03010	51 - 2	36
03260 05013	37 - 2	100
03307 10040	21 - 2	31
03307 14050	21 - 2	132
03310 30022	54 - 1	15
03316 14028	21 - 2	4
03322 12074	54 - 1	15
03402 00252	51 - 2	48
03402 00322	51 - 2	47
03402 00404	51 - 2	69
03402 00502	33 - 2	84
03402 10070	21 - 2	78
03402 10095	21 - 2	7
03402 10125	21 - 2	74
03402 10125	21 - 2	101
03402 15025	37 - 2	2
03402 15045	37 - 2	3
03402 15050	21 - 2	12
03402 15055	33 - 2	48
03402 15070	33 - 2	47
03402 15075	33 - 2	89
03402 15140	33 - 2	45
03402 20030	33 - 2	3
03402 25008	21 - 2	89
03402 25016	41 - 2	103
03402 25016	41 - 4	113
03402 25021	21 - 2	91
03402 25024	37 - 2	13
03402 25032	33 - 2	91
03402 25044	33 - 2	6
03402 25045	37 - 2	1
03403 00303	51 - 2	68
03403 00512	51 - 2	70
03407 14016	41 - 2	137
03407 14016	41 - 4	137
03407 16022	41 - 2	5
03407 16022	41 - 4	5
03407 20016	41 - 2	137-1
03407 20016	41 - 4	137-1
03407 64786	51 - 2	51
03407 66837	51 - 2	28
03407 66837	51 - 2	72
03407 66839	51 - 2	24
03407 66851	51 - 2	39
03407 66932	51 - 2	64
03407 67033	51 - 2	35
03407 67038	37 - 2	45
03407 67043	51 - 2	63
03407 67048	51 - 2	44
03407 67402	51 - 2	67
03407 67404	51 - 2	65
03407 67409	51 - 2	66
03407 68021	51 - 2	43
03407 68077	51 - 2	42
03407 68084	41 - 2	148
03407 68084	41 - 4	148
03407 68086	51 - 2	72-1
03407 68096	51 - 2	58
03407 69006	51 - 2	63-1
03407 69065	51 - 2	35-1
03408 10010	54 - 1	9
03410 06209	21 - 2	36
03410 06211	21 - 2	34
03410 30204	54 - 1	5
03410 30207	54 - 1	4
03413 10055	21 - 2	35
03413 20052	21 - 2	26
03413 20090	21 - 2	21
03413 40020	21 - 2	25
03424 80011	37 - 2	76
03424 80231	37 - 2	75
03425 00001	36 - 2	28
03425 00001	37 - 2	73
03425 00001	41 - 2	104
03425 00001	41 - 2	170
03425 00001	41 - 2	170
03425 00001	41 - 4	114
03425 00001	41 - 5	170
03511 10015	41 - 2	90
03511 10015	41 - 4	90
03511 10017	41 - 4	109
03511 10063	31 - 2	48
03511 20035	41 - 2	7
03511 20035	41 - 4	7
03511 20040	37 - 2	52
03511 20060	37 - 2	51
03511 20080	31 - 2	44
03511 20100	31 - 2	46
03511 30155	37 - 2	65
03511 40006	41 - 2	100
03511 40016	37 - 2	69
03511 40016	41 - 2	99
03511 40016	41 - 2	99
03511 40016	41 - 4	108
03511 40018	37 - 2	58
03511 40020	41 - 4	110
03570 08030	41 - 4	105
03570 08068	41 - 4	102
03570 08072	41 - 4	106
03570 15009	33 - 2	12
03580 19100	41 - 2	6
03580 19100	41 - 4	6
03600 06040	41 - 2	98
03600 08027	41 - 2	96
03600 08034	41 - 2	107
03600 08035	41 - 2	108
03600 08044	41 - 2	96
03600 08056	41 - 4	101
03600 08070	41 - 2	97
03600 09028	41 - 4	107
03600 09038	41 - 4	100
03600 09045	41 - 2	89
03600 09045	41 - 4	89
03611 08100	37 - 2	57
03620 41008	33 - 2	42-2
03620 60001	21 - 2	75
03620 60002	21 - 2	2
03620 60002	21 - 2	75-1
03620 60002	21 - 2	76
03620 60002	21 - 2	102
03730 04120	33 - 2	9
03731 21004	33 - 2	8

silverhorn.co.uk

I N D E X

PART NO.	PAGE	REF. NO.
03731 42003	37 - 2	60
03731 44002	36 - 2	23-1
03731 44002	41 - 2	142
03731 44002	41 - 4	142
03731 44004	41 - 2	9
03731 44004	41 - 4	9
03734 20020	37 - 2	19
03734 21010	21 - 2	38
03734 21015	36 - 2	13
03734 21020	37 - 2	18
03734 21030	33 - 2	7
03734 21030	37 - 2	62
03734 21151	36 - 2	3-1
03734 43020	36 - 2	23
03734 43020	36 - 2	23
03734 43020	41 - 2	93
03734 43020	41 - 4	93
03734 44002	36 - 2	7
03734 44002	36 - 2	7
03734 52021	21 - 2	96
03734 53021	21 - 2	95
03734 60144	33 - 2	11
03734 64020	21 - 2	100
03734 64020	36 - 2	26
03734 64020	36 - 2	30
03734 65020	21 - 2	98
03734 65020	36 - 2	25
03734 65020	36 - 2	30
03734 65028	36 - 2	20
03734 66020	36 - 2	18
03734 70010	33 - 2	50
03734 70010	33 - 2	50
03734 70021	33 - 2	50-1
03734 70021	33 - 2	50-1
03734 75060	37 - 2	6
03735 13002	36 - 2	24
03735 13002	41 - 2	91
03735 13002	41 - 4	91
03735 13003	37 - 2	59
03735 13004	33 - 2	10
03735 13004	41 - 2	10
03735 13004	41 - 4	10
03830 08004	41 - 2	46
03830 08004	41 - 4	46
03840 15100	36 - 2	12
03841 20094	37 - 2	15
03841 30015	33 - 2	7
03851 30040	37 - 2	61
03890 20020	21 - 2	97
03890 20020	36 - 2	21
03890 20025	36 - 2	16
03890 20030	21 - 2	99
03890 20038	36 - 2	15
03890 20038	36 - 2	15
03890 20052	36 - 2	15-1
03890 20060	36 - 2	22
03890 20065	36 - 2	14
03890 30023	36 - 2	19
03890 30027	36 - 2	19-1
03891 20060	36 - 2	22-1
06540 07090	36 - 2	12
06540 15040	41 - 2	89
06540 15040	41 - 4	89
06540 15110	41 - 2	149-1
06540 15110	41 - 4	149-1
07885 25140	41 - 2	149-1
07885 25140	41 - 4	149-1
07885 25160	41 - 2	149
07885 25160	41 - 4	149
07888 51040	41 - 2	151
07888 51040	41 - 4	151
21201 41500	21 - 2	1
21211 10800	21 - 2	8
21212 18300	21 - 2	6
21212 18500	21 - 2	5
21214 17000	21 - 2	3
21217 31000	21 - 2	9
21218 33600	21 - 2	13
21218 33700	21 - 2	15
21221 02100	21 - 2	93
21222 09600	21 - 2	37
21406 28700	21 - 2	24
21406 29900	21 - 2	20
21412 05002	21 - 2	134
21414 06000	21 - 2	134
21420 18900	21 - 2	131
21441 04800	21 - 2	81
21441 04900	21 - 2	82
21461 31600	21 - 2	18
21462 22300	21 - 2	19
21467 30800	21 - 2	30
21468 02700	21 - 2	23
21468 04400	21 - 2	133
21468 09200	21 - 2	28
21468 19800	21 - 2	32
21469 29100	21 - 2	33
21470 14300	21 - 2	22
21470 14400	21 - 2	27
22100 40300	21 - 2	71
22100 40301	21 - 2	71-1
22111 28100	21 - 2	72
22111 28200	21 - 2	72-1
22115 11300	21 - 2	77
22115 11400	21 - 2	73
22115 11600	21 - 2	73-1
22123 04300	36 - 3	12
22123 04400	36 - 3	12
22130 05500	36 - 3	4
22130 09500	21 - 2	80
22144 07700	33 - 2	93
22144 10600	21 - 2	86
22144 12800	36 - 3	8
22144 16600	21 - 2	84
22144 16700	21 - 2	83
22150 13801	21 - 2	79
22152 04900	36 - 3	3
22153 03400	21 - 2	5
22211 14100	21 - 2	11
22314 02500	21 - 2	14
22314 06200	21 - 2	16
22314 06400	21 - 2	10
22314 06500	33 - 2	46
22314 06600	33 - 2	47-1
23124 10300	36 - 3	5
23124 15600	21 - 2	85
31110 01510	31 - 2	2
31110 99201	31 - 2	1
31110 99201	31 - 2	2
31113 30300	31 - 2	6
31130 24300	31 - 2	4
31131 04900	37 - 2	44
31144 09600	36 - 3	9-2
31144 12200	36 - 3	9-1
31144 14400	36 - 3	9
31144 14500	36 - 3	9
32100 40500	31 - 2	31
32100 40900	31 - 2	36
32142 08900	31 - 2	38
32142 11000	31 - 2	33
32143 11500	31 - 2	32
32143 11800	31 - 2	37
32148 02300	31 - 2	35
32148 03000	31 - 2	40
32151 01400	31 - 2	34
32151 01600	31 - 2	39
32240 37900	31 - 2	42
32331 66501	31 - 2	47
32331 70000	31 - 2	43
32331 70400	31 - 2	45
33100 39910	33 - 2	1
33100 40110	33 - 2	1
33100 42310	33 - 2	1

silverhorn.co.uk

I N D E X

PART NO.	PAGE	REF. NO.
33100 42510	33 - 2	1
33100 43110	33 - 2	1-1
33100 43610	33 - 2	1-1
33100 43710	33 - 2	1-1
33100 43810	33 - 2	1-1
33231 02500	33 - 2	2
33231 03600	33 - 2	2
33260 07100	33 - 2	13
33260 07700	33 - 2	13-1
34210 30200	33 - 2	41
34210 30400	33 - 2	41-1
34210 30700	33 - 2	41
34210 31500	33 - 2	41-1
34220 16101	33 - 2	43
34232 00300	36 - 3	10
34250 18301	33 - 2	44
34260 06800	33 - 2	49
34260 06800	33 - 2	49
34260 07000	33 - 2	49-1
34260 07000	33 - 2	49-1
34280 00500	33 - 2	42
34280 00600	33 - 2	42-2
34280 00800	33 - 2	42-1
35100 51001	33 - 2	82
35200 14100	33 - 2	81
35200 15200	33 - 2	81
35300 17000	33 - 2	87
35301 20200	33 - 2	88
35303 03300	33 - 2	92
35303 08400	33 - 2	90
35410 05800	33 - 2	83
35410 05900	33 - 2	85
35421 00105	33 - 2	86
36110 96400	41 - 2	152
36110 96400	41 - 4	152
36131 03100	36 - 2	2
36141 15503	36 - 2	1
36141 18300	36 - 2	1
36141 18600	36 - 2	1-1
36149 02800	41 - 2	154
36149 02800	41 - 4	154
36152 02500	36 - 2	3
36152 02500	36 - 2	3
36158 00500	41 - 2	155
36158 00500	41 - 4	155
36159 04100	41 - 2	160
36159 04100	41 - 4	160
36230 00600	36 - 2	10
36260 13100	36 - 2	11
36280 32200	36 - 2	9
36280 32500	36 - 2	9
36331 07100	41 - 2	136
36331 07100	41 - 4	136
36331 15300	36 - 2	17
36349 22400	21 - 2	94
36400 19000	36 - 2	5
36400 21401	36 - 2	8
36400 21901	36 - 2	8
36400 22300	36 - 2	8-1
36421 03600	36 - 3	1
36422 01900	36 - 3	2-1
36422 02000	36 - 3	2
36428 00700	21 - 2	88
36429 00800	21 - 2	87
36435 01400	36 - 3	7
36437 01500	36 - 3	6
36621 01401	21 - 2	92
36623 00800	21 - 2	90
36710 33501	36 - 2	4
36710 33901	36 - 2	4
37111 20200	37 - 2	4
37123 07300	37 - 2	5
37160 09710	37 - 2	9
37160 49520	41 - 2	101
37160 49520	41 - 4	111
37160 49620	41 - 2	102
37160 53720	41 - 4	112
37160 84000	33 - 2	4
37170 02900	41 - 2	11
37170 02900	41 - 4	11
37170 14000	41 - 2	92
37170 14000	41 - 4	92
37170 21500	41 - 2	92-1
37170 21500	41 - 4	92-1
37181 02600	51 - 2	89
37181 03600	36 - 2	29
37181 03600	37 - 2	74
37181 03600	37 - 2	74
37181 03600	41 - 2	13
37181 03600	41 - 2	168
37181 03600	41 - 4	13
37181 03600	41 - 5	168
37181 03600	51 - 2	88
37181 03600	51 - 2	88
37181 05000	41 - 2	169
37181 05000	41 - 5	169
37189 06100	36 - 2	27
37189 06100	36 - 2	27
37189 09700	41 - 2	172
37189 09700	41 - 5	175
37189 34400	37 - 2	16
37200 11502	37 - 2	1
37231 02100	37 - 2	1
37400 13600	37 - 2	11
37438 05501	37 - 2	11
37510 36100	37 - 2	14
37530 26400	37 - 2	8
37580 01900	37 - 2	17
37731 11200	37 - 2	12
37731 11300	37 - 2	7
37731 12000	36 - 2	27-1
38100 42700	37 - 2	41
38200 39100	37 - 2	47
38410 05700	37 - 2	41
38420 91200	37 - 2	42
38420 91800	37 - 2	43
38440 01210	37 - 2	55
38440 02210	37 - 2	53-1
38440 98300	37 - 2	55
38440 98400	37 - 2	53
38450 75200	37 - 2	66
38450 75700	37 - 2	56
38450 78700	37 - 2	66
38450 79500	37 - 2	56-1
38465 11900	41 - 2	84
38465 11900	41 - 4	84
38524 66600	37 - 2	49
38524 67100	37 - 2	50
38590 01200	37 - 2	63
38591 00800	37 - 2	64
38591 00900	37 - 2	70
38594 02100	37 - 2	67
38594 03300	37 - 2	67
38594 03700	37 - 2	68
39103 10810	39 - 2	1
39147 00602	39 - 2	10
39147 02800	39 - 2	10
39153 64200	39 - 2	6
39170 02000	39 - 2	2
39173 02100	39 - 2	32
39173 04200	39 - 2	22
39176 00110	39 - 2	11
39176 00510	39 - 2	41
39176 35600	39 - 2	19
39176 50000	39 - 2	21
39176 69300	39 - 2	20
39176 69500	39 - 2	28
39176 69500	39 - 2	40
39176 69600	39 - 2	29
39176 69700	39 - 2	30

silverhorn.co.uk

I N D E X

PART NO.	PAGE	REF. NO.
39176 69800	39 - 2	31
39176 73300	39 - 2	23
39176 73400	39 - 2	24
39176 73500	39 - 2	25
39176 73500	39 - 2	39
39176 73600	39 - 2	26
39176 73800	39 - 2	27
39178 00310	39 - 2	9
39178 08230	39 - 2	8
39178 08330	39 - 2	7
39178 12430	39 - 2	4
39178 12530	39 - 2	5
39178 12630	39 - 2	16
39178 13330	39 - 2	15
39178 23930	39 - 2	4-1
39178 24030	39 - 2	5-1
39178 25210	39 - 2	9
39178 36330	39 - 2	8
39178 37310	39 - 2	38
39178 43110	39 - 2	14
39178 63100	39 - 2	12
39178 63200	39 - 2	13
39178 72410	39 - 2	17
39178 72500	39 - 2	18
39189 17100	39 - 2	33
39189 17200	39 - 2	34
39189 17300	39 - 2	35
39189 17400	39 - 2	36
39189 19100	39 - 2	37
39200 09600	37 - 2	100
41250 04500	41 - 2	8
41250 04500	41 - 4	8
41250 05000	41 - 4	14
41290 00900	41 - 2	1
41290 00900	41 - 4	1
42100 77600	41 - 2	41
42100 77600	41 - 4	41
42210 02700	41 - 2	49
42210 02700	41 - 4	49
42240 22600	41 - 2	45
42240 22600	41 - 4	45
42310 89100	41 - 2	42
42310 89100	41 - 4	42
42324 07100	41 - 2	43
42324 07100	41 - 4	43
42324 13600	41 - 2	44
42324 13600	41 - 4	44
43100 66600	41 - 2	81
43100 66600	41 - 4	81
43210 01700	41 - 2	83
43210 01700	41 - 4	83
43216 00500	41 - 2	86
43216 00500	41 - 4	86
43220 02700	41 - 2	82
43220 02700	41 - 4	82
43240 06200	41 - 2	85
43240 06200	41 - 4	85
43310 27400	41 - 2	87
43310 27400	41 - 4	87
43322 04400	41 - 2	12
43322 04400	41 - 4	12
43322 06200	41 - 2	88
43322 06200	41 - 4	88
43340 20500	41 - 4	99
43340 33000	41 - 2	106
43510 08600	41 - 4	103
43510 08700	41 - 4	104
43532 05201	41 - 2	4
43532 05201	41 - 4	4
43534 01702	41 - 2	3
43534 01702	41 - 4	3
43540 05500	41 - 4	96
43540 05600	41 - 4	98
43540 07400	41 - 2	95
43541 00700	41 - 4	96
43543 01100	41 - 2	95
43550 01000	41 - 4	95
43550 02800	41 - 2	105
43650 01900	41 - 4	97
44210 06600	41 - 2	131
44210 06600	41 - 4	131
44210 08200	41 - 2	131
44210 08200	41 - 4	131
44220 23800	41 - 2	132
44220 23800	41 - 4	132
44243 05500	41 - 2	166
44250 23810	41 - 2	147
44250 23810	41 - 4	147
44250 26710	41 - 2	144
44250 26710	41 - 4	144
44250 27810	41 - 5	173
44290 41700	41 - 2	171
44290 41700	41 - 5	171
44322 07200	41 - 2	153
44322 07200	41 - 4	153
44327 04100	41 - 2	143
44327 04100	41 - 4	143
44328 19100	41 - 2	138
44328 19100	41 - 4	138
44328 20600	41 - 2	159
44328 20600	41 - 4	159
44346 07200	41 - 2	139
44346 07200	41 - 2	140
44346 07200	41 - 4	139
44346 07200	41 - 4	140
44346 07300	41 - 4	166
44358 01200	41 - 5	172
44364 06500	41 - 2	135
44364 06500	41 - 4	135
44462 00800	41 - 2	150
44462 00800	41 - 4	150
44462 05500	41 - 2	150
44462 05500	41 - 4	150
44463 06200	37 - 2	15
44470 01600	41 - 2	146
44470 01600	41 - 4	146
44470 01700	41 - 5	174
44490 50432	41 - 2	161
44490 56032	41 - 4	161
46167 02900	41 - 2	156
46167 02900	41 - 4	156
46480 47300	41 - 2	157
46480 47300	41 - 4	157
46811 24100	41 - 2	141
46811 24100	41 - 4	141
46879 41400	41 - 2	167
46879 45700	41 - 2	167
46879 45700	41 - 5	167
46934 03200	41 - 2	146
46934 03200	41 - 4	146
46934 03300	41 - 5	174
51100 13840	51 - 2	1-1
51100 14941	51 - 2	1-2
51100 97630	51 - 2	1
51158 07800	51 - 2	7
51244 00500	54 - 1	17
51244 00600	54 - 1	18
51300 22201	51 - 2	2
51410 22000	51 - 2	3
51410 23400	51 - 2	4
51420 01000	51 - 2	5
51420 01100	51 - 2	5
51434 02400	51 - 2	6
51435 00200	51 - 2	83
51460 02500	51 - 2	4
51520 00100	51 - 2	5
52100 48720	51 - 2	22
52100 48820	51 - 2	21
52100 49120	51 - 2	33
52100 49220	51 - 2	34

silverhorn.co.uk

I N D E X

PART NO.	PAGE	REF. NO.
52100 49320	51 - 2	37
52100 49420	51 - 2	38
52100 52620	51 - 2	25
52100 52720	51 - 2	26
52100 52820	51 - 2	74
52100 53620	51 - 2	76
52100 53720	51 - 2	75
52100 53820	51 - 2	27
52100 62420	51 - 2	76
52100 62520	51 - 2	75
52100 62620	51 - 2	74
52100 69820	51 - 2	74-1
52100 70320	51 - 2	22-1
52100 70520	51 - 2	74-1
52100 70620	51 - 2	33-1
52100 70720	51 - 2	34-1
52100 70920	51 - 2	27-1
52100 71020	51 - 2	76-1
52100 71120	51 - 2	75-1
52100 71220	51 - 2	76-1
52100 71320	51 - 2	75-1
52210 41701	51 - 2	71
52300 06020	51 - 2	41-1
52300 92810	51 - 2	41
52310 03800	51 - 2	45
52350 21921	51 - 2	78
52350 30120	51 - 2	23
52350 32120	51 - 2	79
52350 38820	51 - 2	85
52350 38921	51 - 2	86
52350 49720	51 - 2	78-1
52354 45900	37 - 2	54
52370 58800	51 - 2	57
52370 67300	51 - 2	57-1
52400 77810	51 - 2	46
52400 77910	51 - 2	49
52450 86120	51 - 2	50
52450 87320	51 - 2	29
52480 13200	51 - 2	52
52480 13200	51 - 2	53
52480 14300	51 - 2	30
52555 17701	51 - 2	36
52555 17800	41 - 2	163
52555 17800	41 - 4	163
52620 44200	51 - 2	59
52630 11800	51 - 2	60
52652 00400	51 - 2	41-1
52660 04700	41 - 2	162
52660 04700	41 - 4	162
52660 05100	51 - 2	40
52710 04800	51 - 2	56
52710 04900	51 - 2	31
52723 00100	51 - 2	32
52728 15910	41 - 2	133
52728 15910	41 - 4	133
52728 16010	31 - 2	5
52728 16110	51 - 2	61
52728 18210	41 - 2	158
52728 18210	41 - 4	158
52728 18810	37 - 2	46
52728 33800	51 - 2	73
52739 00600	41 - 2	153
52739 00600	41 - 4	153
52744 00900	51 - 2	60
52746 01800	51 - 2	62
52746 02100	51 - 2	84
52750 26901	51 - 2	80
52919 00630	52 - 1	2
52919 00730	52 - 1	6
52919 63310	52 - 1	2-1
52919 78710	52 - 1	1
52919 99620	52 - 1	3
52939 03740	52 - 1	4
52939 03840	52 - 1	5
52959 38550	52 - 1	8
52959 68730	52 - 1	7
52977 09100	52 - 1	16
52977 09300	52 - 1	13
52977 09400	52 - 1	14
52977 09500	52 - 1	15
52977 10000	52 - 1	10
52978 03800	52 - 1	11
52978 04700	52 - 1	9
52978 04900	52 - 1	12
52978 06700	52 - 1	11-1
53220 69300	51 - 2	77
53220 69400	51 - 2	77
54200 37800	54 - 1	1
54337 00500	54 - 1	14
54341 03600	54 - 1	2
54342 00700	54 - 1	3
54343 01900	54 - 1	2
54344 01300	54 - 1	7
54345 00100	54 - 1	6
54420 04903	54 - 1	7
54431 00400	54 - 1	7
54500 02900	54 - 1	16
54622 00300	54 - 1	10
54624 01600	54 - 1	8
54627 05100	54 - 1	11
54628 01500	54 - 1	13
61111 12600	21 - 2	135
61111 12800	21 - 2	135-1
86183 01500	36 - 2	6
86183 01500	36 - 2	6
86183 01500	41 - 2	94
86183 01500	41 - 4	94
GD920 12800	33 - 2	5
GD920 14700	37 - 2	10
GE360 03000	51 - 2	55

silverhorn.co.uk

HOKUETSU INDUSTRIES CO., LTD.

Copyright(C)2008 HOKUETSU INDUSTRIES CO., LTD. All Rights Reserved

0906-11
CAT.NO.39520 28000

silverhorn.co.uk