AIRMAN

PC

PARTS CATALOG

ENGINE COMPRESSOR

PDS400S-6E1
PDS400SC-6E1
PDSF330DP-6E1
PDSF330DPC-6E1

silverhorn.co.uk

HOKUETSU INDUSTRIES CO., LTD.

適　用　型　式
FOR　MODEL

型　　式 MODEL	適　用　号　機 SER. NO.
ＰＤＳ４００Ｓ－６Ｅ１	Ｃ１－６Ｅ１００５１～
ＰＤＳ４００ＳＣ－６Ｅ１ [WITH AFTERCOOLER TYPE]	Ｃ１Ｃ６Ｅ１００５１～
ＰＤＳＦ３３０ＤＰ－６Ｅ１	７９Ｄ６Ｅ１００５１～
ＰＤＳＦ３３０ＤＰＣ－６Ｅ１ [WITH AFTERCOOLER TYPE]	７９Ｆ６Ｅ１００５１～

silvermorn.co.uk

STANDARD PAINTING

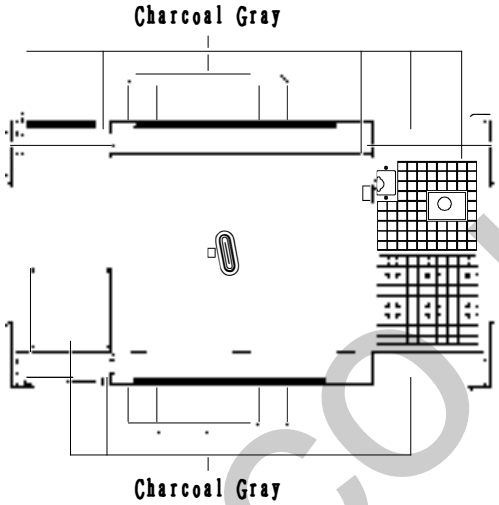

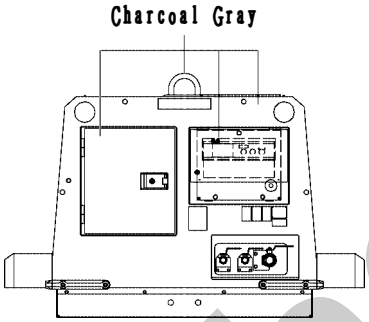

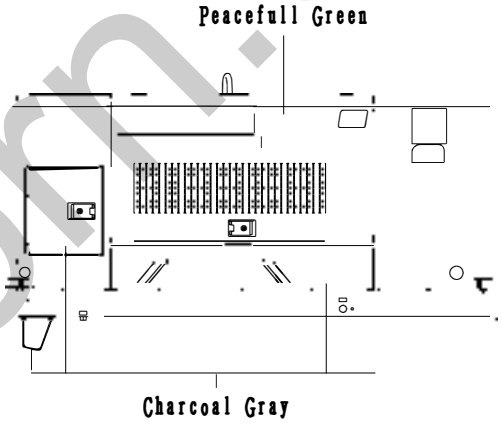

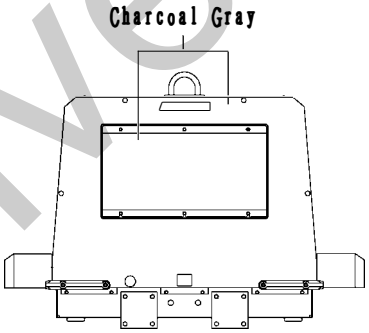

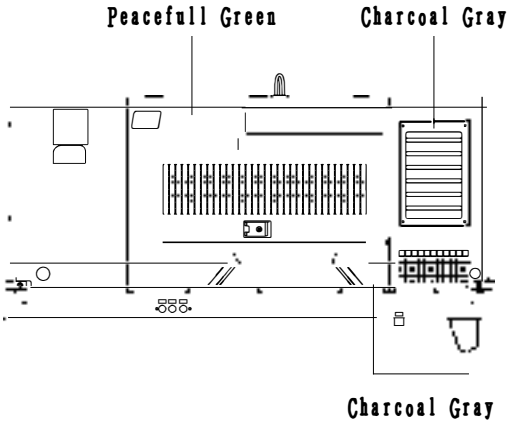

silverhorn.co.uk

N O T I C E

1. This parts catalog contains all the parts and assemblies of “AIRMAN” brand products. The complete unit is divided into several parts groups, the details of which are clearly illustrated, and completely listed. So desired part number, name and quantity can be easily determined referring to Ref.No.

2. When you place order for service parts, please be sure to advise us of the following information.
   (1) Part number.
   (2) Quantity required.
   (3) Part name.
   (4) Model name and Serial number.

3. How to read parts catalog.

(8) 備考 Remarks S :STD. SC:w.AFTERCOOLER SD:DRY AIR

52 - 00 LINING

(1) 見出番号 Ref.NO.	(2) 部品番号 Part NO.	(3) 互換性 Inter-change ability	(4) 部品名称 Part Name	(5) 数量 Q'ty	(6) 適用号機範囲 Applicable Ser.No.		(7) 変更 C/H	(8) 備考 Remarks S	SC	SD
	52900 04921		URETHANE FOAM KIT ウレタン フォーム キット					◎		
	52900 05121		URETHANE FOAM KIT ウレタン フォーム キット (Const.No.1～21)						◎	
	52900 06121		URETHANE FOAM KIT ウレタン フォーム キット (Const.No.1～9 & 11～24)							◎
1	52959 71350		Lining ﾗｲﾆﾝｸﾞ	1						
2	52959 97640		Lining ﾗｲﾆﾝｸﾞ	1						
3	52959 80220		Lining ﾗｲﾆﾝｸﾞ	1						
4	52959 71450		Lining ﾗｲﾆﾝｸﾞ	1						
5	52959 71550		Lining ﾗｲﾆﾝｸﾞ	1						
6	52959 30940		Lining ﾗｲﾆﾝｸﾞ	1						
7	52959 71650		Lining ﾗｲﾆﾝｸﾞ	2						

(1) Ref.No.
Reference number (Ref.No.) is to be used for locating the part number and name from the illustrations. (However some parts such as bolts and nuts etc., are not illustrated but their reference numbers only listed.)
Ref.No.1, 1-1, 1-2,…… shows history of part modifications.
[These reference numbers mean 1: primary period, 1-1: first alteration, 1-2: second alteration and 1-3……follows]

(2) Part No.
Every part has its own proper number. Even if a part has the same shape as an other part and if its number different, it is not interchangeable at all in many cases.

(3) Interchangeability
A, B, C, D, Q, X, Y and Z in column “Interchangeability” show the following.
A : A new part can replace an old part, but an old part cannot replace a new part.
B : Not interchangeable.
C : Disused.
D : Newly added.
E : Compatible with eachother.
Q : Quantity per unit changed.
X : Included in this set of parts, this part is not used for this model.
Y : Part to be selected.
Z : This part can not be supplied as an individual part.

silvernorn.co.uk

(4) Part name
Every part has its own proper name.

(5) Q'ty
The number shown in the column of Q'TY indicates the quantity of parts used per one unit machine.

(6) Applicable Ser.No. (Serial Number)
Ser.No. shows the machine number to which the part is applicable.
Month and year stated in column "Ser.No." show the month and year from which the part is applicable.

(7) Change column
M1, M2,…… Mn mentioned in the column indicate the change of part number and the serial number of the unit, the part of which was modified.

(8) Remarks
This column "Remarks" mentions in mark or signal the specifications of each part, original part number of manufacturer, model name of the part for which is used and etc.
[Example. SC:w.AFTERCOOLER]

4. Abbreviations used in this catalog.

ass'y	assembly	L	Length
C/H	Change column	o & p	overrun & parking brake
Comp.	Compressor	OPT.	Option
Const.	Consisting of	Press.	Pressure
Cont.	Control	SPC/S.	Special specifications
Cyl.	Cylinder	STD.	Standards
Eng.	Engine	T or t	Thickness
EXP.	Export	w.	with
Incl.	Including	w/o	without

NOTE : We are always engaged in improving our products. So there may be some changes of the product which are not yet mentioned in this parts catalog. Therefore, in necessary case, we issue a revision in which such changes ars added. When you have any question on the parts catalog, please ask your nearest dealer or directly us.

silvernorm.co.uk

目　　次
CONTENTS

図番号 FIG.NO.	図名称 FIG.NAME		頁 PAGE
21 - 00	AIR END	ｴｱ ｴﾝﾄﾞ	21- 1～3
22 - 00	UNLOADER	ｱﾝﾛｰﾀﾞ	22- 1～2
31 - 00	MOUNTING & INTAKE	ﾏｳﾝﾃｨﾝｸﾞ,ｲﾝﾃｰｸ	31- 1～2
33 - 00	RECEIVER,SEPARATOR & SERVICE HEADER	ﾚｼｰﾊﾞ,ｾﾊﾟﾚｰﾀ,ｻｰﾋﾞｽ ﾍｯﾀﾞ	33- 1～3
33 - 01	PRESSURE CONTROL VALVE	圧力ｺﾝﾄﾛｰﾙ ﾊﾞﾙﾌﾞ	33- 4
35 - 00	SERVICE HEADER(WITH AFTERCOOLER)	ｻｰﾋﾞｽ ﾍｯﾀﾞ(ｱﾌﾀｸｰﾗ付)	35- 1～2
36 - 00	AIR LINE	ｴｱ ﾗｲﾝ	36- 1～2
36 - 01	AIR LINE(HIGH PRESSURE TYPE)	ｴｱ ﾗｲﾝ(高圧仕様)	36- 3～4
37 - 00	OIL LINE	ｵｲﾙ ﾗｲﾝ	37- 1～2
38 - 00	COOLING	ｸｰﾘﾝｸﾞ	38- 1～3
39 - 00	NAME PLATE	ﾈｰﾑ ﾌﾟﾚｰﾄ	39- 1～3
41 - 00	ENGINE & EXHAUST	ｴﾝｼﾞﾝ,ｴｷｿﾞｰｽﾄ	41- 1～2
43 - 00	FUEL LINE	ﾌｭｴﾙ ﾗｲﾝ	43- 1～3
44 - 00	ELECTRIC	ｴﾚｸﾄﾘｯｸ	44- 1～3
51 - 00	FRAME & BONNET	ﾌﾚｰﾑ,ﾎﾞﾝﾈｯﾄ	51- 1～4
52 - 00	LINING	ﾗｲﾆﾝｸﾞ	52- 1～2

型式名の見方
HOW TO READ MODELS

Ｐ	Ｄ	Ｓ	□	４	０	０	Ｓ	□	－	６	Ｅ	１
①		②	③		④		⑤	⑥		⑦	⑧	⑨

① PD : PORTABLE DIESEL ENGINE
② S : SCREW(OIL-INJECTION)
③ No mark : 0.7MPa
F : 1.03MPa
④ 400 : Free air delivery(cfm)
⑤ S : SILENT TYPE
DP : DUAL PRESSURE TYPE
⑥ No mark : STANDARD TYPE
C : AFTERCOOLER TYPE
⑦ 6 : WIDE BODY
⑧ MODEL CHANGE MARK
⑨ VARIATION MARK

① PD : 可搬式,ﾃﾞｨｰｾﾞﾙｴﾝｼﾞﾝ
② S : ｽｸﾘｭ(ｵｲﾙｲﾝｼﾞｪｸｼｮﾝ)
③ 無し: 0.7MPa
F : 1.03MPa
④ 400 : 吐出空気量(cfm)
⑤ S : 防音型
DP : 圧力2段切替
⑥ 無し: 標準仕様
C : ｱﾌﾀｸｰﾗ付
⑦ 6 : ﾜｲﾄﾞﾎﾞﾃﾞｨ
⑧ ﾓﾃﾞﾙﾁｪﾝｼﾞ記号
⑨ ﾊﾞﾘｴｰｼｮﾝ記号

silverhorn.co.uk

目　次
CONTENTS

図番号 FIG.NO.	図名称 FIG.NAME		頁 PAGE
―ENGINE PARTS―			
500000	CRANKCASE	ｸﾗﾝｸｹｰｽ	1
501000	OIL PAN	ｵｲﾙﾊﾟﾝ	3
501200	DIPSTICK AND GUIDE	ｵｲﾙｹﾞｰｼﾞ･ｶﾞｲﾄﾞ	4
502000	CYLINDER HEAD	ｼﾘﾝﾀﾞﾍｯﾄﾞ	5
503000	INLET VALVE AND EXHAUST VALVE	ｲﾝﾚｯﾄﾊﾞﾙﾌﾞ･ｴｷｿﾞｰｽﾄﾊﾞﾙﾌﾞ	6
504000	ROCKER ARM SHAFT	ﾛｯｶｱｰﾑ軸	7
505000	HEAD COVER	ﾍｯﾄﾞｶﾊﾞｰ	8
508000	GEAR CASE	ｷﾞﾔｰｹｰｽ	9
511000	PISTON AND CRANKSHAFT	ﾋﾟｽﾄﾝ･ｸﾗﾝｸ軸	10
512000	CAMSHAFT AND IDLE GEAR SHAFT	ｶﾑ軸･ｱｲﾄﾞﾙ軸	11
514000	BEARING CASE COVER	ﾍﾞｱﾘﾝｸﾞｹｰｽｶﾊﾞｰ	12
515000	FLYWHEEL	ﾌﾗｲﾎｲｰﾙ	13
526500	SUPPLY PUMP	ｻﾌﾟﾗｲﾎﾟﾝﾌﾟ	14
531001	FUEL FILTER	燃料ﾌｨﾙﾀ	15
531002	FUEL FILTER	燃料ﾌｨﾙﾀ	16
531500	FUEL PIPE	燃料ﾊﾟｲﾌﾟ	17
532500	SEPARATOR	ｾﾊﾟﾚｰﾀ	18
545000	INJECTION PUMP	燃料噴射ﾎﾟﾝﾌﾟ	19
547100	FUEL PUMP (ELECTRICAL)	燃料ﾎﾟﾝﾌﾟ(電気式)	20
548000	COMMON RAIL	ｺﾓﾝﾚｰﾙ	21
550000	ALTERNATOR AND PULLEY	ｵﾙﾀﾈｰﾀ･ﾌﾟｰﾘ	22
551000	ALTERNATOR [COMPONENT PARTS]	ｵﾙﾀﾈｰﾀ分解	23
554000	STARTER	ｽﾀｰﾀ	24
555000	STARTER [COMPONENT PARTS]	ｽﾀｰﾀ分解	25
557000	SWITCH/SENSOR	ｽｲｯﾁ･ｾﾝｻ	26
557500	INJECTOR HARNESS	ｲﾝｼﾞｪｸﾀﾊｰﾈｽ	27
558000	WIRE HARNESS	ﾜｲﾔｰﾊｰﾈｽ	28
558500	WIRE HARNESS BRACKET	ﾜｲﾔｰﾊｰﾈｽﾌﾞﾗｹｯﾄ	29
560000	WATER FLANGE AND THERMOSTAT	ｳｫｰﾀﾌﾗﾝｼﾞ･ｻｰﾓｽﾀｯﾄ	30
561000	WATER PUMP	ｳｫｰﾀﾎﾟﾝﾌﾟ	31
561200	WATER PIPE	ｳｫｰﾀﾊﾟｲﾌﾟ	32
567000	FAN AND PULLEY	冷却ﾌｧﾝ･ﾌﾟｰﾘ	33
571000	INLET MANIFOLD	吸気ﾏﾆﾎｰﾙﾄﾞ	34
571100	AIR CLEANER FLANGE AND THROTTLE VALVE	ｴｱｸﾘｰﾅﾌﾗﾝｼﾞ･ｽﾛｯﾄﾙﾊﾞﾙﾌﾞ	35
572000	EXHAUST MANIFOLD	排気ﾏﾆﾎｰﾙﾄﾞ	36
572300	EGR VALVE	EGRﾊﾞﾙﾌﾞ	37
572400	EGR COOLER	EGRｸｰﾗ	38
572600	TURBO CHARGER	ﾀｰﾎﾞﾁｬｰｼﾞｬ	39
574000	DIESEL PARTICULATE FILTER MUFFLER	ﾃﾞｨｰｾﾞﾙﾊﾟﾃｨｷｭﾚｰﾄﾌｨﾙﾀﾏﾌﾗ	40
574200	DIESEL PARTICULATE FILTER MUFFLER [COMPONENT PARTS]	ﾃﾞｨｰｾﾞﾙﾊﾟﾃｨｷｭﾚｰﾄﾌｨﾙﾀﾏﾌﾗ分解	41
574300	DIESEL PARTICULATE FILTER MUFFLER SENSOR	ﾃﾞｨｰｾﾞﾙﾊﾟﾃｨｷｭﾚｰﾄﾌｨﾙﾀﾏﾌﾗｾﾝｻ	42
574500	PRESSURE PIPE	差圧ﾊﾟｲﾌﾟ	43
575000	SELECTIVE CATALYTIC REDUCTION MUFFLER	ｾﾚｸﾃｨﾌﾞｶﾀﾘﾃｨｯｸﾘﾀﾞｸｼｮﾝﾏﾌﾗ	44
576000	BREATHER PIPE/SEPARATOR PIPE	ﾌﾞﾚｻﾞｰﾊﾟｲﾌﾟ･ｾﾊﾟﾚｰﾀﾊﾟｲﾌﾟ	46
576501	OIL SEPARATOR	ｵｲﾙｾﾊﾟﾚｰﾀ	47
576502	OIL SEPARATOR [OPTION]	ｵｲﾙｾﾊﾟﾚｰﾀ [ｵﾌﾟｼｮﾝ]	48
580000	OIL PIPE (TURBO CHARGER)	ｵｲﾙﾊﾟｲﾌﾟ (ﾀｰﾎﾞﾁｬｰｼﾞｬ)	49
582000	OIL COOLER	ｵｲﾙｸｰﾗ	50
583000	OIL FILTER	ｵｲﾙﾌｨﾙﾀ	51
587000	STARTER SWITCH	ｽﾀｰﾀｽｲｯﾁ	52
587200	ECU	ECU	53
588000	ACCESSORIES AND SERVICE PARTS	付属品･ｻｰﾋﾞｽ部品	54
589000	LABEL AND OPERATOR'S MANUAL	銘板･取扱説明書	55
594000	PISTON KIT [OPTION]	ﾋﾟｽﾄﾝｷｯﾄ [ｵﾌﾟｼｮﾝ]	56
597500	HEAT INSULATION KIT [OPTION]	ﾀﾞﾝﾈﾂｻﾞｲｷｯﾄ [ｵﾌﾟｼｮﾝ]	57
599000	Diagmaster [OPTION]	診断ﾂｰﾙｷｯﾄ [ｵﾌﾟｼｮﾝ]	58

silverhorn.co.uk

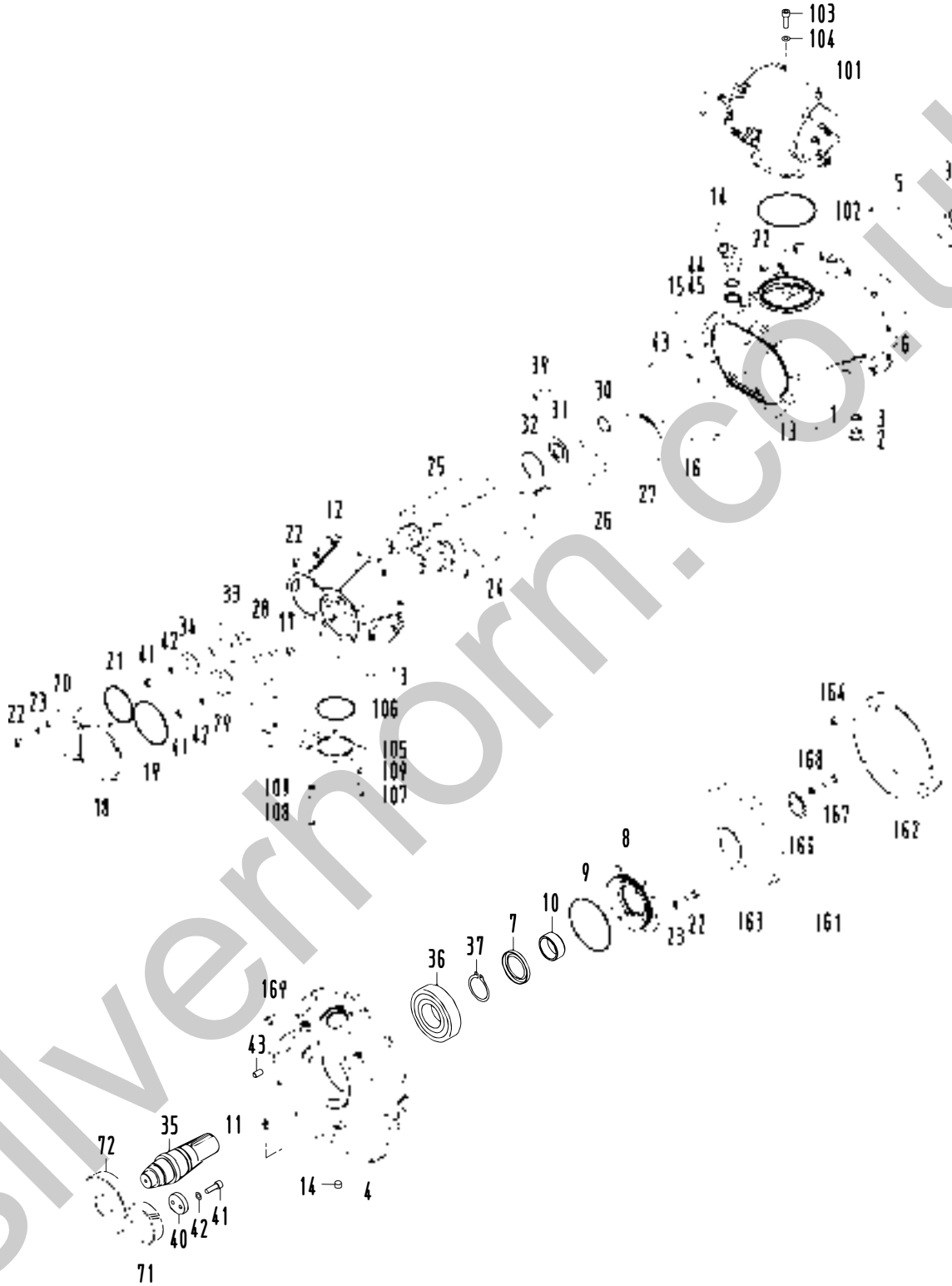

silvernorn.co.uk

見出番号 Ref.NO.	部品番号 Part NO.	互換性 Inter-change ability	部品名称 Part Name		数量 Q'ty	適用号機範囲 Applicable Ser.No. S/SC	DP/DPC	変更 C/H	備考 Remarks
	21 - 00		COMPRESSION GROUP	ｺﾝﾌﾟﾚｯｼｮﾝ ｸﾞﾙｰﾌﾟ					
1	21201 45802		Cylinder,1st	ｼﾘﾝﾀﾞ	1				
2	33238 02000		Plug	ﾌﾟﾗｸﾞ	1				Incl.No.3
3	03402 25024		O-ring	O-ﾘﾝｸﾞ	1				
4	21214 19100		Casing,power side	ﾊﾟﾜｰ ｻｲﾄﾞ ｹｰｼﾝｸﾞ	1				
5	21221 05300		O-ring	O-ﾘﾝｸﾞ	1				
6	22314 06400		O-ring	O-ﾘﾝｸﾞ	1				
7	21211 13301		Oil seal	ｵｲﾙ ｼｰﾙ	1				
8	21212 21100		Cover,oil seal	ｵｲﾙ ｼｰﾙ ｶﾊﾞｰ	1				
9	03402 15150		O-ring	O-ﾘﾝｸﾞ	1				
10	21465 07000		Collar	ｶﾗｰ	1				
11	21207 03800		Nozzle	ﾉｽﾞﾙ	1				
12	21217 35401		Casing,discharge	ﾃﾞｨｽﾁｬｰｼﾞ ｹｰｼﾝｸﾞ	1				
13	03620 60002		Plug	ﾌﾟﾗｸﾞ	7				
14	03620 60003		Plug	ﾌﾟﾗｸﾞ	2				
15	03620 60004		Plug	ﾌﾟﾗｸﾞ	1				
16	21221 05200		O-ring	O-ﾘﾝｸﾞ	1				
17	02280 10045		Socket bolt	ｿｹｯﾄ ﾎﾞﾙﾄ	2				
18	21218 36100		End cover	ｴﾝﾄﾞ ｶﾊﾞｰ	1				
19	03402 15125		O-ring	O-ﾘﾝｸﾞ	1				
20	21218 36200		End cover	ｴﾝﾄﾞ ｶﾊﾞｰ	1				
21	03402 15105		O-ring	O-ﾘﾝｸﾞ	1				
22	02280 10030		Socket bolt	ｿｹｯﾄ ﾎﾞﾙﾄ	32				
23	03115 40010		Spring washer	ｽﾌﾟﾘﾝｸﾞ ﾜｯｼｬ	13				
24	21461 36900		Rotor,male	ｵｽﾛｰﾀ	1				
25	21462 27200		Rotor,female	ﾒｽﾛｰﾀ	1				
	ロータは、オス・メス一対でご注文下さい								
	A pair of rotor (male & female) should be ordered.								
26	21406 43800		Bearing,rotor	ﾛｰﾀ ﾍﾞｱﾘﾝｸﾞ	1				
27	03413 20160		Snap ring	ｽﾅｯﾌﾟ ﾘﾝｸﾞ	1				
28	21470 17600		Bearing,complete	ﾍﾞｱﾘﾝｸﾞ,ｺﾝﾌﾟﾘｰﾄ	1				
29	21468 19901		Plate	ﾌﾟﾚｰﾄ	1				
30	03413 40040		Snap ring	ｽﾅｯﾌﾟ ﾘﾝｸﾞ	1				
31	21406 28400	Y	Bearing,rotor	ﾛｰﾀ ﾍﾞｱﾘﾝｸﾞ	1				
31	21406 30400	Y	Bearing,rotor	ﾛｰﾀ ﾍﾞｱﾘﾝｸﾞ	1				
32	03413 20080		Snap ring	ｽﾅｯﾌﾟ ﾘﾝｸﾞ	1				
33	21470 17700		Bearing,complete	ﾍﾞｱﾘﾝｸﾞ,ｺﾝﾌﾟﾘｰﾄ	1				
34	21468 01300		Plate	ﾌﾟﾚｰﾄ	1				
35	21411 10400		Shaft	ｼｬﾌﾄ	1				
36	03410 06315		Bearing	ﾍﾞｱﾘﾝｸﾞ	1				
37	03413 10075		Snap ring	ｽﾅｯﾌﾟ ﾘﾝｸﾞ	1				
38	21406 43100		Bearing	ﾍﾞｱﾘﾝｸﾞ	1				
39	03306 14050		Key	ｷｰ	1				
40	21468 03500		Plate	ﾌﾟﾚｰﾄ	1				
41	02280 10040		Socket bolt	ｿｹｯﾄ ﾎﾞﾙﾄ	6				
42	03115 30010		Lock washer	ﾛｯｸ ﾜｯｼｬ	6				
43	03316 14028		Pin	ﾋﾟﾝ	4				
44	GD920 14200		Nipple elbow	ﾆｯﾌﾟﾙ ｴﾙﾎﾞ	1				Incl.No.45
45	03402 25029		O-ring	O-ﾘﾝｸﾞ	1				

silverform.co.uk

見出番号 Ref.NO.	部品番号 Part NO.	互換性 Inter-change ability	部品名称 Part Name		数量 Q'ty	適用号機範囲 Applicable Ser.No. S/SC	DP/DPC	変更 C/H	備考 Remarks
	21 - 01		COMPRESSION GROUP	ｺﾝﾌﾟﾚｯｼｮﾝ ｸﾞﾙｰﾌﾟ					
71	21467 47700		Gear,driven	ﾄﾞﾘﾌﾞﾝ ｷﾞﾔ	1	◎			
71	21467 50400		Gear,driven	ﾄﾞﾘﾌﾞﾝ ｷﾞﾔ	1		◎		
72	21469 37300		Gear,drive	ﾄﾞﾗｲﾌﾞ ｷﾞﾔ	1	◎			
72	21469 40000		Gear,drive	ﾄﾞﾗｲﾌﾞ ｷﾞﾔ	1		◎		
	シャフトとギヤは、一対でご注文下さい								
	Shaft & gear should be ordered in pairs.								
	22 - 00		VALVE GROUP	ﾊﾞﾙﾌﾞ ｸﾞﾙｰﾌﾟ					
101	22100 48500		Unloader ass'y	ｱﾝﾛｰﾀﾞ	1				See page 22-1
102	03402 15150		O-ring	O-ﾘﾝｸﾞ	1				
103	02280 10030		Socket bolt	ｿｹｯﾄ ﾎﾞﾙﾄ	4				
104	03115 30010		Lock washer	ﾛｯｸ ﾜｯｼｬ	4				
105	22311 10201		Discharge elbow	ﾃﾞｨｽﾁｬｰｼﾞ ｴﾙﾎﾞ	1				
106	03402 25095		O-ring	O-ﾘﾝｸﾞ	1				
107	02280 10035		Socket bolt	ｿｹｯﾄ ﾎﾞﾙﾄ	2				
108	02280 10120		Socket bolt	ｿｹｯﾄ ﾎﾞﾙﾄ	2				
109	03115 40010		Spring washer	ｽﾌﾟﾘﾝｸﾞ ﾜｯｼｬ	4				
	61 - 00		COUPLING GROUP	ｶｯﾌﾟﾘﾝｸﾞ ｸﾞﾙｰﾌﾟ					
161	61123 03900		Coupling complete	ｶｯﾌﾟﾘﾝｸﾞ ｺﾝﾌﾟﾘｰﾄ	1				Const.No.162～163
162	61121 09200		Coupling,drive	ｶｯﾌﾟﾘﾝｸﾞ,ﾄﾞﾗｲﾌﾞ	1				
163	21420 19100		Coupling,driven	ｶｯﾌﾟﾘﾝｸﾞ,ﾄﾞﾘﾌﾞﾝ	1				
164	61136 01800		Bolt	ﾎﾞﾙﾄ	8				
165	03307 18080		Key	ｷｰ	1				
166	21468 16900		Plate	ﾌﾟﾚｰﾄ	1				
167	02282 10040		Socket bolt	ｿｹｯﾄ ﾎﾞﾙﾄ	2				
168	03115 30010		Lock washer	ﾛｯｸ ﾜｯｼｬ	2				
169	02238 10030		Bolt,w/w	ﾜｯｼｬ付ﾎﾞﾙﾄ	12				

silverhorn.co.uk

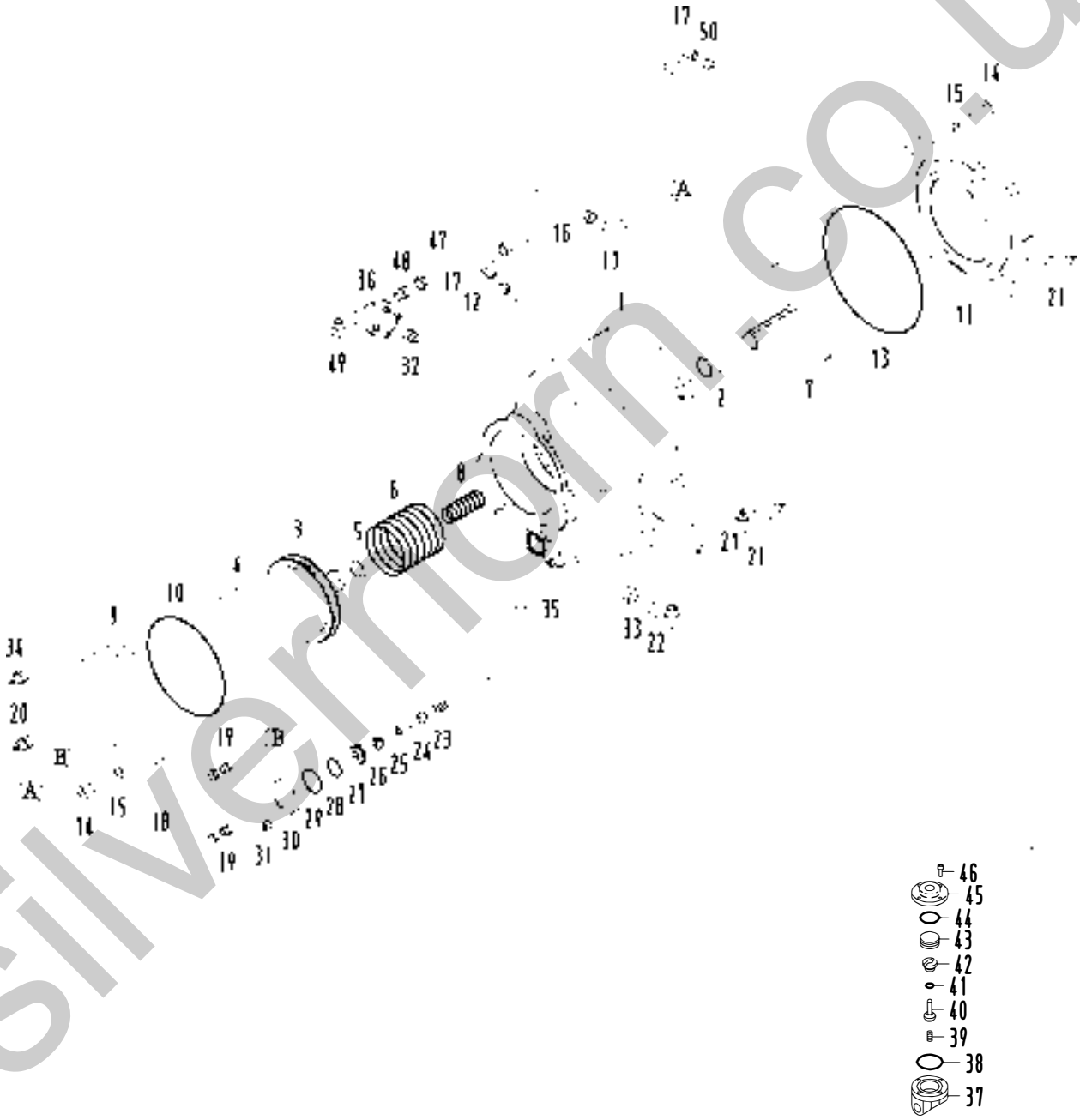

DETAIL NO. 36

silvernorn.co.uk

22 - 00　UNLOADER

見出番号 Ref.NO.	部品番号 Part NO.	互換性 Inter-change ability	部品名称 Part Name		数量 Q'ty	適用号機範囲 Applicable Ser.No. S/SC	DP/DPC	変更 C/H	備考 Remarks
	22100 48500		UNLOADER ASS'Y	ｱﾝﾛｰﾀﾞ					
1	22111 32801		Body,unloader	ｱﾝﾛｰﾀﾞ ﾎﾞﾃﾞｨ	1				
2	23124 14100		Bushing	ﾌﾞｯｼﾝｸﾞ	1				
3	22130 10000		Piston,unloader	ｱﾝﾛｰﾀﾞ ﾋﾟｽﾄﾝ	1				
4	21441 05400		O-ring	O-ﾘﾝｸﾞ	1				
5	21441 05300		O-ring	O-ﾘﾝｸﾞ	1				
6	22144 11600		Spring	ｽﾌﾟﾘﾝｸﾞ	1				
7	22150 15700		Valve,unloader	ｱﾝﾛｰﾀﾞ ﾊﾞﾙﾌﾞ	1				
8	22144 15200		Spring	ｽﾌﾟﾘﾝｸﾞ	1				
9	22115 13701		Cover,unloader	ｱﾝﾛｰﾀﾞ ｶﾊﾞｰ	1				
10	03402 15135		O-ring	O-ﾘﾝｸﾞ	1				
11	22115 15101		Cover,unloader	ｱﾝﾛｰﾀﾞ ｶﾊﾞｰ	1				
12	22123 03100		Orifice	ｵﾘﾌｨｽ	1				
13	03402 15170		O-ring	O-ﾘﾝｸﾞ	1				
14	02280 10035		Socket bolt	ｿｹｯﾄ ﾎﾞﾙﾄ	7				
15	03115 30010		Lock washer	ﾛｯｸ ﾜｯｼｬ	7				
16	36388 02300		Pipe	ﾊﾟｲﾌﾟ	1				
17	03734 53020		Nipple elbow	ﾆｯﾌﾟﾙ ｴﾙﾎﾞ	3				
18	36352 11301		Pipe	ﾊﾟｲﾌﾟ	1				
19	03734 52021		Nipple	ﾆｯﾌﾟﾙ	2				
20	03734 20032		Nipple	ﾆｯﾌﾟﾙ	1				
21	03734 21020		Nipple elbow	ﾆｯﾌﾟﾙ ｴﾙﾎﾞ	4				
22	03734 44102		Nipple elbow	ﾆｯﾌﾟﾙ ｴﾙﾎﾞ	1				
23	22144 10600		Spring	ｽﾌﾟﾘﾝｸﾞ	1				
24	36429 01600		Needle valve	ﾆｰﾄﾞﾙ ﾊﾞﾙﾌﾞ	1				
25	03402 25008		O-ring	O-ﾘﾝｸﾞ	1				
26	36428 01100		Valve seat	ﾊﾞﾙﾌﾞ ｼｰﾄ	1				
27	36623 00900		Piston	ﾋﾟｽﾄﾝ	1				
28	03402 25021		O-ring	O-ﾘﾝｸﾞ	1				
29	21221 02100		O-ring	O-ﾘﾝｸﾞ	1				
30	36621 01401		Cover	ｶﾊﾞｰ	1				
31	02270 04012		Socket bolt,w/w	ﾜｯｼｬ付ｿｹｯﾄ ﾎﾞﾙﾄ	4				
32	03731 44002		Nipple	ﾆｯﾌﾟﾙ	1				
33	03732 10302		Bush	ﾌﾞｯｼｭ	1				
34	03734 20020		Nipple	ﾆｯﾌﾟﾙ	1				
35	03620 60002		Plug	ﾌﾟﾗｸﾞ	1				
36	36600 03503		Auto-relief valve ass'y	ｵｰﾄﾚﾘｰﾌ ﾊﾞﾙﾌﾞ	1				Const.No.37～46
37	36610 00401		Body	ﾎﾞﾃﾞｨ	1				
38	21221 02100		O-ring	O-ﾘﾝｸﾞ	1				
39	22144 10600		Spring	ｽﾌﾟﾘﾝｸﾞ	1				
40	36429 01600		Needle valve	ﾆｰﾄﾞﾙ ﾊﾞﾙﾌﾞ	1				
41	03402 25008		O-ring	O-ﾘﾝｸﾞ	1				
42	36428 01100		Valve seat	ﾊﾞﾙﾌﾞ ｼｰﾄ	1				
43	36623 00900		Piston,auto-relief	ﾋﾟｽﾄﾝ	1				
44	03402 25021		O-ring	O-ﾘﾝｸﾞ	1				
45	36621 01401		Cover	ｶﾊﾞｰ	1				
46	02270 04012		Socket bolt,w/w	ﾜｯｼｬ付ｿｹｯﾄ ﾎﾞﾙﾄ	4				
47	36349 23400		Pipe	ﾊﾟｲﾌﾟ	1				
48	03734 52020		Nipple	ﾆｯﾌﾟﾙ	1				
49	03734 44002		Nipple elbow	ﾆｯﾌﾟﾙ ｴﾙﾎﾞ	1				
50	22123 05600		Orifice	ｵﾘﾌｨｽ	1				

silvernorm.co.uk

silverhorn.co.uk

見出番号 Ref.NO.	部品番号 Part NO.	互換性 Inter-change ability	部品名称 Part Name		数量 Q'ty	適用号機範囲 Applicable Ser.No. S/SC	DP/DPC	変更 C/H	備考 Remarks
	31 - 00		MOUNTING GROUP	ﾏｳﾝﾃｨﾝｸﾞ ｸﾞﾙｰﾌﾟ					
1	31110 14011		Bracket	ﾌﾞﾗｹｯﾄ	1				
2	02135 10025		Bolt	ﾎﾞﾙﾄ	4				
3	03115 02010		Spring washer	ｽﾌﾟﾘﾝｸﾞ ﾜｯｼｬ	4				
4	31130 28600		Vibration isolator ass'y	防振ｺﾞﾑ	2				
5	31122 09500		Shim	ｼﾑ	1				
6	31110 14110		Bracket	ﾌﾞﾗｹｯﾄ	1				
7	31110 14210		Bracket	ﾌﾞﾗｹｯﾄ	1				
8	02102 12025		Bolt	ﾎﾞﾙﾄ	8				
9	03115 02012		Spring washer	ｽﾌﾟﾘﾝｸﾞ ﾜｯｼｬ	8				
10	31130 22400		Vibration isolator ass'y	防振ｺﾞﾑ	2				
11	02915 20012		Nut,w/w	ﾜｯｼｬ付ﾅｯﾄ	8				
12	31120 08900		Shim	ｼﾑ	2				
13	31110 15110		Bracket	ﾌﾞﾗｹｯﾄ	4				
14	02201 08020		Flange bolt	ﾌﾗﾝｼﾞ付ﾎﾞﾙﾄ	8				
	32 - 00		INTAKE GROUP	ｲﾝﾃｰｸ ｸﾞﾙｰﾌﾟ					
21	32100 41900		Air filter ass'y	ｴｱ ﾌｨﾙﾀ	1				Const.No.22～25
22	32143 12800		Element	ｴﾚﾒﾝﾄ	1				
23	32142 09300		Cup	ｶｯﾌﾟ	1				
24	32151 01400		Vacuator valve	ﾊﾞｷｭｴｰﾀ ﾊﾞﾙﾌﾞ	1				
25	32147 02500		O-ring	O-ﾘﾝｸﾞ	1				
26	32240 50700		Bracket	ﾌﾞﾗｹｯﾄ	1				
27	02248 10020		Bolt,w/w	ﾜｯｼｬ付ﾎﾞﾙﾄ	10				
28	02915 20008		Nut,w/w	ﾜｯｼｬ付ﾅｯﾄ	4				
29	32148 03000		Filter,service indicator	ｲﾝｼﾞｹｰﾀ	1				
30	32100 39700		Air filter ass'y	ｴｱ ﾌｨﾙﾀ	1				Const.No.31～35
31	32143 12500		Element	ｴﾚﾒﾝﾄ	1				
32	32142 10700		Cup	ｶｯﾌﾟ	1				
33	39148 05300		Plate(top)	ﾌﾟﾚｰﾄ	1				
34	32151 01600		Vacuator valve	ﾊﾞｷｭｴｰﾀ ﾊﾞﾙﾌﾞ	1				
35	32147 03100		O-ring	O-ﾘﾝｸﾞ	1				
36	32331 89201		Hose	ﾎｰｽ	1				
37	32240 47700		Bracket	ﾌﾞﾗｹｯﾄ	1				
38	03511 20140		Hose clip	ﾎｰｽ ｸﾘｯﾌﾟ	1				
39	02102 12035		Bolt	ﾎﾞﾙﾄ	2				
40	03115 02012		Spring washer	ｽﾌﾟﾘﾝｸﾞ ﾜｯｼｬ	2				
41	03511 20160		Hose clip	ﾎｰｽ ｸﾘｯﾌﾟ	1				
42	32331 94101		Hose	ﾎｰｽ	1				
43	32320 74800		Pipe	ﾊﾟｲﾌﾟ	1				
44	02248 12030		Bolt,w/w	ﾜｯｼｬ付ﾎﾞﾙﾄ	2				
45	32331 91501		Hose	ﾎｰｽ	1				
46	32320 71300		Pipe	ﾊﾟｲﾌﾟ	1				
47	32331 89100		Hose	ﾎｰｽ	1				
48	03511 20080		Hose clip	ﾎｰｽ ｸﾘｯﾌﾟ	5				
49	03511 20120		Hose clip	ﾎｰｽ ｸﾘｯﾌﾟ	1				

silvermorn.co.uk

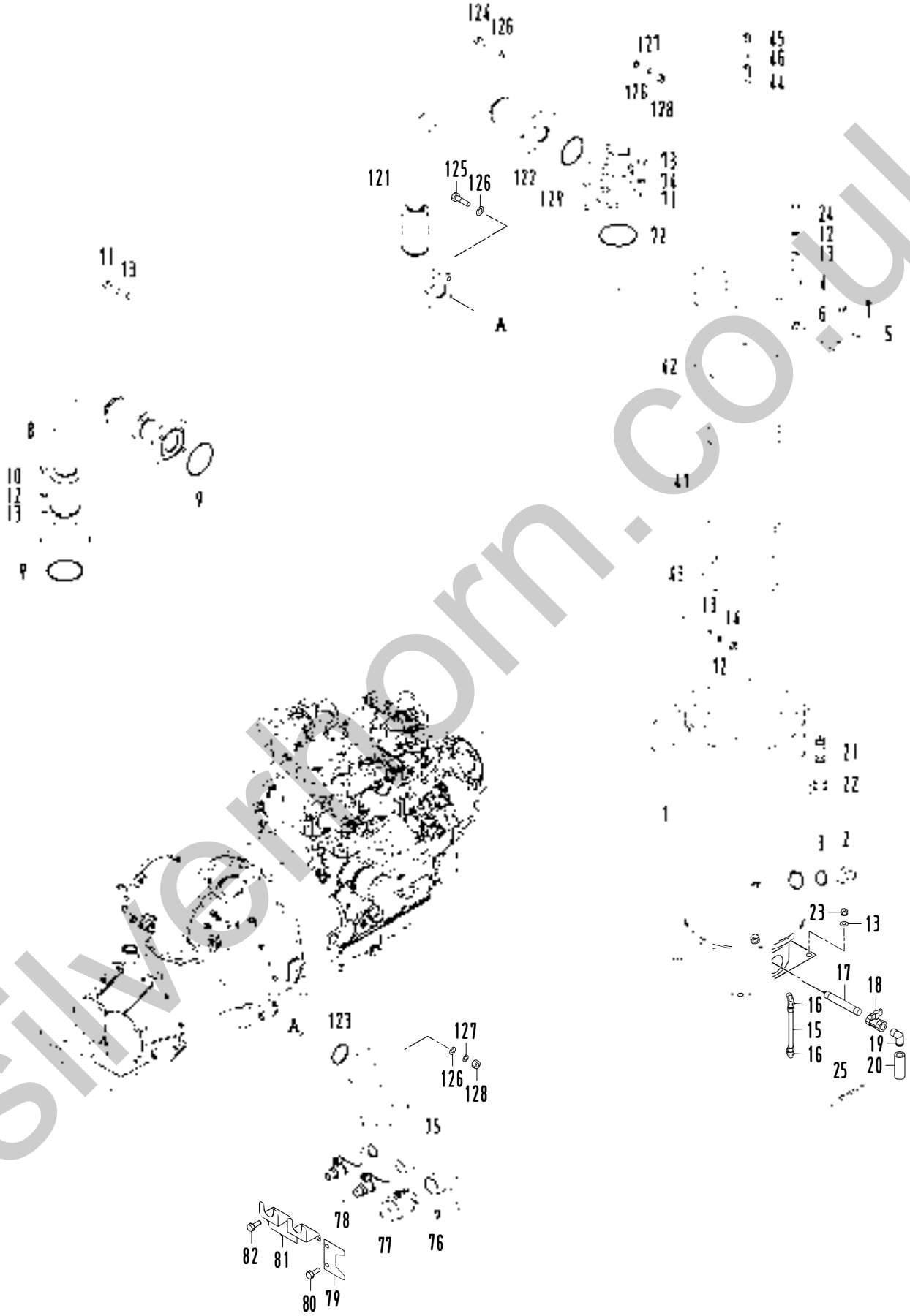

silverhorn.co.uk

33 - 00 RECEIVER,SEPARATOR & SERVICE HEADER

見出番号 Ref.NO.	部品番号 Part NO.	互換性 Inter-change ability	部品名称 Part Name		数量 Q'ty	適用号機範囲 Applicable Ser.No. S/SC	DP/DPC	変更 C/H	備考 Remarks
	33 - 00		RECEIVER GROUP	ﾚｼｰﾊﾞｰ ｸﾞﾙｰﾌﾟ					
1	33100 92110		Oil separator	ｵｲﾙ ｾﾊﾟﾚｰﾀ	1				ASME(EURE)
			(Receiver tank)(Incl.No.2,4 & 24)						
2	33231 03900		Cap	ｷｬｯﾌﾟ	1				ASME(EURE)
3	03402 25040		O-ring	O-ﾘﾝｸﾞ	1				
4	34250 36000		Cover	ｶﾊﾞｰ	1				ASME(EURE)
5	33260 09500		Bracket	ﾌﾞﾗｹｯﾄ	1				
6	02201 08020		Flange bolt	ﾌﾗﾝｼﾞ付ﾎﾞﾙﾄ	2				
7	02248 10030		Bolt,w/w	ﾜｯｼｬ付ﾎﾞﾙﾄ	2				
8	33310 65700		Pipe,discharge	ﾃﾞｨｽﾁｬｰｼﾞ ﾊﾟｲﾌﾟ	1	◎			
8	33310 64400		Pipe,discharge	ﾃﾞｨｽﾁｬｰｼﾞ ﾊﾟｲﾌﾟ	1		◎		
9	03402 25095		O-ring	O-ﾘﾝｸﾞ	2				
10	02135 12040		Bolt	ﾎﾞﾙﾄ	4				
11	02135 12060		Bolt	ﾎﾞﾙﾄ	4				
12	03115 02012		Spring washer	ｽﾌﾟﾘﾝｸﾞ ﾜｯｼｬ	16				
13	03116 12012		Plain washer	ﾌﾟﾚｰﾝ ﾜｯｼｬ	24				
14	02912 06012		Nut	ﾅｯﾄ	4				
15	03841 30024		Nylon tube,w/n	ﾅｯﾄ付ﾅｲﾛﾝﾁｭｰﾌﾞ	1				
16	03734 21030		Nipple elbow	ﾆｯﾌﾟﾙ ｴﾙﾎﾞ	2				
17	03728 04140		Pipe	ﾊﾟｲﾌﾟ	1				
18	03735 13004		Valve	ﾊﾞﾙﾌﾞ	1				
19	37730 02001		Nipple	ﾆｯﾌﾟﾙ	1				
20	33241 09100		Pipe	ﾊﾟｲﾌﾟ	1				
21	35200 23900		Safety valve ass'y	安全弁	1	◎			(150psi)
21	35200 24500		Safety valve ass'y	安全弁	1		◎		(195psi)
22	37740 01400		Elbow	ｴﾙﾎﾞ	1				
23	02915 20012		Nut,w/w	ﾜｯｼｬ付ﾅｯﾄ	4				
24	34262 03200		Bolt	ﾎﾞﾙﾄ	8				ASME(EURE)
25	03425 00001		Vinyl clip	ﾋﾞﾆｰﾙ ｸﾘｯﾌﾟ	1				
	34 - 00		SEPARATOR GROUP	ｾﾊﾟﾚｰﾀ ｸﾞﾙｰﾌﾟ					
41	34220 16501		Separator ass'y	ｾﾊﾟﾚｰﾀ	1				
42	34235 06000		Gasket	ｶﾞｽｹｯﾄ	1				
43	34235 06100		Gasket	ｶﾞｽｹｯﾄ	1				
44	37730 11000		Nipple	ﾆｯﾌﾟﾙ	1				
45	37189 38800		Bushing	ﾌﾞｯｼﾝｸﾞ	1				
46	37580 01900		Strainer	ｽﾄﾚｰﾅ	1				
	35 - 00		SERVICE HEADER GROUP	ｻｰﾋﾞｽ ﾍｯﾀﾞ ｸﾞﾙｰﾌﾟ					
71	35300 18200		Press.cont.vlv.ass'y	圧力ｺﾝﾄﾛｰﾙ ﾊﾞﾙﾌﾞ	1				See page 33-4
72	03402 25100		O-ring	O-ﾘﾝｸﾞ	1				
73	02135 12050		Bolt	ﾎﾞﾙﾄ	4				
74	03115 02012		Spring washer	ｽﾌﾟﾘﾝｸﾞ ﾜｯｼｬ	4				
75	35100 58200		Air manifold	ｴｱ ﾏﾆﾎｰﾙﾄﾞ	1	◎			
75	35100 56900		Air manifold	ｴｱ ﾏﾆﾎｰﾙﾄﾞ	1		◎		
76	02246 08025		Bolt,w/w	ﾜｯｼｬ付ﾎﾞﾙﾄ	4				
77	35421 00903		Air valve	ｴｱ ﾊﾞﾙﾌﾞ	1				

silverhorn.co.uk

33 - 00 RECEIVER,SEPARATOR & SERVICE HEADER

見出番号 Ref.NO.	部品番号 Part NO.	互換性 Inter-change ability	部品名称 Part Name		数量 Q'ty	適用号機範囲 Applicable Ser.No. S/SC	DP/DPC	変更 C/H	備考 Remarks
78	35421 00105		Air valve	ｴｱ ﾊﾞﾙﾌﾞ	2				
79	35470 44900		Bracket	ﾌﾞﾗｹｯﾄ	1				
80	02246 08025		Bolt,w/w	ﾜｯｼｬ付ﾎﾞﾙﾄ	2				
81	35470 44800		Bracket	ﾌﾞﾗｹｯﾄ	1				
82	02246 06016		Bolt,w/w	ﾜｯｼｬ付ﾎﾞﾙﾄ	4				
	38 - 00		COOLING GROUP	ｸｰﾘﾝｸﾞ ｸﾞﾙｰﾌﾟ					
121	37160 79420		Pipe	ﾊﾟｲﾌﾟ	1				
122	03402 25080		O-ring	O-ﾘﾝｸﾞ	1				
123	03402 15060		O-ring	O-ﾘﾝｸﾞ	1				
124	02135 12055		Bolt	ﾎﾞﾙﾄ	4				
125	02135 12050		Bolt	ﾎﾞﾙﾄ	4				
126	03116 12012		Plain washer	ﾌﾟﾚｰﾝ ﾜｯｼｬ	16				
127	03115 02012		Spring washer	ｽﾌﾟﾘﾝｸﾞ ﾜｯｼｬ	8				
128	02912 06012		Nut	ﾅｯﾄ	8				
129	03620 60002		Plug	ﾌﾟﾗｸﾞ	5				

silverhorn.co.uk

33 - 01 PRESSURE CONTROL VALVE

見出番号 Ref.NO.	部品番号 Part NO.	互換性 Inter-change ability	部品名称 Part Name		数量 Q'ty	適用号機範囲 Applicable Ser.No. S/SC	DP/DPC	変更 C/H	備考 Remarks
	35300 18200		PRESSURE CONTROL VALVE ASS'Y	圧力ｺﾝﾄﾛｰﾙ ﾊﾞﾙﾌﾞ					
1	35301 23000		Body	ﾎﾞﾃﾞｨ	1				
2	35302 05200		Cover	ｶﾊﾞｰ	1				
3	35302 05101		Cover	ｶﾊﾞｰ	1				
4	03402 15080		O-ring	O-ﾘﾝｸﾞ	1				
5	35303 09900		Piston	ﾋﾟｽﾄﾝ	1				
6	21441 03700		O-ring	O-ﾘﾝｸﾞ	1				
7	22505 03300		Ring,piston seal	ﾋﾟｽﾄﾝ ｼｰﾙ ﾘﾝｸﾞ	1				
8	35303 10500		Piston	ﾋﾟｽﾄﾝ	1				
9	35304 03000		Spring	ｽﾌﾟﾘﾝｸﾞ	1				
10	35305 01300		Spring seat	ｽﾌﾟﾘﾝｸﾞ ｼｰﾄ	2				

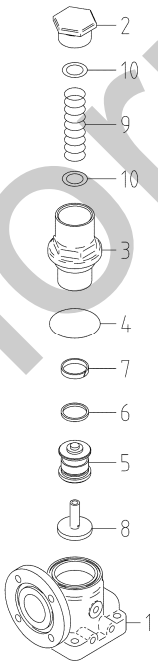

silverhorn.co.uk

silverhorn.co.uk

35 - 00　SERVICE HEADER (WITH AFTERCOOLER)

見出番号 Ref.NO.	部品番号 Part NO.	互換性 Inter-change ability	部品名称 Part Name		数量 Q'ty	適用号機範囲 Applicable Ser.No. 400SC	330DPC	変更 C/H	備考 Remarks
	38 - 00		COOLING GROUP	ｸｰﾘﾝｸﾞ ｸﾞﾙｰﾌﾟ					
1	38900 07600		Aftercooler	ｱﾌﾀｸｰﾗ	1				
2	38300 42900		Casing	ｹｰｼﾝｸﾞ	1				
3	03407 66909		Seal rubber	ｼｰﾙ ﾗﾊﾞｰ	2				
4	03407 66936		Seal rubber	ｼｰﾙ ﾗﾊﾞｰ	2				
5	38465 13900		Cushion rubber	ｸｯｼｮﾝ ﾗﾊﾞｰ	1				
6	38420 04010		Bracket	ﾌﾞﾗｹｯﾄ	1				
7	52370 20310		Duct	ﾀﾞｸﾄ	1				
8	02201 08020		Flange bolt	ﾌﾗﾝｼﾞ付ﾎﾞﾙﾄ	10				
9	35430 19400		Pipe	ﾊﾟｲﾌﾟ	1	◎			
9	35430 15500		Pipe	ﾊﾟｲﾌﾟ	1		◎		
10	03402 25080		O-ring	O-ﾘﾝｸﾞ	1				
11	35483 05200		Stop valve	ｽﾄｯﾌﾟ ﾊﾞﾙﾌﾞ	1				
12	03734 44016		Nipple elbow	ﾆｯﾌﾟﾙ ｴﾙﾎﾞ	1				
13	37160 72220		Pipe	ﾊﾟｲﾌﾟ	1				
14	03734 47164		Nipple elbow	ﾆｯﾌﾟﾙ ｴﾙﾎﾞ	1				
15	37160 75320		Pipe	ﾊﾟｲﾌﾟ	2				
16	33500 03400		Coupling ass'y	ｶｯﾌﾟﾘﾝｸﾞ	1				
17	34200 06200		Separator ass'y	ｾﾊﾟﾚｰﾀ	1				
18	35430 21500		Pipe	ﾊﾟｲﾌﾟ	1	◎			
18	35430 21600		Pipe	ﾊﾟｲﾌﾟ	1		◎		
19	03734 48164		Nipple elbow	ﾆｯﾌﾟﾙ ｴﾙﾎﾞ	1				
20	37160 73820		Pipe	ﾊﾟｲﾌﾟ	1				
21	03402 15060		O-ring	O-ﾘﾝｸﾞ	1				
22	02135 12050		Bolt	ﾎﾞﾙﾄ	4				
23	02135 12055		Bolt	ﾎﾞﾙﾄ	4				
24	03116 12012		Plain washer	ﾌﾟﾚｰﾝ ﾜｯｼｬ	16				
25	03115 02012		Spring washer	ｽﾌﾟﾘﾝｸﾞ ﾜｯｼｬ	8				
26	02912 06012		Nut	ﾅｯﾄ	8				
27	38860 37100		Bracket	ﾌﾞﾗｹｯﾄ	1				
28	02201 06016		Flange bolt	ﾌﾗﾝｼﾞ付ﾎﾞﾙﾄ	2				
29	37731 12700		Nipple	ﾆｯﾌﾟﾙ	1				
30	03841 30048		Nylon tube,w/n	ﾅｯﾄ付ﾅｲﾛﾝﾁｭｰﾌﾞ	1				
31	03734 20032		Nipple	ﾆｯﾌﾟﾙ	1				
32	03734 21032		Nipple elbow	ﾆｯﾌﾟﾙ ｴﾙﾎﾞ	1				
33	03840 20125		Nylon tube,w/n	ﾅｯﾄ付ﾅｲﾛﾝﾁｭｰﾌﾞ	1				
34	03734 20020		Nipple	ﾆｯﾌﾟﾙ	1				
35	03734 21020		Nipple elbow	ﾆｯﾌﾟﾙ ｴﾙﾎﾞ	1				
36	37731 11800		Nipple	ﾆｯﾌﾟﾙ	1				
37	03735 13002		Valve	ﾊﾞﾙﾌﾞ	2				
38	03731 46203		Nipple	ﾆｯﾌﾟﾙ	1				
39	35440 03400		Silencer	ｻｲﾚﾝｻ	1				
40	38466 08400		Pipe	ﾊﾟｲﾌﾟ	1				
41	03511 20040		Hose clip	ﾎｰｽ ｸﾘｯﾌﾟ	1				
42	03402 00502		Eyelet ring	ｱｲﾚｯﾄ ﾘﾝｸﾞ	1				
43	38465 13200		Cushion rubber	ｸｯｼｮﾝ ﾗﾊﾞｰ	1				
44	38465 19400		Cushion rubber	ｸｯｼｮﾝ ﾗﾊﾞｰ	1				
45	03620 60002		Plug	ﾌﾟﾗｸﾞ	5				

silverhorn.co.uk

silverhorn.co.uk

見出番号 Ref.NO.	部品番号 Part NO.	互換性 Inter-change ability	部品名称 Part Name		数量 Q'ty	適用号機範囲 Applicable Ser.No.		変更 C/H	備考 Remarks
	36 - 00		CONTROL GROUP	ｺﾝﾄﾛｰﾙ ｸﾞﾙｰﾌﾟ					
1	36110 25610		Instrument panel	ｲﾝｽﾄﾙﾒﾝﾄ ﾊﾟﾈﾙ	1				
2	52312 03300		Hinge	ﾋﾝｼﾞ	2				
3	02305 64006		Screw	ｽｸﾘｭ	4				
4	02305 64012		Screw	ｽｸﾘｭ	4				
5	03116 12004		Plain washer	ﾌﾟﾚｰﾝ ﾜｯｼｬ	4				
6	02401 66030		Screw	ｽｸﾘｭ	4				
7	45214 01400		Washer	ﾜｯｼｬ	4				
8	31131 04100		Rubber	ﾗﾊﾞｰ	2				
9	03424 82006		Clip	ｸﾘｯﾌﾟ	2				
10	03840 20028		Nylon tube,w/n	ﾅｯﾄ付ﾅｲﾛﾝﾁｭｰﾌﾞ	1				
11	36384 04400		Pipe	ﾊﾟｲﾌﾟ	1				
12	03734 52030		Nipple	ﾆｯﾌﾟﾙ	2				
13	35100 57700		Air manifold	ｴｱ ﾏﾆﾎｰﾙﾄﾞ	1				
14	36710 37600		Bracket	ﾌﾞﾗｹｯﾄ	1				
15	03734 20020		Nipple	ﾆｯﾌﾟﾙ	1				
16	36400 24100		Regulator ass'y	ﾚｷﾞｭﾚｰﾀ	1				(PRESS.)
17	36710 37900		Bracket	ﾌﾞﾗｹｯﾄ	1				
18	36710 38800		Bracket	ﾌﾞﾗｹｯﾄ	1				
19	02201 08020		Flange bolt	ﾌﾗﾝｼﾞ付ﾎﾞﾙﾄ	5				
20	02201 06016		Flange bolt	ﾌﾗﾝｼﾞ付ﾎﾞﾙﾄ	4				
21	37189 33500		Bushing	ﾌﾞｯｼﾝｸﾞ	1				
22	03731 42002		Nipple	ﾆｯﾌﾟﾙ	2				
23	37189 28000		Bushing	ﾌﾞｯｼﾝｸﾞ	1				
24	37189 09700		Bushing	ﾌﾞｯｼﾝｸﾞ	1				
25	03840 20030		Nylon tube,w/n	ﾅｯﾄ付ﾅｲﾛﾝﾁｭｰﾌﾞ	1				
26	03840 30035		Nylon tube,w/n	ﾅｯﾄ付ﾅｲﾛﾝﾁｭｰﾌﾞ	1				
27	03620 60002		Plug	ﾌﾟﾗｸﾞ	3				
28	37181 07700		Clip	ｸﾘｯﾌﾟ	2				
29	37110 12100		Hose	ﾎｰｽ	2				
30	03734 44002		Nipple elbow	ﾆｯﾌﾟﾙ ｴﾙﾎﾞ	1				
31	03734 44102		Nipple elbow	ﾆｯﾌﾟﾙ ｴﾙﾎﾞ	1				
32	02248 05010		Bolt,w/w	ﾜｯｼｬ付ﾎﾞﾙﾄ	2				
33	03840 20014		Nylon tube,w/n	ﾅｯﾄ付ﾅｲﾛﾝﾁｭｰﾌﾞ	1				
34	03840 20019		Nylon tube,w/n	ﾅｯﾄ付ﾅｲﾛﾝﾁｭｰﾌﾞ	1				
35	03734 21020		Nipple elbow	ﾆｯﾌﾟﾙ ｴﾙﾎﾞ	3				
36	03734 21032		Nipple elbow	ﾆｯﾌﾟﾙ ｴﾙﾎﾞ	1				
37	02915 00006		Hexagon flange nut	ﾌﾗﾝｼﾞ付ﾅｯﾄ	4				

silverhorn.co.uk

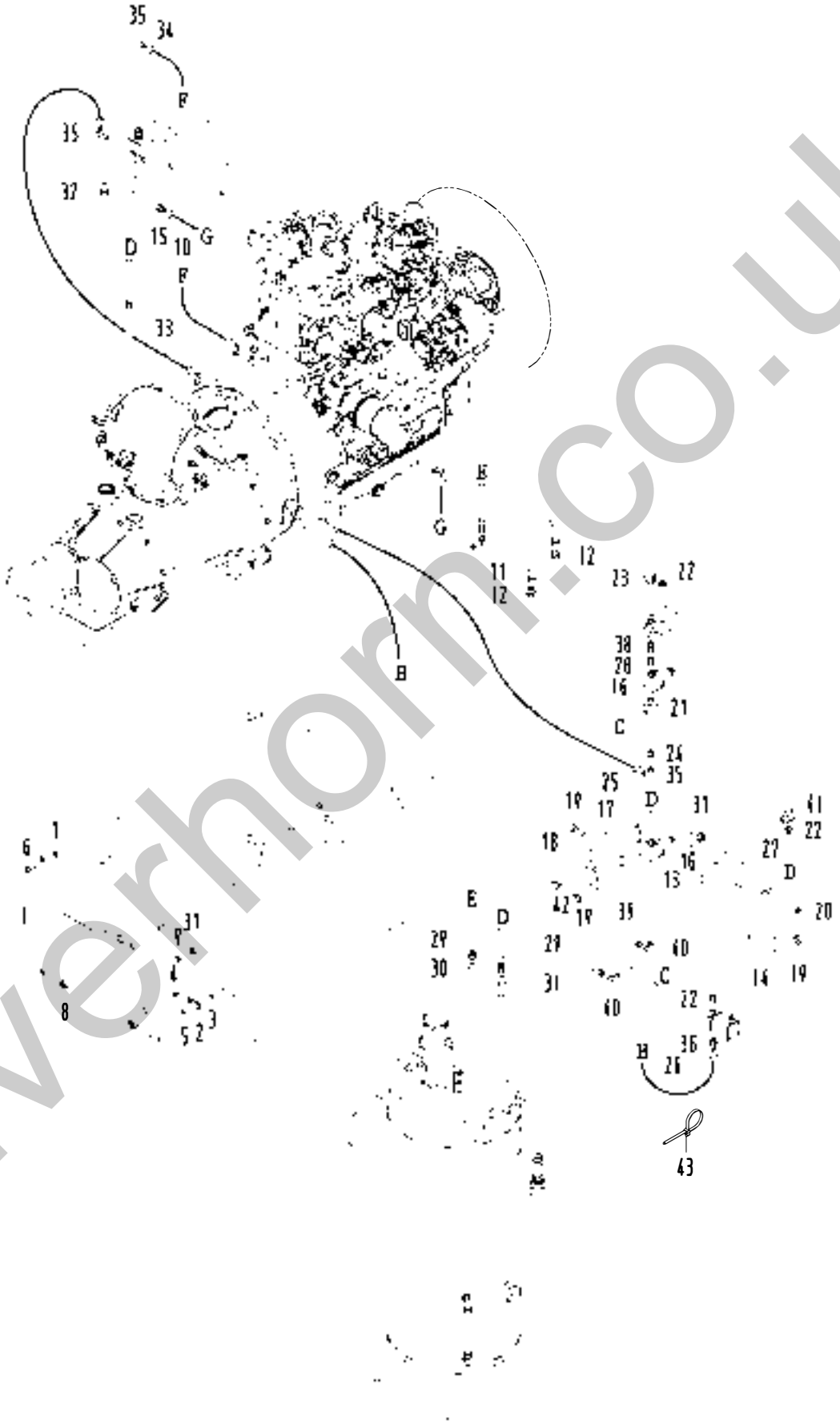

silverhorn.co.uk

36 - 01　AIR LINE(HIGH PRESSURE TYPE)

見出番号 Ref.NO.	部品番号 Part NO.	互換性 Inter-change ability	部品名称 Part Name		数量 Q'ty	適用号機範囲 Applicable Ser.No.		変更 C/H	備考 Remarks
	36 - 01		CONTROL GROUP	ｺﾝﾄﾛｰﾙ ｸﾞﾙｰﾌﾟ					
1	36110 25610		Instrument panel	ｲﾝｽﾄﾙﾒﾝﾄ ﾊﾟﾈﾙ	1				
2	52312 03300		Hinge	ﾋﾝｼﾞ	2				
3	02305 64006		Screw	ｽｸﾘｭ	4				
4	02305 64012		Screw	ｽｸﾘｭ	4				
5	03116 12004		Plain washer	ﾌﾟﾚｰﾝ ﾜｯｼｬ	4				
6	02401 66030		Screw	ｽｸﾘｭ	4				
7	45214 01400		Washer	ﾜｯｼｬ	4				
8	31131 04100		Rubber	ﾗﾊﾞｰ	2				
9	03424 82006		Clip	ｸﾘｯﾌﾟ	2				
10	03840 20028		Nylon tube,w/n	ﾅｯﾄ付ﾅｲﾛﾝﾁｭｰﾌﾞ	1				
11	36384 04400		Pipe	ﾊﾟｲﾌﾟ	1				
12	03734 52030		Nipple	ﾆｯﾌﾟﾙ	2				
13	35100 57700		Air manifold	ｴｱ ﾏﾆﾎｰﾙﾄﾞ	1				
14	36710 37600		Bracket	ﾌﾞﾗｹｯﾄ	1				
15	03734 20020		Nipple	ﾆｯﾌﾟﾙ	1				
16	36400 24100		Regulator ass'y	ﾚｷﾞｭﾚｰﾀ	2				
17	36710 37900		Bracket	ﾌﾞﾗｹｯﾄ	1				
18	36710 39000		Bracket	ﾌﾞﾗｹｯﾄ	1				
19	02201 08020		Flange bolt	ﾌﾗﾝｼﾞ付ﾎﾞﾙﾄ	5				
20	02201 06016		Flange bolt	ﾌﾗﾝｼﾞ付ﾎﾞﾙﾄ	4				
21	37189 39400		Bushing	ﾌﾞｯｼﾝｸﾞ	1				
22	03731 42002		Nipple	ﾆｯﾌﾟﾙ	3				
23	37189 28000		Bushing	ﾌﾞｯｼﾝｸﾞ	1				
24	37189 09700		Bushing	ﾌﾞｯｼﾝｸﾞ	1				
25	03840 20026		Nylon tube,w/n	ﾅｯﾄ付ﾅｲﾛﾝﾁｭｰﾌﾞ	1				
26	03840 30038		Nylon tube,w/n	ﾅｯﾄ付ﾅｲﾛﾝﾁｭｰﾌﾞ	1				
27	03620 60002		Plug	ﾌﾟﾗｸﾞ	2				
28	03734 43020		Nipple	ﾆｯﾌﾟﾙ	1				
29	37110 12100		Hose	ﾎｰｽ	2				
30	03734 44002		Nipple elbow	ﾆｯﾌﾟﾙ ｴﾙﾎﾞ	1				
31	03734 44102		Nipple elbow	ﾆｯﾌﾟﾙ ｴﾙﾎﾞ	1				
32	02248 05010		Bolt,w/w	ﾜｯｼｬ付ﾎﾞﾙﾄ	2				
33	03840 20014		Nylon tube,w/n	ﾅｯﾄ付ﾅｲﾛﾝﾁｭｰﾌﾞ	1				
34	03840 20019		Nylon tube,w/n	ﾅｯﾄ付ﾅｲﾛﾝﾁｭｰﾌﾞ	1				
35	03734 21020		Nipple elbow	ﾆｯﾌﾟﾙ ｴﾙﾎﾞ	3				
36	03734 20032		Nipple	ﾆｯﾌﾟﾙ	1				
37	02915 00006		Hexagon flange nut	ﾌﾗﾝｼﾞ付ﾅｯﾄ	4				
38	86183 01500		Joint	ｼﾞｮｲﾝﾄ	1				
39	36384 07500		Pipe	ﾊﾟｲﾌﾟ	1				
40	03734 53020		Nipple elbow	ﾆｯﾌﾟﾙ ｴﾙﾎﾞ	2				
41	37189 43100		Bushing	ﾌﾞｯｼﾝｸﾞ	1				
42	02248 05010		Bolt,w/w	ﾜｯｼｬ付ﾎﾞﾙﾄ	2				
43	37181 07700		Clip	ｸﾘｯﾌﾟ	1				

silverhorn.co.uk

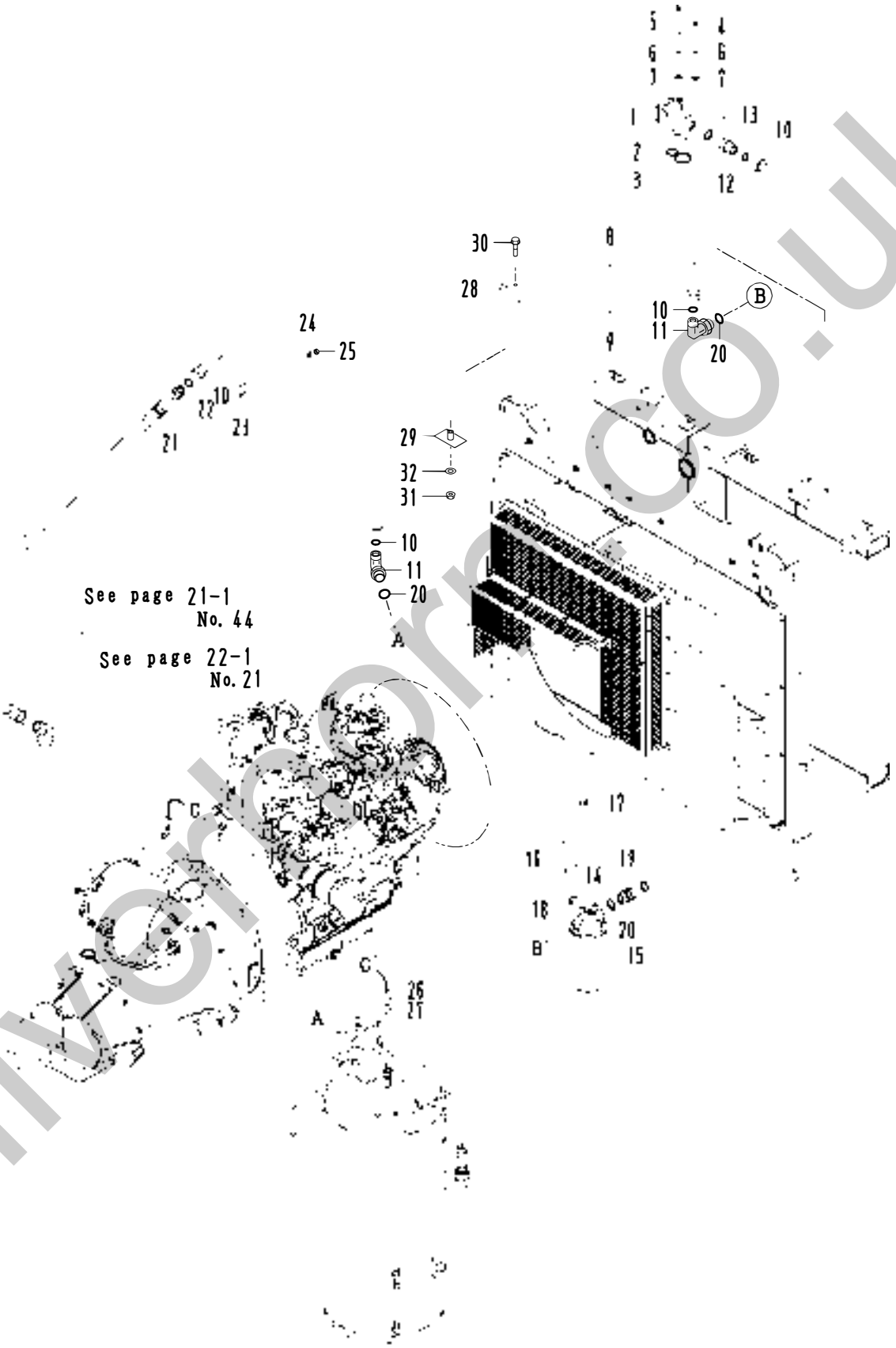

silvercorp.co.uk

見出番号 Ref.NO.	部品番号 Part NO.	互換性 Inter-change ability	部品名称 Part Name		数量 Q'ty	適用号機範囲 Applicable Ser.No. S/SC	DP/DPC	変更 C/H	備考 Remarks
	37 - 00		OIL LINE GROUP	ｵｲﾙ ﾗｲﾝ ｸﾞﾙｰﾌﾟ					
1	37200 11502		By-pass valve ass'y	ﾊﾞｲﾊﾟｽ ﾊﾞﾙﾌﾞ	1	◎			
1	37200 12400		By-pass valve ass'y	ﾊﾞｲﾊﾟｽ ﾊﾞﾙﾌﾞ	1		◎		
	37231 02100		Pellet ass'y	ﾍﾟﾚｯﾄ	1	◎			
	37231 04500		Pellet ass'y	ﾍﾟﾚｯﾄ	1		◎		
	03402 25045		O-ring	O-ﾘﾝｸﾞ	1				
2	03402 15025		O-ring	O-ﾘﾝｸﾞ	1				
3	03402 15045		O-ring	O-ﾘﾝｸﾞ	1				
4	02136 08035		Bolt	ﾎﾞﾙﾄ	2				
5	02136 08090		Bolt	ﾎﾞﾙﾄ	2				
6	03115 06008		Spring washer	ｽﾌﾟﾘﾝｸﾞ ﾜｯｼｬ	4				
7	03116 15008		Plain washer	ﾌﾟﾚｰﾝ ﾜｯｼｬ	4				
8	37111 26100		Pipe	ﾊﾟｲﾌﾟ	1				
9	37123 08500		Pipe	ﾊﾟｲﾌﾟ	1				
10	37187 01100		O-ring	O-ﾘﾝｸﾞ	4				
11	03734 76080		Nipple elbow	ﾆｯﾌﾟﾙ ｴﾙﾎﾞ	2				Incl.No.20
12	GD920 12400		Nipple	ﾆｯﾌﾟﾙ	1				Incl.No.13
13	03402 25024		O-ring	O-ﾘﾝｸﾞ	1				
14	37411 06100		Body	ﾎﾞﾃﾞｨ	1				
15	37438 05601		Filter cartridge	ﾌｨﾙﾀ ｶｰﾄﾘｯｼﾞ	1				
16	37510 39400		Bracket	ﾌﾞﾗｹｯﾄ	1				
17	02248 10020		Bolt,w/w	ﾜｯｼｬ付ﾎﾞﾙﾄ	2				
18	02201 08020		Flange bolt	ﾌﾗﾝｼﾞ付ﾎﾞﾙﾄ	2				
19	37731 05200		Nipple	ﾆｯﾌﾟﾙ	1				Incl.No.20
20	03402 25029		O-ring	O-ﾘﾝｸﾞ	4				
21	37110 09800		Hose	ﾎｰｽ	1				
22	37731 13700		Nipple	ﾆｯﾌﾟﾙ	1				
23	03831 06020		U-bolt	U-ﾎﾞﾙﾄ	1				
24	03116 12006		Plain washer	ﾌﾟﾚｰﾝ ﾜｯｼｬ	2				
25	02915 20006		Nut,w/w	ﾜｯｼｬ付ﾅｯﾄ	2				
26	03847 20075		Nylon tube,w/n	ﾅｯﾄ付ﾅｲﾛﾝﾁｭｰﾌﾞ	1				
27	03734 21020		Nipple elbow	ﾆｯﾌﾟﾙ ｴﾙﾎﾞ	1				
28	37530 27700		Bracket	ﾌﾞﾗｹｯﾄ	1				
29	37530 27801		Bracket	ﾌﾞﾗｹｯﾄ	1				
30	02201 08050		Flange bolt	ﾌﾗﾝｼﾞ付ﾎﾞﾙﾄ	1				
31	02915 20008		Nut,w/w	ﾜｯｼｬ付ﾅｯﾄ	1				
32	03116 12008		Plain washer	ﾌﾟﾚｰﾝ ﾜｯｼｬ	1				

silvermoon.co.uk

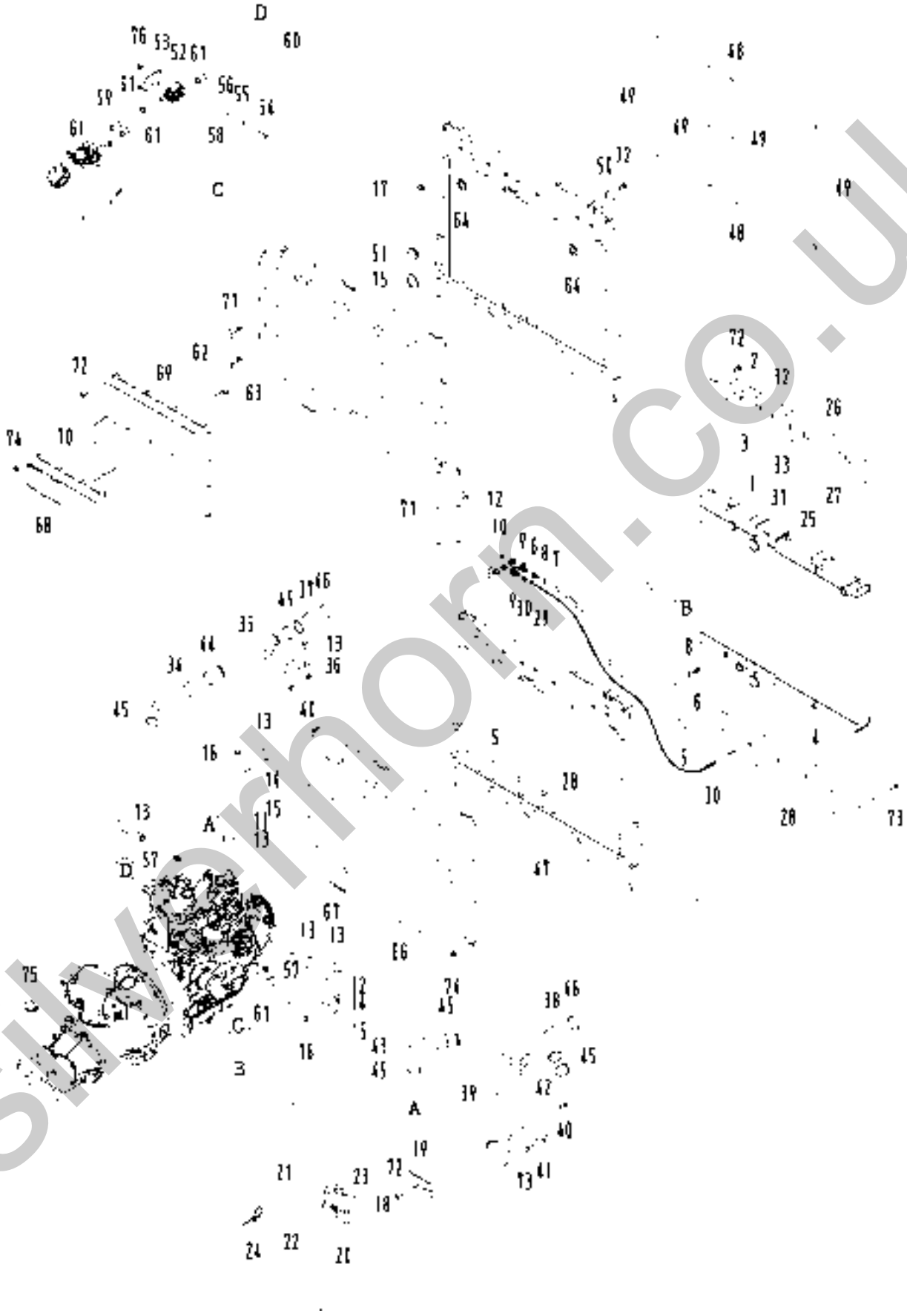

silverhorn.co.uk

見出番号 Ref.NO.	部品番号 Part NO.	互換性 Interchange ability	部品名称 Part Name		数量 Q'ty	適用号機範囲 Applicable Ser.No. S/SC	DP/DPC	変更 C/H	備考 Remarks
	38 - 00		COOLING GROUP	ｸｰﾘﾝｸﾞ ｸﾞﾙｰﾌﾟ					
1	38100 46200		Radiator	ﾗｼﾞｴｰﾀ	1				
2	38420 03310		Bracket	ﾌﾞﾗｹｯﾄ	1				
3	03407 64632		Seal rubber	ｼｰﾙ ﾗﾊﾞｰ	1				
4	52350 39930		Cover	ｶﾊﾞｰ	1	～0083	～0061		
4 -1	52350 46530	A	Cover	ｶﾊﾞｰ	1	0084～	0062～	M 2	
5	03407 64622		Seal rubber	ｼｰﾙ ﾗﾊﾞｰ	2				
6	37170 12200		Joint	ｼﾞｮｲﾝﾄ	2				
7	03611 08033		Hose	ﾎｰｽ	1				
8	03511 40018		Hose clip	ﾎｰｽ ｸﾘｯﾌﾟ	2				
9	03735 13003		Valve	ﾊﾞﾙﾌﾞ	2				
10	03620 41003		Plug	ﾌﾟﾗｸﾞ	2				
11	38524 76000		Hose	ﾎｰｽ	1				(upper)
12	38524 77400		Hose	ﾎｰｽ	1				(lower)
13	03511 20060		Hose clip	ﾎｰｽ ｸﾘｯﾌﾟ	4				
14	38526 03900		Clip	ｸﾘｯﾌﾟ	3				
15	43322 07500		Cushion	ｸｯｼｮﾝ	3				
16	02201 08030		Flange bolt	ﾌﾗﾝｼﾞ付ﾎﾞﾙﾄ	3				
17	03403 00303		Grommet	ｸﾞﾛﾒｯﾄ	1				
18	38590 01200		Reserve tank ass'y	ﾘｻﾞｰﾌﾞ ﾀﾝｸ	1				
19	38860 35500		Bracket	ﾌﾞﾗｹｯﾄ	1				
20	03511 30155		Hose clip	ﾎｰｽ ｸﾘｯﾌﾟ	1				
21	38594 05600		Hose	ﾎｰｽ	1				
22	38594 06800		Hose	ﾎｰｽ	1				
23	03511 40016		Hose clip	ﾎｰｽ ｸﾘｯﾌﾟ	3				
24	37181 07700		Clip	ｸﾘｯﾌﾟ	6				
25	38200 45600		Oil cooler	ｵｲﾙ ｸｰﾗ	1				
26	38420 03510		Bracket	ﾌﾞﾗｹｯﾄ	1				
27	03407 64619		Seal rubber	ｼｰﾙ ﾗﾊﾞｰ	1				
28	03407 64617		Seal rubber	ｼｰﾙ ﾗﾊﾞｰ	2				
29	03841 30107		Nylon tube,w/n	ﾅｯﾄ付ﾅｲﾛﾝﾁｭｰﾌﾞ	1				
30	03734 20030		Nipple	ﾆｯﾌﾟﾙ	2				
31	38920 05300		Intercooler	ｲﾝﾀｸｰﾗ	1				
32	38420 03710		Bracket	ﾌﾞﾗｹｯﾄ	1				
33	03407 64626		Seal rubber	ｼｰﾙ ﾗﾊﾞｰ	1				
34	32331 89300		Hose	ﾎｰｽ	1				
35	32320 72200		Pipe	ﾊﾟｲﾌﾟ	1				
36	32270 07300		Bracket	ﾌﾞﾗｹｯﾄ	1				
37	32332 08102		Hose	ﾎｰｽ	1				
38	32331 89400		Hose	ﾎｰｽ	1				
39	32320 74300		Pipe	ﾊﾟｲﾌﾟ	1				
40	02248 12030		Bolt,w/w	ﾜｯｼｬ付ﾎﾞﾙﾄ	6				
41	32270 08900		Bracket	ﾌﾞﾗｹｯﾄ	1				
42	32270 09100		Bracket	ﾌﾞﾗｹｯﾄ	1				
43	32331 89500		Hose	ﾎｰｽ	1				
44	03511 50065		Hose clip	ﾎｰｽ ｸﾘｯﾌﾟ	1				
45	03511 50075		Hose clip	ﾎｰｽ ｸﾘｯﾌﾟ	5				
46	03511 50085		Hose clip	ﾎｰｽ ｸﾘｯﾌﾟ	2				
47	52350 41330		Cover	ｶﾊﾞｰ	1				
48	03407 66946		Seal rubber	ｼｰﾙ ﾗﾊﾞｰ	2				
49	03407 66905		Seal rubber	ｼｰﾙ ﾗﾊﾞｰ	4				

silvernorm.co.uk

見出番号 Ref.NO.	部品番号 Part NO.	互換性 Inter-change ability	部品名称 Part Name		数量 Q'ty	適用号機範囲 Applicable Ser.No. S/SC	DP/DPC	変更 C/H	備考 Remarks
50	52350 02330		Cover	ｶﾊﾞｰ	1				
51	03403 00512		Grommet	ｸﾞﾛﾒｯﾄ	1				
52	35483 14200		Stop valve	ｽﾄｯﾌﾟﾊﾞﾙﾌﾞ	1				
53	38860 36800		Bracket	ﾌﾞﾗｹｯﾄ	1				
54	02138 08060		Bolt	ﾎﾞﾙﾄ	3				
55	03115 02008		Spring washer	ｽﾌﾟﾘﾝｸﾞ ﾜｯｼｬ	3				
56	03116 12008		Plain washer	ﾌﾟﾚｰﾝ ﾜｯｼｬ	3				
57	37170 27800		Joint	ｼﾞｮｲﾝﾄ	2				
58	03590 01009		Hose	ﾎｰｽ	1				
59	03590 01007		Hose	ﾎｰｽ	1				
60	03590 01008		Hose	ﾎｰｽ	1				
61	03511 20028		Hose Clip	ﾎｰｽｸﾘｯﾌﾟ	6				
62	44290 65600		Guide	ｶﾞｲﾄﾞ	1				
63	03424 80101		Clip	ｸﾘｯﾌﾟ	2				
64	52728 55510		Cushion rubber	ｸｯｼｮﾝﾗﾊﾞｰ	1				
65	52728 55610		Cushion rubber	ｸｯｼｮﾝﾗﾊﾞｰ	1				
66	38440 20310		Shroud,fan	ﾌｧﾝ ｼｭﾗｳﾄﾞ	1				
67	38440 21510		Shroud,fan	ﾌｧﾝ ｼｭﾗｳﾄﾞ	1				
68	38450 04610		Guard,fan	ﾌｧﾝ ｶﾞｰﾄﾞ	1				
69	38450 01710		Guard,fan	ﾌｧﾝ ｶﾞｰﾄﾞ	1				
70	38450 02810		Guard,fan	ﾌｧﾝ ｶﾞｰﾄﾞ	1				
71	38441 26710		Plate	ﾌﾟﾚｰﾄ	2				
72	02201 06016		Flange bolt	ﾌﾗﾝｼﾞ付ﾎﾞﾙﾄ	35				
73	02201 08020		Flange bolt	ﾌﾗﾝｼﾞ付ﾎﾞﾙﾄ	25				
74	02915 00006		Hexagon flange nut	ﾌﾗﾝｼﾞ付ﾅｯﾄ	24				
75	03403 00592		Grommet	ｸﾞﾛﾒｯﾄ	1				
76	02246 06016		Bolt,w/w	ﾜｯｼｬ付ﾎﾞﾙﾄ	3				

silverhorn.co.uk

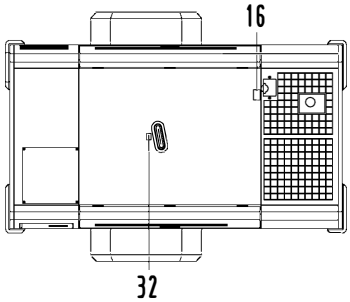

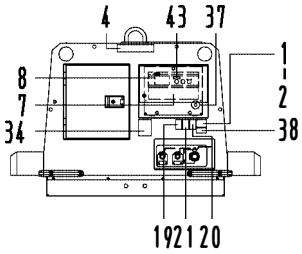

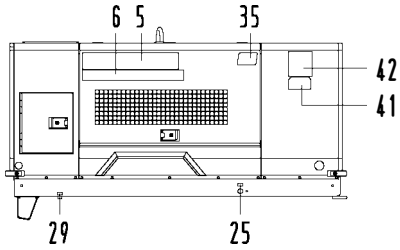

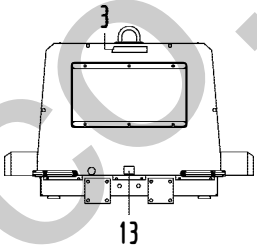

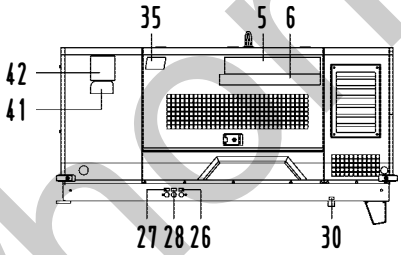

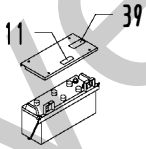

BATTERY

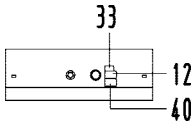

FUEL TANK

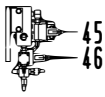

REGULATOR

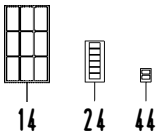

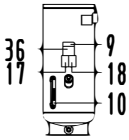

RECEIVER TANK

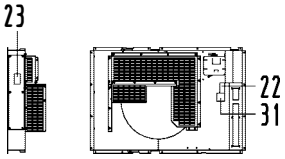

FAN SHROUD

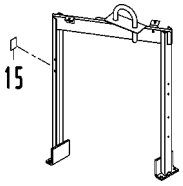

LIFTING BAIL

silverhorn.co.uk

39 - 00 NAME PLATE

見出番号 Ref.NO.	部品番号 Part NO.	互換性 Inter-change ability	部品名称 Part Name		数量 Q'ty	適用号機範囲 Applicable Ser.No. S/SC	DP/DPC	変更 C/H	備考 Remarks
	39 - 00		ACCESSORY GROUP	ｱｸｾｻﾘ ｸﾞﾙｰﾌﾟ					
	39600 99830		Instruction manual	取扱説明書					
	39615 11900		Instruction manual	取扱説明書(Eng.)					
1	39103 10811		Plate(SER.NO.)	ﾌﾟﾚｰﾄ	1				
2	03260 03010		Blind rivet	ﾘﾍﾞｯﾄ	4				
3	39170 02000		Mark(AIRMAN)	ﾏｰｸ	1				
4	39178 06840		Plate(AIRMAN)	ﾌﾟﾚｰﾄ	1				
5	39178 83700		Plate(AIRMAN Large)	ﾌﾟﾚｰﾄ	2				
6	39178 80440		Plate(PDS400)	ﾌﾟﾚｰﾄ	2	◎			
6	39178 83440		Plate(PDSF330DP)	ﾌﾟﾚｰﾄ	2		◎		
7	39153 74900		Plate(start-stop)	ﾌﾟﾚｰﾄ	1				
8	39178 83340		Plate(in-pane)	ﾌﾟﾚｰﾄ	1				
9	39176 07510		Plate(caution,strainer)	ﾌﾟﾚｰﾄ	1				
10	39178 58930		Plate(level gauge)	ﾌﾟﾚｰﾄ	1				
11	39176 50000		Plate(warning,battery)	ﾌﾟﾚｰﾄ	1				
12	39178 22031		Plate(diesel fuel)	ﾌﾟﾚｰﾄ	1				
13	39178 37310		Plate	ﾌﾟﾚｰﾄ	1				
			(caution,tow machine)						
14	39173 04200		Plate,complete	ﾌﾟﾚｰﾄ(1ｾｯﾄ)	1				Const.No.15～23
15	* * *	Z	Plate	ﾌﾟﾚｰﾄ	1				(39173 04200)
			(caution,high temp.)						
16	* * *	Z	Plate	ﾌﾟﾚｰﾄ	1				(39173 04200)
			(caution,radiator cap)						
17	* * *	Z	Plate(caution,fire)	ﾌﾟﾚｰﾄ	1				(39173 04200)
18	* * *	Z	Plate	ﾌﾟﾚｰﾄ	1				(39173 04200)
			(warning,compressed air)						
19	* * *	Z	Plate	ﾌﾟﾚｰﾄ	1				(39173 04200)
			(warning,exhaust gases)						
20	* * *	Z	Plate	ﾌﾟﾚｰﾄ	1				(39173 04200)
			(warning,compressed air)						
21	* * *	Z	Plate	ﾌﾟﾚｰﾄ	1				(39173 04200)
			(danger,compressed air)						
22	* * *	Z	Plate	ﾌﾟﾚｰﾄ	1				(39173 04200)
			(warning,cooling fan)						
23	* * *	Z	Plate(warning,belt)	ﾌﾟﾚｰﾄ	1				(39173 04200)
24	39173 00701		Plate,complete	ﾌﾟﾚｰﾄ(1ｾｯﾄ)	1				S/DP
			(Const.No.25～29)						
24	39173 00701		Plate,complete	ﾌﾟﾚｰﾄ(1ｾｯﾄ)	1				SC/DPC
			(Const.No.25～30)						
25	* * *	Z	Plate(fuel drain)	ﾌﾟﾚｰﾄ	1				(39173 00701)
26	* * *	Z	Plate(radiator drain)	ﾌﾟﾚｰﾄ	1				(39173 00701)
27	* * *	Z	Plate(eng.oil drain)	ﾌﾟﾚｰﾄ	1				(39173 00701)
28	* * *	Z	Plate	ﾌﾟﾚｰﾄ	1				(39173 00701)
			(oil cooler drain)						
29	* * *	Z	Plate(receiver drain)	ﾌﾟﾚｰﾄ	1				(39173 00701)
30	* * *	Z	Plate	ﾌﾟﾚｰﾄ	1				(39173 00701)SC/DPC
			(after cooler drain)						
31	39178 00310		Plate(LLC -30℃)	ﾌﾟﾚｰﾄ	1				
32	39176 69300		Plate(lift position)	ﾌﾟﾚｰﾄ	1				

silverhorn.co.uk

39 - 00 NAME PLATE

見出番号 Ref.NO.	部品番号 Part NO.	互換性 Inter-change ability	部品名称 Part Name		数量 Q'ty	適用号機範囲 Applicable Ser.No. S/SC	DP/DPC	変更 C/H	備考 Remarks
33	39176 07310		Plate	ﾌﾟﾚｰﾄ	1				
			(caution,fuel level)						
34	39176 14810		Plate(notice)	ﾌﾟﾚｰﾄ	1				SC/DPC
35	39178 06240		Plate(AC)	ﾌﾟﾚｰﾄ	2	◎	—		SC
36	39147 02800		Plate(comp.oil)	ﾌﾟﾚｰﾄ	1	～0095	～0071		
36 -1	39179 01700	A	Plate(comp.oil)	ﾌﾟﾚｰﾄ	1	0096～	0072～	M 4	
37	39178 47610		Plate(emergency stop)	ﾌﾟﾚｰﾄ	1				
38	39178 67840		Plate	ﾌﾟﾚｰﾄ	1				
			(exhaust gas California regulation)						
39	39178 70840		Plate(urea inlet)	ﾌﾟﾚｰﾄ	1				
40	39178 70940		Plate	ﾌﾟﾚｰﾄ	1				
			(caution,urea level)						
41	39178 12630		Plate(E2)	ﾌﾟﾚｰﾄ	2				
42	39178 72540		Plate(ANA,side small)	ﾌﾟﾚｰﾄ	2				
43	39178 84540		Plate(PRESSURE SELECT)	ﾌﾟﾚｰﾄ	1	—	◎		
44	39173 07400		Plate,complete	ﾌﾟﾚｰﾄ(1ｾｯﾄ)	1	—	◎		
			(Const.No.45,46)						
45	＊ ＊ ＊	Z	Plate(HIGH PRESSURE)	ﾌﾟﾚｰﾄ	1	—	◎		(39173 07400)
46	＊ ＊ ＊	Z	Plate(LOW PRESSURE)	ﾌﾟﾚｰﾄ	1	—	◎		(39173 07400)

silverhorn.co.uk

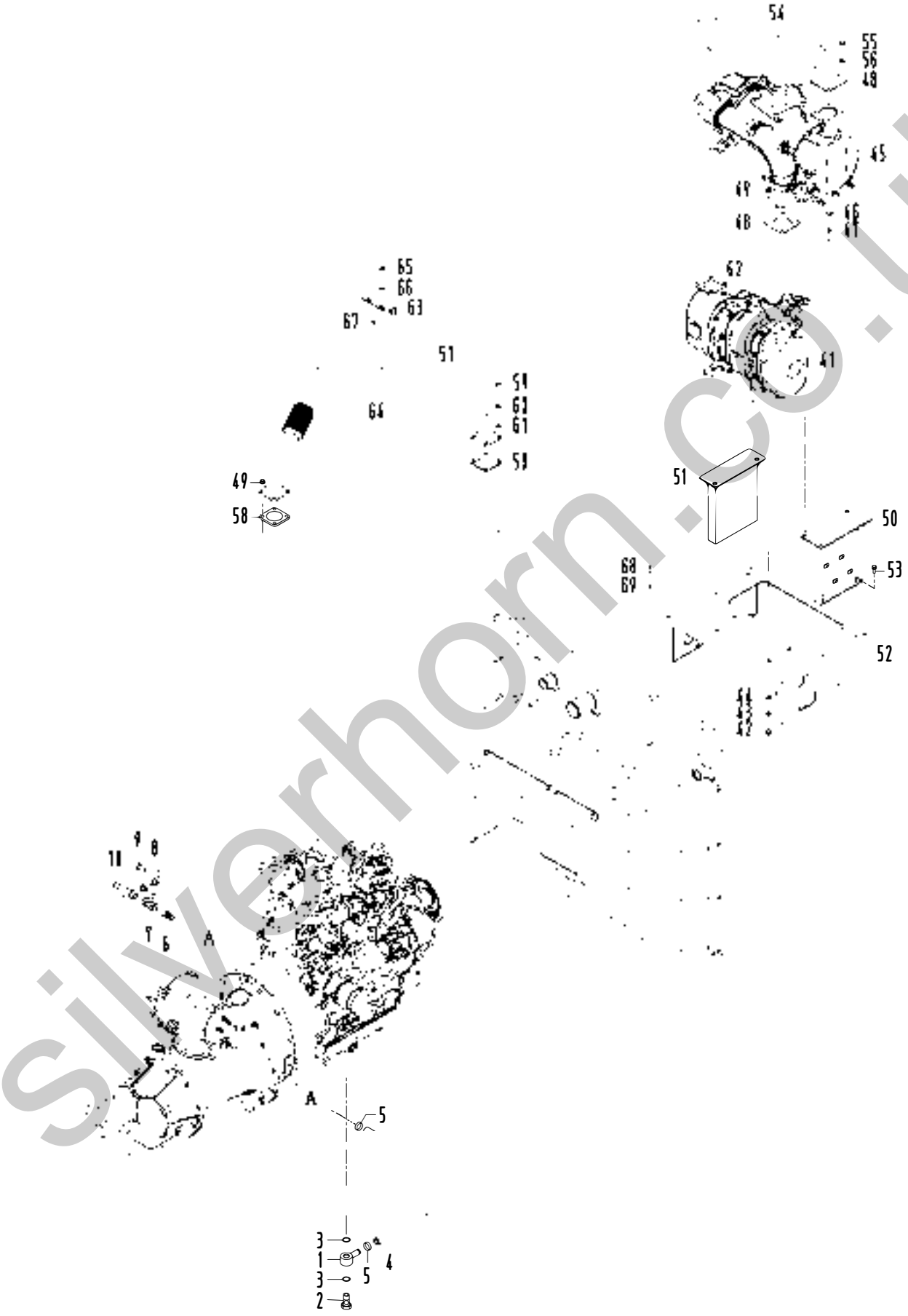

silverhorn.co.uk

見出番号 Ref.NO.	部品番号 Part NO.	互換性 Inter-change ability	部品名称 Part Name		数量 Q'ty	適用号機範囲 Applicable Ser.No. S/SC	DP/DPC	変更 C/H	備考 Remarks
	41 - 00		ENGINE GROUP	ｴﾝｼﾞﾝ ｸﾞﾙｰﾌﾟ					
1	43534 02102		Ring connector	ﾘﾝｸﾞ ｺﾈｸﾀ	1				
2	43532 09400		Nipple(Bolt)	ﾆｯﾌﾟﾙ(ﾎﾞﾙﾄ)	1				
3	03407 16024		Gasket	ｶﾞｽｹｯﾄ	2				
4	03580 19075		Hose	ﾎｰｽ	1				
5	03511 20035		Hose clip	ﾎｰｽ ｸﾘｯﾌﾟ	2				
6	37170 02900		Joint	ｼﾞｮｲﾝﾄ	1				
7	03735 13004		Valve	ﾊﾞﾙﾌﾞ	1				
8	37170 22900		Joint	ｼﾞｮｲﾝﾄ	1				
9	02246 08025		Bolt,w/w	ﾜｯｼｬ付ﾎﾞﾙﾄ	2				
10	03620 41004		Plug	ﾌﾟﾗｸﾞ	1				
	42 - 00		EXHAUST GROUP	ｴｷｿﾞｰｽﾄ ｸﾞﾙｰﾌﾟ					
41	42180 00300		Exhaust filter	ｴｷｿﾞｰｽﾄ ﾌｨﾙﾀ	1				See Engine parts
42	02108 10020		Bolt	ﾎﾞﾙﾄ	4				Fig.40～43
43	03115 02010		Spring washer	ｽﾌﾟﾘﾝｸﾞ ﾜｯｼｬ	4				
44	03116 12010		Plain washer	ﾌﾟﾚｰﾝ ﾜｯｼｬ	4				
45	42170 00200		Catalytic converter	ｺﾝﾊﾞｰﾀｰ	1				See Engine parts
46	02238 10030		Bolt,w/w	ﾜｯｼｬ付ﾎﾞﾙﾄ	4				Fig.44,45
47	45214 00800		Washer	ﾜｯｼｬ	4				
48	42323 05100		Gasket	ｶﾞｽｹｯﾄ	2				
49	02915 11010		Hexagon flange nut	ﾌﾗﾝｼﾞ付ﾅｯﾄ	8				
50	42240 37201		Bracket	ﾌﾞﾗｹｯﾄ	1				
51	42240 37301		Bracket	ﾌﾞﾗｹｯﾄ	1				
52	42240 37100		Bracket	ﾌﾞﾗｹｯﾄ	1	～0083	～0061		
52 -1	42240 38700	B	Bracket	ﾌﾞﾗｹｯﾄ	1	0084～	0062～	M 2	
53	02246 08025		Bolt,w/w	ﾜｯｼｬ付ﾎﾞﾙﾄ	4				
54	42310 15010		Pipe,exhaust	ｴｷｿﾞｰｽﾄ ﾊﾟｲﾌﾟ	1				
55	02102 10025		Bolt	ﾎﾞﾙﾄ	4				
56	03115 02010		Spring washer	ｽﾌﾟﾘﾝｸﾞ ﾜｯｼｬ	4				
57	42310 14010		Pipe,exhaust	ｴｷｿﾞｰｽﾄ ﾊﾟｲﾌﾟ	1				
58	42324 16900		Gasket	ｶﾞｽｹｯﾄ	2				
59	02136 10035		Bolt	ﾎﾞﾙﾄ	4				
60	03115 06010		Spring washer	ｽﾌﾟﾘﾝｸﾞ ﾜｯｼｬ	4				
61	03116 15010		Plain washer	ﾌﾟﾚｰﾝ ﾜｯｼｬ	8				
62	02912 06010		Nut	ﾅｯﾄ	4				
63	42240 35700		Bracket	ﾌﾞﾗｹｯﾄ	1				
64	03831 08050		U-bolt	U-ﾎﾞﾙﾄ	1				
65	02915 20008		Nut,w/w	ﾜｯｼｬ付ﾅｯﾄ	2				
66	03116 12008		Plain washer	ﾌﾟﾚｰﾝ ﾜｯｼｬ	2				
67	02201 08020		Flange bolt	ﾌﾗﾝｼﾞ付ﾎﾞﾙﾄ	2				
68	02246 08025		Bolt,w/w	ﾜｯｼｬ付ﾎﾞﾙﾄ	4	～0083	～0061		
68 -1	02201 08020	A	Flange bolt	ﾌﾗﾝｼﾞ付ﾎﾞﾙﾄ	4	0084～	0062～	M 2	
69	45214 02300	D	Washer	ﾜｯｼｬ	4	0084～	0062～	M 2	

silvernorm.co.uk

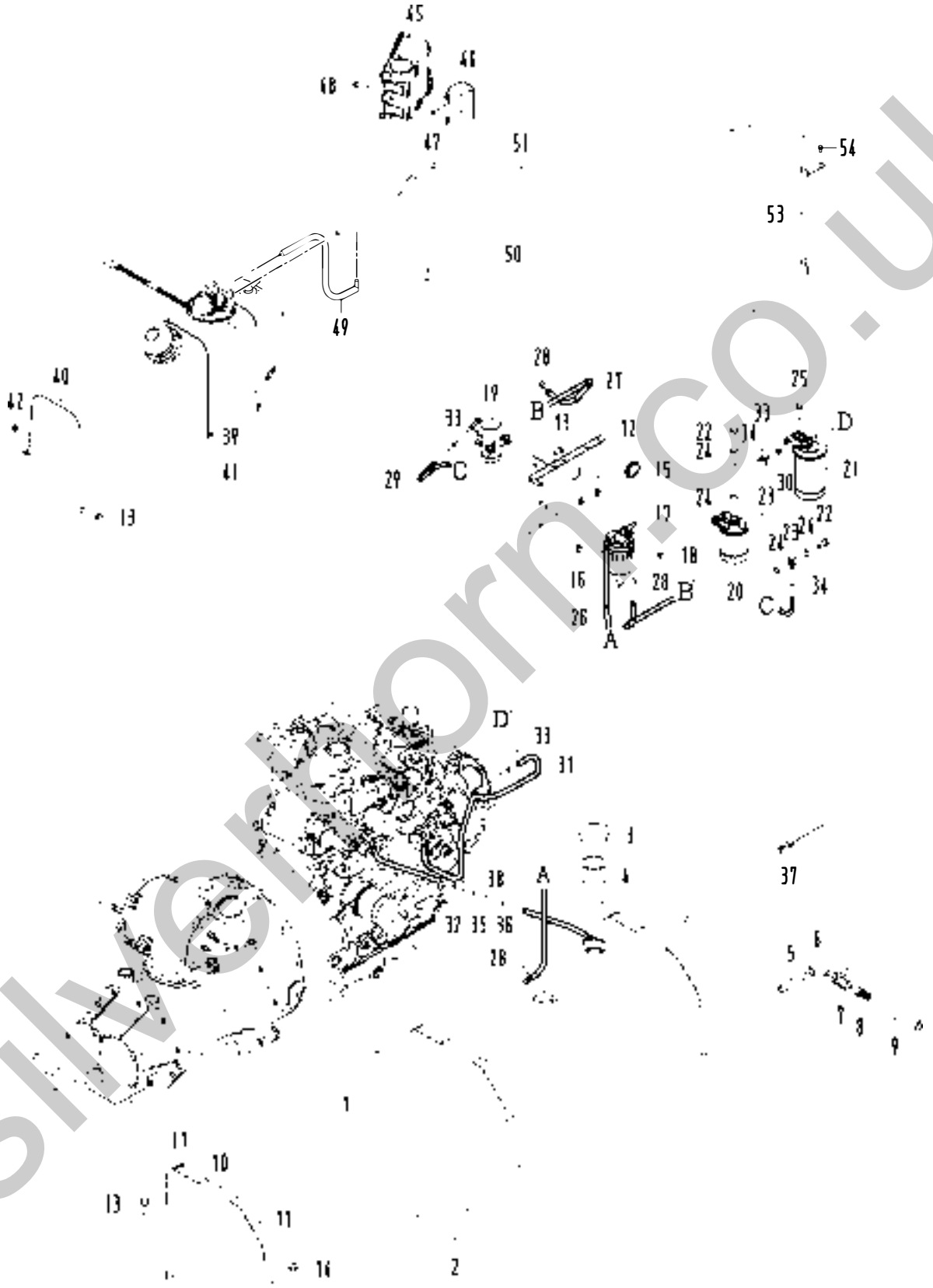

silverthorn.co.uk

見出番号 Ref.NO.	部品番号 Part NO.	互換性 Interchange ability	部品名称 Part Name		数量 Q'ty	適用号機範囲 Applicable Ser.No. S/SC	DP/DPC	変更 C/H	備考 Remarks
	43 - 00		FUEL GROUP	ﾌｭｴﾙ ｸﾞﾙｰﾌﾟ					
1	43100 84800		Fuel tank	ﾌｭｴﾙ ﾀﾝｸ	1				
2	38465 18900		Cushion rubber	ｸｯｼｮﾝ ﾗﾊﾞｰ	2				
3	43220 01300		Cap	ｷｬｯﾌﾟ	1				
4	43210 01301		Strainer	ｽﾄﾚｰﾅ	1				
5	03730 04100		Gas pipe	ｶﾞｽ ﾊﾟｲﾌﾟ	1				
6	03731 21004		Elbow	ｴﾙﾎﾞ	1				
7	03735 13004		Valve	ﾊﾞﾙﾌﾞ	1				
8	37170 02900		Joint	ｼﾞｮｲﾝﾄ	1				
9	03570 19017		Hose	ﾎｰｽ	1				
10	43310 34900		Belt	ﾍﾞﾙﾄ	2				
11	43322 06700		Cushion	ｸｯｼｮﾝ	4				
12	43340 40400		Bracket	ﾌﾞﾗｹｯﾄ	1				
13	02201 08020		Flange bolt	ﾌﾗﾝｼﾞ付ﾎﾞﾙﾄ	4				
14	02915 00008		Hexagon flange nut	ﾌﾗﾝｼﾞ付ﾅｯﾄ	2				
15	03402 00404		Eyelet ring	ｱｲﾚｯﾄﾘﾝｸﾞ	1				
16	02201 08050		Flange bolt	ﾌﾗﾝｼﾞ付ﾎﾞﾙﾄ	2				
17	43550 03400		Sedimenter	ｾﾞﾞﾒﾝﾀ	1				See Engine parts
18	02201 08070		Flange bolt	ﾌﾗﾝｼﾞ付ﾎﾞﾙﾄ	1				Fig.18
19	43650 03200		Fuel pump	ﾌｭｴﾙ ﾎﾟﾝﾌﾟ	1				See Engine parts
									Fig.20
20	43540 08500		Filter ass'y	燃料ﾌｨﾙﾀ	1				See Engine parts
									Fig.15
21	43540 08400		Filter ass'y	燃料ﾌｨﾙﾀ	1				See Engine parts
									Fig.16
22	43532 09900		Nipple	ﾆｯﾌﾟﾙ	1				See Engine parts
									Fig.16
23	43534 05700		Ring connector	ﾘﾝｸﾞ ｺﾈｸﾀ	2				See Engine parts
									Fig.16
24	43531 02400		Gasket	ｶﾞｽｹｯﾄ	4				See Engine parts
									Fig.16
25	02201 08030		Flange bolt	ﾌﾗﾝｼﾞ付ﾎﾞﾙﾄ	4				
26	03600 08044		Hose	ﾎｰｽ	1				
27	03600 08058		Hose	ﾎｰｽ	1				
28	03511 40016		Hose clip	ﾎｰｽ ｸﾘｯﾌﾟ	4				
29	03570 08036		Hose	ﾎｰｽ	1				
30	03570 08012		Hose	ﾎｰｽ	1				
31	03570 08069		Hose	ﾎｰｽ	1				
32	03570 08020		Hose	ﾎｰｽ	1				
33	03511 10017		Hose clip	ﾎｰｽ ｸﾘｯﾌﾟ	6				
34	03511 20016		Hose clip	ﾎｰｽ ｸﾘｯﾌﾟ	2				
35	43525 01800		Pipe	ﾊﾟｲﾌﾟ	1				
36	03570 09033		Hose	ﾎｰｽ	1				
37	37181 03600		Clip	ｸﾘｯﾌﾟ	2				
38	03511 10018		Hose clip	ﾎｰｽ ｸﾘｯﾌﾟ	2				
39	43230 00100		Def tank	DEFﾀﾝｸ	1				
40	43310 37300		Belt	ﾍﾞﾙﾄ	2				
41	43810 00100		Diesel exhaust fluid	DEF(尿素水)	1				
42	02915 00008		Hexagon flange nut	ﾌﾗﾝｼﾞ付ﾅｯﾄ	2				
43	03570 08095		Hose	ﾎｰｽ	1				
44	03511 10017		Hose clip	ﾎｰｽ ｸﾘｯﾌﾟ	1				

silverhorn.co.uk

見出番号 Ref.NO.	部品番号 Part NO.	互換性 Inter-change ability	部品名称 Part Name		数量 Q'ty	適用号機範囲 Applicable Ser.No. S/SC	DP/DPC	変更 C/H	備考 Remarks
45	43850 00100		Def pump	DEFﾎﾟﾝﾌﾟ	1				
46	43570 09500		Bracket	ﾌﾞﾗｹｯﾄ	1				
47	02201 06016		Flange bolt	ﾌﾗﾝｼﾞ付ﾎﾞﾙﾄ	2				
48	02201 08040		Flange bolt	ﾌﾗﾝｼﾞ付ﾎﾞﾙﾄ	4				
49	43510 14400		Hose	ﾎｰｽ	1				
50	43510 14500		Hose	ﾎｰｽ	1				See Engine parts Fig.54
51	43510 14600		Hose	ﾎｰｽ	1				See Engine parts Fig.54
52	03425 00001		Clip	ｸﾘｯﾌﾟ	20				
53	44290 64200		Guide	ｶﾞｲﾄﾞ	1	～0083	～0061		
53 -1	44290 66500	B	Guide	ｶﾞｲﾄﾞ	1	0084～	0062～	M 2	
54	02246 06016		Bolt,w/w	ﾜｯｼｬ付ﾎﾞﾙﾄ	2	～0083	～0061		
54 -1	02246 08025	B	Bolt,w/w	ﾜｯｼｬ付ﾎﾞﾙﾄ	2	0084～	0062～	M 2	

silverhorn.co.uk

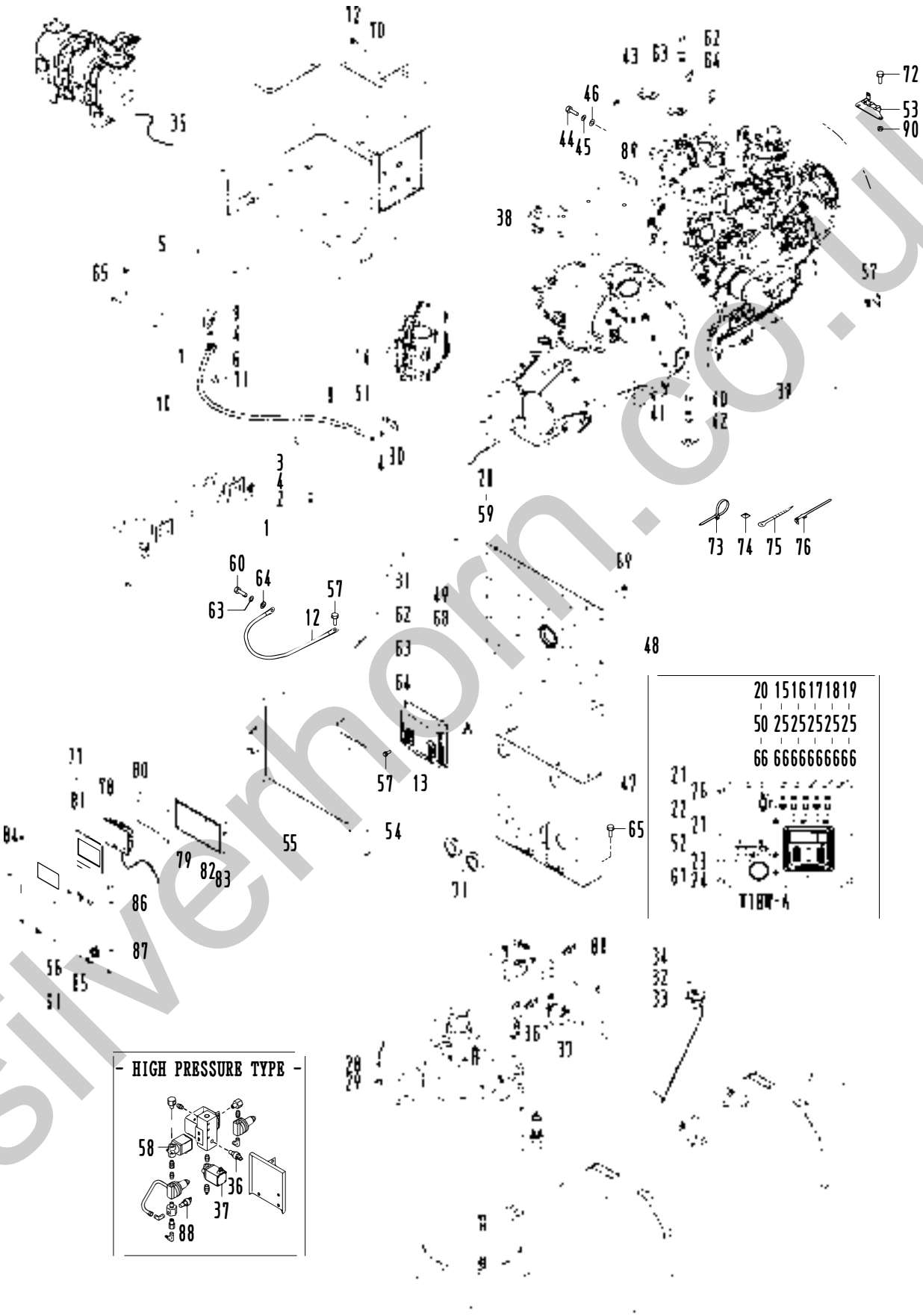

silverhorn.co.uk

見出番号 Ref.NO.	部品番号 Part NO.	互換性 Inter-change ability	部品名称 Part Name		数量 Q'ty	適用号機範囲 Applicable Ser.No. S/SC	DP/DPC	変更 C/H	備考 Remarks
	44 - 00		ELECTRIC GROUP	ｴﾚｸﾄﾘｯｸ ｸﾞﾙｰﾌﾟ					
1	44210 08700		Battery	ﾊﾞｯﾃﾘ	1				(130F51)
2	44220 30800		Cover	ｶﾊﾞｰ	1				
3	44243 03100		Holder	ﾎﾙﾀﾞ	2				
4	02915 20008		Nut,w/w	ﾜｯｼｬ付ﾅｯﾄ	4				
5	44220 31800		Cover	ｶﾊﾞｰ	1				
6	05625 00018		Terminal	端子	1				
7	05105 21090		Cable	ｹｰﾌﾞﾙ	1				(batt.～starter)
8	06540 15080		Corrugated tube	ｺﾙｹﾞｰﾄ ﾁｭｰﾌﾞ	1				
9	44462 06700		Insulator	ｲﾝｼｭﾚｰﾀ	1				(red)
10	07808 41060		Cable(Incl.No.11)	ｹｰﾌﾞﾙ	1				(batt.～Eng.)
11	44462 05600		Insulator	ｲﾝｼｭﾚｰﾀ	1				
12	05138 23050		Cable	ｹｰﾌﾞﾙ	1				(Eng.～frame)
13	44390 05900		Controller(ECU)	ｺﾝﾄﾛｰﾗ	1				
14	44390 06000		Controller(ACU)	ｺﾝﾄﾛｰﾗ	1				(KUBOTA 1J508-19451)
15	44346 16700		Relay(starter)	ﾘﾚｰ	1				(KUBOTA 1J423-60233)
16	44346 16700		Relay(ECU)	ﾘﾚｰ	1				(KUBOTA 1J423-60233)
17	44346 16700		Relay(unloader)	ﾘﾚｰ	1				(KUBOTA 1J423-60233)
18	44346 16700		Relay(ACU)	ﾘﾚｰ	1				(KUBOTA 1J423-60233)
19	44346 16700		Relay(DEF hanter)	ﾘﾚｰ	1				(KUBOTA 1J423-60233)
20	44346 17300		Relay(heater)	ﾘﾚｰ(ﾋｰﾀ)	1				(KUBOTA 3N300-75213)
21	44470 02500		Fuse box(120A)	ﾋｭｰｽﾞ ﾎﾞｯｸｽ	1				
22	44461 22600		Connector	ｺﾈｸﾀ	1				
23	44470 02600		Fuse box	ﾋｭｰｽﾞ ﾎﾞｯｸｽ	2				
	46934 05100		Fuse (30A)	ﾋｭｰｽﾞ	2				
24	44470 01700		Fuse box	ﾋｭｰｽﾞ ﾎﾞｯｸｽ	1				
	46934 03300		Fuse (20A)	ﾋｭｰｽﾞ	1				
25	44250 61210		Bracket	ﾌﾞﾗｹｯﾄ	5				
26	44250 32110		Bracket	ﾌﾞﾗｹｯﾄ	1				
27	02248 06016		Bolt,w/w	ﾜｯｼｬ付ﾎﾞﾙﾄ	2				
28	44364 08200		Thermo sensor	ｻｰﾓ ｾﾝｻ	2				
29	37189 36000		Bushing	ﾌﾞｯｼﾝｸﾞ	1				
30	44462 00800		Insulator	ｲﾝｼｭﾚｰﾀ	1				
31	44490 88841		Wiring harness	ﾜｲﾔﾊｰﾈｽ	1				(main)
32	36159 04500		Sending unit	ｾﾝﾃﾞｨﾝｸﾞ ﾕﾆｯﾄ	1				Incl.No.33
33	36153 01600		Gasket	ｶﾞｽｹｯﾄ	1				
34	02415 65012		Screw,w/w	ﾜｯｼｬ付ｽｸﾘｭ	5				
35	44490 91640		Wiring harness(DPF)	ﾜｲﾔﾊｰﾈｽ	1				(KUBOTA 1J508-65082)
36	44328 20600		Pressure switch	圧力ｽｲｯﾁ	1				
37	46811 30000		Solenoid valve	電磁弁	1				(starting unloader)
38	46811 31800		Solenoid valve	電磁弁	1				
39	44290 65300		Guide	ｶﾞｲﾄﾞ	1				
40	02138 16025		Bolt	ﾎﾞﾙﾄ	1				
41	03115 02016		Spring washer	ｽﾌﾟﾘﾝｸﾞ ﾜｯｼｬ	1				
42	03116 12016		Plain washer	ﾌﾟﾚｰﾝ ﾜｯｼｬ	1				
43	44290 65401		Guide	ｶﾞｲﾄﾞ	1				
44	02102 10020		Bolt	ﾎﾞﾙﾄ	1				
45	03115 02010		Spring washer	ｽﾌﾟﾘﾝｸﾞ ﾜｯｼｬ	1				
46	03116 12010		Plain washer	ﾌﾟﾚｰﾝ ﾜｯｼｬ	1				
47	52350 16730		Cover	ｶﾊﾞｰ	1				
48	44250 81010		Bracket	ﾌﾞﾗｹｯﾄ	1				

silvermarm.co.uk

見出番号 Ref.NO.	部品番号 Part NO.	互換性 Inter-change ability	部品名称 Part Name		数量 Q'ty	適用号機範囲 Applicable Ser.No. S/SC	DP/DPC	変更 C/H	備考 Remarks
49	03407 68200		Seal rubber	ｼｰﾙ ﾗﾊﾞｰ	1				
50	02915 20006		Nut,w/w	ﾜｯｼｬ付ﾅｯﾄ	2				
51	02138 06030		Bolt	ﾎﾞﾙﾄ	4				
	03116 12006		Plain washer	ﾌﾟﾚｰﾝ ﾜｯｼｬ	4				
52	44550 55200		Cable kit	ｹｰﾌﾞﾙｷｯﾄ	1				(heater)
53	44250 82210		Blacket	ﾌﾞﾗｹｯﾄ	1				(KUBOTA 1J508-65171)
54	52100 78430		Cover	ｶﾊﾞｰ	1				
55	03407 64713		Seal rubber	ｼｰﾙ ﾗﾊﾞｰ	1				
56	52746 05800		Cap	ｷｬｯﾌﾟ	1	◎			
56	46167 05100		Select switch	ｾﾚｸﾄｽｲｯﾁ	1		◎		(press. change)
57	02248 08025		Bolt,w/w	ﾜｯｼｬ付ﾎﾞﾙﾄ	6				
58	46811 31700		Solenoid valve	電磁弁	1		◎		(press. change)
59	06540 07020		Corrugated tube	ｺﾙｹﾞｰﾄ ﾁｭｰﾌﾞ	1				
60	02108 12025		Bolt	ﾎﾞﾙﾄ	2				
61	44490 90240		Wiring harness	ﾊｰﾈｽ	1	―	◎		
62	02102 12025		Bolt	ﾎﾞﾙﾄ	3				
63	03115 02012		Spring washer	ｽﾌﾟﾘﾝｸﾞ ﾜｯｼｬ	5				
64	03116 12012		Plain washer	ﾌﾟﾚｰﾝ ﾜｯｼｬ	5				
65	02201 08020		Flange bolt	ﾌﾗﾝｼﾞ付ﾎﾞﾙﾄ	14				
66	02415 66016		Screw,w/w	ﾜｯｼｬ付ｽｸﾘｭ	7				
67	02345 66008		Screw	ｽｸﾘｭ	2				
	03115 02006		Spring washer	ｽﾌﾟﾘﾝｸﾞ ﾜｯｼｬ	2				
	03116 12006		Plain washer	ﾌﾟﾚｰﾝ ﾜｯｼｬ	2				
68	03403 00803		Grommet	ｸﾞﾛﾒｯﾄ	1				
69	02915 00006		Hexagon flange nut	ﾌﾗﾝｼﾞ付ﾅｯﾄ	12				
70	44250 81110		Bracket	ﾌﾞﾗｹｯﾄ	1				
71	03402 00453		Eyelet ring	ｱｲﾚｯﾄ ﾘﾝｸﾞ	2				
72	02246 08025		Bolt,w/w	ﾜｯｼｬ付ﾎﾞﾙﾄ	8				
73	37181 07700		Clip	ｸﾘｯﾌﾟ	8				
74	44243 04600		Holder	ﾎﾙﾀﾞ	1				
75	03425 00001		Vinyl clip	ﾋﾞﾆｰﾙ ｸﾘｯﾌﾟ	24				
76	37181 03600		Clip	ｸﾘｯﾌﾟ	7				
77	46750 22110		Control panel	ｺﾝﾄﾛｰﾙﾊﾟﾈﾙ	1				Const.No.78～83
78	46879 79200		Controller complete	ﾀｯﾁﾊﾟﾈﾙ	1				
79	44480 94100		Cable	ｹｰﾌﾞﾙ	1				
80	36120 30200		Plate	ﾌﾟﾚｰﾄ	1				
81	52728 55210		Cushion rubber	ｸｯｼｮﾝﾗﾊﾞｰ	1				
82	46879 79300		Controller complete	ｺﾝﾄﾛｰﾗ	1				
83	46470 27110		Box	ﾎﾞｯｸｽ	1				
84	36120 30100		Plate	ﾌﾟﾚｰﾄ	1				
85	46242 23200		Push button switch	ﾌﾟｯｼｭﾎﾞﾀﾝｽｲｯﾁ	1				
86	46167 05900		Select switch	ｾﾚｸﾄｽｲｯﾁ	1				
87	44336 03002		Button switch	非常停止ﾎﾞﾀﾝ	1				(emergency stop)
88	44328 20600		Pressure switch	圧力ｽｲｯﾁ	1	◎			
88	44328 20700		Pressure switch	圧力ｽｲｯﾁ	1		◎		
89	44462 01900		Insulator	ｲﾝｼｭﾚｰﾀ	1				
90	02915 00008		Hexagon flange nut	ﾌﾗﾝｼﾞ付ﾅｯﾄ	2				

silverhorn.co.uk

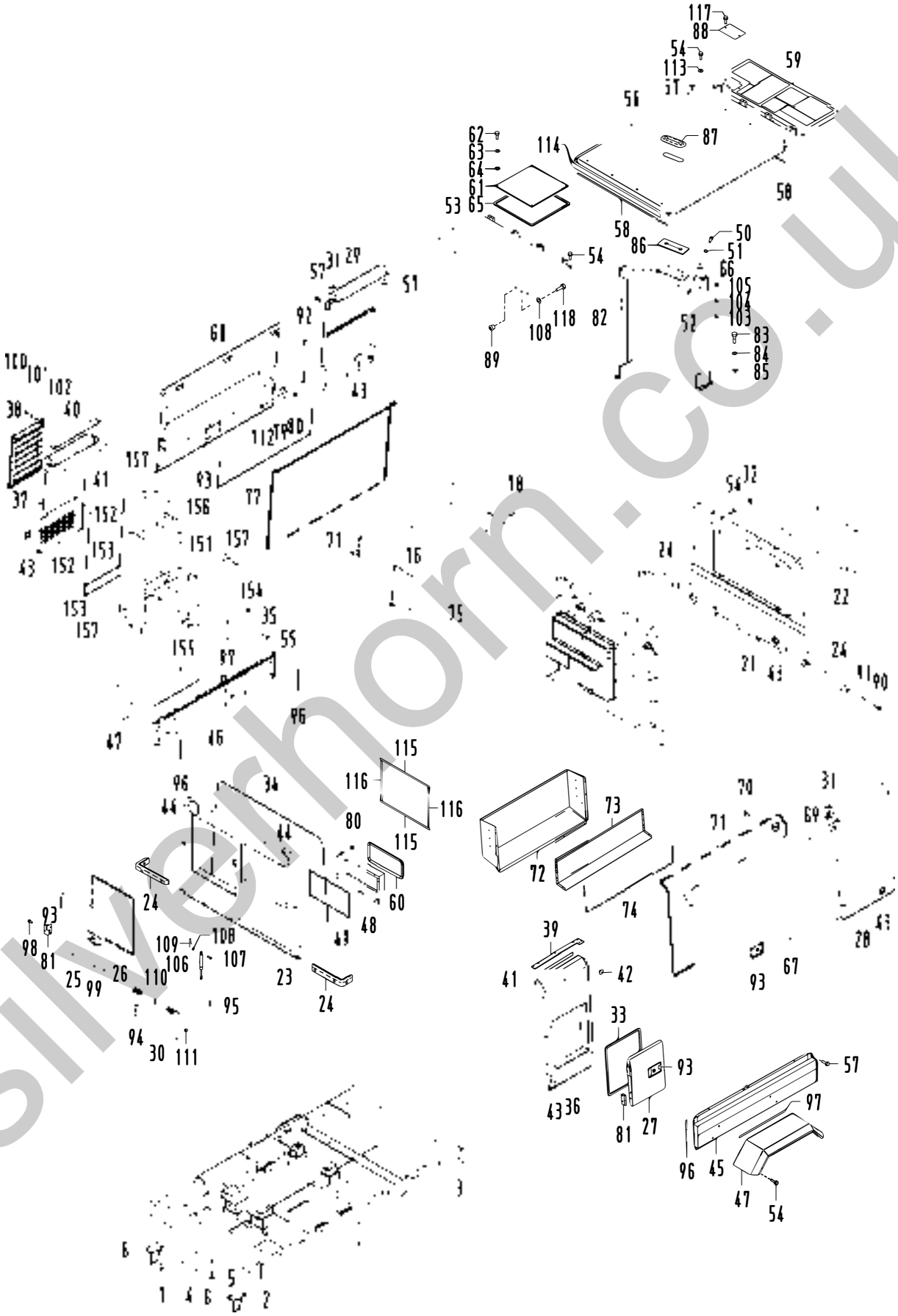

silverhorn.co.uk

51 - 00　FRAME & BONNET

見出番号 Ref.NO.	部品番号 Part NO.	互換性 Inter-change ability	部品名称 Part Name		数量 Q'ty	適用号機範囲 Applicable Ser.No. S/SC	DP/DPC	変更 C/H	備考 Remarks
	51 - 00		FRAME GROUP	ﾌﾚｰﾑ ｸﾞﾙｰﾌﾟ					
1	51100 88541		Frame	ﾌﾚｰﾑ	1				
2	03403 10019		Grommet	ｸﾞﾛﾒｯﾄ	6				
3	37181 07200		Clip	ｸﾘｯﾌﾟ	2				
4	52350 72620	C	Cover	ｶﾊﾞｰ	1	0130～	0086～ M 6		
5	02246 06016	C	Bolt,w/w	ﾜｯｼｬ付ﾎﾞﾙﾄ	4	0130～	0086～ M 6		
6	51550 03100		Stand,rear	ｽﾀﾝﾄﾞ	2				
7	02246 10030		Bolt,w/w	ﾜｯｼｬ付ﾎﾞﾙﾄ	8				
	52 - 00		BONNET GROUP	ﾎﾞﾝﾈｯﾄ ｸﾞﾙｰﾌﾟ					
21	52100 78230		Cover	ｶﾊﾞｰ	1				
22	52350 14230		Cover	ｶﾊﾞｰ	1				
23	52100 78330		Cover	ｶﾊﾞｰ	1				
24	52728 31211		Cushion rubber	ｸｯｼｮﾝ ﾗﾊﾞｰ	4				
25	52450 66930		Door	ﾄﾞｱ	1				
26	03407 64725		Seal rubber	ｼｰﾙ ﾗﾊﾞｰ	1				
27	52450 67030		Door	ﾄﾞｱ	1				
28	52100 71630		Cover	ｶﾊﾞｰ	1				
29	52100 71730		Cover	ｶﾊﾞｰ	1				
30	52450 92730		Door	ﾄﾞｱ	1				
31	52728 50810		Cushion rubber	ｸｯｼｮﾝ ﾗﾊﾞｰ	2				
32	52746 02101		Cap	ｷｬｯﾌﾟ	8				
33	03407 64732		Seal rubber	ｼｰﾙ ﾗﾊﾞｰ	1				
34	03407 66876		Seal rubber	ｼｰﾙ ﾗﾊﾞｰ	1				
35	39200 05202		Tool box	ﾂｰﾙ ﾎﾞｯｸｽ	1				
36	52100 72930		Cover	ｶﾊﾞｰ	1				
37	52100 73330		Cover	ｶﾊﾞｰ	1				
38	52370 18010		Duct	ﾀﾞｸﾄ	1				
39	52728 55310		Cushion rubber	ｸｯｼｮﾝ ﾗﾊﾞｰ	1				
40	52728 55410		Cushion rubber	ｸｯｼｮﾝ ﾗﾊﾞｰ	1				
41	03407 67036		Seal rubber	ｼｰﾙ ﾗﾊﾞｰ	2				
42	03403 10010		Grommet	ｸﾞﾛﾒｯﾄ	8				
43	03403 00592		Grommet	ｸﾞﾛﾒｯﾄ	5				
44	03403 01022		Grommet	ｸﾞﾛﾒｯﾄ	2				
45	52400 84220		Side cover	ｻｲﾄﾞ ｶﾊﾞｰ	1				
46	52400 83920		Side cover	ｻｲﾄﾞ ｶﾊﾞｰ	1				
47	53220 71300		Fender	ﾌｪﾝﾀﾞ	2				
48	52100 44530		Cover	ｶﾊﾞｰ	1				
49	03407 68150		Seal rubber	ｼｰﾙ ﾗﾊﾞｰ	1				
50	02138 08045		Bolt	ﾎﾞﾙﾄ	2				
51	03116 12008		Plain washer	ﾌﾟﾚｰﾝ ﾜｯｼｬ	2				
52	02915 20008		Nut,w/w	ﾜｯｼｬ付ﾅｯﾄ	2				
53	52300 73420		Top cover	ﾄｯﾌﾟ ｶﾊﾞｰ	1				
54	02246 08025		Bolt,w/w	ﾜｯｼｬ付ﾎﾞﾙﾄ	82				
55	02201 06016		Flange bolt	ﾌﾗﾝｼﾞ付ﾎﾞﾙﾄ	4				
56	52300 73320		Top cover	ﾄｯﾌﾟ ｶﾊﾞｰ	1				
57	02246 06016		Bolt,w/w	ﾜｯｼｬ付ﾎﾞﾙﾄ	16				
58	03407 66850		Seal rubber	ｼｰﾙ ﾗﾊﾞｰ	2				
59	52300 73020		Top cover	ﾄｯﾌﾟ ｶﾊﾞｰ	1				

silverhorn.co.uk

見出番号 Ref.NO.	部品番号 Part NO.	互換性 Inter-change ability	部品名称 Part Name		数量 Q'ty	適用号機範囲 Applicable Ser.No. S/SC	DP/DPC	変更 C/H	備考 Remarks
60	03407 64724		Seal rubber	ｼｰﾙ ﾗﾊﾞｰ	1				
61	52350 78620		Cover	ｶﾊﾞｰ	1				
62	02136 06025		Bolt	ﾎﾞﾙﾄ	4				
63	52744 01100		Washer	ﾜｯｼｬ	4				
64	03116 15006		Plain washer	ﾌﾟﾚｰﾝ ﾜｯｼｬ	4				
65	03407 64713		Seal rubber	ｼｰﾙ ﾗﾊﾞｰ	1				
66	52630 13600		Stay	ｽﾃｰ	2				
67	52450 92630		Door	ﾄﾞｱ	1				
68	52450 92530		Door	ﾄﾞｱ	1				
69	52480 14800		Hinge	ﾋﾝｼﾞ	6				
70	02136 08016		Bolt	ﾎﾞﾙﾄ	24				
71	03407 64734		Seal rubber	ｼｰﾙ ﾗﾊﾞｰ	2				
72	52800 29010		Duct	ﾀﾞｸﾄ	1				
73	52370 42510		Duct	ﾀﾞｸﾄ	1				
74	03407 68147		Seal rubber	ｼｰﾙ ﾗﾊﾞｰ	1				
75	52800 29110		Duct	ﾀﾞｸﾄ	1				
76	52370 42610		Duct	ﾀﾞｸﾄ	1				
77	03407 68170		Seal rubber	ｼｰﾙ ﾗﾊﾞｰ	1				
78	03266 05012		Blind rivet	ﾘﾍﾞｯﾄ	16				
79	52750 31800		Bracket	ﾌﾞﾗｹｯﾄ	4				
80	02915 00006		Hexagon flange nut	ﾌﾗﾝｼﾞ付ﾅｯﾄ	66				
81	52480 12500		Hinge	ﾋﾝｼﾞ	4				
82	52620 51300		Lifting bail	ﾘﾌﾃｨﾝｸﾞ ﾍﾞｲﾙ	1				
83	02135 12045		Bolt	ﾎﾞﾙﾄ	4				
84	03115 02012		Spring washer	ｽﾌﾟﾘﾝｸﾞ ﾜｯｼｬ	4				
85	03116 12012		Plain washer	ﾌﾟﾚｰﾝ ﾜｯｼｬ	4				
86	52728 35411		Cushion rubber	ｸｯｼｮﾝ ﾗﾊﾞｰ	1				
87	52746 04200		Cap	ｷｬｯﾌﾟ	1				
88	52350 89010		Cover	ｶﾊﾞｰ	1				
89	52652 00400		Nut	ﾅｯﾄ	4				
90	02246 08050		Bolt,w/w	ﾜｯｼｬ付ﾎﾞﾙﾄ	12				
91	52162 00200		Collar	ｶﾗｰ	12				
92	GE360 02100		Dumper	ﾀﾞﾝﾊﾟ	4				
93	52710 03601		Latch ass'y	ﾗｯﾁ	4				
94	52723 00900		Lock	ﾛｯｸ	1				
95	02401 66012		Screw	ｽｸﾘｭ	4				
96	03407 66832		Seal rubber	ｼｰﾙ ﾗﾊﾞｰ	4				
97	03407 66811		Seal rubber	ｼｰﾙ ﾗﾊﾞｰ	2				
98	02136 08020		Bolt	ﾎﾞﾙﾄ	16				
99	52728 14810		Cushion rubber	ｸｯｼｮﾝ ﾗﾊﾞｰ	4				
100	02136 08040		Bolt	ﾎﾞﾙﾄ	4				
101	03115 06008		Spring washer	ｽﾌﾟﾘﾝｸﾞ ﾜｯｼｬ	4				
102	03116 15008		Plain washer	ﾌﾟﾚｰﾝ ﾜｯｼｬ	4				
103	02912 06008		Nut	ﾅｯﾄ	2				
104	03115 02008		Spring washer	ｽﾌﾟﾘﾝｸﾞ ﾜｯｼｬ	4				
105	52744 01200		Washer	ﾜｯｼｬ	2				
106	GE360 03200		Dumper	ﾀﾞﾝﾊﾟ	1				
107	03322 06017		Pin	ﾋﾟﾝ	2				
108	03116 12006		Plain washer	ﾌﾟﾚｰﾝ ﾜｯｼｬ	6				
109	56166 00900		Pin	ﾋﾟﾝ	2				
110	GE240 01100		Rubber cushion	ﾗﾊﾞｰ ｸｯｼｮﾝ	1				
111	31131 04100		Rubber	ﾗﾊﾞｰ	4				

silverhorn.co.uk

見出番号 Ref.NO.	部品番号 Part NO.	互換性 Inter-change ability	部品名称 Part Name		数量 Q'ty	適用号機範囲 Applicable Ser.No. S/SC	DP/DPC	変更 C/H	備考 Remarks
112	02915 00008		Hexagon flange nut	ﾌﾗﾝｼﾞ付ﾅｯﾄ	8				
113	52744 00900		Washer	ﾜｯｼｬ	8				
114	52728 51510		Cushion rubber	ｸｯｼｮﾝ ﾗﾊﾞｰ	1				
115	03407 66831		Seal rubber	ｼｰﾙ ﾗﾊﾞｰ	2				
116	03407 66866		Seal rubber	ｼｰﾙ ﾗﾊﾞｰ	2				
117	02246 08016		Bolt,w/w	ﾜｯｼｬ付ﾎﾞﾙﾄ	2				
118	02248 06012		Bolt,w/w	ﾜｯｼｬ付ﾎﾞﾙﾄ	4				
	38 - 00		COOLING GROUP	ｸｰﾘﾝｸﾞ ｸﾞﾙｰﾌﾟ					
151	38300 42900		Casing	ｹｰｼﾝｸﾞ	1				
152	03407 66909		Seal rubber	ｼｰﾙﾗﾊﾞｰ	2				
153	03407 66936		Seal rubber	ｼｰﾙﾗﾊﾞｰ	2				
154	52370 44510		Duct	ﾀﾞｸﾄ	1				
155	03407 66826		Seal rubber	ｼｰﾙﾗﾊﾞｰ	1				
156	52800 30310		Duct	ﾀﾞｸﾄ	1				
157	02201 08020		Flange bolt	ﾌﾗﾝｼﾞ付ﾎﾞﾙﾄ	10				

silverhorn.co.uk

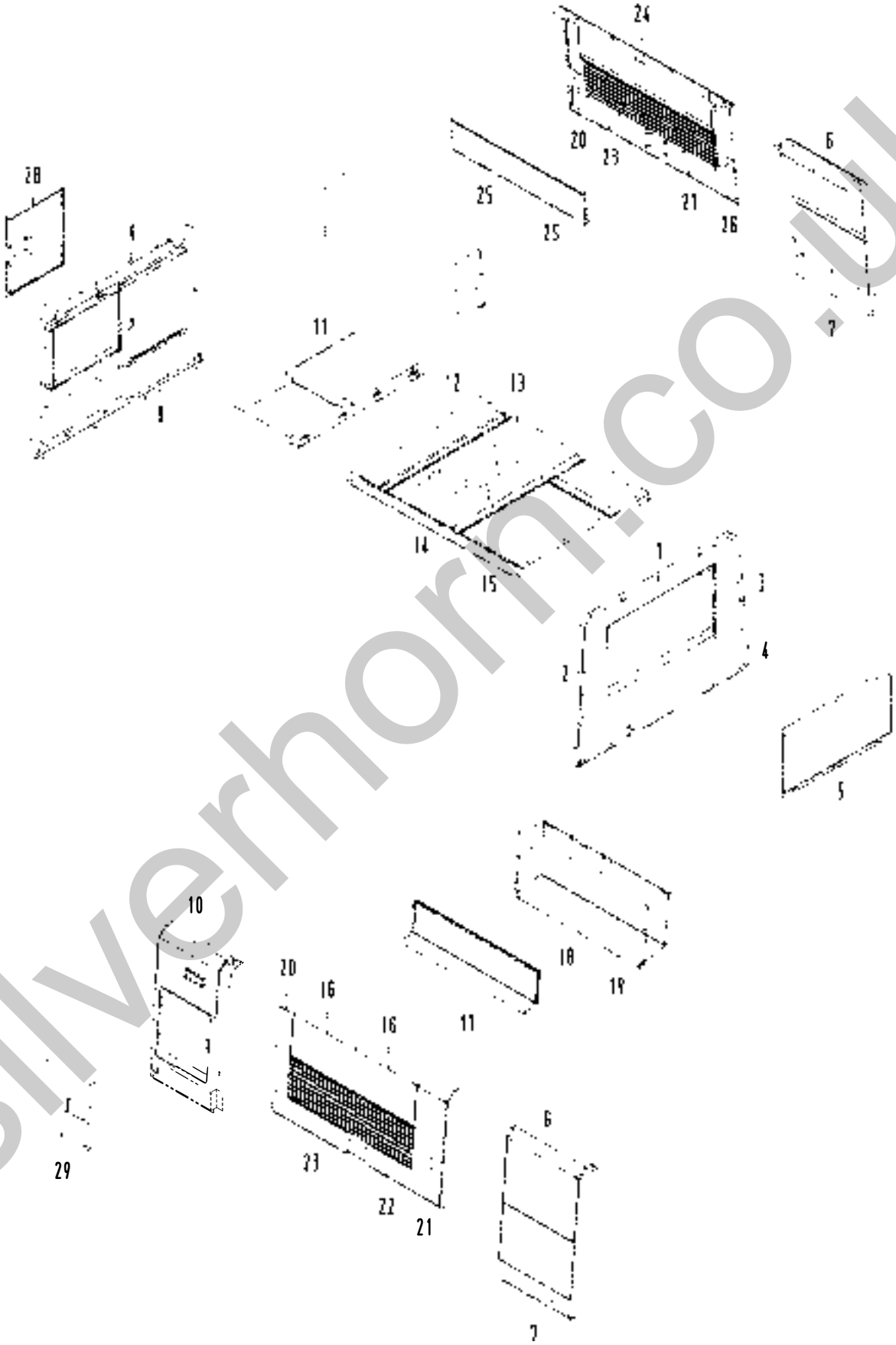

silverhorn.co.uk

見出番号 Ref.NO.	部品番号 Part NO.	互換性 Inter-change ability	部品名称 Part Name		数量 Q'ty	適用号機範囲 Applicable Ser.No. S/SC	DP/DPC	変更 C/H	備考 Remarks
	52900 60220		URETHANE FOAM KIT	ｳﾚﾀﾝ ﾌｫｰﾑ ｷｯﾄ					
1	52919 11230		Lining	ﾗｲﾆﾝｸﾞ	1				
2	52939 11740		Lining	ﾗｲﾆﾝｸﾞ	1				
3	52939 11840		Lining	ﾗｲﾆﾝｸﾞ	1				
4	52939 11940		Lining	ﾗｲﾆﾝｸﾞ	1				
5	52919 22830		Lining	ﾗｲﾆﾝｸﾞ	1				
6	52919 25130		Lining	ﾗｲﾆﾝｸﾞ	2				
7	52919 25230		Lining	ﾗｲﾆﾝｸﾞ	2				
8	52959 88050		Lining	ﾗｲﾆﾝｸﾞ	1				
9	52967 44500		Lining	ﾗｲﾆﾝｸﾞ	1				
10	52931 18130		Lining	ﾗｲﾆﾝｸﾞ	1				
11	52931 18230		Lining	ﾗｲﾆﾝｸﾞ	1				
12	52959 27960		Lining	ﾗｲﾆﾝｸﾞ	1				
13	52968 31300		Lining	ﾗｲﾆﾝｸﾞ	1				
14	52968 31400		Lining	ﾗｲﾆﾝｸﾞ	1				
15	52967 48500		Lining	ﾗｲﾆﾝｸﾞ	1				
16	52977 11910		Lining	ﾗｲﾆﾝｸﾞ	2				
17	52977 22510		Lining	ﾗｲﾆﾝｸﾞ	2				
18	52978 65400		Lining	ﾗｲﾆﾝｸﾞ	1				
19	52977 22610		Lining	ﾗｲﾆﾝｸﾞ	1				
20	52977 12210		Lining	ﾗｲﾆﾝｸﾞ	2				
21	52978 51300		Lining	ﾗｲﾆﾝｸﾞ	1				
22	52977 12310		Lining	ﾗｲﾆﾝｸﾞ	1				
23	52977 79500		Lining	ﾗｲﾆﾝｸﾞ	2				
24	52977 45900		Lining	ﾗｲﾆﾝｸﾞ	2				
25	52977 22710		Lining	ﾗｲﾆﾝｸﾞ	2				
26	52978 51400		Lining	ﾗｲﾆﾝｸﾞ	1				
27	52977 12610		Lining	ﾗｲﾆﾝｸﾞ	1				
28	52978 51500		Lining	ﾗｲﾆﾝｸﾞ	1				
29	52978 51600		Lining	ﾗｲﾆﾝｸﾞ	1				

silvernorm.co.uk

エンジン パーツ
ENGINE PARTS

原動機型式 ENGINE MODEL	KUBOTA V3800

silverhorn.co.uk

NOTICE

This Parts List is for the following purposes.

1. When ordering parts, check with this Parts List to confirm the part number and the name of parts.
2. When making repairs, refer to the illustrations in this Parts List.
3. This Parts List is subject to change without notice.

INSTRUCTIONS

Fig. No. ..... Represents No. corresponding to each group name.

Components ..... The components of an assembly are identified by a bracket of dotted lines.

Point ..... Indicates that the parts is not sold independently.
The assembly containing the part needs to be ordered.

REF. No. ..... Reference numbers are assigned to parts in the illustration. The code number of a part in the illustration can be identified by referring to the same reference number in the parts list.

Model name ..... The name of the basic model is indicated in this column. Other applicable models are indicated on the "REMARKS" column.

ENGINE MODEL	CODE No.	REMARKS
V3800-TIEF4B-COHE-1	1J303-14000	PDS400(SET ENGINE)

S. No. ..... Indicates a group of serial numbers to which a design change is applied.
(serial No.)

I. C. ..... Indicates the interchangeability of parts due to design change.
(interchangeability)

..... ← indicates that a new part can replace an old part, but not vice versa.

..... ≠ indicates that the new and old parts are not interchangeable.

..... ↔ indicates that the new and old parts are interchangeable.

REMARKS ..... In this column, enter other applicable model names, dimensions and other special items.

STD ... Standard SET ... Set sale

OLD ... Old parts, old shapes or old models

NEW ... New parts, new shapes or new models

silverhorn.co.uk

500000 クランクケース CRANKCASE

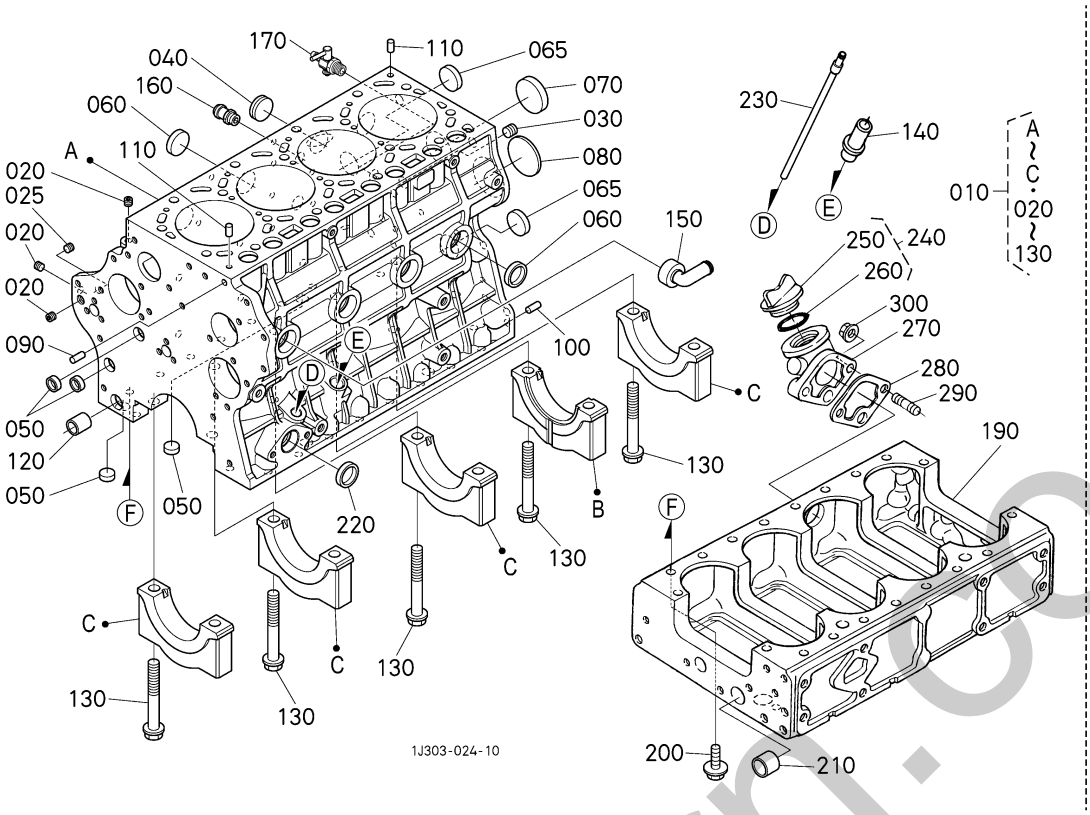

A:V3800-TIEF4B-COHE-1

図番 REF.No.	品番 PART No.	部品名称	PART NAME	数量 Q'TY/S.No. A	互換 I.C.	備考 REMARKS
010	1J508-0101-2	ｸﾗﾝｸｹｰｽ,ｺﾝﾌﾟ	CRANKCASE,COMP	1		
020	15521-9602-0	ﾌﾟﾗｸﾞ(R1/8)	PLUG	3		
025	15841-9602-0	ﾌﾟﾗｸﾞ	PLUG	1		
030	1C010-9601-0	ﾌﾟﾗｸﾞ	PLUG	1		
040	16683-9602-0	ﾌﾟﾗｸﾞ(PT1)	PLUG	1		
050	15261-0337-0	ﾜﾝｶﾞﾀ ﾌﾟﾗｸﾞ	CAP,SEALING	4		
060	1J550-0338-0	ﾜﾝｶﾞﾀﾌﾟﾗｸﾞ	PLUG,CUP TYPE	6		
065	15221-0338-0	ﾜﾝｶﾞﾀ ﾌﾟﾗｸﾞ	CAP,SEALING	2		
070	15221-0339-0	ﾜﾝｶﾞﾀ ﾌﾟﾗｸﾞ	CAP,SEALING	1		
080	1C010-9616-0	ﾍﾞﾙﾁﾌﾟﾗｸﾞ	PLUG,EXPANSION	1		
090	05012-00820	ﾍｲｺｳ ﾋﾟﾝ	PIN,STRAIGHT	1		
100	05012-01016	ﾍｲｺｳ ﾋﾟﾝ	PIN STRAIGHT	4		
110	15221-3365-0	ﾊﾟｲﾌﾟ ﾋﾟﾝ	PIN,PIPE	2		
120	1C010-3364-3	ﾍｲｺｳﾋﾟﾝ(1,ｷﾞﾔｹｰｽ)	PIN,STRAIGHT	1		
130	1C010-0456-0	ﾎﾞﾙﾄ (ﾍﾞｱﾘﾝｸﾞｹｰｽ)	BOLT,BEARING CASE	10		
140	1C040-3321-2	ﾊﾟｲﾌﾟ(2,ｵｲﾙ)	PIPE,OIL	1		
150	1J550-7135-2	ｺﾈｸﾀ,ｺﾝﾌﾟ(WP)	JOINT,PIPE	1		
160	1C010-3711-4	ｸﾀﾞﾂｷﾞﾃ(ｳｵｰﾀﾊﾟｲﾌﾟ)	JOINT,WATER PIPE	1		
170	1G377-7310-0	ｺｯｸ(ﾄﾞﾚｰﾝ)	COCK(DRAIN)	1		
180	----	ﾌﾞﾗﾝｸ	BLANK	-		
190	1G518-0112-2	ｸﾗﾝｸｹｰｽ(2)	CRANKCASE	1		
200	01774-51030	ﾌﾗﾝｼﾞﾎﾞﾙﾄ	BOLT,FLANGE	16		
210	1C010-3365-3	ﾍｲｺｳﾋﾟﾝ(2,ｷﾞﾔｹｰｽ)	PIN,STRAIGHT	1		
220	15221-0338-0	ﾜﾝｶﾞﾀ ﾌﾟﾗｸﾞ	CAP,SEALING	1		
230	1J419-0584-0	ﾊﾟｲﾌﾟ,ｺﾝﾌﾟ(ｵｲﾙﾘﾀｰﾝ)	COMP.PIPE(OIL RETURN)	1		
240	1C010-3308-0	ﾌﾟﾗｸﾞ,ｱﾂｼ(ｷｭｳﾕ)	ASSY PLUG,O/FILLER	1		
250	E9151-3314-0	ﾌﾟﾗｸﾞ(ｷｭｳﾕ)	PLUG(OIL FILLER)	1		
260	04817-50300	Oﾘﾝｸﾞ	O RING	1		
270	15602-3311-0	ﾌﾗﾝｼﾞ,ｷｭｳﾕ	FLANGE,OIL FILLER	1		
280	15625-3289-0	ﾊﾟﾂｷﾝ NA	GASKET	1		

↔ 新旧部品兼用可; ≠ 新旧部品兼用不可; ← 新部品は旧部品に兼用可; → 旧部品は新部品に兼用可

shernborn.co.uk

500000 クランクケース CRANKCASE

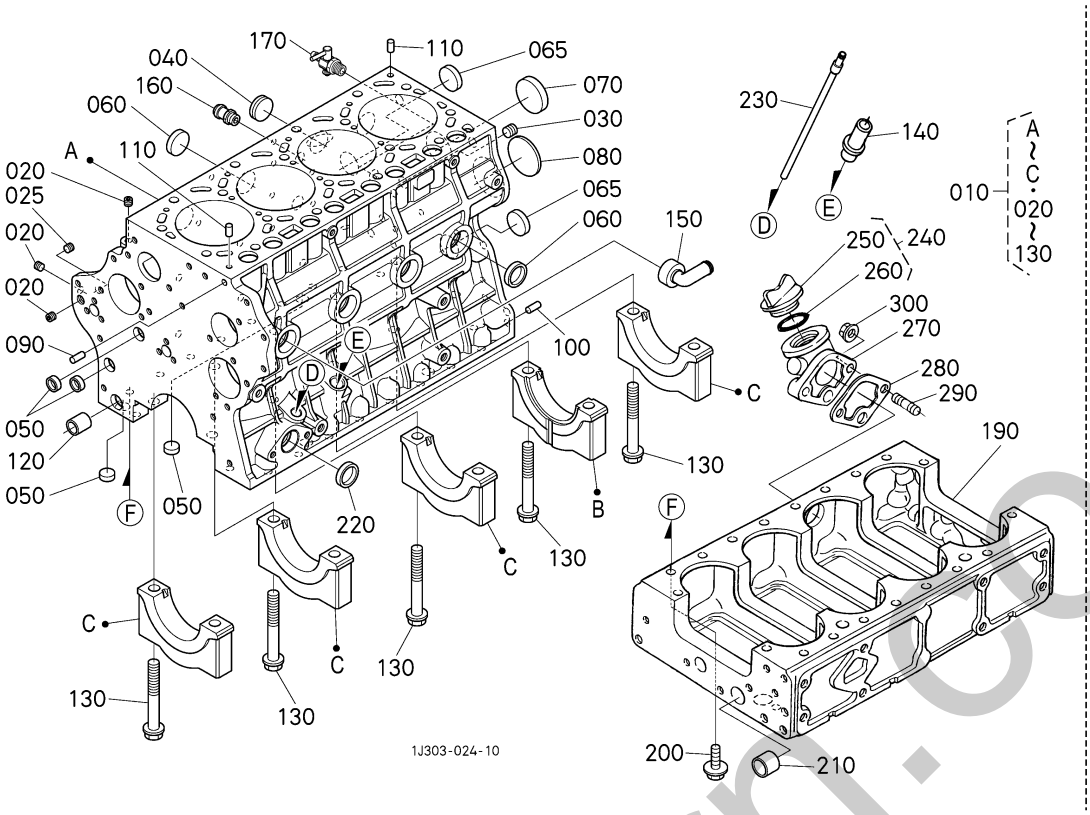

A:V3800-TIEF4B-COHE-1

図番 REF.No.	品番 PART No.	部品名称	PART NAME	数量 Q'TY/S.No. A	互換 I.C.	備考 REMARKS
290	1J542-9163-2	ｽﾀｯﾄﾞ (M8X23)	STUD	2		
300	02751-50080	ﾌﾗﾝｼﾞ ﾅｯﾄ	NUT,FLANGE	2		

↔ 新旧部品兼用可; ≠ 新旧部品兼用不可; ← 新部品は旧部品に兼用可; → 旧部品は新部品に兼用可

silverhorn.co.uk

501000 オイルパン
OIL PAN

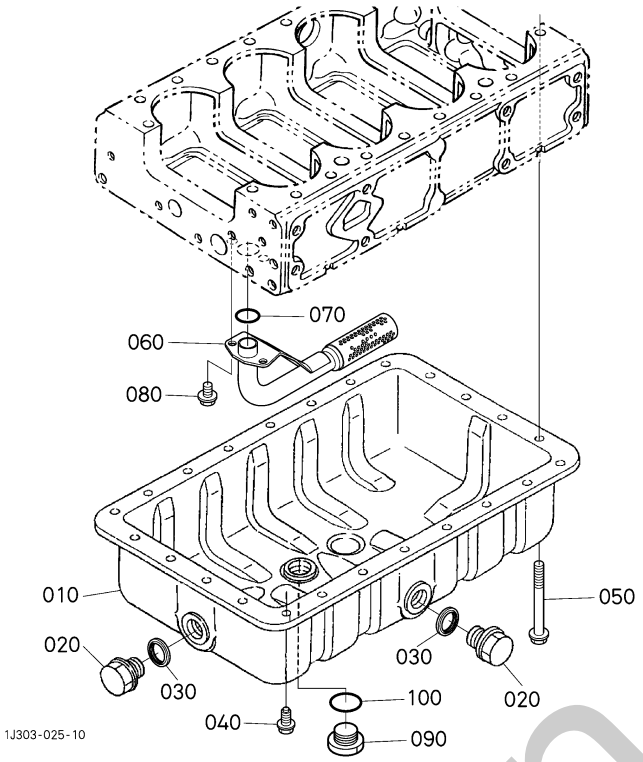

A:V3800-TIEF4B-COHE-1

図番 REF.No.	品番 PART No.	部品名称	PART NAME	数量 Q'TY/S.No. A	互換 I.C.	備考 REMARKS
010	1G517-0150-2	ｵｲﾙﾊﾟﾝ,ｺﾝﾌﾟ	COMP.OIL PAN	1		
020	15707-3375-0	ﾌﾟﾗｸﾞ(ﾄﾞﾚｰﾝ)	PLUG(DRAIN)	2		
030	16265-9667-0	ｶﾞｽｹｯﾄ(ﾄﾞﾚﾝ,ｵｲﾙﾊﾟﾝ)	PACKING	2		
040	1C010-9110-0	ﾎﾞﾙﾄ(ｵｲﾙﾊﾟﾝ)	BOLT,OILPAN	20		
050	01774-51004	ﾌﾗﾝｼﾞﾎﾞﾙﾄ	BOLT,FLANGE	4		
060	1J550-3211-0	ﾌｨﾙﾀ(1,ｵｲﾙ)	FILTER,OIL	1		
070	04814-00220	Oﾘﾝｸﾞ	O RING	1		
080	01754-50812	ﾌﾗﾝｼﾞﾎﾞﾙﾄ	BOLT,FLANGE	2		
090	36340-4356-3	ﾌﾟﾗｸﾞ	PLUG	1		
100	04814-00220	Oﾘﾝｸﾞ	O RING	1		

↔ 新旧部品兼用可; ≠ 新旧部品兼用不可; ← 新部品は旧部品に兼用可; → 旧部品は新部品に兼用可

silverhorn.co.uk

501200 オイルゲージ・ガイド DIPSTICK AND GUIDE

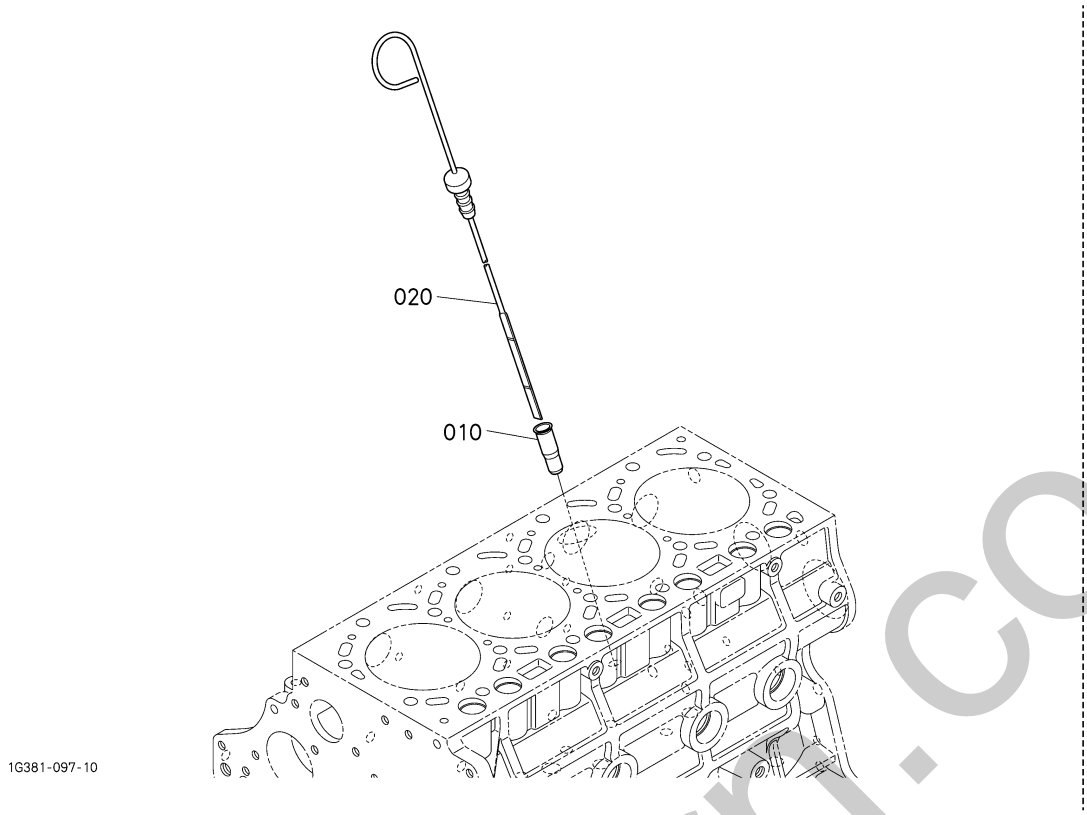

A:V3800-TIEF4B-COHE-1

図番 REF.No.	品番 PART No.	部品名称	PART NAME	数量 Q'TY/S.No. A	互換 I.C.	備考 REMARKS
010	1C010-3642-2	ｶﾞｲﾄﾞ(ｵｲﾙｹﾞｰｼﾞ)	GUIDE,OIL GAUGE	1		
020	1G524-3641-0	ｴﾝｼﾞﾝｵｲﾙｹﾞｰｼﾞ	GAUGE,OIL	1		

↔ 新旧部品兼用可; ≠ 新旧部品兼用不可; ← 新部品は旧部品に兼用可; → 旧部品は新部品に兼用可

silverhorn.co.uk

502000 シリンダヘッド CYLINDER HEAD

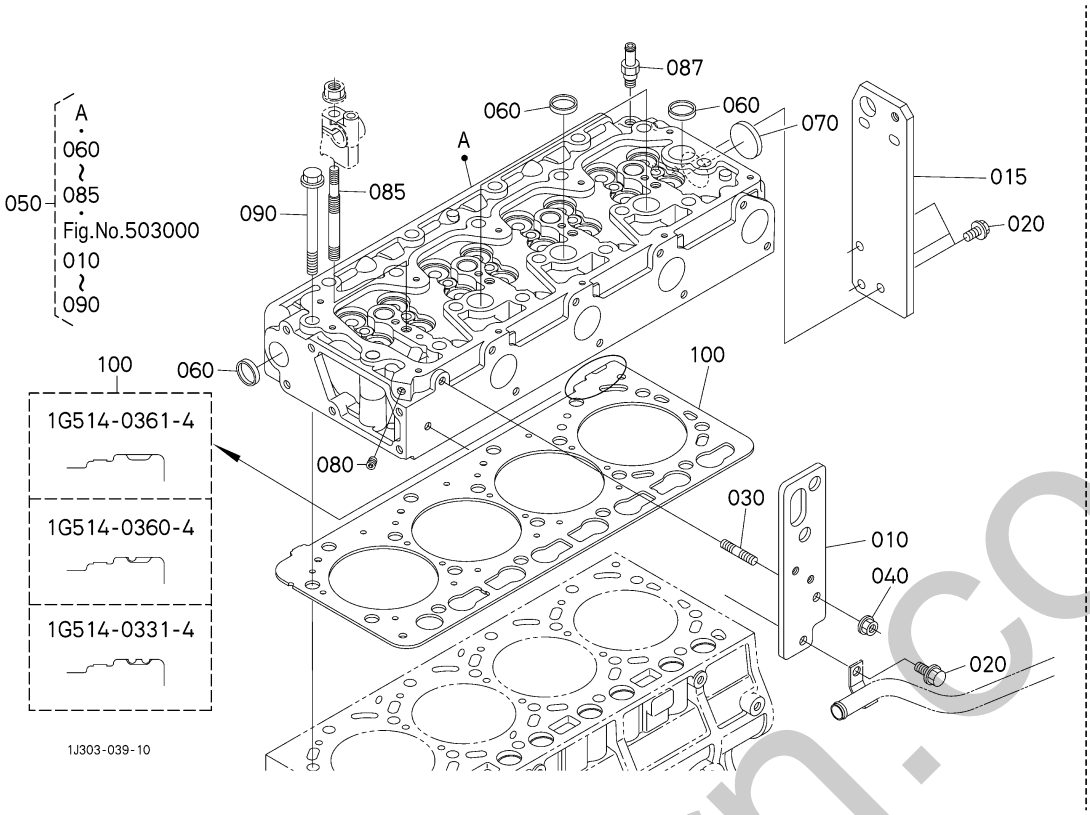

A:V3800-TIEF4B-COHE-1

図番 REF.No.	品番 PART No.	部品名称	PART NAME	数量 Q'TY/S.No. A	互換 I.C.	備考 REMARKS
010	1J508-0174-0	ﾌｯｸ(ｴﾝｼﾞﾝ)	HOOK(ENGINE)	1		
015	1J509-0175-0	ﾌｯｸ(ｴﾝｼﾞﾝ)	HOOK(ENGINE)	1		
020	1J500-9102-0	ﾌﾗﾝｼﾞﾎﾞﾙﾄ(8X18)	BOLT,FLANGE	4		
030	1J542-9163-2	ｽﾀｯﾄﾞ(M8X23)	STUD	1		
040	02751-50080	ﾌﾗﾝｼﾞﾅｯﾄ	NUT,FLANGE	1		
050	1J574-0302-6	ｼﾘﾝﾀﾞﾍｯﾄﾞ,ｱｯｼ	ASSY CYLINDER HEAD	1		
060	15221-0337-0	ﾜﾝｶﾞﾀ ﾌﾟﾗｸﾞ	PLUG,CUP TYPE	5		
070	15221-0349-0	ﾜﾝｶﾞﾀ ﾌﾟﾗｸﾞ	CAP,SEALING	1		
080	15521-9602-0	ﾌﾟﾗｸﾞ(R1/8)	PLUG	1		
085	1J574-0341-0	ｽﾀｯﾄﾞ	STUD	4		
087	1J500-1761-0	ｸﾀﾞｯｷﾞﾃ(ｳｵｰﾀ)	JOINT,PIPE(WATER)	1		
090	1C010-0345-0	ﾍｯﾄﾞﾎﾞﾙﾄ	BOLT,CYLINDER HEAD	18		
100	1G514-0331-4	ｶﾞｽｹｯﾄ(ｼﾘﾝﾀﾞﾍｯﾄﾞ)	GASKET,CYL.HEAD	1		STD/切欠き 2個
100	1G514-0360-4	ｶﾞｽｹｯﾄ(ｼﾘﾝﾀﾞﾍｯﾄﾞ)	GASKET,CYL.HEAD	1		適宜/切欠き 1個
100	1G514-0361-4	ｶﾞｽｹｯﾄ(ｼﾘﾝﾀﾞﾍｯﾄﾞ)	GASKET,CYL.HEAD	1		適宜/切欠き 無し

↔ 新旧部品兼用可; ≠ 新旧部品兼用不可; ← 新部品は旧部品に兼用可; → 旧部品は新部品に兼用可

silverhorn.co.uk

503000 インレットバルブ・エキゾーストバルブ
INLET VALVE AND EXHAUST VALVE

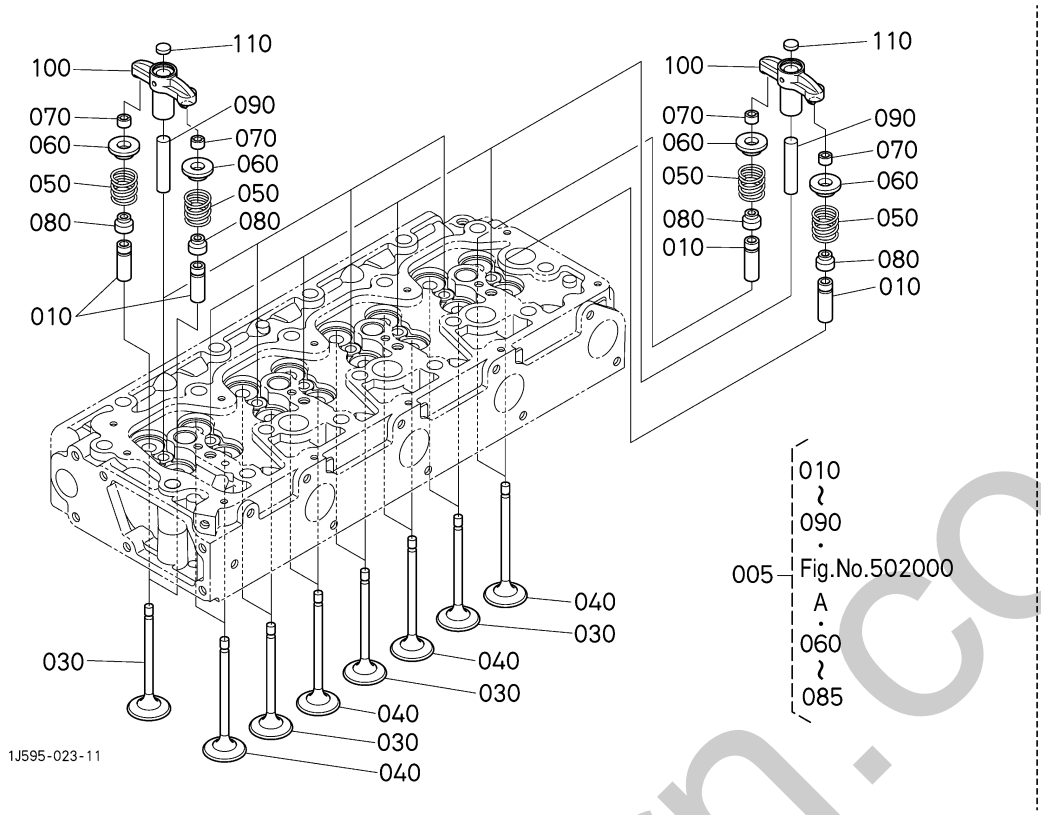

A:V3800-TIEF4B-COHE-1

図番 REF.No.	品番 PART No.	部品名称	PART NAME	数量 Q'TY/S.No. A	互換 I.C.	備考 REMARKS
005	1J574-0302-6	ｼﾘﾝﾀﾞ ﾍｯﾄﾞ, ｱｯｼ	ASSY CYLINDER HEAD	1		
010	16261-1356-0	ｶﾞｲﾄﾞ (ｴｷｿﾞｰｽﾄﾊﾞﾙﾌﾞ	GUIDE,EXHAUST VALVE	16		
020	----	ﾌﾞﾗﾝｸ	BLANK	-		
030	1C020-1311-3	ﾊﾞﾙﾌﾞ (ｲﾝﾚｯﾄ)	VALVE,INLET	8		
040	1C020-1312-3	ﾊﾞﾙﾌﾞ (ｴｷｿﾞｰｽﾄ)	VALVE,EXHAUST	8		
050	1C010-1324-0	ﾊﾞﾙﾌﾞｽﾌﾟﾘﾝｸﾞ	SPRING,VALVE	16		
060	16261-1333-0	ﾘﾃｰﾅ(ﾊﾞﾙﾌﾞｽﾌﾟﾘﾝｸﾞ)	RETAINER,VALVE SP.	16		
070	15261-1398-0	ｺﾚｯﾄ (2ｹｰ1ｾｯﾄ)	COLLET(VALVE SPRING)	16		SET
080	1C010-1315-0	ｼｰﾙ(ﾊﾞﾙﾌﾞｽﾃﾑ)	SEAL,VALVE STEM	16		
090	1C010-1348-2	ｼｬﾌﾄ(ﾊﾞﾙﾌﾞﾌﾞﾘｯｼﾞ)	SHAFT,VALVE BURIGE	8		
100	1C020-1346-3	ｱｰﾑ(ﾊﾞﾙﾌﾞﾌﾞﾘｯｼﾞ)	ARM,VALVE BURI.	8		
110	1C010-1349-0	ﾊﾟｯﾄﾞ	PAD	8		

↔ 新旧部品兼用可; ≠ 新旧部品兼用不可; ← 新部品は旧部品に兼用可; → 旧部品は新部品に兼用可

silverhorn.co.uk

504000 ロッカアーム軸 ROCKER ARM SHAFT

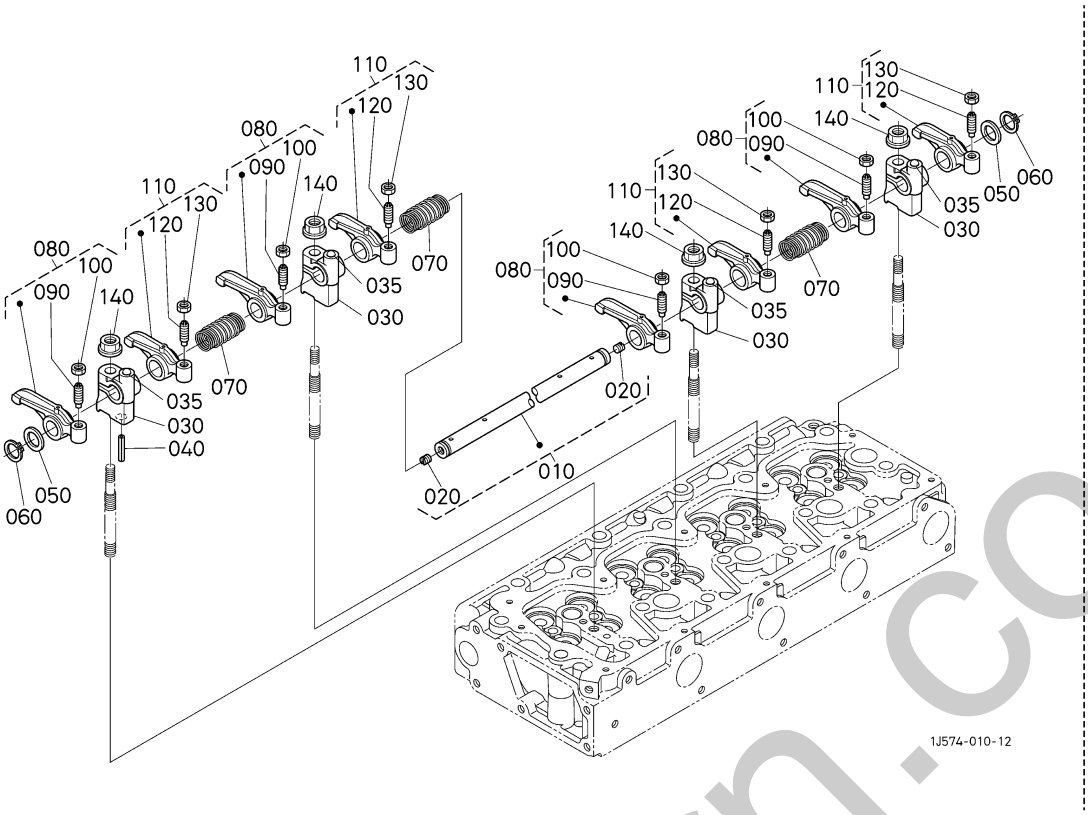

A:V3800-TIEF4B-COHE-1

図番 REF.No.	品番 PART No.	部品名称	PART NAME	数量 Q'TY/S.No. A	互換 I.C.	備考 REMARKS
010	1C020-1405-0	ｼﾔﾌﾄ,ｱｯｼ(ﾛｯｶｱｰﾑ)	ASSY SHAFT,R-ARM	1		
020	03410-50808	ﾄﾒﾈｼﾞ	SCREW,SLOTTED	2		
030	1J574-1435-3	ﾌﾞﾗｹｯﾄ (ﾛｯｶｱｰﾑ)	BRACKET,ROCKER ARM	4		
035	07715-01605	ﾎﾞｰﾙ	BALL	4		
040	05411-00528	ｽﾌﾟﾘﾝｸﾞ ﾋﾟﾝ	SPRING PIN	1		
050	1C010-1443-0	ｻﾞｶﾞﾈ (ﾛｯｶｱｰﾑ ｼﾔﾌﾄ)	WASHER	2		
060	04612-00160	ｼﾞｸ ｻｰｸﾘｯﾌﾟ	CIR-CLIP, EXTERNAL	2		
070	1C020-1431-0	ｽﾌﾟﾘﾝｸﾞ(ﾛｯｶｱｰﾑ)	SPRING(ROCKER ARM)	3		
080	1C020-1402-3	ﾛｯｶｱｰﾑ,ｱｯｼ(ｲﾝﾚｯﾄ)	ASSY ROCKER ARM,IN.	4		
090	1G896-1423-0	ﾈｼﾞ(ﾁﾖｳｾｲ)	SCREW	4		
100	15021-1424-0	ﾅｯﾄ	NUT	4		
110	1C020-1415-3	ﾛｯｶｱｰﾑ,ｱｯｼ(ｴｷｿﾞｰｽﾄ)	ASSY ROCKER ARM,EXH.	4		
120	1G896-1423-0	ﾈｼﾞ(ﾁﾖｳｾｲ)	SCREW	4		
130	15021-1424-0	ﾅｯﾄ	NUT	4		
140	02771-50100	ﾌﾗﾝｼﾞﾅｯﾄ	NUT,FLANGE	4		

↔ 新旧部品兼用可； ≠ 新旧部品兼用不可； ← 新部品は旧部品に兼用可； → 旧部品は新部品に兼用可

silverhorn.co.uk

505000 ヘッドカバー HEAD COVER

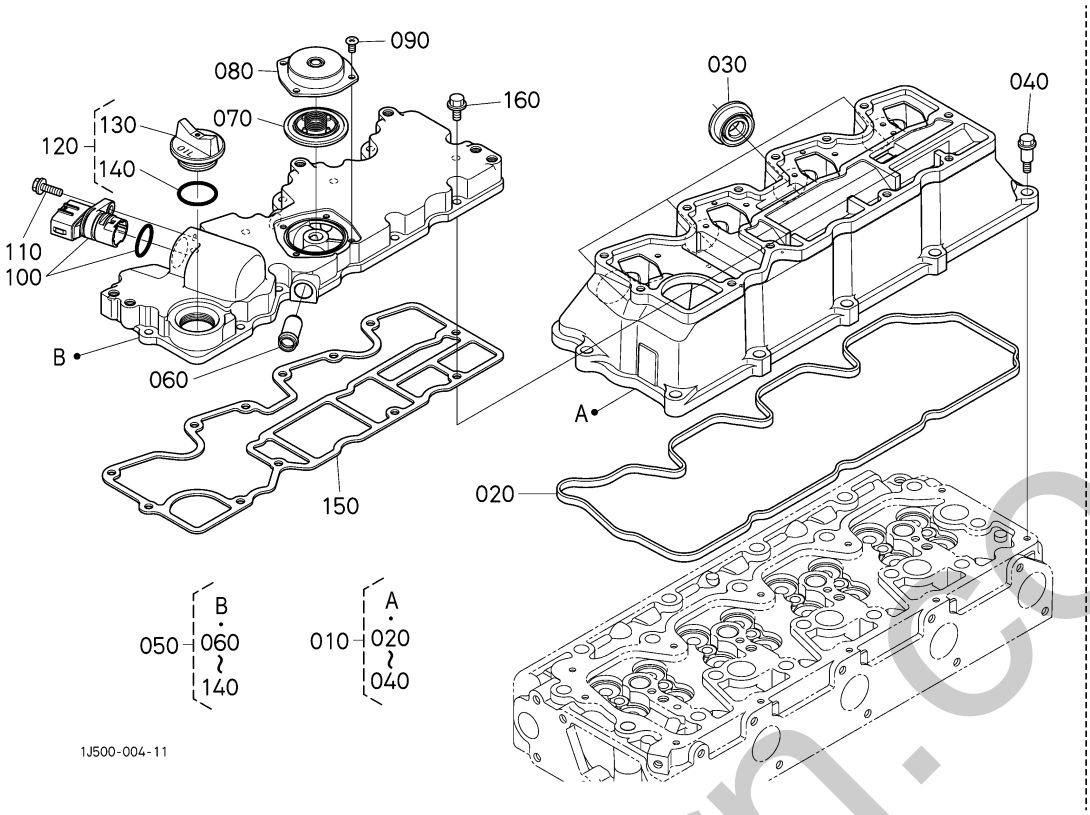

A:V3800-TIEF4B-COHE-1

図番 REF.No.	品番 PART No.	部品名称	PART NAME	数量 Q'TY/S.No. A	互換 I.C.	備考 REMARKS
010	1J500-1450-3	ﾍｯﾄﾞｶﾊﾞｰ(1),ｱｯｼ	ASSY COVER,CYL.HEAD	1		
020	1C020-1452-0	ｶﾞｽｹｯﾄ(ﾍｯﾄﾞｶﾊﾞｰ)	GASKET,HEAD COVER	1		
030	1C020-5381-0	ｼｰﾙ(ｲﾝｼﾞｴｸｼｮﾝﾊﾟｲﾌﾟ)	SEAL,INJECTION PIPE	4		
040	1G911-9102-2	ﾎﾞﾙﾄ	BOLT	10		
050	1J508-1458-2	ﾍｯﾄﾞｶﾊﾞｰ(2),ｱｯｼ	COVER,HEAD	1		
060	16241-0555-0	ﾌﾞﾚｻﾞﾊﾟｲﾌﾟ ﾂｷﾞﾃ	JOINT,BREATHER PIPE	1		
070	1A021-0543-0	Oﾘﾝｸﾞ(ﾌﾞﾚｻﾞ)	O RING,BREATHER	1		
080	1G742-0512-0	ｶﾊﾞｰ(ﾌﾞﾚｻﾞ)	COVER,BREATHER	1		
090	03054-50508	ﾅﾍﾞ ｺﾈｼﾞ	SCREW,PAN HEAD(PHILLIPS)	4		
100	1J574-6583-0	ｺﾈｸﾀ,ｱｯｼ	ASSY CONNECTOR,2	1		
110	01754-50620	ﾌﾗﾝｼﾞﾎﾞﾙﾄ	BOLT,FLANGE	1		
120	1C010-3308-0	ﾌﾟﾗｸﾞ,ｱｯｼ(ｷｭｳﾕ)	ASSY PLUG,O/FILLER	1		
130	E9151-3314-0	ﾌﾟﾗｸﾞ(ｷｭｳﾕ)	PLUG(OIL FILLER)	1		
140	04817-50300	Oﾘﾝｸﾞ	O RING	1		
150	1J500-1453-0	ｶﾞｽｹｯﾄ(ﾍｯﾄﾞｶﾊﾞｰ,2)	GASKET(COVER,HEAD)	1		
160	01754-50620	ﾌﾗﾝｼﾞﾎﾞﾙﾄ	BOLT,FLANGE	12		

↔ 新旧部品兼用可; ≠ 新旧部品兼用不可; ← 新部品は旧部品に兼用可; → 旧部品は新部品に兼用可

sherborn.co.uk

508000 ギヤーケース GEAR CASE

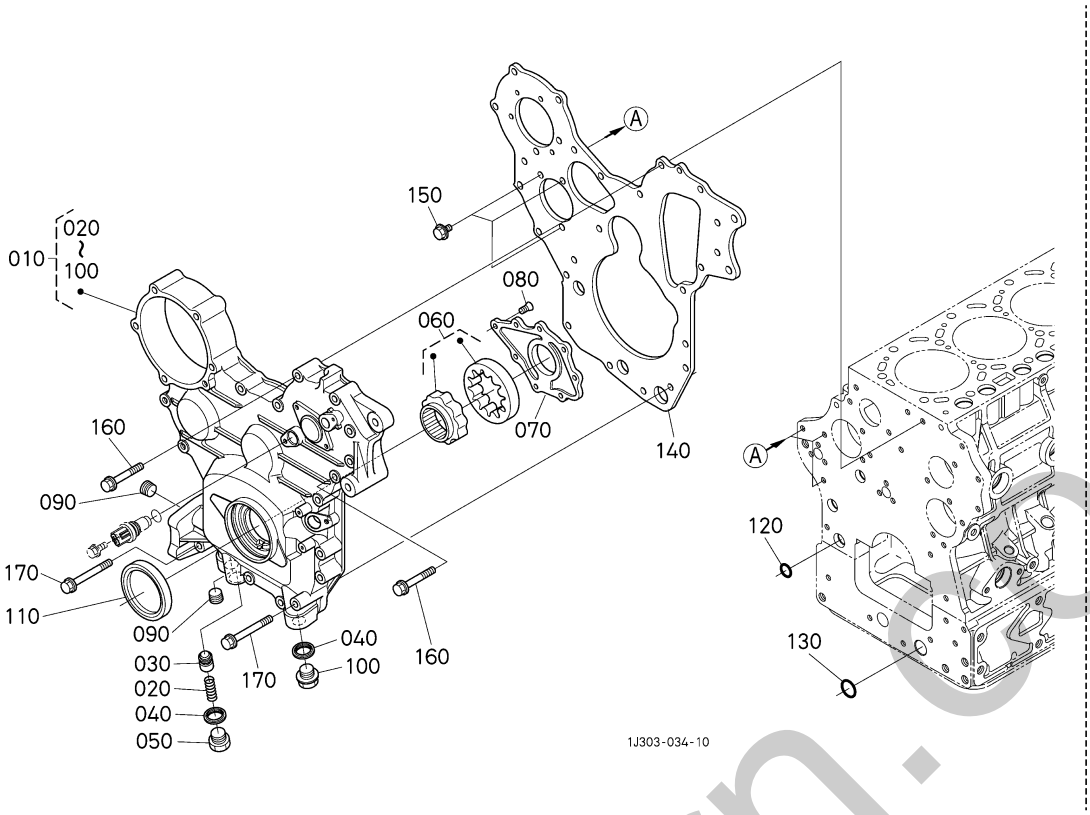

A:V3800-TIEF4B-COHE-1

図番 REF.No.	品番 PART No.	部品名称	PART NAME	数量 Q'TY/S.No. A	互換 I.C.	備考 REMARKS
010	1G381-0401-3	ｷﾞﾔｹｰｽ,ｱﾂｼ	ASSY CASE,GEAR	1		
020	1C010-3695-0	ｽﾌﾟﾘﾝｸﾞ	SPRING	1		
030	1C010-3692-2	ﾊﾞﾙﾌﾞ(ﾘﾘｰﾌ)	VALVE,RELIEF	1		
040	16265-9667-0	ｶﾞｽｹｯﾄ(ﾄﾞﾚﾝ,ｵｲﾙﾊﾟﾝ)	PACKING	2		
050	1C010-3696-0	ﾌﾟﾗｸﾞ(ﾘﾘｰﾌ)	PLUG	1		
060	1C010-3507-0	ﾛｰﾀ,ｱﾂｼ(ｵｲﾙﾎﾟﾝﾌﾟ)	ROTOR,ASSY(OIL PUMP)	1		
070	1C010-3513-0	ｶﾊﾞｰ(ｵｲﾙﾎﾟﾝﾌﾟ)	COVER,OIL PUMP	1		
080	03016-50616	ｻﾗ ｺﾈｼﾞ	SCREW,FLAT HEAD(PHILLIPS)	8		
090	1C010-9602-0	ﾌﾟﾗｸﾞ	PLUG	2		
100	16286-3375-0	ﾌﾟﾗｸﾞ(ﾄﾞﾚｰﾝ)	PLUG,DRAIN	1		
110	1C020-0414-0	ｵｲﾙｼｰﾙ	SEAL,OIL	1		
120	04814-00200	O ﾘﾝｸﾞ	O RING	1		
130	04814-00240	Oﾘﾝｸﾞ	O RING	1		
140	1C011-0416-4	ﾌﾟﾚｰﾄ(ｷﾞﾔｹｰｽ)	PLATE,GEAR CASE	1		
150	01754-50816	ﾌﾗﾝｼﾞﾎﾞﾙﾄ	BOLT,FLANGE	3		
160	1C010-9103-0	ﾌﾗﾝｼﾞﾎﾞﾙﾄ	BOLT,FLANGE	11		
170	1C010-9104-0	ﾌﾗﾝｼﾞﾎﾞﾙﾄ	BOLT,FLANGE	2		

↔ 新旧部品兼用可； ≠ 新旧部品兼用不可； ← 新部品は旧部品に兼用可； → 旧部品は新部品に兼用可

silverhorn.co.uk

511000 ピストン・クランク軸 PISTON AND CRANKSHAFT

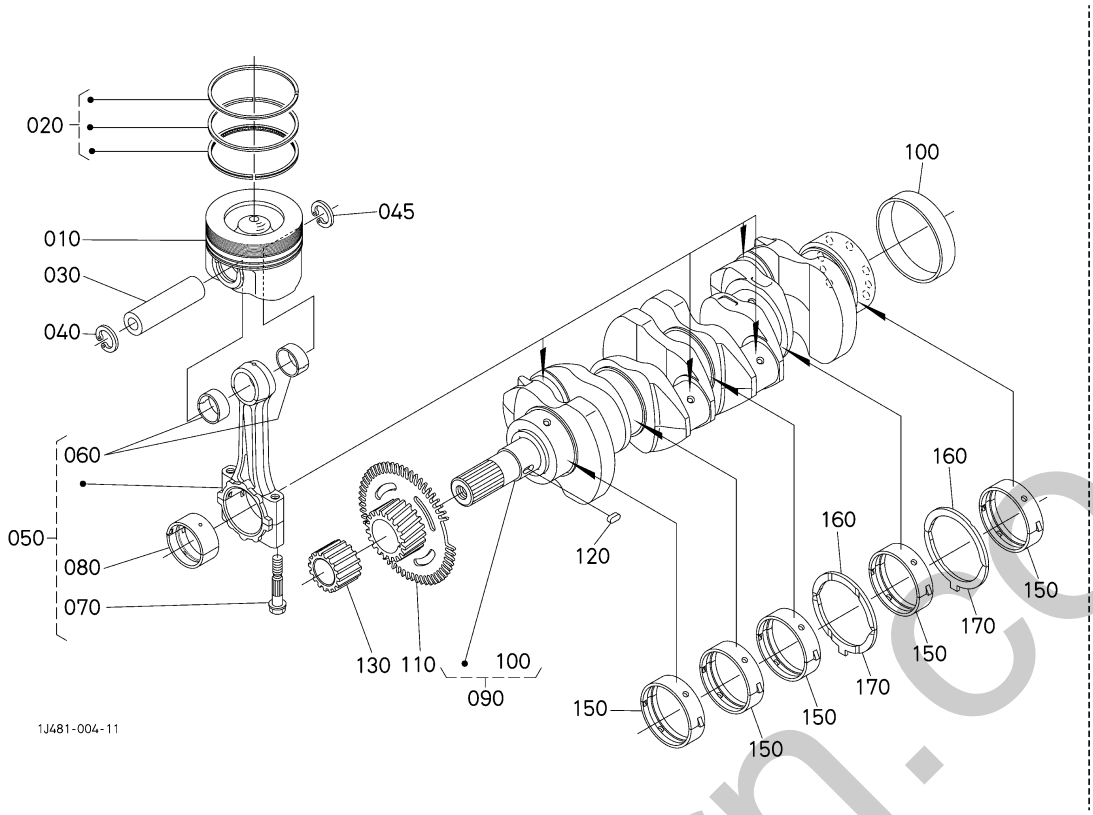

A:V3800-TIEF4B-COHE-1

図番 REF.No.	品番 PART No.	部品名称	PART NAME	数量 Q'TY/S.No. A	互換 I.C.	備考 REMARKS
010	1J508-2111-0	ﾋﾟｽﾄﾝ	PISTON	4		STD
010	1J508-2191-0	ﾋﾟｽﾄﾝ(05)	PISTON(05)	4		+0.5mm
020	1J508-2105-0	ﾋﾟｽﾄﾝﾘﾝｸﾞ,ｱｯｼ	RING,PISTON,ASSY	4		STD
020	1J508-2109-0	ﾋﾟｽﾄﾝﾘﾝｸﾞ,ｱｯｼ(05)	RING,PISTON,ASSY05	4		+0.5mm
030	1J550-2131-0	ﾋﾟｽﾄﾝﾋﾟﾝ	PIN,PISTON	4		
040	04611-00300	ｱﾅ ｻｰｸﾘｯﾌﾟ	CIR-CLIP,INTERNAL	4		
045	04611-00300	ｱﾅ ｻｰｸﾘｯﾌﾟ	CIR-CLIP,INTERNAL	4		
050	1J574-2201-6	ｺﾈｸﾃｲﾝｸﾞﾛｯﾄﾞ,ｱｯｼ	ASSY ROD,CONNECTING	4		
060	1J574-2198-2	ﾌﾞｯｼｭ(ﾋﾟｽﾄﾝﾋﾟﾝ)	BUSH,PISTON PIN	8		
070	1C010-2214-2	ｺﾝﾛｯﾄﾞﾎﾞﾙﾄ	BOLT(ROD,CONNECTING)	8		
080	1C020-2231-3	ﾒﾀﾙ(ｸﾗﾝｸﾋﾟﾝ) L	METAL,CRANKPIN	4		STD/青色/SET
080	1C020-2233-4	ﾒﾀﾙ(ｸﾗﾝｸﾋﾟﾝ) S	METAL,CRANKPIN	4		STD/SET
080	1C020-2296-3	ﾒﾀﾙ(ｸﾗﾝｸﾋﾟﾝ) 02	METAL,CRANKPIN	4		-0.2mm/緑色/SET
080	1C020-2297-3	ﾒﾀﾙ(ｸﾗﾝｸﾋﾟﾝ) 04	METAL,CRANKPIN	4		-0.4mm/赤色/SET
090	1G381-2301-2	ｸﾗﾝｸｼｬﾌﾄ,ｺﾝﾌﾟ	COMP.CRANKSHAFT	1		
100	1C010-2330-0	ｽﾘｰﾌﾞ(ｸﾗﾝｸｼｬﾌﾄ)	SLEEVE(CRANKSHAFT)	1		
110	1C057-2410-0	ｷﾞｬ,ｺﾝﾌﾟ(ｸﾗﾝｸｼｬﾌﾄ)	GEAR COMP,CRANKSHAFT	1		
120	05712-00515	ﾌｪｻﾞｰ ｷｰ	KEY,FEATHER	1		
130	1G381-3563-0	ｷﾞｬ(ｵｲﾙﾎﾟﾝﾌﾟｸﾄﾞｳ)	GEAR(OIL PUMP DRIVE)	1		
140	----	ﾌﾞﾗﾝｸ	BLANK	-		
150	1C020-2347-2	ﾒﾀﾙ(ｸﾗﾝｸｼｬﾌﾄ)	METAL,CRANKSHAFT	5		STD/SET
150	1C020-2391-2	ﾒﾀﾙ(ｸﾗﾝｸｼｬﾌﾄ) 02	METAL,CRANKSHAFT	5		-0.2mm/SET
150	1C020-2392-2	ﾒﾀﾙ(ｸﾗﾝｸｼｬﾌﾄ) 04	METAL,CRANKSHAFT	5		-0.4mm/SET
160	1C010-2353-2	ｻｲﾄﾞﾒﾀﾙ(1)	METAL,SIDE	2		STD
160	1C010-2395-2	ｻｲﾄﾞﾒﾀﾙ(1) 02	METAL,SIDE	2		+0.2mm
160	1C010-2396-2	ｻｲﾄﾞﾒﾀﾙ(1) 04	METAL,SIDE	2		+0.4mm
170	1C010-2354-2	ｻｲﾄﾞﾒﾀﾙ(2)	METAL,SIDE	2		STD
170	1C010-2397-2	ｻｲﾄﾞﾒﾀﾙ(2) 02	METAL,SIDE	2		+0.2mm
170	1C010-2398-2	ｻｲﾄﾞﾒﾀﾙ(2) 04	METAL,SIDE	2		+0.4mm

↔ 新旧部品兼用可; ≠ 新旧部品兼用不可; ← 新部品は旧部品に兼用可; → 旧部品は新部品に兼用可

sherborn.co.uk

512000 カム軸・アイドル軸 CAMSHAFT AND IDLE GEAR SHAFT

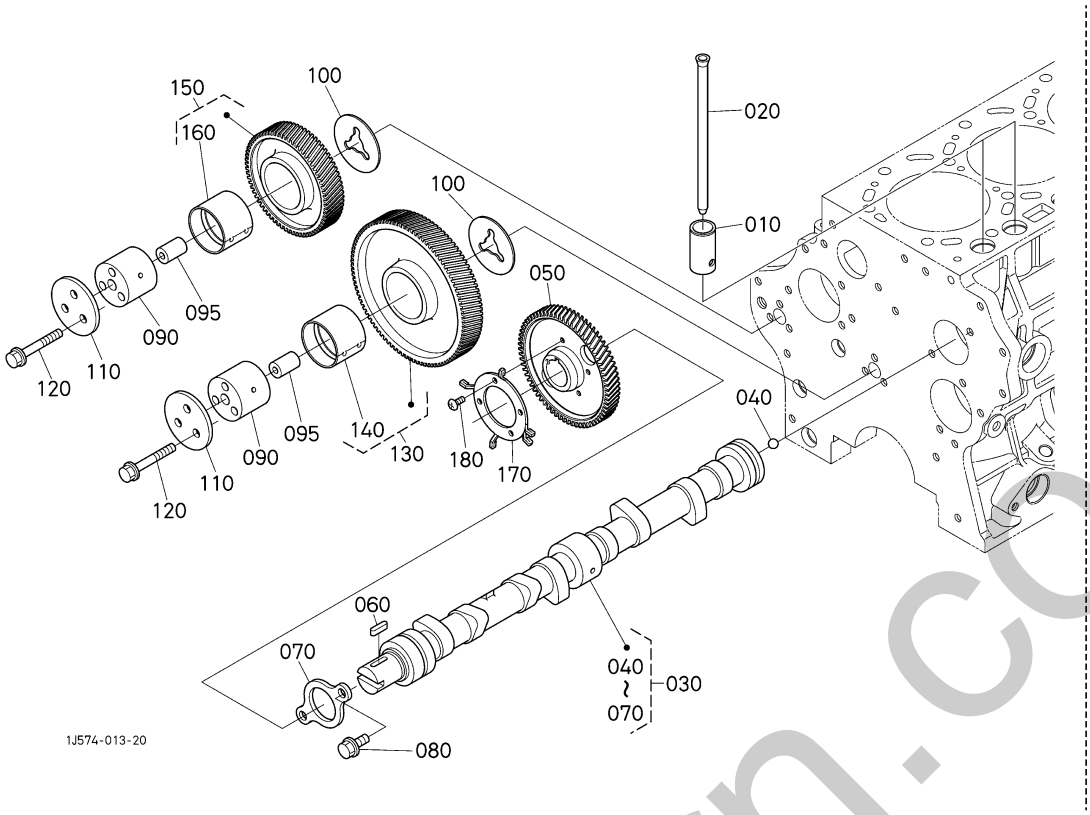

A:V3800-TIEF4B-COHE-1

図番 REF.No.	品番 PART No.	部品名称	PART NAME	数量 Q'TY/S.No. A	互換 I.C.	備考 REMARKS
010	15601-1555-3	ﾀﾍﾟｯﾄ	TAPPET	8		
020	1C010-1511-0	ﾌﾟｯｼｭﾛｯﾄﾞ	PUSH ROD	8		
030	1J574-1601-5	ｶﾑｼｬﾌﾄ,ｱｯｼ	ASSY CAMSHAFT	1		
040	07715-01605	ﾎﾞｰﾙ	BALL	1		
050	1J574-1651-2	ｷﾞｬ(ｶﾑ)	GEAR,CAM	1		
060	05712-00520	ﾌｪｻﾞｰ ｷｰ	KEY,FEATHER	1		
070	1C010-1627-0	ｽﾄｯﾊﾟ(ｶﾑｼｬﾌﾄ)	STOPPER(CAMSHAFT)	1		
080	01754-50816	ﾌﾗﾝｼﾞﾎﾞﾙﾄ	BOLT,FLANGE	2		
090	1C010-2425-0	ｼｬﾌﾄ(ｱｲﾄﾞﾙｷﾞｬ)	SHAFT(IDLE GEAR)	2		
095	1C010-2452-0	ﾋﾟﾝ(ｱｲﾄﾞﾙｷﾞｬ)	PIN(GEAR IDLE)	2		
100	1C010-2436-0	ｶﾗｰ(1,ｱｲﾄﾞﾙｷﾞｬ)	COLLAR(IDLE GEAR)	2		
110	1C010-2437-0	ｶﾗｰ(2,ｱｲﾄﾞﾙｷﾞｬ)	COLLAR(IDLE GEAR)	2		
120	01754-50855	ﾌﾗﾝｼﾞﾎﾞﾙﾄ	BOLT,FLANGE	6		
130	1C010-2401-7	ｷﾞｬ,ｺﾝﾌﾟ(1,ｱｲﾄﾞﾙ)	COMP.GEAR,IDLE	1		
140	1C010-2498-3	ﾌﾞｯｼｭ(ｱｲﾄﾞﾙｷﾞｬ)	BUSH,IDLE GEAR	1		
150	1C010-2402-7	ｷﾞｬ,ｺﾝﾌﾟ(2,ｱｲﾄﾞﾙ)	GEAR,COMP(IDLE)	1		
160	1C010-2498-3	ﾌﾞｯｼｭ(ｱｲﾄﾞﾙｷﾞｬ)	BUSH,IDLE GEAR	1		
170	1J574-1691-3	ｷﾞｬ(ﾊﾟﾙｻｰ,G)	GEAR(G-PULSER)	1		
180	03057-50508	ﾊﾞｲﾝﾄﾞ ｺﾈｼﾞ	SCREW,BINDING(PHILLIPS)	4		

↔ 新旧部品兼用可; ≠ 新旧部品兼用不可; ← 新部品は旧部品に兼用可; → 旧部品は新部品に兼用可

smithorn.co.uk

514000 ベアリングケースカバー BEARING CASE COVER

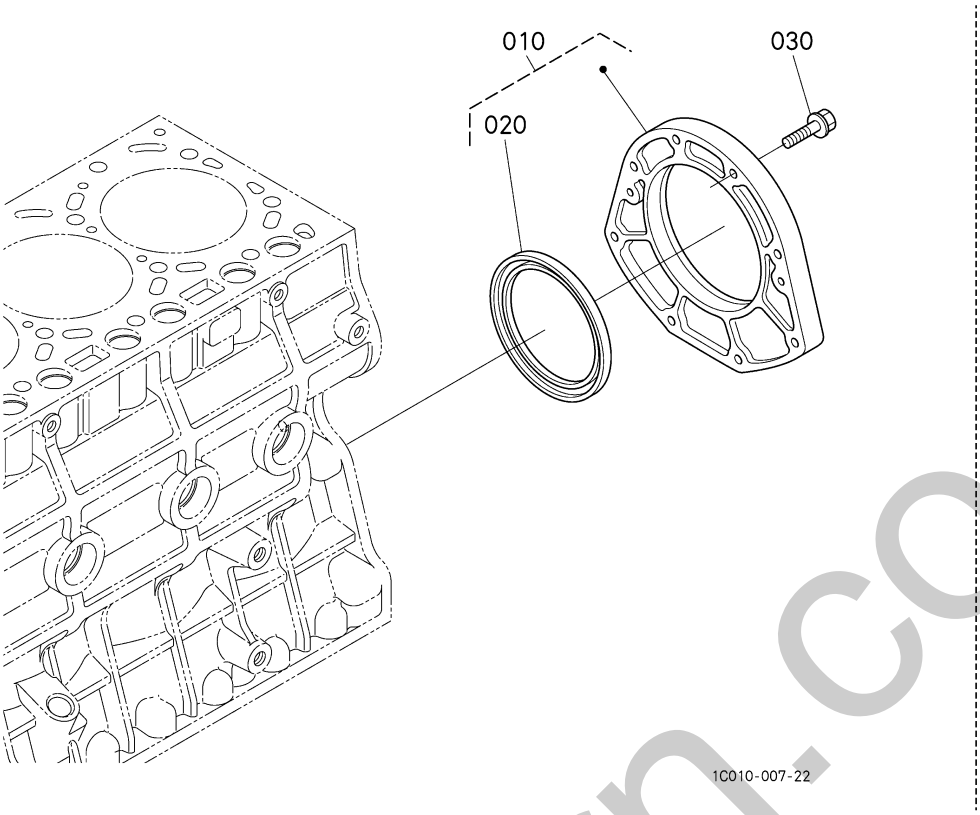

A:V3800-TIEF4B-COHE-1

図番 REF.No.	品番 PART No.	部品名称	PART NAME	数量 Q'TY/S.No. A	互換 I.C.	備考 REMARKS
010	1C010-0430-0	ｶﾊﾞｰ,ｱｯｼ(ﾍﾞｱﾘﾝｸﾞｹｰｽ)	ASSY COVER,BRG.CASE	1		
020	1C010-0446-0	ｵｲﾙｼｰﾙ	SEAL,OIL	1		
030	01754-50830	ﾌﾗﾝｼﾞﾎﾞﾙﾄ	BOLT,FLANGE	8		

↔ 新旧部品兼用可; ≠ 新旧部品兼用不可; ← 新部品は旧部品に兼用可; → 旧部品は新部品に兼用可

silverhorn.co.uk

515000 フライホイール FLYWHEEL

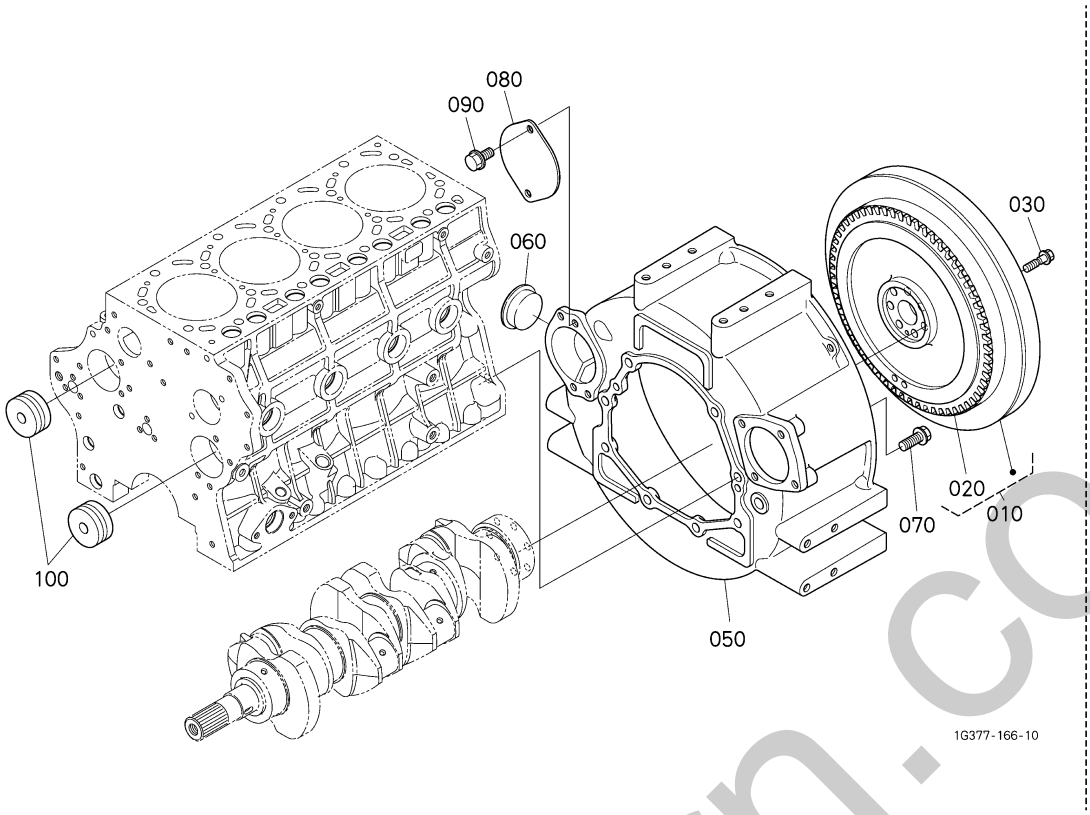

A:V3800-TIEF4B-COHE-1

図番 REF.No.	品番 PART No.	部品名称	PART NAME	数量 Q'TY/S.No. A	互換 I.C.	備考 REMARKS
010	1K988-2501-0	ﾌﾗｲﾎｲｰﾙ,ｺﾝﾌﾟ	FLYWHEEL,COMP	1		
020	1G772-6382-3	ｷﾞﾔ(ﾘﾝｸﾞ)	GEAR,RING	1		
030	15424-2516-2	ﾌﾗｲﾎｲｰﾙ ﾎﾞﾙﾄ	BOLT,FLYWHEEL	7		
040	----	ﾌﾞﾗﾝｸ	BLANK	-		
050	1K988-0461-2	ﾌﾗｲﾎｲｰﾙﾊｳｼﾞﾝｸﾞ	HOUSING,FW	1		
060	1C010-0468-0	ｶﾊﾞｰ(ﾀｲﾐﾝｸﾞﾏﾄﾞ)	COVER	1		
070	1G772-9103-2	ﾌﾗﾝｼﾞﾎﾞﾙﾄ(1,FWﾊｳｼﾞﾝｸ	BOLT,FLANGE	8		
080	1C010-0445-0	ｶﾊﾞｰ(F.W.ﾊｳｼﾞﾝｸﾞ)	COVER,FW HOUSING	1		
090	01774-51020	ﾌﾗﾝｼﾞﾎﾞﾙﾄ	BOLT,FLANGE	2		
100	1C020-2634-0	ｶﾊﾞｰE(ﾊﾞﾗﾝｻ)	COVER,BLANCER	2		

↔ 新旧部品兼用可; ≠ 新旧部品兼用不可; ← 新部品は旧部品に兼用可; → 旧部品は新部品に兼用可

silverhorn.co.uk

526500 サプライポンプ SUPPLY PUMP

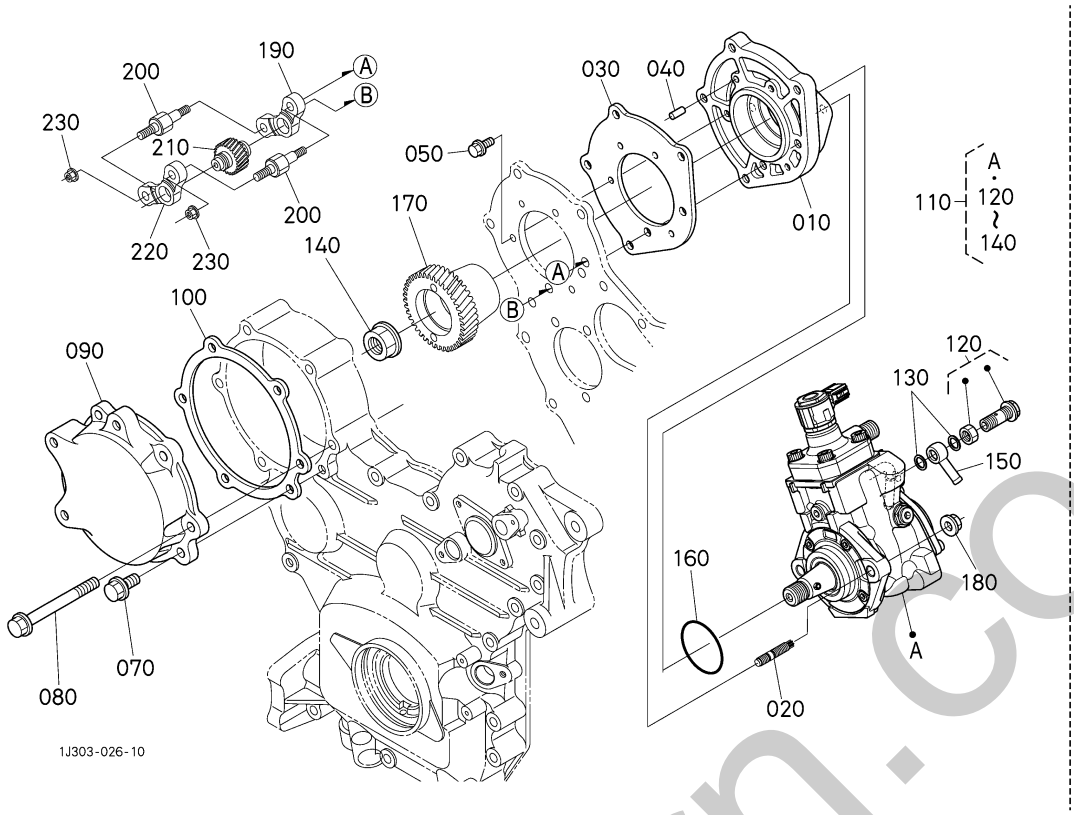

A:V3800-TIEF4B-COHE-1

図番 REF.No.	品番 PART No.	部品名称	PART NAME	数量 Q'TY/S.No. A	互換 I.C.	備考 REMARKS
010	1J508-5117-0	ﾍﾞｰｽ(ｻﾌﾟﾗｲﾎﾟﾝﾌﾟ)	BASE(SUPPLY PUMP)	1		
020	1C020-9149-0	ｽﾀｯﾄﾞ(M8X25)	STUD	2		
030	1J508-5118-0	ｶﾞｽｹｯﾄ(S.P.ﾍﾞｰｽ)	GASKET(S.P.BASE)	1		
040	05012-00614	ﾍｲｺｳ ﾋﾟﾝ	PIN,STRAIGHT	1		
050	01754-50616	ﾌﾗﾝｼﾞﾎﾞﾙﾄ	BOLT,FLANGE	2		
060	----	ﾌﾞﾗﾝｸ	BLANK	-		
070	01754-50825	ﾌﾗﾝｼﾞﾎﾞﾙﾄ	BOLT,FLANGE	1		
080	01754-50875	ﾌﾗﾝｼﾞﾎﾞﾙﾄ	BOLT,FLANGE	5		
090	1C020-5165-0	ｶﾊﾞｰ(ｲﾝｼﾞｴｸｼｮﾝﾎﾟﾝﾌﾟ)	COVER(INJ.PUMP)	1		
100	1C010-5166-3	ｶﾞｽｹｯﾄ(I.P.ｶﾊﾞｰ)	GASKET,IP COVER	1		
110	1J508-5050-0	ﾎﾟﾝﾌﾟ,ｱｯｼ(ｻﾌﾟﾗｲ)	PUMP,ASSY(SUPPLY)	1		
120	1J508-5132-0	ﾂｷﾞﾃﾎﾞﾙﾄ,ｺﾝﾌﾟ	BOLT,CONNECTING,COMP	1		
130	1J574-9666-0	ｶﾞｽｹｯﾄ	GASKET	2		
140	1J508-9292-0	ﾌﾗﾝｼﾞﾅｯﾄ	NUT,FLANGE	1		
150	15451-9568-0	ｱｲｶﾝ ﾂｷﾞﾃ	JOINT,EYE	1		
160	1J574-5213-0	ｶﾞｽｹｯﾄ(ｻﾌﾟﾗｲﾎﾟﾝﾌﾟ)	GASKET(PUMP)	1		
170	1J508-5115-0	ｷﾞﾔ(ｻﾌﾟﾗｲﾎﾝﾌﾟ)	GEAR(SUPPLY PUMP)	1		
180	02751-50080	ﾌﾗﾝｼﾞﾅｯﾄ	NUT,FLANGE	2		
190	1J508-2465-0	ﾎﾙﾀﾞ(ｱｲﾄﾞﾙｷﾞﾔ3)	HOLDER(3,IDLE)	1		
200	1J508-2469-0	ﾎﾞﾙﾄ(ｱｲﾄﾞﾙｷﾞﾔ3)	BOLT(IDLE,3)	2		
210	1J508-2461-0	ｷﾞﾔ(3,ｱｲﾄﾞﾙ)	GEAR(3,IDLE)	1		
220	1J508-2465-0	ﾎﾙﾀﾞ(ｱｲﾄﾞﾙｷﾞﾔ3)	HOLDER(3,IDLE)	1		
230	02751-50080	ﾌﾗﾝｼﾞﾅｯﾄ	NUT,FLANGE	2		

↔ 新旧部品兼用可; ≠ 新旧部品兼用不可; ← 新部品は旧部品に兼用可; → 旧部品は新部品に兼用可

morrhorn.co.uk

531001 燃料フィルタ FUEL FILTER

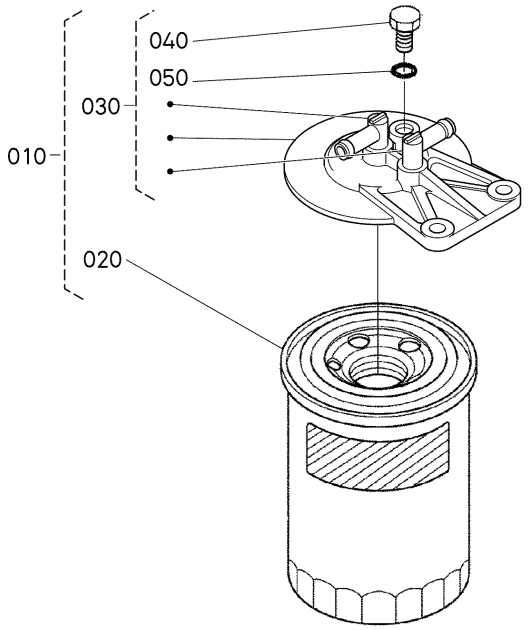

A:V3800-TIEF4B-COHE-1

図番 REF.No.	品番 PART No.	部品名称	PART NAME	数量 Q'TY/S.No. A	互換 I.C.	備考 REMARKS
010	1G381-4301-2	ﾌｨﾙﾀ,ｱｯｼ(ﾌｭｰｴﾙ)	FILTER,ASSY(FUEL)	1		
020	1K947-4317-2	ﾌｨﾙﾀ(ｶｰﾄﾘｯｼﾞ)	CARTRIDGE,FILTER	1		
030	1G390-4322-0	ﾍﾞｰｽ(ﾌｨﾙﾀ)	BASE,FILTER	1		
040	1G390-4341-0	ｺﾈｼﾞ(ｴｱﾇｷ,M8X1.25)	PLUG(M8X1.25)	1		
050	1G390-4397-0	ﾊﾟｯｷﾝ(ｴｱﾇｷﾌﾟﾗｸﾞ)	GASKET	1		

↔ 新旧部品兼用可; ≠ 新旧部品兼用不可; ← 新部品は旧部品に兼用可; → 旧部品は新部品に兼用可

silvermarn.co.uk

531002 燃料フィルタ FUEL FILTER

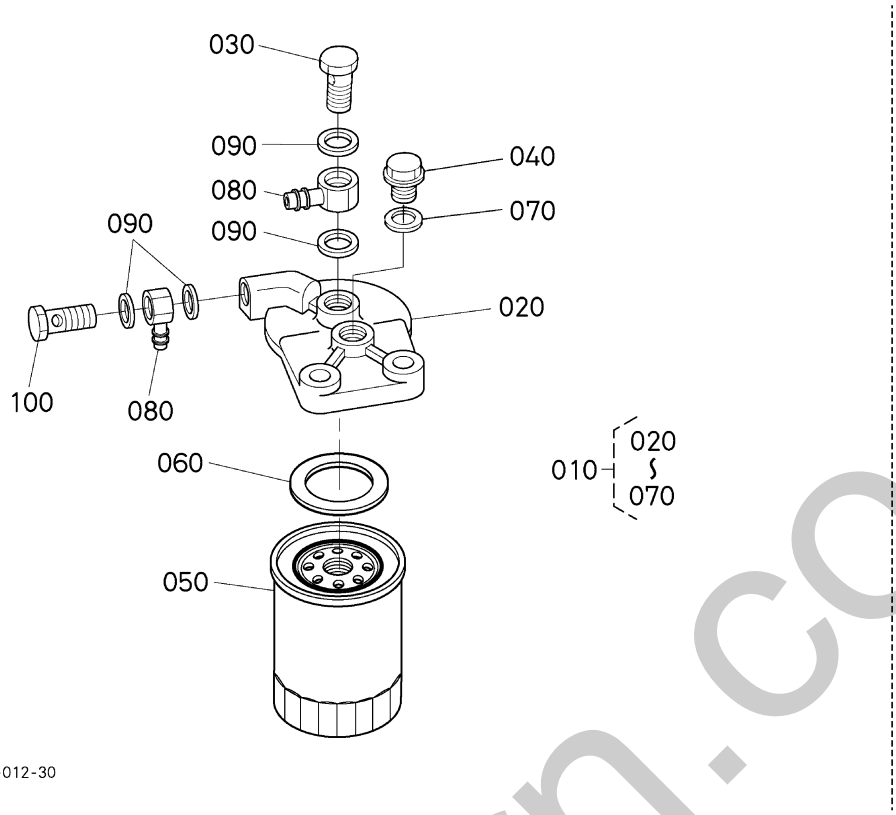

A:V3800-TIEF4B-COHE-1

図番 REF.No.	品番 PART No.	部品名称	PART NAME	数量 Q'TY/S.No. A	互換 I.C.	備考 REMARKS
010	1G518-4301-0	ﾌｨﾙﾀ, ｱｯｼ(ﾌｭｰｴﾙ)	ASSY FILTER,FUEL	1		
020	16541-4321-0	ｶﾊﾞｰ	COVER	1		
030	16541-9579-0	ﾂｷﾞﾃﾎﾞﾙﾄ	BOLT,JOINT	1		
040	19077-4328-0	ﾌﾟﾗｸﾞ	PLUG	1		
050	16631-4356-0	ﾌｭｰｴﾙﾌｨﾙﾀｰｴﾚﾒﾝﾄ	ELEMENT,FUEL FILTER	1		
060	16541-4333-0	ﾊﾟｯｷﾝ	GASKET	1		
070	17105-3368-0	ﾊﾟｯｷﾝ	GASKET	1		
080	15401-9569-3	ｱｲｶﾝﾂｷﾞﾃ	JOINT,EYE	2		
090	17105-3368-0	ﾊﾟｯｷﾝ	GASKET	4		
100	16541-9579-0	ﾂｷﾞﾃﾎﾞﾙﾄ	BOLT,JOINT	1		

↔ 新旧部品兼用可; ≠ 新旧部品兼用不可; ← 新部品は旧部品に兼用可; → 旧部品は新部品に兼用可

silverhorn.co.uk

531500 燃料パイプ FUEL PIPE

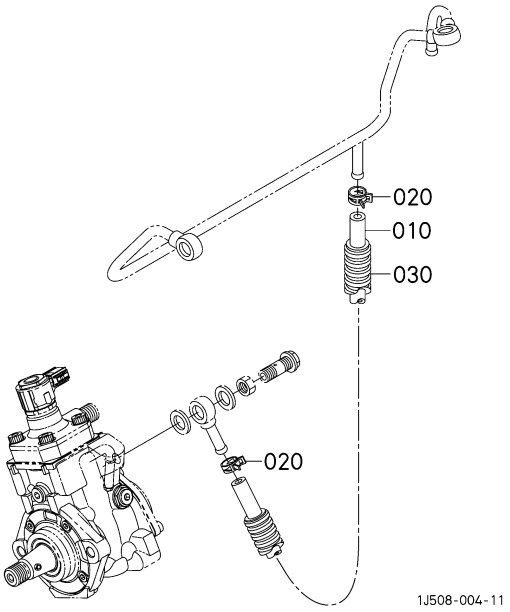

A:V3800-TIEF4B-COHE-1

図番 REF.No.	品番 PART No.	部品名称	PART NAME	数量 Q'TY/S.No. A	互換 I.C.	備考 REMARKS
010	1J508-4211-2	ﾌｭｰｴﾙﾁｭｰﾌﾞ	TUBE,FUEL	1		
020	14911-4275-0	ﾊﾟｲﾌﾟｸﾘｯﾌﾟ	CLIP,PIPE	2		
030	1J508-4221-0	ﾁｭｰﾌﾞ（ｺﾙｹﾞｰﾄ）	TUBE(CORRUGATE)	1		

↔ 新旧部品兼用可； ≠ 新旧部品兼用不可； ← 新部品は旧部品に兼用可； → 旧部品は新部品に兼用可

silverhorn.co.uk

532500 セパレータ SEPARATOR

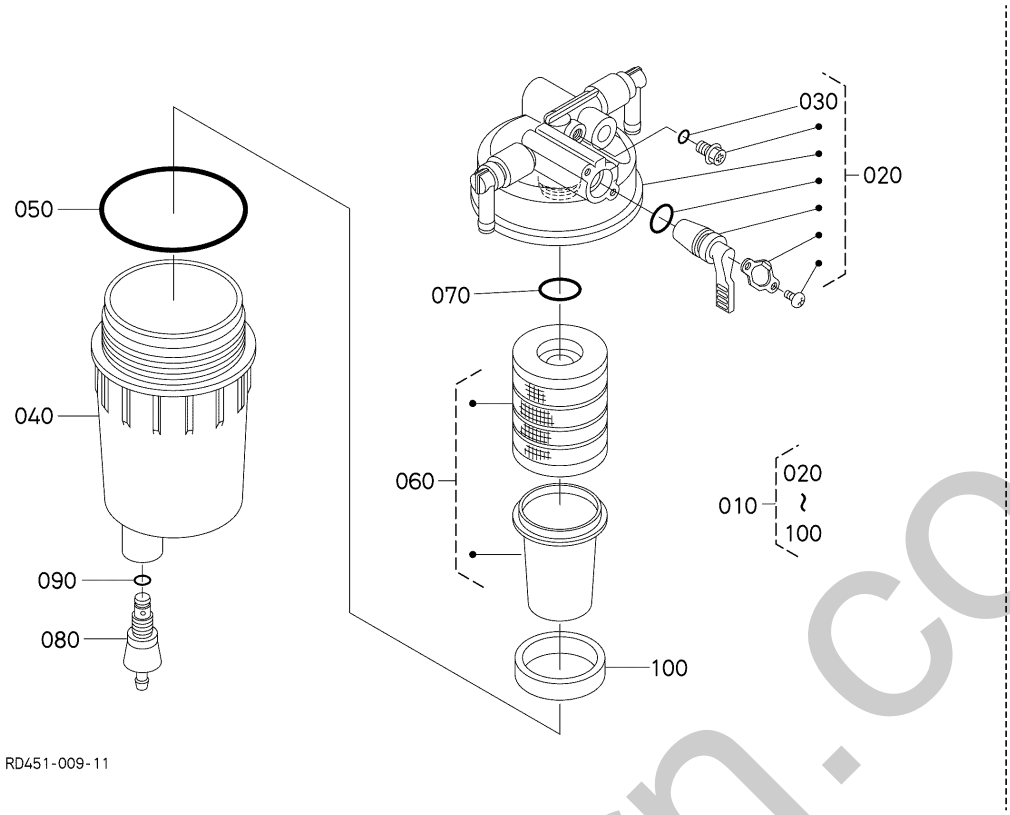

A:V3800-TIEF4B-COHE-1

図番 REF.No.	品番 PART No.	部品名称	PART NAME	数量 Q'TY/S.No. A	互換 I.C.	備考 REMARKS
010	RD451-5136-0	ﾌｨﾙﾀ,ｱｯｼ(Wｾﾊﾟﾚｰﾀ)	FILTER,ASSY(W,SEPARATOR)	1		
020	RD451-5191-0	ﾎﾞﾃﾞｰ,ｱｯｼ	ASSY BODY	1		
030	04817-00060	Oﾘﾝｸﾞ	O RING	1		
040	RD451-5192-0	ｶｯﾌﾟ	CUP	1		
050	RD451-5193-0	Oﾘﾝｸﾞ	O RING	1		
060	RD451-5194-0	ｴﾚﾒﾝﾄ,ｱｯｼ	ASSY ELEMENT	1		
070	04817-00160	Oﾘﾝｸﾞ	O RING	1		
080	RD451-5195-0	ﾌﾟﾗｸﾞ(ﾄﾞﾚﾝ)	PLUG,DRAIN	1		
090	04817-00070	Oﾘﾝｸﾞ	O RING	1		
100	RD451-5196-0	ﾌﾛｰﾄ	FLOAT	1		

↔ 新旧部品兼用可; ≠ 新旧部品兼用不可; ← 新部品は旧部品に兼用可; → 旧部品は新部品に兼用可

silverhorn.co.uk

545000 燃料噴射パイプ INJECTION PIPE

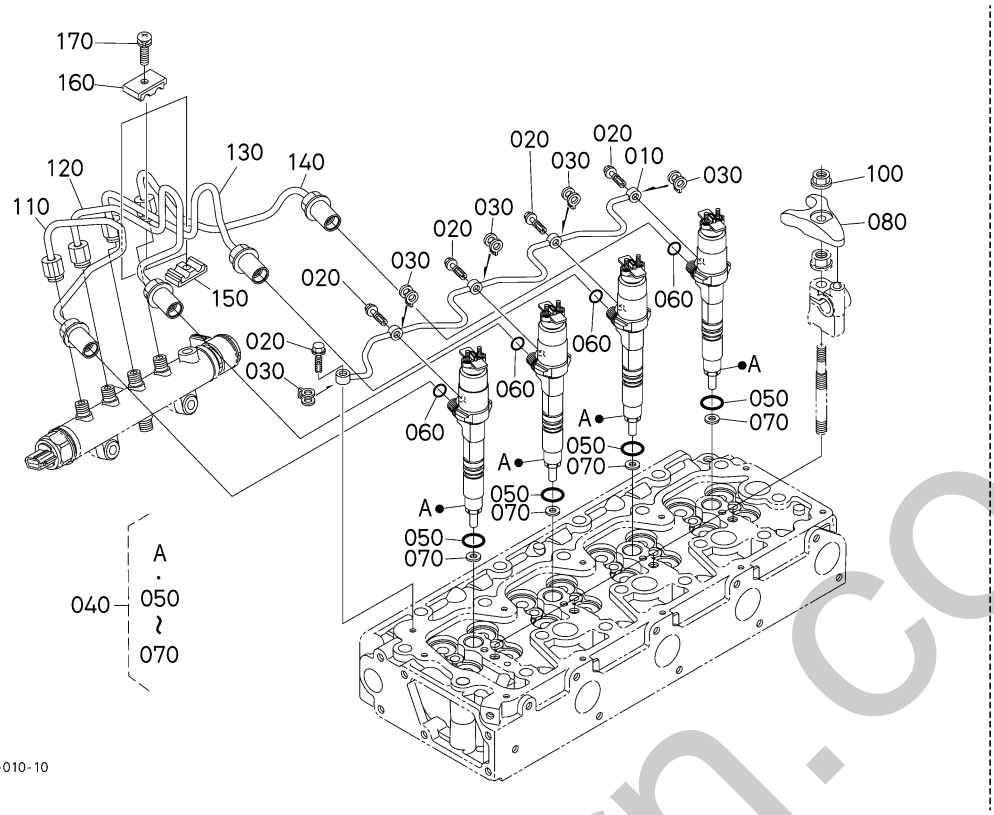

A:V3800-TIEF4B-COHE-1

図番 REF.No.	品番 PART No.	部品名称	PART NAME	数量 Q'TY/S.No. A	互換 I.C.	備考 REMARKS
010	1J574-4250-0	ﾊﾟｲﾌﾟ,ｱﾂｼ(ｵｰﾊﾞｰﾌﾛｰ)	ASSY PIPE,OVER FLOW	1		
020	1C020-9581-0	ﾎﾞﾙﾄ(ｱｲｶﾝﾂｷﾞﾃ)	BOLT(JOINT,SWV PIPE)	5		
030	1J550-9673-0	ｶﾞｽｹｯﾄ	GASKET	5		
040	1J508-5307-0	ｲﾝｼﾞｪｸﾀ,ｷｯﾄ	INJECTOR,KIT	4		
050	04814-00160	O ﾘﾝｸﾞ	O RING	4		
060	04814-05120	Oﾘﾝｸﾞ	O RING	4		
070	1G796-5362-0	ﾊﾟｯｷﾝ	PACKING	4		
080	1J574-5315-0	ｸﾗﾝﾌﾟ(ｲﾝｼﾞｪｸﾀ)	CLAMP	4		
090	----	ﾌﾞﾗﾝｸ	BLANK	-		
100	02751-50080	ﾌﾗﾝｼﾞﾅｯﾄ	NUT,FLANGE	4		
110	1J508-5371-0	ﾊﾟｲﾌﾟ(ｲﾝｼﾞｪｸｼｮﾝ,1)	PIPE(INJECTION)	1		
120	1J508-5372-0	ﾊﾟｲﾌﾟ(ｲﾝｼﾞｪｸｼｮﾝ,2)	PIPE(INJECTION,2)	1		
130	1J508-5373-0	ﾊﾟｲﾌﾟ(ｲﾝｼﾞｪｸｼｮﾝ,3)	PIPE(INJECTION,3)	1		
140	1J508-5374-0	ﾊﾟｲﾌﾟ(ｲﾝｼﾞｪｸｼｮﾝ,4)	PIPE(INJECTION,4)	1		
150	15841-5385-0	ﾊﾟｲﾌﾟ ｸﾗﾝﾌﾟ 1	CLAMP,PIPE	3		
160	15841-5386-0	ﾊﾟｲﾌﾟ ｸﾗﾝﾌﾟ 2	CLAMP,PIPE	3		
170	03024-50520	ｻﾞｶﾞﾈｯｷ ｺﾈｼﾞ	SCREW,SEMS(PAN HEAD)	3		

↔ 新旧部品兼用可; ≠ 新旧部品兼用不可; ← 新部品は旧部品に兼用可; → 旧部品は新部品に兼用可

smerhorn.co.uk

547100 燃料ポンプ（電気式）
FUEL PUMP (ELECTRICAL)

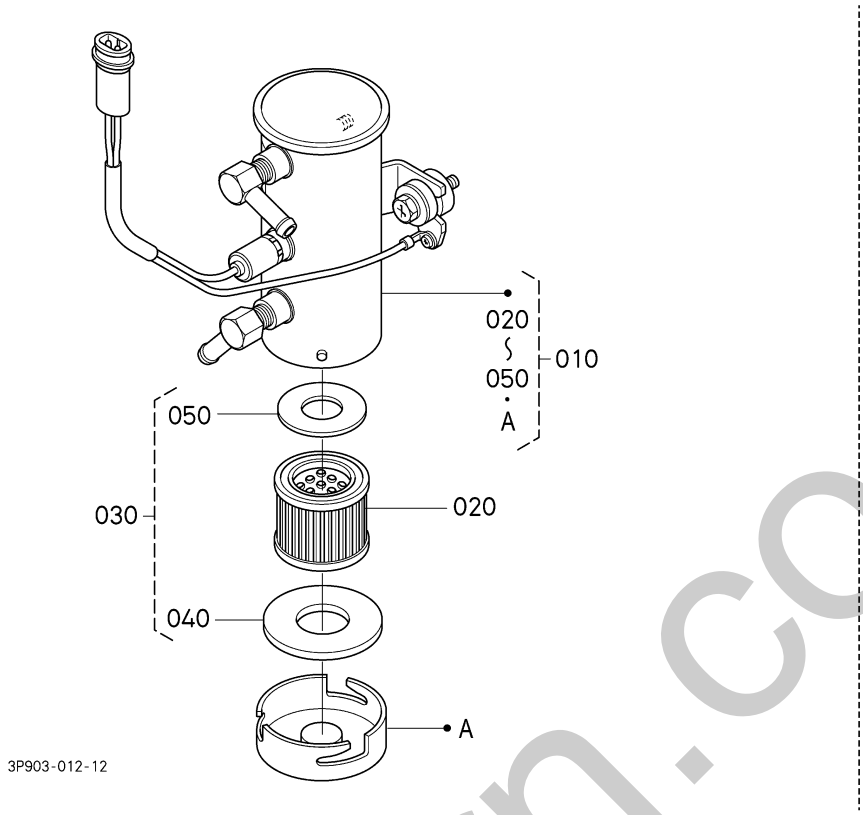

A:V3800-TIEF4B-COHE-1

図番 REF.No.	品番 PART No.	部品名称	PART NAME	数量 Q'TY/S.No. A	互換 I.C.	備考 REMARKS
010	3T400-5203-2	ﾎﾟﾝﾌﾟ,ｺﾝﾌﾟ(ﾌｭｰｴﾙ)	COMP.PUMP,FUEL	1		
020	1G410-5230-0	ﾌｨﾙﾀ	FILTER	1		
030	1G410-5239-0	ｶﾞｽｹｯﾄ,ｷｯﾄ	KIT,GASKET	1		
040	3T999-0159-0	ｶﾞｽｹｯﾄ	GASKET	1		
050	3T999-0160-0	ｶﾞｽｹｯﾄ	GASKET	1		

↔ 新旧部品兼用可； ≠ 新旧部品兼用不可； ← 新部品は旧部品に兼用可； → 旧部品は新部品に兼用可

silverhorn.co.uk

548000 コモンレール COMMON RAIL

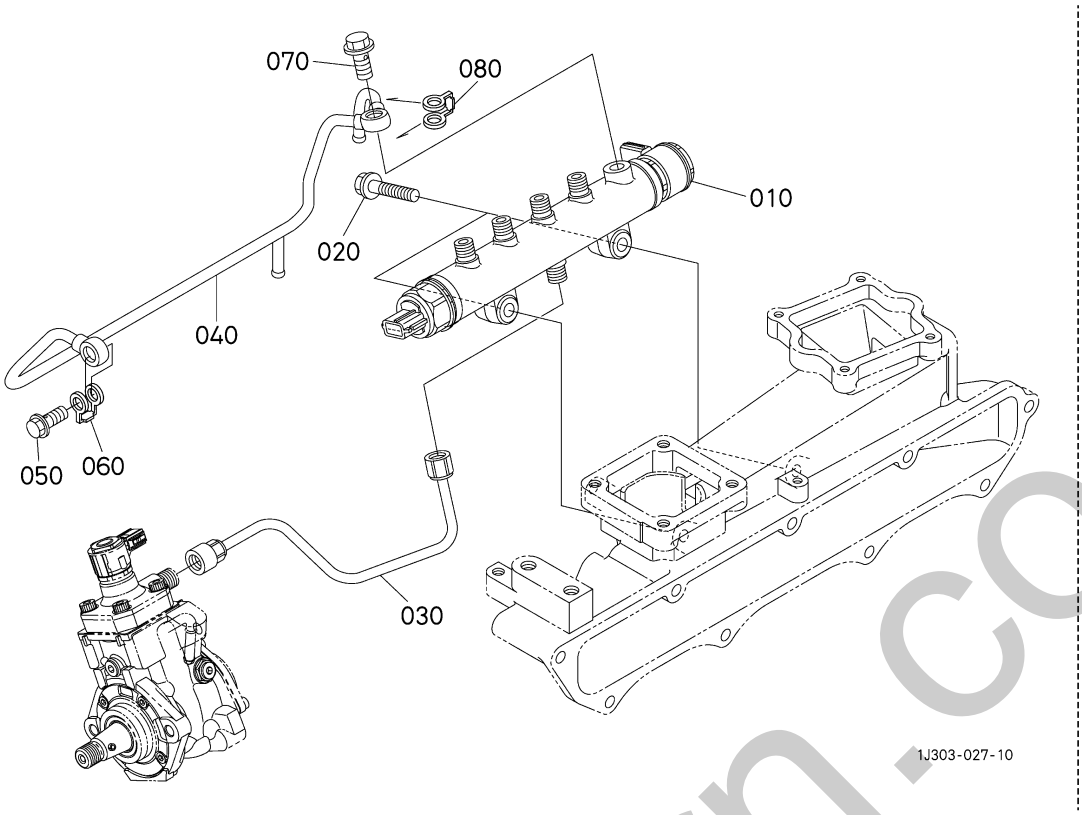

A:V3800-TIEF4B-COHE-1

図番 REF.No.	品番 PART No.	部品名称	PART NAME	数量 Q'TY/S.No. A	互換 I.C.	備考 REMARKS
010	1J508-5060-0	ﾚｰﾙ,ｱﾂｼ(ｺﾓﾝ)	RAIL,ASSY	1		
020	01754-50830	ﾌﾗﾝｼﾞﾎﾞﾙﾄ	BOLT,FLANGE	2		
030	1J508-5375-0	ﾊﾟｲﾌﾟ(ｲﾝｼﾞｴｸｼｮﾝ,A)	PIPE(INJECTION,A)	1		
040	1J508-4285-0	ﾊﾟｲﾌﾟ,ｺﾝﾌﾟ(2,OF)	PIPE,COMP(2,OVERFLOW)	1		
050	1J860-9579-0	ﾂｷﾞﾃﾎﾞﾙﾄ	BOLT,CONNECT	1		
060	1G557-9665-0	ｶﾞｽｹｯﾄ	GASKET	1		
070	1J508-9578-0	ﾂｷﾞﾃﾎﾞﾙﾄ(M10X1.0)	BOLT,CONNECTING(M10X1.0)	1		
080	1J510-9665-0	ｶﾞｽｹｯﾄ	GASKET	1		

↔ 新旧部品兼用可; ≠ 新旧部品兼用不可; ← 新部品は旧部品に兼用可; → 旧部品は新部品に兼用可

silvernorn.co.uk

550000 オルタネータ・プーリ
ALTERNATOR AND PULLEY

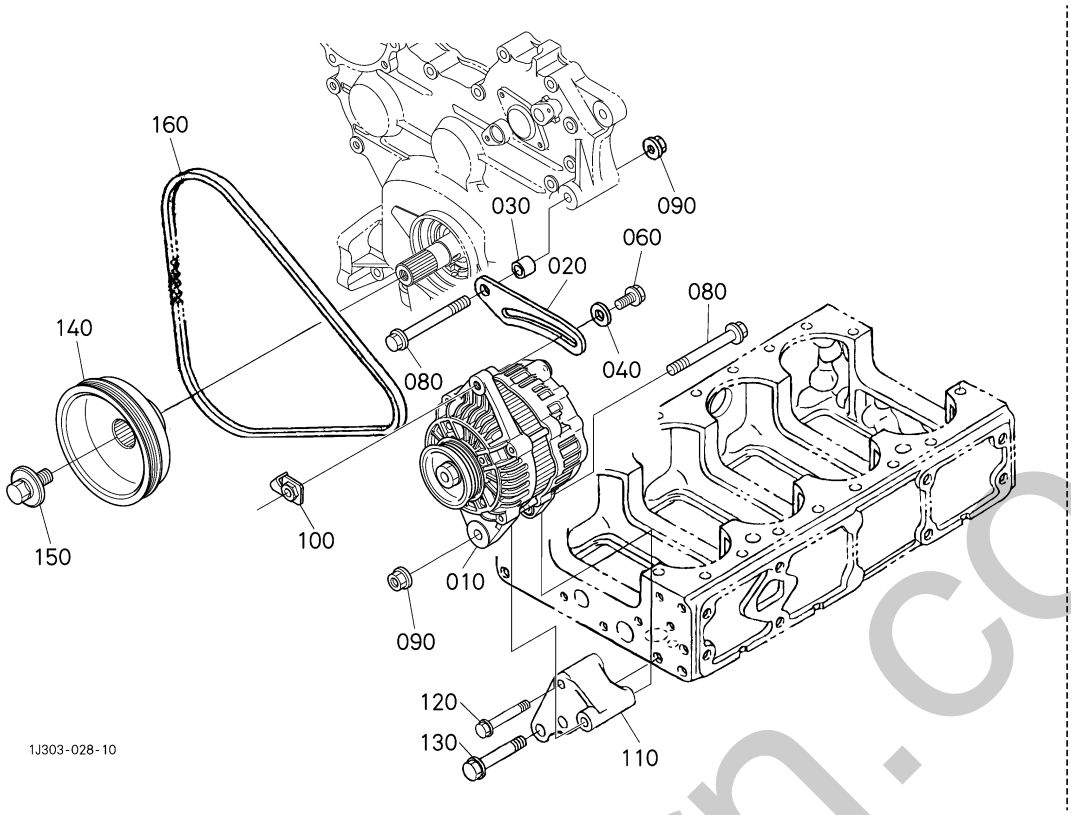

A:V3800-TIEF4B-COHE-1

図番 REF.No.	品番 PART No.	部品名称	PART NAME	数量 Q'TY/S.No. A	互換 I.C.	備考 REMARKS
010	1G377-6401-2	ｵﾙﾀﾈｰﾀ,ｱｯｼ(12V80A,P)	ALTERNATOR,ASSY	1		12V 80A
020	1K021-6442-0	ｽﾃｰ(ﾀﾞｲﾅﾓ)	STAY,DYNAMO	1		
030	1K021-6446-0	ｶﾗｰ(ﾀﾞｲﾅﾓ)	COLLAR,DYNAMO	1		
040	04015-50080	ﾋﾗｻﾞｶﾞﾈ	WASHER,PLAIN	1		
050	----	ﾌﾞﾗﾝｸ	BLANK	-		
060	01754-50825	ﾌﾗﾝｼﾞﾎﾞﾙﾄ	BOLT,FLANGE	1		
070	----	ﾌﾞﾗﾝｸ	BLANK	-		
080	01774-51002	ﾌﾗﾝｼﾞﾎﾞﾙﾄ	BOLT,FLANGE	2		
090	02771-50100	ﾌﾗﾝｼﾞﾅｯﾄ	NUT,FLANGE	2		
100	1G381-6447-0	ﾄﾘｯﾂｹｶﾅｸﾞ(ｵﾙﾀﾈｰﾀ)	STAY,ALTERNATOR	1		
110	1E637-6435-0	ｻﾎﾟｰﾄ(ｵﾙﾀﾈｰﾀ)	SUPPORT	1		
120	01754-50865	ﾌﾗﾝｼﾞﾎﾞﾙﾄ	BOLT,FLANGE	1		
130	01774-51270	ﾌﾗﾝｼﾞﾎﾞﾙﾄ	BOLT,FLANGE	2		
140	1K861-7428-0	ﾌｧﾝｸﾄﾞｳﾌﾟｰﾘ	PULLEY,FAN DRV	1		
150	1G774-9101-0	ﾎﾞﾙﾄ	BOLT	1		
160	1K861-9701-0	ﾌｧﾝﾍﾞﾙﾄ(Vﾘﾌﾞﾄﾞ,1030)	BELT,FAN	1		

↔ 新旧部品兼用可; ≠ 新旧部品兼用不可; ← 新部品は旧部品に兼用可; → 旧部品は新部品に兼用可

simpornpn.co.uk

551000 オルタネータ分解 ALTERNATOR [COMPONENT PARTS]

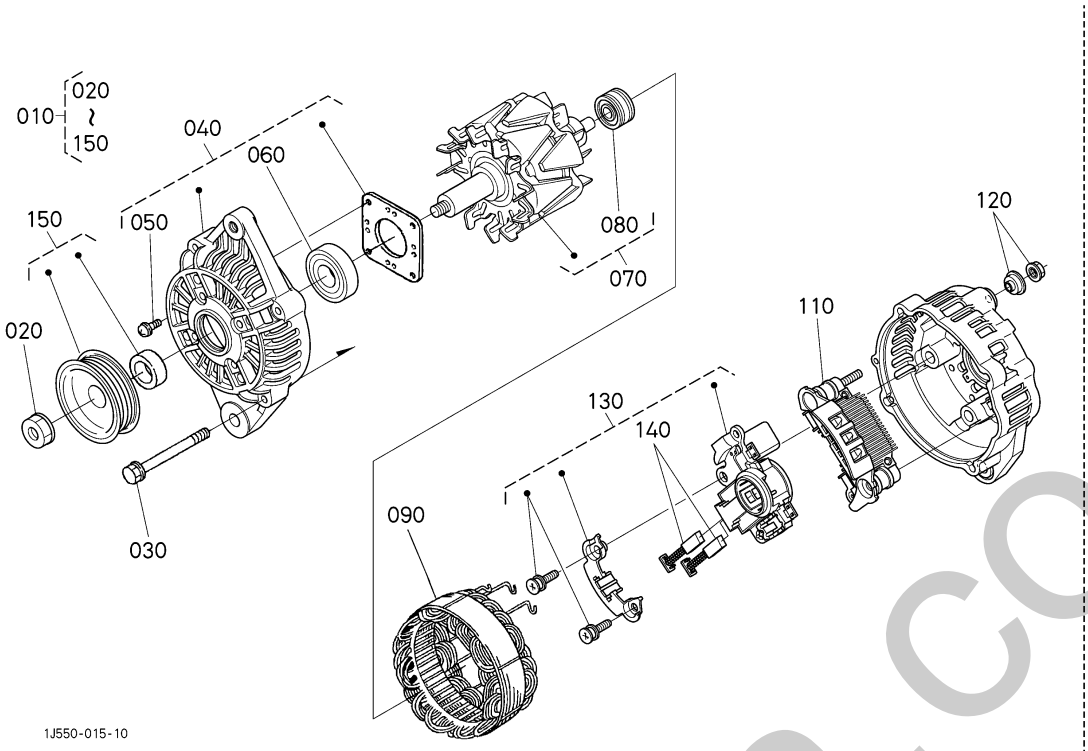

A:V3800-TIEF4B-COHE-1

図番 REF.No.	品番 PART No.	部品名称	PART NAME	数量 Q'TY/S.No. A	互換 I.C.	備考 REMARKS
010	1G377-6401-2	ｵﾙﾀﾈｰﾀ, ｱｯｼ(12V80A, P)	ALTERNATOR,ASSY	1		12V 80A
020	1C010-9201-0	ﾅｯﾄ	NUT	1		
030	1C010-9105-0	ﾎﾞﾙﾄ ｾｯﾄ	SET,BOLT	1		
040	1G377-6402-0	ﾌﾞﾗｹｯﾄ, ｱｯｼ(ﾌﾛﾝﾄ)	ASSY BRACKET,FRONT	1		
050	1C010-9301-0	ﾎﾞﾙﾄ ｾｯﾄ	SET,BOLT	1		
060	3F261-7812-0	ﾍﾞｱﾘﾝｸﾞ (F)	BEARING	1		
070	3F261-7813-0	ﾛｰﾀ ｱｯｼ	ASSY ROTOR	1		
080	1C010-6477-0	ﾍﾞｱﾘﾝｸﾞ (R)	BEARING	1		
090	1G377-6408-0	ｽﾃｰﾀ, ｱｯｼ	ASSY STATOR	1		
100	----	ﾌﾞﾗﾝｸ	BLANK	-		
110	1G377-6485-0	ﾚｸﾁﾌｧｲｱ, ｱｯｼ	ASSY RECTIFIER	1		
120	1K011-9203-0	ﾅｯﾄ ｾｯﾄ	SET NUT	1		
130	1G377-6460-2	ﾚｷﾞｭﾚｰﾀ, ｾｯﾄ	SET,REGULATOR	1		
140	1C010-6431-0	ﾌﾞﾗｼ ｾｯﾄ	SET BRUSH	1		
150	1G377-6411-0	ﾌﾟｰﾘ, ｱｯｼ	ASSY PULLEY	1		

↔ 新旧部品兼用可; ≠ 新旧部品兼用不可; ← 新部品は旧部品に兼用可; → 旧部品は新部品に兼用可

simenborn.co.uk

554000 スタータ STARTER

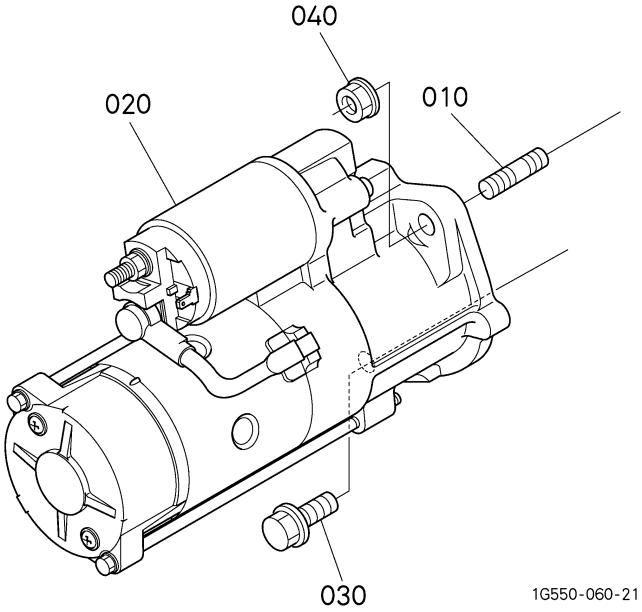

A:V3800-TIEF4B-COHE-1

図番 REF.No.	品番 PART No.	部品名称	PART NAME	数量 Q'TY/S.No. A	互換 I.C.	備考 REMARKS
010	01517-51030	ｽﾀｯﾄﾞ	BOLT,STUD	1		
020	1K012-6301-3	ｽﾀｰﾀ,ｱｯｼ(12V 3.0KW)	ASSY STARTER	1		
030	01774-51035	ﾌﾗﾝｼﾞﾎﾞﾙﾄ	BOLT,FLANGE	1		
040	02771-50100	ﾌﾗﾝｼﾞﾅｯﾄ	NUT,FLANGE	1		

↔ 新旧部品兼用可; ≠ 新旧部品兼用不可; ← 新部品は旧部品に兼用可; → 旧部品は新部品に兼用可

silverhorn.co.uk

555000 スタータ分解
STARTER [COMPONENT PARTS]

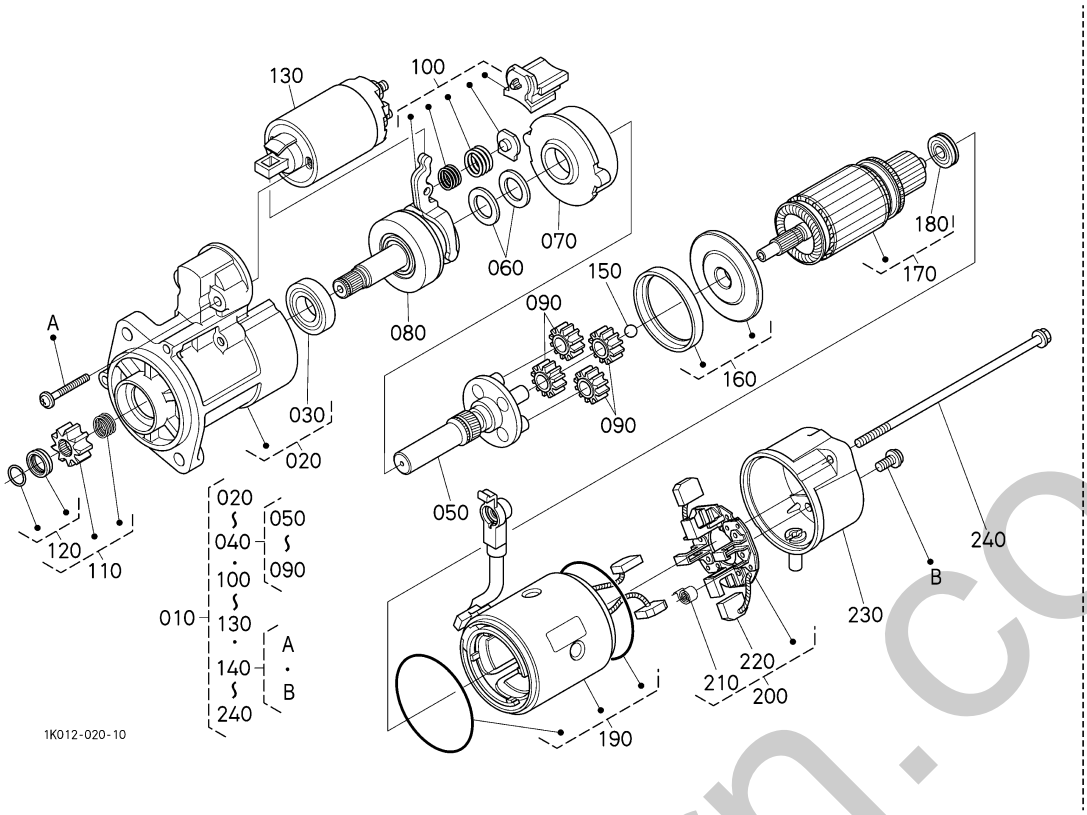

A:V3800-TIEF4B-COHE-1

図番 REF.No.	品番 PART No.	部品名称	PART NAME	数量 Q'TY/S.No. A	互換 I.C.	備考 REMARKS
010	1K012-6301-3	ｽﾀｰﾀ,ｱｯｼ(12V 3.0KW)	ASSY STARTER	1		12V 3.0KW
020	1K012-6303-0	ﾌﾞﾗｹｯﾄ,ｱｯｼ(ﾌﾛﾝﾄ)	ASSY BRACKET,FRONT	1		
030	1C010-6324-0	ﾍﾞｱﾘﾝｸﾞ ｾｯﾄ	SET BEARING	1		
040	1K012-6304-0	ｼｬﾌﾄ ｱｯｼ(ｸﾗｯﾁｾｯﾄ)	ASSY SHAFT,CLUTCH	1		
050	1K012-6321-0	ｼｬﾌﾄｱｯｼ(ｷﾞﾔｰ)	ASSY SHAFT,GEAR	1		
060	1C010-6341-0	ﾜｯｼｬ ｾｯﾄ	SET WASHER	1		
070	1C010-6326-0	ｲﾝﾀｰﾅﾙｷﾞﾔ ｾｯﾄ	SET GEAR	1		
080	1C010-6333-0	ｵｰﾊﾞ ﾗﾝﾆﾝｸﾞ ｸﾗｯﾁ	CLUTCH,OVER RUNNING	1		
090	1C010-6327-0	ｷﾞﾔｰ ｱｯｼ	ASSY GEAR	4		
100	1K012-6305-0	ﾚﾊﾞｰ ｱｯｼ (ｾｯﾄ)	ASSY LEVER,SET	1		
110	1K012-6328-0	ﾋﾟﾆｵﾝ ｾｯﾄ	SET PINION	1		
120	1C010-6317-0	ｽﾄｯﾊﾟ ｾｯﾄ	SET STOPPER	1		
130	1C010-6302-3	ｽｲｯﾁ ｱｯｼ(ﾏｸﾞﾈﾁｯｸ)	ASSY SWITCH,MAGNETIC	1		
140	1K012-6376-2	ﾅﾍﾞｺﾈｼﾞｾｯﾄ	SET SCREW	1		
150	6C040-8269-0	ﾎﾞｰﾙ	BALL	1		
160	1C010-6352-0	ﾊﾟｯｷﾝ ｾｯﾄ	SET,PACKING	1		
170	1K012-6307-2	ｱﾏﾁｭｱ ｱｯｼ	ASSY ARMATURE	1		
180	1C010-6325-2	ﾍﾞｱﾘﾝｸﾞ	BEARING	1		
190	1K012-6308-3	ﾖｰｸ ｱｯｼ	ASSY YOKE	1		
200	1K012-6338-0	ﾌﾞﾗｼﾎﾙﾀﾞｰｱｯｼ	ASSY HOLDER,BRUSH	1		
210	1K012-6339-0	ｽﾌﾟﾘﾝｸﾞ ﾌﾞﾗｼ	BRUSH,SPRING	4		
220	1K012-6337-0	ﾌﾞﾗｼ(+)	BRUSH	2		
230	1K012-6320-2	ﾌﾞﾗｹｯﾄ ｱｯｼ (ﾘﾔｰ)	ASSY BRACKET,REAR	1		
240	1K012-6332-0	ﾎﾞﾙﾄ ｾｯﾄ	SET,BOLT	1		

↔ 新旧部品兼用可; ≠ 新旧部品兼用不可; ← 新部品は旧部品に兼用可; → 旧部品は新部品に兼用可

swernorn.co.uk

557000 スイッチ・センサ SWITCH/SENSOR

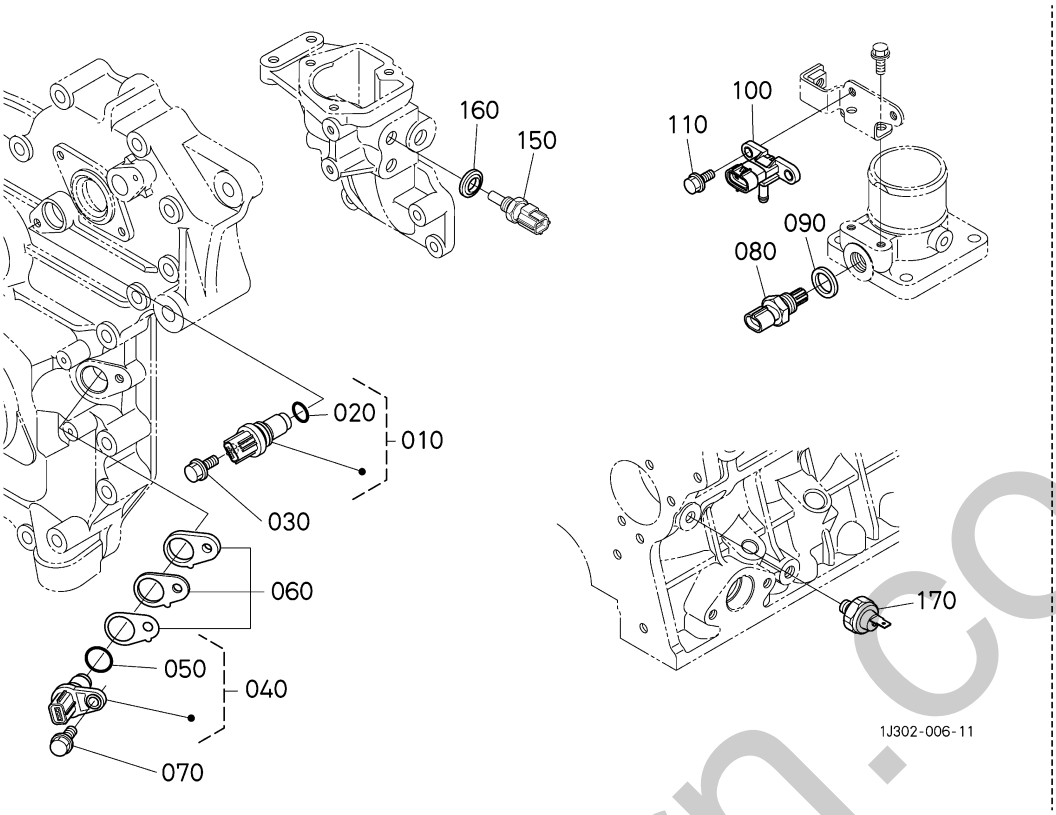

A:V3800-TIEF4B-COHE-1

図番 REF.No.	品番 PART No.	部品名称	PART NAME	数量 Q'TY/S.No. A	互換 I.C.	備考 REMARKS
010	1J574-5971-0	ｾﾝｻ(G)	SENSOR(G)	1		
020	1J574-9675-0	Oﾘﾝｸﾞ	O RING	1		
030	01754-50616	ﾌﾗﾝｼﾞﾎﾞﾙﾄ	BOLT,FLANGE	1		
040	1J574-5971-0	ｾﾝｻ(G)	SENSOR(G)	1		
050	1J574-9675-0	Oﾘﾝｸﾞ	O RING	1		
060	1G381-0442-0	ｼﾑ(NEｾﾝｻ,025)	SHIM	1		0.25mm
060	1G381-0443-0	ｼﾑ(NEｾﾝｻ,050)	SHIM	1		0.50mm
060	1G381-0444-0	ｼﾑ(NEｾﾝｻ,100)	SHIM	1		1.00mm
070	01754-50616	ﾌﾗﾝｼﾞﾎﾞﾙﾄ	BOLT,FLANGE	1		
080	1J574-5968-0	ｾﾝｻ(ｷｭｳｷｵﾝﾄﾞ)	SENSOR(THERMO)	1		
090	04724-00160	ｶﾞｽｹｯﾄ	PACKING	1		
100	1J500-5967-0	ｾﾝｻ(ﾌﾞｰｽﾄ)	SENSOR,BOOST	1		
110	01754-50616	ﾌﾗﾝｼﾞﾎﾞﾙﾄ	BOLT,FLANGE	2		
120	----	ﾌﾞﾗﾝｸ	BLANK	-		
130	----	ﾌﾞﾗﾝｸ	BLANK	-		
140	----	ﾌﾞﾗﾝｸ	BLANK	-		
150	5H601-4194-0	ｾﾝｻ(ｽｲｵﾝ)	SENSOR,WATER TEMP.	1		
160	04717-01200	ｺﾞﾑﾂｷ ｻﾞｶﾞﾈ	WASHER,SEAL	1		
170	1A024-3901-0	ｵｲﾙｽｲｯﾁ	SWITCH(OIL)	1		

↔ 新旧部品兼用可; ≠ 新旧部品兼用不可; ← 新部品は旧部品に兼用可; → 旧部品は新部品に兼用可

silverhorn.co.uk

557500 インジェクタハーネス INJECTOR HARNESS

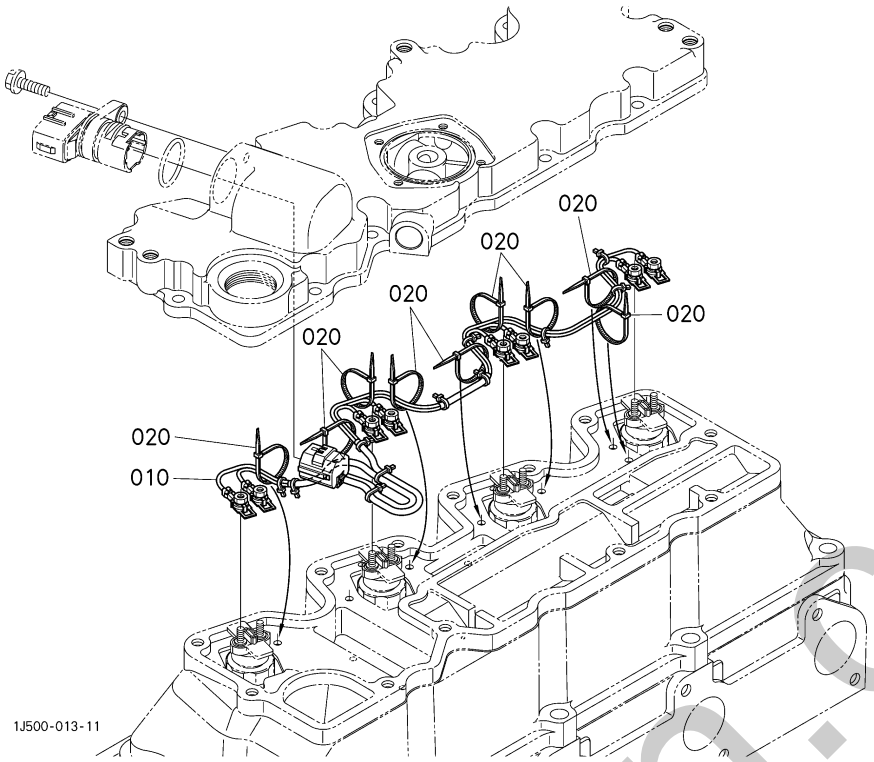

A:V3800-TIEF4B-COHE-1

図番 REF.No.	品番 PART No.	部品名称	PART NAME	数量 Q'TY/S.No. A	互換 I.C.	備考 REMARKS
010	1J500-6505-6	ﾜｲﾔﾊｰﾈｽ,ｱﾂｼ(ｲﾝｼﾞｪｸﾀ)	ASSY HARNESS,INJECT.	1		
020	1J574-6534-0	ﾊﾞﾝﾄﾞ(ﾊｰﾈｽ)	BAND(HARNESS)	9		

↔ 新旧部品兼用可; ≠ 新旧部品兼用不可; ← 新部品は旧部品に兼用可; → 旧部品は新部品に兼用可

silverhorn.co.uk

558000 ワイヤハーネス WIRE HARNESS

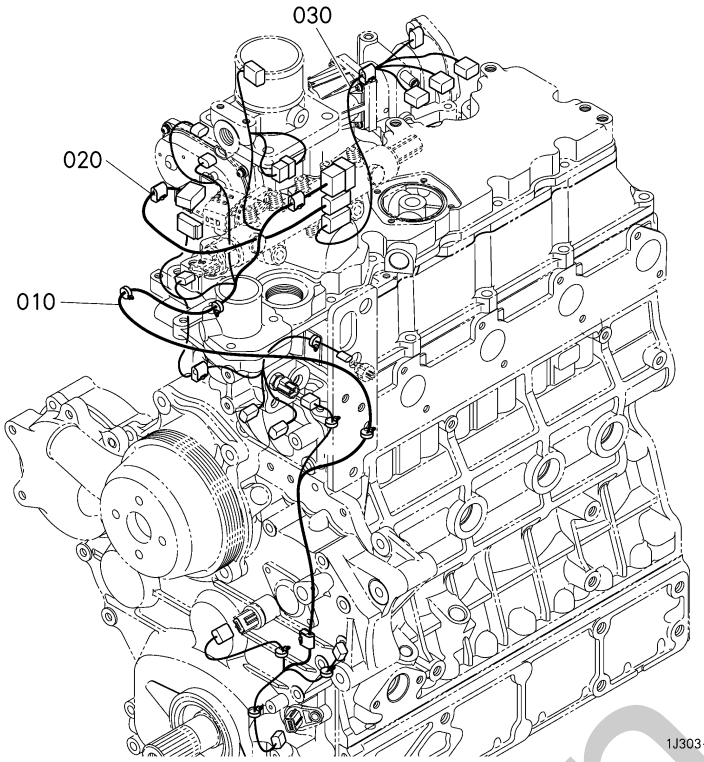

A:V3800-TIEF4B-COHE-1

図番 REF.No.	品番 PART No.	部品名称	PART NAME	数量 Q'TY/S.No. A	互換 I.C.	備考 REMARKS
010	1J508-6506-0	ﾜｲﾔﾊｰﾈｽ,ｱｯｼ(ENG,IN)	HARNESS,WIRE,ASSY	1		
020	1J508-6507-0	ﾜｲﾔﾊｰﾈｽ,ｱｯｼ(INJ)	HARNESS,WIRE,ASSY(INJ)	1		
030	1J508-6508-0	ﾜｲﾔﾊｰﾈｽ,ｱｯｼ(DPF)	HARNESS,WIRE,ASSY(DPF)	1		

↔ 新旧部品兼用可; ≠ 新旧部品兼用不可; ← 新部品は旧部品に兼用可; → 旧部品は新部品に兼用可

silverhorn.co.uk

558500 ワイヤハーネスブラケット WIRE HARNESS BRACKET

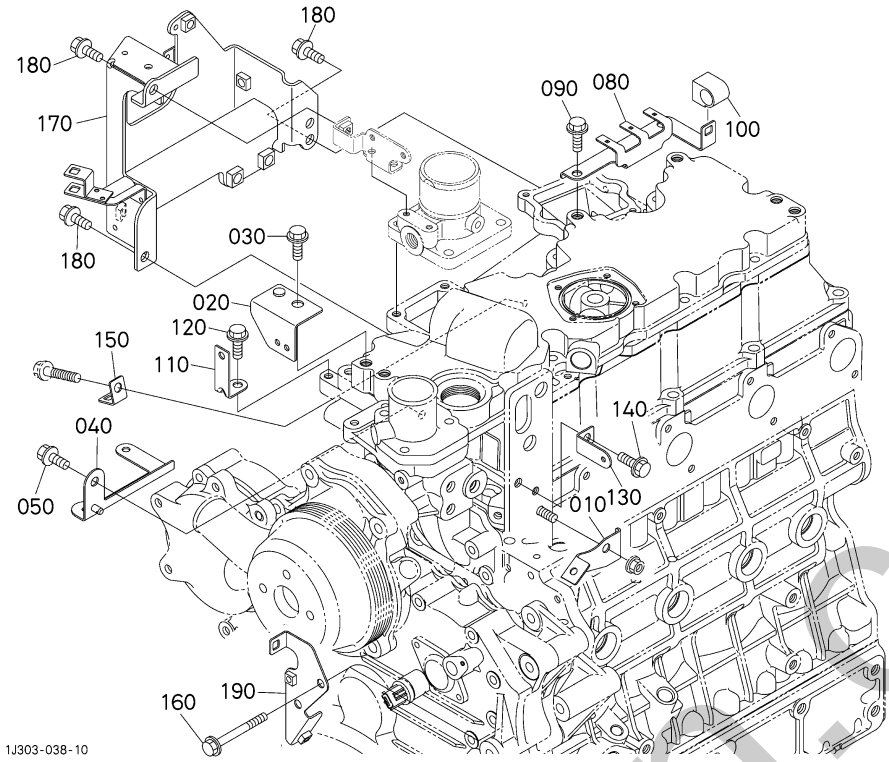

A:V3800-TIEF4B-COHE-1

図番 REF.No.	品番 PART No.	部品名称	PART NAME	数量 Q'TY/S.No. A	互換 I.C.	備考 REMARKS
010	1J508-6522-0	ﾌﾞﾗｹｯﾄ(WH,3)	BRACKET(WH,3)	1		
020	1J508-6523-0	ﾌﾞﾗｹｯﾄ,ｺﾝﾌﾟ(WH,4)	BRACKET,COMP(WH,4)	1		
030	01754-50816	ﾌﾗﾝｼﾞﾎﾞﾙﾄ	BOLT,FLANGE	1		
040	1J508-6524-0	ﾌﾞﾗｹｯﾄ,ｺﾝﾌﾟ(WH,5)	COMP.BRACKET,HARNESS	1		
050	01754-50816	ﾌﾗﾝｼﾞﾎﾞﾙﾄ	BOLT,FLANGE	1		
060	----	ﾌﾞﾗﾝｸ	BLANK	-		
070	----	ﾌﾞﾗﾝｸ	BLANK	-		
080	1J508-6517-0	ﾌﾞﾗｹｯﾄ(WH,7)	BRACKET(WH,7)	1		
090	01754-50816	ﾌﾗﾝｼﾞﾎﾞﾙﾄ	BOLT,FLANGE	2		
100	1J500-6539-0	ｸﾗﾝﾌﾟ(ﾜｲﾔﾊｰﾈｽ)	CLAMP	1		
110	1J508-6537-0	ﾌﾞﾗｹｯﾄ(WH,8)	BRACKET(WH,6)	1		
120	01754-50816	ﾌﾗﾝｼﾞﾎﾞﾙﾄ	BOLT,FLANGE	1		
130	1J508-6538-0	ﾌﾞﾗｹｯﾄ(WH,9)	BRACKET(WH,6)	1		
140	01754-50816	ﾌﾗﾝｼﾞﾎﾞﾙﾄ	BOLT,FLANGE	1		
150	1J508-6533-0	ﾌﾞﾗｹｯﾄ(WH,10)	BRACKET(WH,10)	1		
160	1C010-9107-0	ﾌﾗﾝｼﾞﾎﾞﾙﾄ	BOLT,FLANGE	2		
170	1J508-6520-2	ﾌﾞﾗｹｯﾄ,ｺﾝﾌﾟ(WH)	BRACKET,COMP(CONNECTOR)	1		
180	01754-50816	ﾌﾗﾝｼﾞﾎﾞﾙﾄ	BOLT,FLANGE	3		
190	1J508-6521-0	ﾌﾞﾗｹｯﾄ,ｺﾝﾌﾟ(WH,2)	BRACKET,COMP(WH,2)	1		

↔ 新旧部品兼用可； ≠ 新旧部品兼用不可； ← 新部品は旧部品に兼用可； → 旧部品は新部品に兼用可

silverhorn.co.uk

560000 ウォータフランジ・サーモスタット
WATER FLANGE AND THERMOSTAT

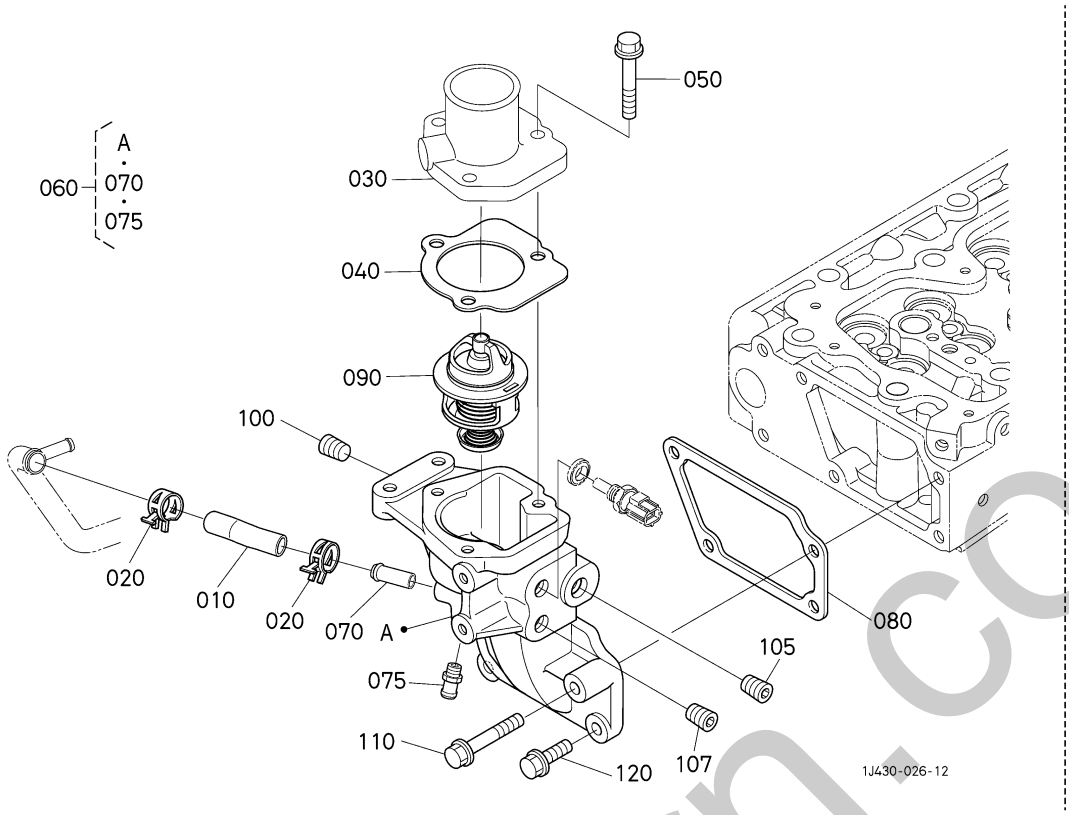

A:V3800-TIEF4B-COHE-1

図番 REF.No.	品番 PART No.	部品名称	PART NAME	数量 Q'TY/S.No. A	互換 I.C.	備考 REMARKS
010	1J500-7335-2	ﾎｰｽ(ｳｵｰﾀ, ﾘﾀｰﾝ)	HOSE,WATER RETURN	1		
020	09318-88200	ﾎｰｽｸﾗﾝﾌﾟ(ﾊﾞﾈｼｷ)	CLAMP,HOSE	2		
030	1C020-7326-0	ｶﾊﾞｰ(ｻｰﾓｽﾀｯﾄ)	COVER,THERMOSTAT	1		
040	1C020-7327-3	ｶﾞｽｹｯﾄ	GASKET	1		
050	01754-50825	ﾌﾗﾝｼﾞﾎﾞﾙﾄ	BOLT,FLANGE	3		
060	1J552-7270-2	ｳｵｰﾀﾌﾗﾝｼﾞ, ｺﾝﾌﾟ	COMP.FLANGE,WATER	1		
070	16241-0555-0	ﾌﾞﾚｻﾞﾊﾟｲﾌﾟ ﾂｷﾞﾃ	JOINT,BREATHER PIPE	1		
075	1C010-3711-4	ｸﾀﾞﾂｷﾞﾃ(ｳｵｰﾀﾊﾟｲﾌﾟ)	JOINT,WATER PIPE	1		
080	1C010-7282-0	ｶﾞｽｹｯﾄ(ｳｵｰﾀﾌﾗﾝｼﾞ 1)	GASKET(FLANGE,WATER)	1		
090	1C011-7301-3	ｻｰﾓｽﾀｯﾄ, ｱｯｼ	ASSY THERMOSTAT	1		
100	1A021-9602-0	ﾌﾟﾗｸﾞ	PLUG	1		
105	1A021-9602-0	ﾌﾟﾗｸﾞ	PLUG	1		
107	1A021-9602-0	ﾌﾟﾗｸﾞ	PLUG	1		
110	01754-50825	ﾌﾗﾝｼﾞﾎﾞﾙﾄ	BOLT,FLANGE	3		
120	01754-50845	ﾌﾗﾝｼﾞﾎﾞﾙﾄ	BOLT,FLANGE	1		

↔ 新旧部品兼用可; ≠ 新旧部品兼用不可; ← 新部品は旧部品に兼用可; → 旧部品は新部品に兼用可

simechern.co.uk

561000 ウォータポンプ WATER PUMP

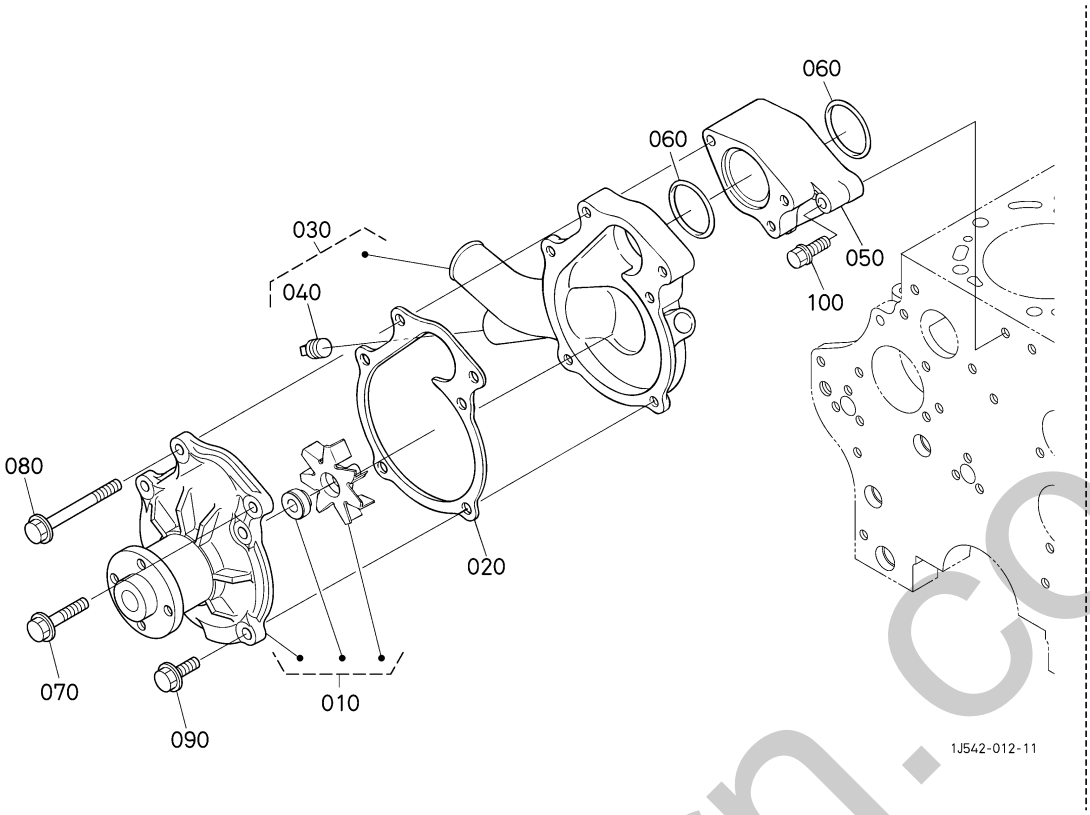

A:V3800-TIEF4B-COHE-1

図番 REF.No.	品番 PART No.	部品名称	PART NAME	数量 Q'TY/S.No. A	互換 I.C.	備考 REMARKS
010	1J542-7303-3	ｳｵｰﾀﾎﾟﾝﾌﾟ,ｱｯｼ	PUMP,WATER,ASSY	1		
020	1C010-7343-0	ｶﾞｽｹｯﾄ(ｳｵｰﾀﾎﾟﾝﾌﾟ)	GASKET(PUMP,WATER)	1		
030	1J411-7306-0	ｻﾎﾟｰﾄ,ｱｯｼ(ｳｵｰﾀﾎﾟﾝﾌﾟ)	ASSY SUPPORT W/P	1		
040	06312-10030	ﾌﾟﾗｸﾞ	W-PLUG	1		
050	1J552-7382-0	ｻﾎﾟｰﾄ(ｳｵｰﾀﾎﾟﾝﾌﾟ,2)	SUPPORT,WATER PUMP	1		
060	1J550-7376-2	ｶﾞｽｹｯﾄ(WPｻﾎﾟｰﾄ)	GASKET,WATER PUMP SUPPORT	2		
070	01754-50880	ﾌﾗﾝｼﾞﾎﾞﾙﾄ	BOLT,FLANGE	2		
080	01754-50804	ﾌﾗﾝｼﾞﾎﾞﾙﾄ	BOLT,FLANGE	1		
090	01754-50830	ﾌﾗﾝｼﾞﾎﾞﾙﾄ	BOLT,FLANGE	3		
100	01754-50840	ﾌﾗﾝｼﾞﾎﾞﾙﾄ	BOLT,FLANGE	3		

↔ 新旧部品兼用可; ≠ 新旧部品兼用不可; ← 新部品は旧部品に兼用可; → 旧部品は新部品に兼用可

silvernorn.co.uk

561200 ウォータパイプ WATER PIPE

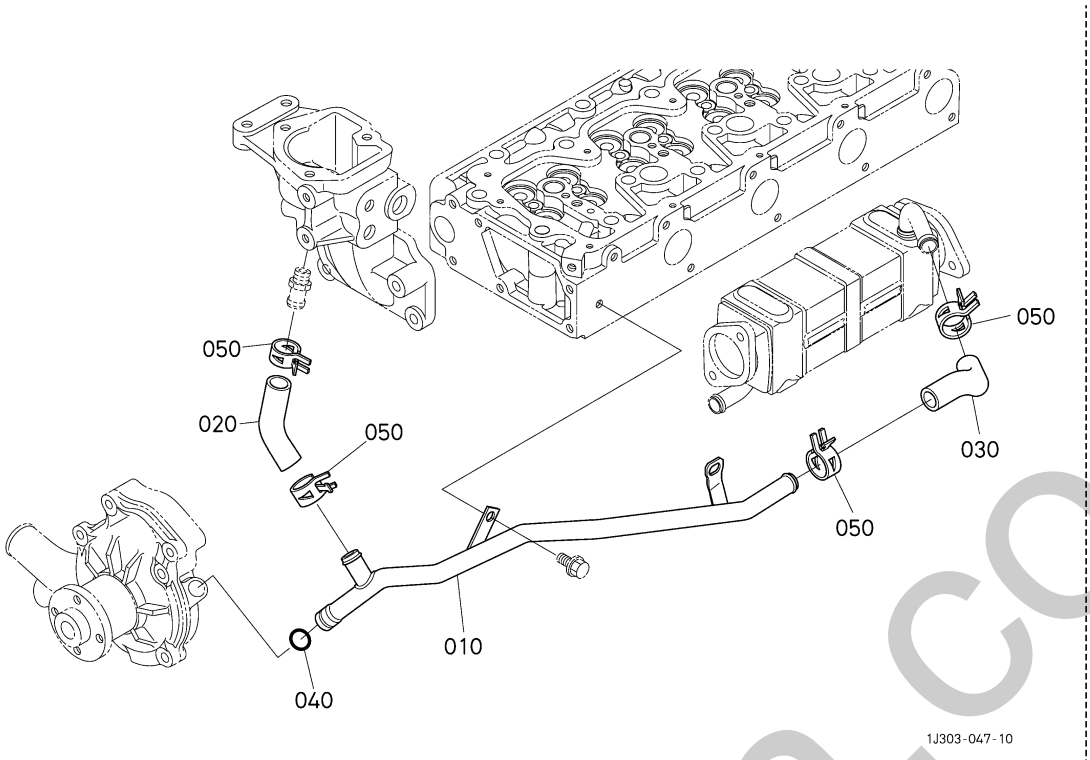

A:V3800-TIEF4B-COHE-1

図番 REF.No.	品番 PART No.	部品名称	PART NAME	数量 Q'TY/S.No. A	互換 I.C.	備考 REMARKS
010	1K861-7147-0	ﾊﾟｲﾌﾟ,ｺﾝﾌﾟ(WP2,EGR)	PIPE,COMP(WATER)	1		
020	1G377-7335-0	ﾊﾟｲﾌﾟ(1,ｳｵｰﾀﾘﾀｰﾝ)	PIPE,WATER RETURN	1		
030	1J508-7146-0	ﾎｰｽ(2,EGR)	HOSE(2,EGR)	1		
040	04816-05150	O ﾘﾝｸﾞ	O RING	1		
050	09318-88200	ﾎｰｽｸﾗﾝﾌﾟ(ﾊﾞﾈｼｷ)	CLAMP,HOSE	4		

↔ 新旧部品兼用可; ≠ 新旧部品兼用不可; ← 新部品は旧部品に兼用可; → 旧部品は新部品に兼用可

silverhorn.co.uk

567000 冷却ファン・プーリ
FAN AND PULLEY

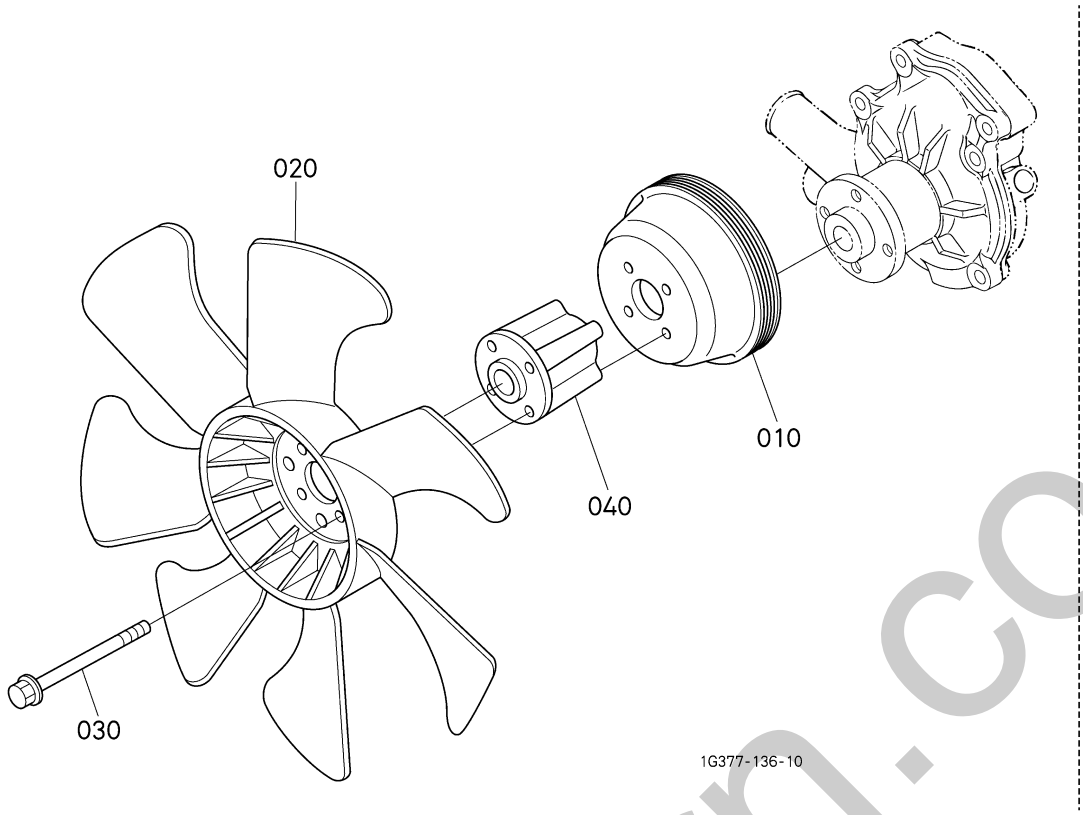

A:V3800-TIEF4B-COHE-1

図番 REF.No.	品番 PART No.	部品名称	PART NAME	数量 Q'TY/S.No. A	互換 I.C.	備考 REMARKS
010	1G377-7425-0	ﾌｱﾝﾌﾟｰﾘ	PULLEY,FAN	1		
020	1G377-7411-0	ｸｰﾘﾝｸﾞﾌｧﾝ(550,FP7)	FAN,COOLING	1		
030	16424-9101-0	ﾌﾗﾝｼﾞﾎﾞﾙﾄ(M8X93)	HEX.BOLT	4		
040	1G381-7415-2	ﾌｧﾝｶﾗｰ	COLLAR,FAN	1		

↔ 新旧部品兼用可; ≠ 新旧部品兼用不可; ← 新部品は旧部品に兼用可; → 旧部品は新部品に兼用可

silverhorn.co.uk

571000 吸気マニホールド INLET MANIFOLD

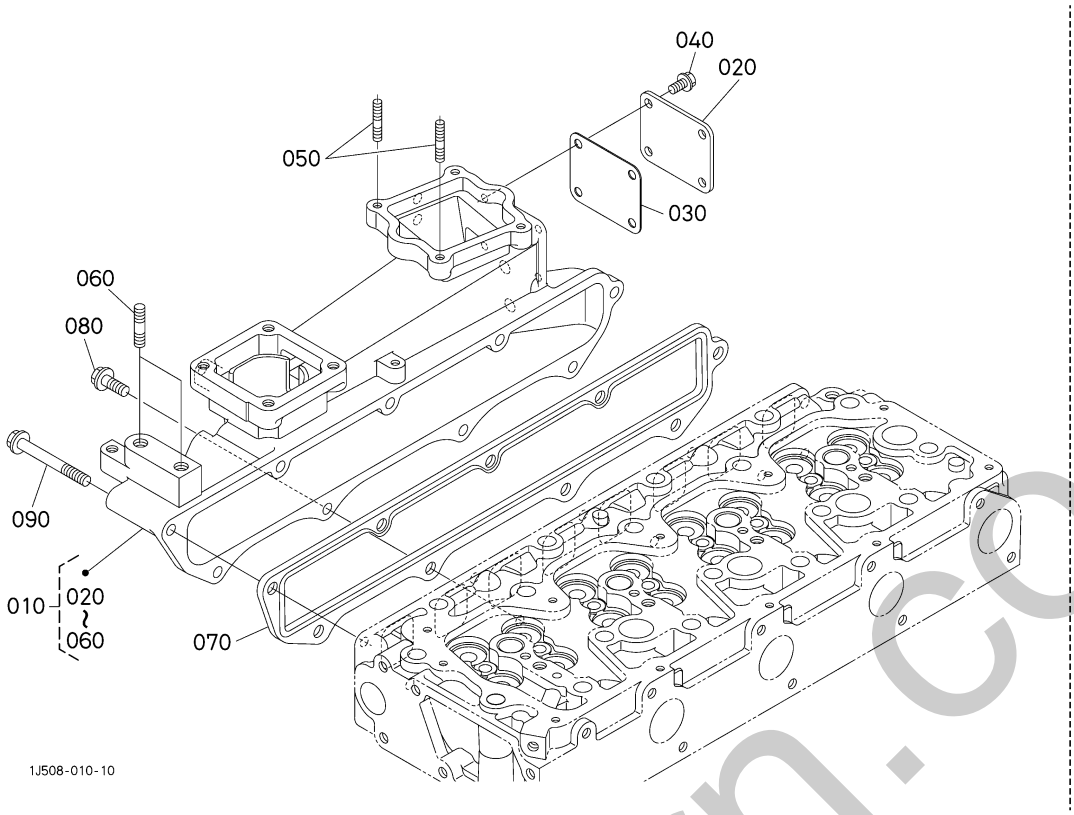

A:V3800-TIEF4B-COHE-1

図番 REF.No.	品番 PART No.	部品名称	PART NAME	数量 Q'TY/S.No. A	互換 I.C.	備考 REMARKS
010	1J509-1177-4	ﾏﾆﾎﾙﾄﾞ,ｱｯｼ(ｲﾝﾚｯﾄ)	MANIFOLD,ASSY(INLET)	1		
020	1J500-1198-0	ｶﾊﾞｰ(ｲﾝﾚｯﾄ,2)	COVER,INLET	1		
030	1J500-1184-0	ｶﾞｽｹｯﾄ(ｲﾝﾚｯﾄ,2)	GASKET,INLET	1		
040	01754-50612	ﾌﾗﾝｼﾞﾎﾞﾙﾄ	BOLT,FLANGE	4		
050	01518-50622	ｽﾀｯﾄﾞ	BOLT,STUD	2		
060	01517-51030	ｽﾀｯﾄﾞ	BOLT,STUD	2		
070	1C020-1182-0	ｶﾞｽｹｯﾄ(ｲﾝﾚｯﾄﾏﾆﾎﾙﾄﾞ)	GASKET(IN-MANIFOLD)	1		
080	01754-50820	ﾌﾗﾝｼﾞﾎﾞﾙﾄ	BOLT,FLANGE	5		
090	01754-50865	ﾌﾗﾝｼﾞﾎﾞﾙﾄ	BOLT,FLANGE	4		

↔ 新旧部品兼用可; ≠ 新旧部品兼用不可; ← 新部品は旧部品に兼用可; → 旧部品は新部品に兼用可

silverhorn.co.uk

571100 エアクリーナフランジ・スロットルバルブ
AIR CLEANER FLANGE AND THROTTLE VALVE

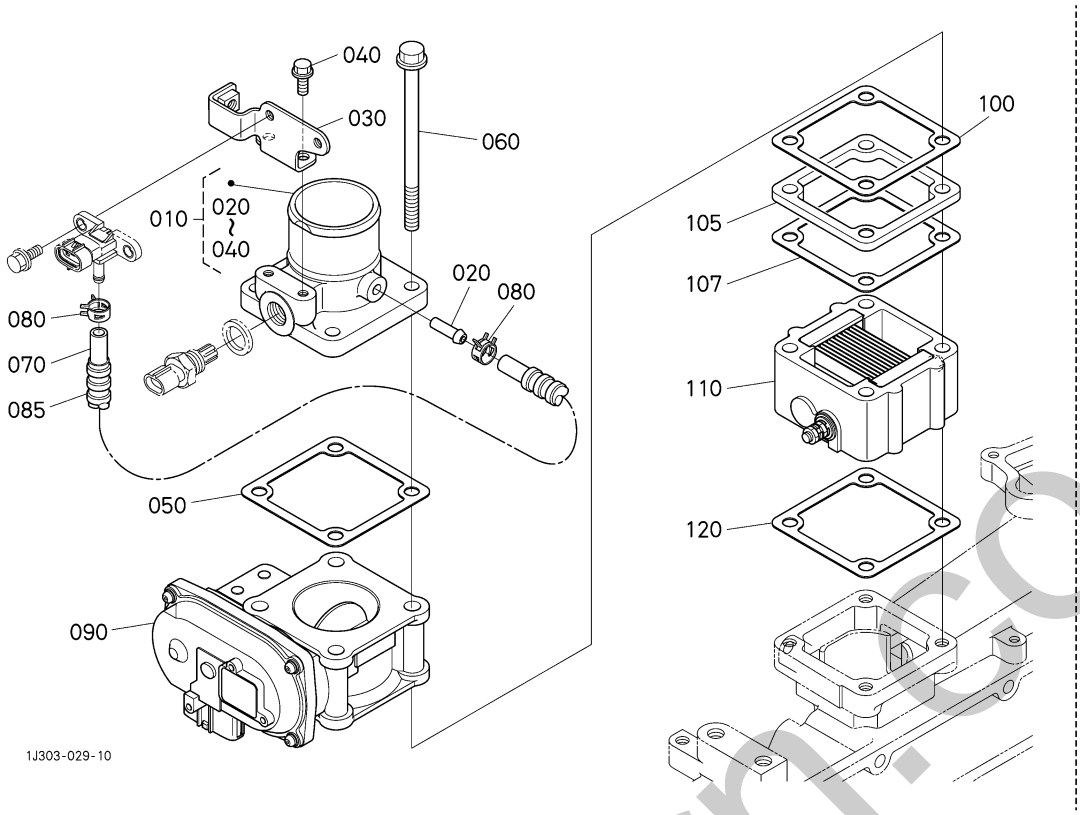

A:V3800-TIEF4B-COHE-1

図番 REF.No.	品番 PART No.	部品名称	PART NAME	数量 Q'TY/S.No. A	互換 I.C.	備考 REMARKS
010	1J302-1181-0	ﾌﾗﾝｼﾞ,ｺﾝﾌﾟ(ｴｱｸﾘｰﾅ)	FLANGE,COMP(AIR CLEANER)	1		
020	1J574-5428-0	ﾊﾟｲﾌﾟ(ﾌﾞｰｽﾄ)	PIPE,BOOST	1		
030	1J302-5972-0	ﾌﾞﾗｹｯﾄ(ﾌﾞｰｽﾄｾﾝｻ)	BRACKET(BOOST)	1		
040	01754-50612	ﾌﾗﾝｼﾞﾎﾞﾙﾄ	BOLT,FLANGE	2		
050	1J500-1165-0	ｶﾞｽｹｯﾄ(ｴｱｸﾘｰﾅﾌﾗﾝｼﾞ)	GASKET,A/C FLANGE	1		
060	1A021-9104-0	ﾌﾗﾝｼﾞﾎﾞﾙﾄ(M8X128)	BOLT	4		
070	09661-50150	ﾌｭｰｴﾙﾁｭｰﾌﾞ	TUBE,FUEL	1		
080	09318-88085	ﾎｰｽｸﾗﾝﾌﾟ(ﾊﾞﾈｼｷ)	CLAMP,HOSE	2		
085	1J540-4212-0	ﾁｭｰﾌﾞ	TUBE	1		
090	1J500-1060-0	ｽﾛｯﾄﾙﾊﾞﾙﾌﾞ,ｱｯｼ(ｷｭｳｷ)	VALVE,THROTTLE,ASSY	1		
100	1J500-1165-0	ｶﾞｽｹｯﾄ(ｴｱｸﾘｰﾅﾌﾗﾝｼﾞ)	GASKET,A/C FLANGE	1		
105	1J302-1158-0	ｽﾍﾟｰｻ(ｴｱｸﾘｰﾅﾌﾗﾝｼﾞ)	SPACER	1		
107	1J500-1165-0	ｶﾞｽｹｯﾄ(ｴｱｸﾘｰﾅﾌﾗﾝｼﾞ)	GASKET,A/C FLANGE	1		
110	1J500-6545-2	ﾋｰﾀ(ｲﾝﾃｰｸｴｱ)	HEATER,INTAKE AIR	1		
120	1J500-1165-0	ｶﾞｽｹｯﾄ(ｴｱｸﾘｰﾅﾌﾗﾝｼﾞ)	GASKET,A/C FLANGE	1		

↔ 新旧部品兼用可; ≠ 新旧部品兼用不可; ← 新部品は旧部品に兼用可; → 旧部品は新部品に兼用可

simonpm.co.uk

572000 排気マニホールド EXHAUST MANIFOLD

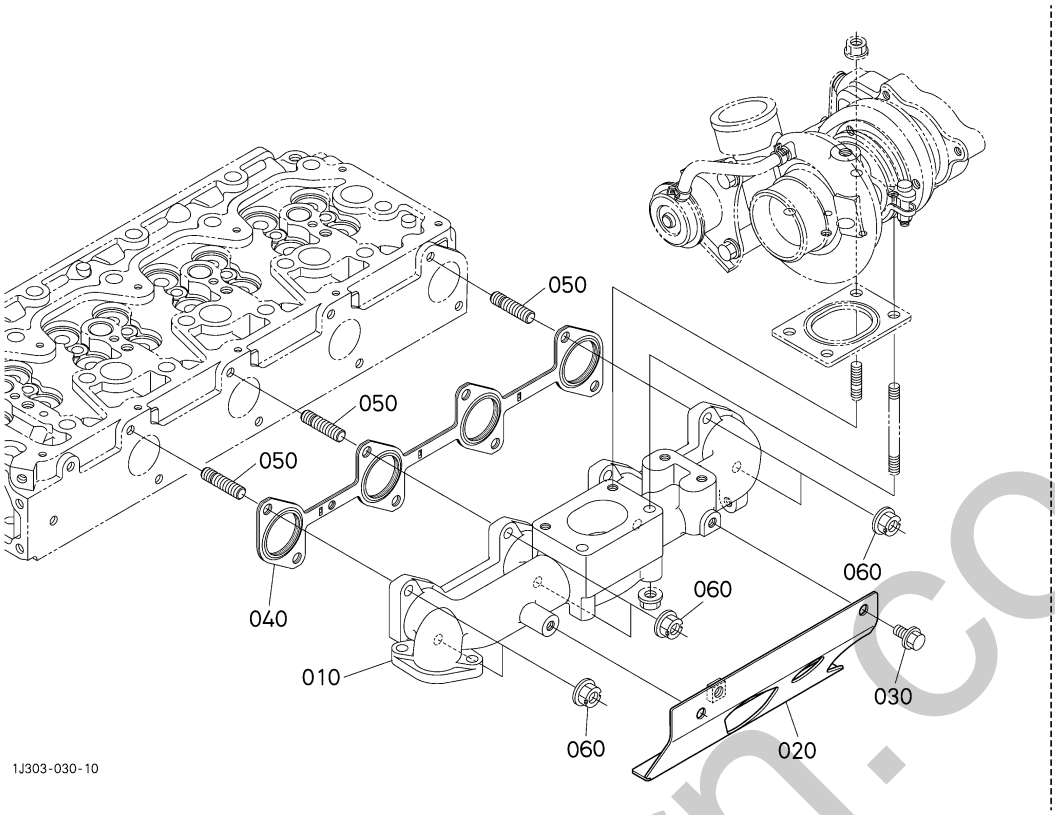

A:V3800-TIEF4B-COHE-1

図番 REF.No.	品番 PART No.	部品名称	PART NAME	数量 Q'TY/S.No. A	互換 I.C.	備考 REMARKS
010	1J540-1231-5	ﾏﾆﾎｰﾙﾄﾞ(ｴｷｿﾞｰｽﾄ)	MANIFOLD(EXHAUST)	1		
020	1E342-1734-3	ｶﾊﾞｰ(ﾏﾆﾎｰﾙﾄﾞ,ﾊｲｷ)	COVER(EX.MANIFOLD)	1		
030	1J301-9101-0	ﾌﾗﾝｼﾞﾎﾞﾙﾄ(SUH)	BOLT,FLANGE(SUH)	2		
040	1J550-1235-0	ｶﾞｽｹｯﾄ(EX.ﾏﾆﾎｰﾙﾄﾞ)	GASKET,EX-MANIFOLD	1		
050	1J542-9163-2	ｽﾀｯﾄﾞ(M8X23)	STUD	8		
060	1J542-9250-0	ﾌﾗﾝｼﾞﾅｯﾄ(M8,HLA)	NUT,FLANGE	8		

↔ 新旧部品兼用可; ≠ 新旧部品兼用不可; ← 新部品は旧部品に兼用可; → 旧部品は新部品に兼用可

silvernorn.co.uk

572300 ＥＧＲバルブ EGR VALVE

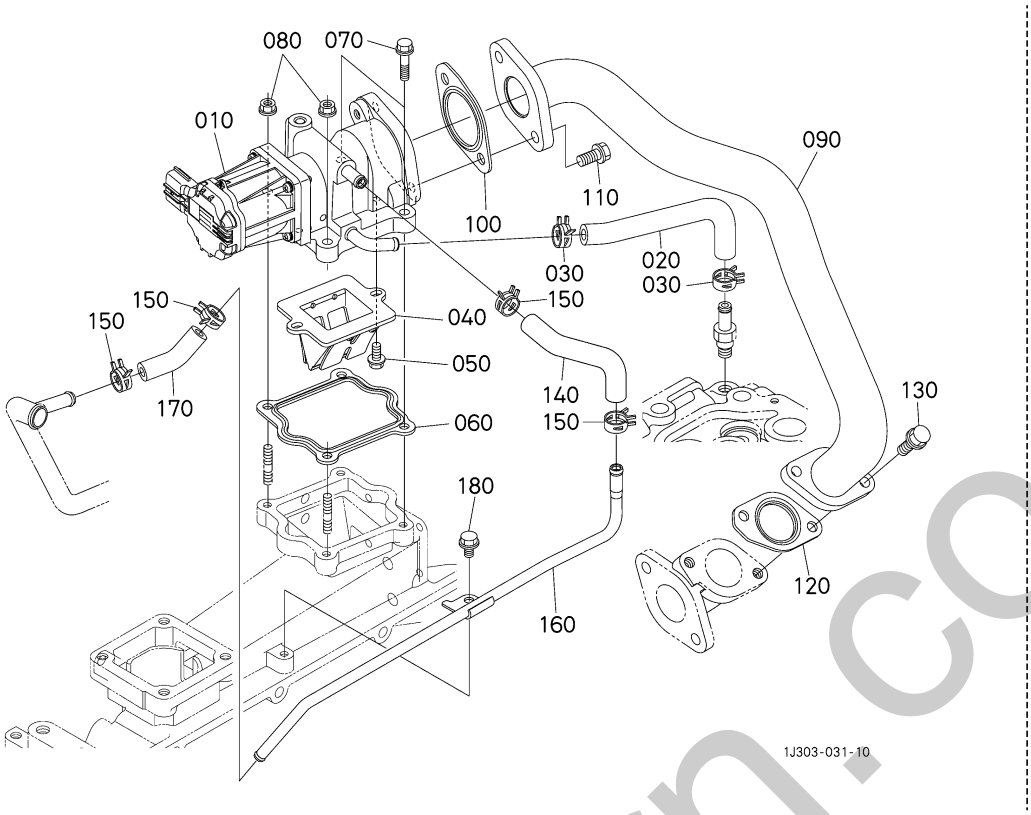

A:V3800-TIEF4B-COHE-1

図番 REF.No.	品番 PART No.	部品名称	PART NAME	数量 Q'TY/S.No. A	互換 I.C.	備考 REMARKS
010	1J508-6270-0	ﾊﾞﾙﾌﾞ,ｱｯｼ(EGR)	VALVE,ASSY(EGR)	1		
020	1J500-7181-0	ﾎｰｽ(1,EGR-V)	HOSE	1		
030	09318-88130	ﾎｰｽｸﾗﾝﾌﾟ(ﾊﾞﾈｼｷ)	CLAMP,HOSE	2		
040	1J574-1371-0	ﾊﾞﾙﾌﾞ(ﾘｰﾄﾞ)	VALVE,LEAD	1		
050	01754-50612	ﾌﾗﾝｼﾞﾎﾞﾙﾄ	BOLT,FLANGE	2		
060	1J803-1741-0	ｶﾞｽｹｯﾄ(EGRﾊﾞﾙﾌﾞ)	GASKET,EGR VALVE	1		
070	01754-50625	ﾌﾗﾝｼﾞﾎﾞﾙﾄ	BOLT,FLANGE	2		
080	02751-50060	ﾌﾗﾝｼﾞﾅｯﾄ	NUT,FLANGE	2		
090	1J500-1732-0	ﾊﾟｲﾌﾟ,ｺﾝﾌﾟ(EGR)	COMP.PIPE,EGR	1		
100	1J803-1743-0	ｶﾞｽｹｯﾄ(EGRｸｰﾗ)	GASKET,EGR COOLER	1		
110	01754-50820	ﾌﾗﾝｼﾞﾎﾞﾙﾄ	BOLT,FLANGE	2		
120	1J500-1749-0	ｶﾞｽｹｯﾄ(EGRﾊﾟｲﾌﾟ)	GASKET(EGR PIPE)	1		
130	01754-50820	ﾌﾗﾝｼﾞﾎﾞﾙﾄ	BOLT,FLANGE	2		
140	1J500-7182-0	ﾁｭｰﾌﾞ(EGR-V,2)	TUBE	1		
150	09318-88130	ﾎｰｽｸﾗﾝﾌﾟ(ﾊﾞﾈｼｷ)	CLAMP,HOSE	4		
160	1J500-7183-0	ﾊﾟｲﾌﾟ,ｺﾝﾌﾟ(EGR-V,1)	PIPE,COMP	1		
170	1J500-7184-0	ﾁｭｰﾌﾞ(EGR-V,3)	TUBE	1		
180	01755-50612	ﾌﾗﾝｼﾞﾎﾞﾙﾄ	BOLT,FLANGE	1		

↔ 新旧部品兼用可; ≠ 新旧部品兼用不可; ← 新部品は旧部品に兼用可; → 旧部品は新部品に兼用可

smorhorn.co.uk

572400 ＥＧＲクーラ EGR COOLER

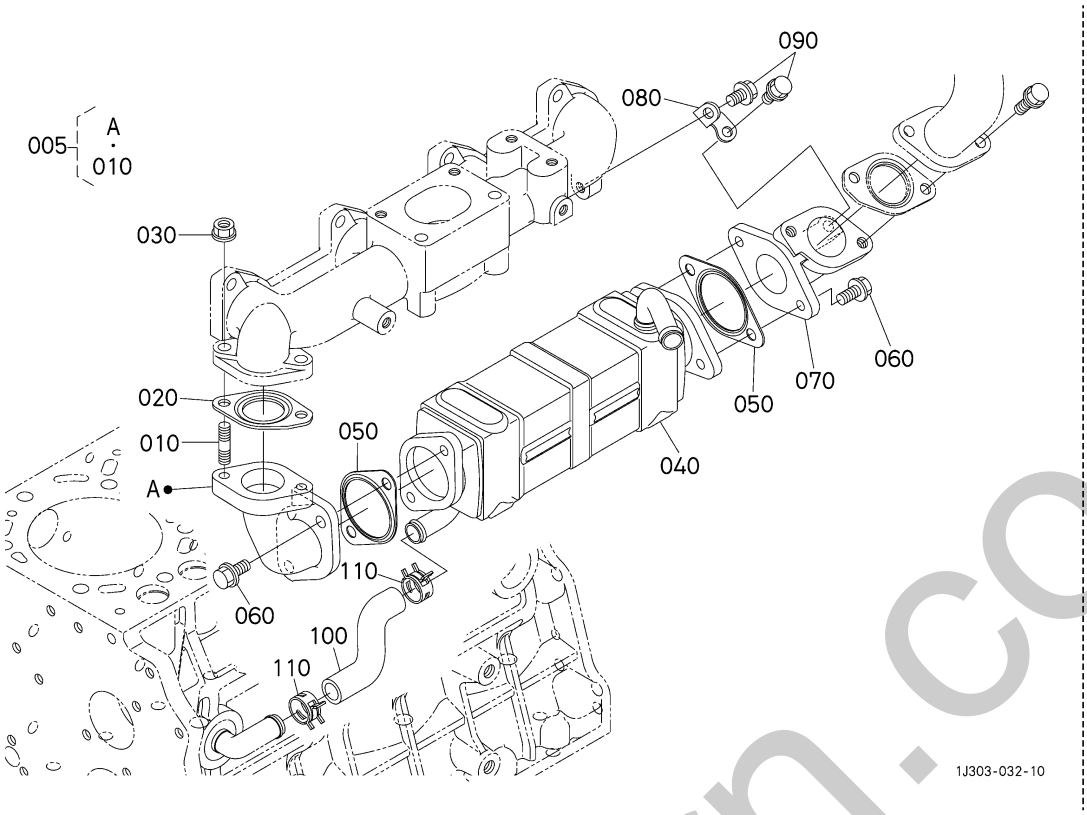

A:V3800-TIEF4B-COHE-1

図番 REF.No.	品番 PART No.	部品名称	PART NAME	数量 Q'TY/S.No. A	互換 I.C.	備考 REMARKS
005	1J583-1724-0	ﾌﾗﾝｼﾞ,ｱｯｼ(EGRｸｰﾗ)	FLANGE,ASSY(EGR COOLER)	1		
010	1J500-9155-0	ｽﾀｯﾄﾞ(M8X23)	STUD	2		
020	1J500-1749-0	ｶﾞｽｹｯﾄ(EGRﾊﾟｲﾌﾟ)	GASKET(EGR PIPE)	1		
030	1J542-9250-0	ﾌﾗﾝｼﾞﾅｯﾄ(M8,HLA)	NUT,FLANGE	2		
040	1J508-7141-0	ｸｰﾗ,ｺﾝﾌﾟ(EGR)	COOLER,COMP(EGR)	1		
050	1J803-1743-0	ｶﾞｽｹｯﾄ(EGRｸｰﾗ)	GASKET,EGR COOLER	2		
060	1J500-9102-0	ﾌﾗﾝｼﾞﾎﾞﾙﾄ(8X18)	BOLT,FLANGE	4		
070	1J583-1727-0	ﾌﾗﾝｼﾞ(EGRﾊﾟｲﾌﾟ)	FLANGE(EGR PIPE)	1		
080	1J508-7143-0	ｽﾃｰ(EGRｸｰﾗ)	STAY(EGR COOLER)	1		
090	1J301-9101-0	ﾌﾗﾝｼﾞﾎﾞﾙﾄ(SUH)	BOLT,FLANGE(SUH)	2		
100	1J508-7145-0	ﾎｰｽ(1,EGR)	HOSE(1,EGR)	1		
110	09318-88200	ﾎｰｽｸﾗﾝﾌﾟ(ﾊﾞﾈｼｷ)	CLAMP,HOSE	2		

↔ 新旧部品兼用可; ≠ 新旧部品兼用不可; ← 新部品は旧部品に兼用可; → 旧部品は新部品に兼用可

silverhorn.co.uk

572600 ターボチャージャ TURBO CHARGER

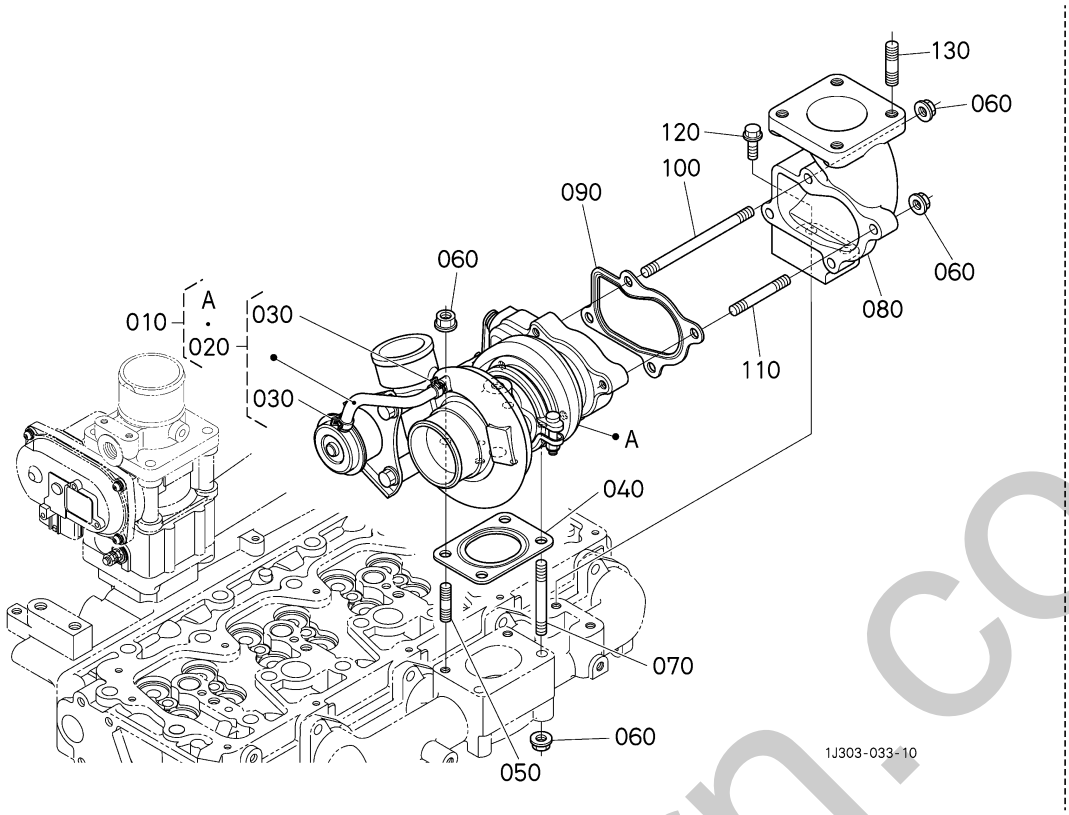

A:V3800-TIEF4B-COHE-1

図番 REF.No.	品番 PART No.	部品名称	PART NAME	数量 Q'TY/S.No. A	互換 I.C.	備考 REMARKS
010	1J583-1701-4	ﾀｰﾎﾞﾁｬｰｼﾞｬ,ｱｯｼ	TURBOCHARGER,ASSY	1		
020	1C041-1720-0	ﾎｰｽ,ｱｯｼ	ASSY HOSE	1		
030	17371-1722-0	ﾎｰｽｸﾗﾝﾌﾟ	CLAMP,HOSE	2		
040	1J550-1710-0	ｶﾞｽｹｯﾄ(1)	GASKET	1		
050	1J530-9150-0	ｽﾀｯﾄﾞ	BOLT,STUD	2		
060	1J542-9250-0	ﾌﾗﾝｼﾞﾅｯﾄ(M8, HLA)	NUT,FLANGE	8		
070	1J530-9153-0	ｽﾀｯﾄﾞ	BOLT,STUD	2		
080	1J540-1232-0	ﾌﾗﾝｼﾞ(ﾏﾌﾗ)	FLANGE(MUFFLER)	1		
090	1G544-1711-0	ｶﾞｽｹｯﾄ(2)	GASKET	1		
100	1J530-9152-0	ｽﾀｯﾄﾞ	BOLT,STUD	1		
110	1J530-9151-0	ｽﾀｯﾄﾞ	BOLT,STUD	3		
120	1J436-9101-2	ﾌﾗﾝｼﾞﾎﾞﾙﾄ	BOLT,FLANGE	2		
130	01517-51025	ｽﾀｯﾄﾞ	BOLT,STUD	4		

↔ 新旧部品兼用可; ≠ 新旧部品兼用不可; ← 新部品は旧部品に兼用可; → 旧部品は新部品に兼用可

silverhorn.co.uk

574000 ディーゼルパティキュレートフィルタマフラ
DIESEL PARTICULATE FILTER MUFFLER

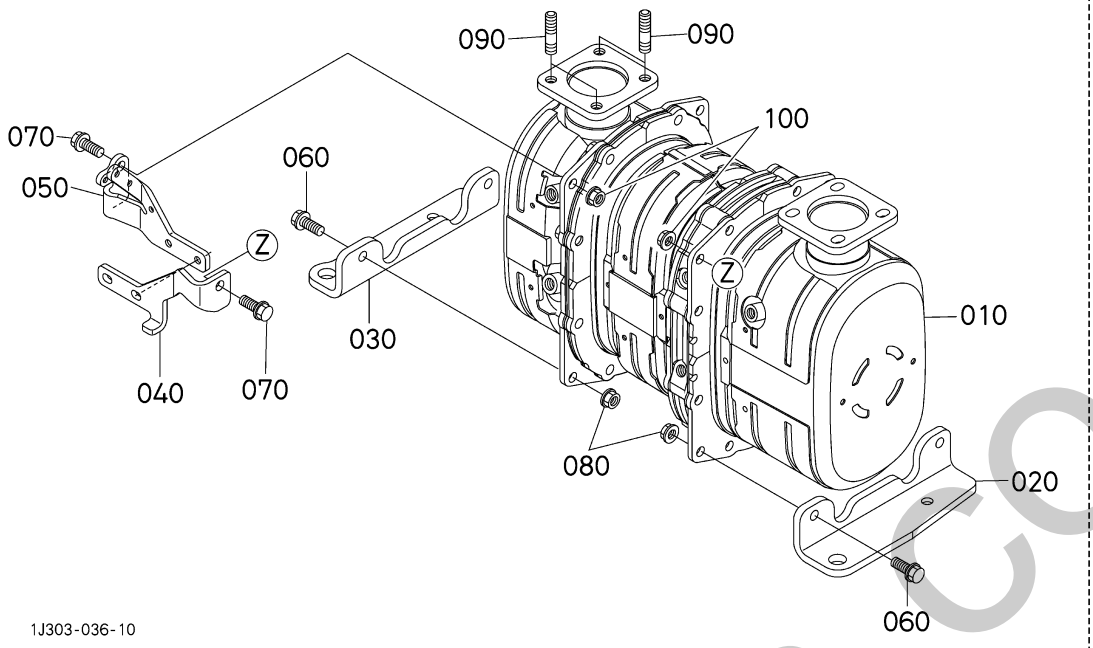

A:V3800-TIEF4B-COHE-1

図番 REF.No.	品番 PART No.	部品名称	PART NAME	数量 Q'TY/S.No. A	互換 I.C.	備考 REMARKS
010	----	ﾏﾌﾗ, ｱｯｼ(DPF)	MUFFLER,ASSY(DPF)	1		
020	1J500-1870-0	ﾌﾞﾗｹｯﾄ(DPF, 1)	BRACKET(DPF,1)	1		
030	1J500-1871-0	ﾌﾞﾗｹｯﾄ(DPF, 2)	BRACKET(DPF,2)	1		
040	1J500-1872-0	ｽﾃｰ(DPF, 1)	STAY(DPF,1)	1		
050	1J500-1873-0	ｽﾃｰ(DPF, 2)	STAY(DPF,2)	1		
060	01774-51025	ﾌﾗﾝｼﾞﾎﾞﾙﾄ	BOLT,FLANGE	4		
070	01774-51025	ﾌﾗﾝｼﾞﾎﾞﾙﾄ	BOLT,FLANGE	2		
080	02771-50100	ﾌﾗﾝｼﾞﾅｯﾄ	NUT,FLANGE	4		
090	1J520-9154-0	ｽﾀｯﾄﾞ	STUD	4		
100	02771-50100	ﾌﾗﾝｼﾞﾅｯﾄ	NUT,FLANGE	2		

↔ 新旧部品兼用可; ≠ 新旧部品兼用不可; ← 新部品は旧部品に兼用可; → 旧部品は新部品に兼用可

silverhorn.co.uk

574200 ディーゼルパティキュレートフィルタマフラ分解
DIESEL PARTICULATE FILTER MUFFLER [COMPONENT PARTS]

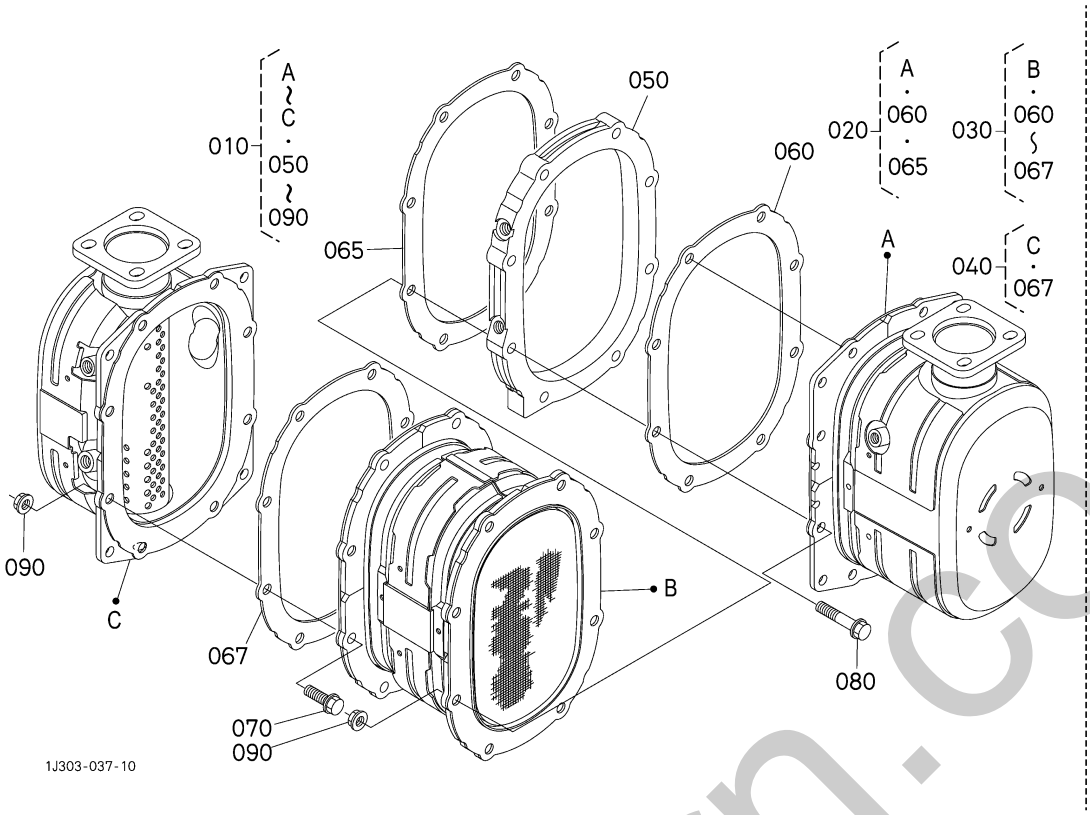

A:V3800-TIEF4B-COHE-1

図番 REF.No.	品番 PART No.	部品名称	PART NAME	数量 Q'TY/S.No. A	互換 I.C.	備考 REMARKS
010	----	ﾏﾌﾗ, ｱｯｼ (DPF)	MUFFLER,ASSY(DPF)	1		
020	1J303-1894-0	ｼｮｸﾊﾞｲ, ｷｯﾄ (DOC)	CATALYST,KIT(DOC)	1		
030	1J508-1893-0	ﾌｨﾙﾀ, ｷｯﾄ (DPF)	FILTER,KIT(DPF)	1		
040	1J508-1895-0	ﾎﾞﾃﾞｰ, ｷｯﾄ (ｱｳﾄﾚｯﾄDPF)	BODY,KIT	1		
050	1J500-1840-0	ｶﾗｰ (DPF)	COLLAR(DPF)	1		
060	1J500-1841-2	ｶﾞｽｹｯﾄ (DPF)	GASKET(DPF)	1		
065	1J500-1841-2	ｶﾞｽｹｯﾄ (DPF)	GASKET(DPF)	1		
067	1J500-1841-2	ｶﾞｽｹｯﾄ (DPF)	GASKET(DPF)	1		
070	01774-51030	ﾌﾗﾝｼﾞﾎﾞﾙﾄ	BOLT,FLANGE	8		
080	01774-51050	ﾌﾗﾝｼﾞﾎﾞﾙﾄ	BOLT,FLANGE	8		
090	1J520-1842-0	ﾌﾗﾝｼﾞﾅｯﾄ	NUT,FLANGE	16		

↔ 新旧部品兼用可; ≠ 新旧部品兼用不可; ← 新部品は旧部品に兼用可; → 旧部品は新部品に兼用可

silvernorn.co.uk

574300 ディーゼルパティキュレートフィルタマフラセンサ
DIESEL PARTICULATE FILTER MUFFLER SENSOR

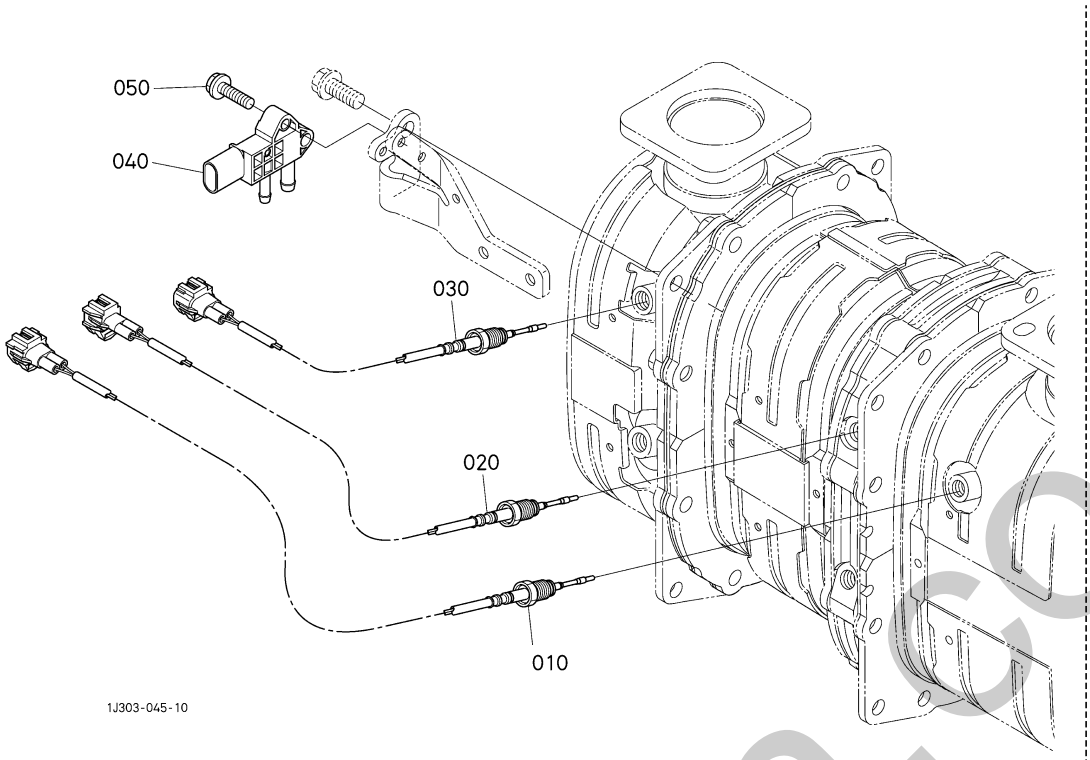

A:V3800-TIEF4B-COHE-1

図番 REF.No.	品番 PART No.	部品名称	PART NAME	数量 Q'TY/S.No. A	互換 I.C.	備考 REMARKS
010	1J500-1850-0	ｾﾝｻ(ｵﾝﾄﾞ,0)	SENSOR(THERMO,0)	1		黒色
020	1J770-1851-0	ｾﾝｻ(ｵﾝﾄﾞ,1)	SENSOR(THERMO,1)	1		灰色
030	1J500-1852-2	ｾﾝｻ(ｵﾝﾄﾞ,2)	SENSOR(THERMO,2)	1		白色
040	1J520-1860-0	ｾﾝｻ(ｻｱﾂ)	SENSOR	1		
050	01754-50625	ﾌﾗﾝｼﾞﾎﾞﾙﾄ	BOLT,FLANGE	2		

↔ 新旧部品兼用可; ≠ 新旧部品兼用不可; ← 新部品は旧部品に兼用可; → 旧部品は新部品に兼用可

silverhorn.co.uk

574500 差圧パイプ PRESSURE PIPE

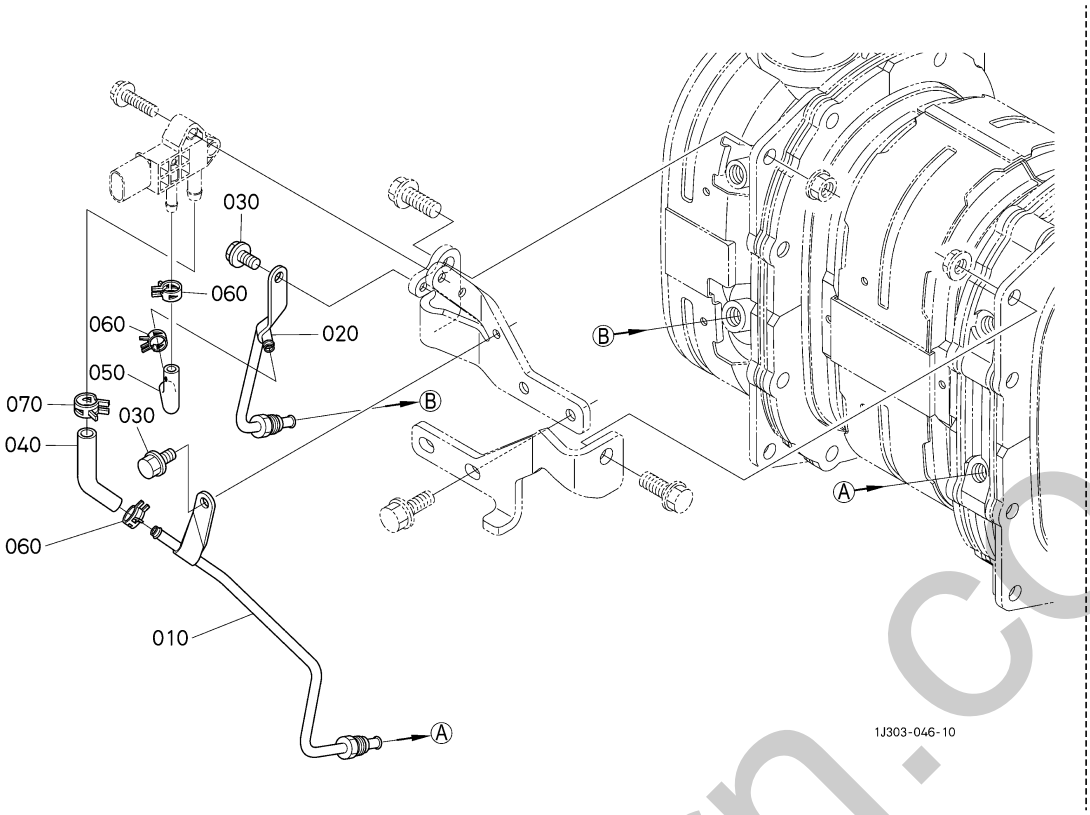

A:V3800-TIEF4B-COHE-1

図番 REF.No.	品番 PART No.	部品名称	PART NAME	数量 Q'TY/S.No. A	互換 I.C.	備考 REMARKS
010	1J500-1862-0	ﾊﾟｲﾌﾟ,ｺﾝﾌﾟ(ｻｱﾂ,1)	PIPE,COMP(PRESSURE,1)	1		
020	1J500-1863-0	ﾊﾟｲﾌﾟ,ｺﾝﾌﾟ(ｻｱﾂ,2)	PIPE,COMP(PRESSURE,2)	1		
030	01754-50612	ﾌﾗﾝｼﾞﾎﾞﾙﾄ	BOLT,FLANGE	2		
040	1J500-1864-2	ﾁｭｰﾌﾞ(ｻｱﾂ,1)	TUBE(PRESSURE,1)	1		
050	1J500-1865-2	ﾁｭｰﾌﾞ(ｻｱﾂ,2)	TUBE(PRESSURE,2)	1		
060	09318-88100	ﾎｰｽｸﾗﾝﾌﾟ(ﾊﾞﾈｼｷ)	CLAMP,HOSE	3		
070	09318-88115	ﾊﾟｲﾌﾟｸﾘｯﾌﾟ	CLAMP,HOSE	1		

↔ 新旧部品兼用可; ≠ 新旧部品兼用不可; ← 新部品は旧部品に兼用可; → 旧部品は新部品に兼用可

silverhorn.co.uk

575000 セレクティブカタリティックリダクションマフラ
SELECTIVE CATALYTIC REDUCTION MUFFLER

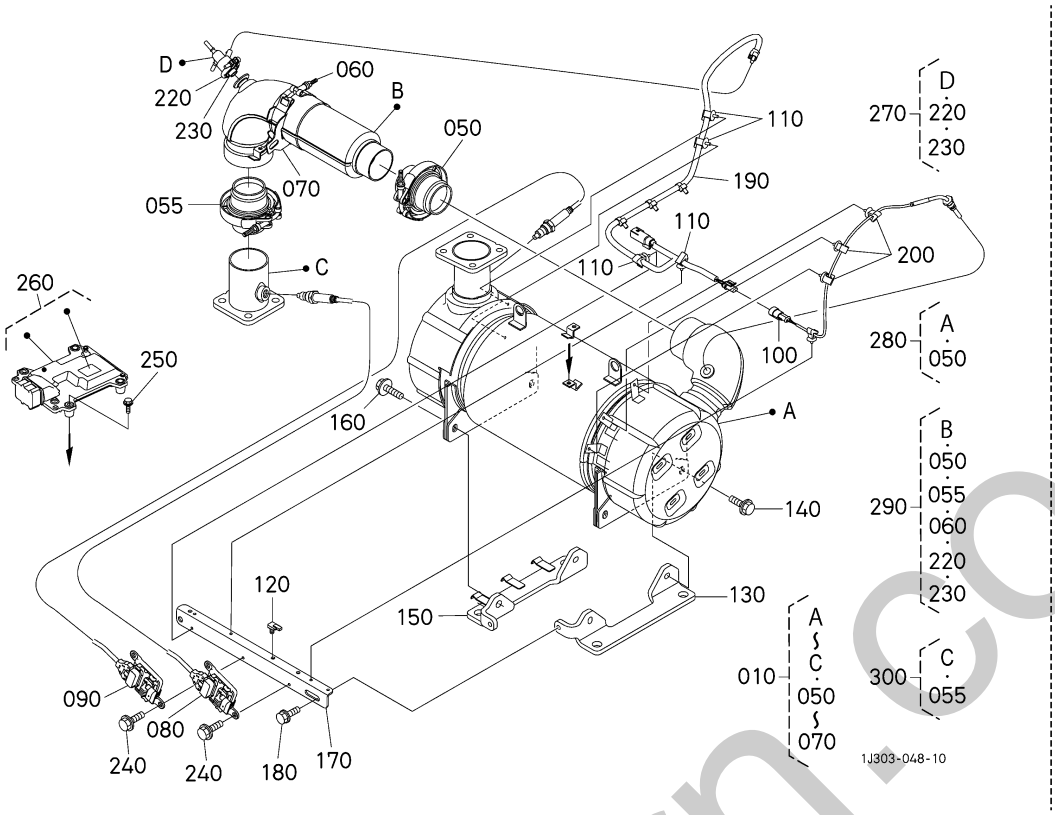

A:V3800-TIEF4B-COHE-1

図番 REF.No.	品番 PART No.	部品名称	PART NAME	数量 Q'TY/S.No. A	互換 I.C.	備考 REMARKS
010	1J508-1910-4	ﾏﾌﾗ,ｱｯｼ(SCR)	MUFFLER,ASSY(SCR)	1		
020	----	ﾌﾞﾗﾝｸ	BLANK	-		
030	----	ﾌﾞﾗﾝｸ	BLANK	-		
040	----	ﾌﾞﾗﾝｸ	BLANK	-		
050	1J508-1927-0	ﾊﾞﾝﾄﾞ,ｱｯｼ(ｽﾘｯﾌﾟ)	BAND,ASSY	1		
055	1J508-1927-0	ﾊﾞﾝﾄﾞ,ｱｯｼ(ｽﾘｯﾌﾟ)	BAND,ASSY	1		
060	1J508-1926-0	ﾊﾞﾝﾄﾞ,ｱｯｼ(ｽﾃｰ)	BAND,ASSY	1		
070	1J507-1979-0	ｽﾃｰ(ﾊﾟｲﾌﾟ)	STAY(PIPE)	1		
080	1J508-1936-0	ｾﾝｻ(NOX,PRE)	SENSOR(NOX,PRE)	1		黒色
090	1J508-1937-0	ｾﾝｻ(NOX,POST)	SENSOR(NOX,POST)	1		灰色
100	1J509-1938-0	ｾﾝｻ(ｵﾝﾄﾞ,SCR)	SENSOR(THERMO)	1		
110	1J508-6539-0	ｸﾗﾝﾌﾟ(WH)	CLAMP(WIRE)	4		
120	1J509-6539-0	ｸﾗﾝﾌﾟ(ｺﾈｸﾀ)	CLAMP	1		
130	1J508-1970-0	ﾌﾞﾗｹｯﾄ(SCR,1)	BRACKET(SCR,1)	1		
140	01774-51030	ﾌﾗﾝｼﾞﾎﾞﾙﾄ	BOLT,FLANGE	2		
150	1J508-1971-0	ﾌﾞﾗｹｯﾄ(SCR,2)	BRACKET	1		
160	01774-51030	ﾌﾗﾝｼﾞﾎﾞﾙﾄ	BOLT,FLANGE	2		
170	1J508-1972-2	ﾌﾞﾗｹｯﾄ(SCR,3)	BRACKET(SCR,3)	1		
180	01774-51016	ﾌﾗﾝｼﾞﾎﾞﾙﾄ	BOLT,FLANGE	2		
190	1J508-6509-0	ﾜｲﾔﾊｰﾈｽ,ｱｯｼ(SCR)	HARNESS,WIRE,ASSY	1		
200	1J508-6539-0	ｸﾗﾝﾌﾟ(WH)	CLAMP(WIRE)	4		
210	----	ﾌﾞﾗﾝｸ	BLANK	-		
220	1J508-1951-0	ﾊﾞﾝﾄﾞ(INJ,DEF)	BAND(INJ)	1		
230	1J508-1952-0	ｶﾞｽｹｯﾄ(INJ,DEF)	GASKET(INJ)	1		
240	01754-50612	ﾌﾗﾝｼﾞﾎﾞﾙﾄ	BOLT,FLANGE	2		
250	01754-50630	ﾌﾗﾝｼﾞﾎﾞﾙﾄ	BOLT,FLANGE	2		
260	1H100-5909-0	ECU,ｻﾌﾞｱｯｼ(ACU-OEM)	ECU,SUB-ASSY(ACU-OEM)	1		
270	1J508-9764-0	ｲﾝｼﾞｴｸﾀ,ｷｯﾄ(DEF)	INJECTOR,KIT(DEF)	1		
280	1J508-9760-0	ｼｮｸﾊﾞｲ,ｷｯﾄ(SCR)	CATALYST,KIT(SCR)	1		
290	1J508-9762-3	ﾊﾟｲﾌﾟ,ｷｯﾄ(ﾐｷｼﾝｸﾞ)	PIPE,KIT(MIXING)	1		

↔ 新旧部品兼用可； ≠ 新旧部品兼用不可； ← 新部品は旧部品に兼用可； → 旧部品は新部品に兼用可

silverhorn.co.uk

575000 セレクティブカタリティックリダクションマフラ SELECTIVE CATALYTIC REDUCTION MUFFLER

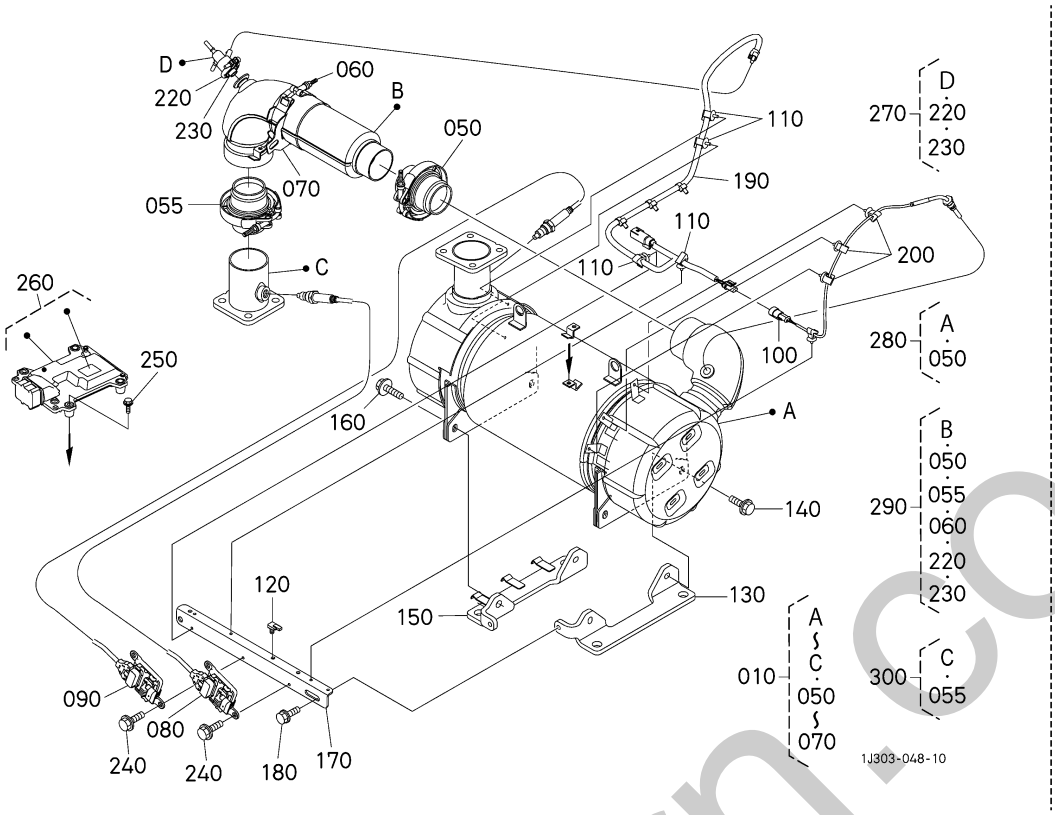

A:V3800-TIEF4B-COHE-1

図番 REF.No.	品番 PART No.	部品名称	PART NAME	数量 Q'TY/S.No. A	互換 I.C.	備考 REMARKS
300	1J508-9763-0	ﾊﾟｲﾌﾟ，ｷｯﾄ(ｲﾝﾚｯﾄ)	PIPE,KIT(INLET)	1		

↔ 新旧部品兼用可； ≠ 新旧部品兼用不可； ← 新部品は旧部品に兼用可； → 旧部品は新部品に兼用可

silverhorn.co.uk

576000 ブレザーパイプ・セパレータパイプ
BREATHER PIPE/SEPARATOR PIPE

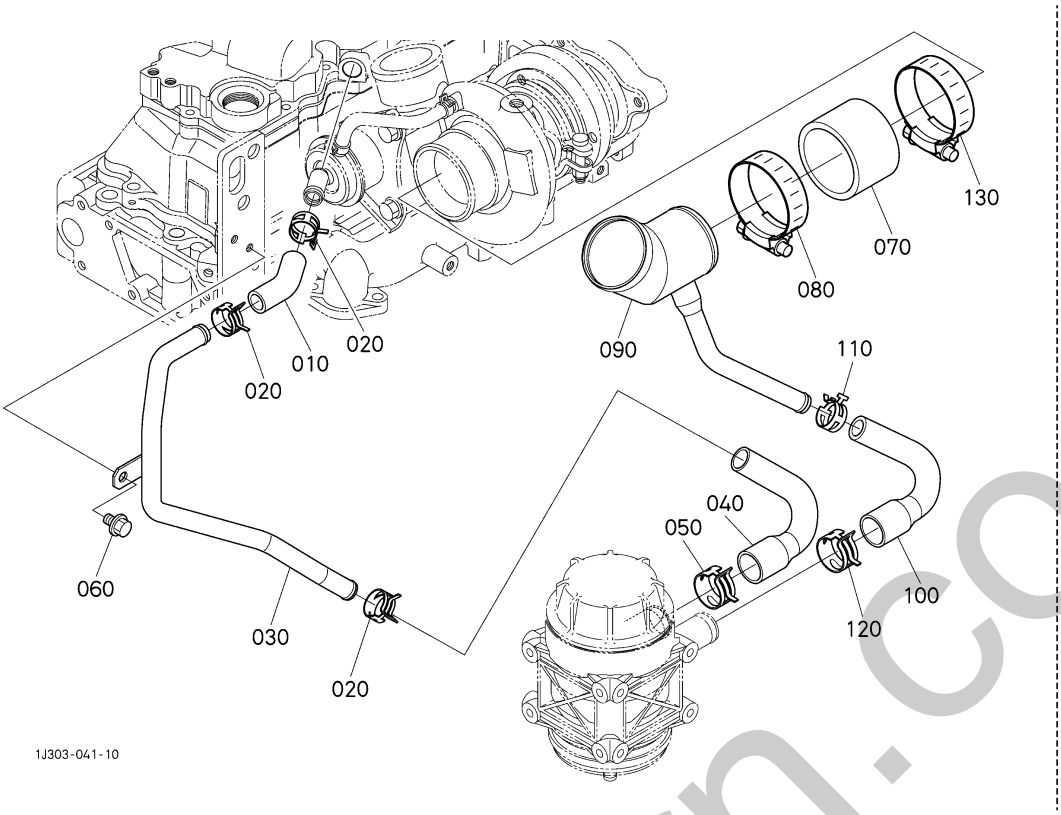

A:V3800-TIEF4B-COHE-1

図番 REF.No.	品番 PART No.	部品名称	PART NAME	数量 Q'TY/S.No. A	互換 I.C.	備考 REMARKS
010	1J500-0585-0	ﾁｭｰﾌﾞ(1,ｾﾊﾟﾚｰﾀ)	TUBE,SEPARATOR	1		
020	1J508-0558-0	ﾎｰｽｸﾗﾝﾌﾟ(ﾊﾞﾈｼｷ)	CLAMP,HOSE	3		
030	1J508-0587-0	ﾊﾟｲﾌﾟ,ｺﾝﾌﾟ(ｾﾊﾟﾚｰﾀ)	PIPE,COMP(SEPARATOR)	1		
040	1J419-0586-0	ﾁｭｰﾌﾞ(2,ｾﾊﾟﾚｰﾀ)	TUBE(2,BREATHER)	1		
050	09318-88260	ﾎｰｽｸﾗﾝﾌﾟ(ﾊﾞﾈｼｷ)	CLAMP,HOSE	1		
060	01754-50812	ﾌﾗﾝｼﾞﾎﾞﾙﾄ	BOLT,FLANGE	1		
070	1J419-1162-0	ﾁｭｰﾌﾞ(ｲﾝﾚｯﾄ,ﾀｰﾎﾞ)	TUBE,INLET TURBO	1		
080	RD809-6310-0	ﾎｰｽｸﾗﾝﾌﾟ(60-80)	CLAMP,HOSE	1		
090	1J301-0565-0	ﾊﾟｲﾌﾟ,ｺﾝﾌﾟ(ﾌﾞﾚｻﾞ)	PIPE,COMP(BREATHER)	1		
100	1J419-0586-0	ﾁｭｰﾌﾞ(2,ｾﾊﾟﾚｰﾀ)	TUBE(2,BREATHER)	1		
110	09318-88200	ﾎｰｽｸﾗﾝﾌﾟ(ﾊﾞﾈｼｷ)	CLAMP,HOSE	1		
120	09318-88260	ﾎｰｽｸﾗﾝﾌﾟ(ﾊﾞﾈｼｷ)	CLAMP,HOSE	1		
130	RD809-6310-0	ﾎｰｽｸﾗﾝﾌﾟ(60-80)	CLAMP,HOSE	1		

↔ 新旧部品兼用可; ≠ 新旧部品兼用不可; ← 新部品は旧部品に兼用可; → 旧部品は新部品に兼用可

silverhorn.co.uk

576501 オイルセパレータ OIL SEPARATOR

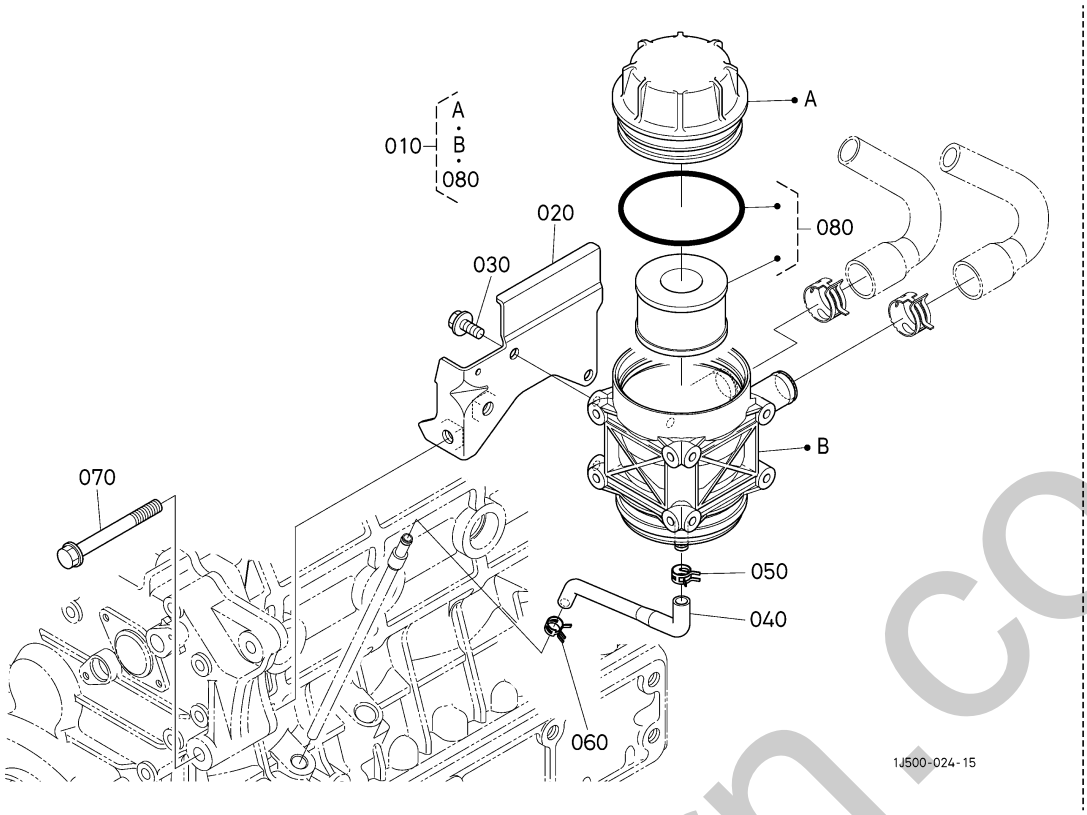

A:V3800-TIEF4B-COHE-1

図番 REF.No.	品番 PART No.	部品名称	PART NAME	数量 Q'TY/S.No. A	互換 I.C.	備考 REMARKS
010	1J508-0503-2	ｾﾊﾟﾚｰﾀ,ｱｯｼ	SEPARATOR,ASSY	1		
020	1J500-0582-2	ﾌﾞﾗｹｯﾄ,ｺﾝﾌﾟ(ｾﾊﾟﾚｰﾀ)	BRACKET,COMP(SEPARATOR)	1		
030	01754-50820	ﾌﾗﾝｼﾞﾎﾞﾙﾄ	BOLT,FLANGE	2		
040	1J419-0583-0	ﾁｭｰﾌﾞ(ｵｲﾙﾘﾀｰﾝ)	TUBE,OIL RETURN	1		
050	09318-88130	ﾎｰｽｸﾗﾝﾌﾟ(ﾊﾞﾈｼｷ)	CLAMP,HOSE	1		
060	09318-88115	ﾊﾟｲﾌﾟｸﾘｯﾌﾟ	CLAMP,HOSE	1		
070	01774-51080	ﾌﾗﾝｼﾞﾎﾞﾙﾄ	BOLT,FLANGE	1		
080	1J508-0581-2	ｴﾚﾒﾝﾄ,ｷｯﾄ(ｾﾊﾟﾚｰﾀ)	ELEMENT,KIT	1		

↔ 新旧部品兼用可; ≠ 新旧部品兼用不可; ← 新部品は旧部品に兼用可; → 旧部品は新部品に兼用可

silverhorn.co.uk

576502 オイルセパレータ〔オプション〕 OIL SEPARATOR [OPTION]

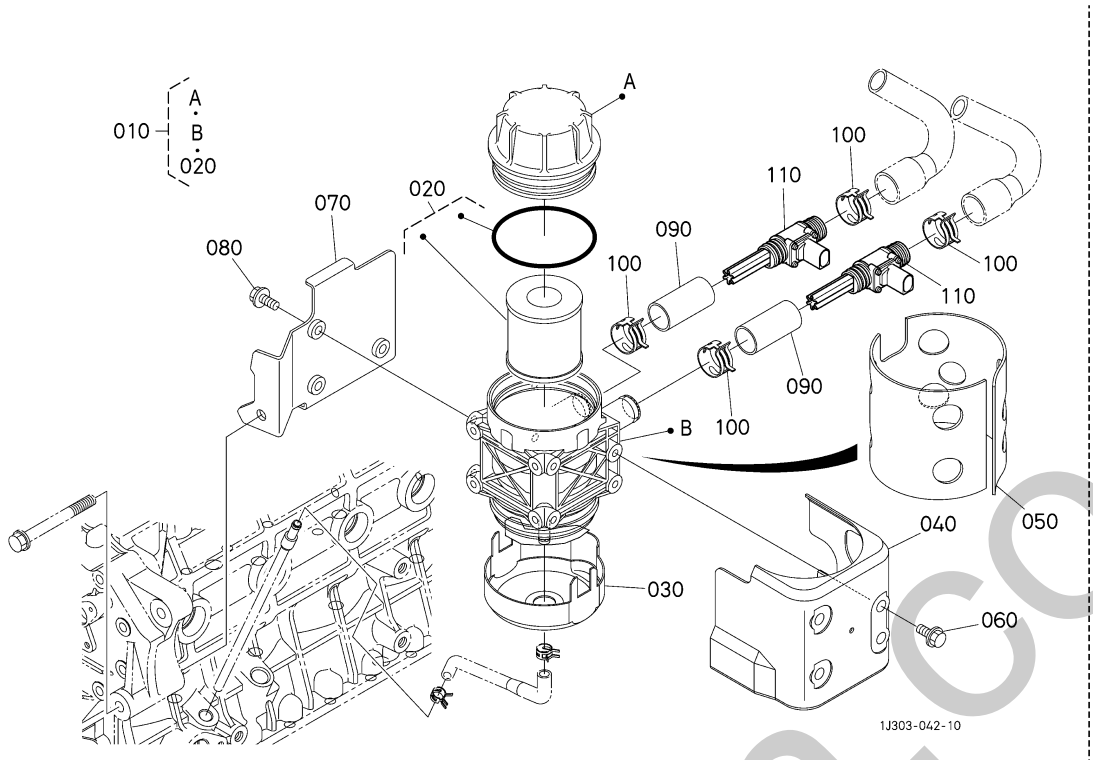

A:V3800-TIEF4B-COHE-1

図番 REF.No.	品番 PART No.	部品名称	PART NAME	数量 Q'TY/S.No. A	互換 I.C.	備考 REMARKS
010	1J509-0503-2	ｾﾊﾟﾚｰﾀ,ｱｯｼ	SEPARATOR,ASSY	1		
020	1J508-0581-2	ｴﾚﾒﾝﾄ,ｷｯﾄ(ｾﾊﾟﾚｰﾀ)	ELEMENT,KIT	1		
030	1E474-0540-0	ｶﾊﾞｰ(ｾﾊﾟﾚｰﾀ,2)	COVER	1		
040	1E474-0535-0	ｶﾊﾞｰ(ｾﾊﾟﾚｰﾀ,1)	COVER	1		
050	1E474-7578-2	ﾀﾞﾝﾈﾂｻﾞｲ(ｶﾊﾞｰ)	INSULATION(HEAT)	1		
060	01754-50825	ﾌﾗﾝｼﾞﾎﾞﾙﾄ	BOLT,FLANGE	4		
070	1J509-0582-0	ﾌﾞﾗｹｯﾄ,ｺﾝﾌﾟ(ｾﾊﾟﾚｰﾀ)	BRACKET,COMP(SEPARATOR)	1		
080	01754-50825	ﾌﾗﾝｼﾞﾎﾞﾙﾄ	BOLT,FLANGE	3		
090	1E474-0586-2	ﾁｭｰﾌﾞ(3,ｾﾊﾟﾚｰﾀ)	TUBE(3,SEPARATOR)	2		
100	09318-88260	ﾎｰｽｸﾗﾝﾌﾟ(ﾊﾞﾈｼｷ)	CLAMP,HOSE	4		
110	1E474-0575-0	ﾋｰﾀ(ﾌﾞﾛｰﾊﾞｲｶﾞｽ,L)	HEATER	2		

↔ 新旧部品兼用可; ≠ 新旧部品兼用不可; ← 新部品は旧部品に兼用可; → 旧部品は新部品に兼用可

silverhorn.co.uk

580000 オイルパイプ（ターボチャージャ）
OIL PIPE (TURBO CHARGER)

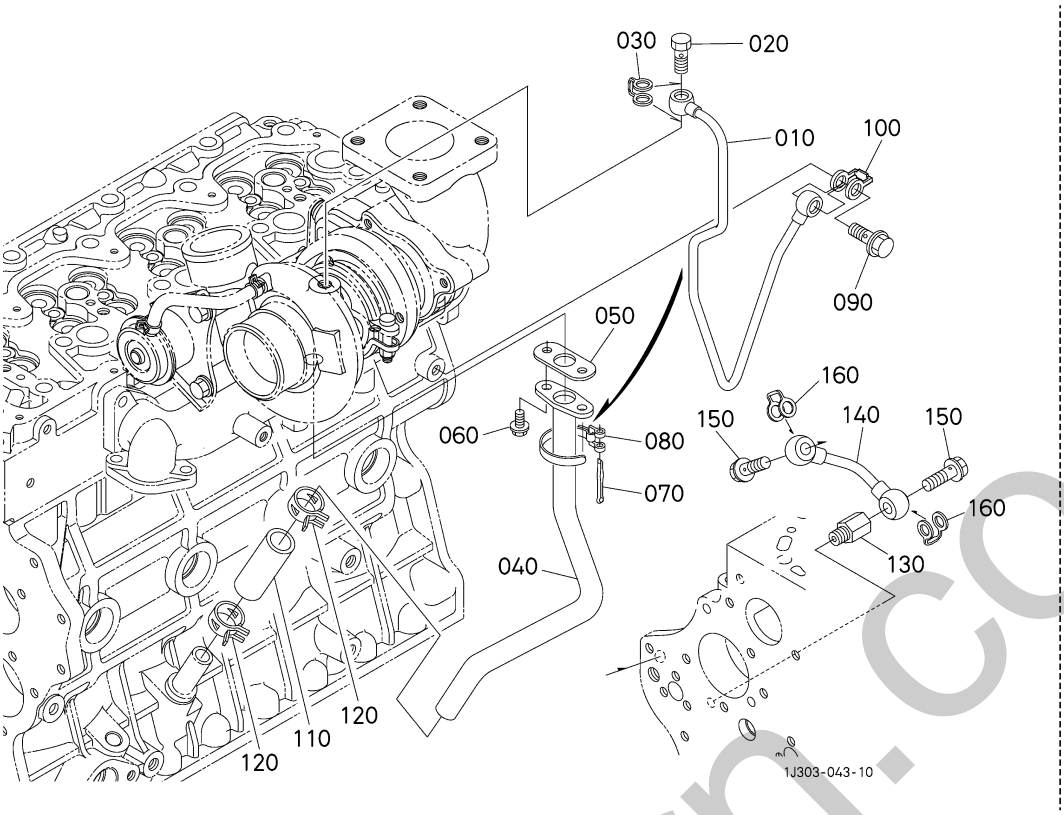

A:V3800-TIEF4B-COHE-1

図番 REF.No.	品番 PART No.	部品名称	PART NAME	数量 Q'TY/S.No. A	互換 I.C.	備考 REMARKS
010	1J583-3304-0	ﾊﾟｲﾌﾟ,ｺﾝﾌﾟ(1,ｵｲﾙ)	PIPE,COMP(1,OIL)	1		
020	17371-9580-0	ｱｲｶﾝ ﾂｷﾞﾃﾞﾎﾞﾙﾄ	BOLT,EYE JOINT	1		
030	1G777-9665-0	ｶﾞｽｹｯﾄ	GASKET	1		
040	1J508-3306-0	ﾊﾟｲﾌﾟ,ｺﾝﾌﾟ(3,ｵｲﾙ)	PIPE,COMP(3,OIL)	1		
050	1J550-3367-0	ｶﾞｽｹｯﾄ(ｵｲﾙﾊﾟｲﾌﾟ,TC)	GASKET(OIL PIPE)	1		
060	01754-50612	ﾌﾗﾝｼﾞﾎﾞﾙﾄ	BOLT,FLANGE	2		
070	33430-8276-0	ﾕｱﾂﾊﾟｲﾌﾟﾊﾞﾝﾄﾞﾋﾟﾝ	PIN(BAND)	1		
080	1A024-3352-0	ｸﾗﾝﾌﾟ(ﾊﾟｲﾌﾟ)	CLAMP(PIPE)	1		
090	1J860-9579-0	ﾂｷﾞﾃﾎﾞﾙﾄ	BOLT,CONNECT	1		
100	1G557-9665-0	ｶﾞｽｹｯﾄ	GASKET	1		
110	1J553-3324-0	ﾎｰｽ(ｵｲﾙ)	HOSE	1		
120	09318-88230	ﾎｰｽｸﾗﾝﾌﾟ(ﾊﾞﾈｼｷ)	CLAMP,HOSE	2		
130	1J508-3336-0	ｸﾀﾞﾂｷﾞﾃ(ｵｲﾙ)	JOINT,PIPE(OIL)	1		
140	1J508-3369-0	ﾊﾟｲﾌﾟ,ｺﾝﾌﾟ(ｵｲﾙ,IG3)	PIPE,COMP(OIL,IG3)	1		
150	1J860-9579-0	ﾂｷﾞﾃﾎﾞﾙﾄ	BOLT,CONNECT	2		
160	1G557-9665-0	ｶﾞｽｹｯﾄ	GASKET	2		

↔ 新旧部品兼用可; ≠ 新旧部品兼用不可; ← 新部品は旧部品に兼用可; → 旧部品は新部品に兼用可

simpern.co.uk

582000 オイルクーラ OIL COOLER

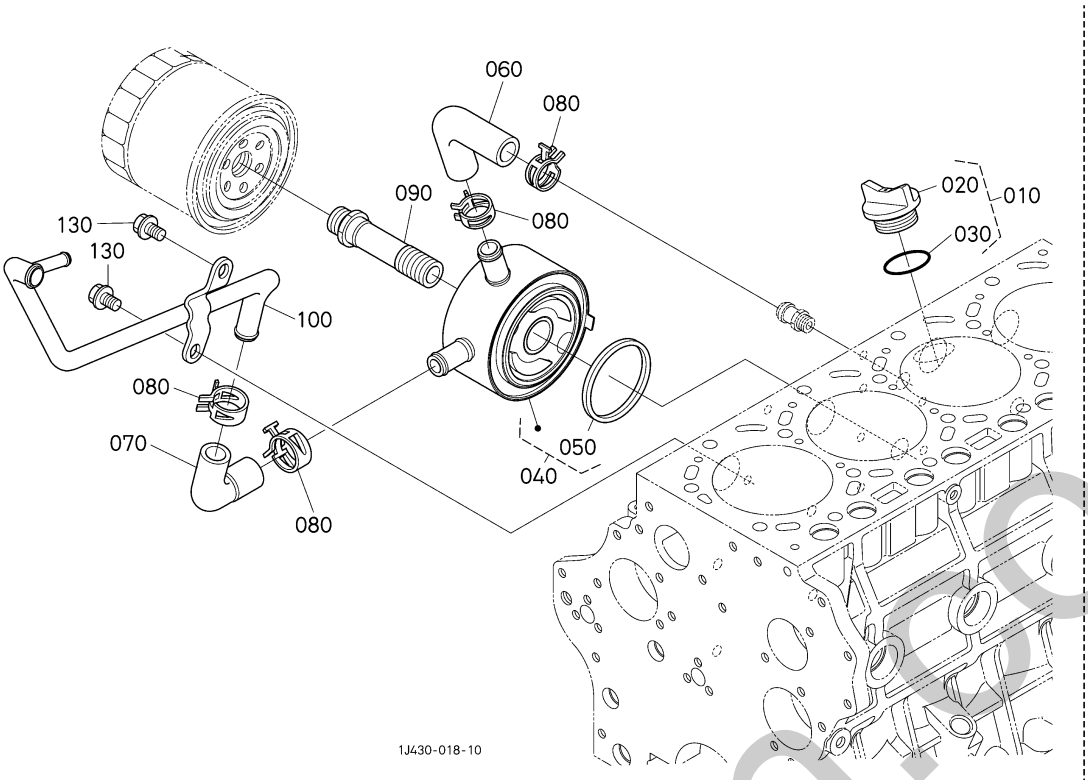

A:V3800-TIEF4B-COHE-1

図番 REF.No.	品番 PART No.	部品名称	PART NAME	数量 Q'TY/S.No. A	互換 I.C.	備考 REMARKS
010	1C010-3308-0	ﾌﾟﾗｸﾞ,ｱﾂｼ(ｷｭｳﾕ)	ASSY PLUG,O/FILLER	1		
020	E9151-3314-0	ﾌﾟﾗｸﾞ(ｷｭｳﾕ)	PLUG(OIL FILLER)	1		
030	04817-50300	Oﾘﾝｸﾞ	O RING	1		
040	1J500-3701-2	ｵｲﾙｸｰﾗ,ｱﾂｼ	COOLER,OIL,ASSY	1		
050	15484-3707-0	ｵｲﾙｸｰﾗｹｰｽ ﾊﾟｯｷﾝ	GASKET	1		
060	1J500-3715-0	ﾎｰｽ(1,ｵｲﾙｸｰﾗ)	HOSE,OIL COOLER	1		
070	1J500-3718-0	ﾎｰｽ(2,ｵｲﾙｸｰﾗ)	HOSE,OIL COOLER	1		
080	09318-88200	ﾎｰｽｸﾗﾝﾌﾟ(ﾊﾞﾈｼｷ)	CLAMP,HOSE	4		
090	1J500-3229-0	ｸﾀﾞﾂｷﾞﾃ(ｵｲﾙｸｰﾗ)	JOINT	1		
100	1E604-3716-0	ﾊﾟｲﾌﾟ,ｺﾝﾌﾟ(ｵｲﾙｸｰﾗ)	PIPE,COMP(OIL COOLER)	1		
110	----	ﾌﾞﾗﾝｸ	BLANK	-		
120	----	ﾌﾞﾗﾝｸ	BLANK	-		
130	01754-50812	ﾌﾗﾝｼﾞﾎﾞﾙﾄ	BOLT,FLANGE	2		

↔ 新旧部品兼用可; ≠ 新旧部品兼用不可; ← 新部品は旧部品に兼用可; → 旧部品は新部品に兼用可

silverhorn.co.uk

583000 オイルフィルタ OIL FILTER

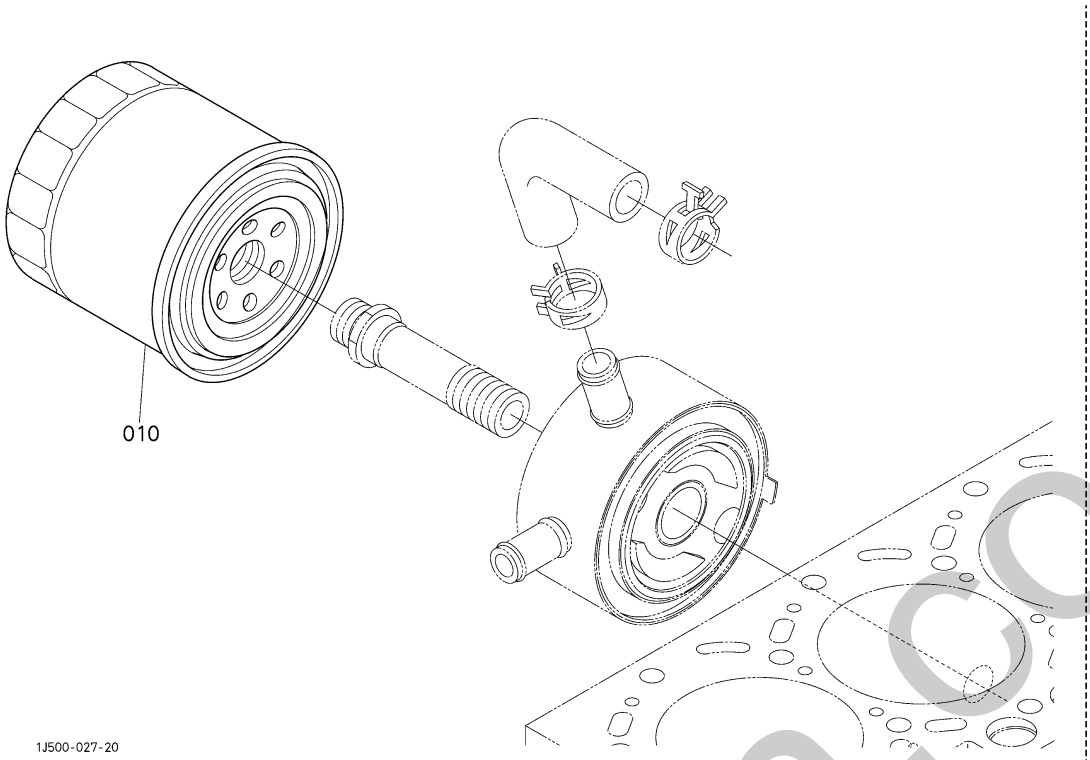

A:V3800-TIEF4B-COHE-1

図番 REF.No.	品番 PART No.	部品名称	PART NAME	数量 Q'TY/S.No. A	互換 I.C.	備考 REMARKS
010	1C020-3243-4	ﾌｨﾙﾀ(ｵｲﾙ,ｶｰﾄﾘｯｼﾞ)	CARTRIDGE,OIL FILTER	1		
010	HH1C0-3243-0	ﾌｨﾙﾀ(ｵｲﾙ,ｶｰﾄﾘｯｼﾞ)	FILTER(CARTRIDGE,OIL)	1		

↔ 新旧部品兼用可; ≠ 新旧部品兼用不可; ← 新部品は旧部品に兼用可; → 旧部品は新部品に兼用可

silverhorn.co.uk

587000 スタータスイッチ STARTER SWITCH

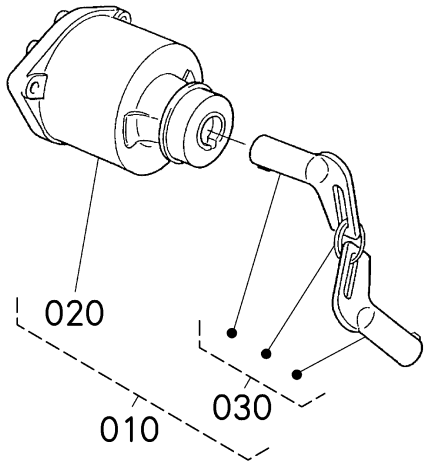

1G313-009-12

A:V3800-TIEF4B-COHE-1

図番 REF.No.	品番 PART No.	部品名称	PART NAME	数量 Q'TY/S.No. A	互換 I.C.	備考 REMARKS
010	17422-6359-0	ｽﾀｰﾀ ｽｲｯﾁ ｱｯｼ	ASSY SWITCH,STARTER	1		
020	17422-6361-0	ｽﾀｰﾀｽｲｯﾁ	SWITCH,STARTER	1		
030	17422-6370-0	ｷｰ,ｱｯｼ	ASSY KEY	1		

↔ 新旧部品兼用可; ≠ 新旧部品兼用不可; ← 新部品は旧部品に兼用可; → 旧部品は新部品に兼用可

silverhorn.co.uk

587200 ECU
ECU

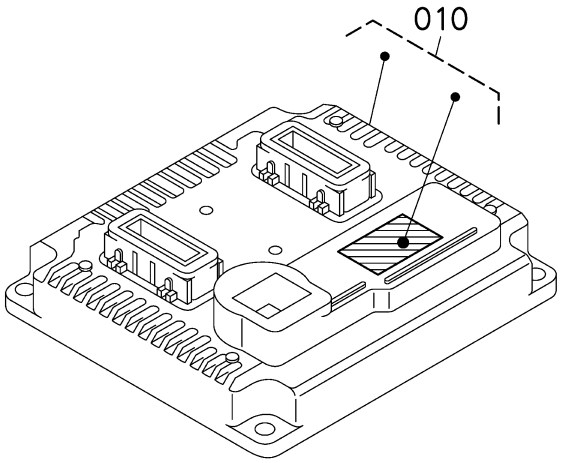

1J481-035-10

A:V3800-TIEF4B-COHE-1

図番 REF.No.	品番 PART No.	部品名称	PART NAME	数量 Q'TY/S.No. A	互換 I.C.	備考 REMARKS
010	1H053-5909-0	ECU,ｻﾌﾞｱｯｼ(C41-OEM)	ECU,SUB-ASSY	1		

↔ 新旧部品兼用可; ≠ 新旧部品兼用不可; ← 新部品は旧部品に兼用可; → 旧部品は新部品に兼用可

silverhorn.co.uk

588000 付属品・サービス部品 ACCESSORIES AND SERVICE PARTS

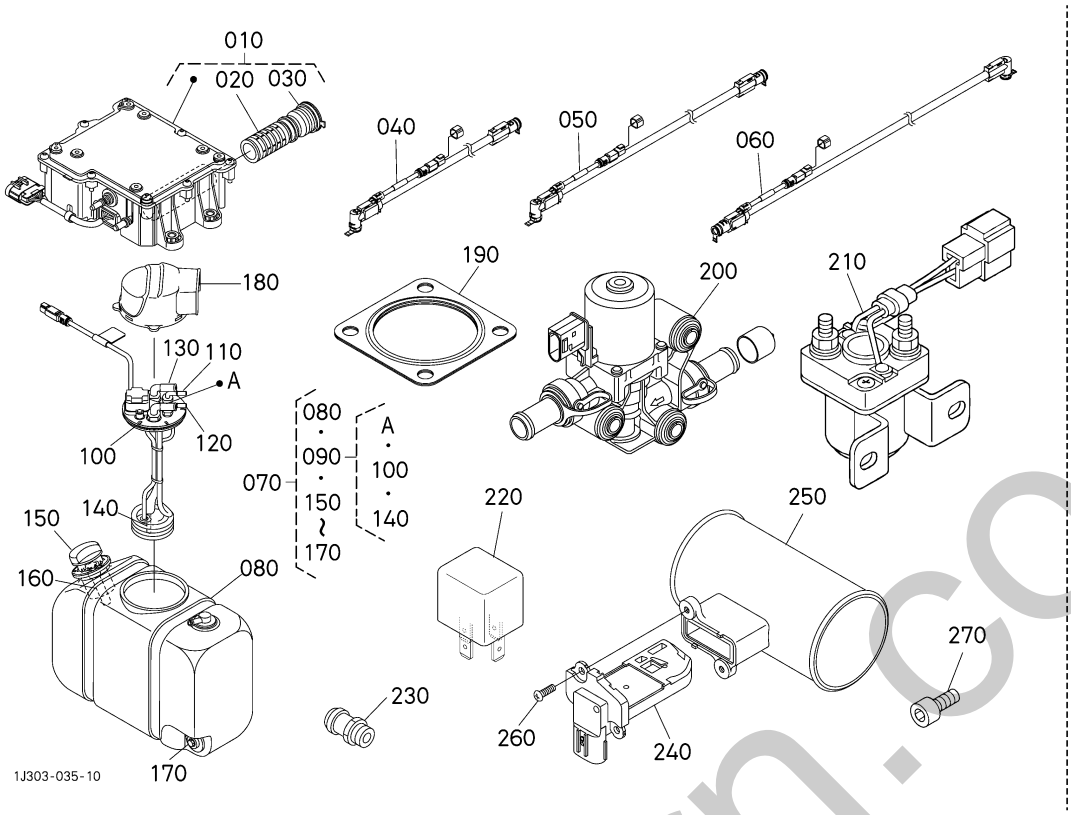

A:V3800-TIEF4B-COHE-1

図番 REF.No.	品番 PART No.	部品名称	PART NAME	数量 Q'TY/S.No. A	互換 I.C.	備考 REMARKS
010	1J508-1965-0	ﾎﾟﾝﾌﾟ,ｱｯｼ(DEF)	PUMP,ASSY	1		
020	1J508-1966-0	ﾌｨﾙﾀ,ｱｯｼ(DEF)	FILTER,ASSY(DEF)	1		
030	1J508-1963-0	ｷｬｯﾌﾟ(ﾌｨﾙﾀ,DEF)	CAP	1		
040	1J508-1955-0	ﾁｭｰﾌﾞ(DEF,S)	TUBE	1		
050	1E667-1956-0	ﾁｭｰﾌﾞ(DEF,P)	TUBE(DEF,P)	1		
060	1J481-1957-0	ﾁｭｰﾌﾞ(DEF,R)	TUBE(DEF,R)	1		
070	1E506-1980-2	ﾀﾝｸ,ｱｯｼ(DEF)	TANK,ASSY(DEF)	1		
080	1J508-1988-0	ﾀﾝｸ(DEF)	TANK(DEF)	1		
090	1E506-1987-0	ﾍｯﾀﾞ,ｱｯｼ(ﾀﾝｸ)	HEADER,ASSY(TANK)	1		
100	1J508-1989-0	ｶﾞｽｹｯﾄ(ﾍｯﾀﾞ)	GASKET	1		
110	1J508-1990-0	ﾂｷﾞﾃ,ｱｯｼ(DEF,1)	JOINT,ASSY	1		
120	1J508-1991-0	ﾂｷﾞﾃ,ｱｯｼ(DEF,2)	JOINT,ASSY	1		
130	1J508-1992-0	ﾂｷﾞﾃ,ｱｯｼ(WT)	JOINT,ASSY	2		
140	1J508-1999-0	ﾌｨﾙﾀ(DEF)	FILTER	1		
150	1J508-1982-2	ｷｬｯﾌﾟ(ﾀﾝｸ,DEF)	CAP(TANK,DEF)	1		青色
160	1J508-1998-0	ﾌｨﾙﾀ(ﾌｨﾗ)	FILTER(FILLER)	1		
170	1J508-1983-0	ﾌﾟﾗｸﾞ,ｱｯｼ(ﾄﾞﾚﾝ)	PLUG,ASSY(DRAIN)	1		
180	1J508-1986-0	ｶﾊﾞｰ(ﾍｯﾀﾞ,ﾀﾝｸ)	COVER	1		
190	1J520-1223-0	ｶﾞｽｹｯﾄ(ﾏﾌﾗ)	GASKET,MUFFLER	2		
200	1J508-1960-0	ﾊﾞﾙﾌﾞ,ｱｯｼ(ｸｰﾗﾝﾄ)	VALVE,ASSY	1		
210	3N300-7521-3	ﾘﾚｰ(ﾋｰﾀ)	RELAY,HEATER	1		
220	1J423-6023-3	ﾘﾚｰ(ｽﾀｰﾀ,12V)	RELAY	5		
230	1C010-3711-4	ｸﾀﾞﾂｷﾞﾃ(ｳｵｰﾀﾊﾟｲﾌﾟ)	JOINT,WATER PIPE	2		
240	1J520-1070-0	ｾﾝｻ(ｴｱﾌﾛ)	SENSOR(AIR FLOW)	1		
250	1J500-1071-0	ﾊﾟｲﾌﾟ(ｴｱﾌﾛ)	PIPE(AIR FLOW)	1		
260	03054-50412	ﾅﾍﾞ ｺﾈｼﾞ	SCREW,PAN HEAD(PHILLIPS)	2		
270	1G381-9101-0	ﾛｯｶｸｱﾅﾂｷﾎﾞﾙﾄ	SCREW,HEX SOC CAP	8		

↔ 新旧部品兼用可; ≠ 新旧部品兼用不可; ← 新部品は旧部品に兼用可; → 旧部品は新部品に兼用可

smithorn.co.uk

589000 銘板・取扱説明書 LABEL AND OPERATOR'S MANUAL

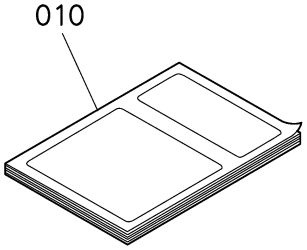

1J500-029-20

A:V3800-TIEF4B-C0HE-1

図番 REF.No.	品番 PART No.	部品名称	PART NAME	数量 Q'TY/S.No. A	互換 I.C.	備考 REMARKS
010	1J508-8915-5	ﾄﾘｱﾂｶｲｾﾂﾒｲｼｮ	MANUAL,OP	1		

↔ 新旧部品兼用可; ≠ 新旧部品兼用不可; ← 新部品は旧部品に兼用可; → 旧部品は新部品に兼用可

silverhorn.co.uk

594000 ピストンキット〔オプション〕 PISTON KIT [OPTION]

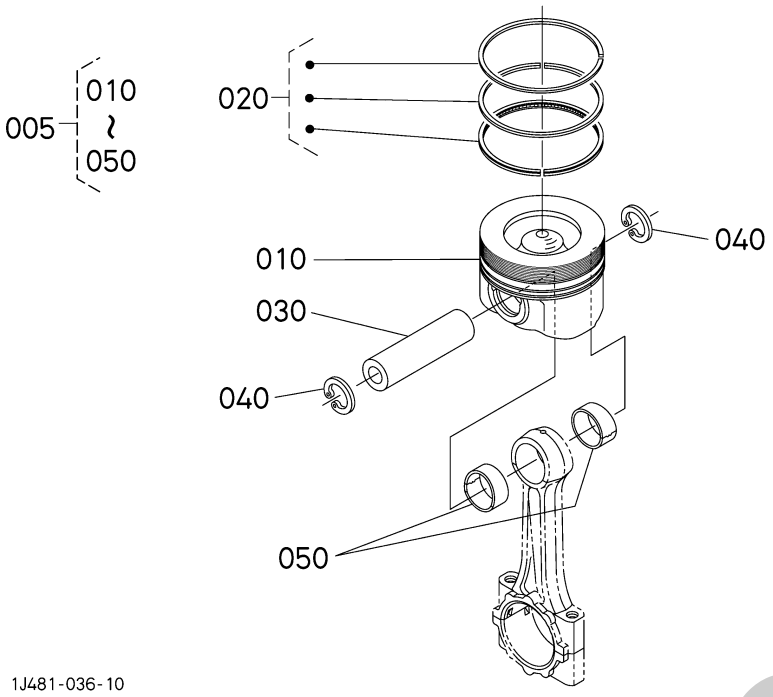

A:V3800-TIEF4B-COHE-1

図番 REF.No.	品番 PART No.	部品名称	PART NAME	数量 Q'TY/S.No. A	互換 I.C.	備考 REMARKS
005	1J508-2177-0	ﾋﾟｽﾄﾝ,ｷｯﾄ(STD)	PISTON,KIT(STD)	4		STD
005	1J508-2178-0	ﾋﾟｽﾄﾝ,ｷｯﾄ(05)	PISTON,KIT(05)	4		+0.5mm
010	1J508-2111-0	ﾋﾟｽﾄﾝ	PISTON	4		STD
010	1J508-2191-0	ﾋﾟｽﾄﾝ(05)	PISTON(05)	4		+0.5mm
020	1J508-2105-0	ﾋﾟｽﾄﾝﾘﾝｸﾞ,ｱｯｼ	RING,PISTON,ASSY	4		STD
020	1J508-2109-0	ﾋﾟｽﾄﾝﾘﾝｸﾞ,ｱｯｼ(05)	RING,PISTON,ASSY05	4		+0.5mm
030	1J550-2131-0	ﾋﾟｽﾄﾝﾋﾟﾝ	PIN,PISTON	4		
040	04611-00300	ｱﾅ ｻｰｸﾘｯﾌﾟ	CIR-CLIP,INTERNAL	8		
050	1J574-2198-2	ﾌﾞｯｼｭ(ﾋﾟｽﾄﾝﾋﾟﾝ)	BUSH,PISTON PIN	8		

↔ 新旧部品兼用可; ≠ 新旧部品兼用不可; ← 新部品は旧部品に兼用可; → 旧部品は新部品に兼用可

silverhorn.co.uk

597500 ダンネツザイキット〔オプション〕 HEAT INSULATION KIT [OPTION]

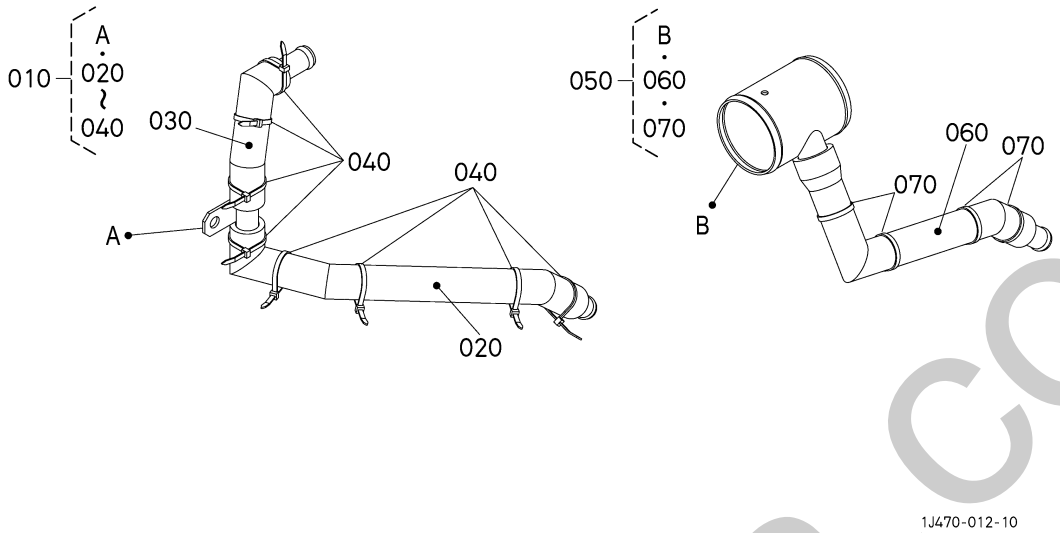

A:V3800-TIEF4B-COHE-1

図番 REF.No.	品番 PART No.	部品名称	PART NAME	数量 Q'TY/S.No. A	互換 I.C.	備考 REMARKS
010	1E474-0574-4	ﾊﾟｲﾌﾟ,ｱｯｼ(ｾﾊﾟﾚｰﾀ)	PIPE,ASSY(SEPARATOR)	1		
020	1E474-7581-0	ﾀﾞﾝﾈﾂｻﾞｲ(1,ﾊﾟｲﾌﾟ)	INSULATION	1		
030	1E474-7583-0	ﾀﾞﾝﾈﾂｻﾞｲ(3,ﾊﾟｲﾌﾟ)	INSULATION	1		
040	1E474-6758-0	ｺｰﾄﾞｸﾗﾝﾌﾟ	CLAMP,CORD	8		
050	1J509-0564-0	ﾊﾟｲﾌﾟ,ｱｯｼ(ﾌﾞﾚｻﾞ)	PIPE,ASSY(BREATHER)	1		
060	1J509-7582-0	ﾀﾞﾝﾈﾂｻﾞｲ(2,ﾊﾟｲﾌﾟ)	INSULATION	1		
070	1E474-6758-0	ｺｰﾄﾞｸﾗﾝﾌﾟ	CLAMP,CORD	4		

↔ 新旧部品兼用可; ≠ 新旧部品兼用不可; ← 新部品は旧部品に兼用可; → 旧部品は新部品に兼用可

silverhorn.co.uk

599000 診断ツールキット〔オプション〕 Diagmaster [OPTION]

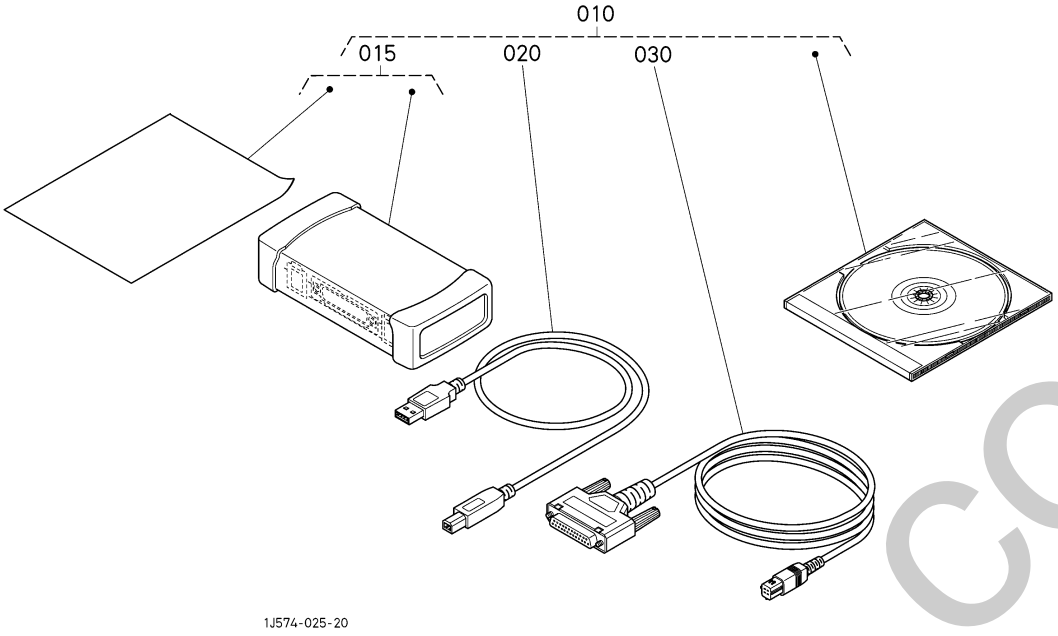

A:V3800-TIEF4B-COHE-1

図番 REF.No.	品番 PART No.	部品名称	PART NAME	数量 Q'TY/S.No. A	互換 I.C.	備考 REMARKS
010	----	ｼﾝﾀﾞﾝﾂｰﾙ,ｷｯﾄ	KIT TOOL	1		
015	1J423-9020-2	ｲﾝﾀﾌｪｰｽ,ｱｯｼ	INTERFACE,ASSY	1		
020	1J423-9031-0	ｹｰﾌﾞﾙ(USB)	CABLE,UBS	1		
030	1J423-9032-0	ｹｰﾌﾞﾙ(VEH)	CABLE,VEH	1		

↔ 新旧部品兼用可; ≠ 新旧部品兼用不可; ← 新部品は旧部品に兼用可; → 旧部品は新部品に兼用可

silverhorn.co.uk

品番索引
NUMERICAL INDEX

品番 PART No.	頁 PAGE	図番 REF.No.
E9151-3314-0	1	250
	8	130
	50	020
HH1C0-3243-0	51	010
RD451-5136-0	18	010
RD451-5191-0	18	020
RD451-5192-0	18	040
RD451-5193-0	18	050
RD451-5194-0	18	060
RD451-5195-0	18	080
RD451-5196-0	18	100
RD809-6310-0	46	080
	46	130
01517-51025	39	130
01517-51030	24	010
	34	060
01518-50622	34	050
01754-50612	34	040
	35	040
	37	050
01754-50612	43	030
	44	240
	49	060
01754-50616	14	050
	26	030
	26	070
	26	110
01754-50620	8	110
	8	160
01754-50625	37	070
01754-50625	42	050
01754-50630	44	250
01754-50804	31	080
01754-50812	3	080
	46	060
	50	130
01754-50816	9	150
	11	080
	29	030
	29	050
01754-50816	29	090
	29	120
	29	140
	29	180
01754-50820	34	080
	37	110
	37	130
	47	030
01754-50825	14	070
	22	060
01754-50825	30	050
	30	110
	48	060
	48	080
01754-50830	12	030
	21	020
	31	090
01754-50840	31	100
01754-50845	30	120
01754-50855	11	120
01754-50865	22	120
	34	090
01754-50875	14	080
01754-50880	31	070
01755-50612	37	180
01774-51002	22	080
01774-51004	3	050
01774-51016	44	180
01774-51020	13	090
01774-51025	40	060
01774-51025	40	070
01774-51030	1	200
	41	070
	44	140
	44	160
01774-51035	24	030
01774-51050	41	080
01774-51080	47	070
01774-51270	22	130
02751-50060	37	080
02751-50080	2	300
	5	040
	14	180
	14	230
	19	100
02771-50100	7	140
	22	090
	24	040
	40	080
	40	100
03016-50616	9	080
03024-50520	19	170
03054-50412	54	260
03054-50508	8	090
03057-50508	11	180
03410-50808	7	020
04015-50080	22	040
04611-00300	10	040
	10	045
	56	040
04612-00160	7	060
04717-01200	26	160
04724-00160	26	090
04814-00160	19	050
04814-00200	9	120
04814-00220	3	070
	3	100
04814-00240	9	130
04814-05120	19	060
04816-05150	32	040
04817-00060	18	030
04817-00070	18	090
04817-00160	18	070
04817-50300	1	260
	8	140
	50	030
05012-00614	14	040
05012-00820	1	090
05012-01016	1	100
05411-00528	7	040
05712-00515	10	120
05712-00520	11	060
06312-10030	31	040
07715-01605	7	035
	11	040
09318-88085	35	080
09318-88100	43	060
09318-88115	43	070
	47	060
09318-88130	37	030
09318-88130	37	150
	47	050
09318-88200	30	020
	32	050
	38	110
	46	110
	50	080
09318-88230	49	120
09318-88260	46	050
	46	120
09318-88260	48	100
09661-50150	35	070
14911-4275-0	17	020
15021-1424-0	7	100
	7	130
15221-0337-0	5	060
15221-0338-0	1	065
	1	220
15221-0339-0	1	070
15221-0349-0	5	070
15221-3365-0	1	110
15261-0337-0	1	050
15261-1398-0	6	070
15401-9569-3	16	080
15424-2516-2	13	030
15451-9568-0	14	150
15484-3707-0	50	050
15521-9602-0	1	020
	5	080
15601-1555-3	11	010
15602-3311-0	1	270
15625-3289-0	1	280
15707-3375-0	3	020
15841-5385-0	19	150
15841-5386-0	19	160
15841-9602-0	1	025
16241-0555-0	8	060
	30	070
16261-1333-0	6	060
16261-1356-0	6	010
16265-9667-0	3	030
	9	040
16286-3375-0	9	100
16424-9101-0	33	030
16541-4321-0	16	020
16541-4333-0	16	060
16541-9579-0	16	030
	16	100
16631-4356-0	16	050
16683-9602-0	1	040
17105-3368-0	16	070
	16	090
17371-1722-0	39	030
17371-9580-0	49	020
17422-6359-0	52	010
17422-6361-0	52	020
17422-6370-0	52	030
19077-4328-0	16	040
1A021-0543-0	8	070
1A021-9104-0	35	060
1A021-9602-0	30	100
	30	105
	30	107
1A024-3352-0	49	080
1A024-3901-0	26	170
1C010-0345-0	5	090
1C010-0430-0	12	010
1C010-0445-0	13	080
1C010-0446-0	12	020
1C010-0456-0	1	130
1C010-0468-0	13	060
1C010-1315-0	6	080
1C010-1324-0	6	050
1C010-1348-2	6	090
1C010-1349-0	6	110
1C010-1443-0	7	050
1C010-1511-0	11	020
1C010-1627-0	11	070
1C010-2214-2	10	070
1C010-2330-0	10	100
1C010-2353-2	10	160
1C010-2354-2	10	170
1C010-2395-2	10	160
1C010-2396-2	10	160
1C010-2397-2	10	170
1C010-2398-2	10	170
1C010-2401-7	11	130
1C010-2402-7	11	150
1C010-2425-0	11	090
1C010-2436-0	11	100
1C010-2437-0	11	110
1C010-2452-0	11	095
1C010-2498-3	11	140
	11	160
1C010-3308-0	1	240
	8	120
	50	010
1C010-3364-3	1	120
1C010-3365-3	1	210
1C010-3507-0	9	060
1C010-3513-0	9	070
1C010-3642-2	4	010
1C010-3692-2	9	030
1C010-3695-0	9	020
1C010-3696-0	9	050
1C010-3711-4	1	160
	30	075
	54	230
1C010-5166-3	14	100
1C010-6302-3	25	130

silverhorn.co.uk

品番索引
NUMERICAL INDEX

品番 PART No.	頁 PAGE	図番 REF.No.
1C010-6317-0	25	120
1C010-6324-0	25	030
1C010-6325-2	25	180
1C010-6326-0	25	070
1C010-6327-0	25	090
1C010-6333-0	25	080
1C010-6341-0	25	060
1C010-6352-0	25	160
1C010-6431-0	23	140
1C010-6477-0	23	080
1C010-7282-0	30	080
1C010-7343-0	31	020
1C010-9103-0	9	160
1C010-9104-0	9	170
1C010-9105-0	23	030
1C010-9107-0	29	160
1C010-9110-0	3	040
1C010-9201-0	23	020
1C010-9301-0	23	050
1C010-9601-0	1	030
1C010-9602-0	9	090
1C010-9616-0	1	080
1C011-0416-4	9	140
1C011-7301-3	30	090
1C020-0414-0	9	110
1C020-1182-0	34	070
1C020-1311-3	6	030
1C020-1312-3	6	040
1C020-1346-3	6	100
1C020-1402-3	7	080
1C020-1405-0	7	010
1C020-1415-3	7	110
1C020-1431-0	7	070
1C020-1452-0	8	020
1C020-2231-3	10	080
1C020-2233-4	10	080
1C020-2296-3	10	080
1C020-2297-3	10	080
1C020-2347-2	10	150
1C020-2391-2	10	150
1C020-2392-2	10	150
1C020-2634-0	13	100
1C020-3243-4	51	010
1C020-5165-0	14	090
1C020-5381-0	8	030
1C020-7326-0	30	030
1C020-7327-3	30	040
1C020-9149-0	14	020
1C020-9581-0	19	020
1C040-3321-2	1	140
1C041-1720-0	39	020
1C057-2410-0	10	110
1E342-1734-3	36	020
1E474-0535-0	48	040
1E474-0540-0	48	030
1E474-0574-4	57	010
1E474-0575-0	48	110
1E474-0586-2	48	090
1E474-6758-0	57	040
	57	070
1E474-7578-2	48	050
1E474-7581-0	57	020
1E474-7583-0	57	030
1E506-1980-2	54	070
1E506-1987-0	54	090
1E604-3716-0	50	100
1E637-6435-0	22	110
1E667-1956-0	54	050
1G377-6401-2	22	010
	23	010
1G377-6402-0	23	040
1G377-6408-0	23	090
1G377-6411-0	23	150
1G377-6460-2	23	130
1G377-6485-0	23	110
1G377-7310-0	1	170
1G377-7335-0	32	020
1G377-7411-0	33	020
1G377-7425-0	33	010
1G381-0401-3	9	010
1G381-0442-0	26	060
1G381-0443-0	26	060
1G381-0444-0	26	060
1G381-2301-2	10	090
1G381-3563-0	10	130
1G381-4301-2	15	010
1G381-6447-0	22	100
1G381-7415-2	33	040
1G381-9101-0	54	270
1G390-4322-0	15	030
1G390-4341-0	15	040
1G390-4397-0	15	050
1G410-5230-0	20	020
1G410-5239-0	20	030
1G514-0331-4	5	100
1G514-0360-4	5	100
1G514-0361-4	5	100
1G517-0150-2	3	010
1G518-0112-2	1	190
1G518-4301-0	16	010
1G524-3641-0	4	020
1G544-1711-0	39	090
1G557-9665-0	21	060
	49	100
	49	160
1G742-0512-0	8	080
1G772-6382-3	13	020
1G772-9103-2	13	070
1G774-9101-0	22	150
1G777-9665-0	49	030
1G796-5362-0	19	070
1G896-1423-0	7	090
	7	120
1G911-9102-2	8	040
1H053-5909-0	53	010
1H100-5909-0	44	260
1J301-0565-0	46	090
1J301-9101-0	36	030
	38	090
1J302-1158-0	35	105
1J302-1181-0	35	010
1J302-5972-0	35	030
1J303-1894-0	41	020
1J411-7306-0	31	030
1J419-0583-0	47	040
1J419-0584-0	1	230
1J419-0586-0	46	040
	46	100
1J419-1162-0	46	070
1J423-6023-3	54	220
1J423-9020-2	58	015
1J423-9031-0	58	020
1J423-9032-0	58	030
1J436-9101-2	39	120
1J481-1957-0	54	060
1J500-0582-2	47	020
1J500-0585-0	46	010
1J500-1060-0	35	090
1J500-1071-0	54	250
1J500-1165-0	35	050
1J500-1165-0	35	100
	35	107
	35	120
1J500-1184-0	34	030
1J500-1198-0	34	020
1J500-1450-3	8	010
1J500-1453-0	8	150
1J500-1732-0	37	090
1J500-1749-0	37	120
	38	020
1J500-1761-0	5	087
1J500-1840-0	41	050
1J500-1841-2	41	060
	41	065
	41	067
1J500-1850-0	42	010
1J500-1852-2	42	030
1J500-1862-0	43	010
1J500-1863-0	43	020
1J500-1864-2	43	040
1J500-1865-2	43	050
1J500-1870-0	40	020
1J500-1871-0	40	030
1J500-1872-0	40	040
1J500-1873-0	40	050
1J500-3229-0	50	090
1J500-3701-2	50	040
1J500-3715-0	50	060
1J500-3718-0	50	070
1J500-5967-0	26	100
1J500-6505-6	27	010
1J500-6539-0	29	100
1J500-6545-2	35	110
1J500-7181-0	37	020
1J500-7182-0	37	140
1J500-7183-0	37	160
1J500-7184-0	37	170
1J500-7335-2	30	010
1J500-9102-0	5	020
	38	060
1J500-9155-0	38	010
1J507-1979-0	44	070
1J508-0101-2	1	010
1J508-0174-0	5	010
1J508-0503-2	47	010
1J508-0558-0	46	020
1J508-0581-2	47	080
	48	020
1J508-0587-0	46	030
1J508-1458-2	8	050
1J508-1893-0	41	030
1J508-1895-0	41	040
1J508-1910-4	44	010
1J508-1926-0	44	060
1J508-1927-0	44	050
	44	055
1J508-1936-0	44	080
1J508-1937-0	44	090
1J508-1951-0	44	220
1J508-1952-0	44	230
1J508-1955-0	54	040
1J508-1960-0	54	200
1J508-1963-0	54	030
1J508-1965-0	54	010
1J508-1966-0	54	020
1J508-1970-0	44	130
1J508-1971-0	44	150
1J508-1972-2	44	170
1J508-1982-2	54	150
1J508-1983-0	54	170
1J508-1986-0	54	180
1J508-1988-0	54	080
1J508-1989-0	54	100
1J508-1990-0	54	110
1J508-1991-0	54	120
1J508-1992-0	54	130
1J508-1998-0	54	160
1J508-1999-0	54	140
1J508-2105-0	10	020
	56	020
1J508-2109-0	10	020
	56	020
1J508-2111-0	10	010
	56	010
1J508-2177-0	56	005
1J508-2178-0	56	005
1J508-2191-0	10	010
	56	010
1J508-2461-0	14	210
1J508-2465-0	14	190
1J508-2465-0	14	220
1J508-2469-0	14	200
1J508-3306-0	49	040
1J508-3336-0	49	130
1J508-3369-0	49	140
1J508-4211-2	17	010
1J508-4221-0	17	030
1J508-4285-0	21	040
1J508-5050-0	14	110
1J508-5060-0	21	010

Sivemon.co.uk

品番索引
NUMERICAL INDEX

品番 PART No.	頁 PAGE	図番 REF.No.
1J508-5115-0	14	170
1J508-5117-0	14	010
1J508-5118-0	14	030
1J508-5132-0	14	120
1J508-5307-0	19	040
1J508-5371-0	19	110
1J508-5372-0	19	120
1J508-5373-0	19	130
1J508-5374-0	19	140
1J508-5375-0	21	030
1J508-6270-0	37	010
1J508-6506-0	28	010
1J508-6507-0	28	020
1J508-6508-0	28	030
1J508-6509-0	44	190
1J508-6517-0	29	080
1J508-6520-2	29	170
1J508-6521-0	29	190
1J508-6522-0	29	010
1J508-6523-0	29	020
1J508-6524-0	29	040
1J508-6533-0	29	150
1J508-6537-0	29	110
1J508-6538-0	29	130
1J508-6539-0	44	110
	44	200
1J508-7141-0	38	040
1J508-7143-0	38	080
1J508-7145-0	38	100
1J508-7146-0	32	030
1J508-8915-5	55	010
1J508-9292-0	14	140
1J508-9578-0	21	070
1J508-9760-0	44	280
1J508-9762-3	44	290
1J508-9763-0	45	300
1J508-9764-0	44	270
1J509-0175-0	5	015
1J509-0503-2	48	010
1J509-0564-0	57	050
1J509-0582-0	48	070
1J509-1177-4	34	010
1J509-1938-0	44	100
1J509-6539-0	44	120
1J509-7582-0	57	060
1J510-9665-0	21	080
1J520-1070-0	54	240
1J520-1223-0	54	190
1J520-1842-0	41	090
1J520-1860-0	42	040
1J520-9154-0	40	090
1J530-9150-0	39	050
1J530-9151-0	39	110
1J530-9152-0	39	100
1J530-9153-0	39	070
1J540-1231-5	36	010
1J540-1232-0	39	080
1J540-4212-0	35	085
1J542-7303-3	31	010
1J542-9163-2	2	290
1J542-9163-2	5	030
	36	050
1J542-9250-0	36	060
	38	030
	39	060
1J550-0338-0	1	060
1J550-1235-0	36	040
1J550-1710-0	39	040
1J550-2131-0	10	030
	56	030
1J550-3211-0	3	060
1J550-3367-0	49	050
1J550-7135-2	1	150
1J550-7376-2	31	060
1J550-9673-0	19	030
1J552-7270-2	30	060
1J552-7382-0	31	050
1J553-3324-0	49	110
1J574-0302-6	5	050
	6	005
1J574-0341-0	5	085
1J574-1371-0	37	040
1J574-1435-3	7	030
1J574-1601-5	11	030
1J574-1651-2	11	050
1J574-1691-3	11	170
1J574-2198-2	10	060
	56	050
1J574-2201-6	10	050
1J574-4250-0	19	010
1J574-5213-0	14	160
1J574-5315-0	19	080
1J574-5428-0	35	020
1J574-5968-0	26	080
1J574-5971-0	26	010
	26	040
1J574-6534-0	27	020
1J574-6583-0	8	100
1J574-9666-0	14	130
1J574-9675-0	26	020
1J574-9675-0	26	050
1J583-1701-4	39	010
1J583-1724-0	38	005
1J583-1727-0	38	070
1J583-3304-0	49	010
1J770-1851-0	42	020
1J803-1741-0	37	060
1J803-1743-0	37	100
	38	050
1J860-9579-0	21	050
1J860-9579-0	49	090
	49	150
1K011-9203-0	23	120
1K012-6301-3	24	020
	25	010
1K012-6303-0	25	020
1K012-6304-0	25	040
1K012-6305-0	25	100
1K012-6307-2	25	170
1K012-6308-3	25	190
1K012-6320-2	25	230
1K012-6321-0	25	050
1K012-6328-0	25	110
1K012-6332-0	25	240
1K012-6337-0	25	220
1K012-6338-0	25	200
1K012-6339-0	25	210
1K012-6376-2	25	140
1K021-6442-0	22	020
1K021-6446-0	22	030
1K861-7147-0	32	010
1K861-7428-0	22	140
1K861-9701-0	22	160
1K947-4317-2	15	020
1K988-0461-2	13	050
1K988-2501-0	13	010
33430-8276-0	49	070
36340-4356-3	3	090
3F261-7812-0	23	060
3F261-7813-0	23	070
3N300-7521-3	54	210
3T400-5203-2	20	010
3T999-0159-0	20	040
3T999-0160-0	20	050
5H601-4194-0	26	150
6C040-8269-0	25	150

Sivermon.co.uk

silverhorn.co.uk

HOKUETSU INDUSTRIES CO., LTD.

Copyright(C)2019 HOKUETSU INDUSTRIES CO., LTD. All Rights Reserved.

1905-02
CAT.NO.39520 80000

AIRMAN
HOKUETSU INDUSTRIES CO., LTD.