AIRMAN

SG

PARTS CATALOG

ENGINE GENERATOR

SDG45S-8E1

silverhorn.co.uk

HOKUETSU INDUSTRIES CO., LTD.

適　用　型　式
ＦＯＲ　ＭＯＤＥＬ

型　　式 ＭＯＤＥＬ	適　用　号　機 ＳＥＲ．ＮＯ．
ＳＤＧ４５Ｓ－８Ｅ１ [WITH OIL FENCE TYPE]	１３３８Ｅ１００５１～

原 動 機 型 式 ENGINE MODEL	ISUZU 4LE2X
Eng.oil filter,cartridge	ISUZU 898075-6761
Fuel filter,element (main filter)	ISUZU 898240-2800
Fuel filter,element (pre filter)	ISUZU 898240-2790
Belt,cooling fan	ISUZU 898095-3350

silvermorn.co.uk

STANDARD PAINTING

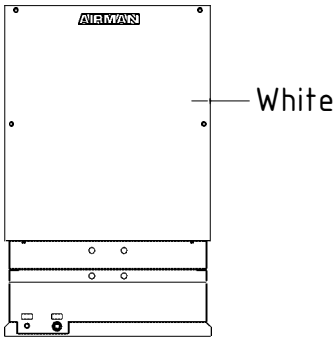

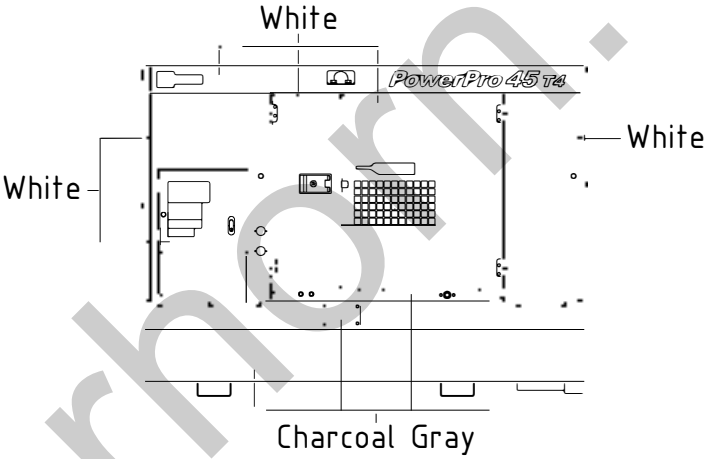

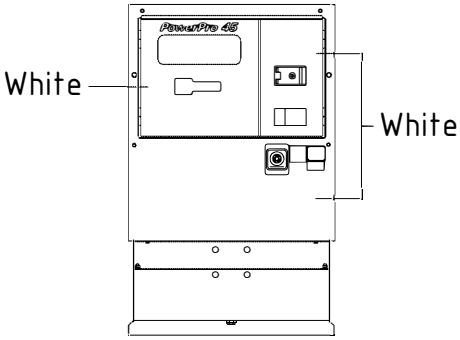

silverhorn.co.uk

N O T I C E

1. This parts catalog contains all the parts and assemblies of “AIRMAN” brand products. The complete unit is divided into several parts groups, the details of which are clearly illustrated, and completely listed. So desired part number, name and quantity can be easily determined referring to Ref.No.

2. When you place order for service parts, please be sure to advise us of the following information.
   (1) Part number.
   (2) Quantity required.
   (3) Part name.
   (4) Model name and Serial number.

3. How to read parts catalog.

(8) 備考 Remarks S :STD. SC:w.AFTERCOOLER SD:DRY AIR

52 - 00 LINING

(1) 見出番号 Ref.NO.	(2) 部品番号 Part NO.	(3) 互換性 Inter-change ability	(4) 部品名称 Part Name	(5) 数量 Q'ty	(6) 適用号機範囲 Applicable Ser.No.		(7) 変更 C/H	(8) 備考 Remarks S	SC	SD
	52900 04921		URETHANE FOAM KIT ウレタン フォーム キット					◎		
	52900 05121		URETHANE FOAM KIT ウレタン フォーム キット (Const.No.1～21)						◎	
	52900 06121		URETHANE FOAM KIT ウレタン フォーム キット (Const.No.1～9 & 11～24)							◎
1	52959 71350		Lining ライニング	1						
2	52959 97640		Lining ライニング	1						
3	52959 80220		Lining ライニング	1						
4	52959 71450		Lining ライニング	1						
5	52959 71550		Lining ライニング	1						
6	52959 30940		Lining ライニング	1						
7	52959 71650		Lining ライニング	2						

(1) Ref.No.
Reference number (Ref.No.) is to be used for locating the part number and name from the illustrations. (However some parts such as bolts and nuts etc., are not illustrated but their reference numbers only listed.)
Ref.No.1, 1-1, 1-2,…… shows history of part modifications.
[These reference numbers mean 1: primary period, 1-1: first alteration, 1-2: second alteration and 1-3……follows]

(2) Part No.
Every part has its own proper number. Even if a part has the same shape as an other part and if its number different, it is not interchangeable at all in many cases.

(3) Interchangeability
A, B, C, D, Q, X, Y and Z in column “Interchangeability” show the following.
A : A new part is replaceable with an old part, but the old part is not replaceable with the new one.
B : Not interchangeable.
C : Disused.
D : Newly added.
Q : Quantity per unit changed.
X : Included in this set of parts, this part is not used for this model.
Y : Part to be selected.
Z : This part can not be supplied as an individual part.

silvernorm.co.uk

(4) Part name
Every part has its own proper name.

(5) Q'ty
The number shown in the column of Q'TY indicates the quantity of parts used per one unit machine.

(6) Applicable Ser.No. (Serial Number)
Ser.No. shows the machine number to which the part is applicable.
Month and year stated in column "Ser.No." show the month and year from which the part is applicable.

(7) Change column
M1, M2,…… Mn mentioned in the column indicate the change of part number and the serial number of the unit, the part of which was modified.

(8) Remarks
This column "Remarks" mentions in mark or signal the specifications of each part, original part number of manufacturer, model name of the part for which is used and etc.
[Example. SC:w.AFTERCOOLER]

4. Abbreviations used in this catalog.

ass'y	assembly	L	Length
A	Ampere	OPT.	Option
AUTO.	Automatic	SPC/S.	Special specifications
C/H	Change column	STD.	Standards
Const.	Consisting of	sw.	switch
Cont.	Control	T or t	Thickness
Eng.	Engine	V	Volt
EXP.	Export	W	Watt
GEN.	Generator	w.	with
Incl.	Including	w/o	without

NOTE:※We are always engaged in improving our products. So there may be some changes of the product which are not yet mentioned in this parts catalog. Therefore, in necessary case, we issue a revision in which such changes ars added. When you have any question on the parts catalog, please ask your nearest dealer or directly us.
※For engine parts, please refer to separate engine parts catalog.

silvermorn.co.uk

目　　次
CONTENTS

図番号 FIG.NO.	図名称 FIG.NAME		頁 PAGE
20 - 00	GENERATOR,MOUNTING & INTAKE	ｾﾞﾈﾚｰﾀ,ﾏｳﾝﾃｨﾝｸﾞ,ｲﾝﾃｰｸ	20- 1～3
38 - 00	COOLING,ENGINE & EXHAUST	ｸｰﾘﾝｸﾞ,ｴﾝｼﾞﾝ,ｴｷｿﾞｰｽﾄ	38- 1～3
39 - 00	NAME PLATE	ﾈｰﾑ ﾌﾟﾚｰﾄ	39- 1～2
43 - 00	FUEL LINE	ﾌｭｴﾙ ﾗｲﾝ	43- 1～2
44 - 00	ELECTRIC(for ENGINE)	ｴﾚｸﾄﾘｯｸ(ｴﾝｼﾞﾝ用)	44- 1～3
46 - 00	ELECTRIC(for GENERATOR)	ｴﾚｸﾄﾘｯｸ(ｾﾞﾈﾚｰﾀ用)	46- 1～3
46 - 01	TERMINAL PLATE	三相出力端子板	46- 4
51 - 00	FRAME & BONNET	ﾌﾚｰﾑ,ﾎﾞﾝﾈｯﾄ	51- 1～3
51 - 01	OIL FENCE	ｵｲﾙ ﾌｪﾝｽ	51- 4～5
52 - 00	LINING	ﾗｲﾆﾝｸﾞ	52- 1～2

型式名の見方
HOW TO READ MODELS

ＳＤＧ ４５ Ｓ － ８ Ｅ １
① ② ③ ④ ⑤ ⑥

① SDG : SEMI PORTABLE DIESEL GENERATOR
② 45 : OUTPUT(kVA)
③ S : SILENT TYPE
④ 8 : NORTH AMERICA TYPE(w.OIL FENCE)
⑤ MODEL CHANGE MARK
⑥ VARIATION MARK

① SDG : ｾﾐﾎﾟｰﾀﾌﾞﾙﾃﾞｨｰｾﾞﾙ発電機
② 45 : 定格出力(kVA)
③ S : 防音型
④ 8 : 北米仕様(ｵｲﾙﾌｪﾝｽ付)
⑤ ﾓﾃﾞﾙﾁｪﾝｼﾞ記号
⑥ ﾊﾞﾘｴｰｼｮﾝ記号

silverhorn.co.uk

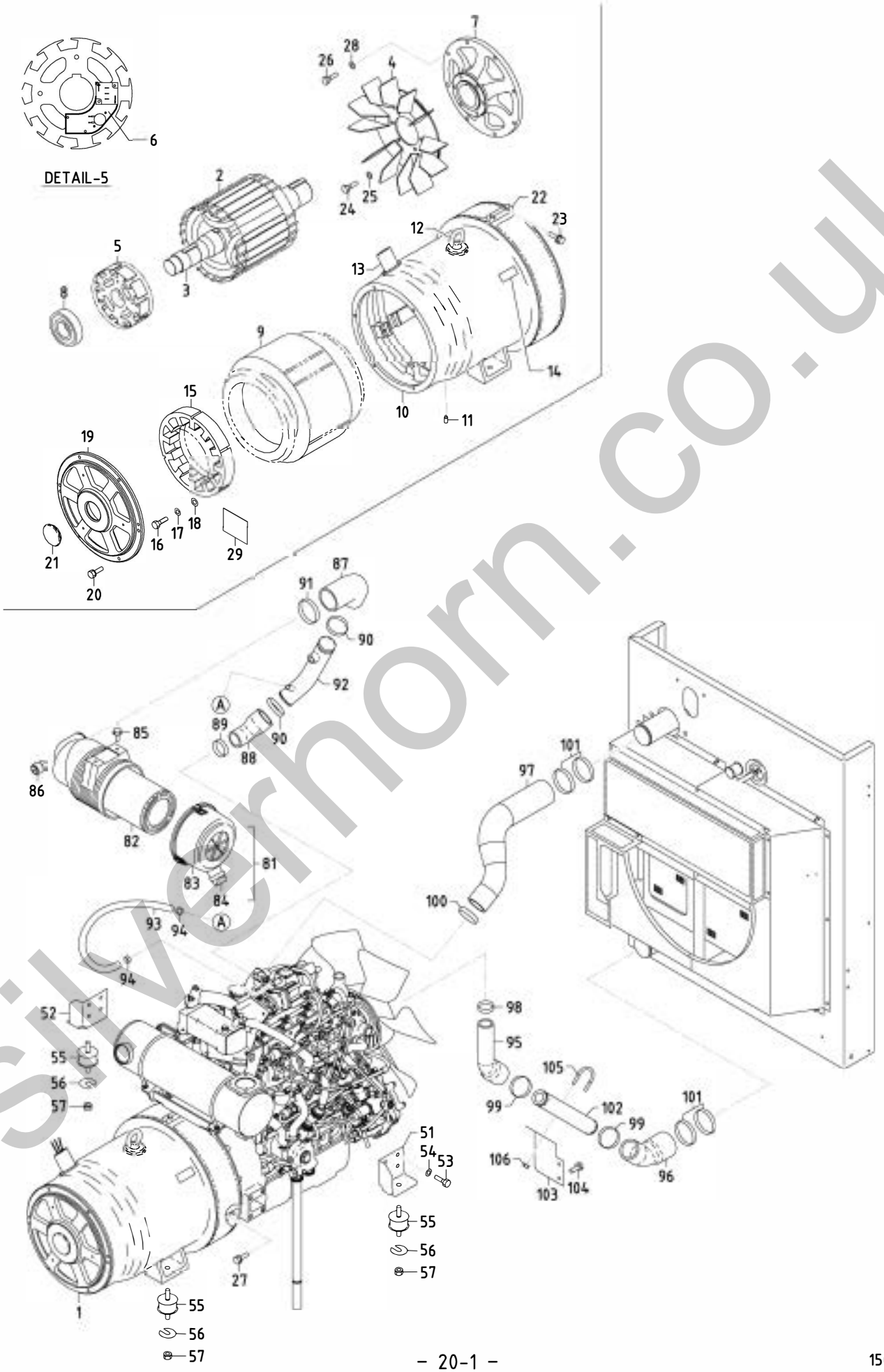

silverhorn.co.uk

20 - 00 GENERATOR,MOUNTING & INTAKE

見出番号 Ref.NO.	部品番号 Part NO.	互換性 Inter-change ability	部品名称 Part Name		数量 Q'ty	適用号機範囲 Applicable Ser.No. 8E1	—	変更 C/H	備考 Remarks
	20 - 00		GENERATOR GROUP	ｾﾞﾈﾚｰﾀ ｸﾞﾙｰﾌﾟ					
1	20003 63901		Generator	ｾﾞﾈﾚｰﾀ	1				Const.No.2～29
2	25100 10700		A.C.G.rotor ass'y	主発電機界磁巻線	1				(回転子)
3	25151 04701		Shaft	ｼｬﾌﾄ	1				
	03307 14180		Key	ｷｰ	1				(A.C.G.rotor side)
	03307 14050		Key	ｷｰ	1				(EX.rotor side)
	03307 14063		Key	ｷｰ	1				(coupling side)
4	25140 05800		Fan	ﾌｧﾝ	1				
5	25600 01400		EX.rotor ass'y	励磁機電機子巻線	1				Incl.No.6
	A.C.G.ﾛｰﾀ・ｼｬﾌﾄ・ｷｰ・ﾌｧﾝ・EX.ﾛｰﾀ(見出番号2～5)は、ｾｯﾄでご注文下さい								
	A set of A.C.G.rotor,shaft,key,fan & EX.rotor(Ref.NO.2-5),should be ordered.								
6	46640 19700		Wiring board	整流器基板	1				
7	61121 09602		Coupling,drive	ｶｯﾌﾟﾘﾝｸﾞ	1				
8	21472 17200		Bearing	ﾍﾞｱﾘﾝｸﾞ	1				(6310ZZC3)
9	25200 12400		A.C.G.stator ass'y	主発電機電機子巻線	1				(固定子)
10	25310 11400		Casing	ｹｰｼﾝｸﾞ	1				
	A.C.G.ｽﾃｰﾀ・ｹｰｼﾝｸﾞは、ｾｯﾄでご注文下さい								
	A set of A.C.G.stator & casing,should be ordered.								
11	02601 10016		Set screw	ｾｯﾄ ｽｸﾘｭ	2				
12	52742 00200		Eye bolt	ｱｲ ﾎﾞﾙﾄ	1				
13	36135 02200		Grommet	ｸﾞﾛﾒｯﾄ	1				(cable protect)
14	39178 79330		Plate(SER.NO.)	ｾﾘｱﾙ銘板	1				
15	25700 08900		EX.stator ass'y	励磁機界磁巻線	1				(固定子)
16	02135 06060		Bolt	ﾎﾞﾙﾄ	3				
17	03115 02006		Spring washer	ｽﾌﾟﾘﾝｸﾞ ﾜｯｼｬ	3				
18	03116 12006		Plain washer	ﾌﾟﾚｰﾝ ﾜｯｼｬ	3				
19	25310 11100		Casing	ｹｰｼﾝｸﾞ	1				
20	02238 08025		Bolt,w/w	ﾜｯｼｬ付ﾎﾞﾙﾄ	6				
21	36135 02300		Grommet	ｸﾞﾛﾒｯﾄ	1				
22	25360 09000		Cover	ｶﾊﾞｰ	1				
23	02248 06025		Bolt,w/w	ﾜｯｼｬ付ﾎﾞﾙﾄ	2				
24	02135 10025		Bolt	ﾎﾞﾙﾄ	6				
25	03115 02010		Spring washer	ｽﾌﾟﾘﾝｸﾞ ﾜｯｼｬ	6				
26	02135 10035		Bolt	ﾎﾞﾙﾄ	8				
27	02238 10030		Bolt,w/w	ﾜｯｼｬ付ﾎﾞﾙﾄ	12				
28	03115 02010		Spring washer	ｽﾌﾟﾘﾝｸﾞ ﾜｯｼｬ	8				
29	39178 92030		Plate(mark)	ﾏｰｸ ﾁｭｰﾌﾞ	1				
	31 - 00		MOUNTING GROUP	ﾏｳﾝﾃｨﾝｸﾞ ｸﾞﾙｰﾌﾟ					
51	31110 94301		Bracket	ﾌﾞﾗｹｯﾄ	1				
52	31110 94401		Bracket	ﾌﾞﾗｹｯﾄ	1				
53	02135 10020		Bolt	ﾎﾞﾙﾄ	8				
54	03115 02010		Spring washer	ｽﾌﾟﾘﾝｸﾞ ﾜｯｼｬ	8				
55	GG160 00100		Vibration isolator ass'y	防振ｺﾞﾑ	4				
56	31120 08900		Shim	ｼﾑ	1				
57	02915 20012		Nut,w/w	ﾜｯｼｬ付ﾅｯﾄ	8				

silvernorm.co.uk

見出番号 Ref.NO.	部品番号 Part NO.	互換性 Inter-change ability	部品名称 Part Name		数量 Q'ty	適用号機範囲 Applicable Ser.No. 8E1	—	変更 C/H	備考 Remarks
	32 - 00		INTAKE GROUP	ｲﾝﾃｰｸ ｸﾞﾙｰﾌﾟ					
81	32100 40700		Air filter ass'y	ｴｱ ﾌｨﾙﾀ	1				Const.No.82～84
82	32143 11700		Element	ｴﾚﾒﾝﾄ	1				
83	32142 08600		Cup	ｶｯﾌﾟ	1				
84	32151 01400		Vacuator valve	ﾊﾞｷｭｴｰﾀ ﾊﾞﾙﾌﾞ	1				
85	02201 08012		Flange bolt	ﾌﾗﾝｼﾞ付ﾎﾞﾙﾄ	2				
86	32148 03000		Filter,service indicator	ｲﾝｼﾞｹｰﾀ	1				
87	32331 86300		Hose	ﾎｰｽ	1				
88	32331 85501		Hose	ﾎｰｽ	1				
89	03511 20060		Hose clip	ﾎｰｽ ｸﾘｯﾌﾟ	1				
90	03511 20070		Hose clip	ﾎｰｽ ｸﾘｯﾌﾟ	2				
91	03511 20080		Hose clip	ﾎｰｽ ｸﾘｯﾌﾟ	1				
92	32320 71600		Pipe	ﾊﾟｲﾌﾟ	1				
93	03591 15050		Hose	ﾎｰｽ	1				
94	03511 20028		Hose clip	ﾎｰｽ ｸﾘｯﾌﾟ	2				
95	32331 86400		Hose	ﾎｰｽ	1				
96	32331 86500		Hose	ﾎｰｽ	1				
97	32331 86600		Hose	ﾎｰｽ	1				
98	03511 50056		Hose clip	ﾎｰｽ ｸﾘｯﾌﾟ	1				
99	03511 50065		Hose clip	ﾎｰｽ ｸﾘｯﾌﾟ	2				
100	03511 50075		Hose clip	ﾎｰｽ ｸﾘｯﾌﾟ	1				
101	03511 50085		Hose clip	ﾎｰｽ ｸﾘｯﾌﾟ	4				
102	32320 71700		Pipe	ﾊﾟｲﾌﾟ	1				
103	32270 07100		Bracket	ﾌﾞﾗｹｯﾄ	1				
104	02201 08020		Flange bolt	ﾌﾗﾝｼﾞ付ﾎﾞﾙﾄ	2				
105	03830 08004		U-bolt	U-ﾎﾞﾙﾄ	1				
106	02915 00008		Hexagon flange nut	ﾌﾗﾝｼﾞ付ﾅｯﾄ	2				

silverhorn.co.uk

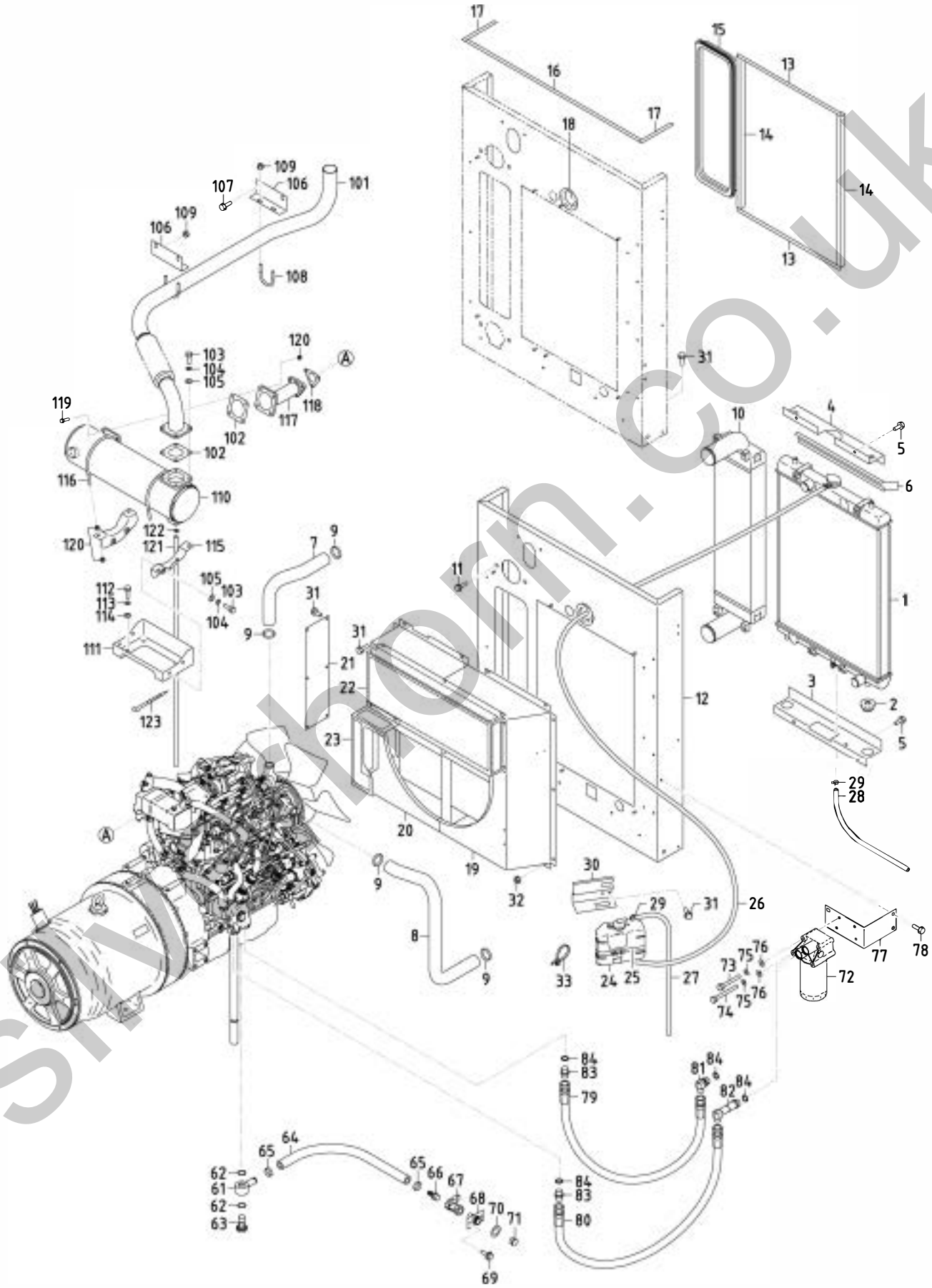

silverhorn.co.uk

見出番号 Ref.NO.	部品番号 Part NO.	互換性 Inter-change ability	部品名称 Part Name		数量 Q'ty	適用号機範囲 Applicable Ser.No. 8E1	—	変更 C/H	備考 Remarks
	38 - 00		COOLING GROUP	ｸｰﾘﾝｸﾞ ｸﾞﾙｰﾌﾟ					
1	38100 45000		Radiator	ﾗｼﾞｴｰﾀ	1				Incl.cap & valve
	38410 05700		Cap	ｷｬｯﾌﾟ	1				
	38469 01800		Valve	ﾊﾞﾙﾌﾞ	1				(drain)
2	31131 04900		Rubber	ｺﾞﾑ	2				
3	38420 00310		Bracket	ﾌﾞﾗｹｯﾄ	1				
4	38420 00410		Bracket	ﾌﾞﾗｹｯﾄ	1				
5	02201 08020		Flange bolt	ﾌﾗﾝｼﾞ付ﾎﾞﾙﾄ	4				
6	03407 66815		Seal rubber	ｼｰﾙ ﾗﾊﾞｰ	2				
7	38524 74300		Hose	ﾎｰｽ	1				(upper)
8	38524 74400		Hose	ﾎｰｽ	1				(lower)
9	03511 20050		Hose clip	ﾎｰｽ ｸﾘｯﾌﾟ	4				
10	38920 04700		Intercooler	ｲﾝﾀｸｰﾗ	1				
11	02201 10020		Flange bolt	ﾌﾗﾝｼﾞ付ﾎﾞﾙﾄ	4				
12	52350 86021		Cover	ｶﾊﾞｰ	1				
13	03407 66856		Seal rubber	ｼｰﾙ ﾗﾊﾞｰ	2				
14	03407 67418		Seal rubber	ｼｰﾙ ﾗﾊﾞｰ	2				
15	03407 67514		Seal rubber	ｼｰﾙ ﾗﾊﾞｰ	1				
16	03407 66954		Seal rubber	ｼｰﾙ ﾗﾊﾞｰ	1				
17	03407 66956		Seal rubber	ｼｰﾙ ﾗﾊﾞｰ	2				
18	03403 00512		Grommet	ｸﾞﾛﾒｯﾄ	1				
19	38440 13411		Shroud,fan	ﾌｧﾝ ｼｭﾗｳﾄﾞ	1				
20	38440 13511		Shroud,fan	ﾌｧﾝ ｼｭﾗｳﾄﾞ	1				
21	38441 12210		Plate	ﾌﾟﾚｰﾄ	1				
22	38450 90600		Guard,fan	ﾌｧﾝ ｶﾞｰﾄﾞ	1				
23	38450 90800		Guard,fan	ﾌｧﾝ ｶﾞｰﾄﾞ	1				
24	38590 01200		Reserve tank ass'y	ﾘｻﾞｰﾌﾞ ﾀﾝｸ	1				
25	03511 30185		Hose clip	ﾎｰｽ ｸﾘｯﾌﾟ	1				
26	38594 05100		Hose	ﾎｰｽ	1				
27	38594 05000		Hose	ﾎｰｽ	1				
28	38594 02300		Hose	ﾎｰｽ	1				
29	03511 40016		Hose clip	ﾎｰｽ ｸﾘｯﾌﾟ	4				
30	38591 01000		Bracket	ﾌﾞﾗｹｯﾄ	1				
31	02201 06016		Flange bolt	ﾌﾗﾝｼﾞ付ﾎﾞﾙﾄ	30				
32	02915 00006		Hexagon flange nut	ﾌﾗﾝｼﾞ付ﾅｯﾄ	8				
33	37181 07700		Clip	ｸﾘｯﾌﾟ	4				
	41 - 00		ENGINE GROUP	ｴﾝｼﾞﾝ ｸﾞﾙｰﾌﾟ					
61	43534 02102		Ring connector	ﾘﾝｸﾞ ｺﾈｸﾀ	1				
62	03407 16024		Gasket	ｶﾞｽｹｯﾄ	2				
63	43532 05500		Nipple	ﾆｯﾌﾟﾙ	1				(bolt)
64	03580 19062		Hose	ﾎｰｽ	1				
65	03511 20035		Hose clip	ﾎｰｽ ｸﾘｯﾌﾟ	2				
66	37170 02900		Joint	ｼﾞｮｲﾝﾄ	1				
67	03735 13004		Valve	ﾊﾞﾙﾌﾞ	1				
68	37170 20100		Joint	ｼﾞｮｲﾝﾄ	1				
69	02201 06016		Flange bolt	ﾌﾗﾝｼﾞ付ﾎﾞﾙﾄ	2				
70	52728 15710		Cushion rubber	ｸｯｼｮﾝ ﾗﾊﾞｰ	1				
71	33238 03000		Plug	ﾌﾟﾗｸﾞ	1				

silverhorn.co.uk

見出番号 Ref.NO.	部品番号 Part NO.	互換性 Inter-change ability	部品名称 Part Name		数量 Q'ty	適用号機範囲 Applicable Ser.No. 8E1	—	変更 C/H	備考 Remarks
72	41290 01600		Filter ass'y	ﾌｨﾙﾀ	1				(ISUZU 898075-6710)
73	02138 08090		Bolt	ﾎﾞﾙﾄ	2				
74	02138 08110		Bolt	ﾎﾞﾙﾄ	2				
75	03115 02008		Spring washer	ｽﾌﾟﾘﾝｸﾞ ﾜｯｼｬ	4				
76	03116 12008		Plain washer	ﾌﾟﾚｰﾝ ﾜｯｼｬ	4				
77	41250 06100		Bracket	ﾌﾞﾗｹｯﾄ	1				
78	02201 08020		Flange bolt	ﾌﾗﾝｼﾞ付ﾎﾞﾙﾄ	4				
79	37110 08300		Hose	ﾎｰｽ	1				
80	37110 08200		Hose	ﾎｰｽ	1				
81	03734 85060		Nipple elbow	ﾆｯﾌﾟﾙ ｴﾙﾎﾞ	1				Incl.No.84
82	GD920 18300		Nipple	ﾆｯﾌﾟﾙ	1				Incl.No.84
83	GD920 14700		Nipple	ﾆｯﾌﾟﾙ	2				Incl.No.84
84	03102 25024		O-ring	O-ﾘﾝｸﾞ	4				
	42 - 00		EXHAUST GROUP	ｴｷｿﾞｰｽﾄ ｸﾞﾙｰﾌﾟ					
101	42310 04510		Pipe,exhaust	ｴｷｿﾞｰｽﾄ ﾊﾟｲﾌﾟ	1				
102	42324 16000		Gasket	ｶﾞｽｹｯﾄ	2				
103	02135 08025		Bolt	ﾎﾞﾙﾄ	8				
104	03115 02008		Spring washer	ｽﾌﾟﾘﾝｸﾞ ﾜｯｼｬ	8				
105	03116 12008		Plain washer	ﾌﾟﾚｰﾝ ﾜｯｼｬ	8				
106	42240 33000		Bracket	ﾌﾞﾗｹｯﾄ	2				
107	02201 08020		Flange bolt	ﾌﾗﾝｼﾞ付ﾎﾞﾙﾄ	2				
108	03830 08004		U-bolt	U-ﾎﾞﾙﾄ	2				
109	02915 00008		Hexagon flange nut	ﾌﾗﾝｼﾞ付ﾅｯﾄ	6				
110	42180 00100		Exhaust filter	ｴｷｿﾞｰｽﾄ ﾌｨﾙﾀ	1				
111	42240 32300		Bracket	ﾌﾞﾗｹｯﾄ	1				
112	02135 10020		Bolt	ﾎﾞﾙﾄ	4				
113	03115 02010		Spring washer	ｽﾌﾟﾘﾝｸﾞ ﾜｯｼｬ	4				
114	03116 12010		Plain washer	ﾌﾟﾚｰﾝ ﾜｯｼｬ	4				
115	42240 32800		Bracket	ﾌﾞﾗｹｯﾄ	2				
116	42243 00200		U-bolt	U-ﾎﾞﾙﾄ	2				
117	42310 05510		Pipe,exhaust	ｴｷｿﾞｰｽﾄ ﾊﾟｲﾌﾟ	1				
118	42324 16100		Gasket	ｶﾞｽｹｯﾄ	1				
119	42325 02700		Bolt	ﾎﾞﾙﾄ	4				
120	42327 04100		Hexagon flange nut	ﾌﾗﾝｼﾞ付ﾅｯﾄ	15				
121	42250 05000		Pipe	ﾊﾟｲﾌﾟ	1				
122	03511 10012		Hose clip	ﾎｰｽ ｸﾘｯﾌﾟ	1				
123	03425 00001		Vinyl clip	ﾋﾞﾆｰﾙ ｸﾘｯﾌﾟ	1				

silvernom.co.uk

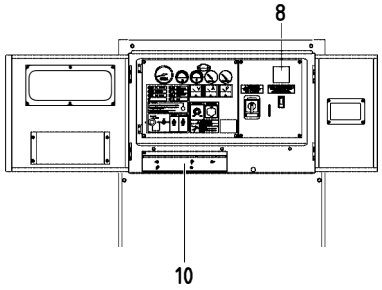

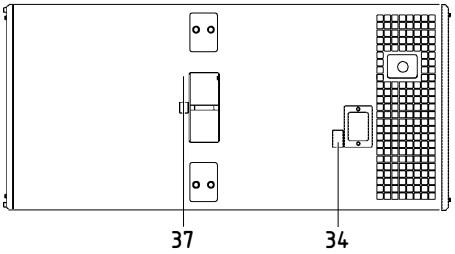

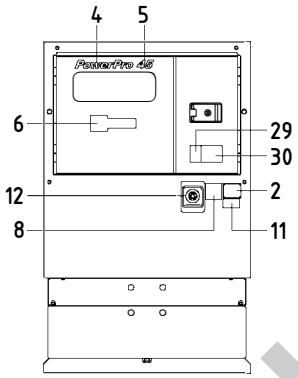

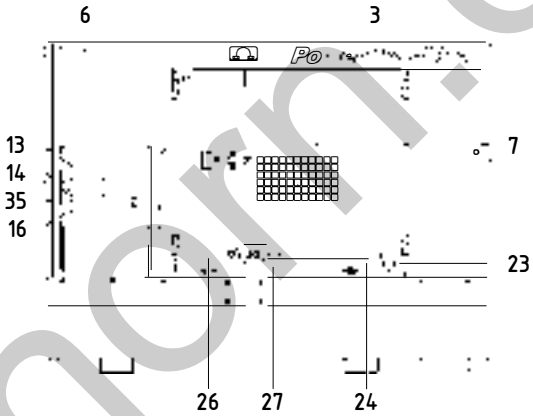

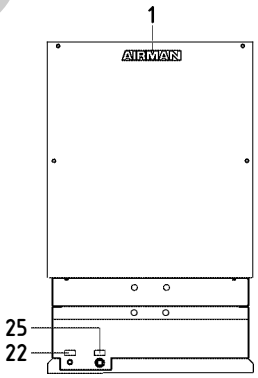

BATTERY

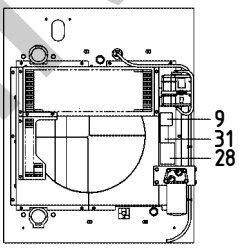

FAN SHROUD

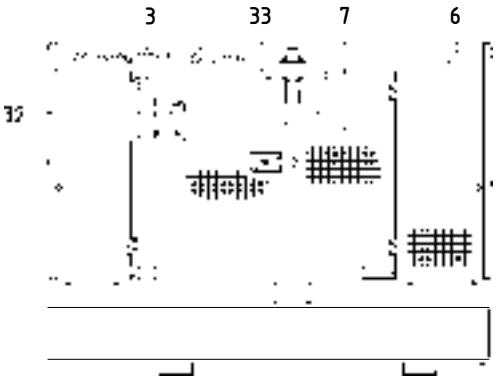

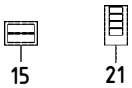

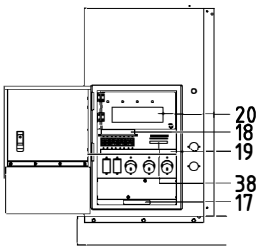

OUTPUT TERMINAL

silverhorn.co.uk

39 - 00 NAME PLATE

見出番号 Ref.NO.	部品番号 Part NO.	互換性 Inter-change ability	部品名称 Part Name		数量 Q'ty	適用号機範囲 Applicable Ser.No. 8E1	—	変更 C/H	備考 Remarks
	39 - 00		ACCESSORY GROUP	ｱｸｾｻﾘ ｸﾞﾙｰﾌﾟ					
	39600 51432		Instruction manual	取扱説明書					
	39615 09700		Instruction manual	取扱説明書(Eng.)					
	39616 07500		Parts catalog	ﾊﾟｰﾂ ｶﾀﾛｸﾞ(Eng.)					
1	39170 02000		Mark (AIRMAN)	ﾏｰｸ	1				
2	39103 46801		Plate(SER.NO.)	ﾌﾟﾚｰﾄ	1				
	03260 03010		Blind rivet	ﾘﾍﾞｯﾄ	4				
3	39178 10240		Plate(PowerPro 45 T4)	ﾌﾟﾚｰﾄ	2				
4	39178 54820		Plate(PowerPro)	ﾌﾟﾚｰﾄ	1				
5	39178 55020		Plate(45)	ﾌﾟﾚｰﾄ	1				
6	39178 57720		Plate(MMD)	ﾌﾟﾚｰﾄ	3				
7	39178 53620		Plate(QUIETECH)	ﾌﾟﾚｰﾄ	2				
8	39178 80820		Plate(DELTA DEMAND)	ﾌﾟﾚｰﾄ	2				
9	39178 00310		Plate(LLC)	ﾌﾟﾚｰﾄ	1				
10	39153 69800		Plate(OPERATION)	ﾌﾟﾚｰﾄ	1				
11	39178 43110		Plate(california)	ﾌﾟﾚｰﾄ	1				
12	39178 47610		Plate(emargency sw.)	ﾌﾟﾚｰﾄ	1				
13	39176 88300		Plate(output)	ﾌﾟﾚｰﾄ	1				
14	39176 62400		Plate(high voltage)	ﾌﾟﾚｰﾄ	1				
15	39173 02000		Plate,complete	ﾌﾟﾚｰﾄ(1ｾｯﾄ)	1				Const.No.16～17
16	* * *	Z	Plate(terminal in)	ﾌﾟﾚｰﾄ	1				(39173 02000)
17	* * *	Z	Plate(terminal in)	ﾌﾟﾚｰﾄ	1				(39173 02000)
18	39178 87210		Plate(breaker)	ﾌﾟﾚｰﾄ	1				
19	39178 50620		Plate(socket)	ﾌﾟﾚｰﾄ	1				
20	39152 23401		Plate(wiring chart)	ﾌﾟﾚｰﾄ	1				
21	39173 05900		Plate,complete	ﾌﾟﾚｰﾄ(1ｾｯﾄ)	1				Const.No.22～25
22	* * *	Z	Plate(fuel drain)	ﾌﾟﾚｰﾄ	1				(39173 05900)
23	* * *	Z	Plate(radiator drain)	ﾌﾟﾚｰﾄ	1				(39173 05900)
24	* * *	Z	Plate(eng.oil drain)	ﾌﾟﾚｰﾄ	1				(39173 05900)
25	* * *	Z	Plate	ﾌﾟﾚｰﾄ(spare:1)	2				(39173 05900)
			(containment drain)						
26	39178 01640		Plate(fuel port)	ﾌﾟﾚｰﾄ	1				
27	39178 22031		Plate(FLAMMABLES)	ﾌﾟﾚｰﾄ	1				
28	39178 49120		Plate	ﾌﾟﾚｰﾄ	1				
			(changed fuel refill)						
29	39176 73300		Plate	ﾌﾟﾚｰﾄ	1				
			(warning,exhaust gases)						
30	39176 09310		Plate	ﾌﾟﾚｰﾄ	1				
			(warning,exhaust gases)						
31	39176 73500		Plate	ﾌﾟﾚｰﾄ	1				
			(warning,cooling fan)						
32	39176 73800		Plate(warning,pulley)	ﾌﾟﾚｰﾄ	1				
33	39176 69500		Plate	ﾌﾟﾚｰﾄ	1				
			(caution,high temp.)						
34	39176 69600		Plate	ﾌﾟﾚｰﾄ	1				
			(caution,radiator cap)						
35	39176 62900		Plate	ﾌﾟﾚｰﾄ	1				
			(warning,electric shock)						
36	39176 50000		Plate(warning,battery)	ﾌﾟﾚｰﾄ	1				
37	39176 69300		Plate(lift position)	ﾌﾟﾚｰﾄ	1				
38	39178 11740		Plate	ﾌﾟﾚｰﾄ	1				
			(2 wire terminal plate)						

silverform.co.uk

silverhorn.co.uk

見出番号 Ref.NO.	部品番号 Part NO.	互換性 Interchangeability	部品名称 Part Name		数量 Q'ty	適用号機範囲 Applicable Ser.No. 8E1	—	変更 C/H	備考 Remarks
	43 - 00		FUEL GROUP	ﾌｭｴﾙ ｸﾞﾙｰﾌﾟ					
1	43100 79300		Fuel tank	ﾌｭｴﾙ ﾀﾝｸ	1				
2	36159 03000		Sending unit	ｾﾝﾃﾞｨﾝｸﾞ ﾕﾆｯﾄ	1				
3	02415 65012		Screw,w/w	ﾜｯｼｬ付ｽｸﾘｭ	5				
4	43220 01300		Cap	ｷｬｯﾌﾟ	1				
5	43210 01301		Strainer	ｽﾄﾚｰﾅ	1				
6	43310 32900		Belt	ﾍﾞﾙﾄ	2				
7	43310 33700		Belt	ﾍﾞﾙﾄ	2				
8	02915 00010		Hexagon flange nut	ﾌﾗﾝｼﾞ付ﾅｯﾄ	4				
9	02915 00008		Hexagon flange nut	ﾌﾗﾝｼﾞ付ﾅｯﾄ	2				
10	43322 06700		Cushion rubber	ｸｯｼｮﾝ ﾗﾊﾞｰ	4				
11	38465 12600		Cushion rubber	ｸｯｼｮﾝ ﾗﾊﾞｰ	2				
12	37170 12700		Joint	ｼﾞｮｲﾝﾄ	5				
13	03570 09028		Hose	ﾎｰｽ	1				
14	03511 20020		Hose clip	ﾎｰｽ ｸﾘｯﾌﾟ	2				
15	35421 06800		Air valve	ｴｱ ﾊﾞﾙﾌﾞ	1				
16	33238 02800		Plug	ﾌﾟﾗｸﾞ	3				
17	43340 36600		Bracket	ﾌﾞﾗｹｯﾄ	1				
18	02138 12020		Bolt	ﾎﾞﾙﾄ	3				
19	03115 02012		Spring washer	ｽﾌﾟﾘﾝｸﾞ ﾜｯｼｬ	3				
20	03116 12012		Plain washer	ﾌﾟﾚｰﾝ ﾜｯｼｬ	3				
21	43540 08600		Filter ass'y	ﾌｨﾙﾀ	1				(pre)
22	43540 08700		Filter ass'y	ﾌｨﾙﾀ	1				(main)
23	43532 09700		Nipple	ﾆｯﾌﾟﾙ	4				(bolt)
24	43534 05500		Ring connector	ﾘﾝｸﾞ ｺﾈｸﾀ	4				
25	43531 02300		Gasket	ｶﾞｽｹｯﾄ	8				
26	02201 10030		Flange bolt	ﾌﾗﾝｼﾞ付ﾎﾞﾙﾄ	4				
27	43650 02600		Fuel pump	ﾌｭｴﾙ ﾎﾟﾝﾌﾟ	1				(ISUZU 898068-2750)
			[Filter kit(Incl.Filter & Gasket):ISUZU 898173-1650]						
			[Filter:ISUZU 898071-4010]						
			[Gasket:ISUZU 898071-4040]						
28	02138 06030		Bolt	ﾎﾞﾙﾄ	2				
29	03115 02006		Spring washer	ｽﾌﾟﾘﾝｸﾞ ﾜｯｼｬ	2				
30	03116 12006		Plain washer	ﾌﾟﾚｰﾝ ﾜｯｼｬ	2				
31	35483 10101		Stop valve	ｽﾄｯﾌﾟ ﾊﾞﾙﾌﾞ	1				
32	02201 06016		Flange bolt	ﾌﾗﾝｼﾞ付ﾎﾞﾙﾄ	2				
33	03734 43030		Nipple	ﾆｯﾌﾟﾙ	2				
34	37170 20200		Joint	ｼﾞｮｲﾝﾄ	3				
35	03731 21003		Elbow	ｴﾙﾎﾞ	2				
36	03600 09030		Hose	ﾎｰｽ	2				
37	03600 09038		Hose	ﾎｰｽ	2				
38	03570 09031		Hose	ﾎｰｽ	1				
39	03570 09048		Hose	ﾎｰｽ	1				
40	03570 09080		Hose	ﾎｰｽ	1				
41	03600 09016		Hose	ﾎｰｽ	2				
42	03511 40020		Hose clip	ﾎｰｽ ｸﾘｯﾌﾟ	12				
43	03511 10018		Hose clip	ﾎｰｽ ｸﾘｯﾌﾟ	6				

silvernorm.co.uk

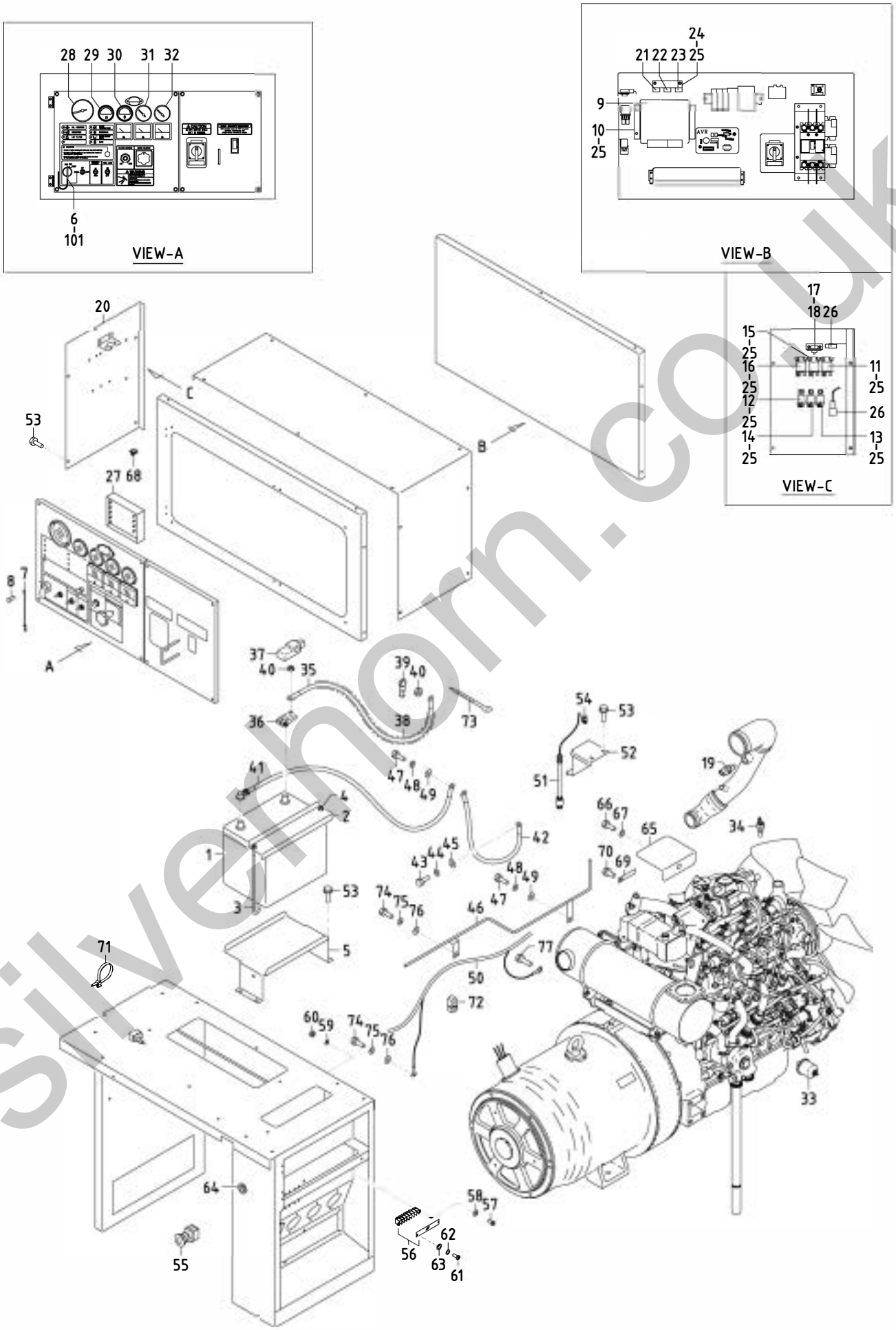

silverhorn.co.uk

見出番号 Ref.NO.	部品番号 Part NO.	互換性 Inter-change ability	部品名称 Part Name		数量 Q'ty	適用号機範囲 Applicable Ser.No. 8E1	—	変更 C/H	備考 Remarks
	44 - 00		ELECTRIC GROUP	ｴﾚｸﾄﾘｯｸ ｸﾞﾙｰﾌﾟ					
1	44210 06600	Y	Battery	ﾊﾞｯﾃﾘ	1				(80D26R)
1	44210 08200	Y	Battery	ﾊﾞｯﾃﾘ	1				(85D26R)
2	44220 25400		Cover	ｶﾊﾞｰ	1				
3	44243 04501		Holder	ﾎﾙﾀﾞ	2				
4	02915 00006		Hexagon flange nut	ﾌﾗﾝｼﾞ付ﾅｯﾄ	2				
5	44100 10900		Battery box	ﾊﾞｯﾃﾘ ﾎﾞｯｸｽ	1				
6	44322 02800		Starter switch	ｽﾀｰﾀ ｽｲｯﾁ	1				(ISUZU 894402-5000)
7	52660 04700		Hook	ﾌｯｸ	1				
8	03260 03010		Blind rivet	ﾘﾍﾞｯﾄ	1				
9	44390 04300		Controller	ｺﾝﾄﾛｰﾗ	1				(ISUZU 898227-1081)
10	44250 50210		Bracket	ﾌﾞﾗｹｯﾄ	2				
11	44346 13200		Relay(charge)	ﾘﾚｰ	1				
12	44346 08500		Relay(main)	ﾘﾚｰ	1				(ISUZU 582550-0290)
13	44346 08500		Relay(starter cut)	ﾘﾚｰ	1				(ISUZU 582550-0290)
14	44346 08500		Relay(fuel pump)	ﾘﾚｰ	1				(ISUZU 582550-0290)
15	44346 15700		Relay(glow)	ﾘﾚｰ	1				(ISUZU 897011-9490)
16	44346 16100		Relay(starter)	ﾘﾚｰ	1				(ISUZU 894248-1610)
17	44328 21500		Pressure switch	油圧ｽｲｯﾁ	1				(ISUZU 897217-7780)
18	02345 65020		Screw	ｽｸﾘｭ	2				
	03115 02005		Spring washer	ｽﾌﾟﾘﾝｸﾞ ﾜｯｼｬ	2				
	03116 12005		Plain washer	ﾌﾟﾚｰﾝ ﾜｯｼｬ	2				
19	44364 06600		Thermo sensor	水温ｾﾝｻ	1				(ISUZU 812146-8300)
20	44250 57210		Bracket	ﾌﾞﾗｹｯﾄ	1				
21	44470 01600		Fuse box	ﾋｭｰｽﾞ ﾎﾞｯｸｽ	1				
	46934 03200		Fuse (10A)	ﾋｭｰｽﾞ	1				
22	44470 01900		Fuse box	ﾋｭｰｽﾞ ﾎﾞｯｸｽ	1				
	46934 03800		Fuse (15A)	ﾋｭｰｽﾞ	1				
23	44470 01700		Fuse box	ﾋｭｰｽﾞ ﾎﾞｯｸｽ	1				
	46934 03300		Fuse (20A)	ﾋｭｰｽﾞ	1				
24	44250 08710		Bracket	ﾌﾞﾗｹｯﾄ	1				
25	02248 06016		Bolt,w/w	ﾜｯｼｬ付ﾎﾞﾙﾄ	19				
26	44470 02300		Fuse box(60A)	ﾋｭｰｽﾞ ﾎﾞｯｸｽ	2				
27	46870 47901		Controller	ｺﾝﾄﾛｰﾗ	1				(Emergency)
28	36146 05901		Tachometer	ｱﾜﾒｰﾀ付回転計	1				
29	36158 00500		Gauge,fuel	燃料計	1				
30	36145 06800		Thermometer,water	水温計	1				
31	36143 03600		Gauge,oil press.	油圧計	1				
32	46154 15300		Ammeter	電流計	1				
33	44365 00300		Oil pressure sender	油圧ｾﾝｻ	1				
34	44334 17600		Thermo switch	水温ｽｲｯﾁ	1				(ISUZU 898023-7170)
35	05135 21050		Cable	ｹｰﾌﾞﾙ	1				(batt.～starter)
36	05625 00018		Terminal	ﾀｰﾐﾅﾙ	1				
37	44462 06700		Insulator	ｲﾝｼｭﾚｰﾀ	1				(red)
38	06540 10037		Corrugated tube	ｺﾙｹﾞｰﾄ ﾁｭｰﾌﾞ	1				
39	44462 01900		Insulator	ｲﾝｼｭﾚｰﾀ	1				
40	02915 00008		Hexagon flange nut	ﾌﾗﾝｼﾞ付ﾅｯﾄ	2				
41	07838 51070		Cable	ｹｰﾌﾞﾙ	1				(batt.～Eng.earth)
42	05068 23030		Cable	ｹｰﾌﾞﾙ	1				(earth)
43	02138 08020		Bolt	ﾎﾞﾙﾄ	1				
44	03115 02008		Spring washer	ｽﾌﾟﾘﾝｸﾞ ﾜｯｼｬ	1				

silverman.co.uk

44 - 00　ELECTRIC (for ENGINE)

見出番号 Ref.NO.	部品番号 Part NO.	互換性 Inter-change ability	部品名称 Part Name		数量 Q'ty	適用号機範囲 Applicable Ser.No. 8E1	—	変更 C/H	備考 Remarks
45	03116 12008		Plain washer	ﾌﾟﾚｰﾝ ﾜｯｼｬ	1				
46	44290 53200		Guide	ｶﾞｲﾄﾞ	1				
47	02138 10020		Bolt	ﾎﾞﾙﾄ	2				
48	03115 02010		Spring washer	ｽﾌﾟﾘﾝｸﾞ ﾜｯｼｬ	2				
49	03116 12010		Plain washer	ﾌﾟﾚｰﾝ ﾜｯｼｬ	2				
50	44490 30440		Wiring harness	ﾜｲﾔﾊｰﾈｽ	1				
51	46813 08100		Level switch	ﾚﾍﾞﾙ ｽｲｯﾁ	1				
52	43350 02200		Bracket	ﾌﾞﾗｹｯﾄ	1				
53	02201 06016		Flange bolt	ﾌﾗﾝｼﾞ付ﾎﾞﾙﾄ	8				
54	37181 03300		Clip	ｸﾘｯﾌﾟ	1				
55	44336 03001		Button switch	ﾎﾞﾀﾝ ｽｲｯﾁ	1				
56	44311 83300		Terminal plate	ﾀｰﾐﾅﾙ ﾌﾟﾚｰﾄ	1				
57	02345 63020		Screw	ｽｸﾘｭ	2				
58	03116 12003		Plain washer	ﾌﾟﾚｰﾝ ﾜｯｼｬ	2				
59	03115 02003		Spring washer	ｽﾌﾟﾘﾝｸﾞ ﾜｯｼｬ	2				
60	02912 08003		Nut	ﾅｯﾄ	2				
61	02345 63008		Screw	ｽｸﾘｭ	2				
62	03115 02003		Spring washer	ｽﾌﾟﾘﾝｸﾞ ﾜｯｼｬ	2				
63	03116 12003		Plain washer	ﾌﾟﾚｰﾝ ﾜｯｼｬ	2				
64	03403 00252		Grommet	ｸﾞﾛﾒｯﾄ	2				
65	52350 02130		Cover	ｶﾊﾞｰ	1				
66	02108 14020		Bolt	ﾎﾞﾙﾄ	1				
67	03115 02014		Spring washer	ｽﾌﾟﾘﾝｸﾞ ﾜｯｼｬ	1				
68	44243 05500		Holder	ﾎﾙﾀﾞ	2				
69	03424 80101		Clip	ｸﾘｯﾌﾟ	2				
70	02201 08012		Flange bolt	ﾌﾗﾝｼﾞ付ﾎﾞﾙﾄ	2				
71	37181 07700		Clip	ｸﾘｯﾌﾟ	1				
72	46921 02300		Silicon rectifier	ﾀﾞｲｵｰﾄﾞ	1				
73	03425 00001		Vinyl clip	ﾋﾞﾆｰﾙ ｸﾘｯﾌﾟ	1				
74	02138 12025		Bolt	ﾎﾞﾙﾄ	2				
75	03115 02012		Spring washer	ｽﾌﾟﾘﾝｸﾞ ﾜｯｼｬ	2				
76	03116 12012		Plain washer	ﾌﾟﾚｰﾝ ﾜｯｼｬ	2				
77	02248 05010		Bolt,w/w	ﾜｯｼｬ付ﾎﾞﾙﾄ	1				
	39 - 00		ACCESSORY GROUP	ｱｸｾｻﾘ ｸﾞﾙｰﾌﾟ					
101	52739 00600		Key	ｷｰ	1				

silverhorn.co.uk

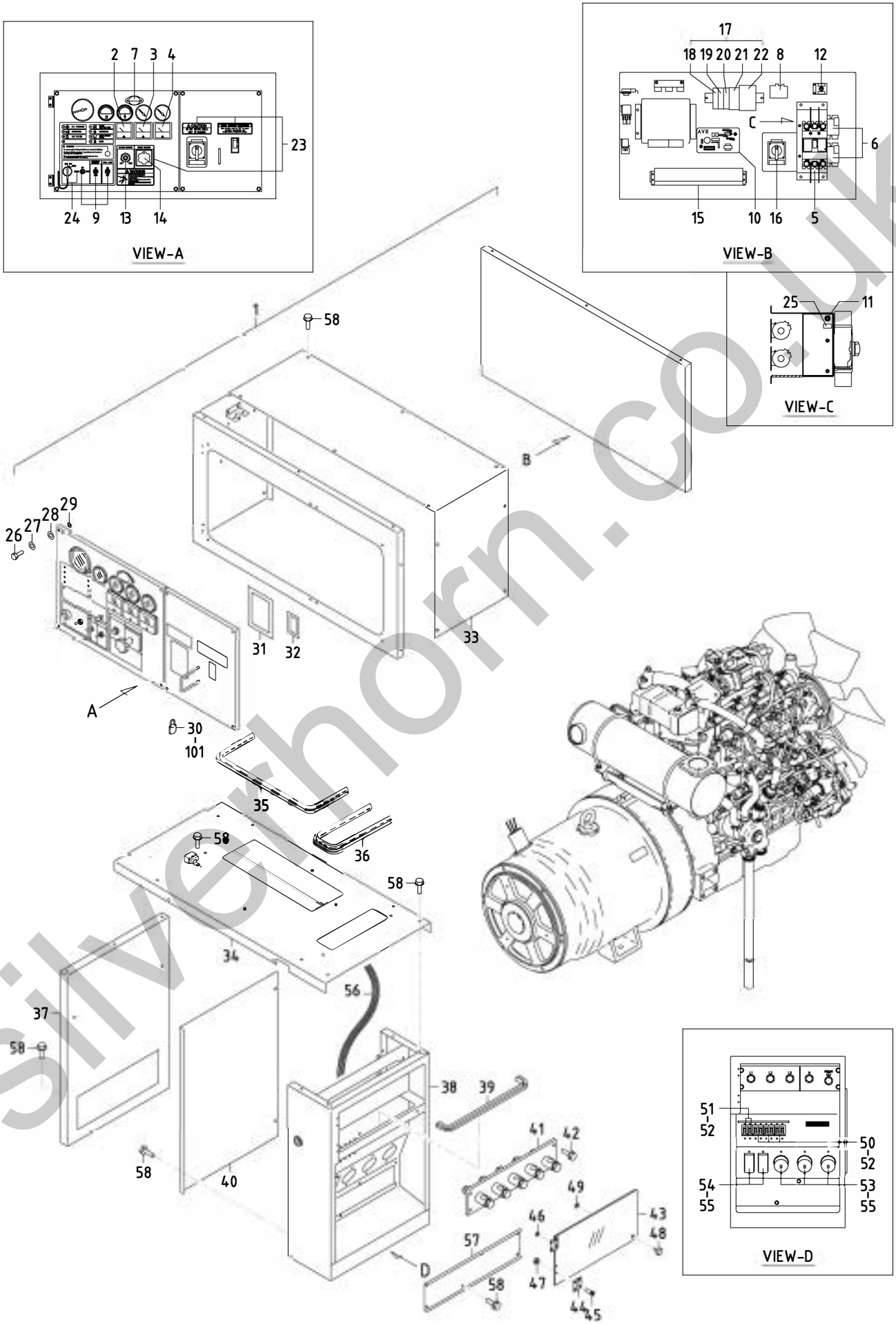

silverthorn.co.uk

見出番号 Ref.NO.	部品番号 Part NO.	互換性 Interchangeability	部品名称 Part Name		数量 Q'ty	適用号機範囲 Applicable Ser.No. 8E1	—	変更 C/H	備考 Remarks
	46 - 00		ELECTRIC GROUP	ｴﾚｸﾄﾘｯｸ ｸﾞﾙｰﾌﾟ					
1	46900 19010		Switch board ass'y	制御盤	1				Const.No.2～29
2	46153 04000		Voltmeter(AC)	交流電圧計	1				
3	46154 14500		Ammeter (AC)	交流電流計	1				
4	46911 01401		Frequency meter	周波数計	1				
5	46120 36600		Circuit breaker	三相遮断器	1				
6	46923 04500		Current transformer	変流器(電流計用)	2				
7	46929 01200		Illuminator	照明灯	1				
	46939 01300		Bulb	電球	1				
8	46928 01500		Thermal relay	ｻｰﾏﾙ ﾘﾚｰ	1				
9	44500 04300		Switch panel ass'y	ｽｲｯﾁ ﾊﾟﾈﾙ	1				
10	46950 02901		A.V.R ass'y	自動電圧調整器	1				
11	46120 36300		Circuit breaker	ｻｰｷｯﾄ ﾌﾟﾛﾃｸﾀ	1				(4.0A)
12	46167 03100		Select switch	周波数切替ｽｲｯﾁ	1				
13	46918 01401		Controller	電圧設定器	1				
	46991 00100		Knob	ﾉﾌﾞ	1				
14	46913 01000		Transfer device	電流計切替器	1				
15	44311 62700		Terminal plate	端子台	1				
	46311 02200		Plate	短絡ﾌﾟﾚｰﾄ	1				
16	46917 05300		Change device,voltage	電圧切替ｽｲｯﾁ	1				
17	46760 73710		Control panel	ｺﾝﾄﾛｰﾙ ﾊﾟﾈﾙ	1				Const.No.18～22
18	46177 08500		Relay	ﾘﾚｰ	1				
19	46177 08400		Relay	ﾘﾚｰ	1				
20	46177 08300		Relay	ﾘﾚｰ	2				
21	46872 01300		Dc power supply	直流変換器	1				
	46948 00900		Surge absorber	ｻｰｼﾞ ｱﾌﾞｿｰﾊﾞ	1				
22	46879 65300		Controller complete	ｼｰｹﾝｻ	1				
	46921 08600		Silicon rectifier	ﾀﾞｲｵｰﾄﾞ	2				
23	39178 50820		Plate(in-pane)	ﾌﾟﾚｰﾄ	1				
24	39178 97030		Plate(warning,lamp)	ﾌﾟﾚｰﾄ	1				
25	39178 85430		Plate(cp)	ﾌﾟﾚｰﾄ	1				
26	02138 06035		Bolt	ﾎﾞﾙﾄ	8				
27	03115 02006		Spring washer	ｽﾌﾟﾘﾝｸﾞ ﾜｯｼｬ	8				
28	03116 12006		Plain washer	ﾌﾟﾚｰﾝ ﾜｯｼｬ	8				
29	45214 01400		Washer	ﾜｯｼｬ	8				
30	52723 00100		Lock ass'y	ﾛｯｸ	1				Incl.No.101
31	52931 92020		Lining	ﾗｲﾆﾝｸﾞ	1				
32	52931 01530		Lining	ﾗｲﾆﾝｸﾞ	1				
33	46480 67800		Cover	ｶﾊﾞｰ	1				
34	52350 86120		Cover	ｶﾊﾞｰ	1				
35	03407 64764		Seal rubber	ｼｰﾙ ﾗﾊﾞｰ	1				
36	03407 64747		Seal rubber	ｼｰﾙ ﾗﾊﾞｰ	1				
37	52350 86220		Cover	ｶﾊﾞｰ	1				
38	46470 04911		Box	ﾎﾞｯｸｽ	1				
39	03407 66505		Seal rubber	ｼｰﾙ ﾗﾊﾞｰ	1				
40	44260 44100		Cover	ｶﾊﾞｰ	1				
41	44311 66300		Terminal plate	三相出力端子板	1				See page 46-4
42	02201 08020		Flange bolt	ﾌﾗﾝｼﾞ付ﾎﾞﾙﾄ	4				
43	52416 29002		Window glass	ｳｲﾝﾄﾞ ｸﾞﾗｽ	1				
44	52312 03300		Hinge	ﾋﾝｼﾞ	2				
45	02305 64012		Screw	ｽｸﾘｭ	8				

silverton.co.uk

46 - 00 ELECTRIC (for GENERATOR)

見出番号 Ref.NO.	部品番号 Part NO.	互換性 Inter-change ability	部品名称 Part Name		数量 Q'ty	適用号機範囲 Applicable Ser.No. 8E1	—	変更 C/H	備考 Remarks
46	03116 12005		Plain washer	ﾌﾟﾚｰﾝ ﾜｯｼｬ	4				
47	02915 00004		Hexagon flange nut	ﾌﾗﾝｼﾞ付ﾅｯﾄ	4				
48	52640 02400		Bolt	ﾎﾞﾙﾄ	1				
49	45214 01400		Washer	ﾜｯｼｬ	1				
50	46120 26900	Y	Circuit breaker	電源遮断器	3				
50	46120 34000	Y	Circuit breaker	電源遮断器	3				
51	46120 26800	Y	Circuit breaker	電源遮断器	2				
51	46120 34100	Y	Circuit breaker	電源遮断器	2				
52	02345 23008		Screw	ｽｸﾘｭ	16				
	03115 03003		Spring washer	ｽﾌﾟﾘﾝｸﾞ ﾜｯｼｬ	16				
	03116 18003		Plain washer	ﾌﾟﾚｰﾝ ﾜｯｼｬ	16				
53	44312 02800		Socket	ｿｹｯﾄ	3				
54	44312 02900		Socket	ｿｹｯﾄ	2				
55	02345 24020		Screw	ｽｸﾘｭ	10				
	02912 09004		Nut	ﾅｯﾄ	10				
	03115 03004		Spring washer	ｽﾌﾟﾘﾝｸﾞ ﾜｯｼｬ	10				
	03116 18004		Plain washer	ﾌﾟﾚｰﾝ ﾜｯｼｬ	20				
56	44550 41300		Cable kit	ｹｰﾌﾞﾙ ｷｯﾄ	1				
57	46480 67900		Cover	ｶﾊﾞｰ	1				
58	02201 06016		Flange bolt	ﾌﾗﾝｼﾞ付ﾎﾞﾙﾄ	39				
	39 - 00		ACCESSORY GROUP	ｱｸｾｻﾘ ｸﾞﾙｰﾌﾟ					
101	52739 04300		Key	ｷｰ	1				(005)

silverhorn.co.uk

46 - 01　TERMINAL PLATE

見出番号 Ref.NO.	部品番号 Part NO.	互換性 Inter-change ability	部品名称 Part Name	数量 Q'ty	適用号機範囲 Applicable Ser.No. 8E1	—	変更 C/H	備考 Remarks
	44311 66300		TERMINAL PLATE　三相出力端子板					
1	46305 09300		Plate　端子板	1				
2	46312 05100		Bolt　ﾎﾞﾙﾄ	5				
3	35208 04500		Bolt　ﾎﾞﾙﾄ	5				
4	03115 06014		Spring washer　ﾅｯﾄ	5				
5	03116 15014		Plain washer　ｽﾌﾟﾘﾝｸﾞ ﾜｯｼｬ	5				
6	02912 03014		Nut　ﾅｯﾄ	10				
7	03115 02014		Spring washer　ｽﾌﾟﾘﾝｸﾞ ﾜｯｼｬ	10				
8	03116 14014		Plain washer　ﾌﾟﾚｰﾝ ﾜｯｼｬ	15				
9	03316 03016		Pin　ﾋﾟﾝ	10				

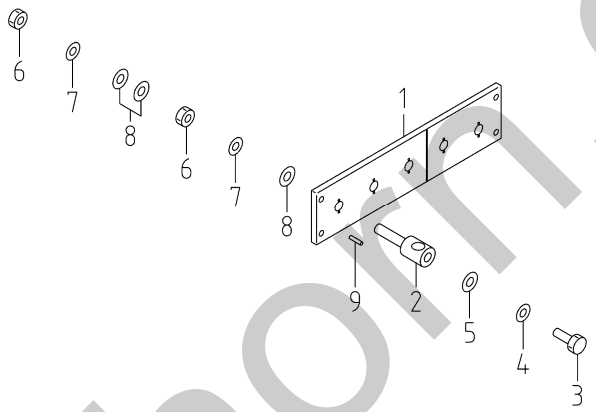

silverhorn.co.uk

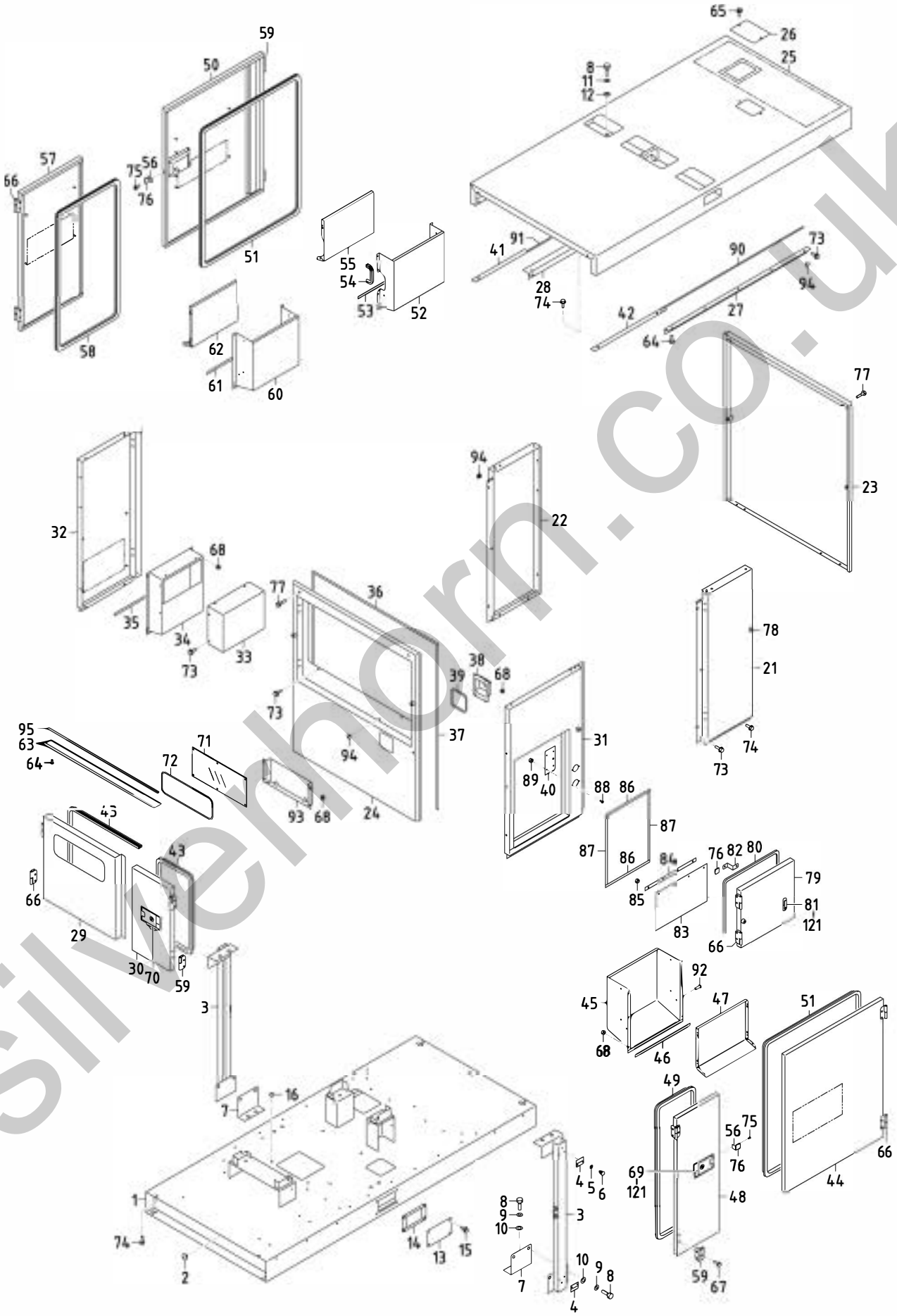

silvernorn.co.uk

見出番号 Ref.NO.	部品番号 Part NO.	互換性 Inter-change ability	部品名称 Part Name	数量 Q'ty	適用号機範囲 Applicable Ser.No. 8E1	—	変更 C/H	備考 Remarks
	51 - 00		FRAME GROUP ﾌﾚｰﾑ ｸﾞﾙｰﾌﾟ					
1	51100 54841		Frame ﾌﾚｰﾑ	1				
2	03403 10017		Grommet ｸﾞﾛﾒｯﾄ	4				
3	52620 50000		Lifting bail ﾘﾌﾃｨﾝｸﾞ ﾍﾞｲﾙ	2				
4	52728 20810		Cushion rubber ｸｯｼｮﾝ ﾗﾊﾞｰ	4				
5	03116 35005		Plain washer ﾌﾟﾚｰﾝ ﾜｯｼｬ	8				
6	52746 02400		Cap ｷｬｯﾌﾟ	8				
7	52630 13800		Stay ｽﾃｲ	2				
8	02135 16040		Bolt ﾎﾞﾙﾄ	12				
9	03115 02016		Spring washer ｽﾌﾟﾘﾝｸﾞ ﾜｯｼｬ	8				
10	03116 12016		Plain washer ﾌﾟﾚｰﾝ ﾜｯｼｬ	8				
11	03115 06016		Spring washer ｽﾌﾟﾘﾝｸﾞ ﾜｯｼｬ	4				
12	03116 15016		Plain washer ﾌﾟﾚｰﾝ ﾜｯｼｬ	4				
13	52350 44421		Cover ｶﾊﾞｰ	2				
14	52728 32010		Cushion rubber ｸｯｼｮﾝ ﾗﾊﾞｰ	2				
15	02201 06016		Flange bolt ﾌﾗﾝｼﾞ付ﾎﾞﾙﾄ	8				
16	03403 10010		Grommet ｸﾞﾛﾒｯﾄ	4				
	52 - 00		BONNET GROUP ﾎﾞﾝﾈｯﾄ ｸﾞﾙｰﾌﾟ					
21	52100 21730		Cover ｶﾊﾞｰ	1				
22	52100 21831		Cover ｶﾊﾞｰ	1				
23	52830 49500		Cover ｶﾊﾞｰ	1				
24	52100 20332		Cover ｶﾊﾞｰ	1				
25	52300 46021		Top cover ﾄｯﾌﾟ ｶﾊﾞｰ	1				
26	52350 89010		Cover ｶﾊﾞｰ	1				
27	52160 79400		Bracket ﾌﾞﾗｹｯﾄ	1				
28	52160 79500		Bracket ﾌﾞﾗｹｯﾄ	1				
29	52450 50430		Door ﾄﾞｱ	1				
30	52450 47931		Door ﾄﾞｱ	1				
31	52100 21930		Cover ｶﾊﾞｰ	1				
32	52100 22030		Cover ｶﾊﾞｰ	1				
33	52370 01610		Duct ﾀﾞｸﾄ	1				
34	52800 21110		Duct ﾀﾞｸﾄ	1				
35	03407 66839		Seal rubber ｼｰﾙ ﾗﾊﾞｰ	1				
36	03407 66809		Seal rubber ｼｰﾙ ﾗﾊﾞｰ	1				
37	03407 66806		Seal rubber ｼｰﾙ ﾗﾊﾞｰ	2				
38	52230 44800		Cover ｶﾊﾞｰ	1				
39	03407 67611		Seal rubber ｼｰﾙ ﾗﾊﾞｰ	1				
40	52350 41920		Cover ｶﾊﾞｰ	1				
41	52728 39010		Cushion rubber ｸｯｼｮﾝ ﾗﾊﾞｰ	1				
42	52728 43010		Cushion rubber ｸｯｼｮﾝ ﾗﾊﾞｰ	1				
43	03407 64732		Seal rubber ｼｰﾙ ﾗﾊﾞｰ	2				
44	52450 50030		Door ﾄﾞｱ	1				
45	52800 20811		Duct ﾀﾞｸﾄ	1				
46	03407 66815		Seal rubber ｼｰﾙ ﾗﾊﾞｰ	1				
47	52370 01510		Duct ﾀﾞｸﾄ	1				
48	52450 50130		Door ﾄﾞｱ	1				
49	03407 64773		Seal rubber ｼｰﾙ ﾗﾊﾞｰ	1				
50	52450 50231		Door ﾄﾞｱ	1				
51	03407 64745		Seal rubber ｼｰﾙ ﾗﾊﾞｰ	2				

silvernorn.co.uk

見出番号 Ref.NO.	部品番号 Part NO.	互換性 Inter-change ability	部品名称 Part Name		数量 Q'ty	適用号機範囲 Applicable Ser.No. 8E1	—	変更 C/H	備考 Remarks
52	52800 20911		Duct	ﾀﾞｸﾄ	1				
53	03407 66815		Seal rubber	ｼｰﾙ ﾗﾊﾞｰ	1				
54	03407 67232		Seal rubber	ｼｰﾙ ﾗﾊﾞｰ	1				
55	52370 04910		Duct	ﾀﾞｸﾄ	1				
56	52160 34600		Bracket	ﾌﾞﾗｹｯﾄ	2				
57	52450 50330		Door	ﾄﾞｱ	1				
58	03407 64748		Seal rubber	ｼｰﾙ ﾗﾊﾞｰ	1				
59	52480 14400		Hinge	ﾋﾝｼﾞ	6				
60	52800 21011		Duct	ﾀﾞｸﾄ	1				
61	03407 66855		Seal rubber	ｼｰﾙ ﾗﾊﾞｰ	1				
62	52370 05010		Duct	ﾀﾞｸﾄ	1				
63	52160 77301		Bracket	ﾌﾞﾗｹｯﾄ	1				
64	52640 05100		Screw	ｽｸﾘｭ	14				
65	02246 08016		Bolt,w/w	ﾜｯｼｬ付ﾎﾞﾙﾄ	2				
66	52480 13800		Hinge	ﾋﾝｼﾞ	8				
67	02136 08016		Bolt	ﾎﾞﾙﾄ	56				
68	02915 00006		Hexagon flange nut	ﾌﾗﾝｼﾞ付ﾎﾞﾙﾄ	46				
69	52710 03601		Latch ass'y	ﾗｯﾁ	3				
70	52728 14810		Cushion rubber	ｸｯｼｮﾝ ﾗﾊﾞｰ	3				
71	52416 19800		Window glass	ｳｲﾝﾄﾞ ｸﾞﾗｽ	1				
72	03407 67605		Seal rubber	ｼｰﾙ ﾗﾊﾞｰ	1				
73	02201 06016		Flange bolt	ﾌﾗﾝｼﾞ付ﾎﾞﾙﾄ	20				
74	02201 08020		Flange bolt	ﾌﾗﾝｼﾞ付ﾎﾞﾙﾄ	21				
75	02401 64012		Screw	ｽｸﾘｭ	4				
76	52746 01900		Cap	ｷｬｯﾌﾟ	3				(protector)
77	02246 08050		Bolt,w/w	ﾜｯｼｬ付ﾎﾞﾙﾄ	8				
78	31131 04100		Rubber	ｺﾞﾑ	7				
79	52450 49930		Door	ﾄﾞｱ	1				
80	03407 64724		Seal rubber	ｼｰﾙ ﾗﾊﾞｰ	1				
81	52711 01400		Latch	ﾗｯﾁ	1				
82	52733 11201		Plate	ﾌﾟﾚｰﾄ	1				
83	52728 42710		Cushion rubber	ｸｯｼｮﾝ ﾗﾊﾞｰ	1				
84	52456 04100		Plate	ﾌﾟﾚｰﾄ	1				
85	02914 60006		Locking nut	ﾛｯｷﾝｸﾞ ﾅｯﾄ	4				
86	03407 66814		Seal rubber	ｼｰﾙ ﾗﾊﾞｰ	2				
87	03407 66811		Seal rubber	ｼｰﾙ ﾗﾊﾞｰ	2				
88	02401 45016		Screw	ｽｸﾘｭ	4				
89	02915 00005		Hexagon flange nut	ﾌﾗﾝｼﾞ付ﾎﾞﾙﾄ	4				
90	03407 68110		Seal rubber	ｼｰﾙ ﾗﾊﾞｰ	1				
91	03407 68125		Seal rubber	ｼｰﾙ ﾗﾊﾞｰ	1				
92	03266 05012		Blind rivet	ﾘﾍﾞｯﾄ	17				
93	39200 04302		Tool box	ﾂｰﾙ ﾎﾞｯｸｽ	1				
94	03403 10010		Grommet	ｸﾞﾛﾒｯﾄ	8				
95	03407 68085		Seal rubber	ｼｰﾙ ﾗﾊﾞｰ	1				
	39 - 00		ACCESSORY GROUP	ｱｸｾｻﾘ ｸﾞﾙｰﾌﾟ					
121	52739 03400		Key(0200)	ｷｰ	4				

silverhorn.co.uk

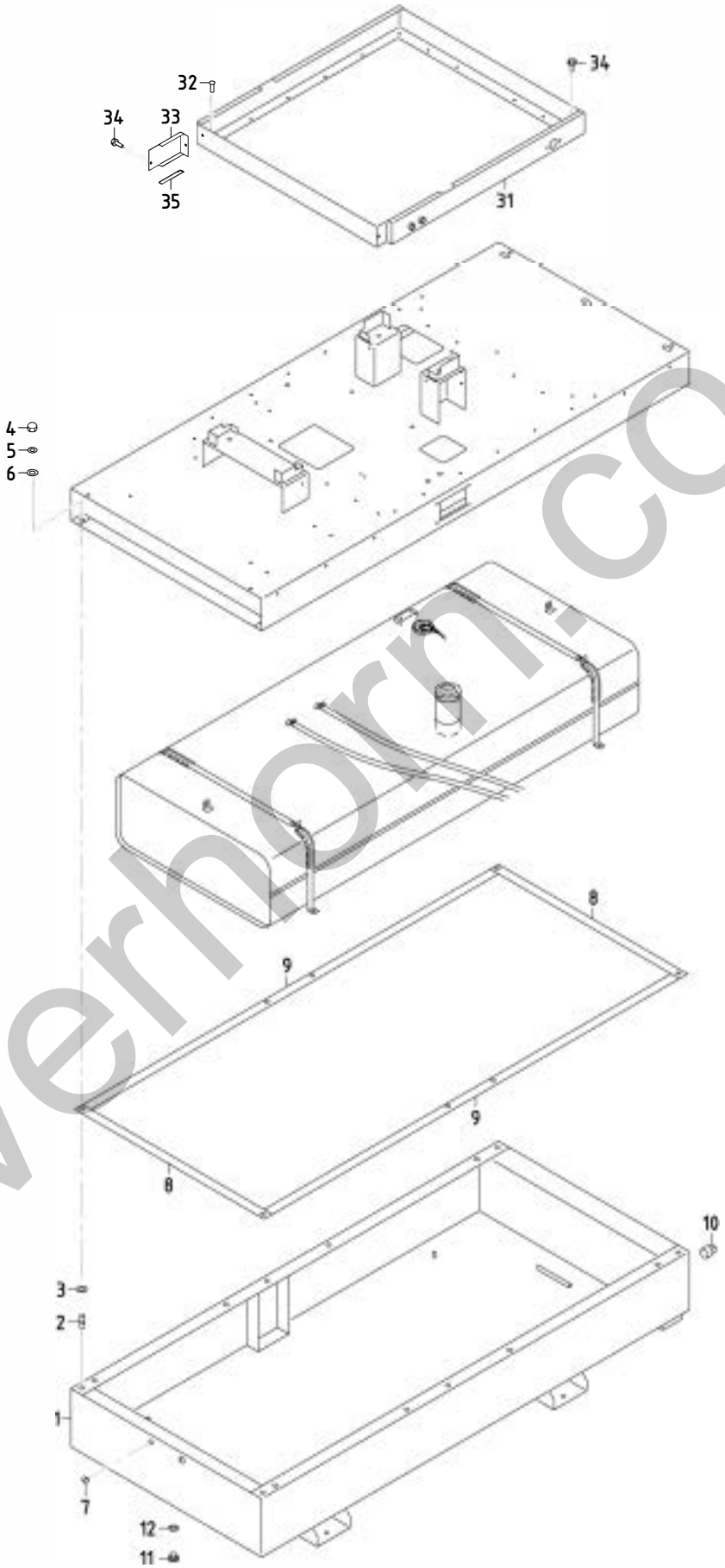

silverhorn.co.uk

51 - 01　OIL FENCE

見出番号 Ref.NO.	部品番号 Part NO.	互換性 Inter-change ability	部品名称 Part Name	数量 Q'ty	適用号機範囲 Applicable Ser.No. 8E1	—	変更 C/H	備考 Remarks
	51 - 01		FRAME GROUP　ﾌﾚｰﾑ ｸﾞﾙｰﾌﾟ					
1	51100 53041		Frame　ﾌﾚｰﾑ	1				
2	02473 12025		Stud bolt　ｽﾀｯﾄﾞ ﾎﾞﾙﾄ	6				
3	52744 01400		Washer　ﾜｯｼｬ	6				
4	02914 20012		Cap nut　ｷｬｯﾌﾟ ﾅｯﾄ	6				
5	03115 02012		Spring washer　ｽﾌﾟﾘﾝｸﾞ ﾜｯｼｬ	6				
6	03116 12012		Plain washer　ﾌﾟﾚｰﾝ ﾜｯｼｬ	6				
7	03403 10017		Grommet　ｸﾞﾛﾒｯﾄ	4				
8	52728 39910		Cushion rubber　ｸｯｼｮﾝ ﾗﾊﾞｰ	2				
9	52728 40010		Cushion rubber　ｸｯｼｮﾝ ﾗﾊﾞｰ	2				
10	03620 41008		Plug　ﾌﾟﾗｸﾞ	1				
11	03620 20022		Plug　ﾌﾟﾗｸﾞ	1				
12	03407 20122		Gasket　ｶﾞｽｹｯﾄ	1				
	52 - 01		BONNET GROUP　ﾎﾞﾝﾈｯﾄ ｸﾞﾙｰﾌﾟ					
31	52160 79300		Bracket　ﾌﾞﾗｹｯﾄ	1				
32	03260 05013		Blind rivet　ﾘﾍﾞｯﾄ	20				
33	52160 79600		Bracket　ﾌﾞﾗｹｯﾄ	1				
34	02201 06016		Flange bolt　ﾌﾗﾝｼﾞ付ﾎﾞﾙﾄ	10				
35	03407 66871		Seal rubber　ｼｰﾙ ﾗﾊﾞｰ	1				

silverhorn.co.uk

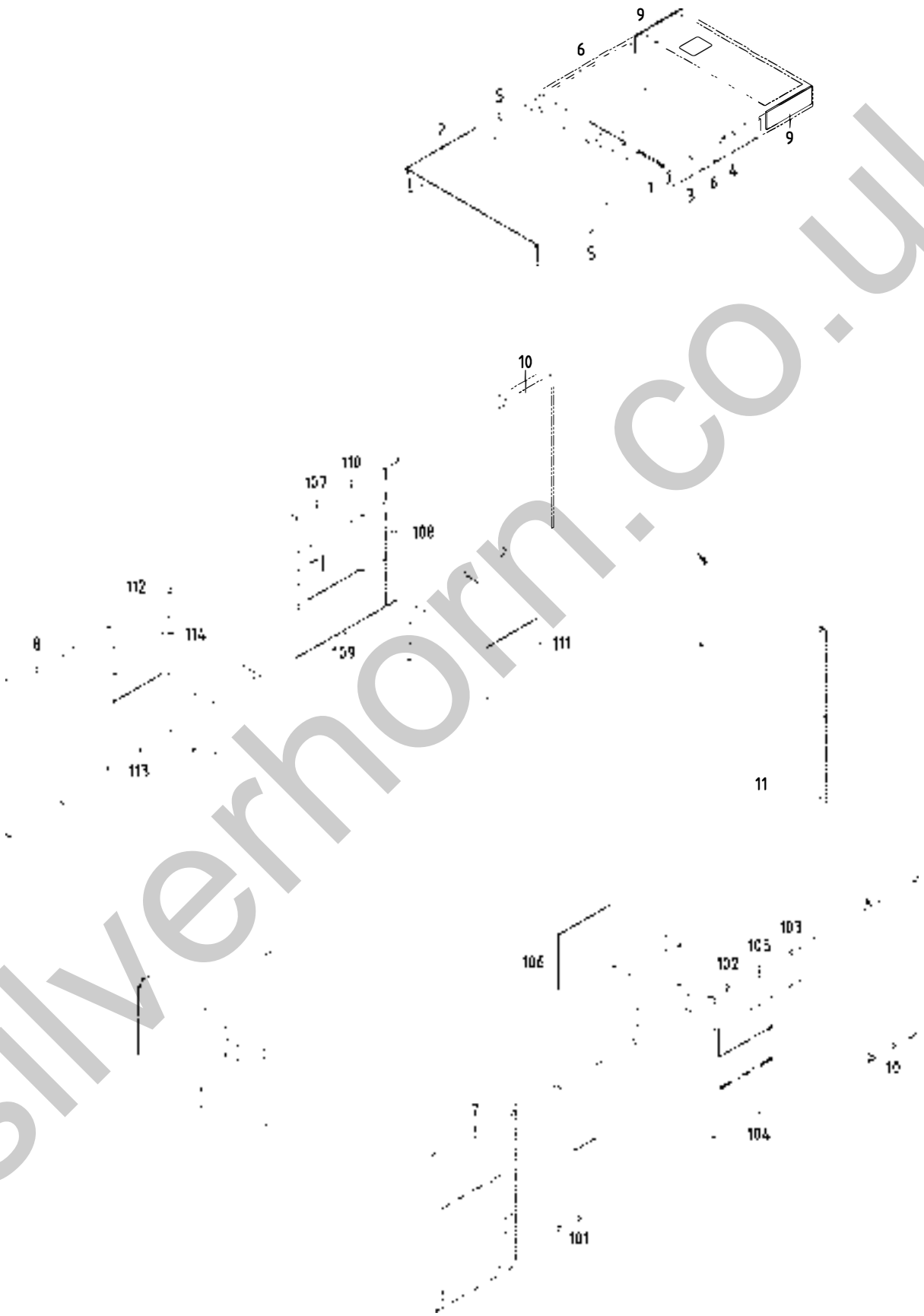

silverhorn.co.uk

見出番号 Ref.NO.	部品番号 Part NO.	互換性 Inter-change ability	部品名称 Part Name		数量 Q'ty	適用号機範囲 Applicable Ser.No. 8E1	—	変更 C/H	備考 Remarks
	52900 25720		URETHANE FOAM KIT	ｳﾚﾀﾝ ﾌｫｰﾑ ｷｯﾄ					Const.No.1～11
1	52931 01630		Lining	ﾗｲﾆﾝｸﾞ	1				
2	52959 04240		Lining	ﾗｲﾆﾝｸﾞ	1				
3	52931 01730		Lining	ﾗｲﾆﾝｸﾞ	1				
4	52959 09840		Lining	ﾗｲﾆﾝｸﾞ	1				
5	52959 05830		Lining	ﾗｲﾆﾝｸﾞ	2				
6	52959 97850		Lining	ﾗｲﾆﾝｸﾞ	2				
7	52959 28240		Lining	ﾗｲﾆﾝｸﾞ	1				
8	52959 97950		Lining	ﾗｲﾆﾝｸﾞ	1				
9	52919 39220		Lining	ﾗｲﾆﾝｸﾞ	2				
10	52919 14430		Lining	ﾗｲﾆﾝｸﾞ	2				
11	52919 14530		Lining	ﾗｲﾆﾝｸﾞ	1				
	52901 25720		URETHANE FOAM KIT	ｳﾚﾀﾝ ﾌｫｰﾑ ｷｯﾄ					Const.No.101～114
101	52978 34600		Lining	ﾗｲﾆﾝｸﾞ	1				
102	52977 75100		Lining	ﾗｲﾆﾝｸﾞ	1				
103	52977 58300		Lining	ﾗｲﾆﾝｸﾞ	1				
104	52977 75200		Lining	ﾗｲﾆﾝｸﾞ	1				
105	52977 65700		Lining	ﾗｲﾆﾝｸﾞ	1				
106	52977 75300		Lining	ﾗｲﾆﾝｸﾞ	1				
107	52977 47400		Lining	ﾗｲﾆﾝｸﾞ	1				
108	52977 48200		Lining	ﾗｲﾆﾝｸﾞ	1				
109	52977 75400		Lining	ﾗｲﾆﾝｸﾞ	1				
110	52978 34700		Lining	ﾗｲﾆﾝｸﾞ	1				
111	52977 75500		Lining	ﾗｲﾆﾝｸﾞ	1				
112	52977 75600		Lining	ﾗｲﾆﾝｸﾞ	1				
113	52977 75700		Lining	ﾗｲﾆﾝｸﾞ	1				
114	52977 75800		Lining	ﾗｲﾆﾝｸﾞ	1				

silvernorm.co.uk

I N D E X

PART NO.	PAGE	REF. NO.
02108 14020	44 - 3	66
02135 06060	20 - 2	16
02135 08025	38 - 3	103
02135 10020	20 - 2	53
02135 10020	38 - 3	112
02135 10025	20 - 2	24
02135 10035	20 - 2	26
02135 16040	51 - 2	8
02136 08016	51 - 3	67
02138 06030	43 - 2	28
02138 06035	46 - 2	26
02138 08020	44 - 2	43
02138 08090	38 - 3	73
02138 08110	38 - 3	74
02138 10020	44 - 3	47
02138 12020	43 - 2	18
02138 12025	44 - 3	74
02201 06016	38 - 2	31
02201 06016	38 - 2	69
02201 06016	43 - 2	32
02201 06016	44 - 3	53
02201 06016	46 - 3	58
02201 06016	51 - 2	15
02201 06016	51 - 3	73
02201 06016	51 - 5	34
02201 08012	20 - 3	85
02201 08012	44 - 3	70
02201 08020	20 - 3	104
02201 08020	38 - 2	5
02201 08020	38 - 3	78
02201 08020	38 - 3	107
02201 08020	46 - 2	42
02201 08020	51 - 3	74
02201 10020	38 - 2	11
02201 10030	43 - 2	26
02238 08025	20 - 2	20
02238 10030	20 - 2	27
02246 08016	51 - 3	65
02246 08050	51 - 3	77
02248 05010	44 - 3	77
02248 06016	44 - 2	25
02248 06025	20 - 2	23
02305 64012	46 - 2	45
02345 23008	46 - 3	52
02345 24020	46 - 3	55
02345 63008	44 - 3	61
02345 63020	44 - 3	57
02345 65020	44 - 2	18
02401 45016	51 - 3	88
02401 64012	51 - 3	75
02415 65012	43 - 2	3
02473 12025	51 - 5	2
02601 10016	20 - 2	11
02912 03014	46 - 4	6
02912 08003	44 - 3	60
02912 09004	46 - 3	55
02914 20012	51 - 5	4
02914 60006	51 - 3	85
02915 00004	46 - 3	47
02915 00005	51 - 3	89
02915 00006	38 - 2	32
02915 00006	44 - 2	4
02915 00006	51 - 3	68
02915 00008	20 - 3	106
02915 00008	38 - 3	109
02915 00008	43 - 2	9
02915 00008	44 - 2	40
02915 00010	43 - 2	8
02915 20012	20 - 2	57
03102 25024	38 - 3	84
03115 02003	44 - 3	59
03115 02003	44 - 3	62
03115 02005	44 - 2	18
03115 02006	20 - 2	17
03115 02006	43 - 2	29
03115 02006	46 - 2	27
03115 02008	38 - 3	75
03115 02008	38 - 3	104
03115 02008	44 - 2	44
03115 02010	20 - 2	25
03115 02010	20 - 2	28
03115 02010	20 - 2	54
03115 02010	38 - 3	113
03115 02010	44 - 3	48
03115 02012	43 - 2	19
03115 02012	44 - 3	75
03115 02012	51 - 5	5
03115 02014	44 - 3	67
03115 02014	46 - 4	7
03115 02016	51 - 2	9
03115 03003	46 - 3	52
03115 03004	46 - 3	55
03115 06014	46 - 4	4
03115 06016	51 - 2	11
03116 12003	44 - 3	58
03116 12003	44 - 3	63
03116 12005	44 - 2	18
03116 12005	46 - 3	46
03116 12006	20 - 2	18
03116 12006	43 - 2	30
03116 12006	46 - 2	28
03116 12008	38 - 3	76
03116 12008	38 - 3	105
03116 12008	44 - 3	45
03116 12010	38 - 3	114
03116 12010	44 - 3	49
03116 12012	43 - 2	20
03116 12012	44 - 3	76
03116 12012	51 - 5	6
03116 12016	51 - 2	10
03116 14014	46 - 4	8
03116 15014	46 - 4	5
03116 15016	51 - 2	12
03116 18003	46 - 3	52
03116 18004	46 - 3	55
03116 35005	51 - 2	5
03260 03010	39 - 2	2
03260 03010	44 - 2	8
03260 05013	51 - 5	32
03266 05012	51 - 3	92
03307 14050	20 - 2	3
03307 14063	20 - 2	3
03307 14180	20 - 2	3
03316 03016	46 - 4	9
03403 00252	44 - 3	64
03403 00512	38 - 2	18
03403 10010	51 - 2	16
03403 10010	51 - 3	94
03403 10017	51 - 2	2
03403 10017	51 - 5	7
03407 16024	38 - 2	62
03407 20122	51 - 5	12
03407 64724	51 - 3	80
03407 64732	51 - 2	43
03407 64745	51 - 2	51
03407 64747	46 - 2	36
03407 64748	51 - 3	58
03407 64764	46 - 2	35
03407 64773	51 - 2	49
03407 66505	46 - 2	39
03407 66806	51 - 2	37
03407 66809	51 - 2	36
03407 66811	51 - 3	87
03407 66814	51 - 3	86
03407 66815	38 - 2	6
03407 66815	51 - 2	46
03407 66815	51 - 3	53
03407 66839	51 - 2	35
03407 66855	51 - 3	61
03407 66856	38 - 2	13

silverhorn.co.uk

I N D E X

PART NO.	PAGE	REF. NO.
03407 66871	51 - 5	35
03407 66954	38 - 2	16
03407 66956	38 - 2	17
03407 67232	51 - 3	54
03407 67418	38 - 2	14
03407 67514	38 - 2	15
03407 67605	51 - 3	72
03407 67611	51 - 2	39
03407 68085	51 - 3	95
03407 68110	51 - 3	90
03407 68125	51 - 3	91
03424 80101	44 - 3	69
03425 00001	38 - 3	123
03425 00001	44 - 3	73
03511 10012	38 - 3	122
03511 10018	43 - 2	43
03511 20020	43 - 2	14
03511 20028	20 - 3	94
03511 20035	38 - 2	65
03511 20050	38 - 2	9
03511 20060	20 - 3	89
03511 20070	20 - 3	90
03511 20080	20 - 3	91
03511 30185	38 - 2	25
03511 40016	38 - 2	29
03511 40020	43 - 2	42
03511 50056	20 - 3	98
03511 50065	20 - 3	99
03511 50075	20 - 3	100
03511 50085	20 - 3	101
03570 09028	43 - 2	13
03570 09031	43 - 2	38
03570 09048	43 - 2	39
03570 09080	43 - 2	40
03580 19062	38 - 2	64
03591 15050	20 - 3	93
03600 09016	43 - 2	41
03600 09030	43 - 2	36
03600 09038	43 - 2	37
03620 20022	51 - 5	11
03620 41008	51 - 5	10
03731 21003	43 - 2	35
03734 43030	43 - 2	33
03734 85060	38 - 3	81
03735 13004	38 - 2	67
03830 08004	20 - 3	105
03830 08004	38 - 3	108
05068 23030	44 - 2	42
05135 21050	44 - 2	35
05625 00018	44 - 2	36
06540 10037	44 - 2	38
07838 51070	44 - 2	41
20003 63901	20 - 2	1
21472 17200	20 - 2	8
25100 10700	20 - 2	2
25140 05800	20 - 2	4
25151 04701	20 - 2	3
25200 12400	20 - 2	9
25310 11100	20 - 2	19
25310 11400	20 - 2	10
25360 09000	20 - 2	22
25600 01400	20 - 2	5
25700 08900	20 - 2	15
31110 94301	20 - 2	51
31110 94401	20 - 2	52
31120 08900	20 - 2	56
31131 04100	51 - 3	78
31131 04900	38 - 2	2
32100 40700	20 - 3	81
32142 08600	20 - 3	83
32143 11700	20 - 3	82
32148 03000	20 - 3	86
32151 01400	20 - 3	84
32270 07100	20 - 3	103
32320 71600	20 - 3	92
32320 71700	20 - 3	102
32331 85501	20 - 3	88
32331 86300	20 - 3	87
32331 86400	20 - 3	95
32331 86500	20 - 3	96
32331 86600	20 - 3	97
33238 02800	43 - 2	16
33238 03000	38 - 2	71
35208 04500	46 - 4	3
35421 06800	43 - 2	15
35483 10101	43 - 2	31
36135 02200	20 - 2	13
36135 02300	20 - 2	21
36143 03600	44 - 2	31
36145 06800	44 - 2	30
36146 05901	44 - 2	28
36158 00500	44 - 2	29
36159 03000	43 - 2	2
37110 08200	38 - 3	80
37110 08300	38 - 3	79
37170 02900	38 - 2	66
37170 12700	43 - 2	12
37170 20100	38 - 2	68
37170 20200	43 - 2	34
37181 03300	44 - 3	54
37181 07700	38 - 2	33
37181 07700	44 - 3	71
38100 45000	38 - 2	1
38410 05700	38 - 2	1
38420 00310	38 - 2	3
38420 00410	38 - 2	4
38440 13411	38 - 2	19
38440 13511	38 - 2	20
38441 12210	38 - 2	21
38450 90600	38 - 2	22
38450 90800	38 - 2	23
38465 12600	43 - 2	11
38469 01800	38 - 2	1
38524 74300	38 - 2	7
38524 74400	38 - 2	8
38590 01200	38 - 2	24
38591 01000	38 - 2	30
38594 02300	38 - 2	28
38594 05000	38 - 2	27
38594 05100	38 - 2	26
38920 04700	38 - 2	10
39103 46801	39 - 2	2
39152 23401	39 - 2	20
39153 69800	39 - 2	10
39170 02000	39 - 2	1
39173 02000	39 - 2	15
39173 05900	39 - 2	21
39176 09310	39 - 2	30
39176 50000	39 - 2	36
39176 62400	39 - 2	14
39176 62900	39 - 2	35
39176 69300	39 - 2	37
39176 69500	39 - 2	33
39176 69600	39 - 2	34
39176 73300	39 - 2	29
39176 73500	39 - 2	31
39176 73800	39 - 2	32
39176 88300	39 - 2	13
39178 00310	39 - 2	9
39178 01640	39 - 2	26
39178 10240	39 - 2	3
39178 11740	39 - 2	38
39178 22031	39 - 2	27
39178 43110	39 - 2	11
39178 47610	39 - 2	12
39178 49120	39 - 2	28
39178 50620	39 - 2	19
39178 50820	46 - 2	23
39178 53620	39 - 2	7
39178 54820	39 - 2	4

silverhorn.co.uk

I N D E X

PART NO.	PAGE	REF. NO.
39178 55020	39 - 2	5
39178 57720	39 - 2	6
39178 79330	20 - 2	14
39178 80820	39 - 2	8
39178 85430	46 - 2	25
39178 87210	39 - 2	18
39178 92030	20 - 2	29
39178 97030	46 - 2	24
39200 04302	51 - 3	93
41250 06100	38 - 3	77
41290 01600	38 - 3	72
42180 00100	38 - 3	110
42240 32300	38 - 3	111
42240 32800	38 - 3	115
42240 33000	38 - 3	106
42243 00200	38 - 3	116
42250 05000	38 - 3	121
42310 04510	38 - 3	101
42310 05510	38 - 3	117
42324 16000	38 - 3	102
42324 16100	38 - 3	118
42325 02700	38 - 3	119
42327 04100	38 - 3	120
43100 79300	43 - 2	1
43210 01301	43 - 2	5
43220 01300	43 - 2	4
43310 32900	43 - 2	6
43310 33700	43 - 2	7
43322 06700	43 - 2	10
43340 36600	43 - 2	17
43350 02200	44 - 3	52
43531 02300	43 - 2	25
43532 05500	38 - 2	63
43532 09700	43 - 2	23
43534 02102	38 - 2	61
43534 05500	43 - 2	24
43540 08600	43 - 2	21
43540 08700	43 - 2	22
43650 02600	43 - 2	27
44100 10900	44 - 2	5
44210 06600	44 - 2	1
44210 08200	44 - 2	1
44220 25400	44 - 2	2
44243 04501	44 - 2	3
44243 05500	44 - 3	68
44250 08710	44 - 2	24
44250 50210	44 - 2	10
44250 57210	44 - 2	20
44260 44100	46 - 2	40
44290 53200	44 - 3	46
44311 62700	46 - 2	15
44311 66300	46 - 2	41
44311 83300	44 - 3	56
44312 02800	46 - 3	53
44312 02900	46 - 3	54
44322 02800	44 - 2	6
44328 21500	44 - 2	17
44334 17600	44 - 2	34
44336 03001	44 - 3	55
44346 08500	44 - 2	12
44346 08500	44 - 2	13
44346 08500	44 - 2	14
44346 13200	44 - 2	11
44346 15700	44 - 2	15
44346 16100	44 - 2	16
44364 06600	44 - 2	19
44365 00300	44 - 2	33
44390 04300	44 - 2	9
44462 01900	44 - 2	39
44462 06700	44 - 2	37
44470 01600	44 - 2	21
44470 01700	44 - 2	23
44470 01900	44 - 2	22
44470 02300	44 - 2	26
44490 30440	44 - 3	50
44500 04300	46 - 2	9
44550 41300	46 - 3	56
45214 01400	46 - 2	29
45214 01400	46 - 3	49
46120 26800	46 - 3	51
46120 26900	46 - 3	50
46120 34000	46 - 3	50
46120 34100	46 - 3	51
46120 36300	46 - 2	11
46120 36600	46 - 2	5
46153 04000	46 - 2	2
46154 14500	46 - 2	3
46154 15300	44 - 2	32
46167 03100	46 - 2	12
46177 08300	46 - 2	20
46177 08400	46 - 2	19
46177 08500	46 - 2	18
46305 09300	46 - 4	1
46311 02200	46 - 2	15
46312 05100	46 - 4	2
46470 04911	46 - 2	38
46480 67800	46 - 2	33
46480 67900	46 - 3	57
46640 19700	20 - 2	6
46760 73710	46 - 2	17
46813 08100	44 - 3	51
46870 47901	44 - 2	27
46872 01300	46 - 2	21
46879 65300	46 - 2	22
46900 19010	46 - 2	1
46911 01401	46 - 2	4
46913 01000	46 - 2	14
46917 05300	46 - 2	16
46918 01401	46 - 2	13
46921 02300	44 - 3	72
46921 08600	46 - 2	22
46923 04500	46 - 2	6
46928 01500	46 - 2	8
46929 01200	46 - 2	7
46934 03200	44 - 2	21
46934 03300	44 - 2	23
46934 03800	44 - 2	22
46939 01300	46 - 2	7
46948 00900	46 - 2	21
46950 02901	46 - 2	10
46991 00100	46 - 2	13
51100 53041	51 - 5	1
51100 54841	51 - 2	1
52100 20332	51 - 2	24
52100 21730	51 - 2	21
52100 21831	51 - 2	22
52100 21930	51 - 2	31
52100 22030	51 - 2	32
52160 34600	51 - 3	56
52160 77301	51 - 3	63
52160 79300	51 - 5	31
52160 79400	51 - 2	27
52160 79500	51 - 2	28
52160 79600	51 - 5	33
52230 44800	51 - 2	38
52300 46021	51 - 2	25
52312 03300	46 - 2	44
52350 02130	44 - 3	65
52350 41920	51 - 2	40
52350 44421	51 - 2	13
52350 86021	38 - 2	12
52350 86120	46 - 2	34
52350 86220	46 - 2	37
52350 89010	51 - 2	26
52370 01510	51 - 2	47
52370 01610	51 - 2	33
52370 04910	51 - 3	55
52370 05010	51 - 3	62
52416 19800	51 - 3	71
52416 29002	46 - 2	43

silverhorn.co.uk

I N D E X

PART NO.	PAGE	REF. NO.
52450 47931	51 - 2	30
52450 49930	51 - 3	79
52450 50030	51 - 2	44
52450 50130	51 - 2	48
52450 50231	51 - 2	50
52450 50330	51 - 3	57
52450 50430	51 - 2	29
52456 04100	51 - 3	84
52480 13800	51 - 3	66
52480 14400	51 - 3	59
52620 50000	51 - 2	3
52630 13800	51 - 2	7
52640 02400	46 - 3	48
52640 05100	51 - 3	64
52660 04700	44 - 2	7
52710 03601	51 - 3	69
52711 01400	51 - 3	81
52723 00100	46 - 2	30
52728 14810	51 - 3	70
52728 15710	38 - 2	70
52728 20810	51 - 2	4
52728 32010	51 - 2	14
52728 39010	51 - 2	41
52728 39910	51 - 5	8
52728 40010	51 - 5	9
52728 42710	51 - 3	83
52728 43010	51 - 2	42
52733 11201	51 - 3	82
52739 00600	44 - 3	101
52739 03400	51 - 3	121
52739 04300	46 - 3	101
52742 00200	20 - 2	12
52744 01400	51 - 5	3
52746 01900	51 - 3	76
52746 02400	51 - 2	6
52800 20811	51 - 2	45
52800 20911	51 - 3	52
52800 21011	51 - 3	60
52800 21110	51 - 2	34
52830 49500	51 - 2	23
52919 14430	52 - 2	10
52919 14530	52 - 2	11
52919 39220	52 - 2	9
52931 01530	46 - 2	32
52931 01630	52 - 2	1
52931 01730	52 - 2	3
52931 92020	46 - 2	31
52959 04240	52 - 2	2
52959 05830	52 - 2	5
52959 09840	52 - 2	4
52959 28240	52 - 2	7
52959 97850	52 - 2	6
52959 97950	52 - 2	8
52977 47400	52 - 2	107
52977 48200	52 - 2	108
52977 58300	52 - 2	103
52977 65700	52 - 2	105
52977 75100	52 - 2	102
52977 75200	52 - 2	104
52977 75300	52 - 2	106
52977 75400	52 - 2	109
52977 75500	52 - 2	111
52977 75600	52 - 2	112
52977 75700	52 - 2	113
52977 75800	52 - 2	114
52978 34600	52 - 2	101
52978 34700	52 - 2	110
61121 09602	20 - 2	7
GD920 14700	38 - 3	83
GD920 18300	38 - 3	82
GG160 00100	20 - 2	55

silverhorn.co.uk

2014年　7月 18日　初版

2015年　7月 29日　改訂

発行　**北越工業株式会社**

新潟本社･工場
新潟県燕市下粟生津3074
TEL 0256－93－5571
FAX 0256－94－7567

（無断複写･転載を禁ず）

HOKUETSU INDUSTRIES CO., LTD.

8TH FLOOR SHINJUKU SAN-EI BLDG,
22-2 NISHI-SHINJUKU 1-CHOME,SHINJUKU-KU
TOKYO 160-0023 JAPAN
TEL:81-3-3348-7281
FAX:81-3-3348-7289
URL:http//www.airman.co.jp

Copyright(C)2014 HOKUETSU INDUSTRIES CO., LTD. All Rights Reserved.

1507-03
CAT.NO.39540 30000

silverhorn.co.uk

silverhorn.co.uk

AIRMAN
HOKUETSU INDUSTRIES CO., LTD.