AIRMAN

SG

PARTS CATALOG

ENGINE GENERATOR

SDG65S-8C1

silverhorn.co.uk

HOKUETSU INDUSTRIES CO., LTD.

適　用　型　式
FOR MODEL

型　　式 MODEL	適　用　号　機 SER. NO.
ＳＤＧ６５Ｓ－８Ｃ１ [WITH OIL FENCE TYPE]	１４７８Ｃ１００５１～

silverhorn.co.uk

STANDARD PAINTING

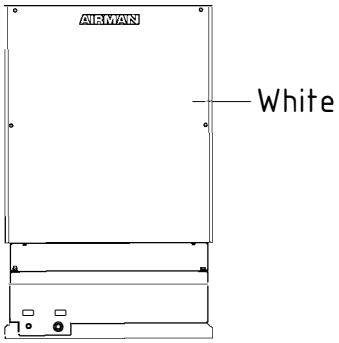

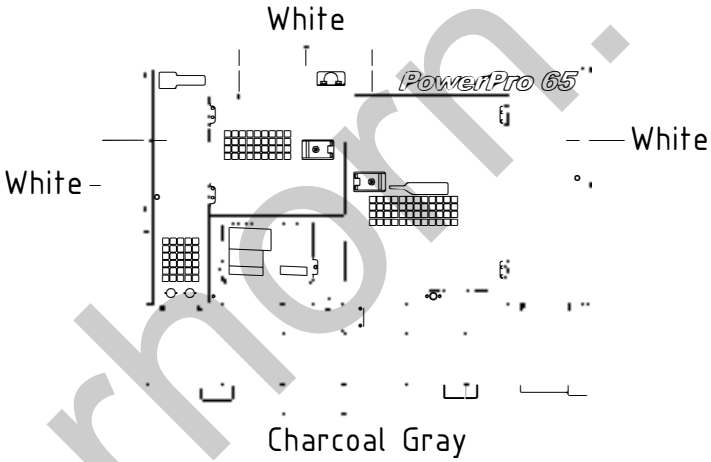

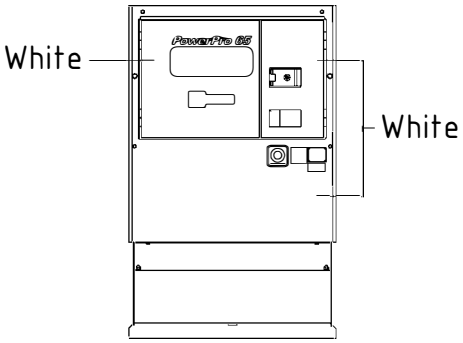

silverhorn.co.uk

N O T I C E

1. This parts catalog contains all the parts and assemblies of "AIRMAN" brand products. The complete unit is divided into several parts groups, the details of which are clearly illustrated, and completely listed. So desired part number, name and quantity can be easily determined referring to Ref.No.

2. When you place order for service parts, please be sure to advise us of the following information.
   (1) Part number.
   (2) Quantity required.
   (3) Part name.
   (4) Model name and Serial number.

3. How to read parts catalog.

(8)

(1) (2) (3) (4) (5) (6) (7) (8)

(1) Ref.No.
Reference number (Ref.No.) is to be used for locating the part number and name from the illustrations. (However some parts such as bolts and nuts etc., are not illustrated but their reference numbers only listed.)
Ref.No.1, 1-1, 1-2,…… shows history of part modifications.
[These reference numbers mean 1: primary period, 1-1: first alteration, 1-2: second alteration and 1-3……follows]

(2) Part No.
Every part has its own proper number. Even if a part has the same shape as an other part and if its number different, it is not interchangeable at all in many cases.

(3) Interchangeability
A, B, C, D, Q, X, Y and Z in column "Interchangeability" show the following.
A : A new part is replaceable with an old part, but the old part is not replaceable with the new one.
B : Not interchangeable.
C : Disused.
D : Newly added.
Q : Quantity per unit changed.
X : Included in this set of parts, this part is not used for this model.
Y : Part to be selected.
Z : This part can not be supplied as an individual part.

silvernorn.co.uk

(4) Part name
Every part has its own proper name.

(5) Q'ty
The number shown in the column of Q'TY indicates the quantity of parts used per one unit machine.

(6) Applicable Ser.No. (Serial Number)
Ser.No. shows the machine number to which the part is applicable.
Month and year stated in column "Ser.No." show the month and year from which the part is applicable.

(7) Change column
M1, M2,…… Mn mentioned in the column indicate the change of part number and the serial number of the unit, the part of which was modified.

(8) Remarks
This column "Remarks" mentions in mark or signal the specifications of each part, original part number of manufacturer, model name of the part for which is used and etc.
[Example. SC:w.AFTERCOOLER]

4. Abbreviations used in this catalog.

ass'y	assembly	L	Length
A	Ampere	OPT.	Option
AUTO.	Automatic	SPC/S.	Special specifications
C/H	Change column	STD.	Standards
Const.	Consisting of	sw.	switch
Cont.	Control	T or t	Thickness
Eng.	Engine	V	Volt
EXP.	Export	W	Watt
GEN.	Generator	w.	with
Incl.	Including	w/o	without

NOTE : We are always engaged in improving our products. So there may be some changes of the product which are not yet mentioned in this parts catalog. Therefore, in necessary case, we issue a revision in which such changes ars added. When you have any question on the parts catalog, please ask your nearest dealer or directly us.

silverhorn.co.uk

目　次
CONTENTS

図番号 FIG.NO.	図名称 FIG.NAME		頁 PAGE
—COMPRESSOR PARTS—			
20 - 00	GENERATOR,MOUNTING & INTAKE	ｾﾞﾈﾚｰﾀ,ﾏｳﾝﾃｨﾝｸﾞ,ｲﾝﾃｰｸ	20- 1～3
38 - 00	COOLING,ENGINE & EXHAUST	ｸｰﾘﾝｸﾞ,ｴﾝｼﾞﾝ,ｴｷｿﾞｰｽﾄ	38- 1～3
39 - 00	NAME PLATE	ﾈｰﾑ ﾌﾟﾚｰﾄ	39- 1～3
43 - 00	FUEL LINE	ﾌｭｴﾙ ﾗｲﾝ	43- 1～3
44 - 00	ELECTRIC(for ENGINE)	ｴﾚｸﾄﾘｯｸ(ｴﾝｼﾞﾝ用)	44- 1～3
46 - 00	ELECTRIC(for GENERATOR)	ｴﾚｸﾄﾘｯｸ(ｾﾞﾈﾚｰﾀ用)	46- 1～3
46 - 01	TERMINAL PLATE	出力端子板	46- 4
51 - 00	FRAME & BONNET	ﾌﾚｰﾑ,ﾎﾞﾝﾈｯﾄ	51- 1～3
51 - 01	OIL FENCE	ｵｲﾙ ﾌｪﾝｽ	51- 4～5
52 - 00	LINING	ﾗｲﾆﾝｸﾞ	52- 1

図番号 FIG.NO.	図名称 FIG.NAME	頁 PAGE	図番号 FIG.NO.	図名称 FIG.NAME	頁 PAGE
—ENGINE PARTS—					
500000	CRANKCASE	1	548000	COMMON RAIL	20
501000	OIL PAN	3	550000	ALTERNATOR AND PULLEY	21
501200	DIPSTICK AND GUIDE	4	551000	ALTERNATOR[COMPONENT PARTS]	22
502000	CYLINDER HEAD	5	554000	STARTER	23
503000	INLET VALVE AND EXHAUST VALVE	6	555000	STARTER[COMPONENT PARTS]	24
504000	ROCKER ARM SHAFT	7	557000	SWITCH/SENSOR	25
505000	HEAD COVER	8	557500	INJECTOR HARNESS	26
508000	GEAR CASE	9	558000	WIRE HARNESS	27
511000	PISTON AND CRANKSHAFT	10	558500	WIRE HARNESS BRACKET	28
512000	CAMSHAFT AND IDLE GEAR SHAFT	11	560000	WATER FLANGE AND THERMOSTAT	29
514000	BEARING CASE COVER	12	561000	WATER PUMP	30
515000	FLYWHEEL	13	567000	FAN AND PULLEY	31
526500	SUPPLY PUMP	14	571000	INLET MANIFOLD	32
531001	FUEL FILTER 1	15	571100	AIR CLEANER FLANGE AND THROTTLE VALVE	33
531002	FUEL FILTER 2	16			
532500	SEPARATOR	17	572000	EXHAUST MANIFOLD	34
545000	INJECTION PIPE	18	572300	EGR VALVE	35
547100	FUEL PUMP(ELECTRICAL)	19	572400	EGR COOLER	36

silvernorn.co.uk

目　　次
CONTENTS

図番号 FIG.NO.	図名称 FIG.NAME	頁 PAGE
—ENGINE PARTS—		
572600	TURBO CHARGER	37
574000	DIESEL PARTICULATE FILTER MUFFLER	38
574200	DIESEL PARTICULATE FILTER MUFFLER[COMPONENT PARTS]	39
574300	MUFFLER SENSOR	40
574500	PRESSURE PIPE	41
576000	BREATHER PIPE/SEPARATOR PIPE	42
576500	OIL SEPARATOR	43
580000	OIL PIPE(TURBO CHARGER)	44
582000	OIL COOLER	45
583000	OIL FILTER	46
585200	HYDRAULIC PUMP COVER	47
587000	STARTER SWITCH	48
588000	ACCESSORIES AND SERVICE PARTS	49
589000	LABEL AND OPERATOR'S MANUAL	50
594000	PISTON KIT[OPTION]	51
599000	Diagmaster[OPTION]	52
■	NUMERICAL INDEX	53

型式名の見方
HOW TO READ MODELS

S D G 6 5 S − 8 C 1
①　②　③　④ ⑤ ⑥

① SDG : SKID-MOUNTED DIESEL GENERATOR
② 65 : OUTPUT(kVA)
③ S : SILENT TYPE
④ 8 : NORTH AMERICA TYPE(w.OIL FENCE)
⑤ MODEL CHANGE MARK
⑥ VARIATION MARK

① SDG : ｽｷｯﾄﾞ型,ﾃﾞｨｰｾﾞﾙ発電機
② 65 : 定格出力(kVA)
③ S : 防音型
④ 8 : 北米仕様(ｵｲﾙﾌｪﾝｽ付)
⑤ ﾓﾃﾞﾙﾁｪﾝｼﾞ記号
⑥ ﾊﾞﾘｴｰｼｮﾝ記号

silverhorn.co.uk

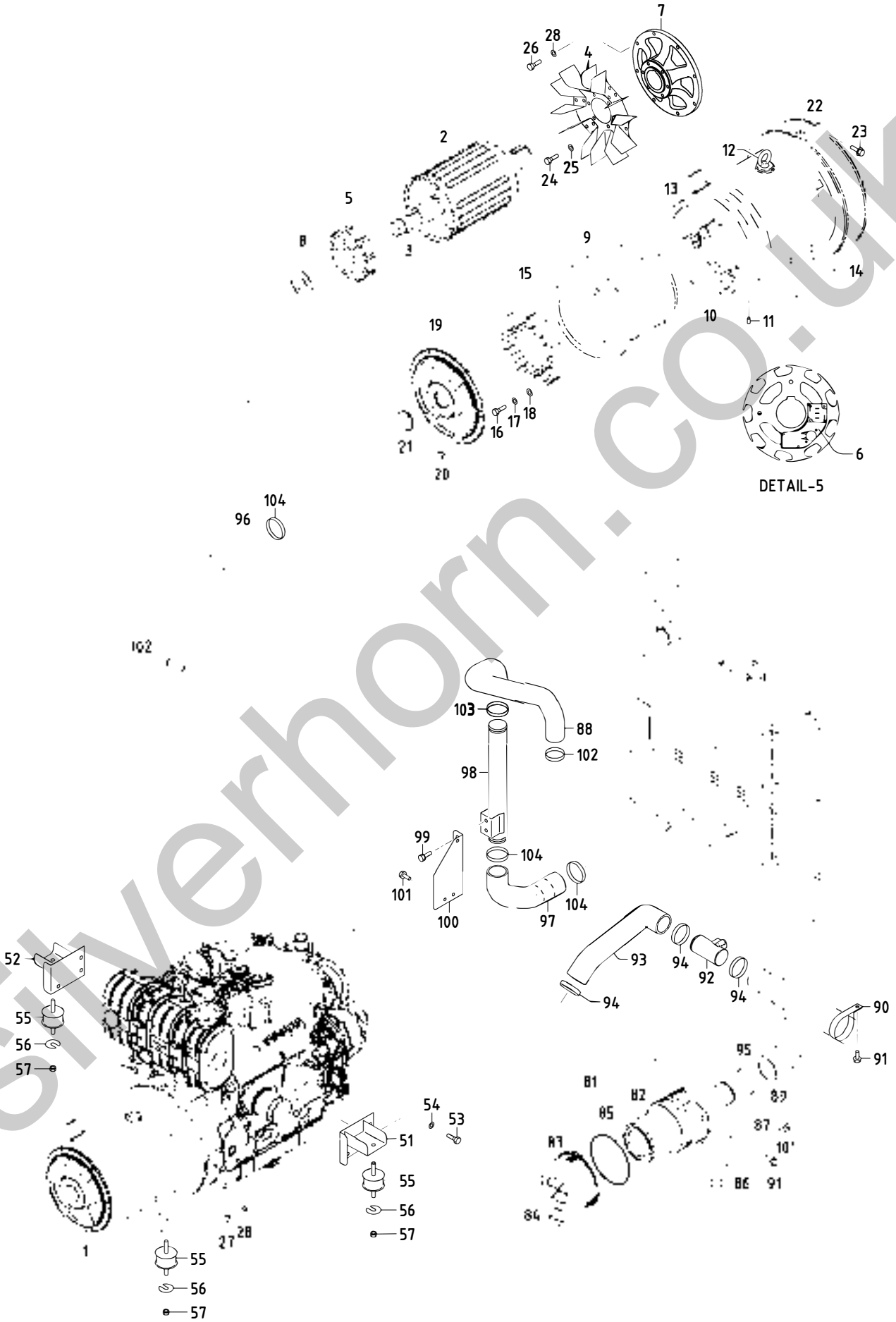

silverhorn.co.uk

20 - 00 GENERATOR,MOUNTING & INTAKE

見出番号 Ref.NO.	部品番号 Part NO.	互換性 Inter-change ability	部品名称 Part Name		数量 Q'ty	適用号機範囲 Applicable Ser.No. 8C1	—	変更 C/H	備考 Remarks
	20 - 00		GENERATOR GROUP	ｾﾞﾈﾚｰﾀ ｸﾞﾙｰﾌﾟ					
1	20003 64401		Generator	ｾﾞﾈﾚｰﾀ	1				Const.No.2～28
2	25100 10400		A.C.G.rotor ass'y	主発電機界磁巻線	1				(回転子)
3	25151 04801		Shaft	ｼｬﾌﾄ	1				
	03307 14250		Key	ｷｰ	1				(A.C.G.rotor side)
	03307 14050		Key	ｷｰ	1				(EX.rotor side)
	03307 14063		Key	ｷｰ	1				(coupling side)
4	25140 05601		Fan	ﾌｧﾝ	1				
5	25600 01400		EX.rotor ass'y	励磁機電機子巻線	1				Incl.No.6
	A.C.G.ﾛｰﾀ・ｼｬﾌﾄ・ｷｰ・ﾌｧﾝ・EX.ﾛｰﾀ(見出番号2～5)は、ｾｯﾄでご注文下さい								
	A set of A.C.G.rotor,shaft,key,fan & EX.rotor(Ref.NO.2-5),should be ordered.								
6	46640 19700		Wiring board	整流器基板	1				
7	61121 09602		Coupling,drive	ｶｯﾌﾟﾘﾝｸﾞ	1				
8	21472 17200		Bearing	ﾍﾞｱﾘﾝｸﾞ	1				(6310ZZC3)
9	25200 12100		A.C.G.stator ass'y	主発電機電機子巻線	1				(固定子)
10	25310 11000		Casing	ｹｰｼﾝｸﾞ	1				
	A.C.G.ｽﾃｰﾀ・ｹｰｼﾝｸﾞは、ｾｯﾄでご注文下さい								
	A set of A.C.G.stator & casing,should be ordered.								
11	02601 10016		Set screw	ｾｯﾄ ｽｸﾘｭ	2				
12	52742 00200		Eye bolt	ｱｲ ﾎﾞﾙﾄ	1				
13	36135 02200		Grommet	ｸﾞﾛﾒｯﾄ	1				(cable protect)
14	39178 79330		Plate(SER.NO.)	ｾﾘｱﾙ銘板	1				
15	25700 08900		EX.stator ass'y	励磁機界磁巻線	1				(固定子)
16	02135 06060		Bolt	ﾎﾞﾙﾄ	3				
17	03115 02006		Spring washer	ｽﾌﾟﾘﾝｸﾞ ﾜｯｼｬ	3				
18	03116 12006		Plain washer	ﾌﾟﾚｰﾝ ﾜｯｼｬ	3				
19	25310 11100		Casing	ｹｰｼﾝｸﾞ	1				
20	02238 08025		Bolt,w/w	ﾜｯｼｬ付ﾎﾞﾙﾄ	6				
21	36135 02300		Grommet	ｸﾞﾛﾒｯﾄ	1				
22	25360 08400		Cover	ｶﾊﾞｰ	1				
23	02248 06025		Bolt,w/w	ﾜｯｼｬ付ﾎﾞﾙﾄ	2				
24	02135 10025		Bolt	ﾎﾞﾙﾄ	6				
25	03115 02010		Spring washer	ｽﾌﾟﾘﾝｸﾞ ﾜｯｼｬ	6				
26	02135 10030		Bolt	ﾎﾞﾙﾄ	8				
27	02138 10030		Bolt	ﾎﾞﾙﾄ	12				
28	03115 02010		Spring washer	ｽﾌﾟﾘﾝｸﾞ ﾜｯｼｬ	20				
	31 - 00		MOUNTING GROUP	ﾏｳﾝﾃｨﾝｸﾞ ｸﾞﾙｰﾌﾟ					
51	31110 10510		Bracket	ﾌﾞﾗｹｯﾄ	1				
52	31110 10610		Bracket	ﾌﾞﾗｹｯﾄ	1				
53	02102 12025		Bolt	ﾎﾞﾙﾄ	6				
54	03115 02012		Spring washer	ｽﾌﾟﾘﾝｸﾞ ﾜｯｼｬ	6				
55	31130 28200		Vibration isolator ass'y	防振ｺﾞﾑ	4				
56	31120 08900		Shim	ｼﾑ	1				
57	02915 20012		Nut,w/w	ﾜｯｼｬ付ﾅｯﾄ	8				

silverhorn.co.uk

見出番号 Ref.NO.	部品番号 Part NO.	互換性 Inter-change ability	部品名称 Part Name		数量 Q'ty	適用号機範囲 Applicable Ser.No. 8C1	—	変更 C/H	備考 Remarks
	32 - 00		INTAKE GROUP	ｲﾝﾃｰｸ ｸﾞﾙｰﾌﾟ					
81	32100 44900		Air filter ass'y	ｴｱ ﾌｨﾙﾀ	1				Const.No.82～85
82	32143 11800		Element	ｴﾚﾒﾝﾄ	1				
83	32142 11300		Cup	ｶｯﾌﾟ	1				
84	32151 01600		Vacuator valve	ﾊﾞｷｭｴｰﾀ ﾊﾞﾙﾌﾞ	1				
85	32147 03600		O-ring	O-ﾘﾝｸﾞ	1				
86	32148 03000		Filter,service indicator	ｲﾝｼﾞｹｰﾀ	1				
87	32240 46800		Bracket	ﾌﾞﾗｹｯﾄ	1				
88	32331 86002		Hose	ﾎｰｽ	1				
89	32331 85601		Hose	ﾎｰｽ	1				
90	03424 80235		Clip	ｸﾘｯﾌﾟ	1				
91	02201 08012		Flange bolt	ﾌﾗﾝｼﾞ付ﾎﾞﾙﾄ	3				
92	32320 71300		Pipe	ﾊﾟｲﾌﾟ	1				
93	32331 85701		Hose	ﾎｰｽ	1				
94	03511 20080		Hose clip	ﾎｰｽ ｸﾘｯﾌﾟ	3				
95	03511 20090		Hose clip	ﾎｰｽ ｸﾘｯﾌﾟ	1				
96	32331 85800		Hose	ﾎｰｽ	1				
97	32331 85901		Hose	ﾎｰｽ	1				
98	32320 71401		Pipe	ﾊﾟｲﾌﾟ	1				
99	02248 12030		Bolt,w/w	ﾜｯｼｬ付ﾎﾞﾙﾄ	2				
100	32270 06401		Bracket	ﾌﾞﾗｹｯﾄ	1				
101	02201 08020		Flange bolt	ﾌﾗﾝｼﾞ付ﾎﾞﾙﾄ	4				
102	03511 50065		Hose clip	ﾎｰｽ ｸﾘｯﾌﾟ	2				
103	03511 50075		Hose clip	ﾎｰｽ ｸﾘｯﾌﾟ	2				
104	03511 50085		Hose clip	ﾎｰｽ ｸﾘｯﾌﾟ	2				

silverhorn.co.uk

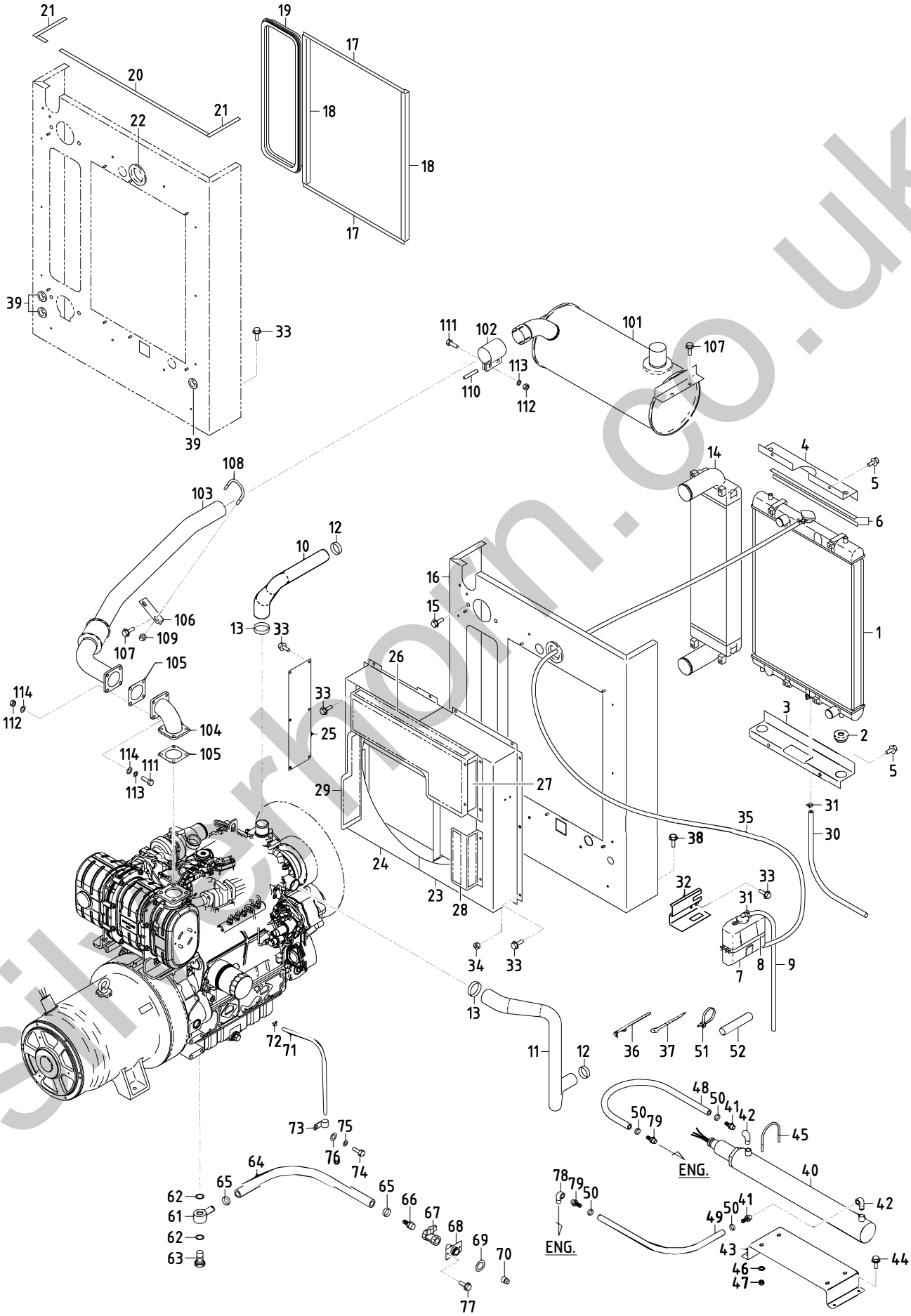

silverhorn.co.uk

見出番号 Ref.NO.	部品番号 Part NO.	互換性 Interchangeability	部品名称 Part Name		数量 Q'ty	適用号機範囲 Applicable Ser.No. 8C1	—	変更 C/H	備考 Remarks
	38 - 00		COOLING GROUP	ｸｰﾘﾝｸﾞ ｸﾞﾙｰﾌﾟ					
1	38100 45000		Radiator	ﾗｼﾞｴｰﾀ	1				Incl.cap & valve
	38410 05700		Cap	ｷｬｯﾌﾟ	1				
	38469 01800		Valve	ﾊﾞﾙﾌﾞ	1				(drain)
2	31131 04900		Rubber	ｺﾞﾑ	2				
3	38420 00310		Bracket	ﾌﾞﾗｹｯﾄ	1				
4	38420 00410		Bracket	ﾌﾞﾗｹｯﾄ	1				
5	02201 08020		Flange bolt	ﾌﾗﾝｼﾞ付ﾎﾞﾙﾄ	4				
6	03407 66815		Seal rubber	ｼｰﾙ ﾗﾊﾞｰ	2				
7	38590 01200		Reserve tank ass'y	ﾘｻﾞｰﾌﾞ ﾀﾝｸ	1				
8	03511 30185		Hose clip	ﾎｰｽ ｸﾘｯﾌﾟ	1				
9	38594 05900		Hose	ﾎｰｽ	1				
10	38524 74101		Hose	ﾎｰｽ	1				
11	38524 74200		Hose	ﾎｰｽ	1				
12	03511 20050		Hose clip	ﾎｰｽ ｸﾘｯﾌﾟ	2				
13	03511 20060		Hose clip	ﾎｰｽ ｸﾘｯﾌﾟ	2				
14	38920 04700		Intercooler	ｲﾝﾀｸｰﾗ	1				
15	02201 10020		Flange bolt	ﾌﾗﾝｼﾞ付ﾎﾞﾙﾄ	4				
16	52350 83522		Cover	ｶﾊﾞｰ	1				
17	03407 66856		Seal rubber	ｼｰﾙ ﾗﾊﾞｰ	2				
18	03407 67418		Seal rubber	ｼｰﾙ ﾗﾊﾞｰ	2				
19	03407 67514		Seal rubber	ｼｰﾙ ﾗﾊﾞｰ	1				
20	03407 66954		Seal rubber	ｼｰﾙ ﾗﾊﾞｰ	1				
21	03407 66939		Seal rubber	ｼｰﾙ ﾗﾊﾞｰ	2				
22	03403 00512		Grommet	ｸﾞﾛﾒｯﾄ	1				
23	38440 13212		Shroud,fan	ﾌｧﾝ ｼｭﾗｳﾄﾞ	1				
24	38440 13312		Shroud,fan	ﾌｧﾝ ｼｭﾗｳﾄﾞ	1				
25	38441 12210		Plate	ﾌﾟﾚｰﾄ	1				
26	38450 90101		Guard,fan	ﾌｧﾝ ｶﾞｰﾄﾞ	1				
27	38450 91400		Guard,fan	ﾌｧﾝ ｶﾞｰﾄﾞ	1				
28	38450 89901		Guard,fan	ﾌｧﾝ ｶﾞｰﾄﾞ	1				
29	38450 90001		Guard,fan	ﾌｧﾝ ｶﾞｰﾄﾞ	1				
30	38594 06100		Hose	ﾎｰｽ	1				
31	03511 40016		Hose clip	ﾎｰｽ ｸﾘｯﾌﾟ	4				
32	38591 01000		Bracket	ﾌﾞﾗｹｯﾄ	1				
33	02201 06016		Flange bolt	ﾌﾗﾝｼﾞ付ﾎﾞﾙﾄ	24				
34	02915 00006		Hexagon flange nut	ﾌﾗﾝｼﾞ付ﾅｯﾄ	8				
35	38594 05000		Hose	ﾎｰｽ	1				
36	37181 03600		Clip	ｸﾘｯﾌﾟ	2				
37	03425 00001		Vinyl clip	ﾋﾞﾆｰﾙ ｸﾘｯﾌﾟ	6				
38	02201 06016		Flange bolt	ﾌﾗﾝｼﾞ付ﾎﾞﾙﾄ	5	～0187			
38 -1	02246 06016	A	Bolt,w/w	ﾜｯｼｬ付ﾎﾞﾙﾄ	5	0188～		M 8	
39	03403 00303	D	Grommet	ｸﾞﾛﾒｯﾄ	3	0188～		M 8	
40	38510 42700	D	Pipe	ﾊﾟｲﾌﾟ	1	0188～		M 8	
41	37170 24800	D	Joint	ｼﾞｮｲﾝﾄ	2	0188～		M 8	
42	03731 28003	D	Elbow	ｴﾙﾎﾞ	2	0188～		M 8	
43	38420 02610	D	Bracket	ﾌﾞﾗｹｯﾄ	1	0188～		M 8	
44	02246 06016	D	Bolt,w/w	ﾜｯｼｬ付ﾎﾞﾙﾄ	4	0188～		M 8	
45	03830 08025	D	U-bolt	U-ﾎﾞﾙﾄ	2	0188～		M 8	
46	03116 12008	D	Plain washer	ﾌﾟﾚｰﾝ ﾜｯｼｬ	4	0188～		M 8	
47	02915 20008	D	Nut,w/w	ﾜｯｼｬ付ﾅｯﾄ	4	0188～		M 8	

silvermorn.co.uk

見出番号 Ref.NO.	部品番号 Part NO.	互換性 Inter-change ability	部品名称 Part Name		数量 Q'ty	適用号機範囲 Applicable Ser.No. 8C1	—	変更 C/H	備考 Remarks
48	03590 00019	D	Hose	ﾎｰｽ	1	0188～		M 8	
49	03590 00020	D	Hose	ﾎｰｽ	1	0188～		M 8	
50	03511 20022	D	Hose clip	ﾎｰｽ ｸﾘｯﾌﾟ	4	0188～		M 8	
51	37181 07700	D	Clip	ｸﾘｯﾌﾟ	5	0188～		M 8	
52	43322 04100	D	Cushion	ｸｯｼｮﾝ	1	0188～		M 8	
	41 - 00		ENGINE GROUP	ｴﾝｼﾞﾝ ｸﾞﾙｰﾌﾟ					
61	43534 02102		Ring connector	ﾘﾝｸﾞ ｺﾈｸﾀ	1				
62	03407 16024		Gasket	ｶﾞｽｹｯﾄ	2				
63	43532 09400		Nipple	ﾆｯﾌﾟﾙ	1				(bolt)
64	03580 19055		Hose	ﾎｰｽ	1				
65	03511 20035		Hose clip	ﾎｰｽ ｸﾘｯﾌﾟ	2				
66	37170 02900		Joint	ｼﾞｮｲﾝﾄ	1				
67	03735 13004		Valve	ﾊﾞﾙﾌﾞ	1				
68	37170 20100		Joint	ｼﾞｮｲﾝﾄ	1				
69	52728 15710		Cushion rubber	ｸｯｼｮﾝ ﾗﾊﾞｰ	1				
70	03620 41004		Plug	ﾌﾟﾗｸﾞ	1				
71	38594 02900		Hose	ﾎｰｽ	1	～0139			
71 -1	03600 09070	B	Hose	ﾎｰｽ	1	0140～		M261	
72	03511 40016		Hose clip	ﾎｰｽ ｸﾘｯﾌﾟ	1	～0139			
72 -1	03511 40020	B	Hose clip	ﾎｰｽ ｸﾘｯﾌﾟ	1	0140～		M261	
73	37181 05000		Clip	ｸﾘｯﾌﾟ	1				
74	02108 12025		Bolt	ﾎﾞﾙﾄ	1				
75	03115 02012		Spring washer	ｽﾌﾟﾘﾝｸﾞ ﾜｯｼｬ	1				
76	03116 12012		Plain washer	ﾌﾟﾚｰﾝ ﾜｯｼｬ	1				
77	02201 06016		Flange bolt	ﾌﾗﾝｼﾞ付ﾎﾞﾙﾄ	2				
78	03731 28003	D	Elbow	ｴﾙﾎﾞ	1	0188～		M 8	
79	37170 24800	D	Joint	ｼﾞｮｲﾝﾄ	2	0188～		M 8	
	42 - 00		EXHAUST GROUP	ｴｷｿﾞｰｽﾄ ｸﾞﾙｰﾌﾟ					
101	42100 84400		Exhaust muffler	ｴｷｿﾞｰｽﾄ ﾏﾌﾗ	1				
102	42230 17700		Belt	ﾍﾞﾙﾄ	1				
103	42310 03610		Pipe,exhaust	ｴｷｿﾞｰｽﾄ ﾊﾟｲﾌﾟ	1				
104	42321 02200		Flange	ﾌﾗﾝｼﾞ	1				
105	42324 15900		Gasket	ｶﾞｽｹｯﾄ	2				
106	42240 23500		Bracket	ﾌﾞﾗｹｯﾄ	1				
107	02201 08020		Flange bolt	ﾌﾗﾝｼﾞ付ﾎﾞﾙﾄ	6				
108	03830 08006		U-bolt	U-ﾎﾞﾙﾄ	1	～0151			
108 -1	03830 08016	A	U-bolt	U-ﾎﾞﾙﾄ	1	0152～		M 2	
109	02915 00008		Hexagon flange nut	ﾌﾗﾝｼﾞ付ﾅｯﾄ	2				
110	42323 03600		Gasket	ｶﾞｽｹｯﾄ	1				
111	02136 10035		Bolt	ﾎﾞﾙﾄ	10				
112	02912 06010		Nut	ﾅｯﾄ	10				
113	03115 06010		Spring washer	ｽﾌﾟﾘﾝｸﾞ ﾜｯｼｬ	10				
114	03116 15010		Plain washer	ﾌﾟﾚｰﾝ ﾜｯｼｬ	16				

silverhorn.co.uk

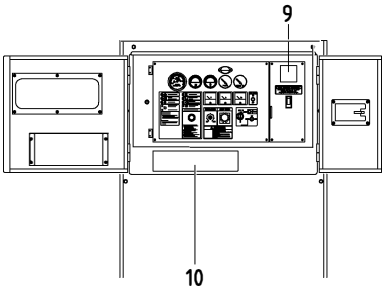

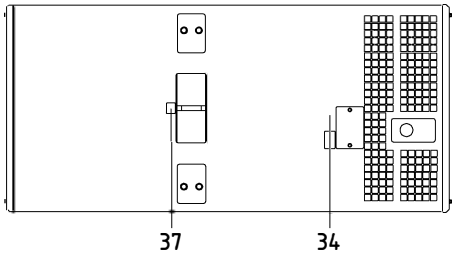

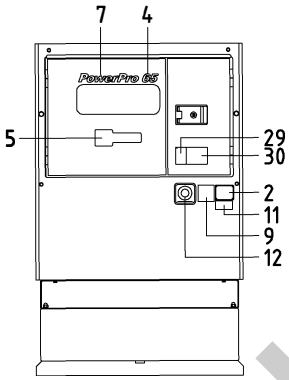

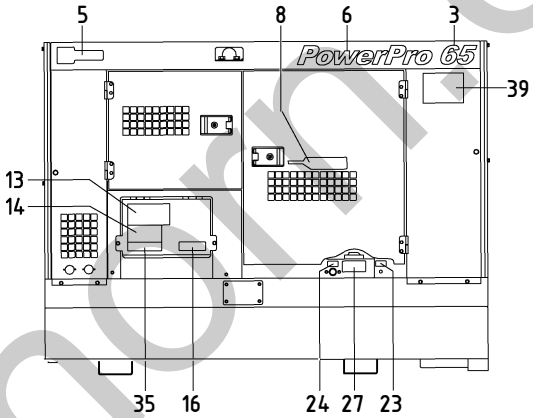

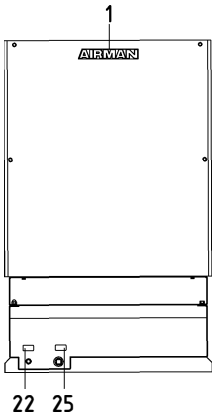

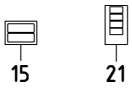

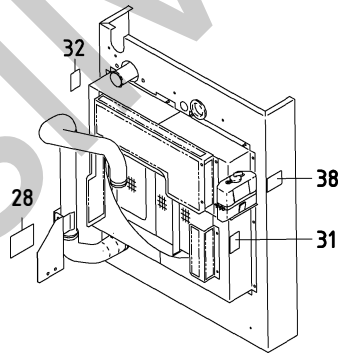

FAN SHROUD

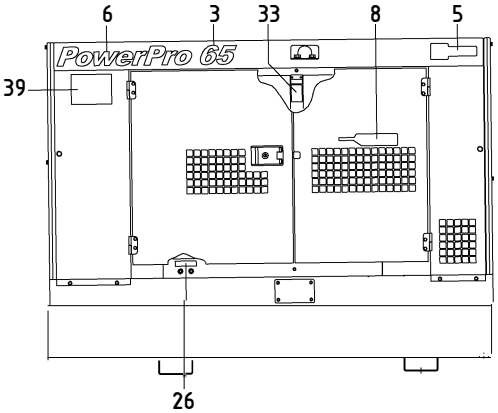

BATTERY

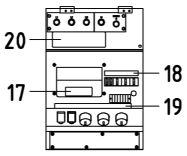

OUTPUT TERMINAL

silverhorn.co.uk

39 - 00 NAME PLATE

見出番号 Ref.NO.	部品番号 Part NO.	互換性 Interchangeability	部品名称 Part Name		数量 Q'ty	適用号機範囲 Applicable Ser.No. 8C1	—	変更 C/H	備考 Remarks
	39 - 00		ACCESSORY GROUP	ｱｸｾｻﾘ ｸﾞﾙｰﾌﾟ					
	39600 50530		Instruction manual	取扱説明書		～0187			
	39600 63130	B	Instruction manual	取扱説明書		0188～		M 8	
	39615 09600		Instruction manual	取扱説明書(Eng.)					
1	39170 02000		Mark (AIRMAN)	ﾏｰｸ	1				
2	39103 46801		Plate(SER.NO.)	ﾌﾟﾚｰﾄ	1				
	03260 03010		Blind rivet	ﾘﾍﾞｯﾄ	4				
3	39178 29930	C	Plate(65)	ﾌﾟﾚｰﾄ	2	0155～		M396	(big)
4	39178 55220		Plate(65)	ﾌﾟﾚｰﾄ	1				(small)
5	39178 57720		Plate(MMD)	ﾌﾟﾚｰﾄ	3				
6	39178 54721		Plate(PowerPro)	ﾌﾟﾚｰﾄ	2	～0154			(big)
6 -1	39178 10340	B	Plate(PowerPro 65 T4)	ﾌﾟﾚｰﾄ	2	0155～		M396	(big)
7	39178 54820		Plate(PowerPro)	ﾌﾟﾚｰﾄ	1				(small)
8	39178 53620		Plate(QUIETECH)	ﾌﾟﾚｰﾄ	2				
9	39178 80820		Plate(DELTA DEMAND)	ﾌﾟﾚｰﾄ	2				
10	39153 70100		Plate(OPERATION)	ﾌﾟﾚｰﾄ	1				
11	39178 43110		Plate(california)	ﾌﾟﾚｰﾄ	1				
12	39178 47610		Plate(emargency sw.)	ﾌﾟﾚｰﾄ	1				
13	39176 05010		Plate(output)	ﾌﾟﾚｰﾄ	1				
14	39176 62400		Plate	ﾌﾟﾚｰﾄ	1				
			(danger,high voltage)						
15	39173 02000		Plate,complete	ﾌﾟﾚｰﾄ(1ｾｯﾄ)	1				Const.No.16～17
16	* * *	Z	Plate(terminal in)	ﾌﾟﾚｰﾄ	1				(39173 02000)
17	* * *	Z	Plate(terminal in)	ﾌﾟﾚｰﾄ	1				(39173 02000)
18	39178 87210		Plate(breaker)	ﾌﾟﾚｰﾄ	1				
19	39178 50620		Plate(socket)	ﾌﾟﾚｰﾄ	1				
20	39152 23401		Plate(wiring chart)	ﾌﾟﾚｰﾄ	1				
21	39173 05900		Plate,complete	ﾌﾟﾚｰﾄ(1ｾｯﾄ)	1				Const.No.22～25
22	* * *	Z	Plate(fuel drain)	ﾌﾟﾚｰﾄ	1				(39173 05900)
23	* * *	Z	Plate(radiator drain)	ﾌﾟﾚｰﾄ	1				(39173 05900)
24	* * *	Z	Plate(eng.oil drain)	ﾌﾟﾚｰﾄ	1				(39173 05900)
25	* * *	Z	Plate	ﾌﾟﾚｰﾄ(spare:1)	2				(39173 05900)
			(containment drain)						
26	39178 01640		Plate(fuel port)	ﾌﾟﾚｰﾄ	1				
27	39178 22031		Plate(FLAMMABLES)	ﾌﾟﾚｰﾄ	1				
28	39178 49120		Plate	ﾌﾟﾚｰﾄ	1				
			(changed fuel refill)						
29	39176 73300		Plate	ﾌﾟﾚｰﾄ	1				
			(warning,exhaust gases)						
30	39176 09310		Plate	ﾌﾟﾚｰﾄ	1				
			(warning,exhaust gases)						
31	39176 73500		Plate	ﾌﾟﾚｰﾄ	1				
			(warning,cooling fan)						
32	39176 73800		Plate(warning,pulley)	ﾌﾟﾚｰﾄ	1				
33	39176 69500		Plate	ﾌﾟﾚｰﾄ	1				
			(caution,high temp.)						
34	39176 69600		Plate	ﾌﾟﾚｰﾄ	1				
			(caution,radiator cap)						
35	39176 62900		Plate	ﾌﾟﾚｰﾄ	1				
			(warning,electric shock)						

silverform.co.uk

39 - 00 NAME PLATE

見出番号 Ref.NO.	部品番号 Part NO.	互換性 Inter-change ability	部品名称 Part Name	数量 Q'ty	適用号機範囲 Applicable Ser.No. 8C1	—	変更 C/H	備考 Remarks
36	39176 50000		Plate(warning,battery) ﾌﾟﾚｰﾄ	1				
37	39176 69300		Plate(lift position) ﾌﾟﾚｰﾄ	1				
38	39178 00310		Plate(LLC) ﾌﾟﾚｰﾄ	1				
39	39178 18540	D	Plate(ZERO LOAD TECHNOLOGY) ﾌﾟﾚｰﾄ	2	0188～		M 8	

silverhorn.co.uk

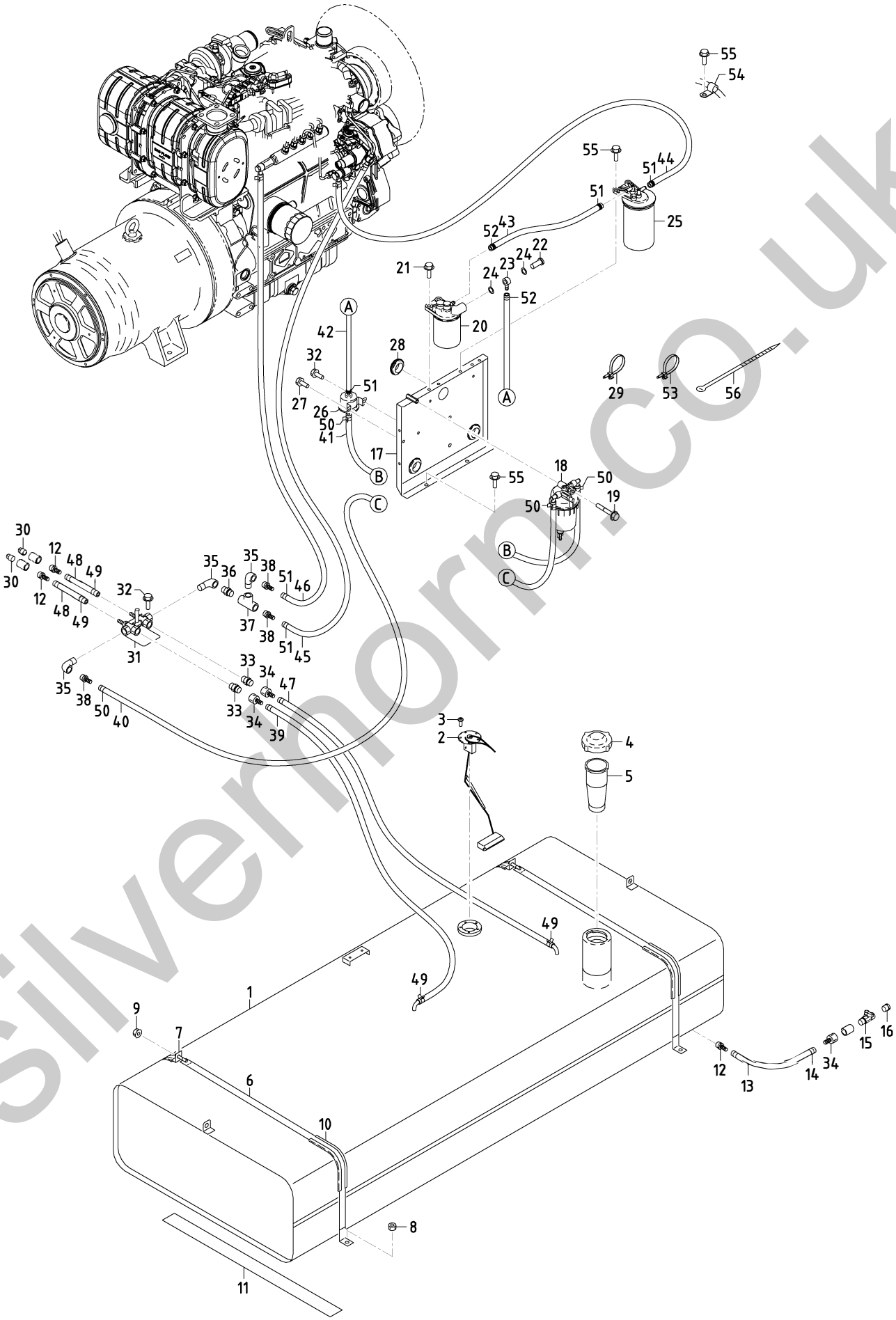

silvernorn.co.uk

見出番号 Ref.NO.	部品番号 Part NO.	互換性 Interchange ability	部品名称 Part Name	数量 Q'ty	適用号機範囲 Applicable Ser.No. 8C1	—	変更 C/H	備考 Remarks
	43 - 00		FUEL GROUP ﾌｭｴﾙ ｸﾞﾙｰﾌﾟ					
1	43100 78900		Fuel tank ﾌｭｴﾙ ﾀﾝｸ	1				
2	36159 03000		Sending unit ｾﾝﾃﾞｨﾝｸﾞ ﾕﾆｯﾄ	1				
3	02415 65012		Screw,w/w ﾜｯｼｬ付ｽｸﾘｭ	5				
4	43220 01300		Cap ｷｬｯﾌﾟ	1				
5	43210 01301		Strainer ｽﾄﾚｰﾅ	1				
6	43310 32900		Belt ﾍﾞﾙﾄ	2				
7	43310 33700		Belt ﾍﾞﾙﾄ	2				
8	02915 00010		Hexagon flange nut ﾌﾗﾝｼﾞ付ﾅｯﾄ	4				
9	02915 00008		Hexagon flange nut ﾌﾗﾝｼﾞ付ﾅｯﾄ	2				
10	43322 06700		Cushion rubber ｸｯｼｮﾝ ﾗﾊﾞｰ	4				
11	38465 12600		Cushion rubber ｸｯｼｮﾝ ﾗﾊﾞｰ	2				
12	37170 12700		Joint ｼﾞｮｲﾝﾄ	3				
13	03570 09028		Hose ﾎｰｽ	1				
14	03511 20020		Hose clip ﾎｰｽ ｸﾘｯﾌﾟ	2				
15	35421 06800		Air valve ｴｱ ﾊﾞﾙﾌﾞ	1				
16	33238 02800		Plug ﾌﾟﾗｸﾞ	1				
17	43340 36400		Bracket ﾌﾞﾗｹｯﾄ	1				
18	43550 03400		Sedimenter ｾﾃﾞﾒﾝﾀ	1				
19	02201 08070		Flange bolt ﾌﾗﾝｼﾞ付ﾎﾞﾙﾄ	1				
20	43540 08400		Filter ass'y ﾌｨﾙﾀ	1				(pre)
21	02201 08030		Flange bolt ﾌﾗﾝｼﾞ付ﾎﾞﾙﾄ	2				
22	43532 09000		Nipple ﾆｯﾌﾟﾙ	1				(bolt)
23	43534 04800		Ring connector ﾘﾝｸﾞ ｺﾈｸﾀ	2				
24	43531 01900		Gasket ｶﾞｽｹｯﾄ	4				
25	43540 08500		Filter ass'y ﾌｨﾙﾀ	1				(main)
26	43650 02400		Fuel pump ﾌｭｴﾙ ﾎﾟﾝﾌﾟ	1				
27	02201 08012		Flange bolt ﾌﾗﾝｼﾞ付ﾎﾞﾙﾄ	1				
28	03402 00326		Eyelet ring ｱｲﾚｯﾄ ﾘﾝｸﾞ	3				
29	37181 07700		Clip ｸﾘｯﾌﾟ	4				
30	03620 41003		Plug ﾌﾟﾗｸﾞ	2				
31	35483 10101		Stop valve ｽﾄｯﾌﾟ ﾊﾞﾙﾌﾞ	1				
32	02201 06016		Flange bolt ﾌﾗﾝｼﾞ付ﾎﾞﾙﾄ	3				
33	03734 43030		Nipple ﾆｯﾌﾟﾙ	2				
34	37170 20200		Joint ｼﾞｮｲﾝﾄ	3				
35	03731 21003		Elbow ｴﾙﾎﾞ	3				
36	03731 44003		Nipple ﾆｯﾌﾟﾙ	1				
37	03731 30003		Tee ﾁｰ	1				
38	37170 12200		Joint ｼﾞｮｲﾝﾄ	3				
39	03600 09100		Hose ﾎｰｽ	1				
40	03600 08165		Hose ﾎｰｽ	1				
41	03600 08042		Hose ﾎｰｽ	1				
42	03570 08034		Hose ﾎｰｽ	1				
43	03570 08012		Hose ﾎｰｽ	1				
44	03570 08047		Hose ﾎｰｽ	1				
45	03570 08164		Hose ﾎｰｽ	1				
46	03570 08200		Hose ﾎｰｽ	1				
47	03600 09040		Hose ﾎｰｽ	1				
48	03600 09006		Hose ﾎｰｽ	2				
49	03511 40020		Hose clip ﾎｰｽ ｸﾘｯﾌﾟ	8				
50	03511 40016		Hose clip ﾎｰｽ ｸﾘｯﾌﾟ	4				

silverhorn.co.uk

見出番号 Ref.NO.	部品番号 Part NO.	互換性 Inter-change ability	部品名称 Part Name		数量 Q'ty	適用号機範囲 Applicable Ser.No. 8C1	—	変更 C/H	備考 Remarks
51	03511 10016		Hose clip	ﾎｰｽ ｸﾘｯﾌﾟ	8				
52	03511 20016		Hose clip	ﾎｰｽ ｸﾘｯﾌﾟ	2				
53	37181 04200		Clip	ｸﾘｯﾌﾟ	2				
54	37181 05000		Clip	ｸﾘｯﾌﾟ	1				
55	02201 08020		Flange bolt	ﾌﾗﾝｼﾞ付ﾎﾞﾙﾄ	7				
56	03425 00003		Vinyl clip	ﾋﾞﾆｰﾙ ｸﾘｯﾌﾟ	14				

silverhorn.co.uk

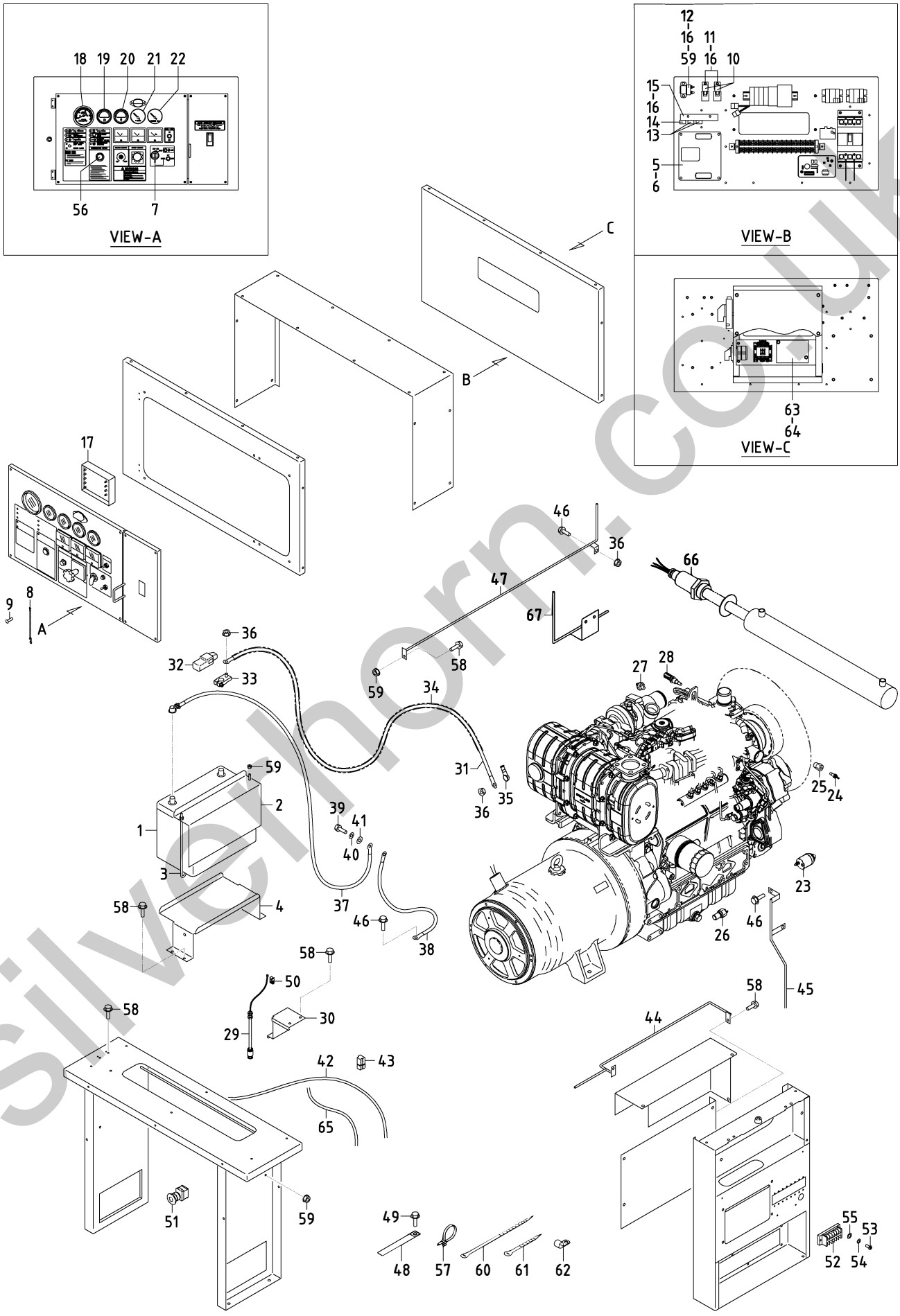

silverthorn.co.uk

見出番号 Ref.NO.	部品番号 Part NO.	互換性 Interchangeability	部品名称 Part Name		数量 Q'ty	適用号機範囲 Applicable Ser.No. 8C1	—	変更 C/H	備考 Remarks
	44 - 00		ELECTRIC GROUP	ｴﾚｸﾄﾘｯｸ ｸﾞﾙｰﾌﾟ					
1	44210 06700		Battery	ﾊﾞｯﾃﾘ	1				(95D31R)
2	44220 24500		Cover	ｶﾊﾞｰ	1				
3	44243 04501		Holder	ﾎﾙﾀﾞ	2				
4	44100 10000		Battery box	ﾊﾞｯﾃﾘ ﾎﾞｯｸｽ	1				
5	44390 04100		Controller (main)	ｺﾝﾄﾛｰﾗ	1	～0187			(KUBOTA 1H726-60201)
5 -1	44390 04800	B	Controller (main)	ｺﾝﾄﾛｰﾗ	1	0188～		M 8	(KUBOTA 1H726-60203)
6	02248 08025		Bolt, w/w	ﾜｯｼｬ付ﾎﾞﾙﾄ	4				
7	44322 07200		Starter switch	ｽﾀｰﾀ ｽｲｯﾁ	1				(KUBOTA 17422-63591)
	52739 00600		Key	ｷｰ	2				
8	52660 04700		Hook	ﾌｯｸ	1				
9	03260 03010		Blind rivet	ﾘﾍﾞｯﾄ	1				
10	44346 16700		Relay (main, starter)	ﾘﾚｰ	2	～0181			(KUBOTA 1J423-60231)
10 -1	44346 16900	B	Relay (main, starter)	ﾘﾚｰ	2	0182～		M 5	(KUBOTA 3C081-75222)
11	44250 54410		Bracket	ﾌﾞﾗｹｯﾄ	2				
12	44346 16200		Relay (heater)	ﾘﾚｰ	1				(KUBOTA 3N300-75211)
13	44470 01600		Fuse box	ﾋｭｰｽﾞ ﾎﾞｯｸｽ	2				
	46934 03200		Fuse (10A)	ﾋｭｰｽﾞ	2				
14	44470 01700		Fuse box	ﾋｭｰｽﾞ ﾎﾞｯｸｽ	1				
	46934 03300		Fuse (20A)	ﾋｭｰｽﾞ	1				
15	44250 14710		Bracket	ﾌﾞﾗｹｯﾄ	1				
16	02248 06016		Bolt, w/w	ﾜｯｼｬ付ﾎﾞﾙﾄ	6				
17	46870 55800		Controller	ｺﾝﾄﾛｰﾗ	1				(Emergency)
18	36146 08800		Tachometer	ｱﾜﾒｰﾀ付回転計	1				
19	36158 00500		Gauge, fuel	燃料計	1				
20	36145 06500		Thermometer, water	水温計	1				
21	36143 03600		Gauge, oil press.	油圧計	1				
22	46154 15300		Ammeter	充電電流計	1				
23	44365 00300		Oil pressure sender	油圧計用ｾﾝｻ	1				
24	44364 04900		Thermo sensor	ｻｰﾓ ｾﾝｻ	1				
25	37189 36000		Bushing	ﾌﾞｯｼﾝｸﾞ	1				
26	44381 04000		Tacho sensor	ﾀｺ ｾﾝｻ	1				(KUBOTA 56713-42931)
27	44328 22500		Pressure switch	油圧ｽｲｯﾁ	1				
28	44334 18700		Thermo switch	水温ｽｲｯﾁ	1				(KUBOTA 51601-37671)
29	46813 08100		Level switch	ﾚﾍﾞﾙ ｽｲｯﾁ	1				
30	43350 02200		Bracket	ﾌﾞﾗｹｯﾄ	1				
31	05105 22080		Cable	ｹｰﾌﾞﾙ	1	～0071			(batt. ～starter)
31 -1	05105 21065	A	Cable	ｹｰﾌﾞﾙ	1	0072～		M 1	(batt. ～starter)
32	44462 06700		Insulator	ｲﾝｼｭﾚｰﾀ	1				(red)
33	05625 00018		Terminal	ﾀｰﾐﾅﾙ	1				
34	06540 19075		Corrugated tube	ｺﾙｹﾞｰﾄ ﾁｭｰﾌﾞ	1	～0071			
34 -1	06540 19060	A	Corrugated tube	ｺﾙｹﾞｰﾄ ﾁｭｰﾌﾞ	1	0072～		M 1	
35	44462 00800		Insulator	ｲﾝｼｭﾚｰﾀ	1				
36	02915 00008		Hexagon flange nut	ﾌﾗﾝｼﾞ付ﾅｯﾄ	3				
37	07808 41060		Cable	ｹｰﾌﾞﾙ	1				(batt. ～Eng. earth)
38	05138 23050		Cable	ｹｰﾌﾞﾙ	1				(earth)
39	02108 12025		Bolt	ﾎﾞﾙﾄ	1				
40	03115 02012		Spring washer	ｽﾌﾟﾘﾝｸﾞ ﾜｯｼｬ	1				
41	03116 12012		Plain washer	ﾌﾟﾚｰﾝ ﾜｯｼｬ	1				
42	44490 22442		Wiring harness (main)	ﾜｲﾔﾊｰﾈｽ	1				
43	46921 02300		Silicon rectifier	ﾀﾞｲｵｰﾄﾞ	2				

silvernorm.co.uk

見出番号 Ref.NO.	部品番号 Part NO.	互換性 Inter-change ability	部品名称 Part Name		数量 Q'ty	適用号機範囲 Applicable Ser.No. 8C1	—	変更 C/H	備考 Remarks
44	44290 53900		Guide	ｶﾞｲﾄﾞ	1				
45	44290 54001		Guide	ｶﾞｲﾄﾞ	1				
46	02201 08020		Flange bolt	ﾌﾗﾝｼﾞ付ﾎﾞﾙﾄ	3				
47	44290 54101		Guide	ｶﾞｲﾄﾞ	1				
48	03424 80101		Clip	ｸﾘｯﾌﾟ	1				
49	02201 08012		Flange bolt	ﾌﾗﾝｼﾞ付ﾎﾞﾙﾄ	1				
50	37181 03300		Clip	ｸﾘｯﾌﾟ	1				
51	44336 03001		Button switch	ﾎﾞﾀﾝ ｽｲｯﾁ	1				
52	44311 65600		Terminal plate	ﾀｰﾐﾅﾙ ﾌﾟﾚｰﾄ	1				
53	02345 24020		Screw	ｽｸﾘｭ	2				
54	03115 03004		Spring washer	ｽﾌﾟﾘﾝｸﾞ ﾜｯｼｬ	2				
55	03116 18004		Plain washer	ﾌﾟﾚｰﾝ ﾜｯｼｬ	2				
56	46242 22900		Push button switch	ﾌﾟｯｼｭ ﾎﾞﾀﾝ ｽｲｯﾁ	1				
57	37181 07700		Clip	ｸﾘｯﾌﾟ	2				
58	02201 06016		Flange bolt	ﾌﾗﾝｼﾞ付ﾎﾞﾙﾄ	10				
59	02915 00006		Hexagon flange nut	ﾌﾗﾝｼﾞ付ﾅｯﾄ	6				
60	03425 00003		Vinyl clip	ﾋﾞﾆｰﾙ ｸﾘｯﾌﾟ	3				
61	03425 00001		Vinyl clip	ﾋﾞﾆｰﾙ ｸﾘｯﾌﾟ	21				
62	37181 05000		Clip	ｸﾘｯﾌﾟ	2				
63	44390 04900	D	Controller (sub)	ｺﾝﾄﾛｰﾗ	1	0188～		M 8	(KUBOTA 1J302-60602)
64	02138 06045	D	Bolt	ﾎﾞﾙﾄ	2	0188～		M 8	
	03115 02006	D	Spring washer	ｽﾌﾟﾘﾝｸﾞ ﾜｯｼｬ	2	0188～		M 8	
	03116 12006	D	Plain washer	ﾌﾟﾚｰﾝ ﾜｯｼｬ	2	0188～		M 8	
65	44490 42740	D	Wiring harness (sub)	ﾜｲﾔﾊｰﾈｽ	1	0188～		M 8	
66	46850 05100	D	Heater	ﾋｰﾀ	1	0188～		M 8	
67	44290 56000	D	Guide	ｶﾞｲﾄﾞ	1	0188～		M 8	

silverhorn.co.uk

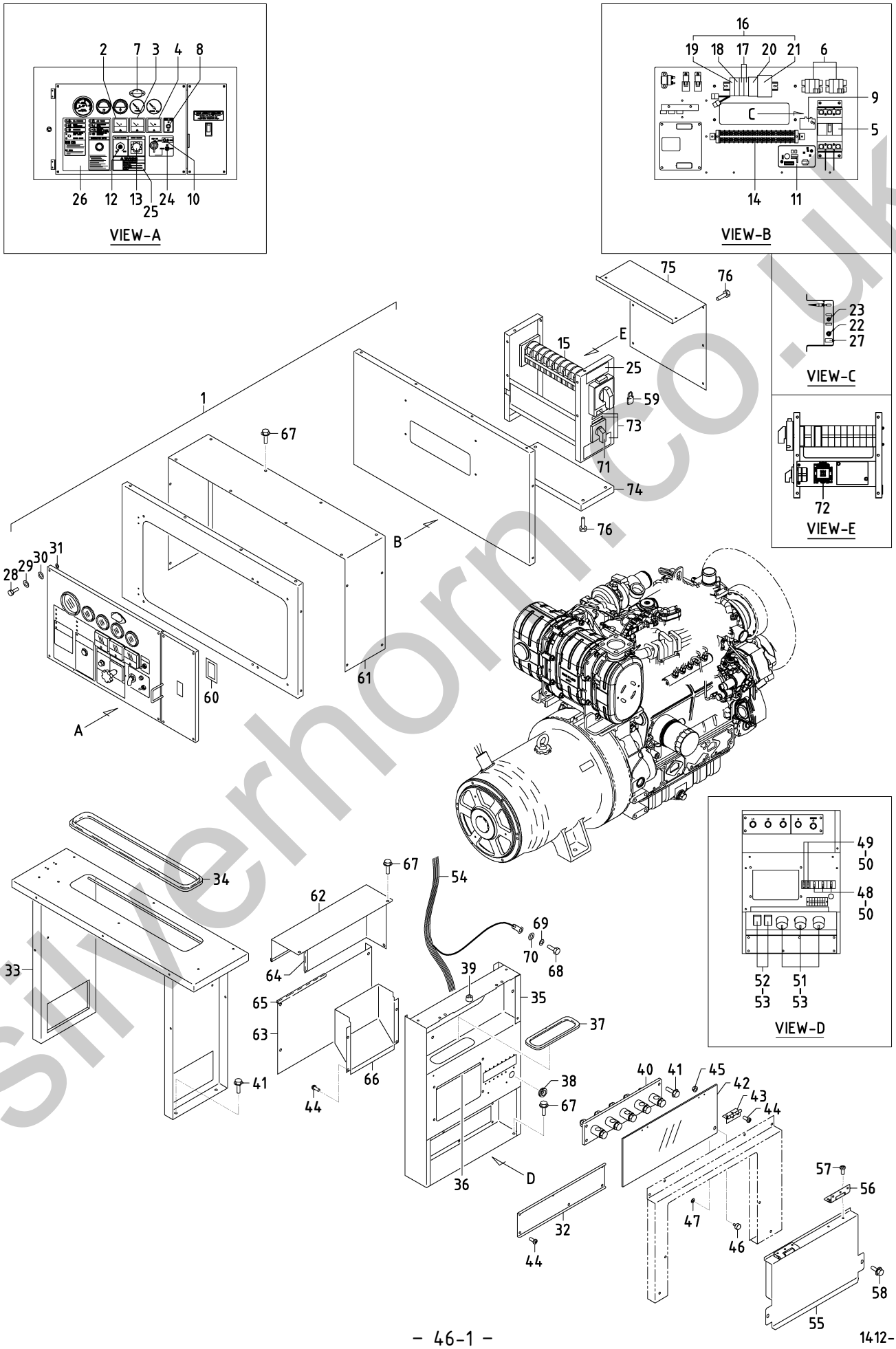

silverhorn.co.uk

1412-05

見出番号 Ref.NO.	部品番号 Part NO.	互換性 Interchangeability	部品名称 Part Name		数量 Q'ty	適用号機範囲 Applicable Ser.No. 8C1	—	変更 C/H	備考 Remarks
	46 - 00		ELECTRIC GROUP	ｴﾚｸﾄﾘｯｸ ｸﾞﾙｰﾌﾟ					
1	46900 08610		Switch board ass'y	制御盤	1	～0151			Const.No.2～31
1 -1	46900 17910	B	Switch board ass'y	制御盤	1	～0187		M 2	Const.No.2～31
1 -2	46900 22010	B	Switch board ass'y	制御盤	1	0188～		M 8	Const.No.2～31
2	46153 04000		Voltmeter(AC)	交流電圧計	1				& 71～73
3	46154 14400		Ammeter (AC)	交流電流計	1				
4	46911 01401		Frequency meter	周波数計	1				
5	46120 38300		Circuit breaker	三相遮断器	1				
6	46923 02700		Current transformer	変流器(電流計用)	2				
7	46929 01200		Illuminator	照明灯	1				
	46939 01300		Bulb	電球	1				
8	46167 02400		Select switch	ﾗｲﾄ ｽｲｯﾁ	1				
9	46928 01500		Thermal relay	ｻｰﾏﾙ ﾘﾚｰ	1				
10	46161 13300		Pilot lamp	ﾊﾟｲﾛｯﾄ ﾗﾝﾌﾟ	1				
11	46950 02901		A.V.R ass'y	自動電圧調整器	1				
12	46918 01401		Controller	電圧設定器	1				
	46991 00100		Knob	ﾉﾌﾞ	1				
13	46913 01000		Transfer device	電流計切替器	1				
14	44311 51300		Terminal plate	端子台	1				
	46311 02200		Plate	短絡ﾌﾟﾚｰﾄ	1				
15	46917 00900		Change device,voltage	電圧切替ｽｲｯﾁ	1				
16	46760 73610		Control panel	ｺﾝﾄﾛｰﾙ ﾊﾟﾈﾙ	1				Const.No.17～21
17	46177 08300		Relay	ﾘﾚｰ	2				
18	46177 08400		Relay	ﾘﾚｰ	1				
19	46177 08500		Relay	ﾘﾚｰ	1				
20	46872 01300		Dc power supply	直流変換器	1				
	46948 00900		Surge absorber	ｻｰｼﾞ ｱﾌﾞｿｰﾊﾞ	1				
21	46879 65200		Controller complete	ｼｰｹﾝｻ	1				
	46921 08600		Silicon rectifier	ﾀﾞｲｵｰﾄﾞ	2				
22	46120 36300		Circuit breaker	ｻｰｷｯﾄ ﾌﾟﾛﾃｸﾀ	1				
23	46167 03100		Select switch	ｾﾚｸﾄ ｽｲｯﾁ	1				
24	46167 02500		Select switch	ｾﾚｸﾄ ｽｲｯﾁ	1				
25	39178 06030		Plate(in-pane)	ﾌﾟﾚｰﾄ	1				
26	39178 04240		Plate(warning,lamp)	ﾌﾟﾚｰﾄ	1				
27	39178 85430		Plate(cp)	ﾌﾟﾚｰﾄ	1				
28	02138 06035		Bolt	ﾎﾞﾙﾄ	8				
29	03115 02006		Spring washer	ｽﾌﾟﾘﾝｸﾞ ﾜｯｼｬ	8				
30	03116 12006		Plain washer	ﾌﾟﾚｰﾝ ﾜｯｼｬ	8				
31	45214 01400		Washer	ﾜｯｼｬ	8				
32	46480 55600		Cover	ｶﾊﾞｰ	1				
33	46450 15910		Bracket	ﾌﾞﾗｹｯﾄ	1				
34	03407 64703		Seal rubber	ｼｰﾙ ﾗﾊﾞｰ	1				
35	46470 95000		Box	ﾎﾞｯｸｽ	1				
36	03407 66512		Seal rubber	ｼｰﾙ ﾗﾊﾞｰ	1				
37	03407 66505		Seal rubber	ｼｰﾙ ﾗﾊﾞｰ	1				
38	03403 00252		Grommet	ｸﾞﾛﾒｯﾄ	1				
39	31131 04100		Rubber	ﾗﾊﾞｰ	1				(stopper)
40	44311 66300		Terminal plate	三相出力端子板	1				See page 46-4
41	02201 08020		Flange bolt	ﾌﾗﾝｼﾞ付ﾎﾞﾙﾄ	8				
42	52416 27400		Window glass	ｳｲﾝﾄﾞ ｸﾞﾗｽ	1				
43	52480 13300		Hinge	ﾋﾝｼﾞ	2				
44	02401 26016		Screw	ｽｸﾘｭ	18				

silverham.co.uk

見出番号 Ref.NO.	部品番号 Part NO.	互換性 Inter-change ability	部品名称 Part Name		数量 Q'ty	適用号機範囲 Applicable Ser.No. 8C1	—	変更 C/H	備考 Remarks
45	02915 00006		Hexagon flange nut	ﾌﾗﾝｼﾞ付ﾅｯﾄ	8				
46	52640 02400		Bolt	ﾎﾞﾙﾄ	1				
47	45214 01400		Washer	ﾜｯｼｬ	1				
48	46120 26900	Y	Circuit breaker	電源遮断器	3				
48	46120 34000	Y	Circuit breaker	電源遮断器	3				
49	46120 26800	Y	Circuit breaker	電源遮断器	2				
49	46120 34100	Y	Circuit breaker	電源遮断器	2				
50	02345 23008		Screw	ｽｸﾘｭ	16				
	03115 03003		Spring washer	ｽﾌﾟﾘﾝｸﾞ ﾜｯｼｬ	16				
	03116 18003		Plain washer	ﾌﾟﾚｰﾝ ﾜｯｼｬ	16				
51	44312 02800		Socket	ｿｹｯﾄ	3				
52	44312 02900		Socket	ｿｹｯﾄ	2				
53	02345 24020		Screw	ｽｸﾘｭ	10				
	02912 09004		Nut	ﾅｯﾄ	10				
	03115 03004		Spring washer	ｽﾌﾟﾘﾝｸﾞ ﾜｯｼｬ	10				
	03116 18004		Plain washer	ﾌﾟﾚｰﾝ ﾜｯｼｬ	20				
54	44550 30001		Cable kit	ｹｰﾌﾞﾙ ｷｯﾄ	1				
55	52400 34820		Side cover	ｻｲﾄﾞ ｶﾊﾞｰ	1				
56	52480 14700		Hinge	ﾋﾝｼﾞ	2				
57	02401 46012		Screw	ｽｸﾘｭ	8				
58	02246 08016		Bolt,w/w	ﾜｯｼｬ付ﾎﾞﾙﾄ	2				
59	52723 00100		Lock ass'y	ﾛｯｸ	1				(w.key)
60	52931 92020		Lining	ﾗｲﾆﾝｸﾞ	1				
61	46480 67000		Cover	ｶﾊﾞｰ	1	～0151			
61 -1	46480 70400	B	Cover	ｶﾊﾞｰ	1	0152～		M 2	
62	44260 37400		Cover	ｶﾊﾞｰ	1				
63	44260 37801		Cover	ｶﾊﾞｰ	1				
64	03407 66507		Seal rubber	ｼｰﾙ ﾗﾊﾞｰ	1				
65	03407 66510		Seal rubber	ｼｰﾙ ﾗﾊﾞｰ	1				
66	46480 47900		Cover	ｶﾊﾞｰ	1				
67	02201 06016		Flange bolt	ﾌﾗﾝｼﾞ付ﾎﾞﾙﾄ	33				
68	02108 12025		Bolt	ﾎﾞﾙﾄ	1				
69	03115 02012		Spring washer	ｽﾌﾟﾘﾝｸﾞ ﾜｯｼｬ	1				
70	03116 12012		Plain washer	ﾌﾟﾚｰﾝ ﾜｯｼｬ	1				
71	46917 05500	D	Change device,voltage	電圧切替ｽｲｯﾁ	1	0188～		M 8	
72	46131 24800	D	Contactor	ｺﾝﾀｸﾀ	1	0188～		M 8	
73	39178 16140	D	Plate(notice)	ﾌﾟﾚｰﾄ	1	0188～		M 8	
74	46450 27210	D	Bracket	ﾌﾞﾗｹｯﾄ	1	0188～		M 8	
75	46480 75000	D	Cover	ｶﾊﾞｰ	1	0188～		M 8	
76	02248 06016	D	Bolt,w/w	ﾜｯｼｬ付ﾎﾞﾙﾄ	12	0188～		M 8	

silverhorn.co.uk

46 - 01　TERMINAL PLATE

見出番号 Ref.NO.	部品番号 Part NO.	互換性 Inter-change ability	部品名称 Part Name	数量 Q'ty	適用号機範囲 Applicable Ser.No. 8C1	—	変更 C/H	備考 Remarks
	44311 66300		TERMINAL PLATE　三相出力端子板					
1	46305 09300		Plate　端子板	1				
2	46312 05100		Bolt　ﾎﾞﾙﾄ	5				
3	35208 04500		Bolt　ﾎﾞﾙﾄ	5				
4	03115 06014		Spring washer　ﾅｯﾄ	5				
5	03116 15014		Plain washer　ｽﾌﾟﾘﾝｸﾞ ﾜｯｼｬ	5				
6	02912 03014		Nut　ﾅｯﾄ	10				
7	03115 02014		Spring washer　ｽﾌﾟﾘﾝｸﾞ ﾜｯｼｬ	10				
8	03116 14014		Plain washer　ﾌﾟﾚｰﾝ ﾜｯｼｬ	15				
9	03316 03016		Pin　ﾋﾟﾝ	10				

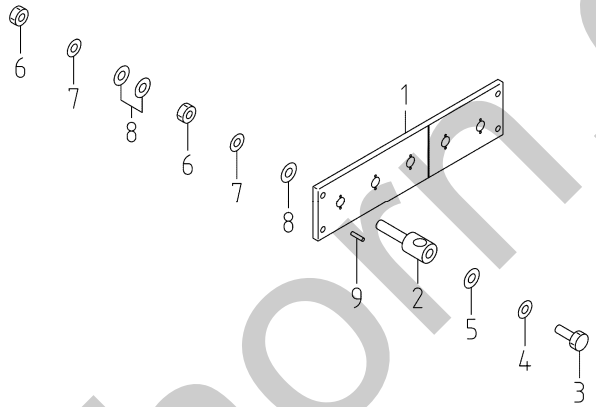

silverhorn.co.uk

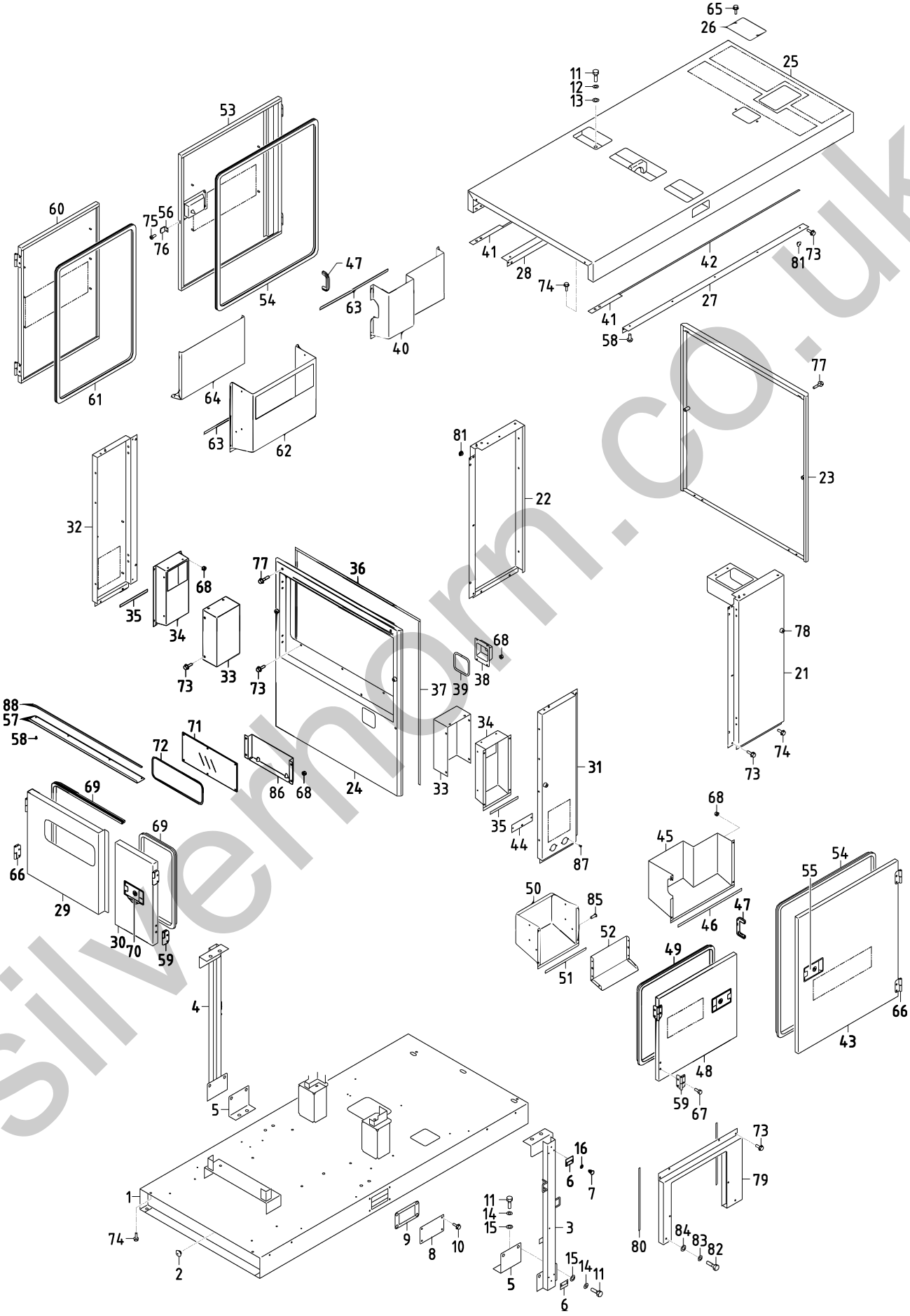

silverhorn.co.uk

見出番号 Ref.NO.	部品番号 Part NO.	互換性 Interchangeability	部品名称 Part Name		数量 Q'ty	適用号機範囲 Applicable Ser.No. 8C1	—	変更 C/H	備考 Remarks
	51 - 00		FRAME GROUP	ﾌﾚｰﾑ ｸﾞﾙｰﾌﾟ					
1	51100 52943		Frame	ﾌﾚｰﾑ	1	～0187			
1 -1	51100 67640	B	Frame	ﾌﾚｰﾑ	1	0188～		M 8	
2	03403 10017		Grommet	ｸﾞﾛﾒｯﾄ	4				
3	52620 49801		Lifting bail	ﾘﾌﾃｨﾝｸﾞ ﾍﾞｲﾙ	1				
4	52620 49901		Lifting bail	ﾘﾌﾃｨﾝｸﾞ ﾍﾞｲﾙ	1				
5	52630 13800		Stay	ｽﾃｲ	2				
6	52728 20810		Cushion rubber	ｸｯｼｮﾝ ﾗﾊﾞｰ	4				
7	52746 02400		Cap	ｷｬｯﾌﾟ	8				
8	52350 44421		Cover	ｶﾊﾞｰ	2				
9	52728 32010		Cushion rubber	ｸｯｼｮﾝ ﾗﾊﾞｰ	2				
10	02201 06016		Flange bolt	ﾌﾗﾝｼﾞ付ﾎﾞﾙﾄ	8				
11	02135 16040		Bolt	ﾎﾞﾙﾄ	12				
12	03115 06016		Spring washer	ｽﾌﾟﾘﾝｸﾞ ﾜｯｼｬ	4				
13	03116 15016		Plain washer	ﾌﾟﾚｰﾝ ﾜｯｼｬ	4				
14	03115 02016		Spring washer	ｽﾌﾟﾘﾝｸﾞ ﾜｯｼｬ	8				
15	03116 12016		Plain washer	ﾌﾟﾚｰﾝ ﾜｯｼｬ	8				
16	03116 35005		Plain washer	ﾌﾟﾚｰﾝ ﾜｯｼｬ	8				
	52 - 00		BONNET GROUP	ﾎﾞﾝﾈｯﾄ ｸﾞﾙｰﾌﾟ					
21	52100 20131		Cover	ｶﾊﾞｰ	1				
22	52100 20231		Cover	ｶﾊﾞｰ	1				
23	52830 49500		Cover	ｶﾊﾞｰ	1				
24	52100 20332		Cover	ｶﾊﾞｰ	1				
25	52300 44622		Top cover	ﾄｯﾌﾟ ｶﾊﾞｰ	1				
26	52350 89010		Cover	ｶﾊﾞｰ	1				
27	52160 77401		Bracket	ﾌﾞﾗｹｯﾄ	1				
28	52160 77501		Bracket	ﾌﾞﾗｹｯﾄ	1				
29	52450 48031		Door	ﾄﾞｱ	1				
30	52450 47931		Door	ﾄﾞｱ	1				
31	52100 20431		Cover	ｶﾊﾞｰ	1				
32	52100 20530		Cover	ｶﾊﾞｰ	1				
33	52370 01410		Duct	ﾀﾞｸﾄ	2				
34	52370 01310		Duct	ﾀﾞｸﾄ	2				
35	03407 66851		Seal rubber	ｼｰﾙ ﾗﾊﾞｰ	2				
36	03407 66809		Seal rubber	ｼｰﾙ ﾗﾊﾞｰ	1				
37	03407 66806		Seal rubber	ｼｰﾙ ﾗﾊﾞｰ	2				
38	52230 44800		Cover	ｶﾊﾞｰ	1				
39	03407 67611		Seal rubber	ｼｰﾙ ﾗﾊﾞｰ	1				
40	52370 99001		Duct	ﾀﾞｸﾄ	1				
41	52728 40110		Cushion rubber	ｸｯｼｮﾝ ﾗﾊﾞｰ	2				
42	03407 68140		Seal rubber	ｼｰﾙ ﾗﾊﾞｰ	2				
43	52450 47531		Door	ﾄﾞｱ	1				
44	52350 83220		Cover	ｶﾊﾞｰ	1				
45	52370 98802		Duct	ﾀﾞｸﾄ	1				
46	03407 66857		Seal rubber	ｼｰﾙ ﾗﾊﾞｰ	1				
47	03407 67232		Seal rubber	ｼｰﾙ ﾗﾊﾞｰ	2				
48	52450 47631		Door	ﾄﾞｱ	1				
49	03407 64727		Seal rubber	ｼｰﾙ ﾗﾊﾞｰ	1				
50	52370 99501		Duct	ﾀﾞｸﾄ	1				

silvernorm.co.uk

見出番号 Ref.NO.	部品番号 Part NO.	互換性 Inter-change ability	部品名称 Part Name		数量 Q'ty	適用号機範囲 Applicable Ser.No. 8C1	—	変更 C/H	備考 Remarks
51	03407 66849		Seal rubber	ｼｰﾙ ﾗﾊﾞｰ	1				
52	52370 99601		Duct	ﾀﾞｸﾄ	1				
53	52450 47731		Door	ﾄﾞｱ	1				
54	03407 64751		Seal rubber	ｼｰﾙ ﾗﾊﾞｰ	2				
55	52710 03601		Latch ass'y	ﾗｯﾁ	4				
	52739 03400		Key(0200)	ｷｰ	4				
56	52160 34600		Bracket	ﾌﾞﾗｹｯﾄ	1				
57	52160 77301		Bracket	ﾌﾞﾗｹｯﾄ	1				
58	52640 05100		Screw	ｽｸﾘｭ	14				
59	52480 14400		Hinge	ﾋﾝｼﾞ	6				
60	52450 47831		Door	ﾄﾞｱ	1				
61	03407 64720		Seal rubber	ｼｰﾙ ﾗﾊﾞｰ	1				
62	52370 99201		Duct	ﾀﾞｸﾄ	1				
63	03407 66856		Seal rubber	ｼｰﾙ ﾗﾊﾞｰ	2				
64	52370 99301		Duct	ﾀﾞｸﾄ	1				
65	02246 08016		Bolt,w/w	ﾜｯｼｬ付ﾎﾞﾙﾄ	2				
66	52480 13800		Hinge	ﾋﾝｼﾞ	6				
67	02136 08016		Bolt	ﾎﾞﾙﾄ	48				
68	02915 00006		Hexagon flange nut	ﾌﾗﾝｼﾞ付ﾎﾞﾙﾄ	60				
69	03407 64732		Seal rubber	ｼｰﾙ ﾗﾊﾞｰ	2				
70	52728 14810		Cushion rubber	ｸｯｼｮﾝ ﾗﾊﾞｰ	4				
71	52416 19800		Window glass	ｳｲﾝﾄﾞ ｸﾞﾗｽ	1				
72	03407 67605		Seal rubber	ｼｰﾙ ﾗﾊﾞｰ	1				
73	02201 06016		Flange bolt	ﾌﾗﾝｼﾞ付ﾎﾞﾙﾄ	31				
74	02201 08020		Flange bolt	ﾌﾗﾝｼﾞ付ﾎﾞﾙﾄ	18				
75	02401 24012		Screw	ｽｸﾘｭ	2				
76	52746 01900		Cap	ｷｬｯﾌﾟ	1				(protector)
77	02246 08050		Bolt,w/w	ﾜｯｼｬ付ﾎﾞﾙﾄ	8				
78	31131 04100		Rubber	ｺﾞﾑ	6				
79	52160 77700		Bracket	ﾌﾞﾗｹｯﾄ	1				
80	03407 68041		Seal rubber	ｼｰﾙ ﾗﾊﾞｰ	4				
81	03403 10010		Grommet	ｸﾞﾛﾒｯﾄ	8				
82	02136 06060		Bolt	ﾎﾞﾙﾄ	2				
83	03115 06006		Spring washer	ｽﾌﾟﾘﾝｸﾞ ﾜｯｼｬ	2				
84	03116 15006		Plain washer	ﾌﾟﾚｰﾝ ﾜｯｼｬ	2				
85	03260 05013		Blind rivet	ﾘﾍﾞｯﾄ	12				
86	39200 04302		Tool box	ﾂｰﾙ ﾎﾞｯｸｽ	1				
87	02401 45016		Screw	ｽｸﾘｭ	2				
88	03407 68085		Seal rubber	ｼｰﾙ ﾗﾊﾞｰ	1				

silvermoon.co.uk

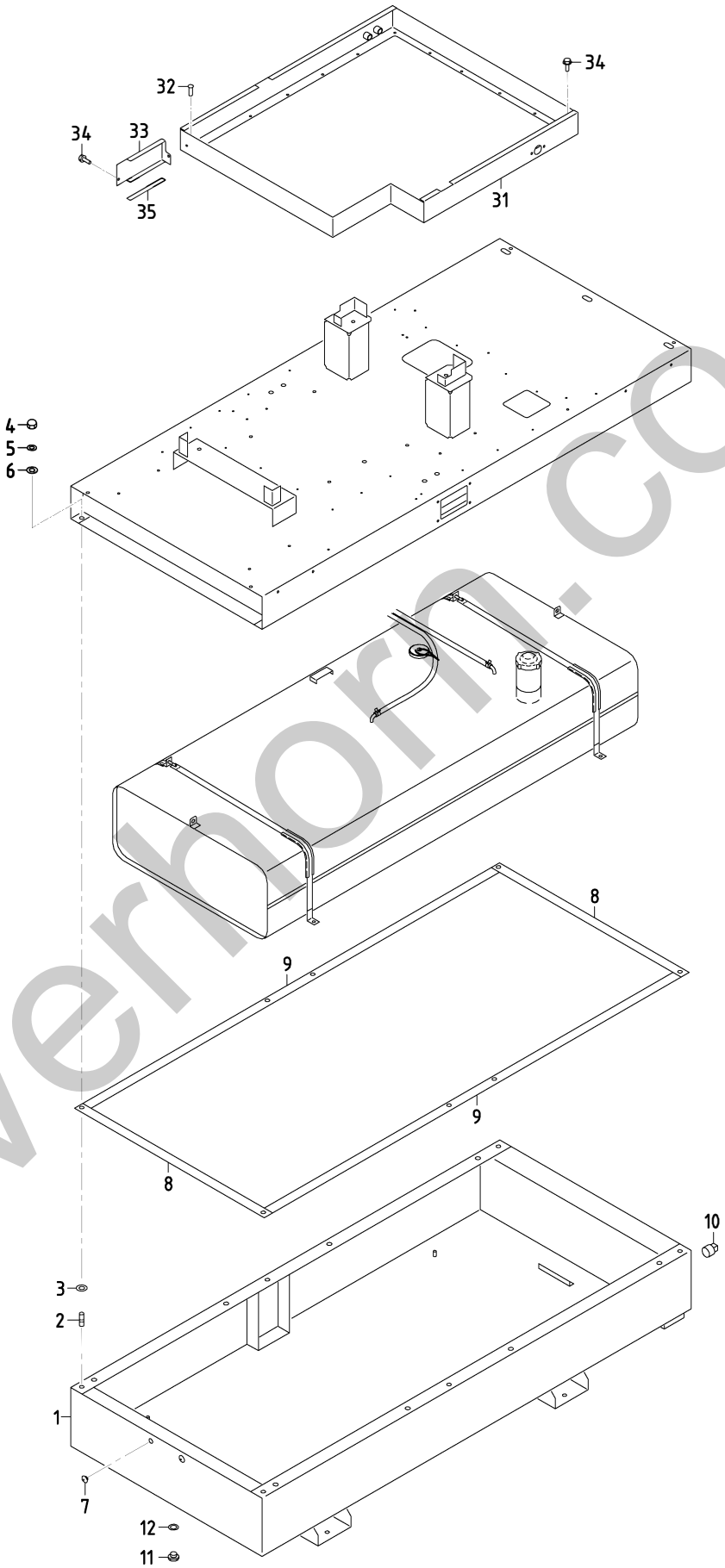

silverhorn.co.uk

51 - 01　OIL FENCE

見出番号 Ref.NO.	部品番号 Part NO.	互換性 Inter-change ability	部品名称 Part Name	数量 Q'ty	適用号機範囲 Applicable Ser.No. 8C1	—	変更 C/H	備考 Remarks
	51 - 01		FRAME GROUP　フレーム グループ					
1	51100 53041		Frame　フレーム	1				
2	02473 12025		Stud bolt　スタッド ボルト	6				
3	52744 01400		Washer　ワッシャ	6				
4	02914 20012		Cap nut　キャップ ナット	6				
5	03115 02012		Spring washer　スプリング ワッシャ	6				
6	03116 12012		Plain washer　プレーン ワッシャ	6				
7	03403 10017		Grommet　グロメット	4				
8	52728 39910		Cushion rubber　クッション ラバー	2				
9	52728 40010		Cushion rubber　クッション ラバー	2				
10	03620 41008		Plug　プラグ	1				
11	03620 20022		Plug　プラグ	1				
12	03407 20122		Gasket　ガスケット	1				
	52 - 01		BONNET GROUP　ボンネット グループ					
31	52160 77602		Bracket　ブラケット	1				
32	03260 05013		Blind rivet　リベット	20				
33	52160 41702		Bracket　ブラケット	1				
34	02201 06016		Flange bolt　フランジ付ボルト	7				
35	03407 66861		Seal rubber　シール ラバー	1				

silverhorn.co.uk

見出番号 Ref.NO.	部品番号 Part NO.	互換性 Inter-change ability	部品名称 Part Name	数量 Q'ty	適用号機範囲 Applicable Ser.No. 8C1	—	変更 C/H	備考 Remarks
	52900 21420		URETHANE FOAM KIT ｳﾚﾀﾝ ﾌｫｰﾑ ｷｯﾄ					Const.No.1～10
1	52959 27430		Lining ﾗｲﾆﾝｸﾞ	1				
2	52959 67240		Lining ﾗｲﾆﾝｸﾞ	1				
3	52959 30850		Lining ﾗｲﾆﾝｸﾞ	2				
4	52959 93050		Lining ﾗｲﾆﾝｸﾞ	2				
5	52959 93150		Lining ﾗｲﾆﾝｸﾞ	1				
6	52959 40240		Lining ﾗｲﾆﾝｸﾞ	1				
7	52931 97620		Lining ﾗｲﾆﾝｸﾞ	1				
8	52939 13940		Lining ﾗｲﾆﾝｸﾞ	1				
9	52919 43100		Lining ﾗｲﾆﾝｸﾞ	1				
10	52919 00530		Lining ﾗｲﾆﾝｸﾞ	1				
	52901 21420		URETHANE FOAM KIT ｳﾚﾀﾝ ﾌｫｰﾑ ｷｯﾄ					Const.No.101～111
101	52978 30400		Lining ﾗｲﾆﾝｸﾞ	1				
102	52977 70500		Lining ﾗｲﾆﾝｸﾞ	1				
103	52977 70600		Lining ﾗｲﾆﾝｸﾞ	1				
104	52977 70700		Lining ﾗｲﾆﾝｸﾞ	1				
105	52977 71400		Lining ﾗｲﾆﾝｸﾞ	1				
106	52978 32701		Lining ﾗｲﾆﾝｸﾞ	1				
107	52977 70900		Lining ﾗｲﾆﾝｸﾞ	1				
108	52977 35600		Lining ﾗｲﾆﾝｸﾞ	1				
109	52977 63700		Lining ﾗｲﾆﾝｸﾞ	1				
110	52977 71000		Lining ﾗｲﾆﾝｸﾞ	1				
111	52977 71100		Lining ﾗｲﾆﾝｸﾞ	1				

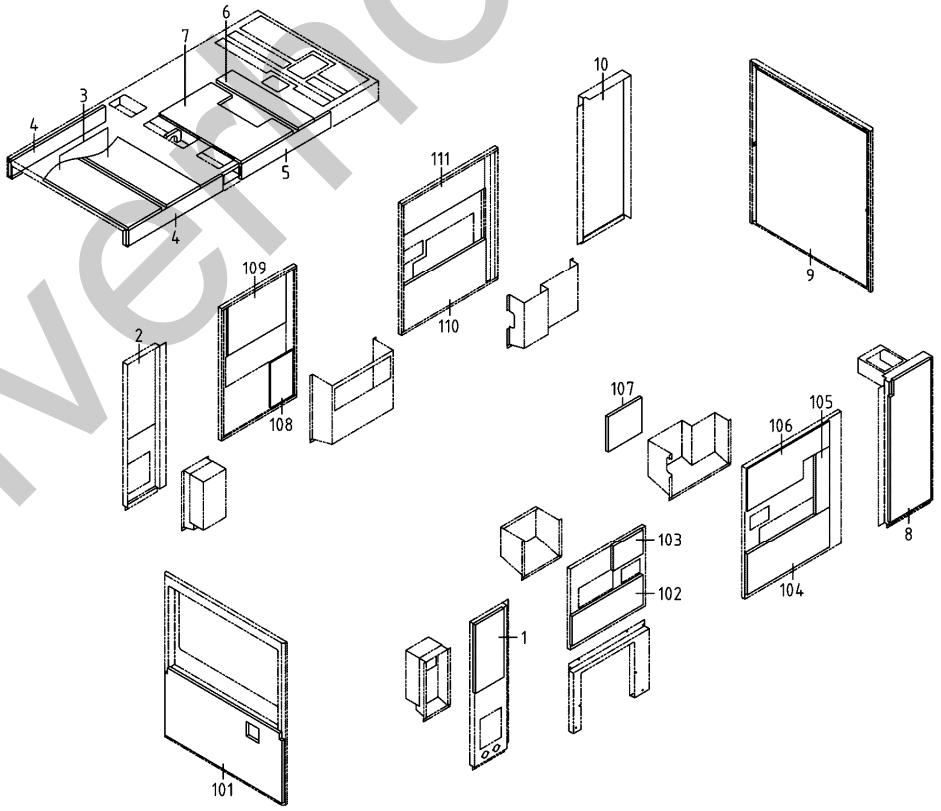

silverthorn.co.uk

I N D E X

PART NO.	PAGE	REF. NO.
02102 12025	20 - 2	53
02108 12025	38 - 3	74
02108 12025	44 - 2	39
02108 12025	46 - 3	68
02135 06060	20 - 2	16
02135 10025	20 - 2	24
02135 10030	20 - 2	26
02135 16040	51 - 2	11
02136 06060	51 - 3	82
02136 08016	51 - 3	67
02136 10035	38 - 3	111
02138 06035	46 - 2	28
02138 06045	44 - 3	64
02138 10030	20 - 2	27
02201 06016	38 - 2	33
02201 06016	38 - 2	38
02201 06016	38 - 3	77
02201 06016	43 - 2	32
02201 06016	44 - 3	58
02201 06016	46 - 3	67
02201 06016	51 - 2	10
02201 06016	51 - 3	73
02201 06016	51 - 5	34
02201 08012	20 - 3	91
02201 08012	43 - 2	27
02201 08012	44 - 3	49
02201 08020	20 - 3	101
02201 08020	38 - 2	5
02201 08020	38 - 3	107
02201 08020	43 - 3	55
02201 08020	44 - 3	46
02201 08020	46 - 2	41
02201 08020	51 - 3	74
02201 08030	43 - 2	21
02201 08070	43 - 2	19
02201 10020	38 - 2	15
02238 08025	20 - 2	20
02246 06016	38 - 2	38-1
02246 06016	38 - 2	44
02246 08016	46 - 3	58
02246 08016	51 - 3	65
02246 08050	51 - 3	77
02248 06016	44 - 2	16
02248 06016	46 - 3	76
02248 06025	20 - 2	23
02248 08025	44 - 2	6
02248 12030	20 - 3	99
02345 23008	46 - 3	50
02345 24020	44 - 3	53
02345 24020	46 - 3	53

PART NO.	PAGE	REF. NO.
02401 24012	51 - 3	75
02401 26016	46 - 2	44
02401 45016	51 - 3	87
02401 46012	46 - 3	57
02415 65012	43 - 2	3
02473 12025	51 - 5	2
02601 10016	20 - 2	11
02912 03014	46 - 4	6
02912 06010	38 - 3	112
02912 09004	46 - 3	53
02914 20012	51 - 5	4
02915 00006	38 - 2	34
02915 00006	44 - 3	59
02915 00006	46 - 3	45
02915 00006	51 - 3	68
02915 00008	38 - 3	109
02915 00008	43 - 2	9
02915 00008	44 - 2	36
02915 00010	43 - 2	8
02915 20008	38 - 2	47
02915 20012	20 - 2	57
03115 02006	20 - 2	17
03115 02006	44 - 3	64
03115 02006	46 - 2	29
03115 02010	20 - 2	25
03115 02010	20 - 2	28
03115 02012	20 - 2	54
03115 02012	38 - 3	75
03115 02012	44 - 2	40
03115 02012	46 - 3	69
03115 02012	51 - 5	5
03115 02014	46 - 4	7
03115 02016	51 - 2	14
03115 03003	46 - 3	50
03115 03004	44 - 3	54
03115 03004	46 - 3	53
03115 06006	51 - 3	83
03115 06010	38 - 3	113
03115 06014	46 - 4	4
03115 06016	51 - 2	12
03116 12006	20 - 2	18
03116 12006	44 - 3	64
03116 12006	46 - 2	30
03116 12008	38 - 2	46
03116 12012	38 - 3	76
03116 12012	44 - 2	41
03116 12012	46 - 3	70
03116 12012	51 - 5	6
03116 12016	51 - 2	15
03116 14014	46 - 4	8

PART NO.	PAGE	REF. NO.
03116 15006	51 - 3	84
03116 15010	38 - 3	114
03116 15014	46 - 4	5
03116 15016	51 - 2	13
03116 18003	46 - 3	50
03116 18004	44 - 3	55
03116 18004	46 - 3	53
03116 35005	51 - 2	16
03260 03010	39 - 2	2
03260 03010	44 - 2	9
03260 05013	51 - 3	85
03260 05013	51 - 5	32
03307 14050	20 - 2	3
03307 14063	20 - 2	3
03307 14250	20 - 2	3
03316 03016	46 - 4	9
03402 00326	43 - 2	28
03403 00252	46 - 2	38
03403 00303	38 - 2	39
03403 00512	38 - 2	22
03403 10010	51 - 3	81
03403 10017	51 - 2	2
03403 10017	51 - 5	7
03407 16024	38 - 3	62
03407 20122	51 - 5	12
03407 64703	46 - 2	34
03407 64720	51 - 3	61
03407 64727	51 - 2	49
03407 64732	51 - 3	69
03407 64751	51 - 3	54
03407 66505	46 - 2	37
03407 66507	46 - 3	64
03407 66510	46 - 3	65
03407 66512	46 - 2	36
03407 66806	51 - 2	37
03407 66809	51 - 2	36
03407 66815	38 - 2	6
03407 66849	51 - 3	51
03407 66851	51 - 2	35
03407 66856	38 - 2	17
03407 66856	51 - 3	63
03407 66857	51 - 2	46
03407 66861	51 - 5	35
03407 66939	38 - 2	21
03407 66954	38 - 2	20
03407 67232	51 - 2	47
03407 67418	38 - 2	18
03407 67514	38 - 2	19
03407 67605	51 - 3	72
03407 67611	51 - 2	39

silverhorn.co.uk

I N D E X

PART NO.	PAGE	REF. NO.
03407 68041	51 - 3	80
03407 68085	51 - 3	88
03407 68140	51 - 2	42
03424 80101	44 - 3	48
03424 80235	20 - 3	90
03425 00001	38 - 2	37
03425 00001	44 - 3	61
03425 00003	43 - 3	56
03425 00003	44 - 3	60
03511 10016	43 - 3	51
03511 20016	43 - 3	52
03511 20020	43 - 2	14
03511 20022	38 - 3	50
03511 20035	38 - 3	65
03511 20050	38 - 2	12
03511 20060	38 - 2	13
03511 20080	20 - 3	94
03511 20090	20 - 3	95
03511 30185	38 - 2	8
03511 40016	38 - 2	31
03511 40016	38 - 3	72
03511 40016	43 - 2	50
03511 40020	38 - 3	72-1
03511 40020	43 - 2	49
03511 50065	20 - 3	102
03511 50075	20 - 3	103
03511 50085	20 - 3	104
03570 08012	43 - 2	43
03570 08034	43 - 2	42
03570 08047	43 - 2	44
03570 08164	43 - 2	45
03570 08200	43 - 2	46
03570 09028	43 - 2	13
03580 19055	38 - 3	64
03590 00019	38 - 3	48
03590 00020	38 - 3	49
03600 08042	43 - 2	41
03600 08165	43 - 2	40
03600 09006	43 - 2	48
03600 09040	43 - 2	47
03600 09070	38 - 3	71-1
03600 09100	43 - 2	39
03620 20022	51 - 5	11
03620 41003	43 - 2	30
03620 41004	38 - 3	70
03620 41008	51 - 5	10
03731 21003	43 - 2	35
03731 28003	38 - 2	42
03731 28003	38 - 3	78
03731 30003	43 - 2	37
03731 44003	43 - 2	36
03734 43030	43 - 2	33
03735 13004	38 - 3	67
03830 08006	38 - 3	108
03830 08016	38 - 3	108-1
03830 08025	38 - 2	45
05105 21065	44 - 2	31-1
05105 22080	44 - 2	31
05138 23050	44 - 2	38
05625 00018	44 - 2	33
06540 19060	44 - 2	34-1
06540 19075	44 - 2	34
07808 41060	44 - 2	37
20003 64401	20 - 2	1
21472 17200	20 - 2	8
25100 10400	20 - 2	2
25140 05601	20 - 2	4
25151 04801	20 - 2	3
25200 12100	20 - 2	9
25310 11000	20 - 2	10
25310 11100	20 - 2	19
25360 08400	20 - 2	22
25600 01400	20 - 2	5
25700 08900	20 - 2	15
31110 10510	20 - 2	51
31110 10610	20 - 2	52
31120 08900	20 - 2	56
31130 28200	20 - 2	55
31131 04100	46 - 2	39
31131 04100	51 - 3	78
31131 04900	38 - 2	2
32100 44900	20 - 3	81
32142 11300	20 - 3	83
32143 11800	20 - 3	82
32147 03600	20 - 3	85
32148 03000	20 - 3	86
32151 01600	20 - 3	84
32240 46800	20 - 3	87
32270 06401	20 - 3	100
32320 71300	20 - 3	92
32320 71401	20 - 3	98
32331 85601	20 - 3	89
32331 85701	20 - 3	93
32331 85800	20 - 3	96
32331 85901	20 - 3	97
32331 86002	20 - 3	88
33238 02800	43 - 2	16
35208 04500	46 - 4	3
35421 06800	43 - 2	15
35483 10101	43 - 2	31
36135 02200	20 - 2	13
36135 02300	20 - 2	21
36143 03600	44 - 2	21
36145 06500	44 - 2	20
36146 08800	44 - 2	18
36158 00500	44 - 2	19
36159 03000	43 - 2	2
37170 02900	38 - 3	66
37170 12200	43 - 2	38
37170 12700	43 - 2	12
37170 20100	38 - 3	68
37170 20200	43 - 2	34
37170 24800	38 - 2	41
37170 24800	38 - 3	79
37181 03300	44 - 3	50
37181 03600	38 - 2	36
37181 04200	43 - 3	53
37181 05000	38 - 3	73
37181 05000	43 - 3	54
37181 05000	44 - 3	62
37181 07700	38 - 3	51
37181 07700	43 - 2	29
37181 07700	44 - 3	57
37189 36000	44 - 2	25
38100 45000	38 - 2	1
38410 05700	38 - 2	1
38420 00310	38 - 2	3
38420 00410	38 - 2	4
38420 02610	38 - 2	43
38440 13212	38 - 2	23
38440 13312	38 - 2	24
38441 12210	38 - 2	25
38450 89901	38 - 2	28
38450 90001	38 - 2	29
38450 90101	38 - 2	26
38450 91400	38 - 2	27
38465 12600	43 - 2	11
38469 01800	38 - 2	1
38510 42700	38 - 2	40
38524 74101	38 - 2	10
38524 74200	38 - 2	11
38590 01200	38 - 2	7
38591 01000	38 - 2	32
38594 02900	38 - 3	71
38594 05000	38 - 2	35
38594 05900	38 - 2	9
38594 06100	38 - 2	30
38920 04700	38 - 2	14
39103 46801	39 - 2	2
39152 23401	39 - 2	20

silverhorn.co.uk

I N D E X

PART NO.	PAGE	REF. NO.
39153 70100	39 - 2	10
39170 02000	39 - 2	1
39173 02000	39 - 2	15
39173 05900	39 - 2	21
39176 05010	39 - 2	13
39176 09310	39 - 2	30
39176 50000	39 - 3	36
39176 62400	39 - 2	14
39176 62900	39 - 2	35
39176 69300	39 - 3	37
39176 69500	39 - 2	33
39176 69600	39 - 2	34
39176 73300	39 - 2	29
39176 73500	39 - 2	31
39176 73800	39 - 2	32
39178 00310	39 - 3	38
39178 01640	39 - 2	26
39178 04240	46 - 2	26
39178 06030	46 - 2	25
39178 10340	39 - 2	6-1
39178 16140	46 - 3	73
39178 18540	39 - 3	39
39178 22031	39 - 2	27
39178 29930	39 - 2	3
39178 43110	39 - 2	11
39178 47610	39 - 2	12
39178 49120	39 - 2	28
39178 50620	39 - 2	19
39178 53620	39 - 2	8
39178 54721	39 - 2	6
39178 54820	39 - 2	7
39178 55220	39 - 2	4
39178 57720	39 - 2	5
39178 79330	20 - 2	14
39178 80820	39 - 2	9
39178 85430	46 - 2	27
39178 87210	39 - 2	18
39200 04302	51 - 3	86
42100 84400	38 - 3	101
42230 17700	38 - 3	102
42240 23500	38 - 3	106
42310 03610	38 - 3	103
42321 02200	38 - 3	104
42323 03600	38 - 3	110
42324 15900	38 - 3	105
43100 78900	43 - 2	1
43210 01301	43 - 2	5
43220 01300	43 - 2	4
43310 32900	43 - 2	6
43310 33700	43 - 2	7
43322 04100	38 - 3	52
43322 06700	43 - 2	10
43340 36400	43 - 2	17
43350 02200	44 - 2	30
43531 01900	43 - 2	24
43532 09000	43 - 2	22
43532 09400	38 - 3	63
43534 02102	38 - 3	61
43534 04800	43 - 2	23
43540 08400	43 - 2	20
43540 08500	43 - 2	25
43550 03400	43 - 2	18
43650 02400	43 - 2	26
44100 10000	44 - 2	4
44210 06700	44 - 2	1
44220 24500	44 - 2	2
44243 04501	44 - 2	3
44250 14710	44 - 2	15
44250 54410	44 - 2	11
44260 37400	46 - 3	62
44260 37801	46 - 3	63
44290 53900	44 - 3	44
44290 54001	44 - 3	45
44290 54101	44 - 3	47
44290 56000	44 - 3	67
44311 51300	46 - 2	14
44311 65600	44 - 3	52
44311 66300	46 - 2	40
44312 02800	46 - 3	51
44312 02900	46 - 3	52
44322 07200	44 - 2	7
44328 22500	44 - 2	27
44334 18700	44 - 2	28
44336 03001	44 - 3	51
44346 16200	44 - 2	12
44346 16700	44 - 2	10
44346 16900	44 - 2	10-1
44364 04900	44 - 2	24
44365 00300	44 - 2	23
44381 04000	44 - 2	26
44390 04100	44 - 2	5
44390 04800	44 - 2	5-1
44390 04900	44 - 3	63
44462 00800	44 - 2	35
44462 06700	44 - 2	32
44470 01600	44 - 2	13
44470 01700	44 - 2	14
44490 22442	44 - 2	42
44490 42740	44 - 3	65
44550 30001	46 - 3	54
45214 01400	46 - 2	31
45214 01400	46 - 3	47
46120 26800	46 - 3	49
46120 26900	46 - 3	48
46120 34000	46 - 3	48
46120 34100	46 - 3	49
46120 36300	46 - 2	22
46120 38300	46 - 2	5
46131 24800	46 - 3	72
46153 04000	46 - 2	2
46154 14400	46 - 2	3
46154 15300	44 - 2	22
46161 13300	46 - 2	10
46167 02400	46 - 2	8
46167 02500	46 - 2	24
46167 03100	46 - 2	23
46177 08300	46 - 2	17
46177 08400	46 - 2	18
46177 08500	46 - 2	19
46242 22900	44 - 3	56
46305 09300	46 - 4	1
46311 02200	46 - 2	14
46312 05100	46 - 4	2
46450 15910	46 - 2	33
46450 27210	46 - 3	74
46470 95000	46 - 2	35
46480 47900	46 - 3	66
46480 55600	46 - 2	32
46480 67000	46 - 3	61
46480 70400	46 - 3	61-1
46480 75000	46 - 3	75
46640 19700	20 - 2	6
46760 73610	46 - 2	16
46813 08100	44 - 2	29
46850 05100	44 - 3	66
46870 55800	44 - 2	17
46872 01300	46 - 2	20
46879 65200	46 - 2	21
46900 08610	46 - 2	1
46900 17910	46 - 2	1-1
46900 22010	46 - 2	1-2
46911 01401	46 - 2	4
46913 01000	46 - 2	13
46917 00900	46 - 2	15
46917 05500	46 - 3	71
46918 01401	46 - 2	12
46921 02300	44 - 2	43
46921 08600	46 - 2	21
46923 02700	46 - 2	6
46928 01500	46 - 2	9

silverhorn.co.uk

I N D E X

PART NO.	PAGE	REF. NO.
46929 01200	46 - 2	7
46934 03200	44 - 2	13
46934 03300	44 - 2	14
46939 01300	46 - 2	7
46948 00900	46 - 2	20
46950 02901	46 - 2	11
46991 00100	46 - 2	12
51100 52943	51 - 2	1
51100 53041	51 - 5	1
51100 67640	51 - 2	1-1
52100 20131	51 - 2	21
52100 20231	51 - 2	22
52100 20332	51 - 2	24
52100 20431	51 - 2	31
52100 20530	51 - 2	32
52160 34600	51 - 3	56
52160 41702	51 - 5	33
52160 77301	51 - 3	57
52160 77401	51 - 2	27
52160 77501	51 - 2	28
52160 77602	51 - 5	31
52160 77700	51 - 3	79
52230 44800	51 - 2	38
52300 44622	51 - 2	25
52350 44421	51 - 2	8
52350 83220	51 - 2	44
52350 83522	38 - 2	16
52350 89010	51 - 2	26
52370 01310	51 - 2	34
52370 01410	51 - 2	33
52370 98802	51 - 2	45
52370 99001	51 - 2	40
52370 99201	51 - 3	62
52370 99301	51 - 3	64
52370 99501	51 - 2	50
52370 99601	51 - 3	52
52400 34820	46 - 3	55
52416 19800	51 - 3	71
52416 27400	46 - 2	42
52450 47531	51 - 2	43
52450 47631	51 - 2	48
52450 47731	51 - 3	53
52450 47831	51 - 3	60
52450 47931	51 - 2	30
52450 48031	51 - 2	29
52480 13300	46 - 2	43
52480 13800	51 - 3	66
52480 14400	51 - 3	59
52480 14700	46 - 3	56
52620 49801	51 - 2	3
52620 49901	51 - 2	4
52630 13800	51 - 2	5
52640 02400	46 - 3	46
52640 05100	51 - 3	58
52660 04700	44 - 2	8
52710 03601	51 - 3	55
52723 00100	46 - 3	59
52728 14810	51 - 3	70
52728 15710	38 - 3	69
52728 20810	51 - 2	6
52728 32010	51 - 2	9
52728 39910	51 - 5	8
52728 40010	51 - 5	9
52728 40110	51 - 2	41
52739 00600	44 - 2	7
52739 03400	51 - 3	55
52742 00200	20 - 2	12
52744 01400	51 - 5	3
52746 01900	51 - 3	76
52746 02400	51 - 2	7
52830 49500	51 - 2	23
52919 00530	52 - 1	10
52919 43100	52 - 1	9
52931 92020	46 - 3	60
52931 97620	52 - 1	7
52939 13940	52 - 1	8
52959 27430	52 - 1	1
52959 30850	52 - 1	3
52959 40240	52 - 1	6
52959 67240	52 - 1	2
52959 93050	52 - 1	4
52959 93150	52 - 1	5
52977 35600	52 - 1	108
52977 63700	52 - 1	109
52977 70500	52 - 1	102
52977 70600	52 - 1	103
52977 70700	52 - 1	104
52977 70900	52 - 1	107
52977 71000	52 - 1	110
52977 71100	52 - 1	111
52977 71400	52 - 1	105
52978 30400	52 - 1	101
52978 32701	52 - 1	106
61121 09602	20 - 2	7

silverhorn.co.uk