PREFACE

1. This Parts Catalog is the 1st edition of 3TNV76-FDG Diesel Engine for Denyo Co., Ltd.

Pub. No, : 000Y00D8520
Published : May.,2005

2. Model name

Engine model	Vehicle		Vehicle made by
	Products	Model name	
3TNV76-FDG	GENERATOR	TLG-15ESX TLG-18ESY	Denyo Co., Ltd.

silverhorn.co.uk

How to read this Parts Catalog.

1.Parts mentioned in Parts Catalog may not necessarily be standard equipping parts
2.Parts change may be made without prior notice.
3.Form of this Parts Catalog.

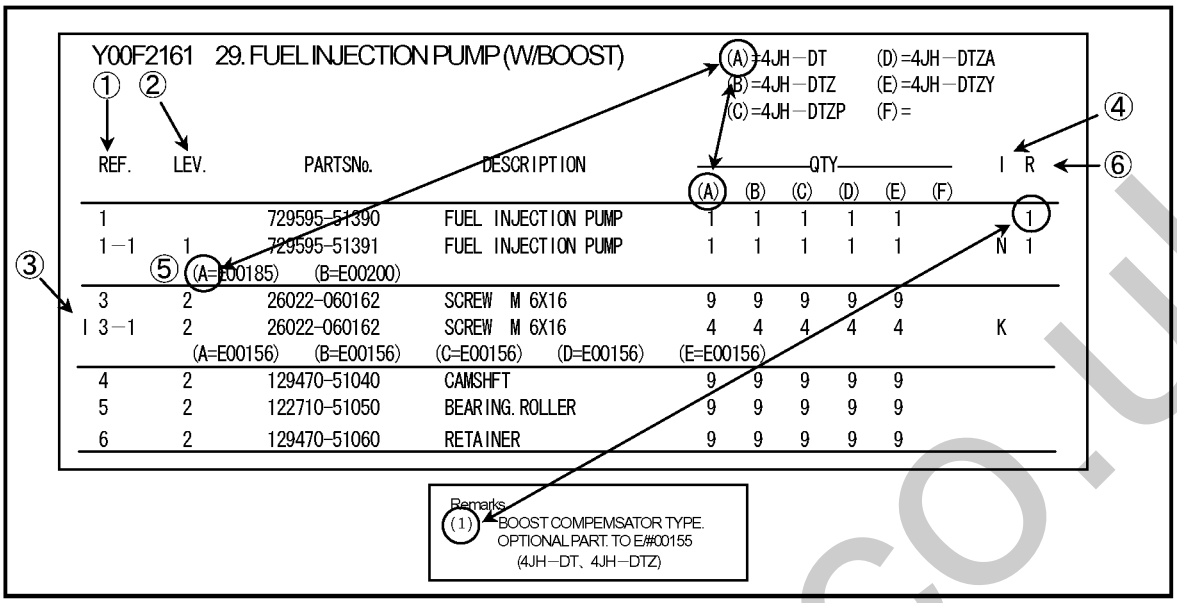

①Ref. No,

The Ref. No, in the list may not be in accordance with the Ref. No, on illustration.
(Ex.) illustration No, List heed No,
1 1 (Before change) → 1 − 1 (After change)
When interchangeable symbol N, and k, illustrations for the new parts are sometimes omitted.

②Lev. (Level)

Indication and Meaning of Level
Level Hereunder is given the relation among the number of number (1,2,3) the level and the nominal parent-child relationship.
1 ----- Parent parts (Assembly parts)
2 ----- Child parts included in " 1 " (Semi-Assembly parts, component parts of Assembly parts.)
3 ----- Child parts included in " 2 ", Grand-child parts in terms of " 1 ".
(Component parts of Semi-Assembly parts.)
Note) A parts of non-sale parts are illustrated but not listed.

③Change Mark

Change Mark " I " is given to the part for which a design change was made at this time.
The design change was not shown in the last published Parts Catalog.

④Interchangeability Mark

In the case where a part change took place, one of the following interchangeability marks is indicated for that part

Symbol	Interchangeability	Contents note
N	Old ⇄ New (○ / ×)	New Part is interchangeable for Old Part but not interchangeable conversely.
Q	Old ⇄ New (× / ○)	New Part is not interchangeable for Old Part but interchangeable conversely.
R	Old ⇄ New (○ / ○)	New Part is interchangeable for Old Part and vice versa.
S	Old ⇄ New (× / ×)	New Part is not interchangeable for Old Part and vice versa.
W		Part newly added.
Z		Part discontinued.
F		Not interchangeable single part but interchangeable by set of the related parts.
K		Changed only in quantity used.

⑤Effective Machine No,

When a part is changed, Effective Machine No, of a Model for which the part is applicable is indication
In each column of (A)-(F).

Product Symbol	Product No,	Product Symbol	Product No,
C	Clutch No, Compressor No,	M	Machine No,
D	Drive No,	T	Tractor No,
E	Engine No,	Note 1)※	Date

Note 1) Date may follow the symbol in some cases.(Ex.) ※1996.01
Note 2) As far as engine models shown by " XXX " are concerned, the modification of the parts could not be Predicted or the engine models themselves could not be identified.
Note 3) (A=E/#00185) means that the design change on the part has been effective for the model at the, column (A) (in the case, for 4JH-DT) on and from E/#(Engine Serial Number) 00185

⑥Remarks Mark

Figures or alphabets (Symbols) are entered in the remark column.
The comments (remarks) on the pertinent parts are indicated in the lower part of the list by the same symbols a those stated above.

silverhorn.co.uk

CONTENTS

MODEL : 3TNV76-FDG (DENYO)
PC NO : Y00D8520

Fig.No.	GROUP NAME
ENGINE (3TNV76-FDG)	
1.	CYLINDER BLOCK
2.	GEAR HOUSING
3.	FLYWHEEL HOUSING & OIL SUMP
4.	CYLINDER HEAD & BONNET
5.	EXHAUST MANIFOLD
6.	CAMSHAFT & DRIVING GEAR
7.	CRANKSHAFT & PISTON
8.	LUB.OIL SYSTEM
9.	COOLING WATER SYSTEM
10.	FUEL INJECTION PUMP
11.	GOVERNOR
12.	FUEL INJECTION VALVE
13.	STARTING MOTOR
14.	GENERATOR
15.	ELECTLIC PART
16.	GASKET SET

Fig.No.	GROUP NAME

silverhorn.co.uk

Fig.1. CYLINDER BLOCK

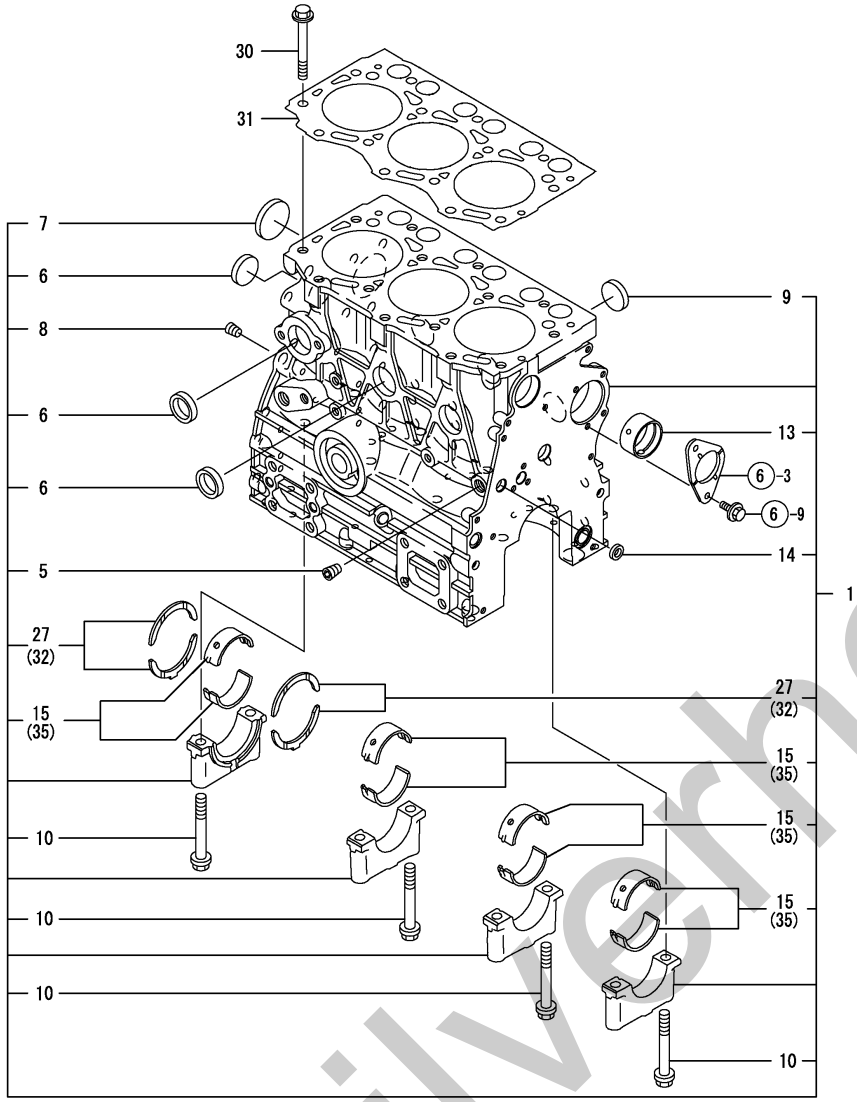

Remarks
(1) OVER-SIZE(O.S=0.25)PART.
(2) REPAIR PART.
(3) UNDER-SIZE(U.S=0.25)PART

1. CYLINDER BLOCK

(A)=3TNV76-FDG (D)=
(B)= (E)=
(C)= (F)=

REF.	LEV.	PARTS NO.	DESCRIPTION	Q'TY (A)	(B)	(C)	(D)	(E)	(F)	I	R
1	1	719717-01561	BLOCK ASSY, CYLINDER	1							
5	2	124060-01050	PLUG PT1/8	1							
6	2	105311-01090	PLUG 30 (SUS)	4							
7	2	119623-01250	PLUG 45	1							
8	2	124160-01910	PLUG PT1/4	1							
9	2	119285-01990	PLUG 25	3							
10	2	119620-02020	BOLT	8							
13	2	119717-02410	BUSH, CAMSHAFT	1							
14	2	27241-120000	PLUG 12	1							
15	2	719717-02900	MAIN BEARING SET	4							2
27	2	119810-02930	BEARING,THRUST(2PAIR	1							
30	1	119810-01200	BOLT, CYL. HEAD	14							
31	1	119717-01330	GASKET, CYL.HEAD	1							
32	1	119810-02940	BEARING,THRUST .25OS	2							1
35	1	719717-02910	MAIN METAL US=0.25	4							3

N:Old ←○/×→ New, Q:Old ←×/○→ New, R:Old ←○/○→ New, S:Old ←×/×→ New, W:Add, Z:Discontinued, F:Set Change, K:Q'ty Change

(C)Copy Rights YANMAR CO.,LTD and YANMAR AGRICULTURAL EQUIPMENT CO.,LTD.

silverhorn.co.uk

Fig.2. GEAR HOUSING

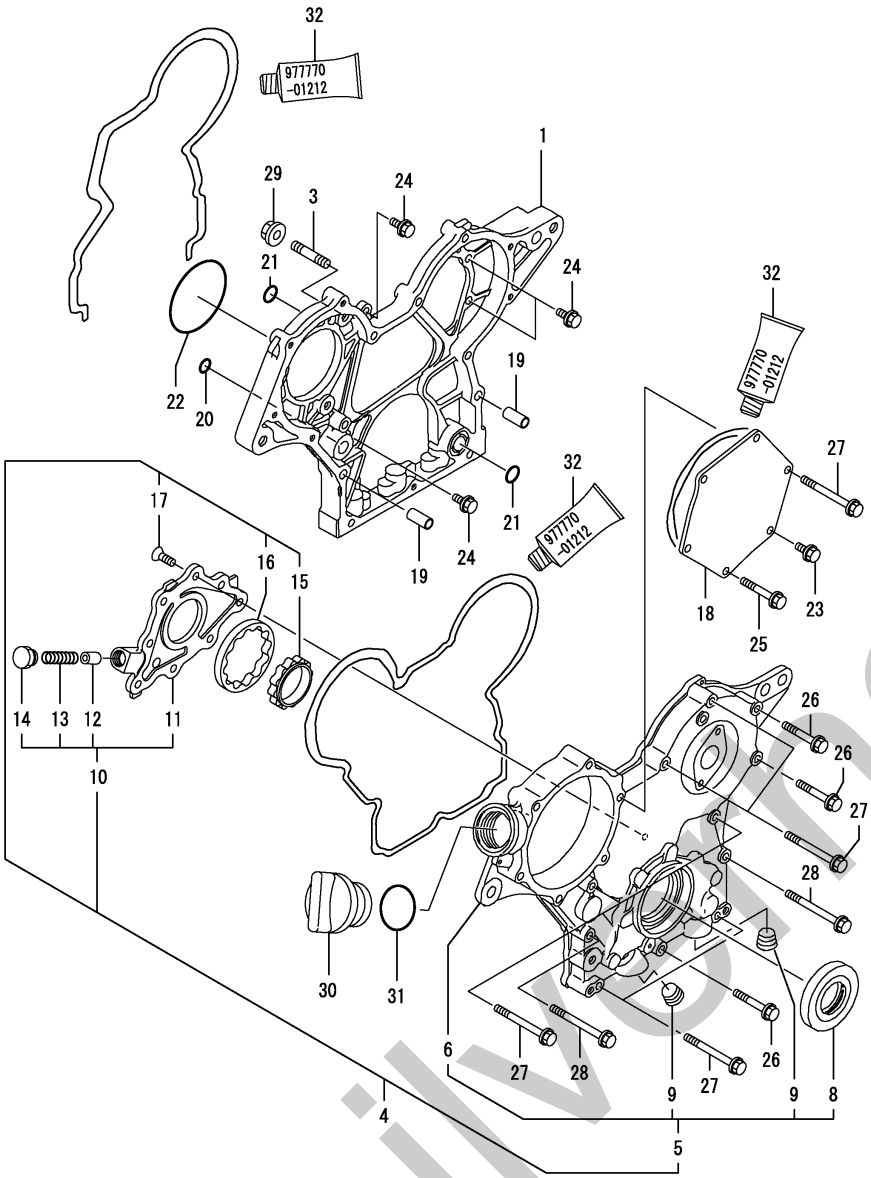

Remarks
(1) OPTIONAL PART.

2. GEAR HOUSING

(A)=3TNV76-FDG (D)=
(B)= (E)=
(C)= (F)=

REF.	LEV.	PARTS NO.	DESCRIPTION	Q'TY (A)	(B)	(C)	(D)	(E)	(F)	I	R
1	1	119717-01501	CASE, GEAR	1							
3	1	119717-01570	BOLT, STUD M8	3							
4	1	119717-01590	COVER ASSY,GEAR CASE	1							
5	2	719717-01500	COVER ASSY,GEAR CASE	1							
6	3	119717-01521	COVER, GEAR CASE	1							
8	3	119620-01800	SEAL, OIL	1							
9	3	23876-030000	PLUG PT3/8,SCREW	2							
10	2	119717-32100	COVER ASSY, PUMP	1							
11	3	119717-32080	COVER, LUB.OIL PUMP	1							
12	3	129900-32130	VALVE, RELIEF	1							
13	3	129001-32320	SPRING	1							
14	3	129001-32330	PLUG	1							
15	2	119717-32110	ROTOR, INNER	1							
16	2	119717-32120	ROTOR, OUTER	1							
17	2	119802-32130	SCREW, M6X16	8							
18	1	119717-01750	COVER, PUMP TIMING	1							
19	1	119660-01911	PIPE, KNOCK	4							
20	1	119624-32040	O-RING P 12.0	1							
21	1	119717-32050	O-RING, P17.0	3							
22	1	121850-51960	O-RING, F.I.PUMP	1							
23	1	26106-060122	BOLT M 6X 12 PLATED	1							
24	1	26106-060162	BOLT M 6X 16 PLATED	4							
25	1	26106-060402	BOLT M 6X 40 PLATED	4							
26	1	26106-060402	BOLT M 6X 40 PLATED	3							
27	1	26106-060602	BOLT M 6X 60 PLATED	7							
28	1	26106-060652	BOLT M 6X 65 PLATED	2							
29	1	26306-080002	NUT	3							
30	1	124160-01751	COVER,FILLER	1							
31	1	24311-000320	O-RING 1A P-32.0	1							
32	1	977770-01212	GASKET, LIQUID	1							1

N:Old ←○/×→ New, Q:Old ←×/○→ New, R:Old ←○/○→ New, S:Old ←×/×→ New, W:Add, Z:Discontinued, F:Set Change, K:Q'ty Change

(C)Copy Rights YANMAR CO.,LTD and YANMAR AGRICULTURAL EQUIPMENT CO.,LTD.

silvermorn.co.uk

Fig.3. FLYWHEEL HOUSING & OIL SUMP

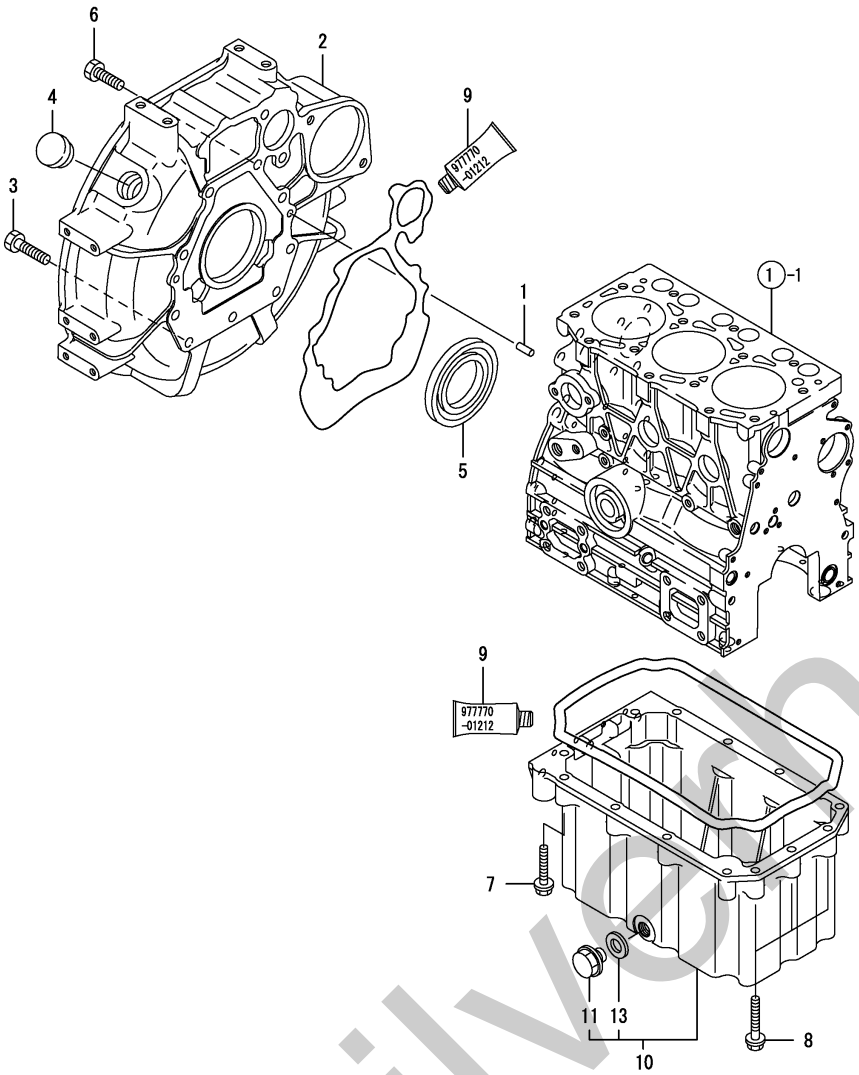

Remarks
(1) OPTIONAL PART.

Y00D8520 3. FLYWHEEL HOUSING & OIL SUMP

(A)=3TNV76-FDG (D)=
(B)= (E)=
(C)= (F)=

REF.	LEV.	PARTS NO.	DESCRIPTION	Q'TY (A)	(B)	(C)	(D)	(E)	(F)	I	R
1	1	129100-01580	PARALLEL PIN 8X16	2							
2	1	119717-01601	HOUSING, FLYWHEEL	1							
3	1	121120-01620	BOLT M 10X 28	3							
4	1	119620-01750	CAP, FLYWHEEL COVER	1							
5	1	124085-02220	SEAL, OIL	1							
6	1	26206-100252	BOLT M10X25	8							
7	1	26106-080452	BOLT M 8X 45 PLATED	10							
8	1	26106-080502	BOLT M 8X 50 PLATED	3							
9	1	977770-01212	GASKET, LIQUID	1							1
10	1	119744-01770	SUMP ASSY, LUB.OIL	1							
11	2	105425-01690	PLUG M16	1							
13	2	22190-160002	SEAL WASHER 16S	1							

N:Old ←○/×→ New, Q:Old ←×/○→ New, R:Old ←○/○→ New, S:Old ←×/×→ New, W:Add, Z:Discontinued, F:Set Change, K:Q'ty Change

(C)Copy Rights YANMAR CO.,LTD and YANMAR AGRICULTURAL EQUIPMENT CO.,LTD.

silverhorn.co.uk

Fig.4. CYLINDER HEAD & BONNET

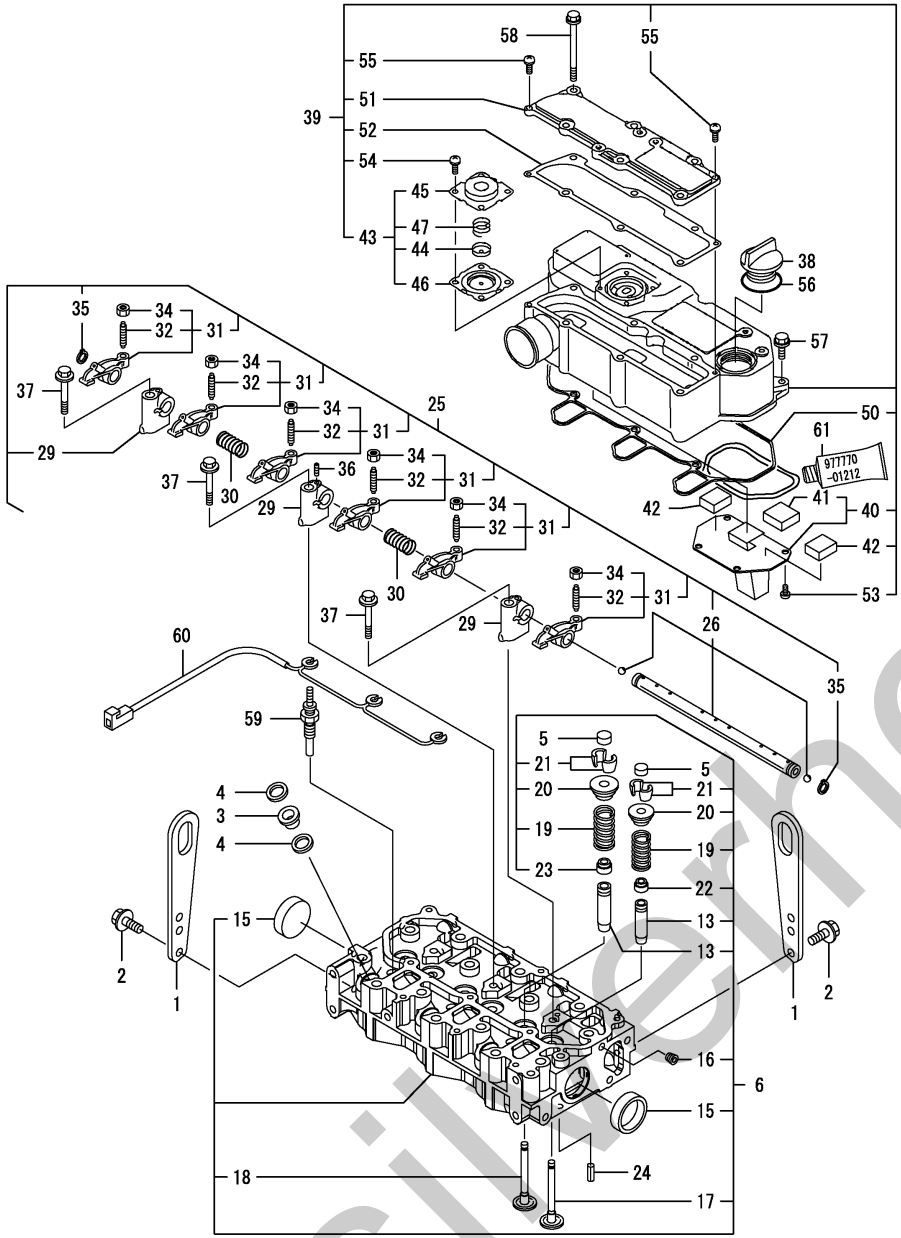

Remarks
(1) REPAIR PART.
(2) OPTIONAL PART.

Y00D8520 4. CYLINDER HEAD & BONNET

(A)=3TNV76-FDG (D)=
(B)= (E)=
(C)= (F)=

REF.	LEV.	PARTS NO.	DESCRIPTION	Q'TY (A)	(B)	(C)	(D)	(E)	(F)	I	R
1	1	129900-07900	LIFTER, ENGINE	2							
2	1	26106-080162	BOLT M 8X 16 PLATED	4							
3	1	129901-11450	PROTECTER, NOZZLE	3							
4	1	119600-11460	GASKET, NOZZLE	6							
5	1	105010-11490	CAP, VALVE	6							
6	1	119746-11740	HEAD ASSY, CYLINDER	1							
13	2	119717-11800	GUIDE, VALVE	6							1
15	2	119285-11990	PLUG 35	2							
16	2	23876-005000	PLUG PT 1/16,SCREW	1							
17	2	119717-11100	VALVE, INTAKE	3							
18	2	119717-11110	VALVE, EXHAUST	3							
19	2	119717-11131	SPRING, VALVE	6							
20	2	129508-11180	RETAINER, SPRING	6							
21	2	119717-11190	COTTER, VALVE	12							
22	2	119717-11340	SEAL, VALVE STEM	3							
23	2	119717-11350	SEAL, VALVE STEM	3							
24	1	22351-060012	SPRING PIN 6X12	2							
25	1	119717-11200	SUPPORT ASSY, ARM	1							
26	2	119717-11240	SHAFT ASSY, ROCKER	1							
29	2	119717-11260	SUPPORT, ROCKER ARM	3							
30	2	119620-11280	SPRING	2							
31	2	119717-11650	ARM ASSY, ROCKER	6							
32	3	129150-11230	SCREW, VALVE	6							
34	3	129150-11750	NUT M8XP1.0	6							
35	2	22242-000120	CIRCLIP 12	2							
36	2	26979-050162	SCREW M 5X16	1							
37	1	26106-080402	BOLT M 8X 40 PLATED	3							
38	1	124160-01751	COVER,FILLER	1							
39	1	119717-11381	BONNET ASSY, HEAD	1							
40	2	119717-03031	PLATE, BAFFLE	1							
41	3	119717-03070	BAFFLE, BREATHER	1							
42	2	119717-03070	BAFFLE, BREATHER	2							
43	2	119802-03100	DIAPHRAGM ASSY	1							
44	3	119802-03110	PLATE, DIAPHRAGM	1							
45	3	119802-03121	COVER, DIAPHRAGM	1							
46	3	119802-03131	DIAPHRAGM	1							
47	3	119802-03141	SPRING, DIAPHRAGM	1							
50	2	119718-11310	GASKET, BONNET	1							
51	2	119717-11320	COVER, BONNET	1							
52	2	119717-11331	GASKET,BONNET COVER	1							
53	2	22857-500100	SCREW 5X10,TAPPING	4							
54	2	22857-500100	SCREW 5X10,TAPPING	4							
55	2	22857-500160	SCREW 5X16	2							
56	1	24311-000320	O-RING 1A P-32.0	1							
57	1	26106-060202	BOLT M 6X 20 PLATED	3							
58	1	26106-060752	BOLT M 6X 75 PLATED	6							
59	1	119717-77800	PLUG, GLOW	3							
60	1	119717-77820	CONNECTOR, GLOW PLUG	1							
61	1	977770-01212	GASKET, LIQUID	1							2

N:Old ←○/×→ New, Q:Old ←×/○→ New, R:Old ←○/○→ New, S:Old ←×/×→ New, W:Add, Z:Discontinued, F:Set Change, K:Q'ty Change

(C)Copy Rights YANMAR CO.,LTD and YANMAR AGRICULTURAL EQUIPMENT CO.,LTD.

silverthorn.co.uk

Fig.5. EXHAUST MANIFOLD

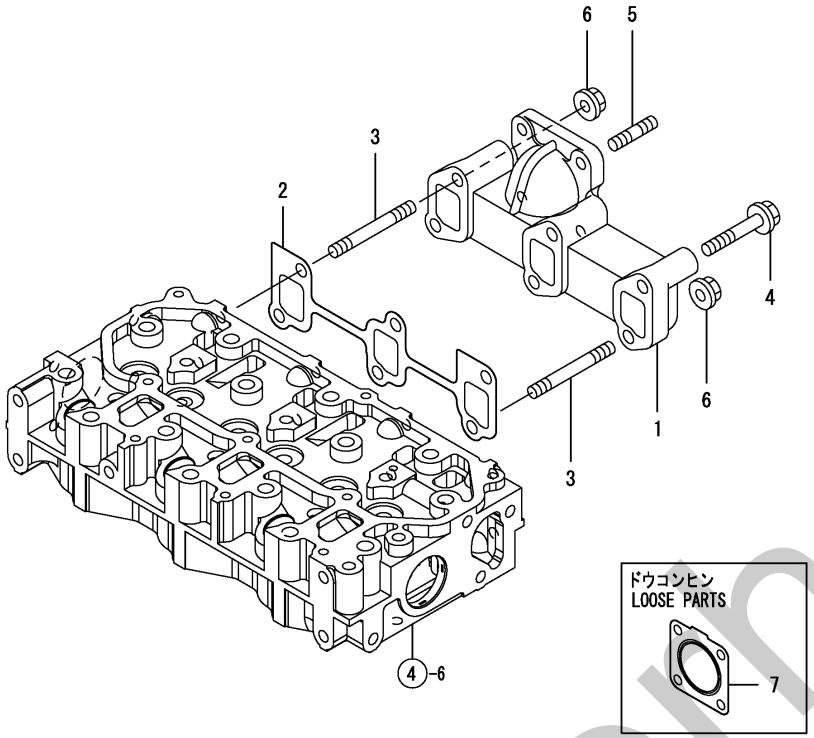

5. EXHAUST MANIFOLD

(A)=3TNV76-FDG (D)=
(B)= (E)=
(C)= (F)=

REF.	LEV.	PARTS NO.	DESCRIPTION	Q'TY (A)	(B)	(C)	(D)	(E)	(F)	I	R
1	1	119718-13100	MANIFOLD, EXHAUST	1							
2	1	119717-13110	GASKET, MANIFOLD	1							
3	1	119717-13600	STUD, M8X50	2							
4	1	119802-13620	BOLT M 8X 50 PLATED	4							
5	1	119131-18320	BOLT M 8X 22	4							
6	1	26306-080002	NUT	2							
7	1	119515-13200	GASKET, SILENCER	1							

N:Old ←○/×→ New, Q:Old ←×/○→ New, R:Old ←○/○→ New, S:Old ←×/×→ New, W:Add, Z:Discontinued, F:Set Change, K:Q'ty Change

(C)Copy Rights YANMAR CO.,LTD and YANMAR AGRICULTURAL EQUIPMENT CO.,LTD.

silvermorn.co.uk

Fig.6. CAMSHAFT & DRIVING GEAR

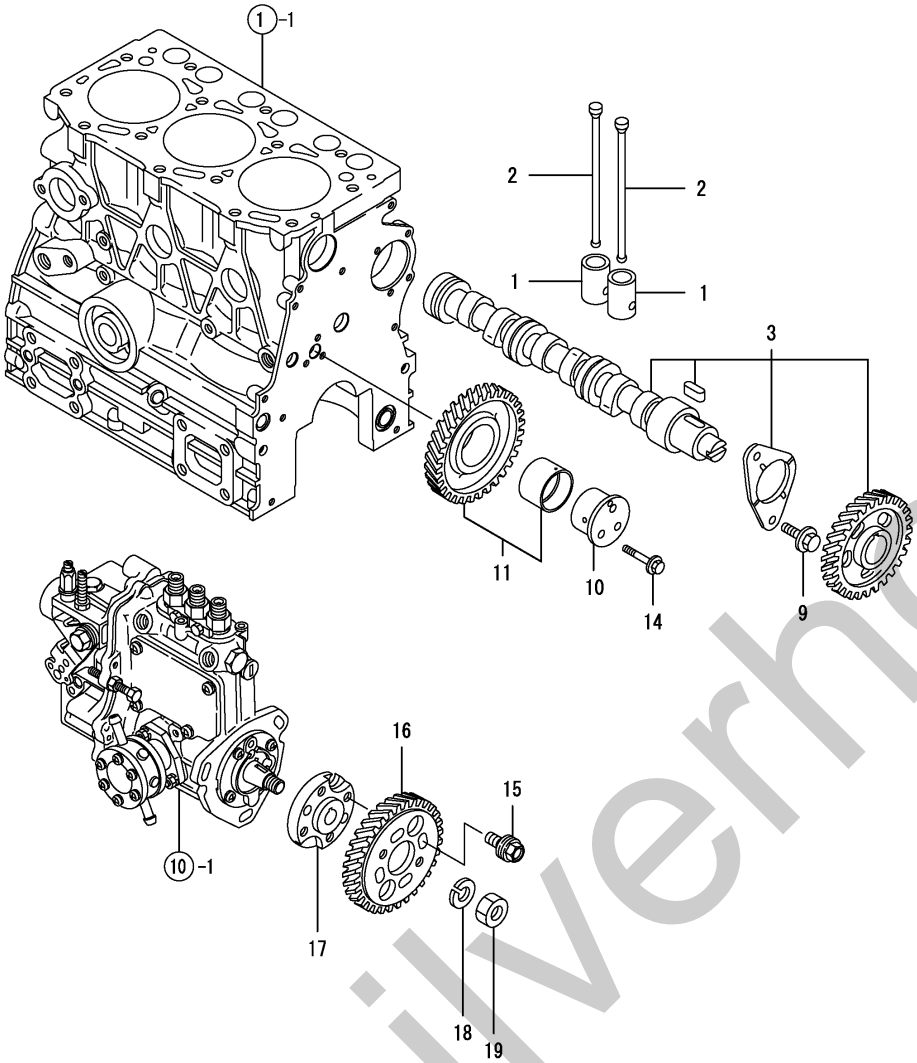

Y00D8520 6. CAMSHAFT & DRIVING GEAR

(A)=3TNV76-FDG (D)=
(B)= (E)=
(C)= (F)=

REF.	LEV.	PARTS NO.	DESCRIPTION	Q'TY (A)	(B)	(C)	(D)	(E)	(F)	I	R
1	1	119620-14200	TAPPET	6							
2	1	119717-14400	ROD, PUSH	6							
3	1	119717-14580	CAMSHFT ASSY	1							
9	1	26106-060122	BOLT M 6X 12 PLATED	2							
10	1	119717-25050	SHAFT, IDLE GEAR	1							
11	1	119717-25100	GEAR ASSY, IDLE	1							
14	1	26106-060352	BOLT M 6X 35 PLATED	3							
15	1	129150-25301	BOLT,FI-P	4							
16	1	119717-25930	GEAR, PUMP	1							
17	1	119717-51150	FLANGE	1							
18	1	22217-120000	SPRING WASHER 12	1							
19	1	26716-120002	NUT 12	1							

N:Old ←○/×→ New, Q:Old ←×/○→ New, R:Old ←○/○→ New, S:Old ←×/×→ New, W:Add, Z:Discontinued, F:Set Change, K:Q'ty Change

(C)Copy Rights YANMAR CO.,LTD and YANMAR AGRICULTURAL EQUIPMENT CO.,LTD.

silverhorn.co.uk

Fig.7. CRANKSHAFT & PISTON

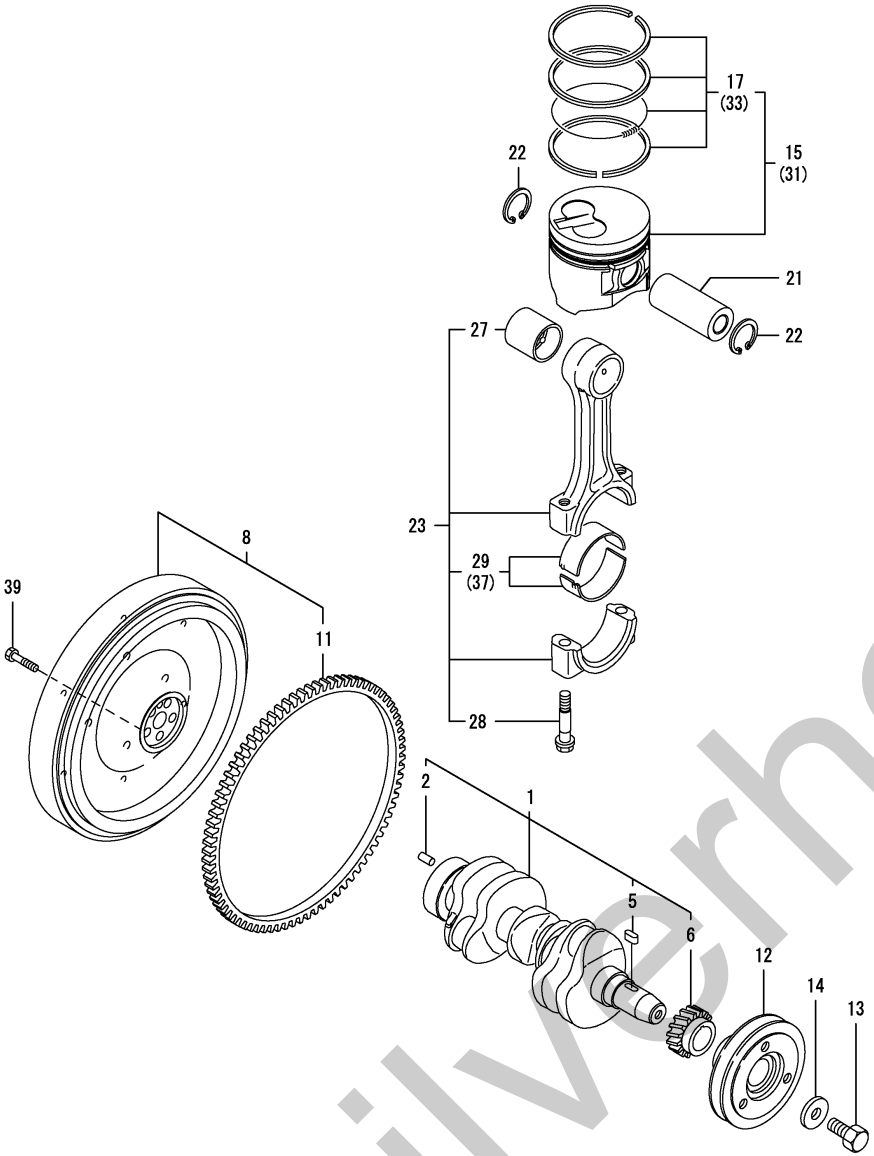

Remarks
(1) OVER-SIZE(O.S=0.25)PART.
(2) REPAIR PART.
(3) UNDER-SIZE(U.S=0.25)PART.

Y00D8520 7. CRANKSHAFT & PISTON

(A)=3TNV76-FDG (D)=
(B)= (E)=
(C)= (F)=

REF.	LEV.	PARTS NO.	DESCRIPTION	Q'TY (A)	(B)	(C)	(D)	(E)	(F)	I	R
1	1	119717-21700	CRANKSHAFT ASSY	1							
2	2	129100-01580	PARALLEL PIN 8X16	1							
5	2	22512-040120	KEY 4X 12	1							
6	2	119717-21200	GEAR, CRANKSHAFT	1							
8	1	119546-21590	FLYWHEEL ASSY	1							
11	2	119865-21600	GEAR, RING	1							
12	1	119717-21650	V-PULLEY, CRANKSHAFT	1							
13	1	119621-21680	BOLT M12X1.25,FLANGE	1							
14	1	119620-21941	WASHER	1							
15	1	119717-22080	PISTON W/RING	3							
17	2	119717-22500	RING SET	3							
21	1	119717-22300	PIN, PISTON	3							
22	1	22252-000220	CIRCLIP 22	6							
23	1	119717-23000	ROD ASSY, CONNECTING	3							
27	2	119717-23910	BUSH, PISTON PIN	3							2
28	2	119717-23200	BOLT, CONNECTING ROD	6							
29	2	119717-23600	METAL ASSY,CRANK PIN	3							
31	1	119717-22090	PISTON W/RING	3							1
33	2	119717-22550	RING SET, 0.25 OS	3							1
37	1	119717-23610	BEARING,PIN US=0.25	3							3
39	1	121111-21501	BOLT, FLYWHEEL	5							

N:Old ←○/×→ New, Q:Old ←×/○→ New, R:Old ←○/○→ New, S:Old ←×/×→ New, W:Add, Z:Discontinued, F:Set Change, K:Q'ty Change

(C)Copy Rights YANMAR CO.,LTD and YANMAR AGRICULTURAL EQUIPMENT CO.,LTD.

silverhorn.co.uk

Fig.8. LUB.OIL SYSTEM

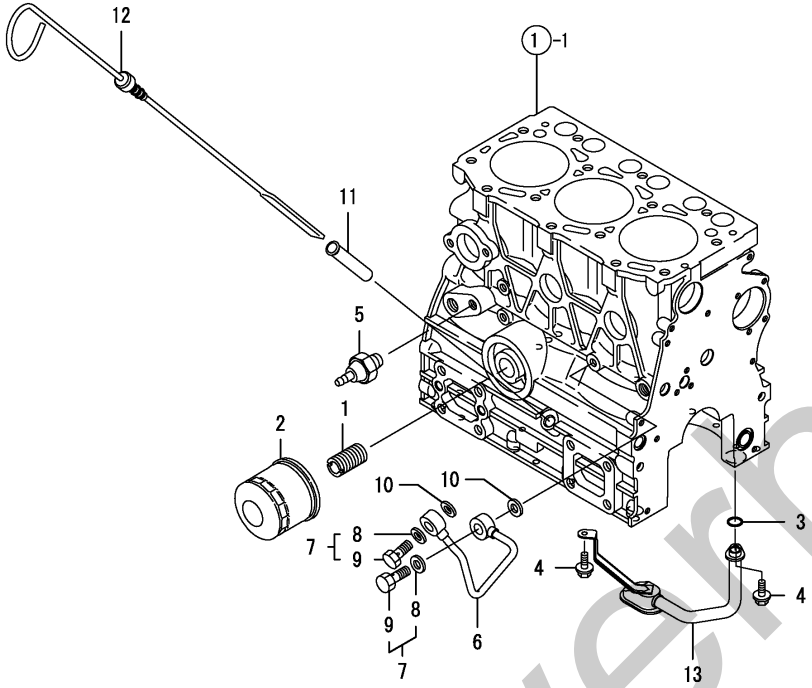

8. LUB.OIL SYSTEM

(A)=3TNV76-FDG (D)=
(B)= (E)=
(C)= (F)=

REF.	LEV.	PARTS NO.	DESCRIPTION	Q'TY (A)	(B)	(C)	(D)	(E)	(F)	I	R
1	1	129100-35140	STUD	1							
2	1	119305-35151	FILTER ASSY, LUB.OIL	1							
3	1	119717-32060	O-RING, P15.0	1							
4	1	26106-060102	BOLT M 6X 10 PLATED	2							
5	1	114250-39450	SWITCH,(0.5KG)L.O.	1							
6	1	119717-39210	PIPE ASSY, HYDRAULIC	1							
7	1	129005-59830	BOLT ASSY, JOINT	2							
8	2	22190-080002	SEAL WASHER 8S	2							
9	2	23857-030000	JOINT BOLT 3	2							
10	1	22190-080002	SEAL WASHER 8S	2							
11	1	121520-34810	GUIDE, DIPSTICK	1							
12	1	119746-34801	DIPSTICK	1							
13	1	119744-35080	PIPE ASSY, LUB,OIL	1							

N:Old ←○/×→ New, Q:Old ←×/○→ New, R:Old ←○/○→ New, S:Old ←×/×→ New, W:Add, Z:Discontinued, F:Set Change, K:Q'ty Change

(C)Copy Rights YANMAR CO.,LTD and YANMAR AGRICULTURAL EQUIPMENT CO.,LTD.

silvermorn.co.uk

Fig.9. COOLING WATER SYSTEM

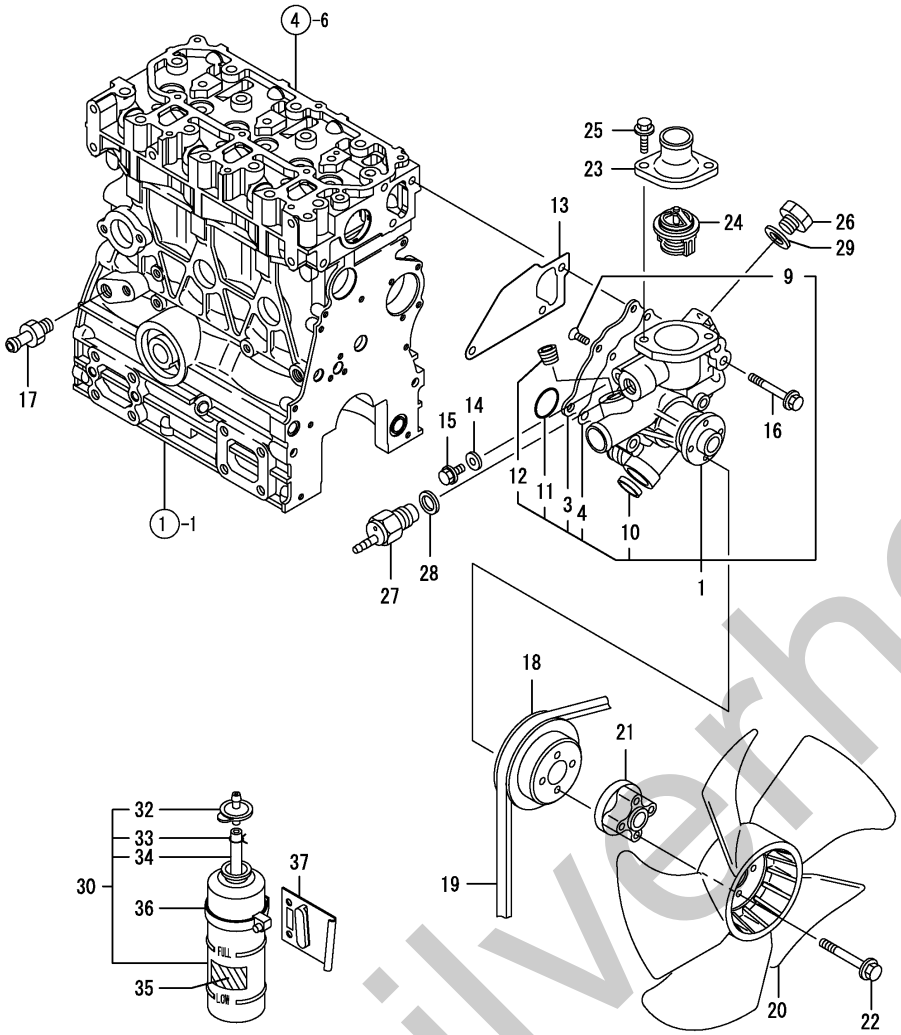

9. COOLING WATER SYSTEM

(A)=3TNV76-FDG (D)=
(B)= (E)=
(C)= (F)=

REF.	LEV.	PARTS NO.	DESCRIPTION	Q'TY (A)	(B)	(C)	(D)	(E)	(F)	I	R
1	1	119717-42002	PUMP ASSY, C.W.	1							
3	2	119717-42041	COVER	1							
4	2	119717-42031	GASKET	1							
9	2	26577-060122	SCREW M 6X 12	4							
10	2	27241-250000	PLUG 25	1							
11	2	119717-42320	O-RING	1							
12	2	129916-49740	PLUG, DRAIN R03	1							
13	1	119717-42020	GASKET, WATER PUMP	1							
14	1	23414-080000	GASKET 8, ROUND	1							
15	1	26106-080122	BOLT M 8X 12 PLATED	1							
16	1	26106-080502	BOLT M 8X 50 PLATED	3							
17	1	121550-49111	JOINT PT1/4	1							
18	1	119515-42350	V-PULLEY, C.W.PUMP	1							
19	1	129612-42310	V-BELT	1							
20	1	119233-44740	FAN (D=290)	1							
21	1	129457-44760	SPACER, FAN	1							
22	1	26106-060452	BOLT M 6X 45 PLATED	4							
23	1	129350-49530	COVER, THERMOSTAT	1							
24	1	119717-49800	THERMOSTAT, 71C	1							
25	1	26106-080202	BOLT M 8X 20 PLATED	2							
26	1	121450-42450	PLUG M16	1							
27	1	121250-44901	SWITCH, THERMO(110 C	1							
28	1	124465-44950	GASKET 16	1							
29	1	124465-44950	GASKET 16	1							
30	1	124450-44510	SUB-TANK ASSY	1							
32	2	124450-44530	CAP	1							
33	2	124450-44560	CLAMP	1							
34	2	23061-070230	PIPE 7X 230	1							
35	1	121470-44540	LABEL, SUB-TANK	1							
36	1	124450-44550	CLAMP, SUB-TANK	1							
37	1	121256-44600	BRACKET, SUB-TANK	1							

N:Old ←○/×→ New, Q:Old ←×/○→ New, R:Old ←○/○→ New, S:Old ←×/×→ New, W:Add, Z:Discontinued, F:Set Change, K:Q'ty Change

(C)Copy Rights YANMAR CO.,LTD and YANMAR AGRICULTURAL EQUIPMENT CO.,LTD.

silverhorn.co.uk

Fig.10. FUEL INJECTION PUMP

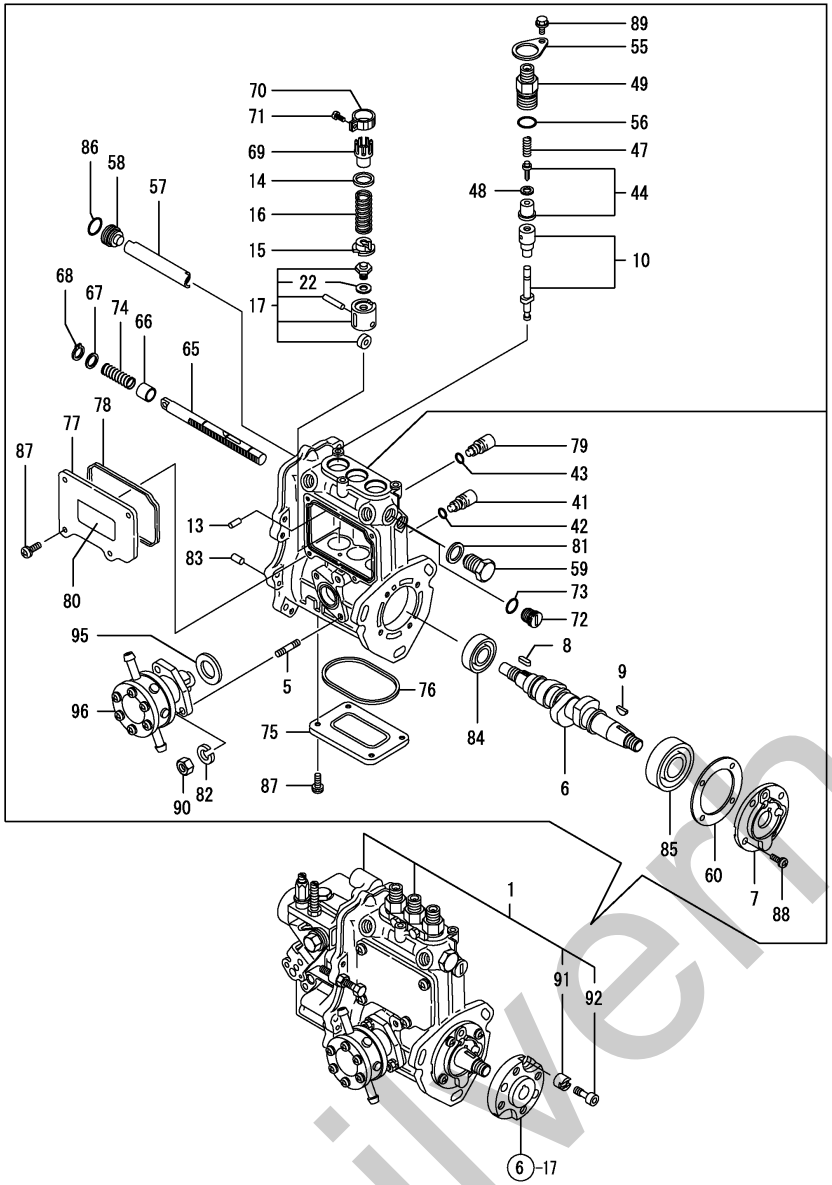

Remarks
(1) GOVERNOR ASSY(FIG.11) IS INCORPORATED IN THIS FOP.CMP (REF.NO.1).

10. FUEL INJECTION PUMP

(A)=3TNV76-FDG (D)=
(B)= (E)=
(C)= (F)=

REF.	LEV.	PARTS NO.	DESCRIPTION	Q'TY (A)	(B)	(C)	(D)	(E)	(F)	I	R
1	1	719746-51380	FIE ASSY(3TNV76-FDG	1							1
5	2	129155-51020	STUD, FEED PUMP	2							
6	2	119717-51030	CAMSHAFT	1							
7	2	119717-51060	SUPPORT, BEARING	1							
8	2	119717-51070	PARALLEL PIN	1							
9	2	122710-51090	KEY	1							
10	2	119717-51100	PLUNGER ASSY	3							
13	2	129155-51140	PIN, BARREL LOCKING	3							
14	2	158600-51170	SEAT SPRING	3							
15	2	119717-51180	RETAINER, SPRING	3							
16	2	119717-51190	SPRING, PLUNGER	3							
17	2	119717-51200	TAPPET ASSY	3							
22	3	129155-51600	SHIM PACK	1							
41	2	158600-51270	STOPPER	3							
42	2	129155-51280	O-RING S6	3							
43	2	129155-51280	O-RING S6	1							
44	2	119717-51300	VALVE ASSY, DELIVERY	3							
47	2	119717-51330	SPRING, DELIVERY	3							
48	2	124550-51350	GASKET, DELIVERY	3							
49	2	158600-51441	VALVE ASSY, DELIVERY	3							
55	2	118400-51370	LOCKING	3							
56	2	24316-000150	O-RING 4D P15	3							
57	2	129155-51400	DEFLECTOR	1							
58	2	158600-51410	PLUG	1							
59	2	158600-51420	PLUG	1							
60	2	129155-51450	SHIM SET, ADJUSTING	1							
65	2	119717-51500	RACK, CONTROL	1							
66	2	129155-51521	BUSH, RACK	1							
67	2	129155-51530	SPACER, AUX. SPRING	1							
68	2	129155-51540	CIRCLIP	1							
69	2	129155-51550	PINION, CONTROL	3							
70	2	129100-51560	PINION	3							
71	2	129100-51570	SCREW	3							
72	2	158600-51570	PLUG	1							
73	2	129155-51580	O-RING	1							
74	2	129155-51591	SPRING, RACK	1							
75	2	129155-51701	COVER	1							
76	2	119717-51710	PACKING	1							
77	2	119717-51750	COVER, BODY SIDE	1							
78	2	119717-51760	GASKET	1							
79	2	158600-51790	GUIDE, RACK	1							
80	2	129156-51910	LABEL, CAUTION	1							
81	2	22190-160002	SEAL WASHER 16S	1							
82	2	22217-060000	SPRING WASHER 6	2							
83	2	22351-050010	SPRING PIN 5X10	2							
84	2	24101-060034	BALL BEARING	1							
85	2	24101-063034	BALL BEARING	1							
86	2	119717-51420	O-RING	1							
87	2	26022-050122	SCREW M 5X 12	8							
88	2	26022-060162	SCREW M 6X 16	4							
89	2	26106-050102	BOLT M 5X 10 PLATED	3							

N:Old New, Q:Old New, R:Old New, S:Old New, W:Add, Z:Discontinued, F:Set Change, K:Q'ty Change

++ CONTINUE ++

(C)Copy Rights YANMAR CO.,LTD and YANMAR AGRICULTURAL EQUIPMENT CO.,LTD.

silvermorn.co.uk

Fig.10. FUEL INJECTION PUMP

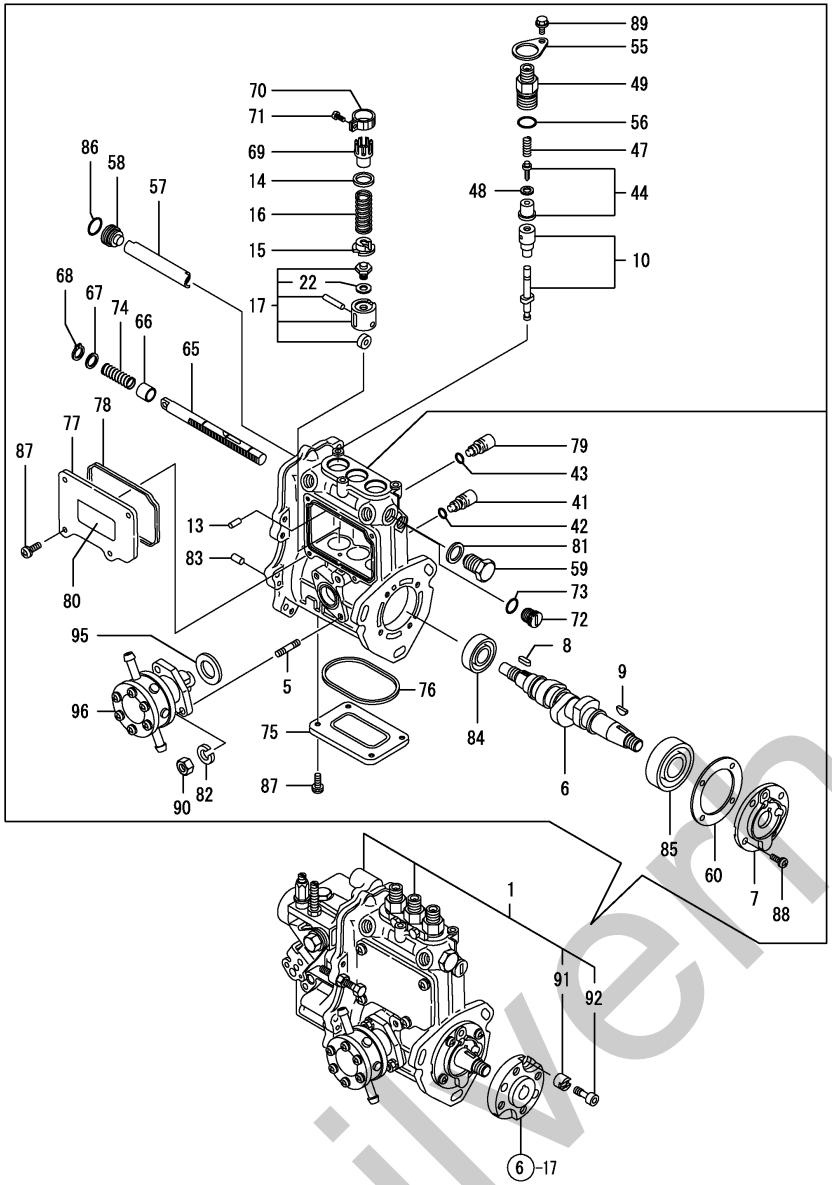

Remarks
(1) GOVERNOR ASSY(FIG.11) IS INCORPORATED IN THIS FOP.CMP (REF.NO.1).

Y00D8520 10. FUEL INJECTION PUMP

(A)=3TNV76-FDG (D)=
(B)= (E)=
(C)= (F)=

REF.	LEV.	PARTS NO.	DESCRIPTION	Q'TY (A)	(B)	(C)	(D)	(E)	(F)	I	R
90	2	26716-060002	NUT 6	2							
91	2	119717-51480	COLLAR. FIC FIX	1							
92	2	119717-51490	BOLT, FIXATION	1							
95	2	129155-52051	GASKET	1							
96	2	129100-52101	PUMP ASSY, FUEL FEED	1							

N:Old New, Q:Old New, R:Old New, S:Old New, W:Add, Z:Discontinued, F:Set Change, K:Q'ty Change

(C)Copy Rights YANMAR CO.,LTD and YANMAR AGRICULTURAL EQUIPMENT CO.,LTD.

silvermorn.co.uk

Fig.11. GOVERNOR

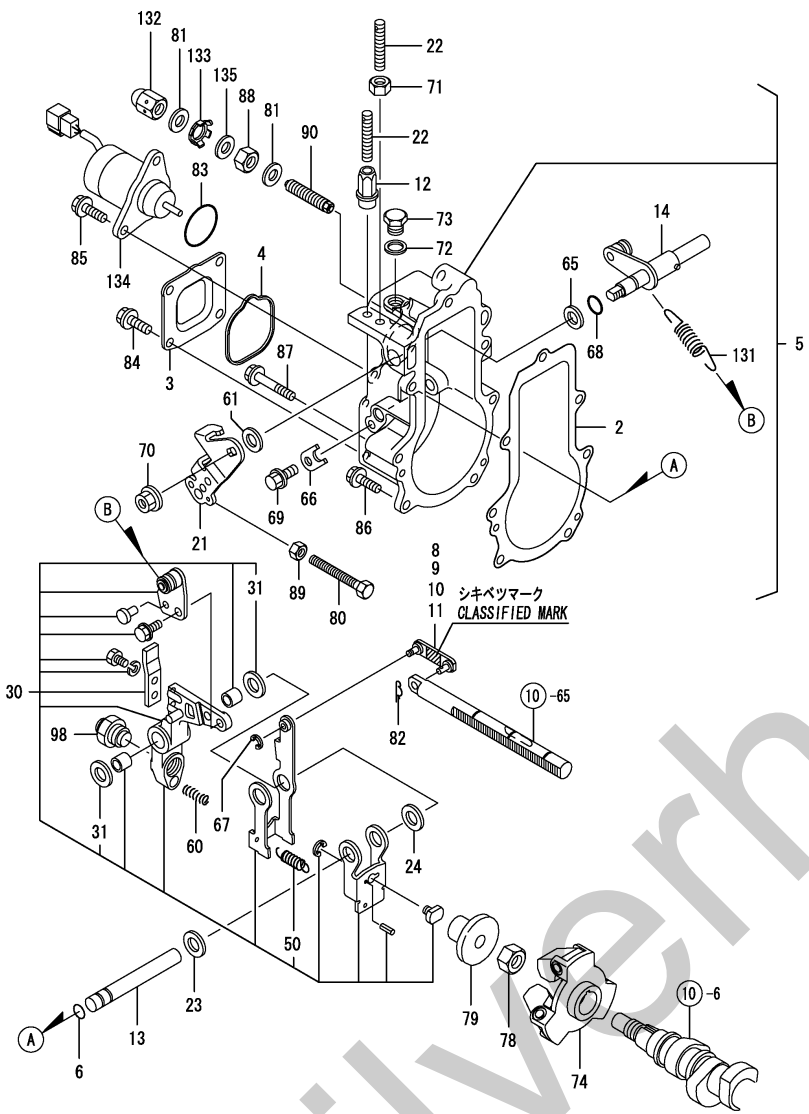

Remarks
(1) SELECTIVE PARTS: CERTAIN THE CLASSIFICATION MARK, THEN PLACE YOUR ORDER.(REF. TO ILLUSTRATION)
* THIS FIGURE(GOVERNOR ASSY)IS INCORPORATED IN THE FUEL INJECTION PUMP ASSY(FIG.10).

11. GOVERNOR

(A)=3TNV76-FDG (D)=
(B)= (E)=
(C)= (F)=

REF.	LEV.	PARTS NO.	DESCRIPTION	Q'TY (A)	(B)	(C)	(D)	(E)	(F)	I	R
2	2	119717-61050	GASKET, CASE	1							
3	2	119717-61060	CASE, GOVERNOR	1							
4	2	119717-61070	GASKET, COVER	1							
5	2	119742-61100	CASE ASSY, GOVERNOR	1							
6	3	129155-51280	O-RING S6	1							
8	3	119717-61120	LINK, L=29.3	1							1
9	3	119717-61130	LINK, L=29.8	1							1
10	3	119717-61140	LINK, L=28.8	1							1
11	3	119717-61150	LINK, L=303	1							1
12	3	129209-61370	NUT M6	1							
13	3	129052-61390	SHAFT, GOV. LEVER	1							
14	3	119717-61400	SHAFT ASSY, CONTROL	1							
21	3	119515-61440	LEVER, CONTROL	1							
22	3	129155-61450	BOLT, REVOL. LIMIT	2							
23	3	129156-61460	SHIM T=0.6	1							
24	3	129155-61480	SPACER ASSY	1							
30	3	119717-61500	LEVER ASSY, GOVERNOR	1							
31	4	174307-51700	SHIM SET	2							
50	4	129486-61540	SPRING, SET	1							
60	3	129100-61650	SPRING, FUEL CONTROL	1							
61	3	158552-61700	SHIM ASSY	1							
65	3	158552-61710	SHIM T=1.0	1							
66	3	119660-61901	RETAINER, SHAFT	1							
67	3	22272-000030	CIRCLIP E- 3	1							
68	3	24341-000070	O-RING 1A S-7.0	1							
69	3	26106-060102	BOLT M 6X 10 PLATED	1							
70	3	26366-080002	NUT M 8	1							
71	3	26756-060002	LOCK NUT 6	1							
72	2	22190-100002	SEAL WASHER 10S	1							
73	2	23887-100002	PLUG 10	1							
74	2	119717-61200	WEIGHT ASSY	1							
78	2	119660-61300	NUT, GOVERNOR WEIGHT	1							
79	2	129155-61341	SLEEVE	1							
80	2	129155-61460	BOLT, IDLE LIMIT	1							
81	2	22190-120002	SEAL WASHER 12	2							
82	2	22372-040000	SNAP PIN 4	1							
83	2	24341-000280	O-RING 1A S-28.0	1							
84	2	26106-060102	BOLT M 6X 10 PLATED	4							
85	2	26106-060142	BOLT M 6X 14 PLATED	2							
86	2	26106-060202	BOLT M 6X 20 PLATED	4							
87	2	26106-060452	BOLT M 6X 45 PLATED	3							
88	2	26736-120002	NUT M12	1							
89	2	26756-060002	LOCK NUT 6	1							
90	2	158601-61700	LIMITER ASSY, FUEL	1							
98	2	119761-61560	ANGLEICH ASSY	1							
131	2	129573-61700	SPRING, GOVERNOR	1							
132	2	129209-61930	CAP NUT	1							
133	2	129209-61970	PLATE	1							
134	2	119233-77932	SOLENOID, STOP	1							
135	2	23414-120016	GASKET 12	1							

N:Old ←○/×→ New, Q:Old ←×/○→ New, R:Old ←○/○→ New, S:Old ←×/×→ New, W:Add, Z:Discontinued, F:Set Change, K:Q'ty Change

(C)Copy Rights YANMAR CO.,LTD and YANMAR AGRICULTURAL EQUIPMENT CO.,LTD.

silverhorn.co.uk

Fig.12. FUEL INJECTION VALVE

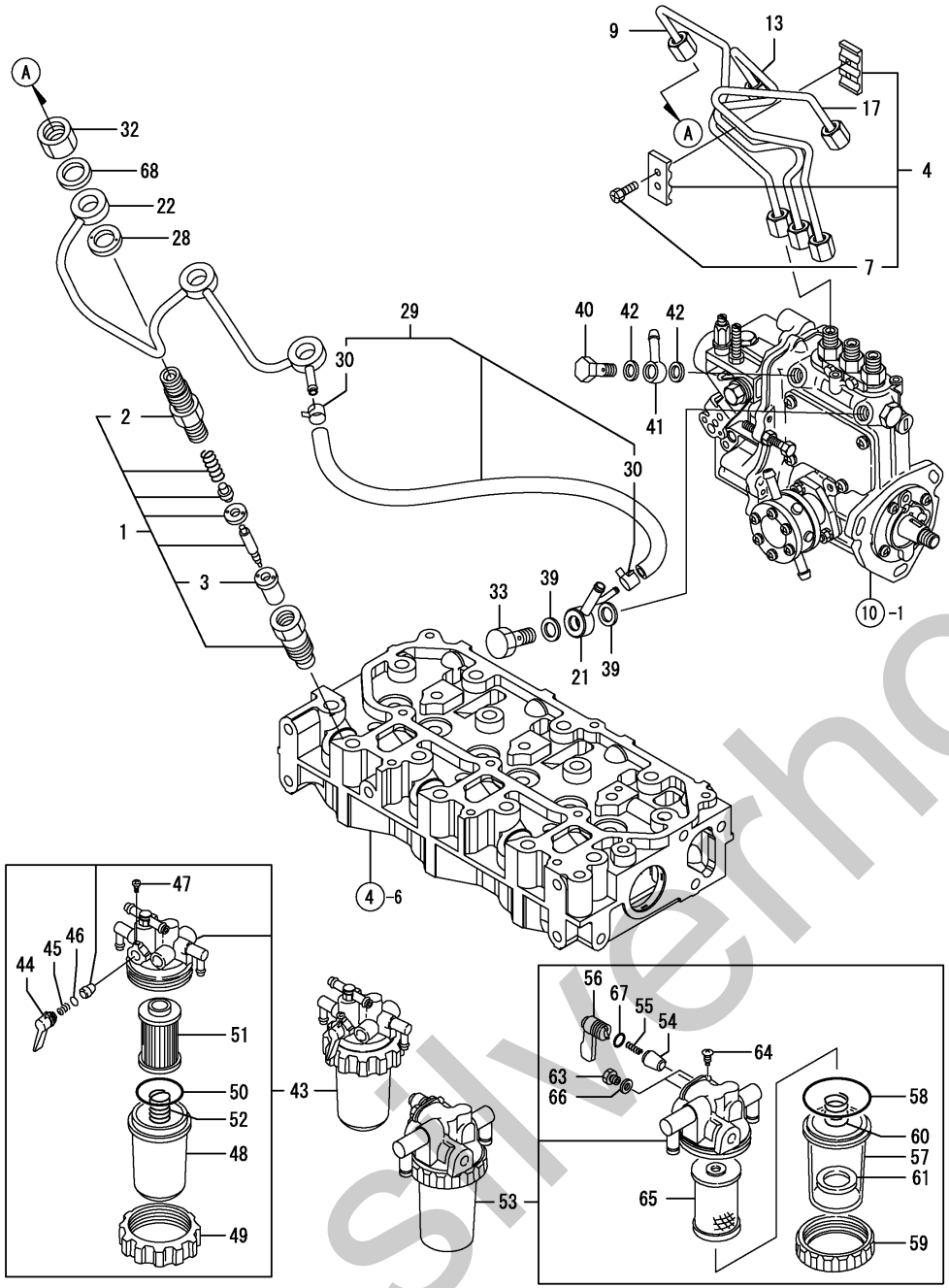

silverhorn.co.uk

Y00D8520 12. FUEL INJECTION VALVE

(A)=3TNV76-FDG (D)=
(B)= (E)=
(C)= (F)=

REF.	LEV.	PARTS NO.	DESCRIPTION	Q'TY (A)	(B)	(C)	(D)	(E)	(F)	I	R
1	1	119515-53001	VALVE ASSY,INJECTION	3							
2	2	118200-53010	HOLDER, NOZZLE	3							
3	2	119515-53010	NOZZLE ASSY	3							
4	1	129150-59120	RETAINER, INJ. PIPE	1							
7	2	129150-59131	BOLT M4X14,HEX.SCKT.	2							
9	1	119746-59810	PIPE, FUEL INJECTION	1							
13	1	119746-59820	PIPE, FUEL INJECTION	1							
17	1	119746-59830	PIPE, FUEL INJECTION	1							
21	1	119840-59570	JOINT	1							
22	1	119717-59510	PIPE ASSY, RETURN	1							
28	1	129901-59560	GASKET, RETURN	3							
29	1	119540-59570	PIPE, FUEL RETURN	1							
30	2	124066-59100	CLAMP 8	2							
32	1	119620-59700	NUT	3							
33	1	119813-59950	VALVE ASSY, CHECK	1							
39	1	22190-120002	SEAL WASHER 12	2							
40	1	103854-39140	BOLT, PIPE JOINT	1							
41	1	101304-59020	JOINT 12, PIPE	1							
42	1	22190-120002	SEAL WASHER 12	2							
43	1	119833-55620	STRAINER ASSY, FUEL	1							
44	2	119810-55340	LEVER	1							
45	2	104200-55330	SPRING, TAPER VALVE	1							
46	2	24311-240100	O-RING 1A P-10A	1							
47	2	104200-55750	SCREW M 4	1							
48	2	121254-55510	CUP, STRAINER	1							
49	2	110250-55610	RING, RETAINING	1							
50	2	102103-55520	O-RING	1							
51	2	119810-55650	ELEMENT	1							
52	2	121250-55620	SPRING	1							
53	1	129335-55700	SEPARATOR, WATER	1							
54	2	104200-55321	VALVE, TAPER	1							
55	2	104200-55330	SPRING, TAPER VALVE	1							
56	2	104200-55341	HANDLE, COCK	1							
57	2	124064-55510	BOWL, FUEL STRAINER	1							
58	2	102103-55520	O-RING	1							
59	2	110250-55610	RING, RETAINING	1							
60	2	121257-55720	SPRING, SCREEN	1							
61	2	121257-55731	FLOAT	1							
63	2	101720-55750	PLUG 6	2							
64	2	104200-55750	SCREW M 4	1							
65	2	171081-55910	SCREEN	1							
66	2	23418-060000	GASKET 6, NYLON	2							
67	2	24311-240100	O-RING 1A P-10A	1							
68	1	22190-120002	SEAL WASHER 12	3							

N:Old ←○/×→ New, Q:Old ←×/○→ New, R:Old ←○/○→ New, S:Old ←×/×→ New, W:Add, Z:Discontinued, F:Set Change, K:Q'ty Change

(C)Copy Rights YANMAR CO.,LTD and YANMAR AGRICULTURAL EQUIPMENT CO.,LTD.

Fig.13. STARTING MOTOR

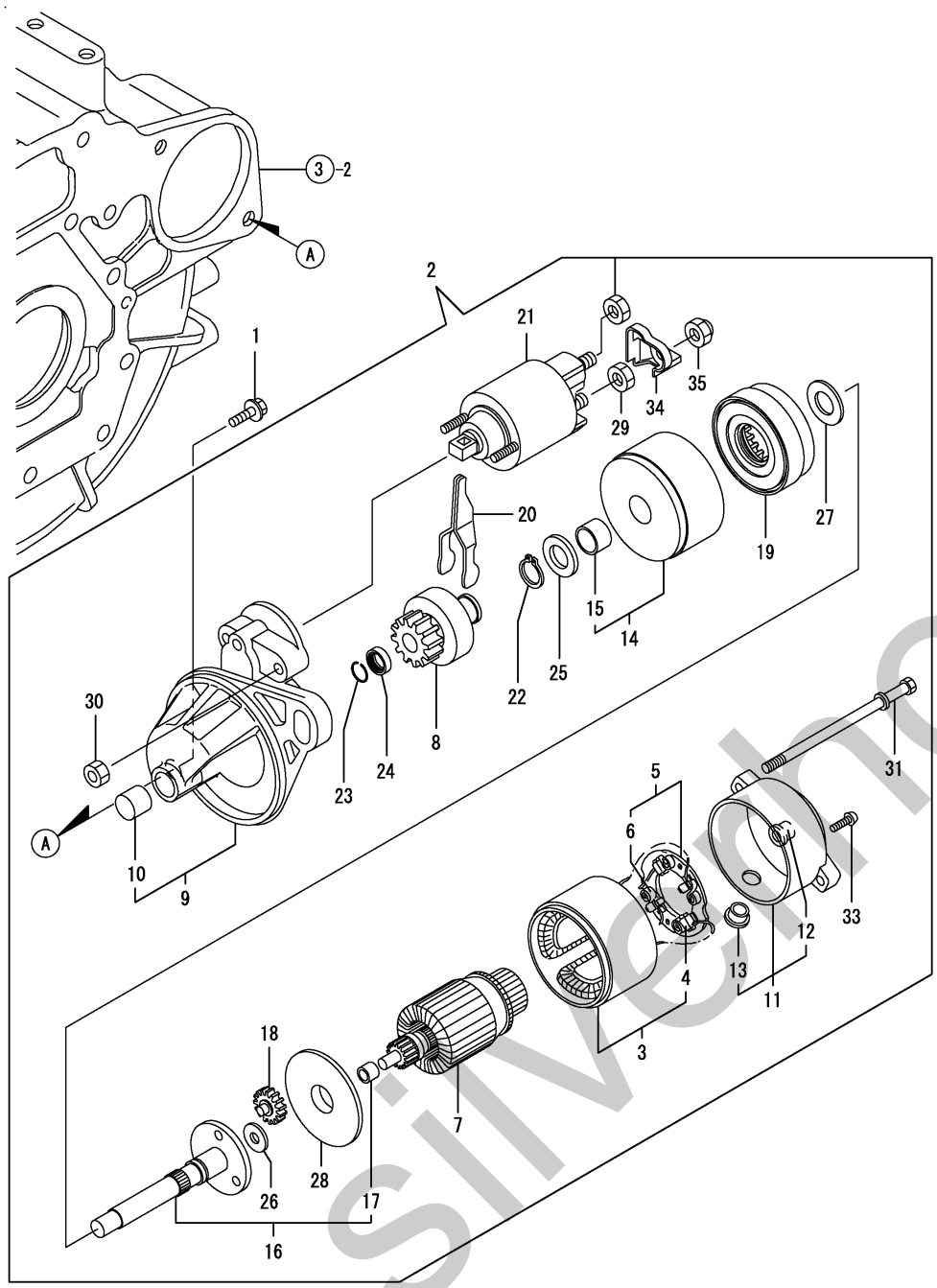

13. STARTING MOTOR

(A)=3TNV76-FDG (D)=
(B)= (E)=
(C)= (F)=

REF.	LEV.	PARTS NO.	DESCRIPTION	Q'TY (A)	(B)	(C)	(D)	(E)	(F)	I	R
1	1	26106-100252	BOLT M10X 25 PLATED	2							
2	1	119717-77010	STARTER, P1.1	1							
3	2	X0281007750	COIL ASSY, FIELD	1							
4	3	X0280996180	STARTER KIT	2							
5	2	X0285105190	HOLDER ASSY.	1							
6	3	X0285205030	SPRING	4							
7	2	X0282005991	ARMATURE ASSY	1							
8	2	X0283006960	CLUTCH SUB-ASSY.	1							
9	2	X4284001590	HOUSING ASSY,STARTER	1							
10	3	X9491050100	NEEDLE BEARING	1							
11	2	X0285007030	FRAME ASSY.	1							
12	3	X9491040990	BEARING	1							
13	3	X0280626010	COVER	1							
14	2	X0284105040	BEARING SUB-ASSY.	1							
15	3	X9491034330	BEARING	1							
16	2	X0286105010	SHAFT SUB-ASSY.	1							
17	3	X9491034320	BEARING	1							
18	2	X0286305010	GEAR	3							
19	2	X0286355010	GEAR	1							
20	2	X0287405140	LEVER	1							
21	2	X0534007800	SWITCH,EMERGENCY	1							
22	2	X9055715000	RING	1							
23	2	X9490721360	RING	1							
24	2	X0280210331	NUT	1							
25	2	X9490138110	WASHER	1							
26	2	X9490138090	WASHER	1							
27	2	X9490138100	WASHER	1							
28	2	X0284525010	PLATE	1							
29	2	X9490562360	NUT	1							
30	2	X9490560750	NUT	2							
31	2	X9490423420	BOLT, THROUGH	2							
33	2	X9490065670	SCREW M 4X 6 (BS)	2							
34	2	X0280335350	COVER SET, TERMINAL	1							
35	2	X1289510130	NUT	1							

N:Old New, Q:Old New, R:Old New, S:Old New, W:Add, Z:Discontinued, F:Set Change, K:Q'ty Change

(C)Copy Rights YANMAR CO.,LTD and YANMAR AGRICULTURAL EQUIPMENT CO.,LTD.

silvanorn.co.uk

Fig.14. GENERATOR

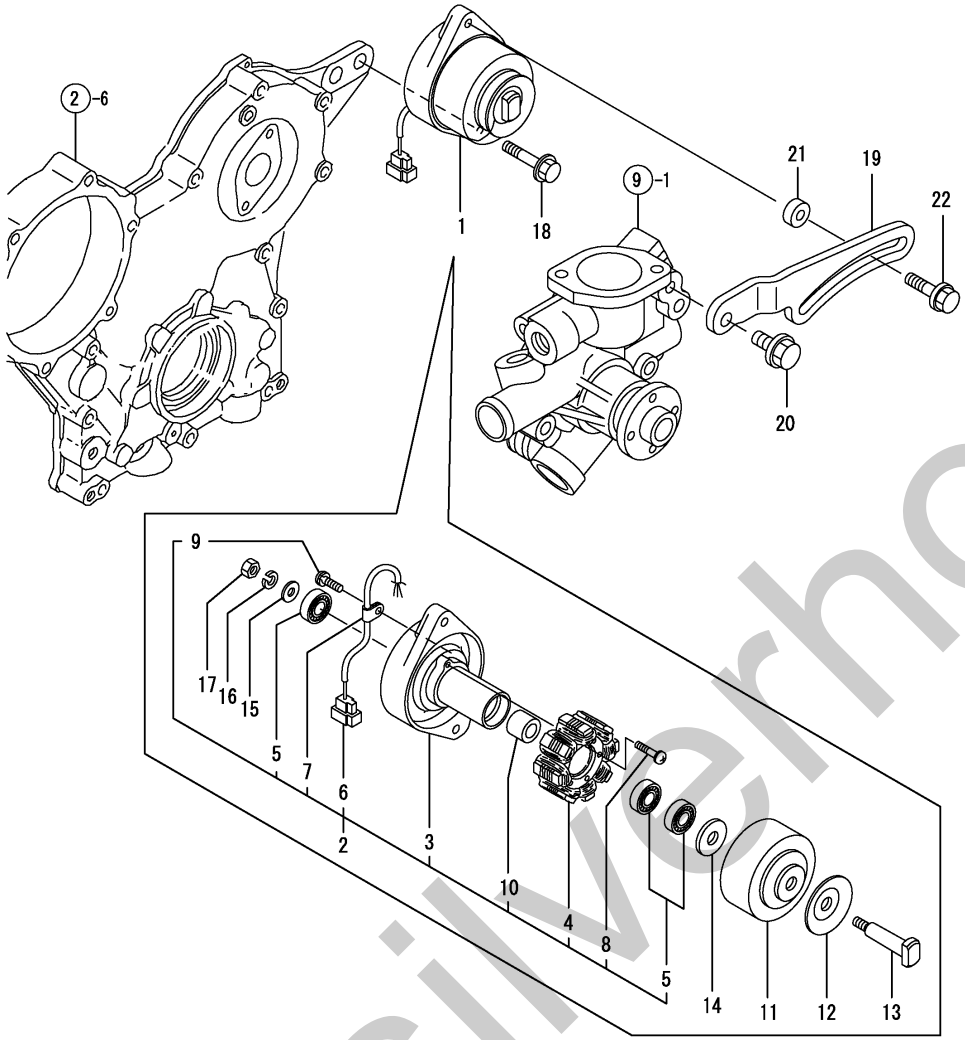

14. GENERATOR

(A)=3TNV76-FDG (D)=
(B)= (E)=
(C)= (F)=

REF.	LEV.	PARTS NO.	DESCRIPTION	Q'TY (A)	(B)	(C)	(D)	(E)	(F)	I	R
1	1	171301-77201	GENERATOR (15A)	1							
2	2	XM08137	PLATE ASSY	1							
3	3	X2A07073KA	PLATE	1							
4	3	X4A07023KB	STATOR ASSY	1							
5	3	24104-062010	BALL BEARING	3							
6	3	X417878	COUPLER	1							
7	3	XM069000000	CLAMP	1							
8	3	XYSPS402400	SCREW	2							
9	3	XYSPS400800	SCREW	1							
10	3	XM329830000	COLLAR	1							
11	2	X3A08877KA	FLYWHEEL	1							
12	2	XM721740000	PULLEY	1							
13	2	X4A07403K01	SHAFT	1							
14	2	XM67935	WASHER	1							
15	2	XM860250000	WASHER 10	1							
16	2	XM219230000	WASHER, SPRING	1							
17	2	XM863720000	NUT	1							
18	1	26106-100402	BOLT M10X 40 PLATED	1							
19	1	119742-77300	ADJUSTER, BELT	1							
20	1	26106-080202	BOLT M 8X 20 PLATED	1							
21	1	119940-77270	ADJUSTER, BELT	1							
22	1	129972-77341	BOLT, ADJUSTING	1							

N:Old ←○/×→ New, Q:Old ←×/○→ New, R:Old ←○/○→ New, S:Old ←×/×→ New, W:Add, Z:Discontinued, F:Set Change, K:Q'ty Change

(C)Copy Rights YANMAR CO.,LTD and YANMAR AGRICULTURAL EQUIPMENT CO.,LTD.

silverhorn.co.uk

Fig.15. ELECTLIC PART

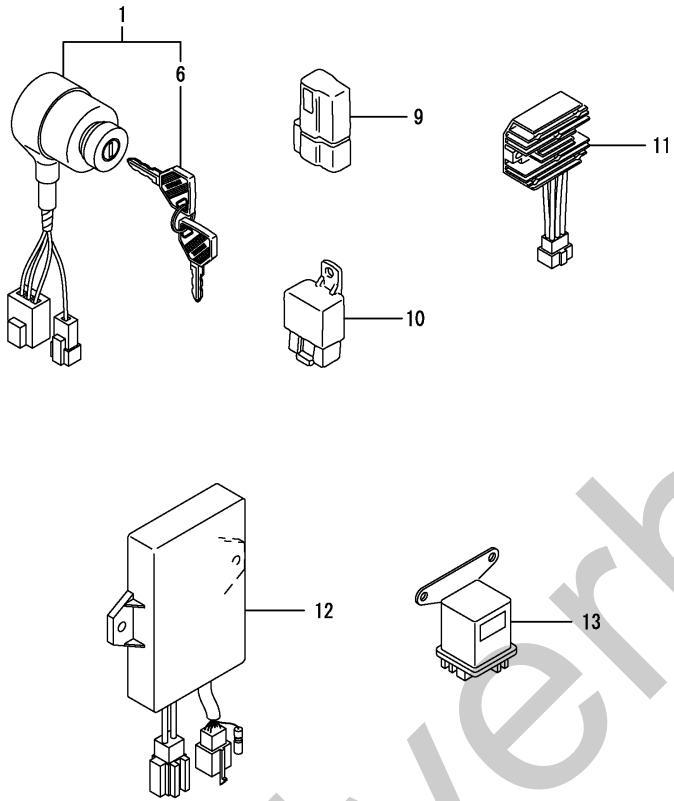

Y00D8520 15. ELECTLIC PART

(A)=3TNV76-FDG (D)=
(B)= (E)=
(C)= (F)=

REF.	LEV.	PARTS NO.	DESCRIPTION	Q'TY (A)	(B)	(C)	(D)	(E)	(F)	I	R
1	1	194940-52110	SWITCH,STARTER	1							
6	2	198360-52160	KEY COMPL.	1							
9	1	119643-66900	DIODE	2							
10	1	119247-77100	RELAY, SAFETY	1							
11	1	119865-77700	CURRENT-REMITTER	1							
12	1	119546-77800	UNIT, EMERGENCY	1							
13	1	119650-77910	RELAY, GROW	1							

N:Old ←○/×→ New, Q:Old ←×/○→ New, R:Old ←○/○→ New, S:Old ←×/×→ New, W:Add, Z:Discontinued, F:Set Change, K:Q'ty Change

(C)Copy Rights YANMAR CO.,LTD and YANMAR AGRICULTURAL EQUIPMENT CO.,LTD.

silverhorn.co.uk

Fig.16. GASKET SET

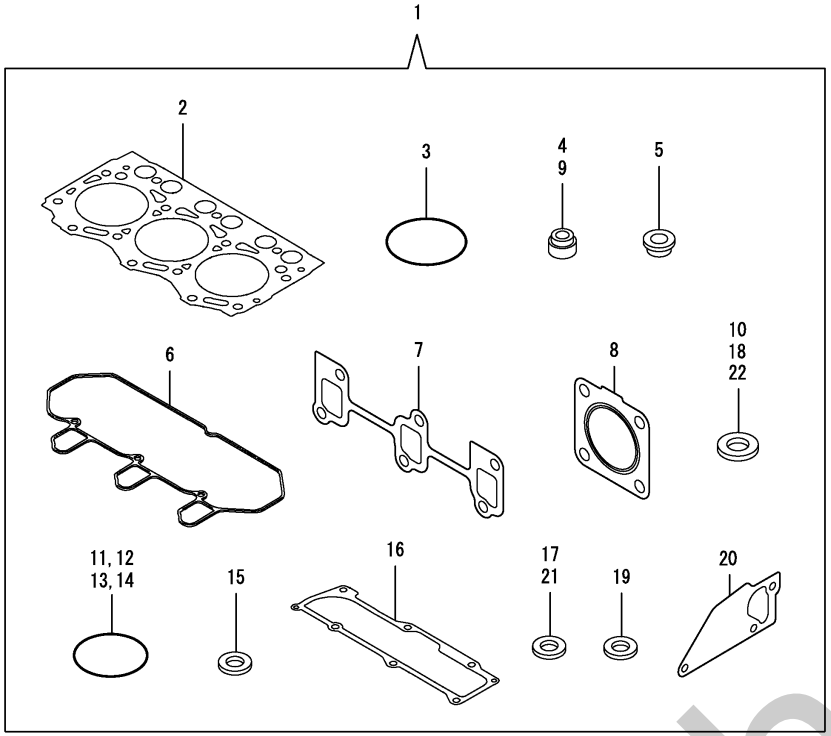

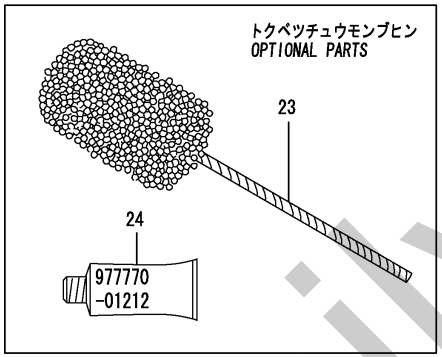

Remarks
(1) OPTIONAL PART.

Y00D8520 16. GASKET SET

(A)=3TNV76-FDG (D)=
(B)= (E)=
(C)= (F)=

REF.	LEV.	PARTS NO.	DESCRIPTION	Q'TY (A)	(B)	(C)	(D)	(E)	(F)	I	R
1	1	719717-92670	GASKET SET(NON-ASB.)	1							1
2	2	119717-01330	GASKET, CYL.HEAD	1							
3	2	121850-51960	O-RING, F.I.PUMP	1							
4	2	119717-11340	SEAL, VALVE STEM	3							
5	2	129901-11450	PROTECTER, NOZZLE	3							
6	2	119718-11310	GASKET, BONNET	1							
7	2	119717-13110	GASKET, MANIFOLD	1							
8	2	119515-13200	GASKET, SILENCER	1							
9	2	119717-11350	SEAL, VALVE STEM	3							
10	2	22190-080002	SEAL WASHER 8S	4							
11	2	24311-000320	O-RING 1A P-32.0	2							
12	2	119717-32060	O-RING, P15.0	1							
13	2	119624-32040	O-RING P 12.0	1							
14	2	119717-32050	O-RING, P17.0	3							
15	2	119600-11460	GASKET, NOZZLE	6							
16	2	119717-11331	GASKET,BONNET COVER	1							
17	2	124465-44950	GASKET 16	2							
18	2	22190-120002	SEAL WASHER 12	4							
19	2	129901-59560	GASKET, RETURN	3							
20	2	119717-42020	GASKET, WATER PUMP	1							
21	2	23414-080000	GASKET 8, ROUND	1							
22	2	22190-160002	SEAL WASHER 16S	1							
23	1	129400-92420	FLEX HORN	1							1
24	1	977770-01212	GASKET, LIQUID	1							1

N:Old ←○→ New, Q:Old ←×→ New, R:Old ←○→ New, S:Old ←×→ New, W:Add, Z:Discontinued, F:Set Change, K:Q'ty Change

(C)Copy Rights YANMAR CO.,LTD and YANMAR AGRICULTURAL EQUIPMENT CO.,LTD.

silverhorn.co.uk

PARTS No.INDEX

All parts of this Parts Catalog is arranged by Part No. order (depending on the spot where the model is used).
If you want to know by Part No.where your object part is used, please use this Parts Catalog.

silverhorn.co.uk

MODEL : 3TNV76-FDG (DENYO)
PC NO : Y00D8520

PARTS No. INDEX

PARTS No.	Fig.	Ref.No.
101304-59020	12	41
101720-55750	12	63
102103-55520	12	50
		58
103854-39140	12	40
104200-55321	12	54
104200-55330	12	45
		55
104200-55341	12	56
104200-55750	12	47
		64
105010-11490	4	5
105311-01090	1	6
105425-01690	3	11
110250-55610	12	49
		59
114250-39450	8	5
118200-53010	12	2
118400-51370	10	55
119131-18320	5	5
119233-44740	9	20
119233-77932	11	134
119247-77100	15	10
119285-01990	1	9
119285-11990	4	15
119305-35151	8	2
119515-13200	5	7
	16	8
119515-42350	9	18
119515-53001	12	1
119515-53010	12	3
119515-61440	11	21
119540-59570	12	29
119546-21590	7	8
119546-77800	15	12
119600-11460	4	4
	16	15
119620-01750	3	4
119620-01800	2	8
119620-02020	1	10
119620-11280	4	30
119620-14200	6	1
119620-21941	7	14
119620-59700	12	32
119621-21680	7	13
119623-01250	1	7
119624-32040	2	20
	16	13
119643-66900	15	9
119650-77910	15	13

PARTS No.	Fig.	Ref.No.
119660-01911	2	19
119660-61300	11	78
119660-61901	11	66
119717-01330	1	31
	16	2
119717-01501	2	1
119717-01521	2	6
119717-01570	2	3
119717-01590	2	4
119717-01601	3	2
119717-01750	2	18
119717-02410	1	13
119717-03031	4	40
119717-03070	4	41
		42
119717-11100	4	17
119717-11110	4	18
119717-11131	4	19
119717-11190	4	21
119717-11200	4	25
119717-11240	4	26
119717-11260	4	29
119717-11320	4	51
119717-11331	4	52
	16	16
119717-11340	4	22
	16	4
119717-11350	4	23
	16	9
119717-11381	4	39
119717-11650	4	31
119717-11800	4	13
119717-13110	5	2
	16	7
119717-13600	5	3
119717-14400	6	2
119717-14580	6	3
119717-21200	7	6
119717-21650	7	12
119717-21700	7	1
119717-22080	7	15
119717-22090	7	31
119717-22300	7	21
119717-22500	7	17
119717-22550	7	33
119717-23000	7	23
119717-23200	7	28
119717-23600	7	29
119717-23610	7	37
119717-23910	7	27

PARTS No.	Fig.	Ref.No.
119717-25050	6	10
119717-25100	6	11
119717-25930	6	16
119717-32050	2	21
	16	14
119717-32060	8	3
	16	12
119717-32080	2	11
119717-32100	2	10
119717-32110	2	15
119717-32120	2	16
119717-39210	8	6
119717-42002	9	1
119717-42020	9	13
	16	20
119717-42031	9	4
119717-42041	9	3
119717-42320	9	11
119717-49800	9	24
119717-51030	10	6
119717-51060	10	7
119717-51070	10	8
119717-51100	10	10
119717-51150	6	17
119717-51180	10	15
119717-51190	10	16
119717-51200	10	17
119717-51300	10	44
119717-51330	10	47
119717-51420	10	86
119717-51480	10	91
119717-51490	10	92
119717-51500	10	65
119717-51710	10	76
119717-51750	10	77
119717-51760	10	78
119717-59510	12	22
119717-61050	11	2
119717-61060	11	3
119717-61070	11	4
119717-61120	11	8
119717-61130	11	9
119717-61140	11	10
119717-61150	11	11
119717-61200	11	74
119717-61400	11	14
119717-61500	11	30
119717-77010	13	2
119717-77800	4	59
119717-77820	4	60

PARTS No.	Fig.	Ref.No.
119718-11310	4	50
	16	6
119718-13100	5	1
119742-61100	11	5
119742-77300	14	19
119744-01770	3	10
119744-35080	8	13
119746-11740	4	6
119746-34801	8	12
119746-59810	12	9
119746-59820	12	13
119746-59830	12	17
119761-61560	11	98
119802-03100	4	43
119802-03110	4	44
119802-03121	4	45
119802-03131	4	46
119802-03141	4	47
119802-13620	5	4
119802-32130	2	17
119810-01200	1	30
119810-02930	1	27
119810-02940	1	32
119810-55340	12	44
119810-55650	12	51
119813-59950	12	33
119833-55620	12	43
119840-59570	12	21
119865-21600	7	11
119865-77700	15	11
119940-77270	14	21
121111-21501	7	39
121120-01620	3	3
121250-44901	9	27
121250-55620	12	52
121254-55510	12	48
121256-44600	9	37
121257-55720	12	60
121257-55731	12	61
121450-42450	9	26
121470-44540	9	35
121520-34810	8	11
121550-49111	9	17
121850-51960	2	22
	16	3
122710-51090	10	9
124060-01050	1	5
124064-55510	12	57
124066-59100	12	30
124085-02220	3	5

silverthorn.co.uk

MODEL : 3TNV76-FDG (DENYO)
PC NO : Y00D8520

PARTS No. INDEX

PARTS No.	Fig.	Ref.No.
124160-01751	2	30
	4	38
124160-01910	1	8
124450-44510	9	30
124450-44530	9	32
124450-44550	9	36
124450-44560	9	33
124465-44950	9	28
		29
	16	17
124550-51350	10	48
129001-32320	2	13
129001-32330	2	14
129005-59830	8	7
129052-61390	11	13
129100-01580	3	1
	7	2
129100-35140	8	1
129100-51560	10	70
129100-51570	10	71
129100-52101	10	96
129100-61650	11	60
129150-11230	4	32
129150-11750	4	34
129150-25301	6	15
129150-59120	12	4
129150-59131	12	7
129155-51020	10	5
129155-51140	10	13
129155-51280	10	42
		43
	11	6
129155-51400	10	57
129155-51450	10	60
129155-51521	10	66
129155-51530	10	67
129155-51540	10	68
129155-51550	10	69
129155-51580	10	73
129155-51591	10	74
129155-51600	10	22
129155-51701	10	75
129155-52051	10	95
129155-61341	11	79
129155-61450	11	22
129155-61460	11	80
129155-61480	11	24
129156-51910	10	80
129156-61460	11	23
129209-61370	11	12

PARTS No.	Fig.	Ref.No.
129209-61930	11	132
129209-61970	11	133
129335-55700	12	53
129350-49530	9	23
129400-92420	16	23
129457-44760	9	21
129486-61540	11	50
129508-11180	4	20
129573-61700	11	131
129612-42310	9	19
129900-07900	4	1
129900-32130	2	12
129901-11450	4	3
	16	5
129901-59560	12	28
	16	19
129916-49740	9	12
129972-77341	14	22
158552-61700	11	61
158552-61710	11	65
158600-51170	10	14
158600-51270	10	41
158600-51410	10	58
158600-51420	10	59
158600-51441	10	49
158600-51570	10	72
158600-51790	10	79
158601-61700	11	90
171081-55910	12	65
171301-77201	14	1
174307-51700	11	31
194940-52110	15	1
198360-52160	15	6
719717-01500	2	5
719717-01561	1	1
719717-02900	1	15
719717-02910	1	35
719717-92670	16	1
719746-51380	10	1
977770-01212	2	32
	3	9
	4	61
	16	24
X0280210331	13	24
X0280335350	13	34
X0280626010	13	13
X0280996180	13	4
X0281007750	13	3
X0282005991	13	7
X0283006960	13	8

PARTS No.	Fig.	Ref.No.
X0284105040	13	14
X0284525010	13	28
X0285007030	13	11
X0285105190	13	5
X0285205030	13	6
X0286105010	13	16
X0286305010	13	18
X0286355010	13	19
X0287405140	13	20
X0534007800	13	21
X1289510130	13	35
X2A07073KA	14	3
X3A08877KA	14	11
X417878	14	6
X4284001590	13	9
X4A07023KB	14	4
X4A07403K01	14	13
X9055715000	13	22
X9490065670	13	33
X9490138090	13	26
X9490138100	13	27
X9490138110	13	25
X9490423420	13	31
X9490560750	13	30
X9490562360	13	29
X9490721360	13	23
X9491034320	13	17
X9491034330	13	15
X9491040990	13	12
X9491050100	13	10
XM069000000	14	7
XM08137	14	2
XM219230000	14	16
XM329830000	14	10
XM67935	14	14
XM721740000	14	12
XM860250000	14	15
XM863720000	14	17
XYSPS400800	14	9
XYSPS402400	14	8

PARTS No.	Fig.	Ref.No.

silverthorn.co.uk