Genie®

A TEREX BRAND

Parts Manual

Serial Number Range

GTH-1256 AF

from GTH12AFM - 101

Part No. 57.0411.0052
Rev: H
January 2020

silverhorn.co.uk

silverhorn.co.uk

To SN GTH12AFM-388

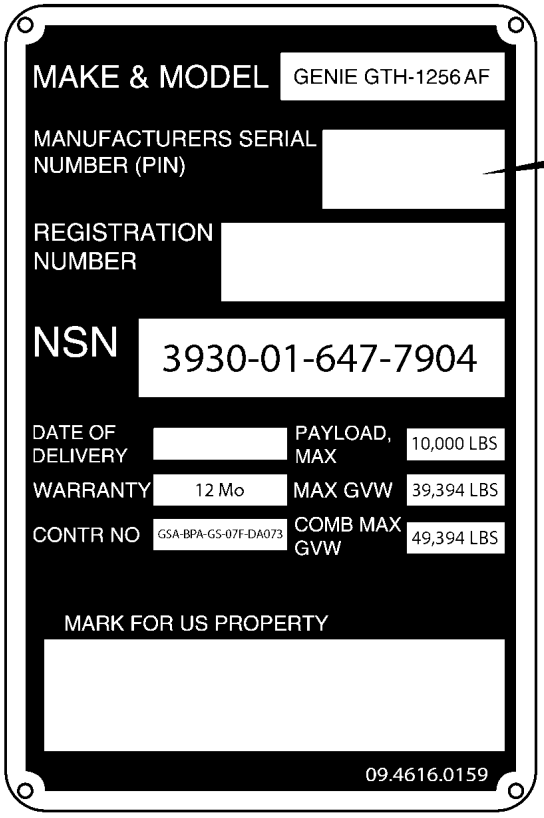

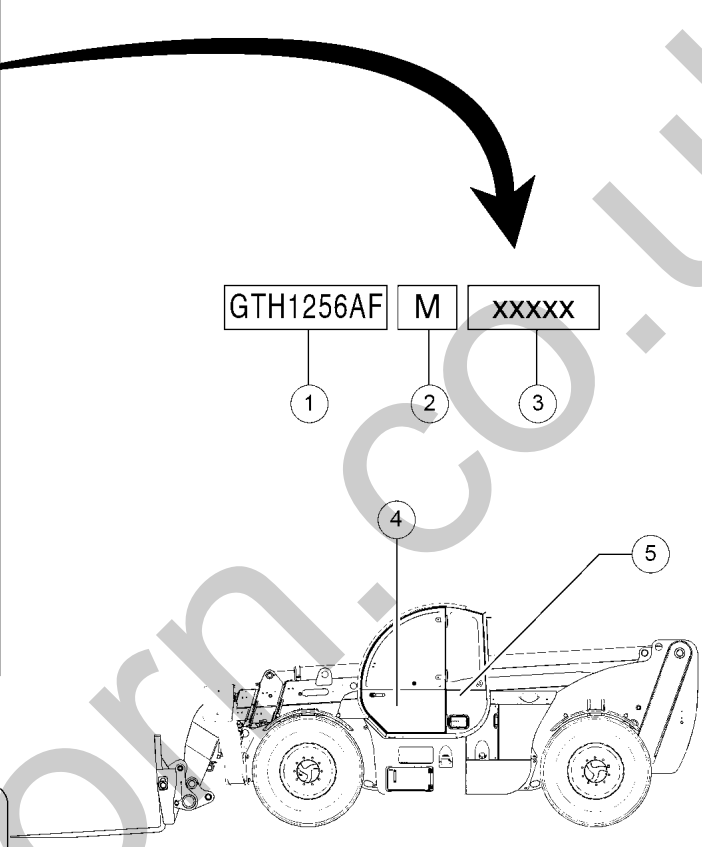

From SN GTH12AFM-389

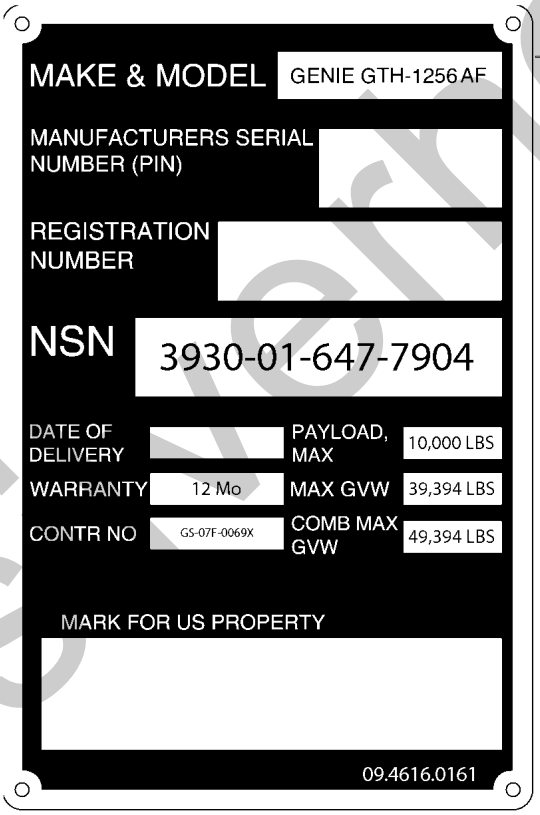

1 Model
2 Facility Code
3 Sequence Number
4 Serial Number (stamped on chassis)
5 Identification Plate

silverthorn.co.uk

How to Order Parts

Please be prepared with the following information when ordering replacement parts for your Terex or Genie product.

- ☒ **Machine model number**
- ☒ **Machine serial number**
- ☒ **Part number**
- ☒ **Part description and quantity**
- ☒ **Purchase order number**
- ☒ **”Ship to” address**
- ☒ **Desired method of shipment**
- ☒ **Name and telephone number of the authorized distributor in your area**

Use the Service Parts Fax Order Form on the next page and fax your order to our Parts Department.

If you don't know the name of your authorized distributor, or if your area is not currently serviced by an authorized distributor, please call Terex or Genie Industries.

Machine Information

_____
Model

_____
Serial Number

_____
Date of Purchase

_____
Authorized Genie Distributor

_____
Phone Number

North America

Telephone (425)881-1800

Toll Free (800)536-1800 in US and Canada

Fax (425)556-8659

Toll Free fax (888)274-6192

Email AWP.PartsSalesPO@terex.com

http://genielift.com/en

EMEAR (Europe, Middle East, Africa and Russia)

Telephone (31)(165)519 313

Fax (31)(165)511 148

http://genielift.co.uk

Asia Pacific (Genie Singapore)

Telephone +65 6692 7777

Fax +65 6261 8893

http://genielift.com.sg/

Australia

Telephone (61)(7)3456 4444

Fax (61)(7)3456 4466

http://genielift.com.au

South America

Telephone (55)(11)4082 5600

Fax (55)(11)4082 5630

silverhorn.co.uk

silverhorn.co.uk

TEREX CORPORATION

Service Parts Fax Order Form

Fax to: (425) 556-8659 or Toll Free: 888-274-6192
International: +1-425-556-8659

Please fill out completely

Date _____ Account Number _____

Your Name _____ Your Fax Number _____

_____ Your Phone Number _____

Bill To _____ Ship To _____

_____ _____

_____ _____

_____ _____

Purchase Order Number _____ Ship Via _____

Model(s) _____ **Serial No.(s)** _____

Optional Equipment _____

Part Number	Description	Quantity	Price

All back-ordered parts will be shipped when available via the same ship method as the original order unless Noted below:

- ☐ Ship complete order only - No back orders
- ☐ Ship all available parts and contact customer on disposition of back-ordered parts
- ☐ Other (please specify)

silverhorn.co.uk

Description **Page**

001 Parts Stocking List **10**

001.1 Parts Stocking List 10

100 Decals **12**

101.1 609950 Decals, View 1 12
102.1 609951 Decals, View 2 14

200 Drive Chassis Components **18**

201.1 609953 Rear Chassis 18
202.1 609954 Left Chassis 22
203.1 609955 Right Chassis 26
204.1 609956 Stabilizers 32
205.1 609957 Hydraulic Oil And Diesel Tanks 34
206.1 609958 Drive Chassis And Wheels 38
207.1 609959 Front Axle - Differential 40
208.1 609960 Front Axle - Brakes 42
209.1 609961 Front And Rear Axle - Central Housing 44
210.1 609962 Front And Rear Axle - Hub Reduction 46
211.1 609963 Front And Rear Axle - Steering Cylinder 50
212.1 609964 Front And Rear Axle - Trunion 52
213.1 609965 Front And Rear Axle - Gear Box 54
214.1 609966 Rear Axle - Differential 60
215.1 609967 Rear Axle - Brakes 62

300 Engine Components **64**

301.1 609973 Diesel Engine 64
302.1 609974 Air Filter 68
303.1 609975 Fuel Circuit 70
304.1 609976 Exhaust System And Accelerator 72
305.1 609977 Cooling System, Radiator 74
306.1 609978 Cooling System, Radiator Hoses 78
307.1 609979 Hydraulic Pumps 80

400 Cab Component **84**

401.1 609984 Cab, View 1 84
402.1 609985 Cab, View 2 88
403.1 609986 Cab, View 3 92
404.1 609987 Cab, View 4 94
405.1 609988 Cab, View 5 98
407.1 609990 Cab, View 7 104
408.1 609991 Cab, View 8 - Heater System (Webasto) 106

silverhorn.co.uk

Description **Page**

409.1 609992 Cab, View 9 - Heater System (Webasto) 108
410.1 609993 Air Conditioning - Part 1 112
411.1 609994 Air Conditioning - Part 2 114

500 Boom Components 118

501.1 609995 Arm 1st - 2nd Telescopic Element 118
502.1 609996 Arm 3rd - 4th Telescopic Element 122
503.1 609997 Chain Unit 1st Boom Section 126
504.1 609998 Chain Unit 2nd Boom Section 128
505.1 609999 Chain Unit 3rd Boom Section 132
506.1 610000 Chain Unit 4th Boom Section 134
507.1 610001 Lifting Cylinder - Slave Cylinder - Tilting Cylinder 136
508.1 610002 Boom Extension Cylinder 140
509.1 610003 Left & Right Chassis Sway Cylinder - Rear Axle Locking Cylinder 142
510.1 610004 Coupling Unit 146
511.1 610005 Fork Frame 148

600 Hydraulic System 152

601.1 610009 Fittings 152
602.1 610010 Boom Extension Cylinder 154
603.1 610011 Forks Tilt Cylinder - Forks Level Slave Cylinder 156
604.1 610012 Attachment Hydraulic Circuit 160
605.1 610013 Front Stabilizers 162
606.1 610014 Chassis Sway Cylinder 164
607.1 610015 Rear Axle Lock Cylinder 166
608.1 610016 Boom Lift Cylinder 168
609.1 610017 Power Steering 170
610.1 610018 Service Brake 174
611.1 610019 Parking Brake 178
612.1 610020 Gear Box 180
613.1 610021 Hydraulic Oil Radiator 182
614.1 610022 Hydraulic Oil Radiator Circuit 186
615.1 610023 Hydraulic Pumps 188
616.1 610024 Boom Hydraulic Control 190
617.1 610025 Transmission 192
618.1 610026 Test Port Manifold 196
619.1 610027 Auxiliary Hidraulic Line, View 1 198
620.1 610028 Auxiliary Hidraulic Line, View 2 200
621.1 610029 Primary Functions Manifold 202

700 Electric Installation 204

701.1 610031 Cabin Fuse-Relay Box 204

silvernorm.co.uk

Description	Page
702.1 610032 Dashboard	206
703.1 610033 Electric Installation - Work Lights - Part 1	210
704.1 610034 Electric Installation - Work Lights - Part 2	212
705.1 610035 Road Lights	214
706.1 610036 Wirings - View 1	216
707.1 610037 Wirings - View 2	218
708.1 610038 Auxiliary Hydraulic Circuit	220
709.1 610039 Power Plant Heaters	222
Part Number Index	**224**

silverhorn.co.uk

001.1 Parts Stocking List

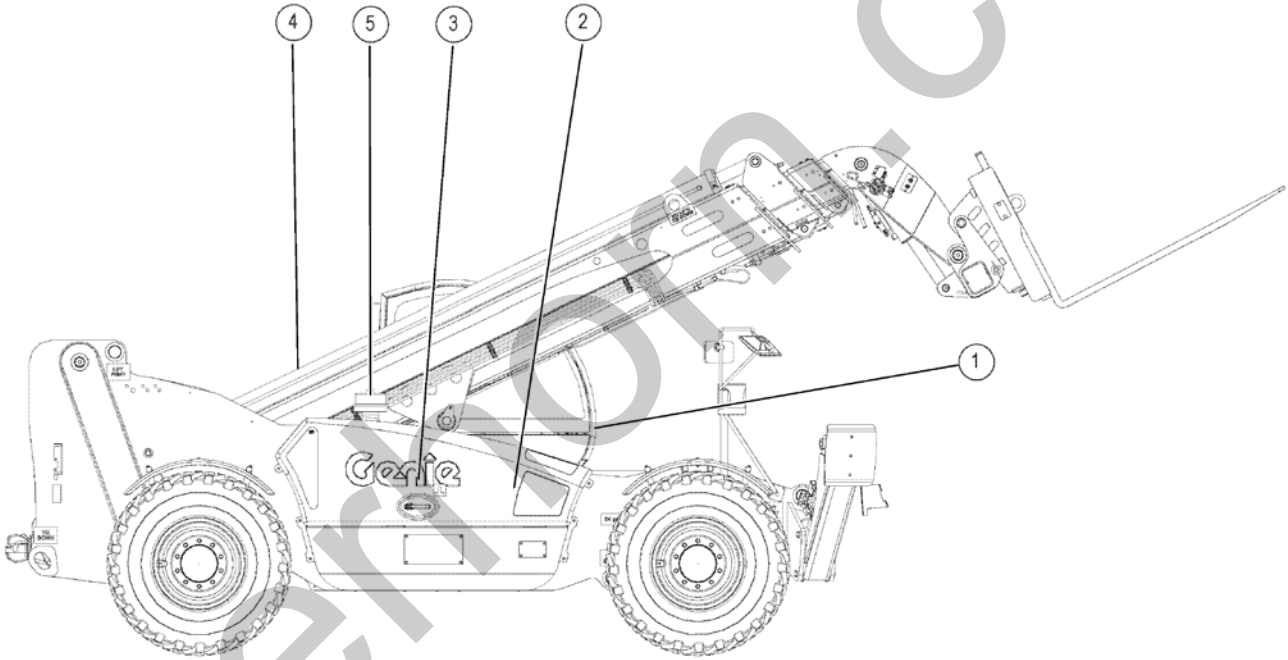

silvermoon.co.uk

001.1 Parts Stocking List

Item	Part No.	Description	Qty.
1	57.0009.0735GT	Operator's manual	
2	07.0501.0057GT	FUEL FILTER ASSEMBLY	
3	07.0501.0079GT	Engine Oil Filter Cartridge	
4	09.4604.0005GT	FILTER ASSY	
5	09.4604.0083GT	AIR FILTER	

silverhorn.co.uk

101.1 609950 Decals, View 1

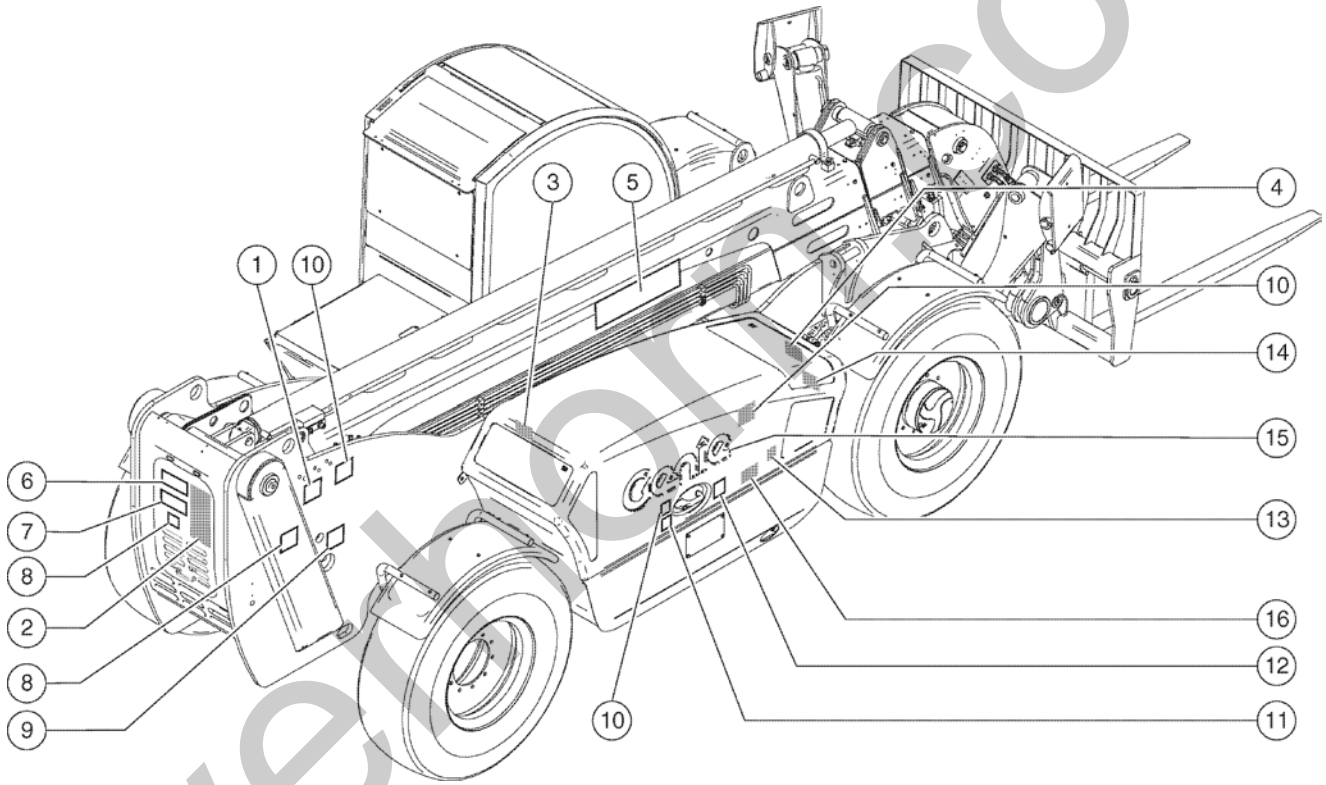

silverhome.co.uk

101.1 609950 Decals, View 1

Item	Part No.	Description	Qty.
1	82558GT	DECAL,WARN,SKIN INJECTION HAZ*	1
2	09.4616.0158GT	Lubrication Chart	1
3	237605GT	DECAL WARNING EXPLOSION/BURN HAZARD	1
4	09.4618.2013GT	Decal, Webasto Waiting Time Shut OFF	1
5	09.4618.2011GT	Cosmetic - Genie GTH-1256 AF	1
6	09.4618.1625GT	DECAL,COSMETIC,GENIE	1
7	09.4618.2009GT	Cosmetic - GTH-1256 AF	1
8	237598GT	DECAL,BODY CRUSH,ROLLING MACHINE	2
9	237970GT	DECAL,WARNING,CRUSH HAZARD,TIRES&CHASSIS	1
10	97667GT	DECAL,WARN,BURN HAZARD	3
11	28175GT	DECAL,WARNING-COMPART ACCESS	1
12	214418GT	DECAL, 2 DECAL COMBO	1
13	09.4618.1646GT	DECAL,INCHING VALVE	1
14	09.4618.1655GT	DECAL,NOTICE CUT OUT SWITCH	1
15	09.4618.1834GT	Cosmetic - Genie	1
16	09.4618.1638GT	LABEL - TESTS PORT	1

silverhorn.co.uk

102.1 609951 Decals, View 2

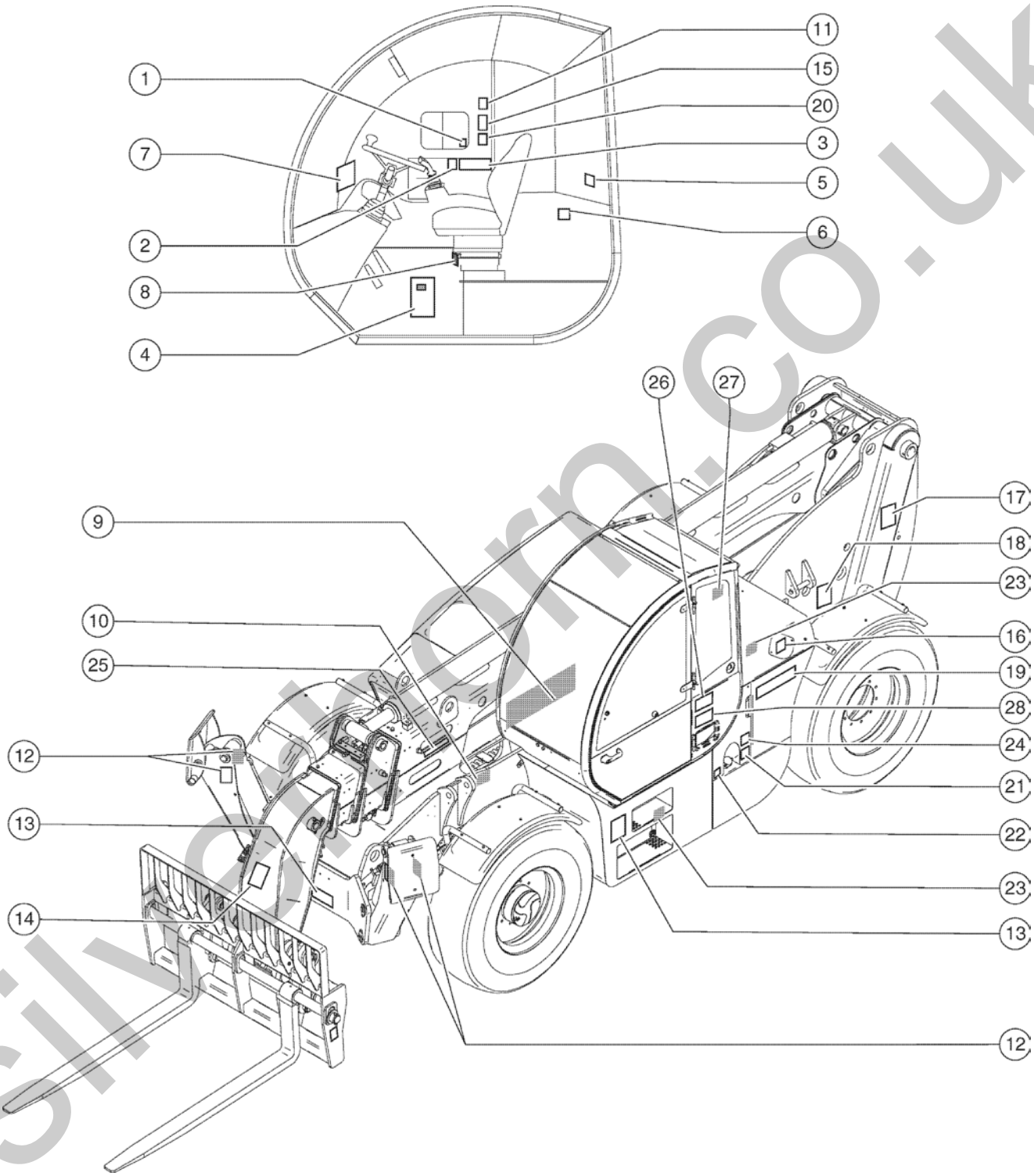

silverthorn.co.uk

102.1 609951 Decals, View 2

Item	Part No.	Description	Qty.
1	09.4618.2021GT	Label, Danger - Keep Arms And Hands Inside	1
2	09.4618.2034GT	Label, Warning- Hearing Hazard	1
3	09.4618.1622GT	Danger/Warning – 7 Decal Combination	1
4	28236GT	DECAL,WARN,IMPROPER OPERATION	1
5	09.4618.1418GT	DECAL,EMERGENCY EXIT	1
6	09.4618.1399GT	DECAL,DOOR UNLOCK SYSTEM	1
7a	09.4618.2019GT	Load Chart - Fork, On Wheels	1
7b	09.4618.2020GT	Load Chart - Fork, On Stabilizers	1
8	09.4618.2012GT	Label, Heater Control Valve	1
9	09.4618.2010GT	Cosmetic - GTH-1256 AF	1
10	215267GT	Label - Product Registration	1
11	09.4618.2033GT	Label, Notice - Change Of Movement Direction	1
12	09.4618.1842GT	WARNING - CRUSH HAZARD, STABILIZERS	4
13	214418GT	DECAL, 2 DECAL COMBO	1
14	215268GT	DECAL, FALL HAZARD	1
15	09.4618.2007GT	Label, Single Controller	1
16	09.4618.2006GT	Label, Shell Tellus S4 Hydraulic Oil	1
17	237598GT	DECAL,BODY CRUSH,ROLLING MACHINE	1
18	237970GT	DECAL,WARNING,CRUSH HAZARD,TIRES&CHASSIS	1
19	09.4618.1621GT	Cosmetic - Genie	1
20	09.4618.2035GT	Label, Notice - Driving Downhill	1
21	237971GT	DECAL,DANGER,EXPLOSION/BURN,DIESEL FUELING	1
22	28159GT	DECAL,DIESEL	1
23	09.4618.1635GT	Danger – Explosion/Burn Hazard	2
24	09.4618.2014GT	Label,Webasto Refuelling Instruction	1
25	09.4618.2018GT	Label, 10,000 LBS	1
26	09.4616.0156GT	Shipping Data Chart	1
27	09.4618.2036GT	Label, Warning - Fan Switch	1

silverhorn.co.uk

102.1 609951 Decals, View 2

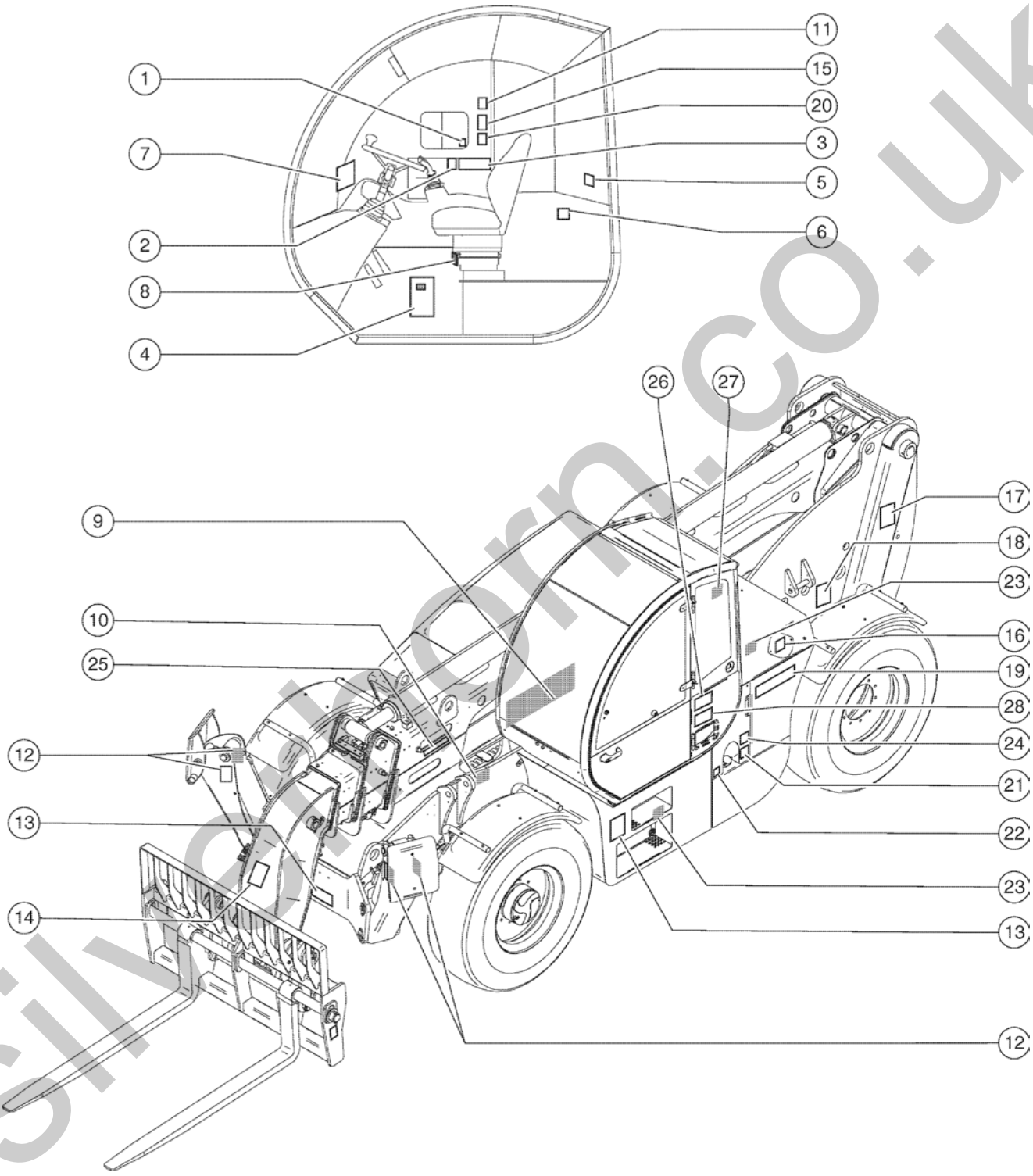

silverthorn.co.uk

102.1 609951 Decals, View 2

Item	Part No.	Description	Qty.
28	09.4616.0157GT	Transportation Data Chart	1

silverhorn.co.uk

201.1 609953 Rear Chassis

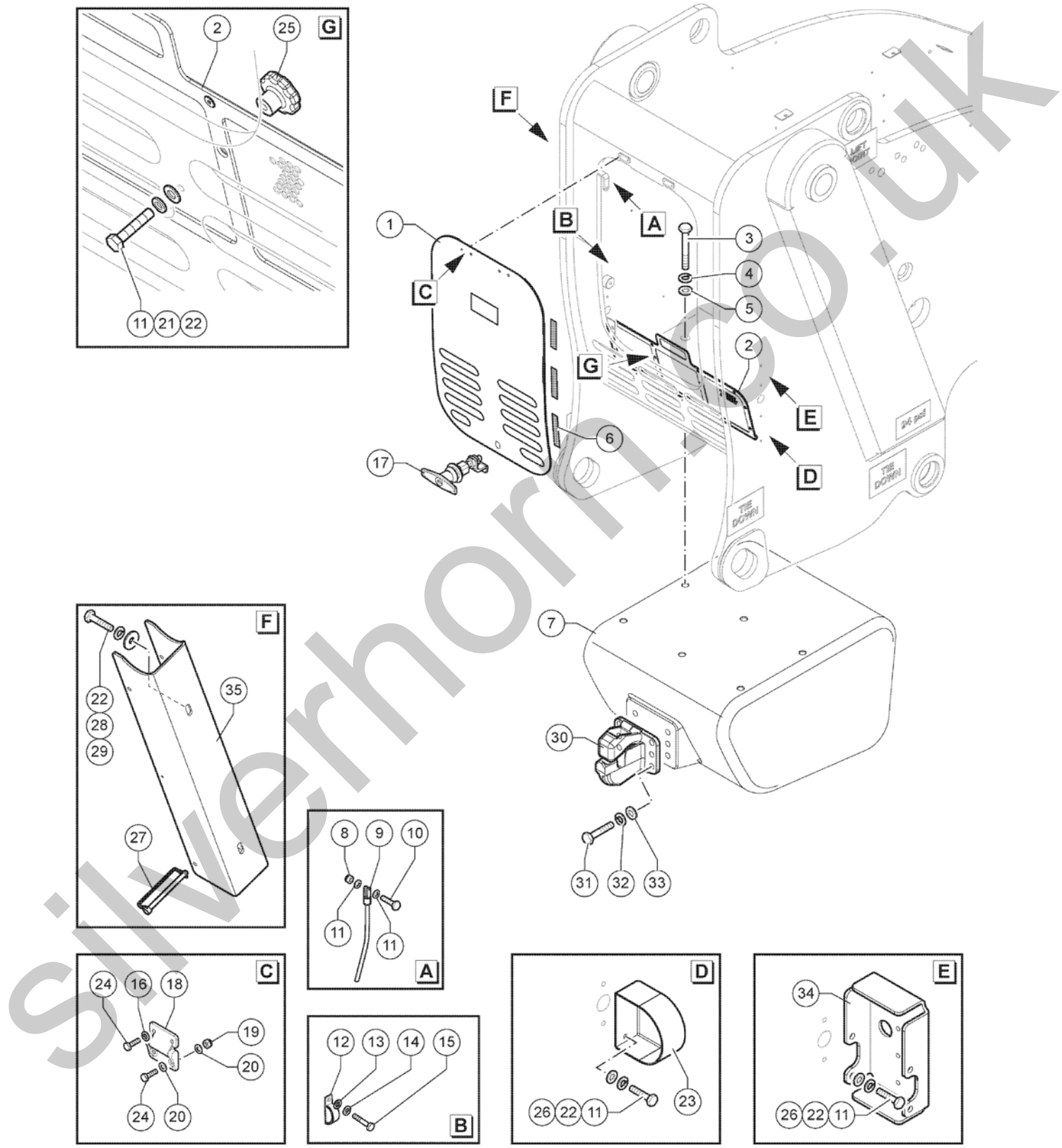

silverhorn.co.uk

201.1 609953 Rear Chassis

Item	Part No.	Description	Qty.
1	51.0903.5265GT	Cover	1
2	55.0409.0253GT	Protection Grid	1
3	01.4001.0177GT	Screw TE M24X100 UNI 5737 8.8 ZN	6
4	01.4032.0000GT	SPRING WASHER D24 ZN	6
5	01.0031.0063GT	FLAT WASHER D24 UNI 6592 ZN	6
6	09.0803.0147GT	GASKET,ADHESIVE	51,2
7	51.1000.5220GT	Counterweight	1
8	01.0023.0054GT	NUT,M8 UNI 7473 6S ZN	3
9	51.0811.4481GT	Bracket	1
10	01.0001.0258GT	SCREW M8X35 UNI 5739 8.8 ZN	1
11	01.0031.0055GT	FLAT WASHER D8 UNI 6592 ZN	8
12	04.4227.0008GT	CLAMP S16 D12 HOLE 8.4	1
13	01.0031.0054GT	FLAT WASHER D6 UNI 6592 ZN	1
14	01.4032.0002GT	SPRING WASHER D6 ZN	1
15	01.0001.0154GT	SCREW,TE,M6X16 UNI 8.8 ZN	1
16	01.4032.0001GT	WASHER,SPRING,D5 ZN	4
17	09.0803.0877GT	Lock	1
18	09.0803.0706GT	Hinge	2
19	01.0023.0052GT	STOP NUT M5 UNI 7473 6S ZN	4
20	01.0031.0053GT	FLAT WASHER D5 UNI 6592 ZN	8
21	01.0001.1465GT	SCREW TE M8X40 UNI 5739 8.8 ZN	2
22	01.4032.0003GT	Spring Washer D 8 ZN	4
23	51.0811.4861GT	Stop Light Bracket	2
24	01.0001.1538GT	SCREW M5X16 UNI5737 8.8 ZN	8
25	09.0803.0879GT	KNOB	2
26	01.0001.0256GT	SCREW M8X25 UNI 5739 8.8 ZN	4
27	09.0803.0881GT	Spring Split Pin	1
28	01.0031.0299GT	FLAT WASHER D8 UNI 6593 ZN	2

silverhorn.co.uk

201.1 609953 Rear Chassis

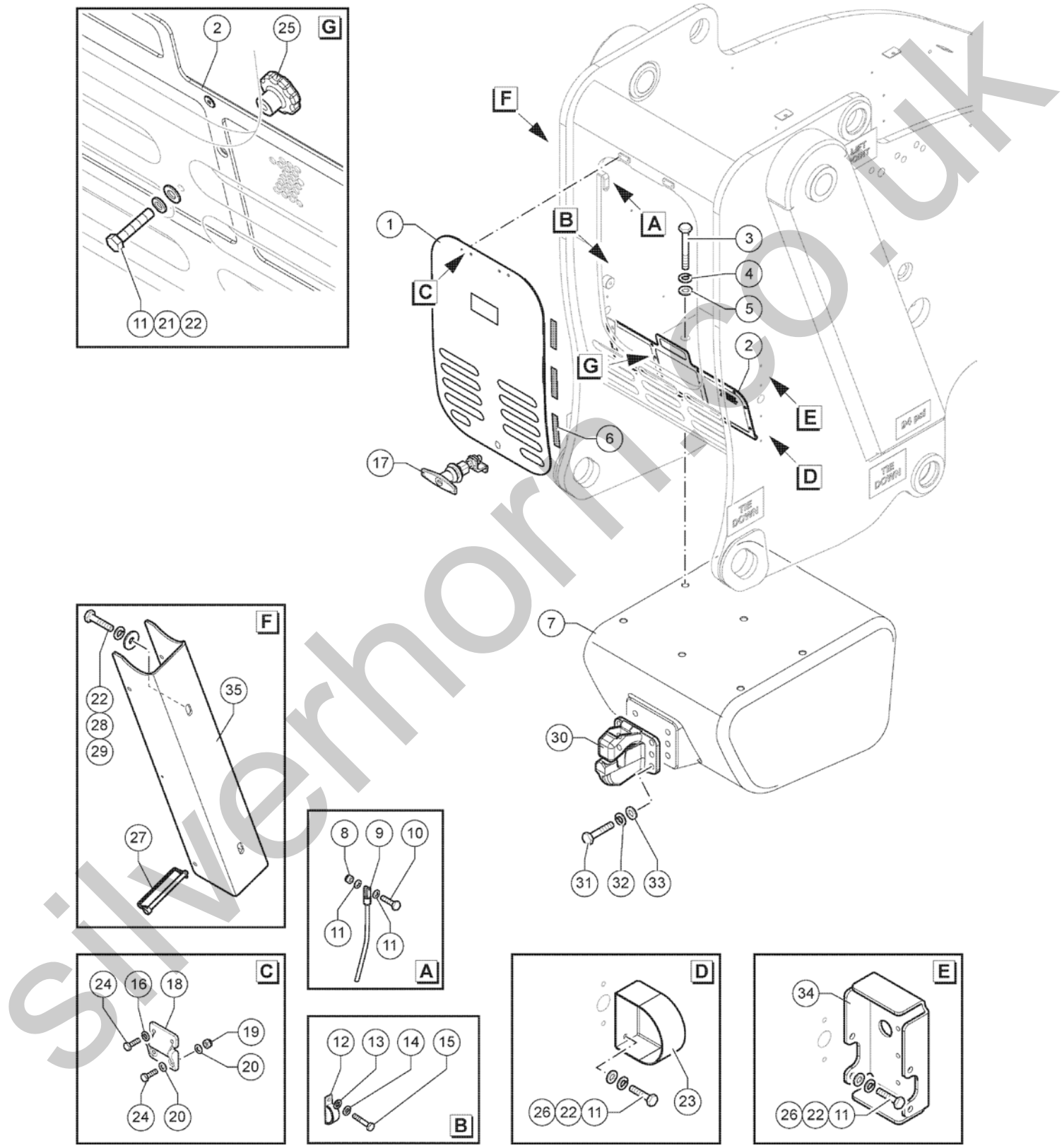

silverhorn.co.uk

201.1 609953 Rear Chassis

Item	Part No.	Description	Qty.
29	01.0001.0254GT	SCREW M8X20 UNI 5739 8.8 ZN	2
30	09.0803.0868GT	Pince Hook	1
31	01.0001.1543GT	SCREW M20X80 UNI 5739 10.9 ZN	4
32	01.4032.0009GT	SPRING WASHER D20 ZN	4
33	01.0031.0061GT	FLAT WASHER D20 UNI 6592 ZN	4
34	51.0811.4821GT	Rear Light Bracket	2
35	51.1301.9247GT	Safety Bracket	1

silverhorn.co.uk

202.1 609954 Left Chassis

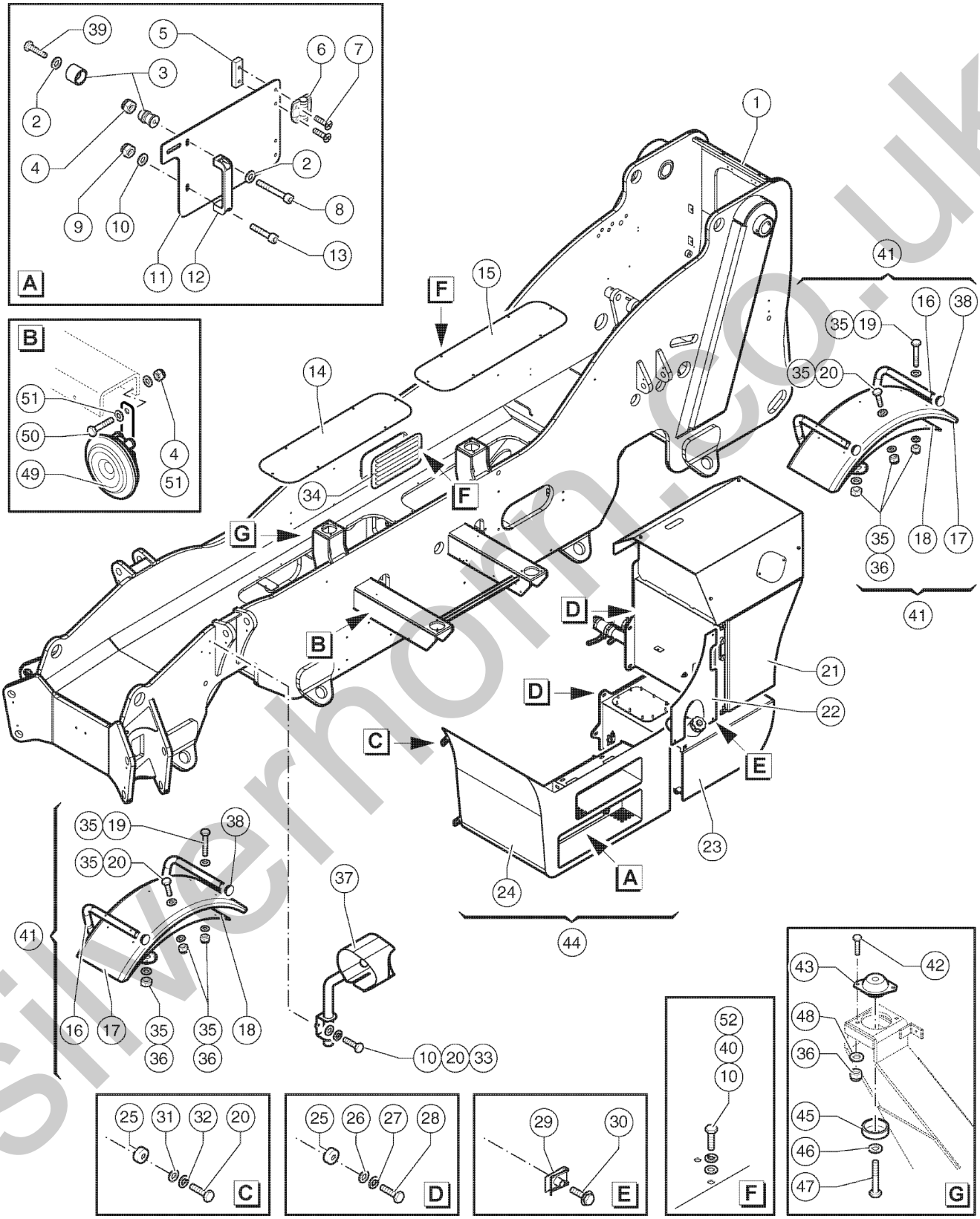

silverhorn.co.uk

202.1 609954 Left Chassis

Item	Part No.	Description	Qty.
1	51.0113.9097GT	Chassis	1
2	01.0031.0054GT	FLAT WASHER D6 UNI 6592 ZN	2
3	09.4670.0000GT	KIT,DOOR LOCK	1
4	01.0023.0053GT	STOP NUT M6 UNI 7473 6S ZN	2
5	51.0811.4442GT	Hinge Fixing Plate	4
6	09.0803.0278GT	Hinge	2
7	01.4001.0062GT	SCREW M5X20 UNI 7687 ZN	8
8	01.0003.0160GT	SCREW M6X40 UNI 5931 8.8 ZN	1
9	01.0023.0054GT	NUT,M8 UNI 7473 6S ZN	1
10	01.0031.0299GT	FLAT WASHER D8 UNI 6593 ZN	19
11	51.0903.5256GT	Cover	1
12	09.0803.0002GT	Handle	1
13	01.0003.0205GT	SCREW M8X25 UNI 5931 8.8 ZN	1
14	51.0903.5258GT	Cover	1
15	51.0903.5257GT	Cover	1
16	51.0811.4801GT	Support	2
17	09.0803.0371GT	Mudguard	2
18	51.0811.4802GT	Locking Plate	2
19	01.0001.0308GT	Screw TE M10X70 UNI 5737 8.8 ZN	8
20	01.0001.0355GT	SCREW M10X25 UNI 5739 8.8 ZN	10
21	55.0240.0070GT	Hydraulic Oil Tank Assembly	1
22	51.0903.5263GT	Cover	1
23	55.0250.0033GT	Fuel Tank Assembly	1
24	51.0811.4803GT	Ladder	1
25	53.3302.0029GT	SHIM	10
26	01.4031.0002GT	FLAT WASHER D14 UNI 6593 ZN	8
27	01.4032.0006GT	SPRING WASHER D14 ZN	8
28	01.0001.0605GT	SCREW M14X35 UNI 5739 8.8 ZN	8

silverhorn.co.uk

202.1 609954 Left Chassis

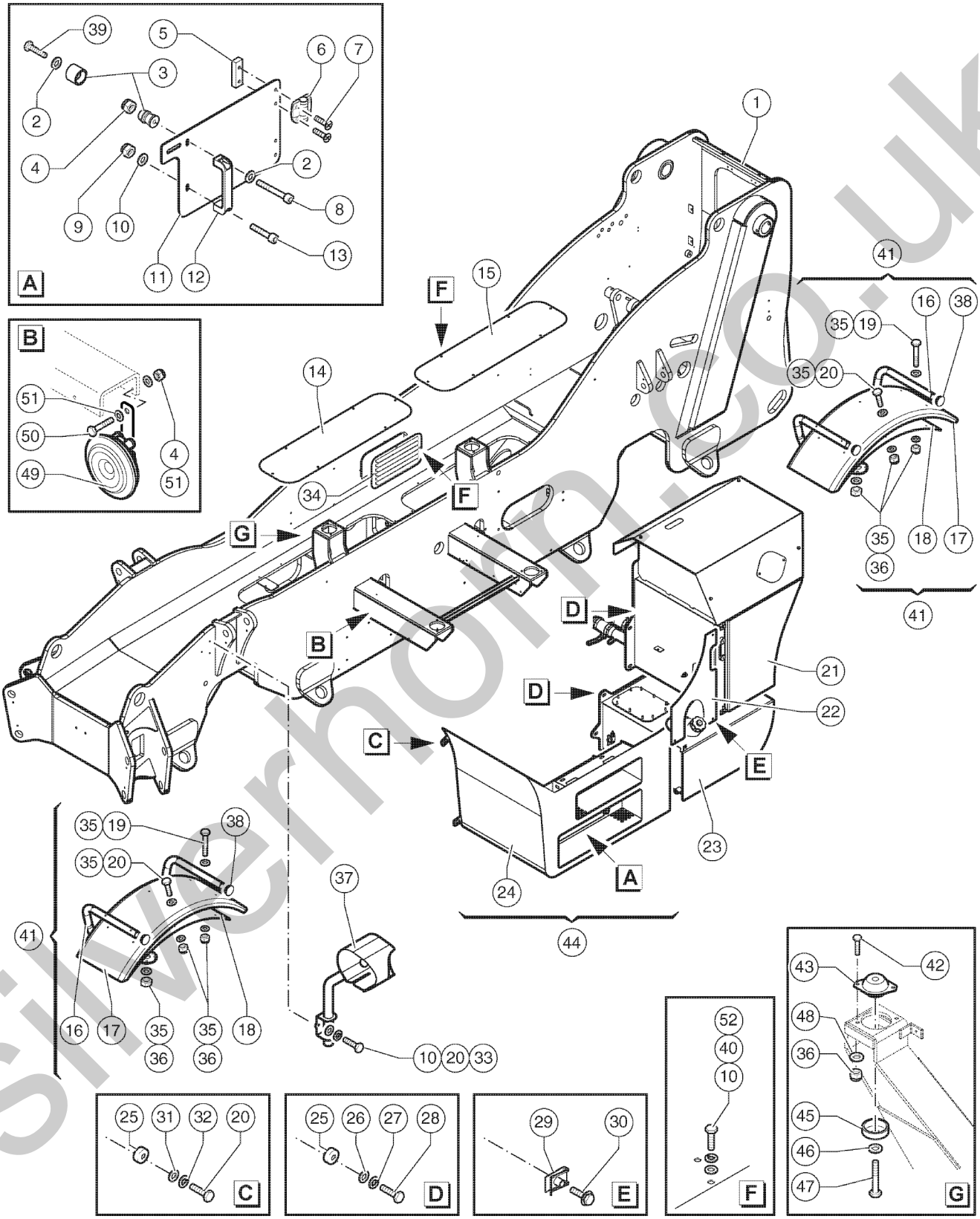

silverhorn.co.uk

202.1 609954 Left Chassis

Item	Part No.	Description	Qty.
29	09.0803.0352GT	SPRING CLIP M8	3
30	01.4001.0078GT	SCREW M8X20 DIN 6923 8.8 ZN	9
31	01.0031.0301GT	FLAT WASHER D10 UNI 6593 ZN	4
32	01.4032.0004GT	Spring Washer D10 ZN	5
33	01.4032.0003GT	Spring Washer D 8 ZN	2
34	51.0903.5259GT	Protection Grid	1
35	01.0031.0056GT	FLAT WASHER D10 UNI 6592 ZN	32
36	01.0023.0055GT	Stop Nut M10 UNI 7473 6S ZN	28
37	51.0811.4822GT	Support	1
38	09.0803.0807GT	Plug	4
39	01.0001.0154GT	SCREW,TE,M6X16 UNI 8.8 ZN	1
40	01.0001.0254GT	SCREW M8X20 UNI 5739 8.8 ZN	16
41	55.0409.0247GT	Mudguard ASSY	2
42	01.0001.0357GT	SCREW,TE,M10X35 UNI 8.8 ZN	8
43	09.4670.0032GT	VIBRATION DAMPING	4
44	55.0409.0248GT	Ladder Assembly	1
45	54.0100.0020GT	VIBRATION DAMPING SUPPORT	4
46	01.4032.0007GT	SPRING WASHER D16 ZN	4
47	01.0001.0657GT	Screw TE M16X80 UNI 5737 8.8 ZN	4
48	01.4031.0001GT	WASHER,CHMFRD,D16,UNI 6593,ZN	8
49	56.0009.0003GT	HORN	1
50	01.0001.1458GT	SCREW M6X35 UNI 5739 8.8 ZN	1
51	01.0031.0298GT	FLAT WASHER D6 UNI 6593 ZN	2
52	01.0034.0056GT	WASHER D8 UNI 8842 ZN	16

silverhorn.co.uk

203.1 609955 Right Chassis

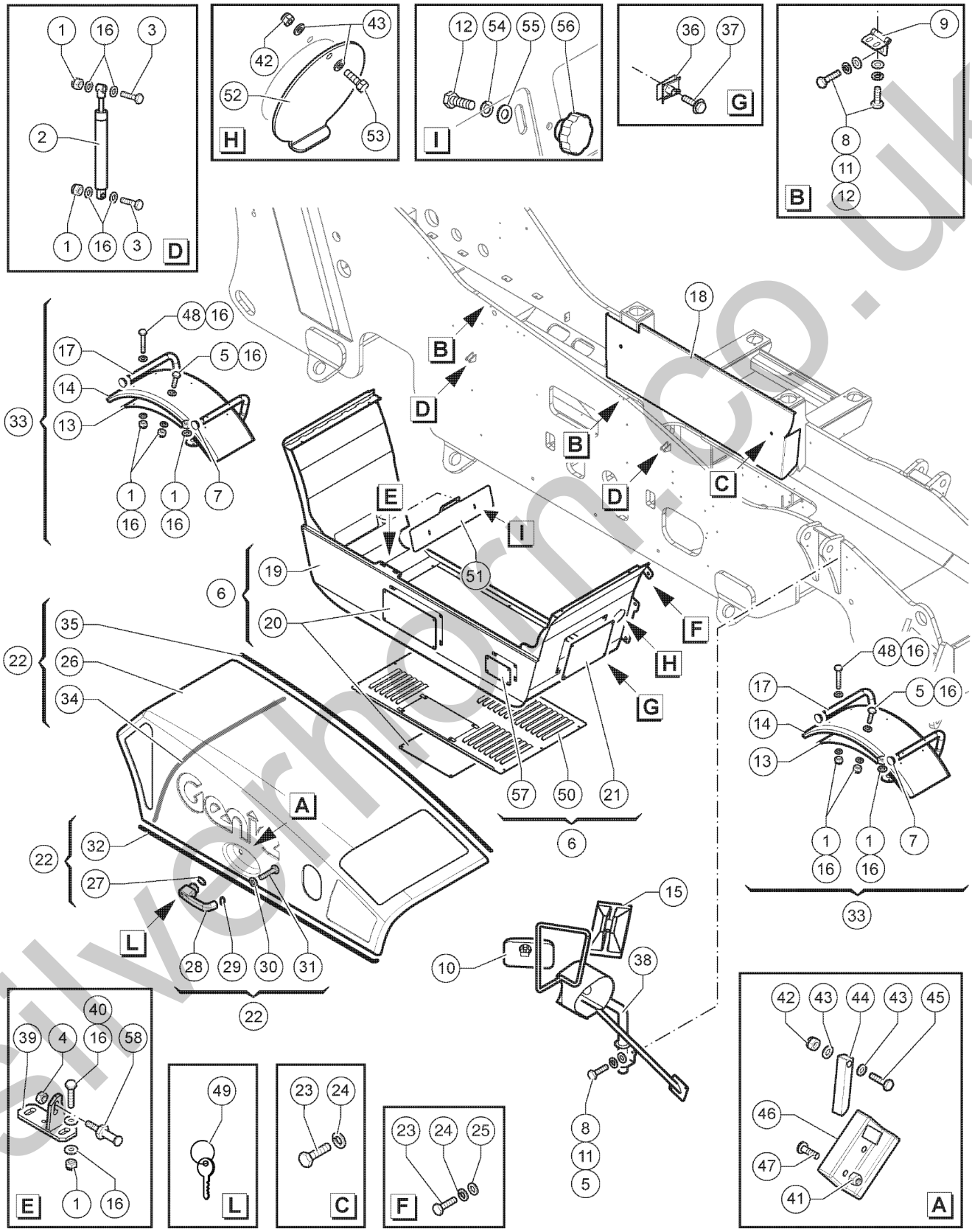

silverhorn.co.uk

203.1 609955 Right Chassis

Item	Part No.	Description	Qty.
1	01.0023.0055GT	Stop Nut M10 UNI 7473 6S ZN	28
2	09.0803.0861GT	Gas Spring	2
3	01.0001.0304GT	SCREW M10X50 UNI 5739 8.8 ZN	2
4	07.0740.0103GT	NUT M12X1	1
5	01.0001.0355GT	SCREW M10X25 UNI 5739 8.8 ZN	6
6	55.0409.0246GT	Engine Housing Assy	1
7	09.0803.0807GT	Plug	4
8	01.0031.0299GT	FLAT WASHER D8 UNI 6593 ZN	15
9	09.0803.0000GT	Hinge	2
10	09.4610.0033GT	MIRROR,CONVEX	1
11	01.4032.0003GT	Spring Washer D 8 ZN	10
12	01.0001.0256GT	SCREW M8X25 UNI 5739 8.8 ZN	10
13	51.0811.4802GT	Locking Plate	2
14	09.0803.0371GT	Mudguard	2
15	09.4610.0032GT	MIRROR	1
16	01.0031.0056GT	FLAT WASHER D10 UNI 6592 ZN	40
17	51.0811.4801GT	Support	2
18	51.0903.5264GT	Cover	1
19	51.0903.5249GT	Engine Housing	1
20	51.0903.5251GT	Cover	2
21	51.0903.5252GT	Cover	1
22	55.0409.0245GT	Engine Cover Assy	1
23	01.0001.0356GT	SCREW M10X30 UNI 5739 8.8 ZN	8
24	01.4032.0004GT	Spring Washer D10 ZN	8
25	01.0031.0301GT	FLAT WASHER D10 UNI 6593 ZN	6
26	52.1100.9134GT	Engine Cover	1
27	07.0740.0048GT	GASKET	1
28	09.0803.0876GT	Handle	1

silverhorn.co.uk

203.1 609955 Right Chassis

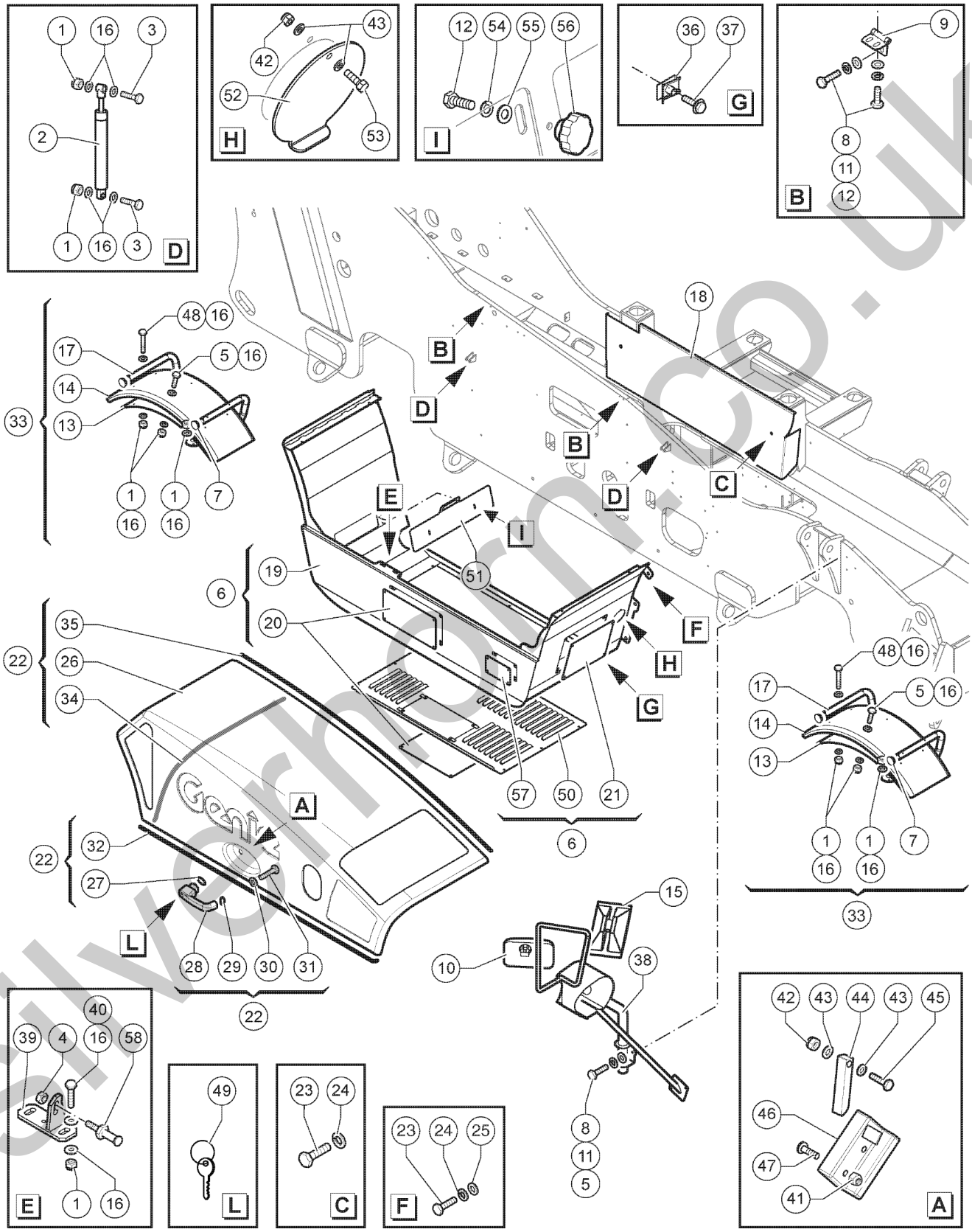

silverhorn.co.uk

203.1 609955 Right Chassis

Item	Part No.	Description	Qty.
29	07.0740.0049GT	GASKET	1
30	01.0031.0053GT	FLAT WASHER D5 UNI 6592 ZN	1
31	01.0001.1438GT	SCREW M5X20 UNI 5739 8.8 ZN	1
32	09.0803.0245GT	GASKET	76
33	55.0409.0247GT	Mudguard ASSY	2
34	09.0805.0119GT	GASKET	53
35	119218GT	TRIM,EDGE,1/8X3/4 SIDE BULB	84
36	09.0803.0352GT	SPRING CLIP M8	6
37	01.4001.0078GT	SCREW M8X20 DIN 6923 8.8 ZN	8
38	51.0811.4823GT	Support	1
39	51.0811.4805GT	Bracket	1
40	01.0001.0357GT	SCREW,TE,M10X35 UNI 8.8 ZN	2
41	01.0023.0054GT	NUT,M8 UNI 7473 6S ZN	2
42	01.0023.0053GT	STOP NUT M6 UNI 7473 6S ZN	2
43	01.0031.0054GT	FLAT WASHER D6 UNI 6592 ZN	4
44	51.0811.4446GT	ENGINE COVER LOCK LEVER	1
45	01.0001.0104GT	SCREW M6X40 UNI 5739 8.8 ZN	1
46	07.0740.0192GT	Engine Cover Lock	1
47	01.4006.0007GT	SCREW M8X40 UNI 5933 10.9 ZN	2
48	01.0001.0308GT	Screw TE M10X70 UNI 5737 8.8 ZN	8
49	09.0803.0685GT	KEY	1
50	51.0903.5250GT	Lower Carter	1
51	51.0903.5283GT	Cover	1
52	51.0903.5284GT	Cap Battery Switch	1
53	01.0001.0156GT	SCREW M6X20 UNI 5739 8.8 ZN	1
54	01.0032.0054GT	FLAT WASHER D8 UNI 1751 ZN	2
55	01.0031.0055GT	FLAT WASHER D8 UNI 6592 ZN	2
56	09.0803.0879GT	KNOB	2

silverhorn.co.uk

203.1 609955 Right Chassis

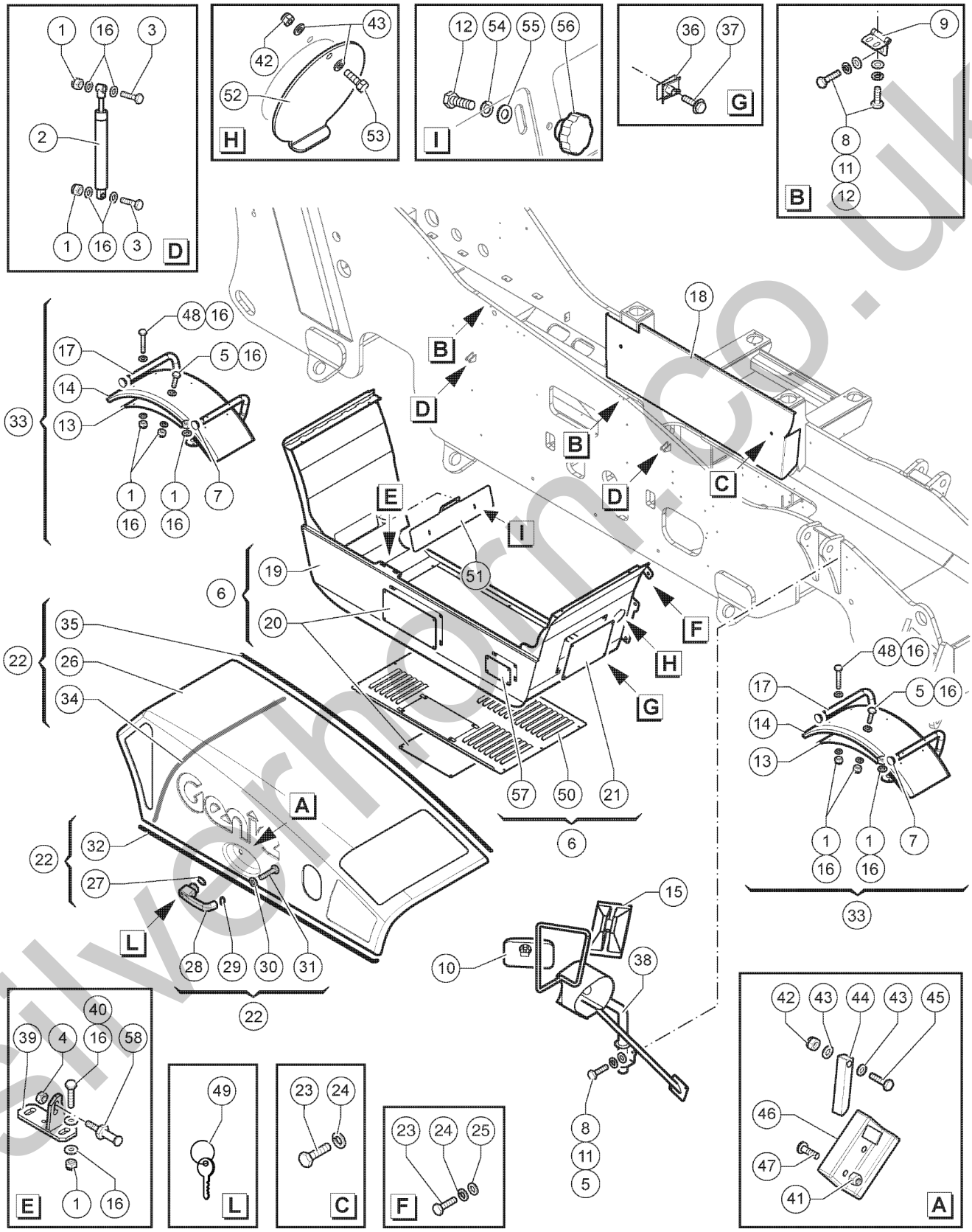

silverhorn.co.uk

203.1 609955 Right Chassis

Item	Part No.	Description	Qty.
57	51.0903.5288GT	Cover	1
58	07.0740.0522GT	Pin	1

silverhorn.co.uk

204.1 609956 Stabilizers

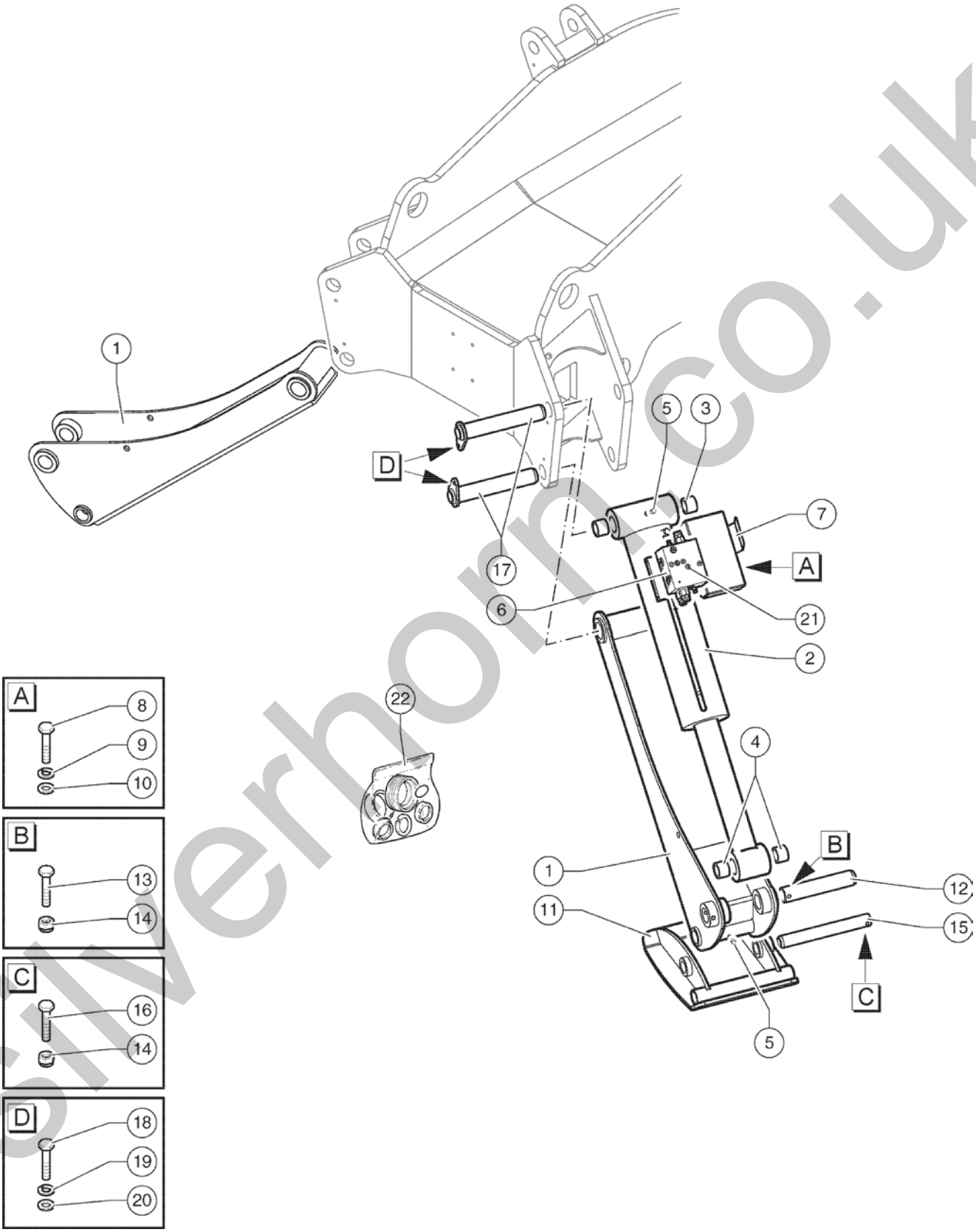

silverhorn.co.uk

204.1 609956 Stabilizers

Item	Part No.	Description	Qty.
1	51.0500.1832GT	Stabilizer	2
2	53.0800.2020GT	Stabilizer Cylinder	2
3	09.0801.0006GT	Bushing	2
4	09.0801.0000GT	Bushing	2
5	02.0117.0101GT	GREASE NIPPLE G1/8	8
6	04.4239.0148GT	Valve	2
7	51.0903.5255GT	Stabilizer Valve Protective Cover	2
8	01.0001.0154GT	SCREW,TE,M6X16 UNI 8.8 ZN	4
9	01.4032.0002GT	SPRING WASHER D6 ZN	4
10	01.0031.0054GT	FLAT WASHER D6 UNI 6592 ZN	4
11	51.0500.1833GT	Stabilizer Foot	2
12	54.0000.0268GT	Pin	2
13	01.0001.0314GT	SCREW M10X100 UNI 5737 8.8 ZN	2
14	01.0023.0055GT	Stop Nut M10 UNI 7473 6S ZN	4
15	54.0000.0269GT	Pin	2
16	01.0001.0310GT	SCREW M10X80 UNI 5737 8.8 ZN	2
17	54.0004.0127GT	Pin	4
18	01.0001.0355GT	SCREW M10X25 UNI 5739 8.8 ZN	4
19	01.4032.0004GT	Spring Washer D10 ZN	4
20	01.0031.0056GT	FLAT WASHER D10 UNI 6592 ZN	4
21	01.0003.0261GT	SCREW M10X55 UNI 5931 8.8 ZN	8
22	07.4529.0211GT	Seal Kit	1

silverhorn.co.uk

205.1 609957 Hydraulic Oil And Diesel Tanks

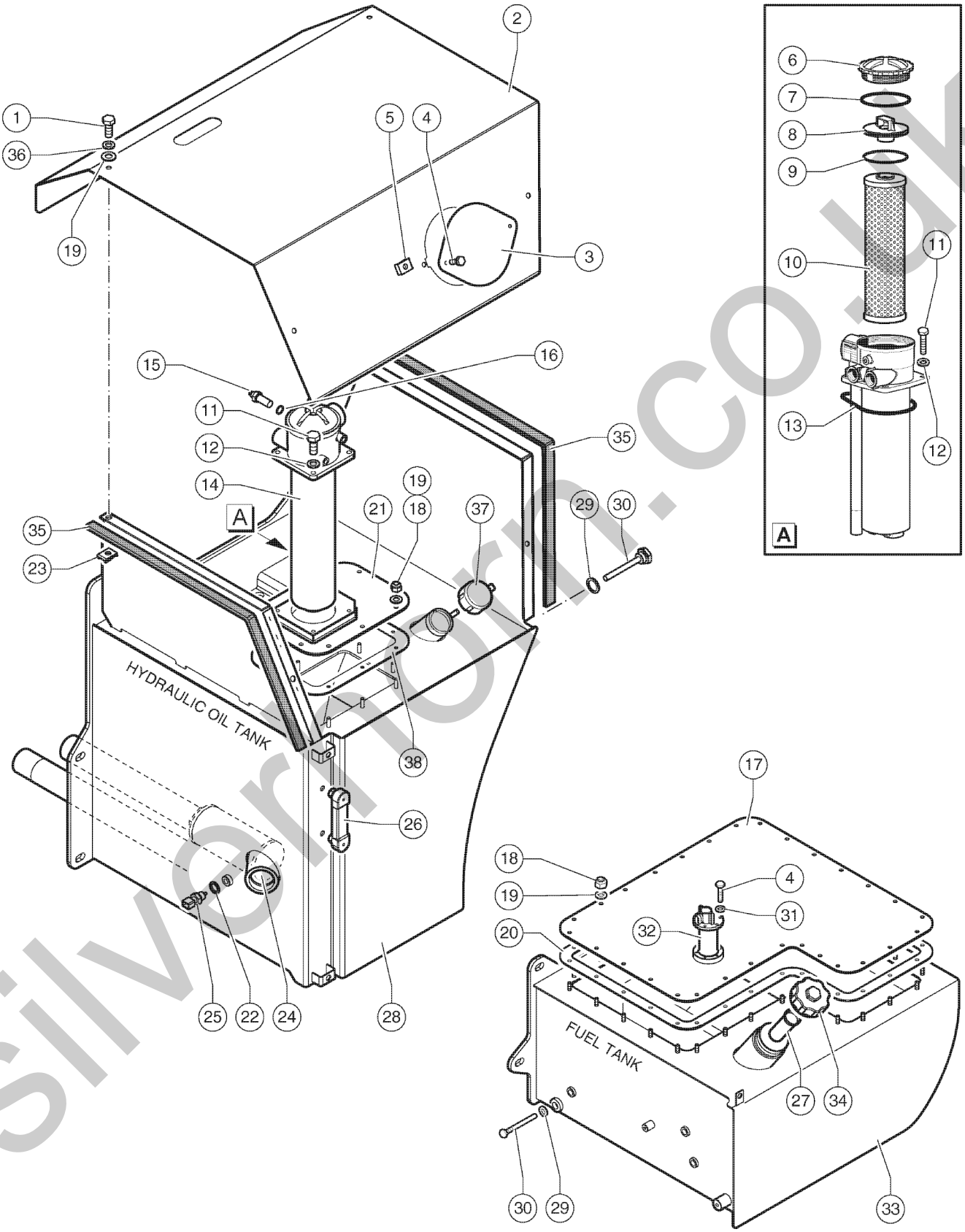

silvermorn.co.uk

205.1 609957 Hydraulic Oil And Diesel Tanks

Item	Part No.	Description	Qty.
1	01.0001.0254GT	SCREW M8X20 UNI 5739 8.8 ZN	4
2	51.0903.5248GT	Oil Tank Upper Cover	1
3	51.0903.5247GT	Oil Tank Cap Cover	1
4	01.0001.0154GT	SCREW,TE,M6X16 UNI 8.8 ZN	8
5	09.0803.0516GT	SPRING CLIP M6	2
6	07.0700.0006GT	CAP,HYDRAULIC FILTER	1
7	07.0700.0007GT	O-RING	1
8	07.0700.0049GT	Inlet Neck	1
9	07.0700.0050GT	O-RING 98X3	1
10	07.0700.0002GT	Oil Filter Cartridge	1
11	01.0001.0355GT	SCREW M10X25 UNI 5739 8.8 ZN	4
12	01.4032.0004GT	Spring Washer D10 ZN	8
13	07.0700.0051GT	O-RING 124X4,5	1
14	09.4604.0005GT	FILTER ASSY	1
15	56.0013.0006GT	PRESSURE SENSOR, HYDRAULIC OIL	1
16	06.0442.0101GT	BONDED RING 3/8"	2
17	51.0903.5297GT	Fuel Tank Inspection Door	1
18	01.4019.0012GT	NUT M8X1,25 8G 8.8 ZN	29
19	01.0031.0055GT	FLAT WASHER D8 UNI 6592 ZN	39
20	53.3301.0008GT	Fuel Tank Seal	1
21	51.0903.5246GT	Hydraulic Oil Tank Inspection Door	1
22	06.0442.0120GT	BONDED RING 3/8"	1
23	09.0803.0352GT	SPRING CLIP M8	4
24	09.4604.0000GT	FILTER, HYD. OIL TANK	1
25	56.0013.0000GT	TEMPERATURE SENSOR, HYDRAULIC OIL	1
26	09.4661.0005GT	Hydraulic Oil Level Indicator	1
27	09.4661.0033GT	Basket	1
28	51.0600.9331GT	Hydraulic Oil Tank	1

silverhorn.co.uk

205.1 609957 Hydraulic Oil And Diesel Tanks

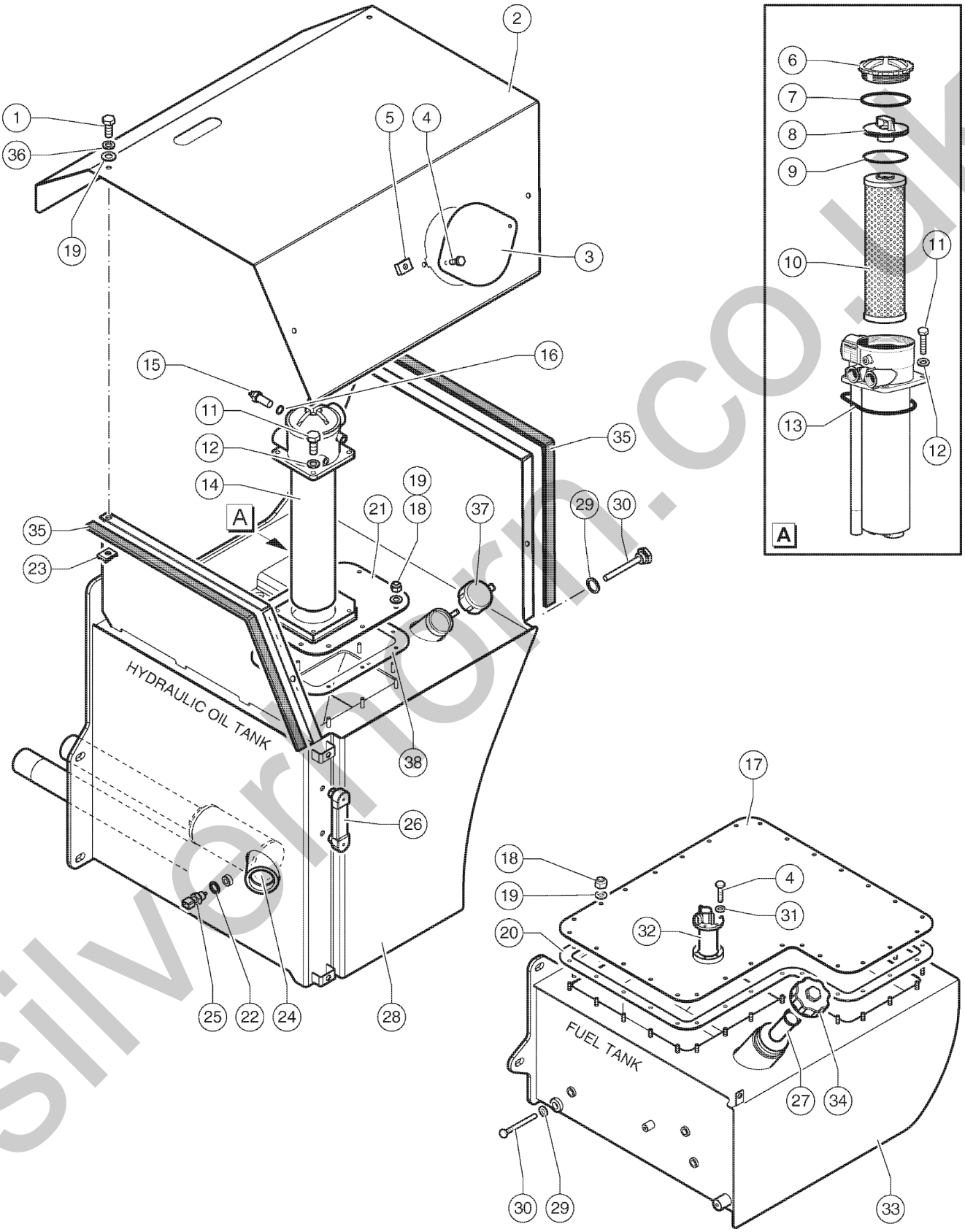

silvermorn.co.uk

205.1 609957 Hydraulic Oil And Diesel Tanks

Item	Part No.	Description	Qty.
29	06.0442.0122GT	BONDED RING 1/2"	2
30	09.4661.0030GT	FILTER,MAGNETIC	2
31	01.4032.0002GT	SPRING WASHER D6 ZN	6
32	56.0012.0098GT	Fuel Gauge	1
33	51.0600.9332GT	Fuel Tank	1
34	09.4661.0027GT	Fuel Tank Cap Kit	1
35	09.0803.0147GT	GASKET,ADHESIVE	59.05
36	01.4032.0003GT	Spring Washer D 8 ZN	4
37	09.4661.0015GT	HYDRAULIC OIL TANK CAP	1
38	53.3301.0005GT	Rubber Gasket	1

silverhorn.co.uk

206.1 609958 Drive Chassis And Wheels

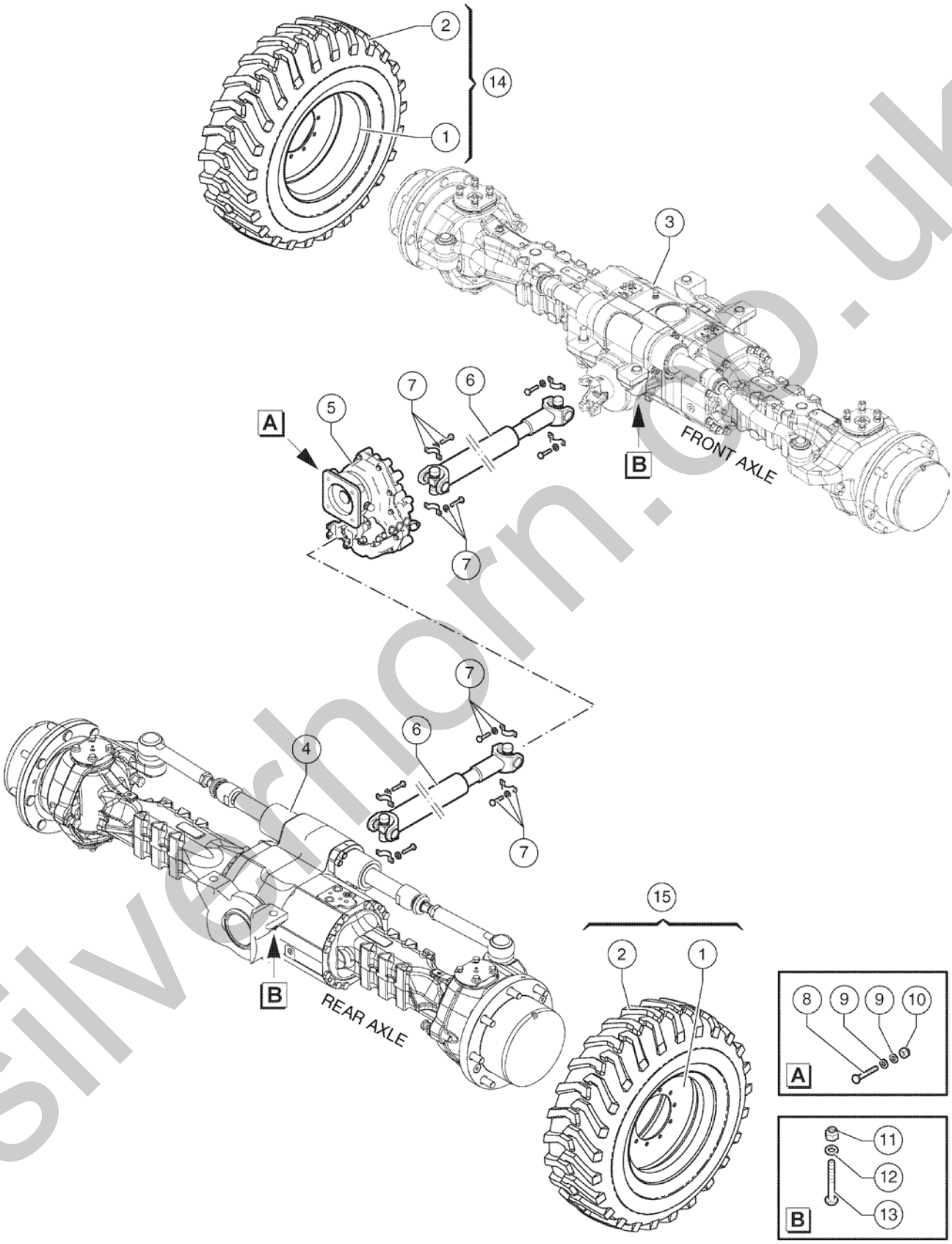

silverhorn.co.uk

206.1 609958 Drive Chassis And Wheels

Item	Part No.	Description	Qty.
1	161974GT	WHEEL,17.5-25	4
2	161973GT	TIRE,17.5X25,22PR	4
3	09.4632.0106GT	Front Axle The Axle Is Supplied Empty,Order Oil Part Number 09.4692.0023Gt, 4,36 Gal Us (16,5 Lt).	2
4	09.4632.0107GT	Rear Axle The Axle Is Supplied Empty, Order Oil Part Number 09.4692.0023Gt, 4,44 Gal Us (16,8 Lt).	1
5	04.4235.0060GT	Gear Box The Gear Box Is Supplied Empty, Order Oil Part Number 9.4692.0023GT, 0,48 Gal Us (1, 80 Lt).	1
6	09.4635.0063GT	Drive Shaft L=1215	2
7	09.4635.0065GT	Cardan Shaft Assembly	8
8	01.0023.0058GT	NUT,STOP,M16 UNI 7473 6S ZN	4
9	01.0031.0059GT	FLAT WASHER D16 UNI 6592 ZN	8
10	01.4001.0063GT	SCREW M16X130 UNI 5739 8.8 ZN	4
11	01.0023.0062GT	STOP NUT M24 UNI 7473 6S ZN	8
12	01.0031.0063GT	FLAT WASHER D24 UNI 6592 ZN	8
13	01.4001.0025GT	SCREW M24X160 UNI 5737 10.9 ZN	8
14	162338GT	WHEEL/TIRE,RT AIR FILL LEFT	2
15	162337GT	WHEEL/TIRE,RT AIR FILL RIGHT	2

silverhorn.co.uk

207.1 609959 Front Axle - Differential

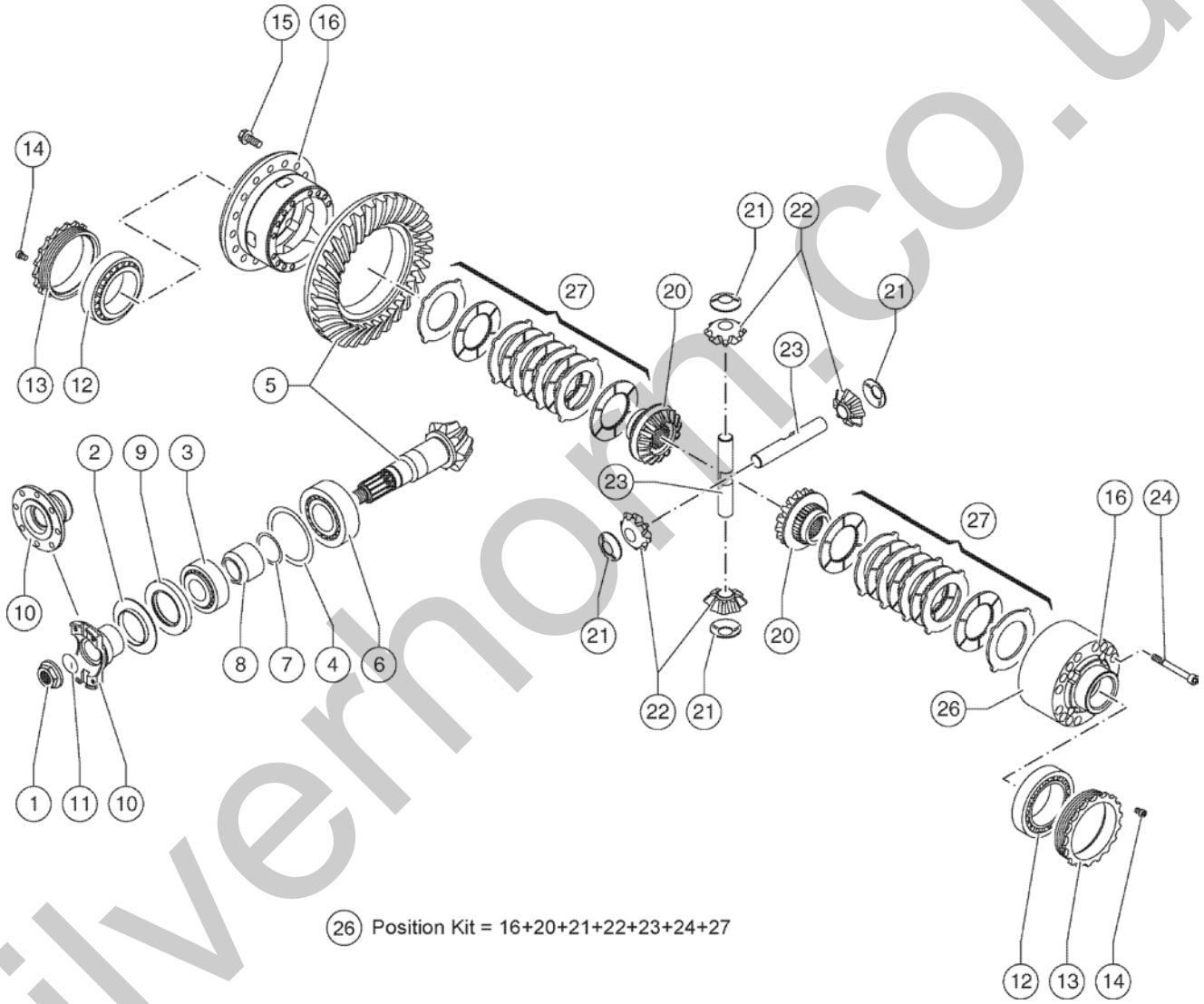

(26) Position Kit = 16+20+21+22+23+24+27

silverhorn.co.uk

207.1 609959 Front Axle - Differential

Item	Part No.	Description	Qty.
26	07.0709.1303GT	Differential	1
27	07.0709.0969GT	Clitch Disc	2

silverhorn.co.uk

208.1 609960 Front Axle - Brakes

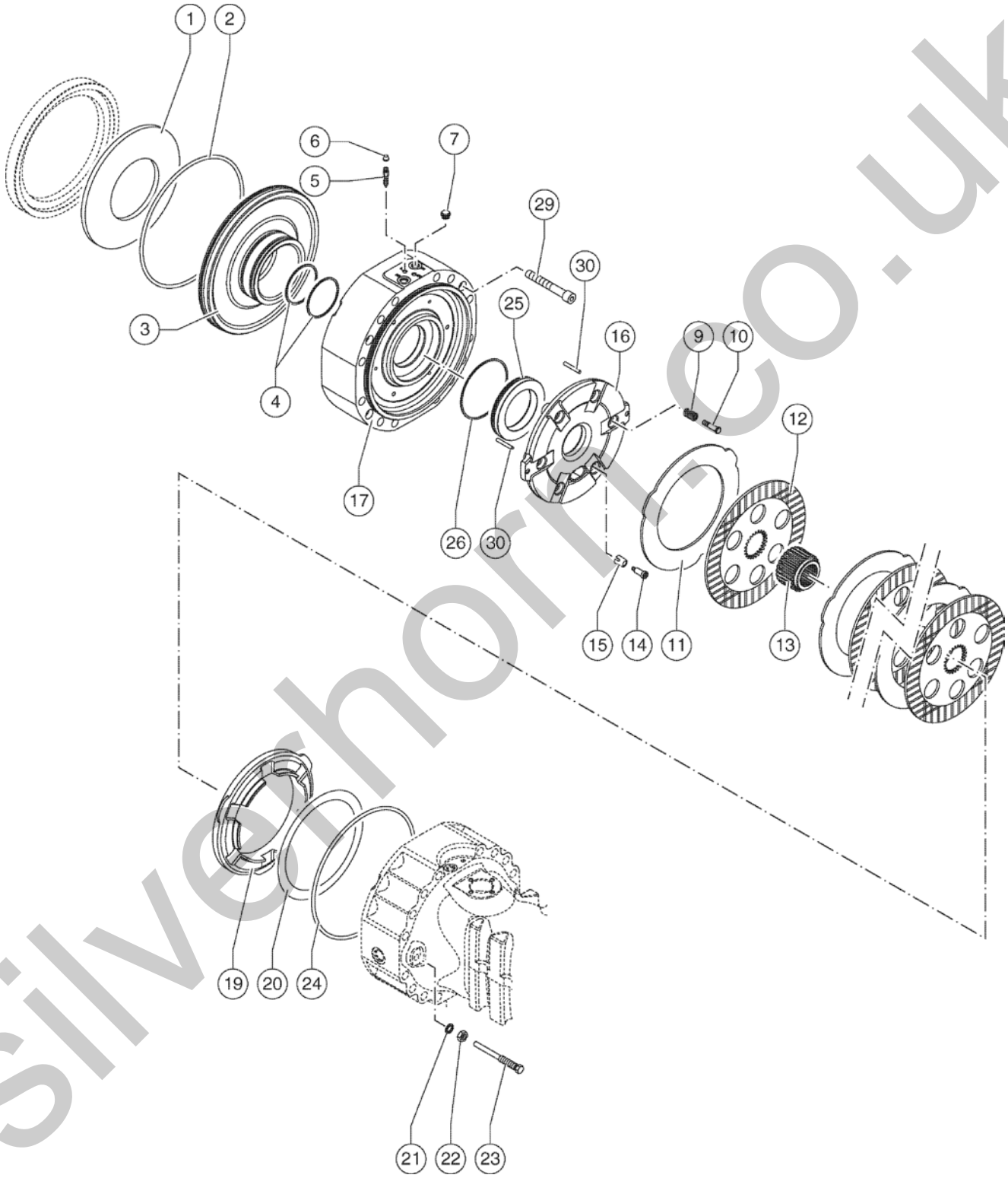

silverhorn.co.uk

208.1 609960 Front Axle - Brakes

Item	Part No.	Description	Qty.
29	07.0709.1048GT	Screw	4
30	07.0709.1014GT	Dowel	4

silverhorn.co.uk

209.1 609961 Front And Rear Axle - Central Housing

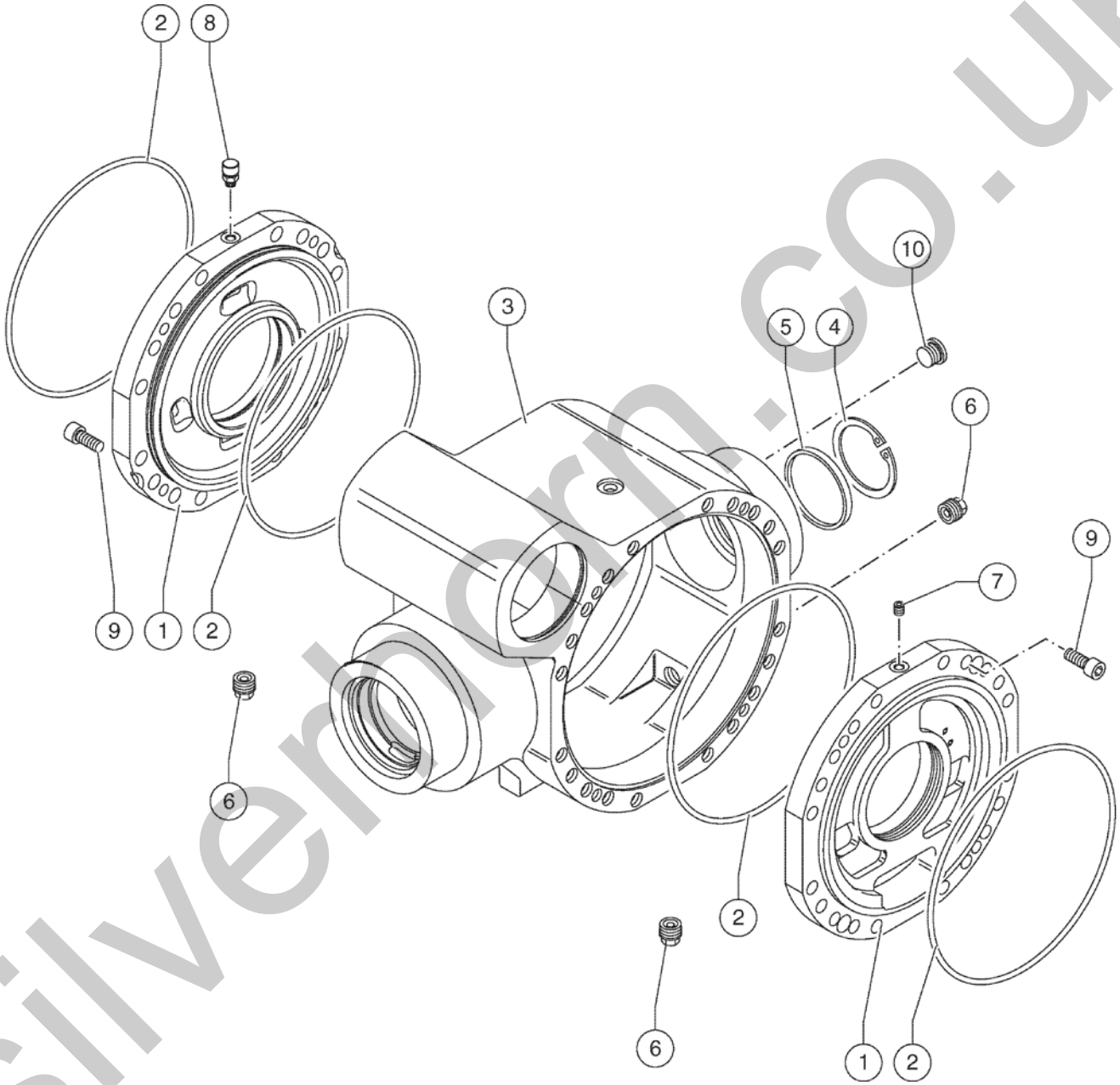

silverhorn.co.uk

209.1 609961 Front And Rear Axle - Central Housing

Item	Part No.	Description	Qty.
1	07.0709.1298GT	Cover Only For Front Axle	2
1	07.0709.1009GT	COVER Only For Rear Axle	2
2	07.0709.0822GT	O-Ring	4
3	07.0709.0965GT	Housing	1
4	07.0709.0441GT	SNAP RING	1
5	07.0709.0084GT	Plug	1
6	07.0709.0747GT	Magnet Plug	1
7	07-0709.0140GT	Plug Only For Front Axle	1
8	631293GT	Vent Only For Front Axle	1
8	07.0709.0912GT	PLUG, BREATHER Only For Rear Axle	1
9	637846GT	Screw	4
10	07.0709.0921GT	PLUG	1

silverhorn.co.uk

210.1 609962 Front And Rear Axle - Hub Reduction

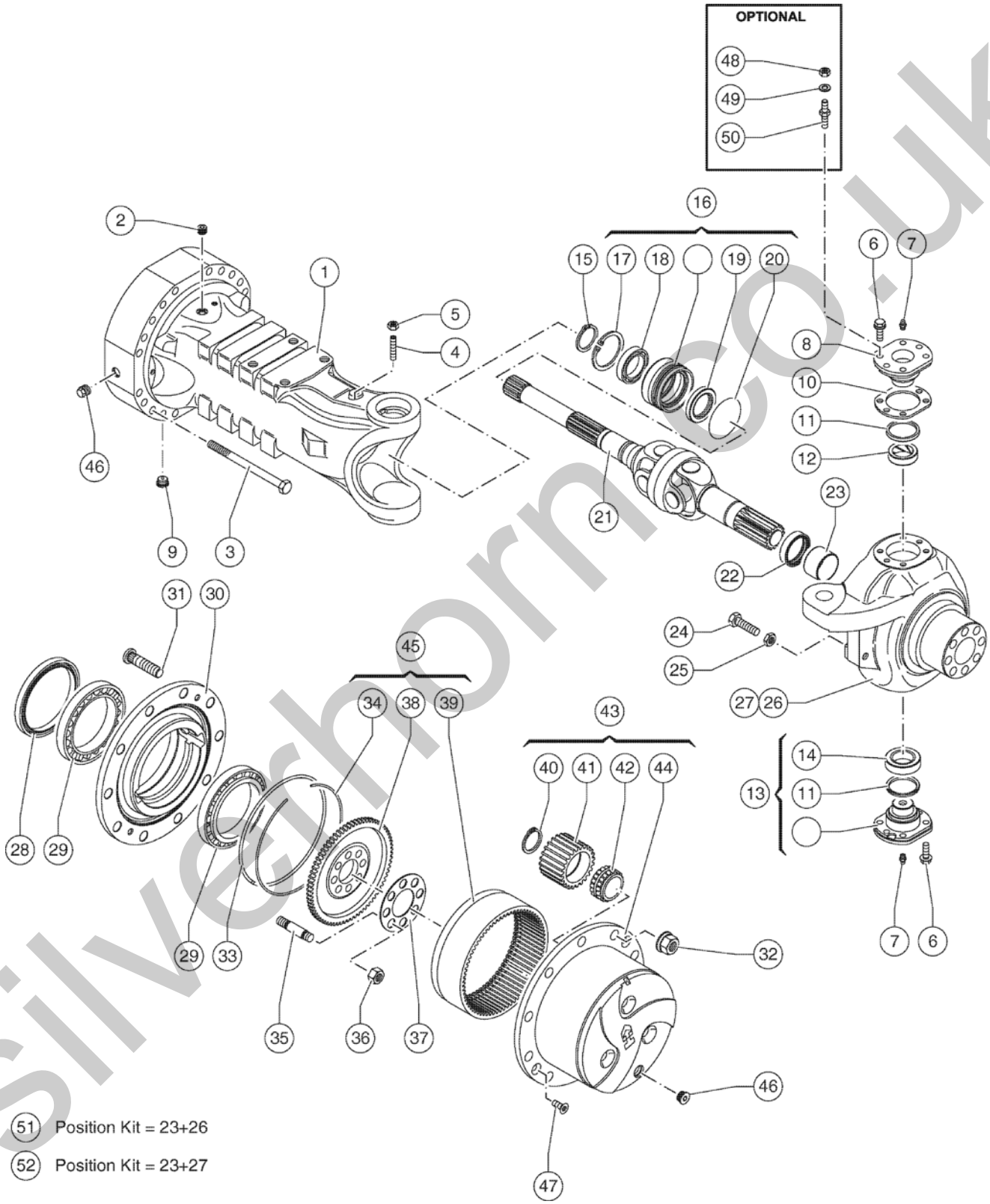

silverhorn.co.uk

210.1 609962 Front And Rear Axle - Hub Reduction

Item	Part No.	Description	Qty.
1	07.0709.1205GT	AXLE CASE Only For Front Axle	2
1	07.0709.1321GT	Axle Case Only For Rear Axle	2
2	7-229-570GT	Cover	2
3	07.0709.1017GT	SCREW Only For Front Axle	40
3	07.0709.1053GT	SCREW Only For Rear Axle	40
4	07.0709.0787GT	SCREW	2
5	633174GT	NUT	2
6	633070GT	SCREW	12
7	633176GT	GREASE ZERK	2
8	07.0709.1304GT	Pivot Pin	2
9	07.0709.0371GT	PLUG,MAGNET	2
10	07.0709.0485GT	SHIM 0.15MM	2
10	07.0709.0486GT	SHIM 0.20MM	2
10	07.0709.0487GT	SHIM 0.50MM	2
11	07.0709.0469GT	DUST EXCLUDER	2
12	07.0709.0789GT	BUSHING	2
13	07.0709.1305GT	Pivot Pin	2
14	07.0709.0470GT	SEAL,DUST EXCLUDER	2
15	1252540GT	CIRCLIP	2
16	640720GT	BUSHING	2
17	07.0709.0441GT	SNAP RING	2
18	633202GT	Bearing	2
19	630846GT	SEAL	2
20	1252532GT	O-RING	2
21	07.0709.1306GT	Joint	2
22	07.0709.0472GT	SEAL	2
23	07.0709.0465GT	BUSHING	1
24	07.0709.0104GT	SCREW	4

silverhorn.co.uk

210.1 609962 Front And Rear Axle - Hub Reduction

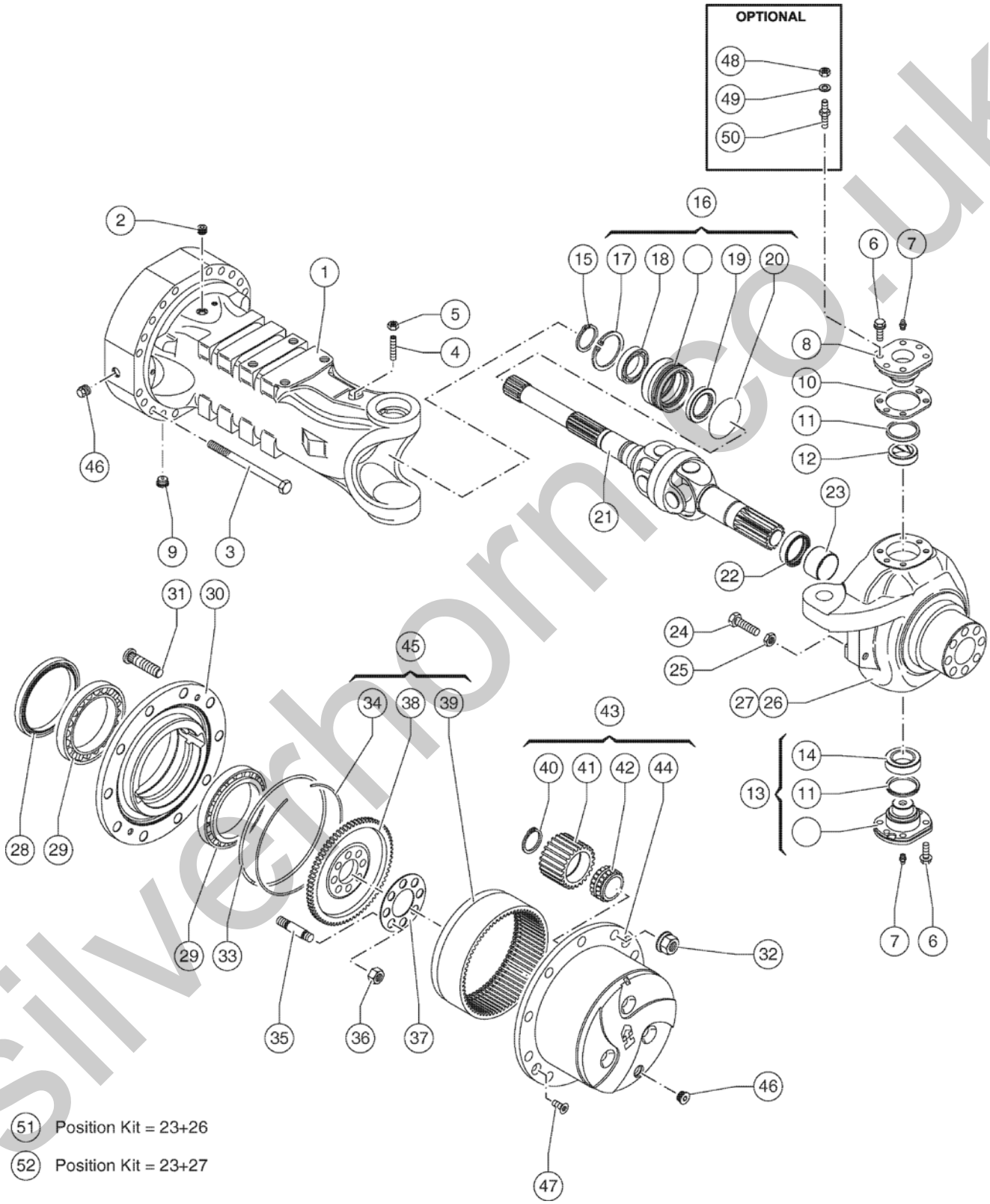

silverhorn.co.uk

210.1 609962 Front And Rear Axle - Hub Reduction

Item	Part No.	Description	Qty.
25	634546GT	NUT	4
26	07.0709.1044GT	STEERING CASE,RIGHT	1
27	07.0709.1045GT	STEERING CASE,LEFT	1
28	1252619GT	SEAL	2
29	638559GT	BEARING	4
30	07.0709.0474GT	WHEEL HUB	2
31	07.0709.0144GT	STUD,WHEEL	20
32	07.0709.1308GT	Nut,Wheel	20
33	07.0709.0475GT	O-RING	2
34	07.0709.0483GT	SNAP RING	2
35	07.0709.0974GT	STUD	16
36	07.0709.0975GT	NUT	16
37	07.0709.0484GT	PLATE,LOCKING	2
38	07.0709.0477GT	SUPPORT	2
39	07.0709.1046GT	RING GEAR	2
40	07.0709.0796GT	SNAP RING	8
41	07.0709.0797GT	PINION,DIFFERENTIAL	8
42	07.0709.0798GT	BEARING	8
43	07.0709.0799GT	SUPPORT	2
44	07.0709.0800GT	SUPPORT	2
45	07.0709.1047GT	SUPPORT	2
46	07.0709.0113GT	PLUG	4
47	07.0709.0065GT	SCREW	4
48	07.0709.0070GT	NUT	8
49	07.0709.0071GT	WASHER	8
50	07.0709.0119GT	STUD,DRIVE AXLE	8
51	07.0709.0976GT	KIT,STEERING CASE,RIGHT	1
52	07.0709.0801GT	KIT,STEERING CASE,LEFT	1

silverhorn.co.uk

211.1 609963 Front And Rear Axle - Steering Cylinder

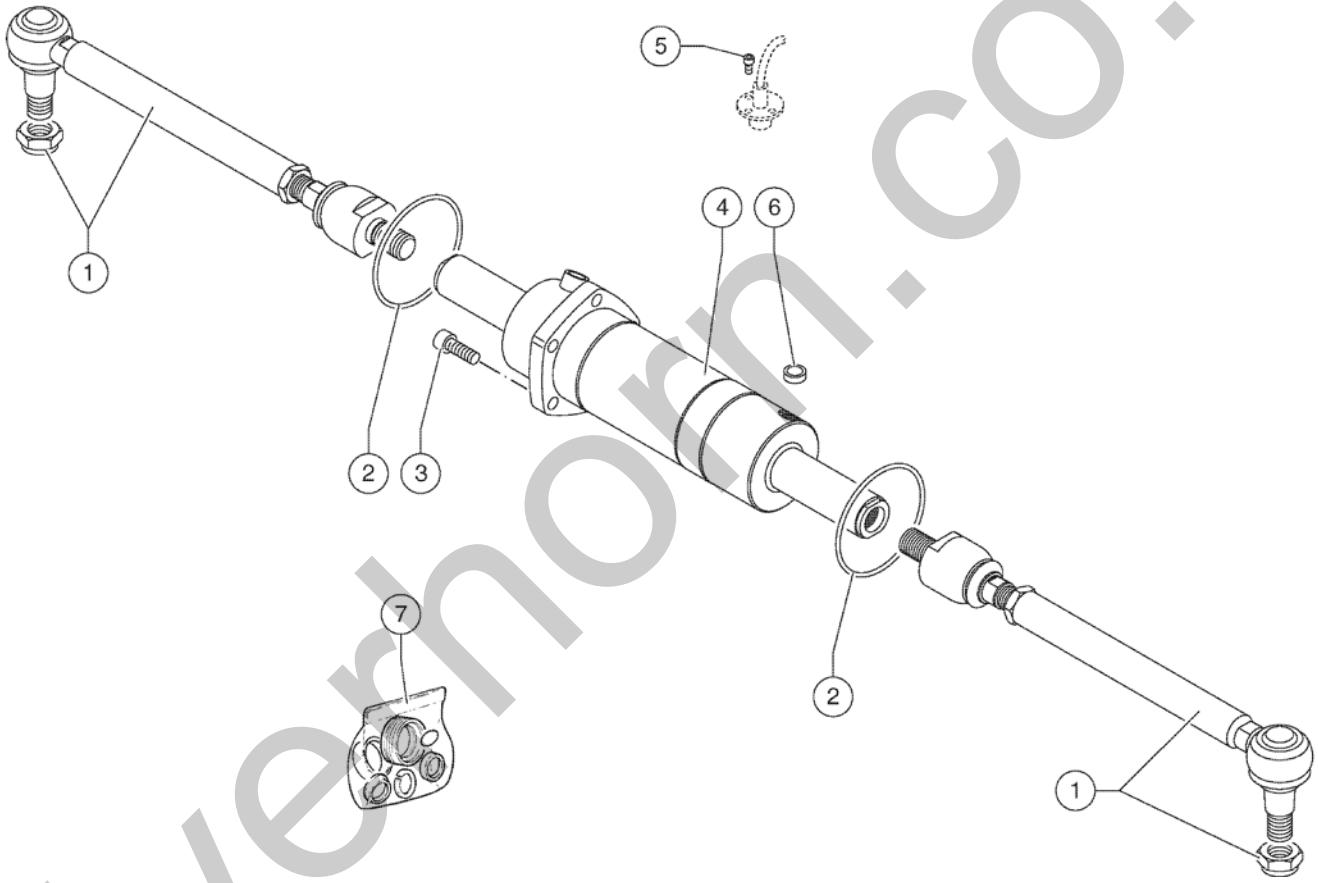

silverhorn.co.uk

211.1 609963 Front And Rear Axle - Steering Cylinder

Item	Part No.	Description	Qty.
1	07.0709.1315GT	Articuleted Tie Rod	2
2	638552GT	O-Ring	2
3	637846GT	Screw	5
4	07.0709.0824GT	Cylinder	1
5	07.0709.0886GT	Screw	3
6	07.0709.0826GT	Plug	1
7	07.0709.0980GT	Seal Kit for 07.0709.0824GT	1

silverhorn.co.uk

212.1 609964 Front And Rear Axle - Trunion

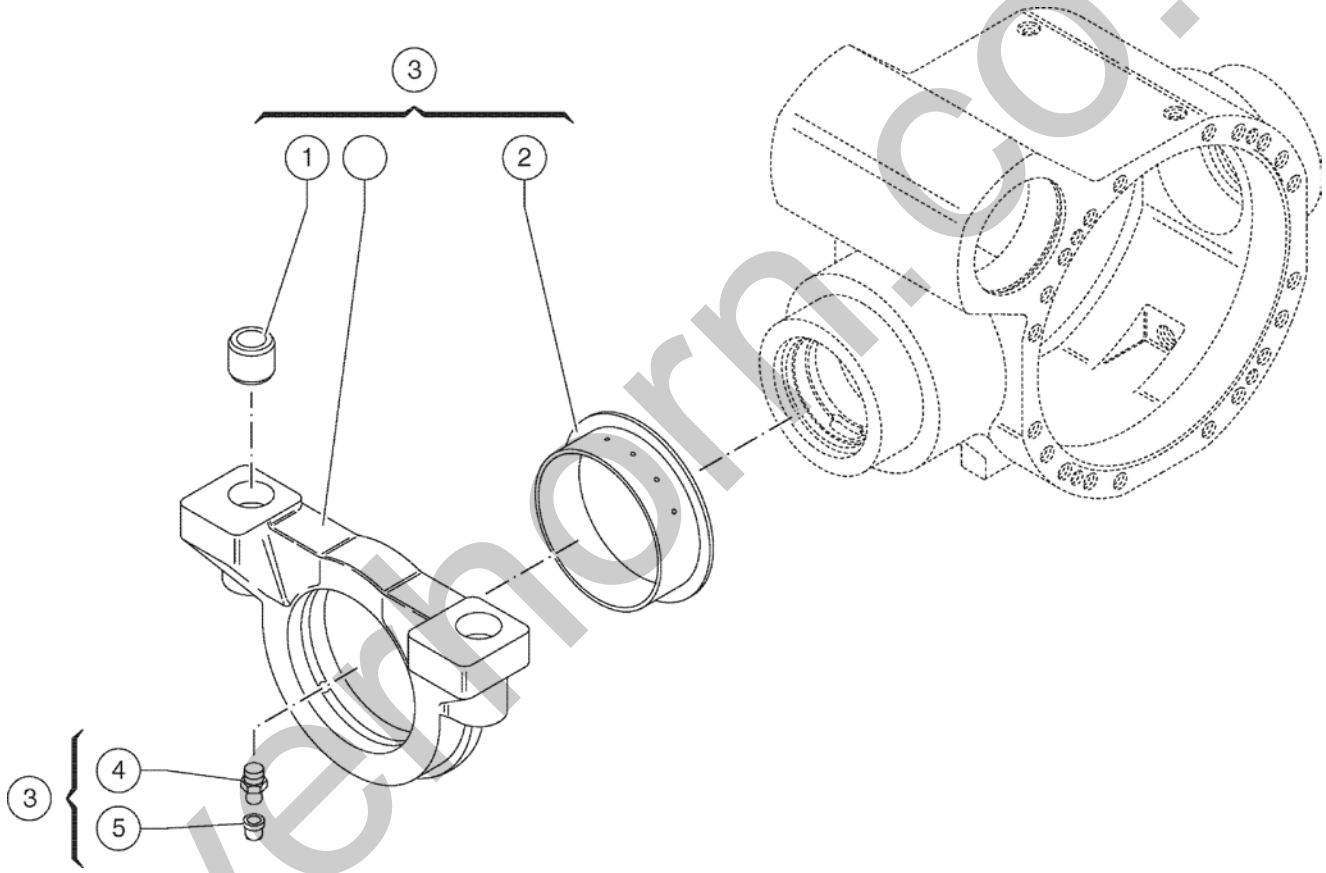

silverthorn.co.uk

212.1 609964 Front And Rear Axle - Trunion

Item	Part No.	Description	Qty.
1	07.0709.0051GT	Bushing	4
2	1252658GT	THRUST BUSHING	2
3	07.0709.1316GT	Support	2
4	633176GT	GREASE ZERK	2
5	638548GT	Plug	2

silverhorn.co.uk

213.1 609965 Front And Rear Axle - Gear Box

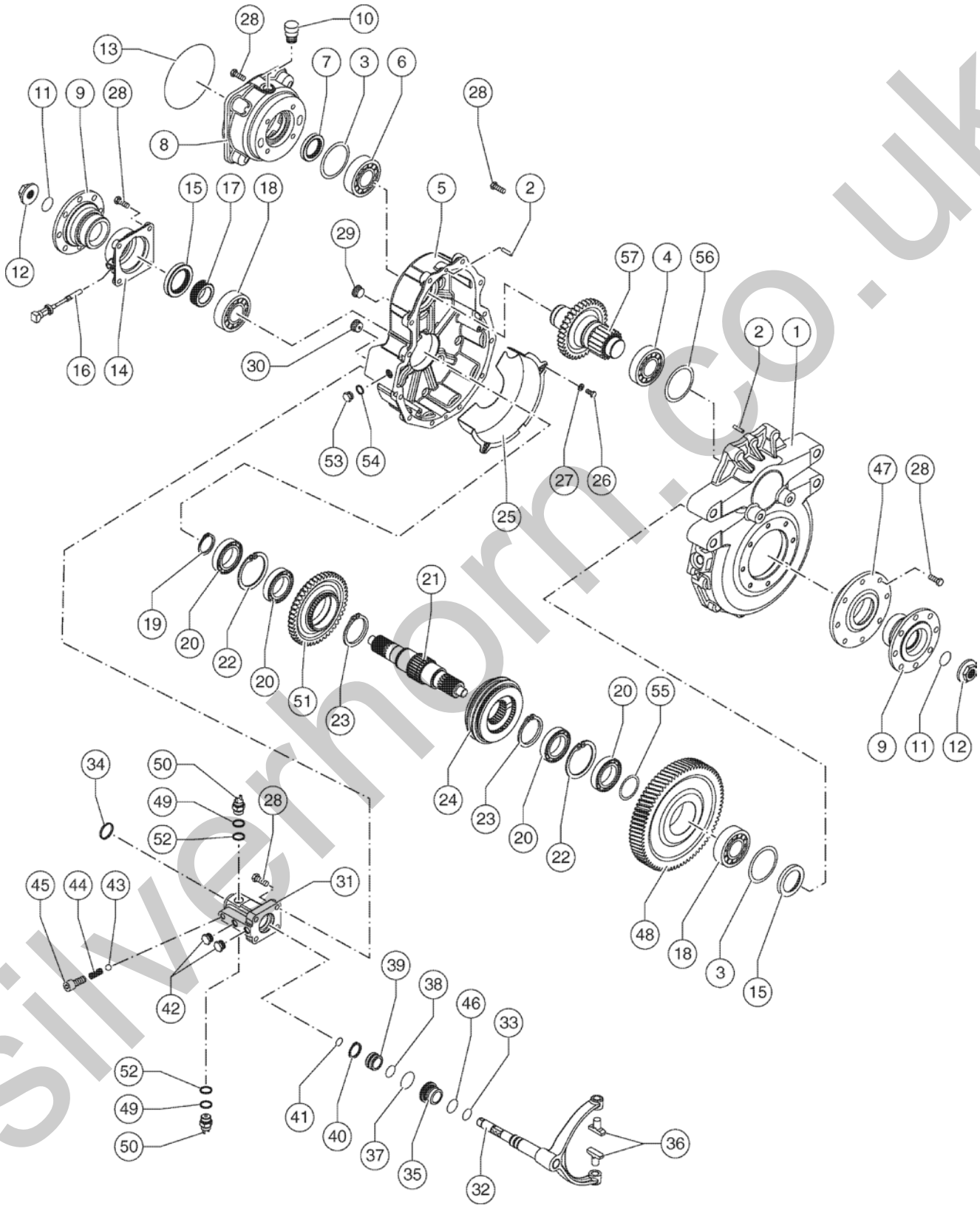

silverhorn.co.uk

213.1 609965 Front And Rear Axle - Gear Box

Item	Part No.	Description	Qty.
1	07.0709.0847GT	Housing	1
2	639785GT	Dowel	2
3	629733GT	SHIM THICKNESS	1
3	629735GT	SHIM/THICKNESS	1
3	639327GT	THICKNESS	1
3	639328GT	THICKNESS	1
3	639329GT	THICKNESS	1
4	07.0709.0848GT	Bearing	1
5	07.0709.0849GT	Cover	1
6	633202GT	Bearing	1
7	639790GT	Seal	1
8	07.0709.0850GT	Cover	1
9	07.0709.0079GT	Flange	2
10	07.0709.0988GT	Vent	1
11	633161GT	O-Ring	2
12	07.0709.1290GT	Nut	2
13	07.0709.0127GT	O-RING	1
14	07.0709.0851GT	Cover	1
15	07.0709.1291GT	Seal	2
16	07.0709.0852GT	Proximity Switch	1
17	07.0709.0853GT	Gear	1
18	07.0709.0443GT	Bearing	2
19	1252540GT	CIRCLIP	1
20	07.0709.0854GT	Bearing	4
21	07.0709.0855GT	Shaft	1
22	07.0709.0856GT	Snap Ring	2
23	07.0709.0857GT	Snap Ring	2
24	07.0709.0858GT	Gear	1

silverhorn.co.uk

213.1 609965 Front And Rear Axle - Gear Box

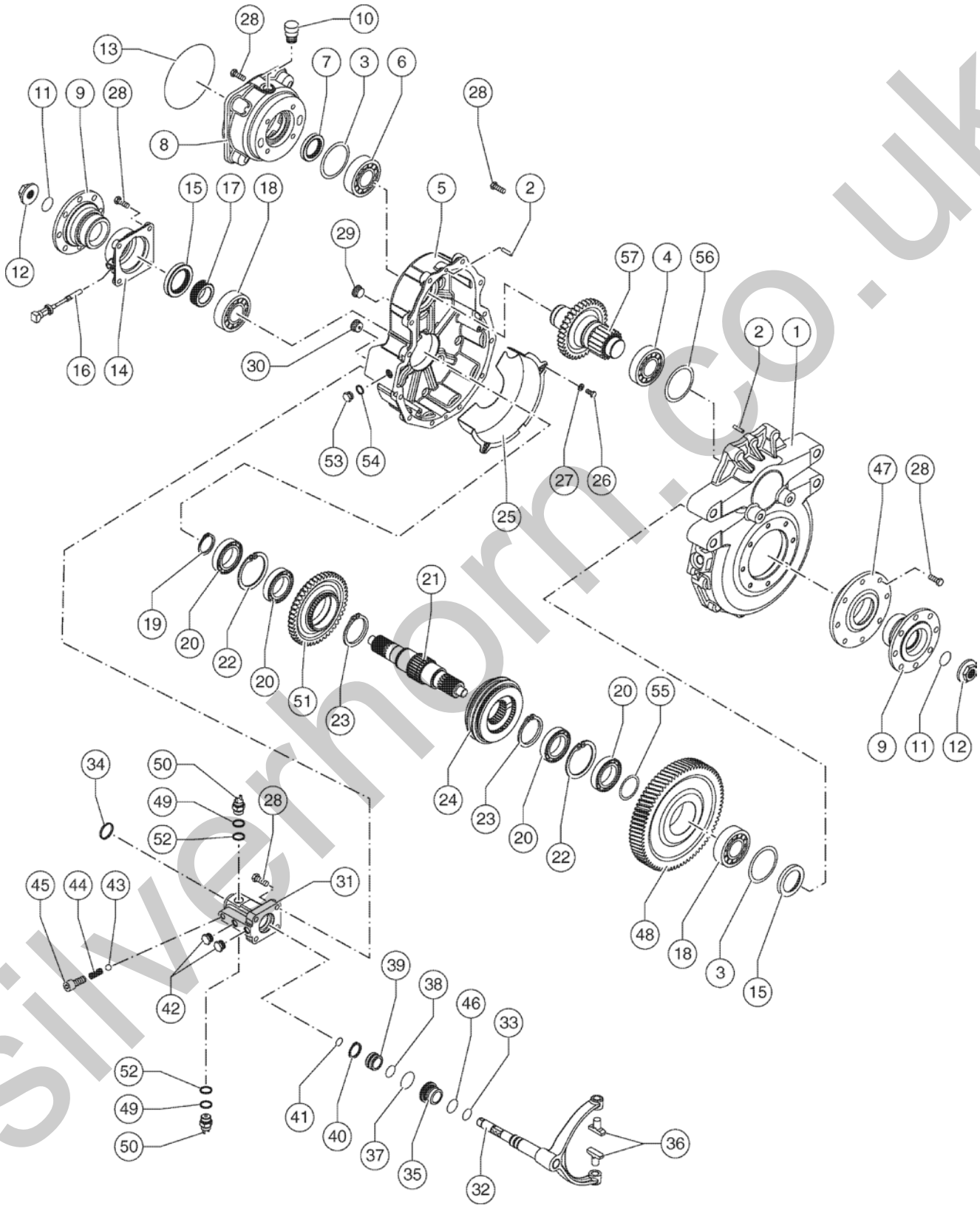

silverhorn.co.uk

213.1 609965 Front And Rear Axle - Gear Box

Item	Part No.	Description	Qty.
25	07.0709.0720GT	Guard	1
26	639792GT	Screw	2
27	07.0709.0718GT	Washer	2
28	07.0709.0939GT	Screw	12
29	633208GT	Plug	1
30	628275GT	PLUG	1
31	07.0709.0859GT	Cylinder	1
32	07.0709.0860GT	Selector Shaft	1
33	637576GT	O-Ring	1
34	07.0709.0861GT	Seal	1
35	07.0709.0862GT	BUSHING	1
36	07.0709.0863GT	Sliding Guide	2
37	07.0709.0864GT	O-Ring	1
38	07.0709.0865GT	O-Ring	1
39	07.0709.0866GT	Piston	1
40	07.0709.0867GT	Snap Ring	2
41	07.0709.0868GT	O-Ring	2
42	639808GT	PLUG	2
43	07.0709.0327GT	BALL	1
44	635596GT	Spring	1
45	07.0709.0869GT	Security Dowel	1
46	07.0709.0870GT	O-Ring	1
47	639783GT	Cover	1
48	07.0709.0881GT	Gear	1
49	07.0709.1292GT	Washer (0.061 in / 1.55 mm)	1
49	07.0709.1293GT	Washer (0.061 in / 1.55 mm) 061 in /	1
49	07.0709.1294GT	Washer (0.065 in / 1.65 mm)	1
49	07.0709.1295GT	Washer (0.069 in / 1.75 mm)	1

silverhorn.co.uk

213.1 609965 Front And Rear Axle - Gear Box

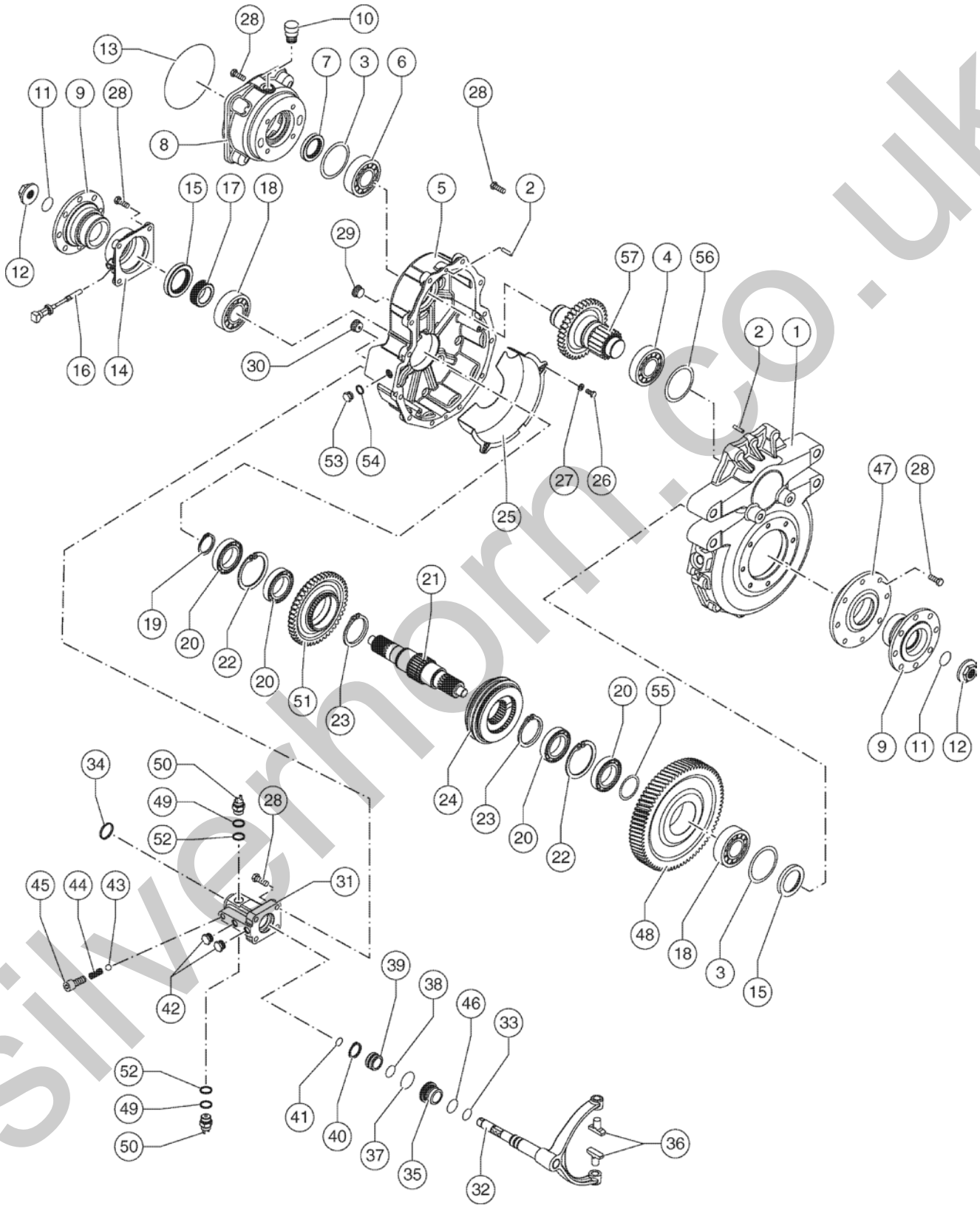

silverhorn.co.uk

213.1 609965 Front And Rear Axle - Gear Box

Item	Part No.	Description	Qty.
49	07.0709.1296GT	Washer (0.057 in / 1.45 mm)	1
49	07.0709.1297GT	Washer (0.077 in / 1.96 mm)	1
50	07.0709.1065GT	Security Microswitch	2
51	07.0709.0880GT	Gear	1
52	07.0709.0873GT	Washer	1
53	07.0709.0422GT	Screw	1
54	639818GT	Washer	2
55	07.0709.0010GT	SHIM 0.15MM	1
55	07.0709.0011GT	SHIM 0.20MM	1
55	07.0709.0012GT	SHIM 0.30MM	1
55	07.0709.0013GT	SHIM 0.40MM	1
56	639306GT	SHIM 0.20MM	1
56	639307GT	SHIM 0.30MM	1
57	07.0709.0879GT	Input Shaft	1

silverhorn.co.uk

214.1 609966 Rear Axle - Differential

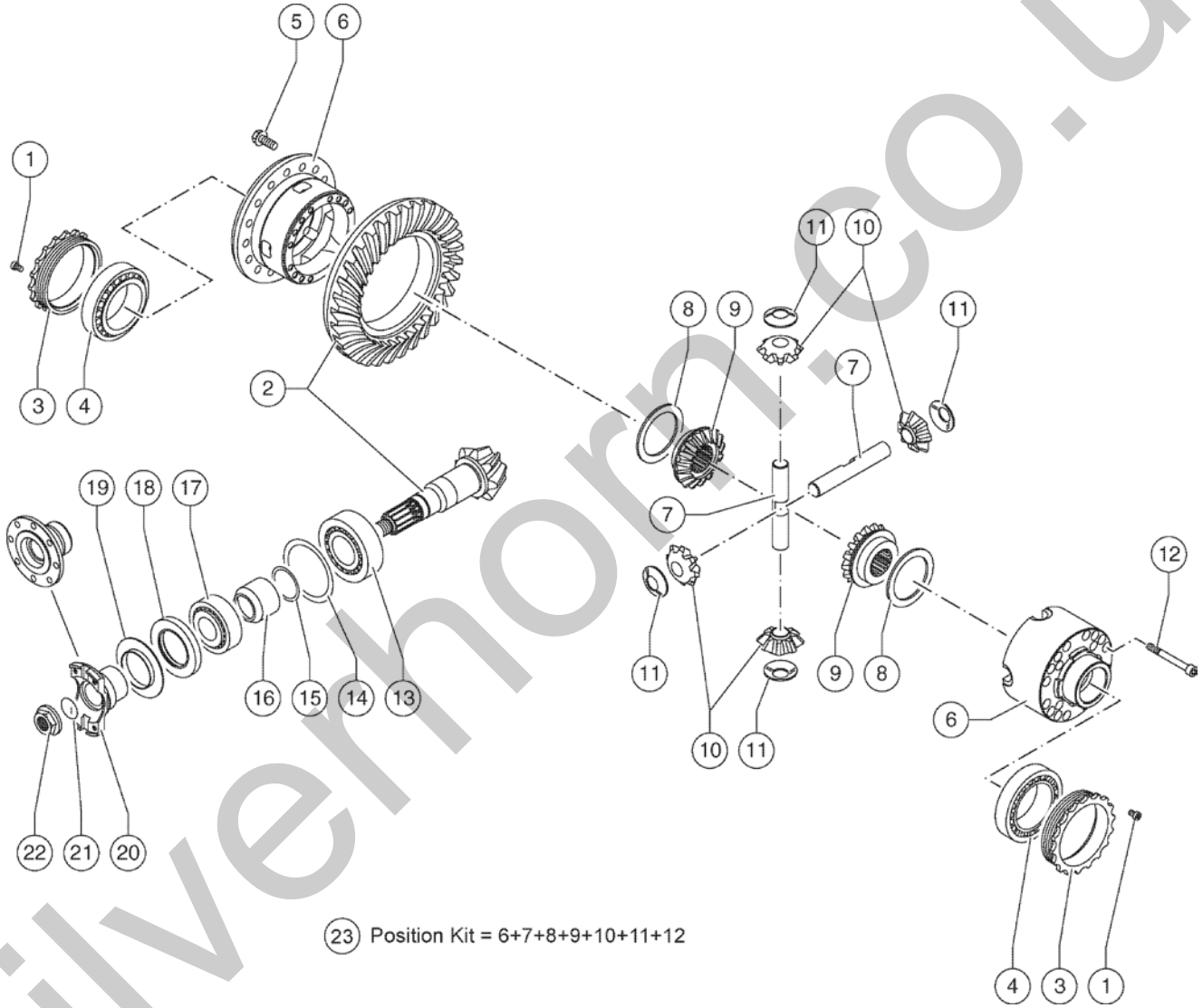

silverhorn.co.uk

214.1 609966 Rear Axle - Differential

Item	Part No.	Description	Qty.
1	07.0709.0884GT	Screw	2
2	07.0709.1319GT	Bevel Gear Set	1
3	07.0709.1010GT	Ring Nut	2
4	07.0709.1300GT	Bearing	2
5	07.0709.0057GT	SCREW,RING GEAR	20
6	07.0709.1317GT	Differential	1
7	07.0709.0972GT	PIN	2
8	07.0709.1027GT	Washer	2
9	07.0709.1028GT	Differential Side Gear	2
10	638527GT	Differential Pinion	4
11	07.0709.1302GT	Washer	4
12	07.0709.1318GT	Screw	15
13	638543GT	Bearing	1
14	7-229-662GT	SHIM / 0.10mm	1
14	07.0709.0143GT	SHIM 0.15MM	1
14	7-229-663GT	SHIM / 0.20mm	1
14	7-229-664GT	SHIM / 0.50mm	1
15	07.0709.1031GT	RING KIT	1
16	07.0709.1032GT	Spacer	1
17	638535GT	Bearing	1
18	637589GT	SEAL	1
19	1252656GT	COVER PLATE	1
20	07.0709.0782GT	Flange	1
21	637586GT	O-Ring	1
22	631378GT	Nut	1
23	07.0709.1320GT	Differential	1

silverhorn.co.uk

215.1 609967 Rear Axle - Brakes

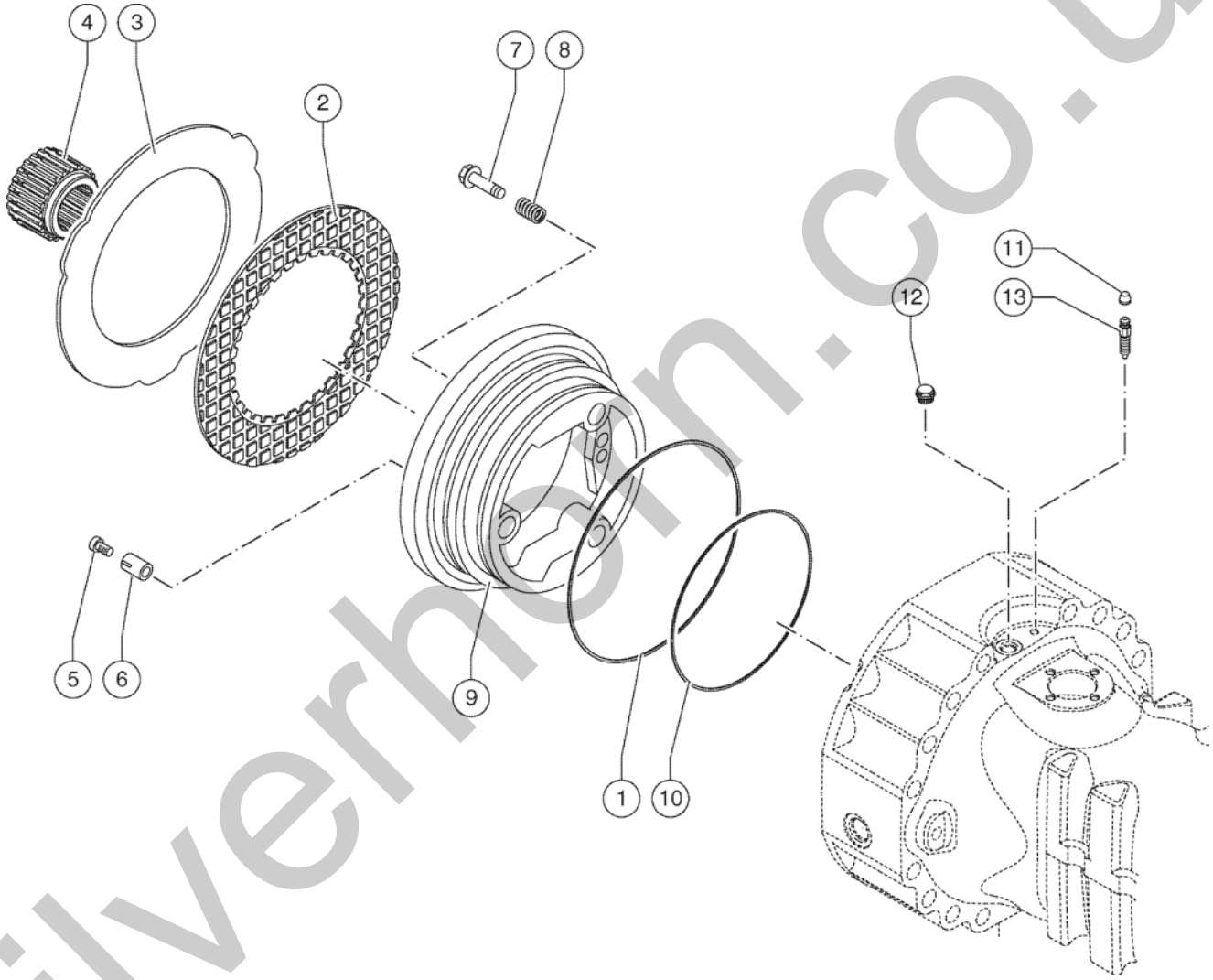

silverhorn.co.uk

215.1 609967 Rear Axle - Brakes

Item	Part No.	Description	Qty.
1	07.0709.1242GT	SEAL	2
2	1252617GT	BRAKE DISC	6
3	07.0709.1310GT	Intermediate Brake Disc	6
4	07.0709.0819GT	Reduction Bushing	2
5	07.0709.0840GT	Adjusting Screw	6
6	07.0709.0106GT	SPRING	6
7	07.0709.0408GT	Adjusting Screw	6
8	1252628GT	SPRING	6
9	07.0709.1323GT	Piston	2
10	07.0709.1324GT	Ring	2
11	638548GT	Plug	2
12	639808GT	PLUG	2
13	633560GT	Bleeding Screw	2

silverhorn.co.uk

301.1 609973 Diesel Engine

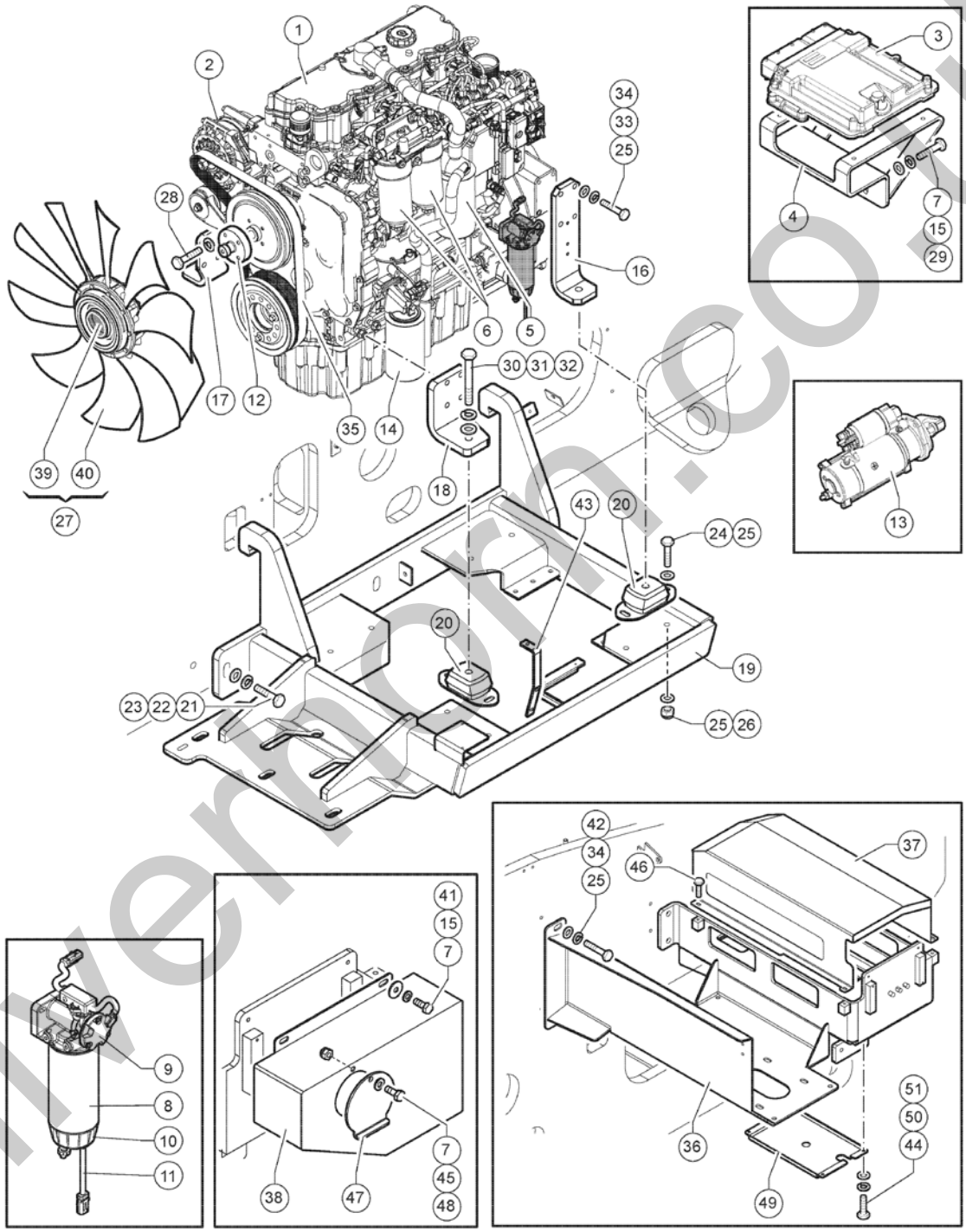

silvermorn.co.uk

301.1 609973 Diesel Engine

Item	Part No.	Description	Qty.
1	09.4601.0093GT	Engine	1
2	07.0501.0064GT	Alternator	1
3		Perkins Engine Control Unit Please Contact Perkins	1
4	51.0811.4413GT	SUPPORT,ENGINE,FWHL	1
5	07.0501.0080GT	Oil Filter Breather Element	1
6	07.4501.0346GT	FUEL FILTER CARTRIDGE	2
7	01.0001.0154GT	SCREW,TE,M6X16 UNI 8.8 ZN	6
8	07.0501.0061GT	Fuel Filter Kit	1
9	07.0501.0057GT	FUEL FILTER ASSEMBLY	1
10	07.0501.0062GT	Fuel Filter Bowl	1
11	07.0501.0063GT	Sensor	1
12	54.0100.0147GT	Fan Spacer	1
13	07.0501.0090GT	Start Motor	1
14	07.0501.0079GT	Engine Oil Filter Cartridge	1
15	01.4032.0002GT	SPRING WASHER D6 ZN	6
16	51.0811.4796GT	Front Engine Support	2
17	51.0811.4798GT	Left Rear Engine Support	1
18	51.0811.4797GT	Right Rear Engine Support	1
19	51.0811.4780GT	Perkins Engine Support	1
20	09.4670.0027GT	Insulator	4
21	01.0001.1558GT	SCREW, HHC , M20 x 60 LG.8.8 ZN UNI 5739, DIN 933	3
22	01.4031.0008GT	FLAT WASHER D22 UNI 6593	3
23	01.4032.0009GT	SPRING WASHER D20 ZN	3
24	01.0001.0508GT	SCREW M12X40 UNI 5739 8.8 ZN	8
25	01.0031.0057GT	WASHER, FLAT, D12, UNI 6592, ZN	34
26	01.0023.0056GT	STOP NUT M12 UNI 7473 6S ZN	8
27	09.4605.0028GT	Complet Fan “P.N. 27 includes P.N. 54 and P.N 55”	1
28	01.0001.0204GT	SCREW M8X45 UNI 5737 8.8 ZN	4

silverhorn.co.uk

301.1 609973 Diesel Engine

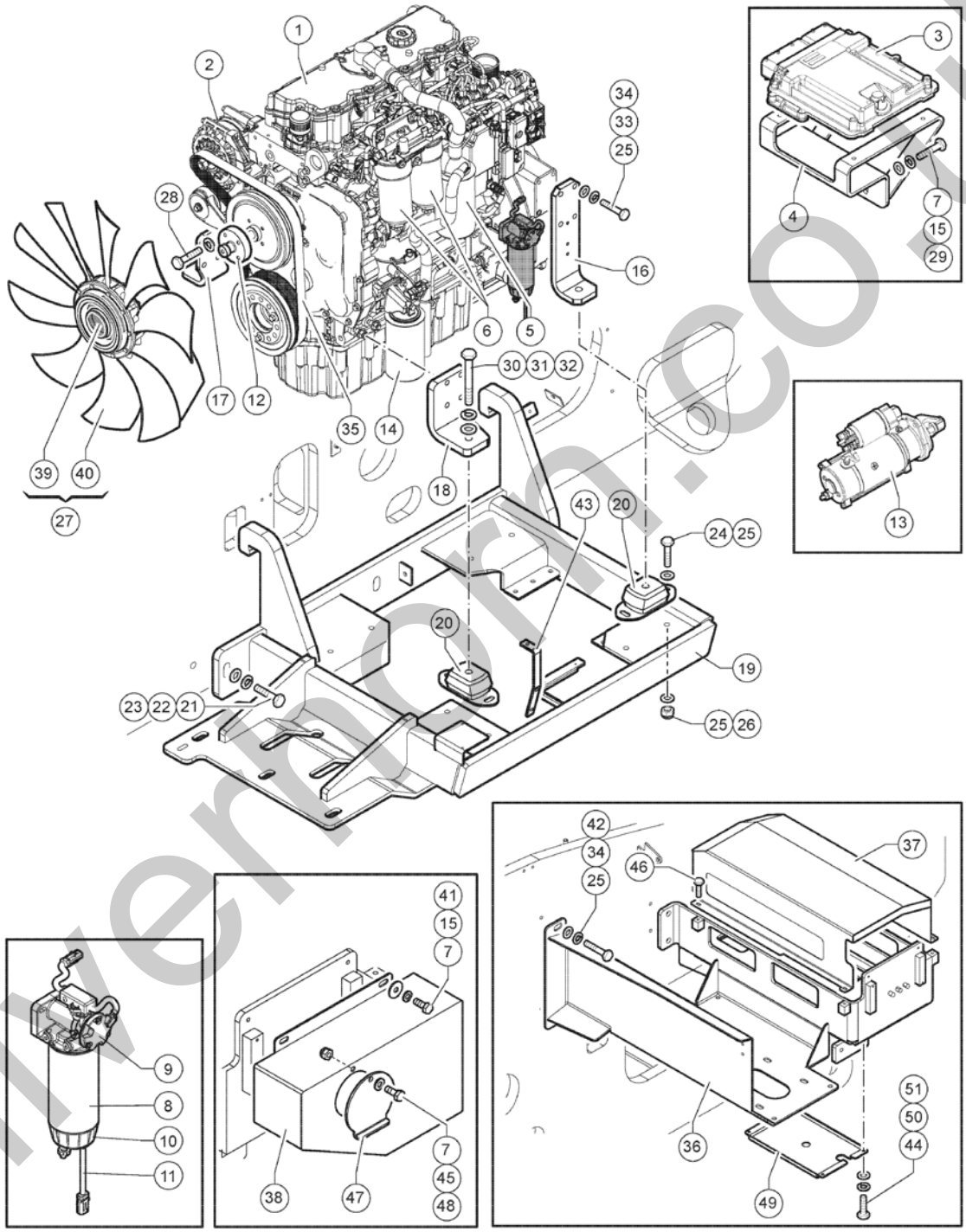

silvermorn.co.uk

301.1 609973 Diesel Engine

Item	Part No.	Description	Qty.
29	01.0031.0308GT	FLAT WASHER D6 UNI ISO 7093 ZN	4
30	01.0031.0059GT	FLAT WASHER D16 UNI 6592 ZN	4
31	01.4032.0007GT	SPRING WASHER D16 ZN	4
32	01.4001.0209GT	SCREW,HHC,M16-2X50,10,9,ZN	4
33	01.0001.0508GT	SCREW M12X40 UNI 5739 8.8 ZN	14
34	01.4032.0005GT	SPRING WASHER D12 ZN	18
35	07.0501.0073GT	Belt	1
36	51.0811.4827GT	Battery support	1
37	51.0811.4828GT	Battery Cover	1
38	51.0811.4899GT	Battery Charger Cover	1
39	07.0501.0096GT	Viscous Fan Drive	1
40	07.0501.0095GT	Fan Without Viscous Drive	1
41	01.0031.0298GT	FLAT WASHER D6 UNI 6593 ZN	2
42	01.0001.0402GT	SCREW M12X45 UNI 5737 8.8 ZN	4
43	51.0811.4866GT	Fuel Hose Bracket	1
44	01.0031.0053GT	FLAT WASHER D5 UNI 6592 ZN	4
45	01.0023.0053GT	STOP NUT M6 UNI 7473 6S ZN	1
46	01.0003.0160GT	SCREW M6X40 UNI 5931 8.8 ZN	2
47	51.0903.5286GT	Cap Charger	1
48	01.0031.0054GT	FLAT WASHER D6 UNI 6592 ZN	1
49	51.0903.5296GT	Battery Pad Cover	1
50	01.0001.0052GT	SCREW M5X14 UNI 5739 8.8 ZN	4
51	01.4032.0001GT	WASHER,SPRING,D5 ZN	4

silverhorn.co.uk

302.1 609974 Air Filter

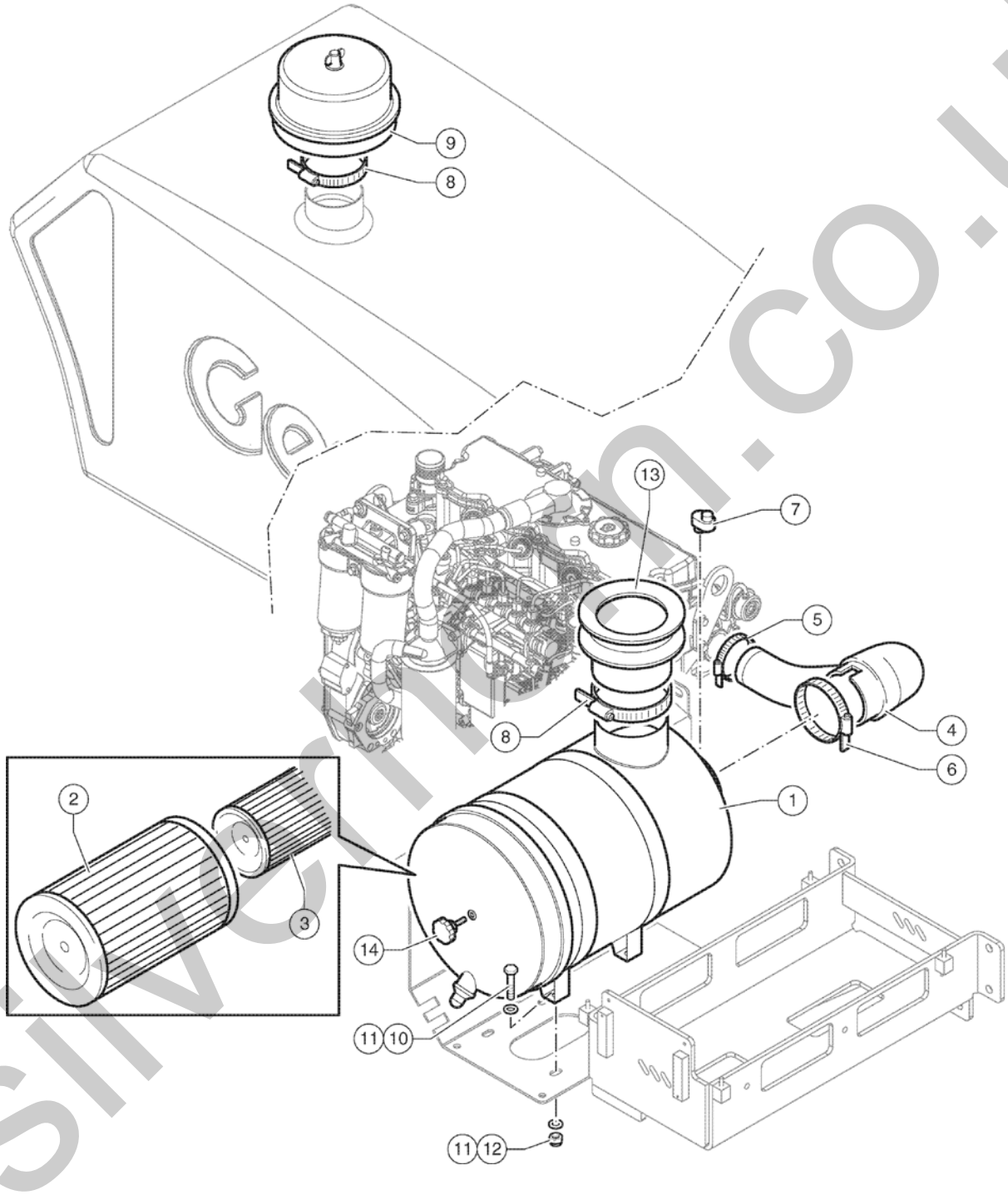

silverhill.co.uk

302.1 609974 Air Filter

Item	Part No.	Description	Qty.
1	09.4604.0083GT	AIR FILTER	1
2	07.4501.0348GT	Air Filter Cartridge	1
3	07.4501.0349GT	Air Filter Safety Cartridge	1
4	53.3001.6844GT	Rubber Manifold	1
5	04.0227.0502GT	Clamp 70/90	1
6	04.4227.0031GT	CLAMP 110/130	2
7	09.4604.0086GT	Clogged Sensor	1
8	04.4227.0000GT	CLAMP DN 60/80 LG12	1
9	09.4604.0084GT	Vortex Prefilter	1
10	01.0001.0256GT	SCREW M8X25 UNI 5739 8.8 ZN	4
11	01.0031.0299GT	FLAT WASHER D8 UNI 6593 ZN	8
12	01.0023.0054GT	NUT,M8 UNI 7473 6S ZN	4
13	53.3302.0041GT	Rubber Manifold	1
14	07.4501.0350GT	Knob M10X70	1

silverhorn.co.uk

303.1 609975 Fuel Circuit

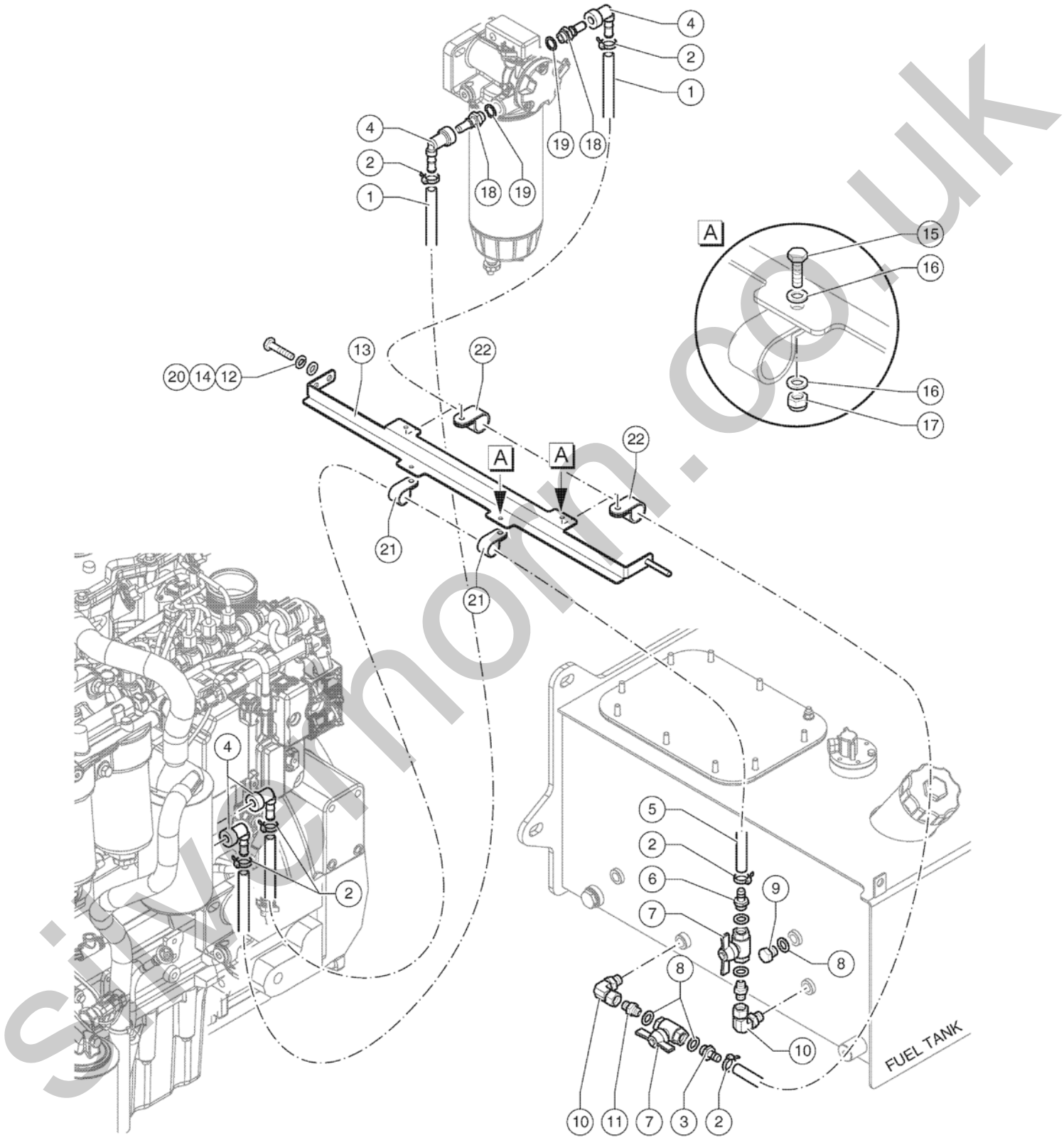

sivernorn.co.uk

303.1 609975 Fuel Circuit

Item	Part No.	Description	Qty.
1	09.0803.0219GT	Carbonpress Hose D12X18	2
2	04.0227.0051GT	CLAMP DN 10/16 LG 9	6
3	04.0600.0179GT	HOSE ADAPTER 3/8" GASXD17	2
4	09.0805.0147GT	FITTING,PUMP,FUEL	4
5	09.0803.0218GT	Carbonpress Hose	1
6	04.0600.0276GT	Hose Adaprter 3/8" BSP x D10	1
7	04.4224.0011GT	Ball Valve	2
8	06.0442.0120GT	BONDED RING 3/8"	5
9	04.0220.0053GT	PLUG 3/8" BSP	1
10	04.0600.0088GT	PIPE FITTING	2
11	04.0600.0029GT	PIPE FITTING 3/8X3/8 BSP	2
12	01.4032.0003GT	Spring Washer D 8 ZN	2
13	51.0811.4867GT	Hose Bracket	1
14	01.0001.0254GT	SCREW M8X20 UNI 5739 8.8 ZN	2
15	01.0001.0156GT	SCREW M6X20 UNI 5739 8.8 ZN	4
16	01.0031.0054GT	FLAT WASHER D6 UNI 6592 ZN	8
17	01.0023.0053GT	STOP NUT M6 UNI 7473 6S ZN	4
18	09.0803.0837GT	FITTING	2
19	06.0443.0002GT	LOCKWASHER	2
20	01.0031.0299GT	FLAT WASHER D8 UNI 6593 ZN	2
21	04.4227.0015GT	CLAMP D40 HOLE 8.5	2
22	04.4227.0046GT	Clamp D74	2

silverhorn.co.uk

304.1 609976 Exhaust System And Accelerator

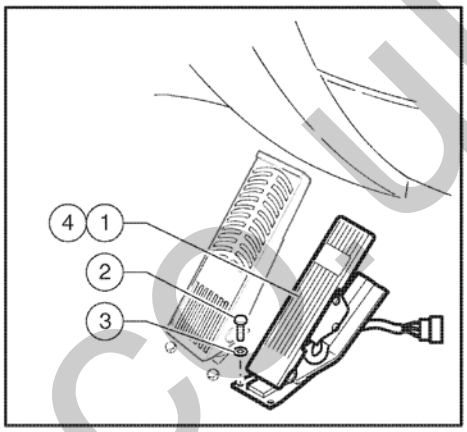

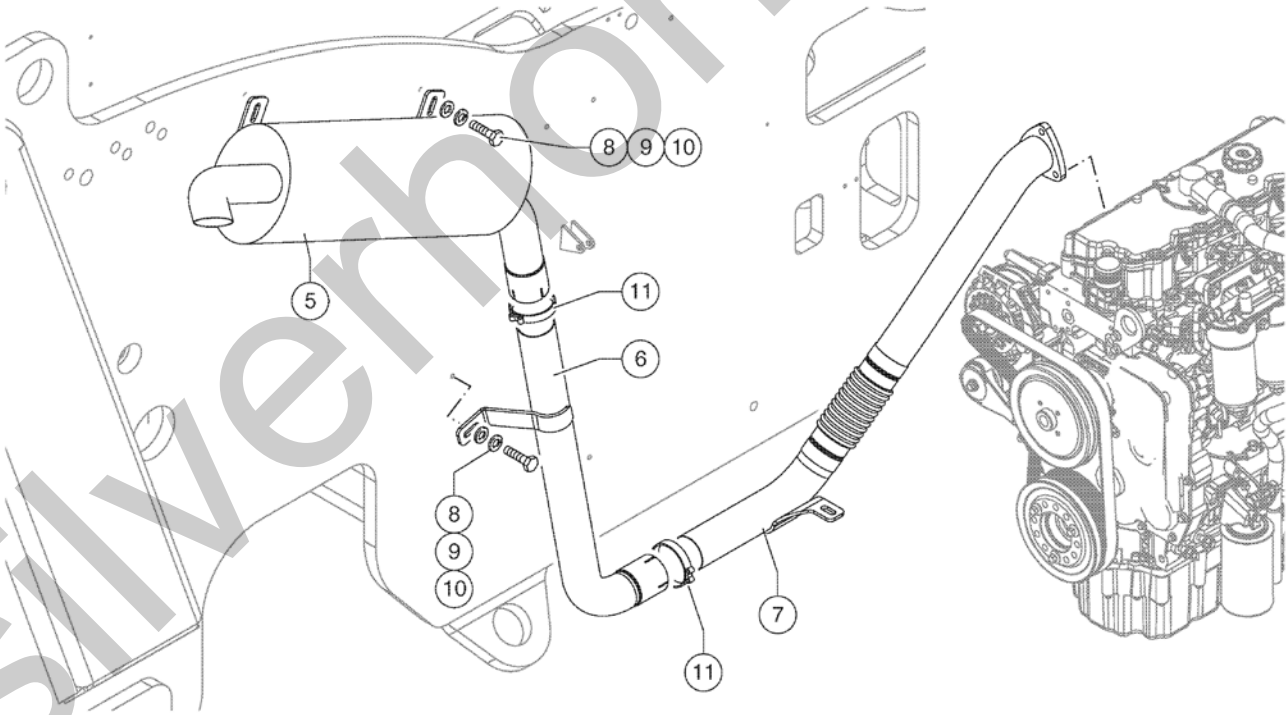

silverhorn.co.uk

304.1 609976 Exhaust System And Accelerator

Item	Part No.	Description	Qty.
1	09.4656.0017GT	ACCELERATOR PEDAL	1
2	01.0001.0257GT	SCREW M8X30 UNI 5739 8.8 ZN	3
3	01.4032.0002GT	SPRING WASHER D6 ZN	3
4	51.0811.4657GT	BRACKET	1
5	53.3100.0056GT	Exhaust Muffler	1
6	53.3001.6846GT	Exhaust Pipe	1
7	53.3001.6845GT	Flexible Exhaust Pipe	1
8	01.0001.0355GT	SCREW M10X25 UNI 5739 8.8 ZN	3
9	01.4032.0004GT	Spring Washer D10 ZN	3
10	01.0031.0301GT	FLAT WASHER D10 UNI 6593 ZN	3
11	09.0803.0348GT	CLAMP	2

silverhorn.co.uk

305.1 609977 Cooling System, Radiator

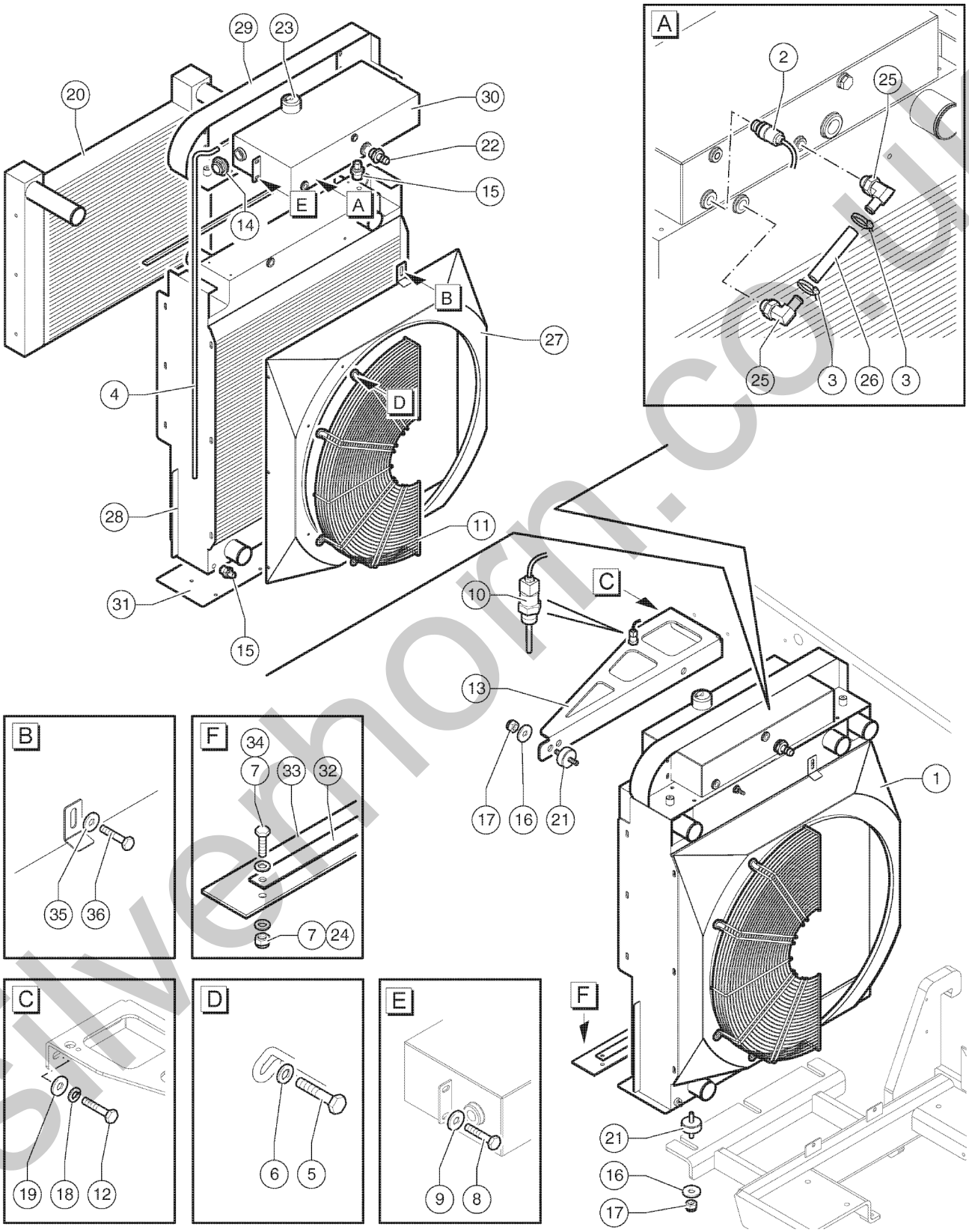

silverhorn.co.uk

305.1 609977 Cooling System, Radiator

Item	Part No.	Description	Qty.
1	55.0404.0078GT	Complete Heatsink	1
2	56.0012.0095GT	Level Sensor	1
3	07.0712.0301GT	CLAMP 15/8	2
4	07.0712.0343GT	Hose	1
5	07.0712.0362GT	HEXAGON FLANGE BOLTS DIN 6921 M8x12	8
6	07.0712.0287GT	FLAT WASHER D8 UNI 6593	19
7	01.0031.0055GT	FLAT WASHER D8 UNI 6592 ZN	10
8	07.0712.0358GT	HEXAGON FLANGE BOLTS DIN 6921 M6x16	10
9	07.0712.0357GT	PLANE WASHER X M6	12
10	56.0012.0101GT	Air Temperature Sensor	1
11	07.0712.0352GT	Radiator Grid	1
12	01.0001.0356GT	SCREW M10X30 UNI 5739 8.8 ZN	2
13	51.0811.4812GT	Radiator Support	1
14	04.4661.0025GT	Level Indicator	1
15	07.0712.0342GT	RELEASE VALVE M14X1.5	2
16	01.4031.0003GT	WASHER,D12 UNI 6593 ZN	10
17	01.0023.0055GT	Stop Nut M10 UNI 7473 6S ZN	10
18	01.0001.0071GT	Spring Washer	2
19	54.0100.0005GT	WASHER	2
20	53.3200.0093GT	Radiator Intercooler	1
21	09.4670.0028GT	INSULATOR	5
22	07.0712.0282GT	Hose Adapter	1
23	07.0712.0324GT	CAP 1 BAR	1
24	01.0023.0054GT	NUT,M8 UNI 7473 6S ZN	5
25	07.0712.0347GT	JOINT 90° G1/4"	2
26	07.0712.0341GT	Includes Screw and Washer Radiator Hose	1
27	07.0712.0336GT	FAN SHROUD	1
28	53.3200.0092GT	Radiator	1

silverhorn.co.uk

305.1 609977 Cooling System, Radiator

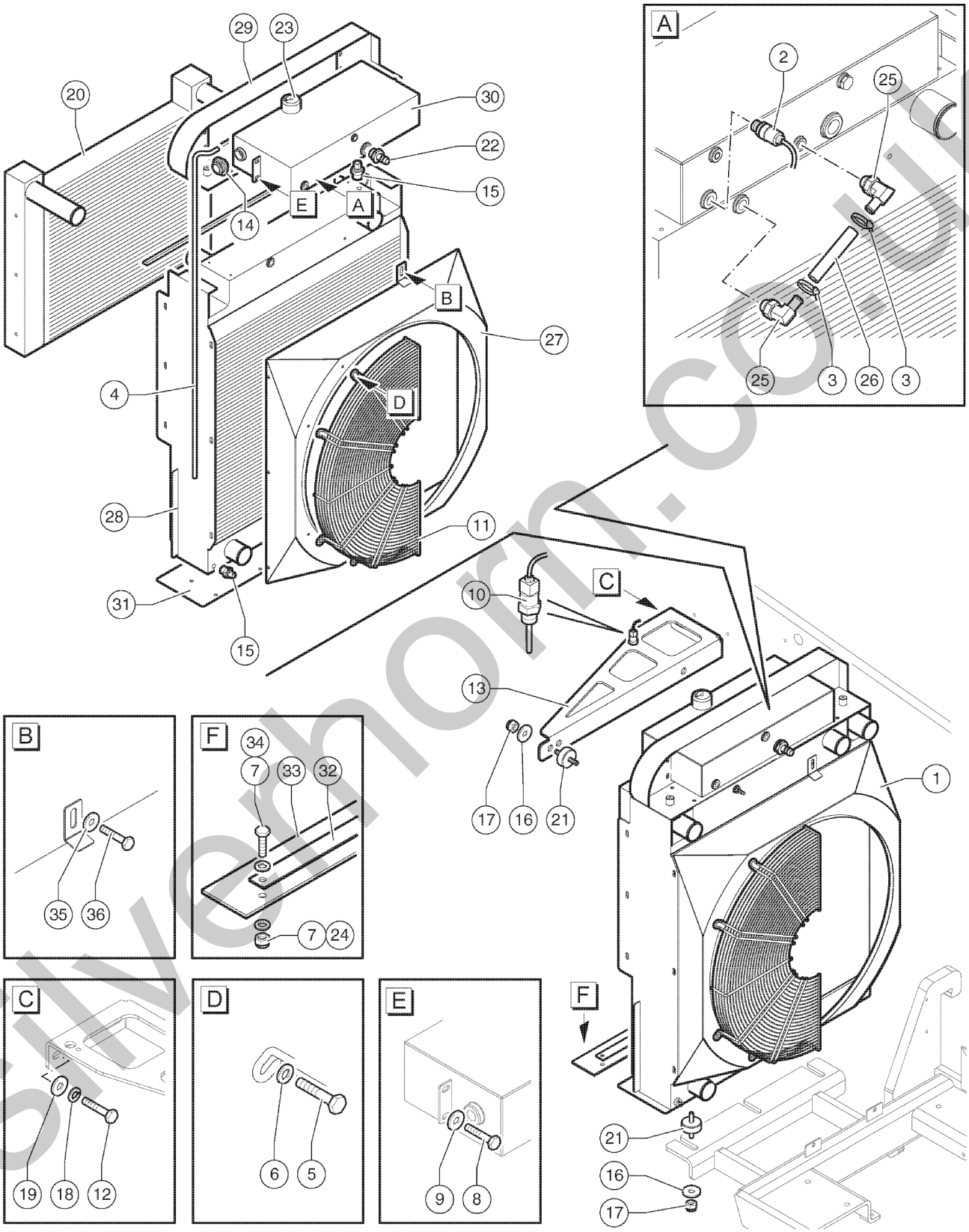

silverhorn.co.uk

305.1 609977 Cooling System, Radiator

Item	Part No.	Description	Qty.
29	07.0712.0337GT	Radiator Tank Support	1
30	07.0712.0339GT	Radiator Tank	1
31	07.0712.0338GT	Intercooler Support	2
32	51.0811.4786GT	Plate	1
33	53.3302.0040GT	Rubber	1
34	01.0001.0256GT	SCREW M8X25 UNI 5739 8.8 ZN	5
35	07.0712.0357GT	PLANE WASHER X M6	12
36	07.0712.0363GT	HEXAGON FLANGE BOLTS DIN 6921 M6x12	2

silverhorn.co.uk

306.1 609978 Cooling System, Radiator Hoses

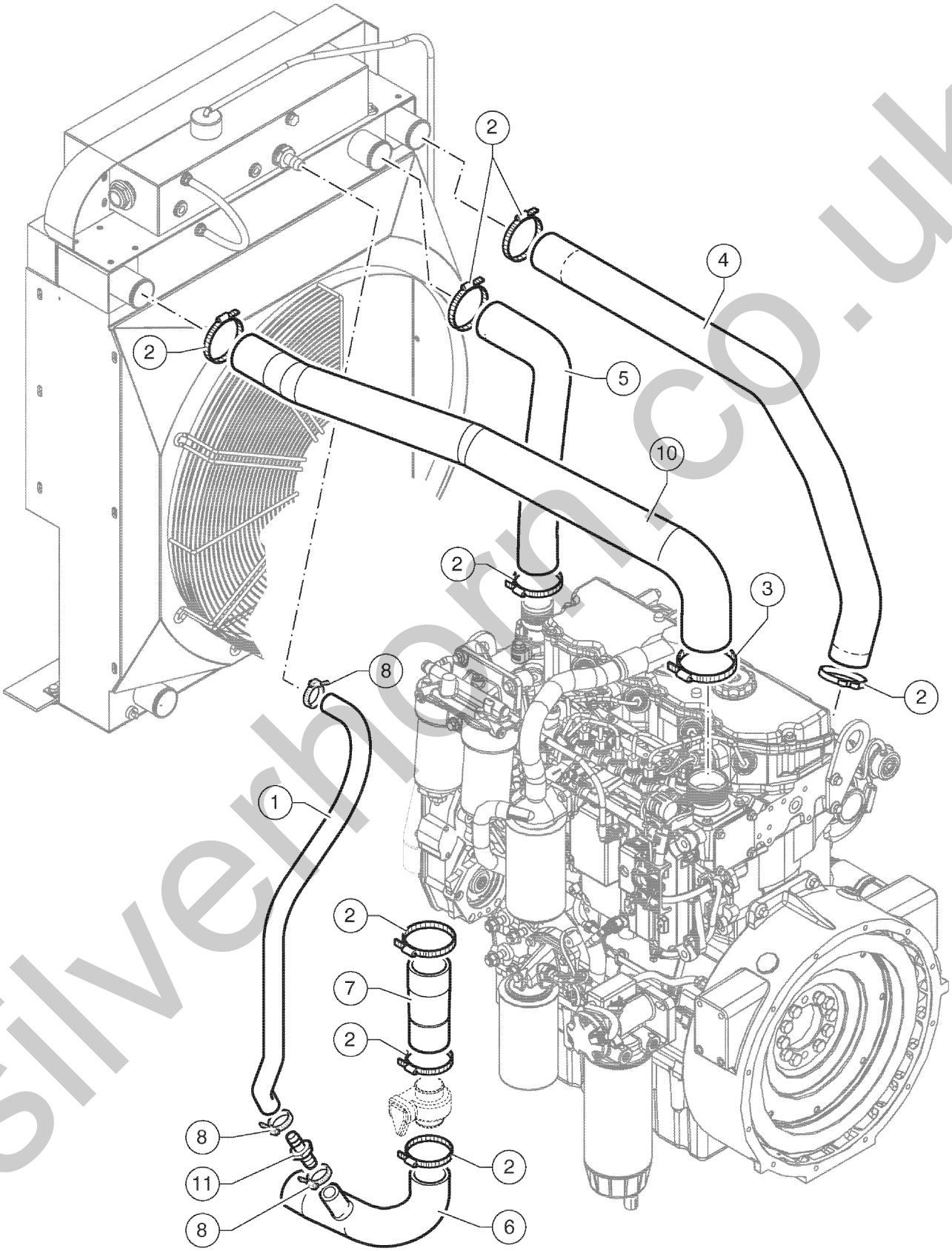

silverhorn.co.uk

306.1 609978 Cooling System, Radiator Hoses

Item	Part No.	Description	Qty.
1	53.3001.6841GT	Rubber Hose	1
2	04.4227.0043GT	Clamp 40/60	8
3	04.4227.0042GT	Clamp 80/85	1
4	53.3001.6842GT	Rubber Manifold	1
5	53.3001.6838GT	Rubber Manifold	1
6	53.3001.6839GT	Rubber Manifold	1
7	53.3001.6840GT	Rubber Manifold	1
8	04.4227.0041GT	Clamp 10/16	3
10	53.3001.6843GT	Rubber Manifold	1
11	09.0806.0072GT	Fitting	1

silverhorn.co.uk

307.1 609979 Hydraulic Pumps

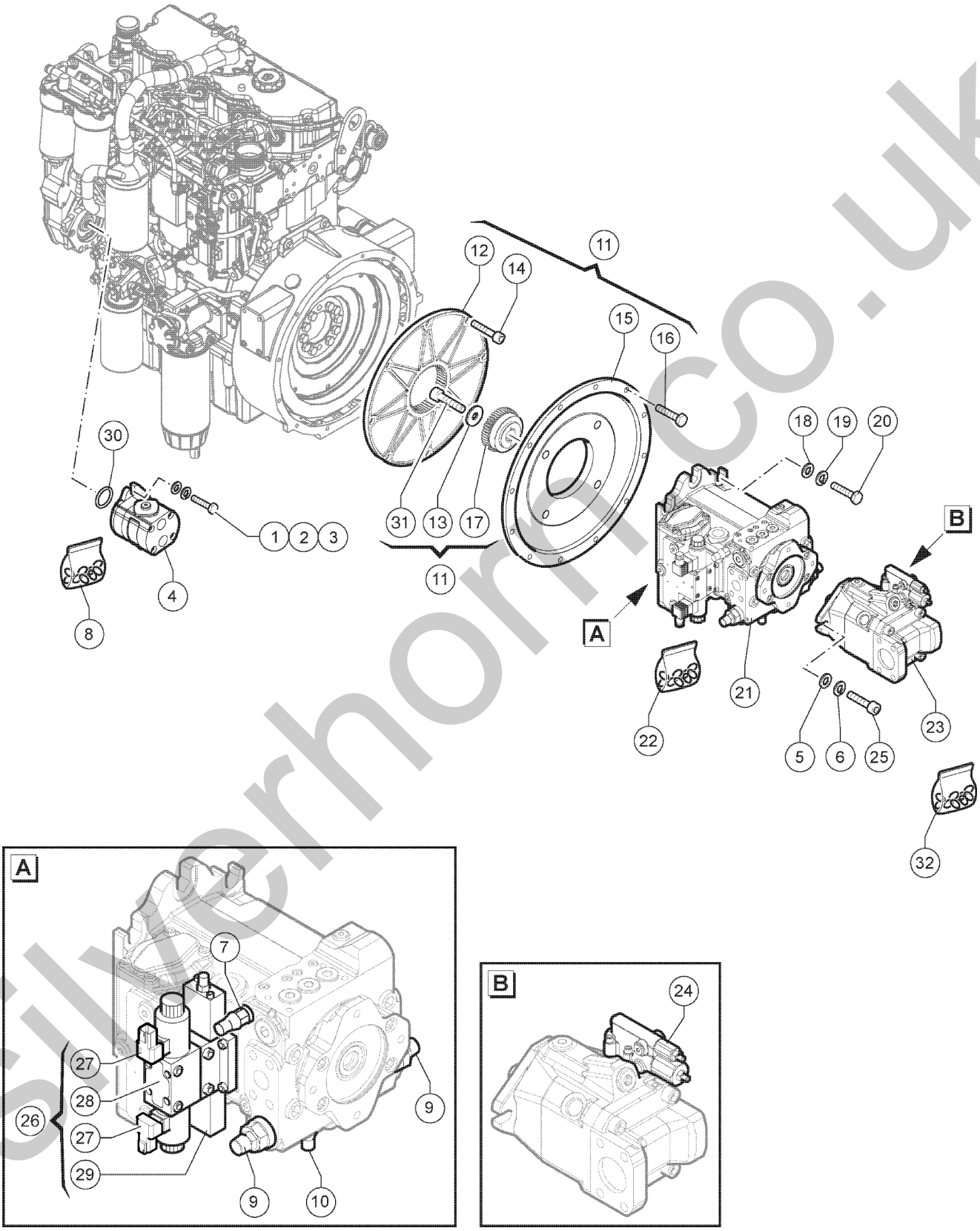

silverhorn.co.uk

307.1 609979 Hydraulic Pumps

Item	Part No.	Description	Qty.
1	01.0001.0356GT	SCREW M10X30 UNI 5739 8.8 ZN	2
2	01.4032.0004GT	Spring Washer D10 ZN	2
3	01.0031.0056GT	FLAT WASHER D10 UNI 6592 ZN	2
4	04.4238.0105GT	Hydraulic Pump 2	1
5	01.0031.0097GT	FLAT WASHER D12 UNI 5714 ZN	2
6	01.4032.0005GT	SPRING WASHER D12 ZN	2
7	07.0701.0217GT	Pressure Override Valve	1
8	07.4529.0208GT	Seal Kit Hydraulic Pump 2	1
9	07.0701.0247GT	MAX PRESSURE VALVE	2
10	07.0701.0216GT	PRESSURE RELIEF VALVE	1
11	09.0804.3447GT	Flywheel Assy	1
12	07.0713.0058GT	Flange	1
13	07.0713.0066GT	Spacer	1
14	01.4005.0009GT	Screw TE M10X35 DIN 6912 8.8	8
15	07.0713.0074GT	Cover	1
16	01.0001.0355GT	SCREW M10X25 UNI 5739 8.8 ZN	12
17	07.0713.0073GT	Hub Pump	1
18	01.0031.0099GT	FLAT WASHER D16 UNI 5714 ZN	4
19	01.4032.0007GT	SPRING WASHER D16 ZN	4
20	01.0001.1506GT	SCREW M16X40 UNI 5739 8.8 ZN	4
21	04.4238.0102GT	Hydraulic Pump 4	1
22	07.0701.0213GT	Seal Kit Pump 4	1
23	04.4238.0093GT	Hydraulic Pump 5	1
24	07.0701.0276GT	Control Valve	1
25	01.0003.0306GT	Screw TCEI M12X40 UNI 5931 8.8ZN	2
26	07.0701.0327GT	Complete Solenoid Valve With Inching Device	1
27	07.0701.0242GT	SOLENOID	2
28	07.0701.0321GT	Valve Block	1

silverhorn.co.uk

307.1 609979 Hydraulic Pumps

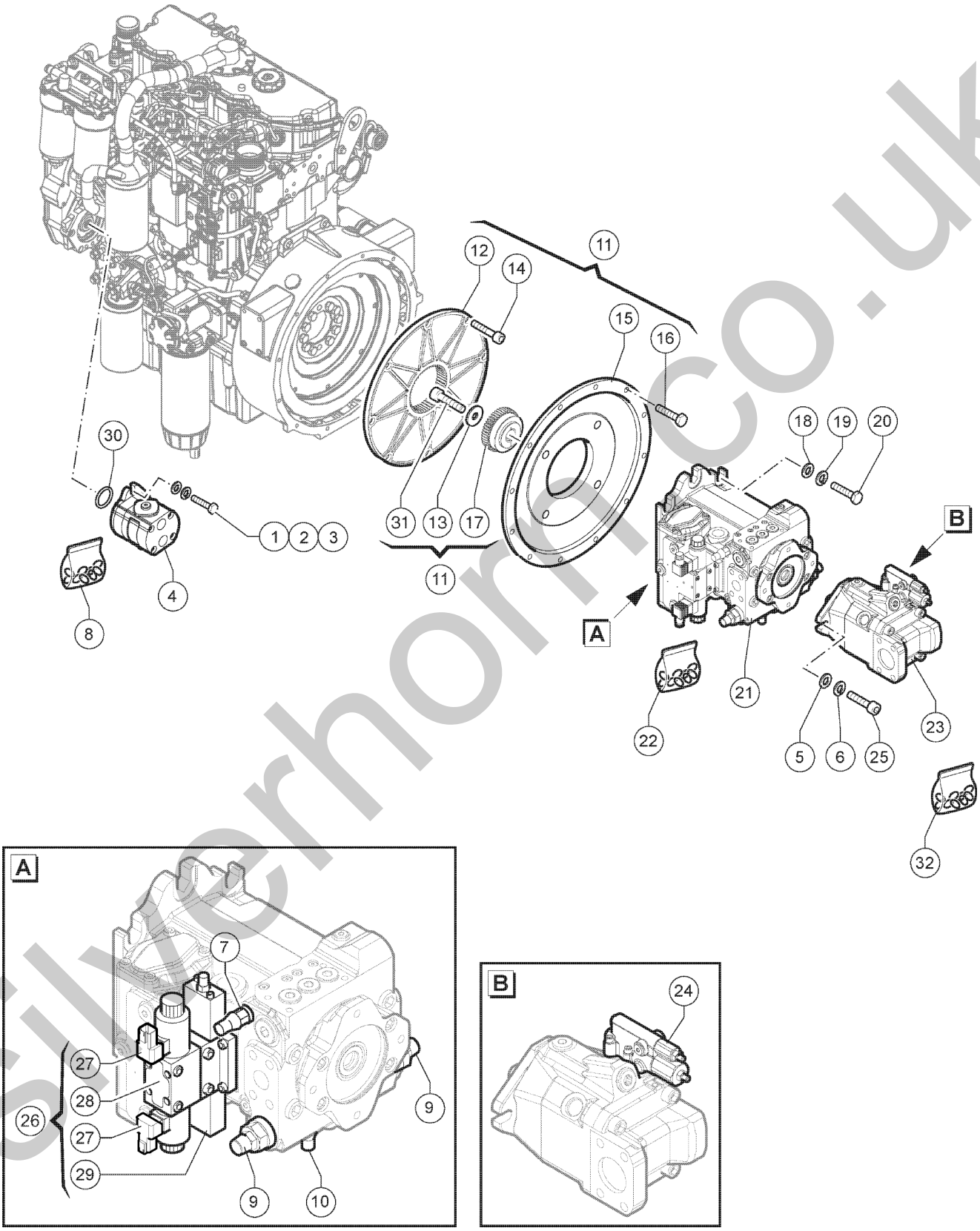

silverhorn.co.uk

307.1 609979 Hydraulic Pumps

Item	Part No.	Description	Qty.
29	07.0701.0328GT	Inching Device	1
30	06.0401.1508GT	O-ring Seal	1
31	01.0003.0957GT	SCREW M12X35	1
32	07.0741.0289GT	Seal Kit	1

silverhorn.co.uk

401.1 609984 Cab, View 1

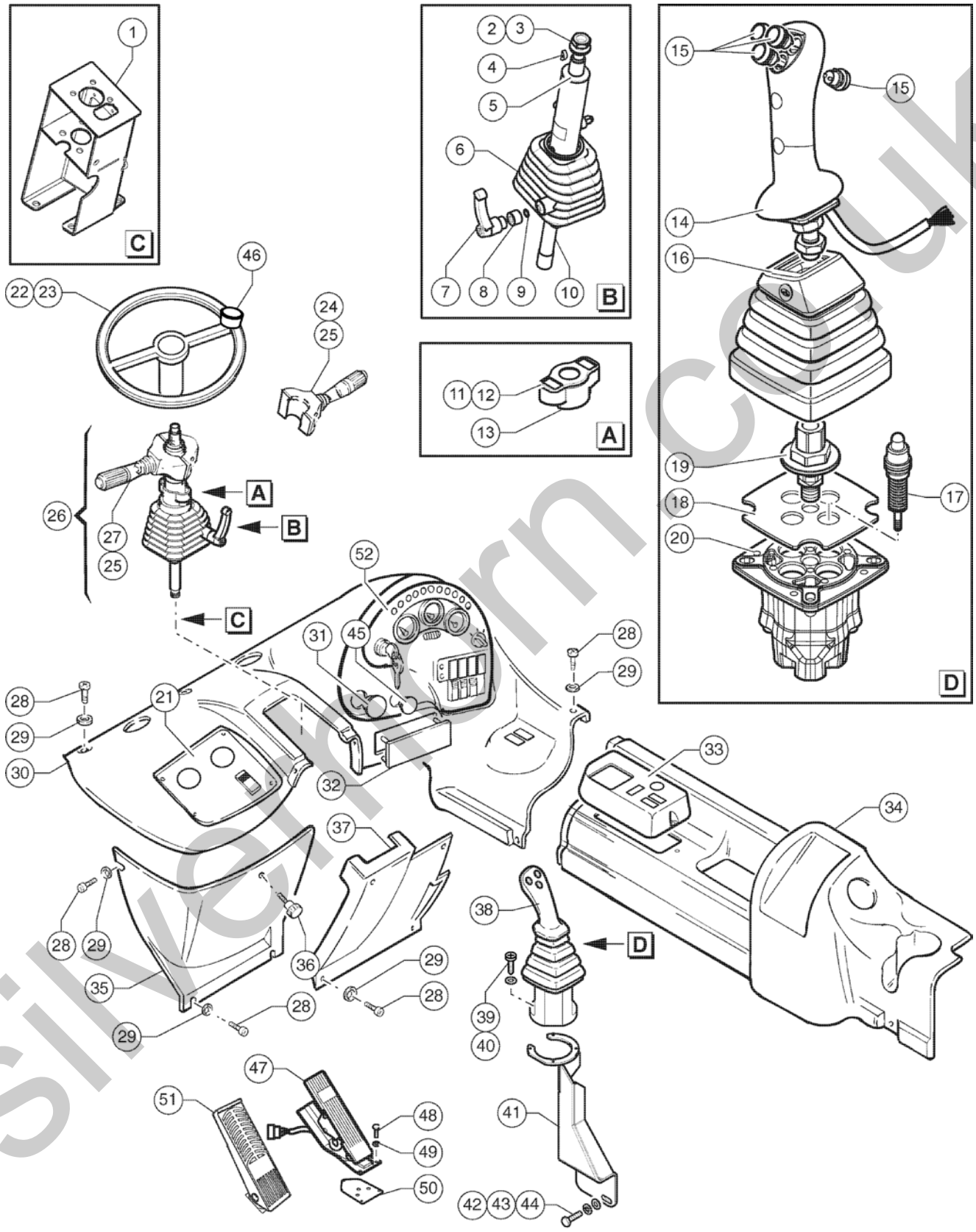

silverhorn.co.uk

401.1 609984 Cab, View 1

Item	Part No.	Description	Qty.
1	51.0811.4833GT	Steering Column Support	1
2	07.0703.0707GT	Nut M18X1,5 UNI 5589 12 ZN	1
3	07.0703.0709GT	FLAT WASHER 18X34X3 UNI16592 12 ZN	1
4	07.0703.0708GT	Locking Tab	1
5	07.0703.0712GT	Protective Cap	1
6	56.0016.0157GT	Rubber Boot	1
7	07.0703.0605GT	HANDLE,STEER COLUMN	1
8	07.0703.0710GT	Spacer	1
9	07.0703.0713GT	O-Ring	1
10	09.4636.0034GT	Steering Column	1
11	56.0016.0158GT	Steering Column Upper Cover With Only Left Control Lever	1
12	56.0016.0159GT	Steering Column Upper Cover With Left and Right Control Lever	1
13	56.0016.0156GT	Connectors Cover	1
14	07.0704.0474GT	Handle	1
15	07.0704.0479GT	Push Button	3
16	07.0704.0476GT	Rubber Boot	1
17	07.0704.0478GT	Elbow Kit	4
18	07.0704.0475GT	Retaining Plate	1
19	07.0704.0477GT	Mechanism Kit	1
20	07.0704.0480GT	Body Kit	4
21		Ref. Draw 610032 Pos. 24	
22	09.0636.0002GT	Steering wheel	1
23	09.0636.0001GT	CENTRAL CAP WITH HORN	1
24	56.0016.0167GT	Right Control Lever	1
25	56.0016.0160GT	Rubber Boot	2
26	09.0636.0004GT	Complete Steering Column Assembly Without Right Control Lever	1
27	56.0016.0147GT	Left Control Lever	1
28	01.4003.0048GT	Screw TTQST C/NUT M6X16 UNI 573	15

silverhorn.co.uk

401.1 609984 Cab, View 1

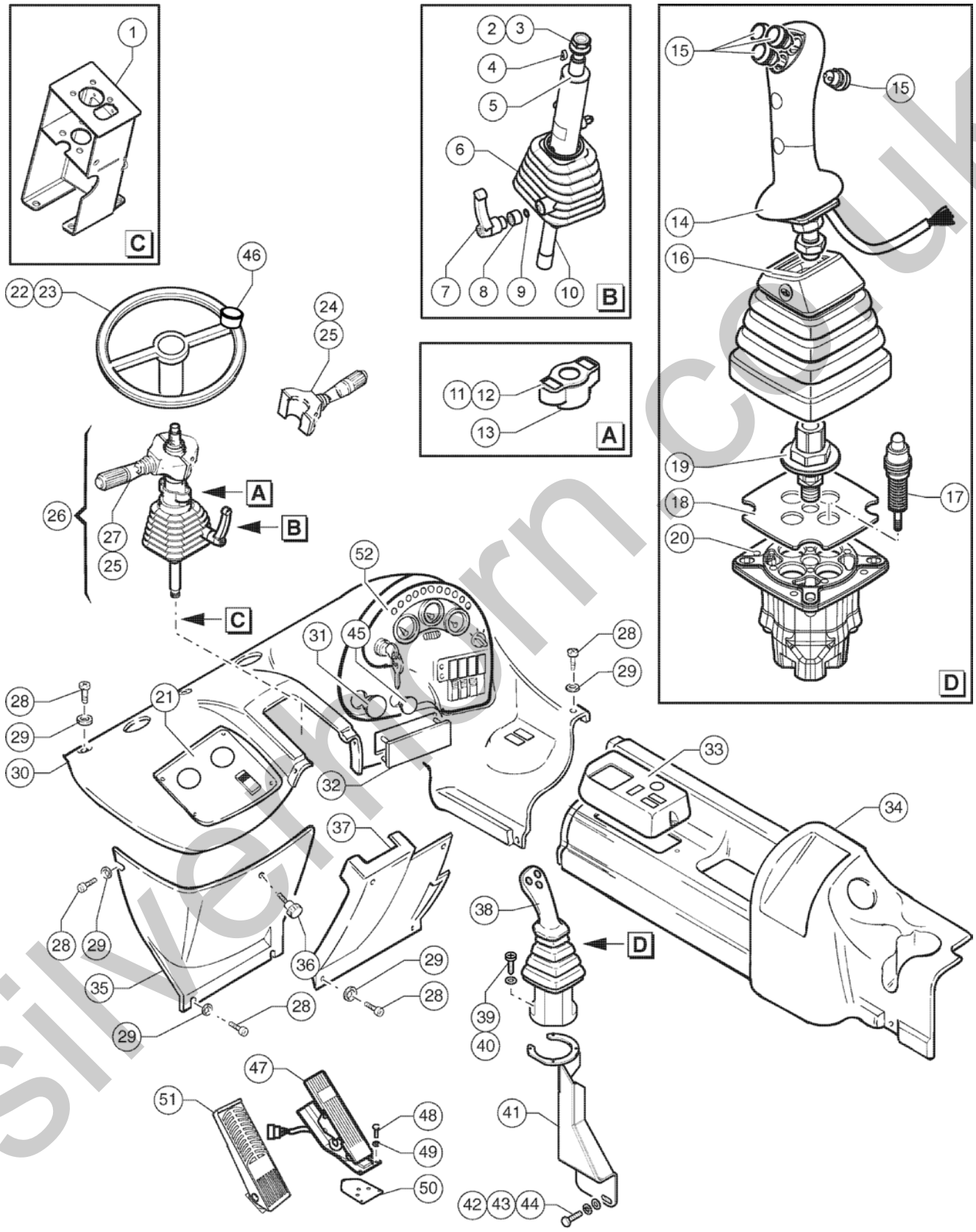

silverhorn.co.uk

401.1 609984 Cab, View 1

Item	Part No.	Description	Qty.
29	09.0803.0012GT	WASHER D6	15
30	52.1200.5531GT	DASHBOARD,FRONT	1
31	07.0723.0634GT	Cap D30	1
32	07.0740.0143GT	COVER,RADIO HOUSING	1
33	52.1200.5530GT	Cover	1
34	52.1200.5529GT	Right Dashboard	1
35	52.1200.5532GT	DASHBOARD,LOWER	1
36	07.0740.0152GT	KNOB	1
37	52.1200.5533GT	DASHBOARD,CENTRAL	1
38	56.0016.0189GT	Joystick SVM100/31	1
39	01.4001.0122GT	SCREW M5X20 UNI 7687 8.8 ZN	4
40	01.0031.0054GT	FLAT WASHER D6 UNI 6592 ZN	4
41	51.0811.4455GT	Joystick Support	1
42	01.0001.0355GT	SCREW M10X25 UNI 5739 8.8 ZN	2
43	01.4032.0004GT	Spring Washer D10 ZN	2
44	01.0031.0056GT	FLAT WASHER D10 UNI 6592 ZN	2
45	07.0723.0635GT	Cap D22	1
46	09.0636.0003GT	Steering wheel knob	1
47	09.4656.0017GT	ACCELERATOR PEDAL	1
48	01.0001.0102GT	SCREW M6X30 UNI 5739 8.8 ZN	3
49	01.4032.0002GT	SPRING WASHER D6 ZN	3
50	51.0811.4087GT	Bracket	1
51		Ref. Draw 610018 Pos. 5	
52		Ref. Draw 610032 Pos. 2	

silverhorn.co.uk

402.1 609985 Cab, View 2

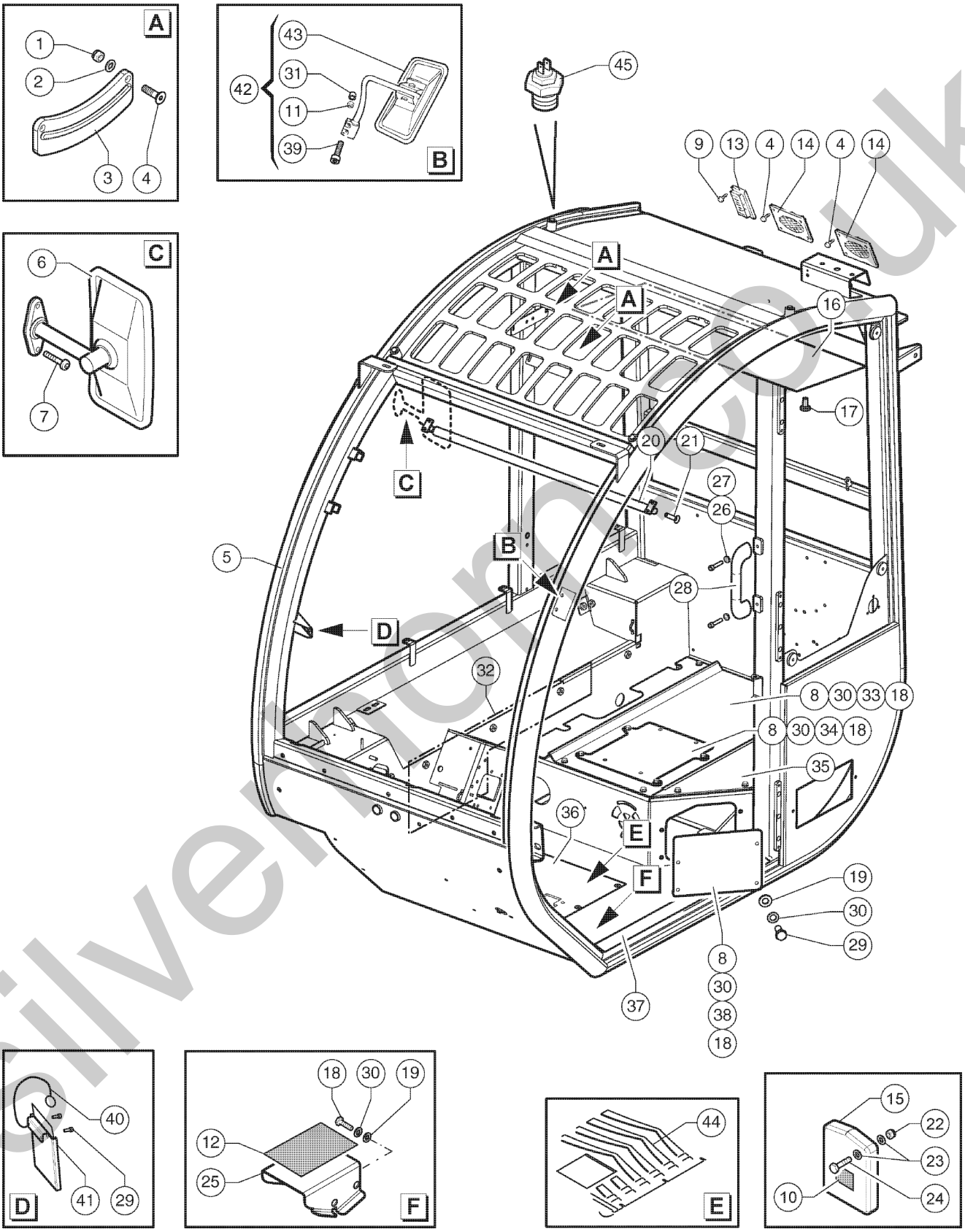

silvermore.co.uk

402.1 609985 Cab, View 2

Item	Part No.	Description	Qty.
1	01.0023.0051GT	NUT,STOP,M4 UNI 7473 6S ZN	4
2	01.4031.0007GT	WASHER,FLAT, D4 UNI 6592, ZN	4
3	09.4610.0057GT	BUBBLE LEVEL	2
4	01.4001.0061GT	PHILLIPS SCREW M4X20 UNI 7687	12
5	51.1100.0042GT	Cab Frame	1
6	09.4610.0065GT	Mirror	1
7	01.0006.0050GT	Screw TBEI M5X20 UNI ISO 7380	2
8	01.0031.0055GT	FLAT WASHER D8 UNI 6592 ZN	12
9	01.4001.0116GT	SCREW TCB T 3.9X16 UNI 6954	10
10	28236GT	DECAL,WARN,IMPROPER OPERATION	1
11	01.0023.0054GT	NUT,M8 UNI 7473 6S ZN	2
12	T53.3303.0002GT	Adhesive Strip	1
13	07.0740.0084GT	CEILING LIGHT	1
14	07.0740.0082GT	COVER,SPEAKER	2
15	24514GT	BOX,INSTRUCTION STORAGE	1
16	07.0740.0020GT	ROOF COVERING	1
17	07.0740.0027GT	CAP	4
18	01.0001.0256GT	SCREW M8X25 UNI 5739 8.8 ZN	12
19	01.0031.0299GT	FLAT WASHER D8 UNI 6593 ZN	16
20	07.0740.0236GT	SUNSHIELD CURTAIN KIT	1
21	07.0740.0128GT	SCREW	4
22	01.0023.0053GT	STOP NUT M6 UNI 7473 6S ZN	4
23	01.0031.0298GT	FLAT WASHER D6 UNI 6593 ZN	8
24	01.0001.0154GT	SCREW,TE,M6X16 UNI 8.8 ZN	8
25	51.0811.4804GT	Foot Support	1
26	07.0740.0445GT	SCREW,TCEI	2
27	07.0740.0446GT	WASHER	2
28	07.0740.0444GT	HANDLE	1

silverhorn.co.uk

402.1 609985 Cab, View 2

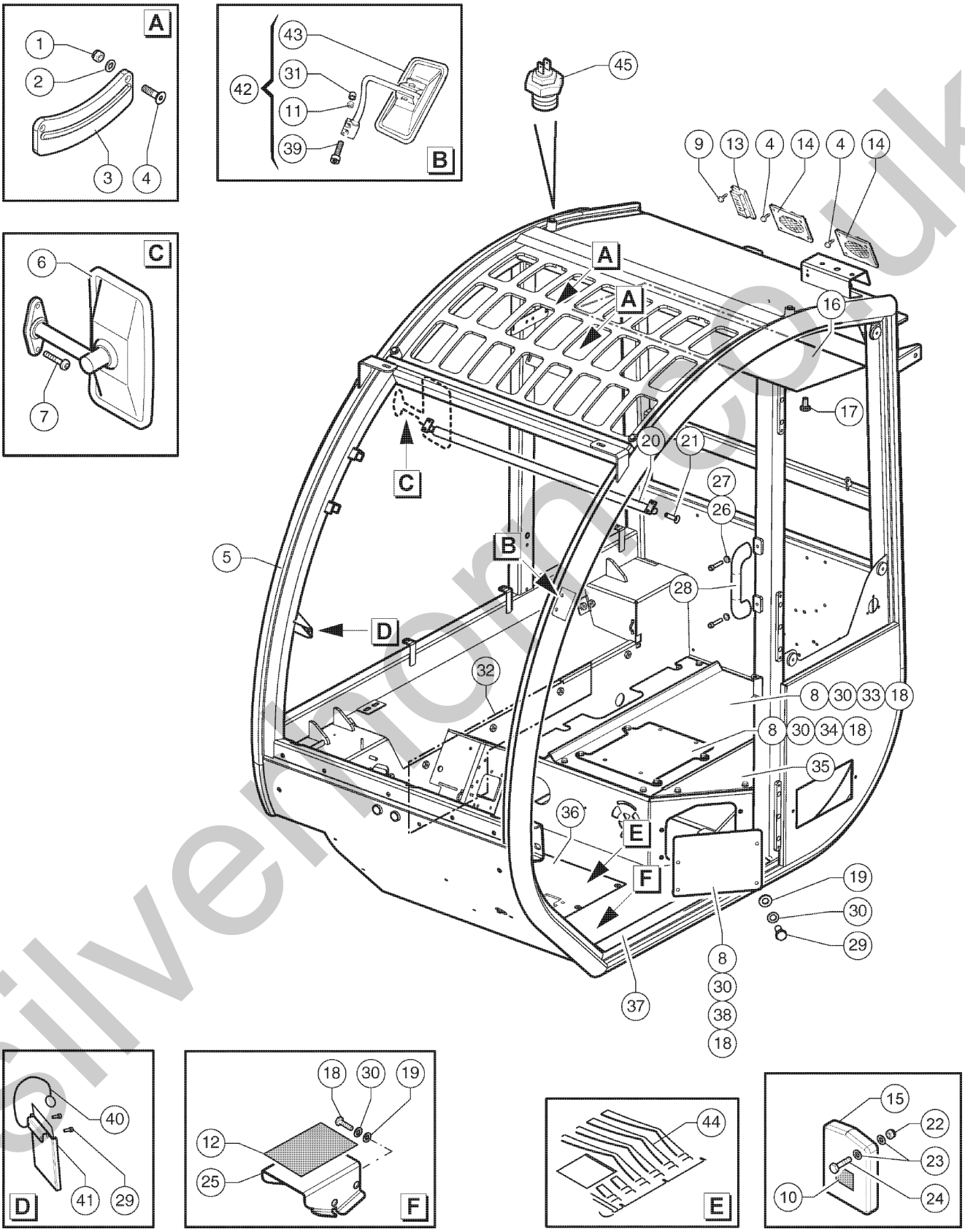

silvermore.co.uk

402.1 609985 Cab, View 2

Item	Part No.	Description	Qty.
29	01.0001.0156GT	SCREW M6X20 UNI 5739 8.8 ZN	2
30	01.4032.0003GT	Spring Washer D 8 ZN	26
31	07.0740.0014GT	NUT,PROTECTION	2
32	07.0740.0021GT	COVERING	1
33	51.0811.4831GT	Seat Support	1
34	51.0811.4832GT	Seat Support	1
35	51.0811.4830GT	Lateral Cover	1
36	07.0740.0482GT	Cover	1
37	T07.0740.0018GT	Safety Walk	28
38	51.0811.4829GT	Cover	1
39	01.0003.0203GT	SCREW,TCEI,M8X20 UNI 8.8 ZN	2
40	09.0803.0512GT	LANYARD	1
41	51.0811.4834GT	Load Charts Support	1
42	07.0740.0097GT	Complete Mirror	1
43	07.0740.0202GT	COMPLETE MIRROR	1
44	09.0803.0692GT	FLOOR MAT,RUBBER	1
45	56.0012.0099GT	External Temperature Sensor	1

silverhorn.co.uk

403.1 609986 Cab, View 3

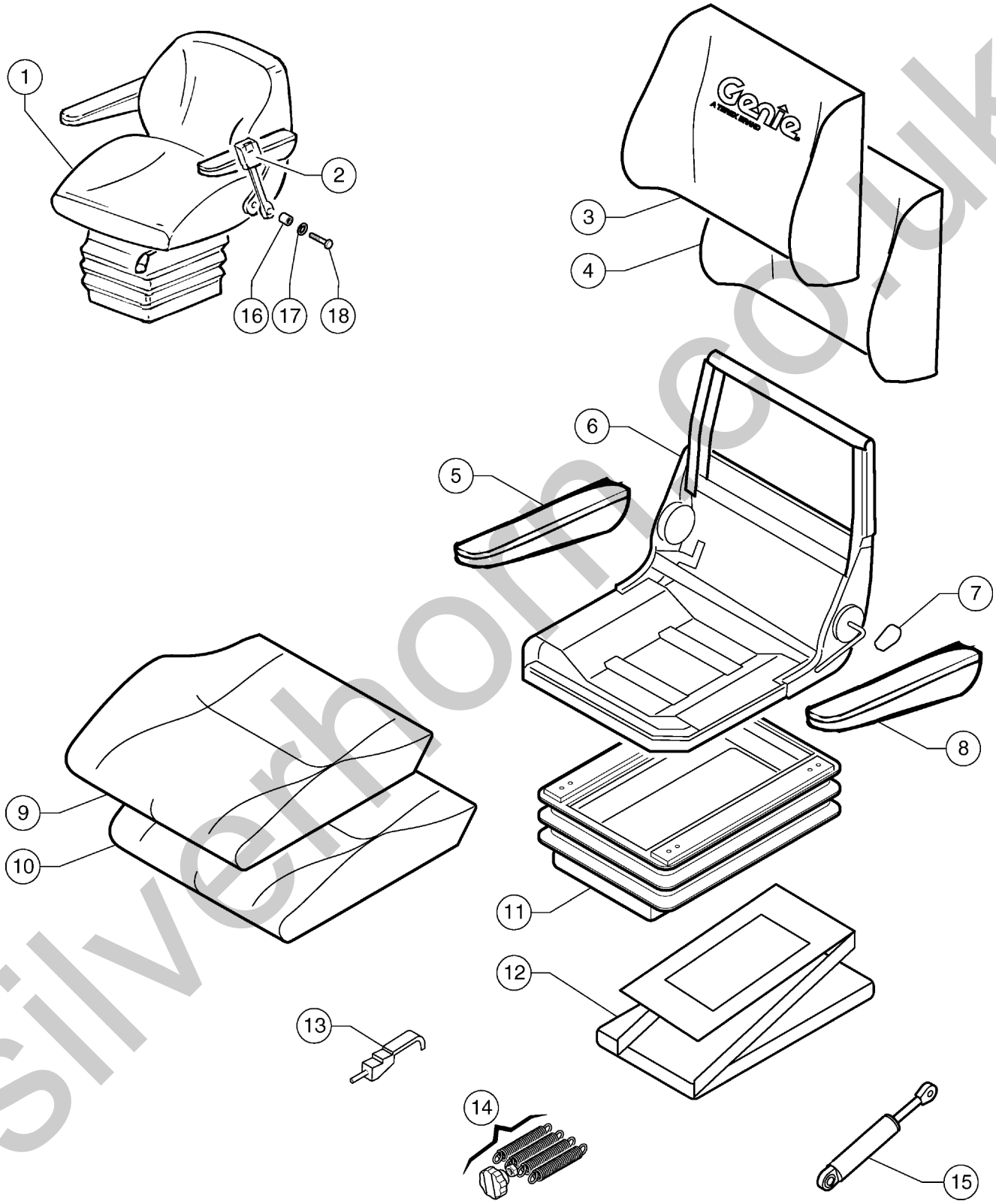

silverhorn.co.uk

403.1 609986 Cab, View 3

Item	Part No.	Description	Qty.
1	09.4610.0050GT	SEAT	1
2	09.4610.0074GT	Safety Belt	1
3	07.0740.0472GT	Back Cover Assembly	1
4	07.0740.0474GT	Back Foam Kit	1
5	07.0740.0480GT	Right Armrest Kit	1
6	07.0740.0367GT	Seat Frame Assembly	1
7	07.0740.0476GT	Knob Kit	1
8	07.0740.0479GT	SEAT ARMREST,LEFT	1
9	07.0740.0473GT	Seat Cover Assembly	1
10	07.0740.0475GT	Seat Foam Kit	1
11	07.0740.0477GT	Suspension Cover Kit	1
12	07.0740.0478GT	Seat Suspension Kit	1
13	07.0740.0485GT	Height Adjuster Kit	1
14	07.0740.0370GT	Weight Adjuster Kit	1
15	07.0740.0486GT	KIT,SEAT DAMPER	1
16	52.0900.9345GT	SPACER D11.5 D20 - L.18	2
17	1272129GT	WASHER,LOCK,7/16,ZAG	2
18	01.0005.0001GT	SCREW HHC 7/16-20 x 1"3/4 UNF 8.8 DIN 931	2

silverhorn.co.uk

404.1 609987 Cab, View 4

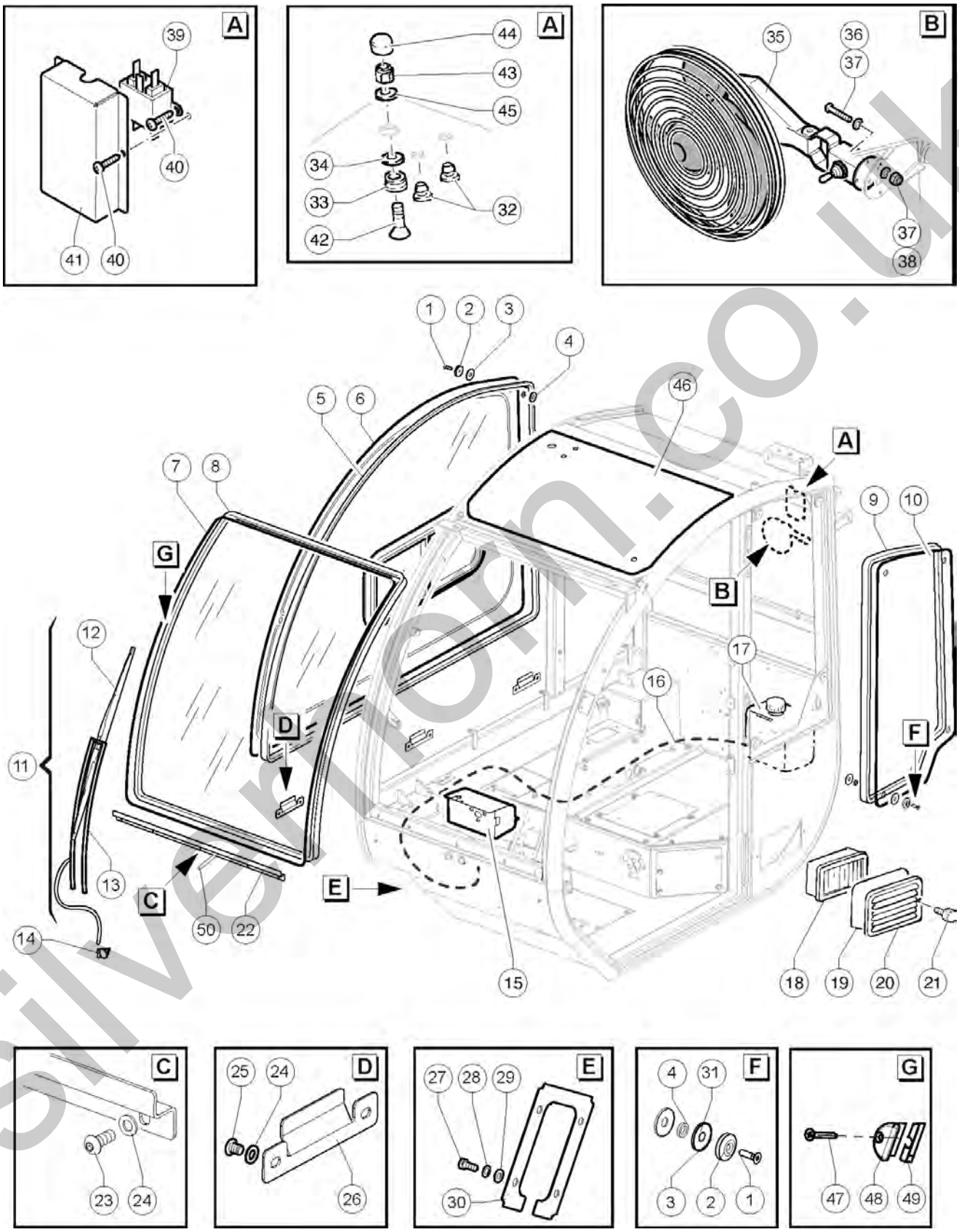

silverton.co.uk

404.1 609987 Cab, View 4

Item	Part No.	Description	Qty.
1	07.0740.0415GT	Screw TSPEI M8X30 UNI 5933	12
2	07.0740.0416GT	Washer D8.5	12
3	07.0740.0417GT	Gasket	12
4	07.0740.0419GT	GASKET	12
5	07.0740.0466GT	Seal	1
6	07.0740.0519GT	Glass	1
7	07.0740.0520GT	Glass	1
8	07.0740.0463GT	Seal	1
9	07.0740.0414GT	Seal	1
10	07.0740.0413GT	GLASS,LEFT REAR	1
11	07.0740.0449GT	Wiper Kit	1
12	07.0740.0089GT	WIPER BLADE	1
13	07.0740.0088GT	Wiper arm	1
14	07.0740.0470GT	Grommet	1
15	55.0409.0257GT	Wiper Motor	1
16	09.0803.0554GT	Water Hose D4 LG.200 Inch	1
17	07.0740.0098GT	TANK	1
18	07.0740.0066GT	AIR FILTER	1
19	07.0740.0091GT	GASKET	28
20	51.0811.4724GT	AIR GRID	1
21	07.0740.0152GT	KNOB	2
22	07.0740.0528GT	BRACKET	1
23	07.0740.0467GT	Screw TBEI M8X20	5
24	07.0740.0425GT	Plain Washer D15	11
25	07.0740.0428GT	Screw TBEI M8X10	6
26	07.0740.0469GT	BRACKET,GLASS,RIGHT,LOWER	3
27	01.0001.0254GT	SCREW M8X20 UNI 5739 8.8 ZN	4
28	01.4032.0003GT	Spring Washer D 8 ZN	4

silverhorn.co.uk

404.1 609987 Cab, View 4

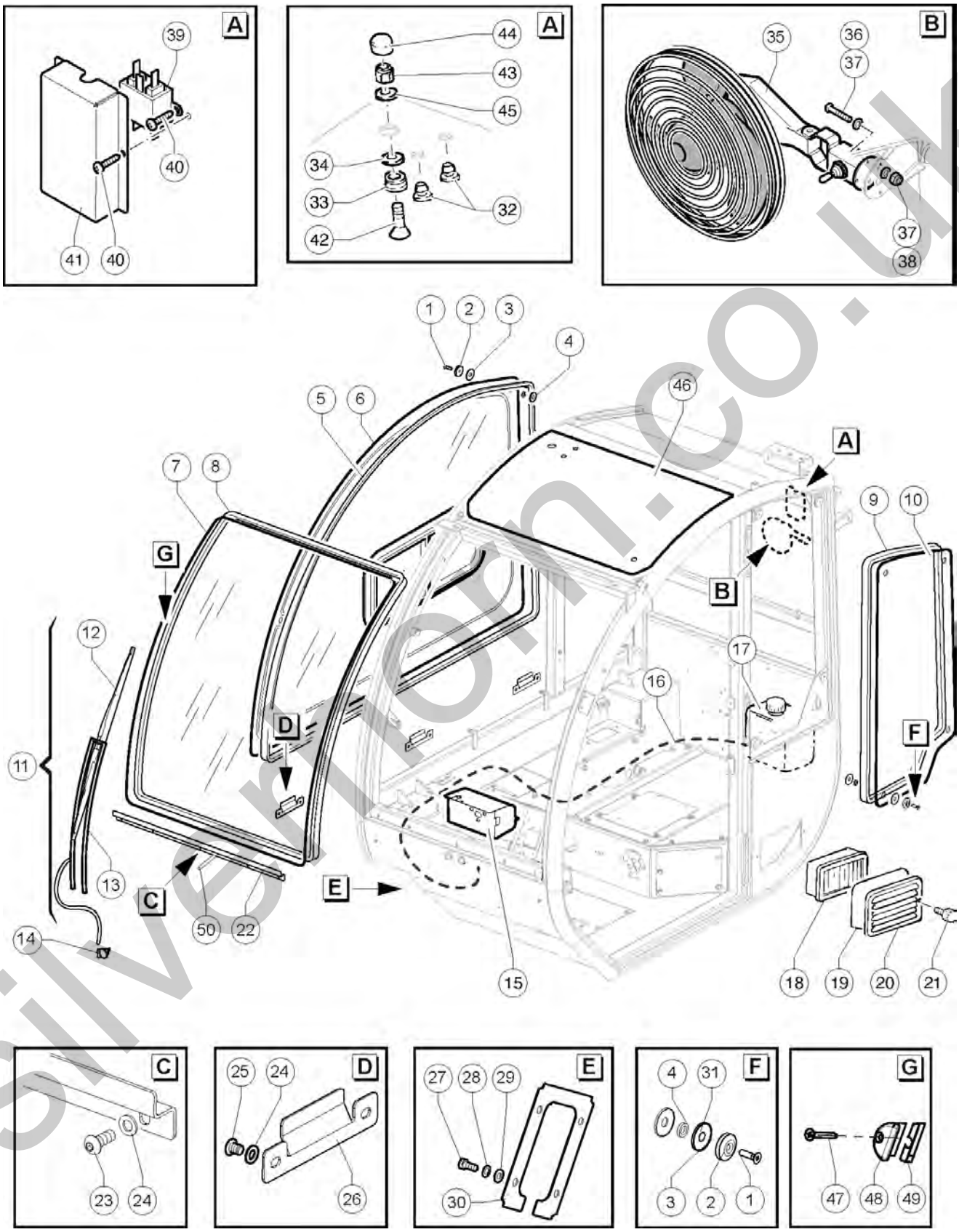

silverton.co.uk

404.1 609987 Cab, View 4

Item	Part No.	Description	Qty.
29	01.0031.0055GT	FLAT WASHER D8 UNI 6592 ZN	4
30	07.0740.0070GT	HOSE GUIDE	1
31	07.0740.0418GT	WASHER,TEFLON D20	4
32	07.0740.0009GT	RUBBER GROMMET	3
33	07.0740.0086GT	Rubber	1
34	07.0740.0032GT	WASHER	1
35	56.0014.0094GT	Operator Fan	1
36	01.4001.0122GT	SCREW M5X20 UNI 7687 8.8 ZN	4
37	01.0031.0053GT	FLAT WASHER D5 UNI 6592 ZN	8
38	01.0023.0052GT	STOP NUT M5 UNI 7473 6S ZN	4
39	56.0016.0200GT	Filter FIN 33.006.F	1
40	01.4001.0062GT	SCREW M5X20 UNI 7687 ZN	4
41	51.0811.4903GT	Filter Box	1
42	07.0740.0079GT	Screw	7
43	07.0740.0046GT	Stop nut	7
44	07.0740.0014GT	NUT,PROTECTION	7
45	07.0740.0081GT	WASHER	3
46	07.0740.0085GT	ROOF GLASS	1
47	07.0744.0001GT	SCREW	2
48	07.0744.0002GT	GLASS LOCKING BRACKET	2
49	07.0740.0526GT	SHIM	2
50	07.0740.0527GT	PIPE	1

silverhorn.co.uk

405.1 609988 Cab, View 5

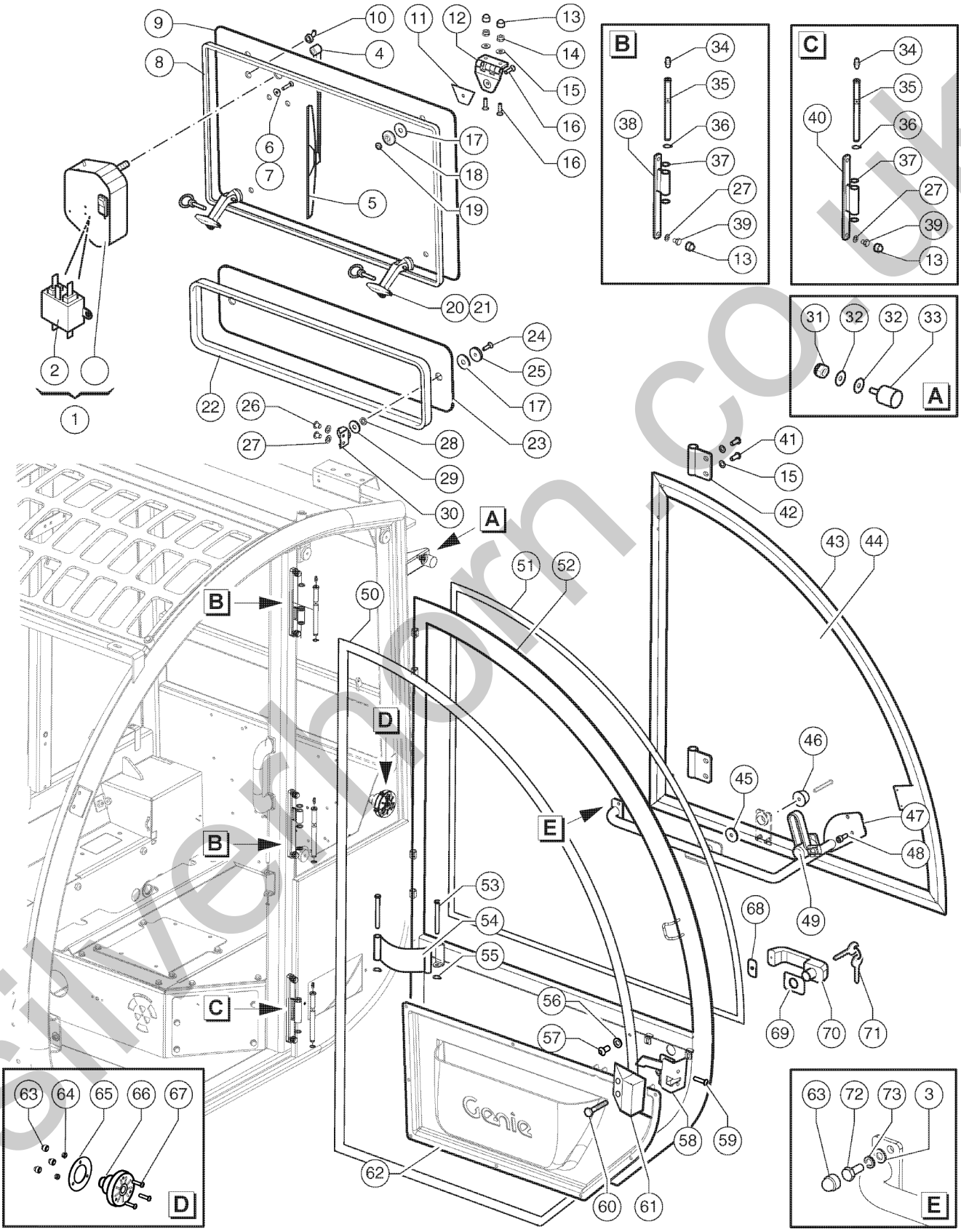

silverhorn.co.uk

405.1 609988 Cab, View 5

Item	Part No.	Description	Qty.
1	55.0409.0258GT	Rear Upper Glass Wiper Kit	1
2	56.0016.0204GT	Filter FIN 33.006.F	1
3	01.0031.0054GT	FLAT WASHER D6 UNI 6592 ZN	2
4	07.0740.0156GT	Wiper arm	1
5	07.0740.0248GT	WIPER BLADE	1
6	07.0740.0483GT	Screw TSPEI M6X30 UNI 5933	2
7	07.0740.0484GT	Washer D6	2
8	07.0740.0437GT	Seal	1
9	07.0740.0521GT	Rear Upper Glass	1
10	07.0740.0461GT	Grommet	1
11	07.0740.0433GT	Gasket	2
12	07.0740.0431GT	Hinge	2
13	07.0740.0423GT	Nut Cover M8	10
14	07.0740.0429GT	NUT,M8 UNI CL8 ZN	4
15	07.0740.0026GT	WASHER	8
16	07.0740.0432GT	Screw TSPIC M8X30	6
17	07.0740.0417GT	Gasket	4
18	07.0740.0434GT	Washer	2
19	07.0740.0435GT	NUT M8	2
20	07.0740.0217GT	PLUG	2
21	07.0740.0076GT	Handle	2
22	07.0740.0427GT	Seal	1
23	07.0740.0426GT	Rear Lower Glass	1
24	07.0740.0415GT	Screw TSPEI M8X30 UNI 5933	2
25	07.0740.0416GT	Washer D8.5	2
26	07.0740.0428GT	Screw TBEI M8X10	4
27	07.0740.0425GT	Plain Washer D15	10
28	07.0740.0418GT	WASHER,TEFLON D20	2

silverhorn.co.uk

405.1 609988 Cab, View 5

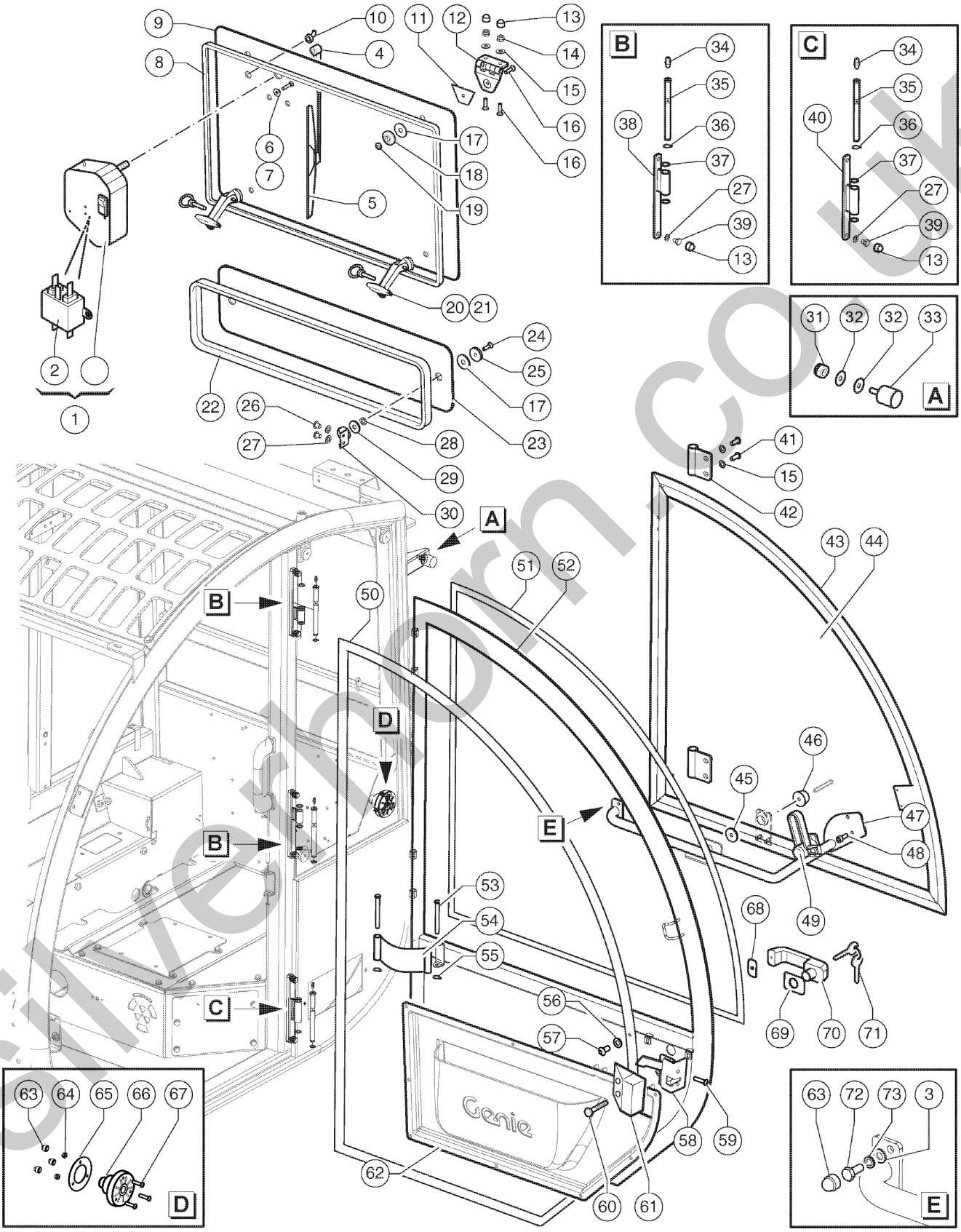

silverhorn.co.uk

405.1 609988 Cab, View 5

Item	Part No.	Description	Qty.
29	07.0740.0419GT	GASKET	2
30	07.0740.0453GT	Bracket	2
31	01.0023.0054GT	NUT,M8 UNI 7473 6S ZN	1
32	01.0031.0299GT	FLAT WASHER D8 UNI 6593 ZN	2
33	07.0740.0015GT	BUMP STOP,RUBBER	1
34	07.0740.0488GT	Greaser	3
35	07.0740.0489GT	Locking Pin	3
36	07.0740.0454GT	Keeper Ring D11	3
37	07.0740.0487GT	Washer D12	6
38	07.0740.0420GT	Hinge	2
39	07.0740.0424GT	Screw TE M8X10	6
40	07.0740.0421GT	Hinge	1
41	07.0740.0467GT	Screw TBEI M8X20	4
42	07.0740.0455GT	Hinge	2
43	07.0740.0277GT	UPPER DOOR, COMPLETE	1
44	07.0740.0279GT	Glass	1
45	07.0740.0494GT	Spacer	1
46	07.0740.0030GT	LOCK,DOOR	1
47	07.0740.0272GT	HANDLE	1
48	07.0740.0447GT	Screw TCEI M6X16 8.8 ZN	2
49	07.0740.0029GT	HANDLE	1
50	07.0740.0058GT	DOOR SEAL	1
51	07.0740.0052GT	ADHESIVE GASKET	1
52	51.1100.0044GT	Door Frame	1
53	07.0740.0491GT	PIN,DOOR FRAME BELT	2
54	07.0740.0490GT	Belt	1
55	07.0740.0492GT	LOCK RING	2
56	07.0740.0497GT	Plain Washer D6 UNI 6592	10

silverhorn.co.uk

405.1 609988 Cab, View 5

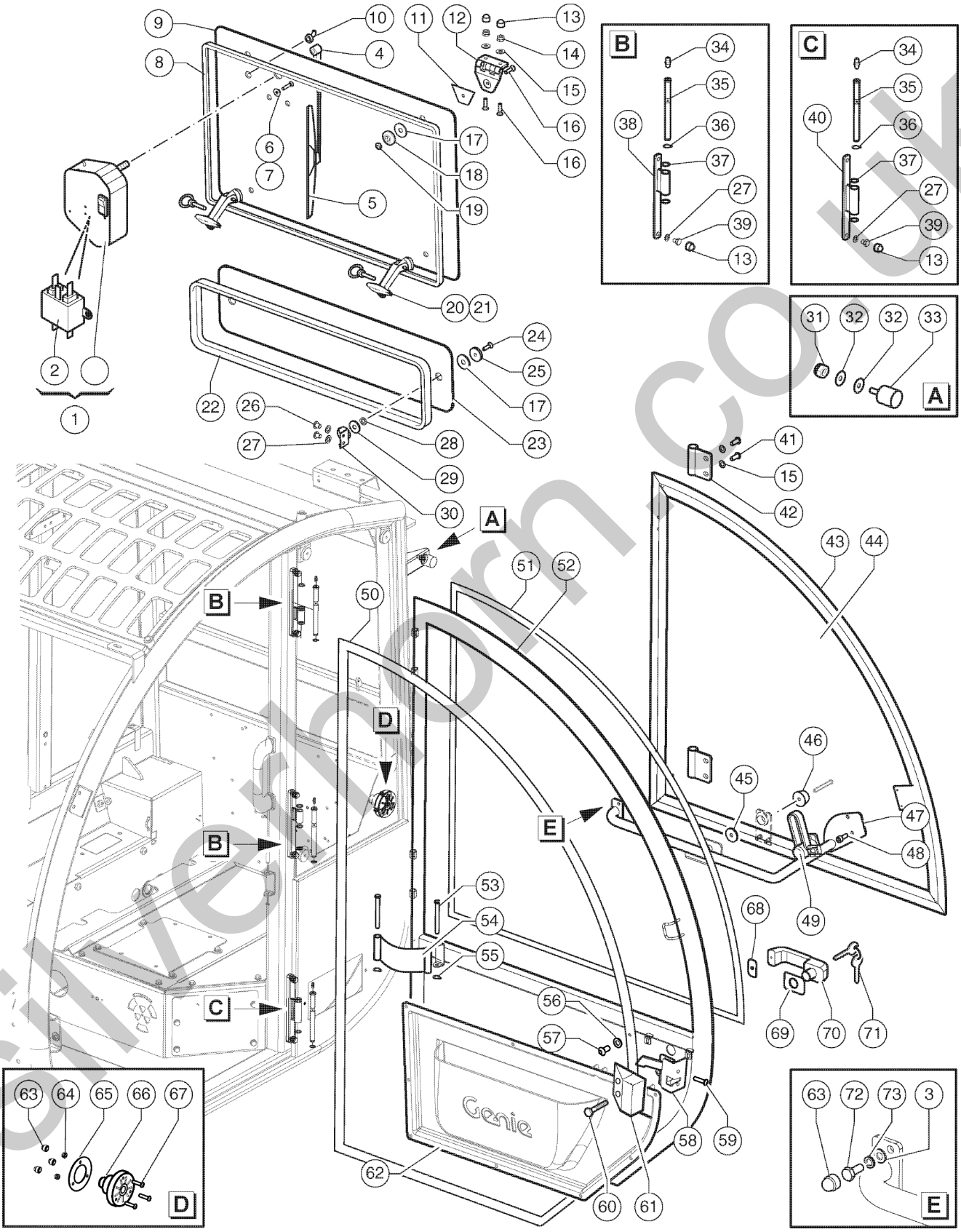

silverhorn.co.uk

405.1 609988 Cab, View 5

Item	Part No.	Description	Qty.
57	07.0740.0496GT	Screw TBEI M6X12	10
58	07.0740.0051GT	DOOR LOCK	1
59	01.4006.0007GT	SCREW M8X40 UNI 5933 10.9 ZN	2
60	01.0003.0963GT	SCREW M4,2X16 UNI 6954 10.9 ZN	1
61	52.1200.5534GT	DOOR LOCK COVER	1
62	52.1200.5535GT	COATING	1
63	07.0740.0422GT	Nut Cover M6	5
64	07.0740.0005GT	Stop nut	3
65	07.0740.0106GT	GASKET,RUBBER	1
66	07.0740.0104GT	DOOR CATCH	1
67	07.0740.0105GT	SCREW M6X30	3
68	07.0740.0049GT	GASKET	1
69	07.0740.0048GT	GASKET	1
70	09.0803.0876GT	Handle	1
71	09.0803.0685GT	KEY	1
72	01.0001.0154GT	SCREW,TE,M6X16 UNI 8.8 ZN	2
73	01.4032.0002GT	SPRING WASHER D6 ZN	2

silverhorn.co.uk

407.1 609990 Cab, View 7

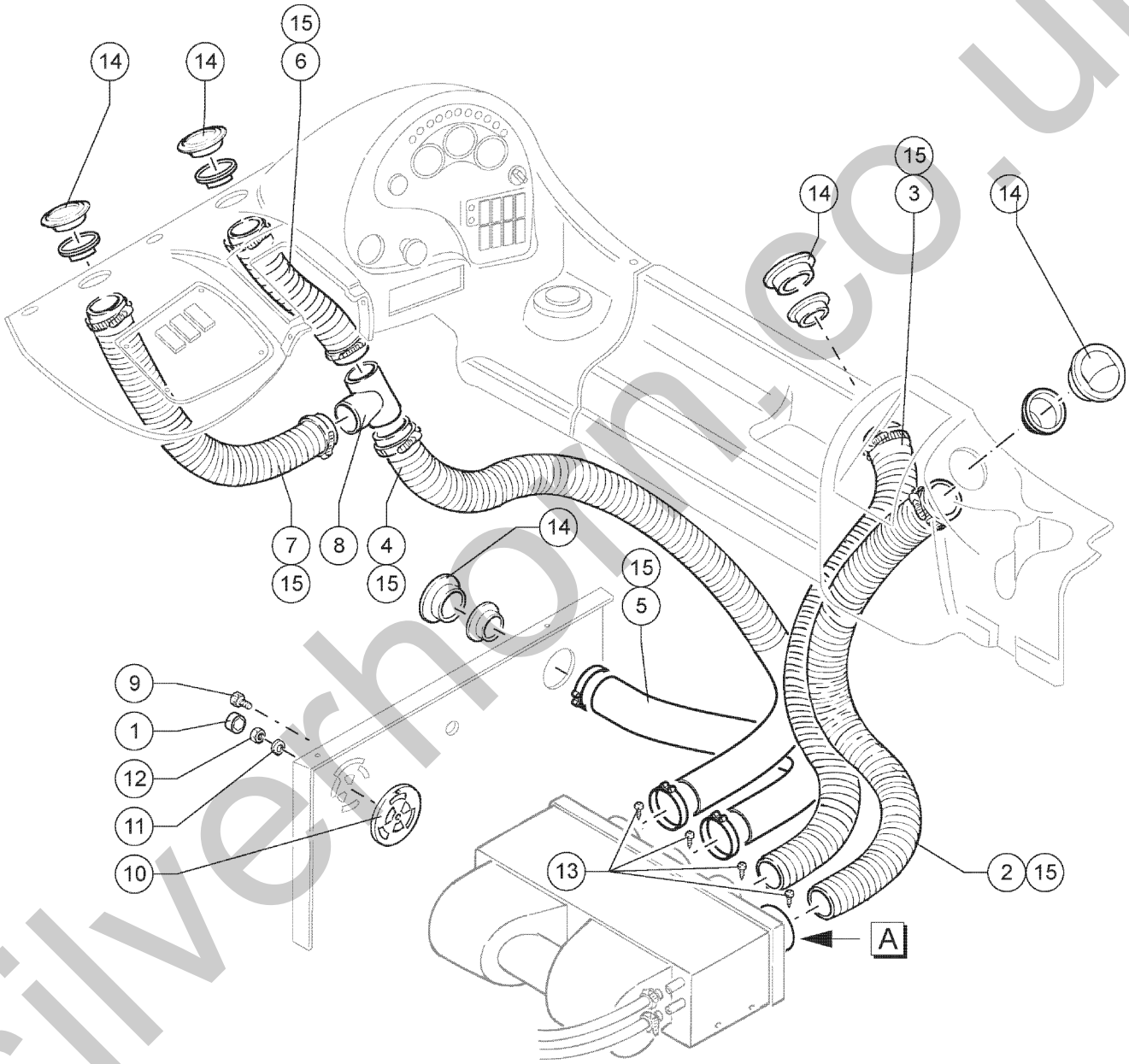

silverhorn.co.uk

407.1 609990 Cab, View 7

Item	Part No.	Description	Qty.
1	07.0740.0028GT	HEX HEAD CAP	1
2	T07.0740.0120GT	Air Hose	24
3	T07.0740.0120GT	Air Hose	24
4	T07.0740.0120GT	Air Hose	51,2
5	T07.0740.0120GT	Air Hose	7,87
6	T07.0740.0120GT	Air Hose	6,3
7	T07.0740.0120GT	Air Hose	20
8	07.0740.0121GT	3-WAY FITTING	1
9	07.0740.0130GT	KNOB	1
10	51.0811.4838GT	Air Inlet	1
11	07.0740.0006GT	WASHER 6.4X12	1
12	01.0023.0053GT	STOP NUT M6 UNI 7473 6S ZN	1
13	07.0740.0124GT	SCREW KN TC+ 3.5x16 ZN	4
14	07.0740.0125GT	AIR INLET D76	5
15	07.0740.0127GT	CLAMP,HOSE,MEB,40-60 H12	8

silverhorn.co.uk

408.1 609991 Cab, View 8 - Heater System (Webasto)

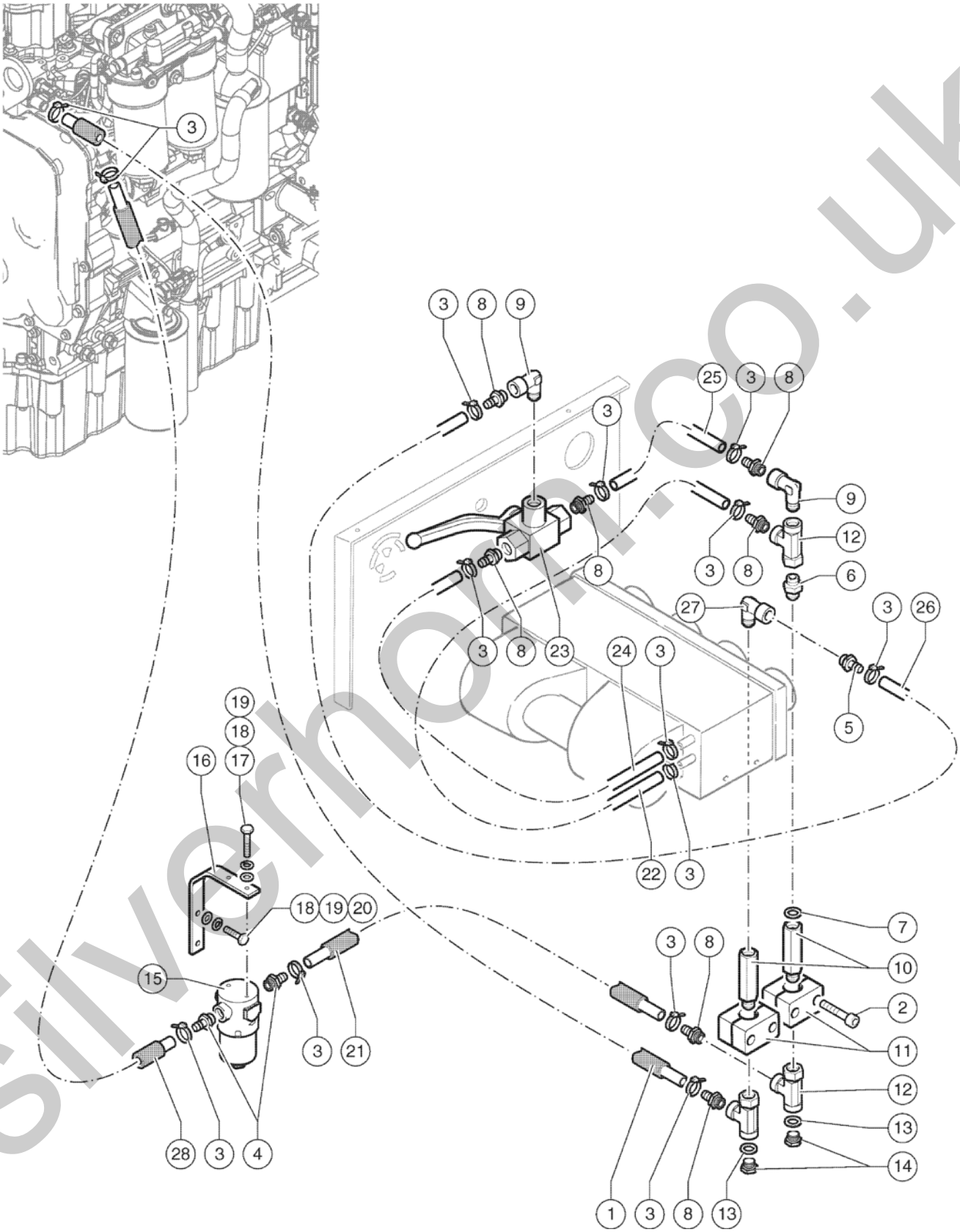

silverhorn.co.uk

408.1 609991 Cab, View 8 - Heater System (Webasto)

Item	Part No.	Description	Qty.
1	56.0014.0112GT	Hose	1
2	01.0003.0159GT	SCREW M6X35 UNI 5931 8.8 ZN	4
3	04.0227.0054GT	CLAMP DN 15/25 LG 9	14
4	04.0600.0828GT	Hose Adapter	2
5	04.0600.0282GT	Hose Adapter 1/2"-17	1
6	04.0600.0017GT	PIPE FITTING 1/2X1/2 BSP	1
7	06.0442.0122GT	BONDED RING 1/2"	2
8	04.0600.0179GT	HOSE ADAPTER 3/8" GASXD17	7
9	04.0600.0283GT	Pipe Fitting 3/8" M-F	2
10	04.0600.0016GT	PIPE FITTING CMF G1/2 ES LG 45	2
11	09.0803.0526GT	DOUBLE HOSE LOCKING PLATE D30	4
12	04.0600.0273GT	Pipe Fitting 3/8" - 1/2"	3
13	06.0442.0120GT	BONDED RING 3/8"	2
14	04.0220.0053GT	PLUG 3/8" BSP	2
15	09.4604.0085GT	Filter	1
16	51.0811.4815GT	Filter Support	1
17	01.4001.0165GT	SCREW M8X16 DIN 6923 8.8 ZN	2
18	01.4032.0003GT	Spring Washer D 8 ZN	4
19	01.0031.0055GT	FLAT WASHER D8 UNI 6592 ZN	4
20	01.0001.0256GT	SCREW M8X25 UNI 5739 8.8 ZN	2
21	56.0014.0110GT	Hose	1
22	56.0014.0108GT	Hose	1
23	04.0224.0001GT	Water Tap	1
24	56.0014.0107GT	Hose	1
25	56.0014.0106GT	Hose	1
26	56.0014.0109GT	Hose	1
27	04.0600.0284GT	Pipe Fitting RLA 1/2" M-F	1
28	56.0014.0111GT	Hose	1

silverhorn.co.uk

409.1 609992 Cab, View 9 - Heater System (Webasto)

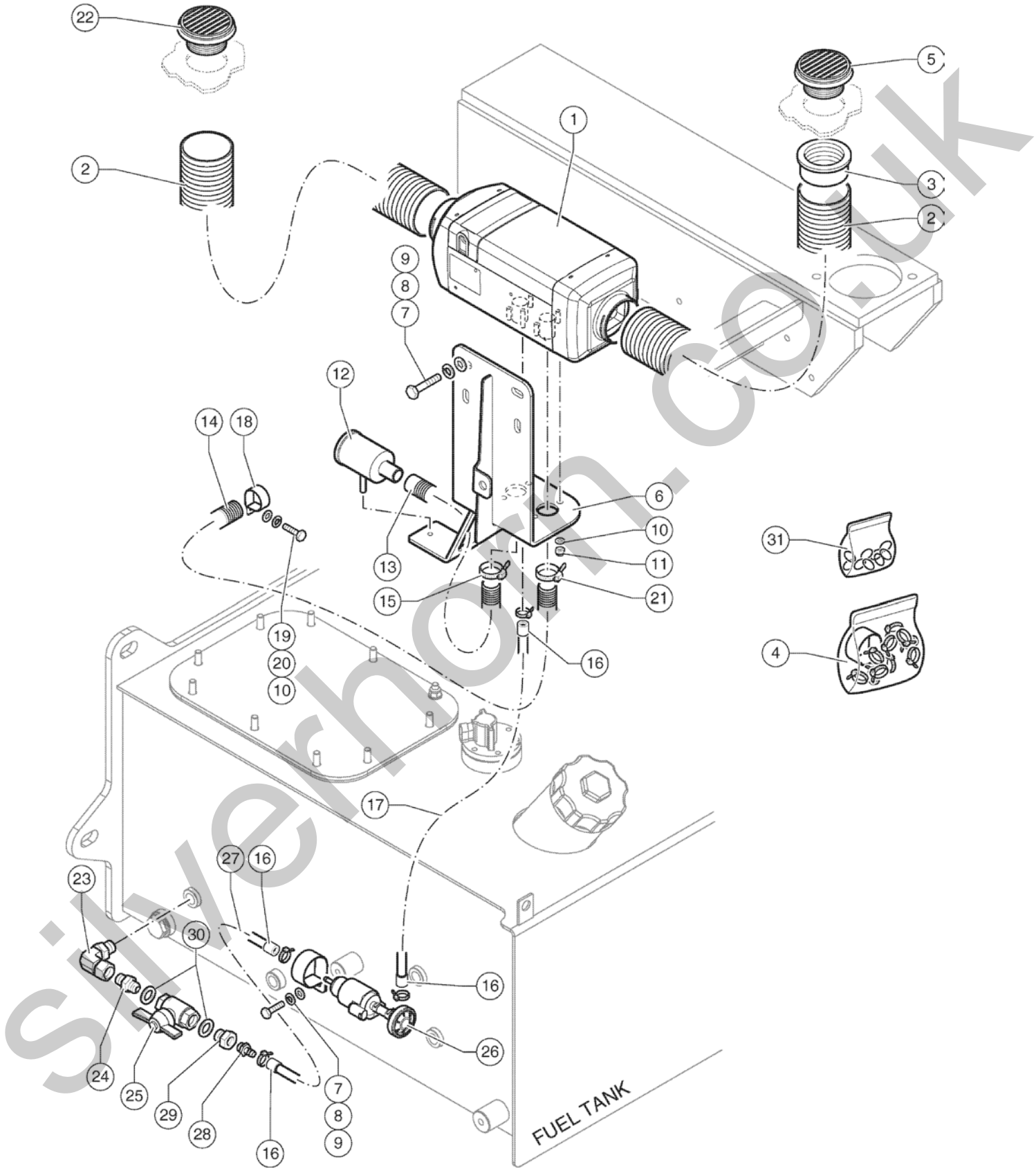

silverhorn.co.uk

409.1 609992 Cab, View 9 - Heater System (Webasto)

Item	Part No.	Description	Qty.
1	56.0014.0096GT	Webasto Heater	1
2	56.0014.0101GT	Air Hose	2
3	56.0014.0128GT	Adapter	1
4	56.0014.0127GT	Clamp Kit Inlcudes Position 18 And Position 21	1
5	56.0014.0129GT	Air Inlet	1
6	51.0811.4844GT	Webasto Heater Support	1
7	01.0001.0254GT	SCREW M8X20 UNI 5739 8.8 ZN	5
8	01.4032.0003GT	Spring Washer D 8 ZN	5
9	01.0031.0055GT	FLAT WASHER D8 UNI 6592 ZN	5
10	01.0031.0054GT	FLAT WASHER D6 UNI 6592 ZN	5
11	01.0023.0053GT	STOP NUT M6 UNI 7473 6S ZN	4
12	56.0014.0100GT	Suction Air Filter	1
13	56.0014.0121GT	Suction Air Hose	1
14	56.0014.0122GT	Exhaust Hose	1
15	04.0227.0054GT	CLAMP DN 15/25 LG 9	1
16	56.0014.0123GT	HOSE	1, 97
17	56.0014.0124GT	Heater pipe	12
18		Clamp See position 4	1
19	01.0001.0154GT	SCREW,TE,M6X16 UNI 8.8 ZN	1
20	01.4032.0002GT	SPRING WASHER D6 ZN	1
21		Clamp See position 4	1
22	56.0014.0131GT	GRID	1
23	04.0600.0088GT	PIPE FITTING	1
24	04.0600.0029GT	PIPE FITTING 3/8X3/8 BSP	1
25	04.4224.0011GT	Ball Valve	1
26	56.0014.0099GT	Fuel Pump	1
27	56.0014.0124GT	Heater pipe	2,7
28	04.0600.0277GT	Hose Adapter	1

silverhorn.co.uk

409.1 609992 Cab, View 9 - Heater System (Webasto)

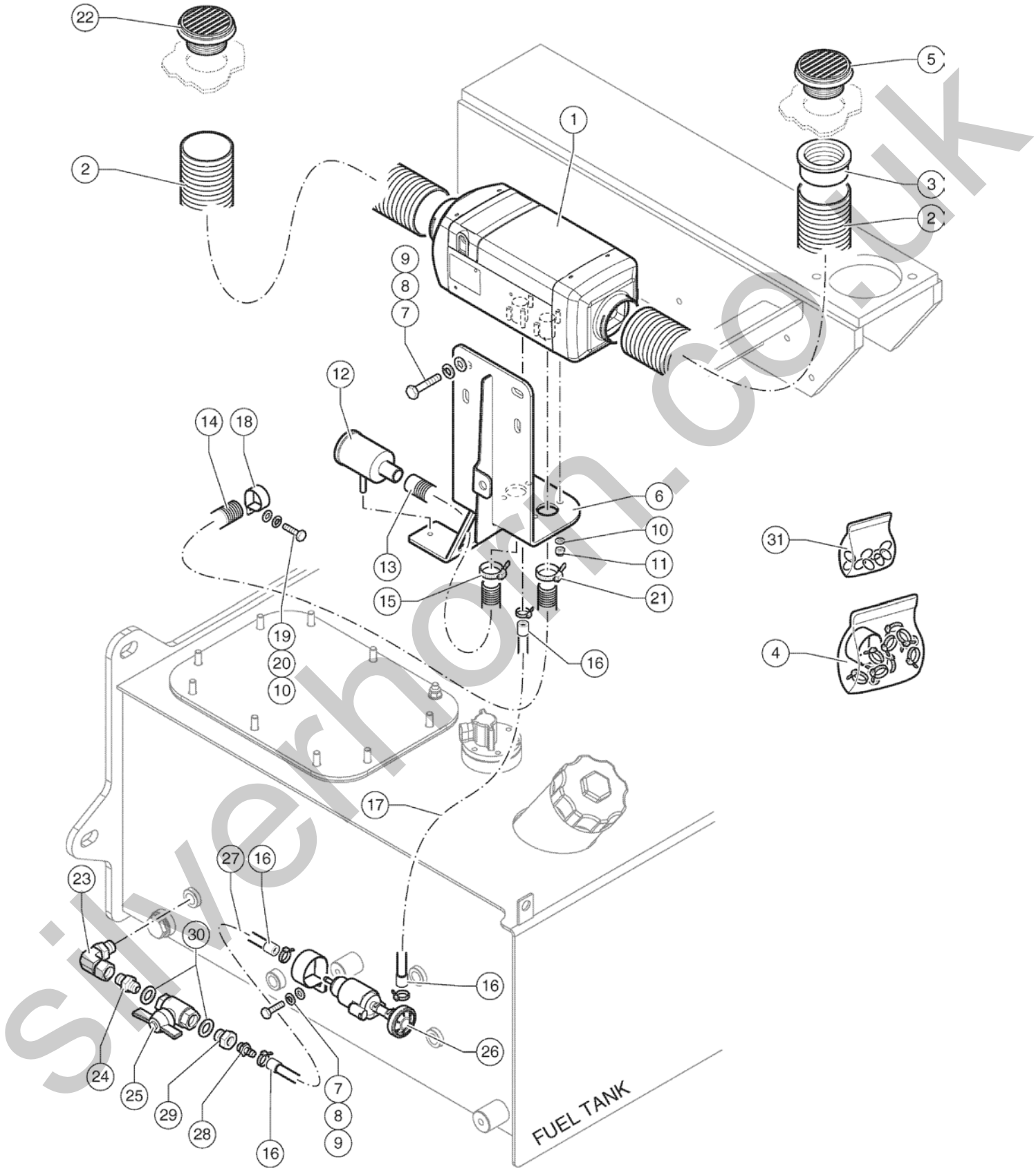

silverhorn.co.uk

409.1 609992 Cab, View 9 - Heater System (Webasto)

Item	Part No.	Description	Qty.
29	04.0600.0278GT	Reduction Fitting	1
30	06.0442.0120GT	BONDED RING 3/8"	2
31	56.0014.0097GT	Seal kit	1

silverhorn.co.uk

410.1 609993 Air Conditioning - Part 1

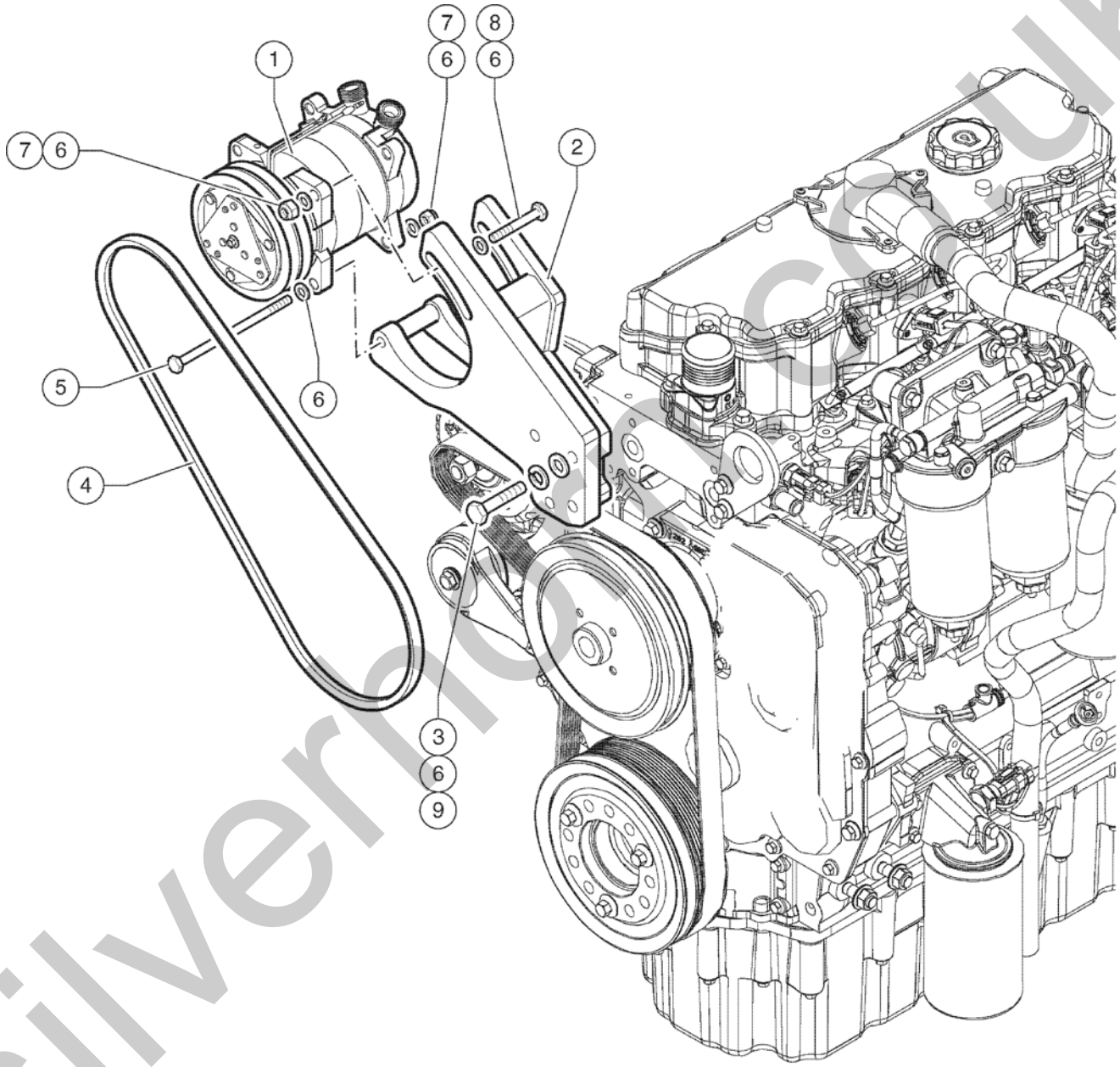

silverhoe.co.uk

410.1 609993 Air Conditioning - Part 1

Item	Part No.	Description	Qty.
1	56.0014.0024GT	Compressor	1
2	51.0811.4772GT	COMPRESSOR SUPPORT	1
3	01.0001.0306GT	SCREW M10X60 UNI 5737 8.8 ZN	4
4	09.0803.0866GT	Belt	1
5	01.0001.0317GT	SCREW M10X130 UNI 5737 8.8 ZN	1
6	01.0031.0056GT	FLAT WASHER D10 UNI 6592 ZN	8
7	01.0023.0055GT	Stop Nut M10 UNI 7473 6S ZN	2
8	01.0001.0358GT	SCREW M10X40 UNI 5739 8.8 ZN	1
9	01.4032.0004GT	Spring Washer D10 ZN	4

silverhorn.co.uk

411.1 609994 Air Conditioning - Part 2

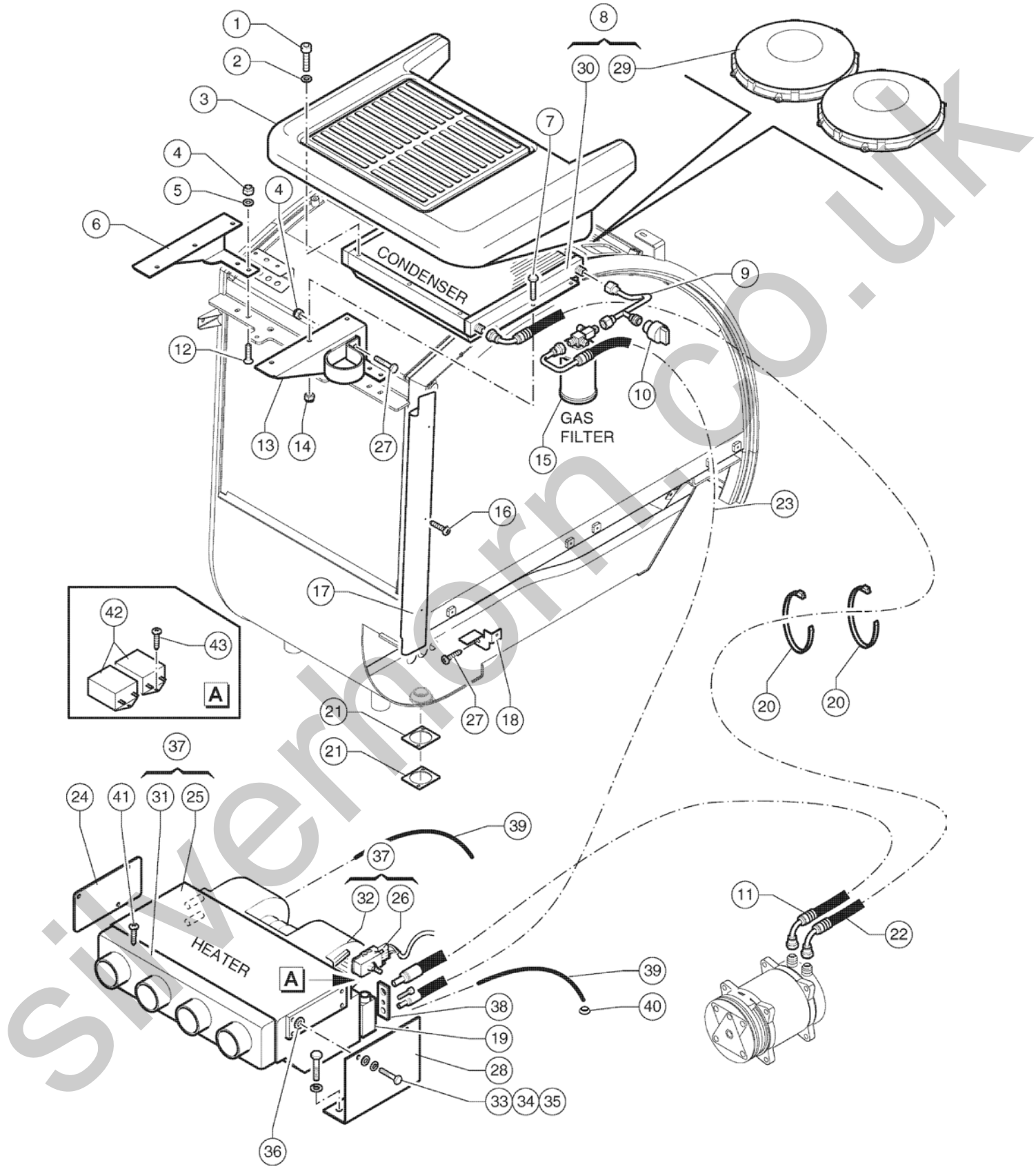

silverthorn.co.uk

411.1 609994 Air Conditioning - Part 2

Item	Part No.	Description	Qty.
1	01.0001.0004GT	SCREW M6X20 UNI 5931 8.8 ZN	6
2	01.0031.0054GT	FLAT WASHER D6 UNI 6592 ZN	10
3	56.0014.0103GT	Guard	1
4	01.0023.0054GT	NUT,M8 UNI 7473 6S ZN	5
5	01.0031.0055GT	FLAT WASHER D8 UNI 6592 ZN	4
6	07.0740.0268GT	Left Bracket	1
7	01.0001.0099GT	Screw TE M 4X16	6
8	56.0014.0104GT	Complete Condenser	1
9	07.0740.0260GT	Hose 5/16	1
10	07.0740.0390GT	Pressure Switch	1
11	09.0803.0890GT	Hose 1/2	1
12	01.4006.0010GT	Screw TSPEI M8X30 UNI5933 10.9 ZN	4
13	07.0740.0269GT	Right Bracket	1
14	01.0001.0035GT	Stop Nut M4	6
15	07.0740.0254GT	Filter	1
16	01.0003.0947GT	SCREW M4X10 UNI 5931 8.8 ZN	4
17	51.0903.5287GT	Protection Cover	1
18	07.0740.0257GT	Bracket	1
19	09.0610.0973GT	VALVE	1
20	04.0227.0058GT	CLAMP DN 40/60 LG12	4
21	54.0100.0092GT	Spacer	4
22	09.0803.0891GT	Hose 13/32	1
23	07.0740.0262GT	HOSE	1
24	51.0811.4103GT	BRACKET, SUPPORT	1
25	07.0740.0386GT	Heater	1
26	07.0740.0398GT	Temperature Switch	1
27	01.0001.0256GT	SCREW M8X25 UNI 5739 8.8 ZN	2
28	51.0811.4102GT	BRACKET, SUPPORT	1

silverhorn.co.uk

411.1 609994 Air Conditioning - Part 2

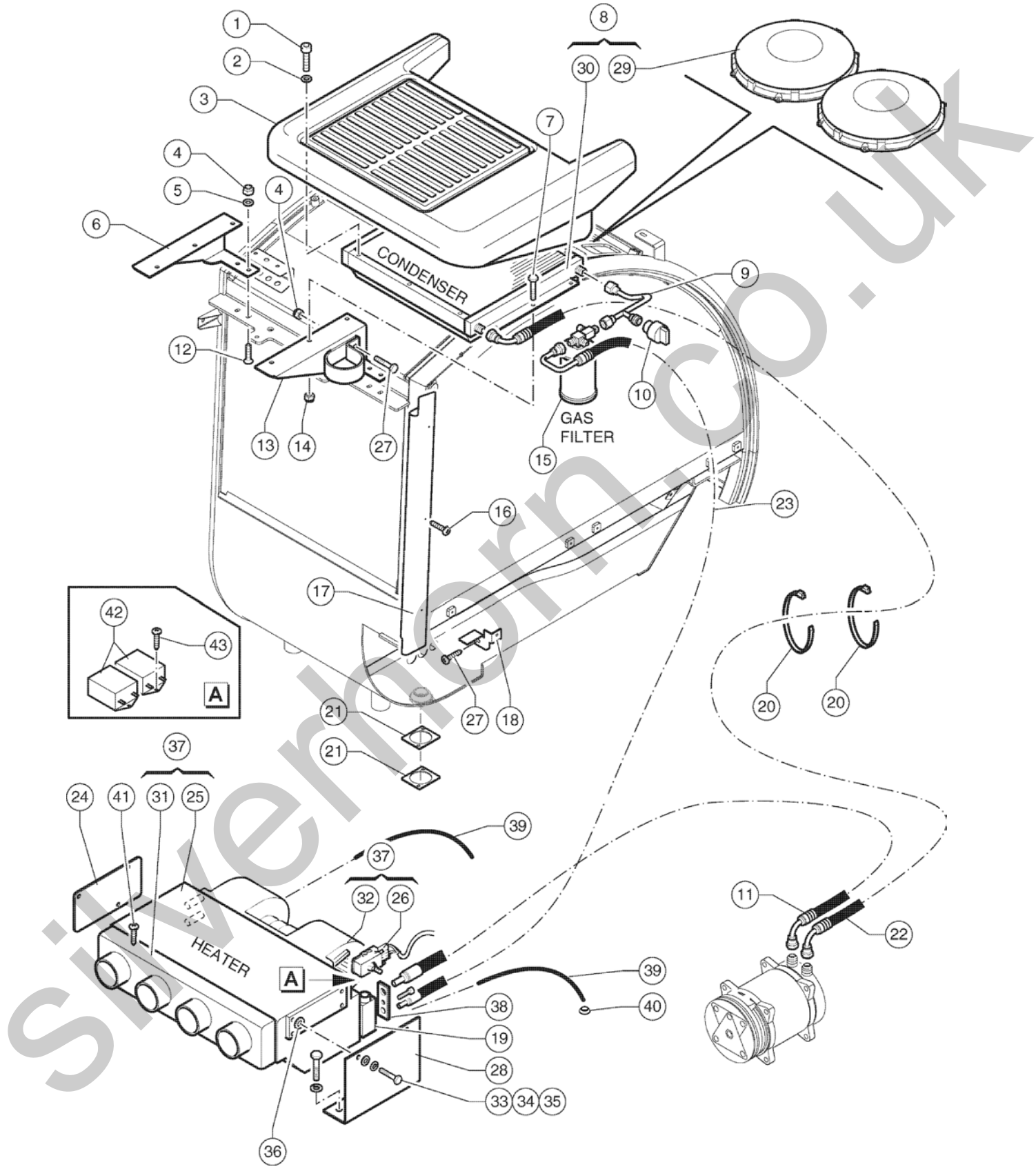

silvernorn.co.uk

411.1 609994 Air Conditioning - Part 2

Item	Part No.	Description	Qty.
29	56.0014.0105GT	Fan	2
30	07.0740.0395GT	Condenser	1
31	07.0740.0385GT	Heater Cover	1
32	07.0740.0389GT	Fan Heater	1
33	01.0001.0156GT	SCREW M6X20 UNI 5739 8.8 ZN	4
34	01.0003.0155GT	SCREW M6X20 UNI 5931 8.8 ZN	1
35	01.0034.0054GT	WASHER D6 UNI 6798A ZN	4
36	54.0101.0020GT	WASHER D6/9	4
37	56.0014.0029GT	COMPLETE HEATER	1
38	07.0740.0392GT	Plate	1
39	07.0740.0387GT	Pipe	78, 74
40	09.0803.0549GT	Rubber D.41X9	1
41	01.0003.0963GT	SCREW M4,2X16 UNI 6954 10.9 ZN	6
42	56.0016.0202GT	Filter FIN 50.010.F	2
43	01.4001.0062GT	SCREW M5X20 UNI 7687 ZN	4

silverhorn.co.uk

501.1 609995 Arm 1st - 2nd Telescopic Element

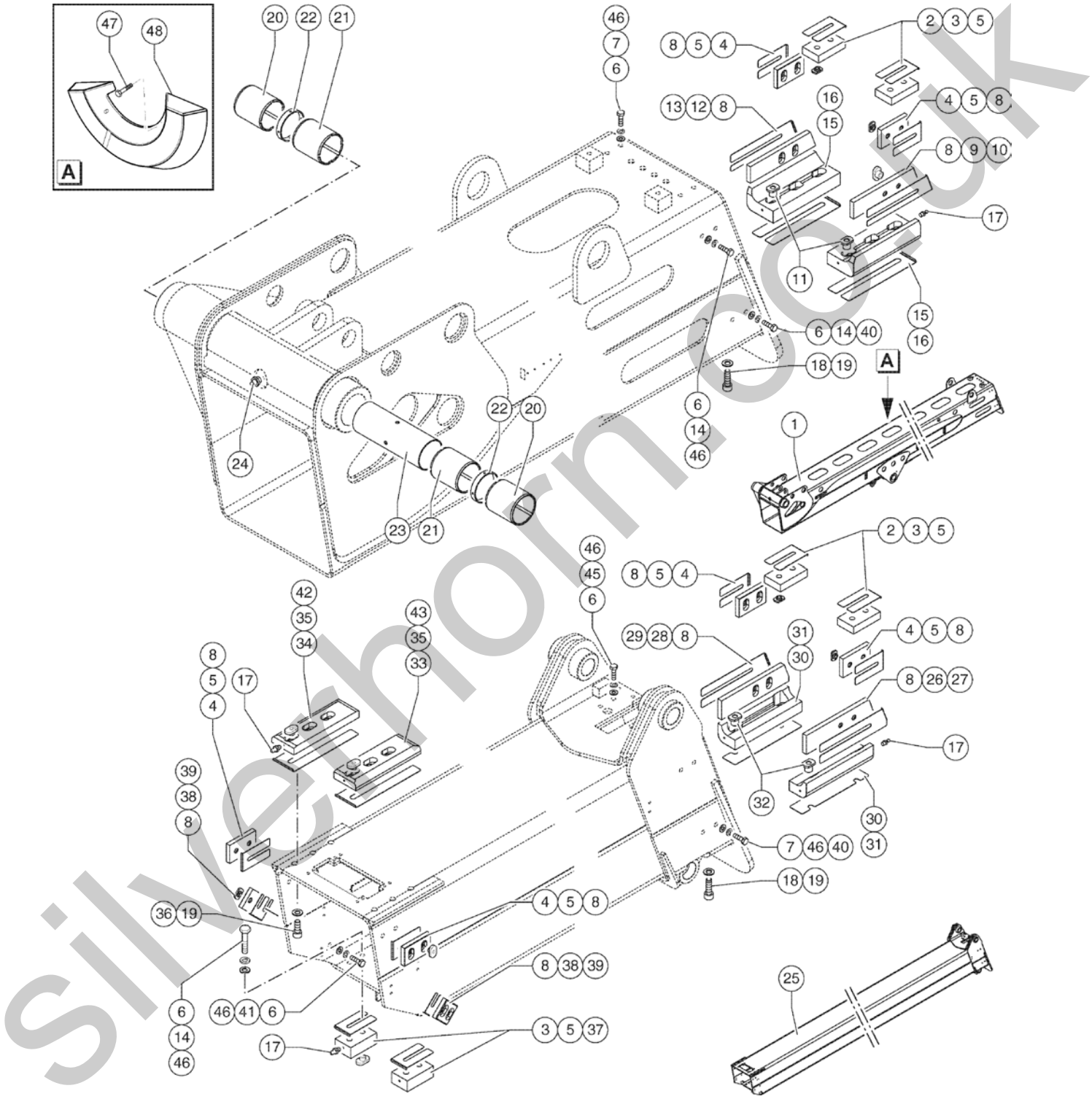

silverhorn.co.uk

501.1 609995 Arm 1st - 2nd Telescopic Element

Item	Part No.	Description	Qty.
1	51.0201.3980GT	1st Telescope Boom	1
2	54.0705.0011GT	Slider Guide	4
3	54.0200.0001GT	BUSHING M10X13.5	12
4	54.0705.0003GT	Lateral pad	6
5	51.0811.4131GT	SHIM, WEAR PAD,100X60X1	12
6	01.0031.0056GT	FLAT WASHER D10 UNI 6592 ZN	28
7	01.0001.0357GT	SCREW,TE,M10X35 UNI 8.8 ZN	12
8	54.0200.0000GT	BUSHING M10X8.5	24
9	54.0705.0015GT	Slider Guide	1
10	51.0811.4789GT	Pad shim	1
11	54.0200.0004GT	BUSHING M14	6
12	54.0705.0014GT	Slider Guide	1
13	51.0811.4788GT	Pad shim	1
14	01.0001.0356GT	SCREW M10X30 UNI 5739 8.8 ZN	4
15	54.0705.0013GT	Front Pad	2
16	51.0811.4604GT	PAD SHIM 250X85	2
17	02.0117.0051GT	GREASE NIPPLE M6	8
18	01.0003.0354GT	SCREW M14X45 UNI 5931 8.8 ZN	6
19	01.0031.0058GT	FLAT WASHER D14 UNI 6592 ZN	16
20	54.0201.0006GT	Bushing 80/90X100	2
21	54.0201.0005GT	BUSHING,D80/90X100	2
22	52.0900.0300GT	BUSHING D88/ 82X15	2
23	52.0900.9338GT	Spacer	1
24	02.0117.0101GT	GREASE NIPPLE G1/8	1
25	51.0201.3985GT	2nd Telescope Boom	1
26	54.0705.0018GT	Slider Guide	1
27	51.0811.4791GT	Pad shim	1
28	54.0705.0017GT	Slider Guide	1

silverhorn.co.uk

501.1 609995 Arm 1st - 2nd Telescopic Element

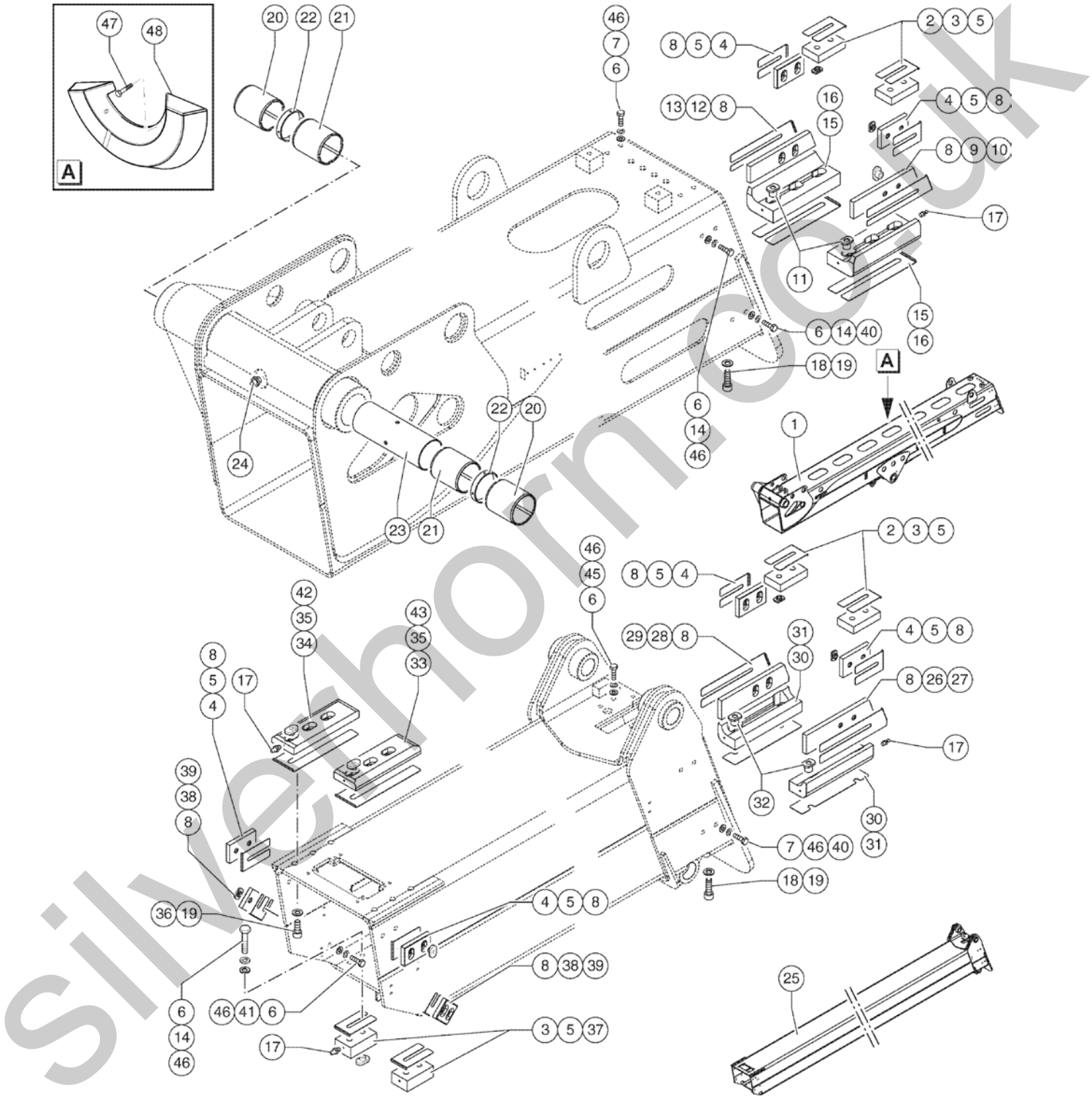

silverhorn.co.uk

501.1 609995 Arm 1st - 2nd Telescopic Element

Item	Part No.	Description	Qty.
29	51.0811.4790GT	Pad shim	1
30	54.0705.0016GT	Front Pad	2
31	51.0811.4884GT	Pad Shim	2
32	54.0200.0007GT	BUSHING M14	4
33	54.0705.0002GT	Rear Pad	1
34	54.0705.0001GT	Left Pad	1
35	54.0200.0006GT	PAD FIXING BUSHING M14	6
36	01.4003.0050GT	Screw TCEI 14 X 35 LG. 8.8 ZN UNI 5931	6
37	54.0705.0005GT	Rear bottom pad	2
38	54.0705.0004GT	Slider Guide	2
39	51.0811.4133GT	SHIM, WEAR PAD,60X60X1	2
40	01.0031.0299GT	FLAT WASHER D8 UNI 6593 ZN	8
41	01.0001.0355GT	SCREW M10X25 UNI 5739 8.8 ZN	4
42	51.0811.4883GT	Left Pad shim 60X60 - SP.1	1
43	51.0811.4882GT	Right Pad shim 60X60 - SP.1	1
45	01.0001.0358GT	SCREW M10X40 UNI 5739 8.8 ZN	8
46	01.4032.0004GT	Spring Washer D10 ZN	8
47	01.4003.0000GT	SCREW M4X16 UNI 5931 8.8 ZN	2
48	09.0803.0357GT	BOOM LEVEL INDICATOR	1

silverhorn.co.uk

502.1 609996 Arm 3rd - 4th Telescopic Element

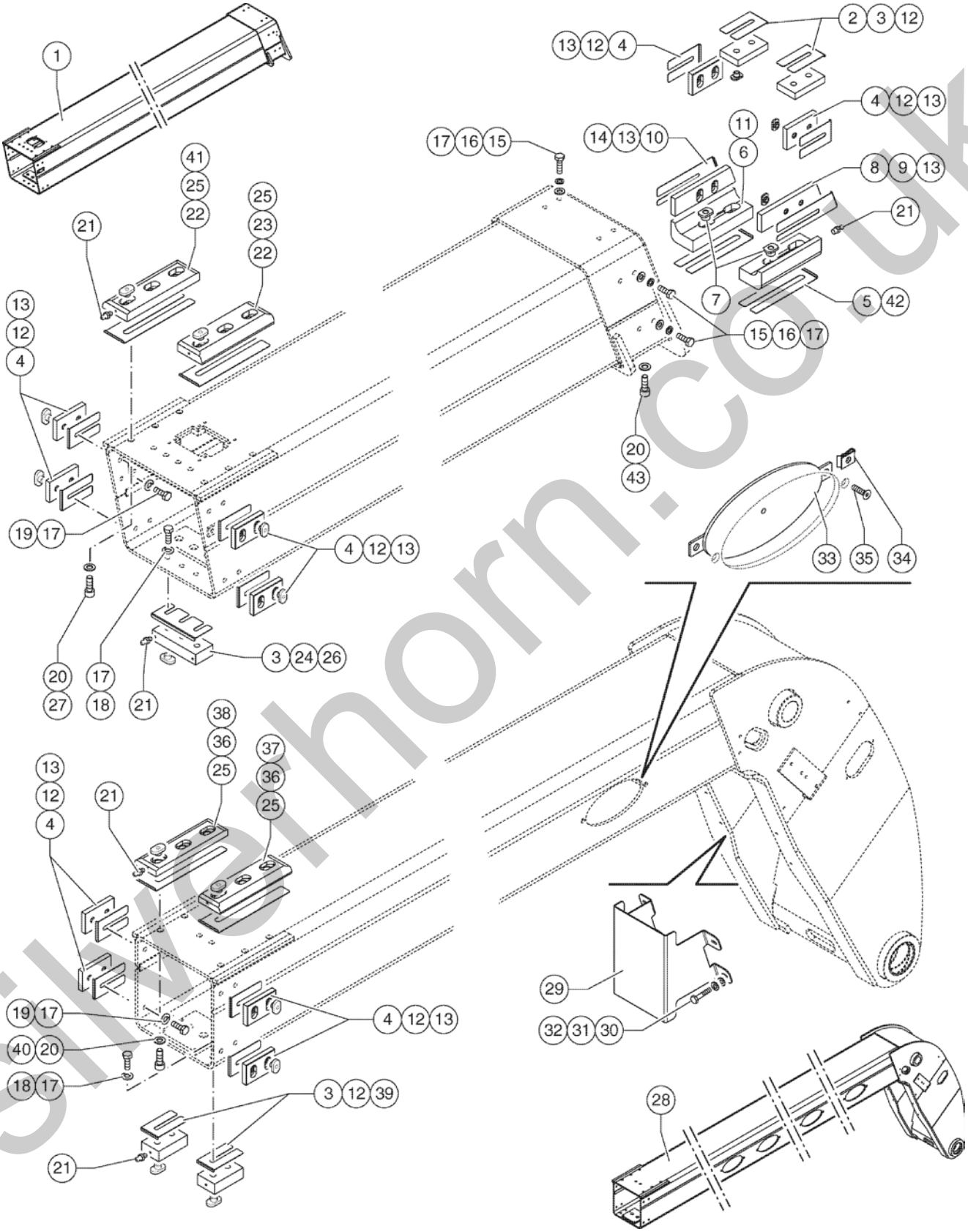

silverhorn.co.uk

502.1 609996 Arm 3rd - 4th Telescopic Element

Item	Part No.	Description	Qty.
1	51.0201.3986GT	3rd Telescope Boom	1
2	54.0704.0012GT	Slider Guide 100X60X20	2
3	54.0200.0001GT	BUSHING M10X13.5	11
4	54.0705.0003GT	Lateral pad	10
5	54.0705.0020GT	Right Front Pad	1
6	54.0705.0019GT	Left Front Pad	1
7	54.0200.0007GT	BUSHING M14	4
8	54.0705.0022GT	Right Slider Guide	1
9	51.0811.4793GT	Right Pad Shim	1
10	54.0705.0021GT	Slider Guide	1
11	51.0811.4886GT	Left Pad Shim	1
12	51.0811.4131GT	SHIM, WEAR PAD,100X60X1	14
13	54.0200.0000GT	BUSHING M10X8.5	24
14	51.0811.4792GT	Left Pad Shim	1
15	01.0001.0357GT	SCREW,TE,M10X35 UNI 8.8 ZN	4
16	01.4032.0004GT	Spring Washer D10 ZN	8
17	01.0031.0056GT	FLAT WASHER D10 UNI 6592 ZN	27
18	01.0001.0356GT	SCREW M10X30 UNI 5739 8.8 ZN	23
19	01.0001.0353GT	SCREW M10X20 UNI 5739 8.8 ZN	16
20	01.0031.0058GT	FLAT WASHER D14 UNI 6592 ZN	16
21	02.0117.0051GT	GREASE NIPPLE M6	10
22	54.0705.0006GT	Rear Pad	2
23	51.0811.4902GT	Right Pad Shim	1
24	54.0705.0007GT	Rear bottom pad	1
25	54.0200.0006GT	PAD FIXING BUSHING M14	12
26	51.0811.4137GT	Pad Shim 100X50X1	1
27	01.0003.0353GT	SCREW M14X40 UNI 5931 8.8 ZN	10
28	51.0201.3984GT	4th Telescope Boom	1

silverhorn.co.uk

502.1 609996 Arm 3rd - 4th Telescopic Element

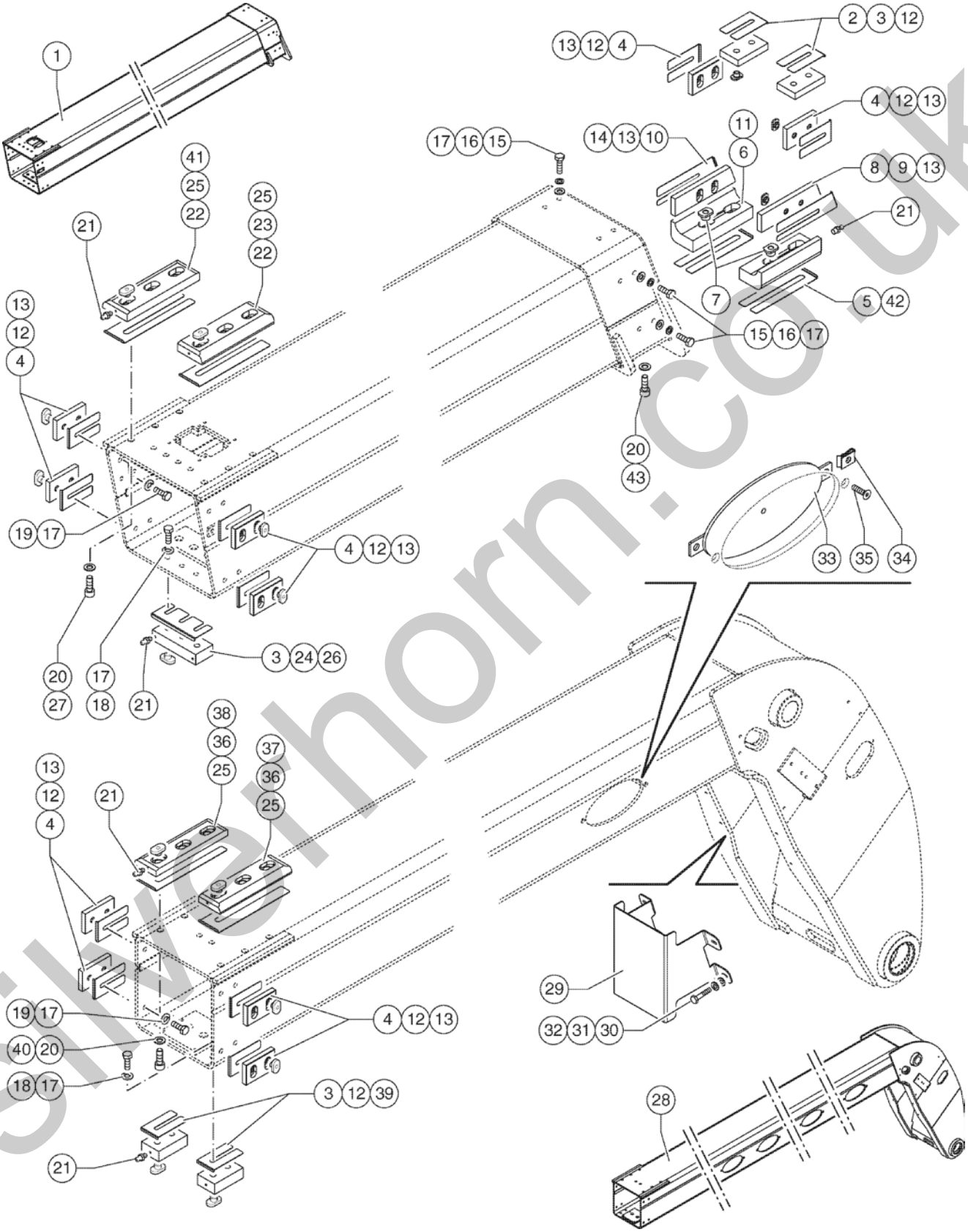

silverhorn.co.uk

502.1 609996 Arm 3rd - 4th Telescopic Element

Item	Part No.	Description	Qty.
29	51.0903.5254GT	Cover	1
30	01.0001.0254GT	SCREW M8X20 UNI 5739 8.8 ZN	4
31	01.0031.0299GT	FLAT WASHER D8 UNI 6593 ZN	4
32	01.4032.0003GT	Spring Washer D 8 ZN	4
33	51.0811.4811GT	Cover	4
34	09.0803.0516GT	SPRING CLIP M6	8
35	01.4006.0011GT	SCREW M6X20 UNI 5933 10.9 ZN	8
36	54.0705.0008GT	Rear Pad	2
37	51.0811.4606GT	RIGHT PAD SHIM	1
38	51.0811.4605GT	SHIM,WEAR PAD 250X75	1
39	54.0705.0009GT	Rear Bottom Pad	2
40	01.4003.0049GT	SCREW M14X25 UNI 5931 8.8 ZN	6
41	51.0811.4901GT	Left Pad Shim	1
42	51.0811.4885GT	Right Pad Shim	1
43	01.4003.0072GT	SCREW M14X65 UNI 5931 8.8 ZN	4

silverhorn.co.uk

503.1 609997 Chain Unit 1st Boom Section

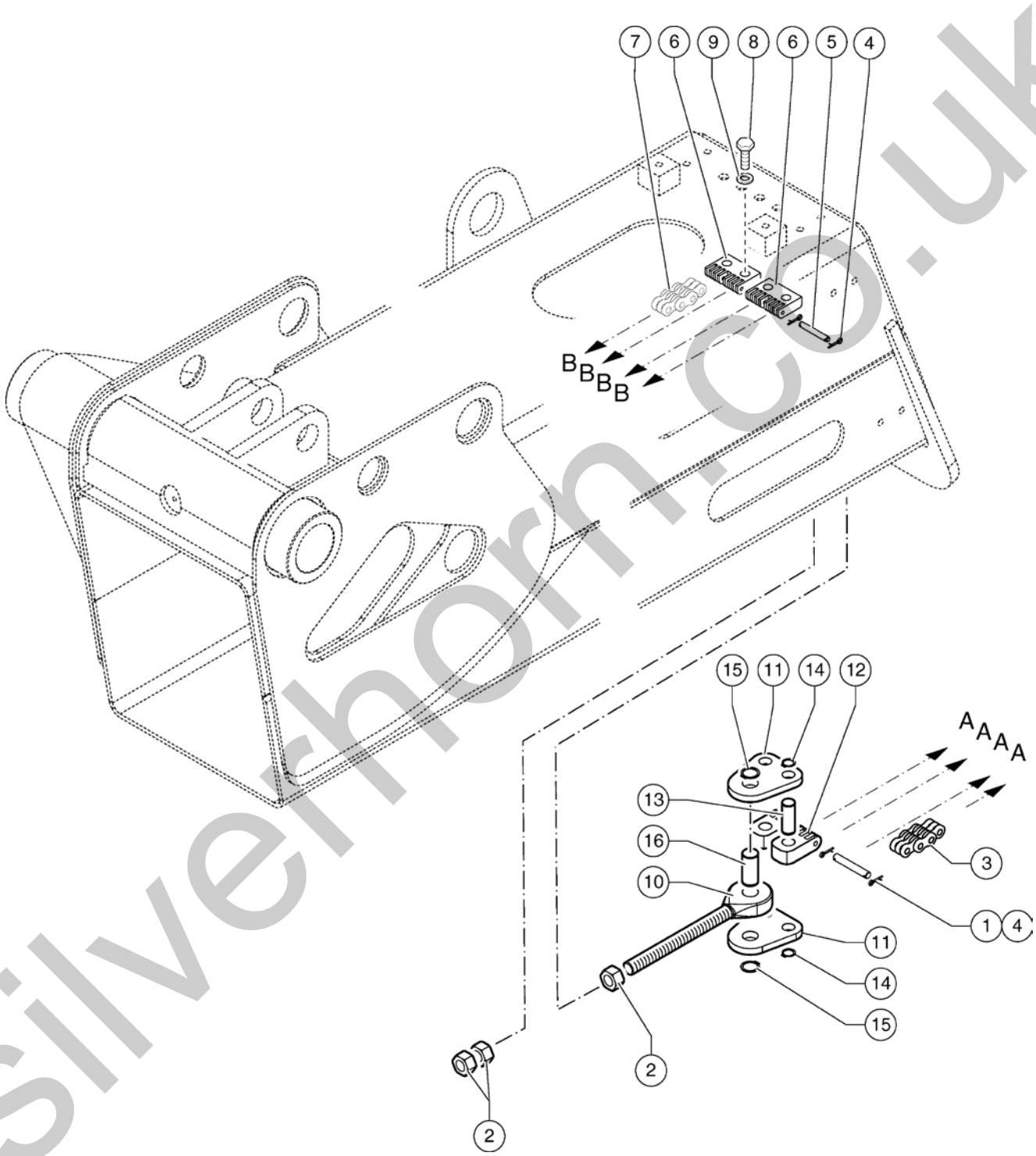

silverhorn.co.uk

503.1 609997 Chain Unit 1st Boom Section

Item	Part No.	Description	Qty.
1	54.0002.0086GT	PIN	4
2	01.0019.0186GT	Nut M22 UNI 5588 8G ZN	6
3	09.0803.0847GT	Fleyer Chain 1" - 6X6 - 207 Steps	2
4	09.0803.0257GT	COTTER PIN D2X25 UNI 1336 ZN	16
5	54.0200.0087GT	Chain Pin	4
6	54.0300.0054GT	Chain Terminal	2
7	09.0803.0878GT	Fleyer Chain	2
8	01.4001.0069GT	SCREW M16X40 UNI 5737 10.9 ZN	4
9	01.0031.0099GT	FLAT WASHER D16 UNI 5714 ZN	4
10	54.0300.0041GT	Stretch Chain Terminal	2
11	54.0300.0051GT	Chain, Pivot Plate	4
12	54.0300.0050GT	CHAIN TERMINAL	4
13	54.0000.0253GT	PIN	4
14	02.4126.0004GT	SEEGER	8
15	02.4126.0003GT	Snap Ring	4
16	54.0000.0254GT	Pin	2

silverhorn.co.uk

504.1 609998 Chain Unit 2nd Boom Section

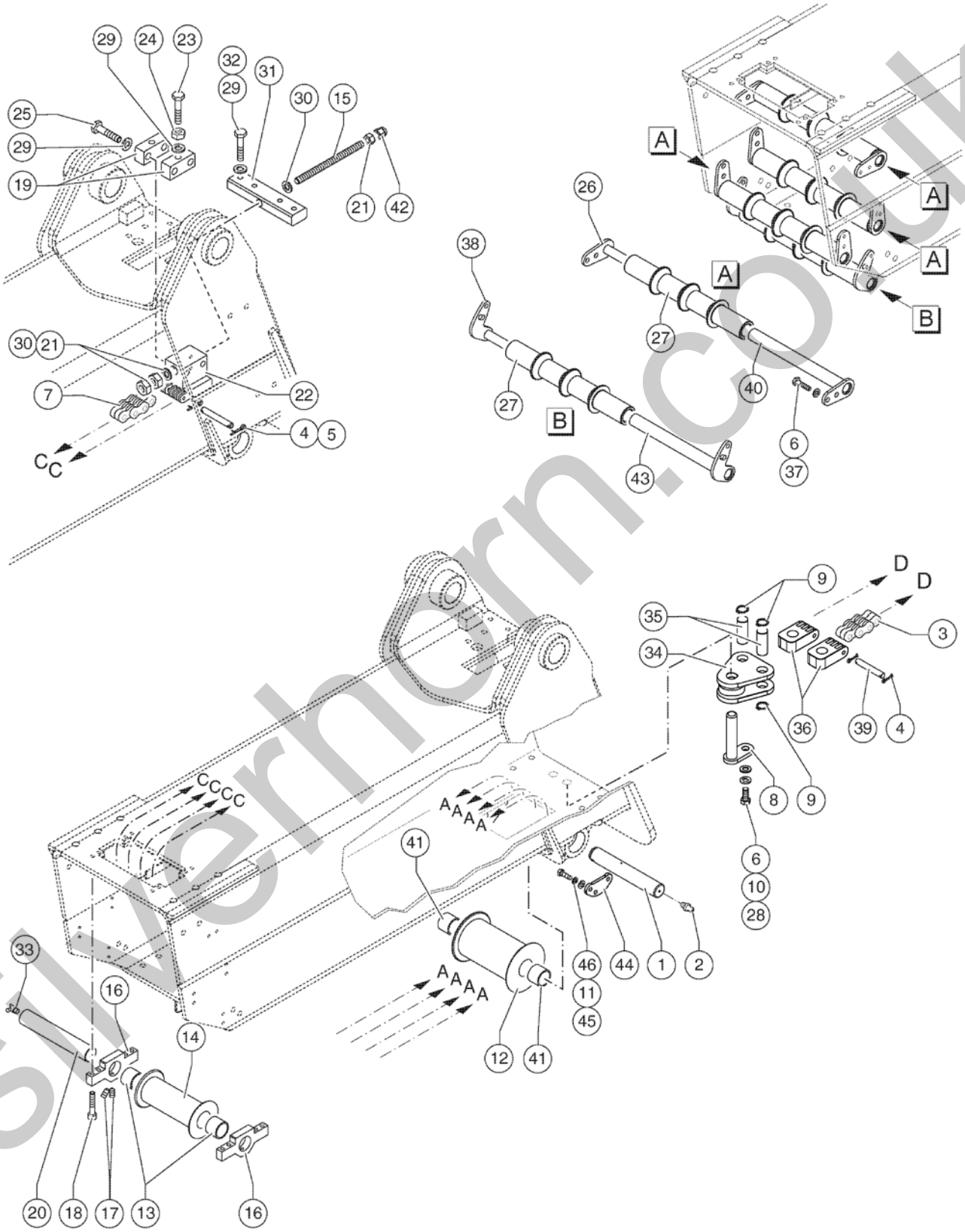

silverhorn.co.uk

504.1 609998 Chain Unit 2nd Boom Section

Item	Part No.	Description	Qty.
1	54.0001.0100GT	Front Pulley Pin	1
2	02.0117.0051GT	GREASE NIPPLE M6	1
3	09.0803.0846GT	FLEYER CHAIN 1? - 6X6 - 209 STEPS	2
4	09.0803.0257GT	COTTER PIN D2X25 UNI 1336 ZN	8
5	54.0200.0087GT	Chain Pin	2
6	01.0031.0055GT	FLAT WASHER D8 UNI 6592 ZN	8
7	09.0803.0878GT	Fleyer Chain	2
8	54.0004.0126GT	Chain Tie Bar Pin	1
9	02.4126.0004GT	SEEGER	4
10	01.0001.0254GT	SCREW M8X20 UNI 5739 8.8 ZN	1
11	01.4001.0180GT	Screw Te M10 X35 10.9Zn Uni 5737	4
12	54.0400.0055GT	Front Pulley	1
13	54.0201.0090GT	BUSHING D.35/45	4
14	54.0400.0053GT	Rear Pulley	1
15	54.0300.0043GT	THREADED ROAD	1
16	51.0811.4781GT	Pulley Support	2
17	01.4041.0000GT	DOWEL M8X16 UNI 5927 12.9 ZN	4
18	01.4003.0034GT	SCREW M10X40 UNI 5931 12.9 ZN	8
19	54.0300.0057GT	Stretch Chain Block	2
20	54.0001.0077GT	Rear Pulley Pin	1
21	01.0019.0179GT	NUT M18 UNI 5589 8G ZN	3
22	54.0300.0056GT	Stretch Chain Terminal	1
23	01.0001.1547GT	SCREW M12X50UNI 5739 10.9 ZN	2
24	01.0019.0106GT	Nut M12 UNI 5588 6SZN	2
25	01.4001.0208GT	SCREW,HHC,M12-1,75X40,10,9,ZN	4
26	51.0811.4366GT	PULLEY HOLDER	4
27	54.0705.0036GT	Nylon Pulley	4
28	01.4032.0003GT	Spring Washer D 8 ZN	2

silverhorn.co.uk

504.1 609998 Chain Unit 2nd Boom Section

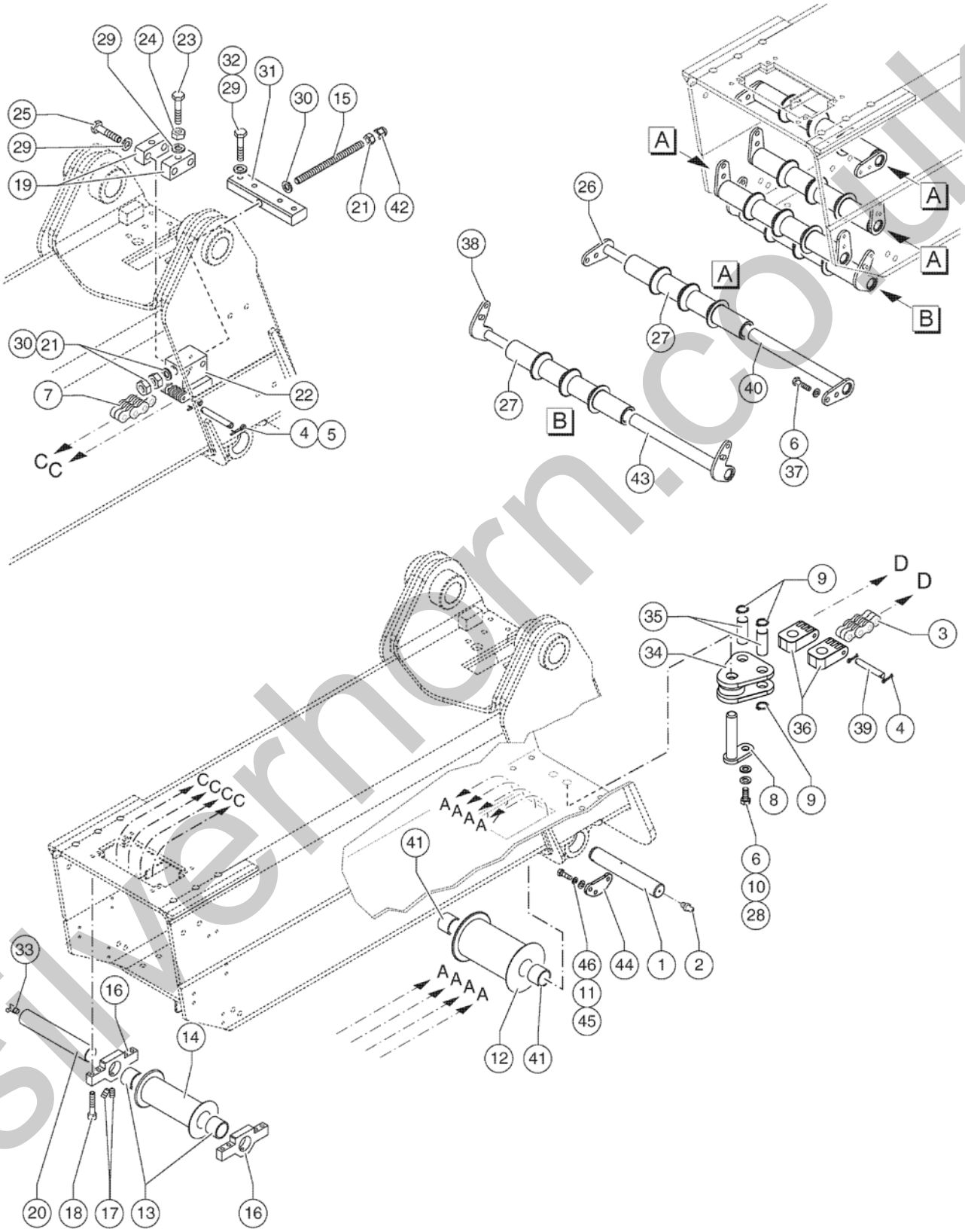

silverhorn.co.uk

504.1 609998 Chain Unit 2nd Boom Section

Item	Part No.	Description	Qty.
29	01.0031.0097GT	FLAT WASHER D12 UNI 5714 ZN	10
30	01.0031.0100GT	FLAT WASHER D18 UNI 5714 ZN	2
31	54.0300.0055GT	Stretch Chain Support	1
32	01.4001.0108GT	SCREW M12X60 UNI 5737 10.9 ZN	4
33	02.0117.0119GT	GREASE NIPPLE G 1/8	1
34	54.0300.0052GT	Chain Tensioner	1
35	54.0000.0253GT	PIN	2
36	54.0300.0050GT	CHAIN TERMINAL	2
37	01.4003.0013GT	SCREW M8X16 UNI 5931 8.8 ZN	16
38	51.0811.4904GT	Pulley Holder	1
39	54.0002.0086GT	PIN	2
40	51.0811.4367GT	PULLEY HOLDER	3
41	54.0201.0080GT	Bushing D.30/40	2
42	01.4019.0026GT	NUT M18 UNI 5721 ZN	1
43	51.0811.4905GT	Pulley Holder	1
44	51.0811.4914GT	Pulley Pin Lock Plate	1
45	01.0031.0056GT	FLAT WASHER D10 UNI 6592 ZN	4
46	01.4032.0004GT	Spring Washer D10 ZN	4

silverhorn.co.uk

505.1 609999 Chain Unit 3rd Boom Section

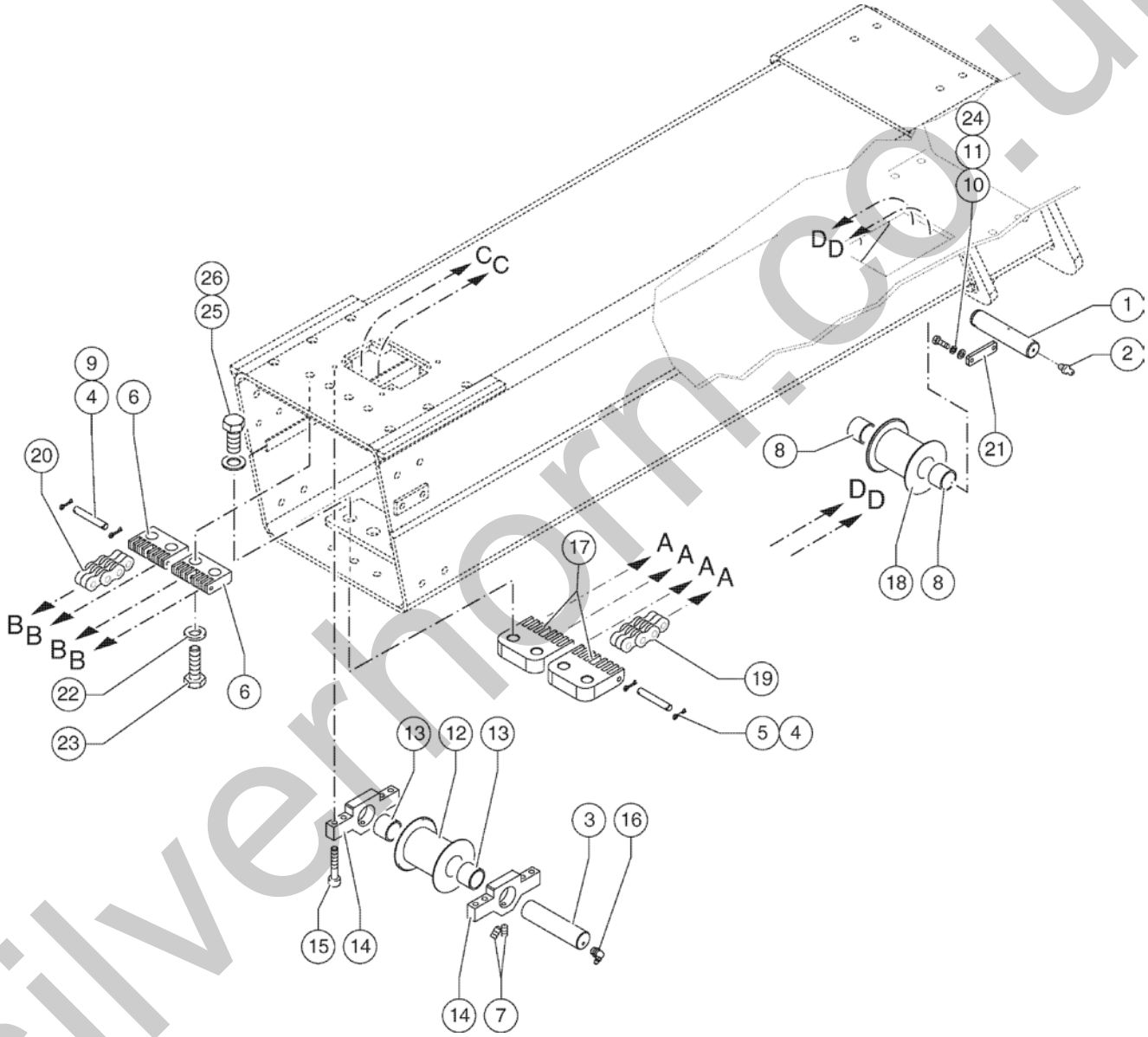

silverhorn.co.uk

505.1 609999 Chain Unit 3rd Boom Section

Item	Part No.	Description	Qty.
1	54.0001.0082GT	PIN	1
2	02.0117.0051GT	GREASE NIPPLE M6	1
3	54.0001.0076GT	Rear Pulley Pin	1
4	09.0803.0257GT	COTTER PIN D2X25 UNI 1336 ZN	16
5	54.0002.0086GT	PIN	4
6	54.0300.0048GT	Chain Terminal	2
7	01.4041.0000GT	DOWEL M8X16 UNI 5927 12.9 ZN	4
8	54.0201.0079GT	Bushing D=40/50 - 40	2
9	54.0002.0087GT	PIN	4
10	01.0001.0256GT	SCREW M8X25 UNI 5739 8.8 ZN	2
11	01.0031.0055GT	FLAT WASHER D8 UNI 6592 ZN	2
12	54.0400.0054GT	Pulley	1
13	54.0201.0089GT	Bushing	2
14	51.0811.4782GT	Pulley Support	2
15	01.4003.0051GT	SCREW M8X30 UNI 5931 12.9 ZN	8
16	02.0117.0119GT	GREASE NIPPLE G 1/8	1
17	54.0300.0049GT	ANCHOR BOOM CHAIN 1"	2
18	54.0400.0056GT	Boom Chain Pulley	1
19	09.0803.0847GT	Fleyer Chain 1" - 6X6 - 207 Steps	4
20	09.0803.0845GT	Fleyer Chain 3/4"- 6X6 - 271 Steps	4
21	51.0811.4800GT	Pulley Pin Lock Plate	1
22	01.0031.0099GT	FLAT WASHER D16 UNI 5714 ZN	4
23	01.4001.0125GT	SCREW M16X45 UNI 5737 10.9 ZN	4
24	01.4032.0003GT	Spring Washer D 8 ZN	2
25	01.4001.0041GT	SCREW M20X45 UNI 5739 10.9 ZN	4
26	01.0031.0061GT	FLAT WASHER D20 UNI 6592 ZN	4

silverhorn.co.uk

506.1 610000 Chain Unit 4th Boom Section

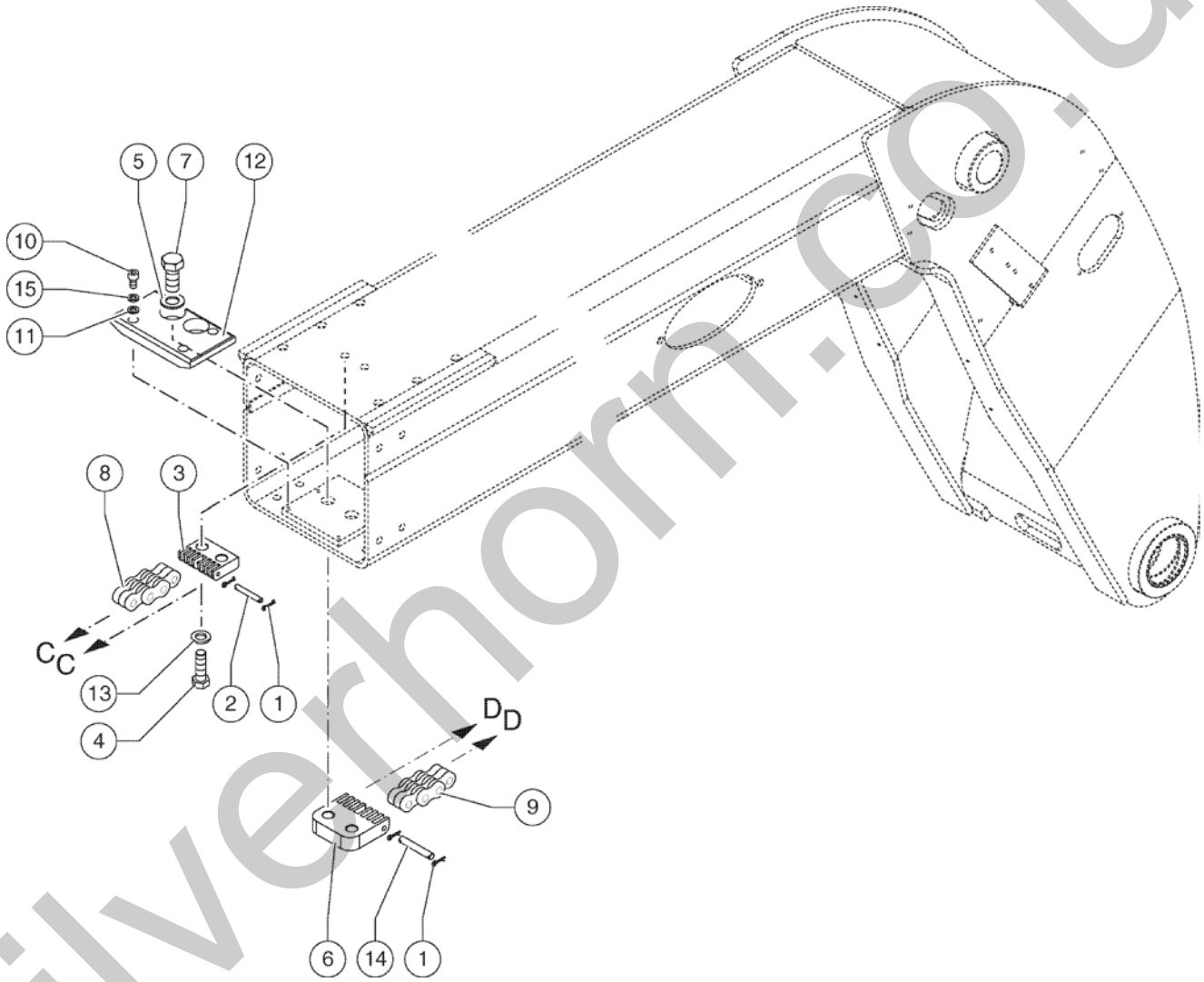

silverhorn.co.uk

506.1 610000 Chain Unit 4th Boom Section

Item	Part No.	Description	Qty.
1	09.0803.0257GT	COTTER PIN D2X25 UNI 1336 ZN	8
2	54.0002.0087GT	PIN	2
3	54.0300.0048GT	Chain Terminal	1
4	01.4001.0209GT	SCREW,HHC,M16-2X50,10,9,ZN	2
5	01.0031.0061GT	FLAT WASHER D20 UNI 6592 ZN	2
6	54.0300.0049GT	ANCHOR BOOM CHAIN 1"	1
7	01.4001.0041GT	SCREW M20X45 UNI 5739 10.9 ZN	2
8	09.0803.0878GT	Fleyer Chain	2
9	09.0803.0846GT	FLEYER CHAIN 1? - 6X6 - 209 STEPS	2
10	01.4003.0013GT	SCREW M8X16 UNI 5931 8.8 ZN	4
11	01.0031.0299GT	FLAT WASHER D8 UNI 6593 ZN	4
12	54.0705.0010GT	Pad	1
13	01.0031.0099GT	FLAT WASHER D16 UNI 5714 ZN	2
14	54.0002.0086GT	PIN	2
15	01.4032.0003GT	Spring Washer D 8 ZN	4

silverhorn.co.uk

507.1 610001 Lifting Cylinder - Slave Cylinder - Tilting Cylinder

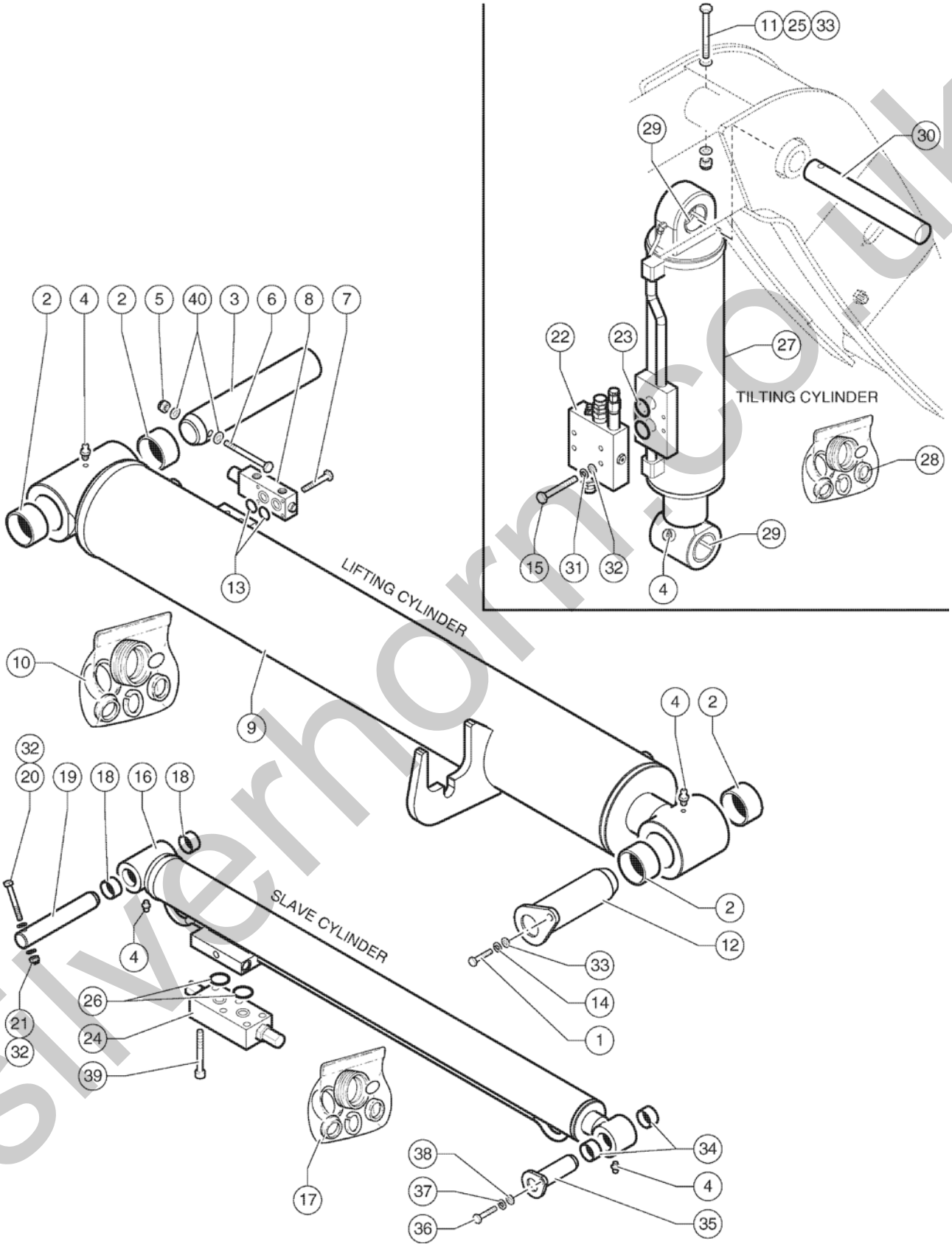

silverhorn.co.uk

507.1 610001 Lifting Cylinder - Slave Cylinder - Tilting Cylinder

Item	Part No.	Description	Qty.
1	01.0001.0508GT	SCREW M12X40 UNI 5739 8.8 ZN	2
2	54.0201.0091GT	Bushing	4
3	54.0000.0270GT	Lifting Cylinder Foot Pin	1
4	02.0117.0101GT	GREASE NIPPLE G1/8	4
5	01.0023.0057GT	STOP NUT M14 UNI 7473 6S ZN	1
6	01.0001.1497GT	SCREW M14X150 UNI 5737 8.8 ZN	1
7	01.0003.0210GT	SCREW M8X50 UNI 5931 8.8 ZN	4
8	04.4239.0005GT	SAFETY VALVE	1
9	53.0000.3826GT	Lifting Cylinder	1
10	07.4529.0207GT	Seals Kit Lifting Cylinder	1
11	01.0023.0056GT	STOP NUT M12 UNI 7473 6S ZN	1
12	54.0003.0185GT	Lifting Cylinder Head Pin	1
13	07.0705.0101GT	O-ring	2
14	01.4032.0005GT	SPRING WASHER D12 ZN	2
15	01.0001.0306GT	SCREW M10X60 UNI 5737 8.8 ZN	4
16	53.0300.2222GT	Fork Levelling Cylinder	1
17	07.4529.0212GT	Seals Kit Levelling Cylinder	1
18	09.0801.0038GT	Bushing	2
19	54.0000.0271GT	Slave Cylinder Foot Pin	1
20	01.0001.0310GT	SCREW M10X80 UNI 5737 8.8 ZN	1
21	01.0023.0055GT	Stop Nut M10 UNI 7473 6S ZN	1
22	04.4239.0142GT	VALVE	1
23	06.4401.0006GT	O-ring	2
24	04.4239.0051GT	SAFETY VALVE	1
25	49383GT	SCREW,HHC,M12 X 120	1
26	07.0722.0037GT	O-ring	2
27	53.0400.1822GT	Tilt Cylinder	1
28	07.4529.0206GT	Seals Kit Tilt Cylinder	2

silverhorn.co.uk

507.1 610001 Lifting Cylinder - Slave Cylinder - Tilting Cylinder

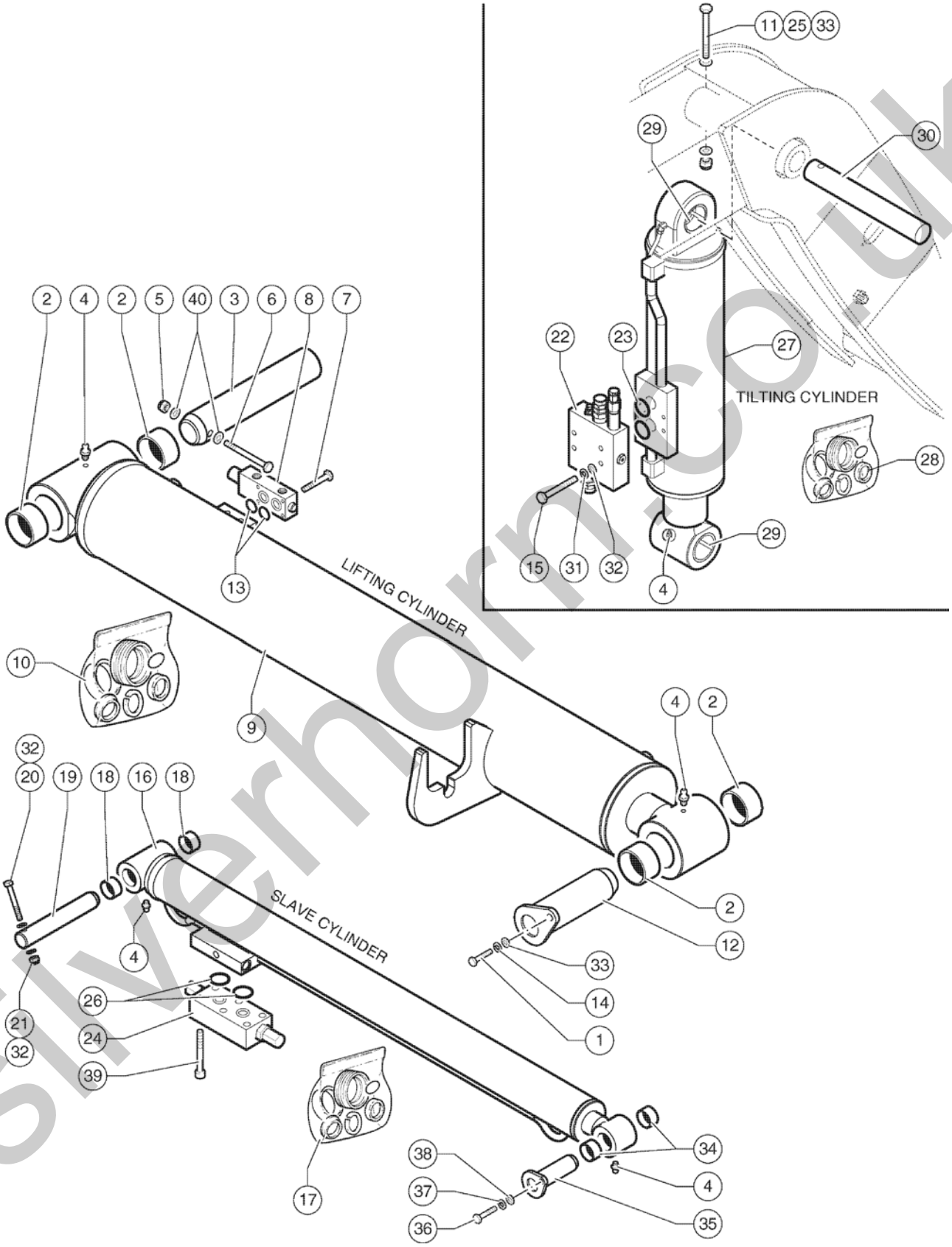

silverhorn.co.uk

507.1 610001 Lifting Cylinder - Slave Cylinder - Tilting Cylinder

Item	Part No.	Description	Qty.
29	54.0400.1822GT	Bushing	3
30	54.0002.0066GT	Pin	1
31	01.4032.0004GT	Spring Washer D10 ZN	4
32	01.0031.0056GT	FLAT WASHER D10 UNI 6592 ZN	6
33	01.0031.0057GT	WASHER, FLAT, D12, UNI 6592, ZN	3
34	09.0801.0039GT	Bushing	2
35	54.0003.0184GT	Slave Cylinder Head Pin	1
36	01.0001.0256GT	SCREW M8X25 UNI 5739 8.8 ZN	1
37	01.4032.0003GT	Spring Washer D 8 ZN	1
38	01.0031.0055GT	FLAT WASHER D8 UNI 6592 ZN	1
39	01.0003.0208GT	SCREW,TCEI,M8X40 UNI 8.8ZN	6
40	01.0031.0058GT	FLAT WASHER D14 UNI 6592 ZN	2

silverhorn.co.uk

508.1 610002 Boom Extension Cylinder

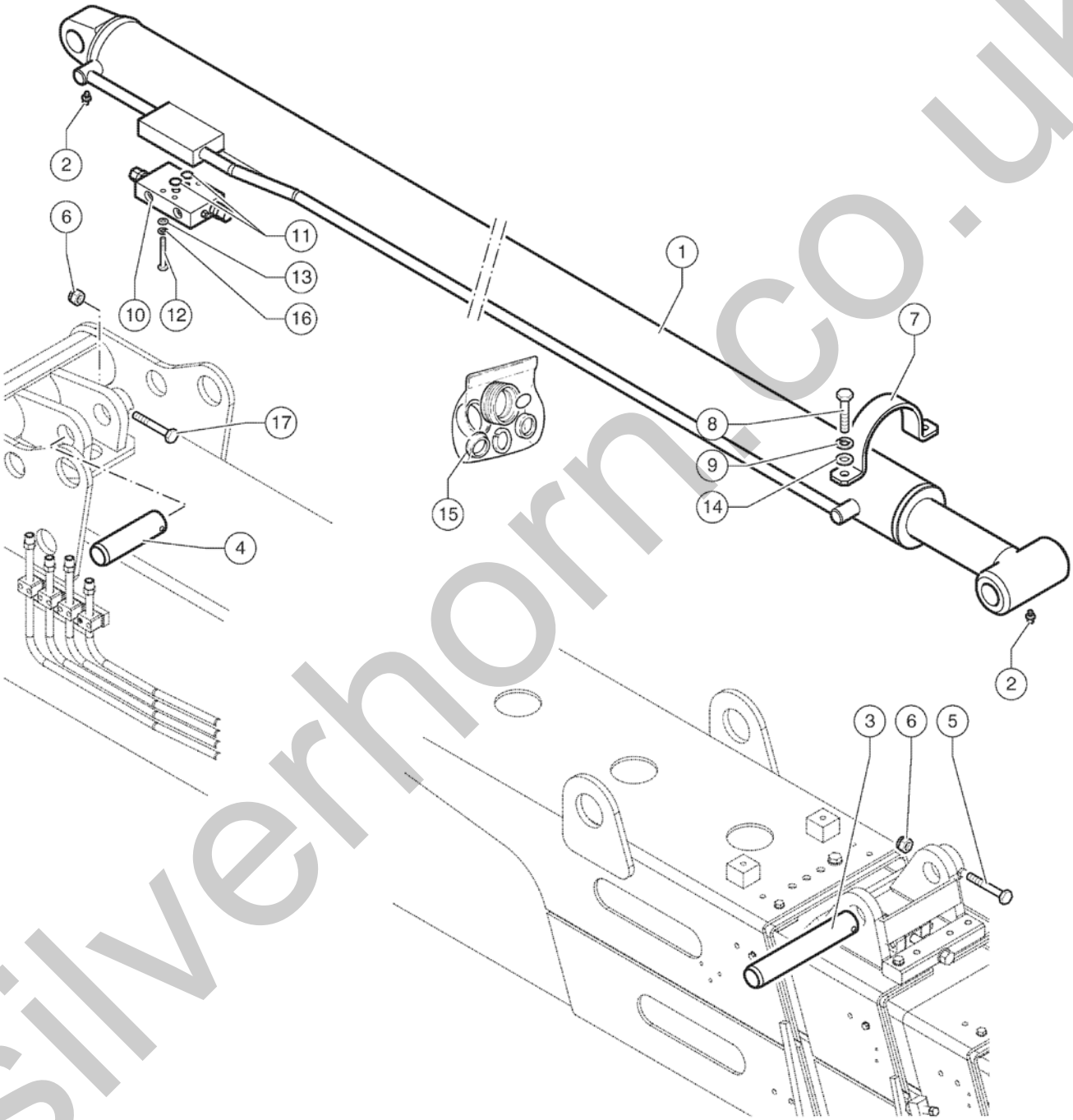

silverhorn.co.uk

508.1 610002 Boom Extension Cylinder

Item	Part No.	Description	Qty.
1	53.0100.3228GT	2nd Telescope Extension Cilinder	1
2	02.0117.0101GT	GREASE NIPPLE G1/8	2
3	54.0001.0092GT	2nd Telescope Extension Cylinder Foot Pin	1
4	54.0001.0085GT	2nd Telescope Extension Cylinder Head Pin	1
5	01.0001.0314GT	SCREW M10X100 UNI 5737 8.8 ZN	1
6	01.0023.0055GT	Stop Nut M10 UNI 7473 6S ZN	4
7	51.0811.4787GT	2nd Telescope Extension Cylinder Collar	1
8	01.0001.0606GT	SCREW M14X40 UNI 5739 8.8 ZN	2
9	01.4032.0006GT	SPRING WASHER D14 ZN	2
10	04.4239.0041GT	SAFETY VALVE	1
11	07.4529.0071GT	O-RING	2
12	01.0001.0306GT	SCREW M10X60 UNI 5737 8.8 ZN	4
13	01.0031.0056GT	FLAT WASHER D10 UNI 6592 ZN	4
14	01.0031.0058GT	FLAT WASHER D14 UNI 6592 ZN	2
15	07.4529.0210GT	Seal kit Extension Cylinder	1
16	01.4032.0004GT	Spring Washer D10 ZN	4
17	01.4001.0008GT	SCREW M10X90 UNI 5737 8.8 ZN	1

silverhorn.co.uk

509.1 610003 Left & Right Chassis Sway Cylinder - Rear Axle Locking Cylinder

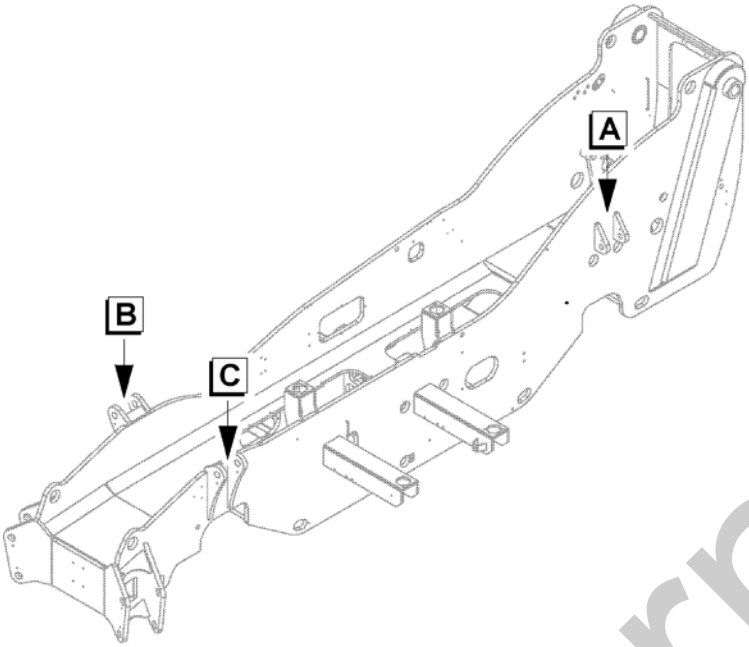

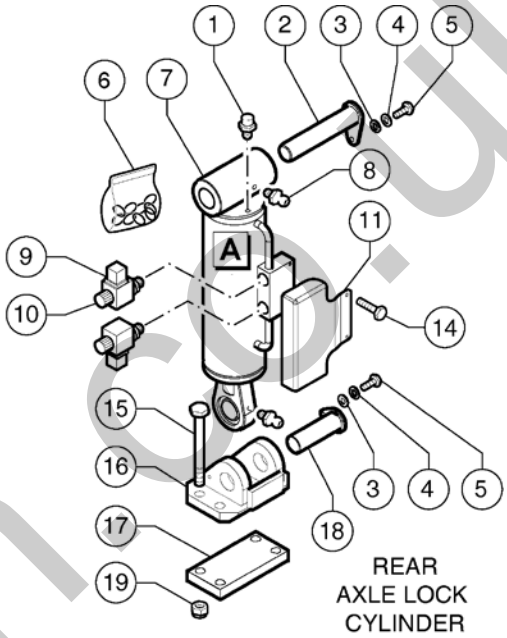

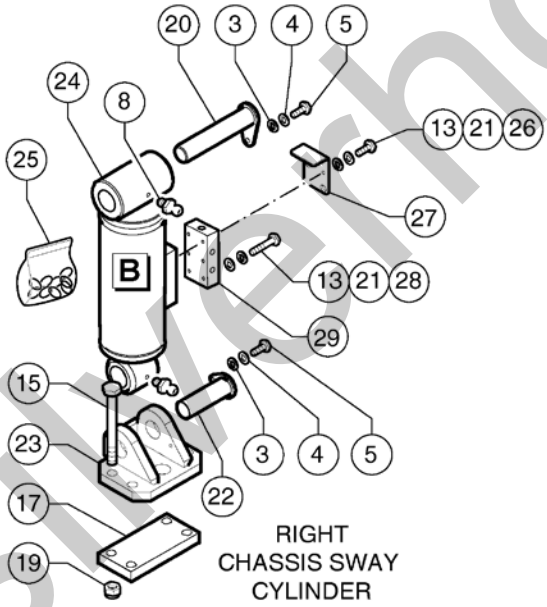

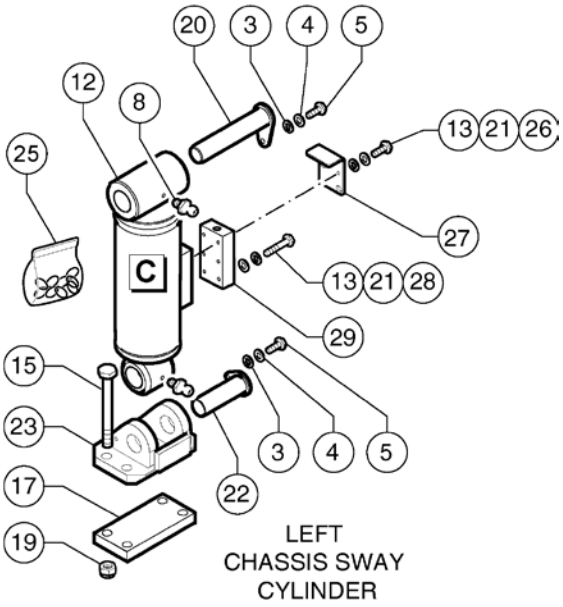

silverhorn.co.uk

509.1 610003 Left & Right Chassis Sway Cylinder - Rear Axle Locking Cylinder

Item	Part No.	Description	Qty.
1	04.0600.0092GT	SCREW,BLEEDER M8X1.25	1
2	54.0004.0130GT	Pin	1
3	01.0031.0056GT	FLAT WASHER D10 UNI 6592 ZN	6
4	01.4032.0004GT	Spring Washer D10 ZN	6
5	01.0001.0355GT	SCREW M10X25 UNI 5739 8.8 ZN	6
6	07.4529.0205GT	Seal Kit	1
7	53.0700.0307GT	Rear Axle Locking Cylinder	1
8	02.0117.0101GT	GREASE NIPPLE G1/8	6
9	04.4240.0041GT	SOLENOID	2
10	04.4240.0024GT	CARTRIDGE	2
11	51.0903.5261GT	Valve Protection Cover	1
12	53.0600.1816GT	Left Chassis Sway Cylinder	1
13	01.4032.0002GT	SPRING WASHER D6 ZN	20
14	01.4001.0106GT	SCREW M6X16 DIN 6923 8.8 ZN	2
15	01.0003.0965GT	SCREW SHC M22 x 280 ZN 8.8 UNI 5931 DIN 912 ISO 4762	12
16	51.0811.4810GT	Bracket	1
17	51.0811.4806GT	Plate	3
18	54.0004.0131GT	Pin	1
19	01.4023.0000GT	STOP NUT M22 UNI 7473 6S ZN	12
20	54.0004.0129GT	Pin	2
21	01.0031.0054GT	FLAT WASHER D6 UNI 6592 ZN	20
22	54.0004.0128GT	Pin	2
23	51.0811.4807GT	Bracket	2
24	53.0600.1817GT	Right Chassis Sway Cylinder	1
25	07.4529.0213GT	Seal Kit	2
26	01.0001.0106GT	SCREW M6X50 UNI 5737 8.8 ZN	4
27	51.0903.5262GT	Valve Protection Cover	2
28	01.4001.0046GT	SCREW M6X45 UNI 5739 8.8 ZN	12

silverhorn.co.uk

509.1 610003 Left & Right Chassis Sway Cylinder - Rear Axle Locking Cylinder

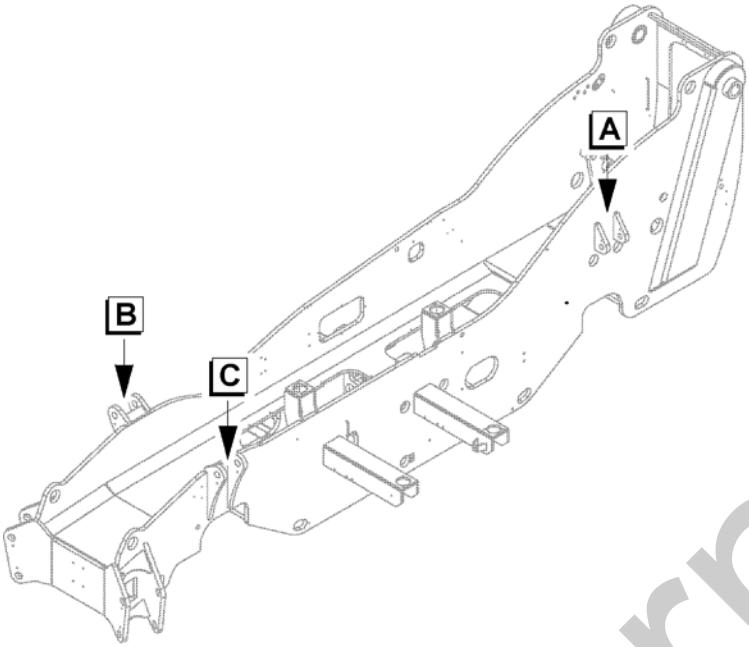

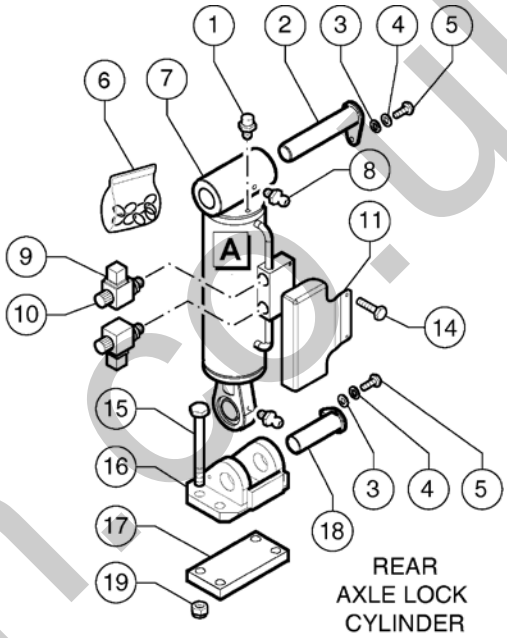

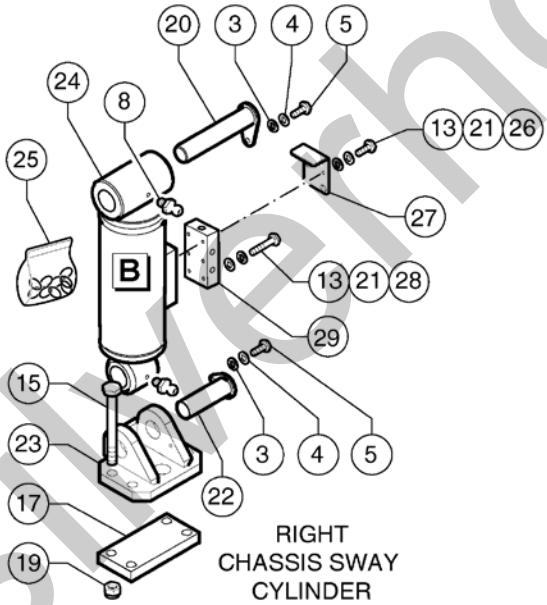

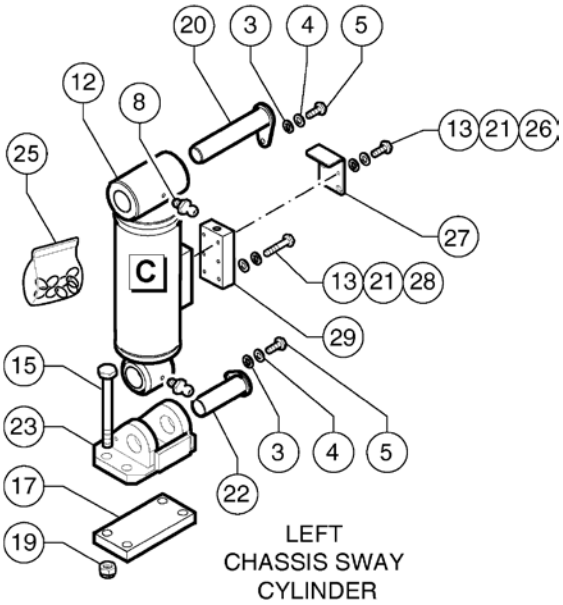

silverhorn.co.uk

509.1 610003 Left & Right Chassis Sway Cylinder - Rear Axle Locking Cylinder

Item	Part No.	Description	Qty.
29	04.4239.0080GT	SAFETY VALVE	2

silverhorn.co.uk

510.1 610004 Coupling Unit

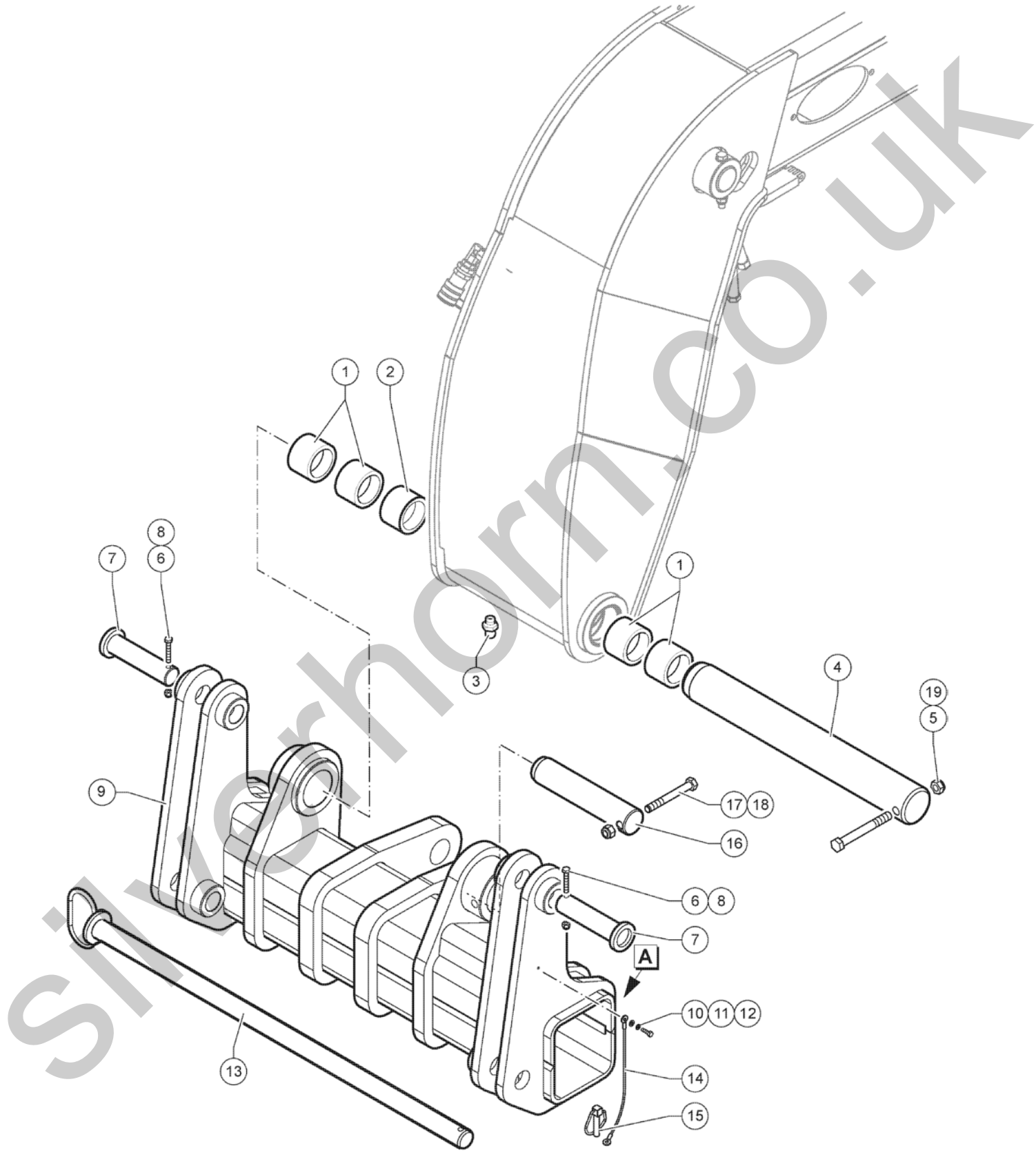

silverhorn.co.uk

510.1 610004 Coupling Unit

Item	Part No.	Description	Qty.
1	54.0201.0088GT	Bushing	4
2	52.0900.9337GT	Spacer	1
3	02.0117.0119GT	GREASE NIPPLE G 1/8	1
4	54.0002.0075GT	Pin	1
5	01.4001.0032GT	Screw TE M16 X 140 ZN UNI 5737	1
6	01.0023.0054GT	NUT,M8 UNI 7473 6S ZN	2
7	54.0002.0071GT	Pin	2
8	01.0001.0206GT	SCREW M8X55 UNI 5737 8.8 ZN	2
9	51.0400.5031GT	Fork Coupling Attachment	1
10	01.0001.0156GT	SCREW M6X20 UNI 5739 8.8 ZN	1
11	01.4032.0002GT	SPRING WASHER D6 ZN	1
12	01.0031.0054GT	FLAT WASHER D6 UNI 6592 ZN	1
13	54.0000.0265GT	Attachment Locking Pin	1
14	09.0803.0406GT	LANYARD,PIN	1
15	02.4102.0015GT	Lock Clip	1
16	54.0002.0079GT	Pin	1
17	01.4001.0189GT	Screw	1
18	01.0023.0057GT	STOP NUT M14 UNI 7473 6S ZN	1
19	01.0023.0058GT	NUT,STOP,M16 UNI 7473 6S ZN	1

silverhorn.co.uk

511.1 610005 Fork Frame

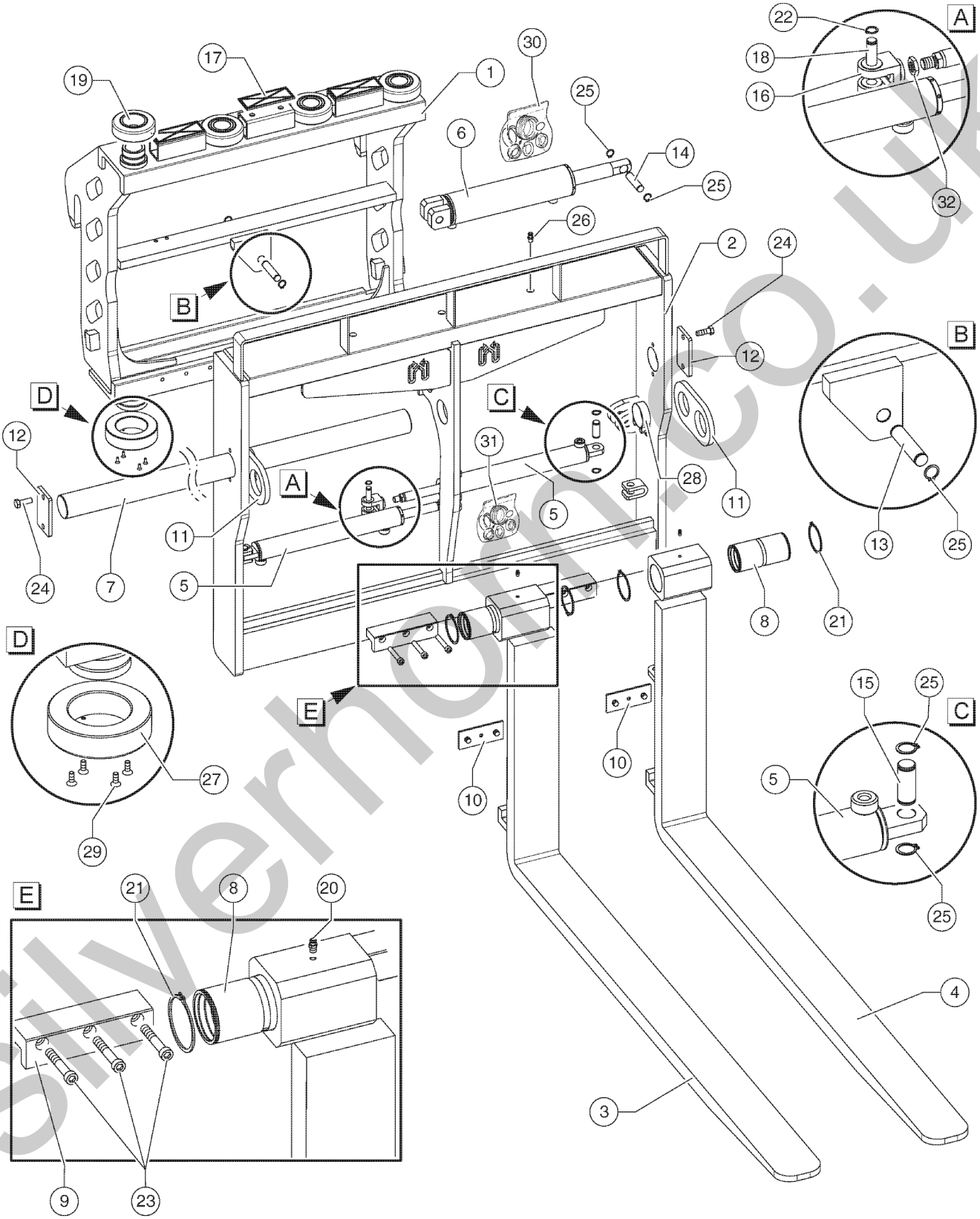

silverhorn.co.uk

511.1 610005 Fork Frame

Item	Part No.	Description	Qty.
1	07.0735.0210GT	Fixed Frame	1
2	07.0735.0211GT	Side-Shift Frame	1
3	07.0735.0212GT	Right Fork	1
4	07.0735.0213GT	Left Fork	1
5	07.0735.0214GT	Cylinder C=340	2
6	07.0735.0215GT	Cylinder C=254	1
7	07.0735.0216GT	Pin	1
8	07.0735.0217GT	Bush	2
9	07.0735.0218GT	Hook	2
10	07.0735.0219GT	Pad	2
11	07.0735.0220GT	Towing Hook	2
12	07.0735.0221GT	Retaining Pin	2
13	07.0735.0222GT	Pin	1
14	07.0735.0223GT	Pin	1
15	07.0735.0224GT	Pin	2
16	07.0735.0225GT	Cylinder Fork	2
17	07.0735.0002GT	Pad	3
18	07.0735.0227GT	Pin	2
19	07.0735.0239GT	Flow Group	4
20	07.0735.0008GT	Grease Nipple	2
21	07.0735.0229GT	Snap Ring	4
22	07.0735.0230GT	Snap Ring	4
23	07.0735.0231GT	Screw	6
24	07.0735.0232GT	Screw	4
25	07.0735.0226GT	Snap Ring	8
26	07.0735.0233GT	Grease Nipple	3
27	07.0735.0240GT	Flow Group	3
28	07.0735.0235GT	Ring	2

silverhorn.co.uk

511.1 610005 Fork Frame

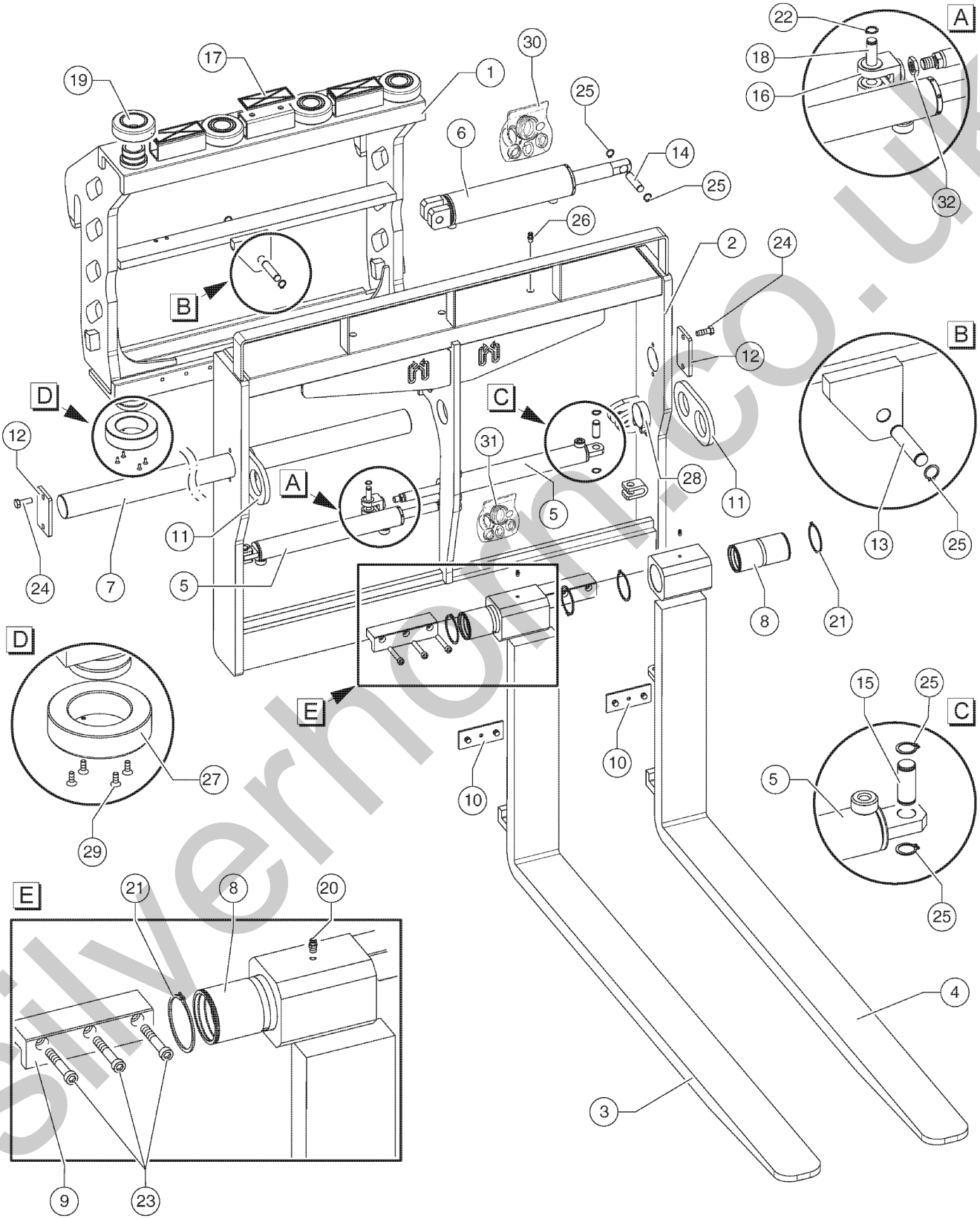

silverhorn.co.uk

511.1 610005 Fork Frame

Item	Part No.	Description	Qty.
29	07.0735.0236GT	Screw	12
30	07.0735.0237GT	Seal Kit	1
31	07.0735.0238GT	Seal Kit	1
32	07.0735.0241GT	Nut	2

silverhorn.co.uk

601.1 610009 Fittings

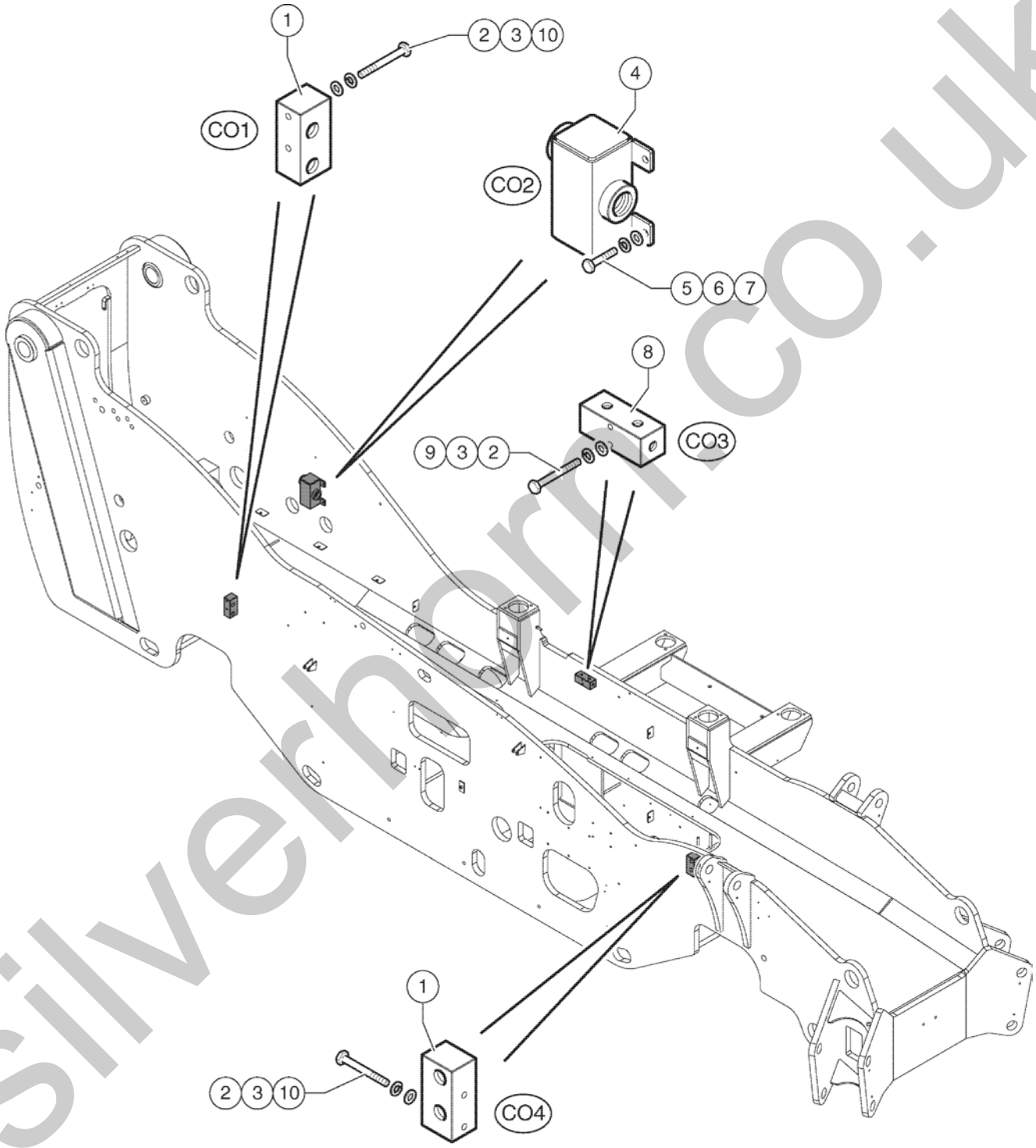

silverhorn.co.uk

601.1 610009 Fittings

Item	Part No.	Description	Qty.
1	53.3001.6826GT	MANIFOLD	2
2	01.4032.0002GT	SPRING WASHER D6 ZN	4
3	01.0031.0054GT	FLAT WASHER D6 UNI 6592 ZN	4
4	53.3001.6824GT	Manifold	1
5	01.0001.0254GT	SCREW M8X20 UNI 5739 8.8 ZN	1
6	01.4032.0003GT	Spring Washer D 8 ZN	1
7	01.0031.0055GT	FLAT WASHER D8 UNI 6592 ZN	1
8	53.3001.6825GT	Manifold	1
9	01.0001.0106GT	SCREW M6X50 UNI 5737 8.8 ZN	1
10	01.0003.0967GT	SCREW,SHC,M6x70, DIN 912,8.8, ZN	4

silverhorn.co.uk

602.1 610010 Boom Extension Cylinder

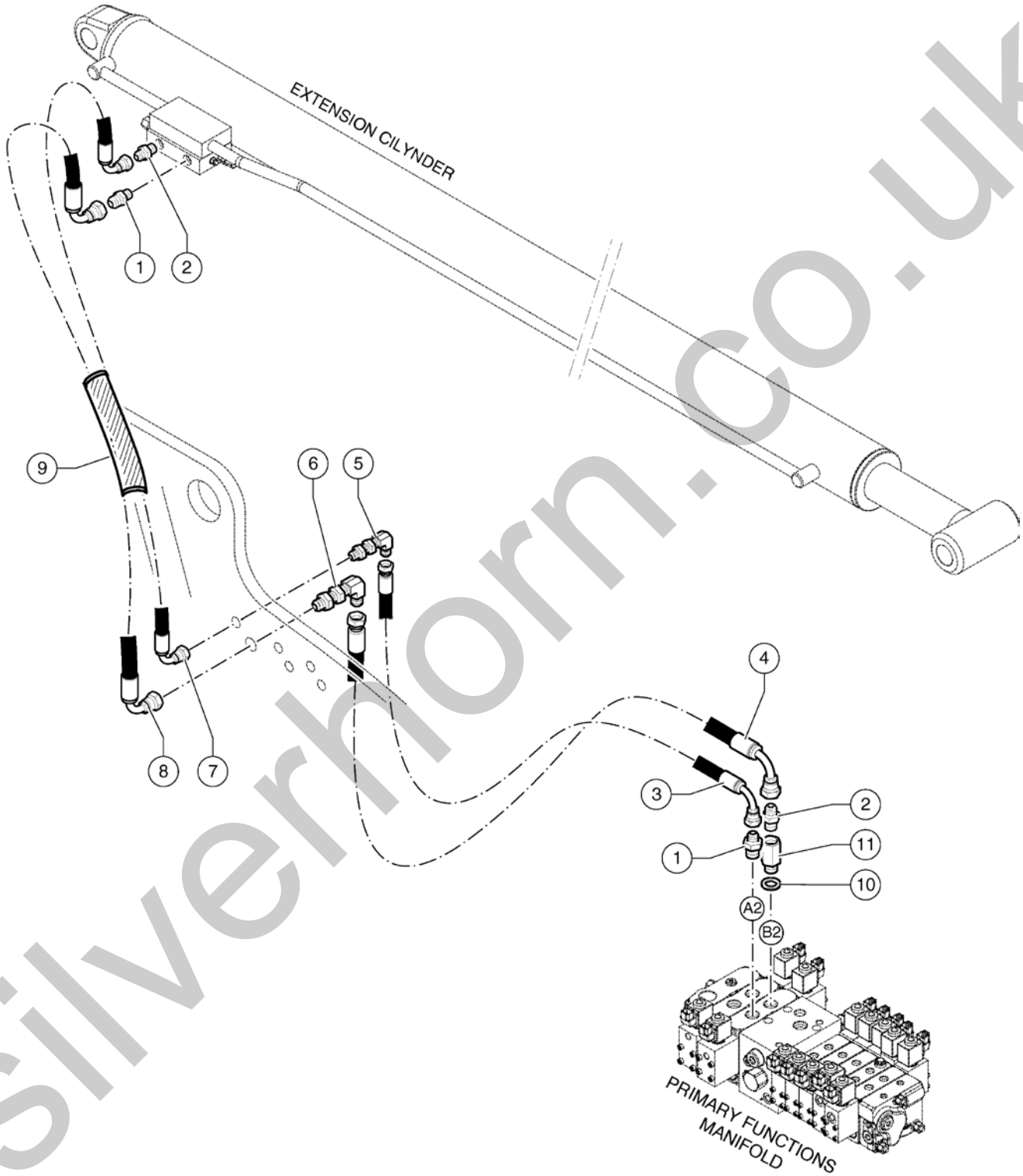

silverhorn.co.uk

602.1 610010 Boom Extension Cylinder

Item	Part No.	Description	Qty.
1	04.0607.0121GT	PIPE FITTING 3/4 BSPX13/16-16 ORFS	2
2	04.0607.0107GT	PIPE FITTING 3/4"BSP X1"3/16-12 ORFS	2
3	04.0605.0896GT	HOSE R2X1/2 3300 F90 13/16-16 FD 13/16-16	1
4	04.0605.1671GT	Flexible Hose R2 (300BAR) X 3/4 3350 F90 FD 13/16"-12	1
5	04.0607.0124GT	PIPE FITTING 90 M-M 13/16-16 ORFS	1
6	04.0607.0853GT	Pipe Fitting M 1"3/16-12 . X M 1"3/16"-12 ORFS	1
7	04.0605.1496GT	HOSE 2X3-4 LG1400 F90-F90 1"3/16 A 270ø	1
8	04.0605.1498GT	HOSE R2X1-2 LG1400 F90-F90 13/16-16 ORFS 270ø	1
9	09.0803.0835GT	HOSES PROTECTION	1
10	06.0442.0124GT	BONDED RING 3/4	1
11	04.0600.0271GT	Pipe Fitting CMF 3/4BSP LG.35	1

silverhorn.co.uk

603.1 610011 Forks Tilt Cylinder - Forks Level Slave Cylinder

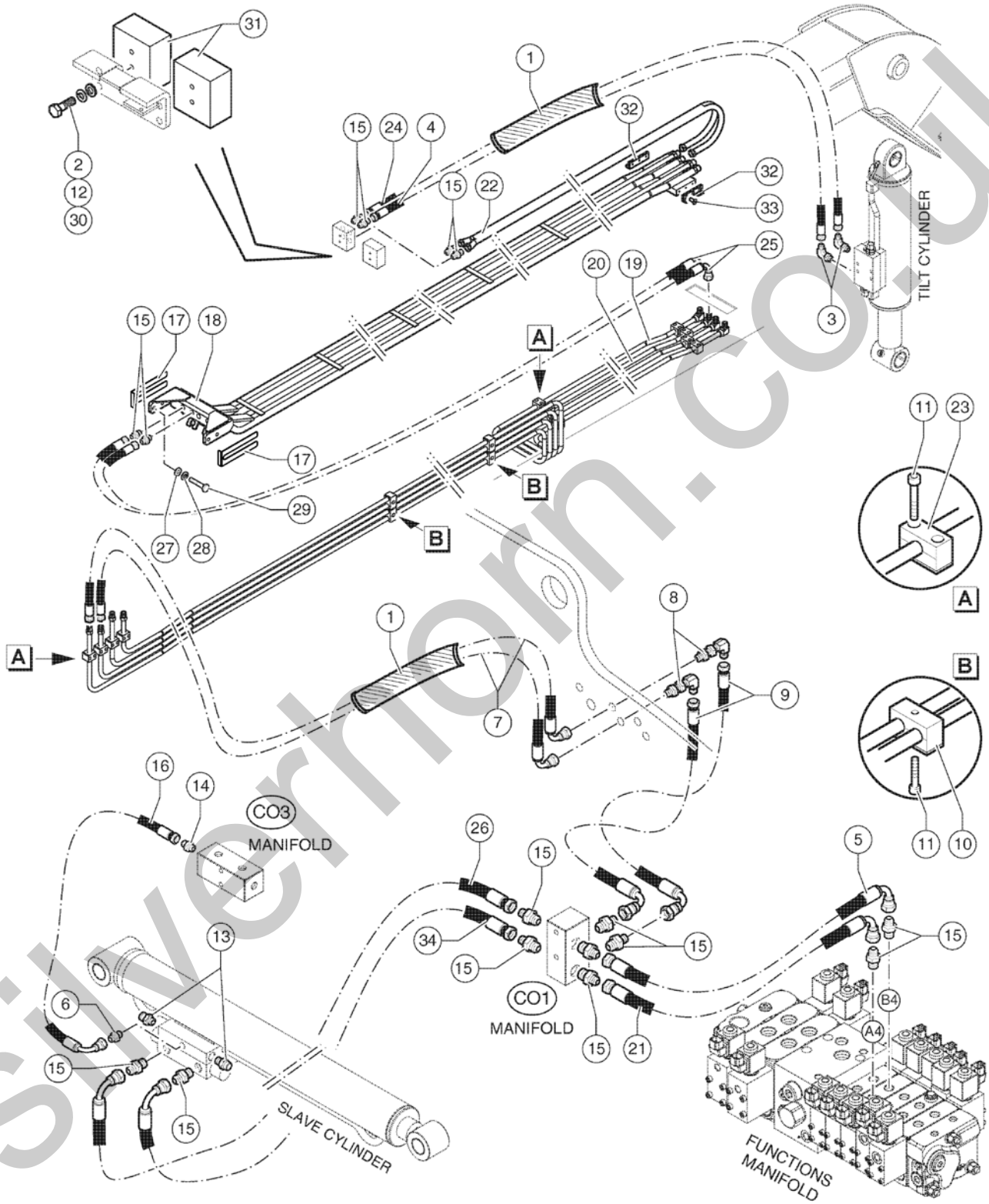

silverhorn.co.uk

603.1 610011 Forks Tilt Cylinder - Forks Level Slave Cylinder

Item	Part No.	Description	Qty.
1	09.0803.0835GT	HOSES PROTECTION	2
2	01.4032.0002GT	SPRING WASHER D6 ZN	4
3	04.0607.0141GT	PIPE FITTING 90 1/2GASXM 13/16-16 ORFS	2
4	04.0605.1711GT	Flexible Hose R2 X 1/2" 350 Bar Lg. 3720 FD - FD 13/16"-16 ORFS	1
5	04.0605.1669GT	Flexible Hose R2 (300BAR) X 1/2 1900 F90 Hight FD 13/16"-16	1
6	04.0607.0114GT	PIPE FITTING 3/8 BSPX9/16-18 ORFS	1
7	04.0605.1628GT	PIPE R2 X 1/2 1300 FD F90 13/16"-16 ORFS	2
8	04.0607.0124GT	PIPE FITTING 90 M-M 13/16-16 ORFS	2
9	04.0605.0891GT	Flexible Hose R2 X 1/2" Lg. 1450 FD - F90 13/16"-16 ORFS	2
10	09.0803.0060GT	CLAMP,DOUBLE,D16	4
11	01.0003.0157GT	SCREW M6X25 UNI 5931 8.8 ZN	28
12	01.0031.0054GT	FLAT WASHER D6 UNI 6592 ZN	2
13	04.4239.0004GT	SAFETY VALVE	2
14	04.0607.0113GT	PIPE FITTING 1/4 BSPX9/16-18 ORFS	1
15	04.0607.0111GT	PIPE FITTING 1/2 BSPX13/16-16 ORFS	16
16	04.0605.1646GT	Flexible Hose R1 X 1/4" LG. 3050 FD - F90 9/16-18 ORFS	1
17	51.0811.4057GT	Shim	6
18	53.3402.4094GT	Iron Hoses	1
19	52.0900.9339GT	Iron Hose With Pipe Fitting	1
20	52.0900.9340GT	Iron Hose With Pipe Fitting	1
21	04.0605.1772GT	Flexible Hose R2 X 1/2 1850 FD F90 13/16"-16	1
22	04.0605.1709GT	Twin Hoses MTKH 1/2 2750 FD 13/16"-16 FD 13/16"-16	1
23	09.0803.0043GT	SINGLE HOSE BRACKET D16	12
24	04.0605.1710GT	Flexible Hose ETeRNITY/2 X 1/2 3620 FD FD 13/16"-16	1
25	04.0605.1708GT	Flexible Hose R2 X 1/2" 300 Bar Lg. 4960 FD - F90 13/16"-16 ORFS	2
26	04.0605.0600GT	HOSE R2X1/2 LG750 F90 FD 13/16-16 ORFS	1
27	01.0031.0057GT	WASHER, FLAT, D12, UNI 6592, ZN	4
28	01.4032.0005GT	SPRING WASHER D12 ZN	4

silverhorn.co.uk

603.1 610011 Forks Tilt Cylinder - Forks Level Slave Cylinder

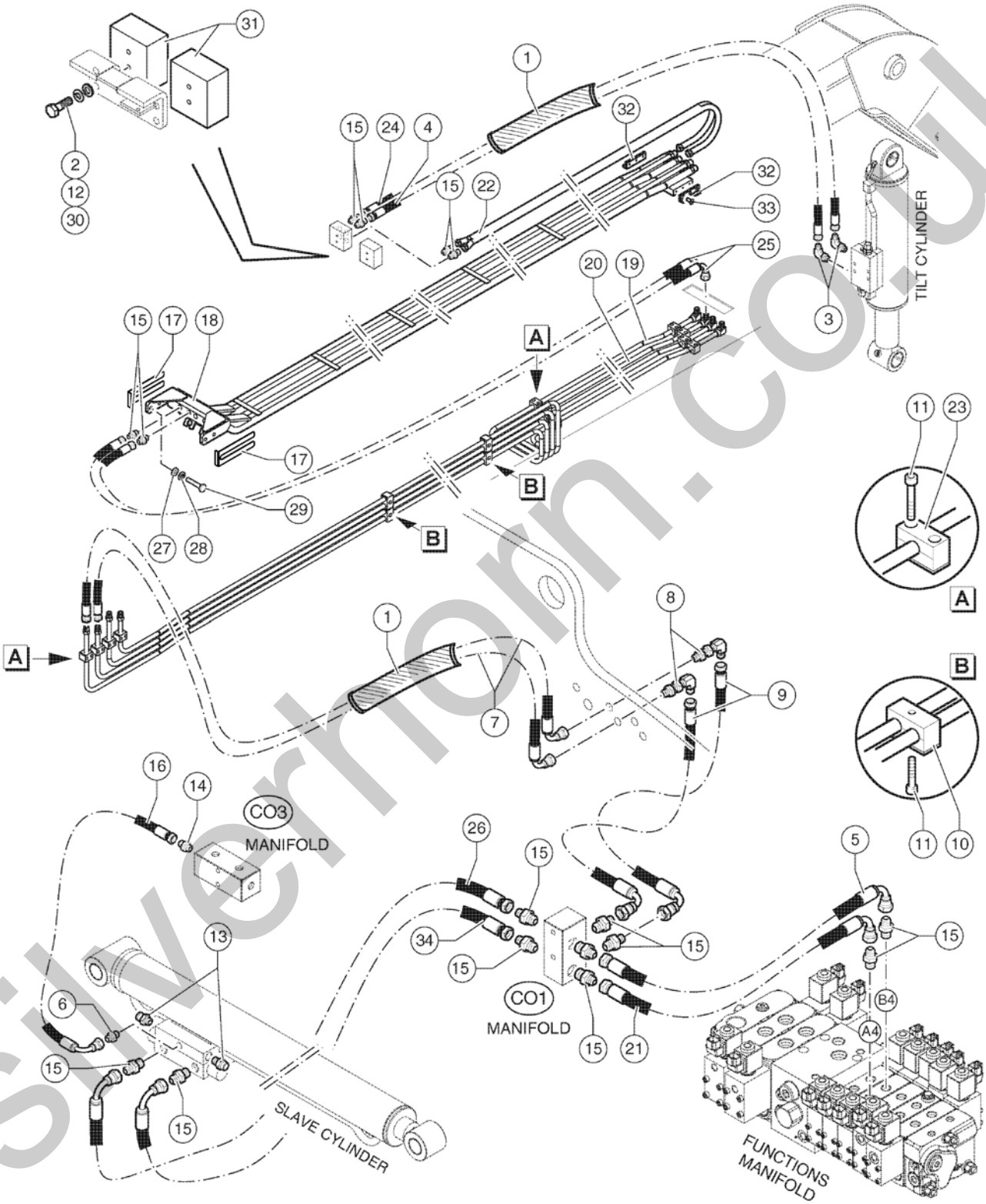

silverhorn.co.uk

603.1 610011 Forks Tilt Cylinder - Forks Level Slave Cylinder

Item	Part No.	Description	Qty.
29	01.0001.0506GT	SCREW M12X30 UNI 5739 8.8 ZN	4
30	01.0001.0156GT	SCREW M6X20 UNI 5739 8.8 ZN	4
31	54.0600.0006GT	HOSES BLOCK	2
32	54.0702.0080GT	WEAR PAD,BRONZE	2
33	01.4006.0011GT	SCREW M6X20 UNI 5933 10.9 ZN	6
34	04.0605.1734GT	Flexible Hose R2 (300 BAR) X 1/2 850 F90 ALTA (56) X FD 13/16"-16	1

silverhorn.co.uk

604.1 610012 Attachment Hydraulic Circuit

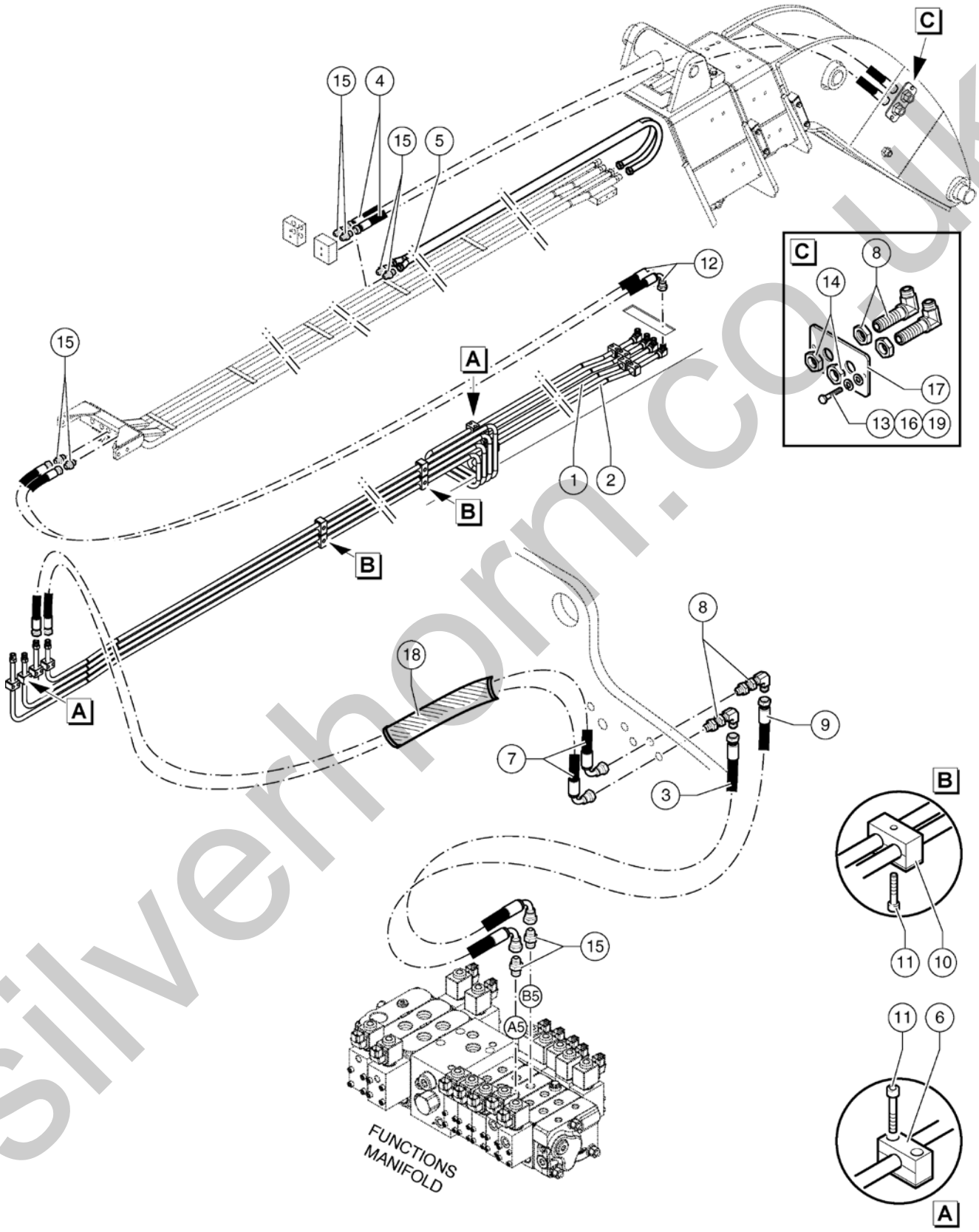

silverhorn.co.uk

604.1 610012 Attachment Hydraulic Circuit

Item	Part No.	Description	Qty.
1	52.0900.9341GT	Iron Hose With Pipe Fitting	1
2	52.0900.9328GT	Iron Hose With Pipe Fitting	1
3	09.0605.1731GT	Flexible Hose R2 X 1/2 3350 FD F90 HIGHT 13/16"-16 (300 BAR)	1
4	04.0605.1711GT	Flexible Hose R2 X 1/2" 350 Bar Lg. 3720 FD - FD 13/16"-16 ORFS	2
5	04.0605.1709GT	Twin Hoses MTKH 1/2 2750 FD 13/16"-16 FD 13/16"-16	1
6	09.0803.0043GT	SINGLE HOSE BRACKET D16	12
7	04.0605.1628GT	PIPE R2 X 1/2 1300 FD F90 13/16"-16 ORFS	2
8	04.0607.0124GT	PIPE FITTING 90 M-M 13/16-16 ORFS	4
9	04.0605.0896GT	HOSE R2X1/2 3300 F90 13/16-16 FD 13/16-16	1
10	09.0803.0060GT	CLAMP,DOUBLE,D16	4
11	01.0003.0157GT	SCREW M6X25 UNI 5931 8.8 ZN	28
12	04.0605.1708GT	Flexible Hose R2 X 1/2" 300 Bar Lg. 4960 FD - F90 13/16"-16 ORFS	2
13	01.4032.0002GT	SPRING WASHER D6 ZN	2
14	01.4019.0029GT	Nut 13/16" Special Esec	2
15	04.0607.0111GT	PIPE FITTING 1/2 BSPX13/16-16 ORFS	8
16	01.0031.0054GT	FLAT WASHER D6 UNI 6592 ZN	2
17	51.0811.4889GT	Braket	1
18	09.0803.0835GT	HOSES PROTECTION	1
19	01.0001.0156GT	SCREW M6X20 UNI 5739 8.8 ZN	2

silverhorn.co.uk

605.1 610013 Front Stabilizers

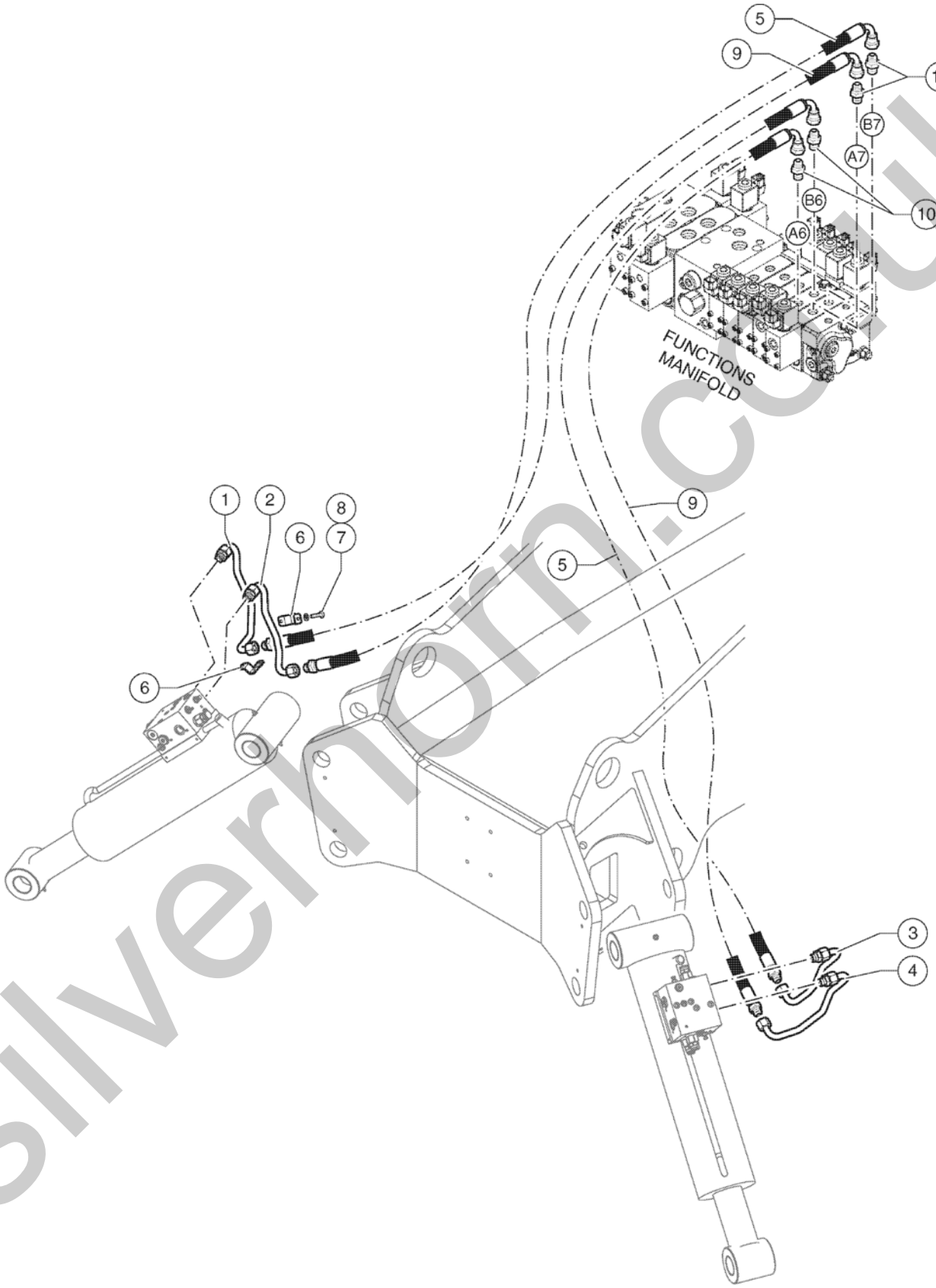

silverhorn.co.uk

605.1 610013 Front Stabilizers

Item	Part No.	Description	Qty.
1	53.3402.4089GT	IRON PIPE	1
2	53.3402.4088GT	IRON PIPE	1
3	53.3402.4086GT	IRON PIPE	1
4	53.3402.4087GT	IRON PIPE	1
5	04.0605.1751GT	Flexible Hose R2 (300BAR)X1/2 LG. 5500 F90 ALTA 13/16-16 ORFS MD 16	2
6	51.0811.4776GT	BRACKET	4
7	01.0001.0107GT	SCREW M6x12 UNI 5739 8.8 ZN	8
8	01.4032.0002GT	SPRING WASHER D6 ZN	8
9	04.0605.1752GT	Flexible Hose R2 (300Bar) X1/2 LG. 5500 F90 13/16-16 ORFS MD16	2
10	04.0607.0111GT	PIPE FITTING 1/2 BSPX13/16-16 ORFS	4

silverhorn.co.uk

606.1 610014 Chassis Sway Cylinder

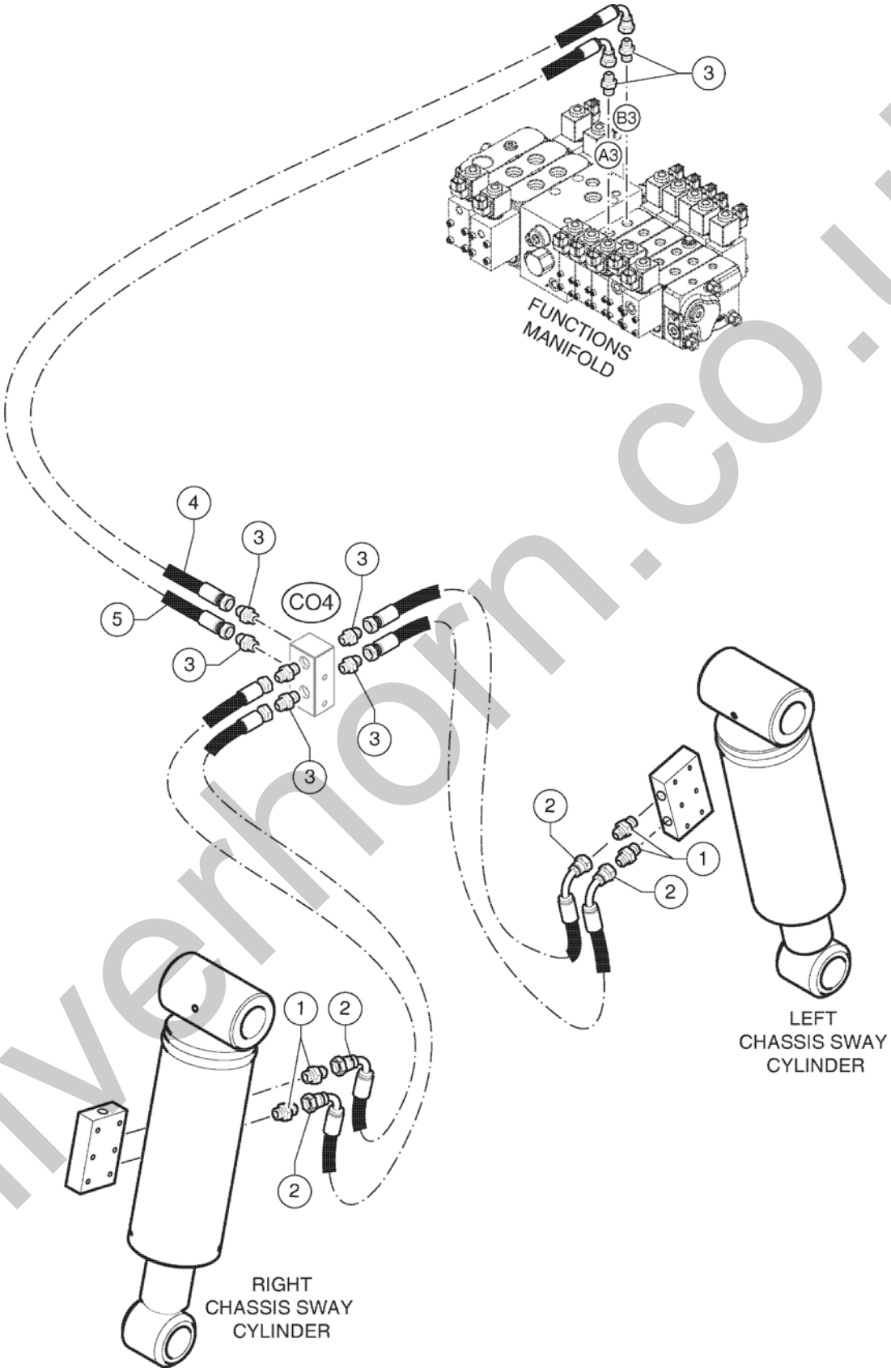

silverhorn.co.uk

606.1 610014 Chassis Sway Cylinder

Item	Part No.	Description	Qty.
1	04.0607.0114GT	PIPE FITTING 3/8 BSPX9/16-18 ORFS	4
2	04.0605.0731GT	HOSE R2X1/4 LG1200 F90 FD 9/16 ORFS	4
3	04.0607.0167GT	PIPE FITTING 1/2BSPX 9/16-18 ORFS	8
4	04.0605.1754GT	Flexible Hose R2 (300 BAR) X 1/4 LG 3450 F90 FD 9/16-18 ORFS	1
5	04.0605.1753GT	Flexible Hose R2 (300BAR)X 1/4 LG.3500 F90 Hight FD 9/16 ORFS	1

silverhorn.co.uk

607.1 610015 Rear Axle Lock Cylinder

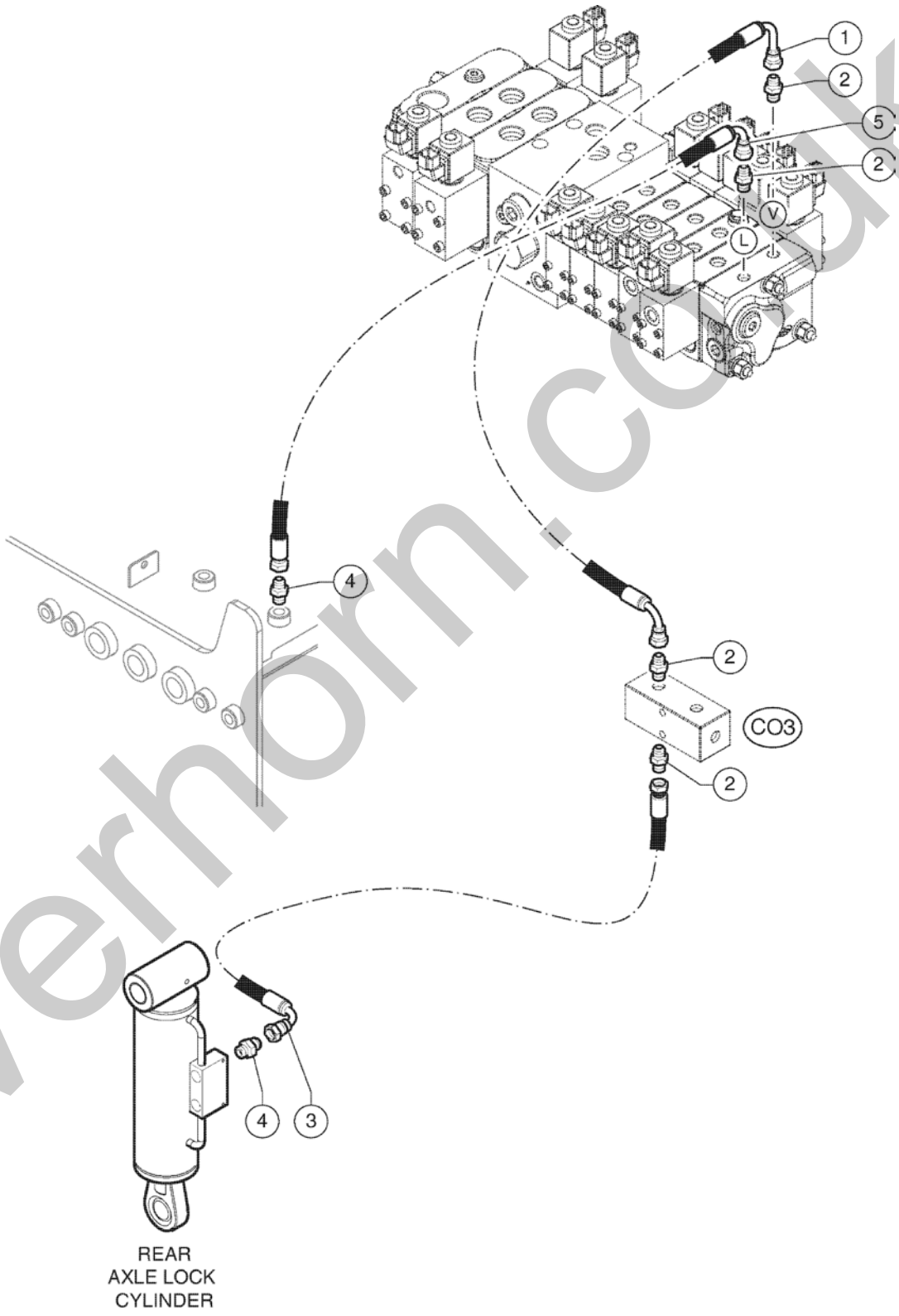

silverhorn.co.uk

607.1 610015 Rear Axle Lock Cylinder

Item	Part No.	Description	Qty.
1	04.0605.1775GT	Flexible Hose R1 X 1/4 1850 F90 ALTA F90 9/16"-18 90°	1
2	04.0607.0113GT	PIPE FITTING 1/4 BSPX9/16-18 ORFS	3
3	04.0605.0770GT	HOSE R1X1/4 L 2400 90 FEM STR FEM 9/16-18	1
4	04.0607.0114GT	PIPE FITTING 3/8 BSPX9/16-18 ORFS	2
5	04.0605.0178GT	HOSE R1X1/4 LG 350 F90 - FD 9/16-16	1

silverhorn.co.uk

608.1 610016 Boom Lift Cylinder

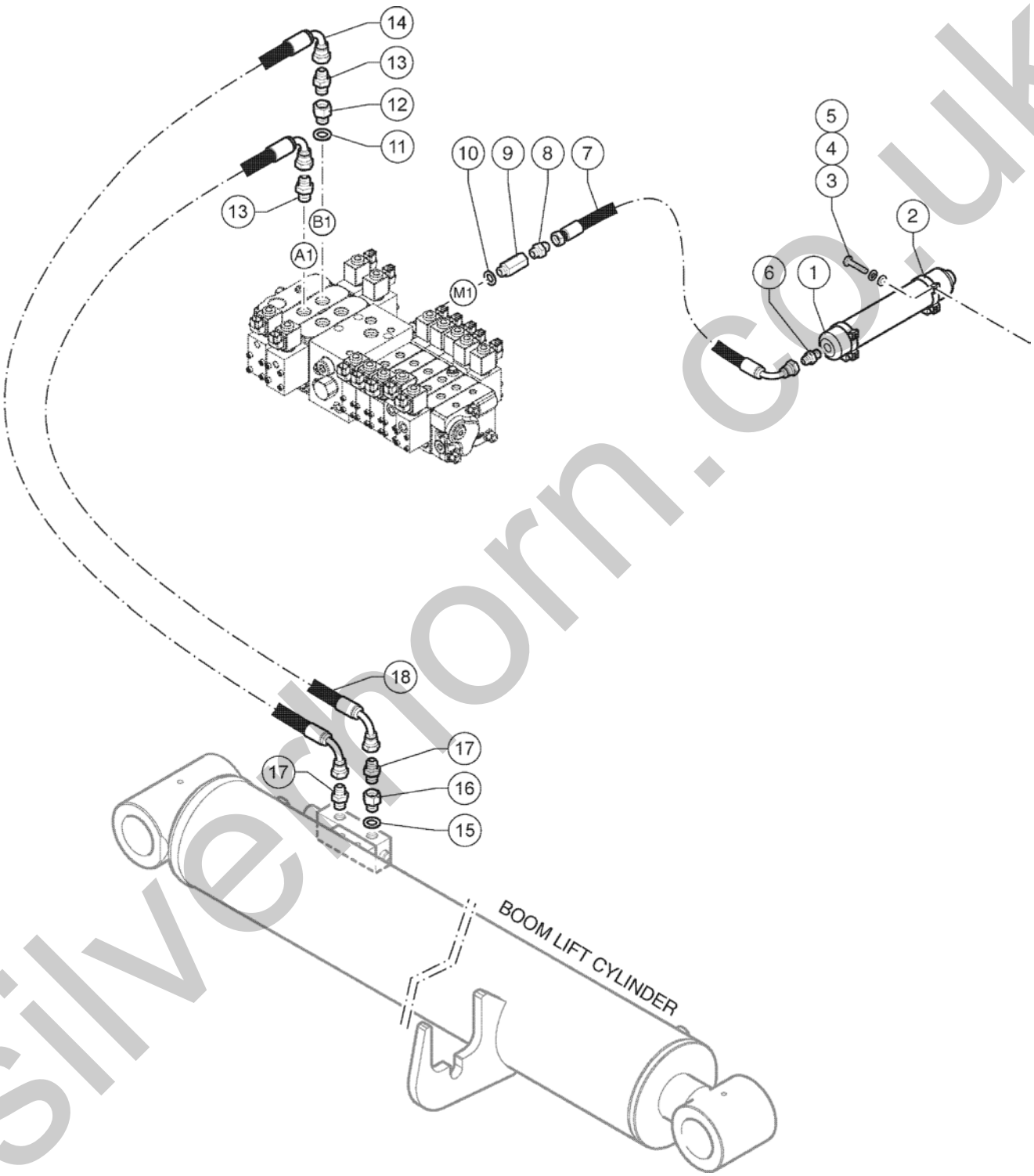

silverhorn.co.uk

608.1 610016 Boom Lift Cylinder

Item	Part No.	Description	Qty.
1	05.4329.0035GT	Accumulator 0,5L	1
2	04.4227.0016GT	CLAMP D60 HOLE 10.5	2
3	01.4032.0003GT	Spring Washer D 8 ZN	2
4	01.0031.0055GT	FLAT WASHER D8 UNI 6592 ZN	2
5	01.0001.0252GT	SCREW M8X16 UNI 5739 8.8 ZN	2
6	04.0607.0167GT	PIPE FITTING 1/2BSPX 9/16-18 ORFS	1
7	04.0605.0230GT	HOSE R2 (300 BAR)X 1/4" LG 900 F90 - FD 9/16-18 ORFS	1
8	04.0607.0113GT	PIPE FITTING 1/4 BSPX9/16-18 ORFS	1
9	04.0600.0069GT	PIPE FITTING CMF 1/4 ES LG 40	1
10	06.0442.0117GT	BONDED RING 1/4"	1
11	06.0442.0124GT	BONDED RING 3/4	1
12	04.0600.0271GT	Pipe Fitting CMF 3/4BSP LG.35	1
13	04.0607.0107GT	PIPE FITTING 3/4"BSP X1"3/16-12 ORFS	2
14	04.0605.1729GT	Flexible Hose R2 (300BAR) X 3/4	1
15	06.0442.0122GT	BONDED RING 1/2"	3
16	04.0600.0091GT	PIPE FITTING CMF1/2 ES LG 25	1
17	04.0607.0102GT	PIPE FITTING 1/2BSPX1-3/16-12ORFS	2
18	04.0605.1730GT	Flexible Hose R2 (300BAR) X 3/4 2400 F90 F90 1 3/16"-12 A 90°	1

silverhorn.co.uk

609.1 610017 Power Steering

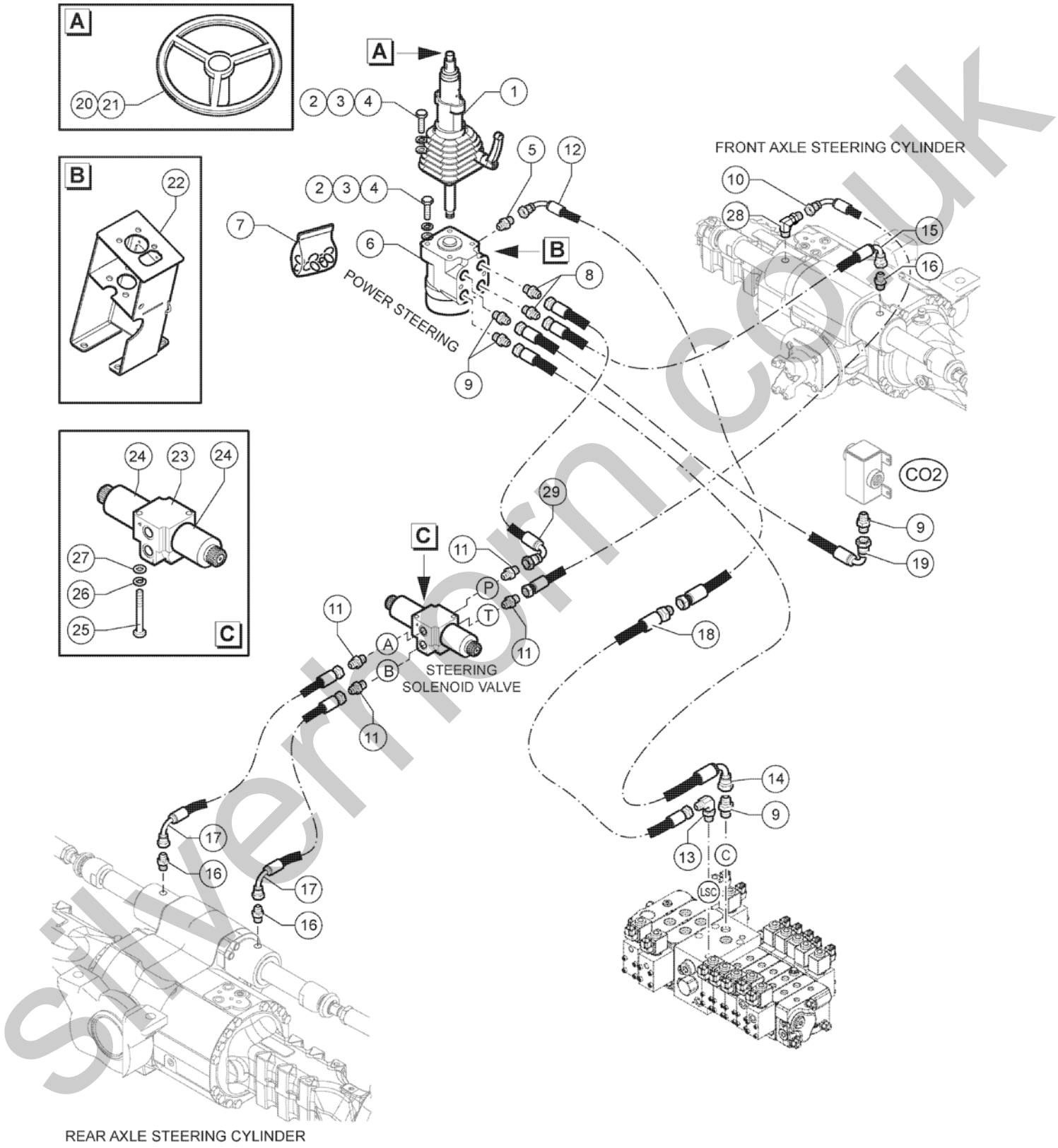

silverthorn.co.uk

609.1 610017 Power Steering

Item	Part No.	Description	Qty.
1	09.0636.0000GT	STEERING COLUMN,COMPLETE	1
2	01.0001.0355GT	SCREW M10X25 UNI 5739 8.8 ZN	7
3	01.4032.0004GT	Spring Washer D10 ZN	7
4	01.0031.0056GT	FLAT WASHER D10 UNI 6592 ZN	7
5	04.0607.0113GT	PIPE FITTING 1/4 BSPX9/16-18 ORFS	1
6	09.4636.0017GT	Power Steering	1
7	07.4529.0118GT	Seal Kit	1
8	04.0607.0110GT	PIPE FITTING 1/2BSP x 11/16-16 ORFS	2
9	04.0607.0111GT	PIPE FITTING 1/2 BSPX13/16-16 ORFS	4
10	04.0605.0431GT	HOSE R2X3/8 LG 1100 F90 FD 11/16-16 ORFS	1
11	04.0607.0114GT	PIPE FITTING 3/8 BSPX9/16-18 ORFS	4
12	04.0605.1442GT	PIPE FITTING R2X1/4 LG950 FD F90 9/16 ORFS	1
13	04.0607.0112GT	PIPE FITTING M-M A 90 1/4 BSPX9/16-18 ORFS	1
14	04.0605.1560GT	Flexible Hose R2 (300BAR) X 1/2 LG 3350 FD F90 13/16 ORFS	1
15	04.0605.0741GT	Flexible Hose R2 (300BAR)X 3/8 LG.2200 FD F90 11/16-16 ORFS	1
16	04.0607.0193GT	Pipe Fitting 3/4-16UNF/ 11/16-16ORFS	3
17	04.0605.1506GT	Flexible Hose R2 (300BAR)X 3/8 3400 FD F90 11/16"-16	2
18	04.0605.1663GT	Flexible Hose R2(300 BAR) X 1/4 3400 FD F90 9/16"-18	1
19	04.0605.1787GT	Flexible Hose R4 X 3/4 3150 F90 FD 1 3/16"-12	1
20	09.0636.0002GT	Steering wheel	1
21	09.0636.0001GT	CENTRAL CAP WITH HORN	1
22	51.0811.4076GT	Steering Support	1
23	04.4240.0052GT	SOLENOID VALVE	1
24	07.4529.0111GT	COIL, VALVE	2
25	01.0001.0102GT	SCREW M6X30 UNI 5739 8.8 ZN	2
26	01.0031.0054GT	FLAT WASHER D6 UNI 6592 ZN	4
27	01.4032.0002GT	SPRING WASHER D6 ZN	2
28	04.0607.0849GT	Pipe Fitting M-M A 90 3/4"-16 UNF X 11/16"-16 ORFS	1

silverhorn.co.uk

609.1 610017 Power Steering

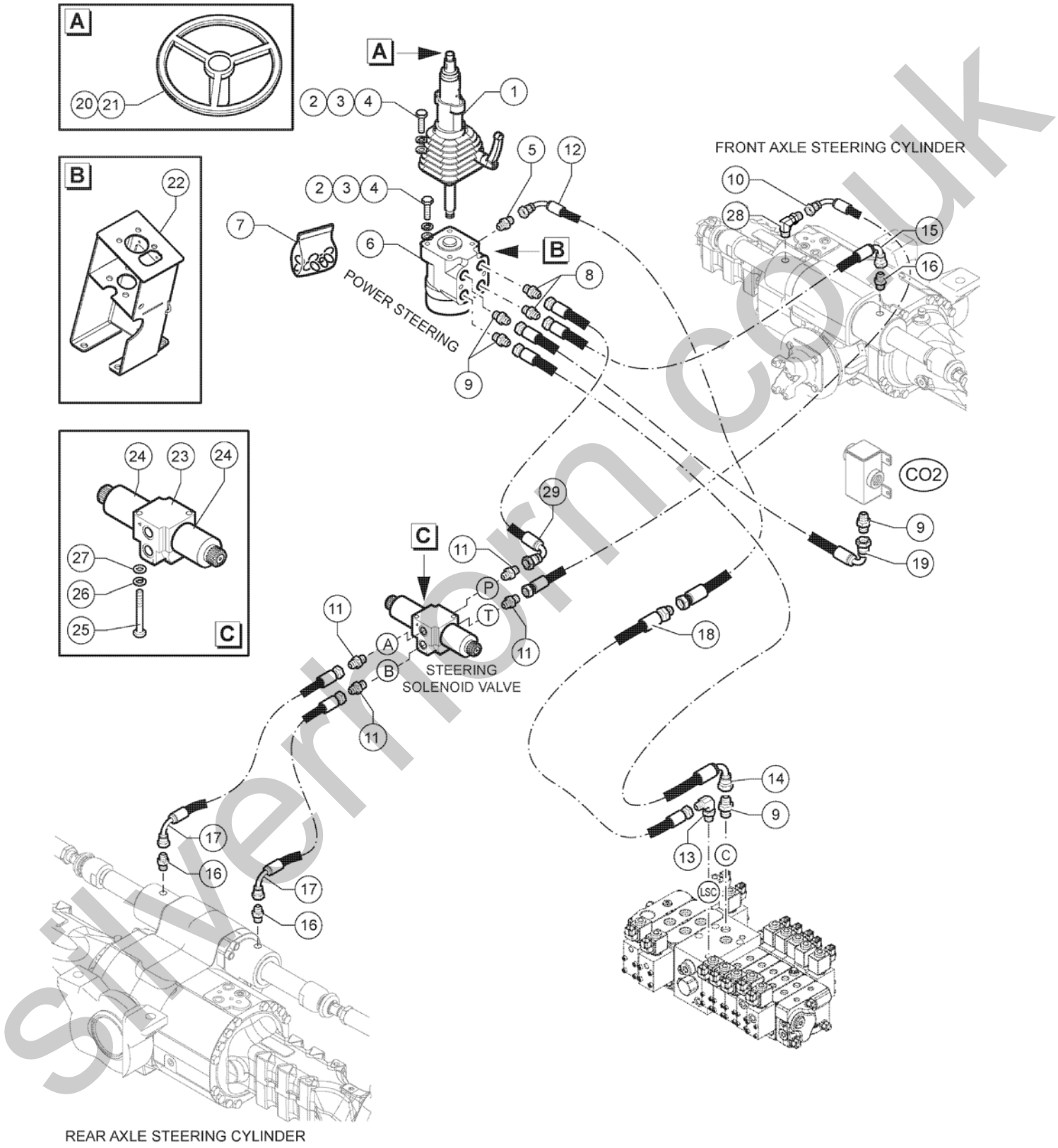

silverthorn.co.uk

609.1 610017 Power Steering

Item	Part No.	Description	Qty.
29	04.0605.1389GT	Flexible Hose R2 (300 bar)X 3/8 LG. 1350 F90 FD 11/16-16 ORFS	1

silverhorn.co.uk

610.1 610018 Service Brake

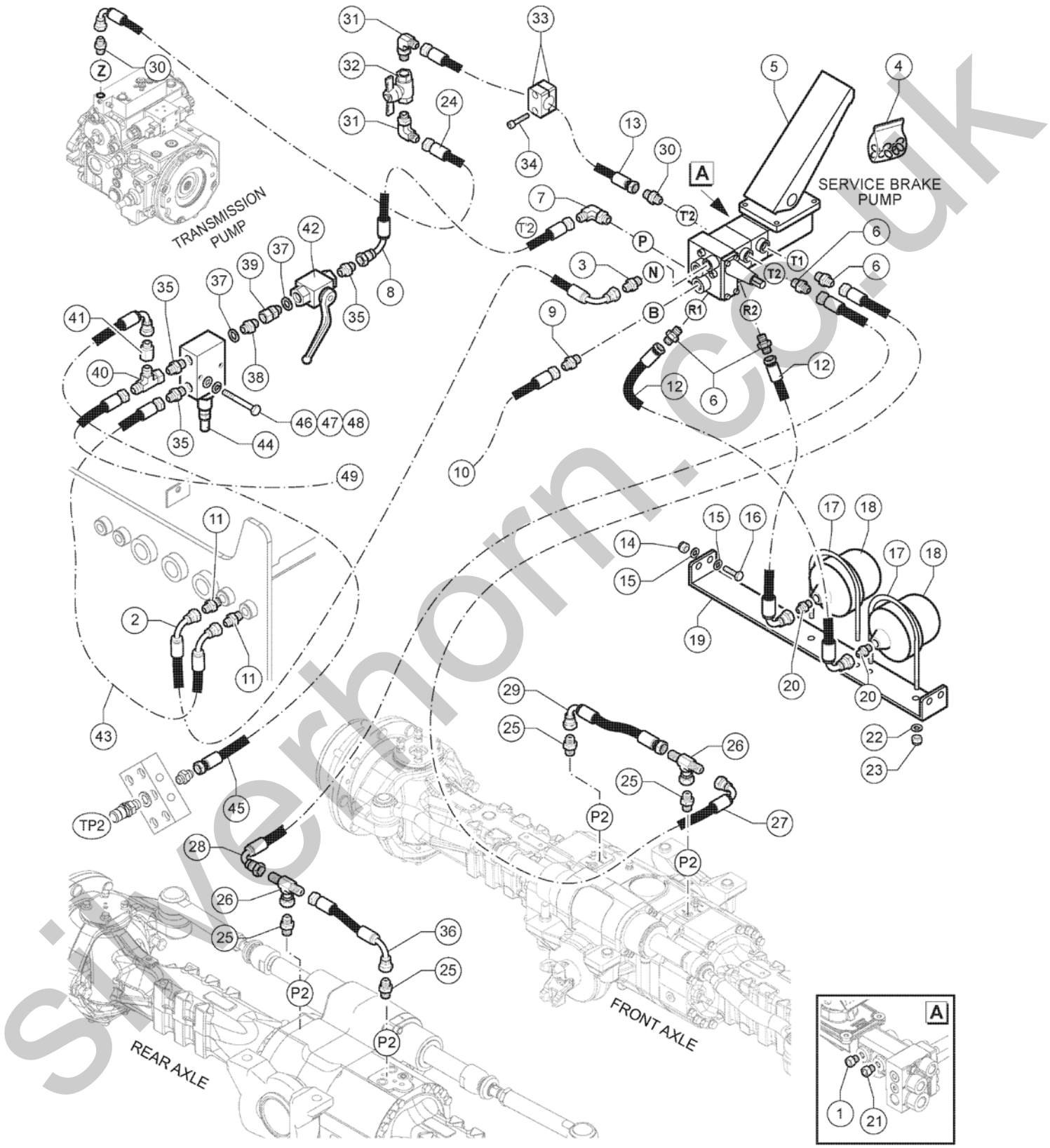

silverhorn.co.uk

610.1 610018 Service Brake

Item	Part No.	Description	Qty.
1	05.4329.0001GT	PRESSURE SWITCH Stop Lights Activation	1
2	04.0605.1744GT	Flexible Hose R1 X 3/8 LG.2200 F90 FD 11/16ORFS	1
3	04.0607.0137GT	PIPE FITTING 18X1.5X11/16 ORFS	1
4	07.0730.0077GT	SEAL KIT	1
5	05.4309.0015GT	Pump Brake	1
6	04.0607.0153GT	PIPE FITTING 14X1.5X9/16-18 ORFS	4
7	04.0607.0141GT	PIPE FITTING 90 1/2GASXM 13/16-16 ORFS	1
8	04.0605.0313GT	HOSE R2X1/2 LG 900	1
9	04.0607.0111GT	PIPE FITTING 1/2 BSPX13/16-16 ORFS	1
10		Figure 610022 pos.8	
11	04.0607.0117GT	PIPE FITTING 3/8BSPX11/16-16 ORFS	2
12	04.0605.0230GT	HOSE R2 (300 BAR)X 1/4" LG 900 F90 - FD 9/16-18 ORFS	2
13	04.0605.1309GT	Flexible Hose R2 (300 bar)X 1/4 LG 3000 F90 FD 9/16-18 ORFS	1
14	01.0023.0054GT	NUT,M8 UNI 7473 6S ZN	4
15	01.0031.0055GT	FLAT WASHER D8 UNI 6592 ZN	8
16	01.0001.0258GT	SCREW M8X35 UNI 5739 8.8 ZN	4
17	51.0800.8100GT	U-Bolt	2
18	05.4329.0029GT	ACCUMULATOR 0.5 L	2
19	51.0811.4699GT	Support Accumulator	1
20	04.0607.0855GT	PIPE FITTING M18X1,5 M 9/16-18 ORFS	2
21	05.4329.0002GT	PROXIMITY SWITCH	1
22	01.0031.0056GT	FLAT WASHER D10 UNI 6592 ZN	4
23	01.0023.0055GT	Stop Nut M10 UNI 7473 6S ZN	4
24	04.0605.0424GT	HOSE R2X1/4 LG 800 F90 FD 9/16-18 ORFS	2
25	04.0607.0813GT	PIPE FITTING, M14X1.5X9/16 ORFS	4
26	04.0607.0131GT	PIPE FITTING TMF+C 9/16-18 ORFS	2
27	04.0605.0464GT	HOSE R2X1/4 2100 FD 9/16-18 F90 9/16-18	1
28	04.0605.1774GT	Flexible Hose R2 X 1/4 2300 FD MD 9/16"-18	1

silverhorn.co.uk

610.1 610018 Service Brake

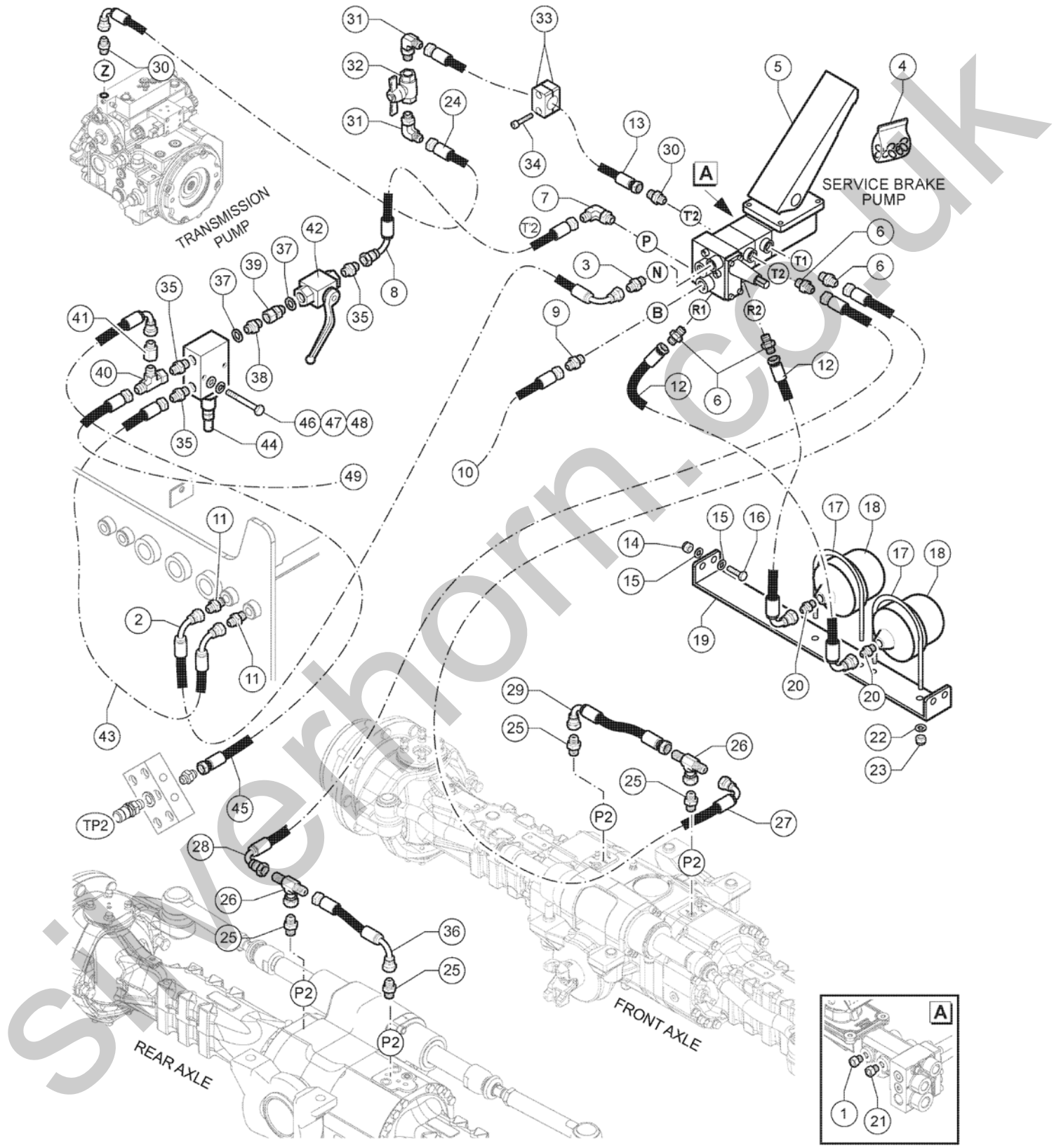

silverhorn.co.uk

Item	Part No.	Description	Qty.
29	04.0605.0422GT	HOSE R2X1/4 LG 400 F90-FD 9/16-18 ORFS	2
30	04.0607.0180GT	PIPE FITTING M10X1- 9/16-18 ORFS	2
31	04.0607.0112GT	PIPE FITTING M-M A 90 1/4 BSPX9/16-18 ORFS	2
32	04.4224.0012GT	Ball Valve	1
33	09.0803.0397GT	Clamp D18	2
34	01.0001.0102GT	SCREW M6X30 UNI 5739 8.8 ZN	2
35	04.0607.0145GT	PIPE FITTING 3/8BSPX13/16-18 ORFS	3
36	04.0605.0462GT	HOSE R2X1/4" LG 500 F90 FD 9/16-18 ORFS	1
37	06.0442.0120GT	BONDED RING 3/8"	2
38	04.0600.0029GT	PIPE FITTING 3/8X3/8 BSP	1
39	04.0600.0090GT	PIPE FITTING GMF 3/8" BSP	1
40	04.0607.0122GT	PIPE FITTING TMF+L 13/16-16 ORFS	1
41	04.0607.0797GT	PIPE FITTING F 13/16-16 ORFS-M 9/16-18 ORFS	1
42	04.4224.0008GT	Manual Ball Valve	1
43	04.0605.0309GT	HOSE R1X1/2 LG 2000 FD-F90 13/16-16 ORFS	1
44	04.4225.0001GT	VALVE	1
45	04.0605.0616GT	HOSE R2X1/4 LG 2300 F90 FD 9/16-18 ORFS	1
46	01.0001.0106GT	SCREW M6X50 UNI 5737 8.8 ZN	2
47	01.0031.0054GT	FLAT WASHER D6 UNI 6592 ZN	2
48	01.4032.0002GT	SPRING WASHER D6 ZN	2
49		Figure 610023 pos.7	

silverhorn.co.uk

611.1 610019 Parking Brake

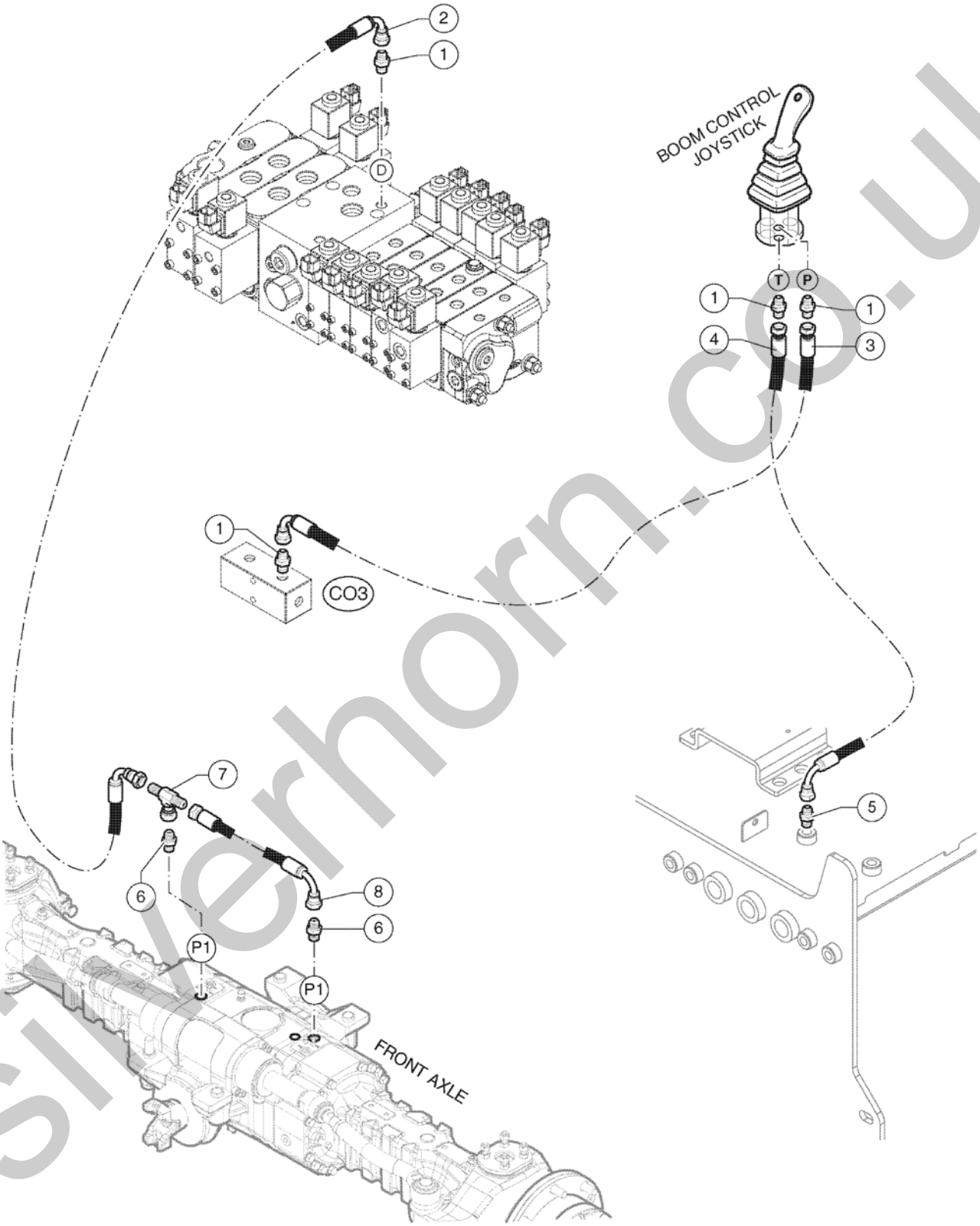

silverhorn.co.uk

611.1 610019 Parking Brake

Item	Part No.	Description	Qty.
1	04.0607.0113GT	PIPE FITTING 1/4 BSPX9/16-18 ORFS	4
2	04.0605.1773GT	Flexible Hose R2 X 1/2 1850 FD F90 13/16"-16	1
3	04.0605.0179GT	HOSE R1X1/4 LG 700 FD-F90 9/16-18 ORFS	1
4	04.0605.0772GT	Hose R1 X ¼ LG.2000 FD-F90 9/16-18 ORFS	1
5	04.0607.0114GT	PIPE FITTING 3/8 BSPX9/16-18 ORFS	1
6	04.0607.0813GT	PIPE FITTING, M14X1.5X9/16 ORFS	2
7	04.0607.0131GT	PIPE FITTING TMF+C 9/16-18 ORFS	1
8	04.0605.0422GT	HOSE R2X1/4 LG 400 F90-FD 9/16-18 ORFS	1

silverhorn.co.uk

612.1 610020 Gear Box

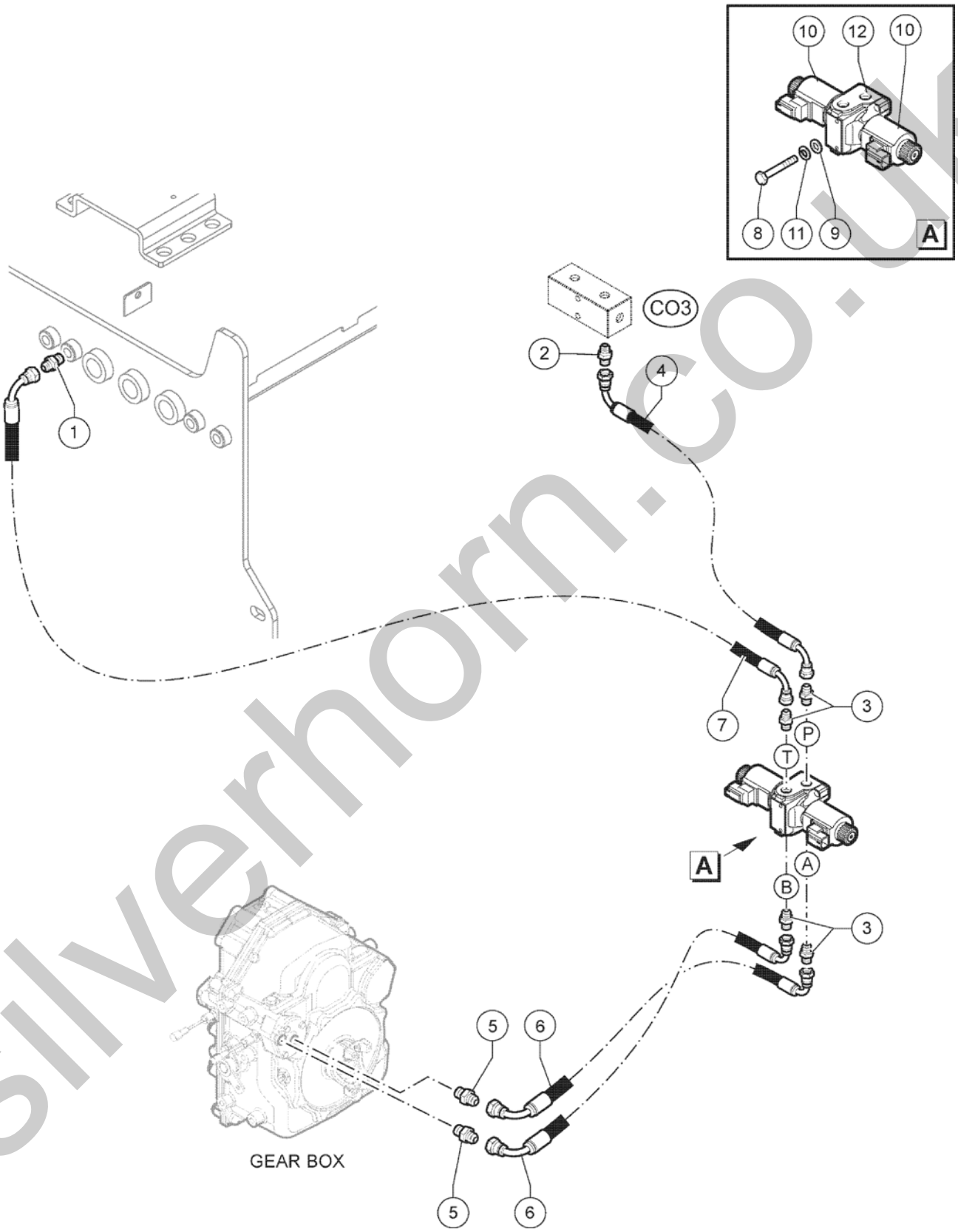

silverhorn.co.uk

612.1 610020 Gear Box

Item	Part No.	Description	Qty.
1	04.0607.0145GT	PIPE FITTING 3/8BSPX13/16-18 ORFS	1
2	04.0607.0113GT	PIPE FITTING 1/4 BSPX9/16-18 ORFS	1
3	04.0607.0114GT	PIPE FITTING 3/8 BSPX9/16-18 ORFS	4
4	04.0605.1660GT	Flexible Hose R1 X 1/4 850 F90 FD 9/16"-18 ORFS	1
5	04.0607.0813GT	PIPE FITTING, M14X1.5X9/16 ORFS	2
6	04.0605.0556GT	HOSE R1X1/4 LG 800 FD F90 9/16-18 ORFS	2
7	04.0605.0204GT	HOSE R1X1/4 LG 2100 F90 F90 A 90 9/16-18 ORFS	1
8	01.0001.0102GT	SCREW M6X30 UNI 5739 8.8 ZN	2
9	01.0031.0054GT	FLAT WASHER D6 UNI 6592 ZN	4
10	07.4529.0111GT	COIL, VALVE	2
11	01.4032.0002GT	SPRING WASHER D6 ZN	2
12	04.4240.0052GT	SOLENOID VALVE	1

silverhorn.co.uk

613.1 610021 Hydraulic Oil Radiator

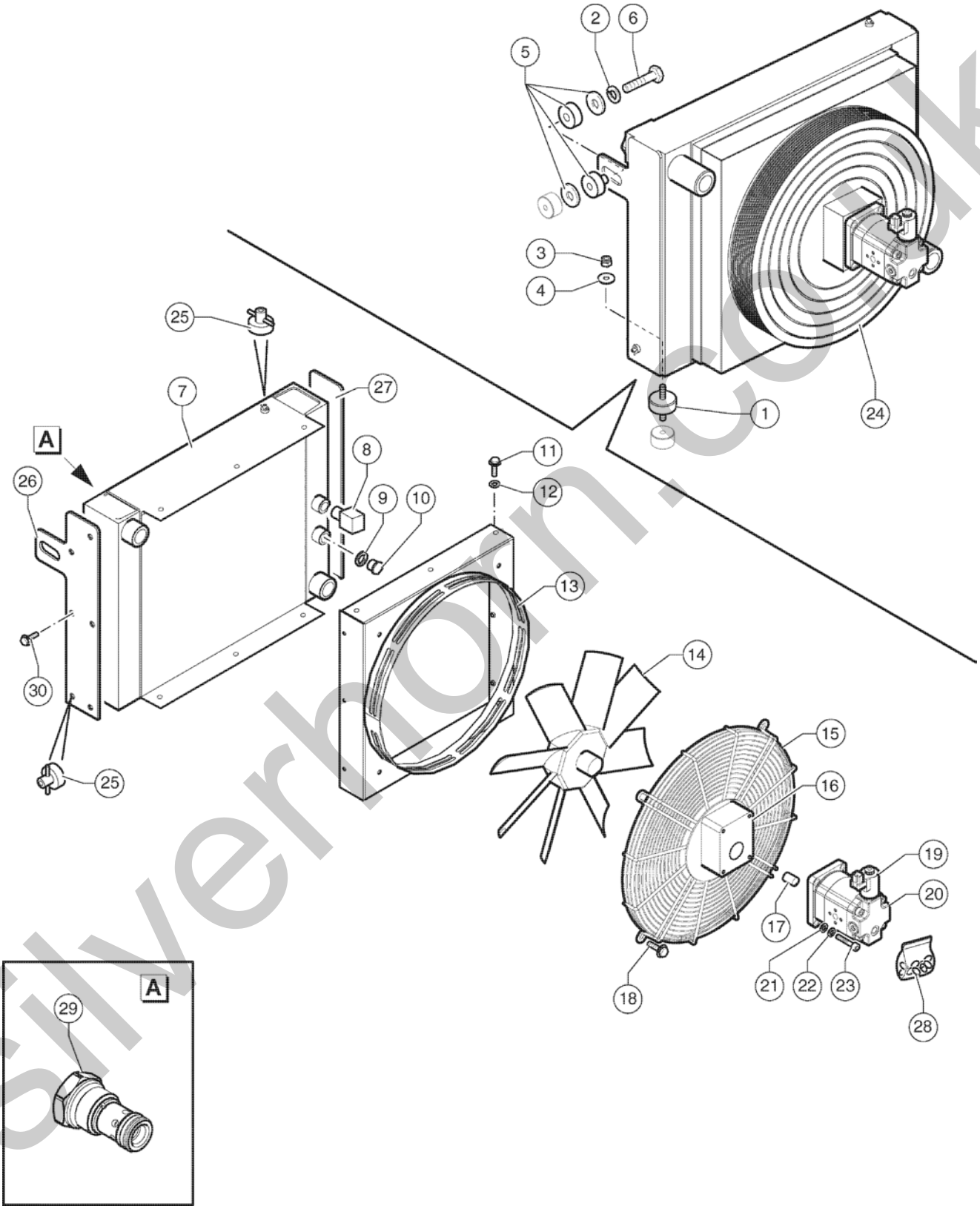

silverhorn.co.uk

613.1 610021 Hydraulic Oil Radiator

Item	Part No.	Description	Qty.
1	09.4670.0028GT	INSULATOR	2
2	01.4032.0005GT	SPRING WASHER D12 ZN	4
3	01.0023.0055GT	Stop Nut M10 UNI 7473 6S ZN	2
4	01.0031.0301GT	FLAT WASHER D10 UNI 6593 ZN	4
5	07.0723.0360GT	VIBRATION DAMPING KIT	2
6	01.4001.0089GT	SCREW M12X70 UNI 5737 8.8 ZN	2
7	07.0712.0367GT	OIL COOLER	1
8	56.0014.0091GT	THERMOSTAT	1
9	06.0442.0122GT	BONDED RING 1/2"	1
10	04.0220.0055GT	PLUG 1/2 BSP	1
11	07.0712.0354GT	HEXAGON FLANGE BOLTS DIN 6921 M6X16	6
12	07.0712.0287GT	FLAT WASHER D8 UNI 6593	6
13	07.0712.0334GT	FAN SHROUD	1
14	07.0712.0344GT	FAN	1
15	07.0712.0335GT	GRID	1
16	07.0723.0356GT	Support	1
17	07.0712.0345GT	SPACER	1
18	07.0712.0360GT	HEXAGON FLANGE BOLTS M8x25 DIN 6921	4
19	07.0722.0067GT	Solenoid	1
20	04.4235.0059GT	Oil Cooler Fan Motor	1
21	01.0031.0055GT	FLAT WASHER D8 UNI 6592 ZN	4
22	01.4032.0003GT	Spring Washer D 8 ZN	4
23	01.0003.0207GT	SCREW M8X35 UNI 5931 8.8 ZN	4
24	53.3200.0090GT	Complete Oil Cooler	1
25	07.0712.0342GT	RELEASE VALVE M14X1.5	2
26	07.0712.0333GT	Right support	1
27	07.0712.0332GT	Left support	1
28	07.4529.0209GT	SEAL KIT	1

silverhorn.co.uk

613.1 610021 Hydraulic Oil Radiator

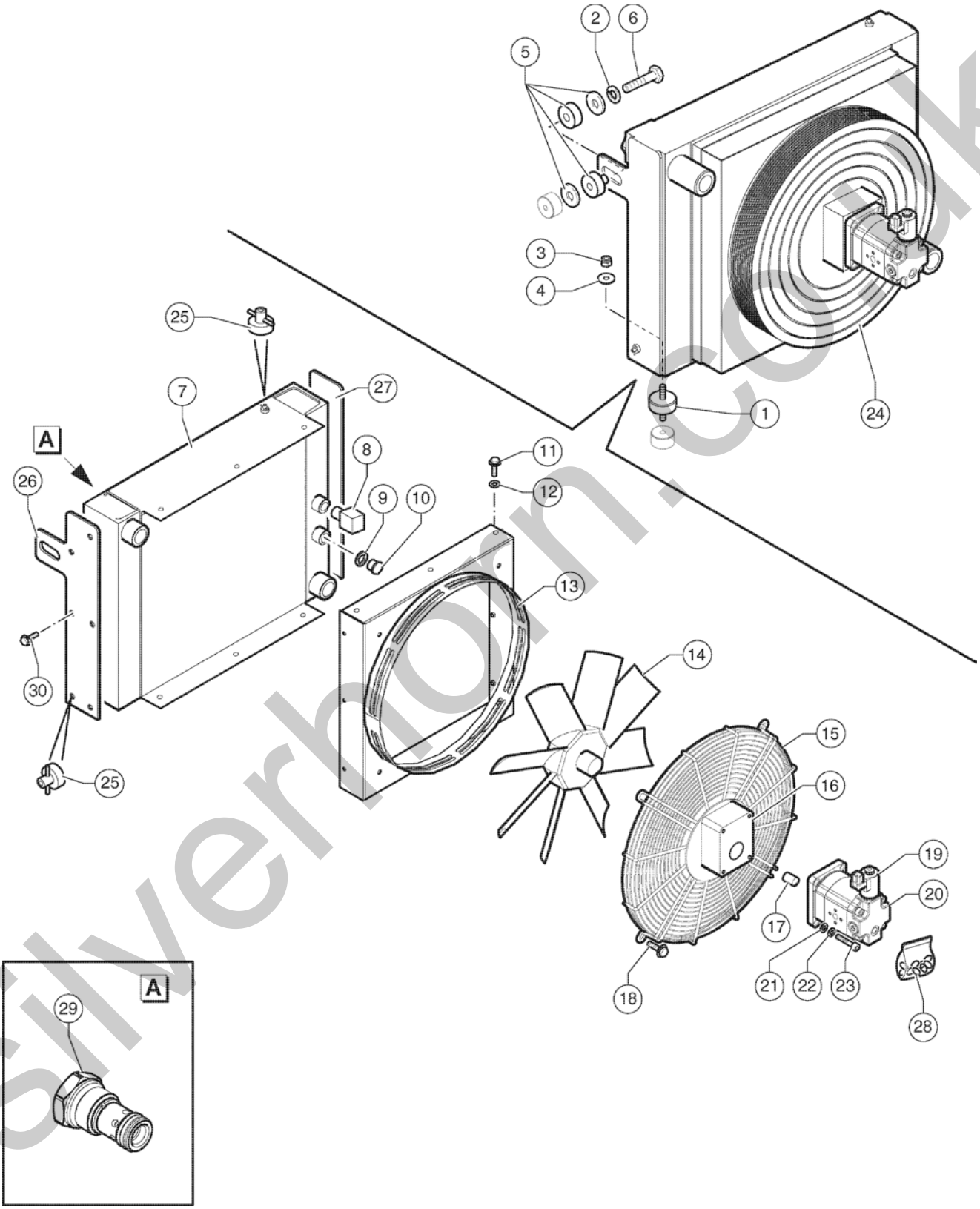

silverhorn.co.uk

613.1 610021 Hydraulic Oil Radiator

Item	Part No.	Description	Qty.
29	07.0712.0291GT	BY-PASS VALVE	1
30	07.0712.0356GT	HEXAGON FLANGE BOLTS DIN 6921 M8x16	13

silverhorn.co.uk

614.1 610022 Hydraulic Oil Radiator Circuit

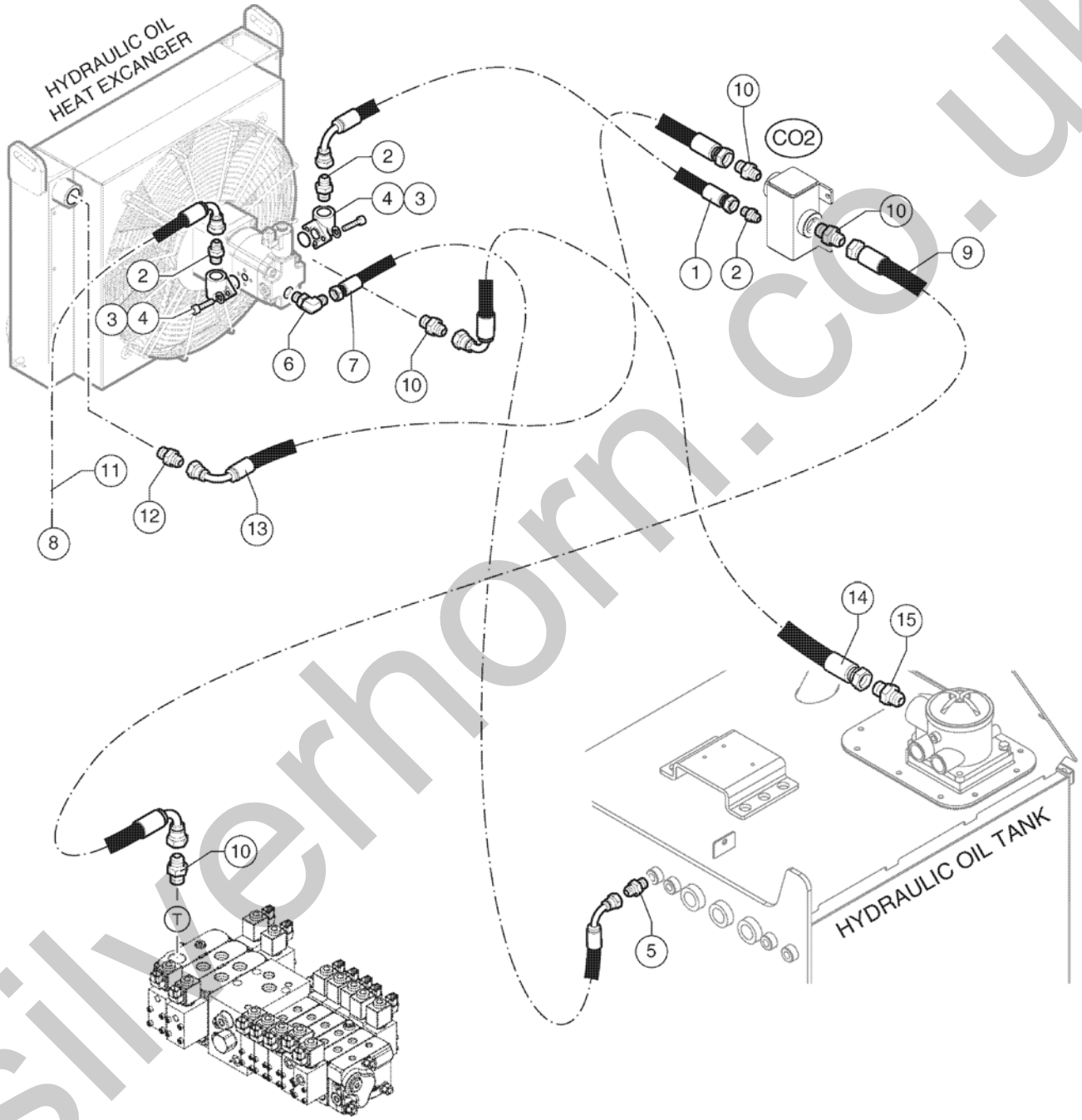

silverhorn.co.uk

614.1 610022 Hydraulic Oil Radiator Circuit

Item	Part No.	Description	Qty.
1	04.0605.0519GT	HOSE R1X1/2 LG 850 F90 FD 13/16 ORFS	1
2	04.0607.0111GT	PIPE FITTING 1/2 BSPX13/16-16 ORFS	2
3	04.4223.0002GT	PIPE FITTING G1 12 Pipe Fitting with O-Ring and Screws	2
4	900007GT	O-Ring	2
5	04.0607.0114GT	PIPE FITTING 3/8 BSPX9/16-18 ORFS	1
6	04.0607.0112GT	PIPE FITTING M-M A 90 1/4 BSPX9/16-18 ORFS	1
7	04.0605.1648GT	Flexible Hose R1 X 1/4 LG 2250 FD F90 9/16 ORFS	1
8		To Drawing 610018 Position 10	
9	04.0605.1644GT	Flexible Hose R4 X 1" LG. 850 F90-FD 1 7/16"-12 ORFS	1
10	04.0607.0142GT	PIPE FITTING 1" GASX1-7/16-12 ORFS	4
11	04.03605.1748GT	Flexible Hose R2 (300BAR) X 1/2 LG 4350 FD F90 13/16-16	2
12	04.0607.0174GT	PIPE FITTING 1"BSPX1"11/16-12 ORFS	1
13	04.0605.1737GT	Flexible Hose R4 X 1 LG 1350FD F90 1"7/16 ORFS	1
14	04.0605.1736GT	Flexible Hose R4 X 1-1/4 LG. 2900 F90-FD 1" 11/16"-12 ORFS	1
15	04.0607.0190GT	Pipe Fitting 1"1/4BSP-1"11/16-12ORFS	1

silverhorn.co.uk

615.1 610023 Hydraulic Pumps

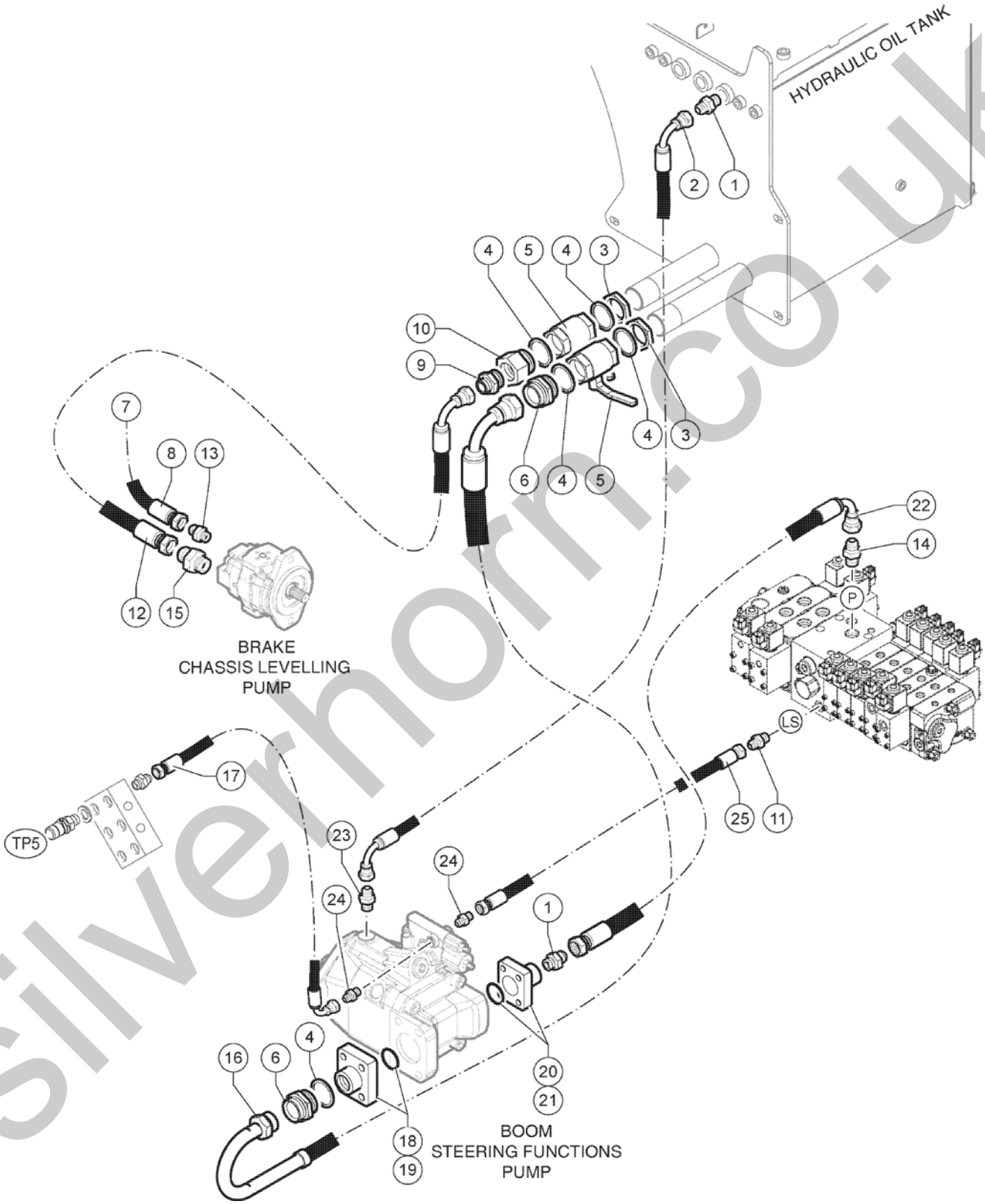

silverhorn.co.uk

615.1 610023 Hydraulic Pumps

Item	Part No.	Description	Qty.
1	04.0607.0130GT	PIPE FITTING 1 BSPX1-3/16-12 ORFS	2
2	04.0605.1743GT	Flexible Hose R4 X 3/4 2900 F90 F90 1 3/16"-12 ORFS A 45	1
3	01.4019.0025GT	Nut M 16 UNI 7473 8G ZN	2
4	06.0442.0132GT	BONDED RING 2"	5
5	04.4224.0001GT	BALL VALVE	2
6	04.0600.0094GT	PIPE FITTING 2X2 BSP	2
7		Figure 610018 Position 49	
8	04.0605.1763GT	Flexible Hose R2 (300BAR) X 1/2 2500 FD FD 13/16"-16	1
9	04.0607.0168GT	Pipe Fitting 1"1/2BSP-1"7/16-12ORFS	1
10	04.0600.0243GT	Pipe Fitting GWR M 2" BSP X F1 1/2" BSP	1
11	04.0607.0153GT	PIPE FITTING 14X1.5X9/16-18 ORFS	1
12	04.0605.1742GT	Flexible Hose R4 X 1" LG. 2850 FD F90 1" 7/16-12 ORFS	1
13	04.0607.0111GT	PIPE FITTING 1/2 BSPX13/16-16 ORFS	1
14	04.0607.0107GT	PIPE FITTING 3/4"BSP X1"3/16-12 ORFS	1
15	04.0607.0196GT	PIPE FITTING 3/4"BSP/1"7/16-12 ORFS	1
16	04.0602.0608GT	Flexible Hose R4 X 2 2000	1
17	04.0605.1740GT	Flexible Hose R2(300 bar) X 1/4 LG. 1550 FD FD 9/16-18 ORFS	1
18	04.0600.0136GT	Pipe Fitting Kit RD2-MF/FG200-N Pipe Fitting With O-Ring and Screws	1
19	06.0401.1501GT	O-Ring	1
20	04.4223.0010GT	Pipe Fitting Kit RD2-MC/FG100-N Pipe Fitting With O-Ring and Screws	1
21	900026GT	O-Ring	1
22	04.0605.1745GT	Flexible Hose R2 (300BAR) X 3/4 3650 F90 FD 1 3/16"-12	1
23	04.0607.0158GT	Pipe Fitting 7/8-14 UNFX 1"3/16-12 ORFS	1
24	04.0607.0228GT	Pipe Fitting 7/16-20 UNF X 9/16-18 ORFS	2
25	04.0605.1746GT	Flexible Hose R2(300 bar) X 1/4 LG 3500 FD FD 9/16-18 ORFS	1

silverhorn.co.uk

616.1 610024 Boom Hydraulic Control

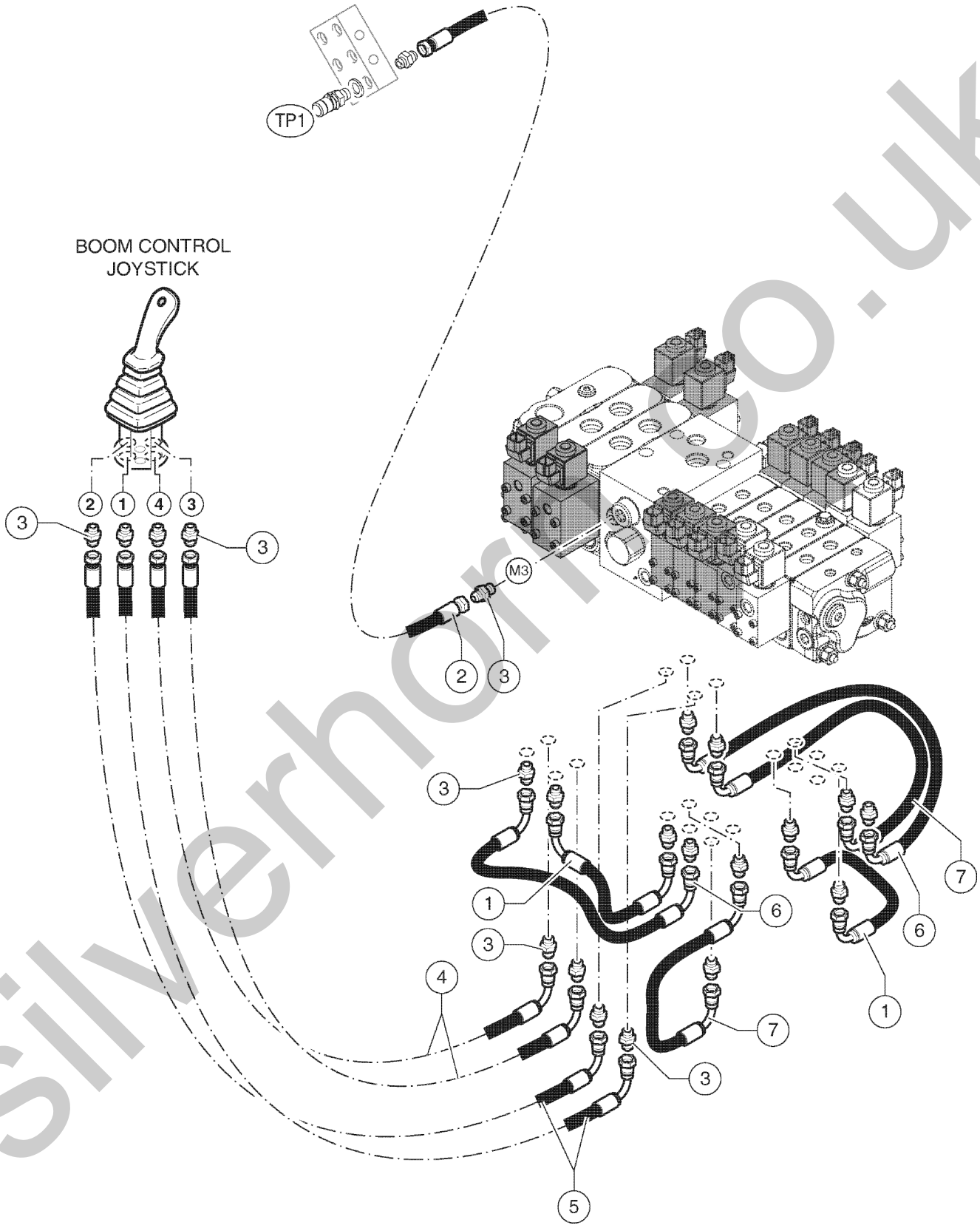

silverhorn.co.uk

616.1 610024 Boom Hydraulic Control

Item	Part No.	Description	Qty.
1	04.0605.1667GT	Flexible Hose R1 X 1/4 LG.250 F90 F90 9/16 ORFS	2
2	04.0605.1747GT	Flexible Hose R2 (300BAR) X 1/4 4350 FD FD 9/16"-18 ORFS	1
3	04.0607.0113GT	PIPE FITTING 1/4 BSPX9/16-18 ORFS	17
4	04.0605.1358GT	Flexible Hose R1 X 1/4 L 2600 90 FEM STR FEM 9/16"-18 ORFS	2
5	04.0605.0853GT	HOSE R1X1/4 2850 F90 FD 9/16-18	2
6	04.0605.1380GT	HOSE R1X1/4 LG 350 F90 F90 9/16 ORFS	2
7	04.0605.1757GT	Flexible Hose R1 X 1/4 LG 300 F90 F90 9/16-18 ORFS	2

silverhorn.co.uk

617.1 610025 Transmission

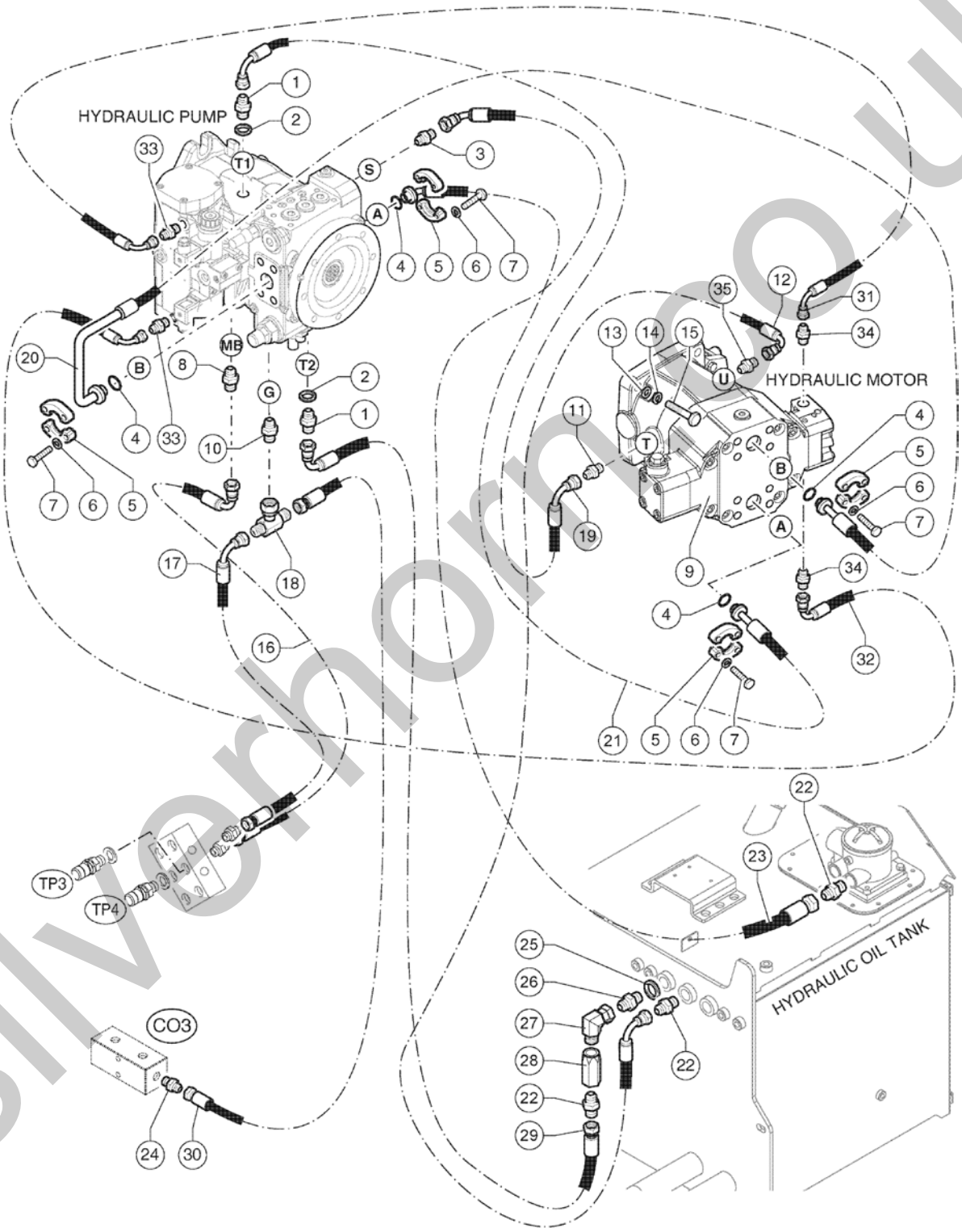

silverhorse.co.uk

617.1 610025 Transmission

Item	Part No.	Description	Qty.
1	04.0607.0183GT	Pipe Fitting M26X1,5X 1”7/16-12 ORFS	2
2	06.0442.0124GT	BONDED RING 3/4	2
3	04.0607.0188GT	PIPE FITTING M42X2X1"11/16-12 ORFS	1
4	06.0401.0219GT	O-RING	4
5	04.4223.0003GT	HALF FLANGE D47	8
6	01.4032.0005GT	SPRING WASHER D12 ZN	16
7	01.0001.0508GT	SCREW M12X40 UNI 5739 8.8 ZN	16
8	04.0607.0103GT	PIPE FITTING M12X1.5 X 9/16-18 ORFS	1
9	04.4235.0058GT	Transmission Hydraulic Motor	1
10	04.0607.0855GT	PIPE FITTING M18X1,5 M 9/16-18 ORFS	1
11	04.0607.0856GT	Pipe Fitting M27X2 X M 1 7/16"-12 ORFS	1
12	04.0605.1643GT	Flexible Hose R4 X 1" LG. 1850 F90 F90 1 7/16"-12 ORFS A180	1
13	01.0031.0059GT	FLAT WASHER D16 UNI 6592 ZN	4
14	01.4032.0007GT	SPRING WASHER D16 ZN	4
15	01.0001.1557GT	SCREW, HHC, M16 x 50 LG.8.8 ZN UNI 5739 , DIN 933	4
16	04.0605.1713GT	Flexible Hose R2 X 1/4 (450 BAR) 1050 FD - F90 9/16"-18 ORFS	1
17	04.0605.0180GT	HOSE R1X1/4 LG 1000 F90 FD 9/16-18	1
18	04.0607.0131GT	PIPE FITTING TMF+C 9/16-18 ORFS	1
19	04.0605.1738GT	Flexible Hose R4 X 1" LG 1100 F90 F45 1" 7/16-12	1
20	04.4229.0082GT	HOSE BM6K 1"X1100 FLD D47 Special	1
21	04.4229.0084GT	Flexible Hose BM6K 1 900 F45 D.47 FLD D47	1
22	04.0607.0142GT	PIPE FITTING 1" GASX1-7/16-12 ORFS	3
23	04.0605.1741GT	Flexible Hose R4 X 1-1/4 3500 FD F45 1 11/16"-12	1
24	04.0607.0113GT	PIPE FITTING 1/4 BSPX9/16-18 ORFS	1
25	06.0442.0125GT	BONDED RING 1"	1
26	04.0600.0066GT	PIPE FITTING 1X1 BSP	1
27	04.0600.0113GT	Pipe Fitting 90° BSP	1
28	04.4239.0034GT	SAFETY VALVE	1

silverhorn.co.uk

617.1 610025 Transmission

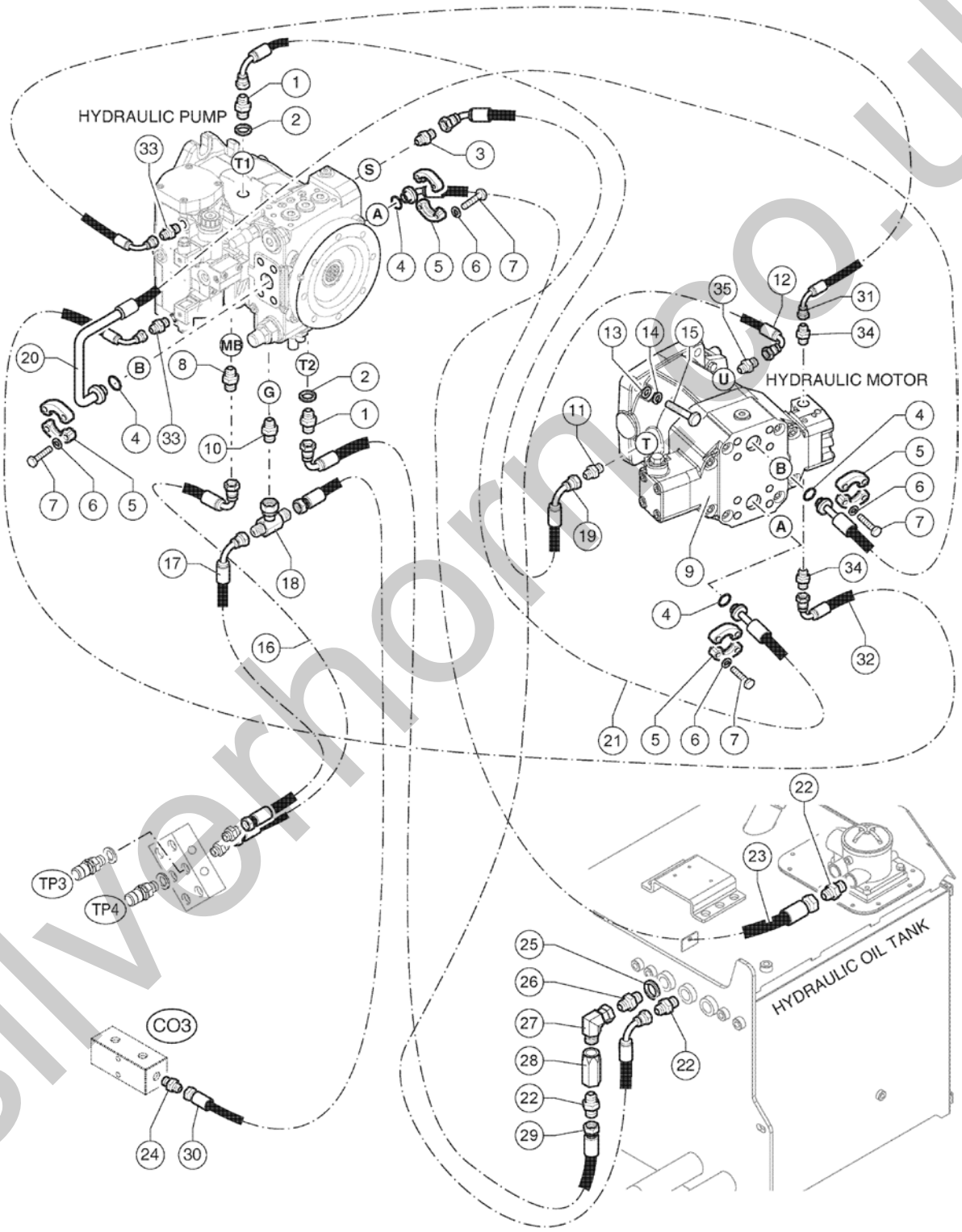

silverhorse.co.uk

617.1 610025 Transmission

Item	Part No.	Description	Qty.
29	04.0605.1333GT	HOSE R4X1 3000 F90 FD 1 7/16-12 ORFS	1
30	04.0605.1649GT	HOSE R1X1/4 1950 FD FD 9/16-19	1
31	04.0605.1766GT	Flexible Hose R1 X 1/4 1700 F90 9/16"-18 F90 11/16"-16 90°	1
32	04.0605.1765GT	Flexible Hose R1 X 1/4 1800 F90 9/16"-18 F90 11/16"-16 270°	1
33	04.0607.0860GT	Pipe Fitting M16x1,5 X 11/16"-16 ORFS	1
34	06.0607.0861GT	Pipe Fitting	2
35	04.0607.0863GT	Pipe Fitting M33x2(ISO6149-2) 1 7/16"-12 ORFS	1

silverhorn.co.uk

618.1 610026 Test Port Manifold

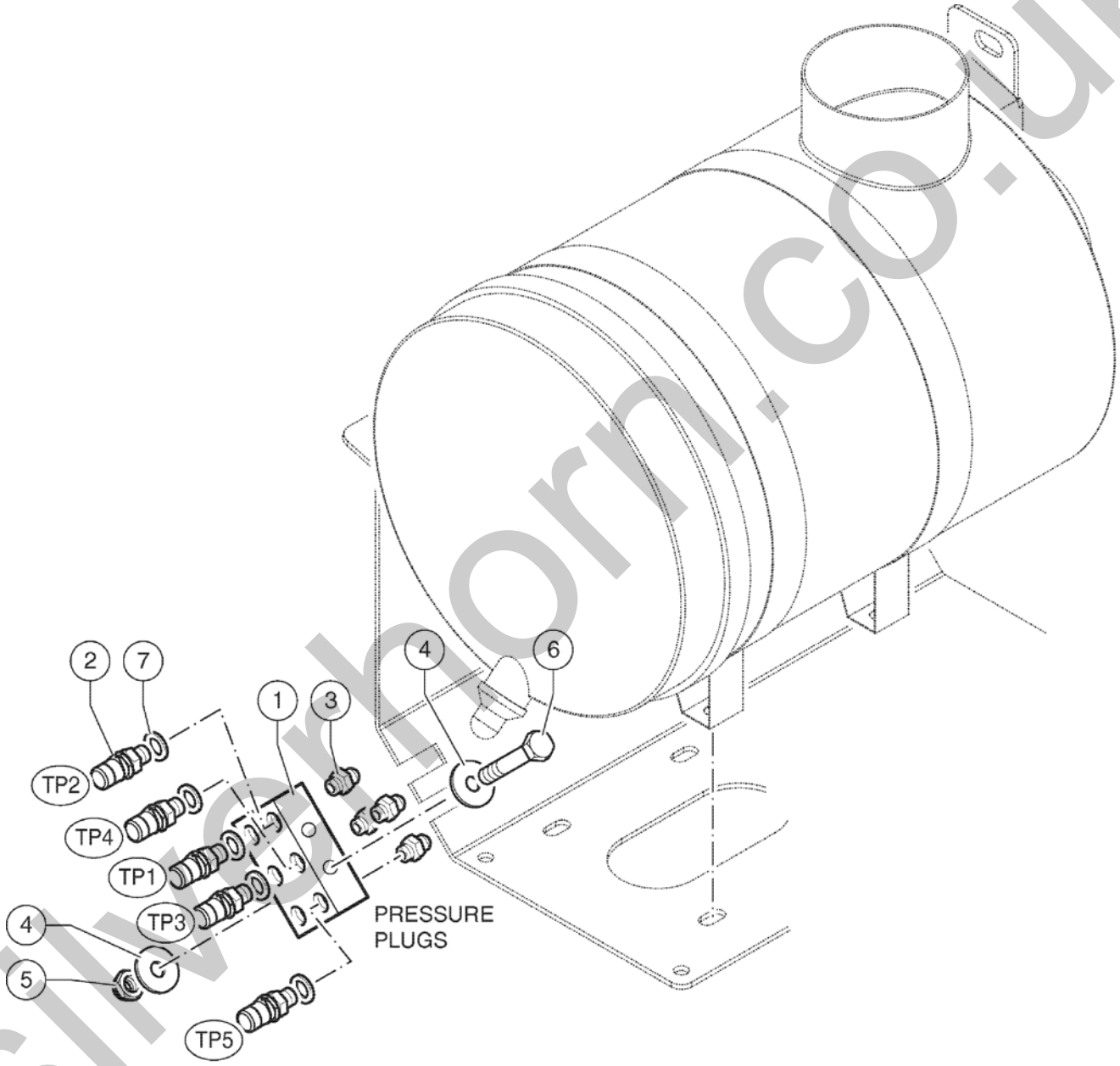

silverhorn.co.uk

618.1 610026 Test Port Manifold

Item	Part No.	Description	Qty.
1	53.3001.6813GT	TEST PORTS MANIFOLD	2
2	04.4210.0016GT	PRESSURE PLUG M14X1.5	4
3	04.0607.0153GT	PIPE FITTING 14X1.5X9/16-18 ORFS	4
4	01.0031.0055GT	FLAT WASHER D8 UNI 6592 ZN	4
5	01.0023.0054GT	NUT,M8 UNI 7473 6S ZN	2
6	01.0001.0209GT	SCREW M8X70 UNI 5737 8.8 ZN	2
7	54.0100.0093GT	FLAT WASHER D.16 1/4-19 BSPP GAS CIL 50100	4

silverhorn.co.uk

619.1 610027 Auxiliary Hidraulic Line, View 1

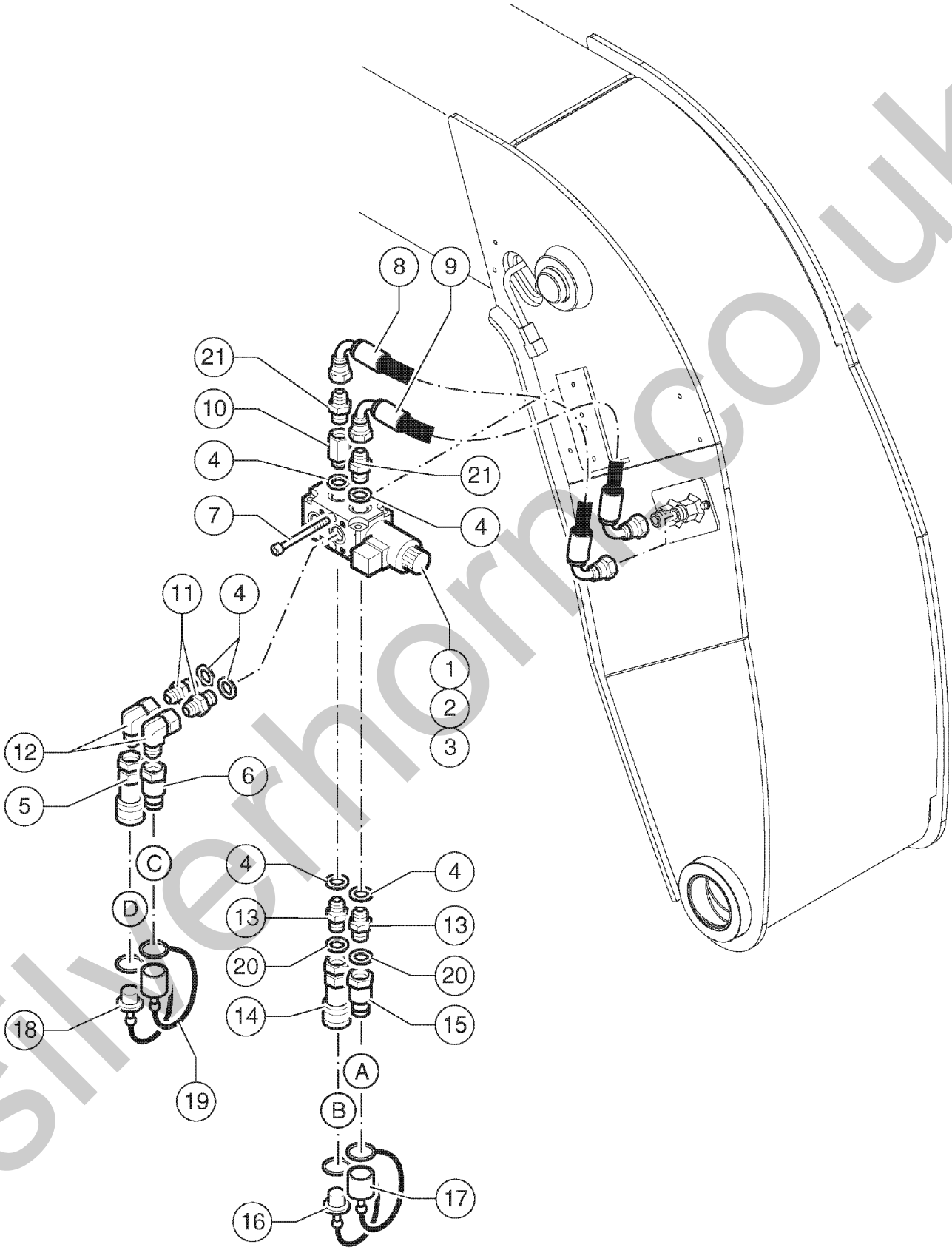

silverhorn.co.uk

619.1 610027 Auxiliary Hidraulic Line, View 1

Item	Part No.	Description	Qty.
A		To Drawing 610028 Position A	
B		To Drawing 610028 Position B	
C		To Drawing 610028 Position C	
D		To Drawing 610028 Position D	
1	04.4240.0075GT	SOLENOID VALVE ASSY 6 WAY	1
2	07.0731.0316GT	Solenoid	1
3	07.0731.0317GT	this part number is wrong, the correct one is 07.0701.0317GT the correct description is SINGLE VALVE BODY	1
4	06.0442.0122GT	BONDED RING 1/2"	6
5	04.4210.0019GT	QUICK COUPLING, FEMALE 1/2	1
6	04.4210.0018GT	QUICK COUPLING, MALE 1/2	1
7	01.4003.0036GT	SCREW M8X65 UNI 5931 8.8 ZN	2
8	04.0605.1786GT	Hose R2 X 1/2 500 F90 F90 13/16"-16 A 270°	1
9	04.0605.1785GT	Hose R2 X 1/2 430 F90 F90 13/16"-16 A 90°	1
10	04.0600.0091GT	PIPE FITTING CMF1/2 ES LG 25	1
11	04.0600.0017GT	PIPE FITTING 1/2X1/2 BSP	2
12	04.0600.0087GT	PIPE FITTING 90	2
13	04.0600.0000GT	PIPE FITTING	2
14	04.4210.0036GT	QUICK COUPLING, FEMALE 3/8	1
15	04.4210.0035GT	QUICK COUPLING, MALE 3/8	1
16	09.0803.0875GT	Female Coupling 3/8” Plug	1
17	09.0803.0874GT	Male Coupling 3/8” Plug	1
18	09.0803.0697GT	Female Coupling 1/2” Plug	1
19	09.0803.0696GT	Male Coupling 1/2” Plug	1
20	06.0442.0120GT	BONDED RING 3/8"	2
21	04.0607.0111GT	PIPE FITTING 1/2 BSPX13/16-16 ORFS	2

silverhorn.co.uk

620.1 610028 Auxiliary Hidraulic Line, View 2

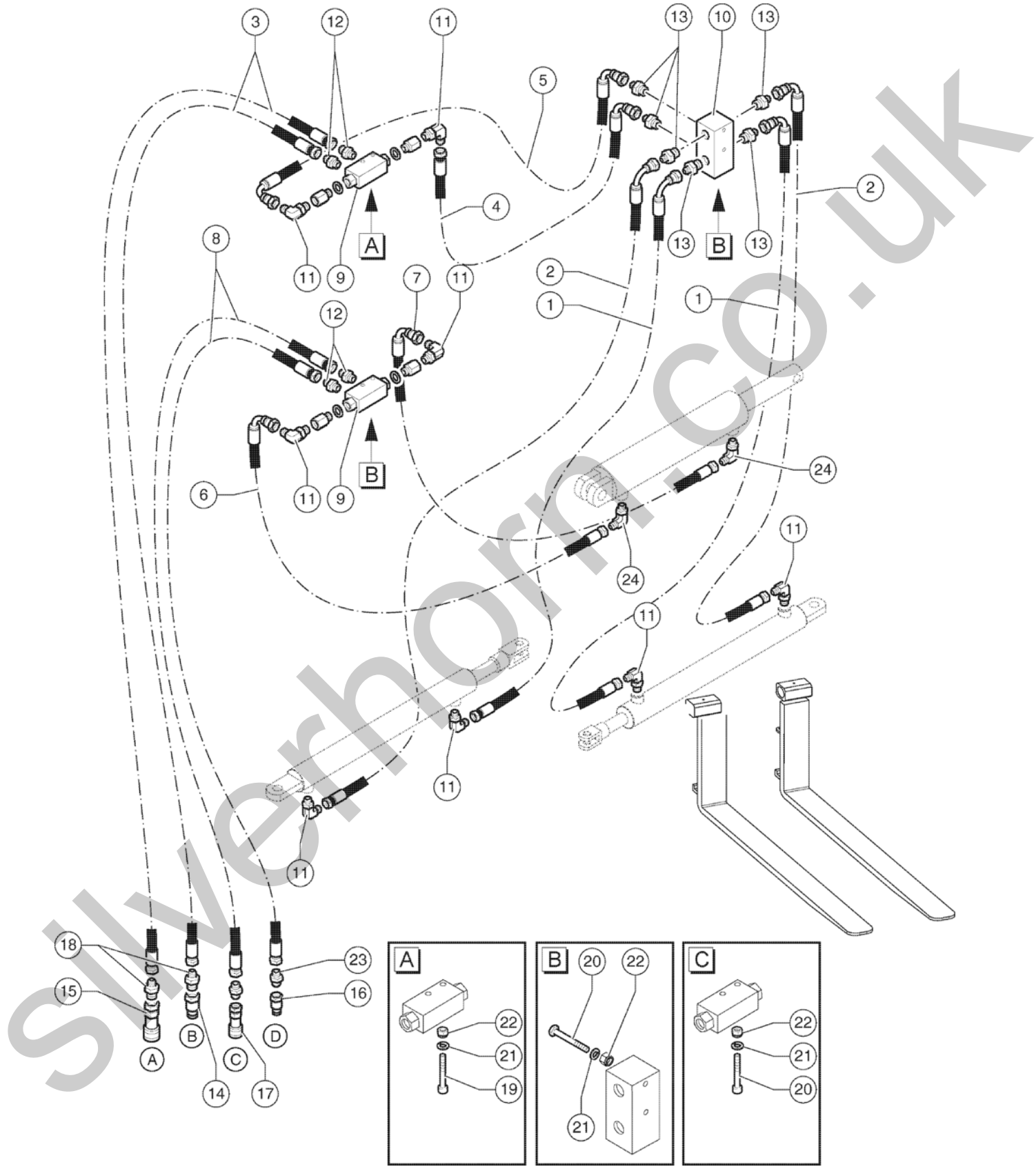

silverhorn.co.uk

620.1 610028 Auxiliary Hidraulic Line, View 2

Item	Part No.	Description	Qty.
A		To Drawing 610027 Position A	
B		To Drawing 610027 Position B	
C		To Drawing 610027 Position C	
D		To Drawing 610027 Position D	
1	04.0605.0462GT	HOSE R2X1/4" LG 500 F90 FD 9/16-18 ORFS	2
2	04.0605.0230GT	HOSE R2 (300 BAR)X 1/4" LG 900 F90 - FD 9/16-18 ORFS	2
3	04.0605.1759GT	Flexible Hose R2 X 3/8 1000 FD FD 11/16-16 ORFS	2
4	04.0605.1760GT	Flexible Hose R2 X 1/4 750 FD F90 9/16-18 ORFS	1
5	04.0605.1761GT	Flexible Hose R2 X 1/4 LG.950 F90 F90 9/16-18 270°	1
6	04.0605.0455GT	HOSE R2X1/4 LG 600 F90 FD 9/16-18 ORFS	1
7	04.0605.0461GT	HOSE R2X1/4" LG 800 F90 FD 9/16-18 ORFS	1
8	04.0605.1762GT	Flexible Hose R2 X 3/8 900 FD FD 11/16-16 ORFS	2
9	04.4239.0002GT	VALVE	2
10	53.3001.6826GT	MANIFOLD	1
11	04.0607.0112GT	PIPE FITTING M-M A 90 1/4 BSPX9/16-18 ORFS	8
12	04.0607.0163GT	PIPE FITTING 1/4BSPX11/16-16 ORFS	4
13	04.0607.0167GT	PIPE FITTING 1/2BSPX 9/16-18 ORFS	6
14	04.4210.0018GT	QUICK COUPLING, MALE 1/2	1
15	04.4210.0019GT	QUICK COUPLING, FEMALE 1/2	1
16	04.4210.0035GT	QUICK COUPLING, MALE 3/8	1
17	04.4210.0036GT	QUICK COUPLING, FEMALE 3/8	1
18	04.0607.0110GT	PIPE FITTING 1/2BSP x 11/16-16 ORFS	2
19	01.4003.0039GT	SCREW TCEI M6x65 UNI 5931 8.8 ZN	2
20	01.4003.0028GT	SCREW M6X80 UNI 5931 8.8 ZN	4
21	01.0031.0054GT	FLAT WASHER D6 UNI 6592 ZN	6
22	01.0023.0053GT	STOP NUT M6 UNI 7473 6S ZN	6
23	04.0607.0117GT	PIPE FITTING 3/8BSPX11/16-16 ORFS	2
24	04.0607.0140GT	PIPE FITTING 3/8 BSPX9/16 ORFS	2

silverhorn.co.uk

621.1 610029 Primary Functions Manifold

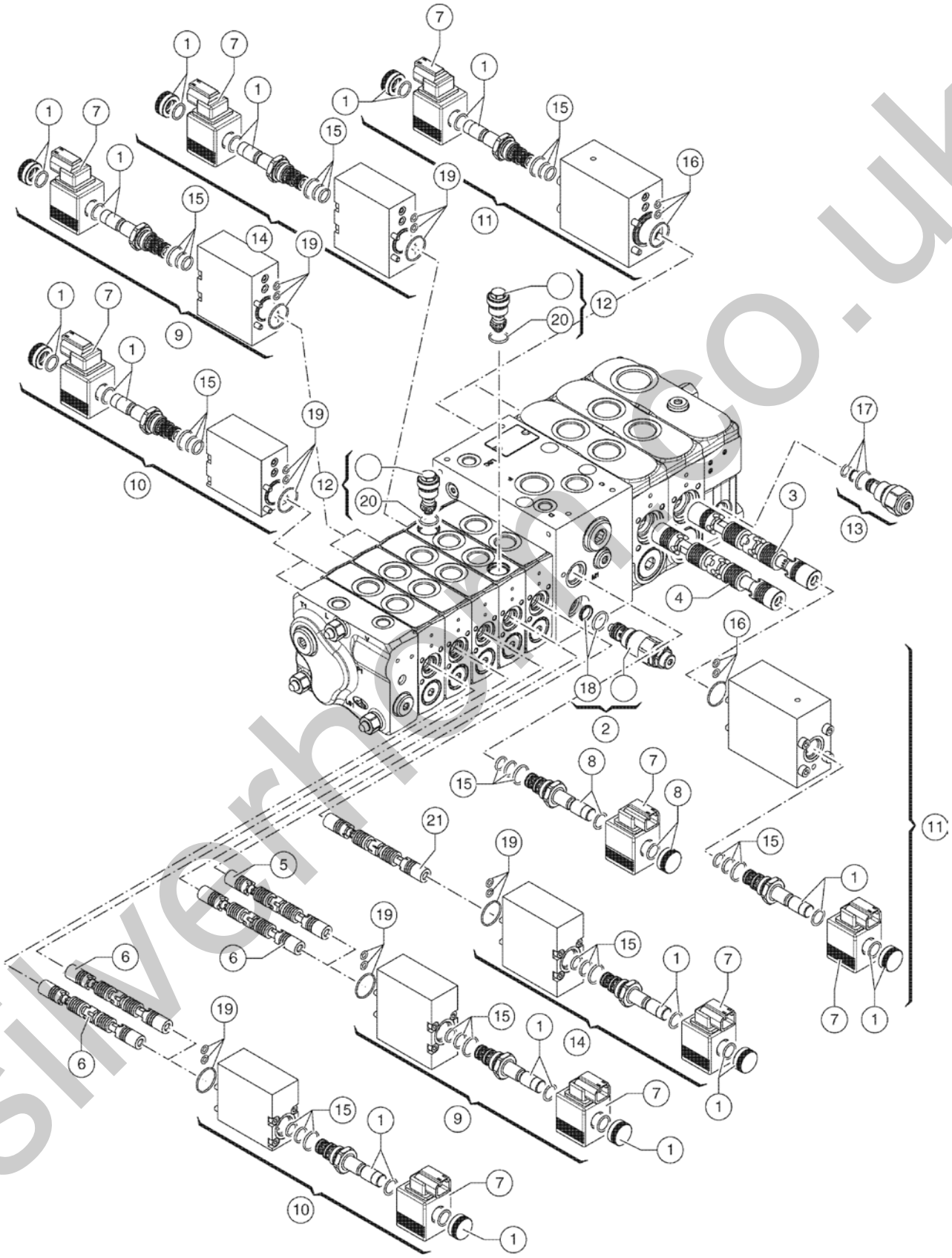

silverhand.co.uk

621.1 610029 Primary Functions Manifold

Item	Part No.	Description	Qty.
1	07.0704.0471GT	Valve	8
2	07.0704.0466GT	Valve	1
3	07.0704.0468GT	Spool	1
4	07.0704.0469GT	Spool	1
5	07.0704.0457GT	Spool	1
6	07.0704.0458GT	Spool	3
7	07.0704.0460GT	Spool	9
8	07.0704.0487GT	Valve	1
9	07.0704.0461GT	Command Kit	2
10	07.0704.0462GT	Command Kit	2
11	07.0704.0463GT	Command Kit	2
12	07.0704.0472GT	Valve	2
13	07.0704.0465GT	Regulator	1
14	07.0704.0470GT	Command Kit	2
15	07.0704.0485GT	O-Ring Kit	9
16	07.0704.0483GT	O-Ring Kit	2
17	07.0704.0486GT	Seal Kit	1
18	07.0704.0484GT	Seal Kit	1
19	07.0704.0481GT	O-Ring Kit	6
20	07.0704.0482GT	O-Ring	2
21	07.0704.0459GT	Spool	1

silverhorn.co.uk

701.1 610031 Cabin Fuse-Relay Box

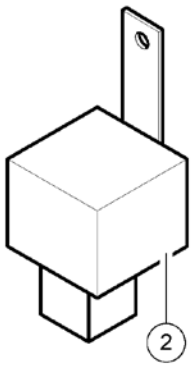

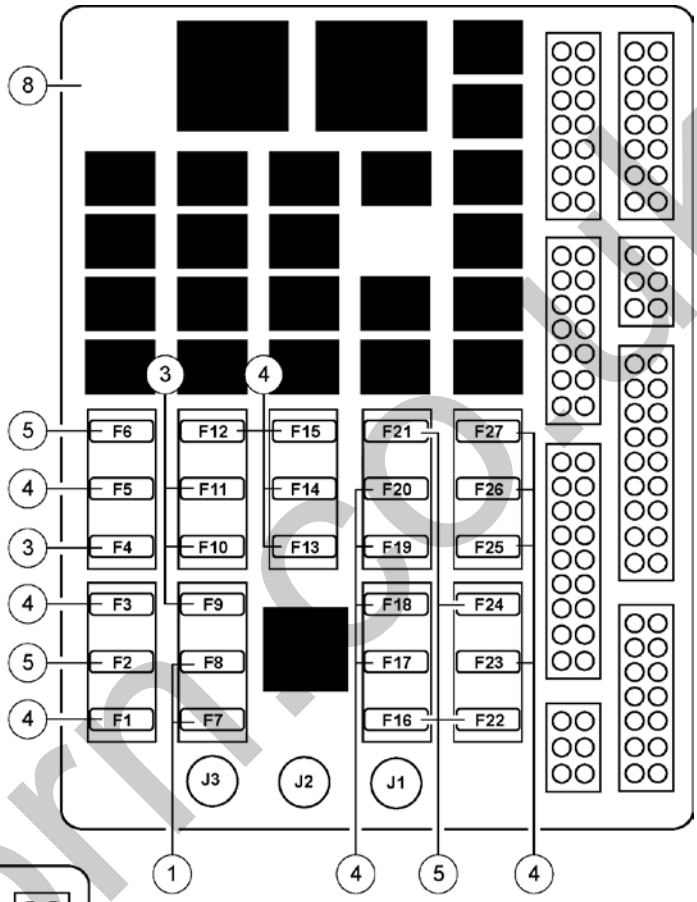

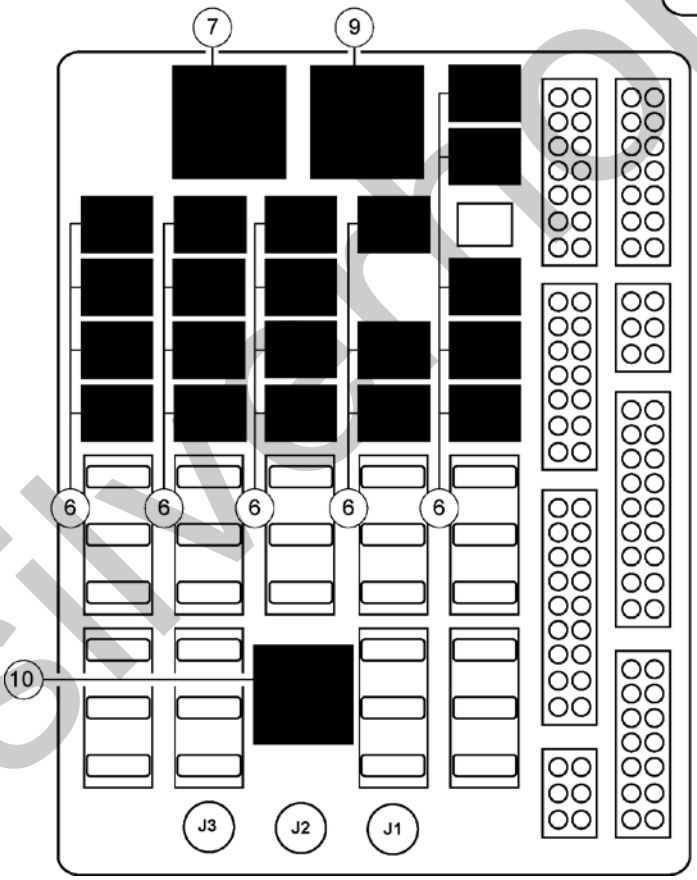

silverhorn.co.uk

701.1 610031 Cabin Fuse-Relay Box

Item	Part No.	Description	Qty.
1	637650GT	Fuse 3A	2
2	56.0021.0162GT	RELAY SUPPORT	1
3	634972GT	Fuse 7.5A	4
4	634974GT	Fuse 10A	14
5	634973GT	Fuse 15A	6
6	07.0703.0485GT	RELAY	20
7	07.0703.0724GT	BLINKER RELAY	1
8	56.0021.0172GT	Complete Fuse-Relay Board	1
9	56.0021.0040GT	Gear Box Unit	1
10	07.0703.0486GT	RELAY	1

silverhorn.co.uk

702.1 610032 Dashboard

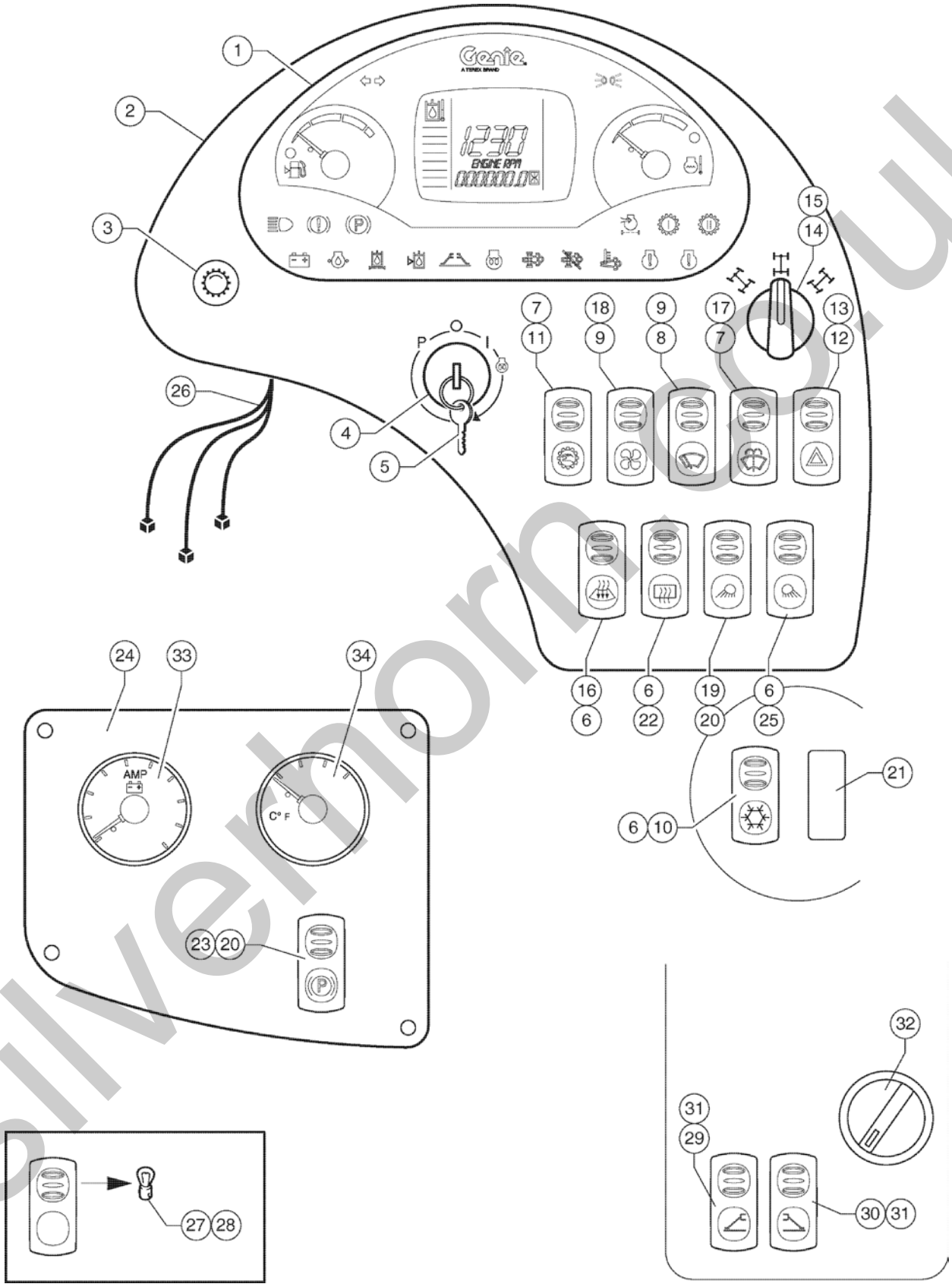

silverthorn.co.uk

702.1 610032 Dashboard

Item	Part No.	Description	Qty.
1	56.0016.0190GT	Instrument Panel	1
2	56.0015.0015GT	Plate,Dash Support,Right	1
3	56.0017.0119GT	Warning Light	1
4	07.0703.0472GT	Starting Switch	1
5	09.0803.0685GT	KEY	1
6	56.0017.0120GT	Switch	4
7	56.0017.0127GT	SWITCH	2
8	56.0017.0114GT	SWITCH COVER	1
9	56.0017.0095GT	CONTACT	2
10	56.0019.0053GT	Switch Cover	1
11	56.0017.0149GT	Switch Cover	1
12	56.0017.0115GT	SWITCH COVER	1
13	56.0017.0110GT	SWITCH	1
14	07.0703.0429GT	KNOB, STEERING MODE SELECTOR	1
15	07.0703.0577GT	SWITCH	1
16	56.0017.0150GT	Switch Cover	1
17	56.0017.0038GT	SWITCH COVER	1
18	56.0017.0054GT	FAN SWITCH COVER	1
19	56.0017.0051GT	SWITCH COVER	1
20	56.0017.0107GT	SWITCH	2
21	56.0017.0039GT	Cap	1
22	56.0017.0151GT	Switch Cover	1
23	56.0017.0046GT	SWITCH COVER	1
24	56.0015.0020GT	Plate Dash Support Left	1
25	56.0017.0152GT	Switch Cover	1
26	55.0602.1123GT	Wiring	1
27	07.0703.0725GT	SWITCH BULB 12V - 0.03A - 0.36W	1
28	07.0703.0101GT	Switch Bulb Light 12V - 1,2W	1

silverhorn.co.uk

702.1 610032 Dashboard

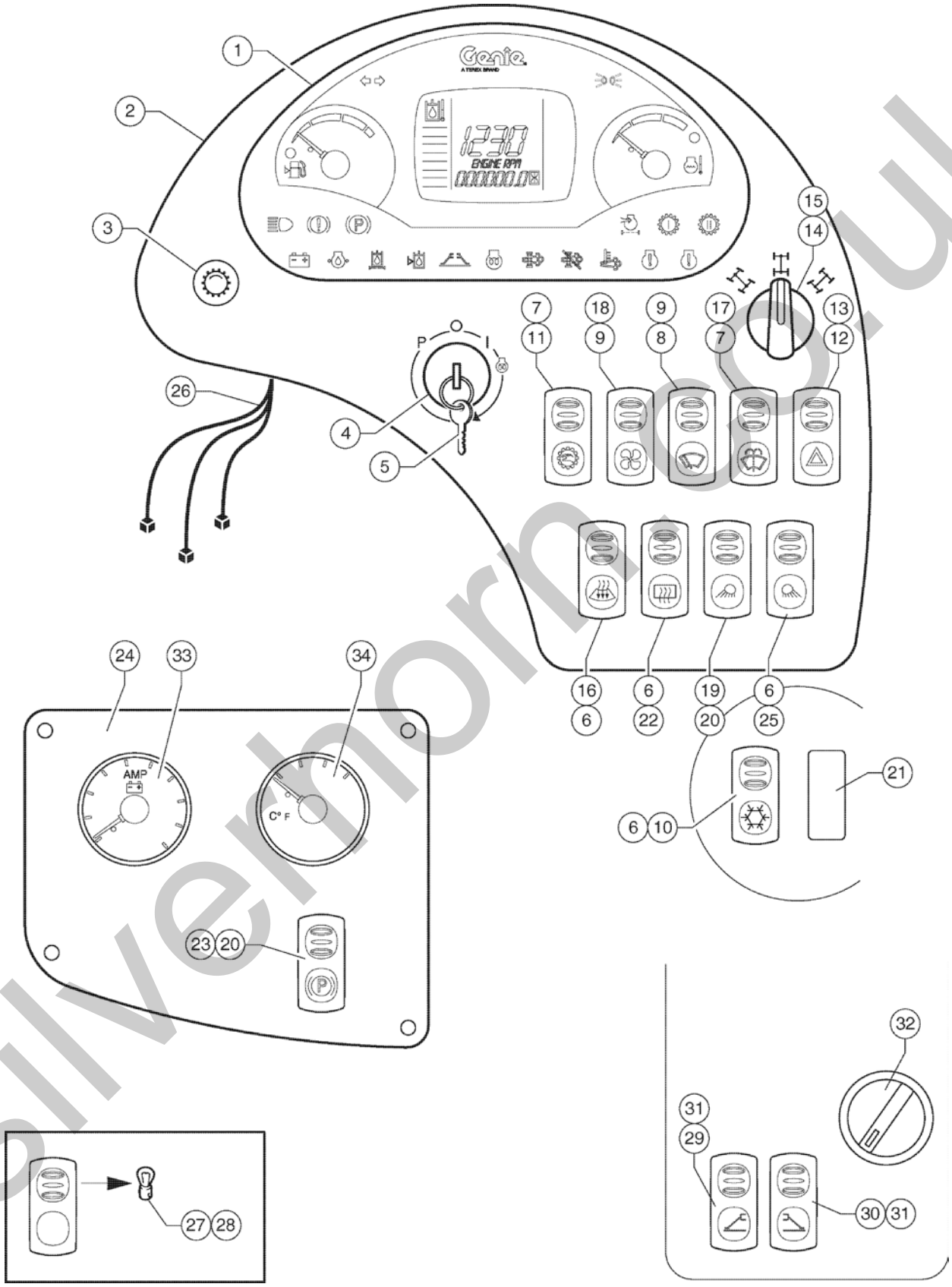

silverthorn.co.uk

702.1 610032 Dashboard

Item	Part No.	Description	Qty.
29	56.0017.0135GT	SWITCH COVER	1
30	56.0017.0136GT	SWITCH COVER	1
31	56.0017.0112GT	SWITCH	2
32	56.0014.0098GT	Webasto Heater Switch	1
33	56.0016.0191GT	Battery Current Indicator	1
34	56.0016.0198GT	Diesel Engine Oil Indicator	1

silverhorn.co.uk

703.1 610033 Electric Installation - Work Lights - Part 1

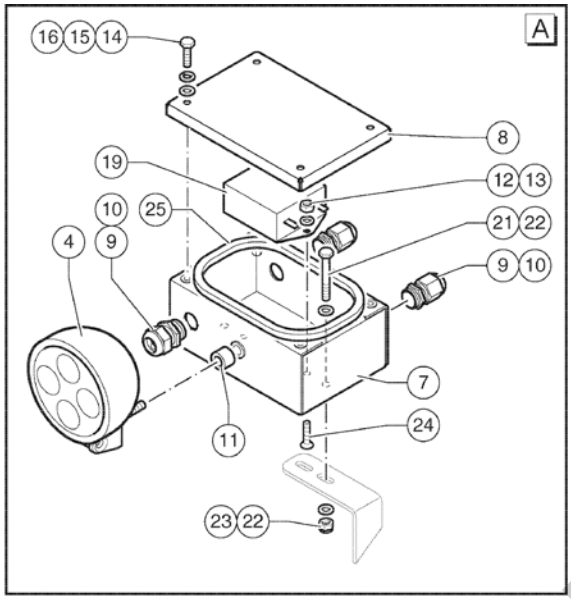

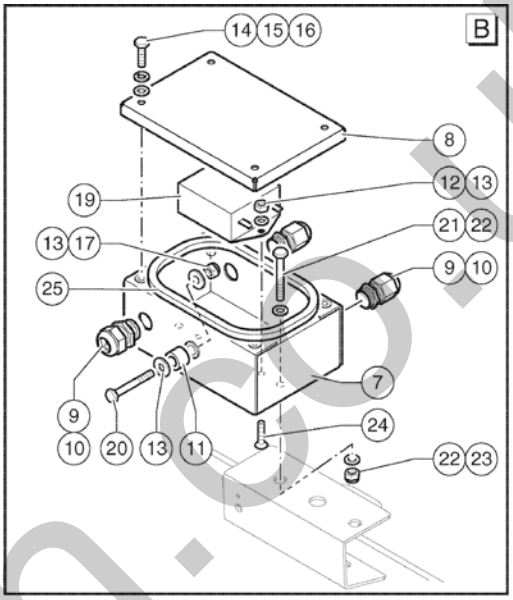

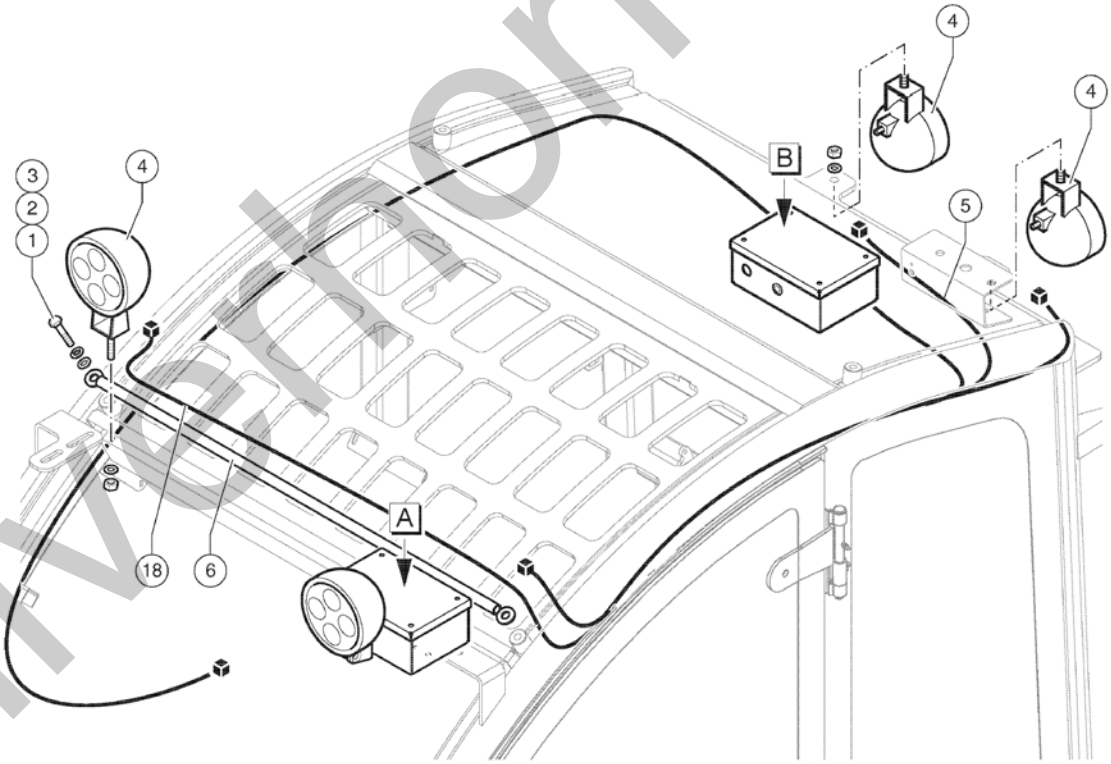

silverhorn.co.uk

703.1 610033 Electric Installation - Work Lights - Part 1

Item	Part No.	Description	Qty.
1	01.0001.0505GT	SCREW M12X25 UNI 5739 8.8 ZN	2
2	01.4032.0005GT	SPRING WASHER D12 ZN	2
3	01.0031.0057GT	WASHER, FLAT, D12, UNI 6592, ZN	2
4	56.0017.0106GT	Work Light	4
5	55.0602.1110GT	Wiring	1
6	51.0811.4862GT	Cable Guide Bracket	1
7	51.0903.5293GT	Filter Box	2
8	51.0903.5294GT	Box Cover	2
9	56.0007.0025GT	Cable Gland	6
10	56.0007.0026GT	Ring Nut	6
11	54.0100.0156GT	Bushing	2
12	01.0023.0051GT	NUT,STOP,M4 UNI 7473 6S ZN	4
13	01.4031.0007GT	WASHER,FLAT, D4 UNI 6592, ZN	6
14	01.0001.1538GT	SCREW M5X16 UNI5737 8.8 ZN	8
15	01.4032.0001GT	WASHER,SPRING,D5 ZN	8
16	01.0031.0053GT	FLAT WASHER D5 UNI 6592 ZN	8
17	01.0023.0054GT	NUT,M8 UNI 7473 6S ZN	1
18	55.0602.1124GT	Wiring	1
19	56.0016.0201GT	Filter FIN 50.005.F	2
20	01.0001.0011GT	Screw TE M 8X25 UNI 5739 8.8	1
21	01.0001.1458GT	SCREW M6X35 UNI 5739 8.8 ZN	2
22	01.0031.0298GT	FLAT WASHER D6 UNI 6593 ZN	4
23	01.0023.0053GT	STOP NUT M6 UNI 7473 6S ZN	2
24	01.4006.0002GT	SCREW M4X15 UNI 5933 10.9 ZN	4
25	09.0803.0889GT	Box Seal	2

silverhorn.co.uk

704.1 610034 Electric Installation - Work Lights - Part 2

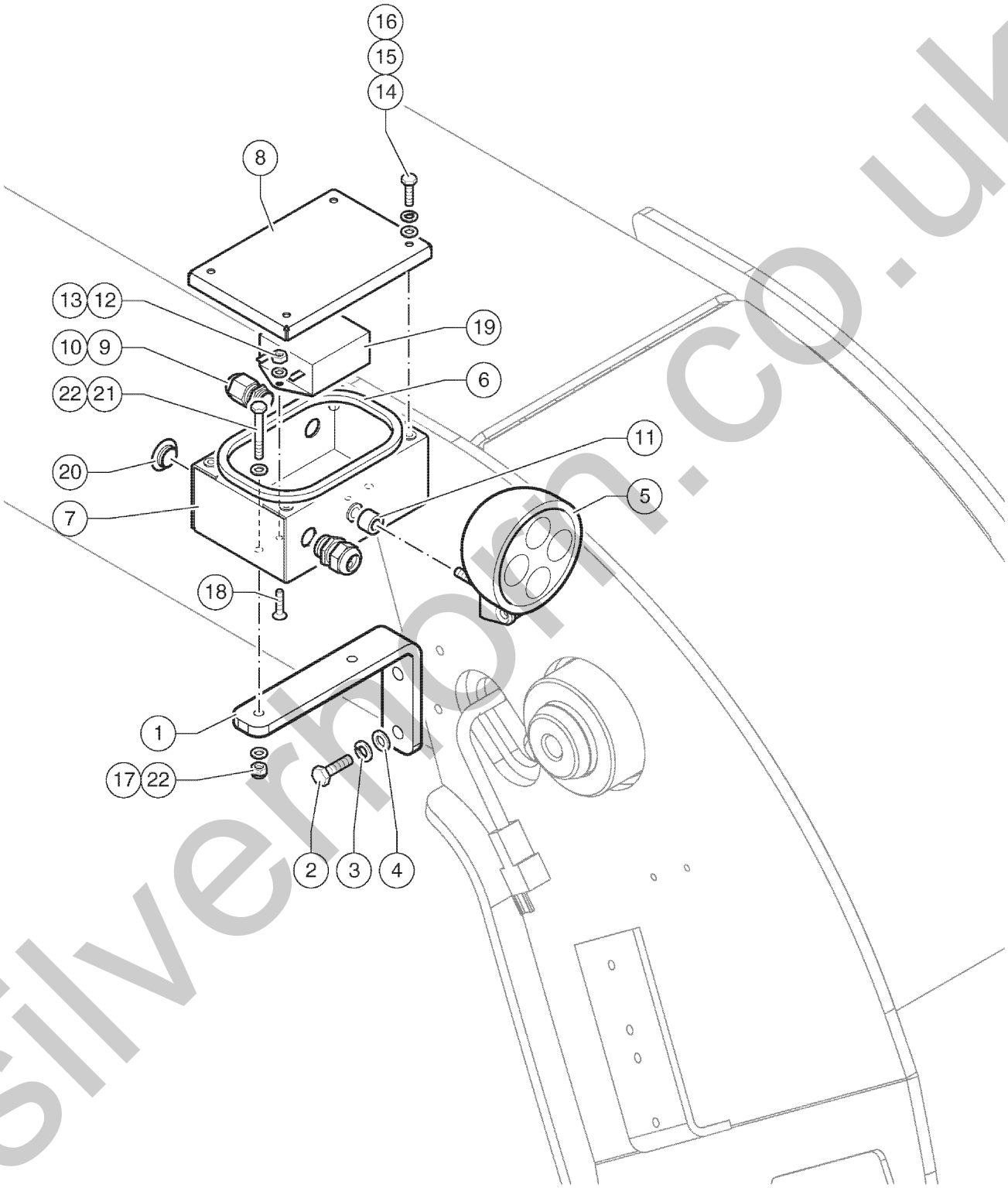

silverhorn.co.uk

704.1 610034 Electric Installation - Work Lights - Part 2

Item	Part No.	Description	Qty.
1	51.0811.4817GT	Bracket	1
2	01.0001.0254GT	SCREW M8X20 UNI 5739 8.8 ZN	2
3	01.4032.0003GT	Spring Washer D 8 ZN	2
4	01.0031.0055GT	FLAT WASHER D8 UNI 6592 ZN	2
5	56.0017.0106GT	Work Light	1
6	09.0803.0889GT	Box Seal	1
7	51.0903.5293GT	Filter Box	1
8	51.0903.5294GT	Box Cover	1
9	56.0007.0025GT	Cable Gland	2
10	56.0007.0026GT	Ring Nut	2
11	54.0100.0156GT	Bushing	1
12	01.0023.0051GT	NUT,STOP,M4 UNI 7473 6S ZN	2
13	01.4031.0007GT	WASHER,FLAT, D4 UNI 6592, ZN	2
14	01.0001.1538GT	SCREW M5X16 UNI5737 8.8 ZN	4
15	01.4032.0001GT	WASHER,SPRING,D5 ZN	4
16	01.0031.0053GT	FLAT WASHER D5 UNI 6592 ZN	4
17	01.0023.0053GT	STOP NUT M6 UNI 7473 6S ZN	2
18	01.4006.0002GT	SCREW M4X15 UNI 5933 10.9 ZN	4
19	56.0016.0201GT	Filter FIN 50.005.F	1
20	56.0007.0027GT	Plug	1
21	01.0001.1458GT	SCREW M6X35 UNI 5739 8.8 ZN	2
22	01.0031.0298GT	FLAT WASHER D6 UNI 6593 ZN	4

silverhorn.co.uk

705.1 610035 Road Lights

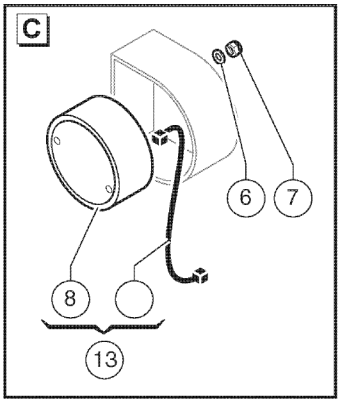

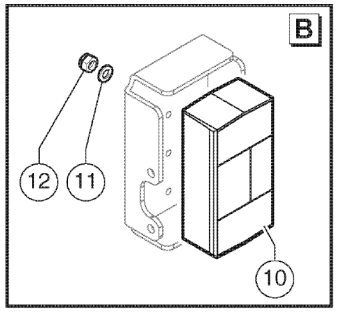

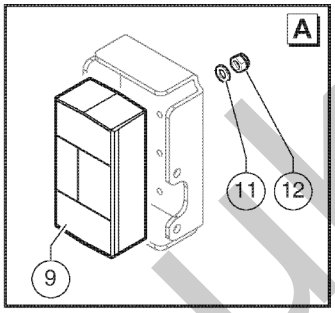

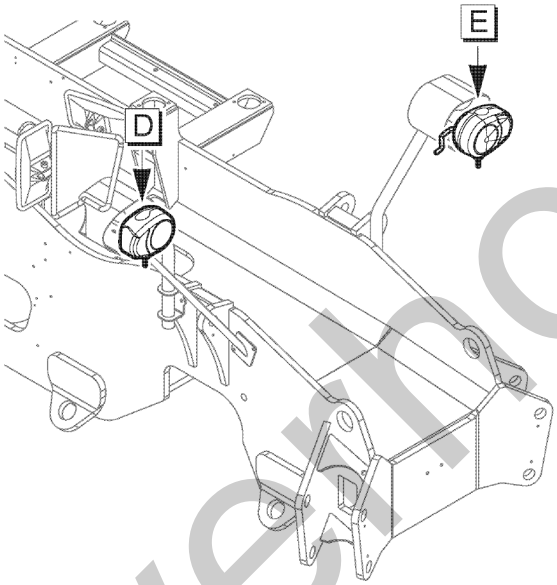

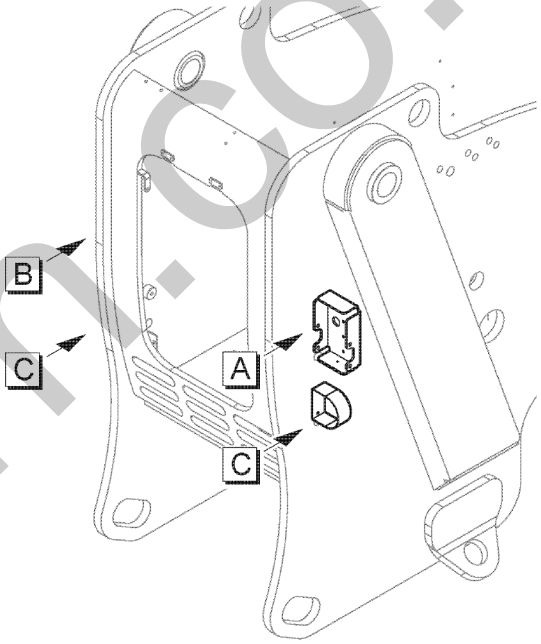

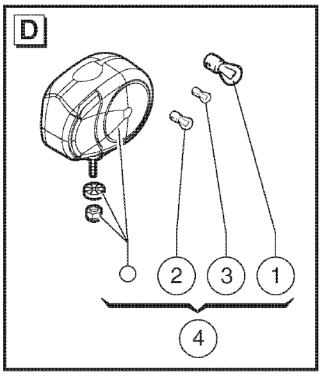

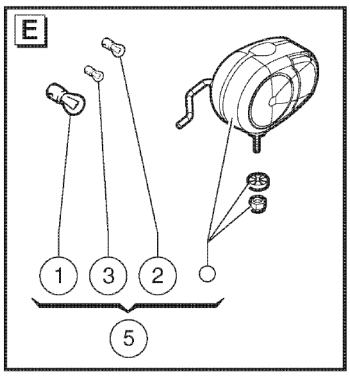

silverthorn.co.uk

705.1 610035 Road Lights

Item	Part No.	Description	Qty.
1	07.0703.0306GT	BULB, HEADLAMP	2
2	56.0010.0058GT	BULB,12V,45/40W	2
3	07.0703.0305GT	BULB, HEADLAMP	2
4	56.0010.0093GT	Right Front Road Light	1
5	56.0010.0092GT	Left Front Road Light	1
6	01.4031.0007GT	WASHER,FLAT, D4 UNI 6592, ZN	4
7	01.4019.0031GT	Stop Nut M4	4
8	56.0010.0089GT	Rear light	2
9	55.0602.0888GT	REAR RIGHT ROAD LIGHT AND HARNESS	1
10	55.0602.0889GT	Rear Left Lights Line	1
11	01.0001.0256GT	SCREW M8X25 UNI 5739 8.8 ZN	4
12	01.0031.0054GT	FLAT WASHER D6 UNI 6592 ZN	4
13	56.0010.0077GT	Rear Light	2

silverhorn.co.uk

706.1 610036 Wirings - View 1

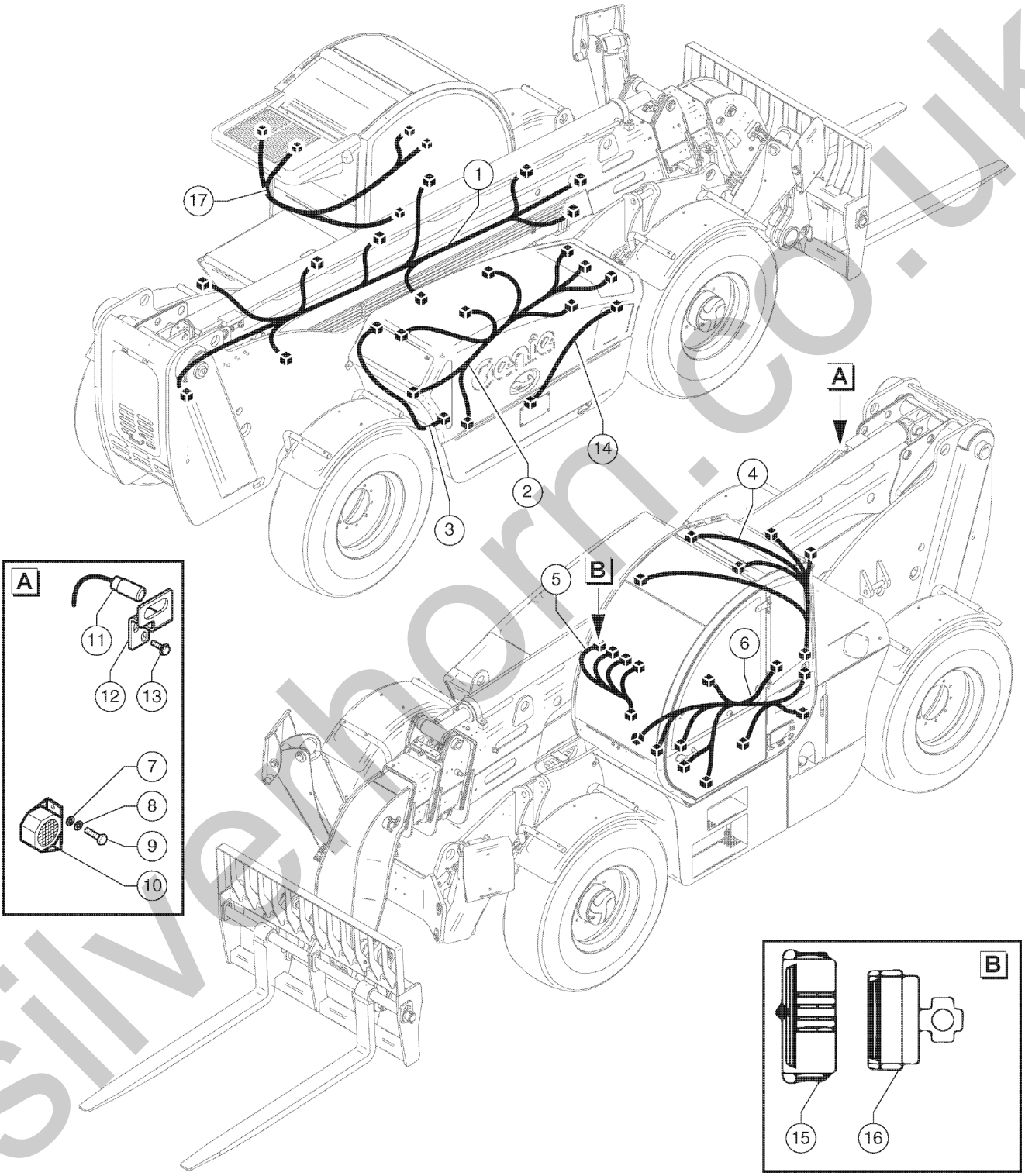

silverhorn.co.uk

706.1 610036 Wirings - View 1

Item	Part No.	Description	Qty.
1	55.0602.1114GT	Chassis Line	1
2	55.0602.1105GT	Engine Line	1
3	55.0602.1108GT	Alternator Cable	1
4	55.0602.1121GT	Upper Cabin Line	1
5	55.0602.0789GT	Dashboard Line	1
6	55.0602.1120GT	Lower Cabin Line	1
7	01.0031.0054GT	FLAT WASHER D6 UNI 6592 ZN	2
8	01.4032.0002GT	SPRING WASHER D6 ZN	2
9	01.0001.0156GT	SCREW M6X20 UNI 5739 8.8 ZN	2
10	56.0010.0072GT	Reverse Gear Buzzer	1
11	55.0602.0507GT	Sensor	1
12	51.0811.4809GT	Support	1
13	01.4001.0165GT	SCREW M8X16 DIN 6923 8.8 ZN	2
14	55.0602.1104GT	Air Filter Wiring	1
15	56.0002.0335GT	18 Ways Ground Collector	1
16	56.0002.0336GT	18 Ways Ground Connector	1
17	55.0602.1111GT	Air Conditioning Complete Wiring	1

silverhorn.co.uk

707.1 610037 Wirings - View 2

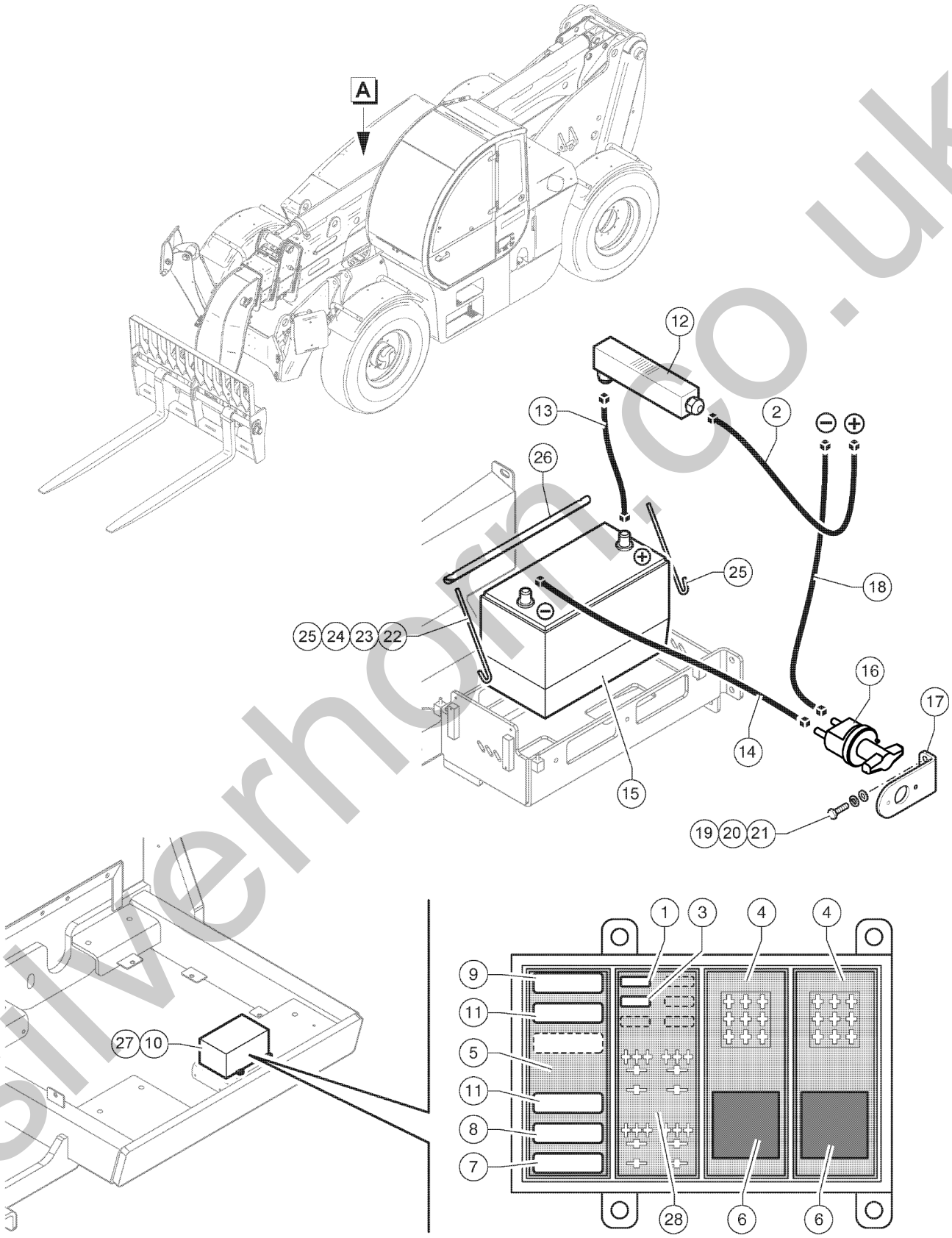

silverhorn.co.uk

707.1 610037 Wirings - View 2

Item	Part No.	Description	Qty.
1	56.0005.0027GT	FUSE,5A	2
2	55.0602.1103GT	Positive Cable	1
3	56.0005.0025GT	FUSE,10A	1
4	56.0005.0036GT	Module	2
5	56.0005.0035GT	Module	1
6	56.0006.9215GT	Relay	2
7	07.0703.0069GT	FUSE,MAXI,30A	1
8	56.0005.0000GT	FUSE, MAXI,40A	1
9	07.0703.0068GT	FUSE,MAXI,20A	1
10	56.0007.0022GT	BOX,FUSE	1
11	56.0005.0031GT	Fuse 50A	1
12	56.0016.0193GT	Shunt	1
13	55.0602.1107GT	Battery Positive Cable	1
14	55.0602.1106GT	Battery Negative Cable	1
15	56.0008.5206GT	Battery 12V 200Ah	1
16	56.0008.5218GT	Battery Cut-Out Switch	1
17	51.0811.4900GT	Battery Cut-Out Switch Bracket	1
18	55.0602.1102GT	Negative Cable	1
19	01.0001.0256GT	SCREW M8X25 UNI 5739 8.8 ZN	2
20	01.4032.0003GT	Spring Washer D 8 ZN	4
21	01.0031.0055GT	FLAT WASHER D8 UNI 6592 ZN	4
22	01.4023.0010GT	NUT,WING,M6 UNI 7473-7474 6S	2
23	01.4032.0002GT	SPRING WASHER D6 ZN	2
24	01.0031.0298GT	FLAT WASHER D6 UNI 6593 ZN	2
25	51.0811.4826GT	Threaded Rod	2
26	51.0811.4825GT	Battery Locking Bracket	1
27	56.0007.0023GT	COVER	1
28	56.0005.0021GT	FUSE HOLDER	1

silverhorn.co.uk

708.1 610038 Auxiliary Hydraulic Circuit

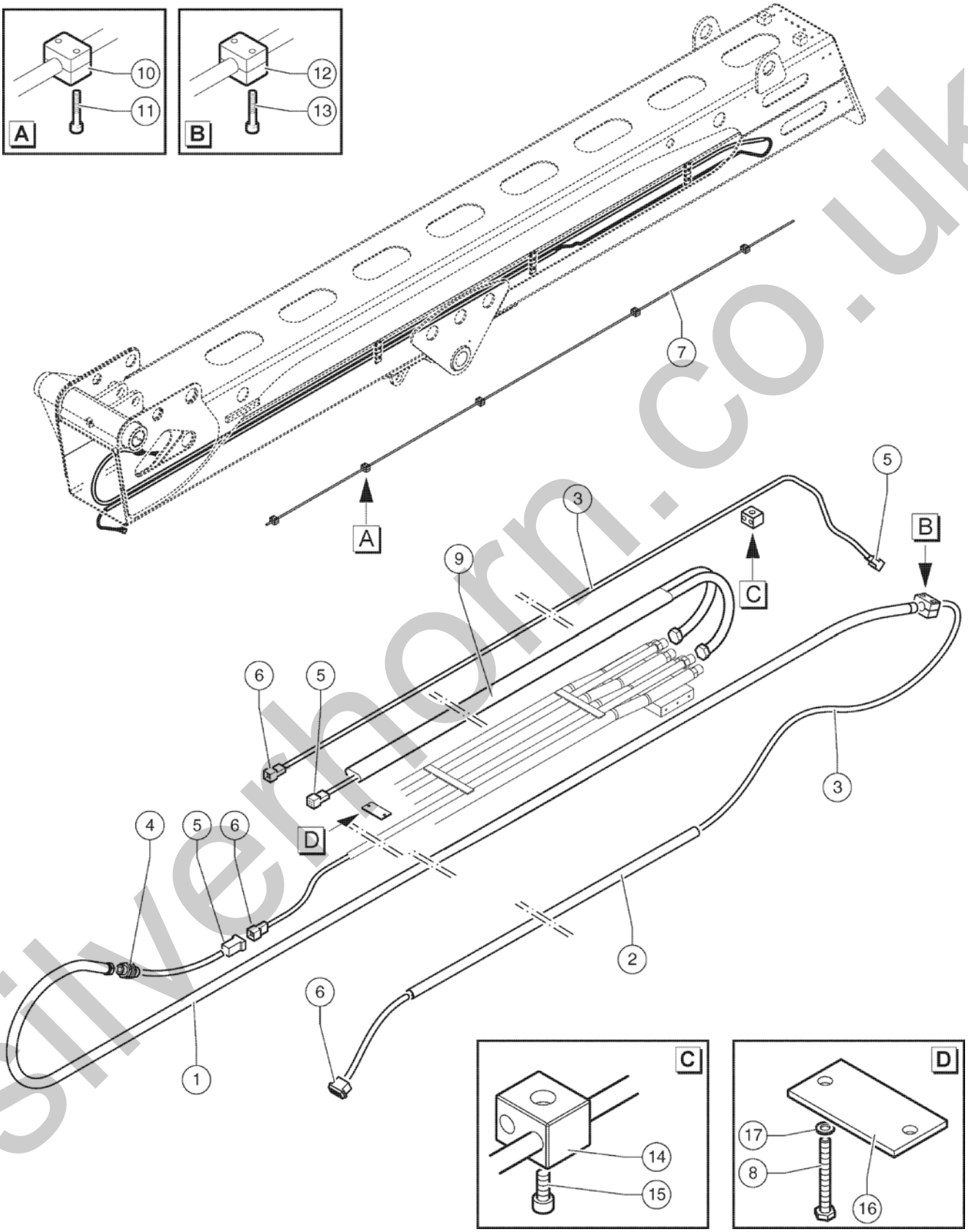

silverthorn.co.uk

708.1 610038 Auxiliary Hydraulic Circuit

Item	Part No.	Description	Qty.
1	04.0602.0623GT	Flexible Hose	1
2	56.0000.0100GT	Sheath	98, 5
3	56.0000.0099GT	Wiring 12 X 0.75	35
4	04.0600.0272GT	PIPE FITTING M 1/2" BSPXM 1/2" BSP	4, 33 1
5	55.0602.1012GT	Deutsch Female Connector	3
6	55.0602.0730GT	Deutsch Male Connector	3
7	51.0811.4783GT	Iron Hose	1
8	01.4001.0169GT	SCREW M4X35 UNI 5737 8.8 ZN	2
9	04.0602.0624GT	Flexible Hose	1
10	09.0803.0662GT	HOSE CLAMP D8	5
11	01.0003.0155GT	SCREW M6X20 UNI 5931 8.8 ZN	10
12	09.0803.0031GT	SINGLE HOSE BRACKET D20	1
13	01.0003.0159GT	SCREW M6X35 UNI 5931 8.8 ZN	2
14	09.0803.0270GT	HOSE CLAMP	1
15	01.0003.0153GT	SCREW M6X15 UNI 5931 8.8 ZN	2
16	51.0811.4356GT	PLATE	1
17	01.4032.0011GT	SPRING WASHER D4 ZN	2

silverhorn.co.uk

709.1 610039 Power Plant Heaters

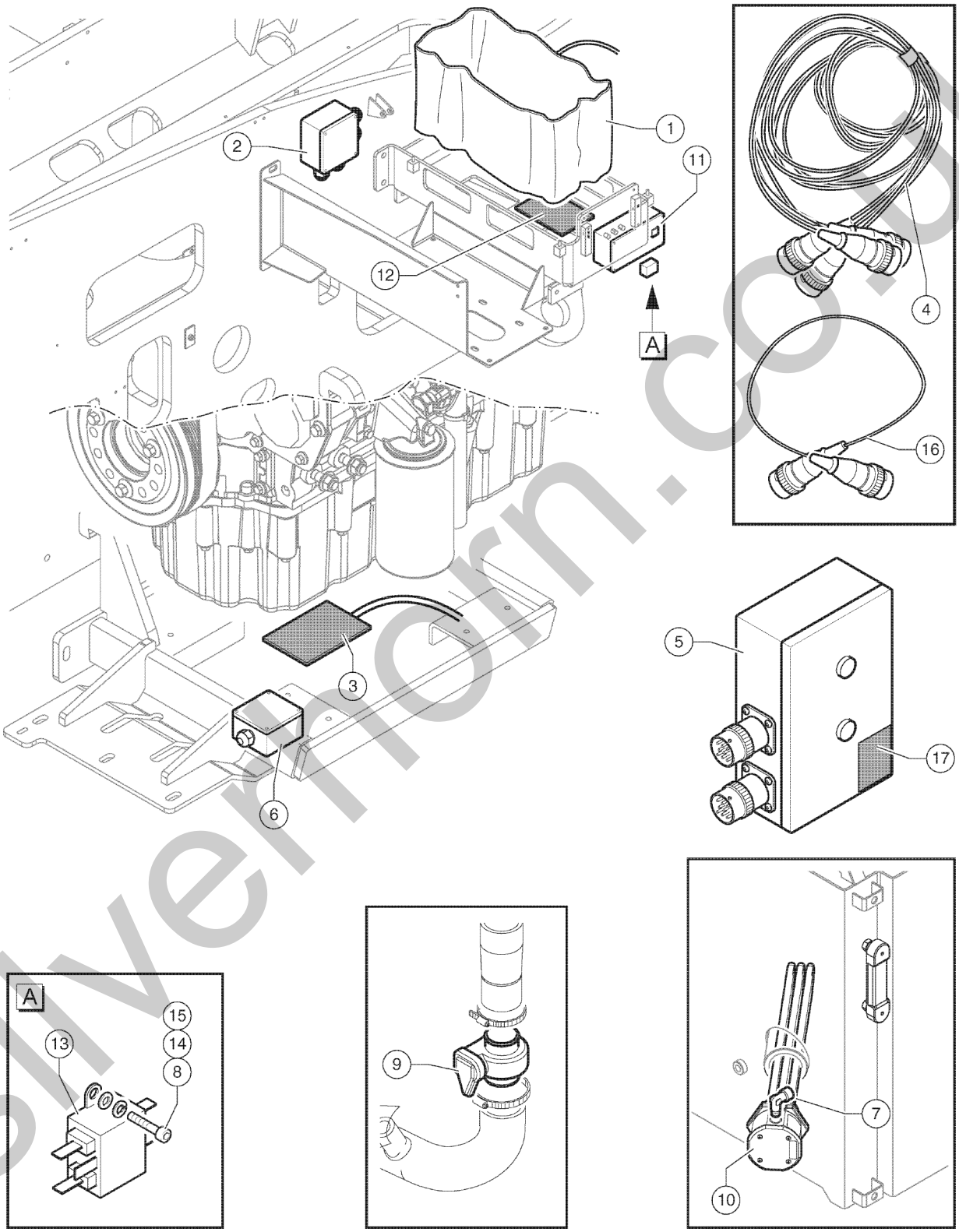

silverhorn.co.uk

709.1 610039 Power Plant Heaters

Item	Part No.	Description	Qty.
1	56.0014.0116GT	Battery Heater Blanket	1
2	56.0014.0120GT	Electric Box	1
3	56.0014.0115GT	Engine Oil Heating Element	1
4	55.0602.1088GT	Power Plant Heaters Electrical Cable	2
5	56.0014.0118GT	Main Junction Box	1
6	56.0014.0119GT	Electric Box	1
7	56.0017.0153GT	Fitting M20-90°	1
8	01.0031.0053GT	FLAT WASHER D5 UNI 6592 ZN	2
9	56.0014.0113GT	Coolant Heater	1
10	56.0014.0117GT	Hydraulic Oil Heating Element	1
11	56.0014.0114GT	Battery Charger	1
12	09.0803.0689GT	Battery Pad	1
13	56.0016.0200GT	Filter FIN 33.006.F	1
14	01.4003.0037GT	SCREW M5X20 UNI 5931 8.8 ZN	2
15	01.4032.0001GT	WASHER,SPRING,D5 ZN	2
16	55.0602.1130GT	EXTENTION CABLE ADAPTER	2
17	09.4618.2052GT	DECAL "DANGER/HAZARDOUS VOLTAGE"	1

silverhorn.co.uk

Part no.	Page Number
01.0001.0004GT	115
01.0001.0011GT	211
01.0001.0035GT	115
01.0001.0052GT	67
01.0001.0071GT	75
01.0001.0099GT	115
01.0001.0102GT	87, 171, 177, 181
01.0001.0104GT	29
01.0001.0106GT	143, 153, 177
01.0001.0107GT	163
01.0001.0154GT	19, 25, 33, 35, 65, 89...
01.0001.0156GT	29, 71, 91, 117, 147, 159...
01.0001.0204GT	65
01.0001.0206GT	147
01.0001.0209GT	197
01.0001.0252GT	169
01.0001.0254GT	21, 25, 35, 71, 95, 109...
01.0001.0256GT	19, 27, 69, 77, 89, 107...
01.0001.0257GT	73
01.0001.0258GT	19, 175
01.0001.0304GT	27
01.0001.0306GT	113, 137, 141
01.0001.0308GT	23, 29
01.0001.0310GT	33, 137
01.0001.0314GT	33, 141
01.0001.0317GT	113
01.0001.0353GT	123
01.0001.0355GT	23, 27, 33, 35, 73, 81...
01.0001.0356GT	27, 75, 81, 119, 123
01.0001.0357GT	25, 29, 119, 123
01.0001.0358GT	113, 121
01.0001.0402GT	67
01.0001.0505GT	211
01.0001.0506GT	159
01.0001.0508GT	65, 67, 137, 193
01.0001.0605GT	23
01.0001.0606GT	141
01.0001.0657GT	25
01.0001.1438GT	29
01.0001.1458GT	25, 211, 213
01.0001.1465GT	19
01.0001.1497GT	137

Part no.	Page Number
01.0001.1506GT	81
01.0001.1538GT	19, 211, 213
01.0001.1543GT	21
01.0001.1547GT	129
01.0001.1557GT	193
01.0001.1558GT	65
01.0003.0153GT	221
01.0003.0155GT	117, 221
01.0003.0157GT	157, 161
01.0003.0159GT	107, 221
01.0003.0160GT	23, 67
01.0003.0203GT	91
01.0003.0205GT	23
01.0003.0207GT	183
01.0003.0208GT	139
01.0003.0210GT	137
01.0003.0261GT	33
01.0003.0306GT	81
01.0003.0353GT	123
01.0003.0354GT	119
01.0003.0947GT	115
01.0003.0957GT	83
01.0003.0963GT	103, 117
01.0003.0965GT	143
01.0003.0967GT	153
01.0005.0001GT	93
01.0006.0050GT	89
01.0019.0106GT	129
01.0019.0179GT	129
01.0019.0186GT	127
01.0023.0051GT	89, 211, 213
01.0023.0052GT	19, 97
01.0023.0053GT	23, 29, 67, 71, 89, 105...
01.0023.0054GT	19, 23, 29, 69, 75, 89...
01.0023.0055GT	25, 27, 33, 75, 113, 137...
01.0023.0056GT	65, 137
01.0023.0057GT	137, 147
01.0023.0058GT	39, 147
01.0023.0062GT	39
01.0031.0053GT	19, 29, 67, 97, 211, 213...
01.0031.0054GT	19, 23, 29, 33, 67, 71...
01.0031.0055GT	19, 29, 35, 75, 89, 97...

Part no.	Page Number
01.0031.0056GT	25, 27, 33, 81, 87, 113...
01.0031.0057GT	65, 139, 157, 211
01.0031.0058GT	119, 123, 139, 141
01.0031.0059GT	39, 67, 193
01.0031.0061GT	21, 133, 135
01.0031.0063GT	19, 39
01.0031.0097GT	81, 131
01.0031.0099GT	81, 127, 133, 135
01.0031.0100GT	131
01.0031.0298GT	25, 67, 89, 211, 213, 219
01.0031.0299GT	19, 23, 27, 69, 71, 89...
01.0031.0301GT	25, 27, 73, 183
01.0031.0308GT	67
01.0032.0054GT	29
01.0034.0054GT	117
01.0034.0056GT	25
01.4001.0008GT	141
01.4001.0025GT	39
01.4001.0032GT	147
01.4001.0041GT	133, 135
01.4001.0046GT	143
01.4001.0061GT	89
01.4001.0062GT	23, 97, 117
01.4001.0063GT	39
01.4001.0069GT	127
01.4001.0078GT	25, 29
01.4001.0089GT	183
01.4001.0106GT	143
01.4001.0108GT	131
01.4001.0116GT	89
01.4001.0122GT	87, 97
01.4001.0125GT	133
01.4001.0165GT	107, 217
01.4001.0169GT	221
01.4001.0177GT	19
01.4001.0180GT	129
01.4001.0189GT	147
01.4001.0208GT	129
01.4001.0209GT	67, 135
01.4003.0000GT	121
01.4003.0013GT	131, 135
01.4003.0028GT	201

silverhorn.co.uk

Part no.	Page Number
01.4003.0034GT	129
01.4003.0036GT	199
01.4003.0037GT	223
01.4003.0039GT	201
01.4003.0048GT	85
01.4003.0049GT	125
01.4003.0050GT	121
01.4003.0051GT	133
01.4003.0072GT	125
01.4005.0009GT	81
01.4006.0002GT	211, 213
01.4006.0007GT	29, 103
01.4006.0010GT	115
01.4006.0011GT	125, 159
01.4019.0012GT	35
01.4019.0025GT	189
01.4019.0026GT	131
01.4019.0029GT	161
01.4019.0031GT	215
01.4023.0000GT	143
01.4023.0010GT	219
01.4031.0001GT	25
01.4031.0002GT	23
01.4031.0003GT	75
01.4031.0007GT	89, 211, 213, 215
01.4031.0008GT	65
01.4032.0000GT	19
01.4032.0001GT	19, 67, 211, 213, 223
01.4032.0002GT	19, 33, 37, 65, 73, 87...
01.4032.0003GT	19, 25, 27, 37, 71, 91...
01.4032.0004GT	25, 27, 33, 35, 73, 81...
01.4032.0005GT	67, 81, 137, 157, 183, 193...
01.4032.0006GT	23, 141
01.4032.0007GT	25, 67, 81, 193
01.4032.0009GT	21, 65
01.4032.0011GT	221
01.4041.0000GT	129, 133
02.0117.0051GT	119, 123, 129, 133
02.0117.0101GT	33, 119, 137, 141, 143
02.0117.0119GT	131, 133, 147
02.4102.0015GT	147
02.4126.0003GT	127
02.4126.0004GT	127, 129
04.0220.0053GT	71, 107
04.0220.0055GT	183
04.0224.0001GT	107
04.0227.0051GT	71
04.0227.0054GT	107, 109
04.0227.0058GT	115
04.0227.0502GT	69
04.0600.0000GT	199
04.0600.0016GT	107
04.0600.0017GT	107, 199
04.0600.0029GT	71, 109, 177
04.0600.0066GT	193
04.0600.0069GT	169
04.0600.0087GT	199
04.0600.0088GT	71, 109
04.0600.0090GT	177
04.0600.0091GT	169, 199
04.0600.0092GT	143
04.0600.0094GT	189
04.0600.0113GT	193
04.0600.0136GT	189
04.0600.0179GT	71, 107
04.0600.0243GT	189
04.0600.0271GT	155, 169
04.0600.0272GT	221
04.0600.0273GT	107
04.0600.0276GT	71
04.0600.0277GT	109
04.0600.0278GT	111
04.0600.0282GT	107
04.0600.0283GT	107
04.0600.0284GT	107
04.0600.0828GT	107
04.0602.0608GT	189
04.0602.0623GT	221
04.0602.0624GT	221
04.0605.0178GT	167
04.0605.0179GT	179
04.0605.0180GT	193
04.0605.0204GT	181
04.0605.0230GT	169, 175, 201
04.0605.0309GT	177
04.0605.0313GT	175
04.0605.0422GT	177, 179
04.0605.0424GT	175
04.0605.0431GT	171
04.0605.0455GT	201
04.0605.0461GT	201
04.0605.0462GT	177, 201
04.0605.0464GT	175
04.0605.0519GT	187
04.0605.0556GT	181
04.0605.0600GT	157
04.0605.0616GT	177
04.0605.0731GT	165
04.0605.0741GT	171
04.0605.0770GT	167
04.0605.0772GT	179
04.0605.0853GT	191
04.0605.0891GT	157
04.0605.0896GT	155, 161
04.0605.1309GT	175
04.0605.1333GT	195
04.0605.1358GT	191
04.0605.1380GT	191
04.0605.1389GT	173
04.0605.1442GT	171
04.0605.1496GT	155
04.0605.1498GT	155
04.0605.1506GT	171
04.0605.1560GT	171
04.0605.1628GT	157, 161
04.0605.1643GT	193
04.0605.1644GT	187
04.0605.1646GT	157
04.0605.1648GT	187
04.0605.1649GT	195
04.0605.1660GT	181
04.0605.1663GT	171
04.0605.1667GT	191
04.0605.1669GT	157
04.0605.1671GT	155
04.0605.1708GT	157, 161

silverhorn.co.uk

Part no.	Page Number
04.0605.1709GT	157, 161
04.0605.1710GT	157
04.0605.1711GT	157, 161
04.0605.1713GT	193
04.0605.1729GT	169
04.0605.1730GT	169
04.0605.1734GT	159
04.0605.1736GT	187
04.0605.1737GT	187
04.0605.1738GT	193
04.0605.1740GT	189
04.0605.1741GT	193
04.0605.1742GT	189
04.0605.1743GT	189
04.0605.1744GT	175
04.0605.1745GT	189
04.0605.1746GT	189
04.0605.1747GT	191
04.0605.1751GT	163
04.0605.1752GT	163
04.0605.1753GT	165
04.0605.1754GT	165
04.0605.1757GT	191
04.0605.1759GT	201
04.0605.1760GT	201
04.0605.1761GT	201
04.0605.1762GT	201
04.0605.1763GT	189
04.0605.1765GT	195
04.0605.1766GT	195
04.0605.1772GT	157
04.0605.1773GT	179
04.0605.1774GT	175
04.0605.1775GT	167
04.0605.1785GT	199
04.0605.1786GT	199
04.0605.1787GT	171
04.0607.0102GT	169
04.0607.0103GT	193
04.0607.0107GT	155, 169, 189
04.0607.0110GT	171, 201
04.0607.0111GT	157, 161, 163, 171, 175, 187...
04.0607.0112GT	171, 177, 187, 201
04.0607.0113GT	157, 167, 169, 171, 179, 181...
04.0607.0114GT	157, 165, 167, 171, 179, 181...
04.0607.0117GT	175, 201
04.0607.0121GT	155
04.0607.0122GT	177
04.0607.0124GT	155, 157, 161
04.0607.0130GT	189
04.0607.0131GT	175, 179, 193
04.0607.0137GT	175
04.0607.0140GT	201
04.0607.0141GT	157, 175
04.0607.0142GT	187, 193
04.0607.0145GT	177, 181
04.0607.0153GT	175, 189, 197
04.0607.0158GT	189
04.0607.0163GT	201
04.0607.0167GT	165, 169, 201
04.0607.0168GT	189
04.0607.0174GT	187
04.0607.0180GT	177
04.0607.0183GT	193
04.0607.0188GT	193
04.0607.0190GT	187
04.0607.0193GT	171
04.0607.0196GT	189
04.0607.0228GT	189
04.0607.0797GT	177
04.0607.0813GT	175, 179, 181
04.0607.0849GT	171
04.0607.0853GT	155
04.0607.0855GT	175, 193
04.0607.0856GT	193
04.0607.0860GT	195
04.0607.0863GT	195
04.03605.1748GT	187
04.4210.0016GT	197
04.4210.0018GT	199, 201
04.4210.0019GT	199, 201
04.4210.0035GT	199, 201
04.4210.0036GT	199, 201
04.4223.0002GT	187
04.4223.0003GT	193
04.4223.0010GT	189
04.4224.0001GT	189
04.4224.0008GT	177
04.4224.0011GT	71, 109
04.4224.0012GT	177
04.4225.0001GT	177
04.4227.0000GT	69
04.4227.0008GT	19
04.4227.0015GT	71
04.4227.0016GT	169
04.4227.0031GT	69
04.4227.0041GT	79
04.4227.0042GT	79
04.4227.0043GT	79
04.4227.0046GT	71
04.4229.0082GT	193
04.4229.0084GT	193
04.4235.0058GT	193
04.4235.0059GT	183
04.4235.0060GT	39
04.4238.0093GT	81
04.4238.0102GT	81
04.4238.0105GT	81
04.4239.0002GT	201
04.4239.0004GT	157
04.4239.0005GT	137
04.4239.0034GT	193
04.4239.0041GT	141
04.4239.0051GT	137
04.4239.0080GT	145
04.4239.0142GT	137
04.4239.0148GT	33
04.4240.0024GT	143
04.4240.0041GT	143
04.4240.0052GT	171, 181
04.4240.0075GT	199
04.4661.0025GT	75
05.4309.0015GT	175
05.4329.0001GT	175
05.4329.0002GT	175
05.4329.0029GT	175

silverhorn.co.uk

Part no.	Page Number
05.4329.0035GT	169
06.0401.0219GT	193
06.0401.1501GT	189
06.0401.1508GT	83
06.0442.0101GT	35
06.0442.0117GT	169
06.0442.0120GT	35, 71, 107, 111, 177, 199
06.0442.0122GT	37, 107, 169, 183, 199
06.0442.0124GT	155, 169, 193
06.0442.0125GT	193
06.0442.0132GT	189
06.0443.0002GT	71
06.0607.0861GT	195
06.4401.0006GT	137
07.0501.0057GT	11, 65
07.0501.0061GT	65
07.0501.0062GT	65
07.0501.0063GT	65
07.0501.0064GT	65
07.0501.0073GT	67
07.0501.0079GT	11, 65
07.0501.0080GT	65
07.0501.0090GT	65
07.0501.0095GT	67
07.0501.0096GT	67
07.0700.0002GT	35
07.0700.0006GT	35
07.0700.0007GT	35
07.0700.0049GT	35
07.0700.0050GT	35
07.0700.0051GT	35
07.0701.0213GT	81
07.0701.0216GT	81
07.0701.0217GT	81
07.0701.0242GT	81
07.0701.0247GT	81
07.0701.0276GT	81
07.0701.0321GT	81
07.0701.0327GT	81
07.0701.0328GT	83
07.0703.0068GT	219
07.0703.0069GT	219
07.0703.0101GT	207
07.0703.0305GT	215
07.0703.0306GT	215
07.0703.0429GT	207
07.0703.0472GT	207
07.0703.0485GT	205
07.0703.0486GT	205
07.0703.0577GT	207
07.0703.0605GT	85
07.0703.0707GT	85
07.0703.0708GT	85
07.0703.0709GT	85
07.0703.0710GT	85
07.0703.0712GT	85
07.0703.0713GT	85
07.0703.0724GT	205
07.0703.0725GT	207
07.0704.0457GT	203
07.0704.0458GT	203
07.0704.0459GT	203
07.0704.0460GT	203
07.0704.0461GT	203
07.0704.0462GT	203
07.0704.0463GT	203
07.0704.0465GT	203
07.0704.0466GT	203
07.0704.0468GT	203
07.0704.0469GT	203
07.0704.0470GT	203
07.0704.0471GT	203
07.0704.0472GT	203
07.0704.0474GT	85
07.0704.0475GT	85
07.0704.0476GT	85
07.0704.0477GT	85
07.0704.0478GT	85
07.0704.0479GT	85
07.0704.0480GT	85
07.0704.0481GT	203
07.0704.0482GT	203
07.0704.0483GT	203
07.0704.0484GT	203
07.0704.0485GT	203
07.0704.0486GT	203
07.0704.0487GT	203
07.0705.0101GT	137
07.0709.0010GT	59
07.0709.0011GT	59
07.0709.0012GT	59
07.0709.0013GT	59
07.0709.0051GT	53
07.0709.0057GT	61
07.0709.0065GT	49
07.0709.0070GT	49
07.0709.0071GT	49
07.0709.0079GT	55
07.0709.0084GT	45
07.0709.0104GT	47
07.0709.0106GT	63
07.0709.0113GT	49
07.0709.0119GT	49
07.0709.0127GT	55
07.0709.0143GT	61
07.0709.0144GT	49
07.0709.0327GT	57
07.0709.0371GT	47
07.0709.0408GT	63
07.0709.0422GT	59
07.0709.0441GT	45, 47
07.0709.0443GT	55
07.0709.0465GT	47
07.0709.0469GT	47
07.0709.0470GT	47
07.0709.0472GT	47
07.0709.0474GT	49
07.0709.0475GT	49
07.0709.0477GT	49
07.0709.0483GT	49
07.0709.0484GT	49
07.0709.0485GT	47
07.0709.0486GT	47
07.0709.0487GT	47
07.0709.0718GT	57
07.0709.0720GT	57

silverhorn.co.uk

Part no.	Page Number
07.0709.0747GT	45
07.0709.0782GT	61
07.0709.0787GT	47
07.0709.0789GT	47
07.0709.0796GT	49
07.0709.0797GT	49
07.0709.0798GT	49
07.0709.0799GT	49
07.0709.0800GT	49
07.0709.0801GT	49
07.0709.0819GT	63
07.0709.0822GT	45
07.0709.0824GT	51
07.0709.0826GT	51
07.0709.0840GT	63
07.0709.0847GT	55
07.0709.0848GT	55
07.0709.0849GT	55
07.0709.0850GT	55
07.0709.0851GT	55
07.0709.0852GT	55
07.0709.0853GT	55
07.0709.0854GT	55
07.0709.0855GT	55
07.0709.0856GT	55
07.0709.0857GT	55
07.0709.0858GT	55
07.0709.0859GT	57
07.0709.0860GT	57
07.0709.0861GT	57
07.0709.0862GT	57
07.0709.0863GT	57
07.0709.0864GT	57
07.0709.0865GT	57
07.0709.0866GT	57
07.0709.0867GT	57
07.0709.0868GT	57
07.0709.0869GT	57
07.0709.0870GT	57
07.0709.0873GT	59
07.0709.0879GT	59
07.0709.0880GT	59

Part no.	Page Number
07.0709.0881GT	57
07.0709.0884GT	61
07.0709.0886GT	51
07.0709.0912GT	45
07.0709.0921GT	45
07.0709.0939GT	57
07.0709.0965GT	45
07.0709.0969GT	41
07.0709.0972GT	61
07.0709.0974GT	49
07.0709.0975GT	49
07.0709.0976GT	49
07.0709.0980GT	51
07.0709.0988GT	55
07.0709.1009GT	45
07.0709.1010GT	61
07.0709.1014GT	43
07.0709.1017GT	47
07.0709.1027GT	61
07.0709.1028GT	61
07.0709.1031GT	61
07.0709.1032GT	61
07.0709.1044GT	49
07.0709.1045GT	49
07.0709.1046GT	49
07.0709.1047GT	49
07.0709.1048GT	43
07.0709.1053GT	47
07.0709.1065GT	59
07.0709.1205GT	47
07.0709.1242GT	63
07.0709.1290GT	55
07.0709.1291GT	55
07.0709.1292GT	57
07.0709.1293GT	57
07.0709.1294GT	57
07.0709.1295GT	57
07.0709.1296GT	59
07.0709.1297GT	59
07.0709.1298GT	45
07.0709.1300GT	61
07.0709.1302GT	61

Part no.	Page Number
07.0709.1303GT	41
07.0709.1304GT	47
07.0709.1305GT	47
07.0709.1306GT	47
07.0709.1308GT	49
07.0709.1310GT	63
07.0709.1315GT	51
07.0709.1316GT	53
07.0709.1317GT	61
07.0709.1318GT	61
07.0709.1319GT	61
07.0709.1320GT	61
07.0709.1321GT	47
07.0709.1323GT	63
07.0709.1324GT	63
07.0712.0282GT	75
07.0712.0287GT	75, 183
07.0712.0291GT	185
07.0712.0301GT	75
07.0712.0324GT	75
07.0712.0332GT	183
07.0712.0333GT	183
07.0712.0334GT	183
07.0712.0335GT	183
07.0712.0336GT	75
07.0712.0337GT	77
07.0712.0338GT	77
07.0712.0339GT	77
07.0712.0341GT	75
07.0712.0342GT	75, 183
07.0712.0343GT	75
07.0712.0344GT	183
07.0712.0345GT	183
07.0712.0347GT	75
07.0712.0352GT	75
07.0712.0354GT	183
07.0712.0356GT	185
07.0712.0357GT	75, 77
07.0712.0358GT	75
07.0712.0360GT	183
07.0712.0362GT	75
07.0712.0363GT	77

silverhorn.co.uk

Part no.	Page Number
07.0712.0367GT	183
07.0713.0058GT	81
07.0713.0066GT	81
07.0713.0073GT	81
07.0713.0074GT	81
07.0722.0037GT	137
07.0722.0067GT	183
07.0723.0356GT	183
07.0723.0360GT	183
07.0723.0634GT	87
07.0723.0635GT	87
07.0730.0077GT	175
07.0731.0316GT	199
07.0731.0317GT	199
07.0735.0002GT	149
07.0735.0008GT	149
07.0735.0210GT	149
07.0735.0211GT	149
07.0735.0212GT	149
07.0735.0213GT	149
07.0735.0214GT	149
07.0735.0215GT	149
07.0735.0216GT	149
07.0735.0217GT	149
07.0735.0218GT	149
07.0735.0219GT	149
07.0735.0220GT	149
07.0735.0221GT	149
07.0735.0222GT	149
07.0735.0223GT	149
07.0735.0224GT	149
07.0735.0225GT	149
07.0735.0226GT	149
07.0735.0227GT	149
07.0735.0229GT	149
07.0735.0230GT	149
07.0735.0231GT	149
07.0735.0232GT	149
07.0735.0233GT	149
07.0735.0235GT	149
07.0735.0236GT	151
07.0735.0237GT	151

Part no.	Page Number
07.0735.0238GT	151
07.0735.0239GT	149
07.0735.0240GT	149
07.0735.0241GT	151
07.0740.0005GT	103
07.0740.0006GT	105
07.0740.0009GT	97
07.0740.0014GT	91, 97
07.0740.0015GT	101
07.0740.0020GT	89
07.0740.0021GT	91
07.0740.0026GT	99
07.0740.0027GT	89
07.0740.0028GT	105
07.0740.0029GT	101
07.0740.0030GT	101
07.0740.0032GT	97
07.0740.0046GT	97
07.0740.0048GT	27, 103
07.0740.0049GT	29, 103
07.0740.0051GT	103
07.0740.0052GT	101
07.0740.0058GT	101
07.0740.0066GT	95
07.0740.0070GT	97
07.0740.0076GT	99
07.0740.0079GT	97
07.0740.0081GT	97
07.0740.0082GT	89
07.0740.0084GT	89
07.0740.0085GT	97
07.0740.0086GT	97
07.0740.0088GT	95
07.0740.0089GT	95
07.0740.0091GT	95
07.0740.0097GT	91
07.0740.0098GT	95
07.0740.0103GT	27
07.0740.0104GT	103
07.0740.0105GT	103
07.0740.0106GT	103
07.0740.0121GT	105

Part no.	Page Number
07.0740.0124GT	105
07.0740.0125GT	105
07.0740.0127GT	105
07.0740.0128GT	89
07.0740.0130GT	105
07.0740.0143GT	87
07.0740.0152GT	87, 95
07.0740.0156GT	99
07.0740.0192GT	29
07.0740.0202GT	91
07.0740.0217GT	99
07.0740.0236GT	89
07.0740.0248GT	99
07.0740.0254GT	115
07.0740.0257GT	115
07.0740.0260GT	115
07.0740.0262GT	115
07.0740.0268GT	115
07.0740.0269GT	115
07.0740.0272GT	101
07.0740.0277GT	101
07.0740.0279GT	101
07.0740.0367GT	93
07.0740.0370GT	93
07.0740.0385GT	117
07.0740.0386GT	115
07.0740.0387GT	117
07.0740.0389GT	117
07.0740.0390GT	115
07.0740.0392GT	117
07.0740.0395GT	117
07.0740.0398GT	115
07.0740.0413GT	95
07.0740.0414GT	95
07.0740.0415GT	95, 99
07.0740.0416GT	95, 99
07.0740.0417GT	95, 99
07.0740.0418GT	97, 99
07.0740.0419GT	95, 101
07.0740.0420GT	101
07.0740.0421GT	101
07.0740.0422GT	103

silverhorn.co.uk

Part no.	Page Number
07.0740.0423GT	99
07.0740.0424GT	101
07.0740.0425GT	95, 99
07.0740.0426GT	99
07.0740.0427GT	99
07.0740.0428GT	95, 99
07.0740.0429GT	99
07.0740.0431GT	99
07.0740.0432GT	99
07.0740.0433GT	99
07.0740.0434GT	99
07.0740.0435GT	99
07.0740.0437GT	99
07.0740.0444GT	89
07.0740.0445GT	89
07.0740.0446GT	89
07.0740.0447GT	101
07.0740.0449GT	95
07.0740.0453GT	101
07.0740.0454GT	101
07.0740.0455GT	101
07.0740.0461GT	99
07.0740.0463GT	95
07.0740.0466GT	95
07.0740.0467GT	95, 101
07.0740.0469GT	95
07.0740.0470GT	95
07.0740.0472GT	93
07.0740.0473GT	93
07.0740.0474GT	93
07.0740.0475GT	93
07.0740.0476GT	93
07.0740.0477GT	93
07.0740.0478GT	93
07.0740.0479GT	93
07.0740.0480GT	93
07.0740.0482GT	91
07.0740.0483GT	99
07.0740.0484GT	99
07.0740.0485GT	93
07.0740.0486GT	93
07.0740.0487GT	101

Part no.	Page Number
07.0740.0488GT	101
07.0740.0489GT	101
07.0740.0490GT	101
07.0740.0491GT	101
07.0740.0492GT	101
07.0740.0494GT	101
07.0740.0496GT	103
07.0740.0497GT	101
07.0740.0519GT	95
07.0740.0520GT	95
07.0740.0521GT	99
07.0740.0522GT	31
07.0740.0526GT	97
07.0740.0527GT	97
07.0740.0528GT	95
07.0741.0289GT	83
07.0744.0001GT	97
07.0744.0002GT	97
07.4501.0346GT	65
07.4501.0348GT	69
07.4501.0349GT	69
07.4501.0350GT	69
07.4529.0071GT	141
07.4529.0111GT	171, 181
07.4529.0118GT	171
07.4529.0205GT	143
07.4529.0206GT	137
07.4529.0207GT	137
07.4529.0208GT	81
07.4529.0209GT	183
07.4529.0210GT	141
07.4529.0211GT	33
07.4529.0212GT	137
07.4529.0213GT	143
7-229-570GT	47
7-229-662GT	61
7-229-663GT	61
7-229-664GT	61
07-0709.0140GT	45
09.0605.1731GT	161
09.0610.0973GT	115
09.0636.0000GT	171

Part no.	Page Number
09.0636.0001GT	85, 171
09.0636.0002GT	85, 171
09.0636.0003GT	87
09.0636.0004GT	85
09.0801.0000GT	33
09.0801.0006GT	33
09.0801.0038GT	137
09.0801.0039GT	139
09.0803.0000GT	27
09.0803.0002GT	23
09.0803.0012GT	87
09.0803.0031GT	221
09.0803.0043GT	157, 161
09.0803.0060GT	157, 161
09.0803.0147GT	19, 37
09.0803.0218GT	71
09.0803.0219GT	71
09.0803.0245GT	29
09.0803.0257GT	127, 129, 133, 135
09.0803.0270GT	221
09.0803.0278GT	23
09.0803.0348GT	73
09.0803.0352GT	25, 29, 35
09.0803.0357GT	121
09.0803.0371GT	23, 27
09.0803.0397GT	177
09.0803.0406GT	147
09.0803.0512GT	91
09.0803.0516GT	35, 125
09.0803.0526GT	107
09.0803.0549GT	117
09.0803.0554GT	95
09.0803.0662GT	221
09.0803.0685GT	29, 103, 207
09.0803.0689GT	223
09.0803.0692GT	91
09.0803.0696GT	199
09.0803.0697GT	199
09.0803.0706GT	19
09.0803.0807GT	25, 27
09.0803.0835GT	155, 157, 161
09.0803.0837GT	71

silverhorn.co.uk

Part no.	Page Number
09.0803.0845GT	133
09.0803.0846GT	129, 135
09.0803.0847GT	127, 133
09.0803.0861GT	27
09.0803.0866GT	113
09.0803.0868GT	21
09.0803.0874GT	199
09.0803.0875GT	199
09.0803.0876GT	27, 103
09.0803.0877GT	19
09.0803.0878GT	127, 129, 135
09.0803.0879GT	19, 29
09.0803.0881GT	19
09.0803.0889GT	211, 213
09.0803.0890GT	115
09.0803.0891GT	115
09.0804.3447GT	81
09.0805.0119GT	29
09.0805.0147GT	71
09.0806.0072GT	79
09.4601.0093GT	65
09.4604.0000GT	35
09.4604.0005GT	11, 35
09.4604.0083GT	11, 69
09.4604.0084GT	69
09.4604.0085GT	107
09.4604.0086GT	69
09.4605.0028GT	65
09.4610.0032GT	27
09.4610.0033GT	27
09.4610.0050GT	93
09.4610.0057GT	89
09.4610.0065GT	89
09.4610.0074GT	93
09.4616.0156GT	15
09.4616.0157GT	17
09.4616.0158GT	13
09.4618.1399GT	15
09.4618.1418GT	15
09.4618.1621GT	15
09.4618.1622GT	15
09.4618.1625GT	13

Part no.	Page Number
09.4618.1635GT	15
09.4618.1638GT	13
09.4618.1646GT	13
09.4618.1655GT	13
09.4618.1834GT	13
09.4618.1842GT	15
09.4618.2006GT	15
09.4618.2007GT	15
09.4618.2009GT	13
09.4618.2010GT	15
09.4618.2011GT	13
09.4618.2012GT	15
09.4618.2013GT	13
09.4618.2014GT	15
09.4618.2018GT	15
09.4618.2019GT	15
09.4618.2020GT	15
09.4618.2021GT	15
09.4618.2033GT	15
09.4618.2034GT	15
09.4618.2035GT	15
09.4618.2036GT	15
09.4618.2052GT	223
09.4632.0106GT	39
09.4632.0107GT	39
09.4635.0063GT	39
09.4635.0065GT	39
09.4636.0017GT	171
09.4636.0034GT	85
09.4656.0017GT	73, 87
09.4661.0005GT	35
09.4661.0015GT	37
09.4661.0027GT	37
09.4661.0030GT	37
09.4661.0033GT	35
09.4670.0000GT	23
09.4670.0027GT	65
09.4670.0028GT	75, 183
09.4670.0032GT	25
51.0113.9097GT	23
51.0201.3980GT	119
51.0201.3984GT	123

Part no.	Page Number
51.0201.3985GT	119
51.0201.3986GT	123
51.0400.5031GT	147
51.0500.1832GT	33
51.0500.1833GT	33
51.0600.9331GT	35
51.0600.9332GT	37
51.0800.8100GT	175
51.0811.4057GT	157
51.0811.4076GT	171
51.0811.4087GT	87
51.0811.4102GT	115
51.0811.4103GT	115
51.0811.4131GT	119, 123
51.0811.4133GT	121
51.0811.4137GT	123
51.0811.4356GT	221
51.0811.4366GT	129
51.0811.4367GT	131
51.0811.4413GT	65
51.0811.4442GT	23
51.0811.4446GT	29
51.0811.4455GT	87
51.0811.4481GT	19
51.0811.4604GT	119
51.0811.4605GT	125
51.0811.4606GT	125
51.0811.4657GT	73
51.0811.4699GT	175
51.0811.4724GT	95
51.0811.4772GT	113
51.0811.4776GT	163
51.0811.4780GT	65
51.0811.4781GT	129
51.0811.4782GT	133
51.0811.4783GT	221
51.0811.4786GT	77
51.0811.4787GT	141
51.0811.4788GT	119
51.0811.4789GT	119
51.0811.4790GT	121
51.0811.4791GT	119

silverhorn.co.uk

Part no.	Page Number
51.0811.4792GT	123
51.0811.4793GT	123
51.0811.4796GT	65
51.0811.4797GT	65
51.0811.4798GT	65
51.0811.4800GT	133
51.0811.4801GT	23, 27
51.0811.4802GT	23, 27
51.0811.4803GT	23
51.0811.4804GT	89
51.0811.4805GT	29
51.0811.4806GT	143
51.0811.4807GT	143
51.0811.4809GT	217
51.0811.4810GT	143
51.0811.4811GT	125
51.0811.4812GT	75
51.0811.4815GT	107
51.0811.4817GT	213
51.0811.4821GT	21
51.0811.4822GT	25
51.0811.4823GT	29
51.0811.4825GT	219
51.0811.4826GT	219
51.0811.4827GT	67
51.0811.4828GT	67
51.0811.4829GT	91
51.0811.4830GT	91
51.0811.4831GT	91
51.0811.4832GT	91
51.0811.4833GT	85
51.0811.4834GT	91
51.0811.4838GT	105
51.0811.4844GT	109
51.0811.4861GT	19
51.0811.4862GT	211
51.0811.4866GT	67
51.0811.4867GT	71
51.0811.4882GT	121
51.0811.4883GT	121
51.0811.4884GT	121
51.0811.4885GT	125

Part no.	Page Number
51.0811.4886GT	123
51.0811.4889GT	161
51.0811.4899GT	67
51.0811.4900GT	219
51.0811.4901GT	125
51.0811.4902GT	123
51.0811.4903GT	97
51.0811.4904GT	131
51.0811.4905GT	131
51.0811.4914GT	131
51.0903.5246GT	35
51.0903.5247GT	35
51.0903.5248GT	35
51.0903.5249GT	27
51.0903.5250GT	29
51.0903.5251GT	27
51.0903.5252GT	27
51.0903.5254GT	125
51.0903.5255GT	33
51.0903.5256GT	23
51.0903.5257GT	23
51.0903.5258GT	23
51.0903.5259GT	25
51.0903.5261GT	143
51.0903.5262GT	143
51.0903.5263GT	23
51.0903.5264GT	27
51.0903.5265GT	19
51.0903.5283GT	29
51.0903.5284GT	29
51.0903.5286GT	67
51.0903.5287GT	115
51.0903.5288GT	31
51.0903.5293GT	211, 213
51.0903.5294GT	211, 213
51.0903.5296GT	67
51.0903.5297GT	35
51.1000.5220GT	19
51.1100.0042GT	89
51.1100.0044GT	101
51.1301.9247GT	21
52.0900.0300GT	119

Part no.	Page Number
52.0900.9328GT	161
52.0900.9337GT	147
52.0900.9338GT	119
52.0900.9339GT	157
52.0900.9340GT	157
52.0900.9341GT	161
52.0900.9345GT	93
52.1100.9134GT	27
52.1200.5529GT	87
52.1200.5530GT	87
52.1200.5531GT	87
52.1200.5532GT	87
52.1200.5533GT	87
52.1200.5534GT	103
52.1200.5535GT	103
53.0000.3826GT	137
53.0100.3228GT	141
53.0300.2222GT	137
53.0400.1822GT	137
53.0600.1816GT	143
53.0600.1817GT	143
53.0700.0307GT	143
53.0800.2020GT	33
53.3001.6813GT	197
53.3001.6824GT	153
53.3001.6825GT	153
53.3001.6826GT	153, 201
53.3001.6838GT	79
53.3001.6839GT	79
53.3001.6840GT	79
53.3001.6841GT	79
53.3001.6842GT	79
53.3001.6843GT	79
53.3001.6844GT	69
53.3001.6845GT	73
53.3001.6846GT	73
53.3100.0056GT	73
53.3200.0090GT	183
53.3200.0092GT	75
53.3200.0093GT	75
53.3301.0005GT	37
53.3301.0008GT	35

silverhorn.co.uk

Part no.	Page Number
53.3302.0029GT	23
53.3302.0040GT	77
53.3302.0041GT	69
53.3402.4086GT	163
53.3402.4087GT	163
53.3402.4088GT	163
53.3402.4089GT	163
53.3402.4094GT	157
54.0000.0253GT	127, 131
54.0000.0254GT	127
54.0000.0265GT	147
54.0000.0268GT	33
54.0000.0269GT	33
54.0000.0270GT	137
54.0000.0271GT	137
54.0001.0076GT	133
54.0001.0077GT	129
54.0001.0082GT	133
54.0001.0085GT	141
54.0001.0092GT	141
54.0001.0100GT	129
54.0002.0066GT	139
54.0002.0071GT	147
54.0002.0075GT	147
54.0002.0079GT	147
54.0002.0086GT	127, 131, 133, 135
54.0002.0087GT	133, 135
54.0003.0184GT	139
54.0003.0185GT	137
54.0004.0126GT	129
54.0004.0127GT	33
54.0004.0128GT	143
54.0004.0129GT	143
54.0004.0130GT	143
54.0004.0131GT	143
54.0100.0005GT	75
54.0100.0020GT	25
54.0100.0092GT	115
54.0100.0093GT	197
54.0100.0147GT	65
54.0100.0156GT	211, 213
54.0101.0020GT	117

Part no.	Page Number
54.0200.0000GT	119, 123
54.0200.0001GT	119, 123
54.0200.0004GT	119
54.0200.0006GT	121, 123
54.0200.0007GT	121, 123
54.0200.0087GT	127, 129
54.0201.0005GT	119
54.0201.0006GT	119
54.0201.0079GT	133
54.0201.0080GT	131
54.0201.0088GT	147
54.0201.0089GT	133
54.0201.0090GT	129
54.0201.0091GT	137
54.0300.0041GT	127
54.0300.0043GT	129
54.0300.0048GT	133, 135
54.0300.0049GT	133, 135
54.0300.0050GT	127, 131
54.0300.0051GT	127
54.0300.0052GT	131
54.0300.0054GT	127
54.0300.0055GT	131
54.0300.0056GT	129
54.0300.0057GT	129
54.0400.0053GT	129
54.0400.0054GT	133
54.0400.0055GT	129
54.0400.0056GT	133
54.0400.1822GT	139
54.0600.0006GT	159
54.0702.0080GT	159
54.0704.0012GT	123
54.0705.0001GT	121
54.0705.0002GT	121
54.0705.0003GT	119, 123
54.0705.0004GT	121
54.0705.0005GT	121
54.0705.0006GT	123
54.0705.0007GT	123
54.0705.0008GT	125
54.0705.0009GT	125

Part no.	Page Number
54.0705.0010GT	135
54.0705.0011GT	119
54.0705.0013GT	119
54.0705.0014GT	119
54.0705.0015GT	119
54.0705.0016GT	121
54.0705.0017GT	119
54.0705.0018GT	119
54.0705.0019GT	123
54.0705.0020GT	123
54.0705.0021GT	123
54.0705.0022GT	123
54.0705.0036GT	129
55.0240.0070GT	23
55.0250.0033GT	23
55.0404.0078GT	75
55.0409.0245GT	27
55.0409.0246GT	27
55.0409.0247GT	25, 29
55.0409.0248GT	25
55.0409.0253GT	19
55.0409.0257GT	95
55.0409.0258GT	99
55.0602.0507GT	217
55.0602.0730GT	221
55.0602.0789GT	217
55.0602.0888GT	215
55.0602.0889GT	215
55.0602.1012GT	221
55.0602.1088GT	223
55.0602.1102GT	219
55.0602.1103GT	219
55.0602.1104GT	217
55.0602.1105GT	217
55.0602.1106GT	219
55.0602.1107GT	219
55.0602.1108GT	217
55.0602.1110GT	211
55.0602.1111GT	217
55.0602.1114GT	217
55.0602.1120GT	217
55.0602.1121GT	217

silverhorn.co.uk

Part no.	Page Number
55.0602.1123GT	207
55.0602.1124GT	211
55.0602.1130GT	223
56.0000.0099GT	221
56.0000.0100GT	221
56.0002.0335GT	217
56.0002.0336GT	217
56.0005.0000GT	219
56.0005.0021GT	219
56.0005.0025GT	219
56.0005.0027GT	219
56.0005.0031GT	219
56.0005.0035GT	219
56.0005.0036GT	219
56.0006.9215GT	219
56.0007.0022GT	219
56.0007.0023GT	219
56.0007.0025GT	211, 213
56.0007.0026GT	211, 213
56.0007.0027GT	213
56.0008.5206GT	219
56.0008.5218GT	219
56.0009.0003GT	25
56.0010.0058GT	215
56.0010.0072GT	217
56.0010.0077GT	215
56.0010.0089GT	215
56.0010.0092GT	215
56.0010.0093GT	215
56.0012.0095GT	75
56.0012.0098GT	37
56.0012.0099GT	91
56.0012.0101GT	75
56.0013.0000GT	35
56.0013.0006GT	35
56.0014.0024GT	113
56.0014.0029GT	117
56.0014.0091GT	183
56.0014.0094GT	97
56.0014.0096GT	109
56.0014.0097GT	111
56.0014.0098GT	209

Part no.	Page Number
56.0014.0099GT	109
56.0014.0100GT	109
56.0014.0101GT	109
56.0014.0103GT	115
56.0014.0104GT	115
56.0014.0105GT	117
56.0014.0106GT	107
56.0014.0107GT	107
56.0014.0108GT	107
56.0014.0109GT	107
56.0014.0110GT	107
56.0014.0111GT	107
56.0014.0112GT	107
56.0014.0113GT	223
56.0014.0114GT	223
56.0014.0115GT	223
56.0014.0116GT	223
56.0014.0117GT	223
56.0014.0118GT	223
56.0014.0119GT	223
56.0014.0120GT	223
56.0014.0121GT	109
56.0014.0122GT	109
56.0014.0123GT	109
56.0014.0124GT	109
56.0014.0127GT	109
56.0014.0128GT	109
56.0014.0129GT	109
56.0014.0131GT	109
56.0015.0015GT	207
56.0015.0020GT	207
56.0016.0147GT	85
56.0016.0156GT	85
56.0016.0157GT	85
56.0016.0158GT	85
56.0016.0159GT	85
56.0016.0160GT	85
56.0016.0167GT	85
56.0016.0189GT	87
56.0016.0190GT	207
56.0016.0191GT	209
56.0016.0193GT	219

Part no.	Page Number
56.0016.0198GT	209
56.0016.0200GT	97, 223
56.0016.0201GT	211, 213
56.0016.0202GT	117
56.0016.0204GT	99
56.0017.0038GT	207
56.0017.0039GT	207
56.0017.0046GT	207
56.0017.0051GT	207
56.0017.0054GT	207
56.0017.0095GT	207
56.0017.0106GT	211, 213
56.0017.0107GT	207
56.0017.0110GT	207
56.0017.0112GT	209
56.0017.0114GT	207
56.0017.0115GT	207
56.0017.0119GT	207
56.0017.0120GT	207
56.0017.0127GT	207
56.0017.0135GT	209
56.0017.0136GT	209
56.0017.0149GT	207
56.0017.0150GT	207
56.0017.0151GT	207
56.0017.0152GT	207
56.0017.0153GT	223
56.0019.0053GT	207
56.0021.0040GT	205
56.0021.0162GT	205
56.0021.0172GT	205
57.0009.0735GT	11
24514GT	89
28159GT	15
28175GT	13
28236GT	15, 89
49383GT	137
82558GT	13
97667GT	13
119218GT	29
161973GT	39
161974GT	39

silverhorn.co.uk

Part no.	Page Number
162337GT	39
162338GT	39
214418GT	13, 15
215267GT	15
215268GT	15
237598GT	13, 15
237605GT	13
237970GT	13, 15
237971GT	15
628275GT	57
629733GT	55
629735GT	55
630846GT	47
631293GT	45
631378GT	61
633070GT	47
633161GT	55
633174GT	47
633176GT	47, 53
633202GT	47, 55
633208GT	57
633560GT	63
634546GT	49
634972GT	205
634973GT	205
634974GT	205
635596GT	57
637576GT	57
637586GT	61
637589GT	61
637650GT	205
637846GT	45, 51
638527GT	61
638535GT	61
638543GT	61
638548GT	53, 63
638552GT	51
638559GT	49
639306GT	59
639307GT	59
639327GT	55
639328GT	55
639329GT	55
639783GT	57
639785GT	55
639790GT	55
639792GT	57
639808GT	57, 63
639818GT	59
640720GT	47
900007GT	187
900026GT	189
1252532GT	47
1252540GT	47, 55
1252617GT	63
1252619GT	49
1252628GT	63
1252656GT	61
1252658GT	53
1272129GT	93
T07.0740.0018GT	91
T07.0740.0120GT	105
T53.3303.0002GT	89

silverhorn.co.uk

California Proposition 65

WARNING

Operating, servicing and maintaining this equipment, passenger vehicle or off-highway motor vehicle can expose you to chemicals including engine exhaust, carbon monoxide, phthalates, and lead, which are known to the State of California to cause cancer and birth defects or other reproductive harm. These chemicals can be emitted from or contained in other various parts and systems, fluids and some component wear by-products. To minimize exposure, avoid breathing exhaust, do not idle the engine except as necessary, service your equipment and vehicle in a well-ventilated area and wear gloves or wash your hands frequently when servicing your equipment or vehicle and after operation. For more information go to www.P65Warnings.ca.gov/passenger-vehicle.

Breathing diesel engine exhaust exposes you to chemicals known to the State of California to cause cancer and birth defects or other reproductive harm.

- Always start and operate the engine in a well-ventilated area.
- If in an enclosed area, vent the exhaust to the outside.
- Do not modify or tamper with the exhaust system.
- Do not idle the engine except as necessary.

For more information go to www.P65warnings.ca.gov/diesel.

Distributed By:
silvernorn.co.uk

Parts Manual
GTH-1256 AF

from SN GTH12AFM-101

Part No.
57.0411.0052

Rev H

Genie
A TEREX BRAND

silverthorn.co.uk