Genie®

A TEREX BRAND

Parts Manual

Serial Number Range

GTH-2506

from SN GTH250619M-1001

Part No. 57.0411.0061GT
Rev: B
May 2020

silverhorn.co.uk

Technical Publications

Genie has endeavored to deliver the highest degree of accuracy possible. However, continuous improvement of our products is a Genie policy.
Therefore, product specifications are subject to change without notice.

Readers are encouraged to notify Genie of errors and send in suggestions for improvement. All communications will be carefully considered for future printings of this and all other manuals.

Contact Us:

www.genielift.com
e-mail: awp.techpub@terex.com

Find additional Manuals for this Model

Go to http://www.genielift.com

Use the links to locate Operator's, Parts, Maintenance, and Service and Repair Manuals.

Copyright © 2018 by Terex Corporation
57.0411.0061GT Rev A October 2018
First Edition, First Printing

Genie is a registered trademark of Terex South Dakota Inc. in the USA and many other countries.

Printed on recycled paper

silverhorn.co.uk

Chassis serial number

(The chassis serial number is punched on the front right part of the chassis side member)

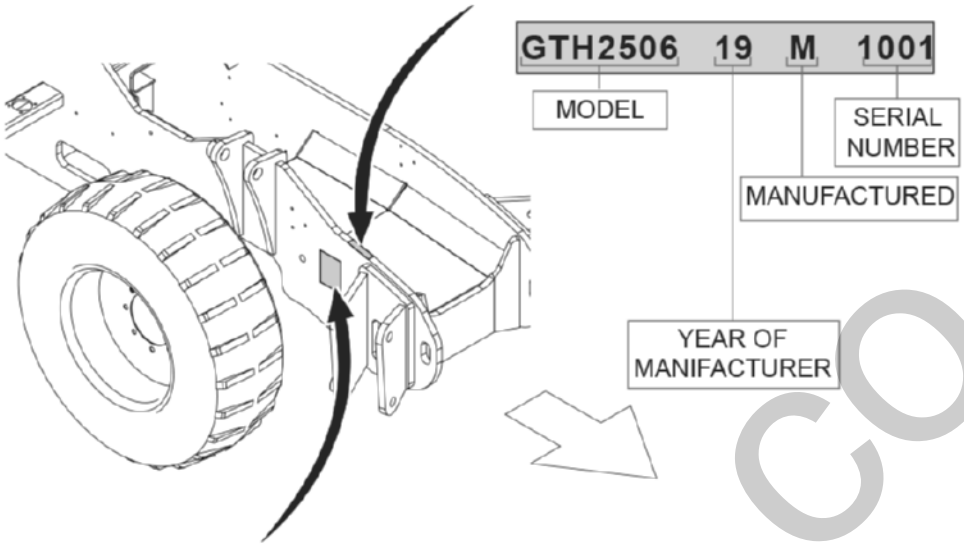

Machine data plate

(On machines destined for the Italian market, the machine data plate is installed in the driving cab, on the right, and is well-visible when the door is opened. On the machines destined for foreign markets, the data plate is applied on the front right side of the chassis)

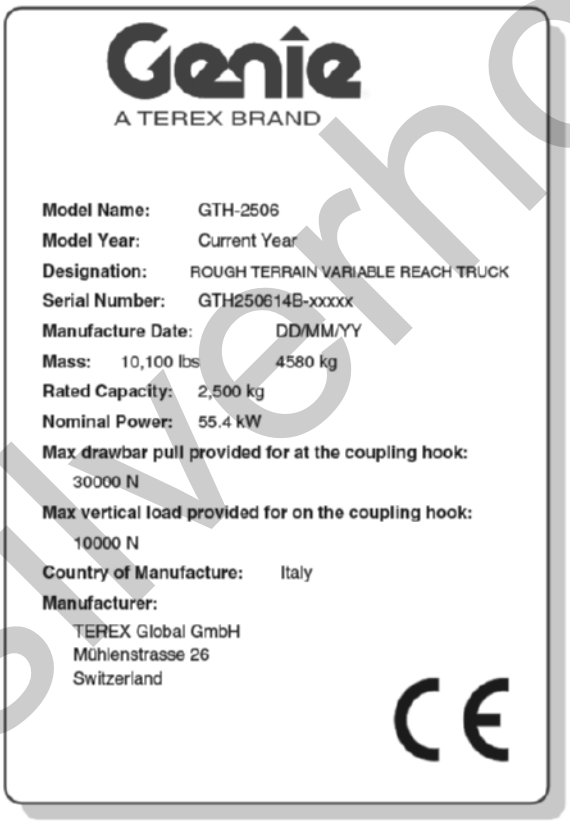

Genie
A TEREX BRAND

Model Name: GTH-2506
Model Year: Current Year
Designation: ROUGH TERRAIN VARIABLE REACH TRUCK
Serial Number: GTH250614B-xxxxx
Manufacture Date: DD/MM/YY
Mass: 10,100 lbs 4580 kg
Rated Capacity: 2,500 kg
Nominal Power: 55.4 kW
Max drawbar pull provided for at the coupling hook:
30000 N
Max vertical load provided for on the coupling hook:
10000 N
Country of Manufacture: Italy
Manufacturer:
TEREX Global GmbH
Mühlenstrasse 26
Switzerland

CE

silverhorn.co.uk

How to Order Parts

Please be prepared with the following information when ordering replacement parts for your Terex or Genie product.

- ☒ **Machine model number**
- ☒ **Machine serial number**
- ☒ **Part number**
- ☒ **Part description and quantity**
- ☒ **Purchase order number**
- ☒ **"Ship to" address**
- ☒ **Desired method of shipment**
- ☒ **Name and telephone number of the authorized distributor in your area**

Use the Service Parts Fax Order Form on the next page and fax your order to our Parts Department.

If you don't know the name of your authorized distributor, or if your area is not currently serviced by an authorized distributor, please call Terex or Genie Industries.

Machine Information

_____
Model

_____
Serial Number

_____
Date of Purchase

_____
Authorized Genie Distributor

_____
Phone Number

North America

Telephone (425)881-1800

Toll Free (800)536-1800 in US and Canada

Fax (425)556-8659

Toll Free fax (888)274-6192

Email AWP.PartsSalesPO@terex.com

http://genielift.com/en

EMEAR (Europe, Middle East, Africa and Russia)

Telephone (31)(165)519 313

Fax (31)(165)511 148

http://genielift.co.uk

Asia Pacific (Genie Singapore)

Telephone +65 6692 7777

Fax +65 6261 8893

http://genielift.com.sg/

Australia

Telephone (61)(7)3456 4444

Fax (61)(7)3456 4466

http://genielift.com.au

South America

Telephone (55)(11)4082 5600

Fax (55)(11)4082 5630

silverhorn.co.uk

Please refer to section 001 for the Recommended Spare Parts List.

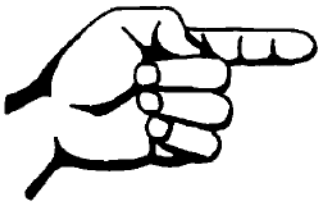

This page intentionally left blank.

silverhorn.co.uk

TEREX CORPORATION

Service Parts Fax Order Form

Fax to: (425) 556-8659 or Toll Free: 888-274-6192
International: +1-425-556-8659

Please fill out completely

Date _____ Account Number _____

Your Name _____ Your Fax Number _____

_____ Your Phone Number _____

Bill To _____ Ship To _____

_____ _____

_____ _____

_____ _____

Purchase Order Number _____ Ship Via _____

Model(s) _____ **Serial No.(s)** _____

Optional Equipment _____

Part Number	Description	Quantity	Price

All back-ordered parts will be shipped when available via the same ship method as the original order unless Noted below:

- ☐ Ship complete order only - No back orders
- ☐ Ship all available parts and contact customer on disposition of back-ordered parts
- ☐ Other (please specify)

silverhorn.co.uk

Description **Page**

001 Spare Parts List **10**

001.1 Spare Parts List 10

100 Decals **12**

101.1 611010 Decals, IIIB and Stage V Version 12
102.1 611011 Decals, IIIA Version 16

200 Drive Chassis Components **20**

201.1 611012 Rear Chassis 20
202.1 611013 Left Chassis 26
203.1 611014 Right Chassis 30
204.1 611015 Right Chassis Soundproofing 36
205.1 611016 Hydraulic Oil Tank 38
206.1 611017 Axles And Wheels 42
207.1 611018 Front Axle - Central Housing 44
208.1 611019 Front Axle - Differential 46
209.1 611020 Front Axle - Brake 50
210.1 611021 Front Axle - Steering Cylinders 52
211.1 611022 Front And Rear Axles - Hub Reduction 54
212.1 611023 Rear Axle - Central Housing 58
213.1 611024 Rear Axle - Differential 60
214.1 611025 Rear Axle - Steering Cylinder 62
215.1 611026 Rear Axle - Coupling Support 64

300 Engine Components **66**

301.1 611027 Cooling System 66
302.1 611028 Injection, Accelerator - Stage IIIA Engine 70
303.1 611029 Exhaust System - Stage IIIA Engine 72
304.1 611030 Exhaust System, Injection, Accelerator - Stage IIIB Engine - To SN GTH250619M-1200 74
304.2 611077 Exhaust System, Injection, Accelerator - Stage V Engine - From SN GTH250619M-1201 78
304.3 611078 DPF - From SN GTH250619M-1201 82
305.1 611031 Hydraulic Pumps 86

400 Cab Components **92**

401.1 611032 Cabin, View 1 92
402.1 611033 Cabin, View 2 98
403.1 611034 Heater 104
404.1 611035 Dashboard 106

500 Boom Components **112**

501.1 611036 Boom (1st - snd Telescopic Element) 112

silverhorn.co.uk

Description **Page**

502.1 611037 Manual Fork Attachments 116
503.1 611038 Standard Forks 118
504.1 611039 Cylinders 120
505.1 611040 First Section Pipes And Clamps 122

600 Hydraulic System 124

601.1 611041 Fork Balancing 124
602.1 611042 Auxiliary Circuits 128
603.1 611043 Boom Extension 130
604.1 611044 Boom Lifting 132
605.1 611045 Service Brake 134
606.1 611046 Main Valve 138
607.1 611047 Tank And Exchanger - IIIA Engine 144
608.1 611048 Tank And Exchanger - IIIB Engine and Stage V Engine 146
609.1 611049 Suction System Hydraulic Pumps 148
610.1 611050 Power Steering System 152

700 Electric Installations 156

701.1 611051 Cabin Relay-Fuse Board 156
702.1 611052 Electric Installation, View 1 158
703.1 611053 Electric Installation, View 2 160
704.1 611054 Electric Installation, View 3 162
705.1 611055 LMI System 164

800 Optionals 166

801.1 611056 Agricolture Towing Hook 166
802.1 611057 Second Hydraulic Circuit - Part 1 168
802.2 611058 Second Hydraulic Circuit - Part 2 170
803.1 611059 Hydraulic Quick Coupling And 1 Aux Circuit - Part 1 172
803.2 611060 Hydraulic Quick Coupling And 1 Aux Circuit - Part 2 174
804.1 611061 Hydraulic Quick Coupling And 2 Aux Circuit - Part 1 178
804.2 611062 Hydraulic Quick Coupling And 2 Aux Circuit - Part 2 180
805.1 611063 Fork FEM2 184
806.1 611064 Forks Side Shifter FEM2 186
807.1 611065 Front Protection Grid 190
808.1 611066 Inching Valve 192
809.1 611067 GM-1 Articulation 194
810.1 611068 Cab Roof Wiper 196
811.1 611069 Air Conditioning - Part 1 198
812.1 611070 Air Conditioning - Part 2 202
813.1 611071 Air Conditioning - Part 3 204
814.1 611072 Italian Market Dotation 206

silverhorn.co.uk

Description	Page
815.1 611073 Swiss Market Dotation	208
816.1 611074 German Market Dotation	210
817.1 611075 Spanish Market Dotation	212
818.1 611076 Hydraulic Jack	214
819.1 611079 Work Lights	216
820.1 611080 Rear Hydraulic Connection	218
Part Number Index	**220**

silverhorn.co.uk

001.1 Spare Parts List

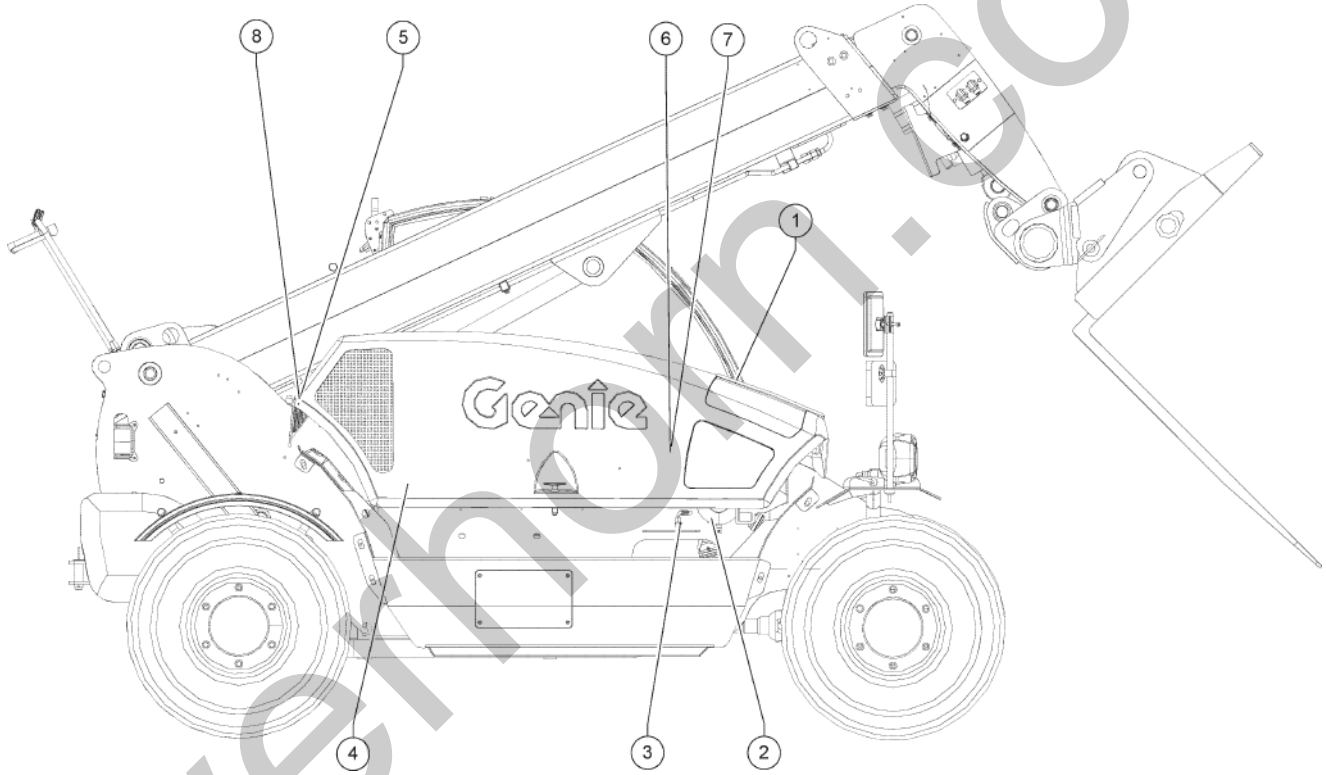

silverhorn.co.uk

001.1 Spare Parts List

Item	Part No.	Description	Qty.
1	57.0009.0741GT	OPERATOR'S MANUAL	
2	214228GT	FILTER, DEUTZ 2.9, FUEL	
3	07.4501.0285GT	FUEL PRE-FILTER	
4	07.4501.0067GT	FILTER,OIL	
5	07.0700.0023GT	OIL FILTER,CARTRIDGE	
6	07.0700.0040GT	Main Air Filter Element	
7	07.0700.0041GT	Secondary Air Filter Element	
8	09.4604.0073GT	Filter	

silverhorn.co.uk

101.1 611010 Decals, IIIB and Stage V Version

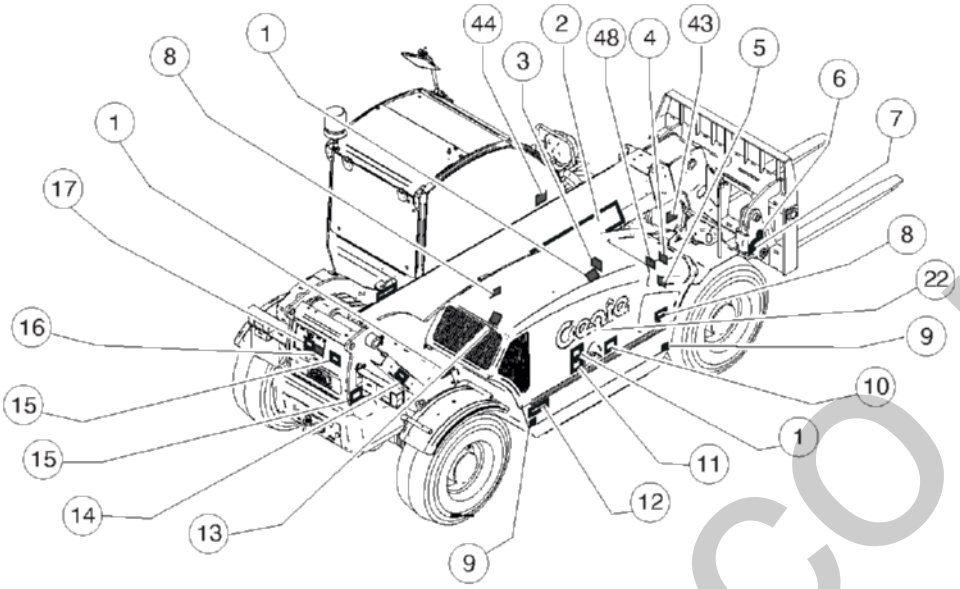

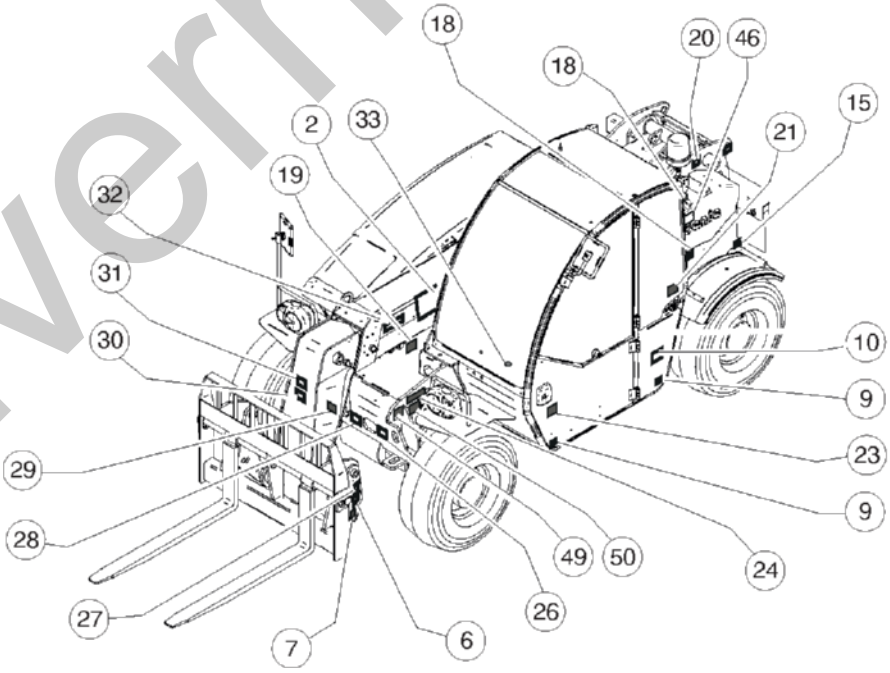

silverhorn.co.uk

101.1 611010 Decals, IIIB and Stage V Version

Item	Part No.	Description	Qty.
1	09.4618.0923GT	DECAL,BURN HAZARD	3
2	09.4618.0390GT	COSMETIC DECAL,GENIE GTH-2506	2
3	09.4618.1713GT	DECAL,DO NOT USE ETHER	1
4	09.4618.0924GT	DECAL,BURN/EXPLOSION HAZARD	1
5	09.4618.1678GT	DECAL,BATTERY CUT-OUT SWITCH	1
6	09.4618.0922GT	DECAL, CRUSH HAZARD	2
7	09.4618.1458GT	DECAL,MAX CAPACITY	2
8	09.4618.1829GT	Decal - Eco Decal To S/N GTH250616M-1200	3
9	09.4618.1681GT	DECAL,TYRE PRESSURE 4.5 BAR	4
10	215646GT	DECAL, 2 DECAL COMBO	2
11	1263542GT	DECAL,SYMBOL-COMP ACCESS	1
12	09.4618.0930GT	Cosmetic - Genie GTH-2506	1
13	237726GT	DECAL,WARN,EXPLOSION/BURN HAZARD	1
14	09.4618.1674GT	DECAL,SAFETY COLLAR	1
15	237720GT	DECAL BODYCRUSH ROLLING MACHINE	3
16	215645GT	DECAL,DANGER,EXPLOSION/BURN,DIESEL FUELING	1
17	09.4618.1671GT	Label - ULSD Fuel	1
18	09.4618.1670GT	DECAL,HYDRAULIC OIL	2
19	09.4618.1423GT	DECAL,EXPLOSION HAZARD	1
20	82560GT	DECAL,SYMBOL-SKIN INJECT HAZRD	1
21	09.4618.0776GT	DECAL,UPPER DOOR UNLOCK SYS	1
22	1258639GT	DECAL,COSMETIC,7.5" GENIE WHIT	1
23	237721GT	DECAL,WARN,WEAR SEAT BELT	1
24	09.4618.1691GT	DECAL, TEST PORT	1
25	09.4618.1742GT	Label - Emergency Exit Handles	1
26	09.4618.1782GT	Electrocution Hazard	1
27	09.4618.1398GT	DECAL,SAFETY PIN	1
28	09.4618.1781GT	Falling Object Hazard	1

silverhorn.co.uk

101.1 611010 Decals, IIIB and Stage V Version

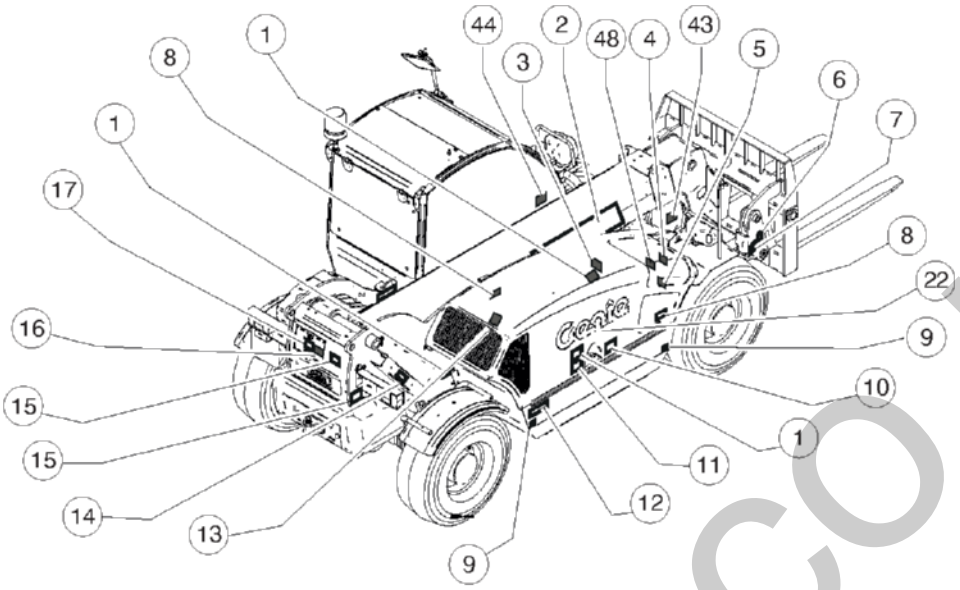

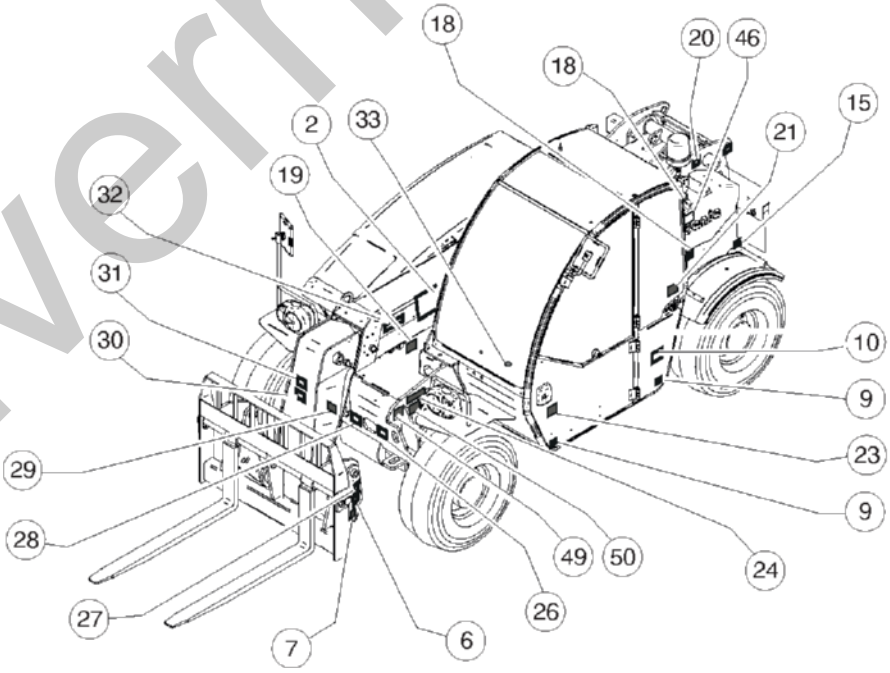

silverhorn.co.uk

101.1 611010 Decals, IIIB and Stage V Version

Item	Part No.	Description	Qty.
29	09.4618.1690GT	DECAL,LIFTING AND ANCHORING	1
30	09.4618.1375GT	DECAL,RESPECT THE TRUCK CAPACITY	1
31	09.4618.1818GT	NO RIDERS ON FORK	1
32	09.4616.0102GT	DECAL,MAXIMUM CAPACITY 2500 KG	1
33	09.4618.1645GT	DECAL,LOAD LIMITING SYSTEM DISABLING	1
34	09.4618.2026GT	Sound level 104dB (only for Stage 3B)	1
35	09.4618.1679GT	DECAL,WARNINGS	1
36	09.4618.1687GT	DECAL,QUICK GUIDE	1
37	09.4618.1025GT	DECAL,UPPR DOOR EXT UNLOCK SYS	1
38	09.4618.1637GT	Load Chart - Fork on tires	1
39	09.4618.0835GT	Load Chart - Hook	1
40	09.4618.0837GT	Load Chart - 2000kg Jib	1
41	09.4618.1426GT	Load Chart - Bucket	1
42	09.4618.1999GT	DECAL, NO DOT FLUID	1
43	1272242GT	DECAL,MACHINE REGISTRATION/OWNER TRANSFER	1
44	09.4618.1029GT	Decal - Road Traffic Warnings	1
45	09.4618.1689GT	DECAL,QUICK GUIDE	1
46	09.4618.1419GT	DECAL,BIODEGRADABLE HYDRAULIC OIL	1
47	09.4618.1515GT	Load Chart - Manitou fork	1
48	09.4618.2053GT	BATTERY DISCONNECT INSTRUCTIONS From S/N GTH250616M-1201	1
49	1291624GT	DECAL COSM,GENIE UFT,CONNECT LEXAN COVER From S/N GTH250616M-1201	1
50	1292513GT	DECAL COSM,GENIE LIFT CONNECT,ESN,SKU4-2 From S/N GTH250616M-1201	1

silverhorn.co.uk

102.1 611011 Decals, IIIA Version

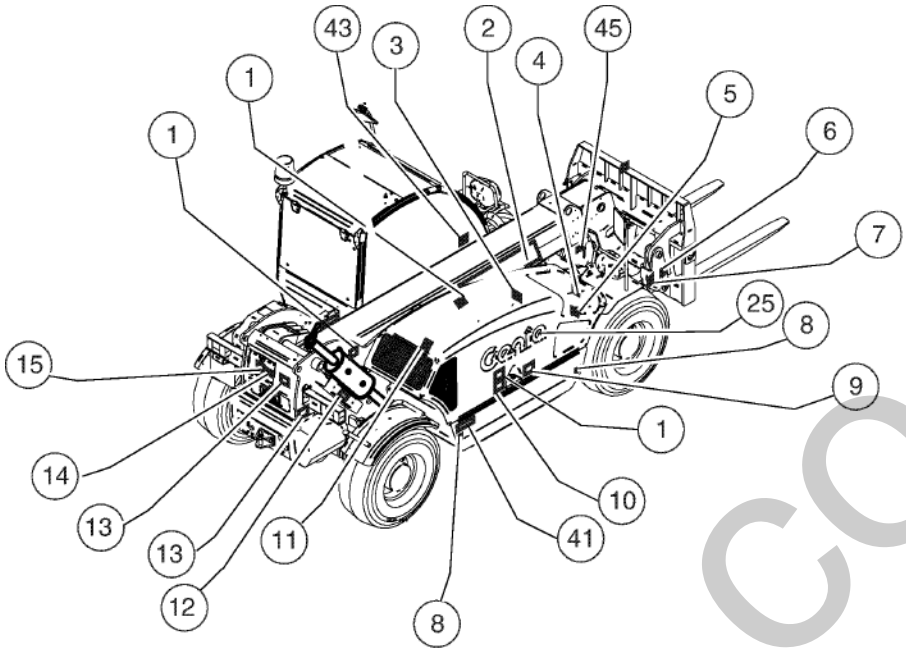

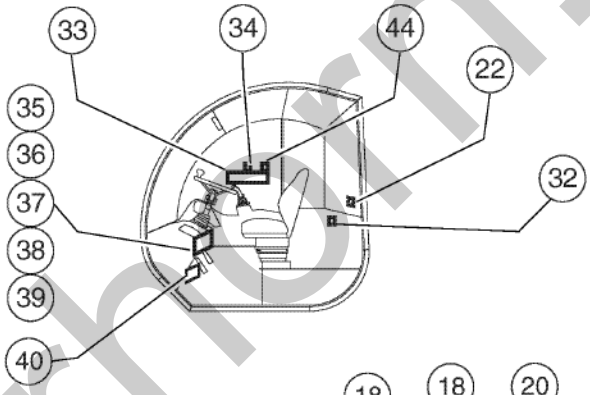

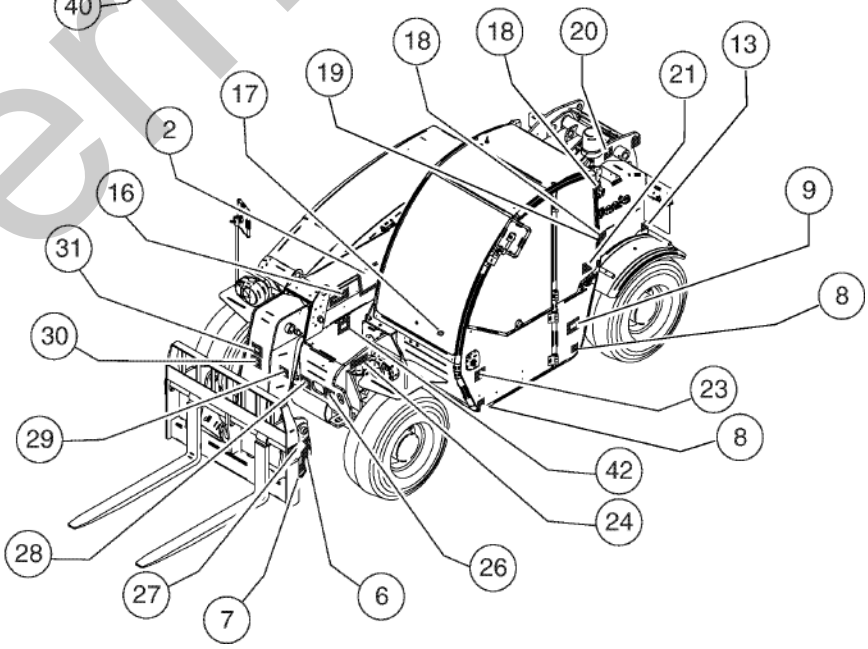

silverhorn.co.uk

102.1 611011 Decals, IIIA Version

Item	Part No.	Description	Qty.
1	09.4618.0923GT	DECAL,BURN HAZARD	4
2	09.4618.0390GT	COSMETIC DECAL,GENIE GTH-2506	2
3	09.4618.1713GT	DECAL,DO NOT USE ETHER	1
4	09.4618.0924GT	DECAL,BURN/EXPLOSION HAZARD	1
5	09.4618.1678GT	DECAL,BATTERY CUT-OUT SWITCH	1
6	09.4618.0922GT	DECAL, CRUSH HAZARD	2
7	09.4618.1458GT	DECAL,MAX CAPACITY	2
8	09.4618.1681GT	DECAL,TYRE PRESSURE 4.5 BAR	4
9	215646GT	DECAL, 2 DECAL COMBO	2
10	09.4618.0920GT	DECAL,COMPARTMENT ACCESS	1
11	237726GT	DECAL,WARN,EXPLOSION/BURN HAZARD	1
12	09.4618.1674GT	DECAL,SAFETY COLLAR	1
13	237720GT	DECAL BODYCRUSH ROLLING MACHINE	3
14	215645GT	DECAL,DANGER,EXPLOSION/BURN,DIESEL FUELING	1
15	28159GT	DECAL,DIESEL	1
16	09.4616.0102GT	DECAL,MAXIMUM CAPACITY 2500 KG	1
17	09.4618.1645GT	DECAL,LOAD LIMITING SYSTEM DISABLING	1
18	09.4618.1670GT	DECAL,HYDRAULIC OIL	2
19	09.4618.1419GT	DECAL,BIODEGRADABLE HYDRAULIC OIL Option	1
20	82560GT	DECAL,SYMBOL-SKIN INJECT HAZRD	1
21	09.4618.0776GT	DECAL,UPPER DOOR UNLOCK SYS	1
22	09.4618.1742GT	Label - Emergency Exit Handles	1
23	237721GT	DECAL,WARN,WEAR SEAT BELT	1
24	09.4618.1691GT	DECAL, TEST PORT	1
25	1258639GT	DECAL,COSMETIC,7.5" GENIE WHIT	1
26	09.4618.1782GT	Electrocution Hazard	1
27	09.4618.1398GT	DECAL,SAFETY PIN	1
28	09.4618.1781GT	Falling Object Hazard	1

silverhorn.co.uk

102.1 611011 Decals, IIIA Version

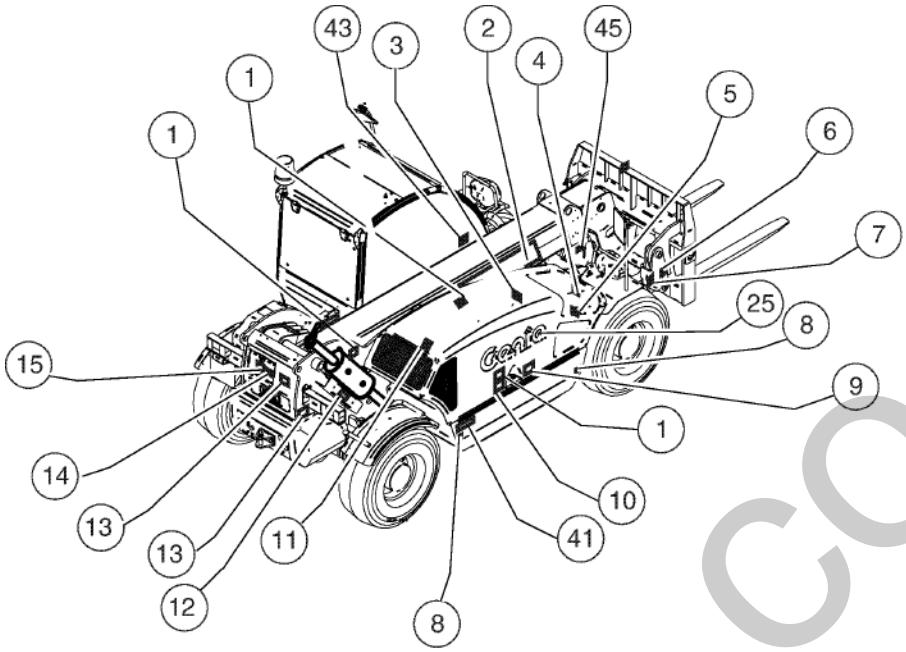

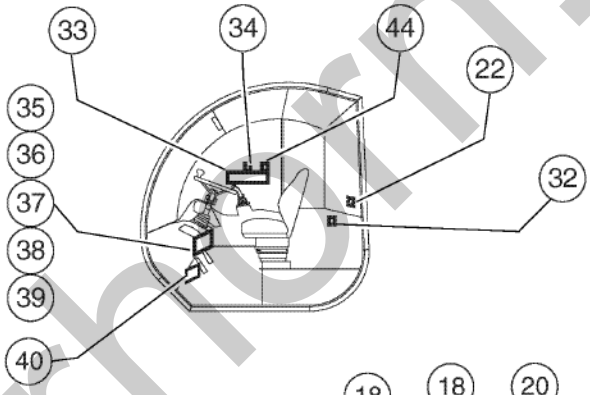

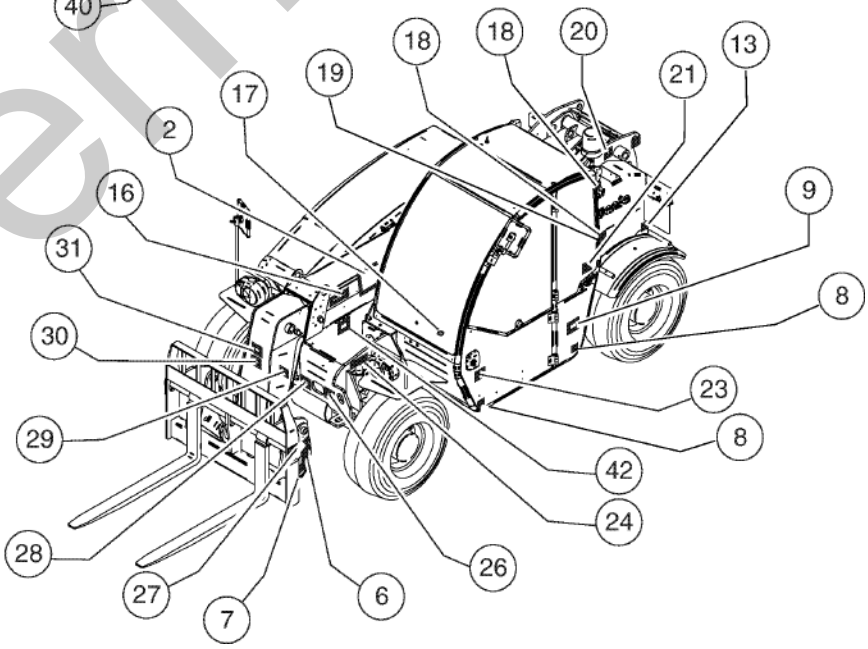

silverhorn.co.uk

102.1 611011 Decals, IIIA Version

Item	Part No.	Description	Qty.
29	09.4618.1690GT	DECAL,LIFTING AND ANCHORING	1
30	09.4618.1375GT	DECAL,RESPECT THE TRUCK CAPACITY	1
31	09.4618.1818GT	NO RIDERS ON FORK	1
32	09.4618.1025GT	DECAL,UPPR DOOR EXT UNLOCK SYS	1
33	09.4618.1679GT	DECAL,WARNINGS	1
34	09.4618.1687GT	DECAL,QUICK GUIDE	1
35	09.4618.1637GT	Load Chart - Fork on tires	1
36	09.4618.0835GT	Load Chart - Hook	1
37	09.4618.0837GT	Load Chart - 2000kg Jib	1
38	09.4618.1426GT	Load Chart - Bucket	1
39	09.4618.1515GT	Load Chart - Manitou fork	1
40	09.4618.1999GT	DECAL, NO DOT FLUID	1
41	09.4618.0930GT	Cosmetic - Genie GTH-2506	1
42	09.4618.1423GT	DECAL,EXPLOSION HAZARD	1
43	09.4618.1029GT	Decal - Road Traffic Warnings Only For The Italian Market	1
44	09.4618.1689GT	DECAL,QUICK GUIDE	1
45	1272242GT	DECAL,MACHINE REGISTRATION/OWNER TRANSFER	1

silverhorn.co.uk

201.1 611012 Rear Chassis

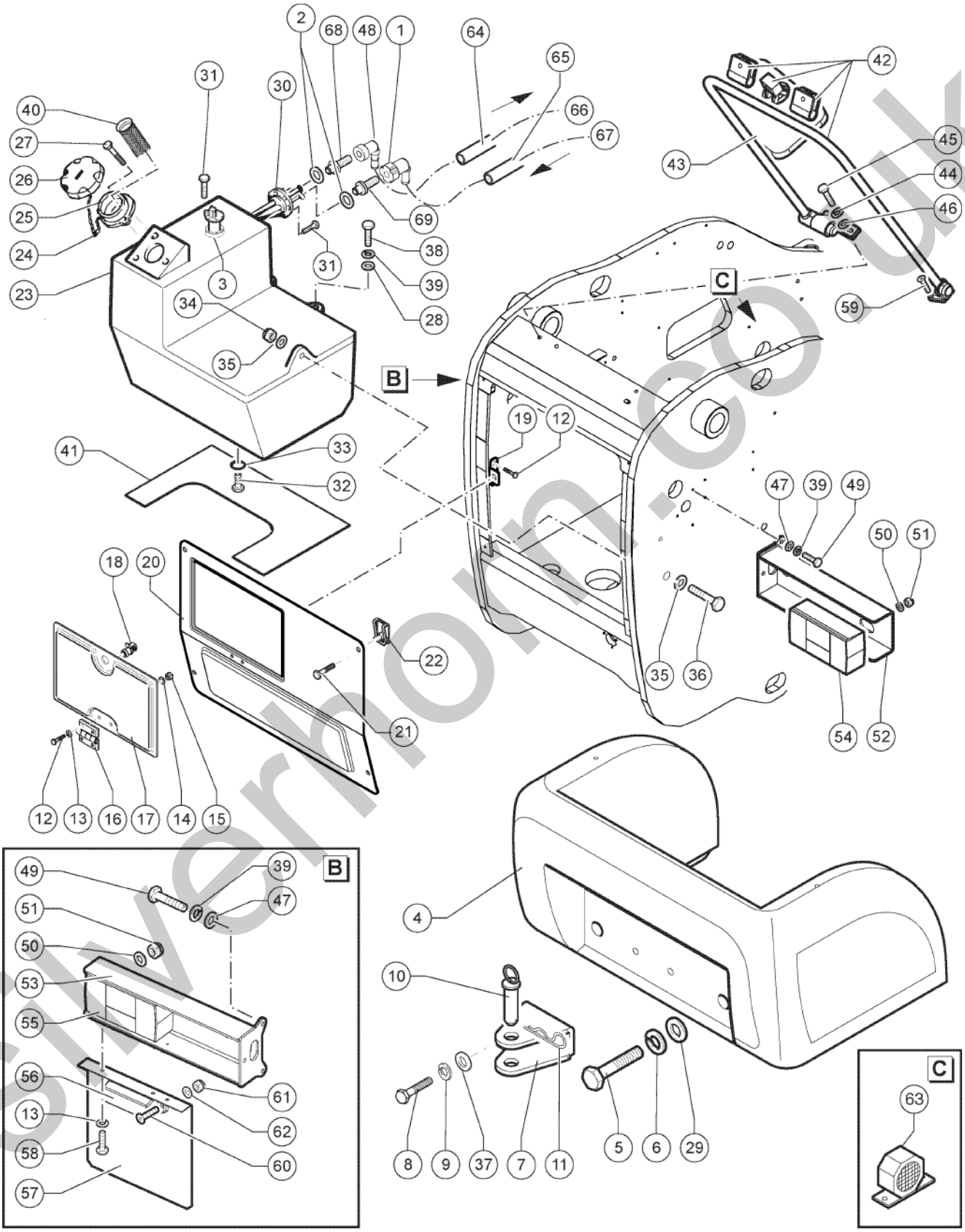

silverhorn.co.uk

201.1 611012 Rear Chassis

Item	Part No.	Description	Qty.
1	826000GT	CONNECTOR, SAE10, QUICK CONN	1
2	1297495GT	WASHER, SHIM, 16.2X22X1.5, AL	2
3	56.0012.0085GT	FUEL GAUGE	1
4	51.1000.5218GT	Counterweight (see note)	1
5	01.4001.0025GT	SCREW M24X160 UNI 5737 10.9 ZN	2
6	01.4032.0000GT	SPRING WASHER D24 ZN	2
7	51.0800.3800GT	Hitch	1
8	01.0001.0703GT	SCREW M16X35 UNI 5739 8.8 ZN	2
9	01.4032.0007GT	SPRING WASHER D16 ZN	2
10	54.0002.0054GT	PIN,DRAWBAR	1
11	09.0803.0026GT	SPRING SPLIT PIN	1
12	01.0001.0156GT	SCREW M6X20 UNI 5739 8.8 ZN	4
13	01.4032.0002GT	SPRING WASHER D6 ZN	6
14	01.0031.0298GT	FLAT WASHER D6 UNI 6593 ZN	4
15	01.0019.0103GT	NUT M6 UNI 5588 6S ZN	4
16	09.0803.0421GT	Hinge	1
17	52.1100.9132GT	Cover	1
18	09.0803.0518GT	Lock	1
19	51.0811.2000GT	Support	1
20	52.1100.9131GT	Cover	1
21	01.4001.0078GT	SCREW M8X20 DIN 6923 8.8 ZN	4
22	09.0803.0352GT	SPRING CLIP M8	4
23	51.0600.9334GT	DIESEL TANK	1
24	09.4661.0022GT	Chain	1
25	09.4661.0021GT	AIR INLET	1
26	09.4661.0032GT	PLUG	1
27	01.4001.0045GT	Screw TE M 5X10 UNI 5739 8.8 ZN	3
28	01.0031.0299GT	FLAT WASHER D8 UNI 6593 ZN	4

silverhorn.co.uk

201.1 611012 Rear Chassis

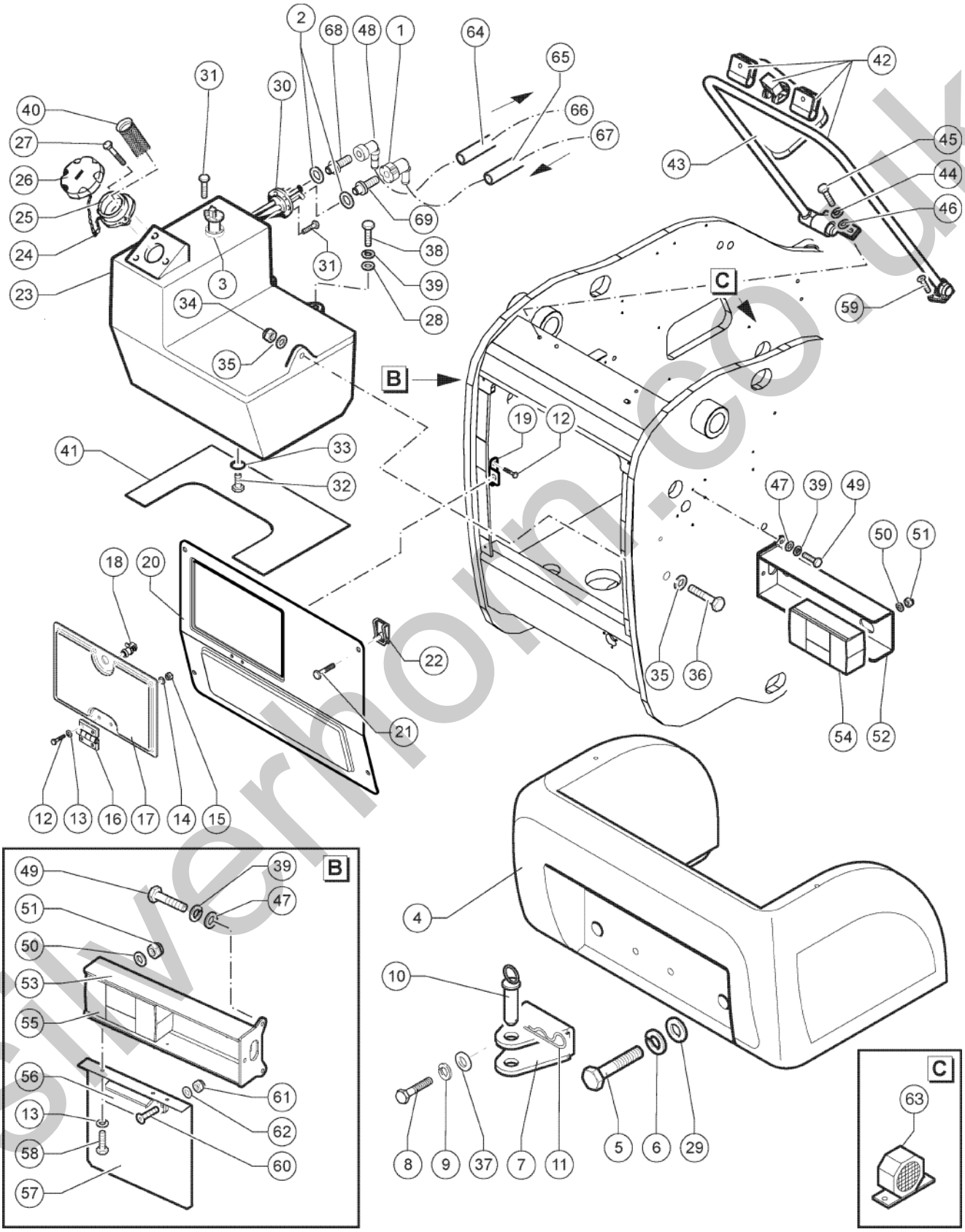

silverhorn.co.uk

201.1 611012 Rear Chassis

Item	Part No.	Description	Qty.
29	01.0031.0063GT	FLAT WASHER D24 UNI 6592 ZN	2
30	53.3001.6851GT	FLANGE	1
31	01.4001.0006GT	SCREW M4X10 UNI 5739 8.8 ZN	10
32	09.0803.0510GT	DRAIN PLUG M16	1
33	900046GT	O-Ring	1
34	01.0023.0056GT	STOP NUT M12 UNI 7473 6S ZN	1
35	01.0031.0151GT	FLAT WASHER D12 UNI 6593 ZN	2
36	01.0001.0405GT	SCREW, 8.8 HCS 12MM1.75X60Z	1
37	01.0031.0059GT	FLAT WASHER D16 UNI 6592 ZN	2
38	01.0001.0252GT	SCREW M8X16 UNI 5739 8.8 ZN	2
39	01.4032.0003GT	Spring Washer D 8 ZN	8
40	09.4661.0016GT	BASKET,PLUG	1
41	53.3302.0016GT	Rubber Base	1
42	09.0803.0652GT	SUPPORT,MIRROR	1
43	09.4610.0028GT	Mirror	1
44	01.4032.0004GT	Spring Washer D10 ZN	2
45	01.0001.0355GT	SCREW M10X25 UNI 5739 8.8 ZN	2
46	01.0031.0056GT	FLAT WASHER D10 UNI 6592 ZN	2
47	01.0031.0055GT	FLAT WASHER D8 UNI 6592 ZN	6
48	1293433GT	CONNECTOR, SAE12, QUICK CONNECT	1
49	01.0001.0256GT	SCREW M8X25 UNI 5739 8.8 ZN	6
50	01.0031.0054GT	FLAT WASHER D6 UNI 6592 ZN	4
51	01.0023.0053GT	STOP NUT M6 UNI 7473 6S ZN	4
52	51.0811.4755GT	REAR ROAD LIGHT SUPPORT,RIGHT	1
53	51.0811.4754GT	REAR ROAD LIGHT SUPPORT,LEFT	1
54	56.0010.0037GT	LIGHT,REAR,RIGHT	1
55	56.0010.0036GT	LIGHT,REAR,LEFT	1
56	56.0010.0004GT	LIGHT,TRAFFIC ROAD PLATE	1

silverhorn.co.uk

201.1 611012 Rear Chassis

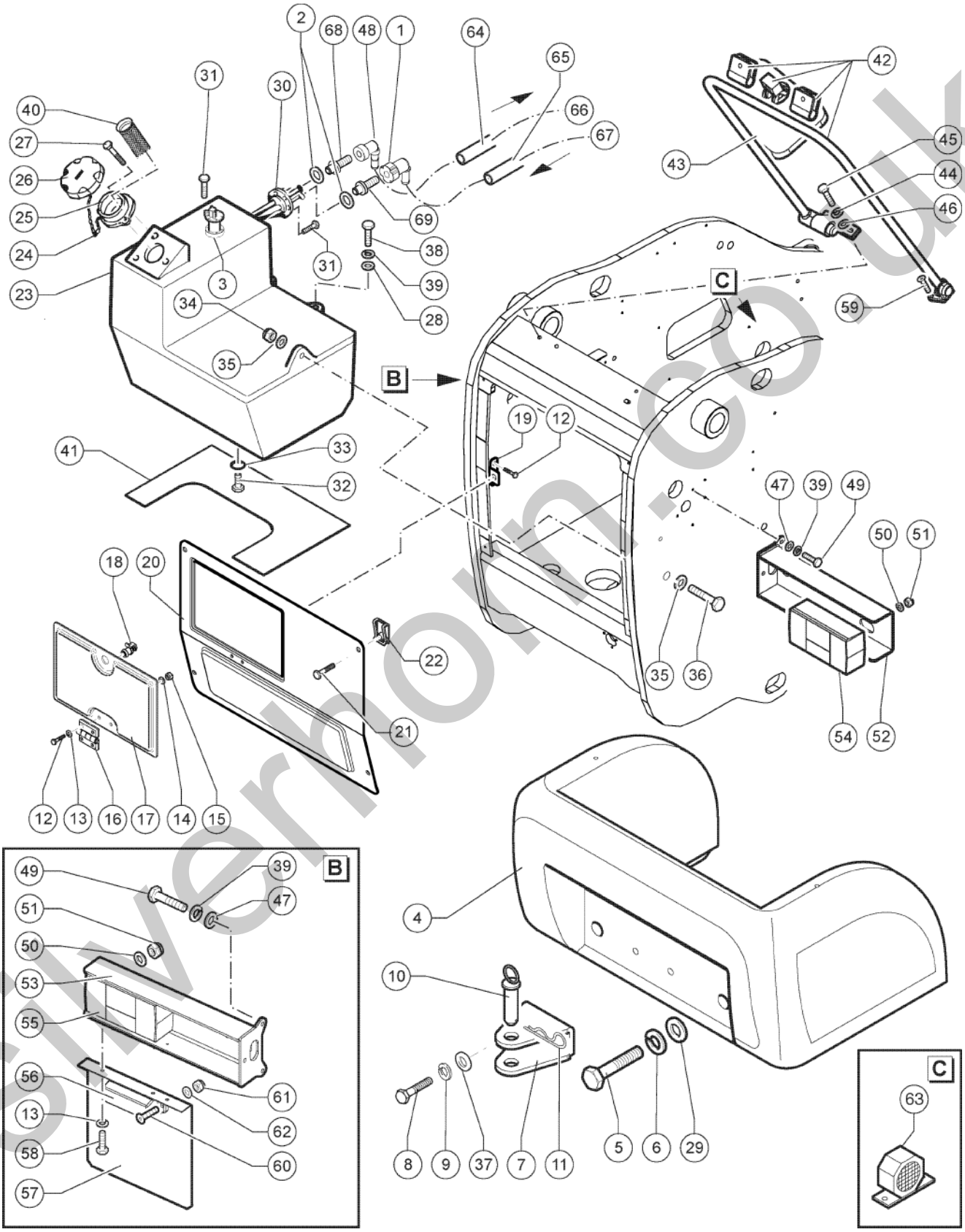

silverhorn.co.uk

201.1 611012 Rear Chassis

Item	Part No.	Description	Qty.
57	51.0804.8700GT	SUPPORT,TRAFFIC ROAD PLATE	1
58	01.4001.0026GT	SCREW M6X10 UNI 5739 8.8 ZN	2
59	01.4001.0106GT	SCREW M6X16 DIN 6923 8.8 ZN	2
60	01.0003.0150GT	SCREW M6X10 UNI 5931 8.8 ZN	2
61	01.0023.0052GT	STOP NUT M5 UNI 7473 6S ZN	2
62	01.0031.0053GT	FLAT WASHER D5 UNI 6592 ZN	2
63	56.0010.0086GT	ALARM	1
64	T09.0805.0070GT	FLEXIBLE HOSE,D12X18(1EACH-1METER)	3.3
65	09.0805.0171GT	HOSE	3.5
66		See 300 Engine Components, Figure 611030, ref. 3	Ref
67		See 300 Engine Components, Figure 611030, ref. 4	Ref
68	1297493GT	FITTING, DEUTZ SAE-J-2044, D12mm	1
69	1297494GT	FITTING, DEUTZ SAE-J-2044, D10mm	2

silverhorn.co.uk

202.1 611013 Left Chassis

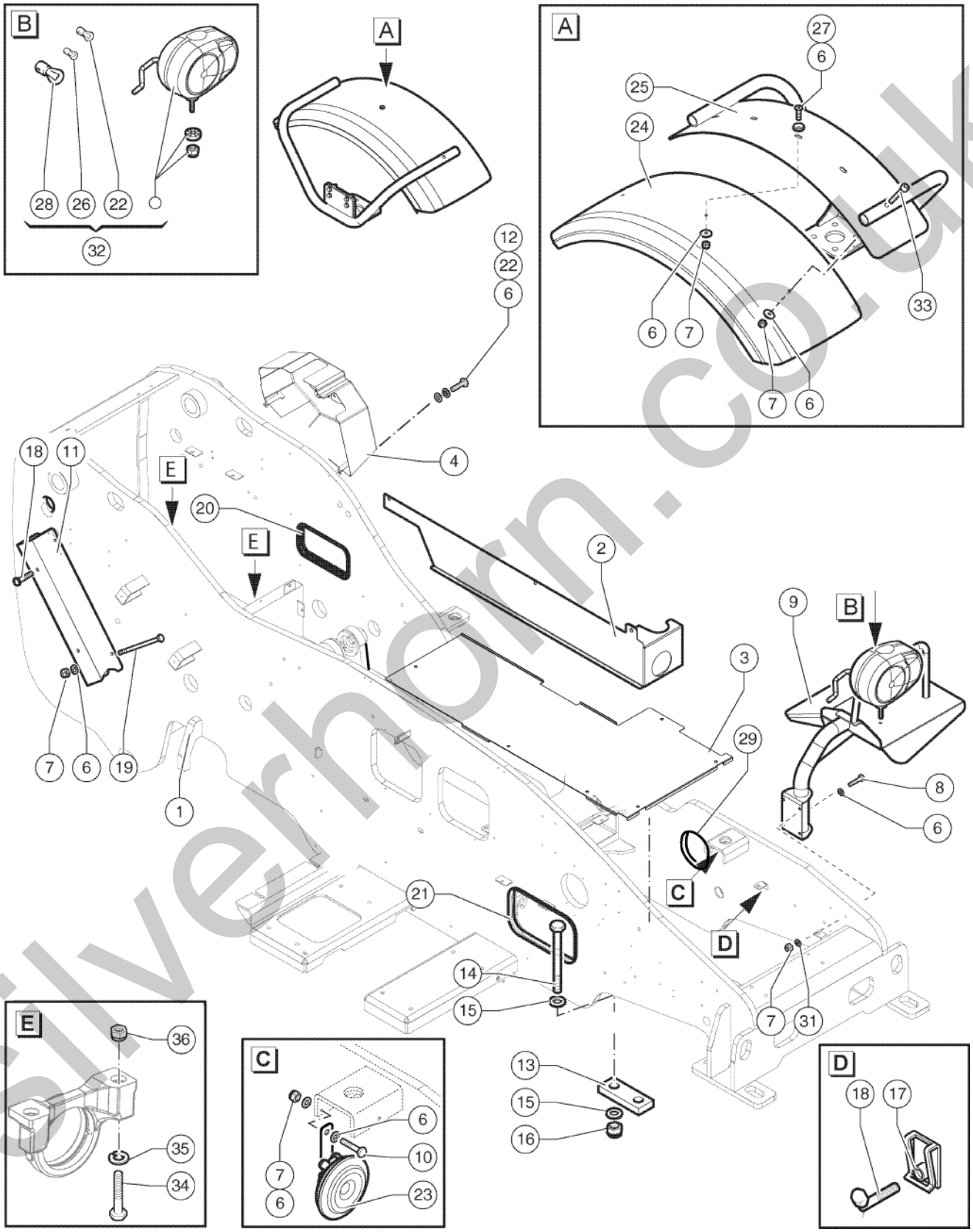

silverhorn.co.uk

202.1 611013 Left Chassis

Item	Part No.	Description	Qty.
1	51.0113.9108GT	Chassis	1
2	51.0903.5187GT	Cab Lateral Cover	1
3	51.0903.5050GT	Protection	1
4	52.1100.9122GT	Main Valve Cover	1
6	01.0031.0055GT	FLAT WASHER D8 UNI 6592 ZN	20
7	01.0023.0054GT	NUT,M8 UNI 7473 6S ZN	11
8	01.0001.1465GT	SCREW TE M8X40 UNI 5739 8.8 ZN	12
9	51.0811.4643GT	Front Left Mudguard	1
10	01.0001.1458GT	SCREW M6X35 UNI 5739 8.8 ZN	1
11	51.1301.9152GT	Maintenance Collar	1
12	01.0001.0254GT	SCREW M8X20 UNI 5739 8.8 ZN	3
13	51.0811.4641GT	Front Axle Bracket Fixing Plate	2
14	01.4001.0057GT	Screw TE M24X220UNI 5737 8.8 ZN	4
15	01.0031.0063GT	FLAT WASHER D24 UNI 6592 ZN	8
16	01.0023.0062GT	STOP NUT M24 UNI 7473 6S ZN	4
17	09.0803.0352GT	SPRING CLIP M8	6
18	01.4001.0078GT	SCREW M8X20 DIN 6923 8.8 ZN	5
19	01.0001.0217GT	SCREW,TE,M8X110 UNI 8.8 ZN	2
20	09.0803.0418GT	GASKET	0.69
21	09.0803.0418GT	GASKET	0.88
22	56.0010.0058GT	BULB,12V,45/40W	1
23	56.0009.0003GT	HORN To S/N GTH250619M-1200	1
23	56.0010.0087GT	HORN From S/N GTH250619M-1201	1
24	09.0803.0667GT	MUD GUARD	1
25	51.0811.4893GT	SUPPORT,REAR,MUD GUARD (KIT)	1
26	07.0703.0305GT	BULB, HEADLAMP	1
27	01.0001.0256GT	SCREW M8X25 UNI 5739 8.8 ZN	1
28	07.0703.0306GT	BULB, HEADLAMP	1

silverhorn.co.uk

202.1 611013 Left Chassis

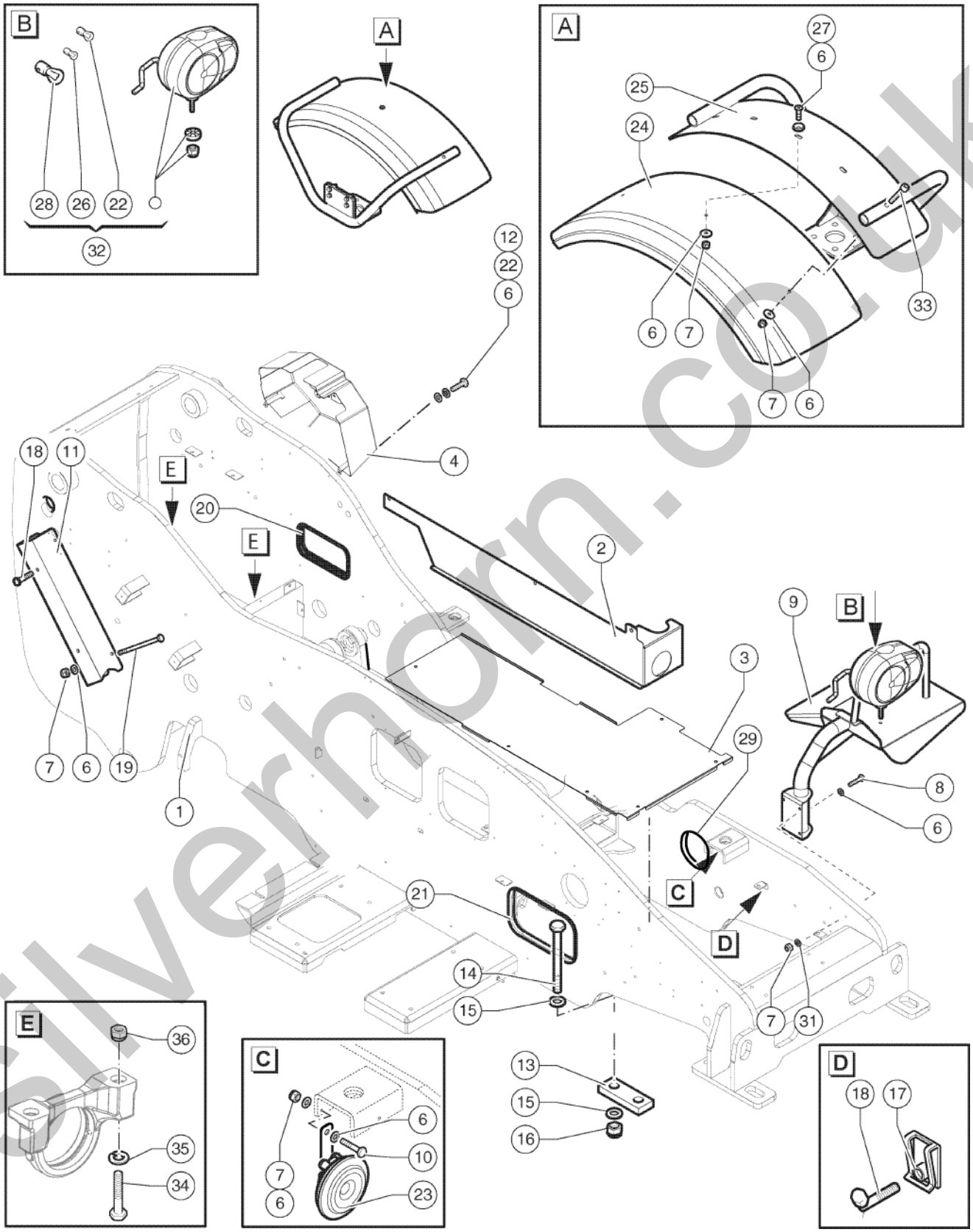

silverhorn.co.uk

202.1 611013 Left Chassis

Item	Part No.	Description	Qty.
29	09.0803.0418GT	GASKET	0.45
31	01.0031.0299GT	FLAT WASHER D8 UNI 6593 ZN	3
32	56.0010.0035GT	LIGHT,FRONT,LEFT	1
33	01.0001.0466GT	SCREW M8X50 UNI 5739 8.8 ZN	4
34	01.4001.0212GT	SCREW,HHC,M20-2,5X160,DIN931,8.8,ZN	4
35	01.4032.0009GT	SPRING WASHER D20 ZN	4
36	01.0023.0060GT	STOP NUT M20 UNI 7473 6S ZN	4

silverhorn.co.uk

203.1 611014 Right Chassis

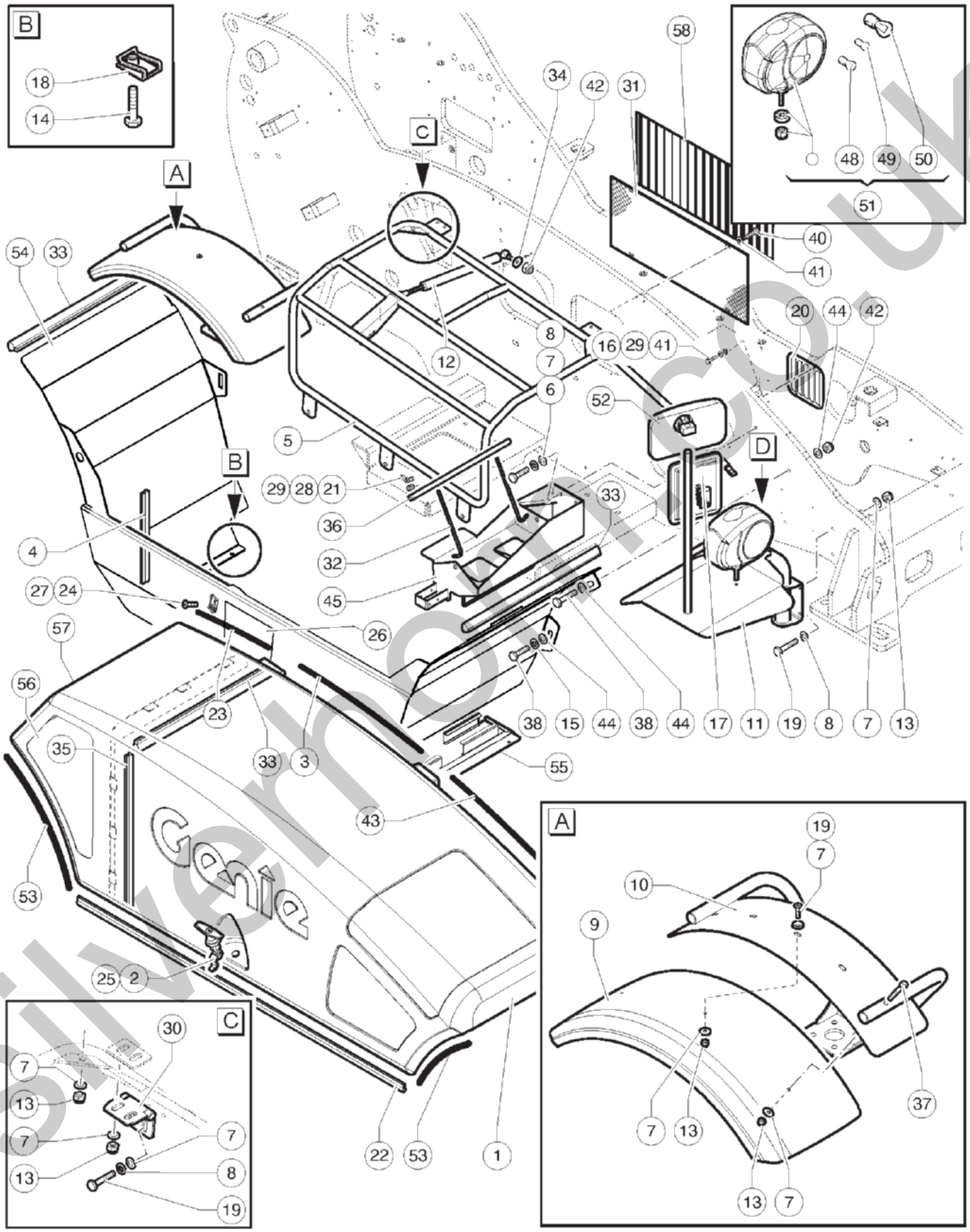

silvernoth.co.uk

203.1 611014 Right Chassis

Item	Part No.	Description	Qty.
1	52.1100.9125GT	Engine Cover	1
2	09.0803.0828GT	ENGINE COVER CLOSING	1
3	07.0723.0089GT	SEAL STRIP	0.6
4	07.0723.0089GT	SEAL STRIP	0.2
5	51.0811.4419GT	Support	1
6	01.0001.0258GT	SCREW M8X35 UNI 5739 8.8 ZN	4
7	01.0031.0055GT	FLAT WASHER D8 UNI 6592 ZN	18
8	01.4032.0003GT	Spring Washer D 8 ZN	16
9	09.0803.0667GT	MUD GUARD	1
10	51.0811.4893GT	SUPPORT,REAR,MUD GUARD (KIT)	1
11	51.0811.4642GT	RF SUPPORT MUDGUARD	1
12	09.0803.0880GT	Gas Spring For Stage 3B	1
12	09.0803.0815GT	Gas Spring For Stage 3A	1
12	09.0803.0913GT	GAS SPRING For Stage V, from S/N GTH250619M-1201	1
13	01.0023.0054GT	NUT,M8 UNI 7473 6S ZN	16
14	01.4001.0078GT	SCREW M8X20 DIN 6923 8.8 ZN	4
15	01.4032.0004GT	Spring Washer D10 ZN	7
16	01.0001.0154GT	SCREW,TE,M6X16 UNI 8.8 ZN	2
17	07.0723.0042GT	Mirror	1
18	09.0803.0352GT	SPRING CLIP M8	4
19	01.0001.0256GT	SCREW M8X25 UNI 5739 8.8 ZN	13
20	51.0903.5057GT	Cover	1
21	01.0031.0298GT	FLAT WASHER D6 UNI 6593 ZN	2
22	07.0723.0089GT	SEAL STRIP	1.5
23	07.0723.0089GT	SEAL STRIP	0.55
24	01.4006.0001GT	SCREW M6X16 UNI 5933 10.9 ZN	4
25	07.0723.0571GT	KEY	1
26	51.0903.5270GT	COVER	1

silverhorn.co.uk

203.1 611014 Right Chassis

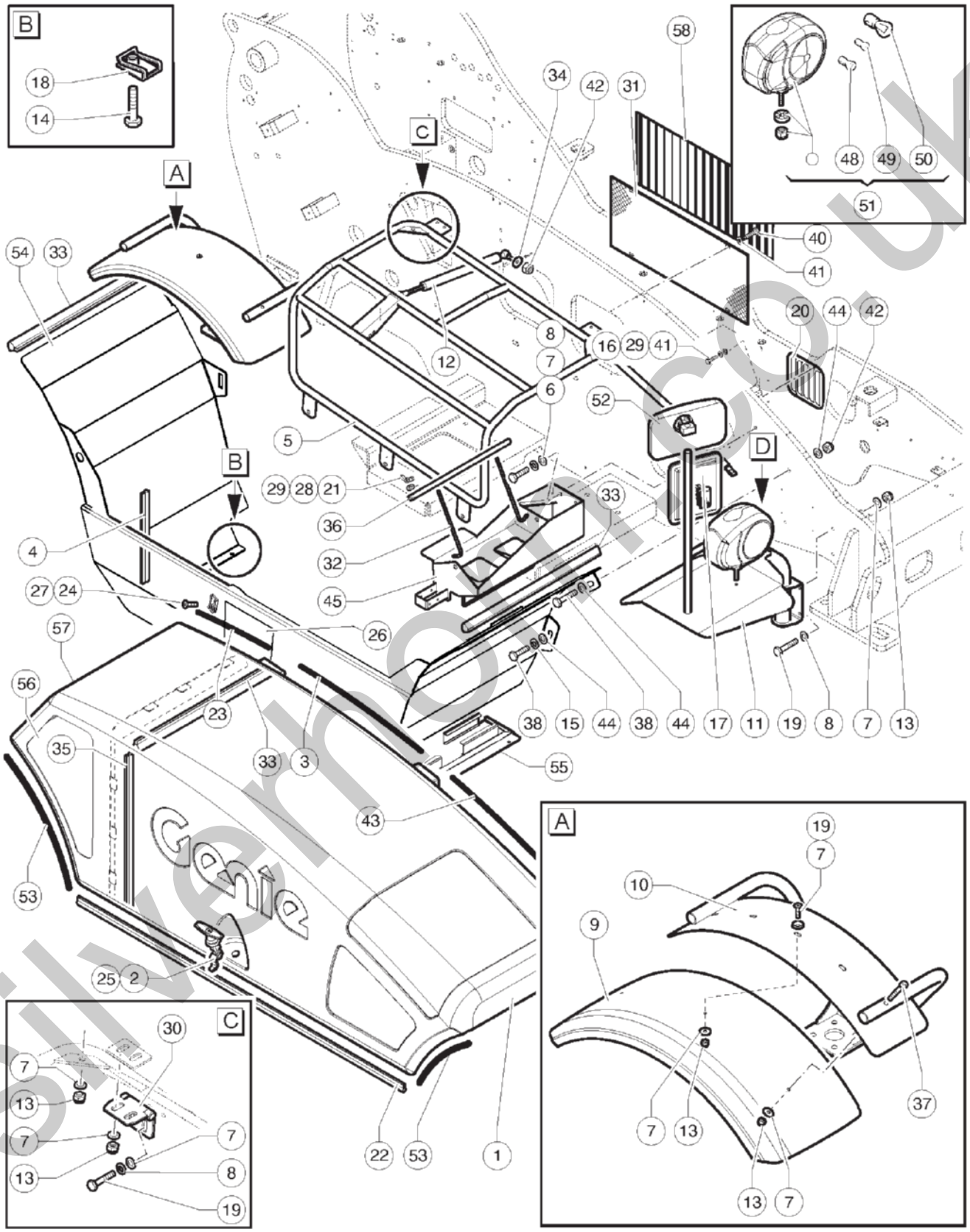

silvernoth.co.uk

203.1 611014 Right Chassis

Item	Part No.	Description	Qty.
27	09.0803.0516GT	SPRING CLIP M6	4
28	01.4023.0010GT	NUT,WING,M6 UNI 7473-7474 6S	2
29	01.4032.0002GT	SPRING WASHER D6 ZN	2
30	09.0803.0000GT	Hinge	2
31	51.0903.5125GT	Cover Only for Stage 3A	1
32	51.0811.4230GT	ROD,BATTERY HOLD DOWN	2
33	09.0805.0119GT	GASKET 0.6m X 3	1.8
34	01.0031.0056GT	FLAT WASHER D10 UNI 6592 ZN	2
35	07.0723.0089GT	SEAL STRIP	1.3
36	51.0811.4236GT	BRACKET,BATTERY HOLD DOWN	1
37	01.0001.0466GT	SCREW M8X50 UNI 5739 8.8 ZN	4
38	01.0001.0004GT	SCREW M6X20 UNI 5931 8.8 ZN	3
40	01.4001.0106GT	SCREW M6X16 DIN 6923 8.8 ZN	8
41	01.0031.0054GT	FLAT WASHER D6 UNI 6592 ZN	11
42	01.0023.0055GT	Stop Nut M10 UNI 7473 6S ZN	1
43	07.0723.0089GT	SEAL STRIP	0.72
44	01.0031.0301GT	FLAT WASHER D10 UNI 6593 ZN	16
45	51.0811.4554GT	Battery Support	1
48	07.0703.0306GT	BULB, HEADLAMP	1
49	07.0703.0305GT	BULB, HEADLAMP	1
50	56.0010.0058GT	BULB,12V,45/40W	1
51	56.0010.0034GT	LIGHT,FRONT,RIGHT	1
52	09.4610.0028GT	Mirror	1
53	09.0803.0245GT	GASKET	0.72
54	51.0903.5269GT	ENGINE HOUSING For Stage 3B	1
54	51.0903.5272GT	Engine Housing For Stage 3A	1
55	51.0903.5285GT	Lower Cover	1
56	07.0726.0138GT	Grid	1

silverhorn.co.uk

203.1 611014 Right Chassis

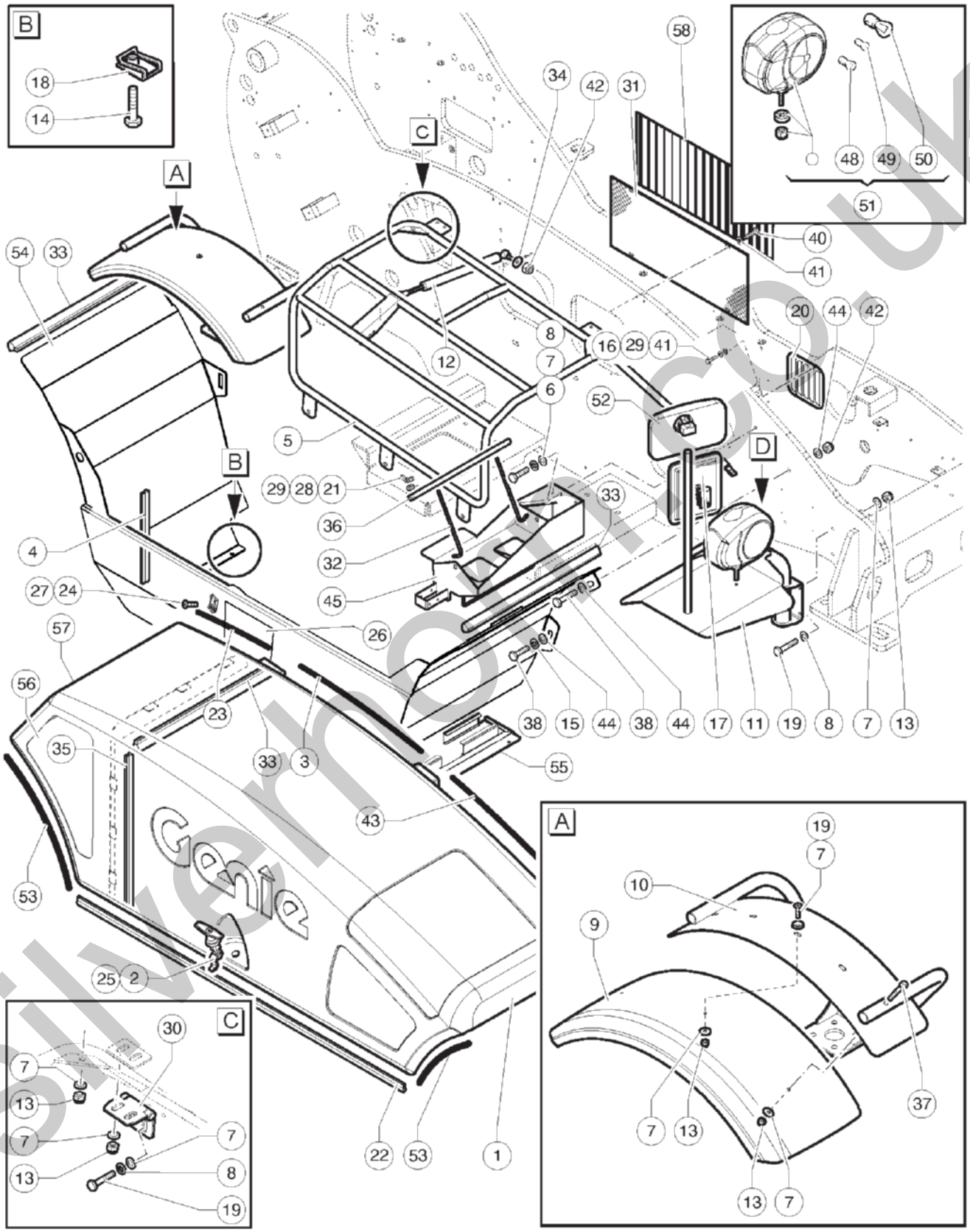

silvernoth.co.uk

203.1 611014 Right Chassis

Item	Part No.	Description	Qty.
57	07.0726.0139GT	Grid	1
58	51.0903.5055GT	COVER Only for Stage V, from S/N GTH250619M-1201	1

silverhorn.co.uk

204.1 611015 Right Chassis Soundproofing

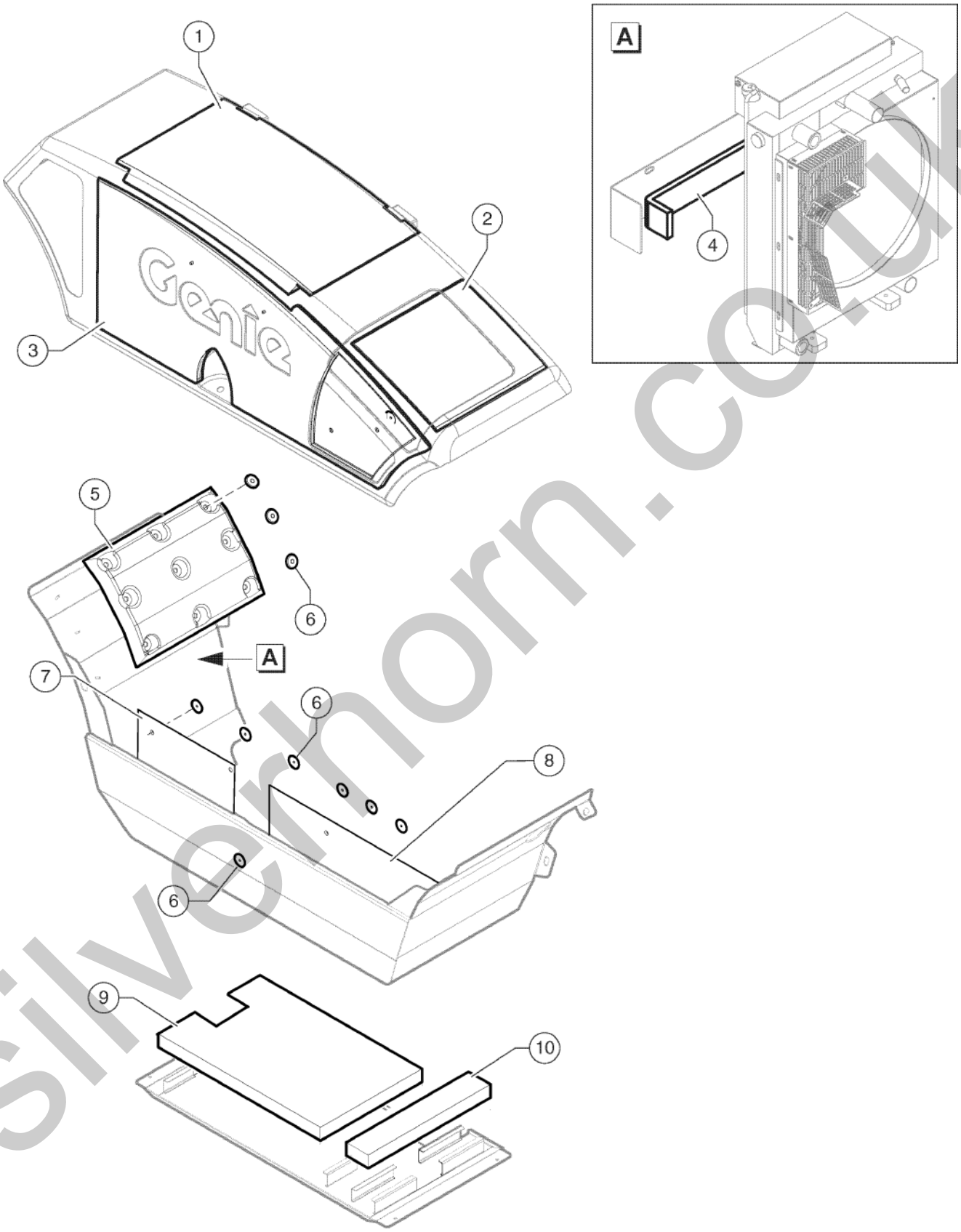

silverhorn.co.uk

204.1 611015 Right Chassis Soundproofing

Item	Part No.	Description	Qty.
1	09.0804.3459GT	Soundproofing Panel	1
2	09.0804.3460GT	Soundproofing Panel	1
3	09.0804.3458GT	Soundproofing Panel	1
4	09.0804.3461GT	Soundproofing Panel	2
5	09.0804.3453GT	Soundproofing Panel	1
6	09.0803.0235GT	Clip	17
7	09.0804.3455GT	Soundproofing Panel	1
8	09.0804.3454GT	Soundproofing Panel	1
9	09.0804.3457GT	Soundproofing Panel	1
10	09.0804.3456GT	Soundproofing Panel	1

silverhorn.co.uk

205.1 611016 Hydraulic Oil Tank

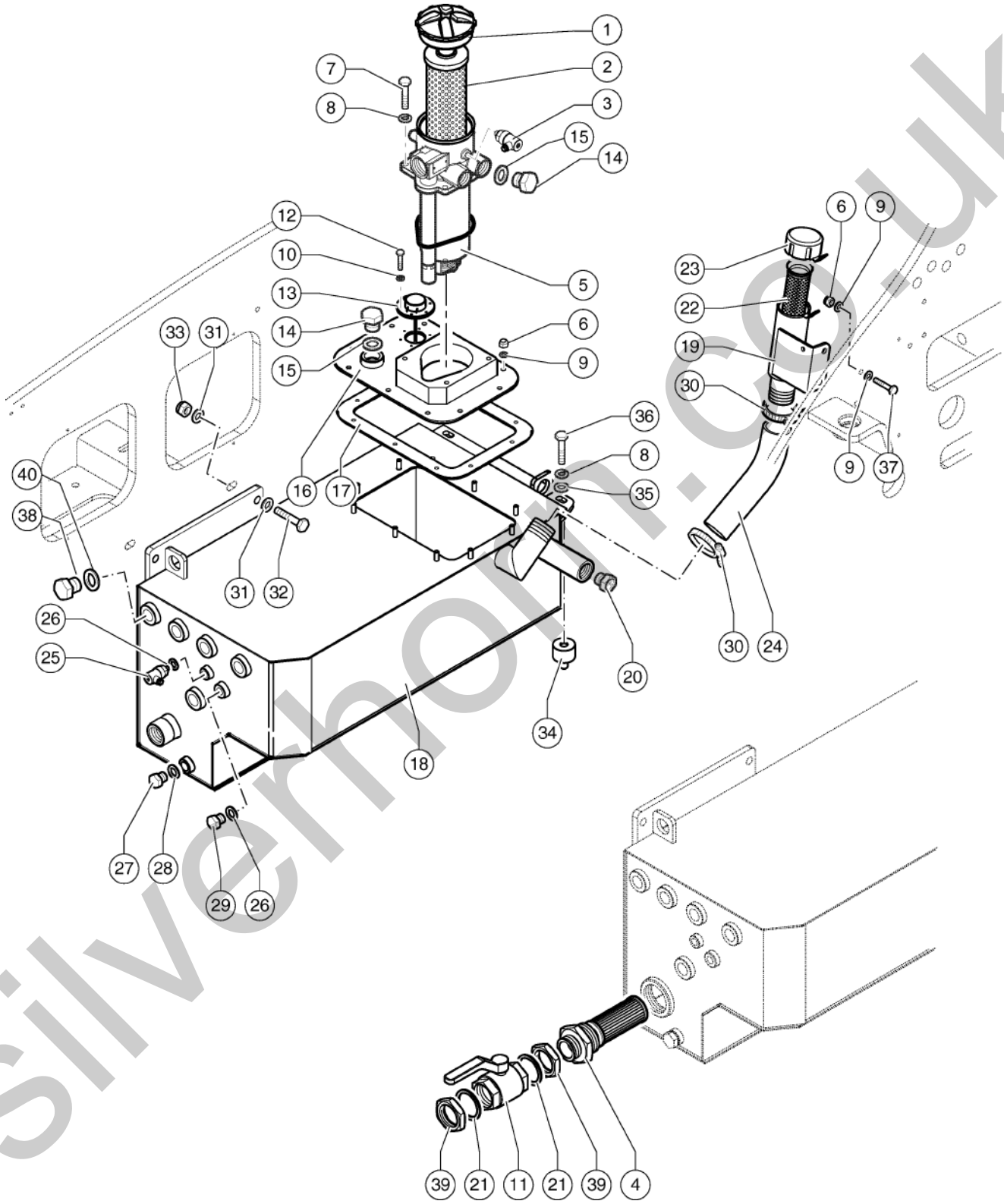

silverhorn.co.uk

205.1 611016 Hydraulic Oil Tank

Item	Part No.	Description	Qty.
1	07.0700.0006GT	CAP,HYDRAULIC FILTER	1
2	07.0700.0023GT	OIL FILTER,CARTRIDGE	1
3	07.0700.0028GT	INDICATOR (OIL CLOGGING)	1
4	09.4604.0073GT	Filter	1
5	09.4604.0047GT	HYD OIL FILTER	1
6	01.0023.0054GT	NUT,M8 UNI 7473 6S ZN	12
7	01.0001.0355GT	SCREW M10X25 UNI 5739 8.8 ZN	4
8	01.4032.0004GT	Spring Washer D10 ZN	6
9	01.0031.0055GT	FLAT WASHER D8 UNI 6592 ZN	14
10	01.4032.0011GT	SPRING WASHER D4 ZN	6
11	04.4224.0000GT	BALL VALVE DN 1 1/2	1
12	01.4003.0012GT	SCREW M4 X 16, 10.9	6
13	56.0013.0028GT	LEVEL INDICATOR	1
14	04.0220.0063GT	PLUG 1 BSP	2
15	06.0442.0125GT	BONDED RING 1"	2
16	51.0903.5205GT	Inspection Hatch	1
17	53.3301.0005GT	Rubber Gasket	1
18	51.0600.9323GT	Oil Tank	1
19	53.3001.6744GT	Oil Manifold	1
20	09.4661.0002GT	OIL LEVEL INDICATOR	1
21	06.0442.0127GT	RING,BONDED	2
22	09.4661.0016GT	BASKET,PLUG	1
23	09.4661.0014GT	PLUG	1
24	09.0805.0166GT	Rubber Pipe D.48/58	1
25	56.0013.0000GT	TEMPERATURE SENSOR, HYDRAULIC OIL	1
26	06.0442.0120GT	BONDED RING 3/8"	2
27	04.0220.0055GT	PLUG 1/2 BSP	1
28	06.0442.0122GT	BONDED RING 1/2"	1

silverhorn.co.uk

205.1 611016 Hydraulic Oil Tank

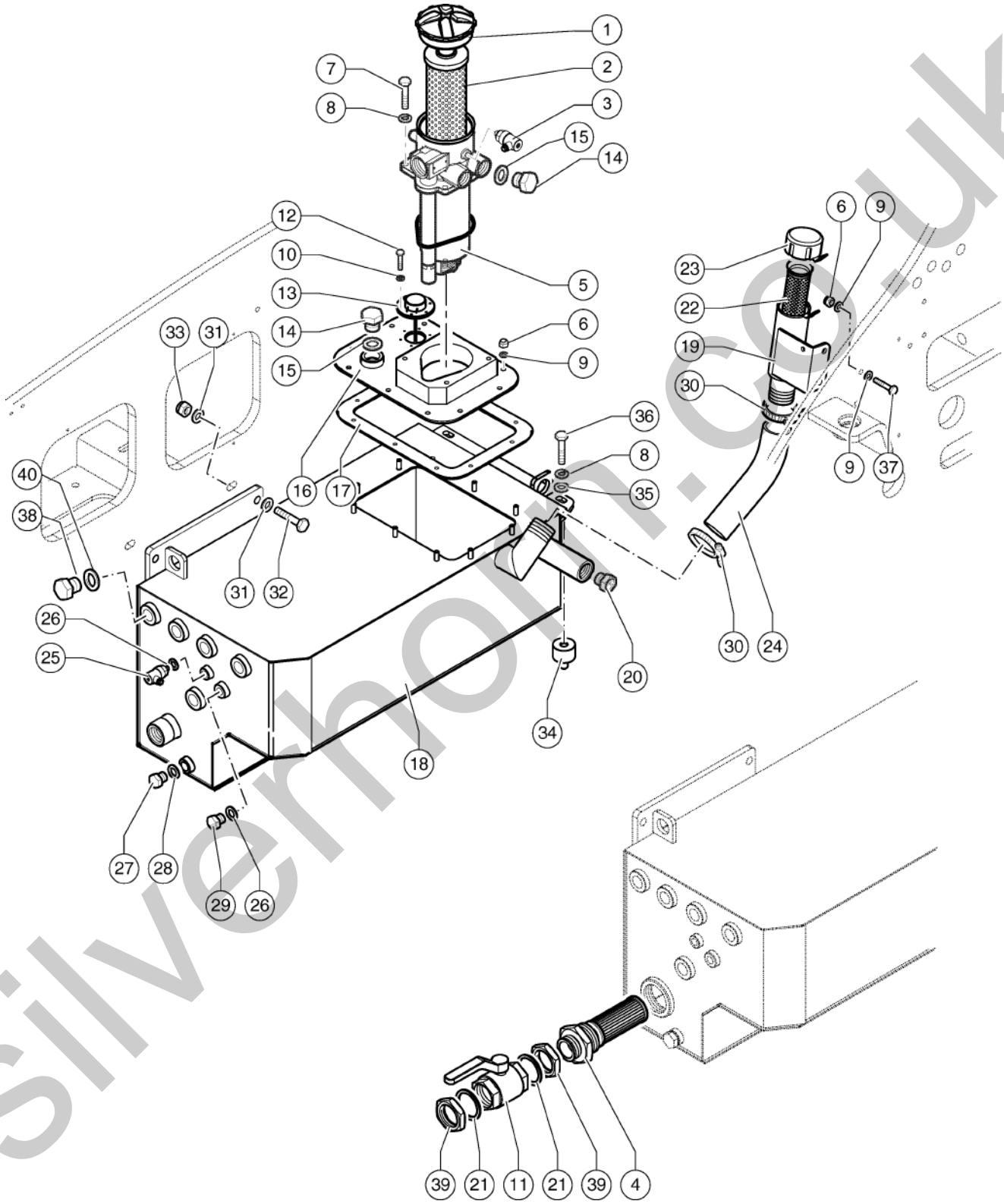

silverhorn.co.uk

205.1 611016 Hydraulic Oil Tank

Item	Part No.	Description	Qty.
29	04.0220.0053GT	PLUG 3/8" BSP	1
30	04.0227.0144GT	Clamp DN 55/59	2
31	01.0031.0151GT	FLAT WASHER D12 UNI 6593 ZN	4
32	01.0001.1482GT	Screw TE M12X50 UNI 5737 8.8 ZN	2
33	01.0023.0056GT	STOP NUT M12 UNI 7473 6S ZN	2
34	09.0803.0232GT	INSULATOR M-F D=30/H=20 M10ART.TCVF 3020	2
35	01.0031.0301GT	FLAT WASHER D10 UNI 6593 ZN	2
36	01.0001.0353GT	SCREW M10X20 UNI 5739 8.8 ZN	2
37	01.0001.1465GT	SCREW TE M8X40 UNI 5739 8.8 ZN	2
38	04.0220.0059GT	PLUG 3/4 BSP	1
39	01.4019.0021GT	NUT	2
40	06.0442.0124GT	BONDED RING 3/4	1

silverhorn.co.uk

206.1 611017 Axles And Wheels

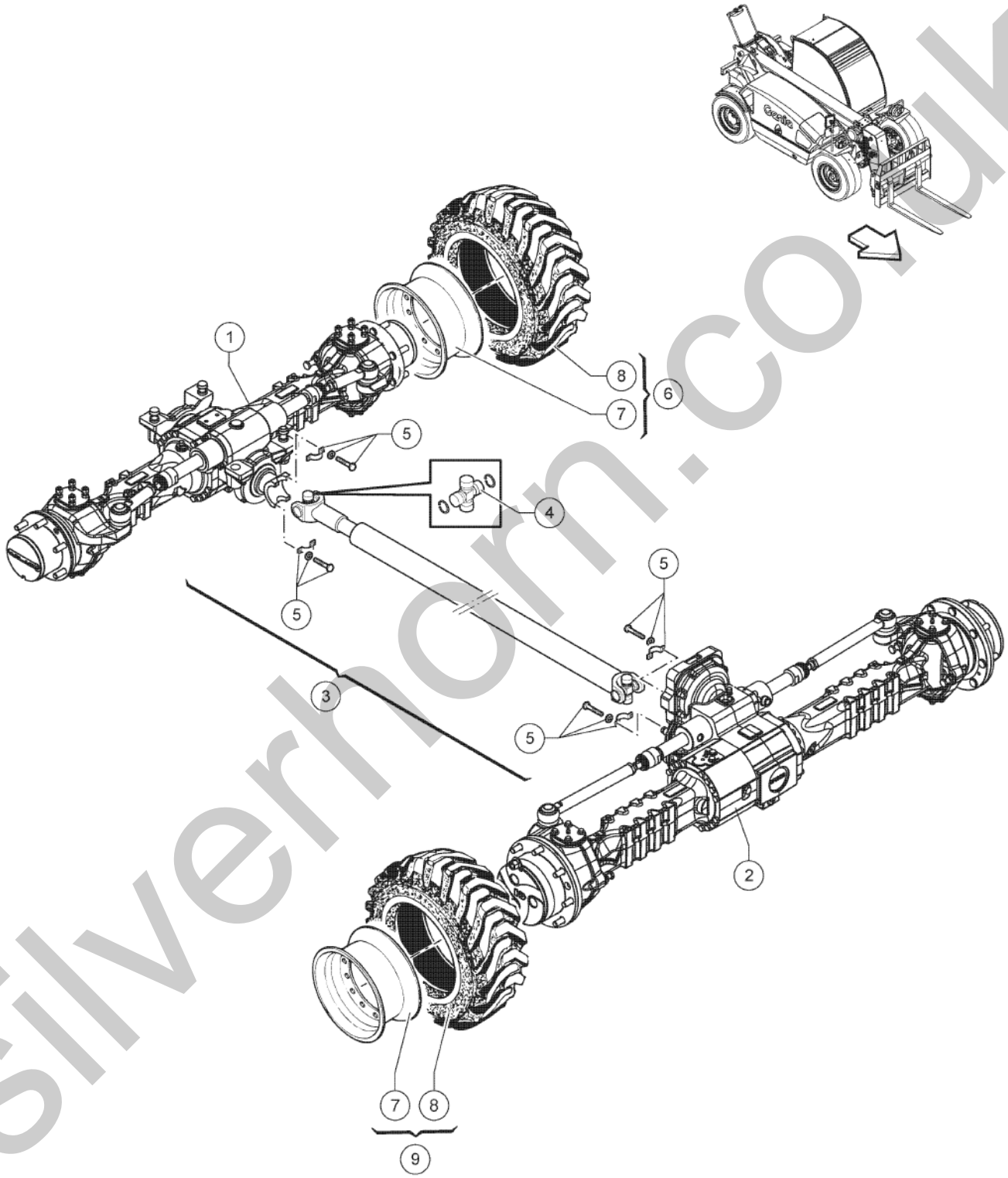

silverhorn.co.uk

206.1 611017 Axles And Wheels

Item	Part No.	Description	Qty.
1	09.4632.0103GT	Rear Steering Axle	1
2	09.4632.0102GT	Front Steering Axle	1
3	09.4635.0066GT	Cardan Shaft	1
4	07.0738.0004GT	Universal Joint Cross	2
5	09.4635.0014GT	CARDAN SHAFT ASSY KIT	4
6	55.0403.0090GT	Complete Left Wheel 16.5" - Air Filled	2
6	55.0403.0082GT	Complete Left Wheel 20" - Solid Boss Optional	2
6	55.0403.0088GT	COMPLETE WHEEL 16.5 MIX CRUMB FILLED,LEFT Optional	2
6	55.0403.0094GT	Complete Left Wheel 16.5" - No Marking Optional	2
7	09.4629.0018GT	Rim 9.75 X 16.5"	4
8	09.4627.0018GT	Tire 12-16.5" PR10	4
9	55.0403.0089GT	Complete Right Wheel 16.5" - Air Filled	2
9	55.0403.0081GT	Complete Right Wheel 20" - Solid Boss Optional	2
9	55.0403.0093GT	Complete Right Wheel 16.5" - No Marking Optional	2
9	55.0403.0095GT	COMPLETE WHEEL 16.5 MIX CRUMB FILLED,RIGHT Optional	2

silverhorn.co.uk

207.1 611018 Front Axle - Central Housing

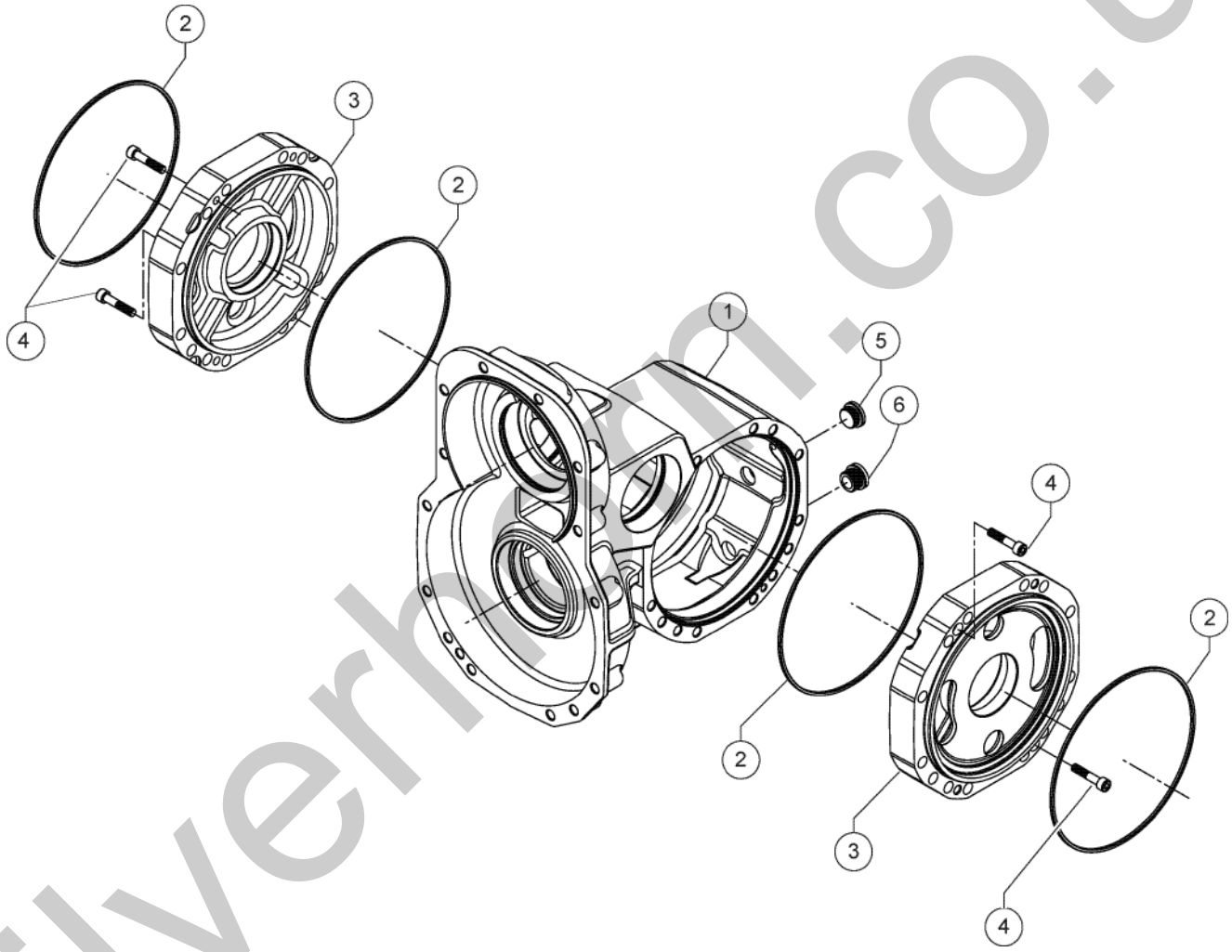

silverhorn.co.uk

207.1 611018 Front Axle - Central Housing

Item	Part No.	Description	Qty.
1	07.0709.1226GT	CARTER	1
2	07.0709.0261GT	SEAL	4
3	07.0709.1227GT	COVER	2
4	639803GT	Screw	4
5	07.0709.0113GT	PLUG	1
6	07.0709.0371GT	PLUG,MAGNET	1

silverhorn.co.uk

208.1 611019 Front Axle - Differential

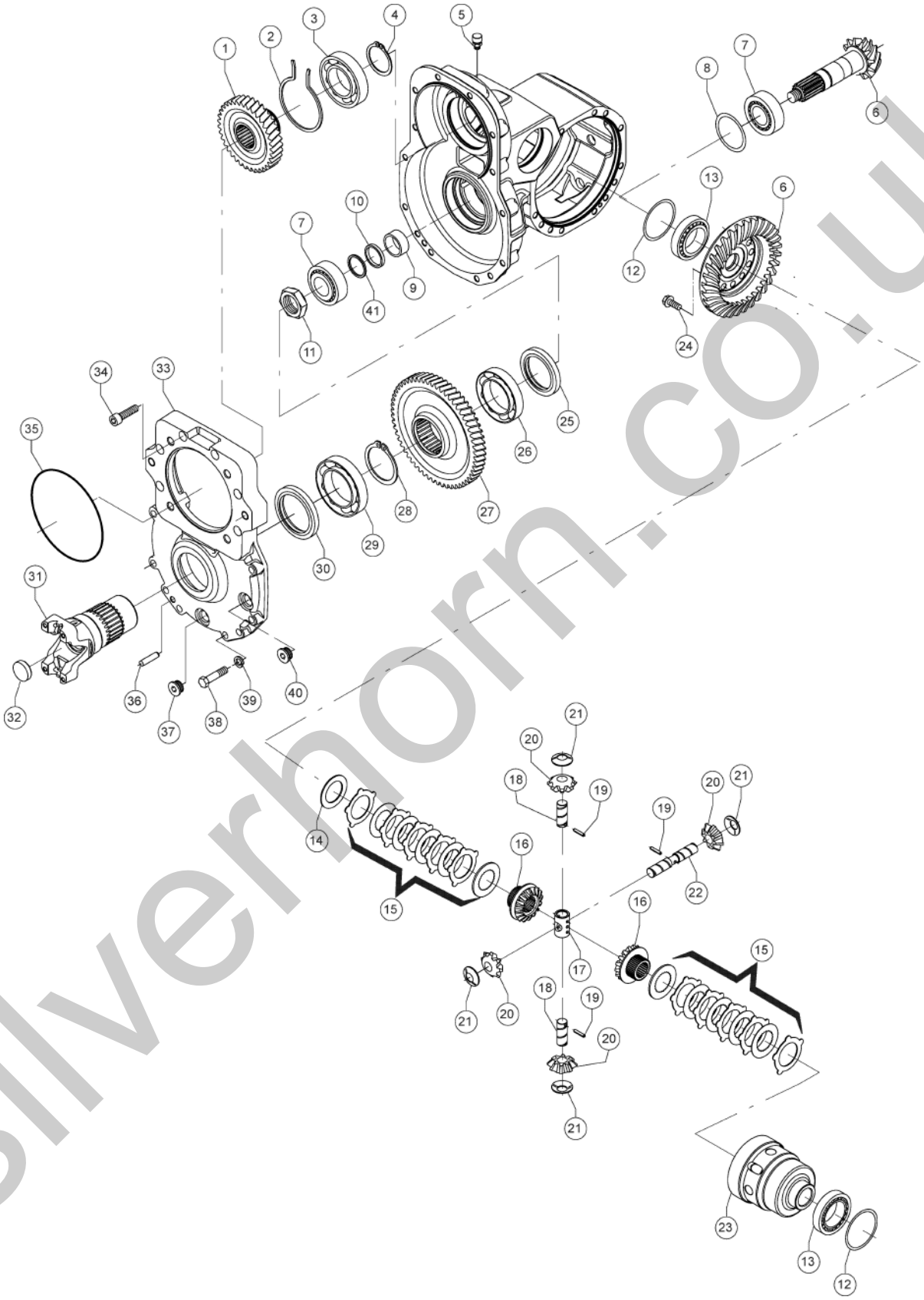

silverhorn.co.uk

208.1 611019 Front Axle - Differential

Item	Part No.	Description	Qty.
1	07.0709.0293GT	Gear	1
2	07.0709.0294GT	SNAP RING	1
3	07.0709.0130GT	BEARING	1
4	07.0709.0295GT	SNAP RING	1
5	07.0709.0912GT	PLUG, BREATHER	1
6	07.0709.1228GT	BEVEL GEAR	1
7	07.0709.0174GT	Bearing	2
8	634391GT	SHIM,THICKNESS	1
8	634392GT	SHIM,THICKNESS	1
8	634393GT	SHIM,THICKNESS	1
9	07.0709.0359GT	SPACER	1
10	07.0709.0245GT	Ring	1
10	07.0709.0249GT	RING	1
11	07.0709.0296GT	RING NUT	1
12	07.0709.0257GT	THICKNESS	2
12	07.0709.0258GT	THICKNESS	2
12	07.0709.0259GT	THICKNESS	2
12	07.0709.0260GT	THICKNESS	2
13	633529GT	BEARING	2
14	633531GT	WASHER	1
15	07.0709.0320GT	CLUTCH DISC	2
16	07.0709.0915GT	DIFFERENTIAL SIDE GEAR	2
17	07.0709.0706GT	CROSS JOINT	1
18	07.0709.0918GT	PIN	2
19	07.0709.0254GT	DOWEL	3
20	07.0709.0916GT	SATELLITE ART (GEAR)	4
21	633533GT	WASHER	4
22	07.0709.0919GT	PIN	1

silverhorn.co.uk

208.1 611019 Front Axle - Differential

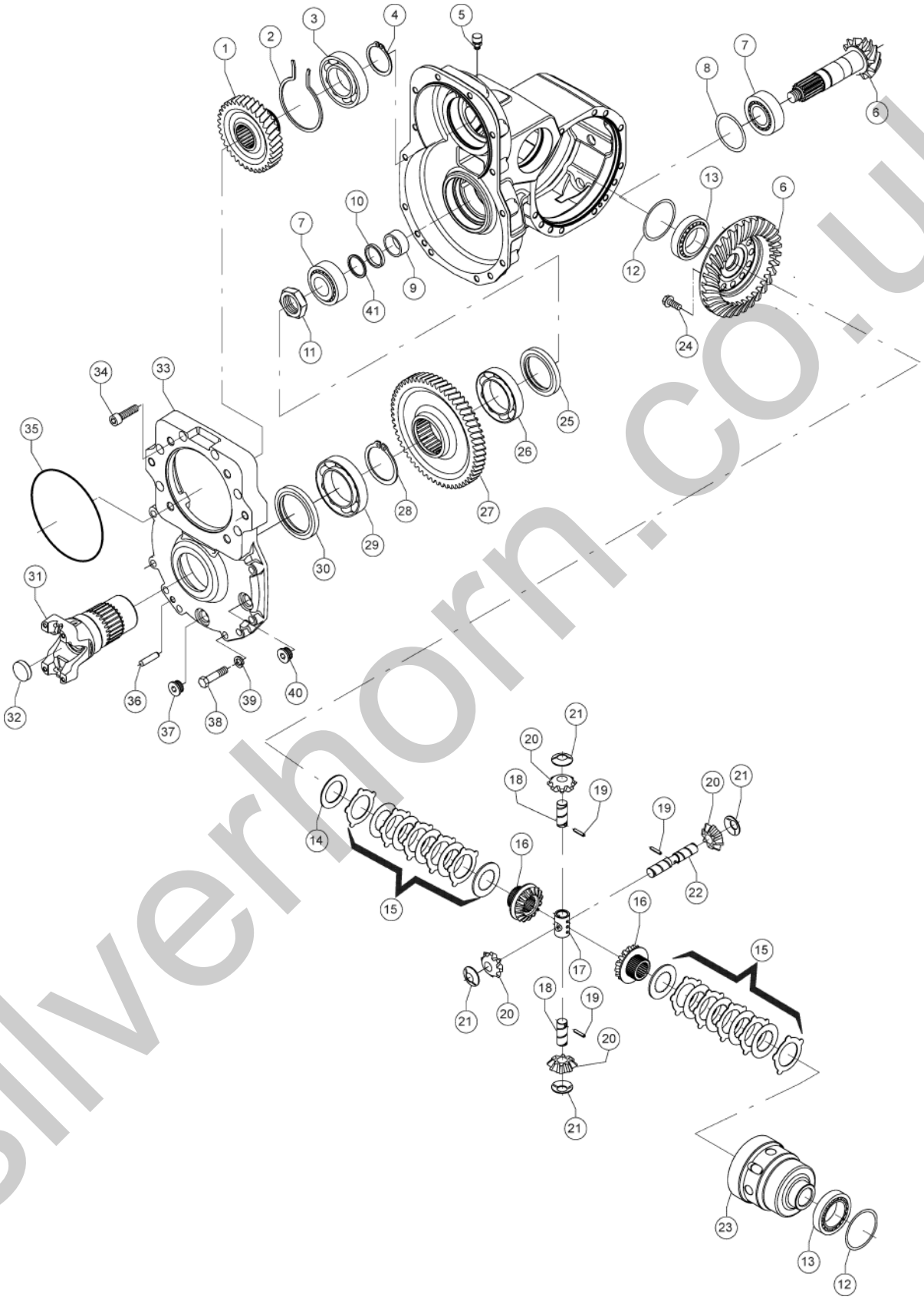

silverhorn.co.uk

208.1 611019 Front Axle - Differential

Item	Part No.	Description	Qty.
23	07.0709.0993GT	DIFFERENTIAL CARRIER	1
24	07.0709.0751GT	Screw	12
25	07.0709.0312GT	SEAL	1
26	07.0709.0313GT	BEARING	1
27	07.0709.0314GT	Gear	1
28	07.0709.0315GT	SNAP RING	1
29	634561GT	BEARING	1
30	07.0709.0316GT	SEAL	1
31	07.0709.0710GT	Flange	1
32	07.0709.0317GT	PLUG	1
33	07.0709.0319GT	Cover	1
34	07.0709.0930GT	SCREW	6
35	07.0709.0127GT	O-RING	1
36	639832GT	DOWEL	1
37	07.0709.0747GT	Magnet Plug	1
38	639830GT	SCREW, 8.8 HCS 12MM-1.75X50	8
39	07.0709.0188GT	SPRING WASHER	8
40	07.0709.0921GT	PLUG	1
41	07.0709.0716GT	SEAL	1

silverhorn.co.uk

209.1 611020 Front Axle - Brake

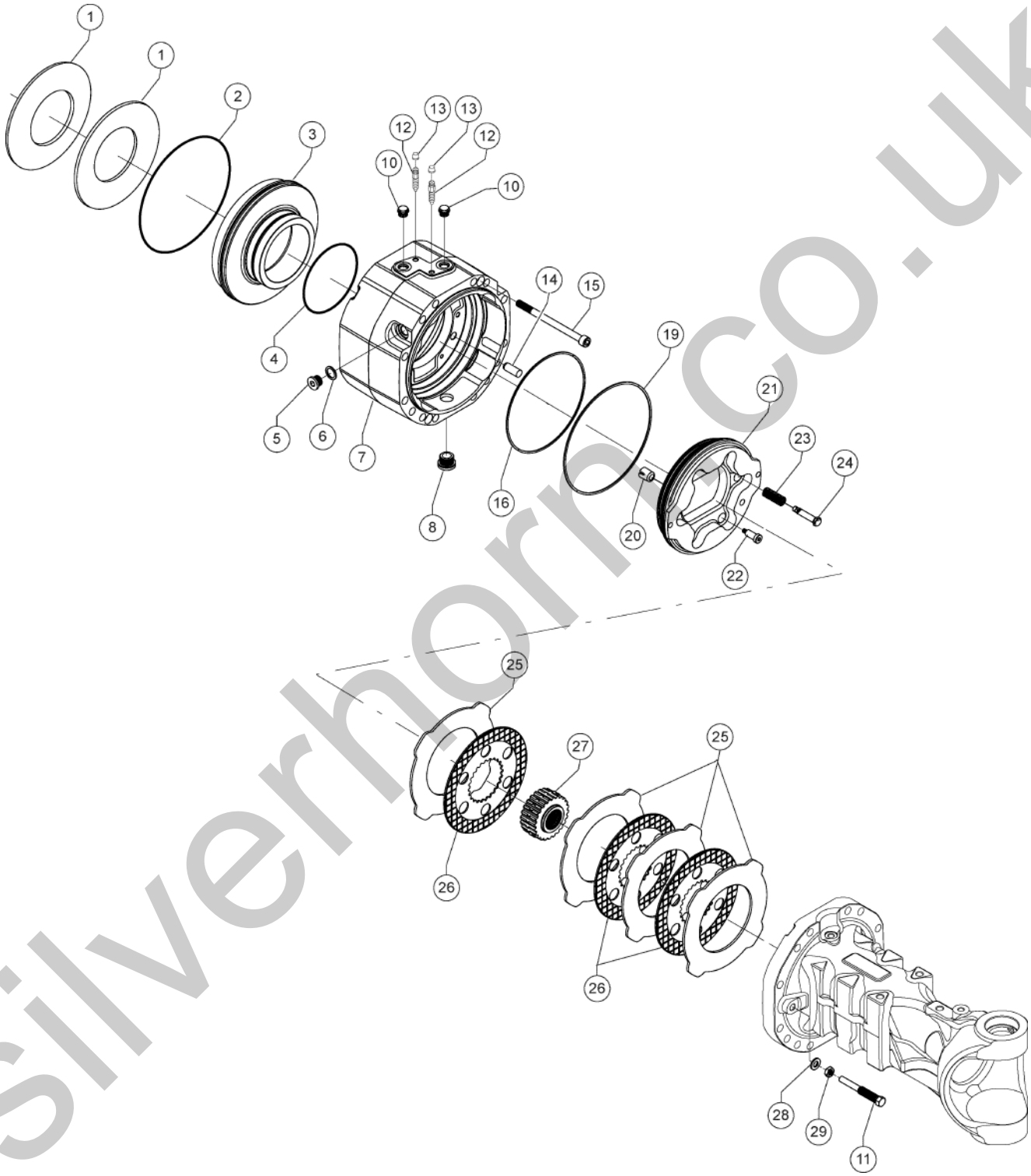

silverhorn.co.uk

209.1 611020 Front Axle - Brake

Item	Part No.	Description	Qty.
1	07.0709.0346GT	SPRING	4
2	07.0709.0844GT	O-RING	2
3	07.0709.1236GT	Piston	2
4	638552GT	O-Ring	2
5	07.0709.1237GT	PLUG	2
6	07.0709.0871GT	Washer	2
7	07.0709.1238GT	COVER	2
8	07.0709.0371GT	PLUG,MAGNET	2
10	639808GT	PLUG	4
11	07.0709.1239GT	Adjusting Screw	4
12	1252673GT	BLEEDER BOLT	4
13	638548GT	Plug	4
14	628447GT	Dowel	2
15	07.0709.1240GT	SCREW	4
16	07.0709.1241GT	Piston	2
19	07.0709.1242GT	SEAL	2
20	07.0709.0106GT	SPRING	6
21	07.0709.1243GT	Piston	2
22	07.0709.0953GT	SCREW,ADJUSTING	6
23	07.0709.1254GT	SPRING	6
24	07.0709.1255GT	ADJUSTING SCREW	6
25	07.0709.1244GT	INTERMEDIATE BRAKE DISC	8
26	07.0709.1245GT	BRAKE DISC	6
27	07.0709.0996GT	BUSHING	2
28	07.0709.0149GT	Washer	4
29	1252549GT	NUT	4

silverhorn.co.uk

210.1 611021 Front Axle - Steering Cylinders

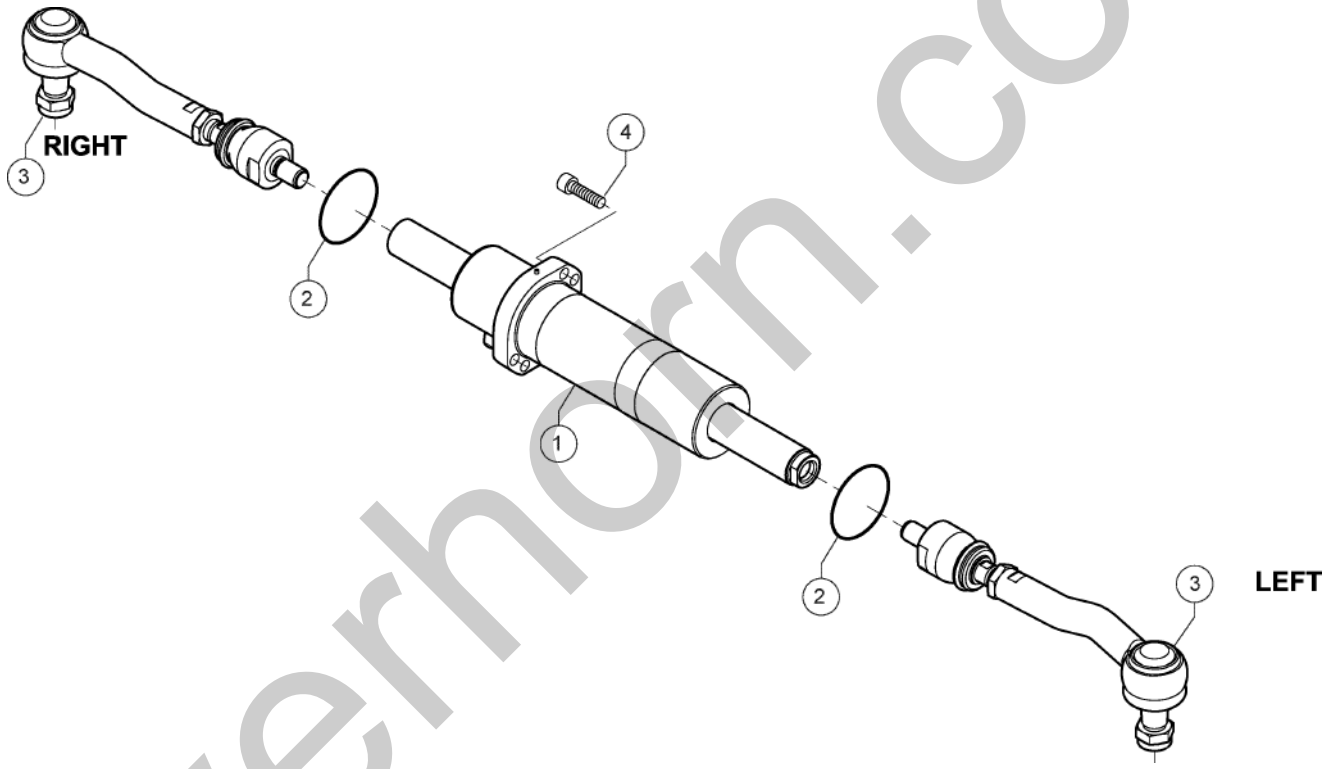

silverhorn.co.uk

210.1 611021 Front Axle - Steering Cylinders

Item	Part No.	Description	Qty.
1	07.0709.1256GT	STEERING CYLINDER	1
2	634397GT	O-RING	2
3	07.0709.0909GT	TIE ROD	2
4	07.0709.0930GT	SCREW	4

silverhorn.co.uk

211.1 611022 Front And Rear Axles - Hub Reduction

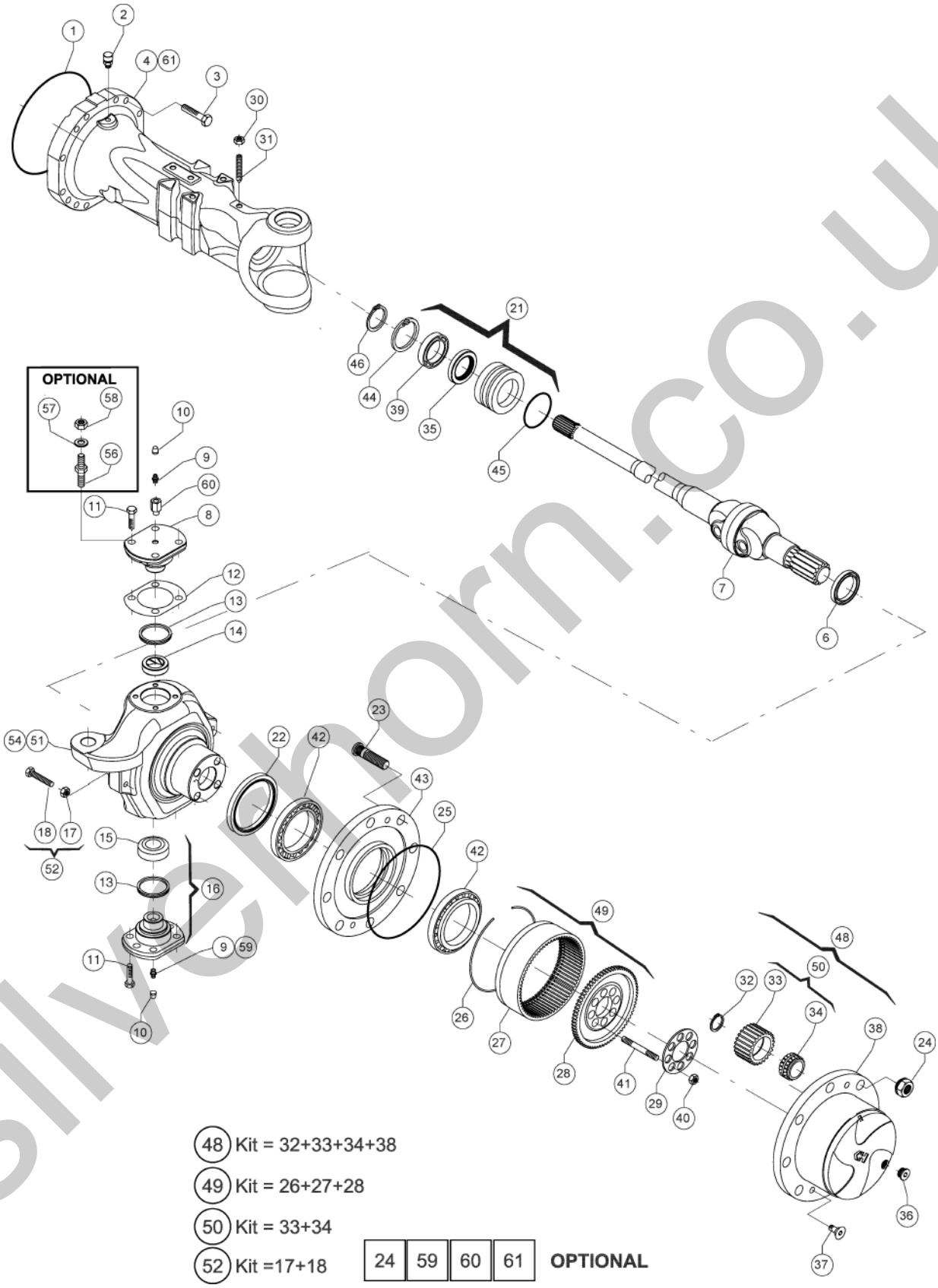

silverthorn.co.uk

211.1 611022 Front And Rear Axles - Hub Reduction

Item	Part No.	Description	Qty.
1	07.0709.0261GT	SEAL	2
2	07.0709.0912GT	PLUG, BREATHER	1
3	07.0709.1229GT	SCREW	28
4	07.0709.1230GT	Axle Case	2
6	07.0709.0265GT	Sealing Ring	2
7	07.0709.1231GT	JOINT	2
8	07.0709.0267GT	Pivot Pin	2
9	07.0709.0756GT	GREASE NIPPLE	2
10	638548GT	Plug	4
11	07.0709.0057GT	SCREW,RING GEAR	12
12	07.0709.0268GT	THICKNESS	2
12	07.0709.0290GT	THICKNESS	2
12	07.0709.0291GT	THICKNESS	2
13	07.0709.0269GT	SEAL	2
14	639625GT	BUSHING	2
15	07.0709.0270GT	Joint Box	2
16	07.0709.0271GT	Pivot Pin	2
17	634546GT	NUT	4
18	07.0709.0104GT	SCREW	4
21	07.0709.0169GT	BUSHING	2
22	07.0709.1232GT	SEAL	2
23	07.0709.0117GT	WHEEL STUD	16
24	07.0709.0118GT	WHEEL NUT	16
25	632383GT	SEAL	2
26	639646GT	Snap Ring	2
27	639639GT	RING GEAR	2
28	639640GT	SUPPORT,RING GEAR	2
29	639647GT	PLATE,LOCKING	2

silverhorn.co.uk

211.1 611022 Front And Rear Axles - Hub Reduction

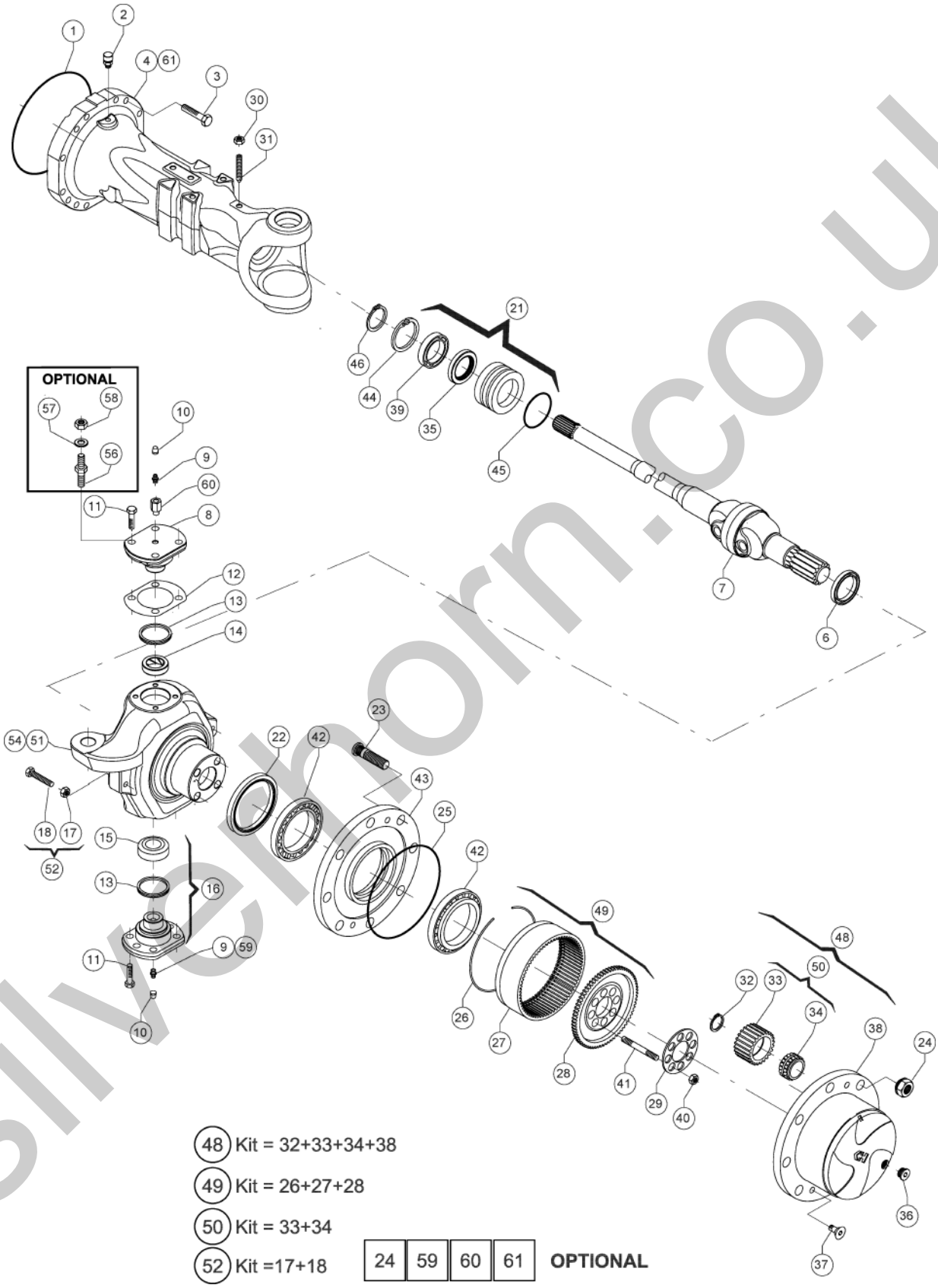

silverthorn.co.uk

211.1 611022 Front And Rear Axles - Hub Reduction

Item	Part No.	Description	Qty.
30	633205GT	NUT	2
31	07.0709.1233GT	SCREW	2
32	639641GT	SNAP RING	3
33	7-229-590GT	PLANET GEAR	6
34	639643GT	BEARING	6
35	633486GT	SEAL	2
36	07.0709.0371GT	PLUG,MAGNET	2
37	07.0709.0065GT	SCREW	4
38	07.0709.0321GT	PLANET GEAR CARRIER	1
39	634417GT	BEARING	2
40	637567GT	Nut	8
41	639645GT	Stud	8
42	7-229-583GT	BEARING	4
43	07.0709.1234GT	WHEEL HUB	2
44	634416GT	SNAP RING	2
45	634419GT	O-RING	2
46	634415GT	SNAP RING	2
48	07.0709.0354GT	PLANET GEAR CARRIER	2
49	07.0709.0727GT	RING GEAR SUPPORT	2
50	07.0709.1253GT	PLANET GEAR KIT	6
51	07.0709.1251GT	STEERING CASE,RIGHT	1
52	07.0709.0365GT	SCREW,STEERING ADJUST	4
54	07.0709.1235GT	STEERING CASE,LEFT	1
56	07.0709.0119GT	STUD,DRIVE AXLE	8
57	07.0709.0071GT	WASHER	8
58	07.0709.0070GT	NUT	8
59	633176GT	GREASE ZERK	2
60	07.0709.0758GT	PIPE FITTING	2

silverhorn.co.uk

212.1 611023 Rear Axle - Central Housing

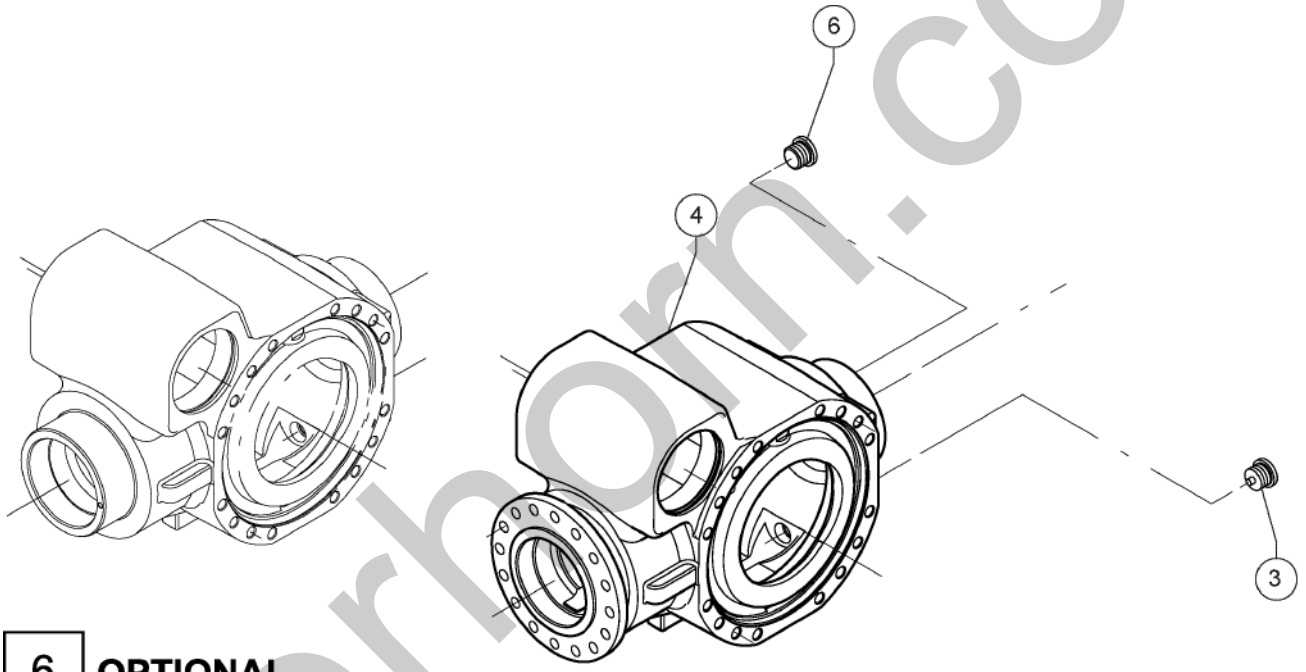

6 **OPTIONAL**

silverhorn.co.uk

212.1 611023 Rear Axle - Central Housing

Item	Part No.	Description	Qty.
3	07.0709.0371GT	PLUG,MAGNET	1
4	07.0709.1246GT	Carter	1
6	07.0709.0113GT	PLUG	1

silverhorn.co.uk

213.1 611024 Rear Axle - Differential

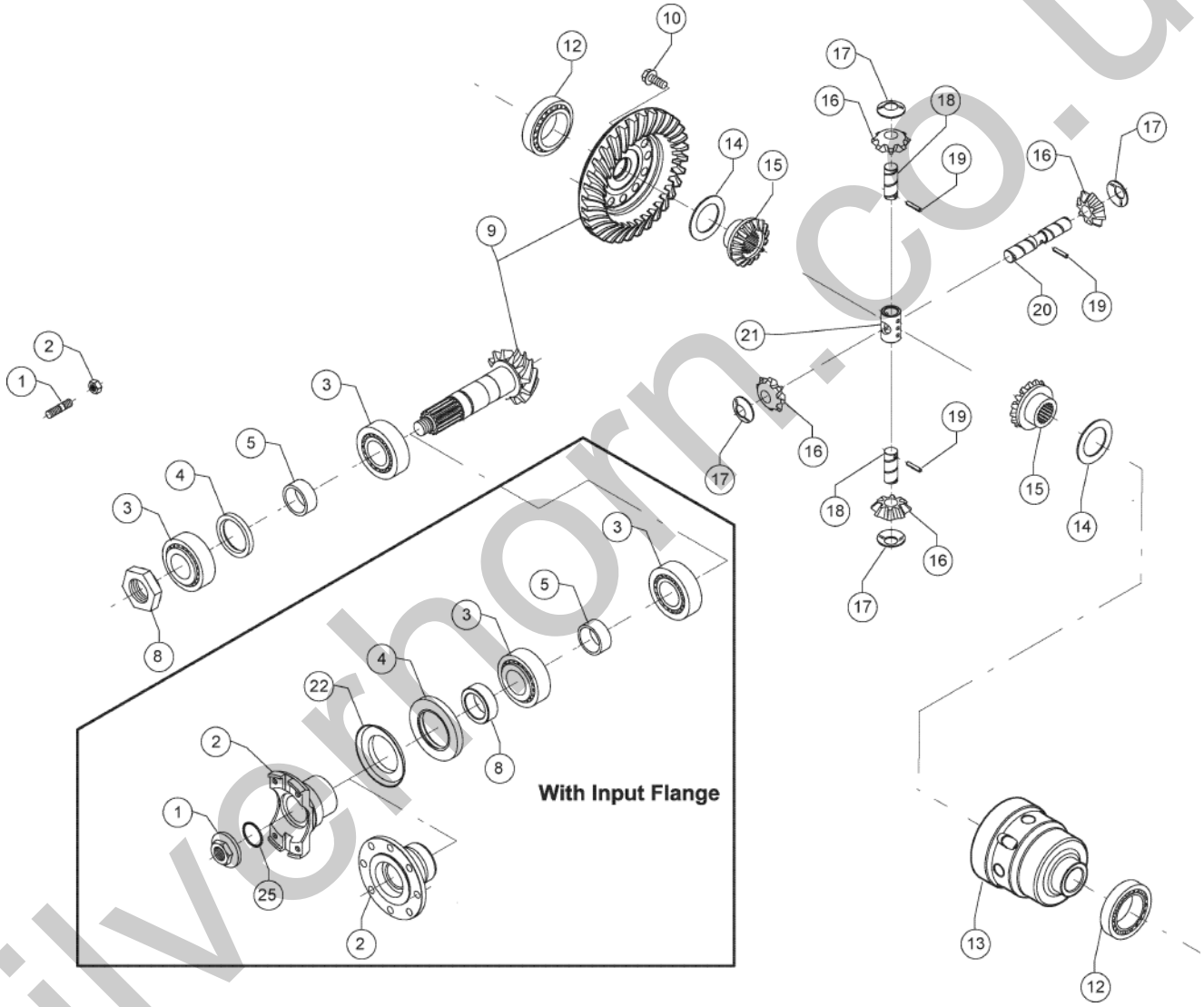

silverhorn.co.uk

213.1 611024 Rear Axle - Differential

Item	Part No.	Description	Qty.
1	633160GT	NUT	1
2	07.0709.0388GT	FLANGE	1
3	07.0709.0174GT	Bearing	2
4	07.0709.0359GT	SPACER	1
8	633574GT	SPACER	1
9	07.0709.1247GT	BEVEL GEAR	1
10	07.0709.0751GT	Screw	12
12	633529GT	BEARING	2
13	07.0709.0761GT	DIFFERENTIAL BOX	1
14	07.0709.0914GT	WASHER	2
15	07.0709.0762GT	DIFFERENTIAL PINION	2
16	07.0709.0916GT	SATELLITE ART (GEAR)	4
17	07.0709.0917GT	Friction Washer	4
18	07.0709.0918GT	PIN	2
19	07.0709.0254GT	DOWEL	3
20	07.0709.0919GT	PIN	1
21	07.0709.0706GT	CROSS JOINT	1
22	07.0709.0235GT	SAFETY SHEET	1
25	633110GT	O-RING	1

silverhorn.co.uk

214.1 611025 Rear Axle - Steering Cylinder

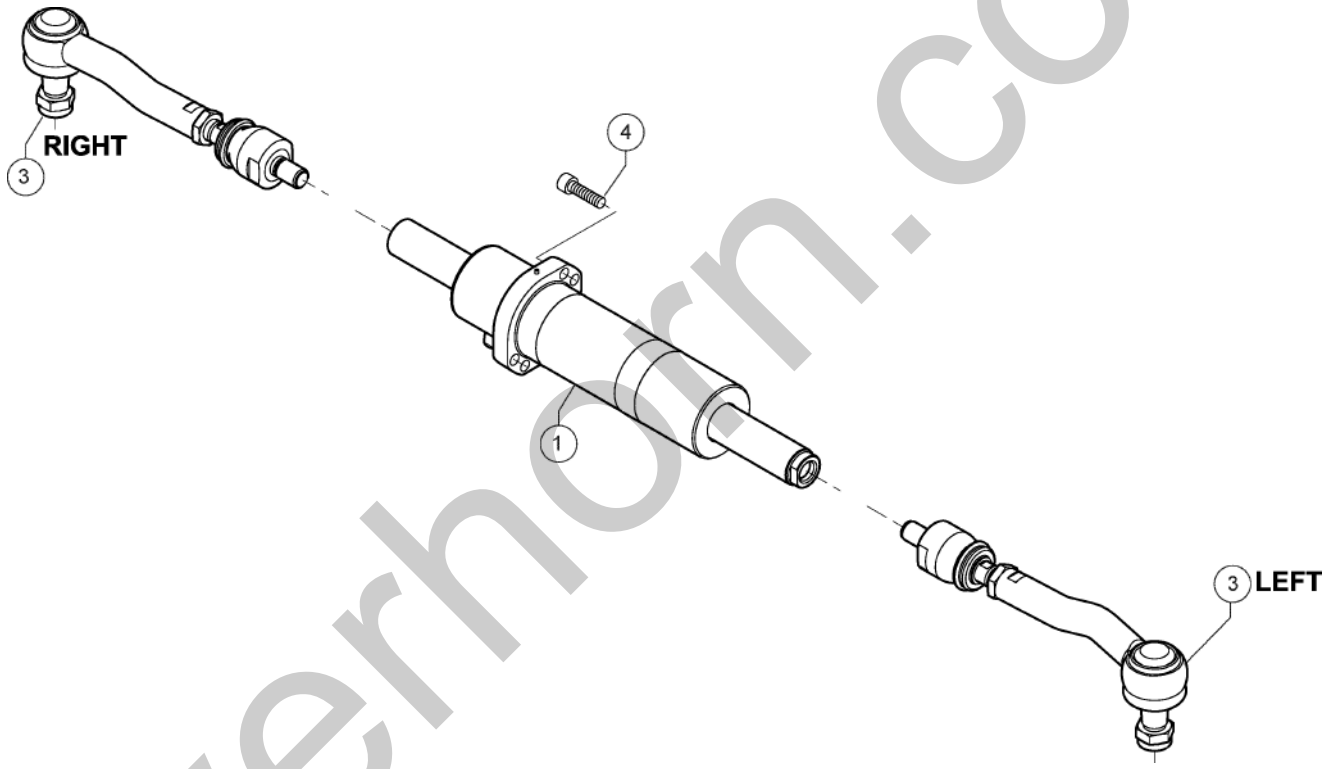

silverhorn.co.uk

214.1 611025 Rear Axle - Steering Cylinder

Item	Part No.	Description	Qty.
1	07.0709.1256GT	STEERING CYLINDER	1
3	07.0709.0909GT	TIE ROD	2
4	07.0709.0930GT	SCREW	4

silverhorn.co.uk

215.1 611026 Rear Axle - Coupling Support

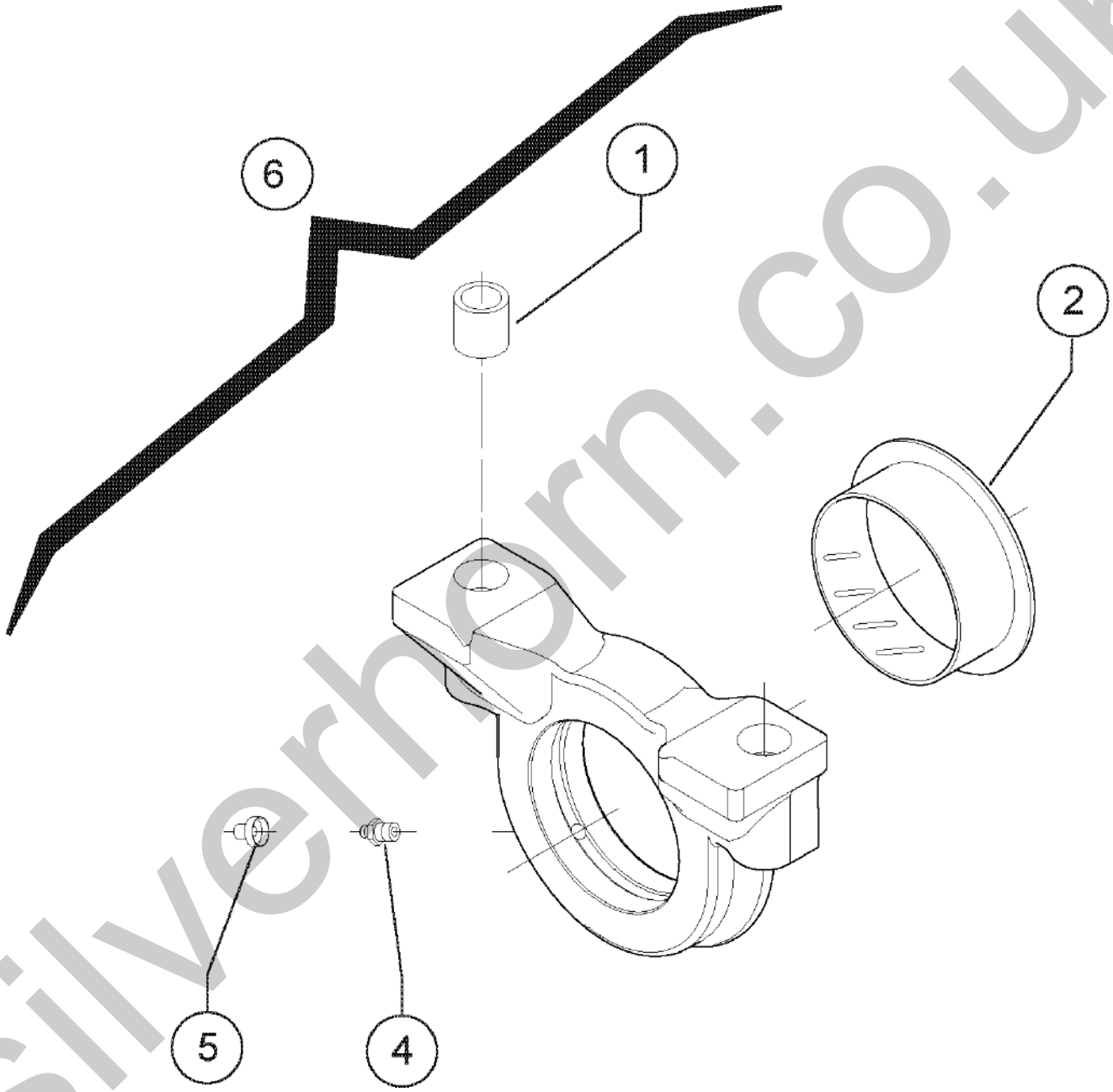

silverhorn.co.uk

215.1 611026 Rear Axle - Coupling Support

Item	Part No.	Description	Qty.
1	07.0709.0218GT	BUSHING	4
2	07.0709.1250GT	BUSHING	2
4	633176GT	GREASE ZERK	2
5	638548GT	Plug	2
6	07.0709.0289GT	SUPPORT	2

silverhorn.co.uk

301.1 611027 Cooling System

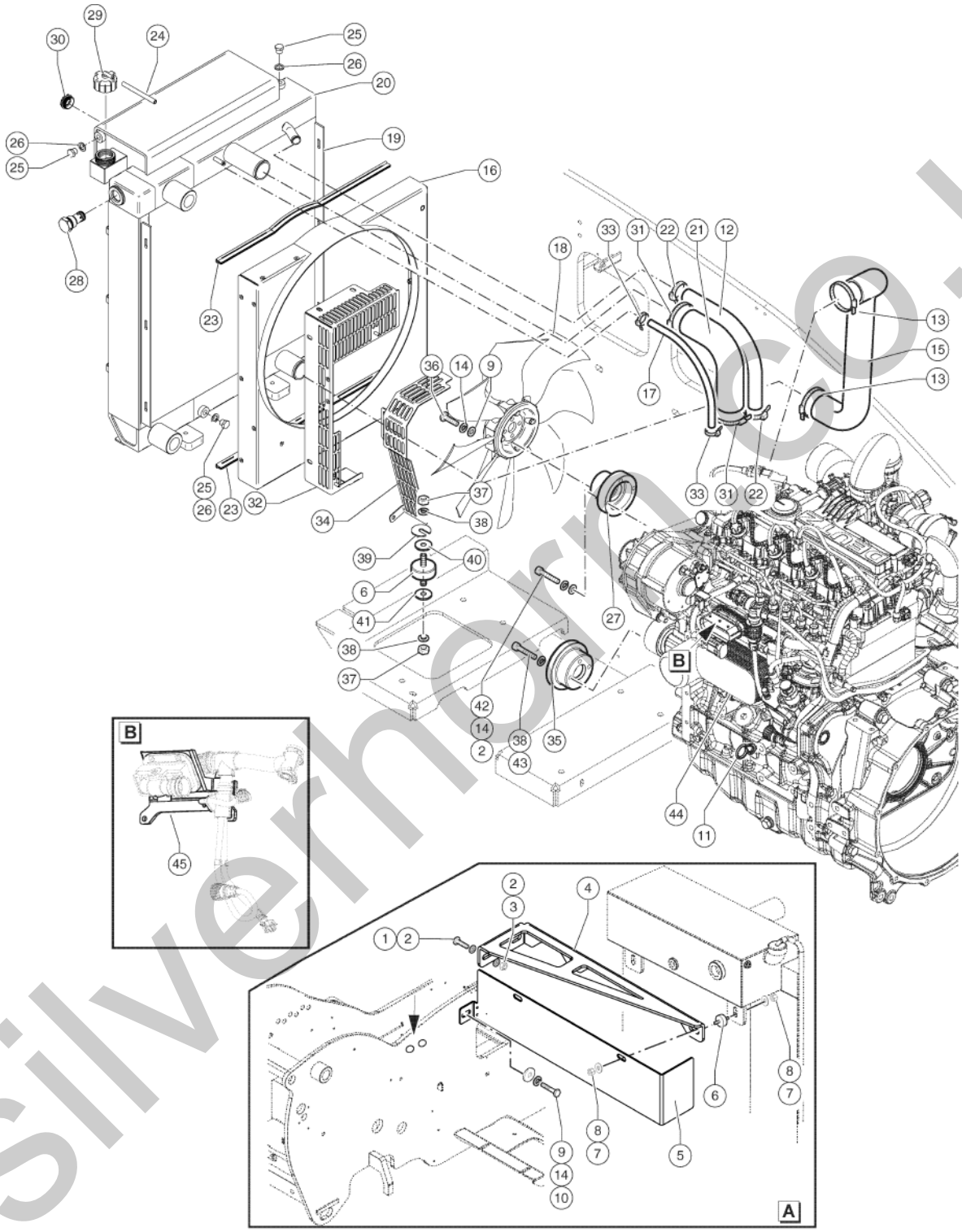

silverhorn.co.uk

301.1 611027 Cooling System

Item	Part No.	Description	Qty.
1	01.0001.0204GT	SCREW M8X45 UNI 5737 8.8 ZN	2
2	01.0031.0299GT	FLAT WASHER D8 UNI 6593 ZN	6
3	01.0023.0054GT	NUT,M8 UNI 7473 6S ZN	2
4	51.0811.4763GT	Bracket	1
5	51.0903.5280GT	COVER	1
6	09.4670.0028GT	INSULATOR	4
7	01.0031.0301GT	FLAT WASHER D10 UNI 6593 ZN	4
8	01.0023.0055GT	Stop Nut M10 UNI 7473 6S ZN	4
9	01.0031.0055GT	FLAT WASHER D8 UNI 6592 ZN	6
10	01.0001.0256GT	SCREW M8X25 UNI 5739 8.8 ZN	2
11	07.0501.0097GT	DIPSTICK	1
12	53.3001.6789GT	Radiator Manifold	1
13	04.0227.0058GT	CLAMP DN 40/60 LG12	2
14	01.4032.0003GT	Spring Washer D 8 ZN	18
15	53.3001.6747GT	Radiator Manifold	1
16	07.0712.0321GT	Conveyor	1
17	53.3001.6806GT	Rubber Hose	1
18	07.0712.0314GT	Fan	1
19	53.3200.0088GT	Complete Radiator	1
20	07.0712.0316GT	Radiator	1
21	53.3001.5500GT	HOSE, UPPER RADIATOR	1
22	04.0227.0068GT	CLAMP DN 22/32 LG 9	2
23	07.0712.0320GT	Rubber Seal	1
24	09.0805.0225GT	RUBBER PIPE	1
25	04.0220.0051GT	PLUG 1/4" BSP	3
26	06.0442.0117GT	BONDED RING 1/4"	3
27	54.0100.0135GT	PULLEY - GTH5519	1
28	07.0712.0317GT	BY-PASS VALVE	1

silverhorn.co.uk

301.1 611027 Cooling System

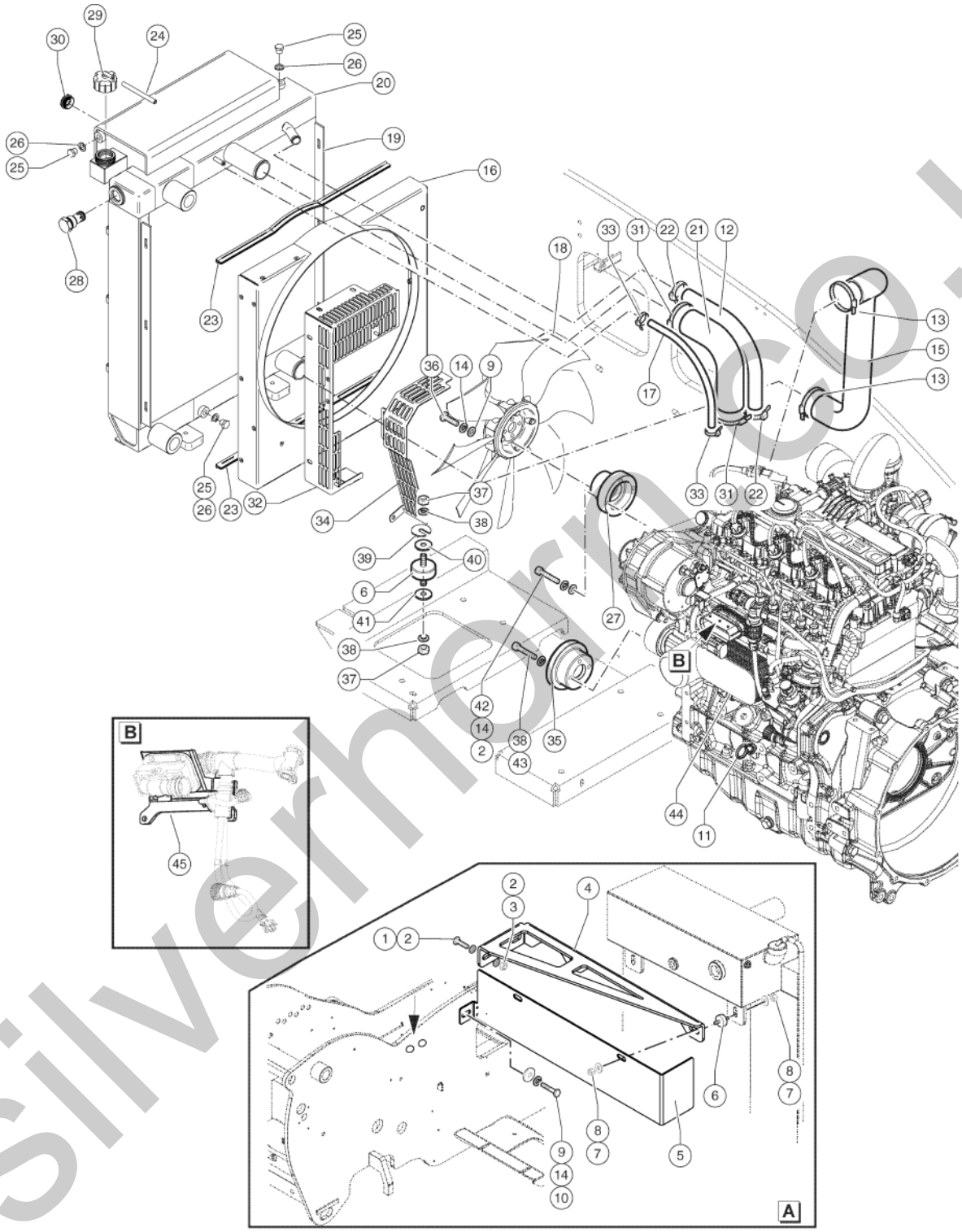

silverhorn.co.uk

301.1 611027 Cooling System

Item	Part No.	Description	Qty.
29	07.0712.0318GT	CAP	1
30	07.0712.0319GT	LEVEL INDICATOR 3/4”	1
31	04.0227.0503GT	Clamp	2
32	07.0712.0322GT	Fan Guard	1
33	04.0227.0051GT	CLAMP DN 10/16 LG 9	4
34	07.0712.0323GT	Alternator Guard Cover	1
35	54.0100.0127GT	Pulley	1
36	01.0001.0254GT	SCREW M8X20 UNI 5739 8.8 ZN	4
37	01.0019.0105GT	NUT M10 UNI 5588 6S ZN	4
38	01.4032.0004GT	Spring Washer D10 ZN	8
39	54.0100.0153GT	SHIM	2
40	54.0100.0005GT	WASHER	5
41	01.4031.0003GT	WASHER,D12 UNI 6593 ZN	2
42	01.0003.0210GT	SCREW M8X50 UNI 5931 8.8 ZN	4
43	01.0003.0959GT	Screw M10 X 40 LG.8.8 ZN UNI 5931	4
44	1260357GT	OIL COOLER,TD2.9	1
45	07.0501.0052GT	Bracket Kit	1

silverhorn.co.uk

302.1 611028 Injection, Accelerator - Stage IIIA Engine

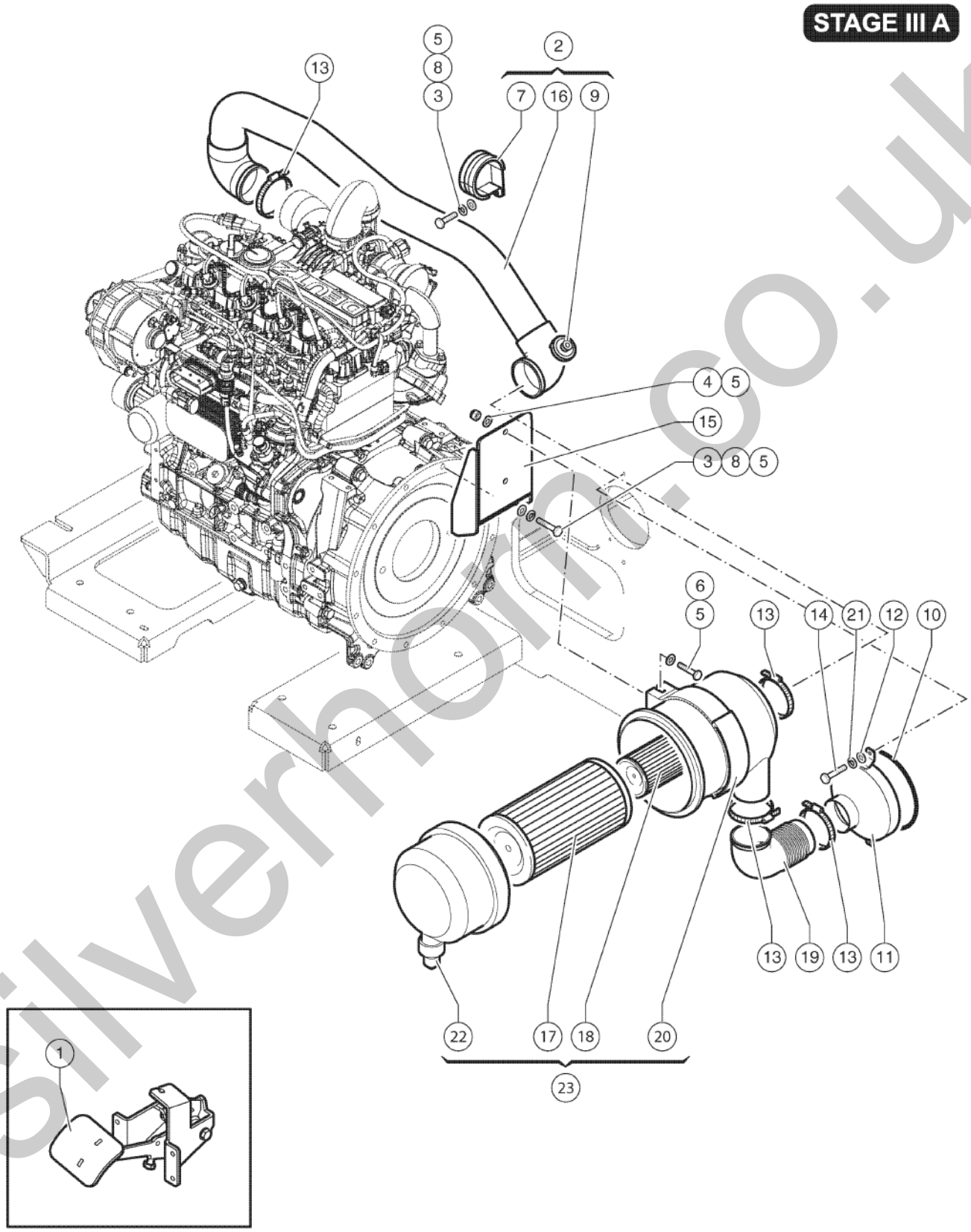

silverhorn.co.uk

302.1 611028 Injection, Accelerator - Stage IIIA Engine

Item	Part No.	Description	Qty.
1	09.4656.0020GT	Complete Throttle Pedal	1
2	55.0208.0114GT	Air Suction Manifold Assembly	1
3	01.0001.0057GT	SCREW TE M14X100UNI 5737 8.	2
4	01.0023.0054GT	NUT,M8 UNI 7473 6S ZN	2
5	01.0031.0299GT	FLAT WASHER D8 UNI 6593 ZN	8
6	01.0001.1465GT	SCREW TE M8X40 UNI 5739 8.8 ZN	3
7	04.4227.0016GT	CLAMP D60 HOLE 10.5	5
8	01.4032.0003GT	Spring Washer D 8 ZN	2
9	09.4604.0076GT	Sensor	1
10	07.0723.0089GT	SEAL STRIP	0.6
11	53.3001.6749GT	Air Filter Manifold	1
12	01.0031.0054GT	FLAT WASHER D6 UNI 6592 ZN	2
13	04.0227.0000GT	Clamp 60x80	4
14	01.0001.0154GT	SCREW,TE,M6X16 UNI 8.8 ZN	2
15	51.0811.4533GT	Air filter support	1
16	53.3001.6746GT	Manifold	1
17	07.0700.0040GT	Main Air Filter Element	1
18	07.0700.0041GT	Secondary Air Filter Element	1
19	53.3001.6792GT	HOSE,INTAKE	1
20	07.0700.0052GT	Bracket, Air Filter	1
21	01.4032.0002GT	SPRING WASHER D6 ZN	2
22	07.0700.0035GT	Output Valve	1
23	09.4604.0069GT	Air Filter Kit	1

silverhorn.co.uk

303.1 611029 Exhaust System - Stage IIIA Engine

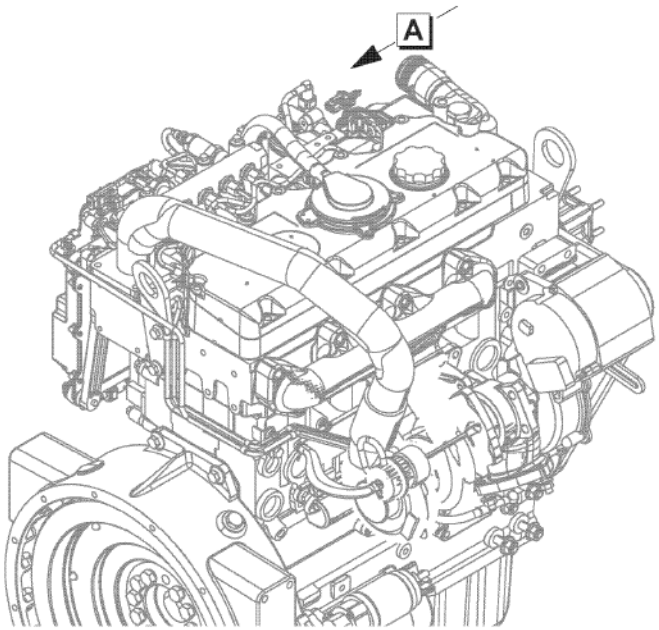

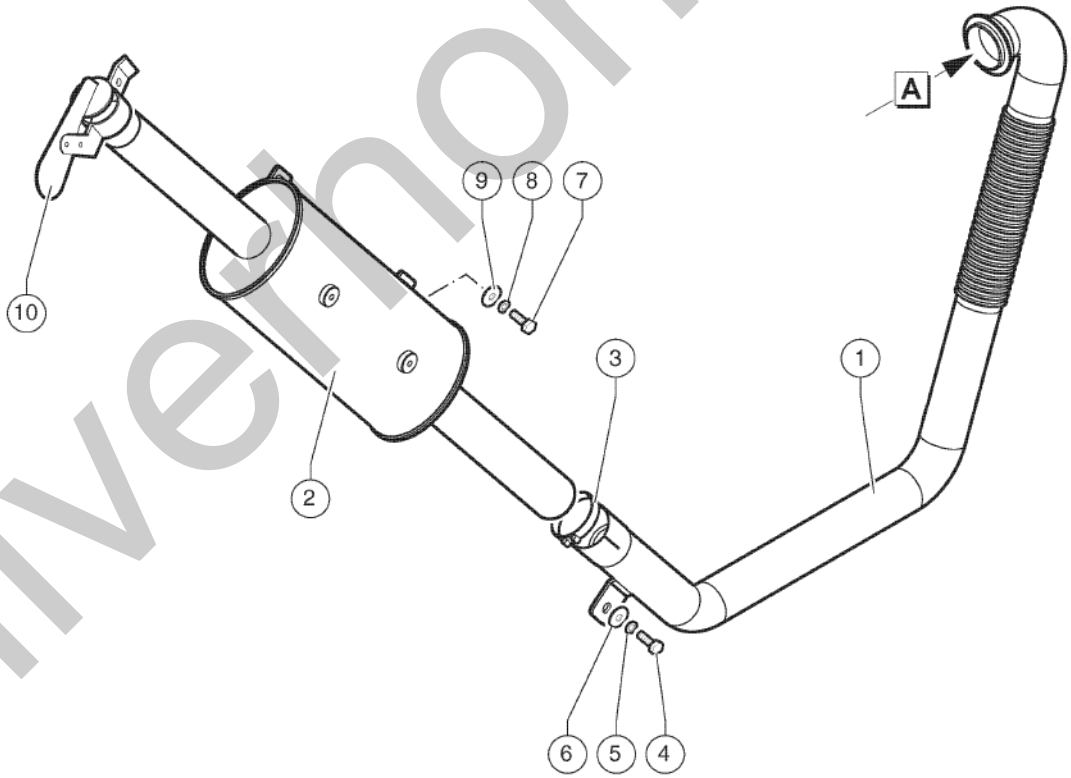

silverthorn.co.uk

303.1 611029 Exhaust System - Stage IIIA Engine

Item	Part No.	Description	Qty.
1	53.3001.6790GT	Exhaust Tube	1
2	53.3100.0059GT	Silencer	1
3	09.0803.0347GT	CLAMP 64-67 M8	1
4	01.0001.0257GT	SCREW M8X30 UNI 5739 8.8 ZN	2
5	01.4032.0003GT	Spring Washer D 8 ZN	2
6	01.0031.0299GT	FLAT WASHER D8 UNI 6593 ZN	2
7	01.0001.0356GT	SCREW M10X30 UNI 5739 8.8 ZN	2
8	01.4032.0004GT	Spring Washer D10 ZN	2
9	01.0031.0301GT	FLAT WASHER D10 UNI 6593 ZN	2
10	09.0803.0539GT	Muffler Cap	1

silverhorn.co.uk

304.1 611030 Exhaust System, Injection, Accelerator - Stage IIIB Engine - To SN GTH250619M-1200

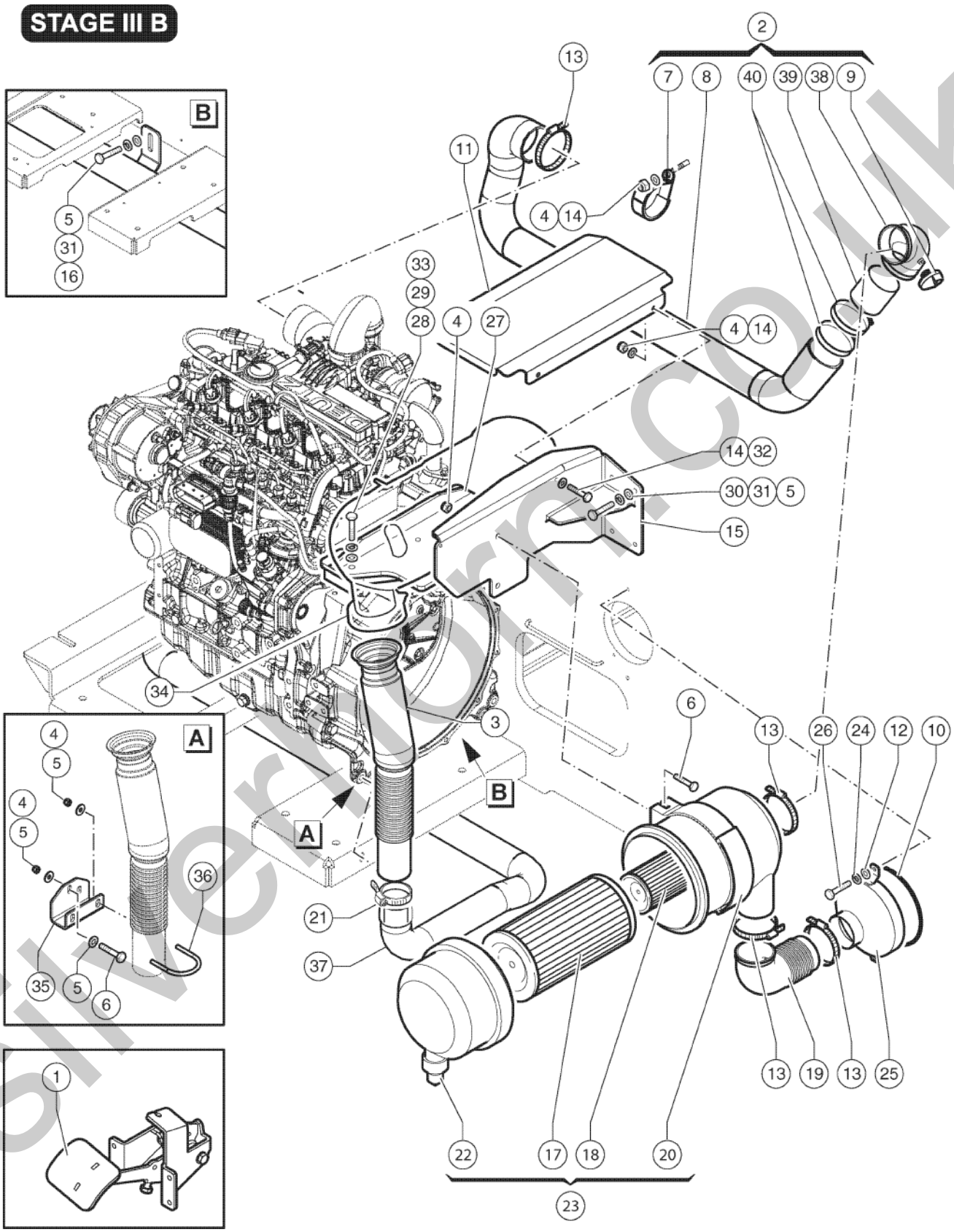

silvermorn.co.uk

304.1 611030 Exhaust System, Injection, Accelerator - Stage IIIB Engine - To SN GTH250619M-1200

Item	Part No.	Description	Qty.
1	09.4656.0020GT	Complete Throttle Pedal	1
2	55.0208.0147GT	Air Suction Manifold Assembly	1
3	53.3001.6822GT	Exhaust Pipe	1
4	01.0023.0054GT	NUT,M8 UNI 7473 6S ZN	9
5	01.0031.0299GT	FLAT WASHER D8 UNI 6593 ZN	12
6	01.0001.1465GT	SCREW TE M8X40 UNI 5739 8.8 ZN	3
7	04.4227.0049GT	RUBBER CLAMP D.70	1
8	09.0805.0226GT	AIR FILTER RUBBER MANIFOLD	1
9	09.4604.0076GT	Sensor	1
10	07.0723.0089GT	SEAL STRIP	0.6
11	51.0903.5046GT	Cover	1
12	01.0031.0054GT	FLAT WASHER D6 UNI 6592 ZN	2
13	04.0227.0000GT	Clamp 60x80	4
14	01.0031.0055GT	FLAT WASHER D8 UNI 6592 ZN	2
15	51.0811.4553GT	Air filter support	1
16	01.0001.0257GT	SCREW M8X30 UNI 5739 8.8 ZN	2
17	07.0700.0040GT	Main Air Filter Element	1
18	07.0700.0041GT	Secondary Air Filter Element	1
19	53.3001.6792GT	HOSE,INTAKE	1
20	07.0700.0052GT	Bracket, Air Filter	1
21	09.0803.0347GT	CLAMP 64-67 M8	1
22	07.0700.0035GT	Output Valve	1
23	09.4604.0069GT	Air Filter Kit	1
24	01.4032.0002GT	SPRING WASHER D6 ZN	2
25	53.3001.6749GT	Air Filter Manifold	1
26	01.0001.0154GT	SCREW,TE,M6X16 UNI 8.8 ZN	2
27	51.0811.4552GT	Cover	1
28	01.0031.0056GT	FLAT WASHER D10 UNI 6592 ZN	4

silverhorn.co.uk

304.1 611030 Exhaust System, Injection, Accelerator - Stage IIIB Engine - To SN GTH250619M-1200

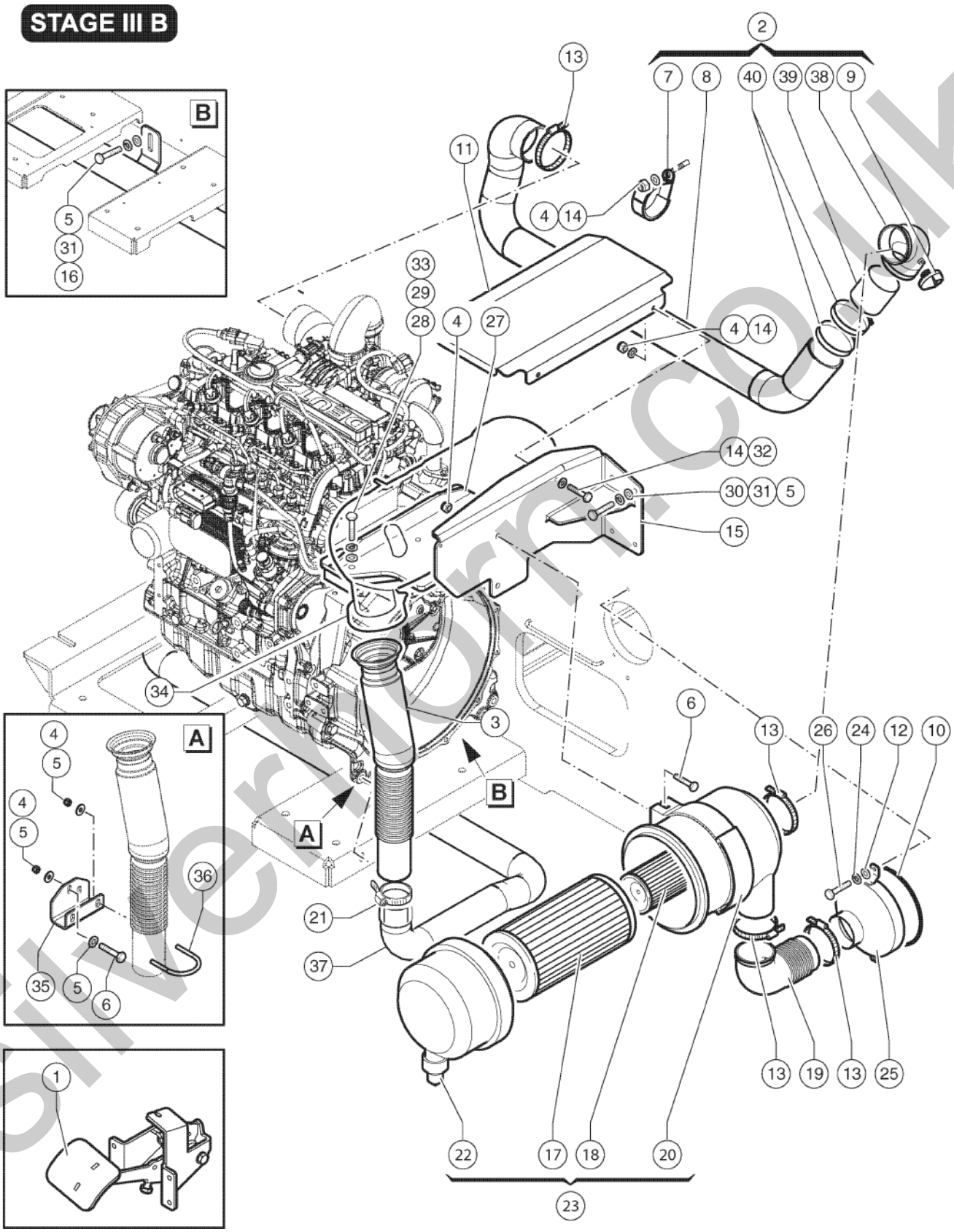

silverhorn.co.uk

304.1 611030 Exhaust System, Injection, Accelerator - Stage IIIB Engine - To SN GTH250619M-1200

Item	Part No.	Description	Qty.
29	01.4032.0004GT	Spring Washer D10 ZN	4
30	01.0001.0057GT	SCREW TE M14X100UNI 5737 8.	4
31	01.4032.0003GT	Spring Washer D 8 ZN	6
32	01.0001.0256GT	SCREW M8X25 UNI 5739 8.8 ZN	2
33	01.0001.0308GT	Screw TE M10X70 UNI 5737 8.8 ZN	4
34	07.4501.0400GT	EAT KIT	1
35	51.0811.4705GT	Bracket	1
36	51.0811.4706GT	U-Bolt Pipe Hanger	1
37	53.3001.6823GT	Exhaust Pipe	1
38	07.0700.0053GT	RUBBER ELBOW	1
39	53.3001.6798GT	PIPE	1
40	04.4227.0000GT	CLAMP DN 60/80 LG12	2

silverhorn.co.uk

304.2 611077 Exhaust System, Injection, Accelerator - Stage V Engine - From SN GTH250619M-1201

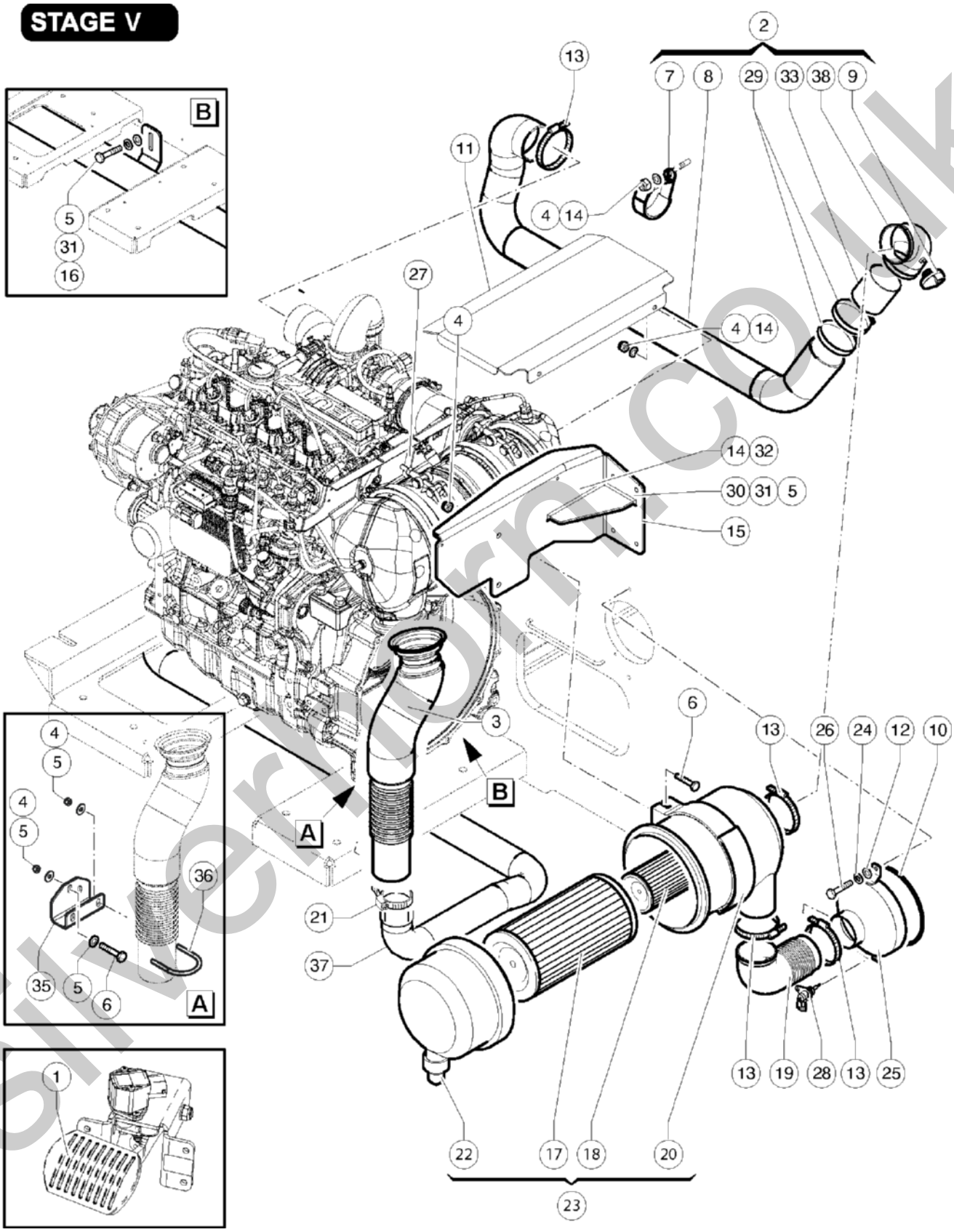

silvermorn.co.uk

304.2 611077 Exhaust System, Injection, Accelerator - Stage V Engine - From SN GTH250619M-1201

Item	Part No.	Description	Qty.
1	09.4656.0021GT	ELECTRONIC TROTTLE PEDAL	1
2	55.0208.0147GT	Air Suction Manifold Assembly	1
3	53.3001.6855GT	EXHAUST TUBE	1
4	01.0023.0054GT	NUT,M8 UNI 7473 6S ZN	9
5	01.0031.0299GT	FLAT WASHER D8 UNI 6593 ZN	12
6	01.0001.1465GT	SCREW TE M8X40 UNI 5739 8.8 ZN	3
7	04.4227.0049GT	RUBBER CLAMP D.70	1
8	09.0805.0226GT	AIR FILTER RUBBER MANIFOLD	1
9	09.4604.0076GT	Sensor	1
10	07.0723.0089GT	SEAL STRIP	0.6
11	51.0903.5309GT	COVER	1
12	01.0031.0054GT	FLAT WASHER D6 UNI 6592 ZN	2
13	04.0227.0000GT	Clamp 60x80	4
14	01.0031.0055GT	FLAT WASHER D8 UNI 6592 ZN	2
15	51.0811.4553GT	Air filter support	1
16	01.0001.0257GT	SCREW M8X30 UNI 5739 8.8 ZN	2
17	07.0700.0040GT	Main Air Filter Element	1
18	07.0700.0041GT	Secondary Air Filter Element	1
19	53.3001.6792GT	HOSE,INTAKE	1
20	07.0700.0052GT	Bracket, Air Filter	1
21	09.0803.0347GT	CLAMP 64-67 M8	1
22	07.0700.0035GT	Output Valve	1
23	09.4604.0069GT	Air Filter Kit	1
24	01.4032.0002GT	SPRING WASHER D6 ZN	2
25	53.3001.6854GT	AIR FILTER MANIFOLD	1
26	01.0001.0154GT	SCREW,TE,M6X16 UNI 8.8 ZN	2
27		REF. DPF (refer to 611078)	
28	07.4501.0227GT	Temperature Sensor	1

silverhorn.co.uk

304.2 611077 Exhaust System, Injection, Accelerator - Stage V Engine - From SN GTH250619M-1201

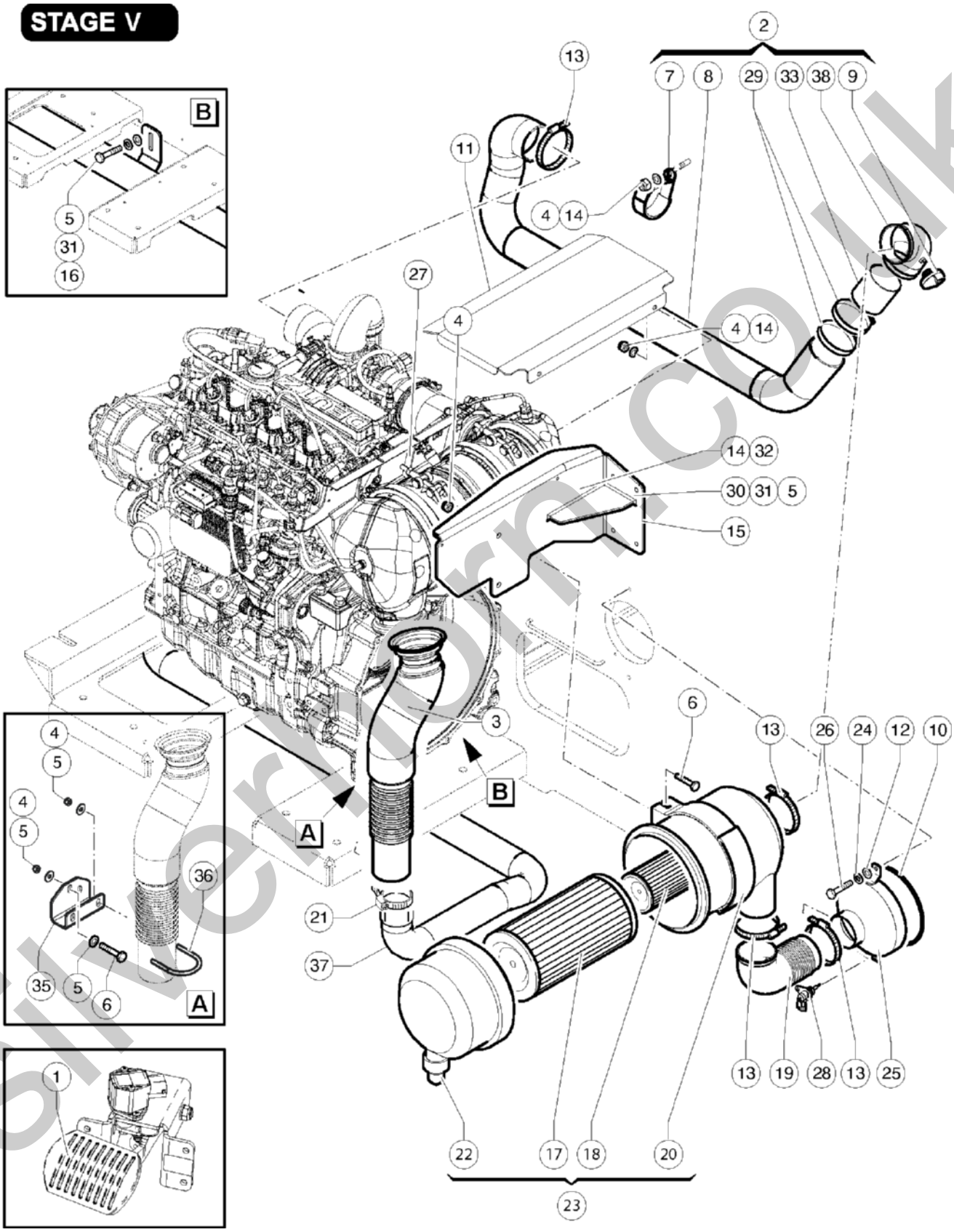

silverthorn.co.uk

304.2 611077 Exhaust System, Injection, Accelerator - Stage V Engine - From SN GTH250619M-1201

Item	Part No.	Description	Qty.
29	04.4227.0000GT	CLAMP DN 60/80 LG12	2
30	01.0001.0057GT	SCREW TE M14X100UNI 5737 8.	4
31	01.4032.0003GT	Spring Washer D 8 ZN	6
32	01.0001.0256GT	SCREW M8X25 UNI 5739 8.8 ZN	2
33	53.3001.6798GT	PIPE	1
34	07.4501.0400GT	EAT KIT	1
35	51.0811.4705GT	Bracket	1
36	51.0811.4706GT	U-Bolt Pipe Hanger	1
37	53.3001.6823GT	Exhaust Pipe	1
38	07.0700.0053GT	RUBBER ELBOW	1

silverhorn.co.uk

304.3 611078 DPF - From SN GTH250619M-1201

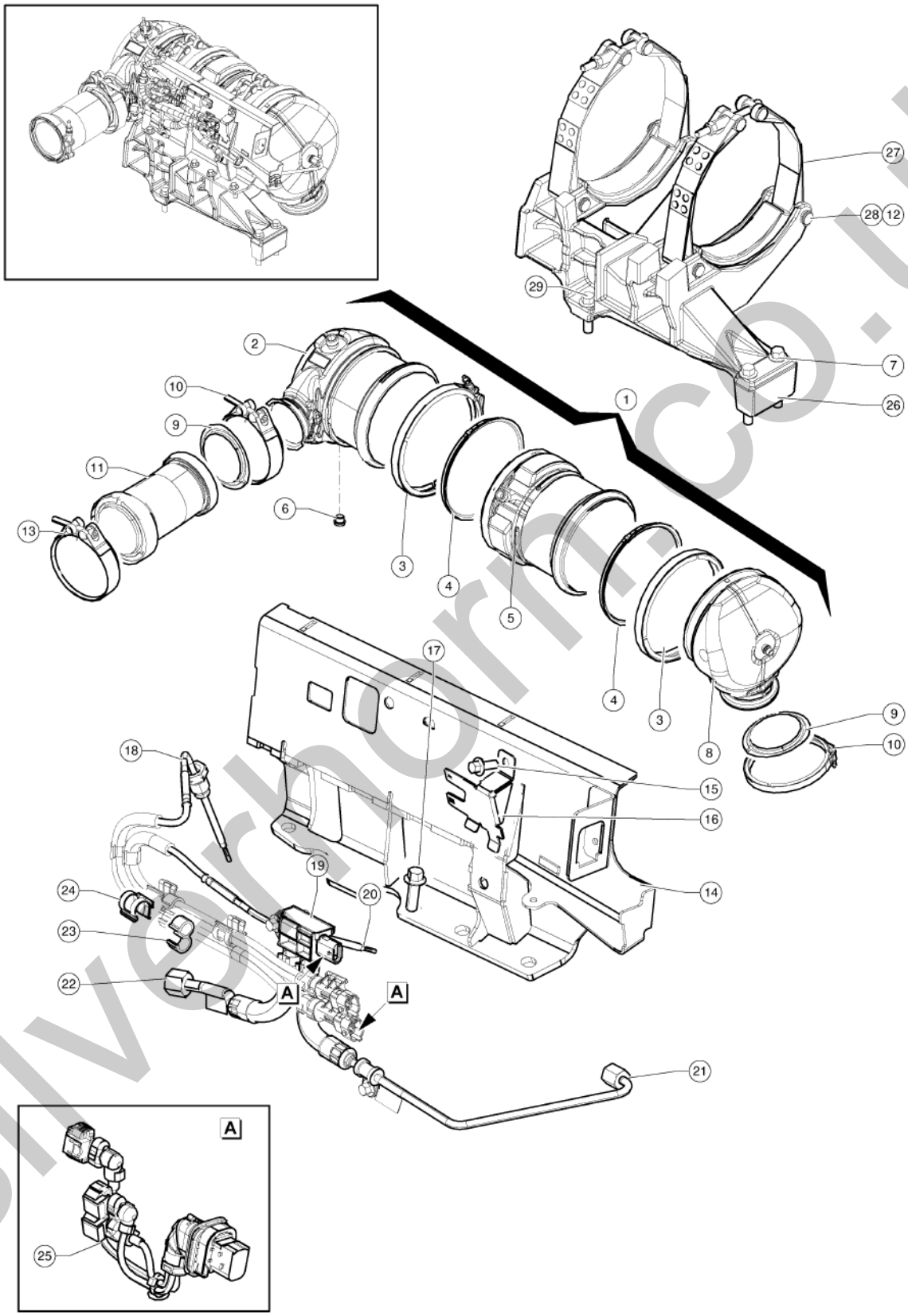

silverhorm.co.uk

304.3 611078 DPF - From SN GTH250619M-1201

Item	Part No.	Description	Qty.
1	1297259GT	COMPLETE DPF	1
2	1297260GT	DPF INLET	1
3	1297261GT	CLIP	2
4	1297262GT	GASKET	2
5	1297263GT	PARTICULATE FILTER	1
6	1297258GT	PLUG	1
7	1297251GT	SCREW M10x65	2
8	1297264GT	DPF OUTLET	1
9	825014GT	GASKET, T4 TCD3.6 DOC	2
10	07.0501.0053GT	CLAMP	1
11	822511GT	HOSE,FLEX,EXHAUST,TD2.9	1
12	1297245GT	CIRCLIP	8
13	824775GT	CLAMP,TURBO OUTLET-TURBO PIPE,	1
14	1297256GT	SHEET / PLATE For the first replacement buy item 26 for S/N 1201-1218, 1222-1230, 1232, 1234, 1248	1
15	1297255GT	SCREW M6x12	1
16	1297257GT	RETAINING PLATE	1
17	07.4501.0376GT	SCREW	3
18	07.4501.0251GT	Temperature Sensor	1
19	1297253GT	PRESSURE SENSOR	1
20	07.4501.0252GT	Temperature Sensor	1
21	1297252GT	TUBE	1
22	1297247GT	TUBE	1
23	1297248GT	HOSE CLIP	2
24	1297254GT	CLAMP	4
25	1297243GT	INTERCONNECTING PIPE	1
26	1297250GT	BRACKET For the first replacement buy item 14 for S/N 1201-1218, 1222-1230, 1232, 1234, 1248	1
27	1297244GT	STRAP W/SCREW	2
28	1297246GT	CLEVIS PIN	4

silverhorn.co.uk

304.3 611078 DPF - From SN GTH250619M-1201

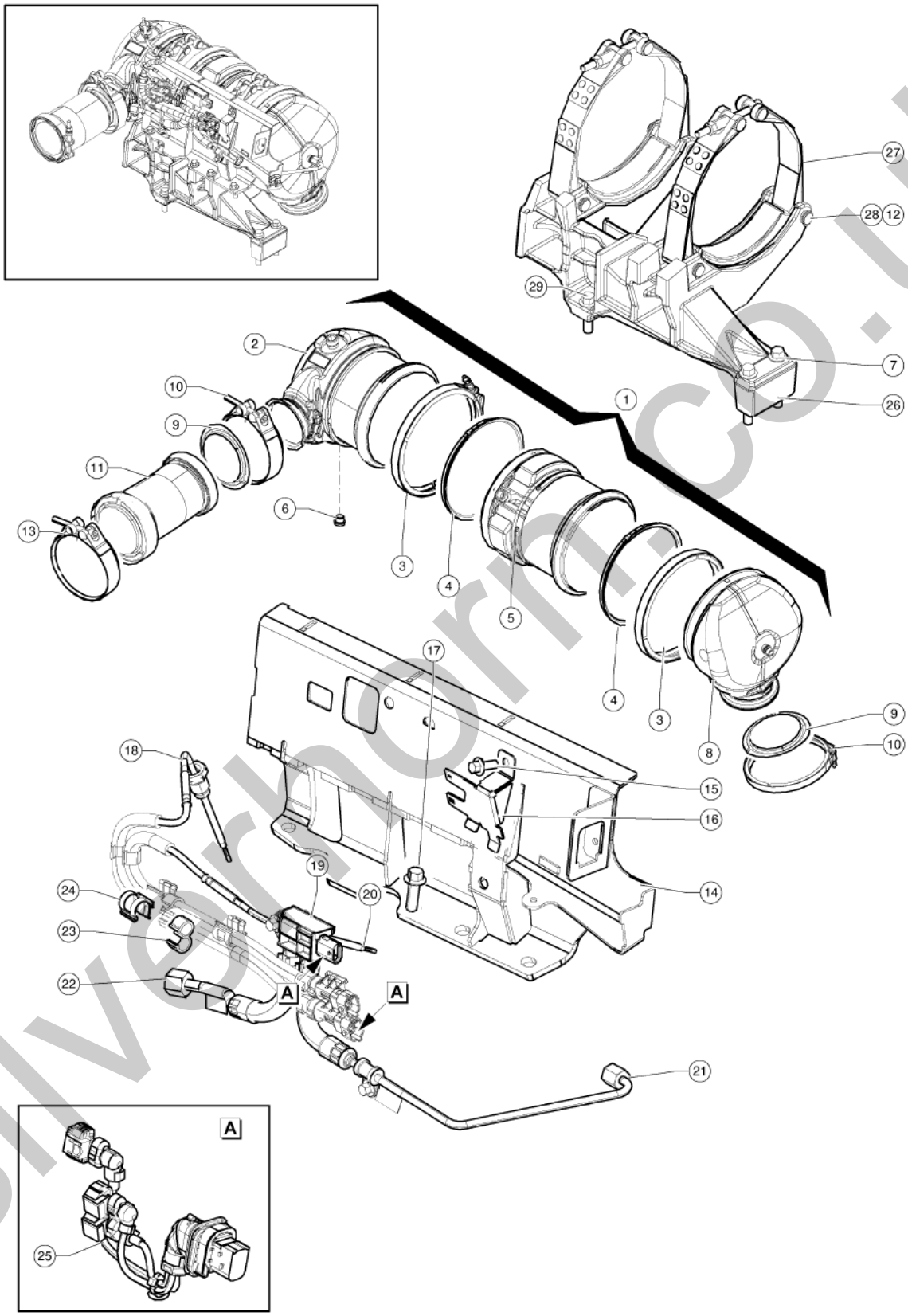

silverhorm.co.uk

304.3 611078 DPF - From SN GTH250619M-1201

Item	Part No.	Description	Qty.
29	1297249GT	SCREW M10x38	2

silverhorn.co.uk

305.1 611031 Hydraulic Pumps

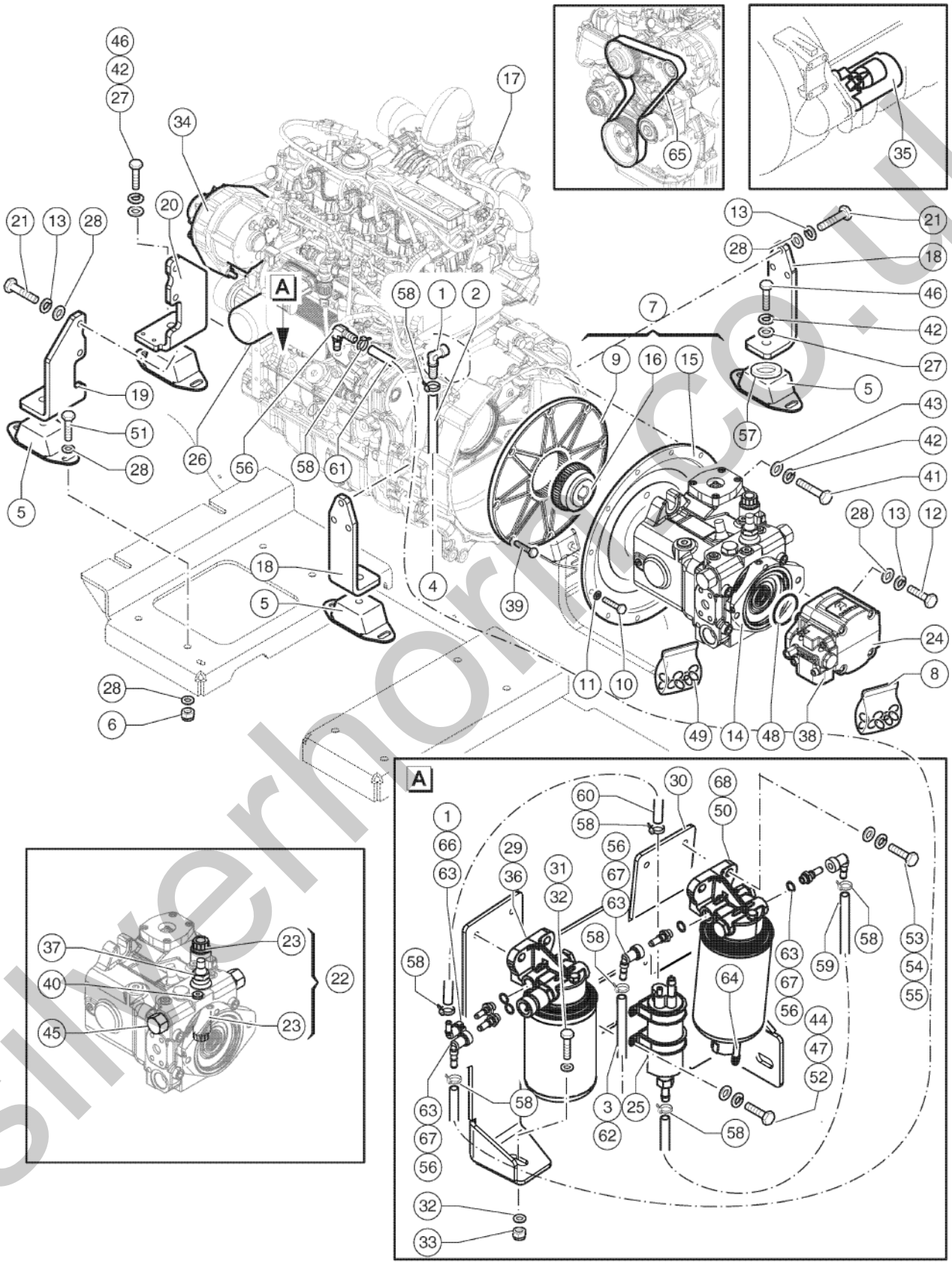

silverhorse.co.uk

305.1 611031 Hydraulic Pumps

Item	Part No.	Description	Qty.
1	826000GT	CONNECTOR, SAE10, QUICK CONN	2
2	09.0805.0171GT	HOSE	3.5
3		See 200 Drive Chassis Components, FIGURE 611012, REF.66	Ref
4		See 200 Drive Chassis Components, FIGURE 611012, REF.67	Ref
5	09.4670.0027GT	Insulator	4
6	01.0023.0056GT	STOP NUT M12 UNI 7473 6S ZN	8
7	09.0804.2300GT	PUMP,PRE ARRANGEMENT	1
8	07.4529.0209GT	SEAL KIT	1
9	07.0713.0061GT	FLANGE	1
10	01.0001.0355GT	SCREW M10X25 UNI 5739 8.8 ZN	12
11	01.4032.0004GT	Spring Washer D10 ZN	12
12	01.0001.0506GT	SCREW M12X30 UNI 5739 8.8 ZN	2
13	01.4032.0005GT	SPRING WASHER D12 ZN	12
14	04.4238.0108GT	Hydraulic Pump	1
15	07.0713.0063GT	BELL	1
16	07.0713.0062GT	HUB	1
17	09.4601.0084GT	ENGINE,DEUTZ Stage IIIB Version	1
17	09.4601.0082GT	DIESEL ENGINE Stage IIIA Version	1
17	09.4601.0096GT	ENGINE Stage V Version	1
18	51.0811.4413GT	SUPPORT,ENGINE,FWHL	1
19	51.0811.4841GT	ENGINE SUPPORT	1
20	51.0811.4414GT	SUPPORT,ENGINE,FRONT L	1
21	01.0001.0508GT	SCREW M12X40 UNI 5739 8.8 ZN	10
22	07.0701.0346GT	SOLENOID VALVE	1
23	07.0701.0267GT	Solenoid	2
24	04.4238.0059GT	HYDRAULIC PUMP 2	1
25	07.4501.0351GT	Fuel Pump	1
26	07.4501.0067GT	FILTER,OIL	1

silvernorn.co.uk

305.1 611031 Hydraulic Pumps

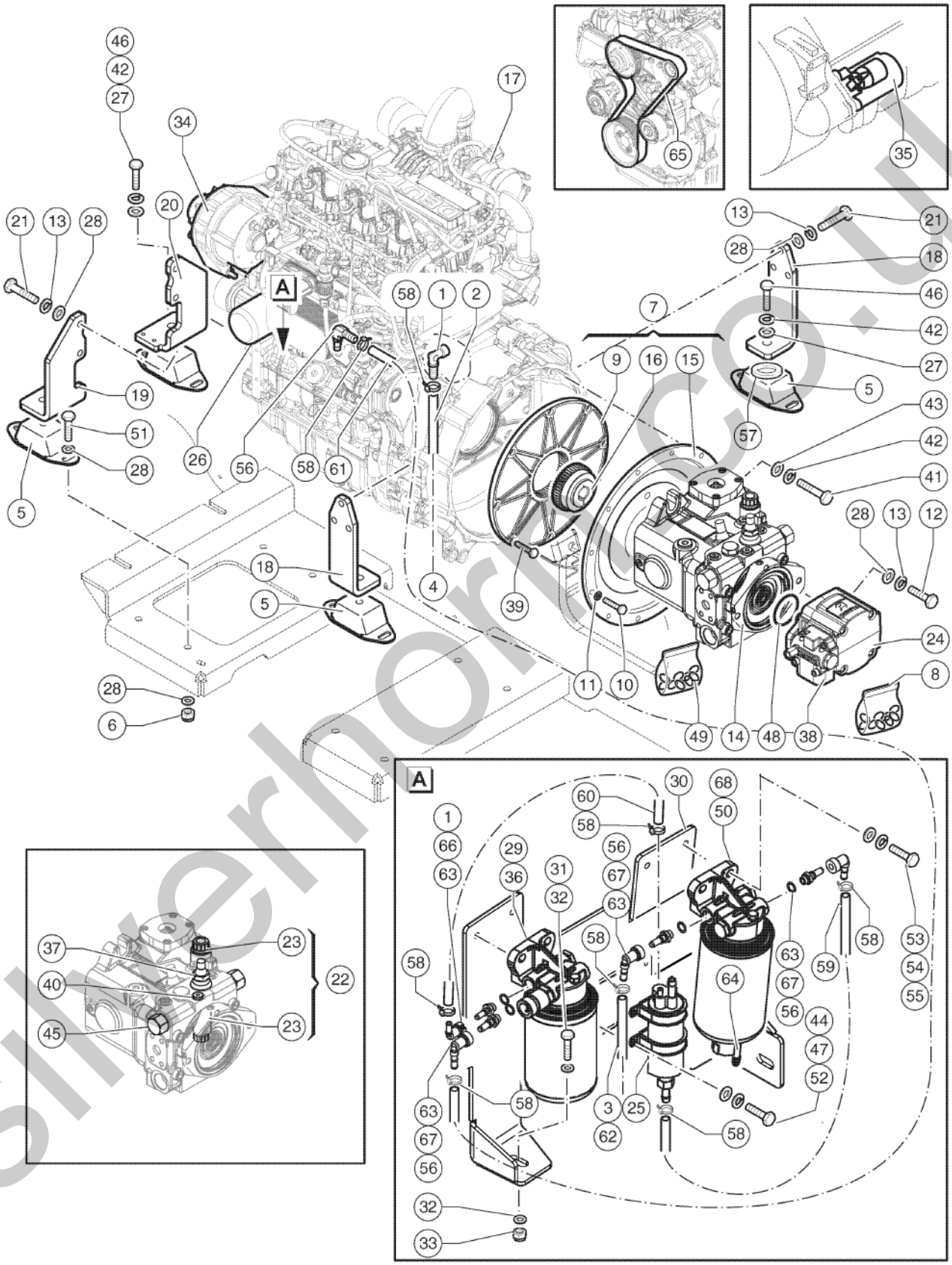

silverhorse.co.uk

305.1 611031 Hydraulic Pumps

Item	Part No.	Description	Qty.
27	01.0031.0059GT	FLAT WASHER D16 UNI 6592 ZN	4
28	01.0031.0057GT	WASHER, FLAT, D12, UNI 6592, ZN	28
29	214228GT	FILTER, DEUTZ 2.9, FUEL	1
30	51.0811.4722GT	FILTER SUPPORT	1
31	01.0001.0258GT	SCREW M8X35 UNI 5739 8.8 ZN	3
32	01.0031.0299GT	FLAT WASHER D8 UNI 6593 ZN	6
33	01.0023.0054GT	NUT,M8 UNI 7473 6S ZN	3
34	07.0501.0051GT	Alternator	1
35	07.4501.0286GT	Starter Motor	1
36	07.4501.0304GT	FUEL FILTER	1
37	07.0701.0241GT	VALVE	1
38	07.0722.0053GT	VALVE,LOAD SENSE	1
39	01.0003.0255GT	SCREW M10X25 UNI 5931 8.8 ZN	8
40	07.0701.0147GT	Pressure Relief Valve	1
41	01.0001.1557GT	SCREW, HHC, M16 x 50 LG.8.8 ZN UNI 5739 , DIN 933	2
42	01.4032.0007GT	SPRING WASHER D16 ZN	6
43	01.0031.0099GT	FLAT WASHER D16 UNI 5714 ZN	2
44	01.4001.0045GT	Screw TE M 5X10 UNI 5739 8.8 ZN	4
45	07.0701.0345GT	VALVE	2
46	01.0001.1537GT	SCREW M16X50 UNI 5737 10.9 ZN	4
47	01.4032.0001GT	WASHER,SPRING,D5 ZN	4
48	07.0701.0211GT	O-RING,R909154589 REXROTH	1
49	07.0701.0200GT	SEAL KIT	1
50	07.4501.0285GT	FUEL PRE-FILTER	1
51	01.0001.0508GT	SCREW M12X40 UNI 5739 8.8 ZN	8
52	01.0031.0053GT	FLAT WASHER D5 UNI 6592 ZN	4
53	01.0001.0254GT	SCREW M8X20 UNI 5739 8.8 ZN	4
54	01.4032.0003GT	Spring Washer D 8 ZN	4

silverhorn.co.uk

305.1 611031 Hydraulic Pumps

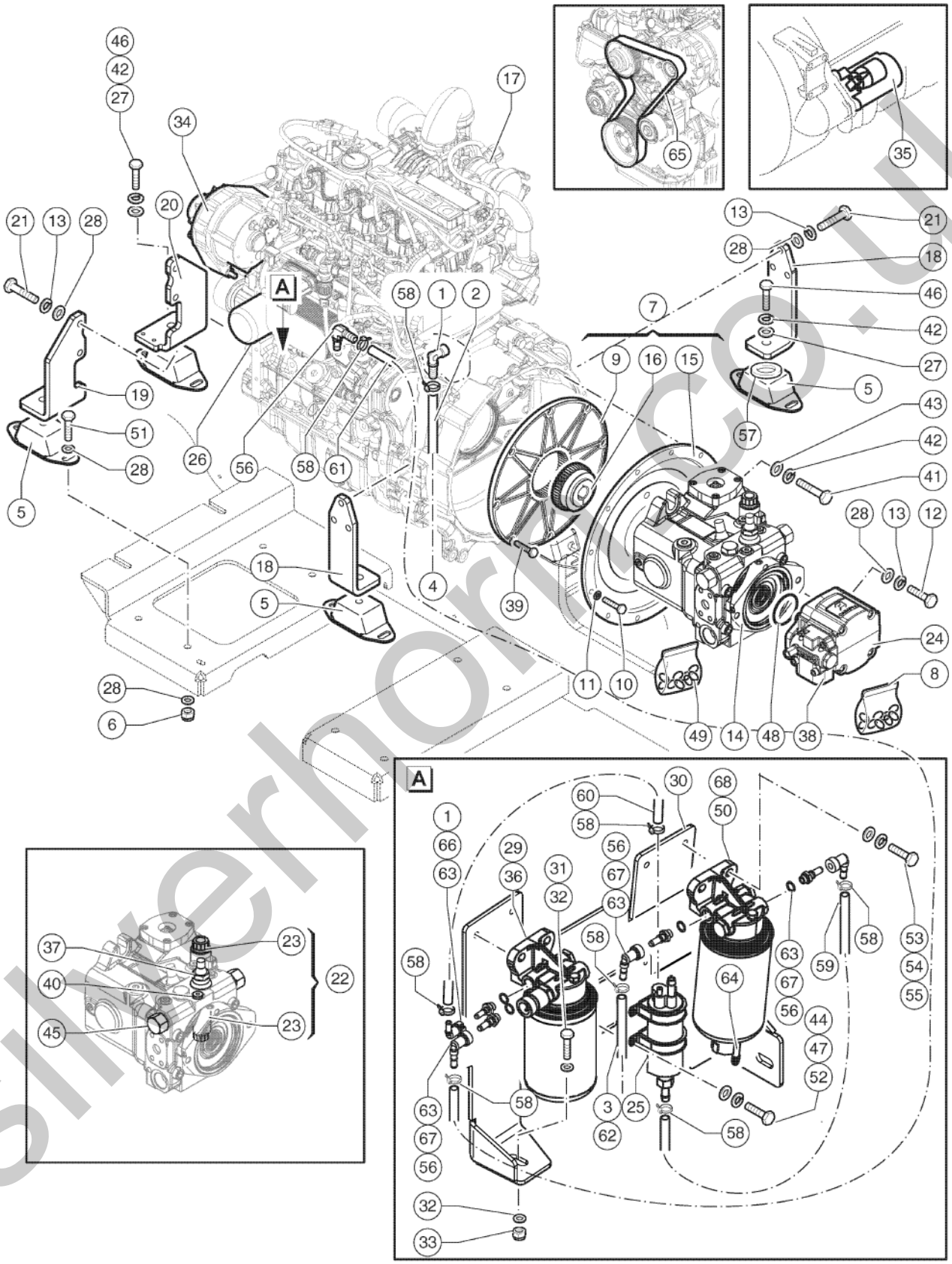

silverhorse.co.uk

305.1 611031 Hydraulic Pumps

Item	Part No.	Description	Qty.
55	01.0031.0055GT	FLAT WASHER D8 UNI 6592 ZN	4
56	1293433GT	CONNECTOR, SAE12, QUICK CONNECT	4
57	54.0100.0017GT	WASHER, ZN, D70/16, SP 4	2
58	04.0227.0051GT	CLAMP DN 10/16 LG 9	8
59	T09.0805.0070GT	FLEXIBLE HOSE,D12X18(1EACH-1METER)	0.47
60	09.0805.0171GT	HOSE	0.35
61	T09.0805.0070GT	FLEXIBLE HOSE,D12X18(1EACH-1METER)	1.25
62	T09.0805.0070GT	FLEXIBLE HOSE,D12X18(1EACH-1METER)	3.3
63	1297495GT	WASHER, SHIM, 16.2X22X1.5, AL	4
64	07.4501.0291GT	SENSOR	1
65	07.4501.0289GT	Belt	1
66	1297494GT	FITTING, DEUTZ SAE-J-2044, D10mm	1
67	1297493GT	FITTING, DEUTZ SAE-J-2044, D12mm	3
68	07.4501.0303GT	Complete Fuel Pre-Filter	1

silverhorn.co.uk

401.1 611032 Cabin, View 1

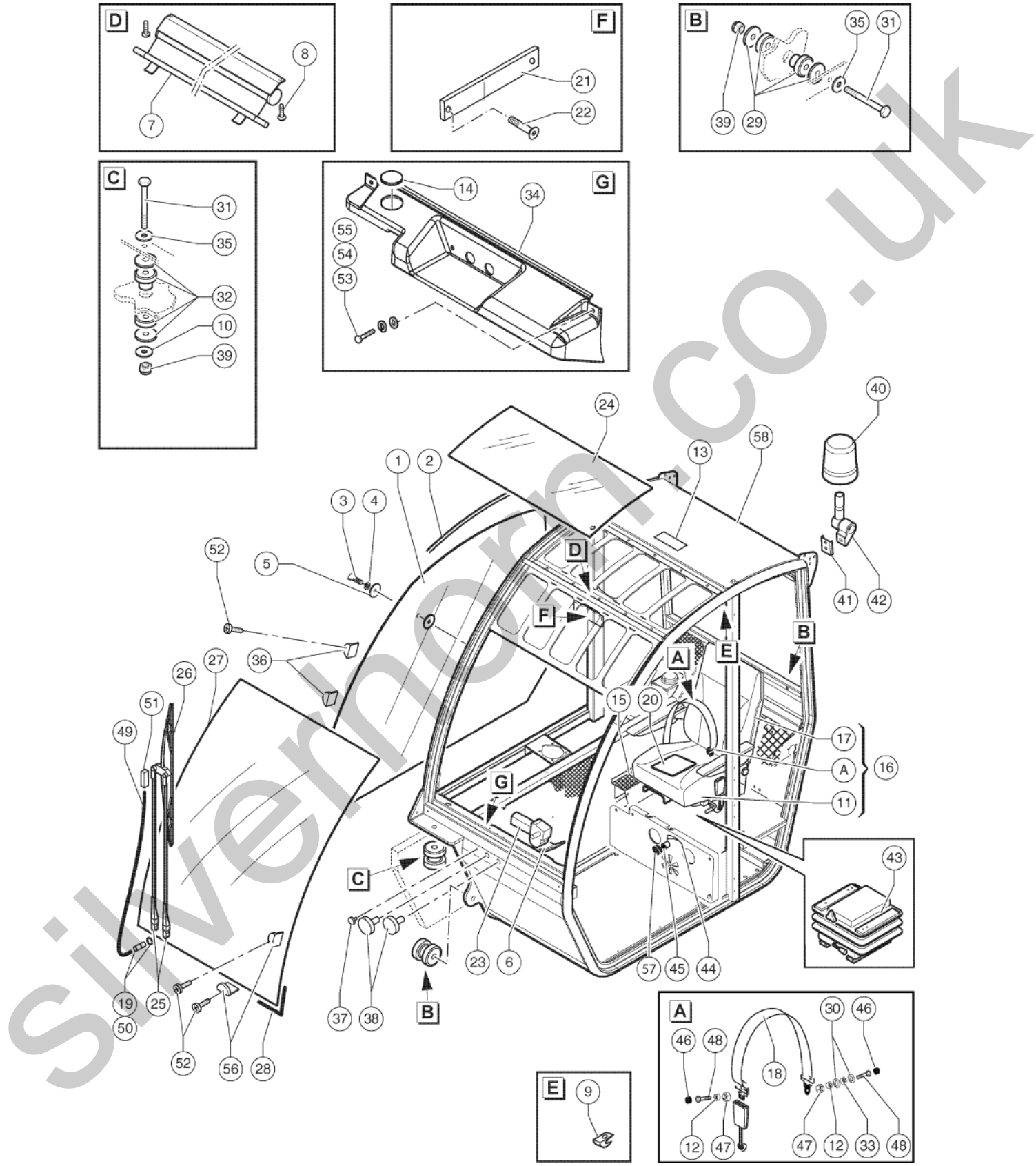

silvernorn.co.uk

401.1 611032 Cabin, View 1

Item	Part No.	Description	Qty.
1	07.0723.0165GT	RIGHT SIDE GLASS	1
2	07.0723.0433GT	GASKET	4.1
3	07.0723.0169GT	Screw TSPEI M8x40	2
4	07.0723.0114GT	Nylon Washer	16
5	07.0723.0096GT	RUBBER	2
6	07.0723.0281GT	SUPPORT	1
7	07.0723.0412GT	Sun Visor	1
8	07.0723.0039GT	SCREW,PPH SMS 10X3/4ZAKEG	10
9	07.0723.0411GT	PVC Hook	2
10	54.0100.0017GT	WASHER, ZN, D70/16, SP 4	4
11	09.4610.0076GT	SEAT,BOTTOM CUSHION Included item 20	1
12	09.0803.0569GT	Bush	2
13	07.0723.0491GT	Light	1
14	07.0723.0718GT	RUBBER CAP	2
15	07.0723.0454GT	COATING	1
16	09.4610.0073GT	Complete Seat	1
17	07.0703.0508GT	SEAT, CUSHION BACK	1
18	09.4610.0027GT	BELT,SEAT A5073.104	1
19	07.0723.0227GT	PIPE FITTING	1
20	07.0703.0777GT	Seat Microswitch	1
21	09.4610.0057GT	BUBBLE LEVEL	1
22	01.4001.0061GT	PHILLIPS SCREW M4X20 UNI 7687	2
23	07.0723.0335GT	WIPER MOTOR	1
24	07.0723.0168GT	Upper Glass	1
25	07.0723.0336GT	WIPER ARM	1
26	07.0723.0013GT	Brush / Wiper Blade 800 mm	1
27	07.0723.0167GT	GLASS	1
28	07.0723.0433GT	GASKET	3.8

silverhorn.co.uk

401.1 611032 Cabin, View 1

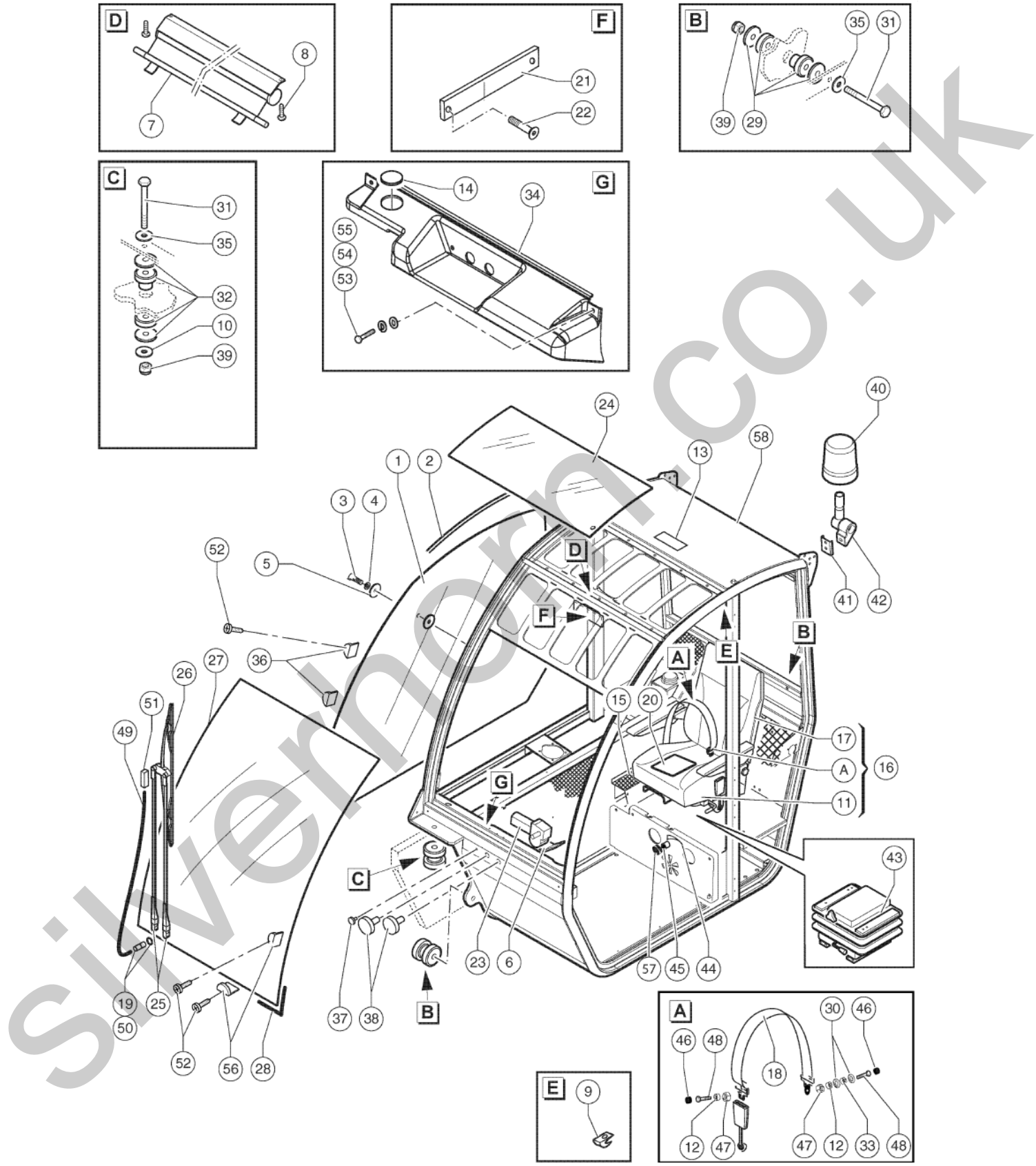

silvernorn.co.uk

401.1 611032 Cabin, View 1

Item	Part No.	Description	Qty.
29	09.4670.0030GT	Lower Vibration Damping	2
30	01.0031.0056GT	FLAT WASHER D10 UNI 6592 ZN	2
31	01.4001.0104GT	Screw TE M16X120 UNI 5737 8.8ZN	4
32	09.4670.0031GT	Upper Vibration Damping	2
33	09.0803.0571GT	Shim	1
34	55.0511.0004GT	SPOILER Included item 58	1
35	01.0031.0059GT	FLAT WASHER D16 UNI 6592 ZN	4
36	641042GT	GLASS STOP	7
37	07.0723.0055GT	RUBBER PLUG D.10	1
38	07.0723.0054GT	RUBBER PLUG D25	2
39	01.0023.0058GT	NUT,STOP,M16 UNI 7473 6S ZN	6
40	56.0010.0104GT	FLASHING BEACON 12V	1
41	07.0723.0651GT	Bracket	1
42	07.0723.0652GT	Flashing Beacon Support	1
43	09.4610.0075GT	SHOCK ABSORBER SEAT	1
44	07.0723.0487GT	Decal	1
45	07.0723.0193GT	TAP	1
46	09.0803.0568GT	Cap	2
47	01.0019.0105GT	NUT M10 UNI 5588 6S ZN	2
48	01.0001.0303GT	Screw TE M10X45 UNI 5737 8.8 ZN	2
49	07.0723.0226GT	RUBBER HOSE	1
50	07.0723.0516GT	GASKET, RUBBER	1
51	07.0723.0224GT	Spray Nozzle	1
52	07.0723.0627GT	Screw	7
53	01.0001.0252GT	SCREW M8X16 UNI 5739 8.8 ZN	2
54	01.0031.0055GT	FLAT WASHER D8 UNI 6592 ZN	2
55	01.4032.0003GT	Spring Washer D 8 ZN	2
56	07.0723.0720GT	GLASS STOP	2

silverhorn.co.uk

401.1 611032 Cabin, View 1

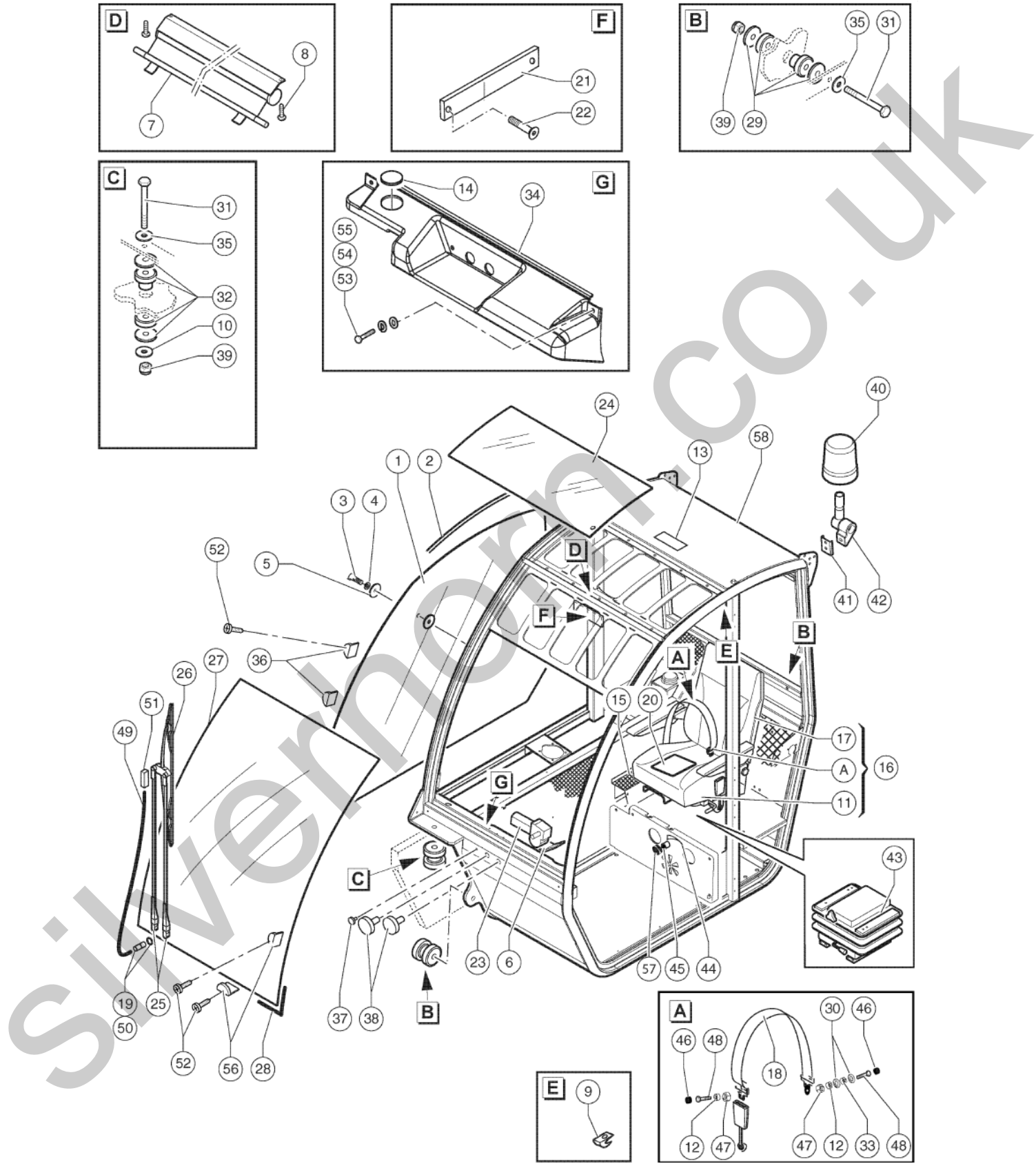

silvernorn.co.uk

401.1 611032 Cabin, View 1

Item	Part No.	Description	Qty.
57	07.0723.0717GT	KNOB	1
58	51.1100.0040GT	Cab Structure	1

silverhorn.co.uk

402.1 611033 Cabin, View 2

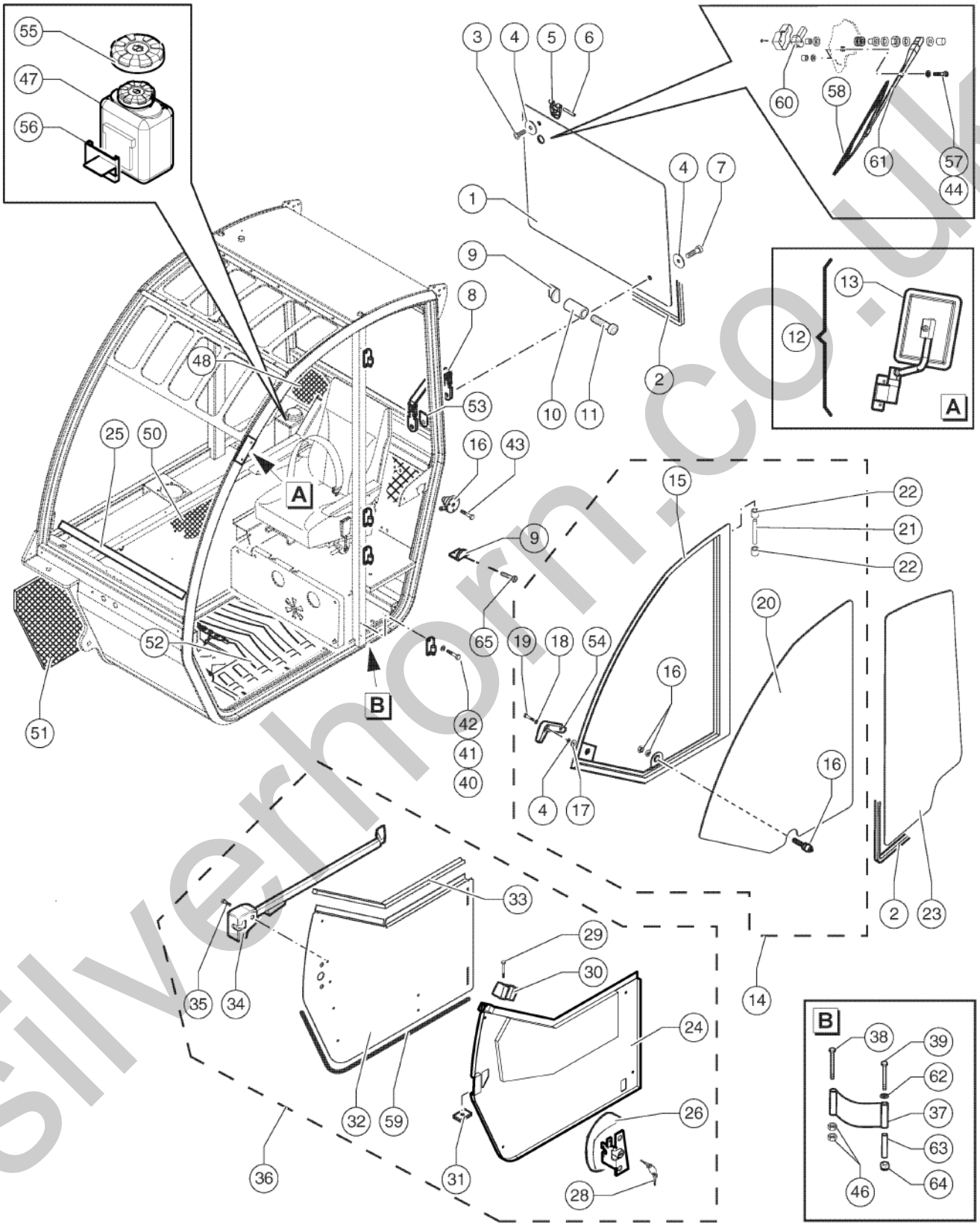

silverhorn.co.uk

402.1 611033 Cabin, View 2

Item	Part No.	Description	Qty.
1	07.0723.0760GT	REAR GLASS	1
2	07.0723.0433GT	GASKET 3m + 3m	6
3	07.0723.0176GT	SCREW,TSPEI M8X25	2
4	07.0723.0114GT	Nylon Washer	16
5	07.0723.0155GT	HINGE	2
6	07.0723.0161GT	PIN	2
7	07.0723.0441GT	SCREW,TCEI M5X50	2
8	07.0723.0434GT	TOGGLE LEVER,COMPLETE	2
9	641042GT	GLASS STOP	3
10	07.0723.0236GT	STOP PAD	2
11	07.0723.0719GT	SCREW,TCB+M5X80 UNI 7687	1
12	07.0723.0024GT	MIRROR W/BRACKET, SINGLE	1
13	07.0723.0042GT	Mirror	1
14	07.0723.0684GT	UPPER DOOR FRAME WITH GLASS	1
15	07.0723.0675GT	UPPER DOOR FRAME	1
16	07.0723.0144GT	DOOR STOP KIT	1
17	07.0723.0429GT	CRINKLE WASHER,DM.10	1
18	07.0723.0428GT	WASHER,D10X20	2
19	07.0723.0427GT	SCREW,TE,M8X16	2
20	07.0723.0426GT	UPPER DOOR GLASS	1
21	07.0723.0410GT	PIN,8X85	4
22	07.0723.0345GT	BUSHING	8
23	07.0723.0764GT	LEFT SIDE GLASS	1
24	07.0723.0655GT	DOOR COATING	1
25	07.0723.0638GT	Profile	1
26	09.0803.0860GT	HANDLE	1
28	07.0723.0571GT	KEY	1
29	07.0723.0421GT	SCREW,TCB+M6X35	4

silverhorn.co.uk

402.1 611033 Cabin, View 2

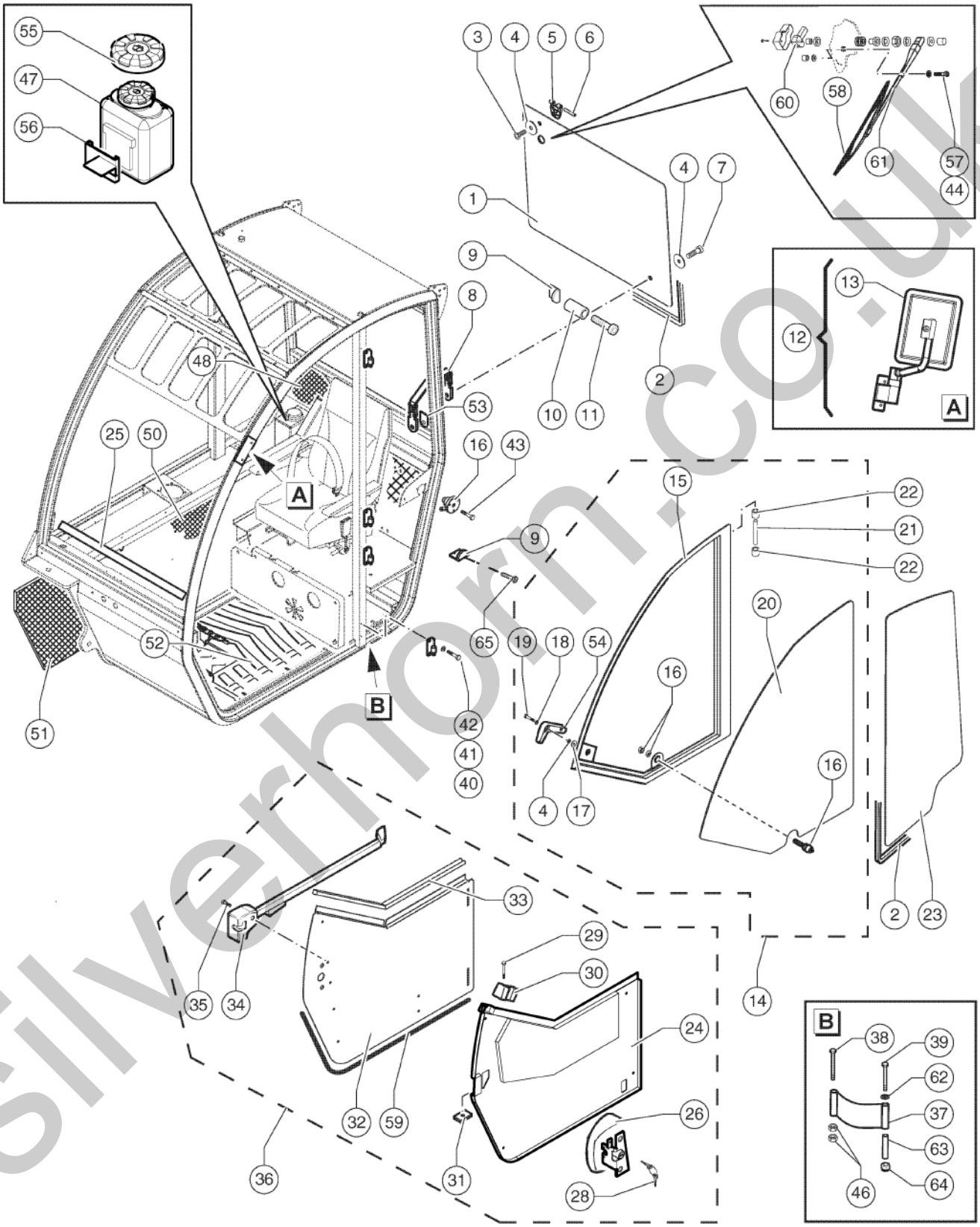

silverhorn.co.uk

402.1 611033 Cabin, View 2

Item	Part No.	Description	Qty.
30	641024GT	STOP	2
31	07.0723.0172GT	Plate	1
32	07.0723.0714GT	LOWER DOOR	1
33	07.0723.0290GT	Seal	1
34	07.0723.0157GT	HANDLE, INTERNAL DOOR	1
35	07.0723.0057GT	SCREW,M6-1.0X20MM FHSCS ZP	3
36	07.0723.0713GT	LOWER DOOR ASSY	1
37	07.0723.0646GT	BELT, DOOR ASSY	1
38	01.0003.0941GT	SCREW	1
39	01.0001.0108GT	SCREW M6X60 UNI 5737 8.8 ZN	1
40	07.0723.0175GT	SCREW, M6X20 DIN 933 YZ HCS	8
41	07.0723.0173GT	Washer D6X12MM	8
42	07.0723.0672GT	HINGE	4
43	07.0723.0185GT	SCREW, M6X30DIN933 YZ HCS	3
44	07.0723.0134GT	PLAIN WASHER	2
46	07.0740.0429GT	NUT,M8 UNI CL8 ZN	2
47	641004GT	TANK, WIPER W/ PUMP	1
48	07.0723.0452GT	Cover	1
50	07.0723.0453GT	Cover	1
51	07.0723.0456GT	External Sound Proofing Panel	1
52	07.0740.0347GT	RUBBER CARPET	1
53	07.0723.0506GT	Receptacles	2
54	641019GT	HANDLE	1
55	52.1200.5300GT	Water Tank Cover (Black Cap)	1
56	07.0723.0494GT	SUPPORT	1
57	07.0723.0444GT	SCREW,TPEI,M8X30	2
58	07.0723.0446GT	WINDSCREEN WIPER BRUSH	1
59	07.0723.0152GT	SEAL	1

silverhorn.co.uk

402.1 611033 Cabin, View 2

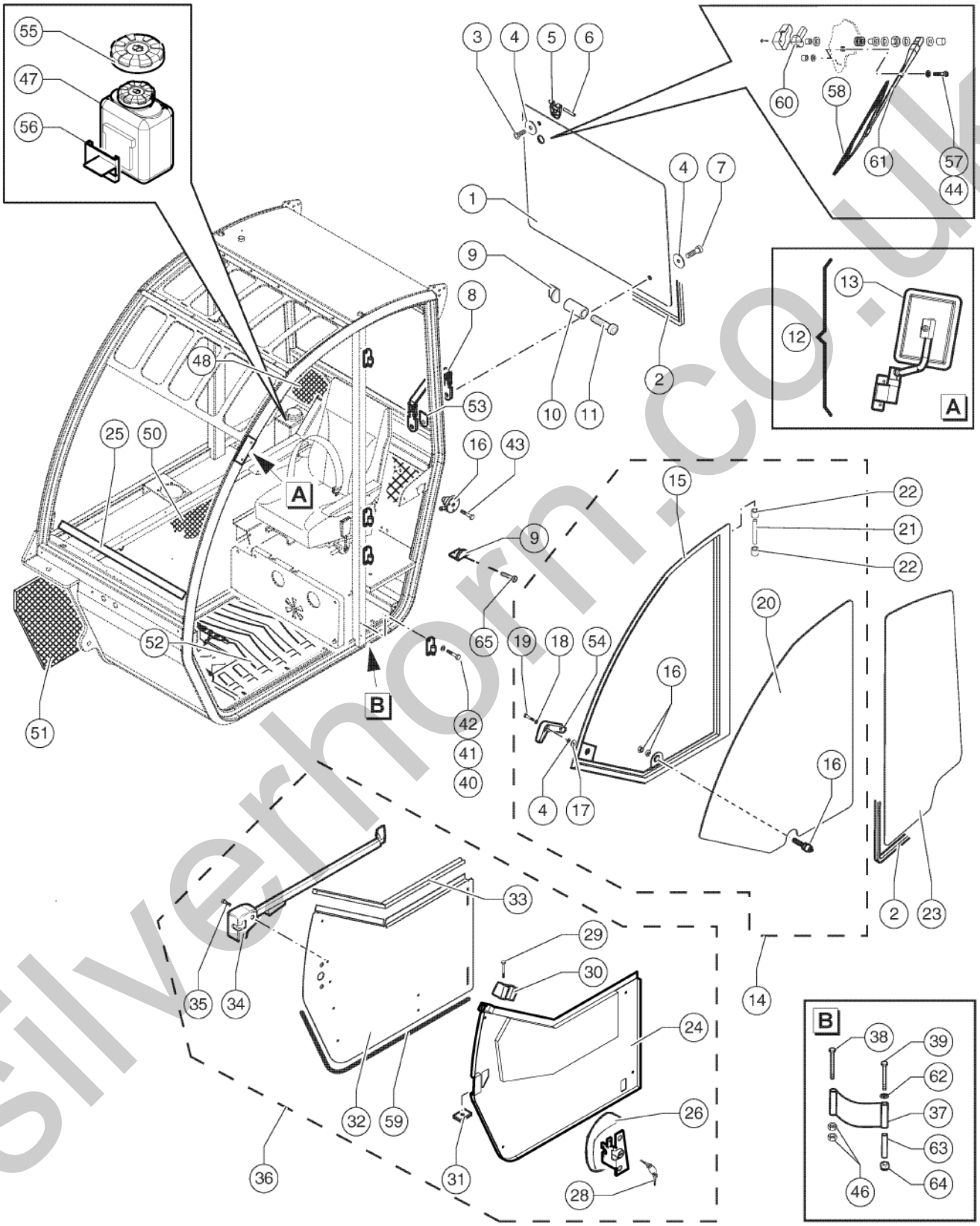

silverhorn.co.uk

402.1 611033 Cabin, View 2

Item	Part No.	Description	Qty.
60	07.0723.0445GT	WINDSCREEN WIPER MOTOR	1
61	07.0723.0036GT	WIPER ARM	1
62	01.0031.0054GT	FLAT WASHER D6 UNI 6592 ZN	1
63	07.0723.0647GT	Bushing	1
64	01.0023.0053GT	STOP NUT M6 UNI 7473 6S ZN	1
65	07.0723.0627GT	Screw	3

silverhorn.co.uk

403.1 611034 Heater

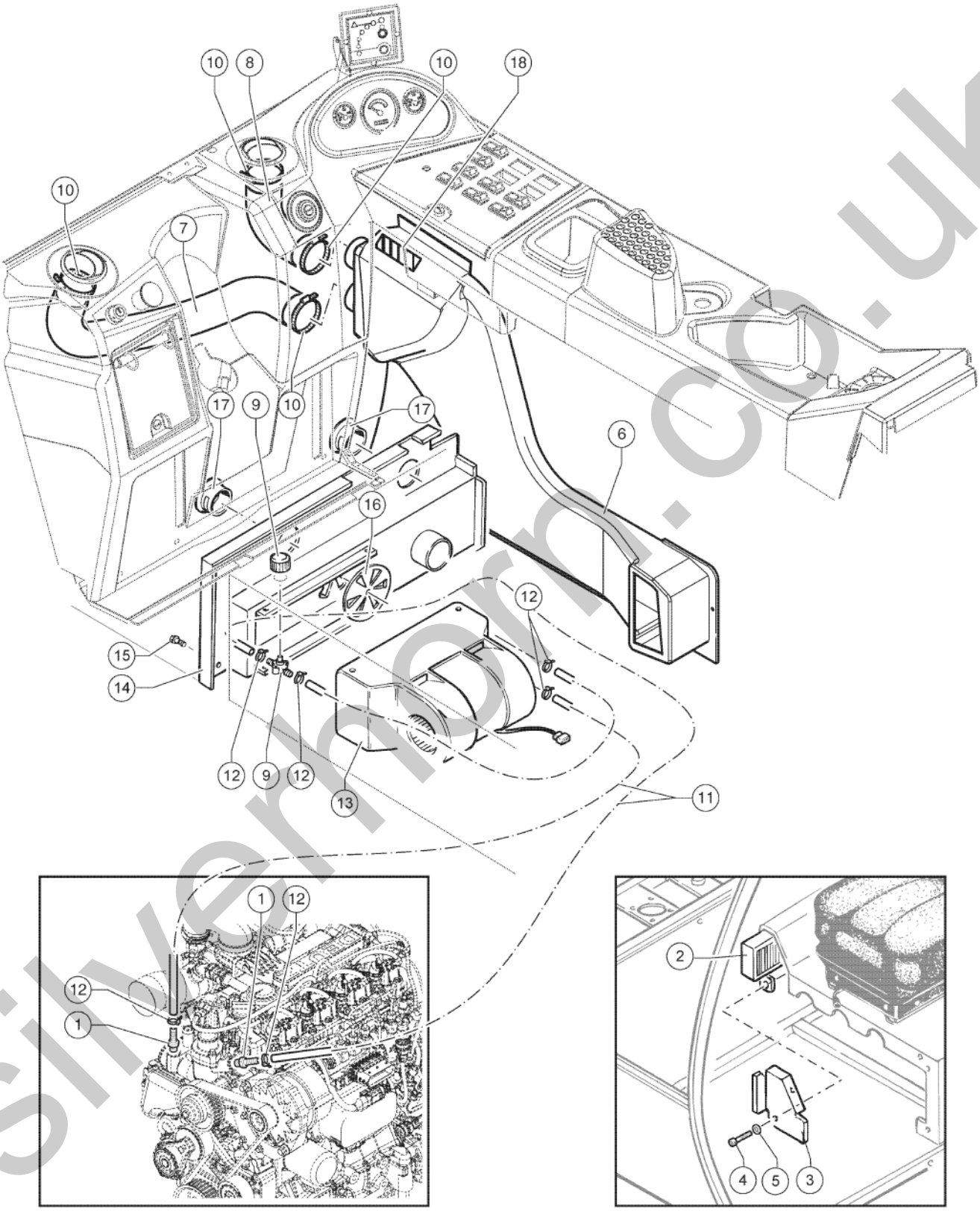

silverhorn.co.uk

403.1 611034 Heater

Item	Part No.	Description	Qty.
1	09.0806.0058GT	Hose Fitting	2
2	07.0723.0757GT	FILTER	1
3	07.0723.0693GT	Cover	1
4	07.0723.0090GT	BALL-GRIP	2
5	07.0723.0076GT	Plain Washer D6x18	2
6	07.0723.0776GT	CONVEYOR ASSY With Item 18	1
7	07.0723.0761GT	AIR HOSE	1
8	07.0723.0762GT	AIR HOSE	1
9	07.0723.0658GT	Heater Valve	1
10	04.4227.0012GT	Clamp	4
11	07.0723.0194GT	Rubber Hose LG.1000	9
12	04.0227.0051GT	CLAMP DN 10/16 LG 9	6
13	640985GT	HEATER	1
14	07.0723.0694GT	Cover	1
15	07.0723.0109GT	Screw	5
16	07.0723.0108GT	Air Inlet	1
17	07.0723.0010GT	Air Inlet	2
18	07.0723.0763GT	AIR INLET	1

silverhorn.co.uk

404.1 611035 Dashboard

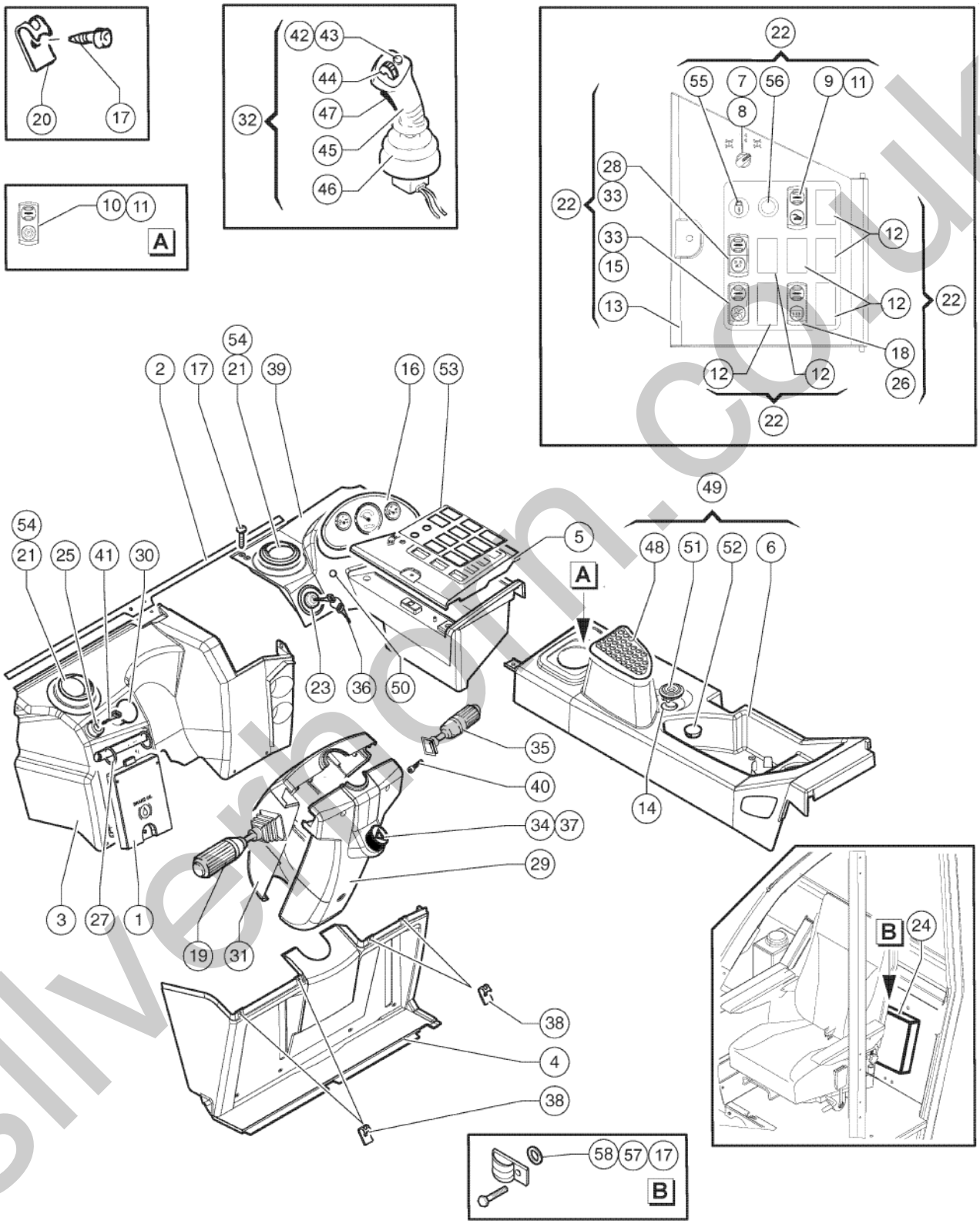

silverthorn.co.uk

404.1 611035 Dashboard

Item	Part No.	Description	Qty.
1	52.1200.5523GT	Oil Tank ABS Cover	1
2	07.0723.0638GT	Profile	1
3	52.1200.5522GT	Upper Front Dashboard	1
4	52.1200.5521GT	Lower Front Dashboard	1
5	52.1200.5519GT	COVER,BOX,ABS	1
6	52.1200.5553GT	Dashboard	1
7	07.0703.0577GT	SWITCH	1
8	07.0703.0429GT	KNOB, STEERING MODE SELECTOR Complete Switch Item 8 + Item 7	1
9	56.0012.0053GT	ROAD/JOBSITE SWITCH COVER Complete Switch Item 9 + Item 11	1
10	56.0017.0046GT	SWITCH COVER Complete Switch Item 10 + Item 11	1
11	56.0017.0044GT	Switch Contact	2
12	56.0017.0039GT	Cap	6
13	52.1200.4400GT	DASHBOARD BOX	1
14	07.0723.0759GT	WASHER	1
15	56.0017.0054GT	FAN SWITCH COVER Complete Switch Item 15 + Item 33	1
16	56.0016.0206GT	DISPLAY To S/N GTH250619M-1200	1
16	56.0016.0215GT	DISPLAY From S/N GTH250619M-1201	1
17	07.0723.0039GT	SCREW,PPH SMS 10X3/4ZAKEG	10
18	56.0017.0157GT	DEFROST COVER	1
19	56.0016.0210GT	LEVER GEAR	1
20	07.0723.0104GT	RETAINER	6
21	07.0723.0639GT	Air Inlet	2
22	55.0602.1198GT	DASHBOARD	1
23	07.0703.0727GT	Switch - Start Engine	1
24	56.0021.0180GT	Boom Control Unit To S/N GTH250619M-1200	1
24	56.0021.0188GT	CONTROL UNIT From S/N GTH250619M-1201	1
25	07.0703.0532GT	CONTACT	1
26	56.0017.0158GT	SWITCH	1

silverhorn.co.uk

404.1 611035 Dashboard

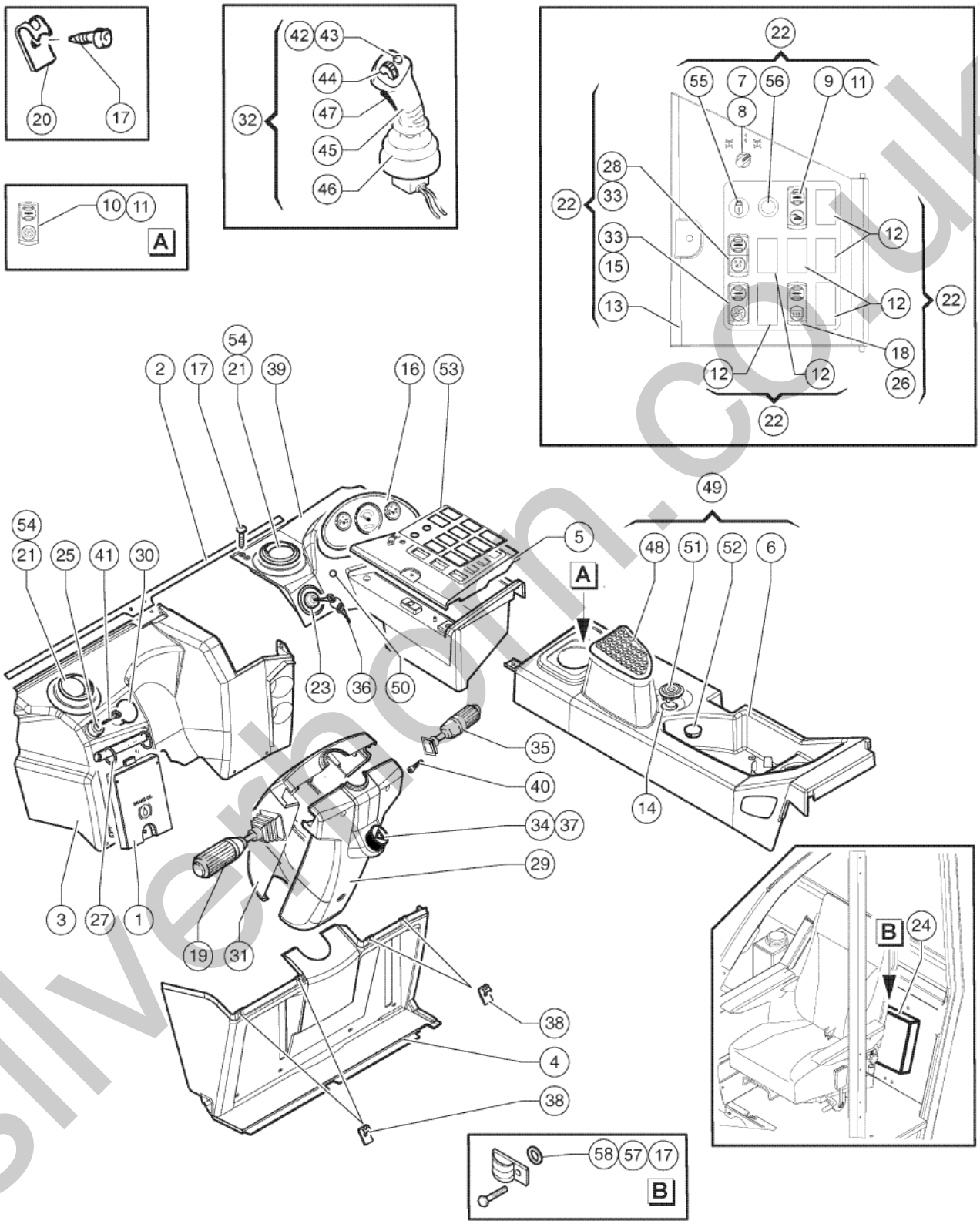

silverthorn.co.uk

404.1 611035 Dashboard

Item	Part No.	Description	Qty.
27	07.0723.0493GT	WIRE-O BINDING FOR LOAD CHARTS	1
28	56.0017.0130GT	Road Lights Switch Cover	1
29	52.1200.5525GT	Front Steering Column Cover	1
30	56.0016.0091GT	Emergency Switch	1
31	52.1200.5526GT	Rear Steering Column Cover	1
32	56.0016.0180GT	Complete Joystick	1
33	56.0017.0132GT	Switch Contact	2
34	56.0017.0064GT	CONTACT (SWITCH) Complete Switch Item 34 + Item 37	1
35	56.0016.0106GT	RIGHT LEVER	1
36	07.0723.0571GT	KEY	2
37	56.0017.0070GT	LIGHT SWITCH COVER Complete Switch Item 37 + Item 34	1
38	09.0803.0572GT	THREADED CLIP M5	4
39	52.1200.5518GT	Instruments Dashboard	1
40	01.4001.0164GT	Screw TC M4 x 10 8.8 ZN UNI 7687 Screw To lock Item 19 - 35 to Steering Column	6
41	56.0017.0067GT	KEY	1
42	07.0741.0010GT	Push Button Cap	1
43	07.0741.0174GT	MICROSWITCH	1
44	07.0741.0023GT	PROPORTIONAL ROLLER	1
45	07.0741.0224GT	Complete Handle	1
46	56.0016.0082GT	Rubber Protection	1
47	07.0741.0225GT	Functions Abilitation Microswitch	1
48	52.1200.5548GT	Panel	1
49	55.0511.0005GT	Complet Rear Side Dashboard	1
50	56.0017.0141GT	SWITCH TYCO	1
51	56.0010.0099GT	BUZZER	1
52	07.0703.0728GT	Plug D.30	1
53	52.1200.5554GT	Plate	1
54	07.0723.0640GT	Air Inlet Fitting	2

silverhorn.co.uk

404.1 611035 Dashboard

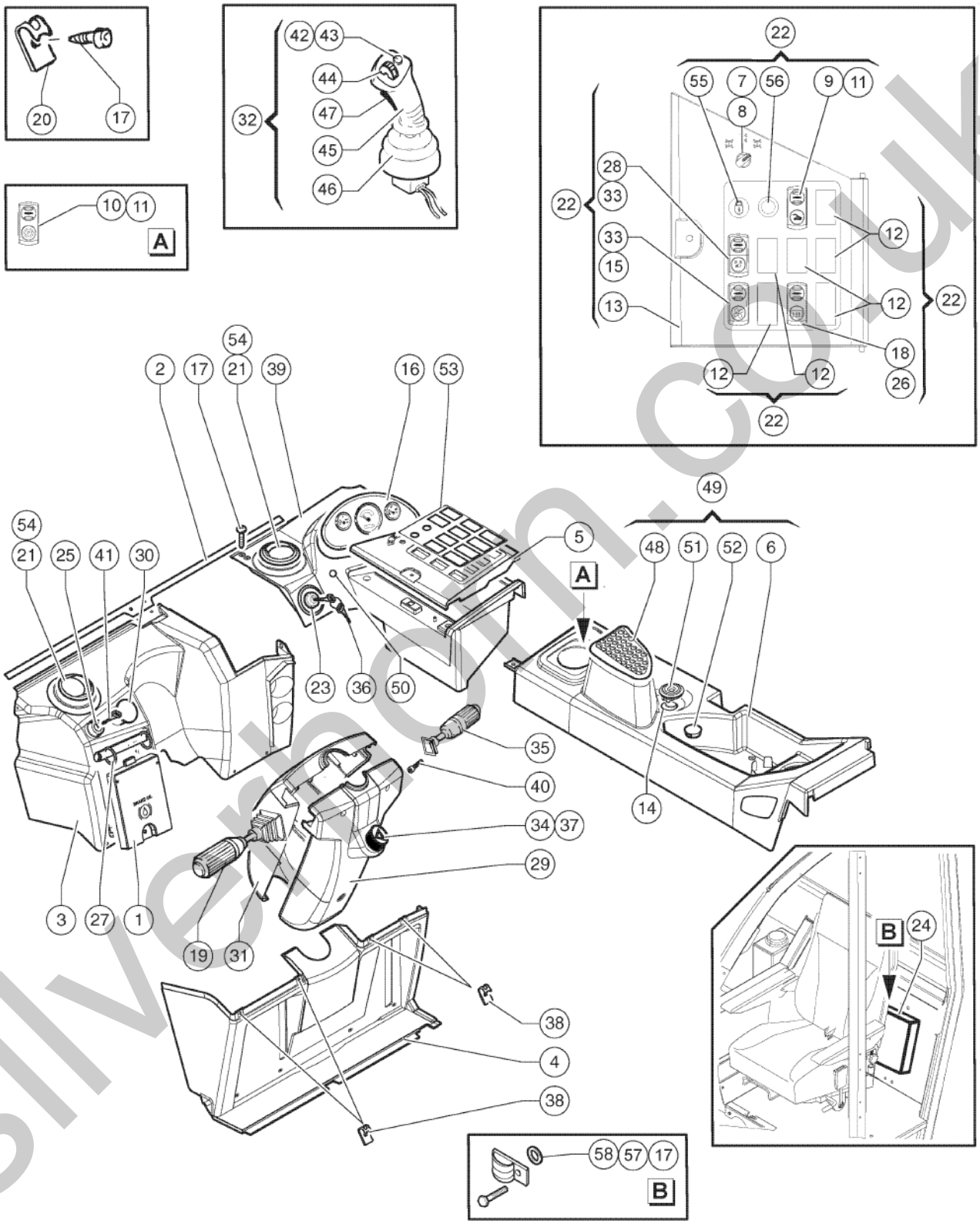

silverthorn.co.uk

404.1 611035 Dashboard

Item	Part No.	Description	Qty.
55	56.0017.0160GT	MULTIFUNCTION LAMP	1
56	56.0017.0159GT	CONTROL DETENT LAMP	1
57	39518GT	CLAMP,2.00,#32 X 3/8,RUB CUSH	1
58	01.0031.0314GT	KNIPPING SCREW TCB 4,8 X 19 DIN 7970	1

silverhorn.co.uk

501.1 611036 Boom (1st - snd Telescopic Element)

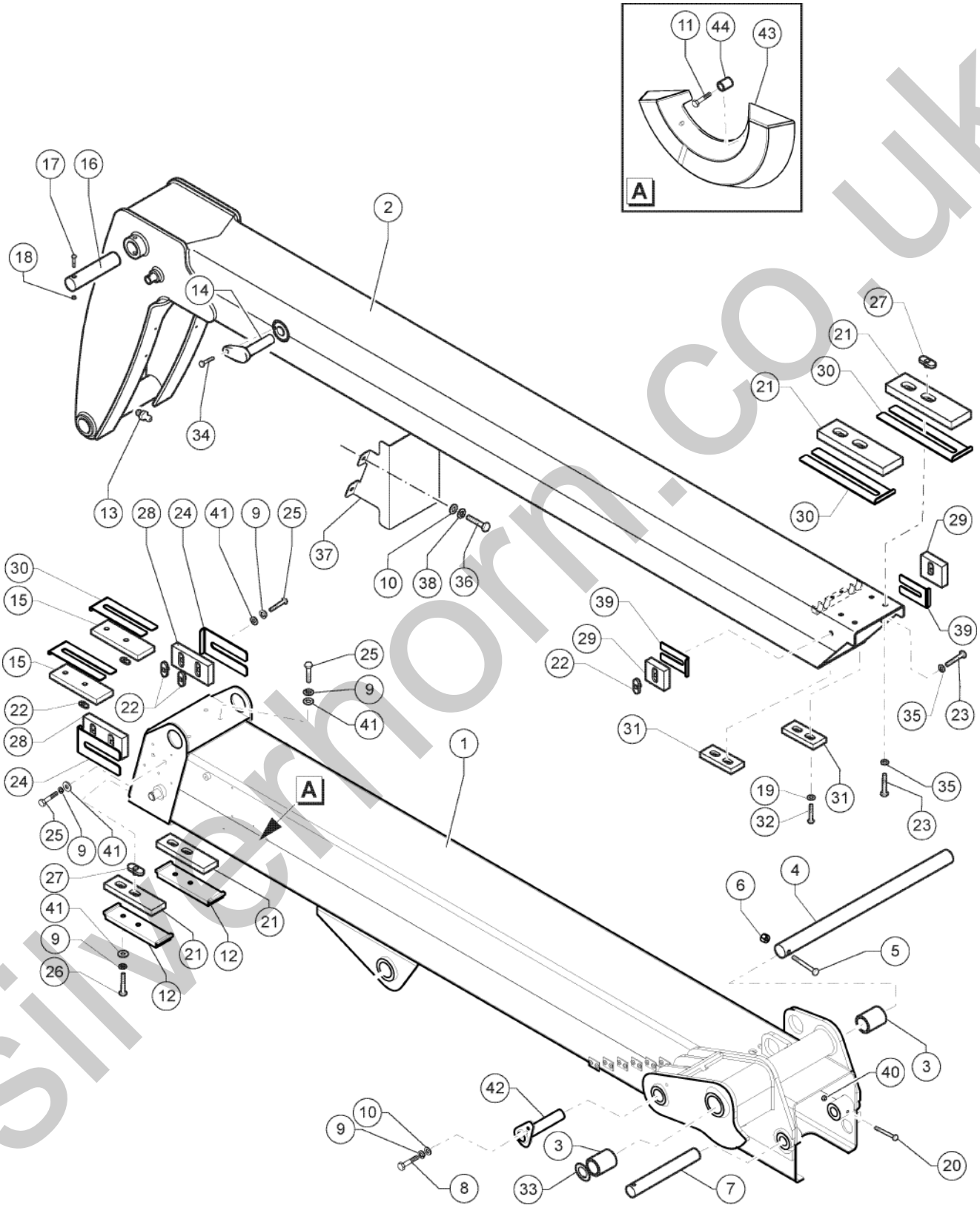

silverhorn.co.uk

501.1 611036 Boom (1st - snd Telescopic Element)

Item	Part No.	Description	Qty.
1	51.0201.3943GT	1st Telescopic Element	1
2	51.0201.3973GT	2nd Telescopic Element	1
3	54.0202.0006GT	Bushing DB 50/58 LG.55	2
4	54.0000.0262GT	PIN	1
5	01.4001.0012GT	SCREW M14X100UNI 5737 8.8 ZN	1
6	01.0023.0057GT	STOP NUT M14 UNI 7473 6S ZN	1
7	54.0000.0258GT	Extension Cylinder Foot Pin	1
8	01.0001.0357GT	SCREW,TE,M10X35 UNI 8.8 ZN	1
9	01.4032.0004GT	Spring Washer D10 ZN	14
10	01.0031.0055GT	FLAT WASHER D8 UNI 6592 ZN	3
11	01.4003.0000GT	SCREW M4X16 UNI 5931 8.8 ZN	2
12	07.0726.0043GT	SLIDING BLOCK HOLDER	2
13	02.0117.0119GT	GREASE NIPPLE G 1/8	1
14	54.0004.0133GT	Extension Cylinder Head Pin	1
15	54.0705.0048GT	SLIDING GUIDE	2
16	54.0000.0259GT	PIN	1
17	01.4001.0008GT	SCREW M10X90 UNI 5737 8.8 ZN	2
18	01.0023.0055GT	Stop Nut M10 UNI 7473 6S ZN	2
19	01.0031.0055GT	FLAT WASHER D8 UNI 6592 ZN	4
20	01.0001.0209GT	SCREW M8X70 UNI 5737 8.8 ZN	1
21	54.0705.0069GT	WEAR PAD,200X60X20	4
22	54.0200.0000GT	BUSHING M10X8.5	1
23	01.4006.0013GT	SCREW M10X25 UNI 5933 10.9 ZN	4
24	51.0811.4131GT	SHIM, WEAR PAD,100X60X1	6
25	01.0001.0356GT	SCREW M10X30 UNI 5739 8.8 ZN	8
26	01.0001.0355GT	SCREW M10X25 UNI 5739 8.8 ZN	4
27	54.0200.0001GT	BUSHING M10X13.5	8
28	54.0705.0049GT	WEAR PAD,100X60X12	2

silverhorn.co.uk

501.1 611036 Boom (1st - snd Telescopic Element)

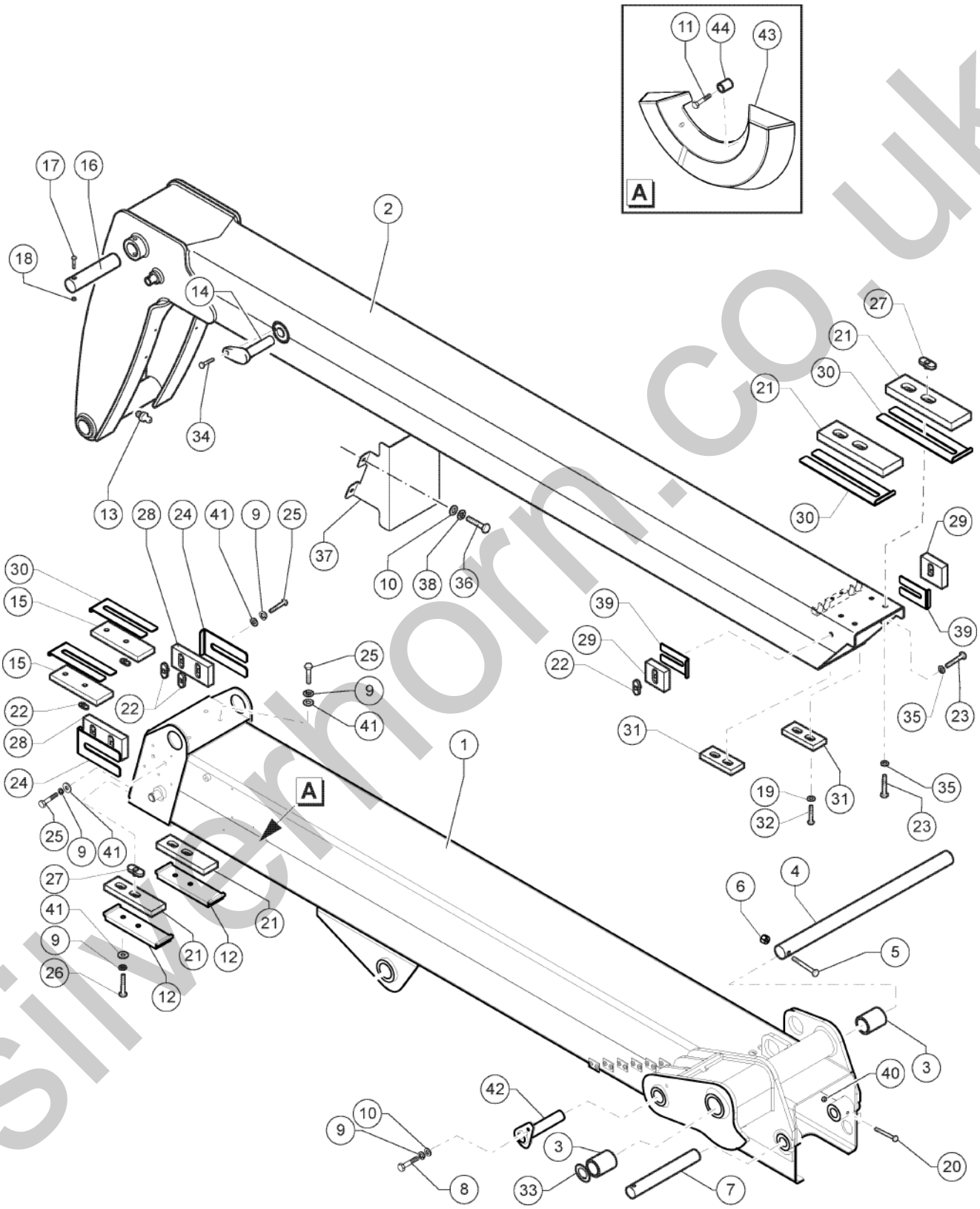

silverhorn.co.uk

501.1 611036 Boom (1st - snd Telescopic Element)

Item	Part No.	Description	Qty.
29	54.0705.0037GT	SLIDING GUIDE	2
30	51.0811.4240GT	SHIM,WEAR PAD,60X200X1	6
31	54.0705.0047GT	Lower Rear Pad 100X25X15	2
32	01.4003.0041GT	SCREW M8X16 DIN 7984 8.8 ZN	4
33	54.0100.0151GT	SHIM	2
34	01.4006.0004GT	SCREW M8X20 UNI 5933 10.9 ZN	1
35	01.4032.0004GT	Spring Washer D10 ZN	6
36	01.0001.0252GT	SCREW M8X16 UNI 5739 8.8 ZN	4
37	51.0903.5304GT	PROTECTIVE BRACKET	1
38	01.4032.0003GT	Spring Washer D 8 ZN	2
39	51.0811.4241GT	SHIM,WEAR PAD,60X60X1	2
40	01.0023.0054GT	NUT,M8 UNI 7473 6S ZN	1
41	01.0031.0301GT	FLAT WASHER D10 UNI 6593 ZN	8
42	54.0000.0263GT	Levelling Cylinder Head Pin	1
43	09.0803.0357GT	BOOM LEVEL INDICATOR	1
44	09.0803.0910GT	SHIM D.5,2/10MM H5MM	2

silverhorn.co.uk

502.1 611037 Manual Fork Attachments

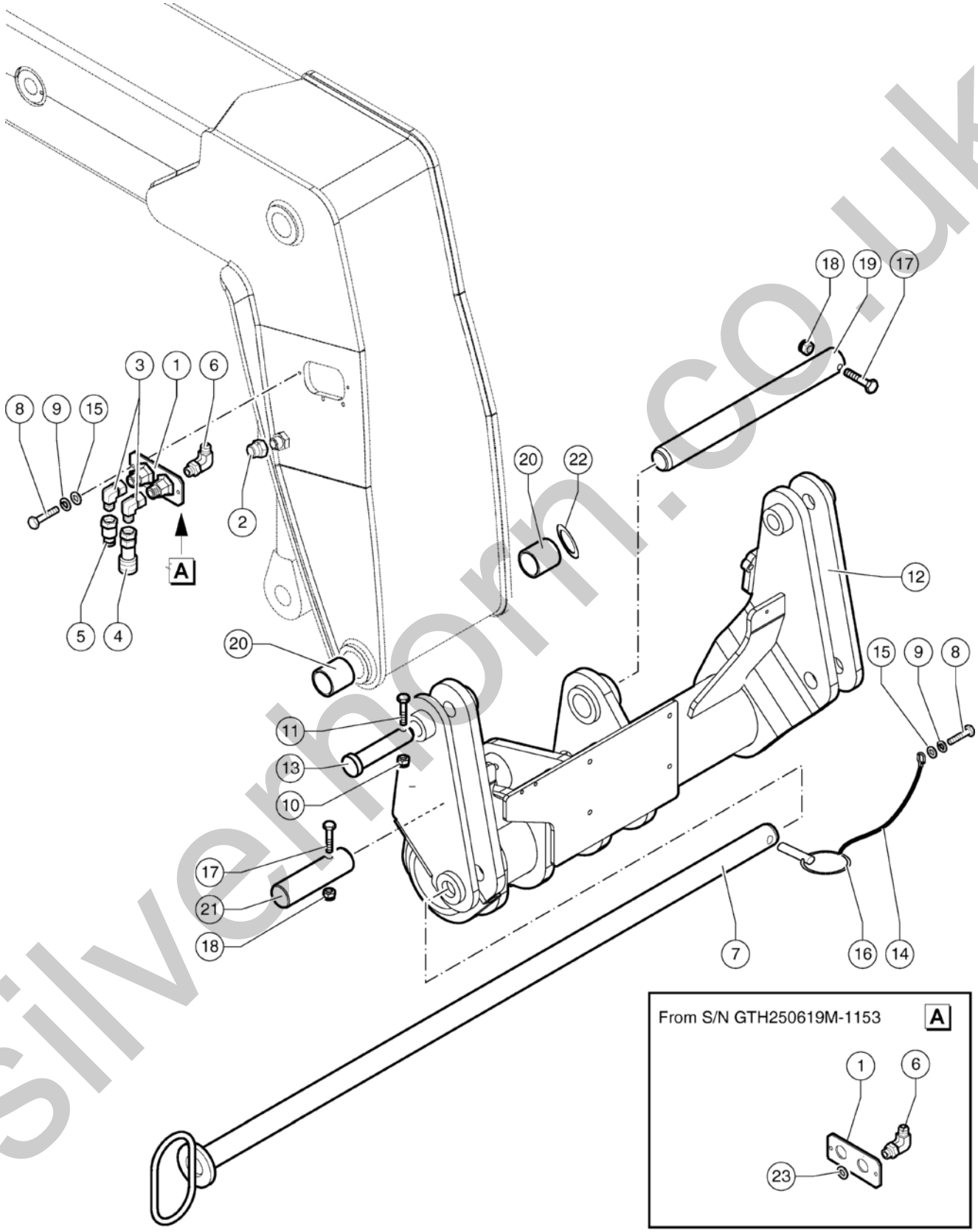

silverhorn.co.uk

502.1 611037 Manual Fork Attachments

Item	Part No.	Description	Qty.
1	53.3001.0500GT	MANIFOLD, BOOM HOSES To SN GTH250619M-1152	1
1	51.0811.4951GT	PASSTHROUGH PLATE From SN GTH250619M-1153	1
2	04.0600.0228GT	CAP FITTING F 1/2" BSP	1
3	04.0600.0087GT	PIPE FITTING 90	2
4	04.4210.0019GT	QUICK COUPLING, FEMALE 1/2	1
5	04.4210.0018GT	QUICK COUPLING, MALE 1/2	1
6	04.0607.0141GT	PIPE FITTING 90 1/2GASXM 13/16-16 ORFS To SN GTH250619M-1152	2
6	04.0607.0869GT	FITTING 90 M-M 1/2 bsp x 13/16-16 orfs From SN GTH250619M-1153	2
7	54.0000.0235GT	PIN	1
8	01.0001.0156GT	SCREW M6X20 UNI 5739 8.8 ZN	3
9	01.4032.0002GT	SPRING WASHER D6 ZN	3
10	01.0023.0053GT	STOP NUT M6 UNI 7473 6S ZN	2
11	01.0001.0104GT	SCREW M6X40 UNI 5739 8.8 ZN	2
12	51.0400.5018GT	Fork Attachment	1
13	54.0001.0081GT	PIN	2
14	09.0803.0406GT	LANYARD,PIN	1
15	01.0031.0054GT	FLAT WASHER D6 UNI 6592 ZN	3
16	02.4102.0012GT	RING PIN	1
17	01.4001.0008GT	SCREW M10X90 UNI 5737 8.8 ZN	2
18	01.0023.0055GT	Stop Nut M10 UNI 7473 6S ZN	2
19	54.0000.0260GT	PIN	1
20	54.0201.0073GT	BUSHING 45/52X50	2
21	54.0000.0261GT	Pin	1
22	54.0100.0154GT	SHIM	1
23	01.0031.0061GT	FLAT WASHER D20 UNI 6592 ZN From SN GTH250619M-1153	1

silverhorn.co.uk

503.1 611038 Standard Forks

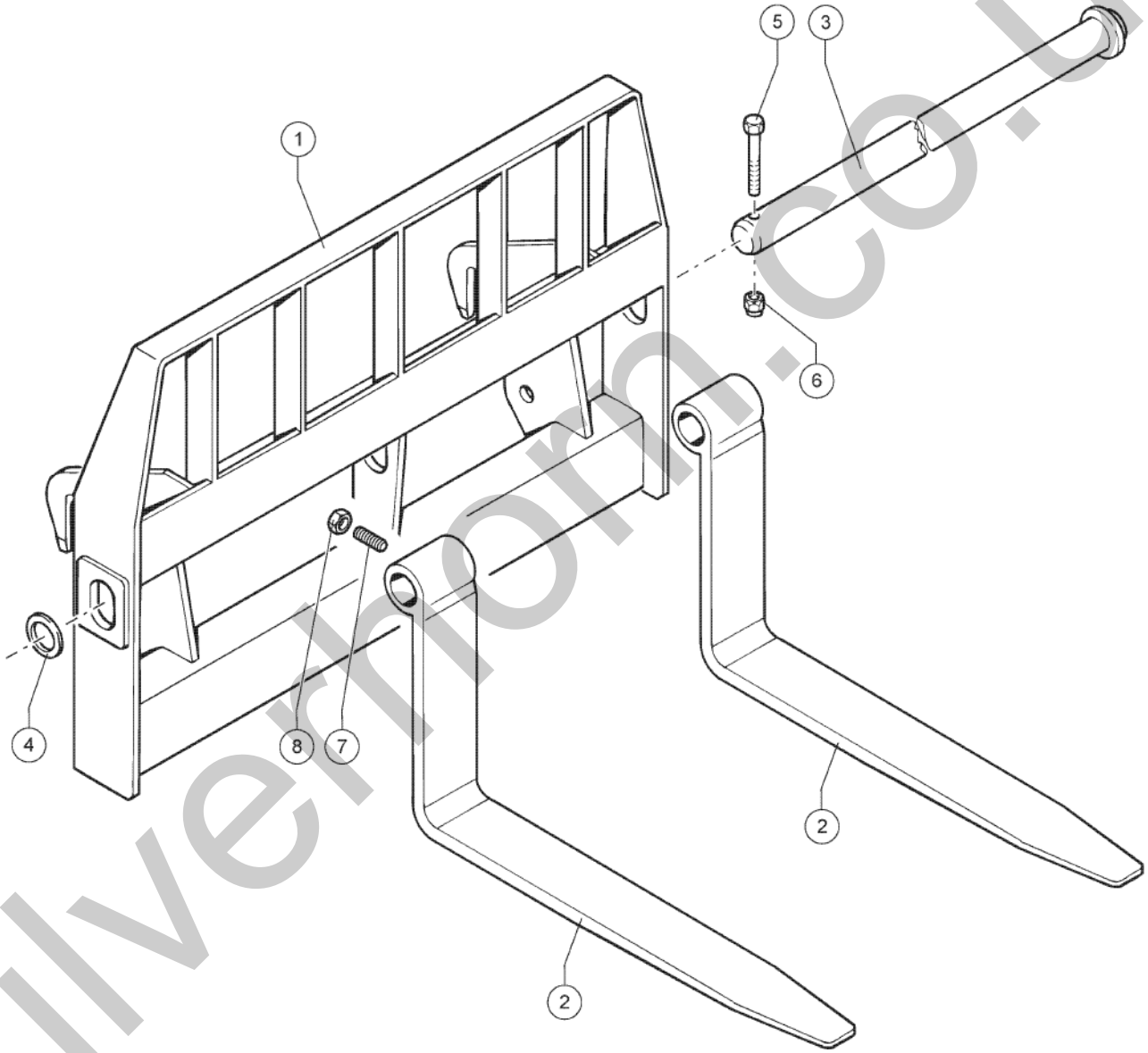

silverhorn.co.uk

503.1 611038 Standard Forks

Item	Part No.	Description	Qty.
1	51.1301.9166GT	Floating Fork Support Plate	1
2	51.1300.5400GT	FORK (4" WIDE X 48" LONG)	2
3	54.0000.0068GT	PIN, FORK	1
4	54.0100.0027GT	WASHER	2
5	01.0001.0409GT	SCREW M12X80 UNI 5737 8.8 ZN	1
6	01.0023.0056GT	STOP NUT M12 UNI 7473 6S ZN	1
7	01.4041.0005GT	DOWEL M12X25 UNI 5927 12.9 ZN	2
8	01.4019.0004GT	NUT M12 UNI 5589	2

silverhorn.co.uk

504.1 611039 Cylinders

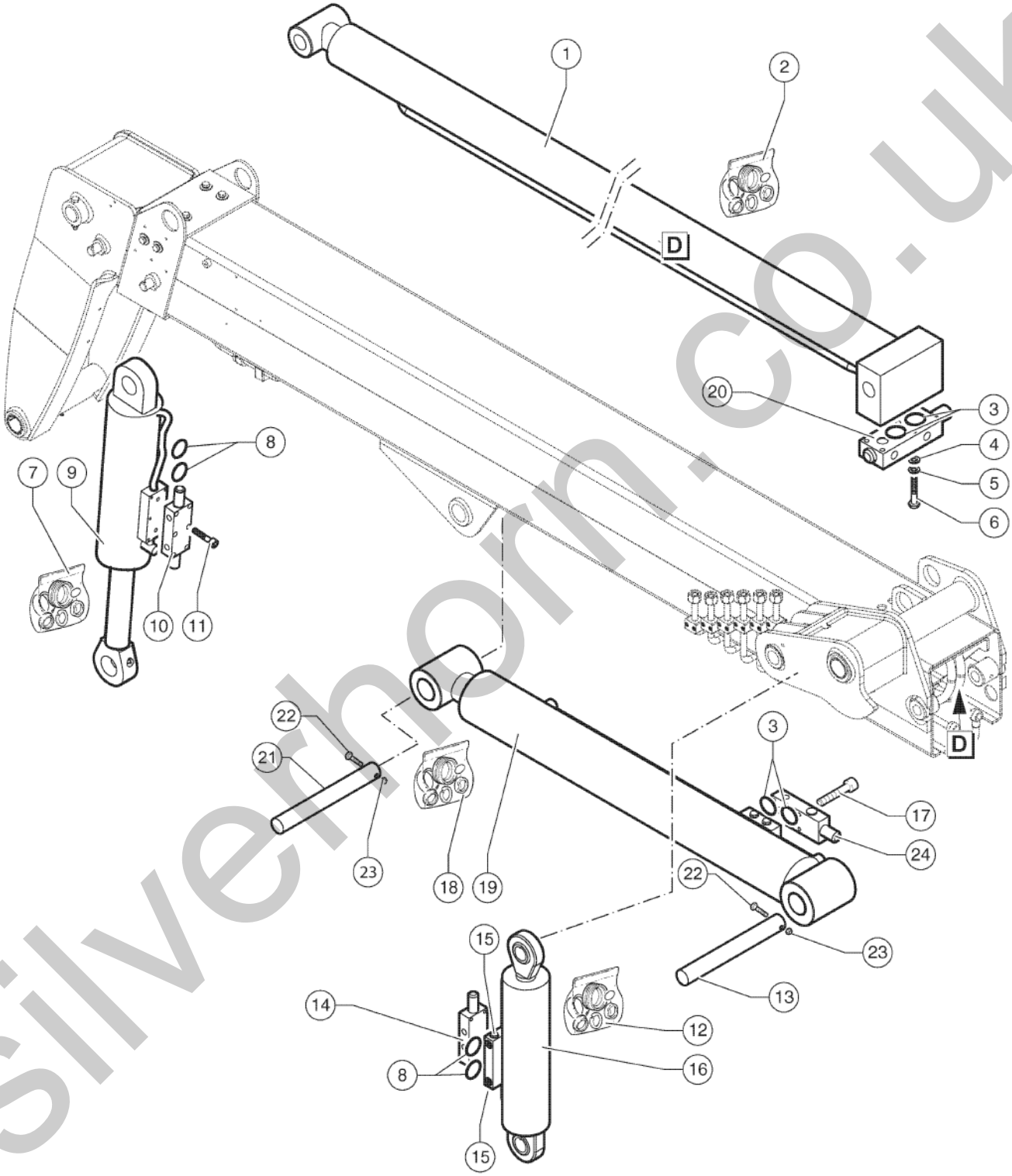

silverhorn.co.uk

504.1 611039 Cylinders

Item	Part No.	Description	Qty.
1	53.0100.3230GT	CYLINDER,EXTENSION	1
2	07.0721.0121GT	Cylinder Gasket Kit	1
3	07.0705.0101GT	O-ring	2
4	01.0031.0055GT	FLAT WASHER D8 UNI 6592 ZN	4
5	01.4032.0003GT	Spring Washer D 8 ZN	4
6	01.0001.0206GT	SCREW M8X55 UNI 5737 8.8 ZN	4
7	07.0721.0123GT	Seal Kit Cylinder	1
8	07.0722.0037GT	O-ring	2
9	53.0400.1817GT	CYLINDER,TILT	1
10	04.4239.0157GT	OVERCENTER VALVE	1
11	01.0003.0208GT	SCREW,TCEI,M8X40 UNI 8.8ZN	12
12	07.0721.0122GT	Cylinder Gasket Kit	1
13	54.0000.0256GT	Lifting Cylinder Foot Pin	1
14	04.4239.0156GT	OVERCENTER VALVE	1
15	04.4239.0004GT	SAFETY VALVE	2
16	53.0300.2219GT	CYLINDER,SLAVE	1
16-	03.0000.0006GT	Ball Joint	2
17	01.0003.0210GT	SCREW M8X50 UNI 5931 8.8 ZN	4
18	07.0721.0120GT	Cylinder Gasket Kit	1
19	53.0000.3823GT	CYLINDER,LIFT	1
20	04.4239.0159GT	OVERCENTER VALVE	1
21	54.0000.0264GT	Lifting Cylinder Head Pin	1
22	01.4001.0003GT	SCREW M12X100 UNI 5737 8.8 ZN	2
23	01.0023.0056GT	STOP NUT M12 UNI 7473 6S ZN	2
24	04.4239.0155GT	OVERCENTER VALVE	1

silverhorn.co.uk

505.1 611040 First Section Pipes And Clamps

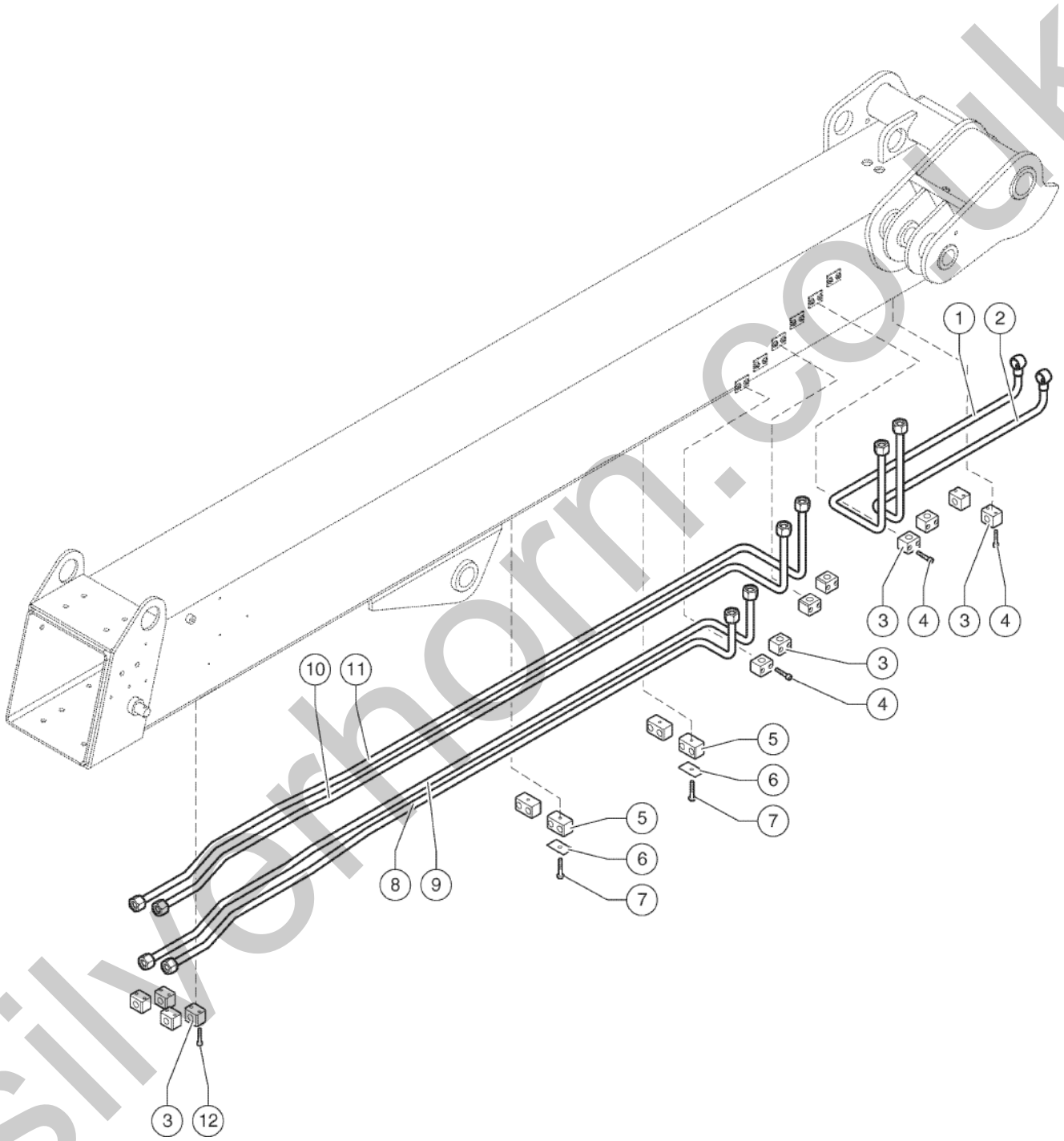

silverhorn.co.uk

505.1 611040 First Section Pipes And Clamps

Item	Part No.	Description	Qty.
1	53.3402.1900GT	PIPE, 5519	1
2	53.3402.1800GT	Pipe 07.4529.0082 Seal Ring	1
3	09.0803.0043GT	SINGLE HOSE BRACKET D16	12
4	01.0003.0157GT	SCREW M6X25 UNI 5931 8.8 ZN	16
5	09.0803.0060GT	CLAMP,DOUBLE,D16	4
6	09.0803.0523GT	DOUBLE HOSE LOCKING PLATE D18	4
7	01.0001.0258GT	SCREW M8X35 UNI 5739 8.8 ZN	4
8	53.3402.2000GT	PIPE, 5519	1
9	53.3402.2100GT	PIPE, 5519	1
10	53.3402.2200GT	PIPE, 5519	1
11	53.3402.2300GT	PIPE, 5519	1
12	01.0003.0158GT	SCREW,TCEI,M6X30 UNI 8.8 ZN	8

silverhorn.co.uk

601.1 611041 Fork Balancing

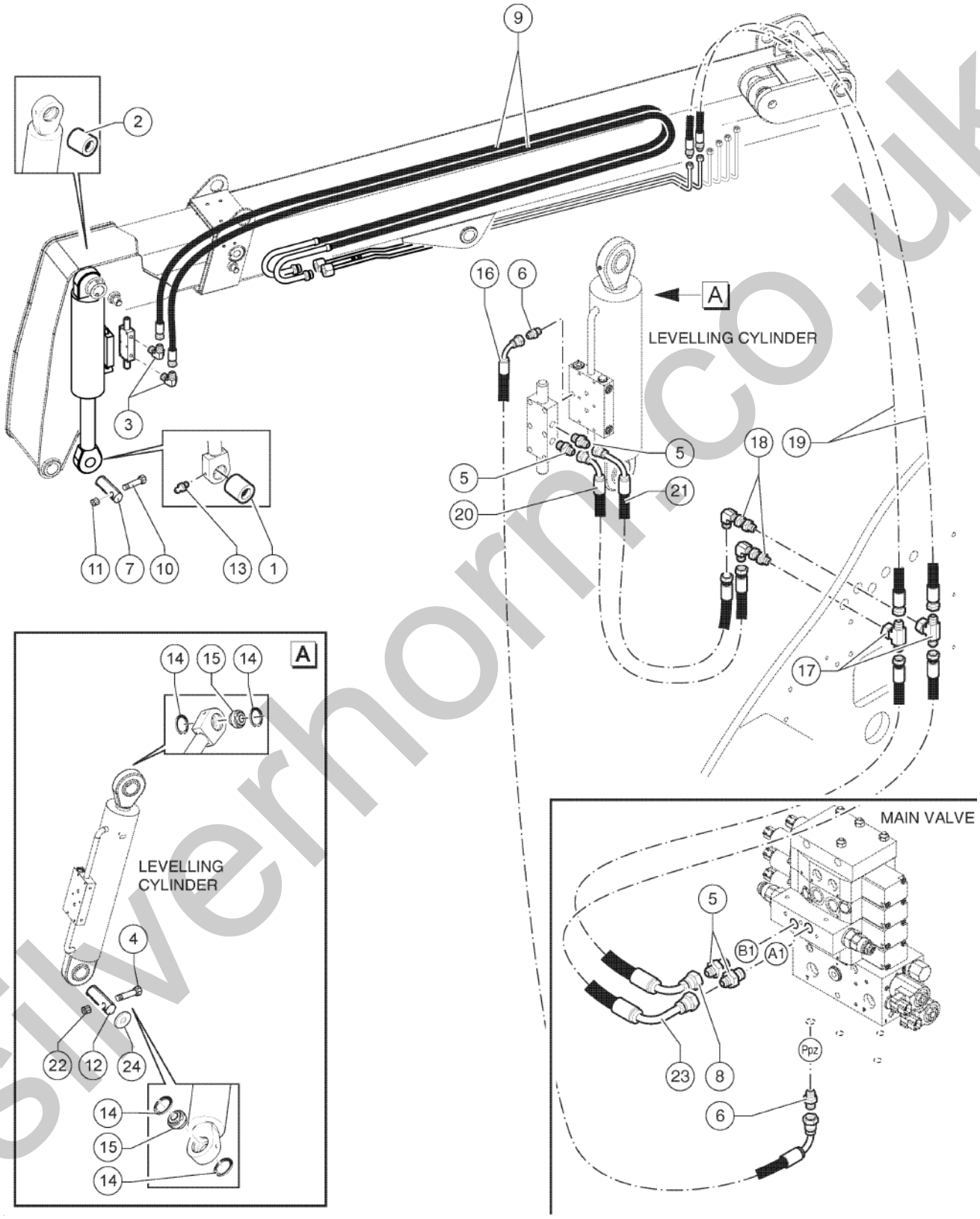

silverhorn.co.uk

601.1 611041 Fork Balancing

Item	Part No.	Description	Qty.
1	09.0800.0025GT	Bushing 45-55 LG 50	1
2	54.0202.0004GT	BUSHING	1
3	04.0607.0141GT	PIPE FITTING 90 1/2GASXM 13/16-16 ORFS	2
4	01.0001.0211GT	SCREW M8X80 UNI 5737 8.8 ZN	1
5	04.0607.0111GT	PIPE FITTING 1/2 BSPX13/16-16 ORFS	4
6	04.0607.0113GT	PIPE FITTING 1/4 BSPX9/16-18 ORFS	2
7	54.0000.0261GT	Pin	1
8	04.0605.0986GT	Flexible Hose R2 X 1/2 LG. 450 F90 - FD 13/16-16 ORFS To SN GTH250619M-1200	1
8	1291858-1772GT	ASSY, HOSE, HYD, -8, 4450, STR, 90	1
		From SN GTH250619M-1201	
9	04.0605.1817GT	Fork Cylinder Double Hose 1/2 6150-6100 SP.F. TO 180° SF 13/16"-16 ORFS	1
10	01.0001.0308GT	Screw TE M10X70 UNI 5737 8.8 ZN	1
11	01.0023.0055GT	Stop Nut M10 UNI 7473 6S ZN	1
12	54.0000.0257GT	Pin Lg.142	1
13	02.0117.0101GT	GREASE NIPPLE G1/8	1
14	07.0721.0117GT	SNAP RING	4
15	07.0721.0019GT	BALL JOINT	2
16	04.0605.1425GT	Hose R1 X 1/4 950 F90 9/16"-18 F90 9/16"-18 ORFS 45° To SN GTH250619M-1200	1
16	1292732-3741GT	ASSY, HOSE, HYD, -4, 3260, 90, 90@45°	1
		From SN GTH250619M-1201	
17	04.0607.0122GT	PIPE FITTING TMF+L 13/16-16 ORFS	2
18	04.0607.0124GT	PIPE FITTING 90 M-M 13/16-16 ORFS	2
19	04.0605.1474GT	Flexible Hose R2 X 1/2 1250 FD 13/16"-16 MD 16 S DIN 24 To SN GTH250619M-1200	2
19	1291999-4922GT	ASSY, HOSE, HYD, -8, 4450, STR, STR	2
		From SN GTH250619M-1201	
20	04.0605.1265GT	Flexible Hose R2 X 1/2 LG. 1050 FD-F90 13/16-16 ORFS To SN GTH250619M-1200	1
20	1291858-4134GT	ASSY, HOSE, HYD, -8, 4450, STR, 90	1
		From SN GTH250619M-1201	
21	04.0605.1481GT	Flexible Hose R2 X 1/2 1050 FD - F90 ALTA (56 mm) 13/16-16 ORFS To SN GTH250619M-1200	1
21	1292000-4134GT	ASSY, HOSE, HYD, -8, 4450, 90, STR	1
		From SN GTH250619M-1201	
22	01.0023.0054GT	NUT,M8 UNI 7473 6S ZN	1

silverhorn.co.uk

601.1 611041 Fork Balancing

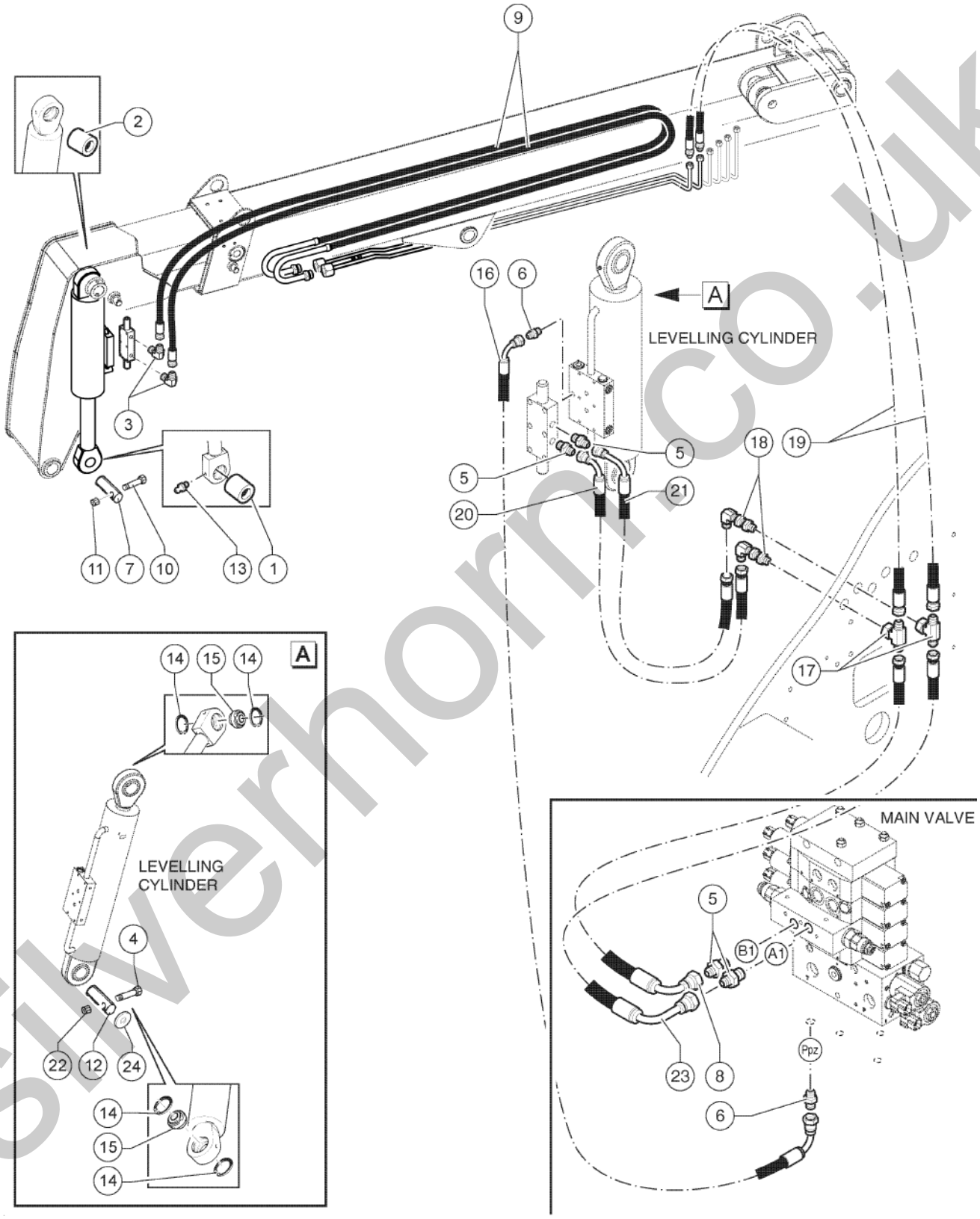

silverhorn.co.uk

601.1 611041 Fork Balancing

Item	Part No.	Description	Qty.
23	04.0605.1427GT	Flexible Hose R2 X 1/2 420 F90-FD 1 3/16"-12 ORFS To SN GTH250619M-1200	1
23	1291858-1654GT	ASSY, HOSE, HYD, -8, 4450, STR, 90 From SN GTH250619M-1201	1
24	54.0100.0152GT	SHIM	1

silverhorn.co.uk

602.1 611042 Auxiliary Circuits

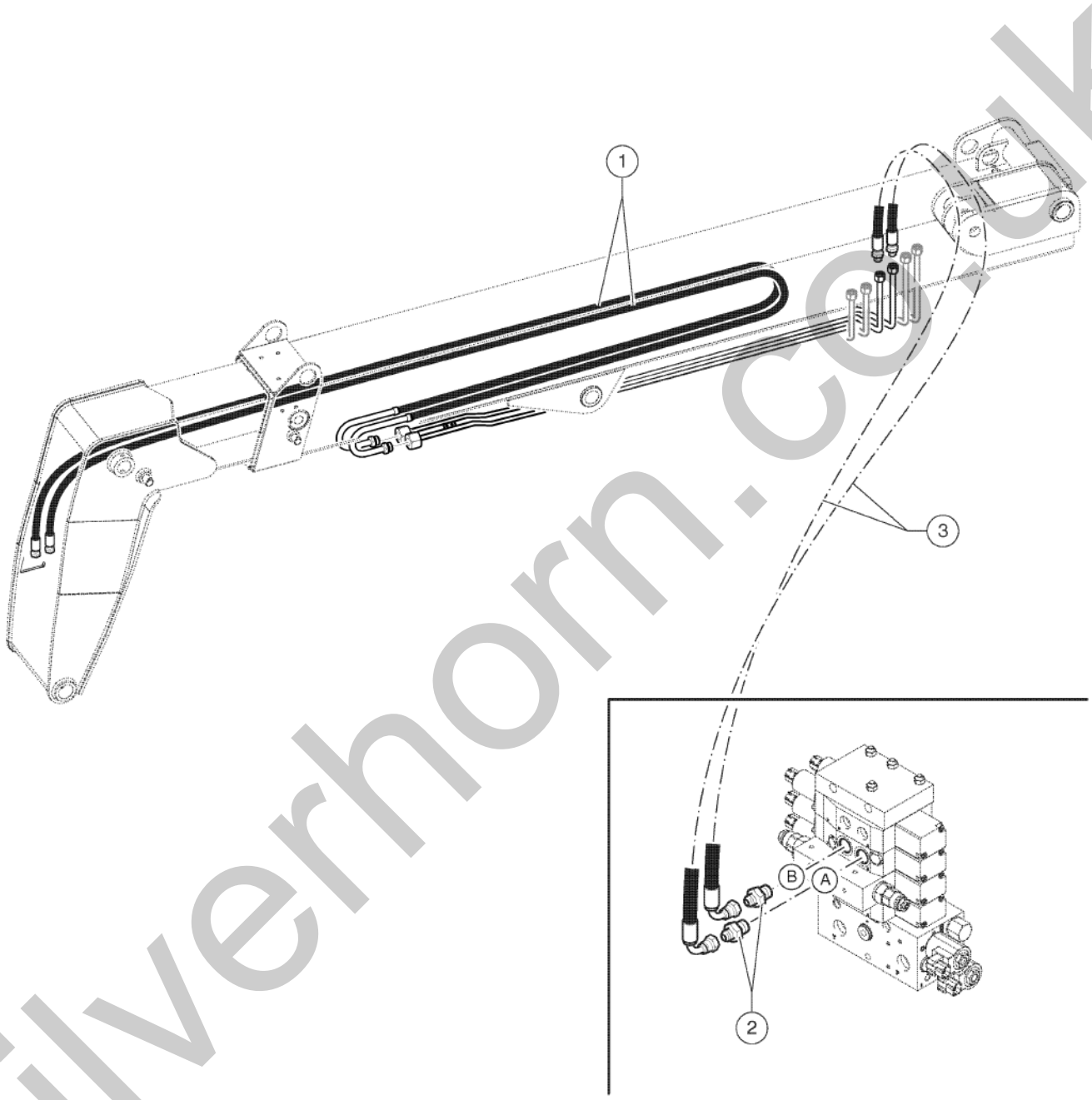

silverhorn.co.uk

602.1 611042 Auxiliary Circuits

Item	Part No.	Description	Qty.
1	04.0605.1608GT	Double Hose 1/2 - SF - R.SP.180°	1
2	04.0607.0111GT	PIPE FITTING 1/2 BSPX13/16-16 ORFS	2
3	04.0605.0626GT	HOSE R2X1/2 LG 1100 F90 13/16 MD 16 S DIN 24 To SN GTH250619M-1200	2
3	1291994-4331GT	ASSY, HOSE, HYD, -8, 4450, 90, STR From SN GTH250619M-1201	2

silverhorn.co.uk

603.1 611043 Boom Extension

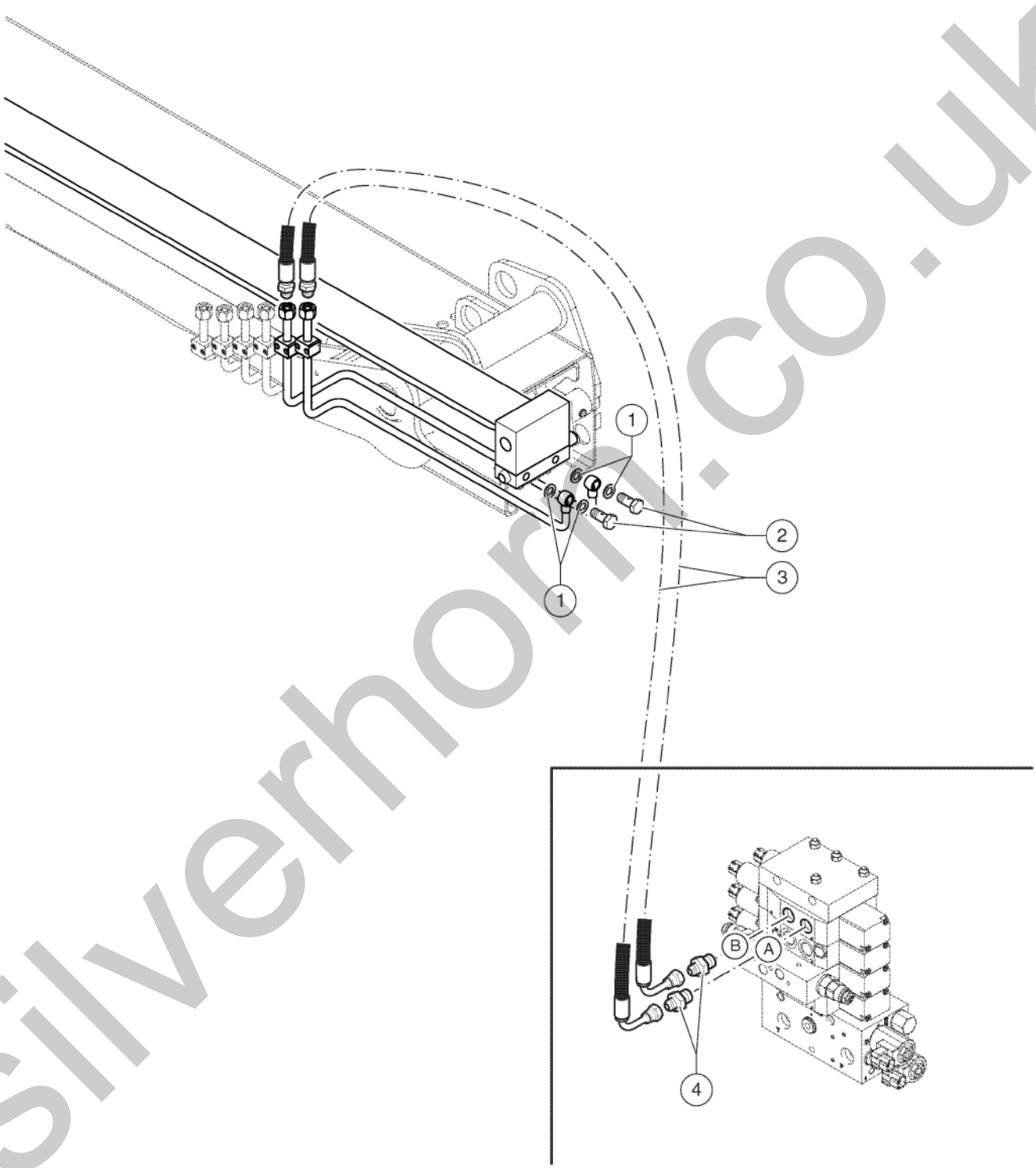

silverhorn.co.uk

603.1 611043 Boom Extension

Item	Part No.	Description	Qty.
1	06.0442.0122GT	BONDED RING 1/2"	4
2	04.0214.0035GT	DRILLED SCREW 1/2 BSP	2
3	04.0605.1423GT	Flexible Hose R2 X 1/2 LG1150 F90 ALTA (65) 13/16 MD 16S DIN 24° To SN GTH250619M-1200	2
3	1291995-4528GT	ASSY, HOSE, HYD, -8, 4450, STR, 90 From SN GTH250619M-1201	2
4	04.0607.0111GT	PIPE FITTING 1/2 BSPX13/16-16 ORFS	2

silverhorn.co.uk

604.1 611044 Boom Lifting

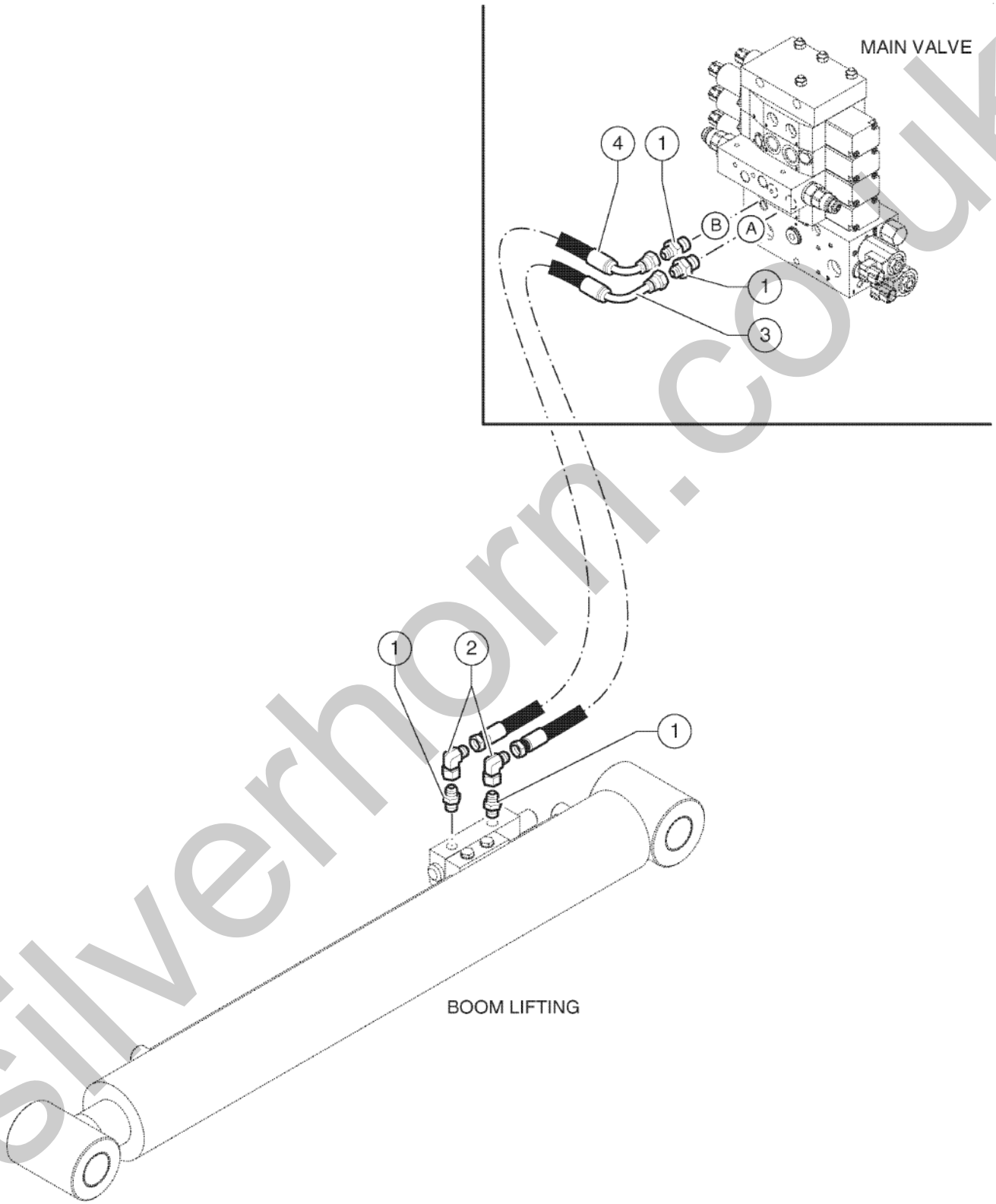

silverhorn.co.uk

604.1 611044 Boom Lifting

Item	Part No.	Description	Qty.
1	04.0607.0111GT	PIPE FITTING 1/2 BSPX13/16-16 ORFS	4
2	04.0607.0109GT	PIPE FITTING,90 M-F 13/16-16	2
3	04.0605.1428GT	Flexible Hose R2 X 1/2 1060 FD - F90 13/16"-16 ORFS To SN GTH250619M-1200	1
3	1291996-3938GT	ASSY, HOSE, HYD, -8, 4450, STR, 90 From SN GTH250619M-1201	1
4	04.0605.1429GT	Flexible Hose R2 X 1/2 1100 FD - F90 13/16"-16 ORFS To SN GTH250619M-1200	1
4	1291858-3938GT	ASSY, HOSE, HYD, -8, 4450, STR, 90 From SN GTH250619M-1201	1

silverhorn.co.uk

605.1 611045 Service Brake

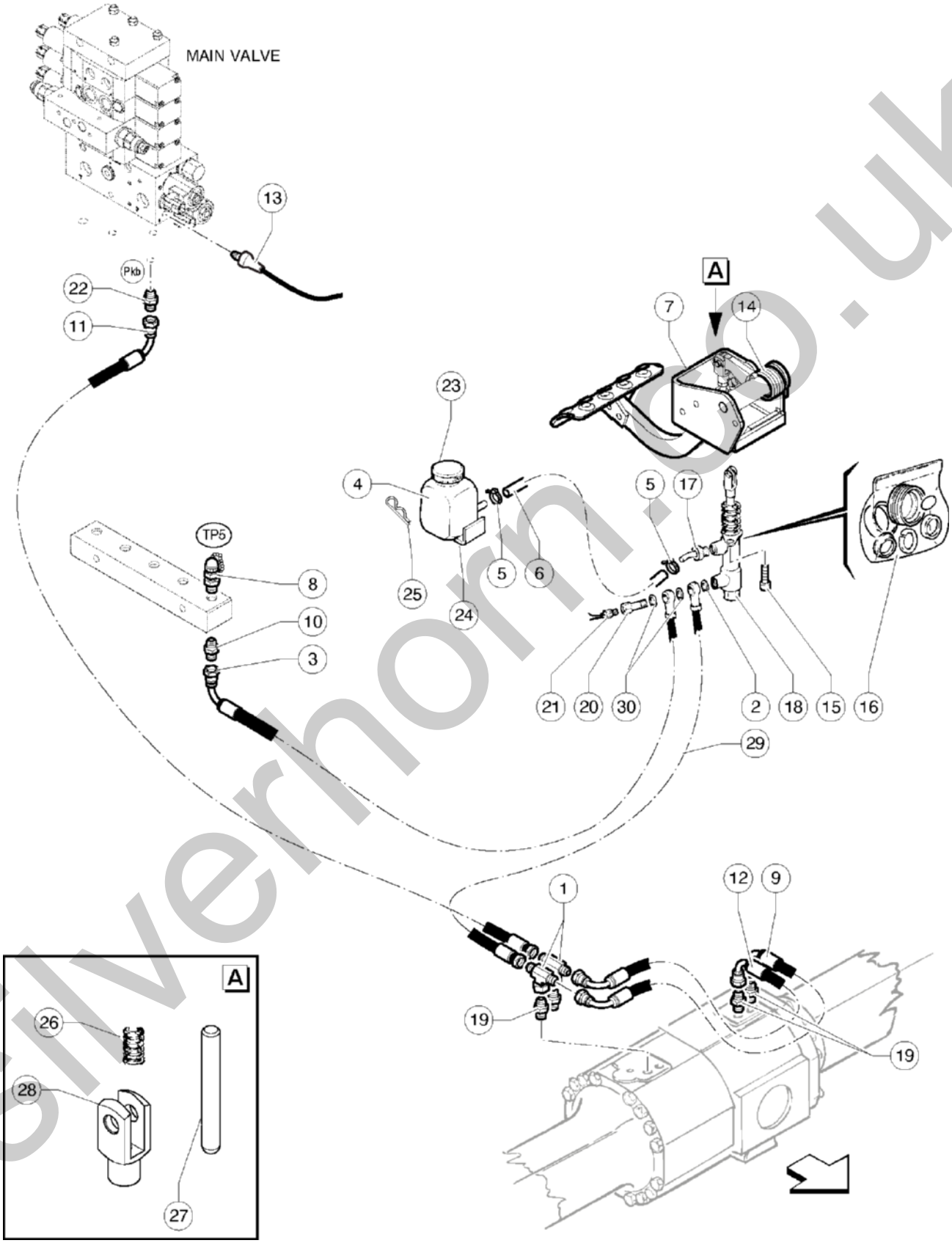

silverhorn.co.uk

605.1 611045 Service Brake

Item	Part No.	Description	Qty.
1	04.0607.0131GT	PIPE FITTING TMF+C 9/16-18 ORFS	2
2	06.0442.0054GT	WASHER	1
3	04.0605.1289GT	Hose R1 X 1/4 1500 D. 14 FD 9/16"-18	1
4	05.4309.0002GT	BRAKE RESERVOIR W/BRACKET	1
5	04.0227.0054GT	CLAMP DN 15/25 LG 9	2
6	07.0723.0092GT	Rubber Hose	1
7	09.4656.0019GT	Complete Brake Pedal	1
8	04.4210.0005GT	TEST PORT MCS M14X1,5	1
9	04.0605.1699GT	Hose R1 X 1/4 LG.450 F90-F90 9/16-18 ORFS a 90° To SN GTH250619M-1200	1
9	1292728-1772GT	ASSY, HOSE, HYD, -4, 3260, 90, 90,@90° From SN GTH250619M-1201	1
10	04.0607.0153GT	PIPE FITTING 14X1.5X9/16-18 ORFS	1
11	04.0605.1473GT	Hose R1 X 1/4 LG.3000 FD- F90 9/16-18 ORFS To SN GTH250619M-1200	1
11	1292233-11812GT	ASSY, HOSE, HYD, -4, 3260, STR, 90 From SN GTH250619M-1201	1
12	04.0605.1702GT	Hose R1 X 1/4 LG.350 F90-F90 9/16-18 ORFS 95° To SN GTH250619M-1200	1
12	1292731-1378GT	ASSY, HOSE, HYD, -4, 3260, 90, 90@95° From SN GTH250619M-1201	1
13	56.0012.0027GT	SWITCH, NEGATIVE BRAKE	1
14	07.0730.0080GT	Spring	1
15	01.0003.0203GT	SCREW,TCEI,M8X20 UNI 8.8 ZN	2
16	07.4529.0027GT	SEAL KIT	1
17	09.0803.0088GT	KNURLED COUPLING	1
18	05.4309.0001GT	Pump	1
19	04.0607.0180GT	PIPE FITTING M10X1- 9/16-18 ORFS	4
20	05.0401.0017GT	Drilled Screw M12	1
21	05.4329.0003GT	Pressure Switch	1
22	04.0607.0113GT	PIPE FITTING 1/4 BSPX9/16-18 ORFS	1
23	07.0730.0083GT	PLUG	1
24	07.0730.0082GT	BRACKET	1

silverhorn.co.uk

605.1 611045 Service Brake

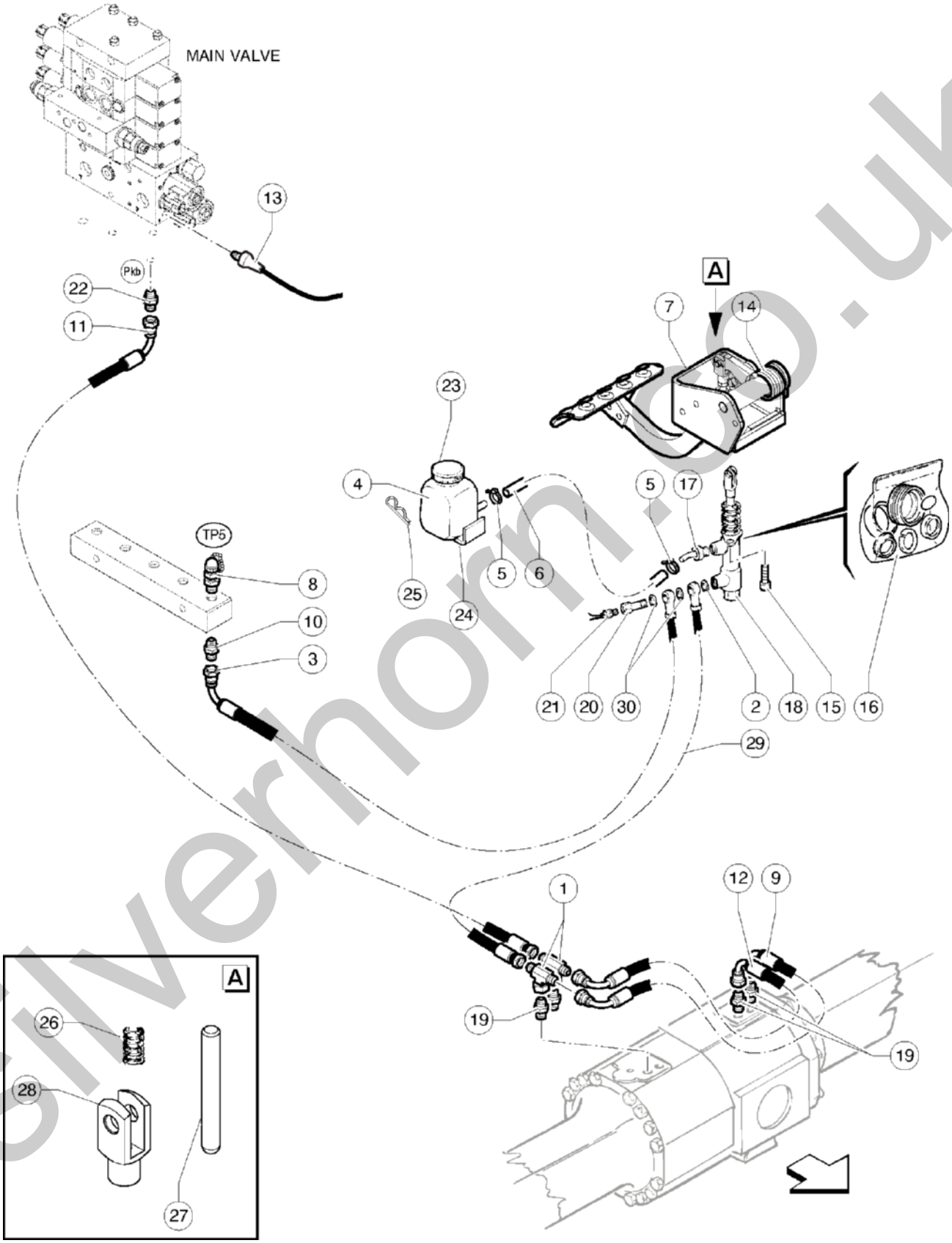

silverhorn.co.uk

605.1 611045 Service Brake

Item	Part No.	Description	Qty.
25	07.0730.0081GT	CLIP	1
26	07.0730.0084GT	RUBBER HOOD	1
27	07.0730.0085GT	PIN To Be Replaced Together With Position 28	1
28	07.0730.0086GT	FORK To Be Replaced Together With Position 27	1
29	04.0605.0653GT	HOSE R1X1/4 LG 1850 HOLE D14 FD 9/16	1
30	06.0442.0119GT	BONDED RING M14 (9/16)	2

silverhorn.co.uk

606.1 611046 Main Valve

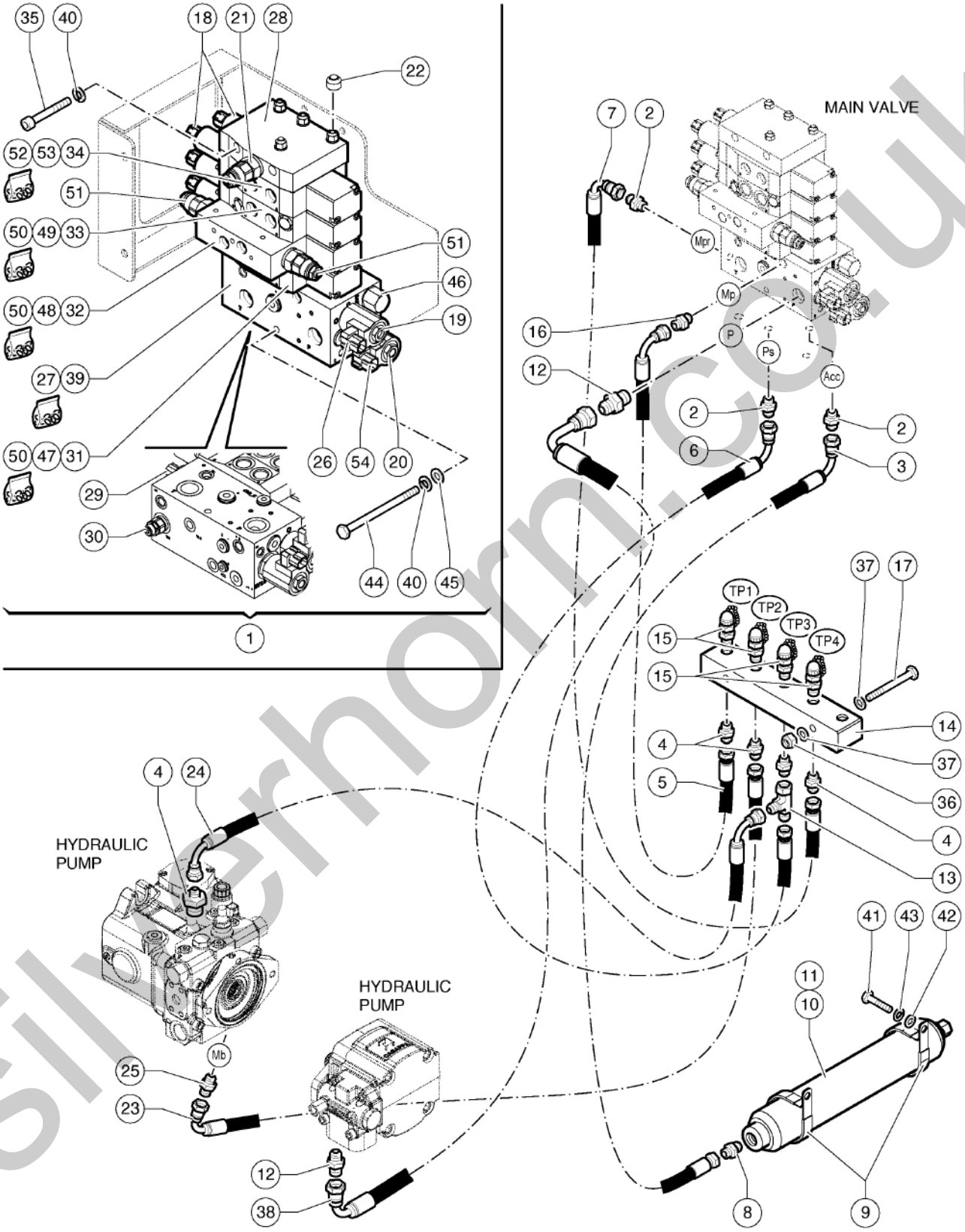

silverhorn.co.uk

606.1 611046 Main Valve

Item	Part No.	Description	Qty.
1	04.4236.0101GT	Main Valve	1
2	04.0607.0113GT	PIPE FITTING 1/4 BSPX9/16-18 ORFS	3
3	04.0605.0766GT	Flexible Hose R2 X 1/4 LG. 2600 FD - F90 9/16"-18 ORFS To SN GTH250619M-1200	1
3	1292235-10237GT	ASSY, HOSE, HYD, -4, 5800, 90, STR	1
		From SN GTH250619M-1201	
4	04.0607.0153GT	PIPE FITTING 14X1.5X9/16-18 ORFS	5
5	04.0605.1418GT	HOSE R2 X 1/4 2500 FD-F90 9/16"-18 ORFS To SN GTH250619M-1200	1
5	1292235-9843GT	ASSY, HOSE, HYD, -4, 5800, 90, STR	1
		From SN GTH250619M-1201	
6	04.0605.1420GT	Hose R1 X 1/4 2450 FD-F90 9/16"-18 ORFS To SN GTH250619M-1200	1
6	1292233-9646GT	ASSY, HOSE, HYD, -4, 3260, STR, 90	1
		From SN GTH250619M-1201	
7	04.0605.1358GT	Flexible Hose R1 X 1/4 L 2600 90 FEM STR FEM 9/16"-18 ORFS To SN GTH250619M-1200	1
7	1292233-10237GT	ASSY, HOSE, HYD, -4, 3260, STR, 90	1
		From SN GTH250619M-1201	
8	04.0607.0167GT	PIPE FITTING 1/2BSPX 9/16-18 ORFS	1
9	04.4227.0016GT	CLAMP D60 HOLE 10.5	2
10	05.4329.0027GT	ACCUMULATOR 0.5 L	1
11	05.4329.0031GT	ACCUMULATORS, EMPTY	1
12	04.0607.0107GT	PIPE FITTING 3/4"BSP X1"3/16-12 ORFS	2
13	04.0607.0115GT	PIPE FITTING TMF+L 9/16-18 ORFS	1
14	53.3001.6753GT	BULKHEAD,TESTPORTS	1
15	04.4210.0005GT	TEST PORT MCS M14X1,5	4
16	04.0607.0114GT	PIPE FITTING 3/8 BSPX9/16-18 ORFS	1
17	01.0001.0207GT	SCREW M8X60 UNI 5737 8.8 ZN	2
18	07.0741.0255GT	Solenoid Valve	8
19	07.0741.0259GT	Cartridge	1
20	07.0741.0258GT	Cartridge	1
21	07.0741.0257GT	Cartridge	1
22	07.0740.0014GT	NUT,PROTECTION	4
23	04.0605.0674GT	HOSE,ETERNITY, 1/4 1500 To SN GTH250619M-1200	1

silverhorn.co.uk

606.1 611046 Main Valve

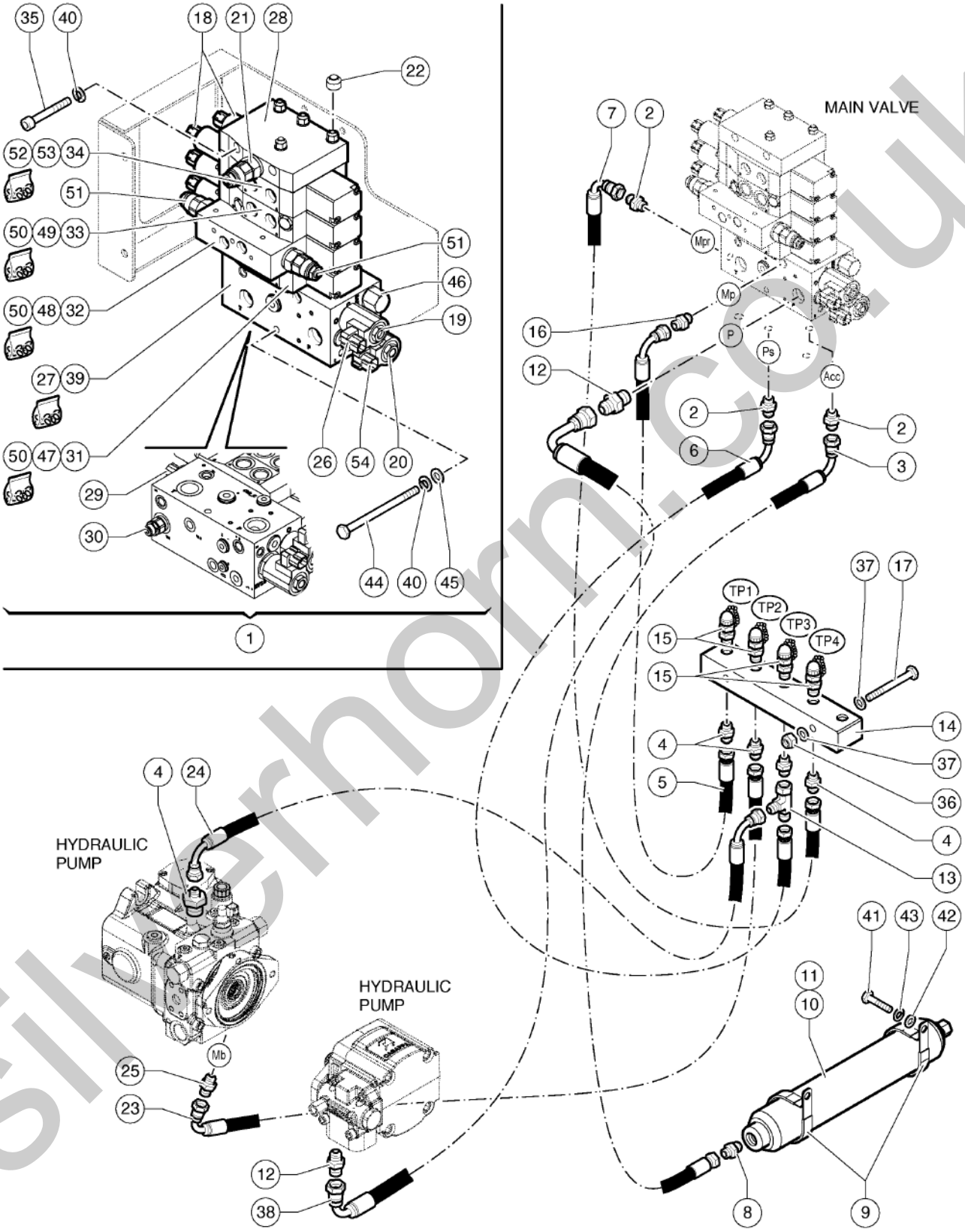

silverhorn.co.uk

606.1 611046 Main Valve

Item	Part No.	Description	Qty.
23	1292318-5906GT	ASSY, HOSE, HYD, -4, 6500, 90, STR	1
24	04.0605.1419GT	From SN GTH250619M-1201 Hose R1 X 1/4 1550 F90-F90 9/16"-18 ORFS A 270 To SN GTH250619M-1200	1
24	1292730-6103GT	ASSY, HOSE, HYD, -4, 3260, 90, 90,@270°	1
25	04.0607.0103GT	From SN GTH250619M-1201 PIPE FITTING M12X1.5 X 9/16-18 ORFS	1
26	07.0741.0058GT	SOLENOID VALVE	1
27	07.0741.0253GT	Inlet Seal Kit Coupling seal kit from item 39 to item 31	1
28	07.0741.0252GT	MANIFOLD CLOSING	1
29	07.0741.0261GT	Valve	1
30	07.0741.0260GT	Valve	1
31	07.0741.0248GT	Boom Lifting Section	1
32	07.0741.0249GT	Fork Levelling Section	1
33	07.0741.0250GT	Auxiliary Circuit Section	1
34	07.0741.0251GT	Boom Extension Section	1
35	01.0003.0960GT	SCREW M8X100 UNI 5931 8.8 ZN	2
36	01.0023.0054GT	NUT,M8 UNI 7473 6S ZN	2
37	01.0031.0055GT	FLAT WASHER D8 UNI 6592 ZN	2
38	04.0605.1414GT	Hose 3/4 2500 F90 F90 height 1" 3/16 ORFS To SN GTH250619M-1200	1
38	1292320-11812GT	ASSY, HOSE, HYD, -12, 5000, 90, 90,@135°	1
39	07.0741.0247GT	From SN GTH250619M-1201 MANIFOLD INLET	1
40	01.4032.0003GT	Spring Washer D 8 ZN	3
41	01.0001.0254GT	SCREW M8X20 UNI 5739 8.8 ZN	2
42	01.0031.0055GT	FLAT WASHER D8 UNI 6592 ZN	2
43	01.4032.0003GT	Spring Washer D 8 ZN	2
44	01.4001.0034GT	SCREW TE M8X120 UNI 5737 8.8 ZN	1
45	01.0031.0055GT	FLAT WASHER D8 UNI 6592 ZN	1
46	07.0741.0269GT	Valve	1
47	07.0741.0262GT	Spool kit	1

silverhorn.co.uk

606.1 611046 Main Valve

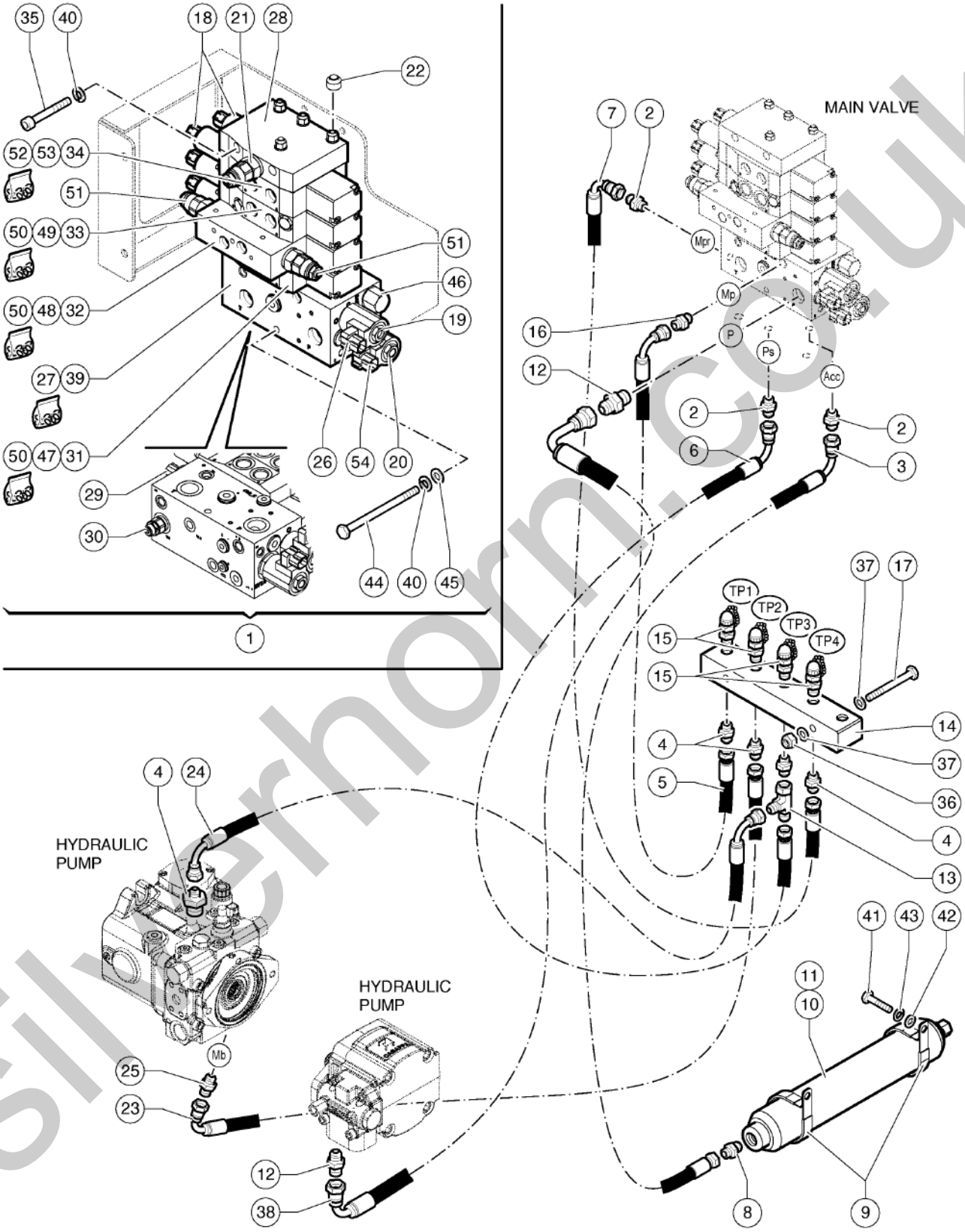

silverhorn.co.uk

606.1 611046 Main Valve

Item	Part No.	Description	Qty.
48	07.0741.0263GT	Spool kit	1
49	07.0741.0264GT	Spool kit	1
50	07.0741.0254GT	SECTION SEAL KIT Coupling seal kit from item 31 to item 32, from 32 to 33, from 33 to 34	3
51	07.0741.0270GT	Overcenter Valve	2
52	07.0741.0271GT	Section Seal Kit Coupling seal kit from item 34 to item 28	1
53	07.0741.0277GT	Spool Kit	1
54	07.0741.0268GT	Solenoid	1

silverhorn.co.uk

607.1 611047 Tank And Exchanger - IIIA Engine

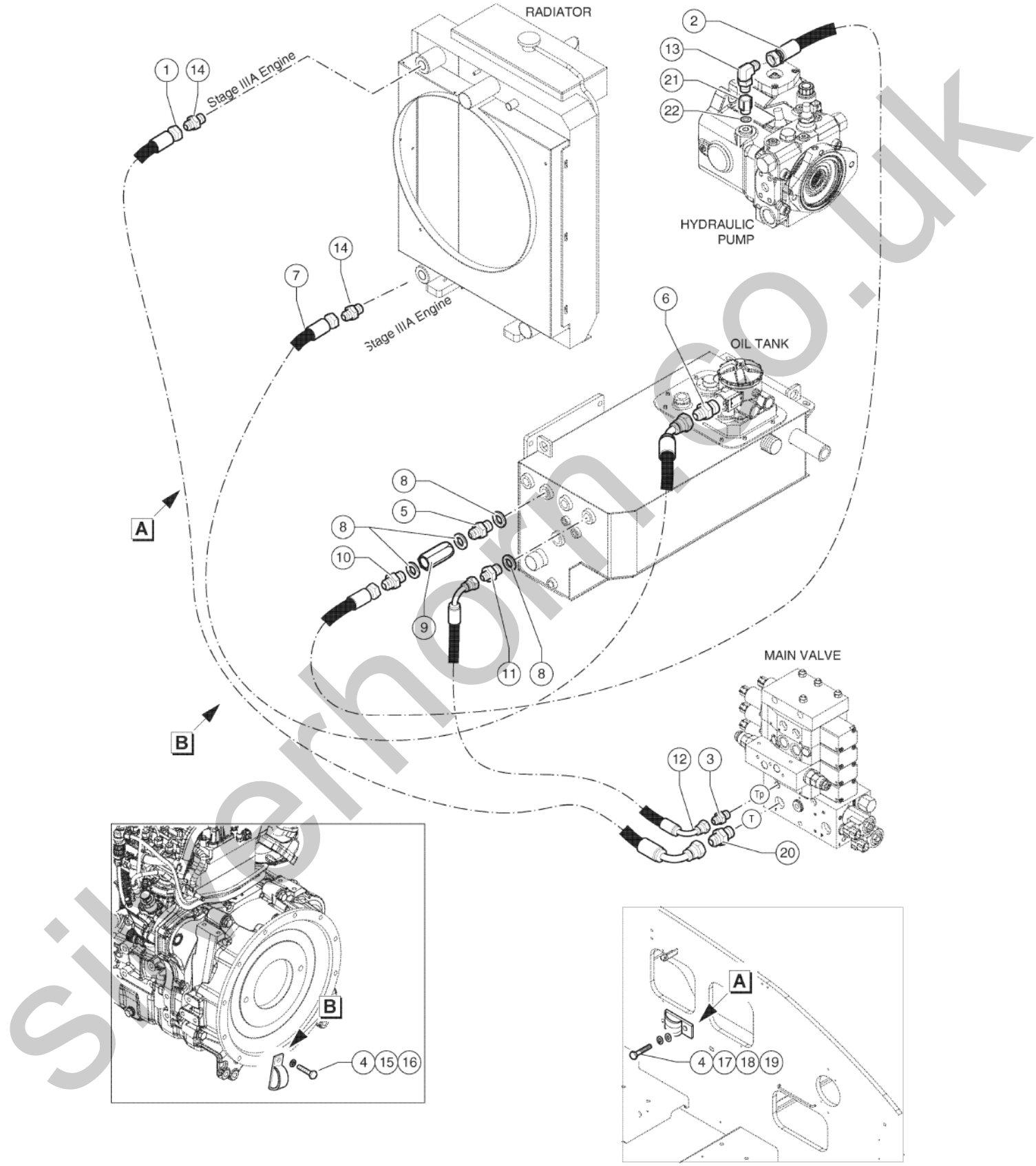

silverhorn.co.uk

607.1 611047 Tank And Exchanger - IIIA Engine

Item	Part No.	Description	Qty.
1	04.0605.1784GT	Hose R4 X 1" Lg. 4100 F90 ? FD 1"7/16?12 ORFS	1
2	04.0605.1446GT	Hose R1 X 3/4 800 FD FD 1"3/16-12 ORFS To SN GTH250619M-1200	1
2	1292248-3150GT	ASSY, HOSE, HYD, -12, 1520, STR, STR From SN GTH250619M-1201	1
3	04.0607.0163GT	PIPE FITTING 1/4BSPX11/16-16 ORFS	1
4	04.4227.0016GT	CLAMP D60 HOLE 10.5	2
5	04.0600.0046GT	PIPE FITTING 3/4X 3/4 BSP	1
6	04.0607.0179GT	PIPE FITTING 1"1/4BSP-1"7/16-12 ORFS	1
7	04.0605.1781GT	Hose R4X 1" Lg. 2600 F45 ? F45 1"7/16?12 ORFS A 200° Only For Stage IIIA Engine	1
8	06.0442.0124GT	BONDED RING 3/4	4
9	04.4239.0083GT	Valve Vuc 3/4 8 Bar	1
10	04.0607.0107GT	PIPE FITTING 3/4"BSP X1"3/16-12 ORFS	1
11	04.0607.0139GT	PIPE FITTING 3/4BSPX11/16-16 ORFS	1
12	04.0605.1417GT	HOSE R1X3/8 LG 1800 F90-F9011/16-16 ORFS To SN GTH250619M-1200	1
12	1292247-7087GT	ASSY, HOSE, HYD, -6, 2610, 90, 90 From SN GTH250619M-1201	1
13	04.0607.0866GT	90° FITTING M-M M22x1,5 ISO 6149 X 1 3/16"-12 ORFS	1
14	04.0607.0142GT	PIPE FITTING 1" GASX1-7/16-12 ORFS	2
15	01.0001.0355GT	SCREW M10X25 UNI 5739 8.8 ZN	1
16	01.4032.0004GT	Spring Washer D10 ZN	1
17	01.0001.0254GT	SCREW M8X20 UNI 5739 8.8 ZN	1
18	01.4032.0003GT	Spring Washer D 8 ZN	1
19	01.0031.0055GT	FLAT WASHER D8 UNI 6592 ZN	1
20	04.0607.0196GT	PIPE FITTING 3/4"BSP/1"7/16-12 ORFS	1
21	04.0600.0285GT	FITTING M-F OP M 22x1.5 . X F 22x1.5 . 25 LG.	1
22	06.0442.0135GT	BONDED RING M 22	1

silverhorn.co.uk

608.1 611048 Tank And Exchanger - IIIB Engine and Stage V Engine

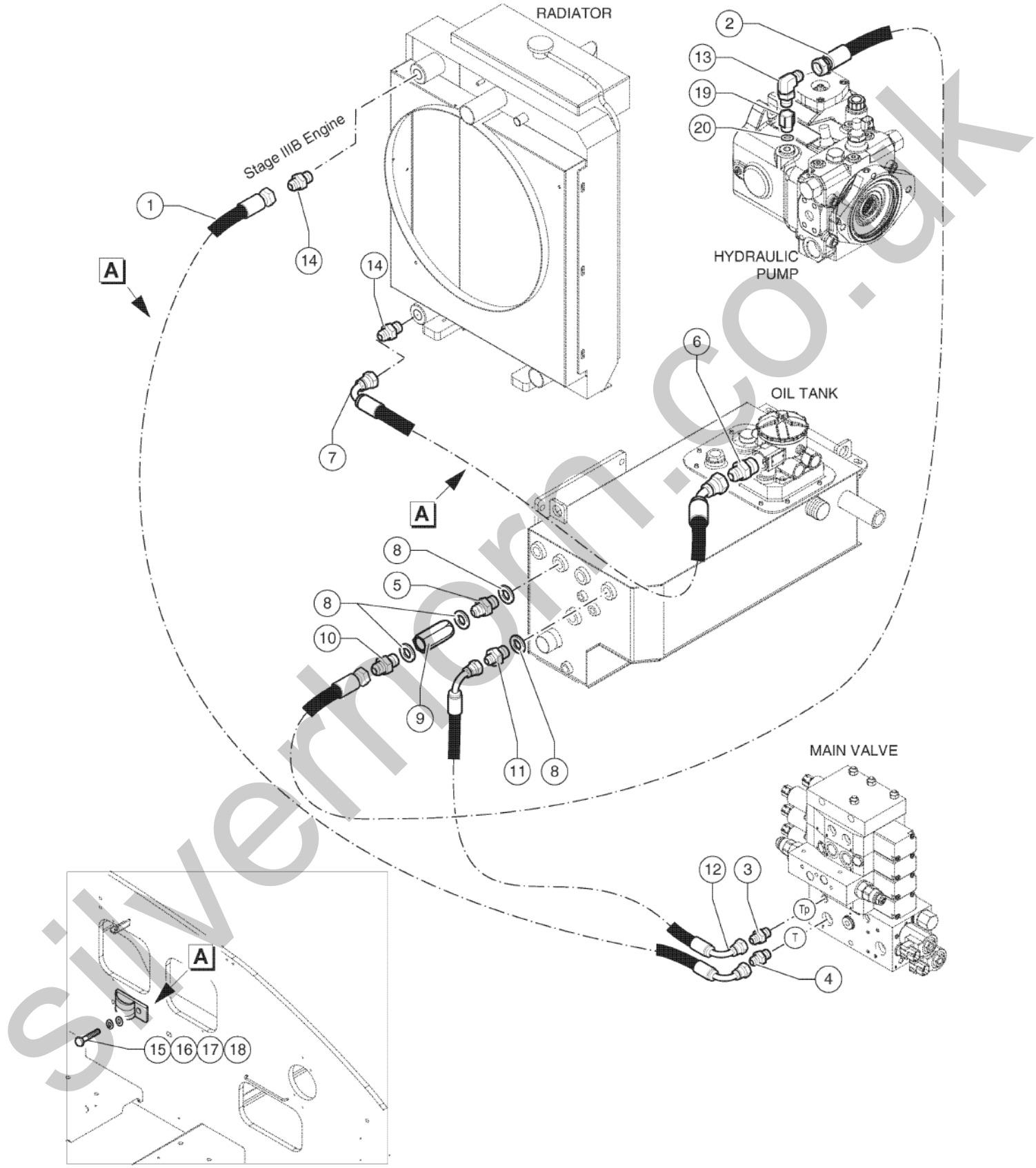

silverhorn.co.uk

608.1 611048 Tank And Exchanger - IIIB Engine and Stage V Engine

Item	Part No.	Description	Qty.
1	04.0605.1779GT	Hose R4 X 1" Lg. 4500 F90 - FD 1"7/16-12 ORFS To SN GTH250619M-1200	1
1	1291907-17717GT	ASSY, HOSE, HYD, -16, 250, STR, 90 From SN GTH250619M-1201	1
2	04.0605.1446GT	Hose R1 X 3/4 800 FD FD 1"3/16-12 ORFS To SN GTH250619M-1200	1
2	1292248-3150GT	ASSY, HOSE, HYD, -12, 1520, STR, STR From SN GTH250619M-1201	1
3	04.0607.0163GT	PIPE FITTING 1/4BSPX11/16-16 ORFS	1
4	04.0607.0196GT	PIPE FITTING 3/4"BSP/1"7/16-12 ORFS	1
5	04.0600.0046GT	PIPE FITTING 3/4X 3/4 BSP	1
6	04.0607.0179GT	PIPE FITTING 1"1/4BSP-1"7/16-12 ORFS	1
7	04.0605.1706GT	HOSE To SN GTH250619M-1200	1
7	1292016-9646GT	ASSY, HOSE, HYD, -16, 250, 45, 90, @90° From SN GTH250619M-1201	1
8	06.0442.0124GT	BONDED RING 3/4	4
9	04.4239.0013GT	Valve 3/4 PA 2.5	1
10	04.0607.0107GT	PIPE FITTING 3/4"BSP X1"3/16-12 ORFS	1
11	04.0607.0139GT	PIPE FITTING 3/4BSPX11/16-16 ORFS	1
12	04.0605.1417GT	HOSE R1X3/8 LG 1800 F90-F9011/16-16 ORFS To SN GTH250619M-1200	1
12	1292247-7087GT	ASSY, HOSE, HYD, -6, 2610, 90, 90 From SN GTH250619M-1201	1
13	04.0607.0866GT	90° FITTING M-M M22x1,5 ISO 6149 X 1 3/16"-12 ORFS	1
14	04.0607.0142GT	PIPE FITTING 1" GASX1-7/16-12 ORFS	2
15	04.4227.0016GT	CLAMP D60 HOLE 10.5	2
16	01.0001.0254GT	SCREW M8X20 UNI 5739 8.8 ZN	2
17	01.4032.0003GT	Spring Washer D 8 ZN	2
18	01.0031.0055GT	FLAT WASHER D8 UNI 6592 ZN	2
19	04.0600.0285GT	FITTING M-F OP M 22x1.5 . X F 22x1.5 . 25 LG.	1
20	06.0442.0135GT	BONDED RING M 22	1

silvernorn.co.uk

609.1 611049 Suction System Hydraulic Pumps

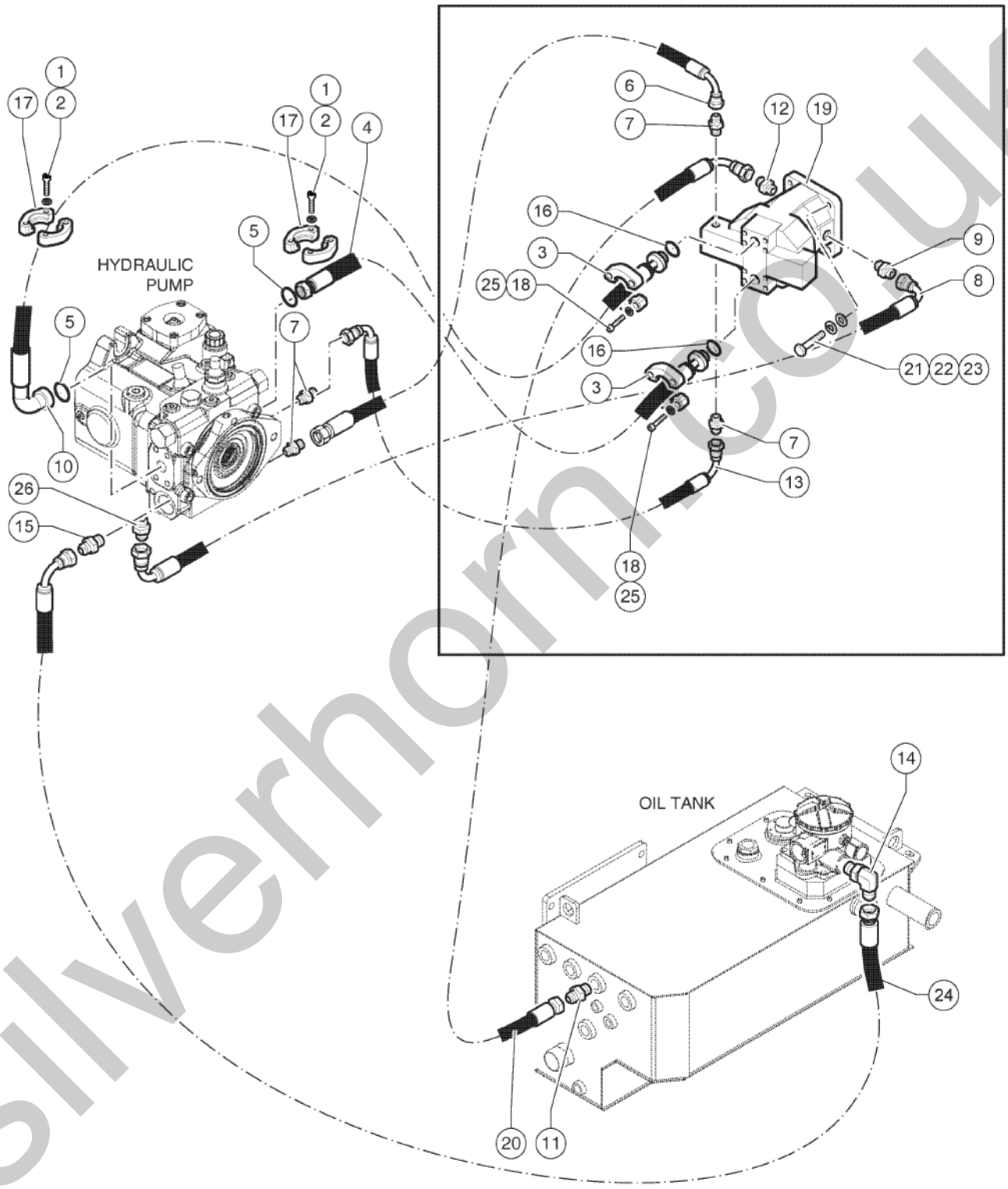

silverhorn.co.uk

609.1 611049 Suction System Hydraulic Pumps

Item	Part No.	Description	Qty.
1	01.0003.0257GT	SCREW M10X35 UNI 5931 8.8 ZN	8
2	01.4032.0004GT	Spring Washer D10 ZN	8
3	04.4223.0018GT	Flange	4
4	04.4229.0092GT	HOSE RC50TC-12 (500 BAR) 3/4 720 FL45 D.42 FLD D.47 To SN GTH250619M-1200	1
4	1292035-2835GT	ASSY, HOSE, HYD, -12, 7250, 45, STR From SN GTH250619M-1201	1
5	06.0401.1510GT	O-Ring	2
6	04.0605.0556GT	HOSE R1X1/4 LG 800 FD F90 9/16-18 ORFS To SN GTH250619M-1200	1
6	1292233-3150GT	ASSY, HOSE, HYD, -4, 3260, STR, 90 From SN GTH250619M-1201	1
7	04.0607.0103GT	PIPE FITTING M12X1.5 X 9/16-18 ORFS	4
8	04.0605.1819GT	HOSE R1 X 3/4 700 F90 1" 3/16-12 F90 1 3/16"-12 A90° To SN GTH250619M-1200	1
8	1292715-2756GT	ASSY, HOSE, HYD, -12, 1520, 90, 90, @90 From SN GTH250619M-1201	1
9	04.0607.0842GT	PIPE FITTING M27x2 ISO 6149-2 X M 1 3/16"-12 ORFS	1
10	04.4229.0093GT	HOSE RC50TC-12 500BAR 3/4 1200 FL90 D.42 FLD D.47 To SN GTH250619M-1200	1
10	1292036-4725GT	ASSY, HOSE, HYD, -12, 7250, 90, STR From SN GTH250619M-1201	1
11	04.0607.0107GT	PIPE FITTING 3/4"BSP X1"3/16-12 ORFS	1
12	04.0607.0865GT	PIPE FITTING M22x1,5 ISO 6149-2 X M 1 3/16"-12 ORFS	1
13	04.0605.0220GT	Hose R1 X 1/4 LG. 900 F90 F90 9/16-18 ORFS To SN GTH250619M-1200	1
13	1292234-3544GT	ASSY, HOSE, HYD, -4, 3260, 90, 90,@180° From SN GTH250619M-1201	1
14	04.0607.0793GT	FITTING,PIPE,90,1" BSP	1
15	04.0607.0867GT	FITTING M33X2 X 1"11-16-12ORFS ISO9974	1
16	06.0401.1509GT	O-Ring	2
17	04.4223.0017GT	Flange	4
18	01.0001.0402GT	SCREW M12X45 UNI 5737 8.8 ZN	8
19	04.4235.0066GT	Hydraulic Motor	1
20	04.0605.0136GT	HOSE R1X3/4 LG 900 FD F90 1"3/16-12 ORFS To SN GTH250619M-1200	1
20	1292232-3544GT	ASSY, HOSE, HYD, -12, 1520, STR, 90 From SN GTH250619M-1201	1
21	01.0001.1557GT	SCREW, HHC, M16 x 50 LG.8.8 ZN UNI 5739 , DIN 933	4

silverhorn.co.uk

609.1 611049 Suction System Hydraulic Pumps

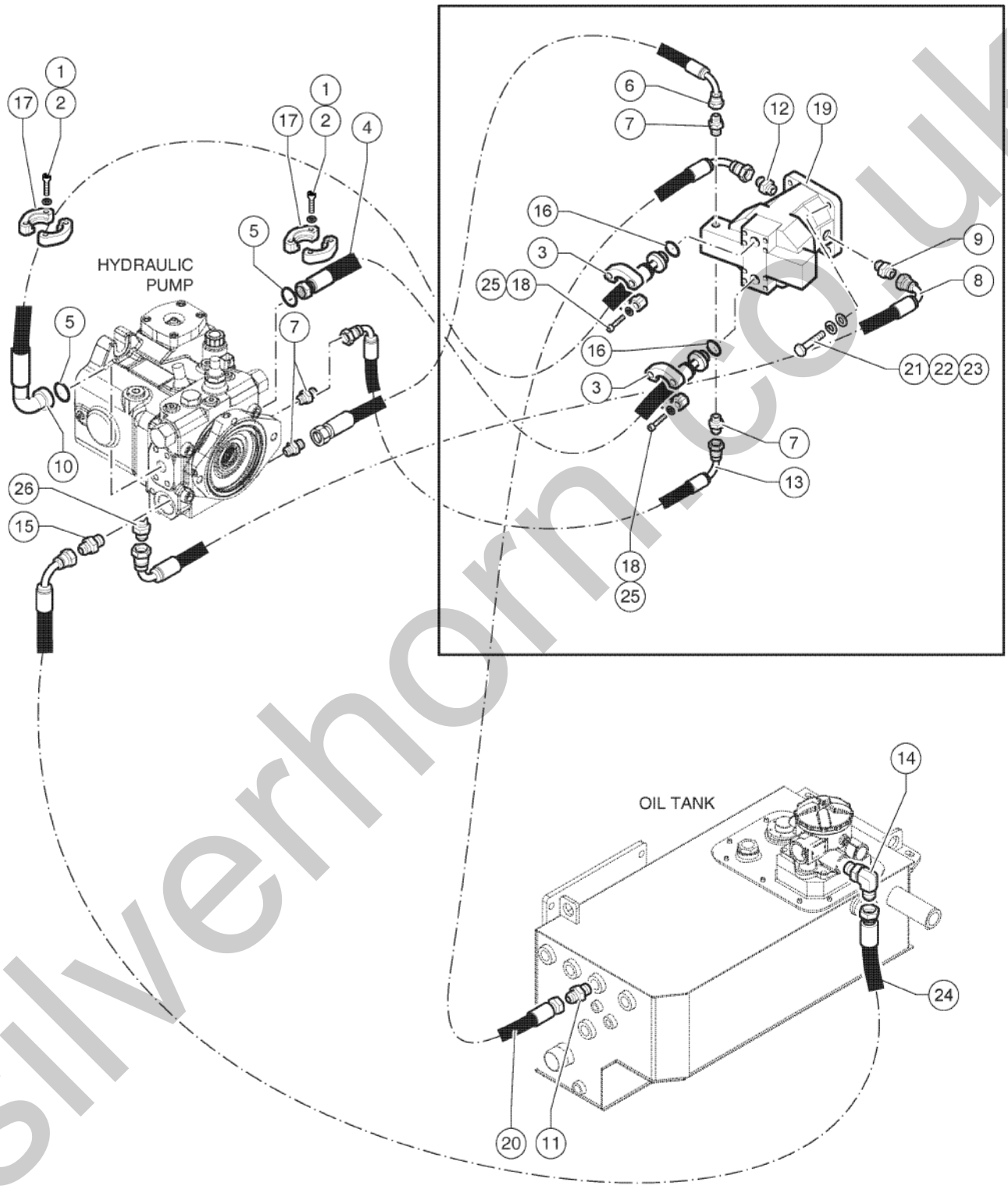

silverhorn.co.uk

609.1 611049 Suction System Hydraulic Pumps

Item	Part No.	Description	Qty.
22	01.4032.0007GT	SPRING WASHER D16 ZN	4
23	01.0031.0059GT	FLAT WASHER D16 UNI 6592 ZN	4
24	04.0605.1818GT	HOSE R4 X 1-1/4 2050 SF 1" 11/16-12 F90 1 11/16"-12 To SN GTH250619M-1200	1
24	1291908-8071GT	ASSY, HOSE, HYD, -20, 200, 90, STR From SN GTH250619M-1201	1
25	01.4032.0005GT	SPRING WASHER D12 ZN	8
26	04.0607.0182GT	Pipe Fitting M22X1,5X 1"3/16-12	1

silverhorn.co.uk

610.1 611050 Power Steering System

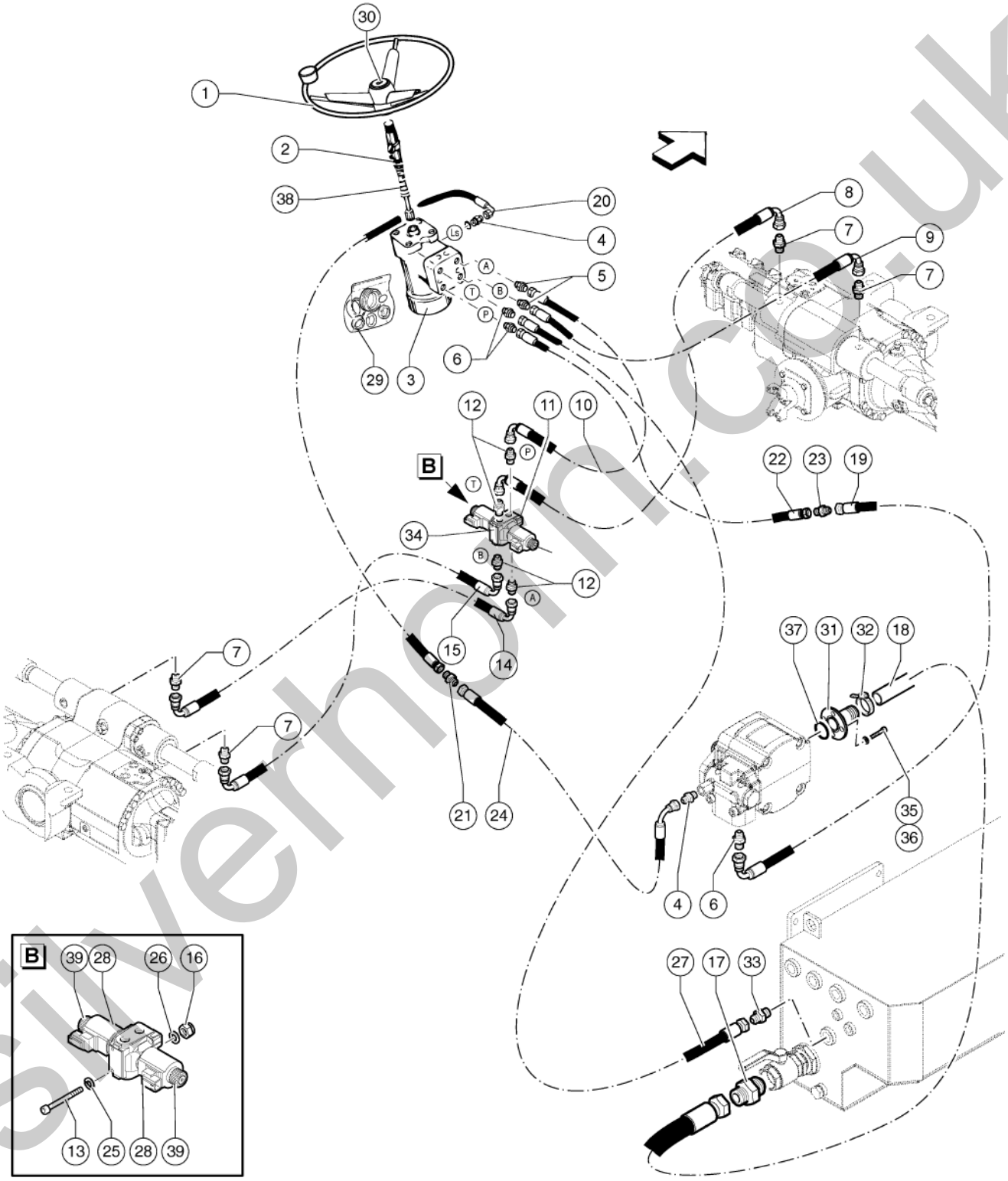

silverhorn.co.uk

610.1 611050 Power Steering System

Item	Part No.	Description	Qty.
1	09.4636.0040GT	Steering Wheel	1
2	56.0016.0209GT	Steering Column Kit	1
3	09.4636.0012GT	POWER STEERING	1
4	04.0607.0113GT	PIPE FITTING 1/4 BSPX9/16-18 ORFS	2
5	04.0607.0110GT	PIPE FITTING 1/2BSP x 11/16-16 ORFS	2
6	04.0607.0111GT	PIPE FITTING 1/2 BSPX13/16-16 ORFS	3
7	04.0607.0117GT	PIPE FITTING 3/8BSPX11/16-16 ORFS	4
8	04.0605.1715GT	Hose R2 X 3/8 560 F90 F90 11/16"-16 ORFS To SN GTH250619M-1200	1
8	1292236-2205GT	ASSY, HOSE, HYD, -6, 4800, 90, 90 From SN GTH250619M-1201	1
9	04.0605.1494GT	Hose R2 X 3/8 1250 F45 . F90 11/16"-16 120‹	1
10	04.0605.1290GT	Hose R2 X 3/8" Lg. 1000 F45 11/16"-16 - F90 11/16"-16 A 90°	1
11	04.4240.0052GT	SOLENOID VALVE	1
12	04.0607.0117GT	PIPE FITTING 3/8BSPX11/16-16 ORFS	4
13	01.0001.0106GT	SCREW M6X50 UNI 5737 8.8 ZN	2
14	04.0605.0348GT	Hose R2 X 3/8 LG.2200 F90F90 11/16 ORFS To SN GTH250619M-1200	1
14	1292236-8662GT	ASSY, HOSE, HYD, -6, 4800, 90, 90 From SN GTH250619M-1201	1
15	04.0605.1422GT	Hose R2 X 3/8 3050 F90 F90 11/16"-16 ORFS To SN GTH250619M-1200	1
15	1292236-12008GT	ASSY, HOSE, HYD, -6, 4800, 90, 90 From SN GTH250619M-1201	1
16	01.0023.0053GT	STOP NUT M6 UNI 7473 6S ZN	2
17	04.0607.0178GT	Pipe Fitting 1"1/2BSP-1"11/16-12ORF	1
18	04.0605.1426GT	Hose R1 X 1-1/4 750 FD 1" 11/16-12 ORFS To SN GTH250619M-1200	1
18	1292020-3071GT	ASSY, HOSE, HYD, -20, 200, STR From SN GTH250619M-1201	1
19	04.0605.0478GT	Flexible Hose R2 X 1/2" Lg. 700 F90 - FD 13/16"-16 ORFS To SN GTH250619M-1200	1
19	1291858-2756GT	ASSY, HOSE, HYD, -8, 4450, STR, 90 From SN GTH250619M-1201	1
20	04.0605.0299GT	Hose R1 X 1/4 LG. 550 - FD F90 9/16-18 ORFS	1
21	04.0607.0236GT	Pipe Fitting 9/16 ORFS X 9/16 ORFS	1
22	04.0605.0100GT	HOSE R2X1/2 LG 550 FD F45 13/16-16 ORFS	1
23	04.0607.0237GT	FITTING,13/16 ORFS	1

silvernorn.co.uk

610.1 611050 Power Steering System

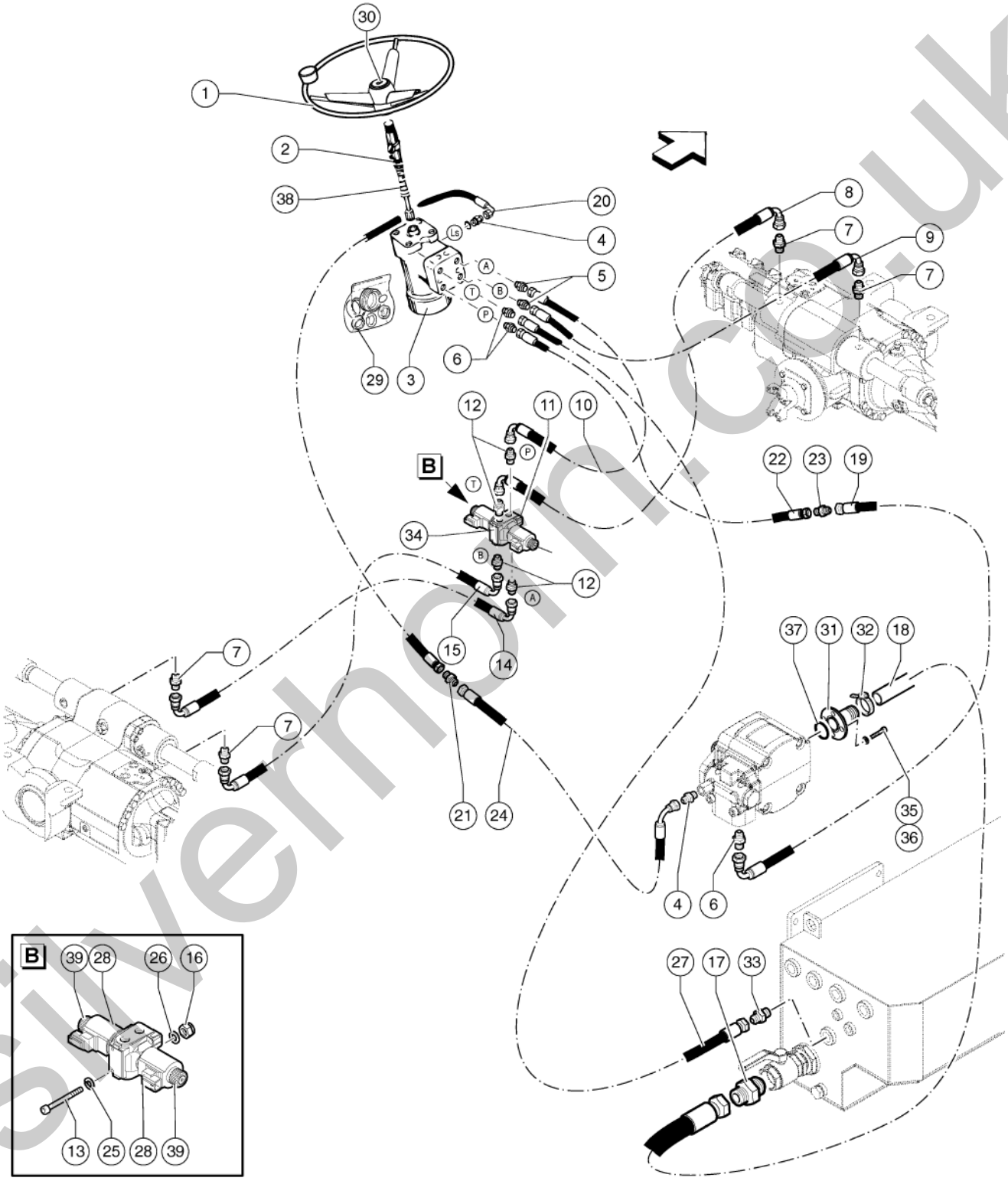

silverhorn.co.uk

610.1 611050 Power Steering System

Item	Part No.	Description	Qty.
24	04.0605.0956GT	Hose R1 X 1/4 LG.950 - FD F90 9/16-18 ORFS To SN GTH250619M-1200	1
24	1292233-3741GT	ASSY, HOSE, HYD, -4, 3260, STR, 90 From SN GTH250619M-1201	1
25	01.0031.0298GT	FLAT WASHER D6 UNI 6593 ZN	2
26	01.0031.0054GT	FLAT WASHER D6 UNI 6592 ZN	2
27	04.0605.0640GT	HOSE R1X1/2 LG 1300 FD F45 13/16 ORFS	1
28	07.4529.0111GT	COIL, VALVE	2
29	07.0706.0043GT	Seal Kit	1
30	09.4636.0041GT	HORN	1
31	53.3001.5700GT	Manifold	1
32	04.4227.0038GT	CLAMP	1
33	04.0607.0121GT	PIPE FITTING 3/4 BSPX13/16-16 ORFS	1
34	04.4240.0052GT	SOLENOID VALVE	1
35	01.4032.0004GT	Spring Washer D10 ZN	4
36	01.0003.0255GT	SCREW M10X25 UNI 5931 8.8 ZN	4
37	06.0401.0123GT	O-RING	1
38	07.0703.0775GT	STEERING COLUMN	1
39	07.0701.0344GT	LOCKNUT	2

silverhorn.co.uk

701.1 611051 Cabin Relay-Fuse Board

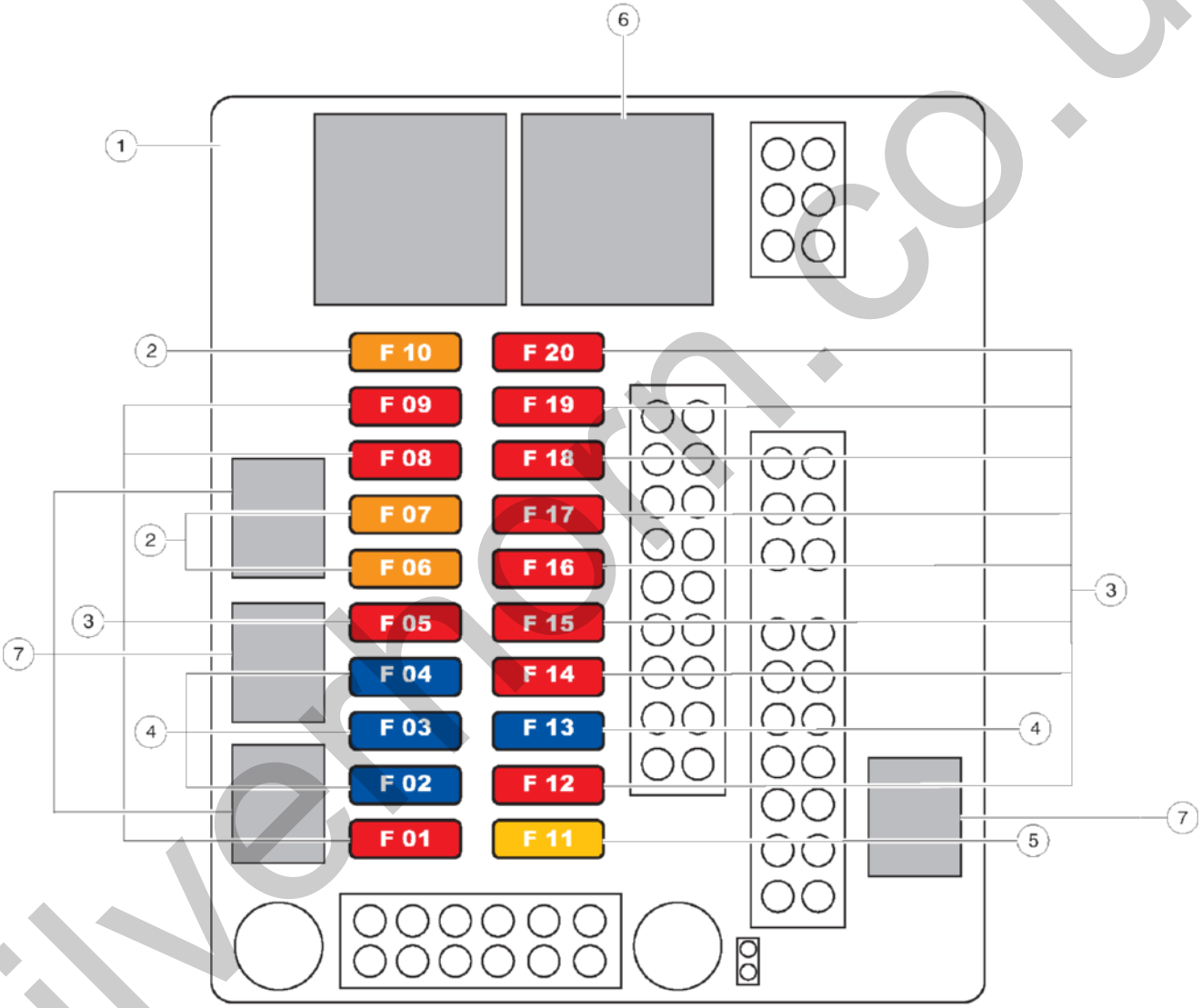

silverhorn.co.uk

701.1 611051 Cabin Relay-Fuse Board

Item	Part No.	Description	Qty.
1	56.0021.0186GT	RELAY FUSE BOARD	1
2	641143GT	FUSE	3
3	07.0703.0148GT	FUSE,10A	12
4	634973GT	Fuse 15A	4
5	07.0703.0071GT	FUSE 25A	1
6	07.0703.0487GT	Intermittence Relay	1
7	56.0006.9213GT	RELAY, 12V	4

silverhorn.co.uk

702.1 611052 Electric Installation, View 1

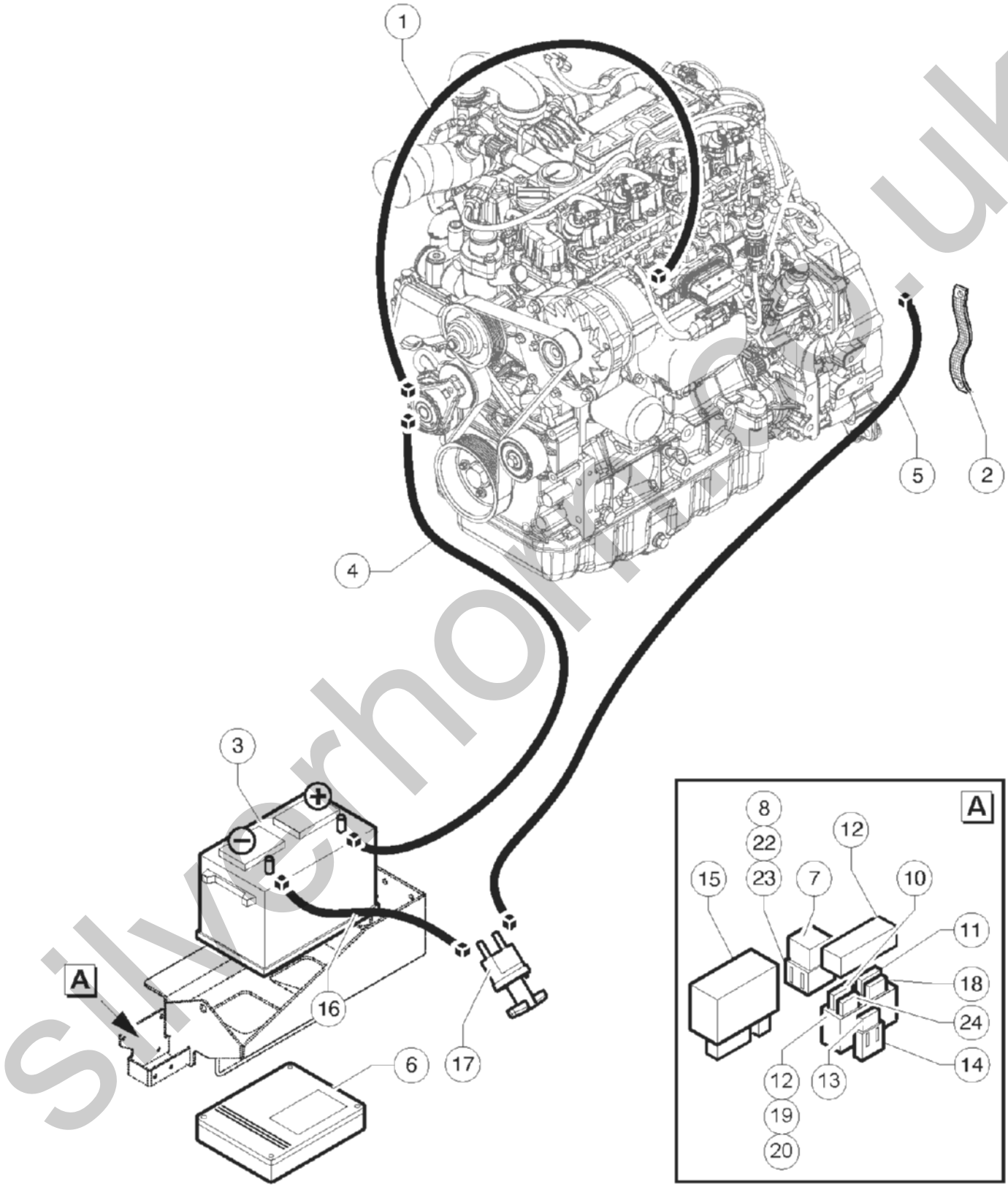

silverhollow.co.uk

702.1 611052 Electric Installation, View 1

Item	Part No.	Description	Qty.
1	55.0602.1023GT	Alternator Line	1
2	56.0008.5216GT	GROUND BRAID	1
3	56.0008.5217GT	BATTERY	1
4	55.0602.1020GT	Positive Battery Cable	1
5	55.0602.1019GT	Negative Battery Cable	1
6		Deutz Control Unit Please Comunicate The Engine Serial Number	1
7	56.0006.9201GT	Relay 12V 50A	1
8	56.0002.0266GT	CONNECTOR	1
10	07.0703.0060GT	FUSE, 50 AMP	1
11	07.0703.0069GT	FUSE,MAXI,30A	1
12	07.0703.0189GT	FUSE HOLDER	1
13	634975GT	Fuse 20A To S/N GTH125619M-1200	1
14	07.0703.0714GT	FUSE HOLDER To S/N GTH125619M-1200	1
15	56.0006.9211GT	Relay 12V 150A	1
16	55.0602.1021GT	Cut-Out Switch Cable	1
17	56.0008.0001GT	BATTERY CUT-OUT SWITCH	1
18	07.0703.0229GT	Fuse Maxi 100A	1
19	56.0002.0333GT	Black 1 way Connector	1
19	56.0001.0049GT	Pin For Black Connector	1
20	56.0002.0264GT	CONNECTOR,1 WAY	1
20	56.0001.0016GT	Pin For Grey Connector	1
22	56.0001.0046GT	PIN For Connector Pin Numbers 1 and 2	2
22	56.0001.0050GT	Small Pin Seal For Connector Pin Numbers 1 and 2	2
23	56.0001.0047GT	Connector Big Pin For Connector Pin Numbers 3 and 5	2
23	56.0001.0051GT	Big Pin Seal For Connector Pin Numbers 3 and 5	2
24	56.0005.0037GT	FUSE,MAXI,20A From S/N GTH125619M-1201	1

silverhorn.co.uk

703.1 611053 Electric Installation, View 2

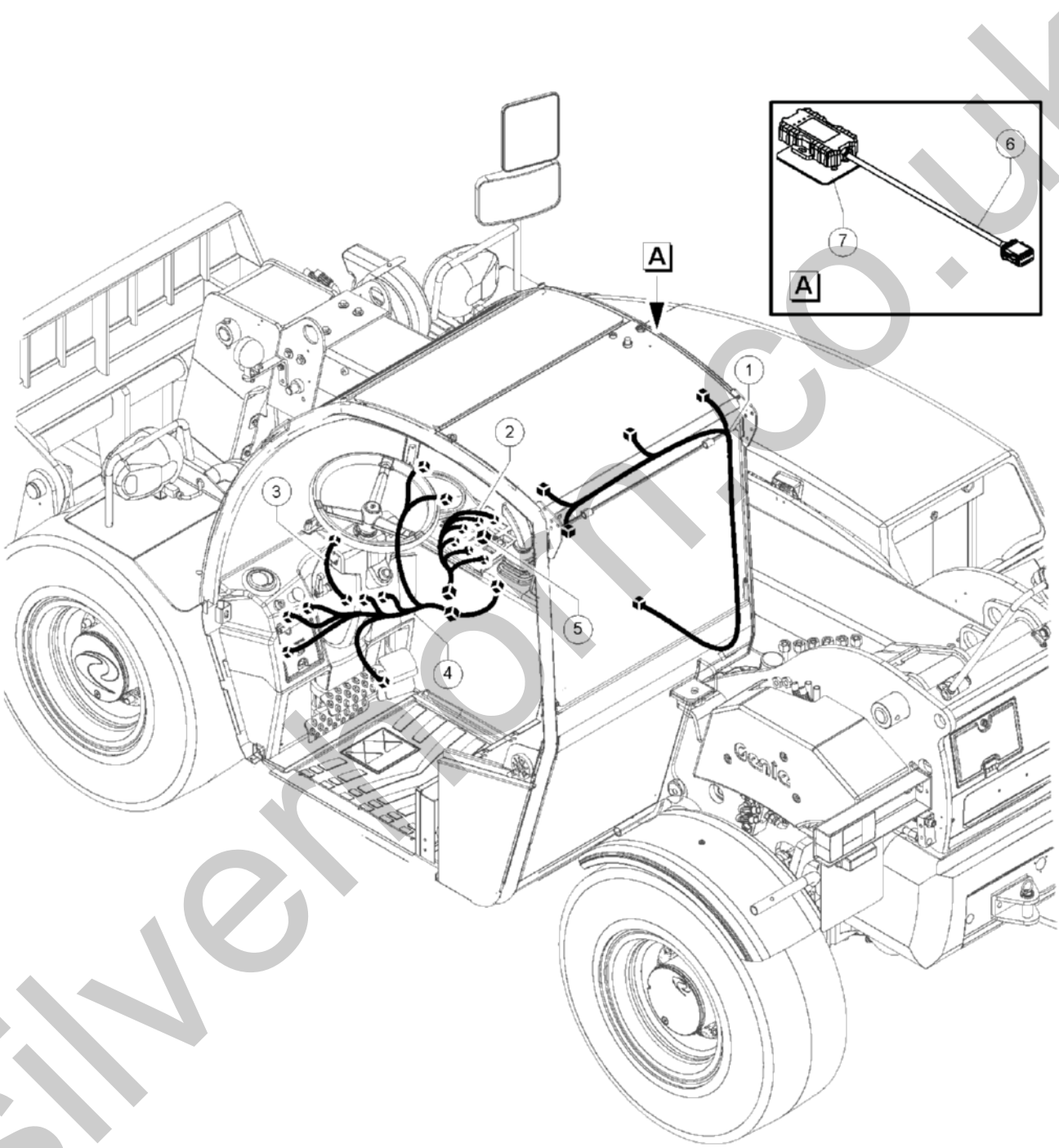

silvermoffco.uk

703.1 611053 Electric Installation, View 2

Item	Part No.	Description	Qty.
1	55.0602.1138GT	Upper Cabin Line	1
2	55.0602.1139GT	Switch Dashboard Line	1
3	55.0602.1150GT	Steering Column Line	1
4	55.0602.1137GT	Lower Cabin Line To S/N GTH250619M-1200	1
4	55.0602.1190GT	HARNESS LOWER CAB From S/N GTH250619M-1201	1
5	56.0002.0351GT	Diode	2
6	1289521GT	MODULE, TELEMATICS, ZTR, M7, EMEA/APAC From S/N GTH250619M-1201	1
7	1289561GT	BRACKET, TELEMATICS From S/N GTH250619M-1201	1

silverhorn.co.uk

704.1 611054 Electric Installation, View 3

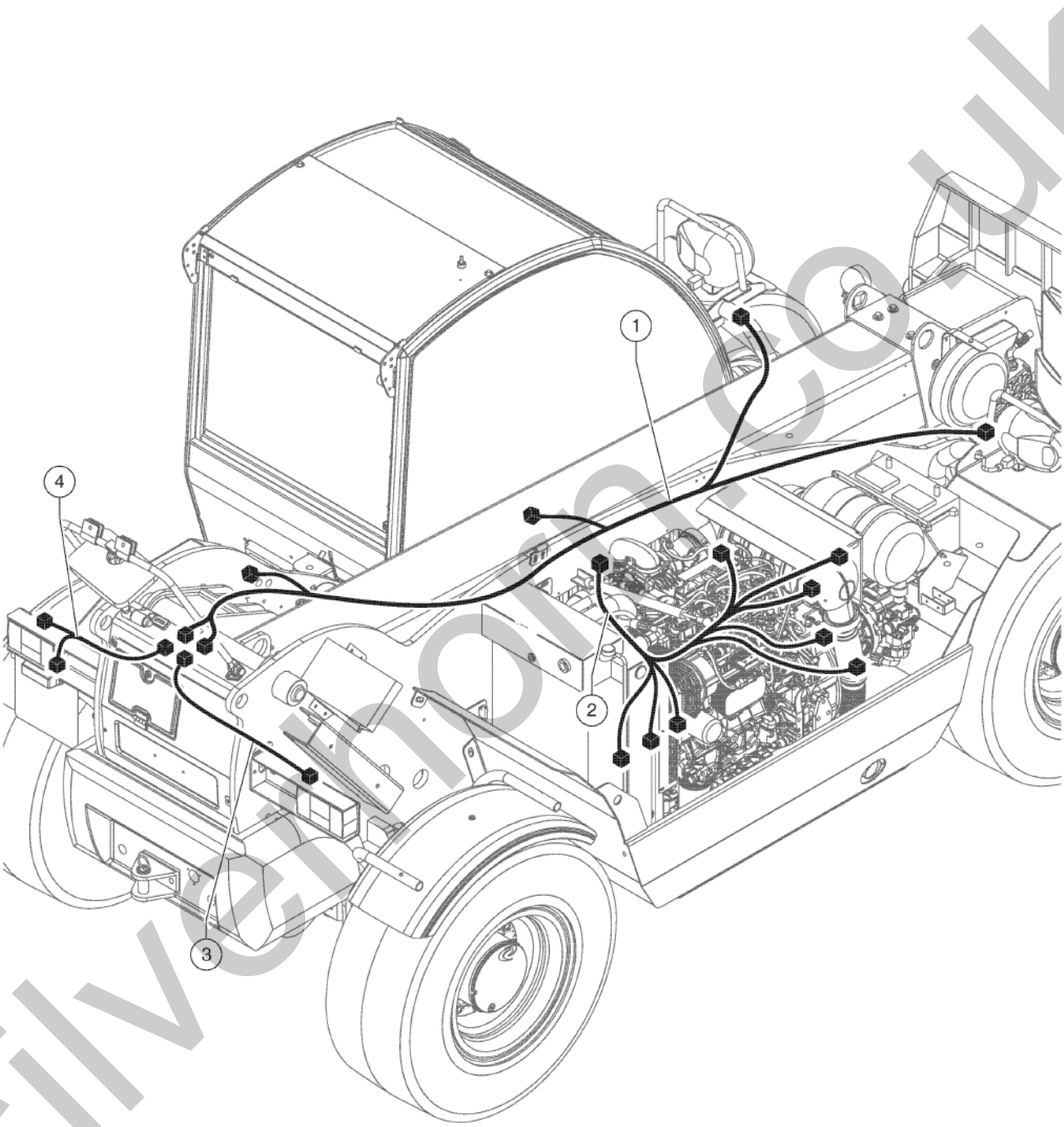

silvermoon.co.uk

704.1 611054 Electric Installation, View 3

Item	Part No.	Description	Qty.
1	55.0602.1140GT	Chassis Line To S/N GTH250619M-1200	1
1	55.0602.1192GT	HARNESSES CHASSIS From S/N GTH250619M-1201	1
2	55.0602.1147GT	Engine Harness To S/N GTH250619M-1200	1
2	55.0602.1191GT	HARNESS ENGINE From S/N GTH250619M-1201	1
3	55.0602.0449GT	REAR RIGHT LIGHT HARNESS	1
4	55.0602.0450GT	Rear Left Light Harness	1

silverhorn.co.uk

705.1 611055 LMI System

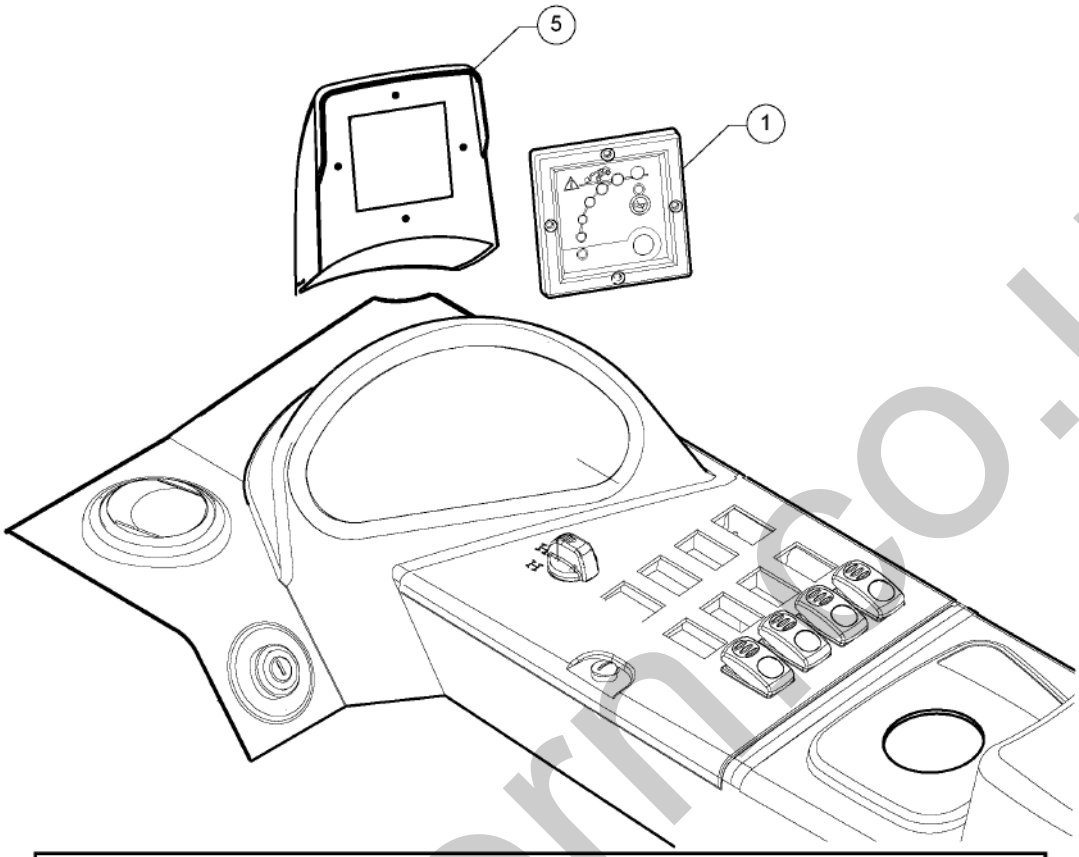

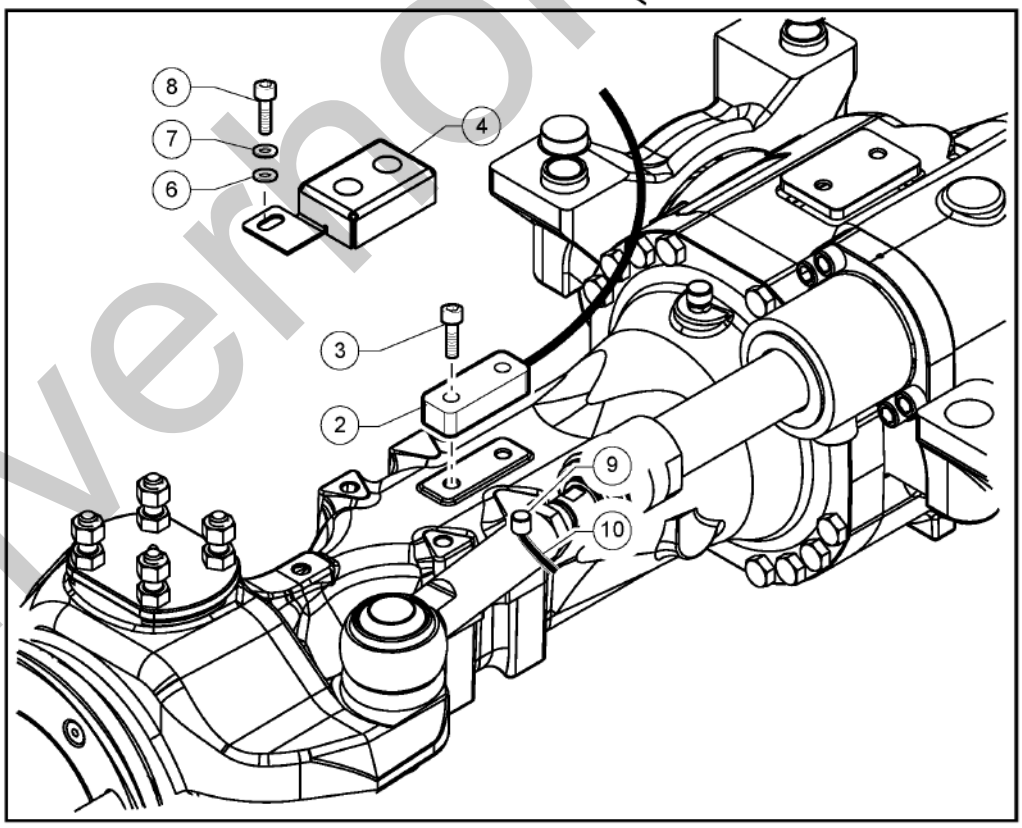

silverhorn.co.uk

705.1 611055 LMI System

Item	Part No.	Description	Qty.
1	56.0016.0132GT	DISPLAY	1
2	09.0802.0043GT	Load Cell	1
3	01.4003.0059GT	SCREW M10X45 UNI 5931 12.9 ZN DIN 912	2
4	51.0903.5195GT	Load Cell Guard	1
5	52.1200.5524GT	Cover	1
6	01.4032.0005GT	SPRING WASHER D12 ZN	1
7	01.0031.0057GT	WASHER, FLAT, D12, UNI 6592, ZN	1
8	01.0001.0503GT	Screw TE M 12x20	1
9	56.0012.0096GT	SENSOR Option	1
10	99087GT	WIRE LOOM,1/4 DIA. SLIT Option	45, 72

silverhorn.co.uk

801.1 611056 Agricolture Towing Hook

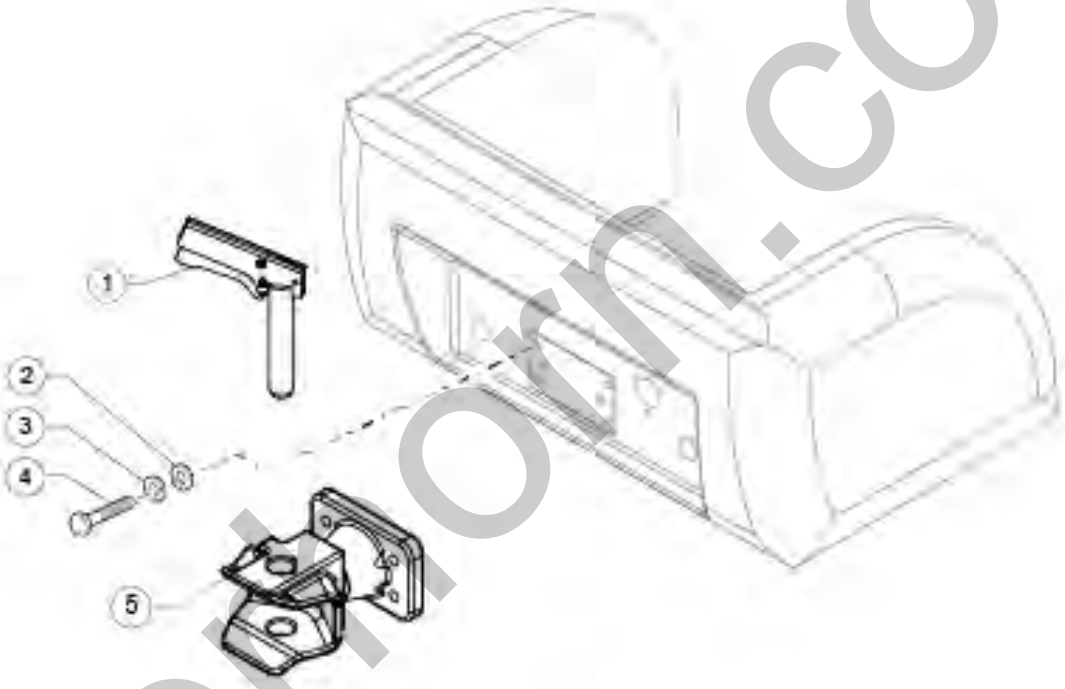

silvermorn.co.uk

801.1 611056 Agricolture Towing Hook

Item	Part No.	Description	Qty.
1	09.0803.0912GT	TOWING HOOK PIN For The First Replacement Buy Item 4 and Item 5	1
2	01.0031.0058GT	FLAT WASHER D14 UNI 6592 ZN	4
3	01.4032.0006GT	SPRING WASHER D14 ZN	4
4	01.4001.0004GT	SCREW M14X50 UNI 5739 10.9 ZN	4
5	09.0803.0911GT	COMPLETE TOWING HOOK Includes Item 1	1

silverhorn.co.uk

802.1 611057 Second Hydraulic Circuit - Part 1

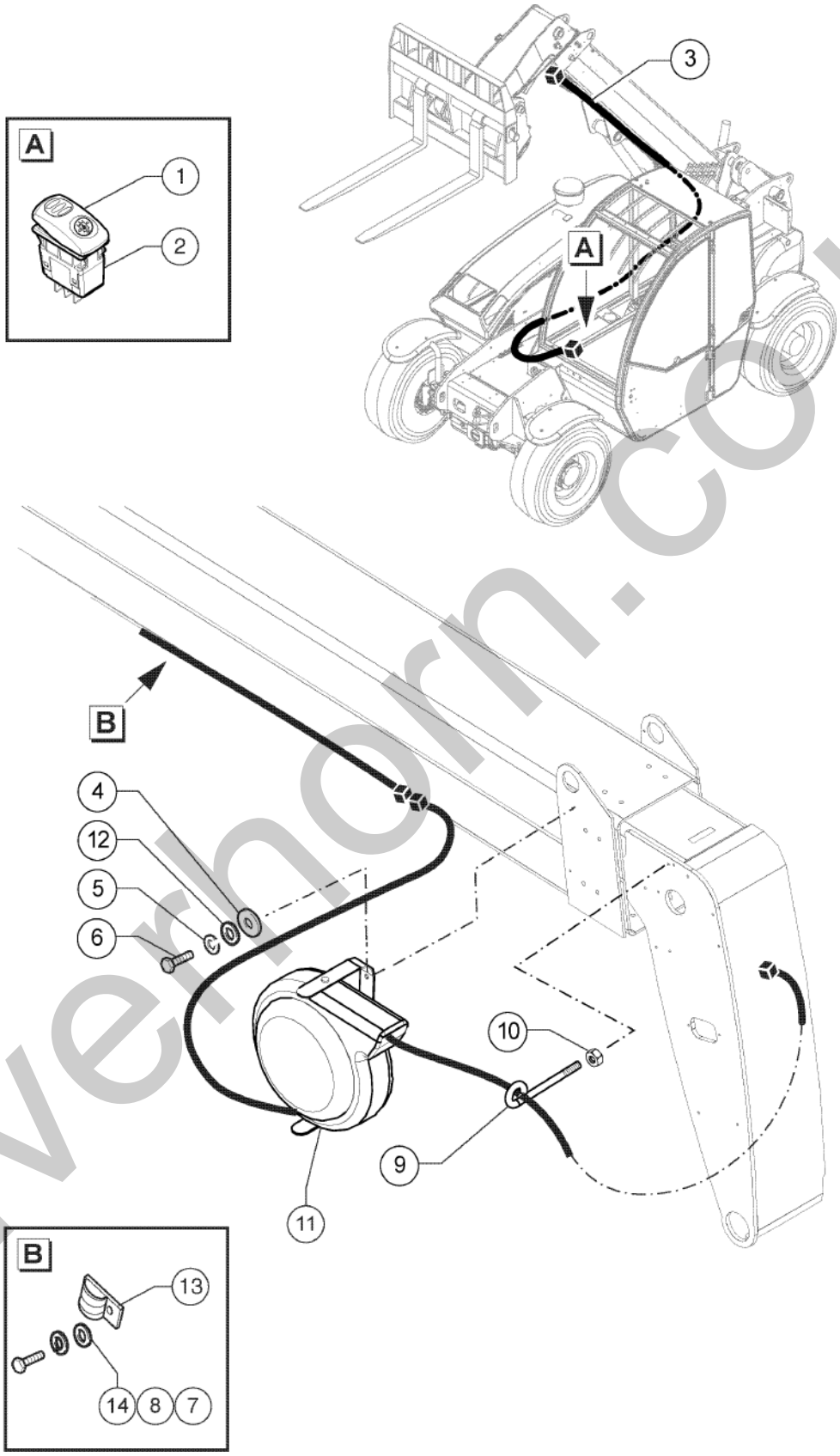

silverhorn.co.uk

802.1 611057 Second Hydraulic Circuit - Part 1

Item	Part No.	Description	Qty.
1	56.0017.0050GT	SWITCH COVER	1
2	56.0017.0132GT	Switch Contact	1
3	55.0602.1026GT	Electrical Line	1
4	54.0101.0004GT	Spacer	2
5	01.4032.0003GT	Spring Washer D 8 ZN	2
6	01.0001.0256GT	SCREW M8X25 UNI 5739 8.8 ZN	2
7	01.4032.0002GT	SPRING WASHER D6 ZN	2
8	01.0031.0054GT	FLAT WASHER D6 UNI 6592 ZN	2
9	51.0811.4537GT	ELECTRICAL CABLE SUPPORT	1
10	01.0019.0104GT	NUT M8 UNI 5588 6S ZN	1
11	56.0023.0050GT	Cable Reel	1
12	01.0031.0298GT	FLAT WASHER D6 UNI 6593 ZN	2
13	04.4227.0003GT	CLAMP D16 HOLE 8.4	2
14	01.0001.0107GT	SCREW M6x12 UNI 5739 8.8 ZN	2

silverhorn.co.uk

802.2 611058 Second Hydraulic Circuit - Part 2

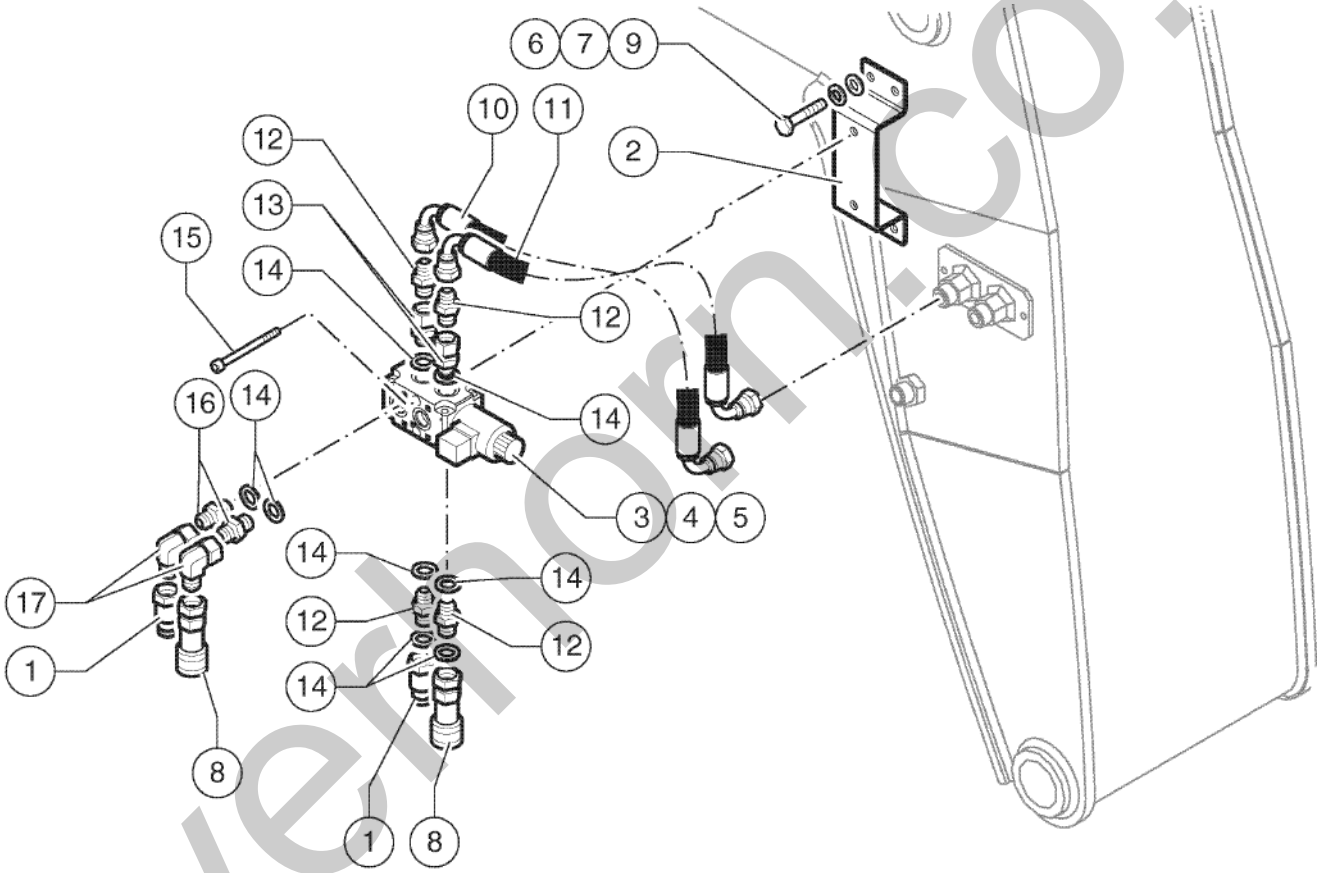

silvernorn.co.uk

802.2 611058 Second Hydraulic Circuit - Part 2

Item	Part No.	Description	Qty.
1	04.4210.0018GT	QUICK COUPLING, MALE 1/2	1
2	51.0811.4527GT	SUPPORT	1
3	04.4240.0075GT	SOLENOID VALVE ASSY 6 WAY	1
4	07.0701.0316GT	SOLENOID	1
5	07.0701.0317GT	SINGLE VALVE BODY	1
6	01.0031.0055GT	FLAT WASHER D8 UNI 6592 ZN	4
7	01.4032.0003GT	Spring Washer D 8 ZN	4
8	04.4210.0019GT	QUICK COUPLING, FEMALE 1/2	1
9	01.0001.0252GT	SCREW M8X16 UNI 5739 8.8 ZN	4
10	04.0602.0613GT	HOSE R2X1/2 500 F90 F90 BSP A 270°	1
11	04.0602.0615GT	HOSE R2X1/2 430 F90 BSP F90 BSP A 270°	1
12	04.0600.0017GT	PIPE FITTING 1/2X1/2 BSP	4
13	04.0600.0091GT	PIPE FITTING CMF1/2 ES LG 25	1
14	06.0442.0122GT	BONDED RING 1/2"	8
15	01.4003.0036GT	SCREW M8X65 UNI 5931 8.8 ZN	2
16	04.0607.0107GT	PIPE FITTING 3/4"BSP X1"3/16-12 ORFS	2
17	04.0600.0087GT	PIPE FITTING 90	2

silverhorn.co.uk

803.1 611059 Hydraulic Quick Coupling And 1 Aux Circuit - Part 1

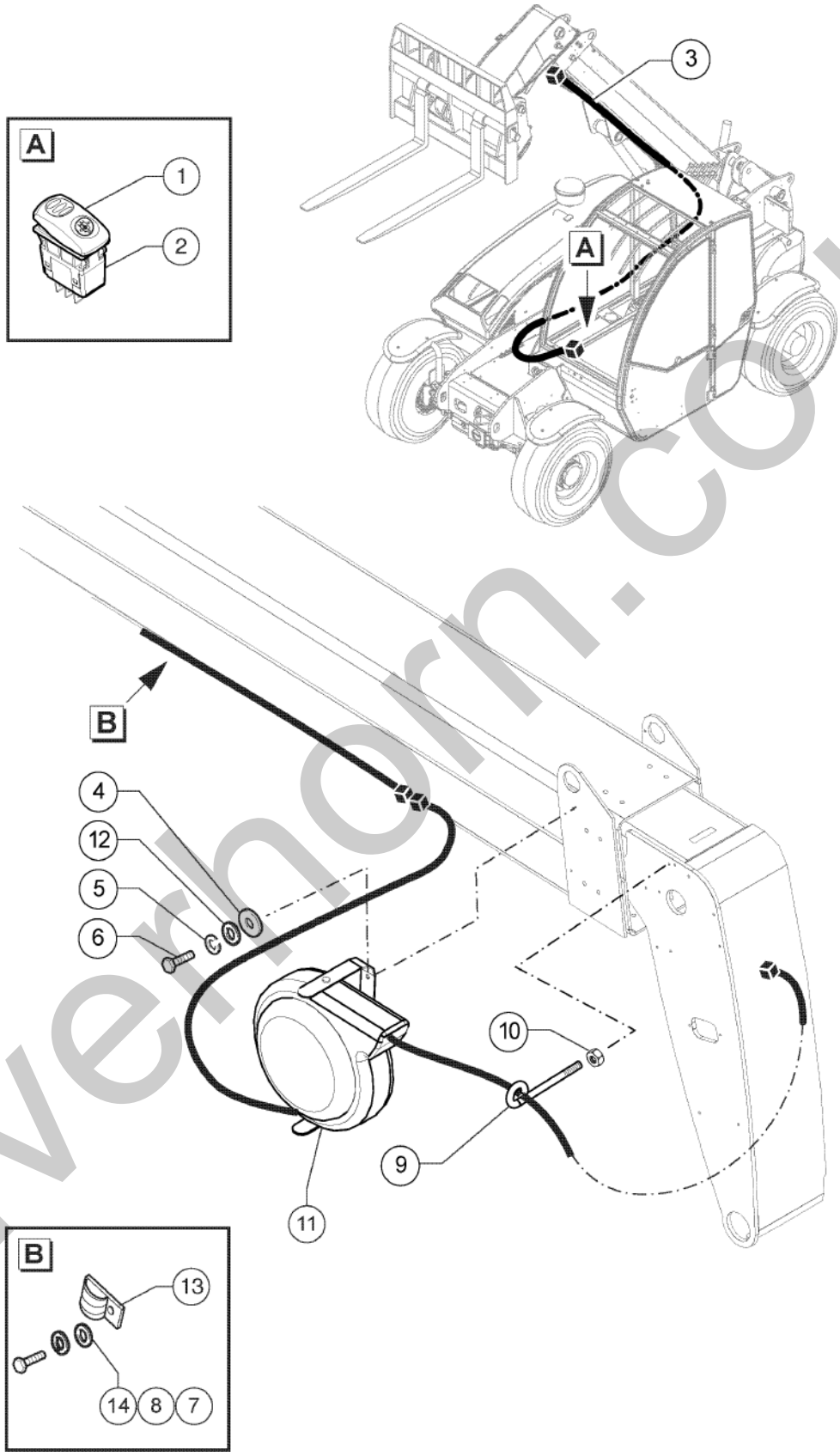

silverhorn.co.uk

803.1 611059 Hydraulic Quick Coupling And 1 Aux Circuit - Part 1

Item	Part No.	Description	Qty.
1	56.0017.0050GT	SWITCH COVER	1
2	56.0017.0132GT	Switch Contact	1
3	55.0602.1026GT	Electrical Line	1
4	54.0100.0137GT	SPACER D20/9 LG 10	2
5	01.4032.0003GT	Spring Washer D 8 ZN	2
6	01.0001.0256GT	SCREW M8X25 UNI 5739 8.8 ZN	2
7	01.4032.0002GT	SPRING WASHER D6 ZN	2
8	01.0031.0054GT	FLAT WASHER D6 UNI 6592 ZN	2
9	51.0811.4537GT	ELECTRICAL CABLE SUPPORT	1
10	01.0019.0104GT	NUT M8 UNI 5588 6S ZN	1
11	56.0023.0050GT	Cable Reel	1
12	01.0031.0298GT	FLAT WASHER D6 UNI 6593 ZN	2
13	04.4227.0003GT	CLAMP D16 HOLE 8.4	2
14	01.0001.0158GT	SCREW M6X25 UNI 5739 8.8 ZN	2

silverhorn.co.uk

803.2 611060 Hydraulic Quick Coupling And 1 Aux Circuit - Part 2

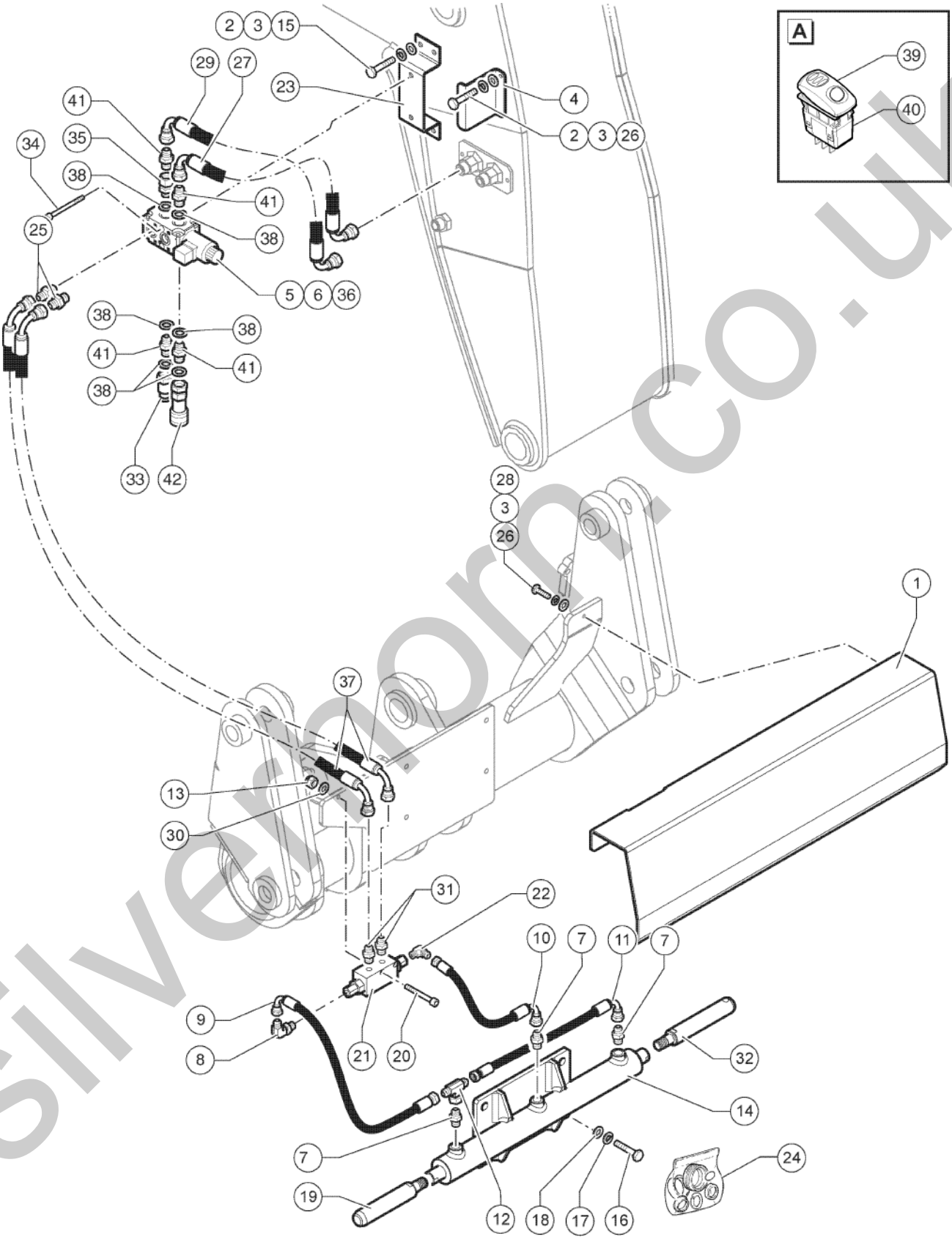

silvermorn.co.uk

803.2 611060 Hydraulic Quick Coupling And 1 Aux Circuit - Part 2

Item	Part No.	Description	Qty.
1	51.0903.5062GT	Protection Cylinder	1
2	01.0031.0055GT	FLAT WASHER D8 UNI 6592 ZN	6
3	01.4032.0003GT	Spring Washer D 8 ZN	6
4	51.0811.4492GT	BRACKET	1
5	04.4240.0075GT	SOLENOID VALVE ASSY 6 WAY	1
6	07.0701.0316GT	SOLENOID	1
7	04.0607.0114GT	PIPE FITTING 3/8 BSPX9/16-18 ORFS	3
8	04.0607.0112GT	PIPE FITTING M-M A 90 1/4 BSPX9/16-18 ORFS	1
9	04.0605.0112GT	FLEXIBLE HOSE 7.75 INCH	1
10	04.0605.0114GT	FLEXIBLE HOSE	1
11	04.0605.0113GT	HOSE R2X1/4 LG 405 FD-F90 9/16-18 ORFS	1
12	04.0607.0131GT	PIPE FITTING TMF+C 9/16-18 ORFS	1
13	01.0023.0053GT	STOP NUT M6 UNI 7473 6S ZN	4
14	53.0500.0604GT	Cylinder	1
15	01.0001.0252GT	SCREW M8X16 UNI 5739 8.8 ZN	4
16	01.0001.0355GT	SCREW M10X25 UNI 5739 8.8 ZN	4
17	01.4032.0004GT	Spring Washer D10 ZN	4
18	01.0031.0301GT	FLAT WASHER D10 UNI 6593 ZN	4
19	54.0001.0088GT	Pin	1
20	01.0003.0162GT	SCREW M6X50 UNI 5931 8.8 ZN	2
21	04.4239.0002GT	VALVE	1
22	04.0607.0132GT	PIPE FITTING 45 M-M 1/4 BSPX9/16-18 ORFS	1
23	51.0811.4527GT	SUPPORT	1
24	07.4529.0158GT	Joint Kit	1
25	04.0607.0110GT	PIPE FITTING 1/2BSP x 11/16-16 ORFS	2
26	01.0001.0254GT	SCREW M8X20 UNI 5739 8.8 ZN	4
27	04.0602.0615GT	HOSE R2X1/2 430 F90 BSP F90 BSP A 270°	1
28	01.0031.0299GT	FLAT WASHER D8 UNI 6593 ZN	2

silverhorn.co.uk

803.2 611060 Hydraulic Quick Coupling And 1 Aux Circuit - Part 2

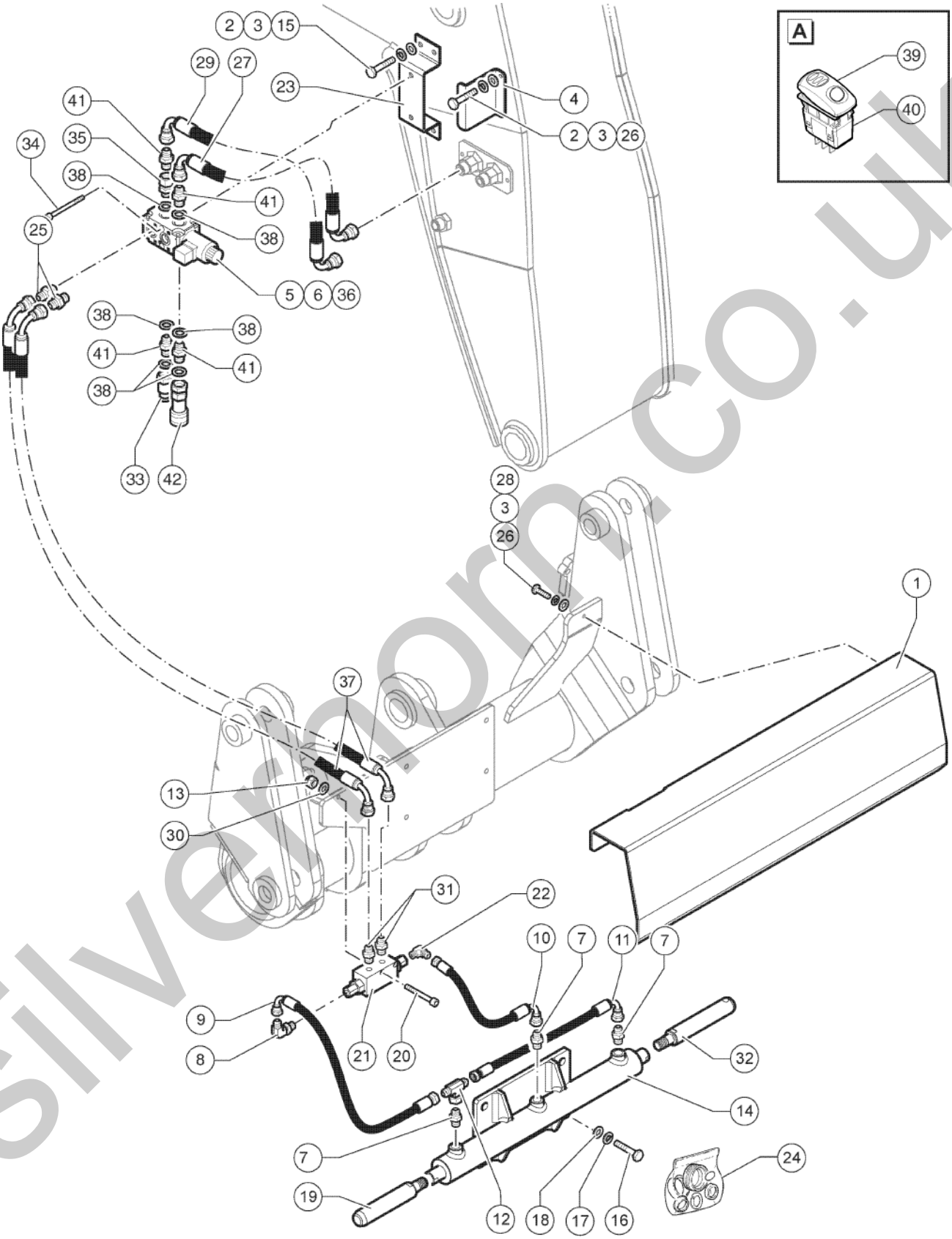

silvermorn.co.uk

803.2 611060 Hydraulic Quick Coupling And 1 Aux Circuit - Part 2

Item	Part No.	Description	Qty.
29	04.0602.0613GT	HOSE R2X1/2 500 F90 F90 BSP A 270°	1
30	01.0031.0054GT	FLAT WASHER D6 UNI 6592 ZN	5
31	04.0607.0163GT	PIPE FITTING 1/4BSPX11/16-16 ORFS	2
32	54.0001.0087GT	Pin	1
33	04.4210.0018GT	QUICK COUPLING, MALE 1/2	2
34	01.4003.0036GT	SCREW M8X65 UNI 5931 8.8 ZN	4
35	04.0600.0107GT	PIPE FITTING GMF 1/2 BSP	1
36	07.0701.0317GT	SINGLE VALVE BODY	1
37	04.0605.1633GT	HOSE R2X3/8 LG 1050 F90-F90 11/16-16 90	2
38	06.0442.0122GT	BONDED RING 1/2"	4
39	56.0017.0063GT	SWITCH COVER	1
40	56.0017.0035GT	SWITCH	1
41	04.0600.0017GT	PIPE FITTING 1/2X1/2 BSP	4
42	04.4210.0019GT	QUICK COUPLING, FEMALE 1/2	2

silverhorn.co.uk

804.1 611061 Hydraulic Quick Coupling And 2 Aux Circuit - Part 1

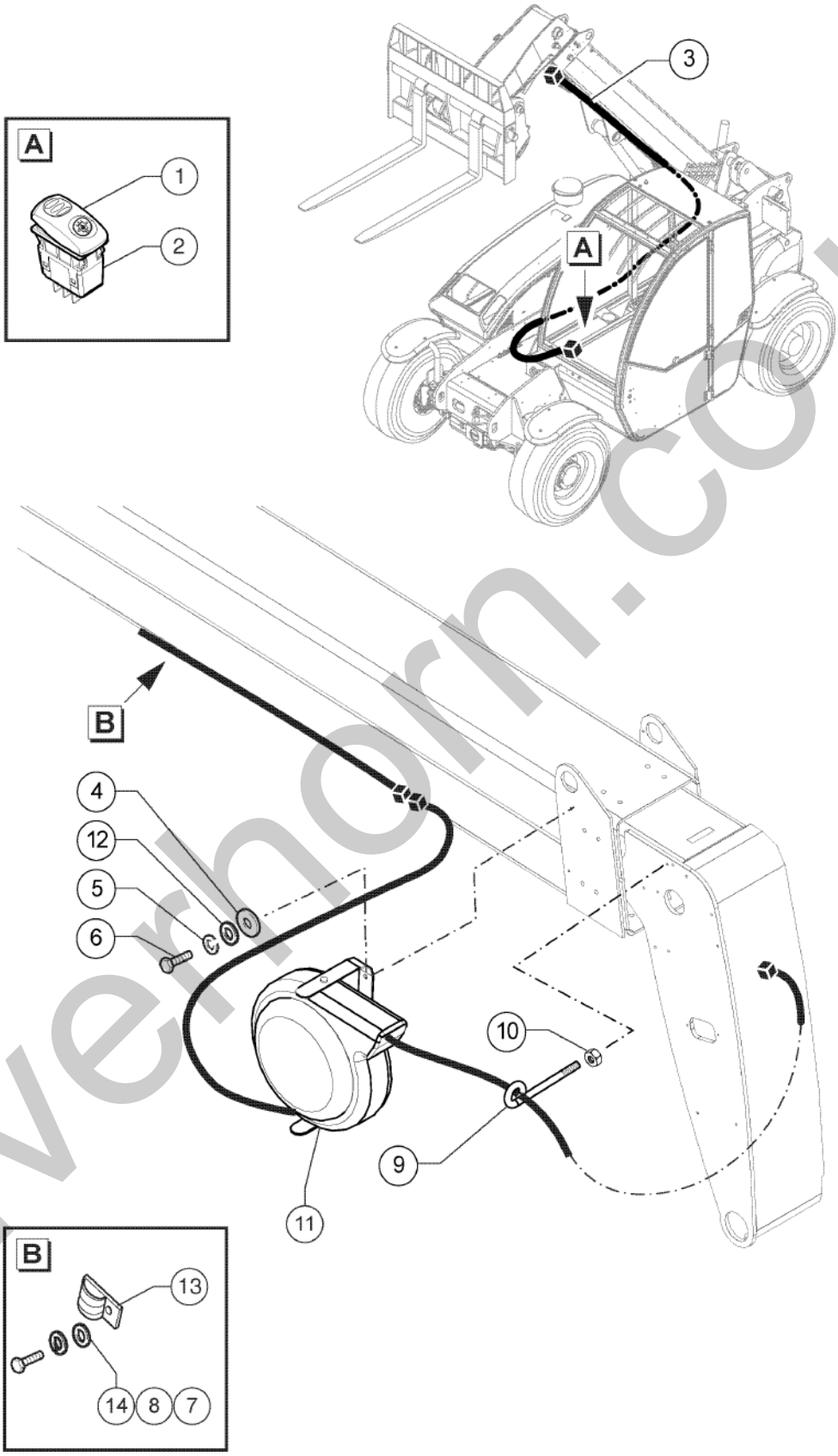

silverhorn.co.uk

804.1 611061 Hydraulic Quick Coupling And 2 Aux Circuit - Part 1

Item	Part No.	Description	Qty.
1	56.0017.0050GT	SWITCH COVER	1
2	56.0017.0132GT	Switch Contact	1
3	55.0602.1026GT	Electrical Line	1
4	54.0100.0137GT	SPACER D20/9 LG 10	2
5	01.4032.0003GT	Spring Washer D 8 ZN	2
6	01.0001.0256GT	SCREW M8X25 UNI 5739 8.8 ZN	2
7	01.4032.0002GT	SPRING WASHER D6 ZN	2
8	01.0031.0054GT	FLAT WASHER D6 UNI 6592 ZN	2
9	51.0811.4537GT	ELECTRICAL CABLE SUPPORT	1
10	01.0019.0104GT	NUT M8 UNI 5588 6S ZN	1
11	56.0023.0050GT	Cable Reel	1
12	01.0031.0298GT	FLAT WASHER D6 UNI 6593 ZN	2
13	04.4227.0003GT	CLAMP D16 HOLE 8.4	2
14	01.0001.0156GT	SCREW M6X20 UNI 5739 8.8 ZN	2

silverhorn.co.uk

804.2 611062 Hydraulic Quick Coupling And 2 Aux Circuit - Part 2

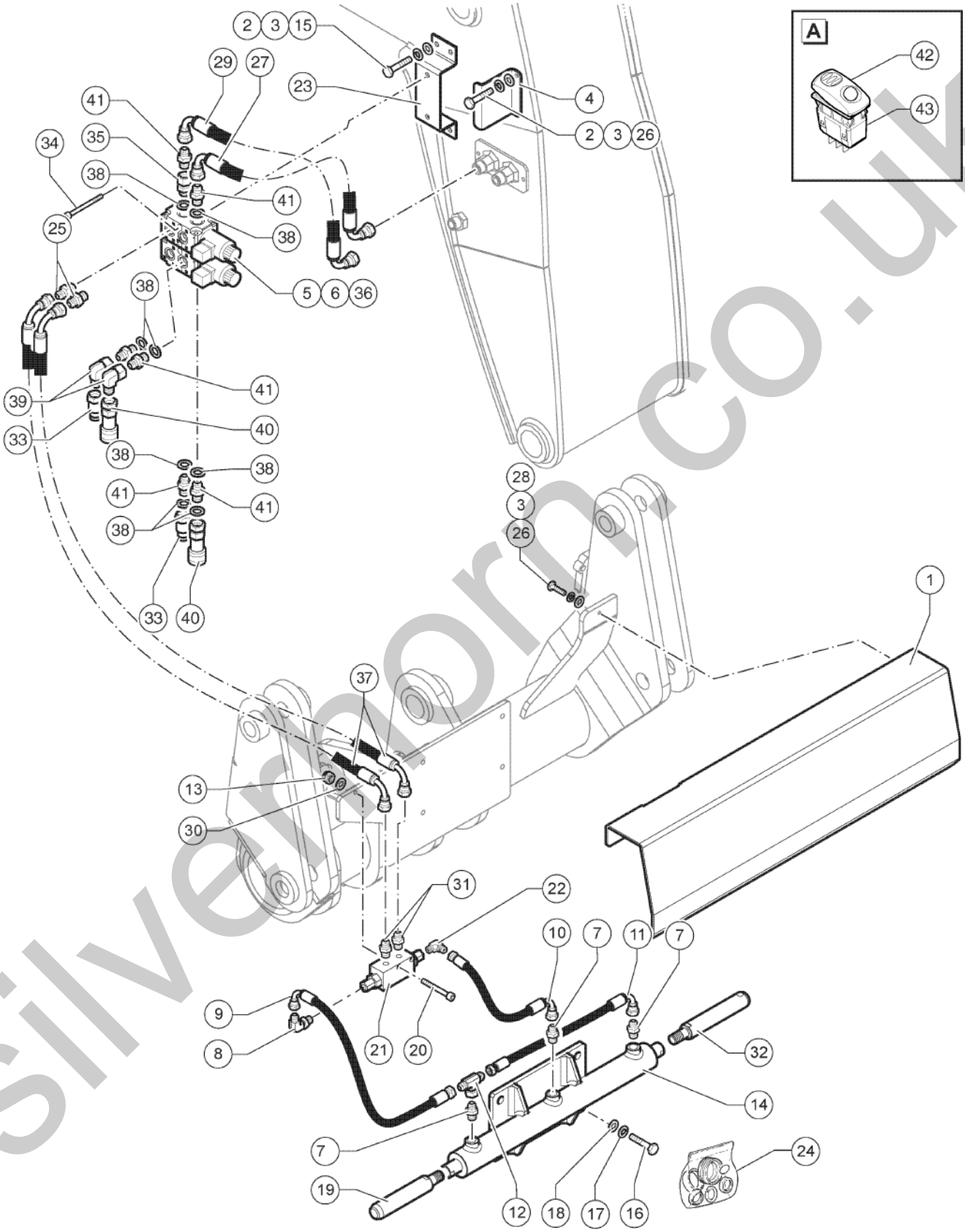

silvermorn.co.uk

804.2 611062 Hydraulic Quick Coupling And 2 Aux Circuit - Part 2

Item	Part No.	Description	Qty.
1	51.0903.5062GT	Protection Cylinder	1
2	01.0031.0055GT	FLAT WASHER D8 UNI 6592 ZN	4
3	01.4032.0003GT	Spring Washer D 8 ZN	4
4	51.0811.4492GT	BRACKET	1
5	04.4240.0076GT	SOLENOID VALVE	1
6	07.0701.0316GT	SOLENOID	2
7	04.0607.0114GT	PIPE FITTING 3/8 BSPX9/16-18 ORFS	3
8	04.0607.0112GT	PIPE FITTING M-M A 90 1/4 BSPX9/16-18 ORFS	1
9	04.0605.0112GT	FLEXIBLE HOSE 7.75 INCH	1
10	04.0605.0114GT	FLEXIBLE HOSE	1
11	04.0605.0113GT	HOSE R2X1/4 LG 405 FD-F90 9/16-18 ORFS	1
12	04.0607.0131GT	PIPE FITTING TMF+C 9/16-18 ORFS	1
13	01.0023.0053GT	STOP NUT M6 UNI 7473 6S ZN	4
14	53.0500.0604GT	Cylinder	1
15	01.0001.0252GT	SCREW M8X16 UNI 5739 8.8 ZN	4
16	01.0001.0355GT	SCREW M10X25 UNI 5739 8.8 ZN	4
17	01.4032.0004GT	Spring Washer D10 ZN	4
18	01.0031.0301GT	FLAT WASHER D10 UNI 6593 ZN	4
19	54.0001.0088GT	Pin	1
20	01.0003.0162GT	SCREW M6X50 UNI 5931 8.8 ZN	2
21	04.4239.0002GT	VALVE	1
22	04.0607.0132GT	PIPE FITTING 45 M-M 1/4 BSPX9/16-18 ORFS	1
23	51.0811.4527GT	SUPPORT	2
24	07.4529.0158GT	Joint Kit	1
25	04.0607.0110GT	PIPE FITTING 1/2BSP x 11/16-16 ORFS	2
26	01.0001.0254GT	SCREW M8X20 UNI 5739 8.8 ZN	4
27	04.0602.0615GT	HOSE R2X1/2 430 F90 BSP F90 BSP A 270°	1
28	01.0031.0299GT	FLAT WASHER D8 UNI 6593 ZN	2

silverhorn.co.uk

804.2 611062 Hydraulic Quick Coupling And 2 Aux Circuit - Part 2

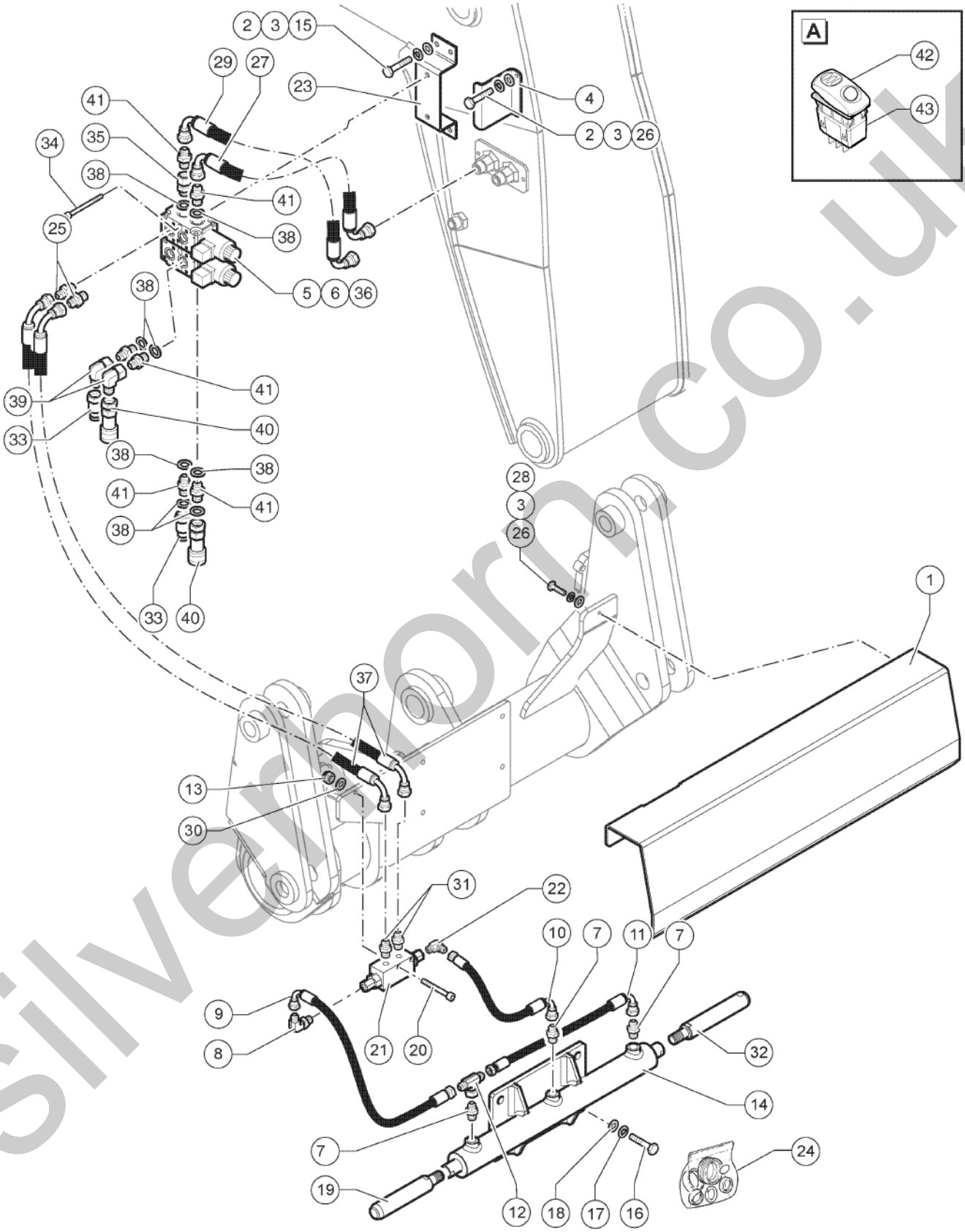

silvermorn.co.uk

804.2 611062 Hydraulic Quick Coupling And 2 Aux Circuit - Part 2

Item	Part No.	Description	Qty.
29	04.0602.0613GT	HOSE R2X1/2 500 F90 F90 BSP A 270°	1
30	01.0031.0054GT	FLAT WASHER D6 UNI 6592 ZN	5
31	04.0607.0163GT	PIPE FITTING 1/4BSPX11/16-16 ORFS	2
32	54.0001.0087GT	Pin	1
33	04.4210.0018GT	QUICK COUPLING, MALE 1/2	2
34	01.4003.0036GT	SCREW M8X65 UNI 5931 8.8 ZN	4
35	04.0600.0107GT	PIPE FITTING GMF 1/2 BSP	1
36	07.0701.0317GT	SINGLE VALVE BODY	2
37	04.0605.1633GT	HOSE R2X3/8 LG 1050 F90-F90 11/16-16 90	2
38	06.0442.0122GT	BONDED RING 1/2"	6
39	04.0600.0087GT	PIPE FITTING 90	2
40	04.4210.0019GT	QUICK COUPLING, FEMALE 1/2	2
41	04.0600.0017GT	PIPE FITTING 1/2X1/2 BSP	6
42	56.0017.0063GT	SWITCH COVER	1
43	56.0017.0035GT	SWITCH	1

silverhorn.co.uk

805.1 611063 Fork FEM2

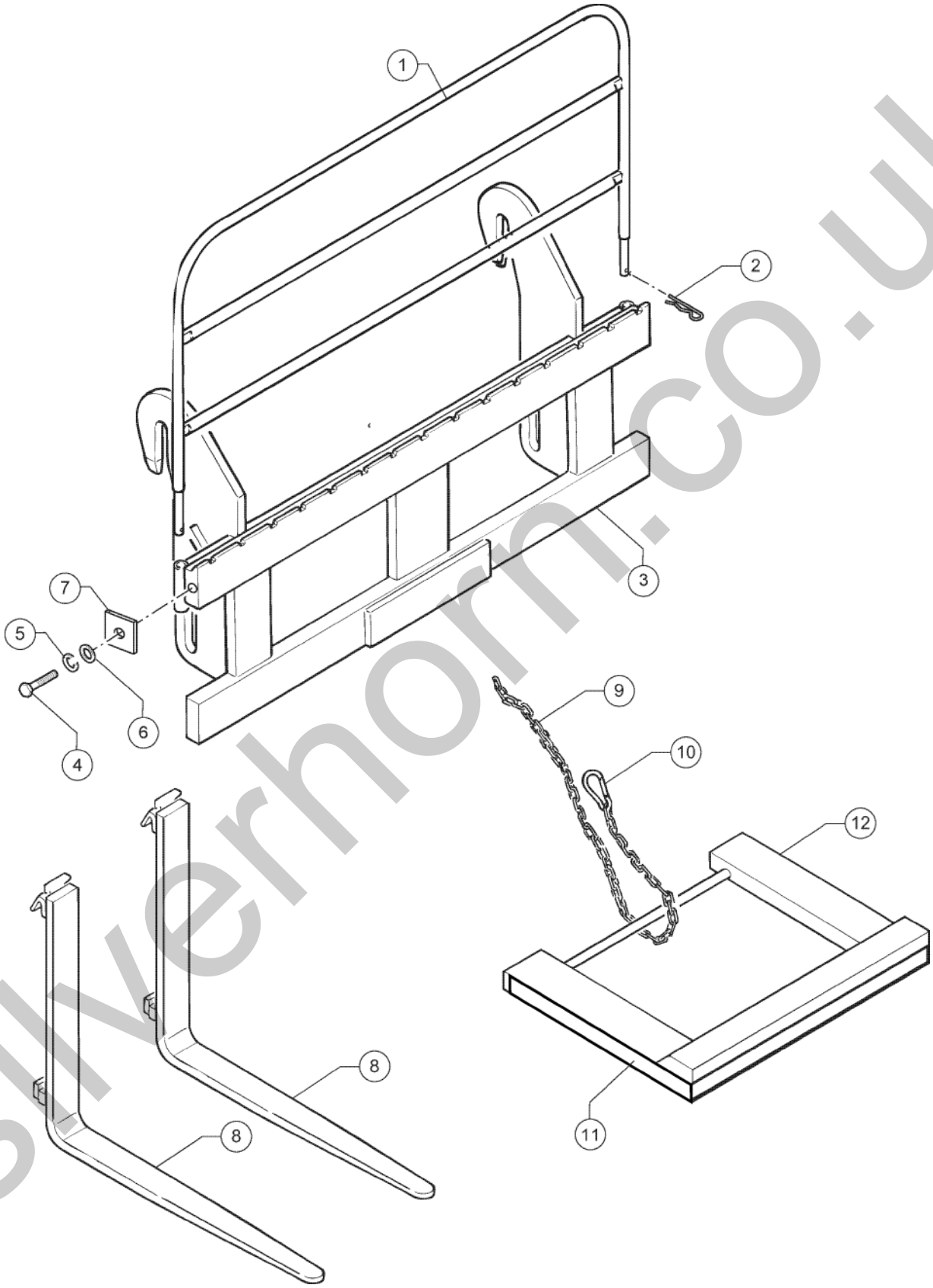

silverhorn.co.uk

805.1 611063 Fork FEM2

Item	Part No.	Description	Qty.
1	51.1300.1000GT	Guard	1
2	09.0803.0026GT	SPRING SPLIT PIN	4
3	51.1301.9154GT	Plate	1
4	01.0001.0256GT	SCREW M8X25 UNI 5739 8.8 ZN	2
5	01.4032.0003GT	Spring Washer D 8 ZN	2
6	01.0031.0055GT	FLAT WASHER D8 UNI 6592 ZN	2
7	51.1300.0100GT	Stop Guard	2
8	09.0803.0071GT	Fork	2
9	09.0803.0068GT	Chain	1.2
10	09.0803.0069GT	CLAMP,DOUBLE,D16	1
11	09.4618.0093GT	REFLECTIVE DECAL,WHITE/RED	3.1
12	51.1300.0300GT	Guard	1

silverhorn.co.uk

806.1 611064 Forks Side Shifter FEM2

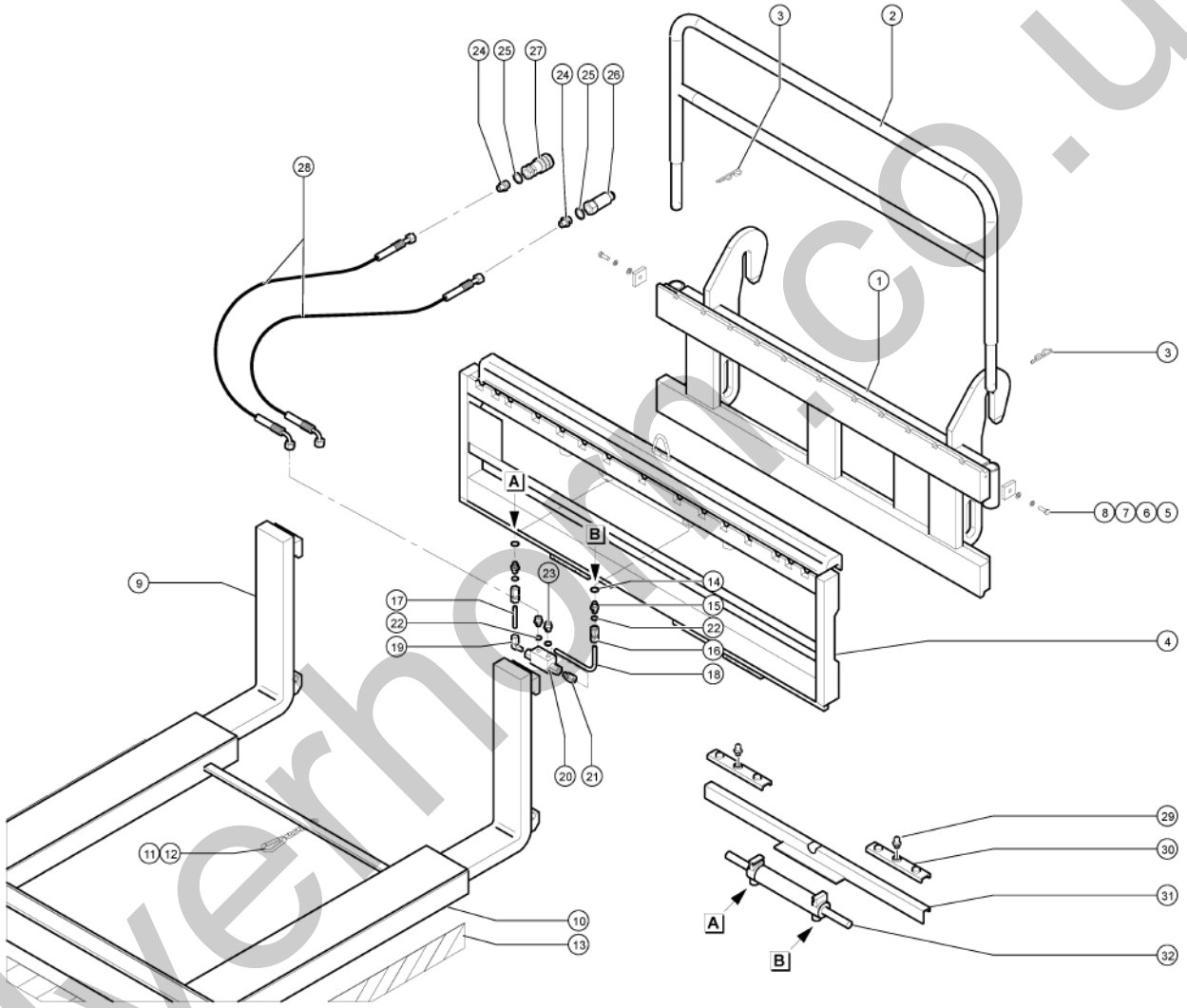

silverhorn.co.uk

806.1 611064 Forks Side Shifter FEM2

Item	Part No.	Description	Qty.
1	51.1301.9154GT	Plate	1
2	51.1300.1000GT	Guard	1
3	09.0803.0026GT	SPRING SPLIT PIN	2
4	09.0803.0319GT	FORK HYDRAULIC SHIFTER	1
5	51.1300.0100GT	Stop Guard	2
6	01.0031.0055GT	FLAT WASHER D8 UNI 6592 ZN	2
7	01.4032.0003GT	Spring Washer D 8 ZN	2
8	01.0001.0256GT	SCREW M8X25 UNI 5739 8.8 ZN	2
9	09.0803.0071GT	Fork	2
10	51.1300.0300GT	Guard	1
11	09.0803.0069GT	CLAMP,DOUBLE,D16	1
12	09.0803.0068GT	Chain	1
13	09.4618.0093GT	REFLECTIVE DECAL,WHITE/RED	1
14	06.0442.0055GT	WASHER,D.14/20X1.5	2
15	04.0609.0016GT	Pipe Fitting 1/4 GAS X 9/16"-18 JIC	2
16	04.0601.0064GT	FITTING TN 147 1/4 X 10L	2
17	53.3402.0000GT	IRON HOSE LG65 D.10	1
18	53.3402.4019GT	Iron Hose LG.130x80 D.10	1
19	04.0601.0011GT	UNION/PIPE FITTING	1
20	04.4239.0002GT	VALVE	1
20	04.4239.0161GT	OVERCENTER VALVE VRDE/L 14	1
21	04.0600.0022GT	Pipe Fitting UMA 10X8,13	1
22	06.0442.0101GT	BONDED RING 3/8"	4
23	04.0600.0021GT	PIPE FITTING 1/4X3/8 BSP	2
24	04.0600.0000GT	PIPE FITTING	2
25	06.0442.0103GT	COPPER WASHER	2
26	04.4210.0018GT	QUICK COUPLING, MALE 1/2	1
27	04.4210.0019GT	QUICK COUPLING, FEMALE 1/2	1

silverhorn.co.uk

806.1 611064 Forks Side Shifter FEM2

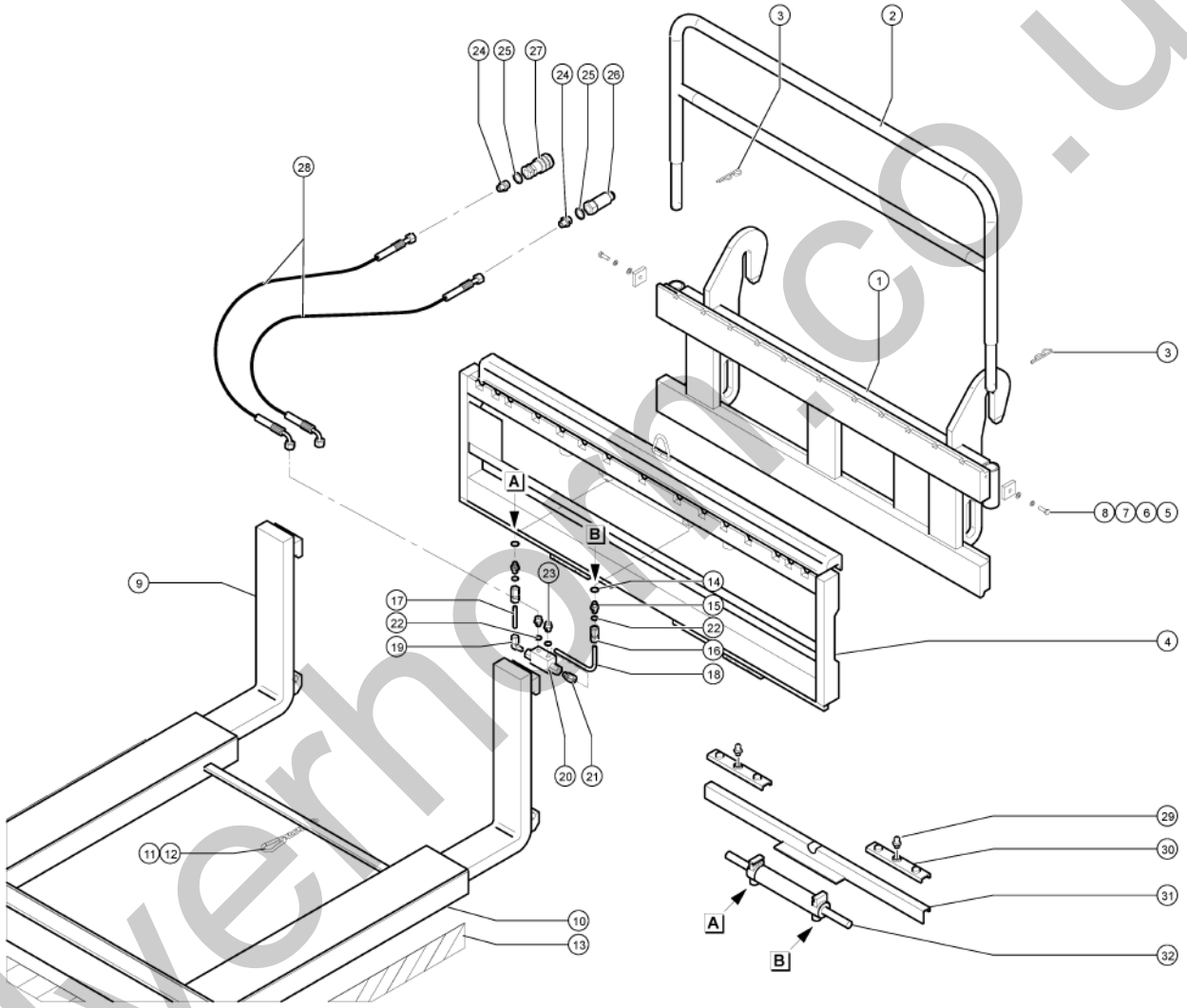

silverhorn.co.uk

806.1 611064 Forks Side Shifter FEM2

Item	Part No.	Description	Qty.
28	04.0602.0143GT	HOSE	2
29	07.0735.0033GT	Greaser	4
30	07.0735.0039GT	Upper Pad	2
31	07.0735.0030GT	Pad Support	1
32	07.0735.0049GT	Cylinder	1

silverhorn.co.uk

807.1 611065 Front Protection Grid

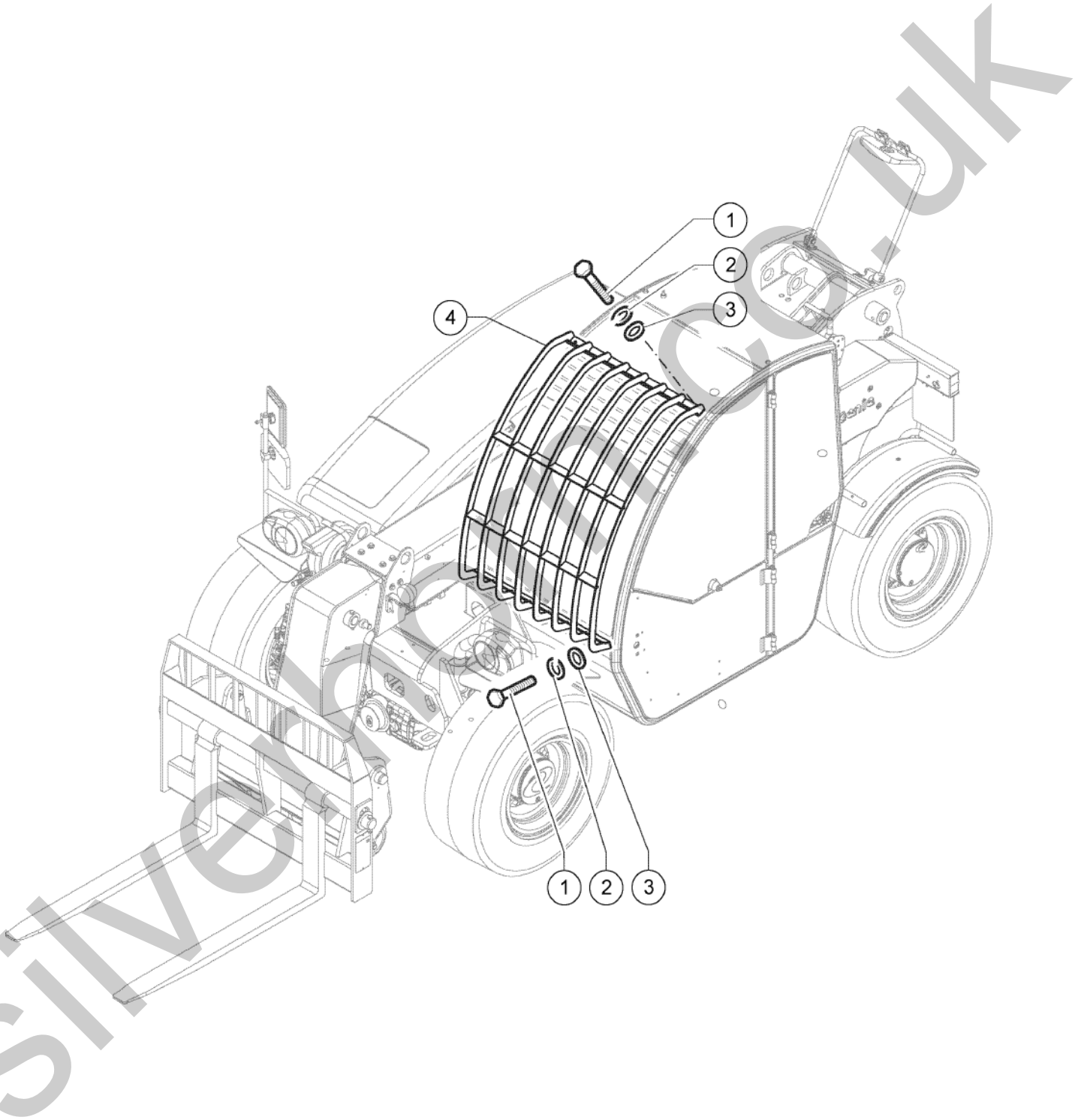

silverhomes.co.uk

807.1 611065 Front Protection Grid

Item	Part No.	Description	Qty.
1	01.0001.0252GT	SCREW M8X16 UNI 5739 8.8 ZN	4
2	01.4032.0003GT	Spring Washer D 8 ZN	4
3	01.0031.0299GT	FLAT WASHER D8 UNI 6593 ZN	4
4	51.0903.5193GT	Front Grille	1

silverhorn.co.uk

808.1 611066 Inching Valve

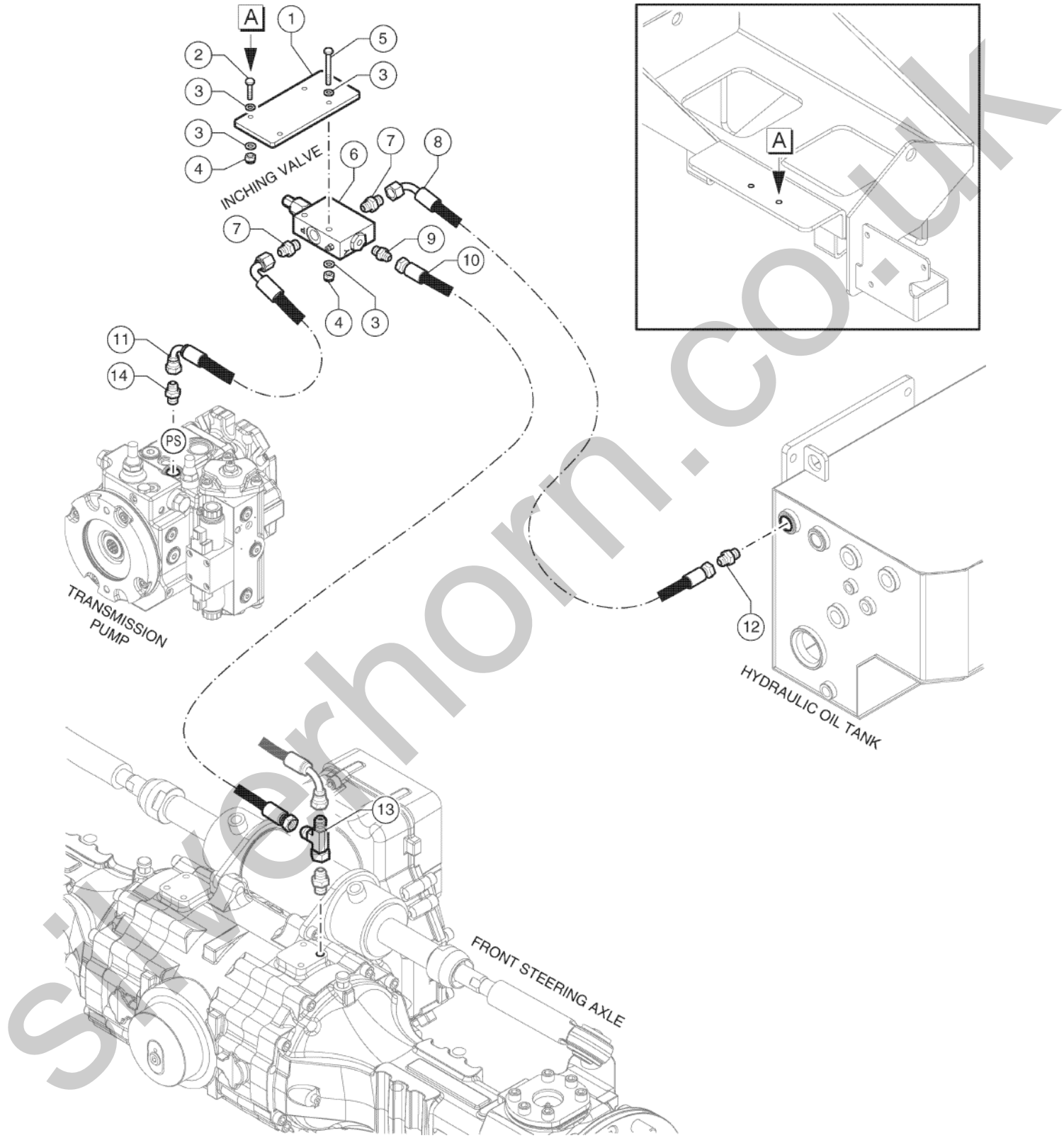

silverhorn.co.uk

808.1 611066 Inching Valve

Item	Part No.	Description	Qty.
1	51.0811.4595GT	Bracket	1
2	01.0001.0158GT	SCREW M6X25 UNI 5739 8.8 ZN	2
3	01.0031.0054GT	FLAT WASHER D6 UNI 6592 ZN	8
4	01.0023.0053GT	STOP NUT M6 UNI 7473 6S ZN	4
5	01.0001.0106GT	SCREW M6X50 UNI 5737 8.8 ZN	2
6	04.4239.0107GT	VALVE	1
7	04.0607.0137GT	PIPE FITTING 18X1.5X11/16 ORFS	2
8	04.0605.1626GT	HOSE R1X3/8 1100 F90 FD 11/16-16 ORFS	1
9	04.0607.0180GT	PIPE FITTING M10X1- 9/16-18 ORFS	1
10	04.0605.1635GT	Hose R1 X 1/4 1500 FD 9/16"-18 FD 9/16"-18	1
11	04.0605.1636GT	HOSE R1X3/8 400 F90 11/16-16 F90 11/16-16 90	1
12	04.0607.0139GT	PIPE FITTING 3/4BSPX11/16-16 ORFS	1
13	04.0607.0115GT	PIPE FITTING TMF+L 9/16-18 ORFS	1
14	04.0607.0011GT	PIPE FITTING 3/8 X M14	1

silverhorn.co.uk

809.1 611067 GM-1 Articulation

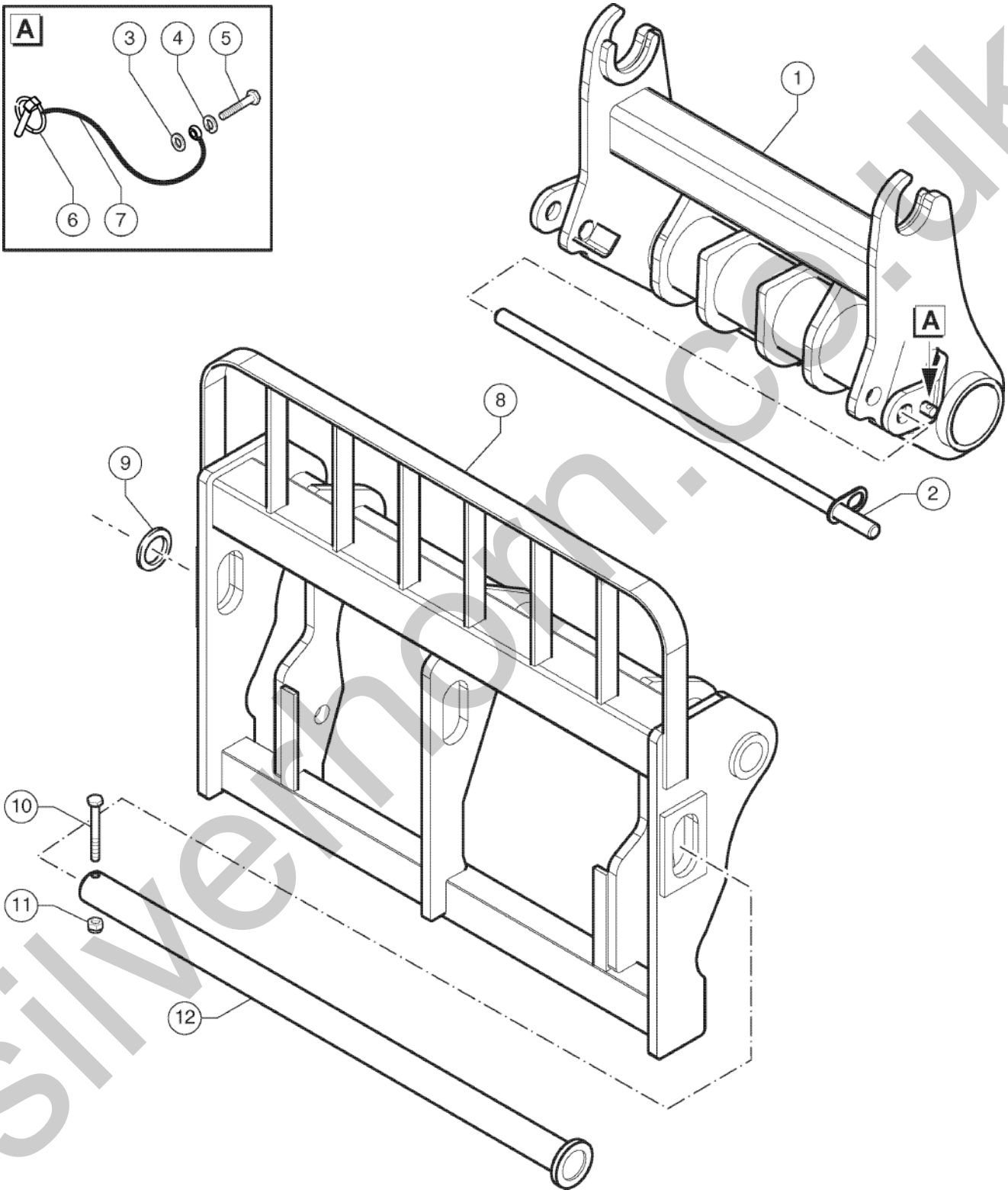

silverhorn.co.uk

809.1 611067 GM-1 Articulation

Item	Part No.	Description	Qty.
1	51.0400.5013GT	GM-1 Articulation	1
2	54.0000.0247GT	Attachement Lock Pin	1
3	01.0031.0054GT	FLAT WASHER D6 UNI 6592 ZN	1
4	01.4032.0002GT	SPRING WASHER D6 ZN	1
5	01.0001.0156GT	SCREW M6X20 UNI 5739 8.8 ZN	1
6	02.4102.0001GT	RING PIN	1
7	09.0803.0406GT	LANYARD,PIN	1
8	51.1301.9120GT	GM-1 Floating Fork Plate	1
9	54.0100.0056GT	WASHER	1
10	01.0001.0409GT	SCREW M12X80 UNI 5737 8.8 ZN	1
11	01.0023.0056GT	STOP NUT M12 UNI 7473 6S ZN	1
12	54.0000.0255GT	GM-1 Fork Lock Pin	1

silverhorn.co.uk

810.1 611068 Cab Roof Wiper

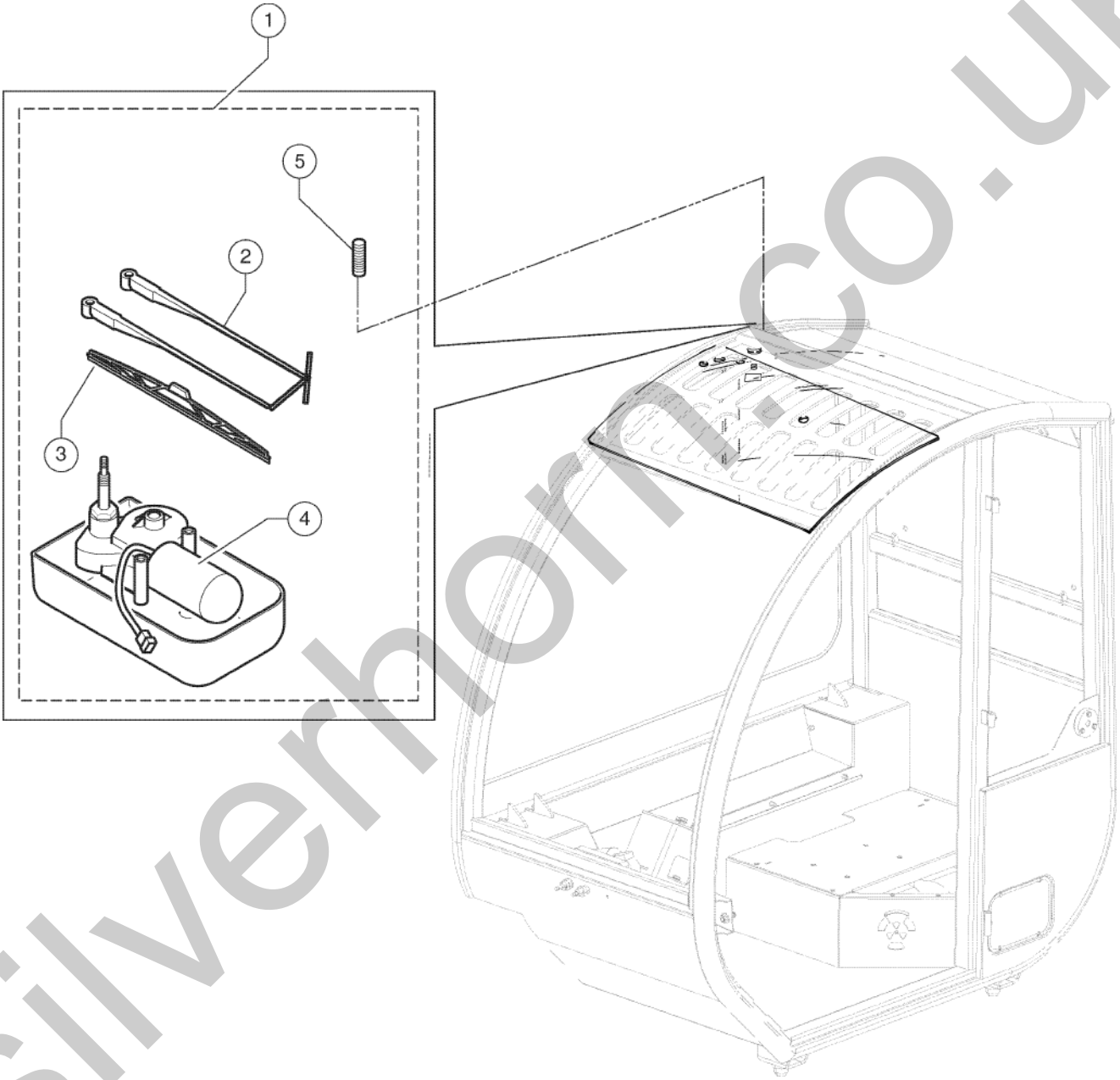

silverhorn.co.uk

810.1 611068 Cab Roof Wiper

Item	Part No.	Description	Qty.
1	07.0723.0535GT	COMPLETE WINDSCREEN WIPER KIT	1
2	07.0723.0533GT	Wiper Arm	1
3	07.0723.0534GT	Wiper Blade	1
4	07.0723.0532GT	Wiper Motor	1
5	01.4041.0015GT	Dowel M8 X 25 UNI 5923	1

silverhorn.co.uk

811.1 611069 Air Conditioning - Part 1

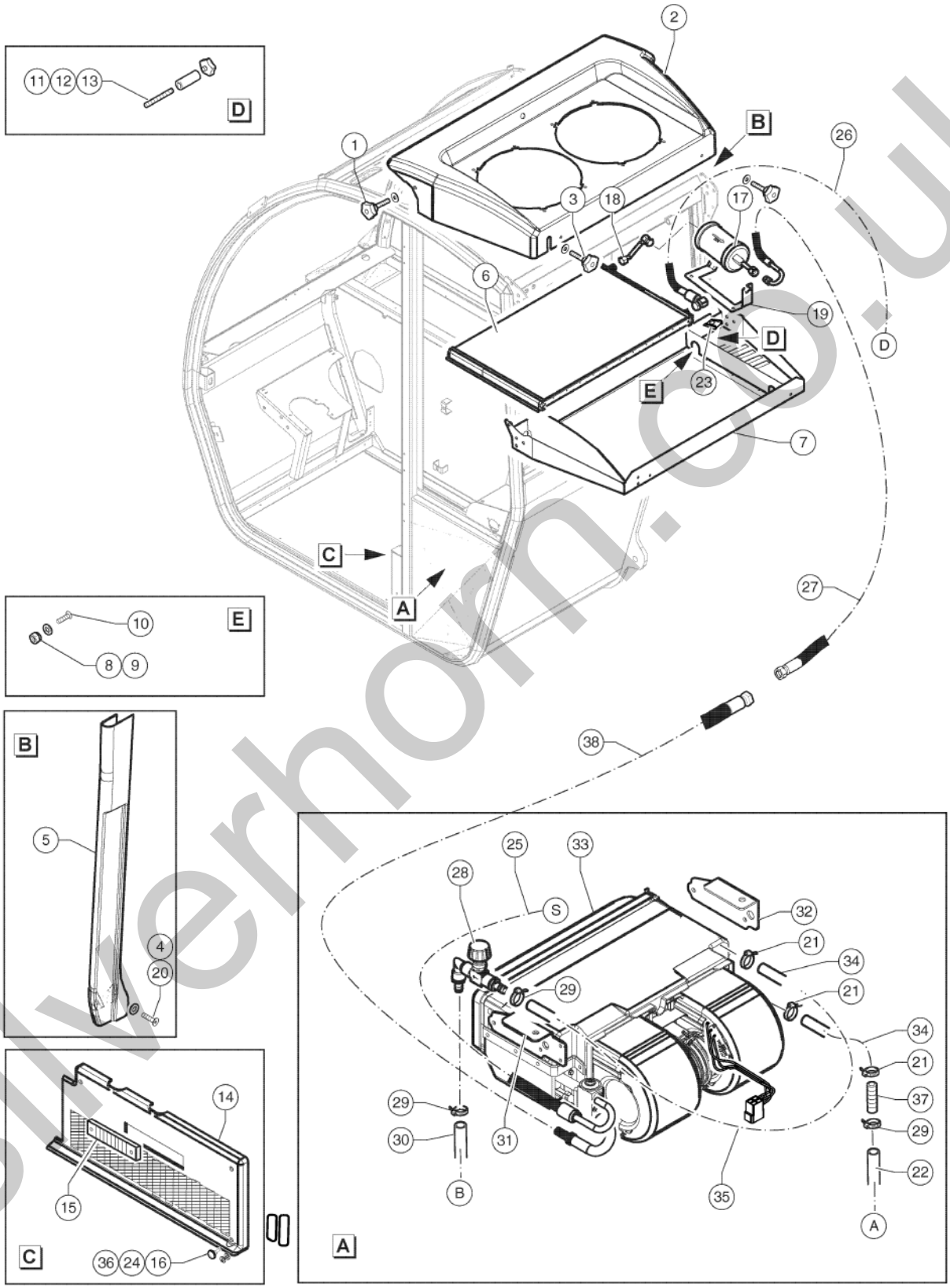

silverhorn.co.uk

811.1 611069 Air Conditioning - Part 1

Item	Part No.	Description	Qty.
1	07.0723.0557GT	Manual Screw M6x25	3
2	07.0723.0721GT	COVER	1
3	07.0723.0090GT	BALL-GRIP	2
4	07.0723.0074GT	WASHER	3
5	07.0723.0736GT	COVER	1
6	07.0723.0737GT	CONDENSER	1
7	07.0723.0766GT	CONDENSER ASSY	1
8	07.0723.0232GT	Plain Washer D8x16 UNI 6592	6
9	07.0723.0181GT	Nut M8 UNI 7473	6
10	07.0723.0176GT	SCREW,TSPEI M8X25	4
11	07.0723.0698GT	Female Manual Screw M6	1
12	07.0723.0708GT	Bushing D10XH30XD6 ZNB	1
13	07.0723.0709GT	Pin M6X60 ZN	1
14	07.0723.0767GT	COVER ASSY	1
15	07.0723.0371GT	Air Inlet	1
16	07.0723.0175GT	SCREW, M6X20 DIN 933 YZ HCS	7
17	07.0723.0549GT	Gas Filter	1
18	07.0723.0768GT	PIPE FITTING	1
19	07.0723.0769GT	FILTER SUPPORT	1
20	07.0723.0039GT	SCREW,PPH SMS 10X3/4ZAKEG	3
21	07.0723.0079GT	Clamp 16/27	4
22	07.0723.0753GT	ENGINE PIPE	1
23	07.0723.0743GT	PLATE	3
24	07.0723.0076GT	Plain Washer D6x18	5
25	07.0723.0770GT	HOSE 5/8"	1
26	07.0723.0771GT	HOSE 13/32"	1
27	07.0723.0772GT	HOSE 5/16"	1
28	07.0723.0658GT	Heater Valve	1

silverhorn.co.uk

811.1 611069 Air Conditioning - Part 1

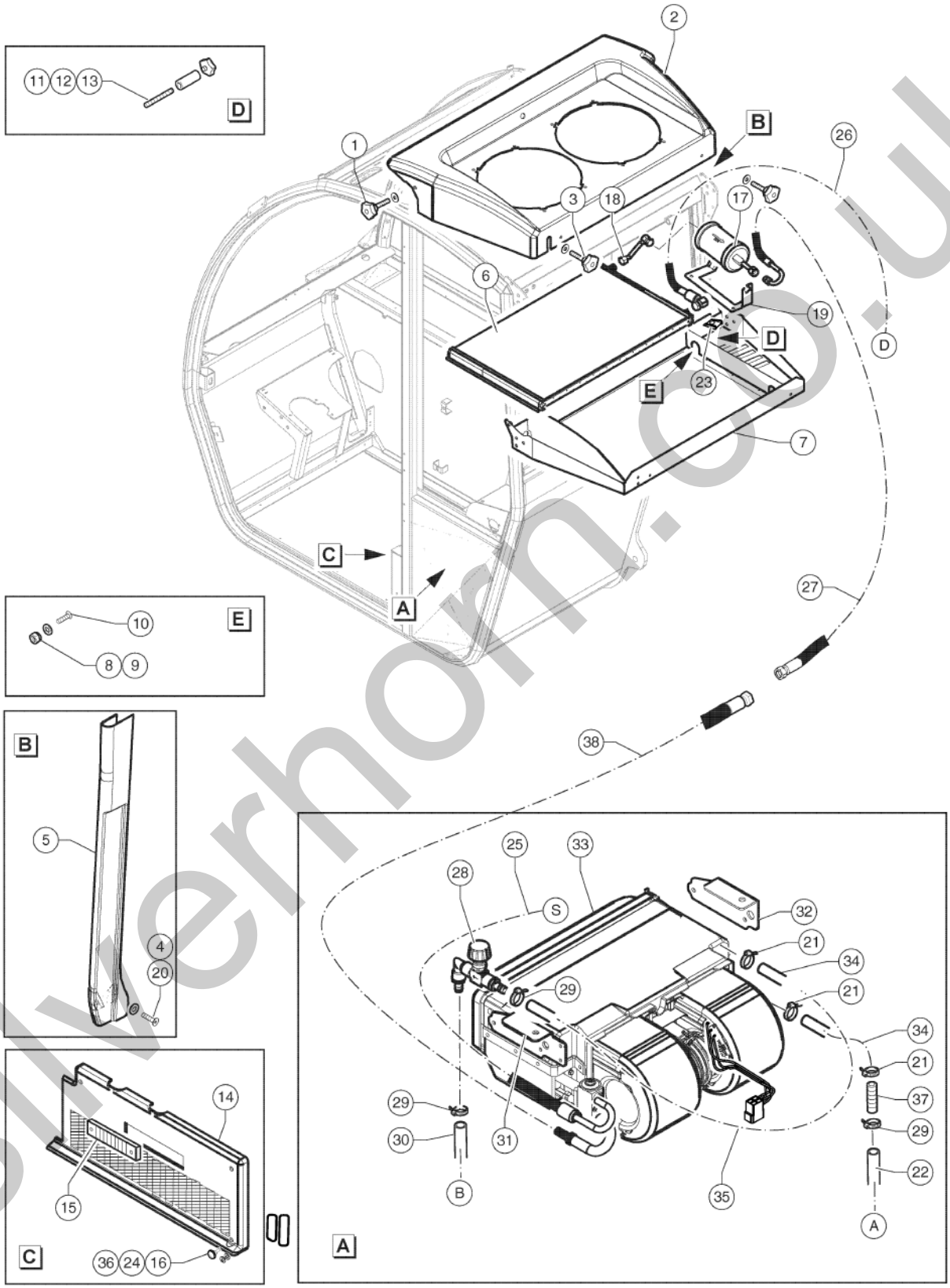

silverhorn.co.uk

811.1 611069 Air Conditioning - Part 1

Item	Part No.	Description	Qty.
29	07.0723.0520GT	Clamp 12/18	4
30	07.0723.0747GT	PIPE	1
31	07.0723.0748GT	LEFT BRACKET EVAPORATOR	1
32	07.0723.0749GT	RIGHT BRACKET EVAPORATOR	1
33	07.0723.0773GT	EVAPORATOR GROUP	1
34	07.0723.0751GT	PIPE D15X23 10 BAR	2
35	07.0723.0752GT	PIPE	1
36	07.0723.0173GT	Washer D6X12MM	4
37	07.0723.0555GT	Pipe Fitting	2
38	07.0723.0774GT	HOSE 5/16"	1

silverhorn.co.uk

812.1 611070 Air Conditioning - Part 2

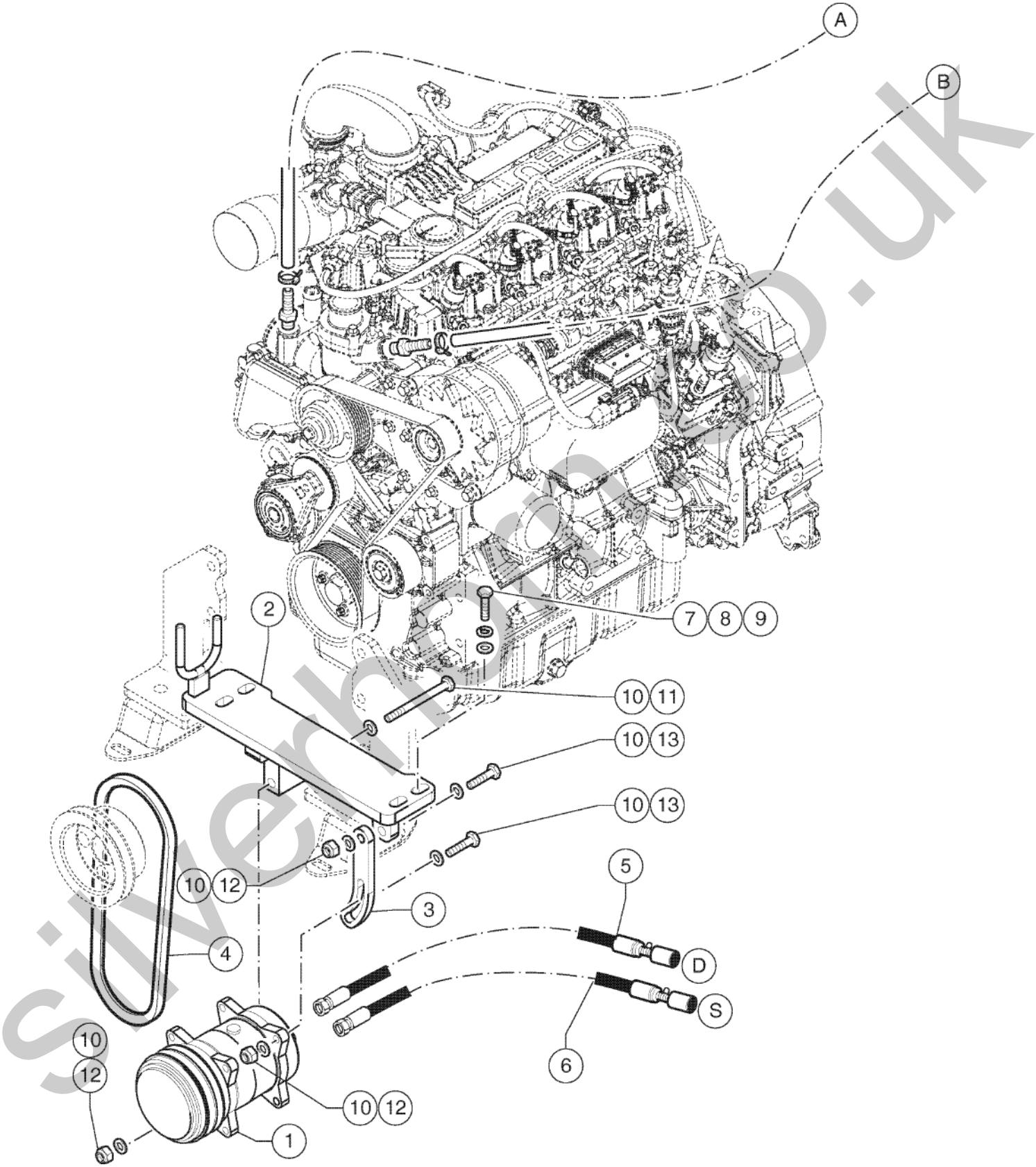

silverhorse.co.uk

812.1 611070 Air Conditioning - Part 2

Item	Part No.	Description	Qty.
1	56.0014.0133GT	Compressor A/C	1
2	51.0811.4839GT	COMPRESSOR SUPPORT	1
3	51.0811.4840GT	SUPPORT	1
4	09.0803.0869GT	BELT A36,5 13 X 925	1
5	09.0805.0213GT	HOSE	1
6	09.0805.0230GT	HOSE	1
7	01.0031.0299GT	FLAT WASHER D8 UNI 6593 ZN	1
8	01.4032.0003GT	Spring Washer D 8 ZN	1
9	01.0001.0256GT	SCREW M8X25 UNI 5739 8.8 ZN	1
10	01.4032.0004GT	Spring Washer D10 ZN	6
11	01.0001.0317GT	SCREW M10X130 UNI 5737 8.8 ZN	1
12	01.0023.0055GT	Stop Nut M10 UNI 7473 6S ZN	3
13	01.0001.0358GT	SCREW M10X40 UNI 5739 8.8 ZN	2

silverhorn.co.uk

813.1 611071 Air Conditioning - Part 3

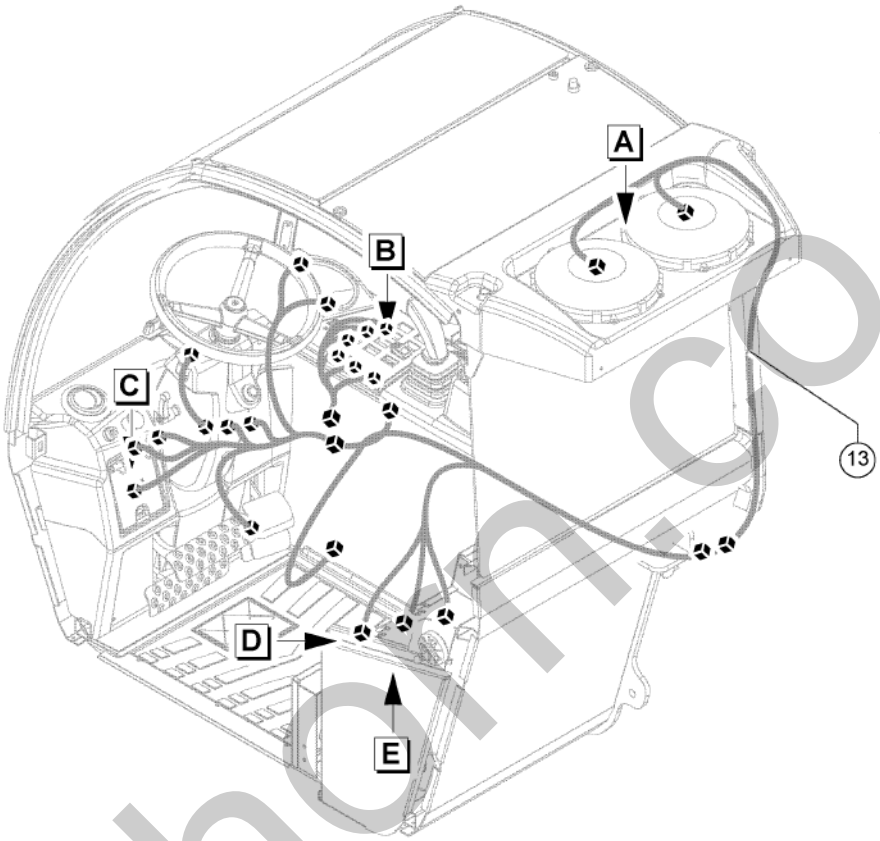

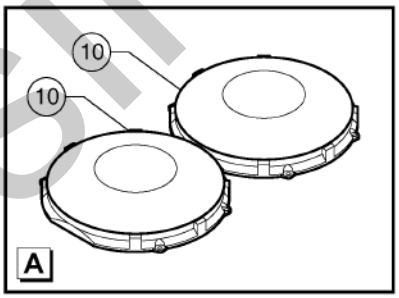

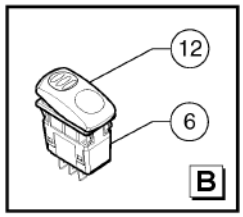

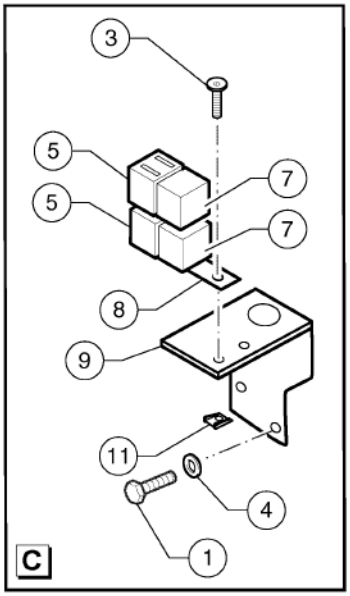

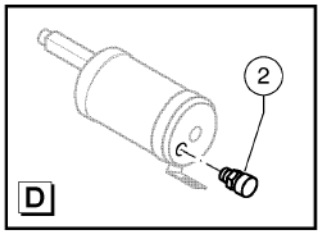

silverhorn.co.uk

813.1 611071 Air Conditioning - Part 3

Item	Part No.	Description	Qty.
1	07.0723.0182GT	Screw	2
2	07.0723.0775GT	PRESSURE SWITCH	1
3	01.4006.0006GT	Screw TSPEI M5X16 UNI 5933 10.9 ZN	2
4	07.0723.0232GT	Plain Washer D8x16 UNI 6592	2
5	07.0703.0188GT	RELAY HOLDER	2
6	56.0017.0048GT	SWITCH	1
7	07.0703.0486GT	RELAY	2
8	56.0005.0017GT	Relay Support Bracket	1
9	07.0723.0494GT	SUPPORT	1
10	07.0723.0756GT	FAN	2
11	07.0723.0743GT	PLATE	1
12	56.0017.0053GT	Air Condition Switch Cover	1
13	55.0602.1169GT	Air Condition Harness	1

silverhorn.co.uk

814.1 611072 Italian Market Dotation

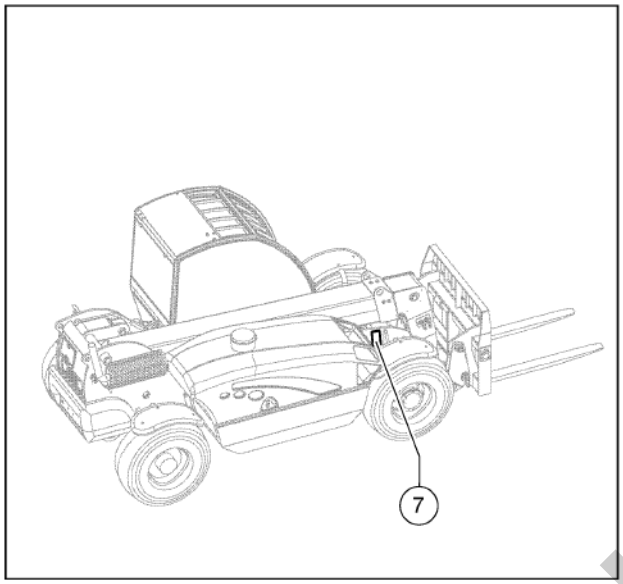

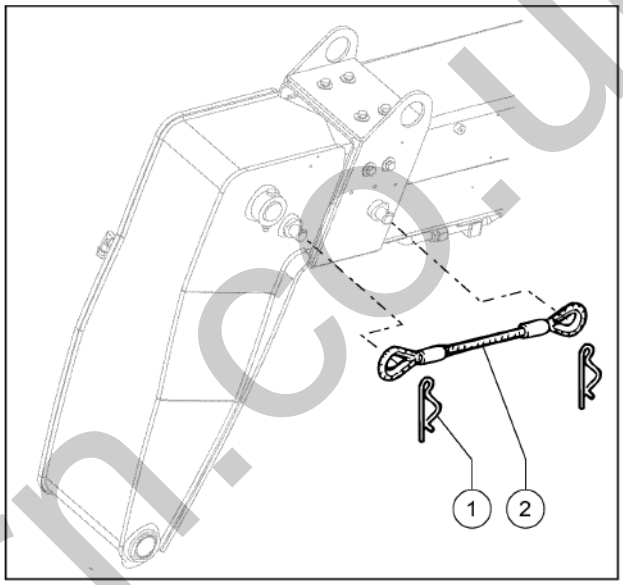

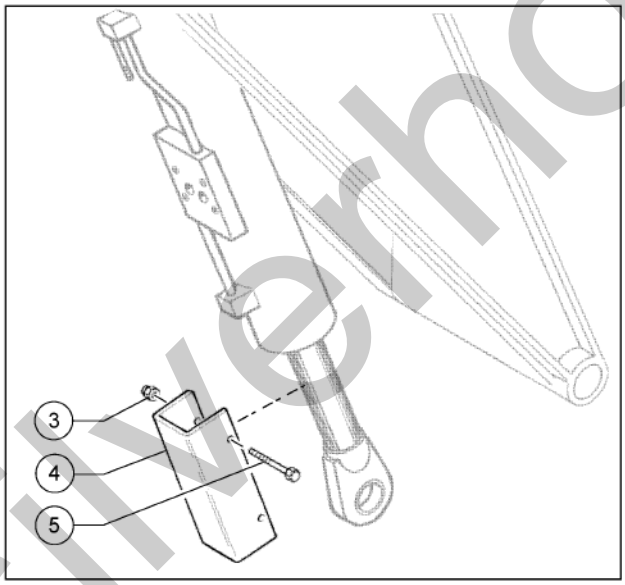

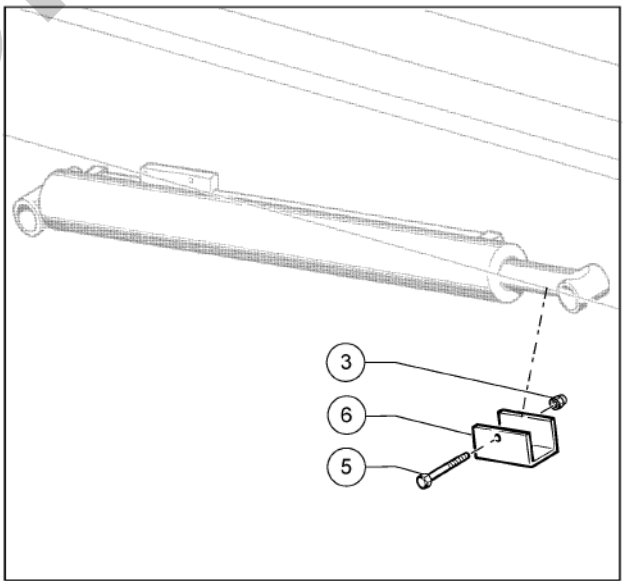

silverhorn.co.uk

814.1 611072 Italian Market Dotation

Item	Part No.	Description	Qty.
1	09.0803.0026GT	SPRING SPLIT PIN	2
2	09.0803.0074GT	CABLE	1
3	01.0023.0054GT	NUT,M8 UNI 7473 6S ZN	3
4	51.1300.2600GT	Bracket	1
5	01.4001.0010GT	Screw TE M8X100 UNI 5737 8.8 ZN	3
6	51.1300.2500GT	Bracket	1
7	09.4616.0153GT	PLATE	1

silverhorn.co.uk

815.1 611073 Swiss Market Dotation

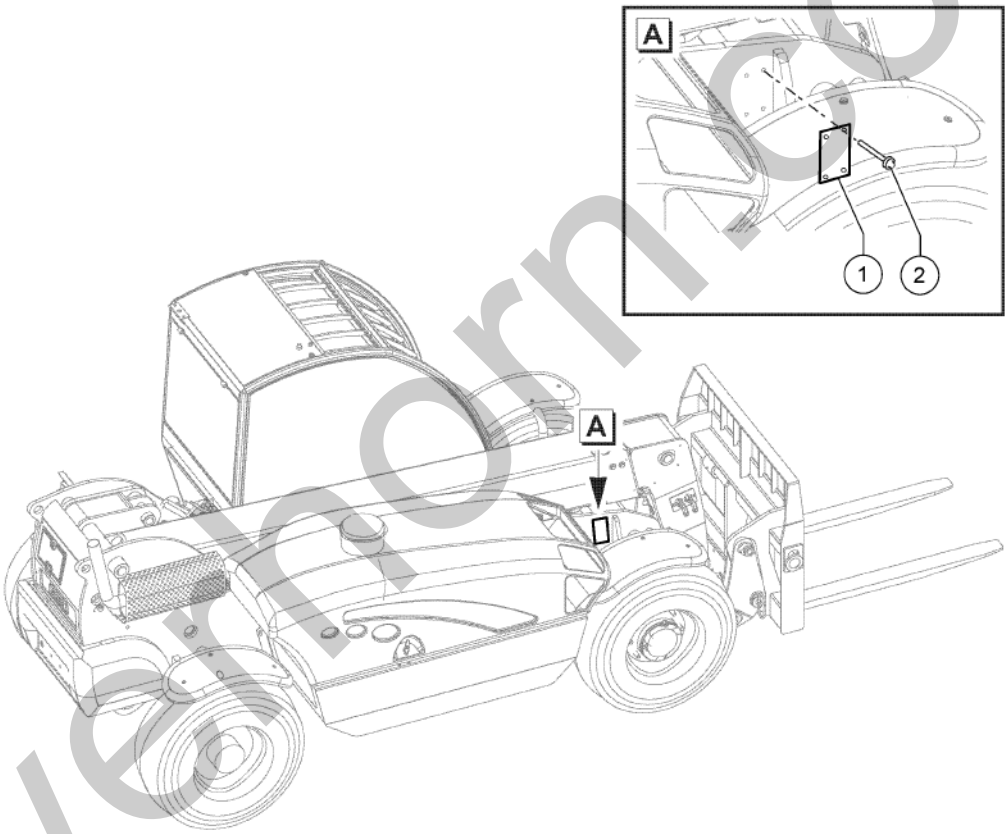

silvernorn.co.uk

815.1 611073 Swiss Market Dotation

Item	Part No.	Description	Qty.
1	09.4616.0155GT	Plate	1
2	02.4115.0000GT	Rivet D4x12	4

silverhorn.co.uk

816.1 611074 German Market Dotation

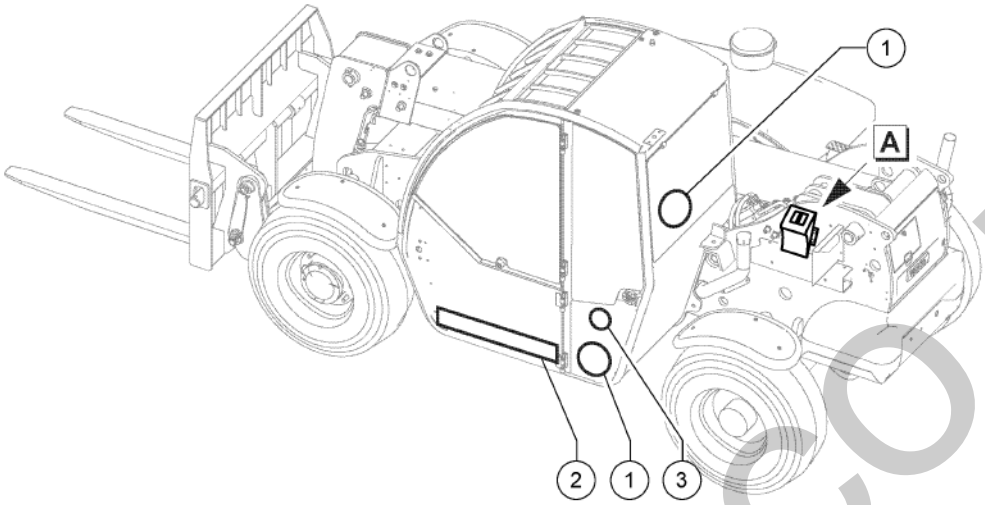

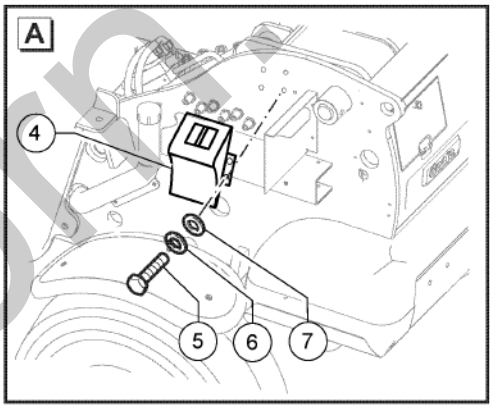

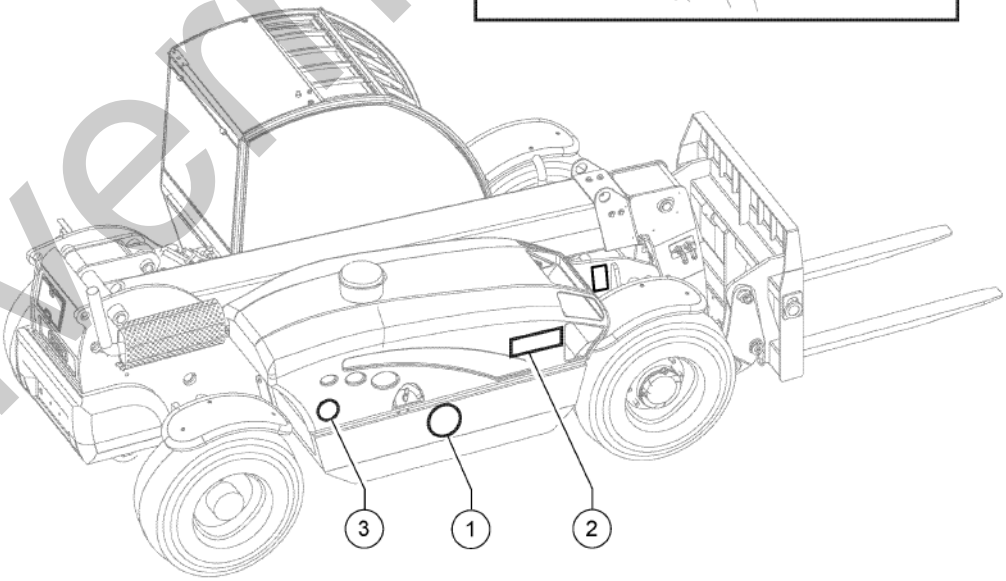

silverhorn.co.uk

816.1 611074 German Market Dotation

Item	Part No.	Description	Qty.
1	09.4618.0339GT	DECAL,MAX SPEED	3
2	09.4618.0276GT	REFLECTIVE DECAL,YELLOW	1
3	56.0010.0020GT	Orange Reflector	2
4	09.0803.0081GT	WEDGE	1
5	01.0001.0254GT	SCREW M8X20 UNI 5739 8.8 ZN	4
6	01.4032.0003GT	Spring Washer D 8 ZN	4
7	01.0031.0055GT	FLAT WASHER D8 UNI 6592 ZN	4

silverhorn.co.uk

817.1 611075 Spanish Market Dotation

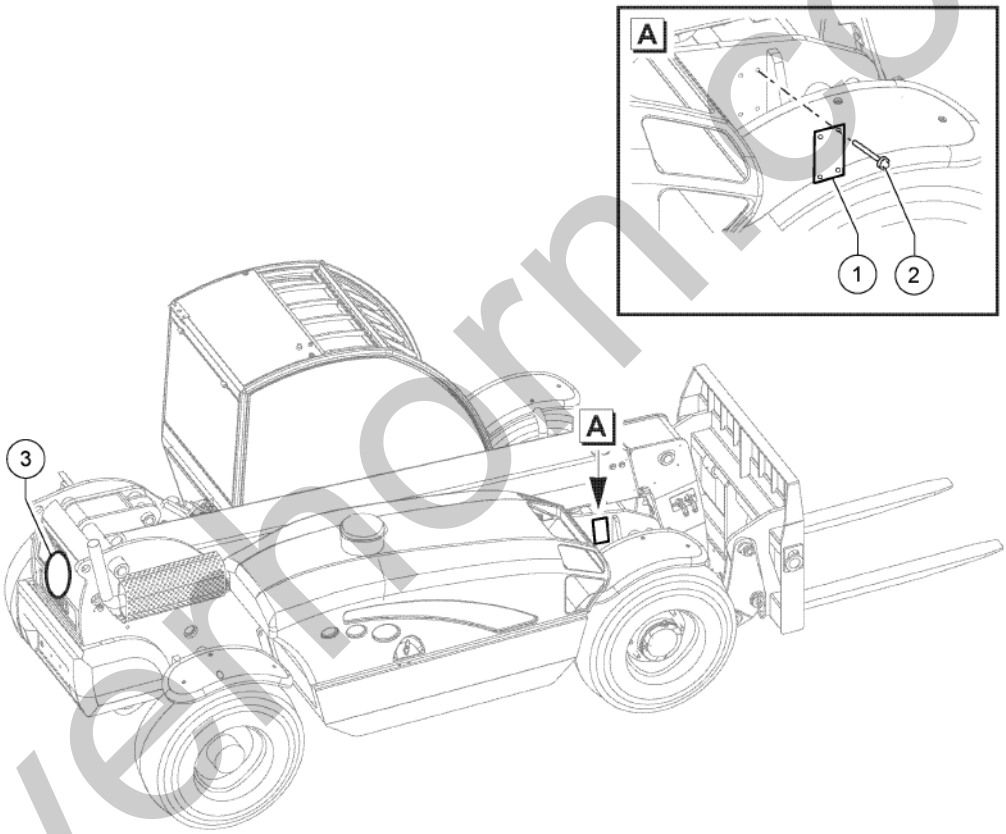

silverhorn.co.uk

817.1 611075 Spanish Market Dotation

Item	Part No.	Description	Qty.
1	09.4616.0153GT	PLATE	1
2	02.4115.0000GT	Rivet D4x12	4
3	09.4618.1488GT	Max Speed Decal 23Km/h	1

silverhorn.co.uk

818.1 611076 Hydraulic Jack

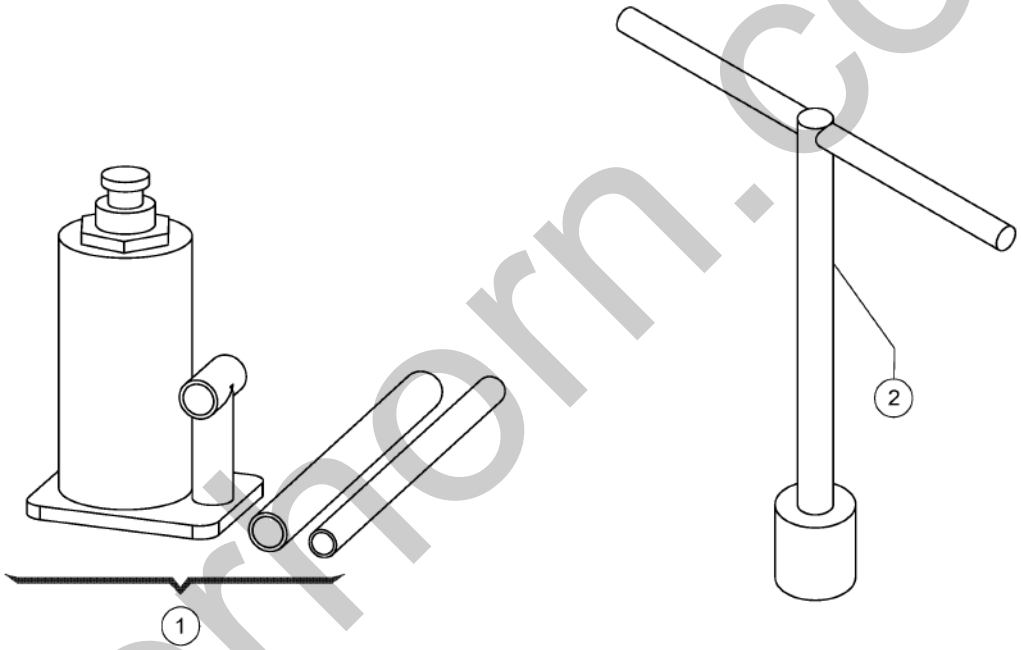

silvermorn.co.uk

818.1 611076 Hydraulic Jack

Item	Part No.	Description	Qty.
1	09.4675.0003GT	Hydraulic Jack	1
2	09.4675.0000GT	Ratchet Socket	1

silverhorn.co.uk

819.1 611079 Work Lights

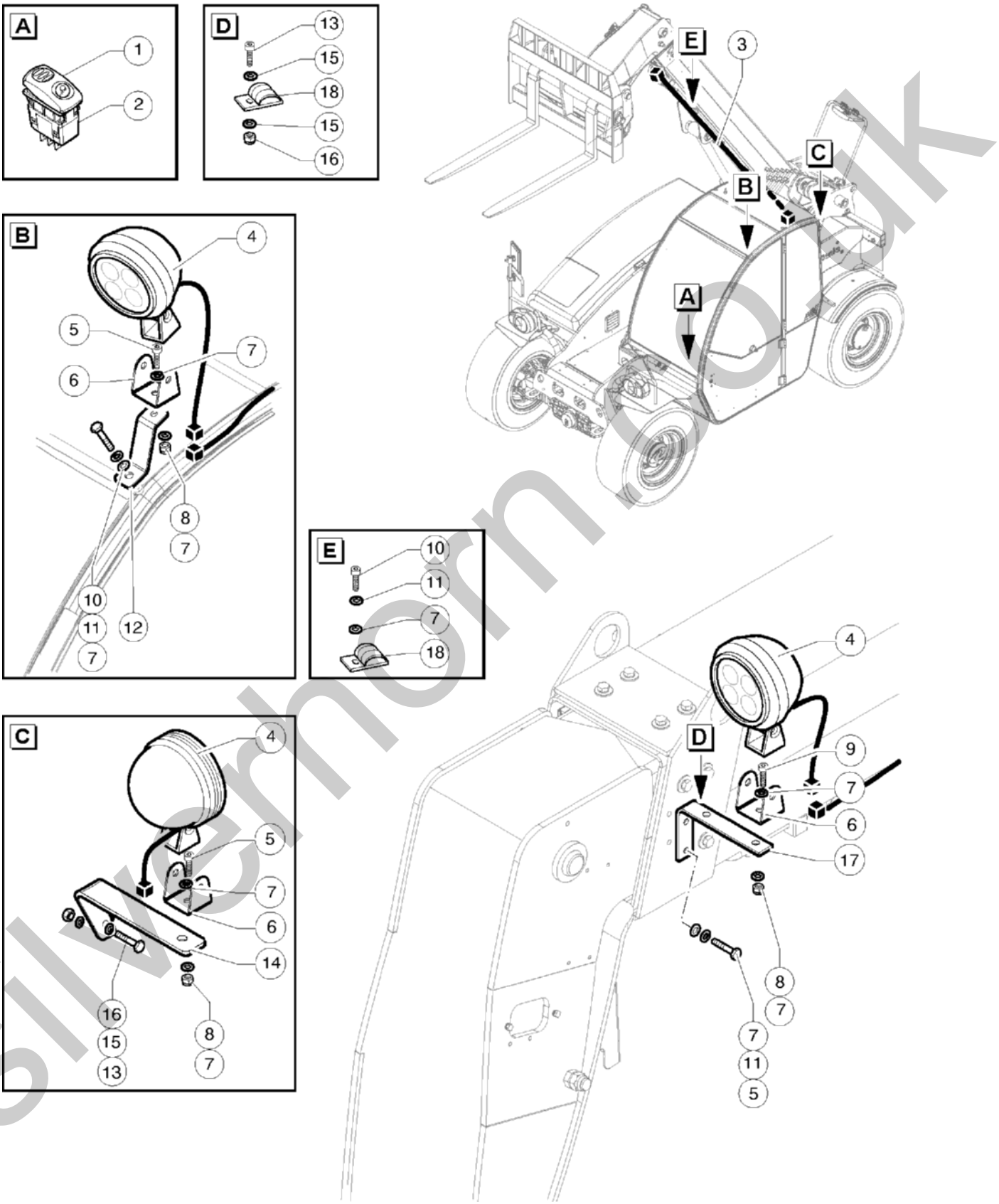

silverhorn.co.uk

819.1 611079 Work Lights

Item	Part No.	Description	Qty.
1	56.0017.0045GT	Work Lights Switch Cover	1
2	56.0017.0132GT	Switch Contact	1
3	55.0602.1026GT	Electrical Line	1
4	56.0010.0103GT	WORK LIGHT	3
5	01.0001.0254GT	SCREW M8X20 UNI 5739 8.8 ZN	4
6	51.0811.4952GT	LED WORK LIGHT SUPPORT	3
7	01.0031.0055GT	FLAT WASHER D8 UNI 6592 ZN	10
8	01.0023.0054GT	NUT,M8 UNI 7473 6S ZN	3
9	01.0001.0256GT	SCREW M8X25 UNI 5739 8.8 ZN	1
10	01.0001.0252GT	SCREW M8X16 UNI 5739 8.8 ZN	2
11	01.4032.0003GT	Spring Washer D 8 ZN	4
12	51.0811.4717GT	Support	1
13	01.0001.0158GT	SCREW M6X25 UNI 5739 8.8 ZN	3
14	51.0811.4718GT	Support	1
15	01.0031.0054GT	FLAT WASHER D6 UNI 6592 ZN	4
16	01.0023.0053GT	STOP NUT M6 UNI 7473 6S ZN	3
17	51.0811.4490GT	WORKING LIGHT BOOM SUPPORT	1
18	04.4227.0008GT	CLAMP S16 D12 HOLE 8.4	2

silverhorn.co.uk

820.1 611080 Rear Hydraulic Connection

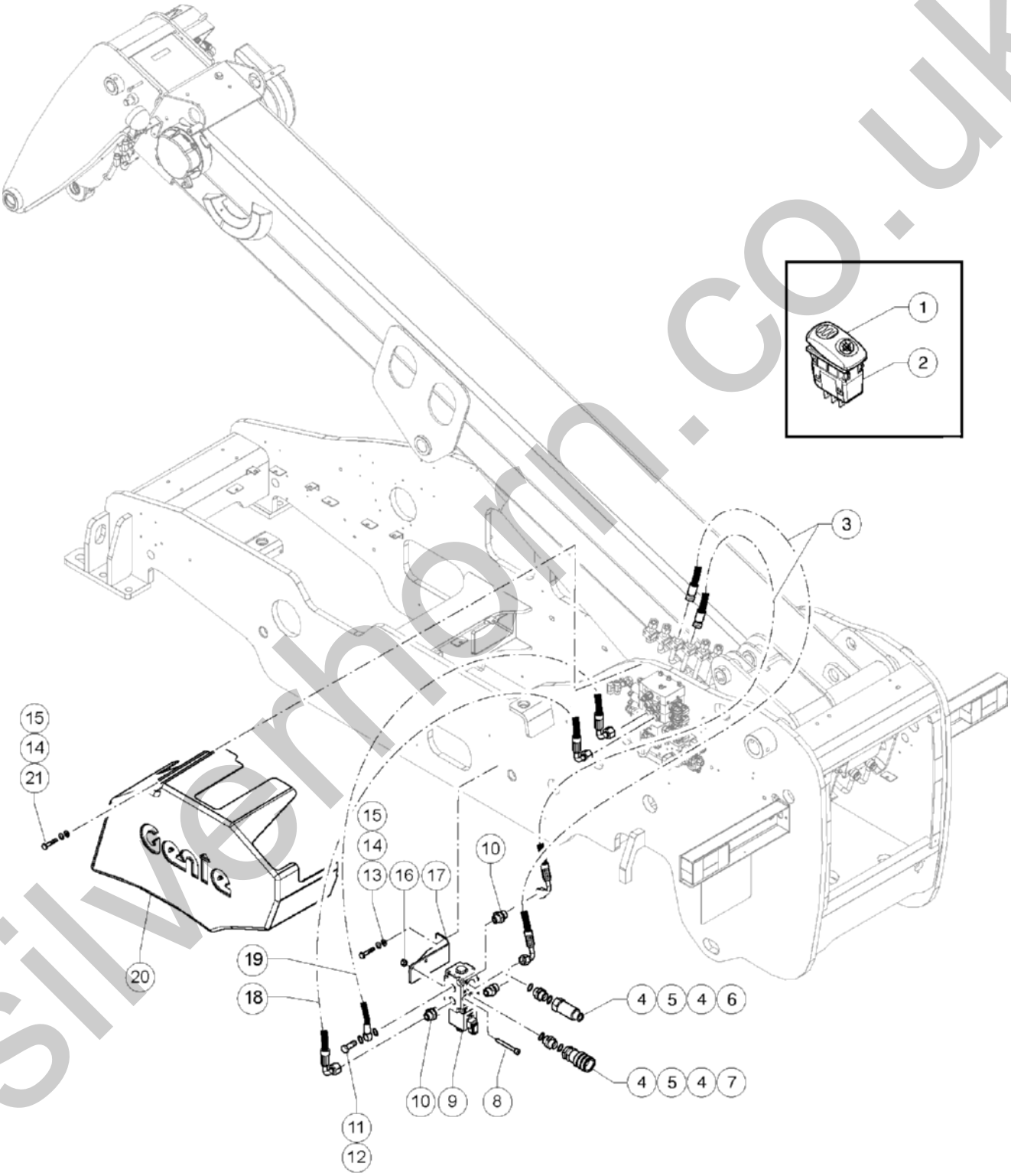

silverhorn.co.uk

820.1 611080 Rear Hydraulic Connection

Item	Part No.	Description	Qty.
1	56.0017.0050GT	SWITCH COVER	1
2	56.0017.0132GT	Switch Contact	1
3	04.0605.1638GT	HOSE R2 X 1/2 1250 F90 13/16"-16 SM 16S DIN 24	2
4	06.0442.0122GT	BONDED RING 1/2"	4
5	04.0600.0017GT	PIPE FITTING 1/2X1/2 BSP	2
6	04.4210.0018GT	QUICK COUPLING, MALE 1/2	1
7	04.4210.0019GT	QUICK COUPLING, FEMALE 1/2	1
8	01.0003.0941GT	SCREW	2
9	04.4240.0075GT	SOLENOID VALVE ASSY 6 WAY	1
10	04.0607.0111GT	PIPE FITTING 1/2 BSPX13/16-16 ORFS	3
11	04.0214.0035GT	DRILLED SCREW 1/2 BSP	1
12	06.0442.0122GT	BONDED RING 1/2"	2
13	01.0001.0256GT	SCREW M8X25 UNI 5739 8.8 ZN	2
14	01.0031.0055GT	FLAT WASHER D8 UNI 6592 ZN	5
15	01.4032.0003GT	Spring Washer D 8 ZN	5
16	01.0023.0054GT	NUT,M8 UNI 7473 6S ZN	2
17	51.0811.4548GT	BRACKET	1
18	04.0605.1640GT	HOSE R2 X 1/2 550 F90 ALTA 13/16"-16 F90 13/16"-16	1
19	04.0605.1639GT	HOSE R2 X 1/2 540 F90 ALTA 13/16"-16 HOLE D.1/2" GAS	1
20	52.1100.9121GT	MAIN VALVE COVER	1
21	01.0001.0254GT	SCREW M8X20 UNI 5739 8.8 ZN	3

silverhorn.co.uk

Part no.	Page Number
01.0001.0004GT	33
01.0001.0057GT	71, 77, 81
01.0001.0104GT	117
01.0001.0106GT	153, 193
01.0001.0107GT	169
01.0001.0108GT	101
01.0001.0154GT	31, 71, 75, 79
01.0001.0156GT	21, 117, 179, 195
01.0001.0158GT	173, 193, 217
01.0001.0204GT	67
01.0001.0206GT	121
01.0001.0207GT	139
01.0001.0209GT	113
01.0001.0211GT	125
01.0001.0217GT	27
01.0001.0252GT	23, 95, 115, 171, 175, 181
01.0001.0254GT	27, 69, 89, 141, 145, 147...
01.0001.0256GT	23, 27, 31, 67, 77, 81...
01.0001.0257GT	73, 75, 79
01.0001.0258GT	31, 89, 123
01.0001.0303GT	95
01.0001.0308GT	77, 125
01.0001.0317GT	203
01.0001.0353GT	41
01.0001.0355GT	23, 39, 87, 113, 145, 175...
01.0001.0356GT	73, 113
01.0001.0357GT	113
01.0001.0358GT	203
01.0001.0402GT	149
01.0001.0405GT	23
01.0001.0409GT	119, 195
01.0001.0466GT	29, 33
01.0001.0503GT	165
01.0001.0506GT	87
01.0001.0508GT	87, 89
01.0001.0703GT	21
01.0001.1458GT	27
01.0001.1465GT	27, 41, 71, 75, 79
01.0001.1482GT	41
01.0001.1537GT	89
01.0001.1557GT	89, 149
01.0003.0150GT	25

Part no.	Page Number
01.0003.0157GT	123
01.0003.0158GT	123
01.0003.0162GT	175, 181
01.0003.0203GT	135
01.0003.0208GT	121
01.0003.0210GT	69, 121
01.0003.0255GT	89, 155
01.0003.0257GT	149
01.0003.0941GT	101, 219
01.0003.0959GT	69
01.0003.0960GT	141
01.0019.0103GT	21
01.0019.0104GT	169, 173, 179
01.0019.0105GT	69, 95
01.0023.0052GT	25
01.0023.0053GT	23, 103, 117, 153, 175, 181...
01.0023.0054GT	27, 31, 39, 67, 71, 75...
01.0023.0055GT	33, 67, 113, 117, 125, 203
01.0023.0056GT	23, 41, 87, 119, 121, 195
01.0023.0057GT	113
01.0023.0058GT	95
01.0023.0060GT	29
01.0023.0062GT	27
01.0031.0053GT	25, 89
01.0031.0054GT	23, 33, 71, 75, 79, 103...
01.0031.0055GT	23, 27, 31, 39, 67, 75...
01.0031.0056GT	23, 33, 75, 95
01.0031.0057GT	89, 165
01.0031.0058GT	167
01.0031.0059GT	23, 89, 95, 151
01.0031.0061GT	117
01.0031.0063GT	23, 27
01.0031.0099GT	89
01.0031.0151GT	23, 41
01.0031.0298GT	21, 31, 155, 169, 173, 179
01.0031.0299GT	21, 29, 67, 71, 73, 75...
01.0031.0301GT	33, 41, 67, 73, 115, 175...
01.0031.0314GT	111
01.4001.0003GT	121
01.4001.0004GT	167
01.4001.0006GT	23
01.4001.0008GT	113, 117

Part no.	Page Number
01.4001.0010GT	207
01.4001.0012GT	113
01.4001.0025GT	21
01.4001.0026GT	25
01.4001.0034GT	141
01.4001.0045GT	21, 89
01.4001.0057GT	27
01.4001.0061GT	93
01.4001.0078GT	21, 27, 31
01.4001.0104GT	95
01.4001.0106GT	25, 33
01.4001.0164GT	109
01.4001.0212GT	29
01.4003.0000GT	113
01.4003.0012GT	39
01.4003.0036GT	171, 177, 183
01.4003.0041GT	115
01.4003.0059GT	165
01.4006.0001GT	31
01.4006.0004GT	115
01.4006.0006GT	205
01.4006.0013GT	113
01.4019.0004GT	119
01.4019.0021GT	41
01.4023.0010GT	33
01.4031.0003GT	69
01.4032.0000GT	21
01.4032.0001GT	89
01.4032.0002GT	21, 33, 71, 75, 79, 117...
01.4032.0003GT	23, 31, 67, 71, 73, 77...
01.4032.0004GT	23, 31, 39, 69, 73, 77...
01.4032.0005GT	87, 151, 165
01.4032.0006GT	167
01.4032.0007GT	21, 89, 151
01.4032.0009GT	29
01.4032.0011GT	39
01.4041.0005GT	119
01.4041.0015GT	197
02.0117.0101GT	125
02.0117.0119GT	113
02.4102.0001GT	195
02.4102.0012GT	117

silverhorn.co.uk

Part no.	Page Number
02.4115.0000GT	209, 213
03.0000.0006GT	121
04.0214.0035GT	131, 219
04.0220.0051GT	67
04.0220.0053GT	41
04.0220.0055GT	39
04.0220.0059GT	41
04.0220.0063GT	39
04.0227.0000GT	71, 75, 79
04.0227.0051GT	69, 91, 105
04.0227.0054GT	135
04.0227.0058GT	67
04.0227.0068GT	67
04.0227.0144GT	41
04.0227.0503GT	69
04.0600.0000GT	187
04.0600.0017GT	171, 177, 183, 219
04.0600.0021GT	187
04.0600.0022GT	187
04.0600.0046GT	145, 147
04.0600.0087GT	117, 171, 183
04.0600.0091GT	171
04.0600.0107GT	177, 183
04.0600.0228GT	117
04.0600.0285GT	145, 147
04.0601.0011GT	187
04.0601.0064GT	187
04.0602.0143GT	189
04.0602.0613GT	171, 177, 183
04.0602.0615GT	171, 175, 181
04.0605.0100GT	153
04.0605.0112GT	175, 181
04.0605.0113GT	175, 181
04.0605.0114GT	175, 181
04.0605.0136GT	149
04.0605.0220GT	149
04.0605.0299GT	153
04.0605.0348GT	153
04.0605.0478GT	153
04.0605.0556GT	149
04.0605.0626GT	129
04.0605.0640GT	155

Part no.	Page Number
04.0605.0653GT	137
04.0605.0674GT	139
04.0605.0766GT	139
04.0605.0956GT	155
04.0605.0986GT	125
04.0605.1265GT	125
04.0605.1289GT	135
04.0605.1290GT	153
04.0605.1358GT	139
04.0605.1414GT	141
04.0605.1417GT	145, 147
04.0605.1418GT	139
04.0605.1419GT	141
04.0605.1420GT	139
04.0605.1422GT	153
04.0605.1423GT	131
04.0605.1425GT	125
04.0605.1426GT	153
04.0605.1427GT	127
04.0605.1428GT	133
04.0605.1429GT	133
04.0605.1446GT	145, 147
04.0605.1473GT	135
04.0605.1474GT	125
04.0605.1481GT	125
04.0605.1494GT	153
04.0605.1608GT	129
04.0605.1626GT	193
04.0605.1633GT	177, 183
04.0605.1635GT	193
04.0605.1636GT	193
04.0605.1638GT	219
04.0605.1639GT	219
04.0605.1640GT	219
04.0605.1699GT	135
04.0605.1702GT	135
04.0605.1706GT	147
04.0605.1715GT	153
04.0605.1779GT	147
04.0605.1781GT	145
04.0605.1784GT	145
04.0605.1817GT	125

Part no.	Page Number
04.0605.1818GT	151
04.0605.1819GT	149
04.0607.0011GT	193
04.0607.0103GT	141, 149
04.0607.0107GT	139, 145, 147, 149, 171
04.0607.0109GT	133
04.0607.0110GT	153, 175, 181
04.0607.0111GT	125, 129, 131, 133, 153, 219
04.0607.0112GT	175, 181
04.0607.0113GT	125, 135, 139, 153
04.0607.0114GT	139, 175, 181
04.0607.0115GT	139, 193
04.0607.0117GT	153
04.0607.0121GT	155
04.0607.0122GT	125
04.0607.0124GT	125
04.0607.0131GT	135, 175, 181
04.0607.0132GT	175, 181
04.0607.0137GT	193
04.0607.0139GT	145, 147, 193
04.0607.0141GT	117, 125
04.0607.0142GT	145, 147
04.0607.0153GT	135, 139
04.0607.0163GT	145, 147, 177, 183
04.0607.0167GT	139
04.0607.0178GT	153
04.0607.0179GT	145, 147
04.0607.0180GT	135, 193
04.0607.0182GT	151
04.0607.0196GT	145, 147
04.0607.0236GT	153
04.0607.0237GT	153
04.0607.0793GT	149
04.0607.0842GT	149
04.0607.0865GT	149
04.0607.0866GT	145, 147
04.0607.0867GT	149
04.0607.0869GT	117
04.0609.0016GT	187
04.4210.0005GT	135, 139
04.4210.0018GT	117, 171, 177, 183, 187, 219
04.4210.0019GT	117, 171, 177, 183, 187, 219

silverhorn.co.uk

Part no.	Page Number
04.4223.0017GT	149
04.4223.0018GT	149
04.4224.0000GT	39
04.4227.0000GT	77, 81
04.4227.0003GT	169, 173, 179
04.4227.0008GT	217
04.4227.0012GT	105
04.4227.0016GT	71, 139, 145, 147
04.4227.0038GT	155
04.4227.0049GT	75, 79
04.4229.0092GT	149
04.4229.0093GT	149
04.4235.0066GT	149
04.4236.0101GT	139
04.4238.0059GT	87
04.4238.0108GT	87
04.4239.0002GT	175, 181, 187
04.4239.0004GT	121
04.4239.0013GT	147
04.4239.0083GT	145
04.4239.0107GT	193
04.4239.0155GT	121
04.4239.0156GT	121
04.4239.0157GT	121
04.4239.0159GT	121
04.4239.0161GT	187
04.4240.0052GT	153, 155
04.4240.0075GT	171, 175, 219
04.4240.0076GT	181
05.0401.0017GT	135
05.4309.0001GT	135
05.4309.0002GT	135
05.4329.0003GT	135
05.4329.0027GT	139
05.4329.0031GT	139
06.0401.0123GT	155
06.0401.1509GT	149
06.0401.1510GT	149
06.0442.0054GT	135
06.0442.0055GT	187
06.0442.0101GT	187
06.0442.0103GT	187

Part no.	Page Number
06.0442.0117GT	67
06.0442.0119GT	137
06.0442.0120GT	39
06.0442.0122GT	39, 131, 171, 177, 183, 219
06.0442.0124GT	41, 145, 147
06.0442.0125GT	39
06.0442.0127GT	39
06.0442.0135GT	145, 147
07.0501.0051GT	89
07.0501.0052GT	69
07.0501.0053GT	83
07.0501.0097GT	67
07.0700.0006GT	39
07.0700.0023GT	11, 39
07.0700.0028GT	39
07.0700.0035GT	71, 75, 79
07.0700.0040GT	11, 71, 75, 79
07.0700.0041GT	11, 71, 75, 79
07.0700.0052GT	71, 75, 79
07.0700.0053GT	77, 81
07.0701.0147GT	89
07.0701.0200GT	89
07.0701.0211GT	89
07.0701.0241GT	89
07.0701.0267GT	87
07.0701.0316GT	171, 175, 181
07.0701.0317GT	171, 177, 183
07.0701.0344GT	155
07.0701.0345GT	89
07.0701.0346GT	87
07.0703.0060GT	159
07.0703.0069GT	159
07.0703.0071GT	157
07.0703.0148GT	157
07.0703.0188GT	205
07.0703.0189GT	159
07.0703.0229GT	159
07.0703.0305GT	27, 33
07.0703.0306GT	27, 33
07.0703.0429GT	107
07.0703.0486GT	205
07.0703.0487GT	157

Part no.	Page Number
07.0703.0508GT	93
07.0703.0532GT	107
07.0703.0577GT	107
07.0703.0714GT	159
07.0703.0727GT	107
07.0703.0728GT	109
07.0703.0775GT	155
07.0703.0777GT	93
07.0705.0101GT	121
07.0706.0043GT	155
07.0709.0057GT	55
07.0709.0065GT	57
07.0709.0070GT	57
07.0709.0071GT	57
07.0709.0104GT	55
07.0709.0106GT	51
07.0709.0113GT	45, 59
07.0709.0117GT	55
07.0709.0118GT	55
07.0709.0119GT	57
07.0709.0127GT	49
07.0709.0130GT	47
07.0709.0149GT	51
07.0709.0169GT	55
07.0709.0174GT	47, 61
07.0709.0188GT	49
07.0709.0218GT	65
07.0709.0235GT	61
07.0709.0245GT	47
07.0709.0249GT	47
07.0709.0254GT	47, 61
07.0709.0257GT	47
07.0709.0258GT	47
07.0709.0259GT	47
07.0709.0260GT	47
07.0709.0261GT	45, 55
07.0709.0265GT	55
07.0709.0267GT	55
07.0709.0268GT	55
07.0709.0269GT	55
07.0709.0270GT	55
07.0709.0271GT	55

silverhorn.co.uk

Part no.	Page Number
07.0709.0289GT	65
07.0709.0290GT	55
07.0709.0291GT	55
07.0709.0293GT	47
07.0709.0294GT	47
07.0709.0295GT	47
07.0709.0296GT	47
07.0709.0312GT	49
07.0709.0313GT	49
07.0709.0314GT	49
07.0709.0315GT	49
07.0709.0316GT	49
07.0709.0317GT	49
07.0709.0319GT	49
07.0709.0320GT	47
07.0709.0321GT	57
07.0709.0346GT	51
07.0709.0354GT	57
07.0709.0359GT	47, 61
07.0709.0365GT	57
07.0709.0371GT	45, 51, 57, 59
07.0709.0388GT	61
07.0709.0706GT	47, 61
07.0709.0710GT	49
07.0709.0716GT	49
07.0709.0727GT	57
07.0709.0747GT	49
07.0709.0751GT	49, 61
07.0709.0756GT	55
07.0709.0758GT	57
07.0709.0761GT	61
07.0709.0762GT	61
07.0709.0844GT	51
07.0709.0871GT	51
07.0709.0909GT	53, 63
07.0709.0912GT	47, 55
07.0709.0914GT	61
07.0709.0915GT	47
07.0709.0916GT	47, 61
07.0709.0917GT	61
07.0709.0918GT	47, 61
07.0709.0919GT	47, 61

Part no.	Page Number
07.0709.0921GT	49
07.0709.0930GT	49, 53, 63
07.0709.0953GT	51
07.0709.0993GT	49
07.0709.0996GT	51
07.0709.1226GT	45
07.0709.1227GT	45
07.0709.1228GT	47
07.0709.1229GT	55
07.0709.1230GT	55
07.0709.1231GT	55
07.0709.1232GT	55
07.0709.1233GT	57
07.0709.1234GT	57
07.0709.1235GT	57
07.0709.1236GT	51
07.0709.1237GT	51
07.0709.1238GT	51
07.0709.1239GT	51
07.0709.1240GT	51
07.0709.1241GT	51
07.0709.1242GT	51
07.0709.1243GT	51
07.0709.1244GT	51
07.0709.1245GT	51
07.0709.1246GT	59
07.0709.1247GT	61
07.0709.1250GT	65
07.0709.1251GT	57
07.0709.1253GT	57
07.0709.1254GT	51
07.0709.1255GT	51
07.0709.1256GT	53, 63
07.0712.0314GT	67
07.0712.0316GT	67
07.0712.0317GT	67
07.0712.0318GT	69
07.0712.0319GT	69
07.0712.0320GT	67
07.0712.0321GT	67
07.0712.0322GT	69
07.0712.0323GT	69

Part no.	Page Number
07.0713.0061GT	87
07.0713.0062GT	87
07.0713.0063GT	87
07.0721.0019GT	125
07.0721.0117GT	125
07.0721.0120GT	121
07.0721.0121GT	121
07.0721.0122GT	121
07.0721.0123GT	121
07.0722.0037GT	121
07.0722.0053GT	89
07.0723.0010GT	105
07.0723.0013GT	93
07.0723.0024GT	99
07.0723.0036GT	103
07.0723.0039GT	93, 107, 199
07.0723.0042GT	31, 99
07.0723.0054GT	95
07.0723.0055GT	95
07.0723.0057GT	101
07.0723.0074GT	199
07.0723.0076GT	105, 199
07.0723.0079GT	199
07.0723.0089GT	31, 33, 71, 75, 79
07.0723.0090GT	105, 199
07.0723.0092GT	135
07.0723.0096GT	93
07.0723.0104GT	107
07.0723.0108GT	105
07.0723.0109GT	105
07.0723.0114GT	93, 99
07.0723.0134GT	101
07.0723.0144GT	99
07.0723.0152GT	101
07.0723.0155GT	99
07.0723.0157GT	101
07.0723.0161GT	99
07.0723.0165GT	93
07.0723.0167GT	93
07.0723.0168GT	93
07.0723.0169GT	93
07.0723.0172GT	101

silverhorn.co.uk

Part no.	Page Number
07.0723.0173GT	101, 201
07.0723.0175GT	101, 199
07.0723.0176GT	99, 199
07.0723.0181GT	199
07.0723.0182GT	205
07.0723.0185GT	101
07.0723.0193GT	95
07.0723.0194GT	105
07.0723.0224GT	95
07.0723.0226GT	95
07.0723.0227GT	93
07.0723.0232GT	199, 205
07.0723.0236GT	99
07.0723.0281GT	93
07.0723.0290GT	101
07.0723.0335GT	93
07.0723.0336GT	93
07.0723.0345GT	99
07.0723.0371GT	199
07.0723.0410GT	99
07.0723.0411GT	93
07.0723.0412GT	93
07.0723.0421GT	99
07.0723.0426GT	99
07.0723.0427GT	99
07.0723.0428GT	99
07.0723.0429GT	99
07.0723.0433GT	93, 99
07.0723.0434GT	99
07.0723.0441GT	99
07.0723.0444GT	101
07.0723.0445GT	103
07.0723.0446GT	101
07.0723.0452GT	101
07.0723.0453GT	101
07.0723.0454GT	93
07.0723.0456GT	101
07.0723.0487GT	95
07.0723.0491GT	93
07.0723.0493GT	109
07.0723.0494GT	101, 205
07.0723.0506GT	101

Part no.	Page Number
07.0723.0516GT	95
07.0723.0520GT	201
07.0723.0532GT	197
07.0723.0533GT	197
07.0723.0534GT	197
07.0723.0535GT	197
07.0723.0549GT	199
07.0723.0555GT	201
07.0723.0557GT	199
07.0723.0571GT	31, 99, 109
07.0723.0627GT	95, 103
07.0723.0638GT	99, 107
07.0723.0639GT	107
07.0723.0640GT	109
07.0723.0646GT	101
07.0723.0647GT	103
07.0723.0651GT	95
07.0723.0652GT	95
07.0723.0655GT	99
07.0723.0658GT	105, 199
07.0723.0672GT	101
07.0723.0675GT	99
07.0723.0684GT	99
07.0723.0693GT	105
07.0723.0694GT	105
07.0723.0698GT	199
07.0723.0708GT	199
07.0723.0709GT	199
07.0723.0713GT	101
07.0723.0714GT	101
07.0723.0717GT	97
07.0723.0718GT	93
07.0723.0719GT	99
07.0723.0720GT	95
07.0723.0721GT	199
07.0723.0736GT	199
07.0723.0737GT	199
07.0723.0743GT	199, 205
07.0723.0747GT	201
07.0723.0748GT	201
07.0723.0749GT	201
07.0723.0751GT	201

Part no.	Page Number
07.0723.0752GT	201
07.0723.0753GT	199
07.0723.0756GT	205
07.0723.0757GT	105
07.0723.0759GT	107
07.0723.0760GT	99
07.0723.0761GT	105
07.0723.0762GT	105
07.0723.0763GT	105
07.0723.0764GT	99
07.0723.0766GT	199
07.0723.0767GT	199
07.0723.0768GT	199
07.0723.0769GT	199
07.0723.0770GT	199
07.0723.0771GT	199
07.0723.0772GT	199
07.0723.0773GT	201
07.0723.0774GT	201
07.0723.0775GT	205
07.0723.0776GT	105
07.0726.0043GT	113
07.0726.0138GT	33
07.0726.0139GT	35
07.0730.0080GT	135
07.0730.0081GT	137
07.0730.0082GT	135
07.0730.0083GT	135
07.0730.0084GT	137
07.0730.0085GT	137
07.0730.0086GT	137
07.0735.0030GT	189
07.0735.0033GT	189
07.0735.0039GT	189
07.0735.0049GT	189
07.0738.0004GT	43
07.0740.0014GT	139
07.0740.0347GT	101
07.0740.0429GT	101
07.0741.0010GT	109
07.0741.0023GT	109
07.0741.0058GT	141

silverhorn.co.uk

Part no.	Page Number
07.0741.0174GT	109
07.0741.0224GT	109
07.0741.0225GT	109
07.0741.0247GT	141
07.0741.0248GT	141
07.0741.0249GT	141
07.0741.0250GT	141
07.0741.0251GT	141
07.0741.0252GT	141
07.0741.0253GT	141
07.0741.0254GT	143
07.0741.0255GT	139
07.0741.0257GT	139
07.0741.0258GT	139
07.0741.0259GT	139
07.0741.0260GT	141
07.0741.0261GT	141
07.0741.0262GT	141
07.0741.0263GT	143
07.0741.0264GT	143
07.0741.0268GT	143
07.0741.0269GT	141
07.0741.0270GT	143
07.0741.0271GT	143
07.0741.0277GT	143
07.4501.0067GT	11, 87
07.4501.0227GT	79
07.4501.0251GT	83
07.4501.0252GT	83
07.4501.0285GT	11, 89
07.4501.0286GT	89
07.4501.0289GT	91
07.4501.0291GT	91
07.4501.0303GT	91
07.4501.0304GT	89
07.4501.0351GT	87
07.4501.0376GT	83
07.4501.0400GT	77, 81
07.4529.0027GT	135
07.4529.0111GT	155
07.4529.0158GT	175, 181
07.4529.0209GT	87

Part no.	Page Number
7-229-583GT	57
7-229-590GT	57
09.0800.0025GT	125
09.0802.0043GT	165
09.0803.0000GT	33
09.0803.0026GT	21, 185, 187, 207
09.0803.0043GT	123
09.0803.0060GT	123
09.0803.0068GT	185, 187
09.0803.0069GT	185, 187
09.0803.0071GT	185, 187
09.0803.0074GT	207
09.0803.0081GT	211
09.0803.0088GT	135
09.0803.0232GT	41
09.0803.0235GT	37
09.0803.0245GT	33
09.0803.0319GT	187
09.0803.0347GT	73, 75, 79
09.0803.0352GT	21, 27, 31
09.0803.0357GT	115
09.0803.0406GT	117, 195
09.0803.0418GT	27, 29
09.0803.0421GT	21
09.0803.0510GT	23
09.0803.0516GT	33
09.0803.0518GT	21
09.0803.0523GT	123
09.0803.0539GT	73
09.0803.0568GT	95
09.0803.0569GT	93
09.0803.0571GT	95
09.0803.0572GT	109
09.0803.0652GT	23
09.0803.0667GT	27, 31
09.0803.0815GT	31
09.0803.0828GT	31
09.0803.0860GT	99
09.0803.0869GT	203
09.0803.0880GT	31
09.0803.0910GT	115
09.0803.0911GT	167

Part no.	Page Number
09.0803.0912GT	167
09.0803.0913GT	31
09.0804.2300GT	87
09.0804.3453GT	37
09.0804.3454GT	37
09.0804.3455GT	37
09.0804.3456GT	37
09.0804.3457GT	37
09.0804.3458GT	37
09.0804.3459GT	37
09.0804.3460GT	37
09.0804.3461GT	37
09.0805.0119GT	33
09.0805.0166GT	39
09.0805.0171GT	25, 87, 91
09.0805.0213GT	203
09.0805.0225GT	67
09.0805.0226GT	75, 79
09.0805.0230GT	203
09.0806.0058GT	105
09.4601.0082GT	87
09.4601.0084GT	87
09.4601.0096GT	87
09.4604.0047GT	39
09.4604.0069GT	71, 75, 79
09.4604.0073GT	11, 39
09.4604.0076GT	71, 75, 79
09.4610.0027GT	93
09.4610.0028GT	23, 33
09.4610.0057GT	93
09.4610.0073GT	93
09.4610.0075GT	95
09.4610.0076GT	93
09.4616.0102GT	15, 17
09.4616.0153GT	207, 213
09.4616.0155GT	209
09.4618.0093GT	185, 187
09.4618.0276GT	211
09.4618.0339GT	211
09.4618.0390GT	13, 17
09.4618.0776GT	13, 17
09.4618.0835GT	15, 19

silverhorn.co.uk

Part no.	Page Number
09.4618.0837GT	15, 19
09.4618.0920GT	17
09.4618.0922GT	13, 17
09.4618.0923GT	13, 17
09.4618.0924GT	13, 17
09.4618.0930GT	13, 19
09.4618.1025GT	15, 19
09.4618.1029GT	15, 19
09.4618.1375GT	15, 19
09.4618.1398GT	13, 17
09.4618.1419GT	15, 17
09.4618.1423GT	13, 19
09.4618.1426GT	15, 19
09.4618.1458GT	13, 17
09.4618.1488GT	213
09.4618.1515GT	15, 19
09.4618.1637GT	15, 19
09.4618.1645GT	15, 17
09.4618.1670GT	13, 17
09.4618.1671GT	13
09.4618.1674GT	13, 17
09.4618.1678GT	13, 17
09.4618.1679GT	15, 19
09.4618.1681GT	13, 17
09.4618.1687GT	15, 19
09.4618.1689GT	15, 19
09.4618.1690GT	15, 19
09.4618.1691GT	13, 17
09.4618.1713GT	13, 17
09.4618.1742GT	13, 17
09.4618.1781GT	13, 17
09.4618.1782GT	13, 17
09.4618.1818GT	15, 19
09.4618.1829GT	13
09.4618.1999GT	15, 19
09.4618.2026GT	15
09.4618.2053GT	15
09.4627.0018GT	43
09.4629.0018GT	43
09.4632.0102GT	43
09.4632.0103GT	43
09.4635.0014GT	43

Part no.	Page Number
09.4635.0066GT	43
09.4636.0012GT	153
09.4636.0040GT	153
09.4636.0041GT	155
09.4656.0019GT	135
09.4656.0020GT	71, 75
09.4656.0021GT	79
09.4661.0002GT	39
09.4661.0014GT	39
09.4661.0016GT	23, 39
09.4661.0021GT	21
09.4661.0022GT	21
09.4661.0032GT	21
09.4670.0027GT	87
09.4670.0028GT	67
09.4670.0030GT	95
09.4670.0031GT	95
09.4675.0000GT	215
09.4675.0003GT	215
51.0113.9108GT	27
51.0201.3943GT	113
51.0201.3973GT	113
51.0400.5013GT	195
51.0400.5018GT	117
51.0600.9323GT	39
51.0600.9334GT	21
51.0800.3800GT	21
51.0804.8700GT	25
51.0811.2000GT	21
51.0811.4131GT	113
51.0811.4230GT	33
51.0811.4236GT	33
51.0811.4240GT	115
51.0811.4241GT	115
51.0811.4413GT	87
51.0811.4414GT	87
51.0811.4419GT	31
51.0811.4490GT	217
51.0811.4492GT	175, 181
51.0811.4527GT	171, 175, 181
51.0811.4533GT	71
51.0811.4537GT	169, 173, 179

Part no.	Page Number
51.0811.4548GT	219
51.0811.4552GT	75
51.0811.4553GT	75, 79
51.0811.4554GT	33
51.0811.4595GT	193
51.0811.4641GT	27
51.0811.4642GT	31
51.0811.4643GT	27
51.0811.4705GT	77, 81
51.0811.4706GT	77, 81
51.0811.4717GT	217
51.0811.4718GT	217
51.0811.4722GT	89
51.0811.4754GT	23
51.0811.4755GT	23
51.0811.4763GT	67
51.0811.4839GT	203
51.0811.4840GT	203
51.0811.4841GT	87
51.0811.4893GT	27, 31
51.0811.4951GT	117
51.0811.4952GT	217
51.0903.5046GT	75
51.0903.5050GT	27
51.0903.5055GT	35
51.0903.5057GT	31
51.0903.5062GT	175, 181
51.0903.5125GT	33
51.0903.5187GT	27
51.0903.5193GT	191
51.0903.5195GT	165
51.0903.5205GT	39
51.0903.5269GT	33
51.0903.5270GT	31
51.0903.5272GT	33
51.0903.5280GT	67
51.0903.5285GT	33
51.0903.5304GT	115
51.0903.5309GT	79
51.1000.5218GT	21
51.1100.0040GT	97
51.1300.0100GT	185, 187

silverhorn.co.uk

Part no.	Page Number
51.1300.0300GT	185, 187
51.1300.1000GT	185, 187
51.1300.2500GT	207
51.1300.2600GT	207
51.1300.5400GT	119
51.1301.9120GT	195
51.1301.9152GT	27
51.1301.9154GT	185, 187
51.1301.9166GT	119
52.1100.9121GT	219
52.1100.9122GT	27
52.1100.9125GT	31
52.1100.9131GT	21
52.1100.9132GT	21
52.1200.4400GT	107
52.1200.5300GT	101
52.1200.5518GT	109
52.1200.5519GT	107
52.1200.5521GT	107
52.1200.5522GT	107
52.1200.5523GT	107
52.1200.5524GT	165
52.1200.5525GT	109
52.1200.5526GT	109
52.1200.5548GT	109
52.1200.5553GT	107
52.1200.5554GT	109
53.0000.3823GT	121
53.0100.3230GT	121
53.0300.2219GT	121
53.0400.1817GT	121
53.0500.0604GT	175, 181
53.3001.0500GT	117
53.3001.5500GT	67
53.3001.5700GT	155
53.3001.6744GT	39
53.3001.6746GT	71
53.3001.6747GT	67
53.3001.6749GT	71, 75
53.3001.6753GT	139
53.3001.6789GT	67
53.3001.6790GT	73

Part no.	Page Number
53.3001.6792GT	71, 75, 79
53.3001.6798GT	77, 81
53.3001.6806GT	67
53.3001.6822GT	75
53.3001.6823GT	77, 81
53.3001.6851GT	23
53.3001.6854GT	79
53.3001.6855GT	79
53.3100.0059GT	73
53.3200.0088GT	67
53.3301.0005GT	39
53.3302.0016GT	23
53.3402.0000GT	187
53.3402.1800GT	123
53.3402.1900GT	123
53.3402.2000GT	123
53.3402.2100GT	123
53.3402.2200GT	123
53.3402.2300GT	123
53.3402.4019GT	187
54.0000.0068GT	119
54.0000.0235GT	117
54.0000.0247GT	195
54.0000.0255GT	195
54.0000.0256GT	121
54.0000.0257GT	125
54.0000.0258GT	113
54.0000.0259GT	113
54.0000.0260GT	117
54.0000.0261GT	117, 125
54.0000.0262GT	113
54.0000.0263GT	115
54.0000.0264GT	121
54.0001.0081GT	117
54.0001.0087GT	177, 183
54.0001.0088GT	175, 181
54.0002.0054GT	21
54.0004.0133GT	113
54.0100.0005GT	69
54.0100.0017GT	91, 93
54.0100.0027GT	119
54.0100.0056GT	195

Part no.	Page Number
54.0100.0127GT	69
54.0100.0135GT	67
54.0100.0137GT	173, 179
54.0100.0151GT	115
54.0100.0152GT	127
54.0100.0153GT	69
54.0100.0154GT	117
54.0101.0004GT	169
54.0200.0000GT	113
54.0200.0001GT	113
54.0201.0073GT	117
54.0202.0004GT	125
54.0202.0006GT	113
54.0705.0037GT	115
54.0705.0047GT	115
54.0705.0048GT	113
54.0705.0049GT	113
54.0705.0069GT	113
55.0208.0114GT	71
55.0208.0147GT	75, 79
55.0403.0081GT	43
55.0403.0082GT	43
55.0403.0088GT	43
55.0403.0089GT	43
55.0403.0090GT	43
55.0403.0093GT	43
55.0403.0094GT	43
55.0403.0095GT	43
55.0511.0004GT	95
55.0511.0005GT	109
55.0602.0449GT	163
55.0602.0450GT	163
55.0602.1019GT	159
55.0602.1020GT	159
55.0602.1021GT	159
55.0602.1023GT	159
55.0602.1026GT	169, 173, 179, 217
55.0602.1137GT	161
55.0602.1138GT	161
55.0602.1139GT	161
55.0602.1140GT	163
55.0602.1147GT	163

silverhorn.co.uk

Part no.	Page Number
55.0602.1150GT	161
55.0602.1169GT	205
55.0602.1190GT	161
55.0602.1191GT	163
55.0602.1192GT	163
55.0602.1198GT	107
56.0001.0016GT	159
56.0001.0046GT	159
56.0001.0047GT	159
56.0001.0049GT	159
56.0001.0050GT	159
56.0001.0051GT	159
56.0002.0264GT	159
56.0002.0266GT	159
56.0002.0333GT	159
56.0002.0351GT	161
56.0005.0017GT	205
56.0005.0037GT	159
56.0006.9201GT	159
56.0006.9211GT	159
56.0006.9213GT	157
56.0008.0001GT	159
56.0008.5216GT	159
56.0008.5217GT	159
56.0009.0003GT	27
56.0010.0004GT	23
56.0010.0020GT	211
56.0010.0034GT	33
56.0010.0035GT	29
56.0010.0036GT	23
56.0010.0037GT	23
56.0010.0058GT	27, 33
56.0010.0086GT	25
56.0010.0087GT	27
56.0010.0099GT	109
56.0010.0103GT	217
56.0010.0104GT	95
56.0012.0027GT	135
56.0012.0053GT	107
56.0012.0085GT	21
56.0012.0096GT	165
56.0013.0000GT	39
56.0013.0028GT	39
56.0014.0133GT	203
56.0016.0082GT	109
56.0016.0091GT	109
56.0016.0106GT	109
56.0016.0132GT	165
56.0016.0180GT	109
56.0016.0206GT	107
56.0016.0209GT	153
56.0016.0210GT	107
56.0016.0215GT	107
56.0017.0035GT	177, 183
56.0017.0039GT	107
56.0017.0044GT	107
56.0017.0045GT	217
56.0017.0046GT	107
56.0017.0048GT	205
56.0017.0050GT	169, 173, 179, 219
56.0017.0053GT	205
56.0017.0054GT	107
56.0017.0063GT	177, 183
56.0017.0064GT	109
56.0017.0067GT	109
56.0017.0070GT	109
56.0017.0130GT	109
56.0017.0132GT	109, 169, 173, 179, 217, 219
56.0017.0141GT	109
56.0017.0157GT	107
56.0017.0158GT	107
56.0017.0159GT	111
56.0017.0160GT	111
56.0021.0180GT	107
56.0021.0186GT	157
56.0021.0188GT	107
56.0023.0050GT	169, 173, 179
57.0009.0741GT	11
28159GT	17
39518GT	111
82560GT	13, 17
99087GT	165
214228GT	11, 89
215645GT	13, 17
215646GT	13, 17
237720GT	13, 17
237721GT	13, 17
237726GT	13, 17
628447GT	51
632383GT	55
633110GT	61
633160GT	61
633176GT	57, 65
633205GT	57
633486GT	57
633529GT	47, 61
633531GT	47
633533GT	47
633574GT	61
634391GT	47
634392GT	47
634393GT	47
634397GT	53
634415GT	57
634416GT	57
634417GT	57
634419GT	57
634546GT	55
634561GT	49
634973GT	157
634975GT	159
637567GT	57
638548GT	51, 55, 65
638552GT	51
639625GT	55
639639GT	55
639640GT	55
639641GT	57
639643GT	57
639645GT	57
639646GT	55
639647GT	55
639803GT	45
639808GT	51
639830GT	49
639832GT	49

silverhorn.co.uk

Part no.	Page Number
640985GT	105
641004GT	101
641019GT	101
641024GT	101
641042GT	95, 99
641143GT	157
822511GT	83
824775GT	83
825014GT	83
826000GT	21, 87
900046GT	23
1252549GT	51
1252673GT	51
1258639GT	13, 17
1260357GT	69
1263542GT	13
1272242GT	15, 19
1289521GT	161
1289561GT	161
1291624GT	15
1291858-1654GT	127
1291858-1772GT	125
1291858-2756GT	153
1291858-3938GT	133
1291858-4134GT	125
1291907-17717GT	147
1291908-8071GT	151
1291994-4331GT	129
1291995-4528GT	131
1291996-3938GT	133
1291999-4922GT	125
1292000-4134GT	125
1292016-9646GT	147
1292020-3071GT	153
1292035-2835GT	149
1292036-4725GT	149
1292232-3544GT	149
1292233-3150GT	149
1292233-3741GT	155
1292233-9646GT	139
1292233-10237GT	139
1292233-11812GT	135

Part no.	Page Number
1292234-3544GT	149
1292235-9843GT	139
1292235-10237GT	139
1292236-2205GT	153
1292236-8662GT	153
1292236-12008GT	153
1292247-7087GT	145, 147
1292248-3150GT	145, 147
1292318-5906GT	141
1292320-11812GT	141
1292513GT	15
1292715-2756GT	149
1292728-1772GT	135
1292730-6103GT	141
1292731-1378GT	135
1292732-3741GT	125
1293433GT	23, 91
1297243GT	83
1297244GT	83
1297245GT	83
1297246GT	83
1297247GT	83
1297248GT	83
1297249GT	85
1297250GT	83
1297251GT	83
1297252GT	83
1297253GT	83
1297254GT	83
1297255GT	83
1297256GT	83
1297257GT	83
1297258GT	83
1297259GT	83
1297260GT	83
1297261GT	83
1297262GT	83
1297263GT	83
1297264GT	83
1297493GT	25, 91
1297494GT	25, 91
1297495GT	21, 91

Part no.	Page Number
T09.0805.0070GT	25, 91

silverhorn.co.uk

California Proposition 65

WARNING

Operating, servicing and maintaining this equipment, passenger vehicle or off-highway motor vehicle can expose you to chemicals including engine exhaust, carbon monoxide, phthalates, and lead, which are known to the State of California to cause cancer and birth defects or other reproductive harm. These chemicals can be emitted from or contained in other various parts and systems, fluids and some component wear by-products. To minimize exposure, avoid breathing exhaust, do not idle the engine except as necessary, service your equipment and vehicle in a well-ventilated area and wear gloves or wash your hands frequently when servicing your equipment or vehicle and after operation. For more information go to www.P65Warnings.ca.gov/passenger-vehicle.

Breathing diesel engine exhaust exposes you to chemicals known to the State of California to cause cancer and birth defects or other reproductive harm.

- Always start and operate the engine in a well-ventilated area.
- If in an enclosed area, vent the exhaust to the outside.
- Do not modify or tamper with the exhaust system.
- Do not idle the engine except as necessary.

For more information go to www.P65warnings.ca.gov/diesel.

Distributed By:
silvernorn.co.uk

Parts Manual
GTH-2506

from SN GTH250619M-1001

Part No.
54.0411.0061GT

Rev B

Genie
A TEREX BRAND

silverthorn.co.uk