93316-00106

November 2008

Kawasaki

PARTS CATALOG

WHEEL LOADER

115Z V

Powered by CUMMINS QSK19 Engine

Serial No. 11C4-5001 ~

silverhorn.co.uk

silverhorn.co.uk

CONTENTS I

• Before Use

• Chassis No. and Manufacturer's Serial No.

• CONTENTS II

• PARTS NAME INDEX

• 115ZV

• CHASSIS AND ELECTRICAL SYSTEM Page

FRONT CHASSIS GROUP 1
LIFT ARM GROUP 3
PIN MOUNT 5
REAR CHASSIS GROUP 7
CENTER PIN GROUP 9
FUEL TANK GROUP 11
OIL TANK GROUP 13
FLOOR BOARD GROUP 15
SEAT STAND & CONTROL BOX MOUNT 17
SEAT STAND & CONTROL BOX MOUNT 19
CONTROL BOX COVER MOUNT 21
CONTROL BOX COVER MOUNT 23
CONTROL BOX COVER MOUNT 25
CONTROL BOX COVER MOUNT 27
OPERATION STAND GROUP 29
DECK & FENDER GROUP 31
HANDRAIL & STEP GROUP 33
SCREEN BOARD MOUNT 35
ENGINE ROOM MOUNT 37
RADIATOR GUARD MOUNT 41
REAR GRILLE GROUP 43
WIND SHIELD GROUP 45
COVER MOUNT 47
SEAT GROUP 49
SEAT 51
SUSPENSION 53
GREASE PIPING <FOR FRONT CHASSIS> 55

silverhorn.co.uk

GREASE PIPING <FOR REAR CHASSIS> 59
GAUGE GROUP 61
ELECTRICAL PARTS MOUNT 63
ELECTRICAL PARTS MOUNT 65
LAMP GROUP 67
BATTERY & GREASE GUN MOUNT 71
RELAY & SWITCH MOUNT 73
ELECTRICAL WIRING - FRONT CHASSIS 75
ELECTRICAL WIRING - REAR CHASSIS 77
ELECTRICAL WIRING - FLOOR BOARD 83
HANDRAIL MOUNT 87

• POWER SYSTEM

POWER GROUP 89
DRAIN LINE 91
1ST PROPELLER SHAFT 93
2ND PROPELLER SHAFT 95
3RD PROPELLER SHAFT 97
RADIATOR GROUP 99
RADIATOR 101
RADIATOR 105
OIL MOTOR 109
WATER LINE 111
AIR COOLER LINE 113
AIR CLEANER GROUP 117
EXHAUST GROUP 121
FUEL LINE 123

• TORQUE CONVERTER AND TRANSMISSION SYSTEM

TRANSMISSION HYDRAULIC LINE 125
TRANSMISSION HYDRAULIC LINE 129
TORQUE CONVERTER 133
T/C INPUT SHAFT GROUP 135
GEAR SHAFT & OIL PUMP GROUP 137
TRANSMISSION 139
INPUT SHAFT GROUP 141
HIGH & REVERSE CLUTCH 143

silverhorn.co.uk

LOW, 2ND & 3RD CLUTCH 145
1ST CLUTCH 149
IDLE SHAFT GROUP 151
OUTPUT SHAFT GROUP 153
SOLENOID VALVE & VALVE UNIT 155
REPAIR KIT 157

• AXLE AND DIFFERENTIAL

FRONT AXLE GROUP 159
REAR AXLE GROUP 163
AXLE SUPPORT GROUP 167
AXLE SUPPORT GROUP 169
FRONT DIFFERENTIAL 171
REAR DIFFERENTIAL 173
REAR DIFFERENTIAL 175
TIRE & WHEEL GROUP 177

• BRAKE SYSTEM

BRAKE LINE - FRONT CHASSIS 179
BRAKE LINE - FLOOR BOARD 181
BRAKE LINE - REAR CHASSIS 183
BRAKE LINE - AXLE 185
BRAKE LINE - ACCUMULATOR 187
PARKING BRAKE GROUP 191
BRAKE VALVE GROUP 193
CHECK VALVE 195
BRAKE VALVE 197
BRAKE VALVE 199
OIL CYLINDER 201
UNLOADER VALVE 203
PARKING BRAKE 205

• CONTROL SYSTEM

VALVE CONTROL GROUP 207
VALVE CONTROL GROUP 209
VALVE CONTROL GROUP 211

silverhorn.co.uk

FUEL CONTROL GROUP 213
STEERING CYLINDER GROUP 215
STEERING VALVE 217
STEERING CYLINDER 221
BUCKET POSITIONER GROUP 223
KICKOUT GROUP 225
CONTROL LEVER GROUP 227
CONTROL LEVER GROUP 231
CONTROL LEVER GROUP 235
PILOT VALVE <FOR STEERING> 239
PILOT VALVE <FOR STEERING> 241

• LOADING HYDRAULIC SYSTEM

LOADING HYDRAULIC LINE - FRONT CHASSIS 243
LOADING HYDRAULIC LINE - REAR CHASSIS 247
LOADING HYDRAULIC LINE - REAR CHASSIS <F 251
LOADING HYDRAULIC LINE - REAR CHASSIS <F 253
LOADING HYDRAULIC LINE - REAR CHASSIS <F 255
LOADING HYDRAULIC LINE - STEERING CYLIND 257
LOADING HYDRAULIC LINE - CENTER PIN 259
LOADING HYDRAULIC LINE - OIL COOLER 261
HYDRAULIC LINE - FAN MOTOR 265
HYDRAULIC LINE - FAN MOTOR 267
PILOT HYDRAULIC LINE 271
PILOT HYDRAULIC LINE 273
PILOT HYDRAULIC LINE - FRONT CHASSIS 277
PILOT HYDRAULIC LINE - REAR CHASSIS 279
PILOT HYDRAULIC LINE - CONTROL BOX 281
PILOT HYDRAULIC LINE - CONTROL BOX 283
OIL PUMP <DOUBLE> 285
OIL PUMP <DOUBLE> 287
ACCUMULATOR 289
CONTROL VALVE 291
PILOT VALVE 293
PILOT VALVE 297
VALVE GROUP 301
FAN MOTOR VALVE 305
FAN MOTOR VALVE 307

silverhorn.co.uk

LIFT CYLINDER 309
TILT CYLINDER 311
FITTING MOUNT 313

• BUCKET, ACCESSORIES, ETC

BUCKET<FOR GENERAL PURPOSE> 317
BUCKET<FOR ROCK-RS> 319
BUCKET<FOR ROCK-RV> 321
MARKING GROUP 323
CAP MOUNT 327
LOCK GROUP 329
REPAIR & MAINTENANCE PARTS 331

• CAB

CAB MOUNT 333
CAB 337
CAB 341
DOOR GROUP 345
FRONT WIPER & WINDOW WASHER GROUP 349
ELECTRICAL PARTS GROUP 353
ELECTRICAL WIRING - CAB 355
MIRROR GROUP 357
REAR WIPER & WINDOW WASHER GROUP 361
CAB ACCESSORIES MOUNT 363
FAN ASSY 367
ROPS MOUNT 369
COVER GROUP - CAB 371
AIR DUCT GROUP - FLOOR BOARD 373
DAMPER ASSY 377
AIR CONDITIONER MOUNT 381
AIR CONDITIONER MOUNT 383
AIR CONDITIONER COVER GROUP 385
AIR CONDITIONER LINE 387
CONDENSER & COVER MOUNT 389
COMPRESSOR MOUNT 391
AIR CONDITIONER UNIT 393
AIR CONDITIONER UNIT 395

silverhorn.co.uk

AIR DAMPER 397
AIR DAMPER 399
CONDENSER 401

• OPTION

• OPTION

REAR LARGE FENDER 403
REAR LARGE FENDER 409
REAR LARGE FENDER 411
BELLY GUARD 415
REAR GRILLE GROUP <STEEL PLATE> 417
LIFT ARM <HIGH LIFT ARM SPEC.> 419
TILT CYLINDER <HIGH LIFT ARM SPEC.> 421
HYDRAULIC LINE <HIGH LIFT ARM SPEC.> 423
CABLE MOUNT <HIGH LIFT ARM SPEC.> 425
FAN MOTOR HYDRAULIC LINE <FOR REVERSING 427
RELIEF VALVE MOUNT <FOR REVERSING FAN> 429
MOTOR MOUNT <FOR REVERSING FAN> 431
FAN MOTOR <FOR REVERSING FAN> 433
FAN MOTOR <FOR REVERSING FAN> 435
ELECTRICAL EQUIPMENT MOUNT <FOR REVERSIN 437
RADIATOR MOUNT <FOR EASY CLEANING> 439
RADIATOR MOUNT <DUST-PROOF TYPE> 443
FRONT CHASSIS HYDRAULIC LINE <3 WAY P 445
FRONT CHASSIS HYDRAULIC LINE <3WAY PIPIN 449
PILOT HYDRAULIC LINE <3 WAY PIPING> 451
PILOT HYDRAULIC LINE <3 WAY PIPING> 453
HYDRAULIC LINE <3 WAY PIPING> 455
OIL PIPE MOUNT <3 WAY PIPING> 457
CONTROL VALVE 459
PILOT VALVE <3WAY PIPING> 461
PILOT VALVE <3WAY PIPING> 463
VALVE CONTROL GROUP <SINGLE LEVER> 465
VALVE CONTROL GROUP <FOR HYDRAULIC SIN 467
VALVE CONTROL GROUP <FOR HYDRAULIC SIN 469
PILOT HYDRAULIC LINE <SINGLE LEVER> 471
PILOT HYDRAULIC LINE <FOR HYDRAULIC SI 473

silverhorn.co.uk

PILOT HYDRAULIC LINE <FOR HYDRAULIC SI 475
PILOT VALVE 477
RIDE CONTROL - HYDRAULIC LINE 479
RIDE CONTROL - ACCUMULATOR 483
RIDE CONTROL - ELECTRICAL WIRING 485
EMERGENCY STEERING GROUP 487
EMERGENCY STEERING - VALVE GROUP 489
CABLE MOUNT 491
STEERING WHEEL MOUNT 493
SHIFT LEVER GROUP <STEERING WHEEL> 495
TILT CASE GROUP <STEERING WHEEL> 497
ORBITROLL 499
ORBITROLL 501
OPERATION STAND GROUP <STEERING WHEEL> 503
SEAT MOUNT <STEERING WHEEL> 505
PILOT HYDRAULIC LINE <STEERING WHEEL> 507
STEERING VALVE 509
STOP VALVE MOUNT 511
STOP VALVE 515
AIR DUCT MOUNT 519
SWITCH MOUNT <STEERING WHEEL> 521
CABLE MOUNT <STEERING WHEEL> 523
MULTI CONTROL VALVE 525
MULTI CONTROL VALVE 527
HYDRAULIC LINE <TWO-STEP RELIEF VALVE> 529
CABLE MOUNT <TWO-STEP RELIEF VALVE> 533
COVER MOUNT - ENGINE ROOM <DUST-PROOF 535
COVER MOUNT - UNDER COVER <DUST-PROOF 539
SPONGE MOUNT <DUST-PROOF SPEC.> 541
BATTERY CUT OFF SWITCH 543
4-WAY FLASHER GROUP 545

• HOT SLAG.

• HOT SLAG SPEC.

FRONT CHASSIS GROUP 547
FUEL TANK GROUP 549
OIL TANK GROUP 551

silvernorn.co.uk

FLOOR BOARD GROUP 555
STEP & HANDRAIL GROUP 557
REAR GRILL GROUP 561
COVER MOUNT 563
GREASE PIPING <FOR FRONT> 567
FRONT LAMP MOUNT 569
BATTERY & GREASE GUN MOUNT 571
ELECTRICAL WIRING - FRONT CHASSIS 573
ELECTRICAL WIRING - REAR CHASSIS 577
ELECTRICAL WIRING - FLOOR BOARD 581
SWITCH MOUNT <FOR EMERGENCY E/G STOP> 583
SWITCH MOUNT <FOR EMERGENCY E/G STOP> 585
RADIATOR GROUP 589
RADIATOR 591
WATER LINE 593
AIR CLEANER GROUP - PRECLEANER 595
FUEL LINE 599
FAN MOTOR HYDRAULIC LINE <FOR REVERSI 601
RELIEF VALVE MOUNT <FOR REVERSING FAN> 603
MOTOR MOUNT <FOR REVERSING FAN> 605
FAN MOTOR <FOR REVERSING FAN> 607
FAN MOTOR <FOR REVERSING FAN> 609
ELECTRICAL EQUIPMENT MOUNT <FOR REVERS 611
TRANSMISSION HYDRAULIC LINE 613
FRONT AXLE GROUP 615
TIRE & DISC WHEEL GROUP 617
BRAKE LINE - FRONT CHASSIS 619
BRAKE LINE - FLOOR BOARD 621
BRAKE LINE - REAR CHASSIS 623
BRAKE LINE - AXLE 625
BRAKE LINE - ACCUMULATOR 627
BRAKE LINE - REAR CHASSIS <FOR PARKING 629
VALVE MOUNT <FOR PARKING BRAKE RELEASE 633
BRAKE LINE - FLOOR BOARD <FOR PARKING B 637
LABEL MOUNT <FOR PARKING BRAKE RELEASE 639
WIND SHIELD GROUP <FOR PARKING BRAKE R 641
BUCKET POSITIONER GROUP 643
LOADING HYDRAULIC LINE - FRONT CHASSI 645
LOADING HYDRAULIC LINE - REAR CHASSIS 647

silvernorn.co.uk

LOADING HYDRAULIC LINE - STEERING CYL 649
LOADING HYDRAULIC LINE - CENTER PIN 651
PILOT HYDRAULIC LINE 653
PILOT HYDRAULIC LINE - FRONT CHASSIS 655
PILOT HYDRAULIC LINE - REAR CHASSIS 657
MARKING GROUP 659
MIRROR GROUP 661
WINDOW GLASS MOUNT 663
CAB ACCESSORIES MOUNT 667
FAN ASSY 671
CAB OPTION PARTS 673
AIR DUCT GROUP - FLOOR BOARD 677

• COLD HANDLING SPEC.

• COLD HANDLING SPEC.

LIFT ARM GROUP 679
PIN MOUNT 681
REAR CHASSIS GROUP 683
CONTROL BOX COVER MOUNT 687
DECK & FENDER GROUP 689
RADIATOR GUARD MOUNT 691
COVER MOUNT 693
GREASE PIPING <FOR FRONT CHASSIS> 695
TRANSMISSION HYDRAULIC LINE 699
FRONT CHASSIS HYDRAULIC LINE <3-WAY PIPI 701
FRONT PILOT HYDRAULIC LINE <3-WAY PIPING 703
PILOT HYDRAULIC LINE <3-WAY PIPING> 705
PILOT HYDRAULIC LINE <3-WAY PIPING> 707
HYDRAULIC LINE <3-WAY PIPING> 709
OIL PIPE MOUNT <3-WAY PIPING> 711
CONTROL VALVE <3-WAY PIPING> 715
PILOT VALVE <3-WAY PIPING> 717
PILOT VALVE <3-WAY PIPING> 719
FRONT AXLE GROUP 721
REAR AXLE GROUP 723
BUCKET POSITIONER GROUP 725
LOADING HYDRAULIC LINE - FRONT CHASSIS 727

silverhorn.co.uk

TILT CYLINDER 729
MIRROR GROUP 733

• PARTS NO. INDEX 736

silverhorn.co.uk

Before Use

I. Introduction

This parts catalog is applied to models indicated on the cover.
Parts of special specifications are not included.
For engines, refer to the "Engine Parts Catalog" offered separately.

II. How to Order Parts

When ordering a part, refer to illustrations and lists in this parts catalog, and clearly notify our company of the model name, the chassis No., the parts No., the parts name, the required quantity, etc.

III. How to Look at Parts Catalog

Illustrations in the parts catalog show the "position and shape" of each part in the range required in ordering. Accordingly, illustrations do not always agree with actual parts.

1. How to look at illustrations

The illustration shown below as an example helps you to understand how to look at illustrations.

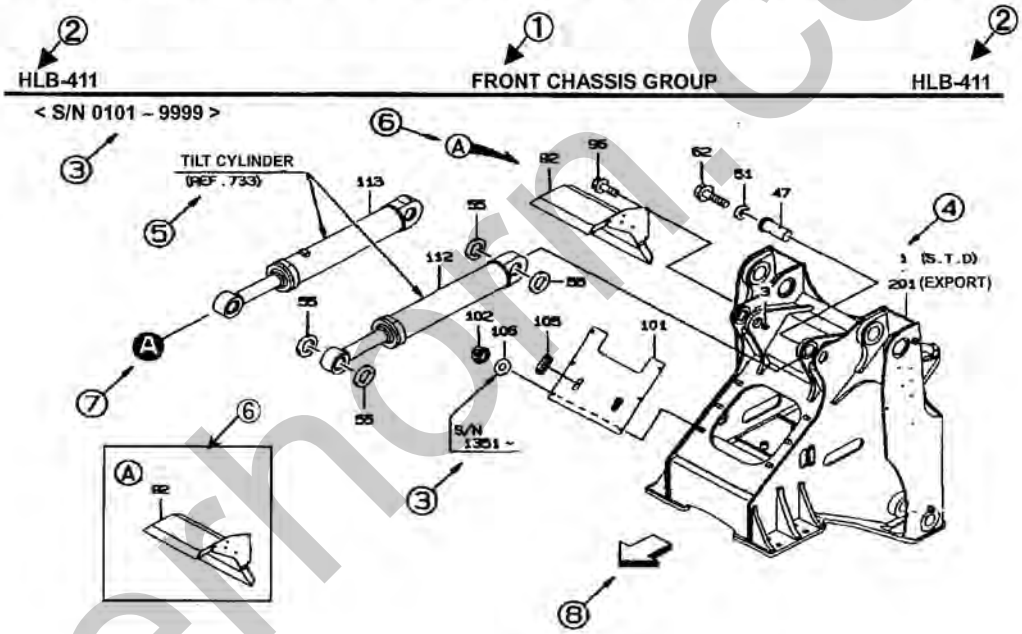

Encircled numbers indicate the following contents:

① section name
② Model code, section No.
③ Applicable chassis Nos. (which indicate the application start and end chassis Nos.)
④ Symbol (which corresponds to the "SYMBOL" column shown in the list)
⑤ Relevant unit guide symbol
⑥ Balloon symbol (which indicates presence of a detailed figure)
⑦ Connection symbol (shows where one component connects to another component)
⑧ Direction symbol (which indicates the front of the machine)

silverhorn.co.uk

2. How to use the lists

The list shown below as an example helps you to understand how to use the lists.

③ ④ ⑤ ① ② ⑥ ⑦ ⑧ ⑩ ⑨ ⑪ ⑫

OOO-□□□

SYM-BOL	PART NUMBER	PART NAME	UNIT Q'TY	SERIAL (A) (B)	NPD	REMARKS (A)	(B)	(C)	(D)	REMARK
1A	34256-20050	CHASSIS ASSY, FRONT	1	101-120		Y01				
B	34256-20060	CHASSIS ASSY, FRONT	1	121-	B		Y02			
2A	30040-20060	ARM ASSY, LIFT	1	101-				Y03		
3A	44340-70210	MIRROR	1	101-120						
B	44344-70020	MIRROR, ROOM	1	121-	B				WA1	
4A	40901-26700	BRACKET	1	101-120						
B	41605-41290	PLATE	1	121-	B				A1	
41A	41621-20340	STOPPER	3	101-		01	02			
42A	41621-20320	STOPPER	2	101-		01	02			
51A	49327-60600	SEAL KIT	1	101-					QK1	
61A	47193-70040	RING SLIPPER	1	101-					K1	
62A	47171-70020	RING, WEAR	1	101-					K1	

Encircled numbers indicate the following contents:

① OOO (MODEL CODE)
Model code shown in the parts catalog (which is different from the model name of the main unit)

② □□□ (SECTION NO.)
Key in retrieval in "SECTION INDEX"

③ SYMBOL
Key to find a parts No. from an illustration (unit drawing)
However, a value starting with three "0" such as "000A" and "000B" indicates the "unit assembly".

④ PART NUMBER

⑤ PART NAME

⑥ UNIT Q'TY

(1) This column indicates the quantity of one set
However, when the "SYMBOL" column indicates "000A", "000B", etc., the "UNIT Q'TY" column indicates the quantity for one machine.

(2) A value with "M" such as "1M" and "2M" indicates that the part is sold in the unit of shown value.
The actual length is shown in the "REMARK" column.

[Example 1] When the "UNIT Q'TY" column indicates "2M" and the "REMARK" column indicates "L=1700", the actual length is 1,700 mm and the part is sold in the unit of 2 meters.

[Example 2] When the "UNIT Q'TY" column indicates "2M" and the "REMARK" column indicates "L=1400xQ'TY 2", the actual length of 1,400 mm is used in 2 positions and the part is sold in the unit of 2 meters. If the part is required in 2 positions, order "3 meters".

(3) When "A/R" is indicated, order the required quantity. This is normally used for shims or liners.

silverhorn.co.uk

⑦ SERIAL(A) • SERIAL(B) (applicable chassis Nos.)

SERIAL(A) : Indicates the application start chassis No.

SERIAL(B) : Indicates the application end chassis No.

However, the torque converter, the transmission and the cab are different from the chassis No.(The serial number shown is for the component – not the machine or chassis.)

⑧ REMARKS: [N] (not for sale)

Parts not for sale are indicated as "N".

⑨ REMARKS: [P] (parts compatibility)

The parts compatibility is indicated in symbols, A, B and C having the following meanings:

[A] A new part and an old part are completely interchangeable with each other.

New ○ → ← ○ Old

[B] A new part and an old part are not interchangeable with each other.

New × → ← × Old

[C] A new part is an alternative of an old part. In this case, an old part is not interchangeable with a new part.

New ○ → ← × Old

⑩ REMARKS: [D]

[D] Indicates that the part is deleted.

[H] Indicates that production or supply of the part is stopped. An alternative is shown just below.

⑪ REMARKS: [(A)], [(B)], [(C)], [(D)]

Symbols indicated in this column have the following meanings.

(1) Assembly parts

(a) 01 - : Indicates parts which make up the assembly parts.

(b) Y01 - : Indicates assembly parts which is made up of the parts 01,02-09.

[Example 1] (Refer to the list in the previous page.)

The part 1A 34256-20050 front chassis has Y01 in the Remarks column, it means that the Front chassis includes the parts with 01[41A and 42A] in the Remarks column.

(2) Kit parts

(a) K1 - : Indicates parts which make up the kit.

(b) QK1 - : Indicates a kit which is made up of parts K1 -, K2 -.

(3) Parts which has a interchangeability when replace with the other related parts.

(a) A1 - : Indicates parts which need to make a interchangeability.

(b) WA1~ : Indicates parts which have a interchangeability when replace with A1 parts.

[Example 2] (Refer to the list in the previous page.)

The part 3B 44344-70020 [WA1] can replace the old part 3A 44340-70210 only if the plate 4B 41605-41290 [A1] is also replaced together.

silverhorn.co.uk

⑫ REMARKS

The other major remarks are shown below:

(1) REF 618 : Indicates the section No. 618.
(2) FR LH : Indicates the left side toward the machine forward direction.
(3) FR RH : Indicates the right side toward the machine forward direction.
(4) D80×185L : Indicates "diameter = 80 mm, length = 185 mm".
(5) (01) ~ : Indicates a component of a repair kit Y01~ of the section No. 391.
(6) (K1) ~ : Indicates a component of a repair kit QK1~ of the section No. 391.
(7) (K) : Indicates a component of the section No. 391.
(8) Old parts No. • reference parts No., etc.

(Note)

1. Parts without an item or symbol number in illustrations cannot be supplied in the form of single parts.
2. Parts shown in this catalog may be deleted, changed or specified as "not for sale" without prior notice.

WARNING :

1. The purpose in issuing this parts catalog is to use for clarifying the parts and for placing the parts order to your Kawasaki loader dealer.

2. You also can use this parts catalog to exchange parts information between you and your Kawasaki loader dealer for clarifying the parts.

3. You must not perform any repair, disassembly and reassembly work on the machine. Contact your Kawasaki loader dealer and ask him to do the above work.

silverhorn.co.uk

Chassis No. and Manufacturer's Serial No.

1. The chassis No. and the manufacturer's serial No. are marked in the following positions:

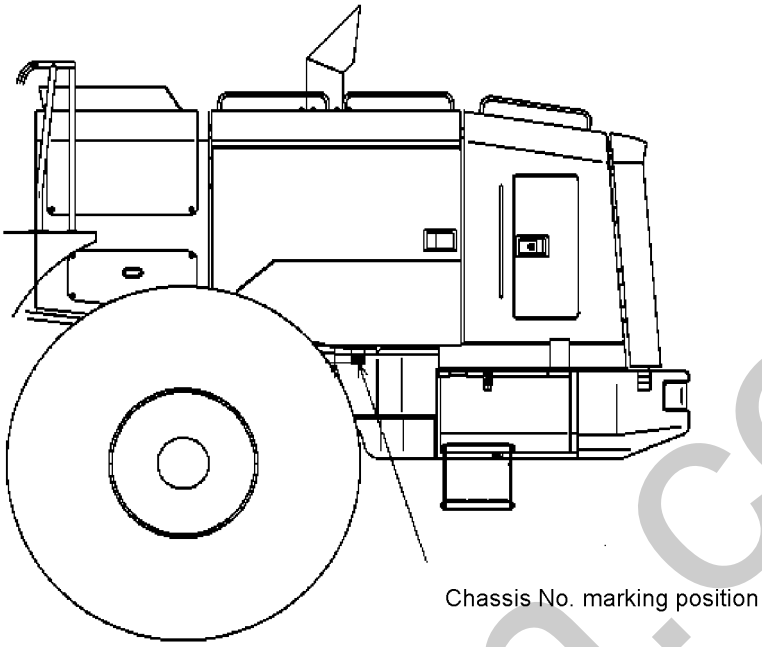

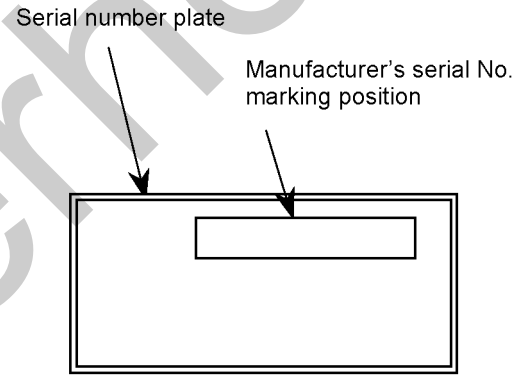

Note: For the serial No. plate installation position, refer to the unit No. 811.

silverhorn.co.uk

2. The chassis No. and the manufacturer's serial No. marked on the machine are indicated in this parts catalog as follows:

Serial No. shown in parts catalog	Chassis No.	Manufacturer's serial No.
5001	11C4-5001	11C4-5001
5031	11C4-5031	11C4-5031
5081	11C4-5081	11C4-5081

It is recommended to write the model name, the chassis No., the manufacturer's serial No. and the date of delivery of your machine in the table below to speed parts orders in the future.

Model name	
Chassis No.	
Manufacturer's serial No.	
Date of delivery	

silverhorn.co.uk

CONTENTS Ⅱ

FRONT CHASSIS GROUP p.1

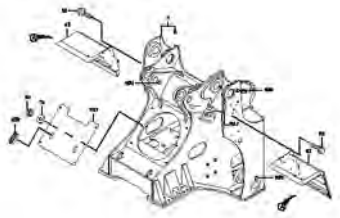

LIFT ARM GROUP p.3

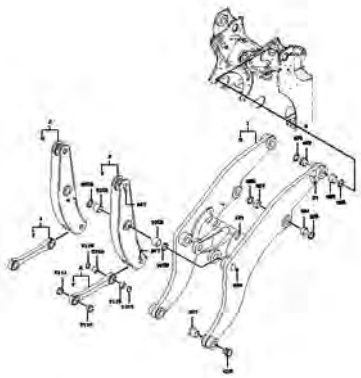

PIN MOUNT p.5

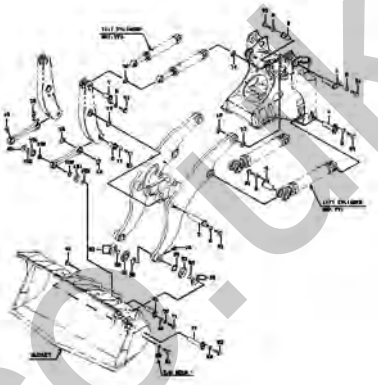

REAR CHASSIS GROUP p.7

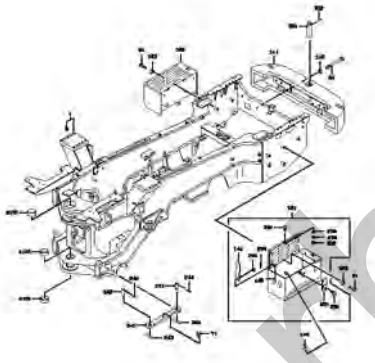

CENTER PIN GROUP p.9

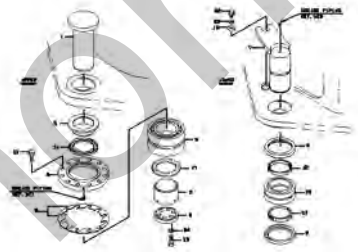

FUEL TANK GROUP p.11

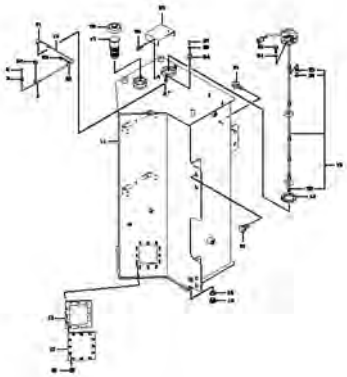

OIL TANK GROUP p.13

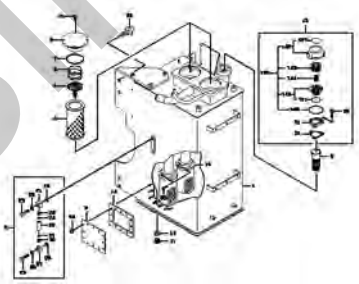

FLOOR BOARD GROUP p.15

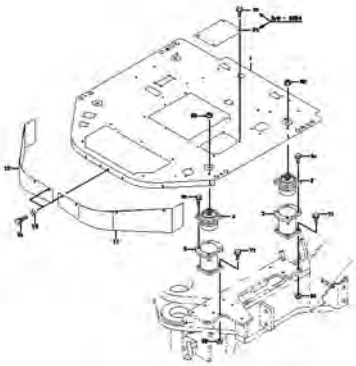

SEAT STAND & CONTROL BOX MOUNT p.17

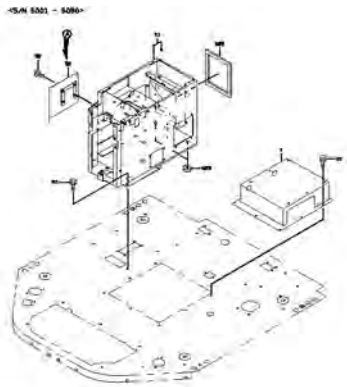

silvermorn.co.uk

SEAT STAND & CONTROL BOX MOUNT p.19

CONTROL BOX COVER MOUNT p.21

CONTROL BOX COVER MOUNT p.23

CONTROL BOX COVER MOUNT p.25

CONTROL BOX COVER MOUNT p.27

OPERATION STAND GROUP p.29

DECK & FENDER GROUP p.31

HANDRAIL & STEP GROUP p.33

SCREEN BOARD MOUNT p.35

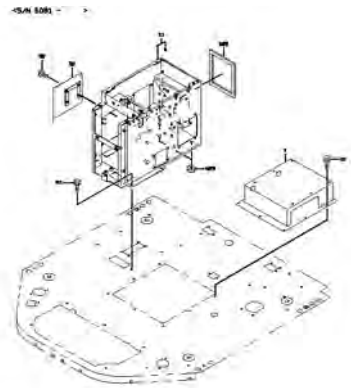

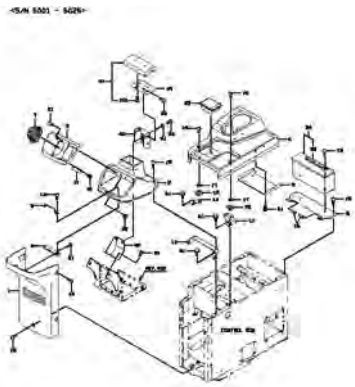

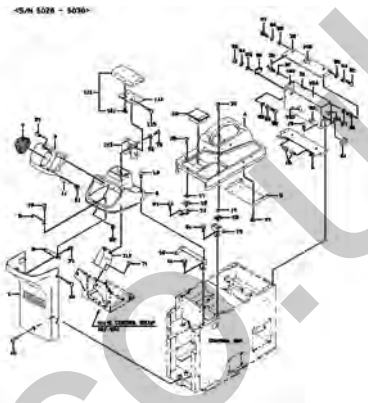

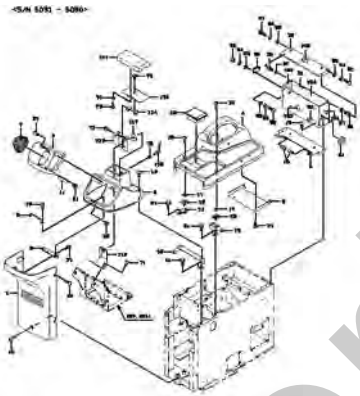

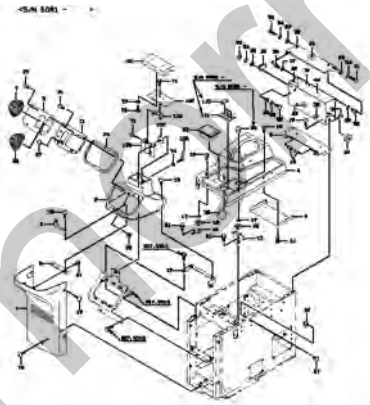

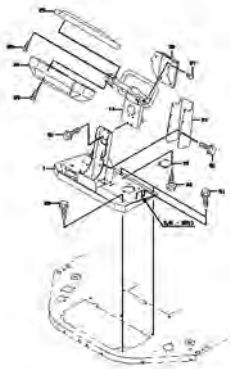

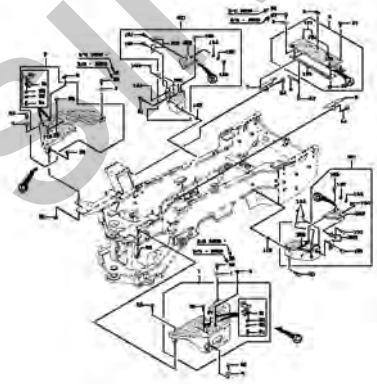

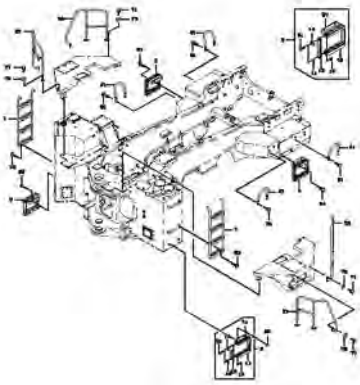

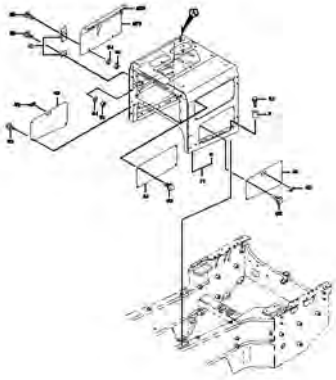

silverhorn.co.uk

ENGINE ROOM MOUNT p.37

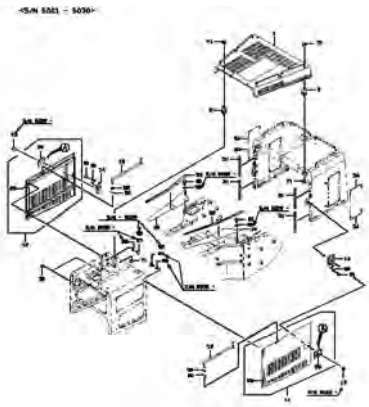

ENGINE ROOM MOUNT p.38

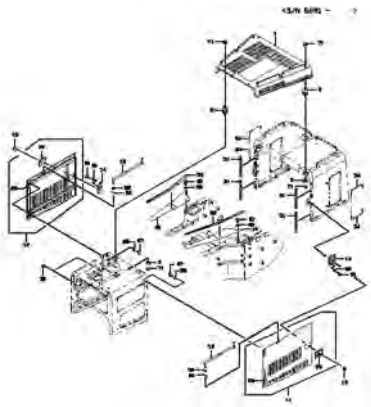

RADIATOR GUARD MOUNT p.41

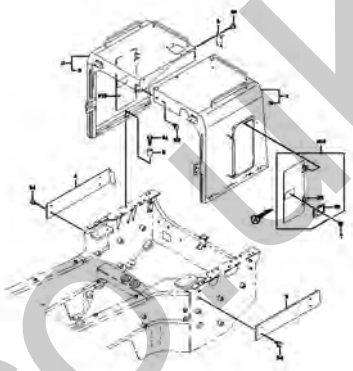

REAR GRILLE GROUP p.43

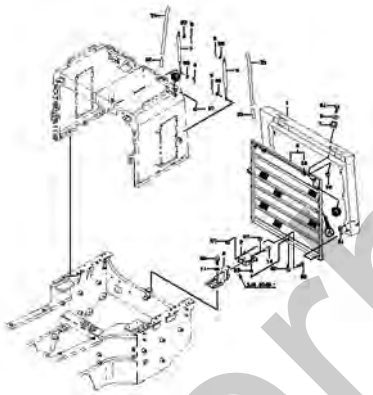

WIND SHIELD GROUP p.45

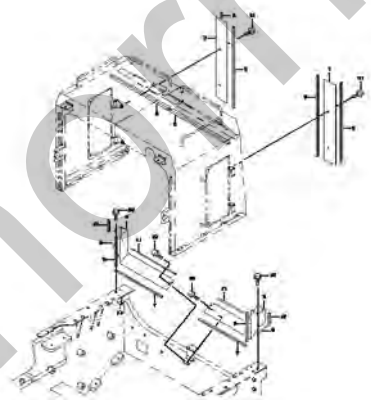

COVER MOUNT p.47

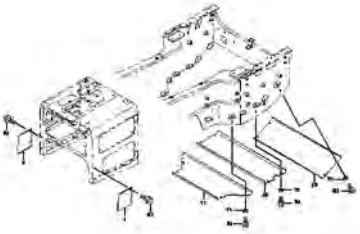

SEAT GROUP p.49

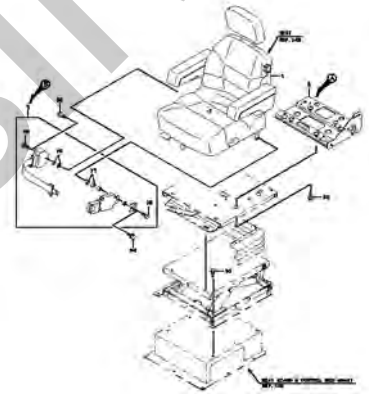

SEAT p.51

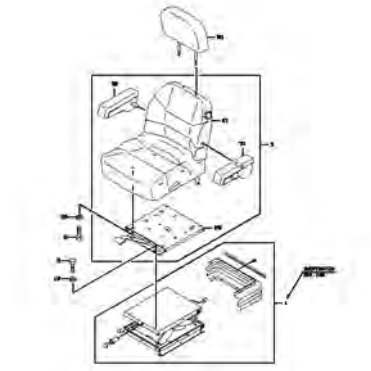

SUSPENSION p.53

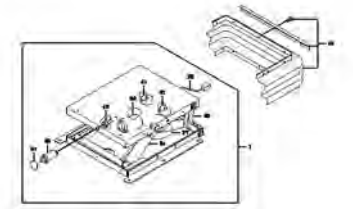

silvermorn.co.uk

GREASE PIPING (FOR FRONT CHASSIS) p.55

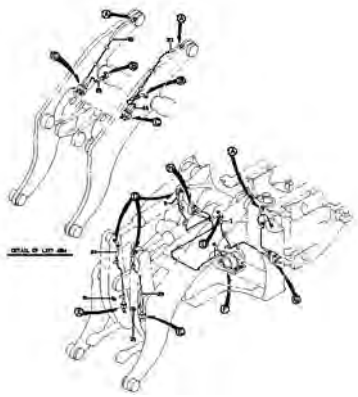

GREASE PIPING (FOR FRONT CHASSIS) p.56

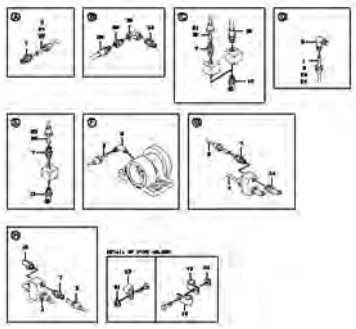

GREASE PIPING (FOR REAR CHASSIS) p.59

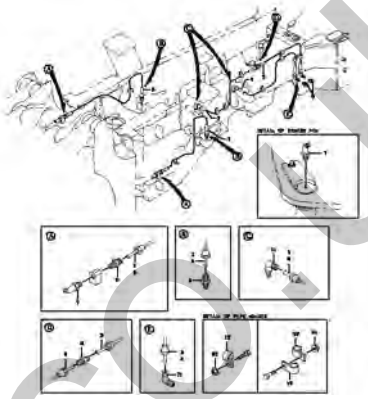

GAUGE GROUP p.61

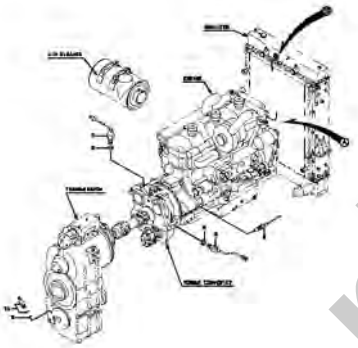

ELECTRICAL PARTS MOUNT p.63

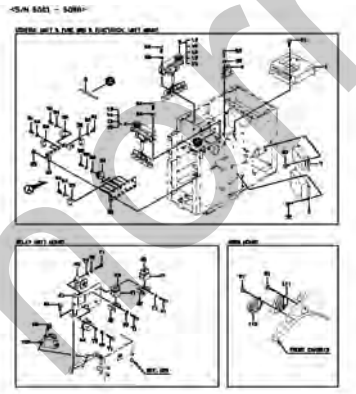

ELECTRICAL PARTS MOUNT p.65

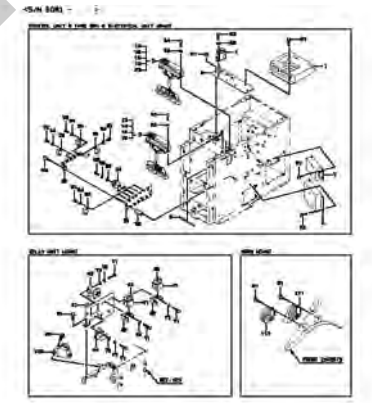

LAMP GROUP p.67

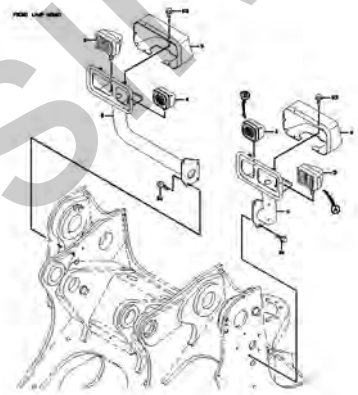

LAMP GROUP p.68

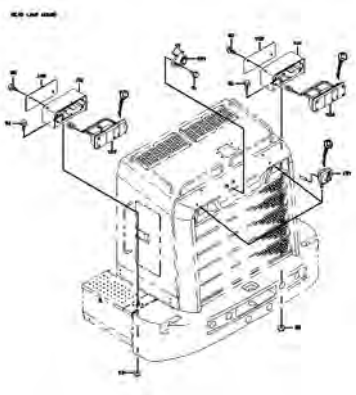

BATTERY & GREASE GUN MOUNT p.71

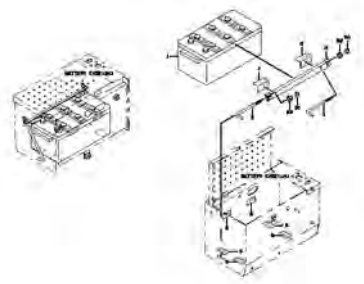

silverhorn.co.uk

RELAY & SWITCH MOUNT p.73	ELECTRICAL WIRING - FRONT CHASSIS p.75	ELECTRICAL WIRING - REAR CHASSIS p.77
ELECTRICAL WIRING - REAR CHASSIS p.78	ELECTRICAL WIRING - REAR CHASSIS p.79	ELECTRICAL WIRING - FLOOR BOARD p.83
ELECTRICAL WIRING - FLOOR BOARD p.84	HANDRAIL MOUNT p.87	POWER GROUP p.89

silverhorn.co.uk

DRAIN LINE p.91

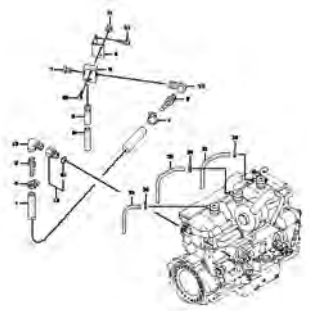

1ST PROPELLER SHAFT p.93

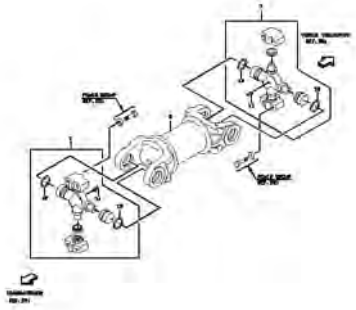

2ND PROPELLER SHAFT p.95

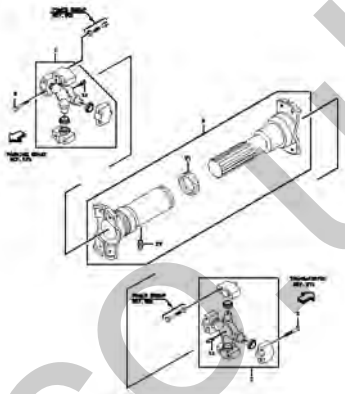

3RD PROPELLER SHAFT p.97

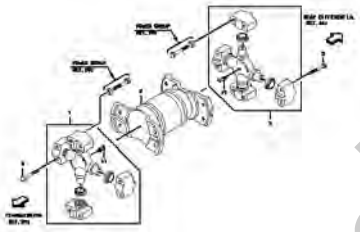

RADIATOR GROUP p.99

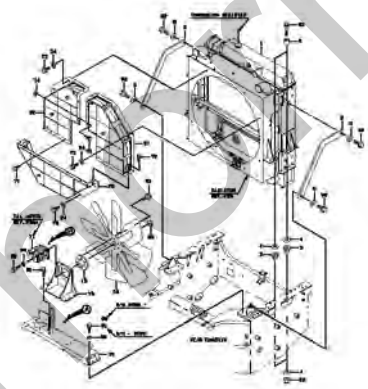

RADIATOR p.101

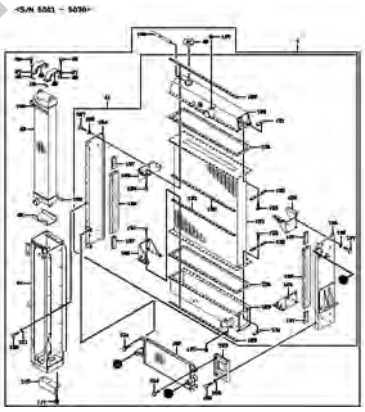

RADIATOR p.102

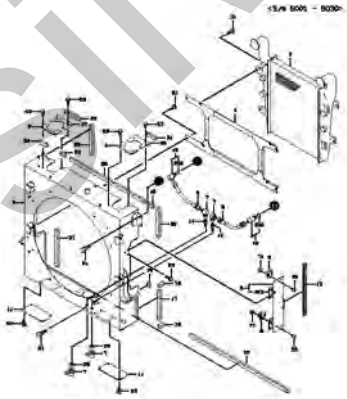

RADIATOR p.105

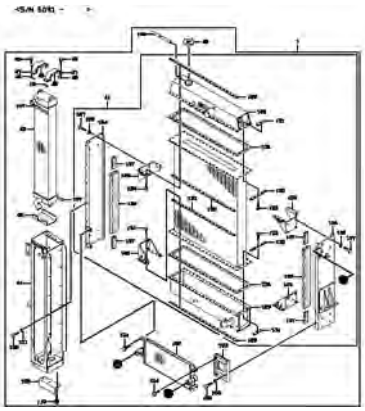

RADIATOR p.106

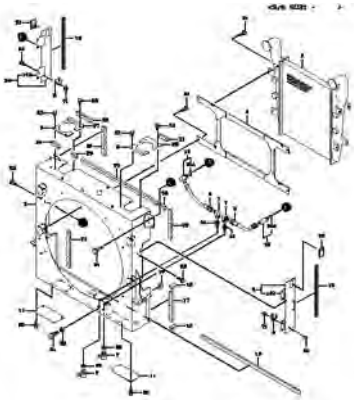

silverhorn.co.uk

OIL MOTOR p.109

WATER LINE p.111

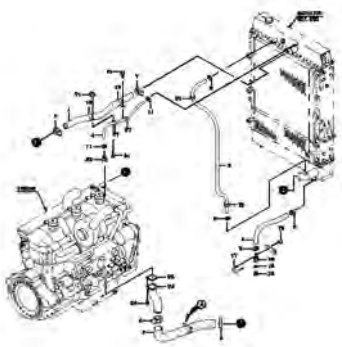

AIR COOLER LINE p.113

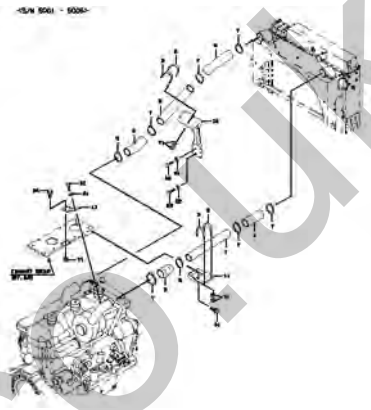

AIR COOLER LINE p.114

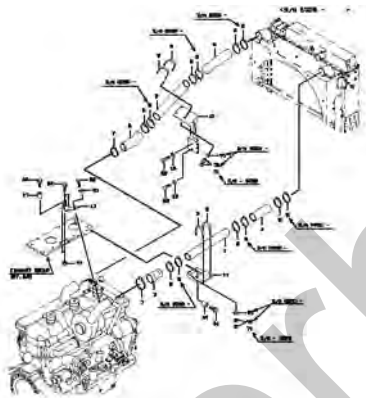

AIR CLEANER GROUP p.117

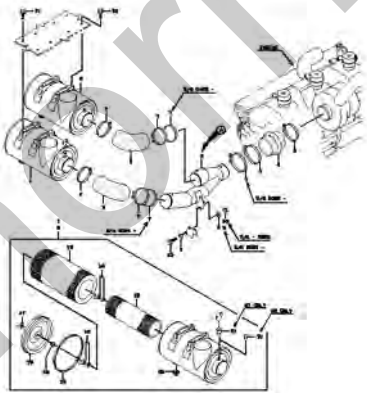

AIR CLEANER GROUP p.118

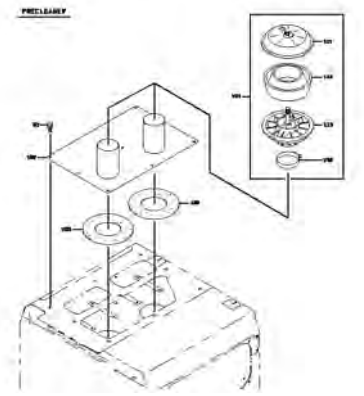

EXHAUST GROUP p.121

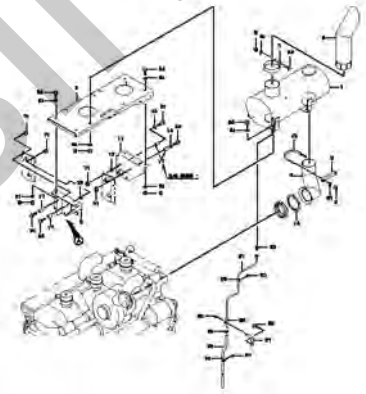

FUEL LINE p.123

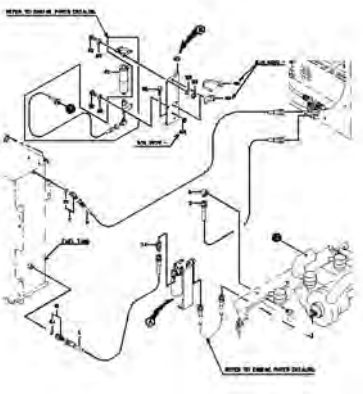

TRANSMISSION HYDRAULIC LINE p.125

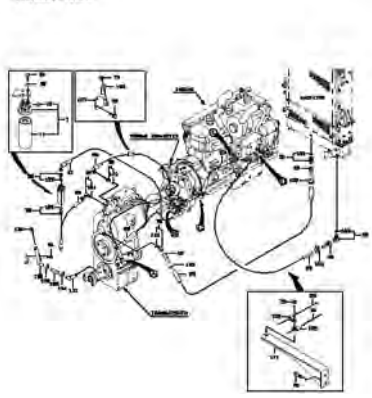

silverhorn.co.uk

TRANSMISSION HYDRAULIC LINE p.126

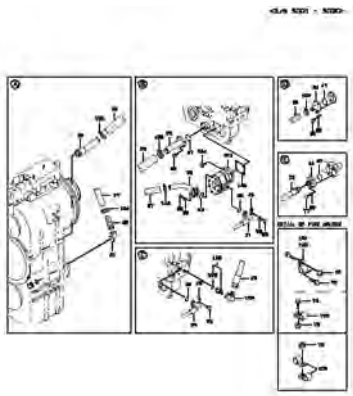

TRANSMISSION HYDRAULIC LINE p.129

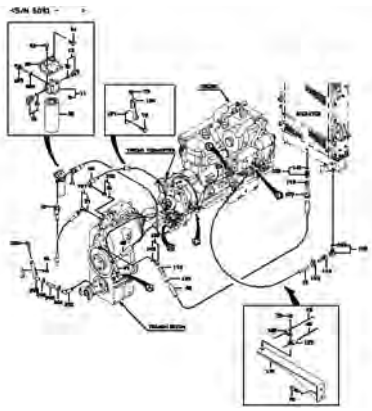

TRANSMISSION HYDRAULIC LINE p.130

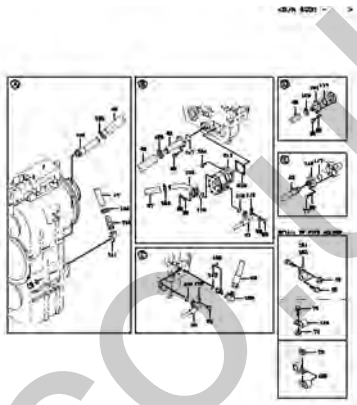

TORQUE CONVERTER p.133

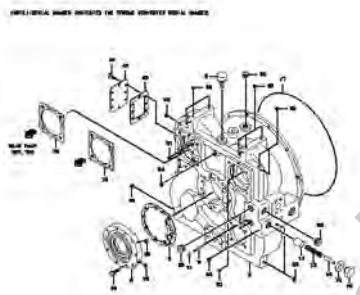

T/C INPUT SHAFT GROUP p.135

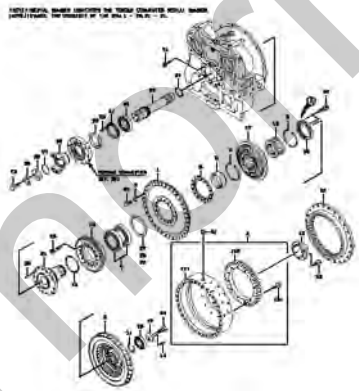

GEAR SHAFT & OIL PUMP GROUP p.137

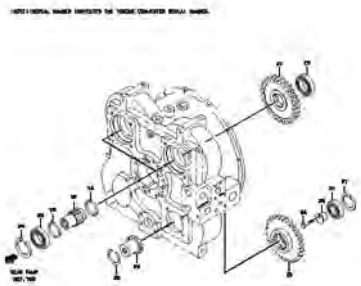

TRANSMISSION p.139

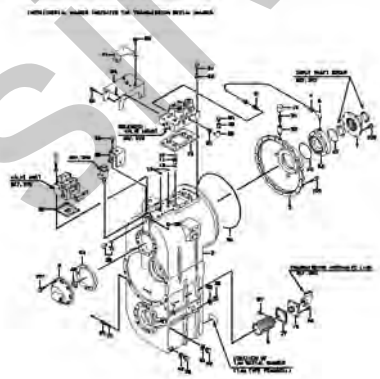

INPUT SHAFT GROUP p.141

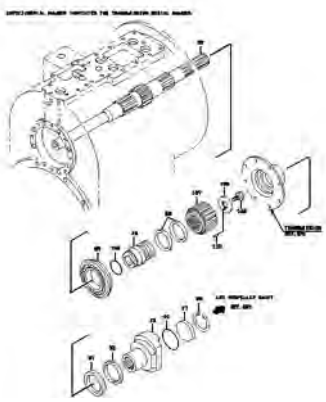

HIGH & REVERSE CLUTCH p.143

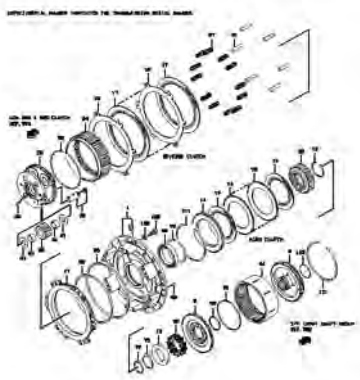

silverhorn.co.uk

LOW, 2ND & 3RD CLUTCH p.145	LOW, 2ND & 3RD CLUTCH p.146	1ST CLUTCH p.149
IDLE SHAFT GROUP p.151	OUTPUT SHAFT GROUP p.153	SOLENOID VALVE & VALVE UNIT p.155
REPAIR KIT p.157	FRONT AXLE GROUP p.159	REAR AXLE GROUP p.163

silvermorn.co.uk

AXLE SUPPORT GROUP p.167

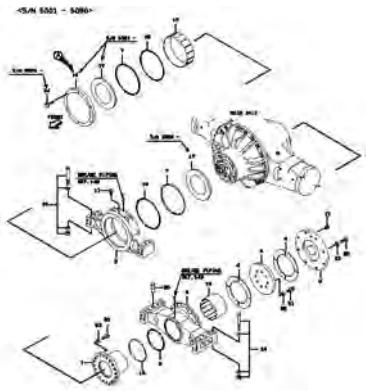

AXLE SUPPORT GROUP p.169

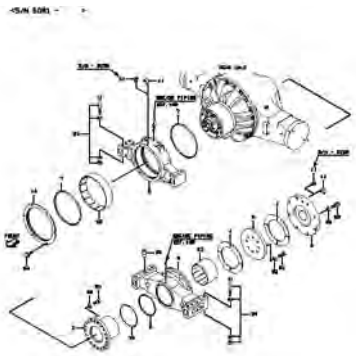

FRONT DIFFERENTIAL p.171

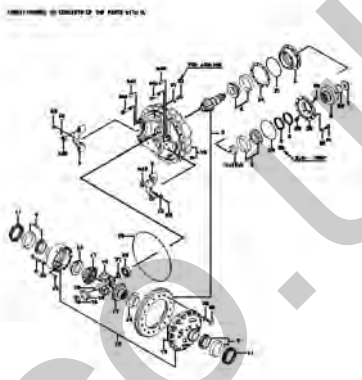

REAR DIFFERENTIAL p.173

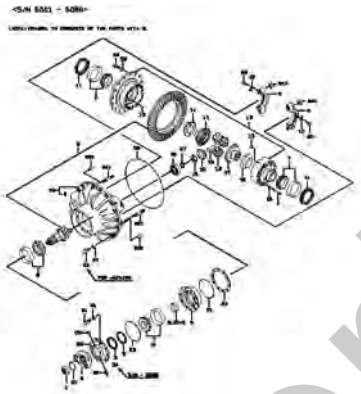

REAR DIFFERENTIAL p.175

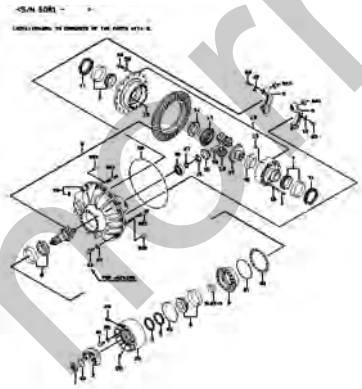

TIRE & WHEEL GROUP p.177

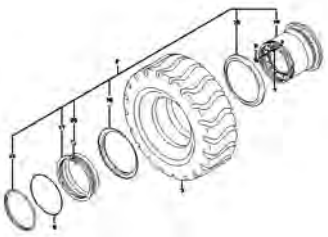

BRAKE LINE - FRONT CHASSIS p.179

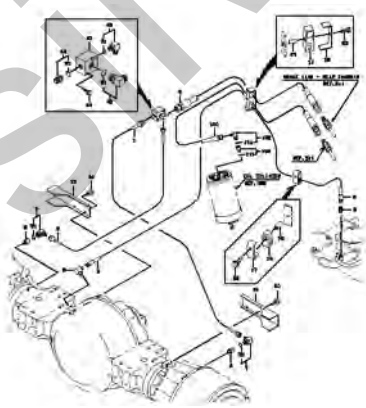

BRAKE LINE - FLOOR BOARD p.181

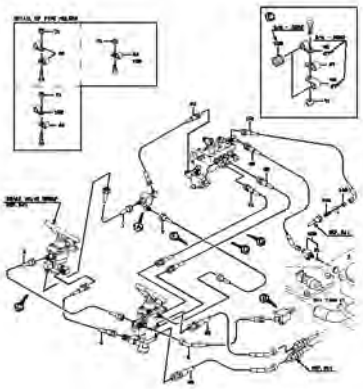

BRAKE LINE - REAR CHASSIS p.183

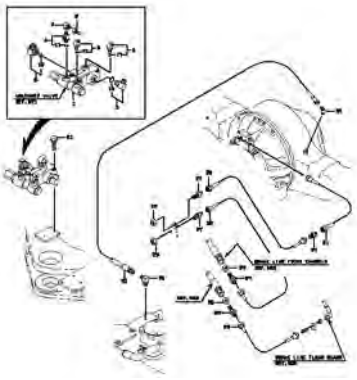

silverhorn.co.uk

BRAKE LINE - AXLE p.185	BRAKE LINE - ACCUMULATOR p.187	BRAKE LINE - ACCUMULATOR p.188
PARKING BRAKE GROUP p.191	BRAKE VALVE GROUP p.193	CHECK VALVE p.195
BRAKE VALVE p.197	BRAKE VALVE p.199	OIL CYLINDER p.201

silverhorn.co.uk

UNLOADER VALVE p.203	PARKING BRAKE p.205	VALVE CONTROL GROUP p.207
VALVE CONTROL GROUP p.209	VALVE CONTROL GROUP p.211	FUEL CONTROL GROUP p.213
STEERING CYLINDER GROUP p.215	STEERING VALVE p.217	STEERING VALVE p.218

silverhorn.co.uk

STEERING CYLINDER p.221	BUCKET POSITIONER GROUP p.223	KICKOUT GROUP p.225
CONTROL LEVER GROUP p.227	CONTROL LEVER GROUP p.231	CONTROL LEVER GROUP p.235
PILOT VALVE (FOR STEERING) p.239	PILOT VALVE (FOR STEERING) p.241	LOADING HYDRAULIC LINE - FRONT CHASSIS p.243

silverthorn.co.uk

LOADING HYDRAULIC LINE - FRONT CHASSIS p.244

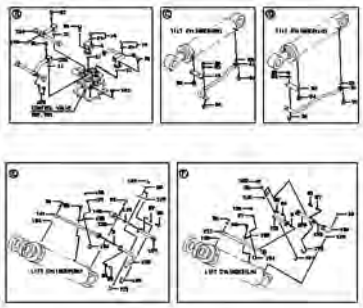

LOADING HYDRAULIC LINE - REAR CHASSIS p.247

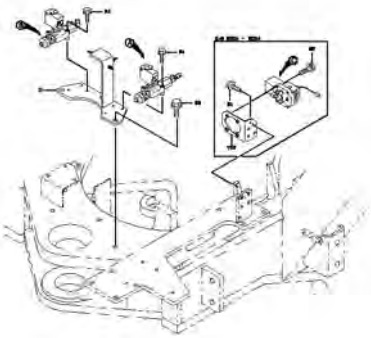

LOADING HYDRAULIC LINE - REAR CHASSIS p.248

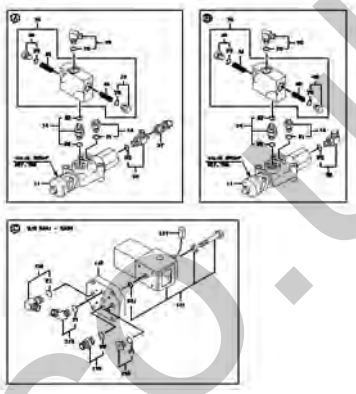

LOADING HYDRAULIC LINE - REAR CHASSIS (FOR SUCTION p.251

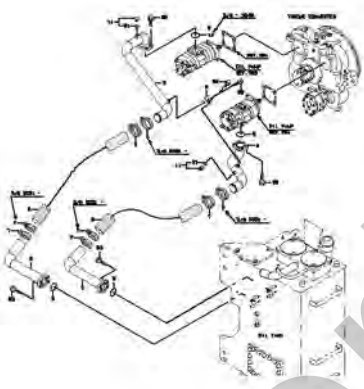

LOADING HYDRAULIC LINE - REAR CHASSIS (FOR PUMP) p.253

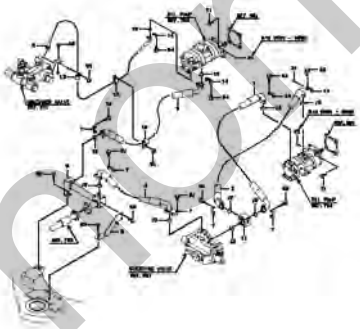

LOADING HYDRAULIC LINE - REAR CHASSIS (FOR RETURN) p.255

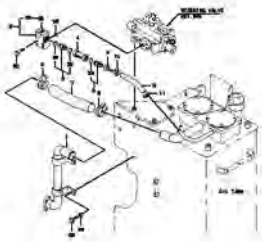

LOADING HYDRAULIC LINE - STEERING CYLINDER p.257

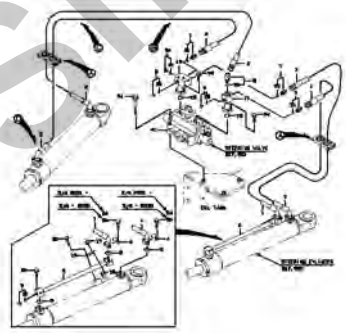

LOADING HYDRAULIC LINE - CENTER PIN p.259

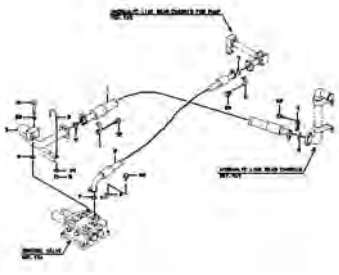

LOADING HYDRAULIC LINE - OIL COOLER p.261

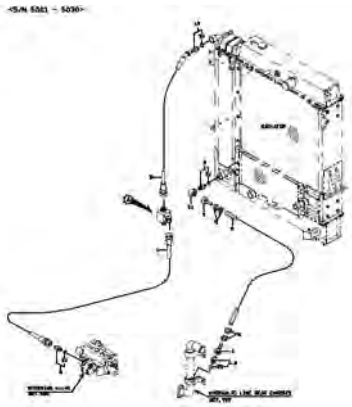

silverhorn.co.uk

LOADING HYDRAULIC LINE - OIL COOLER p.262	HYDRAULIC LINE - FAN MOTOR p.265	HYDRAULIC LINE - FAN MOTOR p.267
HYDRAULIC LINE - FAN MOTOR p.268	PILOT HYDRAULIC LINE p.271	PILOT HYDRAULIC LINE p.273
PILOT HYDRAULIC LINE p.274	PILOT HYDRAULIC LINE - FRONT CHASSIS p.277	PILOT HYDRAULIC LINE - REAR CHASSIS p.279

silverhorn.co.uk

PILOT HYDRAULIC LINE - CONTROL BOX .....p.281 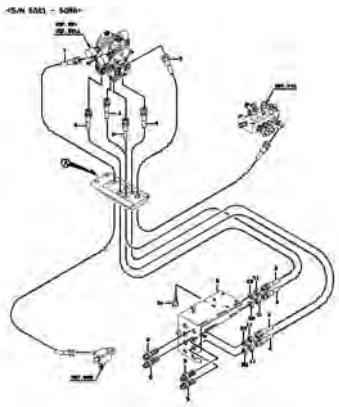	PILOT HYDRAULIC LINE - CONTROL BOX .....p.283 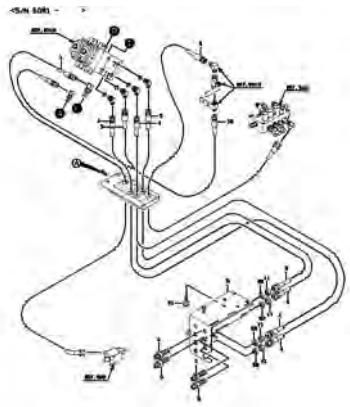	OIL PUMP (DOUBLE) .....p.285 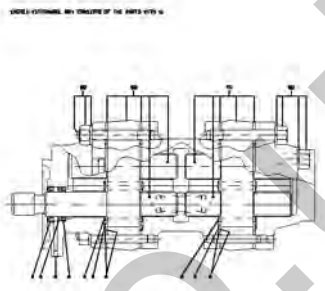
OIL PUMP (DOUBLE) .....p.287 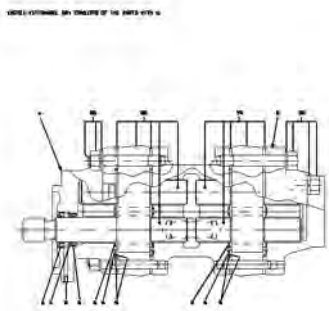	ACCUMULATOR .....p.289 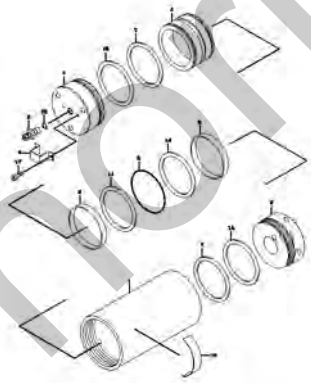	CONTROL VALVE .....p.291 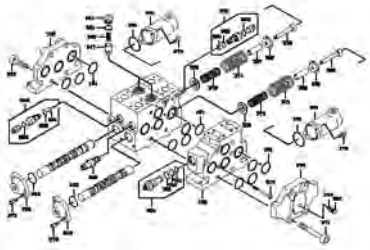
PILOT VALVE .....p.293 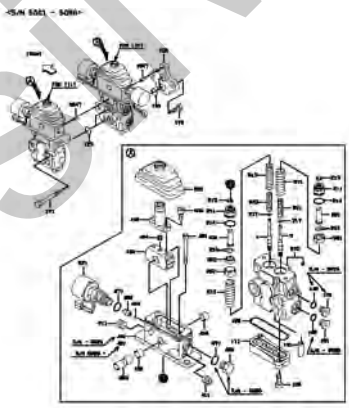	PILOT VALVE .....p.294 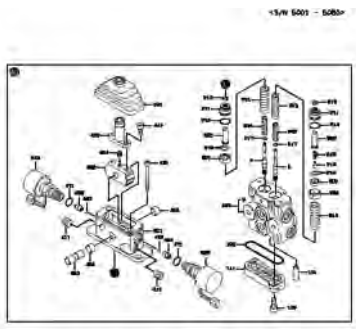	PILOT VALVE .....p.297 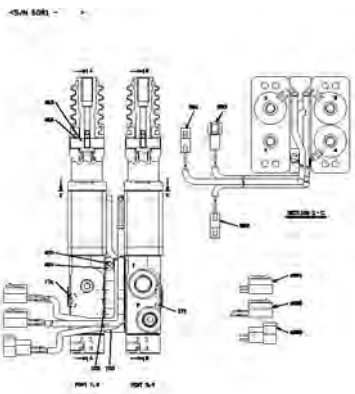

silverhorn.co.uk

PILOT VALVE .....p.298 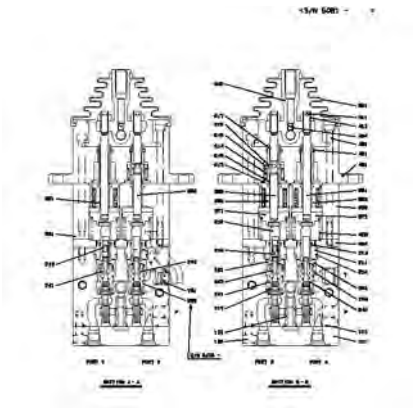	VALVE GROUP .....p.301 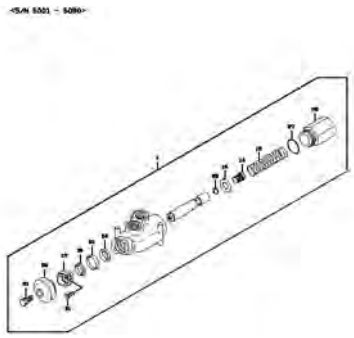	VALVE GROUP .....p.302 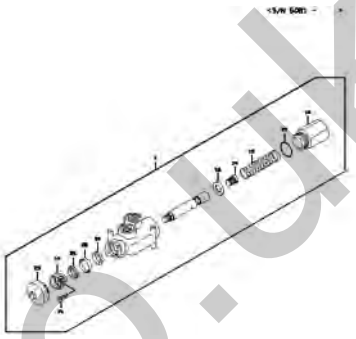
FAN MOTOR VALVE .....p.305 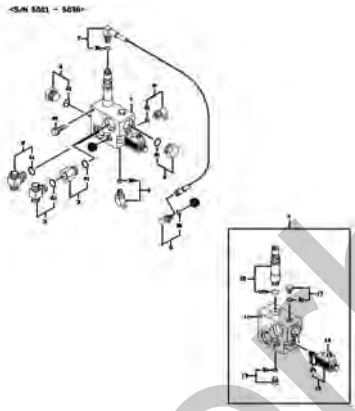	FAN MOTOR VALVE .....p.307 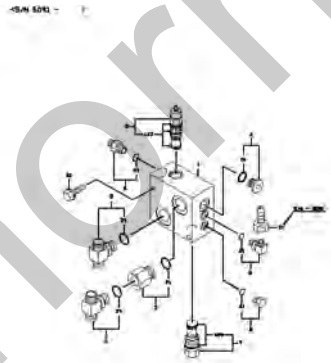	LIFT CYLINDER .....p.309 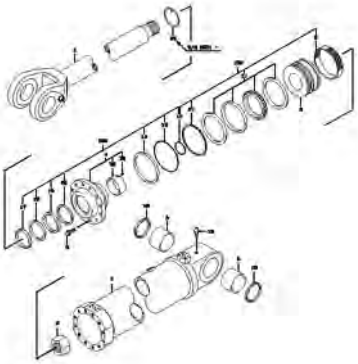
TILT CYLINDER .....p.311 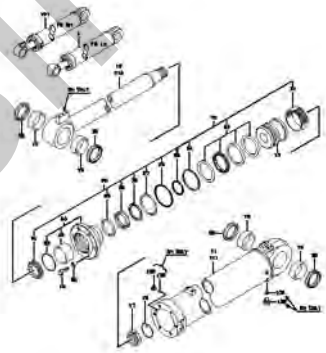	FITTING MOUNT .....p.313 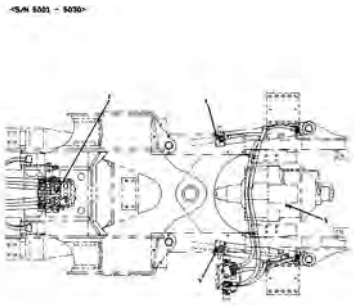	FITTING MOUNT .....p.314 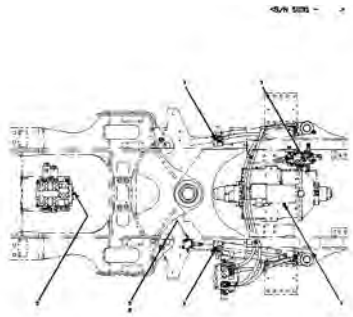

silverthorn.co.uk

BUCKET(FOR GENERAL PURPOSE) p.317

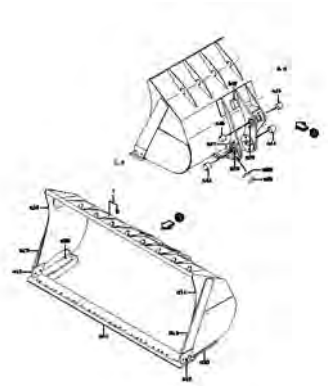

BUCKET(FOR ROCK-RS) p.319

BUCKET(FOR ROCK-RV) p.321

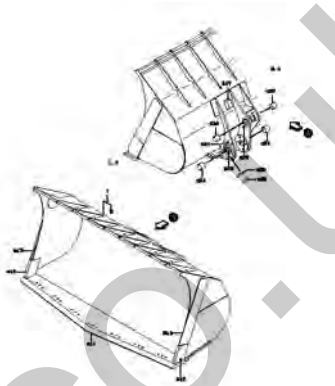

MARKING GROUP p.323

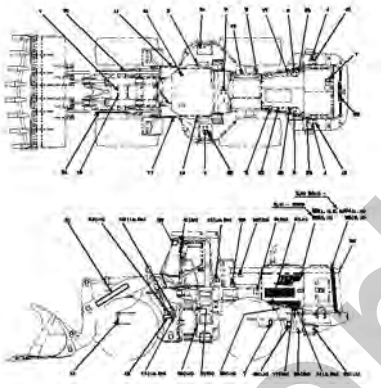

MARKING GROUP p.324

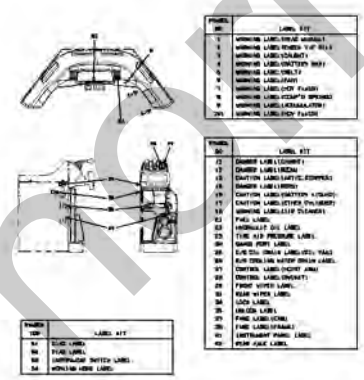

CAP MOUNT p.327

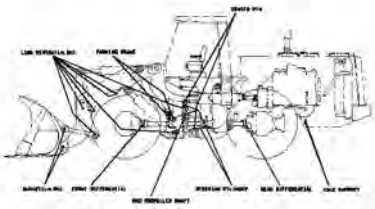

LOCK GROUP p.329

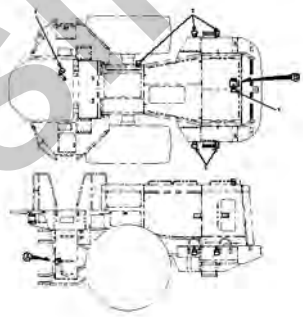

REPAIR & MAINTENANCE PARTS p.331

CAB MOUNT p.333

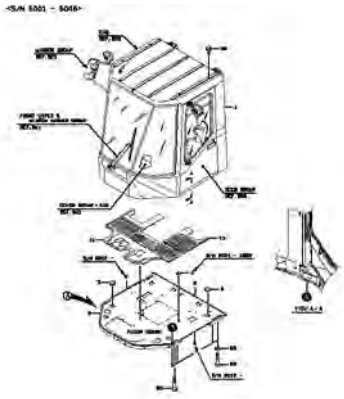

silverhorn.co.uk

CAB MOUNT
.....p.334

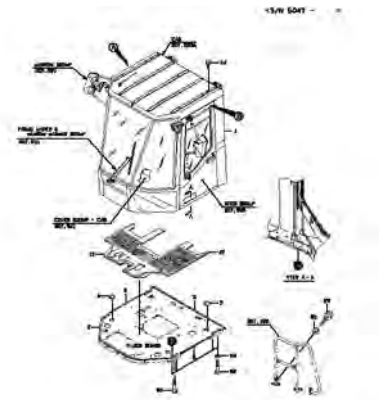

CAB
.....p.337

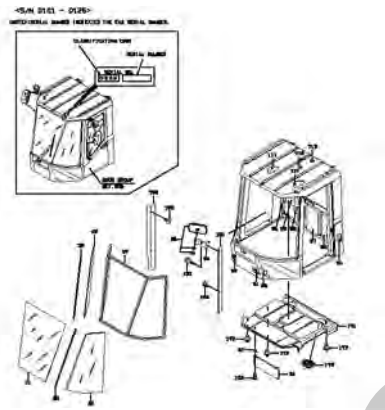

CAB
.....p.338

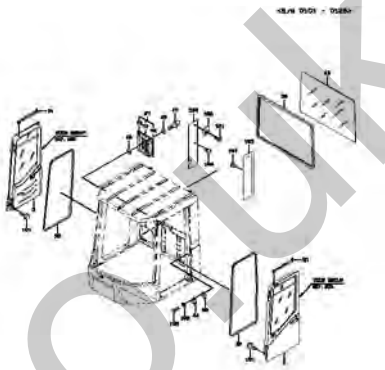

CAB
.....p.341

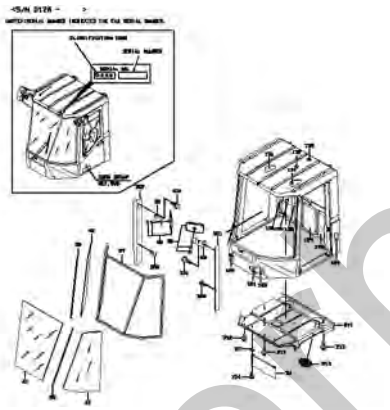

CAB
.....p.342

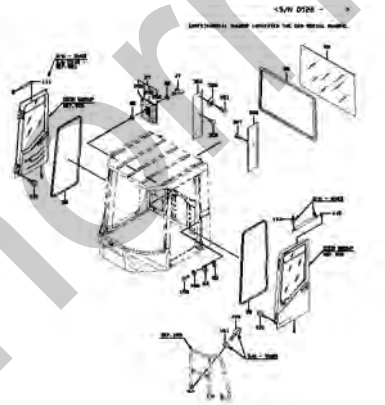

DOOR GROUP
.....p.345

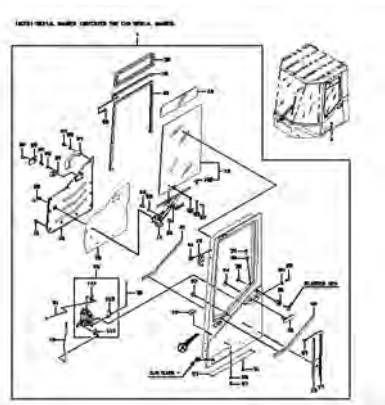

DOOR GROUP
.....p.346

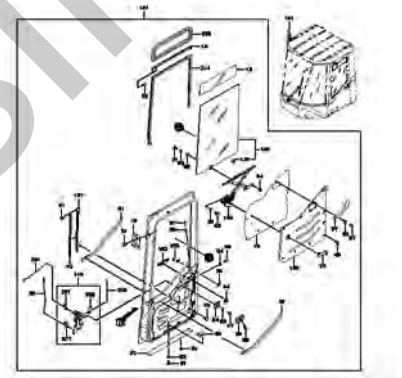

FRONT WIPER & WINDOW WASHER GROUP
.....p.349

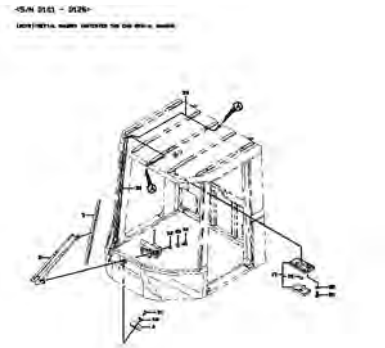

FRONT WIPER & WINDOW WASHER GROUP
.....p.350

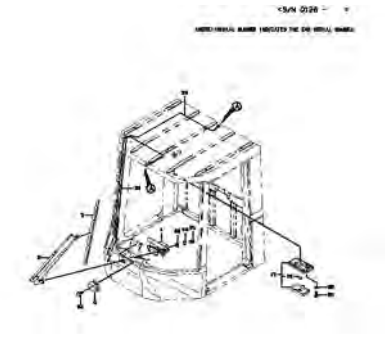

silvernorn.co.uk

ELECTRICAL PARTS GROUP p.353

ELECTRICAL WIRING - CAB p.355

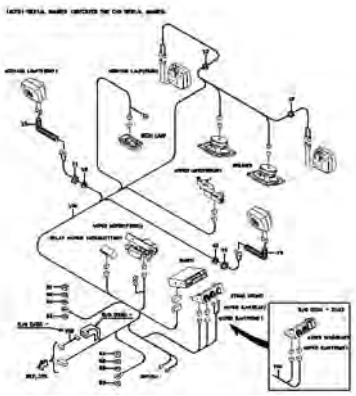

MIRROR GROUP p.357

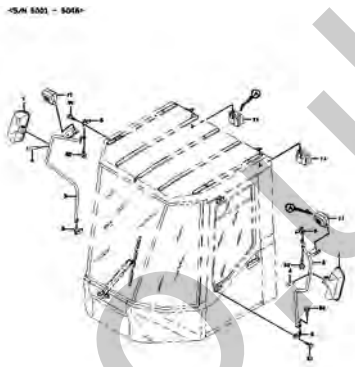

MIRROR GROUP p.358

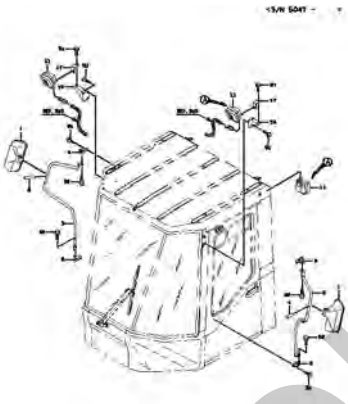

REAR WIPER & WINDOW WASHER GROUP p.361

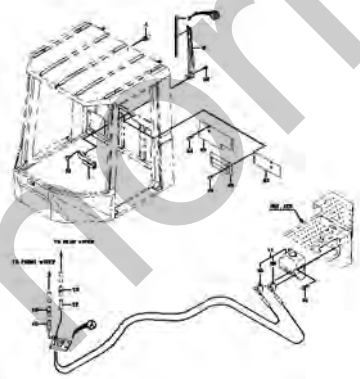

CAB ACCESSORIES MOUNT p.363

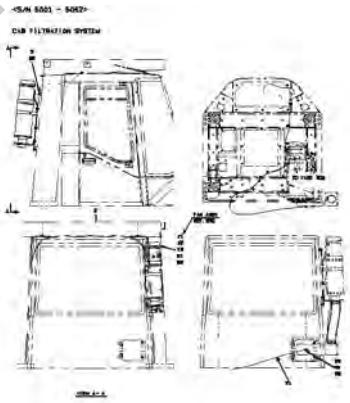

CAB ACCESSORIES MOUNT p.364

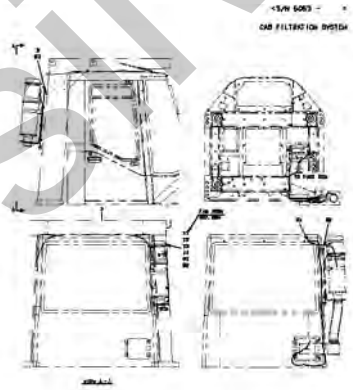

CAB ACCESSORIES MOUNT p.365

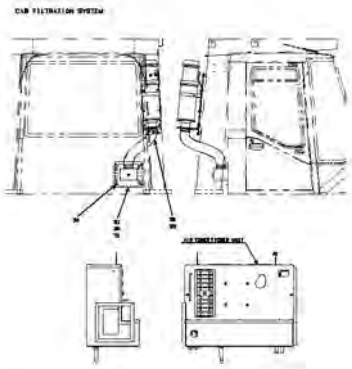

FAN ASSY p.367

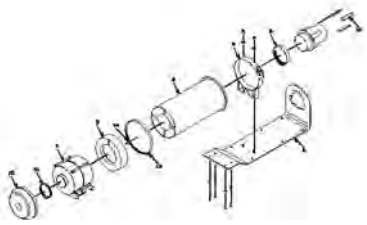

silverhorn.co.uk

ROPS MOUNT .....p.369 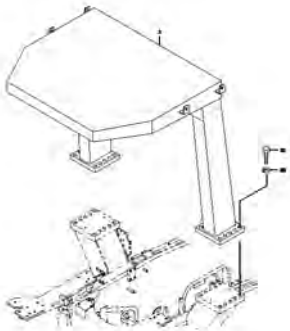	COVER GROUP - CAB .....p.371 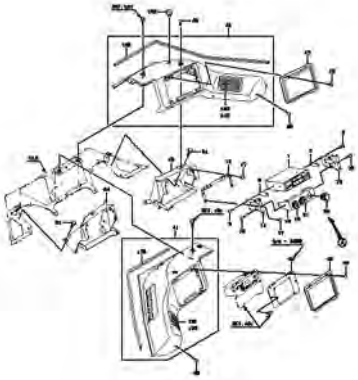	AIR DUCT GROUP - FLOOR BOARD .....p.373 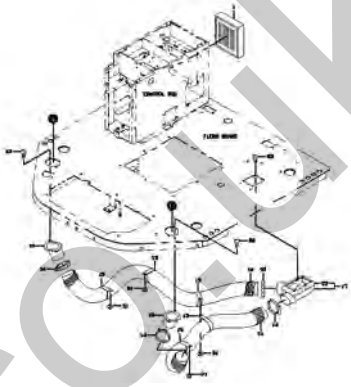
AIR DUCT GROUP - FLOOR BOARD .....p.374 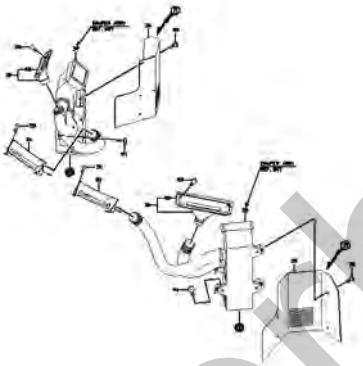	DAMPER ASSY .....p.377 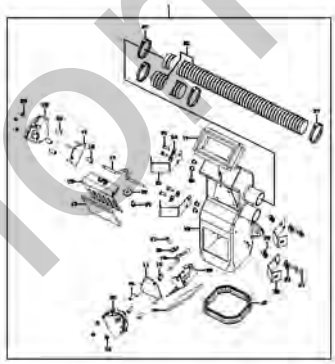	DAMPER ASSY .....p.378 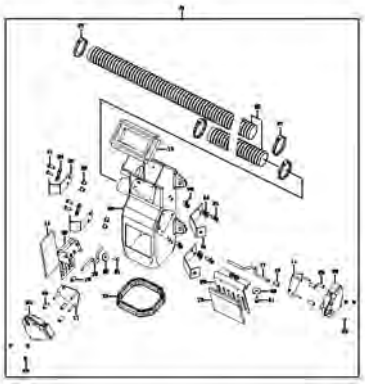
AIR CONDITIONER MOUNT .....p.381 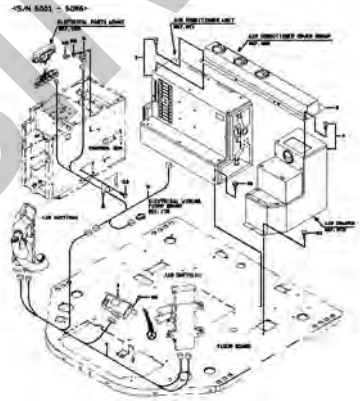	AIR CONDITIONER MOUNT .....p.383 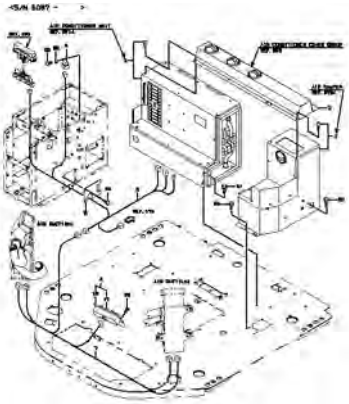	AIR CONDITIONER COVER GROUP .....p.385 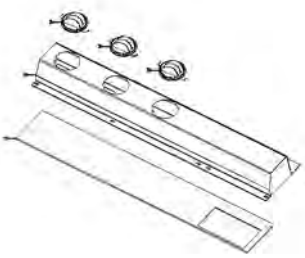

silverhorn.co.uk

AIR CONDITIONER LINE p.387

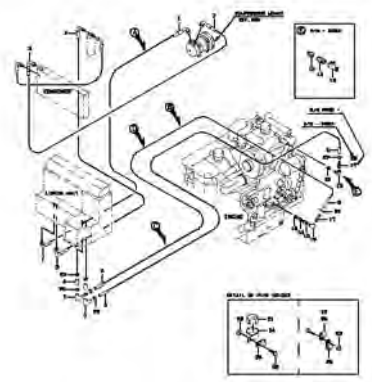

CONDENSER & COVER MOUNT p.389

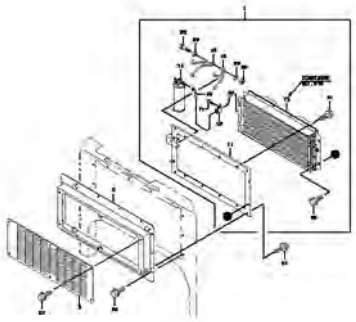

COMPRESSOR MOUNT p.391

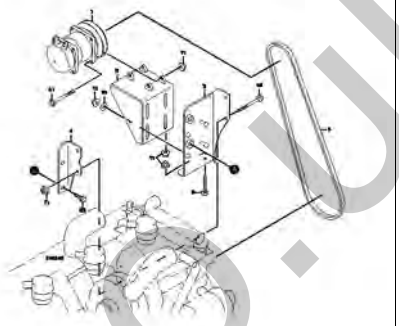

AIR CONDITIONER UNIT p.393

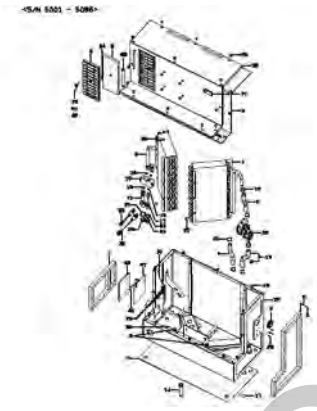

AIR CONDITIONER UNIT p.395

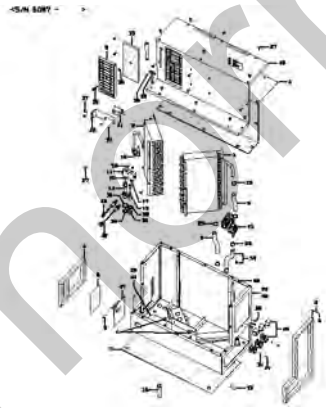

AIR DAMPER p.397

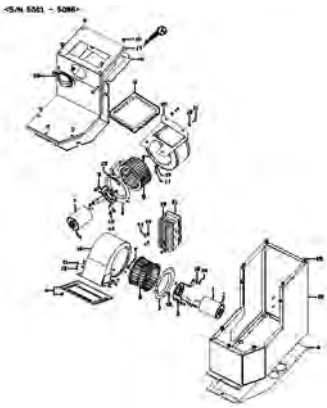

AIR DAMPER p.399

CONDENSER p.401

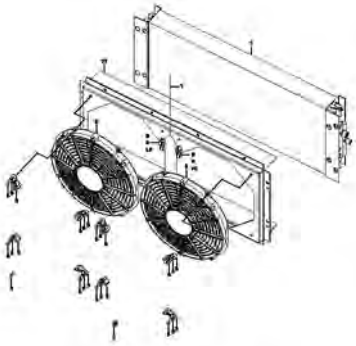

REAR LARGE FENDER p.403

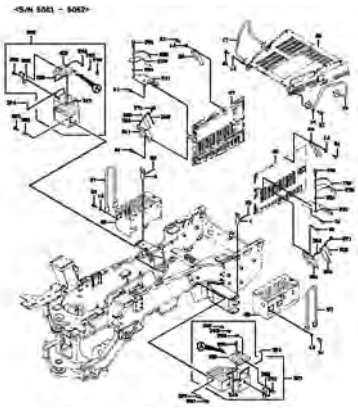

silverhorn.co.uk

REAR LARGE FENDER .....p.404 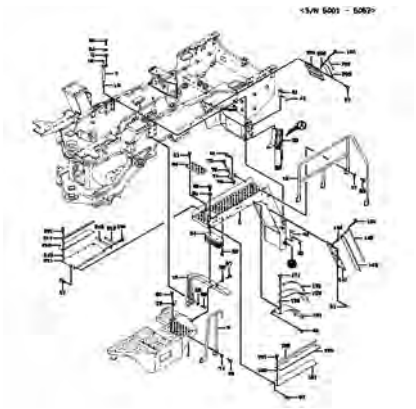	REAR LARGE FENDER .....p.405 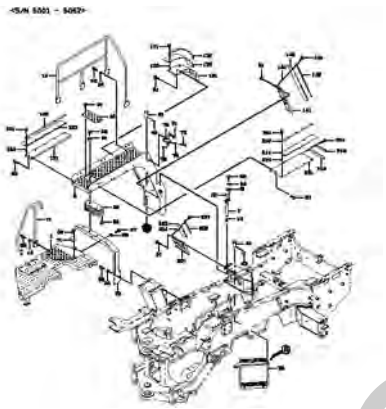	REAR LARGE FENDER .....p.409 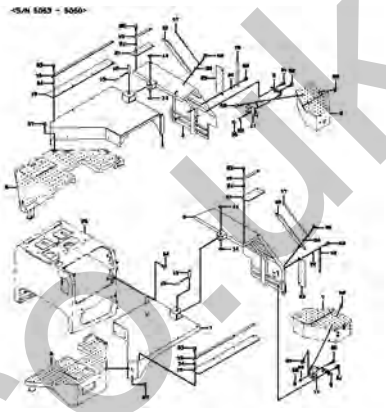
REAR LARGE FENDER .....p.411 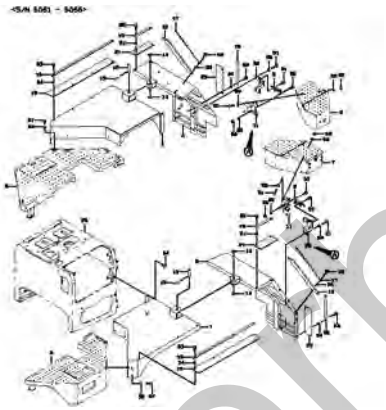	REAR LARGE FENDER .....p.412 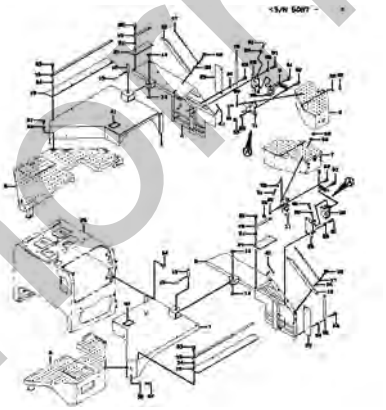	BELLY GUARD .....p.415 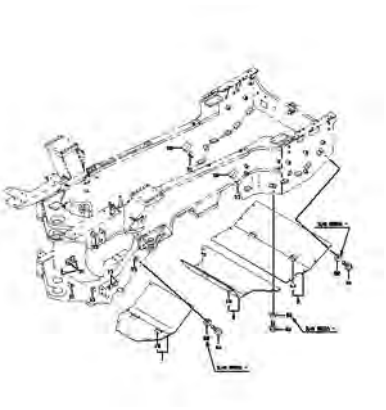
REAR GRILLE GROUP (STEEL PLATE) .....p.417 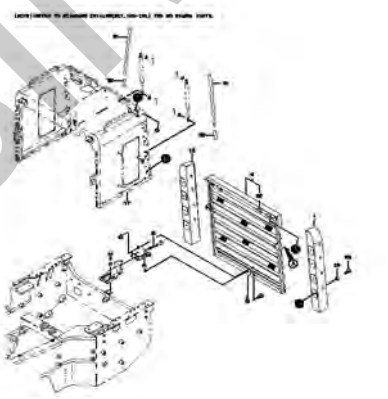	LIFT ARM (HIGH LIFT ARM SPEC.) .....p.419 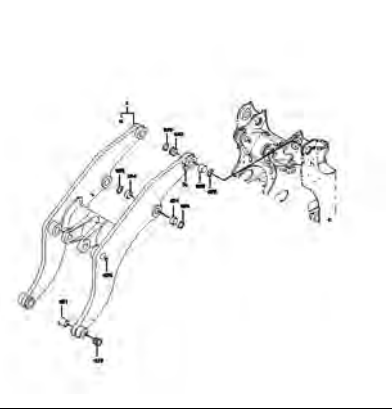	TILT CYLINDER (HIGH LIFT ARM SPEC.) .....p.421 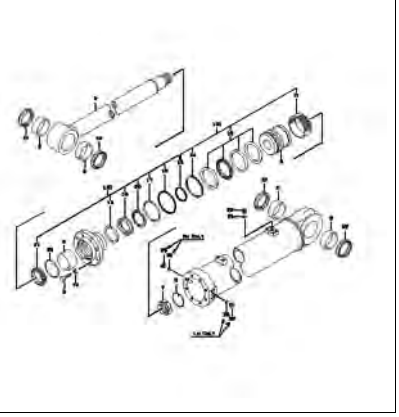

silvermorn.co.uk

HYDRAULIC LINE (HIGH LIFT ARM SPEC.) p.423	CABLE MOUNT (HIGH LIFT ARM SPEC.) p.425	FAN MOTOR HYDRAULIC LINE (FOR REVERSING FAN) p.427
RELIEF VALVE MOUNT (FOR REVERSING FAN) p.429	MOTOR MOUNT (FOR REVERSING FAN) p.431	FAN MOTOR (FOR REVERSING FAN) p.433
FAN MOTOR (FOR REVERSING FAN) p.435	ELECTRICAL EQUIPMENT MOUNT (FOR REVERSING FAN) p.437	RADIATOR MOUNT (FOR EASY CLEANING) p.439

silverhorn.co.uk

RADIATOR MOUNT (FOR EASY CLEANING) .....p.440 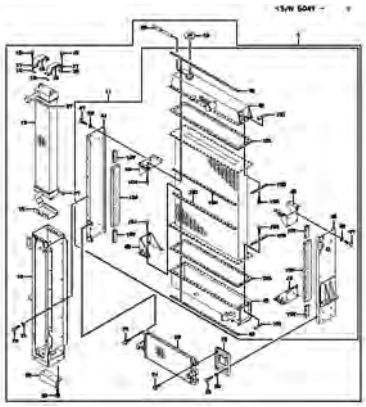	RADIATOR MOUNT (DUST-PROOF TYPE) .....p.443 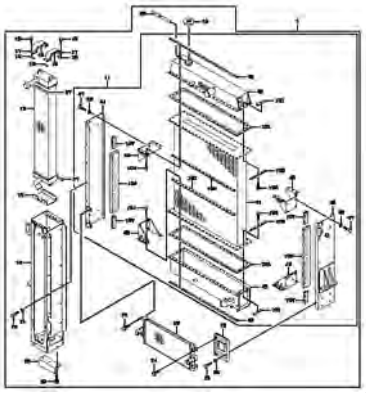	FRONT CHASSIS HYDRAULIC LINE (3 WAY PIPING) .....p.445 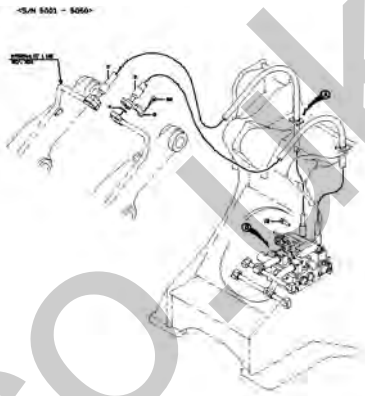
FRONT CHASSIS HYDRAULIC LINE (3 WAY PIPING) .....p.446 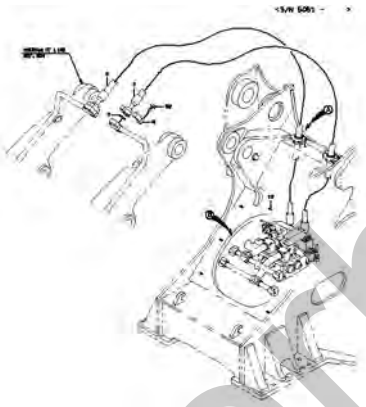	FRONT CHASSIS HYDRAULIC LINE (3WAY PIPING) .....p.449 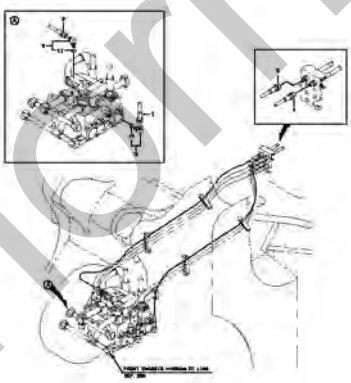	PILOT HYDRAULIC LINE (3 WAY PIPING) .....p.451 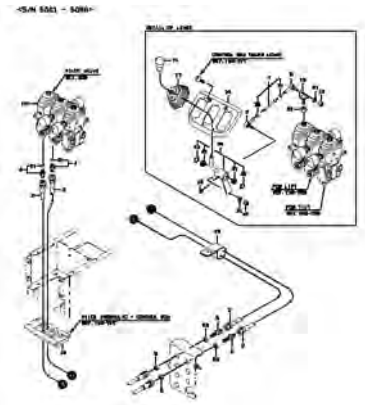
PILOT HYDRAULIC LINE (3 WAY PIPING) .....p.453 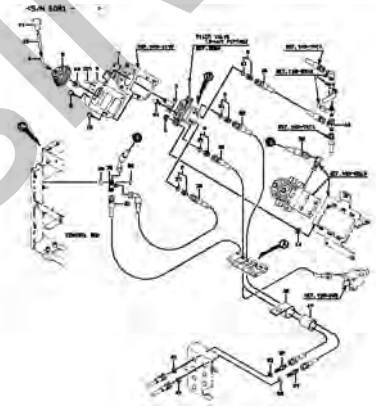	HYDRAULIC LINE (3 WAY PIPING) .....p.455 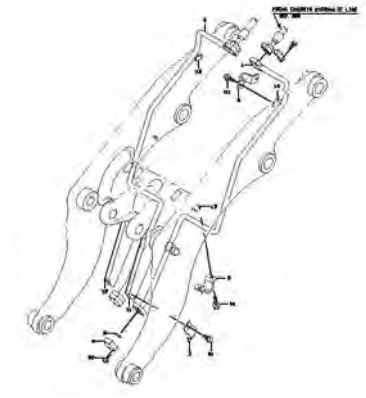	OIL PIPE MOUNT (3 WAY PIPING) .....p.457 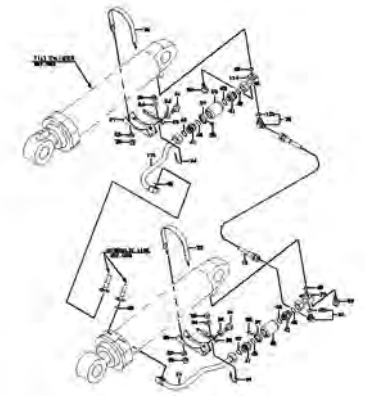

silvermorn.co.uk

CONTROL VALVE p.459

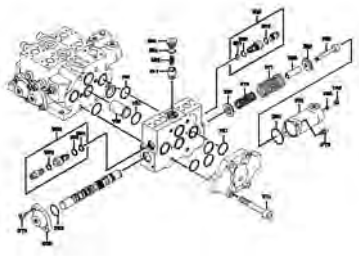

PILOT VALVE (3WAY PIPING) p.461

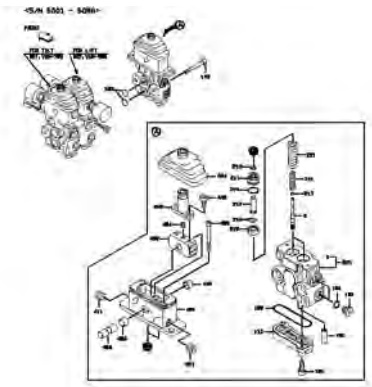

PILOT VALVE (3WAY PIPING) p.463

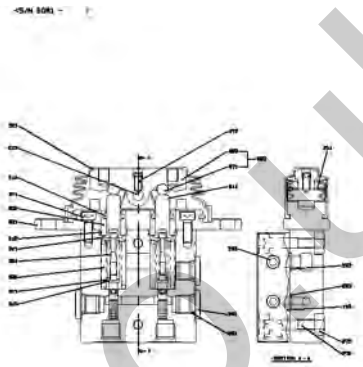

VALVE CONTROL GROUP (SINGLE LEVER) p.465

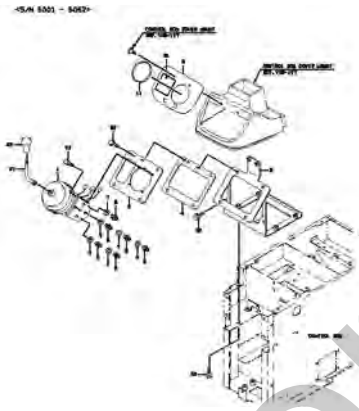

VALVE CONTROL GROUP (FOR HYDRAULIC SINGLE LEVER) p.467

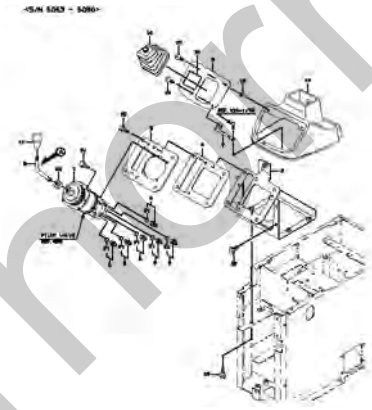

VALVE CONTROL GROUP (FOR HYDRAULIC SINGLE LEVER) p.469

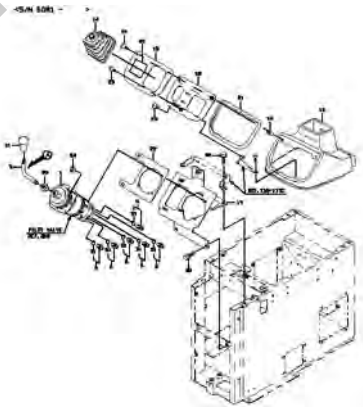

PILOT HYDRAULIC LINE (SINGLE LEVER) p.471

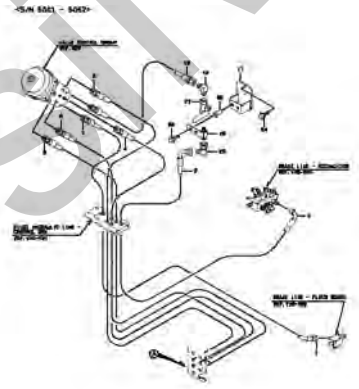

PILOT HYDRAULIC LINE (FOR HYDRAULIC SINGLE LEVER p.473

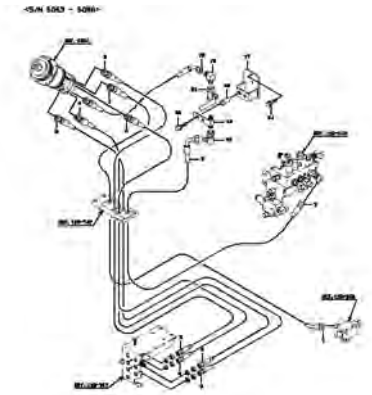

PILOT HYDRAULIC LINE (FOR HYDRAULIC SINGLE LEVER p.475

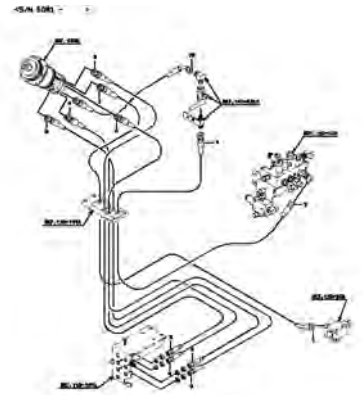

silverhorn.co.uk

PILOT VALVE p.477	RIDE CONTROL - HYDRAULIC LINE p.479	RIDE CONTROL - HYDRAULIC LINE p.480
RIDE CONTROL - ACCUMULATOR p.483	RIDE CONTROL - ELECTRICAL WIRING p.485	EMERGENCY STEERING GROUP p.487
EMERGENCY STEERING - VALVE GROUP p.489	CABLE MOUNT p.491	STEERING WHEEL MOUNT p.493

silverhorn.co.uk

SHIFT LEVER GROUP (STEERING WHEEL) p.495

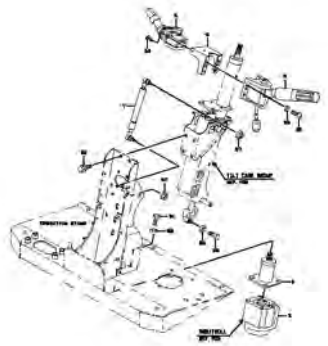

TILT CASE GROUP (STEERING WHEEL) p.497

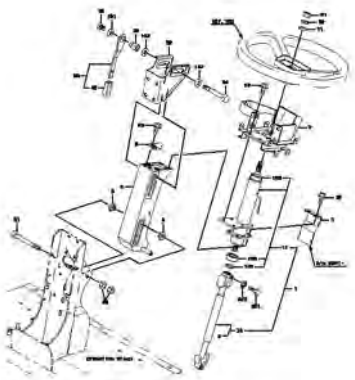

ORBITROLL p.499

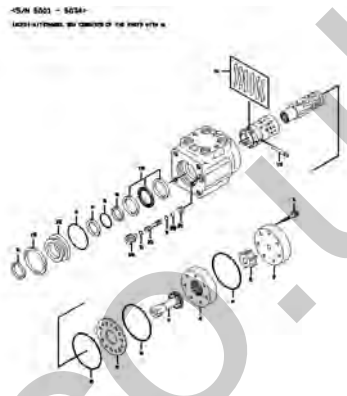

ORBITROLL p.501

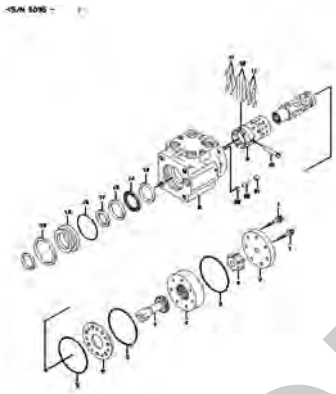

OPERATION STAND GROUP (STEERING WHEEL) p.503

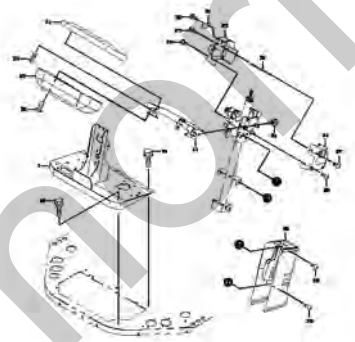

SEAT MOUNT (STEERING WHEEL) p.505

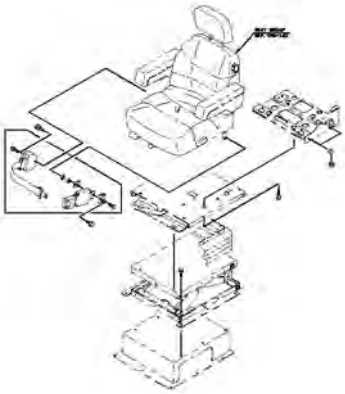

PILOT HYDRAULIC LINE (STEERING WHEEL) p.507

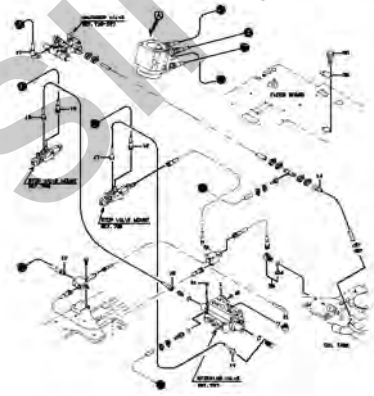

STEERING VALVE p.509

STOP VALVE MOUNT p.511

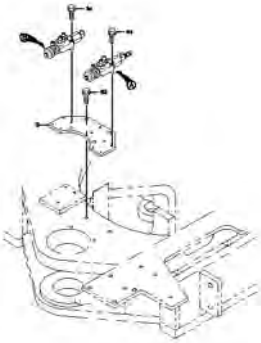

silverhorn.co.uk

STOP VALVE MOUNT .....p.512 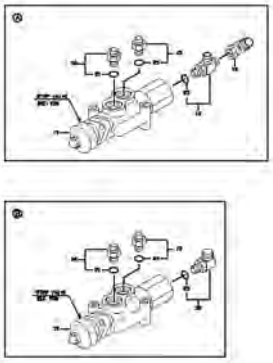	STOP VALVE .....p.515 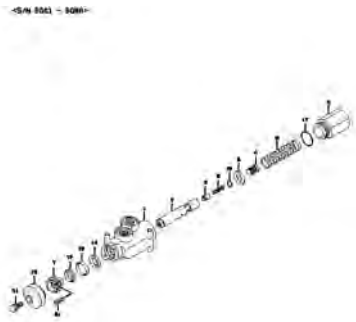	STOP VALVE p.516
AIR DUCT MOUNT .....p.519 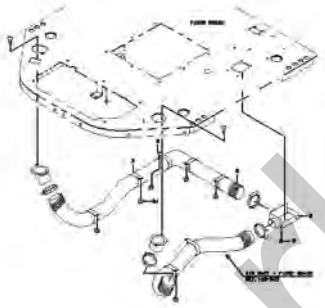	SWITCH MOUNT (STEERING WHEEL) p.521	CABLE MOUNT (STEERING WHEEL) .....p.523 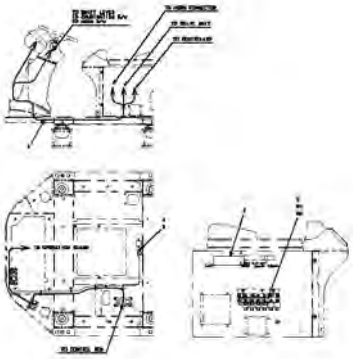
MULTI CONTROL VALVE .....p.525 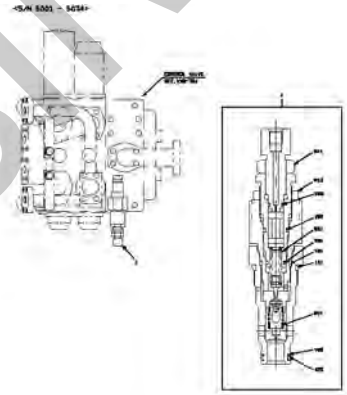	MULTI CONTROL VALVE .....p.527 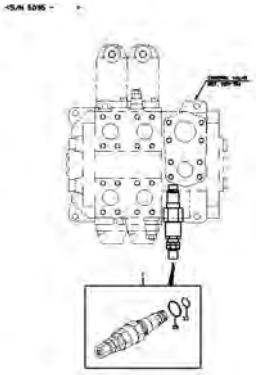	HYDRAULIC LINE (TWO-STEP RELIEF VALVE) .....p.529 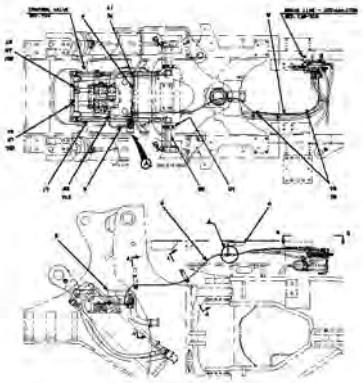

silverhorn.co.uk

HYDRAULIC LINE (TWO-STEP RELIEF VALVE) p.530	CABLE MOUNT (TWO-STEP RELIEF VALVE) p.533	COVER MOUNT - ENGINE ROOM (DUST-PROOF SPEC.) p.535
COVER MOUNT - ENGINE ROOM (DUST-PROOF SPEC.) p.536	COVER MOUNT - UNDER COVER (DUST-PROOF SPEC.) p.539	SPONGE MOUNT (DUST-PROOF SPEC.) p.541
BATTERY CUT OFF SWITCH p.543	4-WAY FLASHER GROUP p.545	FRONT CHASSIS GROUP p.547

silverhorn.co.uk

FUEL TANK GROUP p.549	OIL TANK GROUP p.551	OIL TANK GROUP p.552
FLOOR BOARD GROUP p.555	STEP & HANDRAIL GROUP p.557	STEP & HANDRAIL GROUP p.558
REAR GRILL GROUP p.561	COVER MOUNT p.563	COVER MOUNT p.564

silverhorn.co.uk

GREASE PIPING (FOR FRONT) p.567

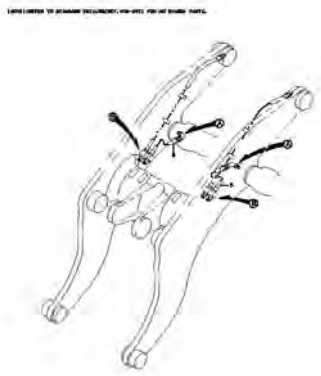

FRONT LAMP MOUNT p.569

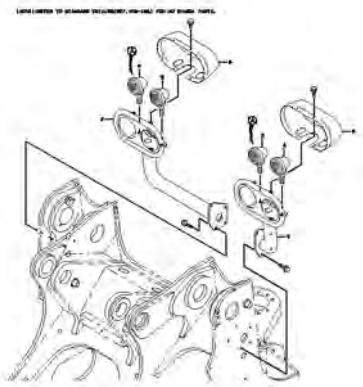

BATTERY & GREASE GUN MOUNT p.571

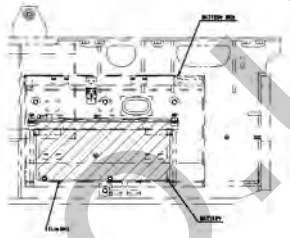

ELECTRICAL WIRING - FRONT CHASSIS p.573

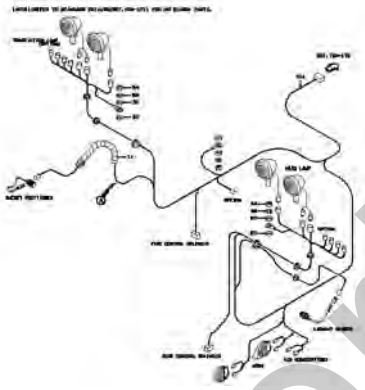

ELECTRICAL WIRING - FRONT CHASSIS p.574

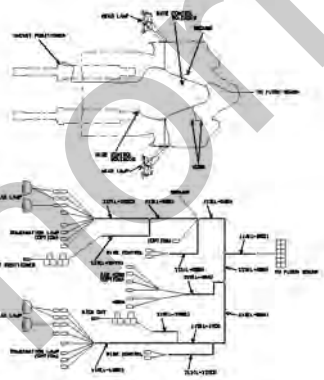

ELECTRICAL WIRING - REAR CHASSIS p.577

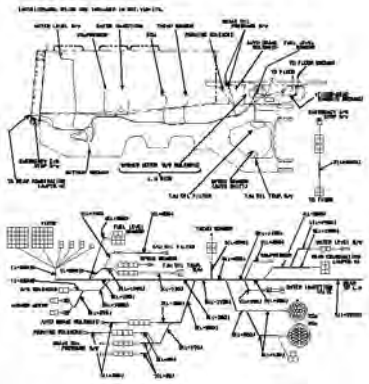

ELECTRICAL WIRING - REAR CHASSIS p.578

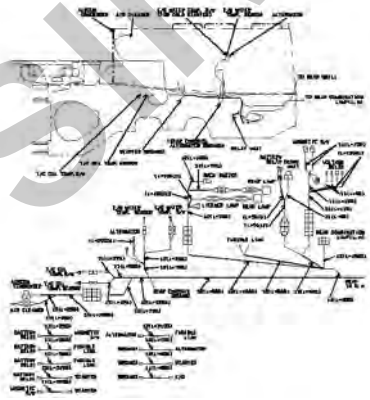

ELECTRICAL WIRING - FLOOR BOARD p.581

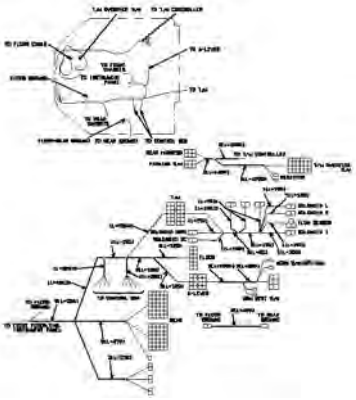

SWITCH MOUNT (FOR EMERGENCY E/G STOP) p.583

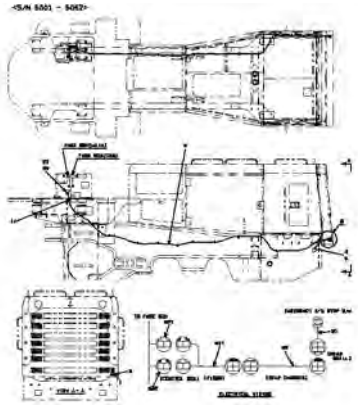

silverhorn.co.uk

SWITCH MOUNT (FOR EMERGENCY E/G STOP) p.585	SWITCH MOUNT (FOR EMERGENCY E/G STOP) p.586	RADIATOR GROUP p.589
RADIATOR p.591	WATER LINE p.593	AIR CLEANER GROUP - PRECLEANER p.595
AIR CLEANER GROUP - PRECLEANER p.596	FUEL LINE p.599	FAN MOTOR HYDRAULIC LINE (FOR REVERSING FAN) p.601

silvermorn.co.uk

RELIEF VALVE MOUNT (FOR REVERSING FAN) p.603

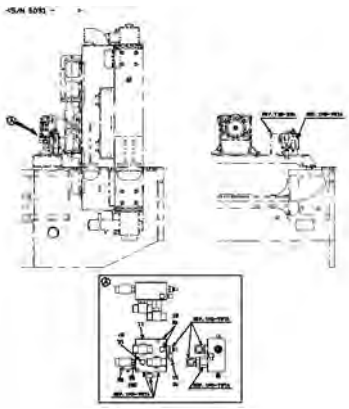

MOTOR MOUNT (FOR REVERSING FAN) p.605

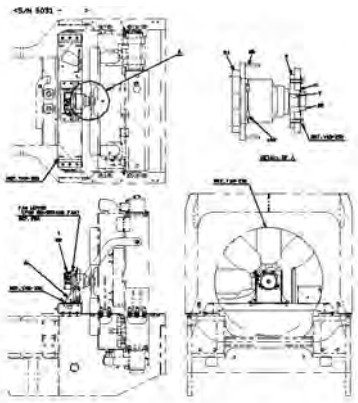

FAN MOTOR (FOR REVERSING FAN) p.607

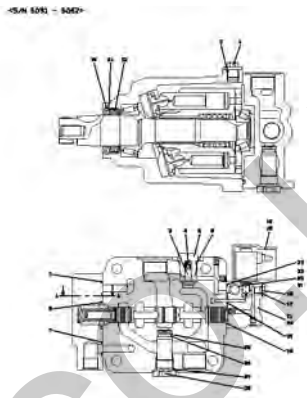

FAN MOTOR (FOR REVERSING FAN) p.609

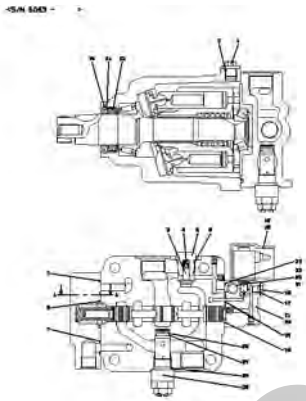

ELECTRICAL EQUIPMENT MOUNT (FOR REVERSING FAN) p.611

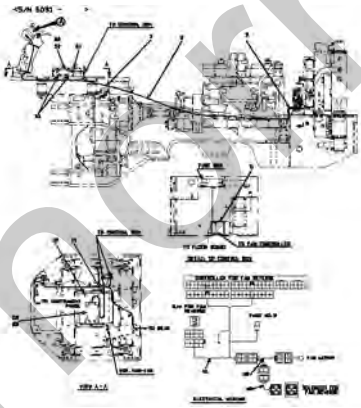

TRANSMISSION HYDRAULIC LINE p.613

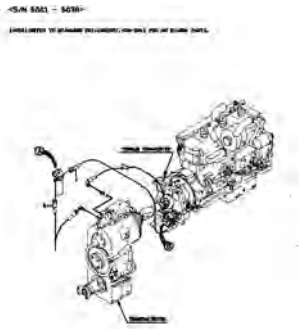

FRONT AXLE GROUP p.615

TIRE & DISC WHEEL GROUP p.617

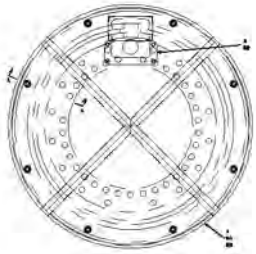

BRAKE LINE - FRONT CHASSIS p.619

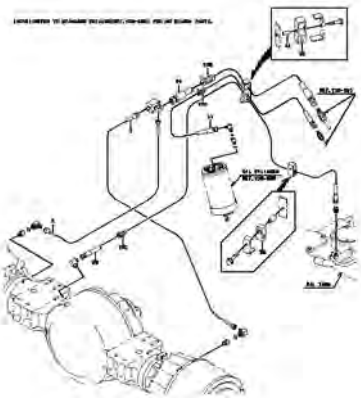

silverhorn.co.uk

BRAKE LINE - FLOOR BOARD p.621	BRAKE LINE - REAR CHASSIS p.623	BRAKE LINE - AXLE p.625
BRAKE LINE - ACCUMULATOR p.627	BRAKE LINE - REAR CHASSIS (FOR PARKING BRAKE REL p.629	BRAKE LINE - REAR CHASSIS (FOR PARKING BRAKE REL p.630
VALVE MOUNT (FOR PARKING BRAKE RELEASE SYSTEM) p.633	VALVE MOUNT (FOR PARKING BRAKE RELEASE SYSTEM) p.634	BRAKE LINE - FLOOR BOARD (FOR PARKING BRAKE RELEA p.637

silverhorn.co.uk

LABEL MOUNT (FOR PARKING BRAKE RELEASE SYSTEM) p.639	WIND SHIELD GROUP (FOR PARKING BRAKE RELEASE SYS p.641	BUCKET POSITIONER GROUP p.643
LOADING HYDRAULIC LINE - FRONT CHASSIS p.645	LOADING HYDRAULIC LINE - REAR CHASSIS (FOR PUMP p.647	LOADING HYDRAULIC LINE - STEERING CYLINDER p.649
LOADING HYDRAULIC LINE - CENTER PIN p.651	PILOT HYDRAULIC LINE p.653	PILOT HYDRAULIC LINE - FRONT CHASSIS p.655

silverhorn.co.uk

PILOT HYDRAULIC LINE - REAR CHASSIS .....p.657 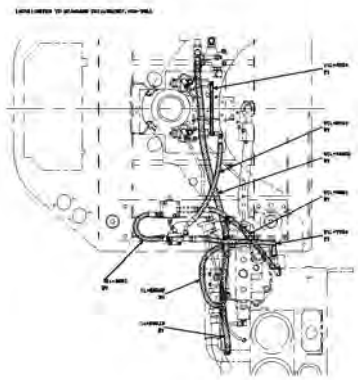	MARKING GROUP .....p.659 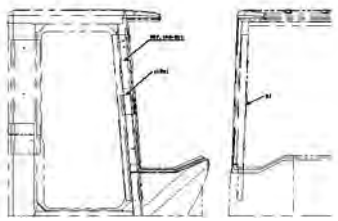	MIRROR GROUP .....p.661 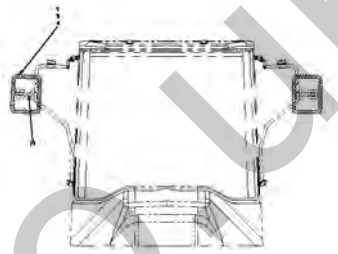
WINDOW GLASS MOUNT .....p.663 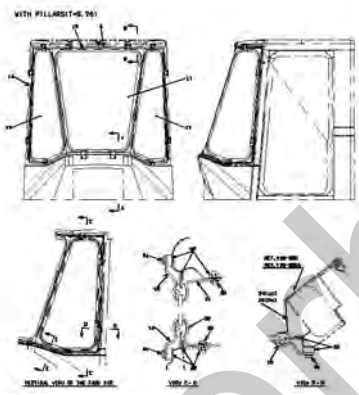	WINDOW GLASS MOUNT .....p.664 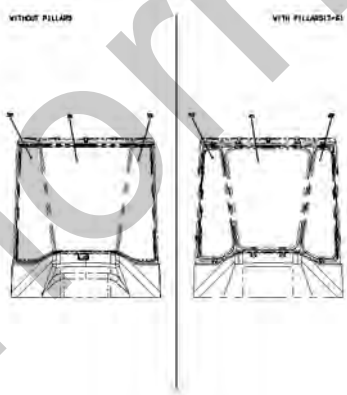	CAB ACCESSORIES MOUNT .....p.667 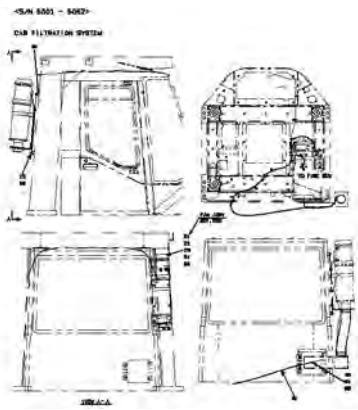
CAB ACCESSORIES MOUNT .....p.668 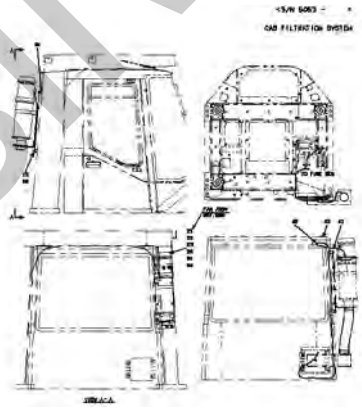	CAB ACCESSORIES MOUNT .....p.669 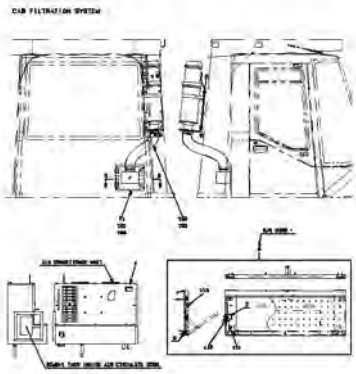	FAN ASSY .....p.671 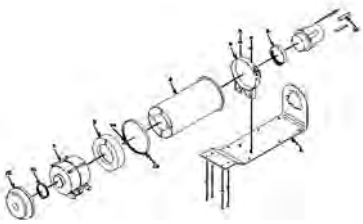

silverthorn.co.uk

CAB OPTION PARTS p.673

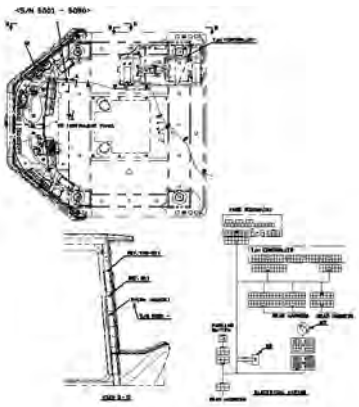

CAB OPTION PARTS p.674

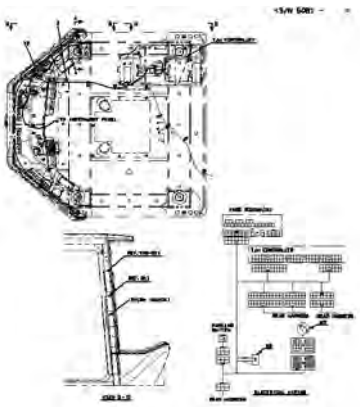

AIR DUCT GROUP - FLOOR BOARD p.677

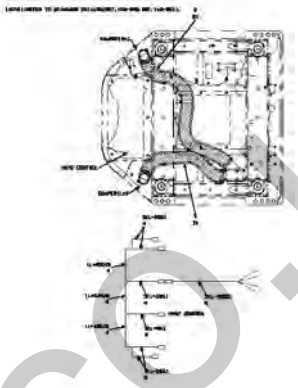

LIFT ARM GROUP p.679

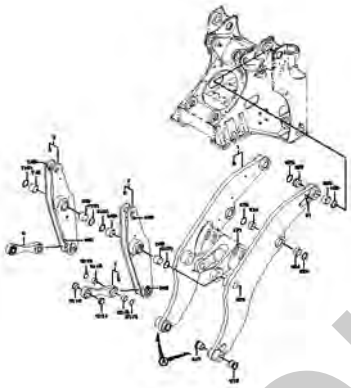

PIN MOUNT p.681

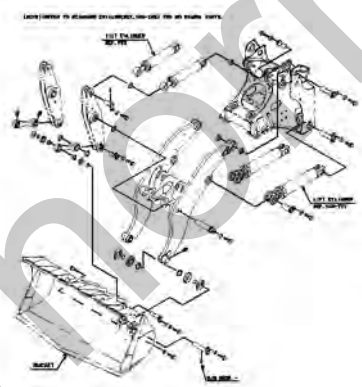

REAR CHASSIS GROUP p.683

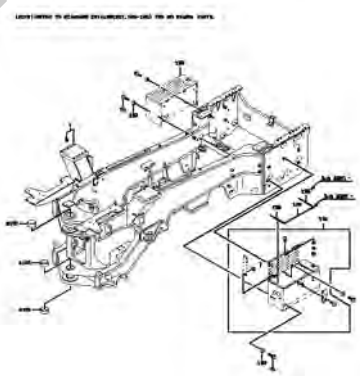

REAR CHASSIS GROUP p.684

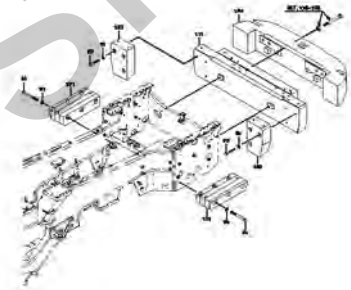

CONTROL BOX COVER MOUNT p.687

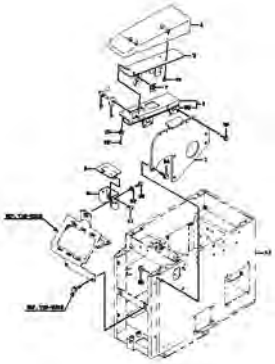

DECK & FENDER GROUP p.689

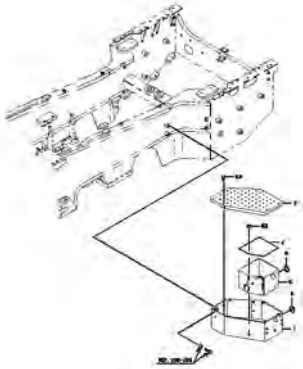

silverhorn.co.uk

RADIATOR GUARD MOUNT p.691	COVER MOUNT p.693	GREASE PIPING (FOR FRONT CHASSIS) p.695
GREASE PIPING (FOR FRONT CHASSIS) p.696	TRANSMISSION HYDRAULIC LINE p.699	FRONT CHASSIS HYDRAULIC LINE (3-WAY PIPING) p.701
FRONT PILOT HYDRAULIC LINE (3-WAY PIPING) p.703	PILOT HYDRAULIC LINE (3-WAY PIPING) p.705	PILOT HYDRAULIC LINE (3-WAY PIPING) p.707

silverhorn.co.uk

HYDRAULIC LINE (3-WAY PIPING) p.709

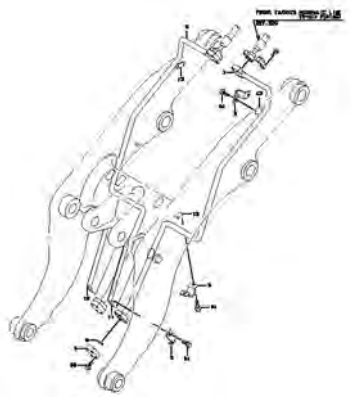

OIL PIPE MOUNT (3-WAY PIPING) p.711

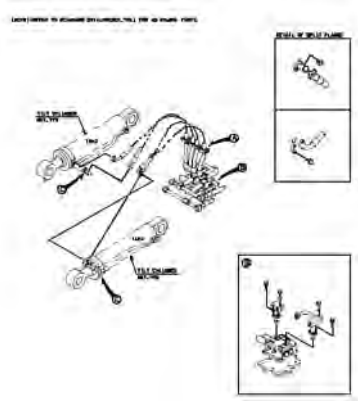

OIL PIPE MOUNT (3-WAY PIPING) p.712

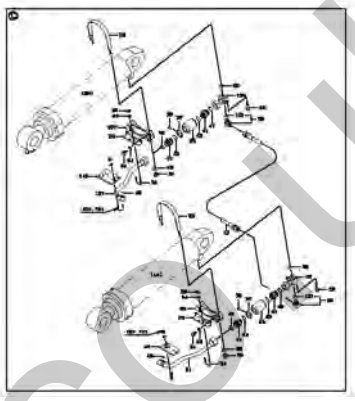

CONTROL VALVE (3-WAY PIPING) p.715

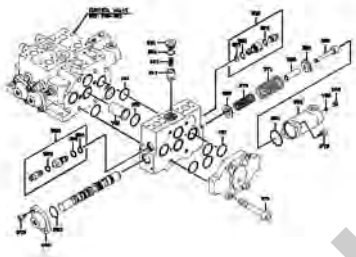

PILOT VALVE (3-WAY PIPING) p.717

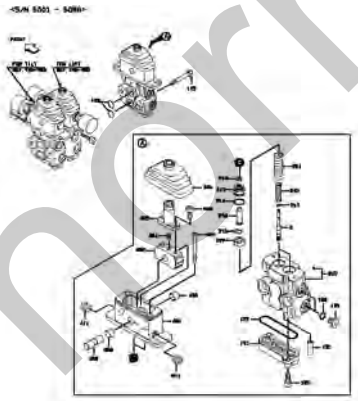

PILOT VALVE (3-WAY PIPING) p.719

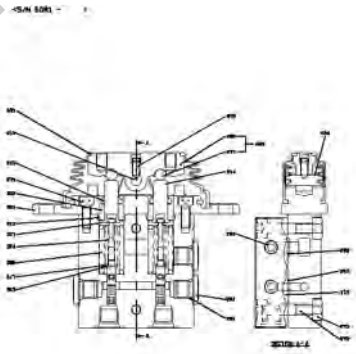

FRONT AXLE GROUP p.721

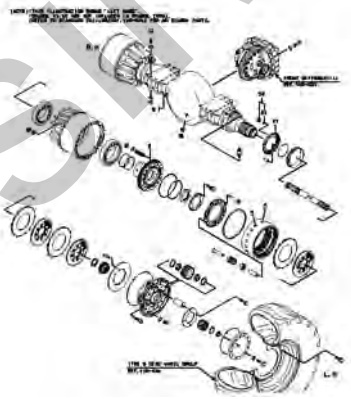

REAR AXLE GROUP p.723

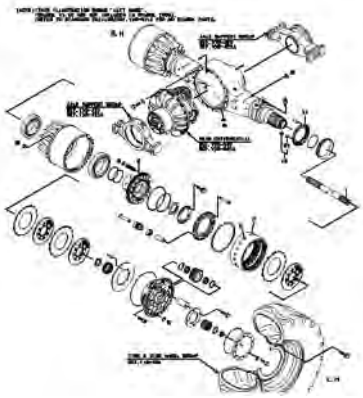

BUCKET POSITIONER GROUP p.725

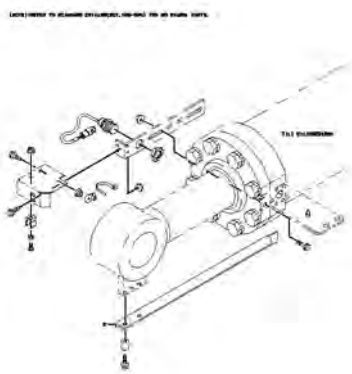

silverhorn.co.uk

LOADING HYDRAULIC LINE - FRONT CHASSIS .....p.727 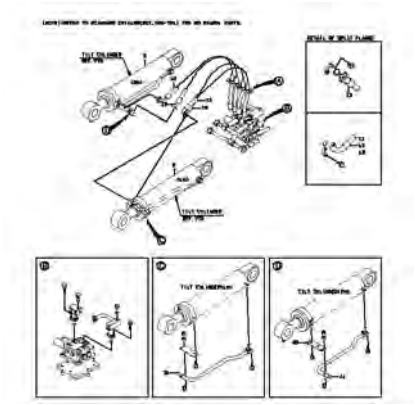	TILT CYLINDER .....p.729 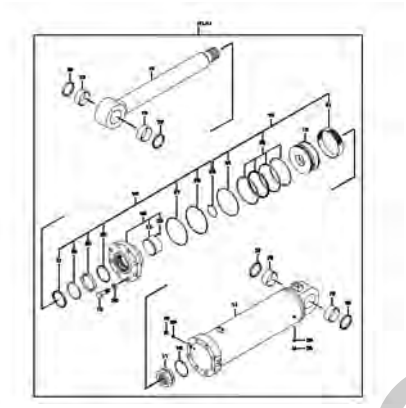	TILT CYLINDER .....p.730 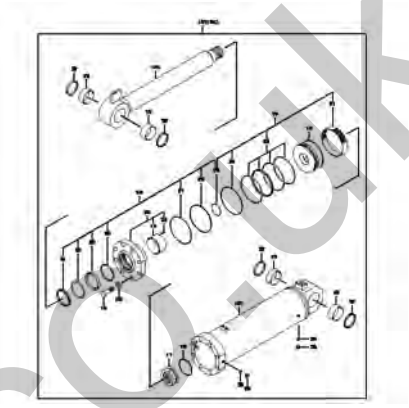
MIRROR GROUP .....p.733 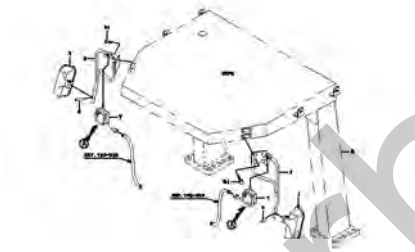		

silverhorn.co.uk

MEMO

silverhorn.co.uk

PARTS NAME INDEX

silverhorn.co.uk

PARTS NAME INDEX

	PART NAME	PAGE
A	ACCUMULATOR ASSY	189,290,481,484
	ACTUATOR ASSY	379
	ADAPTER	62,92,103,107,124,127 ...
	ADAPTER,ELBOW	103,107,124,127,131,180 ...
	ADAPTER,ELBOW UNIO	103,107,124,127,131,184 ...
	ADAPTER,TEE	182,184,189,194,249,280 ...
	ADAPTER,UNION	57,124,481,697
	ADJUSTOR ASSY	206
	ADJUSTOR,SEAT	52
	AIR CONDITIONER UN	366,382,384,394,396,670
	ANGLE	88,92,224,556,726
	ANTENNA	354
	ARM	192,208,210,228,232,237 ...
	ARM ASSY	335,339,343
	ARM ASSY,LIFT	4,420,680
	ARM,WIPER	351,362
	ARMREST	22,24,26,28,52,228,232 ...
	ASHTRAY	22,24,26,28
	AXLE ASSY,FRONT	160,722
	AXLE ASSY,REAR	164,724
B	BALL	110,134,295,299,464,500 ...
	BAND	74,189,481,534
	BAND,HOSE	12,76,92,112,115,122 ...
	BAND,HOSE-HIGH TOR	112,119,252,256
	BAR,ROUND	39,347
	BATTERY	72
	BEARING KIT	500
	BEARING,BALL	136,138,142,144,147,152 ...
	BEARING,NEEDLE	147,208,210,452,502,706
	BEARING,ROLLER	150,152,154,172,174,176 ...
	BEARING,SPHERICAL	10
	BEARING,TAPER ROLL	10,160,164,172,174,176
	BELT	54
	BELT,SEAT	50
	BELT,V	392
	BIT,SIDE	318
	BLADE,WIPER	351,362
	BLOCK	14,90,92,156,180,182 ...
	BLOCK ASSY	249,490
	BLOWER	398,400
	BLOWER ASSY	382,384,398,400
	BOARD ASSY,SCREEN	36,410,413
	BOARD,FLOOR	16
	BODY	14,69,110,119
	BOLT	6,8,10,14,44,48,50,52 ...
	BOLT KIT	286,288
	BOLT SET	103,104,107,108,147,160 ...
	BOLT(UNIFY)	90,115,124,127,131,496
	BOLT,FLANGED	2,6,8,10,12,14,16,18,20 ...
	BOLT,JOINT	14,700
	BOLT,SOCKET	14,88,136,140,150,156 ...
	BOLT,STUD	110,172,174,176,616
	BOLT,U	112,115,122,245,258,260 ...
	BOLT,W/WASHER	103,107,441,444,592
	BOMB,ETHER	124
	BOOT	22,24,26,28,54,74,198 ...
	BOSS	2,4,88,100,115,122,224 ...
	BOX	8,22,24,26,28,30,406 ...
	BOX ASSY	18,20,32,407,410,413 ...
	BOX,FUSE	64,66
	BRACKET	4,16,22,24,26,32,50,64 ...
	BRACKET ASSY	198,200,206,402
	BRACKET,LAMP	69,570
	BRAKE ASSY,PARKING	192,206
	BRAKE FLUID	332
	BREAKER,CIRCUIT	64,66
	BREATHER	168,170,172,174,176
	BREATHER ASSY	134,140
	BUCKET ASSY	318,320,322

	PART NAME	PAGE
B	BULB	69,74,351,359,546,570 ...
	BUMPER	54
	BUSHING	4,8,10,110,147,156,160 ...
	BUSHING,COLUMN	498
	BUSHING,ELASTIC	2,32,36,44,76,80,85,90 ...
	BUZZER	64,66,69
C	CAB ASSY	335,339,343
	CAB ASSY,ROPS	366,665,670
	CABLE	80,81,85,299,354,546
	CABLE ASSY	54,74,76,80,81,85,249 ...
	CAGE,NEEDLE	144,147,160,164
	CAM	464,720
	CAM ASSY	464,720
	CAMSHAFT	206,240,242,295,462,464 ...
	CAP	74,81,88,119,204,232 ...
	CAP ASSY	14,103,107,441,444,592
	CAP,ELASTIC	12,208,210,228,232,237 ...
	CAP,TERMINAL	81,85,544
	CAR RADIO	372
	CARTRIDGE ASSY	131,614
	CASE	74,172,174,190,202,280 ...
	CASE ASSY	295,394,396,398,400,462 ...
	CATCH	8,22,24,26,28,32,36,44 ...
	CATCH ASSY	44,228,232,236
	CATCH,DOOR	39,42,107
	CATCH,MAGNET	24,26,28
	CHASSIS ASSY,FRONT	2,565
	CHASSIS ASSY,REAR	8,562,631,685
	CLAMP	103,107,119,122,368,390 ...
	CLAMP,HOSE	74,76,80,85,112,124,224 ...
	CLAMP,MULTIPLE	245,258,447,702
	CLEANER ASSY,AIR	119
	CLIP	119,347,351,354,356,398 ...
	COIL	394,396
	COLLAR	198,200,206
	COLUMN ASSY	498
	COMPRESSOR ASSY	54,392
	CONDENSER	390,402
	CONDENSER ASSY	390
	CONNECTOR	81,85,236,402
	CONNECTOR ASSY	584,587
	CONTROL UNIT	398,400
	CONTROLLER ASSY,WR	64,66
	CONTROLLER UNIT	64,66,438,524,612
	CONVERTER	64,66,354
	COOLER	103,107,441,444,592
	COOLER ASSY,AIR	103,107
	COOLER,OIL	103,107,441,444,592
	CORE	103,441,444
	CORE ASSY	103,107,441,444,592
	COUPLER,CABLE	232,366,524,670
	COVER	2,10,14,22,24,26,28,30 ...
	COVER ASSY	14,39,42,44,119,160,164 ...
	COVER ASSY,ROD	222,310,312,731
	COVER,DRIVE	136
	COVER,HEAD	202
	COVER,PEDAL	198,200
	COVER,ROD	202
	CUP	347
	CUSHION ASSY,SEAT	52
	CYLINDER	290,347
	CYLINDER ASSY,OIL	192,202,216,222,310,312 ...
D	DAMPER	147
	DAMPER ASSY	375,379
	DECK	32,410,413,670
	DIFFERENTIAL ASSY	160,164,172,174,176
	DIODE	81,85
	DIODE ASSY	81,85
	DISC	240,242,295,462,718

silverhorn.co.uk

PARTS NAME INDEX

	PART NAME	PAGE
D	DISC,FRICTION	144,147,150,160,164,410 ...
	DISC,SEPARATION	144,147,150,160,164
	DOOR	379,394,396
	DOOR ASSY	339,343,347
	DRIVER,LOCK RING	178
	DRUM ASSY,CLUTCH	144
	DRUM,BRAKE	192
	DRUM,CLUTCH	144,150
	DUCT	119,366,375,379,386,520 ...
	DUCT ASSY	375,382,384,386
	DUCT,RADIATOR	103,107
E	EDGE	318,320,322,366,670
	EDGE,SIDE	318,320,322
	ELEMENT,FILTER	14,119,127,190,280,700
	ENGINE ASSY	90
	EVAPORATOR	394,396
	EXTENSION,AXLE HOU	161,165
F	FAN	100
	FAN ASSY	366,368,402,670,672
	FENDER	2,410,413
	FILLER ASSY,FUEL	12
	FILLER ASSY,OIL	700
	FILTER	12,14,140,202,204,368 ...
	FILTER ASSY	394,396
	FILTER ASSY,LINE	127,131,190,280,614
	FILTER ASSY,RETURN	14
	FITTING	194,315,458,713
	FITTING,BUSHING	140,280,490
	FITTING,CROSS	189
	FITTING,ELBOW	57,92,127,131,140,194 ...
	FITTING,NIPPLE	57,388,697
	FITTING,SOCKET	140,256,388
	FITTING,TEE	266,388
	FLANGE	100,127,131,136,140,152 ...
	FLANGE,SPLIT	127,131,245,254,258,260 ...
	FLARED FITTING	57,60,140,180,182,194 ...
	FLARED FITTING,CON	184
	FLARED FITTING,ELB	12,57,60,122,140,170 ...
	FLARED FITTING,TEE	189,194
	FLARED FITTING,UNI	60,184
	FLASHER UNIT	546
	FLOAT	12
	FRAME	44,69,103,107,418,441 ...
	FRAME ASSY	384
	FUSE	64,66,675
G	GASKET	12,14,62,69,104,108,112 ...
	GAUGE,FUEL LEVEL	74
	GAUGE,LEVEL	14,127,131,700
	GAUGE,OIL TEMPERAT	74
	GAUGE,WATER TEMPER	74
	GEAR	136,138,150,152,154,160 ...
	GEAR ASSY	144,147
	GEAR SET,SPIRAL BE	172,174,176
	GEAR,BEVEL	172,174,176
	GEAR,DRIVEN	110
	GEAR,INTERNAL	147,160,164
	GEAR,PLANET	144,147,160,164
	GEAR,PUMP BOSS	136
	GEAR,SUN	147,160,164
	GLASS,WINDOW	339,343,347,665
	GRILLE	339,343,372,562
	GROMMET	85,180,206,272,275,282 ...
	GUARD,FAN	100
	GUARD,LAMP	69,570
	GUARD,RADIATOR	42,418,562
	GUIDE	136
H	HANDLE	347
	HANDLE,DOOR	347
	HANDRAIL	34,88,228,232,236,406

	PART NAME	PAGE
H	HANGER	339,343
	HARNESS	396,402
	HEADREST	52
	HINGE	8,22,32,36,39,42,44,104 ...
	HOLDER	74,80,85,198,200,236 ...
	HOLDER,HOSE	80,92,112,124,127,131 ...
	HOLDER,PIPE	12,57,60,80,85,92,112 ...
	HOLDER,SPRING	12,80,85,224,226
	HORN	64,66
	HORN ASSY	494
	HOSE	127,131,379,394,396
	HOSE,AIR	115,119,272,275,366,375 ...
	HOSE,COOLER	388,390
	HOSE,HEAT RESISTIN	12,92,112,127,131,252 ...
	HOSE,HIGH PRESSURE	57,103,107,124,127,131 ...
	HOSE,WATER	112,388
	HOUSING	134,140,147,154,160,164 ...
	HOUSING ASSY	144,172,174,176
	HOUSING ASSY,AXLE	160,164
	HUB	136,144,150
	HUB,INTERNAL GEAR	160,164
	HUB,WHEEL	160,164
I	IMPELLER ASSY,TURB	136
	IMPELLER,PUMP	136
	INDICATOR	127
	INDICATOR,FILTER	131,614
	INSERT	502
	INSULATOR	396,572,575,579,582,594 ...
J	JOINT	478
	JOINT ASSY,UNIVERS	498
	JOINT,BALL	208,210,452,706
	JOINT,YOKE	192
K	KEY	39,42,74,522
	KEY,WOODRUFF	432,606
	KNOB	54,74,189,208,210,212 ...
L	LABEL	28,325,394,396,413,438 ...
	LABEL KIT	325,454,708
	LABEL,LUBRICATION	325
	LABEL,MANUAL	466,468,470
	LADDER	34
	LAMP	351
	LAMP,COMBINATION	69,546
	LAMP,HEAD	69,359,570,734
	LATCH ASSY	32,103,107,398
	LENS	69,359,546,734
	LEVER	26,28,208,210,228,232 ...
	LEVER ASSY	4,680
	LEVER ASSY,SHIFT	496
	LINK,BUCKET	4,680
	LIQUID,LOCKING	332
	LOCK	330
	LOCK ASSY,DOOR	347
	LOUVER	386,398,400
M	MAGNET	140
	MAT,FLOOR	335
	METAL,SHELL	147
	METER,HOUR	74
	MIRROR	359,662,734
	MIRROR,ROOM	339,343
	MODIFICATION	406
	MOTOR ASSY,WIPER	351,362
	MOTOR,OIL	100,110,432,434,436,606 ...
	MUFFLER	122
N	NIPPLE	190,280
	NIPPLE,GREASE	6,57,60,94,96,98,172 ...
	NIPPLE,HOSE	92,112,127,131,184,256 ...
	NOZZLE	351,362
	NOZZLE ASSY,DEFROS	375
	NUT	8,22,24,26,28,32,36,44 ...

silverthorn.co.uk

PARTS NAME INDEX

	PART NAME	PAGE
N	NUT,AXLE	160,164
	NUT,CAP	119,198,200,208,506
	NUT,FLANGED	2,12,14,16,28,32,39,44 ...
	NUT,NYLON	379,390,398,400
	NUT,PISTON	222,310,312,422,731
	NUT,SELF-LOCKING	36,50,90,100,112,115 ...
	NUT,U	34,160,164,202
	NUT,WING	119
O	ORBITROL(TM) ASSY	496,500,502
	ORIFICE	204,398,400,510
P	PACKING	14,103,104,107,108,168 ...
	PACKING,U	222,303,310,312,422,517 ...
	PAINT	332
	PANEL	28,347
	PANEL ASSY,CONTROL	382,384
	PANEL ASSY,INSTRUM	74
	PEDAL	198,200
	PEDAL ASSY,ACCEL	214
	PIN	6,8,198,200,208,210,216 ...
	PIN KIT	214
	PIN,ANCHOR	206
	PIN,CENTER	10
	PIN,HEAD	24,26,28,168,170,192 ...
	PIN,KNOCK	90
	PIN,PLANET	144,147,160,164
	PIN,SNAP	8,198,200,406,410,413
	PIN,SPLIT	8,32,39,44,192,208,228 ...
	PIN,SPRING	8,134,136,142,144,147 ...
	PIN,STRAIGHT	136,144,147,150,154,165 ...
	PIN,TAPER	100,254
	PIPE	180,192,208,210,269,278 ...
	PIPE ASSY,FLARED	12,57,60,122,140,180 ...
	PIPE,AIR	115,119
	PIPE,EXHAUST	122
	PIPE,OIL	127,131,245,252,254,256 ...
	PIPE,WATER	112,388
	PIPING KIT	54
	PISTON	144,147,150,160,164,198 ...
	PLATE	2,4,6,8,10,12,14,16,18 ...
	PLATE ASSY	394,396
	PLATE,ELASTIC	347
	PLATE,END	219,292,500,502
	PLATE,LOCK	136,158,172,174,176,206
	PLATE,MANUAL	14
	PLATE,NAME	290,484
	PLATE,VALVE	299
	PLATE,WEAR	110,318,320,322,500,502
	PLUG	28,74,90,92,103,112,134 ...
	PLUG,ELASTIC	85,232,236,335,524
	PLUG,MAGNET	12,14,160,164
	PLUNGER	134,204,236
	POPPET	219,292,460,517,716
	POWDER,CLEANING	332
	PRECLEANER	119,368,597,672
	PROPELLER SHAFT AS	90,94
	PROPELLER SHAFT AS	90,96,192
	PROPELLER SHAFT AS	90,98
	PROTECTOR	290,484
	PUMP ASSY	362
	PUMP ASSY,OIL	286,288
	PUMP KIT	286,288
	PUMP,GEAR	127,131
	PUMP,OIL	286,488
R	RACE	502
	RADIATOR ASSY	100,103,107,441,444,590 ...
	RAIL	347
	REGULATOR	347
	RELAY	64,66,382,384,396,486 ...
	RELAY ASSY	351

	PART NAME	PAGE
R	RELAY,BATTERY	64,66
	REPAIR KIT	156,158,488
	RESISTER	81
	RESISTER,CORROSION	100
	RESISTOR	675
	RETAINER	198,200,236,500
	RETAINER,BEARING	138,150
	RETAINER,BRAKE	160,164
	RETAINER,OIL SEAL	172,174
	RETAINER,SEAL	110,140,142,154,500,502
	RETAINER,SPRING	144,150,219,292,460,510 ...
	RIB	103,107,441,444,592
	RIM	178
	RING	6,10,36,42,44,122,147 ...
	RING,BACK-UP	219,222,292,310,312,422 ...
	RING,BUFFER	222,310,312,422,731
	RING,D	160,164
	RING,FELT	206
	RING,LOCK	178
	RING,O	6,14,62,92,104,108,110 ...
	RING,PISTON	136,140,142,150,158
	RING,RETAINER	110,500,502
	RING,SCRAPER	222,312,422
	RING,SIDE	178
	RING,SLIPPER	222
	RING,SNAP	12,14,94,136,138,142 ...
	RING,SQUARE	222
	RING,STOP	222,310,312,422,731
	RING,U	144,147,150,158
	RING,WEAR	160,164,168,170,172,174 ...
	RIVET	339,343,347,394,396,398 ...
	ROD	72,88,198,200,204,208 ...
	ROD,PISTON	202,222,310,312,422,731
	ROD,PUSH	240,242,295,299,462,464 ...
	ROLLER ASSY	198,200,214
	ROOF	39,406
	ROOF ASSY	339,343
	ROPE,WIRE	559
	ROPS	366,370,734
	ROTOR ASSY	500,502
	RUBBER	28,368,470,672
	RUBBER,CUSHION	16,39,228,236,275
S	SASH	347
	SCRAPER	299
	SCREW	8,12,18,20,22,24,26,28 ...
	SCREW,BLEED	160,164,194
	SCREW,SET	74,202,299,458,464,534 ...
	SCREW,TAPPING	22,24,26,28,30,69,228 ...
	SEAL	110,208,210,240,242,290 ...
	SEAL KIT	110,189,190,219,222,286 ...
	SEAL SET	202,310,312,422,731
	SEAL,DUST	4,6,10,96,222,303,310 ...
	SEAL,FLOATING	160,164
	SEAL,GREASE	154,158
	SEAL,OIL	136,142,154,158,172,174 ...
	SEALANT	332
	SEAT	198,200
	SEAT ASSY	50,52
	SEAT,SPRING	202,204,240,242,295,299 ...
	SENSOR	214
	SENSOR,OIL LEVEL	62
	SENSOR,PRESSURE	119
	SENSOR,TEMPERATURE	62,394
	SENSOR,WATER LEVEL	394
	SHAFT	138,142,168,170,208,228 ...
	SHAFT ASSY	154,496,498
	SHAFT,AXLE	160,164
	SHAFT,DRIVE	110
	SHAFT,GEAR	147

silverhorn.co.uk

PARTS NAME INDEX

	PART NAME	PAGE
S	SHAFT,PROPELLER	94,96,98,192
	SHAFT,STATOR	136
	SHAFT,TURBINE	136
	SHEET,CAB	347
	SHEET,RUBBER	8,34,44,72,80,103,107 ...
	SHIM	6,10,103,107,136,172 ...
	SHOCK ABSORBER SET	54
	SHOE,BRAKE	206
	SLEEVE	14,85,90,134,140,142 ...
	SLEEVE ASSY	119
	SOCKET ASSY	372
	SOLENOID	156,189,190,295,299,306 ...
	SPACER	8,32,115,136,138,206 ...
	SPEAKER	354
	SPIDER	144,147,172,174,176
	SPIDER ASSY,JOURNA	94,96,98,192
	SPONGE	18,20,24,26,28,103,107 ...
	SPOOL	204,219,502,510,517
	SPOOL ASSY	156,219,510
	SPRING	14,134,144,147,150,156 ...
	SPRING KIT	54,500
	SPRING,GAS	228,232,236,335,343,496
	STAND ASSY	30,504
	STAND,SEAT	18,20,438,612
	STATOR	136
	STAY	359,662,734
	STAY ASSY	44
	STEP	34,406
	STEP ASSY	34,406
	STOPPER	44,198,200,228,232,236 ...
	STRIP, SEAL	8,32,39,46,64,66,103 ...
	SUPPORT ASSY	103,107,441,444,592
	SUPPORT,AXLE	168,170
	SUSPENSION ASSY	52,54
	SWITCH	74,228,232,236,396,438 ...
	SWITCH ASSY	74,228,232,236,534,675
	SWITCH ASSY,STARTE	74,522
	SWITCH,BATTERY	544
	SWITCH,BUTTON	584,587
	SWITCH,COMBINATION	74
	SWITCH,FLASHER	496
	SWITCH,LEVEL	12
	SWITCH,MAGNET	64,66
	SWITCH,PRESSURE	189,194,394,396,490
	SWITCH,PROXIMITY	62,140,224,226
	SWITCH,PUSH	74,534
	SWITCH,PUSH-PULL	74,522
	SWITCH,TEMPERATURE	62
	SWITCH,WIPER	372
T	TACHOMETER	74
	TANK	103,107,390,441,444,592
	TANK,FUEL	12
	TANK,OIL	14
	TAPE,INSULATION	575,579,582,662,678
	TERMINAL	81,85,232,236,366,402 ...
	TIRE ASSY,TUBELESS	178
	TORQUE CONVERTER	90,134
	TRANSMISSION ASSY	90,140
	TRQ CONV SUB ASSY	136
	TRUNNION	176
	TUBE	14,394,396,700
	TUBE KIT	394,396
	TUBE,CONDUIT	356
	TUBE,CYLINDER	202,222,310,312,731
	TUBE,SPIRAL	76
	TUBE,VINYL	22,24,26,28,103,107,122 ...
V	VALVE	54,178,212,249,303,306 ...
	VALVE ASSY	14,189,190,198,200,263 ...
	VALVE ASSY,BRAKE	194,198,200
V	VALVE ASSY,BREATHE	14
	VALVE ASSY,CHECK	256
	VALVE ASSY,MULTIPL	292,447,460,702,716
	VALVE ASSY,STEERIN	219,258,508,510
	VALVE KIT	156
	VALVE UNIT	156,178
	VALVE,CHECK	182,189,196,308,351,434 ...
	VALVE,PILOT	204,208,210,212,228,232 ...
	VALVE,REDUCING	156,189,190,280
	VALVE,RELIEF	14,219,292,306,308,436 ...
	VALVE,SOLENOID	156,249,531
	VALVE,UNLOADER	184,204
	VALVE,VACUATOR	119
	VISOR,SUN	339,343
W	WASHER	22,24,26,28,90,103,107 ...
	WASHER,AXLE	160,164
	WASHER,CONICAL SPR	228,233,237
	WASHER,LOCK	206,394,396
	WASHER,PLANE	2,6,8,10,12,16,22,24,26 ...
	WASHER,SEAL	12,14,62,131,160,164 ...
	WASHER,SPRING	6,8,10,12,24,26,28,32 ...
	WASHER,TOOTH	339,343,347,394,396,498 ...
	WEIGHT	8,685
	WHEEL ASSY,STEERIN	494
	WHEEL,DISC	178
	WHEEL,STEERING	494
	WINDOW WASHER ASSY	362
S	YOKE,FLANGE	142,154,172,174,176,192

silvermorn.co.uk

FRONT CHASSIS GROUP

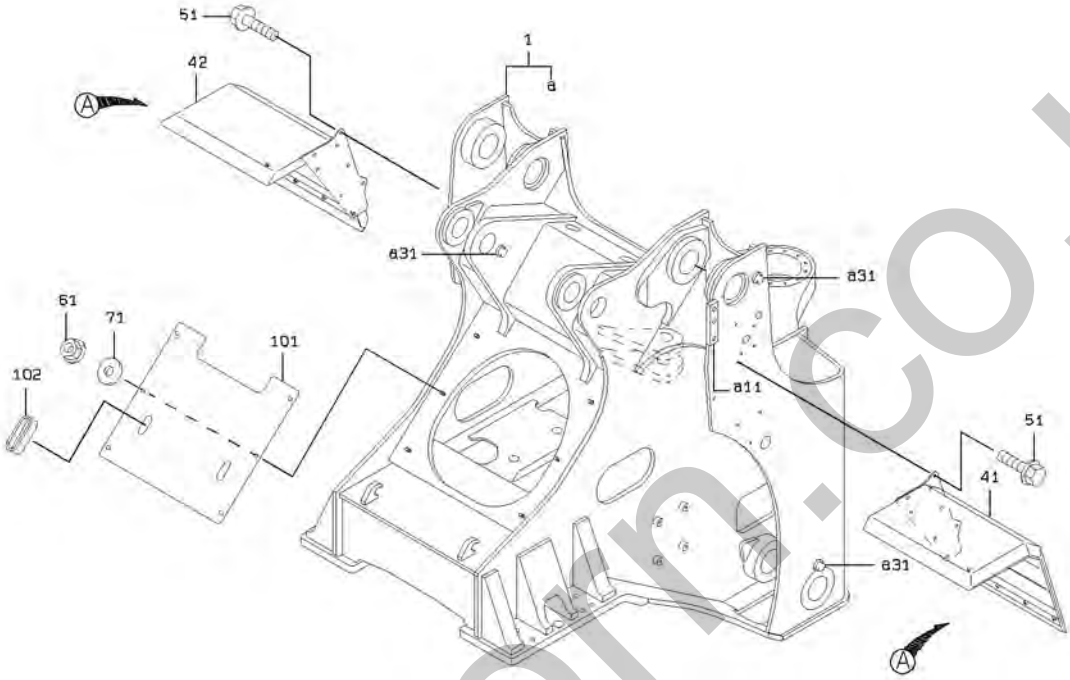

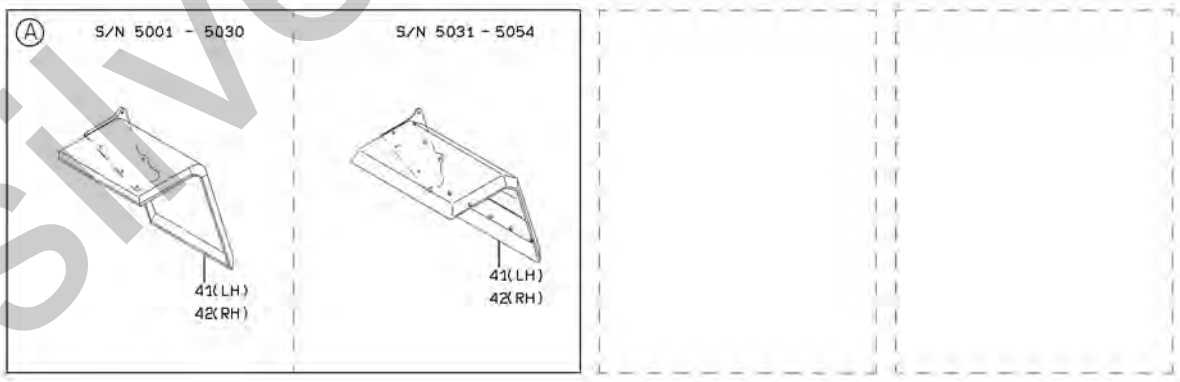

silverhorn.co.uk

FRONT CHASSIS GROUP

SYM-BOL	PART NUMBER	PART NAME	UNIT Q,TY	SERIAL (A) - (B)	REMARKS N P D	(A)	(B)	(C)	(D)	REMARK
1A	34256-23100	CHASSIS ASSY,FRONT	1	5001 - 5027		Y01				34258-22410
1B	34256-23430	CHASSIS ASSY,FRONT	1	5028 -	B	Y01				
11A	41611-25170	PLATE	1	5001 -		01				WELDING
31A	41621-20340	BOSS	6	5001 -		01				WELDING
41A	40410-24810	FENDER	1	5001 - 5030						FR LH
41B	40410-25740	FENDER	1	5031 - 5054	B					FR LH
41C	40410-28650	FENDER	1	5055 -	B					FR LH
42A	40410-24820	FENDER	1	5001 - 5030						FR RH
42B	40410-25750	FENDER	1	5031 - 5054	B					FR RH
42C	40410-28660	FENDER	1	5055 -	B					FR RH
51A	61802-12020	BOLT,FLANGED	10	5001 -						
61A	62480-21101	NUT,FLANGED	6	5001 -						
71A	62710-18101	WASHER,PLANE	6	5001 -						
101A	31205-39000	COVER	1	5001 -						
102A	65801-63032	BUSHING,ELASTIC	2	5001 -						

silverhorn.co.uk

LIFT ARM GROUP

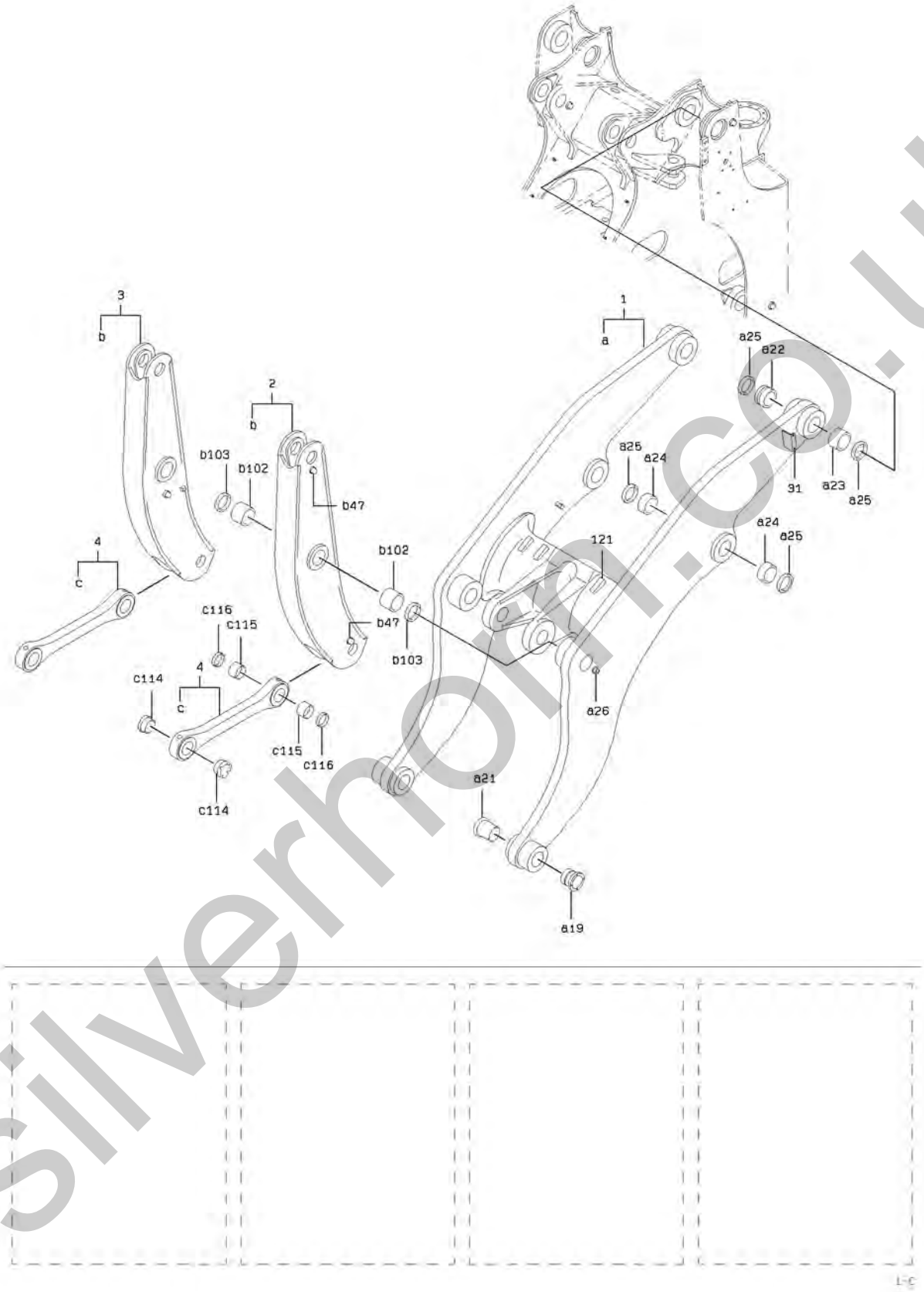

silverhorn.co.uk

LIFT ARM GROUP

SYM-BOL	PART NUMBER	PART NAME	UNIT Q,TY	SERIAL (A) - (B)	REMARKS N P D	(A)	(B)	(C)	(D)	REMARK
1A	30040-22890	ARM ASSY,LIFT	1	5001 -		Y01				
2A	45610-22350	LEVER ASSY	1	5001 -			Y02			FR (LH)
3A	45610-22370	LEVER ASSY	1	5001 -			Y02			FR (RH)
4A	45125-21170	LINK,BUCKET	2	5001 -				Y03		
19A	40840-25440	BUSHING	2	5001 -		01				
21A	40840-25450	BUSHING	2	5001 -		01				
22A	40840-20800	BUSHING	2	5001 -		01				
23A	63422-48780	BUSHING	2	5001 -		01				
24A	63422-48540	BUSHING	4	5001 -		01				
25A	65051-02510	SEAL,DUST	8	5001 -		01				
26A	41621-20340	BOSS	2	5001 -		01				WELDING
31A	41604-21170	BRACKET	1	5001 -						WELDING
47A	41621-20340	BOSS	2	5001 -			02			WELDING
102A	63422-48980	BUSHING	2	5001 -			02			
103A	65051-02510	SEAL,DUST	2	5001 -			02			
114A	40840-20850	BUSHING	2	5001 -				03		
115A	63422-45490	BUSHING	2	5001 -				03		
116A	65051-01906	SEAL,DUST	2	5001 -				03		
121A	41600-25840	PLATE	4	5001 -						WELDING

silverhorn.co.uk

PIN MOUNT

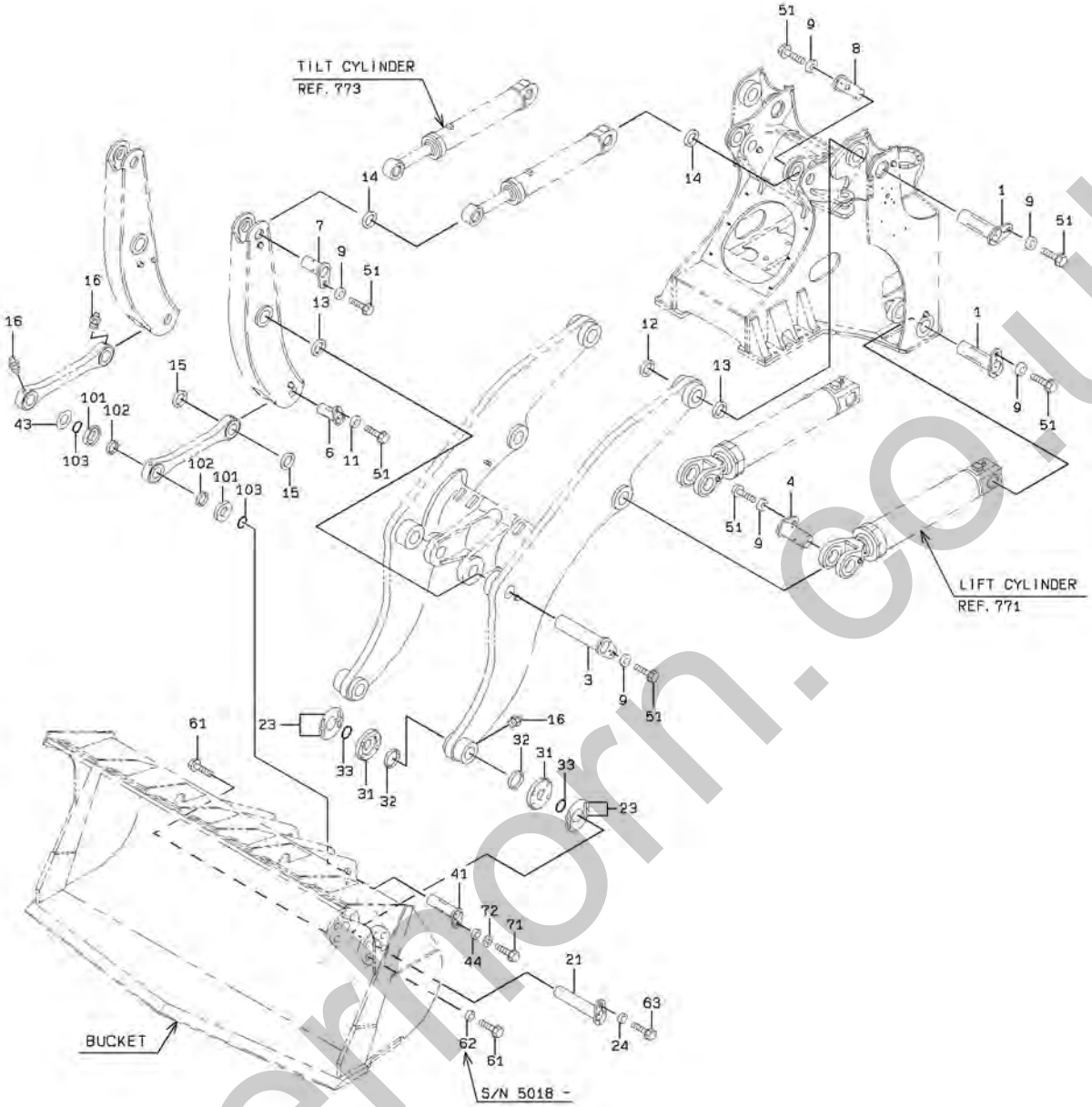

silverthorn.co.uk

PIN MOUNT

SYM-BOL	PART NUMBER	PART NAME	UNIT Q,TY	SERIAL (A) - (B)	REMARKS N P D	(A) (B)	(C) (D)	REMARK
1A	40000-26890	PIN	4	5001 -				D=120X403L
3A	40000-26900	PIN	2	5001 -				D=120X523L
4A	40000-38740	PIN	2	5001 -				D=120X283L
6A	40000-38760	PIN	2	5001 -				D=90X243L
7A	40000-36510	PIN	2	5001 -				D=100X232L
8A	40000-36520	PIN	2	5001 -				D=100X252L
9A	46011-20170	WASHER,PLANE	12	5001 -				
11A	46011-20950	WASHER,PLANE	2	5001 -				
12A	41621-24820	PLATE	2	5001 -				T=4.5
13A	41621-20250	PLATE	8	5001 -				
14A	41621-20230	PLATE	10	5001 -				
15A	41621-20200	PLATE	4	5001 -				T=1
16A	75011-25400	NIPPLE,GREASE	6	5001 -				
21A	40000-38730	PIN	2	5001 -				D=100X493L
23A	34200-21090	SHIM	A/R	5001 -				T=0.5&1.0
24A	46011-20950	WASHER,PLANE	2	5001 -				
31A	45200-25600	RING	4	5001 -				
32A	65051-02810	SEAL,DUST	4	5001 -				
33A	65210-12100	RING,O	4	5001 -				
41A	40000-26870	PIN	2	5001 -				D=90X308L
43A	34200-21120	SHIM	A/R	5001 -				T=0.5&1.0
44A	46011-20950	WASHER,PLANE	2	5001 -				
51A	61802-20032	BOLT,FLANGED	14	5001 -				61802-24095
61A	61802-24095	BOLT,FLANGED	16	5001 - 5017				61802-24080
61B	61802-24085	BOLT,FLANGED	16	5018 -	B			
62A	62710-18241	WASHER,PLANE	16	5018 -				
63A	61802-20032	BOLT,FLANGED	2	5001 -				
71A	61033-20035	BOLT	2	5001 -				
72A	62721-20100	WASHER,SPRING	2	5001 -				
101A	45200-23670	RING	4	5001 -				
102A	65051-02510	SEAL,DUST	4	5001 -				
103A	65210-12090	RING,O	4	5001 -				

silverhorn.co.uk

REAR CHASSIS GROUP

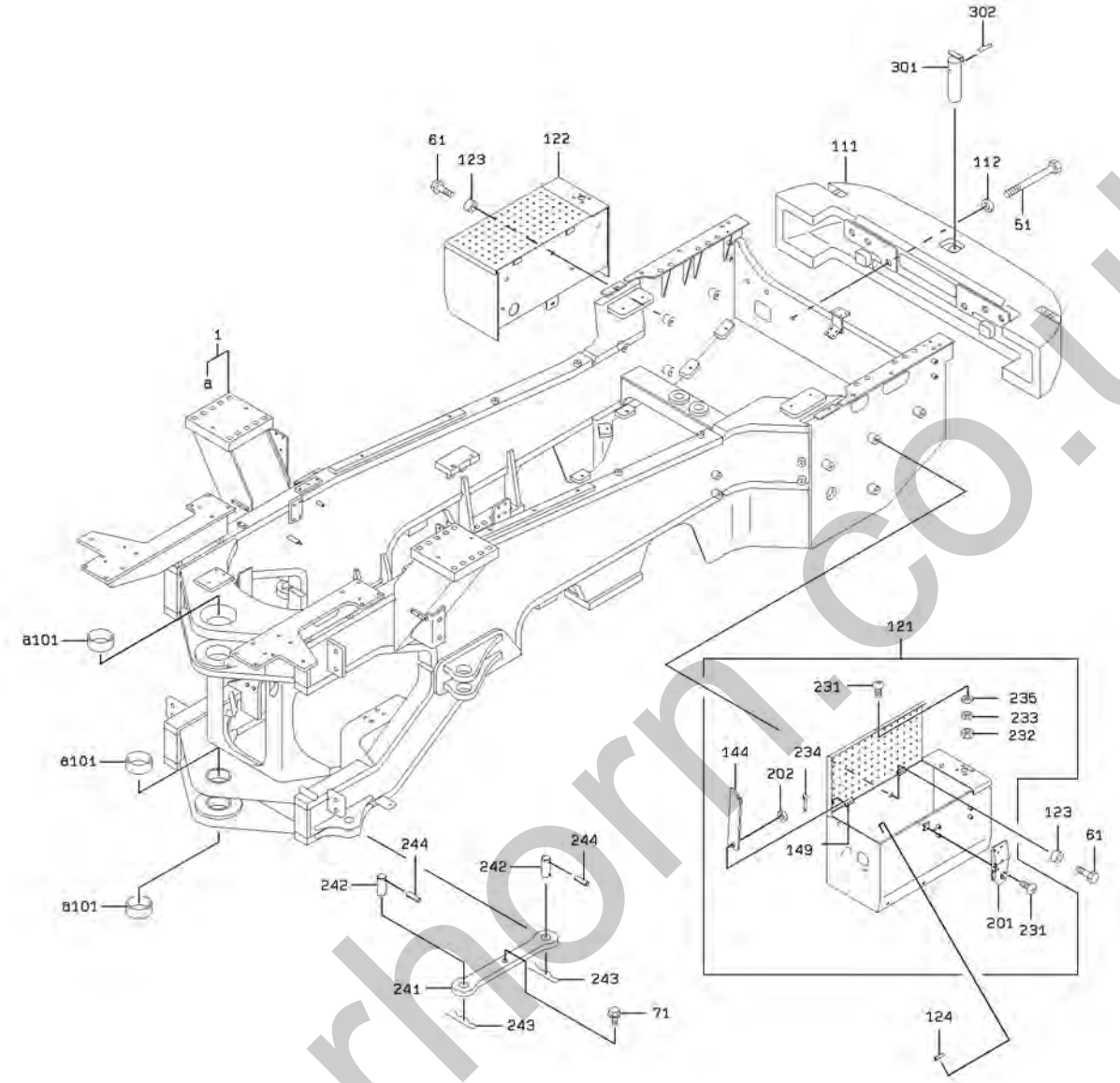

silverhorn.co.uk

REAR CHASSIS GROUP

SYM-BOL	PART NUMBER	PART NAME	UNIT Q,TY	SERIAL (A) - (B)	REMARKS N P D	(A)	(B)	(C)	(D)	REMARK
1A	34257-25740	CHASSIS ASSY,REAR	1	5001 - 5030		Y01				34257-25700
1B	34257-26380	CHASSIS ASSY,REAR	1	5031 - 5034	B	Y01				
1C	34257-26500	CHASSIS ASSY,REAR	1	5035 -	B	Y01				
51A	61033-30350	BOLT	6	5001 -						
61A	61802-16040	BOLT,FLANGED	8	5001 -						
71A	61802-10050	BOLT,FLANGED	1	5001 -						
101A	40840-20690	BUSHING	3	5001 -		01				
111A	30780-23180-7	WEIGHT	1	5001 -						
112A	46011-21990	WASHER,PLANE	6	5001 -						
121A	43800-26400	BOX	1	5001 -			Y02			FR (LH)
122A	43800-26410	BOX	1	5001 -			Y02			FR (RH)
123A	35700-20660	SPACER	8	5001 -						
124A	34041-21650	STRIP, SEAL	4	5001 - 5030						L=30
124B	33713-27920	SHEET,RUBBER	4	5031 -	B					
144A	41605-57120	PLATE	1	5001 -			02			
149A	39890-70010	HINGE	2	5001 -			02			WELDING
201A	32150-60020	CATCH	1	5001 - 5060			02			
201B	32150-60050	CATCH	1	5061 -	C		02			
202A	46011-20190	WASHER,PLANE	1	5001 -			02			
231A	62256-51412	SCREW	6	5001 -			02			
232A	62401-81041	NUT	3	5001 -			02			
233A	62721-04100	WASHER,SPRING	3	5001 -			02			
234A	63002-03020	PIN,SPLIT	1	5001 -			02			
235A	62701-40041	WASHER,PLANE	3	5001 -			02			
241A	41600-36100	PLATE	1	5001 -						
242A	40000-35110	PIN	2	5001 -						
243A	40045-20220	PIN,SNAP	2	5001 -						
244A	40033-20100	PIN,SPRING	2	5001 -						
301A	40000-38910	PIN	1	5001 -						
302A	40045-20180	PIN,SNAP	1	5001 -						

silverhorn.co.uk

CENTER PIN GROUP

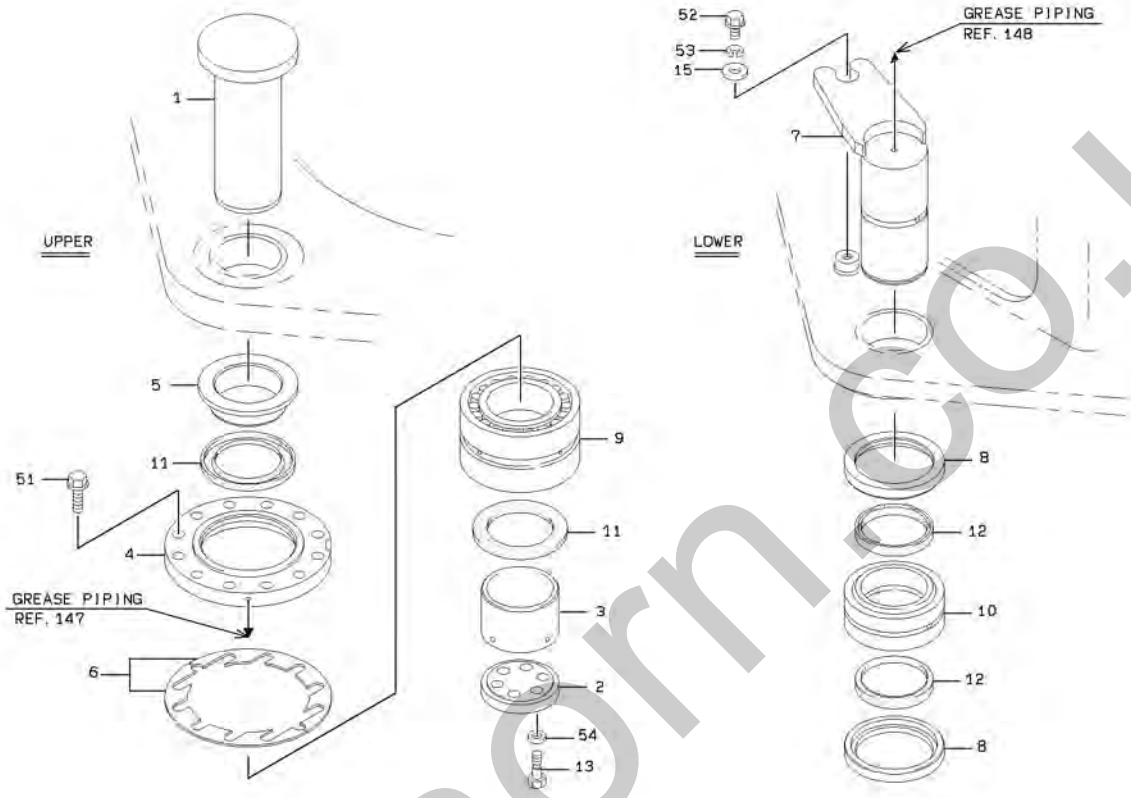

silverhorn.co.uk

CENTER PIN GROUP

SYM-BOL	PART NUMBER	PART NAME	UNIT Q,TY	SERIAL (A) - (B)	REMARKS N P D	(A) (B)	(C) (D)	REMARK
1A	40034-20180	PIN,CENTER	1	5001 -				FR UPPER
2A	41621-20920	PLATE	1	5001 -				
3A	40840-20700	BUSHING	1	5001 -				
4A	31205-20600	COVER	1	5001 -				
5A	45200-20730	RING	1	5001 -				
6A	34200-20960	SHIM	A/R	5001 -				
7A	40034-20190	PIN,CENTER	1	5001 -				FR LOWER
8A	45200-20740	RING	2	5001 -				
9A	42004-60060	BEARING,TAPER ROLL	1	5001 -				
10A	42017-60040	BEARING,SPHERICAL	1	5001 -				
11A	65051-02810	SEAL,DUST	2	5001 -				
12A	65051-02510	SEAL,DUST	2	5001 -				
13A	43900-23980	BOLT	6	5001 -				
15A	46011-20170	WASHER,PLANE	1	5001 -				
51A	61802-20045	BOLT,FLANGED	12	5001 -				
52A	61802-20032	BOLT,FLANGED	1	5001 -				
53A	62721-20100	WASHER,SPRING	1	5001 -				
54A	62710-18201	WASHER,PLANE	6	5001 -				

silverhorn.co.uk

FUEL TANK GROUP

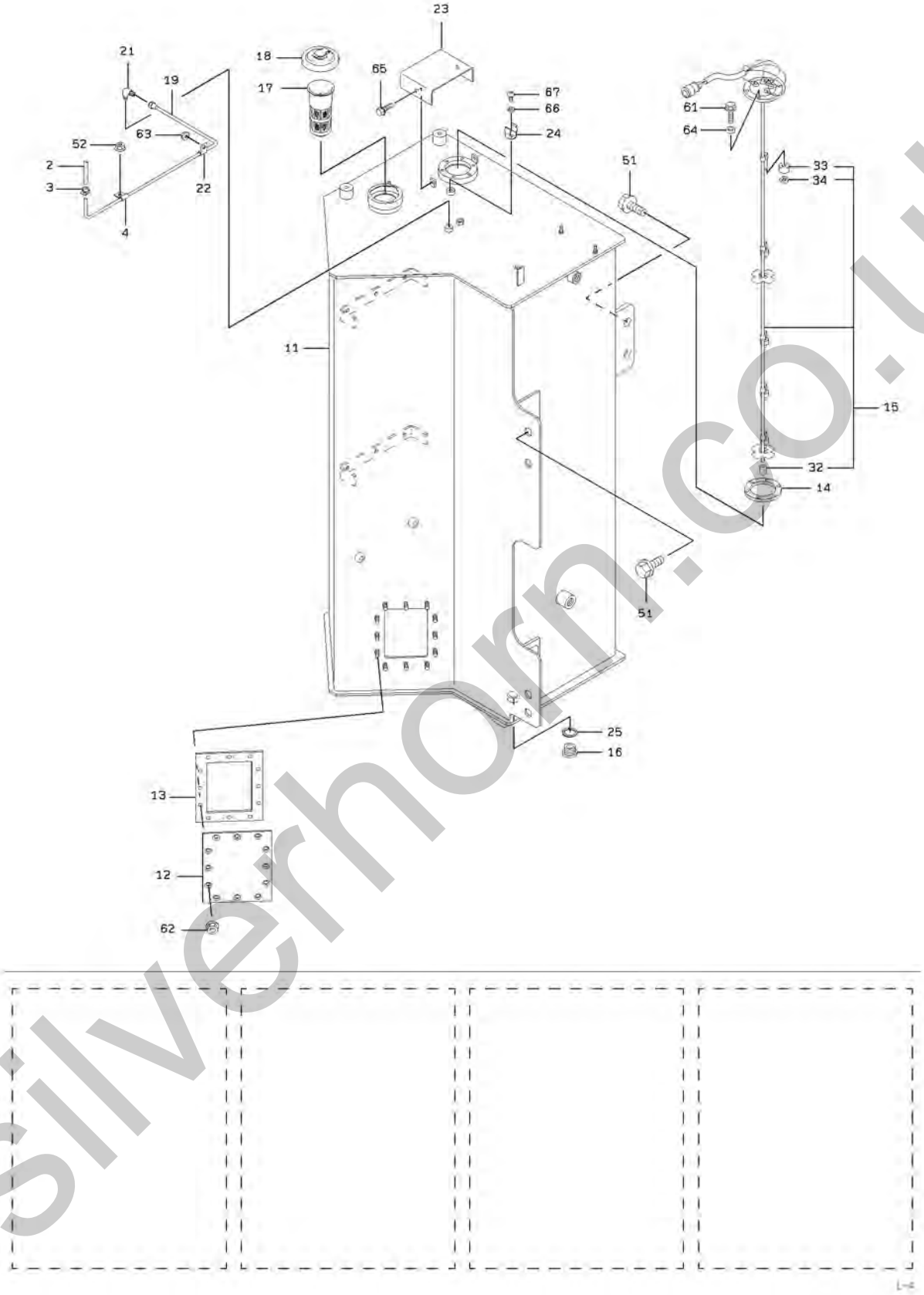

silverhorn.co.uk

FUEL TANK GROUP

SYM-BOL	PART NUMBER	PART NAME	UNIT Q,TY	SERIAL (A) - (B)	REMARKS N P D	(A)	(B)	(C)	(D)	REMARK
2A	67040-06000	HOSE,HEAT RESISTIN	1 M	5001 -						L=500
3A	69002-02300-7	BAND,HOSE	1	5001 -						
4A	72001-10600	HOLDER,PIPE	1	5001 -						
11A	36233-23200	TANK,FUEL	1	5001 - 5030						36233-23190
11B	36233-24020	TANK,FUEL	1	5031 -	C					
12A	41611-20140	PLATE	1	5001 -						
13A	31990-20020	GASKET	1	5001 -						
14A	31990-20320	GASKET	1	5001 -						
15A	35065-60060	SWITCH,LEVEL	1	5001 -		Y01				
16A	41535-20010	PLUG,MAGNET	1	5001 -						
17A	40330-60200	FILTER	1	5001 - 5052						
17B	40330-60400	FILTER	1	5053 -	C					
18A	40314-60060	FILLER ASSY,FUEL	1	5001 -						
19A	38705-49560	PIPE ASSY,FLARED	1	5001 -						
21A	69100-20600	FLARED FITTING,ELB	1	5001 -						
22A	72001-10600	HOLDER,PIPE	1	5001 -						D=6.3
23A	41605-43690	PLATE	1	5001 -						
24A	43571-20160	HOLDER,SPRING	1	5001 -						
25A	88111-12490	WASHER,SEAL	1	5001 -						
32A	32224-20040	CAP,ELASTIC	1	5001 -		01				
33A	40740-20010	FLOAT	5	5001 -		01				
34A	45311-20070	RING,SNAP	5	5001 -		01				
51A	61802-24050	BOLT,FLANGED	6	5001 -						
52A	62480-21081	NUT,FLANGED	1	5001 -						
61A	61802-08012	BOLT,FLANGED	6	5001 -						
62A	62480-21101	NUT,FLANGED	12	5001 -						
63A	62480-21081	NUT,FLANGED	1	5001 -						
64A	62701-40081	WASHER,PLANE	6	5001 -						
65A	61802-08020	BOLT,FLANGED	2	5001 -						
66A	62721-06100	WASHER,SPRING	1	5001 -						
67A	62256-51608	SCREW	1	5001 -						

silverhorn.co.uk

OIL TANK GROUP

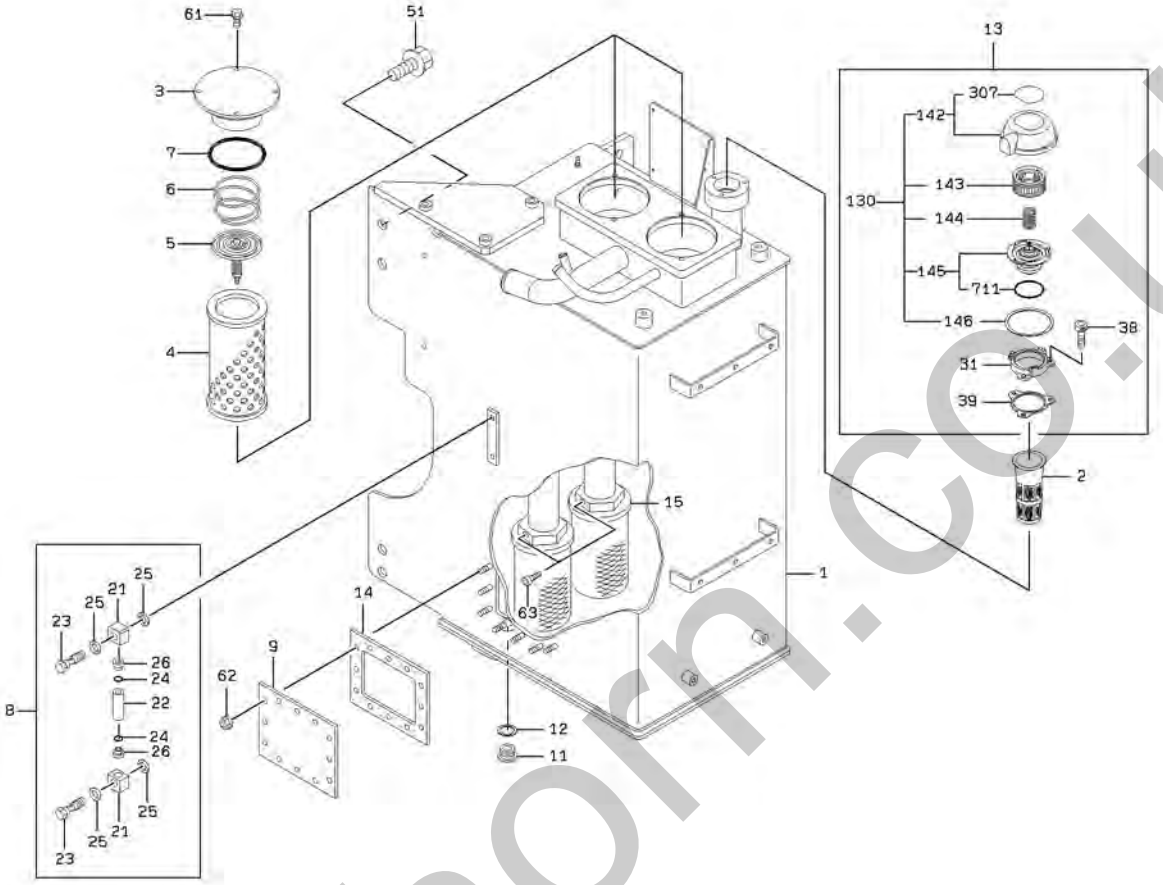

silverhorn.co.uk

OIL TANK GROUP

SYM-BOL	PART NUMBER	PART NAME	UNIT Q,TY	SERIAL (A) - (B)	REMARKS N P D	(A)	(B)	(C)	(D)	REMARK
1A	36229-22820	TANK,OIL	1	5001 - 5005						
1B	36229-23130	TANK,OIL	1	5006 -	B					
2A	40330-60170	FILTER	1	5001 -						
3A	31210-20990	COVER	2	5001 -						
4A	40338-20020	FILTER ASSY,RETURN	2	5001 -						
5A	38565-20040	VALVE,RELIEF	2	5001 -						
6A	35600-20120	SPRING	2	5001 -						
7A	65210-22165	RING,O	2	5001 -						
8A	33258-20010	GAUGE,LEVEL	1	5001 -		Y01				
9A	41611-22180	PLATE	1	5001 -						
11A	41535-20010	PLUG,MAGNET	1	5001 -						
12A	88111-12490	WASHER,SEAL	1	5001 -						
13A	38530-60080	VALVE ASSY,BREATHE	1	5001 -			Y02			
14A	31990-20030	GASKET	1	5001 -						
15A	40335-60020	FILTER	2	5001 -						
21A	41410-90010	BLOCK	2	5001 -		01				
22A	36700-90010	TUBE	1	5001 -		01				
23A	43953-90010	BOLT,JOINT	2	5001 -		01				
24A	47131-90010	RING,O	2	5001 -		01				
25A	88111-21000	WASHER,SEAL	4	5001 -		01				
26A	35750-90010	SLEEVE	2	5001 -		01				
31A	43890-70380	BODY	1	5001 -			02			
38A	61101-08016	BOLT,SOCKET	3	5001 -			02			
39A	39600-71670	PACKING	1	5001 -			02			
51A	61802-24050	BOLT,FLANGED	6	5001 -						
61A	61802-12020	BOLT,FLANGED	4	5001 -						
62A	62480-21101	NUT,FLANGED	18	5001 -						
63A	61131-05020	BOLT,SOCKET	2	5001 - 5025						
63B	43900-25040	BOLT	2	5026 -	B					
130A	32211-70330	CAP ASSY	1	5001 -			02	Y03		
142A	31231-70170	COVER ASSY	1	5001 -				03	Y04	
143A	30981-70330	ELEMENT,FILTER	1	5001 -				03		
144A	35600-76030	SPRING	1	5001 -				03		
145A	38511-71080	VALVE ASSY	1	5001 -		Y05		03		
146A	45311-70800	RING,SNAP	1	5001 -				03		
307A	41677-70010	PLATE,MANUAL	1	5001 -					04	
711A	47131-75740	RING,O	1	5001 -		05				

silverhorn.co.uk

FLOOR BOARD GROUP

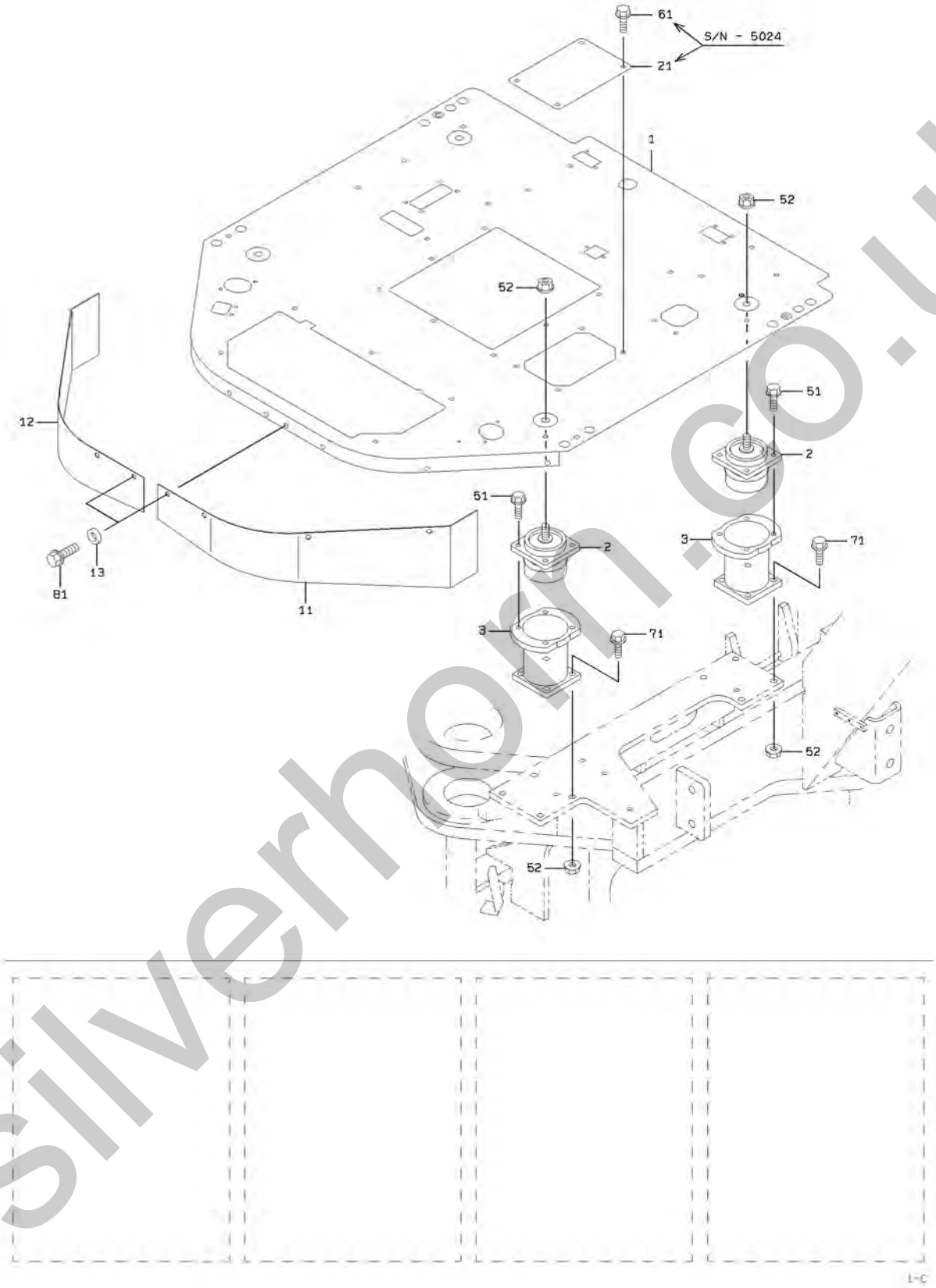

silverhorn.co.uk

FLOOR BOARD GROUP

SYM-BOL	PART NUMBER	PART NAME	UNIT Q,TY	SERIAL (A) - (B)	REMARKS N P D	(A) (B)	(C) (D)	REMARK
1A	43718-21890	BOARD,FLOOR	1	5001 - 5023				
1B	43718-22050	BOARD,FLOOR	1	5024 - 5030	B			
1C	43718-22170	BOARD,FLOOR	1	5031 -	B			
2A	44822-60140	RUBBER,CUSHION	4	5001 -				
3A	40901-58890	BRACKET	4	5001 -				
11A	41641-40500	PLATE	1	5001 - 5108				FR LH
11B	41641-51690	PLATE	1	5109 -	C			FR LH
12A	41641-40510	PLATE	1	5001 - 5108				FR RH
12B	41641-51750	PLATE	1	5109 -	C			FR RH
13A	46011-20180	WASHER,PLANE	8	5001 -				
21A	41607-51020	PLATE	1	5024 -				
51A	61802-10020	BOLT,FLANGED	16	5001 -				
52A	62480-21161	NUT,FLANGED	20	5001 -				
61A	61802-10020	BOLT,FLANGED	4	5024 -				
71A	61802-16055	BOLT,FLANGED	16	5001 -				
81A	61802-08020	BOLT,FLANGED	8	5001 -				

silverhorn.co.uk

SEAT STAND & CONTROL BOX MOUNT

<S/N 5001 - 5080>

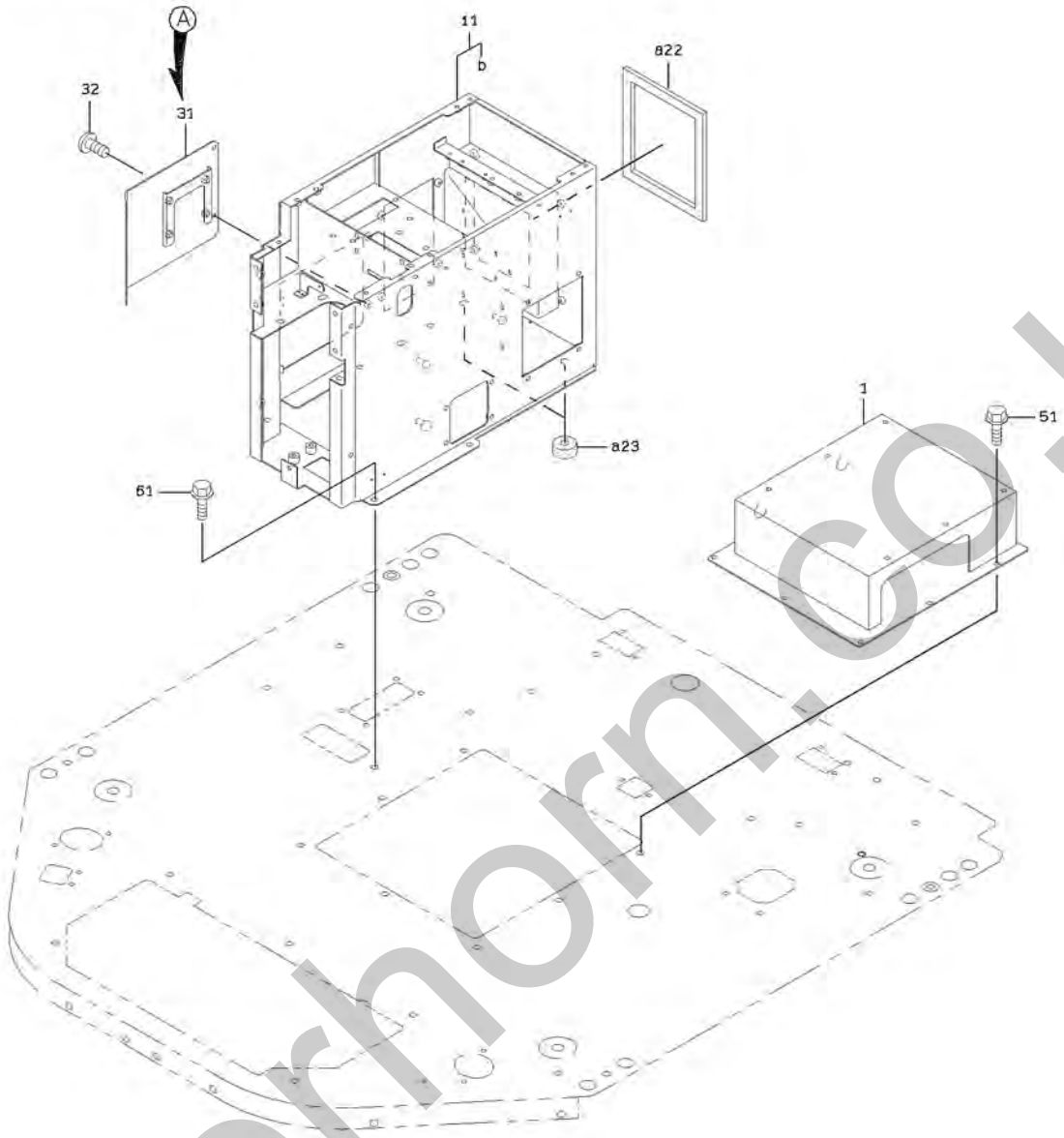

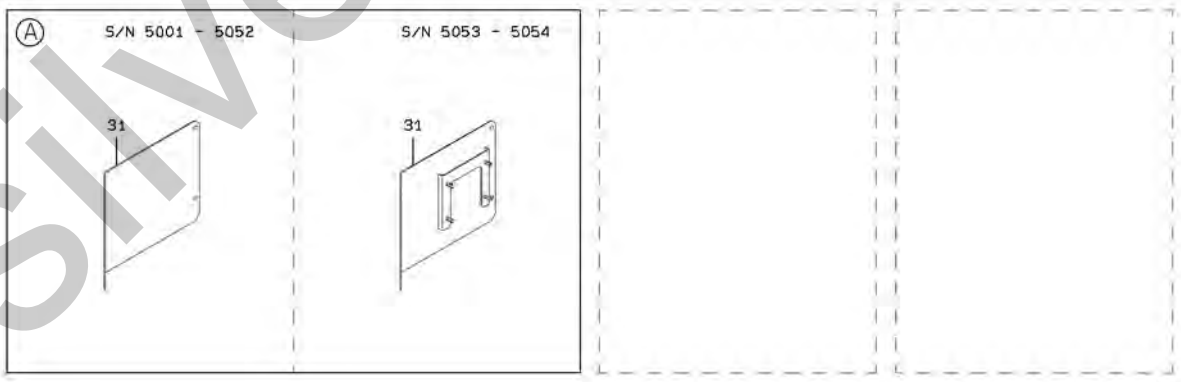

silverhorn.co.uk

SEAT STAND & CONTROL BOX MOUNT

SYM-BOL	PART NUMBER	PART NAME	UNIT Q,TY	SERIAL (A) - (B)	REMARKS N P D	(A) (B)	(C) (D)	REMARK
1A	35195-20440-7	STAND,SEAT	1	5001 - 5007				
1B	35195-20750	STAND,SEAT	1	5008 - 5080				
11A	43805-20900	BOX ASSY	1	5001 - 5080		Y01		
22A	35680-35560	SPONGE	1	5001 - 5080		01		
23A	35680-33340	SPONGE	2	5001 - 5080		01		
31A	41617-31910	PLATE	1	5001 - 5052				
31B	41750-27140	PLATE	1	5053 - 5054	B			
31C	41750-39600	PLATE	1	5055 - 5080	C			
32A	35100-20620	SCREW	4	5001 - 5080				
51A	61802-10020	BOLT,FLANGED	7	5001 - 5080				
61A	61802-10020	BOLT,FLANGED	5	5001 - 5080				

silverhorn.co.uk

SEAT STAND & CONTROL BOX MOUNT

<S/N 5081 - >

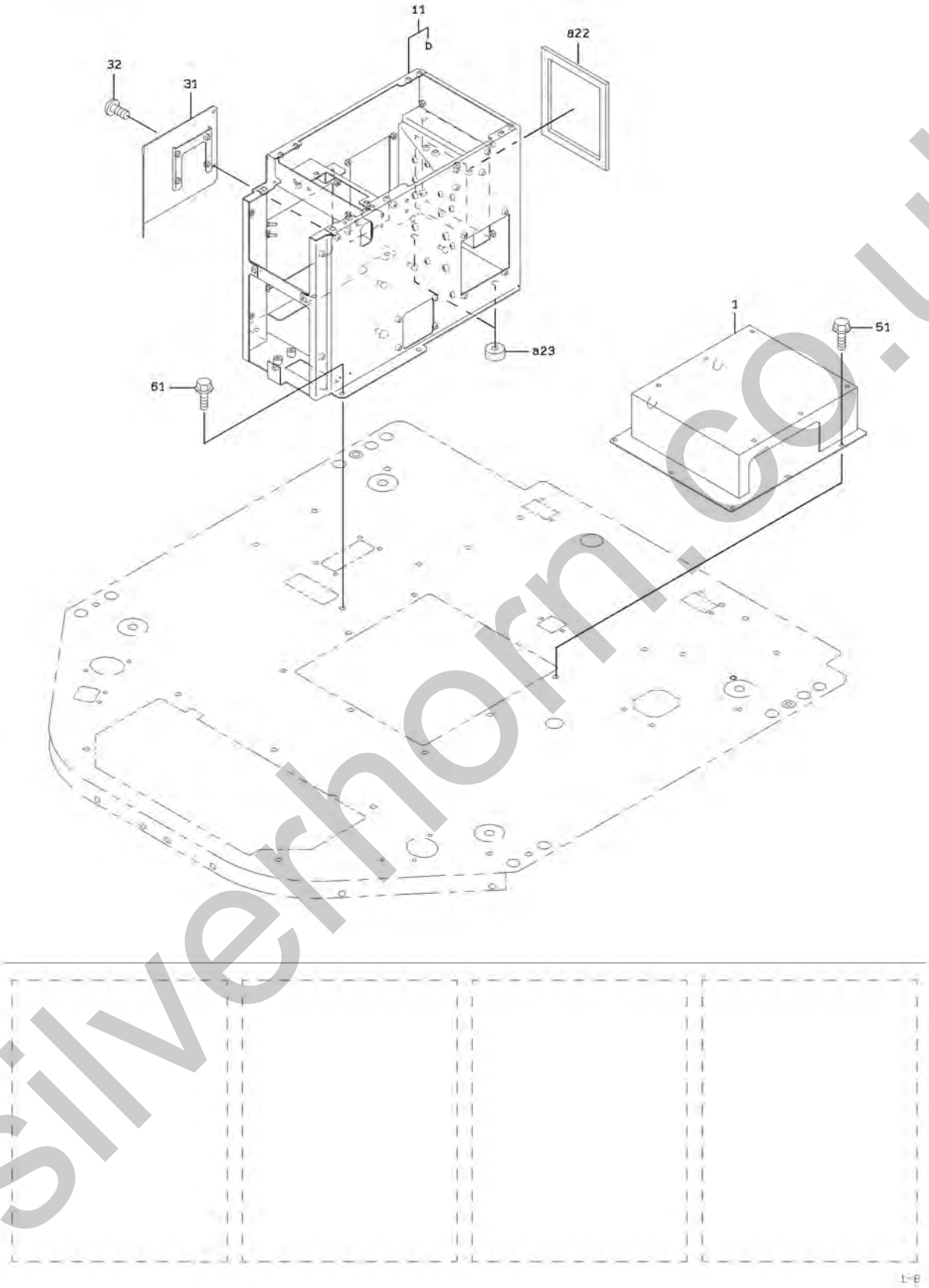

silverhorn.co.uk

SEAT STAND & CONTROL BOX MOUNT

SYM-BOL	PART NUMBER	PART NAME	UNIT Q,TY	SERIAL (A) - (B)	REMARKS N P D	(A) (B)	(C) (D)	REMARK
1A	35195-20750	STAND,SEAT	1	5081 -				
11A	43805-21780	BOX ASSY	1	5081 -		Y01		
22A	35680-35560	SPONGE	1	5081 -		01		
23A	35680-33340	SPONGE	2	5081 -		01		
31A	41750-39600	PLATE	1	5081 -				
32A	35100-20620	SCREW	4	5081 -				
51A	61802-10020	BOLT,FLANGED	7	5081 -				
61A	61802-10020	BOLT,FLANGED	5	5081 -				

silverhorn.co.uk

CONTROL BOX COVER MOUNT

<S/N 5001 - 5025>

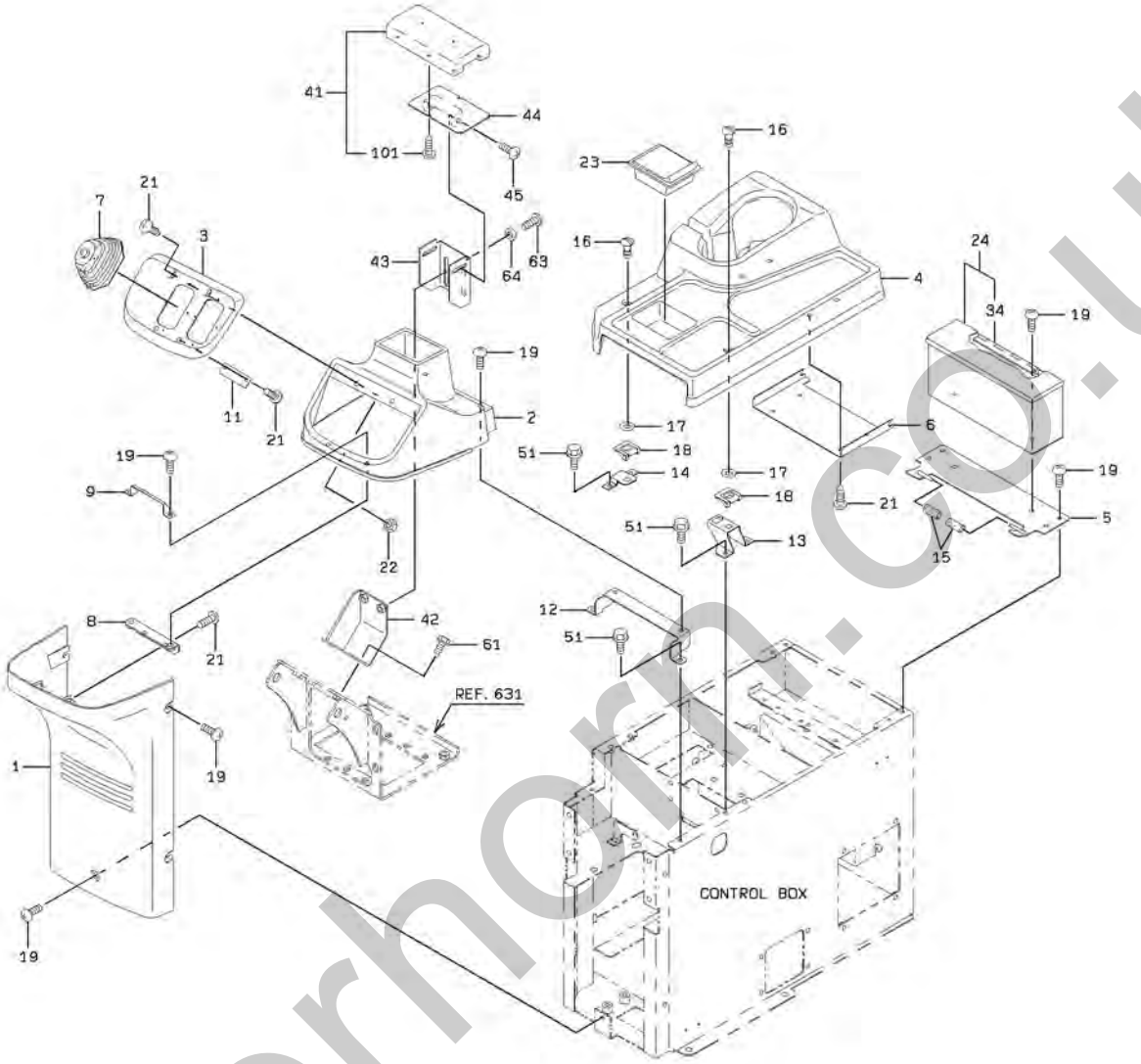

silverhorn.co.uk

CONTROL BOX COVER MOUNT

SYM-BOL	PART NUMBER	PART NAME	UNIT Q,TY	SERIAL (A) - (B)	REMARKS N P D	(A) (B)	(C) (D)	REMARK
1A	31200-60140	COVER	1	5001 - 5025				
2A	31200-60270	COVER	1	5001 - 5025				
3A	31200-60110	COVER	1	5001 - 5025				
4A	31200-60320	COVER	1	5001 - 5025				
5A	41618-26050	PLATE	1	5001 - 5025				
6A	41617-32650	PLATE	1	5001 - 5025				
7A	40790-60070	BOOT	2	5001 - 5025				
8A	41613-35410	PLATE	1	5001 - 5025				
9A	41613-34920	PLATE	1	5001 - 5025				
11A	41601-48190	PLATE	1	5001 - 5025				
12A	41610-30180	PLATE	1	5001 - 5025				
13A	41617-32040	PLATE	1	5001 - 5025				
14A	41617-32050	PLATE	1	5001 - 5025				
15A	67015-00001	TUBE,VINYL	1 M	5001 - 5025				L=20 X Q'TY 2
16A	32150-20210	CATCH	2	5001 - 5025				
17A	46000-21020	WASHER	2	5001 - 5025				
18A	41635-38650	PLATE	2	5001 - 5025				
19A	35100-20200	SCREW	15	5001 - 5025				
21A	35106-20020	SCREW,TAPPING	10	5001 - 5025				
22A	37600-21750	NUT	2	5001 - 5025				
23A	30320-60030	ASHTRAY	1	5001 - 5025				
24A	43800-26160	BOX	1	5001 - 5025		Y01		
34A	39890-70320	HINGE	1	5001 - 5025		01		WELDING
41A	30062-60050	ARMREST	1	5001 - 5025		Y02		
42A	40901-44620	BRACKET	1	5001 - 5025				
43A	41616-39080	PLATE	1	5001 - 5025				
44A	41616-39070	PLATE	1	5001 - 5025				
45A	35100-20200	SCREW	2	5001 - 5025				
51A	61802-06010	BOLT,FLANGED	6	5001 - 5025				
61A	61802-08016-7	BOLT,FLANGED	4	5001 - 5025				
63A	62256-51820	SCREW	2	5001 - 5025				
64A	62701-40081	WASHER,PLANE	2	5001 - 5025				
101A	35106-70170	SCREW,TAPPING	2	5001 - 5025		02		

silverhorn.co.uk

CONTROL BOX COVER MOUNT

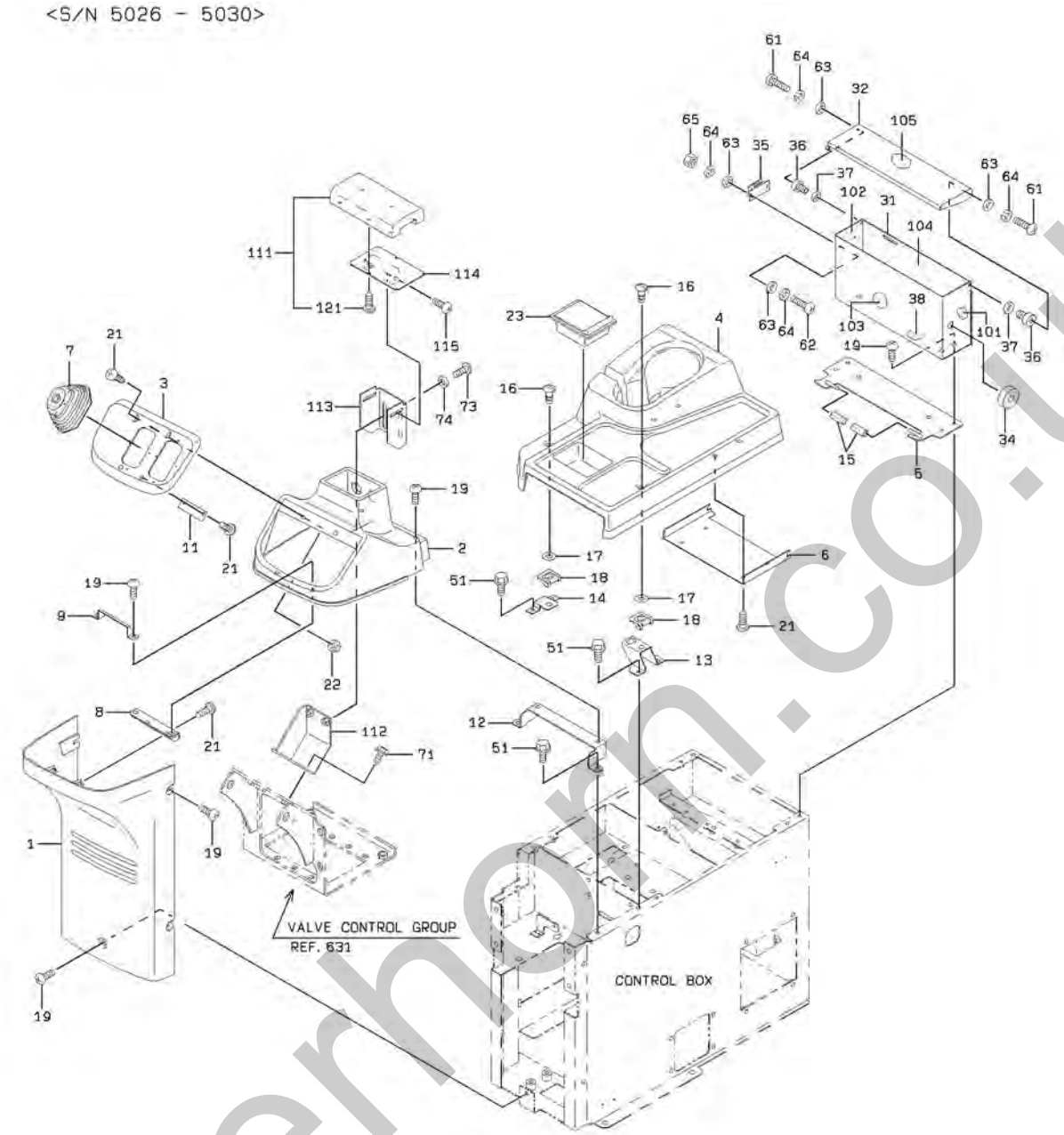

silverhorn.co.uk

CONTROL BOX COVER MOUNT

SYM-BOL	PART NUMBER	PART NAME	UNIT Q,TY	SERIAL (A) - (B)	REMARKS N P D	(A) (B)	(C) (D)	REMARK
1A	31200-60140	COVER	1	5026 - 5030				
2A	31200-60270	COVER	1	5026 - 5030				
3A	31200-60110	COVER	1	5026 - 5030				
4A	31200-60320	COVER	1	5026 - 5030				
5A	41618-26050	PLATE	1	5026 - 5030				
6A	41617-32650	PLATE	1	5026 - 5030				
7A	40790-60070	BOOT	2	5026 - 5030				
8A	41613-35410	PLATE	1	5026 - 5030				
9A	41613-34920	PLATE	1	5026 - 5030				
11A	41601-48190	PLATE	1	5026 - 5030				
12A	41610-30180	PLATE	1	5026 - 5030				
13A	41617-32040	PLATE	1	5026 - 5030				
14A	41617-32050	PLATE	1	5026 - 5030				
15A	67015-00001	TUBE,VINYL	1 M	5026 - 5030				L=20 X Q'TY 2
16A	32150-20210	CATCH	2	5026 - 5030				
17A	46000-21020	WASHER	2	5026 - 5030				
18A	41635-38650	PLATE	2	5026 - 5030				
19A	35100-20200	SCREW	15	5026 - 5030				
21A	35106-20020	SCREW,TAPPING	10	5026 - 5030				
22A	37600-21750	NUT	2	5026 - 5030				
23A	30320-60030	ASHTRAY	1	5026 - 5030				
31A	43800-26960	BOX	1	5026 - 5030				
32A	41619-26380	PLATE	1	5026 - 5030				
34A	35680-33340	SPONGE	1	5026 - 5030				
35A	32155-70020	CATCH,MAGNET	1	5026 - 5030				
36A	40044-21840	PIN,HEAD	2	5026 - 5030				
37A	46000-21020	WASHER	4	5026 - 5030				
38A	35680-52890	SPONGE	1	5026 - 5030				
51A	61802-06010	BOLT,FLANGED	6	5026 - 5030				
61A	62256-51308	SCREW	2	5026 - 5030				
62A	62256-51310	SCREW	2	5026 - 5030				
63A	62701-40031	WASHER,PLANE	6	5026 - 5030				
64A	62721-03100	WASHER,SPRING	4	5026 - 5030				
65A	62401-81031	NUT	2	5026 - 5030				
71A	61802-08016-7	BOLT,FLANGED	4	5026 - 5030				
73A	62256-51820	SCREW	2	5026 - 5030				
74A	62701-40081	WASHER,PLANE	2	5026 - 5030				
101A	35680-53810	SPONGE	1	5026 - 5030				
102A	35680-53820	SPONGE	1	5026 - 5030				
103A	35680-53830	SPONGE	1	5026 - 5030				
104A	35680-53840	SPONGE	1	5026 - 5030				
105A	35680-53850	SPONGE	1	5026 - 5030				
111A	30062-60050	ARMREST	1	5026 - 5030		Y01		
112A	40901-44620	BRACKET	1	5026 - 5030				
113A	41616-39080	PLATE	1	5026 - 5030				
114A	41616-39070	PLATE	1	5026 - 5030				
115A	35100-20200	SCREW	2	5026 - 5030				
121A	35106-70170	SCREW,TAPPING	2	5026 - 5030		01		

silverhorn.co.uk

CONTROL BOX COVER MOUNT

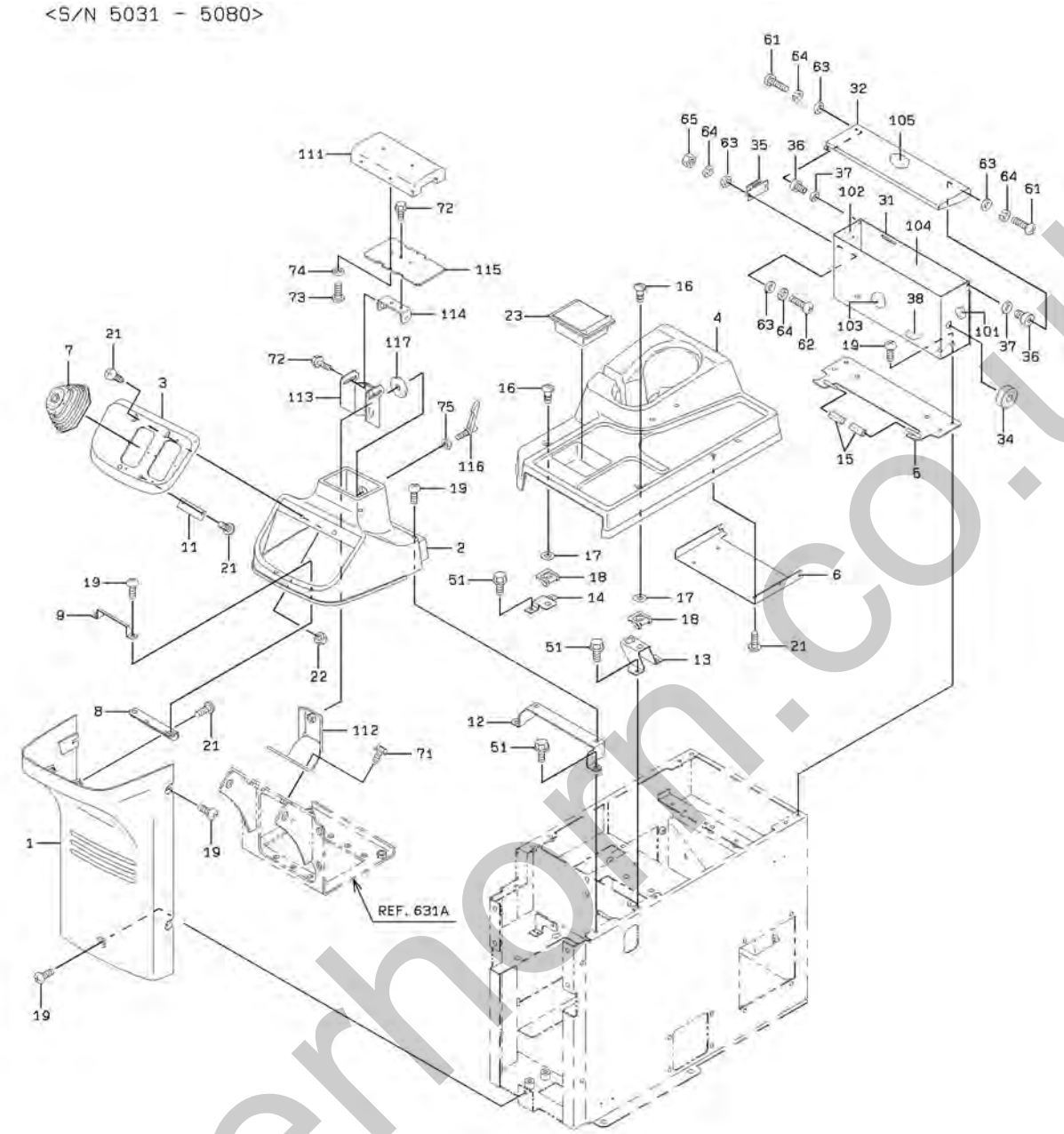

silverhorn.co.uk

CONTROL BOX COVER MOUNT

SYM-BOL	PART NUMBER	PART NAME	UNIT Q,TY	SERIAL (A) - (B)	REMARKS N P D	(A) (B)	(C) (D)	REMARK
1A	31200-60140	COVER	1	5031 - 5080				
2A	31200-60420	COVER	1	5031 - 5080				
3A	31200-60110	COVER	1	5031 - 5080				
4A	31200-60320	COVER	1	5031 - 5080				
5A	41618-26050	PLATE	1	5031 - 5080				
6A	41617-32650	PLATE	1	5031 - 5080				
7A	40790-60070	BOOT	2	5031 - 5080				
8A	41613-35410	PLATE	1	5031 - 5080				
9A	41613-34920	PLATE	1	5031 - 5080				
11A	41601-48190	PLATE	1	5031 - 5080				
12A	41610-30180	PLATE	1	5031 - 5080				
13A	41617-32040	PLATE	1	5031 - 5080				
14A	41617-32050	PLATE	1	5031 - 5080				
15A	67015-00001	TUBE,VINYL	1 M	5031 - 5080				L=20 X Q'TY 2
16A	32150-20210	CATCH	2	5031 - 5080				
17A	46000-21020	WASHER	2	5031 - 5080				
18A	41635-38650	PLATE	2	5031 - 5080				
19A	35100-20200	SCREW	15	5031 - 5080				
21A	35106-20020	SCREW,TAPPING	10	5031 - 5080				
22A	37600-21750	NUT	2	5031 - 5080				
23A	30320-60030	ASHTRAY	1	5031 - 5080				
31A	43800-26960	BOX	1	5031 - 5080				
32A	41619-26380	PLATE	1	5031 - 5080				
34A	35680-33340	SPONGE	1	5031 - 5080				
35A	32155-70020	CATCH,MAGNET	1	5031 - 5080				
36A	40044-21840	PIN,HEAD	2	5031 - 5080				
37A	46000-21020	WASHER	4	5031 - 5080				
38A	35680-52890	SPONGE	1	5031 - 5080				
51A	61802-06010	BOLT,FLANGED	6	5031 - 5058				
51B	61802-06016	BOLT,FLANGED	6	5059 - 5080	B			
61A	62256-51308	SCREW	2	5031 - 5080				
62A	62256-51310	SCREW	2	5031 - 5080				
63A	62701-40031	WASHER,PLANE	6	5031 - 5080				
64A	62721-03100	WASHER,SPRING	4	5031 - 5080				
65A	62401-81031	NUT	2	5031 - 5080				
71A	61802-08020	BOLT,FLANGED	4	5031 - 5080				
72A	61802-06016	BOLT,FLANGED	4	5031 - 5080				
73A	62261-14020	SCREW,TAPPING	4	5031 - 5080				
74A	62701-40041	WASHER,PLANE	4	5031 - 5080				
75A	62710-18101	WASHER,PLANE	1	5031 - 5080				
101A	35680-53810	SPONGE	1	5031 - 5080				
102A	35680-53820	SPONGE	1	5031 - 5080				
103A	35680-53830	SPONGE	1	5031 - 5080				
104A	35680-53840	SPONGE	1	5031 - 5080				
105A	35680-53850	SPONGE	1	5031 - 5080				
111A	30062-60050	ARMREST	1	5031 - 5080				
112A	40902-33050	BRACKET	1	5031 - 5080				
113A	41620-24500	PLATE	1	5031 - 5080				
114A	41619-36060	PLATE	1	5031 - 5080				
115A	41619-39010	PLATE	1	5031 - 5080				
116A	45600-24960	LEVER	1	5031 - 5080				
117A	46011-20050	WASHER,PLANE	1	5031 - 5080				

silvernorm.co.uk

CONTROL BOX COVER MOUNT

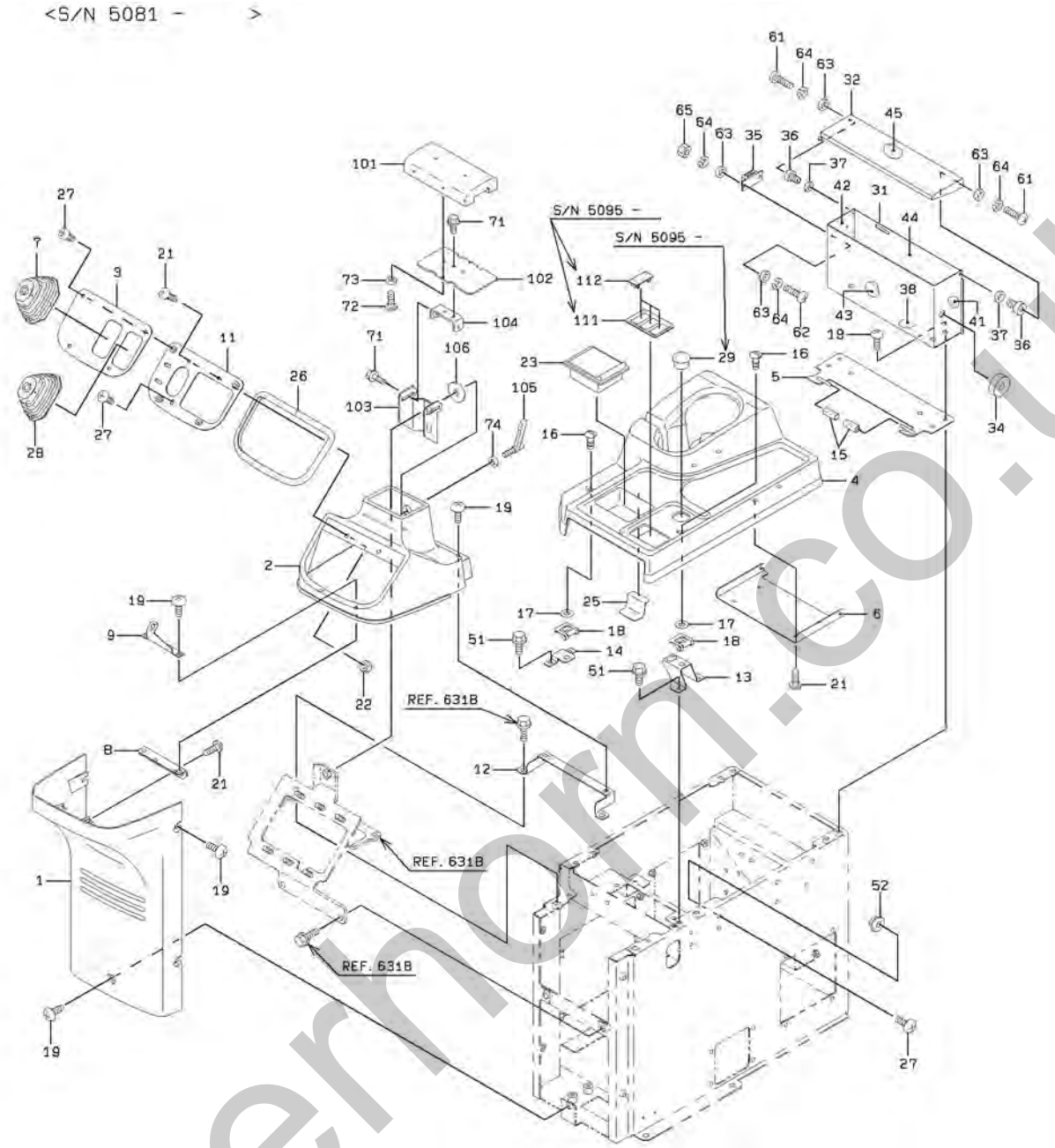

silvernorn.co.uk

CONTROL BOX COVER MOUNT

SYM-BOL	PART NUMBER	PART NAME	UNIT Q,TY	SERIAL (A) - (B)	REMARKS N P D	(A) (B)	(C) (D)	REMARK
1A	31200-60140	COVER	1	5081 -				
2A	31200-60420	COVER	1	5081 -				
3A	41710-56870	PLATE	1	5081 -				
4A	31200-60320	COVER	1	5081 - 5094				
4B	31200-60450	COVER	1	5095 -	B	WA1		
5A	41618-26050	PLATE	1	5081 -				
6A	41617-32650	PLATE	1	5081 -				
7A	40790-60070	BOOT	1	5081 -				
8A	41613-35410	PLATE	1	5081 -				
9A	41750-43990	PLATE	1	5081 -				
11A	41750-44010	PLATE	1	5081 -				
12A	41750-47440	PLATE	1	5081 -				
13A	41617-32040	PLATE	1	5081 -				
14A	41617-32050	PLATE	1	5081 -				
15A	67015-00001	TUBE,VINYL	1 M	5081 -				L=20 X Q'TY 2
16A	32150-20210	CATCH	2	5081 -				
17A	46000-21020	WASHER	2	5081 -				
18A	41635-38650	PLATE	2	5081 -				
19A	35100-20200	SCREW	15	5081 -				
21A	35106-20020	SCREW,TAPPING	8	5081 -				
22A	37600-21750	NUT	2	5081 -				
23A	30320-60030	ASHTRAY	1	5081 -				
25A	44770-55830	LABEL	1	5081 -				
26A	44820-20520	RUBBER	1	5081 -				
27A	35100-20330	SCREW	9	5081 -				
28A	40790-20430	BOOT	1	5081 -				
29A	41530-22740	PLUG	1	5095 -		A1		
31A	43800-26960	BOX	1	5081 -				
32A	41619-26380	PLATE	1	5081 -				
34A	35680-33340	SPONGE	1	5081 -				
35A	32155-70020	CATCH,MAGNET	1	5081 -				
36A	40044-21840	PIN,HEAD	2	5081 -				
37A	46000-21020	WASHER	4	5081 -				
38A	35680-52890	SPONGE	1	5081 -				
41A	35680-53810	SPONGE	1	5081 -				
42A	35680-53820	SPONGE	1	5081 -				
43A	35680-53830	SPONGE	1	5081 -				
44A	35680-53840	SPONGE	1	5081 -				
45A	35680-53850	SPONGE	1	5081 -				
51A	61802-06016	BOLT,FLANGED	4	5081 -				
52A	62480-21061	NUT,FLANGED	4	5081 -				
61A	62256-51308	SCREW	2	5081 -				
62A	62256-51310	SCREW	2	5081 -				
63A	62701-40031	WASHER,PLANE	6	5081 -				
64A	62721-03100	WASHER,SPRING	4	5081 -				
65A	62401-81031	NUT	2	5081 -				
71A	61802-06016	BOLT,FLANGED	4	5081 -				
72A	62261-14020	SCREW,TAPPING	4	5081 -				
73A	62701-20041	WASHER,PLANE	4	5081 -				
74A	62710-18101	WASHER,PLANE	1	5081 -				
101A	30062-60050	ARMREST	1	5081 -				
102A	41619-39010	PLATE	1	5081 -				
103A	41750-28230	PLATE	1	5081 -				
104A	41619-36060	PLATE	1	5081 -				
105A	45600-24960	LEVER	1	5081 -				
106A	46011-20050	WASHER,PLANE	1	5081 -				
111A	39750-70900	PANEL	1	5095 -		A1		
112A	41530-60080	PLUG	3	5095 -		A1		

silverhorn.co.uk

OPERATION STAND GROUP

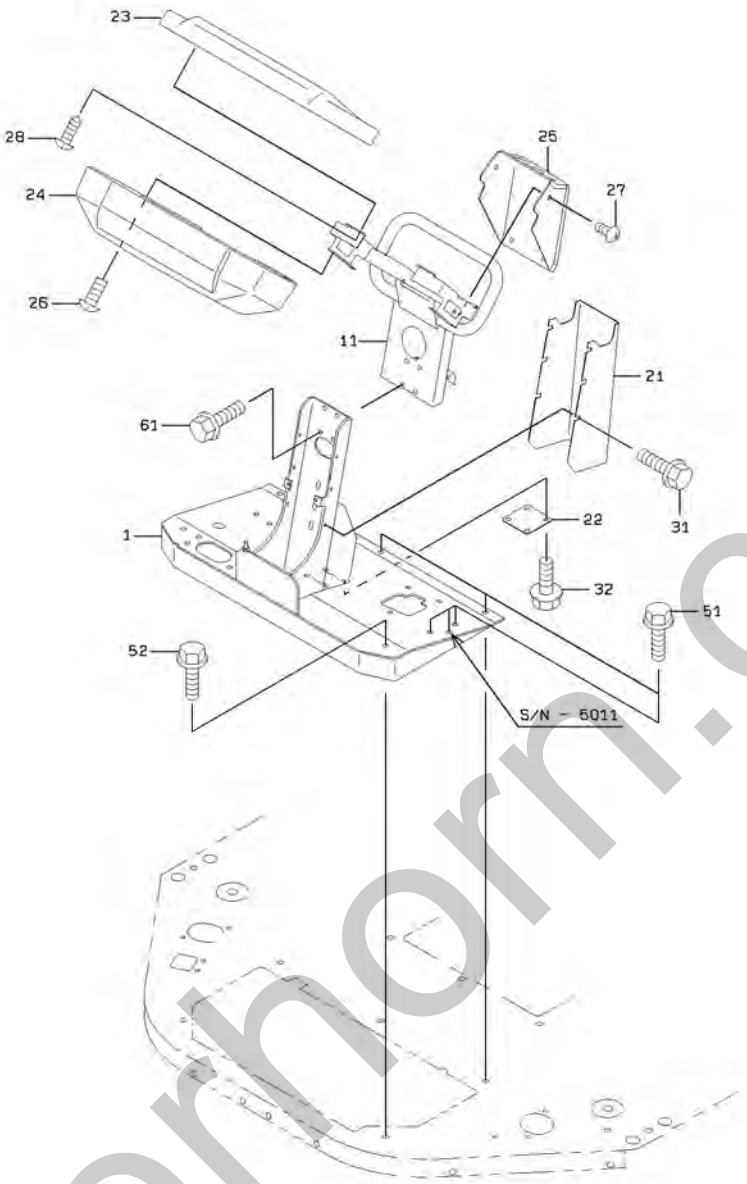

silverhorn.co.uk

OPERATION STAND GROUP

SYM-BOL	PART NUMBER	PART NAME	UNIT Q,TY	SERIAL (A) - (B)	REMARKS N P D	(A) (B)	(C) (D)	REMARK
1A	35175-20540	STAND ASSY	1	5001 -				
11A	43800-27010	BOX	1	5001 -				43800-26310
21A	31200-38380	COVER	1	5001 -				
22A	41618-35720	PLATE	1	5001 -				
23A	31200-60030	COVER	1	5001 -				
24A	31200-60040	COVER	1	5001 -				
25A	31200-39480	COVER	1	5001 -				31200-38390
26A	35100-20200	SCREW	4	5001 -				
27A	35100-20010	SCREW	4	5001 -				
28A	35106-20020	SCREW,TAPPING	4	5001 -				
31A	61802-08020	BOLT,FLANGED	4	5001 -				
32A	61802-10020	BOLT,FLANGED	4	5001 -				
51A	61802-10025	BOLT,FLANGED	6	5001 - 5011				
51B	61802-10025	BOLT,FLANGED	5	5012 -				
52A	61802-10085	BOLT,FLANGED	2	5001 -				
61A	61802-08025	BOLT,FLANGED	4	5001 -				61802-08020

silverhorn.co.uk

DECK & FENDER GROUP

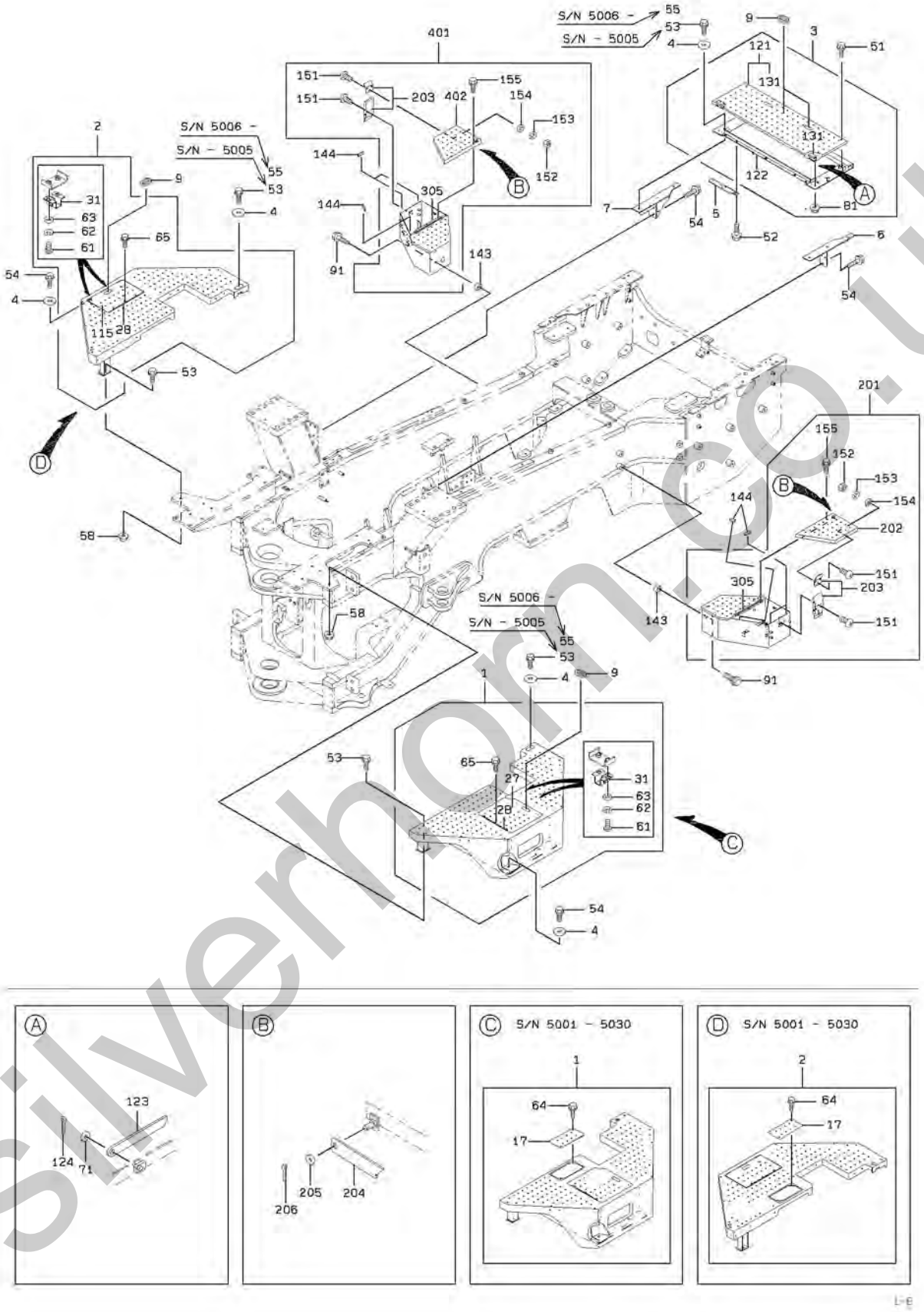

silverhorn.co.uk

DECK & FENDER GROUP

SYM-BOL	PART NUMBER	PART NAME	UNIT Q,TY	SERIAL (A)	-	(B)	REMARKS N P D	(A)	(B)	(C)	(D)	REMARK
1A	37290-26310	DECK	1	5001	-	5005		Y01				FR (LH)
1B	37290-27940	DECK	1	5006	-	5030	C	Y01				FR (LH)
1D	37290-28860	DECK	1	5031	-		C	Y01				FR (LH)
2A	37290-26320	DECK	1	5001	-	5005			Y02			FR (RH)
2B	37290-27950	DECK	1	5006	-	5030	C		Y02			FR (RH)
2C	37290-28870	DECK	1	5031	-		C		Y02			FR (RH)
3A	37290-27180	DECK	1	5001	-					Y03		
4A	46011-21450	WASHER,PLANE	10	5001	-							
5A	41607-23700	PLATE	1	5001	-							
6A	40901-58040	BRACKET	1	5001	-							FR (LH)
7A	40901-58050	BRACKET	1	5001	-							FR (RH)
9A	65801-63032	BUSHING,ELASTIC	4	5001	-							
17A	41605-59730	PLATE	1	5001	-	5030	D	01	02			
27A	31200-31470	COVER	1	5001	-			01				
28A	39890-21870	HINGE	1	5001	-			01	02			WELDING
31A	44810-70050	LATCH ASSY	2	5001	-			01	02			
51A	61802-10016	BOLT,FLANGED	2	5001	-							
52A	61802-08020	BOLT,FLANGED	2	5001	-							
53A	61802-12050	BOLT,FLANGED	8	5001	-	5005						
53B	61802-12050	BOLT,FLANGED	2	5006	-							
54A	61802-12025	BOLT,FLANGED	8	5001	-							
55A	61802-12035	BOLT,FLANGED	6	5006	-							
58A	62480-21121	NUT,FLANGED	2	5001	-							
61A	62256-51410	SCREW	4	5001	-			01	02			
62A	62721-04100	WASHER,SPRING	4	5001	-			01	02			
63A	62701-20041	WASHER,PLANE	4	5001	-			01	02			
64A	61802-08016-7	BOLT,FLANGED	2	5001	-	5030	D	01	02			
65A	61802-06016	BOLT,FLANGED	3	5001	-			01	02			
71A	62701-40121-7	WASHER,PLANE	1	5001	-					03		
81A	62480-21081	NUT,FLANGED	4	5001	-					03		
91A	61802-12045	BOLT,FLANGED	8	5001	-							
115A	31200-31530	COVER	1	5001	-				02			
121A	31205-42580	COVER	1	5001	-					03	Y04	
122A	40901-58970	BRACKET	1	5001	-					03		
123A	41636-45900	PLATE	1	5001	-					03		
124A	63002-03220	PIN,SPLIT	1	5001	-					03		
131A	39890-70050	HINGE	2	5001	-						04	WELDING
143A	35700-21050	SPACER	8	5001	-							
144A	34041-21650	STRIP, SEAL	6	5001	-							
151A	62256-51410	SCREW	6	5001	-			05	06			
152A	62401-81041	NUT	3	5001	-			05	06			
153A	62721-04100	WASHER,SPRING	3	5001	-			05	06			
154A	62701-20041	WASHER,PLANE	3	5001	-			05	06			
155A	61802-06016	BOLT,FLANGED	3	5001	-			05	06			
201A	43805-21060	BOX ASSY	1	5001	-			Y05				FR (LH)
202A	41636-43500	PLATE	1	5001	-			05				FR (RH)
203A	32150-60020	CATCH	1	5001	-	5060		05	06			
203B	32150-60050	CATCH	1	5061	-		C	05	06			
204A	41605-57120	PLATE	1	5001	-			05	06			
205A	46011-20190	WASHER,PLANE	1	5001	-			05	06			
206A	63002-03020	PIN,SPLIT	1	5001	-			05	06			
305A	39890-21870	HINGE	1	5001	-			05	06			WELDING
401A	43805-21070	BOX ASSY	1	5001	-				Y06			FR (RH)
402A	41636-43510	PLATE	1	5001	-				06			FR (RH)

silverhorn.co.uk

HANDRAIL & STEP GROUP

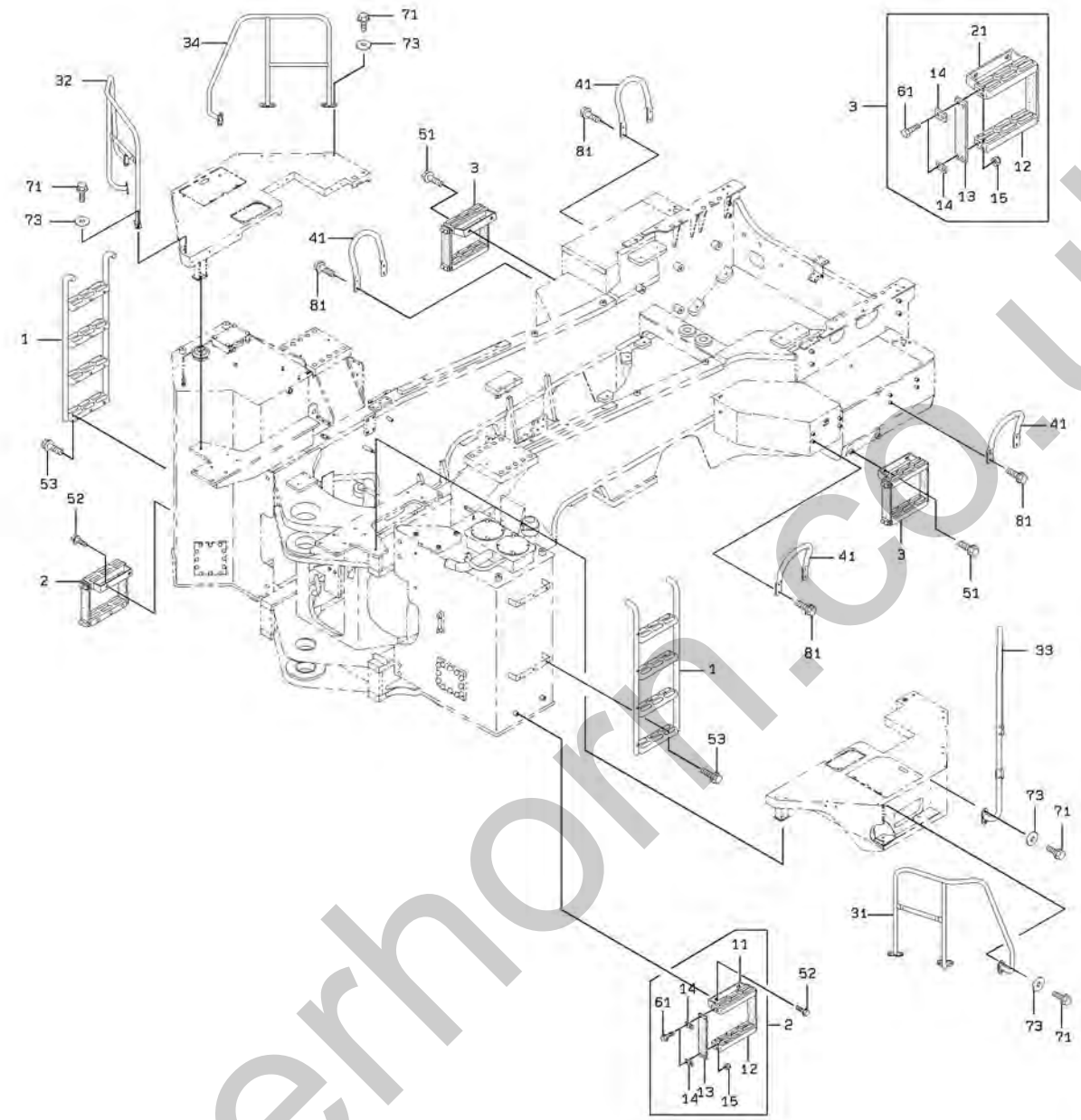

silverhorn.co.uk

HANDRAIL & STEP GROUP

SYM-BOL	PART NUMBER	PART NAME	UNIT Q,TY	SERIAL (A) - (B)	REMARKS N P D	(A)	(B)	(C)	(D)	REMARK
1A	44730-20460	LADDER	2	5001 -						
2A	35371-20530	STEP ASSY	2	5001 -		Y01				
3A	35371-20100	STEP ASSY	2	5001 -			Y02			
11A	35370-20060	STEP	1	5001 -		01				
12A	35370-20070	STEP	1	5001 -		01	02			
13A	33713-22820	SHEET,RUBBER	2	5001 -		01	02			
14A	41611-23340	PLATE	4	5001 -		01	02			
15A	88001-41101	NUT,U	8	5001 -		01	02			
21A	35370-20590	STEP	1	5001 -			02			
31A	38130-27990	HANDRAIL	1	5001 -						FR (LH)
32A	38130-28000	HANDRAIL	1	5001 -						FR (RH)
33A	38130-26650-7	HANDRAIL	1	5001 -						FR (LH)
34A	38130-26660-7	HANDRAIL	1	5001 -						FR (RH)
41A	38130-26670-7	HANDRAIL	4	5001 - 5046						
41B	38130-22570	HANDRAIL	4	5047 -	A					
51A	61802-12025	BOLT,FLANGED	4	5001 -						
52A	61802-12020	BOLT,FLANGED	4	5001 -						
53A	61802-10030	BOLT,FLANGED	12	5001 -						
61A	61802-10035	BOLT,FLANGED	8	5001 -		01	02			
71A	61802-10025	BOLT,FLANGED	24	5001 -						
73A	46011-21300	WASHER,PLANE	24	5001 -						
81A	61802-10020	BOLT,FLANGED	16	5001 -						

silverhorn.co.uk

SCREEN BOARD MOUNT

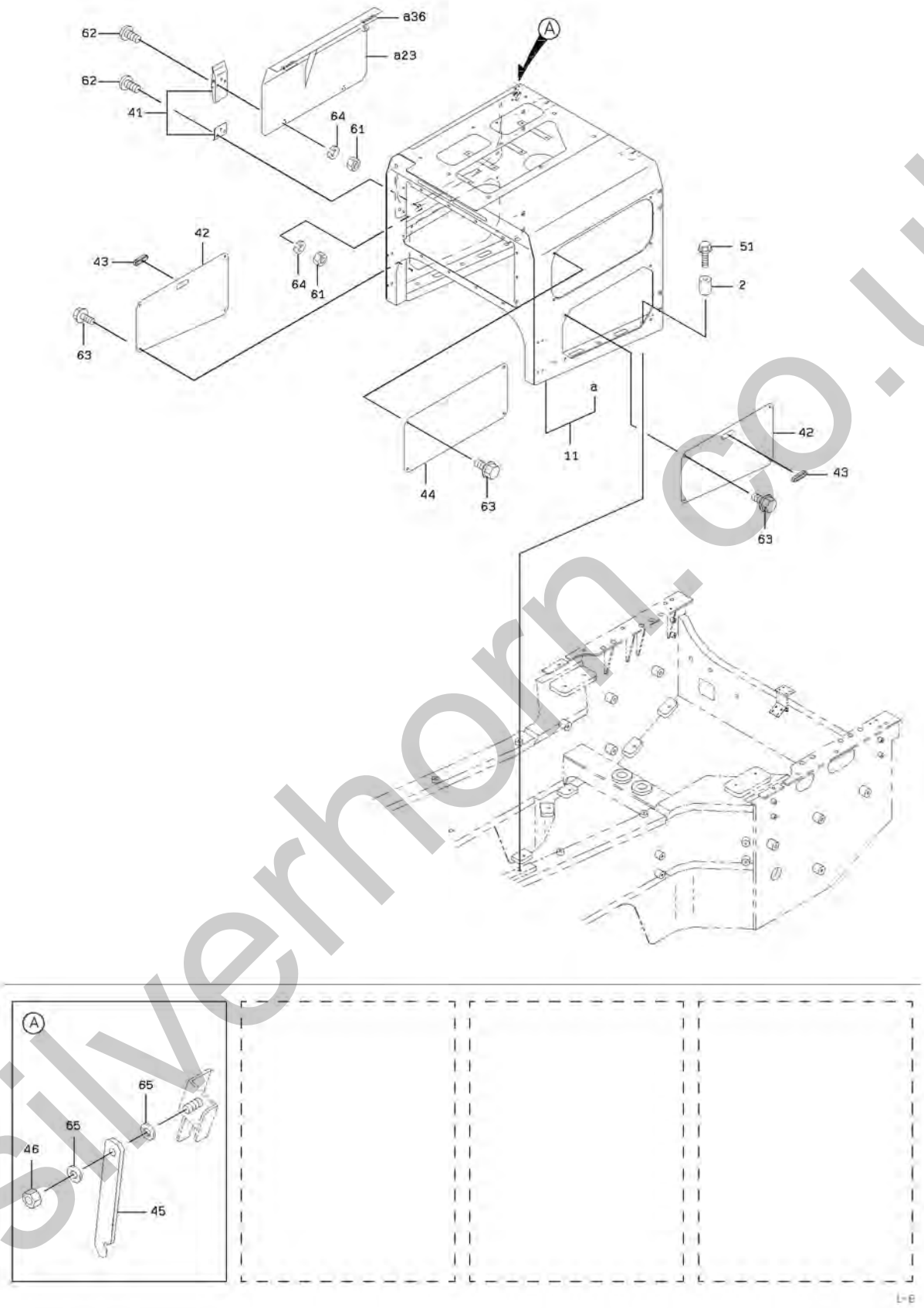

silverhorn.co.uk

SCREEN BOARD MOUNT

SYM-BOL	PART NUMBER	PART NAME	UNIT Q,TY	SERIAL (A)	-	(B)	REMARKS N P D	(A)	(B)	(C)	(D)	REMARK
2A	45200-23640	RING	6	5001	-							
11A	43711-22350	BOARD ASSY,SCREEN	1	5001	-	5030		Y01				
11B	43711-22890	BOARD ASSY,SCREEN	1	5031	-	5046	B	Y01				
11C	43711-23080	BOARD ASSY,SCREEN	1	5047	-		C	Y01				
23A	31200-38270	COVER	1	5001	-			01				
36A	39890-20780	HINGE	2	5001	-			01				WELDING
41A	32150-60020	CATCH	2	5001	-							
42A	41602-20170	PLATE	2	5001	-							
43A	65801-63032	BUSHING,ELASTIC	2	5001	-							
44A	41606-20660	PLATE	1	5001	-							
45A	41605-50850	PLATE	1	5001	-							
46A	88031-06101	NUT,SELF-LOCKING	1	5001	-							
51A	61802-16080	BOLT,FLANGED	6	5001	-							
61A	62401-81041	NUT	12	5001	-							
62A	62256-51416	SCREW	12	5001	-							
63A	61802-10020	BOLT,FLANGED	12	5001	-							
64A	62721-04100	WASHER,SPRING	12	5001	-							
65A	46011-21650	WASHER,PLANE	2	5001	-							

silverhorn.co.uk

ENGINE ROOM MOUNT

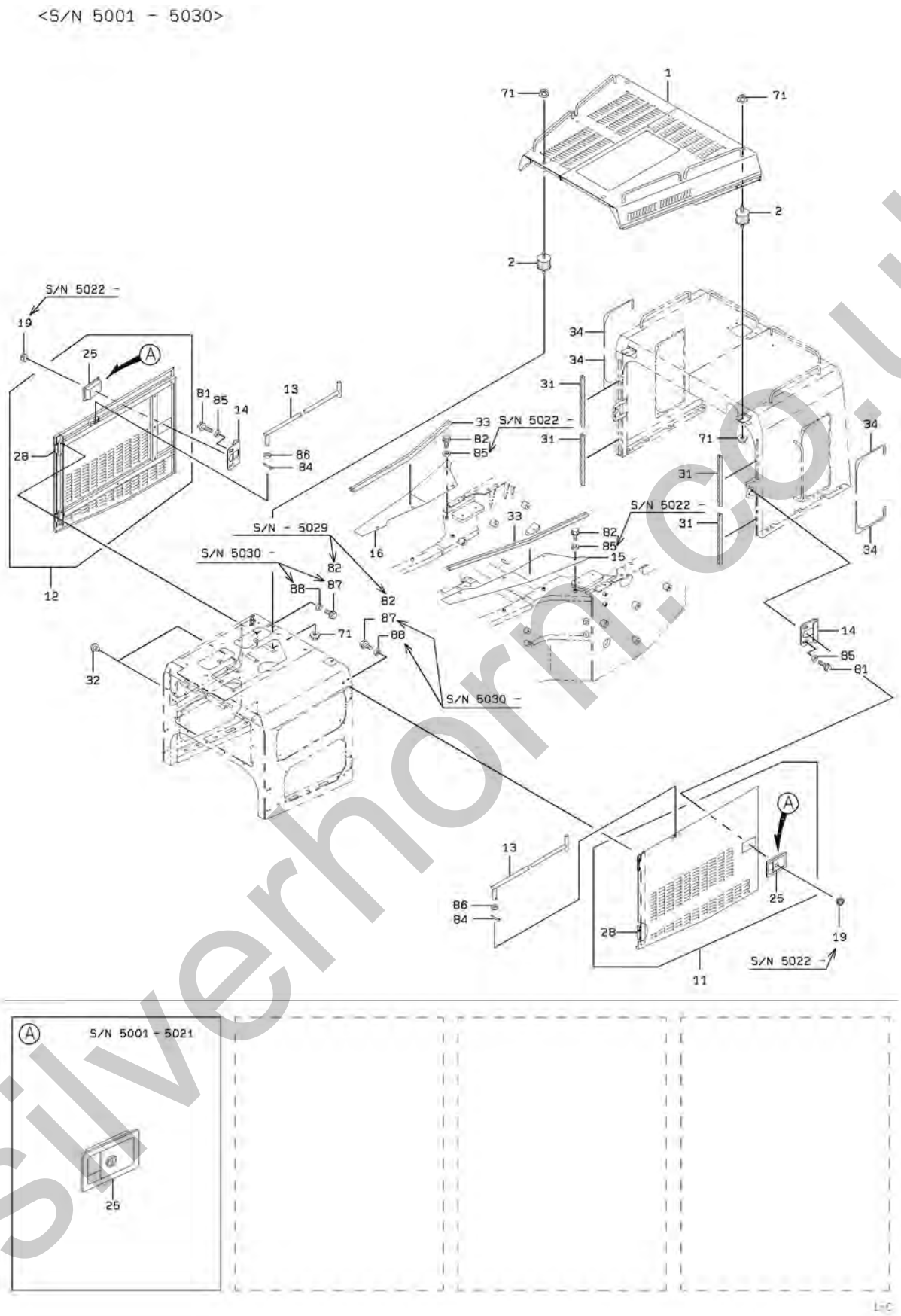

silverhorn.co.uk

ENGINE ROOM MOUNT

<S/N 5031 - >

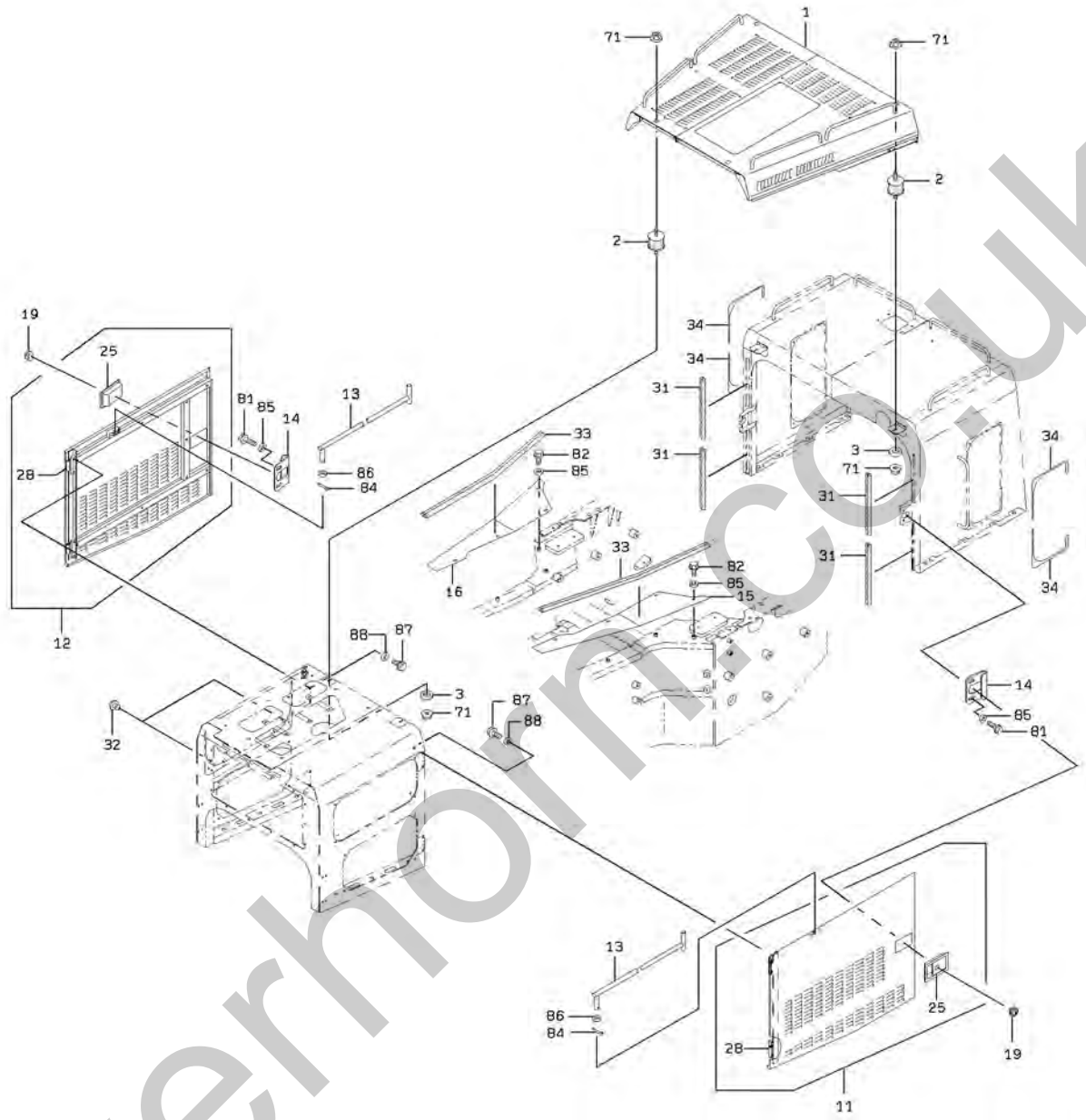

silverhorn.co.uk

ENGINE ROOM MOUNT

SYM-BOL	PART NUMBER	PART NAME	UNIT Q,TY	SERIAL (A)	-	(B)	REMARKS N P D	(A)	(B)	(C)	(D)	REMARK
1A	45375-23990	ROOF	1	5001	-	5030						
1B	45375-25090	ROOF	1	5031	-		B					
2A	44822-20800	RUBBER,CUSHION	4	5001	-							
3A	46011-20630	WASHER,PLANE	4	5031	-							
11A	31236-24920	COVER ASSY	1	5001	-			Y01				FR (LH)
12A	31236-24930	COVER ASSY	1	5001	-				Y02			FR (RH)
13A	38171-33060	BAR,ROUND	2	5001	-							
14A	41600-53130	PLATE	2	5001	-							
15A	31205-42480	COVER	1	5001	-							FR (LH)
16A	31205-42490	COVER	1	5001	-							FR (RH)
19A	32110-60010	KEY	2	5022	-							
25A	32153-60030	CATCH,DOOR	1	5001	-	5021		01	02			WELDING
25B	32153-60180	CATCH,DOOR	1	5022	-		A	01	02			WELDING
28A	39890-20790	HINGE	1	5001	-			01	02			WELDING
31A	34041-22770	STRIP, SEAL	4	5001	-							
32A	44822-20660	RUBBER,CUSHION	2	5001	-							
33A	34041-23990	STRIP, SEAL	2	5001	-							
34A	34041-24280	STRIP, SEAL	4	5001	-							
71A	62480-21121	NUT,FLANGED	8	5001	-							
81A	61802-08020	BOLT,FLANGED	4	5001	-							
82A	61802-10016	BOLT,FLANGED	16	5001	-	5029						
82B	61802-10016	BOLT,FLANGED	8	5030	-							
84A	63002-04025	PIN,SPLIT	2	5001	-							
85A	62710-18101	WASHER,PLANE	4	5001	-	5021						
85B	62710-18101	WASHER,PLANE	12	5022	-							
86A	62710-18121	WASHER,PLANE	2	5001	-							
87A	61802-10020	BOLT,FLANGED	8	5030	-							
88A	46011-21300	WASHER,PLANE	8	5030	-							

silverhorn.co.uk

MEMO

silverhorn.co.uk

RADIATOR GUARD MOUNT

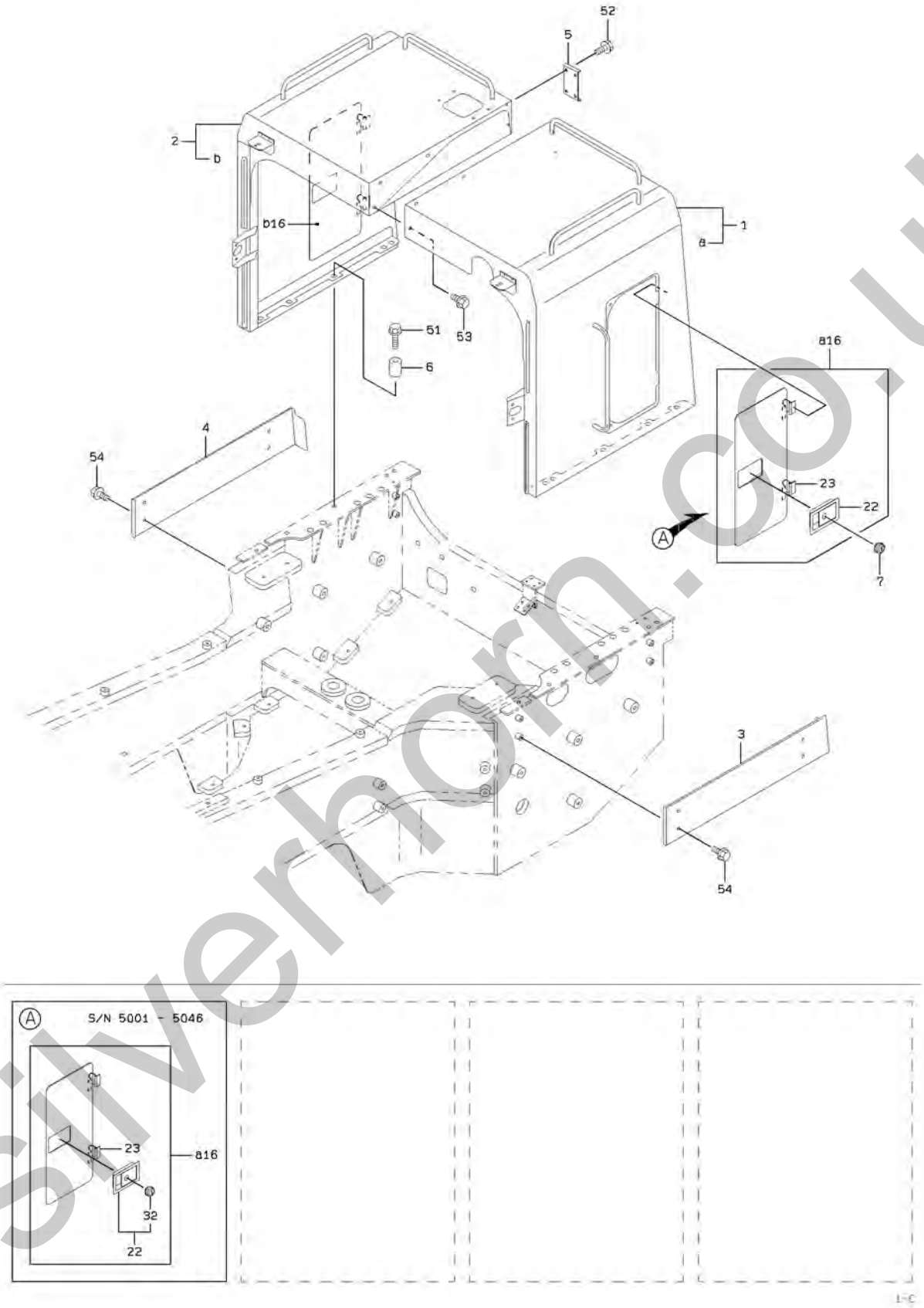

silverhorn.co.uk

RADIATOR GUARD MOUNT

SYM-BOL	PART NUMBER	PART NAME	UNIT Q,TY	SERIAL (A)	-	(B)	REMARKS N P D	(A)	(B)	(C)	(D)	REMARK
1A	31827-21640	GUARD,RADIATOR	1	5001	-	5030		Y01				FR (LH)
1B	31827-22120	GUARD,RADIATOR	1	5031	-		B	Y01				FR (LH)
2A	31827-21650	GUARD,RADIATOR	1	5001	-	5030			Y02			FR (RH)
2B	31827-22130	GUARD,RADIATOR	1	5031	-		B		Y02			FR (RH)
3A	41618-35030	PLATE	1	5001	-							FR (LH)
4A	41618-35040	PLATE	1	5001	-							FR (RH)
5A	41604-42450	PLATE	1	5001	-							
6A	45200-23640	RING	10	5001	-							
7A	32110-60010	KEY	2	5047	-							
16A	31236-24990	COVER ASSY	1	5001	-			01	02	Y03		
22A	32153-60150	CATCH,DOOR	1	5001	-	5005				03		WELDING
22B	32153-60030	CATCH,DOOR	1	5006	-	5021	C			03		WELDING
22C	32153-60170	CATCH,DOOR	1	5022	-	5046	N B			03	Y04	WELDING
22D	32153-60180	CATCH,DOOR	1	5047	-		C			03		WELDING
23A	39890-21790	HINGE	2	5001	-					03		WELDING
32A	32110-60010	KEY	1	5022	-	5046	D				04	
51A	61802-16090	BOLT,FLANGED	10	5001	-							
52A	61802-12025	BOLT,FLANGED	4	5001	-							
53A	61802-12035	BOLT,FLANGED	3	5001	-							
54A	61802-10012	BOLT,FLANGED	8	5001	-							

silverhorn.co.uk

REAR GRILLE GROUP

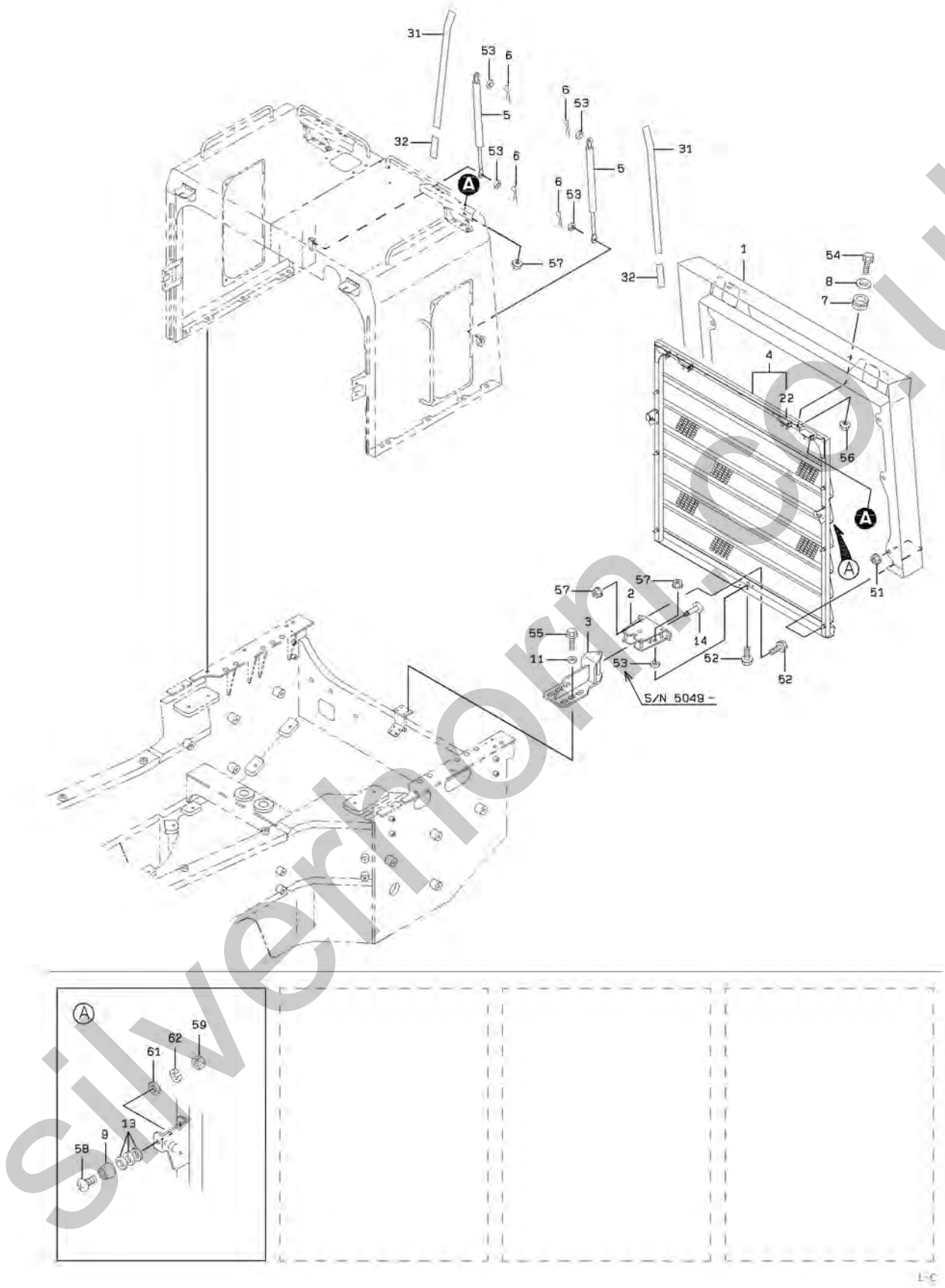

silverthorn.co.uk

REAR GRILLE GROUP

SYM-BOL	PART NUMBER	PART NAME	UNIT Q,TY	SERIAL (A) - (B)	REMARKS N P D	(A) (B)	(C) (D)	REMARK
1A	31231-20840	COVER ASSY	1	5001 -				
2A	32151-60100	CATCH ASSY	1	5001 -				
3A	32150-20340	CATCH	1	5001 -				
4A	40600-37560	FRAME	1	5001 -		Y01		
5A	35211-60050	STAY ASSY	2	5001 -				
6A	63002-02016	PIN,SPLIT	4	5001 -				
7A	65801-16032	BUSHING,ELASTIC	2	5001 -				
8A	45200-27110	RING	2	5001 -				
9A	35440-20960	STOPPER	2	5001 -				
11A	46011-20180	WASHER,PLANE	4	5001 -				
13A	46011-20510	WASHER,PLANE	3	5001 -				
14A	43900-24420	BOLT	1	5001 -				
22A	39890-70040	HINGE	4	5001 -		01		WELDING
31A	33713-25800	SHEET,RUBBER	2	5001 -				
32A	33713-25810	SHEET,RUBBER	2	5001 -				
51A	62480-21121	NUT,FLANGED	6	5001 -				
52A	61802-08020	BOLT,FLANGED	4	5001 -				
53A	62701-40081	WASHER,PLANE	4	5001 - 5048				
53B	62701-40081	WASHER,PLANE	6	5049 -				
54A	61802-10035	BOLT,FLANGED	2	5001 -				
55A	61802-08025	BOLT,FLANGED	4	5001 -				
56A	62480-21101	NUT,FLANGED	2	5001 -				
57A	62480-21081	NUT,FLANGED	12	5001 -				
58A	62256-51416	SCREW	2	5001 -				
59A	62401-81041	NUT	2	5001 -				
61A	62701-20041	WASHER,PLANE	2	5001 -				
62A	62721-04100	WASHER,SPRING	2	5001 -				

silverhorn.co.uk

WIND SHIELD GROUP

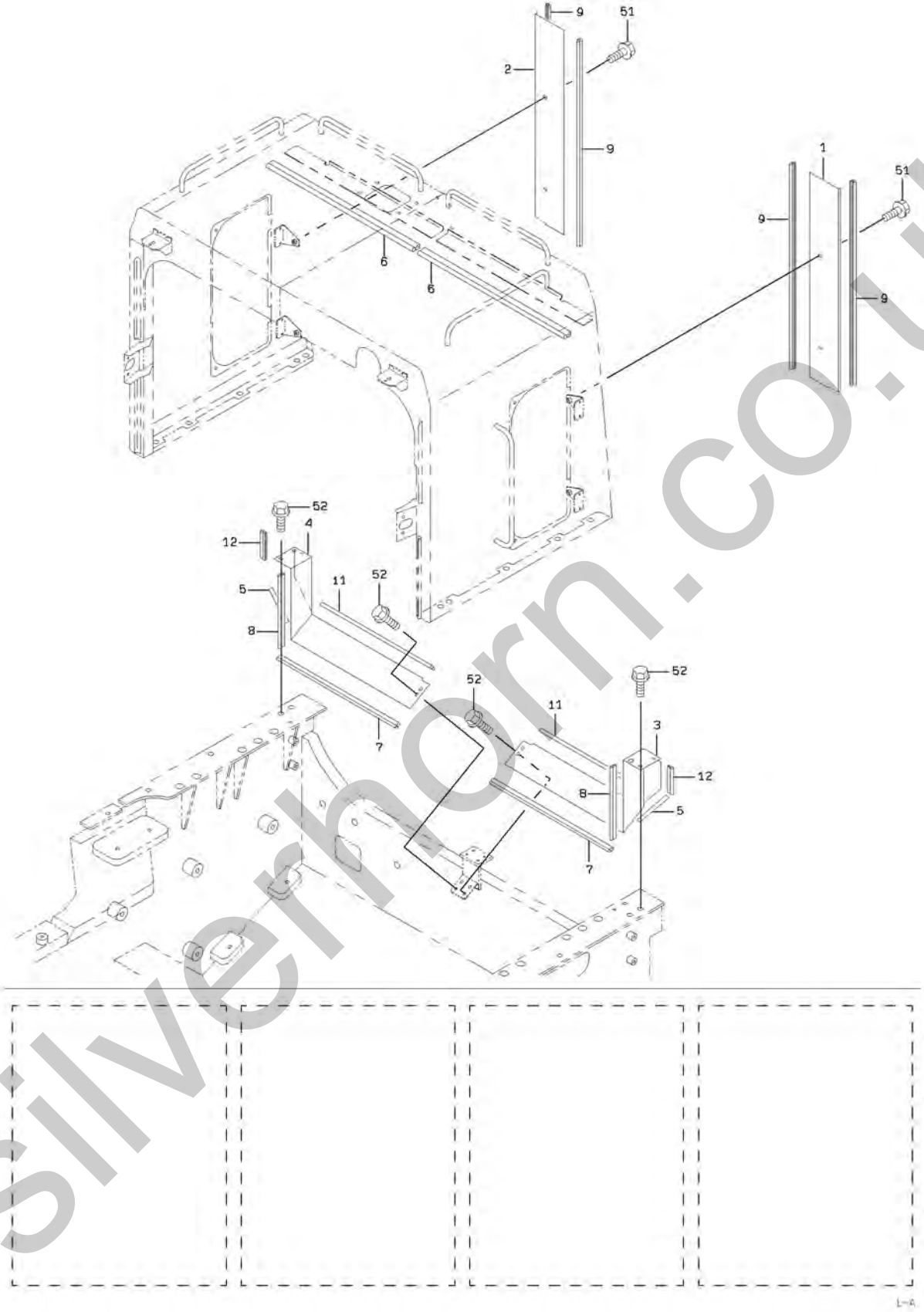

silverhorn.co.uk

WIND SHIELD GROUP

SYM-BOL	PART NUMBER	PART NAME	UNIT Q,TY	SERIAL (A) - (B)	REMARKS N P D	(A) (B)	(C) (D)	REMARK
1A	41606-31630	PLATE	1	5001 -				FR (LH)
2A	41606-58640	PLATE	1	5001 -				FR (RH)
3A	41636-45680	PLATE	1	5001 -				FR (LH)
4A	41636-45690	PLATE	1	5001 -				FR (RH)
5A	34041-23700	STRIP, SEAL	2	5001 -				
6A	34041-23610	STRIP, SEAL	2	5001 -				
7A	34041-23620	STRIP, SEAL	2	5001 -				
8A	34041-23640	STRIP, SEAL	2	5001 -				
9A	34041-23670	STRIP, SEAL	4	5001 -				
11A	34041-23680	STRIP, SEAL	2	5001 -				
12A	34041-23690	STRIP, SEAL	2	5001 -				
51A	61802-10020	BOLT,FLANGED	4	5001 -				
52A	61802-08025	BOLT,FLANGED	8	5001 -				

silverhorn.co.uk

COVER MOUNT

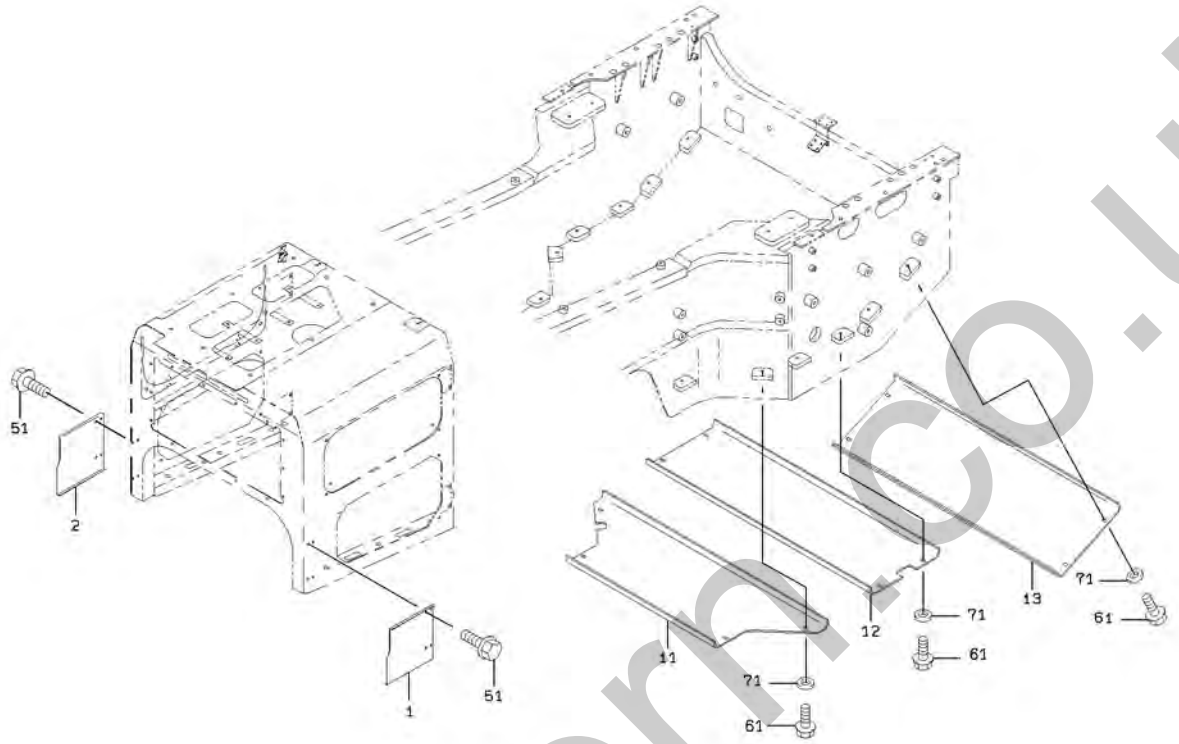

silverhorn.co.uk

COVER MOUNT

SYM-BOL	PART NUMBER	PART NAME	UNIT Q,TY	SERIAL (A) - (B)	REMARKS N P D	(A) (B)	(C) (D)	REMARK
1A	41636-45650	PLATE	1	5001 -				FR (LH)
2A	41636-45660	PLATE	1	5001 -				FR (RH)
11A	41636-45870	PLATE	1	5001 -				
12A	41618-33130	PLATE	1	5001 -				
13A	41618-33140	PLATE	1	5001 -				
51A	61802-10016	BOLT,FLANGED	8	5001 -				
61A	61802-12040	BOLT,FLANGED	12	5001 - 5054				
61B	61033-12040	BOLT	12	5055 -	B			
71A	62710-18121	WASHER,PLANE	12	5001 -				

silverhorn.co.uk

SEAT GROUP

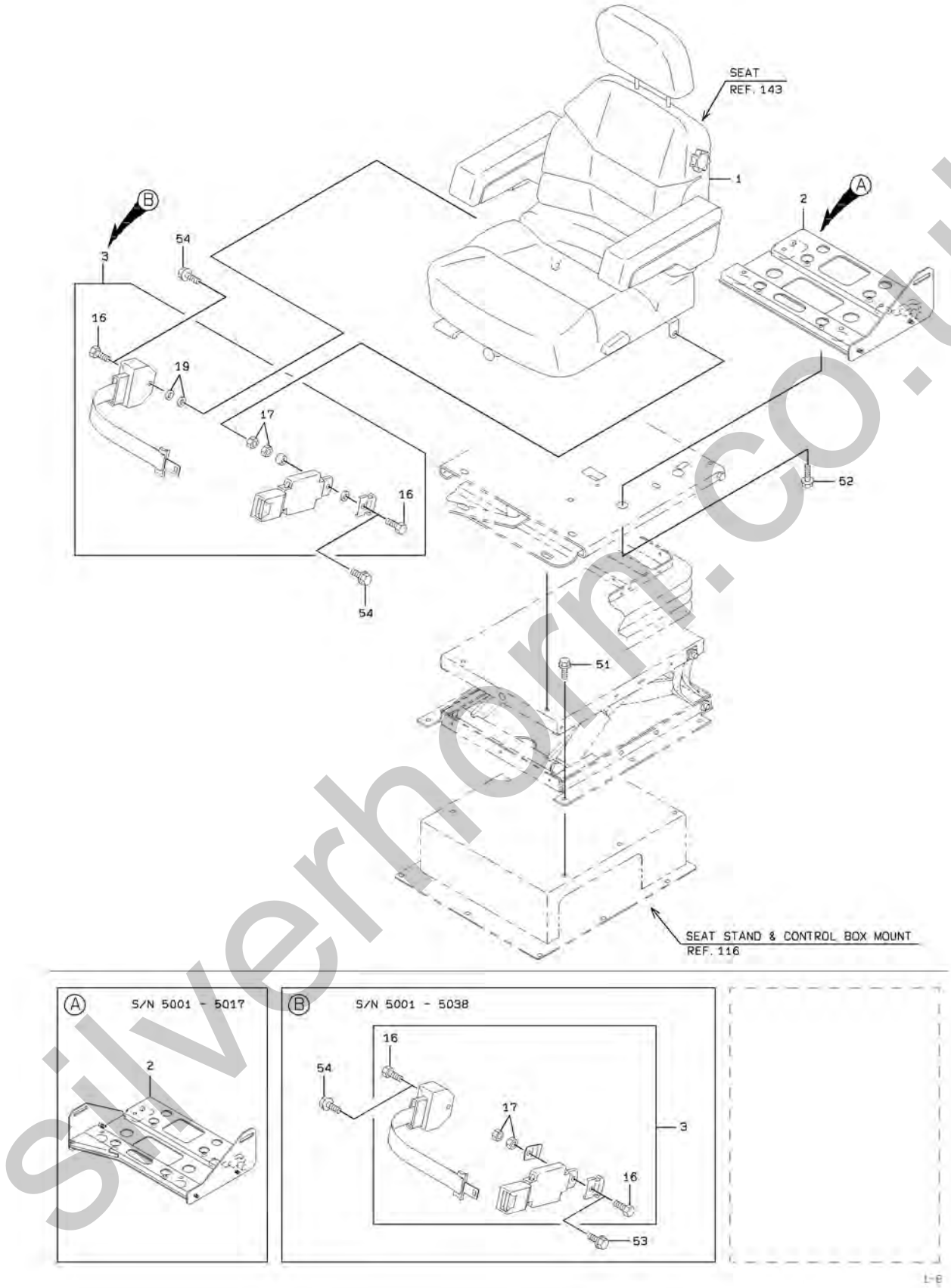

silverhorn.co.uk

SEAT GROUP

SYM-BOL	PART NUMBER	PART NAME	UNIT Q,TY	SERIAL (A) - (B)	REMARKS N P D	(A)	(B)	(C)	(D)	REMARK
1A	33921-60590-7	SEAT ASSY	1	5001 -						REF.143
2A	40902-22760	BRACKET	1	5001 - 5017						
2B	40902-25430	BRACKET	1	5018 - 5025	C					
2C	40902-30150	BRACKET	1	5026 - 5030	B					
2D	40902-34200	BRACKET	1	5031 -	B					
3A	43005-70060-7	BELT,SEAT	1	5001 - 5038		Y01				
3B	43005-60050-7	BELT,SEAT	1	5039 -	B	Y01				
16A	43900-73260-7	BOLT	2	5001 -		01				
17A	37643-70080-7	NUT,SELF-LOCKING	2	5001 -		01				
19A	46011-70630-7	WASHER,PLANE	2	5039 -		01				
51A	61802-08020	BOLT,FLANGED	6	5001 -						
52A	61802-10020	BOLT,FLANGED	4	5001 -						
53A	61802-10025	BOLT,FLANGED	1	5001 - 5038	D					
54A	61802-10035	BOLT,FLANGED	1	5001 - 5038						
54B	61802-10035	BOLT,FLANGED	2	5039 -						

silverhorn.co.uk

SEAT

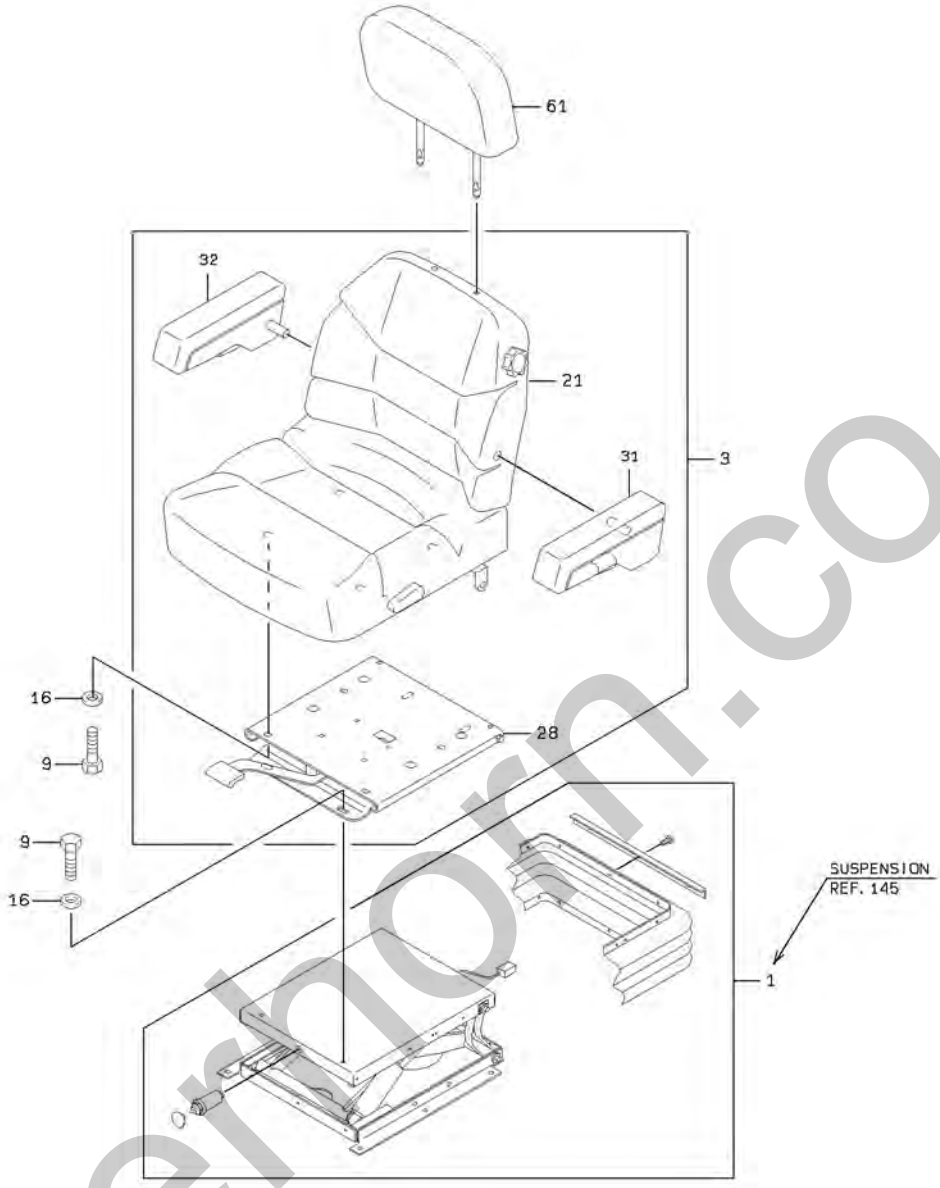

silvernorn.co.uk

SEAT

SYM-BOL	PART NUMBER	PART NAME	UNIT Q,TY	SERIAL (A) - (B)	REMARKS N P D	(A) (B)	(C) (D)	REMARK
000A	33921-60590-7	SEAT ASSY	1	5001 -				
1A	33500-70040-7	SUSPENSION ASSY	1	5001 -				REF.145
3A	33921-70180-7	SEAT ASSY	1	5001 -		Y01		
9A	43900-73530-7	BOLT	8	5001 -				
16A	46011-70650-7	WASHER,PLANE	8	5001 -				
21A	32860-70030-7	CUSHION ASSY,SEAT	1	5001 -		01		
28A	30215-70250-7	ADJUSTOR,SEAT	1	5001 -		01		
31A	30062-70380-7	ARMREST	1	5001 -		01		FR LH
32A	30062-70390-7	ARMREST	1	5001 -		01		FR RH
61A	42761-70010-7	HEADREST	1	5001 -				

silverhorn.co.uk

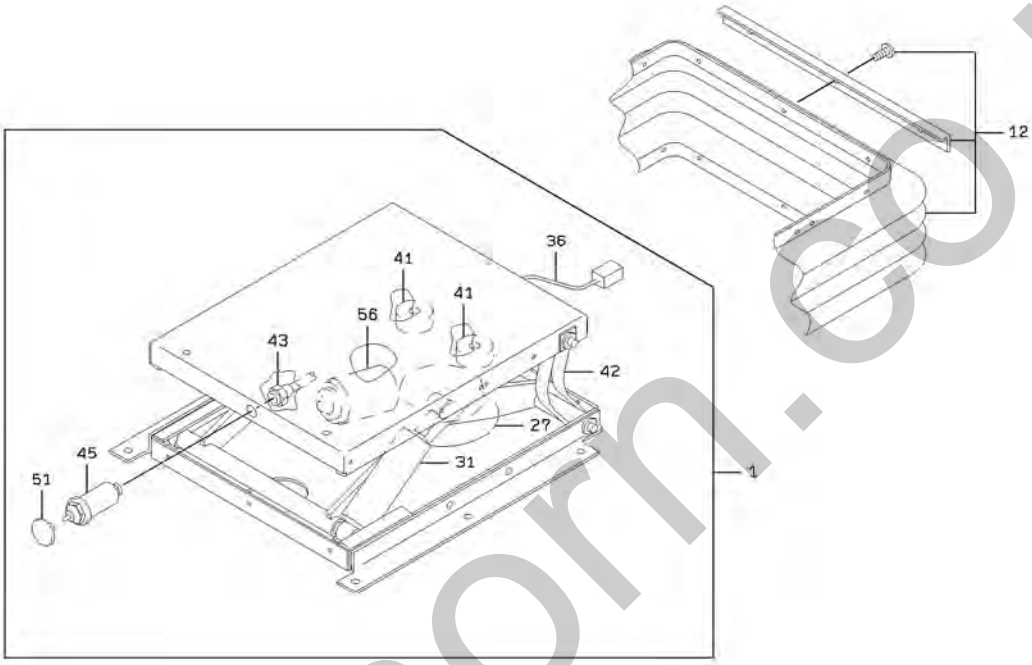

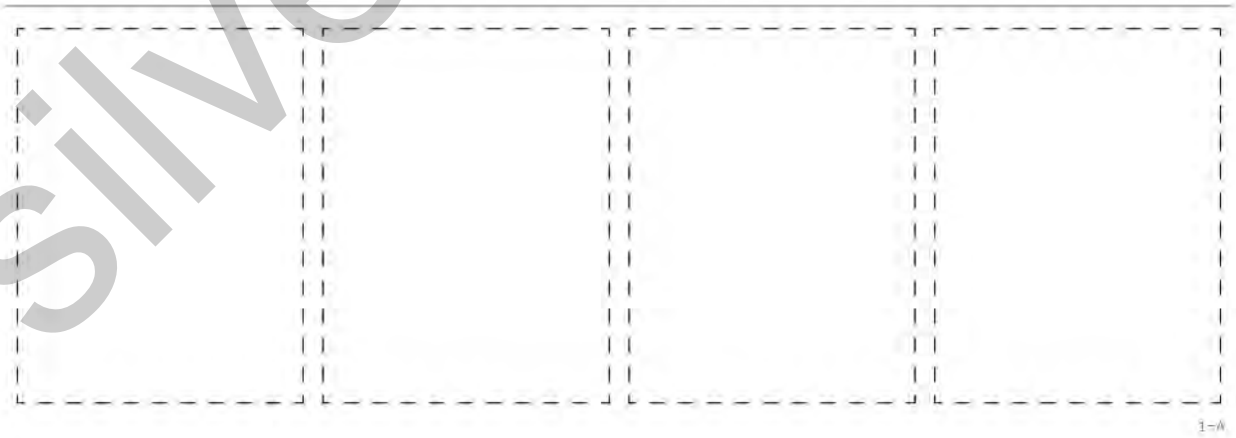

silverhorn.co.uk

SUSPENSION

SYM-BOL	PART NUMBER	PART NAME	UNIT Q,TY	SERIAL (A) - (B)	REMARKS N P D	(A)	(B)	(C)	(D)	REMARK
000A	33500-70040-7	SUSPENSION ASSY	1	5001 -						33500-70020-7
1A	33500-70050-7	SUSPENSION ASSY	1	5001 -		Y01				
12A	40790-70400-7	BOOT	1	5001 -						
27A	49212-70070-7	SPRING KIT	1	5001 -		01				
31A	49190-70020-7	SHOCK ABSORBER SET	1	5001 -		01				
36A	33191-70520-7	CABLE ASSY	1	5001 -		01				
41A	38691-70040-7	BUMPER	2	5001 -		01				
42A	43000-70060-7	BELT	2	5001 -		01				
43A	49501-70010-7	PIPING KIT	1	5001 -		01				
45A	38510-71090-7	VALVE	1	5001 -		01				
51A	37810-70560-7	KNOB	1	5001 -		01				
56A	33470-70080-7	COMPRESSOR ASSY	1	5001 -		01				

silverhorn.co.uk

GREASE PIPING (FOR FRONT CHASSIS)

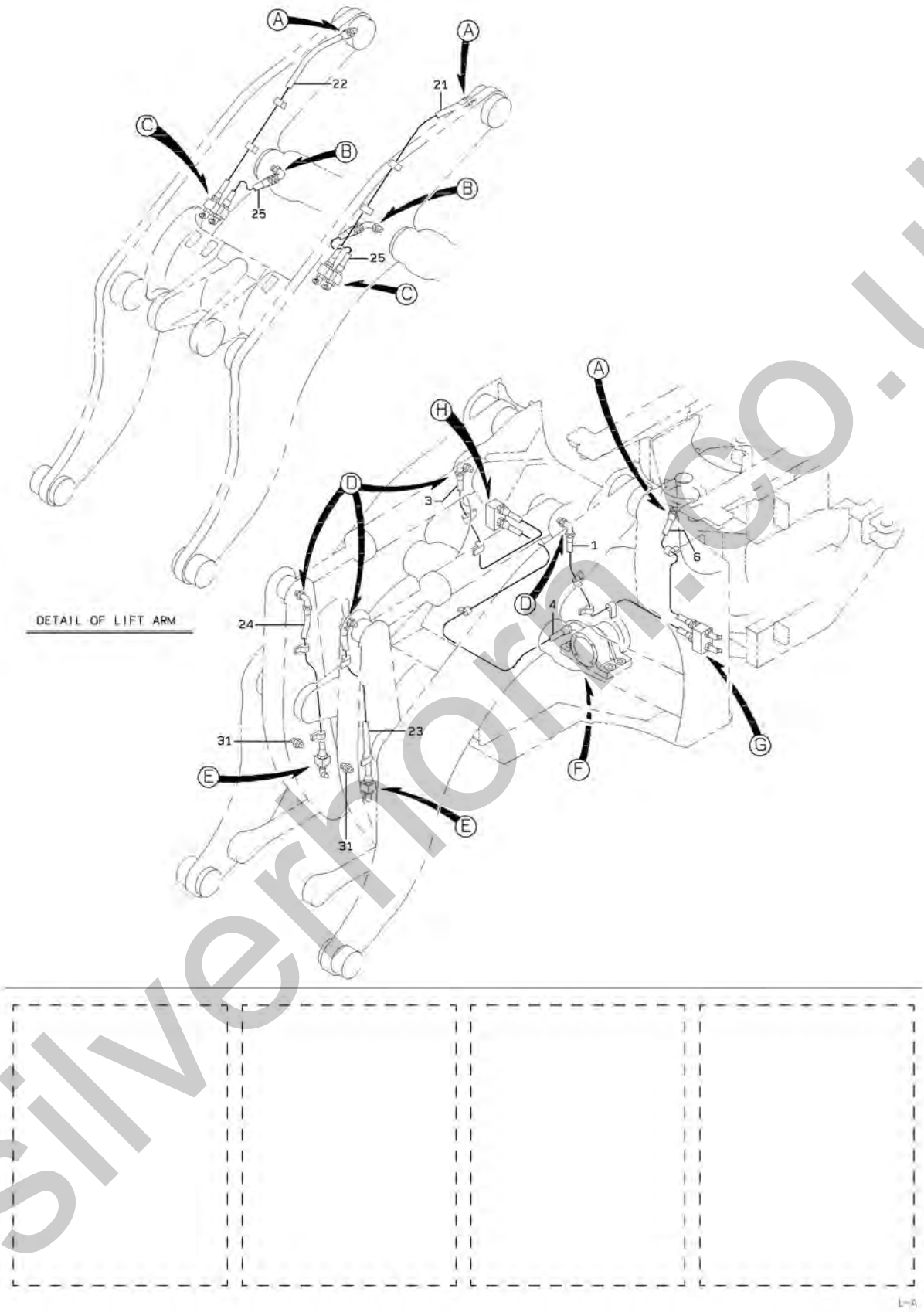

silverhorn.co.uk

GREASE PIPING (FOR FRONT CHASSIS)

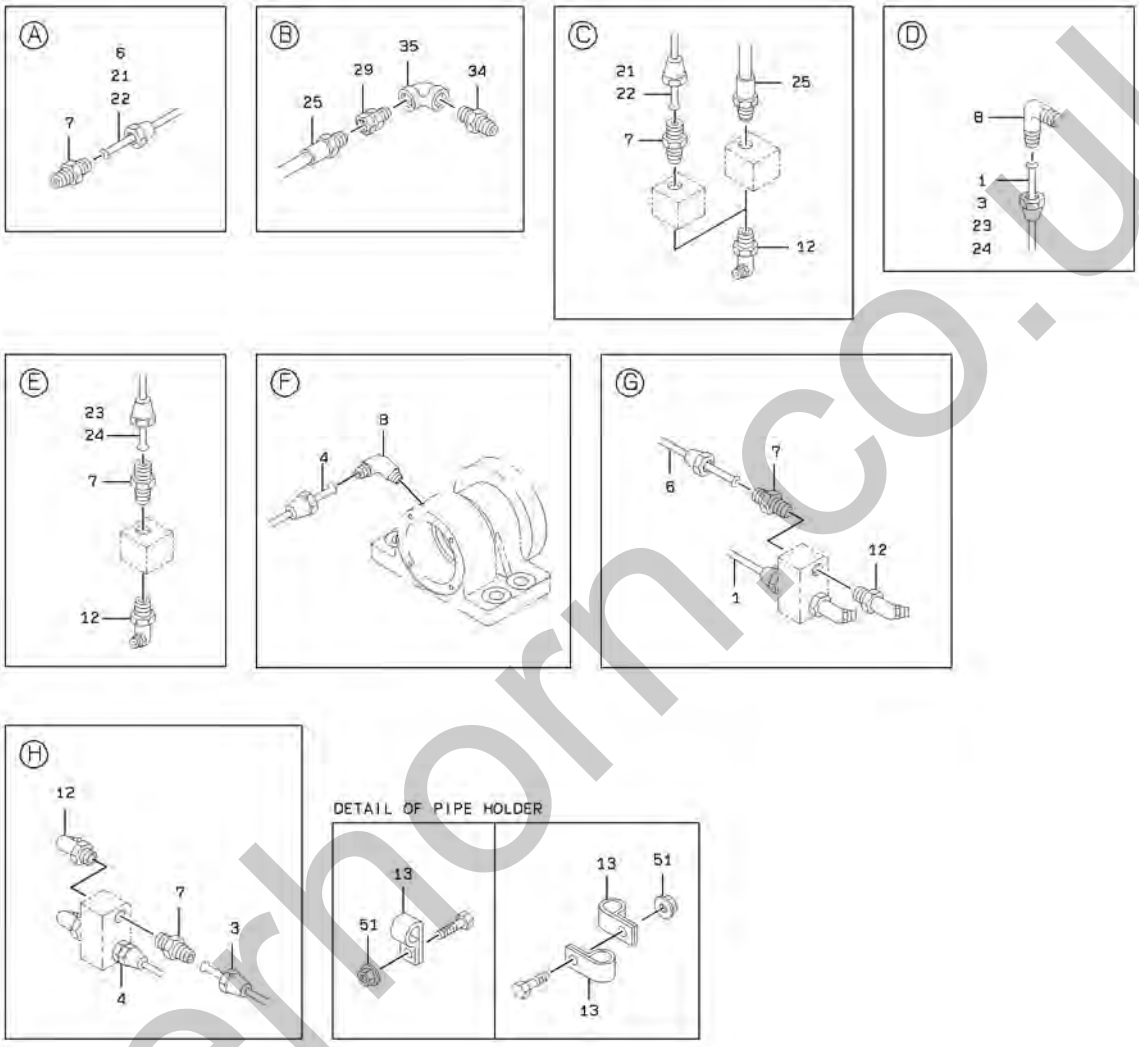

silverhorn.co.uk

GREASE PIPING (FOR FRONT CHASSIS)

SYM-BOL	PART NUMBER	PART NAME	UNIT Q,TY	SERIAL (A) - (B)	REMARKS N P D	(A) (B)	(C) (D)	REMARK
1A	38705-53270	PIPE ASSY,FLARED	1	5001 -				TILT CYL.(LH)
3A	38705-53280	PIPE ASSY,FLARED	1	5001 -				TILT CYL.(RH)
4A	38705-46410	PIPE ASSY,FLARED	1	5001 -				PARKING BRAKE
6A	38705-46420	PIPE ASSY,FLARED	1	5001 -				CENTER PIN(UPP
7A	69100-10600	FLARED FITTING	11	5001 -				
8A	69100-20600	FLARED FITTING,ELB	5	5001 -				
12A	75011-45400	NIPPLE,GREASE	10	5001 -				
13A	72001-10600	HOLDER,PIPE	A/R	5001 -				(D=6.35)
21A	38705-35650	PIPE ASSY,FLARED	1	5001 -				LIFT ARM(LH)
22A	38705-35660	PIPE ASSY,FLARED	1	5001 -				LIFT ARM(RH)
23A	38705-35400	PIPE ASSY,FLARED	1	5001 -				LEVER(LH)
24A	38705-35410	PIPE ASSY,FLARED	1	5001 -				LEVER(RH)
25A	68612-10060	HOSE,HIGH PRESSURE	2	5001 -				LIFT CYL.
29A	88221-00604	ADAPTER,UNION	2	5001 -				
31A	75011-25400	NIPPLE,GREASE	2	5001 -				
34A	88302-40402	FITTING,NIPPLE	2	5001 -				
35A	88340-12604	FITTING,ELBOW	2	5001 -				
51A	62480-21081	NUT,FLANGED	A/R	5001 -				

silverhorn.co.uk

MEMO

silverhorn.co.uk

GREASE PIPING (FOR REAR CHASSIS)

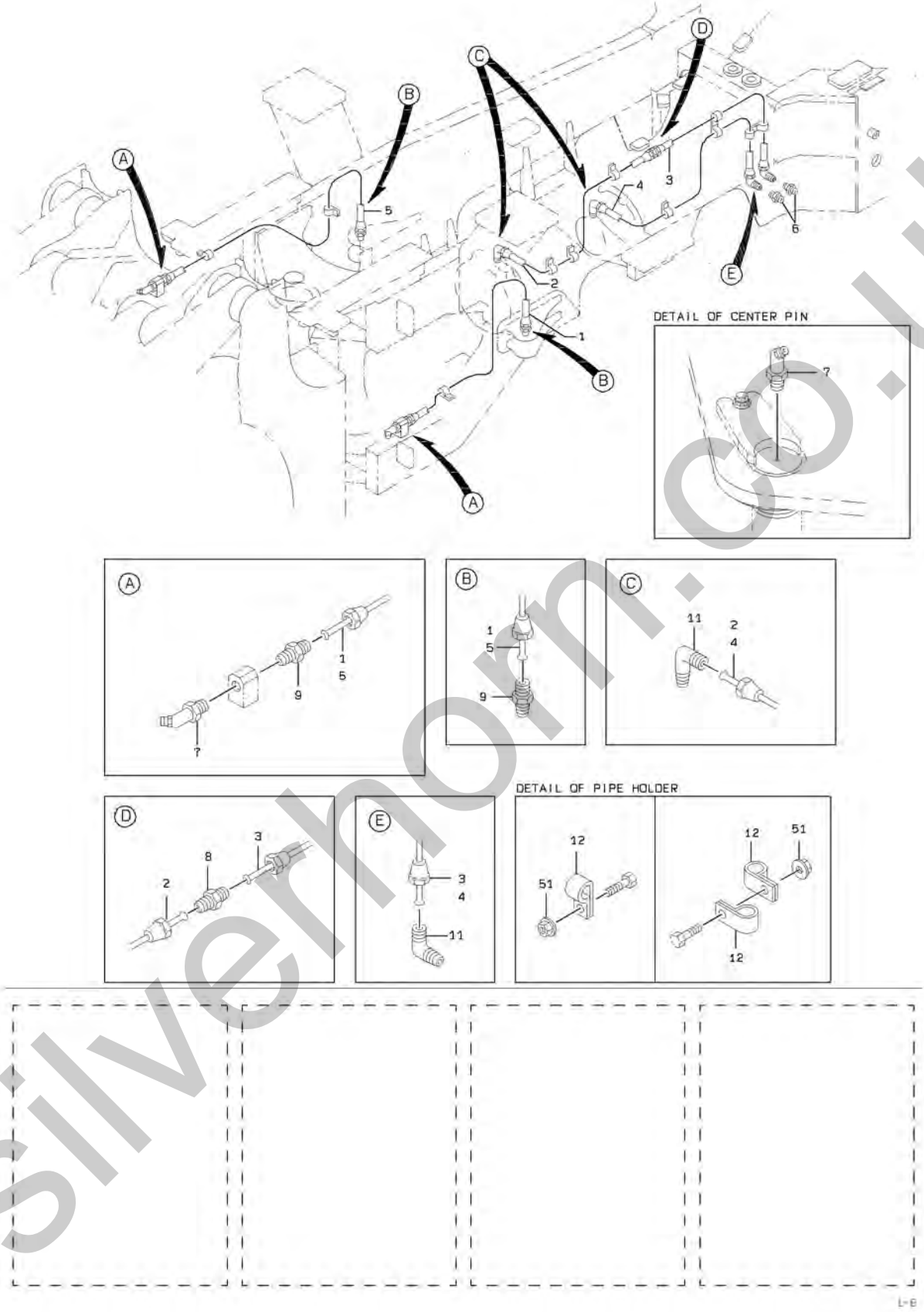

silverhorn.co.uk

GREASE PIPING (FOR REAR CHASSIS)

SYM-BOL	PART NUMBER	PART NAME	UNIT Q,TY	SERIAL (A) - (B)	REMARKS N P D	(A) (B)	(C) (D)	REMARK
1A	38705-46430	PIPE ASSY,FLARED	1	5001 -				CYLINDER (LH)
2A	38705-52910	PIPE ASSY,FLARED	1	5001 -				REAR AXLE(FRON
3A	38705-52920	PIPE ASSY,FLARED	1	5001 -				
4A	38705-52930	PIPE ASSY,FLARED	1	5001 -				REAR AXLE(REAR
5A	38705-46450	PIPE ASSY,FLARED	1	5001 -				CYLINDER (RH)
6A	75011-25400	NIPPLE,GREASE	2	5001 -				
7A	75011-45400	NIPPLE,GREASE	3	5001 -				
8A	69100-60600	FLARED FITTING,UNI	1	5001 -				
9A	69100-10600	FLARED FITTING	4	5001 -				
11A	69100-20600	FLARED FITTING,ELB	4	5001 -				
12A	72001-10600	HOLDER,PIPE	A/R	5001 -				(D=6.35)
51A	62480-21081	NUT,FLANGED	A/R	5001 -				

silverhorn.co.uk

GAUGE GROUP

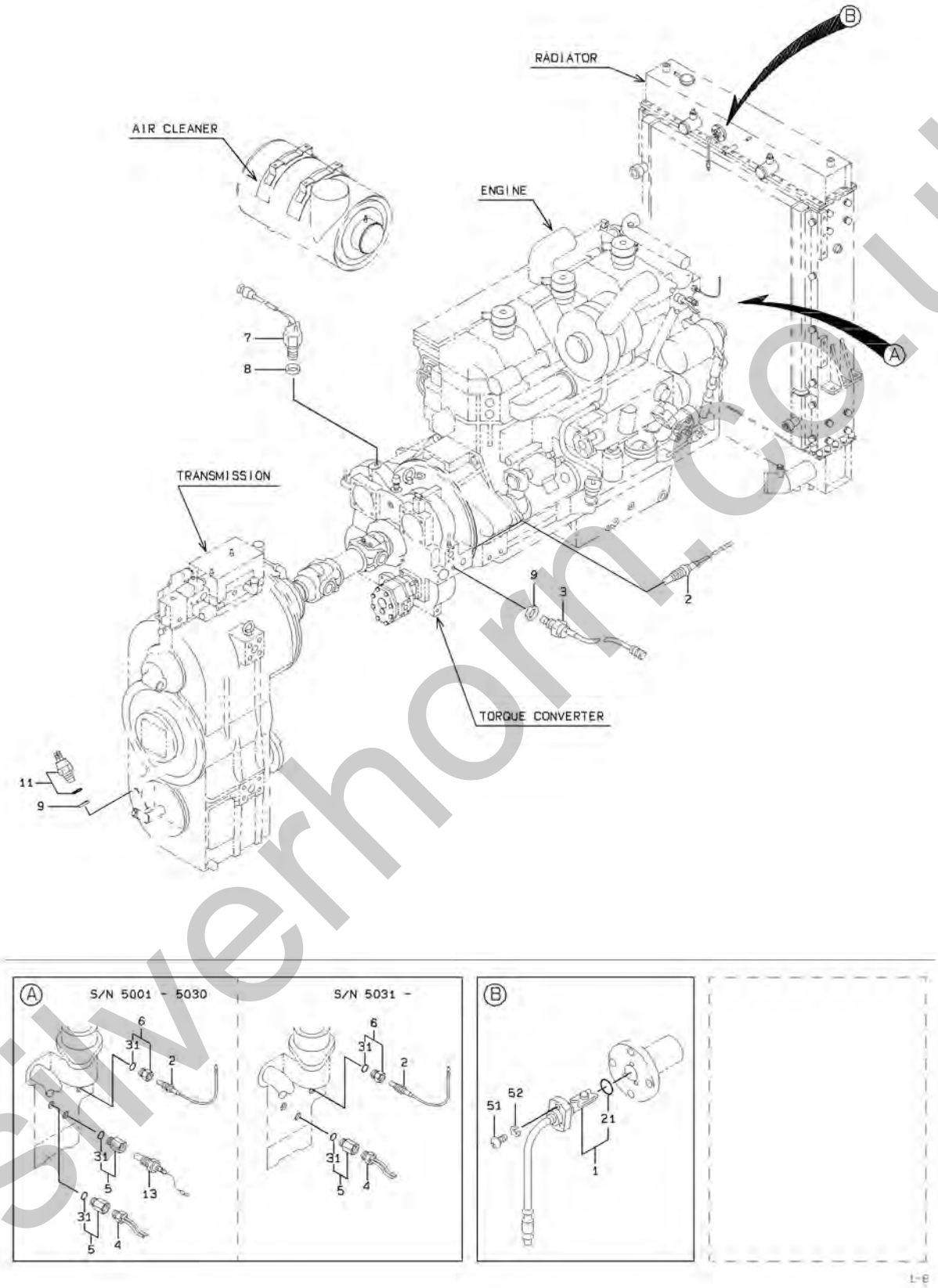

silverhorn.co.uk

GAUGE GROUP

SYM-BOL	PART NUMBER	PART NAME	UNIT Q,TY	SERIAL (A)	-	(B)	REMARKS N P D	(A)	(B)	(C)	(D)	REMARK
1A	35824-20010	SENSOR,OIL LEVEL	1	5001	-			Y01				WATER LEVEL
2A	35829-60050	SENSOR,TEMPERATURE	2	5001	-							OIL & W.TEMP.G
3A	35037-20200	SWITCH,TEMPERATURE	1	5001	-							
4A	35037-20020	SWITCH,TEMPERATURE	1	5001	-							ETHER SOLINOID
5A	30230-26100	ADAPTER	2	5001	-	5030			Y02			
5B	30230-26100	ADAPTER	1	5031	-				Y02			
6A	30230-25720	ADAPTER	1	5001	-				Y02			
7A	35051-60080	SWITCH,PROXIMITY	1	5001	-							
8A	31990-20970	GASKET	1	5001	-							
9A	88111-11690	WASHER,SEAL	1	5001	-	5052						
9B	88111-11690	WASHER,SEAL	2	5053	-							
11A	35037-60030	SWITCH,TEMPERATURE	1	5001	-							T/M OIL / LIGH
13A	50401-03610	SWITCH,TEMPERATURE	1	5001	-	5030	D					E/G OIL / LIGH
21A	47131-20240	RING,O	1	5001	-			01				
31A	65231-00081	RING,O	1	5001	-				02			
51A	62256-51610	SCREW	3	5001	-							
52A	62721-06100	WASHER,SPRING	3	5001	-							

silverhorn.co.uk

ELECTRICAL PARTS MOUNT

<S/N 5001 - 5080>

CONTROL UNIT & FUSE BOX & ELECTRICAL UNIT MOUNT

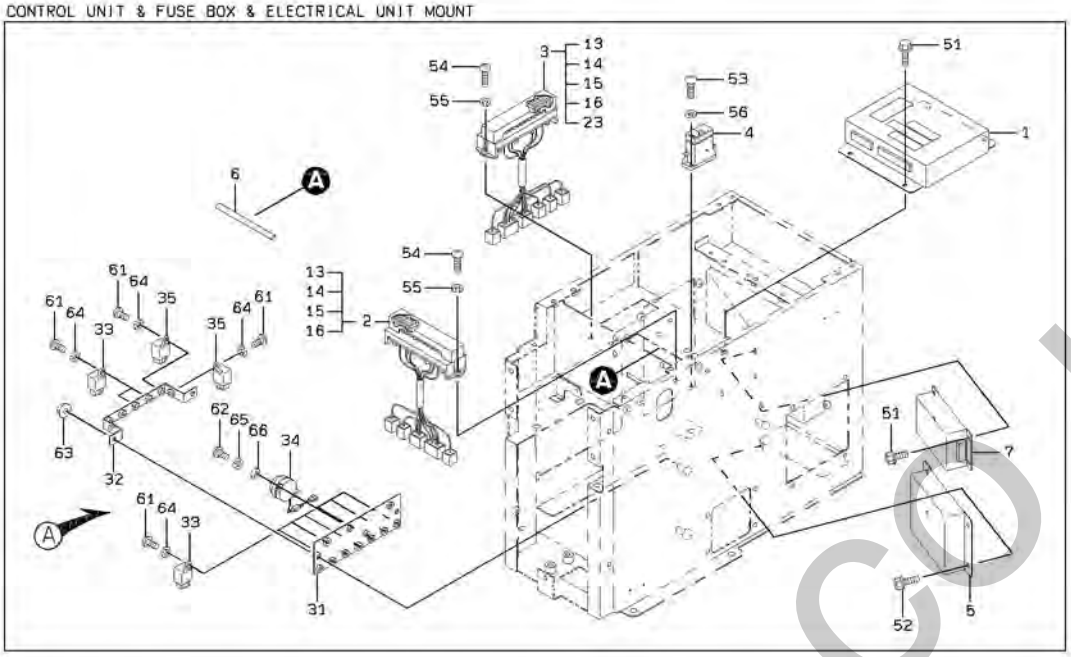

RELAY UNIT MOUNT

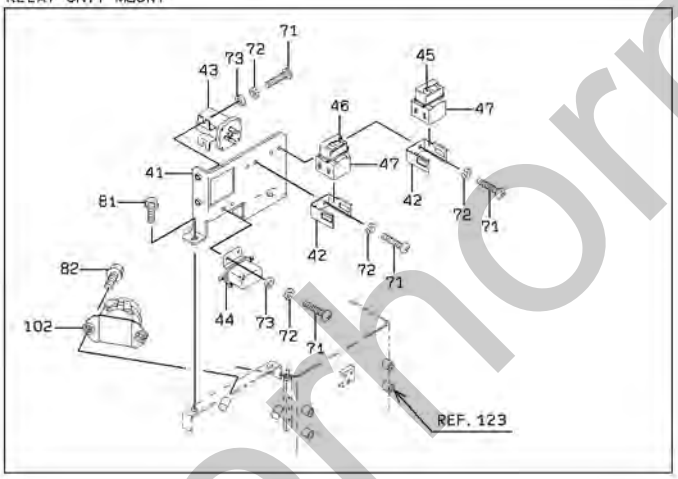

HORN MOUNT

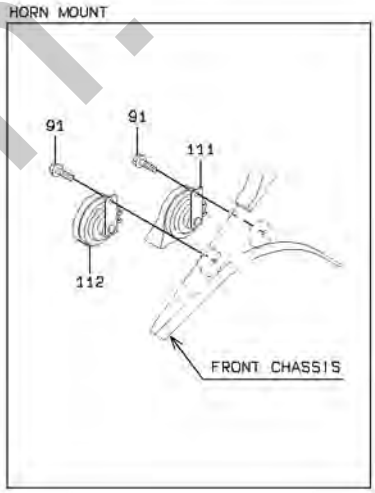

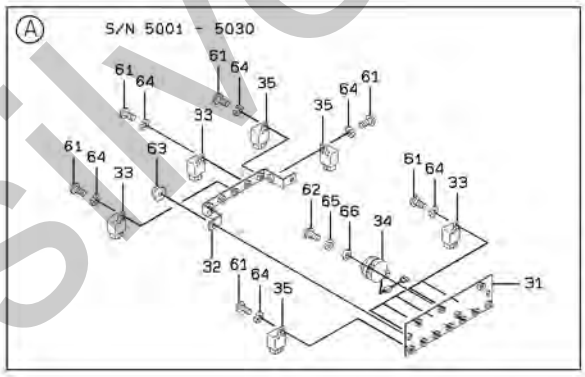

silvernorn.co.uk

ELECTRICAL PARTS MOUNT

SYM-BOL	PART NUMBER	PART NAME	UNIT Q,TY	SERIAL (A)	-	(B)	REMARKS N P D	(A)	(B)	(C)	(D)	REMARK
1A	33410-61340	CONTROLLER UNIT	1	5001	-	5080						
2A	43871-20440	BOX,FUSE	1	5001	-	5080		Y01				
3A	43871-20450	BOX,FUSE	1	5001	-	5080			Y02			
4A	41195-70010	BREAKER,CIRCUIT	1	5001	-	5080						
5A	33411-60120	CONTROLLER ASSY,WR	1	5001	-	5080						
6A	34041-22660	STRIP, SEAL	1	5001	-	5080						
7A	33460-60070	CONVERTER	1	5001	-	5052	N					
7B	33460-60150	CONVERTER	1	5053	-	5080	A					
13A	39880-70130	FUSE	A/R	5001	-	5080		01	02			24V5A
14A	39880-70110	FUSE	A/R	5001	-	5080		01	02			24V10A
15A	39880-70100	FUSE	A/R	5001	-	5080		01	02			24V15A
16A	39880-70090	FUSE	A/R	5001	-	5080		01	02			24V20A
23A	39880-70120	FUSE	A/R	5001	-	5080			02			24V3A
31A	41618-33220	PLATE	1	5001	-	5080						
32A	41618-26570	PLATE	1	5001	-	5080						
33A	45050-70310	RELAY	7	5001	-	5030						
33B	45050-70310	RELAY	8	5031	-	5080						
34A	40810-20020	BUZZER	1	5001	-	5080						
35A	45050-70350	RELAY	3	5001	-	5030						
35B	45050-70350	RELAY	2	5031	-	5080						
41A	40901-54220	BRACKET	1	5001	-	5023						
41B	40902-29020	BRACKET	1	5024	-	5080	C					
42A	41600-48260	PLATE	2	5001	-	5080						
43A	50401-00140-7	SWITCH,MAGNET	1	5001	-	5080						
44A	50401-00100-7	RELAY	1	5001	-	5080						
45A	39880-70250	FUSE	1	5001	-	5080						24V30A
46A	39880-70220	FUSE	1	5001	-	5080						24V70A
47A	43871-20190	BOX,FUSE	2	5001	-	5080						
51A	61802-06016	BOLT,FLANGED	8	5001	-	5080						
52A	61802-08012	BOLT,FLANGED	4	5001	-	5080						
53A	62256-51416	SCREW	2	5001	-	5058						
53B	62256-51420	SCREW	2	5059	-	5080	B					
54A	62256-51620	SCREW	4	5001	-	5058						
54B	62256-51625	SCREW	4	5059	-	5080	B					
55A	62721-06100	WASHER,SPRING	4	5001	-	5080						
56A	62721-04100	WASHER,SPRING	2	5001	-	5080						
61A	62256-51610	SCREW	10	5001	-	5080						62256-51616
62A	62256-51412	SCREW	2	5001	-	5080						62256-51416
63A	62480-21081	NUT,FLANGED	2	5001	-	5080						
64A	62721-06100	WASHER,SPRING	10	5001	-	5080						
65A	62721-04100	WASHER,SPRING	2	5001	-	5080						
66A	62701-20041	WASHER,PLANE	2	5001	-	5080						
71A	62256-51616	SCREW	8	5001	-	5080						
72A	62721-06100	WASHER,SPRING	8	5001	-	5080						
73A	62701-40061	WASHER,PLANE	4	5001	-	5080						
81A	61802-10020	BOLT,FLANGED	2	5001	-	5080						
82A	61802-08020	BOLT,FLANGED	2	5001	-	5080						
91A	61802-08016-7	BOLT,FLANGED	2	5001	-	5080						
102A	45058-20010	RELAY,BATTERY	1	5001	-	5080						
111A	43300-60060	HORN	1	5001	-	5080						
112A	43300-60070	HORN	1	5001	-	5080						

silverhorn.co.uk

ELECTRICAL PARTS MOUNT

<S/N 5081 - >

CONTROL UNIT & FUSE BOX & ELECTRICAL UNIT MOUNT

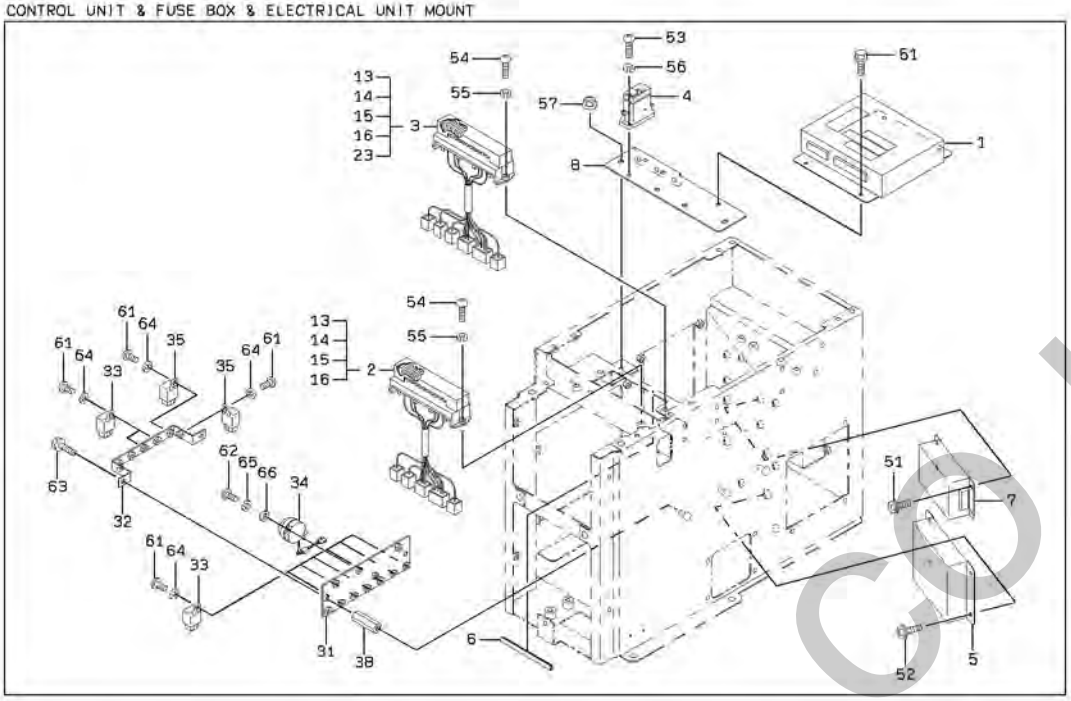

RELAY UNIT MOUNT

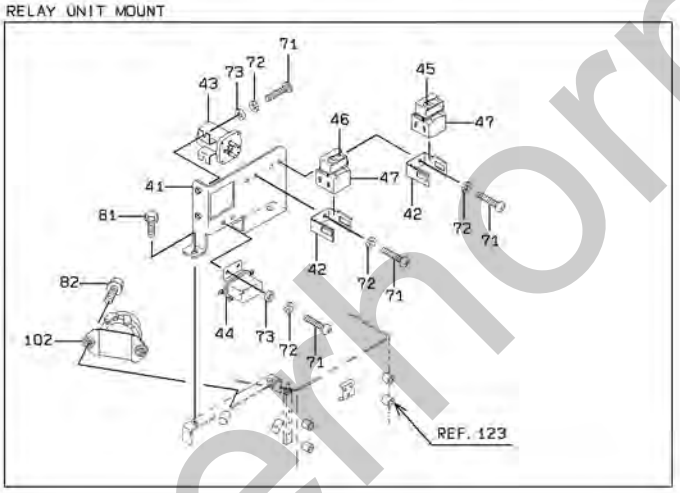

HORN MOUNT

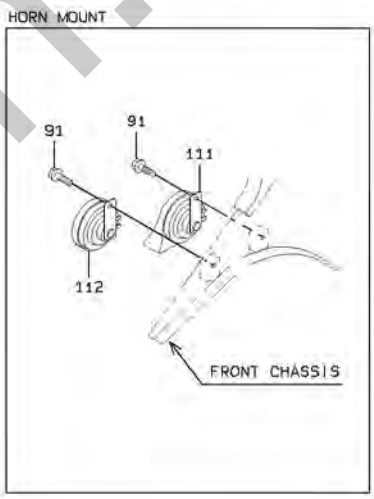

silvernorn.co.uk

ELECTRICAL PARTS MOUNT

SYM-BOL	PART NUMBER	PART NAME	UNIT Q,TY	SERIAL (A) - (B)			REMARKS N P D	(A)	(B)	(C)	(D)	REMARK
1A	33410-61340	CONTROLLER UNIT	1	5081	-							
2A	43871-20440	BOX,FUSE	1	5081	-			Y01				
3A	43871-20450	BOX,FUSE	1	5081	-				Y02			
4A	41195-70010	BREAKER,CIRCUIT	1	5081	-							
5A	33411-60120	CONTROLLER ASSY,WR	1	5081	-							
6A	34041-22660	STRIP, SEAL	1	5081	-							
7A	33460-60150	CONVERTER	1	5081	-							
8A	41750-33960	PLATE	1	5081	-							
13A	39880-70130	FUSE	A/R	5081	-			01	02			24V5A
14A	39880-70110	FUSE	A/R	5081	-			01	02			24V10A
15A	39880-70100	FUSE	A/R	5081	-			01	02			24V15A
16A	39880-70090	FUSE	A/R	5081	-			01	02			24V20A
23A	39880-70120	FUSE	A/R	5081	-				02			24V3A
31A	41618-33220	PLATE	1	5081	-							
32A	41618-26570	PLATE	1	5081	-							
33A	45050-70310	RELAY	8	5081	-							
34A	40810-20020	BUZZER	1	5081	-							
35A	45050-70350	RELAY	2	5081	-							
38A	37600-24550	NUT	2	5081	-							
41A	40902-29020	BRACKET	1	5081	-							
42A	41600-48260	PLATE	2	5081	-							
43A	50401-00140-7	SWITCH,MAGNET	1	5081	-							
44A	50401-00100-7	RELAY	1	5081	-							
45A	39880-70250	FUSE	1	5081	-							24V30A
46A	39880-70220	FUSE	1	5081	-							24V70A
47A	43871-20190	BOX,FUSE	2	5081	-							
51A	61802-06016	BOLT,FLANGED	8	5081	-							
52A	61802-08012	BOLT,FLANGED	4	5081	-							
53A	62256-51420	SCREW	2	5081	-							
54A	62256-51625	SCREW	4	5081	-							
55A	62721-06100	WASHER,SPRING	4	5081	-							
56A	62721-04100	WASHER,SPRING	2	5081	-							
57A	62480-21061	NUT,FLANGED	2	5081	-							
61A	62256-51610	SCREW	10	5081	-							
62A	62256-51412	SCREW	2	5081	-							
63A	61802-08016	BOLT,FLANGED	2	5081	-							
64A	62721-06100	WASHER,SPRING	10	5081	-							
65A	62721-04100	WASHER,SPRING	2	5081	-							
66A	62701-20041	WASHER,PLANE	2	5081	-							
71A	62256-51616	SCREW	8	5081	-							
72A	62721-06100	WASHER,SPRING	8	5081	-							
73A	62701-40061	WASHER,PLANE	4	5081	-							
81A	61802-10020	BOLT,FLANGED	2	5081	-							
82A	61802-08020	BOLT,FLANGED	2	5081	-							
91A	61802-08016-7	BOLT,FLANGED	2	5081	-							
102A	45058-20010	RELAY,BATTERY	1	5081	-							
111A	43300-60060	HORN	1	5081	-	5104						
111B	43300-60090	HORN	1	5105	-		C					
112A	43300-60070	HORN	1	5081	-	5104						
112B	43300-60100	HORN	1	5105	-		C					

silvermoon.co.uk

LAMP GROUP

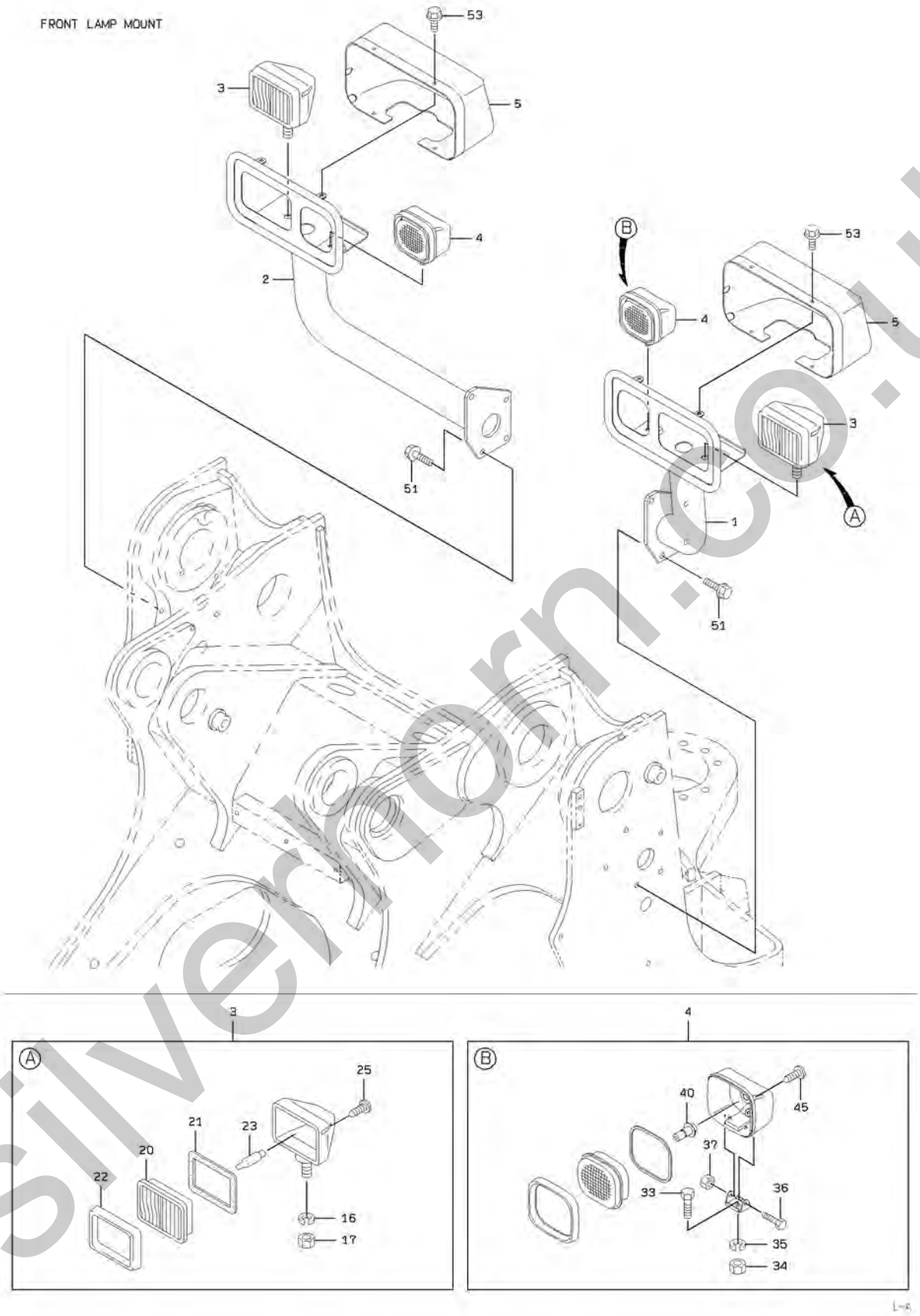

silverhorn.co.uk

LAMP GROUP

REAR LAMP MOUNT

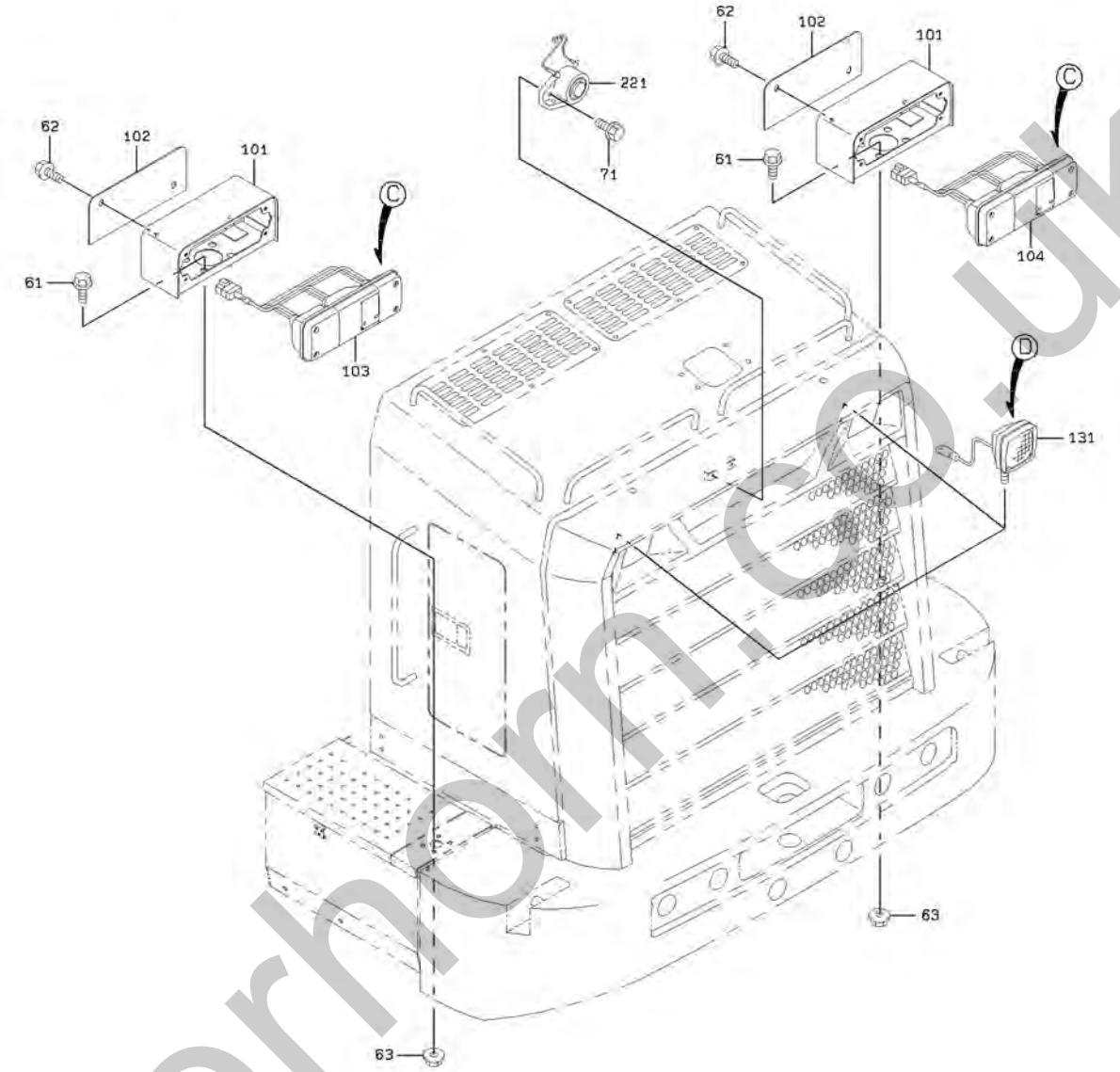

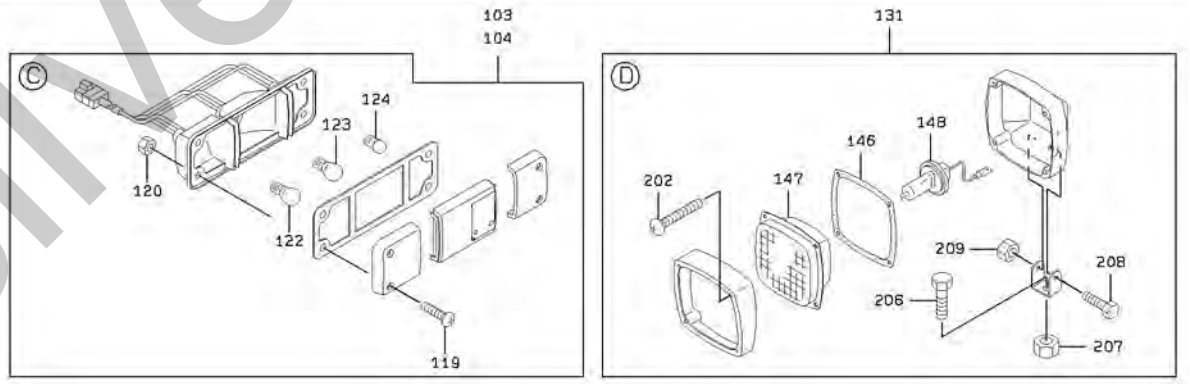

silverhorn.co.uk

LAMP GROUP

SYM-BOL	PART NUMBER	PART NAME	UNIT Q,TY	SERIAL (A) - (B)	REMARKS N P D	(A)	(B)	(C)	(D)	REMARK
1A	40968-24830	BRACKET,LAMP	1	5001 -						FR LH
2A	40968-24840	BRACKET,LAMP	1	5001 -						FR RH
3A	44890-60240	LAMP,HEAD	2	5001 -		Y01				HALOGEN LAMP
4A	44890-60260	LAMP,HEAD	2	5001 -			Y02			HALOGEN LAMP
5A	31828-20490	GUARD,LAMP	2	5001 - 5114						
5B	31828-20600	GUARD,LAMP	2	5115 -	C					
16A	62721-14100	WASHER,SPRING	1	5001 -		01				
17A	62401-81142	NUT	1	5001 -		01				
20A	43890-70420	BODY	1	5001 -		01				
21A	31990-71300	GASKET	1	5001 -		01				
22A	40600-70510	FRAME	1	5001 -		01				
23A	38480-70850	BULB	1	5001 -		01				24V75/70W
25A	62261-15025	SCREW,TAPPING	4	5001 -		01				
33A	61001-08020	BOLT	1	5001 -			02			
34A	62401-81081	NUT	1	5001 -			02			
35A	62721-08100	WASHER,SPRING	1	5001 -			02			
36A	61001-06050	BOLT	1	5001 -			02			
37A	37600-72340	NUT	1	5001 -			02			
40A	38480-70770	BULB	1	5001 -			02			24V55W
45A	62261-14018	SCREW,TAPPING	4	5001 -			02			
51A	61802-12025	BOLT,FLANGED	8	5001 -						
53A	61802-06016	BOLT,FLANGED	8	5001 -						
61A	61802-12025	BOLT,FLANGED	8	5001 -						
62A	61802-08016-7	BOLT,FLANGED	4	5001 -						
63A	62480-21121	NUT,FLANGED	8	5001 -						
71A	61802-06012	BOLT,FLANGED	2	5001 -						
101A	31210-22490	COVER	2	5001 -						
102A	41607-21240	PLATE	2	5001 -						
103A	44881-60300	LAMP,COMBINATION	1	5001 -				Y03		FR LH
104A	44881-60310	LAMP,COMBINATION	1	5001 -					Y04	FR RH
119A	62256-51530	SCREW	4	5001 -				03	04	
120A	37600-72350	NUT	4	5001 -				03	04	
122A	38480-70930	BULB	1	5001 -				03	04	24V25W
123A	38480-70870	BULB	1	5001 -				03	04	24V25/10W
124A	38480-70920	BULB	1	5001 -				03	04	24V12W
131A	44890-60190	LAMP,HEAD	2	5001 -		Y05				
146A	31990-71580	GASKET	1	5001 -		05				
147A	45701-70670	LENS	1	5001 -		05				
148A	38480-70410	BULB	1	5001 -		05				24V70W
202A	35106-70180	SCREW,TAPPING	4	5001 -		05				
206A	61034-10028	BOLT	1	5001 -		05				
207A	37600-71930	NUT	1	5001 -		05				
208A	43900-73040	BOLT	1	5001 -		05				
209A	37600-71940	NUT	1	5001 -		05				
221A	40810-60030	BUZZER	1	5001 -						

silverhorn.co.uk

MEMO

silverhorn.co.uk

BATTERY & GREASE GUN MOUNT

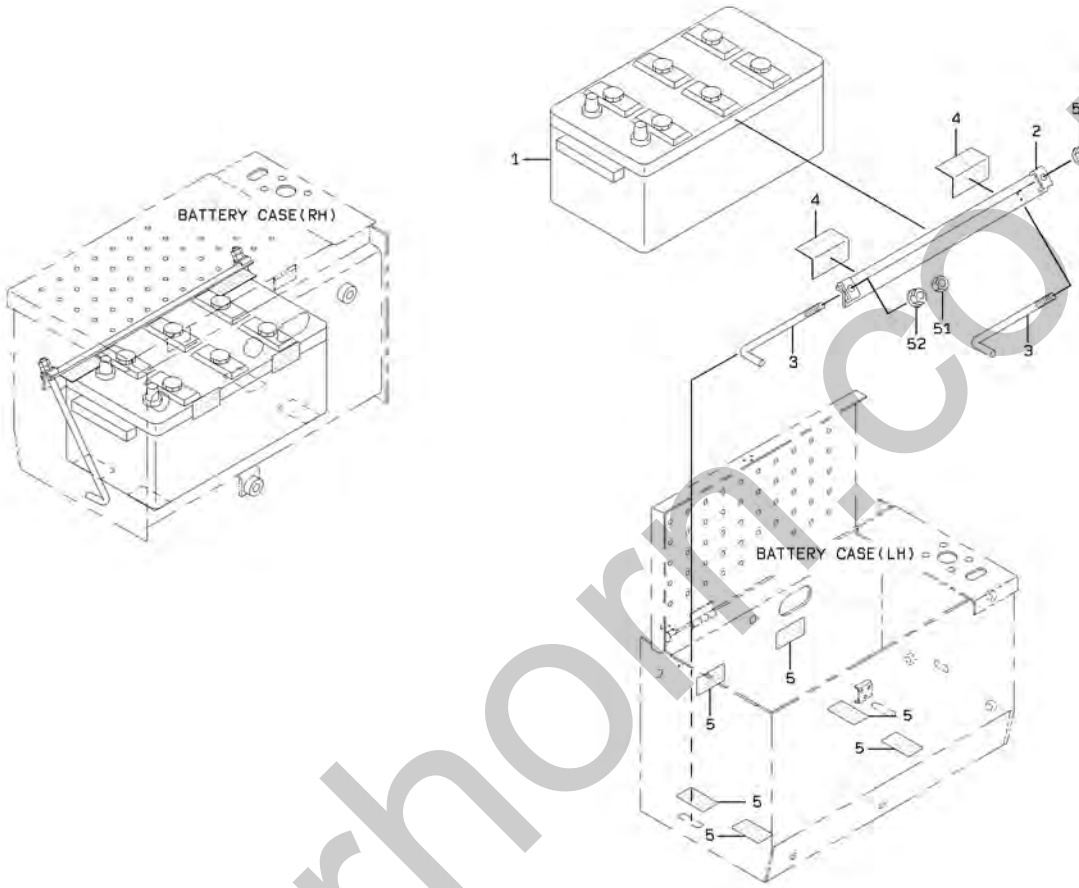

silverhorn.co.uk

BATTERY & GREASE GUN MOUNT

SYM-BOL	PART NUMBER	PART NAME	UNIT Q,TY	SERIAL (A) - (B)	REMARKS N P D	(A) (B)	(C) (D)	REMARK
1A	38450-60050-7	BATTERY	2	5001 -				
2A	41611-20150	PLATE	2	5001 -				
3A	45870-20010	ROD	4	5001 -				
4A	33713-20030	SHEET,RUBBER	4	5001 -				
5A	33713-20110	SHEET,RUBBER	12	5001 -				
51A	62401-81121	NUT	4	5001 -				
52A	62480-21121	NUT,FLANGED	4	5001 -				

silverhorn.co.uk

RELAY & SWITCH MOUNT

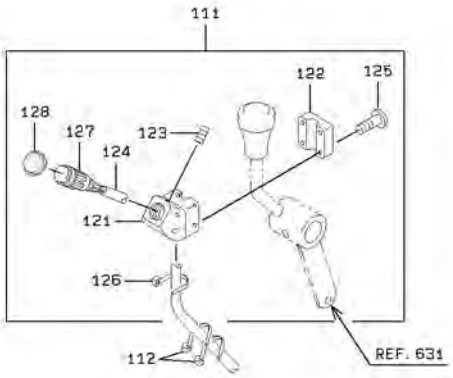

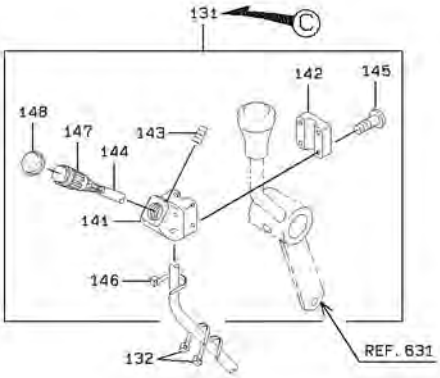

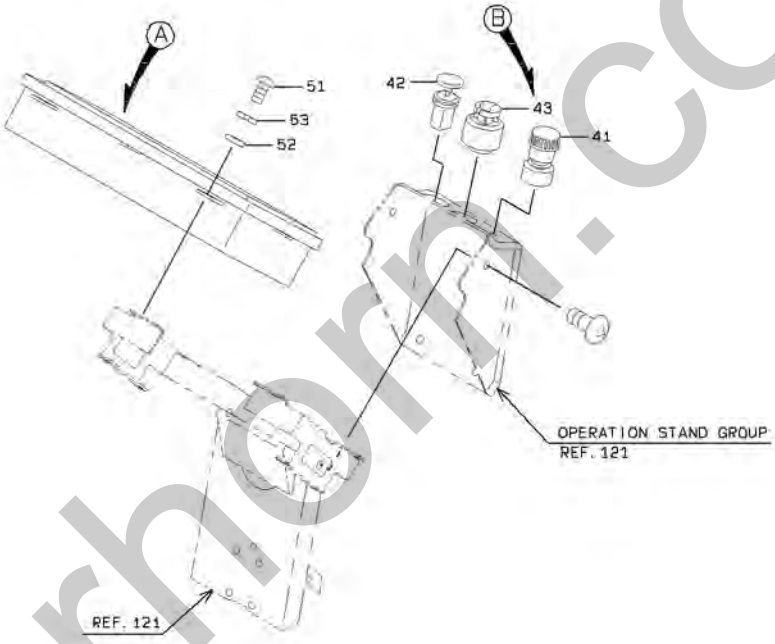

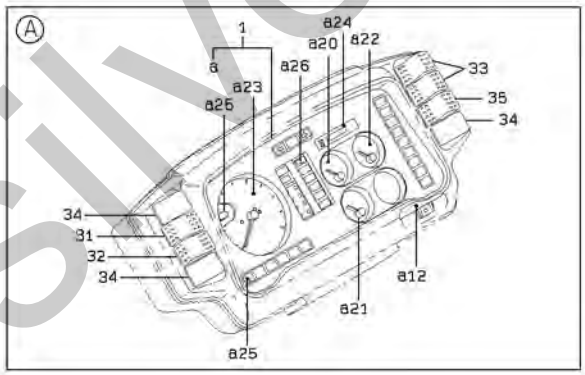

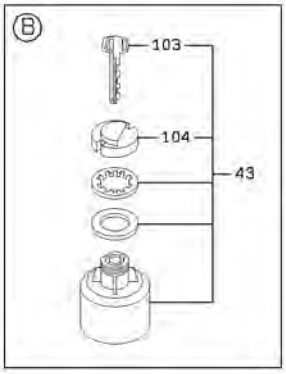

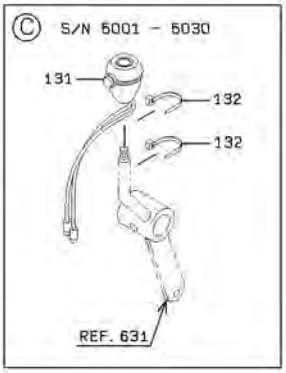

L-e

silverhorn.co.uk

RELAY & SWITCH MOUNT

SYM-BOL	PART NUMBER	PART NAME	UNIT Q,TY	SERIAL (A) - (B)	REMARKS N P D	(A)	(B)	(C)	(D)	REMARK
1A	39753-60450	PANEL ASSY,INSTRUM	1	5001 -		Y01				
12A	31205-70120	COVER	1	5001 -		01				
20A	33243-70050	GAUGE,WATER TEMPER	1	5001 -		01				
21A	33245-70080	GAUGE,OIL TEMPERAT	1	5001 -		01				
22A	33241-70060	GAUGE,FUEL LEVEL	1	5001 -		01				
23A	44370-70070	TACHOMETER	1	5001 -		01				
24A	44361-70050	METER,HOUR	1	5001 -		01				
25A	38480-70420	BULB	32	5001 -		01				24V1.4W
26A	38480-70440	BULB	1	5001 -		01				24V3W
31A	35010-60270	SWITCH	1	5001 -						INCHING
32A	35010-60280	SWITCH	1	5001 -						COLD STARTER
33A	35010-60460	SWITCH	2	5001 -						WORKING LAMP
34A	41530-60080	PLUG	3	5001 -						35010-60570
35A	35010-60570	SWITCH	1	5001 -						41530-60080
41A	35035-60080	SWITCH,COMBINATION	1	5001 -						
42A	35048-60040	SWITCH,PUSH-PULL	1	5001 -						
43A	35021-60020	SWITCH ASSY,STARTE	1	5001 -			Y02			W.MRK350216004
51A	62256-51412	SCREW	4	5001 -						
52A	62701-20041	WASHER,PLANE	4	5001 -						
53A	62721-04100	WASHER,SPRING	4	5001 -						
103A	32110-70150	KEY	1	5001 -			02			W.MRK321107017
104A	32210-71370	CAP	1	5001 -			02			
111A	35020-60070	SWITCH ASSY	1	5001 -				Y03		
112A	32923-70090	CLAMP,HOSE	2	5001 -						L=202
121A	33100-70300	CASE	1	5001 -				03		
122A	43550-70160	HOLDER	1	5001 -				03		
123A	35104-70030	SCREW,SET	1	5001 -				03		
124A	33191-70260	CABLE ASSY	1	5001 -				03		
125A	62256-51420	SCREW	4	5001 -				03		
126A	38670-70250	BAND	1	5001 -				03		
127A	35046-70080	SWITCH,PUSH	1	5001 -				03		
128A	40790-70180	BOOT	1	5001 -				03		
131A	37810-20270	KNOB	1	5001 - 5030						
131B	35020-60070	SWITCH ASSY	1	5031 -	B				Y04	
132A	32923-70090	CLAMP,HOSE	2	5001 -						L=202
141A	33100-70300	CASE	1	5031 -					04	
142A	43550-70160	HOLDER	1	5031 -					04	
143A	35104-70030	SCREW,SET	1	5031 -					04	
144A	33191-70260	CABLE ASSY	1	5031 -					04	
145A	62256-51420	SCREW	4	5031 -					04	
146A	38670-70250	BAND	1	5031 -					04	
147A	35046-70080	SWITCH,PUSH	1	5031 -					04	
148A	40790-70180	BOOT	1	5031 -					04	

silverhorn.co.uk

ELECTRICAL WIRING - FRONT CHASSIS

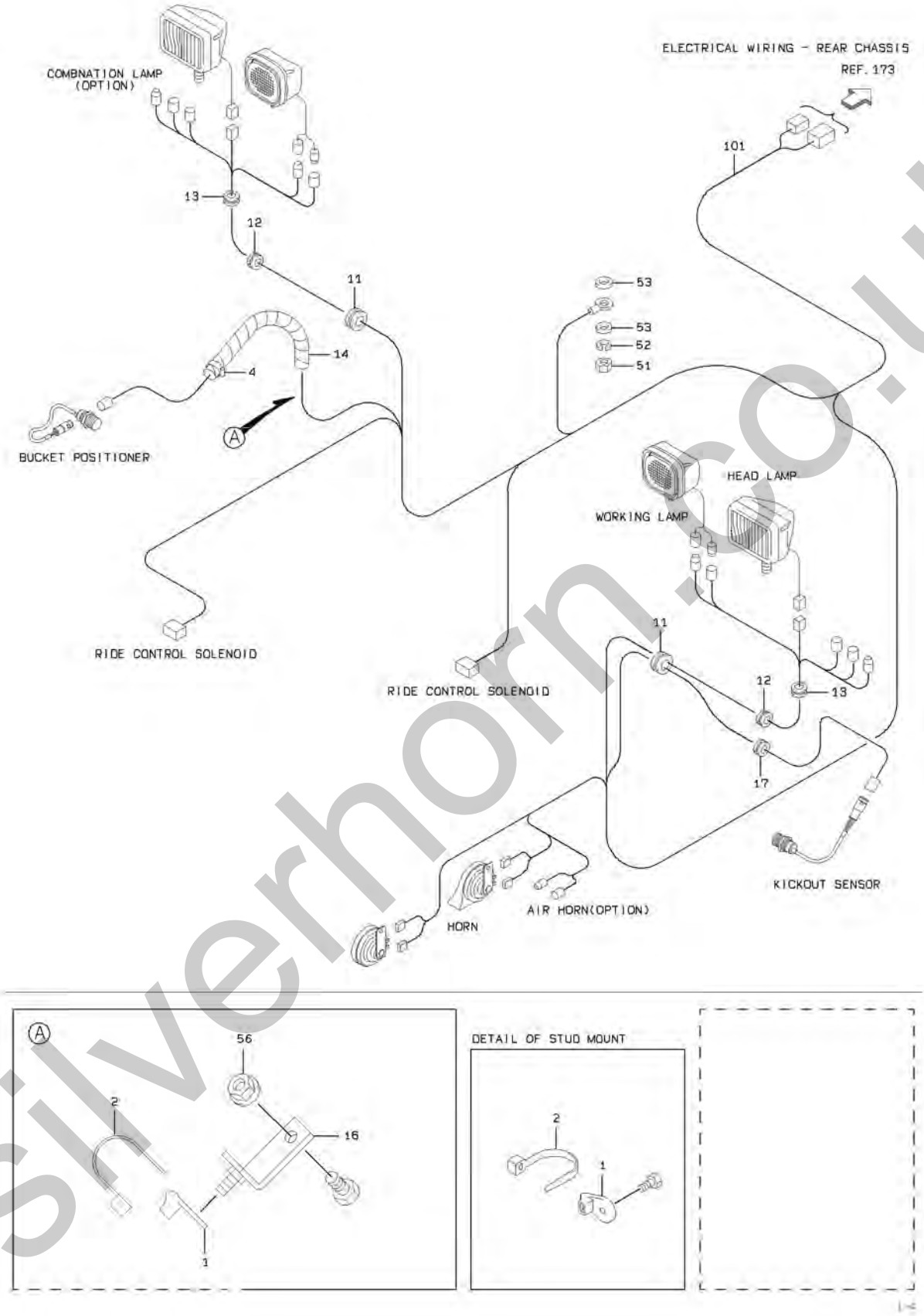

silverhorn.co.uk

ELECTRICAL WIRING - FRONT CHASSIS

SYM-BOL	PART NUMBER	PART NAME	UNIT Q,TY	SERIAL (A) - (B)	REMARKS N P D	(A) (B)	(C) (D)	REMARK
1A	32923-70120	CLAMP,HOSE	A/R	5001 -				FR M8
2A	32923-70090	CLAMP,HOSE	A/R	5001 -				L=202
4A	69002-05200-7	BAND,HOSE	1	5001 -				
11A	65801-50250	BUSHING,ELASTIC	2	5001 -				
12A	65801-31250	BUSHING,ELASTIC	2	5001 -				
13A	65801-31060	BUSHING,ELASTIC	2	5001 -				
14A	69081-23100-7	TUBE,SPIRAL	1	5001 -				
16A	41612-37620	PLATE	1	5001 -				
17A	65801-25190	BUSHING,ELASTIC	1	5001 -				
51A	62401-81101	NUT	1	5001 -				
52A	62721-10100	WASHER,SPRING	1	5001 -				
53A	46011-21650	WASHER,PLANE	2	5001 -				
56A	62480-21081	NUT,FLANGED	1	5001 -				
101A	33193-25950	CABLE ASSY	1	5001 - 5023				F.CHASSIS
101B	33193-31390	CABLE ASSY	1	5024 - 5046	C			F.CHASSIS
101C	33193-43430	CABLE ASSY	1	5047 -	B			F.CHASSIS

silverhorn.co.uk

ELECTRICAL WIRING - REAR CHASSIS

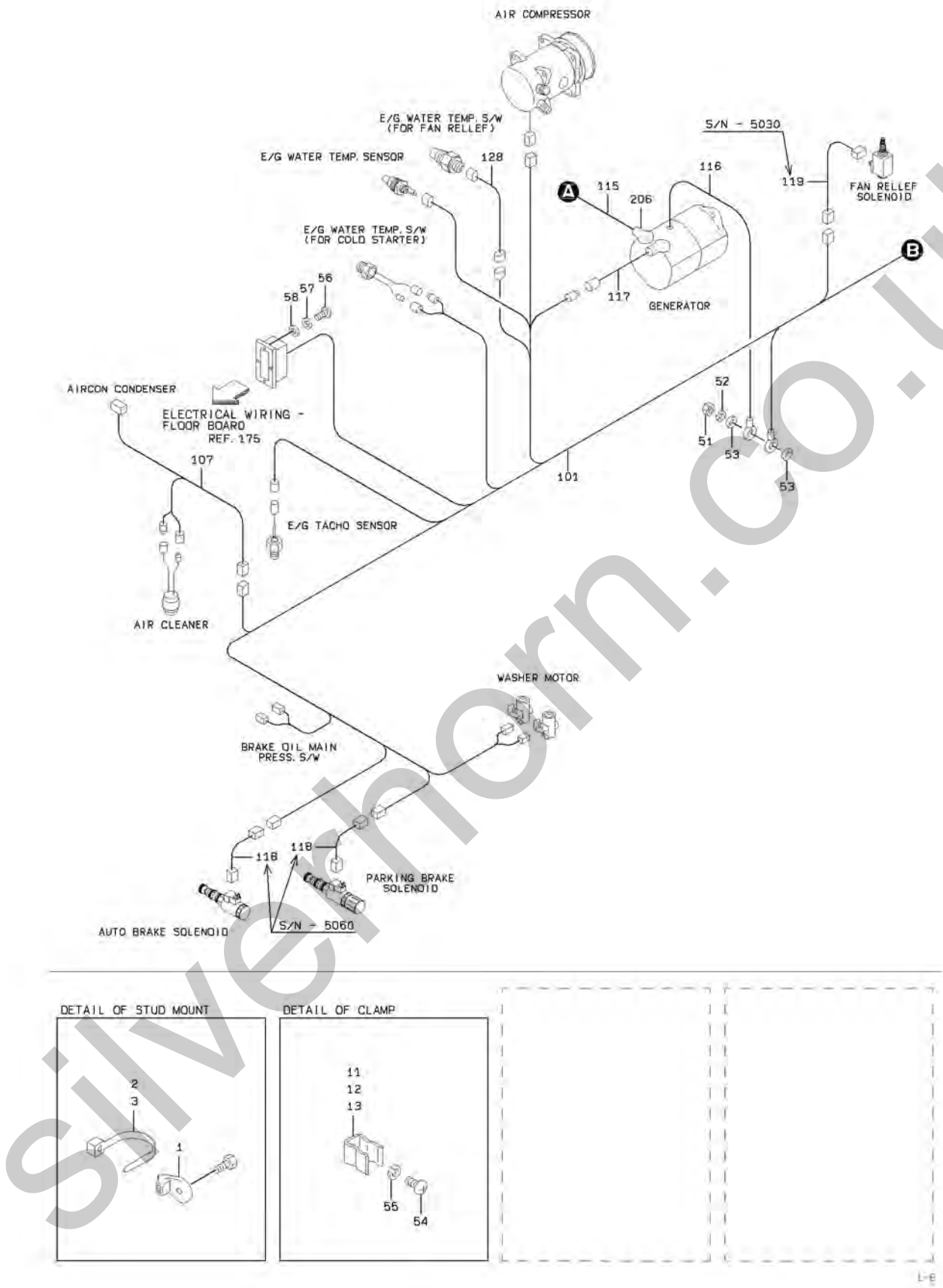

silverhorn.co.uk

ELECTRICAL WIRING - REAR CHASSIS

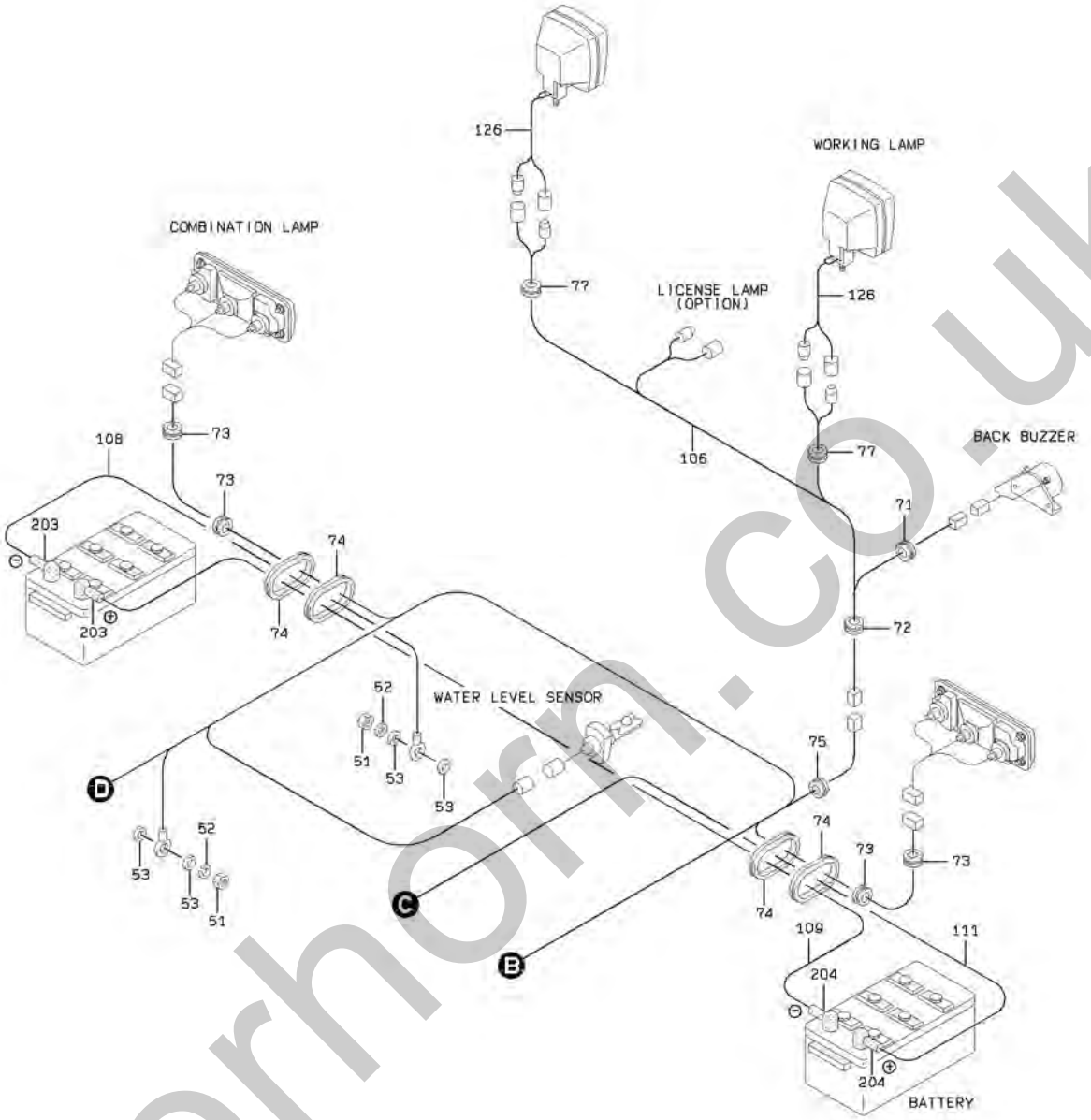

DETAIL OF PIPE HOLDER

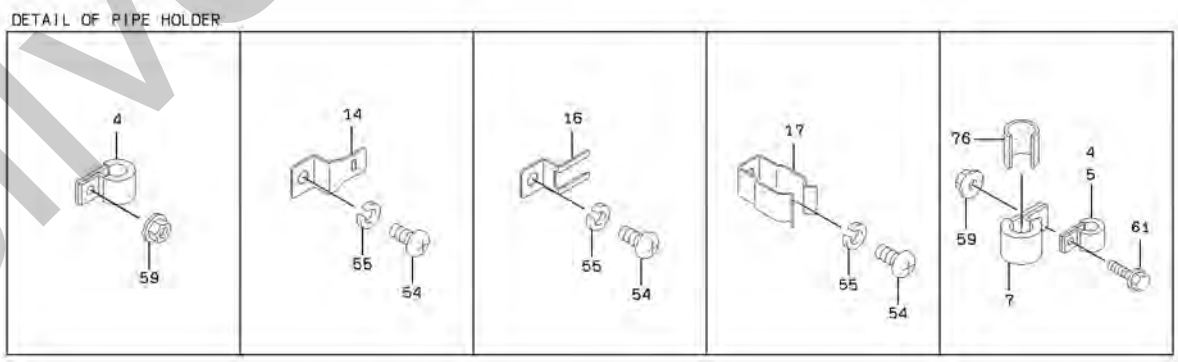

silverhorn.co.uk

ELECTRICAL WIRING - REAR CHASSIS

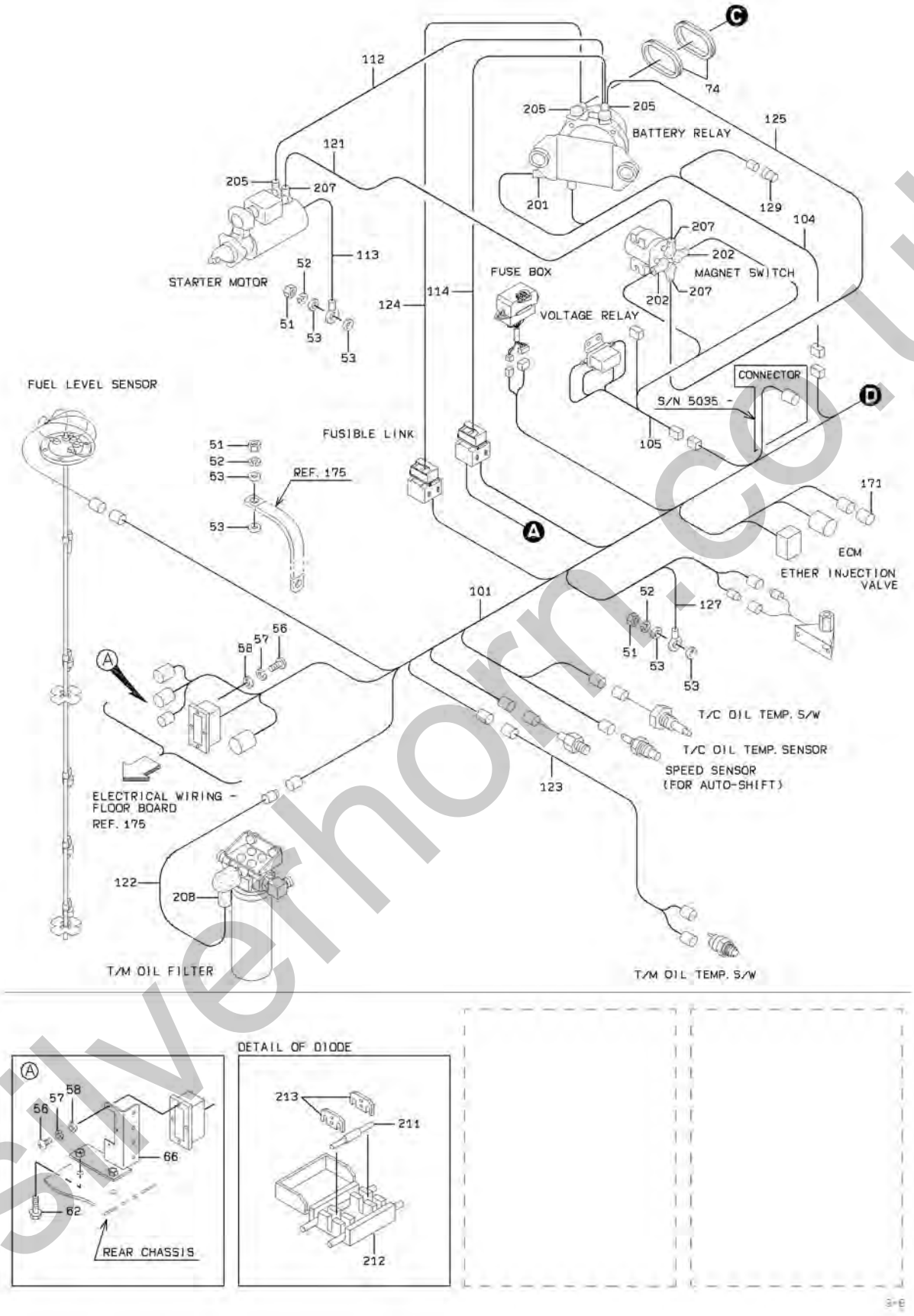

silverthorn.co.uk

ELECTRICAL WIRING - REAR CHASSIS

SYM-BOL	PART NUMBER	PART NAME	UNIT Q,TY	SERIAL (A)	-	(B)	REMARKS N P D	(A)	(B)	(C)	(D)	REMARK
1A	32923-70120	CLAMP,HOSE	A/R	5001	-							FR M8
2A	32923-70090	CLAMP,HOSE	A/R	5001	-							L=202
3A	32923-70100	CLAMP,HOSE	A/R	5001	-							L=382
4A	72001-11000	HOLDER,PIPE	5	5001	-							D=10
5A	72001-12500	HOLDER,PIPE	1	5001	-							D=25
7A	72010-46000	HOLDER,HOSE	2	5001	-							D=46
11A	43571-20140	HOLDER,SPRING	A/R	5001	-							D=14
12A	43571-20150	HOLDER,SPRING	A/R	5001	-							D=15
13A	43571-20160	HOLDER,SPRING	A/R	5001	-							D=22
14A	43550-20680	HOLDER	A/R	5001	-							
16A	43550-60100	HOLDER	A/R	5001	-							
17A	43571-60040	HOLDER,SPRING	A/R	5001	-							
51A	62401-81101	NUT	5	5001	-							
52A	62721-10100	WASHER,SPRING	5	5001	-							
53A	46011-21650	WASHER,PLANE	10	5001	-							
54A	62256-51610	SCREW	A/R	5001	-							
55A	62721-06100	WASHER,SPRING	A/R	5001	-							
56A	62256-51312	SCREW	3	5001	-							
57A	62721-03100	WASHER,SPRING	3	5001	-							
58A	62701-40031	WASHER,PLANE	3	5001	-							
59A	62480-21081	NUT,FLANGED	2	5001	-							
61A	61802-08020	BOLT,FLANGED	2	5001	-							
62A	61802-12035	BOLT,FLANGED	2	5001	-							
66A	40901-28910	BRACKET	1	5001	-							
71A	65801-40060	BUSHING,ELASTIC	1	5001	-							
72A	65801-12032	BUSHING,ELASTIC	1	5001	-							
73A	65801-31060	BUSHING,ELASTIC	4	5001	-							
74A	65801-63060	BUSHING,ELASTIC	6	5001	-							
75A	65801-10060	BUSHING,ELASTIC	1	5001	-							
76A	33713-22680	SHEET,RUBBER	2	5001	-							
77A	65801-10032	BUSHING,ELASTIC	2	5001	-							
101A	33193-27290	CABLE ASSY	1	5001	-	5005						REAR CHASSIS
101B	33193-29590	CABLE ASSY	1	5006	-	5023	C					REAR CHASSIS
101C	33193-32320	CABLE ASSY	1	5024	-	5030	C					REAR CHASSIS
101D	33193-36630	CABLE ASSY	1	5031	-	5034	C					REAR CHASSIS
101E	33193-41090	CABLE ASSY	1	5035	-	5046	C					REAR CHASSIS
101F	33193-43350	CABLE ASSY	1	5047	-	5060	B					REAR CHASSIS
101G	33193-49290	CABLE ASSY	1	5061	-		C					REAR CHASSIS
104A	33193-26980	CABLE ASSY	1	5001	-							BATTERY RELAY
105A	33193-26990	CABLE ASSY	1	5001	-	5023						E/G RELAY
105B	33193-31600	CABLE ASSY	1	5024	-	5046	C					E/G RELAY
105C	33193-43370	CABLE ASSY	1	5047	-		B					E/G RELAY
106A	33193-25880	CABLE ASSY	1	5001	-	5023						RADIATOR GUARD
106B	33193-31610	CABLE ASSY	1	5024	-	5046	C					RADIATOR GUARD
106C	33193-43380	CABLE ASSY	1	5047	-		B					RADIATOR GUARD
107A	33193-25890	CABLE ASSY	1	5001	-	5023						E/G ROOM
107B	33193-31620	CABLE ASSY	1	5024	-	5046	C					E/G ROOM
107C	33193-43390	CABLE ASSY	1	5047	-		B					E/G ROOM
108A	33190-33760	CABLE	1	5001	-							BAT.(-)-GROUND
109A	33190-35600	CABLE	1	5001	-							BATTERY(+)-(-)
111A	33190-35610	CABLE	1	5001	-							BATTERY(+)-REL
112A	33190-35620	CABLE	1	5001	-							RELAY-ST.MOTOR
113A	33190-26830	CABLE	1	5001	-							E/G GROUNDING
114A	33190-35630	CABLE	1	5001	-							BAT.RELAY-FUSI
115A	33190-35980	CABLE	1	5001	-							GENERATOR-FUSI
116A	33190-27180	CABLE	1	5001	-							GENERATOR-GROU
117A	33191-20770	CABLE ASSY	1	5001	-							GENERATOR
118A	33193-22030	CABLE ASSY	2	5001	-	5060	D					SOLINOID
119A	33193-22040	CABLE ASSY	1	5001	-	5030	D					SOLINOID
121A	33190-35680	CABLE	1	5001	-							MAGNET S/W-ST
122A	33190-27870	CABLE	1	5001	-	5030						T/M OIL FILTER
122B	33190-39560	CABLE	1	5031	-		B					T/M OIL FILTER
123A	33191-28650	CABLE ASSY	1	5001	-							T/M OIL THERMO
124A	33190-35690	CABLE	1	5001	-							BAT.RELAY-FUSI
125A	33190-35700	CABLE	1	5001	-							BAT.RELAY-S/W
126A	33191-56830	CABLE ASSY	2	5001	-							WORKING LAMP

silvermorn.co.uk

ELECTRICAL WIRING - REAR CHASSIS

SYM-BOL	PART NUMBER	PART NAME	UNIT Q,TY	SERIAL (A) - (B)	REMARKS N P D	(A)	(B)	(C)	(D)	REMARK
127A	33190-34280	CABLE	1	5001 -						E/G GROUNDING
128A	33193-22080	CABLE ASSY	1	5001 - 5030	D					E/G WATOR TEMP
129A	36406-20030	DIODE ASSY	1	5001 -						3A X 2
171A	45531-20100	RESISTER	1	5001 -						
201A	32215-70050	CAP,TERMINAL	1	5001 -						
202A	32210-70450	CAP	2	5001 -						
203A	32215-20050	CAP,TERMINAL	2	5001 -						
204A	32215-20040	CAP,TERMINAL	2	5001 -						
205A	32210-70360	CAP	3	5001 -						
206A	32215-70070	CAP,TERMINAL	1	5001 -						
207A	32215-70040	CAP,TERMINAL	3	5001 -						
208A	32215-70150	CAP,TERMINAL	1	5001 -						
211A	36405-70020	DIODE	1	5001 -						
212A	33300-70050	CONNECTOR	1	5001 -						
213A	35930-70010	TERMINAL	2	5001 -						

silverhorn.co.uk

MEMO

silverhorn.co.uk

ELECTRICAL WIRING - FLOOR BOARD

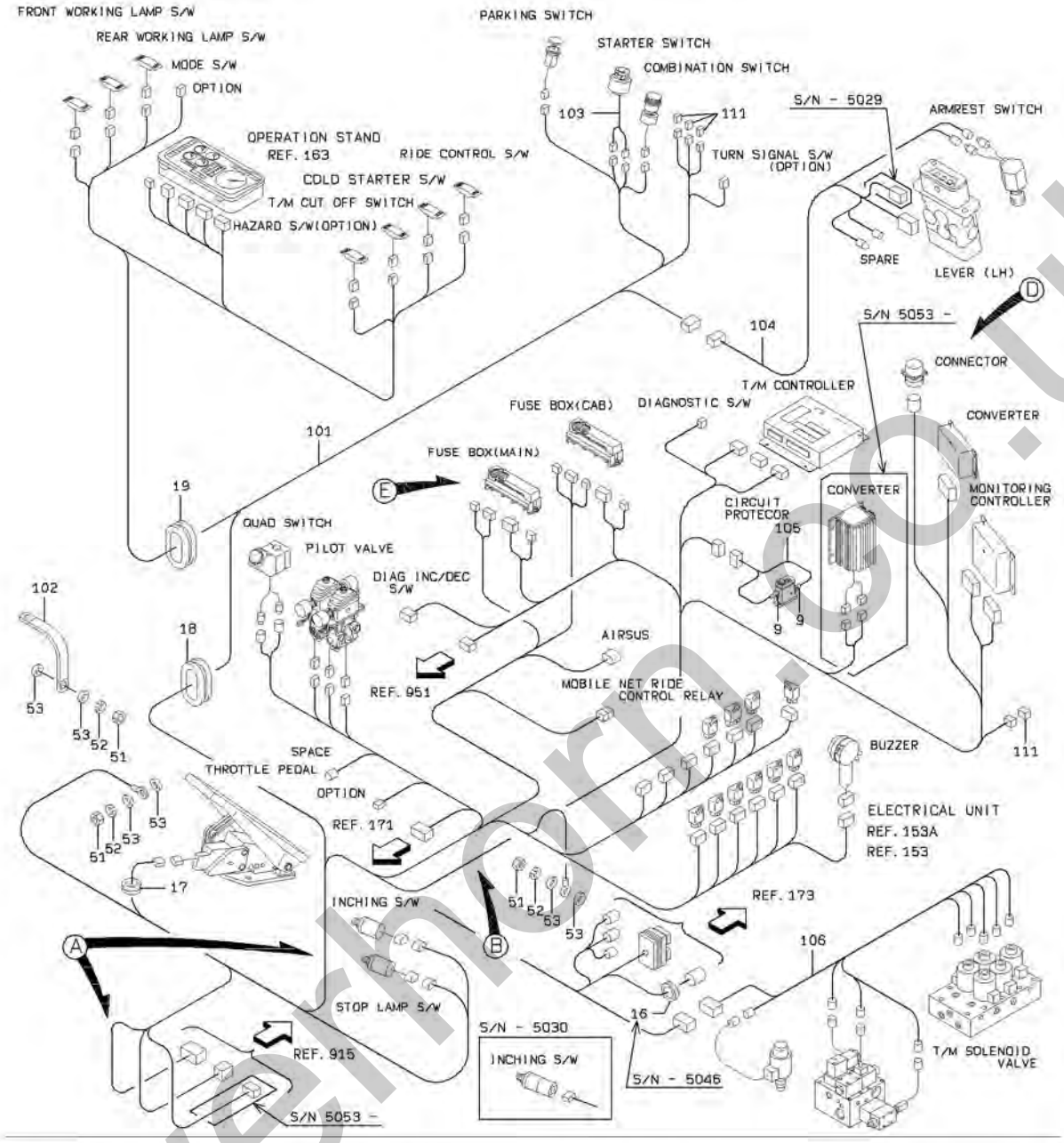

silverthorn.co.uk

ELECTRICAL WIRING - FLOOR BOARD

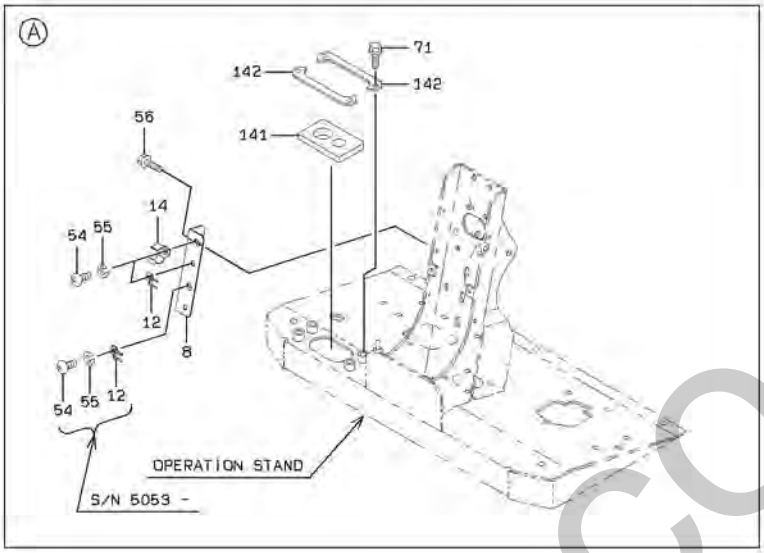

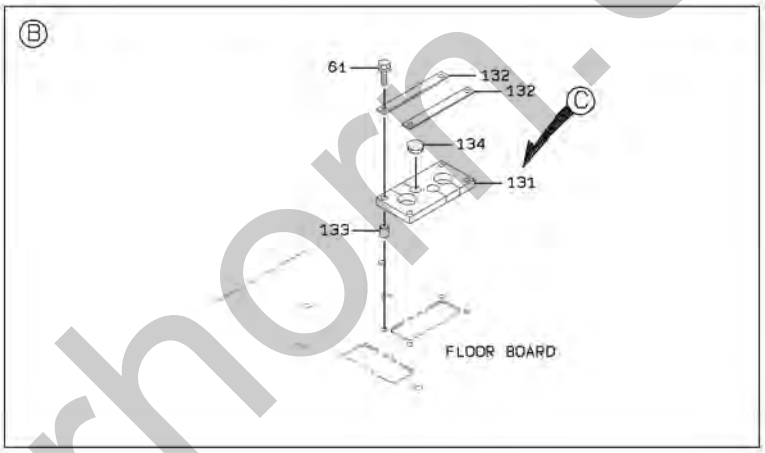

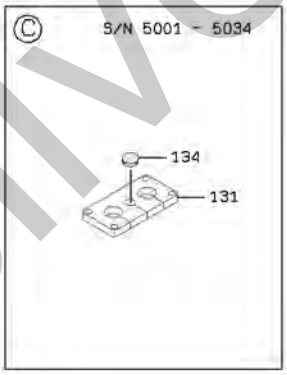

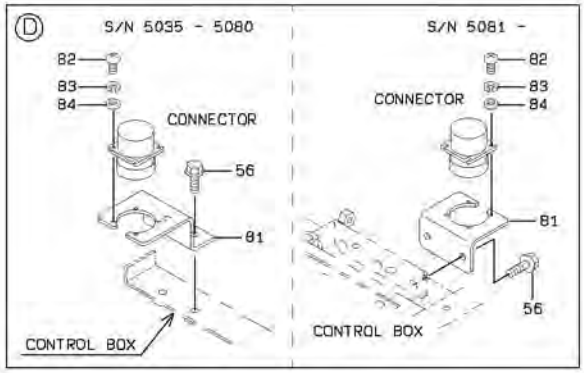

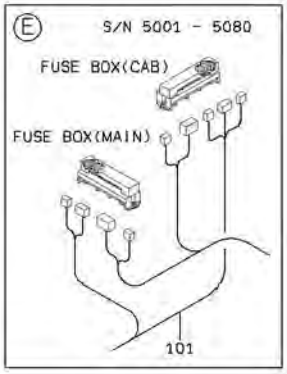

silverhorn.co.uk

ELECTRICAL WIRING - FLOOR BOARD

SYM-BOL	PART NUMBER	PART NAME	UNIT Q,TY	SERIAL (A)	-	(B)	REMARKS N P D	(A)	(B)	(C)	(D)	REMARK
1A	32923-70120	CLAMP,HOSE	A/R	5001	-							FR M8
2A	32923-70090	CLAMP,HOSE	A/R	5001	-							L=202
3A	32923-70100	CLAMP,HOSE	A/R	5001	-							L=382
4A	72001-11500	HOLDER,PIPE	A/R	5001	-							D=15
5A	72001-11800	HOLDER,PIPE	A/R	5001	-							D=18
8A	41617-46070	PLATE	1	5001	-							
9A	32215-20080	CAP,TERMINAL	2	5001	-							
11A	43571-20150	HOLDER,SPRING	A/R	5001	-							
12A	43550-60100	HOLDER	1	5001	-	5052						
12B	43550-60100	HOLDER	2	5053	-							
13A	43571-60050	HOLDER,SPRING	A/R	5001	-							
14A	43571-60060	HOLDER,SPRING	A/R	5001	-							
16A	65801-16060	BUSHING,ELASTIC	1	5001	-	5046	D					
17A	41533-20040	PLUG,ELASTIC	1	5001	-							
18A	65801-50060	BUSHING,ELASTIC	1	5001	-							
19A	65801-63060	BUSHING,ELASTIC	1	5001	-							
51A	62401-81101	NUT	3	5001	-							
52A	62721-10100	WASHER,SPRING	3	5001	-							
53A	46011-21650	WASHER,PLANE	6	5001	-							
54A	62256-51610	SCREW	A/R	5001	-							
55A	62721-06100	WASHER,SPRING	A/R	5001	-							
56A	61802-06016	BOLT,FLANGED	2	5001	-	5034						
56B	61802-06016	BOLT,FLANGED	4	5035	-							
57A	62480-21081	NUT,FLANGED	A/R	5001	-							
58A	61802-08020	BOLT,FLANGED	A/R	5001	-							
61A	61802-08030	BOLT,FLANGED	4	5001	-							
71A	61802-08016	BOLT,FLANGED	4	5001	-							
81A	41609-51020	PLATE	1	5035	-	5080						
81B	41711-22850	PLATE	1	5081	-		B					
82A	62256-51312	SCREW	4	5035	-							
83A	62721-03100	WASHER,SPRING	4	5035	-							
84A	62701-40031	WASHER,PLANE	4	5035	-							
101A	33193-27300	CABLE ASSY	1	5001	-	5005						FLOOR
101B	33193-29600	CABLE ASSY	1	5006	-	5023	C					FLOOR
101C	33193-32800	CABLE ASSY	1	5024	-	5030	C					FLOOR
101D	33193-36640	CABLE ASSY	1	5031	-	5034	B					FLOOR
101E	33193-40970	CABLE ASSY	1	5035	-	5046	C					FLOOR
101F	33193-45230	CABLE ASSY	1	5047	-	5052	B					FLOOR
101G	33193-47420	CABLE ASSY	1	5053	-	5080	C					FLOOR
101H	33193-50790	CABLE ASSY	1	5081	-		B					FLOOR
102A	33190-24690	CABLE	1	5001	-							GROUNDING(F-R)
103A	33191-47010	CABLE ASSY	1	5001	-							STARTER S/W
104A	33193-26010	CABLE ASSY	1	5001	-	5023						LEVER
104B	33193-31510	CABLE ASSY	1	5024	-	5029	C					LEVER
104C	33193-35470	CABLE ASSY	1	5030	-	5082	B					LEVER
104D	33193-51550	CABLE ASSY	1	5083	-	5088	B					LEVER
104E	33193-52880	CABLE ASSY	1	5089	-		B					LEVER
105A	33191-34820	CABLE ASSY	1	5001	-							CIRCUIT PROTEC
106A	33193-26250	CABLE ASSY	1	5001	-	5034						T/M SOLENOID
106B	33193-40860	CABLE ASSY	1	5035	-	5046	C					T/M SOLENOID 3
106C	33193-43420	CABLE ASSY	1	5047	-		B					T/M SOLENOID
111A	36406-20090	DIODE ASSY	4	5001	-							2.5A
121A	36405-70020	DIODE	1	5001	-							
122A	33300-70050	CONNECTOR	1	5001	-							
123A	35930-70010	TERMINAL	2	5001	-							
131A	33057-21050	GROMMET	1	5001	-	5034						
131B	33057-21110	GROMMET	1	5035	-	5070	B					
131C	33057-21470	GROMMET	1	5071	-	5088	C					
131D	33057-21520	GROMMET	1	5089	-		B					
132A	41605-53600	PLATE	2	5001	-							
133A	35750-23790	SLEEVE	4	5001	-							
134A	41533-20080	PLUG,ELASTIC	1	5001	-							
141A	33057-20790	GROMMET	1	5001	-							
142A	41613-37210	PLATE	2	5001	-							

silverhorn.co.uk

MEMO

silverhorn.co.uk

HANDRAIL MOUNT

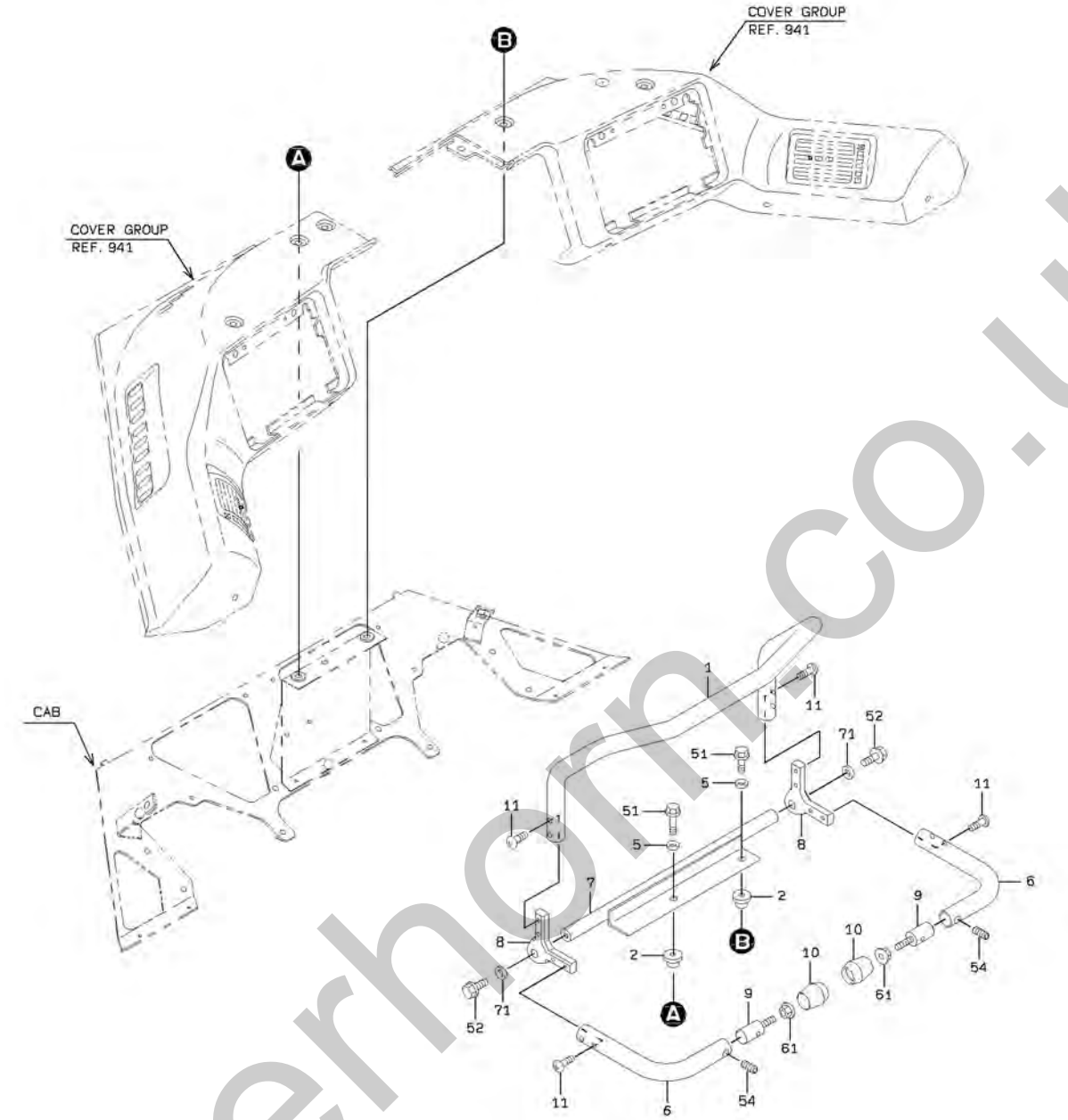

silverhorn.co.uk

HANDRAIL MOUNT

SYM-BOL	PART NUMBER	PART NAME	UNIT Q,TY	SERIAL (A) - (B)	REMARKS N P D	(A) (B)	(C) (D)	REMARK
1A	38130-28080	HANDRAIL	1	5001 -				
2A	43780-38520	BOSS	2	5001 -				
5A	62701-40081	WASHER,PLANE	2	5001 -				
6A	38130-28090	HANDRAIL	2	5001 -				
7A	30502-41570	ANGLE	1	5001 -				
8A	41618-22840	PLATE	2	5001 -				
9A	45870-26730	ROD	2	5001 -				
10A	32210-20690	CAP	2	5001 -				
11A	35100-20010	SCREW	8	5001 -				
51A	61802-06040	BOLT,FLANGED	2	5001 -				
52A	61802-08025	BOLT,FLANGED	2	5001 -				
54A	61121-06015	BOLT,SOCKET	2	5001 -				
61A	62480-21081	NUT,FLANGED	2	5001 -				
71A	62701-40101	WASHER,PLANE	2	5001 -				

silverhorn.co.uk

POWER GROUP

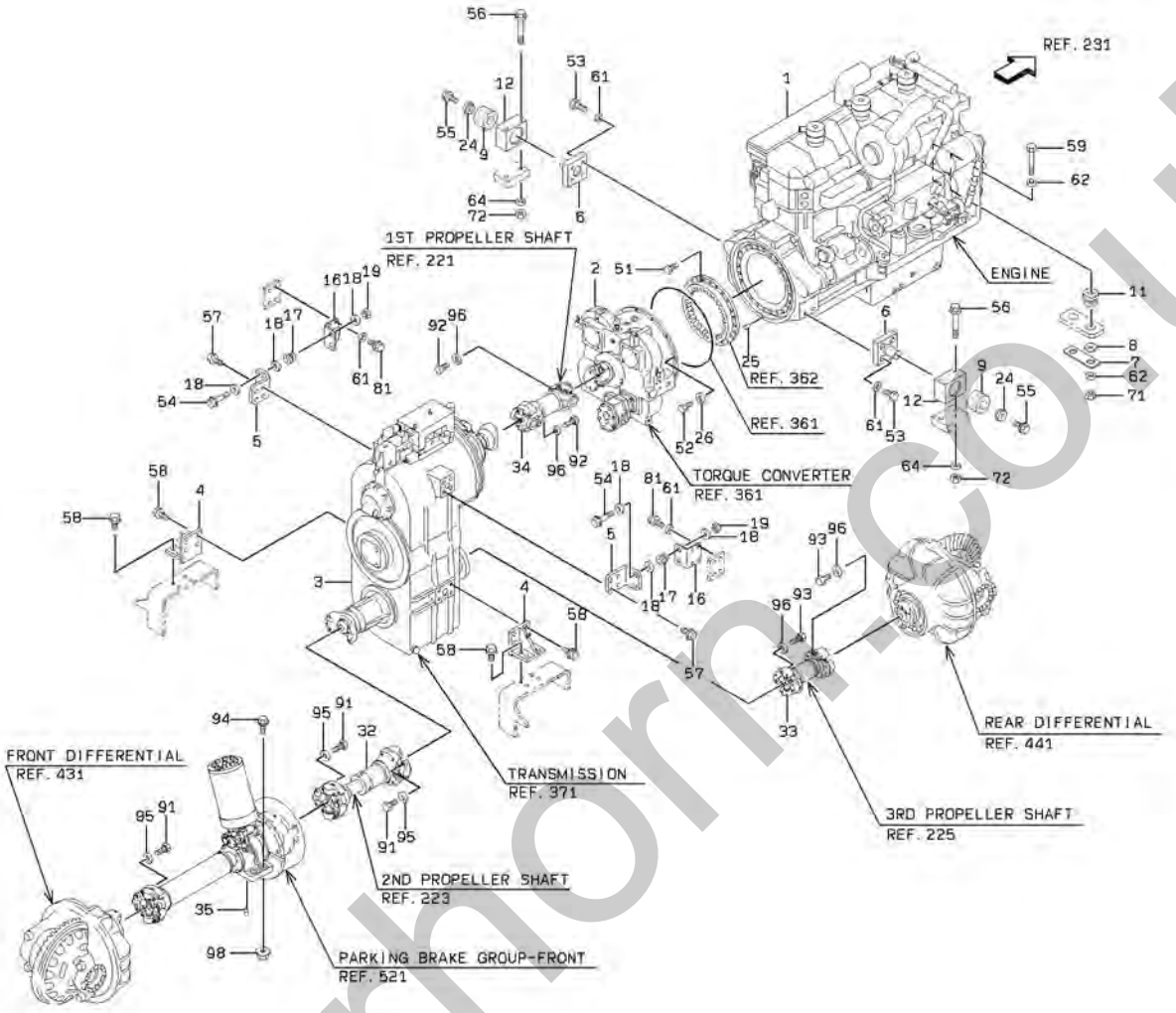

silverhorn.co.uk

POWER GROUP

SYM-BOL	PART NUMBER	PART NAME	UNIT Q,TY	SERIAL (A) - (B)	REMARKS N P D	(A)	(B)	(C)	(D)	REMARK
1A	31000-62940-7	ENGINE ASSY	1	5001 - 5030						
1B	31000-63480-7	ENGINE ASSY	1	5031 -	B					
2A	37430-20490	TORQUE CONVERTER	1	5001 -						REF.361-363
3A	37421-20660	TRANSMISSION ASSY	1	5001 -						REF.371-378
4A	40900-55250	BRACKET	2	5001 -						
5A	40900-55260	BRACKET	2	5001 -						
6A	40901-58460	BRACKET	2	5001 -						
7A	46000-20020	WASHER	1	5001 -						
8A	46011-20020	WASHER,PLANE	2	5001 -						
9A	40850-20140	BUSHING,ELASTIC	2	5001 -						
11A	40850-20160	BUSHING,ELASTIC	2	5001 -						
12A	41410-33400	BLOCK	2	5001 -						
16A	40900-55240	BRACKET	2	5001 -						
17A	40850-20110	BUSHING,ELASTIC	4	5001 -						
18A	41615-22330	PLATE	12	5001 -						
19A	88031-06121	NUT,SELF-LOCKING	4	5001 -						
24A	35750-20380	SLEEVE	2	5001 -						
25A	41530-20110	PLUG	1	5001 -						
26A	46011-21170	WASHER,PLANE	12	5001 -						
32A	42752-60890	PROPELLER SHAFT AS	1	5001 -						REF 223
33A	42753-60440	PROPELLER SHAFT AS	1	5001 -						REF 225
34A	42751-60180	PROPELLER SHAFT AS	1	5001 -						REF 221
35A	40037-20030	PIN,KNOCK	2	5001 -						
51A	43931-20090	BOLT(UNIFY)	24	5001 -						
52A	61261-07030	BOLT(UNIFY)	12	5001 -						
53A	61275-10050	BOLT(UNIFY)	8	5001 -						
54A	61802-12070	BOLT,FLANGED	4	5001 -						
55A	61802-16025	BOLT,FLANGED	2	5001 -						
56A	61802-20195	BOLT,FLANGED	4	5001 -						
57A	61802-20035	BOLT,FLANGED	8	5001 -						
58A	61802-20040	BOLT,FLANGED	16	5001 -						
59A	61033-18115	BOLT	2	5001 -						
61A	62710-18161	WASHER,PLANE	16	5001 -						
62A	62710-18181	WASHER,PLANE	4	5001 -						
64A	62710-18201	WASHER,PLANE	4	5001 -						
71A	62401-81181	NUT	2	5001 -						
72A	62401-81201	NUT	4	5001 -						
81A	61802-16030	BOLT,FLANGED	8	5001 -						
91A	61014-14080	BOLT	12	5001 -						
92A	61014-12055	BOLT	8	5001 -						
93A	61014-12075	BOLT	8	5001 -						
94A	61802-24110	BOLT,FLANGED	4	5001 -						
95A	46011-22080	WASHER,PLANE	12	5001 -						
96A	46011-22320	WASHER,PLANE	16	5001 -						
98A	62480-21241	NUT,FLANGED	4	5001 -						

silverhorn.co.uk

DRAIN LINE

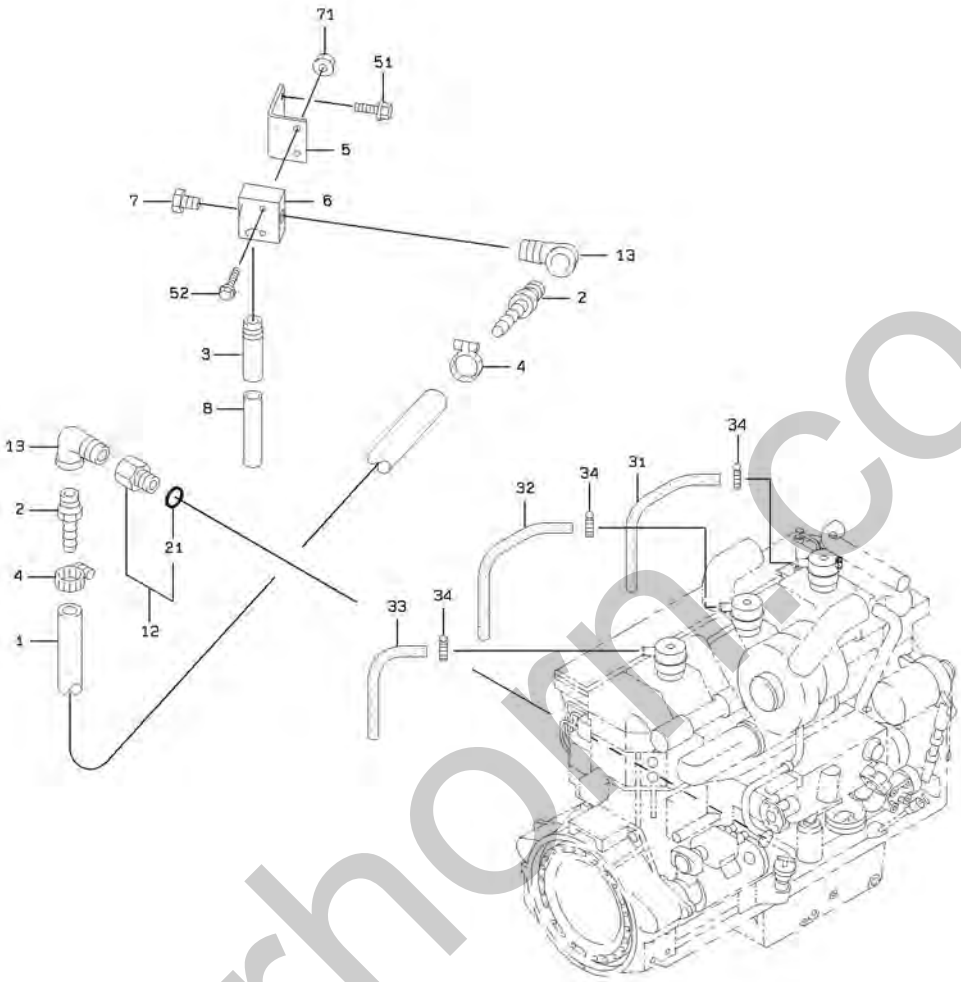

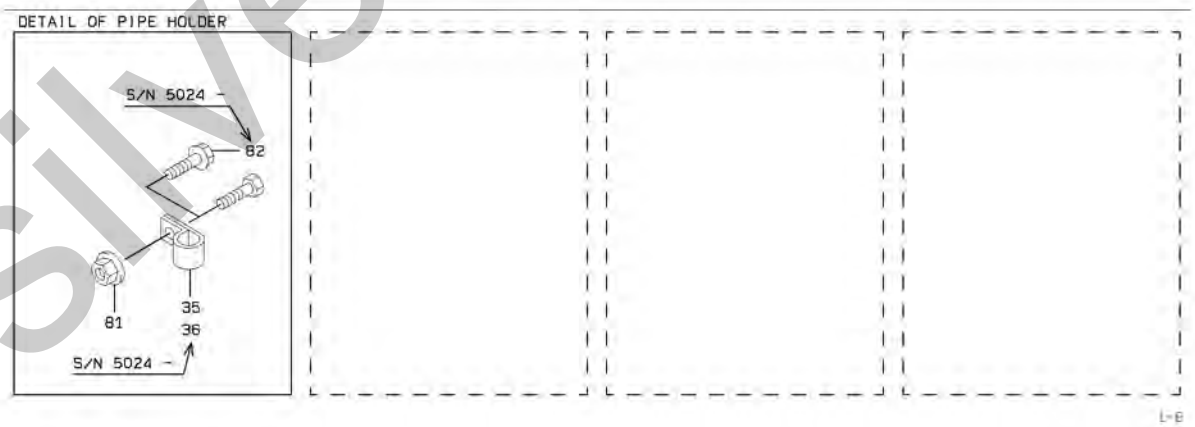

silverhorn.co.uk

DRAIN LINE

SYM-BOL	PART NUMBER	PART NAME	UNIT Q,TY	SERIAL (A) - (B)	REMARKS N P D	(A) (B)	(C) (D)	REMARK
1A	67040-19000	HOSE,HEAT RESISTIN	1 M	5001 -				L=550
2A	88511-01121	NIPPLE,HOSE	2	5001 -				
3A	37715-22640	NIPPLE,HOSE	1	5001 -				
4A	69002-03800-7	BAND,HOSE	2	5001 -				
5A	30502-28280	ANGLE	1	5001 -				
6A	41410-32030	BLOCK	1	5001 -				
7A	41530-20530	PLUG	1	5001 -				
8A	67040-19000	HOSE,HEAT RESISTIN	1 M	5001 -				L=120
12A	88214-31712	ADAPTER	1	5001 -		Y01		
13A	69205-06000	FITTING,ELBOW	2	5001 -				
21A	65231-00121	RING,O	1	5001 -		01		
31A	67040-15000	HOSE,HEAT RESISTIN	3 M	5001 -				L=2800
32A	67040-15000	HOSE,HEAT RESISTIN	3 M	5001 -				L=2400
33A	67040-15000	HOSE,HEAT RESISTIN	2 M	5001 -				L=2000
34A	69002-03100-7	BAND,HOSE	3	5001 -				
35A	72010-55000	HOLDER,HOSE	3	5001 -				(D=55)
36A	72001-12500	HOLDER,PIPE	2	5024 -				(D=25)
51A	61802-08012	BOLT,FLANGED	2	5001 -				
52A	61802-08050	BOLT,FLANGED	2	5001 -				
71A	62480-21081	NUT,FLANGED	2	5001 -				
81A	62480-21081	NUT,FLANGED	3	5001 - 5023				
81B	62480-21081	NUT,FLANGED	4	5024 -				
82A	61802-08020	BOLT,FLANGED	1	5024 -				

silverhorn.co.uk

1ST PROPELLER SHAFT

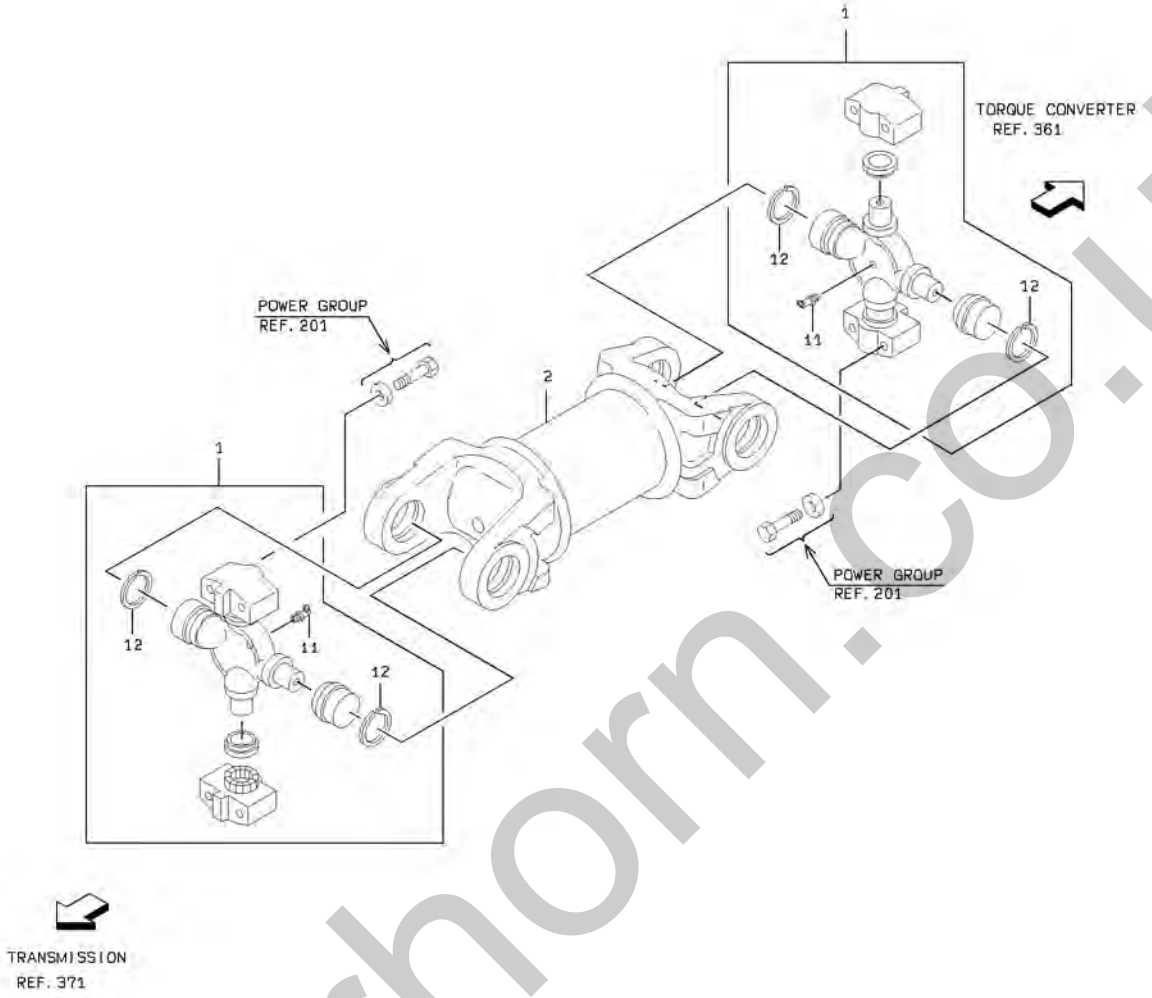

silverhorn.co.uk

1ST PROPELLER SHAFT

SYM-BOL	PART NUMBER	PART NAME	UNIT Q,TY	SERIAL (A) - (B)	REMARKS N P D	(A) (B)	(C) (D)	REMARK
000A	42751-60180	PROPELLER SHAFT AS	1	5001 -				
1A	35513-70260	SPIDER ASSY,JOURNA	2	5001 -		Y01		
2A	34541-70450	SHAFT,PROPELLER	1	5001 -				
11A	37713-60020	NIPPLE,GREASE	1	5001 -		01		75011-45400
12A	45311-70240	RING,SNAP	2	5001 -		01		

silverhorn.co.uk

2ND PROPELLER SHAFT

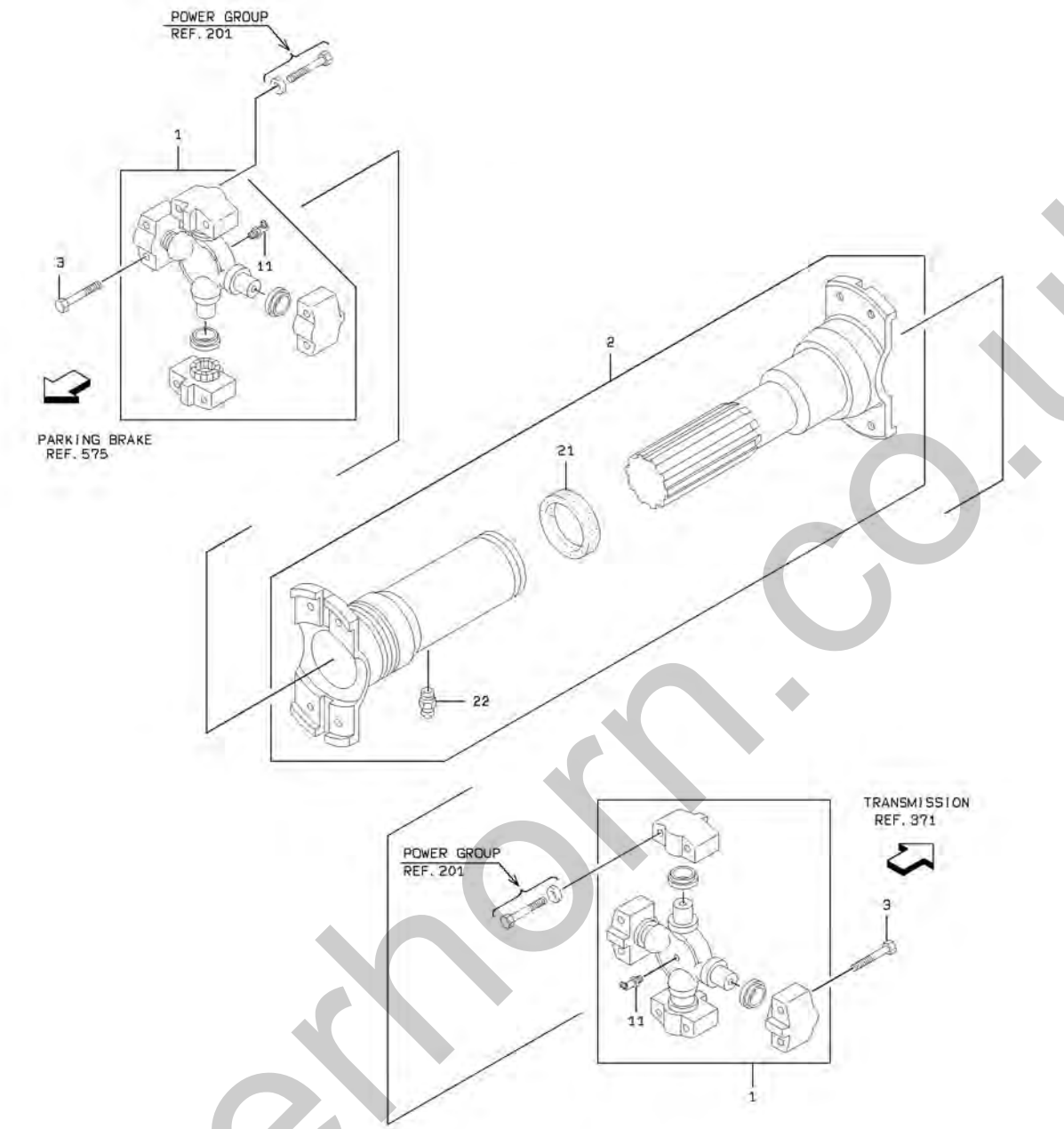

silverhorn.co.uk

2ND PROPELLER SHAFT

SYM-BOL	PART NUMBER	PART NAME	UNIT Q,TY	SERIAL (A) - (B)	REMARKS N P D	(A)	(B)	(C)	(D)	REMARK
000A	42752-60890	PROPELLER SHAFT AS	1	5001 -						
1A	35513-70210	SPIDER ASSY,JOURNA	2	5001 -		Y01				
2A	34541-70590	SHAFT,PROPELLER	1	5001 -			Y02			
3A	43900-72430	BOLT	8	5001 -						
11A	37713-60020	NIPPLE,GREASE	1	5001 -		01				75011-45400
21A	34044-70780	SEAL,DUST	1	5001 -			02			
22A	75011-25400	NIPPLE,GREASE	1	5001 -			02			

silverhorn.co.uk

3RD PROPELLER SHAFT

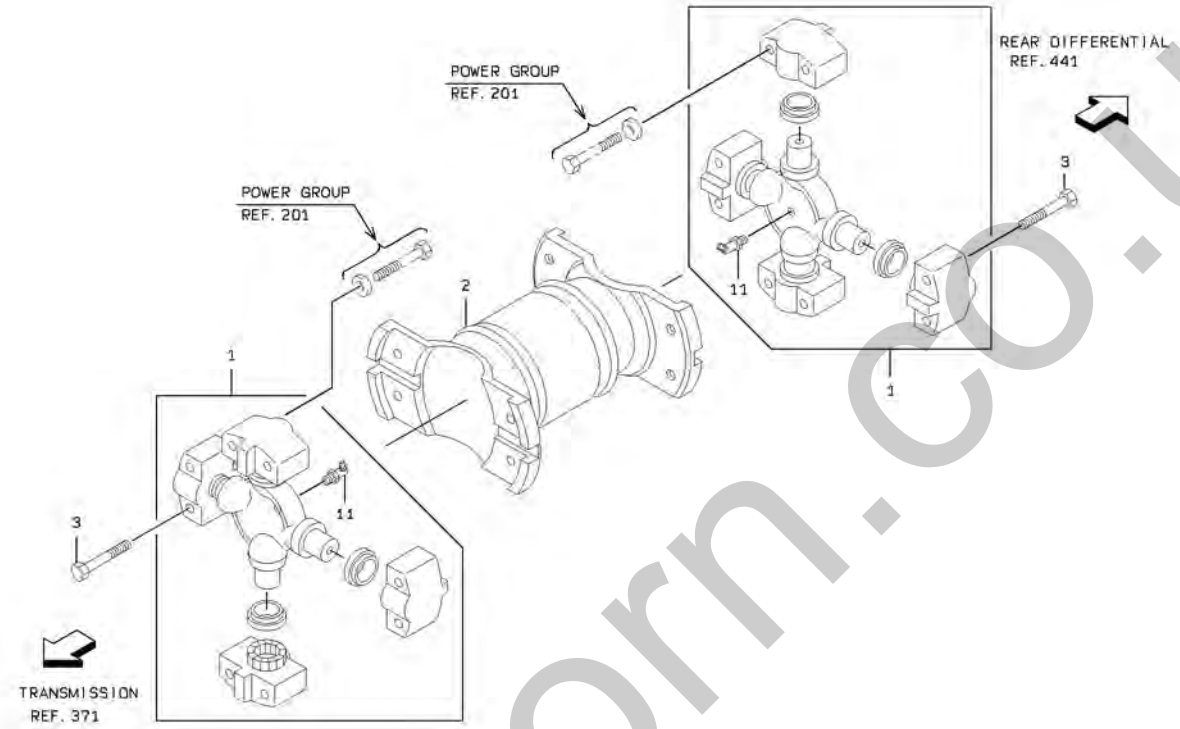

silverhorn.co.uk

3RD PROPELLER SHAFT

SYM-BOL	PART NUMBER	PART NAME	UNIT Q,TY	SERIAL (A) - (B)	REMARKS N P D	(A) (B)	(C) (D)	REMARK
000A	42753-60440	PROPELLER SHAFT AS	1	5001 -				
1A	35513-70270	SPIDER ASSY,JOURNA	2	5001 -		Y01		
2A	34541-70440	SHAFT,PROPELLER	1	5001 -				
3A	43900-70690	BOLT	8	5001 -				43900-72420
11A	37713-60020	NIPPLE,GREASE	1	5001 -		01		75011-45400

silverhorn.co.uk

RADIATOR GROUP

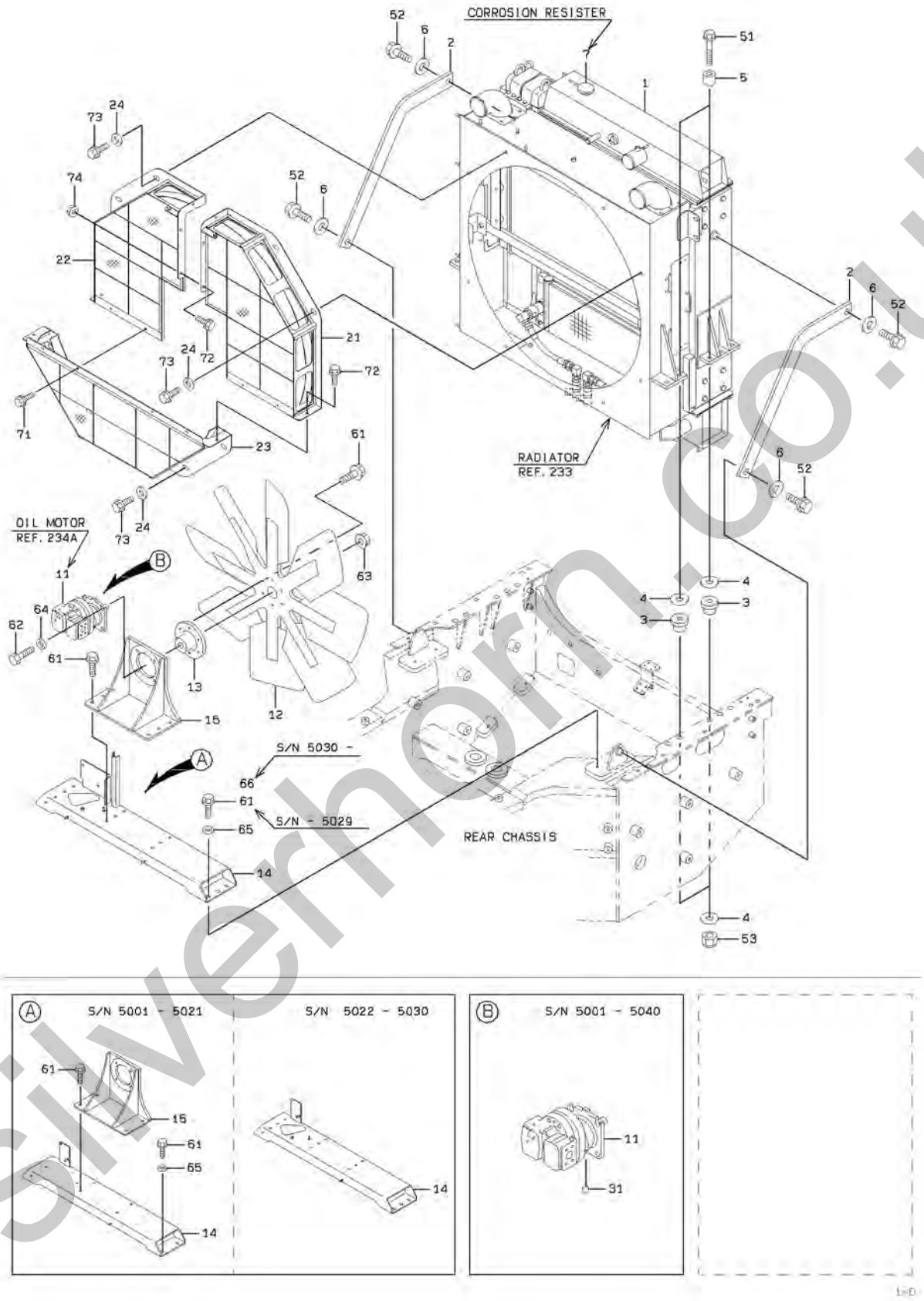

silverhorn.co.uk

RADIATOR GROUP

SYM-BOL	PART NUMBER	PART NAME	UNIT Q,TY	SERIAL (A) - (B)	REMARKS N P D	(A)	(B)	(C)	(D)	REMARK
1A	44721-20510	RADIATOR ASSY	1	5001 -						REF.233
2A	41618-33960	PLATE	2	5001 -						
3A	40850-20110	BUSHING,ELASTIC	10	5001 -						
4A	41615-22330	PLATE	20	5001 -						
5A	43780-23200	BOSS	10	5001 -						
6A	46011-20150	WASHER,PLANE	4	5001 -						
7A	50401-02860-7	RESISTER,CORROSION	6	5001 -						YEDCA65L
11A	48976-60400-7	MOTOR,OIL	1	5001 - 5023						
11B	48976-60620-7	MOTOR,OIL	1	5024 - 5040	A					
11C	48976-60910-7	MOTOR,OIL	1	5041 - 5096	C					
11D	48976-61170-7	MOTOR,OIL	1	5097 -	C					REF.234A
12A	40200-60010-7	FAN	1	5001 -						
13A	40510-24070	FLANGE	1	5001 -						
14A	40901-58540	BRACKET	1	5001 - 5021						
14B	40902-25550	BRACKET	1	5022 - 5030	B					
14C	40902-33420	BRACKET	1	5031 - 5034	B					
14D	40902-35830	BRACKET	1	5035 -	C					
15A	40902-20050	BRACKET	1	5001 - 5021						
15B	40902-25560	BRACKET	1	5022 - 5029	B					
15C	40902-31880	BRACKET	1	5030 -	B					
21A	31823-22080	GUARD,FAN	1	5001 - 5005						FR (LH)
21B	31823-22150	GUARD,FAN	1	5006 - 5030	B					FR (LH)
21C	31823-22450	GUARD,FAN	1	5031 -	C					FR (LH)
22A	31823-22090	GUARD,FAN	1	5001 - 5005						FR (RH)
22B	31823-22160	GUARD,FAN	1	5006 - 5030	B					FR (RH)
22C	31823-22440	GUARD,FAN	1	5031 -	C					FR (RH)
23A	31823-22100	GUARD,FAN	1	5001 - 5005						
23B	31823-22170	GUARD,FAN	1	5006 -	B					
24A	46011-20200	WASHER,PLANE	8	5001 -						
31A	40035-20030	PIN,TAPER	1	5001 - 5040	D					
51A	61802-12090	BOLT,FLANGED	10	5001 -						
52A	61802-16020	BOLT,FLANGED	4	5001 -						
53A	88031-06121	NUT,SELF-LOCKING	10	5001 -						
61A	61802-12035	BOLT,FLANGED	14	5001 - 5021						
61B	61802-12035	BOLT,FLANGED	18	5022 - 5029						
61C	61802-12035	BOLT,FLANGED	12	5030 -						
62A	61033-14035	BOLT	4	5001 - 5029						
62B	61033-14050	BOLT	4	5030 -	B					
63A	62480-21241	NUT,FLANGED	1	5001 -						
64A	62710-18141	WASHER,PLANE	4	5001 -						
65A	62710-18121	WASHER,PLANE	4	5001 - 5021						
65B	62710-18121	WASHER,PLANE	6	5022 -						
66A	61033-12030	BOLT	6	5030 -						
71A	61802-10016	BOLT,FLANGED	4	5001 -						
72A	61802-10020	BOLT,FLANGED	5	5001 -						
73A	61802-12025	BOLT,FLANGED	8	5001 -						
74A	62480-21101	NUT,FLANGED	3	5001 -						

silverhorn.co.uk

RADIATOR

<S/N 5001 - 5030>

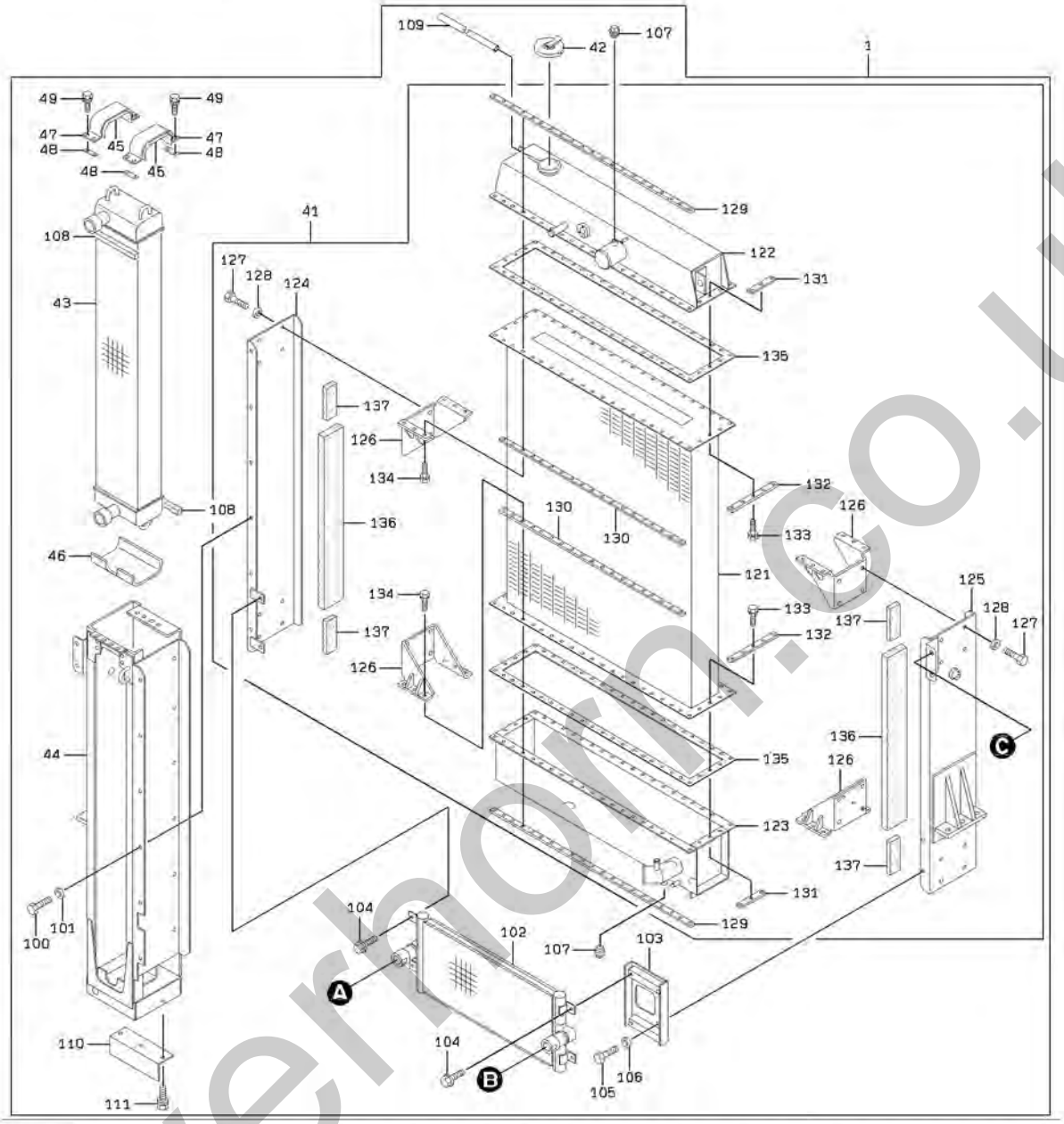

silverhorn.co.uk

RADIATOR

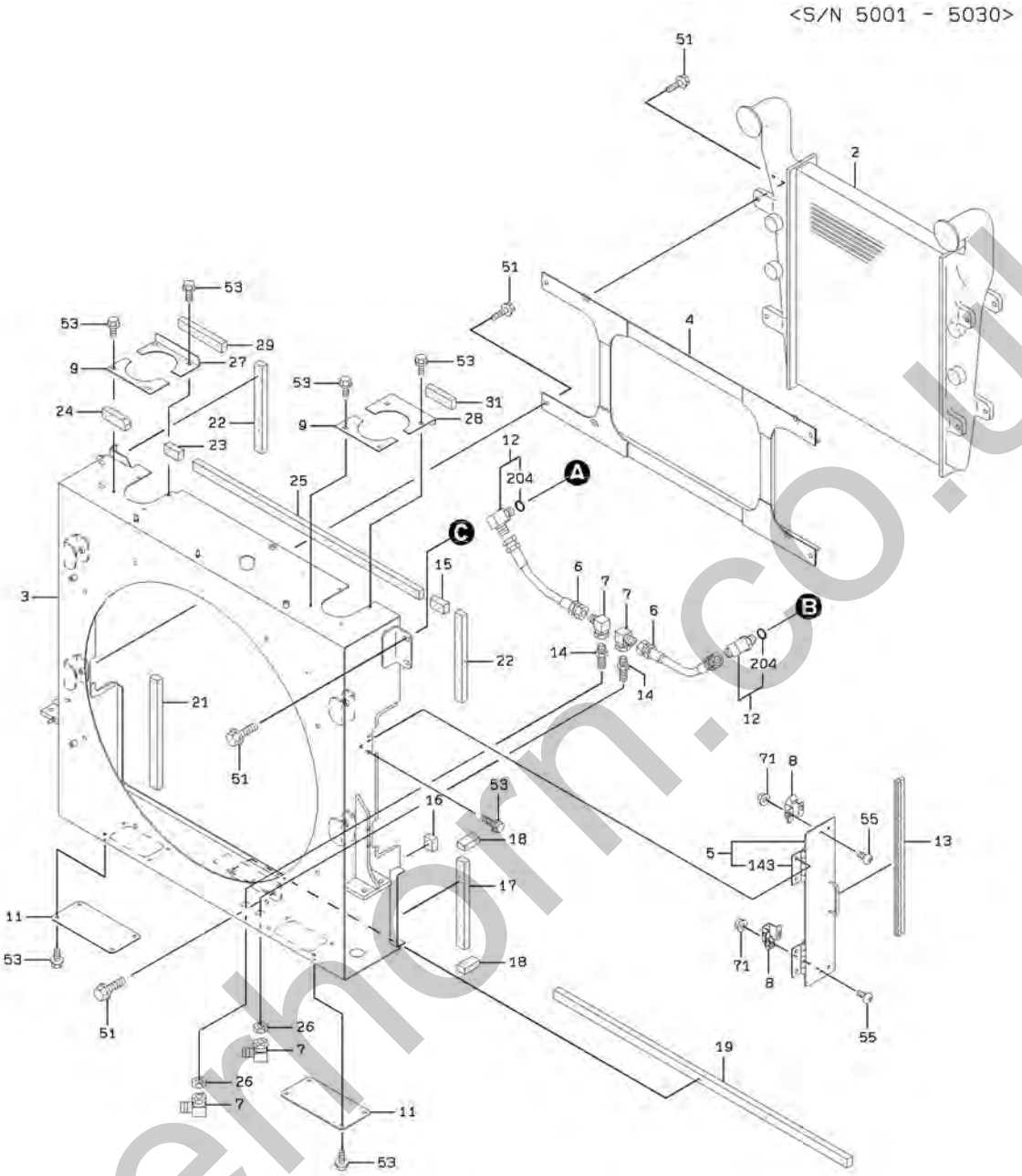

silvernorn.co.uk

RADIATOR

SYM-BOL	PART NUMBER	PART NAME	UNIT Q,TY	SERIAL (A) - (B)	REMARKS N P D	(A)	(B)	(C)	(D)	REMARK
1A	44721-62720	RADIATOR ASSY	1	5001 - 5030		Y01				
2A	32815-60110	COOLER ASSY,AIR	1	5001 - 5030						
3A	36436-20580	DUCT,RADIATOR	1	5001 - 5005						
3B	36436-20680	DUCT,RADIATOR	1	5006 - 5030	C					
4A	40902-20150	BRACKET	1	5001 - 5030						
5A	31205-40640	COVER	2	5001 - 5030				Y03		
6A	68255-50034	HOSE,HIGH PRESSURE	2	5001 - 5030						
7A	30242-20020	ADAPTER,ELBOW UNIO	4	5001 - 5030						
8A	44810-70050	LATCH ASSY	4	5001 - 5030						
9A	41607-20590	PLATE	2	5001 - 5030						
11A	41606-59420	PLATE	2	5001 - 5030						
12A	30241-23620	ADAPTER,ELBOW	2	5001 - 5030					Y04	
13A	34041-23430	STRIP, SEAL	2	5001 - 5030						
14A	30230-21980	ADAPTER	2	5001 - 5030						
15A	35680-48260	SPONGE	1	5001 - 5030						
16A	35680-48270	SPONGE	1	5001 - 5030						FR (LH)
17A	35680-48090	SPONGE	1	5001 - 5030						FR (LH)
18A	35680-48130	SPONGE	2	5001 - 5030						FR (LH)
19A	35680-48280	SPONGE	1	5001 - 5030						
21A	35680-48290	SPONGE	1	5001 - 5030						FR (RH)
22A	35680-48320	SPONGE	2	5001 - 5030						
23A	35680-48330	SPONGE	1	5001 - 5030						
24A	35680-48340	SPONGE	1	5001 - 5030						
25A	35680-48350	SPONGE	1	5001 - 5030						
26A	37600-21330	NUT	2	5001 - 5030						
27A	41607-20600	PLATE	1	5001 - 5030						
28A	41607-20610	PLATE	1	5001 - 5030						
29A	35680-48360	SPONGE	1	5001 - 5030						
31A	35680-48370	SPONGE	1	5001 - 5030						
41A	33281-71150	CORE ASSY	1	5001 - 5030		01	Y02			
42A	32211-70230	CAP ASSY	1	5001 - 5030		01				
43A	32816-70350	COOLER,OIL	1	5001 - 5030		01				
44A	40600-70910	FRAME	1	5001 - 5030		01				
45A	33713-70240	SHEET,RUBBER	2	5001 - 5030		01				
46A	33713-70260	SHEET,RUBBER	1	5001 - 5030		01				
47A	32920-70760	CLAMP	2	5001 - 5030		01				
48A	34200-71620	SHIM	A/R	5001 - 5030		01				
49A	43925-70190	BOLT SET	8	5001 - 5030		01				
51A	61802-12030	BOLT,FLANGED	15	5001 - 5030						
53A	61802-08025	BOLT,FLANGED	24	5001 - 5030						
55A	62256-51512	SCREW	8	5001 - 5030						
71A	62480-21051	NUT,FLANGED	8	5001 - 5030						
100A	43900-73830	BOLT	12	5001 - 5030		01				
101A	46000-70860	WASHER	12	5001 - 5030		01				
102A	32810-70020	COOLER	1	5001 - 5030		01				
103A	40900-71650	BRACKET	1	5001 - 5030		01				
104A	43963-70160	BOLT,FLANGED	4	5001 - 5030		01				
105A	43900-73490	BOLT	2	5001 - 5030		01				
106A	46000-70860	WASHER	2	5001 - 5030		01				
107A	41530-74570	PLUG	2	5001 - 5030		01				
108A	39600-72690	PACKING	2	5001 - 5030		01				
109A	36733-70090	TUBE,VINYL	1	5001 - 5030		01				L=2600
110A	40900-71660	BRACKET	1	5001 - 5030		01				
111A	43925-70230	BOLT,W/WASHER	3	5001 - 5030		01				
121A	33280-70180	CORE	1	5001 - 5030			02			
122A	36200-70930	TANK	1	5001 - 5030			02			
123A	36200-70940	TANK	1	5001 - 5030			02			
124A	33610-70290	SUPPORT ASSY	1	5001 - 5030			02			
125A	33610-70300	SUPPORT ASSY	1	5001 - 5030			02			
126A	45090-70030	RIB	4	5001 - 5030			02			
127A	43900-73490	BOLT	16	5001 - 5030			02			
128A	46000-70860	WASHER	16	5001 - 5030			02			
129A	41600-71380	PLATE	4	5001 - 5030			02			
130A	41600-71370	PLATE	4	5001 - 5030			02			
131A	41611-70440	PLATE	4	5001 - 5030			02			
132A	41600-70440	PLATE	4	5001 - 5030			02			

silverhorn.co.uk

RADIATOR

SYM-BOL	PART NUMBER	PART NAME	UNIT Q,TY	SERIAL (A) - (B)	REMARKS N P D	(A)	(B)	(C)	(D)	REMARK
133A	43925-70170	BOLT SET	72	5001 - 5030			02			
134A	43925-70210	BOLT SET	24	5001 - 5030			02			
135A	31990-71730	GASKET	2	5001 - 5030			02			
136A	39600-71910	PACKING	2	5001 - 5030			02			
137A	39600-72490	PACKING	4	5001 - 5030			02			
143A	39890-21220	HINGE	2	5001 - 5030				03		WELDING
204A	65210-12029	RING,O	1	5001 - 5030					04	

silverhorn.co.uk

RADIATOR

<S/N 5031 - >

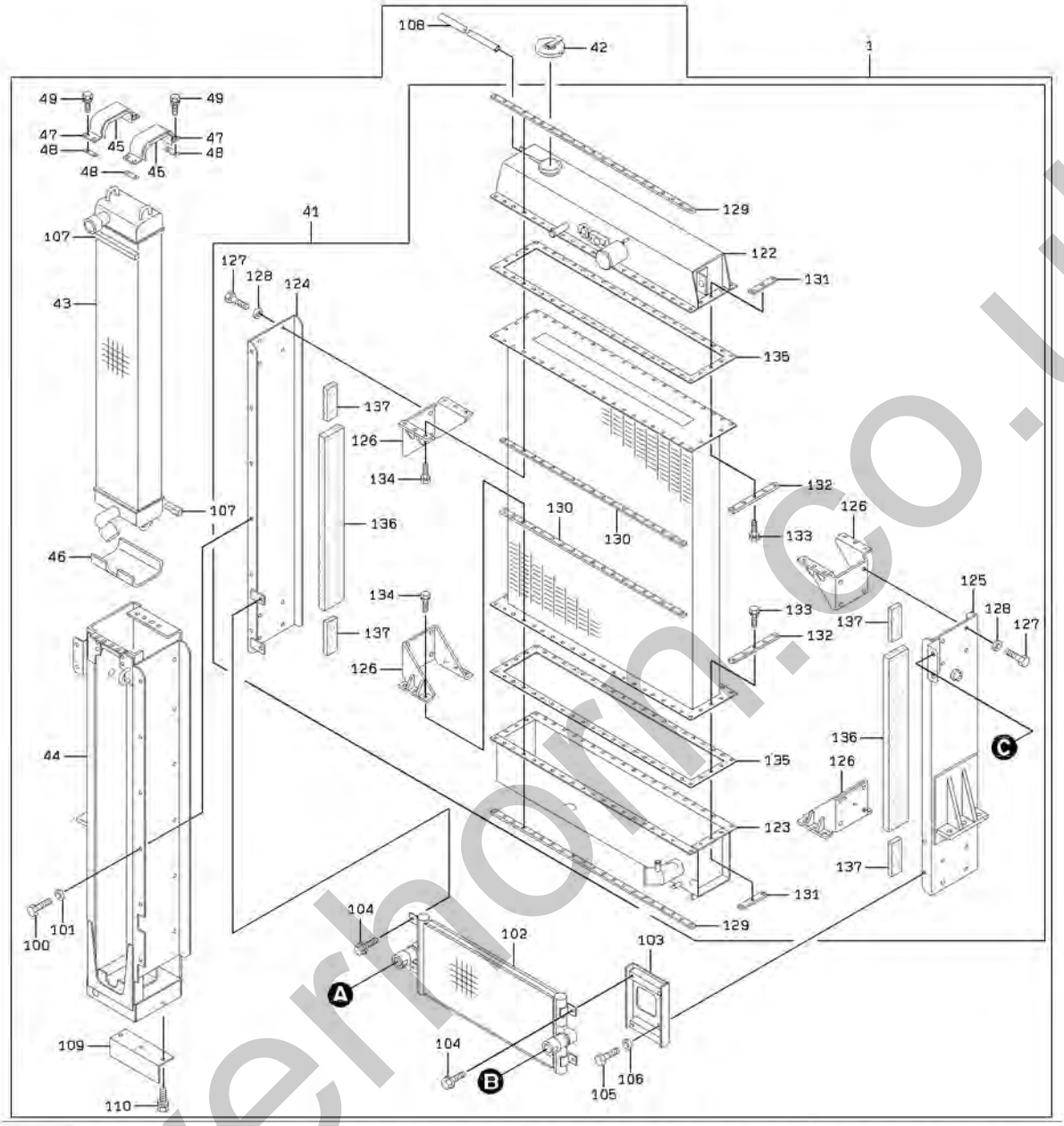

silverhorn.co.uk

RADIATOR

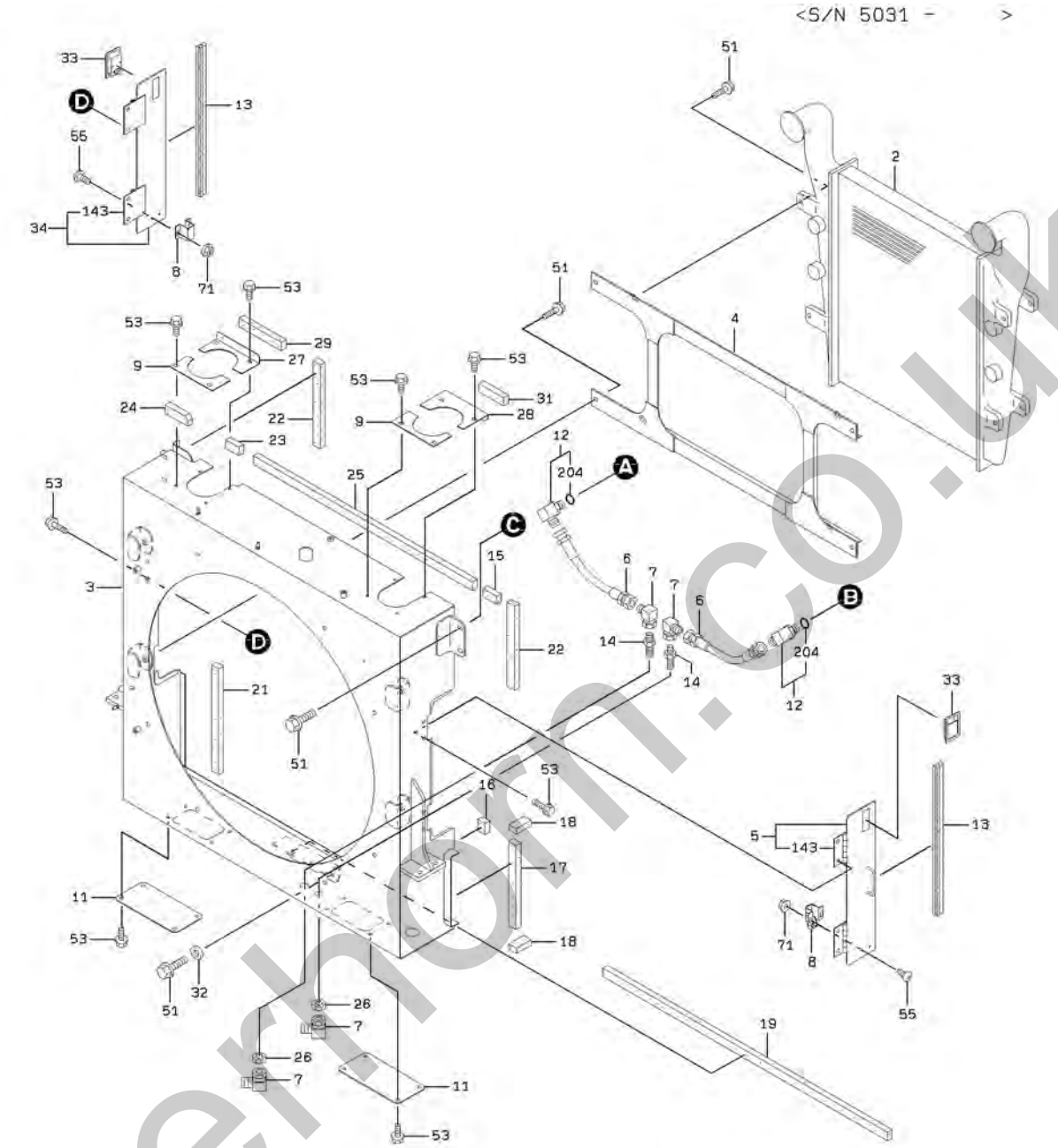

silverhorn.co.uk

RADIATOR

SYM-BOL	PART NUMBER	PART NAME	UNIT Q,TY	SERIAL (A) - (B)	REMARKS N P D	(A)	(B)	(C)	(D)	REMARK
1A	44721-63560	RADIATOR ASSY	1	5031 -		Y01				
2A	32815-60110	COOLER ASSY,AIR	1	5031 -						
3A	36436-20870	DUCT,RADIATOR	1	5031 - 5048						
3B	36436-20940	DUCT,RADIATOR	1	5049 -	C					
4A	40902-20150	BRACKET	1	5031 -						
5A	31205-50510	COVER	1	5031 -				Y03		
6A	68255-50034	HOSE,HIGH PRESSURE	2	5031 -						
7A	30242-20020	ADAPTER,ELBOW UNIO	4	5031 -						
8A	44810-70050	LATCH ASSY	2	5031 -						
9A	41607-20590	PLATE	2	5031 -						
11A	41606-59420	PLATE	2	5031 -						
12A	30241-23620	ADAPTER,ELBOW	2	5031 -					Y04	
13A	34041-23430	STRIP, SEAL	2	5031 -						
14A	30230-21980	ADAPTER	2	5031 -						
15A	35680-48260	SPONGE	1	5031 -						
16A	35680-48270	SPONGE	1	5031 -						
17A	35680-48090	SPONGE	1	5031 -						FR (LH)
18A	35680-48130	SPONGE	2	5031 -						FR (LH)
19A	35680-48280	SPONGE	1	5031 -						
21A	35680-48290	SPONGE	1	5031 -						FR (RH)
22A	35680-48320	SPONGE	2	5031 -						
23A	35680-48330	SPONGE	1	5031 -						
24A	35680-48340	SPONGE	1	5031 -						
25A	35680-48350	SPONGE	1	5031 -						
26A	37600-21330	NUT	2	5031 -						
27A	41607-20600	PLATE	1	5031 -						
28A	41607-20610	PLATE	1	5031 -						
29A	35680-48360	SPONGE	1	5031 -						
31A	35680-48370	SPONGE	1	5031 -						
32A	46011-22030	WASHER,PLANE	3	5031 -						
33A	32153-60190	CATCH,DOOR	2	5031 -						
34A	31205-50520	COVER	1	5031 -				Y03		
41A	33281-71630	CORE ASSY	1	5031 -		01	Y02			
42A	32211-70230	CAP ASSY	1	5031 -		01				
43A	32816-70420	COOLER,OIL	1	5031 -		01				
44A	40600-70910	FRAME	1	5031 -		01				
45A	33713-70240	SHEET,RUBBER	2	5031 -		01				
46A	33713-70260	SHEET,RUBBER	1	5031 -		01				
47A	32920-70760	CLAMP	2	5031 -		01				
48A	34200-71620	SHIM	A/R	5031 -		01				
49A	43925-70190	BOLT SET	8	5031 -		01				
51A	61802-12030	BOLT,FLANGED	15	5031 -						
53A	61802-08025	BOLT,FLANGED	24	5031 -						
55A	62256-51512	SCREW	4	5031 -						
71A	62480-21051	NUT,FLANGED	4	5031 -						
100A	43900-73830	BOLT	12	5031 -		01				
101A	46000-70860	WASHER	12	5031 -		01				
102A	32810-70020	COOLER	1	5031 -		01				
103A	40900-71650	BRACKET	1	5031 -		01				
104A	43963-70160	BOLT,FLANGED	4	5031 -		01				
105A	43900-73490	BOLT	2	5031 -		01				
106A	46000-70860	WASHER	2	5031 -		01				
107A	39600-72690	PACKING	2	5031 -		01				
108A	36733-70090	TUBE,VINYL	1	5031 -		01				L=2600
109A	40900-71660	BRACKET	1	5031 -		01				
110A	43925-70230	BOLT,W/WASHER	3	5031 -		01				
122A	36200-71260	TANK	1	5031 -			02			
123A	36200-70940	TANK	1	5031 -			02			
124A	33610-70290	SUPPORT ASSY	1	5031 -			02			
125A	33610-70300	SUPPORT ASSY	1	5031 -			02			
126A	45090-70030	RIB	4	5031 -			02			
127A	43900-73490	BOLT	16	5031 -			02			
128A	46000-70860	WASHER	16	5031 -			02			
129A	41600-71380	PLATE	4	5031 -			02			
130A	41600-71370	PLATE	4	5031 -			02			
131A	41611-70440	PLATE	4	5031 -			02			

silverhorn.co.uk

RADIATOR

SYM-BOL	PART NUMBER	PART NAME	UNIT Q,TY	SERIAL (A) - (B)	REMARKS N P D	(A)	(B)	(C)	(D)	REMARK
132A	41600-70440	PLATE	4	5031 -			02			
133A	43925-70170	BOLT SET	72	5031 -			02			
134A	43925-70210	BOLT SET	24	5031 -			02			
135A	31990-71730	GASKET	2	5031 -			02			
136A	39600-71910	PACKING	2	5031 -			02			
137A	39600-72490	PACKING	4	5031 -			02			
143A	39890-21220	HINGE	2	5031 -				03		WELDING
204A	65210-12029	RING,O	1	5031 -					04	

silverhorn.co.uk

OIL MOTOR

<S/N 5097 - >

(NOTE):KIT(SYMBOL 50) CONSISTS OF THE PARTS WITH a.

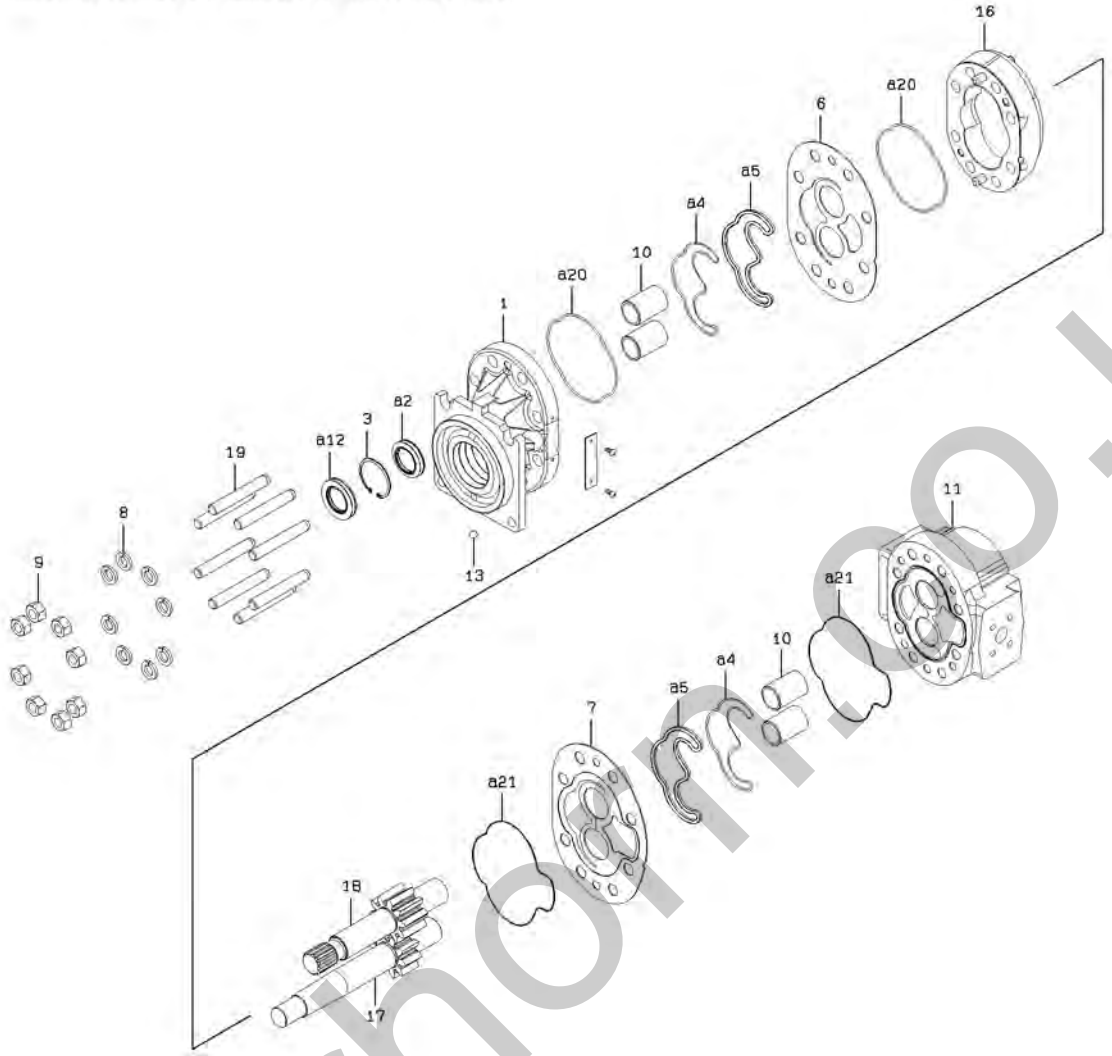

silverhorn.co.uk

OIL MOTOR

SYM-BOL	PART NUMBER	PART NAME	UNIT Q,TY	SERIAL (A) - (B)	REMARKS N P D	(A) (B)	(C) (D)	REMARK
000A	48976-61170-7	MOTOR,OIL	1	5097 -				
1A	31200-73180-7	COVER	1	5097 -				
2A	34000-70910-7	SEAL	1	5097 -		K1		
3A	45323-70250-7	RING,RETAINER	1	5097 -				
4A	44953-70380-7	RETAINER,SEAL	2	5097 -		K1		
5A	44953-70340-7	RETAINER,SEAL	2	5097 -		K1		
6A	41656-70250-7	PLATE,WEAR	1	5097 -				
7A	41656-70260-7	PLATE,WEAR	1	5097 -				
8A	46013-70530-7	WASHER,SPRING	8	5097 -				
9A	37600-71790-7	NUT	8	5097 -				
10A	40840-73140-7	BUSHING	4	5097 -				
11A	31200-73480-7	COVER	1	5097 -				
12A	34000-71040-7	SEAL	1	5097 -		K1		
13A	43751-70480-7	BALL	1	5097 -				
16A	43890-70970-7	BODY	1	5097 -				
17A	34528-70270-7	SHAFT,DRIVE	1	5097 -				
18A	32429-70380-7	GEAR,DRIVEN	1	5097 -				
19A	43955-70370-7	BOLT,STUD	8	5097 -				
20A	47131-75900-7	RING,O	2	5097 -		K1		
21A	47131-75910-7	RING,O	2	5097 -		K1		
50A	49327-74220-7	SEAL KIT	1	5097 -		QK1		

silverhorn.co.uk

WATER LINE

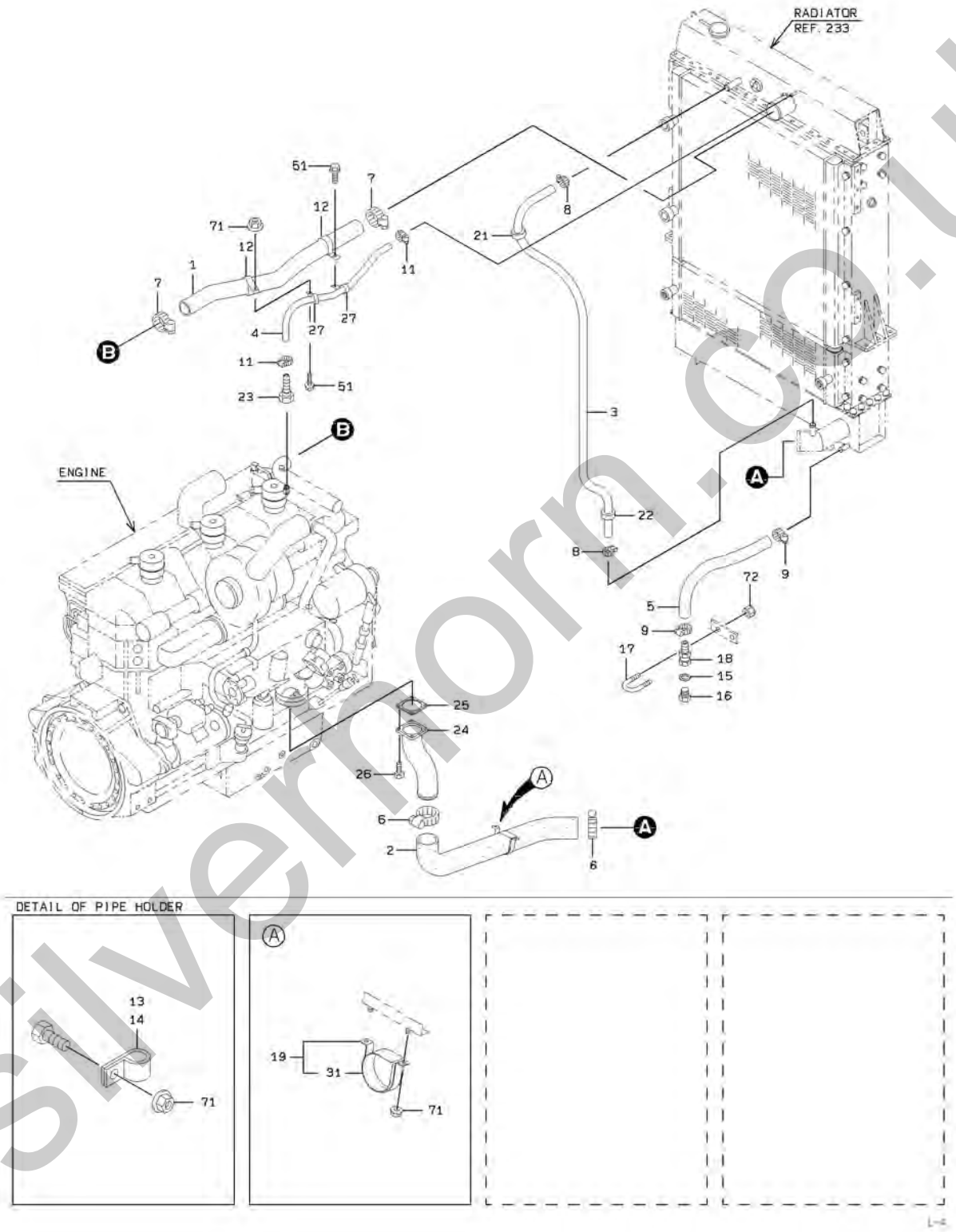

silvermorn.co.uk

WATER LINE

SYM-BOL	PART NUMBER	PART NAME	UNIT Q,TY	SERIAL (A) - (B)	REMARKS N P D	(A) (B)	(C) (D)	REMARK
1A	43110-24350	HOSE,WATER	1	5001 -				
2A	43110-24360	HOSE,WATER	1	5001 -				
3A	67040-25000	HOSE,HEAT RESISTIN	2 M	5001 -				L=2000
4A	67040-09000	HOSE,HEAT RESISTIN	2 M	5001 -				L=1400
5A	67040-19000	HOSE,HEAT RESISTIN	1 M	5001 -				L=530
6A	69030-11800	BAND,HOSE-HIGH TOR	2	5001 -				
7A	69030-09200	BAND,HOSE-HIGH TOR	2	5001 -				
8A	69030-04400	BAND,HOSE-HIGH TOR	2	5001 -				
9A	69002-03800-7	BAND,HOSE	2	5001 -				
11A	69002-02200-7	BAND,HOSE	2	5001 -				
12A	72010-86000	HOLDER,HOSE	2	5001 -				(D=86)
13A	72010-37000	HOLDER,HOSE	3	5001 -				(D=37)
14A	72001-11000	HOLDER,PIPE	4	5001 -				(D=10)
15A	50201-00110	GASKET	1	5001 -				
16A	50201-02070	PLUG	1	5001 -				
17A	43962-20100	BOLT,U	1	5001 -				
18A	37715-20960	NIPPLE,HOSE	1	5001 -				
19A	32923-20100	CLAMP,HOSE	1	5001 -		Y01		
21A	65801-63060	BUSHING,ELASTIC	1	5001 -				
22A	65801-40060	BUSHING,ELASTIC	1	5001 -				
23A	37715-21280	NIPPLE,HOSE	1	5001 -				
24A	38752-20520	PIPE,WATER	1	5001 -				
25A	50401-00650	GASKET	1	5001 -				
26A	50401-03670	BOLT	4	5001 -				
27A	72001-11800	HOLDER,PIPE	2	5001 -				(D=18)
31A	33713-22830	SHEET,RUBBER	1	5001 -		01		
51A	61802-08020	BOLT,FLANGED	2	5001 -				
71A	62480-21081	NUT,FLANGED	11	5001 -				
72A	88031-06081	NUT,SELF-LOCKING	2	5001 -				

silverhorn.co.uk

AIR COOLER LINE

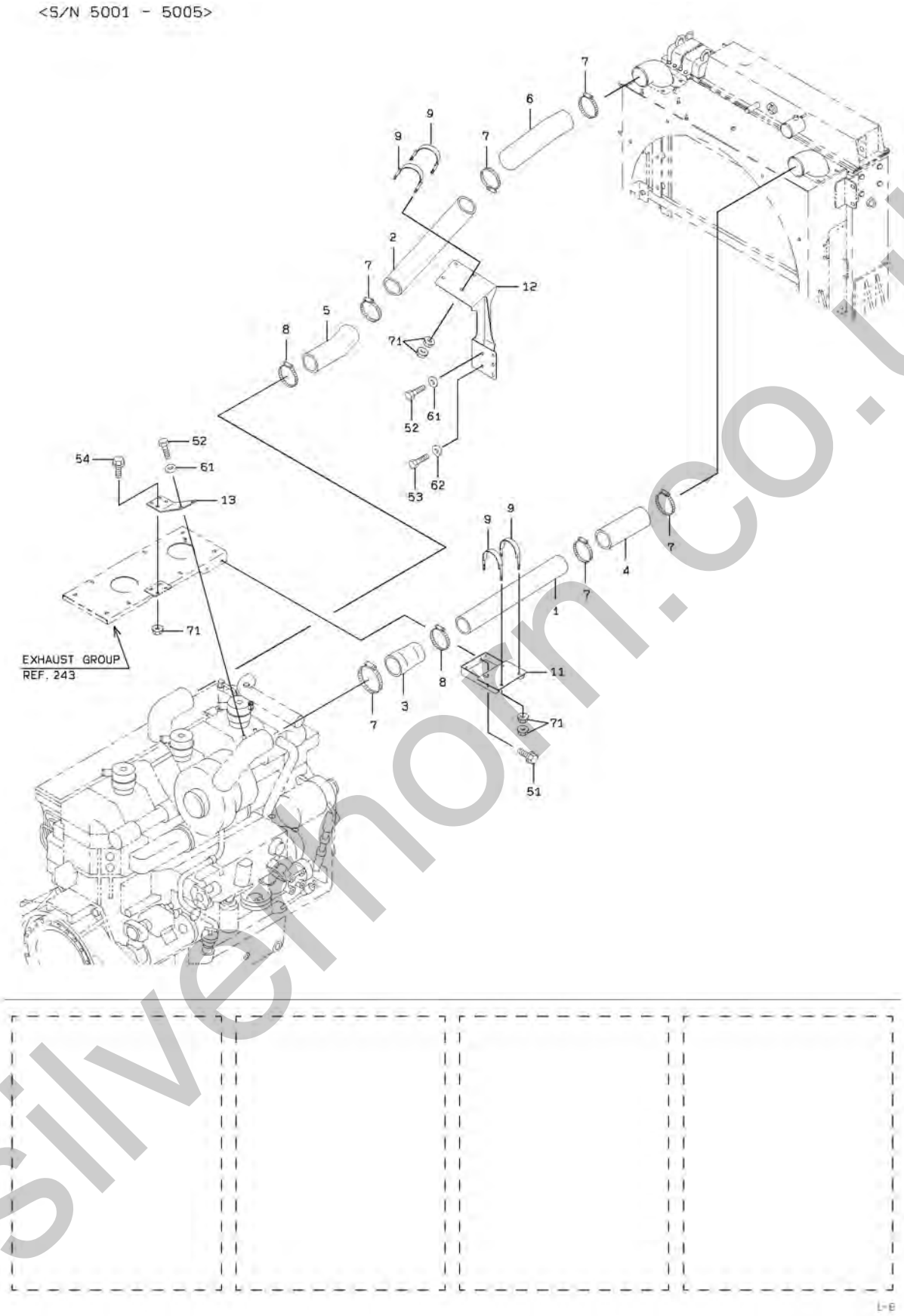

silvermoon.co.uk

AIR COOLER LINE

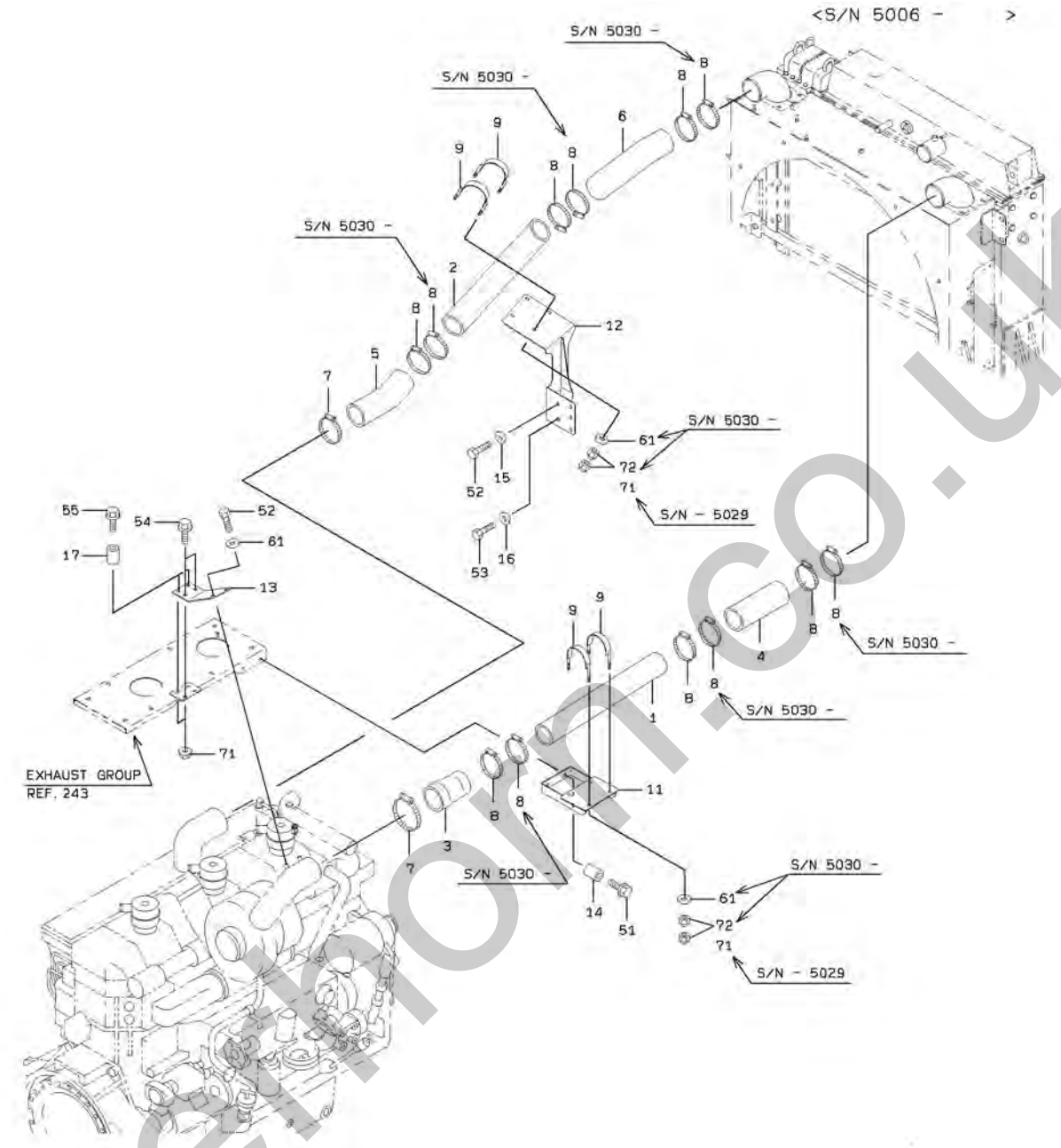

silverthorn.co.uk

AIR COOLER LINE

SYM-BOL	PART NUMBER	PART NAME	UNIT Q,TY	SERIAL (A) - (B)	REMARKS N P D	(A) (B)	(C) (D)	REMARK
1A	38753-22620	PIPE,AIR	1	5001 - 5029				
1B	38753-23710	PIPE,AIR	1	5030 -	C			
2A	38753-22630	PIPE,AIR	1	5001 - 5029				
2B	38753-23720	PIPE,AIR	1	5030 -	C			
3A	43111-22610	HOSE,AIR	1	5001 -				
4A	43111-22620	HOSE,AIR	1	5001 -				
5A	43111-22630	HOSE,AIR	1	5001 -				
6A	43111-22640	HOSE,AIR	1	5001 -				
7A	38677-70750-7	BAND,HOSE	6	5001 - 5005				
7B	38677-70750-7	BAND,HOSE	2	5006 -				
8A	38677-70740-7	BAND,HOSE	2	5001 - 5005				
8B	38677-70740-7	BAND,HOSE	6	5006 - 5029				
8C	38677-70740-7	BAND,HOSE	12	5030 -				
9A	43962-21190	BOLT,U	4	5001 -				
11A	40902-20360	BRACKET	1	5001 - 5029				
11B	40902-33260	BRACKET	1	5030 -	C			
12A	40901-58030	BRACKET	1	5001 -				
13A	41607-29800	PLATE	1	5001 -				
14A	43780-23540	BOSS	2	5006 -				
15A	46011-20870	WASHER,PLANE	4	5006 -				
16A	46011-22030	WASHER,PLANE	1	5006 -				
17A	35700-20520	SPACER	2	5006 -				
51A	61802-10020	BOLT,FLANGED	2	5001 - 5005				
51B	61802-10045	BOLT,FLANGED	2	5006 -	B			
52A	61261-06020	BOLT	6	5001 -				
53A	61261-07020	BOLT(UNIFY)	1	5001 - 5005				
53B	61261-07030	BOLT(UNIFY)	1	5006 -	B			
54A	61802-10025	BOLT,FLANGED	4	5001 - 5005				
54B	61802-10025	BOLT,FLANGED	2	5006 -				
55A	61802-10040	BOLT,FLANGED	2	5006 -				
61A	62710-18109	WASHER,PLANE	6	5001 - 5005				
61B	62710-18109	WASHER,PLANE	2	5006 - 5029				
61C	62710-18101	WASHER,PLANE	10	5030 -	C			
62A	62710-18129	WASHER,PLANE	1	5001 - 5005	D			
71A	62480-21101	NUT,FLANGED	20	5001 - 5029				
71B	62480-21101	NUT,FLANGED	4	5030 -				
72A	88031-06101	NUT,SELF-LOCKING	8	5030 -				

silverhorn.co.uk

MEMO

silverhorn.co.uk

AIR CLEANER GROUP

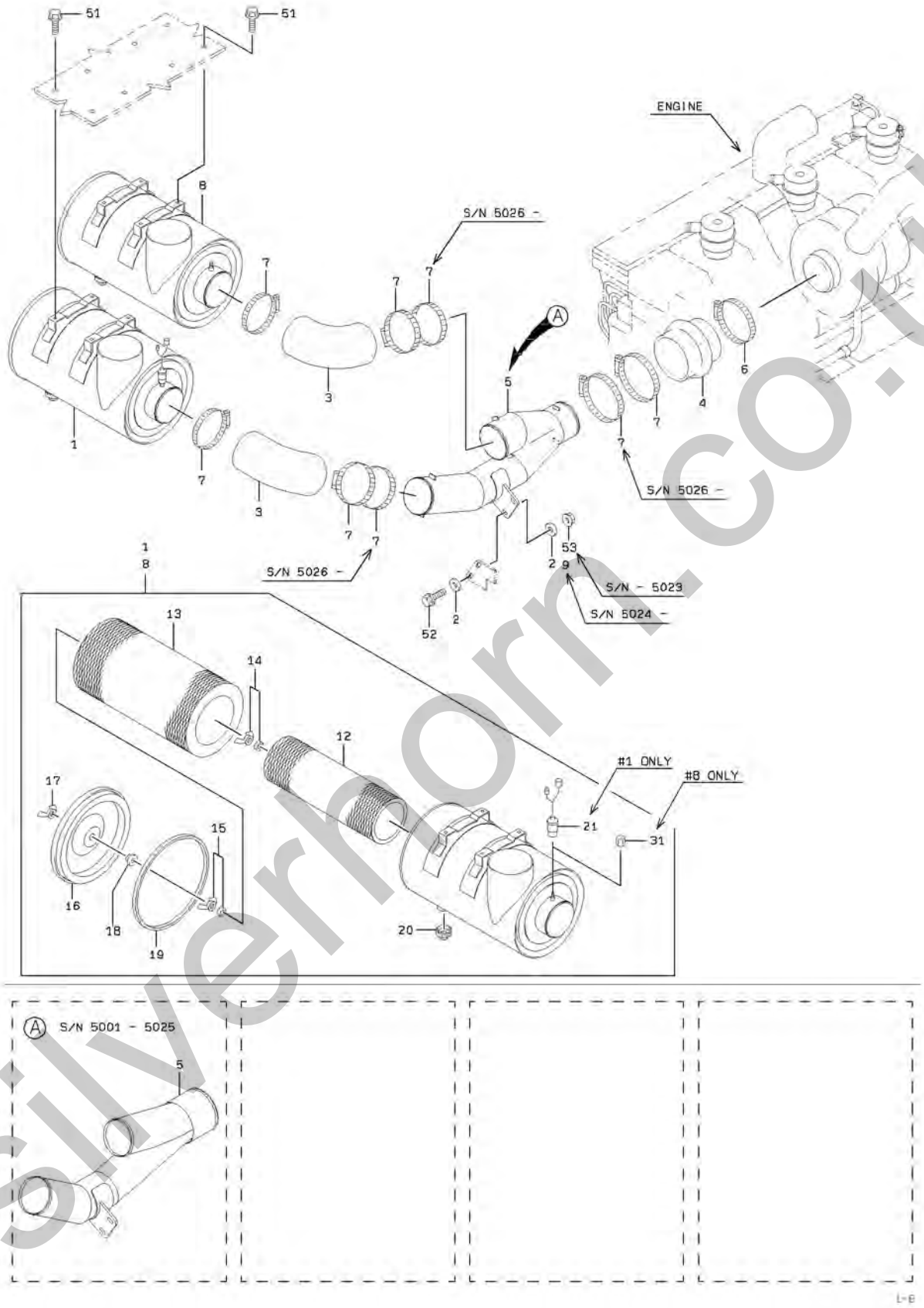

silverhorn.co.uk

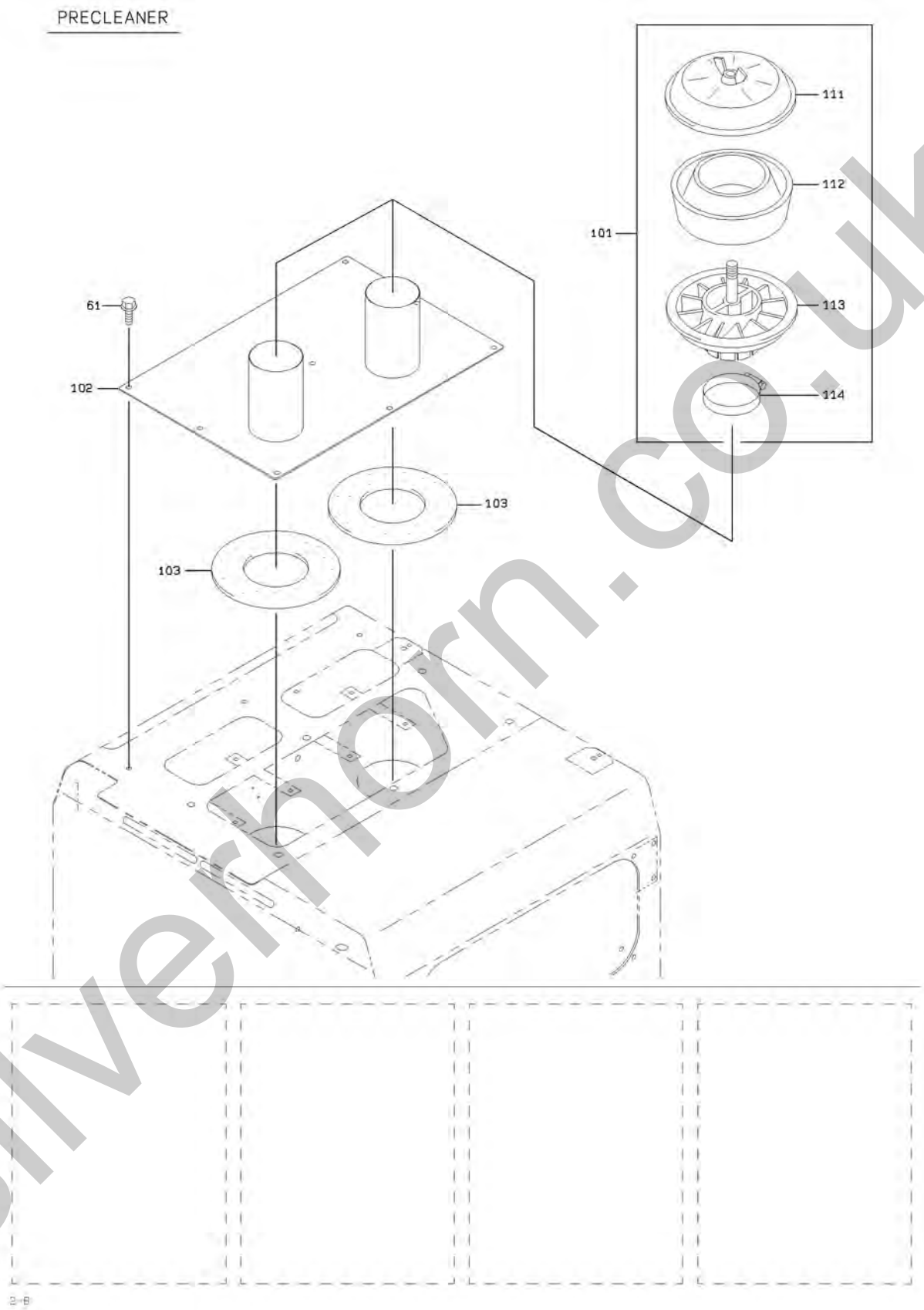

silverhorn.co.uk

AIR CLEANER GROUP

SYM-BOL	PART NUMBER	PART NAME	UNIT Q,TY	SERIAL (A) - (B)	REMARKS N P D	(A)	(B)	(C)	(D)	REMARK
1A	32962-60300	CLEANER ASSY,AIR	1	5001 -		Y01				
2A	46011-21300	WASHER,PLANE	4	5001 -						
3A	43111-70220	HOSE,AIR	2	5001 -						
4A	43111-70140	HOSE,AIR	1	5001 -						
5A	38753-22560	PIPE,AIR	1	5001 - 5025						
5B	38753-23620	PIPE,AIR	1	5026 -	C					
6A	69030-16800	BAND,HOSE-HIGH TOR	1	5001 -						
7A	69030-18100	BAND,HOSE-HIGH TOR	5	5001 - 5025						
7B	69030-18100	BAND,HOSE-HIGH TOR	8	5026 -						
8A	32962-60320	CLEANER ASSY,AIR	1	5001 -			Y02			
9A	88031-06101	NUT,SELF-LOCKING	2	5024 -						
12A	30981-70490	ELEMENT,FILTER	1	5001 -		01	02			FR INNER
13A	30981-70480	ELEMENT,FILTER	1	5001 -		01	02			FR OUTER
14A	37618-70010	NUT,WING	1	5001 -		01	02			
15A	37618-70070	NUT,WING	1	5001 -		01	02			
16A	31200-71020	COVER	1	5001 -		01	02			
17A	37628-70010	NUT,CAP	1	5001 -		01	02			
18A	32970-70020	CLIP	1	5001 -		01	02			
19A	31990-70710	GASKET	1	5001 -		01	02			
20A	38559-70010	VALVE,VACUATOR	1	5001 -		01	02			
21A	35830-70010	SENSOR,PRESSURE	1	5001 -		01				
31A	32210-70060	CAP	1	5001 -			02			
51A	61802-10025	BOLT,FLANGED	8	5001 -						
52A	61802-10035	BOLT,FLANGED	2	5001 -						
53A	62480-21101	NUT,FLANGED	2	5001 - 5023	D					
61A	61802-10025	BOLT,FLANGED	9	5001 -						
101A	42730-70090-7	PRECLEANER	2	5001 -				Y03		
102A	36430-23270	DUCT	1	5001 -						
103A	31990-24620	GASKET	2	5001 -						
111A	31231-70150-7	COVER ASSY	1	5001 -				03		
112A	43890-70360-7	BODY	1	5001 -				03		
113A	35755-70160-7	SLEEVE ASSY	1	5001 -				03		35755-70050-7
114A	32920-70790-7	CLAMP	1	5001 -				03		

silverhorn.co.uk

MEMO

silverhorn.co.uk

EXHAUST GROUP

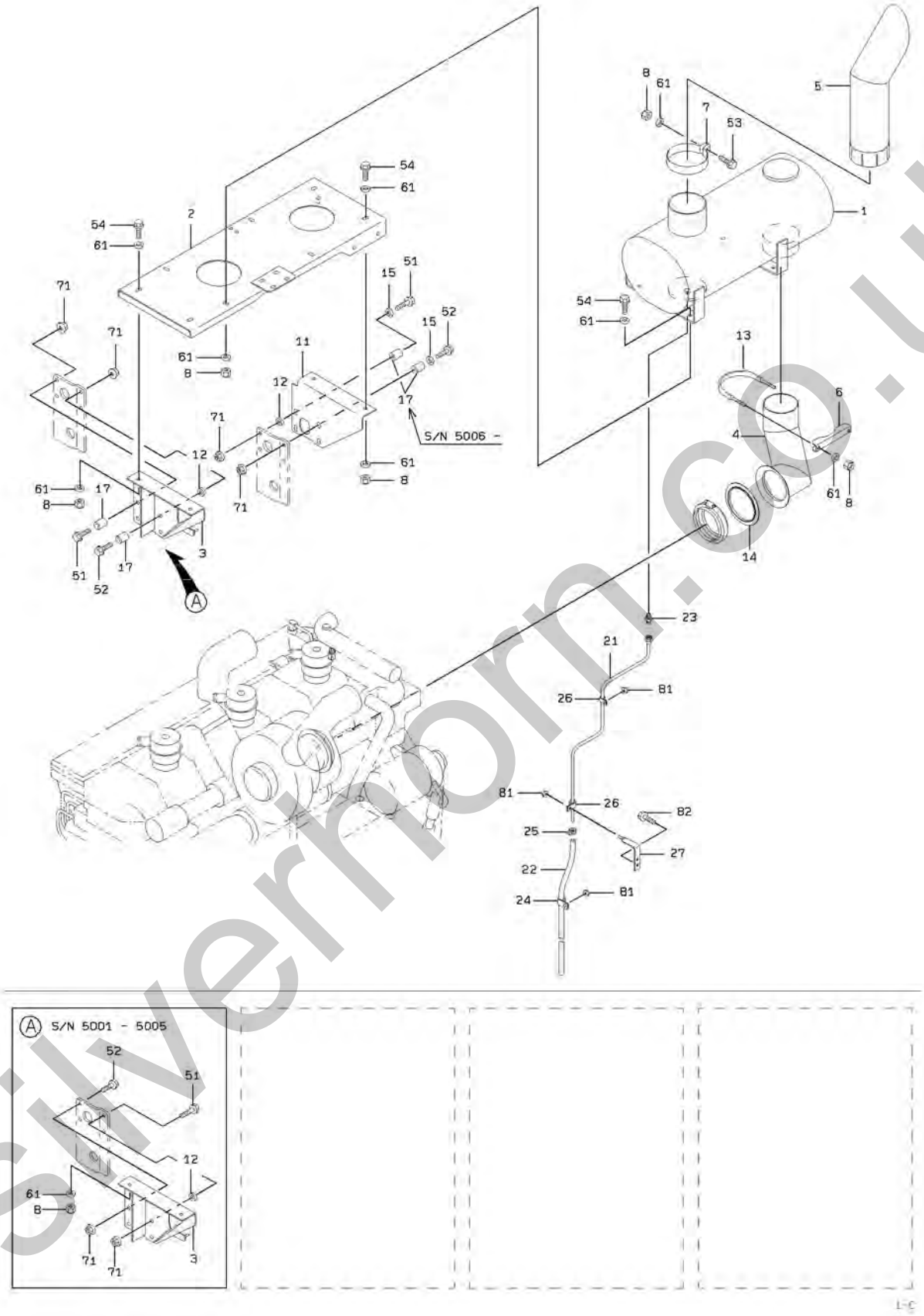

silverhorn.co.uk

EXHAUST GROUP

SYM-BOL	PART NUMBER	PART NAME	UNIT Q,TY	SERIAL (A) - (B)	REMARKS N P D	(A) (B)	(C) (D)	REMARK
1A	44300-60620	MUFFLER	1	5001 -				
2A	40902-21350	BRACKET	1	5001 - 5025				
2B	40902-26870	BRACKET	1	5026 -	B			
3A	40901-58000	BRACKET	1	5001 -				
4A	38765-25910	PIPE,EXHAUST	1	5001 - 5064				
4B	38765-28160	PIPE,EXHAUST	1	5065 -	C			
5A	38765-22260	PIPE,EXHAUST	1	5001 - 5005				
5B	38765-26450	PIPE,EXHAUST	1	5006 -	C			
6A	40900-52700	BRACKET	1	5001 -				
7A	32920-21110	CLAMP	1	5001 -				
8A	88031-06101	NUT,SELF-LOCKING	11	5001 -				
11A	40901-57990	BRACKET	1	5001 -				
12A	46000-20760	WASHER	4	5001 -				
13A	43962-20960	BOLT,U	1	5001 -				
14A	45200-24210	RING	1	5001 -				
15A	46011-20200	WASHER,PLANE	4	5001 -				
17A	43780-23200	BOSS	8	5006 -				
21A	38705-49550	PIPE ASSY,FLARED	1	5001 -				
22A	67031-39000	TUBE,VINYL	1 M	5001 -				L=1000
23A	69100-21000	FLARED FITTING,ELB	1	5001 -				
24A	72001-11800	HOLDER,PIPE	1	5001 -				(D=18)
25A	69002-02200-7	BAND,HOSE	1	5001 -				
26A	72001-11000	HOLDER,PIPE	2	5001 -				(D=10)
27A	41618-39250	PLATE	1	5001 -				
51A	61802-12045	BOLT,FLANGED	4	5001 - 5005				
51B	61802-12065	BOLT,FLANGED	4	5006 -	B			
52A	61802-12030	BOLT,FLANGED	4	5001 - 5005				
52B	61802-12055	BOLT,FLANGED	4	5006 -	B			
53A	61802-10030	BOLT,FLANGED	1	5001 -				
54A	61802-10035	BOLT,FLANGED	8	5001 -				
61A	62710-18101	WASHER,PLANE	11	5001 - 5046				
61B	62710-18101	WASHER,PLANE	19	5047 -				
71A	62480-21121	NUT,FLANGED	8	5001 -				
81A	62480-21081	NUT,FLANGED	5	5001 -				
82A	61802-08020	BOLT,FLANGED	2	5001 -				

silverhorn.co.uk

FUEL LINE

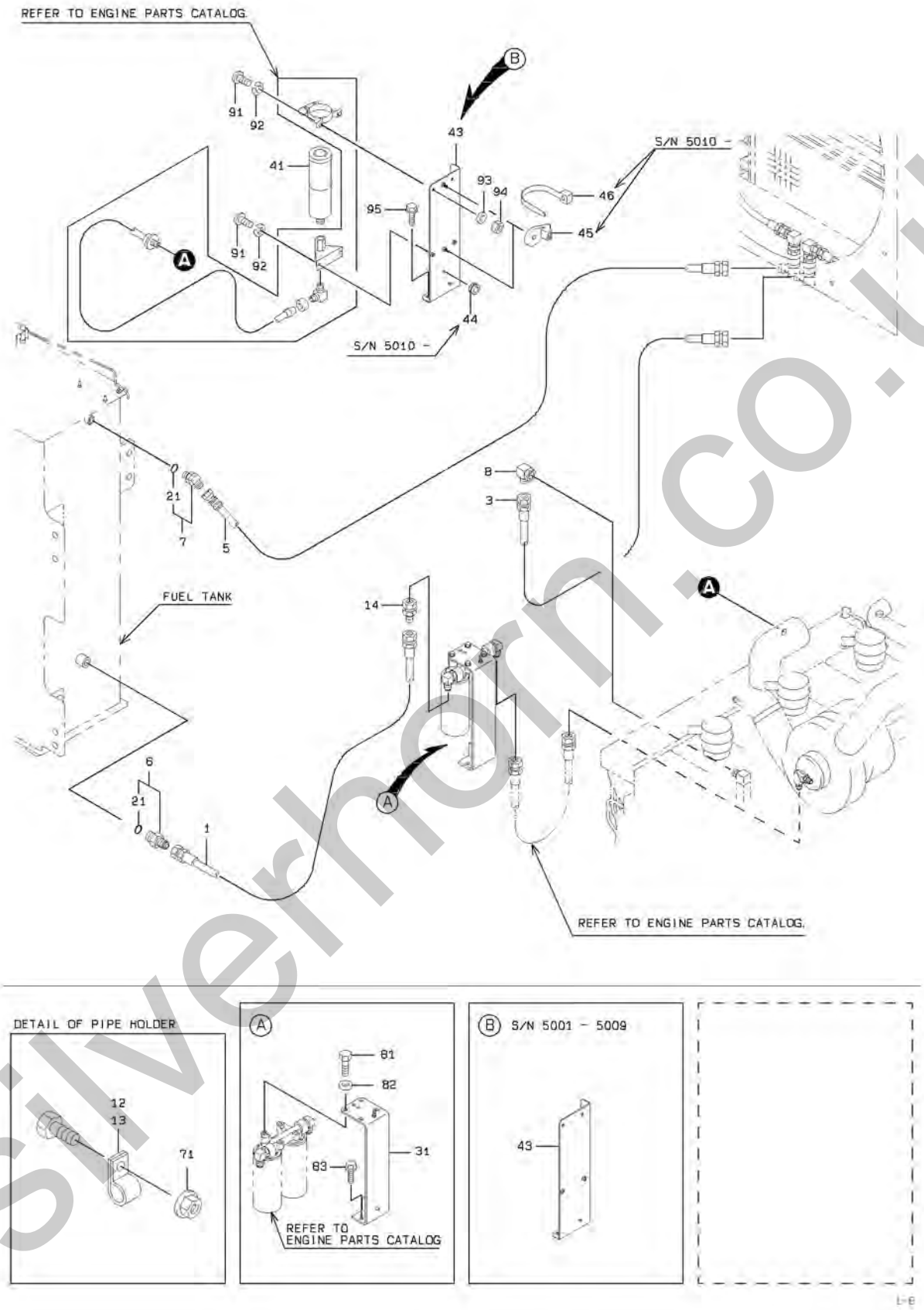

silverhorn.co.uk

FUEL LINE

SYM-BOL	PART NUMBER	PART NAME	UNIT Q,TY	SERIAL (A) - (B)	REMARKS N P D	(A) (B)	(C) (D)	REMARK
1A	68255-50308	HOSE,HIGH PRESSURE	1	5001 -				
3A	68255-50225	HOSE,HIGH PRESSURE	1	5001 -				
5A	68255-50435	HOSE,HIGH PRESSURE	1	5001 -				
6A	88201-06712	ADAPTER	1	5001 -		Y01		
7A	88241-07212	ADAPTER,ELBOW	1	5001 -		Y01		
8A	30242-20440	ADAPTER,ELBOW UNIO	1	5001 -				
12A	72001-12000	HOLDER,PIPE	A/R	5001 -				(D=20)
13A	72010-28000	HOLDER,HOSE	A/R	5001 -				(D=28)
14A	30250-20250	ADAPTER,UNION	1	5001 -				
21A	65210-12024	RING,O	1	5001 -		01		
31A	40901-21700	BRACKET	1	5001 -				
41A	50401-03550-7	BOMB,ETHER	1	5001 -				
43A	40901-20960	BRACKET	1	5001 - 5009				
43B	40902-24370	BRACKET	1	5010 - 5023	C			
43C	40902-25210	BRACKET	1	5024 - 5030	C			
43D	40902-26110	BRACKET	1	5031 -	C			
44A	65801-10032	BUSHING,ELASTIC	1	5010 - 5023				
44B	65801-16032	BUSHING,ELASTIC	1	5024 -	B			
45A	32923-70120	CLAMP,HOSE	2	5010 -				
46A	32923-70090	CLAMP,HOSE	2	5010 -				
71A	62480-21081	NUT,FLANGED	A/R	5001 -				
81A	61275-06016	BOLT(UNIFY)	4	5001 -				
82A	62702-40031	WASHER,PLANE	4	5001 -				
83A	61802-12020	BOLT,FLANGED	2	5001 -				
91A	62256-51616	SCREW	4	5001 -				
92A	62721-06100	WASHER,SPRING	4	5001 -				
93A	62701-40061	WASHER,PLANE	2	5001 -				
94A	62401-81061	NUT	2	5001 -				
95A	61802-10016	BOLT,FLANGED	2	5001 -				

silverhorn.co.uk

TRANSMISSION HYDRAULIC LINE

<S/N 5001 - 5030>

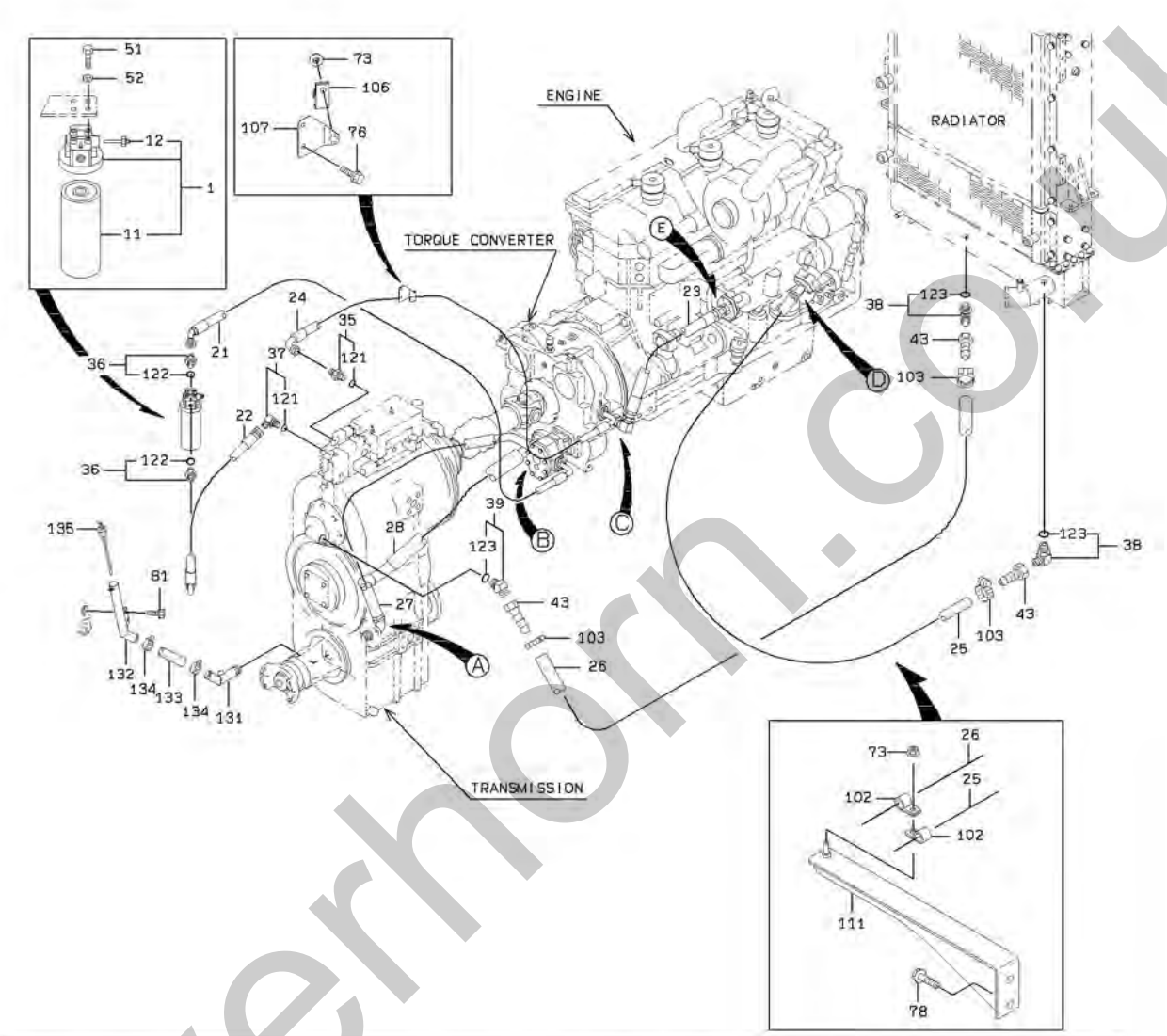

silverhorn.co.uk

TRANSMISSION HYDRAULIC LINE

<S/N 5001 - 5030>

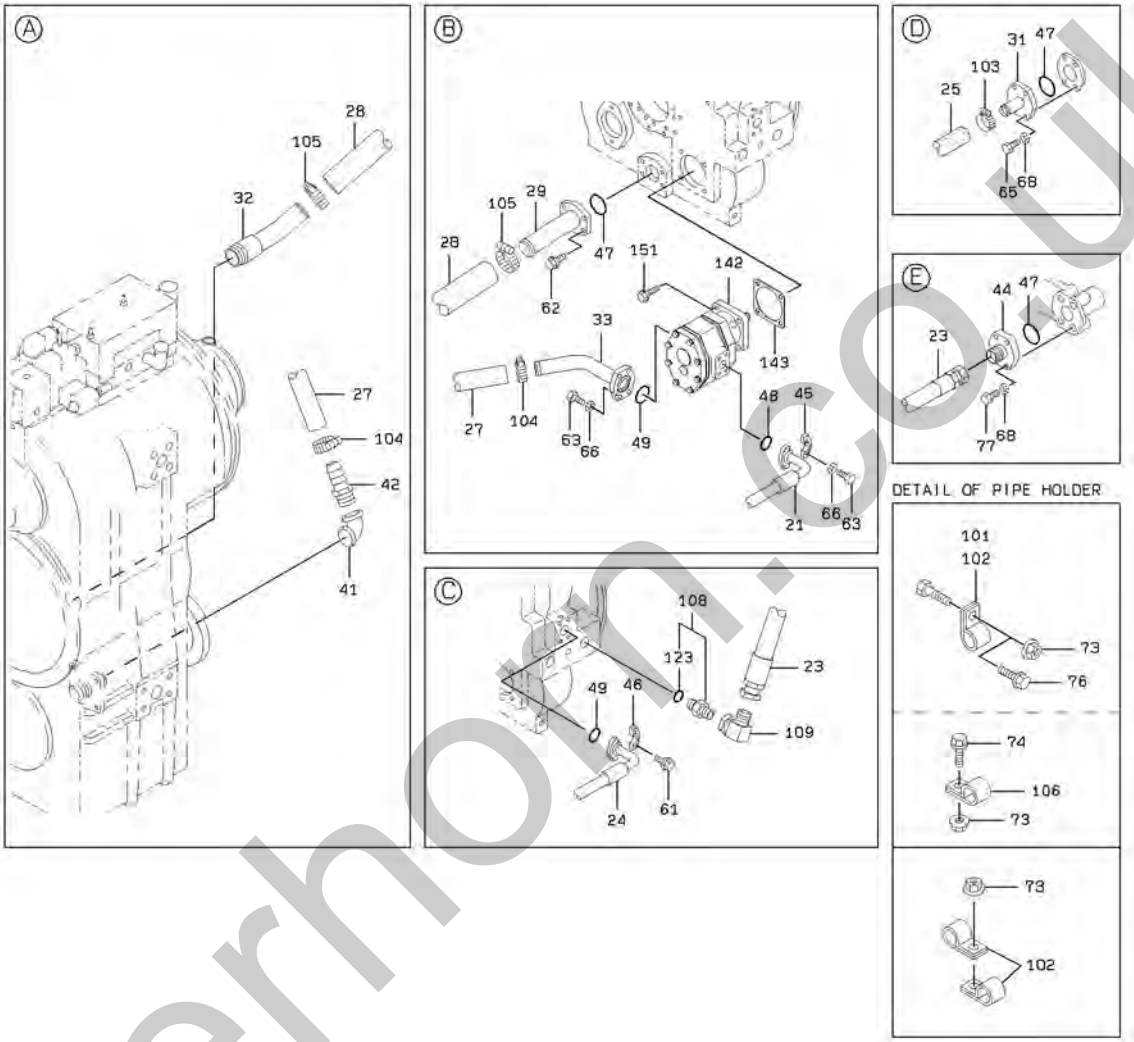

silverhorn.co.uk

TRANSMISSION HYDRAULIC LINE

SYM-BOL	PART NUMBER	PART NAME	UNIT Q,TY	SERIAL (A) - (B)	REMARKS N P D	(A)	(B)	(C)	(D)	REMARK
1A	40337-60210-7	FILTER ASSY,LINE	1	5001 - 5030		Y01				
11A	30981-70340-7	ELEMENT,FILTER	1	5001 - 5030		01				
12A	30650-70020	INDICATOR	1	5001 - 5030		01				
21A	43113-38280	HOSE,HIGH PRESSURE	1	5001 - 5030						
22A	68635-60064	HOSE,HIGH PRESSURE	1	5001 - 5030						
23A	68255-70068	HOSE,HIGH PRESSURE	1	5001 - 5030						
24A	43113-24450	HOSE,HIGH PRESSURE	1	5001 - 5030						
25A	67040-32000	HOSE,HEAT RESISTIN	3 M	5001 - 5030						L=2250
26A	67040-32000	HOSE,HEAT RESISTIN	5 M	5001 - 5030						L=4900
27A	67059-38000	HOSE	2 M	5001 - 5030						L=1100
28A	67040-50000	HOSE,HEAT RESISTIN	1 M	5001 - 5030						L=770
29A	38755-21370	PIPE,OIL	1	5001 - 5030						
31A	38755-57720	PIPE,OIL	1	5001 - 5030						
32A	38755-23750	PIPE,OIL	1	5001 - 5030						
33A	38755-37720	PIPE,OIL	1	5001 - 5030						
35A	88201-06716	ADAPTER	1	5001 - 5030			Y02			
36A	88201-06816	ADAPTER	2	5001 - 5030				Y03		
37A	88241-07116	ADAPTER,ELBOW	1	5001 - 5030			Y02			
38A	88241-07120	ADAPTER,ELBOW	2	5001 - 5030					Y04	
39A	88241-07220	ADAPTER,ELBOW	1	5001 - 5030					Y04	
41A	69203-14000	FITTING,ELBOW	1	5001 - 5030						
42A	88511-01240	NIPPLE,HOSE	1	5001 - 5030						
43A	88511-03200	NIPPLE,HOSE	3	5001 - 5030						
44A	40510-21410	FLANGE	1	5001 - 5030						
45A	69811-25210-7	FLANGE,SPLIT	2	5001 - 5030						
46A	40511-20010	FLANGE,SPLIT	2	5001 - 5030						
47A	65220-41006	RING,O	3	5001 - 5030						
48A	65220-31024	RING,O	1	5001 - 5030						
49A	65220-31027	RING,O	2	5001 - 5030						
51A	61275-06020	BOLT(UNIFY)	4	5001 - 5030						
52A	62722-03100	WASHER,SPRING	4	5001 - 5030						
61A	61802-10025	BOLT,FLANGED	4	5001 - 5030						
62A	61802-12030	BOLT,FLANGED	4	5001 - 5030						
63A	61275-06030	BOLT(UNIFY)	8	5001 - 5030						
65A	61275-08035	BOLT(UNIFY)	4	5001 - 5030						
66A	62722-03100	WASHER,SPRING	8	5001 - 5030						
68A	62722-04100	WASHER,SPRING	8	5001 - 5030						
73A	62480-21081	NUT,FLANGED	A/R	5001 - 5030						
74A	61802-08025	BOLT,FLANGED	1	5001 - 5030						
76A	61802-08016-7	BOLT,FLANGED	3	5001 - 5030						
77A	61275-08040	BOLT(UNIFY)	4	5001 - 5030						
78A	61802-12016	BOLT,FLANGED	2	5001 - 5030						
81A	61802-10020	BOLT,FLANGED	2	5001 - 5030						
101A	72010-37000	HOLDER,HOSE	A/R	5001 - 5030						(D=37)
102A	72010-46000	HOLDER,HOSE	A/R	5001 - 5030						(D=46)
103A	69002-05200-7	BAND,HOSE	8	5001 - 5030						
104A	69002-05700-7	BAND,HOSE	4	5001 - 5030						
105A	69002-07600-7	BAND,HOSE	4	5001 - 5030						
106A	72010-34000	HOLDER,HOSE	A/R	5001 - 5030						(D=34)
107A	41612-35690	PLATE	1	5001 - 5030						
108A	88201-06720	ADAPTER	1	5001 - 5030					Y04	
109A	30242-20180	ADAPTER,ELBOW UNIO	1	5001 - 5030						
111A	40902-20120	BRACKET	1	5001 - 5030						
121A	65210-12029	RING,O	1	5001 - 5030			02			
122A	65231-00161	RING,O	1	5001 - 5030				03		
123A	65210-12038	RING,O	1	5001 - 5030					04	
131A	38755-31720	PIPE,OIL	1	5001 - 5030						
132A	38755-44040	PIPE,OIL	1	5001 - 5030						
133A	67040-38000	HOSE,HEAT RESISTIN	1 M	5001 - 5030						L=130
134A	69002-05700-7	BAND,HOSE	2	5001 - 5030						
135A	33258-60070	GAUGE,LEVEL	1	5001 - 5030						
142A	44094-60010	PUMP,GEAR	1	5001 - 5030						
143A	31990-22100	GASKET	1	5001 - 5030						
151A	61802-12035	BOLT,FLANGED	4	5001 - 5030						

silverhorn.co.uk

MEMO

silverhorn.co.uk

TRANSMISSION HYDRAULIC LINE

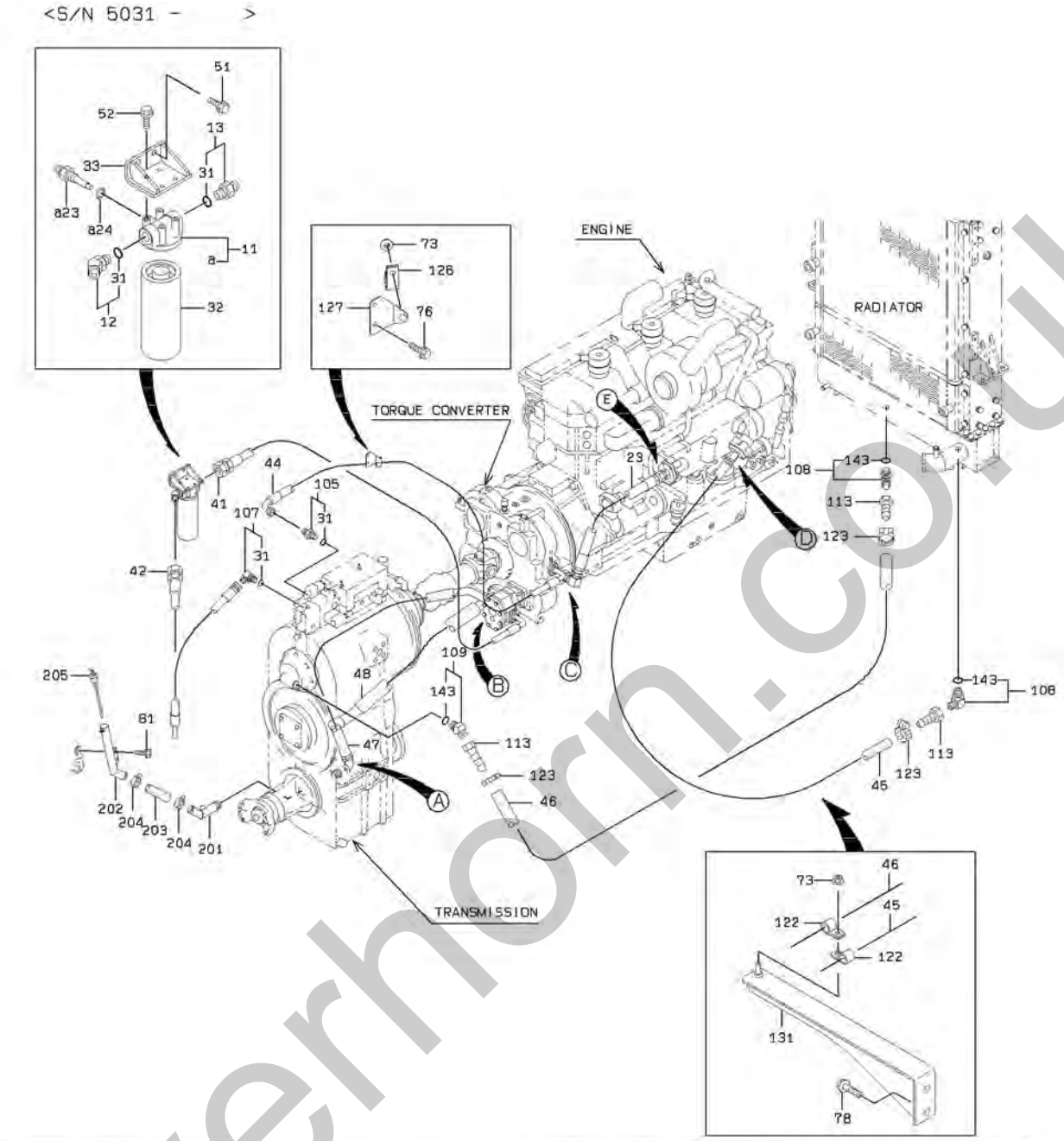

silverhorn.co.uk

TRANSMISSION HYDRAULIC LINE

<S/N 5031 - >

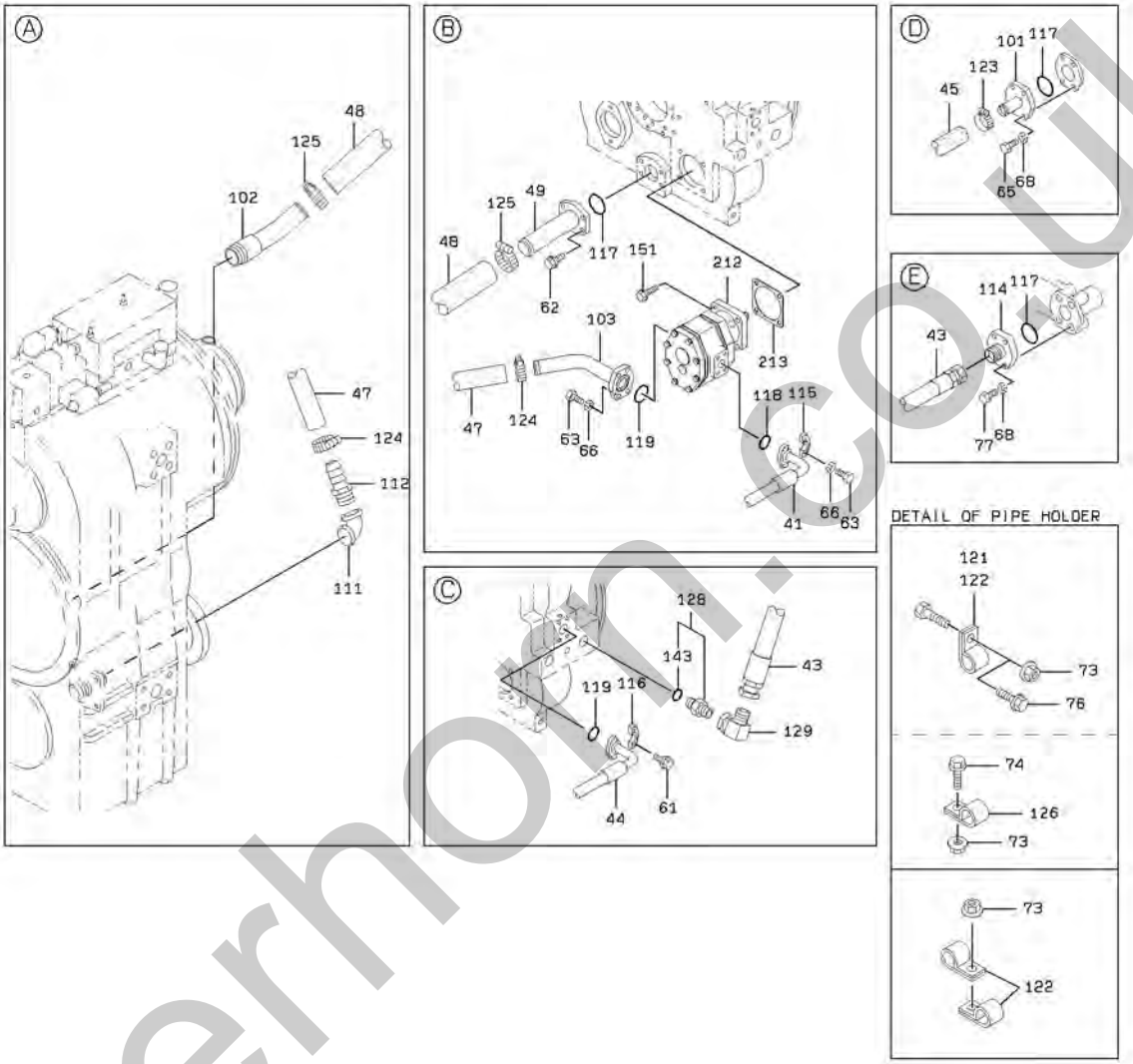

silverhorn.co.uk

TRANSMISSION HYDRAULIC LINE

SYM-BOL	PART NUMBER	PART NAME	UNIT Q,TY	SERIAL (A) - (B)	REMARKS N P D	(A)	(B)	(C)	(D)	REMARK
11A	40337-60450	FILTER ASSY,LINE	1	5031 -		Y01				
12A	88201-06716	ADAPTER	1	5031 -			Y02			
13A	88241-07216	ADAPTER,ELBOW	1	5031 -			Y02			
23A	30654-70060	INDICATOR,FILTER	1	5031 -		01				
24A	46023-70270	WASHER,SEAL	1	5031 -		01				
31A	65210-12029	RING,O	1	5031 -			02			
32A	31115-70010	CARTRIDGE ASSY	1	5031 -						
33A	40902-33630	BRACKET	1	5031 -						
41A	68658-60140	HOSE,HIGH PRESSURE	1	5031 -						
42A	68655-60090	HOSE,HIGH PRESSURE	1	5031 -						
43A	68255-70068	HOSE,HIGH PRESSURE	1	5031 -						
44A	43113-24450	HOSE,HIGH PRESSURE	1	5031 -						
45A	67040-32000	HOSE,HEAT RESISTIN	3 M	5031 -						L=2250
46A	67040-32000	HOSE,HEAT RESISTIN	5 M	5031 -						L=4900
47A	67059-38000	HOSE	2 M	5031 -						L=1100
48A	67040-50000	HOSE,HEAT RESISTIN	1 M	5031 -						L=770
49A	38755-21370	PIPE,OIL	1	5031 -						
51A	61802-12020	BOLT,FLANGED	2	5031 -						
52A	61802-10025	BOLT,FLANGED	4	5031 -						
61A	61802-10025	BOLT,FLANGED	4	5031 -						
62A	61802-12030	BOLT,FLANGED	4	5031 -						
63A	61275-06030	BOLT(UNIFY)	8	5031 -						
65A	61275-08035	BOLT(UNIFY)	4	5031 -						
66A	62722-03100	WASHER,SPRING	8	5031 -						
68A	62722-04100	WASHER,SPRING	8	5031 -						
73A	62480-21081	NUT,FLANGED	A/R	5031 -						
74A	61802-08025	BOLT,FLANGED	1	5031 -						
76A	61802-08016	BOLT,FLANGED	3	5031 -						
77A	61275-08040	BOLT(UNIFY)	4	5031 -						
78A	61802-12016	BOLT,FLANGED	2	5031 -						
81A	61802-10020	BOLT,FLANGED	2	5031 -						
101A	38755-57720	PIPE,OIL	1	5031 -						
102A	38755-23750	PIPE,OIL	1	5031 -						
103A	38755-37720	PIPE,OIL	1	5031 -						
105A	88201-06716	ADAPTER	1	5031 -			Y02			
107A	88241-07116	ADAPTER,ELBOW	1	5031 -			Y02			
108A	88241-07120	ADAPTER,ELBOW	2	5031 -				Y03		
109A	88241-07220	ADAPTER,ELBOW	1	5031 -				Y03		
111A	69203-14000	FITTING,ELBOW	1	5031 -						
112A	88511-01240	NIPPLE,HOSE	1	5031 -						
113A	88511-03200	NIPPLE,HOSE	3	5031 -						
114A	40510-21410	FLANGE	1	5031 -						
115A	69811-25210	FLANGE,SPLIT	2	5031 -						
116A	40511-20010	FLANGE,SPLIT	2	5031 -						
117A	65220-41006	RING,O	3	5031 -						
118A	65220-31024	RING,O	1	5031 -						
119A	65220-31027	RING,O	2	5031 -						
121A	72010-37000	HOLDER,HOSE	A/R	5031 -						D=37
122A	72010-46000	HOLDER,HOSE	A/R	5031 -						D=46
123A	69002-05200-7	BAND,HOSE	8	5031 -						
124A	69002-05700-7	BAND,HOSE	4	5031 -						
125A	69002-07600-7	BAND,HOSE	4	5031 -						
126A	72010-34000	HOLDER,HOSE	A/R	5031 -						D=34
127A	41612-35690	PLATE	1	5031 -						
128A	88201-06720	ADAPTER	1	5031 -				Y03		
129A	30242-20180	ADAPTER,ELBOW UNIO	1	5031 -						
131A	40902-20120	BRACKET	1	5031 -						
143A	65210-12038	RING,O	1	5031 -				03		
151A	61802-12035	BOLT,FLANGED	4	5031 -						
201A	38755-31720	PIPE,OIL	1	5031 -						
202A	38755-44040	PIPE,OIL	1	5031 -						
203A	67040-38000	HOSE,HEAT RESISTIN	1 M	5031 -						L=130
204A	69002-05700-7	BAND,HOSE	2	5031 -						
205A	33258-60070	GAUGE,LEVEL	1	5031 -						
212A	44094-60010	PUMP,GEAR	1	5031 -						
213A	31990-22100	GASKET	1	5031 -						

silverhorn.co.uk

MEMO

silverhorn.co.uk

TORQUE CONVERTER

(NOTE):SERIAL NUMBER INDICATES THE TORQUE CONVERTER SERIAL NUMBER.

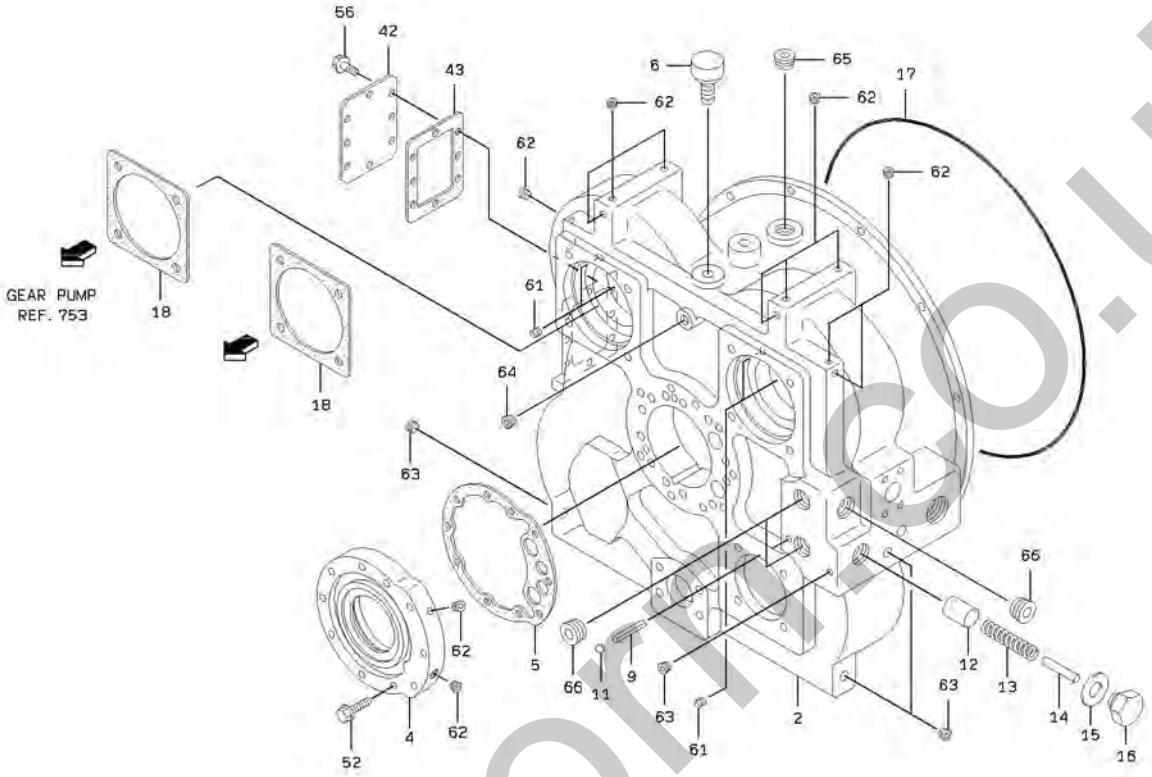

silverhorse.co.uk

TORQUE CONVERTER

SYM-BOL	PART NUMBER	PART NAME	UNIT Q,TY	SERIAL (A) - (B)	REMARKS N P D	(A) (B)	(C) (D)	REMARK
000A	37430-20310	TORQUE CONVERTER	1	103 -				INC.SEC.361-36
2A	37900-23180	HOUSING	1	103 -				
4A	31210-21510	COVER	1	103 -				
5A	31990-22900	GASKET	1	103 - 272				(K1)
5B	31990-27560	GASKET	1	273 -	C			(K1)
6A	41101-60010	BREATHER ASSY	1	103 -				
9A	63011-10050	PIN,SPRING	1	103 -				
11A	43751-20020	BALL	1	103 -				
12A	41585-20020	PLUNGER	1	103 -				
13A	35600-21770	SPRING	1	103 -				
14A	35750-23220	SLEEVE	1	103 - 267				
14B	35750-24920	SLEEVE	1	268 -	C			
15A	31990-23090	GASKET	1	103 -				(K1)
16A	41530-21070	PLUG	1	103 -				
17A	47131-21510	RING,O	1	103 -				(K1)
18A	31990-22880	GASKET	2	103 - 272				(K1)
18B	31990-27570	GASKET	2	273 -	C			(K1)
42A	41600-54800	PLATE	1	103 -				
43A	31990-22140	GASKET	1	103 - 272				(K1)
43B	31990-27500	GASKET	1	273 -	C			(K1)
52A	61802-10045	BOLT,FLANGED	10	103 -				
56A	61802-10016	BOLT,FLANGED	8	103 -				
61A	41530-21100	PLUG	4	103 -				
62A	88390-16102	PLUG	11	103 -				
63A	88390-16104	PLUG	4	103 -				
64A	88390-16106	PLUG	1	103 -				
65A	88390-16112	PLUG	1	103 -				
66A	88390-16116	PLUG	3	103 -				

silverhorn.co.uk

T/C INPUT SHAFT GROUP

(NOTE):SERIAL NUMBER INDICATES THE TORQUE CONVERTER SERIAL NUMBER.
(NOTE):SYMBOL 100 CONSISTS OF THE SYM. 1 - 29, 51 - 61.

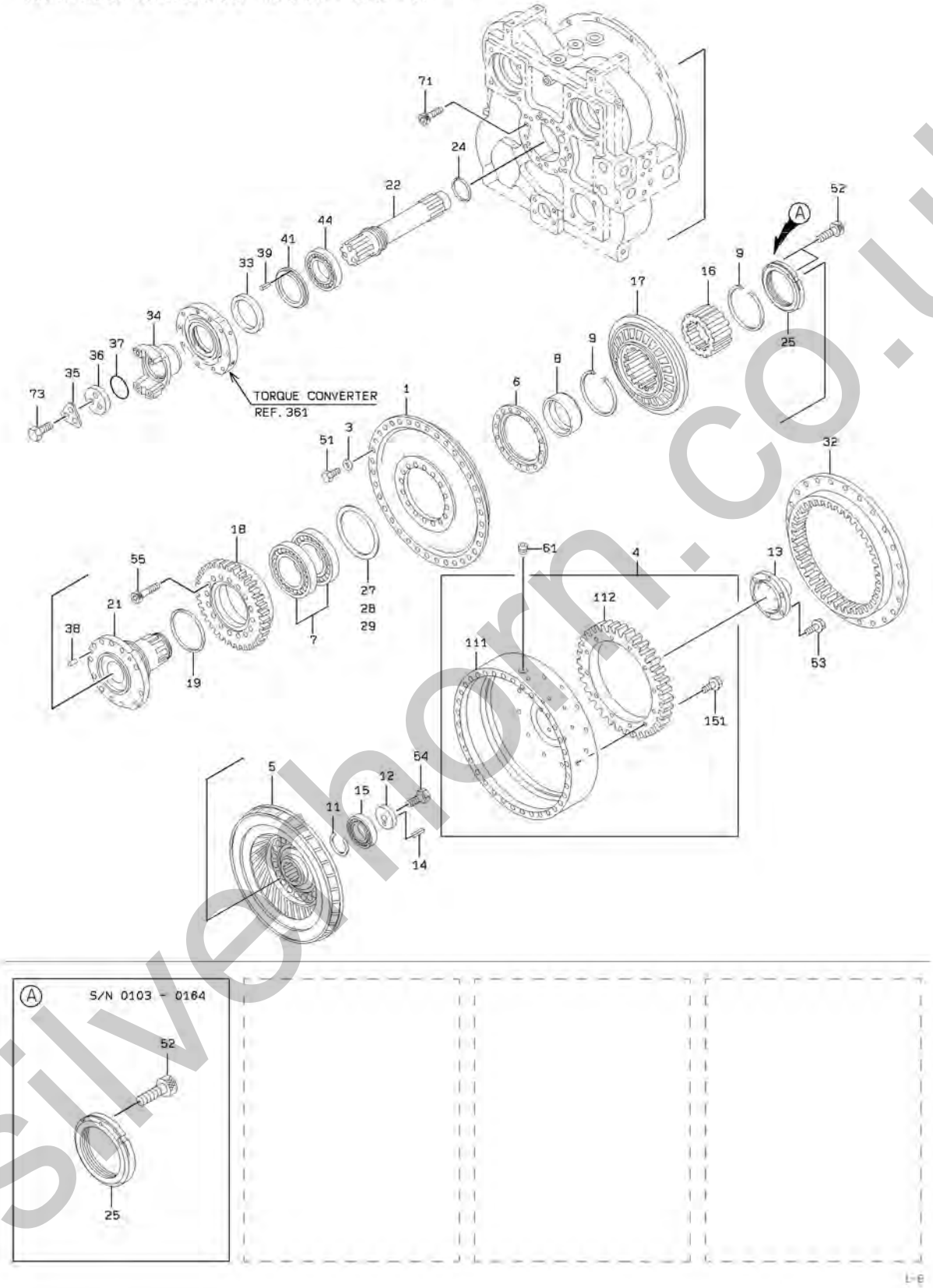

silverhorn.co.uk

T/C INPUT SHAFT GROUP

SYM-BOL	PART NUMBER	PART NAME	UNIT Q,TY	SERIAL (A)	-	(B)	REMARKS N P D	(A)	(B)	(C)	(D)	REMARK
1A	30725-20150	IMPELLER,PUMP	1	103	-	271						
1B	30725-20380	IMPELLER,PUMP	1	272	-		C					
3A	46011-22190	WASHER,PLANE	36	103	-							
4A	31267-20030	COVER,DRIVE	1	103	-			Y01				
5A	30721-20050	IMPELLER ASSY,TURB	1	103	-							
6A	38050-20670	HUB	1	103	-							
7A	42001-60150	BEARING,BALL	1	103	-							
8A	35700-20910	SPACER	1	103	-							
9A	45311-20580	RING,SNAP	2	103	-							
11A	45311-20600	RING,SNAP	1	103	-							
12A	46000-21100	WASHER	1	103	-							
13A	31930-20510	GUIDE	1	103	-							
14A	63011-06028	PIN,SPRING	1	103	-							
15A	42001-60130	BEARING,BALL	1	103	-							
16A	43783-20030	HUB	1	103	-							
17A	35200-20070	STATOR	1	103	-							
18A	32437-20140	GEAR,PUMP BOSS	1	103	-							
19A	45301-60180	RING,PISTON	1	103	-							(K1)
21A	34522-20100	SHAFT,STATOR	1	103	-							
22A	34527-20080	SHAFT,TURBINE	1	103	-							
24A	45301-60190	RING,PISTON	1	103	-							(K1)
25A	37600-21740	NUT	1	103	-	164						
25B	37600-25250	NUT	1	165	-		C					
27A	34200-23170	SHIM	1	103	-	176						T=0.1
27B	34200-27340	SHIM	1	177	-		C					T=0.1
28A	34200-24730	SHIM	1	103	-	176						T=0.2
28B	34200-27350	SHIM	1	177	-		C					T=0.2
29A	34200-24740	SHIM	1	103	-	176						T=0.3
29B	34200-27360	SHIM	1	177	-		C					T=0.3
32A	32400-21800	GEAR	1	103	-							
33A	65084-06013	SEAL,OIL	1	103	-							(K1)
34A	40510-23060	FLANGE	1	103	-							
35A	41694-21020	PLATE,LOCK	1	103	-							(K1)
36A	46000-21120	WASHER	1	103	-							
37A	65210-18060	RING,O	1	103	-							(K1)
38A	63026-10025	PIN,STRAIGHT	3	103	-							
39A	63011-02008	PIN,SPRING	1	103	-							
41A	35700-20920	SPACER	1	103	-							
44A	42001-60140	BEARING,BALL	1	103	-							
51A	61013-10025	BOLT	36	103	-							
52A	61101-05010	BOLT,SOCKET	1	103	-	164						
52B	61101-05010	BOLT,SOCKET	2	165	-							
53A	61802-10025	BOLT,FLANGED	6	103	-							
54A	61033-16040	BOLT	1	103	-							
55A	61101-12080	BOLT,SOCKET	16	103	-							
61A	88390-16104	PLUG	1	103	-							
71A	61101-10060	BOLT,SOCKET	12	103	-							
73A	61033-16040	BOLT	3	103	-							
100A	37419-20080	TRQ CONV SUB ASSY	1	103	-							INC.#1-29,51-6
111A	31281-20080	COVER,DRIVE	1	103	-	271		01				
111B	31281-20440	COVER,DRIVE	1	272	-		C	01				
112A	32400-21930	GEAR	1	103	-			01				
151A	61802-12030	BOLT,FLANGED	12	103	-			01				

silverhorn.co.uk

GEAR SHAFT & OIL PUMP GROUP

(NOTE):SERIAL NUMBER INDICATES THE TORQUE CONVERTER SERIAL NUMBER.

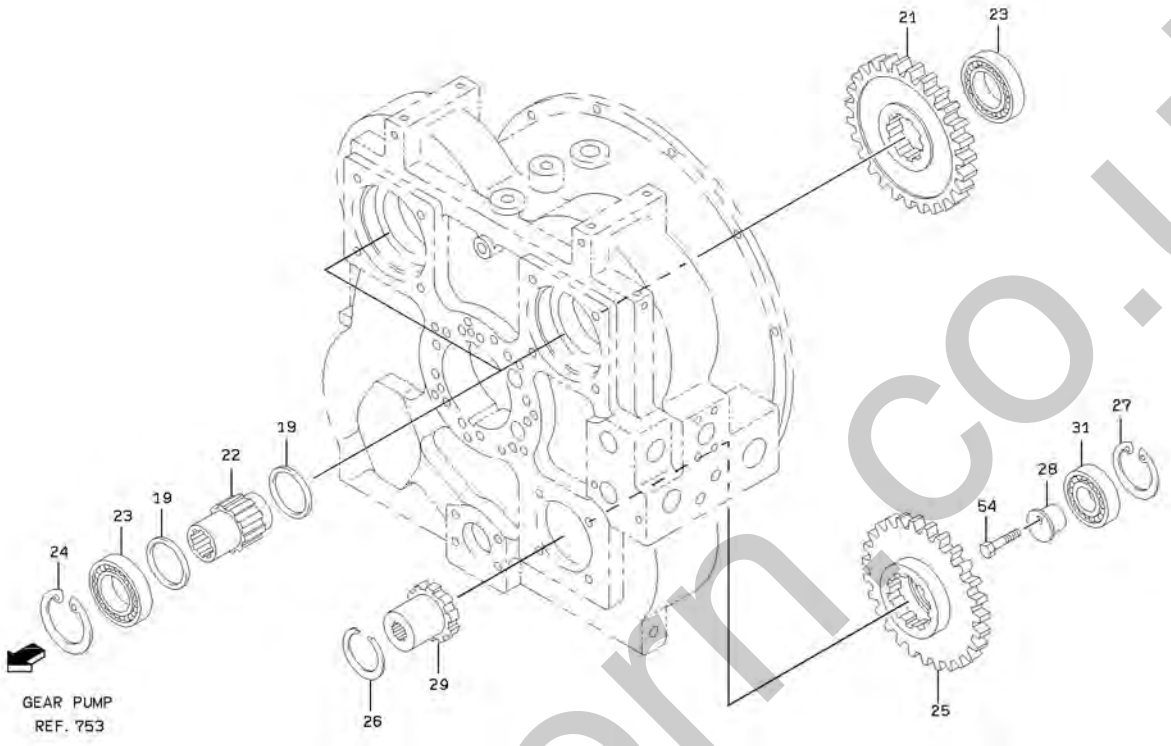

silverhorn.co.uk

GEAR SHAFT & OIL PUMP GROUP

SYM-BOL	PART NUMBER	PART NAME	UNIT Q,TY	SERIAL (A) - (B)	REMARKS N P D	(A) (B)	(C) (D)	REMARK
19A	35700-20940	SPACER	4	103 -				
21A	32400-22270	GEAR	2	103 -				
22A	34500-24620	SHAFT	2	103 -				
23A	78101-06210	BEARING,BALL	4	103 -				
24A	63812-00090	RING,SNAP	2	103 -				
25A	32400-22280	GEAR	1	103 -				
26A	45311-20590	RING,SNAP	1	103 -				
27A	63812-00080	RING,SNAP	1	103 -				
28A	44960-20270	RETAINER,BEARING	1	103 -				
29A	32400-21680	GEAR	1	103 -				
31A	78101-06307	BEARING,BALL	1	103 -				
54A	61057-10050	BOLT	1	103 -				

silverhorn.co.uk

(NOTE):SERIAL NUMBER INDICATES THE TRANSMISSION SERIAL NUMBER.

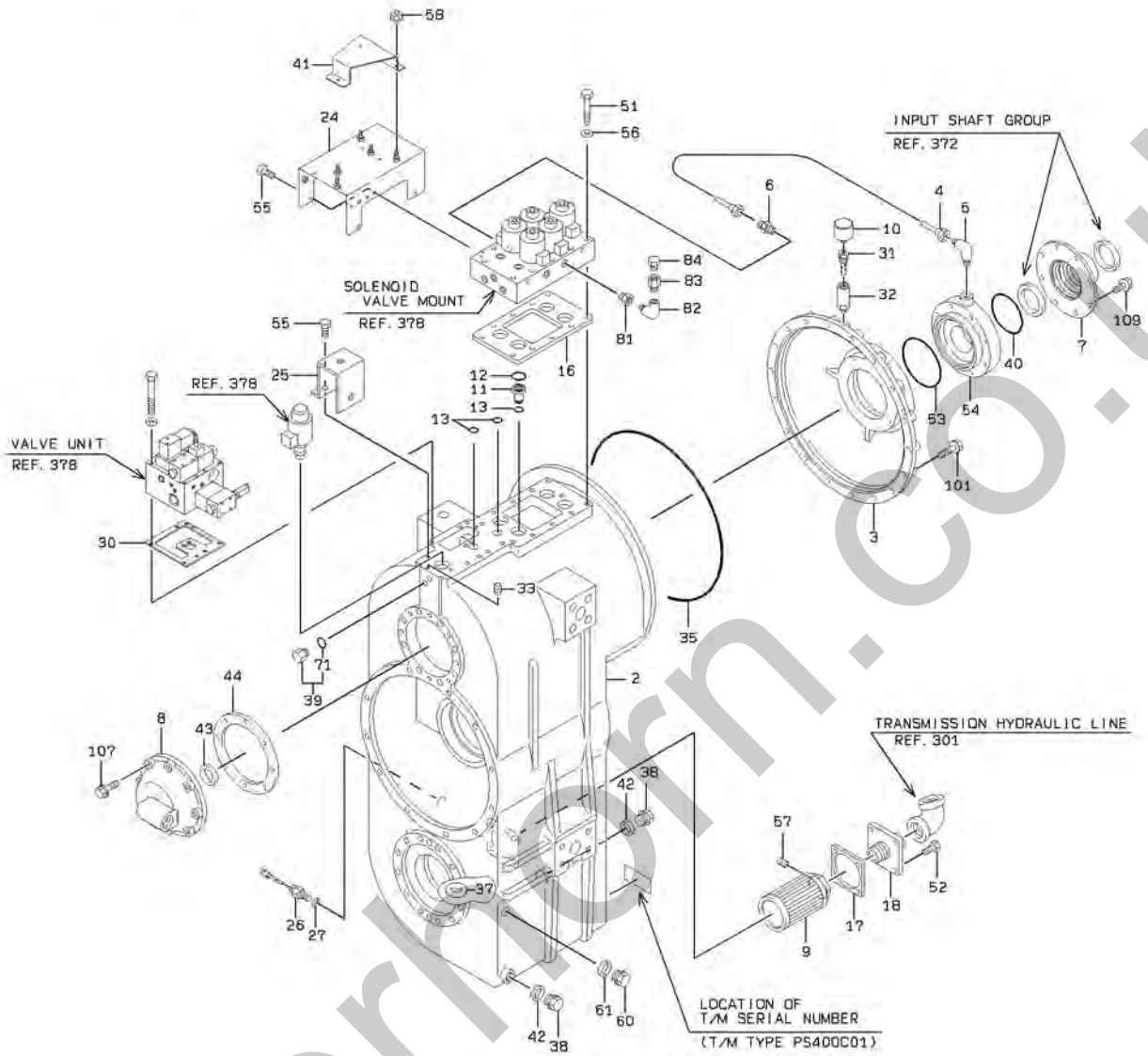

silverhorn.co.uk

TRANSMISSION

SYM-BOL	PART NUMBER	PART NAME	UNIT Q,TY	SERIAL (A) - (B)	REMARKS N P D	(A) (B)	(C) (D)	REMARK
000A	37421-20660	TRANSMISSION ASSY	1	103 -				INC.SEC.371-37
2A	37900-23940	HOUSING	1	103 -				
3A	37900-20350	HOUSING	1	103 -				
4A	38705-22520	PIPE ASSY,FLARED	1	103 -				
5A	69100-21500	FLARED FITTING,ELB	1	103 -				
6A	69100-11500	FLARED FITTING	1	103 -				
7A	44953-20340	RETAINER,SEAL	1	103 -				
8A	31210-20070	COVER	1	103 -				
9A	40330-60040	FILTER	1	103 -				
10A	41101-60010	BREATHER ASSY	1	103 -				
11A	35750-20460	SLEEVE	4	103 -				
12A	65210-18024	RING,O	4	103 -				(K2)
13A	65210-18020	RING,O	6	103 -				(K2)
16A	31990-20420	GASKET	1	103 -				(K2)
17A	31990-20410	GASKET	1	103 - 272				(K2)
17B	31990-27420	GASKET	1	273 -	C			(K2)
18A	38901-20140	FITTING,SOCKET	1	103 -				
24A	31200-28220	COVER	1	103 -				
25A	31200-21660	COVER	1	103 -				
26A	35051-60080	SWITCH,PROXIMITY	1	103 -				
27A	31990-20970	GASKET	1	103 -				(K2)
30A	31990-21970	GASKET	1	103 -				(K2)
31A	38906-20130	FITTING,BUSHING	1	103 -				
32A	38906-20140	FITTING,BUSHING	1	103 -				
33A	88390-16106	PLUG	2	103 -				
35A	47131-20800	RING,O	1	103 -				(K2)
37A	44160-60010	MAGNET	1	103 -				
38A	41530-72360	PLUG	2	103 -				
39A	88390-21304	PLUG	1	103 -		Y01		
40A	47131-20860	RING,O	1	103 -				(K2)
41A	41600-57670	PLATE	1	103 -				
42A	31990-71280	GASKET	2	103 -				(K2)
43A	45301-60110	RING,PISTON	1	103 -				(K2)
44A	31990-20380	GASKET	1	103 -				(K2)
51A	61033-12085	BOLT	9	103 -				
52A	61033-10025	BOLT	4	103 -				
53A	47131-20870	RING,O	1	103 -				(K2)
54A	40510-20160	FLANGE	1	103 -				
55A	61033-08020	BOLT	6	103 -				
56A	62710-18121	WASHER,PLANE	9	103 -				
57A	61131-05010	BOLT,SOCKET	1	103 -				
58A	62480-21081	NUT,FLANGED	3	103 -				
60A	41530-20750	PLUG	1	103 -				
61A	31990-22210	GASKET	1	103 -				(K2)
71A	65210-12011	RING,O	1	103 -		01		
81A	88372-50604	FITTING,BUSHING	1	103 -				
82A	88340-13504	FITTING,ELBOW	1	103 -				
83A	30230-23430	ADAPTER	1	103 -				
84A	88390-21304	PLUG	1	103 -				
101A	61802-12045	BOLT,FLANGED	18	103 -				
107A	61802-10040	BOLT,FLANGED	8	103 -				
109A	61802-10060	BOLT,FLANGED	8	103 -				

silverhorn.co.uk

INPUT SHAFT GROUP

(NOTE):SERIAL NUMBER INDICATES THE TRANSMISSION SERIAL NUMBER.

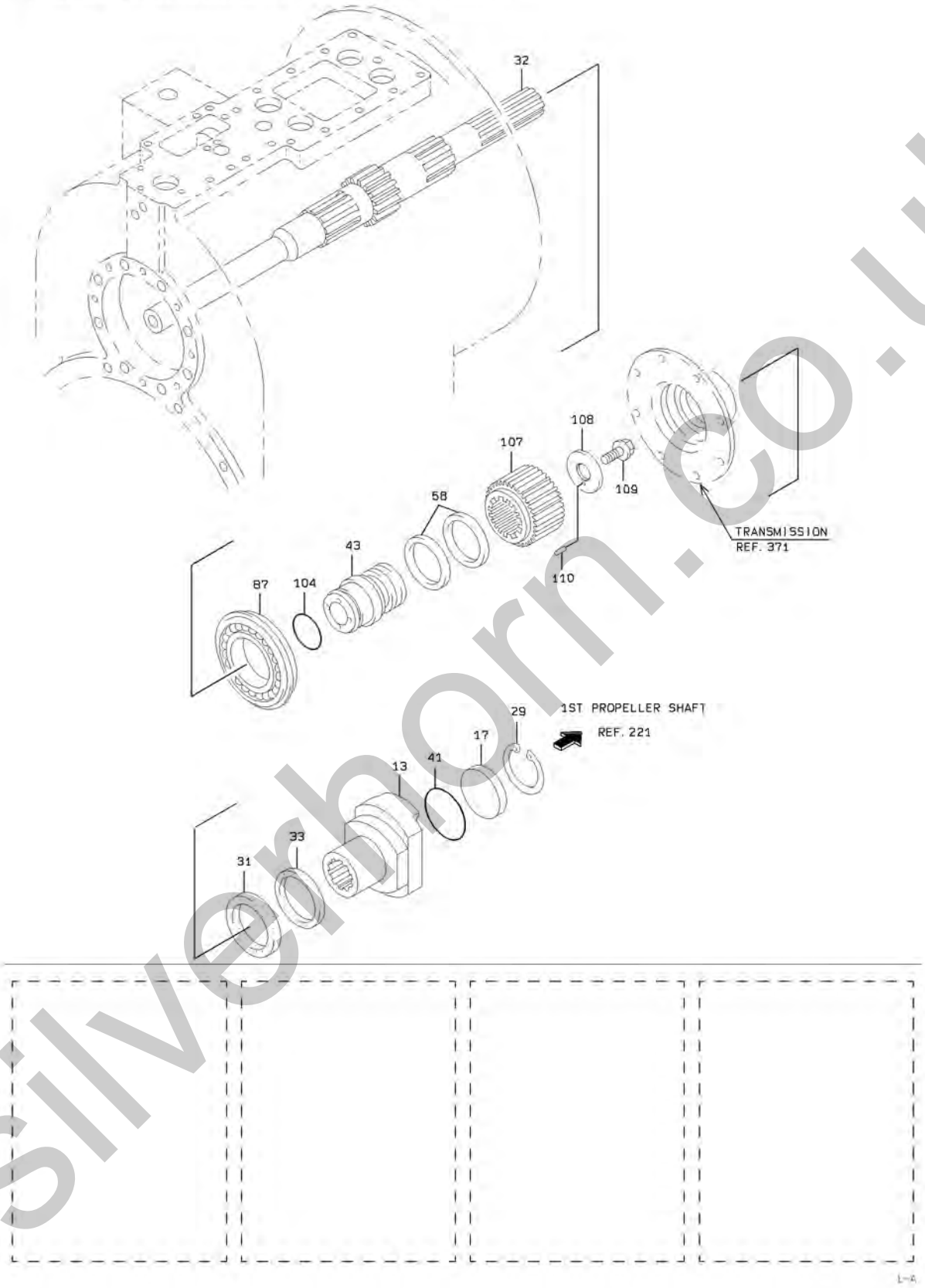

silverhorn.co.uk

INPUT SHAFT GROUP

SYM-BOL	PART NUMBER	PART NAME	UNIT Q,TY	SERIAL (A) - (B)	REMARKS N P D	(A) (B)	(C) (D)	REMARK
13A	44621-20710	YOKE,FLANGE	1	103 -				
17A	41621-21500	PLATE	1	103 -				
29A	63812-00085	RING,SNAP	1	103 -				
31A	65084-06313	SEAL,OIL	1	103 -				(K2)
32A	34500-21280	SHAFT	1	103 -				
33A	65054-06313	SEAL,OIL	1	103 -				(K2)
41A	47131-20840	RING,O	1	103 -				(K2)
43A	44953-20320	RETAINER,SEAL	1	103 -				
58A	45301-60090	RING,PISTON	2	103 -				(K2)
87A	78112-06217	BEARING,BALL	1	103 -				
104A	65210-28070	RING,O	1	103 -				(K2)
107A	35750-21200	SLEEVE	1	103 -				
108A	41621-22720	PLATE	1	103 -				
109A	43900-21520	BOLT	1	103 -				
110A	63011-04016	PIN,SPRING	1	103 -				

silverhorn.co.uk

HIGH & REVERSE CLUTCH

(NOTE): SERIAL NUMBER INDICATES THE TRANSMISSION SERIAL NUMBER.

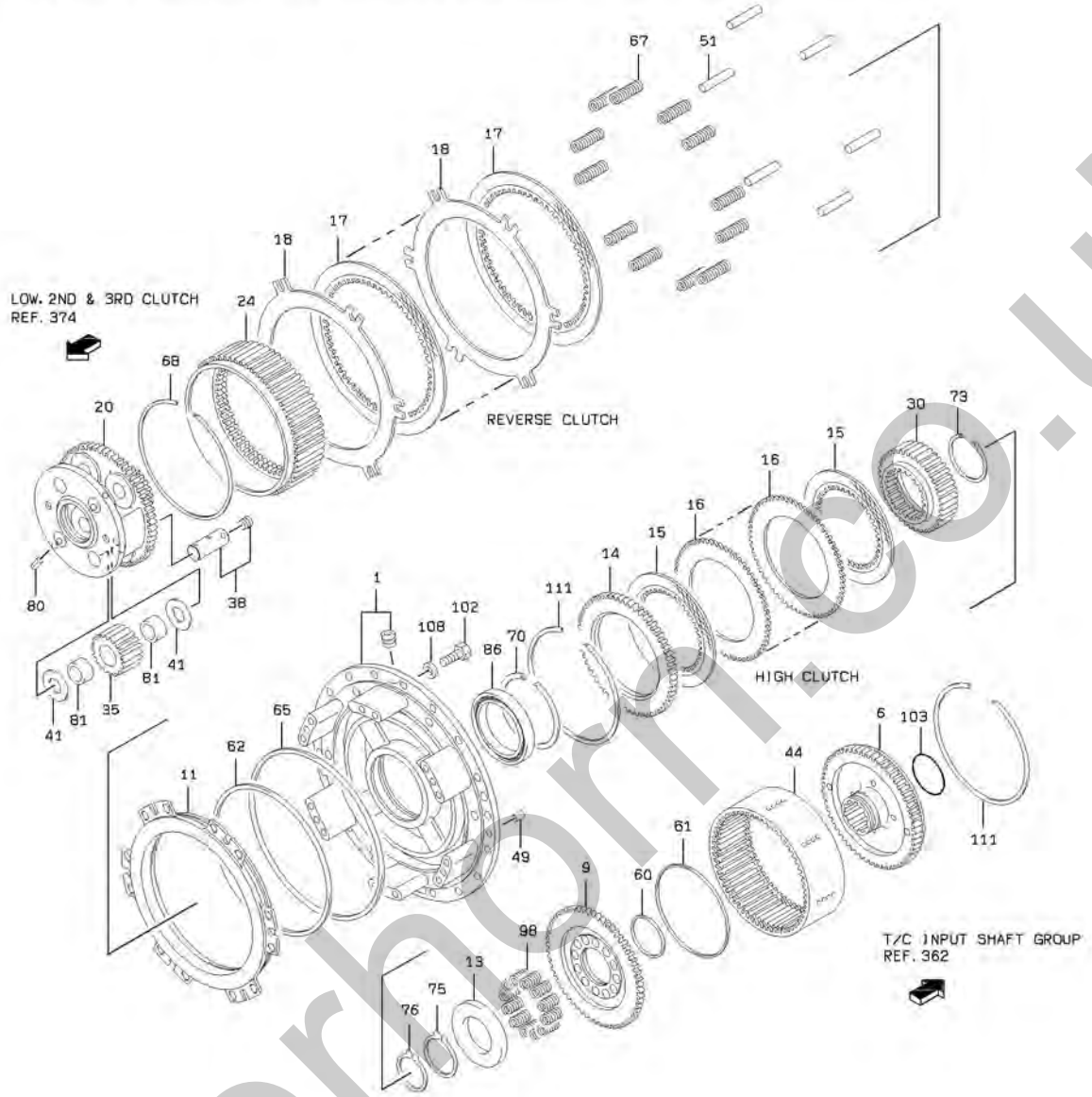

silverhorn.co.uk

HIGH & REVERSE CLUTCH

SYM-BOL	PART NUMBER	PART NAME	UNIT Q,TY	SERIAL (A) - (B)	REMARKS N P D	(A) (B)	(C) (D)	REMARK
1A	37904-20710	HOUSING ASSY	1	103 -				
6A	38050-20540	HUB	1	103 -				
9A	39960-20950	PISTON	1	103 -				
11A	39960-21890	PISTON	1	103 -				
13A	44955-20010	RETAINER,SPRING	1	103 -				
14A	41621-21060	PLATE	1	103 -				
15A	37213-20050	DISC,FRICTION	4	103 -				
16A	37212-20010	DISC,SEPARATION	3	103 -				
17A	37213-60340	DISC,FRICTION	8	103 -				
18A	37212-60020	DISC,SEPARATION	8	103 -				
20A	35510-20590	SPIDER	1	103 -				
24A	37582-20010	DRUM ASSY,CLUTCH	1	103 -				
30A	32405-20040	GEAR ASSY	1	103 -				
35A	32431-20090	GEAR,PLANET	4	103 -				
38A	40040-20160	PIN,PLANET	4	103 - 179				
38B	40040-20550	PIN,PLANET	4	180 -	C			
41A	46000-20420	WASHER	8	103 -				
44A	37584-20020	DRUM,CLUTCH	1	103 -				
49A	63024-12020	PIN,STRAIGHT	2	103 -				
51A	40010-20580	PIN,STRAIGHT	6	103 -				
60A	47142-20180	RING,U	1	103 -				(K2)
61A	47142-20170	RING,U	1	103 -				(K2)
62A	47142-20190	RING,U	1	103 -				(K2)
65A	47142-20210	RING,U	1	103 -				(K2)
67A	35600-20210	SPRING	12	103 -				
68A	45311-20350	RING,SNAP	1	103 -				
70A	45311-20360	RING,SNAP	1	103 -				
73A	45311-20170	RING,SNAP	1	103 -				
75A	63811-00078	RING,SNAP	1	103 -				
76A	63811-00065	RING,SNAP	1	103 -				
80A	63011-05025	PIN,SPRING	4	103 -				
81A	33065-60110	CAGE,NEEDLE	8	103 -				
86A	78101-06922	BEARING,BALL	1	103 -				
98A	35600-20220	SPRING	12	103 -				
102A	61033-12032	BOLT	18	103 -				
103A	65220-43013	RING,O	1	103 -				(K2)
108A	62710-18121	WASHER,PLANE	18	103 -				
111A	45311-20320	RING,SNAP	2	103 -				

silvernorm.co.uk

LOW, 2ND & 3RD CLUTCH

(NOTE):SERIAL NUMBER INDICATES THE TRANSMISSION SERIAL NUMBER.

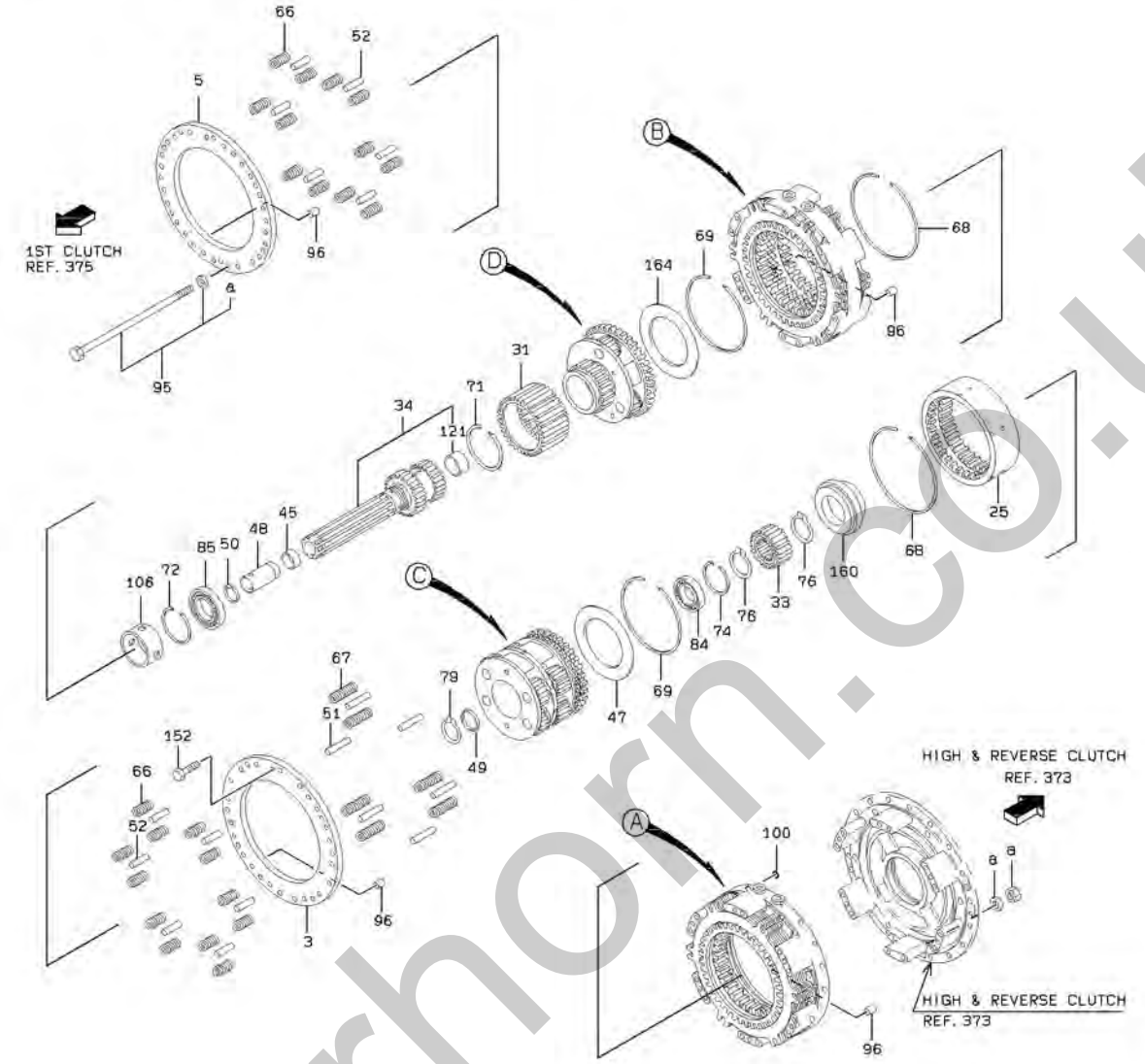

silverhorn.co.uk

LOW, 2ND & 3RD CLUTCH

(NOTE):SERIAL NUMBER INDICATES THE TRANSMISSION SERIAL NUMBER.

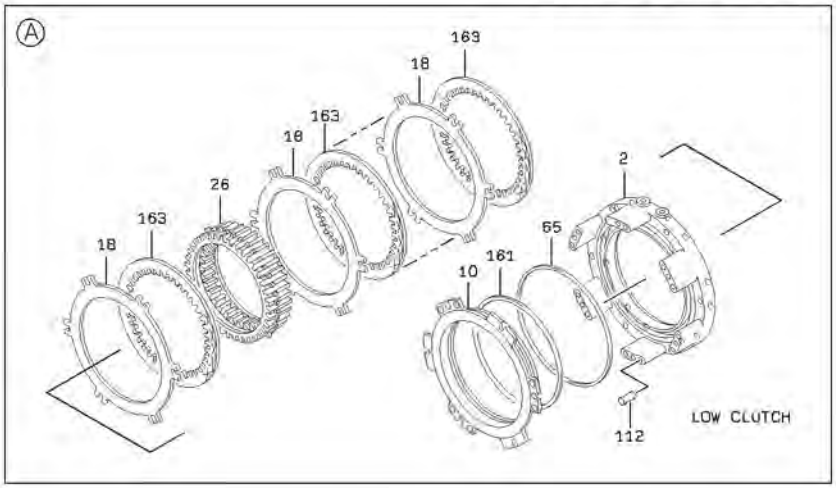

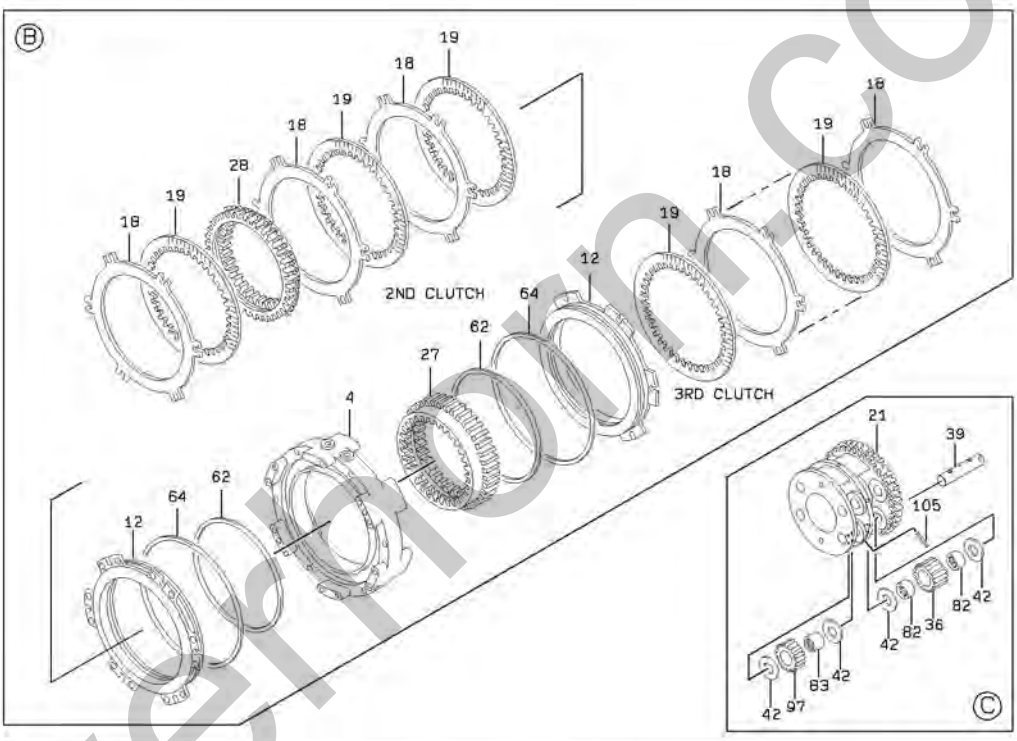

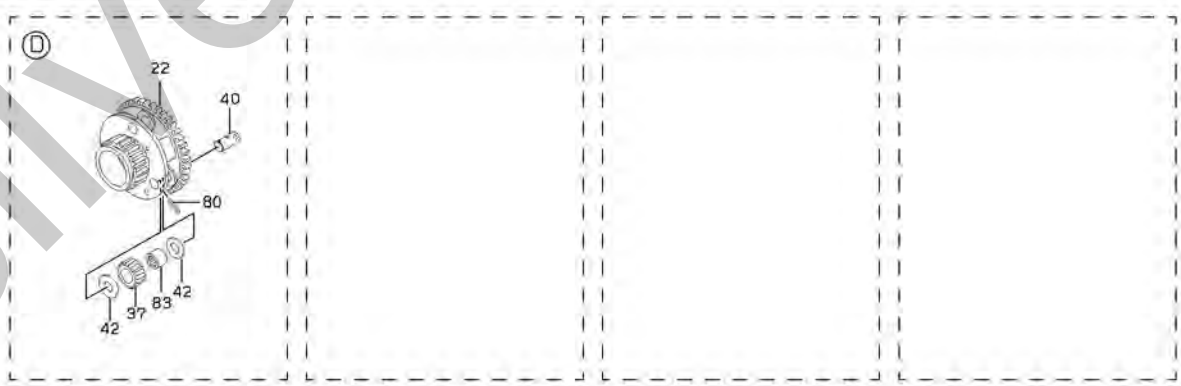

silverfoon.co.uk

LOW, 2ND & 3RD CLUTCH

SYM-BOL	PART NUMBER	PART NAME	UNIT Q,TY	SERIAL (A) - (B)	REMARKS N P D	(A) (B)	(C) (D)	REMARK
2A	37900-23570	HOUSING	1	103 -				
3A	41621-21480	PLATE	1	103 -				
4A	37900-23580	HOUSING	1	103 -				
5A	41621-29810	PLATE	1	103 -				
10A	39960-21910	PISTON	1	103 -				
12A	39960-21810	PISTON	2	103 -				
18A	37212-60020	DISC,SEPARATION	15	103 -				
19A	37213-60070	DISC,FRICTION	7	103 -				
21A	35510-20160	SPIDER	1	103 -				
22A	35510-20580	SPIDER	1	103 -				
25A	32421-20090	GEAR,INTERNAL	1	103 -				
26A	32405-20250	GEAR ASSY	1	103 -				
27A	32405-20020	GEAR ASSY	1	103 -				
28A	32405-20030	GEAR ASSY	1	103 -				
31A	32405-20050	GEAR ASSY	1	103 -				
33A	32425-20090	GEAR,SUN	1	103 -				
34A	32425-20080	SHAFT,GEAR	1	103 -		Y01		
36A	32431-20100	GEAR,PLANET	4	103 -				
37A	32431-20080	GEAR,PLANET	3	103 -				
39A	40040-20270	PIN,PLANET	4	103 - 156				
39B	40040-20490	PIN,PLANET	4	157 -	C			
40A	40040-20280	PIN,PLANET	3	103 -				
42A	46000-20310	WASHER	22	103 -				
45A	42006-70280	BEARING,NEEDLE	1	103 -				
47A	41621-21070	PLATE	1	103 -				
48A	35750-20440	SLEEVE	1	103 -				
49A	45200-20800	RING	1	103 -				
50A	63812-00048	RING,SNAP	1	103 -				
51A	40010-20580	PIN,STRAIGHT	6	103 -				
52A	40010-20590	PIN,STRAIGHT	12	103 -				
62A	47142-20190	RING,U	2	103 -				(K2)
64A	47142-20200	RING,U	2	103 -				(K2)
65A	47142-20210	RING,U	1	103 -				(K2)
66A	35600-20200	SPRING	24	103 -				
67A	35600-20210	SPRING	6	103 -				
68A	45311-20350	RING,SNAP	2	103 -				
69A	45311-20340	RING,SNAP	2	103 -				
71A	45311-20390	RING,SNAP	1	103 -				
72A	45311-20370	RING,SNAP	1	103 -				
74A	45311-20380	RING,SNAP	1	103 -				
76A	63811-00065	RING,SNAP	2	103 -				
79A	63811-00055	RING,SNAP	1	103 -				
80A	63011-05025	PIN,SPRING	3	103 -				
82A	33065-60040	CAGE,NEEDLE	8	103 -				
83A	33065-60120	CAGE,NEEDLE	7	103 -				
84A	42001-60030	BEARING,BALL	1	103 -				
85A	78101-06013	BEARING,BALL	1	103 -				
95A	43925-20210	BOLT SET	11	103 -				
96A	40010-20090	PIN,STRAIGHT	8	103 -				
97A	32431-20070	GEAR,PLANET	4	103 -				
100A	65210-18018	RING,O	1	103 -				(K2)
105A	63011-06025	PIN,SPRING	4	103 -				
106A	35750-20930	SLEEVE	1	103 -				
112A	36500-20010	DAMPER	11	103 -				
121A	44450-20020	METAL,SHELL	1	103 -		01		
152A	61033-12150	BOLT	2	103 -				
160A	40840-25580	BUSHING	1	103 - 137	D			
161A	47142-60120	RING,U	1	103 -				
163A	37213-60340	DISC,FRICTION	8	103 -				
164A	41615-29610	PLATE	1	103 -				

silverhorn.co.uk

MEMO

silverhorn.co.uk

1ST CLUTCH

(NOTE):SERIAL NUMBER INDICATES THE TRANSMISSION SERIAL NUMBER.

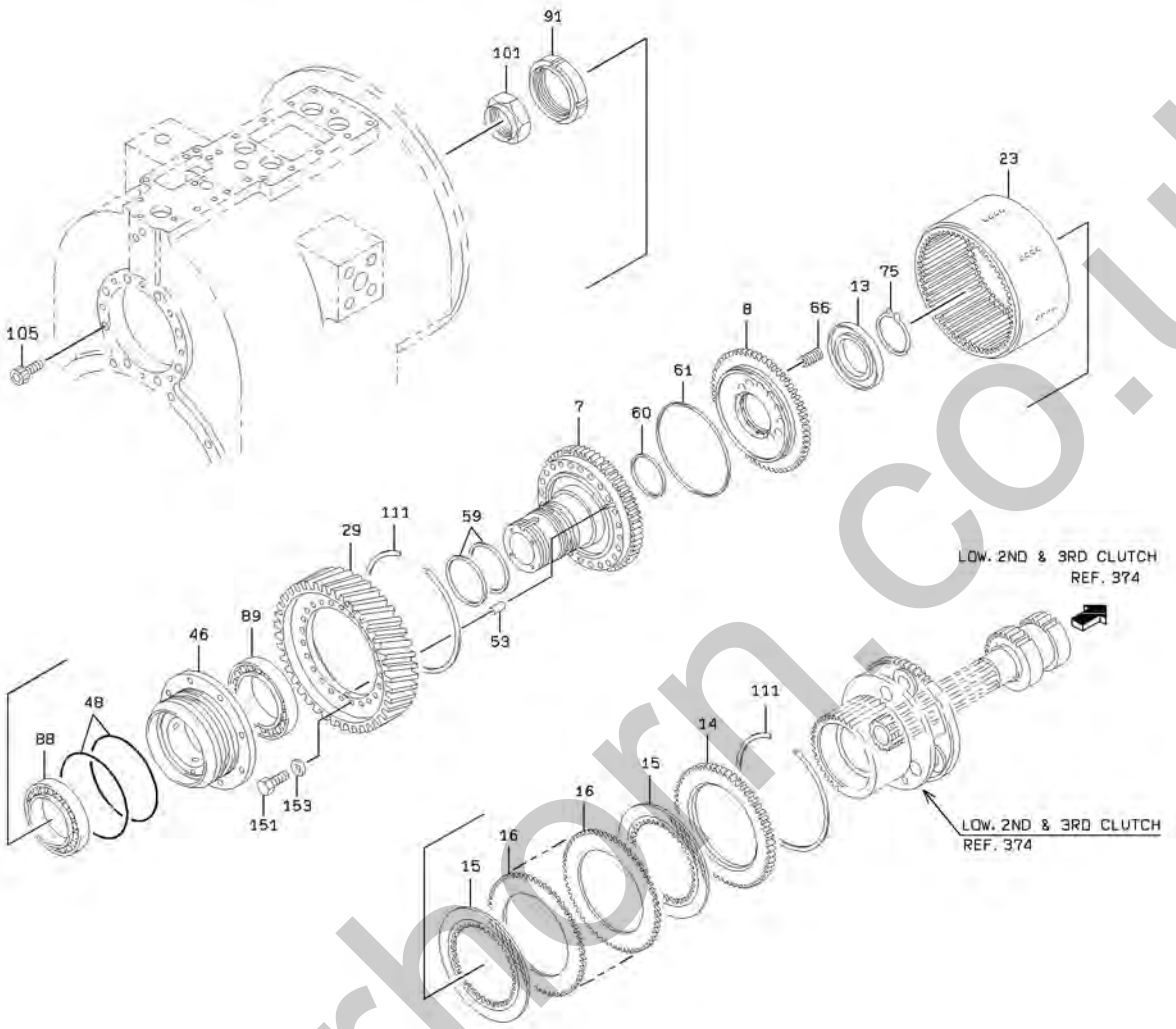

silverhorn.co.uk

1ST CLUTCH

SYM-BOL	PART NUMBER	PART NAME	UNIT Q,TY	SERIAL (A) - (B)	REMARKS N P D	(A) (B)	(C) (D)	REMARK
7A	38050-20040	HUB	1	103 -				
8A	39960-20490	PISTON	1	103 -				
13A	44955-20010	RETAINER,SPRING	1	103 -				
14A	41621-21060	PLATE	1	103 -				
15A	37213-20050	DISC,FRICTION	9	103 -				
16A	37212-20010	DISC,SEPARATION	8	103 -				
23A	37584-20010	DRUM,CLUTCH	1	103 -				
29A	32400-22220	GEAR	1	103 -				
46A	44960-20200	RETAINER,BEARING	1	103 -				
48A	47131-20720	RING,O	2	103 -				(K2)
53A	40010-20080	PIN,STRAIGHT	2	103 -				
59A	45301-60100	RING,PISTON	2	103 -				(K2)
60A	47142-20180	RING,U	1	103 -				(K2)
61A	47142-20170	RING,U	1	103 -				(K2)
66A	35600-20200	SPRING	12	103 -				
75A	63811-00078	RING,SNAP	1	103 -				
88A	78255-32020	BEARING,ROLLER	1	103 -				
89A	78255-32021	BEARING,ROLLER	1	103 -				
91A	37600-20550	NUT	1	103 -				
101A	37600-20420	NUT	1	103 -				
105A	61101-12040	BOLT,SOCKET	8	103 -				
111A	45311-20320	RING,SNAP	2	103 -				
151A	61005-12035	BOLT	22	103 -				
153A	62710-18121	WASHER,PLANE	22	103 -				

silverhorn.co.uk

IDLE SHAFT GROUP

(NOTE):SERIAL NUMBER INDICATES THE TRANSMISSION SERIAL NUMBER.

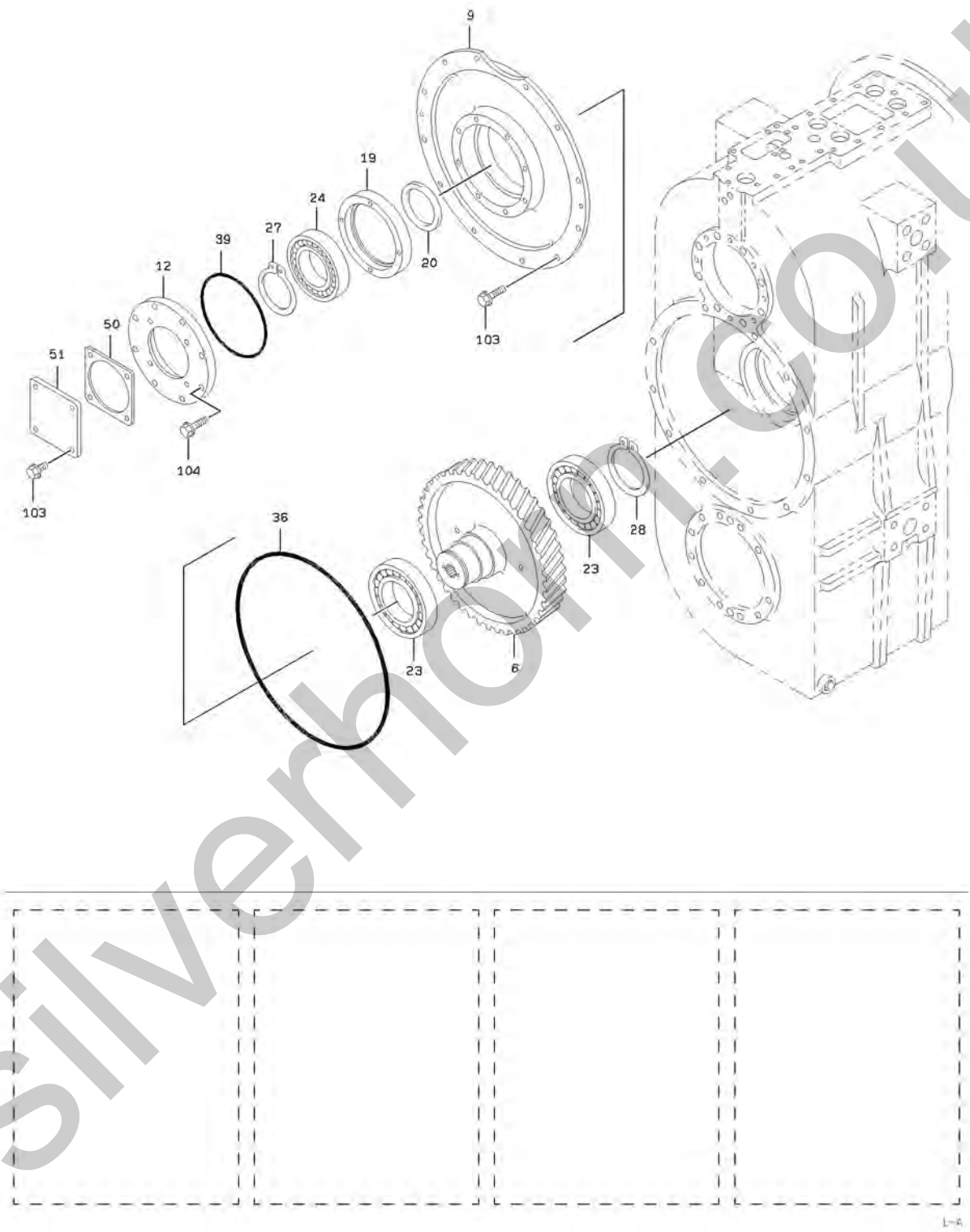

silverhorn.co.uk

IDLE SHAFT GROUP

SYM-BOL	PART NUMBER	PART NAME	UNIT Q,TY	SERIAL (A) - (B)	REMARKS N P D	(A) (B)	(C) (D)	REMARK
6A	32400-22230	GEAR	1	103 -				
9A	31210-22510	COVER	1	103 -				
12A	40510-20150	FLANGE	1	103 -				
19A	45200-20810	RING	1	103 -				
20A	45200-20820	RING	1	103 -				
23A	78203-00220	BEARING,ROLLER	2	103 -				
24A	78101-06218	BEARING,BALL	1	103 -				
27A	63811-00090	RING,SNAP	1	103 -				
28A	63811-00100	RING,SNAP	1	103 -				
36A	47131-20810	RING,O	1	103 -				(K2)
39A	47131-20820	RING,O	1	103 -				(K2)
50A	31990-20370	GASKET	1	103 -				(K2)
51A	41611-24440	PLATE	1	103 -				
103A	61802-12025	BOLT,FLANGED	16	103 -				
104A	61802-12035	BOLT,FLANGED	8	103 -				

silverhorn.co.uk

OUTPUT SHAFT GROUP

(NOTE):SERIAL NUMBER INDICATES THE TRANSMISSION SERIAL NUMBER.

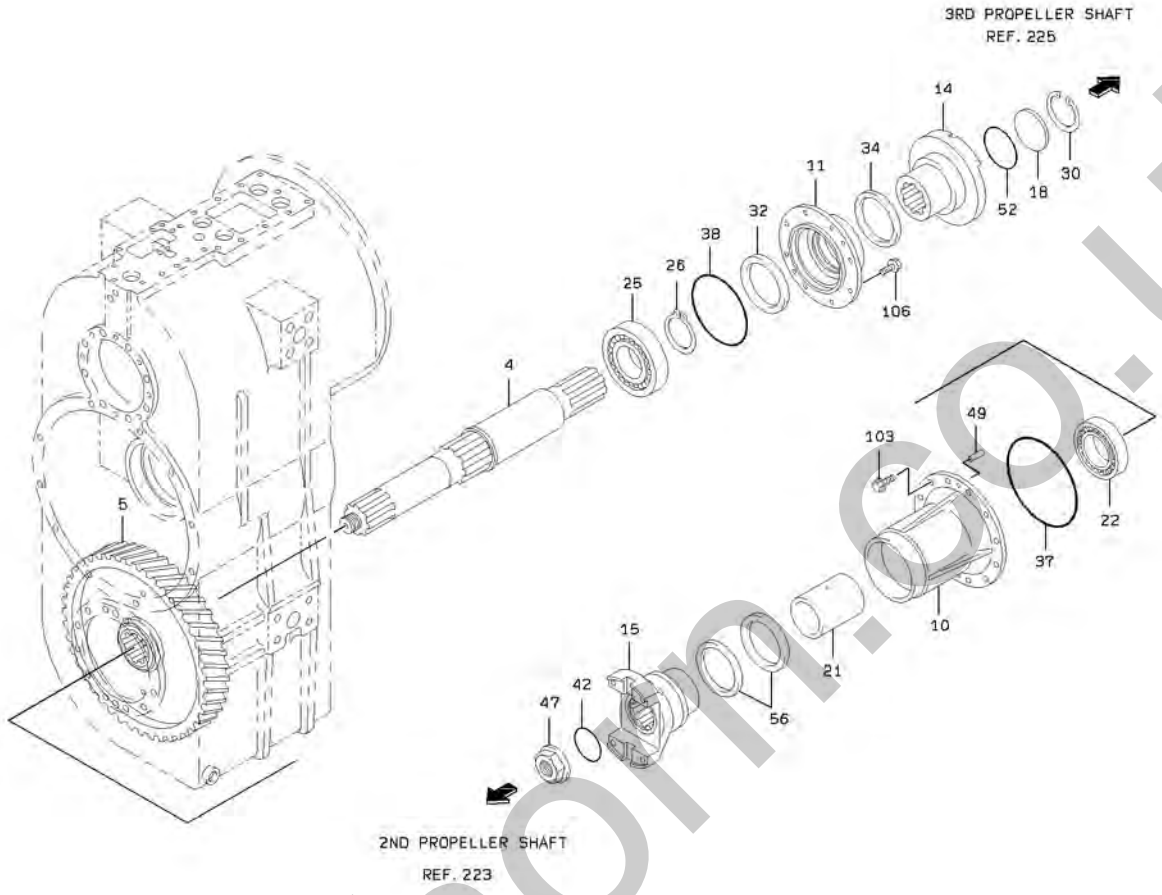

silverhorn.co.uk

OUTPUT SHAFT GROUP

SYM-BOL	PART NUMBER	PART NAME	UNIT Q,TY	SERIAL (A) - (B)	REMARKS N P D	(A) (B)	(C) (D)	REMARK
4A	34501-20300	SHAFT ASSY	1	103 -				
5A	32400-22240	GEAR	1	103 -				
10A	37900-21110	HOUSING	1	103 -				
11A	44953-20160	RETAINER,SEAL	1	103 -				
14A	44621-20370	YOKE,FLANGE	1	103 -				
15A	44621-20360	YOKE,FLANGE	1	103 -				
18A	41621-21510	PLATE	1	103 -				
21A	35750-21430	SLEEVE	1	103 -				
22A	78251-22216	BEARING,ROLLER	1	103 -				
25A	78101-06316	BEARING,BALL	1	103 -				
26A	63811-00080	RING,SNAP	1	103 -				
30A	63812-00100	RING,SNAP	1	103 -				
32A	65084-06514	SEAL,OIL	1	103 -				(K2)
34A	65040-01808	SEAL,GREASE	1	103 -				(K2)
37A	47131-20890	RING,O	1	103 -				(K2)
38A	47131-20880	RING,O	1	103 -				(K2)
42A	47131-20830	RING,O	1	103 -				(K2)
47A	37600-20250	NUT	1	103 -				
49A	63024-12020	PIN,STRAIGHT	2	103 -				
52A	47131-20850	RING,O	1	103 -				(K2)
56A	65054-06514	SEAL,OIL	2	103 -				(K2)
103A	61802-12025	BOLT,FLANGED	12	103 -				
106A	61802-10025	BOLT,FLANGED	8	103 -				

silverhorn.co.uk

SOLENOID VALVE & VALVE UNIT

(NOTE):SERIAL NUMBER INDICATES THE TRANSMISSION SERIAL NUMBER.

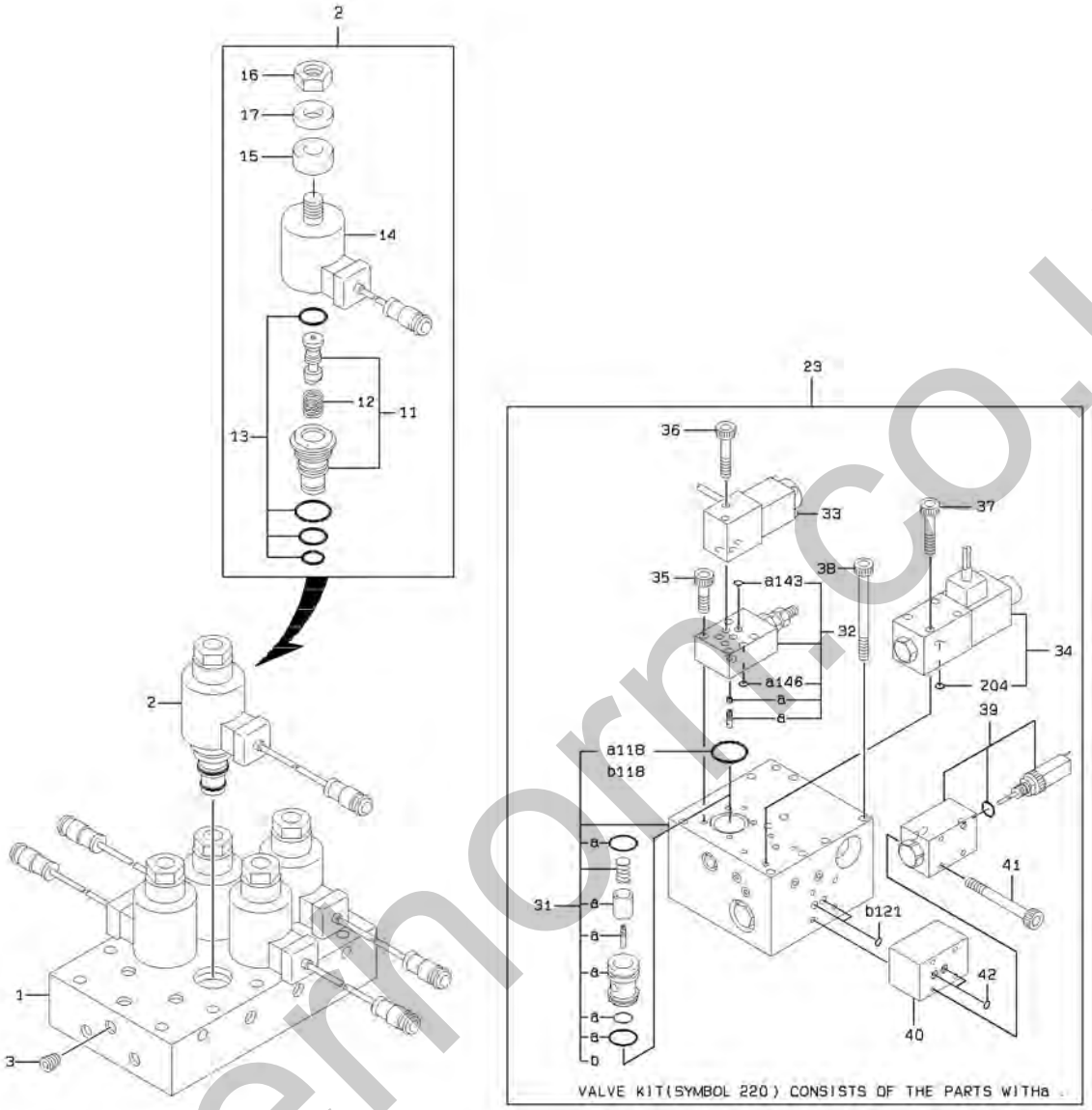

silvermorn.co.uk

SOLENOID VALVE & VALVE UNIT

SYM-BOL	PART NUMBER	PART NAME	UNIT Q,TY	SERIAL (A) - (B)	REMARKS N P D	(A)	(B)	(C)	(D)	REMARK
1A	41410-20480	BLOCK	1	103 -						
2A	38553-60050	VALVE,SOLENOID	5	103 -		Y01				
3A	88390-16106	PLUG	13	103 -						
11A	35575-70060	SPOOL ASSY	1	103 -		01				
12A	35600-71540	SPRING	1	103 -		01				
13A	49691-70260	REPAIR KIT	1	103 -		01				
14A	35910-70010	SOLENOID	1	103 -		01				
15A	40840-71400	BUSHING	1	103 -		01				
16A	37600-70510	NUT	1	103 -		01				
17A	46011-70350	WASHER,PLANE	1	103 -		01				
23A	38553-20400	VALVE,SOLENOID	1	103 -			Y02			
31A	38542-70060	VALVE UNIT	1	103 -			02	Y03		
32A	38542-70020	VALVE UNIT	1	103 -			02		Y04	
33A	38567-70020	VALVE,REDUCING	1	103 -			02			
34A	38553-70440	VALVE,SOLENOID	1	103 -		Y05	02			
35A	61101-06030	BOLT,SOCKET	4	103 -			02			
36A	61101-06045	BOLT,SOCKET	2	103 -			02			
37A	43956-70300	BOLT,SOCKET	4	103 -			02			
38A	43956-70310	BOLT,SOCKET	10	103 -			02			
39A	38542-70070	VALVE UNIT	1	103 -			02			
40A	30230-70210	ADAPTER	1	103 -			02			
41A	43956-70640	BOLT,SOCKET	4	103 -			02			
42A	47131-72140	RING,O	2	103 -			02			
118A	47131-72150	RING,O	1	103 -		K1		03		
121A	47131-72140	RING,O	2	103 -				03		
143A	47131-72140	RING,O	3	103 -		K1			04	
146A	47131-72160	RING,O	1	103 -		K1			04	
204A	47131-72160	RING,O	4	103 -		05				
220A	38538-70040	VALVE KIT	1	103 -		QK1				

silverhorn.co.uk

REPAIR KIT

(T/M TYPE NO. P5400C01)

LIST ONLY

silverhorn.co.uk

REPAIR KIT

SYM-BOL	PART NUMBER	PART NAME	UNIT Q,TY	SERIAL (A)	-	(B)	REMARKS N P D	(A)	(B)	(C)	(D)	REMARK
1A	49691-90210	REPAIR KIT	1	103	-	272		QK1				T/C
1B	49691-91560	REPAIR KIT	1	273	-		C	QK1				T/C
2A	31990-22900	GASKET	1	103	-	272		K1				361-5
2B	31990-27560	GASKET	1	273	-		C	K1				361-5
3A	31990-23090	GASKET	1	103	-			K1				361-15
4A	47131-21510	RING,O	1	103	-			K1				361-17
5A	31990-22880	GASKET	2	103	-	272		K1				361-18
5B	31990-27570	GASKET	2	273	-		C	K1				361-18
6A	31990-22140	GASKET	1	103	-	272		K1				361-43
6B	31990-27500	GASKET	1	273	-		C	K1				361-43
7A	45301-60180	RING,PISTON	1	103	-			K1				362-19
8A	45301-60190	RING,PISTON	1	103	-			K1				362-24
9A	65084-06013	SEAL,OIL	1	103	-			K1				362-33
10A	41694-21020	PLATE,LOCK	1	103	-			K1				362-35
11A	65210-18060	RING,O	1	103	-			K1				362-37
20A	49691-90410	REPAIR KIT	1	103	-	272			QK2			T/M
20B	49691-91570	REPAIR KIT	1	273	-		C		QK2			T/M
21A	65210-18024	RING,O	4	103	-				K2			371-12
22A	65210-18020	RING,O	6	103	-				K2			371-13
23A	47131-20800	RING,O	1	103	-				K2			371-35
24A	47131-20860	RING,O	1	103	-				K2			371-40
25A	47131-20870	RING,O	1	103	-				K2			371-53
26A	47131-20840	RING,O	1	103	-				K2			372-41
27A	65210-28070	RING,O	1	103	-				K2			372-104
28A	65220-43013	RING,O	1	103	-				K2			373-103
29A	65210-18018	RING,O	1	103	-				K2			374-100
30A	47131-20720	RING,O	2	103	-				K2			375-48
31A	47131-20810	RING,O	1	103	-				K2			376-36
32A	47131-20820	RING,O	1	103	-				K2			376-39
33A	47131-20890	RING,O	1	103	-				K2			377-37
34A	47131-20880	RING,O	1	103	-				K2			377-38
35A	47131-20830	RING,O	1	103	-				K2			377-42
36A	47131-20850	RING,O	1	103	-				K2			377-52
37A	31990-20420	GASKET	1	103	-				K2			371-16
39A	31990-20410	GASKET	1	103	-	272			K2			371-17
39B	31990-27420	GASKET	1	273	-		C		K2			371-17
40A	31990-20970	GASKET	1	103	-				K2			371-27
41A	31990-21970	GASKET	1	103	-				K2			371-30
42A	31990-71280	GASKET	2	103	-				K2			371-42
43A	31990-20380	GASKET	1	103	-				K2			371-44
44A	31990-22210	GASKET	1	103	-				K2			371-61
45A	31990-20370	GASKET	1	103	-				K2			376-50
46A	65084-06313	SEAL,OIL	1	103	-				K2			372-31
47A	65054-06313	SEAL,OIL	1	103	-				K2			372-33
48A	65084-06514	SEAL,OIL	1	103	-				K2			377-32
49A	65054-06514	SEAL,OIL	2	103	-				K2			377-56
50A	65040-01808	SEAL,GREASE	1	103	-				K2			377-34
51A	45301-60110	RING,PISTON	1	103	-				K2			371-43
52A	45301-60090	RING,PISTON	2	103	-				K2			372-58
53A	45301-60100	RING,PISTON	2	103	-				K2			375-59
54A	47142-20180	RING,U	1	103	-				K2			373-60
55A	47142-20170	RING,U	1	103	-				K2			373-61
56A	47142-20190	RING,U	1	103	-				K2			373-62
57A	47142-20210	RING,U	1	103	-				K2			373-65
58A	47142-20190	RING,U	2	103	-				K2			374-62
59A	47142-20200	RING,U	2	103	-				K2			374-64
60A	47142-20210	RING,U	1	103	-				K2			374-65
61A	47142-20180	RING,U	1	103	-				K2			375-60
62A	47142-20170	RING,U	1	103	-				K2			375-61

silverhorn.co.uk

FRONT AXLE GROUP

(NOTE):THIS ILLUSTRATION SHOWS "LEFT HAND". SYMBOL 111, 151 ARE NOT INCLUDED IN AXLE ASSY(000).

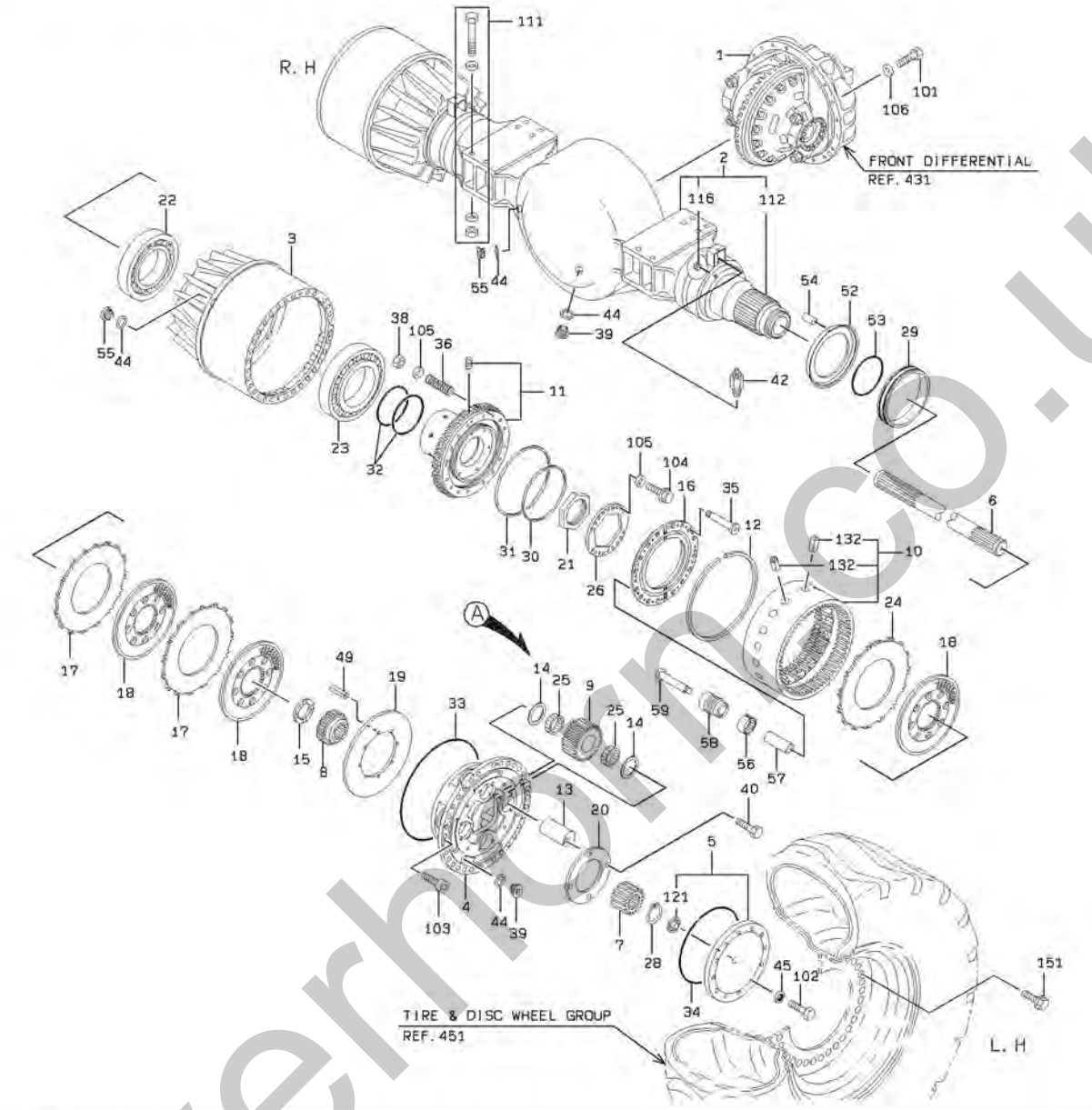

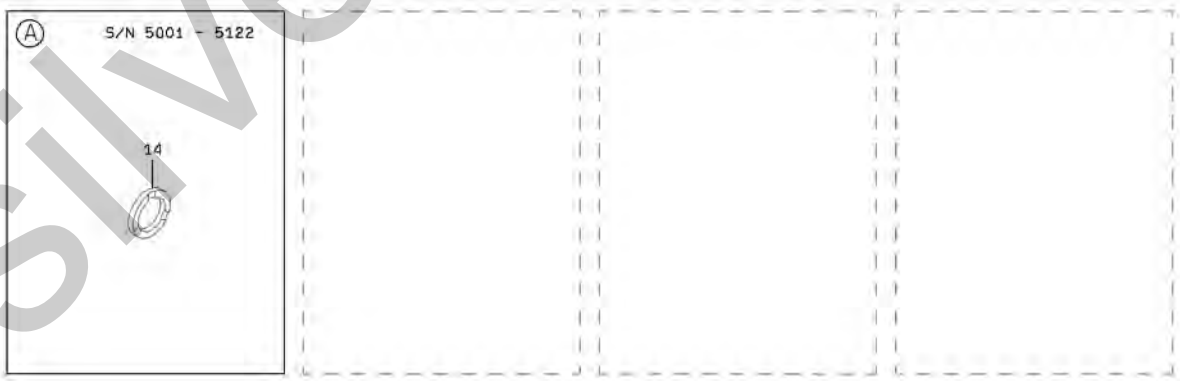

silverhorn.co.uk

FRONT AXLE GROUP

SYM-BOL	PART NUMBER	PART NAME	UNIT Q,TY	SERIAL (A)	-	(B)	REMARKS N P D	(A)	(B)	(C)	(D)	REMARK
000A	30111-21330	AXLE ASSY,FRONT	1	5001	-							W/O SYMBOL 111
1A	37301-21600	DIFFERENTIAL ASSY	1	5001	-							REF 431
2A	37910-21050	HOUSING ASSY,AXLE	1	5001	-			Y01				
3A	38055-20390	HUB,WHEEL	2	5001	-							
4A	37900-22280	HOUSING	2	5001	-							
5A	31241-20320	COVER ASSY	2	5001	-				Y02			
6A	34511-20790	SHAFT,AXLE	2	5001	-							
7A	32425-20350	GEAR,SUN	2	5001	-							
8A	32400-23100	GEAR	2	5001	-							
9A	32431-20470	GEAR,PLANET	8	5001	-							
10A	32421-20350	GEAR,INTERNAL	2	5001	-					Y03		
11A	38052-20570	HUB,INTERNAL GEAR	2	5001	-							
12A	45311-20280	RING,SNAP	2	5001	-							
13A	40040-20070	PIN,PLANET	8	5001	-							
14A	47171-21080	RING,WEAR	16	5001	-	5080						
14B	47171-21540	RING,WEAR	16	5081	-	5122	C					
14C	47171-21530	RING,WEAR	16	5123	-		C					
15A	47171-21130	RING,WEAR	2	5001	-							
16A	39960-21460	PISTON	2	5001	-							
17A	37212-20210	DISC,SEPARATION	4	5001	-							
18A	37213-20180	DISC,FRICTION	6	5001	-	5088						
18B	37213-60600	DISC,FRICTION	6	5089	-		C					
19A	44956-20200	RETAINER,BRAKE	2	5001	-							
20A	41621-21470	PLATE	2	5001	-							
21A	37616-20030	NUT,AXLE	2	5001	-							
22A	42004-20080	BEARING,TAPER ROLL	2	5001	-							
23A	42004-70120	BEARING,TAPER ROLL	2	5001	-							
24A	37212-20220	DISC,SEPARATION	2	5001	-							
25A	33065-60250	CAGE,NEEDLE	16	5001	-							
26A	46031-20220	WASHER,AXLE	2	5001	-							
28A	63811-00085	RING,SNAP	2	5001	-							
29A	34047-60050	SEAL,FLOATING	2	5001	-							
30A	47148-60090	RING,D	2	5001	-							
31A	47148-60080	RING,D	2	5001	-							
32A	47131-21050	RING,O	4	5001	-							
33A	47131-20360	RING,O	2	5001	-							
34A	47131-20370	RING,O	2	5001	-							
35A	43956-20020	BOLT,SOCKET	32	5001	-							
36A	35600-20240	SPRING	32	5001	-							
38A	88001-61101	NUT,U	32	5001	-							
39A	41535-20040	PLUG,MAGNET	3	5001	-	5032						
39B	41535-20080	PLUG,MAGNET	3	5033	-		C					
40A	61013-24032	BOLT	8	5001	-							
42A	35107-20040	SCREW,BLEED	2	5001	-	5029						
42B	35107-70030	SCREW,BLEED	2	5030	-		C					
44A	88111-13090	WASHER,SEAL	8	5001	-							
45A	88111-11200	WASHER,SEAL	24	5001	-							
49A	63011-10016	PIN,SPRING	16	5001	-							
52A	45200-25960	RING	2	5001	-							
53A	47131-60220	RING,O	2	5001	-							
54A	63011-05020	PIN,SPRING	4	5001	-							
55A	41530-21600	PLUG	5	5001	-	5032						
55B	41530-22530	PLUG	5	5033	-		C					
56A	35600-60150	SPRING	12	5001	-							
57A	35750-23740	SLEEVE	12	5001	-	5056						
57B	35750-24680	SLEEVE	12	5057	-		C					
58A	40840-24810	BUSHING	12	5001	-	5056						
58B	40840-26050	BUSHING	12	5057	-		C					
59A	43956-20210	BOLT,SOCKET	12	5001	-							
101A	61005-16060	BOLT	20	5001	-							
102A	61033-12040	BOLT	24	5001	-							
103A	61101-12025	BOLT,SOCKET	8	5001	-							
104A	61802-10016	BOLT,FLANGED	8	5001	-							
105A	62710-18101	WASHER,PLANE	36	5001	-							
106A	62710-18161	WASHER,PLANE	20	5001	-							
111A	43925-21370	BOLT SET	12	5001	-							

silverhorn.co.uk

FRONT AXLE GROUP

SYM-BOL	PART NUMBER	PART NAME	UNIT Q,TY	SERIAL (A) - (B)	REMARKS N P D	(A)	(B)	(C)	(D)	REMARK
112A	30582-20490	EXTENSION,AXLE HOU	2	5001 -		01				
116A	88390-16102	PLUG	4	5001 -		01				
121A	40840-23050	BUSHING	1	5001 -			02			
132A	40033-20030	PIN,SPRING	2	5001 -				03		
151A	61805-24080	BOLT,FLANGED	62	5001 -						

silverhorn.co.uk

MEMO

silverhorn.co.uk

REAR AXLE GROUP

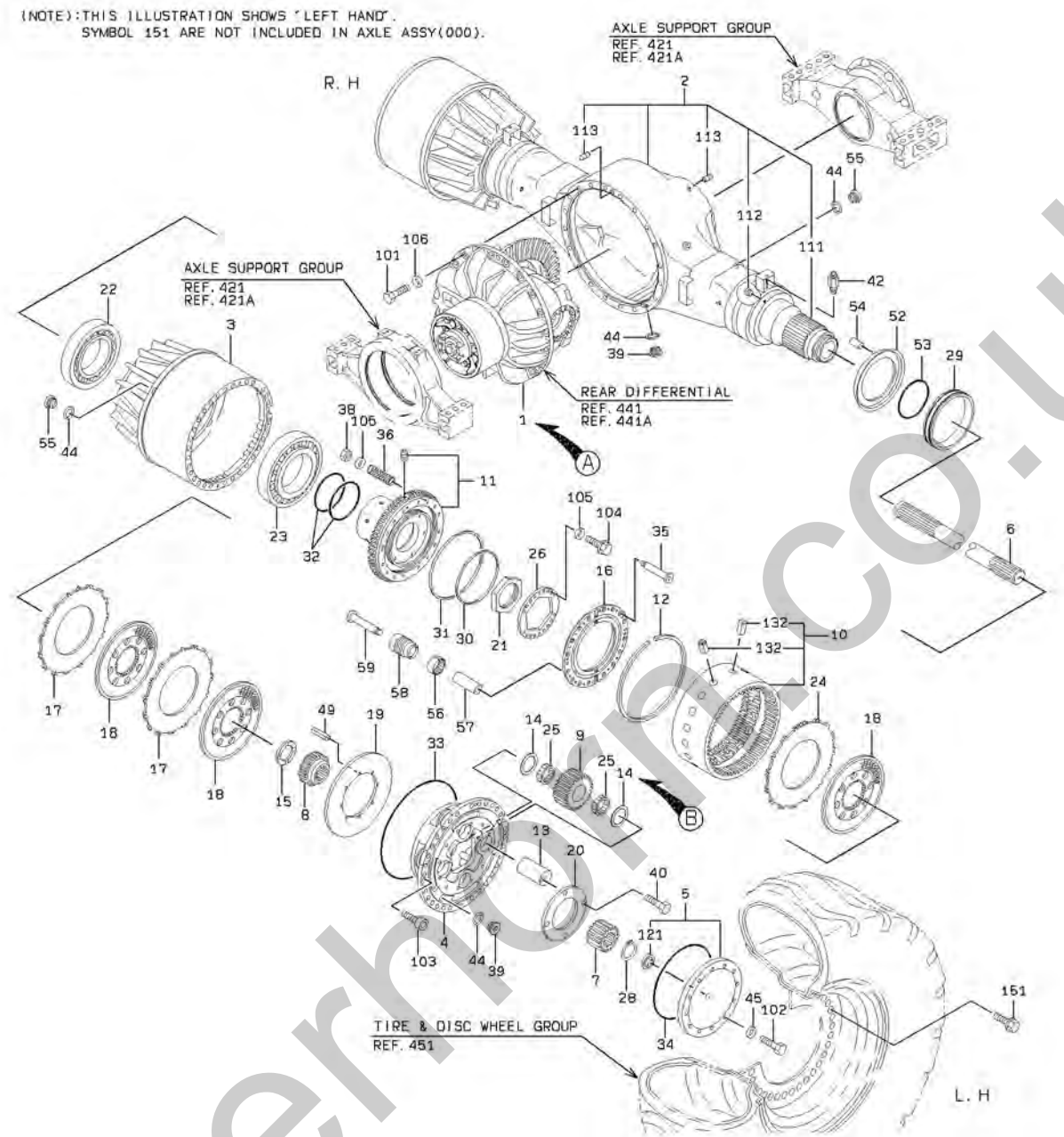

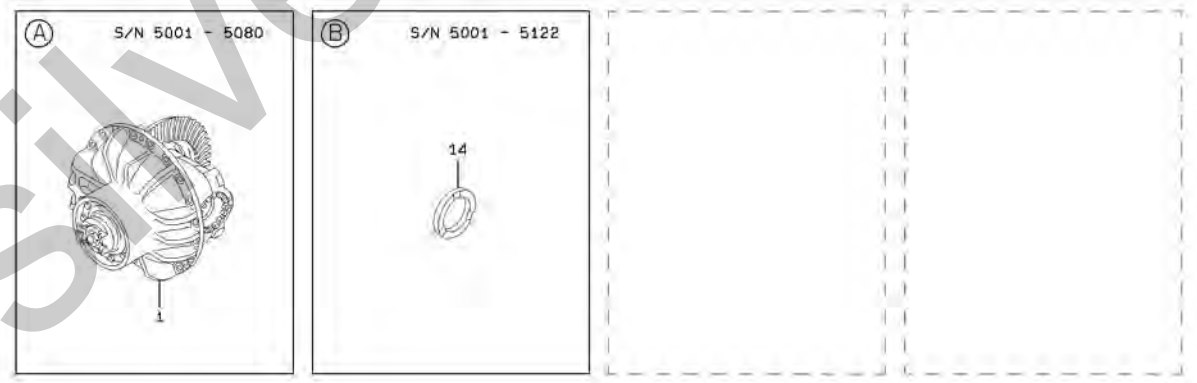

silverhorn.co.uk

REAR AXLE GROUP

SYM-BOL	PART NUMBER	PART NAME	UNIT Q,TY	SERIAL (A)	-	(B)	REMARKS N P D	(A)	(B)	(C)	(D)	REMARK
000A	30112-21660	AXLE ASSY,REAR	1	5001	-	5023						W/O SYMBOL 151
000B	30112-22030	AXLE ASSY,REAR	1	5024	-	5080	B					W/O SYNBOL 151
000C	30112-22610	AXLE ASSY,REAR	1	5081	-		B					W/O SYMBOL 151
1A	37301-21610	DIFFERENTIAL ASSY	1	5001	-	5023						REF.441
1B	37301-22020	DIFFERENTIAL ASSY	1	5024	-	5080	B					REF.441
1C	37301-22700	DIFFERENTIAL ASSY	1	5081	-		B					REF.441A
2A	37910-20890	HOUSING ASSY,AXLE	1	5001	-			Y01				
3A	38055-20390	HUB,WHEEL	2	5001	-							
4A	37900-22280	HOUSING	2	5001	-							
5A	31241-20320	COVER ASSY	2	5001	-				Y02			
6A	34511-20790	SHAFT,AXLE	2	5001	-							
7A	32425-20350	GEAR,SUN	2	5001	-							
8A	32400-23100	GEAR	2	5001	-							
9A	32431-20470	GEAR,PLANET	8	5001	-							
10A	32421-20350	GEAR,INTERNAL	2	5001	-					Y03		
11A	38052-20570	HUB,INTERNAL GEAR	2	5001	-							
12A	45311-20280	RING,SNAP	2	5001	-							
13A	40040-20070	PIN,PLANET	8	5001	-							
14A	47171-21080	RING,WEAR	16	5001	-	5080						
14B	47171-21540	RING,WEAR	16	5081	-	5122	C					
14C	47171-21530	RING,WEAR	16	5123	-		C					
15A	47171-21130	RING,WEAR	2	5001	-							
16A	39960-21460	PISTON	2	5001	-							
17A	37212-20210	DISC,SEPARATION	4	5001	-							
18A	37213-20180	DISC,FRICTION	6	5001	-	5088						
18B	37213-60600	DISC,FRICTION	6	5089	-		C					
19A	44956-20200	RETAINER,BRAKE	2	5001	-							
20A	41621-21470	PLATE	2	5001	-							
21A	37616-20030	NUT,AXLE	2	5001	-							
22A	42004-20080	BEARING,TAPER ROLL	2	5001	-							
23A	42004-70120	BEARING,TAPER ROLL	2	5001	-							
24A	37212-20220	DISC,SEPARATION	2	5001	-							
25A	33065-60250	CAGE,NEEDLE	16	5001	-							
26A	46031-20220	WASHER,AXLE	2	5001	-							
28A	63811-00085	RING,SNAP	2	5001	-							
29A	34047-60050	SEAL,FLOATING	2	5001	-							
30A	47148-60090	RING,D	2	5001	-							
31A	47148-60080	RING,D	2	5001	-							
32A	47131-21050	RING,O	4	5001	-							
33A	47131-20360	RING,O	2	5001	-							
34A	47131-20370	RING,O	2	5001	-							
35A	43956-20020	BOLT,SOCKET	32	5001	-							
36A	35600-20240	SPRING	32	5001	-							
38A	88001-61101	NUT,U	32	5001	-							
39A	41535-20040	PLUG,MAGNET	3	5001	-	5032						
39B	41535-20080	PLUG,MAGNET	3	5033	-		C					
40A	61013-24032	BOLT	8	5001	-							
42A	35107-20040	SCREW,BLEED	2	5001	-	5029						
42B	35107-70030	SCREW,BLEED	2	5030	-		C					
44A	88111-13090	WASHER,SEAL	8	5001	-							
45A	88111-11200	WASHER,SEAL	24	5001	-							
49A	63011-10016	PIN,SPRING	16	5001	-							
52A	45200-25960	RING	2	5001	-							
53A	47131-60220	RING,O	2	5001	-							
54A	63011-05020	PIN,SPRING	4	5001	-							
55A	41530-21600	PLUG	5	5001	-	5032						
55B	41530-22530	PLUG	5	5033	-		C					
56A	35600-60150	SPRING	12	5001	-							
57A	35750-23740	SLEEVE	12	5001	-	5056						
57B	35750-24680	SLEEVE	12	5057	-		C					
58A	40840-24810	BUSHING	12	5001	-	5056						
58B	40840-26050	BUSHING	12	5057	-		C					
59A	43956-20210	BOLT,SOCKET	12	5001	-							
101A	61005-24065	BOLT	20	5001	-							
102A	61033-12040	BOLT	24	5001	-							
103A	61101-12025	BOLT,SOCKET	8	5001	-							

silverhorn.co.uk

REAR AXLE GROUP

SYM-BOL	PART NUMBER	PART NAME	UNIT Q,TY	SERIAL (A) - (B)	REMARKS N P D	(A)	(B)	(C)	(D)	REMARK
104A	61802-10016	BOLT,FLANGED	8	5001 -						
105A	62710-18101	WASHER,PLANE	36	5001 -						
106A	62710-18241	WASHER,PLANE	20	5001 -						
111A	30582-20490	EXTENSION,AXLE HOU	2	5001 -		01				
112A	88390-16102	PLUG	4	5001 -		01				
113A	40010-20100	PIN,STRAIGHT	2	5001 -		01				
121A	40840-23050	BUSHING	1	5001 -			02			
132A	40033-20030	PIN,SPRING	2	5001 -				03		
151A	61805-24080	BOLT,FLANGED	62	5001 -						

silverhorn.co.uk

MEMO

silverhorn.co.uk

AXLE SUPPORT GROUP

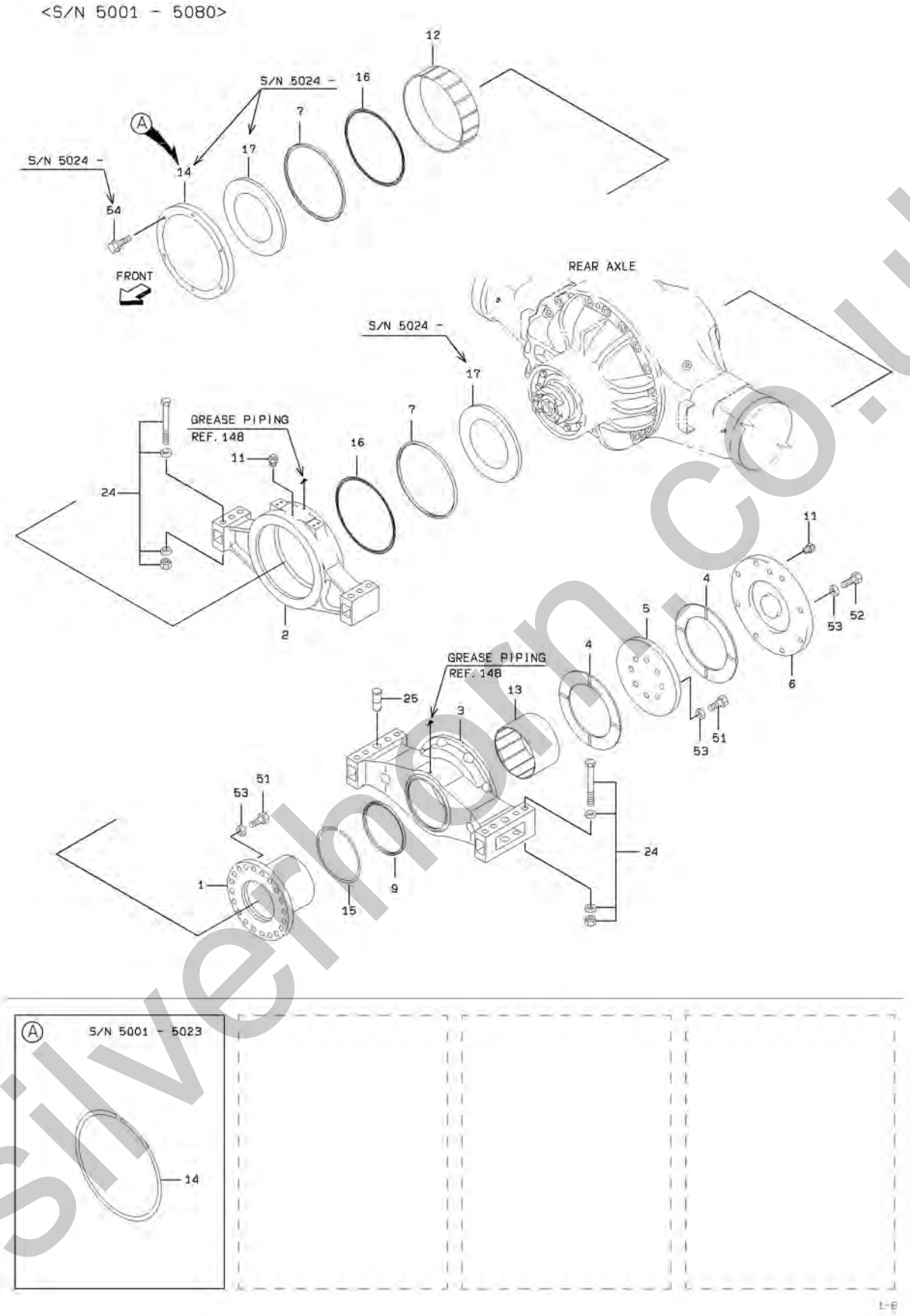

silverhorn.co.uk

AXLE SUPPORT GROUP

SYM-BOL	PART NUMBER	PART NAME	UNIT Q,TY	SERIAL (A) - (B)	REMARKS N P D	(A) (B)	(C) (D)	REMARK
1A	34500-24580	SHAFT	1	5001 - 5080				
2A	33621-21210	SUPPORT,AXLE	1	5001 - 5080				
3A	33621-21260	SUPPORT,AXLE	1	5001 - 5080				
4A	47171-20260	RING,WEAR	2	5001 - 5080				
5A	41621-21100	PLATE	1	5001 - 5080				
6A	41621-23330	PLATE	1	5001 - 5080				
7A	39600-60320	PACKING	2	5001 - 5080				
9A	39600-60360	PACKING	1	5001 - 5080				
11A	41100-60020	BREATHER	2	5001 - 5080				
12A	40840-60090	BUSHING	1	5001 - 5080				
13A	40840-60130	BUSHING	1	5001 - 5031				
13B	40840-60300	BUSHING	1	5032 - 5080	C			
14A	45311-20550	RING,SNAP	1	5001 - 5023				
14B	41621-31000	PLATE	1	5024 - 5080	B			
15A	45311-20570	RING,SNAP	1	5001 - 5080				
16A	47131-60120	RING,O	2	5001 - 5080				
17A	45200-27600	RING	2	5024 - 5080				
24A	43925-21180	BOLT SET	14	5001 - 5080				
25A	40044-20350	PIN,HEAD	2	5001 - 5080				
51A	61005-24065	BOLT	28	5001 - 5080				
52A	61005-24070	BOLT	8	5001 - 5080				
53A	62710-18241	WASHER,PLANE	36	5001 - 5080				
54A	61802-10020	BOLT,FLANGED	6	5024 - 5080				

silverhorn.co.uk

AXLE SUPPORT GROUP

<S/N 5081 - >

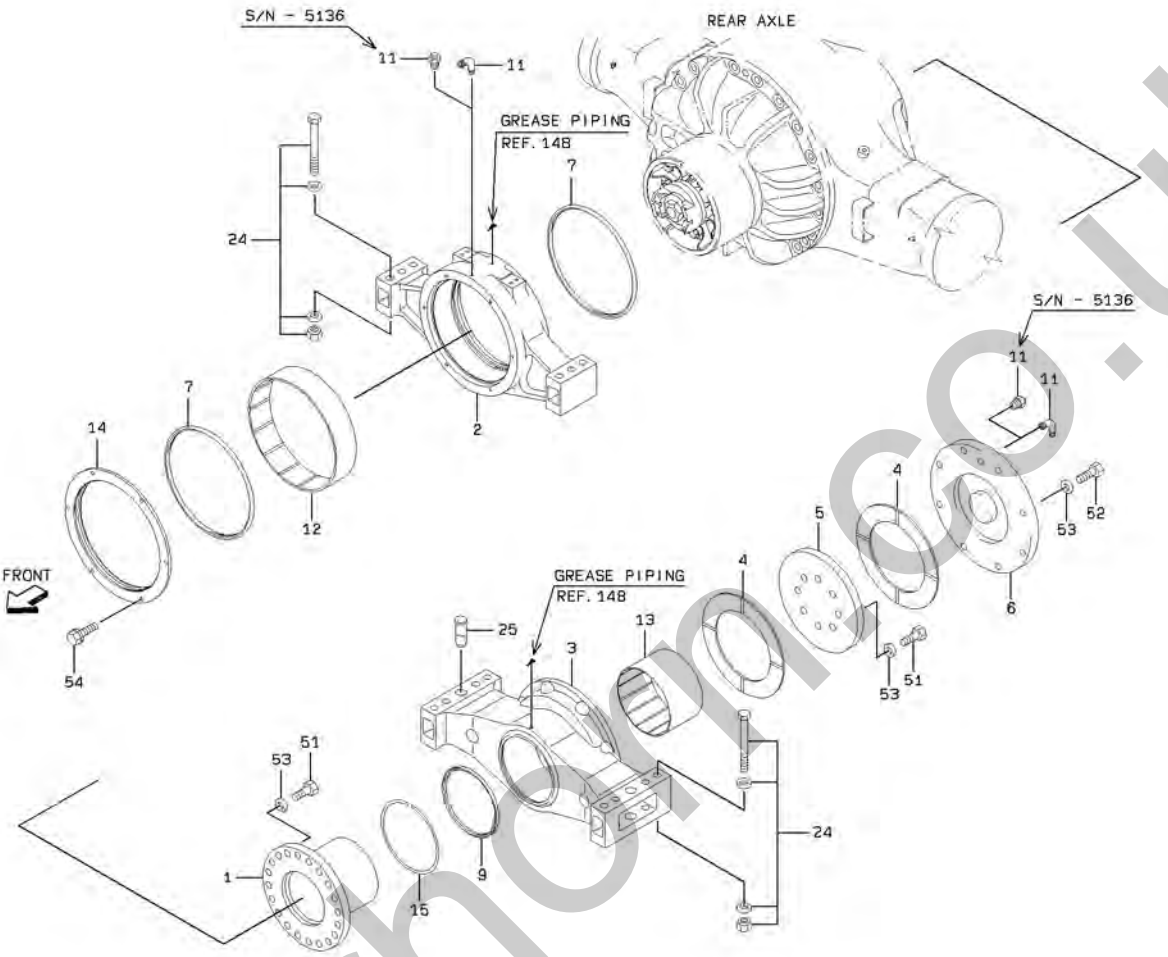

silvermoon.co.uk

AXLE SUPPORT GROUP

SYM-BOL	PART NUMBER	PART NAME	UNIT Q,TY	SERIAL (A) - (B)	REMARKS N P D	(A) (B)	(C) (D)	REMARK
1A	34500-24580	SHAFT	1	5081 -				
2A	33621-21970	SUPPORT,AXLE	1	5081 -				
3A	33621-21260	SUPPORT,AXLE	1	5081 -				
4A	47171-20260	RING,WEAR	2	5081 -				
5A	41621-21100	PLATE	1	5081 -				
6A	41621-23330	PLATE	1	5081 -				
7A	39600-60480	PACKING	2	5081 -				
9A	39600-60360	PACKING	1	5081 -				
11A	41100-60020	BREATHER	2	5081 - 5136				
11B	69100-20600	FLARED FITTING,ELB	2	5137 -	C			
12A	40840-60340	BUSHING	1	5081 -				
13A	40840-60300	BUSHING	1	5081 -				
14A	45200-29140	RING	1	5081 -				
15A	45311-20570	RING,SNAP	1	5081 -				
24A	43925-21180	BOLT SET	14	5081 -				
25A	40044-20350	PIN,HEAD	2	5081 -				
51A	61005-24065	BOLT	28	5081 -				
52A	61005-24070	BOLT	8	5081 -				
53A	62710-18241	WASHER,PLANE	36	5081 -				
54A	61802-10020	BOLT,FLANGED	6	5081 -				

silverhorn.co.uk

(NOTE):SYMBOL 10 CONSISTS OF THE PARTS WITH a.

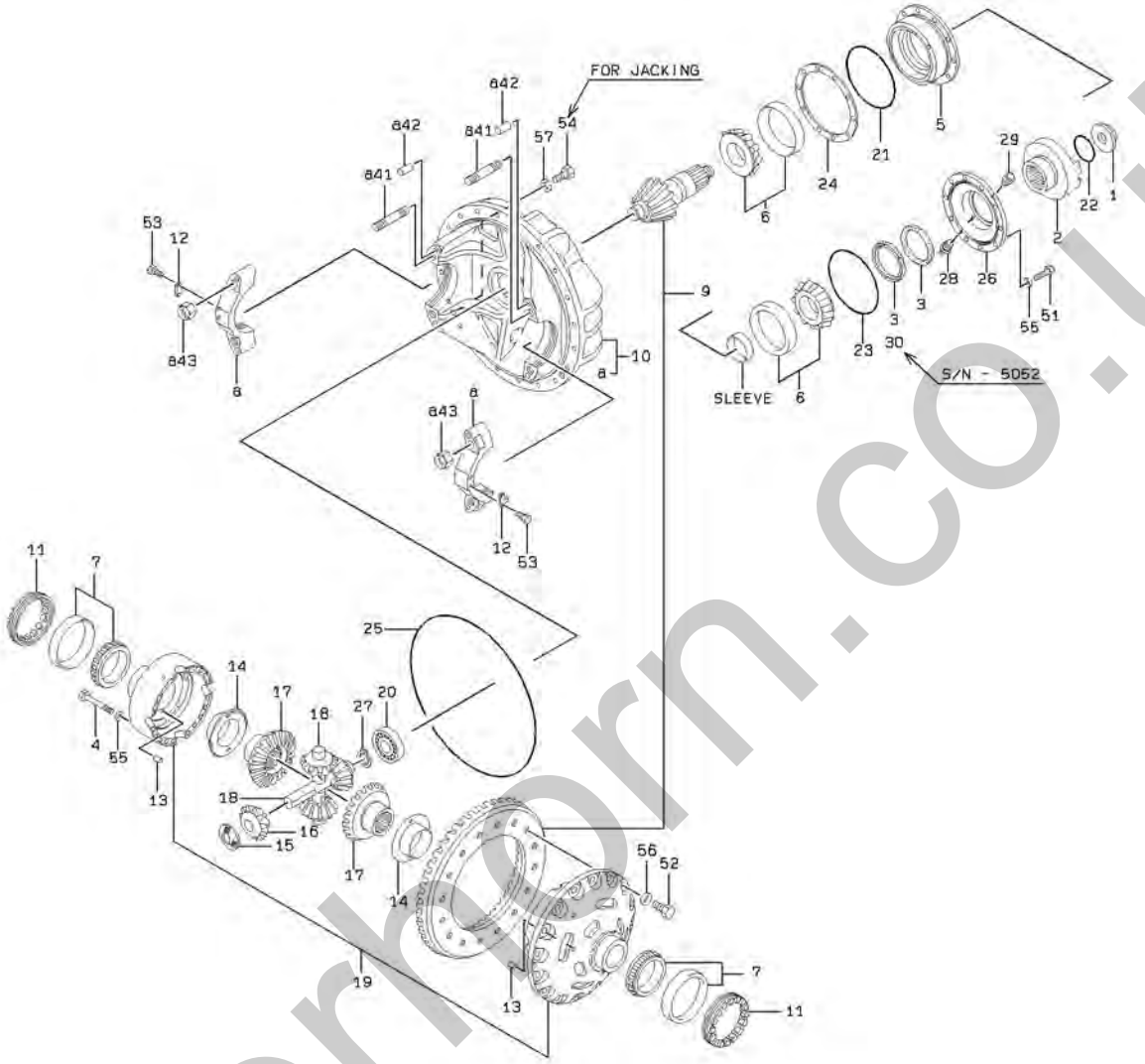

SLEEVE			
101	T=29.20	112	T=29.40
102	T=29.22	113	T=29.42
103	T=29.24	114	T=29.44
104	T=29.26	115	T=29.46
105	T=29.28	116	T=29.48
106	T=29.30	117	T=29.18
107	T=29.32	118	T=29.16
108	T=29.34	119	T=29.14
109	T=29.36	120	T=29.12
111	T=29.38	121	T=29.10

silverhorn.co.uk

FRONT DIFFERENTIAL

SYM-BOL	PART NUMBER	PART NAME	UNIT Q,TY	SERIAL (A) - (B)	REMARKS N P D	(A) (B)	(C) (D)	REMARK
000A	37301-21600	DIFFERENTIAL ASSY	1	5001 -				
1A	37600-20360	NUT	1	5001 -				
2A	44621-20380	YOKE,FLANGE	1	5001 -				
3A	65054-06914	SEAL,OIL	1	5001 - 5052				
3B	34042-60600	SEAL,OIL	2	5053 -	C			
4A	61013-16135	BOLT	20	5001 -				
5A	33100-20100	CASE	1	5001 -				
6A	42004-60360	BEARING,TAPER ROLL	2	5001 -				
7A	42004-70080	BEARING,TAPER ROLL	2	5001 -				
9A	32420-20300	GEAR SET,SPIRAL BE	1	5001 -				
10A	37904-20350	HOUSING ASSY	1	5001 -		Y01		
11A	37600-20300	NUT	2	5001 -				
12A	41694-20060	PLATE,LOCK	2	5001 -				
13A	63021-08012	PIN,STRAIGHT	4	5001 -				
14A	40840-20810	BUSHING	2	5001 -				
15A	47171-21140	RING,WEAR	4	5001 -				
16A	32433-20140	GEAR,BEVEL	4	5001 -				
17A	32433-20130	GEAR,BEVEL	2	5001 -				
18A	35510-20510	SPIDER	2	5001 -				
19A	37904-20150	HOUSING ASSY	1	5001 -				
20A	42003-60030	BEARING,ROLLER	1	5001 -				
21A	65210-22240	RING,O	1	5001 -				
22A	65210-22100	RING,O	1	5001 -				
23A	65211-32470	RING,O	1	5001 -				
24A	34200-21150	SHIM	A/R	5001 -				T=0.1-1.00
25A	47131-20380	RING,O	1	5001 -				
26A	44951-20060	RETAINER,OIL SEAL	1	5001 -				
27A	63811-00050	RING,SNAP	1	5001 -				
28A	75011-25400	NIPPLE,GREASE	1	5001 -				
29A	41100-60030	BREATHER	1	5001 -				
30A	34042-60400	SEAL,OIL	1	5001 - 5052	D			
41A	43955-20040	BOLT,STUD	4	5001 -		01		
42A	40010-20380	PIN,STRAIGHT	4	5001 -		01		
43A	88031-06301	NUT,SELF-LOCKING	4	5001 -		01		
51A	61005-16060	BOLT	10	5001 -				
52A	61006-24055	BOLT	16	5001 -				
53A	61033-10020	BOLT	4	5001 -				
54A	61033-24030	BOLT	2	5001 -				
55A	62710-18161	WASHER,PLANE	30	5001 -				
56A	62710-18241	WASHER,PLANE	16	5001 -				
57A	62721-24100	WASHER,SPRING	2	5001 -				
101A	35750-23050	SLEEVE	1	5001 -				T=29.20
102A	35750-23060	SLEEVE	1	5001 -				T=29.22
103A	35750-23070	SLEEVE	1	5001 -				T=29.24
104A	35750-23080	SLEEVE	1	5001 -				T=29.26
105A	35750-23090	SLEEVE	1	5001 -				T=29.28
106A	35750-23100	SLEEVE	1	5001 -				T=29.30
107A	35750-23110	SLEEVE	1	5001 -				T=29.32
108A	35750-23120	SLEEVE	1	5001 -				T=29.34
109A	35750-23130	SLEEVE	1	5001 -				T=29.36
111A	35750-23140	SLEEVE	1	5001 -				T=29.38
112A	35750-23150	SLEEVE	1	5001 -				T=29.40
113A	35750-23160	SLEEVE	1	5001 -				T=29.42
114A	35750-23170	SLEEVE	1	5001 -				T=29.44
115A	35750-23180	SLEEVE	1	5001 -				T=29.46
116A	35750-23190	SLEEVE	1	5001 -				T=29.48
117A	35750-24990	SLEEVE	1	5137 -				T=29.18
118A	35750-25000	SLEEVE	1	5137 -				T=29.16
119A	35750-25010	SLEEVE	1	5137 -				T=29.14
120A	35700-25020	SLEEVE	1	5137 -				T=29.12
121A	35750-25030	SLEEVE	1	5137 -				T=29.10

silverhorn.co.uk

<S/N 5001 - 5080>

(NOTE):SYMBOL 10 CONSISTS OF THE PARTS WITH a.

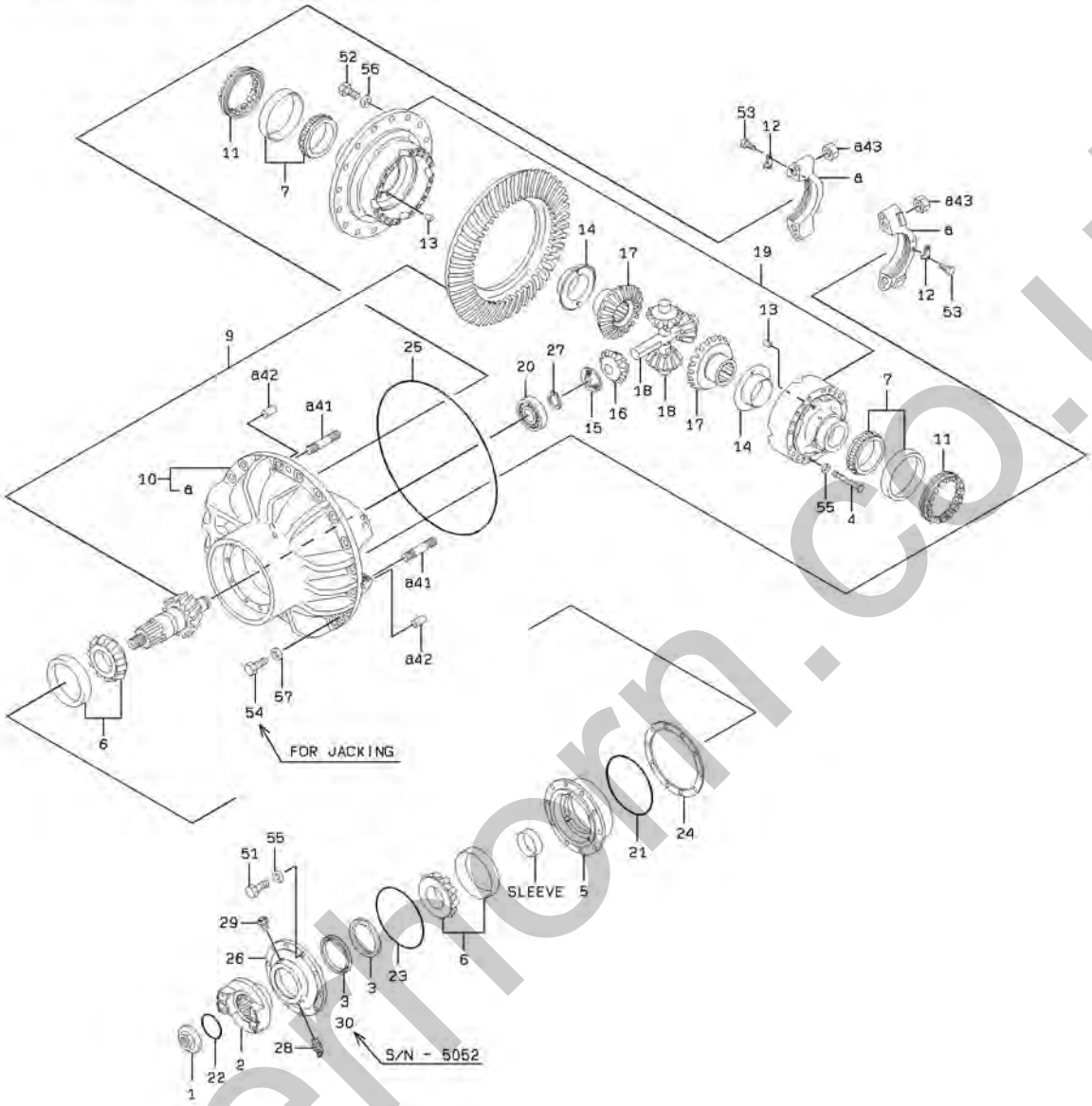

SLEEVE			
101	T=29.20	109	T=29.36
102	T=29.22	111	T=29.38
103	T=29.24	112	T=29.40
104	T=29.26	113	T=29.42
105	T=29.28	114	T=29.44
106	T=29.30	115	T=29.46
107	T=29.32	116	T=29.48
108	T=29.34		

silvernorn.co.uk

REAR DIFFERENTIAL

SYM-BOL	PART NUMBER	PART NAME	UNIT Q,TY	SERIAL (A) - (B)	REMARKS N P D	(A) (B)	(C) (D)	REMARK
000A	37301-21610	DIFFERENTIAL ASSY	1	5001 - 5023				
000B	37301-22020	DIFFERENTIAL ASSY	1	5024 - 5080	B			
1A	37600-20360	NUT	1	5001 - 5080				
2A	44621-20390	YOKE,FLANGE	1	5001 - 5080				
3A	65054-06914	SEAL,OIL	1	5001 - 5052				
3B	34042-60600	SEAL,OIL	2	5053 - 5080	C			
4A	61013-16135	BOLT	20	5001 - 5080				
5A	33100-20100	CASE	1	5001 - 5080				
6A	42004-60360	BEARING,TAPER ROLL	2	5001 - 5080				
7A	42004-70080	BEARING,TAPER ROLL	2	5001 - 5080				
9A	32420-20300	GEAR SET,SPIRAL BE	1	5001 - 5080				
10A	37904-20480	HOUSING ASSY	1	5001 - 5023		Y01		
10B	37904-20850	HOUSING ASSY	1	5024 - 5080	B	Y01		
11A	37600-20300	NUT	2	5001 - 5080				
12A	41694-20060	PLATE,LOCK	2	5001 - 5080				
13A	63021-08012	PIN,STRAIGHT	4	5001 - 5080				
14A	40840-20810	BUSHING	2	5001 - 5080				
15A	47171-21140	RING,WEAR	4	5001 - 5080				
16A	32433-20140	GEAR,BEVEL	4	5001 - 5080				
17A	32433-20130	GEAR,BEVEL	2	5001 - 5080				
18A	35510-20510	SPIDER	2	5001 - 5080				
19A	37904-20150	HOUSING ASSY	1	5001 - 5080				
20A	42003-60030	BEARING,ROLLER	1	5001 - 5080				
21A	65210-22240	RING,O	1	5001 - 5080				
22A	65210-22100	RING,O	1	5001 - 5080				
23A	65211-32470	RING,O	1	5001 - 5080				
24A	34200-21150	SHIM	A/R	5001 - 5080				T=0.1-1.00
25A	47131-20380	RING,O	1	5001 - 5080				
26A	44951-20060	RETAINER,OIL SEAL	1	5001 - 5080				
27A	63811-00050	RING,SNAP	1	5001 - 5080				
28A	75011-45400	NIPPLE,GREASE	1	5001 - 5080				
29A	41100-60030	BREATHER	1	5001 - 5080				
30A	34042-60400	SEAL,OIL	1	5001 - 5052	D			
41A	43955-20040	BOLT,STUD	4	5001 - 5080		01		
42A	40010-20380	PIN,STRAIGHT	4	5001 - 5080		01		
43A	88031-06301	NUT,SELF-LOCKING	4	5001 - 5080		01		
51A	61005-16060	BOLT	10	5001 - 5080				
52A	61006-24055	BOLT	16	5001 - 5080				
53A	61033-10020	BOLT	4	5001 - 5080				
54A	61033-24030	BOLT	2	5001 - 5080				
55A	62710-18161	WASHER,PLANE	30	5001 - 5080				
56A	62710-18241	WASHER,PLANE	16	5001 - 5080				
57A	62721-24100	WASHER,SPRING	2	5001 - 5080				
101A	35750-23050	SLEEVE	1	5001 - 5080				T=29.20
102A	35750-23060	SLEEVE	1	5001 - 5080				T=29.22
103A	35750-23070	SLEEVE	1	5001 - 5080				T=29.24
104A	35750-23080	SLEEVE	1	5001 - 5080				T=29.26
105A	35750-23090	SLEEVE	1	5001 - 5080				T=29.28
106A	35750-23100	SLEEVE	1	5001 - 5080				T=29.30
107A	35750-23110	SLEEVE	1	5001 - 5080				T=29.32
108A	35750-23120	SLEEVE	1	5001 - 5080				T=29.34
109A	35750-23130	SLEEVE	1	5001 - 5080				T=29.36
111A	35750-23140	SLEEVE	1	5001 - 5080				T=29.38
112A	35750-23150	SLEEVE	1	5001 - 5080				T=29.40
113A	35750-23160	SLEEVE	1	5001 - 5080				T=29.42
114A	35750-23170	SLEEVE	1	5001 - 5080				T=29.44
115A	35750-23180	SLEEVE	1	5001 - 5080				T=29.46
116A	35750-23190	SLEEVE	1	5001 - 5080				T=29.48

silverhorn.co.uk

REAR DIFFERENTIAL

<S/N 5081 - >

(NOTE):SYMBOL 10 CONSISTS OF THE PARTS WITH a.

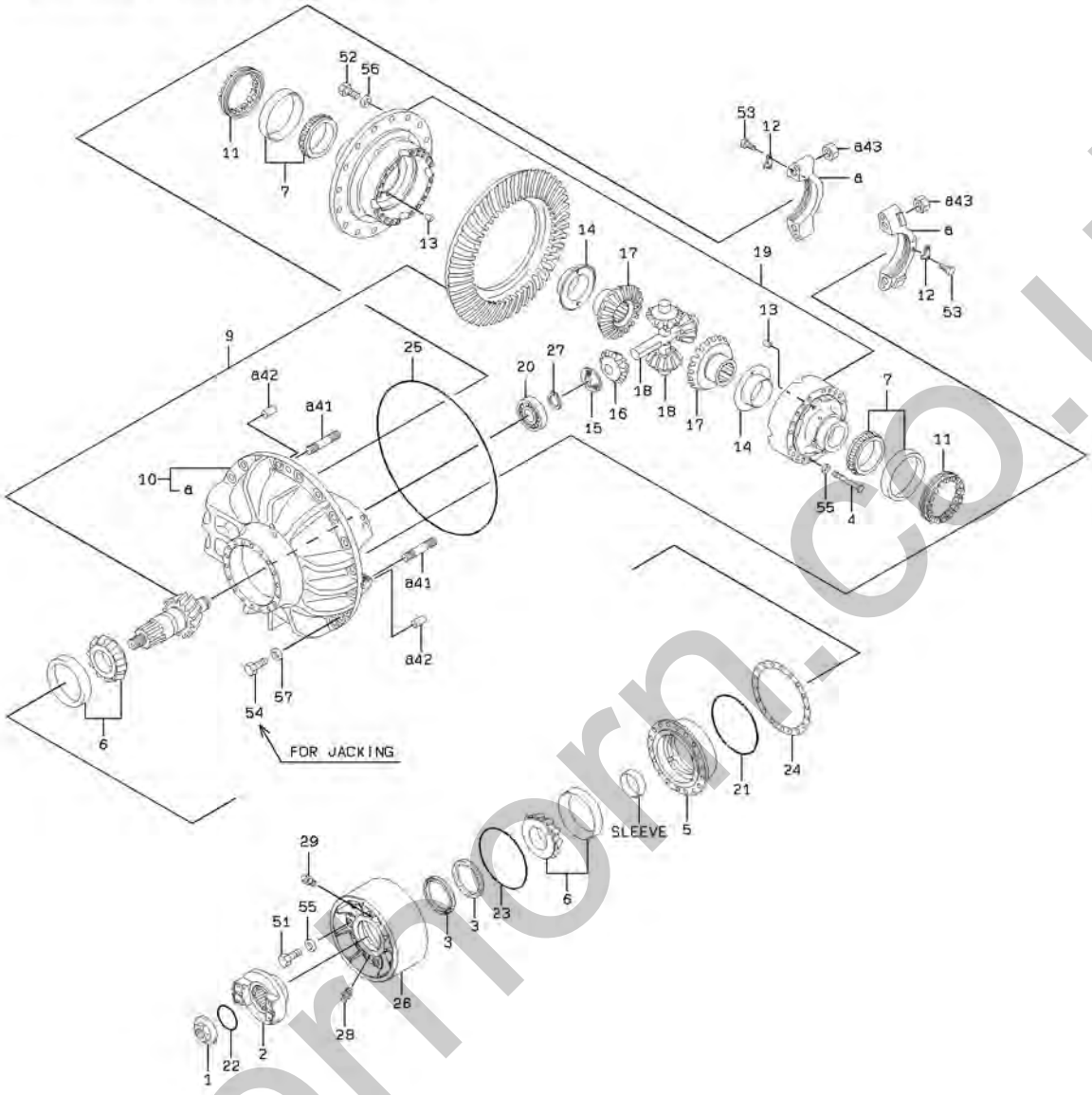

SLEEVE			
101	T=29.20	112	T=29.40
102	T=29.22	113	T=29.42
103	T=29.24	114	T=29.44
104	T=29.26	115	T=29.46
105	T=29.28	116	T=29.48
106	T=29.30	117	T=29.18
107	T=29.32	118	T=29.16
108	T=29.34	119	T=29.14
109	T=29.36	120	T=29.12
111	T=29.38	121	T=29.10

silvermorn.co.uk

REAR DIFFERENTIAL

SYM-BOL	PART NUMBER	PART NAME	UNIT Q,TY	SERIAL (A) - (B)	REMARKS N P D	(A) (B)	(C) (D)	REMARK
000A	37301-22700	DIFFERENTIAL ASSY	1	5081 -				
1A	37600-20360	NUT	1	5081 -				
2A	44621-20390	YOKE,FLANGE	1	5081 -				
3A	34042-60600	SEAL,OIL	2	5081 -				
4A	61013-16135	BOLT	20	5081 -				
5A	37900-25660	HOUSING	1	5081 -				
6A	42004-60360	BEARING,TAPER ROLL	2	5081 -				
7A	42004-70080	BEARING,TAPER ROLL	2	5081 -				
9A	32420-20300	GEAR SET,SPIRAL BE	1	5081 -				
10A	37904-21020	HOUSING ASSY	1	5081 -		Y01		
11A	37600-20300	NUT	2	5081 -				
12A	41694-20060	PLATE,LOCK	2	5081 -				
13A	63021-08012	PIN,STRAIGHT	4	5081 -				
14A	40840-20810	BUSHING	2	5081 -				
15A	47171-21140	RING,WEAR	4	5081 -				
16A	32433-20140	GEAR,BEVEL	4	5081 -				
17A	32433-20130	GEAR,BEVEL	2	5081 -				
18A	35510-20510	SPIDER	2	5081 -				
19A	37904-20150	HOUSING ASSY	1	5081 -				
20A	42003-60030	BEARING,ROLLER	1	5081 -				
21A	65210-22240	RING,O	1	5081 -				
22A	65210-22100	RING,O	1	5081 -				
23A	65211-32470	RING,O	1	5081 -				
24A	34200-27700	SHIM	A/R	5081 -				T=0.1-1.00
25A	47131-20380	RING,O	1	5081 -				
26A	37381-20090	TRUNNION	1	5081 -				
27A	63811-00050	RING,SNAP	1	5081 -				
28A	75011-45400	NIPPLE,GREASE	1	5081 -				
29A	41100-60030	BREATHER	1	5081 -				
41A	43955-20040	BOLT,STUD	4	5081 -		01		
42A	40010-20380	PIN,STRAIGHT	4	5081 -		01		
43A	88031-06301	NUT,SELF-LOCKING	4	5081 -		01		
51A	61005-16065	BOLT	18	5081 -				
52A	61006-24055	BOLT	16	5081 -				
53A	61033-10020	BOLT	4	5081 -				
54A	61033-24030	BOLT	2	5081 -				
55A	62710-18161	WASHER,PLANE	38	5081 -				
56A	62710-18241	WASHER,PLANE	16	5081 -				
57A	62721-24100	WASHER,SPRING	2	5081 -				
101A	35750-23050	SLEEVE	1	5081 -				T=29.20
102A	35750-23060	SLEEVE	1	5081 -				T=29.22
103A	35750-23070	SLEEVE	1	5081 -				T=29.24
104A	35750-23080	SLEEVE	1	5081 -				T=29.26
105A	35750-23090	SLEEVE	1	5081 -				T=29.28
106A	35750-23100	SLEEVE	1	5081 -				T=29.30
107A	35750-23110	SLEEVE	1	5081 -				T=29.32
108A	35750-23120	SLEEVE	1	5081 -				T=29.34
109A	35750-23130	SLEEVE	1	5081 -				T=29.36
111A	35750-23140	SLEEVE	1	5081 -				T=29.38
112A	35750-23150	SLEEVE	1	5081 -				T=29.40
113A	35750-23160	SLEEVE	1	5081 -				T=29.42
114A	35750-23170	SLEEVE	1	5081 -				T=29.44
115A	35750-23180	SLEEVE	1	5081 -				T=29.46
116A	35750-23190	SLEEVE	1	5081 -				T=29.48
117A	35750-24990	SLEEVE	1	5137 -				T=29.18
118A	35750-25000	SLEEVE	1	5137 -				T=29.16
119A	35750-25010	SLEEVE	1	5137 -				T=29.14
120A	35750-25020	SLEEVE	1	5137 -				T=29.12
121A	35750-25030	SLEEVE	1	5137 -				T=29.10

silvermorn.co.uk

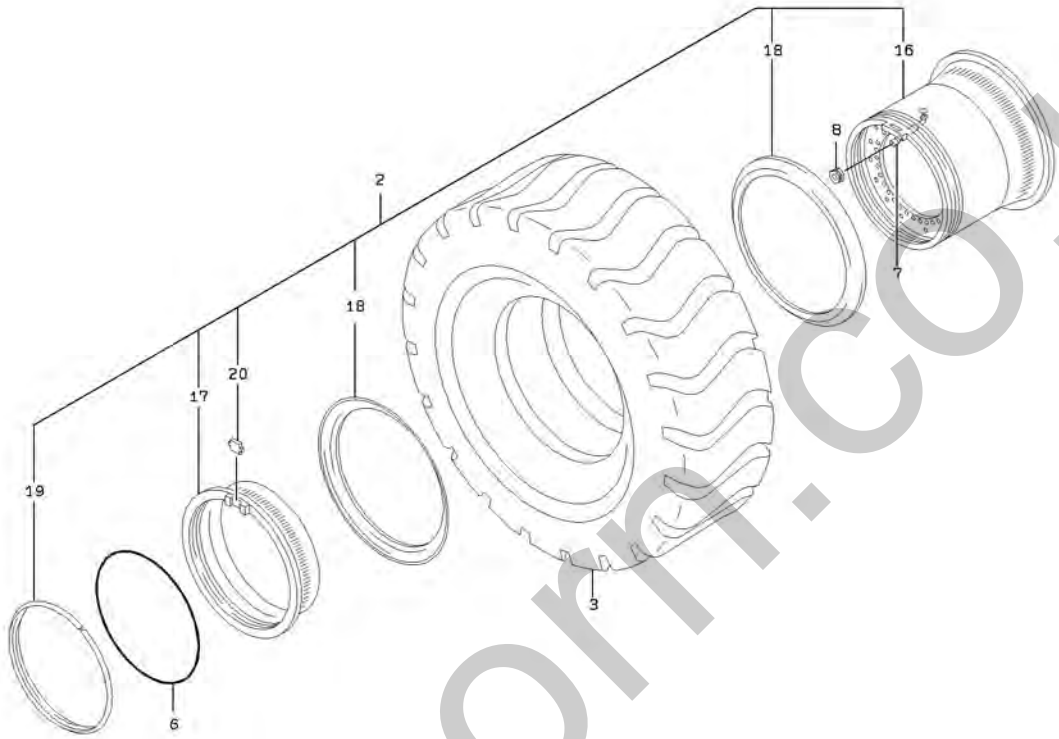

silverhorn.co.uk

TIRE & WHEEL GROUP

SYM-BOL	PART NUMBER	PART NAME	UNIT Q,TY	SERIAL (A) - (B)	REMARKS N P D	(A)	(B)	(C)	(D)	REMARK
2A	43424-61260-7	WHEEL,DISC	4	5001 - 5005		Y01				
2B	43424-60500-7	WHEEL,DISC	4	5006 -	A	Y01				
3A	36011-70020-7	TIRE ASSY,TUBELESS	4	5001 -						
6A	47131-71230	RING,O	2	5001 -						
7A	38510-60470-7	VALVE	4	5001 -						
8A	38542-60050	VALVE UNIT	4	5001 -						
16A	45040-70110-7	RIM	1	5001 - 5005		01				
16B	45040-60370-7	RIM	1	5006 -	B	01				
17A	45200-71300-7	RING	1	5001 - 5005		01				
17B	45200-60110-7	RING	1	5006 -	B	01				
18A	45282-70170-7	RING,SIDE	2	5001 - 5005		01				
18B	45282-60350-7	RING,SIDE	2	5006 -	B	01				
19A	45324-70190-7	RING,LOCK	1	5001 - 5005		01				
19B	45324-60360-7	RING,LOCK	1	5006 -	B	01				
20A	49457-70090-7	DRIVER,LOCK RING	1	5001 - 5005		01				
20B	49457-60070-7	DRIVER,LOCK RING	1	5006 -	B	01				

silverhorn.co.uk

BRAKE LINE - FRONT CHASSIS

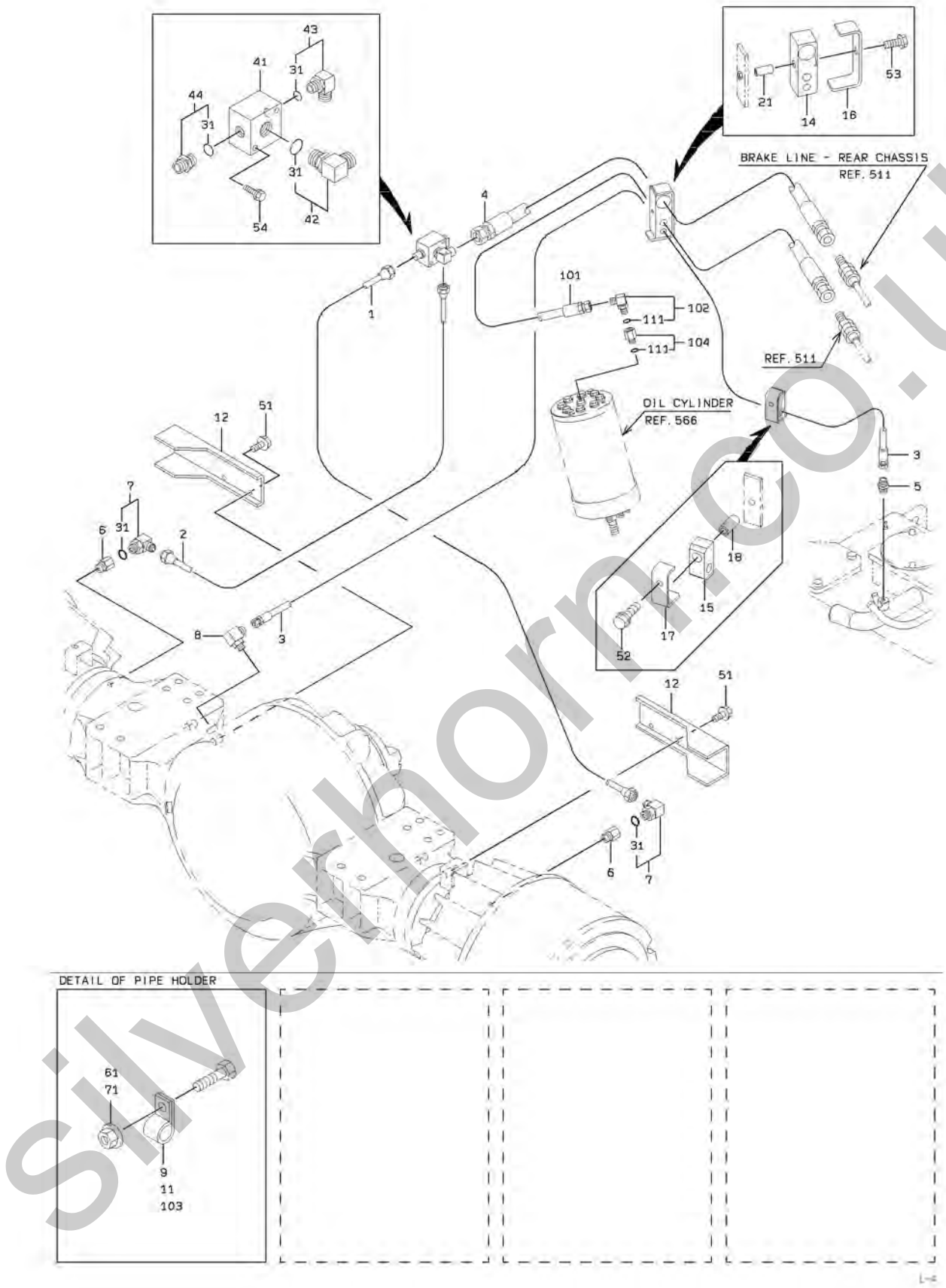

silverthorn.co.uk

BRAKE LINE - FRONT CHASSIS

SYM-BOL	PART NUMBER	PART NAME	UNIT Q,TY	SERIAL (A) - (B)	REMARKS N P D	(A) (B)	(C) (D)	REMARK
1A	38705-52430	PIPE ASSY,FLARED	1	5001 -				
2A	38705-49250	PIPE ASSY,FLARED	1	5001 -				
3A	68055-10420	HOSE,HIGH PRESSURE	1	5001 -				
4A	68655-50200	HOSE,HIGH PRESSURE	1	5001 -				
5A	88201-00904	ADAPTER	1	5001 -				
6A	30230-21300	ADAPTER	2	5001 -				
7A	40732-20140	FLARED FITTING,ELB	2	5001 -		Y01		
8A	88241-03404	ADAPTER,ELBOW	1	5001 -				
9A	72001-11200	HOLDER,PIPE	9	5001 -				(D=12)
11A	72010-31000	HOLDER,HOSE	1	5001 -				(D=31)
12A	41618-38230-7	PLATE	2	5001 -				
14A	33057-21170	GROMMET	1	5001 -				
15A	33057-21160	GROMMET	1	5001 -				
16A	41606-52350	PLATE	1	5001 -				
17A	41605-59700	PLATE	1	5001 -				
18A	38720-45120	PIPE	1	5001 -				
21A	38720-49290	PIPE	1	5001 -				
31A	65210-12014	RING,O	1	5001 -		01		
41A	41410-32530	BLOCK	1	5001 -				
42A	88241-07112	ADAPTER,ELBOW	1	5001 -		Y01		
43A	40732-20140	FLARED FITTING,ELB	1	5001 -		Y01		
44A	40730-20040	FLARED FITTING	1	5001 -		Y01		
51A	61802-10016	BOLT,FLANGED	4	5001 -				
52A	61802-08040	BOLT,FLANGED	1	5001 -				
53A	61802-08060	BOLT,FLANGED	1	5001 -				
54A	61802-08065	BOLT,FLANGED	2	5001 -				
61A	62480-21081	NUT,FLANGED	8	5001 -				
71A	62480-21081	NUT,FLANGED	1	5001 -				
101A	68655-10180	HOSE,HIGH PRESSURE	1	5001 -				
102A	88241-07104	ADAPTER,ELBOW	1	5001 -		Y02		
103A	72001-11500	HOLDER,PIPE	1	5001 -				(D=15)
104A	30230-21180	ADAPTER	1	5001 -		Y02		
111A	65210-12011	RING,O	1	5001 -		02		

silverhorn.co.uk

BRAKE LINE - FLOOR BOARD

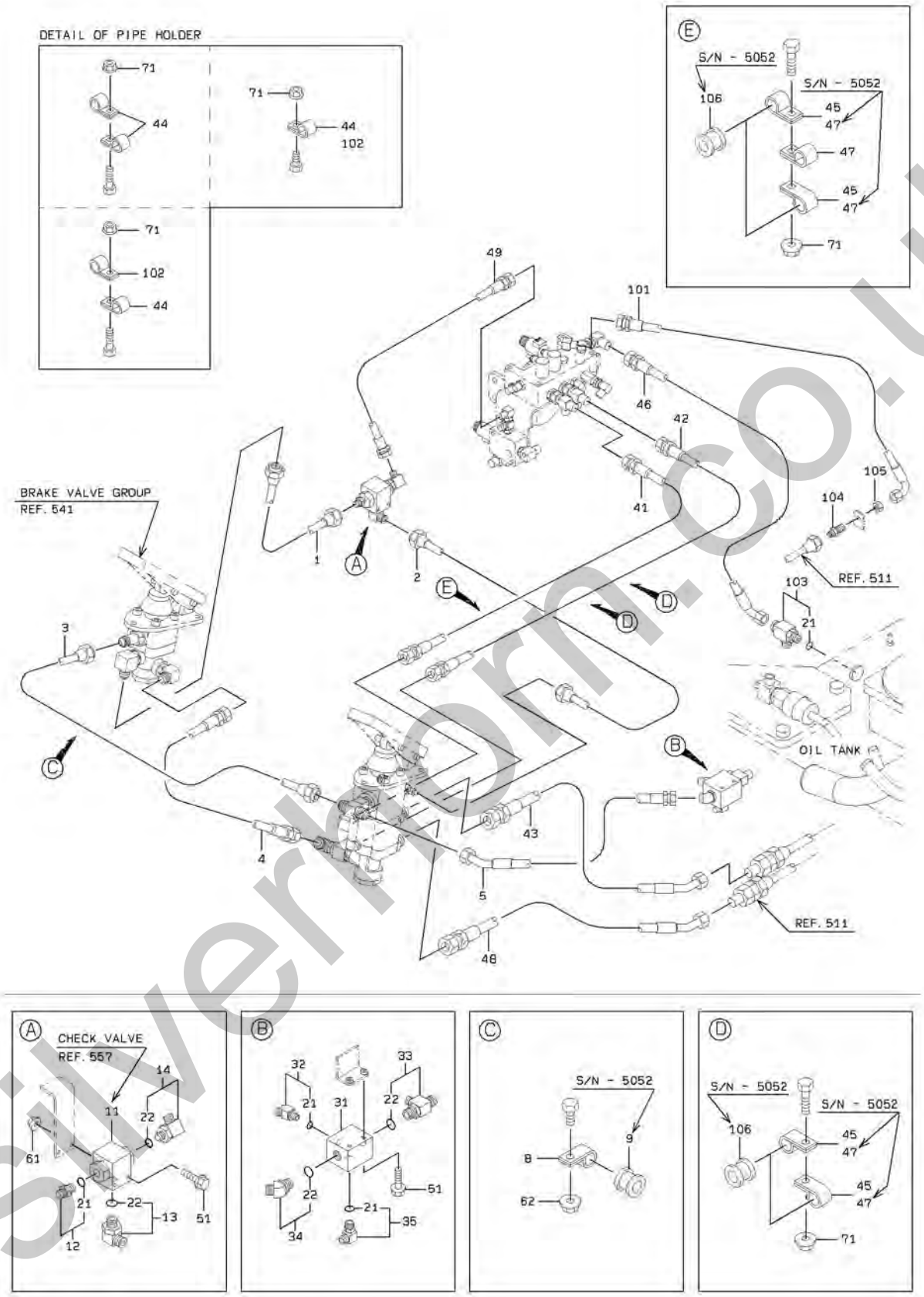

silverthorn.co.uk

BRAKE LINE - FLOOR BOARD

SYM-BOL	PART NUMBER	PART NAME	UNIT Q,TY	SERIAL (A) - (B)	REMARKS N P D	(A)	(B)	(C)	(D)	REMARK
1A	38705-51950	PIPE ASSY,FLARED	1	5001 -						
2A	38705-53460	PIPE ASSY,FLARED	1	5001 -						
3A	38705-51940	PIPE ASSY,FLARED	1	5001 -						
4A	68655-20045	HOSE,HIGH PRESSURE	1	5001 -						
5A	68635-30085	HOSE,HIGH PRESSURE	1	5001 -						
8A	72001-12500	HOLDER,PIPE	1	5001 - 5052						D=25
8B	43573-20300	HOLDER,PIPE	1	5053 -	B					D=18
9A	65801-16220	BUSHING,ELASTIC	1	5001 - 5052	D					
11A	38554-20110	VALVE,CHECK	1	5001 -						REF.557
12A	40730-20360	FLARED FITTING	1	5001 -		Y01				
13A	40732-20440	FLARED FITTING,ELB	1	5001 -			Y02			
14A	30241-21330	ADAPTER,ELBOW	1	5001 -			Y02			
21A	65210-12014	RING,O	1	5001 -		01				
22A	65210-12018	RING,O	1	5001 -			02			
31A	41410-32310	BLOCK	1	5001 -						
32A	88241-07206	ADAPTER,ELBOW	1	5001 -		Y01				
33A	30246-60030	ADAPTER,TEE	1	5001 -			Y02			
34A	88241-07208	ADAPTER,ELBOW	1	5001 -			Y02			
35A	88241-07106	ADAPTER,ELBOW	1	5001 -		Y01				
41A	68655-30225	HOSE,HIGH PRESSURE	1	5001 -						
42A	68655-30230	HOSE,HIGH PRESSURE	1	5001 -						
43A	68645-50075	HOSE,HIGH PRESSURE	1	5001 -						
44A	72001-12500	HOLDER,PIPE	4	5001 -						D=25
45A	43573-20370	HOLDER,PIPE	6	5053 - 5080						D=30
45B	43573-20460	HOLDER,PIPE	6	5081 -	C					D=22
46A	68045-30163	HOSE,HIGH PRESSURE	1	5001 -						43113-37850
47A	72010-31000	HOLDER,HOSE	7	5001 - 5052						D=31
47B	72010-31000	HOLDER,HOSE	1	5053 -						D=31
48A	43113-37860	HOSE,HIGH PRESSURE	1	5001 -						
49A	68655-20148	HOSE,HIGH PRESSURE	1	5001 -						68635-20150
51A	61802-06065	BOLT,FLANGED	4	5001 -						
61A	62480-21061	NUT,FLANGED	2	5001 -						
62A	62480-21081	NUT,FLANGED	1	5001 -						
71A	62480-21081	NUT,FLANGED	A/R	5001 -						
101A	68635-20098	HOSE,HIGH PRESSURE	1	5001 -						
102A	72001-11800	HOLDER,PIPE	5	5001 -						D=18
103A	30246-20720	ADAPTER,TEE	1	5001 -		Y01				
104A	30230-20490	ADAPTER	1	5001 -						
105A	37600-20680	NUT	1	5001 -						
106A	65801-25250	BUSHING,ELASTIC	6	5001 - 5052	D					

silverhorn.co.uk

BRAKE LINE - REAR CHASSIS

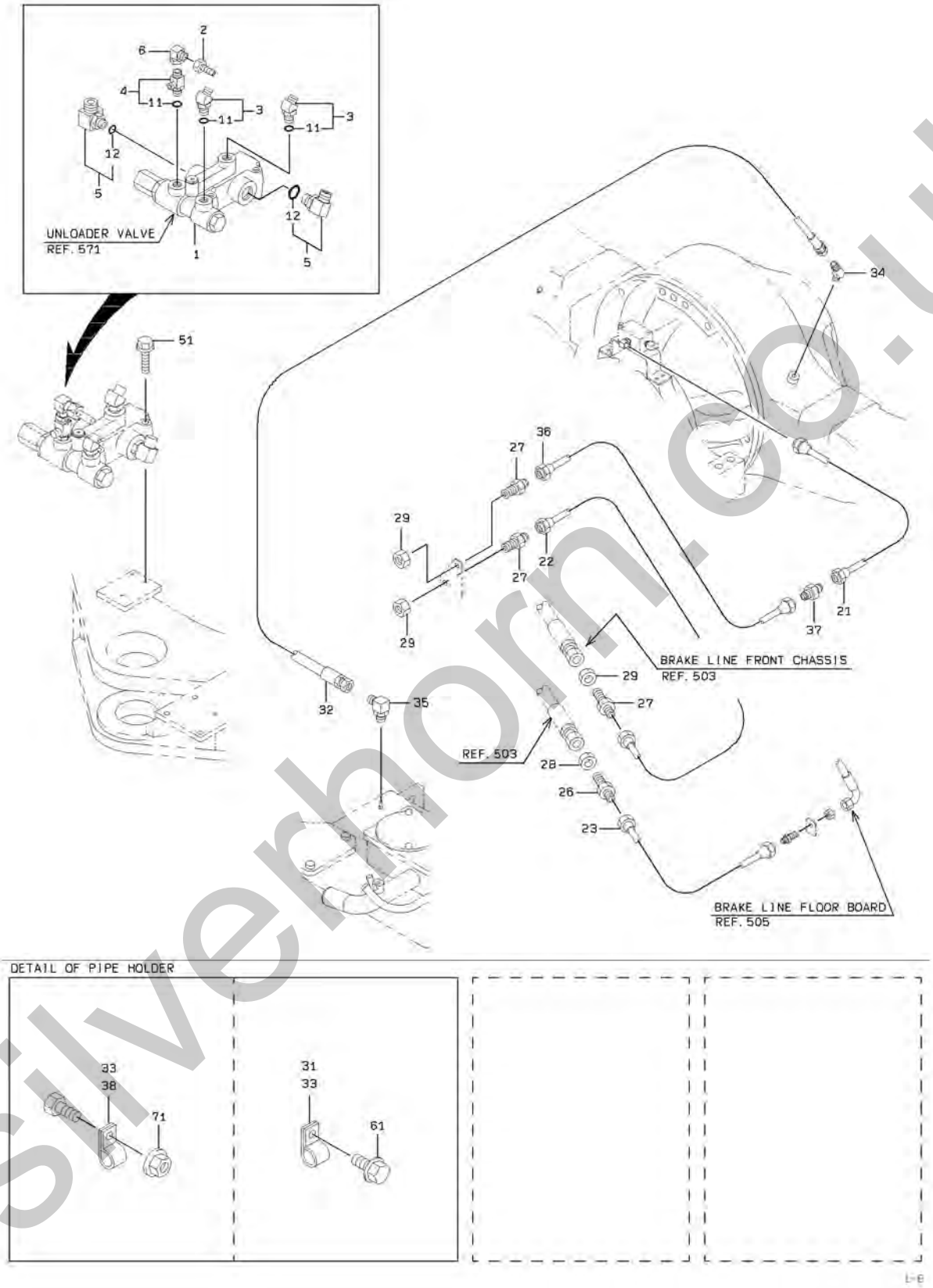

silverhorn.co.uk

BRAKE LINE - REAR CHASSIS

SYM-BOL	PART NUMBER	PART NAME	UNIT Q,TY	SERIAL (A)	-	(B)	REMARKS N P D	(A)	(B)	(C)	(D)	REMARK
1A	38543-60160	VALVE,UNLOADER	1	5001	-							REF 571
2A	88511-03080	NIPPLE,HOSE	1	5001	-							
3A	88241-07206	ADAPTER,ELBOW	2	5001	-			Y01				
4A	30246-20720	ADAPTER,TEE	1	5001	-			Y01				
5A	88241-07116	ADAPTER,ELBOW	2	5001	-				Y02			
6A	30242-20210	ADAPTER,ELBOW UNIO	1	5001	-							
11A	65210-12014	RING,O	1	5001	-			01				
12A	65210-12029	RING,O	1	5001	-				02			
21A	38705-49210	PIPE ASSY,FLARED	1	5001	-							
22A	38705-49220	PIPE ASSY,FLARED	1	5001	-							
23A	38705-52240	PIPE ASSY,FLARED	1	5001	-							
26A	40735-20090	FLARED FITTING,CON	1	5001	-							
27A	30230-23990	ADAPTER	3	5001	-							
28A	37600-20790	NUT	1	5001	-							
29A	37600-21330	NUT	3	5001	-							
31A	72001-11500	HOLDER,PIPE	3	5001	-							(D=15)
32A	68055-10235	HOSE,HIGH PRESSURE	1	5001	-							
33A	72001-11200	HOLDER,PIPE	4	5001	-	5025						(D=12)
33B	72001-11200	HOLDER,PIPE	5	5026	-							
34A	88241-03604	ADAPTER,ELBOW	1	5001	-							
35A	88241-03404	ADAPTER,ELBOW	1	5001	-							
36A	38705-52280	PIPE ASSY,FLARED	1	5001	-							
37A	69100-61500	FLARED FITTING,UNI	1	5001	-							
38A	72001-11000	HOLDER,PIPE	1	5001	-							(D=18)
51A	61802-10065	BOLT,FLANGED	3	5001	-							
61A	61802-08012	BOLT,FLANGED	4	5001	-							
71A	62480-21081	NUT,FLANGED	3	5001	-	5025						
71B	62480-21081	NUT,FLANGED	4	5026	-							

silverhorn.co.uk

BRAKE LINE - AXLE

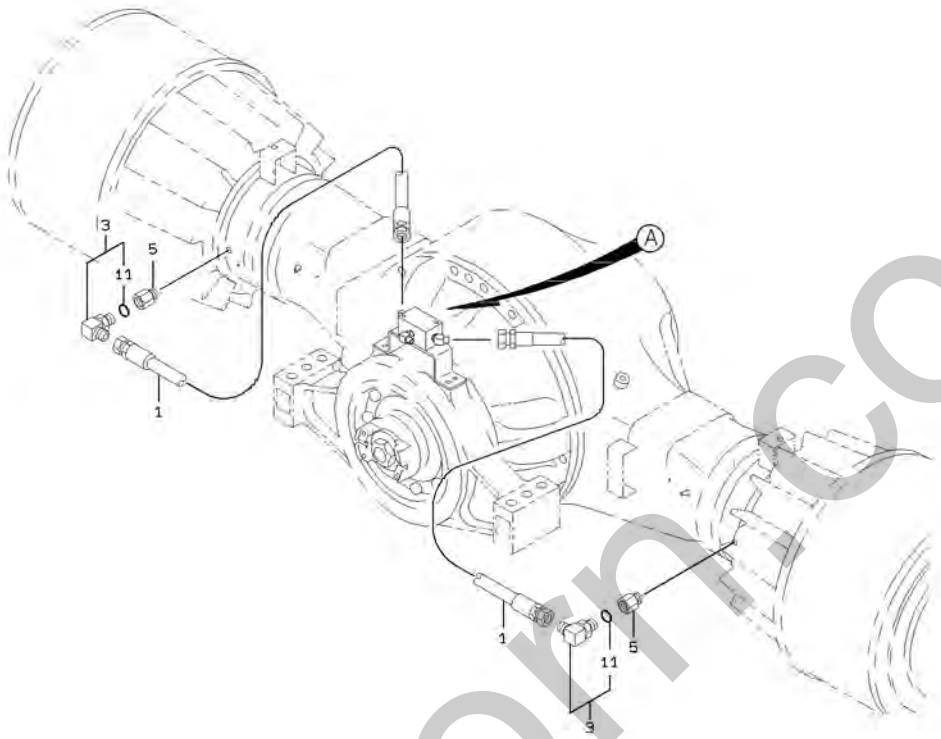

DETAIL OF PIPE HOLDER

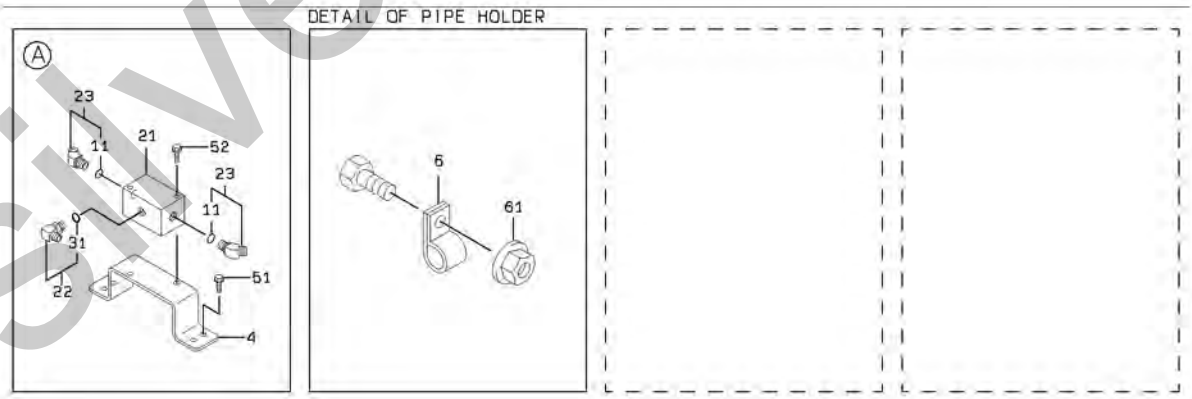

silverhorn.co.uk

BRAKE LINE - AXLE

SYM-BOL	PART NUMBER	PART NAME	UNIT Q,TY	SERIAL (A) - (B)	REMARKS N P D	(A)	(B)	(C)	(D)	REMARK
1A	68655-28130	HOSE,HIGH PRESSURE	2	5001 -						
3A	88241-07106	ADAPTER,ELBOW	2	5001 -		Y01				
4A	41617-31160	PLATE	1	5001 -						
5A	30230-21300	ADAPTER	2	5001 -						
6A	72001-12000	HOLDER,PIPE	4	5001 -						(D=20)
11A	65210-12014	RING,O	1	5001 -		01				
21A	41410-32280	BLOCK	1	5001 -						
22A	40732-20150	FLARED FITTING,ELB	1	5001 -			Y02			
23A	88241-07206	ADAPTER,ELBOW	2	5001 -		Y01				
31A	65210-12018	RING,O	1	5001 -			02			
51A	61802-10020	BOLT,FLANGED	4	5001 -						
52A	61802-08075	BOLT,FLANGED	2	5001 -						
61A	62480-21081	NUT,FLANGED	4	5001 -						

silverhorn.co.uk

BRAKE LINE - ACCUMULATOR

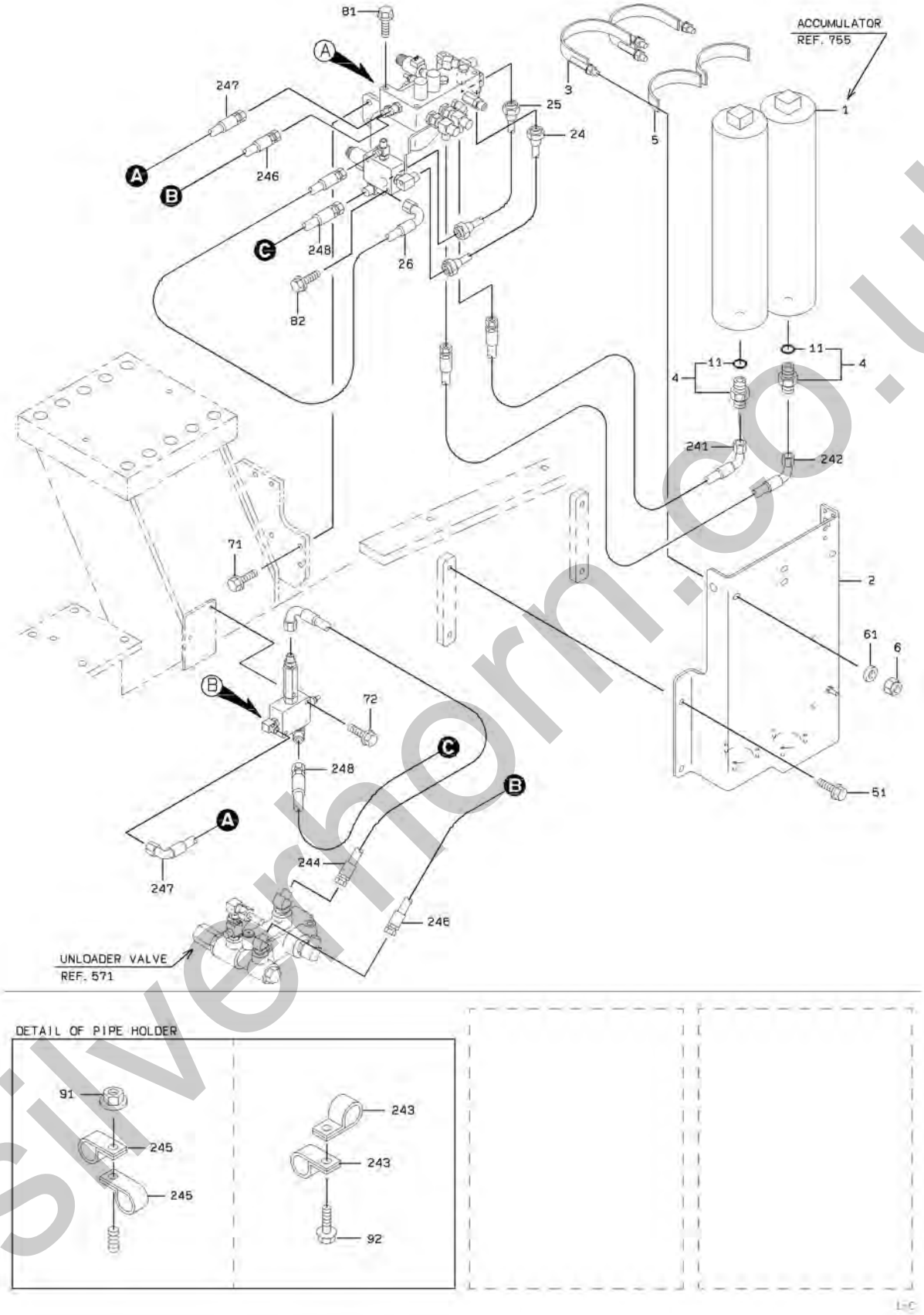

silverhorn.co.uk

BRAKE LINE - ACCUMULATOR

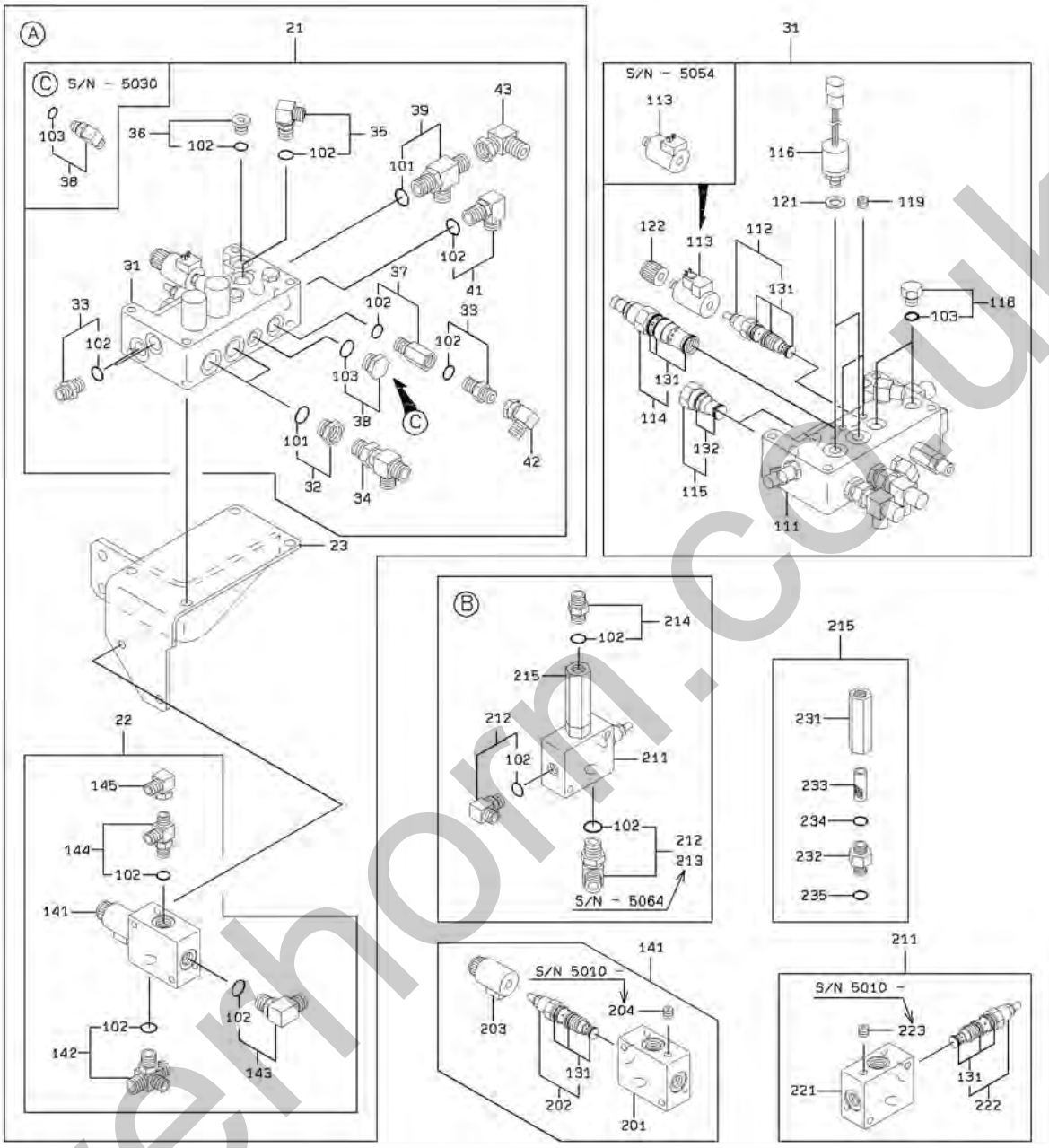

silverhorn.co.uk

BRAKE LINE - ACCUMULATOR

SYM-BOL	PART NUMBER	PART NAME	UNIT Q,TY	SERIAL (A)	-	(B)	REMARKS N P D	(A)	(B)	(C)	(D)	REMARK
1A	30100-60510-7	ACCUMULATOR ASSY	2	5001	-							REF.755
2A	40901-56470	BRACKET	1	5001	-							
3A	38670-21730	BAND	2	5001	-	5009						
3B	38670-21850	BAND	2	5010	-		A					
4A	88201-06808	ADAPTER	2	5001	-			Y01				
5A	33713-22540	SHEET,RUBBER	2	5001	-							
6A	88031-06121	NUT,SELF-LOCKING	4	5001	-							
11A	65210-12018	RING,O	1	5001	-			01				
21A	38511-24930	VALVE ASSY	1	5001	-	5030			Y02			38511-24150
21B	38511-26230	VALVE ASSY	1	5031	-		B		Y02			
22A	38511-24890	VALVE ASSY	1	5001	-	5064				Y03		38511-24330
22B	38511-27710	VALVE ASSY	1	5065	-		B			Y03		
23A	40901-57980	BRACKET	1	5001	-	5005						
23B	40902-22710	BRACKET	1	5006	-		C					
24A	38705-52200	PIPE ASSY,FLARED	1	5001	-							
25A	38705-52190	PIPE ASSY,FLARED	1	5001	-							
26A	68035-20035	HOSE,HIGH PRESSURE	1	5001	-							
31A	38511-24140	VALVE ASSY	1	5001	-				02	Y07		
32A	88201-06708	ADAPTER	2	5001	-				02		Y04	
33A	88201-06706	ADAPTER	3	5001	-			Y05	02			
34A	30246-20340	ADAPTER,TEE	2	5001	-				02			
35A	88241-07106	ADAPTER,ELBOW	1	5001	-			Y05	02			
36A	88390-21506	PLUG	1	5001	-			Y05	02			
37A	30230-24160	ADAPTER	1	5001	-			Y05	02			30230-21110
38A	88241-07104	ADAPTER,ELBOW	1	5001	-	5030		Y06	02			
38B	88390-21304	PLUG	1	5031	-		B	Y06	02			
39A	40733-20880	FLARED FITTING,TEE	1	5001	-				02		Y04	
41A	40732-20140	FLARED FITTING,ELB	1	5001	-			Y05	02			
42A	30242-20190	ADAPTER,ELBOW UNIO	1	5001	-				02			
43A	30242-20210	ADAPTER,ELBOW UNIO	1	5001	-				02			
51A	61802-12020	BOLT,FLANGED	4	5001	-							
61A	62701-40121-7	WASHER,PLANE	4	5001	-							
71A	61802-12025	BOLT,FLANGED	2	5001	-							
72A	61802-08060	BOLT,FLANGED	2	5001	-							
81A	61802-10085	BOLT,FLANGED	4	5001	-							
82A	61802-08060	BOLT,FLANGED	2	5001	-							
91A	62480-21081	NUT,FLANGED	1	5001	-							
92A	61802-08016-7	BOLT,FLANGED	2	5001	-							
101A	65210-12018	RING,O	1	5001	-						04	
102A	65210-12014	RING,O	1	5001	-			05				
103A	65210-12011	RING,O	1	5001	-			06				
111A	41410-33440	BLOCK	1	5001	-					07		
112A	38511-71020	VALVE ASSY	1	5001	-			Y13		07		
113A	35910-70260	SOLENOID	1	5001	-	5054				07		
113B	35910-70390	SOLENOID	1	5055	-		B			07		
114A	38567-70130	VALVE,REDUCING	1	5001	-	5046				07	Y08	
114B	38567-70170	VALVE,REDUCING	1	5047	-	5108	C			07	Y08	
114C	38567-70290	VALVE,REDUCING	1	5109	-		C			07	Y08	
115A	38554-60310	VALVE,CHECK	2	5001	-			Y09		07		
116A	35047-60250	SWITCH,PRESSURE	2	5001	-					07		
118A	88390-21304	PLUG	2	5001	-			Y06		07		
119A	88390-16102	PLUG	2	5001	-					07		
121A	88111-11490	WASHER,SEAL	2	5001	-					07		
122A	37810-60200	KNOB	1	5001	-					07		
131A	49327-72080	SEAL KIT	1	5001	-						08	
132A	49327-72070	SEAL KIT	1	5001	-			09				
141A	38511-22990	VALVE ASSY	1	5001	-				Y10	03		
142A	38905-20150	FITTING,CROSS	1	5001	-	5064		Y05		03		
142B	38905-20420	FITTING,CROSS	1	5065	-		B	Y05		03		
143A	40732-20140	FLARED FITTING,ELB	1	5001	-			Y05		03		
144A	30246-22950	ADAPTER,TEE	1	5001	-			Y05		03		
145A	30242-20190	ADAPTER,ELBOW UNIO	1	5001	-					03		
201A	41410-31950	BLOCK	1	5001	-	5009			10			
201B	41410-34270	BLOCK	1	5010	-		C		10			
202A	38511-71020	VALVE ASSY	1	5001	-				10		Y08	
203A	35910-70260	SOLENOID	1	5001	-	5054			10			

silverhorn.co.uk

BRAKE LINE - ACCUMULATOR

SYM-BOL	PART NUMBER	PART NAME	UNIT Q,TY	SERIAL (A)	-	(B)	REMARKS N P D	(A)	(B)	(C)	(D)	REMARK
203B	35910-70390	SOLENOID	1	5055	-		B		10			
204A	88390-16102	PLUG	1	5010	-				10			
211A	38511-23050	VALVE ASSY	1	5001	-					Y11		
212A	88241-07106	ADAPTER,ELBOW	1	5001	-	5064		Y05				
212B	88241-07106	ADAPTER,ELBOW	2	5065	-			Y05				
213A	40732-20140	FLARED FITTING,ELB	1	5001	-	5064	D	Y05				
214A	88201-06706	ADAPTER	1	5001	-			Y05				
215A	40337-60370	FILTER ASSY,LINE	1	5001	-						Y12	
221A	41410-31950	BLOCK	1	5001	-	5009				11		
221B	41410-34270	BLOCK	1	5010	-		C			11		
222A	38567-70150	VALVE,REDUCING	1	5001	-					11	Y08	
223A	88390-16102	PLUG	1	5010	-					11		
231A	33100-70690	CASE	1	5001	-						12	
232A	37710-70390	NIPPLE	1	5001	-						12	
233A	30981-70720	ELEMENT,FILTER	1	5001	-						12	
234A	65210-12018	RING,O	1	5001	-						12	
235A	65210-12014	RING,O	1	5001	-						12	
241A	68635-30087	HOSE,HIGH PRESSURE	1	5001	-							
242A	68635-30108	HOSE,HIGH PRESSURE	1	5001	-							
243A	72001-12500	HOLDER,PIPE	2	5001	-							(D=25)
244A	68635-20080	HOSE,HIGH PRESSURE	1	5001	-							
245A	72001-11800	HOLDER,PIPE	2	5001	-							(D=18)
246A	68655-20102	HOSE,HIGH PRESSURE	1	5001	-							
247A	68635-20040	HOSE,HIGH PRESSURE	1	5001	-							
248A	38705-52260	PIPE ASSY,FLARED	1	5001	-	5064						
248B	68055-20040	HOSE,HIGH PRESSURE	1	5065	-		B					
249A	49327-74570	SEAL KIT	1	5001	-			13				49327-72080

silverhorn.co.uk

PARKING BRAKE GROUP

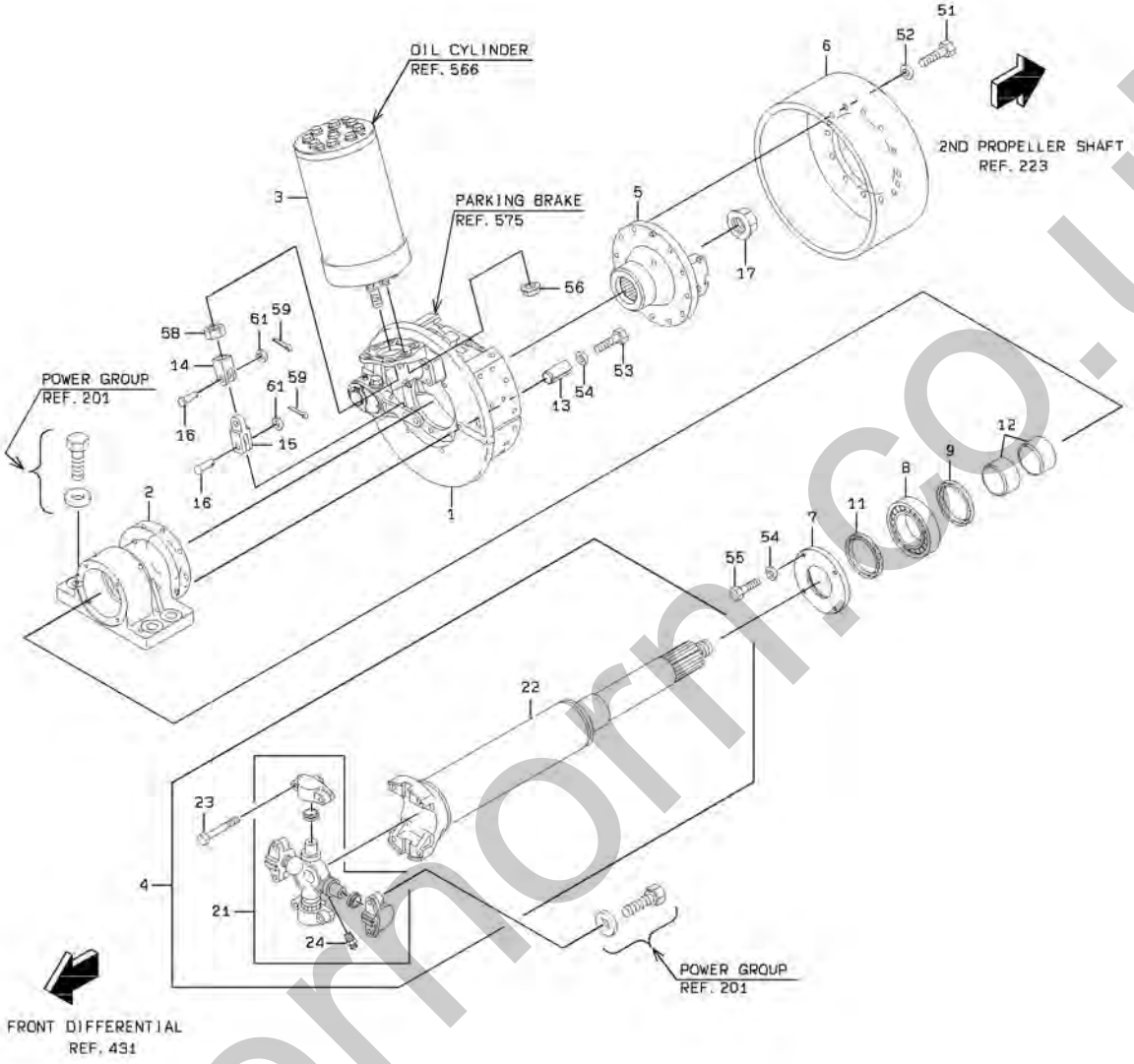

silvermorn.co.uk

PARKING BRAKE GROUP

SYM-BOL	PART NUMBER	PART NAME	UNIT Q,TY	SERIAL (A) - (B)	REMARKS N P D	(A)	(B)	(C)	(D)	REMARK
1A	41210-60030	BRAKE ASSY,PARKING	1	5001 -						REF 575
2A	37900-21700	HOUSING	1	5001 -						
3A	34820-63470	CYLINDER ASSY,OIL	1	5001 -						REF 566
4A	42752-60900	PROPELLER SHAFT AS	1	5001 -		Y01				
5A	44621-20500	YOKE,FLANGE	1	5001 -						
6A	37585-20130	DRUM,BRAKE	1	5001 -						
7A	41621-24550	PLATE	1	5001 -						
8A	42003-70180	BEARING,ROLLER	1	5001 -						
9A	34042-70440	SEAL,OIL	1	5001 -						
11A	34042-70450	SEAL,OIL	1	5001 -						
12A	38720-21590	PIPE	2	5001 -						
13A	40033-20060	PIN,SPRING	8	5001 -						
14A	34956-21140	JOINT,YOKE	1	5001 -						
15A	30020-23800	ARM	1	5001 -						
16A	63055-16051	PIN,HEAD	2	5001 -						
17A	37600-20360	NUT	1	5001 -						
21A	35513-70210	SPIDER ASSY,JOURNA	1	5001 -		01	Y02			35513-70130
22A	34541-70460	SHAFT,PROPELLER	1	5001 -		01				
23A	43900-72430	BOLT	4	5001 -		01				
24A	37713-60020	NIPPLE,GREASE	1	5001 -			02			37713-70110
51A	61005-14040	BOLT	12	5001 -						
52A	62710-18141	WASHER,PLANE	12	5001 -						
53A	61005-10050	BOLT	8	5001 -						
54A	62710-18101	WASHER,PLANE	12	5001 -						
55A	61033-10035	BOLT	4	5001 -						
56A	62480-21161	NUT,FLANGED	4	5001 -						
58A	62403-81242	NUT	1	5001 -						
59A	63002-04032	PIN,SPLIT	2	5001 -						
61A	62701-40161	WASHER,PLANE	2	5001 -						

silverhorn.co.uk

BRAKE VALVE GROUP

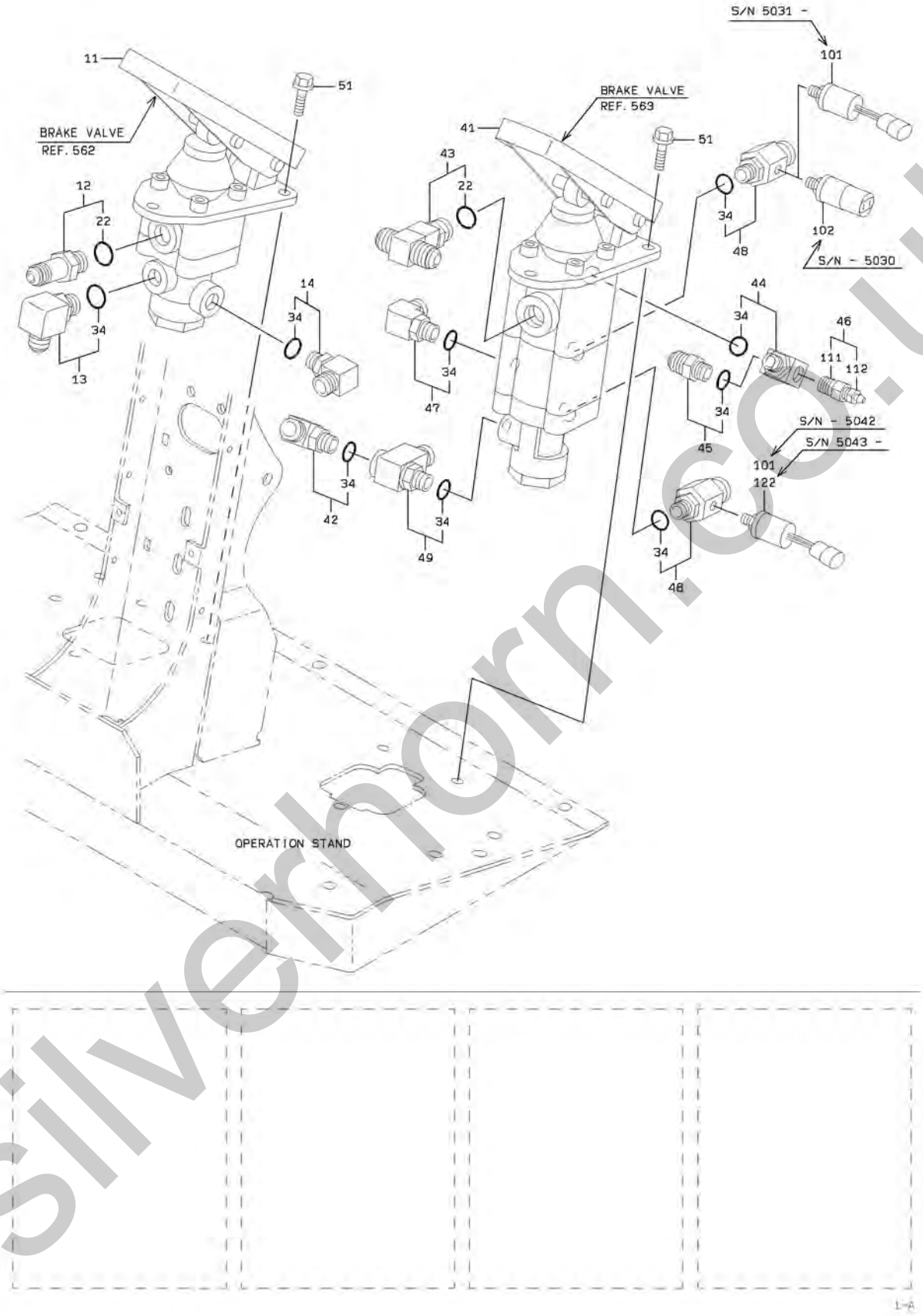

silverhorn.co.uk

BRAKE VALVE GROUP

SYM-BOL	PART NUMBER	PART NAME	UNIT Q,TY	SERIAL (A)	-	(B)	REMARKS N P D	(A)	(B)	(C)	(D)	REMARK
11A	38531-60300	VALVE ASSY,BRAKE	1	5001	-							REF.562
12A	40730-20530	FLARED FITTING	1	5001	-			Y01				
13A	40732-20380	FLARED FITTING,ELB	1	5001	-				Y02			
14A	88241-07106	ADAPTER,ELBOW	1	5001	-				Y02			
22A	65210-12018	RING,O	1	5001	-			01				
34A	65210-12014	RING,O	1	5001	-				02			
41A	38531-60290	VALVE ASSY,BRAKE	1	5001	-	5050						REF.563
41B	38531-60610	VALVE ASSY,BRAKE	1	5051	-		C					REF.563
42A	88241-07106	ADAPTER,ELBOW	1	5001	-				Y02			
43A	40733-20840	FLARED FITTING,TEE	1	5001	-			Y01				
44A	30241-22550	ADAPTER,ELBOW	1	5001	-				Y02			
45A	40730-20320	FLARED FITTING	1	5001	-				Y02			
46A	35107-20030	SCREW,BLEED	1	5001	-					Y03		
47A	38903-20830	FITTING,ELBOW	1	5001	-				Y02			
48A	30230-24630	ADAPTER	2	5001	-				Y02			
49A	30246-22270	ADAPTER,TEE	1	5001	-				Y02			
51A	61802-08020	BOLT,FLANGED	6	5001	-							
101A	35047-20270	SWITCH,PRESSURE	1	5001	-	5030						
101B	35047-20270	SWITCH,PRESSURE	2	5031	-	5042						
101C	35047-20270	SWITCH,PRESSURE	1	5043	-							
102A	35047-60260	SWITCH,PRESSURE	1	5001	-	5030	D					
111A	38900-24160	FITTING	1	5001	-					03		
112A	35107-60010	SCREW,BLEED	1	5001	-					03		
122A	35047-60610	SWITCH,PRESSURE	1	5043	-							

silverhorn.co.uk

CHECK VALVE

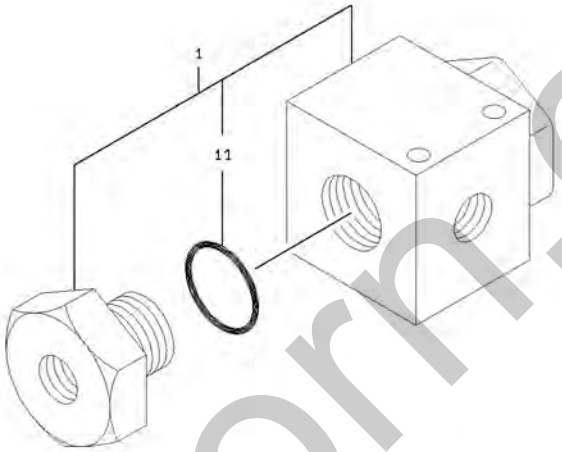

silverhorn.co.uk

CHECK VALVE

SYM-BOL	PART NUMBER	PART NAME	UNIT Q,TY	SERIAL (A) - (B)	REMARKS N P D	(A) (B)	(C) (D)	REMARK
1A	38554-20110	VALVE,CHECK	1	5001 -		Y01		
11A	65210-12028	RING,O	1	5001 -		01		

silverhorn.co.uk

BRAKE VALVE

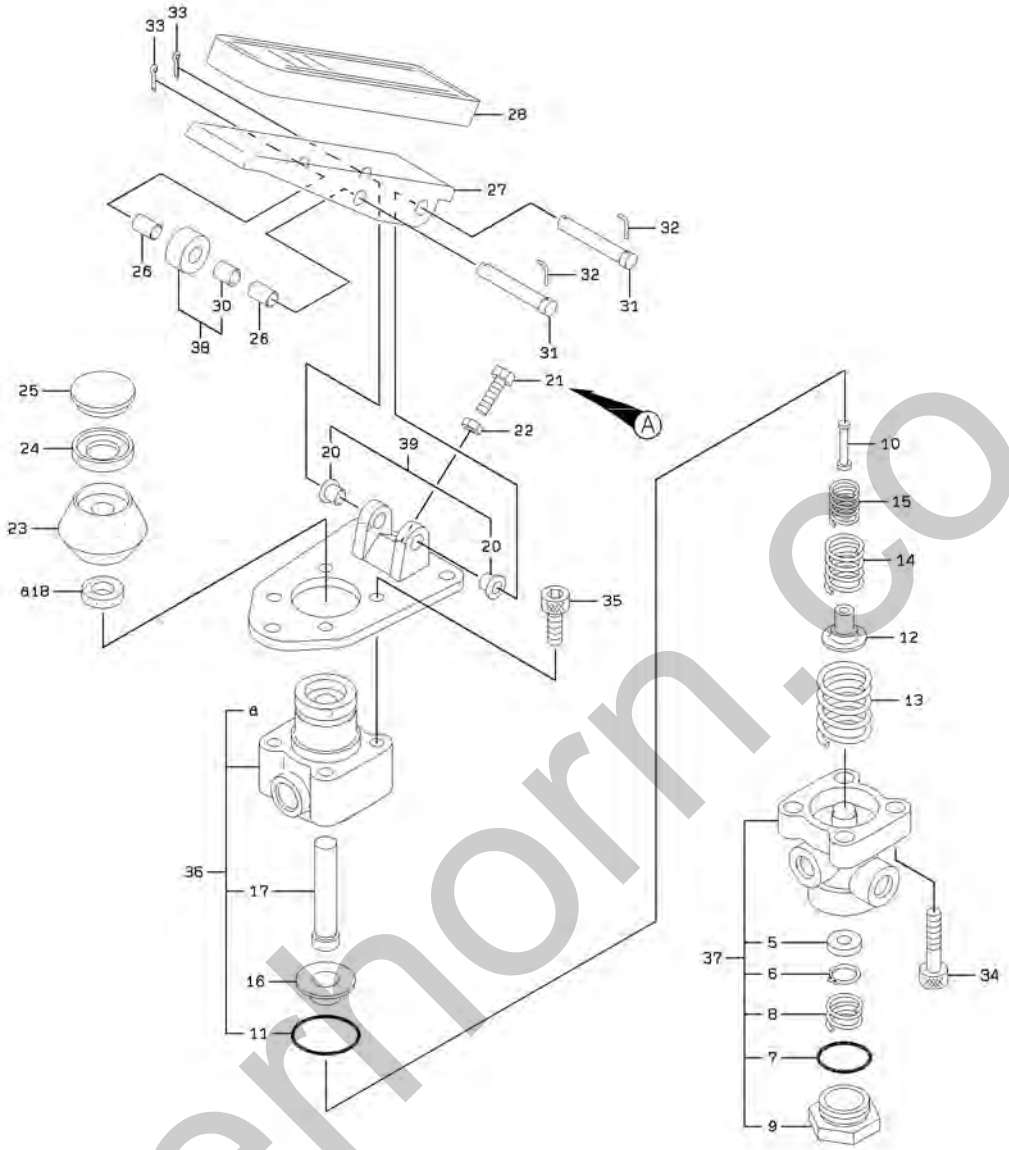

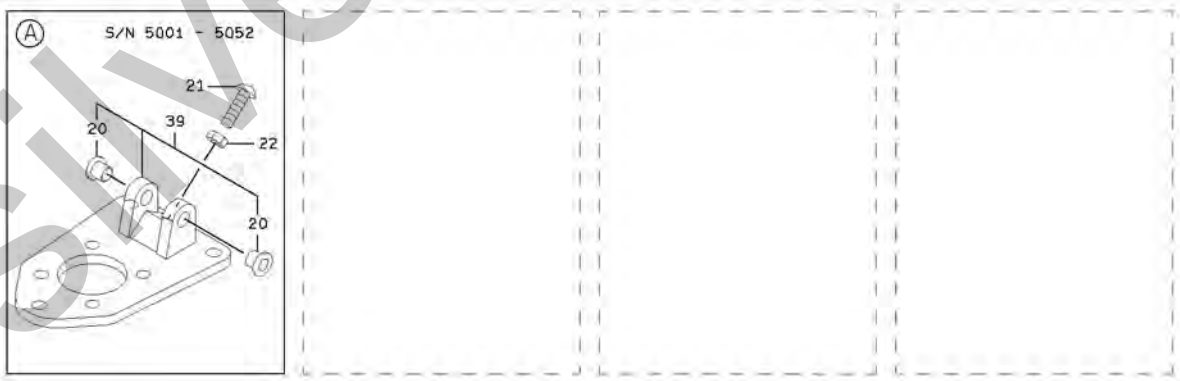

silvernorn.co.uk

BRAKE VALVE

SYM-BOL	PART NUMBER	PART NAME	UNIT Q,TY	SERIAL (A) - (B)	REMARKS N P D	(A)	(B)	(C)	(D)	REMARK
000A	38531-60300	VALVE ASSY,BRAKE	1	5001 -						
5A	44950-70520	RETAINER	1	5001 -			02			
6A	45311-71480	RING,SNAP	1	5001 -			02			
7A	65210-12032	RING,O	1	5001 -			02			
8A	35600-76060	SPRING	1	5001 -			02			
9A	37628-70170	NUT,CAP	1	5001 -			02			
10A	45870-70720	ROD	1	5001 -						
11A	65210-22045	RING,O	1	5001 -		01				
12A	43550-70420	HOLDER	1	5001 -						
13A	35600-76270	SPRING	1	5001 -						
14A	35600-76240	SPRING	1	5001 -						
15A	35600-76250	SPRING	1	5001 -						
16A	44950-70550	RETAINER	1	5001 -						
17A	39960-72150	PISTON	1	5001 -		01				
18A	34042-71440	SEAL,OIL	1	5001 -		01				
20A	40840-72550	BUSHING	2	5001 -					04	
21A	43900-73910	BOLT	1	5001 - 5052						
21B	43900-74190	BOLT	1	5053 -	B					
22A	37600-72140	NUT	1	5001 -						
23A	40790-70500	BOOT	1	5001 -						
24A	35440-70810	STOPPER	1	5001 -						
25A	33920-70100	SEAT	1	5001 -						
26A	31701-70850	COLLAR	2	5001 -						
27A	43020-70070	PEDAL	1	5001 -						
28A	32223-70050	COVER,PEDAL	1	5001 -						
30A	40840-72560	BUSHING	1	5001 -				03		
31A	40000-71310	PIN	2	5001 -						
32A	40000-71320	PIN	2	5001 -						
33A	40045-70130	PIN,SNAP	2	5001 -						
34A	61101-10040	BOLT,SOCKET	4	5001 -						
35A	61101-10025	BOLT,SOCKET	4	5001 -						
36A	38511-71230	VALVE ASSY	1	5001 -		Y01				
37A	38511-71280	VALVE ASSY	1	5001 -			Y02			
38A	45810-70030	ROLLER ASSY	1	5001 -				Y03		
39A	40910-70090	BRACKET ASSY	1	5001 - 5052					Y04	
39B	40910-70120	BRACKET ASSY	1	5053 -	B				Y04	

silverhorn.co.uk

BRAKE VALVE

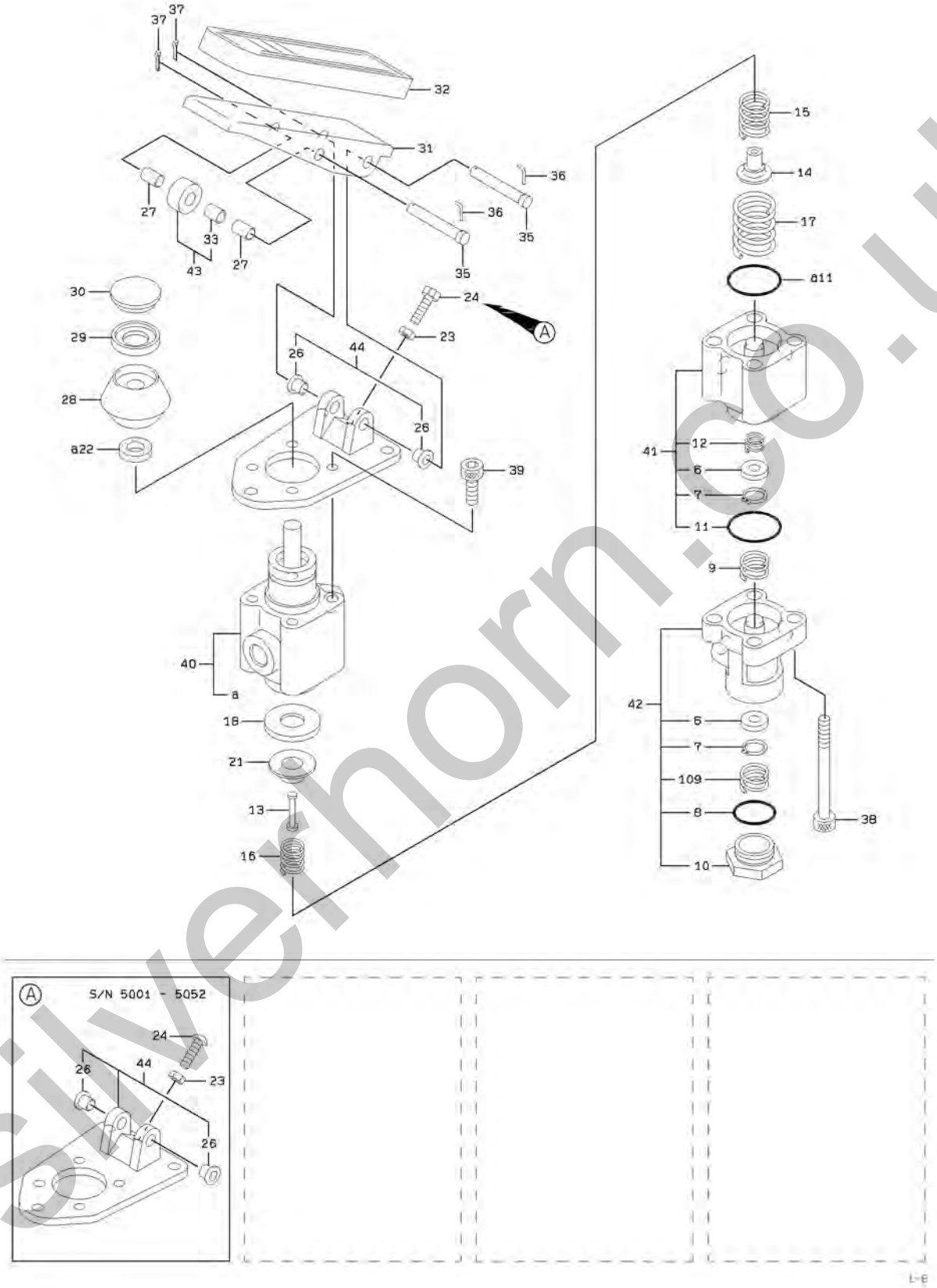

silverhorn.co.uk

BRAKE VALVE

SYM-BOL	PART NUMBER	PART NAME	UNIT Q,TY	SERIAL (A)	-	(B)	REMARKS N P D	(A)	(B)	(C)	(D)	REMARK
000A	38531-60290	VALVE ASSY,BRAKE	1	5001	-	5050						
000B	38531-60610	VALVE ASSY,BRAKE	1	5051	-		C					
6A	44950-70520	RETAINER	1	5001	-				02	03		
7A	45311-71480	RING,SNAP	1	5001	-				02	03		
8A	65210-12032	RING,O	1	5001	-					03		
9A	35600-76060	SPRING	1	5001	-							
10A	37628-70170	NUT,CAP	1	5001	-					03		
11A	65210-22045	RING,O	1	5001	-			01	02			
12A	35600-76070	SPRING	1	5001	-				02			
13A	45870-70720	ROD	1	5001	-							
14A	43550-70420	HOLDER	1	5001	-							
15A	35600-76240	SPRING	1	5001	-							
16A	35600-76250	SPRING	1	5001	-							
17A	35600-76260	SPRING	1	5001	-	5050						
17B	35600-77320	SPRING	1	5051	-		B					
18A	44950-70530	RETAINER	1	5001	-							
21A	44950-70540	RETAINER	1	5001	-							
22A	34042-71440	SEAL,OIL	1	5001	-			01				
23A	37600-72140	NUT	1	5001	-							
24A	62256-51825	SCREW	1	5001	-	5050						
24B	61101-08025	BOLT,SOCKET	1	5051	-	5052	B					
24C	43900-74190	BOLT	1	5053	-		B					
26A	40840-72550	BUSHING	2	5001	-			05				
27A	31701-70850	COLLAR	2	5001	-							
28A	40790-70500	BOOT	1	5001	-							
29A	35440-70810	STOPPER	1	5001	-							
30A	33920-70100	SEAT	1	5001	-							
31A	43020-70070	PEDAL	1	5001	-							
32A	32223-70050	COVER,PEDAL	1	5001	-							
33A	40840-72560	BUSHING	1	5001	-						04	
35A	40000-71310	PIN	2	5001	-							
36A	40000-71320	PIN	2	5001	-							
37A	40045-70130	PIN,SNAP	2	5001	-							
38A	43956-71190	BOLT,SOCKET	4	5001	-							
39A	61101-10025	BOLT,SOCKET	4	5001	-							
40A	38511-71200	VALVE ASSY	1	5001	-			Y01				
41A	38511-71270	VALVE ASSY	1	5001	-				Y02			
42A	38511-71260	VALVE ASSY	1	5001	-					Y03		
43A	45810-70020	ROLLER ASSY	1	5001	-	5030	N				Y04	
43B	45810-70030	ROLLER ASSY	1	5031	-		C				Y04	
44A	40910-70080	BRACKET ASSY	1	5001	-	5030		Y05				
44B	40910-70090	BRACKET ASSY	1	5031	-	5052	C	Y05				
44C	40910-70120	BRACKET ASSY	1	5053	-		B	Y05				
109A	35600-76060	SPRING	1	5001	-					03		

silvermoon.co.uk

OIL CYLINDER

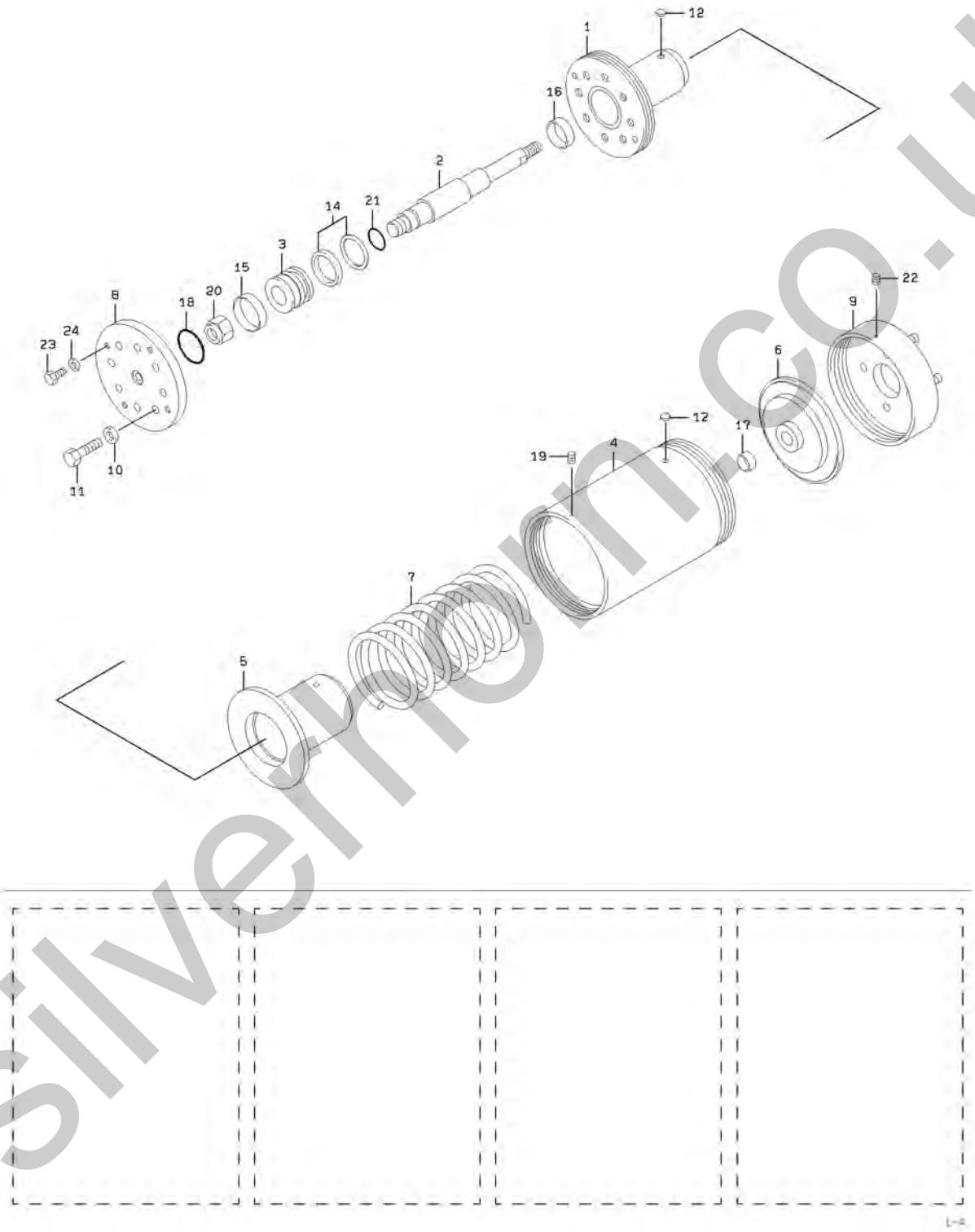

silverhorn.co.uk

OIL CYLINDER

SYM-BOL	PART NUMBER	PART NAME	UNIT Q,TY	SERIAL (A) - (B)	REMARKS N P D	(A) (B)	(C) (D)	REMARK
000A	34820-63470	CYLINDER ASSY,OIL	1	5001 -				
1A	36725-71400	TUBE,CYLINDER	1	5001 -				
2A	45886-71570	ROD,PISTON	1	5001 -				
3A	39960-71310	PISTON	1	5001 -				
4A	33100-70350	CASE	1	5001 -				
5A	33930-70370	SEAT,SPRING	1	5001 -				
6A	33930-70380	SEAT,SPRING	1	5001 -				
7A	35600-73510	SPRING	1	5001 -				
8A	31285-70060	COVER,HEAD	1	5001 -				
9A	31289-70570	COVER,ROD	1	5001 -				
10A	62710-18161	WASHER,PLANE	8	5001 -				
11A	61005-16050	BOLT	8	5001 -				
12A	40330-60060	FILTER	2	5001 -				
14A	49328-70050	SEAL SET	1	5001 -				
15A	47171-70350	RING,WEAR	1	5001 -				
16A	47171-70370	RING,WEAR	1	5001 -				
17A	47171-70380	RING,WEAR	1	5001 -				
18A	65210-22065	RING,O	1	5001 -				
19A	62216-06006	SCREW,SET	1	5001 -				
20A	37652-70130	NUT,U	1	5001 -				
21A	65210-22030	RING,O	1	5001 -				
22A	62216-06008	SCREW,SET	1	5001 -				
23A	61033-12020	BOLT	2	5001 -				
24A	62701-40121-7	WASHER,PLANE	2	5001 -				

silverhorn.co.uk

UNLOADER VALVE

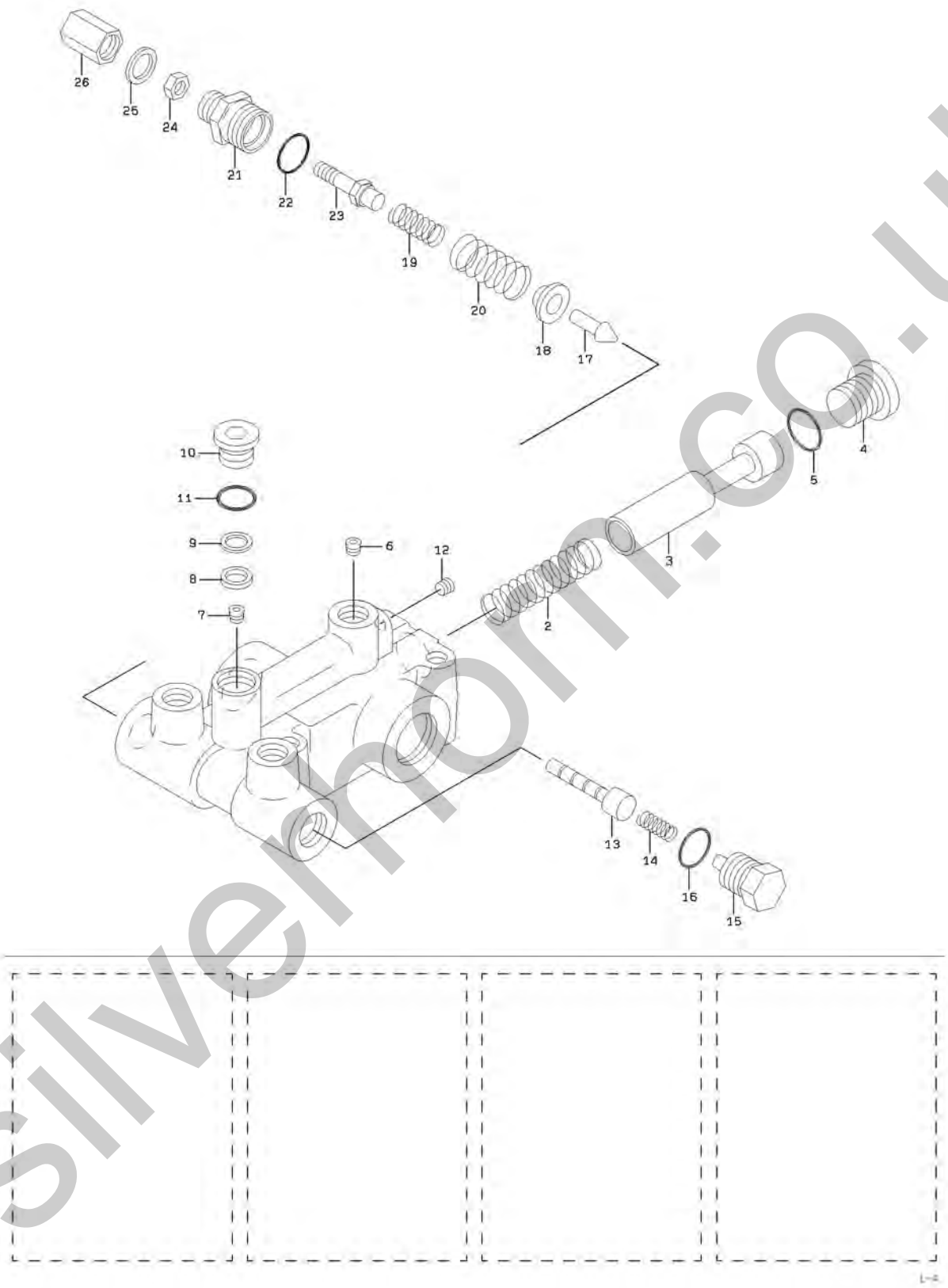

silverhorn.co.uk

UNLOADER VALVE

SYM-BOL	PART NUMBER	PART NAME	UNIT Q,TY	SERIAL (A) - (B)	REMARKS N P D	(A) (B)	(C) (D)	REMARK
000A	38543-60160	VALVE,UNLOADER	1	5001 -				
2A	35600-71450	SPRING	1	5001 -				
3A	35570-70540	SPOOL	1	5001 -				
4A	41530-73910	PLUG	1	5001 -				
5A	65210-12029	RING,O	1	5001 -				
6A	31053-70200	ORIFICE	1	5001 -				
7A	31053-70700	ORIFICE	1	5001 -				
8A	46000-71510	FILTER	1	5001 -				
9A	35700-71860	RING	1	5001 -				
10A	41530-74580	PLUG	1	5001 -				
11A	47131-75780	RING,O	1	5001 -				
12A	41530-73930	PLUG	1	5001 -				
13A	41585-70270	PLUNGER	1	5001 -				
14A	35600-74850	SPRING	1	5001 -				
15A	41530-73940	PLUG	1	5001 -				
16A	47131-75790	RING,O	1	5001 -				
17A	38560-70080	VALVE,PILOT	1	5001 -				
18A	33930-70600	SEAT,SPRING	1	5001 -				
19A	35600-74860	SPRING	1	5001 -				
20A	35600-74870	SPRING	1	5001 -				
21A	41530-73950	PLUG	1	5001 -				
22A	65210-12026	RING,O	1	5001 -				
23A	45870-70580	ROD	1	5001 -				
24A	62402-81081	NUT	1	5001 -				
25A	39600-72310	PACKING	1	5001 -				
26A	32210-71960	CAP	1	5001 -				

silverhorn.co.uk

PARKING BRAKE

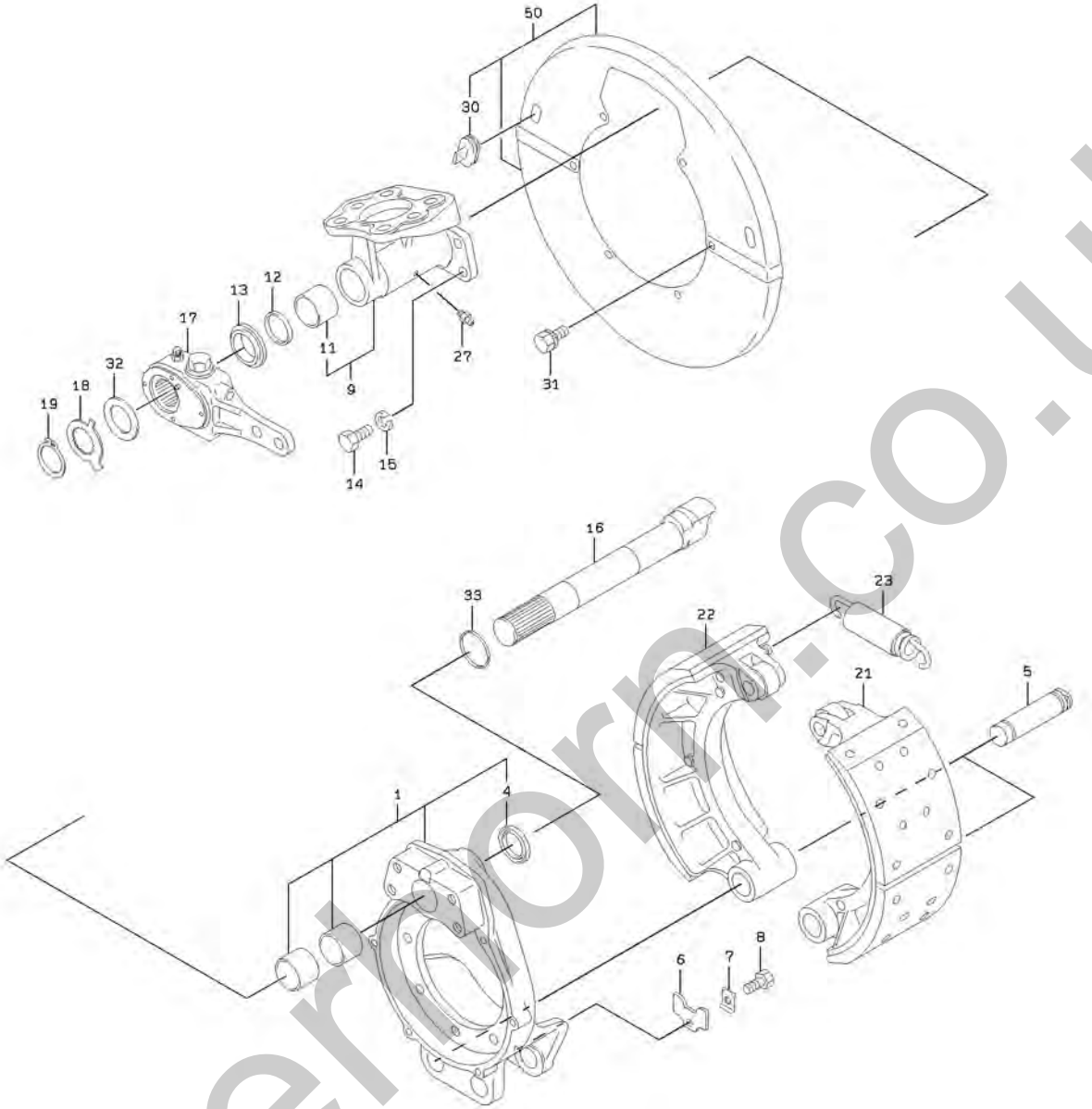

silverthorn.co.uk

PARKING BRAKE

SYM-BOL	PART NUMBER	PART NAME	UNIT Q,TY	SERIAL (A) - (B)	REMARKS N P D	(A) (B)	(C) (D)	REMARK
000A	41210-60030	BRAKE ASSY,PARKING	1	5001 -				
1A	40910-70040	BRACKET ASSY	1	5001 -		Y01		
4A	34042-71030	SEAL,OIL	1	5001 -		01		
5A	40021-70010	PIN,ANCHOR	2	5001 -				
6A	41694-70170	PLATE,LOCK	1	5001 -				
7A	46926-70190	WASHER,LOCK	1	5001 -				
8A	43900-72450	BOLT	1	5001 -				
9A	40910-70050	BRACKET ASSY	1	5001 -		Y02		
11A	40840-71530	BUSHING	1	5001 -		02		
12A	47196-70180	RING,FELT	1	5001 -				
13A	31701-70550	COLLAR	1	5001 -				
14A	43900-72460	BOLT	4	5001 -				
15A	46013-70440	WASHER,SPRING	4	5001 -				
16A	31611-70010	CAMSHAFT	1	5001 -				
17A	30212-70030	ADJUSTOR ASSY	1	5001 -				
18A	41635-70010	PLATE	1	5001 -				
19A	45311-70950	RING,SNAP	1	5001 -				
21A	34715-70050	SHOE,BRAKE	1	5001 -				
22A	34715-70040	SHOE,BRAKE	1	5001 -				
23A	35600-73520	SPRING	1	5001 -				
27A	37713-70260	NIPPLE,GREASE	1	5001 -				
30A	33057-70550	GROMMET	2	5001 -			03	
31A	43900-73250	BOLT,FLANGED	6	5001 -				
32A	35700-71000	SPACER	1	5001 -				
33A	45200-70870	RING	1	5001 -				
50A	31231-70210	COVER ASSY	1	5001 -			Y03	

silverhorn.co.uk

VALVE CONTROL GROUP

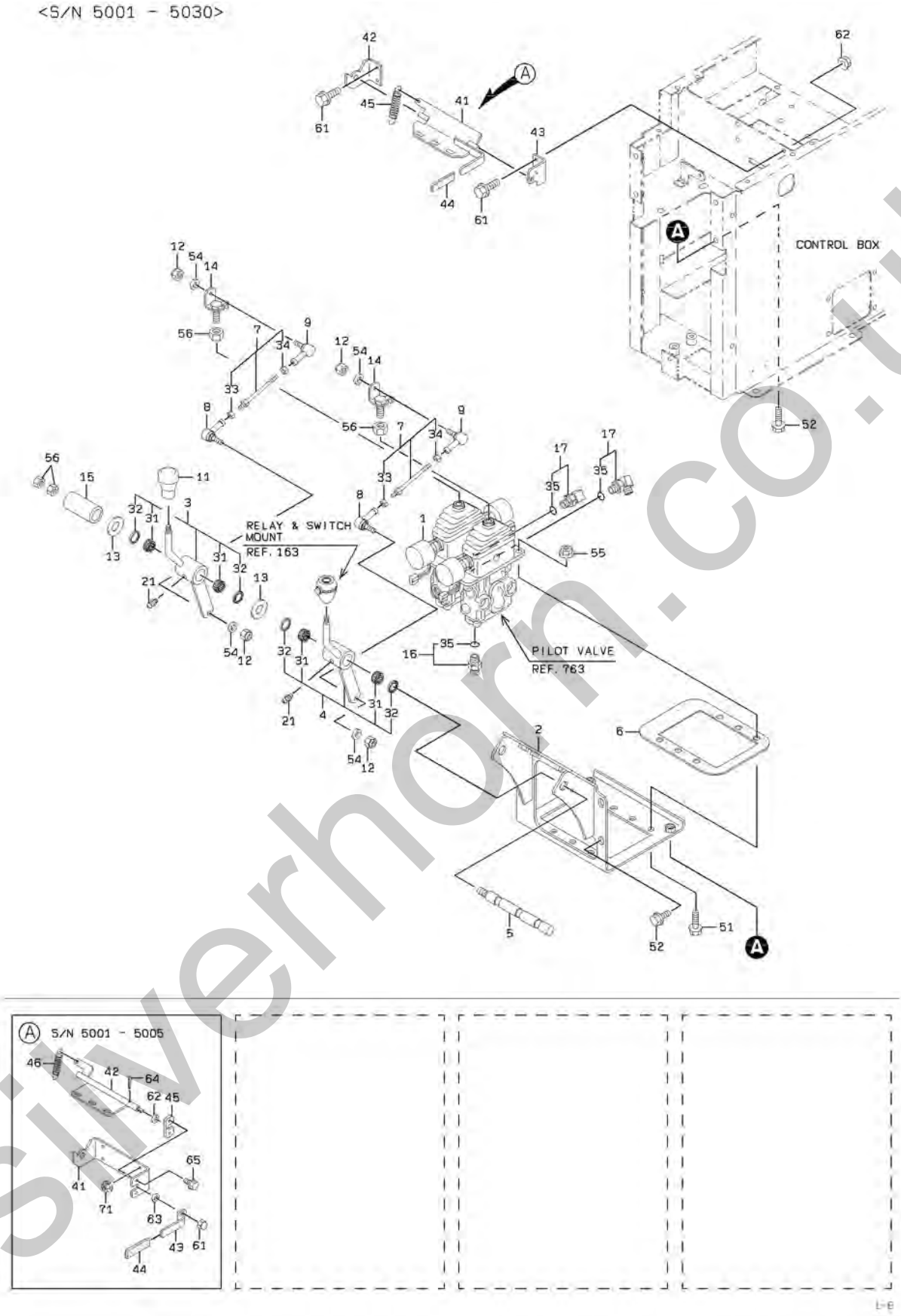

silverhorn.co.uk

VALVE CONTROL GROUP

SYM-BOL	PART NUMBER	PART NAME	UNIT Q,TY	SERIAL (A) - (B)	REMARKS N P D	(A)	(B)	(C)	(D)	REMARK
1A	38560-60360	VALVE,PILOT	1	5001 - 5030						REF.763
2A	41616-45240	PLATE	1	5001 - 5030						
3A	45600-23740	LEVER	1	5001 - 5030		Y01				
4A	45600-23750	LEVER	1	5001 - 5030		Y01				
5A	40000-35940	PIN	1	5001 - 5030						
6A	31990-22840	GASKET	1	5001 - 5030						
7A	64111-01001	ROD	2	5001 - 5030			Y02			
8A	34950-60020	JOINT,BALL	2	5001 - 5009						
8B	34950-20010	JOINT,BALL	2	5010 - 5030	C					
9A	34950-20020	JOINT,BALL	2	5001 - 5030						
11A	37810-60060	KNOB	1	5001 - 5030						
12A	88031-06061	NUT,SELF-LOCKING	4	5001 - 5030						
13A	34200-22770	SHIM	A/R	5001 - 5030						(T=1.2,2.3,3.2
14A	30020-24600	ARM	2	5001 - 5030						
15A	38720-41870	PIPE	1	5001 - 5030						
16A	88201-06704	ADAPTER	4	5001 - 5030				Y03		
17A	88241-07104	ADAPTER,ELBOW	2	5001 - 5030				Y03		
21A	75011-25400	NIPPLE,GREASE	2	5001 - 5030						
31A	42006-70060	BEARING,NEEDLE	2	5001 - 5030		01				
32A	34000-70030	SEAL	2	5001 - 5030		01				
33A	62401-81061	NUT	1	5001 - 5030			02			
34A	62401-81067	NUT	1	5001 - 5030			02			
35A	65210-12011	RING,O	1	5001 - 5030				03		
41A	41612-47570	PLATE	1	5001 - 5005						
41B	41641-43690	PLATE	1	5006 - 5030	B					
42A	34500-23380	SHAFT	1	5001 - 5005						
42B	41618-51320	PLATE	1	5006 - 5030	B					
43A	45600-22010	LEVER	1	5001 - 5005						
43B	41618-51330	PLATE	1	5006 - 5030	B					
44A	32224-20170	CAP,ELASTIC	1	5001 - 5030						
45A	41613-33950	PLATE	1	5001 - 5005						
45B	35600-21900	SPRING	1	5006 - 5030	B					
46A	35600-21900	SPRING	1	5001 - 5005	D					
51A	61802-10035	BOLT,FLANGED	4	5001 - 5030						
52A	61802-10020	BOLT,FLANGED	6	5001 - 5030						
54A	62701-40061	WASHER,PLANE	4	5001 - 5030						
55A	62480-21101	NUT,FLANGED	4	5001 - 5030						
56A	62401-81121	NUT	4	5001 - 5030						
61A	62443-31081	NUT,CAP	1	5001 - 5005						
61B	61802-06016	BOLT,FLANGED	4	5006 - 5030	B					
62A	62701-40121	WASHER,PLANE	1	5001 - 5005						
62B	62480-21061	NUT,FLANGED	4	5006 - 5030	B					
63A	62701-40081	WASHER,PLANE	1	5001 - 5005	D					
64A	63002-04025	PIN,SPLIT	1	5001 - 5005	D					
65A	61802-06012	BOLT,FLANGED	2	5001 - 5005	D					
71A	62480-21061	NUT,FLANGED	4	5001 - 5005	D					

silverhorn.co.uk

VALVE CONTROL GROUP

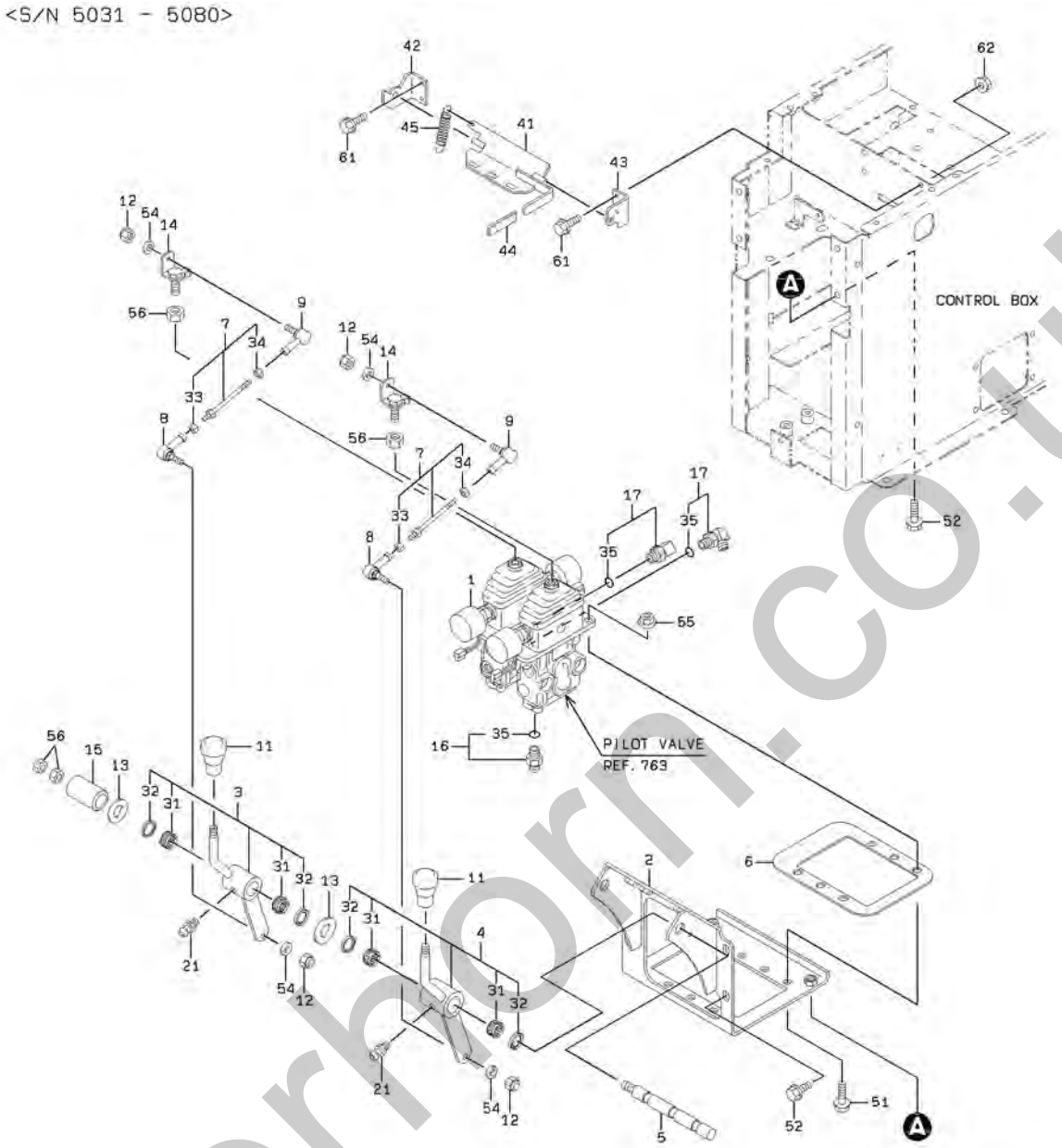

silverhorn.co.uk

VALVE CONTROL GROUP

SYM-BOL	PART NUMBER	PART NAME	UNIT Q,TY	SERIAL (A) - (B)	REMARKS N P D	(A)	(B)	(C)	(D)	REMARK
1A	38560-60360	VALVE,PILOT	1	5031 - 5080						REF.763
2A	41616-45240	PLATE	1	5031 - 5080						
3A	45600-23740	LEVER	1	5031 - 5080		Y01				
4A	45600-23750	LEVER	1	5031 - 5080			Y02			
5A	40000-35940	PIN	1	5031 - 5080						
6A	31990-22840	GASKET	1	5031 - 5080						
7A	64111-01001	ROD	2	5031 - 5080				Y03		
8A	34950-20010	JOINT,BALL	2	5031 - 5080						
9A	34950-20020	JOINT,BALL	2	5031 - 5080						
11A	37810-60060	KNOB	2	5031 - 5080						
12A	88031-06061	NUT,SELF-LOCKING	4	5031 - 5080						
13A	34200-22770	SHIM	1	5031 - 5080						(T=1.2,2.3,3.2
14A	30020-24600	ARM	2	5031 - 5056						
14B	30020-25840	ARM	2	5057 - 5080	C					
15A	38720-41870	PIPE	1	5031 - 5080						
16A	88201-06704	ADAPTER	4	5031 - 5080					Y04	
17A	88241-07104	ADAPTER,ELBOW	2	5031 - 5080					Y04	
21A	75011-25400	NIPPLE,GREASE	2	5031 - 5080						
31A	42006-70060	BEARING,NEEDLE	2	5031 - 5080		01	02			
32A	34000-70030	SEAL	2	5031 - 5080		01	02			
33A	62401-81061	NUT	1	5031 - 5080				03		
34A	62401-81067	NUT	1	5031 - 5080				03		
35A	65210-12011	RING,O	1	5031 - 5080					04	
41A	41641-43690	PLATE	1	5031 - 5080						
42A	41618-51320	PLATE	1	5031 - 5080						
43A	41618-51330	PLATE	1	5031 - 5080						
44A	32224-20170	CAP,ELASTIC	1	5031 - 5080						
45A	35600-21900	SPRING	1	5031 - 5080						
51A	61802-10025	BOLT,FLANGED	4	5031 - 5080						
52A	61802-10020	BOLT,FLANGED	6	5031 - 5080						
54A	62701-40061	WASHER,PLANE	4	5031 - 5080						
55A	62480-21101	NUT,FLANGED	4	5031 - 5080						
56A	62401-81121	NUT	4	5031 - 5080						
61A	61802-06016	BOLT,FLANGED	4	5031 - 5080						
62A	62480-21061	NUT,FLANGED	4	5031 - 5080						

silverhorn.co.uk

VALVE CONTROL GROUP

<S/N 5081 - >

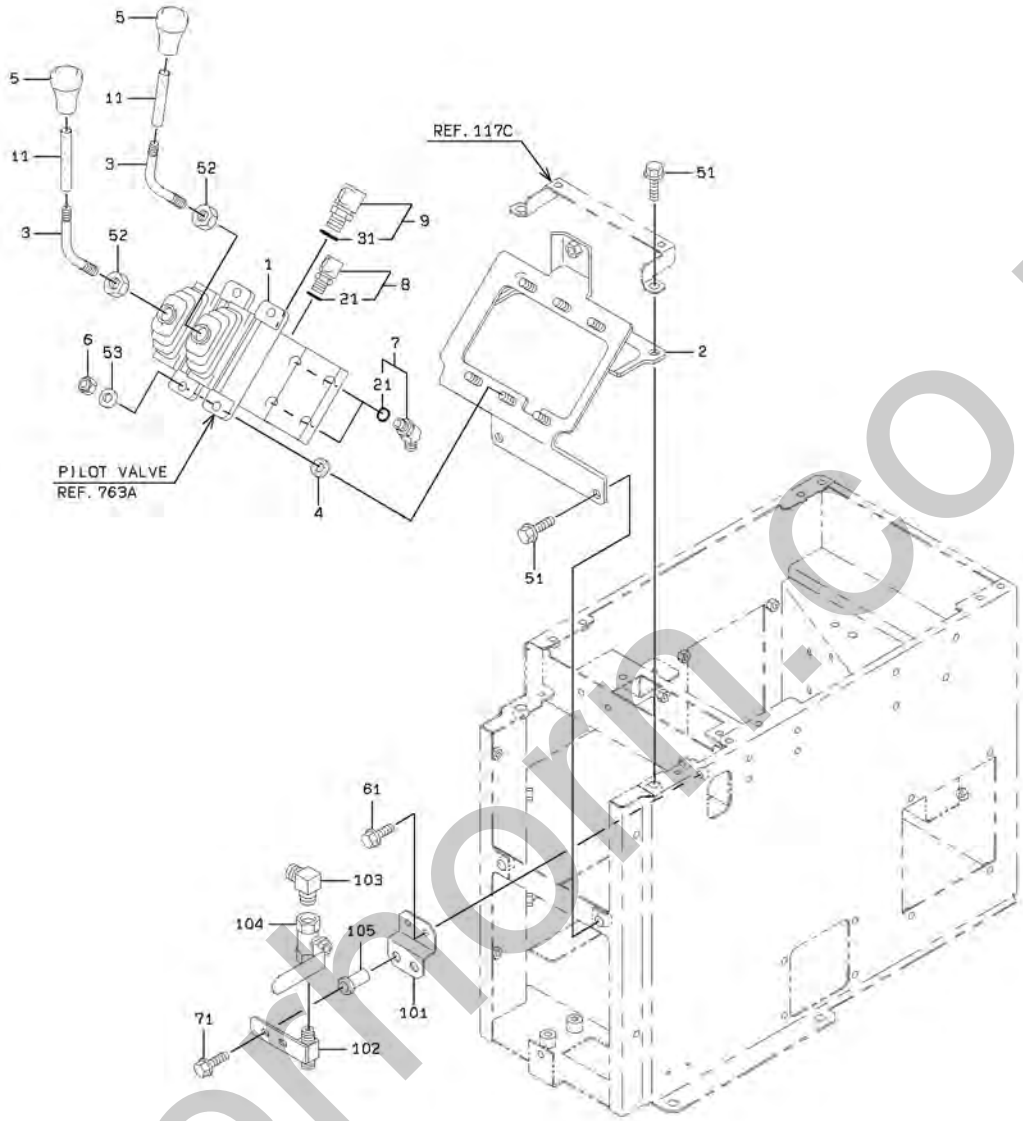

silvermorn.co.uk

VALVE CONTROL GROUP

SYM-BOL	PART NUMBER	PART NAME	UNIT Q,TY	SERIAL (A)	-	(B)	REMARKS N P D	(A)	(B)	(C)	(D)	REMARK
1A	38560-60650	VALVE,PILOT	1	5081	-	5104						REF.763A
1B	38560-60710	VALVE,PILOT	1	5105	-		C					REF.763A
2A	40902-42040	BRACKET	1	5081	-							
3A	45870-28920	ROD	2	5081	-							
4A	33713-29770	SHEET,RUBBER	4	5081	-							
5A	37810-60060	KNOB	2	5081	-							
6A	88031-06101	NUT,SELF-LOCKING	4	5081	-							
7A	88241-07204	ADAPTER,ELBOW	4	5081	-			Y01				
8A	88241-07104	ADAPTER,ELBOW	1	5081	-			Y01				
9A	88241-07106	ADAPTER,ELBOW	1	5081	-	5082			Y02			
9B	30241-21320	ADAPTER,ELBOW	1	5083	-		B		Y02			
11A	36733-20200	TUBE,VINYL	2	5081	-							
21A	65210-12011	RING,O	1	5081	-			01				
31A	65210-12014	RING,O	1	5081	-				02			
51A	61802-10020	BOLT,FLANGED	4	5081	-							
52A	62403-81121	NUT	2	5081	-							
53A	62701-40101	WASHER,PLANE	4	5081	-							
61A	61802-06010	BOLT,FLANGED	2	5081	-							
71A	61802-06025	BOLT,FLANGED	2	5081	-							
101A	41750-34750	PLATE	1	5081	-							
102A	30230-21720	ADAPTER	1	5081	-							
103A	88241-03404	ADAPTER,ELBOW	1	5081	-							
104A	38510-60500	VALVE	1	5081	-							
105A	37600-21210	NUT	2	5081	-							

silverhorn.co.uk

FUEL CONTROL GROUP

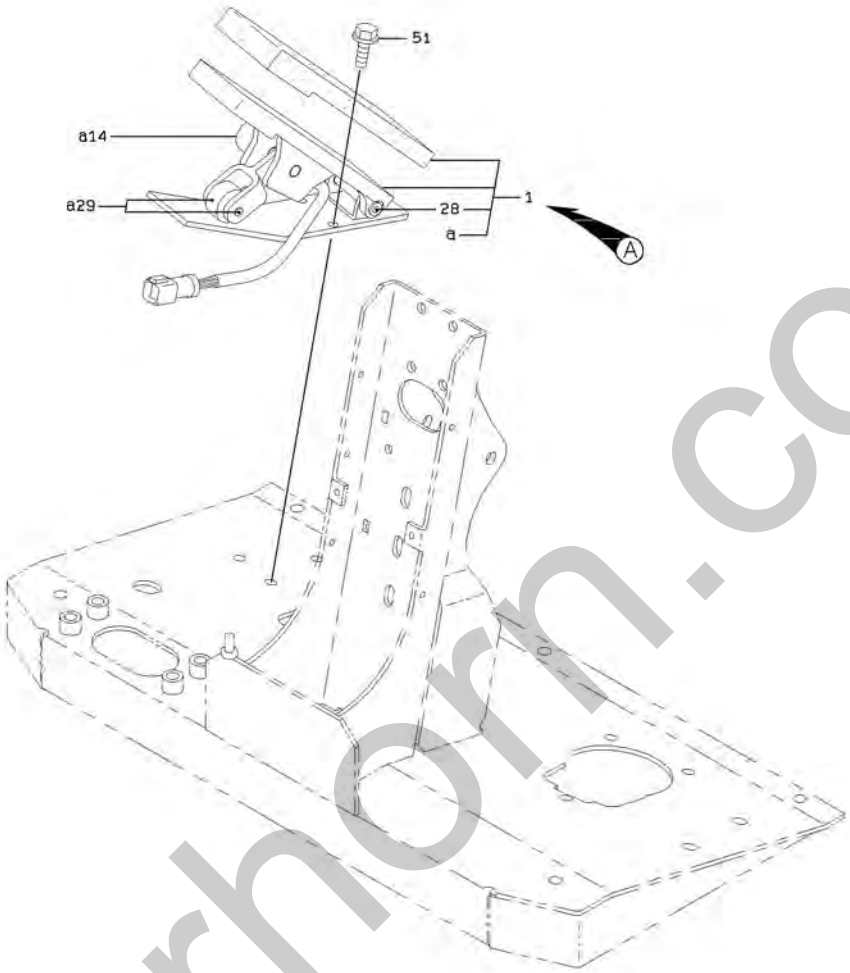

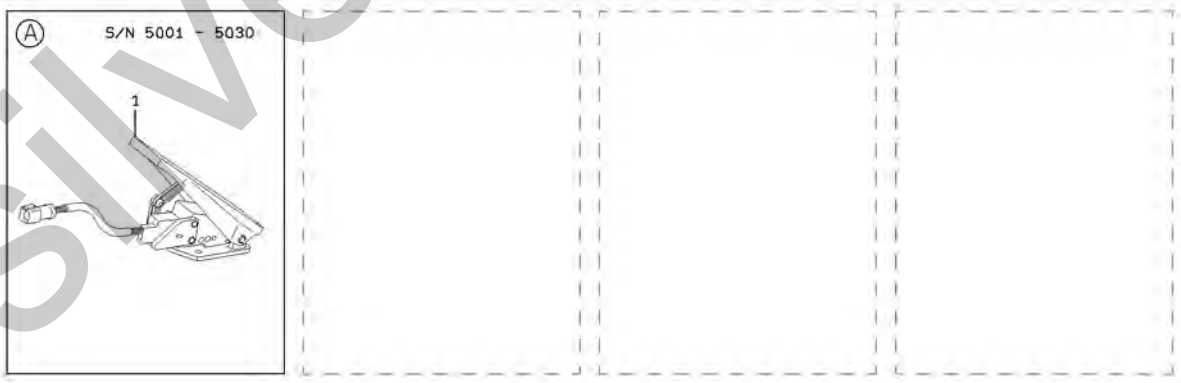

silverhorn.co.uk

FUEL CONTROL GROUP

SYM-BOL	PART NUMBER	PART NAME	UNIT Q,TY	SERIAL (A) - (B)	REMARKS N P D	(A) (B)	(C) (D)	REMARK
1A	43022-60050	PEDAL ASSY,ACCEL	1	5001 - 5009				
1B	43022-60060	PEDAL ASSY,ACCEL	1	5010 - 5023	N B			
1C	43022-60070	PEDAL ASSY,ACCEL	1	5024 - 5030	C			
1D	43022-20180	PEDAL ASSY,ACCEL	1	5031 -	B	Y01		
14A	35820-70190-7	SENSOR	1	5031 -		01		
28A	40061-70030-7	PIN KIT	1	5031 -		01		
29A	45810-70040-7	ROLLER ASSY	1	5031 -		01		
51A	61802-08020	BOLT,FLANGED	3	5001 -				

silverhorn.co.uk

STEERING CYLINDER GROUP

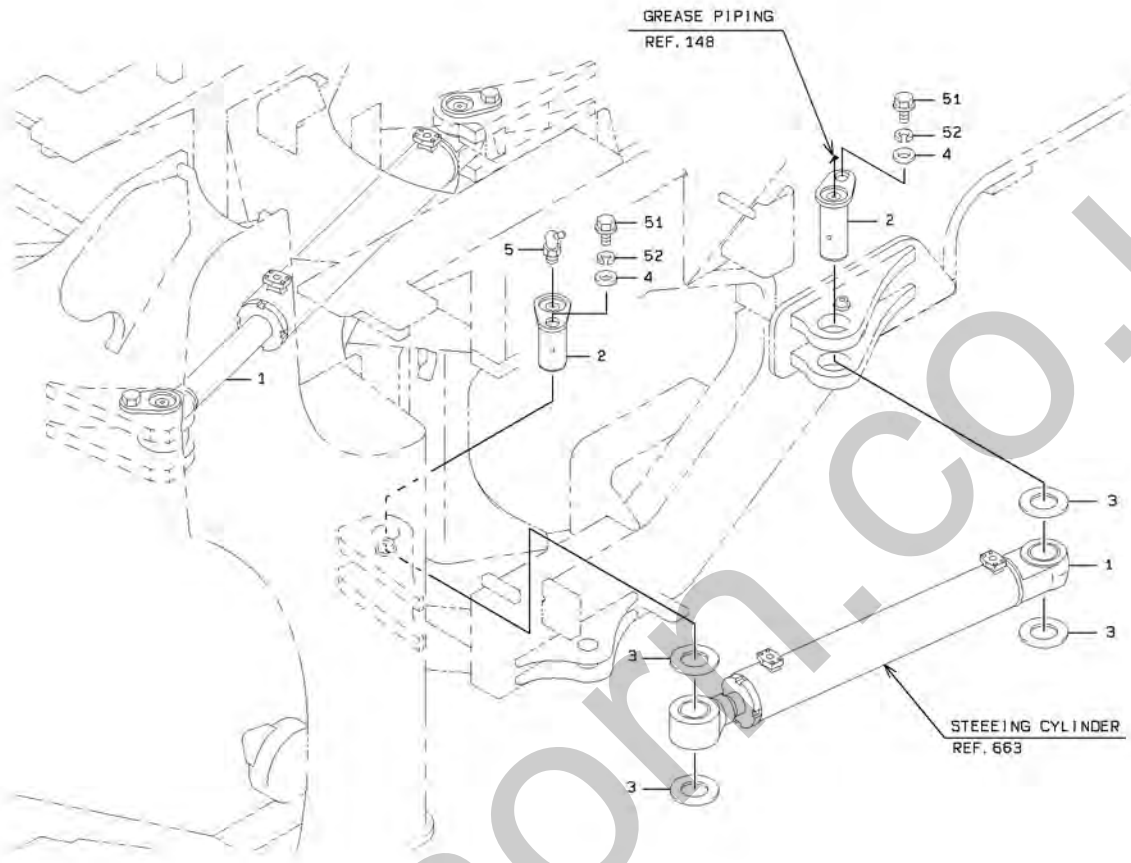

(NOTE):SYMBOL NO. 3 PART MAY BE USED AS A CLEARANCE ADJUSTMENT LINER.

L-A

silverhorn.co.uk

STEERING CYLINDER GROUP

SYM-BOL	PART NUMBER	PART NAME	UNIT Q,TY	SERIAL (A) - (B)	REMARKS N P D	(A) (B)	(C) (D)	REMARK
1A	34820-63970	CYLINDER ASSY,OIL	2	5001 -				REF 663
2A	40000-26860	PIN	4	5001 -				D=70 X 176
3A	41621-20140	PLATE	A/R	5001 -				T=1
4A	46011-20150	WASHER,PLANE	4	5001 -				
5A	75011-45400	NIPPLE,GREASE	2	5001 -				
51A	61802-16020	BOLT,FLANGED	4	5001 -				
52A	62721-16100	WASHER,SPRING	4	5001 -				

silverhorn.co.uk

STEERING VALVE

<S/N 5001 - 5029>

(NOTE):KIT(SYMBOL 700) CONSISTS OF THE PARTS WITH a.

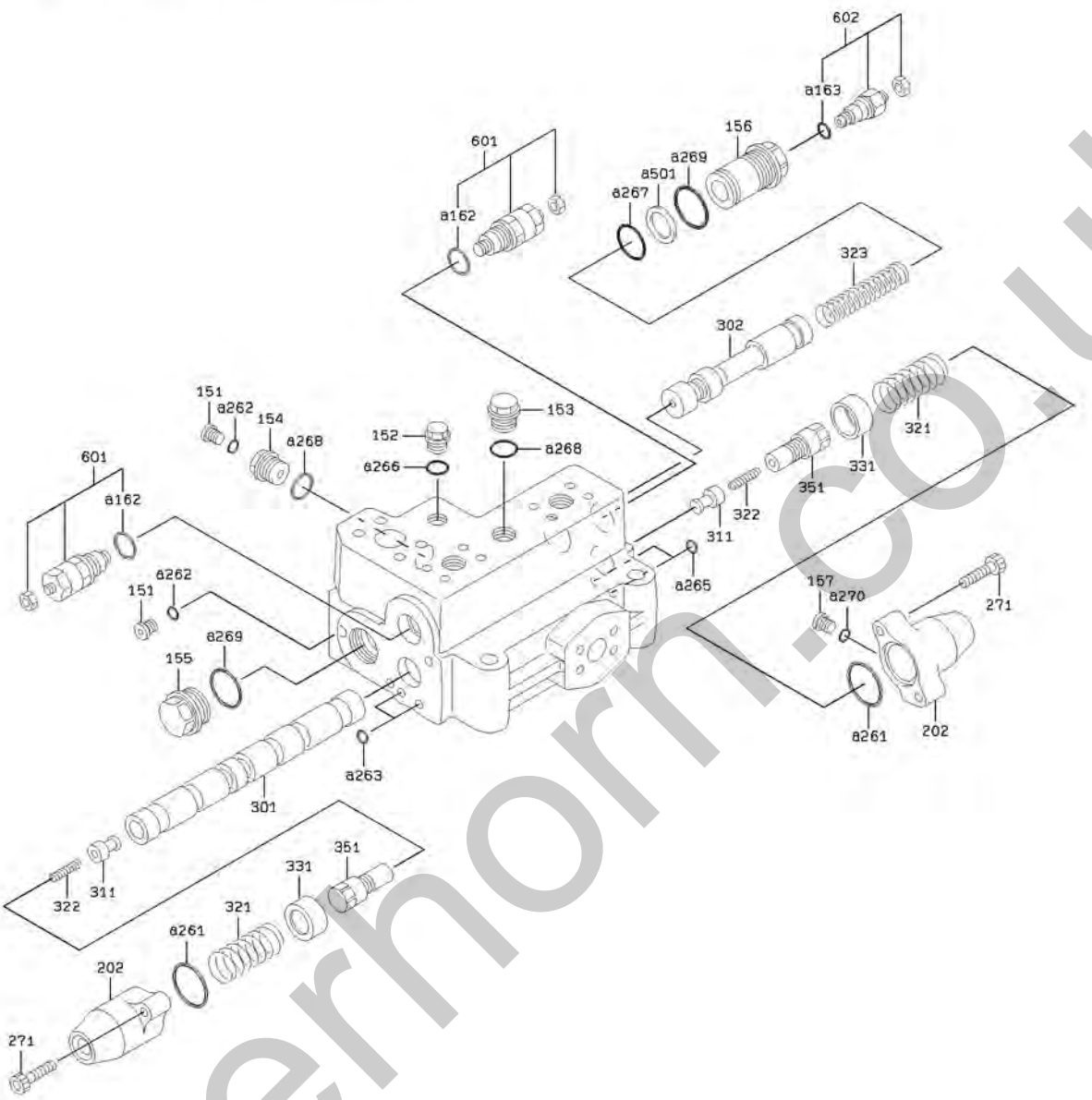

silverhorn.co.uk

STEERING VALVE

<S/N 5030 - >

(NOTE):KIT(SYMBOL ?00) CONSISTS OF THE PARTS WITH a.

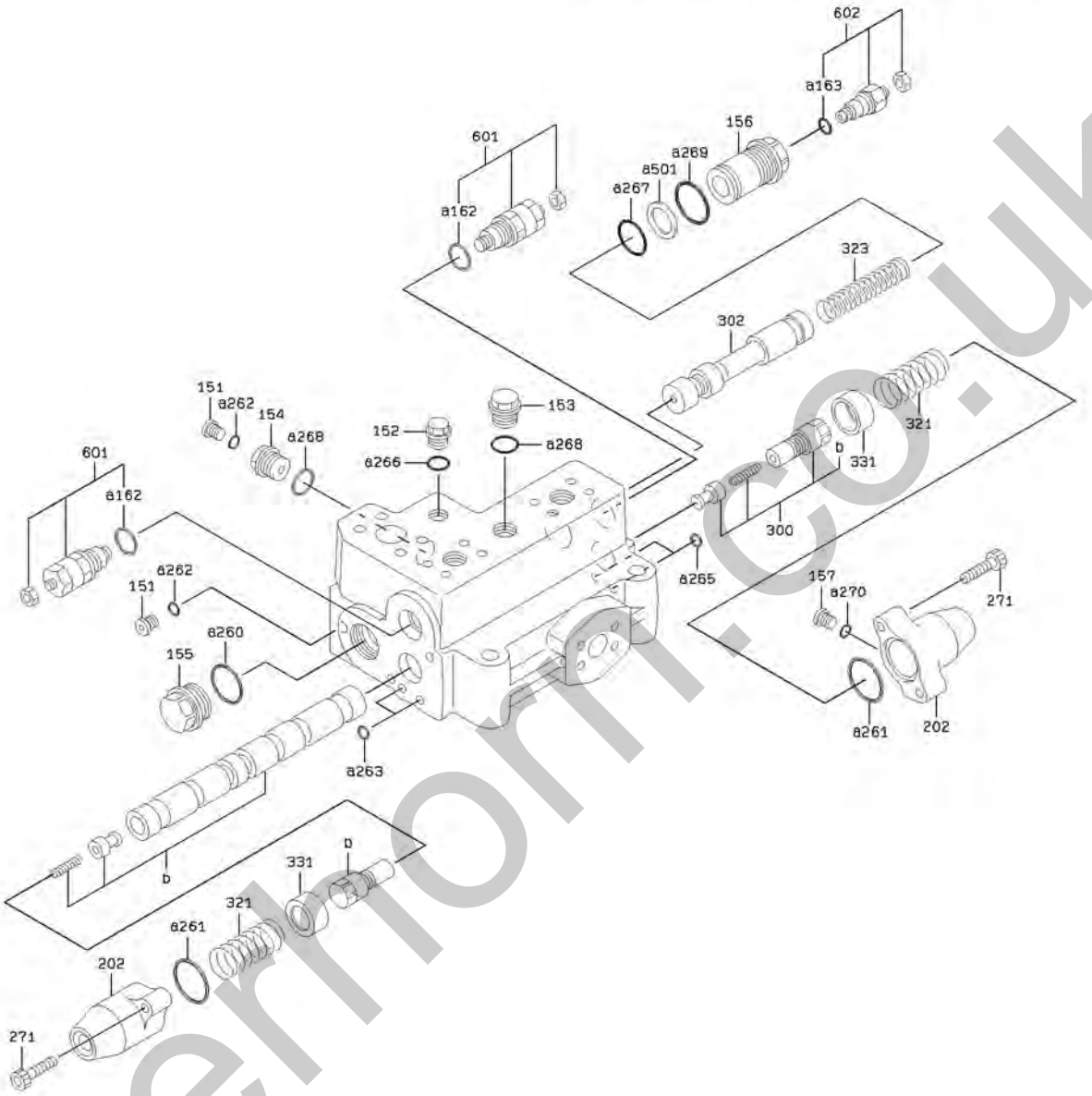

silverhorn.co.uk

STEERING VALVE

SYM-BOL	PART NUMBER	PART NAME	UNIT Q,TY	SERIAL (A) - (B)	REMARKS N P D	(A) (B)	(C) (D)	REMARK
000A	38523-60510	VALVE ASSY,STEERIN	1	5001 - 5023				
000B	38523-60580	VALVE ASSY,STEERIN	1	5024 - 5029	C			
000C	38523-60610	VALVE ASSY,STEERIN	1	5030 - 5080	A			
000D	38523-60800	VALVE ASSY,STEERIN	1	5081 -	C			
151A	41530-72790	PLUG	2	5001 -				
152A	41530-73560	PLUG	1	5001 -				
153A	41530-74150	PLUG	1	5001 -				
154A	41530-74240	PLUG	1	5001 -				
155A	41530-74250	PLUG	1	5001 - 5029				
155B	41530-74830	PLUG	1	5030 -	B			
156A	41530-74480	PLUG	1	5001 -				
157A	41530-74610	PLUG	1	5001 -				
162A	65210-12024	RING,O	1	5001 -		01	K1 K2	
163A	65210-12018	RING,O	1	5001 -		02	K1 K2	
202A	41657-70190	PLATE,END	2	5001 -				
260A	65210-12040	RING,O	1	5030 -			K2	
261A	65210-22045	RING,O	2	5001 -			K1 K2	
262A	65210-12011	RING,O	2	5001 -			K1 K2	
263A	65210-12010	RING,O	2	5001 -			K1 K2	
265A	65210-12012	RING,O	2	5001 -			K1 K2	
266A	65210-12024	RING,O	1	5001 -			K1 K2	
267A	65210-12026	RING,O	1	5001 -			K1 K2	
268A	65210-12029	RING,O	2	5001 -			K1 K2	
269A	65210-12042	RING,O	2	5001 - 5029			K1	
269B	65210-12042	RING,O	1	5030 -			K2	
270A	65210-12008	RING,O	1	5001 -			K1 K2	
271A	61101-10045	BOLT,SOCKET	4	5001 -				
300A	35575-70190	SPOOL ASSY	1	5030 - 5080				
300B	35575-70240	SPOOL ASSY	1	5081 -	B			
301A	35570-71120	SPOOL	1	5001 - 5029	N D			
302A	35570-71130	SPOOL	1	5001 - 5023	N			
302B	35570-71090	SPOOL	1	5024 -	B			
311A	44074-70460	POPPET	2	5001 - 5029	D			
321A	35600-75630	SPRING	2	5001 -				
322A	35600-75640	SPRING	2	5001 - 5029	D			
323A	35600-75650	SPRING	1	5001 - 5023				
323B	35600-75890	SPRING	1	5024 -	B			
331A	44955-70380	RETAINER,SPRING	2	5001 -				
351A	41530-74620	PLUG	2	5001 - 5029	D			
501A	65240-21026	RING,BACK-UP	1	5001 -			K1 K2	
601A	38565-71460	VALVE,RELIEF	2	5001 -		Y01		
602A	38565-71470	VALVE,RELIEF	1	5001 -		Y02		
700A	49327-73240	SEAL KIT	1	5001 - 5029			QK1	
700B	49327-73580	SEAL KIT	1	5030 -	B		QK2	

silverhorn.co.uk

MEMO

silverhorn.co.uk

STEERING CYLINDER

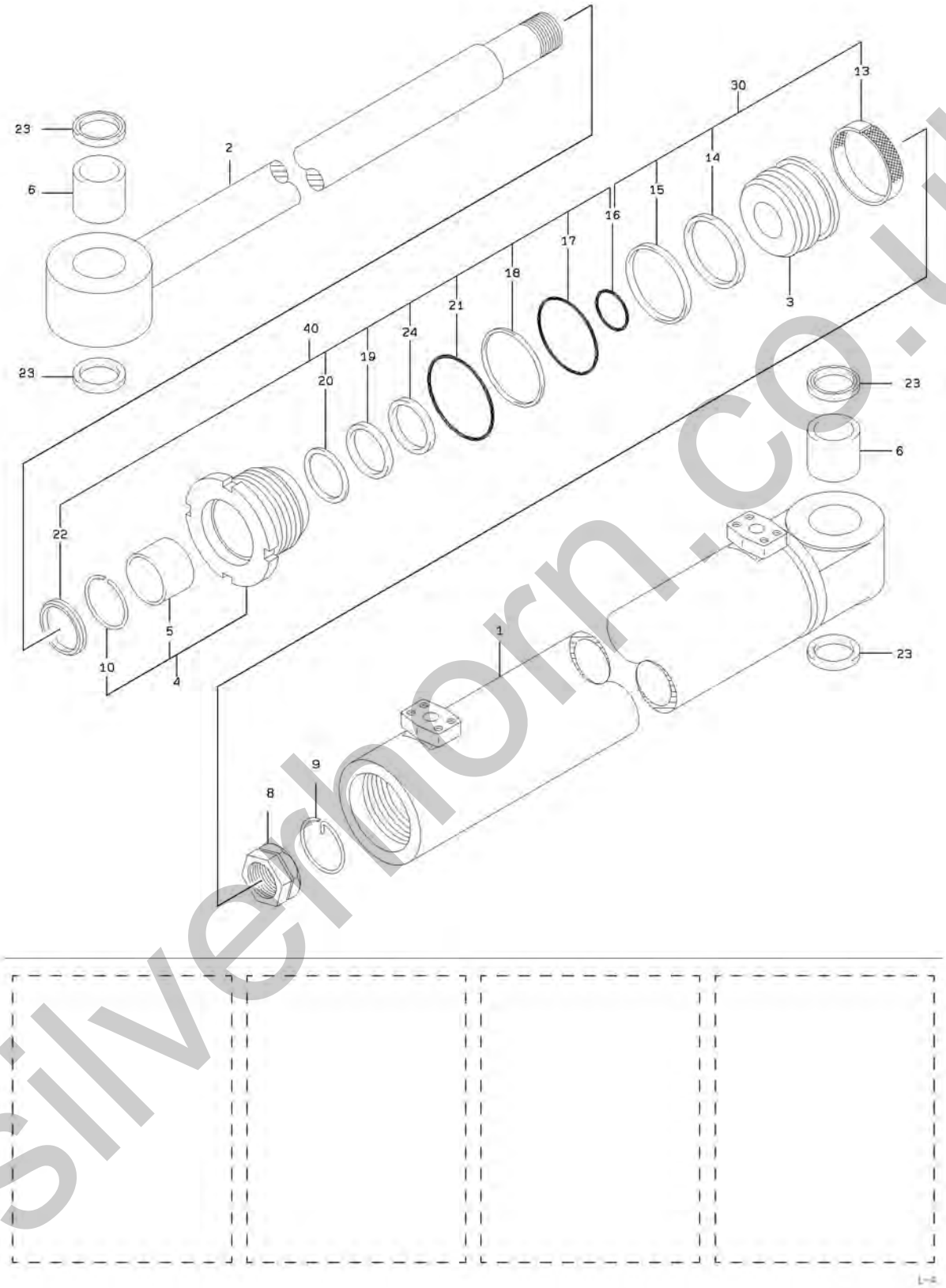

silverhorn.co.uk

STEERING CYLINDER

SYM-BOL	PART NUMBER	PART NAME	UNIT Q,TY	SERIAL (A) - (B)	REMARKS N P D	(A)	(B)	(C)	(D)	REMARK
000A	34820-63970	CYLINDER ASSY,OIL	2	5001 -						
1A	36725-71980	TUBE,CYLINDER	1	5001 -						
2A	45886-70840	ROD,PISTON	1	5001 -						
3A	39960-70330	PISTON	1	5001 -						
4A	31265-70230	COVER ASSY,ROD	1	5001 -		Y01				
5A	88811-06040	BUSHING	1	5001 -		01				
6A	63422-40590	BUSHING	2	5001 -						
8A	37636-60010	NUT,PISTON	1	5001 -						
9A	45315-20020	RING,STOP	1	5001 -						
10A	45315-70110	RING,STOP	1	5001 -		01				
13A	65431-14144	RING,WEAR	1	5001 -			K1			
14A	65421-14147	RING,SQUARE	1	5001 -			K1			
15A	65412-14143	RING,SLIPPER	1	5001 -			K1			
16A	65210-22045	RING,O	1	5001 -			K1	K2		
17A	65210-22105	RING,O	1	5001 -				K2		
18A	65240-32105	RING,BACK-UP	1	5001 -				K2		
19A	65446-02509	PACKING,U	1	5001 -				K2		
20A	65471-10430	RING,BACK-UP	1	5001 -				K2		
21A	65210-22110	RING,O	1	5001 -				K2		
22A	65455-03008	RING,SCRAPER	1	5001 -				K2		
23A	65051-01208	SEAL,DUST	4	5001 -						
24A	65462-05860	RING,BUFFER	1	5001 -				K2		
30A	49327-60130	SEAL KIT	1	5001 -			QK1			FR PISTON
40A	49327-72590	SEAL KIT	1	5001 -				QK2		FR ROD COV

silverhorn.co.uk

BUCKET POSITIONER GROUP

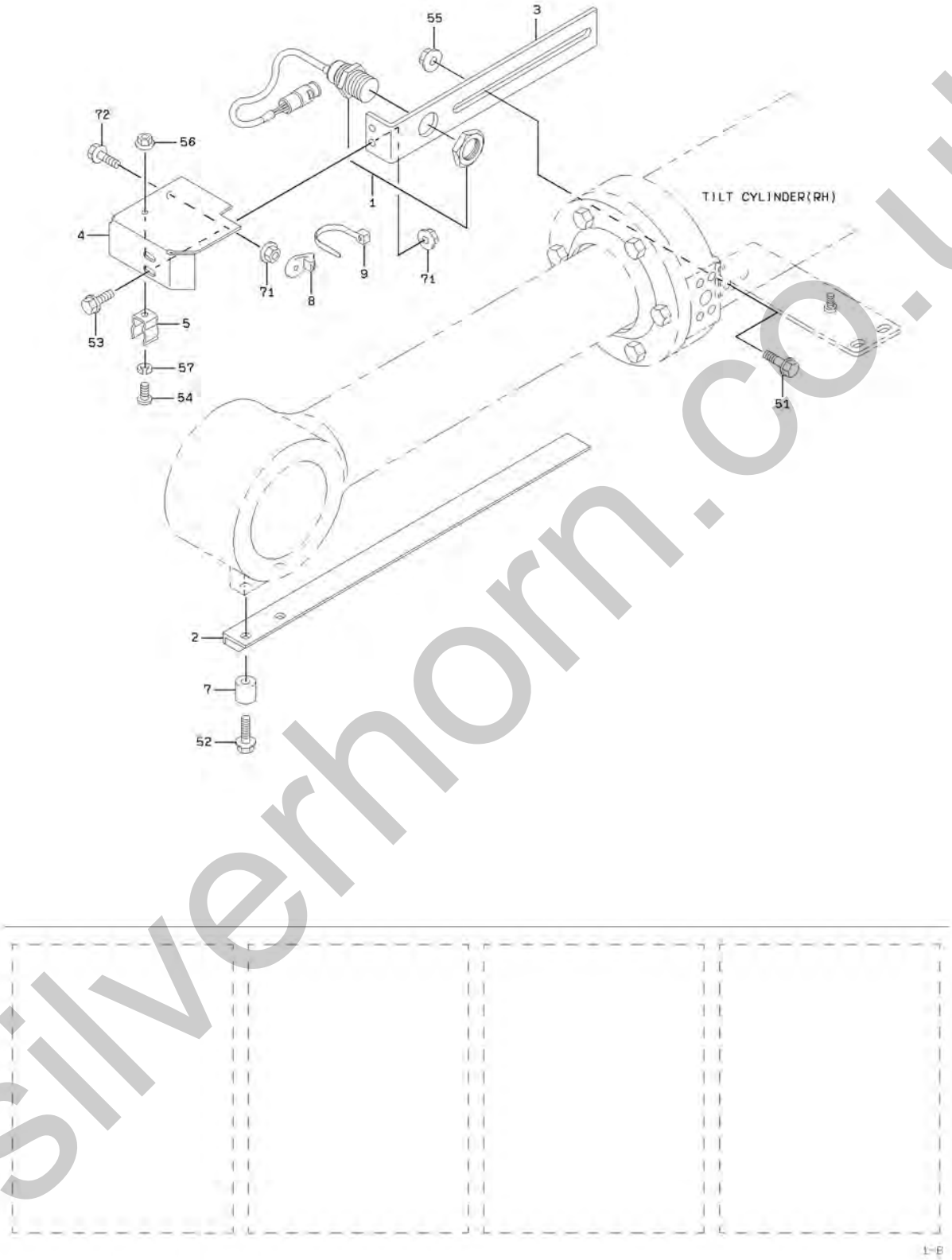

silverhorn.co.uk

BUCKET POSITIONER GROUP

SYM-BOL	PART NUMBER	PART NAME	UNIT Q,TY	SERIAL (A) - (B)	REMARKS N P D	(A) (B)	(C) (D)	REMARK
1A	35051-70040	SWITCH,PROXIMITY	1	5001 -				
2A	30502-28950	ANGLE	1	5001 -				
3A	41611-26980	PLATE	1	5001 - 5136				
3B	41751-30270	PLATE	1	5137 -	C			
4A	41605-51370	PLATE	1	5001 -				
5A	43571-20150	HOLDER,SPRING	1	5001 -				
7A	43780-37490	BOSS	2	5001 -				
8A	32923-70120	CLAMP,HOSE	2	5001 -				
9A	32923-70090	CLAMP,HOSE	2	5001 -				L=202
51A	61802-12030	BOLT,FLANGED	2	5001 -				
52A	61802-10045	BOLT,FLANGED	2	5001 -				
53A	61802-08020	BOLT,FLANGED	2	5001 -				
54A	62256-51612	SCREW	1	5001 -				
55A	62480-21121	NUT,FLANGED	2	5001 -				
56A	62480-21061	NUT,FLANGED	1	5001 -				
57A	62721-06100	WASHER,SPRING	1	5001 -				
71A	62480-21081	NUT,FLANGED	3	5001 -				
72A	61802-08025	BOLT,FLANGED	1	5001 -				

silverhorn.co.uk

KICKOUT GROUP

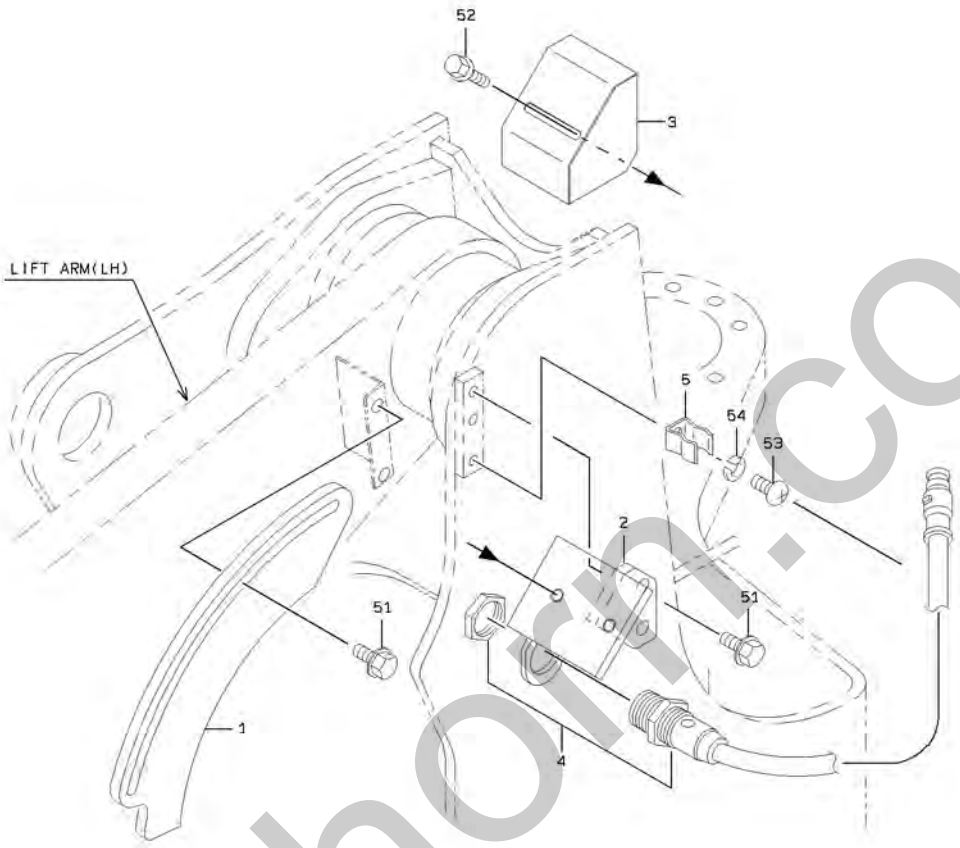

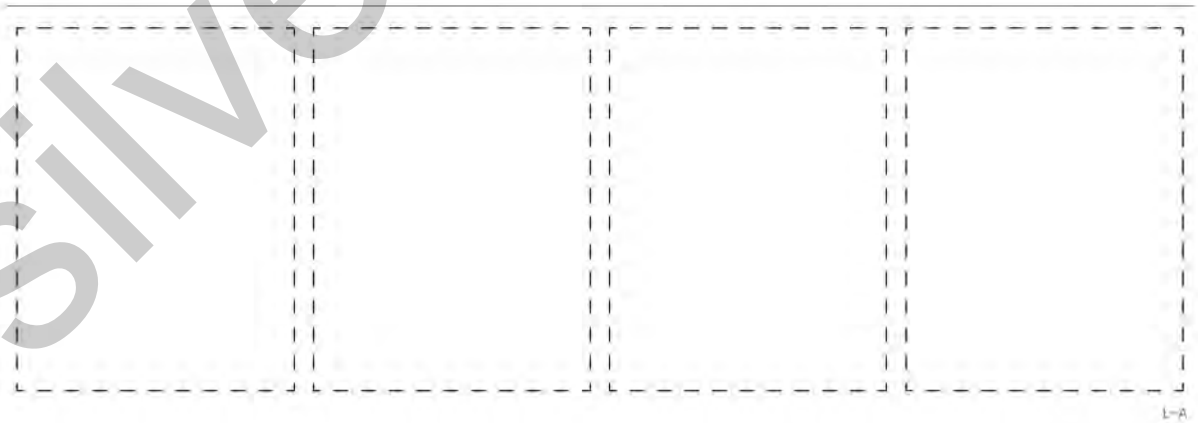

silverhorn.co.uk

KICKOUT GROUP

SYM-BOL	PART NUMBER	PART NAME	UNIT Q,TY	SERIAL (A) - (B)	REMARKS N P D	(A) (B)	(C) (D)	REMARK
1A	41641-38770	PLATE	1	5001 -				
2A	40901-45090	BRACKET	1	5001 -				
3A	31200-36330	COVER	1	5001 -				
4A	35051-70040	SWITCH,PROXIMITY	1	5001 -				
5A	43571-20150	HOLDER,SPRING	1	5001 -				
51A	61802-10020	BOLT,FLANGED	4	5001 -				
52A	61802-10016	BOLT,FLANGED	2	5001 -				
53A	62256-51612	SCREW	1	5001 -				
54A	62721-06100	WASHER,SPRING	1	5001 -				

silverhorn.co.uk

CONTROL LEVER GROUP

<S/N 5001 - 5025>

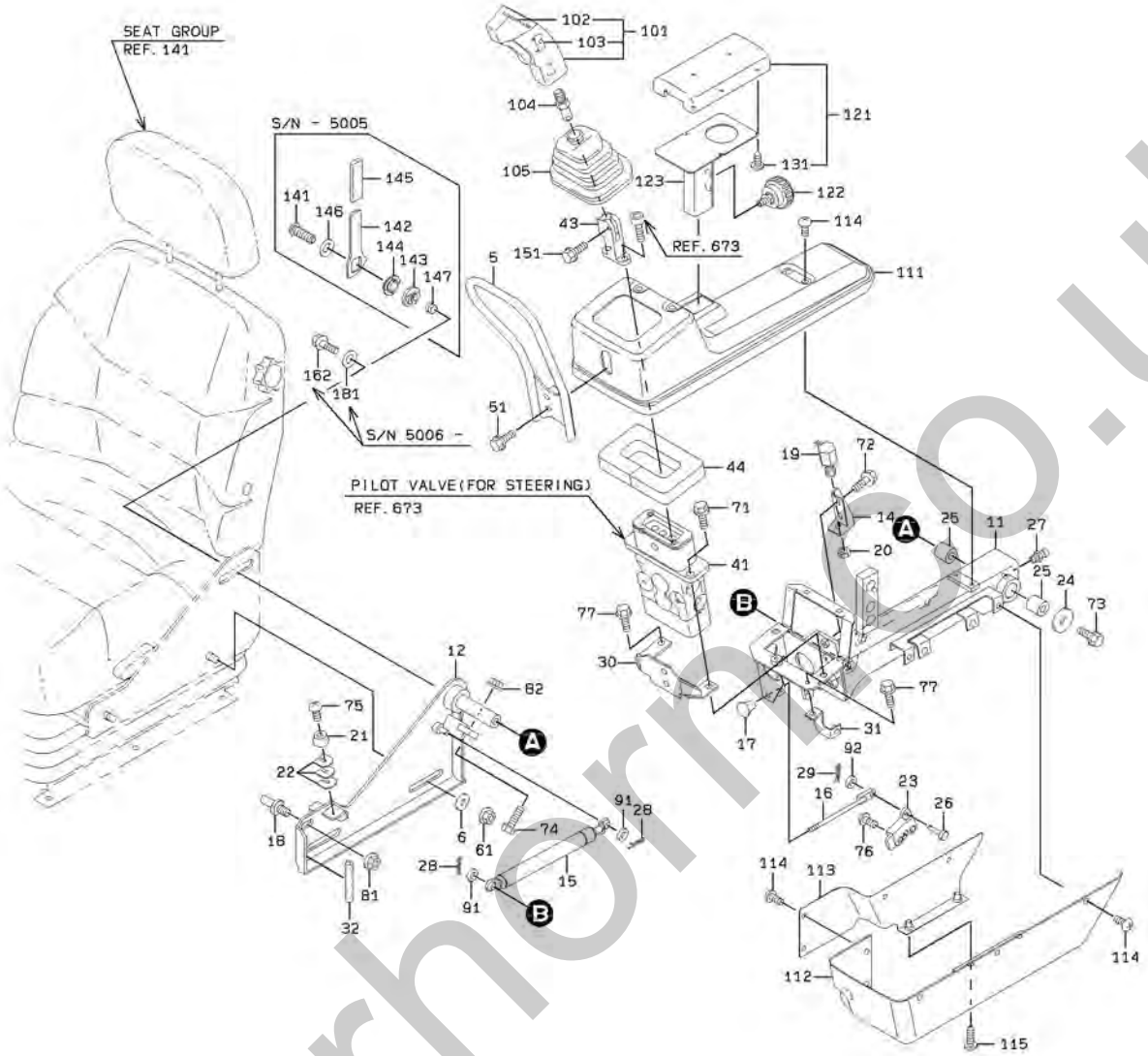

silverhorn.co.uk

CONTROL LEVER GROUP

SYM-BOL	PART NUMBER	PART NAME	UNIT Q,TY	SERIAL (A) - (B)	REMARKS N P D	(A) (B)	(C) (D)	REMARK
5A	38130-27210	HANDRAIL	1	5001 - 5025				
6A	46011-20180	WASHER,PLANE	2	5001 - 5025				
11A	40901-55170	BRACKET	1	5001 - 5023				
11B	40902-26090	BRACKET	1	5024 - 5025	C			
12A	40901-54710	BRACKET	1	5001 - 5005				
12B	40902-22750	BRACKET	1	5006 - 5025	B			
14A	40901-54460	BRACKET	1	5001 - 5025				
15A	35617-60050	SPRING,GAS	1	5001 - 5025				
16A	45870-26450	ROD	1	5001 - 5025				
17A	37810-20460	KNOB	1	5001 - 5025				
18A	40044-21630	PIN,HEAD	1	5001 - 5005				
18B	40044-21780	PIN,HEAD	1	5006 - 5025	C			
19A	35010-60010	SWITCH	1	5001 - 5025				
20A	37600-20150	NUT	1	5001 - 5025				
21A	35440-20960	STOPPER	1	5001 - 5025				
22A	34200-25370	SHIM	3	5001 - 5025				
23A	32151-60080	CATCH ASSY	1	5001 - 5025				
24A	46011-20630	WASHER,PLANE	1	5001 - 5025				
25A	88811-02225	BUSHING	2	5001 - 5025				
26A	63057-06016	PIN,HEAD	1	5001 - 5025				
27A	75011-25400	NIPPLE,GREASE	1	5001 - 5025				
28A	63002-02016	PIN,SPLIT	2	5001 - 5025				
29A	63002-01612	PIN,SPLIT	1	5001 - 5025				
30A	40901-54810	BRACKET	1	5001 - 5025				
31A	41617-48510	PLATE	1	5001 - 5025				
32A	44822-21450	RUBBER,CUSHION	1	5001 - 5005				
32B	34041-24320	STRIP, SEAL	1	5006 - 5025	C			
41A	38560-60530	VALVE,PILOT	1	5001 - 5025				REF 673
43A	45600-23980	LEVER	1	5001 - 5025				
44A	35680-45520	SPONGE	1	5001 - 5025				
51A	61802-08030	BOLT,FLANGED	2	5001 - 5025				
61A	62480-21081	NUT,FLANGED	2	5001 - 5025				
71A	61802-08025	BOLT,FLANGED	2	5001 - 5025				
72A	61802-06016	BOLT,FLANGED	2	5001 - 5025				
73A	61802-12020	BOLT,FLANGED	1	5001 - 5025				
74A	61802-08040	BOLT,FLANGED	1	5001 - 5025				
75A	62256-29310	SCREW	1	5001 - 5025				
76A	62256-51520	SCREW	2	5001 - 5005				
76B	61802-05020	BOLT,FLANGED	2	5006 - 5025	C			
77A	61802-06012	BOLT,FLANGED	2	5001 - 5025				
81A	62480-21121	NUT,FLANGED	1	5001 - 5025				
82A	62480-21081	NUT,FLANGED	1	5001 - 5025				
91A	62701-40081	WASHER,PLANE	2	5001 - 5025				
92A	62701-40061	WASHER,PLANE	1	5001 - 5025				
101A	37810-60180	KNOB	1	5001 - 5025		Y01		
102A	35020-70210	SWITCH ASSY	1	5001 - 5025		01		
103A	35020-70220	SWITCH ASSY	1	5001 - 5025		01		
104A	34500-25790	SHAFT	1	5001 - 5025				
105A	03501-36880	BOOT	1	5001 - 5025				
111A	31200-37110	COVER	1	5001 - 5025				
112A	31200-37120	COVER	1	5001 - 5025				
113A	31205-41870	COVER	1	5001 - 5025				
114A	35100-20330	SCREW	11	5001 - 5025				
115A	35100-20200	SCREW	2	5001 - 5025				
121A	30062-60050	ARMREST	1	5001 - 5025		Y02		
122A	37810-20480	KNOB	1	5001 - 5025				
123A	40901-54520	BRACKET	1	5001 - 5025				
131A	35106-70170	SCREW,TAPPING	4	5001 - 5025		02		
141A	43900-24300	BOLT	1	5001 - 5005	D			
142A	30020-24770	ARM	1	5001 - 5005	D			
143A	45200-26750	RING	1	5001 - 5005	D			
144A	45200-26760	RING	1	5001 - 5005	D			
145A	32224-20140	CAP,ELASTIC	1	5001 - 5005	D			
146A	88120-11200	WASHER,CONICAL SPR	1	5001 - 5005	D			
147A	61121-12008	BOLT,SOCKET	1	5001 - 5005	D			
151A	61802-06020	BOLT,FLANGED	1	5001 - 5025				

silverhorn.co.uk

CONTROL LEVER GROUP

SYM-BOL	PART NUMBER	PART NAME	UNIT Q,TY	SERIAL (A) - (B)	REMARKS N P D	(A) (B)	(C) (D)	REMARK
162A	61802-12025	BOLT,FLANGED	1	5006 - 5025				
181A	62701-40161	WASHER,PLANE	1	5006 - 5025				

silverhorn.co.uk

MEMO

silverhorn.co.uk

CONTROL LEVER GROUP

<S/N 5026 - 5030>

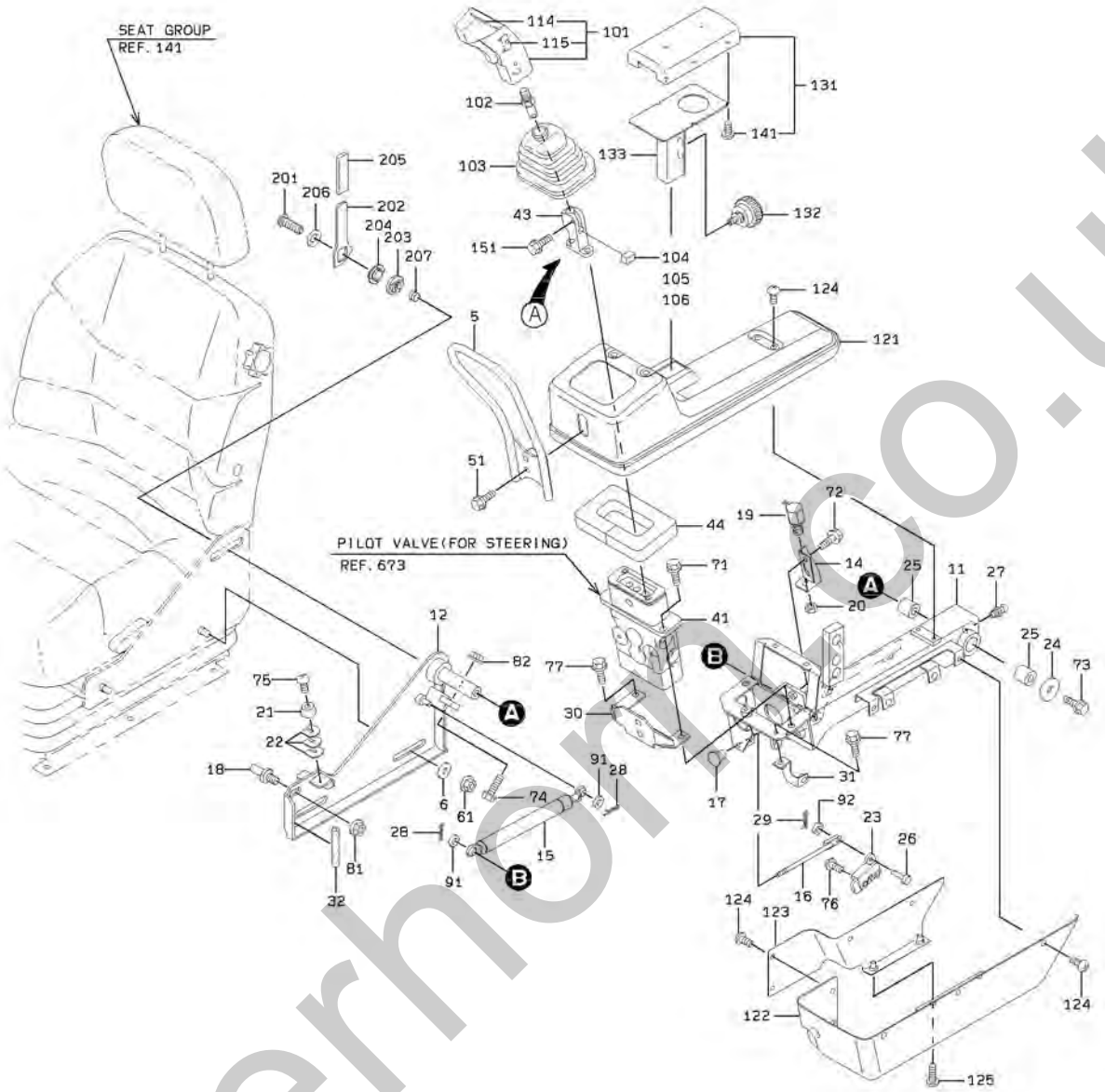

silverhorn.co.uk

CONTROL LEVER GROUP

SYM-BOL	PART NUMBER	PART NAME	UNIT Q,TY	SERIAL (A) - (B)	REMARKS N P D	(A) (B)	(C) (D)	REMARK
5A	38130-27210	HANDRAIL	1	5026 - 5030				
6A	46011-20180	WASHER,PLANE	2	5026 - 5030				
11A	40902-26090	BRACKET	1	5026 - 5030				
12A	40902-20060	BRACKET	1	5026 - 5030				
14A	40901-54460	BRACKET	1	5026 - 5030				
15A	35617-60050	SPRING,GAS	1	5026 - 5030				
16A	45870-26450	ROD	1	5026 - 5030				
17A	37810-20460	KNOB	1	5026 - 5030				
18A	40044-21780	PIN,HEAD	1	5026 - 5030				
19A	35010-60010	SWITCH	1	5026 - 5030				
20A	37600-20150	NUT	1	5026 - 5030				
21A	35440-20960	STOPPER	1	5026 - 5030				
22A	34200-25370	SHIM	3	5026 - 5030				
23A	32151-60080	CATCH ASSY	1	5026 - 5030				
24A	46011-20630	WASHER,PLANE	1	5026 - 5030				
25A	88811-02225	BUSHING	2	5026 - 5030				
26A	63057-06016	PIN,HEAD	1	5026 - 5030				
27A	75011-25400	NIPPLE,GREASE	1	5026 - 5030				
28A	63002-02016	PIN,SPLIT	2	5026 - 5030				
29A	63002-01612	PIN,SPLIT	1	5026 - 5030				
30A	40901-54810	BRACKET	1	5026 - 5030				
31A	41617-48510	PLATE	1	5026 - 5030				
32A	34041-24320	STRIP, SEAL	1	5026 - 5030				
41A	38560-60530	VALVE,PILOT	1	5026 - 5030				REF 673
43A	45600-23980	LEVER	1	5026 - 5030				
44A	35680-45520	SPONGE	1	5026 - 5029				
44B	35680-55910	SPONGE	1	5030 - 5030	B			
51A	61802-08030	BOLT,FLANGED	2	5026 - 5030				
61A	62480-21081	NUT,FLANGED	2	5026 - 5030				
71A	61802-08025	BOLT,FLANGED	2	5026 - 5030				
72A	61802-06016	BOLT,FLANGED	2	5026 - 5030				
73A	61802-12020	BOLT,FLANGED	1	5026 - 5030				
74A	61802-08040	BOLT,FLANGED	1	5026 - 5030				
75A	62256-29310	SCREW	1	5026 - 5030				
76A	61802-05020	BOLT,FLANGED	2	5026 - 5030				
77A	61802-06012	BOLT,FLANGED	2	5026 - 5030				
81A	62480-21121	NUT,FLANGED	1	5026 - 5030				
82A	62480-21081	NUT,FLANGED	1	5026 - 5030				
91A	62701-40081	WASHER,PLANE	2	5026 - 5030				
92A	62701-40061	WASHER,PLANE	1	5026 - 5030				
101A	37810-60180	KNOB	1	5026 - 5030		Y01		
102A	34500-25790	SHAFT	1	5026 - 5030				
103A	03501-36880	BOOT	1	5026 - 5030				
104A	73225-00310	COUPLER,CABLE	1	5026 - 5029				
104B	32210-72420	CAP	1	5030 - 5030	B			
105A	73225-00360	COUPLER,CABLE	1	5026 - 5029				
105B	41533-70320	PLUG,ELASTIC	6	5030 - 5030	B			
106A	73213-00100	TERMINAL	6	5026 - 5029				
106B	33300-70200	TERMINAL	6	5030 - 5030	B			
114A	35020-70210	SWITCH ASSY	1	5026 - 5030		01		
115A	35020-70220	SWITCH ASSY	1	5026 - 5030		01		
121A	31200-37110	COVER	1	5026 - 5030				
122A	31200-37120	COVER	1	5026 - 5030				
123A	31205-41870	COVER	1	5026 - 5030				
124A	35100-20330	SCREW	11	5026 - 5030				
125A	35100-20200	SCREW	2	5026 - 5030				
131A	30062-60050	ARMREST	1	5026 - 5030		Y02		
132A	37810-20480	KNOB	1	5026 - 5030				
133A	40901-54520	BRACKET	1	5026 - 5030				
141A	35106-70170	SCREW,TAPPING	4	5026 - 5030		02		
151A	61802-06020	BOLT,FLANGED	1	5026 - 5030				
201A	43900-24300	BOLT	1	5026 - 5030				
202A	30020-24770	ARM	1	5026 - 5030				
203A	45200-26750	RING	1	5026 - 5030				
204A	45200-26760	RING	1	5026 - 5030				
205A	32224-20140	CAP,ELASTIC	1	5026 - 5030				

silvermorn.co.uk

CONTROL LEVER GROUP

SYM-BOL	PART NUMBER	PART NAME	UNIT Q,TY	SERIAL (A) - (B)	REMARKS N P D	(A) (B)	(C) (D)	REMARK
206A	88120-11200	WASHER,CONICAL SPR	1	5026 - 5030				
207A	61121-12008	BOLT,SOCKET	1	5026 - 5030				

silverhorn.co.uk

MEMO

silverhorn.co.uk

CONTROL LEVER GROUP

<S/N 5031 - >

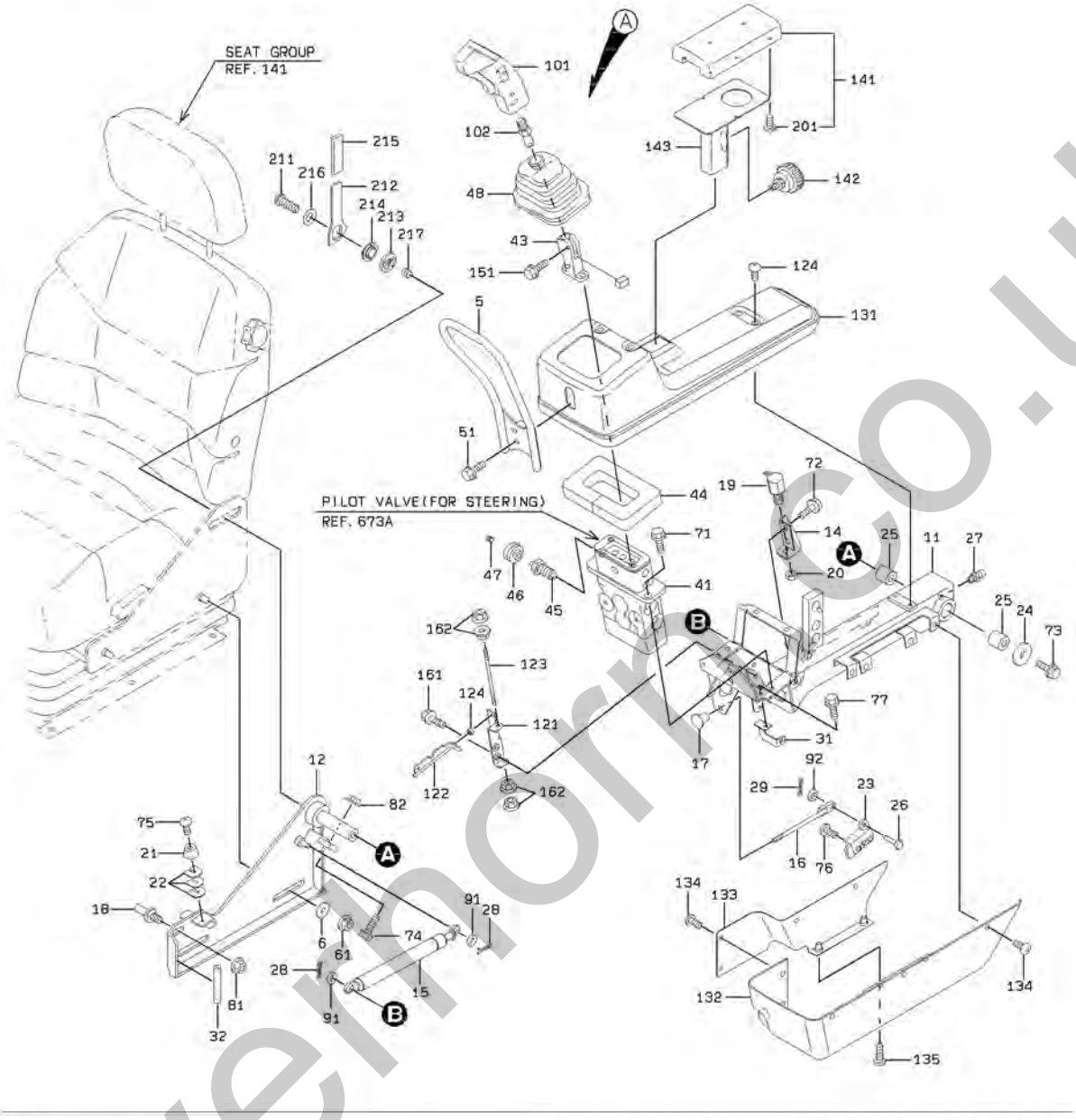

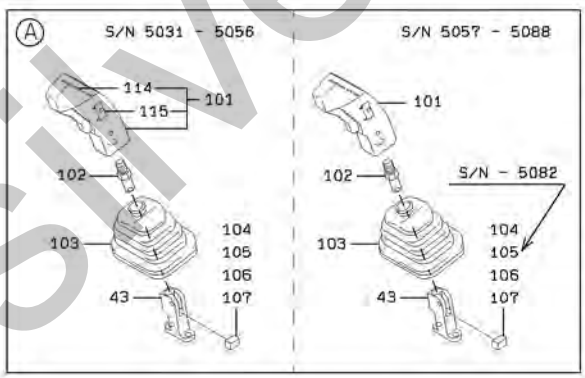

silvermorr.co.uk

CONTROL LEVER GROUP

SYM-BOL	PART NUMBER	PART NAME	UNIT Q,TY	SERIAL (A)	-	(B)	REMARKS N P D	(A)	(B)	(C)	(D)	REMARK
5A	38130-27210	HANDRAIL	1	5031	-							
6A	46011-20180	WASHER,PLANE	2	5031	-							
11A	40902-31820	BRACKET	1	5031	-	5054						
11B	40902-41080	BRACKET	1	5055	-		C					
12A	40902-31860	BRACKET	1	5031	-	5054						
12B	40902-41090	BRACKET	1	5055	-		C					
14A	40901-54460	BRACKET	1	5031	-							
15A	35617-60050	SPRING,GAS	1	5031	-							
16A	45870-26450	ROD	1	5031	-							
17A	37810-20460	KNOB	1	5031	-							
18A	40044-21780	PIN,HEAD	1	5031	-							
19A	35010-60010	SWITCH	1	5031	-							
20A	37600-20150	NUT	1	5031	-							
21A	35440-20960	STOPPER	1	5031	-							
22A	34200-25370	SHIM	3	5031	-	5034						
22B	45870-28530	ROD	1	5035	-		C					
23A	32151-60080	CATCH ASSY	1	5031	-							
24A	46011-20630	WASHER,PLANE	1	5031	-							
25A	88811-02225	BUSHING	2	5031	-							
26A	63057-06016	PIN,HEAD	1	5031	-							
27A	75011-25400	NIPPLE,GREASE	1	5031	-							
28A	63002-02016	PIN,SPLIT	2	5031	-							
29A	63002-01612	PIN,SPLIT	1	5031	-							
31A	41619-58980	PLATE	1	5031	-							
32A	34041-24320	STRIP, SEAL	2	5031	-							
41A	38560-60580	VALVE,PILOT	1	5031	-							REF.673
43A	45600-23980	LEVER	1	5031	-							
44A	35680-55910	SPONGE	1	5031	-							
45A	41585-20080	PLUNGER	1	5031	-							
46A	43550-21010	HOLDER	1	5031	-							
47A	61121-05008	BOLT,SOCKET	1	5031	-							
48A	03501-36880	BOOT	1	5089	-							
51A	61802-08030	BOLT,FLANGED	2	5031	-							
61A	62480-21081	NUT,FLANGED	2	5031	-							
71A	61802-08025	BOLT,FLANGED	2	5031	-							
72A	61802-06016	BOLT,FLANGED	2	5031	-							
73A	61802-12020	BOLT,FLANGED	1	5031	-							
74A	61802-08040	BOLT,FLANGED	1	5031	-							
75A	62256-29310	SCREW	1	5031	-							
76A	61802-05020	BOLT,FLANGED	2	5031	-							
77A	61802-06012	BOLT,FLANGED	1	5031	-							
81A	62480-21121	NUT,FLANGED	1	5031	-							
82A	62480-21081	NUT,FLANGED	1	5031	-							
91A	62701-40081	WASHER,PLANE	2	5031	-							
92A	62701-40061	WASHER,PLANE	1	5031	-							
101A	37810-60180	KNOB	1	5031	-	5056		Y01				
101B	37810-60280	KNOB	1	5057	-	5082	C					
101C	37810-60340	KNOB	1	5083	-		B					
102A	34500-25790	SHAFT	1	5031	-							
103A	03501-36880	BOOT	1	5031	-	5088	D					
104A	32210-72420	CAP	1	5031	-	5082						
104B	33300-71250	CONNECTOR	1	5083	-	5088	B D					
105A	41533-70320	PLUG,ELASTIC	6	5031	-	5082	D					
106A	33300-70200	TERMINAL	6	5031	-	5082						
106B	35930-70590	TERMINAL	9	5083	-	5088	B D					
107A	44950-70610	RETAINER	1	5031	-	5082						
107B	44950-70680	RETAINER	2	5083	-	5088	B D					
114A	35020-70210	SWITCH ASSY	1	5031	-	5056	D	01				
115A	35020-70220	SWITCH ASSY	1	5031	-	5056	D	01				
121A	41619-48260	PLATE	1	5031	-							
122A	45870-28180	ROD	1	5031	-	5034						
122B	45870-28530	ROD	1	5035	-		C					
123A	45870-28200	ROD	1	5031	-							
124A	44822-21640	RUBBER,CUSHION	1	5031	-							
131A	31200-37110	COVER	1	5031	-							
132A	31200-37120	COVER	1	5031	-							

silverhorn.co.uk

CONTROL LEVER GROUP

SYM-BOL	PART NUMBER	PART NAME	UNIT Q,TY	SERIAL (A) - (B)	REMARKS N P D	(A) (B)	(C) (D)	REMARK
133A	31205-41870	COVER	1	5031 -				
134A	35100-20330	SCREW	11	5031 -				
135A	35100-20200	SCREW	2	5031 -				
141A	30062-60050	ARMREST	1	5031 -		Y02		
142A	37810-20480	KNOB	1	5031 -				
143A	40901-54520	BRACKET	1	5031 -				
151A	61802-06020	BOLT,FLANGED	1	5031 -				
161A	61802-06016	BOLT,FLANGED	2	5031 -				
162A	62480-21061	NUT,FLANGED	4	5031 -				
201A	35106-70170	SCREW,TAPPING	4	5031 -		02		
211A	43900-24300	BOLT	1	5031 -				
212A	30020-24770	ARM	1	5031 -				
213A	45200-26750	RING	1	5031 -				
214A	45200-26760	RING	1	5031 -				
215A	32224-20140	CAP,ELASTIC	1	5031 -				
216A	88120-11200	WASHER,CONICAL SPR	1	5031 -				
217A	61121-12008	BOLT,SOCKET	1	5031 -				

silverhorn.co.uk

MEMO

silverhorn.co.uk

PILOT VALVE (FOR STEERING)

<S/N 5001 - 5030>

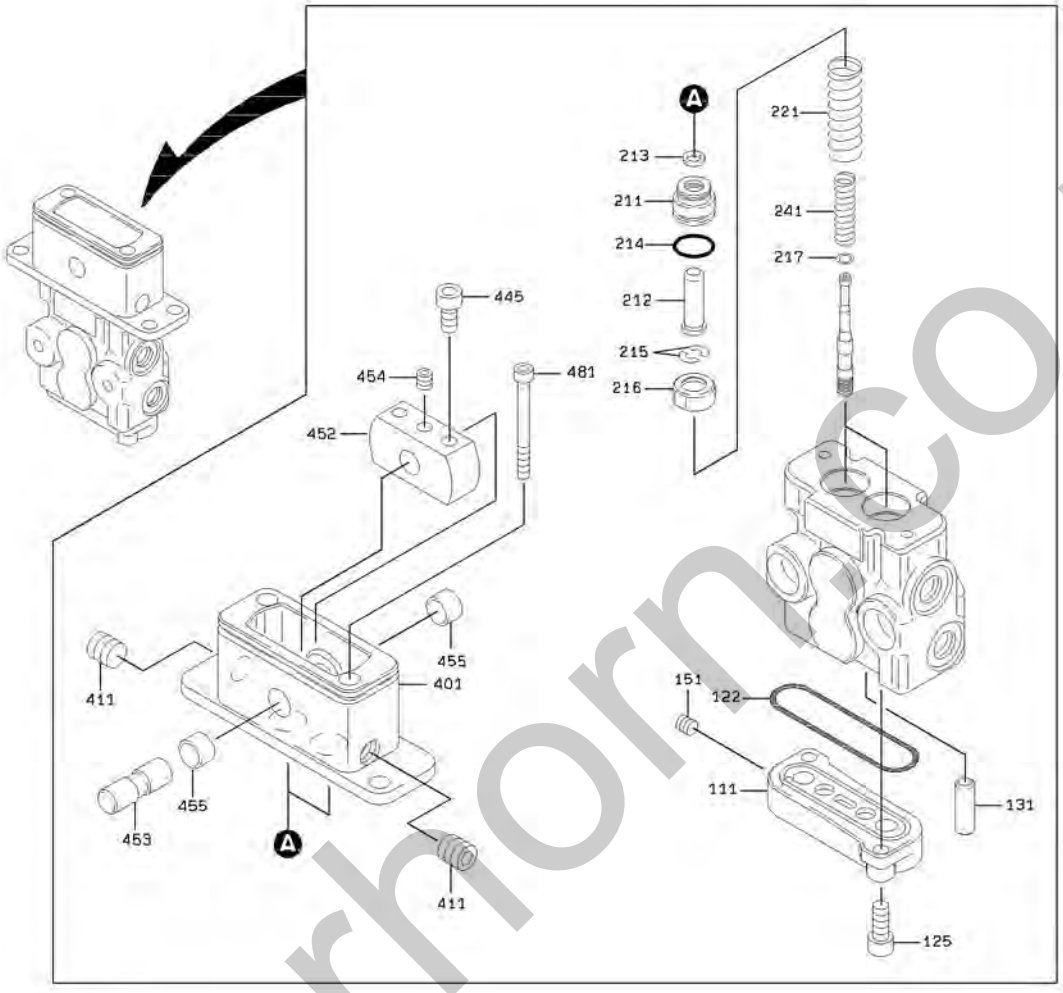

silverhorn.co.uk

PILOT VALVE (FOR STEERING)

SYM-BOL	PART NUMBER	PART NAME	UNIT Q,TY	SERIAL (A) - (B)	REMARKS N P D	(A) (B)	(C) (D)	REMARK
000A	38560-60530	VALVE,PILOT	1	5001 - 5030				
111A	41600-71190	PLATE	1	5001 - 5030				
122A	65210-22060	RING,O	1	5001 - 5030				
125A	61101-08040	BOLT,SOCKET	2	5001 - 5030				
131A	40840-71600	BUSHING	1	5001 - 5030				
151A	41530-74280	PLUG	1	5001 - 5030				
211A	41530-72410	PLUG	2	5001 - 5030				
212A	45887-70280	ROD,PUSH	2	5001 - 5030				
213A	34000-70600	SEAL	2	5001 - 5030				
214A	65210-12020	RING,O	2	5001 - 5030				
215A	46011-70380	WASHER,PLANE	4	5001 - 5030				
216A	33930-70330	SEAT,SPRING	2	5001 - 5030				
217A	34200-70850	SHIM	2	5001 - 5030				
221A	35600-75680	SPRING	2	5001 - 5030				
241A	35600-75690	SPRING	2	5001 - 5030				
401A	31200-72130	COVER	1	5001 - 5030				
411A	43956-70690	BOLT,SOCKET	2	5001 - 5030				
445A	61101-08016	BOLT,SOCKET	2	5001 - 5030				
452A	37200-70070	DISC	1	5001 - 5030				
453A	31611-70020	CAMSHAFT	1	5001 - 5030				
454A	43956-70680	BOLT,SOCKET	1	5001 - 5030				
455A	88811-01410	BUSHING	2	5001 - 5030				
481A	61101-06060	BOLT,SOCKET	2	5001 - 5030				

silverhorn.co.uk

PILOT VALVE (FOR STEERING)

<S/N 5031 - >

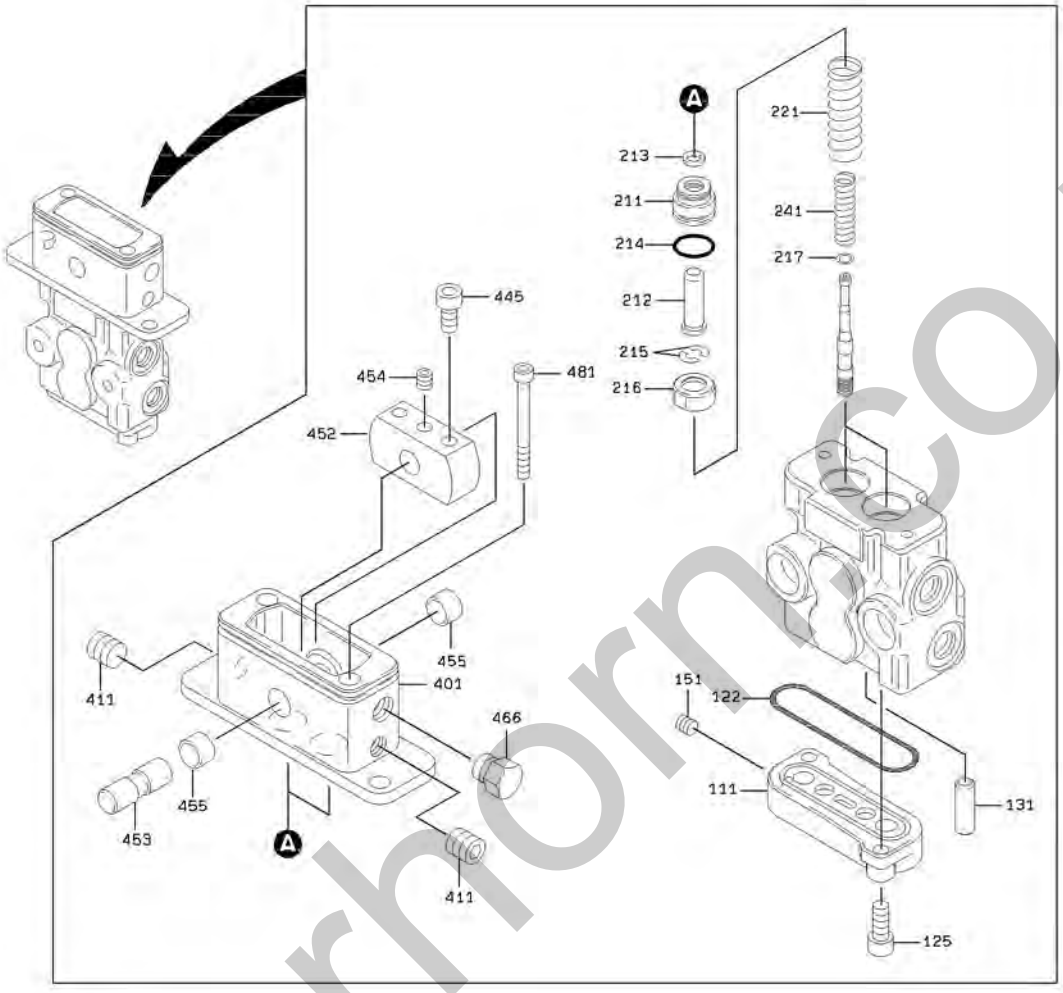

silverhorn.co.uk

PILOT VALVE (FOR STEERING)

SYM-BOL	PART NUMBER	PART NAME	UNIT Q,TY	SERIAL (A) - (B)	REMARKS N P D	(A) (B)	(C) (D)	REMARK
000A	38560-60580	VALVE,PILOT	1	5031 -				
111A	41600-71190	PLATE	1	5031 -				
122A	65210-22060	RING,O	1	5031 -				
125A	61101-08040	BOLT,SOCKET	2	5031 -				
131A	40840-71600	BUSHING	1	5031 -				
151A	41530-74280	PLUG	1	5031 -				
211A	41530-72410	PLUG	2	5031 -				
212A	45887-70280	ROD,PUSH	2	5031 -				
213A	34000-70600	SEAL	2	5031 -				
214A	65210-12020	RING,O	2	5031 -				
215A	46011-70380	WASHER,PLANE	4	5031 -				
216A	33930-70330	SEAT,SPRING	2	5031 -				
217A	34200-70850	SHIM	2	5031 -				
221A	35600-75680	SPRING	2	5031 -				
241A	35600-75690	SPRING	2	5031 -				
401A	31200-73300	COVER	1	5031 -				
411A	43956-70690	BOLT,SOCKET	2	5031 -				
445A	61101-08016	BOLT,SOCKET	2	5031 -				
452A	37200-70130	DISC	1	5031 -				
453A	31611-70020	CAMSHAFT	1	5031 -				
454A	61121-08008	BOLT,SOCKET	1	5031 -				
455A	40840-72730	BUSHING	2	5031 -				
466A	41530-74850	PLUG	1	5031 -				
481A	61101-06060	BOLT,SOCKET	2	5031 -				

silverhorn.co.uk

LOADING HYDRAULIC LINE - FRONT CHASSIS

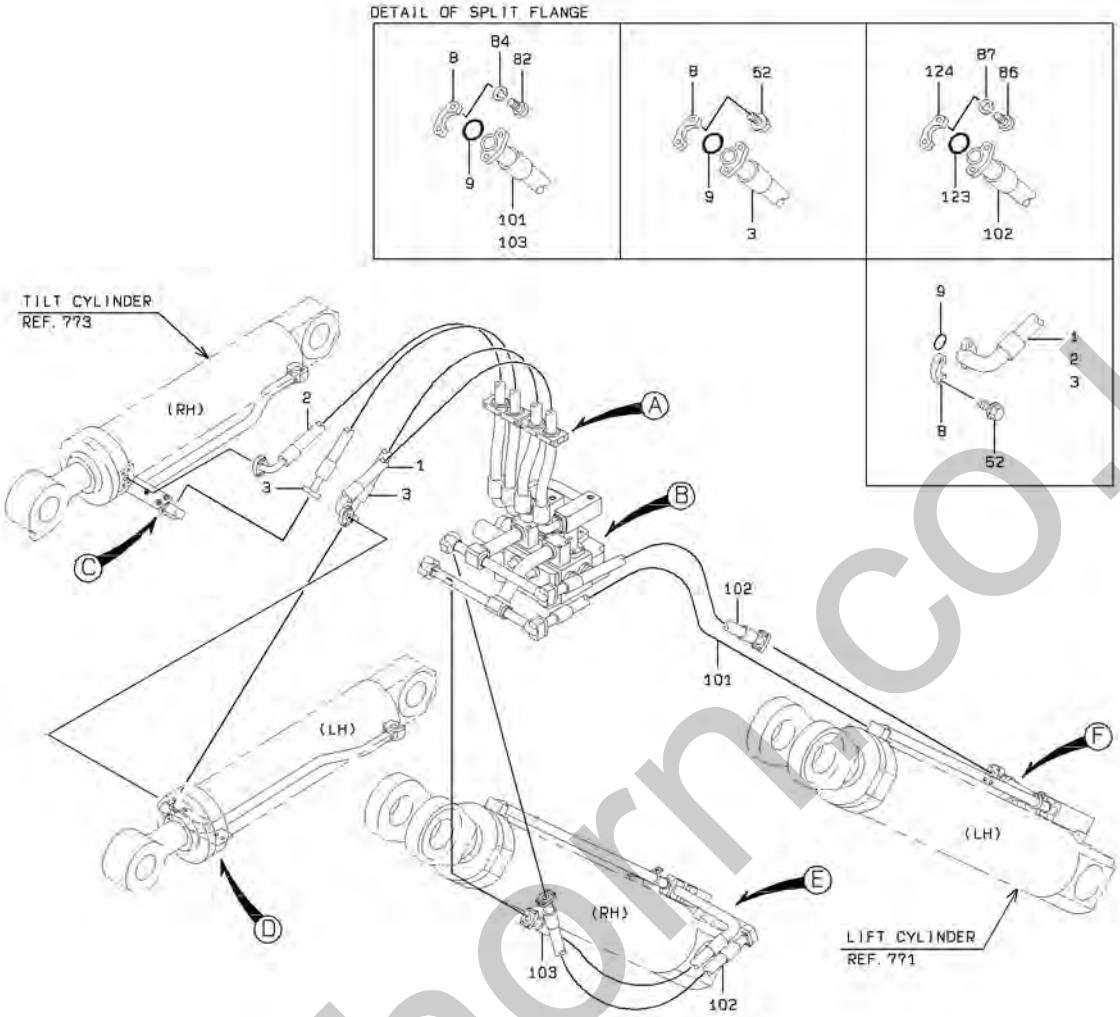

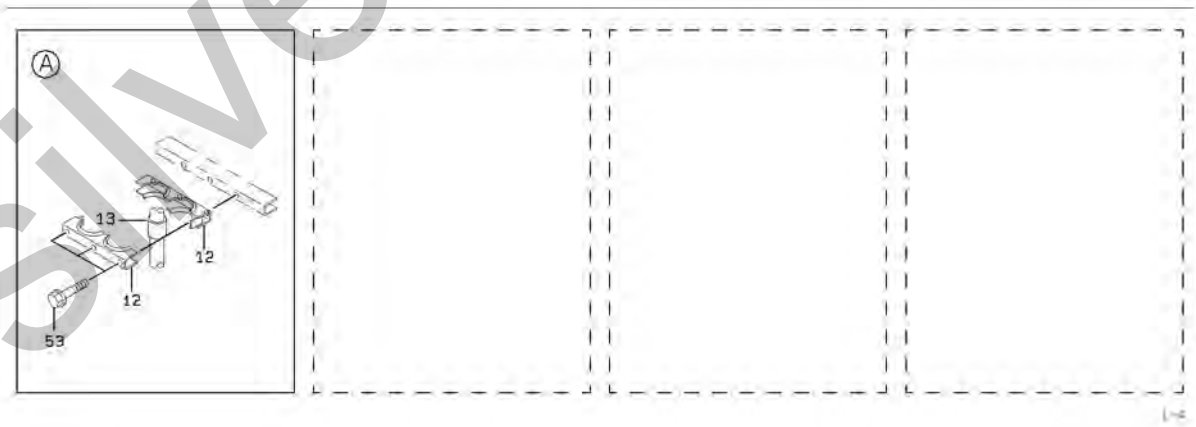

silverhorn.co.uk

LOADING HYDRAULIC LINE - FRONT CHASSIS

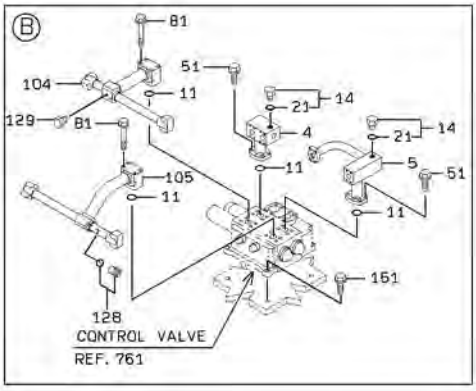

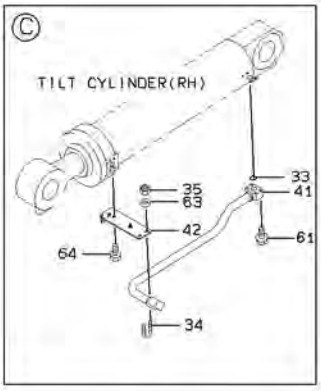

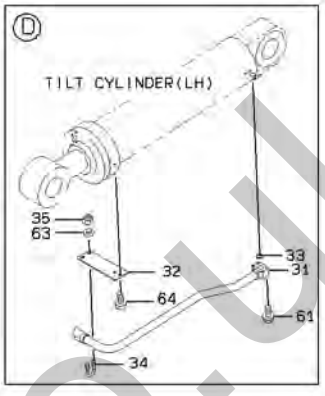

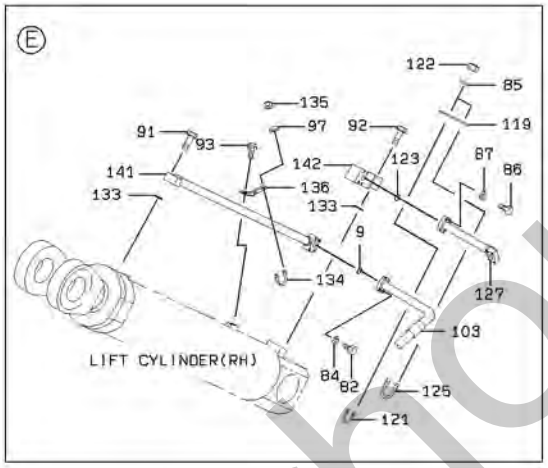

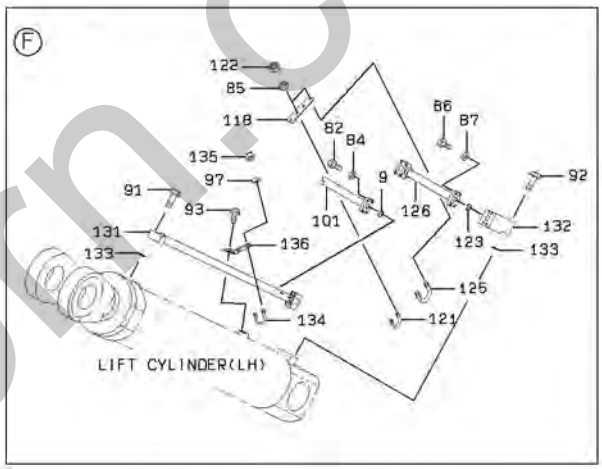

silverhorn.co.uk

LOADING HYDRAULIC LINE - FRONT CHASSIS

SYM-BOL	PART NUMBER	PART NAME	UNIT Q,TY	SERIAL (A) - (B)	REMARKS N P D	(A) (B)	(C) (D)	REMARK
1A	43113-24990	HOSE,HIGH PRESSURE	1	5001 -				
2A	43113-25000	HOSE,HIGH PRESSURE	1	5001 -				
3A	43113-24980	HOSE,HIGH PRESSURE	2	5001 -				
4A	38755-37820	PIPE,OIL	1	5001 - 5030				
4B	38775-28550	PIPE,OIL	1	5031 -	C			
5A	38755-37830	PIPE,OIL	1	5001 - 5030				
5B	38775-28570	PIPE,OIL	1	5031 -	C			
8A	69811-25210	FLANGE,SPLIT	24	5001 -				
9A	65220-31024	RING,O	12	5001 -				
11A	65220-41003	RING,O	4	5001 -				
12A	32924-20040	CLAMP,MULTIPLE	4	5001 -				
13A	40850-70090	BUSHING,ELASTIC	4	5001 -				
14A	88390-21304	PLUG	2	5001 -		Y01		
21A	65210-12011	RING,O	1	5001 -		01		
31A	38755-90250	PIPE,OIL	1	5001 -				FR (LH)
32A	41601-23510	PLATE	1	5001 -				
33A	65220-31024	RING,O	2	5001 -				
34A	43962-20030	BOLT,U	2	5001 -				
35A	88031-06101	NUT,SELF-LOCKING	4	5001 -				
41A	38755-90260	PIPE,OIL	1	5001 -				FR (RH)
42A	41612-54680	PLATE	1	5001 -				
51A	61802-12030	BOLT,FLANGED	8	5001 -				
52A	61802-10025	BOLT,FLANGED	32	5001 - 5030				
52B	61802-10030	BOLT,FLANGED	A/R	5031 -	C			
53A	61802-10095	BOLT,FLANGED	6	5001 -				
61A	61802-10050	BOLT,FLANGED	8	5001 -				
63A	46011-21650	WASHER,PLANE	4	5001 -				
64A	61802-12025	BOLT,FLANGED	4	5001 -				
81A	61802-12100	BOLT,FLANGED	8	5001 -				
82A	61057-10030	BOLT	16	5001 -				
84A	62721-10100	WASHER,SPRING	16	5001 -				
85A	62710-18101	WASHER,PLANE	8	5001 -				
86A	61057-12030	BOLT	24	5001 -				
87A	62721-12100	WASHER,SPRING	24	5001 -				
91A	61802-10050	BOLT,FLANGED	8	5001 -				
92A	61802-10090	BOLT,FLANGED	8	5001 -				
93A	61802-12020	BOLT,FLANGED	4	5001 -				
97A	46011-21650	WASHER,PLANE	4	5001 -				
101A	43113-28110	HOSE,HIGH PRESSURE	1	5001 -				
102A	68677-70155	HOSE,HIGH PRESSURE	2	5001 -				
103A	43113-28130	HOSE,HIGH PRESSURE	1	5001 -				
104A	38755-56520	PIPE,OIL	1	5001 -				
105A	38755-56490	PIPE,OIL	1	5001 -				
118A	41602-24590	PLATE	1	5001 -				
119A	41602-24600	PLATE	1	5001 -				
121A	43962-20020	BOLT,U	2	5001 -				
122A	88031-06101	NUT,SELF-LOCKING	8	5001 -				
123A	65220-31027	RING,O	6	5001 -				
124A	69811-32210	FLANGE,SPLIT	12	5001 -				
125A	43962-20040	BOLT,U	2	5001 -				
126A	38755-49190	PIPE,OIL	1	5001 -				
127A	38755-49200	PIPE,OIL	1	5001 -				
128A	41530-21610-7	PLUG	1	5001 -				
129A	41530-21650-7	PLUG	1	5001 -				
131A	38755-90270	PIPE,OIL	1	5001 -				FR (LH)
132A	41410-27740	BLOCK	1	5001 -				FR (LH)
133A	65220-31024	RING,O	4	5001 -				
134A	43962-20030	BOLT,U	2	5001 -				
135A	88031-06101	NUT,SELF-LOCKING	4	5001 -				
136A	41611-23220	PLATE	2	5001 -				
141A	38755-90280	PIPE,OIL	1	5001 -				FR (RH)
142A	41410-27750	BLOCK	1	5001 -				FR (RH)
151A	61802-12045	BOLT,FLANGED	4	5001 -				

silverthorn.co.uk

MEMO

silverhorn.co.uk

LOADING HYDRAULIC LINE - REAR CHASSIS

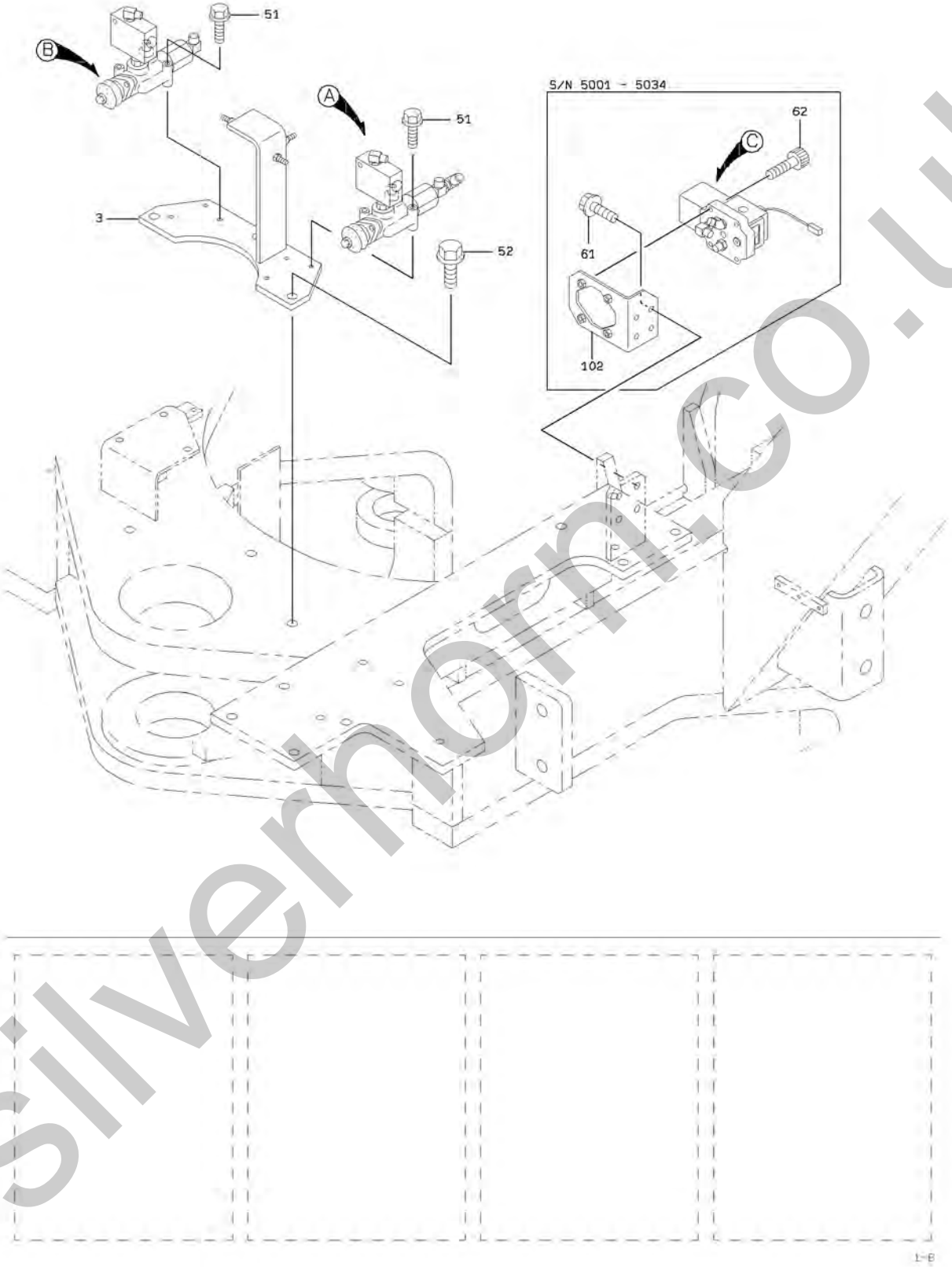

silvermorn.co.uk

LOADING HYDRAULIC LINE - REAR CHASSIS

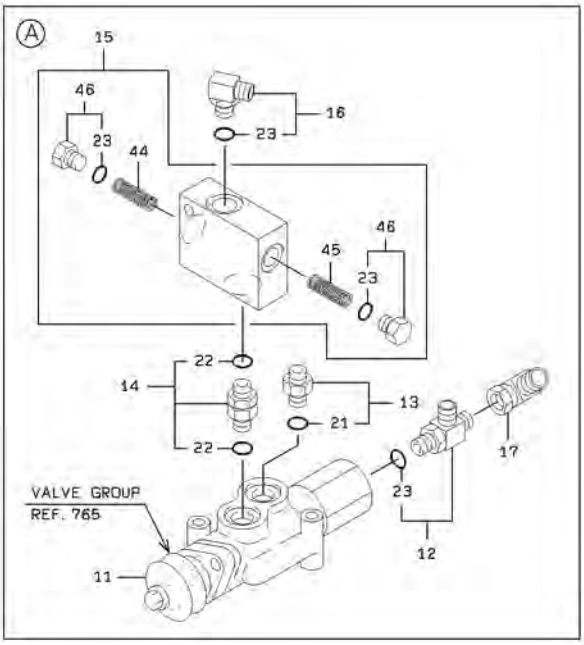

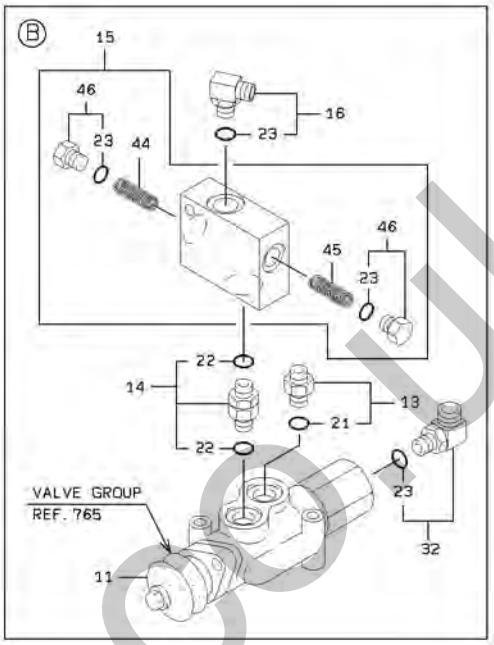

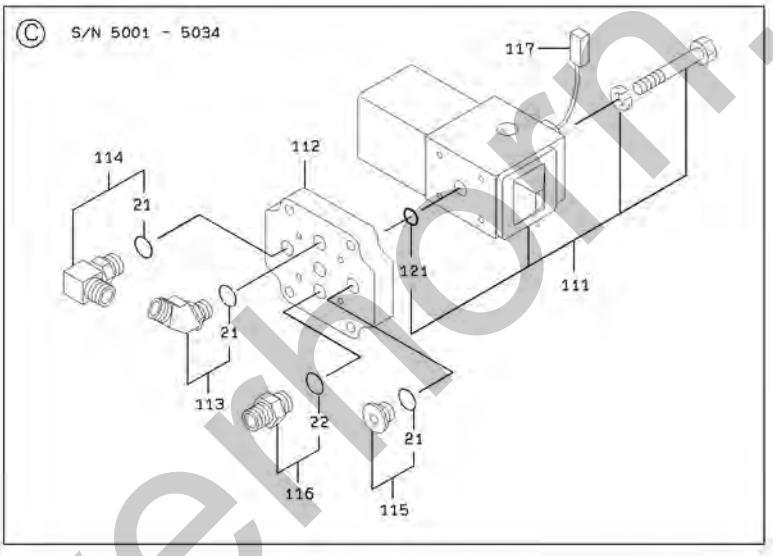

silverhorn.co.uk

LOADING HYDRAULIC LINE - REAR CHASSIS

SYM-BOL	PART NUMBER	PART NAME	UNIT Q,TY	SERIAL (A)	-	(B)	REMARKS N	P	D	(A)	(B)	(C)	(D)	REMARK
3A	41641-26420	PLATE	1	5001	-									
11A	38510-20280	VALVE	2	5001	-									REF.765
12A	30246-21480	ADAPTER,TEE	1	5001	-					Y01				
13A	88201-06706	ADAPTER	2	5001	-						Y02			
14A	30230-21520	ADAPTER	2	5001	-							Y03		
15A	41411-21210	BLOCK ASSY	2	5001	-								Y04	
16A	40732-20140	FLARED FITTING,ELB	2	5001	-					Y01				
17A	30242-20120	ADAPTER,ELBOW UNIO	1	5001	-									
21A	65210-12014	RING,O	1	5001	-						02			
22A	65210-12014	RING,O	2	5001	-							03		
23A	65210-12011	RING,O	1	5001	-					01				
32A	88241-07104	ADAPTER,ELBOW	1	5001	-					Y01				
44A	35600-22930	SPRING	1	5001	-								04	
45A	35600-23030	SPRING	1	5001	-								04	
46A	88390-21304	PLUG	2	5001	-					Y01			04	
51A	61802-08055	BOLT,FLANGED	6	5001	-									
52A	61802-16030	BOLT,FLANGED	4	5001	-									
61A	61802-10030	BOLT,FLANGED	4	5001	-	5034			D					
62A	61101-10045	BOLT,SOCKET	4	5001	-	5034			D					
102A	41618-22310	PLATE	1	5001	-	5034			D					
111A	38553-60220	VALVE,SOLENOID	1	5001	-	5034			D	Y05				
112A	41410-60170	BLOCK	1	5001	-	5034			D					
113A	88241-07206	ADAPTER,ELBOW	1	5001	-	5034			D		Y02			
114A	88241-07106	ADAPTER,ELBOW	1	5001	-	5034			D		Y02			
115A	88390-21506	PLUG	1	5001	-	5034			D		Y02			
116A	88201-06706	ADAPTER	1	5001	-	5034			D			Y03		
117A	33193-25930	CABLE ASSY	1	5001	-	5034			D					
121A	47131-71290	RING,O	5	5001	-	5034			D	05				

silverhorn.co.uk

MEMO

silverhorn.co.uk

LOADING HYDRAULIC LINE - REAR CHASSIS (FOR SUCTION)

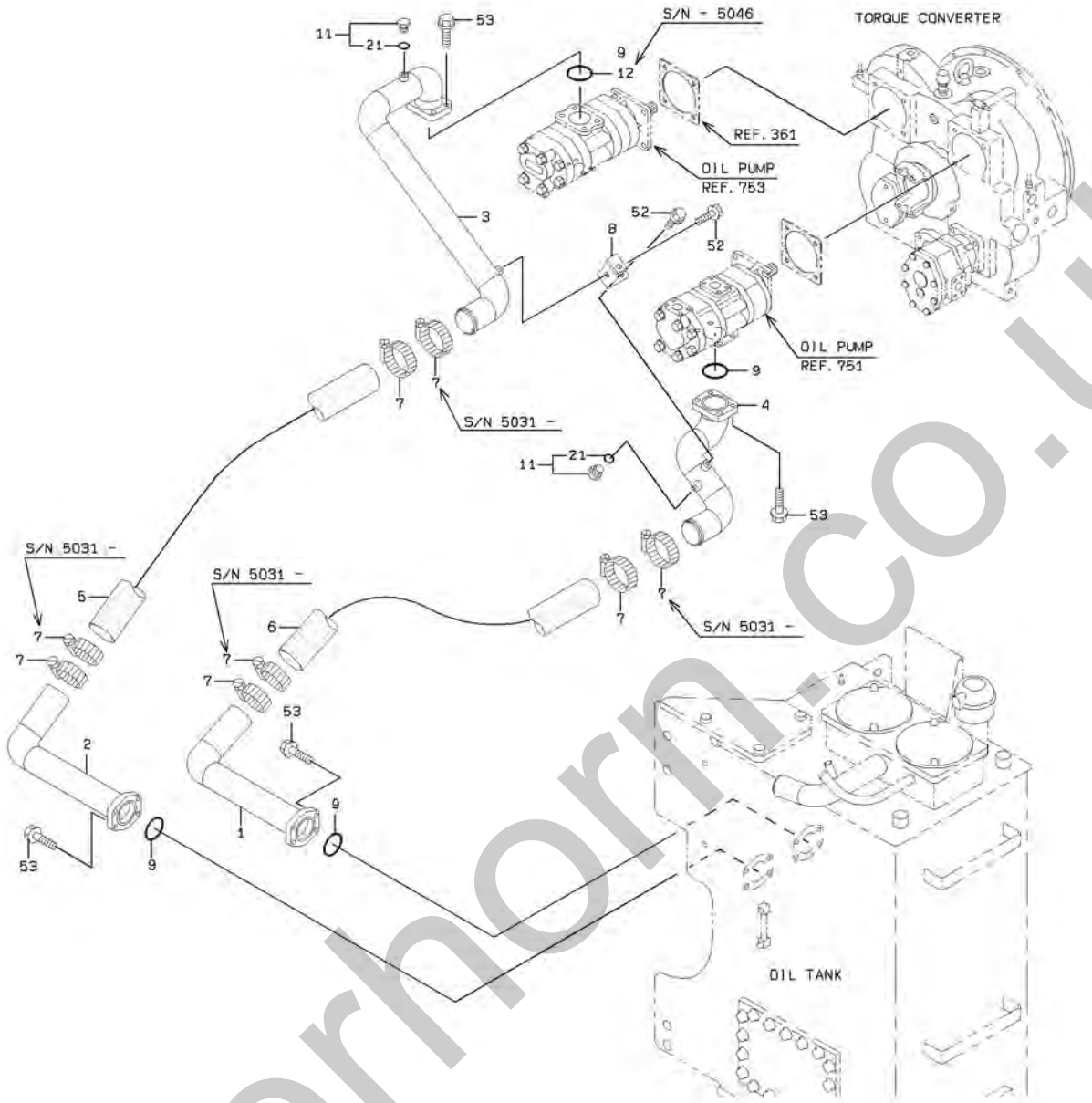

silverhorn.co.uk

LOADING HYDRAULIC LINE - REAR CHASSIS (FOR SUCTION)

SYM-BOL	PART NUMBER	PART NAME	UNIT Q,TY	SERIAL (A) - (B)	REMARKS N P D	(A) (B)	(C) (D)	REMARK
1A	38755-21570	PIPE,OIL	1	5001 -				
2A	38755-21580	PIPE,OIL	1	5001 -				
3A	38755-52770	PIPE,OIL	1	5001 -				
4A	38755-38240	PIPE,OIL	1	5001 -				
5A	67041-75092	HOSE,HEAT RESISTIN	1	5001 -				L=920
6A	67041-75085	HOSE,HEAT RESISTIN	1	5001 -				L=850
7A	69030-10500	BAND,HOSE-HIGH TOR	4	5001 - 5030				
7B	69030-10500	BAND,HOSE-HIGH TOR	8	5031 -				
8A	41603-42860	PLATE	1	5001 -				
9A	65220-41010	RING,O	3	5001 - 5046				
9B	65220-41010	RING,O	4	5047 -				
11A	88390-21304	PLUG	2	5001 -		Y01		
12A	65220-41006	RING,O	1	5001 - 5046	D			
21A	65210-12011	RING,O	1	5001 -		01		
52A	61802-12025	BOLT,FLANGED	2	5001 -				
53A	61802-12030	BOLT,FLANGED	16	5001 -				

silverhorn.co.uk

LOADING HYDRAULIC LINE - REAR CHASSIS (FOR PUMP)

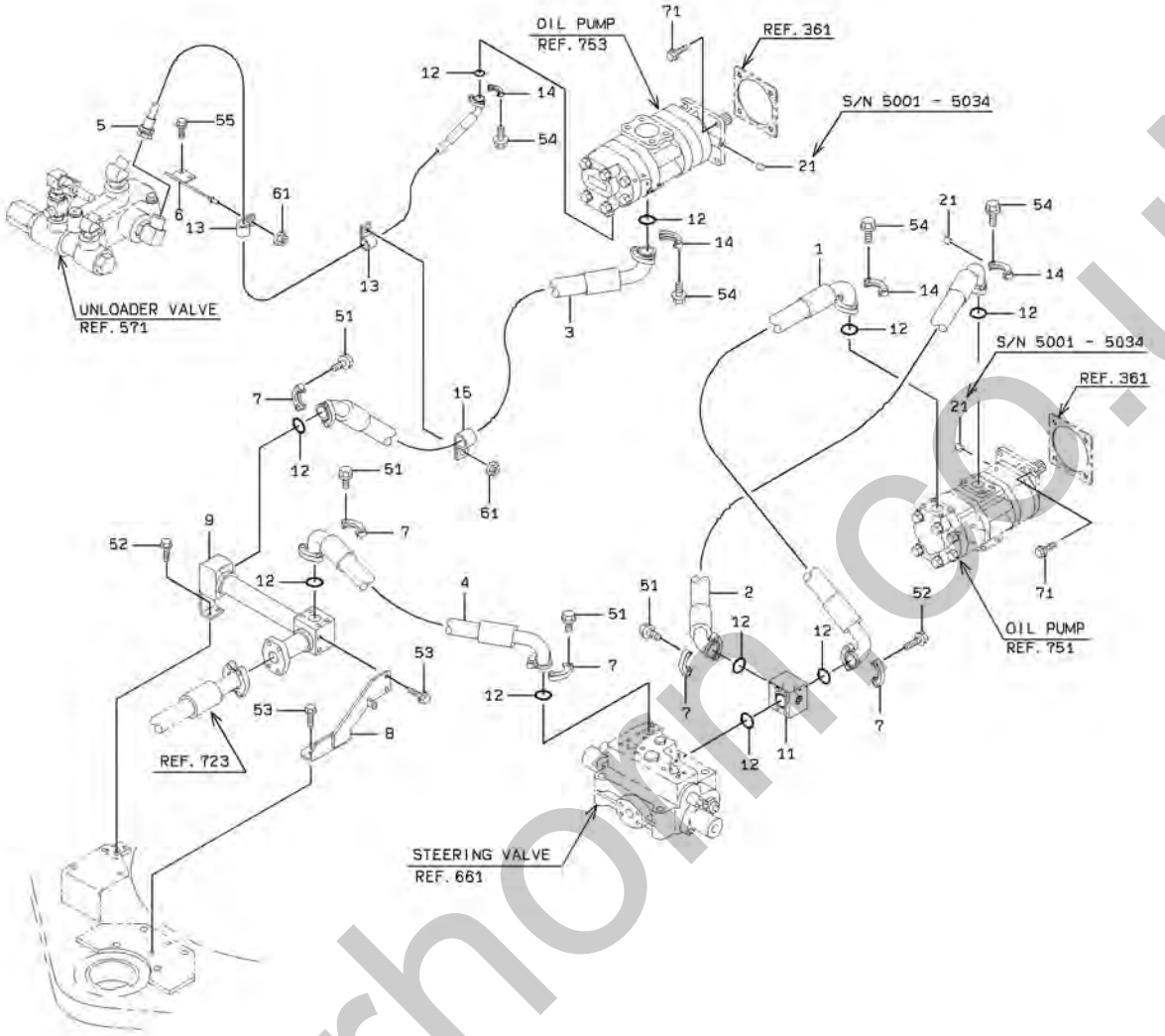

silverhoe.co.uk

LOADING HYDRAULIC LINE - REAR CHASSIS (FOR PUMP)

SYM-BOL	PART NUMBER	PART NAME	UNIT Q,TY	SERIAL (A)	-	(B)	REMARKS N	P	D	(A)	(B)	(C)	(D)	REMARK
1A	43113-26430	HOSE,HIGH PRESSURE	1	5001	-									
2A	43113-25090	HOSE,HIGH PRESSURE	1	5001	-									
3A	43113-37750	HOSE,HIGH PRESSURE	1	5001	-									
4A	68688-70078	HOSE,HIGH PRESSURE	1	5001	-									
5A	43113-37760	HOSE,HIGH PRESSURE	1	5001	-									
6A	41618-39210	PLATE	1	5001	-									
7A	69811-32210	FLANGE,SPLIT	10	5001	-									
8A	40900-53940	BRACKET	1	5001	-									
9A	38755-37650	PIPE,OIL	1	5001	-									
11A	41410-33610	BLOCK	1	5001	-									
12A	65220-31027	RING,O	10	5001	-									
13A	72010-37000	HOLDER,HOSE	2	5001	-									D=37
14A	40511-20010	FLANGE,SPLIT	8	5001	-									
15A	72010-49000	HOLDER,HOSE	1	5001	-									D=49
21A	40035-20030	PIN,TAPER	2	5001	-	5034			D					
51A	61802-12030	BOLT,FLANGED	16	5001	-									
52A	61802-12105	BOLT,FLANGED	4	5001	-									
53A	61802-10016	BOLT,FLANGED	4	5001	-									
54A	61802-10030	BOLT,FLANGED	16	5001	-									
55A	61802-08016	BOLT,FLANGED	2	5001	-									
61A	62480-21081	NUT,FLANGED	2	5001	-									
71A	61802-12025	BOLT,FLANGED	8	5001	-									

silverhorn.co.uk

LOADING HYDRAULIC LINE - REAR CHASSIS (FOR RETURN)

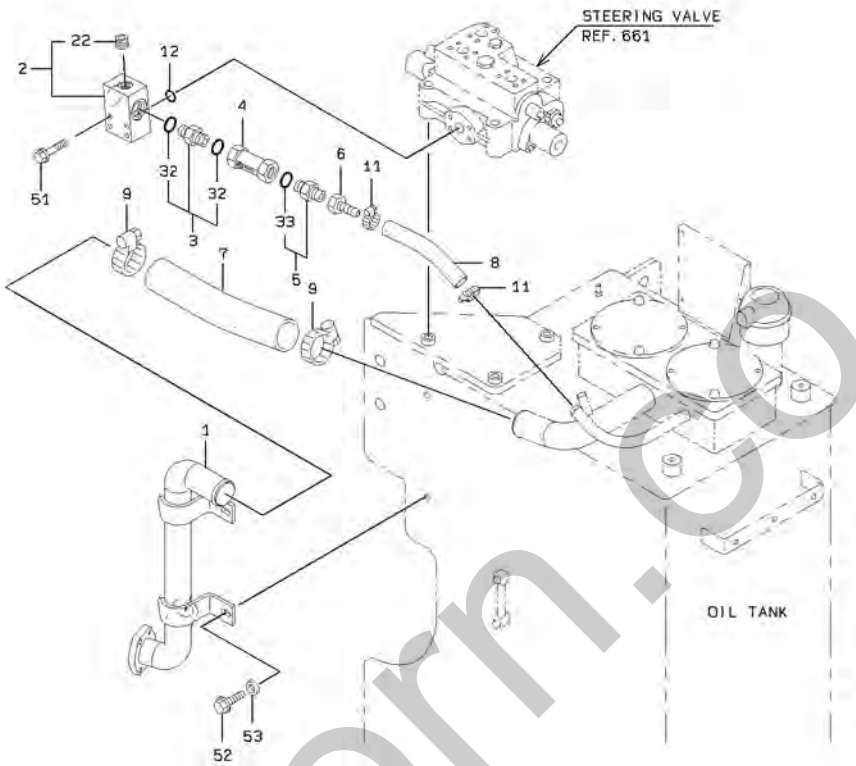

silverhorn.co.uk

LOADING HYDRAULIC LINE - REAR CHASSIS (FOR RETURN)

SYM-BOL	PART NUMBER	PART NAME	UNIT Q,TY	SERIAL (A) - (B)	REMARKS N P D	(A)	(B)	(C)	(D)	REMARK
1A	38755-58960	PIPE,OIL	1	5001 -						
2A	41410-32190	BLOCK	1	5001 -		Y01				
3A	38901-20890	FITTING,SOCKET	1	5001 -			Y02			
4A	38534-60180	VALVE ASSY,CHECK	1	5001 - 5054	N					
4B	38534-60330	VALVE ASSY,CHECK	1	5055 -	C					
5A	88201-06724	ADAPTER	1	5001 -				Y03		
6A	88511-03240	NIPPLE,HOSE	1	5001 -						
7A	67040-60000	HOSE,HEAT RESISTIN	1 M	5001 -						L=400
8A	67041-38030	HOSE,HEAT RESISTIN	1	5001 -						L=300
9A	69030-07900	BAND,HOSE-HIGH TOR	2	5001 -						
11A	69030-06700	BAND,HOSE-HIGH TOR	2	5001 -						
12A	65220-31024	RING,O	1	5001 -						
22A	88390-16116	PLUG	1	5001 -		01				
32A	65210-12044	RING,O	2	5001 -			02			
33A	65210-12044	RING,O	1	5001 -				03		
51A	61802-10080	BOLT,FLANGED	4	5001 -						
52A	61802-12040	BOLT,FLANGED	2	5001 - 5080						
52B	61033-12040	BOLT	2	5081 -	C					
53A	62710-18121	WASHER,PLANE	2	5001 -						

silverhorn.co.uk

LOADING HYDRAULIC LINE - STEERING CYLINDER

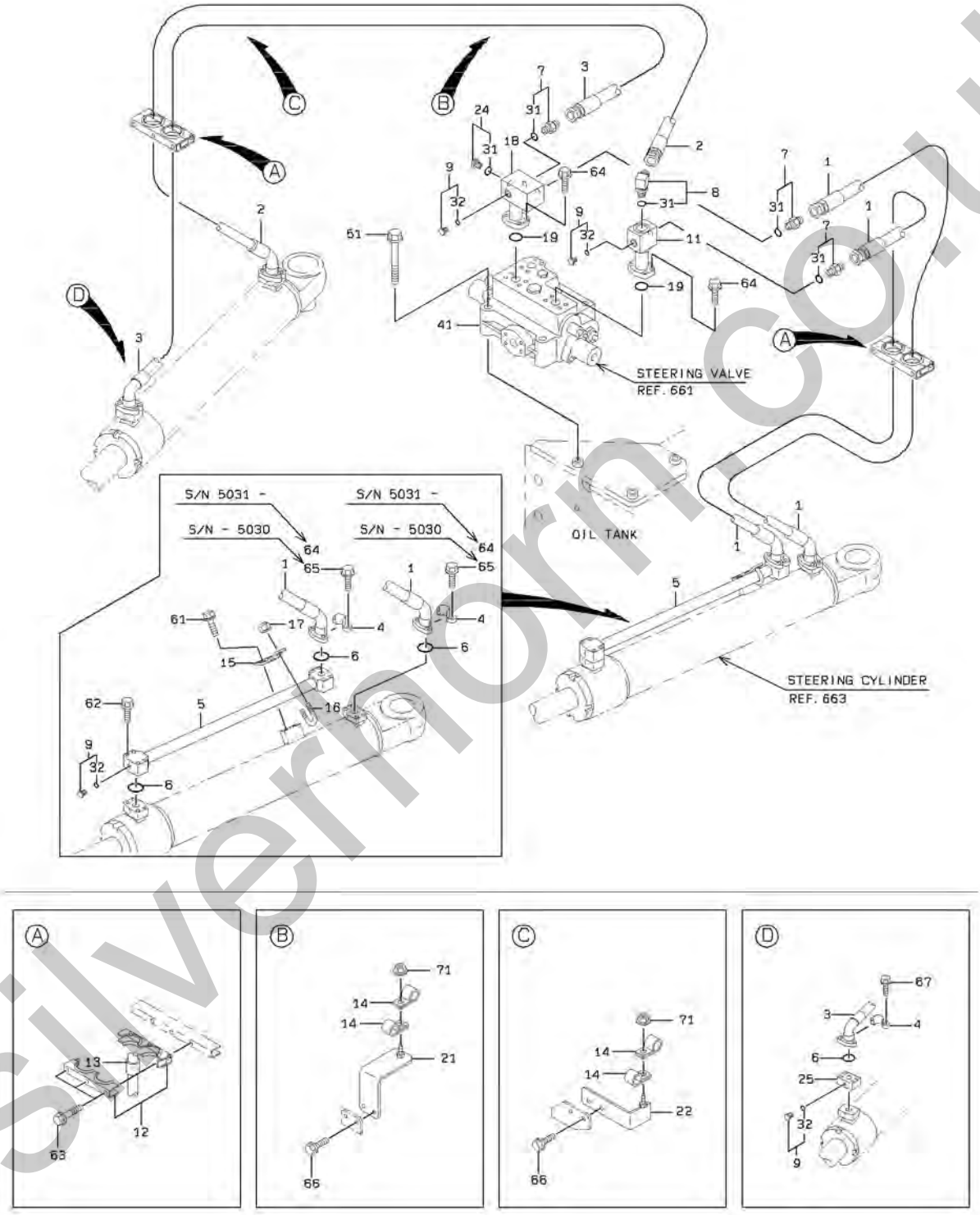

silvermorn.co.uk

LOADING HYDRAULIC LINE - STEERING CYLINDER

SYM-BOL	PART NUMBER	PART NAME	UNIT Q,TY	SERIAL (A)	-	(B)	REMARKS N P D	(A)	(B)	(C)	(D)	REMARK
1A	68650-58132	HOSE,HIGH PRESSURE	2	5001	-							FR (LH)
2A	68650-58260	HOSE,HIGH PRESSURE	1	5001	-	5025						FR (RH)68650-5
2B	68650-58270	HOSE,HIGH PRESSURE	1	5026	-		C					FR (RH)
3A	68658-58255	HOSE,HIGH PRESSURE	1	5001	-							68658-58265
4A	69811-19210	FLANGE,SPLIT	8	5001	-							
5A	38775-22110	PIPE,OIL	1	5001	-							
6A	65220-31019	RING,O	6	5001	-							
7A	88201-06712	ADAPTER	3	5001	-			Y01				
8A	88241-07112	ADAPTER,ELBOW	1	5001	-			Y01				
9A	88390-21304	PLUG	4	5001	-				Y02			
11A	38755-37970	PIPE,OIL	1	5001	-							
12A	32924-20010	CLAMP,MULTIPLE	2	5001	-							
13A	40850-70160	BUSHING,ELASTIC	4	5001	-							
14A	72010-31000	HOLDER,HOSE	A/R	5001	-							(D=31)
15A	41611-23230	PLATE	1	5001	-							
16A	43962-20020	BOLT,U	1	5001	-							
17A	88031-06101	NUT,SELF-LOCKING	2	5001	-							
18A	38755-48620	PIPE,OIL	1	5001	-							
19A	65220-31024	RING,O	2	5001	-							
21A	41617-46580	PLATE	1	5001	-							
22A	41617-46560	PLATE	1	5001	-							
24A	41530-20560	PLUG	1	5001	-			Y01				
25A	30230-21060	ADAPTER	1	5001	-							40510-24600
31A	65210-12024	RING,O	1	5001	-			01				
32A	65210-12011	RING,O	1	5001	-				02			
41A	38523-60510	VALVE ASSY,STEERIN	1	5001	-	5023						REF.661
41B	38523-60580	VALVE ASSY,STEERIN	1	5024	-	5029	C					REF.661
41C	38523-60610	VALVE ASSY,STEERIN	1	5030	-	5080	A					REF.661
41D	38523-60800	VALVE ASSY,STEERIN	1	5081	-		C					REF.661
51A	61802-16110	BOLT,FLANGED	3	5001	-							
61A	61802-12025	BOLT,FLANGED	2	5001	-							
62A	61802-10050	BOLT,FLANGED	4	5001	-							Q'TY 8
63A	61802-08060	BOLT,FLANGED	6	5001	-							
64A	61802-10030	BOLT,FLANGED	8	5001	-	5030						
64B	61802-10030	BOLT,FLANGED	20	5031	-							
65A	61802-10025	BOLT,FLANGED	12	5001	-	5030	D					
66A	61802-10016	BOLT,FLANGED	4	5001	-							
67A	61802-10055	BOLT,FLANGED	4	5001	-							
71A	62480-21081	NUT,FLANGED	2	5001	-							

silvermorn.co.uk

LOADING HYDRAULIC LINE - CENTER PIN

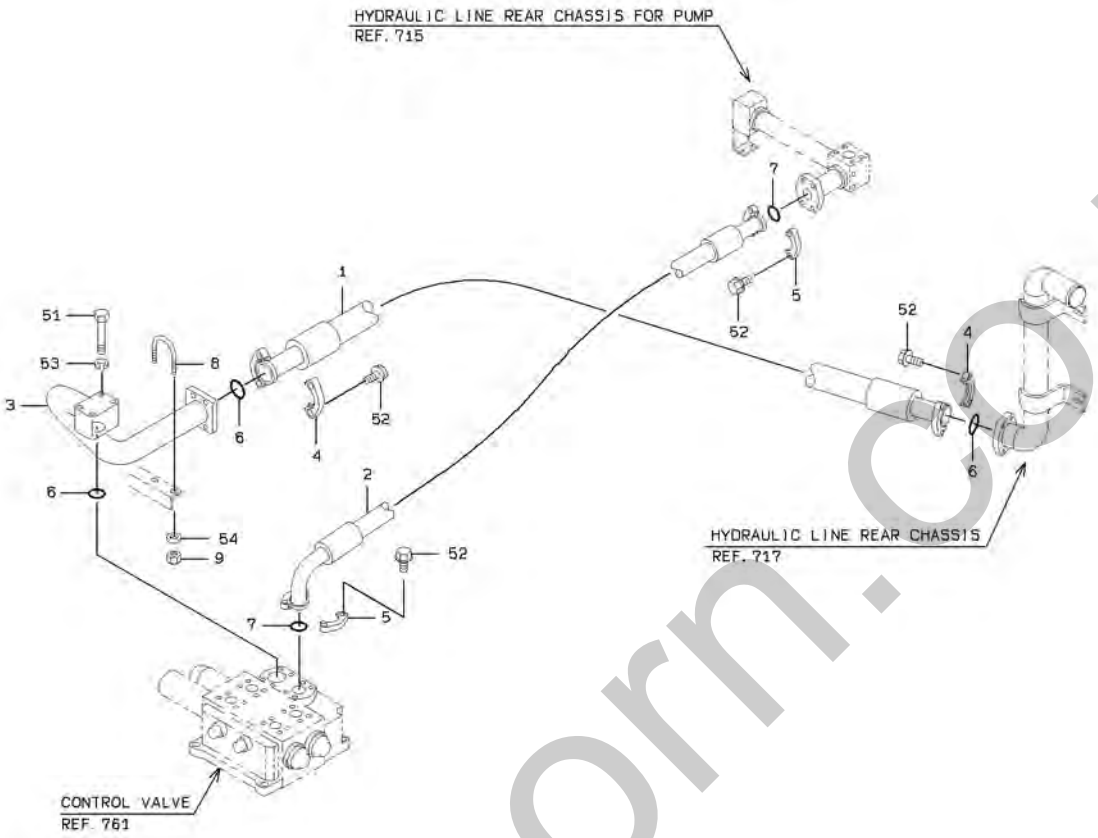

silverhorn.co.uk

LOADING HYDRAULIC LINE - CENTER PIN

SYM-BOL	PART NUMBER	PART NAME	UNIT Q,TY	SERIAL (A) - (B)	REMARKS N P D	(A) (B)	(C) (D)	REMARK
1A	68277-90143	HOSE,HIGH PRESSURE	1	5001 -				
2A	43113-25370	HOSE,HIGH PRESSURE	1	5001 -				
3A	38755-26340	PIPE,OIL	1	5001 -				
4A	69811-50210	FLANGE,SPLIT	4	5001 -				
5A	69811-38210	FLANGE,SPLIT	4	5001 -				
6A	65220-41006	RING,O	3	5001 -				
7A	65220-41003	RING,O	2	5001 -				
8A	43962-20780	BOLT,U	1	5001 -				
9A	88031-06101	NUT,SELF-LOCKING	2	5001 -				
51A	61089-12090	BOLT	4	5001 -				
52A	61802-12030	BOLT,FLANGED	16	5001 -				
53A	62721-12100	WASHER,SPRING	4	5001 -				
54A	62710-18101	WASHER,PLANE	2	5001 -				

silverhorn.co.uk

LOADING HYDRAULIC LINE - OIL COOLER

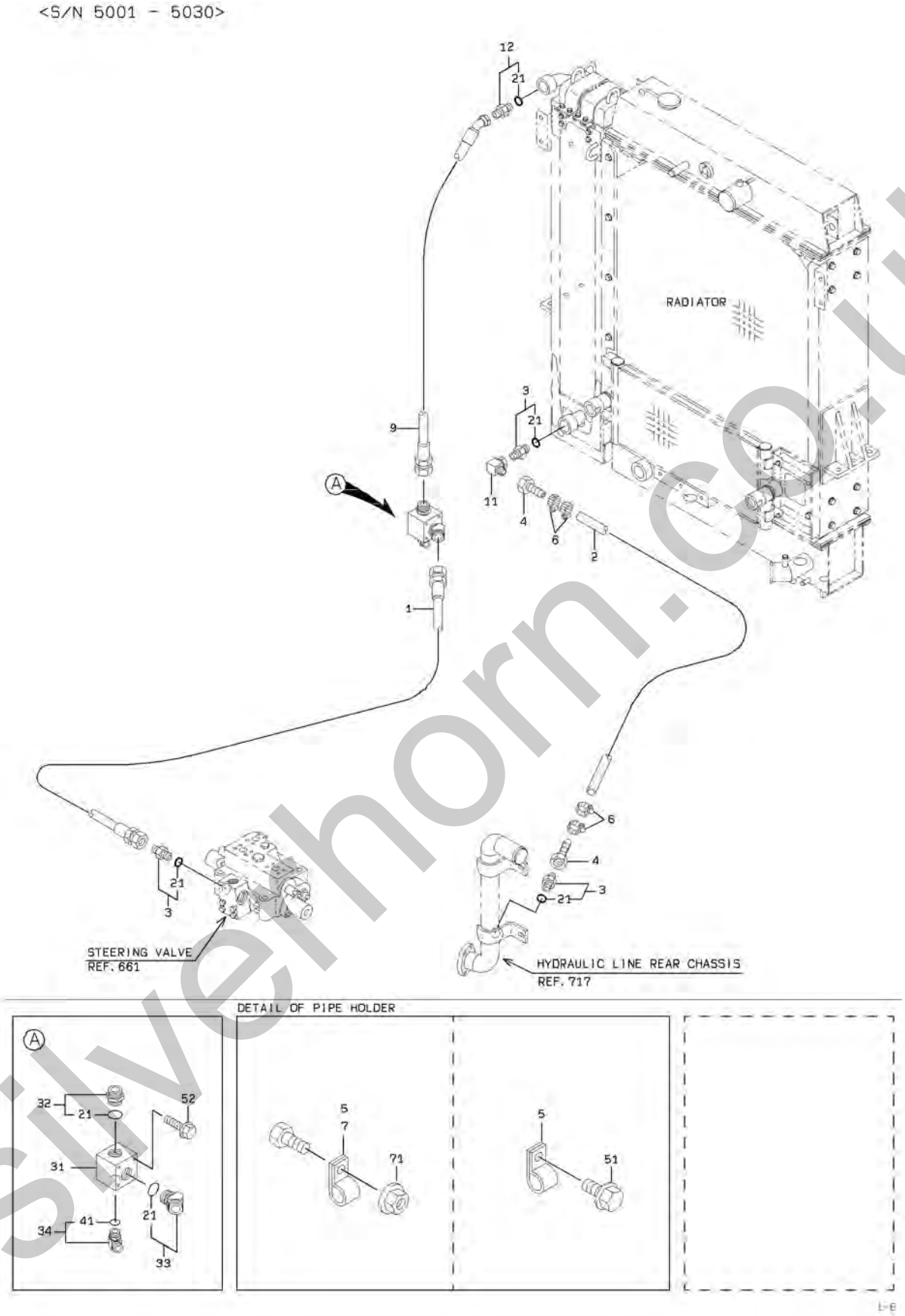

silverhorn.co.uk

LOADING HYDRAULIC LINE - OIL COOLER

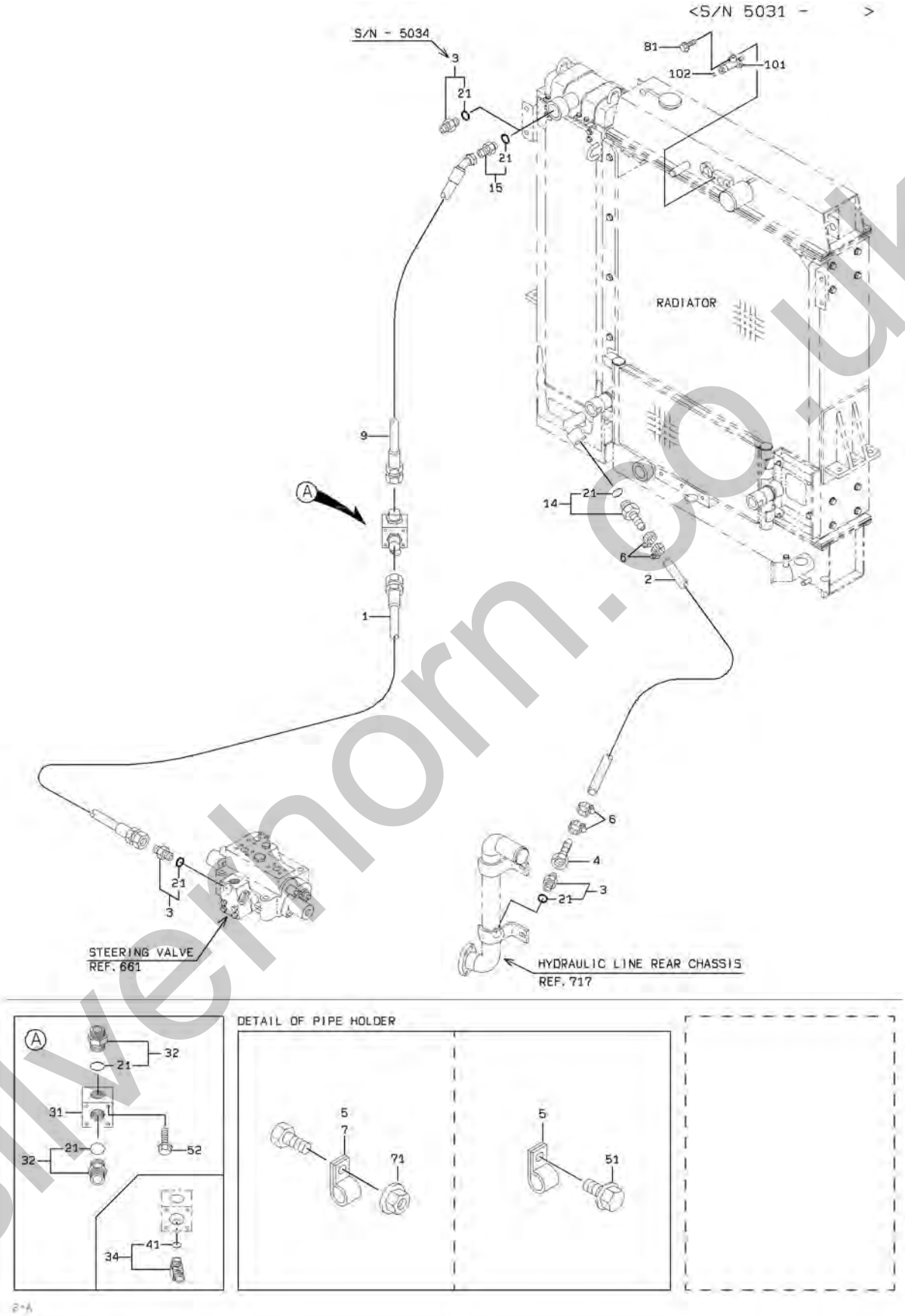

silverhorn.co.uk

LOADING HYDRAULIC LINE - OIL COOLER

SYM-BOL	PART NUMBER	PART NAME	UNIT Q,TY	SERIAL (A) - (B)	REMARKS N P D	(A)	(B)	(C)	(D)	REMARK
1A	68255-80510	HOSE,HIGH PRESSURE	1	5001 -						
2A	67040-38000	HOSE,HEAT RESISTIN	5 M	5001 -						L=4200
3A	88201-06724	ADAPTER	3	5001 - 5034		Y01				
3B	88201-06724	ADAPTER	2	5035 -		Y01				
4A	88511-03240	NIPPLE,HOSE	2	5001 - 5030						
4B	88511-03240	NIPPLE,HOSE	1	5031 -						
5A	72010-49000	HOLDER,HOSE	A/R	5001 -						(D=49)
6A	69002-05700-7	BAND,HOSE	4	5001 -						
7A	72010-52000	HOLDER,HOSE	A/R	5001 -						(D=52)
9A	43113-38320	HOSE,HIGH PRESSURE	1	5001 - 5030						
9B	68235-80163	HOSE,HIGH PRESSURE	1	5031 -	B					
11A	30242-20240	ADAPTER,ELBOW UNIO	1	5001 - 5030	D					
12A	30230-21240	ADAPTER	1	5001 - 5030	D	Y01				
14A	37715-21150	NIPPLE,HOSE	1	5031 -		Y01				
15A	30230-21240	ADAPTER	1	5035 -		Y01				
21A	65210-12044	RING,O	1	5001 -		01				
31A	41410-33490	BLOCK	1	5001 -						
32A	88201-06724	ADAPTER	1	5001 - 5030		Y01				
32B	88201-06724	ADAPTER	2	5031 -		Y01				
33A	88241-07224	ADAPTER,ELBOW	1	5001 - 5030	D	Y01				
34A	88241-07116	ADAPTER,ELBOW	1	5001 -			Y02			
41A	65210-12029	RING,O	1	5001 -			02			
51A	61802-08020	BOLT,FLANGED	1	5001 -						
52A	61802-08110	BOLT,FLANGED	4	5001 -						
71A	62480-21081	NUT,FLANGED	A/R	5001 -						
81A	61802-10016	BOLT,FLANGED	2	5031 -						
101A	38511-60180	VALVE ASSY	1	5031 -						
102A	47131-21870	RING,O	1	5031 -						

silverhorn.co.uk

MEMO

silverhorn.co.uk

HYDRAULIC LINE - FAN MOTOR

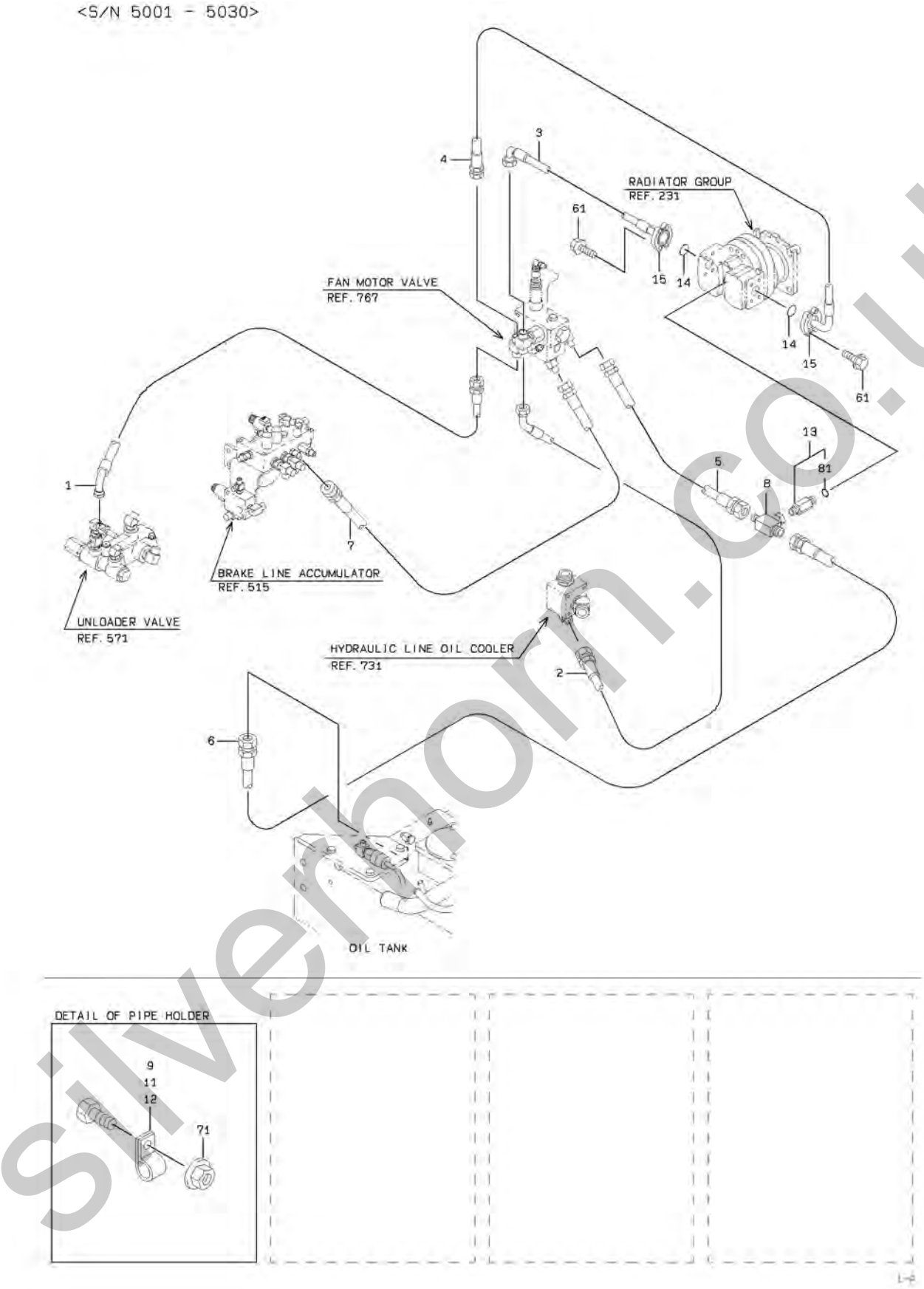

silverhorn.co.uk

HYDRAULIC LINE - FAN MOTOR

SYM-BOL	PART NUMBER	PART NAME	UNIT Q,TY	SERIAL (A) - (B)	REMARKS N P D	(A) (B)	(C) (D)	REMARK
1A	68635-60440	HOSE,HIGH PRESSURE	1	5001 - 5030				
2A	68245-60120	HOSE,HIGH PRESSURE	1	5001 - 5030				
3A	68237-60035	HOSE,HIGH PRESSURE	1	5001 - 5030				
4A	68658-60117	HOSE,HIGH PRESSURE	1	5001 - 5030				
5A	68055-10067	HOSE,HIGH PRESSURE	1	5001 - 5030				
6A	68055-20447	HOSE,HIGH PRESSURE	1	5001 - 5030				
7A	68055-10343	HOSE,HIGH PRESSURE	1	5001 - 5030				
8A	38904-21380	FITTING,TEE	1	5001 - 5030				
9A	72001-11500	HOLDER,PIPE	A/R	5001 - 5030				(D=15)
11A	72010-37000	HOLDER,HOSE	A/R	5001 - 5030				(D=37)
12A	72001-11200	HOLDER,PIPE	A/R	5001 - 5030				(D=12)
13A	30230-24800	ADAPTER	1	5001 - 5030		Y01		
14A	65220-31024	RING,O	2	5001 - 5030				
15A	69811-25210	FLANGE,SPLIT	4	5001 - 5030				
61A	61802-10030	BOLT,FLANGED	8	5001 - 5030				
71A	62480-21081	NUT,FLANGED	A/R	5001 - 5030				
81A	65231-00041	RING,O	1	5001 - 5030		01		

silverhorn.co.uk

HYDRAULIC LINE - FAN MOTOR

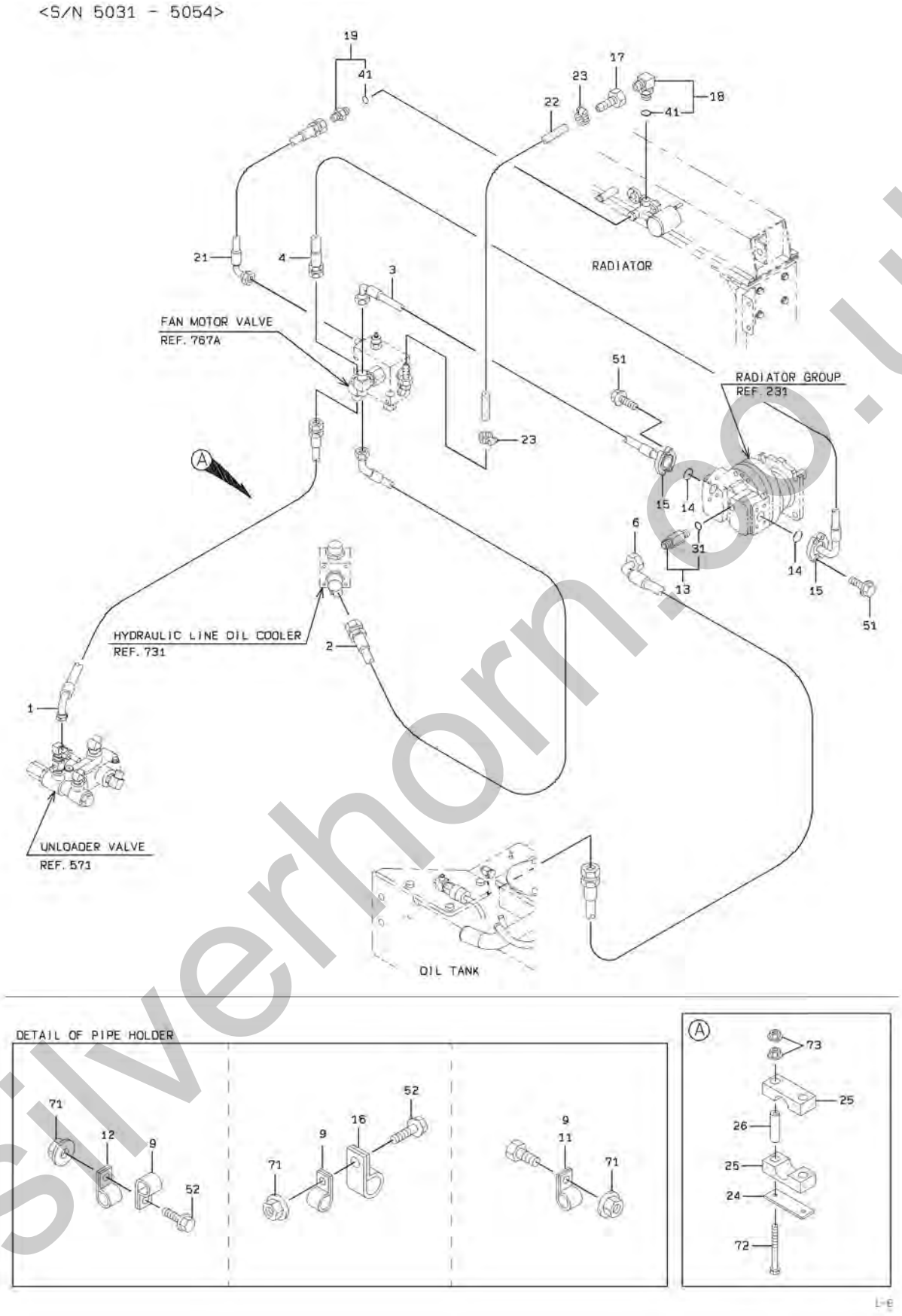

silverhorn.co.uk

HYDRAULIC LINE - FAN MOTOR

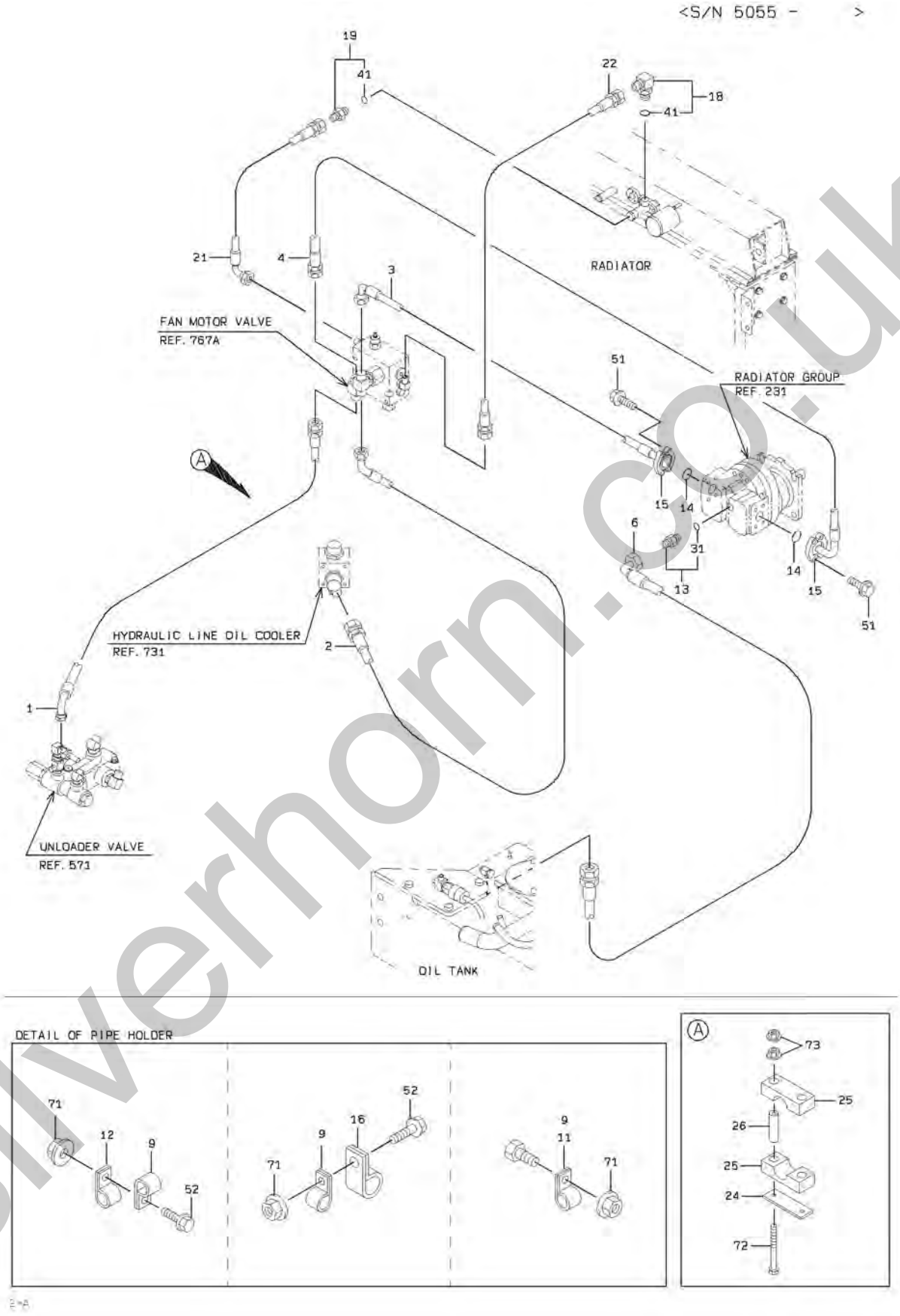

silverhorn.co.uk

HYDRAULIC LINE - FAN MOTOR

SYM-BOL	PART NUMBER	PART NAME	UNIT Q,TY	SERIAL (A) - (B)	REMARKS N	P	D	(A)	(B)	(C)	(D)	REMARK
1A	68635-60440	HOSE,HIGH PRESSURE	1	5031 -								
2A	68245-60120	HOSE,HIGH PRESSURE	1	5031 -								
3A	68237-60035	HOSE,HIGH PRESSURE	1	5031 -								
4A	68658-60117	HOSE,HIGH PRESSURE	1	5031 -								
6A	43113-45210	HOSE,HIGH PRESSURE	1	5031 -								
9A	72001-11500	HOLDER,PIPE	A/R	5031 -								D=15
11A	72010-37000	HOLDER,HOSE	A/R	5031 -								D=37
12A	72001-11200	HOLDER,PIPE	A/R	5031 -								D=12
13A	30230-24800	ADAPTER	1	5031 - 5054				Y01				
13B	88201-06804	ADAPTER	1	5055 -		B		Y01				
14A	65220-31024	RING,O	2	5031 -								
15A	69811-25210	FLANGE,SPLIT	4	5031 -								
16A	72010-52000	HOLDER,HOSE	1	5031 -								D=52
17A	88511-03041	NIPPLE,HOSE	1	5031 - 5054			D					
18A	88241-07104	ADAPTER,ELBOW	1	5031 -					Y02			
19A	88201-06704	ADAPTER	1	5031 -					Y02			
21A	68635-10155	HOSE,HIGH PRESSURE	1	5031 -								
22A	67040-08000	HOSE,HEAT RESISTIN	2 M	5031 - 5054								L=1480
22B	68055-10150	HOSE,HIGH PRESSURE	1	5055 -		B						
23A	69002-02200-7	BAND,HOSE	2	5031 - 5054			D					
24A	41611-42170	PLATE	1	5053 -								
25A	32923-20070	CLAMP,HOSE	2	5053 -								
26A	38720-20390	PIPE	2	5053 -								
31A	65231-00041	RING,O	1	5031 -				01				
41A	65210-12011	RING,O	1	5031 -					02			
51A	61802-10030	BOLT,FLANGED	8	5031 -								
52A	61802-08016	BOLT,FLANGED	2	5031 -								
71A	62480-21081	NUT,FLANGED	A/R	5031 -								
72A	61802-10100	BOLT,FLANGED	2	5053 -								
73A	62480-21101	NUT,FLANGED	4	5053 -								

silverhorn.co.uk

MEMO

silverhorn.co.uk

PILOT HYDRAULIC LINE

<S/N 5001 - 5030>

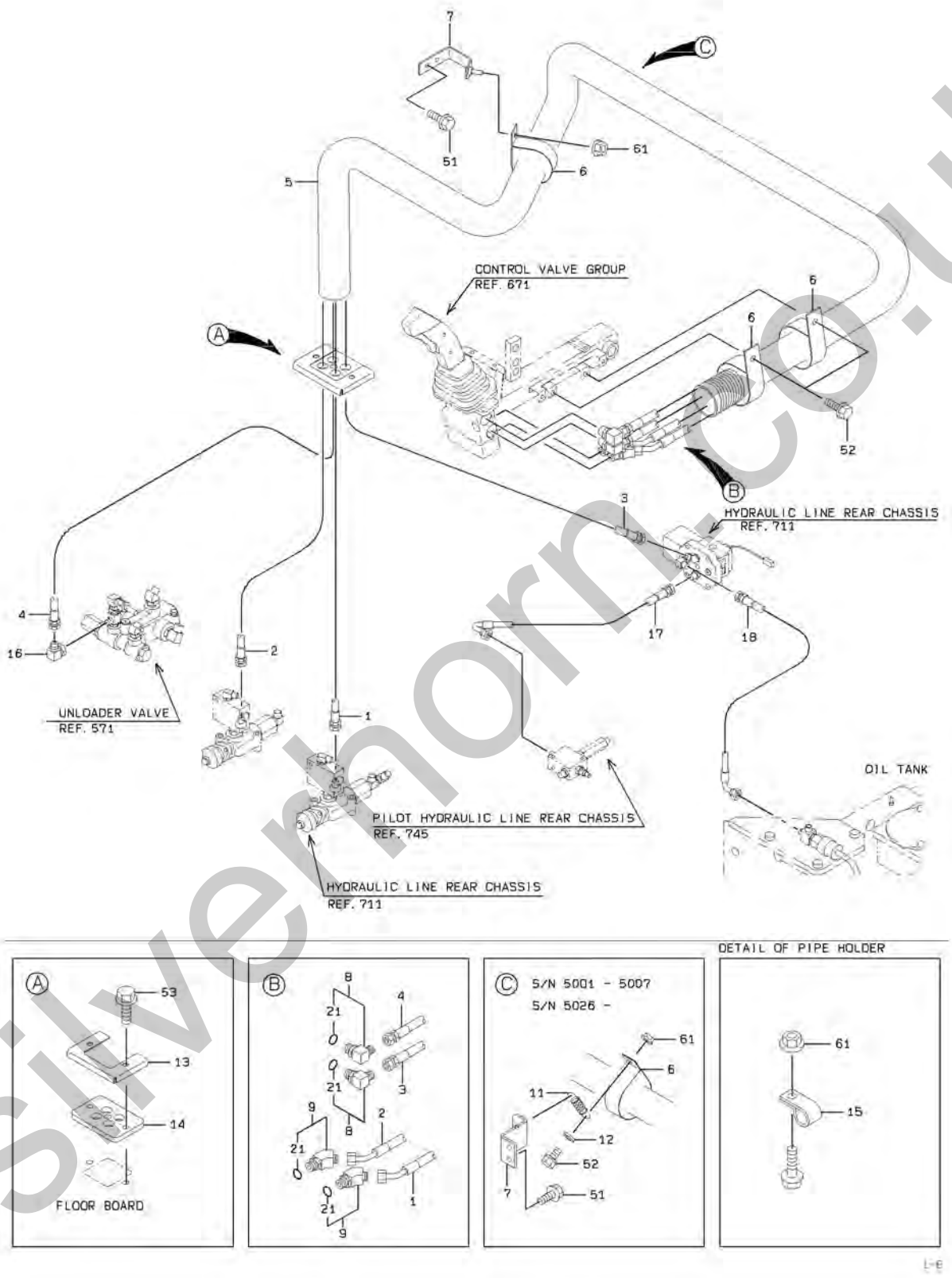

silverhorn.co.uk

PILOT HYDRAULIC LINE

SYM-BOL	PART NUMBER	PART NAME	UNIT Q,TY	SERIAL (A) - (B)	REMARKS N P D	(A) (B)	(C) (D)	REMARK
1A	68045-20185	HOSE,HIGH PRESSURE	1	5001 - 5007				
1B	68045-20223	HOSE,HIGH PRESSURE	1	5008 - 5025	B			
1C	68045-20185	HOSE,HIGH PRESSURE	1	5026 - 5030	B			
2A	68045-20175	HOSE,HIGH PRESSURE	1	5001 - 5007				
2B	68045-20214	HOSE,HIGH PRESSURE	1	5008 - 5025	B			
2C	68045-20175	HOSE,HIGH PRESSURE	1	5026 - 5030	B			
3A	68055-20170	HOSE,HIGH PRESSURE	1	5001 - 5007				
3B	68055-20207	HOSE,HIGH PRESSURE	1	5008 - 5025	B			
3C	68055-20170	HOSE,HIGH PRESSURE	1	5026 - 5030	B			
4A	68055-20207	HOSE,HIGH PRESSURE	1	5001 - 5007				
4B	68055-20244	HOSE,HIGH PRESSURE	1	5008 - 5025	B			
4C	68055-20207	HOSE,HIGH PRESSURE	1	5026 - 5030	B			
5A	43111-22090	HOSE,AIR	1	5001 - 5007				
5B	43111-23100	HOSE,HIGH PRESSURE	1	5008 - 5025	B			
5C	43111-22090	HOSE,AIR	1	5026 - 5030	B			
6A	72010-58000	HOLDER,HOSE	3	5001 - 5030				
7A	41606-30750	PLATE	1	5001 - 5007				
7B	41618-57350	PLATE	1	5008 - 5025	B			
7C	41606-30750	PLATE	1	5026 - 5030	B			
8A	30241-20890	ADAPTER,ELBOW	2	5001 - 5030		Y01		
9A	30241-23400	ADAPTER,ELBOW	2	5001 - 5030		Y01		
11A	35600-20150	SPRING	1	5001 - 5007	D			35600-75000
11B	35600-20150	SPRING	1	5026 - 5030				
12A	46011-20180	WASHER,PLANE	1	5001 - 5007	D			
12B	46011-20180	WASHER,PLANE	1	5026 - 5030				
13A	41618-33480	PLATE	1	5001 - 5030				
14A	33057-21150	GROMMET	1	5001 - 5030				
15A	72001-11500	HOLDER,PIPE	3	5001 - 5030				(D=15)
16A	30242-20120	ADAPTER,ELBOW UNIO	1	5001 - 5030				
17A	68035-20070	HOSE,HIGH PRESSURE	1	5001 - 5030				
18A	68035-20050	HOSE,HIGH PRESSURE	1	5001 - 5030				
21A	65210-12011	RING,O	1	5001 - 5030		01		
51A	61802-06016	BOLT,FLANGED	2	5001 - 5030				
52A	61802-08016	BOLT,FLANGED	3	5001 - 5007				
52B	61802-08016	BOLT,FLANGED	2	5008 - 5025				
52C	61802-08016	BOLT,FLANGED	3	5026 - 5030				
53A	61802-06025	BOLT,FLANGED	2	5001 - 5030				
61A	62480-21081	NUT,FLANGED	4	5001 - 5030				

silvernorm.co.uk

PILOT HYDRAULIC LINE

<S/N 5031 - 5034>

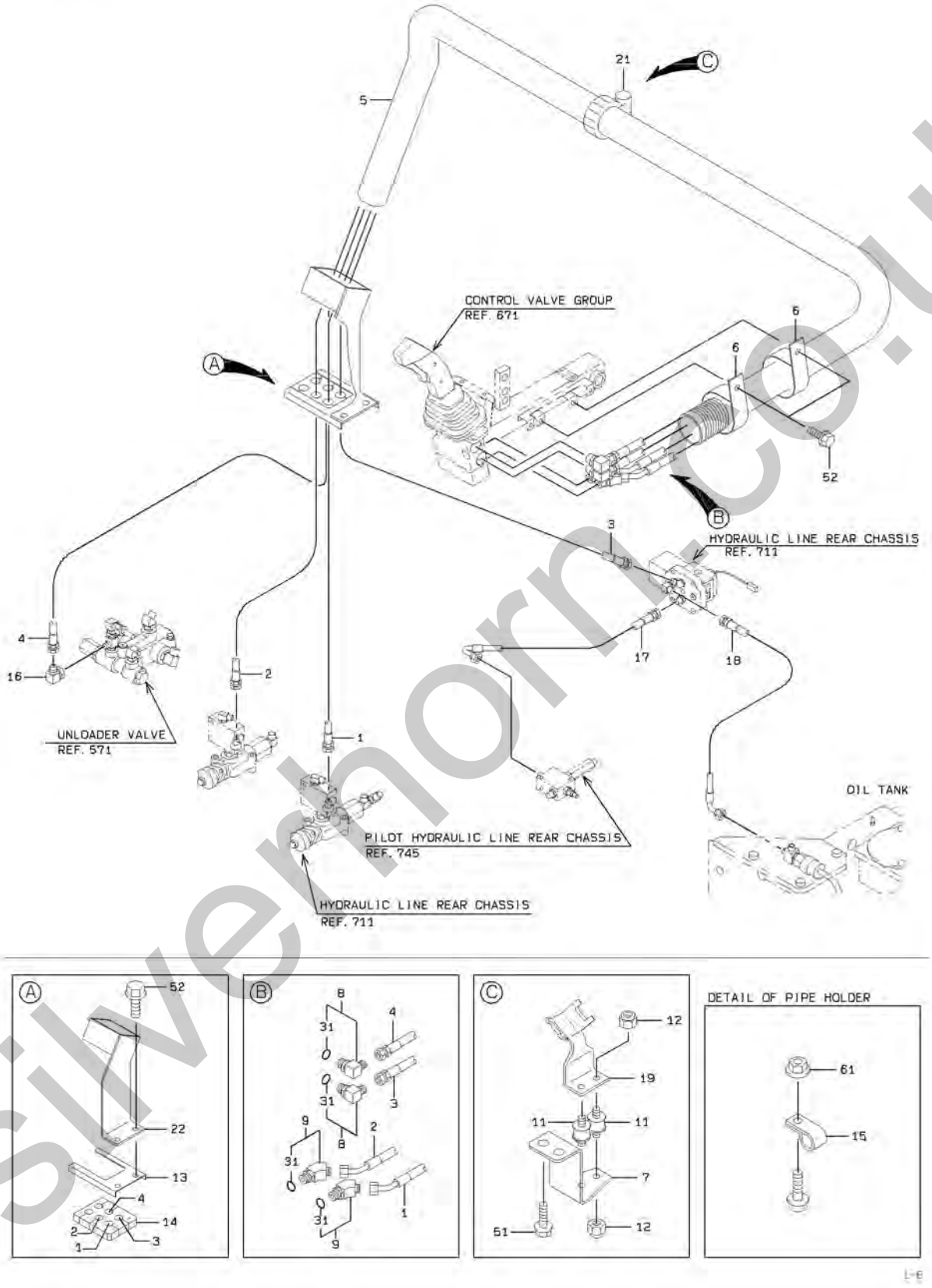

silverhorn.co.uk

PILOT HYDRAULIC LINE

<S/N 5035 - >

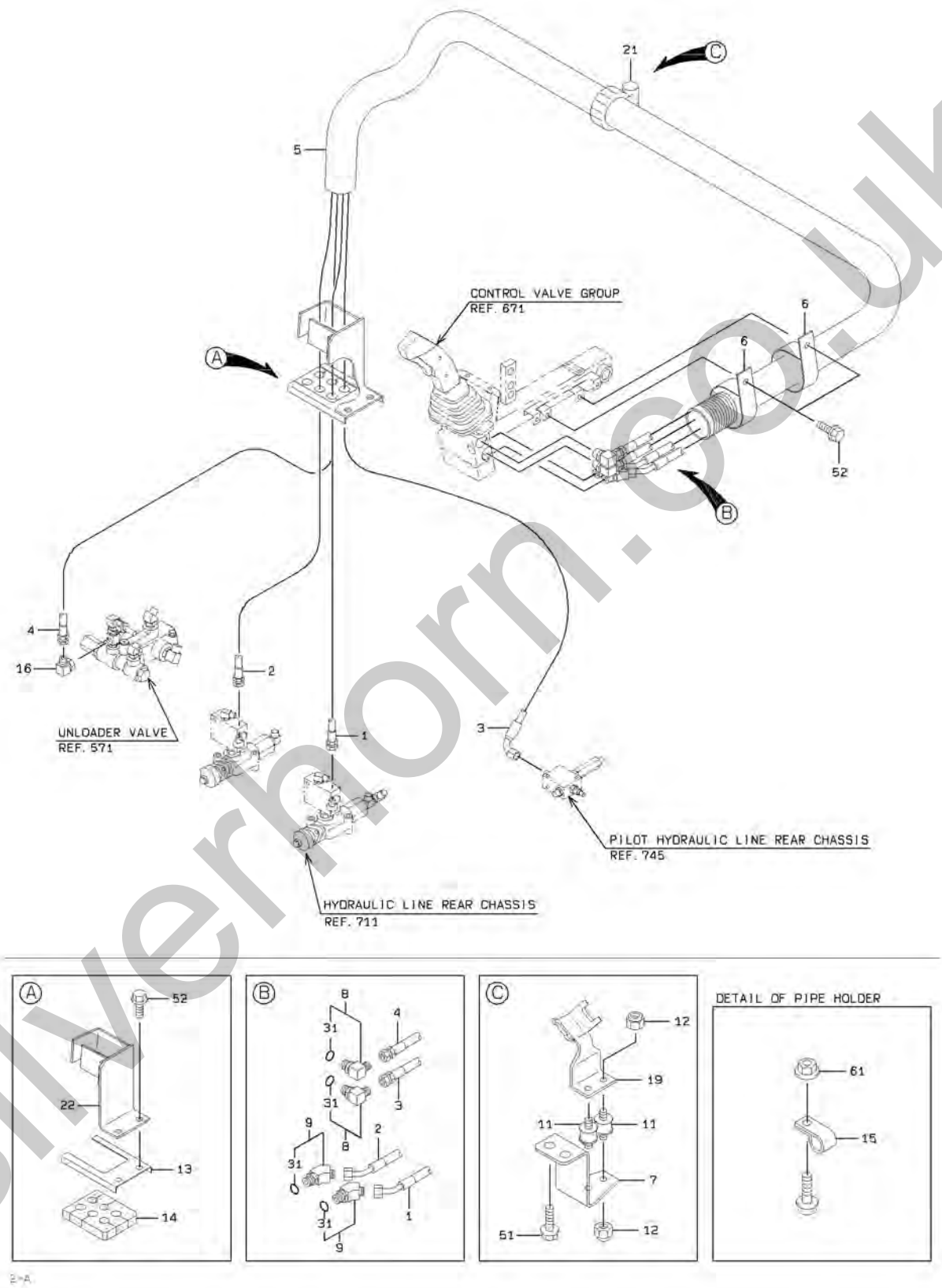

silverhorn.co.uk

PILOT HYDRAULIC LINE

SYM-BOL	PART NUMBER	PART NAME	UNIT Q,TY	SERIAL (A) - (B)	REMARKS N P D	(A) (B)	(C) (D)	REMARK
1A	68045-20190	HOSE,HIGH PRESSURE	1	5031 -				
2A	68045-20200	HOSE,HIGH PRESSURE	1	5031 -				
3A	68055-20190	HOSE,HIGH PRESSURE	1	5031 - 5034				
3B	68035-20210	HOSE,HIGH PRESSURE	1	5035 -	B			
4A	68055-20220	HOSE,HIGH PRESSURE	1	5031 -				
5A	43111-23410	HOSE,AIR	1	5031 -				
6A	72010-58000	HOLDER,HOSE	2	5031 -				
7A	41609-21670	PLATE	1	5031 -				
8A	30241-20890	ADAPTER,ELBOW	2	5031 - 5080		Y01		
8B	30241-25790	ADAPTER,ELBOW	2	5081 -	C	Y01		
9A	30241-23400	ADAPTER,ELBOW	2	5031 -		Y01		
11A	44822-70090	RUBBER,CUSHION	2	5031 -				
12A	88031-06061	NUT,SELF-LOCKING	4	5031 -				
13A	41603-58860	PLATE	1	5031 -				
14A	33057-20850	GROMMET	1	5031 -				
15A	72001-11500	HOLDER,PIPE	3	5031 -				(D=15)
16A	30242-20120	ADAPTER,ELBOW UNIO	1	5031 -				
17A	68035-20070	HOSE,HIGH PRESSURE	1	5031 - 5034	D			
18A	68035-20050	HOSE,HIGH PRESSURE	1	5031 - 5034	D			
19A	41641-45020	PLATE	1	5031 -				
21A	69002-07600-7	BAND,HOSE	1	5031 -				
22A	41620-34410	PLATE	1	5031 - 5036				
22B	41620-57130	PLATE	1	5037 -	C			
31A	65210-12011	RING,O	1	5031 -		01		
51A	61802-10020	BOLT,FLANGED	2	5031 -				
52A	61802-08016	BOLT,FLANGED	4	5031 -				
61A	62480-21081	NUT,FLANGED	3	5031 -				

silverhorn.co.uk

MEMO

silverhorn.co.uk

PILOT HYDRAULIC LINE - FRONT CHASSIS

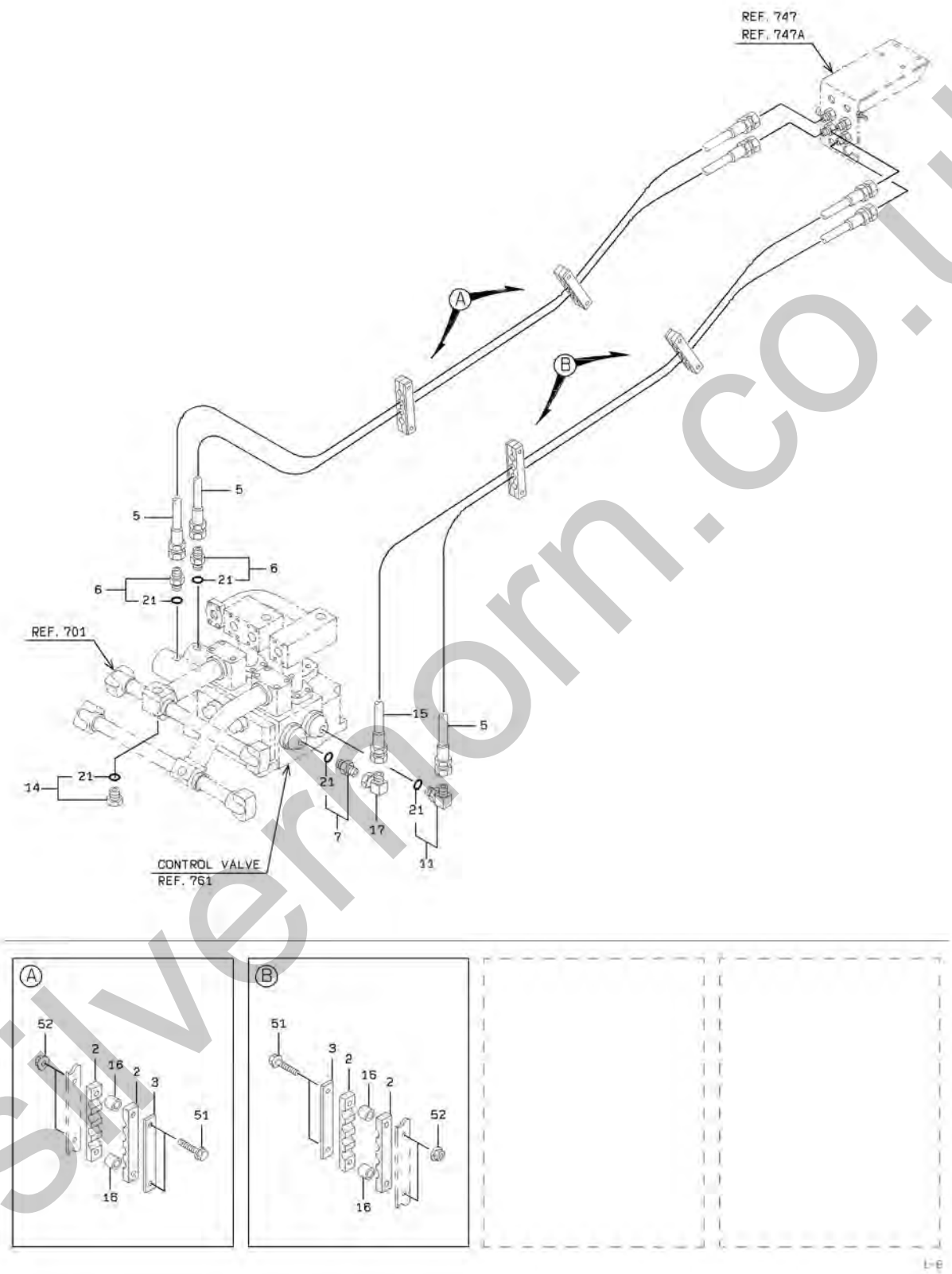

silvermorn.co.uk

PILOT HYDRAULIC LINE - FRONT CHASSIS

SYM-BOL	PART NUMBER	PART NAME	UNIT Q,TY	SERIAL (A) - (B)	REMARKS N P D	(A) (B)	(C) (D)	REMARK
2A	32923-20690	CLAMP,HOSE	8	5001 -				
3A	41605-43580	PLATE	4	5001 -				
5A	68055-20190	HOSE,HIGH PRESSURE	3	5001 -				
6A	88201-06706	ADAPTER	2	5001 -		Y01		
7A	30230-23900	ADAPTER	1	5001 -		Y01		
11A	88241-07106	ADAPTER,ELBOW	1	5001 -		Y01		
14A	88390-21306	PLUG	1	5001 -		Y01		
15A	68055-20195	HOSE,HIGH PRESSURE	1	5001 -				68035-20200
16A	38720-43480	PIPE	8	5001 -				
17A	30242-20190	ADAPTER,ELBOW UNIO	1	5001 -				
21A	65210-12014	RING,O	1	5001 -		01		
51A	61802-10055	BOLT,FLANGED	8	5001 -				
52A	62480-21101	NUT,FLANGED	8	5001 -				

silverhorn.co.uk

PILOT HYDRAULIC LINE - REAR CHASSIS

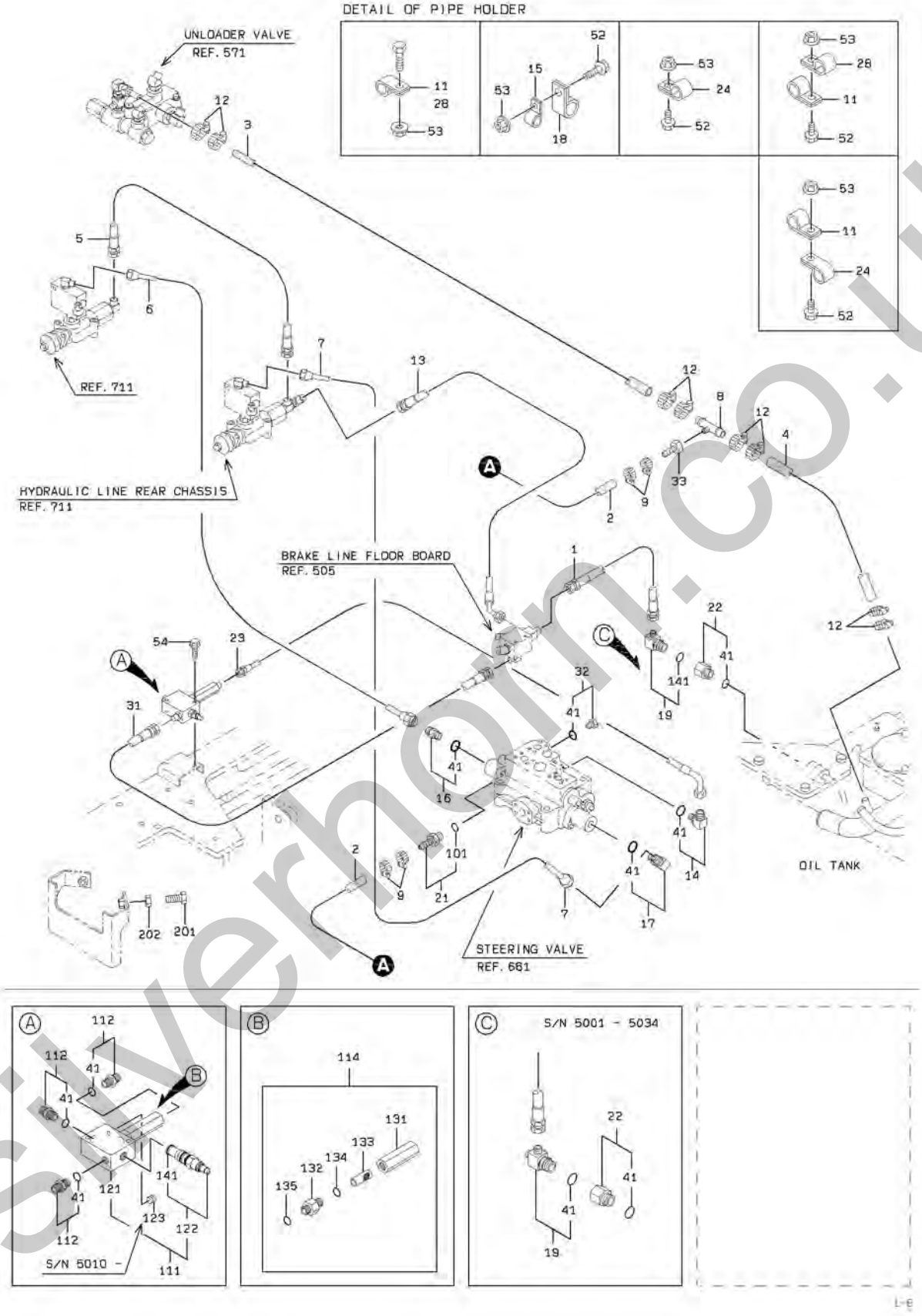

silverhorn.co.uk

PILOT HYDRAULIC LINE - REAR CHASSIS

SYM-BOL	PART NUMBER	PART NAME	UNIT Q,TY	SERIAL (A)	-	(B)	REMARKS N P D	(A)	(B)	(C)	(D)	REMARK
1A	68055-30084	HOSE,HIGH PRESSURE	1	5001	-							
2A	67040-06000	HOSE,HEAT RESISTIN	1 M	5001	-							L=550
3A	67040-12000	HOSE,HEAT RESISTIN	2 M	5001	-							L=1300
4A	67040-12000	HOSE,HEAT RESISTIN	1 M	5001	-							L=250
5A	68055-10052	HOSE,HIGH PRESSURE	1	5001	-							
6A	38705-50670	PIPE ASSY,FLARED	1	5001	-							
7A	38705-50680	PIPE ASSY,FLARED	1	5001	-							
8A	38775-22250	PIPE,OIL	1	5001	-							
9A	69002-01500-7	BAND,HOSE	4	5001	-							
11A	72001-12200	HOLDER,PIPE	4	5001	-							(D=22)
12A	69002-03100-7	BAND,HOSE	8	5001	-							
13A	68045-20065	HOSE,HIGH PRESSURE	1	5001	-							
14A	88241-07106	ADAPTER,ELBOW	1	5001	-			Y01				
15A	72001-11500	HOLDER,PIPE	1	5001	-							(D=15)
16A	40730-20040	FLARED FITTING	1	5001	-			Y01				
17A	40732-20070	FLARED FITTING,ELB	1	5001	-			Y01				
18A	72010-86000	HOLDER,HOSE	1	5001	-	5025						(D=86)
18B	72010-73000	HOLDER,HOSE	1	5026	-		B					(D=73)
19A	30246-22560	ADAPTER,TEE	1	5001	-	5034		Y01				
19B	30241-23660	ADAPTER,ELBOW	1	5035	-		B	Y05				
21A	37715-23050	NIPPLE,HOSE	1	5001	-				Y02			
22A	38906-20810	FITTING,BUSHING	1	5001	-			Y01				
23A	68645-20062	HOSE,HIGH PRESSURE	1	5001	-							
24A	72001-11200	HOLDER,PIPE	3	5001	-							(D=12)
28A	72001-11800	HOLDER,PIPE	2	5001	-							(D=18)
31A	68055-20042	HOSE,HIGH PRESSURE	1	5001	-							
32A	88390-21506	PLUG	1	5001	-			Y01				
33A	88511-02020	NIPPLE,HOSE	1	5001	-							
41A	65210-12014	RING,O	1	5001	-			01				
52A	61802-08020	BOLT,FLANGED	5	5001	-							
53A	62480-21081	NUT,FLANGED	A/R	5001	-							
54A	61802-08060	BOLT,FLANGED	2	5001	-							
101A	65210-12008	RING,O	1	5001	-				02			
111A	38511-23000	VALVE ASSY	1	5001	-					Y03		
112A	88201-06706	ADAPTER	3	5001	-			Y01				
114A	40337-60370	FILTER ASSY,LINE	1	5001	-						Y04	
121A	41410-31950	BLOCK	1	5001	-	5009				03		
121B	41410-34270	BLOCK	1	5010	-		C			03		
122A	38567-70170	VALVE,REDUCING	1	5001	-			Y05		03		
123A	88390-16102	PLUG	1	5010	-							
131A	33100-70690	CASE	1	5001	-						04	
132A	37710-70390	NIPPLE	1	5001	-						04	
133A	30981-70720	ELEMENT,FILTER	1	5001	-						04	
134A	65210-12018	RING,O	1	5001	-						04	
135A	65210-12014	RING,O	1	5001	-						04	
141A	65210-12024	RING,O	1	5001	-			05				
201A	43900-20610	BOLT	2	5001	-							
202A	62403-81161	NUT	2	5001	-							

silverhorn.co.uk

PILOT HYDRAULIC LINE - CONTROL BOX

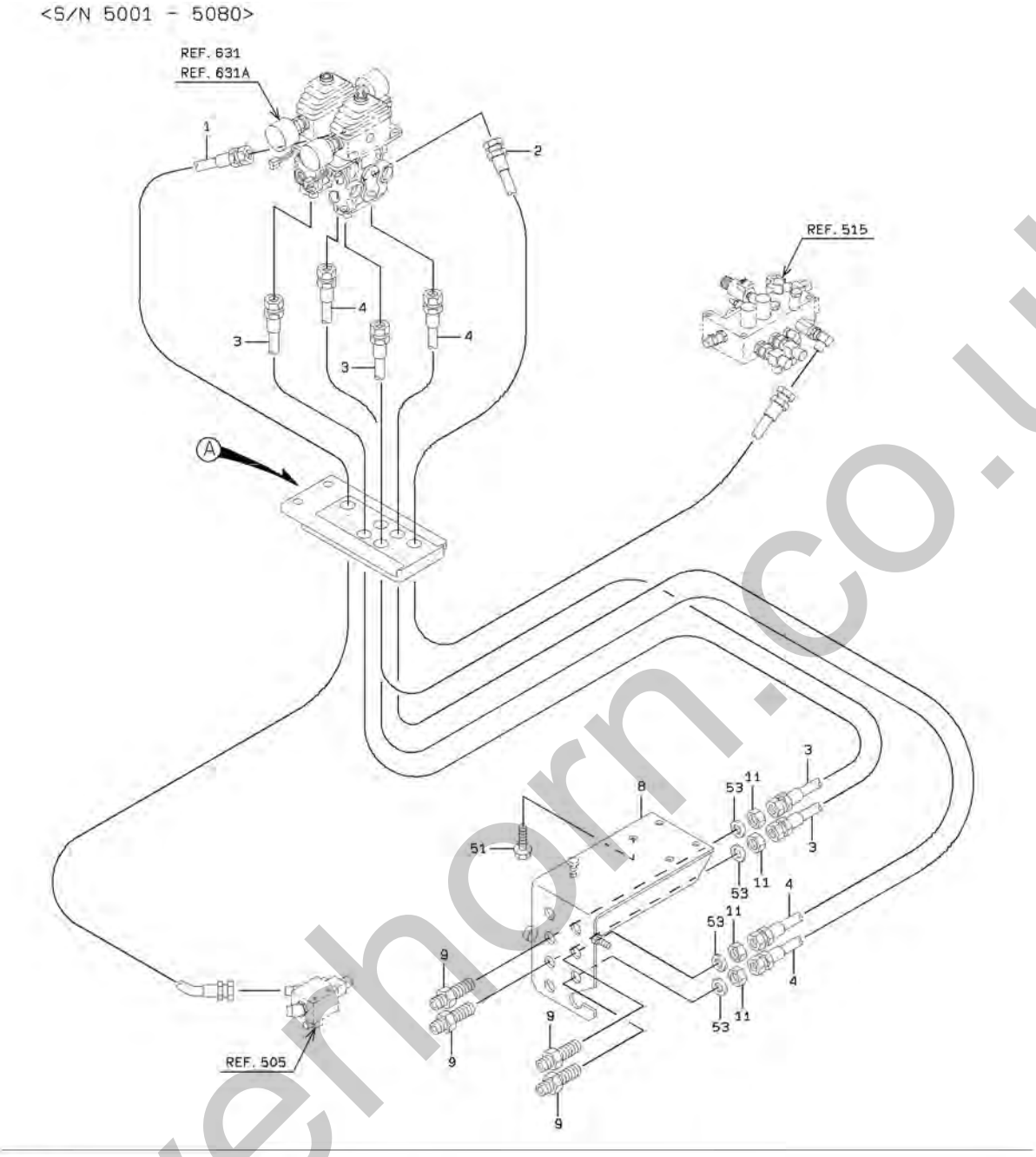

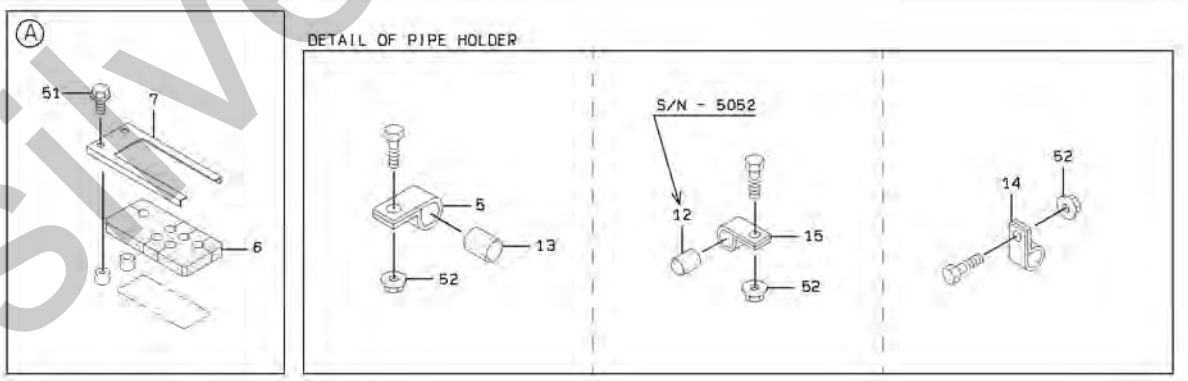

silverhorn.co.uk

PILOT HYDRAULIC LINE - CONTROL BOX

SYM-BOL	PART NUMBER	PART NAME	UNIT Q,TY	SERIAL (A) - (B)	REMARKS N P D	(A) (B)	(C) (D)	REMARK
1A	43113-37490	HOSE,HIGH PRESSURE	1	5001 - 5080				
2A	43113-38730	HOSE,HIGH PRESSURE	1	5001 - 5080				43113-37510
3A	43113-35410	HOSE,HIGH PRESSURE	2	5001 - 5080				
4A	43113-35470	HOSE,HIGH PRESSURE	2	5001 - 5080				
5A	72010-62000	HOLDER,HOSE	1	5001 - 5080				D=62
6A	33057-20810	GROMMET	1	5001 - 5080				
7A	41612-22950	PLATE	1	5001 - 5080				
8A	40901-53570	BRACKET	1	5001 - 5080				
9A	30230-20600	ADAPTER	4	5001 - 5080				
11A	37600-20680	NUT	4	5001 - 5080				
12A	65801-16220	BUSHING,ELASTIC	2	5001 - 5052	D			
13A	65801-50250	BUSHING,ELASTIC	1	5001 - 5080				
14A	72001-11800	HOLDER,PIPE	A/R	5001 - 5080				D=18
15A	72001-12500	HOLDER,PIPE	2	5001 - 5052				D=25
15B	43573-20350	HOLDER,PIPE	2	5053 - 5080	B			D=15
51A	61802-08012	BOLT,FLANGED	6	5001 - 5080				
52A	62480-21081	NUT,FLANGED	A/R	5001 - 5080				
53A	62701-40161	WASHER,PLANE	4	5001 - 5080				

silverhorn.co.uk

PILOT HYDRAULIC LINE - CONTROL BOX

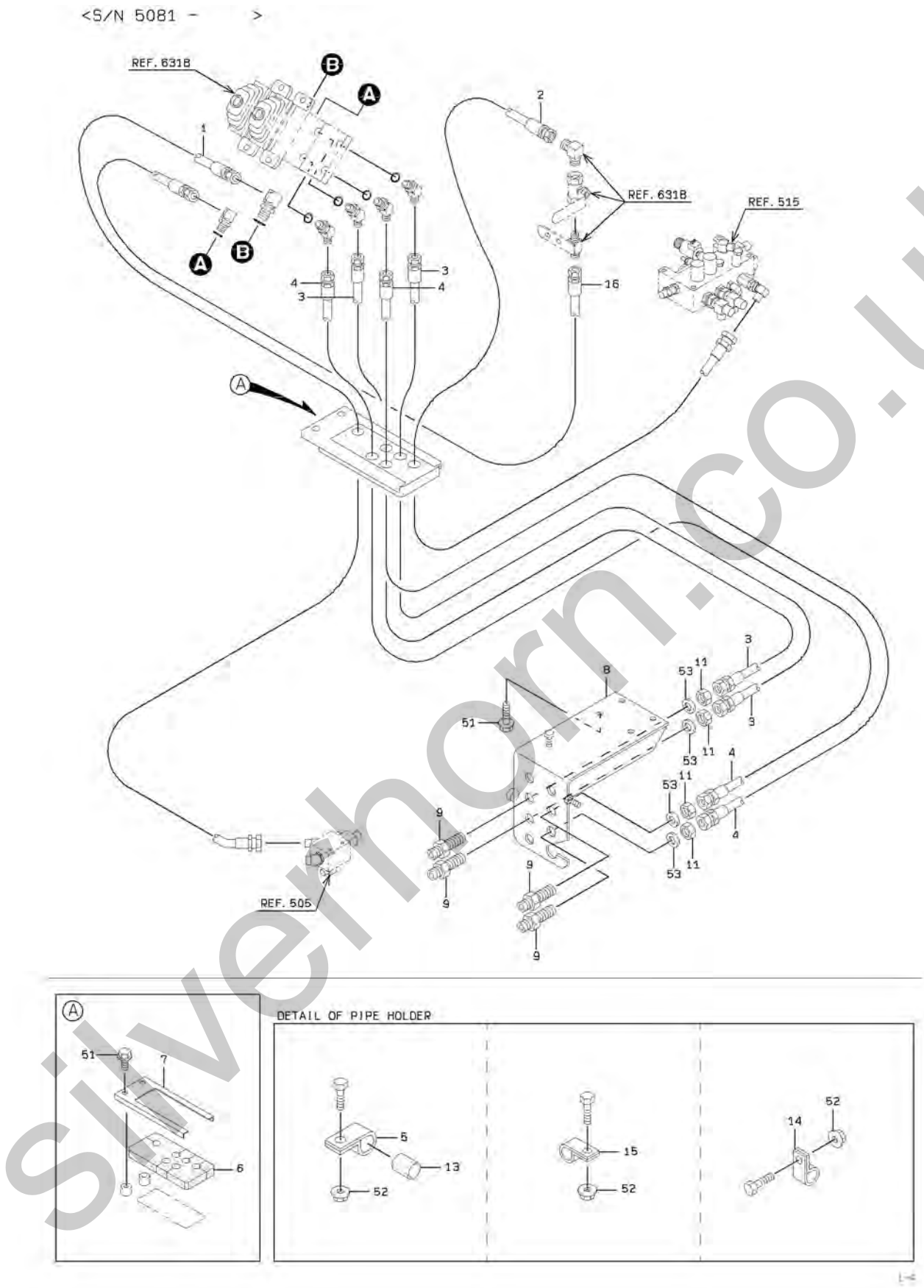

silverhorn.co.uk

PILOT HYDRAULIC LINE - CONTROL BOX

SYM-BOL	PART NUMBER	PART NAME	UNIT Q,TY	SERIAL (A) - (B)	REMARKS N P D	(A) (B)	(C) (D)	REMARK
1A	43113-49780	HOSE,HIGH PRESSURE	1	5081 -				
2A	43113-49970	HOSE,HIGH PRESSURE	1	5081 -				
3A	43113-49980	HOSE,HIGH PRESSURE	2	5081 -				
4A	43113-38910	HOSE,HIGH PRESSURE	2	5081 -				
5A	72010-62000	HOLDER,HOSE	1	5081 -				D=62
6A	33057-20810	GROMMET	1	5081 -				
7A	41612-22950	PLATE	1	5081 -				
8A	40901-53570	BRACKET	1	5081 -				
9A	30230-20600	ADAPTER	4	5081 -				
11A	37600-20680	NUT	4	5081 -				
13A	65801-50250	BUSHING,ELASTIC	1	5081 -				
14A	72001-11800	HOLDER,PIPE	A/R	5081 -				D=18
15A	43573-20350	HOLDER,PIPE	2	5081 -				D=15
16A	68055-10050	HOSE,HIGH PRESSURE	1	5081 -				
51A	61802-08012	BOLT,FLANGED	6	5081 -				
52A	62480-21081	NUT,FLANGED	A/R	5081 -				
53A	62701-40161	WASHER,PLANE	4	5081 -				

silverhorn.co.uk

OIL PUMP (DOUBLE)

(NOTE):KIT(SYMBOL 50) CONSISTS OF THE PARTS WITH a.

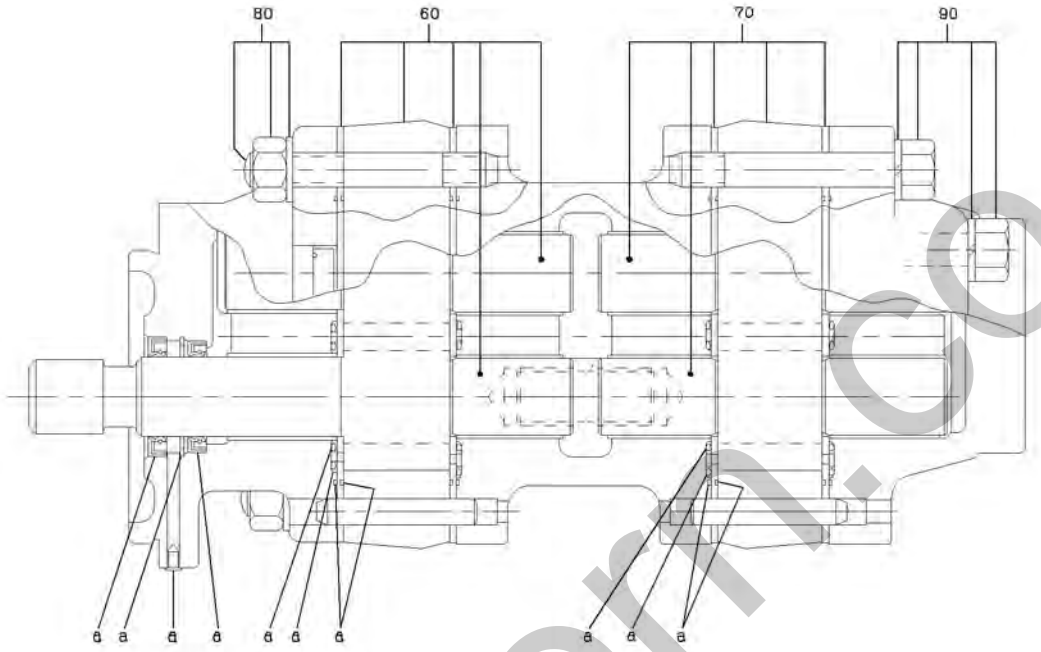

silverhorn.co.uk

OIL PUMP (DOUBLE)

SYM-BOL	PART NUMBER	PART NAME	UNIT Q,TY	SERIAL (A) - (B)	REMARKS N	P	D	(A)	(B)	(C)	(D)	REMARK
000A	44093-61220-7	PUMP,OIL	1	5001 - 5034								
000B	44083-61530-7	PUMP ASSY,OIL	1	5035 -		C						
50A	49327-72420-7	SEAL KIT	1	5001 - 5034			D					
60A	44085-70050-7	PUMP KIT	1	5001 - 5034			D					
70A	44085-70080-7	PUMP KIT	1	5001 - 5034			D					
80A	49621-70020-7	BOLT KIT	1	5001 - 5034			D					
90A	49621-70030-7	BOLT KIT	1	5001 - 5034			D					

silverhorn.co.uk

OIL PUMP (DOUBLE)

(NOTE):KIT(SYMBOL 50) CONSISTS OF THE PARTS WITH a.

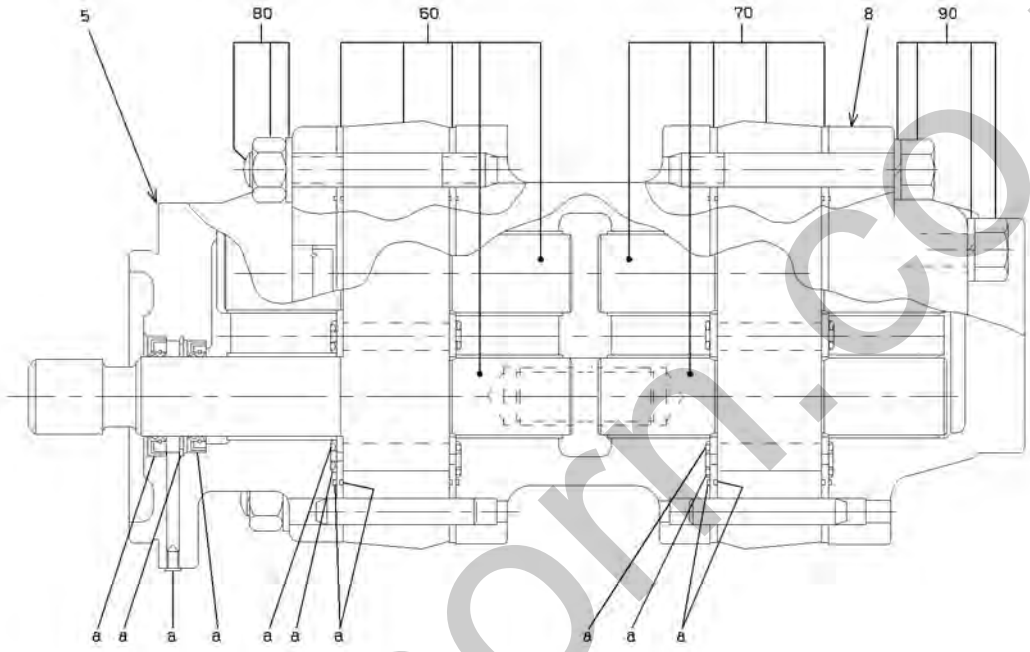

silverhorn.co.uk

OIL PUMP (DOUBLE)

SYM-BOL	PART NUMBER	PART NAME	UNIT Q,TY	SERIAL (A) - (B)	REMARKS N P D	(A) (B)	(C) (D)	REMARK
000A	44083-61140-7	PUMP ASSY,OIL	1	5001 - 5034				
000B	44083-61540-7	PUMP ASSY,OIL	1	5035 -	C			
5A	31200-72310-7	COVER	1	5001 - 5034	D			
8A	31200-73110-7	COVER	1	5001 - 5034	D			
50A	49327-72420-7	SEAL KIT	1	5001 - 5034	D			
60A	44085-70250-7	PUMP KIT	1	5001 - 5034	D			
70A	44085-70260-7	PUMP KIT	1	5001 - 5034	D			
80A	49621-70020-7	BOLT KIT	1	5001 - 5034	D			
90A	49621-70140-7	BOLT KIT	1	5001 - 5034	D			

silverhorn.co.uk

ACCUMULATOR

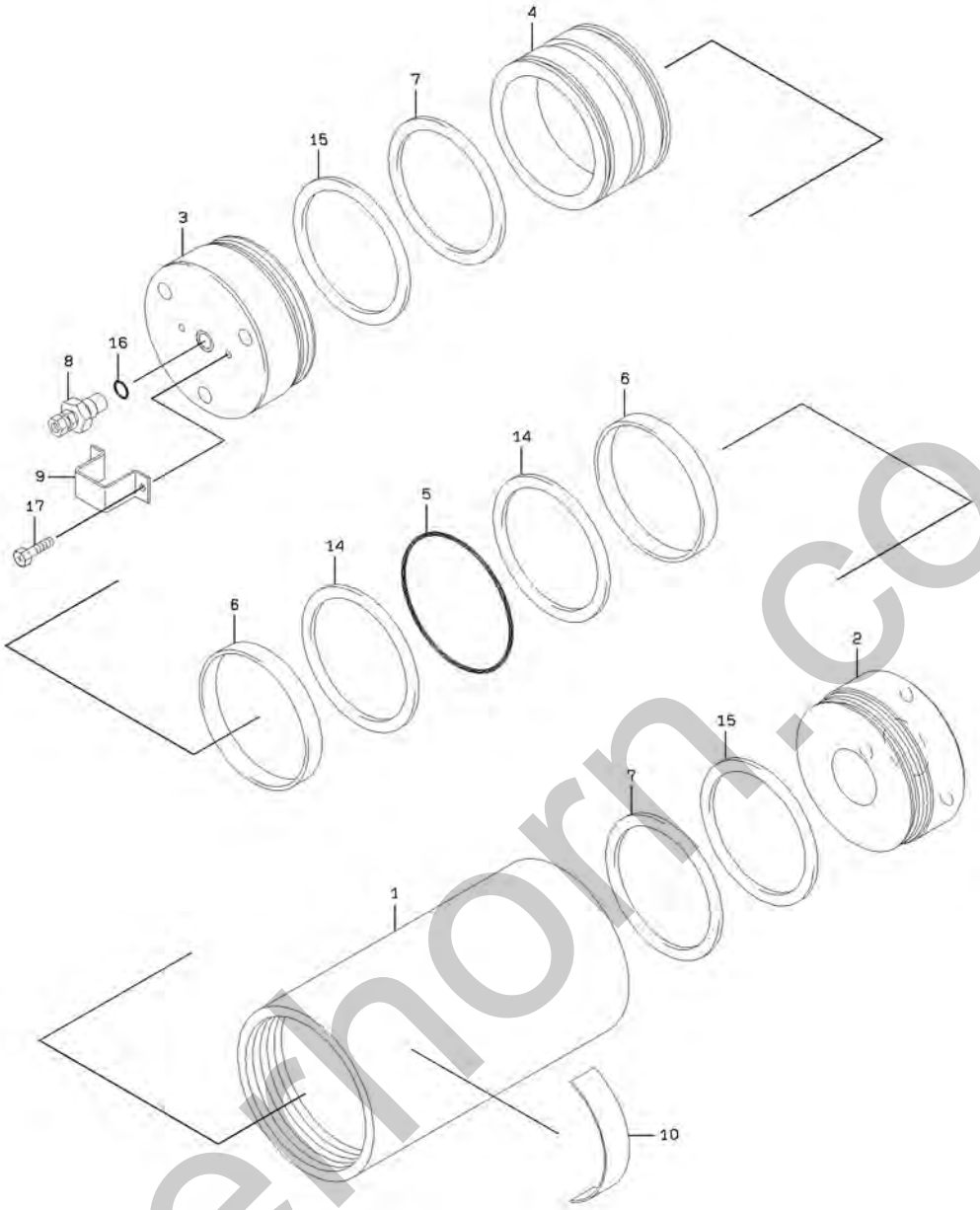

silverhorn.co.uk

ACCUMULATOR

SYM-BOL	PART NUMBER	PART NAME	UNIT Q,TY	SERIAL (A) - (B)	REMARKS N P D	(A) (B)	(C) (D)	REMARK
000A	30100-60510-7	ACCUMULATOR ASSY	2	5001 -				
1A	34800-70380-7	CYLINDER	1	5001 -				
2A	32210-72240-7	CAP	1	5001 -				
3A	32210-72250-7	CAP	1	5001 -				
4A	39960-72130-7	PISTON	1	5001 -				
5A	47131-75750-7	RING,O	1	5001 -				
6A	45200-71280-7	RING	2	5001 -				
7A	34000-70850-7	SEAL	2	5001 -				
8A	38511-71130-7	VALVE ASSY	1	5001 -				
9A	48979-70060-7	PROTECTOR	1	5001 -				
10A	41678-70040-7	PLATE,NAME	1	5001 -				
14A	46000-71490-7	WASHER	2	5001 -				
15A	46000-71500-7	WASHER	2	5001 -				
16A	47131-75760-7	RING,O	1	5001 -				
17A	35100-71970-7	SCREW	2	5001 -				

silverhorn.co.uk

CONTROL VALVE

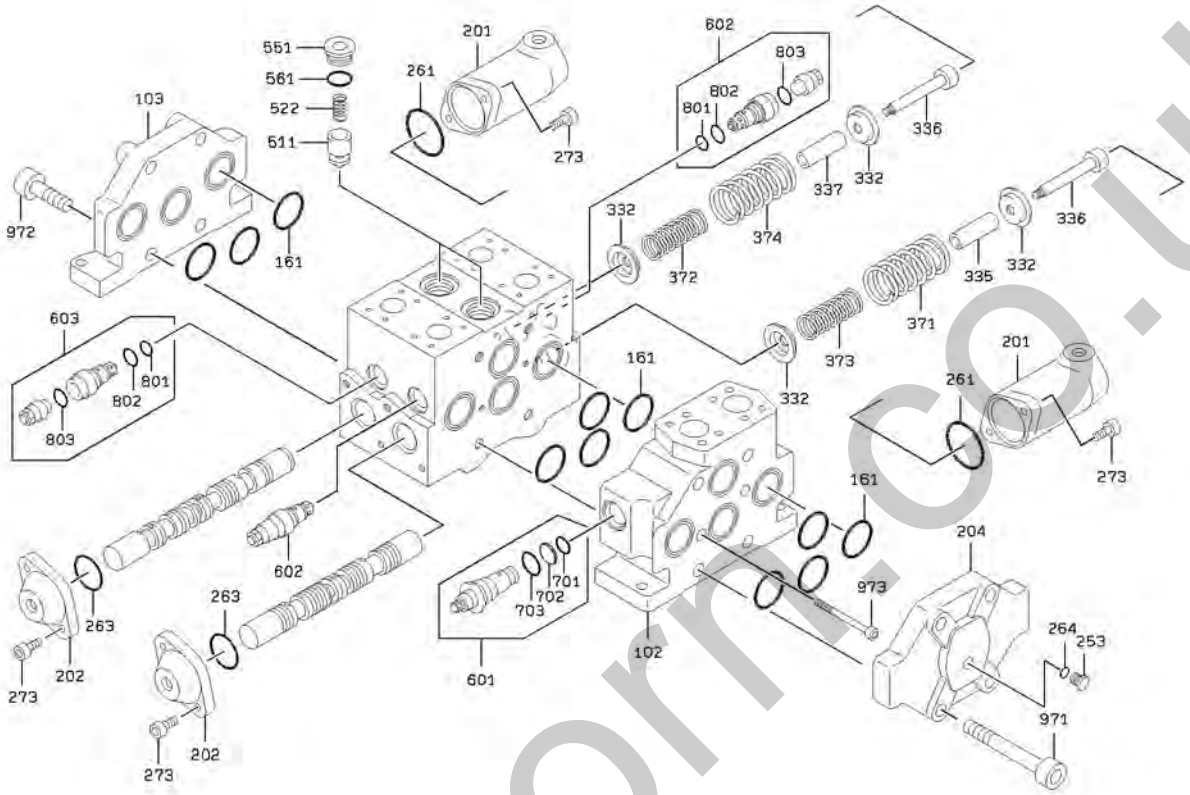

silverhorn.co.uk

CONTROL VALVE

SYM-BOL	PART NUMBER	PART NAME	UNIT Q,TY	SERIAL (A) - (B)	REMARKS N P D	(A)	(B)	(C)	(D)	REMARK
000A	38532-61520	VALVE ASSY,MULTIPL	1	5001 -						
102A	41410-70260	BLOCK	1	5001 -						
103A	41657-70160	PLATE,END	1	5001 -						
161A	65210-12050	RING,O	11	5001 -						
201A	31200-72570	COVER	2	5001 -						
202A	31200-71040	COVER	2	5001 -						
204A	41641-70470	PLATE	1	5001 -						
253A	41530-71210	PLUG	1	5001 -						
261A	65210-22065	RING,O	2	5001 -						
263A	65210-22055	RING,O	2	5001 -						
264A	65210-12011	RING,O	1	5001 -						
273A	61101-10025	BOLT,SOCKET	8	5001 -						
332A	44955-70180	RETAINER,SPRING	4	5001 -						
335A	35440-70220	STOPPER	1	5001 -						
336A	43900-71280	BOLT	2	5001 -						
337A	35440-70210	STOPPER	1	5001 -						
371A	35600-73340	SPRING	1	5001 -						
372A	35600-73440	SPRING	1	5001 -						
373A	35600-72760	SPRING	1	5001 -						
374A	35600-73450	SPRING	1	5001 -						
511A	44074-70220	POPPET	2	5001 -						
522A	35600-71820	SPRING	2	5001 -						
551A	41530-71220	PLUG	2	5001 -						
561A	65210-12029	RING,O	2	5001 -						
601A	38565-70760	VALVE,RELIEF	1	5001 -		Y01				
602A	38565-71020	VALVE,RELIEF	2	5001 -			Y02			
603A	38565-71440	VALVE,RELIEF	1	5001 -			Y02			
701A	65210-12018	RING,O	1	5001 -		01				
702A	65240-31018	RING,BACK-UP	1	5001 -		01				
703A	65210-12030	RING,O	1	5001 -		01				
801A	65210-12018	RING,O	1	5001 -			02			
802A	65210-12024	RING,O	1	5001 -			02			
803A	65210-12022	RING,O	1	5001 -			02			
971A	61101-18160	BOLT,SOCKET	4	5001 -						
972A	61101-18060	BOLT,SOCKET	4	5001 -						
973A	61101-08115	BOLT,SOCKET	2	5001 -						

silverhorn.co.uk

PILOT VALVE

<S/N 5001 - 5080>

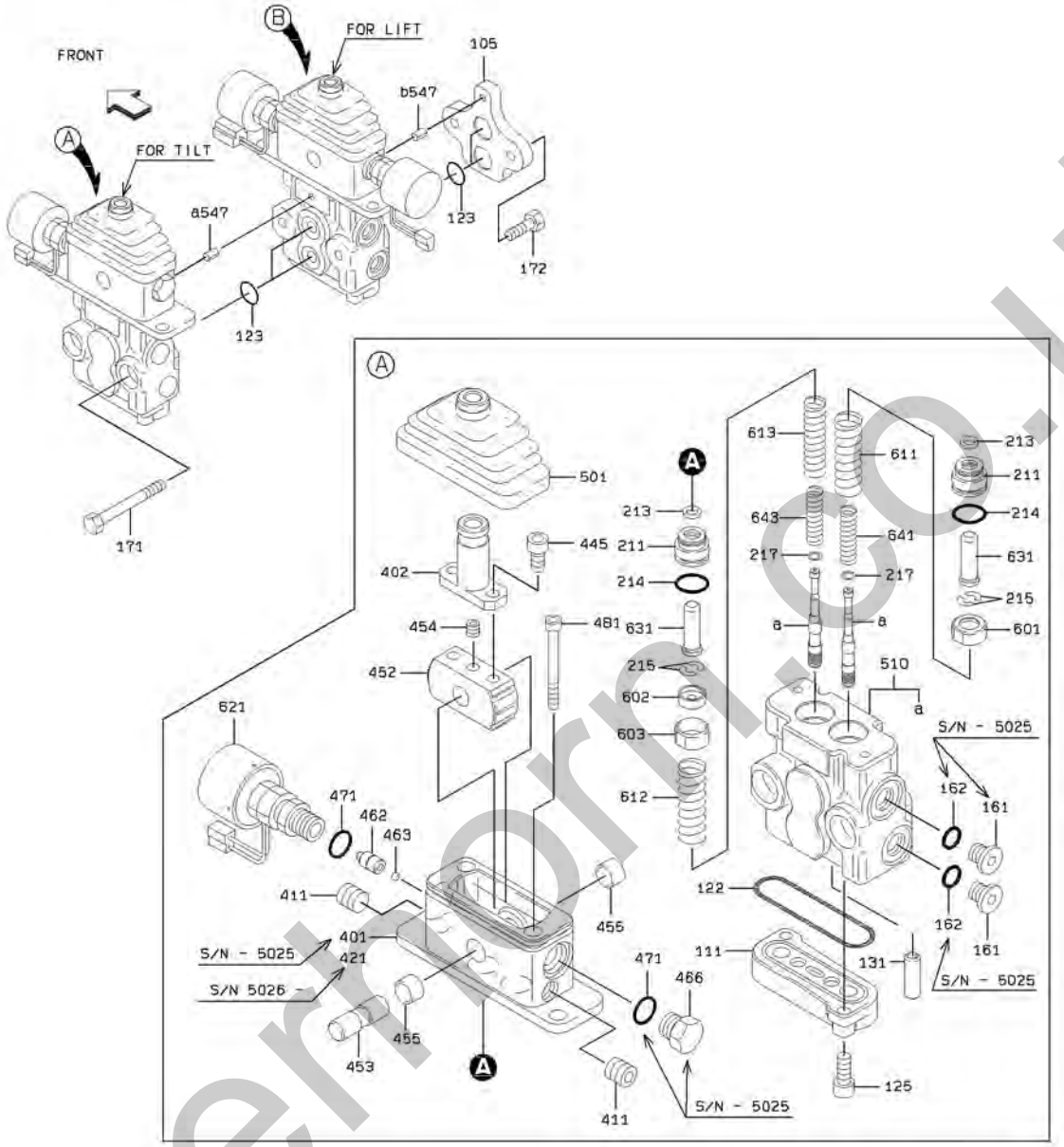

silverthorn.co.uk

PILOT VALVE

<S/N 5001 - 5080>

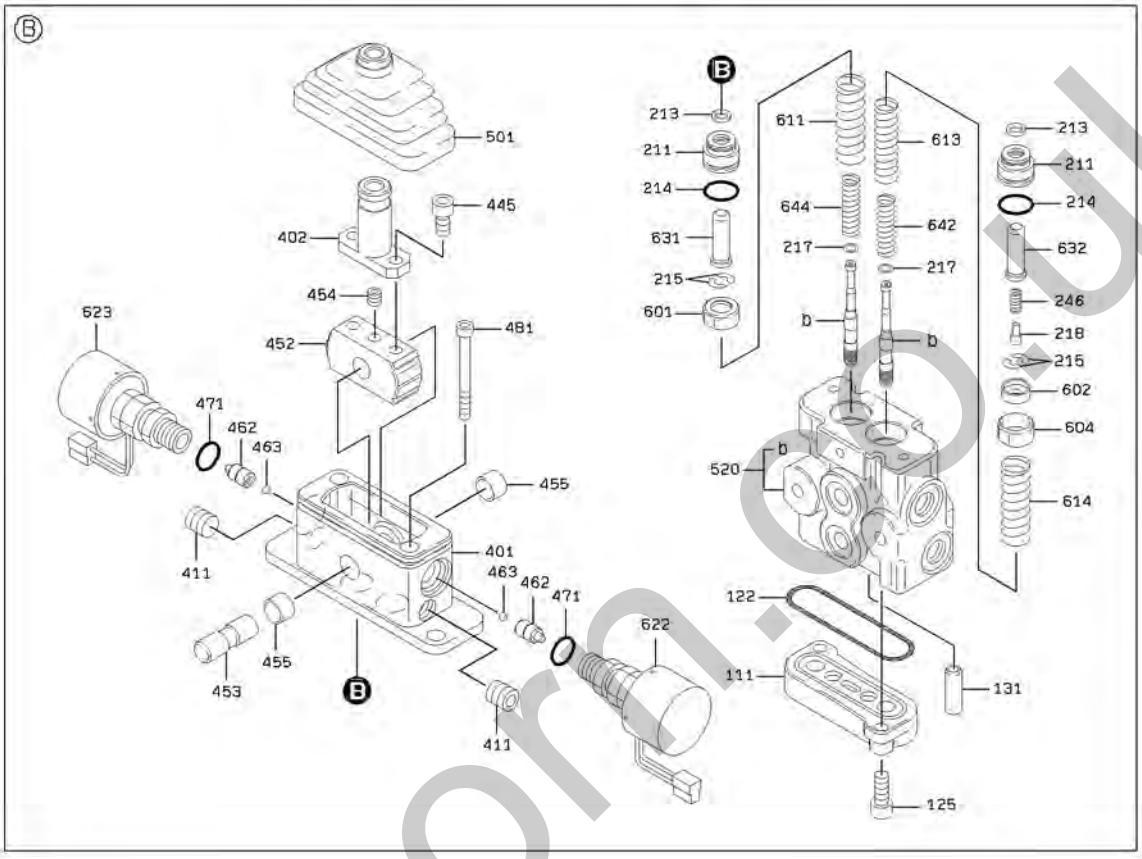

silverhorn.co.uk

PILOT VALVE

SYM-BOL	PART NUMBER	PART NAME	UNIT Q,TY	SERIAL (A) - (B)	REMARKS N P D	(A)	(B)	(C)	(D)	REMARK
000A	38560-60360	VALVE,PILOT	1	5001 - 5080						
105A	41600-70750	PLATE	1	5001 - 5080						
111A	41600-70890	PLATE	2	5001 - 5080						
122A	65210-22060	RING,O	2	5001 - 5080						
123A	65210-12018	RING,O	4	5001 - 5080						
125A	61101-08020	BOLT,SOCKET	4	5001 - 5080						
131A	40840-71600	BUSHING	2	5001 - 5080						
161A	41530-72790	PLUG	2	5001 - 5025						
161B	41530-71250	PLUG	1	5026 - 5080	B					
162A	65210-12011	RING,O	2	5001 - 5025	D					
171A	61033-08050	BOLT	2	5001 - 5080						
172A	61033-08025	BOLT	2	5001 - 5080						
211A	41530-72410	PLUG	4	5001 - 5080						
213A	34000-70600	SEAL	4	5001 - 5080						
214A	65210-12020	RING,O	4	5001 - 5080						
215A	46011-70380	WASHER,PLANE	8	5001 - 5080						
217A	34200-70850	SHIM	4	5001 - 5080						
218A	33930-70430	SEAT,SPRING	1	5001 - 5080						
246A	35600-73970	SPRING	1	5001 - 5080						
401A	31200-72080	COVER	2	5001 - 5025						
401B	31200-72080	COVER	1	5026 - 5080						
402A	45600-70190	LEVER	2	5001 - 5080						
411A	43956-70690	BOLT,SOCKET	4	5001 - 5080						
421A	31200-73260	COVER	1	5026 - 5080						
445A	61101-08016	BOLT,SOCKET	4	5001 - 5080						
452A	37200-70060	DISC	2	5001 - 5080						
453A	31611-70020	CAMSHAFT	2	5001 - 5080						
454A	43956-70680	BOLT,SOCKET	2	5001 - 5080						
455A	88811-01410	BUSHING	4	5001 - 5080						
462A	43550-70210	HOLDER	3	5001 - 5080						
463A	43751-70110	BALL	3	5001 - 5080						
466A	41530-72780	PLUG	1	5001 - 5025	D					
471A	65210-12016	RING,O	4	5001 - 5025						
471B	65210-12016	RING,O	3	5026 - 5080						
481A	61101-06060	BOLT,SOCKET	4	5001 - 5080						
501A	40790-70200	BOOT	2	5001 - 5080						
510A	33110-70380	CASE ASSY	1	5001 - 5025		Y01				
510B	33110-70680	CASE ASSY	1	5026 - 5080	B	Y01				
520A	33110-70370	CASE ASSY	1	5001 - 5080		Y01				
547A	63011-05010	PIN,SPRING	1	5001 - 5080		01				
601A	33930-70330	SEAT,SPRING	2	5001 - 5080						
602A	33930-70460	SEAT,SPRING	2	5001 - 5080						
603A	33930-70450	SEAT,SPRING	1	5001 - 5080						
604A	33930-70440	SEAT,SPRING	1	5001 - 5080						
611A	35600-73940	SPRING	2	5001 - 5080						
612A	35600-73930	SPRING	1	5001 - 5080						
613A	35600-73920	SPRING	2	5001 - 5080						
614A	35600-73910	SPRING	1	5001 - 5080						
621A	35910-70140	SOLENOID	1	5001 - 5025						
621B	35910-70200	SOLENOID	1	5026 - 5080	B					
622A	35910-70130	SOLENOID	1	5001 - 5025						
622B	35910-70220	SOLENOID	1	5026 - 5080	B					
623A	35910-70120	SOLENOID	1	5001 - 5025						
623B	35910-70210	SOLENOID	1	5026 - 5080	B					
631A	45887-70280	ROD,PUSH	3	5001 - 5080						
632A	45887-70270	ROD,PUSH	1	5001 - 5080						
641A	35600-73950	SPRING	1	5001 - 5080						
642A	35600-74270	SPRING	1	5001 - 5080						
643A	35600-74340	SPRING	1	5001 - 5080						
644A	35600-74360	SPRING	1	5001 - 5080						

silverhorn.co.uk

MEMO

silverhorn.co.uk

PILOT VALVE

<S/N 5081 - >

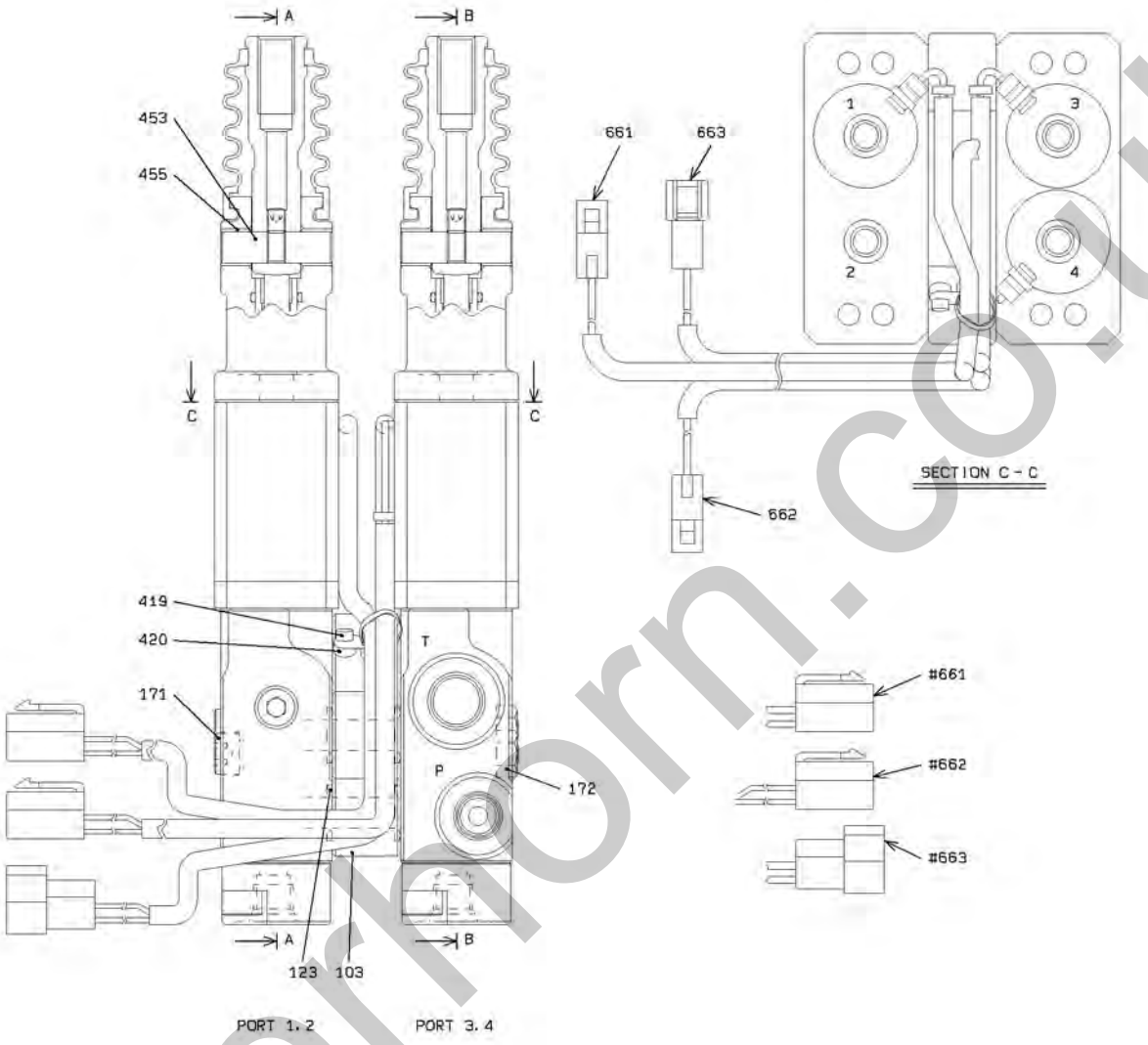

silverhorn.co.uk

PILOT VALVE

<S/N 5081 - >

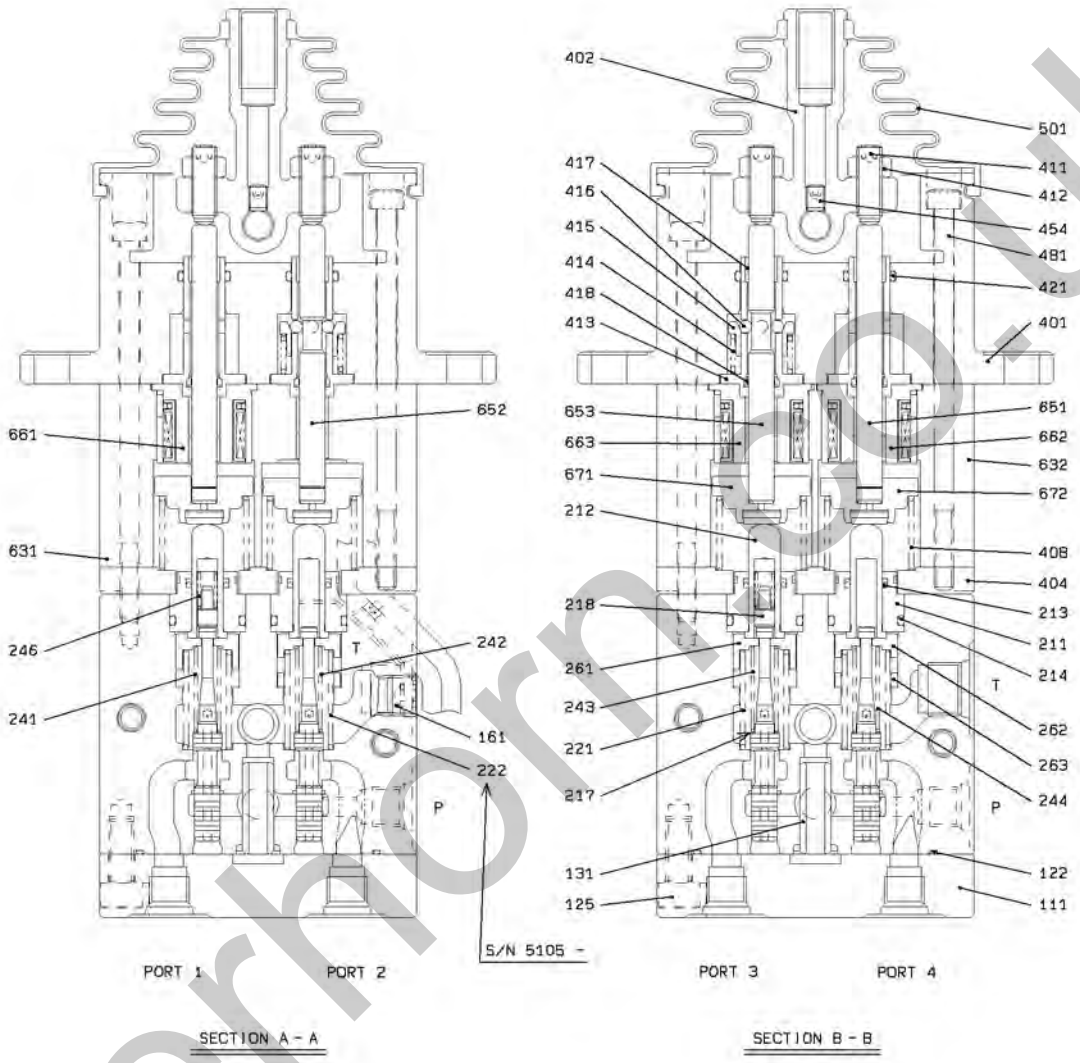

silverhorn.co.uk

PILOT VALVE

SYM-BOL	PART NUMBER	PART NAME	UNIT Q,TY	SERIAL (A) - (B)	REMARKS N P D	(A)	(B)	(C)	(D)	REMARK
000A	38560-60650	VALVE,PILOT	1	5081 - 5104						
000B	38560-60710	VALVE,PILOT	1	5105 -	C					
103A	41681-70170	PLATE,VALVE	1	5081 - 5104						
103B	41681-70180	PLATE,VALVE	1	5105 -	C					
111A	41600-71740	PLATE	2	5081 -						
122A	47131-76900	RING,O	2	5081 -						
123A	65210-12014	RING,O	4	5081 -						
125A	61101-08020	BOLT,SOCKET	4	5081 -						
131A	40840-73020	BUSHING	2	5081 -						
161A	41530-75250	PLUG	1	5081 - 5104						
161B	41530-75290	PLUG	1	5105 -	C					
171A	61101-08090	BOLT,SOCKET	2	5081 -						
172A	62401-61081	NUT	2	5081 -						
211A	41530-75260	PLUG	4	5081 - 5104						
211B	41530-72410	PLUG	4	5105 -	C					
212A	45887-70390	ROD,PUSH	4	5081 -						
213A	34000-71020	SEAL	4	5081 -						
214A	65210-12020	RING,O	4	5081 -						
217A	46000-71780	WASHER	4	5081 -						
218A	33930-71020	SEAT,SPRING	2	5081 -						PORT 1,3
221A	35600-77510	SPRING	4	5081 - 5104						
221B	35600-77700	SPRING	2	5105 -	C					PORT 1,3
222A	35600-77510	SPRING	2	5105 -						PORT 2,4
241A	35600-77580	SPRING	1	5081 -						PORT 1
242A	35600-77590	SPRING	1	5081 -						PORT 2
243A	35600-77600	SPRING	1	5081 -						PORT 3
244A	35600-77610	SPRING	1	5081 -						PORT 4
246A	35600-77540	SPRING	2	5081 -						PORT 1,3
261A	33930-71000	SEAT,SPRING	2	5081 -						PORT 1,3
262A	33930-71010	SEAT,SPRING	2	5081 -						PORT 2,4
263A	35700-71970	SPACER	2	5081 -						PORT 2,4
401A	31210-70320	COVER	2	5081 -						
402A	45600-70480	LEVER	2	5081 -						
404A	41610-70010	PLATE	2	5081 -						
408A	35600-76620	SPRING	4	5081 -						
411A	35104-70180	SCREW,SET	4	5081 -						
412A	37600-72680	NUT	4	5081 -						
413A	40840-73080	BUSHING	4	5081 -						
414A	35600-77550	SPRING	2	5081 -						PORT 2,3
415A	45200-71570	RING	2	5081 -						PORT 2,3
416A	43751-70470	BALL	8	5081 -						
417A	40840-72670	BUSHING	5	5081 -						
418A	35110-70050	SCRAPER	4	5081 -						
419A	43956-71340	BOLT,SOCKET	1	5081 -						
420A	33190-70650	CABLE	1	5081 -						
421A	65219-12012	RING,O	4	5081 -						
453A	34500-70790	SHAFT	2	5081 -						
454A	61131-06008	BOLT,SOCKET	2	5081 -						
455A	40840-73040	BUSHING	4	5081 -						
481A	43956-71350	BOLT,SOCKET	8	5081 -						
501A	40790-70560	BOOT	2	5081 -						
631A	33100-70890	CASE	1	5081 -						PORT 1,2
632A	33100-70900	CASE	1	5081 -						PORT 3,4
651A	45887-70400	ROD,PUSH	2	5081 -						PORT 1,4
652A	45887-70410	ROD,PUSH	1	5081 -						PORT 2
653A	45887-70420	ROD,PUSH	1	5081 -						PORT 3
661A	35910-70430	SOLENOID	1	5081 -						PORT 1
662A	35910-70410	SOLENOID	1	5081 -						PORT 4
663A	35910-70420	SOLENOID	1	5081 -						PORT 3
671A	41600-71750	PLATE	2	5081 -						PORT 1,3
672A	41600-71760	PLATE	2	5081 -						PORT 2,4

silverhorn.co.uk

MEMO

silverhorn.co.uk

VALVE GROUP

<S/N 5001 - 5080>

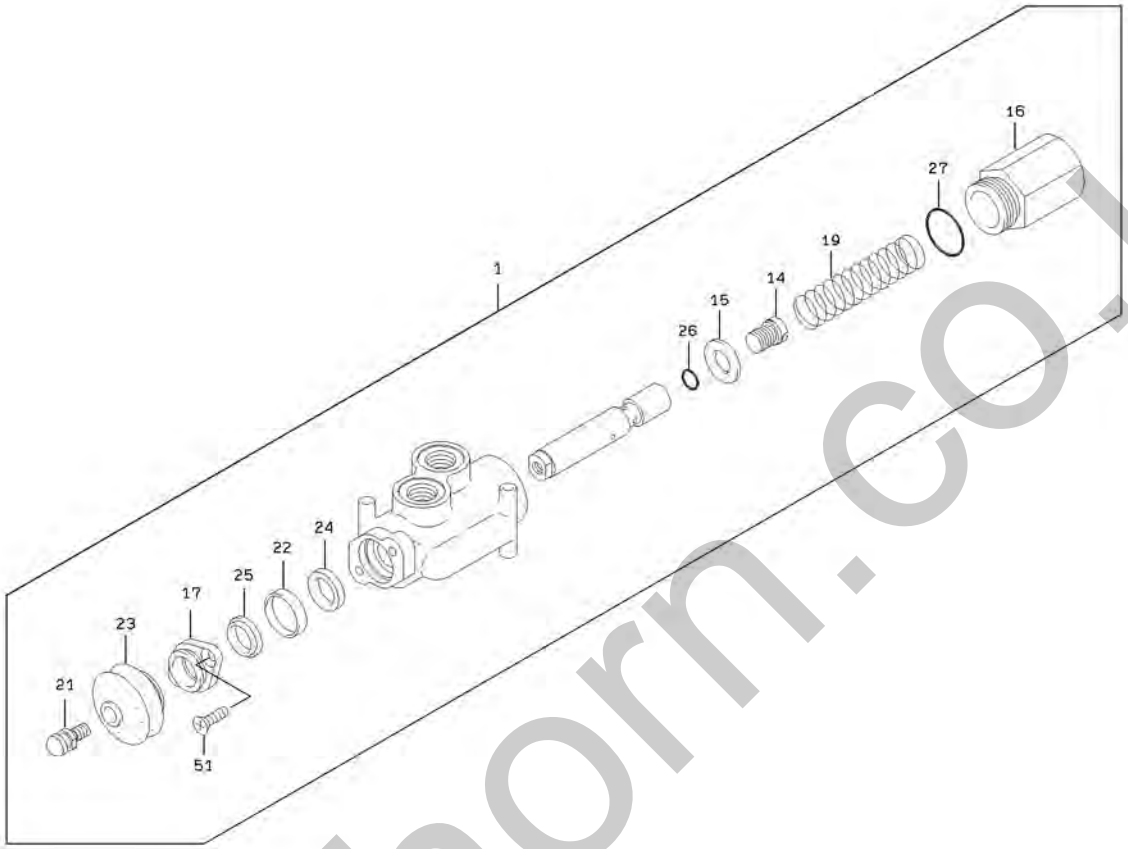

silverhorn.co.uk

VALVE GROUP

<S/N 5081 - >

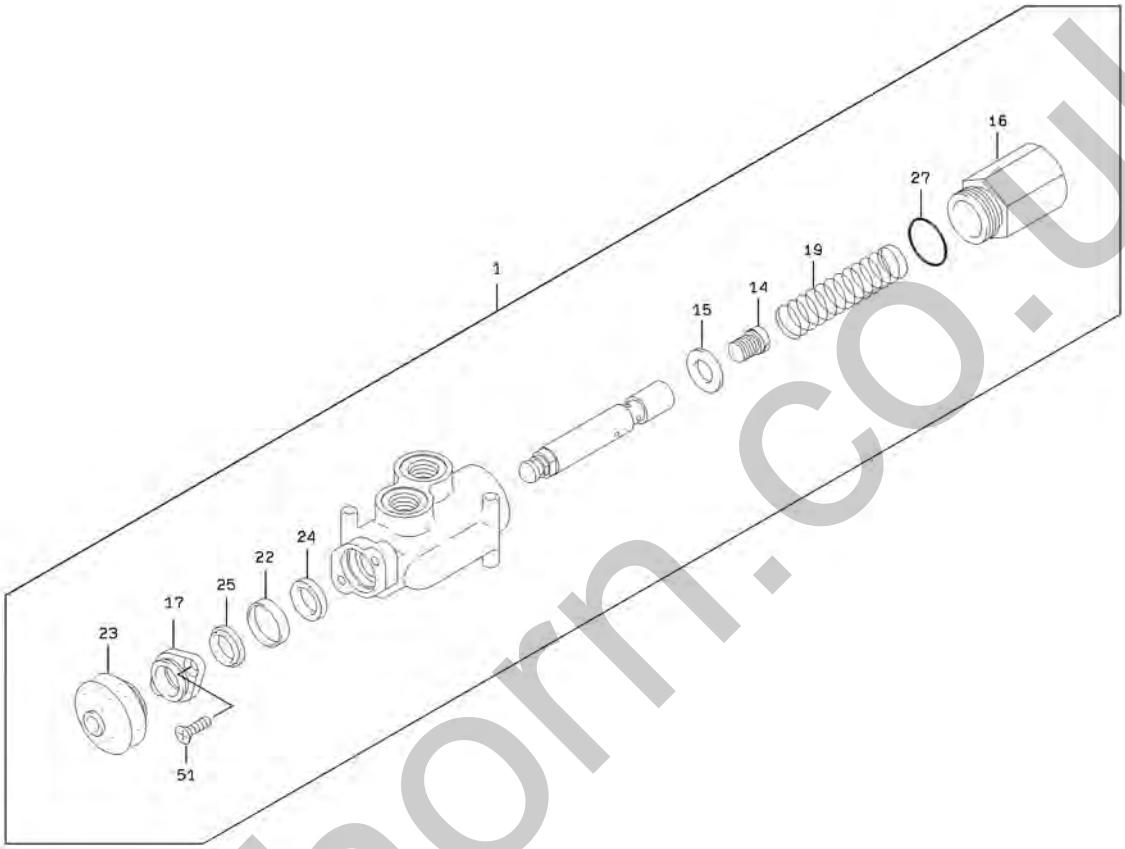

silverhorn.co.uk

VALVE GROUP

SYM-BOL	PART NUMBER	PART NAME	UNIT Q,TY	SERIAL (A) - (B)	REMARKS N P D	(A)	(B)	(C)	(D)	REMARK
1A	38510-20280	VALVE	1	5001 -		Y01				
14A	41530-21700	PLUG	1	5001 - 5070		01				
14B	41530-22780	PLUG	1	5071 -	A	01				
15A	46000-20920	WASHER	1	5001 -		01				
16A	41530-20920	PLUG	1	5001 -		01				
17A	40510-22130	FLANGE	1	5001 -		01				
19A	35600-21700	SPRING	1	5001 -		01				
21A	43900-23070	BOLT	1	5001 - 5070	D	01				
22A	35700-20810	SPACER	1	5001 -		01				
23A	40790-20210	BOOT	1	5001 -		01				
24A	39661-70390	PACKING,U	1	5001 -		01				
25A	34044-70660	SEAL,DUST	1	5001 -		01				
26A	65210-12011	RING,O	1	5001 - 5070	D	01				
27A	65210-12029	RING,O	1	5001 -		01				
51A	62257-51616	SCREW	2	5001 -		01				

silverhorn.co.uk

MEMO

silverhorn.co.uk

FAN MOTOR VALVE

<S/N 5001 - 5030>

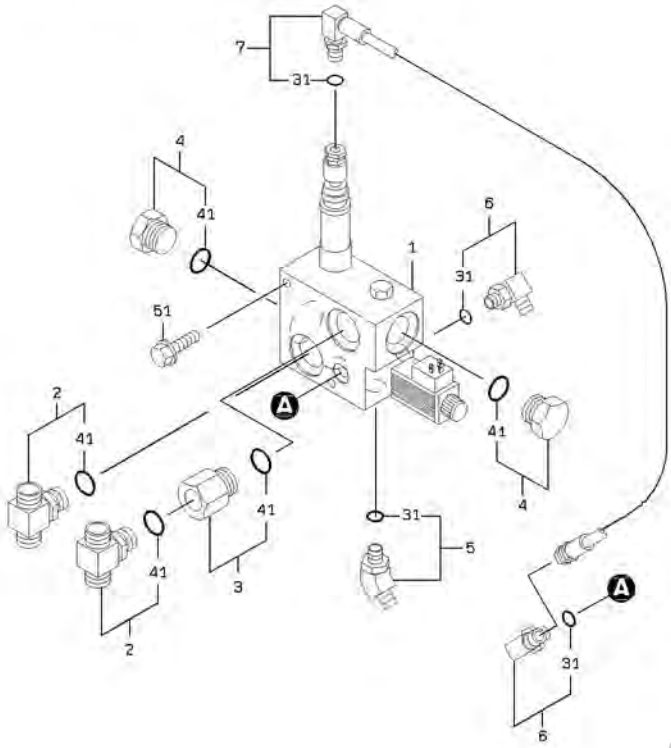

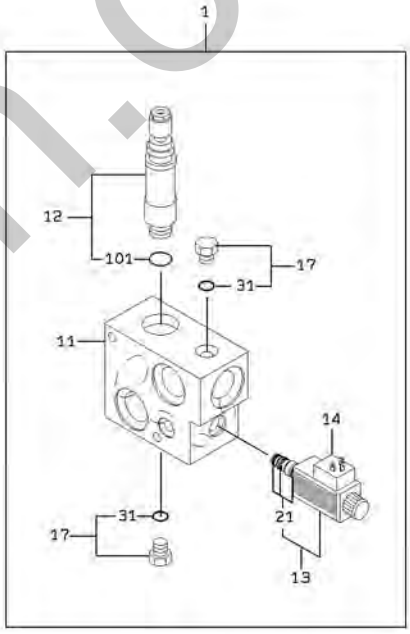

silverhorn.co.uk

FAN MOTOR VALVE

SYM-BOL	PART NUMBER	PART NAME	UNIT Q,TY	SERIAL (A) - (B)	REMARKS N P D	(A)	(B)	(C)	(D)	REMARK
1A	38511-24680	VALVE ASSY	1	5001 - 5030		Y01				
2A	30246-20360	ADAPTER,TEE	2	5001 - 5030		Y05				
3A	30230-21890	ADAPTER	1	5001 - 5030		Y05				
4A	88390-21516	PLUG	2	5001 - 5030		Y05				
5A	88241-07204	ADAPTER,ELBOW	1	5001 - 5030					Y04	
6A	88241-07104	ADAPTER,ELBOW	2	5001 - 5030					Y04	
7A	43113-38310	HOSE,HIGH PRESSURE	1	5001 - 5030					Y04	43113-28310
11A	41410-33430	BLOCK	1	5001 - 5030		01				
12A	38565-60850	VALVE,RELIEF	1	5001 - 5030		01	Y02			
13A	38510-71010	VALVE	1	5001 - 5030		01		Y03		
14A	35910-70250	SOLENOID	1	5001 - 5030		01				
17A	88390-21304	PLUG	2	5001 - 5030		01			Y04	
21A	49327-73020	SEAL KIT	1	5001 - 5030				03		
31A	65210-12011	RING,O	1	5001 - 5030					04	
41A	65210-12029	RING,O	1	5001 - 5030		05				
51A	61802-10095	BOLT,FLANGED	2	5001 - 5030						
101A	65210-12024	RING,O	1	5001 - 5030			02			

silverhorn.co.uk

FAN MOTOR VALVE

<S/N 5031 - >

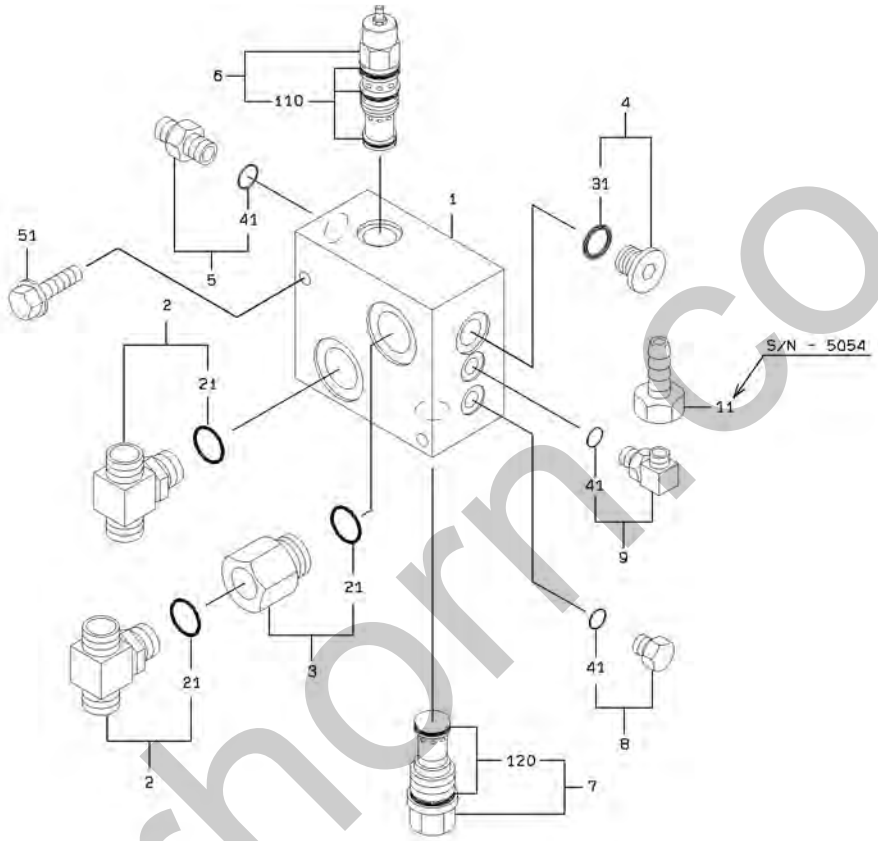

silverhorn.co.uk

FAN MOTOR VALVE

SYM-BOL	PART NUMBER	PART NAME	UNIT Q,TY	SERIAL (A) - (B)	REMARKS N P D	(A)	(B)	(C)	(D)	REMARK
1A	41410-35650	BLOCK	1	5031 -						
2A	30246-20360	ADAPTER,TEE	2	5031 -		Y01				
3A	30230-21890	ADAPTER	1	5031 -		Y01				
4A	88390-21508	PLUG	1	5031 -			Y02			
5A	88201-06704	ADAPTER	1	5031 -				Y03		
6A	38565-71820	VALVE,RELIEF	1	5031 -					Y04	
7A	38554-60420	VALVE,CHECK	1	5031 -		Y05				
8A	88390-21504	PLUG	1	5031 -				Y03		
9A	88241-07104	ADAPTER,ELBOW	1	5031 -				Y03		
11A	88511-03041	NIPPLE,HOSE	1	5031 - 5054	D					
21A	65210-12029	RING,O	1	5031 -		01				
31A	65210-12018	RING,O	1	5031 -			02			
41A	65210-12011	RING,O	1	5031 -				03		
51A	61802-10095	BOLT,FLANGED	2	5031 -						
110A	49327-72900	SEAL KIT	1	5031 -					04	
120A	49327-72340	SEAL KIT	1	5031 -						

silverhorn.co.uk

LIFT CYLINDER

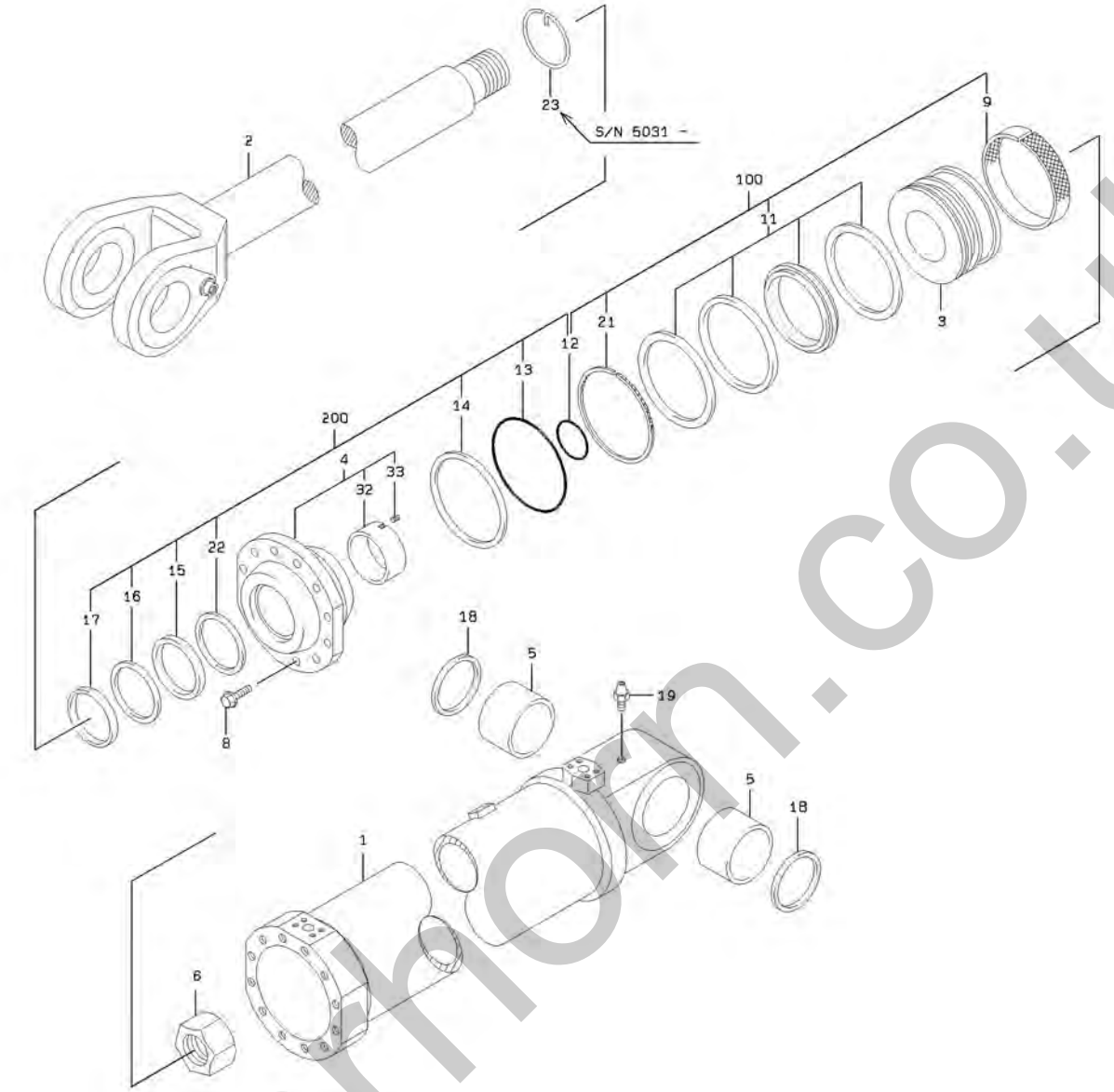

silverhorn.co.uk

LIFT CYLINDER

SYM-BOL	PART NUMBER	PART NAME	UNIT Q,TY	SERIAL (A)	-	(B)	REMARKS N P D	(A)	(B)	(C)	(D)	REMARK
000A	34820-22160	CYLINDER ASSY,OIL	2	5001	-							
1A	36725-20860	TUBE,CYLINDER	1	5001	-							
2A	45886-20620	ROD,PISTON	1	5001	-							
3A	39960-70800	PISTON	1	5001	-							
4A	31265-20330	COVER ASSY,ROD	1	5001	-	5030		Y01				
4B	31265-20440	COVER ASSY,ROD	1	5031	-		C	Y01				
5A	63422-48780	BUSHING	2	5001	-							
6A	37636-20250	NUT,PISTON	1	5001	-							
8A	61805-24075	BOLT,FLANGED	12	5001	-							
9A	65431-31298	RING,WEAR	1	5001	-				K1			
11A	49328-70020	SEAL SET	1	5001	-				K1			
12A	65210-22090	RING,O	1	5001	-				K1	K2		
13A	65210-22215	RING,O	1	5001	-					K2		
14A	65240-32215	RING,BACK-UP	1	5001	-					K2		
15A	65446-06615	PACKING,U	1	5001	-					K2		
16A	65473-07930	RING,BACK-UP	1	5001	-					K2		
17A	65455-04908	SEAL,DUST	1	5001	-					K2		
18A	65051-02510	SEAL,DUST	2	5001	-							
19A	75011-22300	NIPPLE,GREASE	1	5001	-							
21A	47171-70150	RING,WEAR	1	5001	-				K1			
22A	65464-06660	RING,BUFFER	1	5001	-					K2		
23A	45315-20250	RING,STOP	1	5031	-							
32A	40840-22160	BUSHING	1	5001	-			01				
33A	62214-06010	SCREW	1	5001	-			01				
100A	49327-60390	SEAL KIT	1	5001	-				QK1			FR PISTON
200A	49327-60750	SEAL KIT	1	5001	-					QK2		FR ROD COVER

silverhorn.co.uk

TILT CYLINDER

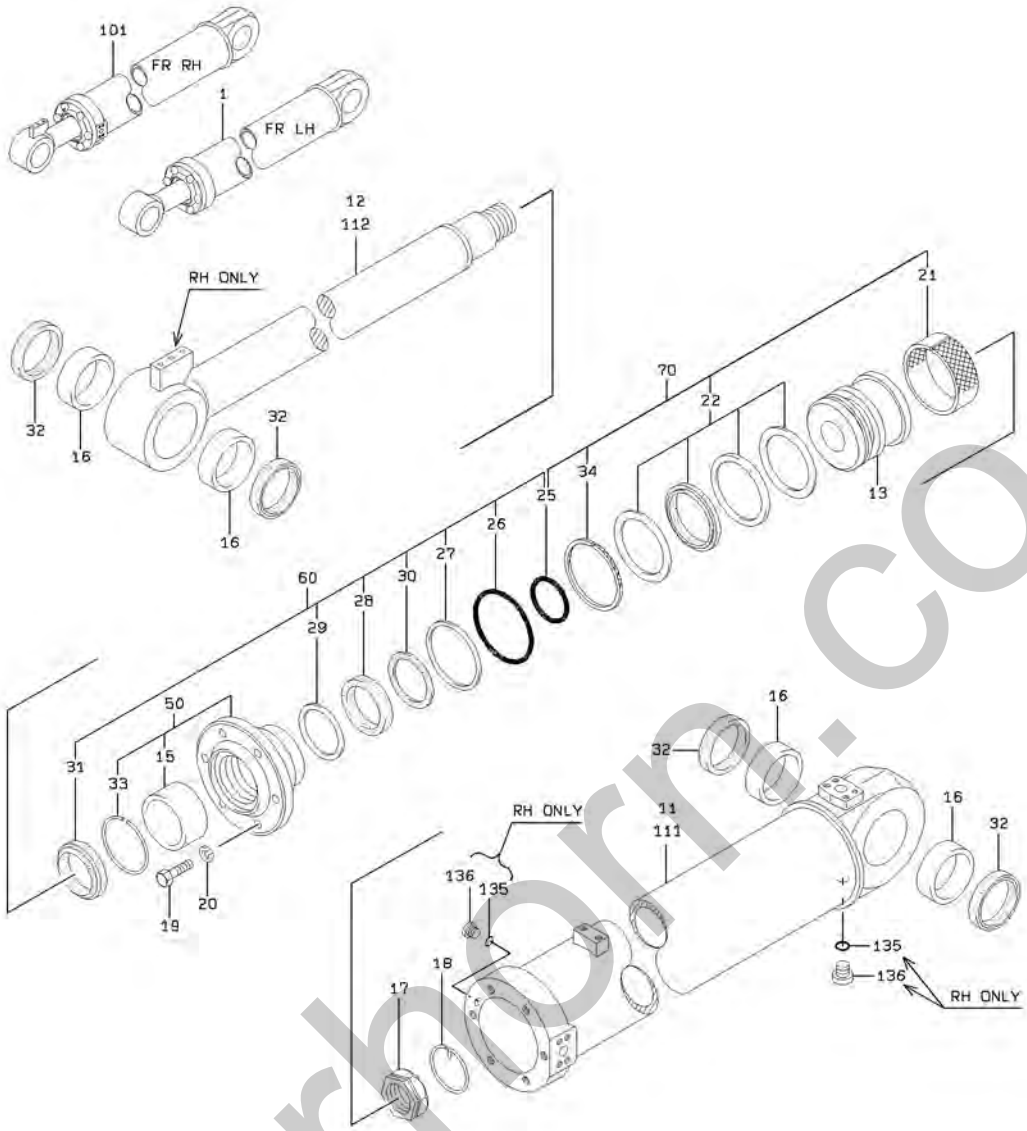

silverhorn.co.uk

TILT CYLINDER

SYM-BOL	PART NUMBER	PART NAME	UNIT Q,TY	SERIAL (A) - (B)	REMARKS N P D	(A)	(B)	(C)	(D)	REMARK
1A	34820-62730	CYLINDER ASSY,OIL	1	5001 -		Y01				FR (LH)
11A	36725-71390	TUBE,CYLINDER	1	5001 -		01				FR (LH)
12A	45886-71320	ROD,PISTON	1	5001 -		01				FR (LH)
13A	39960-70780	PISTON	1	5001 -		01		03		
15A	88811-10050	BUSHING	1	5001 -			02			
16A	63422-46440	BUSHING	4	5001 -		01		03		
17A	37636-70050	NUT,PISTON	1	5001 -		01		03		
18A	45315-70090	RING,STOP	1	5001 -		01		03		
19A	43900-71050	BOLT	8	5001 -		01		03		
20A	62721-24100	WASHER,SPRING	8	5001 -		01		03		
21A	65431-24248	RING,WEAR	1	5001 -			K1	03		
22A	49328-70010	SEAL SET	1	5001 -			K1			
25A	65210-22080	RING,O	1	5001 -			K1		K2	
26A	65210-22180	RING,O	1	5001 -					K2	
27A	65240-32180	RING,BACK-UP	1	5001 -					K2	
28A	65446-05712	PACKING,U	1	5001 -					K2	
29A	65473-07130	RING,BACK-UP	1	5001 -					K2	
30A	65464-06460	RING,BUFFER	1	5001 -					K2	
31A	65455-04308	RING,SCRAPER	1	5001 -					K2	
32A	65051-02007	SEAL,DUST	4	5001 -		01		03		
33A	45315-20190	RING,STOP	1	5001 -			02			
34A	47171-70130	RING,WEAR	1	5001 -			K1			
50A	31265-60070	COVER ASSY,ROD	1	5001 -		01	Y02			
60A	49327-60760	SEAL KIT	1	5001 -		01		03	QK2	FR ROD COVER
70A	49327-60410	SEAL KIT	1	5001 -		01	QK1	03		FR PISTON
101A	34820-64300	CYLINDER ASSY,OIL	1	5001 -				Y03		FR (RH)
111A	36725-72280	TUBE,CYLINDER	1	5001 -				03		FR (RH)
112A	45886-71310	ROD,PISTON	1	5001 -				03		FR (RH)
135A	65210-12011	RING,O	2	5001 -				03		FR (RH)
136A	41530-71210	PLUG	2	5001 -				03		FR (RH)

silverhorn.co.uk

FITTING MOUNT

<S/N 5001 - 5030>

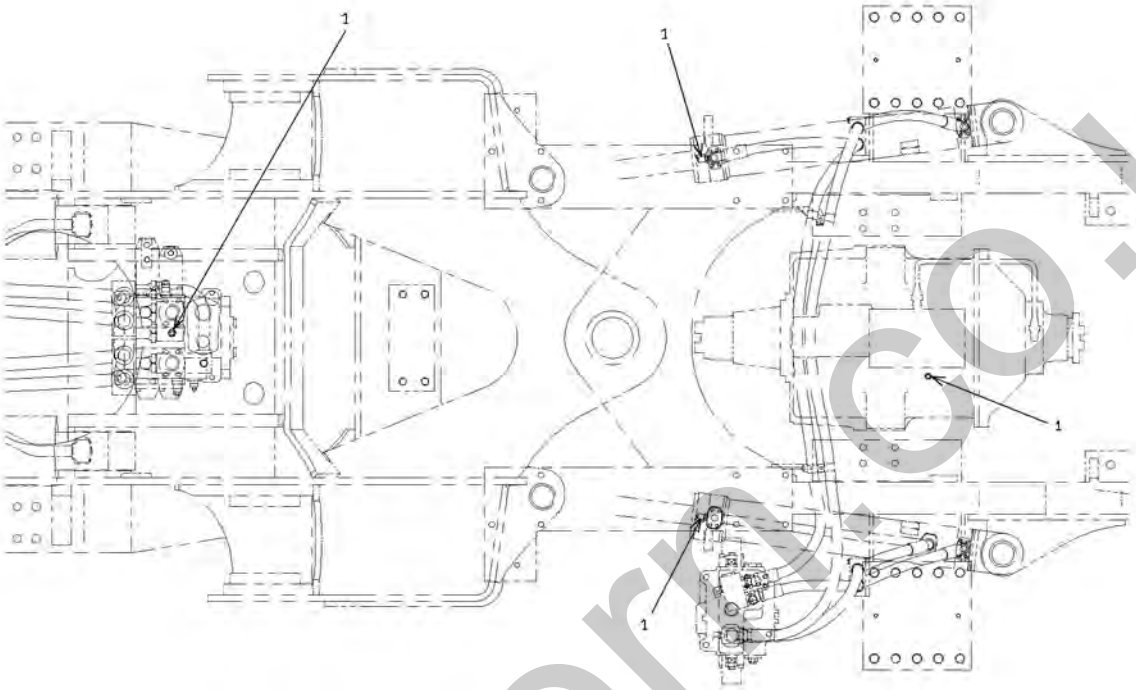

silverhorn.co.uk

FITTING MOUNT

<S/N 5031 - >

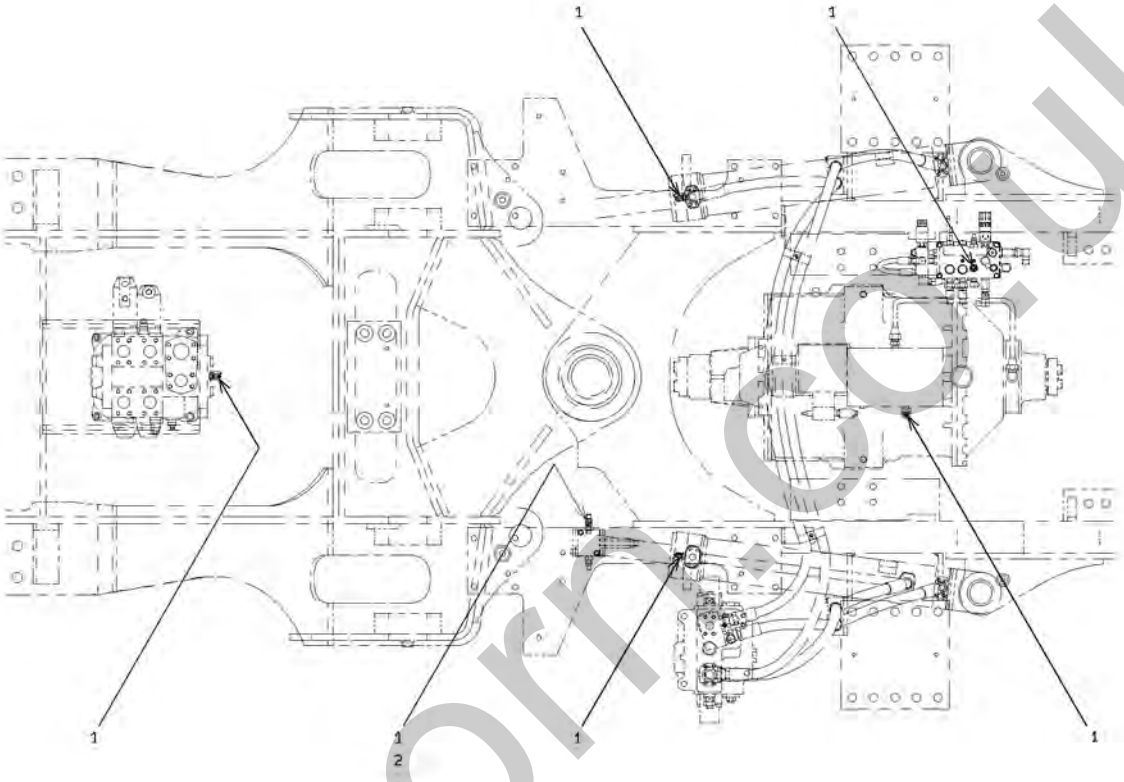

2-A

silverhorn.co.uk

FITTING MOUNT

SYM-BOL	PART NUMBER	PART NAME	UNIT Q,TY	SERIAL (A) - (B)	REMARKS N P D	(A) (B)	(C) (D)	REMARK
1A	38900-23510-7	FITTING	4	5001 - 5030				
1B	38900-23510-7	FITTING	6	5031 -	B			
2A	30246-20470	ADAPTER,TEE	1	5031 -				

silverhorn.co.uk

MEMO

silverhorn.co.uk

BUCKET(FOR GENERAL PURPOSE)

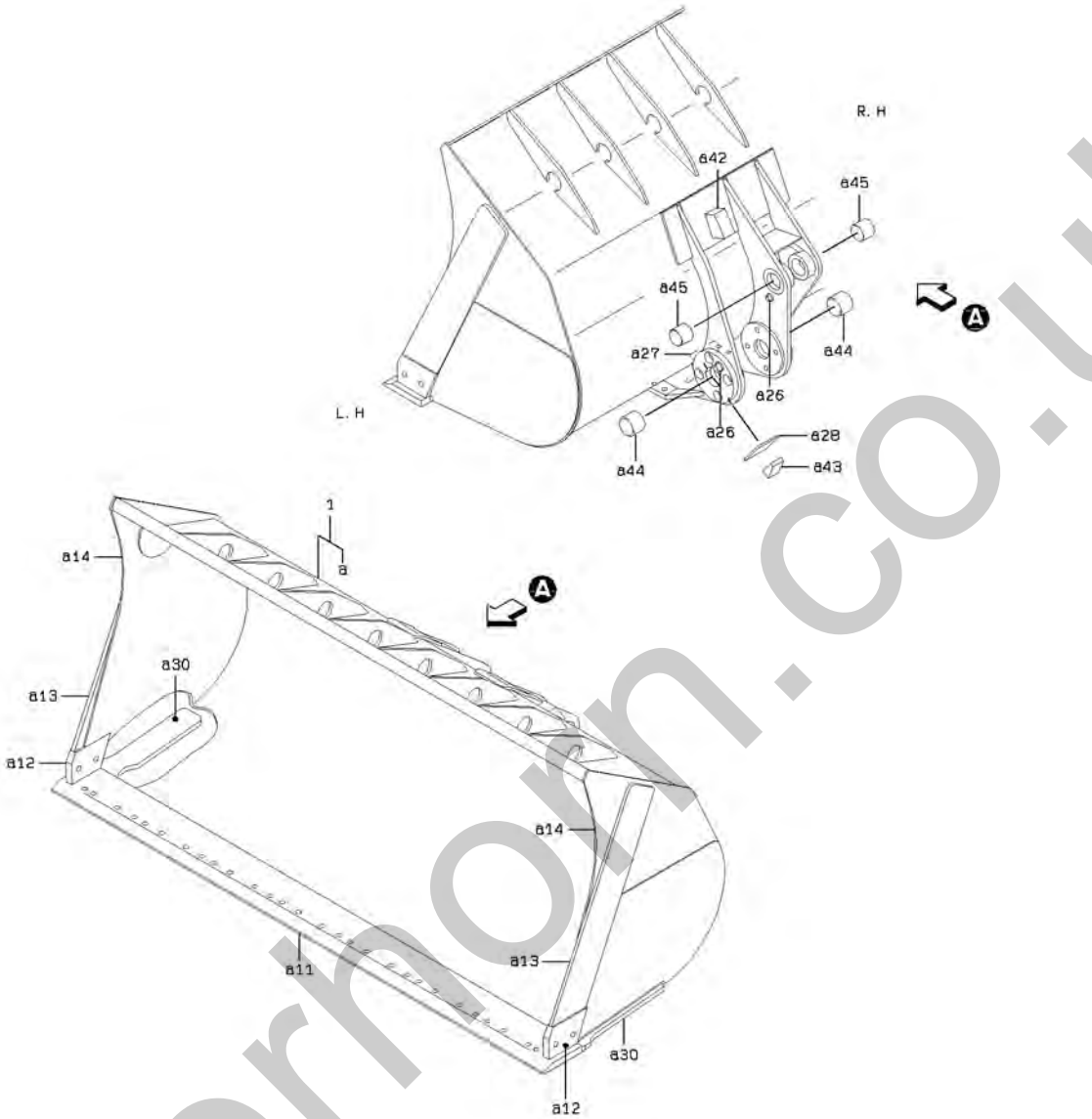

silverhorn.co.uk

BUCKET(FOR GENERAL PURPOSE)

SYM-BOL	PART NUMBER	PART NAME	UNIT Q,TY	SERIAL (A) - (B)	REMARKS N P D	(A)	(B)	(C)	(D)	REMARK
1A	38311-60640-7	BUCKET ASSY	1	5001 -		Y01				
11A	30930-70150-7	EDGE	1	5001 -		01				WELDING
12A	30938-70150-7	EDGE,SIDE	2	5001 -		01				WELDING
13A	39953-70090-7	BIT,SIDE	2	5001 -		01				WELDING
14A	39953-70100-7	BIT,SIDE	2	5001 -		01				WELDING
26A	41656-70350-7	PLATE,WEAR	4	5001 -		01				WELDING
27A	41600-71660-7	PLATE	2	5001 -		01				WELDING
28A	41600-71670-7	PLATE	2	5001 -		01				WELDING
30A	41600-71680-7	PLATE	2	5001 -		01				WELDING
42A	41600-71690-7	PLATE	2	5001 -		01				WELDING
43A	41600-71700-7	PLATE	2	5001 -		01				WELDING
44A	40840-72960-7	BUSHING	4	5001 -		01				
45A	40840-72970-7	BUSHING	4	5001 -		01				

silverhorn.co.uk

BUCKET(FOR ROCK-RS)

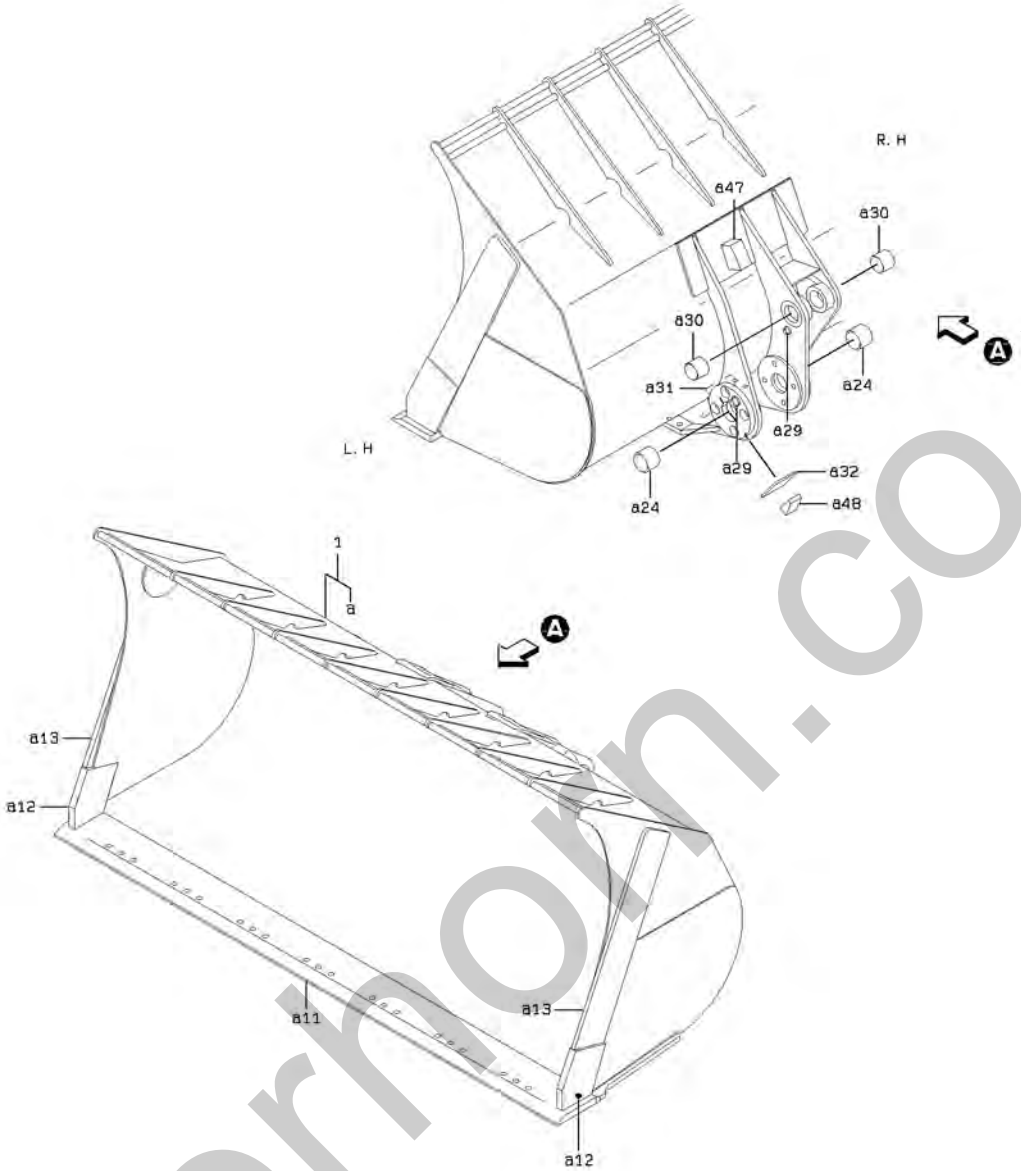

silverhorn.co.uk

BUCKET(FOR ROCK-RS)

SYM-BOL	PART NUMBER	PART NAME	UNIT Q,TY	SERIAL (A) - (B)	REMARKS N P D	(A) (B)	(C) (D)	REMARK
1A	38311-60630-7	BUCKET ASSY	1	5001 -		Y01		
11A	30930-70160-7	EDGE	1	5001 -		01		WELDING
12A	30938-70160-7	EDGE,SIDE	2	5001 -		01		WELDING
13A	30938-70170-7	EDGE,SIDE	2	5001 -		01		WELDING
24A	40840-72960-7	BUSHING	4	5001 -		01		
29A	41656-70350-7	PLATE,WEAR	4	5001 -		01		WELDING
30A	40840-72970-7	BUSHING	4	5001 -		01		
31A	41600-71660-7	PLATE	2	5001 -		01		WELDING
32A	41600-71670-7	PLATE	2	5001 -		01		WELDING
47A	41600-71690-7	PLATE	2	5001 -		01		WELDING
48A	41600-71700-7	PLATE	2	5001 -		01		WELDING

silverhorn.co.uk

BUCKET(FOR ROCK-RV)

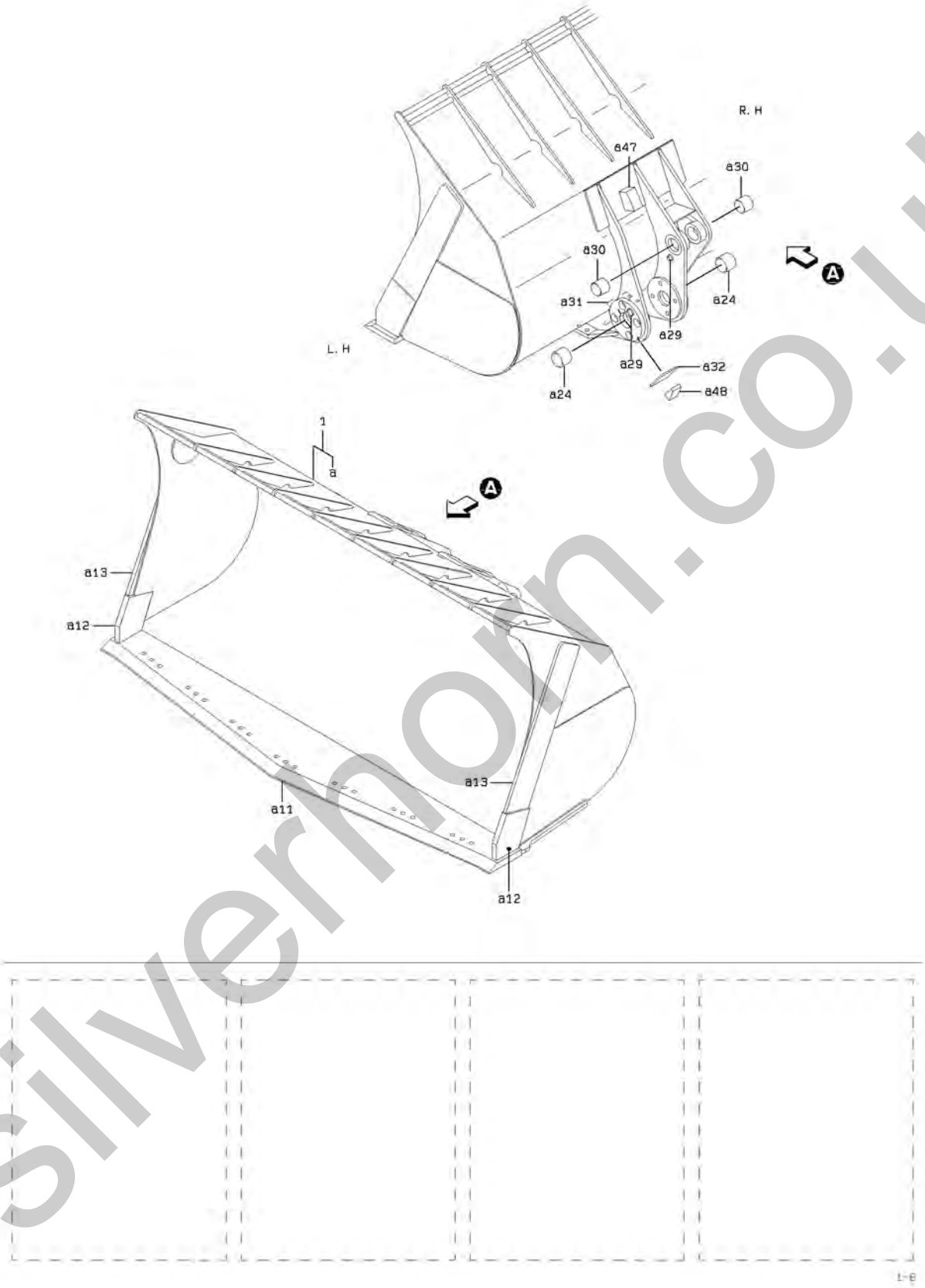

silverhorn.co.uk

BUCKET(FOR ROCK-RV)

SYM-BOL	PART NUMBER	PART NAME	UNIT Q,TY	SERIAL (A) - (B)	REMARKS N P D	(A)	(B)	(C)	(D)	REMARK
1A	38311-60620-7	BUCKET ASSY	1	5001 -		Y01				
11A	30930-70170-7	EDGE	1	5001 -		01				WELDING
12A	30938-70160-7	EDGE,SIDE	2	5001 -		01				WELDING
13A	30938-70170-7	EDGE,SIDE	2	5001 -		01				WELDING
24A	40840-72960-7	BUSHING	4	5001 -		01				
29A	41656-70350-7	PLATE,WEAR	4	5001 -		01				WELDING
30A	40840-72970-7	BUSHING	4	5001 -		01				
31A	41600-71660-7	PLATE	2	5001 -		01				WELDING
32A	41600-71670-7	PLATE	2	5001 -		01				WELDING
47A	41600-71690-7	PLATE	2	5001 -		01				WELDING
48A	41600-71700-7	PLATE	2	5001 -		01				WELDING

silverhorn.co.uk

MARKING GROUP

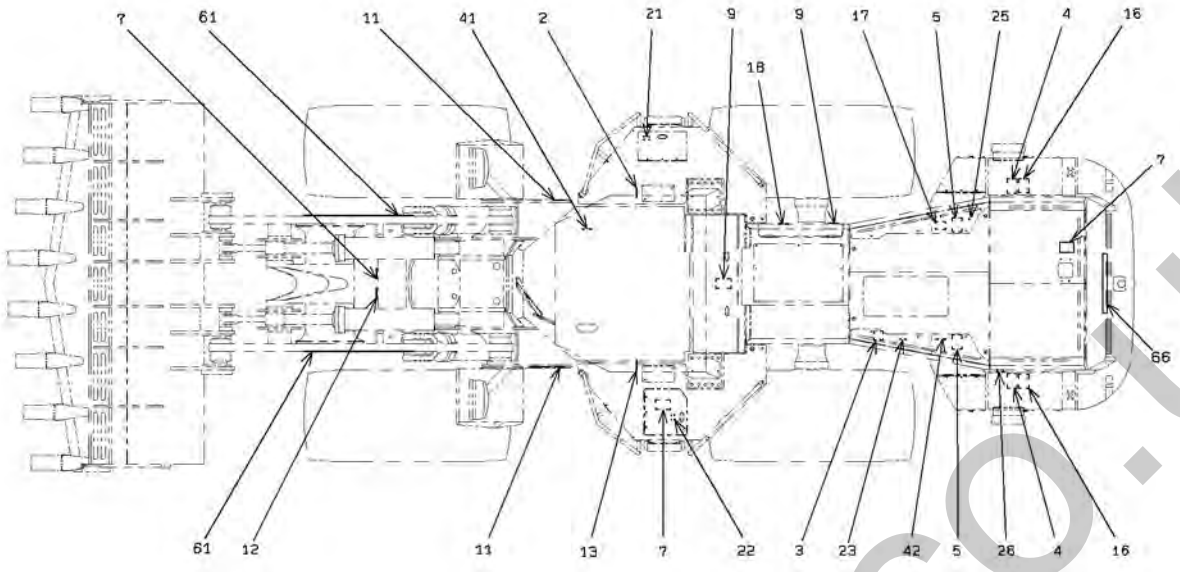

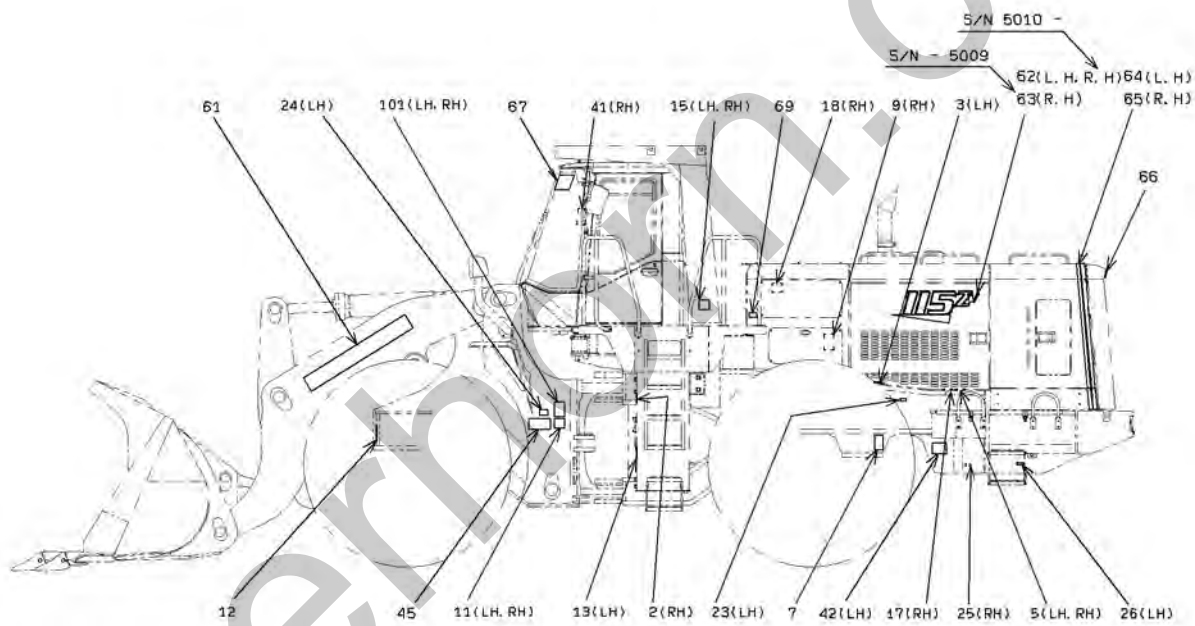

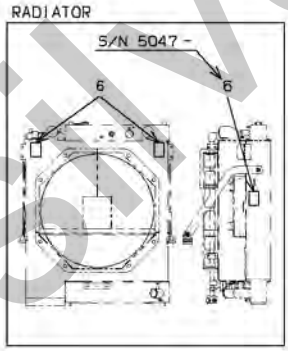

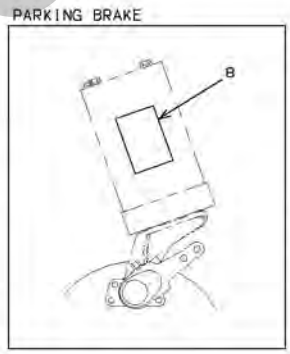

silvermoon.co.uk

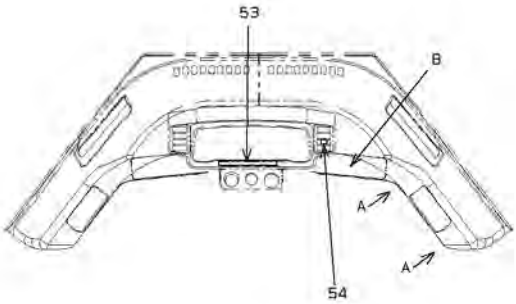

SYMBOL 80	LABEL KIT
1	WARNING LABEL(READ MANUAL)
2	WARNING LABEL(CHECK T/C OIL)
3	WARNING LABEL(CAUGHT)
4	WARNING LABEL(BATTERY GAS)
5	WARNING LABEL(BELT)
6	WARNING LABEL(FAN)
7	WARNING LABEL(HOT FLUID)
8	WARNING LABEL(COMP'D SPRING)
9	WARNING LABEL(ACCUMULATOR)
101	WARNING LABEL(HOY FLUID)

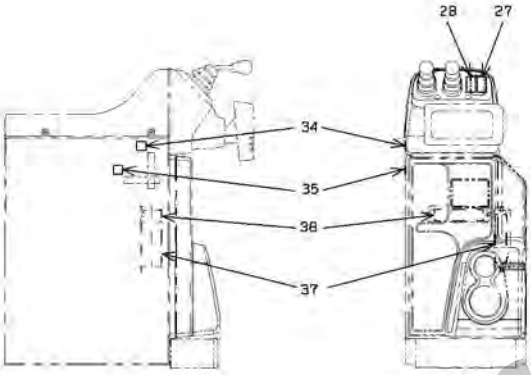

SYMBOL 90	LABEL KIT
11	DANGER LABEL(CAUGHT)
12	DANGER LABEL(BOOM)
13	CAUTION LABEL(ARTIC. STOPPER)
15	DANGER LABEL(ROPS)
16	CAUTION LABEL(BATTERY LIQUID)
17	CAUTION LABEL(ETHER CYLINDER)
18	WARNING LABEL(AIR CLEANER)
21	FUEL LABEL
22	HYDRAULIC OIL LABEL
23	TIRE AIR PRESSURE LABEL
24	GAUGE PORT LABEL
25	E/G OIL DRAIN LABEL(OIL PAN)
26	R/D COOLING WATER DRAIN LABEL
27	CONTROL LABEL(HOIST ARM)
28	CONTROL LABEL(BUCKET)
29	FRONT WIPER LABEL
31	REAR WIPER LABEL
34	LOCK LABEL
35	UNLOCK LABEL
37	FUSE LABEL(CAB)
38	FUSE LABEL(FRAME)
41	INSTRUMENT PANEL LABEL
42	REAR AXLE LABEL

SYMBOL 100	LABEL KIT
51	DIAG LABEL
52	DIAG LABEL
53	INSTRUMENT SWITCH LABEL
54	WORKING MODE LABEL

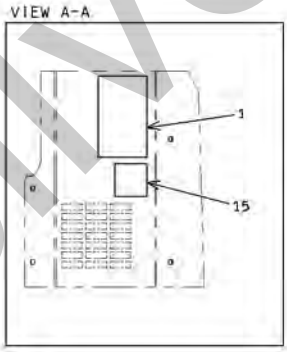

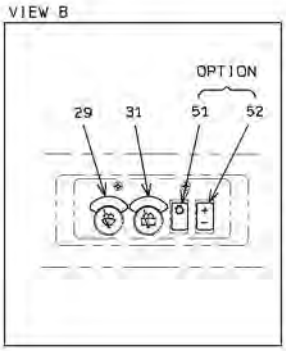

silverhorn.co.uk

MARKING GROUP

SYM-BOL	PART NUMBER	PART NAME	UNIT Q,TY	SERIAL (A) - (B)	REMARKS N P D	(A) (B)	(C) (D)	REMARK
6A	44841-21100	LABEL	2	5047 -				
45A	44794-22600	LABEL,LUBRICATION	1	5001 -				
61A	44770-34230	LABEL	2	5001 -				
62A	44770-49280	LABEL	1	5001 - 5009				FR LH
62B	44770-49280	LABEL	2	5010 -				
63A	44770-49290	LABEL	1	5001 - 5009	D			FR RH
64A	44770-49300	LABEL	1	5001 -				FR LH
65A	44770-49310	LABEL	1	5001 -				FR RH
66A	44770-49210	LABEL	1	5001 -				
67A	44770-60050-7	LABEL	1	5001 -				
69A	44770-47390-7	LABEL	1	5001 -				
80A	44771-22200	LABEL KIT	1	5001 - 5046				44771-21980
80B	44771-22540	LABEL KIT	1	5047 -	C			
90A	44771-21990	LABEL KIT	1	5001 -				
100A	44771-22080	LABEL KIT	1	5001 -				

silverhorn.co.uk

MEMO

silverhorn.co.uk

CAP MOUNT

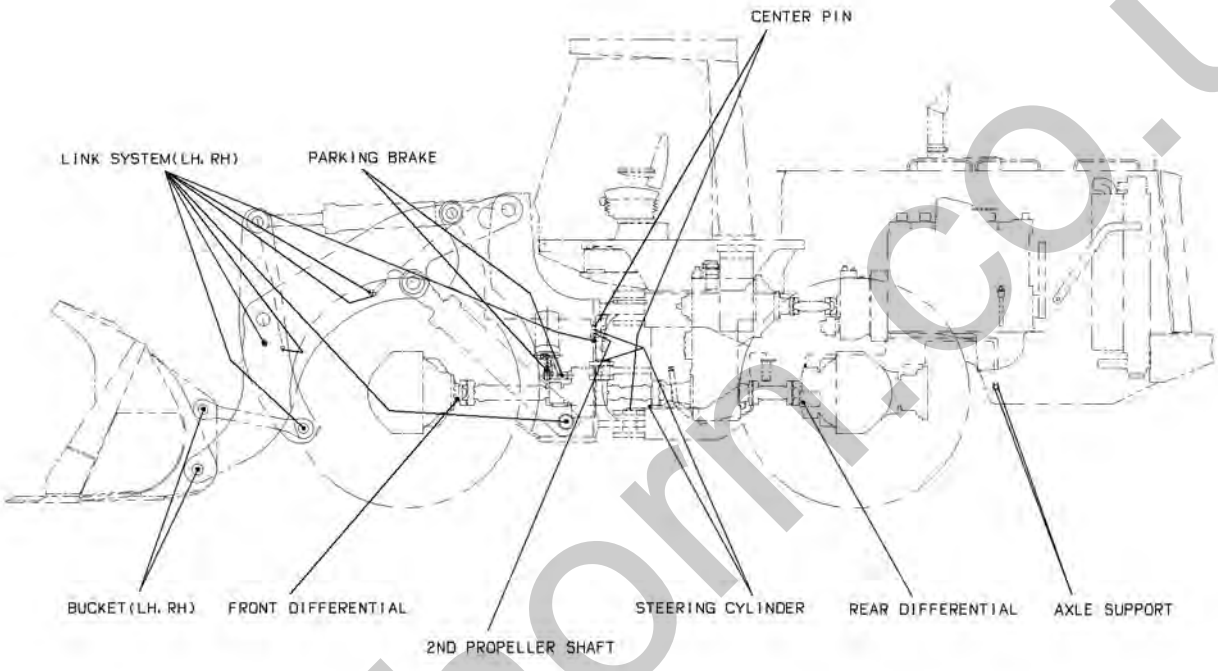

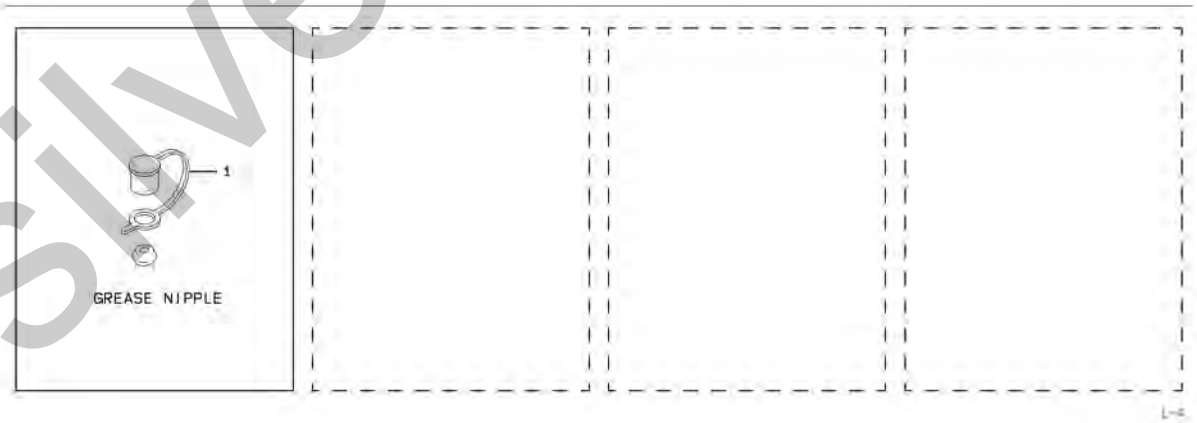

silverhorn.co.uk

CAP MOUNT

SYM-BOL	PART NUMBER	PART NAME	UNIT Q,TY	SERIAL (A) - (B)	REMARKS N P D	(A) (B)	(C) (D)	REMARK
1A	32224-20160-7	CAP,ELASTIC	A/R	5001 -				

silverhorn.co.uk

LOCK GROUP

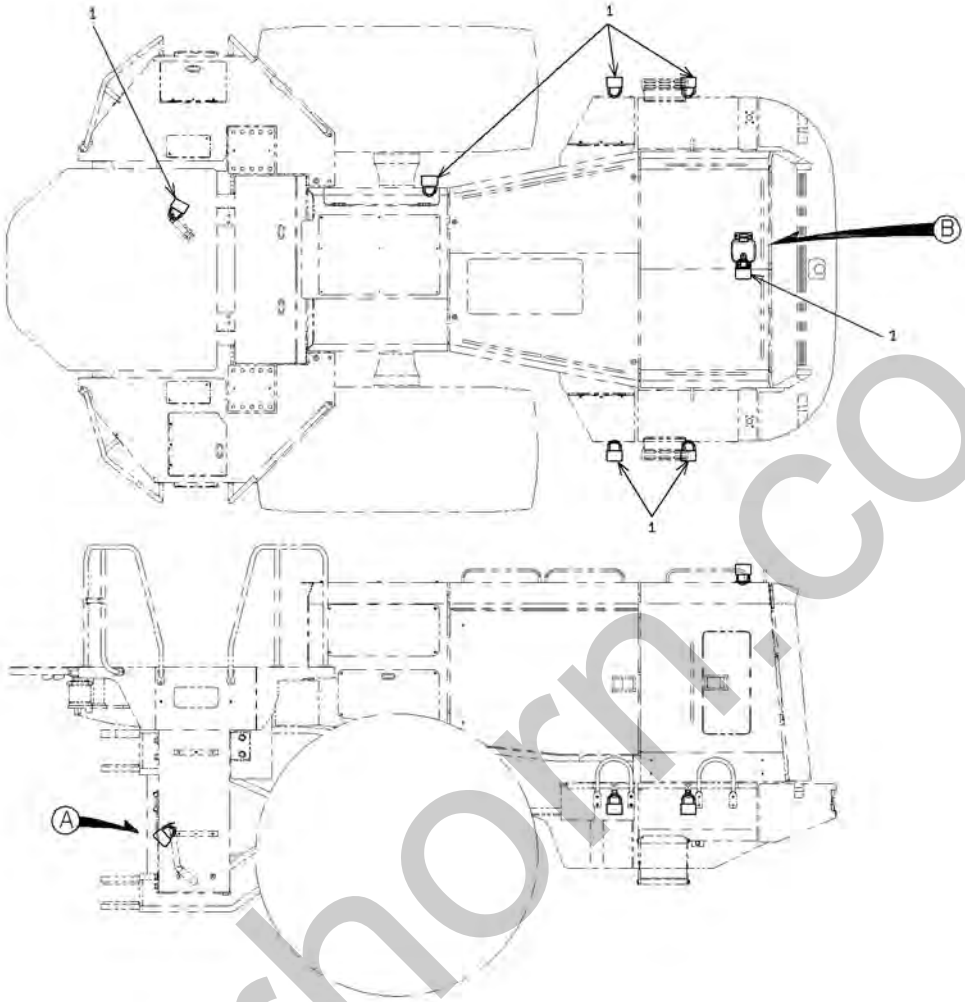

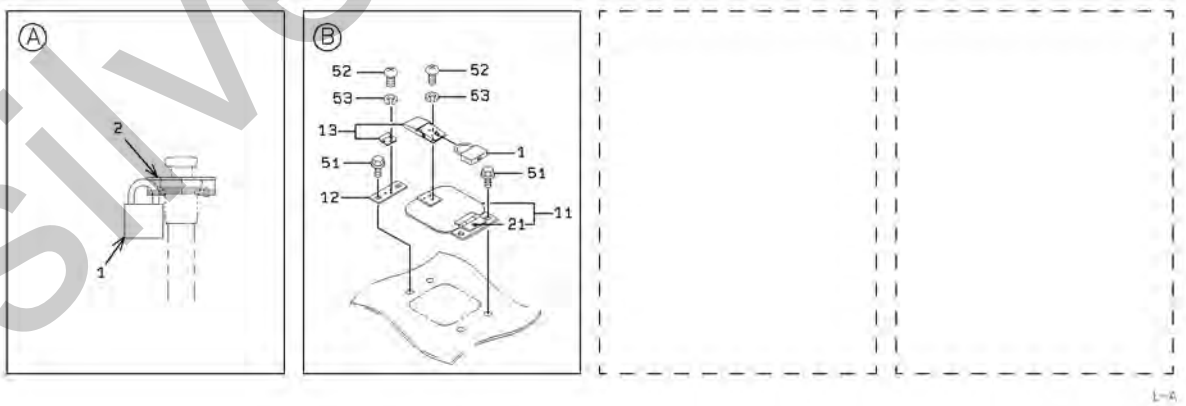

silverhorn.co.uk

LOCK GROUP

SYM-BOL	PART NUMBER	PART NAME	UNIT Q,TY	SERIAL (A) - (B)	REMARKS N P D	(A) (B)	(C) (D)	REMARK
1A	45830-20050	LOCK	7	5031 -				
2A	41612-51390	PLATE	1	5031 -				
11A	31241-20190	COVER ASSY	1	5031 -		Y01		
12A	41612-33760	PLATE	1	5031 -				
13A	32150-60020	CATCH	1	5031 -				
21A	39890-70570	HINGE	1	5031 -		01		WELDING
51A	61802-10020	BOLT,FLANGED	4	5031 -				
52A	62256-51406	SCREW	6	5031 -				
53A	62721-04100	WASHER,SPRING	6	5031 -				

silverhorn.co.uk

SYMBOL	OUTWARD FORM	PART NUMBER	PART NAME	CONTENT	DESCRIPTION
12		49511-70010	CLEANING POWDER	1KG	DETERGENT FOR WASHING "AIR CLEANER ELEMENT" (DONALDOSON ONLY)
15		41262-70020	BRAKE OIL	1L	WET DISC BRAKE ONLY
17		48977-20060	AUTHENT GREEN	1	PAINT (FOR REAR GRILLE & HANDRAIL)
20		48977-20020	KAWASAKI GRAY	1	PAINT (FOR OPERATION STAND)
21		39651-70010	SEALANT	250G	THEEE BOND 1215
23		45860-70010	LIQUID LOCKING	250CC	LOCK TITE 262
27		45860-70020	LIQUID LOCKING	250CC	LOCK TITE (PLASTIC GASKET)
28		45860-70030	LIQUID LOCKING	250G	THREE BOND 1327
29		45860-70040	LIQUID LOCKING	250G	THREE BOND 1374

silverhorn.co.uk

REPAIR & MAINTENANCE PARTS

SYM-BOL	PART NUMBER	PART NAME	UNIT Q,TY	SERIAL (A) - (B)	REMARKS N P D	(A) (B)	(C) (D)	REMARK
12A	49511-70010	POWDER,CLEANING	1	5001 -	N			
15A	41262-70020	BRAKE FLUID	1	5001 -				
17A	48977-20060	PAINT	1	5001 -				
20A	48977-20020	PAINT	1	5001 -				
21A	39651-70010	SEALANT	1	5001 -				
23A	45860-70010	LIQUID,LOCKING	1	5001 -				
27A	45860-70020	LIQUID,LOCKING	1	5001 -				
28A	45860-70030	LIQUID,LOCKING	1	5001 -				
29A	45860-70040	LIQUID,LOCKING	1	5001 -				

silverhorn.co.uk

CAB MOUNT

<S/N 5001 - 5046>

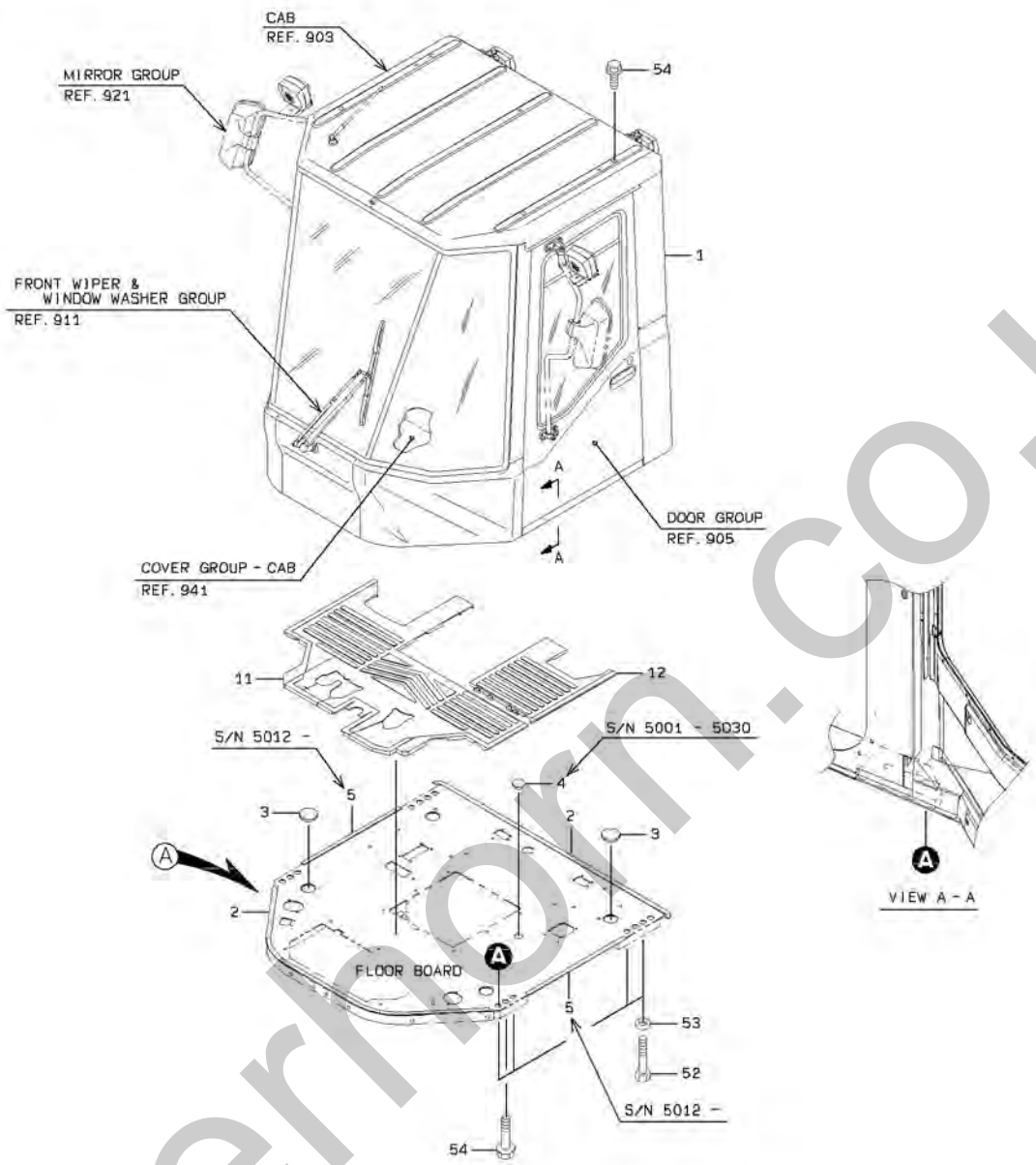

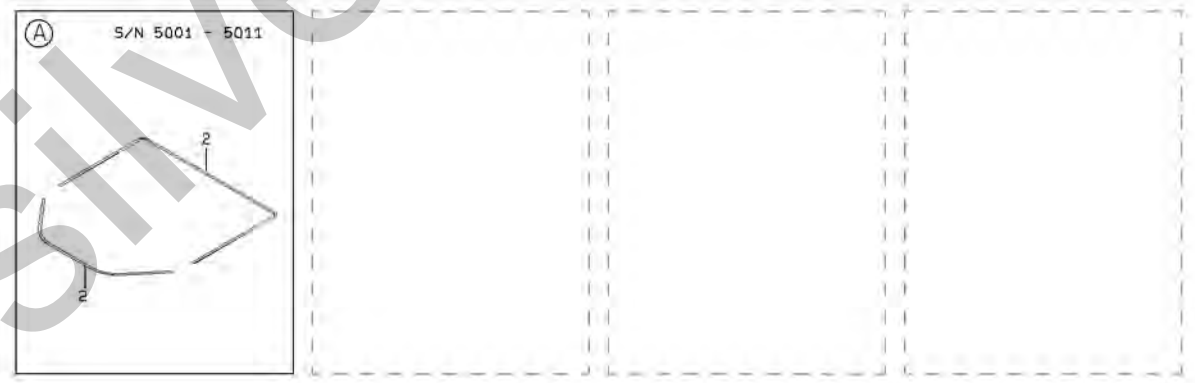

silverhorn.co.uk

CAB MOUNT

<S/N 5047 - >

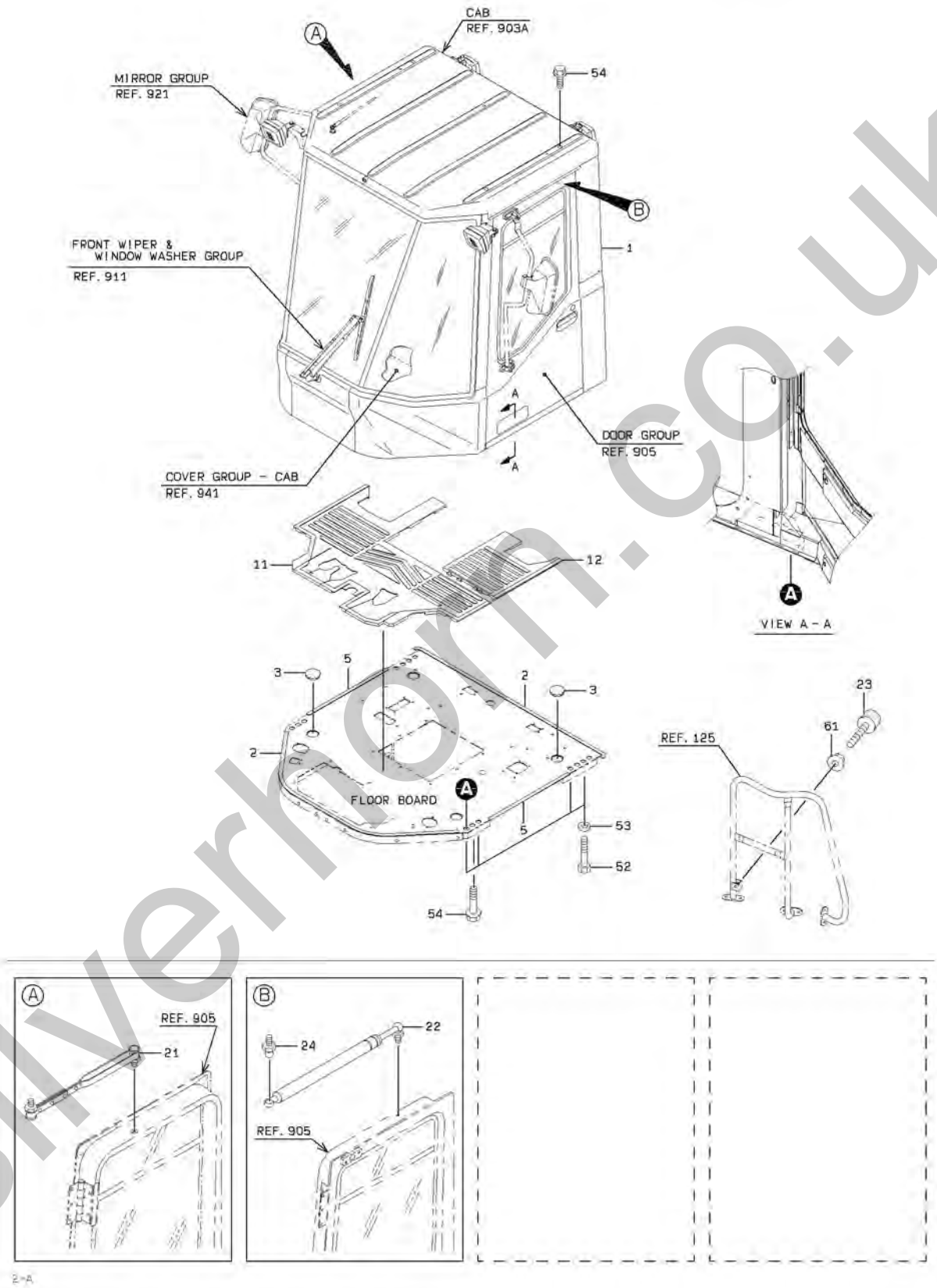

silverhorn.co.uk

CAB MOUNT

SYM-BOL	PART NUMBER	PART NAME	UNIT Q,TY	SERIAL (A) - (B)	REMARKS N P D	(A)	(B)	(C)	(D)	REMARK
1A	32264-21320	CAB ASSY	1	5001 - 5030						REF.903,911,91
1B	32264-21490	CAB ASSY	1	5031 - 5046	B					REF.903A,911,9
1C	32264-21880	CAB ASSY	1	5047 -	B					REF.903A,911,9
2A	31990-71420	GASKET	2	5001 - 5011						
2B	35680-52840	SPONGE	2	5012 -	B					
3A	41533-20160	PLUG,ELASTIC	4	5001 -						
4A	41533-20140	PLUG,ELASTIC	1	5001 - 5030	D					
5A	35680-51710	SPONGE	2	5012 -						
11A	44184-23580	MAT,FLOOR	1	5001 -						
12A	44184-23570	MAT,FLOOR	1	5001 -						
21A	30021-20890	ARM ASSY	1	5047 -						FR RH
22A	35617-60120	SPRING,GAS	1	5047 - 5136						FR LH
22B	35617-60140	SPRING,GAS	1	5137 -	C					FR LH
23A	35440-21810	STOPPER	1	5047 -						
24A	43900-25010	BOLT	1	5047 -						FR LH
52A	61005-24070	BOLT	8	5001 -						
53A	62710-18241	WASHER,PLANE	8	5001 -						
54A	61802-16018	BOLT,FLANGED	8	5001 -						
61A	62480-21101	NUT,FLANGED	1	5047 -						

silverhorn.co.uk

MEMO

silverhorn.co.uk

CAB

<S/N 0101 - 0125>

(NOTE):SERIAL NUMBER INDICATES THE CAB SERIAL NUMBER.

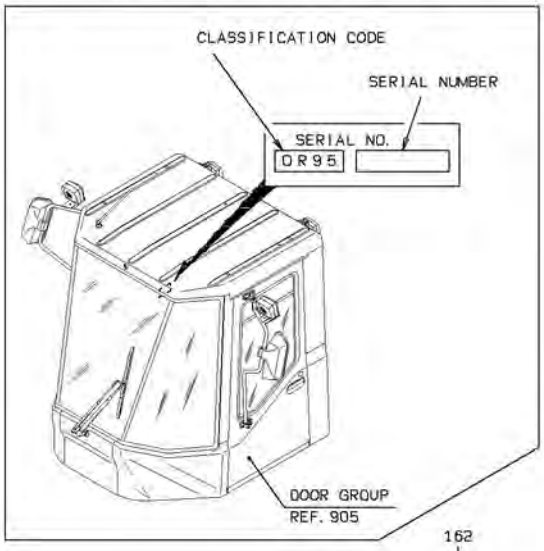

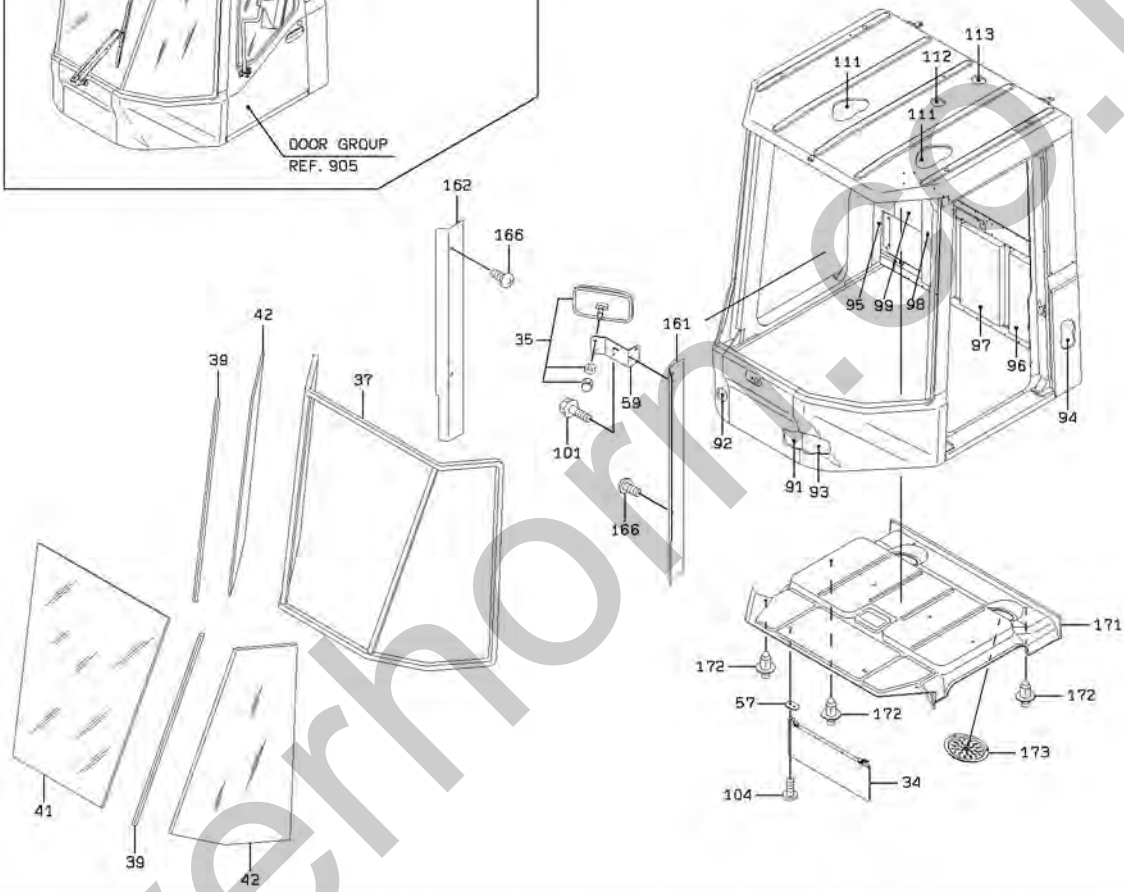

silverhorn.co.uk

CAB

<S/N 0101 - 0125>

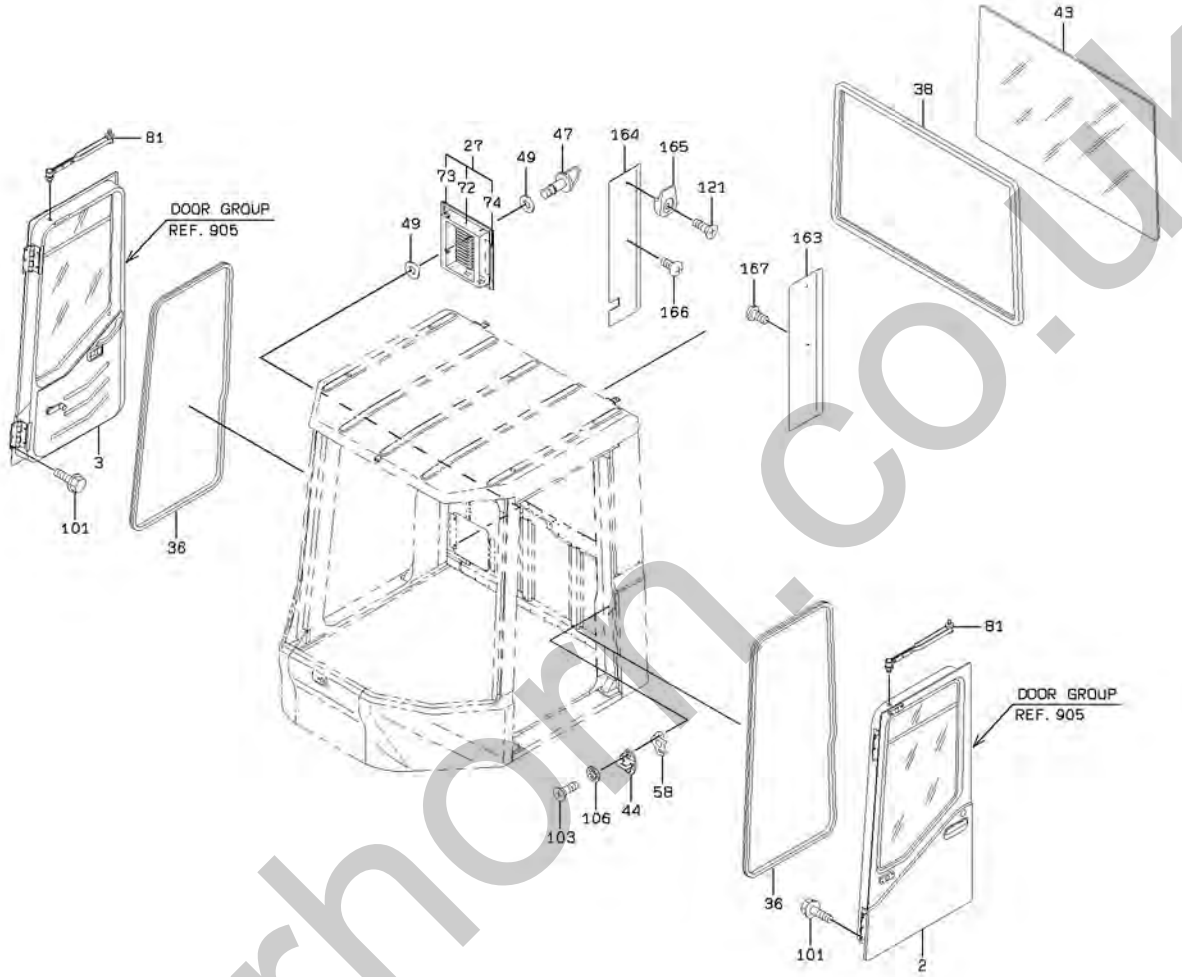

silverhorn.co.uk

CAB

SYM-BOL	PART NUMBER	PART NAME	UNIT Q,TY	SERIAL (A) - (B)	REMARKS N P D	(A)	(B)	(C)	(D)	REMARK
000A	32264-21320	CAB ASSY	1	101 - 125						INC.905/911,91
2A	37521-20730	DOOR ASSY	1	101 - 124						REF 905(LH)
2B	37521-21080	DOOR ASSY	1	125 - 125	B					REF 905(LH)
3A	37521-20740	DOOR ASSY	1	101 - 124						REF 905(RH)
3B	37521-21090	DOOR ASSY	1	125 - 125	B					REF 905(RH)
27A	31236-24980	COVER ASSY	1	101 - 125		Y01				
34A	38191-20060	VISOR,SUN	1	101 - 125						
35A	44344-70020	MIRROR,ROOM	1	101 - 125						
36A	34041-60070	STRIP, SEAL	2	101 - 125						D00R OPEN
37A	34041-60280	STRIP, SEAL	1	101 - 125						FRONT
38A	34041-60250	STRIP, SEAL	1	101 - 125						REAR
39A	34041-60270	STRIP, SEAL	2	101 - 125						FRONT SIDE
41A	32011-21690-7	GLASS,WINDOW	1	101 - 125						FR FRONT
42A	32011-21700-7	GLASS,WINDOW	2	101 - 125						FR FRONT SIDE
43A	32011-21500-7	GLASS,WINDOW	1	101 - 125						REAR
44A	32150-60030	CATCH	2	101 - 125						
47A	32150-20250	CATCH	2	101 - 125						
49A	46000-21020	WASHER	4	101 - 125						
57A	41615-24340	PLATE	2	101 - 125						
58A	41603-45670	PLATE	2	101 - 125						
59A	41605-41290	PLATE	1	101 - 125						
72A	35680-44010	SPONGE	1	101 - 125		01				
73A	35680-46310	SPONGE	1	101 - 106		01				
73B	35680-51230	SPONGE	1	107 - 125	C	01				
74A	34041-23970	STRIP, SEAL	1	101 - 125		01				
81A	30021-20820	ARM ASSY	2	101 - 125						
91A	35680-43840	SPONGE	1	101 - 125						
92A	35680-43850	SPONGE	1	101 - 125						FR RH
93A	35680-43860	SPONGE	1	101 - 125						FR LH
94A	35680-47930	SPONGE	1	101 - 125						FR LH
95A	35680-47940	SPONGE	1	101 - 125						FR RH
96A	35680-47950	SPONGE	1	101 - 125						FR LH
97A	35680-47960	SPONGE	1	101 - 125						
98A	35680-47970	SPONGE	1	101 - 125						
99A	35680-47980	SPONGE	1	101 - 125						FR RH
101A	61802-08016	BOLT,FLANGED	14	101 - 125						
103A	62257-51820	SCREW	4	101 - 125						
104A	35100-20310	SCREW	4	101 - 125						
106A	62761-37081	WASHER,TOOTH	4	101 - 125						
111A	35680-43910	SPONGE	2	101 - 125						
112A	35680-43900	SPONGE	1	101 - 125						
113A	35680-47570	SPONGE	1	101 - 125						
121A	62257-51620	SCREW	1	101 - 125						
161A	41617-35180	PLATE	1	101 - 125						FR LH
162A	41617-35190	PLATE	1	101 - 125						FR RH
163A	41617-30180	PLATE	1	101 - 125						FR LH
164A	41617-30190	PLATE	1	101 - 125						FR RH
165A	38110-70040	HANGER	1	101 - 125						
166A	35100-20400	SCREW	5	101 - 125						
167A	35100-20280	SCREW	2	101 - 125						
171A	45370-60060	ROOF ASSY	1	101 - 125						
172A	45020-70160	RIVET	10	101 - 125						
173A	33070-60020	GRILLE	2	101 - 125						

silverhorn.co.uk

MEMO

silverhorn.co.uk

CAB

<S/N 0126 - >

(NOTE):SERIAL NUMBER INDICATES THE CAB SERIAL NUMBER.

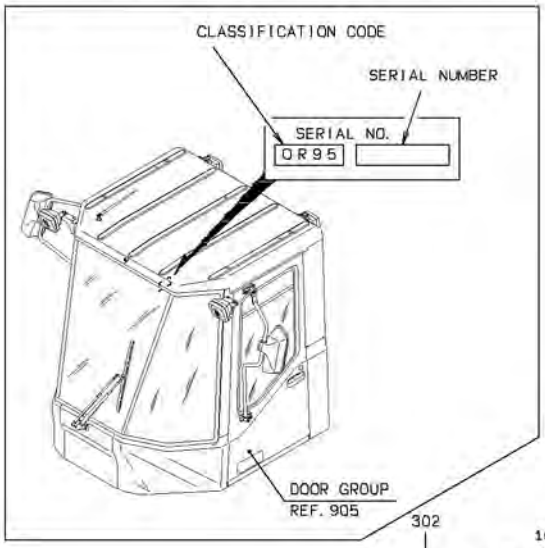

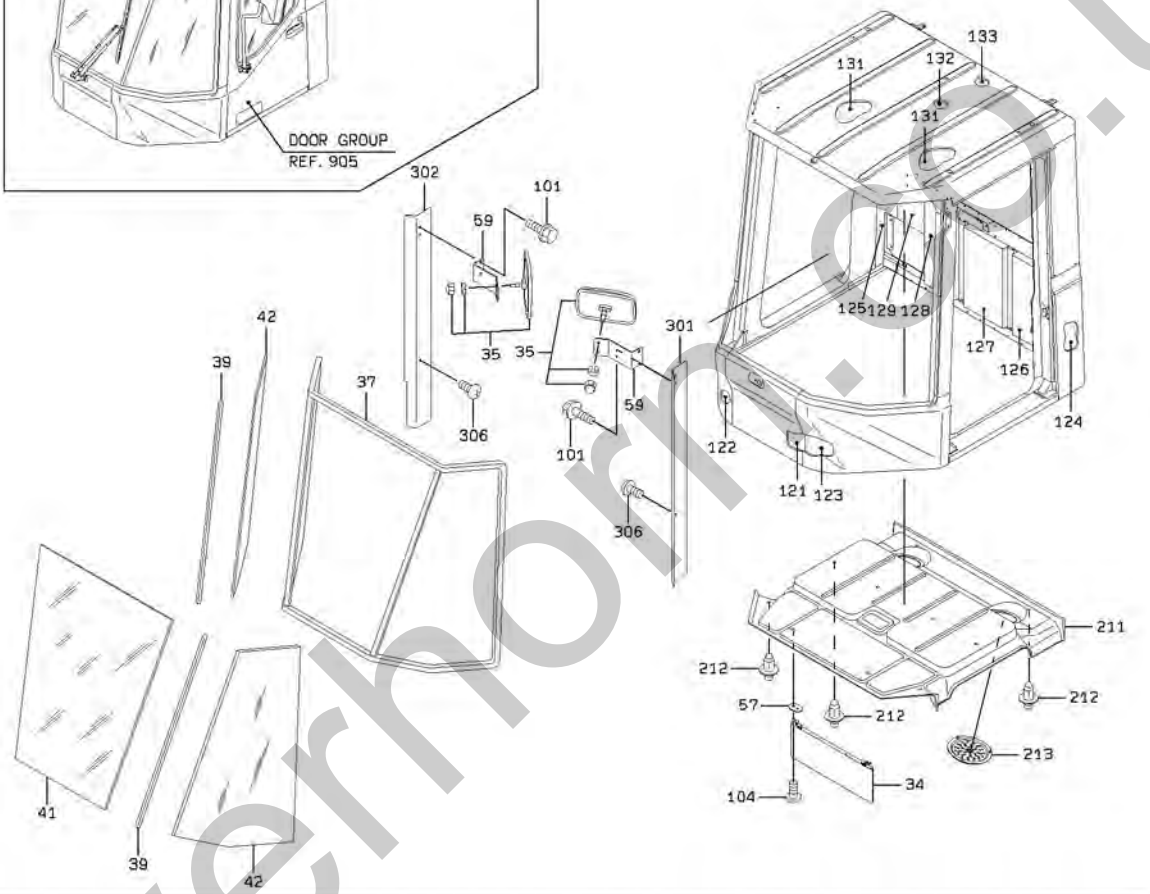

silverhorn.co.uk

CAB

<S/N 0126 - >

(NOTE):SERIAL NUMBER INDICATES THE CAB SERIAL NUMBER.

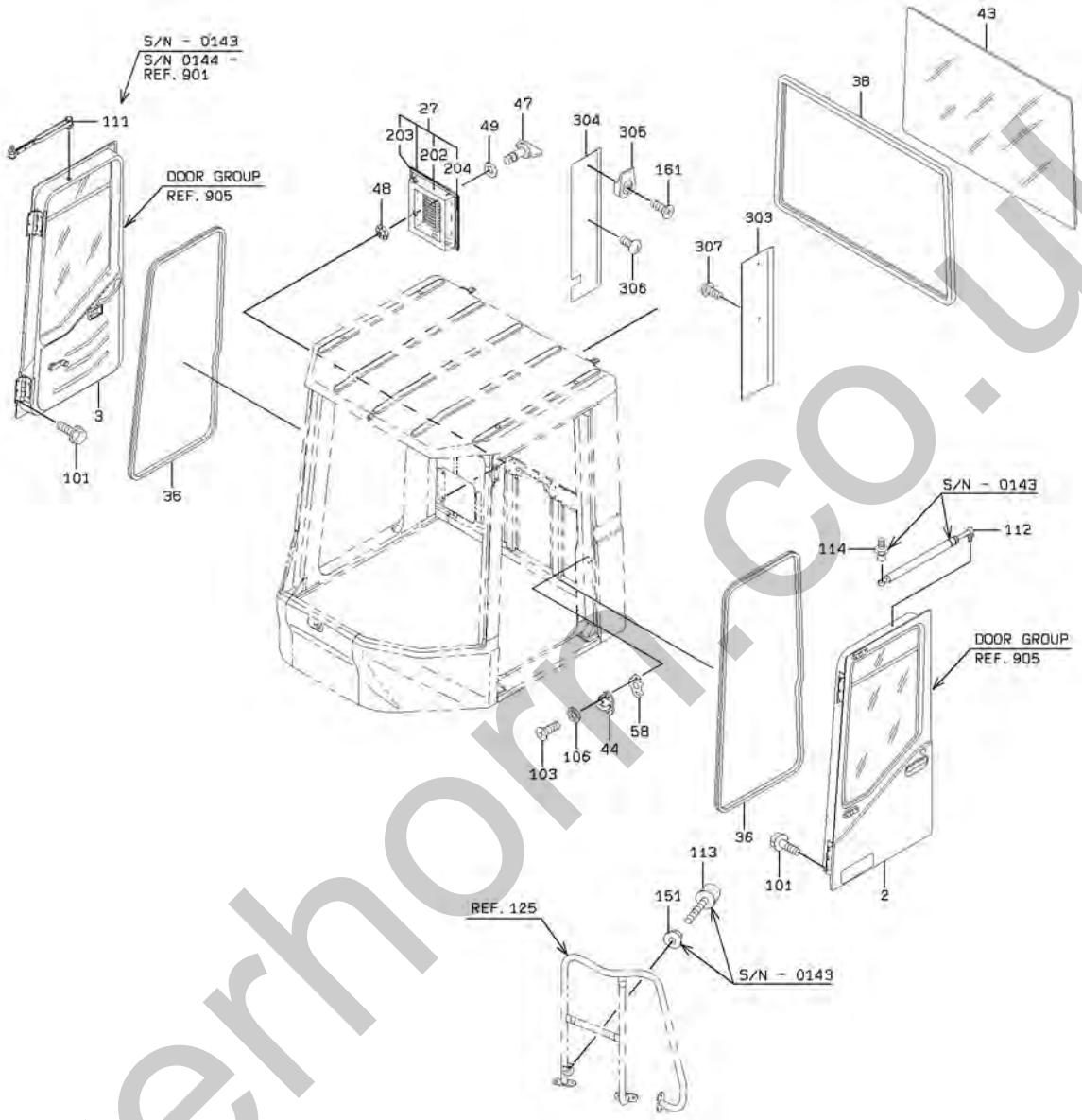

silverhorn.co.uk

CAB

SYM-BOL	PART NUMBER	PART NAME	UNIT Q,TY	SERIAL (A)	-	(B)	REMARKS N P D	(A)	(B)	(C)	(D)	REMARK
000A	32264-21490	CAB ASSY	1	126	-	143						INC,905-911,91
000B	32264-21880	CAB ASSY	1	144	-		B					INC.905-911,91
2A	37521-21130	DOOR ASSY	1	126	-							REF 905 LH
3A	37521-21090	DOOR ASSY	1	126	-							REF 905 RH
27A	31236-26370	COVER ASSY	1	126	-			Y01				
34A	38191-20060	VISOR,SUN	1	126	-							
35A	44344-70020	MIRROR,ROOM	2	126	-							
36A	34041-60070	STRIP, SEAL	2	126	-							DOOR OPEN
37A	34041-60280	STRIP, SEAL	1	126	-							FRONT
38A	34041-60250	STRIP, SEAL	1	126	-							REAR
39A	34041-60270	STRIP, SEAL	2	126	-							FRONT SIDE
41A	32011-21690-7	GLASS,WINDOW	1	126	-							FR FRONT
42A	32011-21700-7	GLASS,WINDOW	2	126	-							FR FRONT SIDE
43A	32011-21500-7	GLASS,WINDOW	1	126	-							REAR
44A	32150-60030	CATCH	2	126	-							
47A	32150-20390	CATCH	2	126	-							
48A	46000-23760	WASHER	2	126	-							
49A	46000-21020	WASHER	2	126	-							
57A	41615-24340	PLATE	2	126	-							
58A	41603-45670	PLATE	2	126	-							
59A	41605-41290	PLATE	2	126	-							
101A	61802-08016	BOLT,FLANGED	16	126	-							
103A	62257-51820	SCREW	4	126	-							
104A	35100-20310	SCREW	4	126	-							
106A	62761-37081	WASHER,TOOTH	4	126	-							
111A	30021-20890	ARM ASSY	1	126	-	143	D					FR RH
112A	35617-60120	SPRING,GAS	1	126	-	143	D					FR LH
113A	35440-21810	STOPPER	1	126	-	143	D					
114A	43900-25010	BOLT	1	126	-	143	D					FR RH
121A	35680-43840	SPONGE	1	126	-							
122A	35680-43850	SPONGE	1	126	-							FR RH
123A	35680-43860	SPONGE	1	126	-							FR LH
124A	35680-47930	SPONGE	1	126	-							FR LH
125A	35680-47940	SPONGE	1	126	-							FR RH
126A	35680-47950	SPONGE	1	126	-							FR LH
127A	35680-47960	SPONGE	1	126	-							
128A	35680-47970	SPONGE	1	126	-							
129A	35680-47980	SPONGE	1	126	-							FR RH
131A	35680-43910	SPONGE	2	126	-							
132A	35680-43900	SPONGE	1	126	-							
133A	35680-47570	SPONGE	1	126	-							
151A	62480-21101	NUT,FLANGED	1	126	-	143	D					
161A	62257-51620	SCREW	1	126	-							
202A	35680-54510	SPONGE	1	126	-			01				
203A	35680-51230	SPONGE	1	126	-			01				
204A	34041-23970	STRIP, SEAL	1	126	-			01				
211A	45370-60090	ROOF ASSY	1	126	-							
212A	45020-70160	RIVET	10	126	-							
213A	33070-60020	GRILLE	2	126	-							
301A	41617-35180	PLATE	1	126	-							FR LH
302A	41619-43450	PLATE	1	126	-							FR RH
303A	41618-30180	PLATE	1	126	-							FR LH
304A	41617-30190	PLATE	1	126	-							FR RH
305A	38110-70040	HANGER	1	126	-							
306A	35100-20400	SCREW	3	126	-							
307A	35100-20280	SCREW	2	126	-							

silverhorn.co.uk

MEMO

silverhorn.co.uk

DOOR GROUP

(NOTE):SERIAL NUMBER INDICATES THE CAB SERIAL NUMBER.

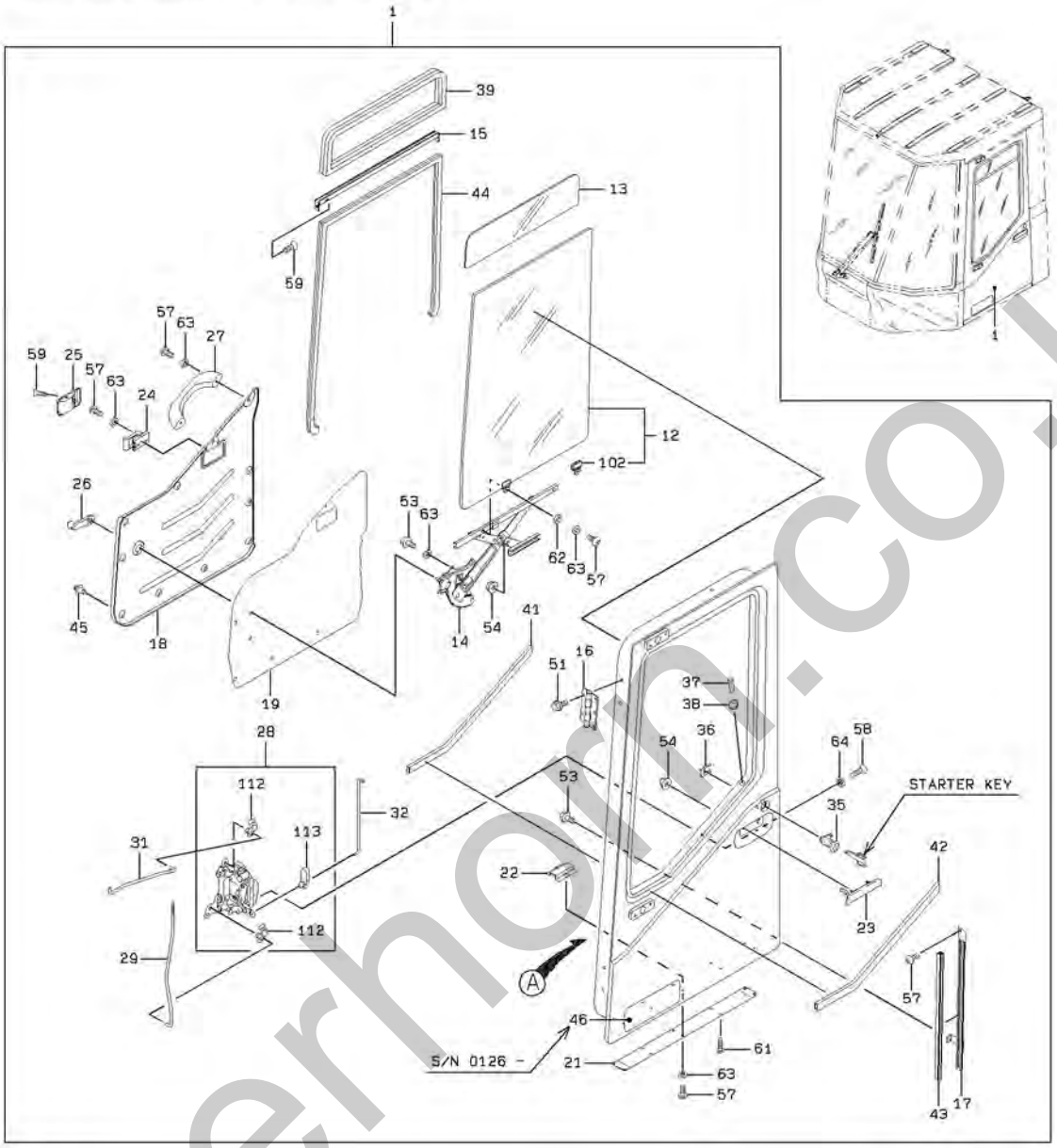

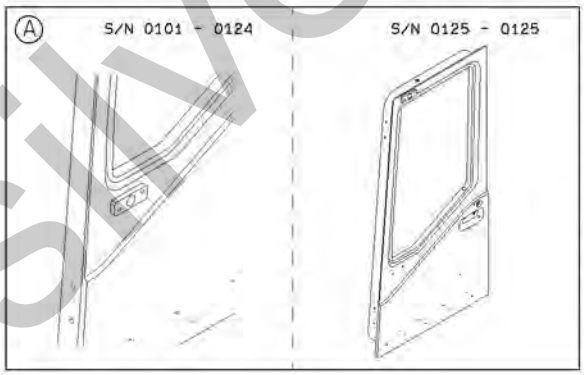

silverhorn.co.uk

DOOR GROUP

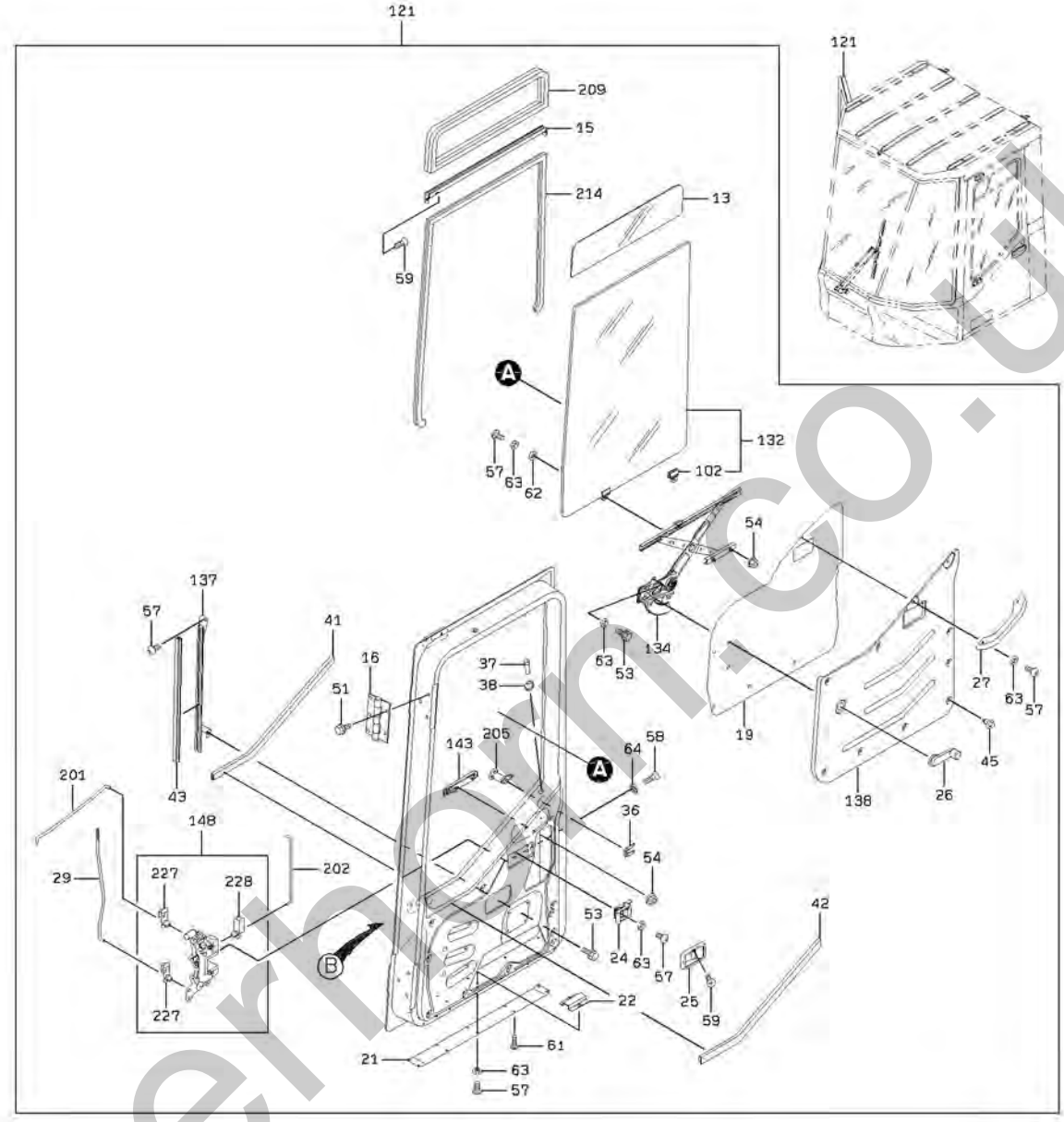

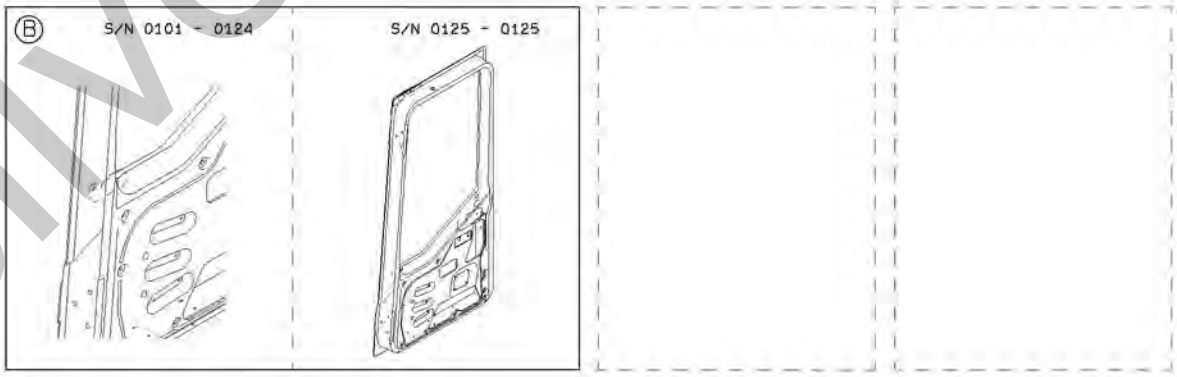

B>A

silverhorn.co.uk

DOOR GROUP

SYM-BOL	PART NUMBER	PART NAME	UNIT Q,TY	SERIAL (A)	-	(B)	REMARKS N P D	(A)	(B)	(C)	(D)	REMARK
1A	37521-20730	DOOR ASSY	1	101	-	124		Y01				FR LH
1B	37521-21080	DOOR ASSY	1	125	-	125	B	Y01				FR LH
1C	37521-21130	DOOR ASSY	1	126	-		B	Y01				FR LH
12A	32011-60240-7	GLASS,WINDOW	1	101	-			01	Y02			
13A	32011-60260-7	GLASS,WINDOW	1	101	-			01			04	
14A	45460-60030	REGULATOR	1	101	-			01				
15A	33530-20010	SASH	1	101	-			01			04	
16A	39890-21000	HINGE	2	101	-			01			04	
17A	45433-20130	RAIL	1	101	-			01				
18A	39750-22380-7	PANEL	1	101	-			01				
19A	33712-20070	SHEET,CAB	1	101	-			01			04	
21A	41601-35410	PLATE	1	101	-			01			04	
22A	35440-21400	STOPPER	1	101	-			01			04	
23A	38126-60020	HANDLE,DOOR	1	101	-			01				
24A	38126-60010	HANDLE,DOOR	1	101	-			01			04	
25A	31140-60010	CUP	1	101	-			01			04	
26A	38120-60050	HANDLE	1	101	-			01			04	
27A	38120-20410	HANDLE	1	101	-			01			04	
28A	45850-60020	LOCK ASSY,DOOR	1	101	-			01		Y03		
29A	45870-23320	ROD	1	101	-			01			04	
31A	38171-30740	BAR,ROUND	1	101	-			01				
32A	38171-21920	BAR,ROUND	1	101	-			01				
35A	34800-70210	CYLINDER	1	101	-			01				
36A	32970-70040	CLIP	1	101	-			01			04	
37A	37810-60090	KNOB	1	101	-			01			04	
38A	33057-60030	GROMMET	1	101	-			01			04	
39A	34041-60090	STRIP, SEAL	1	101	-			01				
41A	34041-60120	STRIP, SEAL	1	101	-			01			04	
42A	34041-60180	STRIP, SEAL	1	101	-			01			04	
43A	34041-60140	STRIP, SEAL	1	101	-			01			04	
44A	34041-60110	STRIP, SEAL	1	101	-			01				
45A	45020-70160	RIVET	9	101	-			01			04	
46A	41700-20210	PLATE,ELASTIC	1	126	-			01				
51A	61802-08016	BOLT,FLANGED	4	101	-			01			04	
53A	61802-06010	BOLT,FLANGED	5	101	-			01			04	
54A	62480-21061	NUT,FLANGED	4	101	-			01			04	
57A	62256-51610	SCREW	7	101	-			01			04	
58A	62257-51620	SCREW	3	101	-			01			04	
59A	62257-51512	SCREW	3	101	-			01			04	
61A	62261-16016	SCREW,TAPPING	8	101	-			01			04	
62A	62701-40061	WASHER,PLANE	2	101	-			01			04	
63A	62721-06100	WASHER,SPRING	10	101	-			01			04	
64A	62761-37061	WASHER,TOOTH	3	101	-			01			04	
102A	43550-20590	HOLDER	2	101	-				02			
112A	43550-60050	HOLDER	2	101	-					03		
113A	43550-60070	HOLDER	1	101	-					03		
121A	37521-20740	DOOR ASSY	1	101	-	124					Y04	FR RH
121B	37521-21090	DOOR ASSY	1	125	-		B				Y04	FR RH
132A	32011-60250-7	GLASS,WINDOW	1	101	-				Y02		04	
134A	45460-60040	REGULATOR	1	101	-						04	
137A	45433-20120	RAIL	1	101	-						04	
138A	39750-22390-7	PANEL	1	101	-						04	
143A	38126-60030	HANDLE,DOOR	1	101	-						04	
148A	45850-60010	LOCK ASSY,DOOR	1	101	-			Y05			04	
201A	38171-30690	BAR,ROUND	1	101	-						04	
202A	38171-21930	BAR,ROUND	1	101	-						04	
205A	34800-70220	CYLINDER	1	101	-						04	
209A	34041-60080	STRIP, SEAL	1	101	-						04	
214A	34041-60100	STRIP, SEAL	1	101	-						04	
227A	43550-60040	HOLDER	2	101	-			05				
228A	43550-60060	HOLDER	1	101	-			05				

silverhorn.co.uk

MEMO

silverhorn.co.uk

<S/N 0101 - 0125>

(NOTE):SERIAL NUMBER INDICATES THE CAB SERIAL NUMBER.

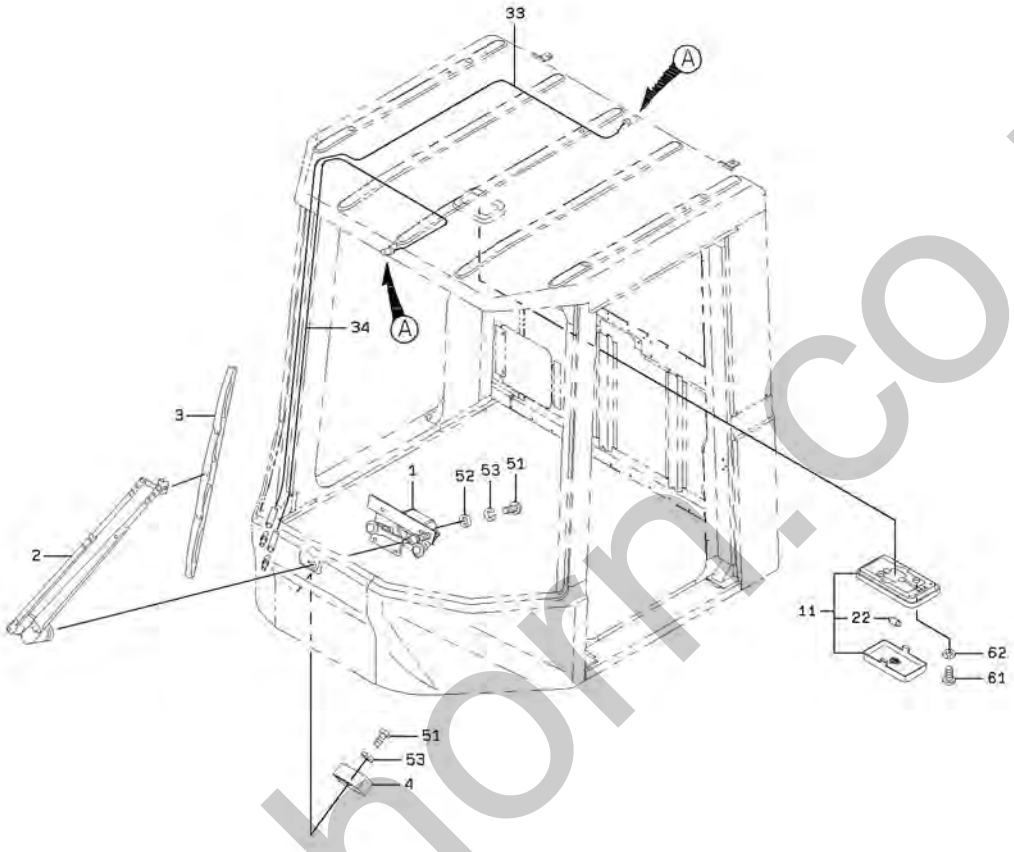

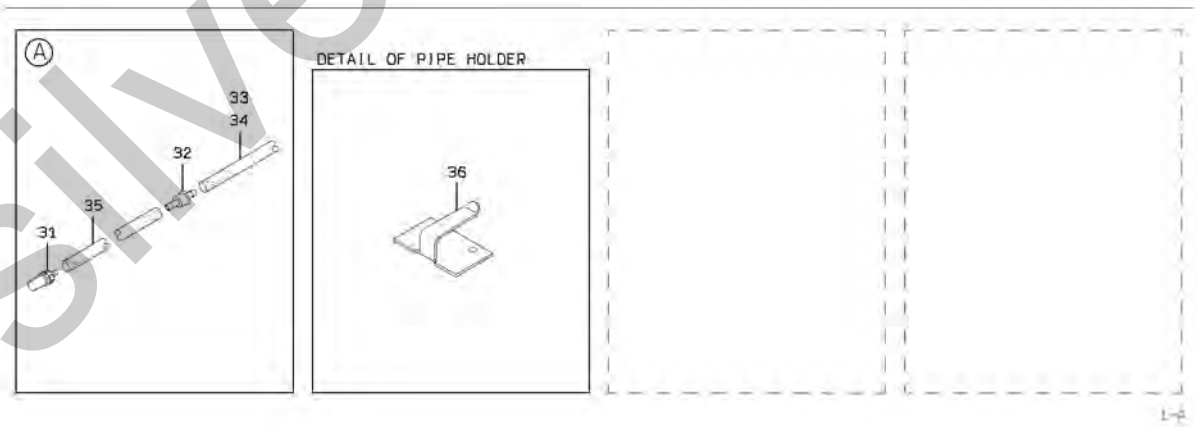

silverhorn.co.uk

FRONT WIPER & WINDOW WASHER GROUP

<S/N 0126 - >

(NOTE):SERIAL NUMBER INDICATES THE CAB SERIAL NUMBER.

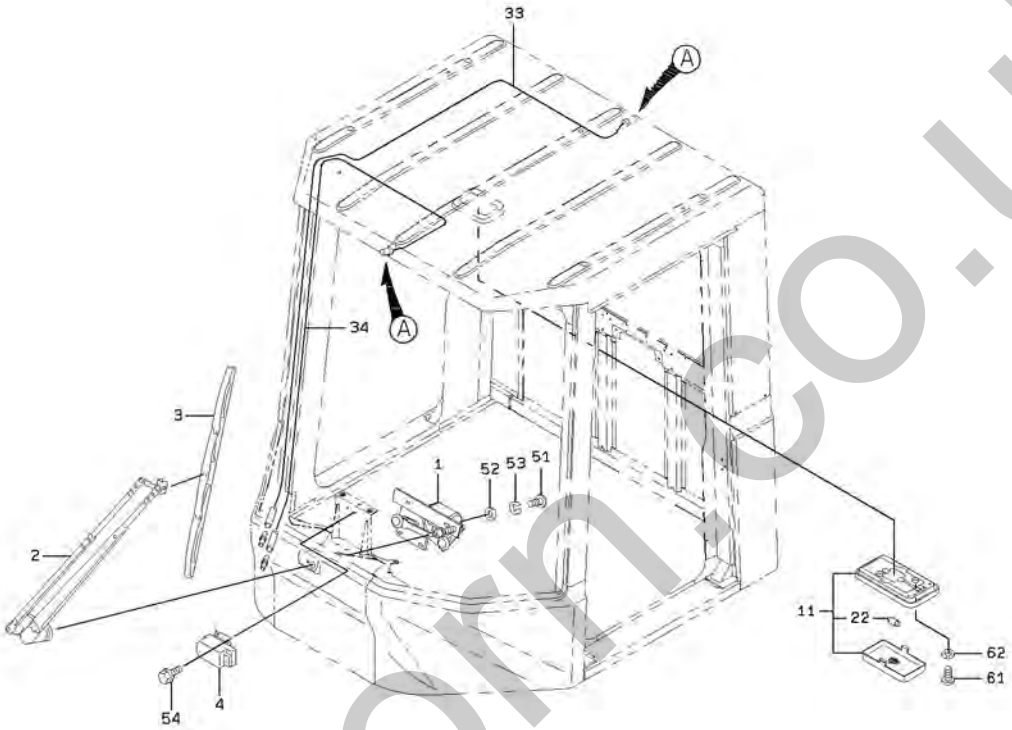

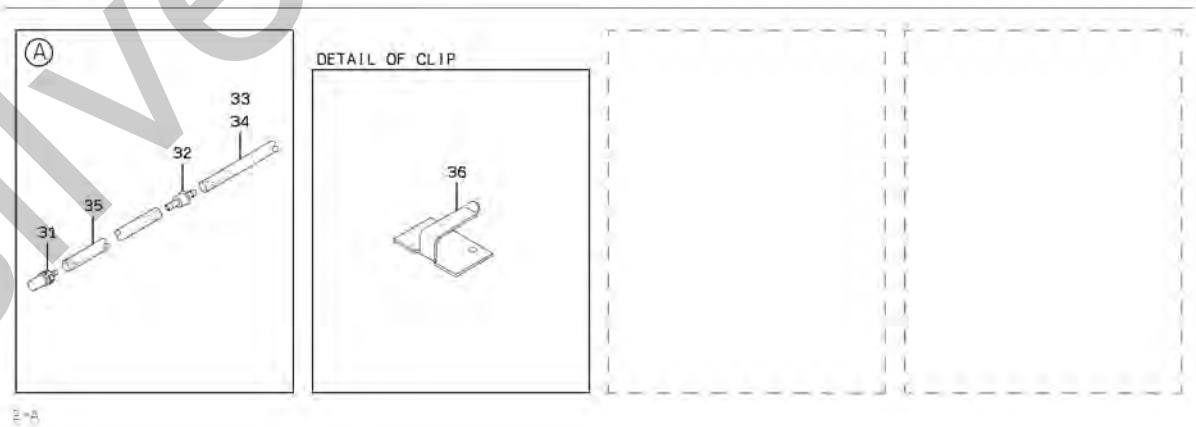

silverhorn.co.uk

FRONT WIPER & WINDOW WASHER GROUP

SYM-BOL	PART NUMBER	PART NAME	UNIT Q,TY	SERIAL (A) - (B)	REMARKS N P D	(A) (B)	(C) (D)	REMARK
1A	44487-60100	MOTOR ASSY,WIPER	1	101 -				
2A	30035-60060	ARM,WIPER	1	101 -				L=750
3A	41321-60020	BLADE,WIPER	1	101 -				L=714
4A	45051-60020	RELAY ASSY	1	101 -				
11A	44860-20070	LAMP	1	101 -		Y01		
22A	38480-70630	BULB	1	101 -		01		24V10W
31A	37740-20080	NOZZLE	1	101 -				
32A	38554-70810	VALVE,CHECK	2	101 -				
33A	67031-07000	TUBE,VINYL	6 M	101 -				L=5400
34A	67031-07000	TUBE,VINYL	5 M	101 -				L=4600
35A	67031-07000	TUBE,VINYL	1 M	101 -				L=100 X Q'TY 2
36A	32970-70210	CLIP	A/R	101 -				
51A	62256-51616	SCREW	6	101 - 125				
51B	62256-51616	SCREW	4	126 - 165				
51C	62256-51612	SCREW	4	166 -	B			
52A	62701-40061	WASHER,PLANE	4	101 -				
53A	62721-06100	WASHER,SPRING	6	101 - 125				
53B	62721-06100	WASHER,SPRING	4	126 -				
54A	61802-06016	BOLT,FLANGED	2	126 -				
61A	62256-51520	SCREW	2	101 -				
62A	62721-05100	WASHER,SPRING	2	101 -				

silverhorn.co.uk

MEMO

silverhorn.co.uk

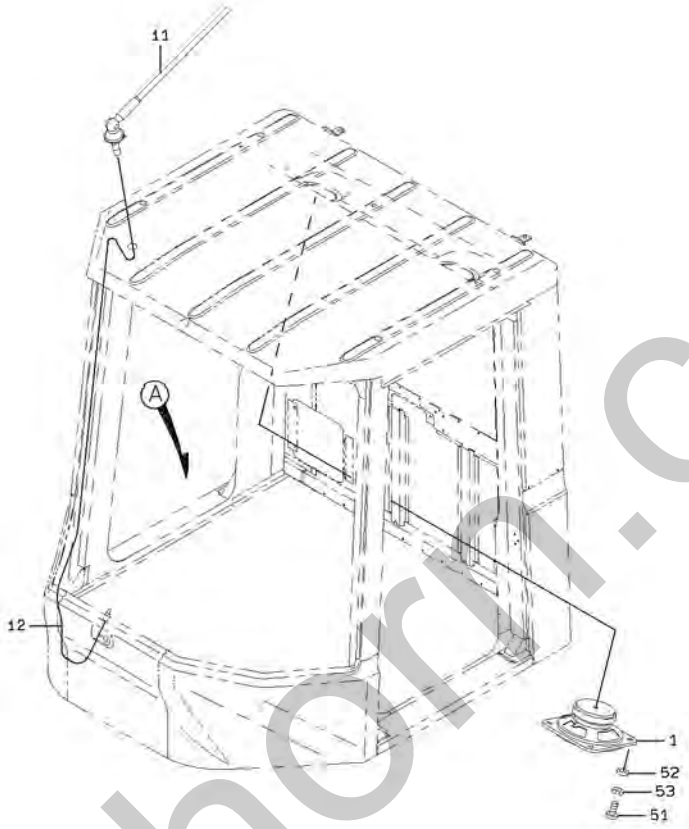

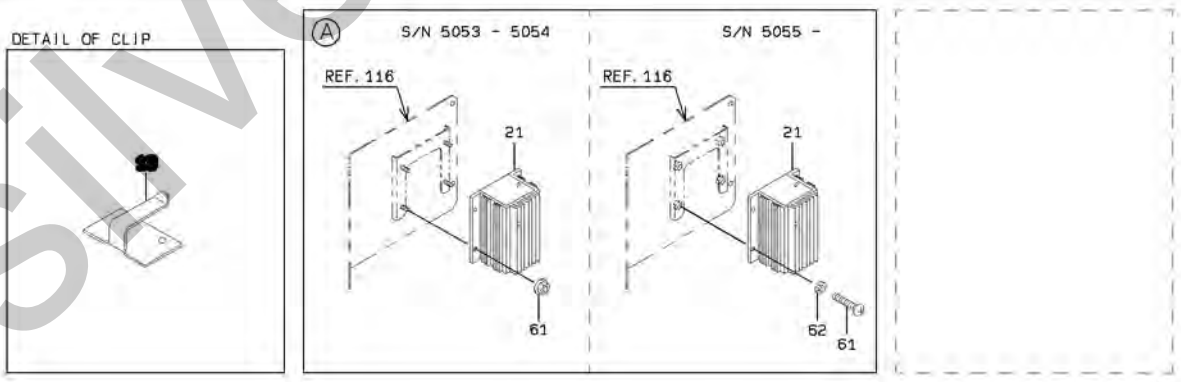

silverhorn.co.uk

ELECTRICAL PARTS GROUP

SYM-BOL	PART NUMBER	PART NAME	UNIT Q,TY	SERIAL (A) - (B)	REMARKS N P D	(A) (B)	(C) (D)	REMARK
1A	35550-60030	SPEAKER	2	5001 - 5136				
1B	35550-20070	SPEAKER	2	5137 -	B			
11A	30510-60090-7	ANTENNA	1	5001 -				
12A	33190-60100	CABLE	1	5001 - 5136				
12B	33190-60150	CABLE	1	5137 -	A			
13A	32970-70210	CLIP	A/R	5001 -				
21A	33460-60190-7	CONVERTER	1	5053 - 5054				
21B	33460-60210-7	CONVERTER	1	5055 - 5080	C			
21C	33460-60190-7	CONVERTER	1	5081 -	B			
51A	62256-51512	SCREW	8	5001 -				
52A	62701-20051	WASHER,PLANE	8	5001 -				
53A	62721-05100	WASHER,SPRING	8	5001 -				
61A	62480-21061	NUT,FLANGED	4	5053 - 5054				
61B	62256-51616	SCREW	4	5055 - 5066	B			
61C	62256-51612	SCREW	4	5067 -	B			
62A	62721-06100	WASHER,SPRING	4	5055 -				

silverhorn.co.uk

ELECTRICAL WIRING - CAB

(NOTE):SERIAL NUMBER INDICATES THE CAB SERIAL NUMBER.

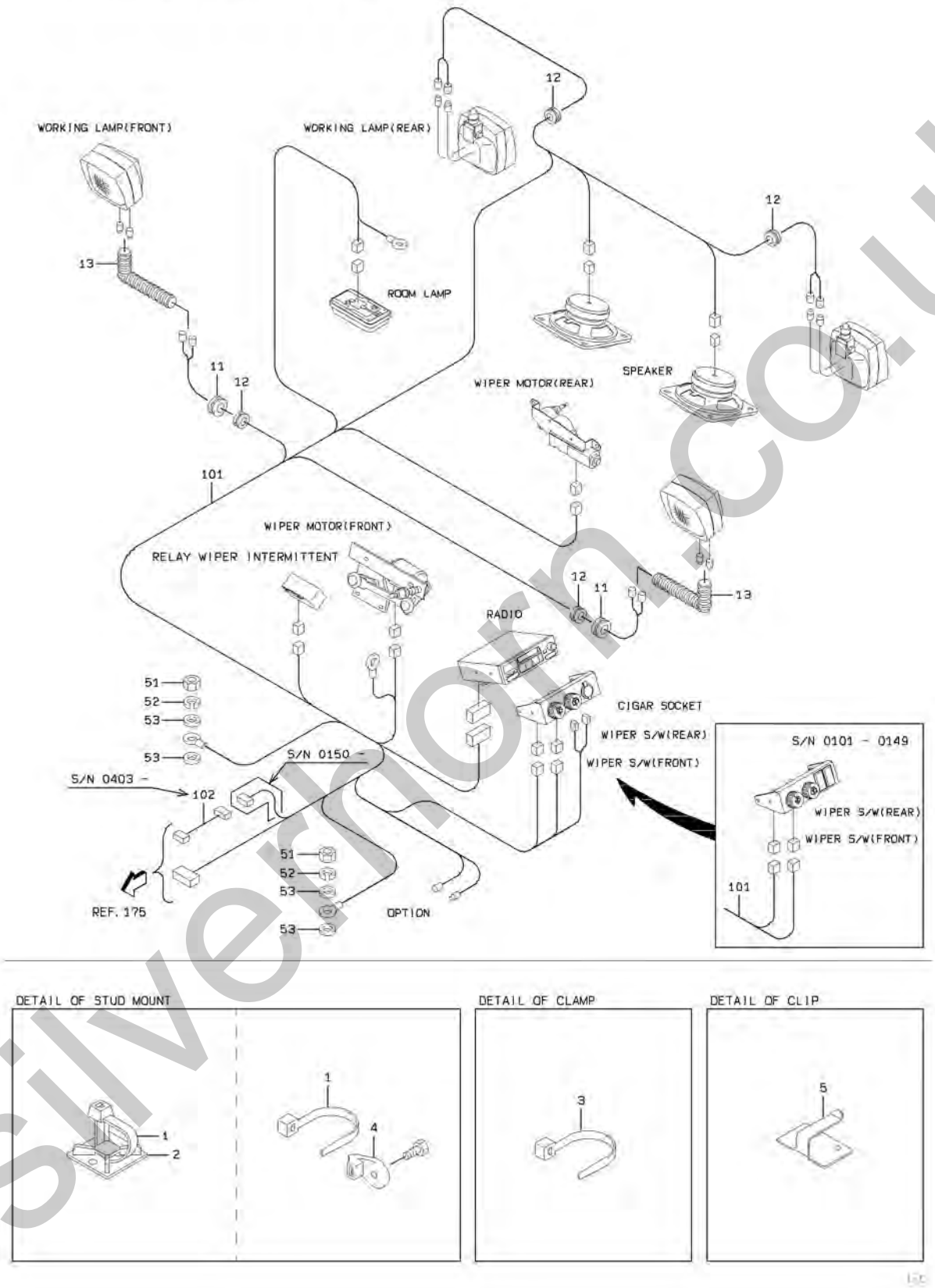

silvermorn.co.uk

ELECTRICAL WIRING - CAB

SYM-BOL	PART NUMBER	PART NAME	UNIT Q,TY	SERIAL (A)	-	(B)	REMARKS N P D	(A)	(B)	(C)	(D)	REMARK
1A	32923-70090	CLAMP,HOSE	A/R	101	-							L=202
2A	32923-70190	CLAMP,HOSE	A/R	101	-							
3A	32923-70100	CLAMP,HOSE	A/R	101	-							L=382
4A	32923-70120	CLAMP,HOSE	A/R	101	-							
5A	32970-70210	CLIP	A/R	101	-							
11A	65801-10016	BUSHING,ELASTIC	2	101	-							
12A	65801-08016	BUSHING,ELASTIC	4	101	-							
13A	36724-70080	TUBE,CONDUIT	2	101	-	124						
13B	36724-70100	TUBE,CONDUIT	2	125	-		C					
51A	62401-81101	NUT	2	101	-							
52A	62721-10100	WASHER,SPRING	2	101	-							
53A	46011-21650	WASHER,PLANE	4	101	-							
101A	33193-25720	CABLE ASSY	1	101	-	102						CAB
101B	33193-30500	CABLE ASSY	1	103	-	125	C					CAB
101C	33193-31980	CABLE ASSY	1	126	-	133	C					CAB
101D	33193-41420	CABLE ASSY	1	134	-	149	C					CAB
101E	33193-47440	CABLE ASSY	1	150	-	402	B					CAB
101F	33193-50510	CABLE ASSY	1	403	-		B					CAB
102A	33193-50550	CABLE ASSY	1	403	-							

silverhorn.co.uk

MIRROR GROUP

<S/N 5001 - 5046>

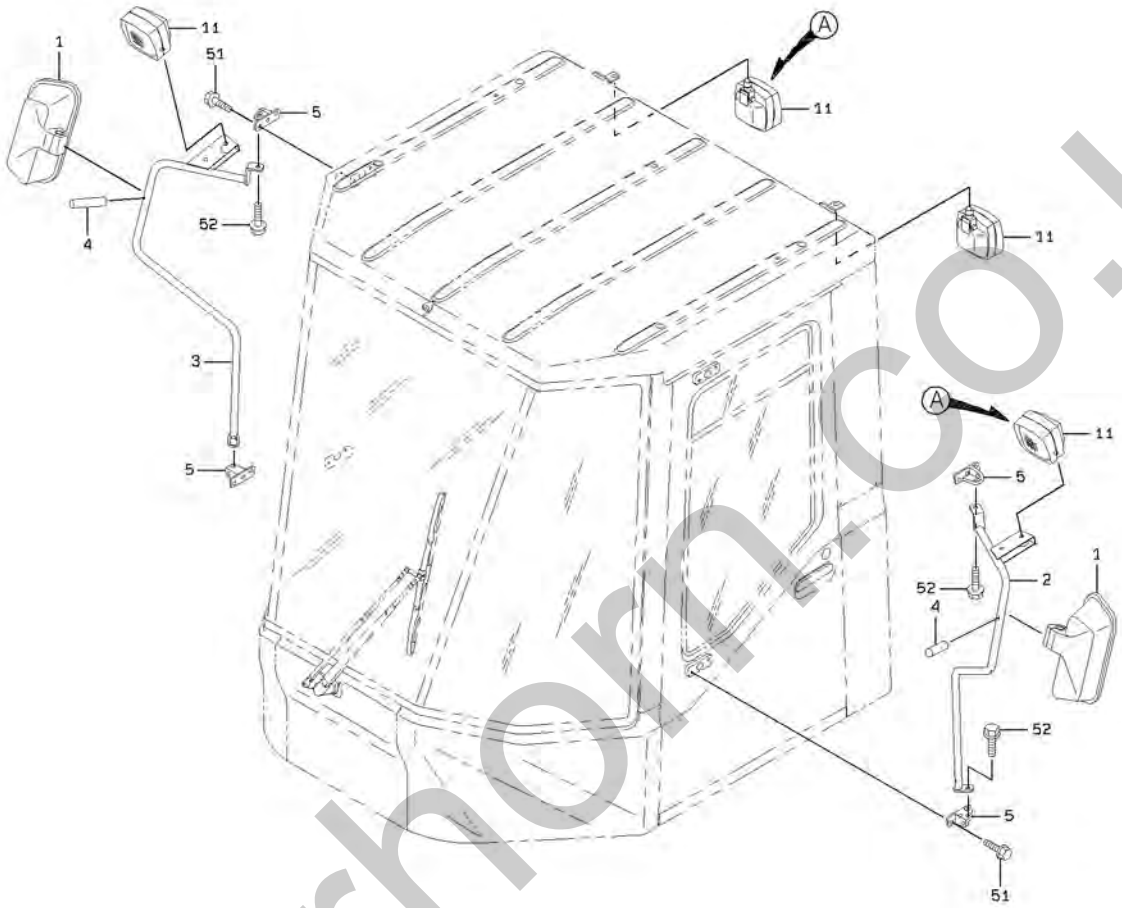

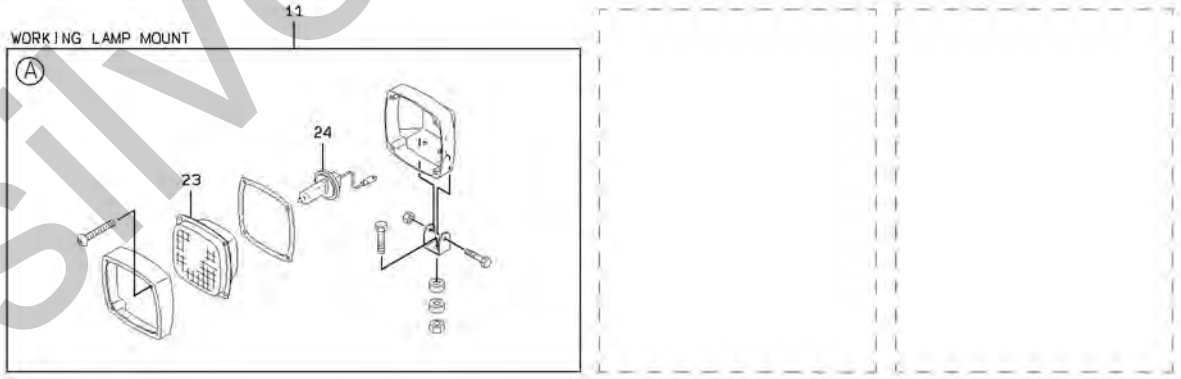

silverhorn.co.uk

MIRROR GROUP

<S/N 5047 - >

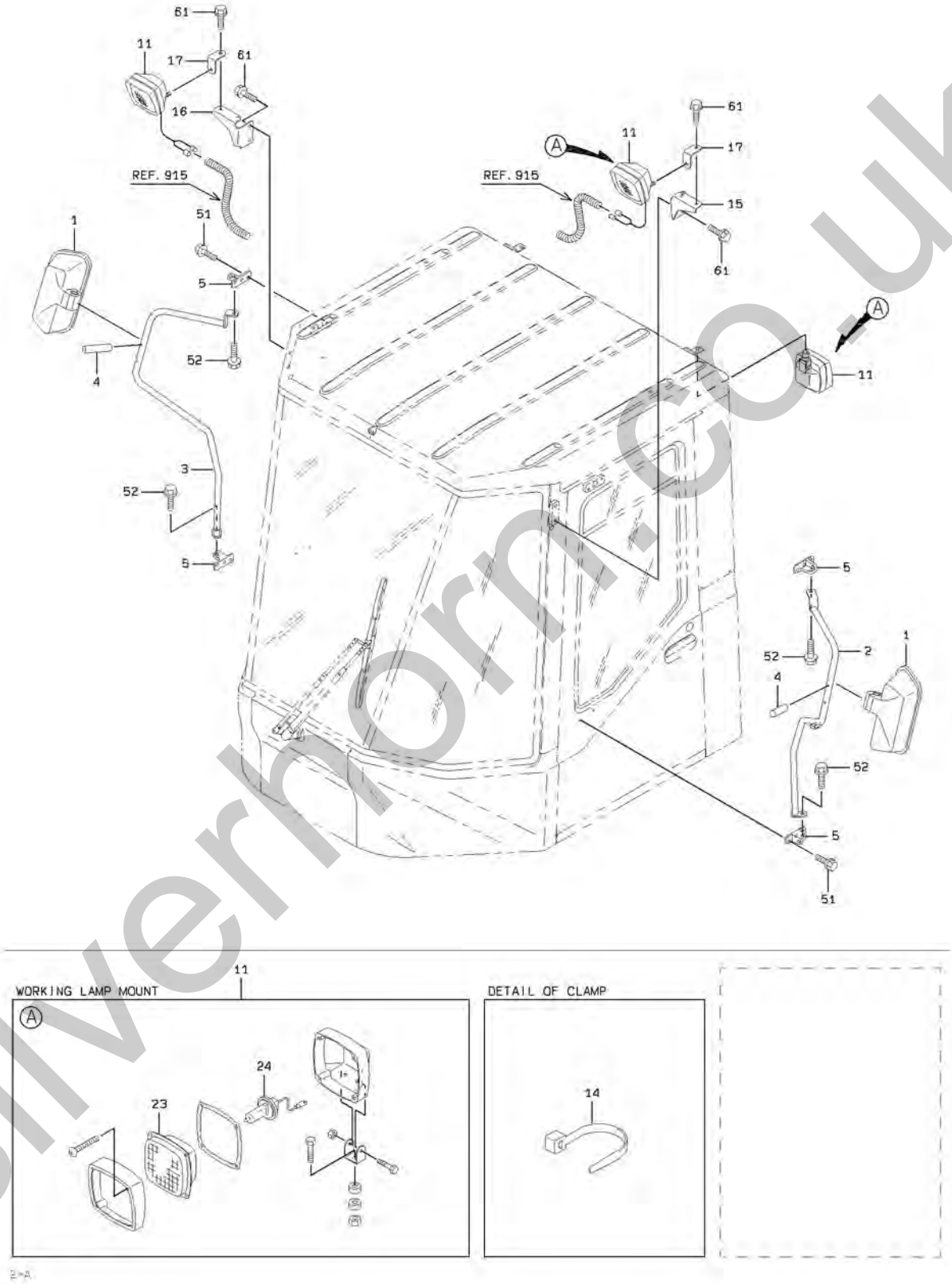

silverhorn.co.uk

MIRROR GROUP

SYM-BOL	PART NUMBER	PART NAME	UNIT Q,TY	SERIAL (A) - (B)	REMARKS N P D	(A)	(B)	(C)	(D)	REMARK
1A	44340-60130	MIRROR	2	5001 -						
2A	35210-22950	STAY	1	5001 - 5023						FR LH
2B	35210-23260	STAY	1	5024 - 5030	B					FR LH
2C	35210-23170	STAY	1	5031 - 5046	B					FR LH
2D	35210-24130	STAY	1	5047 -	B					FR LH
3A	35210-22940	STAY	1	5001 - 5023						FR RH
3B	35210-23250	STAY	1	5024 - 5030	B					FR RH
3C	35210-23160	STAY	1	5031 - 5046	B					FR RH
3D	35210-24140	STAY	1	5047 -	B					FR RH
4A	40000-27270	PIN	2	5001 -						
5A	40901-58320	BRACKET	4	5001 -						
11A	44890-70140-7	LAMP,HEAD	4	5001 -		Y01				ABL
14A	32923-70100	CLAMP,HOSE	A/R	5047 -						
15A	40902-38630	BRACKET	1	5047 -						
16A	40902-38750	BRACKET	1	5047 -						
17A	41620-53760	PLATE	2	5047 -						
23A	45701-70650-7	LENS	1	5001 -		01				
24A	38480-70800-7	BULB	1	5001 -		01				24V65W
51A	61802-08016-7	BOLT,FLANGED	8	5001 -						
52A	61802-12020	BOLT,FLANGED	4	5001 -						
61A	61802-10016	BOLT,FLANGED	6	5047 -						

silverhorn.co.uk

MEMO

silverhorn.co.uk

REAR WIPER & WINDOW WASHER GROUP

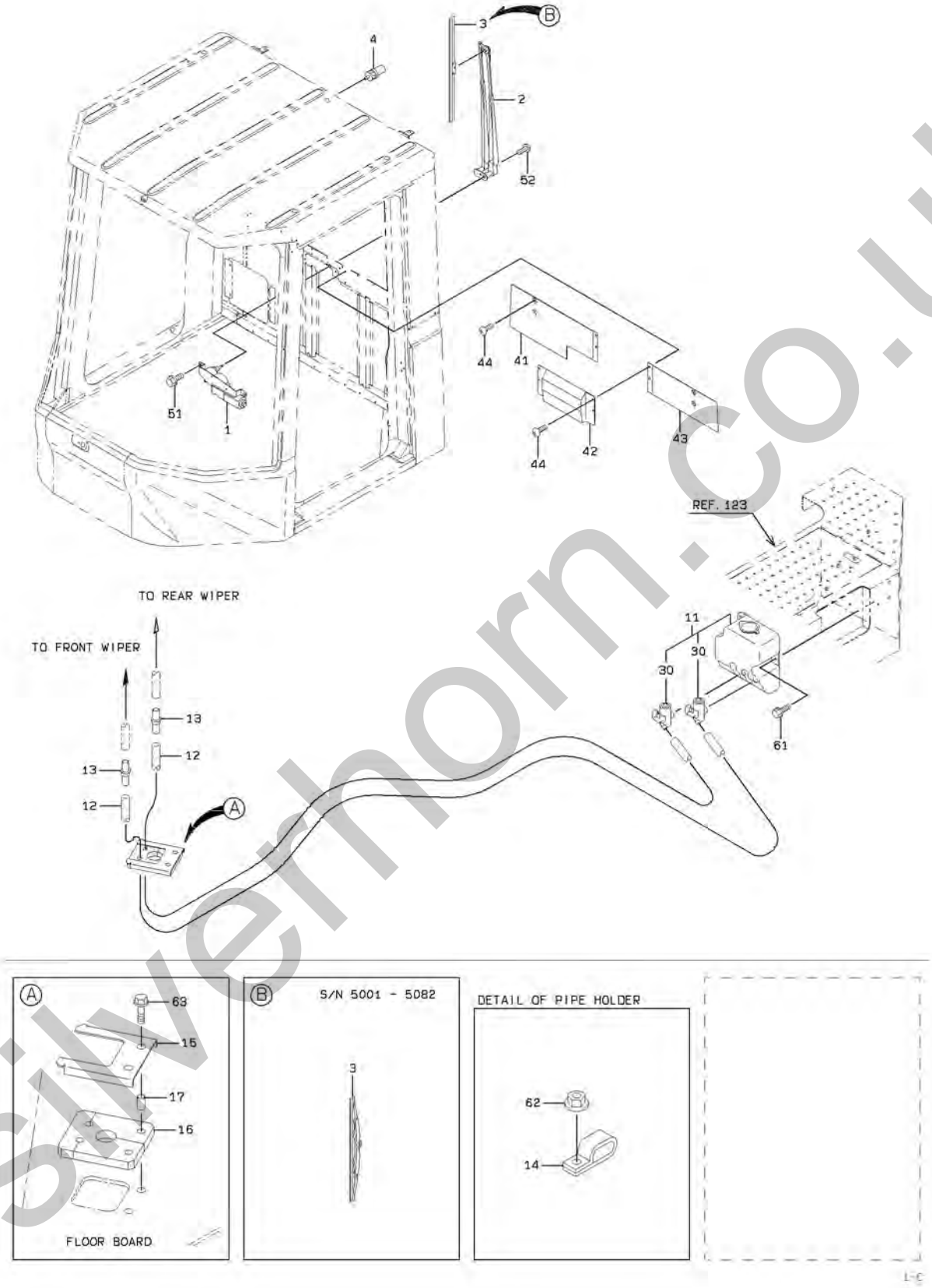

silverhorn.co.uk

REAR WIPER & WINDOW WASHER GROUP

SYM-BOL	PART NUMBER	PART NAME	UNIT Q,TY	SERIAL (A) - (B)	REMARKS N P D	(A) (B)	(C) (D)	REMARK
1A	44487-60070	MOTOR ASSY,WIPER	1	5001 -				
2A	30035-60040	ARM,WIPER	1	5001 -				L=550
3A	41321-60040	BLADE,WIPER	1	5001 - 5082				L=450
3B	41321-70090	BLADE,WIPER	1	5083 -	A			L=450
4A	37740-20080	NOZZLE	1	5001 -				
11A	30771-60010	WINDOW WASHER ASSY	1	5001 -		Y01		
12A	67031-07000	TUBE,VINYL	4 M	5001 -				L=3400 X Q'TY
13A	37715-20020	NIPPLE,HOSE	2	5001 -				
14A	72001-20600	HOLDER,PIPE	A/R	5001 -				D=6.35 X Q'TY
15A	41613-40210	PLATE	1	5001 -				41605-26980
16A	33057-21020	GROMMET	1	5001 - 5034				
16B	33057-21300	GROMMET	1	5035 - 5088	C			
16C	33057-21530	GROMMET	1	5089 -	B			
17A	35750-22780	SLEEVE	2	5001 -				
30A	44081-70070	PUMP ASSY	2	5001 -		01		
41A	31205-42300	COVER	1	5001 -				FR RH
42A	31205-42360	COVER	1	5001 -				
43A	31205-42320	COVER	1	5001 -				FR LH
44A	35100-20010	SCREW	8	5001 -				
51A	61802-08012	BOLT,FLANGED	2	5001 -				
52A	35100-20180	SCREW	1	5001 -				
61A	61802-06016	BOLT,FLANGED	3	5001 -				
62A	62480-21081	NUT,FLANGED	A/R	5001 -				
63A	61802-06025	BOLT,FLANGED	2	5001 -				

silverhorn.co.uk

CAB ACCESSORIES MOUNT

<S/N 5001 - 5052>

CAB FILTRATION SYSTEM

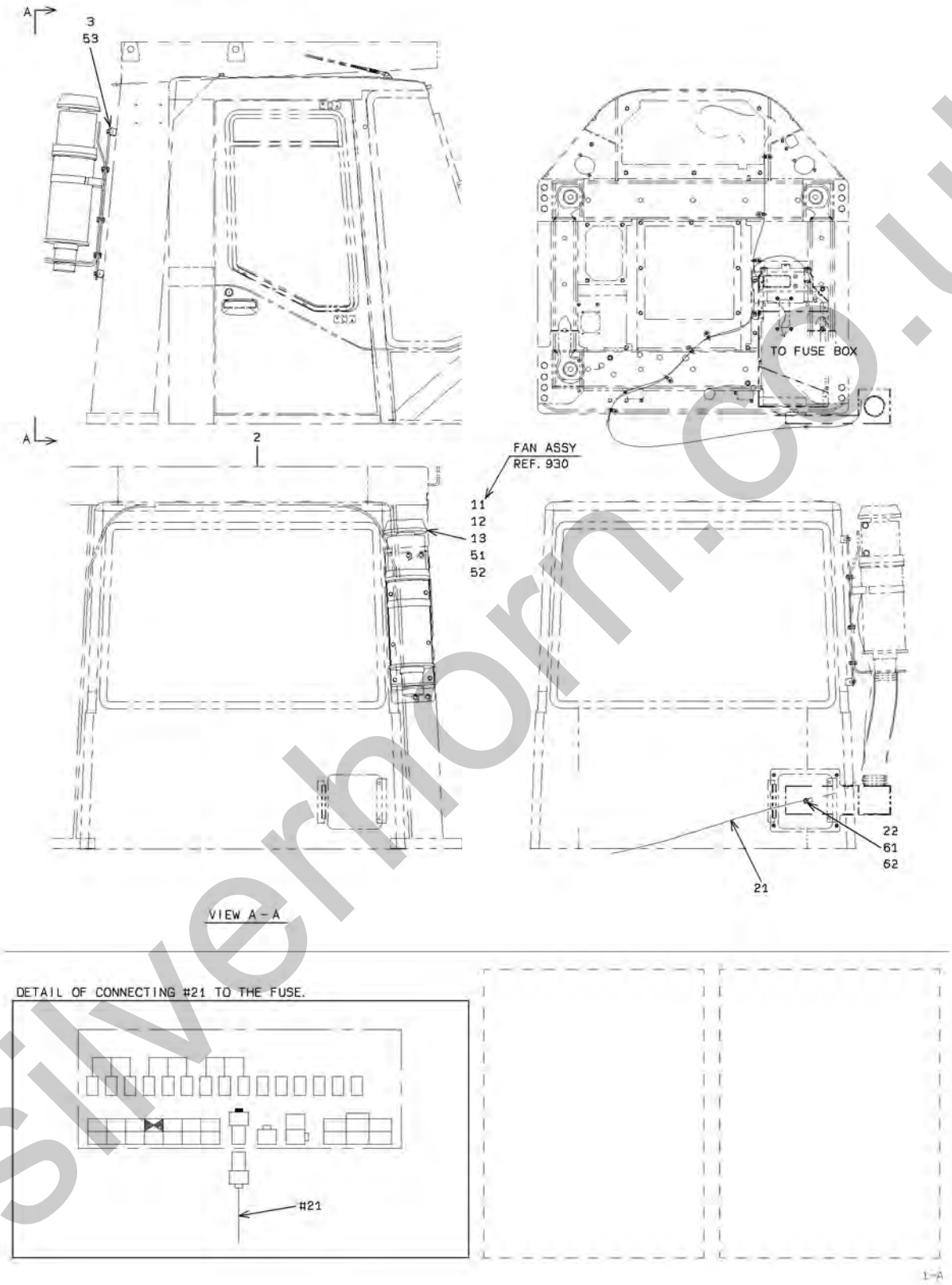

silverhorn.co.uk

<S/N 5053 - >

CAB FILTRATION SYSTEM

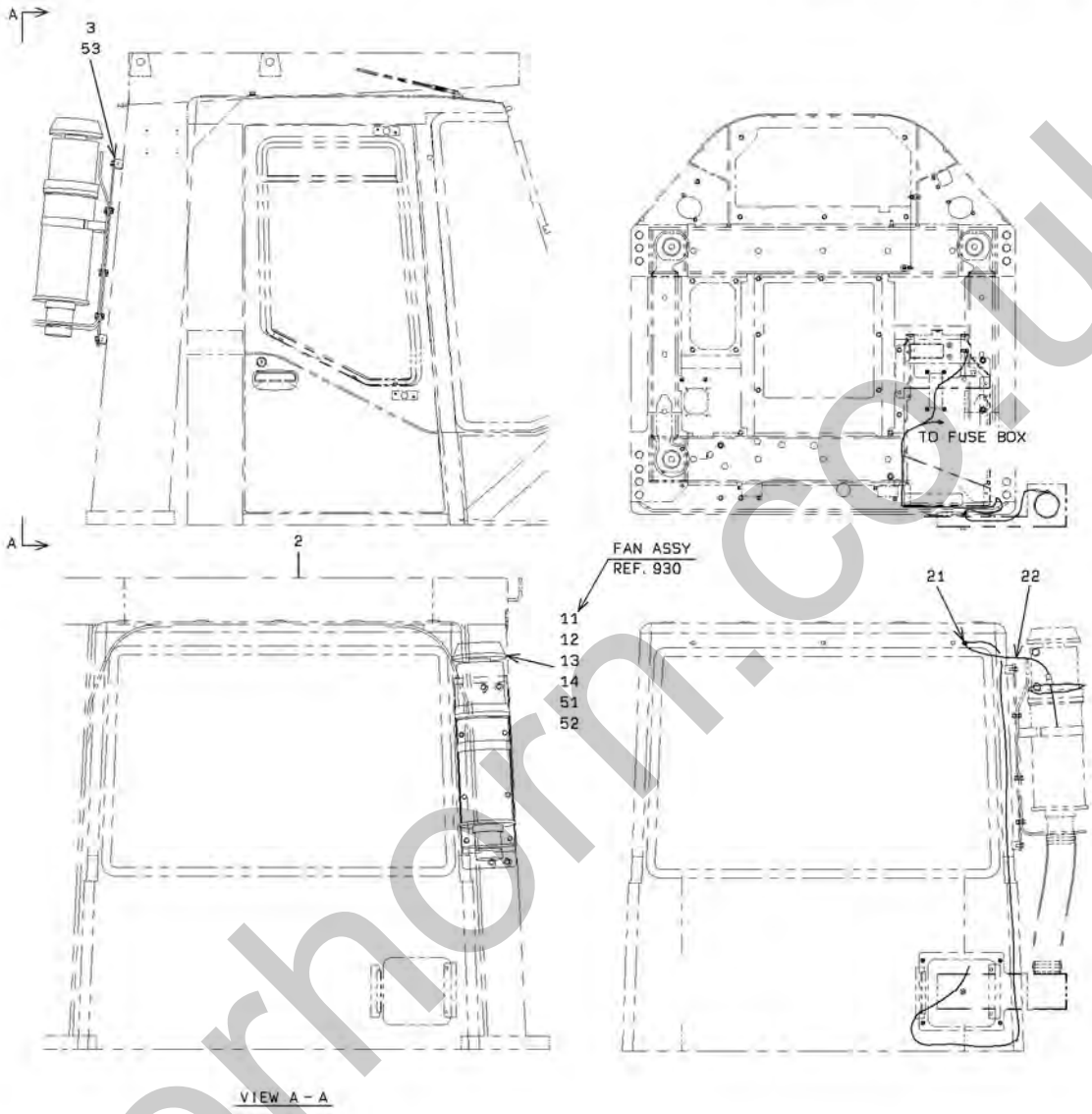

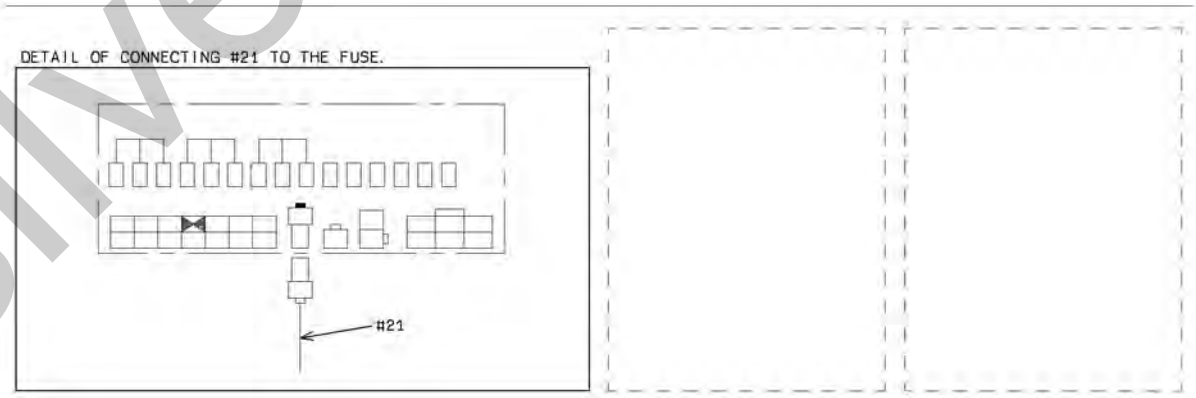

2-A

silverhorn.co.uk

CAB FILTRATION SYSTEM

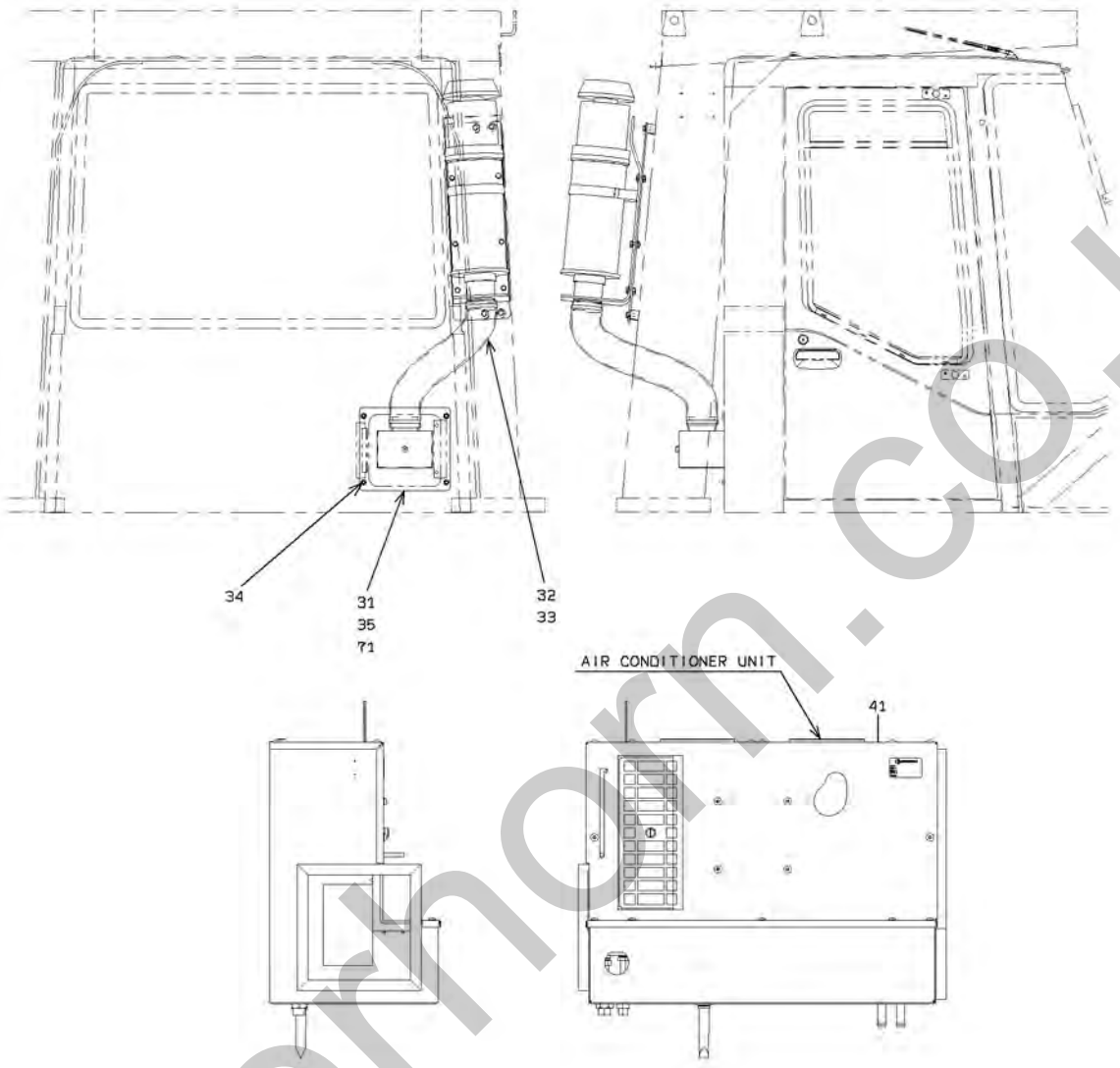

silverhorn.co.uk

CAB ACCESSORIES MOUNT

SYM-BOL	PART NUMBER	PART NAME	UNIT Q,TY	SERIAL (A) - (B)	REMARKS N P D	(A)	(B)	(C)	(D)	REMARK
2A	03501-60590	ROPS	1	5001 -						
3A	41619-54980	PLATE	1	5001 -						
11A	40205-60010-7	FAN ASSY	1	5001 -						REF.930
12A	31523-70190	COUPLER,CABLE	1	5001 -						
13A	35930-70350	TERMINAL	2	5001 -						
14A	30930-23820	EDGE	1	5053 -						
21A	33193-36060	CABLE ASSY	1	5001 - 5052						
21B	33193-48670	CABLE ASSY	1	5053 -	B					
22A	43550-60100	HOLDER	1	5001 - 5052						
22B	65801-08016	BUSHING,ELASTIC	1	5053 -	B					
31A	36430-23990	DUCT	1	5001 -						
32A	43111-23560	HOSE,AIR	1	5001 -						
33A	69002-12700	BAND,HOSE	2	5001 -						
34A	03501-55680	CAB ASSY,ROPS	1	5001 -						
35A	31990-25980	GASKET	1	5001 -						
41A	03501-54880	AIR CONDITIONER UN	1	5001 -						
51A	61802-10025	BOLT,FLANGED	6	5001 -						
52A	62480-21101	NUT,FLANGED	6	5001 -						
53A	61802-12020	BOLT,FLANGED	4	5001 -						
61A	62256-51610	SCREW	1	5001 - 5052	D					
62A	62721-06100	WASHER,SPRING	1	5001 - 5052	D					
71A	61802-10020	BOLT,FLANGED	4	5001 -						

silverhorn.co.uk

FAN ASSY

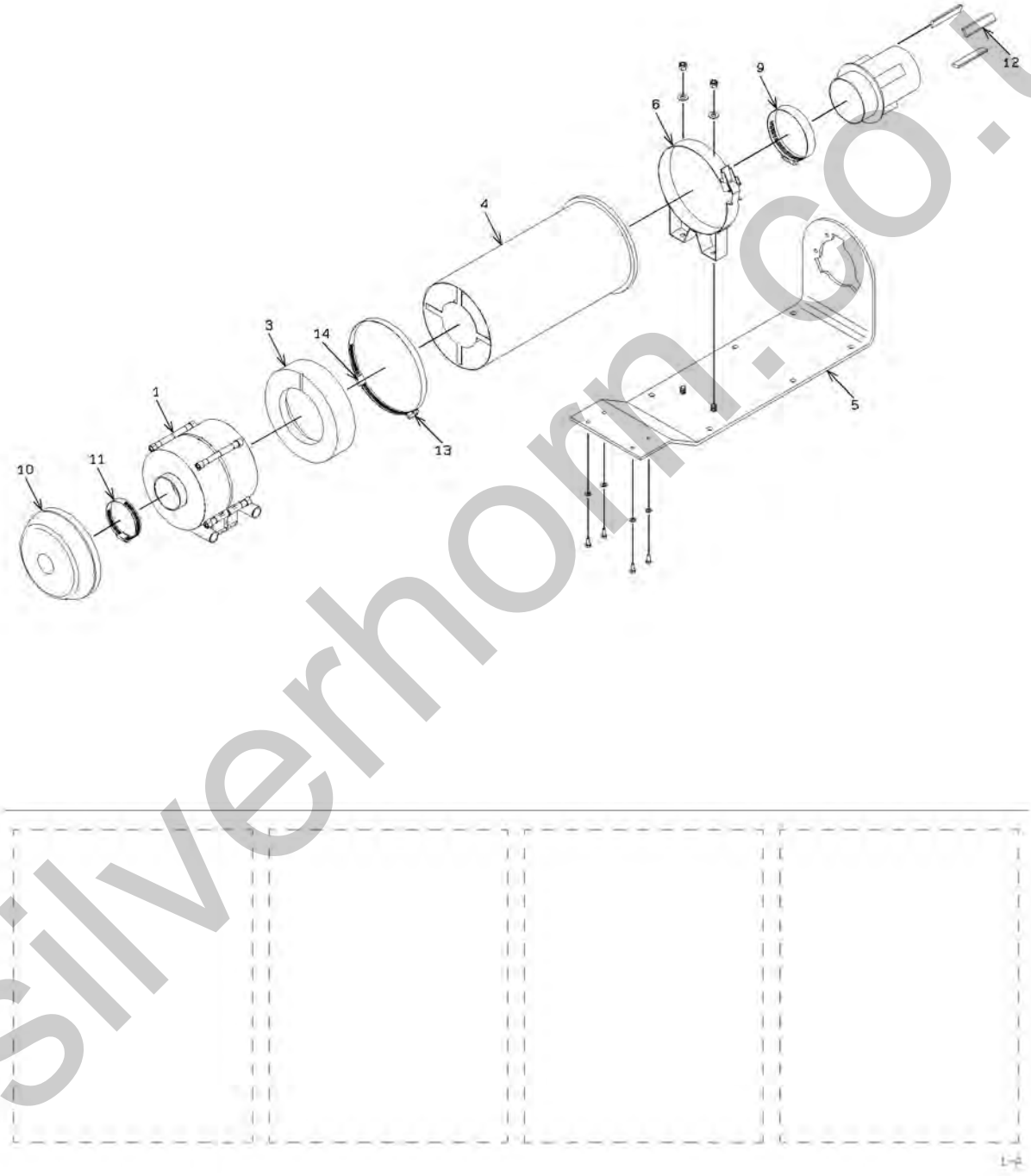

silverhorn.co.uk

FAN ASSY

SYM-BOL	PART NUMBER	PART NAME	UNIT Q,TY	SERIAL (A) - (B)	REMARKS N P D	(A) (B)	(C) (D)	REMARK
000A	40205-60010-7	FAN ASSY	1	5001 -				
1A	42730-70150-7	PRECLEANER	1	5001 -				
3A	30230-70600-7	ADAPTER	1	5001 -				
4A	40330-70640-7	FILTER	1	5001 -				
5A	41600-71870-7	PLATE	1	5001 -				
6A	32920-70990-7	CLAMP	1	5001 -				
9A	32920-71000-7	CLAMP	1	5001 -				
10A	32210-72810-7	CAP	1	5001 -				
11A	32920-70960-7	CLAMP	1	5001 -				
12A	44820-70840-7	RUBBER	1	5001 -				
13A	32920-70980-7	CLAMP	1	5001 -				
14A	32920-70970-7	CLAMP	1	5001 -				

silverhorn.co.uk

ROPS MOUNT

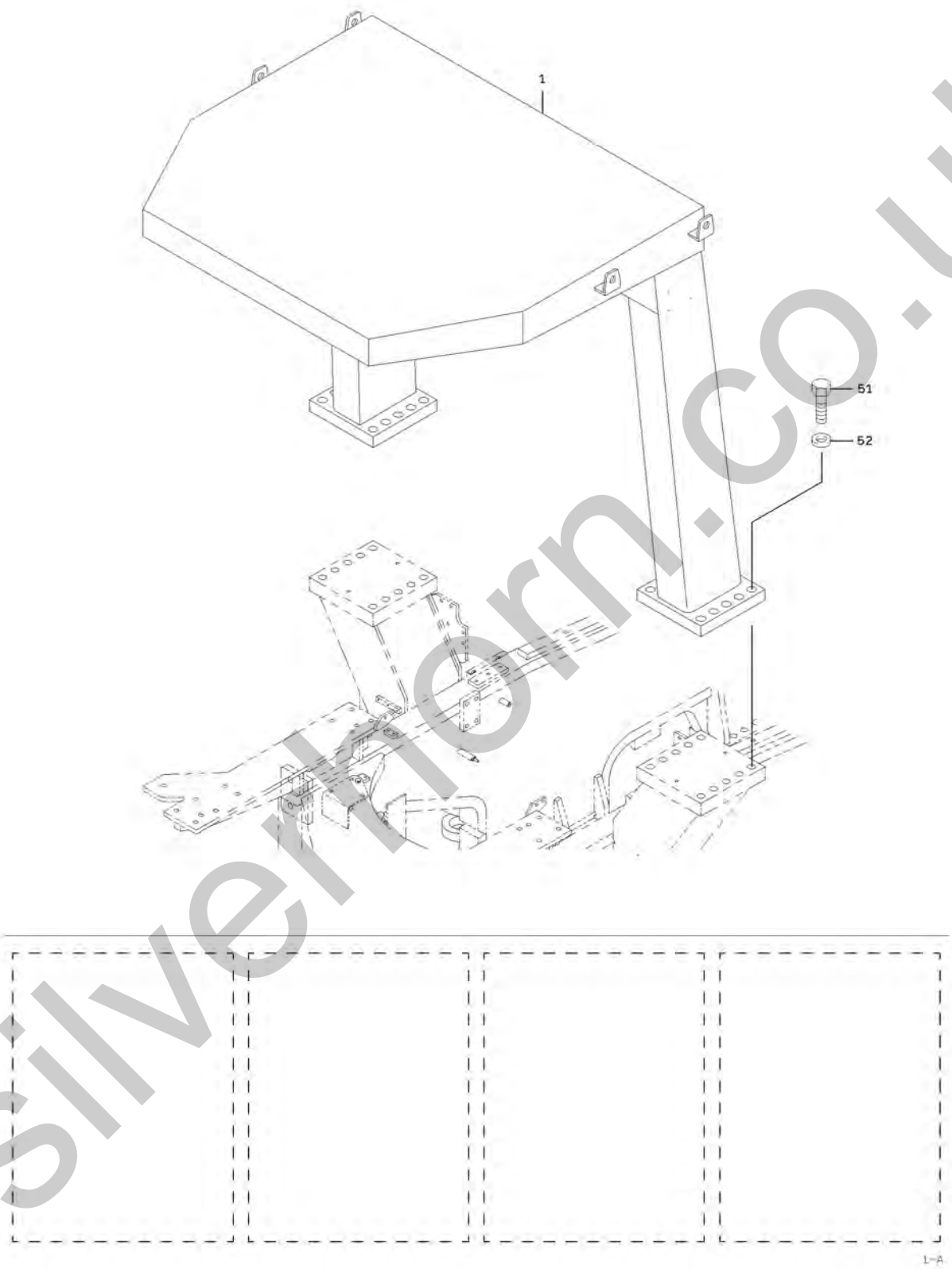

silverthorn.co.uk

ROPS MOUNT

SYM-BOL	PART NUMBER	PART NAME	UNIT Q,TY	SERIAL (A) - (B)	REMARKS N P D	(A) (B)	(C) (D)	REMARK
1A	45953-20470	ROPS	1	5001 -				
51A	61005-30095	BOLT	20	5001 -				
52A	62710-18301	WASHER,PLANE	20	5001 -				

silverhorn.co.uk

COVER GROUP - CAB

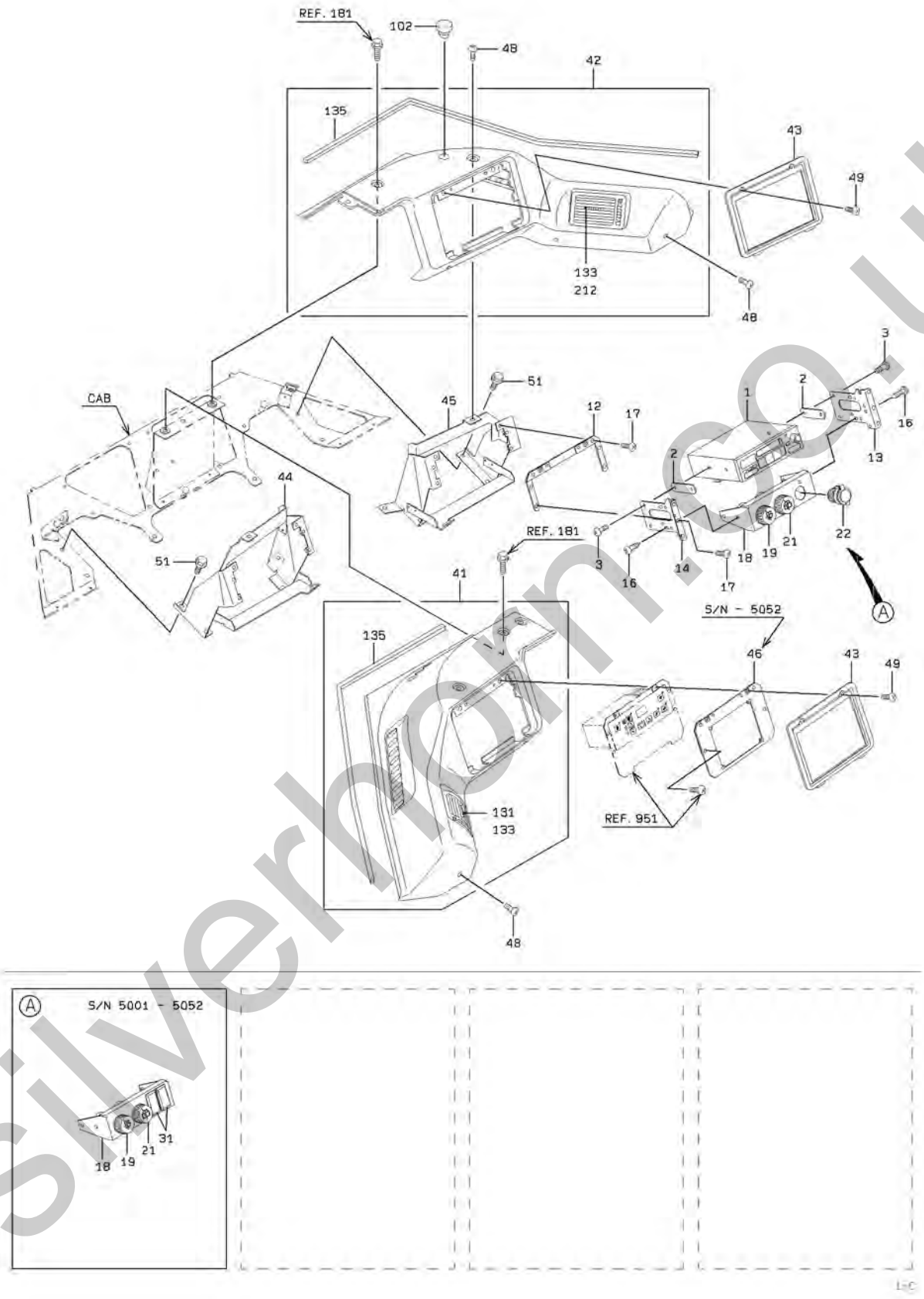

silverhorn.co.uk

COVER GROUP - CAB

SYM-BOL	PART NUMBER	PART NAME	UNIT Q,TY	SERIAL (A) - (B)			REMARKS N P D	(A)	(B)	(C)	(D)	REMARK
1A	31102-60040	CAR RADIO	1	5001	-							
2A	41617-59770	PLATE	2	5001	-							
3A	35100-20020	SCREW	4	5001	-							
12A	41613-51300	PLATE	1	5001	-							
13A	41610-26860	PLATE	1	5001	-	5136						FR LH
13B	41619-59830	PLATE	1	5137	-		C					FR LH
14A	41610-26870	PLATE	1	5001	-	5136						FR RH
14B	41619-59840	PLATE	1	5137	-		C					FR RH
16A	35100-20020	SCREW	4	5001	-							
17A	35100-20280	SCREW	6	5001	-							
18A	41610-36050	PLATE	1	5001	-	5052						
18B	41750-27290	PLATE	1	5053	-		B					
19A	35067-60060	SWITCH,WIPER	1	5001	-							FR FRONT
21A	35067-60070	SWITCH,WIPER	1	5001	-							FR REAR
22A	35902-60020-7	SOCKET ASSY	1	5053	-							
31A	32224-60020	CAP,ELASTIC	2	5001	-	5052	D					
41A	31200-60300	COVER	1	5001	-			Y01				FR LH
42A	31200-60310	COVER	1	5001	-				Y02			FR RH
43A	31200-60100	COVER	2	5001	-							
44A	40901-58210	BRACKET	1	5001	-							FR LH
45A	40901-57970	BRACKET	1	5001	-							FR RH
46A	41610-36700	PLATE	1	5001	-	5052	D					
48A	35100-20200	SCREW	9	5001	-							
49A	35100-20280	SCREW	4	5001	-							
51A	61802-08016-7	BOLT,FLANGED	10	5001	-							
102A	33057-70240	GROMMET	1	5001	-							
131A	33070-70100	GRILLE	1	5001	-			01				
133A	40900-60110	BRACKET	1	5001	-			01	02			
135A	35680-70100	SPONGE	1	5001	-			01	02			
212A	33070-70110	GRILLE	1	5001	-				02			

silverhorn.co.uk

AIR DUCT GROUP - FLOOR BOARD

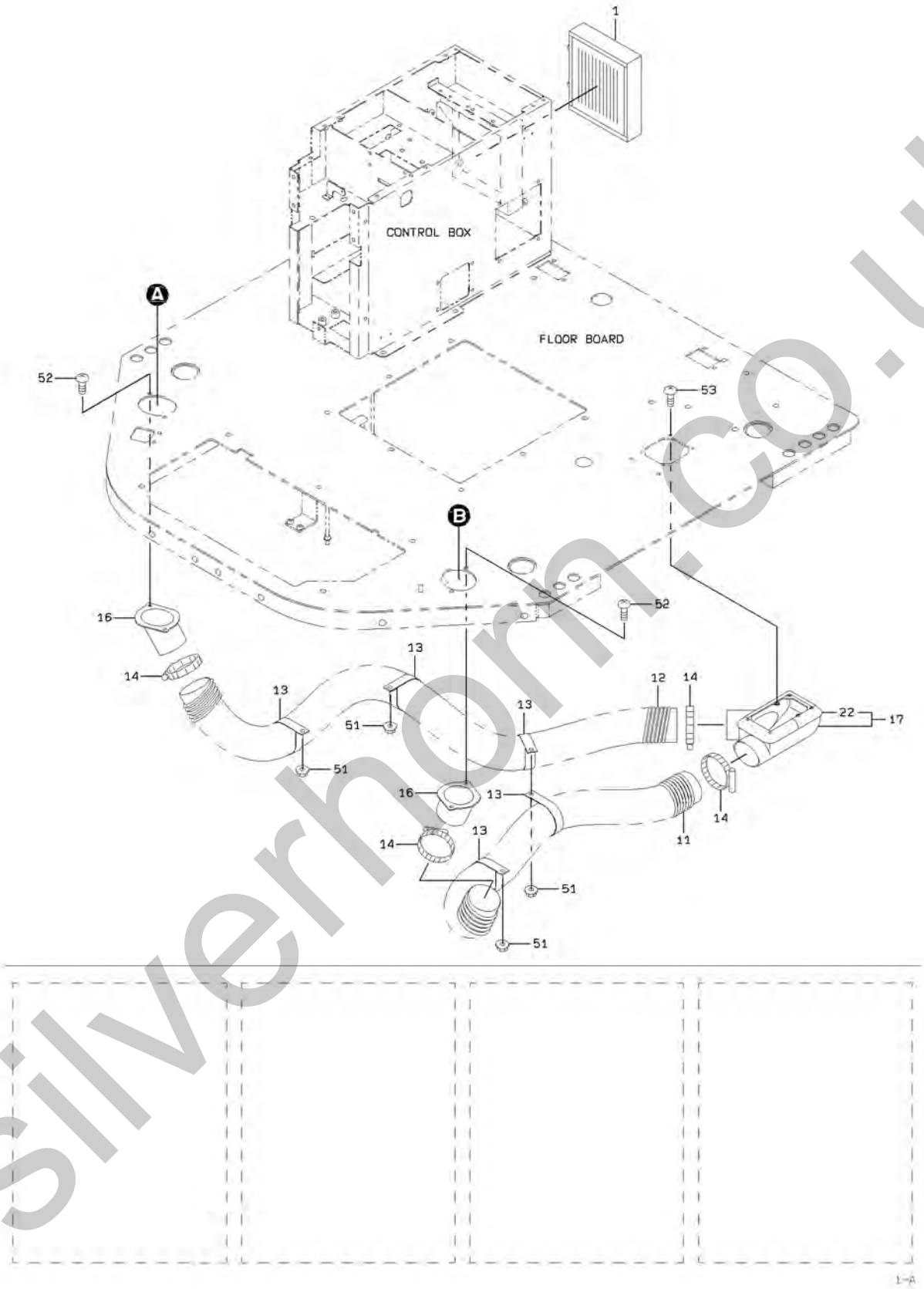

silverhorn.co.uk

AIR DUCT GROUP - FLOOR BOARD

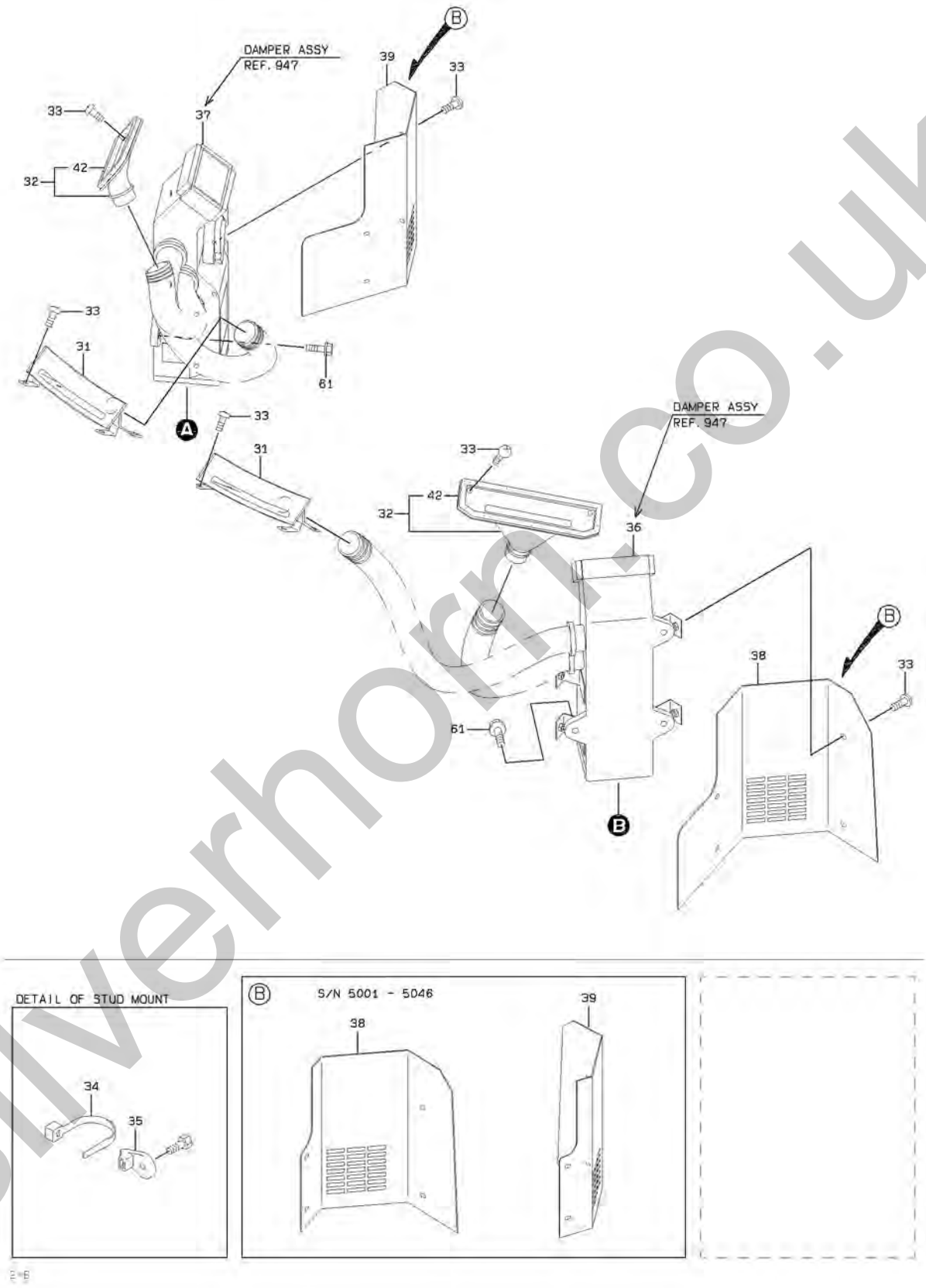

silverhorn.co.uk

AIR DUCT GROUP - FLOOR BOARD

SYM-BOL	PART NUMBER	PART NAME	UNIT Q,TY	SERIAL (A) - (B)	REMARKS N P D	(A)	(B)	(C)	(D)	REMARK
1A	40330-60270	FILTER	1	5001 -						
11A	43111-21750	HOSE,AIR	1	5001 -						
12A	43111-21700	HOSE,AIR	1	5001 -						
13A	72010-86000	HOLDER,HOSE	5	5001 -						D=86
14A	69002-09800-7	BAND,HOSE	4	5001 -						
16A	36430-23360	DUCT	2	5001 -						
17A	36431-21120	DUCT ASSY	1	5001 -		Y01				
22A	35680-50160	SPONGE	1	5001 -		01				
31A	37743-60030	NOZZLE ASSY,DEFROS	2	5001 -						
32A	37743-20010	NOZZLE ASSY,DEFROS	2	5001 -			Y02			
33A	35100-20200	SCREW	20	5001 -						
34A	32923-70100	CLAMP,HOSE	A/R	5001 -						L=382
35A	32923-70120	CLAMP,HOSE	A/R	5001 -						FR M8
36A	36505-60060-7	DAMPER ASSY	1	5001 - 5046						REF.947-1(LH)
36B	36505-60080-7	DAMPER ASSY	1	5047 -	B	WA1				REF.947
37A	36505-60070-7	DAMPER ASSY	1	5001 - 5046						REF.947-41(RH)
37B	36505-60090-7	DAMPER ASSY	1	5047 -	B		WA2			REF.947
38A	41604-60050-7	PLATE	1	5001 - 5046						FR LH
38B	41604-60070-7	PLATE	1	5047 -	B	A1				FR LH
39A	41604-60060-7	PLATE	1	5001 - 5046						FR RH
39B	41604-60080-7	PLATE	1	5047 -	B		A2			FR RH
42A	35680-47920	SPONGE	1	5001 -			02			
51A	62480-21081	NUT,FLANGED	4	5001 -						
52A	35100-20200	SCREW	4	5001 -						
53A	35100-20280	SCREW	4	5001 -						
61A	61802-08030	BOLT,FLANGED	6	5001 -						

silverhorn.co.uk

MEMO

silverhorn.co.uk

DAMPER ASSY

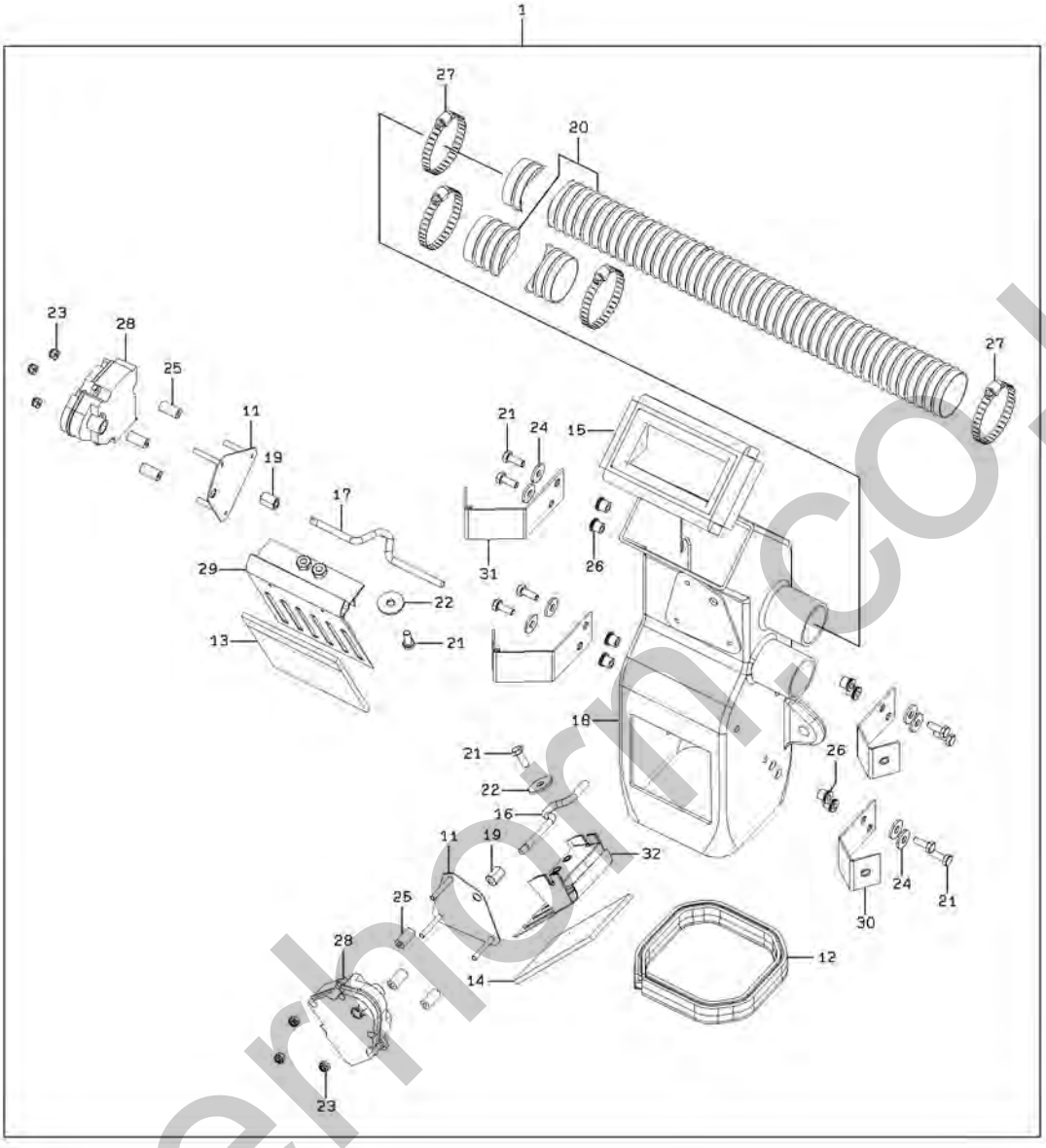

silverhorn.co.uk

DAMPER ASSY

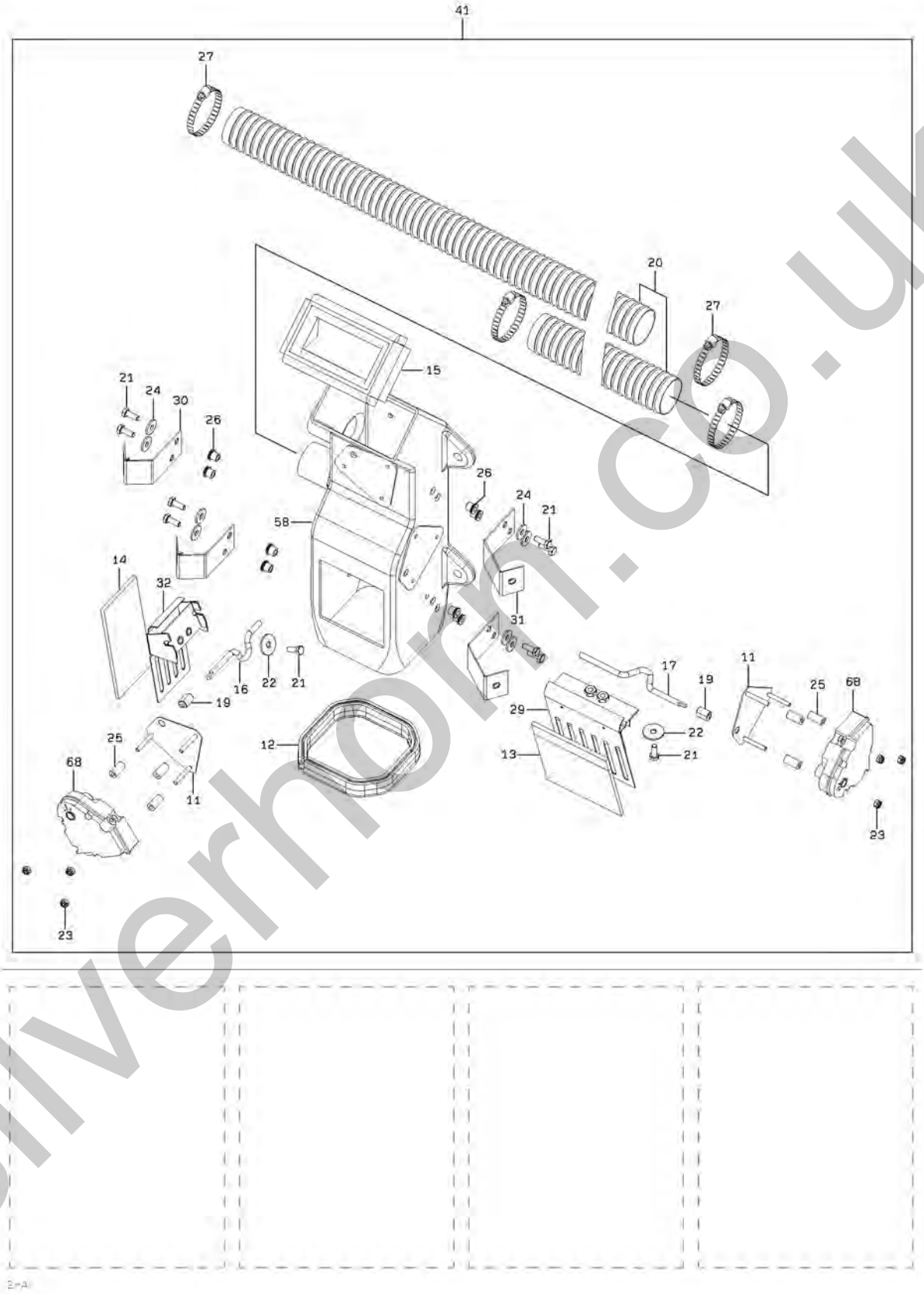

silverhorn.co.uk

DAMPER ASSY

SYM-BOL	PART NUMBER	PART NAME	UNIT Q,TY	SERIAL (A) - (B)	REMARKS N P D	(A)	(B)	(C)	(D)	REMARK
1A	36505-60060-7	DAMPER ASSY	1	5001 - 5046		Y01				FR LH
1B	36505-60080-7	DAMPER ASSY	1	5047 -	B	Y01				FR LH
11A	40901-70050-7	BRACKET	2	5001 -		01	02			
12A	33057-70700-7	GROMMET	1	5001 -		01	02			
13A	31990-71840-7	GASKET	1	5001 -		01	02			
14A	31990-71850-7	GASKET	1	5001 -		01	02			
15A	31990-71860-7	GASKET	1	5001 -		01	02			
16A	45870-70730-7	ROD	1	5001 -		01	02			
17A	45870-70740-7	ROD	1	5001 -		01	02			
18A	36430-60070-7	DUCT	1	5001 -		01				
19A	40840-72580-7	BUSHING	2	5001 -		01	02			
20A	43100-71390-7	HOSE	1	5001 -		01	02			
21A	35100-72040-7	SCREW	10	5001 -		01	02			
22A	46000-71560-7	WASHER	2	5001 -		01	02			
23A	37634-70020-7	NUT,NYLON	6	5001 -		01	02			
24A	46000-71570-7	WASHER	8	5001 -		01	02			
25A	35700-71870-7	SPACER	6	5001 -		01	02			
26A	46000-71580-7	WASHER	8	5001 -		01	02			
27A	32923-70230-7	CLAMP,HOSE	4	5001 -		01	02			
28A	30201-70040-7	ACTUATOR ASSY	2	5001 -		01				
29A	37520-70170-7	DOOR	1	5001 -		01	02			
30A	40901-70060-7	BRACKET	2	5001 - 5046		01	02			
30B	40901-60130-7	BRACKET	2	5047 -	B	01	02			
31A	40901-70070-7	BRACKET	2	5001 -		01	02			
32A	37520-70180-7	DOOR	1	5001 -		01	02			
41A	36505-60070-7	DAMPER ASSY	1	5001 - 5046			Y02			FR RH
41B	36505-60090-7	DAMPER ASSY	1	5047 -	B		Y02			FR RH
58A	36430-60080-7	DUCT	1	5001 -			02			
68A	30201-70050-7	ACTUATOR ASSY	2	5001 -			02			

silverhorn.co.uk

MEMO

silverhorn.co.uk

AIR CONDITIONER MOUNT

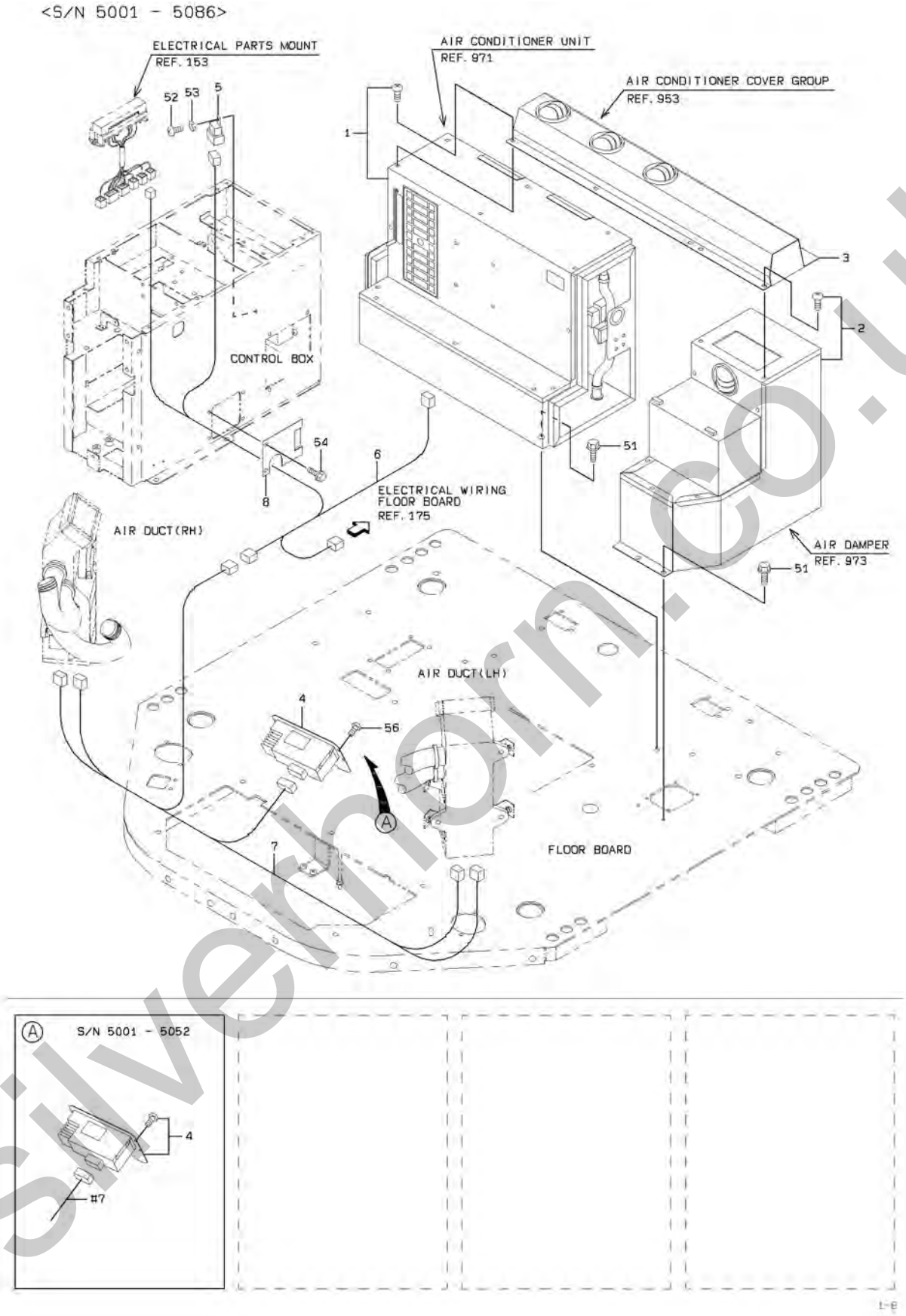

silverthorn.co.uk

AIR CONDITIONER MOUNT

SYM-BOL	PART NUMBER	PART NAME	UNIT Q,TY	SERIAL (A) - (B)	REMARKS N P D	(A) (B)	(C) (D)	REMARK
1A	30890-60090-7	AIR CONDITIONER UN	1	5001 - 5086				REF 971
2A	41351-60010-7	BLOWER ASSY	1	5001 - 5025				REF 973
2B	41351-60020-7	BLOWER ASSY	1	5026 - 5086	B			REF 973
3A	36431-60070-7	DUCT ASSY	1	5001 - 5025				REF 953
3B	36431-60080-7	DUCT ASSY	1	5026 - 5086	B			REF 953
4A	39754-60060-7	PANEL ASSY,CONTROL	1	5001 - 5086				
5A	45050-60070-7	RELAY	1	5001 - 5086				
6A	33191-60450-7	CABLE ASSY	1	5001 - 5086				
7A	33191-60470-7	CABLE ASSY	1	5001 - 5086				
8A	41604-60040-7	PLATE	1	5001 - 5086				
51A	61802-10020	BOLT,FLANGED	10	5001 - 5086				
52A	62256-51610	SCREW	1	5001 - 5060				
52B	62256-51616	SCREW	1	5061 - 5086	B			
53A	62721-06100	WASHER,SPRING	1	5001 - 5086				
54A	61802-06016	BOLT,FLANGED	2	5001 - 5086				
56A	35100-20280	SCREW	4	5053 - 5086				

silverhorn.co.uk

AIR CONDITIONER MOUNT

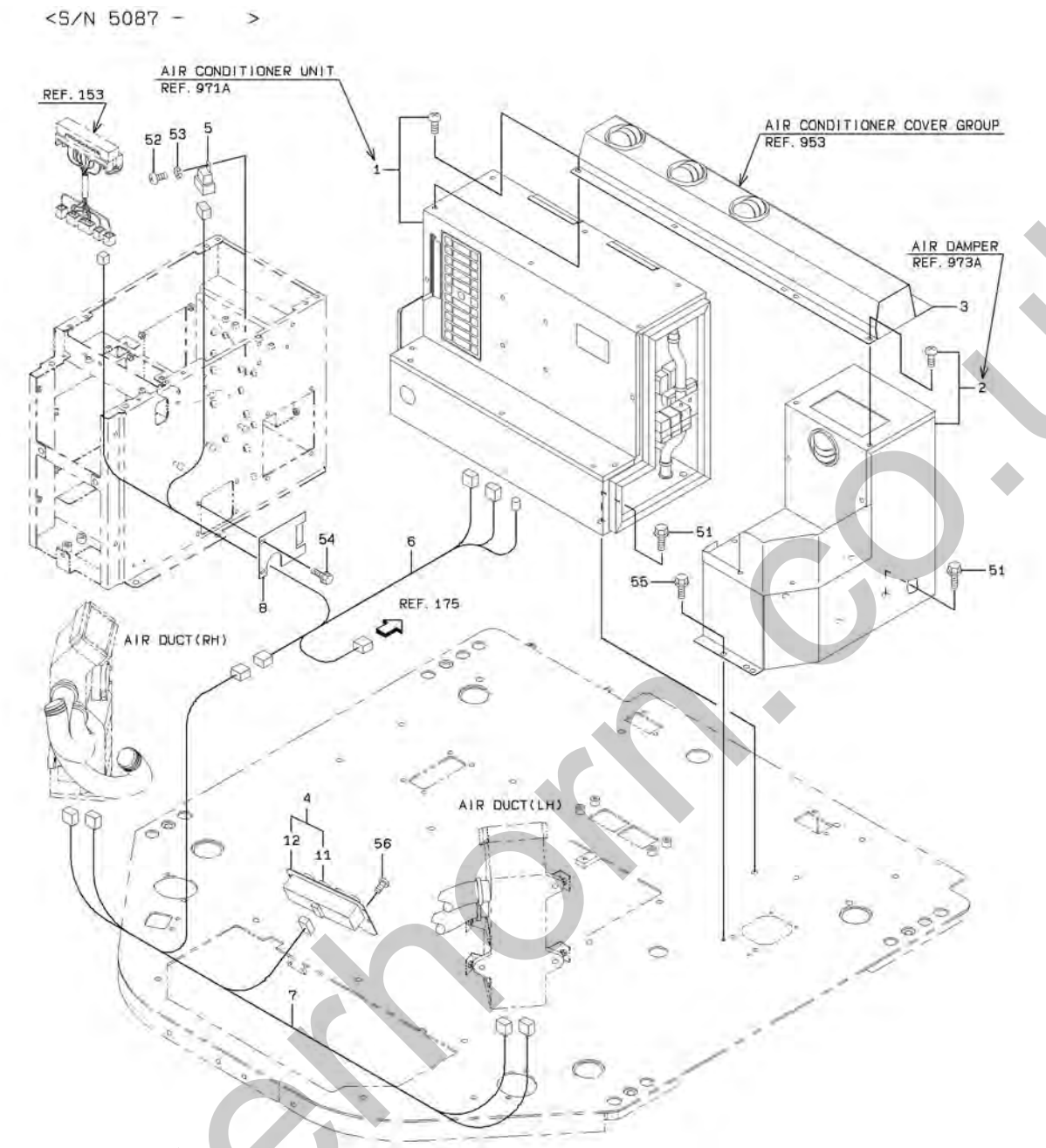

silverhorn.co.uk

AIR CONDITIONER MOUNT

SYM-BOL	PART NUMBER	PART NAME	UNIT Q,TY	SERIAL (A) - (B)	REMARKS N P D	(A) (B)	(C) (D)	REMARK
1A	30890-60120-7	AIR CONDITIONER UN	1	5087 -				REF.971A
2A	41351-60040-7	BLOWER ASSY	1	5087 -				REF.973A
3A	36431-60080-7	DUCT ASSY	1	5087 -				REF.953
4A	39754-60080-7	PANEL ASSY,CONTROL	1	5087 -		Y01		
5A	45050-60070-7	RELAY	1	5087 -				
6A	33191-60520-7	CABLE ASSY	1	5087 -				
7A	33191-60530-7	CABLE ASSY	1	5087 -				
8A	41604-60040-7	PLATE	1	5087 -				
11A	39754-70020-7	PANEL ASSY,CONTROL	1	5087 -		01		
12A	40604-70190-7	FRAME ASSY	1	5087 -		01		
51A	61802-10020	BOLT,FLANGED	8	5087 -				
52A	62256-51616	SCREW	1	5087 -				
53A	62721-06100	WASHER,SPRING	1	5087 -				
54A	61802-06016	BOLT,FLANGED	2	5087 -				
55A	61802-08020	BOLT,FLANGED	2	5087 -				
56A	35100-20280	SCREW	4	5087 -				

silverhorn.co.uk

AIR CONDITIONER COVER GROUP

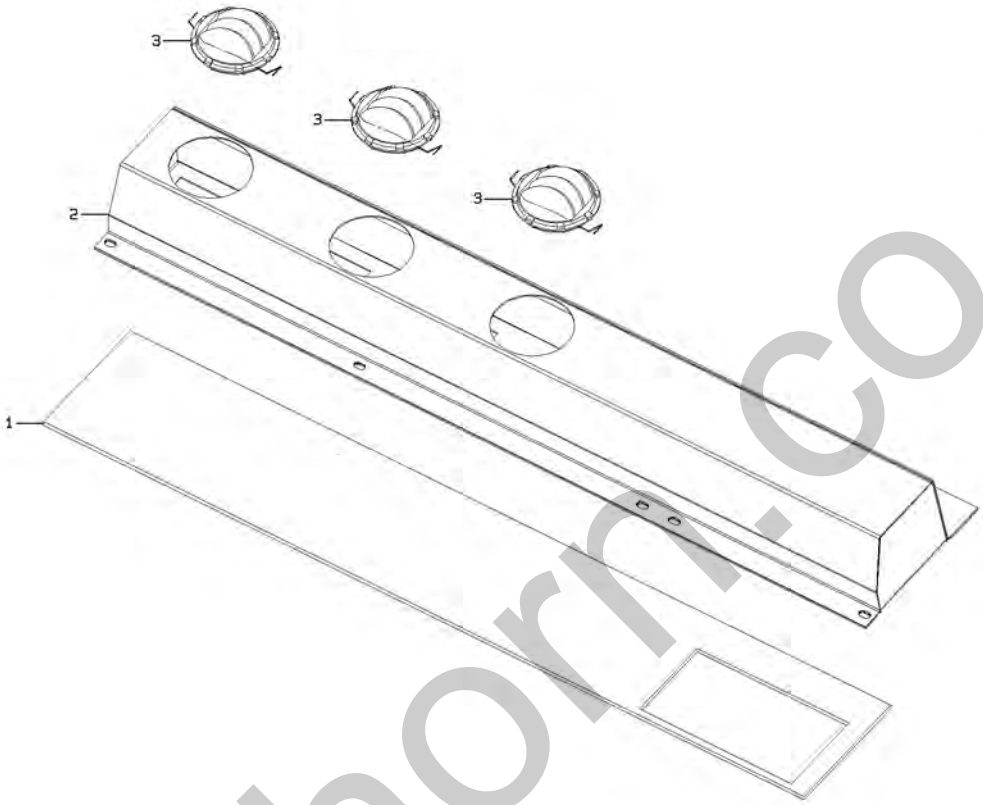

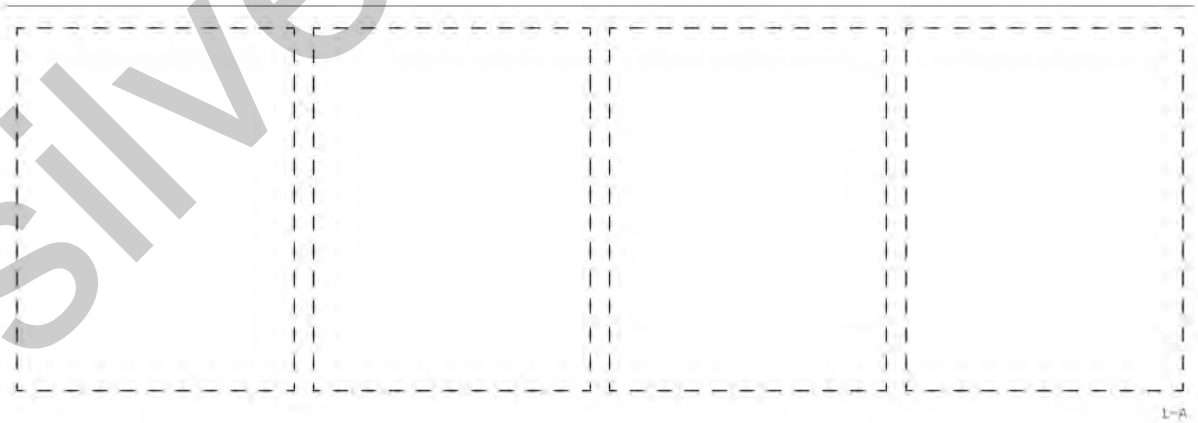

silverhorn.co.uk

AIR CONDITIONER COVER GROUP

SYM-BOL	PART NUMBER	PART NAME	UNIT Q,TY	SERIAL (A) - (B)	REMARKS N P D	(A) (B)	(C) (D)	REMARK
000A	36431-60070-7	DUCT ASSY	1	5001 - 5025				
000B	36431-60080-7	DUCT ASSY	1	5026 -	B			
1A	31990-71830-7	GASKET	1	5001 -				
2A	36430-70170-7	DUCT	1	5001 - 5025				
2B	36430-70220-7	DUCT	1	5026 -	B			
3A	45360-70040-7	LOUVER	3	5001 -				

silverhorn.co.uk

AIR CONDITIONER LINE

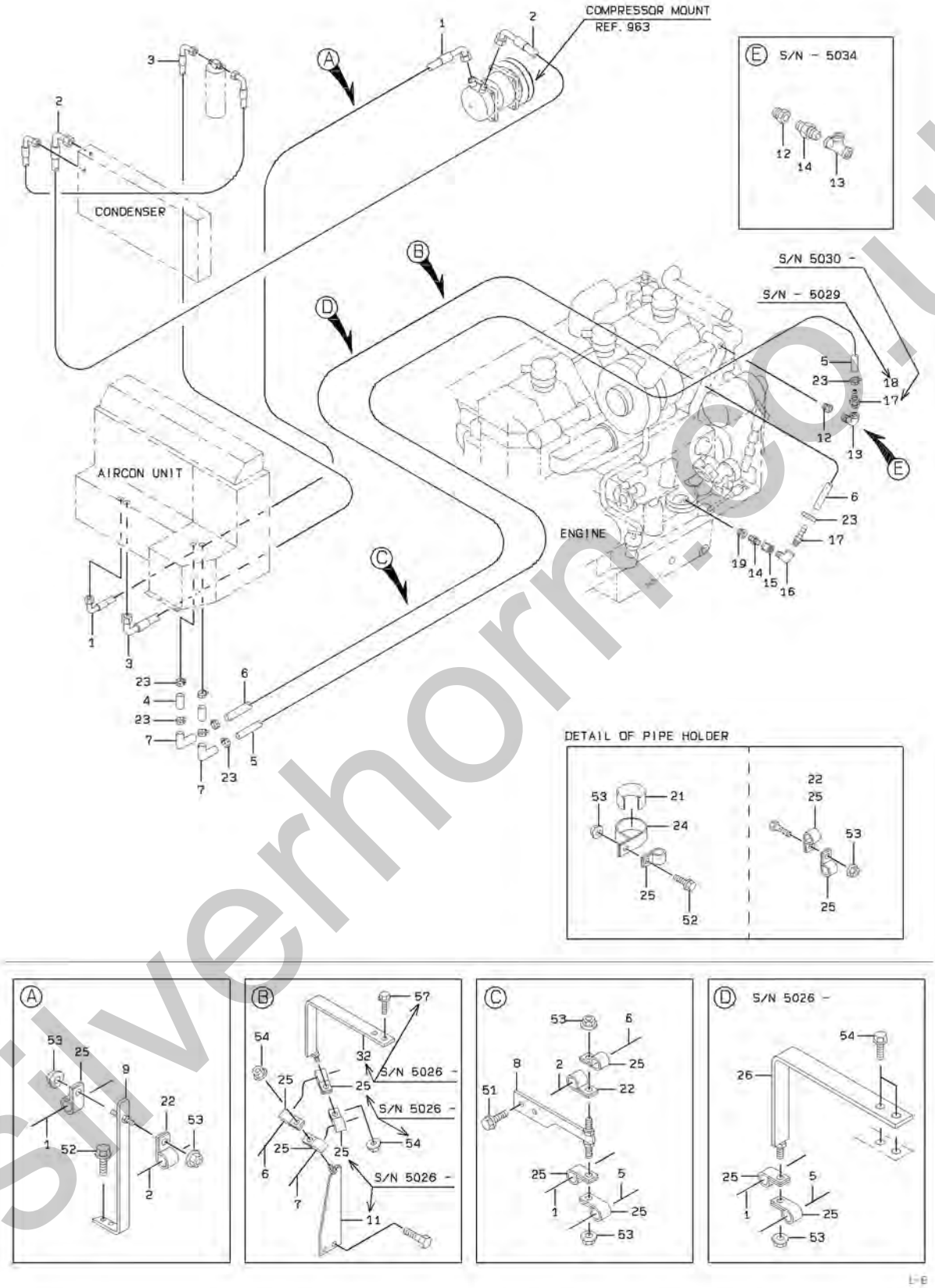

silverhorn.co.uk

AIR CONDITIONER LINE

SYM-BOL	PART NUMBER	PART NAME	UNIT Q,TY	SERIAL (A) - (B)	REMARKS N P D	(A) (B)	(C) (D)	REMARK
1A	43124-60120	HOSE,COOLER	1	5001 -				
2A	43124-60100	HOSE,COOLER	1	5001 -				
3A	43124-60110	HOSE,COOLER	1	5001 -				
4A	67230-15000	HOSE,WATER	1 M	5001 -				L=100
5A	67230-15000	HOSE,WATER	4 M	5001 -				L=3650
6A	67230-15000	HOSE,WATER	5 M	5001 -				L=4300
7A	38752-21550	PIPE,WATER	2	5001 -				
8A	41618-33460	PLATE	1	5001 -				
9A	41612-49940	PLATE	1	5001 -				
11A	41618-39240	PLATE	1	5001 -				
12A	50401-02540	ADAPTER	1	5001 - 5025				
12B	33057-21070	GROMMET	1	5026 -	C			
13A	69207-04000	FITTING,TEE	1	5001 - 5034				
13B	69205-04000	FITTING,ELBOW	1	5035 -	B			
14A	69202-04000	FITTING,NIPPLE	2	5001 - 5034				
14B	69202-04000	FITTING,NIPPLE	1	5035 -	B			
15A	69200-04000	FITTING,SOCKET	1	5001 -				
16A	69205-04000	FITTING,ELBOW	1	5001 -				
17A	88511-01081	NIPPLE,HOSE	1	5001 - 5029				
17B	88511-01081	NIPPLE,HOSE	2	5030 -				
18A	37715-20600	NIPPLE,HOSE	1	5001 - 5029	D			
19A	88214-31708	ADAPTER	1	5001 -				
21A	33713-22680	SHEET,RUBBER	2	5001 -				
22A	72001-12000	HOLDER,PIPE	4	5001 -				D=20
23A	69002-02300-7	BAND,HOSE	8	5001 -				
24A	72010-46000	HOLDER,HOSE	2	5001 -				D=46
25A	72001-12500	HOLDER,PIPE	A/R	5001 -				D=25
26A	41619-30270	PLATE	1	5026 -				
32A	41619-30270	PLATE	1	5026 -				
51A	61802-06025	BOLT,FLANGED	2	5001 -				
52A	61802-08020	BOLT,FLANGED	4	5001 -				
53A	62480-21081	NUT,FLANGED	A/R	5001 -				
54A	61802-10020	BOLT,FLANGED	2	5026 -				
57A	61802-10020	BOLT,FLANGED	2	5026 -				

silverhorn.co.uk

CONDENSER & COVER MOUNT

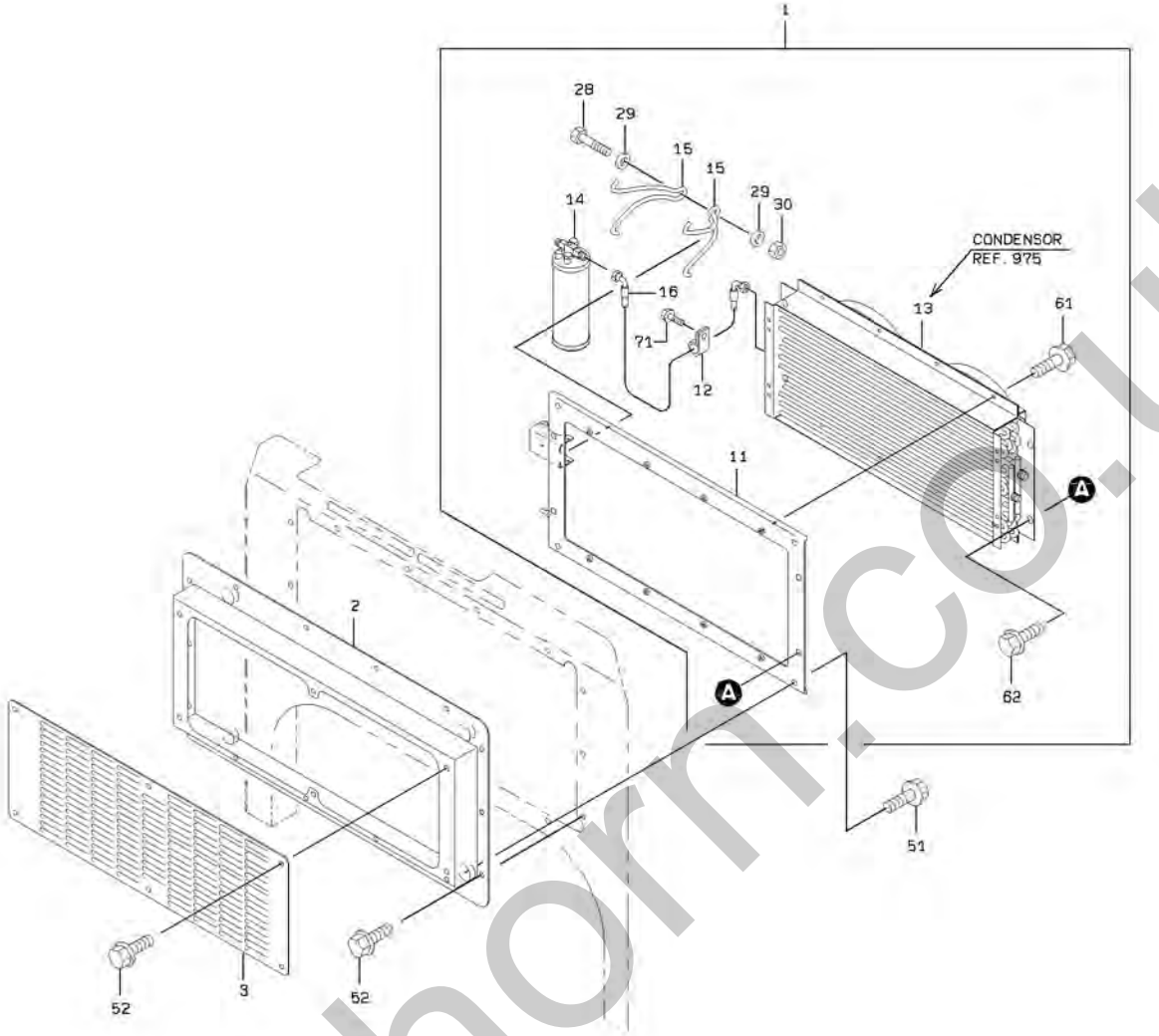

silverhorn.co.uk

CONDENSER & COVER MOUNT

SYM-BOL	PART NUMBER	PART NAME	UNIT Q,TY	SERIAL (A) - (B)	REMARKS N P D	(A)	(B)	(C)	(D)	REMARK
1A	33365-20040-7	CONDENSER ASSY	1	5001 -		Y01				
2A	40902-22600-7	BRACKET	1	5001 -						
3A	41607-39850-7	PLATE	1	5001 -						
11A	40902-22590-7	BRACKET	1	5001 -		01				
12A	72001-11800	HOLDER,PIPE	1	5001 -		01				
13A	33360-60070-7	CONDENSER	1	5001 -		01				REF 975
14A	36200-60030-7	TANK	1	5001 -		01				
15A	32920-60070-7	CLAMP	2	5001 -		01				
16A	43124-60090-7	HOSE,COOLER	1	5001 -		01				
28A	43900-60130-7	BOLT	1	5001 -		01				
29A	46011-60040	WASHER,PLANE	2	5001 -		01				
30A	37634-60010-7	NUT,NYLON	1	5001 -		01				
51A	61802-12016	BOLT,FLANGED	4	5001 -						
52A	61802-10020	BOLT,FLANGED	20	5001 -						
61A	61802-06016	BOLT,FLANGED	8	5001 -		01				
62A	61802-12020	BOLT,FLANGED	4	5001 -		01				
71A	61802-08012	BOLT,FLANGED	1	5001 -		01				

silverhorn.co.uk

COMPRESSOR MOUNT

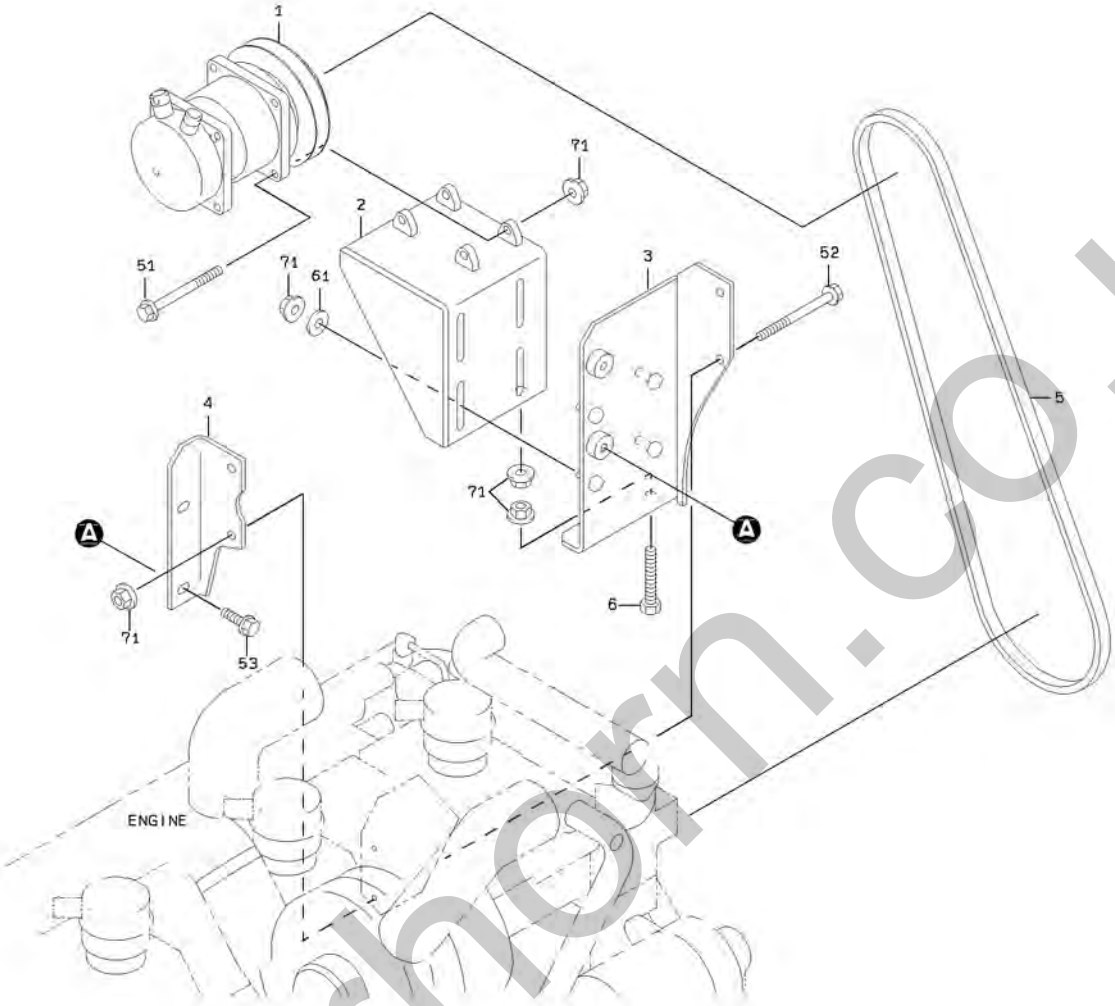

silverhorn.co.uk

COMPRESSOR MOUNT

SYM-BOL	PART NUMBER	PART NAME	UNIT Q,TY	SERIAL (A) - (B)	REMARKS N P D	(A) (B)	(C) (D)	REMARK
1A	33470-60170-7	COMPRESSOR ASSY	1	5001 - 5086				
1B	33470-60120-7	COMPRESSOR ASSY	1	5087 -	C			
2A	40901-56440	BRACKET	1	5001 -				
3A	40901-52810	BRACKET	1	5001 -				
4A	41612-50600-7	PLATE	1	5001 -				
5A	43001-60010	BELT,V	1	5001 -				
6A	43900-20630	BOLT	1	5001 -				
51A	61802-10040	BOLT,FLANGED	4	5001 -				
52A	61802-10135	BOLT,FLANGED	2	5001 -				
53A	61802-10016	BOLT,FLANGED	2	5001 -				
61A	62710-18101	WASHER,PLANE	4	5001 -				
71A	62480-21101	NUT,FLANGED	12	5001 -				

silverhorn.co.uk

AIR CONDITIONER UNIT

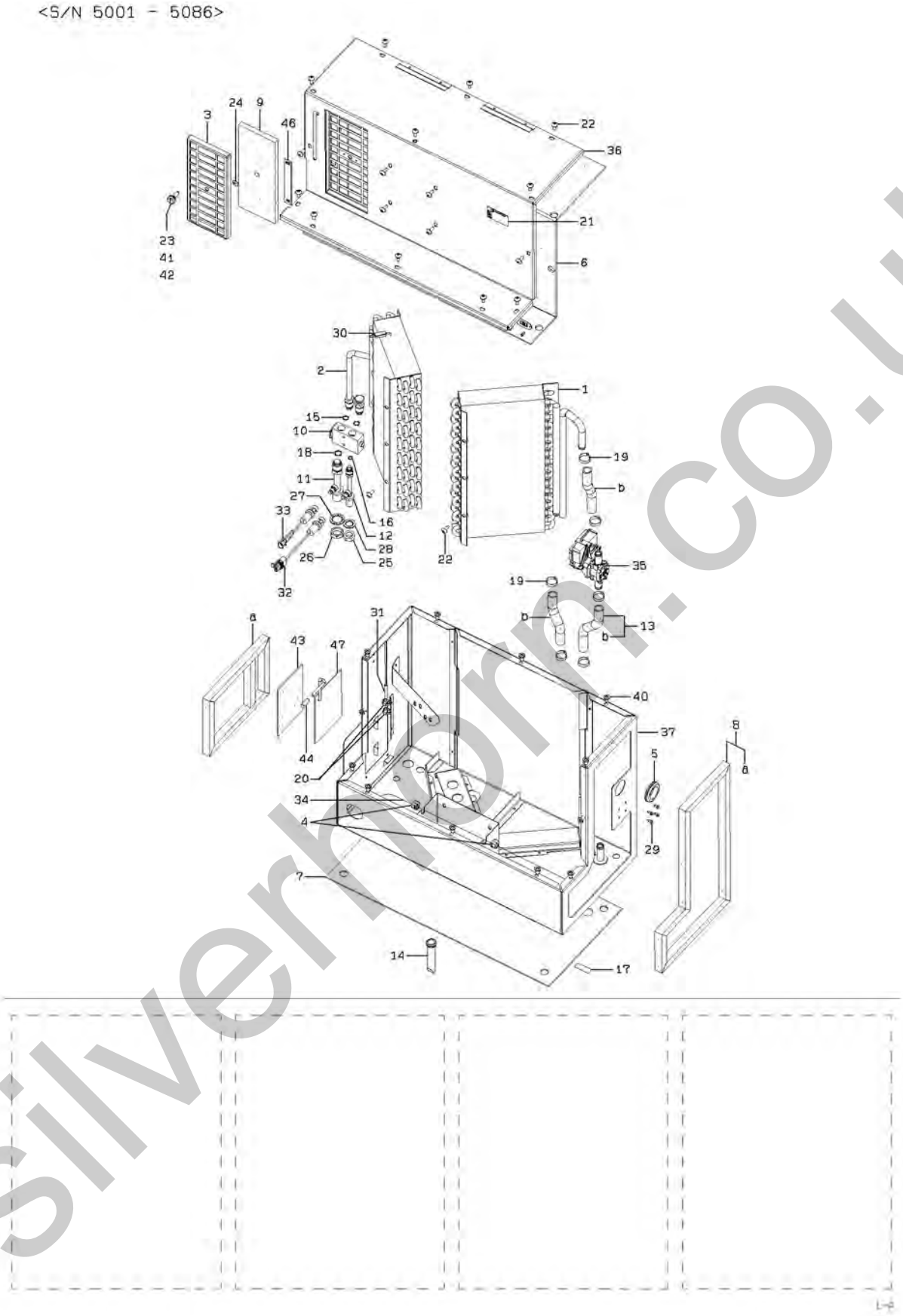

silverhorn.co.uk

AIR CONDITIONER UNIT

SYM-BOL	PART NUMBER	PART NAME	UNIT Q,TY	SERIAL (A) - (B)	REMARKS N P D	(A) (B)	(C) (D)	REMARK
000A	30890-60090-7	AIR CONDITIONER UN	1	5001 - 5086				
1A	33220-70090-7	COIL	1	5001 - 5086				
2A	30999-70100-7	EVAPORATOR	1	5001 - 5086				
3A	41650-70190-7	PLATE ASSY	1	5001 - 5086				
4A	33057-70680-7	GROMMET	2	5001 - 5086				
5A	33057-70690-7	GROMMET	1	5001 - 5086				
6A	31990-71770-7	GASKET	1	5001 - 5086				
7A	31990-71780-7	GASKET	1	5001 - 5086				
8A	31990-71790-7	GASKET	1	5001 - 5086				
9A	40332-70100-7	FILTER ASSY	1	5001 - 5086				
10A	38511-71290-7	VALVE ASSY	1	5001 - 5086				
11A	49290-70190-7	TUBE KIT	1	5001 - 5086				
12A	49290-70200-7	TUBE KIT	1	5001 - 5086				
13A	43100-71380-7	HOSE	1	5001 - 5086				
14A	36700-70380-7	TUBE	1	5001 - 5086				
15A	47131-75920-7	RING,O	2	5001 - 5086				
16A	47131-75930-7	RING,O	1	5001 - 5086				
17A	44770-70520-7	LABEL	1	5001 - 5086				
18A	47131-75940-7	RING,O	1	5001 - 5086				
19A	32923-70220-7	CLAMP,HOSE	6	5001 - 5086				
20A	32920-70800-7	CLAMP	5	5001 - 5086				
21A	44770-70530-7	LABEL	1	5001 - 5086				
22A	35100-71980-7	SCREW	19	5001 - 5086				
23A	35100-72010-7	SCREW	1	5001 - 5086				
24A	46000-71550-7	WASHER	1	5001 - 5086				
25A	37600-72380-7	NUT	1	5001 - 5086				
26A	37600-72390-7	NUT	1	5001 - 5086				
27A	46926-70240-7	WASHER,LOCK	1	5001 - 5086				
28A	46017-70050-7	WASHER,TOOTH	1	5001 - 5086				
29A	35100-72020-7	SCREW	4	5001 - 5086				
30A	35822-70010-7	SENSOR,WATER LEVEL	1	5001 - 5086				
31A	35829-70050-7	SENSOR,TEMPERATURE	1	5001 - 5086				
32A	35047-70190-7	SWITCH,PRESSURE	1	5001 - 5086				
33A	35047-70200-7	SWITCH,PRESSURE	1	5001 - 5086				
34A	33191-60480-7	CABLE ASSY	1	5001 - 5086				
35A	38511-71300-7	VALVE ASSY	1	5001 - 5086				
36A	31236-70030-7	COVER ASSY	1	5001 - 5086				
37A	33110-70630-7	CASE ASSY	1	5001 - 5086				
40A	45020-70220-7	RIVET	12	5001 - 5086				
41A	37600-72400-7	NUT	1	5001 - 5086				
42A	45020-70230-7	RIVET	2	5001 - 5086				
43A	31990-71800-7	GASKET	1	5001 - 5086				
44A	35100-72030-7	SCREW	1	5001 - 5086				
46A	44770-70540-7	LABEL	1	5001 - 5086				
47A	37520-70160-7	DOOR	1	5001 - 5086				

silverhorn.co.uk

AIR CONDITIONER UNIT

<S/N 5087 - >

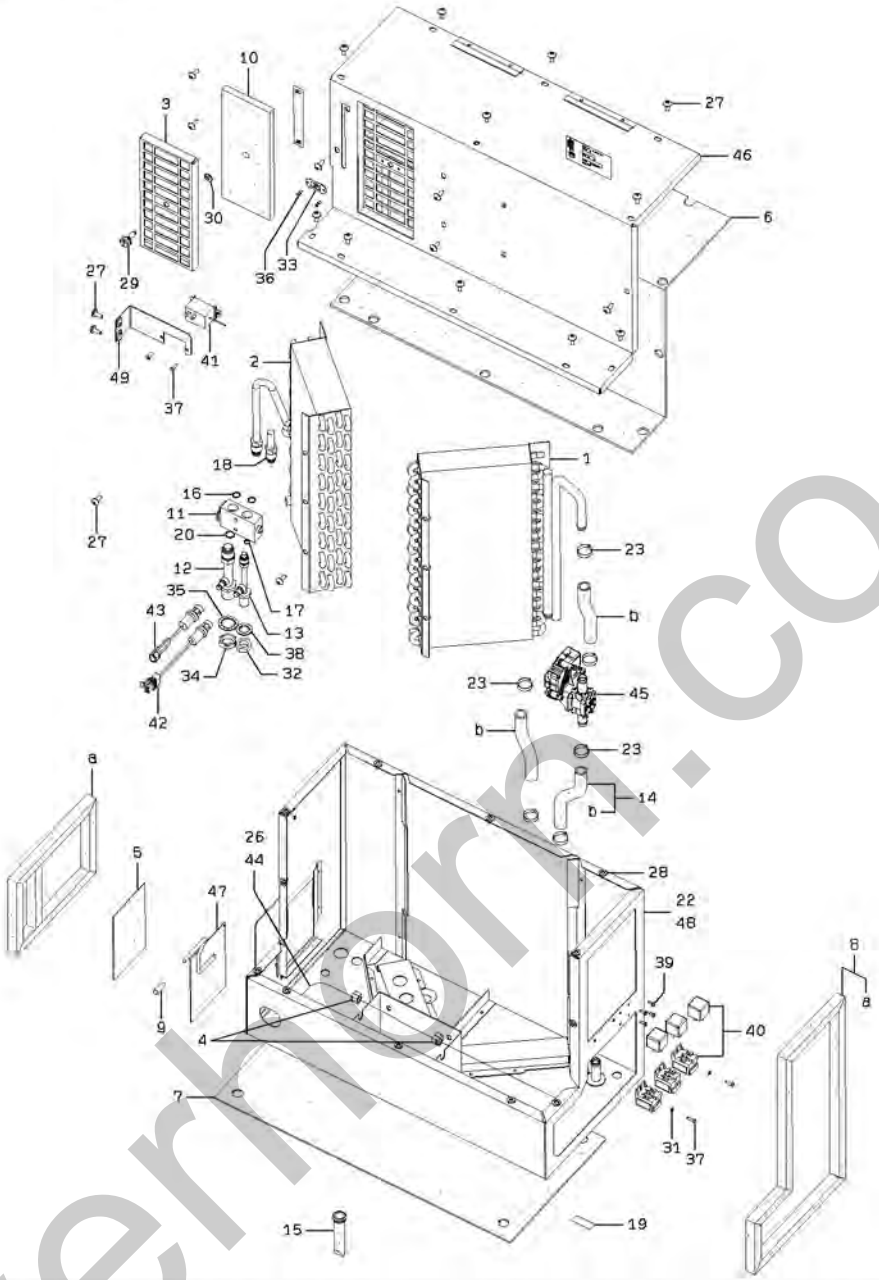

silverhorn.co.uk

AIR CONDITIONER UNIT

SYM-BOL	PART NUMBER	PART NAME	UNIT Q,TY	SERIAL (A) - (B)	REMARKS N P D	(A) (B)	(C) (D)	REMARK
000A	30890-60120-7	AIR CONDITIONER UN	1	5087 -				
1A	33220-70090-7	COIL	1	5087 -				
2A	30999-60010-7	EVAPORATOR	1	5087 -				
3A	41650-70190-7	PLATE ASSY	1	5087 -				
4A	33057-70680-7	GROMMET	2	5087 -				
5A	31990-71800-7	GASKET	1	5087 -				
6A	31990-71770-7	GASKET	1	5087 -				
7A	31990-71780-7	GASKET	1	5087 -				
8A	31990-71790-7	GASKET	1	5087 -				
9A	35100-72030-7	SCREW	1	5087 -				
10A	40332-70100-7	FILTER ASSY	1	5087 -				
11A	38511-71290-7	VALVE ASSY	1	5087 -				
12A	49290-70190-7	TUBE KIT	1	5087 -				
13A	49290-70200-7	TUBE KIT	1	5087 -				
14A	43100-71380-7	HOSE	1	5087 -				
15A	36700-70380-7	TUBE	1	5087 -				
16A	47131-75920-7	RING,O	2	5087 -				
17A	47131-75930-7	RING,O	1	5087 -				
18A	30610-70410-7	INSULATOR	1	5087 -				
19A	44770-70520-7	LABEL	1	5087 -				
20A	47131-75940-7	RING,O	1	5087 -				
22A	34000-70920-7	SEAL	1	5087 -				
23A	32923-70220-7	CLAMP,HOSE	6	5087 -				
26A	32920-70800-7	CLAMP	1	5087 -				
27A	35100-71980-7	SCREW	21	5087 -				
28A	45020-70220-7	RIVET	12	5087 -				
29A	35100-72010-7	SCREW	1	5087 -				
30A	46000-71550-7	WASHER	1	5087 -				
31A	46000-71800-7	WASHER	2	5087 -				
32A	37600-72380-7	NUT	1	5087 -				
33A	37600-72400-7	NUT	1	5087 -				
34A	37600-72390-7	NUT	1	5087 -				
35A	46926-70240-7	WASHER,LOCK	1	5087 -				
36A	45020-70230-7	RIVET	2	5087 -				
37A	35100-72290-7	SCREW	4	5087 -				
38A	46017-70050-7	WASHER,TOOTH	1	5087 -				
39A	35100-72020-7	SCREW	4	5087 -				
40A	45050-60080-7	RELAY	3	5087 -				
41A	35010-70660-7	SWITCH	1	5087 -				
42A	35047-70190-7	SWITCH,PRESSURE	1	5087 -				
43A	35047-70200-7	SWITCH,PRESSURE	1	5087 -				
44A	33197-70100-7	HARNESS	1	5087 -				
45A	38511-71300-7	VALVE ASSY	1	5087 -				
46A	31236-70030-7	COVER ASSY	1	5087 -				
47A	37520-70160-7	DOOR	1	5087 -				
48A	33110-60020-7	CASE ASSY	1	5087 -				
49A	41601-60010-7	PLATE	1	5087 -				

silverhorn.co.uk

AIR DAMPER

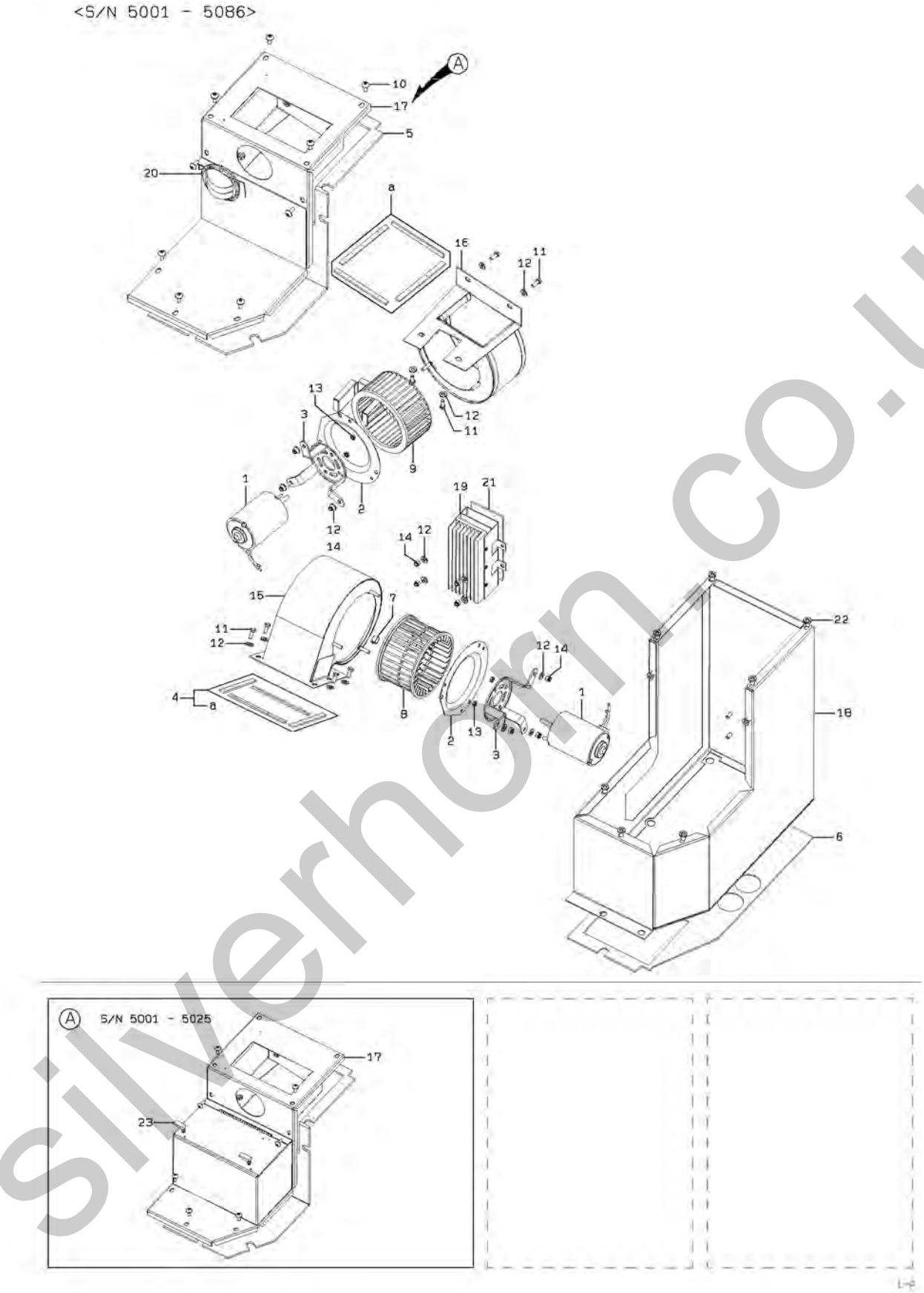

silverhorn.co.uk

AIR DAMPER

SYM-BOL	PART NUMBER	PART NAME	UNIT Q,TY	SERIAL (A) - (B)	REMARKS N P D	(A) (B)	(C) (D)	REMARK
000A	41351-60010-7	BLOWER ASSY	1	5001 - 5025				
000B	41351-60020-7	BLOWER ASSY	1	5026 - 5086	B			
1A	34500-70740-7	SHAFT	2	5001 - 5086				
2A	31053-70730-7	ORIFICE	2	5001 - 5086				
3A	40900-71760-7	BRACKET	2	5001 - 5025				
3B	40900-71830-7	BRACKET	2	5026 - 5086	B			
4A	34000-70930-7	SEAL	1	5001 - 5086				
5A	31990-71810-7	GASKET	1	5001 - 5086				
6A	31990-71820-7	GASKET	1	5001 - 5086				
7A	32970-70370-7	CLIP	1	5001 - 5086				
8A	41350-70020-7	BLOWER	1	5001 - 5086				
9A	41350-70030-7	BLOWER	1	5001 - 5086				
10A	35100-71980-7	SCREW	9	5001 - 5086				
11A	35100-72040-7	SCREW	8	5001 - 5086				
12A	46011-60040-7	WASHER,PLANE	18	5001 - 5086				
13A	37600-72410-7	NUT	4	5001 - 5086				
14A	37634-60010-7	NUT,NYLON	10	5001 - 5086				
15A	31236-70040-7	COVER ASSY	1	5001 - 5086				
16A	31236-70050-7	COVER ASSY	1	5001 - 5086				
17A	31236-70060-7	COVER ASSY	1	5001 - 5025				
17B	31236-70100-7	COVER ASSY	1	5026 - 5086	B			
18A	33110-70640-7	CASE ASSY	1	5001 - 5086				
19A	33435-70130-7	CONTROL UNIT	1	5001 - 5086				
20A	45360-70040-7	LOUVER	1	5001 - 5086				
21A	34000-70920-7	SEAL	1	5001 - 5086				
22A	45020-70220-7	RIVET	9	5001 - 5086				
23A	44810-70110-7	LATCH ASSY	2	5001 - 5025	D			

silverhorn.co.uk

AIR DAMPER

<S/N 5087 - >

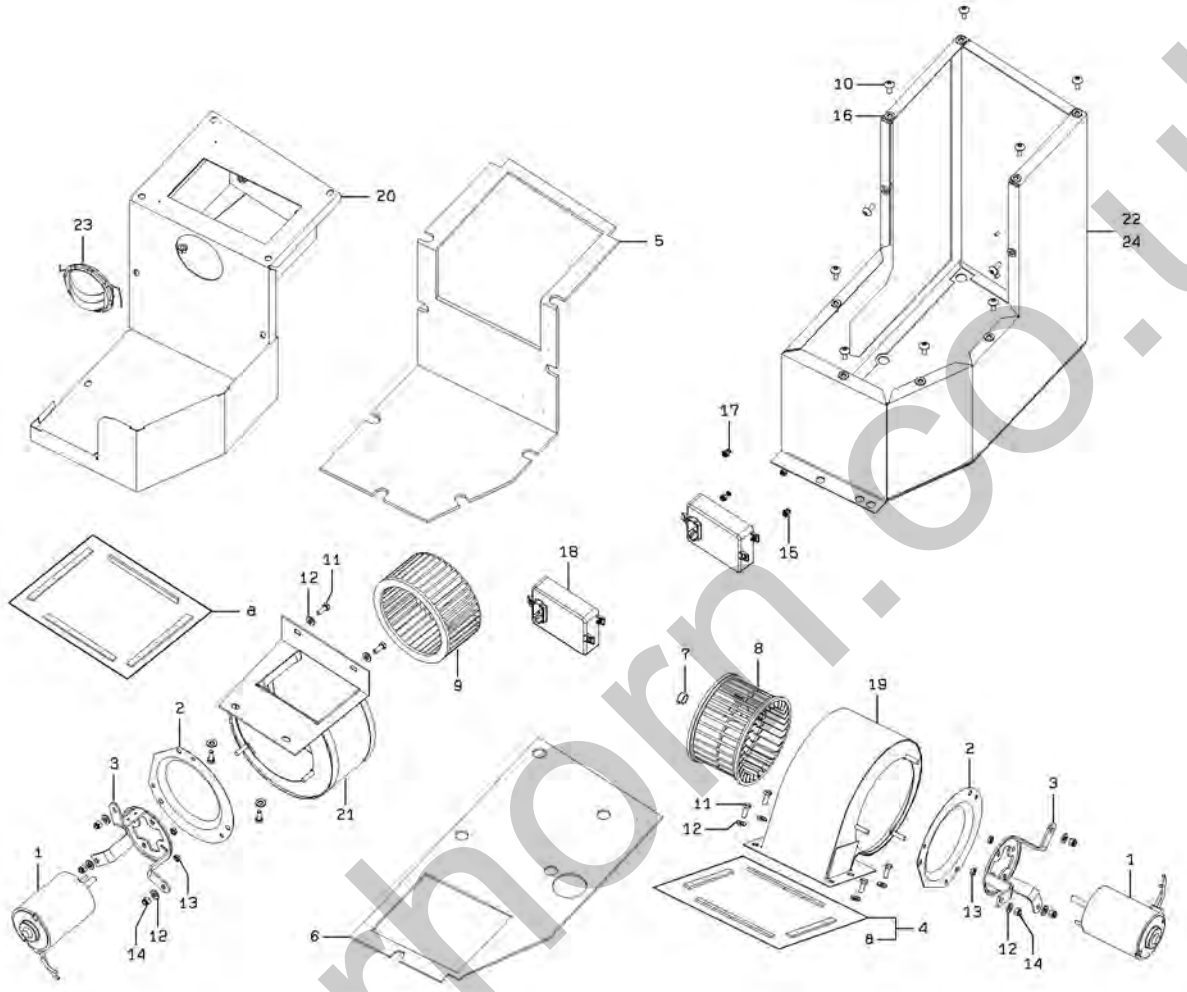

silverhorn.co.uk

AIR DAMPER

SYM-BOL	PART NUMBER	PART NAME	UNIT Q,TY	SERIAL (A) - (B)	REMARKS N P D	(A) (B)	(C) (D)	REMARK
000A	41351-60040-7	BLOWER ASSY	1	5087 -				
1A	34500-70740-7	SHAFT	2	5087 -				
2A	31053-70730-7	ORIFICE	2	5087 -				
3A	40900-71830-7	BRACKET	2	5087 -				
4A	34000-70930-7	SEAL	1	5087 -				
5A	31990-71920-7	GASKET	1	5087 -				
6A	31990-71930-7	GASKET	1	5087 -				
7A	32970-70370-7	CLIP	1	5087 -				
8A	41350-70020-7	BLOWER	1	5087 -				
9A	41350-70030-7	BLOWER	1	5087 -				
10A	35100-71980-7	SCREW	10	5087 -				
11A	35100-72040-7	SCREW	8	5087 -				
12A	46000-71600-7	WASHER	14	5087 -				
13A	37600-72410-7	NUT	4	5087 -				
14A	37634-70030-7	NUT,NYLON	6	5087 -				
15A	37634-70020-7	NUT,NYLON	4	5087 -				
16A	45020-70220-7	RIVET	10	5087 -				
17A	46000-71800-7	WASHER	4	5087 -				
18A	33435-60280-7	CONTROL UNIT	2	5087 -				
19A	31236-70040-7	COVER ASSY	1	5087 -				
20A	31236-70080-7	COVER ASSY	1	5087 -				
21A	31236-70050-7	COVER ASSY	1	5087 -				
22A	33110-60050-7	CASE ASSY	1	5087 -				
23A	45360-70040-7	LOUVER	1	5087 -				
24A	34000-70920-7	SEAL	1	5087 -				

silverhorn.co.uk

CONDENSER

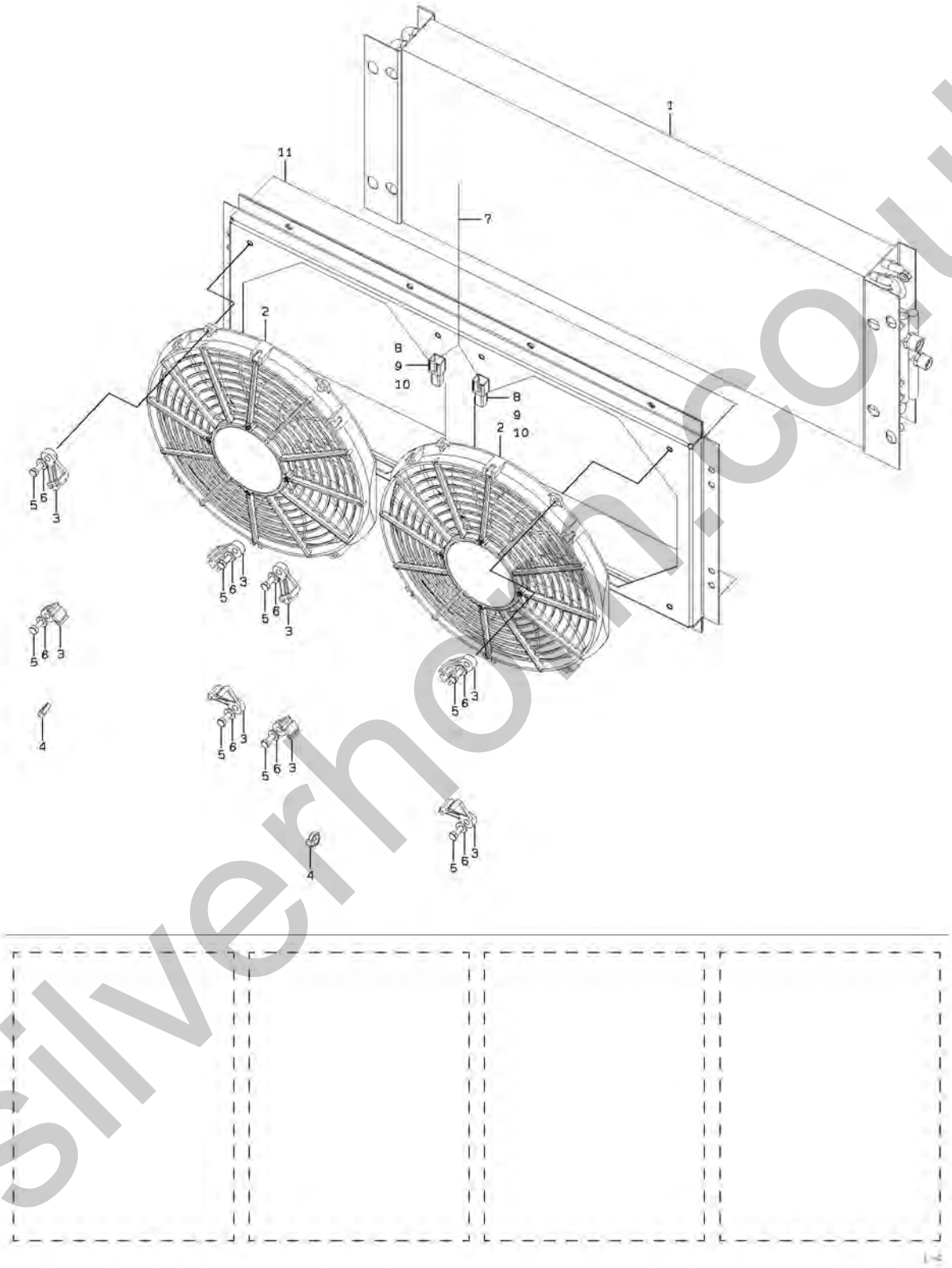

silverhorn.co.uk

CONDENSER

SYM-BOL	PART NUMBER	PART NAME	UNIT Q,TY	SERIAL (A) - (B)	REMARKS N P D	(A) (B)	(C) (D)	REMARK
000A	33360-60070-7	CONDENSER	1	5001 -				
1A	33360-70130-7	CONDENSER	1	5001 -				
2A	40205-70070-7	FAN ASSY	2	5001 -				
3A	40901-70080-7	BRACKET	8	5001 -				
4A	32920-70800-7	CLAMP	2	5001 -				
5A	35100-72050-7	SCREW	8	5001 -				
6A	46011-60040-7	WASHER,PLANE	8	5001 -				
7A	33197-70040-7	HARNESS	1	5001 -				
8A	35930-70420-7	TERMINAL	4	5001 -				
9A	33300-70880-7	CONNECTOR	2	5001 -				
10A	40910-70100-7	BRACKET ASSY	2	5001 -				
11A	41600-71410-7	PLATE	1	5001 -				

silverhorn.co.uk

REAR LARGE FENDER

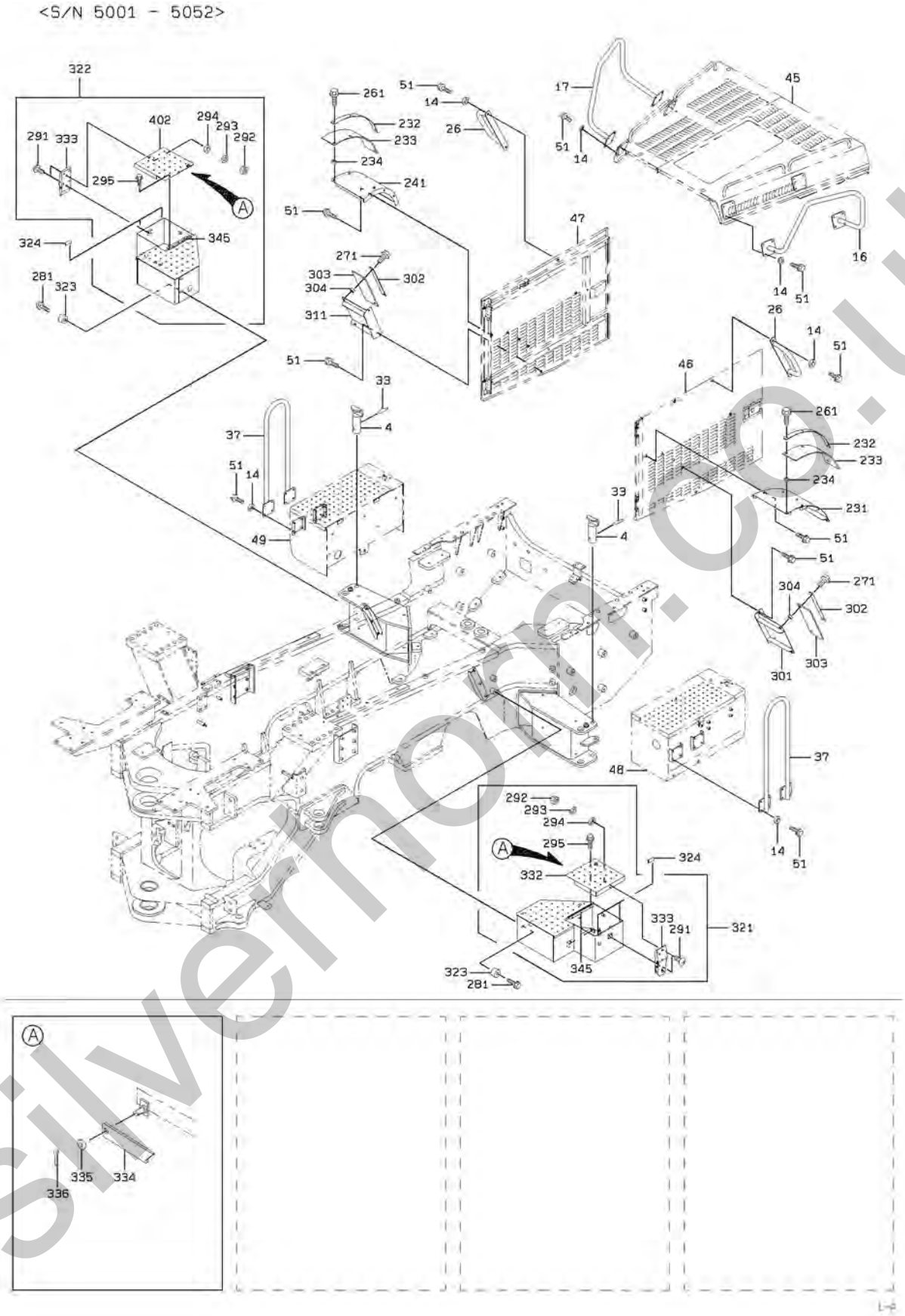

silvernorm.co.uk

REAR LARGE FENDER

<S/N 5001 - 5052>

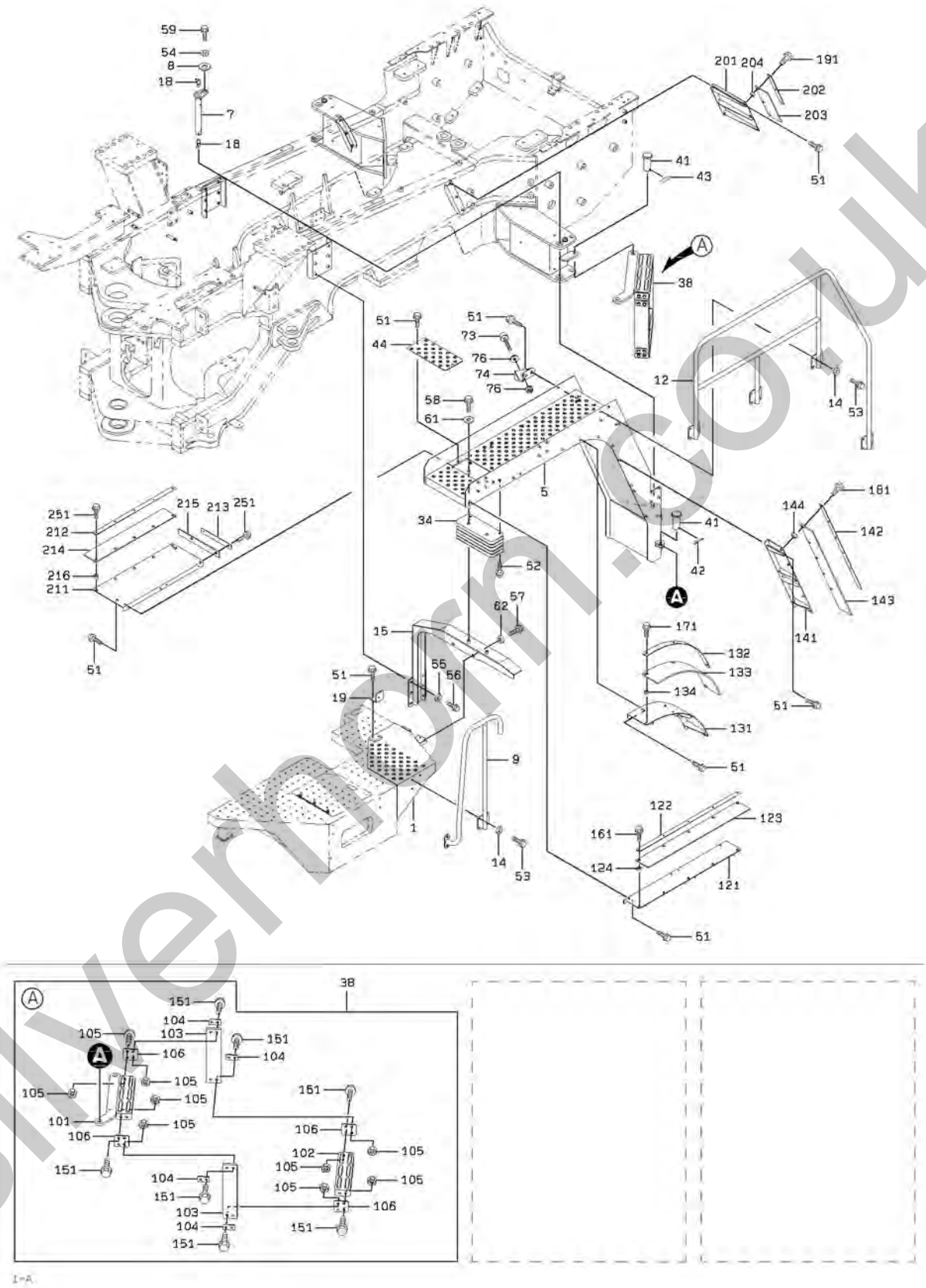

silvernorn.co.uk

REAR LARGE FENDER

<S/N 5001 - 5052>

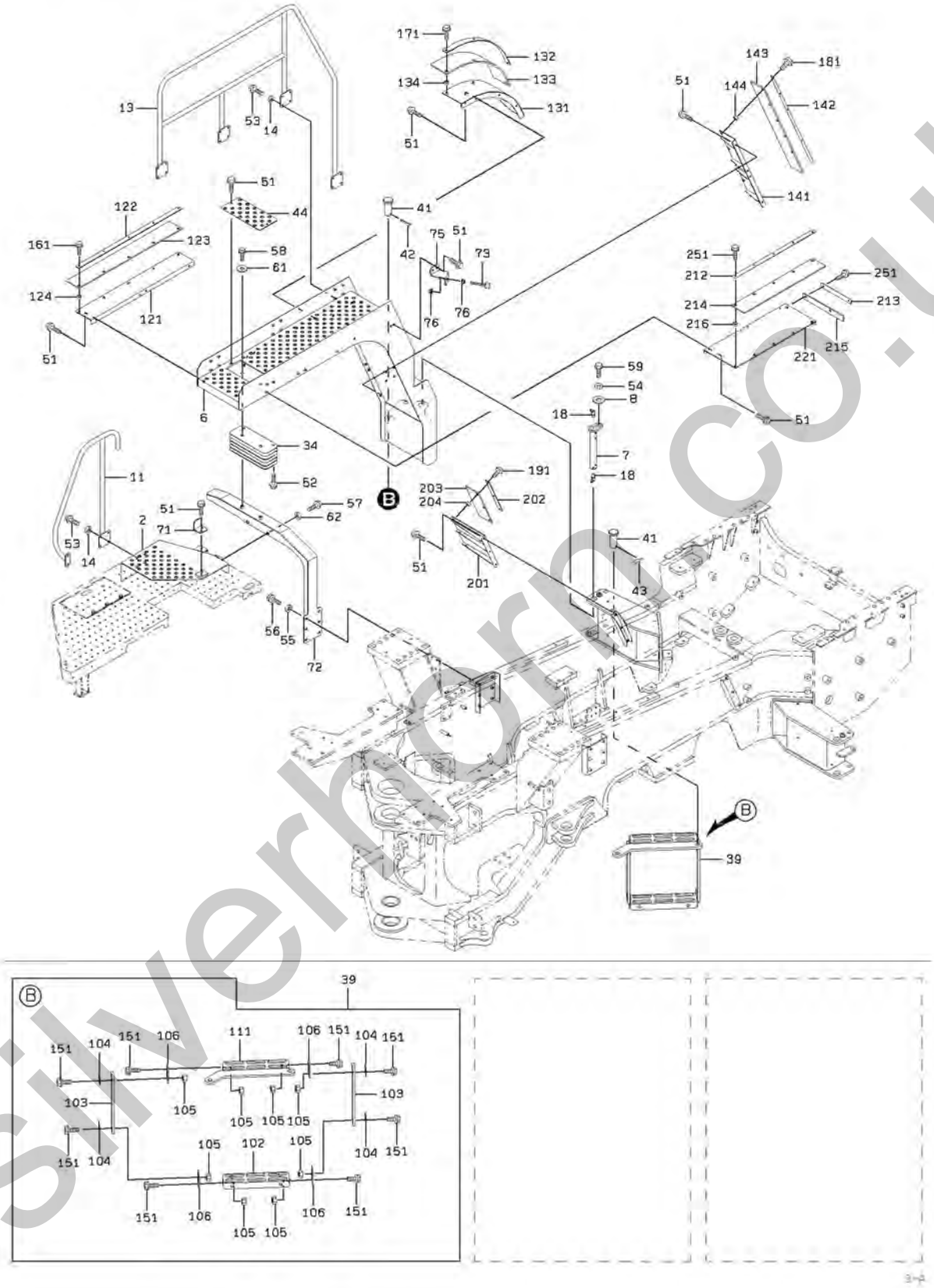

silverhorn.co.uk

REAR LARGE FENDER

SYM-BOL	PART NUMBER	PART NAME	UNIT Q,TY	SERIAL (A)	-	(B)	REMARKS N P D	(A)	(B)	(C)	(D)	REMARK
1A	03501-61590	MODIFICATION	1	5001	-	5052						FR LH
2A	03501-61600	MODIFICATION	1	5001	-	5052						FR RH
4A	40000-41810	PIN	2	5001	-	5052						
5A	35371-20860	STEP ASSY	1	5001	-	5052						FR LH
6A	35371-20870	STEP ASSY	1	5001	-	5052						FR RH
7A	40000-42000	PIN	2	5001	-	5052						
8A	46011-20150	WASHER,PLANE	2	5001	-	5052						
9A	38130-30480	HANDRAIL	1	5001	-	5052						FR LH
11A	38130-30490	HANDRAIL	1	5001	-	5052						FR RH
12A	38130-30990	HANDRAIL	1	5001	-	5052						FR LH
13A	38130-31000	HANDRAIL	1	5001	-	5052						FR RH
14A	46011-21300	WASHER,PLANE	80	5001	-	5052						
15A	40902-37880	BRACKET	1	5001	-	5052						FR LH
16A	38130-30700	HANDRAIL	1	5001	-	5052						FR LH
17A	38130-30710	HANDRAIL	1	5001	-	5052						FR RH
18A	75011-45400	NIPPLE,GREASE	4	5001	-	5052						
19A	41609-59820	PLATE	1	5001	-	5052						FR LH
26A	38130-30730	HANDRAIL	2	5001	-	5052						
33A	40045-20010	PIN,SNAP	2	5001	-	5052						
34A	41609-58170	PLATE	22	5001	-	5052						
37A	38130-30720	HANDRAIL	2	5001	-	5052						
38A	35371-20730	STEP ASSY	1	5001	-	5052		Y01				FR LH
39A	35371-20740	STEP ASSY	1	5001	-	5052			Y02			FR RH
41A	63051-20045	PIN,HEAD	4	5001	-	5052						
42A	63002-05035	PIN,SPLIT	2	5001	-	5052						
43A	40045-20150	PIN,SNAP	2	5001	-	5052						
44A	41609-59320	PLATE	2	5001	-	5052						
45A	03501-63990	ROOF	1	5001	-	5052						
46A	03501-64000	COVER ASSY	1	5001	-	5052						FR LH
47A	03501-64010	COVER ASSY	1	5001	-	5052						FR RH
48A	03501-64020	BOX	1	5001	-	5052						FR LH
49A	03501-64030	BOX	1	5001	-	5052						FR RH
51A	61802-10020	BOLT,FLANGED	84	5001	-	5052						
52A	61802-10040	BOLT,FLANGED	4	5001	-	5052						
53A	61802-10025	BOLT,FLANGED	44	5001	-	5052						
54A	62721-16100	WASHER,SPRING	2	5001	-	5052						
55A	62710-18121	WASHER,PLANE	12	5001	-	5052						
56A	61802-12020	BOLT,FLANGED	12	5001	-	5052						
57A	61802-16025	BOLT,FLANGED	4	5001	-	5052						
58A	61802-16060	BOLT,FLANGED	4	5001	-	5052						
59A	61802-16020	BOLT,FLANGED	2	5001	-	5052						
61A	46011-22680	WASHER,PLANE	4	5001	-	5052						
62A	62710-18161	WASHER,PLANE	4	5001	-	5052						
71A	41710-22550	PLATE	1	5001	-	5052						FR RH
72A	40902-38130	BRACKET	1	5001	-	5052						FR RH
73A	35440-20230	STOPPER	2	5001	-	5052						
74A	41710-36590	PLATE	1	5001	-	5052						FR LH
75A	41710-36600	PLATE	1	5001	-	5052						FR RH
76A	62480-21101	NUT,FLANGED	4	5001	-	5052						
101A	35370-22060	STEP	1	5001	-	5052		01				
102A	35370-20070	STEP	1	5001	-	5052		01	02			
103A	33713-22820	SHEET,RUBBER	2	5001	-	5052		01	02			
104A	41611-23340	PLATE	4	5001	-	5052		01	02			
105A	88031-06101	NUT,SELF-LOCKING	16	5001	-	5052		01	02			
106A	41609-59750	PLATE	4	5001	-	5052		01	02			
111A	35370-22070	STEP	1	5001	-	5052			02			
121A	41620-44050	PLATE	2	5001	-	5052						
122A	41609-53670	PLATE	2	5001	-	5052						
123A	33713-28620	SHEET,RUBBER	2	5001	-	5052						
124A	35700-20720	SPACER	10	5001	-	5052						
131A	41620-44070	PLATE	2	5001	-	5052						
132A	41609-53800	PLATE	2	5001	-	5052						
133A	33713-28570	SHEET,RUBBER	2	5001	-	5052						
134A	35700-20720	SPACER	8	5001	-	5052						
141A	41620-44060	PLATE	2	5001	-	5052						
142A	41609-53660	PLATE	2	5001	-	5052						

silvermoon.co.uk

REAR LARGE FENDER

SYM-BOL	PART NUMBER	PART NAME	UNIT Q,TY	SERIAL (A) - (B)	REMARKS N P D	(A)	(B)	(C)	(D)	REMARK
143A	33713-28560	SHEET,RUBBER	2	5001 - 5052						
144A	35700-20720	SPACER	10	5001 - 5052						
151A	61802-10035	BOLT,FLANGED	16	5001 - 5052		01	02			
161A	61802-10025	BOLT,FLANGED	10	5001 - 5052						
171A	61802-10025	BOLT,FLANGED	8	5001 - 5052						
181A	61802-10025	BOLT,FLANGED	10	5001 - 5052						
191A	61802-10025	BOLT,FLANGED	6	5001 - 5052						
201A	41620-44090	PLATE	2	5001 - 5052						
202A	41609-53710	PLATE	2	5001 - 5052						
203A	33713-28590	SHEET,RUBBER	2	5001 - 5052						
204A	35700-20720	SPACER	6	5001 - 5052						
211A	41620-44100	PLATE	1	5001 - 5052						FR LH
212A	41609-53740	PLATE	2	5001 - 5052						
213A	41609-59780	PLATE	2	5001 - 5052						
214A	33713-28630	SHEET,RUBBER	2	5001 - 5052						
215A	33713-28780	SHEET,RUBBER	2	5001 - 5052						
216A	35700-20720	SPACER	14	5001 - 5052						
221A	41620-50780	PLATE	1	5001 - 5052						FR RH
231A	41620-50850	PLATE	1	5001 - 5052						FR LH
232A	41609-59940	PLATE	2	5001 - 5052						
233A	33713-28790	SHEET,RUBBER	2	5001 - 5052						
234A	35700-20720	SPACER	8	5001 - 5052						
241A	41620-50860	PLATE	1	5001 - 5052						FR RH
251A	61802-10025	BOLT,FLANGED	14	5001 - 5052						
261A	61802-10025	BOLT,FLANGED	8	5001 - 5052						
271A	61802-10025	BOLT,FLANGED	4	5001 - 5052						
281A	61802-12045	BOLT,FLANGED	8	5001 - 5052						
291A	62256-51410	SCREW	6	5001 - 5052				03	04	
292A	62401-81041	NUT	3	5001 - 5052				03	04	
293A	62721-04100	WASHER,SPRING	3	5001 - 5052				03	04	
294A	62701-20041	WASHER,PLANE	3	5001 - 5052				03	04	
295A	61802-06016	BOLT,FLANGED	3	5001 - 5052				03	04	
301A	41620-50890	PLATE	1	5001 - 5052						FR LH
302A	41710-20020	PLATE	2	5001 - 5052						
303A	33713-28800	SHEET,RUBBER	2	5001 - 5052						
304A	35700-20720	SPACER	4	5001 - 5052						
311A	41620-50900	PLATE	1	5001 - 5052						FR RH
321A	43805-21470	BOX ASSY	1	5001 - 5052				Y03		FR LH
322A	43805-21480	BOX ASSY	1	5001 - 5052					Y04	FR RH
323A	35700-21050	SPACER	8	5001 - 5052						
324A	34041-21650	STRIP, SEAL	4	5001 - 5052						
332A	41637-23740	PLATE	1	5001 - 5052				03		
333A	32150-60020	CATCH	1	5001 - 5052				03	04	
334A	41605-57120	PLATE	1	5001 - 5052				03	04	
335A	46011-20190	WASHER,PLANE	1	5001 - 5052				03	04	
336A	63002-03020	PIN,SPLIT	1	5001 - 5052				03	04	
342A	41637-23750	PLATE	1	5001 - 5052					04	
345A	39890-21910	HINGE	1	5001 - 5052				03		WELDING
402A	41637-23750	PLATE	1	5001 - 5052					04	

silverhorn.co.uk

MEMO

silverhorn.co.uk

REAR LARGE FENDER

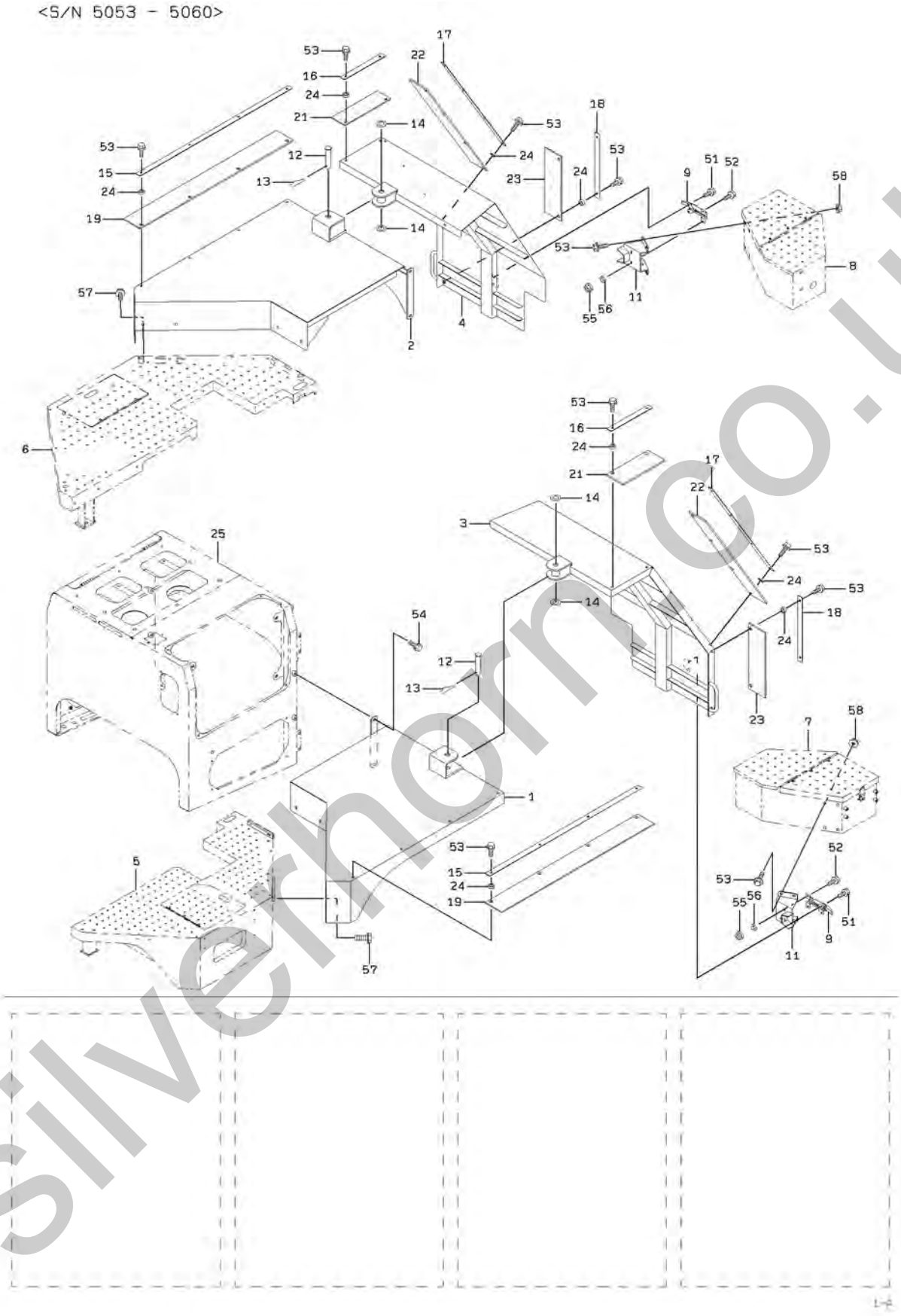

silverhorn.co.uk

REAR LARGE FENDER

SYM-BOL	PART NUMBER	PART NAME	UNIT Q,TY	SERIAL (A) - (B)	REMARKS N P D	(A)	(B)	(C)	(D)	REMARK
1A	37290-29940	DECK	1	5053 - 5060						FR LH
2A	37290-29950	DECK	1	5053 - 5060						FR RH
3A	40410-28800	FENDER	1	5053 - 5060						FR LH
4A	40410-28810	FENDER	1	5053 - 5060						FR RH
5A	03501-71910	DECK	1	5053 - 5060						FR LH
6A	03501-71920	DECK	1	5053 - 5060						FR RH
7A	03501-71930	BOX ASSY	1	5053 - 5060						FR LH
8A	03501-71940	BOX ASSY	1	5053 - 5060						FR RH
9A	32150-60040	CATCH	2	5053 - 5060						
11A	40902-40700	BRACKET	2	5053 - 5060						
12A	40000-42830	PIN	2	5053 - 5060						
13A	40045-20200	PIN,SNAP	2	5053 - 5060						
14A	37213-20450	DISC,FRICTION	A/R	5053 - 5060						T=1.5
15A	41710-51570	PLATE	2	5053 - 5060						
16A	41710-51580	PLATE	2	5053 - 5060						
17A	41710-51590	PLATE	2	5053 - 5060						
18A	41710-51600	PLATE	2	5053 - 5060						
19A	33713-29360	SHEET,RUBBER	2	5053 - 5060						
21A	33713-29370	SHEET,RUBBER	2	5053 - 5060						
22A	33713-29380	SHEET,RUBBER	2	5053 - 5060						
23A	33713-29390	SHEET,RUBBER	2	5053 - 5060						
24A	35700-20720	SPACER	24	5053 - 5060						
25A	03501-71950	BOARD ASSY,SCREEN	1	5053 - 5060						
51A	61802-08016	BOLT,FLANGED	4	5053 - 5060						
52A	61802-08025	BOLT,FLANGED	4	5053 - 5060						
53A	61802-10025	BOLT,FLANGED	32	5053 - 5060						
54A	61802-12020	BOLT,FLANGED	4	5053 - 5060						
55A	62480-21081	NUT,FLANGED	4	5053 - 5060						
56A	62701-40081	WASHER,PLANE	4	5053 - 5060						
57A	61802-10016	BOLT,FLANGED	8	5053 - 5060						
58A	62480-21101	NUT,FLANGED	8	5053 - 5060						

silverhorn.co.uk

REAR LARGE FENDER

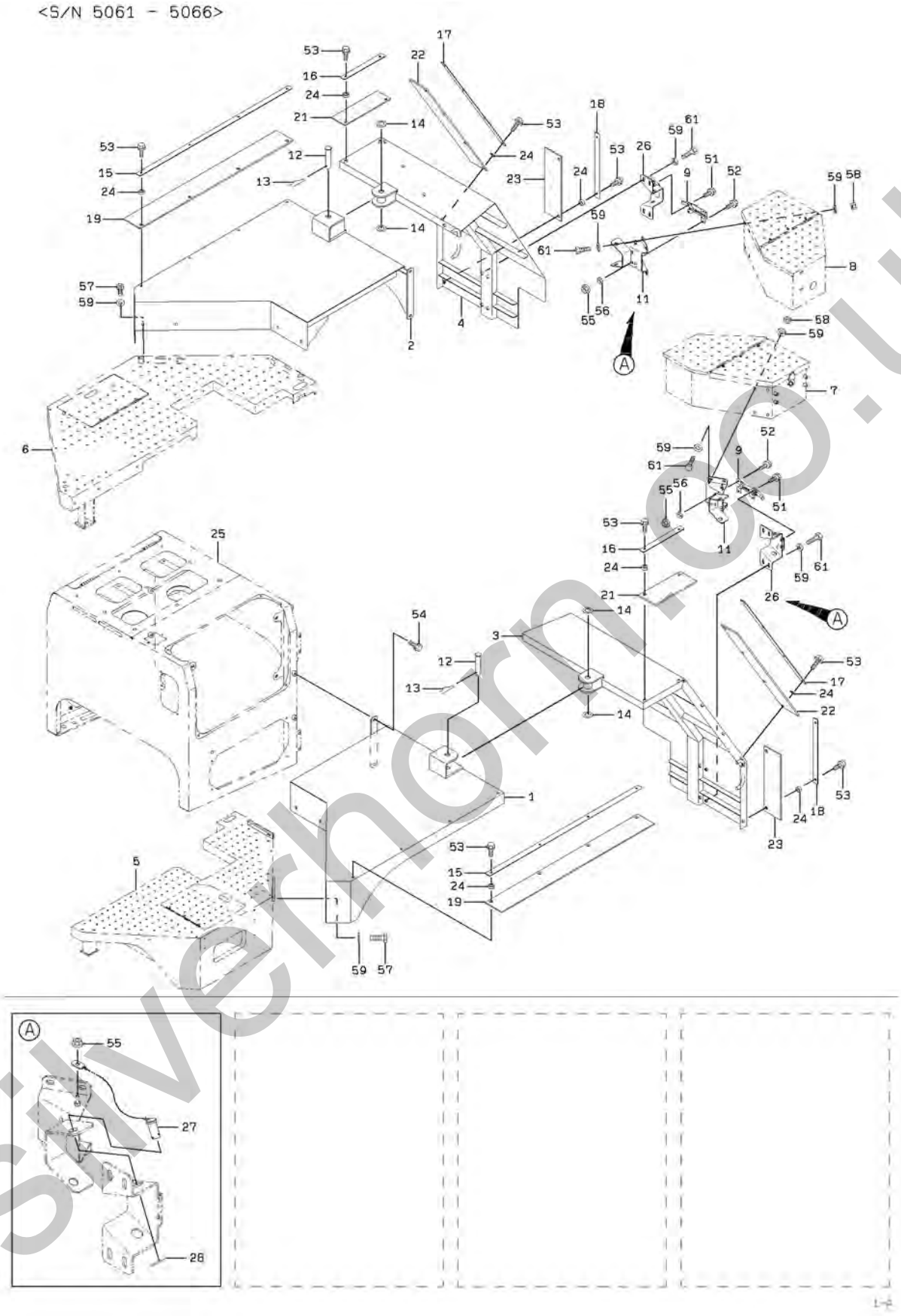

silverhorn.co.uk

REAR LARGE FENDER

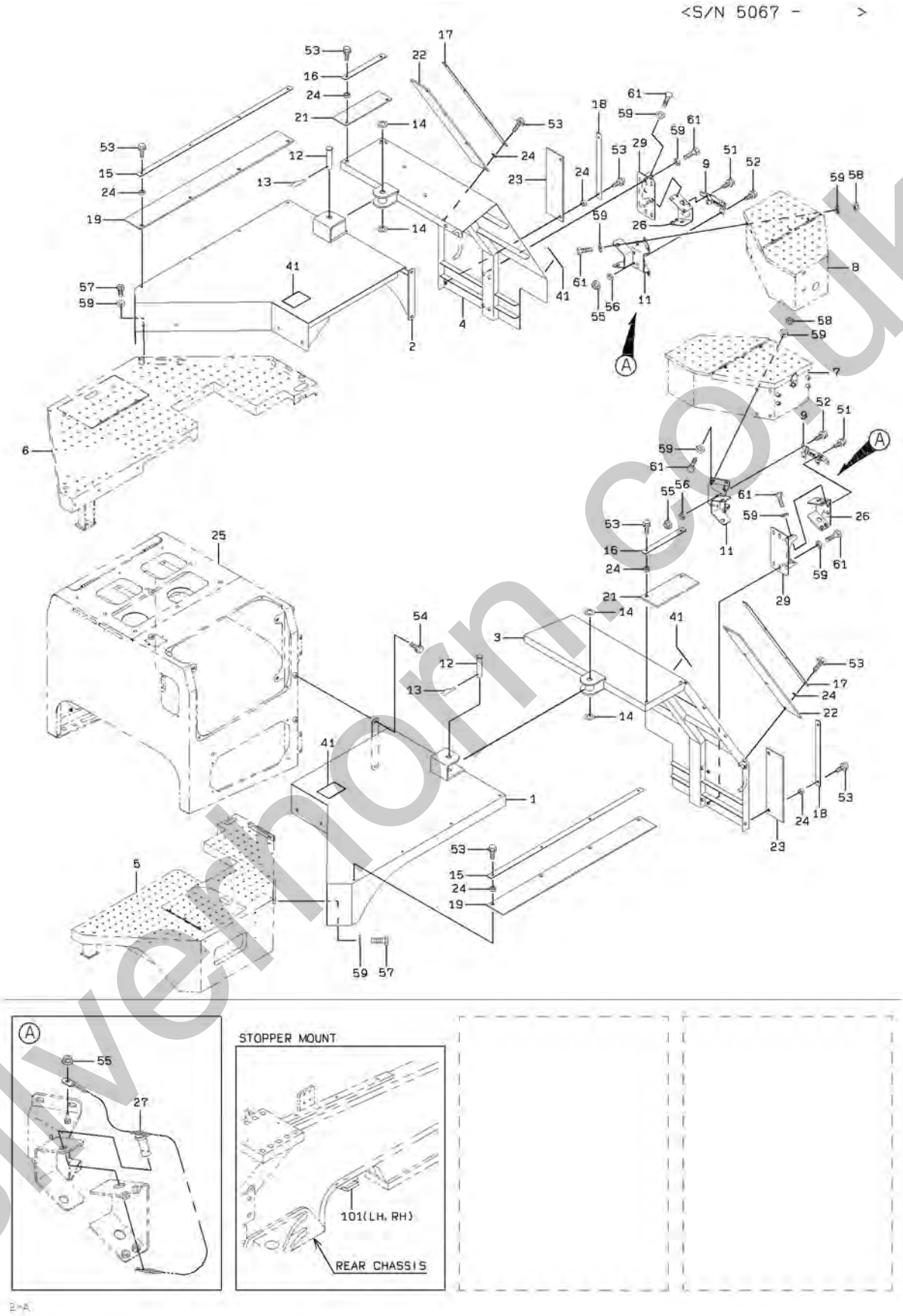

silvernorn.co.uk

REAR LARGE FENDER

SYM-BOL	PART NUMBER	PART NAME	UNIT Q,TY	SERIAL (A) - (B)	REMARKS N P D	(A)	(B)	(C)	(D)	REMARK
1A	37290-29940	DECK	1	5061 -						FR LH
2A	37290-29950	DECK	1	5061 -						FR RH
3A	40410-28880	FENDER	1	5061 - 5082						FR LH
3B	40410-29270	FENDER	1	5083 -	B					FR LH
4A	40410-28890	FENDER	1	5061 - 5082						FR RH
4B	40410-29280	FENDER	1	5083 -	B					FR RH
5A	03501-71910	DECK	1	5061 -						FR LH
6A	03501-71920	DECK	1	5061 -						FR RH
7A	03501-71930	BOX ASSY	1	5061 -						FR LH
8A	03501-71940	BOX ASSY	1	5061 -						FR RH
9A	32150-60040	CATCH	2	5061 -						
11A	40902-41790	BRACKET	2	5061 -						
12A	40000-42830	PIN	2	5061 -						
13A	40045-20200	PIN,SNAP	2	5061 -						
14A	37213-20450	DISC,FRICTION	A/R	5061 -						T=1.5
15A	41710-51570	PLATE	2	5061 -						
16A	41710-51580	PLATE	2	5061 - 5082						
16B	41711-34700	PLATE	2	5083 -	B					
17A	41710-51590	PLATE	2	5061 - 5082						
17B	41711-34710	PLATE	2	5083 -	B					
18A	41710-51600	PLATE	2	5061 -						
19A	33713-29360	SHEET,RUBBER	2	5061 -						
21A	33713-29370	SHEET,RUBBER	2	5061 - 5082						
21B	33713-29930	SHEET,RUBBER	2	5083 -	B					
22A	33713-29380	SHEET,RUBBER	2	5061 - 5082						
22B	33713-29940	SHEET,RUBBER	2	5083 -	B					
23A	33713-29390	SHEET,RUBBER	2	5061 -						
24A	35700-20720	SPACER	24	5061 -						
25A	03501-71950	BOARD ASSY,SCREEN	1	5061 -						
26A	40902-41800	BRACKET	2	5061 - 5066						
26B	40902-42360	BRACKET	2	5067 -	B					
27A	40000-43070	PIN	2	5061 - 5066						
27B	40000-43330	PIN	2	5067 -	B					
28A	40045-20150	PIN,SNAP	2	5061 - 5066	D					
29A	40902-42370	BRACKET	2	5067 -						
41A	44841-21120	LABEL	4	5067 -						
51A	61802-08016	BOLT,FLANGED	4	5061 -						
52A	61802-08025	BOLT,FLANGED	4	5061 -						
53A	61802-10025	BOLT,FLANGED	24	5061 -						
54A	61802-12020	BOLT,FLANGED	4	5061 -						
55A	62480-21081	NUT,FLANGED	6	5061 -						
56A	62701-40081	WASHER,PLANE	4	5061 -						
57A	61033-10016	BOLT	8	5061 -						
58A	62401-81101	NUT	8	5061 -						
59A	62710-18101	WASHER,PLANE	32	5061 - 5066						
59B	62710-18101	WASHER,PLANE	40	5067 -						
61A	61033-10025	BOLT	16	5061 - 5066						
61B	61033-10025	BOLT	24	5067 -						
101A	41608-48740	PLATE	2	5067 -						WELDING

silverhorn.co.uk

MEMO

silverhorn.co.uk

BELLY GUARD

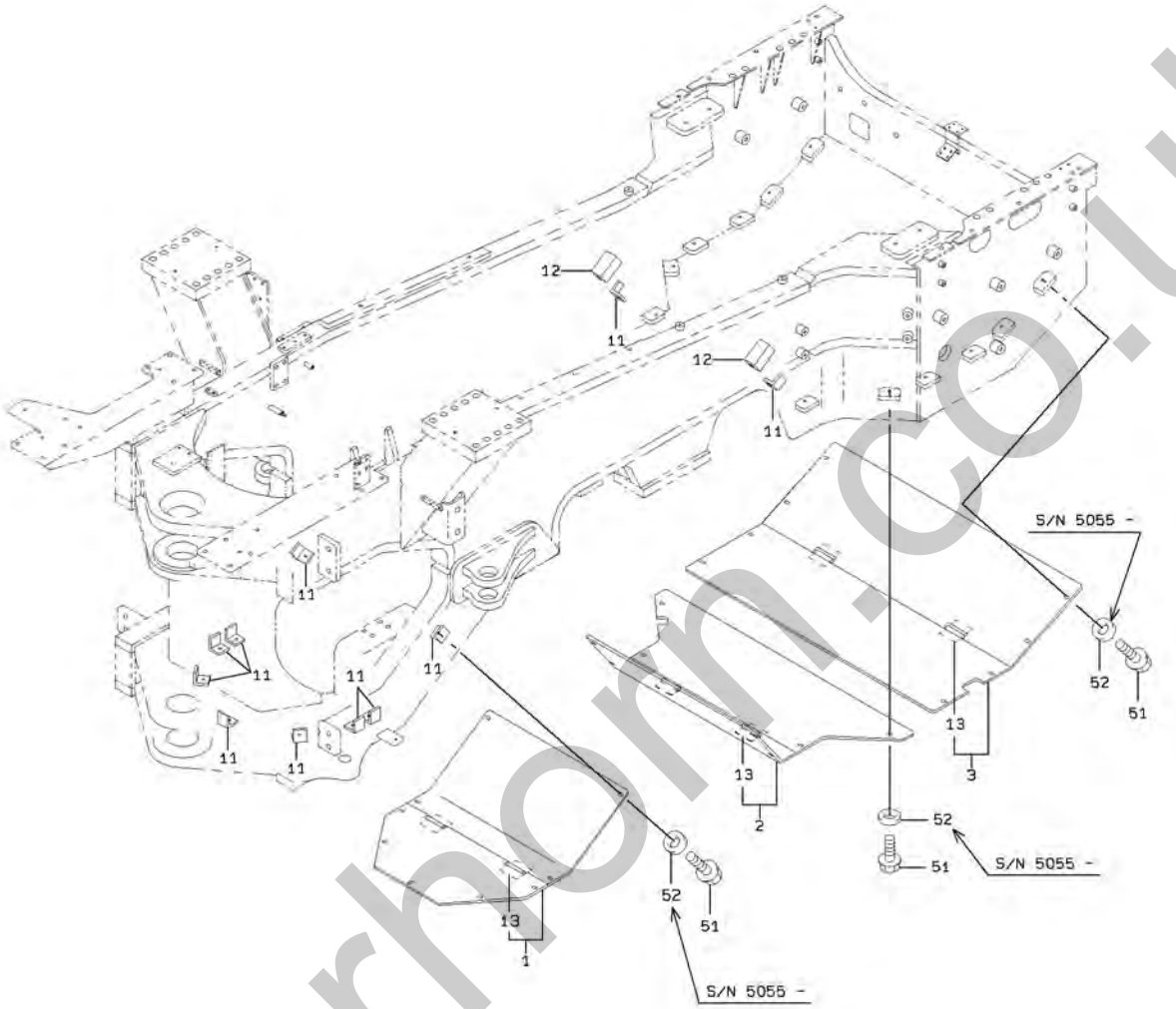

silverhorn.co.uk

BELLY GUARD

SYM-BOL	PART NUMBER	PART NAME	UNIT Q,TY	SERIAL (A) - (B)	REMARKS N P D	(A)	(B)	(C)	(D)	REMARK
1A	41612-50790-7	PLATE	1	5001 -		Y01				
2A	41618-36120-7	PLATE	1	5001 -		Y01				
3A	41618-36150-7	PLATE	1	5001 -		Y01				
11A	40900-56890-7	BRACKET	11	5001 -						WELDING
12A	40900-56880-7	BRACKET	2	5001 -						WELDING
13A	39890-20930	HINGE	2	5001 -		01				WELDING
51A	61802-12035	BOLT,FLANGED	25	5001 - 5054						
51B	61033-12040	BOLT	25	5055 -	B					
52A	62710-18121	WASHER,PLANE	25	5055 -						

silverhorn.co.uk

REAR GRILLE GROUP (STEEL PLATE)

(NOTE):REFER TO STANDARD CATALOG(REF. YX9-131) FOR NO SYMBOL PARTS.

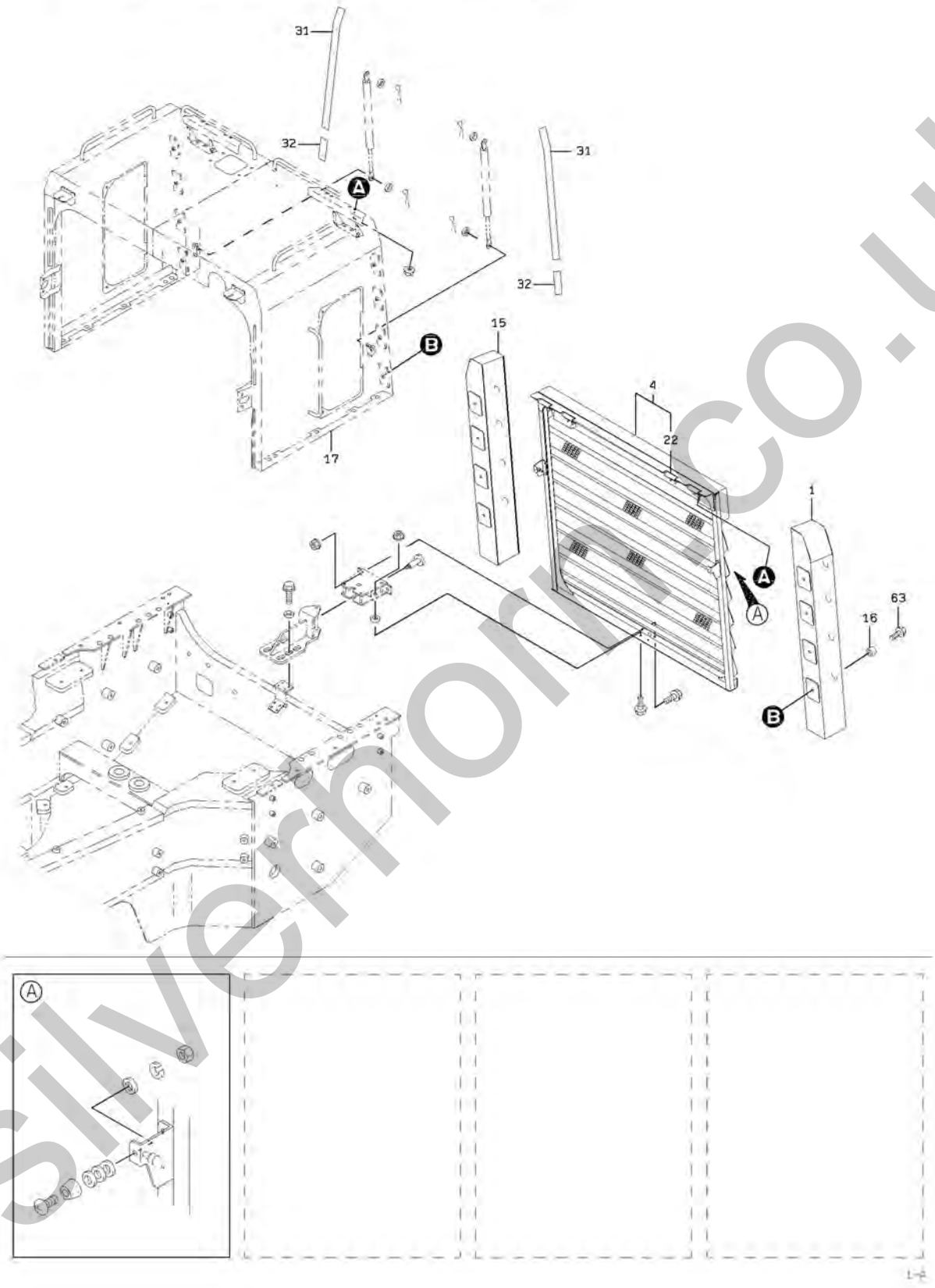

silverhome.co.uk

REAR GRILLE GROUP (STEEL PLATE)

SYM-BOL	PART NUMBER	PART NAME	UNIT Q,TY	SERIAL (A) - (B)	REMARKS N P D	(A) (B)	(C) (D)	REMARK
1A	31231-21540	COVER ASSY	1	5001 -				FR LH
4A	40600-40730	FRAME	1	5001 -		Y01		
15A	31231-21550	COVER ASSY	1	5001 -				FR RH
16A	35700-20230	SPACER	8	5001 -				
17A	03501-63010	GUARD,RADIATOR	1	5001 -				WELDING
22A	39890-70040	HINGE	4	5001 -		01		WELDING
31A	33713-28670	SHEET,RUBBER	2	5001 -				
32A	33713-28060	SHEET,RUBBER	2	5001 -				
63A	61802-12050	BOLT,FLANGED	8	5001 -				

silverhorn.co.uk

LIFT ARM (HIGH LIFT ARM SPEC.)

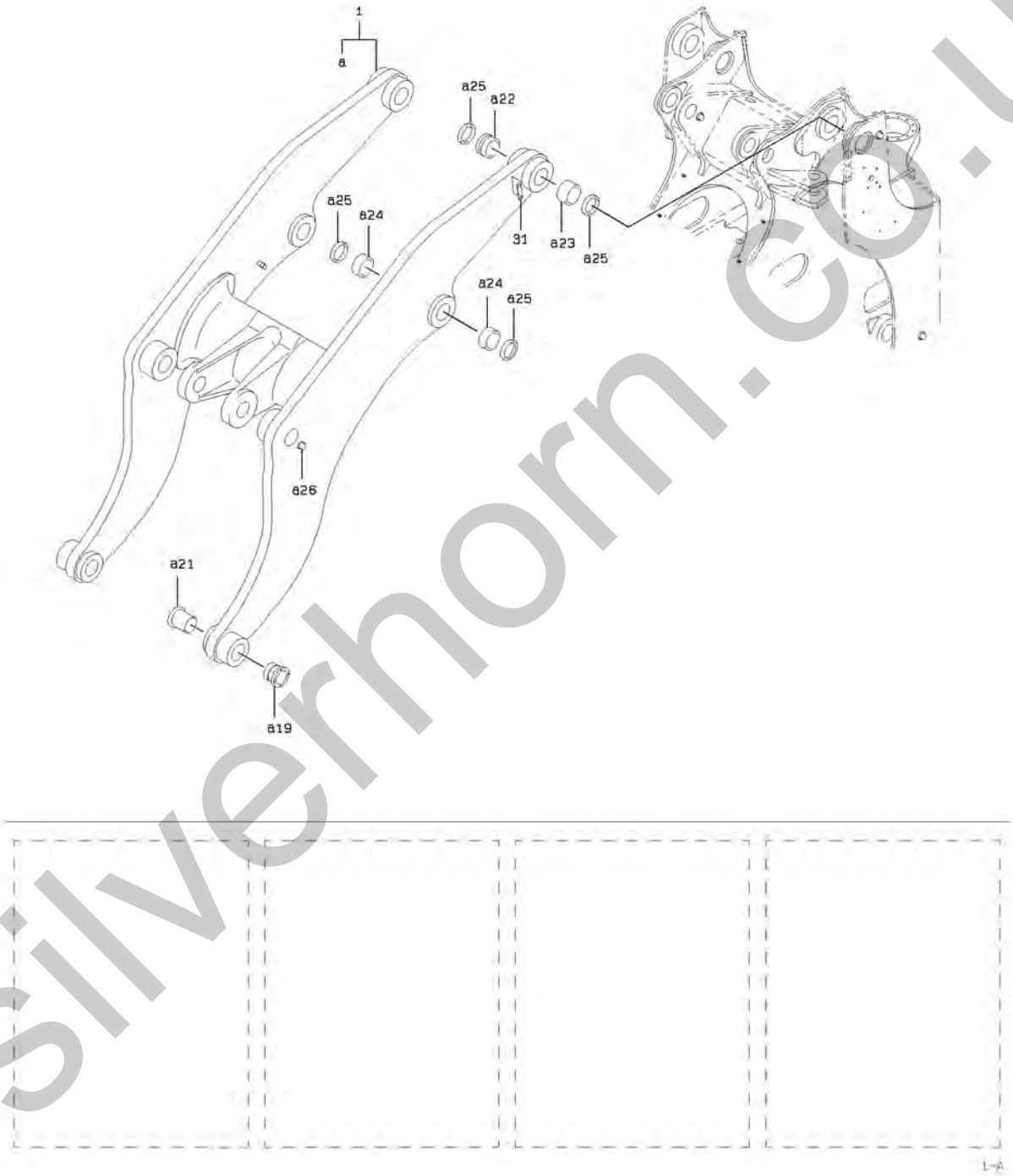

silverhorn.co.uk

LIFT ARM (HIGH LIFT ARM SPEC.)

SYM-BOL	PART NUMBER	PART NAME	UNIT Q,TY	SERIAL (A) - (B)	REMARKS N P D	(A) (B)	(C) (D)	REMARK
1A	30040-23000	ARM ASSY,LIFT	1	5001 -		Y01		
19A	40840-25440	BUSHING	2	5001 -		01		
21A	40840-25450	BUSHING	2	5001 -		01		
22A	40840-20800	BUSHING	2	5001 -		01		
23A	63422-48780	BUSHING	2	5001 -		01		
24A	63422-48540	BUSHING	4	5001 -		01		
25A	65051-02510	SEAL,DUST	8	5001 -		01		
26A	41621-20340	BOSS	2	5001 -		01		WELDING
31A	41604-21170	BRACKET	1	5001 -				WELDING

silverhorn.co.uk

TILT CYLINDER (HIGH LIFT ARM SPEC.)

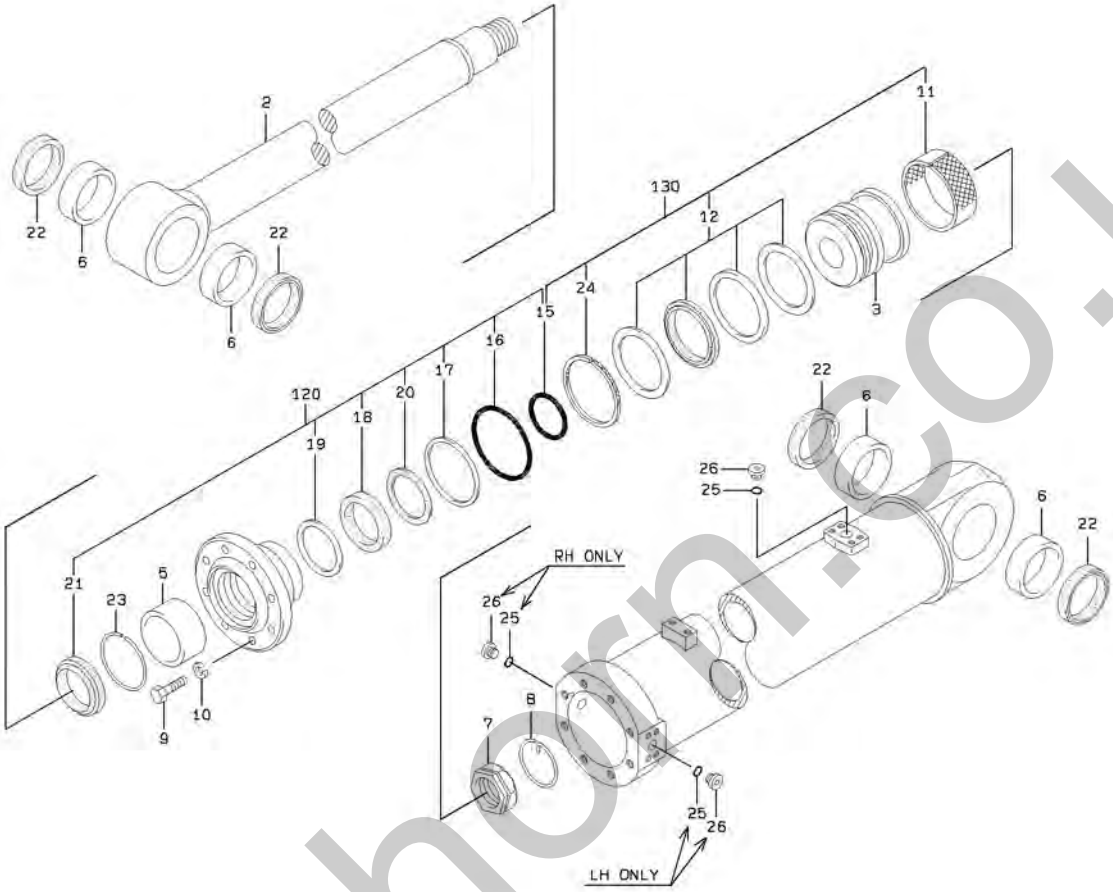

silverhorn.co.uk

TILT CYLINDER (HIGH LIFT ARM SPEC.)

SYM-BOL	PART NUMBER	PART NAME	UNIT Q,TY	SERIAL (A) - (B)	REMARKS N P D	(A) (B)	(C) (D)	REMARK
000A	34820-63090	CYLINDER ASSY,OIL	2	5001 -				
2A	45886-71310	ROD,PISTON	1	5001 -				
3A	39960-70780	PISTON	1	5001 -				
5A	88811-10050	BUSHING	1	5001 -				
6A	63422-46440	BUSHING	4	5001 -				
7A	37636-70050	NUT,PISTON	1	5001 -				
8A	45315-70090	RING,STOP	1	5001 -				
9A	43900-71050	BOLT	8	5001 -				
10A	62721-24100	WASHER,SPRING	8	5001 -				
11A	65431-24248	RING,WEAR	1	5001 -		K2		
12A	49328-70010	SEAL SET	1	5001 -		K2		
15A	65210-22080	RING,O	1	5001 -		K1 K2		
16A	65210-22180	RING,O	1	5001 -		K1		
17A	65240-32180	RING,BACK-UP	1	5001 -		K1		
18A	65446-05712	PACKING,U	1	5001 -		K1		
19A	65473-07130	RING,BACK-UP	1	5001 -		K1		
20A	65464-06460	RING,BUFFER	1	5001 -		K1		
21A	65455-04308	RING,SCRAPER	1	5001 -		K1		
22A	65051-02007	SEAL,DUST	4	5001 -				
23A	45315-70120	RING,STOP	1	5001 -				
24A	47171-70130	RING,WEAR	1	5001 -		K2		
25A	65210-12011	RING,O	2	5001 -				
26A	41530-71210	PLUG	2	5001 -				
120A	49327-60760	SEAL KIT	1	5001 -		QK1		
130A	49327-60410	SEAL KIT	1	5001 -		QK2		

silverhorn.co.uk

HYDRAULIC LINE (HIGH LIFT ARM SPEC.)

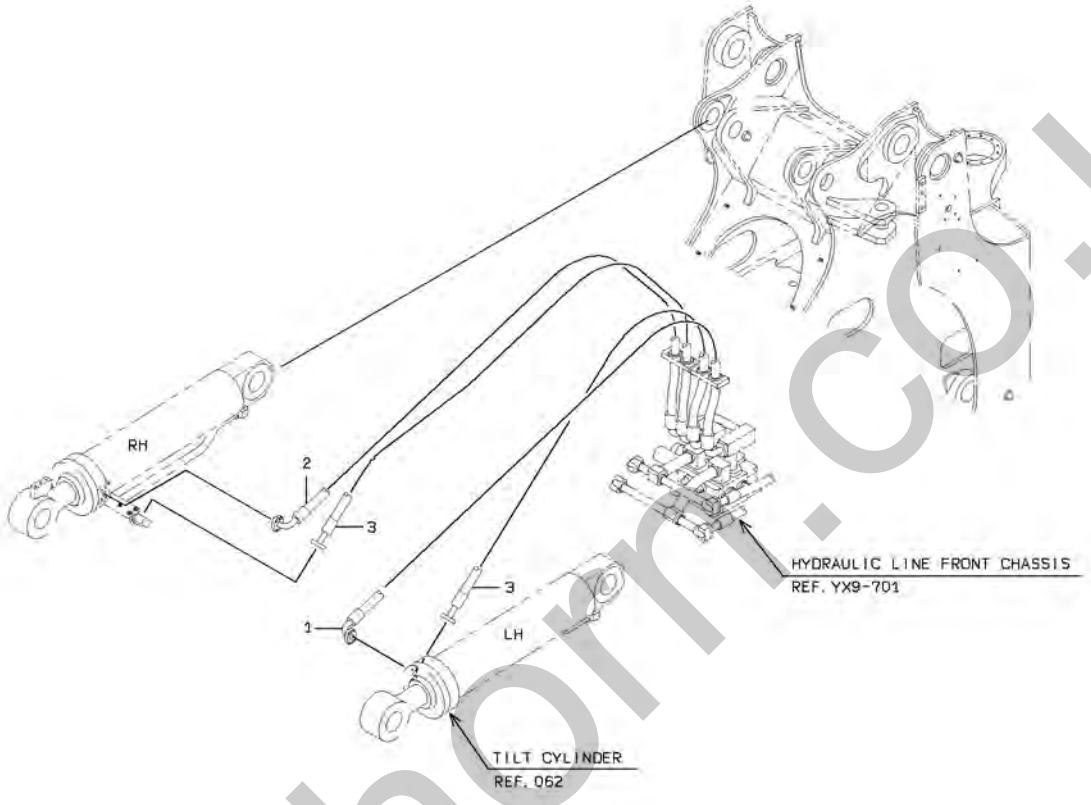

silverhorn.co.uk

HYDRAULIC LINE (HIGH LIFT ARM SPEC.)

SYM-BOL	PART NUMBER	PART NAME	UNIT Q,TY	SERIAL (A) - (B)	REMARKS N P D	(A) (B)	(C) (D)	REMARK
1A	43113-28000	HOSE,HIGH PRESSURE	1	5001 -				
2A	43113-27980	HOSE,HIGH PRESSURE	1	5001 -				
3A	43113-27990	HOSE,HIGH PRESSURE	2	5001 -				

silverhorn.co.uk

CABLE MOUNT (HIGH LIFT ARM SPEC.)

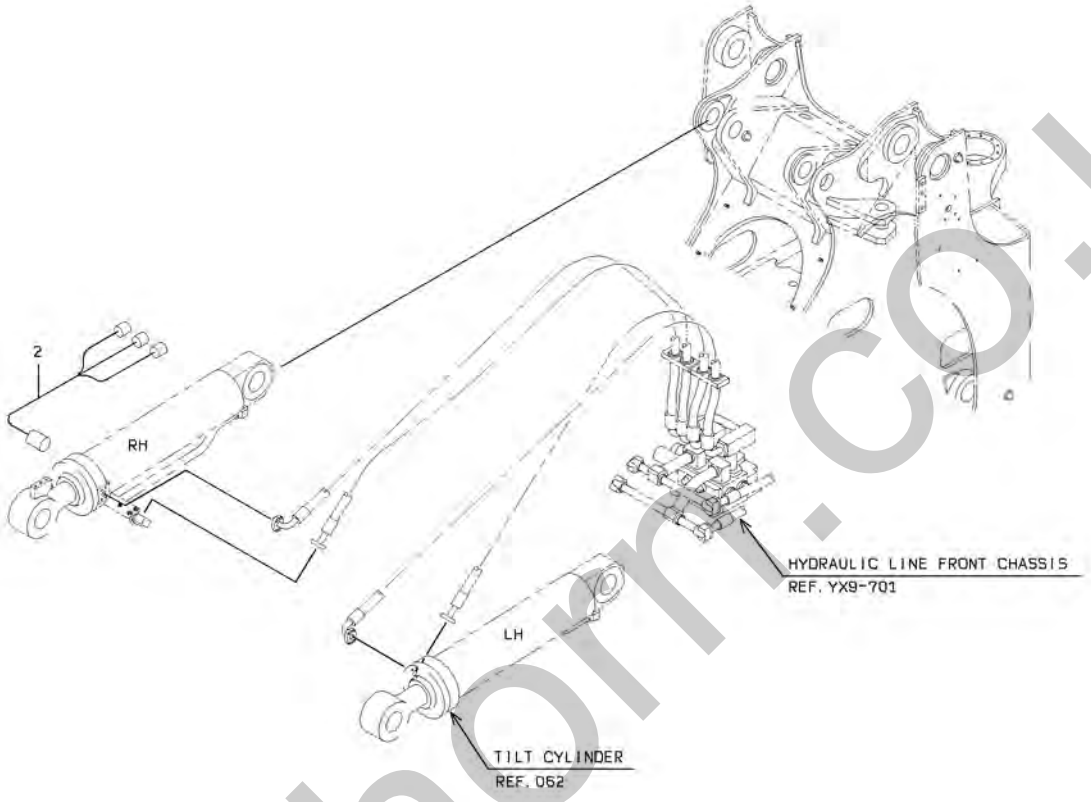

silverhorn.co.uk

CABLE MOUNT (HIGH LIFT ARM SPEC.)

SYM-BOL	PART NUMBER	PART NAME	UNIT Q,TY	SERIAL (A) - (B)	REMARKS N P D	(A) (B)	(C) (D)	REMARK
2A	33191-42030	CABLE ASSY	1	5001 -				

silverhorn.co.uk

FAN MOTOR HYDRAULIC LINE (FOR REVERSING FAN)

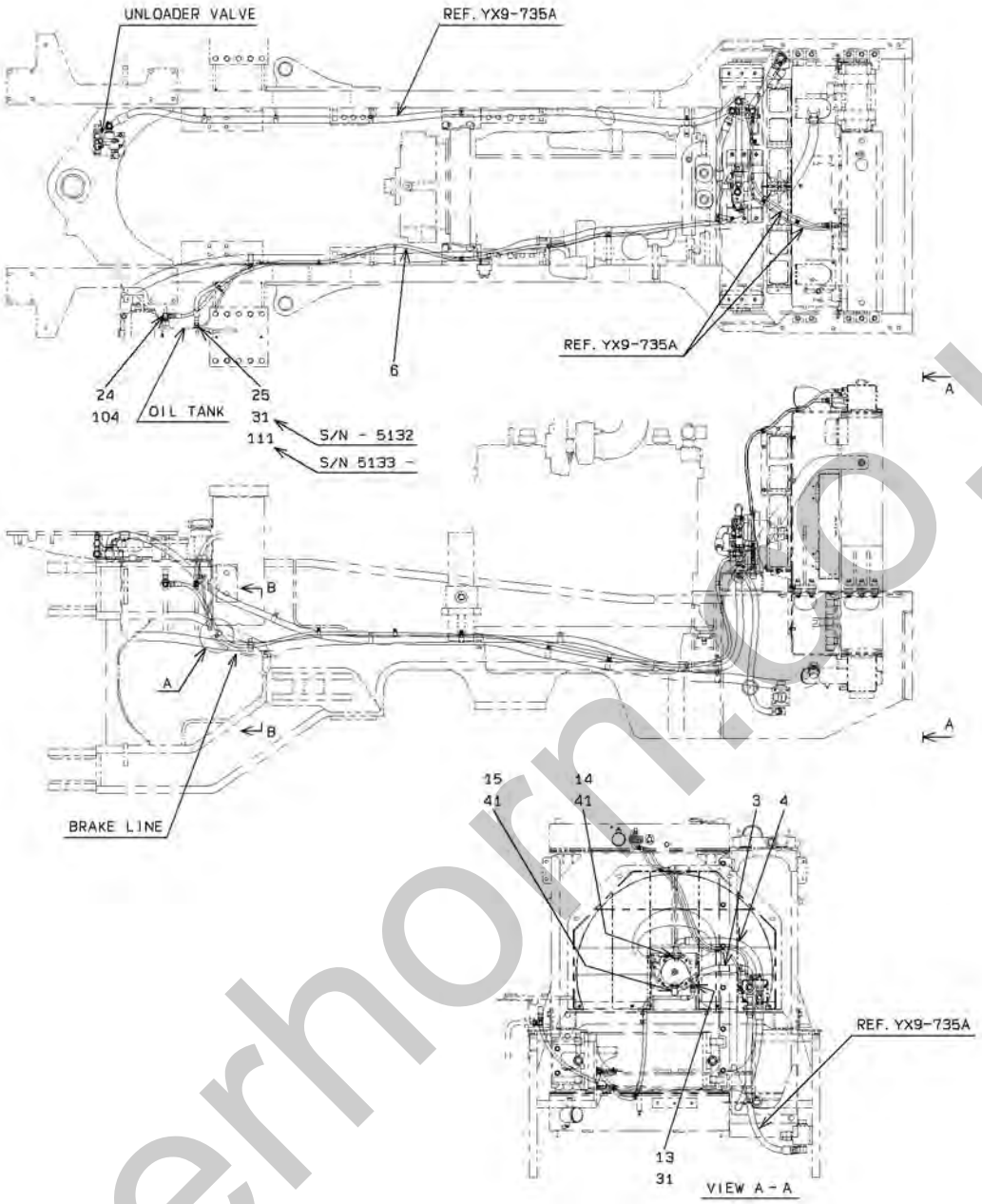

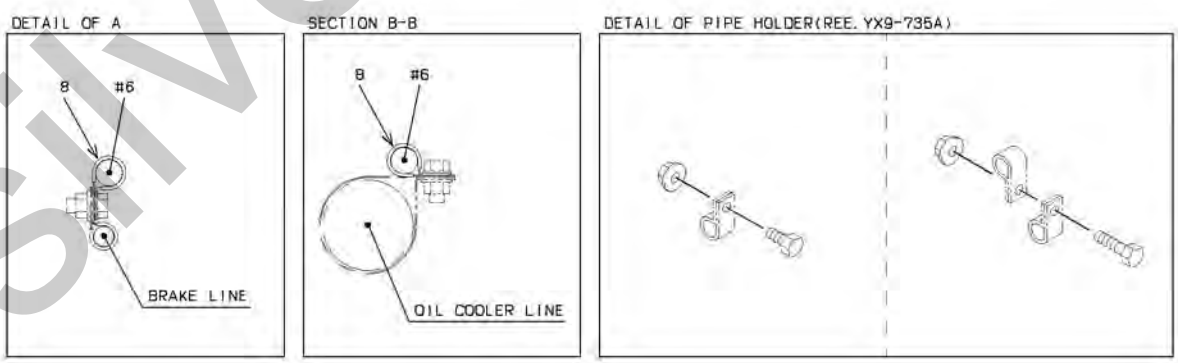

silverhorn.co.uk

FAN MOTOR HYDRAULIC LINE (FOR REVERSING FAN)

SYM-BOL	PART NUMBER	PART NAME	UNIT Q,TY	SERIAL (A) - (B)	REMARKS N P D	(A)	(B)	(C)	(D)	REMARK
3A	43113-46960	HOSE,HIGH PRESSURE	1	5001 - 5036						
3B	43113-48120	HOSE,HIGH PRESSURE	1	5037 -	C					
4A	68635-60070	HOSE,HIGH PRESSURE	1	5001 -						
6A	68035-30470	HOSE,HIGH PRESSURE	1	5001 -						
8A	72001-11800	HOLDER,PIPE	A/R	5001 -						D=18
13A	88201-06708	ADAPTER	1	5001 -		Y01				
14A	30230-21250	ADAPTER	1	5001 - 5036			Y02			
14B	88201-06716	ADAPTER	1	5037 -	C		Y02			
15A	88241-07112	ADAPTER,ELBOW	1	5001 - 5036			Y02			
15B	88241-07116	ADAPTER,ELBOW	1	5037 -	C		Y02			
24A	30246-24190	ADAPTER,TEE	1	5001 - 5082				Y03		
24B	30246-24720	ADAPTER,TEE	1	5083 -	B			Y03		
25A	30230-27040	ADAPTER	1	5001 - 5132		Y01				
25B	30230-26390	ADAPTER	1	5133 -	C				Y04	
31A	65210-12018	RING,O	1	5001 -		01				
41A	65210-12024	RING,O	1	5001 - 5036			02			
41B	65210-12029	RING,O	1	5037 -	C		02			
104A	65210-12024	RING,O	1	5001 -				03		
111A	65210-12014	RING,O	1	5133 -					04	

silverhorn.co.uk

RELIEF VALVE MOUNT (FOR REVERSING FAN)

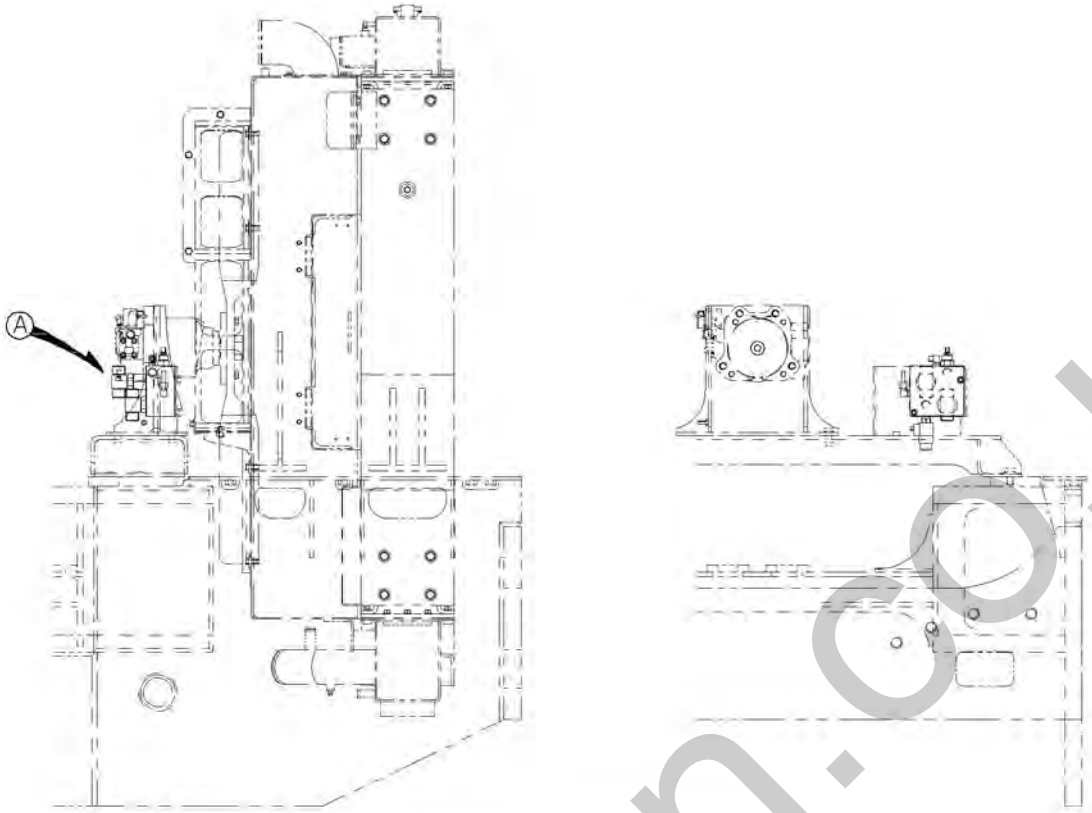

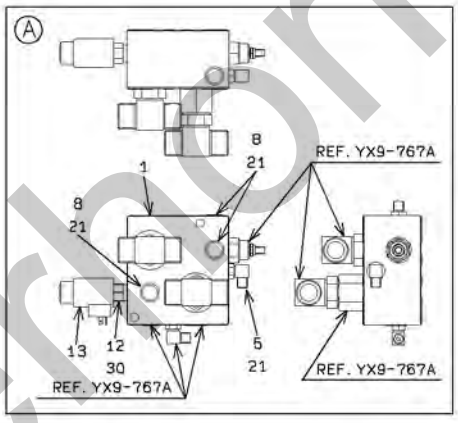

silverhorn.co.uk

RELIEF VALVE MOUNT (FOR REVERSING FAN)

SYM-BOL	PART NUMBER	PART NAME	UNIT Q,TY	SERIAL (A) - (B)	REMARKS N P D	(A)	(B)	(C)	(D)	REMARK
1A	41410-36090	BLOCK	1	5001 -						
5A	88241-07104	ADAPTER,ELBOW	1	5001 -		Y01				
8A	88390-21504	PLUG	3	5001 -		Y01				
12A	38511-71000	VALVE ASSY	1	5001 -			Y02			
13A	35910-70260	SOLENOID	1	5001 -						
21A	65210-12011	RING,O	1	5001 -		01				
30A	49327-72070	SEAL KIT	1	5001 -			02			

silverhorn.co.uk

MOTOR MOUNT (FOR REVERSING FAN)

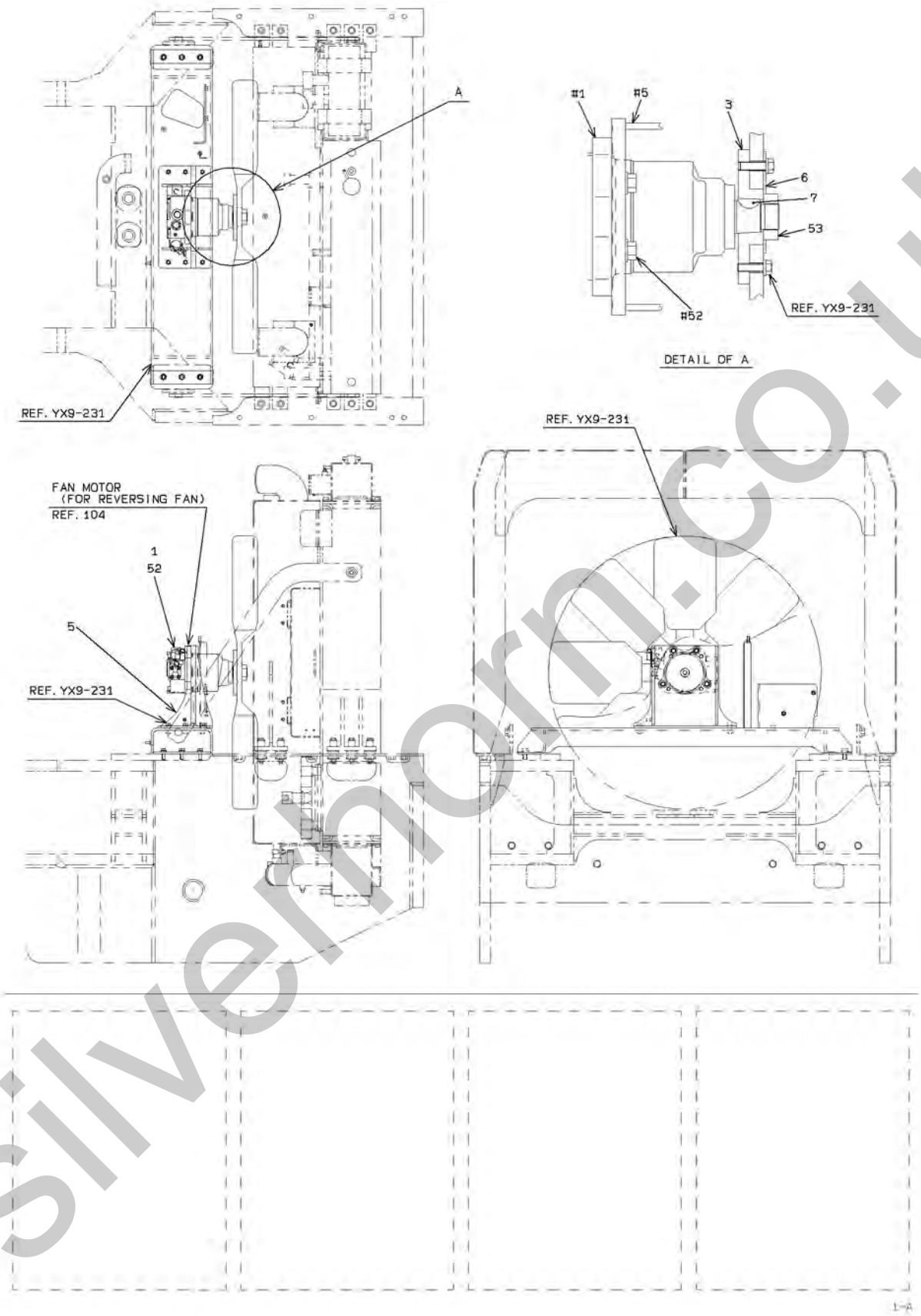

silvernorn.co.uk

MOTOR MOUNT (FOR REVERSING FAN)

SYM-BOL	PART NUMBER	PART NAME	UNIT Q,TY	SERIAL (A) - (B)	REMARKS N P D	(A) (B)	(C) (D)	REMARK
1A	48976-60780	MOTOR,OIL	1	5001 - 5062				REF.104
1B	48976-60810	MOTOR,OIL	1	5063 -	C			REF.104A
3A	40510-25230	FLANGE	1	5001 -				
5A	40902-35740	BRACKET	1	5001 - 5046				
5B	40902-38430	BRACKET	1	5047 -	A			
6A	41615-32030	PLATE	1	5001 -				
7A	32112-20010	KEY,WOODRUFF	1	5001 -				
52A	61802-16040	BOLT,FLANGED	4	5001 -				
53A	37600-25140	NUT	1	5001 - 5046				
53B	37600-25320	NUT	1	5047 -	C			

silverhorn.co.uk

FAN MOTOR (FOR REVERSING FAN)

<S/N 5001 - 5062>

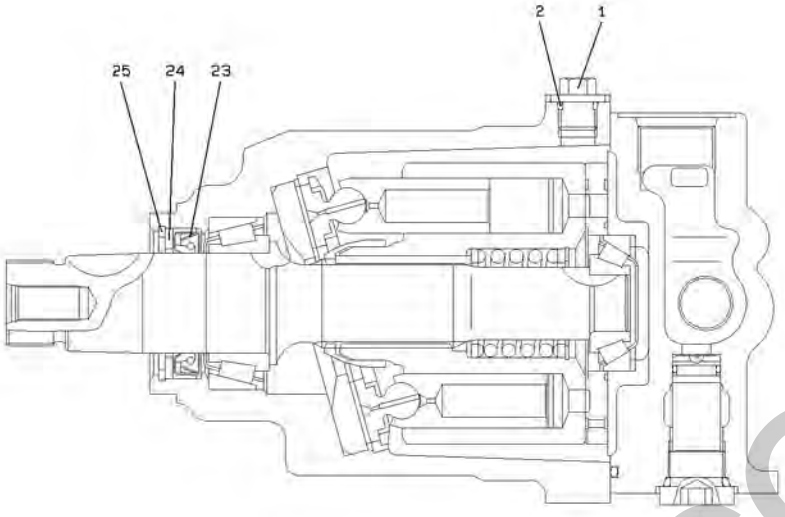

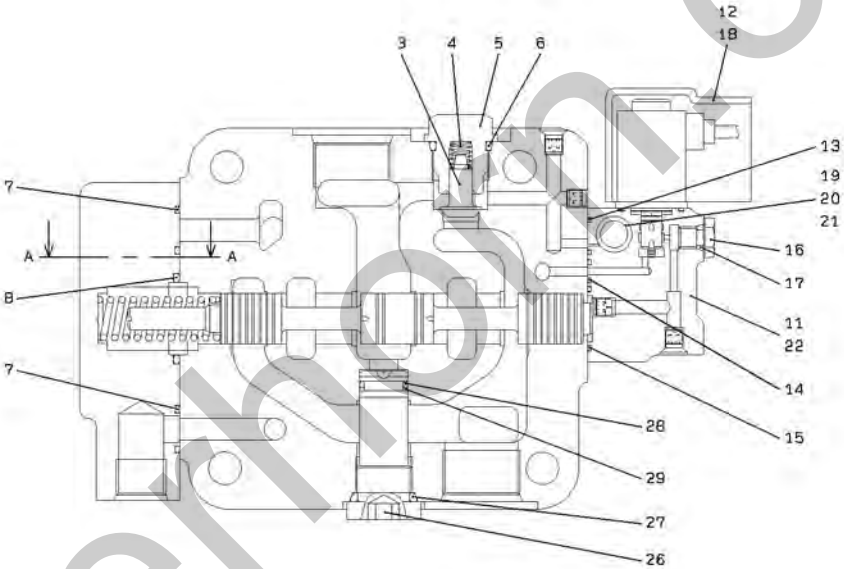

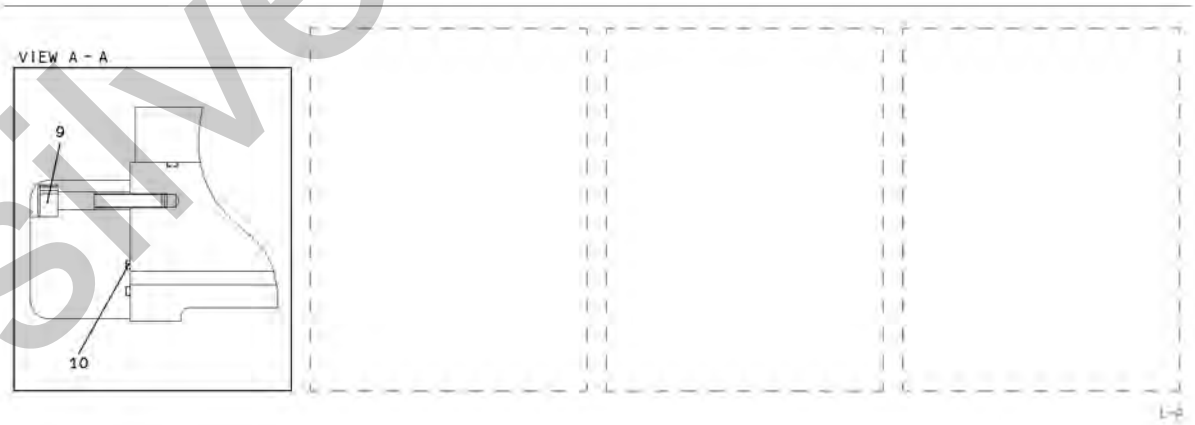

silverhorn.co.uk

FAN MOTOR (FOR REVERSING FAN)

SYM-BOL	PART NUMBER	PART NAME	UNIT Q,TY	SERIAL (A) - (B)	REMARKS N P D	(A) (B)	(C) (D)	REMARK
000A	48976-60780	MOTOR,OIL	1	5001 - 5062				
1A	41530-75420	PLUG	1	5001 - 5062				
2A	47131-77260	RING,O	1	5001 - 5062				
3A	38554-71520	VALVE,CHECK	1	5001 - 5062				
4A	35600-77950	SPRING	1	5001 - 5062				
5A	41530-75430	PLUG	1	5001 - 5062				
6A	47131-77270	RING,O	1	5001 - 5062				
7A	47131-77280	RING,O	2	5001 - 5062				
8A	47131-77290	RING,O	1	5001 - 5062				
9A	43900-74380	BOLT	4	5001 - 5062				
10A	47131-77300	RING,O	1	5001 - 5062				
11A	38560-70100	VALVE,PILOT	1	5001 - 5062				
12A	43900-74360	BOLT	2	5001 - 5062				
13A	47131-77210	RING,O	1	5001 - 5062				
14A	47131-77220	RING,O	1	5001 - 5062				
15A	47131-77230	RING,O	1	5001 - 5062				
16A	41530-75380	PLUG	1	5001 - 5062				
17A	47131-77170	RING,O	1	5001 - 5062				
18A	31205-70240	COVER	1	5001 - 5062				
19A	40330-70660	FILTER	1	5001 - 5062				
20A	47131-77190	RING,O	1	5001 - 5062				
21A	47131-77240	RING,O	1	5001 - 5062				
22A	43900-74370	BOLT	4	5001 - 5062				
23A	34042-71550	SEAL,OIL	1	5001 - 5062				
24A	35700-72030	SPACER	1	5001 - 5062				
25A	45200-71610	RING	1	5001 - 5062				
26A	41530-75440	PLUG	1	5001 - 5062				
27A	47131-77270	RING,O	1	5001 - 5062				
28A	47131-77280	RING,O	1	5001 - 5062				
29A	45200-71620	RING	1	5001 - 5062				

silverhorn.co.uk

FAN MOTOR (FOR REVERSING FAN)

<S/N 5063 - >

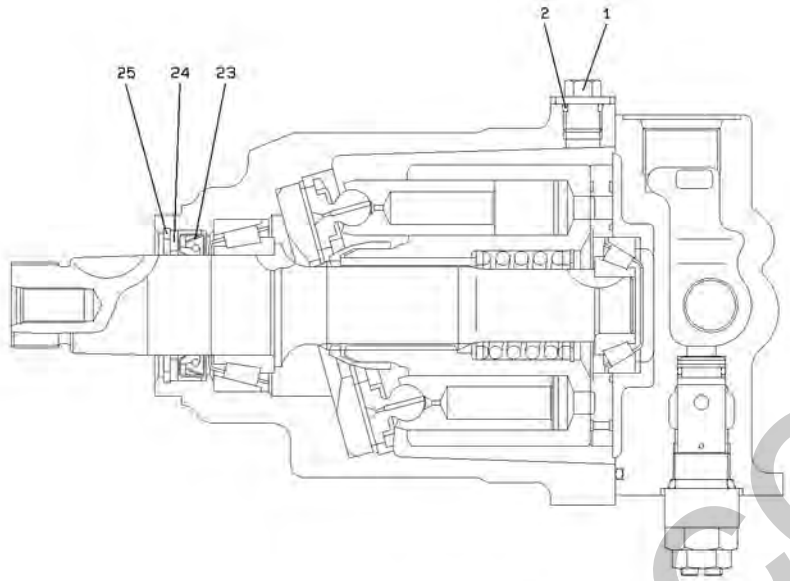

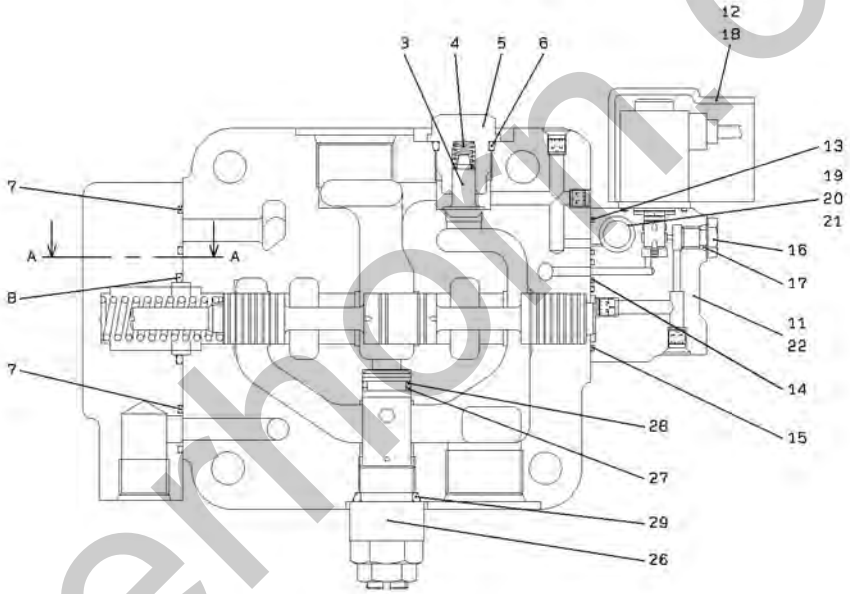

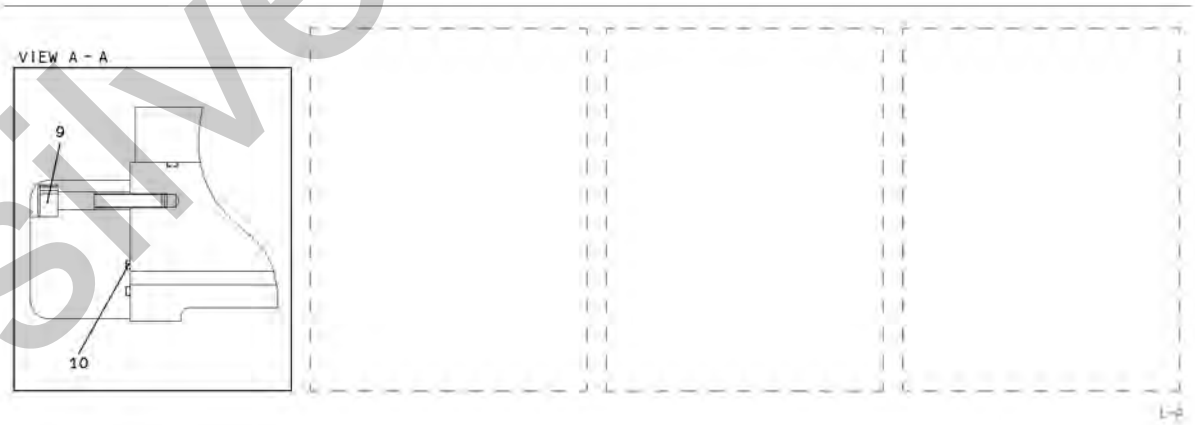

silverhorn.co.uk

FAN MOTOR (FOR REVERSING FAN)

SYM-BOL	PART NUMBER	PART NAME	UNIT Q,TY	SERIAL (A) - (B)	REMARKS N P D	(A) (B)	(C) (D)	REMARK
000A	48976-60810	MOTOR,OIL	1	5063 -				
1A	41530-75420	PLUG	1	5063 -				
2A	47131-77260	RING,O	1	5063 -				
3A	38554-71520	VALVE,CHECK	1	5063 -				
4A	35600-77950	SPRING	1	5063 -				
5A	41530-75430	PLUG	1	5063 -				
6A	47131-77270	RING,O	1	5063 -				
7A	47131-77280	RING,O	2	5063 -				
8A	47131-77290	RING,O	1	5063 -				
9A	43900-74380	BOLT	4	5063 -				
10A	47131-77300	RING,O	1	5063 -				
11A	38560-70100	VALVE,PILOT	1	5063 -				
12A	43900-74360	BOLT	2	5063 -				
13A	47131-77210	RING,O	1	5063 -				
14A	47131-77220	RING,O	1	5063 -				
15A	47131-77230	RING,O	1	5063 -				
16A	41530-75380	PLUG	1	5063 -				
17A	47131-77170	RING,O	1	5063 -				
18A	31205-70240	COVER	1	5063 -				
19A	40330-70660	FILTER	1	5063 -				
20A	47131-77190	RING,O	1	5063 -				
21A	47131-77240	RING,O	1	5063 -				
22A	43900-74370	BOLT	4	5063 -				
23A	34042-71550	SEAL,OIL	1	5063 -				
24A	35700-72030	SPACER	1	5063 -				
25A	45200-71610	RING	1	5063 -				
26A	38565-72000	VALVE,RELIEF	1	5063 -				
27A	47194-71750	RING,BACK-UP	1	5063 -				47194-71250
28A	47131-77280	RING,O	1	5063 -				
29A	47131-77270	RING,O	1	5063 -				
50A	35910-60070	SOLENOID	1	5063 -				

silverhorn.co.uk

ELECTRICAL EQUIPMENT MOUNT (FOR REVERSING FAN)

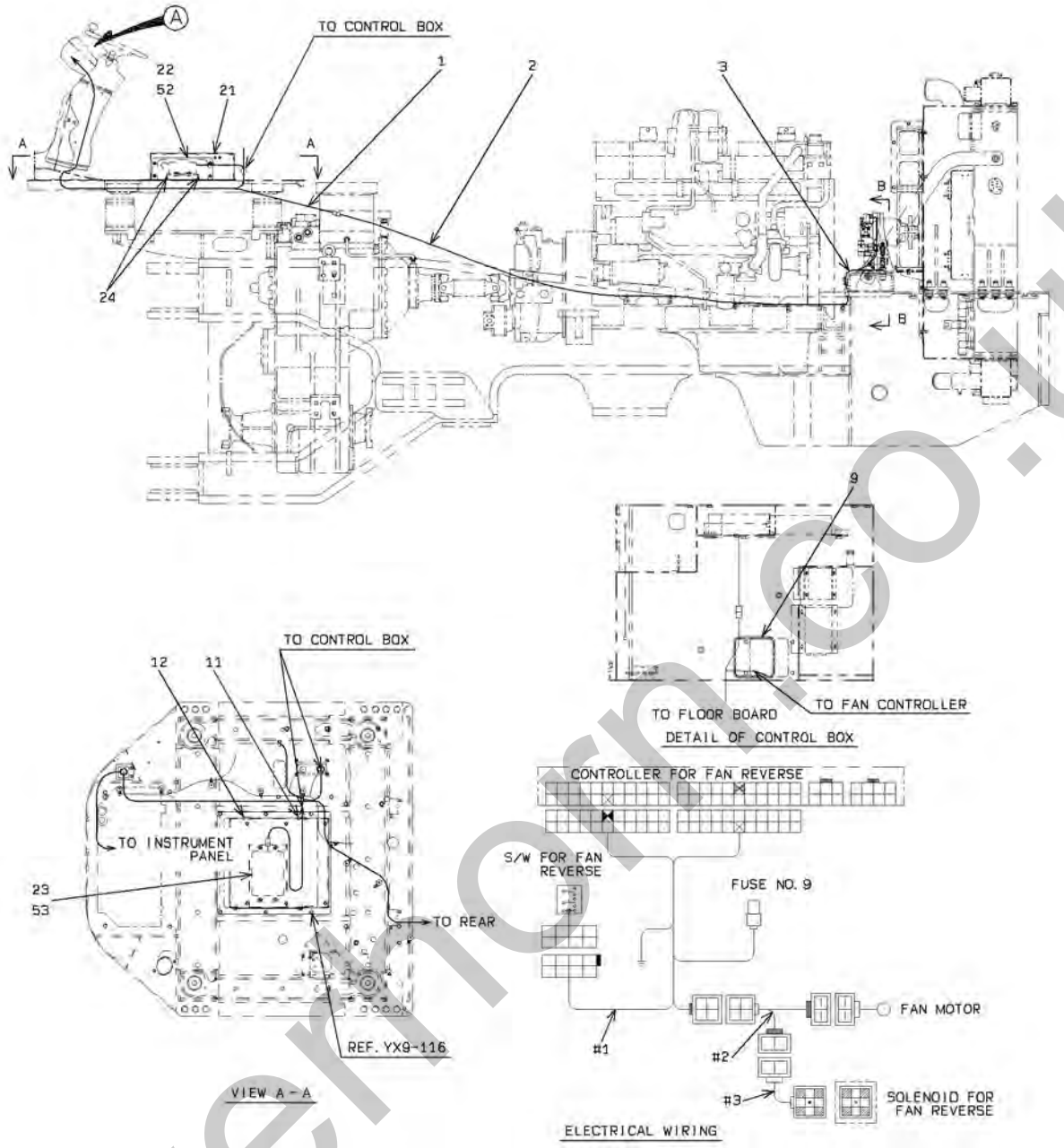

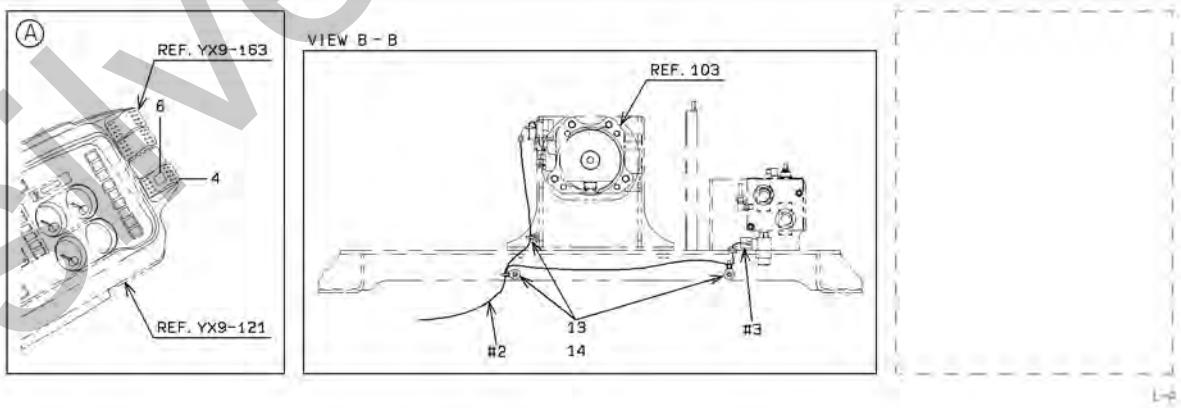

silvermorn.co.uk

ELECTRICAL EQUIPMENT MOUNT (FOR REVERSING FAN)

SYM-BOL	PART NUMBER	PART NAME	UNIT Q,TY	SERIAL (A) - (B)	REMARKS N P D	(A) (B)	(C) (D)	REMARK
1A	33193-41720	CABLE ASSY	1	5001 - 5046				
1B	33193-45870	CABLE ASSY	1	5047 -	C			
2A	33193-40670	CABLE ASSY	1	5001 -				
3A	33193-22030	CABLE ASSY	1	5001 -				
4A	35010-20340	SWITCH	1	5001 -				
6A	44770-51880	LABEL	1	5001 -				
9A	40850-70280	BUSHING,ELASTIC	1	5001 -				
11A	65801-25032	BUSHING,ELASTIC	1	5001 -				
12A	33057-70010	GROMMET	1	5001 -				
13A	32923-70120	CLAMP,HOSE	3	5001 -				
14A	32923-70100	CLAMP,HOSE	3	5001 -				
21A	35195-20810	STAND,SEAT	1	5001 -				
22A	41620-21000	PLATE	1	5001 -				
23A	33410-61650	CONTROLLER UNIT	1	5001 -				
24A	34041-25210	STRIP, SEAL	2	5001 -				
52A	61802-08020	BOLT,FLANGED	4	5001 -				
53A	61802-08016	BOLT,FLANGED	4	5001 -				

silverhorn.co.uk

RADIATOR MOUNT (FOR EASY CLEANING)

<S/N 5001 - 5046>

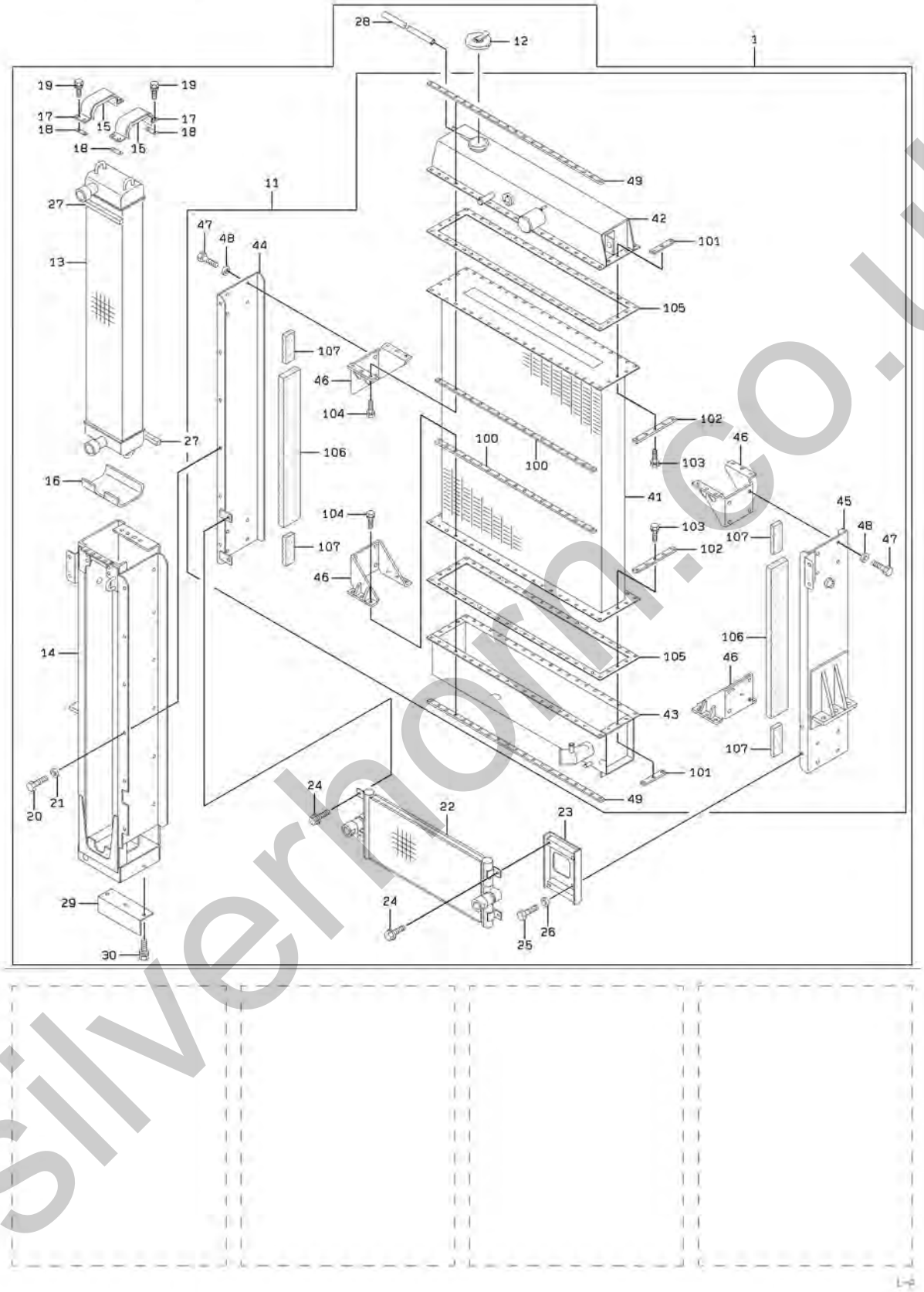

silverhorn.co.uk

RADIATOR MOUNT (FOR EASY CLEANING)

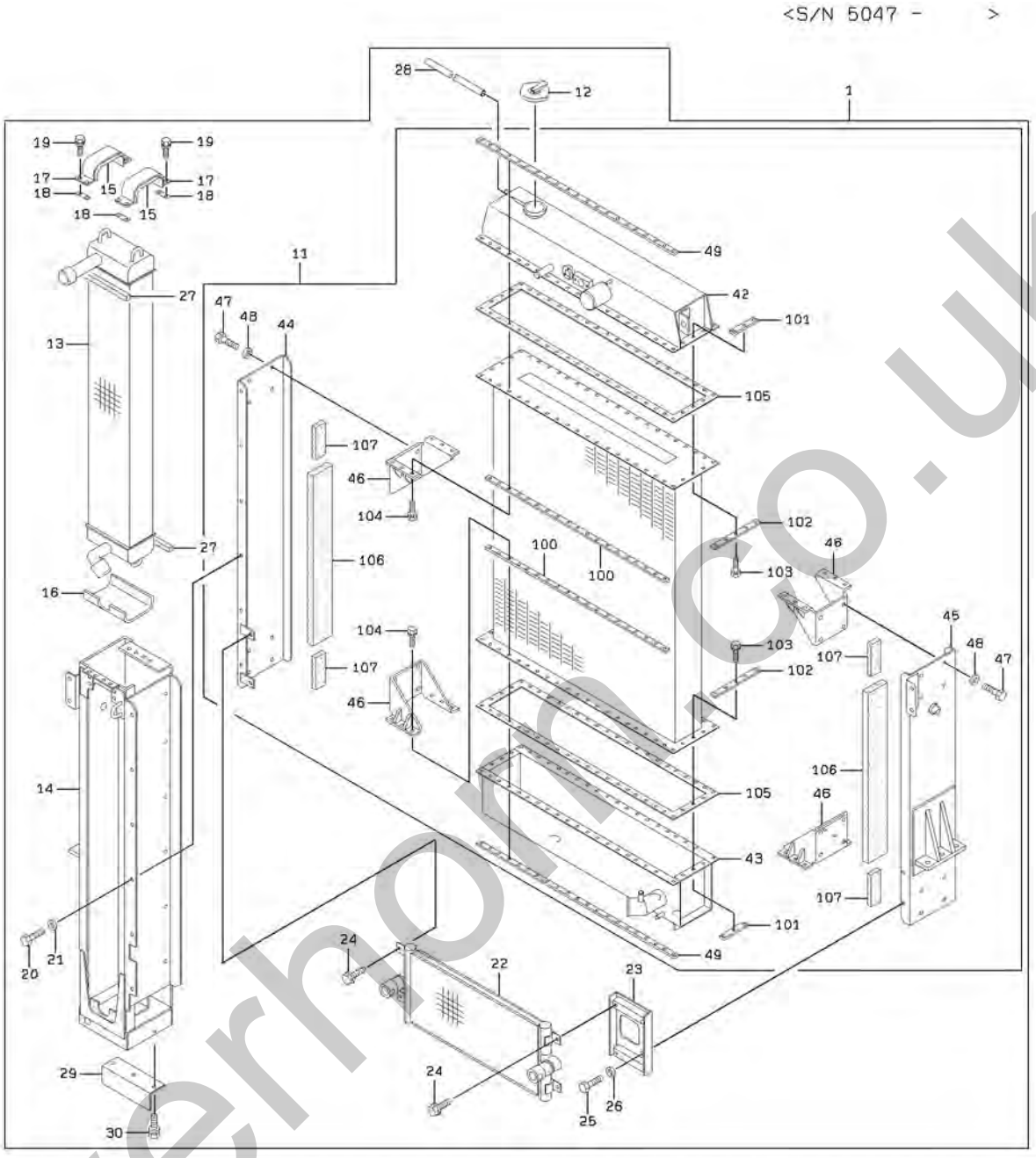

silverhorn.co.uk

RADIATOR MOUNT (FOR EASY CLEANING)

SYM-BOL	PART NUMBER	PART NAME	UNIT Q,TY	SERIAL (A) - (B)	REMARKS N P D	(A)	(B)	(C)	(D)	REMARK
1A	44721-63070	RADIATOR ASSY	1	5001 - 5046		Y01				
1B	44721-63620	RADIATOR ASSY	1	5047 -	B	Y01				
11A	33281-71740	CORE ASSY	1	5001 - 5046		01	Y02			
11B	33281-71590	CORE ASSY	1	5047 -	B	01	Y02			
12A	32211-70230	CAP ASSY	1	5001 -		01				
13A	32816-70450	COOLER,OIL	1	5001 - 5046		01				
13B	32816-70410	COOLER,OIL	1	5047 -	B	01				
14A	40600-70910	FRAME	1	5001 -		01				
15A	33713-70240	SHEET,RUBBER	2	5001 -		01				
16A	33713-70260	SHEET,RUBBER	1	5001 -		01				
17A	32920-70760	CLAMP	2	5001 -		01				
18A	34200-71620	SHIM	A/R	5001 -		01				
19A	43925-70190	BOLT SET	8	5001 -		01				
20A	43900-73830	BOLT	12	5001 -		01				
21A	46000-70860	WASHER	12	5001 -		01				
22A	32810-70020	COOLER	1	5001 -		01				
23A	40900-71650	BRACKET	1	5001 -		01				
24A	43963-70160	BOLT,FLANGED	4	5001 -		01				
25A	43900-73490	BOLT	2	5001 -		01				
26A	46000-70860	WASHER	2	5001 -		01				
27A	39600-72690	PACKING	2	5001 -		01				
28A	36733-70090	TUBE,VINYL	1	5001 -		01				L=2600
29A	40900-71660	BRACKET	1	5001 -		01				
30A	43925-70230	BOLT,W/WASHER	3	5001 -		01				
41A	33280-70250	CORE	1	5001 - 5046	N		02			
42A	36200-70930	TANK	1	5001 - 5046			02			
42B	36200-71260	TANK	1	5047 -	B		02			
43A	36200-70940	TANK	1	5001 -			02			
44A	33610-70290	SUPPORT ASSY	1	5001 -			02			
45A	33610-70300	SUPPORT ASSY	1	5001 -			02			
46A	45090-70030	RIB	4	5001 -			02			
47A	43900-73490	BOLT	16	5001 -			02			
48A	46000-70860	WASHER	16	5001 -			02			
49A	41600-71380	PLATE	4	5001 -			02			
100A	41600-71370	PLATE	4	5001 -			02			
101A	41611-70440	PLATE	4	5001 -			02			
102A	41600-70440	PLATE	4	5001 -			02			
103A	43925-70170	BOLT SET	72	5001 -			02			
104A	43925-70210	BOLT SET	24	5001 -			02			
105A	31990-71730	GASKET	2	5001 -			02			
106A	39600-71910	PACKING	2	5001 -			02			
107A	39600-72490	PACKING	4	5001 -			02			

silverhorn.co.uk

MEMO

silverhorn.co.uk

RADIATOR MOUNT (DUST-PROOF TYPE)

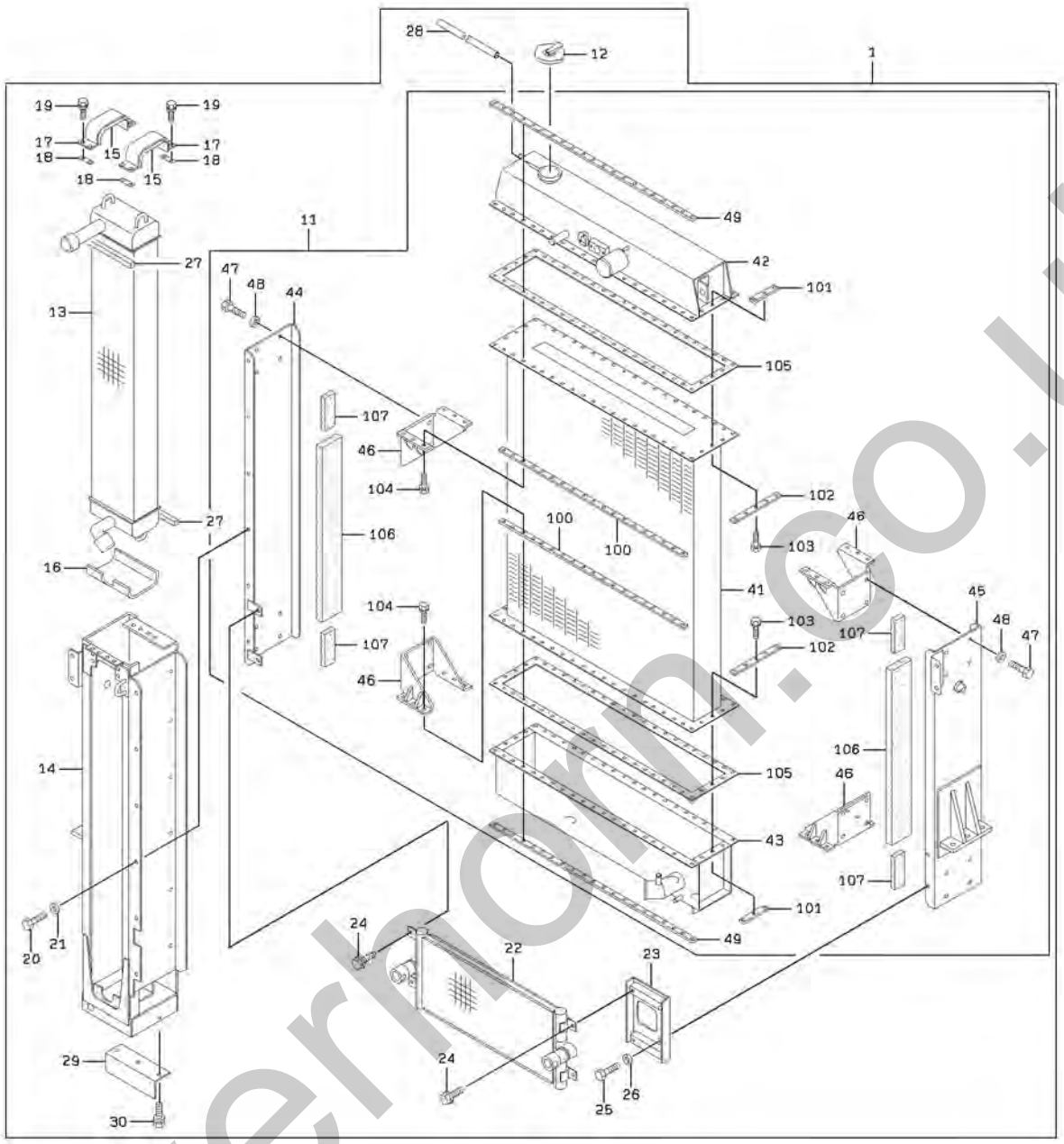

silverhorn.co.uk

RADIATOR MOUNT (DUST-PROOF TYPE)

SYM-BOL	PART NUMBER	PART NAME	UNIT Q,TY	SERIAL (A) - (B)	REMARKS N P D	(A)	(B)	(C)	(D)	REMARK
1A	44721-63720	RADIATOR ASSY	1	5001 -		Y01				
11A	33281-71750	CORE ASSY	1	5001 -		01	Y02			
12A	32211-70230	CAP ASSY	1	5001 -		01				
13A	32816-70420	COOLER,OIL	1	5001 -		01				
14A	40600-70910	FRAME	1	5001 -		01				
15A	33713-70240	SHEET,RUBBER	2	5001 -		01				
16A	33713-70260	SHEET,RUBBER	1	5001 -		01				
17A	32920-70760	CLAMP	1	5001 -		01				
18A	34200-71620	SHIM	A/R	5001 -		01				
19A	43925-70190	BOLT SET	8	5001 -		01				
20A	43900-73830	BOLT	12	5001 -		01				
21A	46000-70860	WASHER	12	5001 -		01				
22A	32810-70020	COOLER	1	5001 -		01				
23A	40900-71650	BRACKET	1	5001 -		01				
24A	43963-70160	BOLT,FLANGED	4	5001 -		01				
25A	43900-73490	BOLT	2	5001 -		01				
26A	46000-70860	WASHER	2	5001 -		01				
27A	39600-72690	PACKING	2	5001 -		01				
28A	36733-70090	TUBE,VINYL	1	5001 -		01				
29A	40900-71660	BRACKET	1	5001 -		01				
30A	43925-70230	BOLT,W/WASHER	3	5001 -		01				
41A	33280-70180	CORE	1	5001 -			02			
42A	36200-71260	TANK	1	5001 -			02			
43A	36200-70940	TANK	1	5001 -			02			
44A	33610-70290	SUPPORT ASSY	1	5001 -			02			
45A	33610-70300	SUPPORT ASSY	1	5001 -			02			
46A	45090-70030	RIB	4	5001 -			02			
47A	43900-73490	BOLT	16	5001 -			02			
48A	46000-70860	WASHER	16	5001 -			02			
49A	41600-71380	PLATE	4	5001 -			02			
100A	41600-71370	PLATE	4	5001 -			02			
101A	41611-70440	PLATE	4	5001 -			02			
102A	41600-70440	PLATE	4	5001 -			02			
103A	43925-70170	BOLT SET	72	5001 -			02			
104A	43925-70210	BOLT SET	24	5001 -			02			
105A	31990-71730	GASKET	2	5001 -			02			
106A	39600-71910	PACKING	2	5001 -			02			
107A	39600-72490	PACKING	4	5001 -			02			

silverhorn.co.uk

FRONT CHASSIS HYDRAULIC LINE (3 WAY PIPING)

<S/N 5001 - 5050>

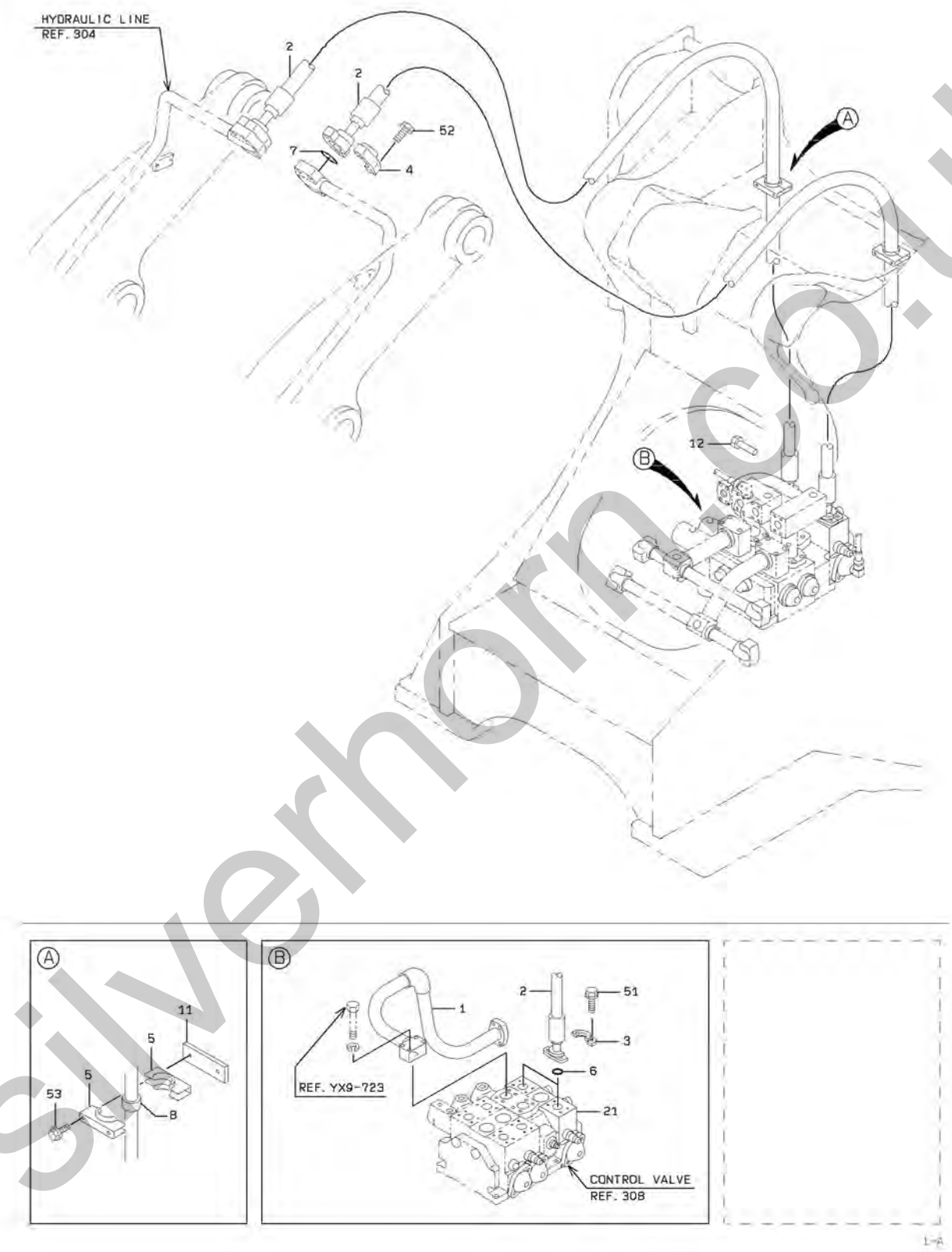

silverhorn.co.uk

FRONT CHASSIS HYDRAULIC LINE (3 WAY PIPING)

<S/N 5051 - >

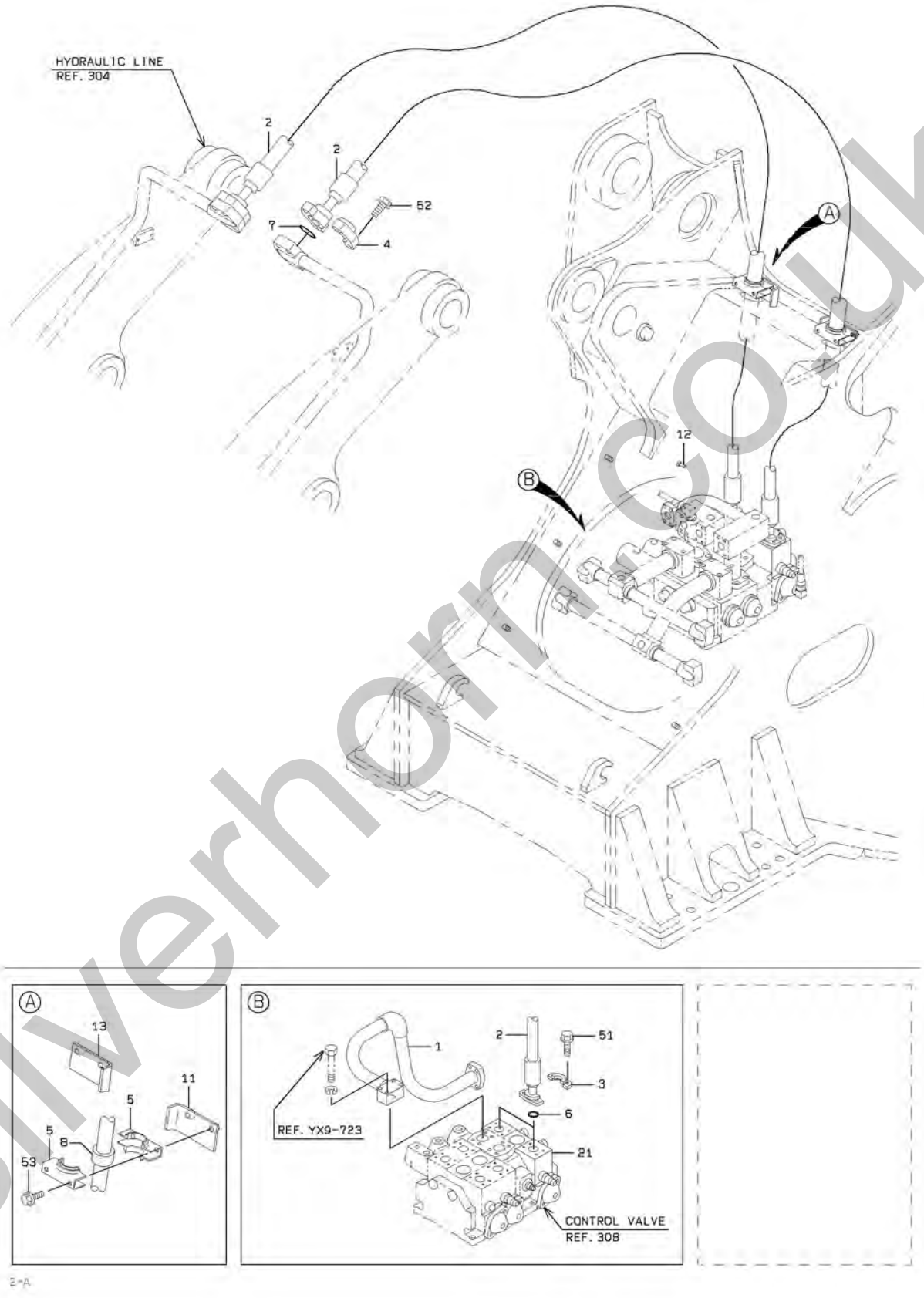

2-A

silverhorn.co.uk

FRONT CHASSIS HYDRAULIC LINE (3 WAY PIPING)

SYM-BOL	PART NUMBER	PART NAME	UNIT Q,TY	SERIAL (A) - (B)	REMARKS N P D	(A) (B)	(C) (D)	REMARK
1A	38755-39440	PIPE,OIL	1	5001 -				
2A	43113-26700	HOSE,HIGH PRESSURE	2	5001 - 5050				
2B	43113-48980	HOSE,HIGH PRESSURE	2	5051 -	C			
3A	69811-38210	FLANGE,SPLIT	4	5001 -				
4A	69811-25210	FLANGE,SPLIT	4	5001 -				
5A	32924-20050	CLAMP,MULTIPLE	4	5001 -				
6A	65220-41003	RING,O	2	5001 -				
7A	65220-31024	RING,O	2	5001 -				
8A	40850-70090	BUSHING,ELASTIC	2	5001 -				
11A	41611-26580	PLATE	2	5001 - 5050				WELDING
11B	41619-55550	PLATE	1	5051 -	C			(WELDING) LH
12A	61033-08020	BOLT	1	5001 -				WELDING
13A	41619-55570	PLATE	1	5051 -				(WELDING) RH
21A	38532-60690	VALVE ASSY,MULTIPL	1	5001 -				REF.308
51A	61802-12030	BOLT,FLANGED	8	5001 -				
52A	61802-10030	BOLT,FLANGED	8	5001 -				
53A	61802-10100	BOLT,FLANGED	4	5001 -				

silverhorn.co.uk

MEMO

silverhorn.co.uk

FRONT CHASSIS HYDRAULIC LINE (3WAY PIPING)

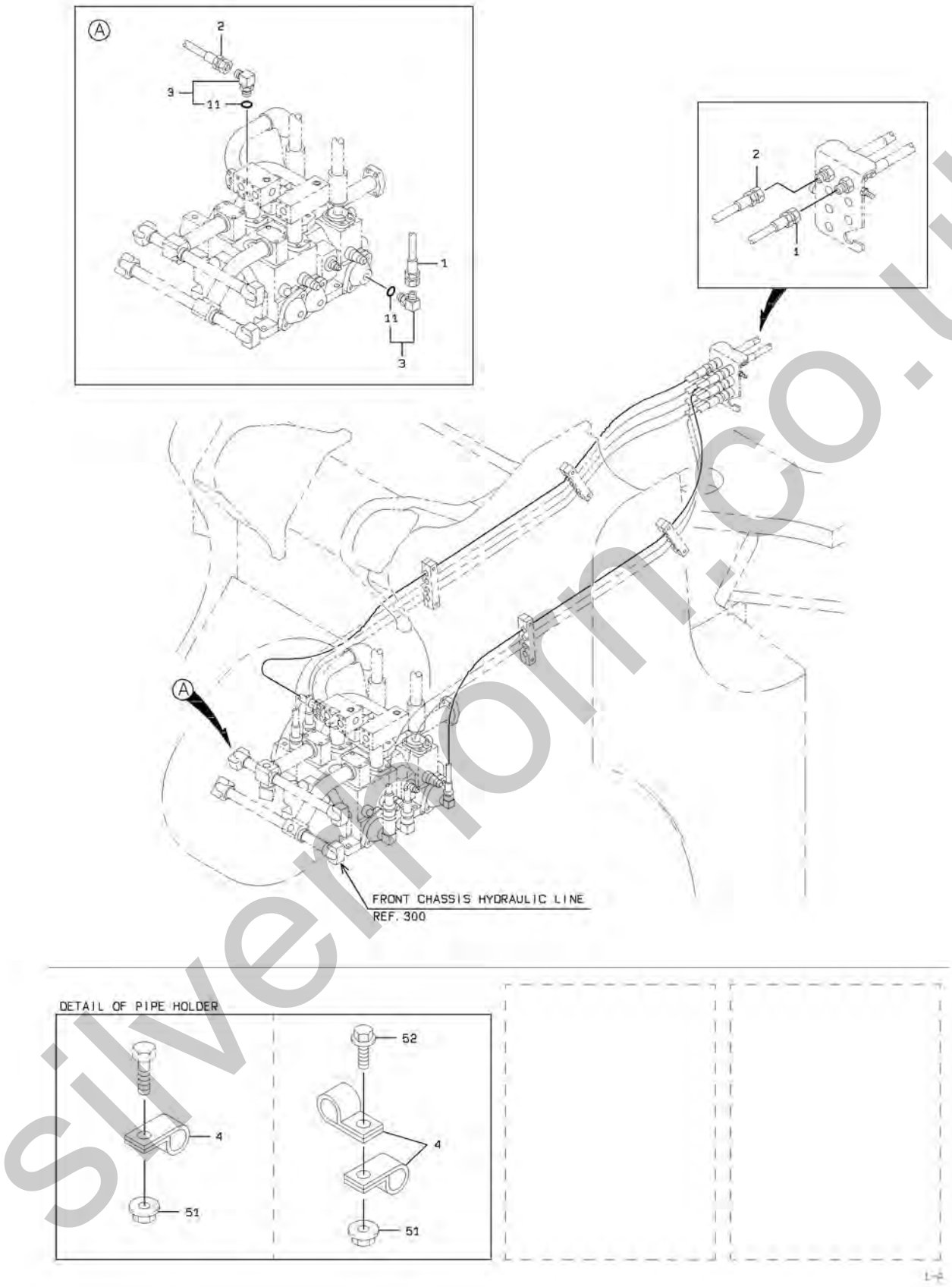

silvermoon.co.uk

FRONT CHASSIS HYDRAULIC LINE (3WAY PIPING)

SYM-BOL	PART NUMBER	PART NAME	UNIT Q,TY	SERIAL (A) - (B)	REMARKS N P D	(A) (B)	(C) (D)	REMARK
1A	68055-20180	HOSE,HIGH PRESSURE	1	5001 -				
2A	68055-20195	HOSE,HIGH PRESSURE	1	5001 -				
3A	88241-07106	ADAPTER,ELBOW	2	5001 -		Y01		
4A	72001-11500	HOLDER,PIPE	A/R	5001 -				D=15
11A	65210-12014	RING,O	1	5001 -		01		
51A	62480-21081	NUT,FLANGED	A/R	5001 -				
52A	61802-08020	BOLT,FLANGED	A/R	5001 -				

silverhorn.co.uk

PILOT HYDRAULIC LINE (3 WAY PIPING)

<S/N 5001 - 5080>

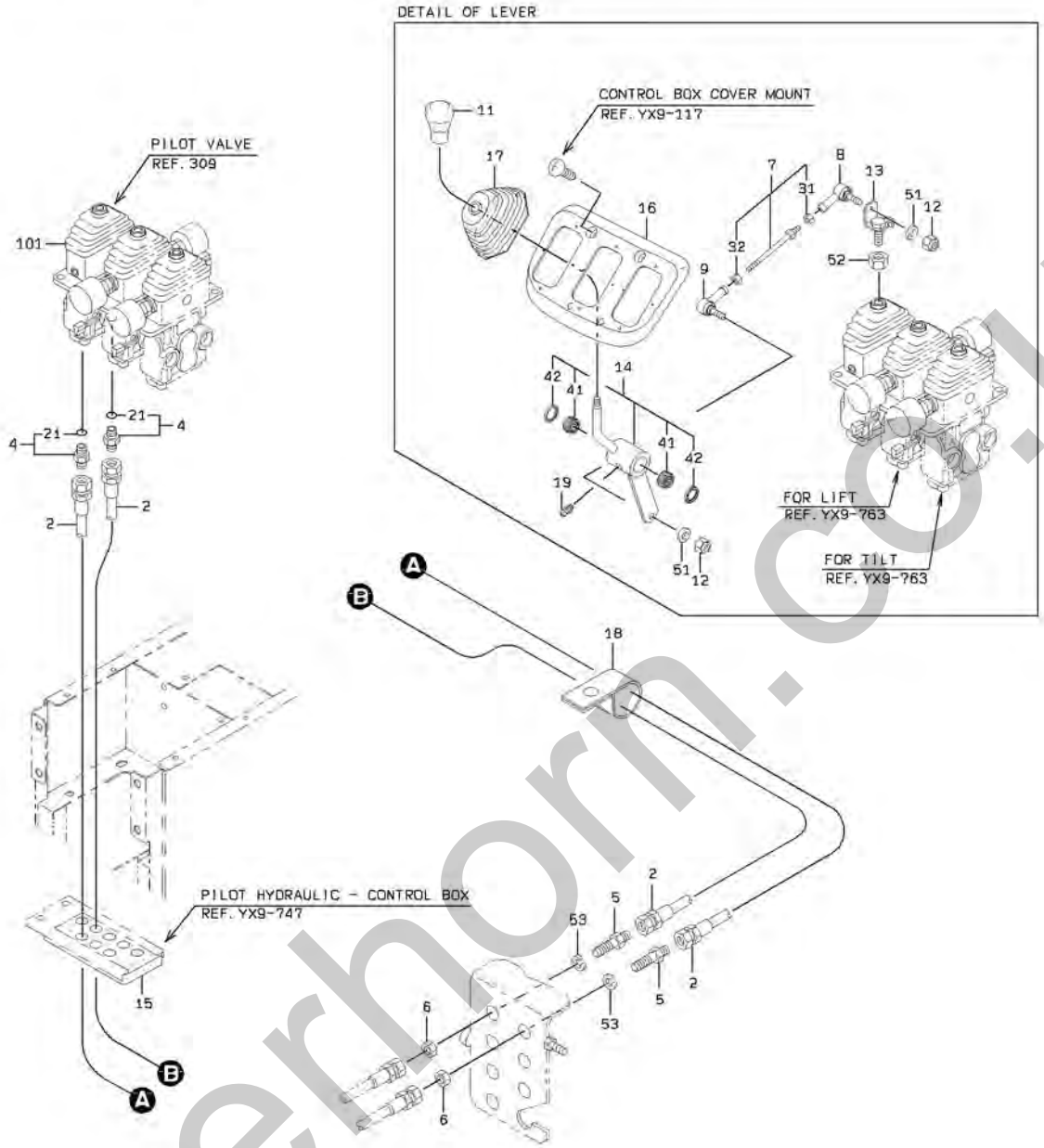

silverhorn.co.uk

PILOT HYDRAULIC LINE (3 WAY PIPING)

SYM-BOL	PART NUMBER	PART NAME	UNIT Q,TY	SERIAL (A) - (B)	REMARKS N P D	(A)	(B)	(C)	(D)	REMARK
2A	43113-23230	HOSE,HIGH PRESSURE	2	5001 - 5080						
4A	88201-06704	ADAPTER	2	5001 - 5080		Y01				
5A	30230-20600	ADAPTER	2	5001 - 5080						
6A	37600-20680	NUT	2	5001 - 5080						
7A	64111-01001	ROD	1	5001 - 5080			Y02			
8A	34950-20010	JOINT,BALL	1	5001 - 5080						
9A	34950-20020	JOINT,BALL	1	5001 - 5080						
11A	37810-60060	KNOB	1	5001 - 5080						
12A	88031-06061	NUT,SELF-LOCKING	2	5001 - 5080						
13A	30020-24600	ARM	1	5001 - 5056						
13B	30020-25840	ARM	1	5057 - 5080	C					
14A	45600-23850	LEVER	1	5001 - 5080				Y03		
15A	33057-20610	GROMMET	1	5001 - 5080						
16A	03501-19200	COVER	1	5001 - 5080						
17A	40790-60070	BOOT	1	5001 - 5080						
18A	72010-62000	HOLDER,HOSE	1	5001 - 5080						
19A	75011-25400	NIPPLE,GREASE	1	5001 - 5080						
21A	65210-12011	RING,O	1	5001 - 5080		01				
31A	62401-81061	NUT	1	5001 - 5080			02			
32A	62401-81067	NUT	1	5001 - 5080			02			
41A	42006-70060	BEARING,NEEDLE	2	5001 - 5080				03		
42A	34000-70030	SEAL	2	5001 - 5080				03		
51A	62701-40061	WASHER,PLANE	2	5001 - 5080						
52A	62402-81121	NUT	1	5001 - 5080						
53A	62721-18100	WASHER,SPRING	2	5001 - 5080						
101A	38560-60320	VALVE,PILOT	1	5001 - 5080						REF.309

silverhorn.co.uk

PILOT HYDRAULIC LINE (3 WAY PIPING)

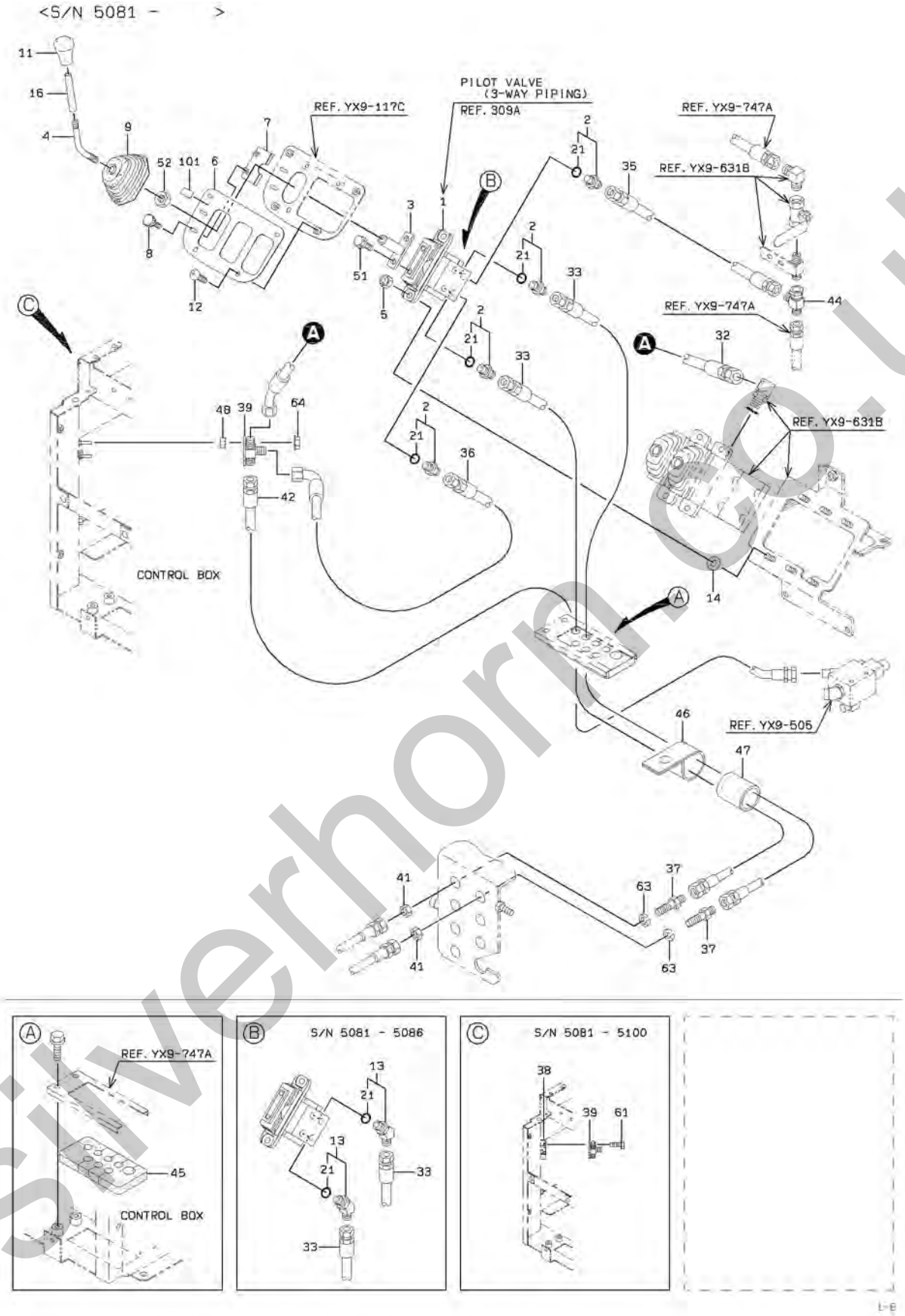

silverhorn.co.uk

PILOT HYDRAULIC LINE (3 WAY PIPING)

SYM-BOL	PART NUMBER	PART NAME	UNIT Q,TY	SERIAL (A) - (B)	REMARKS N P D	(A)	(B)	(C)	(D)	REMARK
1A	38560-60640	VALVE,PILOT	1	5081 -						REF.309A
2A	88201-06704	ADAPTER	2	5081 - 5086		Y01				
2B	88201-06704	ADAPTER	4	5087 -		Y01				
3A	40902-42060	BRACKET	1	5081 -						
4A	45870-28920	ROD	1	5081 -						
5A	88031-06101	NUT,SELF-LOCKING	2	5081 -						
6A	41711-21910	PLATE	1	5081 -						
7A	41750-47380	PLATE	1	5081 -						
8A	35100-20830	SCREW	2	5081 -						
9A	03501-74740	BOOT	1	5081 -						
11A	37810-60060	KNOB	1	5081 -						
12A	35100-20200	SCREW	4	5081 -						
13A	88241-07204	ADAPTER,ELBOW	2	5081 - 5086	D	Y01				
14A	33713-29770	SHEET,RUBBER	2	5081 -						
16A	36733-20200	TUBE,VINYL	1	5081 -						L=85
21A	65210-12011	RING,O	1	5081 -		01				
32A	68045-10022	HOSE,HIGH PRESSURE	1	5081 -						
33A	43113-23770	HOSE,HIGH PRESSURE	2	5081 -						
35A	68055-10025	HOSE,HIGH PRESSURE	1	5081 -						
36A	68035-10023	HOSE,HIGH PRESSURE	1	5081 -						
37A	30230-20600	ADAPTER	2	5081 -						
38A	03501-70400	BOX ASSY	1	5081 - 5100	D					
39A	30246-24450	ADAPTER,TEE	1	5081 -						
41A	37600-20680	NUT	2	5081 -						
42A	43113-37490	HOSE,HIGH PRESSURE	1	5081 -						
44A	30246-23060	ADAPTER,TEE	1	5081 -						
45A	33057-20610	GROMMET	1	5081 -						
46A	72010-73000	HOLDER,HOSE	1	5081 -						D=73
47A	65801-63250	BUSHING,ELASTIC	1	5081 -						
48A	45200-24190	RING	2	5101 - 5132						
48B	45200-29730	RING	2	5133 -	C					
51A	61802-08012	BOLT,FLANGED	2	5081 -						
52A	62403-81121	NUT	1	5081 -						
61A	61802-06012	BOLT,FLANGED	2	5081 - 5100	D					
63A	62721-18100	WASHER,SPRING	2	5081 -						
64A	62480-21061	NUT,FLANGED	2	5101 -						
101A	44771-22590	LABEL KIT	1	5081 -						44770-56040

silverhorn.co.uk

HYDRAULIC LINE (3 WAY PIPING)

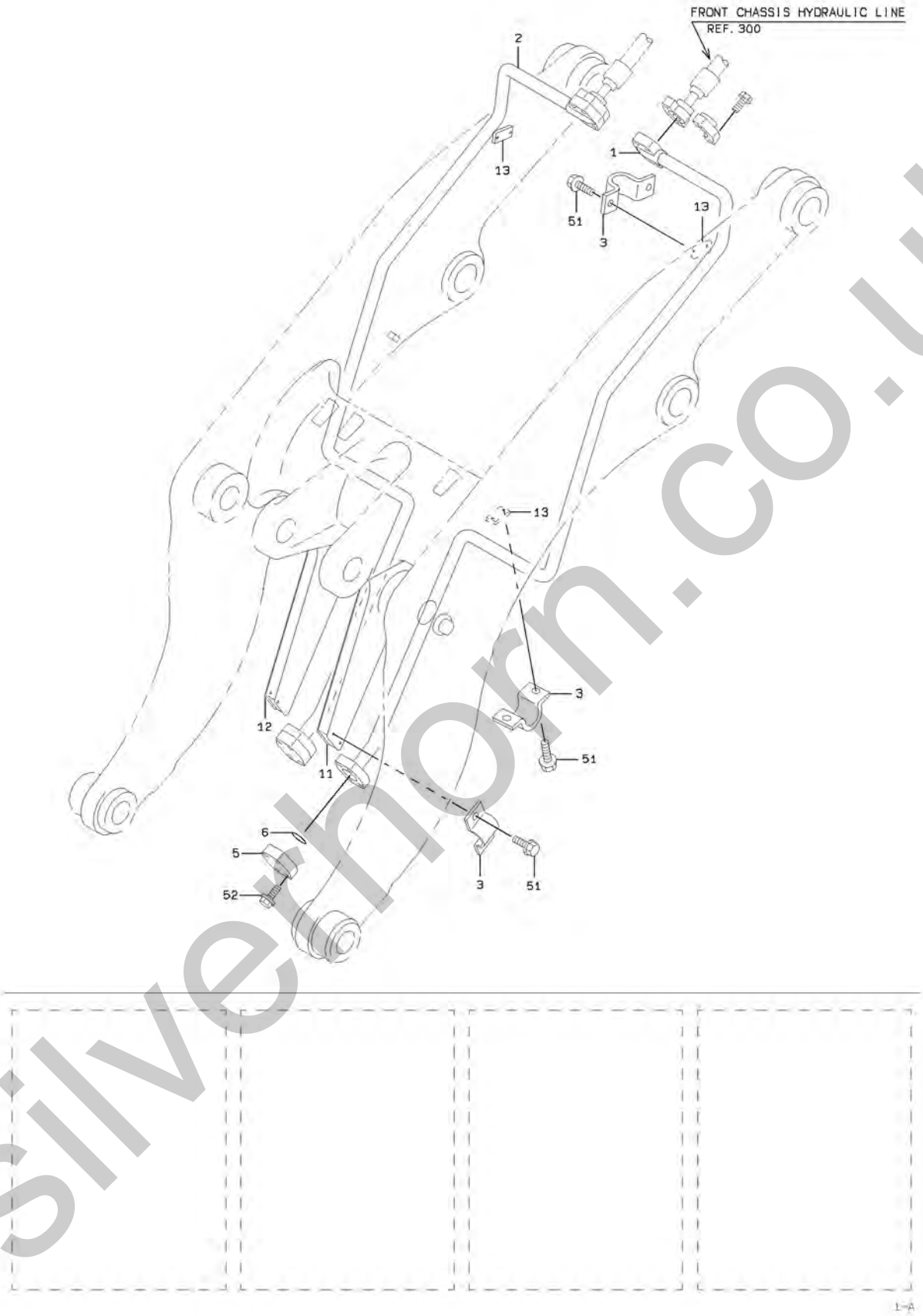

silverthorn.co.uk

HYDRAULIC LINE (3 WAY PIPING)

SYM-BOL	PART NUMBER	PART NAME	UNIT Q,TY	SERIAL (A) - (B)	REMARKS N P D	(A) (B)	(C) (D)	REMARK
1A	38755-39450	PIPE,OIL	1	5001 -				
2A	38755-39460	PIPE,OIL	1	5001 -				
3A	43573-20070	HOLDER,PIPE	6	5001 -				
5A	41641-20450	PLATE	2	5001 -				
6A	65220-31024	RING,O	2	5001 -				
11A	40901-32000	BRACKET	1	5001 -				FR LH (WELDING
12A	40901-32010	BRACKET	1	5001 -				FR RH (WELDING
13A	41600-27510	PLATE	4	5001 -				WELDING
51A	61802-10016	BOLT,FLANGED	12	5001 -				
52A	61802-10035	BOLT,FLANGED	8	5001 -				

silverhorn.co.uk

OIL PIPE MOUNT (3 WAY PIPING)

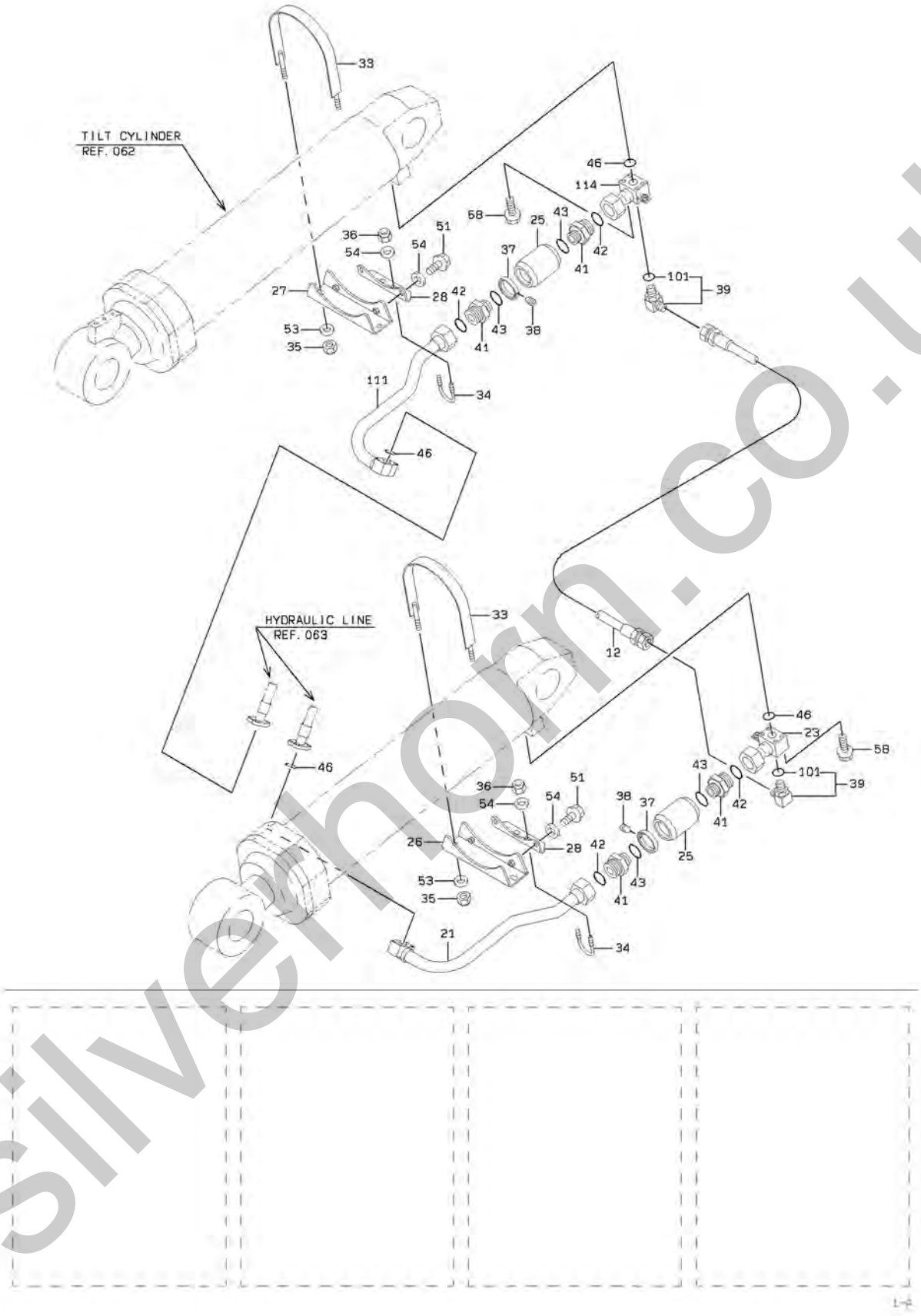

silverhorn.co.uk

OIL PIPE MOUNT (3 WAY PIPING)

SYM-BOL	PART NUMBER	PART NAME	UNIT Q,TY	SERIAL (A) - (B)	REMARKS N P D	(A) (B)	(C) (D)	REMARK
12A	68655-10075	HOSE,HIGH PRESSURE	1	5001 -				
21A	38755-39470	PIPE,OIL	1	5001 -				FR (LH)
23A	38755-50020	PIPE,OIL	1	5001 -				FR (LH)
25A	38554-70830	VALVE,CHECK	2	5001 -				
26A	40901-30680	BRACKET	1	5001 -				FR (LH)
27A	40901-30690	BRACKET	1	5001 -				FR (RH)
28A	41635-28210	PLATE	2	5001 -				
33A	43962-20910	BOLT,U	2	5001 -				
34A	43962-20030	BOLT,U	2	5001 -				
35A	88031-06121	NUT,SELF-LOCKING	4	5001 -				
36A	88031-06101	NUT,SELF-LOCKING	4	5001 -				
37A	35700-20470	SPACER	2	5001 -				
38A	62216-05008	SCREW,SET	2	5001 -				
39A	88241-07104	ADAPTER,ELBOW	2	5001 -		Y01		
41A	38900-20720	FITTING	4	5001 -				
42A	65210-22040	RING,O	4	5001 -				
43A	65210-22045	RING,O	4	5001 -				
46A	65220-31024	RING,O	4	5001 -				
51A	61802-10030	BOLT,FLANGED	4	5001 -				
53A	62701-40121	WASHER,PLANE	4	5001 -				
54A	62710-18109	WASHER,PLANE	8	5001 -				
58A	61802-10065	BOLT,FLANGED	8	5001 -				
101A	65210-12011	RING,O	1	5001 -		01		
111A	38755-39480	PIPE,OIL	1	5001 -				FR (RH)
114A	38755-50030	PIPE,OIL	1	5001 -				FR (RH)

silverhorn.co.uk

CONTROL VALVE

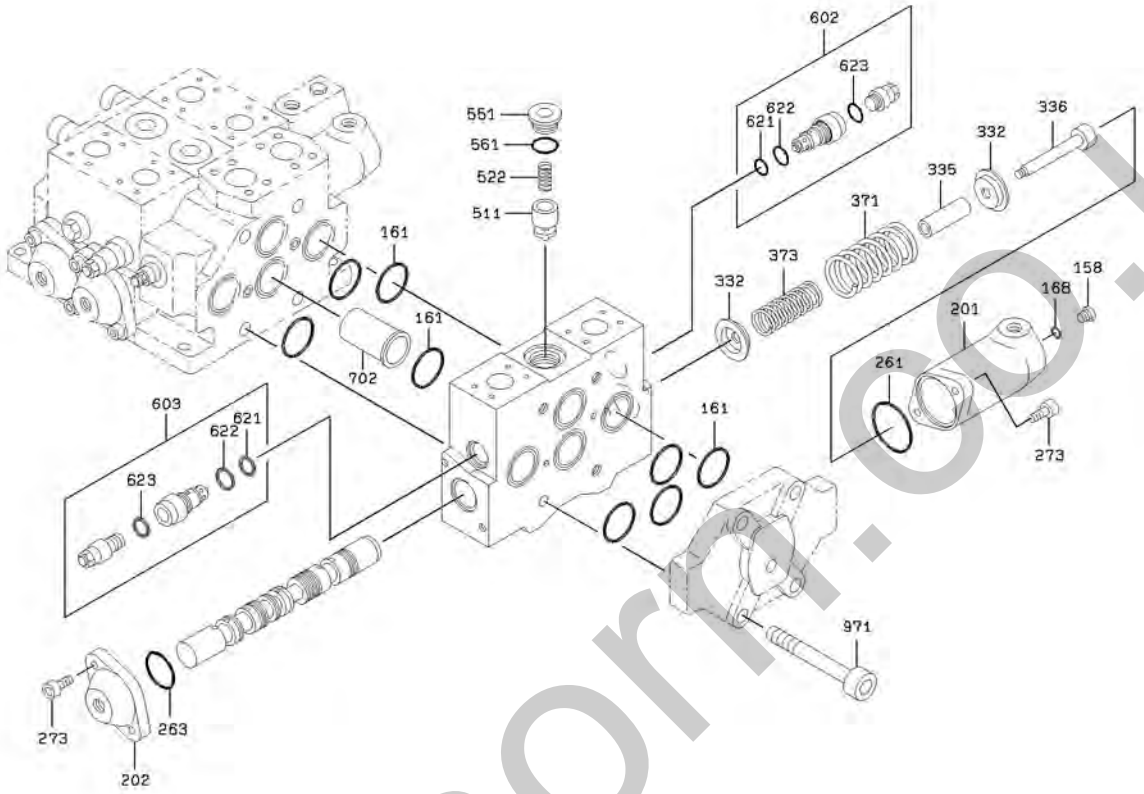

silverhorn.co.uk

CONTROL VALVE

SYM-BOL	PART NUMBER	PART NAME	UNIT Q,TY	SERIAL (A) - (B)	REMARKS N P D	(A) (B)	(C) (D)	REMARK
000A	38532-60690	VALVE ASSY,MULTIPL	1	5001 -				
158A	41530-71190	PLUG	1	5001 -				
161A	65210-12050	RING,O	8	5001 -				
168A	65210-12008	RING,O	1	5001 -				
201A	31200-71030	COVER	1	5001 -				
202A	31200-71040	COVER	1	5001 -				
261A	65210-22065	RING,O	1	5001 -				
263A	65210-22055	RING,O	1	5001 -				
273A	61101-10025	BOLT,SOCKET	4	5001 -				
332A	44955-70180	RETAINER,SPRING	2	5001 -				
335A	35440-70220	STOPPER	1	5001 -				
336A	43900-71280	BOLT	1	5001 -				
371A	35600-73340	SPRING	1	5001 -				
373A	35600-71810	SPRING	1	5001 -				
511A	44074-70110	POPPET	1	5001 -				
522A	35600-71820	SPRING	1	5001 -				
551A	41530-71220	PLUG	1	5001 -				
561A	65210-12029	RING,O	1	5001 -				
602A	38565-70740	VALVE,RELIEF	1	5001 -		Y01		
603A	38565-71630	VALVE,RELIEF	1	5001 -		Y01		
621A	65210-12018	RING,O	1	5001 -		01		
622A	65210-12024	RING,O	1	5001 -		01		
623A	65210-12022	RING,O	1	5001 -		01		
702A	35750-70470	SLEEVE	1	5001 -				
971A	43956-70650	BOLT,SOCKET	4	5001 -				

silverhorn.co.uk

PILOT VALVE (3WAY PIPING)

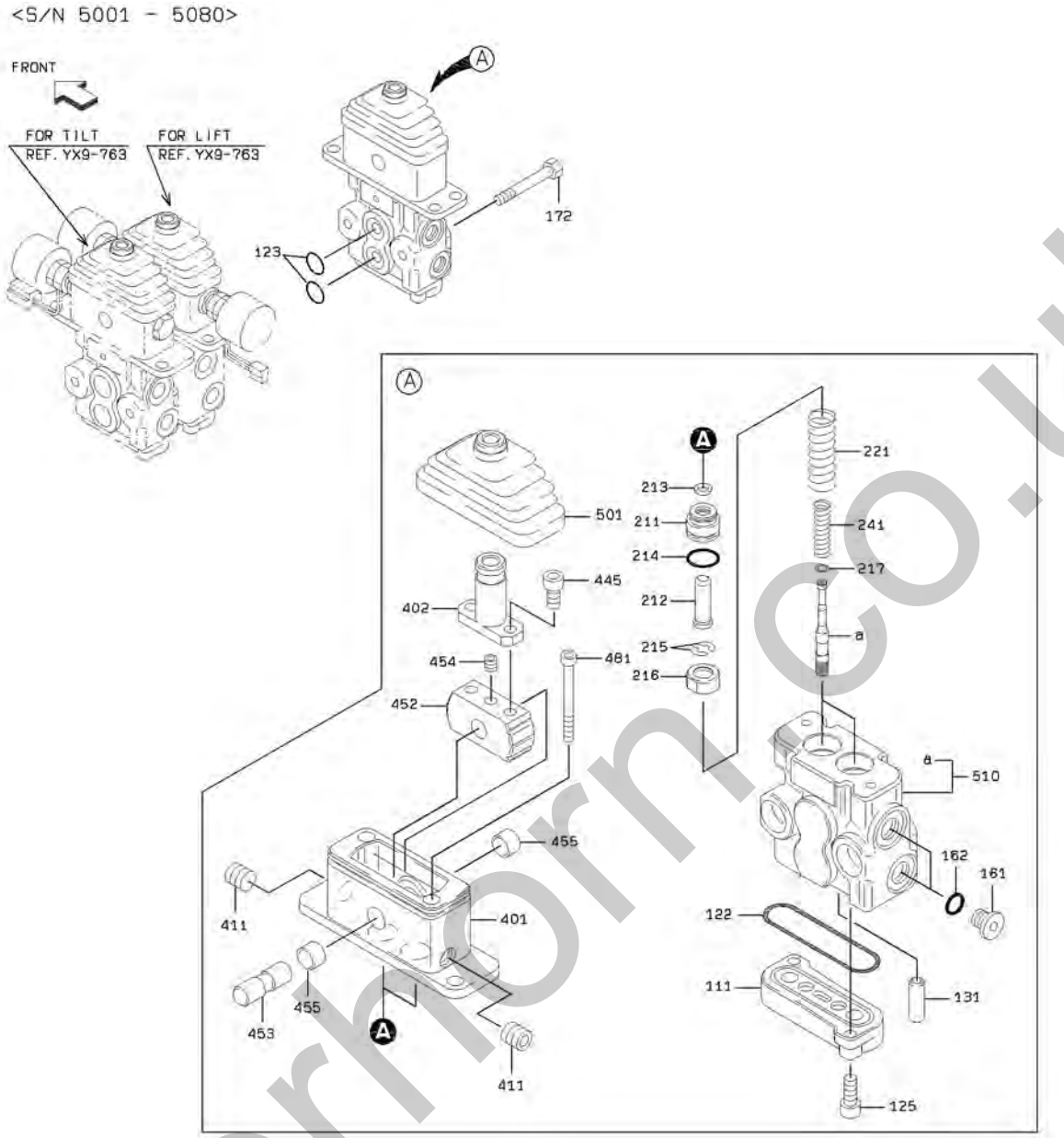

silverhorn.co.uk

PILOT VALVE (3WAY PIPING)

SYM-BOL	PART NUMBER	PART NAME	UNIT Q,TY	SERIAL (A) - (B)	REMARKS N P D	(A) (B)	(C) (D)	REMARK
000A	38560-60320	VALVE,PILOT	1	5001 - 5080				
111A	41600-70890	PLATE	1	5001 - 5080				
122A	65210-22060	RING,O	1	5001 - 5080				
123A	65210-12018	RING,O	2	5001 - 5080				
125A	61101-08020	BOLT,SOCKET	2	5001 - 5080				
131A	40840-71600	BUSHING	2	5001 - 5080				
161A	41530-72790	PLUG	2	5001 - 5080				
162A	65210-12011	RING,O	2	5001 - 5080				
172A	61033-08050	BOLT	2	5001 - 5080				
211A	41530-72410	PLUG	2	5001 - 5080				
212A	45887-70280	ROD,PUSH	2	5001 - 5080				
213A	34000-70600	SEAL	2	5001 - 5080				
214A	65210-12020	RING,O	2	5001 - 5080				
215A	46011-70380	WASHER,PLANE	2	5001 - 5080				
216A	33930-70330	SEAT,SPRING	2	5001 - 5080				
217A	34200-70850	SHIM	2	5001 - 5080				
221A	35600-73940	SPRING	2	5001 - 5080				
241A	35600-73950	SPRING	2	5001 - 5080				
401A	31200-72130	COVER	1	5001 - 5080				
402A	45600-70190	LEVER	1	5001 - 5080				
411A	43956-70690	BOLT,SOCKET	2	5001 - 5080				
445A	61101-08016	BOLT,SOCKET	2	5001 - 5080				
452A	37200-70070	DISC	1	5001 - 5080				
453A	31611-70020	CAMSHAFT	1	5001 - 5080				
454A	43956-70680	BOLT,SOCKET	1	5001 - 5080				
455A	88811-01410	BUSHING	2	5001 - 5080				
481A	61101-06060	BOLT,SOCKET	2	5001 - 5080				
501A	40790-70200	BOOT	1	5001 - 5080				
510A	33110-70400	CASE ASSY	1	5001 - 5080				

silverhorn.co.uk

PILOT VALVE (3WAY PIPING)

<S/N 5081 - >

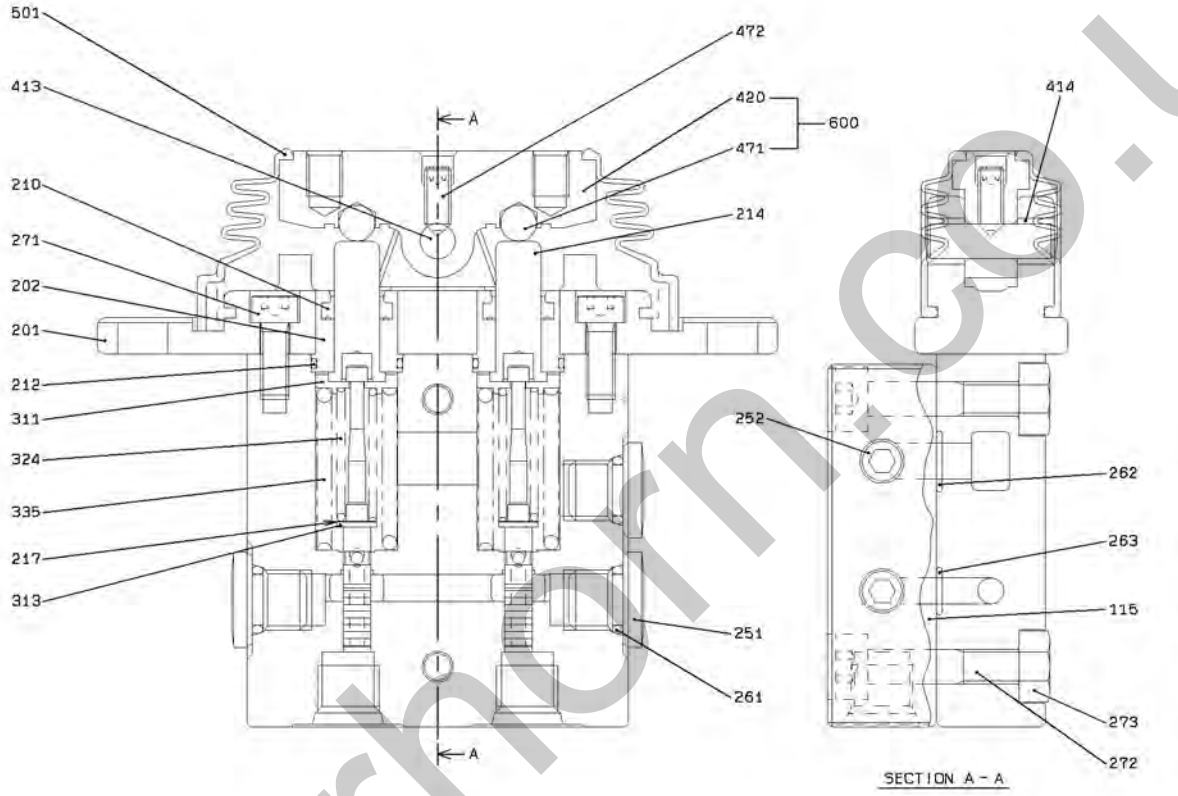

silverhorn.co.uk

PILOT VALVE (3WAY PIPING)

SYM-BOL	PART NUMBER	PART NAME	UNIT Q,TY	SERIAL (A) - (B)	REMARKS N P D	(A) (B)	(C) (D)	REMARK
000A	38560-60640	VALVE,PILOT	1	5081 -				
115A	41600-71770	PLATE	1	5081 -				
201A	31205-70220	COVER	1	5081 -				
202A	41530-75150	PLUG	2	5081 -				
210A	39600-72960	PACKING	2	5081 -				
212A	47131-76700	RING,O	2	5081 -				
214A	45887-70380	ROD,PUSH	2	5081 -				
217A	34200-71720	SHIM	2	5081 -				
251A	41530-72790	PLUG	3	5081 -				
252A	41530-73550	PLUG	2	5081 -				
261A	65210-12011	RING,O	3	5081 -				
262A	65210-12010	RING,O	1	5081 -				
263A	65210-12008	RING,O	1	5081 -				
271A	61101-06016	BOLT,SOCKET	2	5081 -				
272A	61101-08040	BOLT,SOCKET	2	5081 -				
273A	62401-81081	NUT	2	5081 -				
311A	33930-70980	SEAT,SPRING	2	5081 -				
313A	46000-71760	WASHER	2	5081 -				
324A	35600-77560	SPRING	2	5081 -				
335A	35600-77350	SPRING	2	5081 -				
413A	31611-70040	CAMSHAFT	1	5081 -				
414A	40840-72670	BUSHING	2	5081 -				
420A	31600-70020	CAM	1	5081 -		01		
471A	43751-70300	BALL	2	5081 -		01		
472A	35104-70170	SCREW,SET	1	5081 -				
501A	40790-70540	BOOT	1	5081 -				
600A	31605-70010	CAM ASSY	1	5081 -		Y01		

silverhorn.co.uk

VALVE CONTROL GROUP (SINGLE LEVER)

<S/N 5001 - 5052>

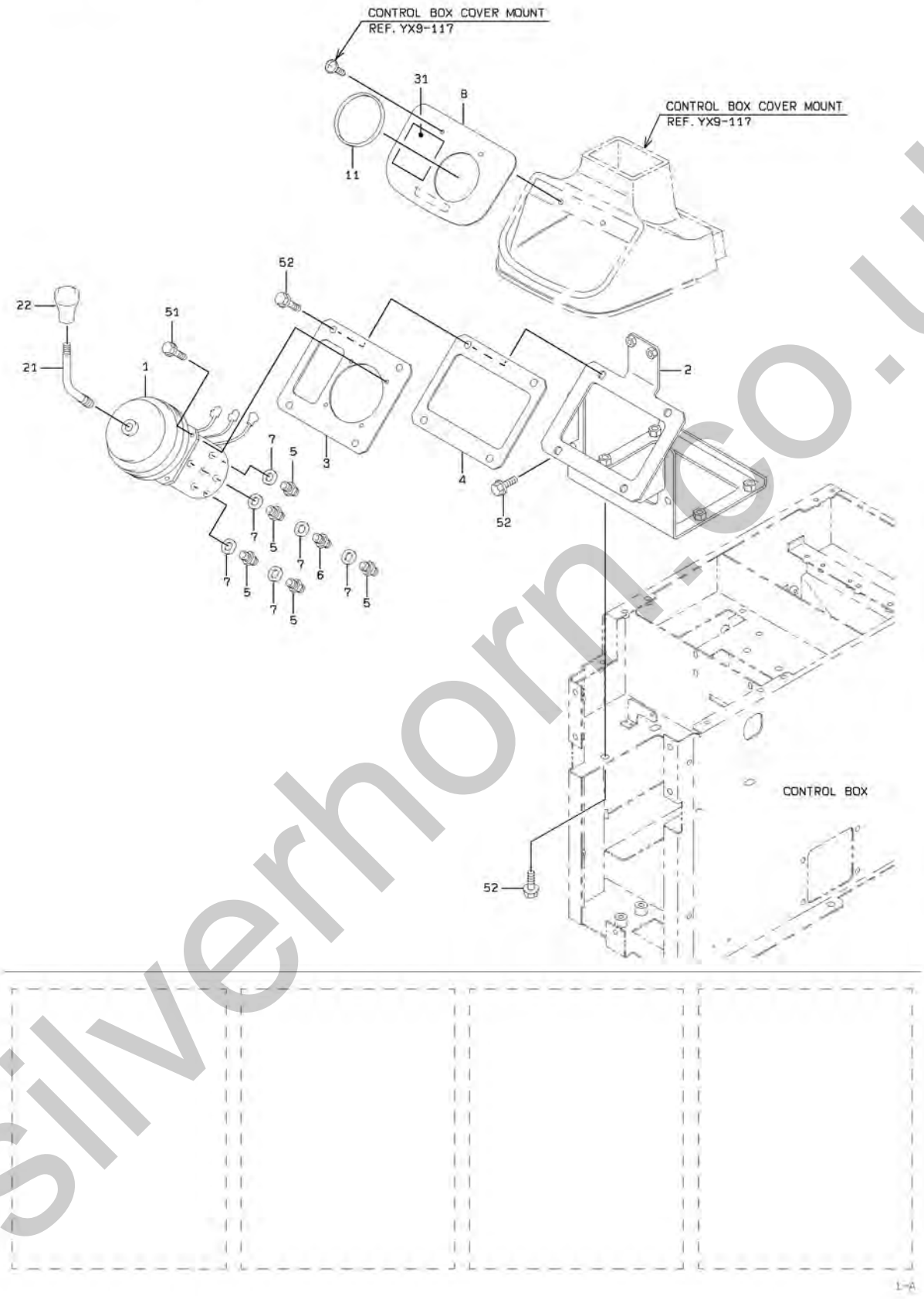

silverhorn.co.uk

VALVE CONTROL GROUP (SINGLE LEVER)

SYM-BOL	PART NUMBER	PART NAME	UNIT Q,TY	SERIAL (A) - (B)	REMARKS N P D	(A) (B)	(C) (D)	REMARK
1A	38560-20180	VALVE,PILOT	1	5001 - 5052				38560-20190
2A	40901-47440	BRACKET	1	5001 - 5052				
3A	41610-50960	PLATE	1	5001 - 5052				
4A	31990-23180	GASKET	1	5001 - 5052				
5A	88201-06704	ADAPTER	5	5001 - 5052				
6A	40330-60180	FILTER	1	5001 - 5052				
7A	88111-11200	WASHER,SEAL	6	5001 - 5052				
8A	41610-50980	PLATE	1	5001 - 5052				
11A	34041-21760	STRIP, SEAL	1	5001 - 5052				
21A	38730-50930	PIPE	1	5001 - 5052				
22A	37810-60060	KNOB	1	5001 - 5052				
31A	44785-20100	LABEL,MANUAL	1	5001 - 5052				
51A	61802-06025	BOLT,FLANGED	4	5001 - 5052				
52A	61802-10020	BOLT,FLANGED	10	5001 - 5052				

silverhorn.co.uk

VALVE CONTROL GROUP (FOR HYDRAULIC SINGLE LEVER)

<S/N 5053 - 5080>

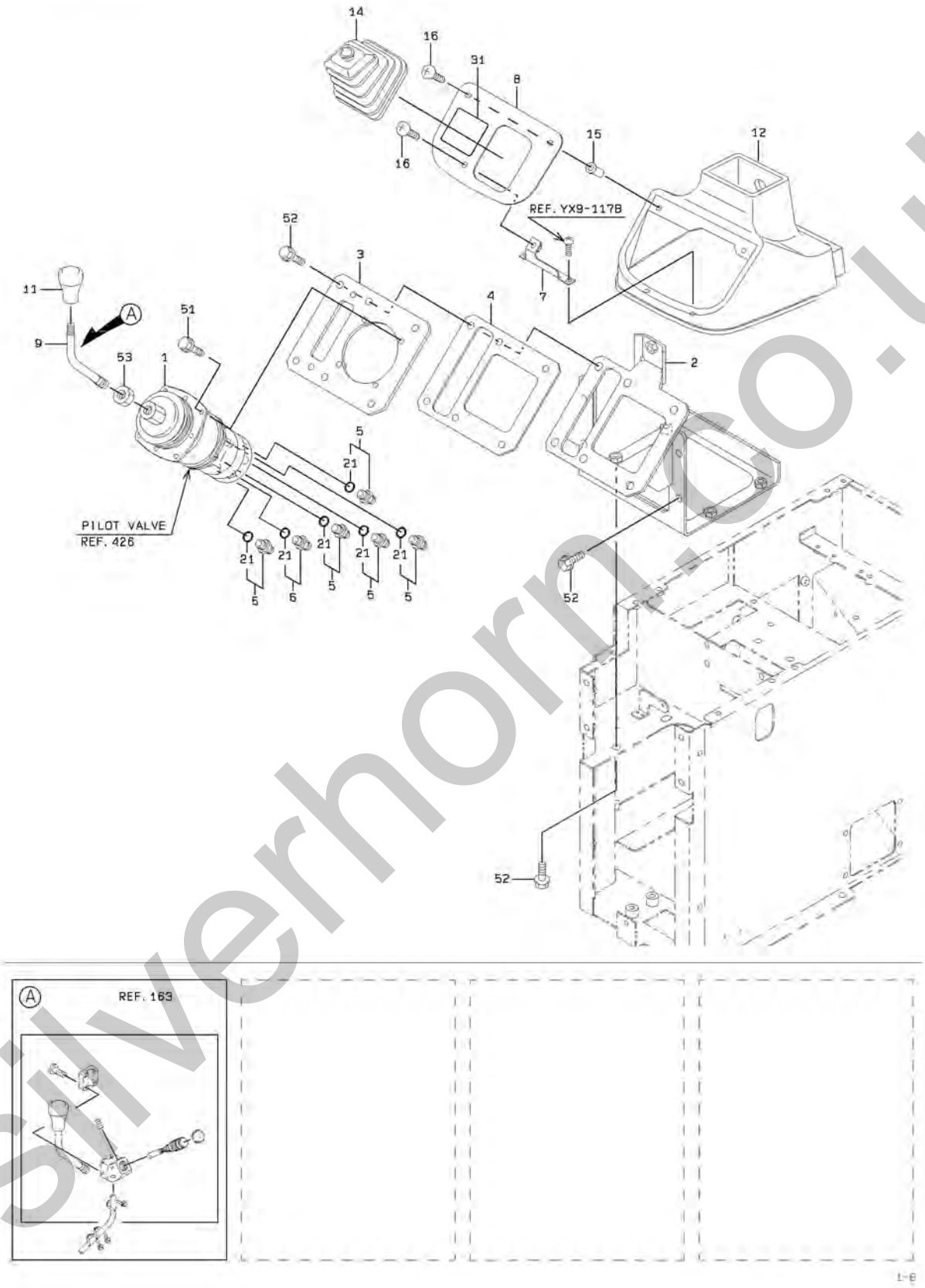

silverhorn.co.uk

VALVE CONTROL GROUP (FOR HYDRAULIC SINGLE LEVER)

SYM-BOL	PART NUMBER	PART NAME	UNIT Q,TY	SERIAL (A) - (B)	REMARKS N P D	(A) (B)	(C) (D)	REMARK
1A	38560-60610	VALVE,PILOT	1	5053 - 5080				REF.426
2A	40902-33060	BRACKET	1	5053 - 5080				
3A	41619-58090	PLATE	1	5053 - 5080				
4A	31990-25940	GASKET	1	5053 - 5080				
5A	88201-06704	ADAPTER	5	5053 - 5080		Y01		
6A	40330-60180	FILTER	1	5053 - 5080		Y01		
7A	41608-39930	PLATE	1	5053 - 5080				
8A	41619-42380	PLATE	1	5053 - 5080				
9A	38731-28460	PIPE	1	5053 - 5080				
11A	37810-60060	KNOB	1	5053 - 5080				
12A	03501-54740	COVER	1	5053 - 5080				
14A	40790-20010	BOOT	1	5053 - 5080				
15A	37600-21080	NUT	2	5053 - 5080				
16A	35100-20200	SCREW	3	5053 - 5080				
21A	65210-12011	RING,O	1	5053 - 5080		01		
31A	44785-22160	LABEL,MANUAL	1	5053 - 5080				
51A	61802-06025	BOLT,FLANGED	4	5053 - 5080				
52A	61802-10020	BOLT,FLANGED	14	5053 - 5080				
53A	62401-81141	NUT	1	5053 - 5080				

silverhorn.co.uk

VALVE CONTROL GROUP (FOR HYDRAULIC SINGLE LEVER)

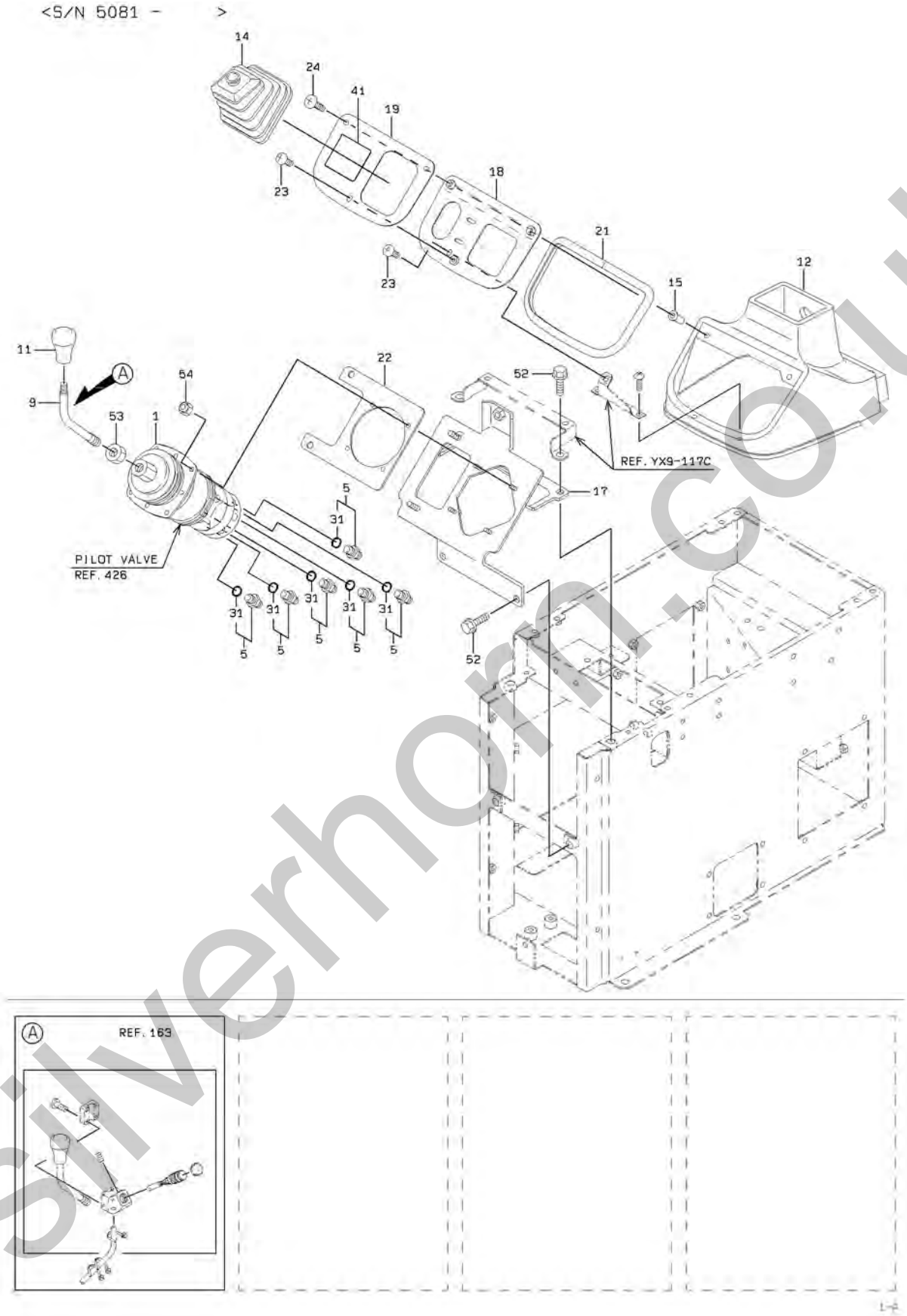

silverhorn.co.uk

VALVE CONTROL GROUP (FOR HYDRAULIC SINGLE LEVER)

SYM-BOL	PART NUMBER	PART NAME	UNIT Q,TY	SERIAL (A) - (B)	REMARKS N P D	(A) (B)	(C) (D)	REMARK
1A	38560-60610	VALVE,PILOT	1	5081 -				REF.426
5A	88201-06704	ADAPTER	6	5081 -		Y01		
9A	38731-28460	PIPE	1	5081 -				
11A	37810-60060	KNOB	1	5081 -				
12A	03501-54740	COVER	1	5081 -				
14A	40790-20010	BOOT	1	5081 -				
15A	37600-21080	NUT	2	5081 -				
17A	40902-42090	BRACKET	1	5081 -				
18A	41750-44220	PLATE	1	5081 -				
19A	41711-22050	PLATE	1	5081 -				
21A	44820-20520	RUBBER	1	5081 -				
22A	33713-29790	SHEET,RUBBER	1	5081 -				
23A	35100-20330	SCREW	2	5081 -				
24A	35100-20850	SCREW	2	5081 -				
31A	65210-12011	RING,O	1	5081 -		01		
41A	44785-22160	LABEL,MANUAL	1	5081 -				
52A	61802-10020	BOLT,FLANGED	4	5081 -				
53A	62401-81141	NUT	1	5081 -				
54A	88031-06061	NUT,SELF-LOCKING	4	5081 -				

silverhorn.co.uk

PILOT HYDRAULIC LINE (SINGLE LEVER)

<S/N 5001 - 5052>

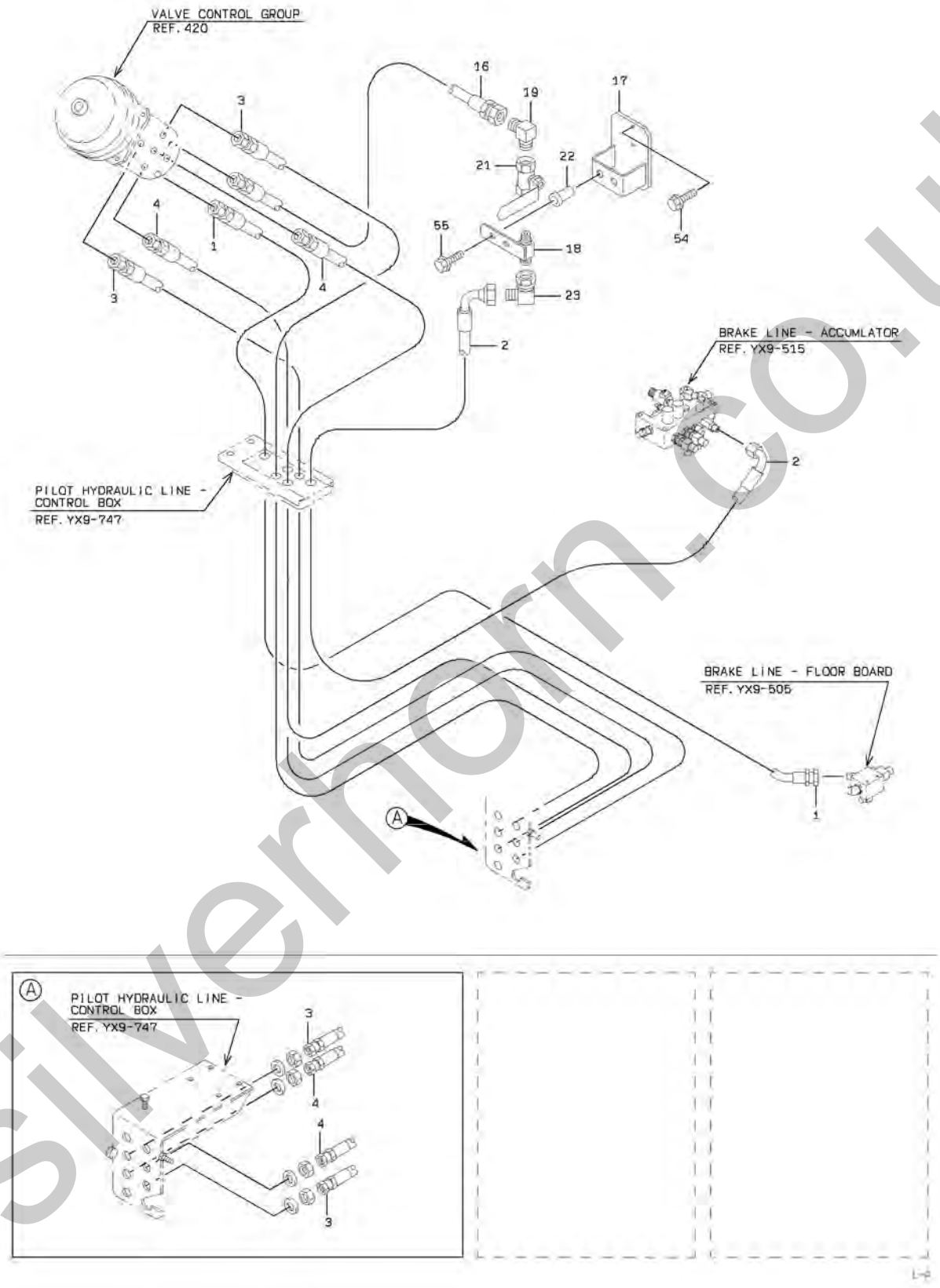

silverhorn.co.uk

PILOT HYDRAULIC LINE (SINGLE LEVER)

SYM-BOL	PART NUMBER	PART NAME	UNIT Q,TY	SERIAL (A) - (B)	REMARKS N P D	(A) (B)	(C) (D)	REMARK
1A	43113-23880	HOSE,HIGH PRESSURE	1	5001 - 5052				
2A	43113-39790	HOSE,HIGH PRESSURE	1	5001 - 5052				
3A	43113-39800	HOSE,HIGH PRESSURE	2	5001 - 5030				
3B	43113-32780	HOSE,HIGH PRESSURE	2	5031 - 5052	A			
4A	43113-30270	HOSE,HIGH PRESSURE	2	5001 - 5052				
16A	68055-10044	HOSE,HIGH PRESSURE	1	5001 - 5052				
17A	40901-38030	BRACKET	1	5001 - 5052				
18A	30230-21720	ADAPTER	1	5001 - 5052				
19A	88241-03404	ADAPTER,ELBOW	1	5001 - 5052				
21A	38510-60030	VALVE	1	5001 - 5030				
21B	38510-60500	VALVE	1	5031 - 5052	C			
22A	37600-21210	NUT	2	5001 - 5052				
23A	30242-20100	ADAPTER,ELBOW UNIO	1	5001 - 5052				
54A	61802-06010	BOLT,FLANGED	2	5001 - 5052				
55A	61802-06025	BOLT,FLANGED	2	5001 - 5052				

silverhorn.co.uk

PILOT HYDRAULIC LINE (FOR HYDRAULIC SINGLE LEVER)

<S/N 5053 - 5080>

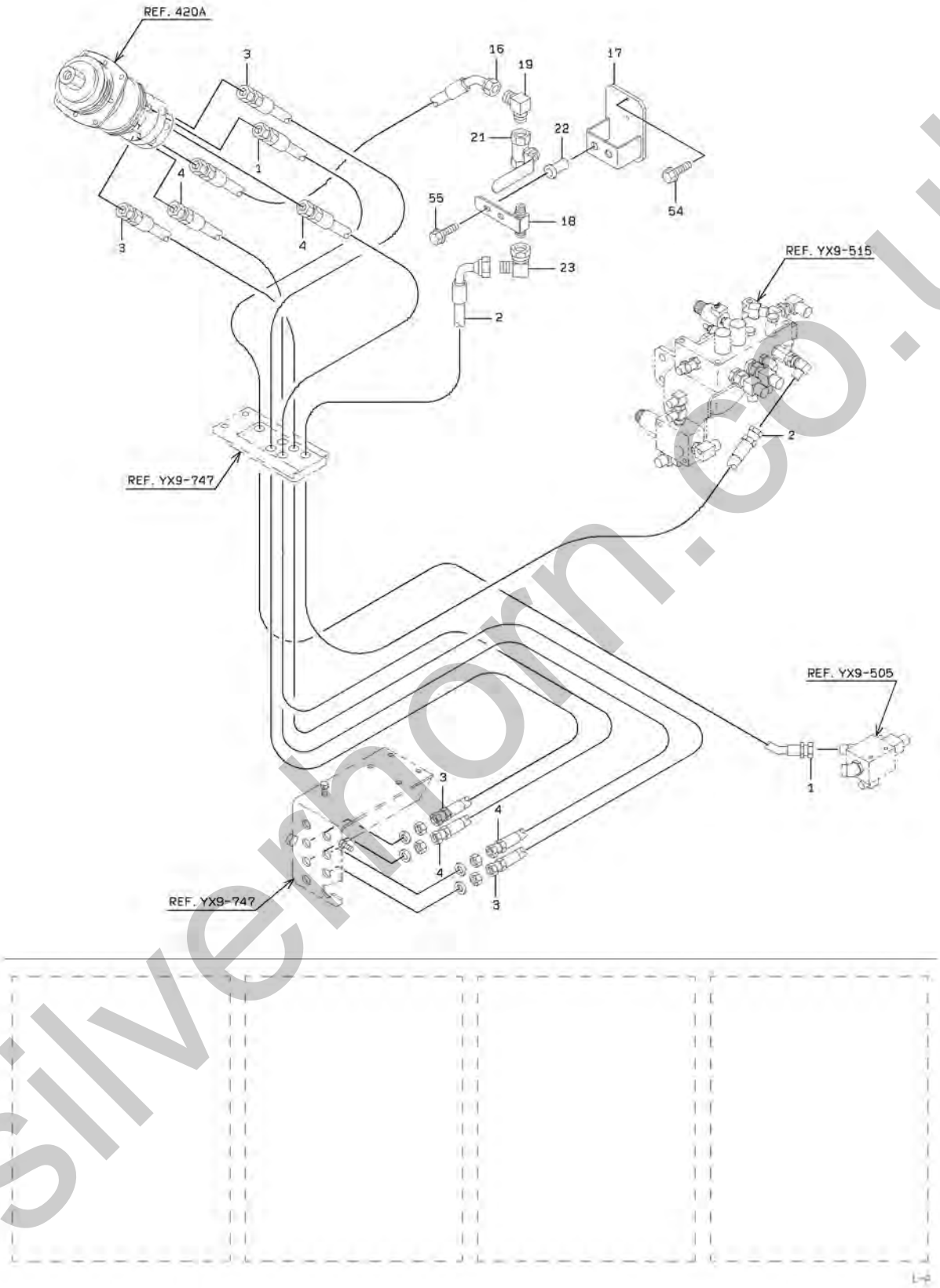

silverhorn.co.uk

PILOT HYDRAULIC LINE (FOR HYDRAULIC SINGLE LEVER)

SYM-BOL	PART NUMBER	PART NAME	UNIT Q,TY	SERIAL (A) - (B)	REMARKS N P D	(A) (B)	(C) (D)	REMARK
1A	43113-45940	HOSE,HIGH PRESSURE	1	5053 - 5080				
2A	43113-39790	HOSE,HIGH PRESSURE	1	5053 - 5080				
3A	43113-30270	HOSE,HIGH PRESSURE	2	5053 - 5080				
4A	43113-45850	HOSE,HIGH PRESSURE	2	5053 - 5080				
16A	68045-10050	HOSE,HIGH PRESSURE	1	5053 - 5080				
17A	40902-22380	BRACKET	1	5053 - 5080				
18A	30230-21720	ADAPTER	1	5053 - 5080				
19A	88241-03404	ADAPTER,ELBOW	1	5053 - 5080				
21A	38510-60500	VALVE	1	5053 - 5080				
22A	37600-21210	NUT	2	5053 - 5080				
23A	30242-20100	ADAPTER,ELBOW UNIO	1	5053 - 5080				
54A	61802-06010	BOLT,FLANGED	2	5053 - 5080				
55A	61802-06025	BOLT,FLANGED	2	5053 - 5080				

silverhorn.co.uk

PILOT HYDRAULIC LINE (FOR HYDRAULIC SINGLE LEVER)

<S/N 5081 - >

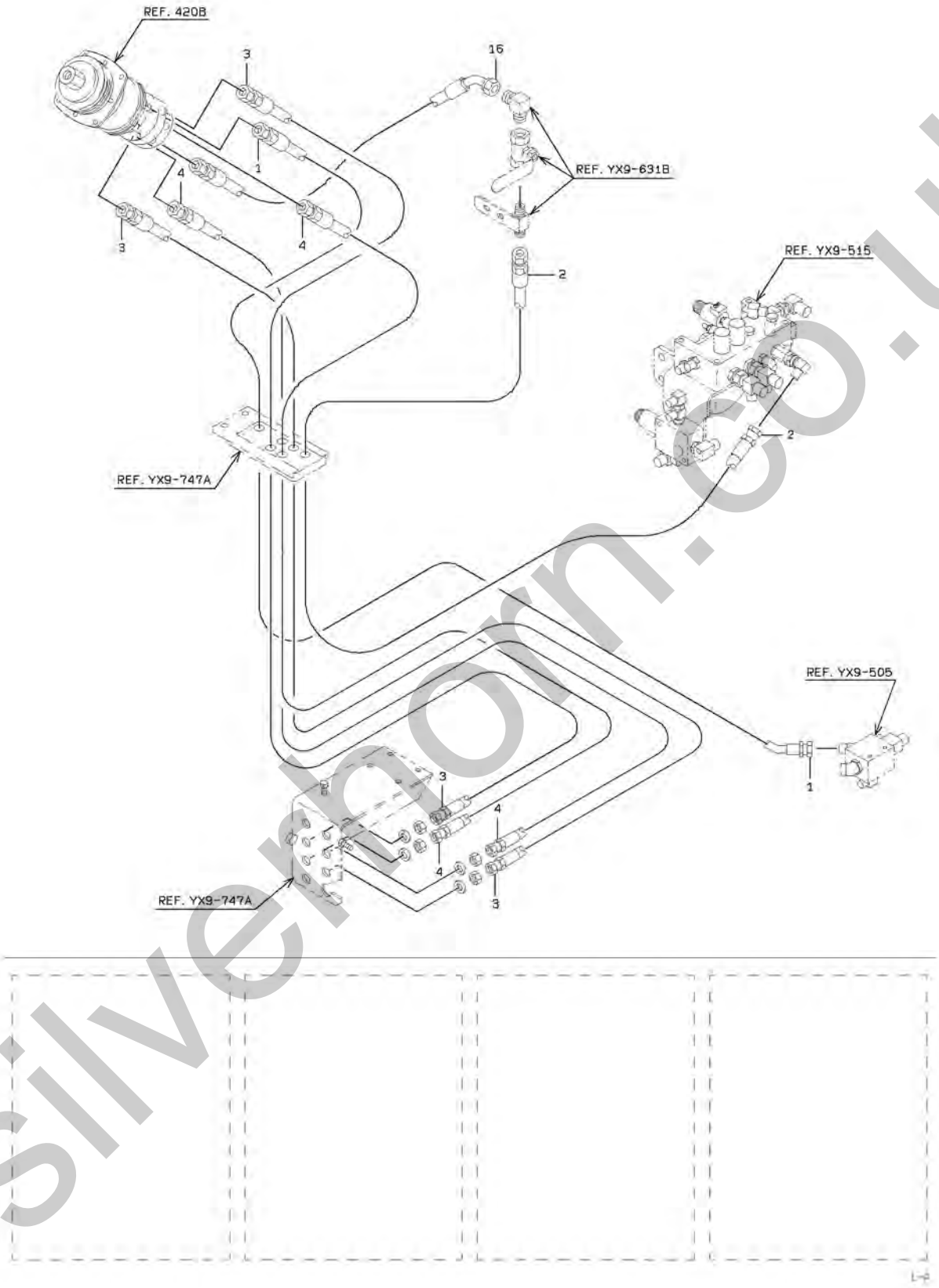

silverhorn.co.uk

PILOT HYDRAULIC LINE (FOR HYDRAULIC SINGLE LEVER)

SYM-BOL	PART NUMBER	PART NAME	UNIT Q,TY	SERIAL (A) - (B)	REMARKS N P D	(A) (B)	(C) (D)	REMARK
1A	43113-45940	HOSE,HIGH PRESSURE	1	5081 -				
2A	43113-25420	HOSE,HIGH PRESSURE	1	5081 -				
3A	43113-30270	HOSE,HIGH PRESSURE	2	5081 -				
4A	43113-45850	HOSE,HIGH PRESSURE	2	5081 -				
16A	68045-10050	HOSE,HIGH PRESSURE	1	5081 -				

silverhorn.co.uk

PILOT VALVE

<S/N 5053 - >

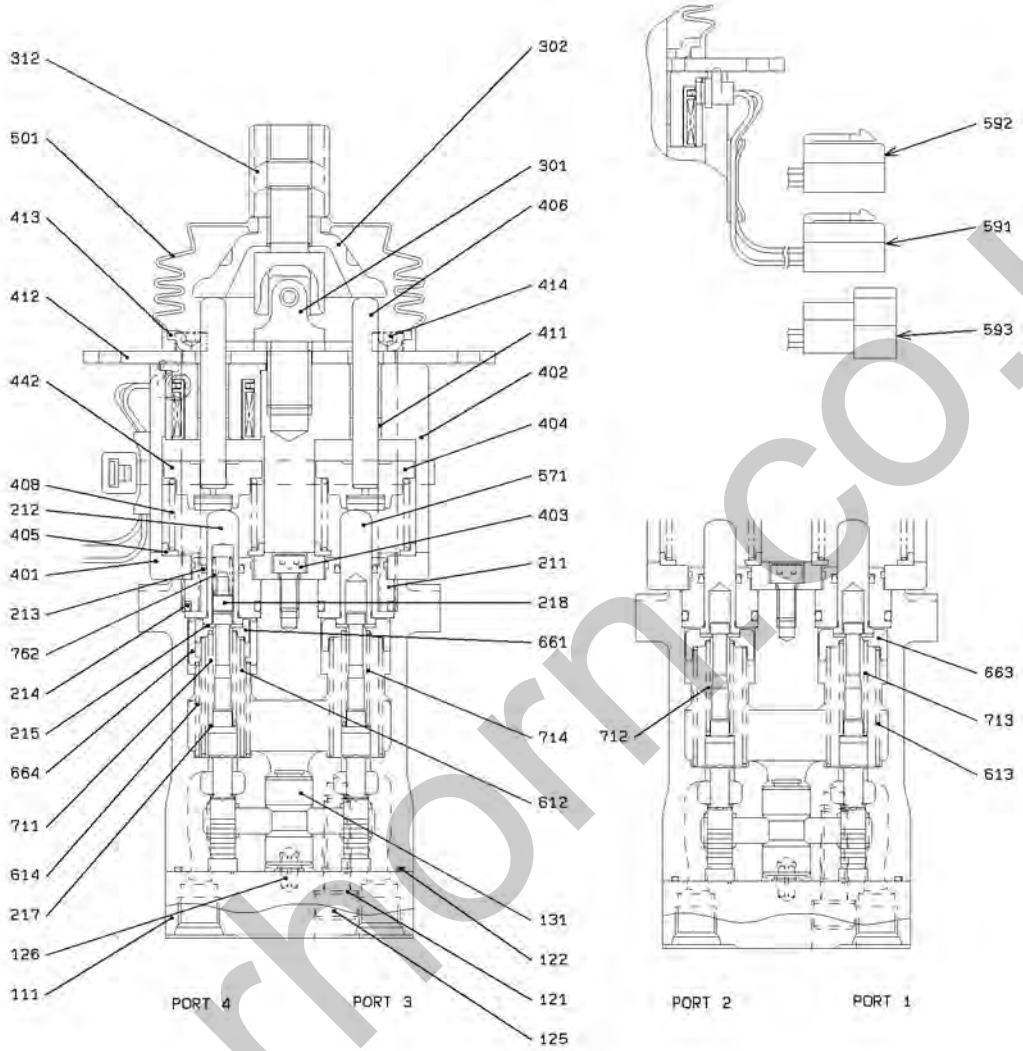

silverhorn.co.uk

PILOT VALVE

SYM-BOL	PART NUMBER	PART NAME	UNIT Q,TY	SERIAL (A) - (B)	REMARKS N P D	(A) (B)	(C) (D)	REMARK
000A	38560-60610	VALVE,PILOT	1	5053 -				
111A	41600-71480	PLATE	1	5053 -				
121A	46023-70190	WASHER,SEAL	2	5053 -				
122A	47131-73470	RING,O	1	5053 -				
125A	43956-70590	BOLT,SOCKET	2	5053 -				
126A	40033-70050	PIN,SPRING	1	5053 -				
131A	40840-71500	BUSHING	1	5053 -				
211A	41530-72410	PLUG	4	5053 -				
212A	45887-70270	ROD,PUSH	1	5053 -				
213A	34000-70600	SEAL	4	5053 -				
214A	65210-12020	RING,O	4	5053 -				
215A	46011-70380	WASHER,PLANE	8	5053 -				
217A	34200-70850	SHIM	4	5053 -				
218A	33930-70430	SEAT,SPRING	1	5053 -				
301A	34940-70270	JOINT	1	5053 -				
302A	41600-71470	PLATE	1	5053 -				
312A	37600-71330	NUT	1	5053 -				
401A	41600-71460	PLATE	1	5053 -				
402A	33100-70740	CASE	1	5053 -				
403A	61101-06012	BOLT,SOCKET	1	5053 -				
404A	33930-70960	SEAT,SPRING	2	5053 -				
405A	33930-70840	SEAT,SPRING	4	5053 -				
406A	45887-70320	ROD,PUSH	4	5053 -				
408A	35600-76620	SPRING	4	5053 -				
411A	40840-72670	BUSHING	2	5053 -				
412A	41600-71500	PLATE	1	5053 -				
413A	41600-71450	PLATE	1	5053 -				
414A	61101-06080	BOLT,SOCKET	4	5053 -				
442A	33930-70970	SEAT,SPRING	2	5053 -				
501A	40790-70460	BOOT	1	5053 -				
571A	45887-70280	ROD,PUSH	3	5053 -				
591A	35910-70440	SOLENOID	1	5053 -				33300-71070
592A	35910-70450	SOLENOID	1	5053 -				33300-71080
593A	35910-70460	SOLENOID	1	5053 -				33300-71090
612A	35600-73920	SPRING	1	5053 -				
613A	35600-73940	SPRING	3	5053 -				
614A	35600-73910	SPRING	1	5053 -				
661A	33930-70460	SEAT,SPRING	1	5053 -				
663A	33930-70330	SEAT,SPRING	3	5053 -				
664A	33930-70440	SEAT,SPRING	1	5053 -				
711A	35600-73900	SPRING	1	5053 -				PORT 4
712A	35600-74350	SPRING	1	5053 -				PORT 2
713A	35600-77250	SPRING	1	5053 -				PORT 1
714A	35600-77260	SPRING	1	5053 -				PORT 3
762A	35600-73890	SPRING	1	5053 -				

silvermorn.co.uk

RIDE CONTROL - HYDRAULIC LINE

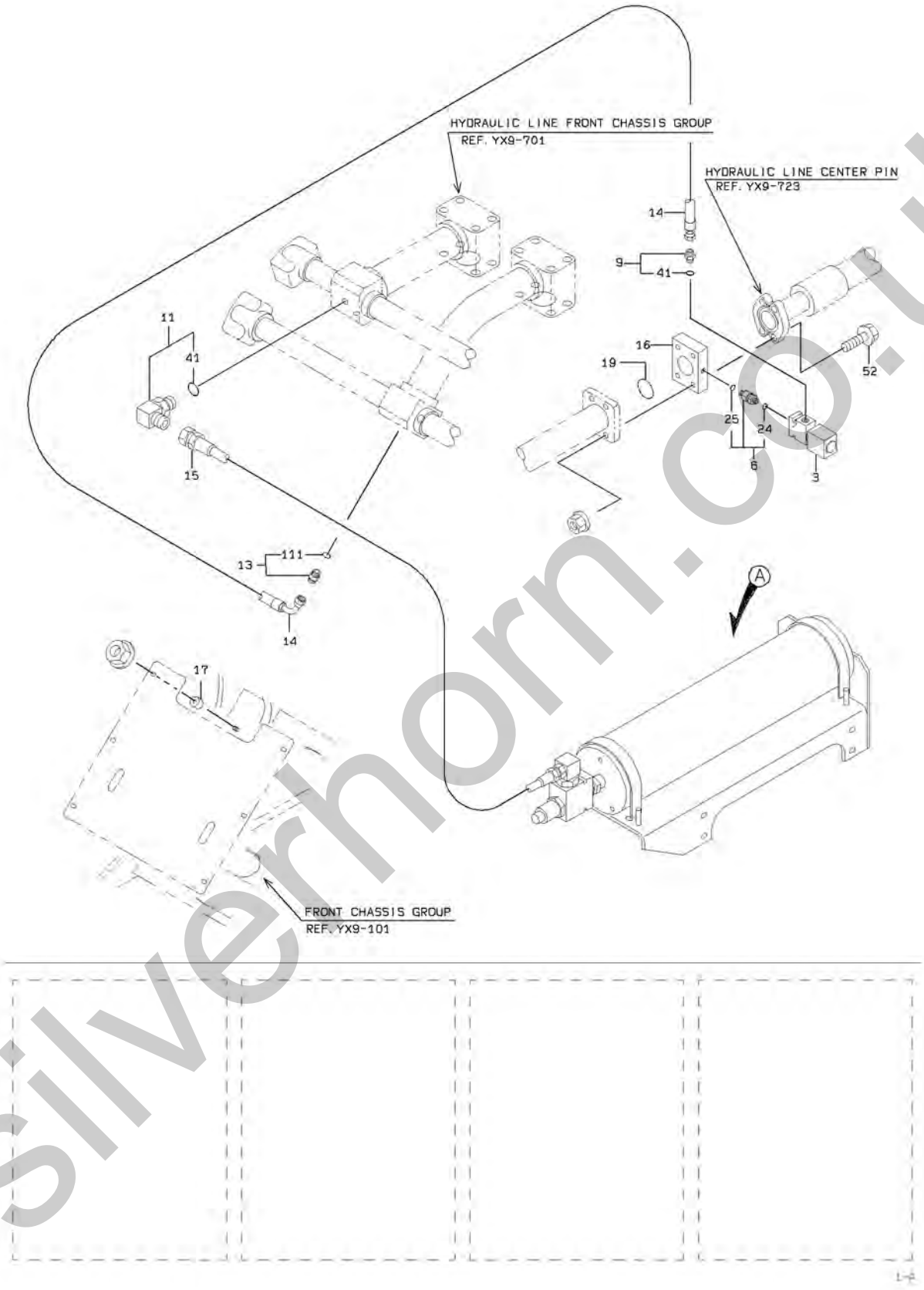

silverhorn.co.uk

RIDE CONTROL - HYDRAULIC LINE

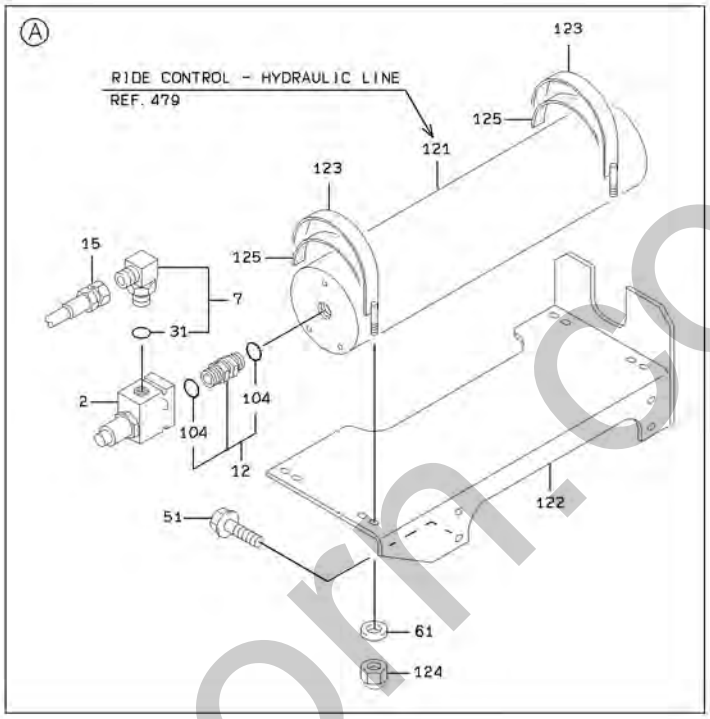

silverhorn.co.uk

RIDE CONTROL - HYDRAULIC LINE

SYM-BOL	PART NUMBER	PART NAME	UNIT Q,TY	SERIAL (A) - (B)	REMARKS N P D	(A)	(B)	(C)	(D)	REMARK
2A	38511-60090-7	VALVE ASSY	1	5001 -						
3A	38511-60100-7	VALVE ASSY	1	5001 -						
6A	30230-27130	ADAPTER	1	5001 -		Y01				
7A	88241-06920	ADAPTER,ELBOW	1	5001 -			Y02			
9A	88201-06806	ADAPTER,UNION	1	5001 -				Y03		
11A	88241-06916	ADAPTER,ELBOW	1	5001 -				Y03		
12A	30230-27150	ADAPTER	1	5001 -					Y04	
13A	88201-06706	ADAPTER	1	5001 -		Y05				
14A	68635-20150	HOSE,HIGH PRESSURE	1	5001 -						
15A	43113-43420	HOSE,HIGH PRESSURE	1	5001 - 5036						
15B	43113-47980	HOSE,HIGH PRESSURE	1	5037 -	C					
16A	40510-24940	FLANGE	1	5001 -						
17A	43780-39070	BOSS	6	5001 -						
19A	65220-41006	RING,O	1	5001 -						
24A	65231-00061	RING,O	1	5001 -		01				
25A	65231-00041	RING,O	1	5001 -		01				
31A	65231-00201	RING,O	1	5001 -			02			
41A	65231-00061	RING,O	1	5001 -				03		
51A	61802-12025	BOLT,FLANGED	4	5001 -						
52A	61802-12055	BOLT,FLANGED	4	5001 -						
61A	62701-40121	WASHER,PLANE	4	5001 -						
104A	65231-00201	RING,O	2	5001 -					04	
111A	65210-12014	RING,O	1	5001 -		05				
121A	30100-60550	ACCUMULATOR ASSY	1	5001 -						REF.479
122A	40902-31030	BRACKET	1	5001 -						
123A	38670-21760	BAND	2	5001 -						
124A	88031-06121	NUT,SELF-LOCKING	4	5001 -						
125A	33713-22540	SHEET,RUBBER	2	5001 -						

silverhorn.co.uk

MEMO

silverhorn.co.uk

RIDE CONTROL - ACCUMULATOR

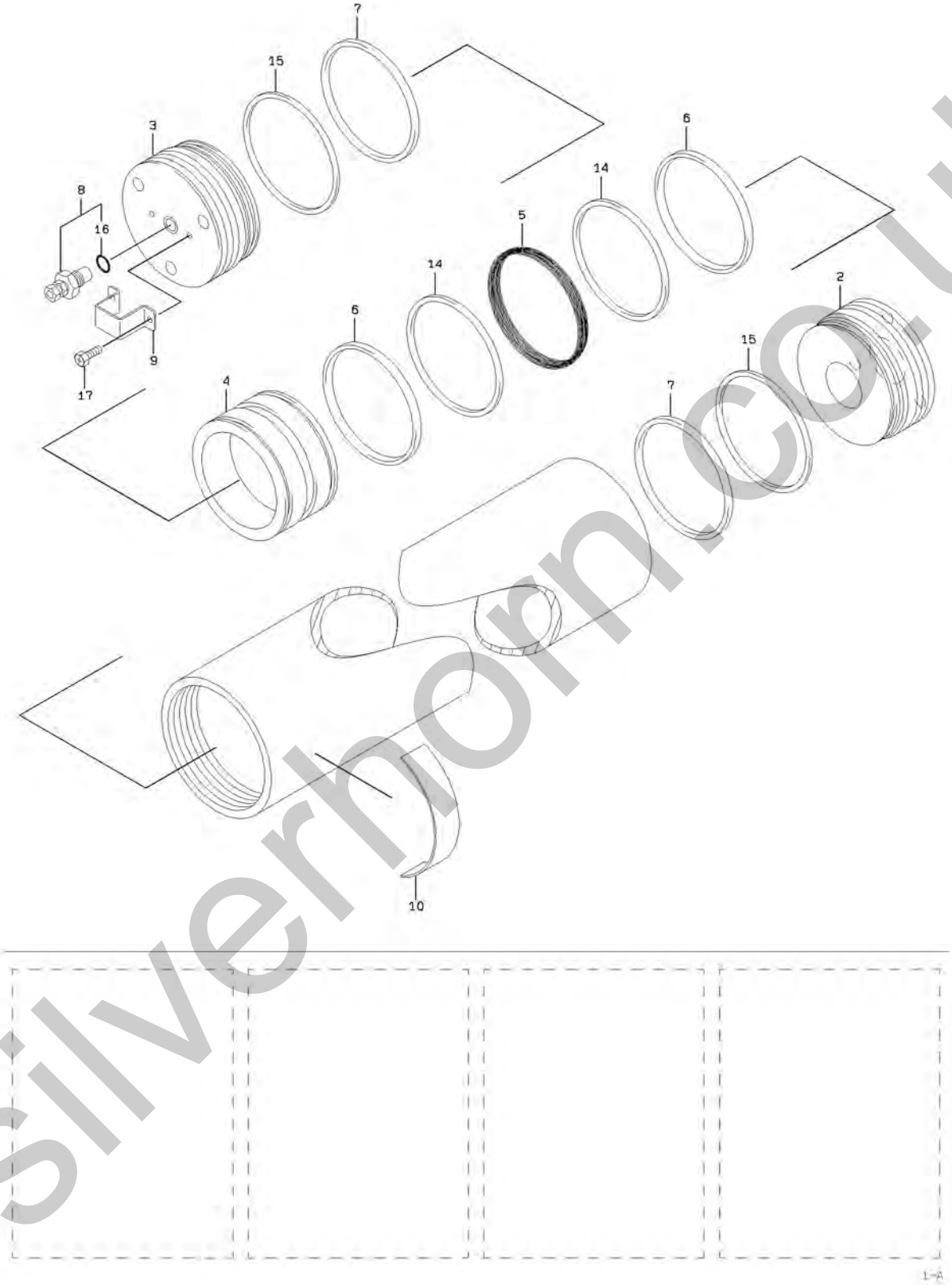

silverhorn.co.uk

RIDE CONTROL - ACCUMULATOR

SYM-BOL	PART NUMBER	PART NAME	UNIT Q,TY	SERIAL (A) - (B)	REMARKS N P D	(A) (B)	(C) (D)	REMARK
000A	30100-60550	ACCUMULATOR ASSY	1	5001 -				
2A	32210-72380	CAP	1	5001 -				
3A	32210-72390	CAP	1	5001 -				
4A	39960-72210	PISTON	1	5001 -				
5A	47131-76010	RING,O	1	5001 -				
6A	45200-71330	RING	2	5001 -				
7A	34000-70940	SEAL	2	5001 -				
8A	38511-71330	VALVE ASSY	1	5001 -		Y01		
9A	48979-70060	PROTECTOR	1	5001 -				
10A	41678-70040	PLATE,NAME	1	5001 -				
14A	46000-71620	WASHER	2	5001 -				
15A	46000-71660	WASHER	2	5001 -				
16A	47131-75760	RING,O	1	5001 -		01		
17A	35100-71970	SCREW	2	5001 -				

silverhorn.co.uk

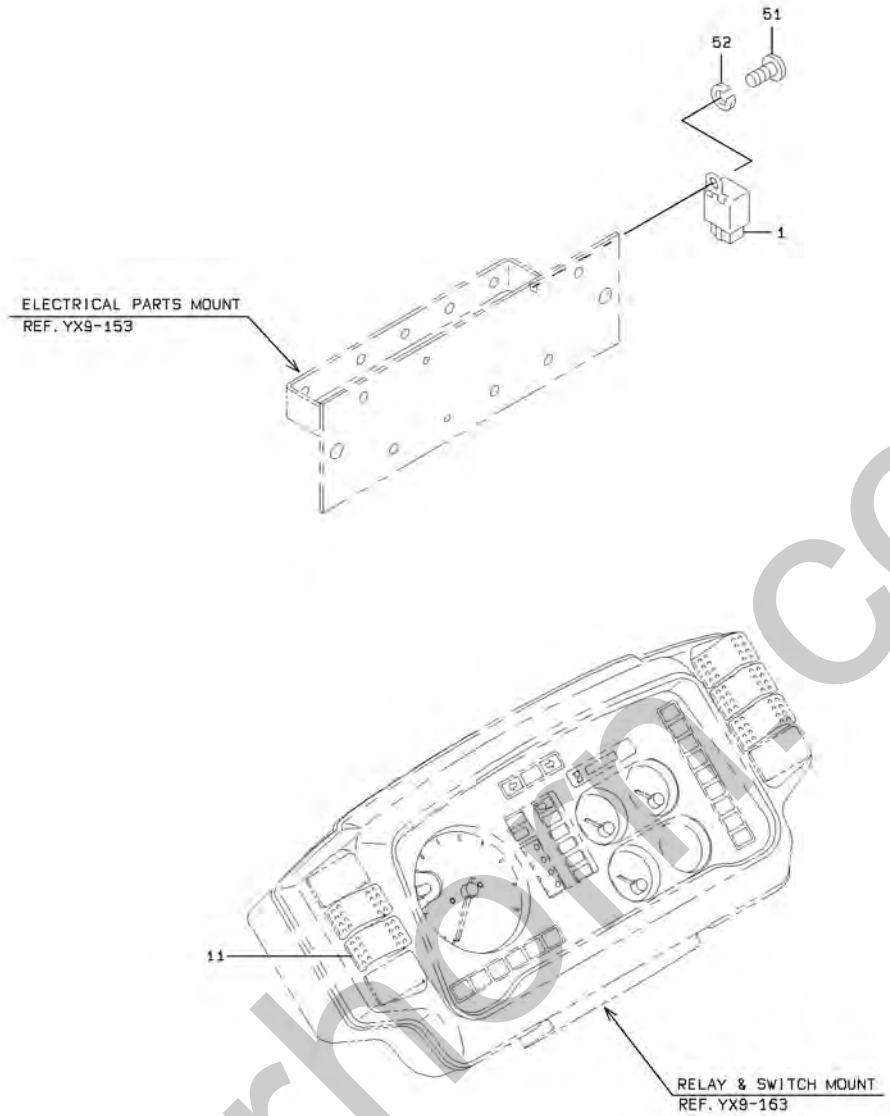

silverhorn.co.uk

RIDE CONTROL - ELECTRICAL WIRING

SYM-BOL	PART NUMBER	PART NAME	UNIT Q,TY	SERIAL (A) - (B)	REMARKS N P D	(A) (B)	(C) (D)	REMARK
1A	45050-70310	RELAY	1	5001 -				
11A	35010-60340	SWITCH	1	5001 -				RIDE CONTROL
51A	62256-51610	SCREW	1	5001 -				
52A	62721-06100	WASHER,SPRING	1	5001 -				

silverhorn.co.uk

EMERGENCY STEERING GROUP

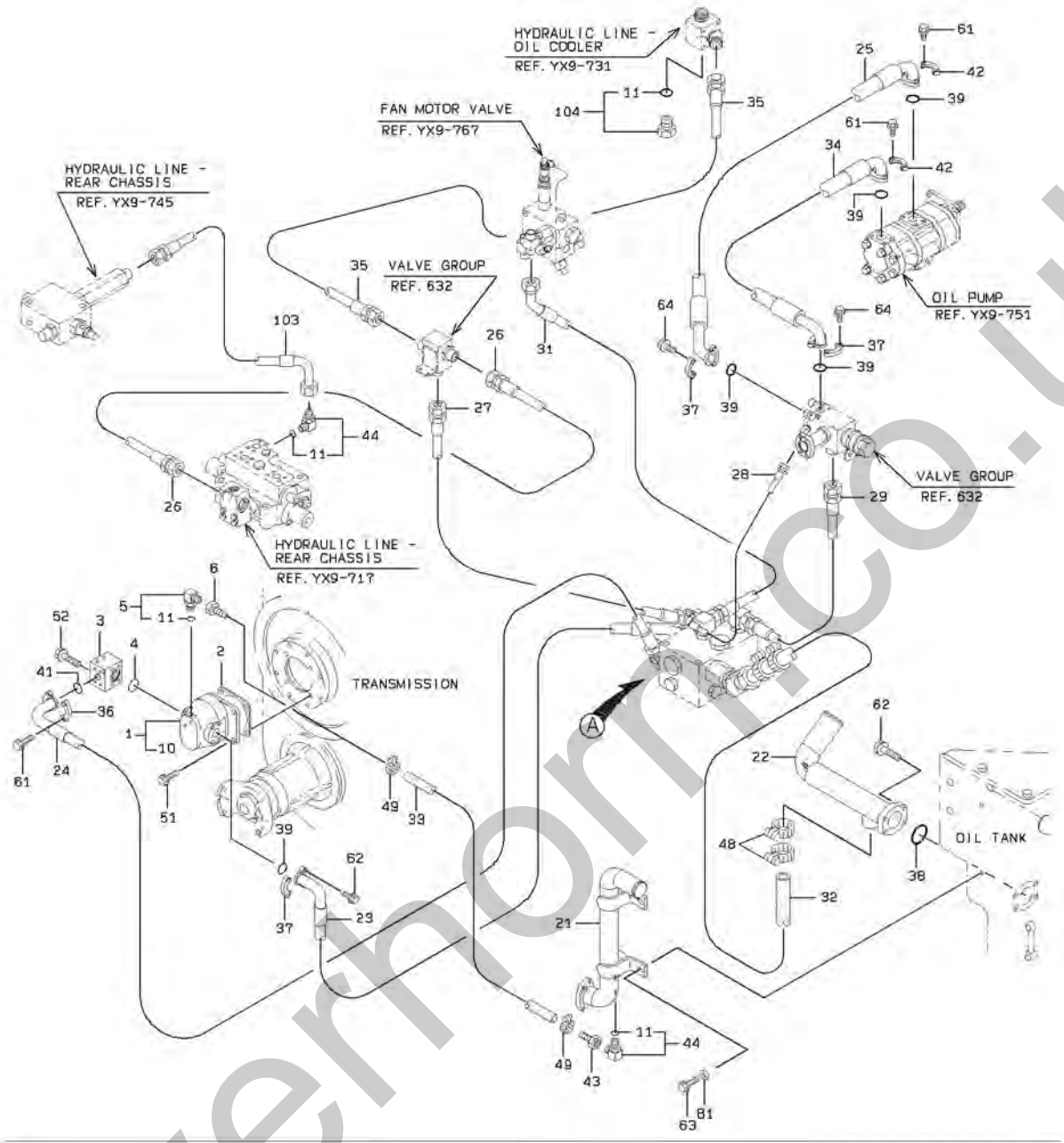

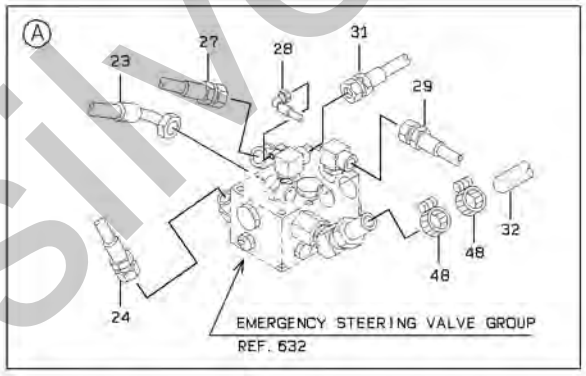

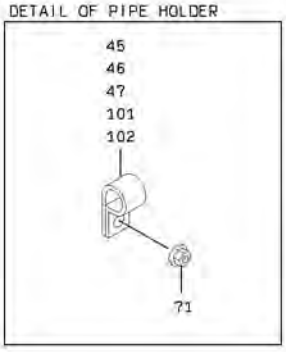

silvermonico.uk

EMERGENCY STEERING GROUP

SYM-BOL	PART NUMBER	PART NAME	UNIT Q,TY	SERIAL (A) - (B)	REMARKS N P D	(A)	(B)	(C)	(D)	REMARK
1A	44093-60460	PUMP,OIL	1	5001 -		Y01				
2A	31990-20370	GASKET	1	5001 -						
3A	41410-32350	BLOCK	1	5001 -						
4A	65220-31027	RING,O	1	5001 -						
5A	88241-07106	ADAPTER,ELBOW	1	5001 -			Y02			
6A	88511-03060	NIPPLE,HOSE	1	5001 -						
10A	49691-70760	REPAIR KIT	1	5001 -		01				
11A	65210-12014	RING,O	1	5001 -			02			
21A	38775-20290	PIPE,OIL	1	5001 -						
22A	38775-20150	PIPE,OIL	1	5001 -						
23A	43113-36280	HOSE,HIGH PRESSURE	1	5001 -						
24A	68658-60076	HOSE,HIGH PRESSURE	1	5001 -						
25A	43113-38060	HOSE,HIGH PRESSURE	1	5001 -						
26A	68255-80060	HOSE,HIGH PRESSURE	1	5001 -						
27A	68255-70098	HOSE,HIGH PRESSURE	1	5001 -						
28A	68635-10120	HOSE,HIGH PRESSURE	1	5001 -						
29A	68655-60105	HOSE,HIGH PRESSURE	1	5001 -						
31A	68245-60450	HOSE,HIGH PRESSURE	1	5001 -						
32A	67041-32032	HOSE,HEAT RESISTIN	1	5001 -						L=320
33A	67040-09000	HOSE,HEAT RESISTIN	1 M	5001 -						L=630
34A	68688-70118	HOSE,HIGH PRESSURE	1	5001 -						
35A	68255-80435	HOSE,HIGH PRESSURE	1	5001 -						
36A	69811-25210	FLANGE,SPLIT	2	5001 -						
37A	69811-32210	FLANGE,SPLIT	6	5001 -						
38A	65220-41010	RING,O	1	5001 -						
39A	65220-31027	RING,O	5	5001 -						
41A	65220-31024	RING,O	1	5001 -						
42A	40511-20010	FLANGE,SPLIT	4	5001 -						
43A	88511-03060	NIPPLE,HOSE	1	5001 -						
44A	88241-07106	ADAPTER,ELBOW	2	5001 -			Y02			
45A	72010-34000	HOLDER,HOSE	A/R	5001 -						D=34
46A	72010-37000	HOLDER,HOSE	A/R	5001 -						D=37
47A	72010-43000	HOLDER,HOSE	A/R	5001 -						D=43
48A	69002-05200-7	BAND,HOSE	4	5001 -						
49A	69002-02200-7	BAND,HOSE	2	5001 -						
51A	61802-12025	BOLT,FLANGED	4	5001 -						
52A	61802-12085	BOLT,FLANGED	4	5001 -						
61A	61802-10030	BOLT,FLANGED	12	5001 -						
62A	61802-12030	BOLT,FLANGED	8	5001 -						
63A	61802-12040	BOLT,FLANGED	2	5001 -						
64A	61802-12025	BOLT,FLANGED	8	5001 -						
71A	62480-21081	NUT,FLANGED	A/R	5001 -						
81A	62710-18121	WASHER,PLANE	2	5001 -						
101A	72001-11800	HOLDER,PIPE	A/R	5001 -						D=18
102A	72001-11500	HOLDER,PIPE	A/R	5001 -						D=15
103A	68645-20052	HOSE,HIGH PRESSURE	1	5001 -						
104A	88390-21316	PLUG	1	5001 -			Y02			

silverhorn.co.uk

EMERGENCY STEERING - VALVE GROUP

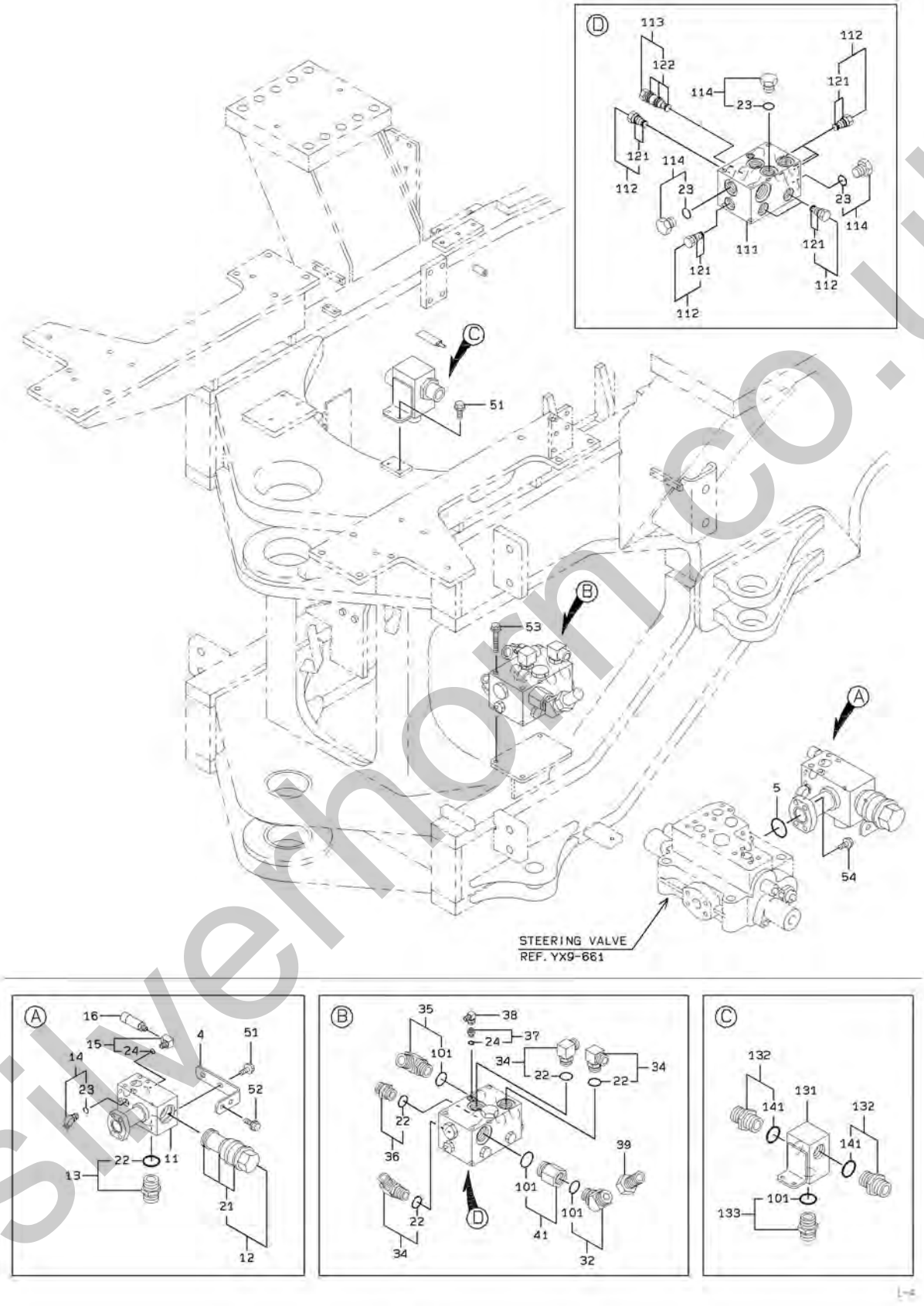

silverhorn.co.uk

EMERGENCY STEERING - VALVE GROUP

SYM-BOL	PART NUMBER	PART NAME	UNIT Q,TY	SERIAL (A) - (B)	REMARKS N P D	(A)	(B)	(C)	(D)	REMARK
4A	41617-46620	PLATE	1	5001 -						
5A	65220-31027	RING,O	1	5001 -						
11A	41411-21050	BLOCK ASSY	1	5001 -						
12A	38554-71140	VALVE,CHECK	1	5001 -		Y01				
13A	88201-06716	ADAPTER	1	5001 -			Y02			
14A	88241-07206	ADAPTER,ELBOW	1	5001 -				Y03		
15A	30241-21100	ADAPTER,ELBOW	1	5001 -					Y04	
16A	35047-20080	SWITCH,PRESSURE	1	5001 -	N					
21A	49327-72510	SEAL KIT	1	5001 -		01				
22A	65210-12029	RING,O	1	5001 -			02			
23A	65210-12014	RING,O	1	5001 -				03		
24A	65210-12011	RING,O	1	5001 -					04	
32A	88241-07220	ADAPTER,ELBOW	1	5001 -		Y05				
34A	88241-07116	ADAPTER,ELBOW	3	5001 -			Y02			
35A	88241-07120	ADAPTER,ELBOW	1	5001 -		Y05				
36A	88201-06716	ADAPTER	1	5001 -			Y02			
37A	88201-06704	ADAPTER	1	5001 -					Y04	
38A	30242-20100	ADAPTER,ELBOW UNIO	1	5001 -						
39A	88511-03200	NIPPLE,HOSE	1	5001 -						
41A	38906-21350	FITTING,BUSHING	1	5001 -		Y05				
51A	61802-10016	BOLT,FLANGED	4	5001 -						
52A	61802-10030	BOLT,FLANGED	2	5001 -						
53A	61802-12135	BOLT,FLANGED	3	5001 -						
54A	61802-12035	BOLT,FLANGED	4	5001 -						
101A	65210-12038	RING,O	1	5001 -		05				
111A	41410-32340	BLOCK	1	5001 -						41410-32620
112A	38554-71110	VALVE,CHECK	7	5001 -			Y06			
113A	38554-70970	VALVE,CHECK	1	5001 -				Y07		
114A	88390-21316	PLUG	3	5001 -				Y03		
121A	49327-72490	SEAL KIT	1	5001 -			06			
122A	49327-72500	SEAL KIT	1	5001 -				07		
131A	41410-32320	BLOCK	1	5001 -						
132A	88201-06724	ADAPTER	2	5001 -					Y08	
133A	88201-06720	ADAPTER	1	5001 -		Y05				
141A	65210-12044	RING,O	1	5001 -					08	

silverhorn.co.uk

CABLE MOUNT

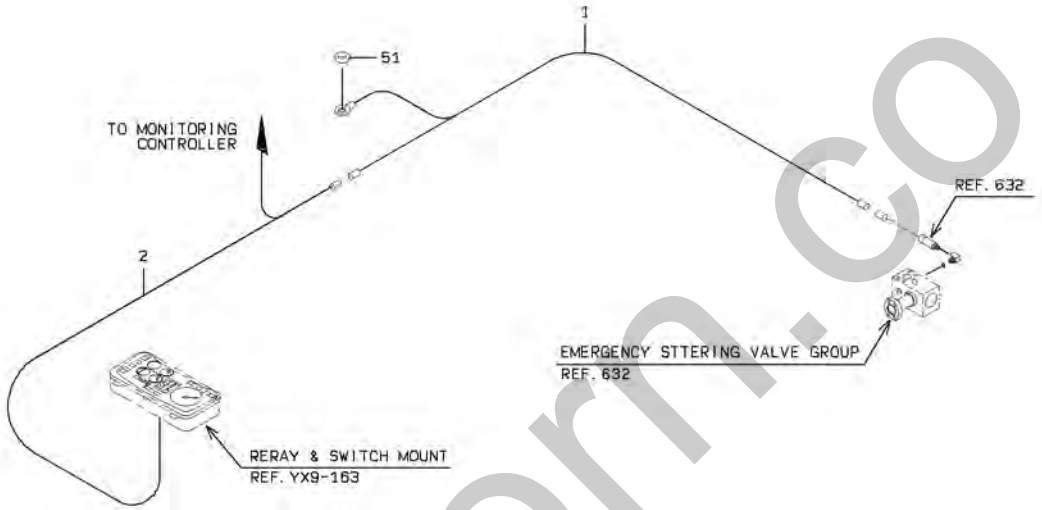

silverhorn.co.uk

CABLE MOUNT

SYM-BOL	PART NUMBER	PART NAME	UNIT Q,TY	SERIAL (A) - (B)	REMARKS N P D	(A) (B)	(C) (D)	REMARK
1A	33193-29960	CABLE ASSY	1	5001 -				
2A	33193-29970	CABLE ASSY	1	5001 -				
51A	62701-40101	WASHER,PLANE	1	5001 -				

silverhorn.co.uk

STEERING WHEEL MOUNT

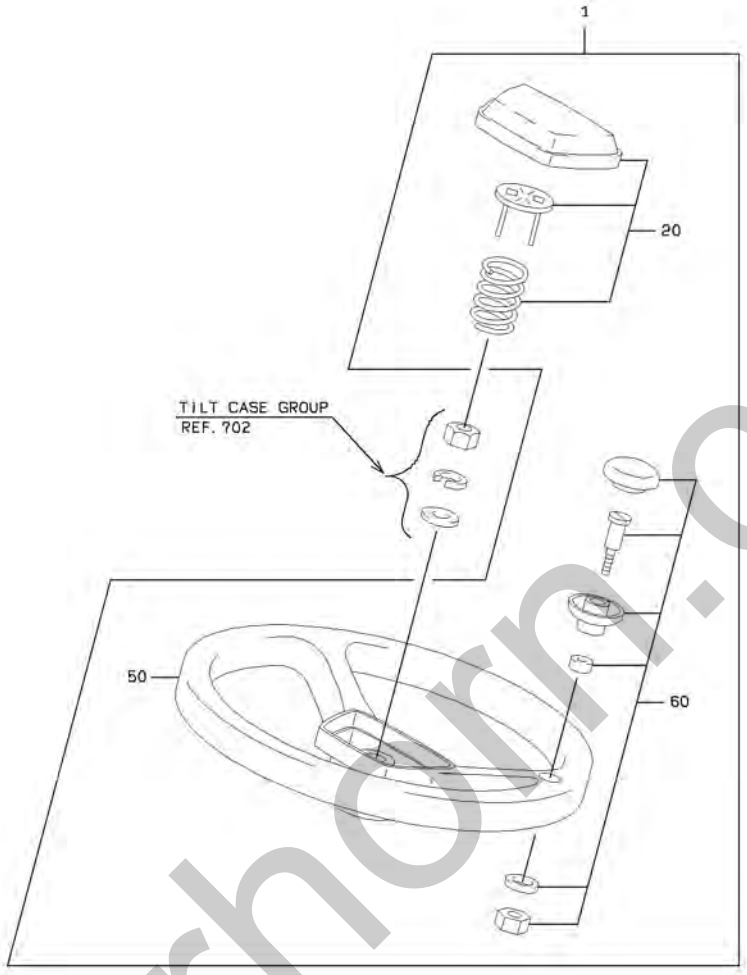

silverhorn.co.uk

STEERING WHEEL MOUNT

SYM-BOL	PART NUMBER	PART NAME	UNIT Q,TY	SERIAL (A) - (B)	REMARKS N P D	(A) (B)	(C) (D)	REMARK
1A	43415-60020	WHEEL ASSY,STEERIN	1	5001 -		Y01		
20A	43301-70050	HORN ASSY	1	5001 -		01		
50A	43420-70030	WHEEL,STEERING	1	5001 -		01		
60A	37810-60140	KNOB	1	5001 -		01		

silverhorn.co.uk

SHIFT LEVER GROUP (STEERING WHEEL)

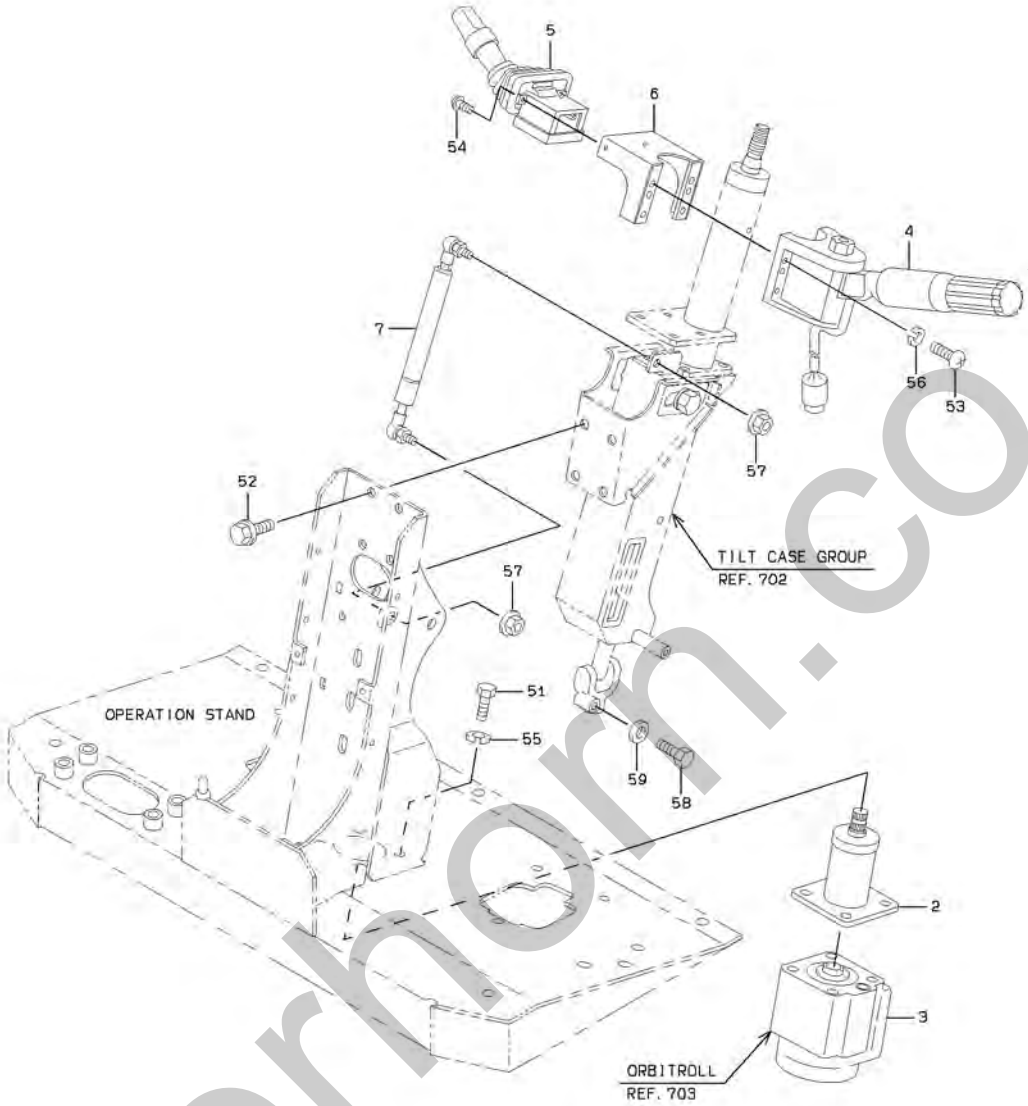

silverhorn.co.uk

SHIFT LEVER GROUP (STEERING WHEEL)

SYM-BOL	PART NUMBER	PART NAME	UNIT Q,TY	SERIAL (A) - (B)	REMARKS N P D	(A) (B)	(C) (D)	REMARK
2A	34501-60170	SHAFT ASSY	1	5001 -				
3A	31050-60240-7	ORBITROL(TM) ASSY	1	5001 -				REF.703
4A	45625-60140	LEVER ASSY,SHIFT	1	5001 -				
5A	35045-60020	SWITCH,FLASHER	1	5001 -				
6A	40901-60090	BRACKET	1	5001 -				
7A	35617-60090	SPRING,GAS	1	5001 -				
51A	61275-06025	BOLT(UNIFY)	4	5001 -				
52A	61802-08020	BOLT,FLANGED	4	5001 -				
53A	62256-51520	SCREW	6	5001 -				
54A	62256-29310	SCREW	2	5001 -				
55A	62722-03100	WASHER,SPRING	4	5001 -				
56A	62721-05100	WASHER,SPRING	6	5001 -				
57A	62480-21081	NUT,FLANGED	2	5001 -				
58A	61033-08025	BOLT	1	5001 -				
59A	62721-08100	WASHER,SPRING	1	5001 -				

silverhorn.co.uk

TILT CASE GROUP (STEERING WHEEL)

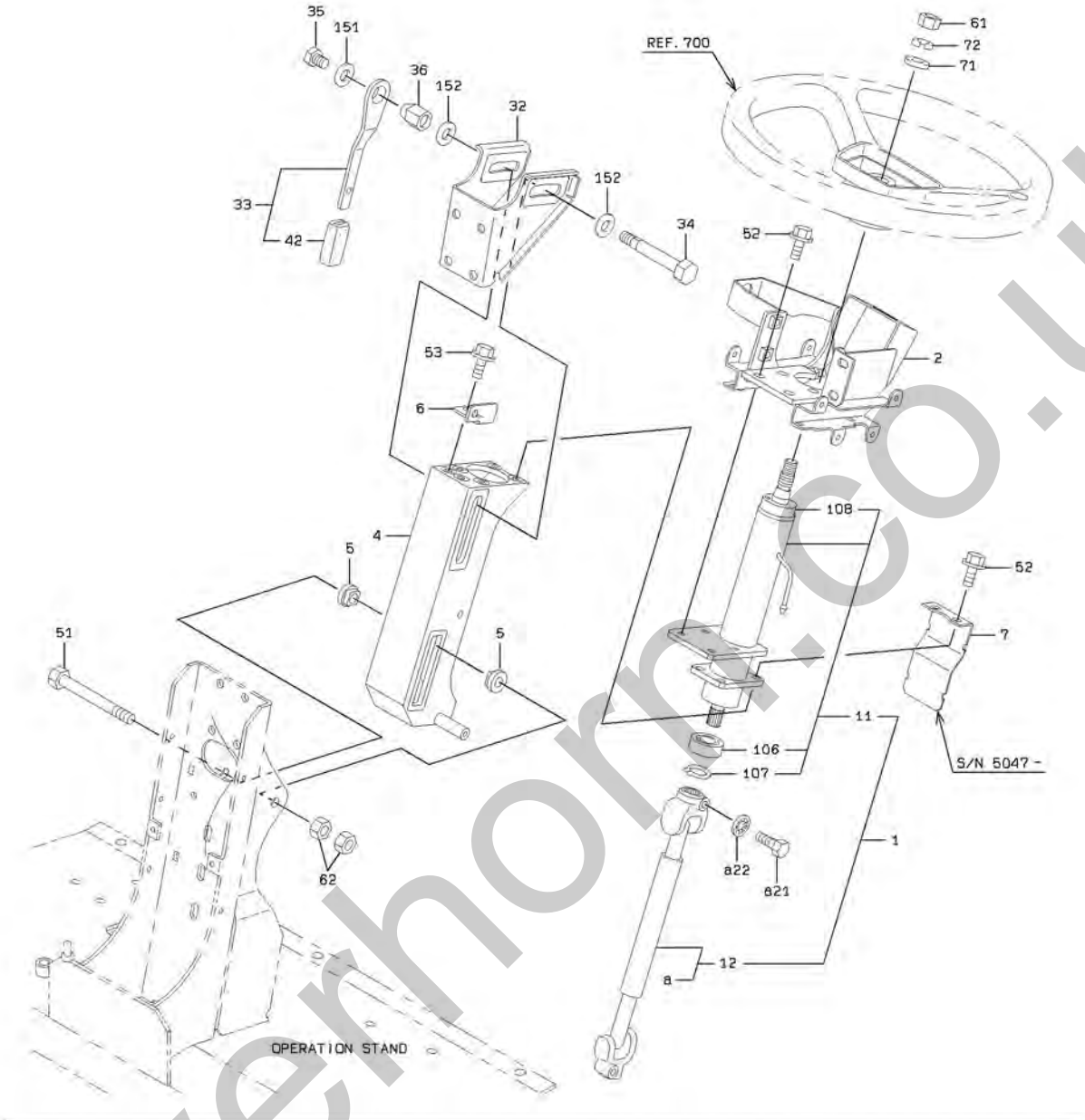

silverhorn.co.uk

TILT CASE GROUP (STEERING WHEEL)

SYM-BOL	PART NUMBER	PART NAME	UNIT Q,TY	SERIAL (A) - (B)	REMARKS N P D	(A)	(B)	(C)	(D)	REMARK
1A	34501-21990	SHAFT ASSY	1	5001 - 5048		Y01				
1B	34501-22550	SHAFT ASSY	1	5049 -	C	Y01				
2A	40902-20030	BRACKET	1	5001 -						
4A	40901-57900	BRACKET	1	5001 -						
5A	40850-20550	BUSHING,ELASTIC	2	5001 -						
6A	41606-56200	PLATE	1	5001 -						
7A	41710-35550	PLATE	1	5047 -						
11A	33311-70020	COLUMN ASSY	1	5001 -		01			Y04	
12A	34944-70020	JOINT ASSY,UNIVERS	1	5001 -		01	Y02			
21A	61033-08025	BOLT	1	5001 -			02			
22A	62761-17081	WASHER,TOOTH	1	5001 -			02			62721-08100
32A	40901-20110	BRACKET	1	5001 -						
33A	45600-24210	LEVER	1	5001 -				Y03		
34A	43900-24610	BOLT	1	5001 -						
35A	43900-24230	BOLT	1	5001 -						
36A	37600-24460	NUT	1	5001 -						
42A	32224-20220	CAP,ELASTIC	1	5001 -	N			03		
51A	61033-12110	BOLT	1	5001 -						
52A	61802-08016	BOLT,FLANGED	8	5001 -						
53A	61802-08012	BOLT,FLANGED	2	5001 -						
61A	62403-81142	NUT	1	5001 -						
62A	62401-81121	NUT	2	5001 -						62401-91121
71A	62701-40141	WASHER,PLANE	1	5001 -						
72A	62721-14100	WASHER,SPRING	1	5001 -						
106A	42001-70530	BEARING,BALL	1	5001 -					04	
107A	63811-00017	RING,SNAP	1	5001 -					04	
108A	40845-70050	BUSHING,COLUMN	1	5001 -					04	
151A	62710-18121	WASHER,PLANE	1	5001 -						
152A	62710-18141	WASHER,PLANE	2	5001 -						

silverhorn.co.uk

ORBITROLL

<S/N 5001 - 5034>

(NOTE):KIT(SYMBOL 30) CONSISTS OF THE PARTS WITH a.

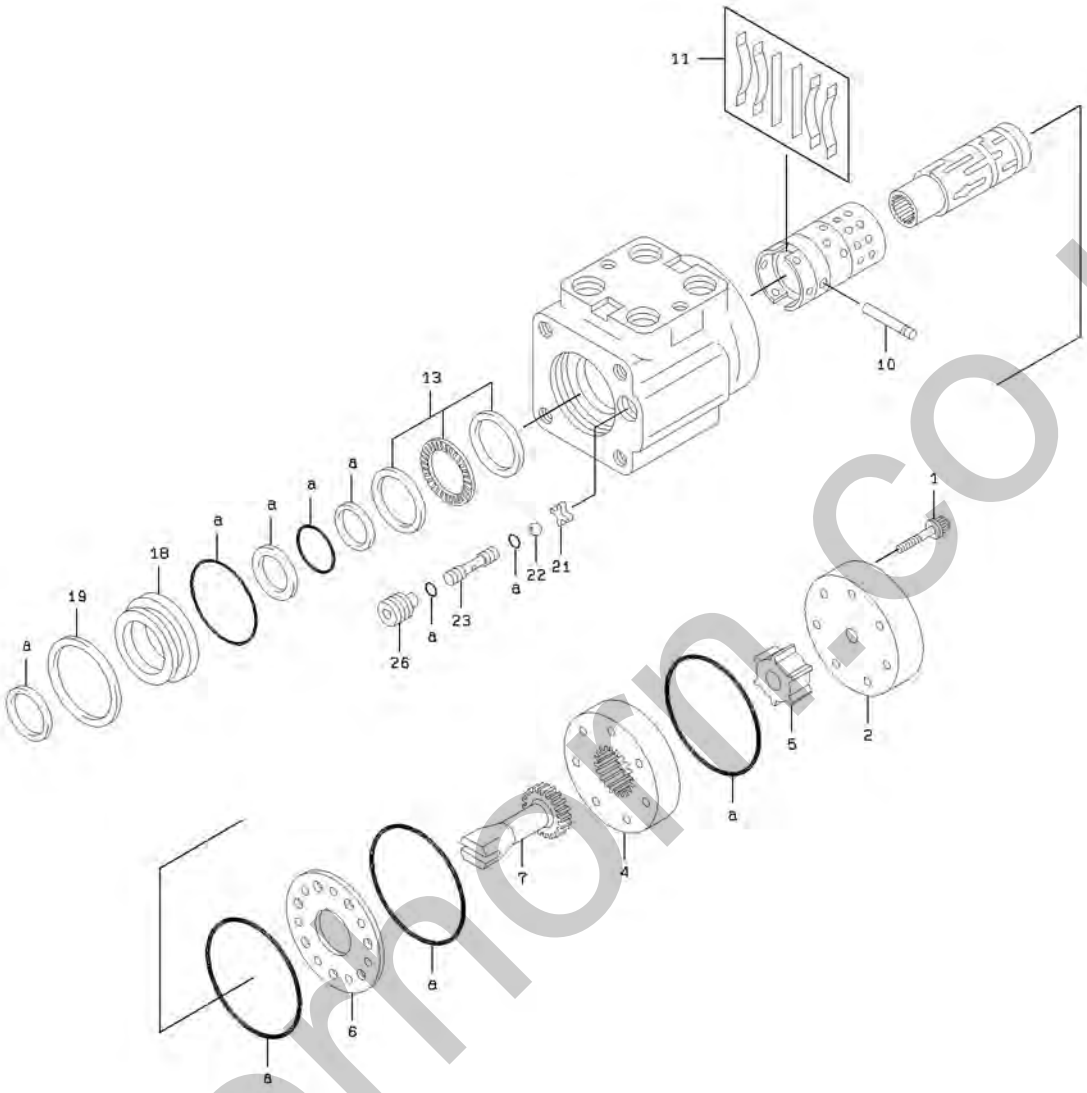

silvermoon.co.uk

ORBITROLL

SYM-BOL	PART NUMBER	PART NAME	UNIT Q,TY	SERIAL (A) - (B)	REMARKS N P D	(A) (B)	(C) (D)	REMARK
000A	31050-60240-7	ORBITROL(TM) ASSY	1	5001 - 5034				
1A	35100-71200-7	SCREW	7	5001 - 5034				
2A	41657-70140-7	PLATE,END	1	5001 - 5034				
4A	45715-70130-7	ROTOR ASSY	1	5001 - 5034				
5A	35700-70970-7	SPACER	1	5001 - 5034				
6A	41656-70220-7	PLATE,WEAR	1	5001 - 5034				
7A	34500-70080-7	SHAFT	1	5001 - 5034				
10A	40000-70010-7	PIN	1	5001 - 5034				
11A	49212-70040-7	SPRING KIT	1	5001 - 5034				
13A	49612-70010-7	BEARING KIT	1	5001 - 5034				
18A	44953-70230-7	RETAINER,SEAL	1	5001 - 5034				
19A	45323-70010-7	RING,RETAINER	1	5001 - 5034				
21A	44950-70010-7	RETAINER	1	5001 - 5034				
22A	43751-70030-7	BALL	1	5001 - 5034				
23A	38554-70030-7	VALVE,CHECK	1	5001 - 5034				
26A	35100-70010-7	SCREW	1	5001 - 5034				
30A	49327-71900-7	SEAL KIT	1	5001 - 5034				

silverhorn.co.uk

ORBITROLL

<S/N 5035 - >

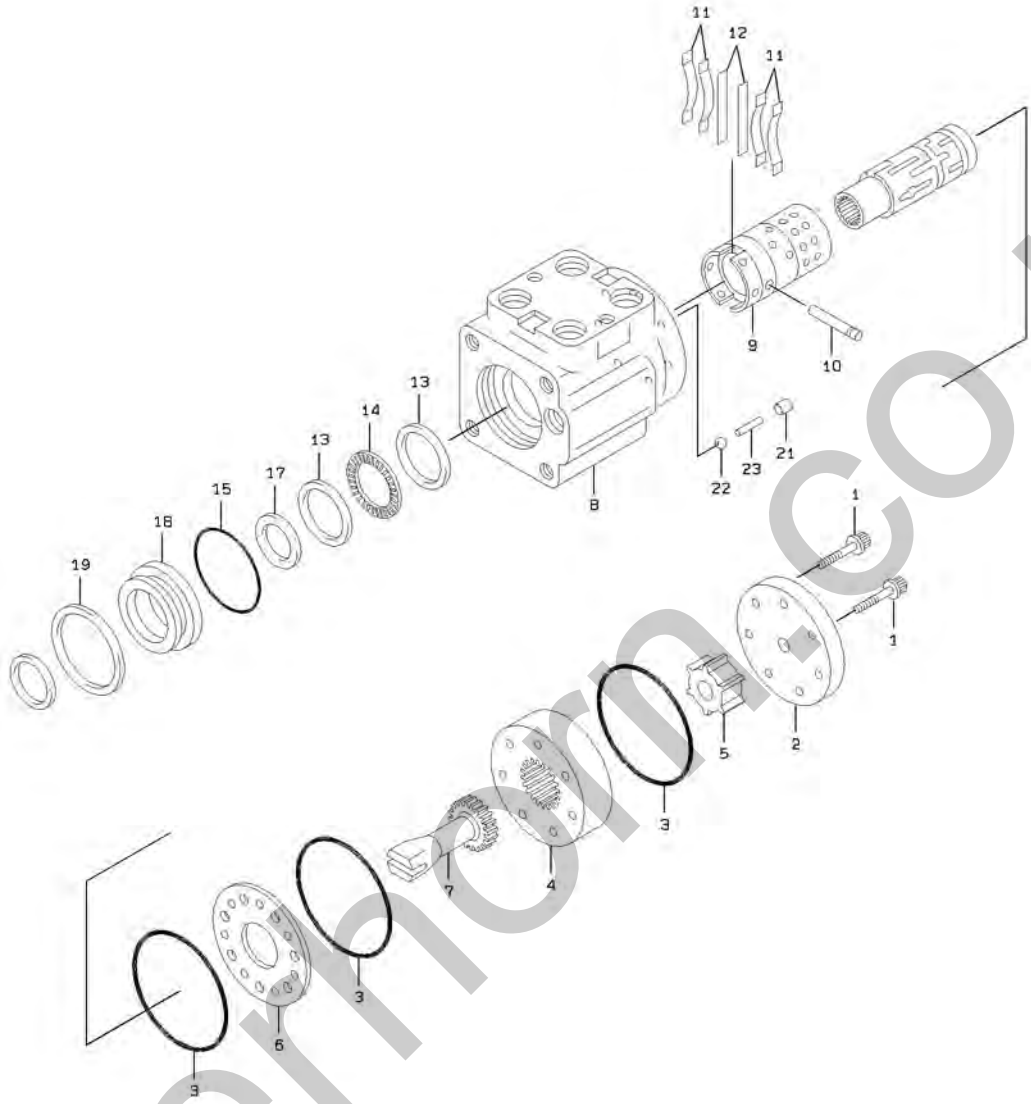

silvermoon.co.uk

ORBITROLL

SYM-BOL	PART NUMBER	PART NAME	UNIT Q,TY	SERIAL (A) - (B)	REMARKS N P D	(A) (B)	(C) (D)	REMARK
000A	31050-60240-7	ORBITROL(TM) ASSY	1	5035 -				
1A	35100-72240-7	SCREW	7	5035 -				35100-71200-7
2A	41657-70220-7	PLATE,END	1	5035 -				41657-70140-7
3A	34000-71010-7	SEAL	3	5035 -				
4A	45715-70130-7	ROTOR ASSY	1	5035 -				
5A	35700-70970-7	SPACER	1	5035 -				
6A	41656-70280-7	PLATE,WEAR	1	5035 -				41656-70220-7
7A	34500-70770-7	SHAFT	1	5035 -				34500-70080-7
8A	37900-70880-7	HOUSING	1	5035 -				
9A	35570-71530-7	SPOOL	1	5035 -				
10A	40000-71530-7	PIN	1	5035 -				40000-70010-7
11A	35600-77080-7	SPRING	4	5035 -				49212-70040-7
12A	35700-71950-7	SPACER	2	5035 -				
13A	45410-70030-7	RACE	2	5035 -				49612-70010-7
14A	42006-70760-7	BEARING,NEEDLE	1	5035 -				
15A	47131-76550-7	RING,O	1	5035 -				
17A	34000-70330-7	SEAL	1	5035 -				
18A	44953-70390-7	RETAINER,SEAL	1	5035 -				44953-70230-7
19A	45323-70290-7	RING,RETAINER	1	5035 -				45323-70010-7
21A	30590-70030-7	INSERT	1	5035 -				44950-70010-7
22A	43751-70450-7	BALL	1	5035 -				43751-70030-7
23A	40000-71540-7	PIN	1	5035 -				38554-70030-7

silverhorn.co.uk

OPERATION STAND GROUP (STEERING WHEEL)

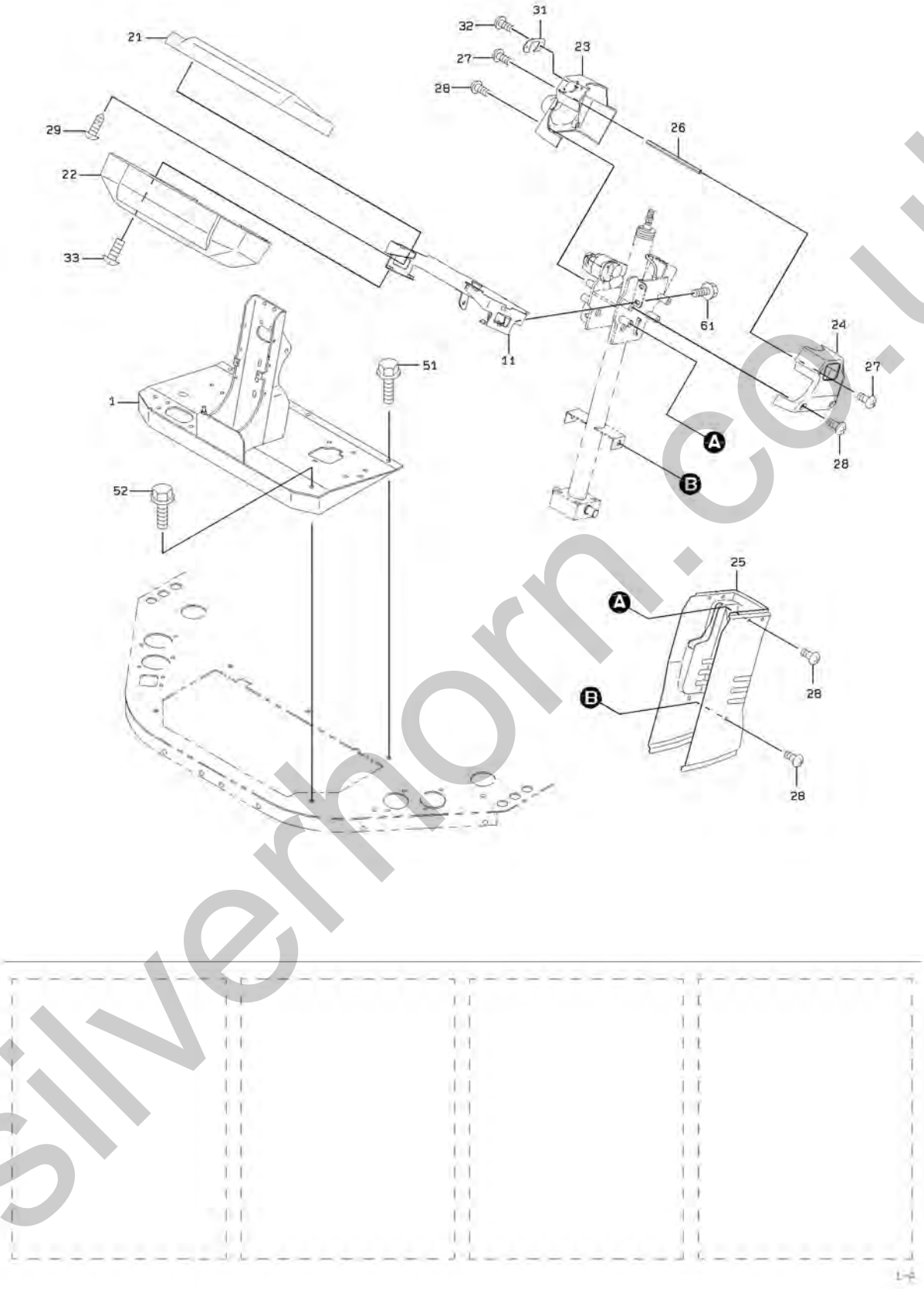

silverhorn.co.uk

OPERATION STAND GROUP (STEERING WHEEL)

SYM-BOL	PART NUMBER	PART NAME	UNIT Q,TY	SERIAL (A) - (B)	REMARKS N P D	(A) (B)	(C) (D)	REMARK
1A	35175-20430	STAND ASSY	1	5001 -				
11A	43800-23080	BOX	1	5001 -				
21A	31200-60030	COVER	1	5001 -				
22A	31200-60040	COVER	1	5001 -				
23A	31200-60340	COVER	1	5001 -				
24A	31200-60060	COVER	1	5001 -				
25A	31200-60410	COVER	1	5001 -				
26A	45870-26590	ROD	2	5001 -				
27A	35100-20020	SCREW	4	5001 -				
28A	35100-20680	SCREW	10	5001 -				
29A	35106-20020	SCREW,TAPPING	4	5001 -				
31A	41617-34940	PLATE	1	5001 -				
32A	62262-14010	SCREW,TAPPING	2	5001 -				
33A	35100-20200	SCREW	4	5001 -				
51A	61802-10025	BOLT,FLANGED	5	5001 -				
52A	61802-10085	BOLT,FLANGED	2	5001 -				
61A	61802-08016	BOLT,FLANGED	4	5001 -				

silverhorn.co.uk

SEAT MOUNT (STEERING WHEEL)

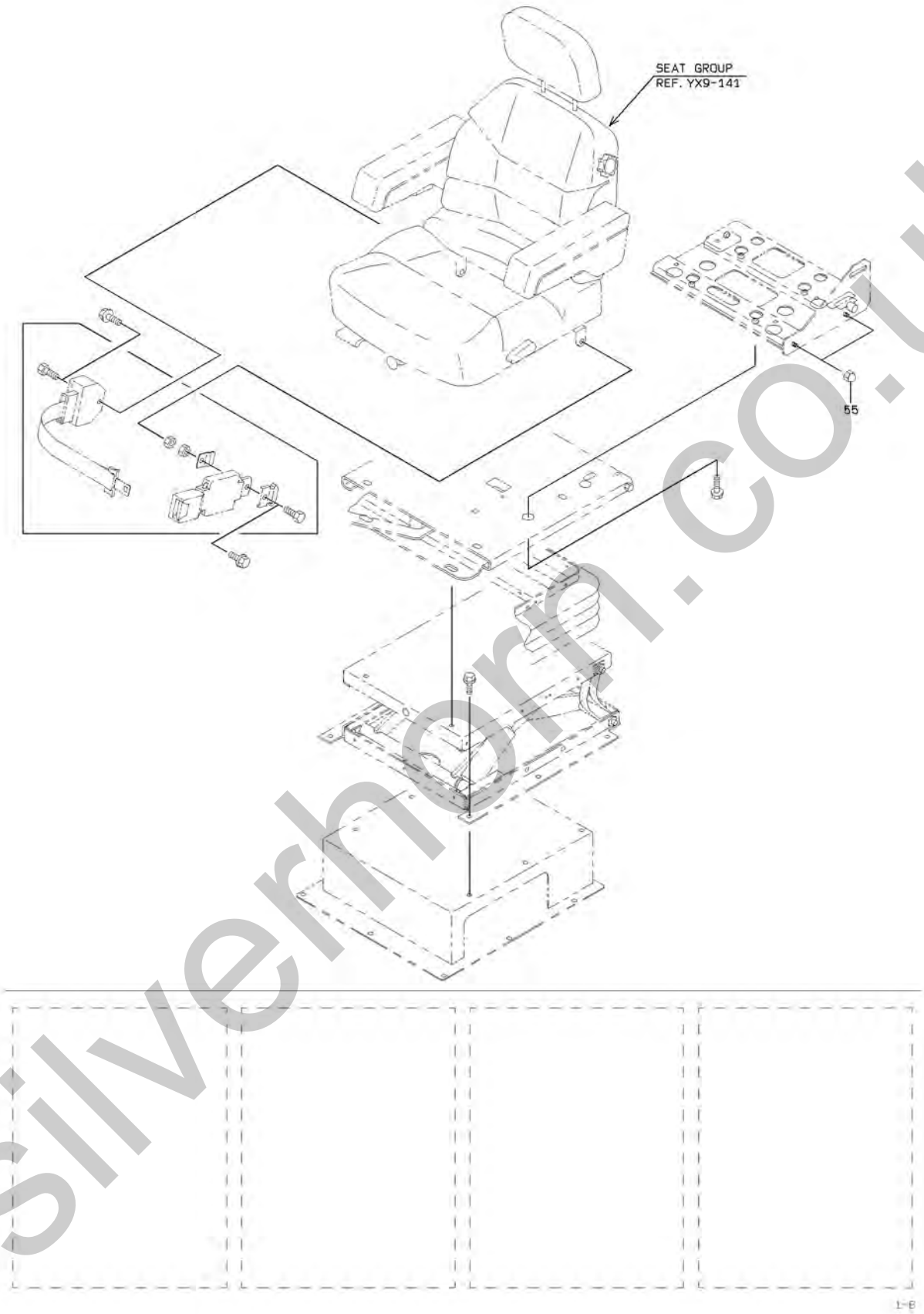

silverhorn.co.uk

SEAT MOUNT (STEERING WHEEL)

SYM-BOL	PART NUMBER	PART NAME	UNIT Q,TY	SERIAL (A) - (B)	REMARKS N P D	(A) (B)	(C) (D)	REMARK
55A	62443-31081	NUT,CAP	2	5001 -				

silverhorn.co.uk

PILOT HYDRAULIC LINE (STEERING WHEEL)

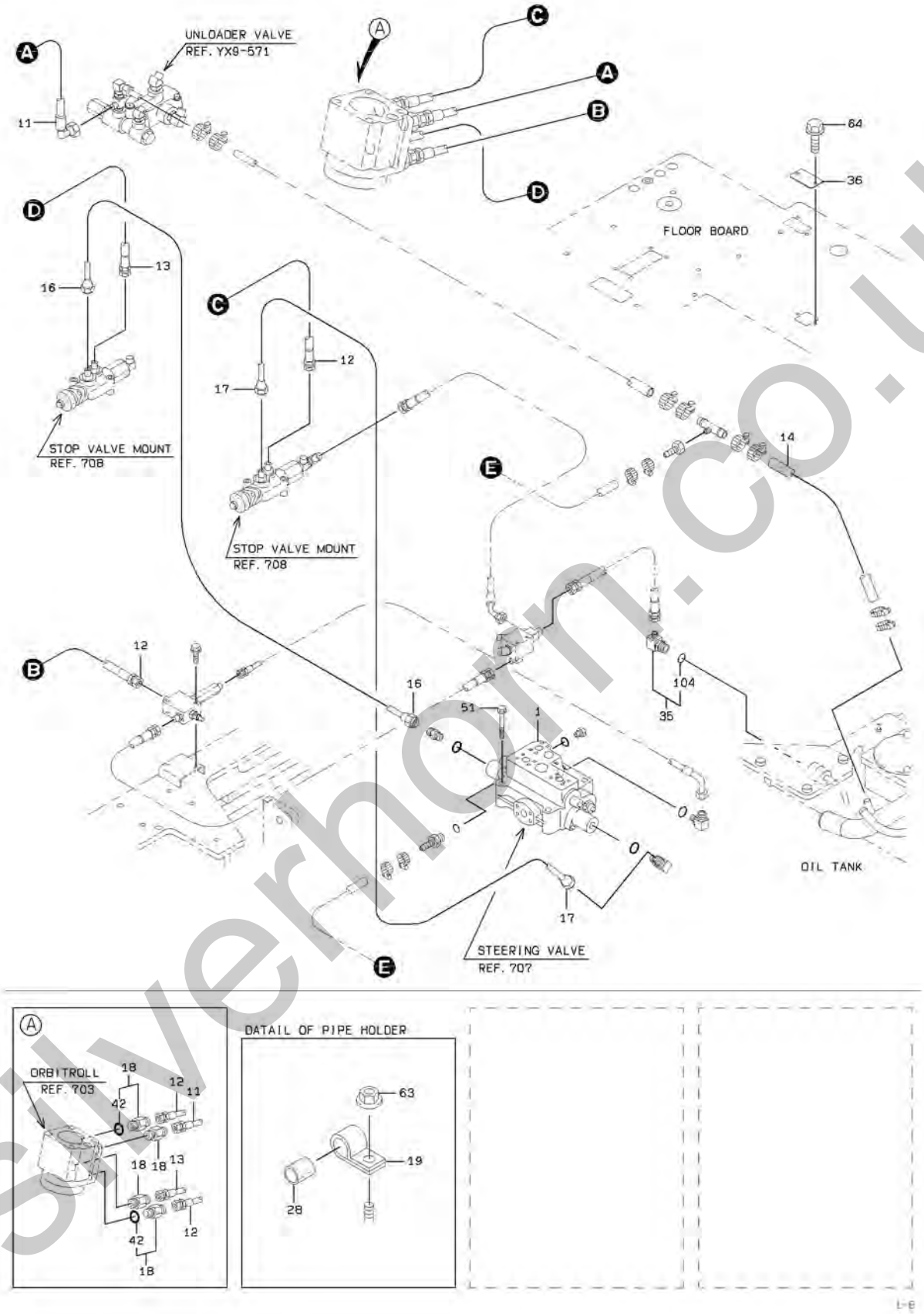

silverhorn.co.uk

PILOT HYDRAULIC LINE (STEERING WHEEL)

SYM-BOL	PART NUMBER	PART NAME	UNIT Q,TY	SERIAL (A) - (B)	REMARKS N P D	(A)	(B)	(C)	(D)	REMARK
1A	38523-60600	VALVE ASSY,STEERIN	1	5001 - 5034						REF.707
1B	38523-60660	VALVE ASSY,STEERIN	1	5035 - 5080	C					REF.707
1C	38523-60790	VALVE ASSY,STEERIN	1	5081 -	C					REF.707
11A	68035-20110	HOSE,HIGH PRESSURE	1	5001 -						
12A	68055-20103	HOSE,HIGH PRESSURE	2	5001 -						
13A	68055-20098	HOSE,HIGH PRESSURE	1	5001 -						
14A	67040-12000	HOSE,HEAT RESISTIN	2 M	5001 -						L=1600
16A	38705-35170	PIPE ASSY,FLARED	1	5001 -						
17A	38705-35160	PIPE ASSY,FLARED	1	5001 -						
18A	30230-20150	ADAPTER	4	5001 -		Y01				
19A	72001-12500	HOLDER,PIPE	8	5001 -						D=25
28A	65801-16220	BUSHING,ELASTIC	8	5001 -						
35A	30241-23660	ADAPTER,ELBOW	1	5001 -			Y02			
36A	41609-22070	PLATE	1	5001 -						
42A	65231-00081	RING,O	1	5001 -		01				
51A	61802-16110	BOLT,FLANGED	3	5001 -						
63A	62480-21081	NUT,FLANGED	3	5001 -						
64A	61802-06016	BOLT,FLANGED	2	5001 -						
104A	65210-12024	RING,O	1	5001 -			02			

silverhorn.co.uk

STEERING VALVE

(NOTE):KIT(SYMBOL 700) CONSISTS OF THE PARTS WITH a.

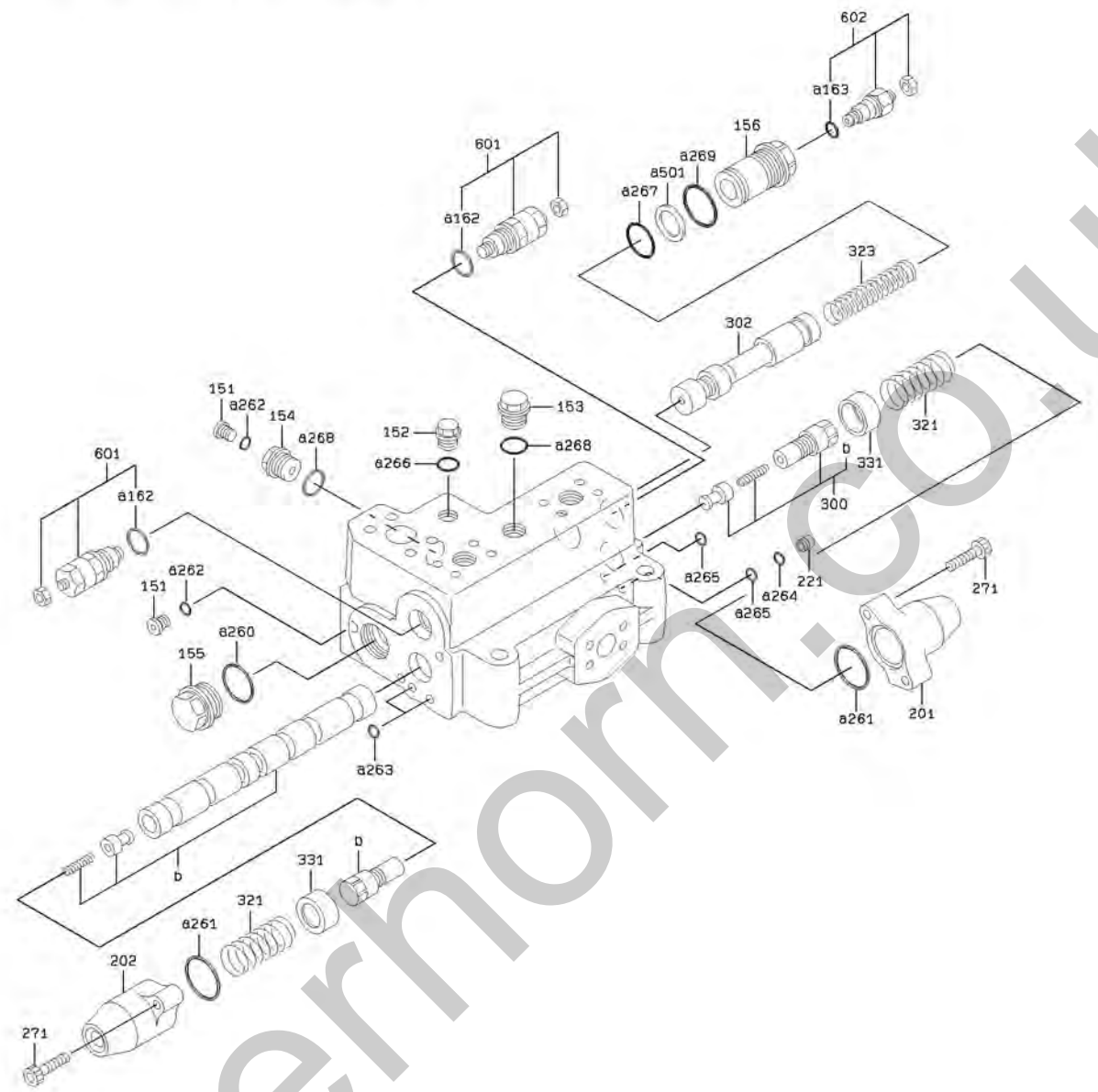

silverhorn.co.uk

STEERING VALVE

SYM-BOL	PART NUMBER	PART NAME	UNIT Q,TY	SERIAL (A) - (B)	REMARKS N P D	(A)	(B)	(C)	(D)	REMARK
000A	38523-60600	VALVE ASSY,STEERIN	1	5001 - 5034						
000B	38523-60660	VALVE ASSY,STEERIN	1	5035 - 5080	C					
000C	38523-60790	VALVE ASSY,STEERIN	1	5081 -	C					
151A	41530-72790	PLUG	2	5001 -						
152A	41530-73560	PLUG	1	5001 -						
153A	41530-74150	PLUG	1	5001 -						
154A	41530-74240	PLUG	1	5001 -						
155A	41530-74830	PLUG	1	5001 -						
156A	41530-74480	PLUG	1	5001 -						
162A	65210-12024	RING,O	1	5001 -		01		K1		
163A	65210-12018	RING,O	1	5001 -			02	K1		
201A	32210-72200	CAP	1	5001 -						
202A	32210-72210	CAP	1	5001 -						
221A	31053-70650	ORIFICE	1	5001 -						
260A	65210-12040	RING,O	1	5001 -				K1		
261A	65210-22045	RING,O	2	5001 -				K1		
262A	65210-12011	RING,O	2	5001 -				K1		
263A	65210-12010	RING,O	2	5001 -				K1		
264A	65210-12007	RING,O	1	5001 -				K1		
265A	65210-12012	RING,O	2	5001 -				K1		
266A	65210-12024	RING,O	1	5001 -				K1		
267A	65210-12026	RING,O	1	5001 -				K1		
268A	65210-12029	RING,O	2	5001 -				K1		
269A	65210-12042	RING,O	1	5001 -				K1		
271A	61101-10045	BOLT,SOCKET	4	5001 -						
300A	35575-70180	SPOOL ASSY	1	5001 - 5034						
300B	35575-70200	SPOOL ASSY	1	5035 - 5080	B					
300C	35575-70250	SPOOL ASSY	1	5081 -	B					
302A	35570-71090	SPOOL	1	5001 - 5034						
302B	35570-70960	SPOOL	1	5035 -	N B					
321A	35600-75880	SPRING	2	5001 -						
323A	35600-75890	SPRING	1	5001 -						
331A	44955-70380	RETAINER,SPRING	2	5001 -						
501A	65240-21026	RING,BACK-UP	1	5001 -				K1		
601A	38565-71460	VALVE,RELIEF	2	5001 -		Y01				
602A	38565-71470	VALVE,RELIEF	1	5001 -			Y02			
700A	49327-73570	SEAL KIT	1	5001 -				QK1		

silverhorn.co.uk

STOP VALVE MOUNT

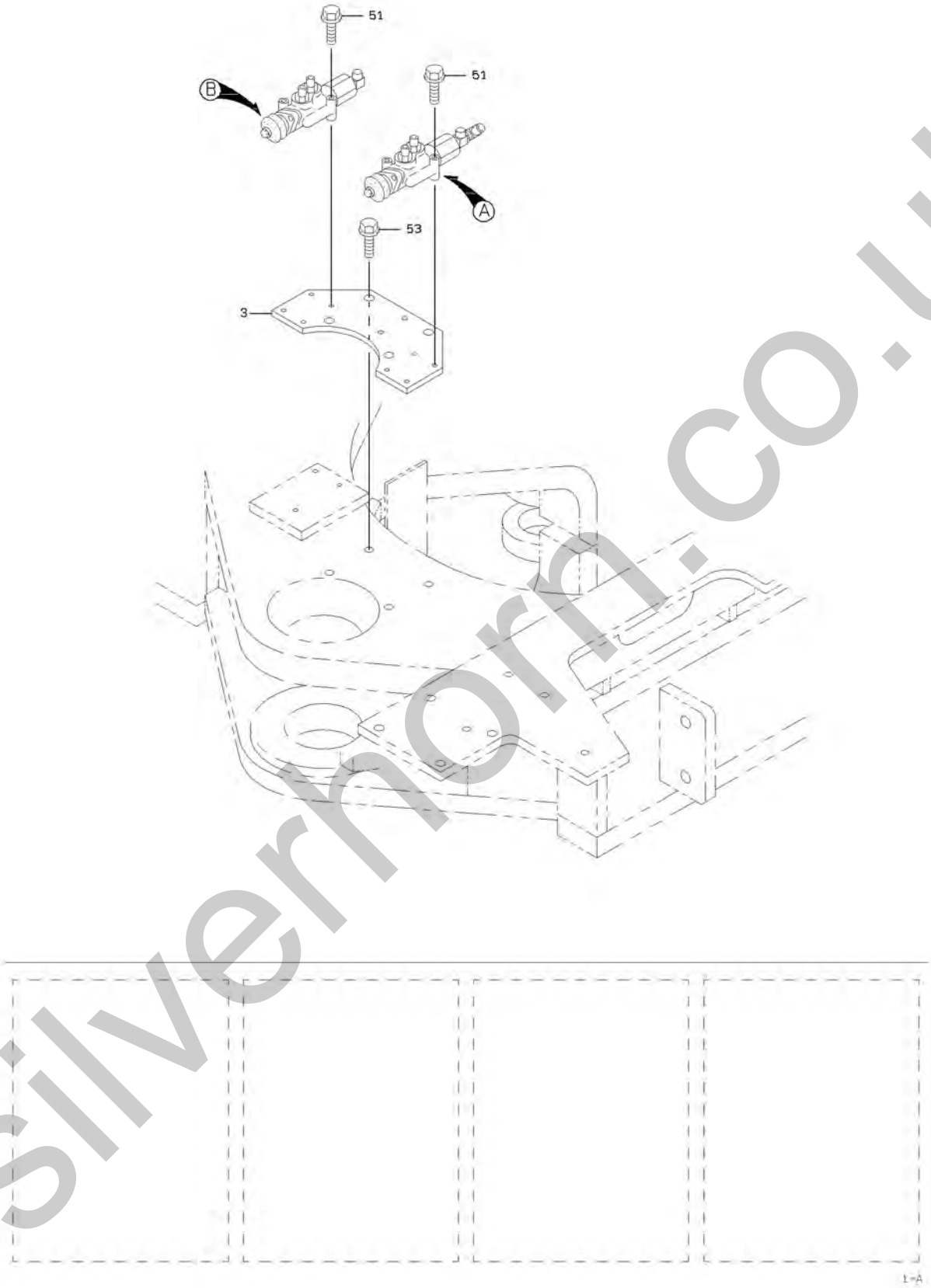

silverhorn.co.uk

STOP VALVE MOUNT

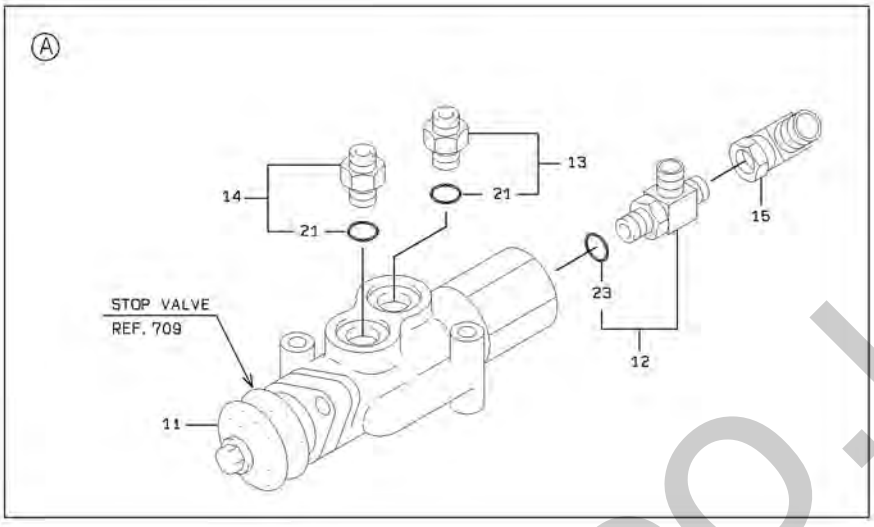

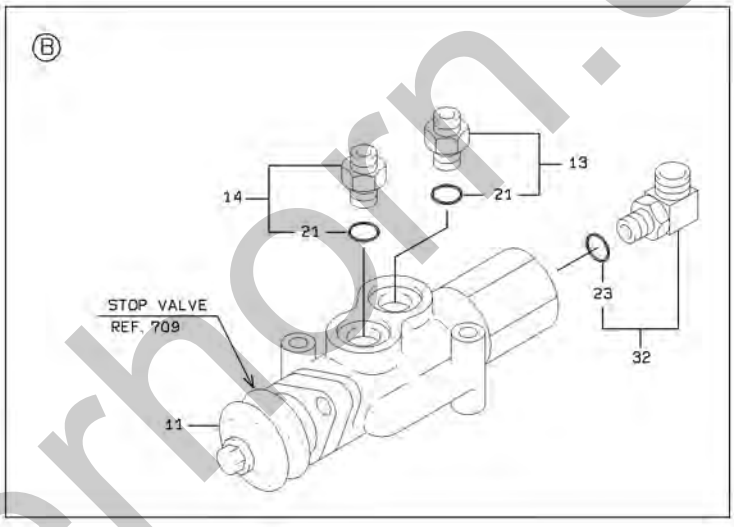

silverhorn.co.uk

STOP VALVE MOUNT

SYM-BOL	PART NUMBER	PART NAME	UNIT Q,TY	SERIAL (A) - (B)	REMARKS N P D	(A)	(B)	(C)	(D)	REMARK
3A	41641-26420	PLATE	1	5001 -						
11A	38510-20160	VALVE	2	5001 -						REF 709
12A	30246-21480	ADAPTER,TEE	1	5001 -		Y01				
13A	88201-06706	ADAPTER	2	5001 -			Y02			
14A	40730-20040	FLARED FITTING	2	5001 -			Y02			
15A	30242-20120	ADAPTER,ELBOW UNIO	1	5001 -						
21A	65210-12014	RING,O	1	5001 -			02			
23A	65210-12011	RING,O	1	5001 -		01				
32A	88241-07104	ADAPTER,ELBOW	1	5001 -		Y01				
51A	61802-08055	BOLT,FLANGED	6	5001 -						
53A	61802-16030	BOLT,FLANGED	4	5001 -						

silverhorn.co.uk

MEMO

silverhorn.co.uk

STOP VALVE

<S/N 5001 - 5080>

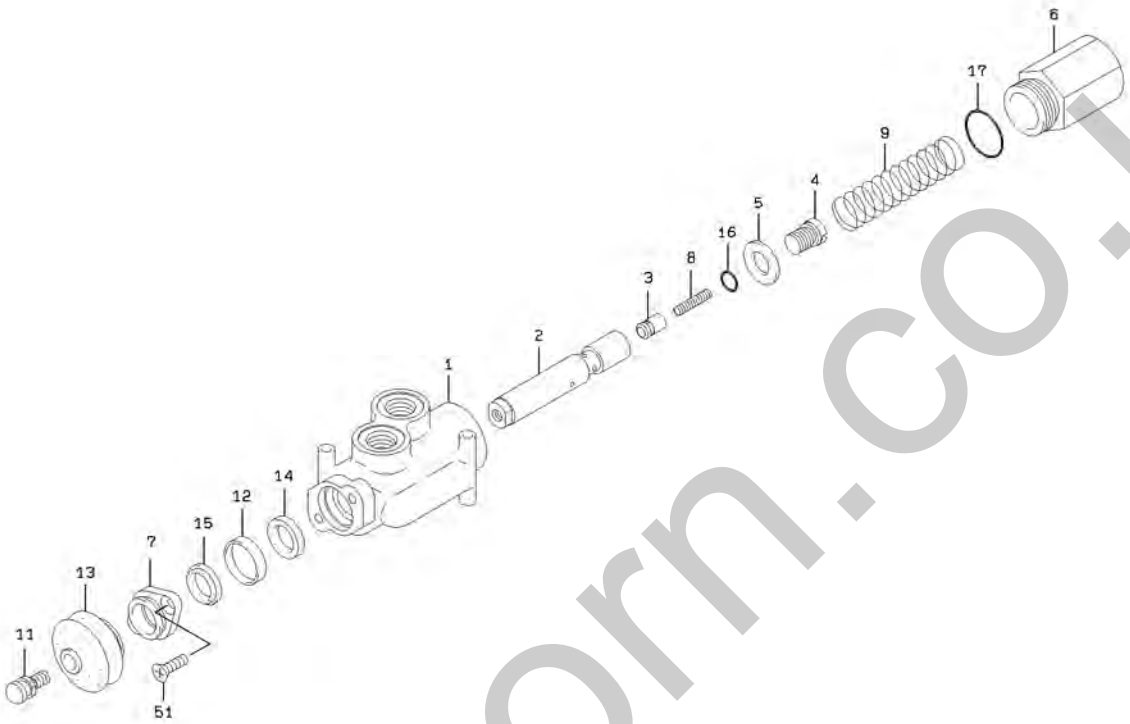

silverhorn.co.uk

STOP VALVE

<S/N 5081 - >

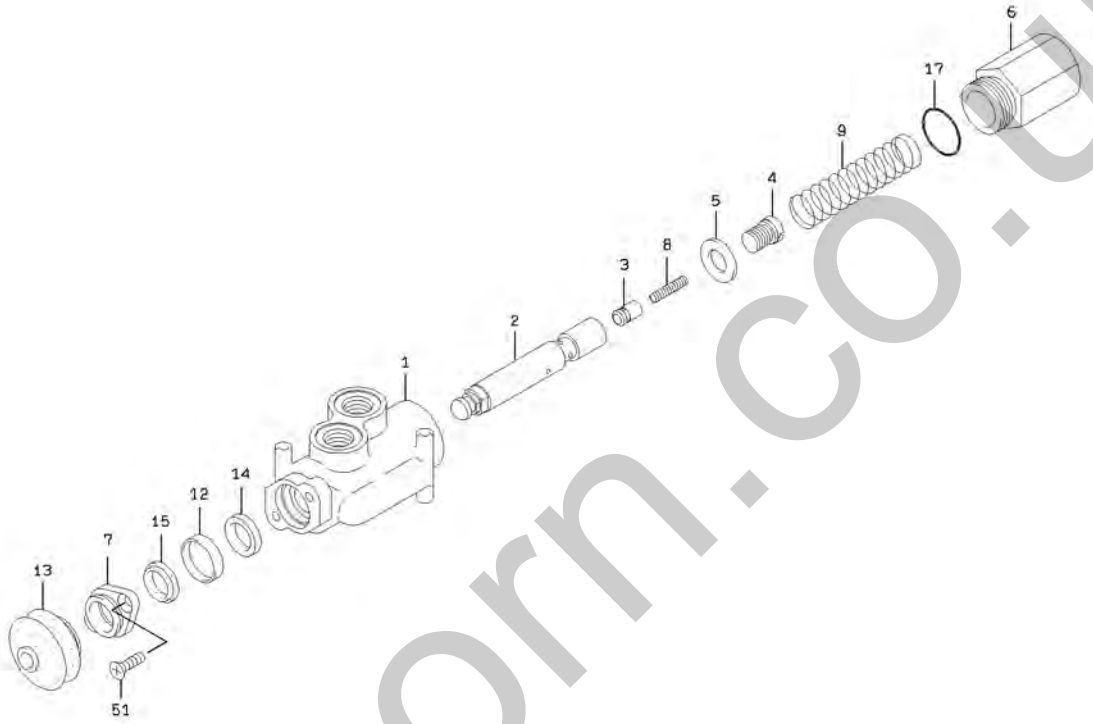

silverhorn.co.uk

STOP VALVE

SYM-BOL	PART NUMBER	PART NAME	UNIT Q,TY	SERIAL (A) - (B)	REMARKS N P D	(A) (B)	(C) (D)	REMARK
000A	38510-20160	VALVE	1	5001 -				
1A	37900-22170	HOUSING	1	5001 -				
2A	35570-20050	SPOOL	1	5001 - 5080				
2B	35570-20320	SPOOL	1	5081 -	C			
3A	44074-20040	POPPET	1	5001 -				
4A	41530-20930	PLUG	1	5001 - 5080				
4B	41530-22790	PLUG	1	5081 -	A			
5A	46000-20920	WASHER	1	5001 -				
6A	41530-20920	PLUG	1	5001 -				
7A	40510-22130	FLANGE	1	5001 -				
8A	35600-21710	SPRING	1	5001 -				
9A	35600-21700	SPRING	1	5001 -				
11A	43900-23070	BOLT	1	5001 - 5080	D			
12A	35700-20810	SPACER	1	5001 -				
13A	40790-20210	BOOT	1	5001 -				
14A	39661-70390	PACKING,U	1	5001 -				
15A	34044-70660	SEAL,DUST	1	5001 -				
16A	65210-12011	RING,O	1	5001 - 5080	D			
17A	65210-12029	RING,O	1	5001 -				
51A	62257-51616	SCREW	2	5001 -				

silverhorn.co.uk

MEMO

silverhorn.co.uk

AIR DUCT MOUNT

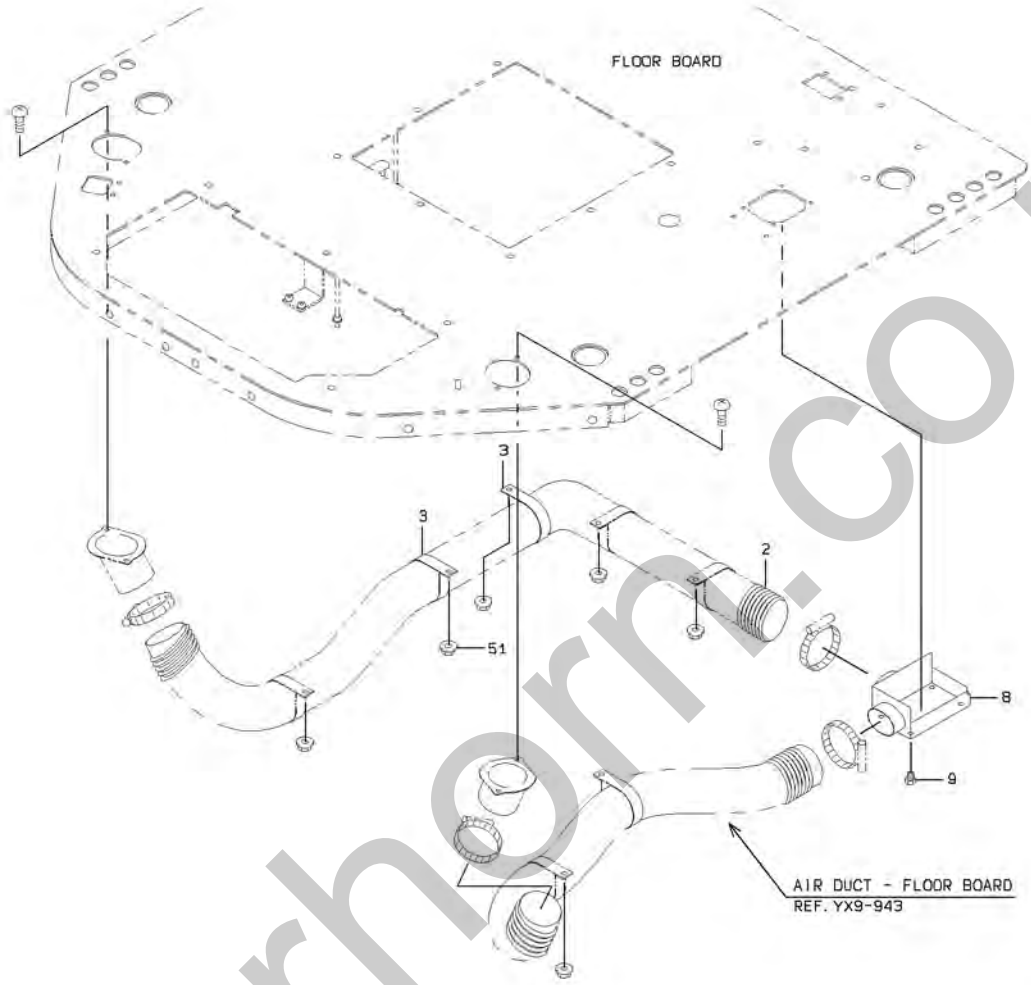

silverhorn.co.uk

AIR DUCT MOUNT

SYM-BOL	PART NUMBER	PART NAME	UNIT Q,TY	SERIAL (A) - (B)	REMARKS N P D	(A) (B)	(C) (D)	REMARK
2A	43111-23390	HOSE,AIR	1	5001 -				
3A	72010-86000	HOLDER,HOSE	2	5001 -				D=86
8A	36430-23830	DUCT	1	5001 -				
9A	41530-21050	PLUG	4	5001 -				
51A	62480-21081	NUT,FLANGED	1	5001 -				

silverhorn.co.uk

SWITCH MOUNT (STEERING WHEEL)

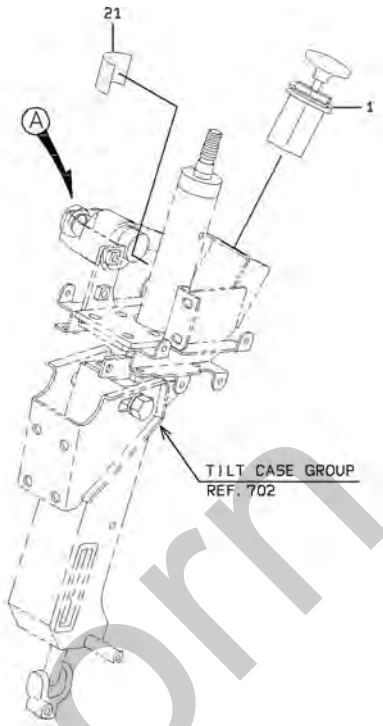

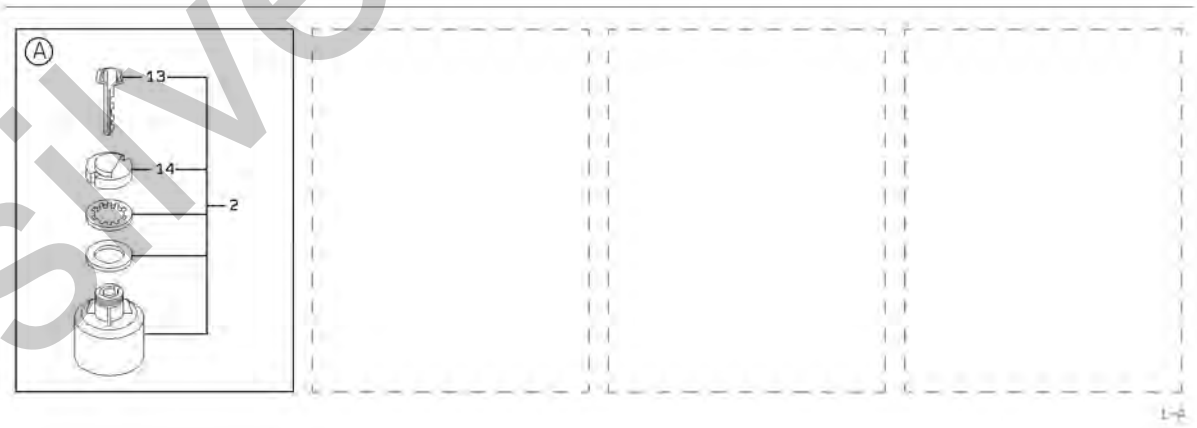

silverhorn.co.uk

SWITCH MOUNT (STEERING WHEEL)

SYM-BOL	PART NUMBER	PART NAME	UNIT Q,TY	SERIAL (A) - (B)	REMARKS N P D	(A) (B)	(C) (D)	REMARK
1A	35048-60040	SWITCH,PUSH-PULL	1	5001 -				
2A	35021-60020	SWITCH ASSY,STARTE	1	5001 -		Y01		W.MRK350216004
13A	32110-70150	KEY	1	5001 -		01		W.MRK321107017
14A	32210-71370	CAP	1	5001 -		01		
21A	33713-20110	SHEET,RUBBER	1	5001 -				

silverhorn.co.uk

CABLE MOUNT (STEERING WHEEL)

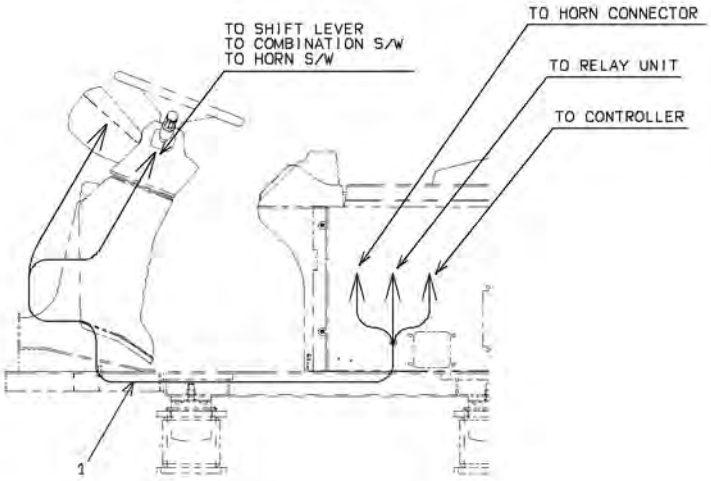

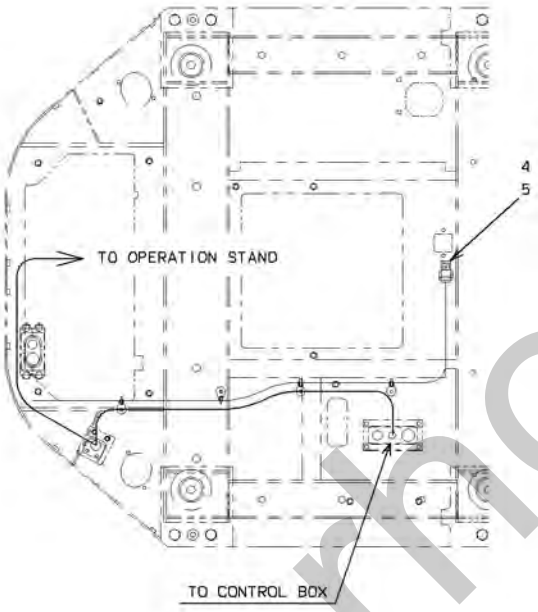

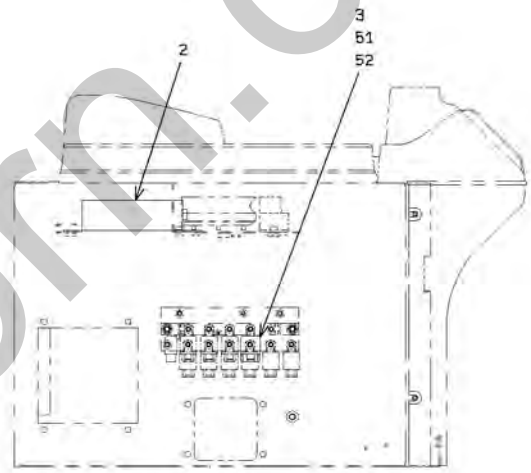

silvermorn.co.uk

CABLE MOUNT (STEERING WHEEL)

SYM-BOL	PART NUMBER	PART NAME	UNIT Q,TY	SERIAL (A) - (B)	REMARKS N P D	(A) (B)	(C) (D)	REMARK
1A	33193-36330	CABLE ASSY	1	5001 -				
2A	33410-61330	CONTROLLER UNIT	1	5001 -				
3A	45050-70290	RELAY	1	5001 -				24V10A
4A	31523-70280	COUPLER,CABLE	1	5001 -				
5A	41533-70300	PLUG,ELASTIC	8	5001 -				
51A	62256-51610	SCREW	1	5001 -				
52A	62721-06100	WASHER,SPRING	1	5001 -				

silverhorn.co.uk

MULTI CONTROL VALVE

<S/N 5001 - 5034>

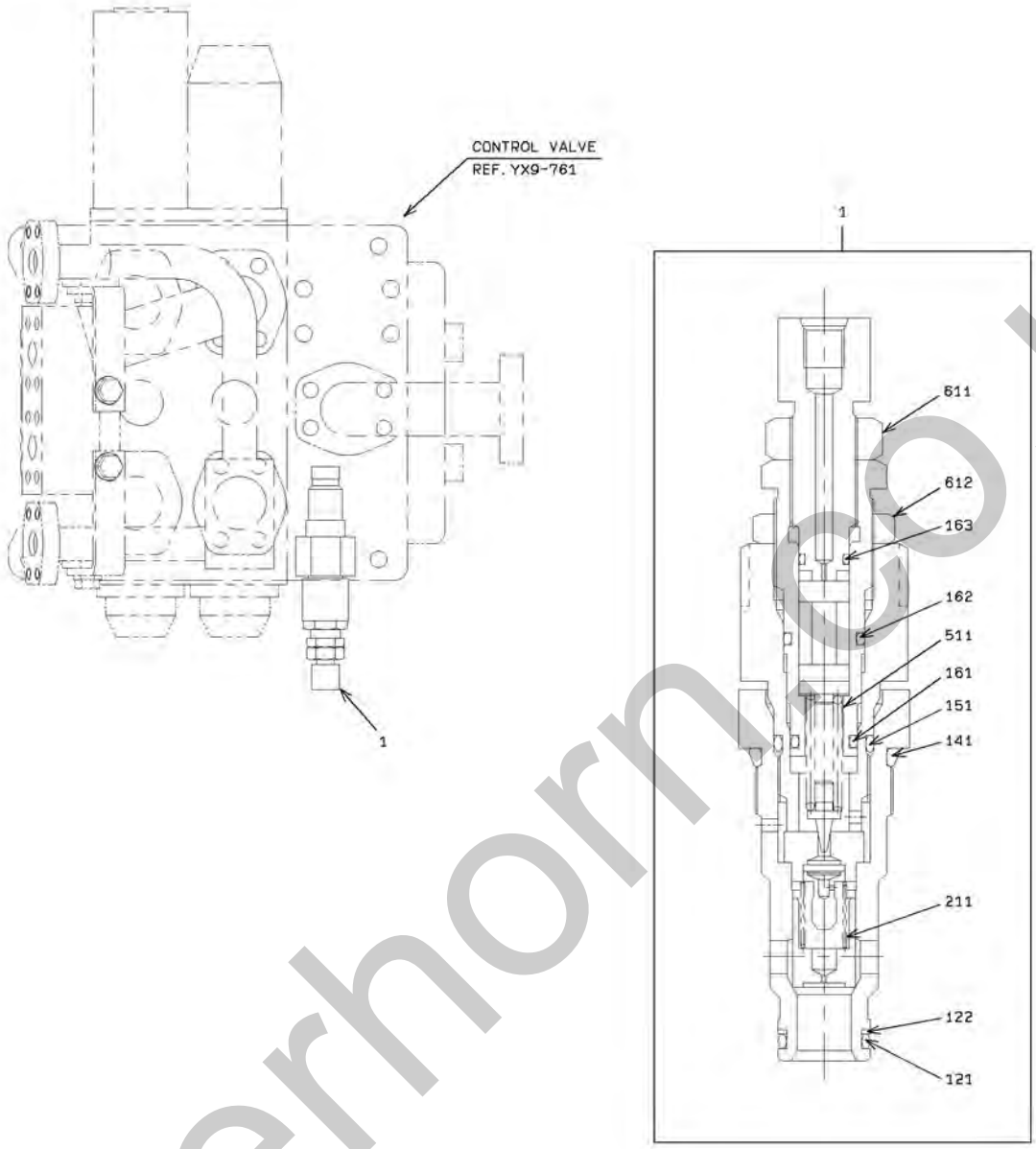

silverhorn.co.uk

MULTI CONTROL VALVE

SYM-BOL	PART NUMBER	PART NAME	UNIT Q,TY	SERIAL (A) - (B)	REMARKS N P D	(A)	(B)	(C)	(D)	REMARK
1A	38565-60720	VALVE,RELIEF	1	5001 - 5034		Y01				
121A	65210-12018	RING,O	1	5001 - 5034		01				
122A	65240-31018	RING,BACK-UP	1	5001 - 5034		01				
141A	65210-12030	RING,O	1	5001 - 5034		01				
151A	65210-12020	RING,O	1	5001 - 5034		01				
161A	65210-12012	RING,O	1	5001 - 5034		01				
162A	65210-12016	RING,O	1	5001 - 5034		01				
163A	65210-12009	RING,O	1	5001 - 5034		01				
211A	35600-74930	SPRING	1	5001 - 5034		01				
511A	35600-74920	SPRING	1	5001 - 5034		01				
611A	37600-71990	NUT	1	5001 - 5034		01				
612A	37600-72000	NUT	1	5001 - 5034		01				

silverhorn.co.uk

MULTI CONTROL VALVE

<S/N 5035 - >

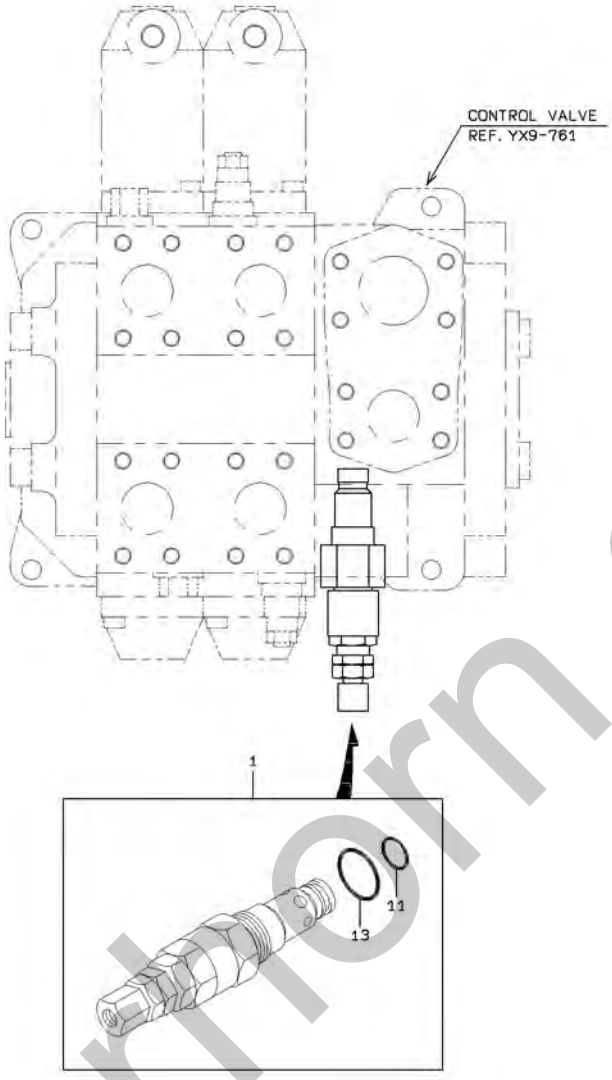

silverthorn.co.uk

MULTI CONTROL VALVE

SYM-BOL	PART NUMBER	PART NAME	UNIT Q,TY	SERIAL (A) - (B)	REMARKS N P D	(A) (B)	(C) (D)	REMARK
1A	38565-71270	VALVE,RELIEF	1	5035 -		Y01		
11A	65210-12018	RING,O	1	5035 -		01		
13A	65210-12030	RING,O	1	5035 -		01		

silverhorn.co.uk

HYDRAULIC LINE (TWO-STEP RELIEF VALVE)

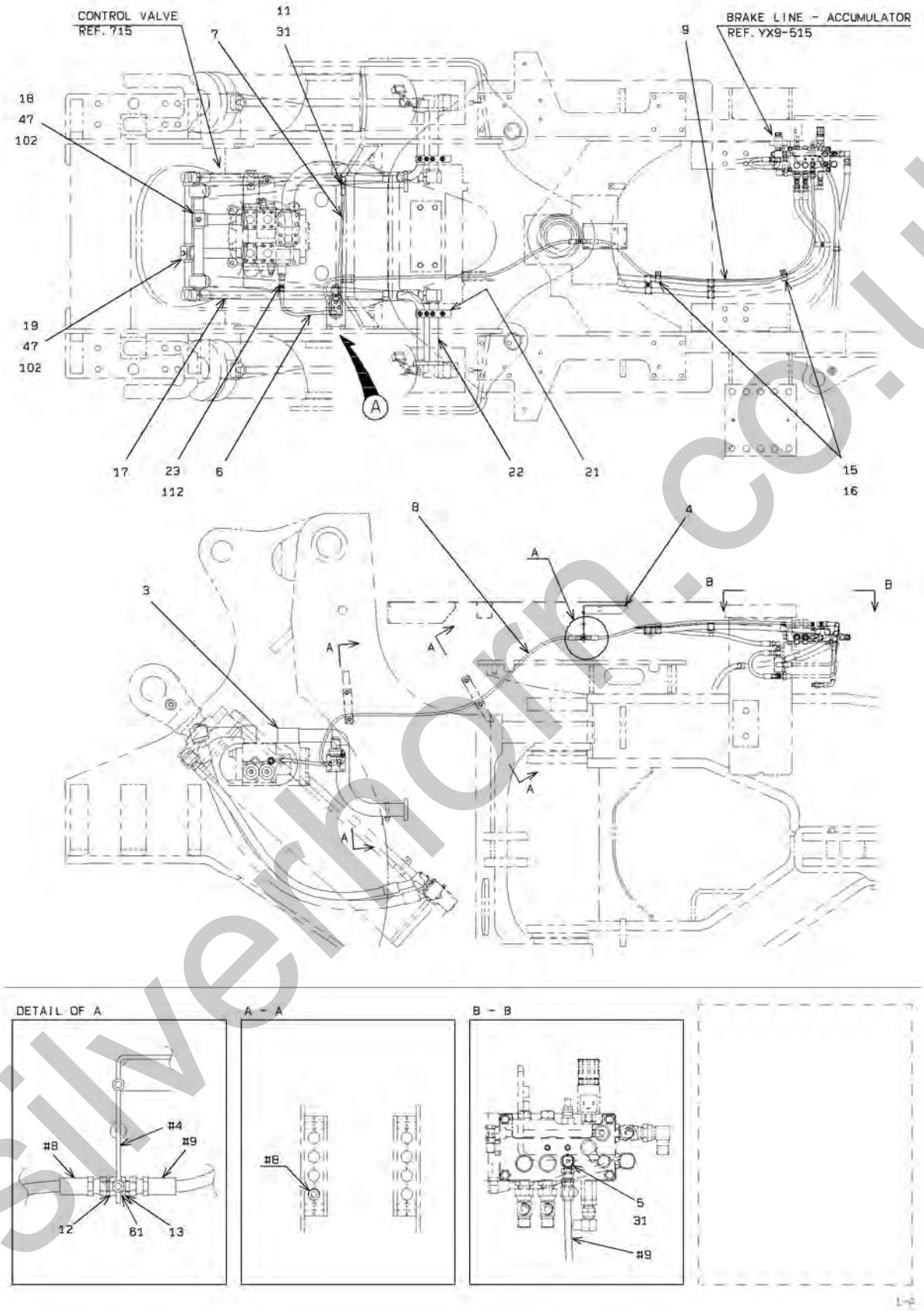

silverthorn.co.uk

HYDRAULIC LINE (TWO-STEP RELIEF VALVE)

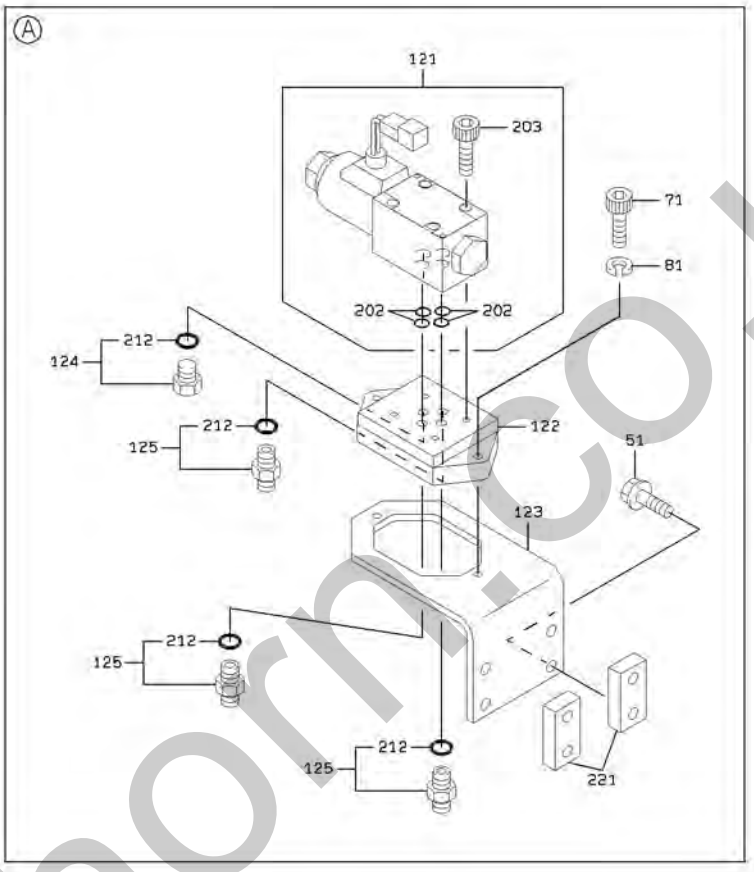

silverhorn.co.uk

HYDRAULIC LINE (TWO-STEP RELIEF VALVE)

SYM-BOL	PART NUMBER	PART NAME	UNIT Q,TY	SERIAL (A) - (B)	REMARKS N P D	(A)	(B)	(C)	(D)	REMARK
3A	38755-52350	PIPE,OIL	1	5001 -						
4A	40902-31050	BRACKET	1	5001 -						
5A	88241-07104	ADAPTER,ELBOW	1	5001 -		Y01				
6A	68635-10036	HOSE,HIGH PRESSURE	1	5001 -						
7A	68035-10061	HOSE,HIGH PRESSURE	1	5001 -						
8A	68635-10173	HOSE,HIGH PRESSURE	1	5001 -						
9A	68655-10155	HOSE,HIGH PRESSURE	1	5001 -						
11A	88201-06704	ADAPTER	1	5001 -		Y01				
12A	30230-21780	ADAPTER	1	5001 -						
13A	37600-20790	NUT	1	5001 -						
15A	72010-31000	HOLDER,HOSE	2	5001 -						D=31
16A	72001-11200	HOLDER,PIPE	2	5001 -						D=12
17A	43113-28130	HOSE,HIGH PRESSURE	1	5001 -						
18A	38775-26310	PIPE,OIL	1	5001 -			Y02			
19A	38775-26330	PIPE,OIL	1	5001 -			Y02			
21A	41602-24600	PLATE	1	5001 -						
22A	38755-52360	PIPE,OIL	1	5001 -						
23A	30230-23300	ADAPTER	1	5001 -					Y04	
31A	65210-12011	RING,O	1	5001 -		01				
47A	41530-20090	PLUG	1	5001 -			02	Y03		
51A	61802-08016	BOLT,FLANGED	4	5001 -						
61A	62701-40121	WASHER,PLANE	1	5001 -						
71A	61103-06016	BOLT,SOCKET	2	5001 -						
81A	62731-06100	WASHER,SPRING	2	5001 -						
102A	65210-12014	RING,O	1	5001 -				03		
112A	65210-12008	RING,O	1	5001 -					04	
121A	38553-60630	VALVE,SOLENOID	1	5001 -		Y05				
122A	41410-60130	BLOCK	1	5001 -						
123A	41603-39850	PLATE	1	5001 -						
124A	88390-21304	PLUG	1	5001 -			Y06			
125A	88201-06704	ADAPTER	3	5001 -			Y06			
202A	65210-12009	RING,O	4	5001 -		05				
203A	61101-05045	BOLT,SOCKET	4	5001 -		05				
212A	65210-12011	RING,O	1	5001 -			06			
221A	41612-33370	PLATE	2	5001 -						WELDING

silverhorn.co.uk

MEMO

silverhorn.co.uk

CABLE MOUNT (TWO-STEP RELIEF VALVE)

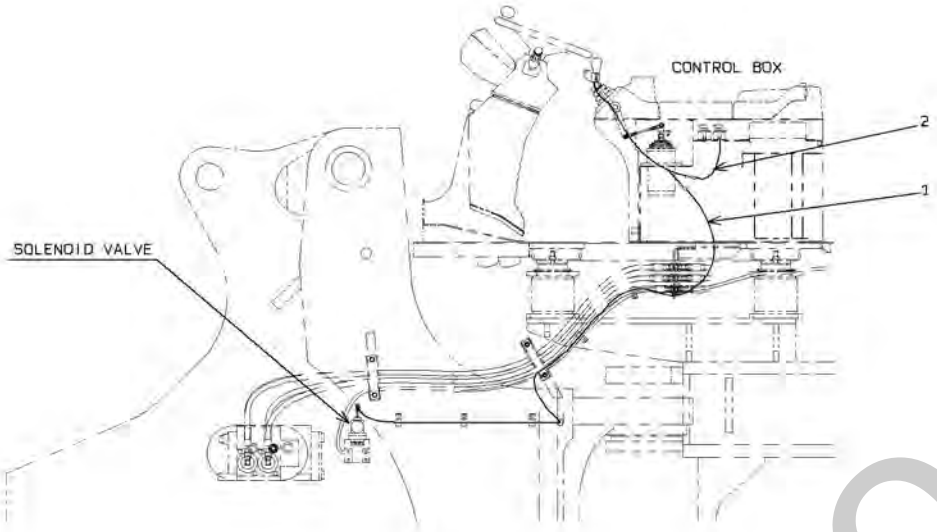

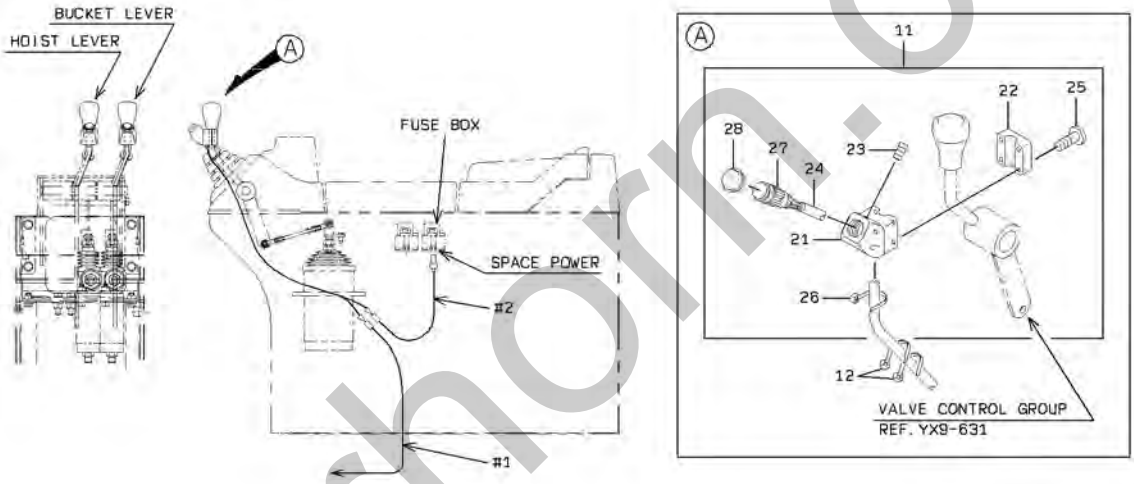

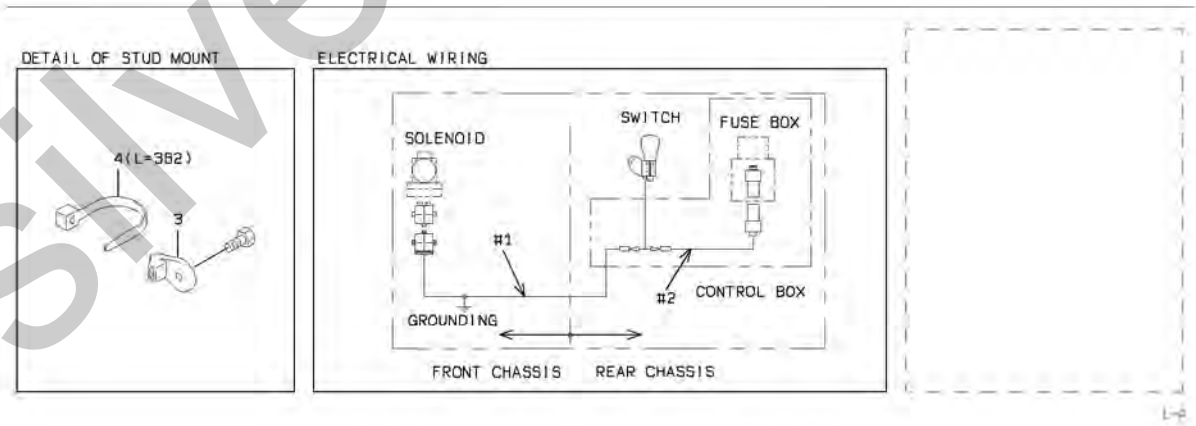

silverhorn.co.uk

CABLE MOUNT (TWO-STEP RELIEF VALVE)

SYM-BOL	PART NUMBER	PART NAME	UNIT Q,TY	SERIAL (A) - (B)	REMARKS N P D	(A) (B)	(C) (D)	REMARK
1A	33193-34510	CABLE ASSY	1	5001 -				
2A	33191-55400	CABLE ASSY	1	5001 -				
3A	32923-70120	CLAMP,HOSE	A/R	5001 -				
4A	32923-70100	CLAMP,HOSE	A/R	5001 -				
11A	35020-60070	SWITCH ASSY	1	5001 -		Y01		
12A	32923-70090	CLAMP,HOSE	2	5001 -				
21A	33100-70300	CASE	1	5001 -		01		
22A	43550-70160	HOLDER	1	5001 -		01		
23A	35104-70030	SCREW,SET	1	5001 -		01		
24A	33191-70260	CABLE ASSY	1	5001 -		01		
25A	62256-51420	SCREW	4	5001 -		01		
26A	38670-70250	BAND	1	5001 -		01		
27A	35046-70080	SWITCH,PUSH	1	5001 -		01		
28A	40790-70180	BOOT	1	5001 -		01		

silverhorn.co.uk

COVER MOUNT - ENGINE ROOM (DUST-PROOF SPEC.)

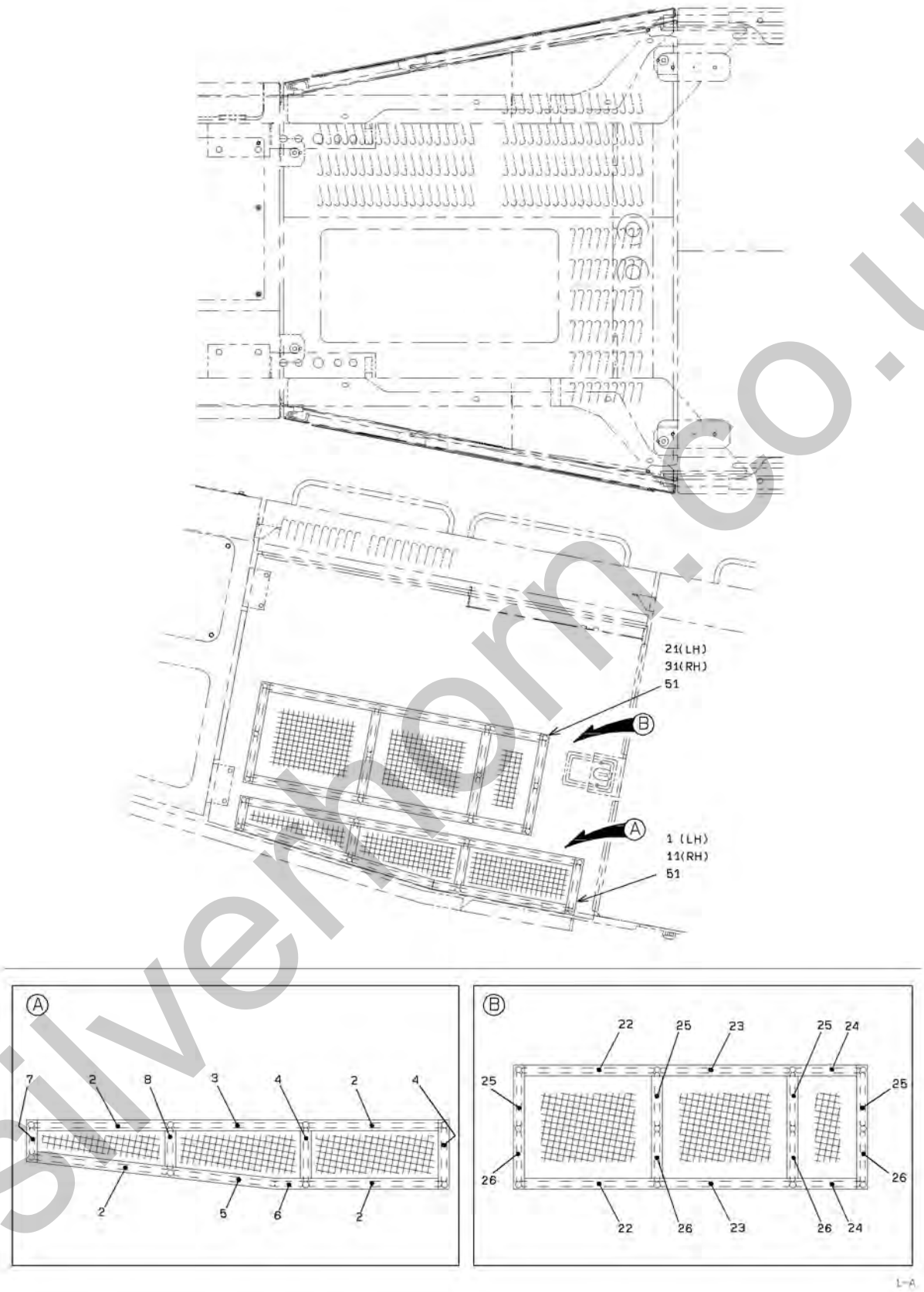

silverhorn.co.uk

COVER MOUNT - ENGINE ROOM (DUST-PROOF SPEC.)

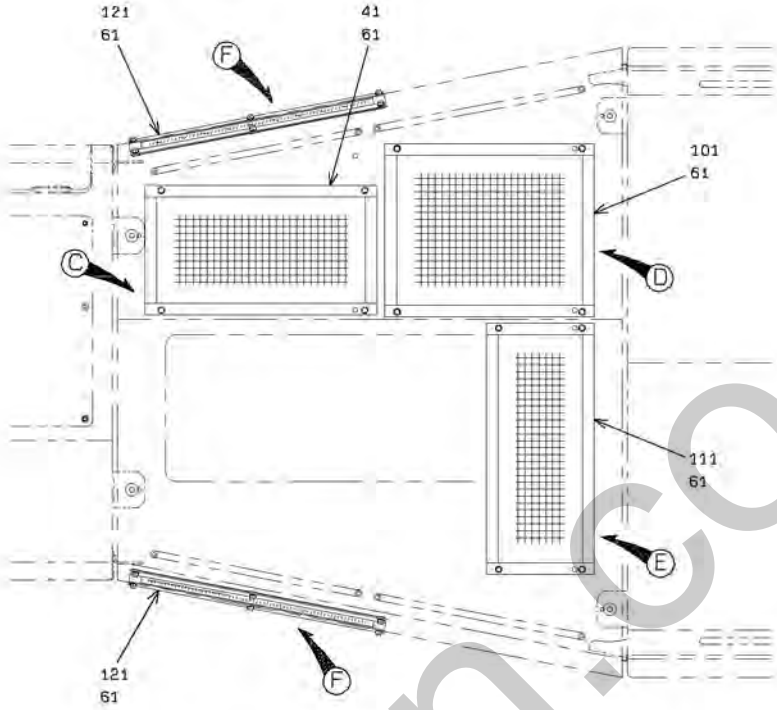

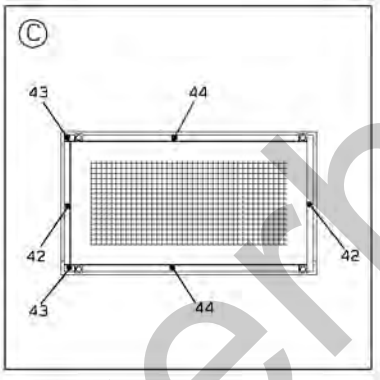

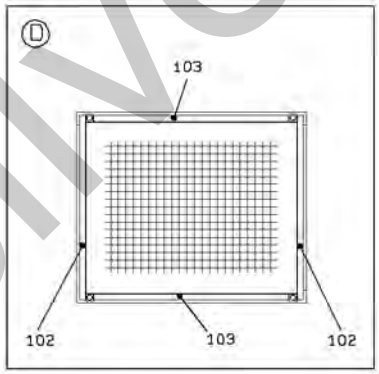

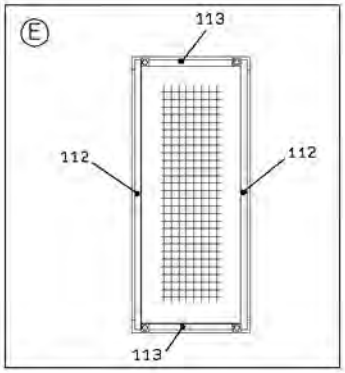

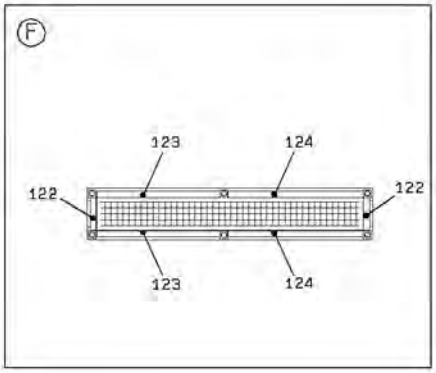

silverhorn.co.uk

COVER MOUNT - ENGINE ROOM (DUST-PROOF SPEC.)

SYM-BOL	PART NUMBER	PART NAME	UNIT Q,TY	SERIAL (A) - (B)	REMARKS N P D	(A) (B)	(C) (D)	REMARK
1A	31205-46790	COVER	1	5001 -				FR LH
2A	33713-27230	SHEET,RUBBER	8	5001 -				
3A	33713-27240	SHEET,RUBBER	2	5001 -				
4A	33713-27280	SHEET,RUBBER	4	5001 -				
5A	33713-27380	SHEET,RUBBER	2	5001 -				
6A	33713-25110	SHEET,RUBBER	2	5001 -				
7A	33713-27400	SHEET,RUBBER	2	5001 -				
8A	33713-27390	SHEET,RUBBER	2	5001 -				
11A	31205-46770	COVER	1	5001 -				FR RH
21A	31205-46800	COVER	1	5001 -				FR LH
22A	33713-27230	SHEET,RUBBER	4	5001 -				
23A	33713-27240	SHEET,RUBBER	4	5001 -				
24A	33713-27270	SHEET,RUBBER	4	5001 -				
25A	33713-27170	SHEET,RUBBER	8	5001 -				
26A	33713-26950	SHEET,RUBBER	8	5001 -				
31A	31205-46780	COVER	1	5001 -				FR RH
41A	31205-46820	COVER	1	5001 -				
42A	33713-26310	SHEET,RUBBER	2	5001 -				
43A	33713-27120	SHEET,RUBBER	2	5001 -				
44A	33713-27130	SHEET,RUBBER	2	5001 -				
51A	61802-10025	BOLT,FLANGED	A/R	5001 -				
61A	61802-10025	BOLT,FLANGED	A/R	5001 -				
101A	31205-46830	COVER	1	5001 -				
102A	33713-27140	SHEET,RUBBER	2	5001 -				
103A	33713-27150	SHEET,RUBBER	2	5001 -				
111A	31205-46840	COVER	1	5001 -				
112A	33713-27160	SHEET,RUBBER	2	5001 -				
113A	33713-26920	SHEET,RUBBER	2	5001 -				
121A	31205-46850	COVER	1	5001 -				
122A	33713-25110	SHEET,RUBBER	2	5001 -				
123A	33713-26310	SHEET,RUBBER	2	5001 -				
124A	33713-27190	SHEET,RUBBER	2	5001 -				

silverhorn.co.uk

MEMO

silverhorn.co.uk

COVER MOUNT - UNDER COVER (DUST-PROOF SPEC.)

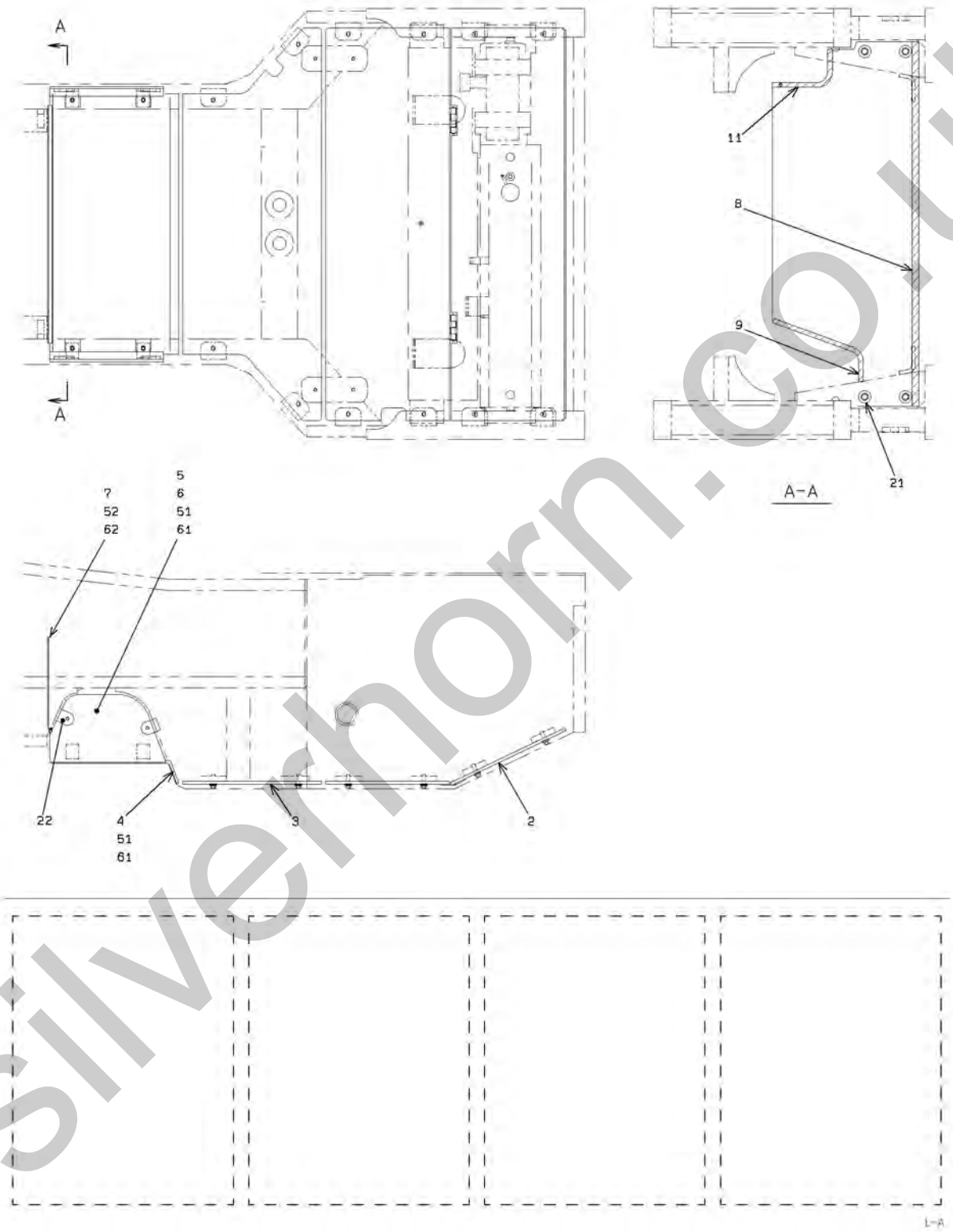

silverhorn.co.uk

COVER MOUNT - UNDER COVER (DUST-PROOF SPEC.)

SYM-BOL	PART NUMBER	PART NAME	UNIT Q,TY	SERIAL (A) - (B)	REMARKS N P D	(A) (B)	(C) (D)	REMARK
2A	41618-36150	PLATE	1	5001 -				
3A	41619-49700	PLATE	1	5001 -				
4A	41620-25240	PLATE	1	5001 -				
5A	31205-36110	COVER	1	5001 -				FR LH
6A	31205-36120	COVER	1	5001 -				FR RH
7A	41619-47440	PLATE	1	5001 -				
8A	34041-25010	STRIP, SEAL	1	5001 -				
9A	34041-25020	STRIP, SEAL	1	5001 -				
11A	34041-25030	STRIP, SEAL	1	5001 -				
21A	41621-20040	PLATE	4	5001 -				WELDING
22A	41604-33390	PLATE	4	5001 -				WELDING
51A	61802-12040	BOLT,FLANGED	8	5001 -				
52A	61802-10020	BOLT,FLANGED	4	5001 -				
61A	62710-18121	WASHER,PLANE	8	5001 -				
62A	46011-20160	WASHER,PLANE	4	5001 -				

silverhorn.co.uk

SPONGE MOUNT (DUST-PROOF SPEC.)

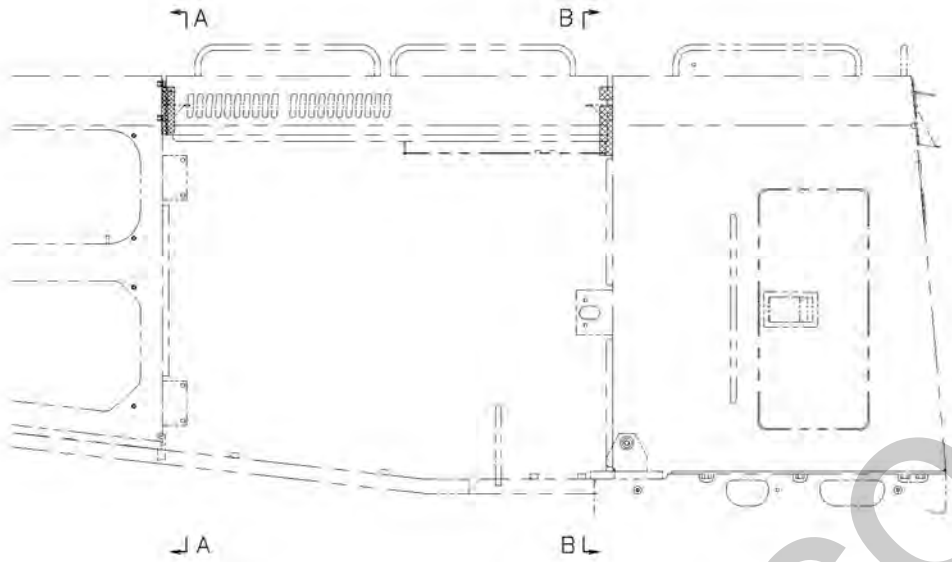

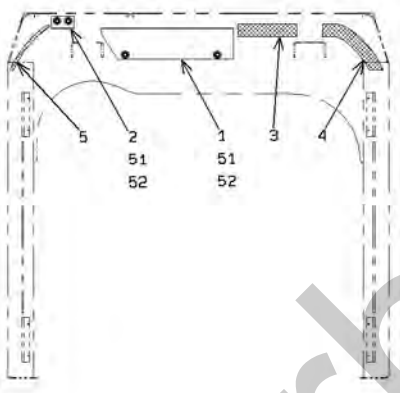

A-A

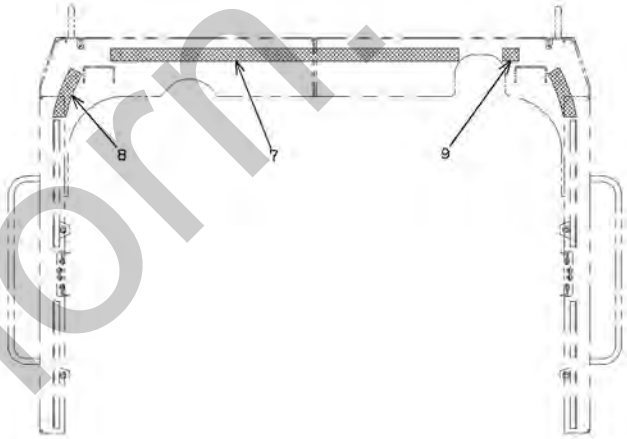

B-B

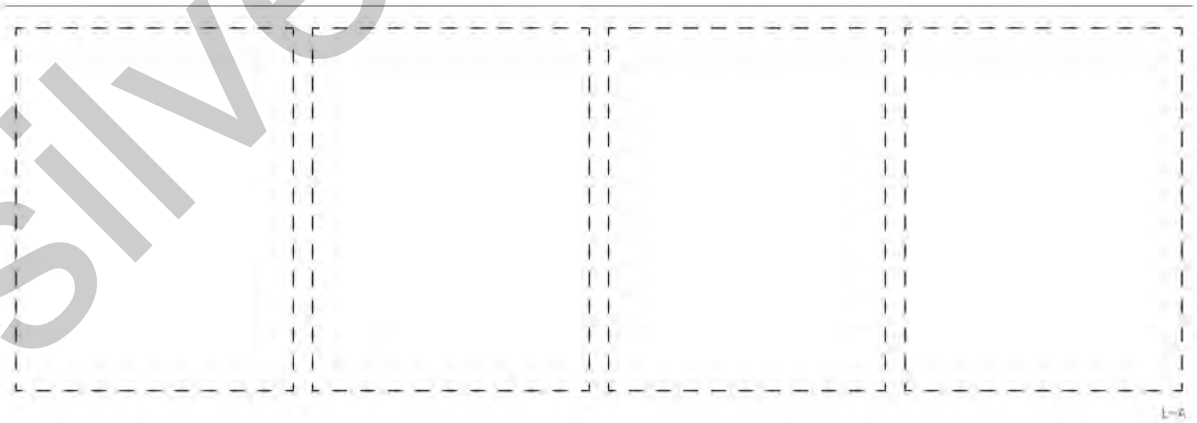

silverhorn.co.uk

SPONGE MOUNT (DUST-PROOF SPEC.)

SYM-BOL	PART NUMBER	PART NAME	UNIT Q,TY	SERIAL (A) - (B)	REMARKS N P D	(A) (B)	(C) (D)	REMARK
1A	41608-46520	PLATE	1	5001 -				
2A	41608-46530	PLATE	1	5001 -				
3A	35680-55330	SPONGE	1	5001 -				
4A	35680-55340	SPONGE	1	5001 -				
5A	35680-55350	SPONGE	1	5001 -				
7A	35680-55300	SPONGE	1	5001 -				
8A	35680-55310	SPONGE	1	5001 -				
9A	35680-55320	SPONGE	1	5001 -				
51A	61802-10020	BOLT,FLANGED	4	5001 -				
52A	46011-20160	WASHER,PLANE	4	5001 -				

silverhorn.co.uk

BATTERY CUT OFF SWITCH

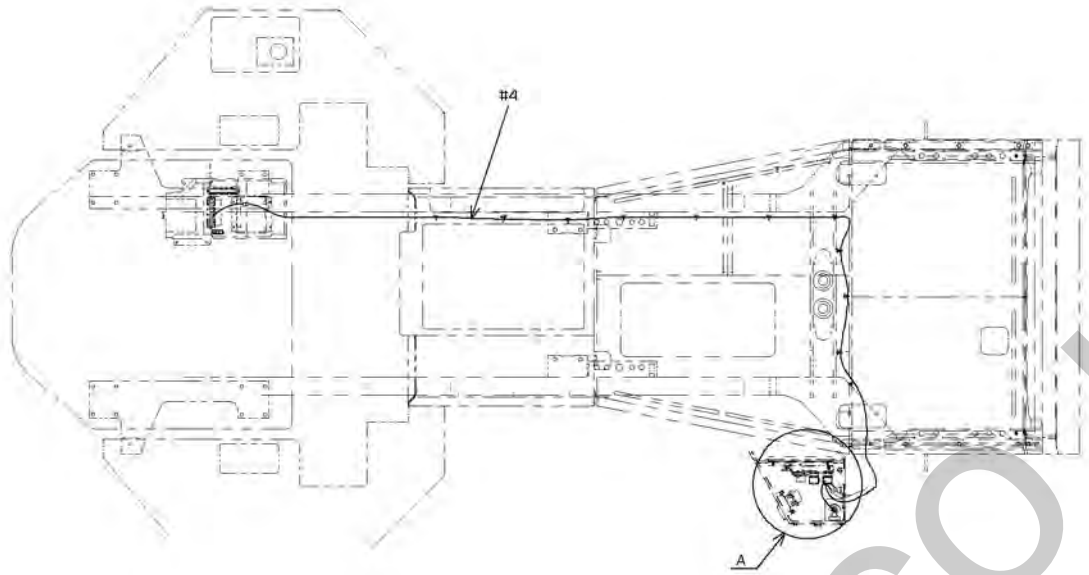

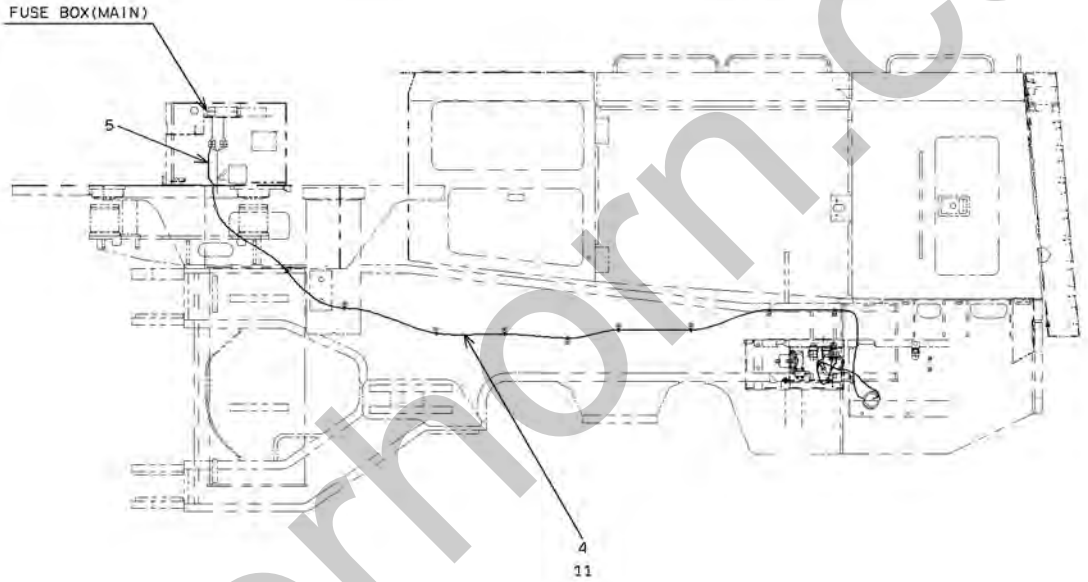

DETAIL OF A

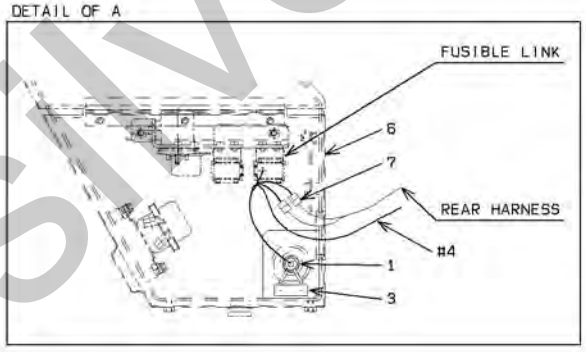

ELECTRICAL WIRING

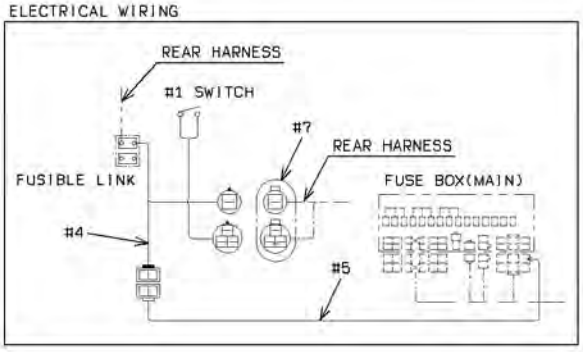

silverhorn.co.uk

BATTERY CUT OFF SWITCH

SYM-BOL	PART NUMBER	PART NAME	UNIT Q,TY	SERIAL (A) - (B)	REMARKS N P D	(A) (B)	(C) (D)	REMARK
1A	35043-60010	SWITCH,BATTERY	1	5001 -				
3A	44770-51330	LABEL	1	5001 -				
4A	33193-46820	CABLE ASSY	1	5001 -				
5A	33193-46720	CABLE ASSY	1	5001 -				
6A	03501-66390	BOX ASSY	1	5001 -				
7A	03501-70040	CABLE ASSY	1	5001 -				
11A	32215-70080	CAP,TERMINAL	2	5001 -				

silverhorn.co.uk

4-WAY FLASHER GROUP

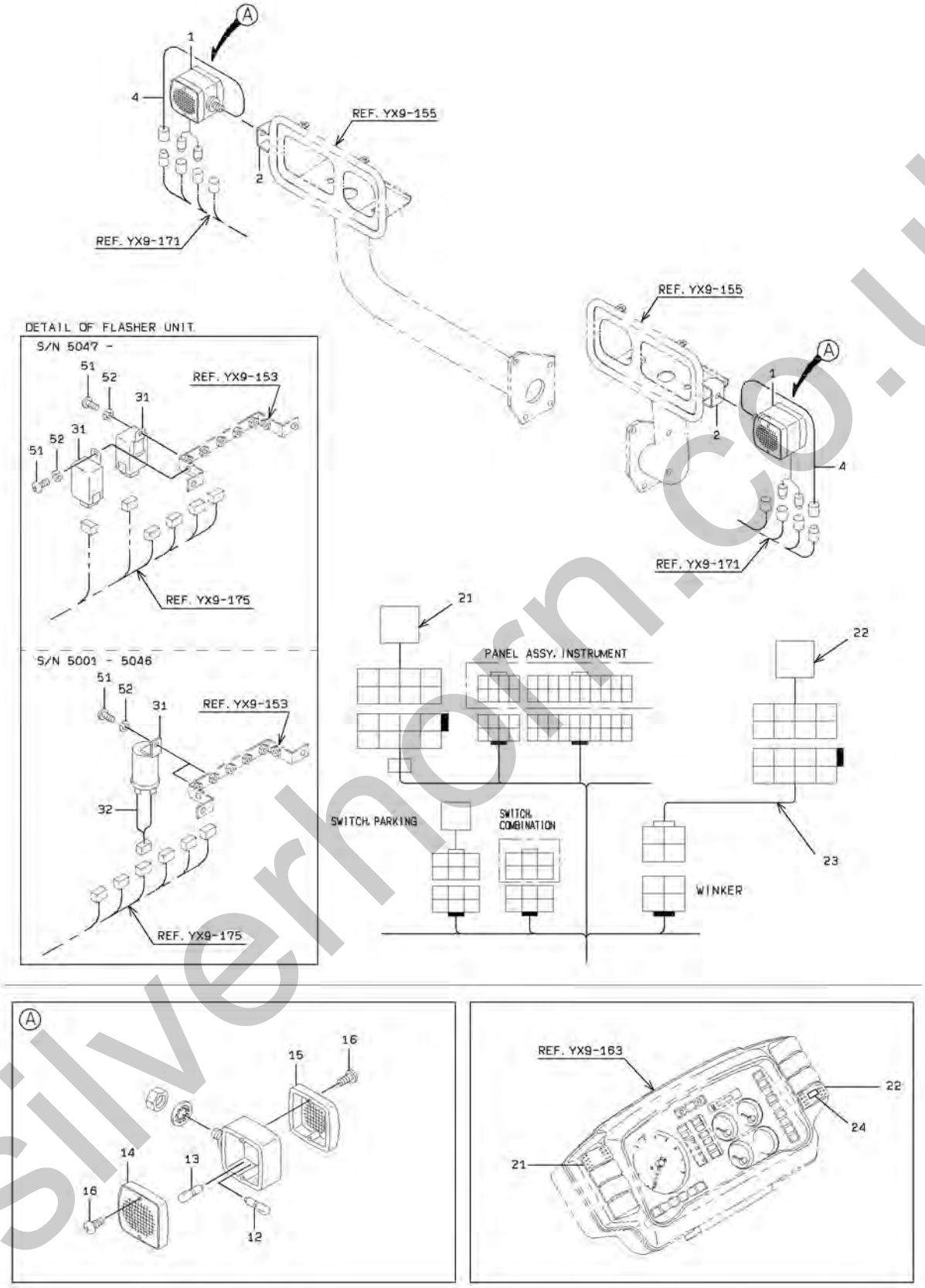

silverhorn.co.uk

4-WAY FLASHER GROUP

SYM-BOL	PART NUMBER	PART NAME	UNIT Q,TY	SERIAL (A) - (B)	REMARKS N P D	(A)	(B)	(C)	(D)	REMARK
1A	44881-60320	LAMP,COMBINATION	2	5001 - 5098		Y01				
1B	44881-60330	LAMP,COMBINATION	2	5099 -	C	Y01				
2A	41618-25840	PLATE	2	5001 - 5056						WELDING
2B	41710-54100	PLATE	2	5057 -	C					WELDING
4A	33190-35750	CABLE	2	5001 -						
12A	38480-70930	BULB	1	5001 -		01				24V25W
13A	38480-70940	BULB	1	5001 -		01				24V5W
14A	45701-70030	LENS	1	5001 - 5098		01				
14B	45701-71030	LENS	1	5099 -	C	01				
15A	45701-70040	LENS	1	5001 - 5098		01				
15B	45701-71040	LENS	1	5099 -	C	01				
16A	35100-20030	SCREW	4	5001 -		01				
21A	35010-60260	SWITCH	1	5001 -						
22A	35010-60550	SWITCH	1	5001 -						
23A	33190-37640	CABLE	1	5001 -						
24A	44770-51250	LABEL	1	5001 -						
31A	40495-70010	FLASHER UNIT	2	5001 - 5046						
31B	40495-60020	FLASHER UNIT	2	5047 -	B					
32A	33191-44210	CABLE ASSY	2	5001 - 5046	D					
51A	62256-51610	SCREW	2	5001 -						
52A	62721-06100	WASHER,SPRING	2	5001 -						

silverhorn.co.uk

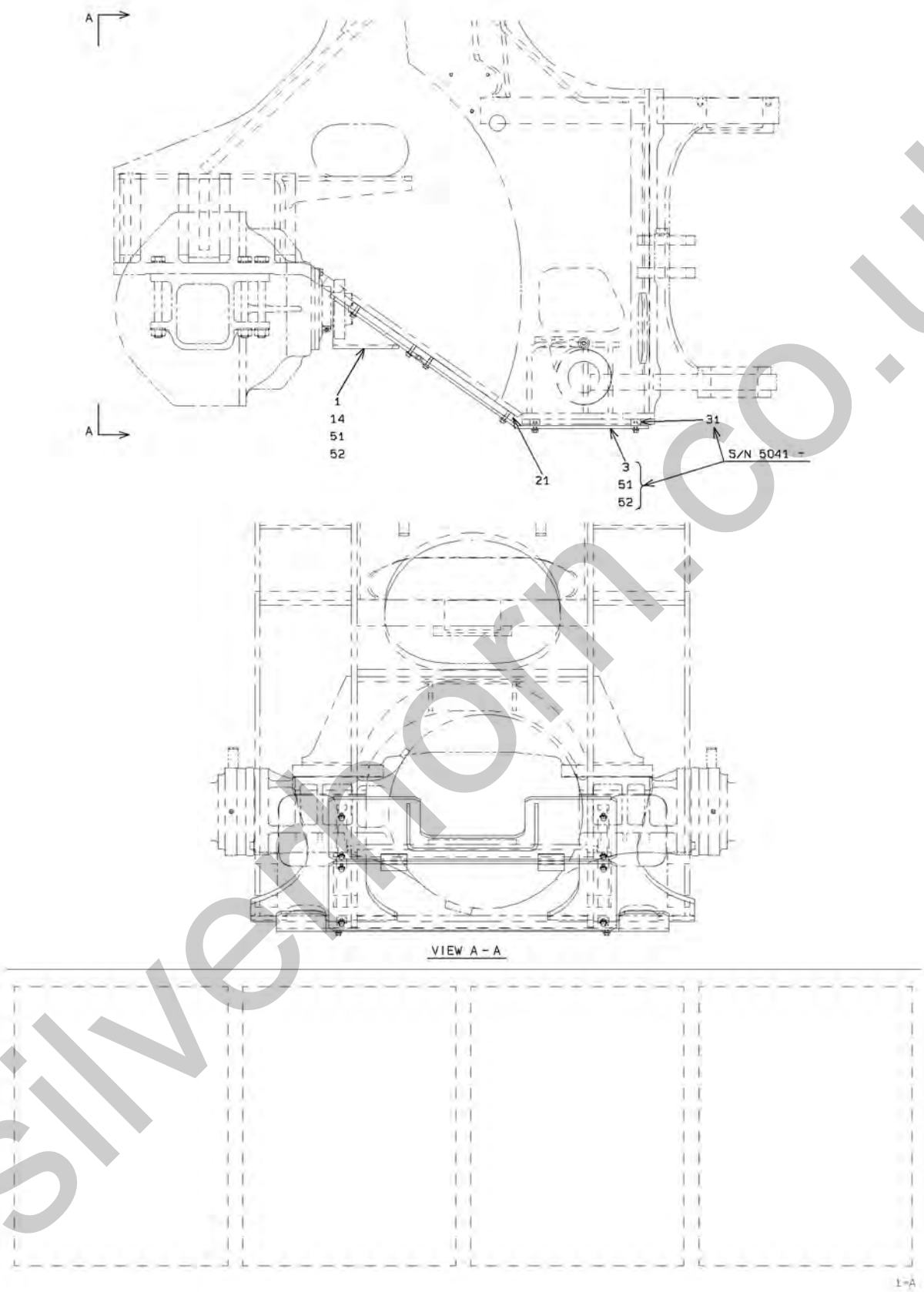

silverthorn.co.uk

FRONT CHASSIS GROUP

SYM-BOL	PART NUMBER	PART NAME	UNIT Q,TY	SERIAL (A) - (B)	REMARKS N P D	(A)	(B)	(C)	(D)	REMARK
1A	31200-40650	COVER	1	5001 - 5080		Y01				
1B	31200-41990	COVER	1	5081 -	B	Y01				
3A	41710-25090	PLATE	1	5041 - 5080						
3B	41711-26750	PLATE	1	5081 -	B					
14A	39890-20930	HINGE	2	5001 -		01				WELDING
21A	41609-45310	PLATE	2	5001 -						WELDING
31A	41621-21170	PLATE	4	5041 -						WELDING
51A	61802-12030	BOLT,FLANGED	8	5001 - 5040						
51B	61802-12030	BOLT,FLANGED	12	5041 -						
52A	62710-18121	WASHER,PLANE	8	5001 - 5040						
52B	62710-18121	WASHER,PLANE	12	5041 -						

silverhorn.co.uk

FUEL TANK GROUP

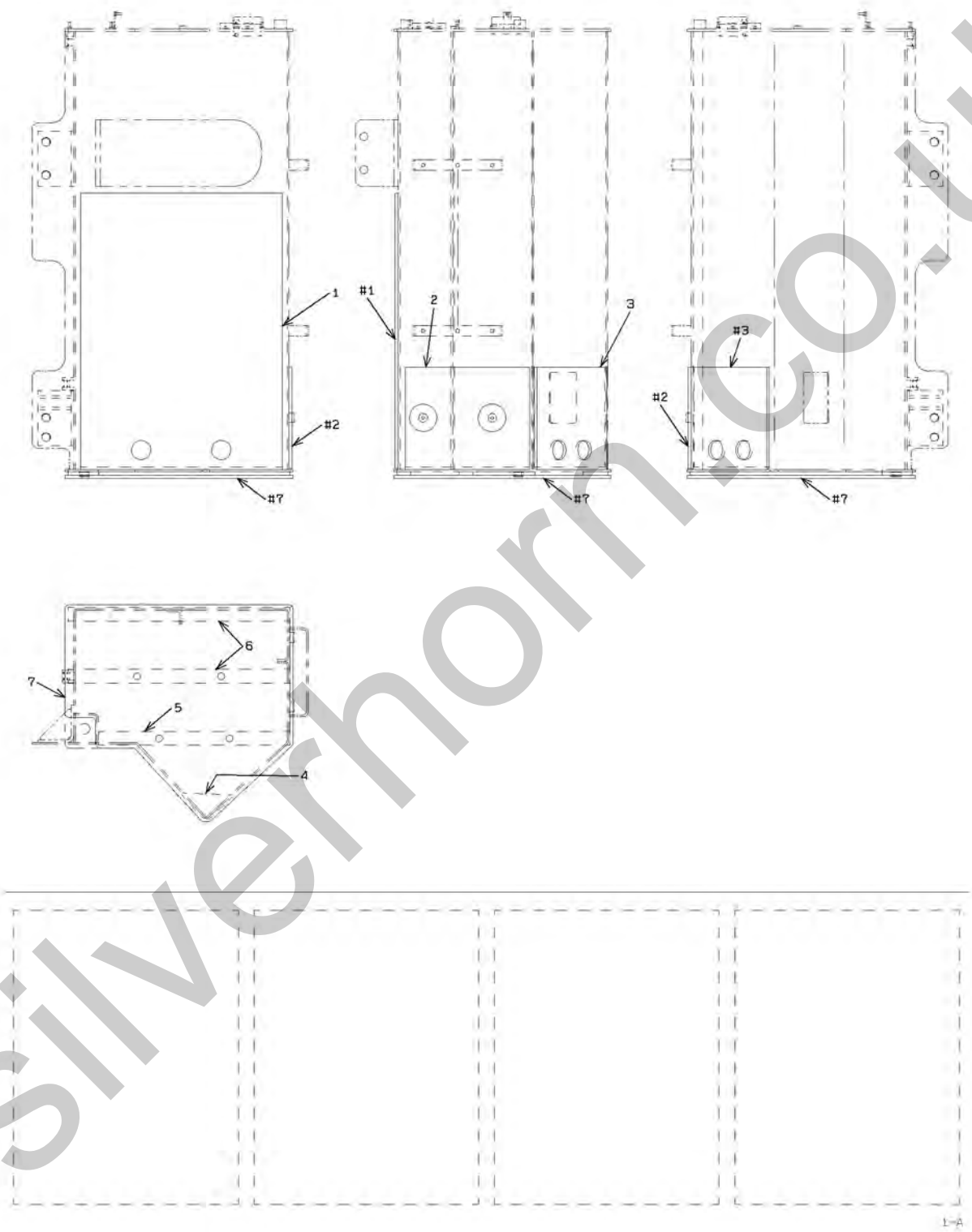

silverhorn.co.uk

FUEL TANK GROUP

SYM-BOL	PART NUMBER	PART NAME	UNIT Q,TY	SERIAL (A) - (B)	REMARKS N P D	(A) (B)	(C) (D)	REMARK
1A	41620-25190	PLATE	1	5001 -				WELDING
2A	41620-28220	PLATE	1	5001 -				WELDING
3A	41620-28230	PLATE	1	5001 -				WELDING
4A	41620-28240	PLATE	1	5001 -				WELDING
5A	41620-28260	PLATE	1	5001 -				WELDING
6A	41620-28250	PLATE	2	5001 -				WELDING
7A	41620-28270	PLATE	1	5001 -				WELDING

silverhorn.co.uk

OIL TANK GROUP

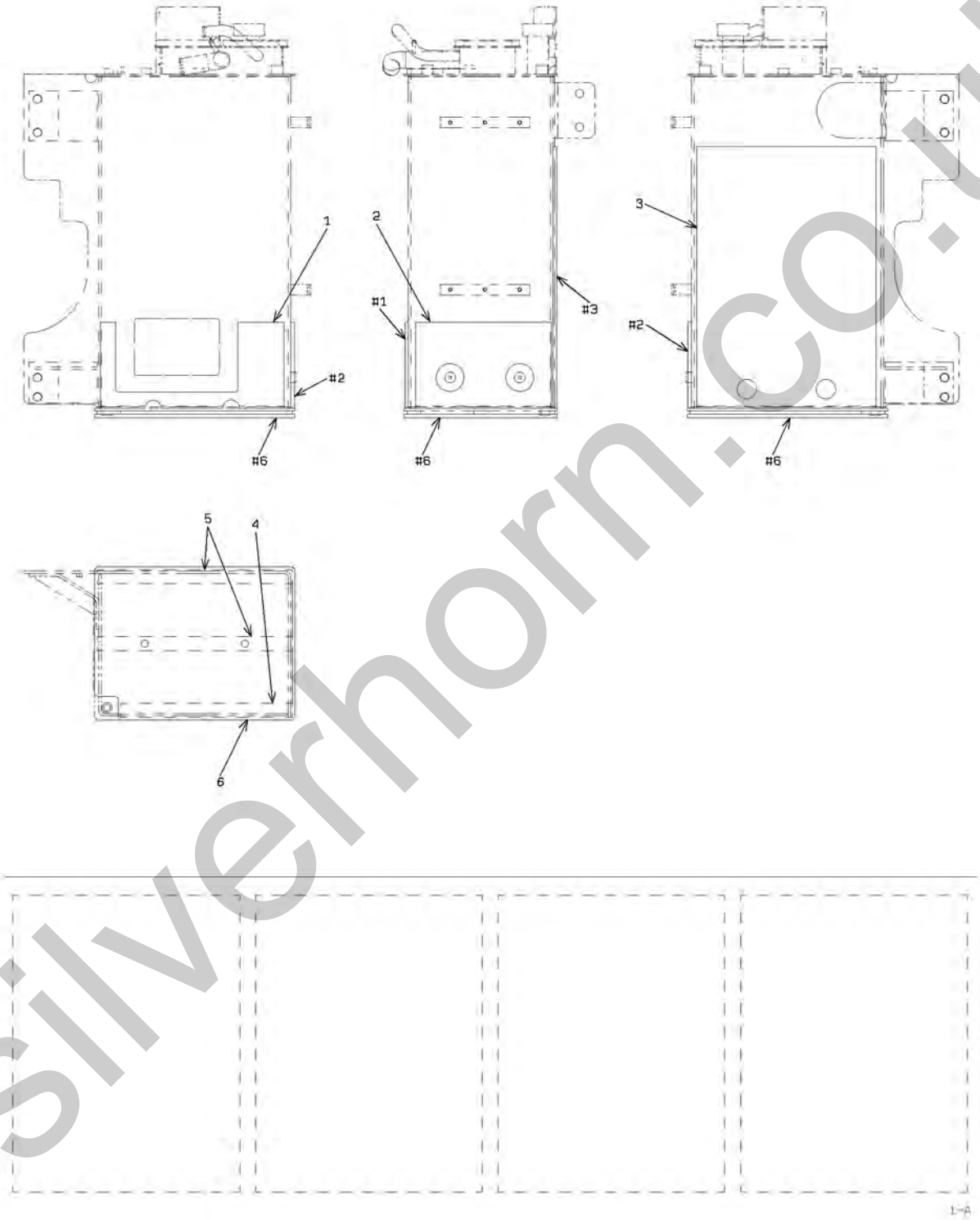

silverhorn.co.uk

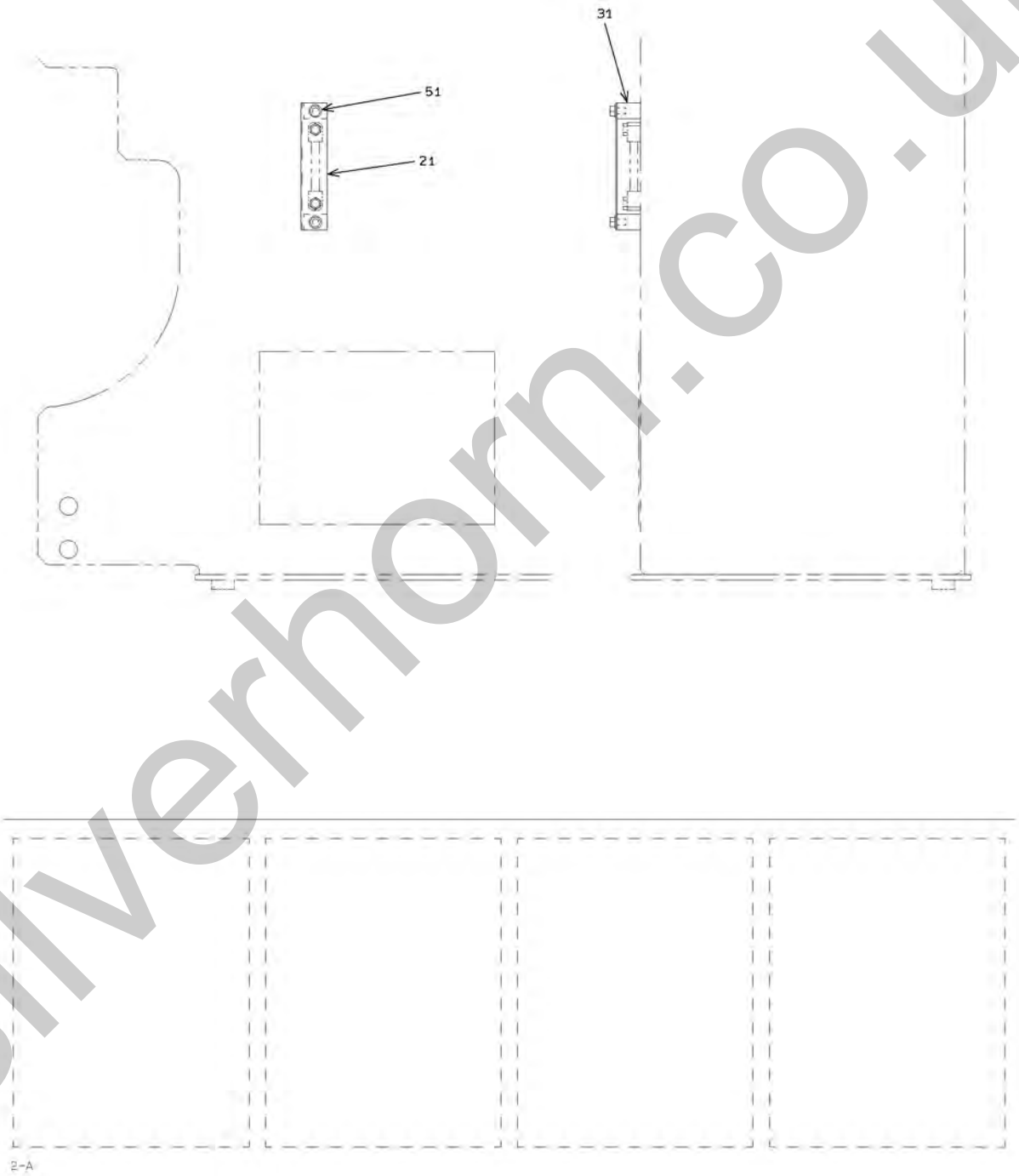

silverhorn.co.uk

OIL TANK GROUP

SYM-BOL	PART NUMBER	PART NAME	UNIT Q,TY	SERIAL (A) - (B)	REMARKS N P D	(A) (B)	(C) (D)	REMARK
1A	41620-28280	PLATE	1	5001 -				WELDING
2A	41620-28290	PLATE	1	5001 -				WELDING
3A	41620-28300	PLATE	1	5001 -				WELDING
4A	41620-28310	PLATE	1	5001 -				WELDING
5A	41620-28320	PLATE	2	5001 -				WELDING
6A	41620-28330	PLATE	1	5001 -				WELDING
21A	31200-29720	COVER	1	5001 -				
31A	43780-24850	BOSS	2	5001 -				WELDING
51A	61802-10016	BOLT,FLANGED	2	5001 -				

silverhorn.co.uk

MEMO

silverhorn.co.uk

FLOOR BOARD GROUP

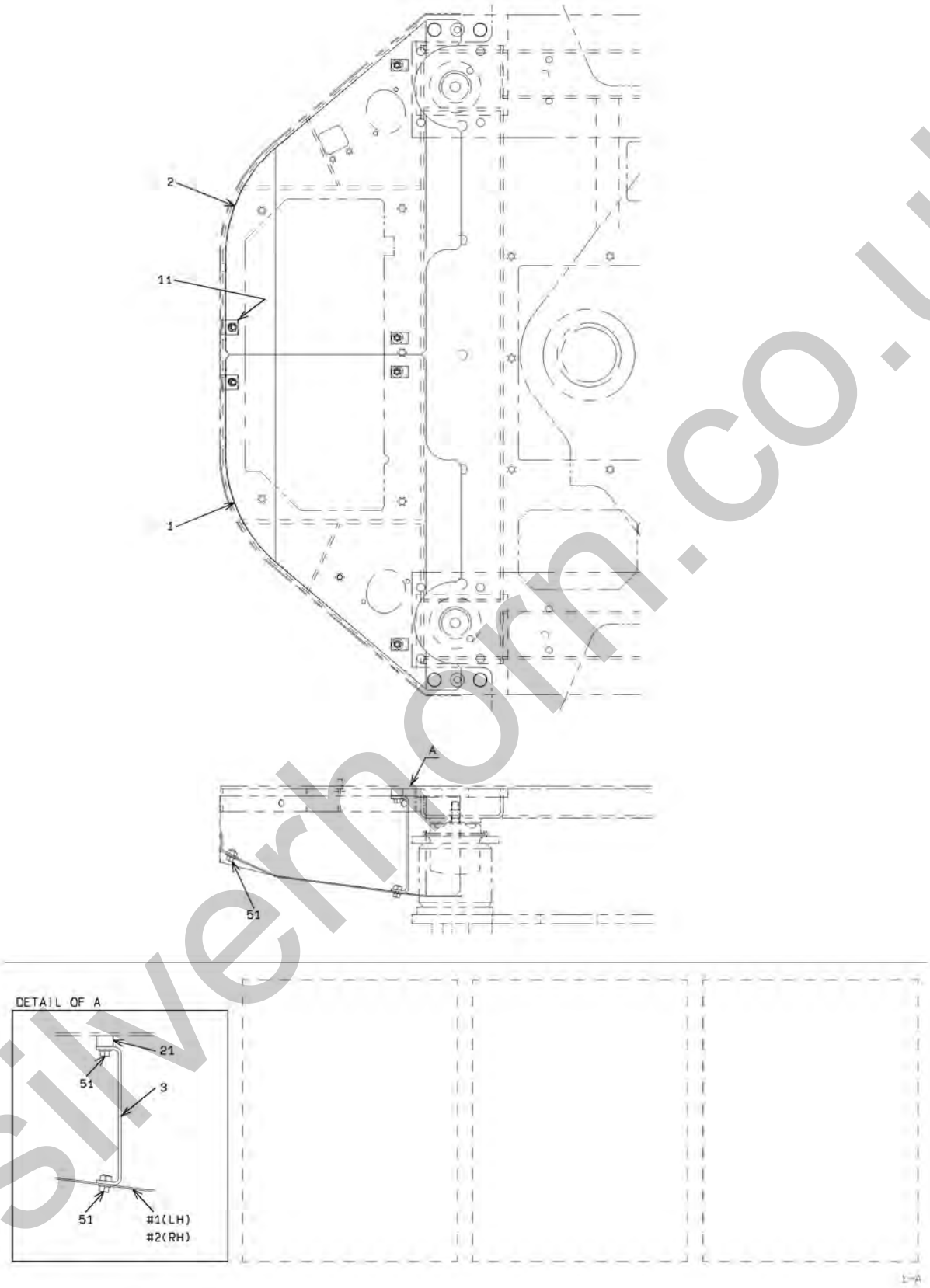

silverhorn.co.uk

FLOOR BOARD GROUP

SYM-BOL	PART NUMBER	PART NAME	UNIT Q,TY	SERIAL (A) - (B)	REMARKS N P D	(A) (B)	(C) (D)	REMARK
1A	41637-21210	PLATE	1	5001 -				FR LH
2A	41637-21220	PLATE	1	5001 -				FR RH
3A	41619-47120	PLATE	4	5001 -				
11A	30502-43860	ANGLE	2	5001 -				WELDING
21A	43780-24110	BOSS	4	5001 -				WELDING
51A	61802-10016	BOLT,FLANGED	10	5001 -				

silverhorn.co.uk

STEP & HANDRAIL GROUP

<S/N 5001 - 5114>

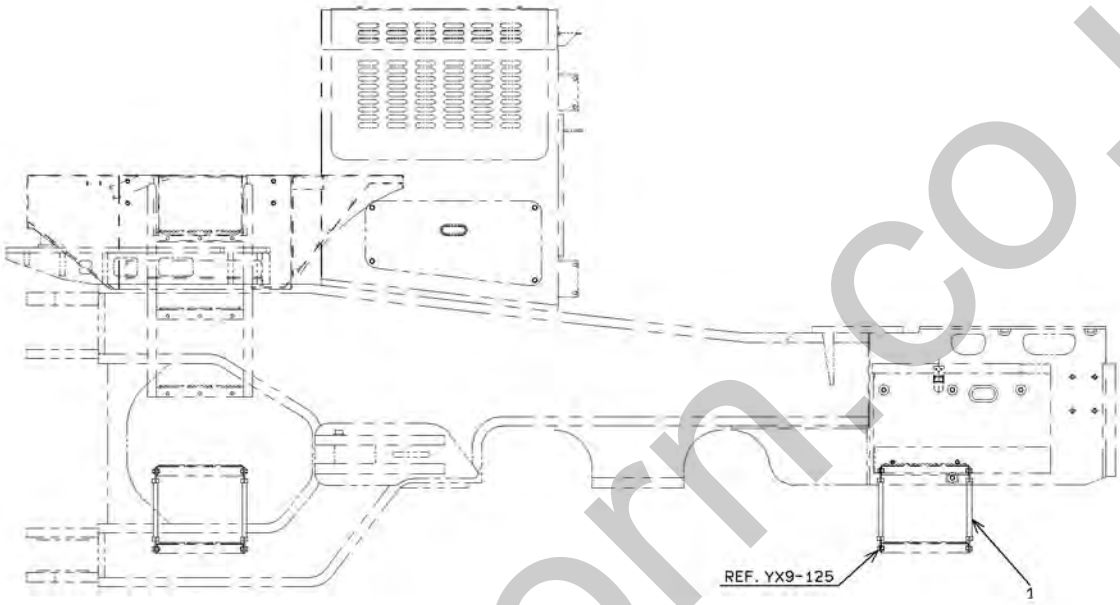

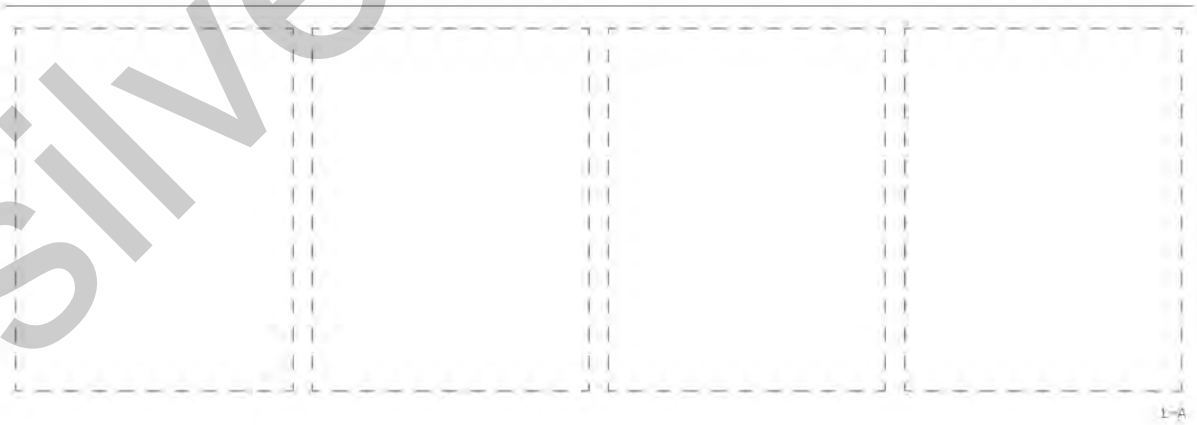

silverhorn.co.uk

STEP & HANDRAIL GROUP

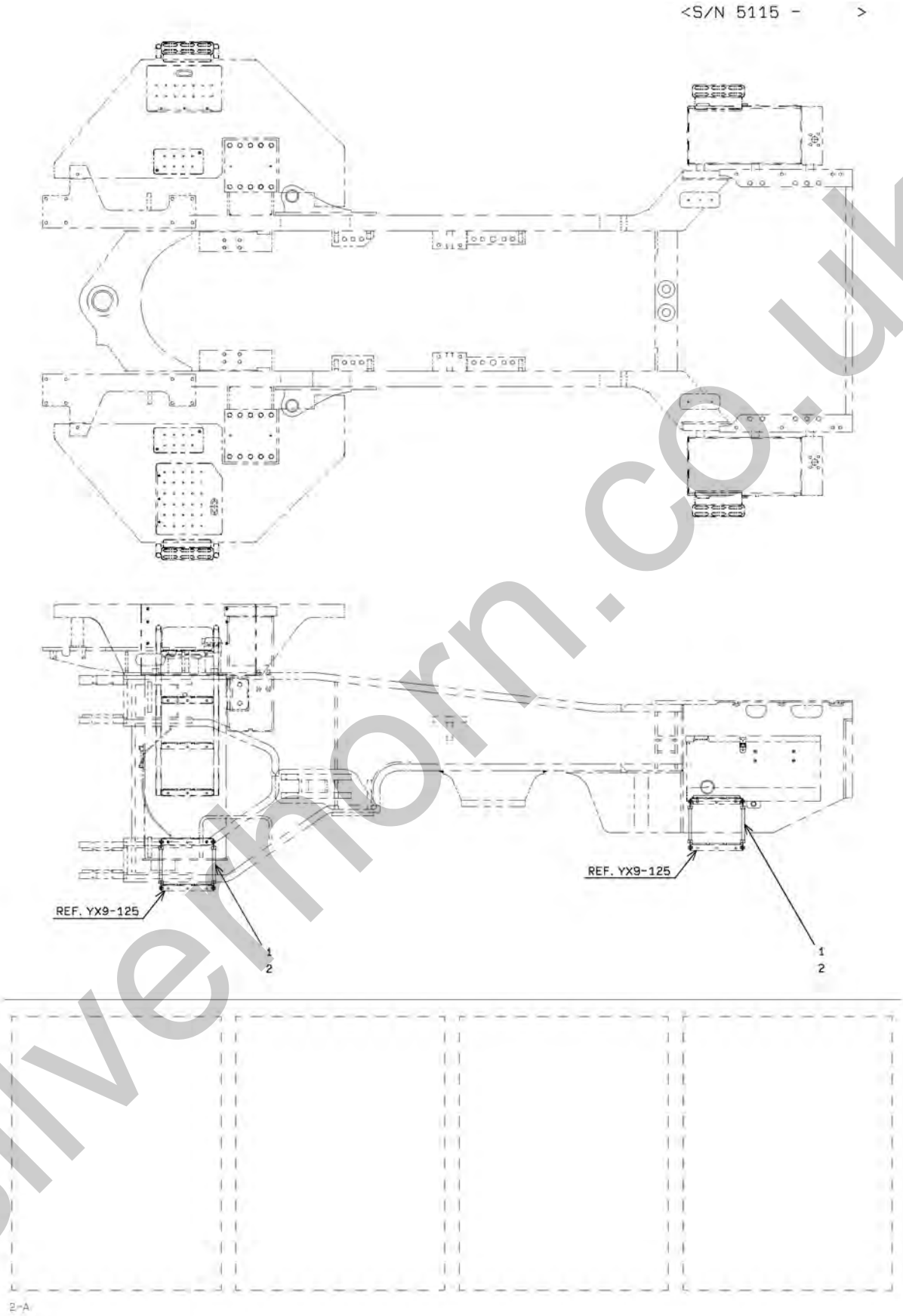

silverthorn.co.uk

STEP & HANDRAIL GROUP

SYM-BOL	PART NUMBER	PART NAME	UNIT Q,TY	SERIAL (A) - (B)	REMARKS N P D	(A) (B)	(C) (D)	REMARK
1A	45785-20090	ROPE,WIRE	8	5001 - 5114				
1B	45785-20270	ROPE,WIRE	8	5115 -	C			
2A	61802-12020	BOLT,FLANGED	32	5115 -				

silverhorn.co.uk

MEMO

silverhorn.co.uk

REAR GRILL GROUP

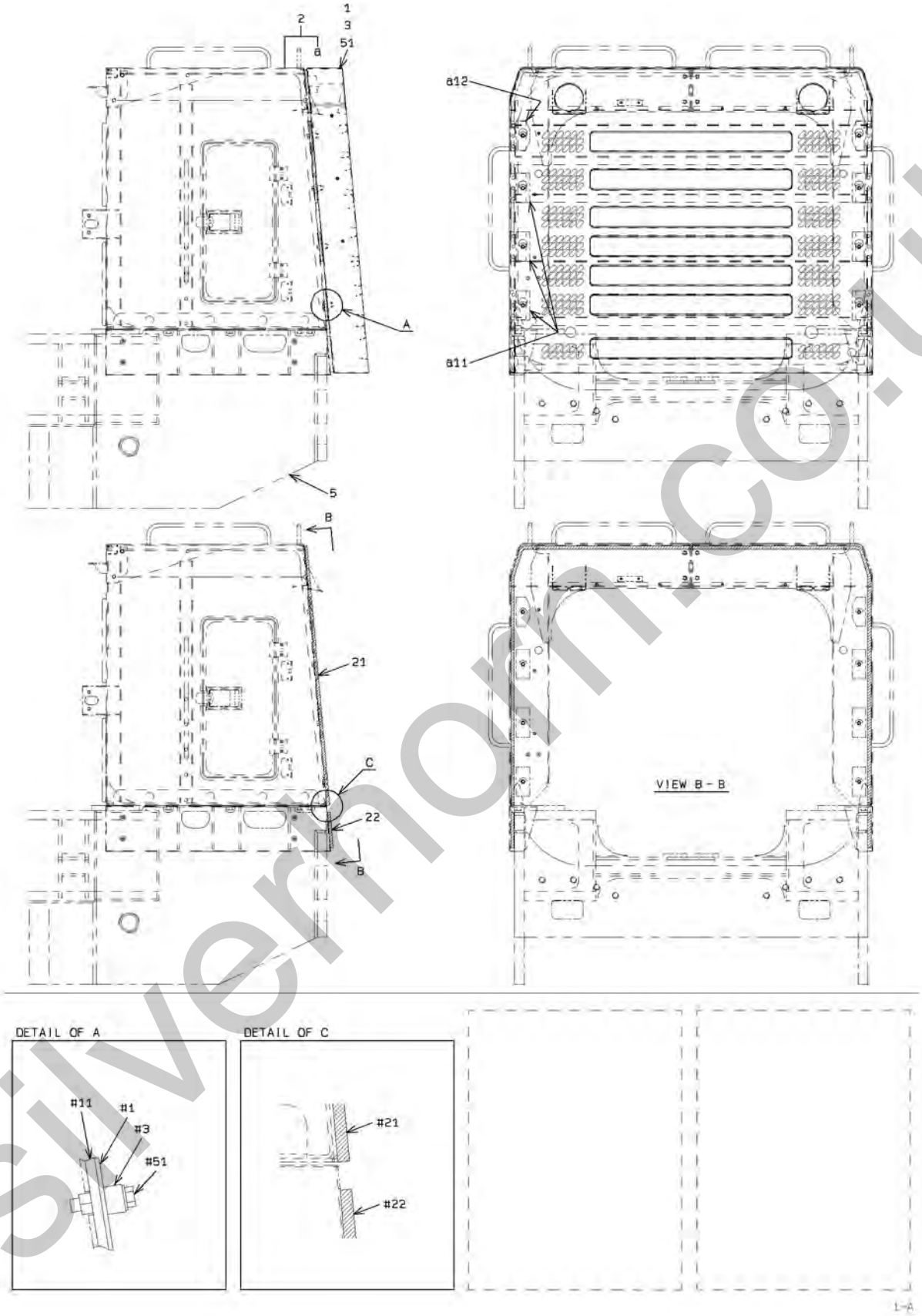

silvermoon.co.uk

REAR GRILL GROUP

SYM-BOL	PART NUMBER	PART NAME	UNIT Q,TY	SERIAL (A) - (B)	REMARKS N P D	(A)	(B)	(C)	(D)	REMARK
1A	33070-22600	GRILLE	1	5001 - 5036						
1B	33070-22720	GRILLE	1	5037 - 5052	B					
1C	33070-22830	GRILLE	1	5053 -	B					
2A	03501-56600	GUARD,RADIATOR	1	5001 -		Y01				
3A	35700-20230	SPACER	8	5001 -						
5A	03501-56610	CHASSIS ASSY,REAR	1	5001 -						
11A	41619-20100	PLATE	6	5001 -		01				WELDING
12A	41619-20110	PLATE	2	5001 -		01				WELDING
21A	33713-28050	SHEET,RUBBER	1	5001 -						
22A	33713-28060	SHEET,RUBBER	2	5001 -						
51A	61802-12050	BOLT,FLANGED	8	5001 -						

silverhorn.co.uk

COVER MOUNT

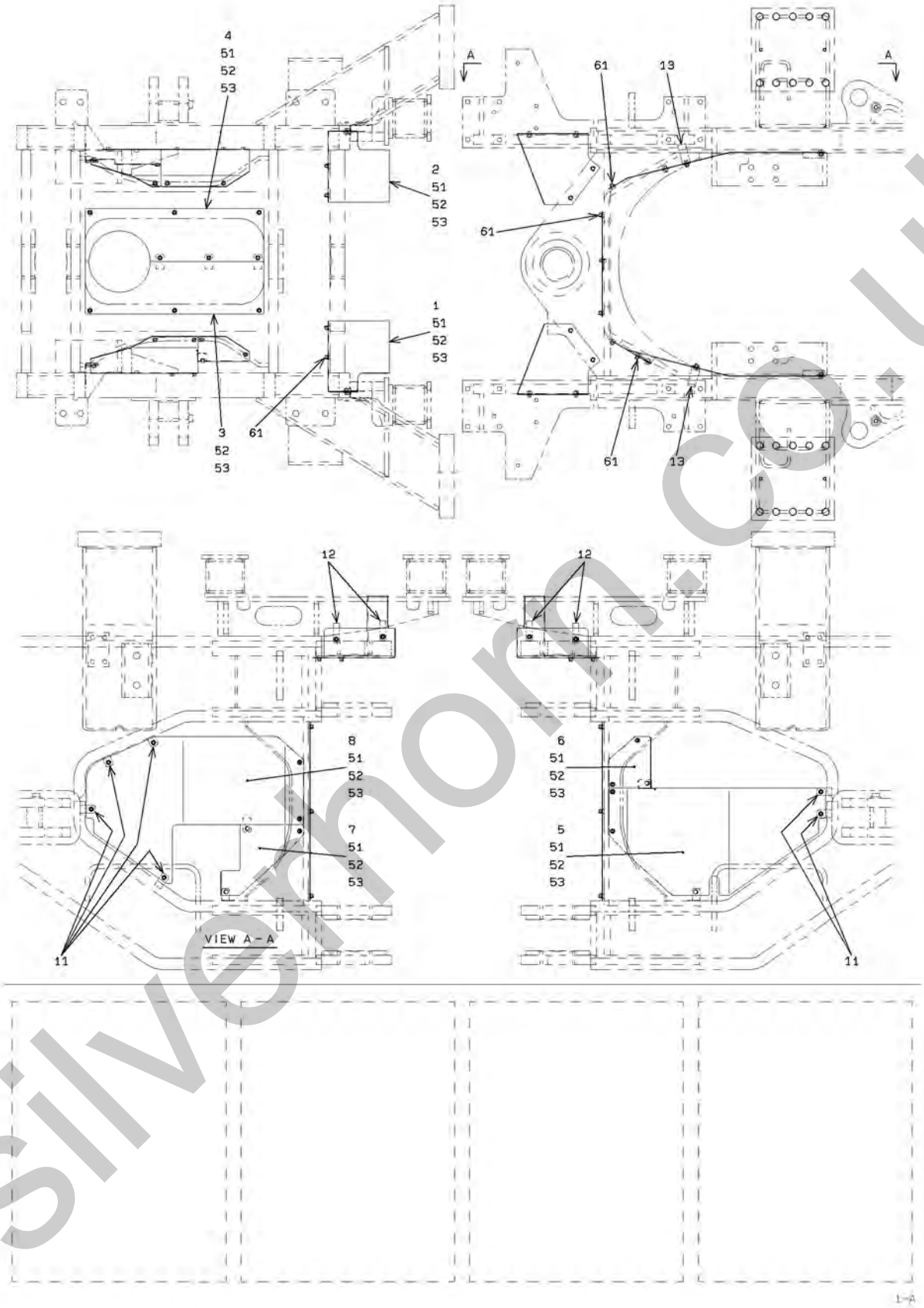

silvermoon.co.uk

COVER MOUNT

<S/N 5041 - >

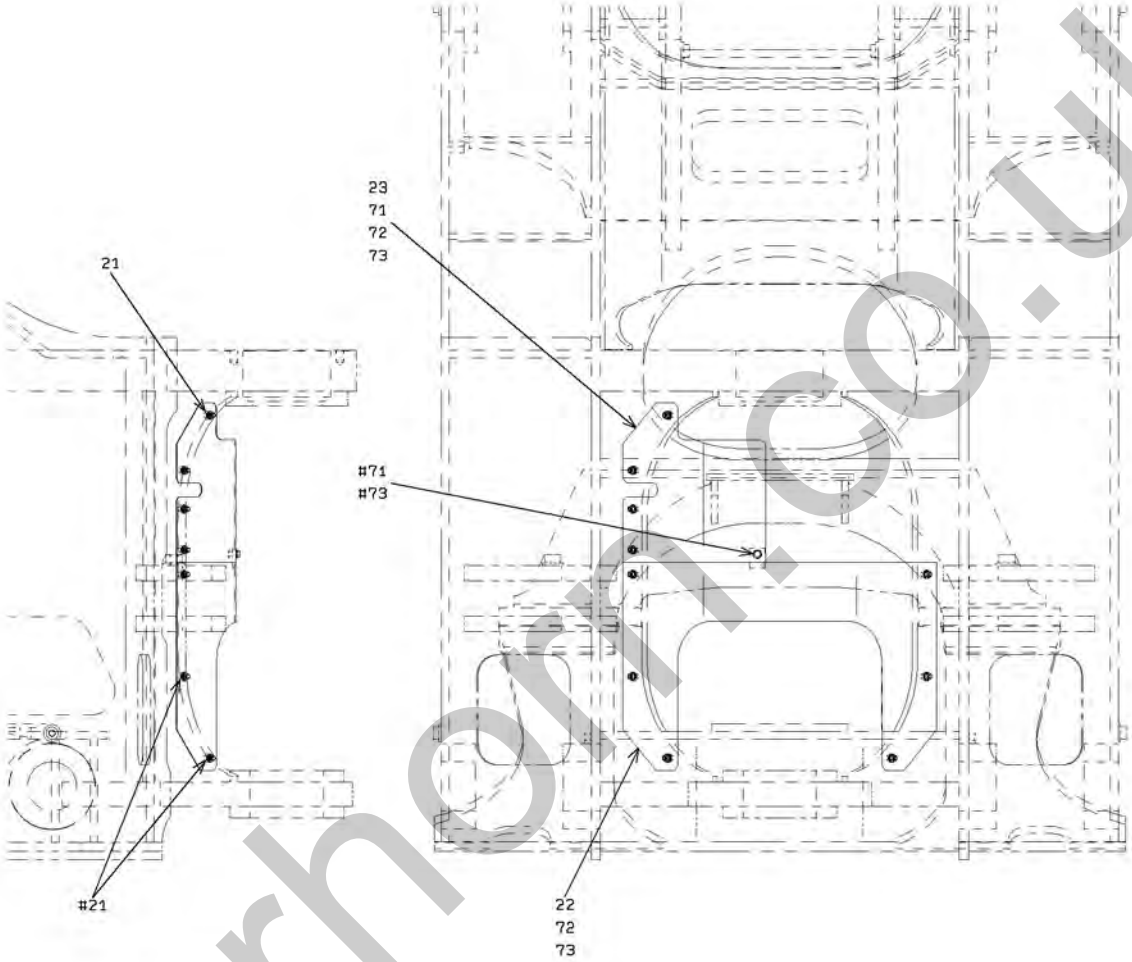

2-A

silverhorn.co.uk

COVER MOUNT

SYM-BOL	PART NUMBER	PART NAME	UNIT Q,TY	SERIAL (A) - (B)	REMARKS N P D	(A) (B)	(C) (D)	REMARK
1A	31200-40820	COVER	1	5001 -				FR LH
2A	31200-40830	COVER	1	5001 -				FR RH
3A	41620-45420	PLATE	1	5001 -				FR LH
4A	41609-54240	PLATE	1	5001 -				FR RH
5A	31200-40840	COVER	1	5001 -				FR LH
6A	41609-54260	PLATE	1	5001 -				FR LH
7A	41609-54270	PLATE	1	5001 -				FR RH
8A	31200-40850	COVER	1	5001 -				FR RH
11A	41620-27250	PLATE	6	5001 -				WELDING
12A	41620-21780	PLATE	4	5001 -				WELDING
13A	41620-45410	PLATE	2	5001 -				WELDING
21A	03501-65820	CHASSIS ASSY,FRONT	1	5041 -				
22A	41710-25100	PLATE	1	5041 -				
23A	41710-25110	PLATE	1	5041 -				
51A	61802-10016	BOLT,FLANGED	17	5001 -				
52A	62480-21101	NUT,FLANGED	17	5001 -				
53A	62701-40101	WASHER,PLANE	34	5001 -				
61A	61033-10016	BOLT	17	5001 -				WELDING
71A	61802-10020	BOLT,FLANGED	1	5041 -				
72A	62480-21101	NUT,FLANGED	10	5041 -				
73A	62701-40101	WASHER,PLANE	11	5041 -				

silverhorn.co.uk

MEMO

silverhorn.co.uk

GREASE PIPING (FOR FRONT)

(NOTE):REFER TO STANDARD CATALOG(REF. YX9-147) FOR NO SYMBOL PARTS.

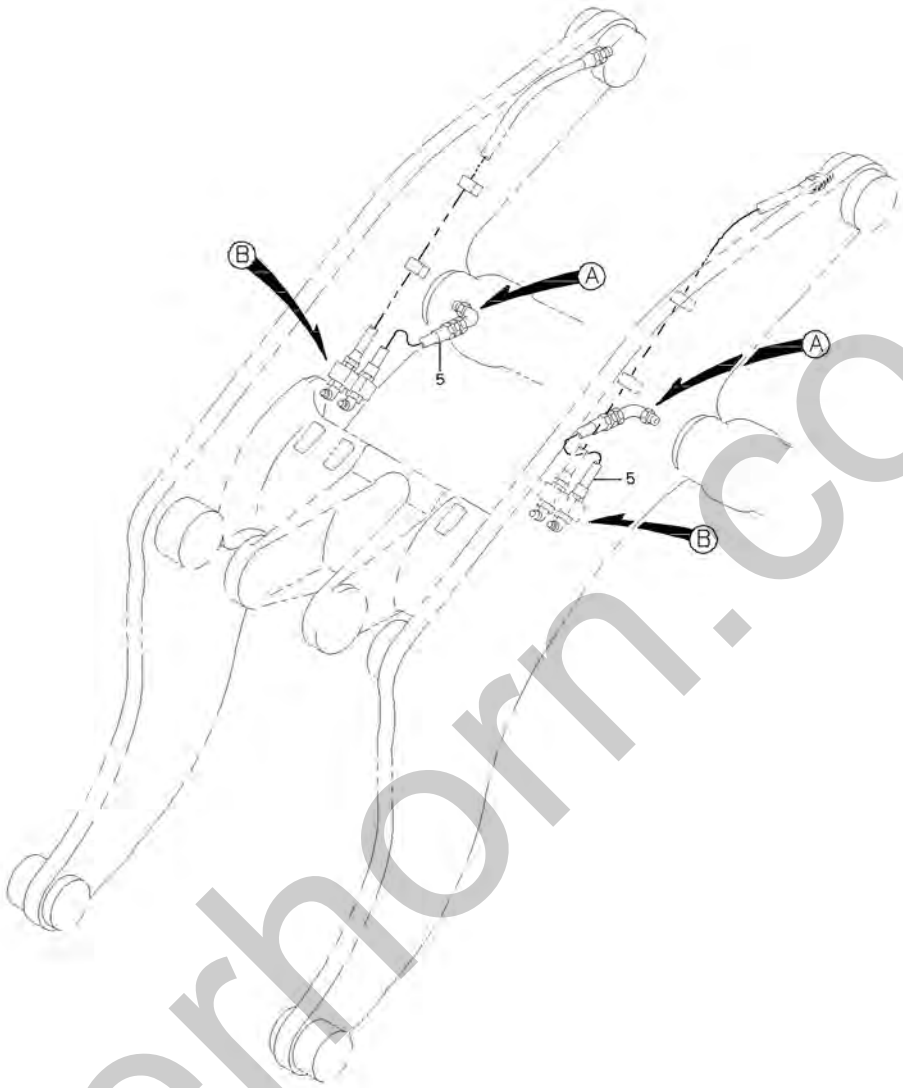

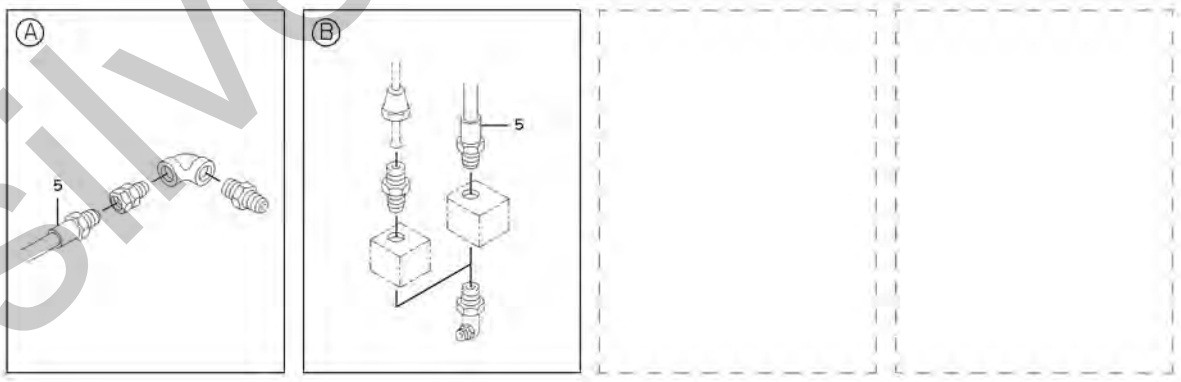

silverhorn.co.uk

GREASE PIPING (FOR FRONT)

SYM-BOL	PART NUMBER	PART NAME	UNIT Q,TY	SERIAL (A) - (B)	REMARKS N P D	(A) (B)	(C) (D)	REMARK
5A	43113-45420	HOSE,HIGH PRESSURE	2	5001 -				LIFT CYL.

silverhorn.co.uk

FRONT LAMP MOUNT

(NOTE):REFER TO STANDARD CATALOG(REF. YX9-155) FOR NO SYMBOL PARTS.

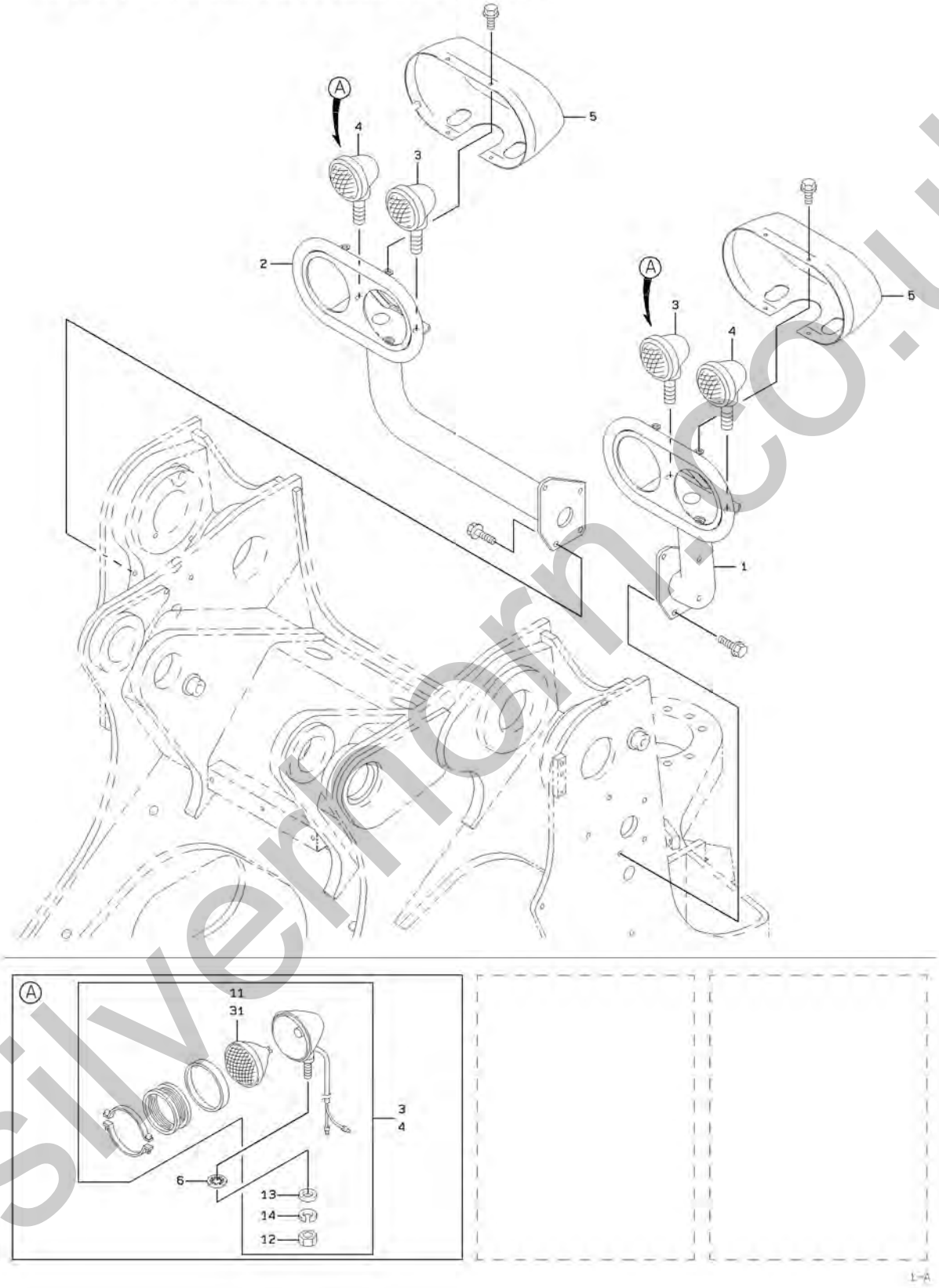

silvernorn.co.uk

FRONT LAMP MOUNT

SYM-BOL	PART NUMBER	PART NAME	UNIT Q,TY	SERIAL (A) - (B)	REMARKS N P D	(A)	(B)	(C)	(D)	REMARK
1A	40968-24110	BRACKET,LAMP	1	5001 - 5046						FR LH
1B	40968-26480	BRACKET,LAMP	1	5047 - 5052	C					FR LH
1C	03501-72910	BRACKET,LAMP	1	5053 -	A					FR LH
2A	40968-24120	BRACKET,LAMP	1	5001 - 5046						FR RH
2B	40968-26490	BRACKET,LAMP	1	5047 - 5052	C					FR RH
2C	03501-72920	BRACKET,LAMP	1	5053 -	A					FR RH
3A	44890-60100	LAMP,HEAD	2	5001 -		Y01				
4A	44890-60090	LAMP,HEAD	2	5001 -			Y02			
5A	31828-20420	GUARD,LAMP	2	5001 -						
6A	46017-20020	WASHER,TOOTH	4	5001 -						
11A	38480-70560	BULB	1	5001 -		01				24V55W
12A	62401-81142	NUT	1	5001 -		01	02			
13A	62701-40141	WASHER,PLANE	1	5001 -		01	02			
14A	62721-14100	WASHER,SPRING	1	5001 -		01	02			
31A	38480-70570	BULB	1	5001 -			02			24V40/60W

silverhorn.co.uk

BATTERY & GREASE GUN MOUNT

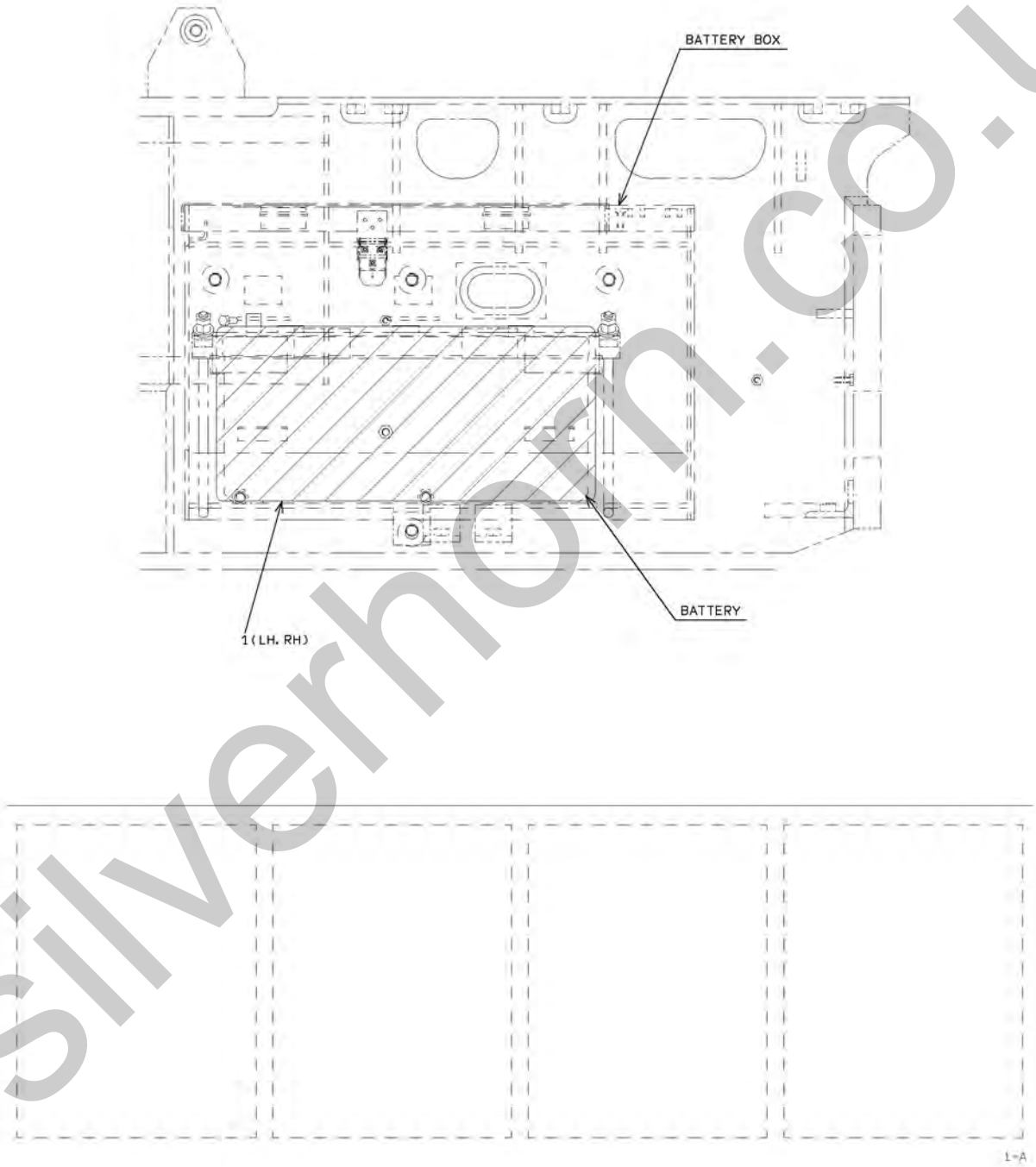

silverhorn.co.uk

BATTERY & GREASE GUN MOUNT

SYM-BOL	PART NUMBER	PART NAME	UNIT Q,TY	SERIAL (A) - (B)	REMARKS N P D	(A) (B)	(C) (D)	REMARK
1A	30610-20930-7	INSULATOR	2	5001 -				

silverhorn.co.uk

ELECTRICAL WIRING - FRONT CHASSIS

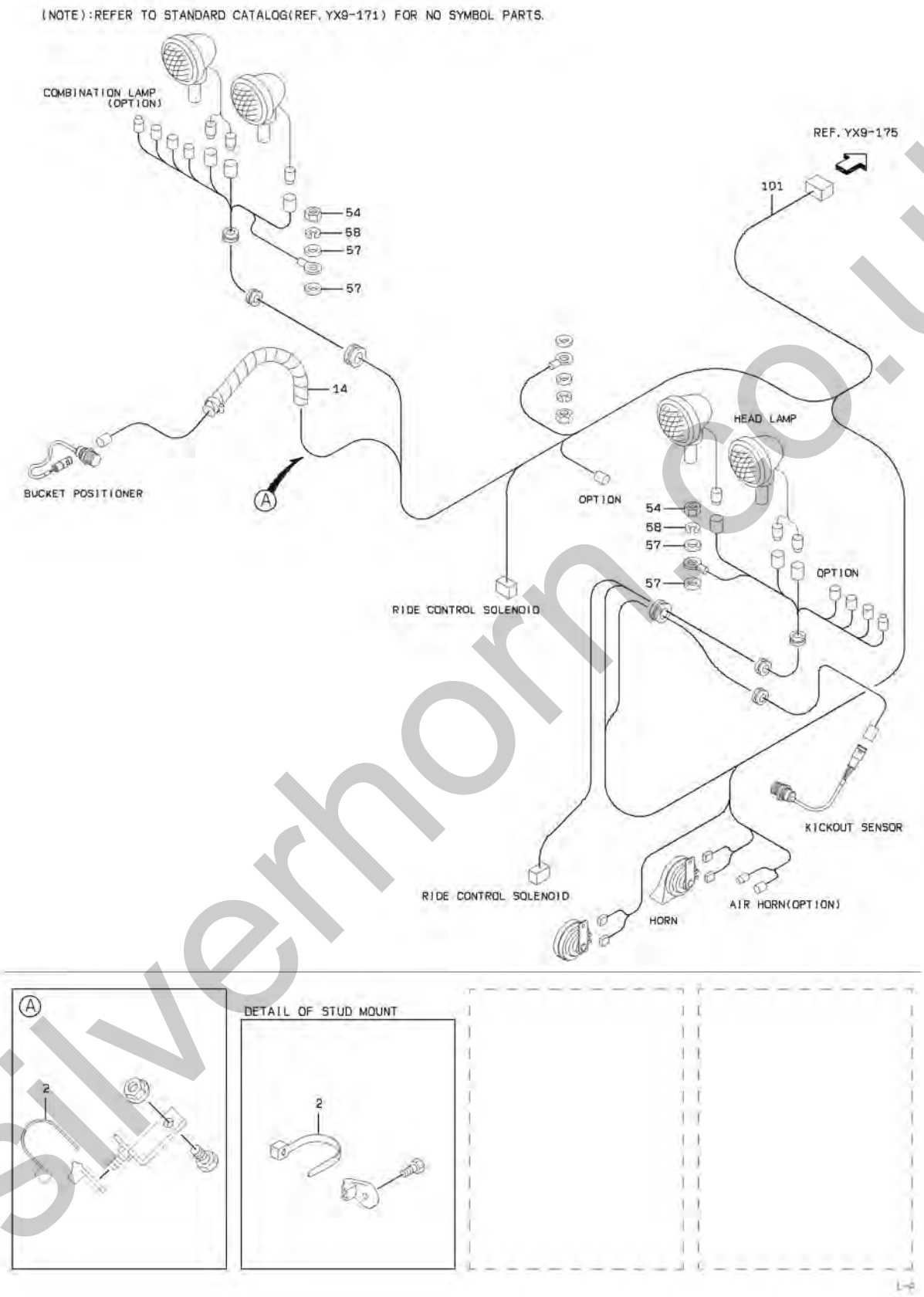

silverhorn.co.uk

ELECTRICAL WIRING - FRONT CHASSIS

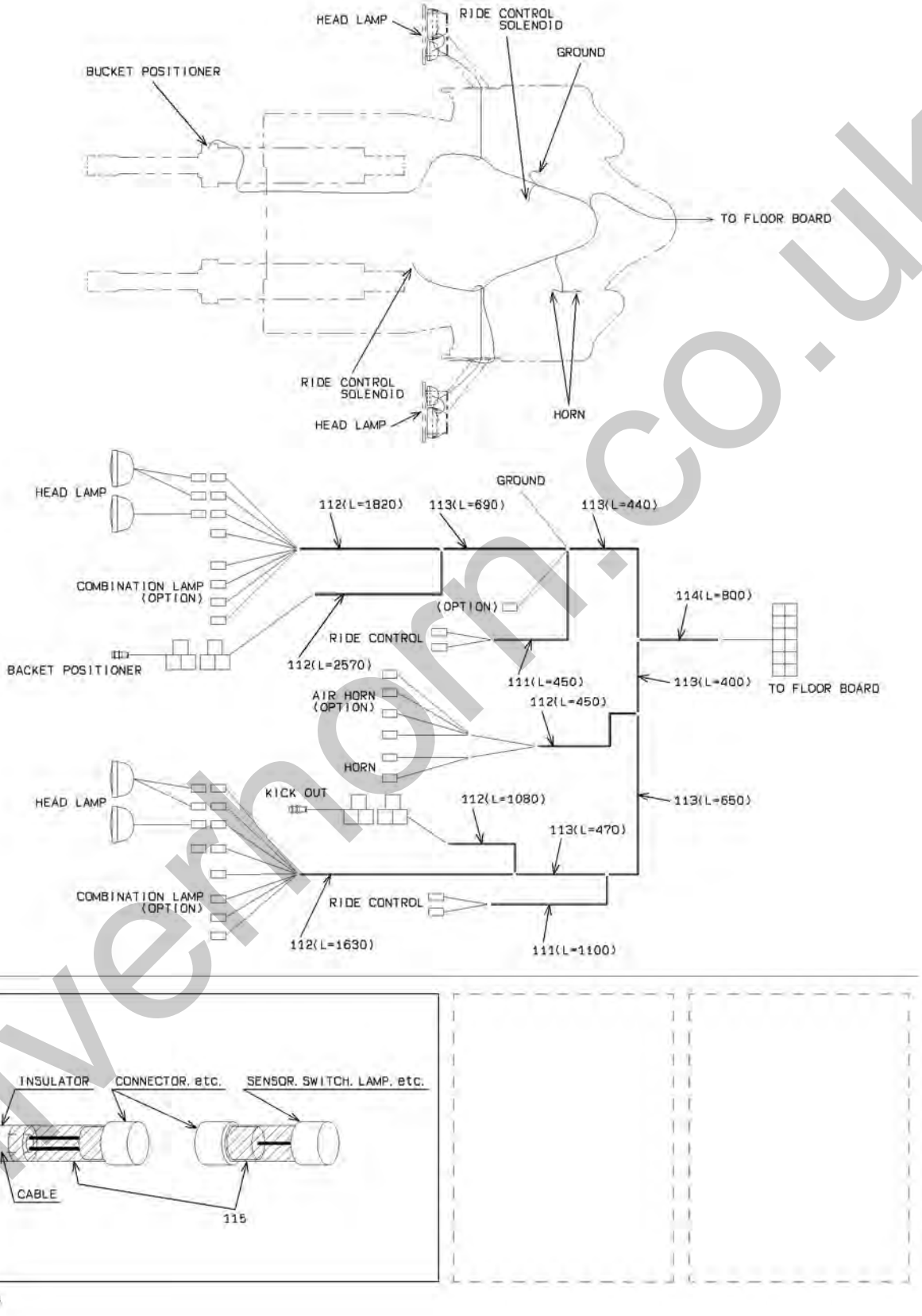

silvermorn.co.uk

ELECTRICAL WIRING - FRONT CHASSIS

SYM-BOL	PART NUMBER	PART NAME	UNIT Q,TY	SERIAL (A) - (B)	REMARKS N P D	(A) (B)	(C) (D)	REMARK
2A	32923-70140	CLAMP,HOSE	A/R	5001 -				L=202
14A	37014-70040	TAPE,INSULATION	1	5001 -				
54A	62401-81081	NUT	2	5001 -				
57A	46011-21640	WASHER,PLANE	4	5001 -				
58A	62721-08100	WASHER,SPRING	2	5001 -				
101A	33193-38380	CABLE ASSY	1	5001 - 5066				FRONT CHASSIS
101B	33193-50840	CABLE ASSY	1	5067 -	C			FRONT CHASSIS
111A	30610-20720-7	INSULATOR	1	5001 -				L=1550
112A	30610-20730-7	INSULATOR	1	5001 -				L=7550
113A	30610-20740-7	INSULATOR	1	5001 -				L=2650
114A	30610-20760-7	INSULATOR	1	5001 -				L=800
115A	37014-70080-7	TAPE,INSULATION	1	5001 -				

silverhorn.co.uk

MEMO

silverhorn.co.uk

ELECTRICAL WIRING - REAR CHASSIS

(NOTE):SYMBOL 21, 22 ARE INCLUDED IN REF. YX9-175.

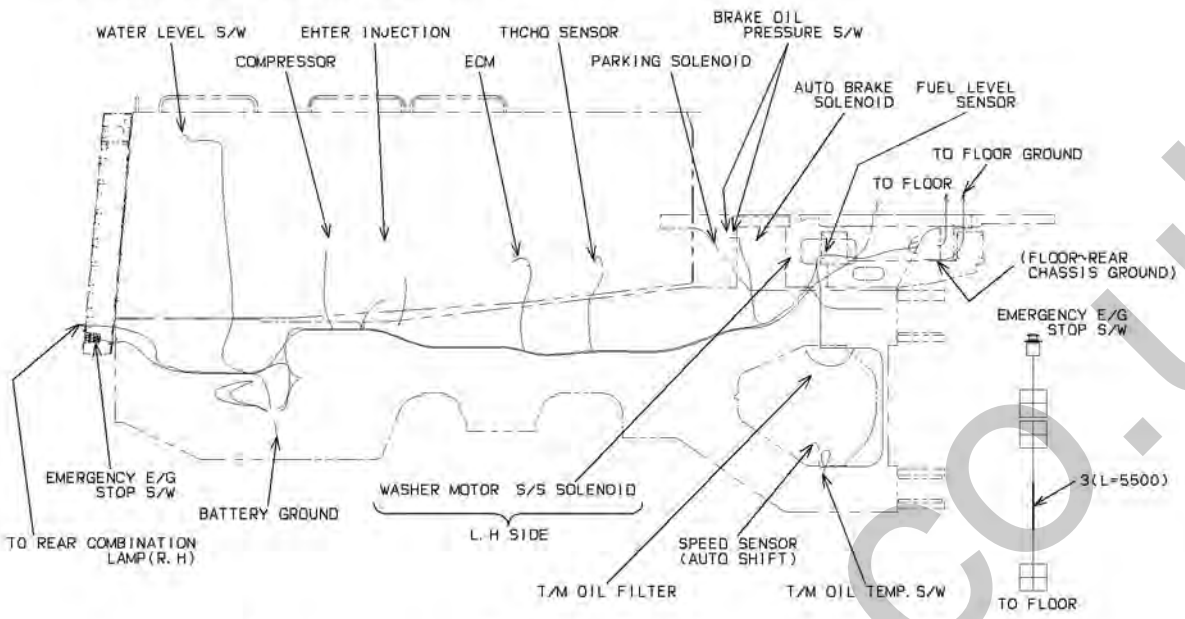

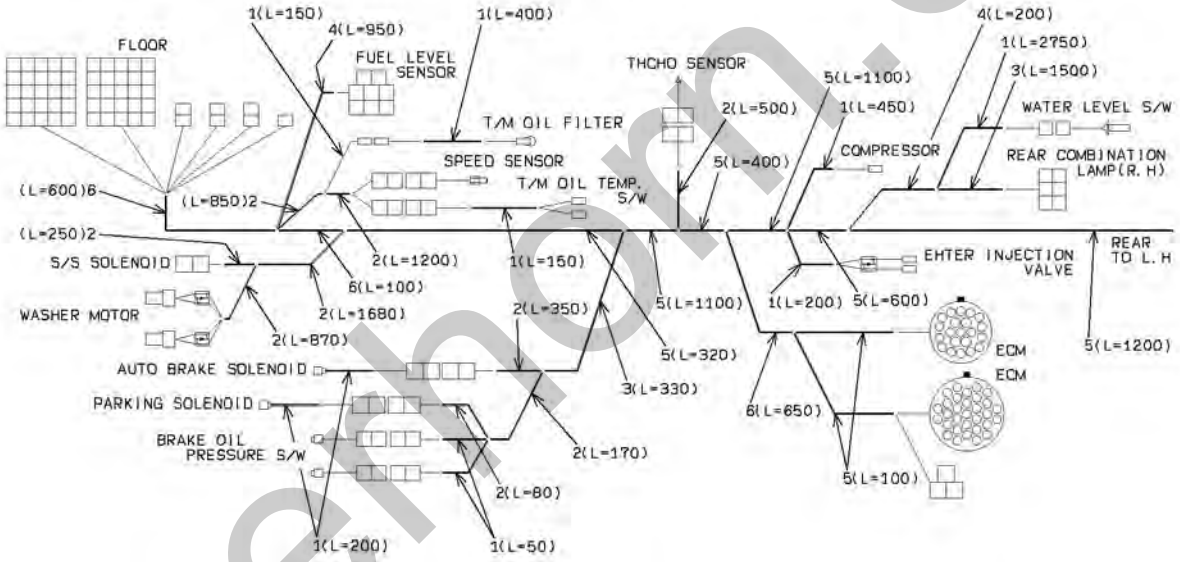

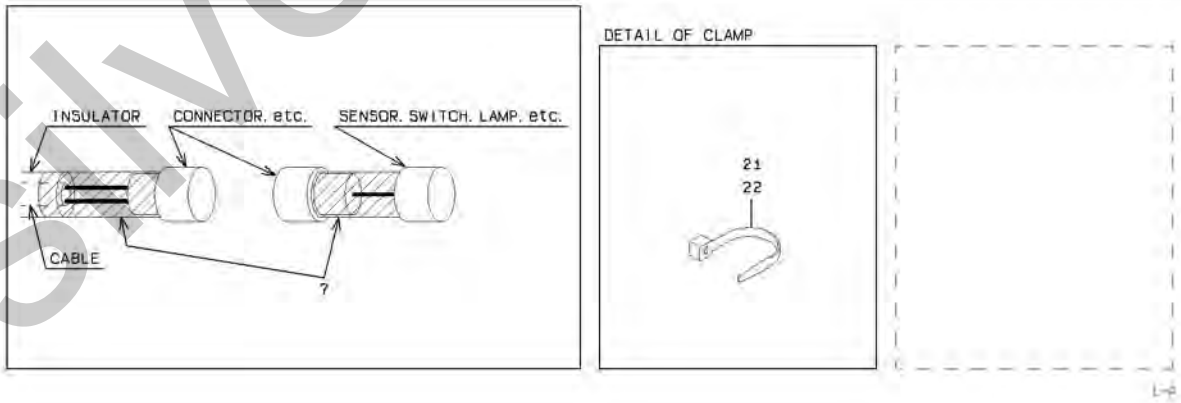

silverhorn.co.uk

ELECTRICAL WIRING - REAR CHASSIS

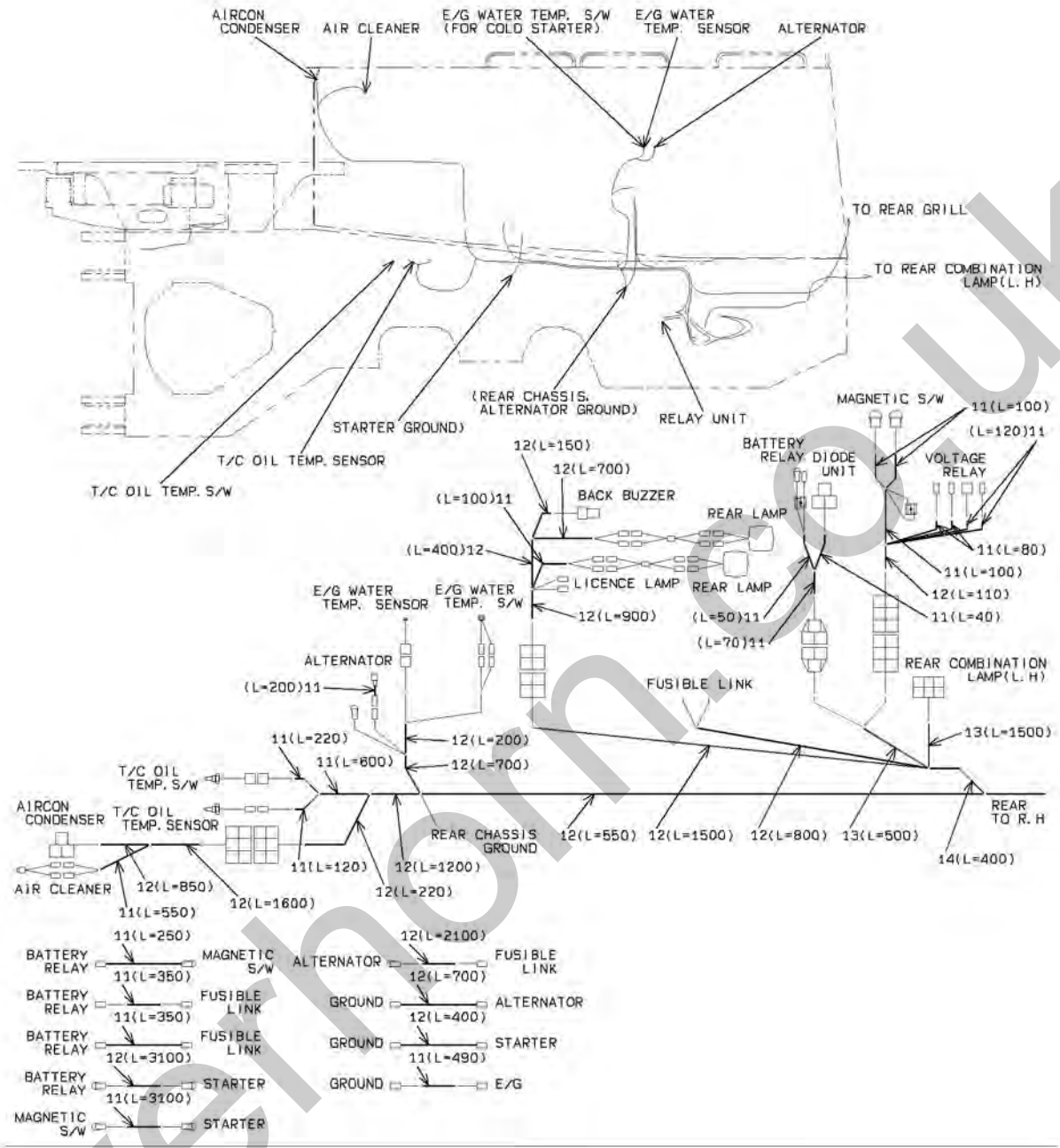

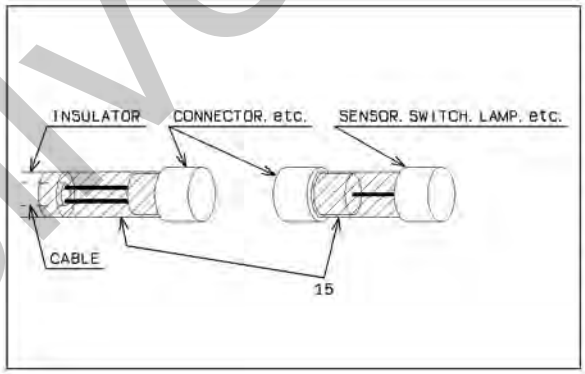

silverhorn.co.uk

ELECTRICAL WIRING - REAR CHASSIS

SYM-BOL	PART NUMBER	PART NAME	UNIT Q,TY	SERIAL (A) - (B)	REMARKS N P D	(A) (B)	(C) (D)	REMARK
1A	30610-20720-7	INSULATOR	1	5001 -				L=4600
2A	30610-20730-7	INSULATOR	1	5001 -				L=5950
3A	30610-20740-7	INSULATOR	1	5001 -				L=7330
4A	30610-20750-7	INSULATOR	1	5001 -				L=1150
5A	30610-20760-7	INSULATOR	1	5001 -				L=4920
6A	30610-20770-7	INSULATOR	1	5001 -				L=1350
7A	37014-70080-7	TAPE,INSULATION	1	5001 -				
11A	30610-20720-7	INSULATOR	1	5001 -				L=7190
12A	30610-20730-7	INSULATOR	1	5001 -				L=16180
13A	30610-20740-7	INSULATOR	1	5001 -				L=2000
14A	30610-20750-7	INSULATOR	1	5001 -				L=400
15A	37014-70080-7	TAPE,INSULATION	1	5001 -				
21A	32923-70140	CLAMP,HOSE	A/R	5001 -				L=202
22A	32923-70150	CLAMP,HOSE	A/R	5001 -				L=382

silverhorn.co.uk

MEMO

silverhorn.co.uk

ELECTRICAL WIRING - FLOOR BOARD

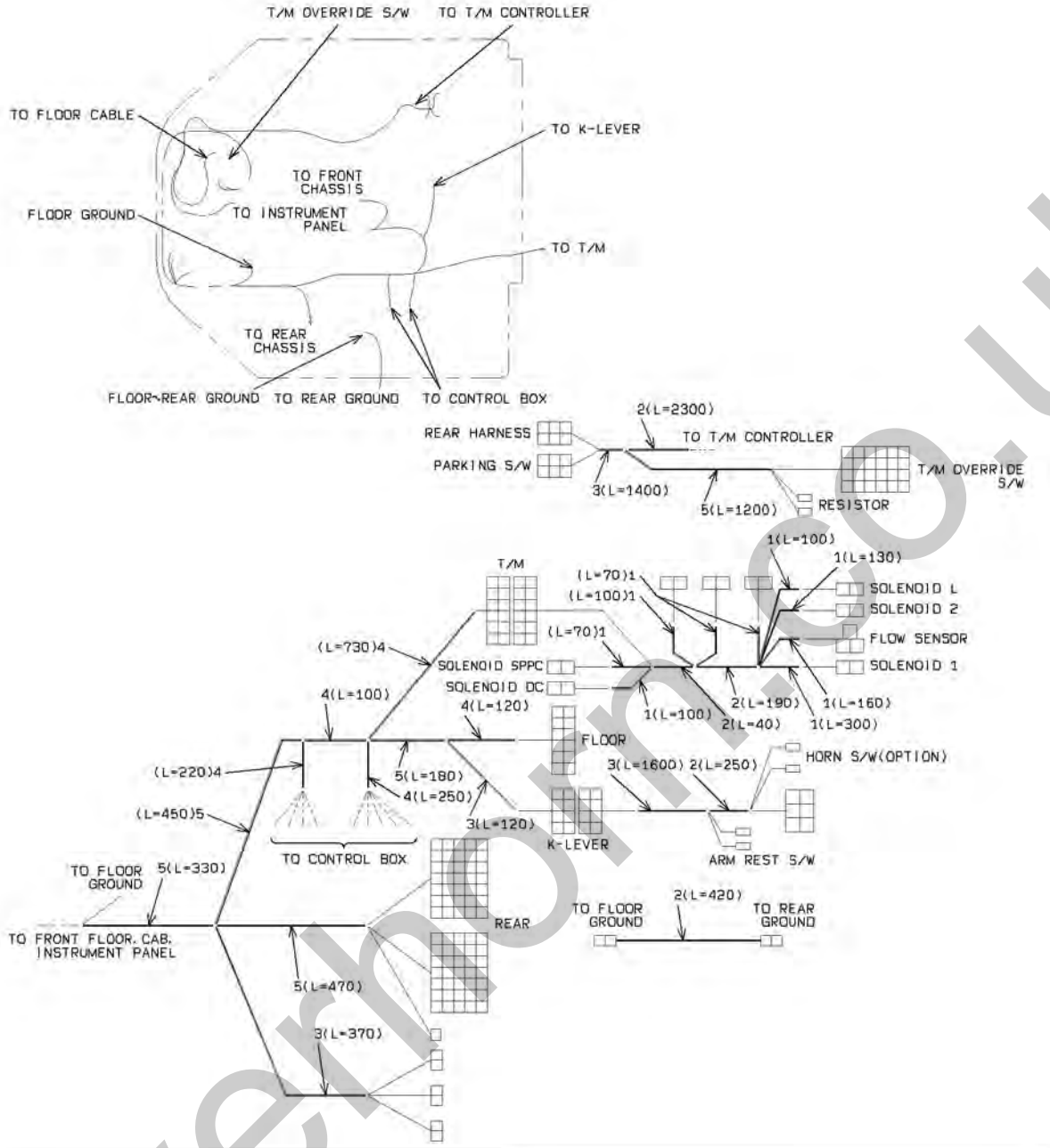

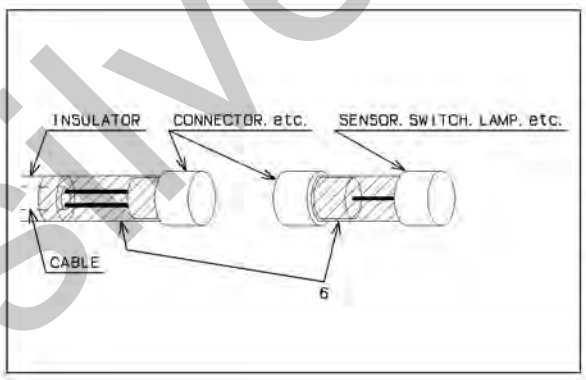

silverhorn.co.uk

ELECTRICAL WIRING - FLOOR BOARD

SYM-BOL	PART NUMBER	PART NAME	UNIT Q,TY	SERIAL (A) - (B)	REMARKS N P D	(A) (B)	(C) (D)	REMARK
1A	30610-20730-7	INSULATOR	1	5001 -				L=1100
2A	30610-20740-7	INSULATOR	1	5001 -				L=3200
3A	30610-20750-7	INSULATOR	1	5001 -				L=3490
4A	30610-20760-7	INSULATOR	1	5001 -				L=1420
5A	30610-20770-7	INSULATOR	1	5001 -				L=2630
6A	37014-70080-7	TAPE,INSULATION	1	5001 -				

silverhorn.co.uk

SWITCH MOUNT (FOR EMERGENCY E/G STOP)

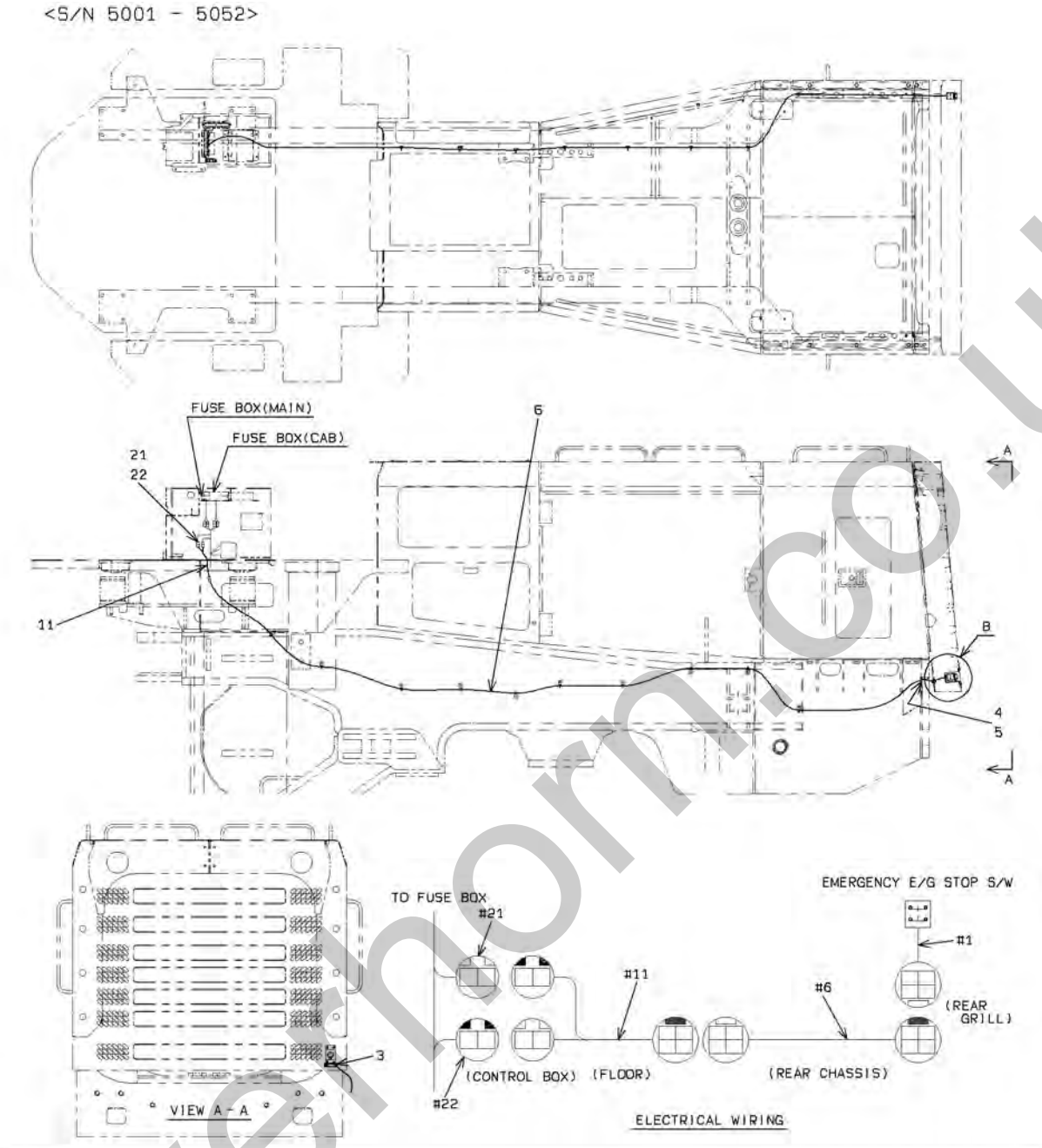

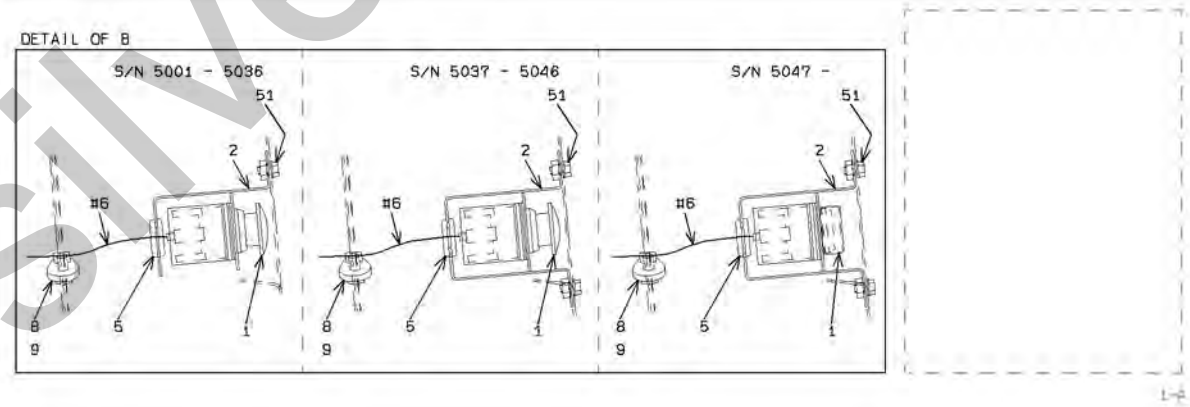

silverhorn.co.uk

SWITCH MOUNT (FOR EMERGENCY E/G STOP)

SYM-BOL	PART NUMBER	PART NAME	UNIT Q,TY	SERIAL (A) - (B)	REMARKS N P D	(A) (B)	(C) (D)	REMARK
1A	35055-20110	SWITCH,BUTTON	1	5001 - 5046				
1B	35055-20200	SWITCH,BUTTON	1	5047 - 5052	C			
2A	40902-29290	BRACKET	1	5001 - 5036				
2B	40902-37120	BRACKET	1	5037 - 5052	B			
3A	44770-51920	LABEL	1	5001 - 5052				
4A	03501-56620	PLATE	1	5001 - 5052				
5A	65801-16160	BUSHING,ELASTIC	2	5001 - 5052				
6A	33193-35660	CABLE ASSY	1	5001 - 5052				
8A	32923-70120	CLAMP,HOSE	1	5001 - 5052				FR M8
9A	32923-70140	CLAMP,HOSE	1	5001 - 5052				L=202
11A	33193-36840	CABLE ASSY	1	5001 - 5048				
11B	33193-46610	CABLE ASSY	1	5049 - 5052	A			
21A	33305-20190	CONNECTOR ASSY	1	5001 - 5052				
22A	33305-20250	CONNECTOR ASSY	1	5001 - 5052				
51A	61802-06016	BOLT,FLANGED	2	5001 - 5036				
51B	61802-06016	BOLT,FLANGED	4	5037 - 5052				

silverhorn.co.uk

SWITCH MOUNT (FOR EMERGENCY E/G STOP)

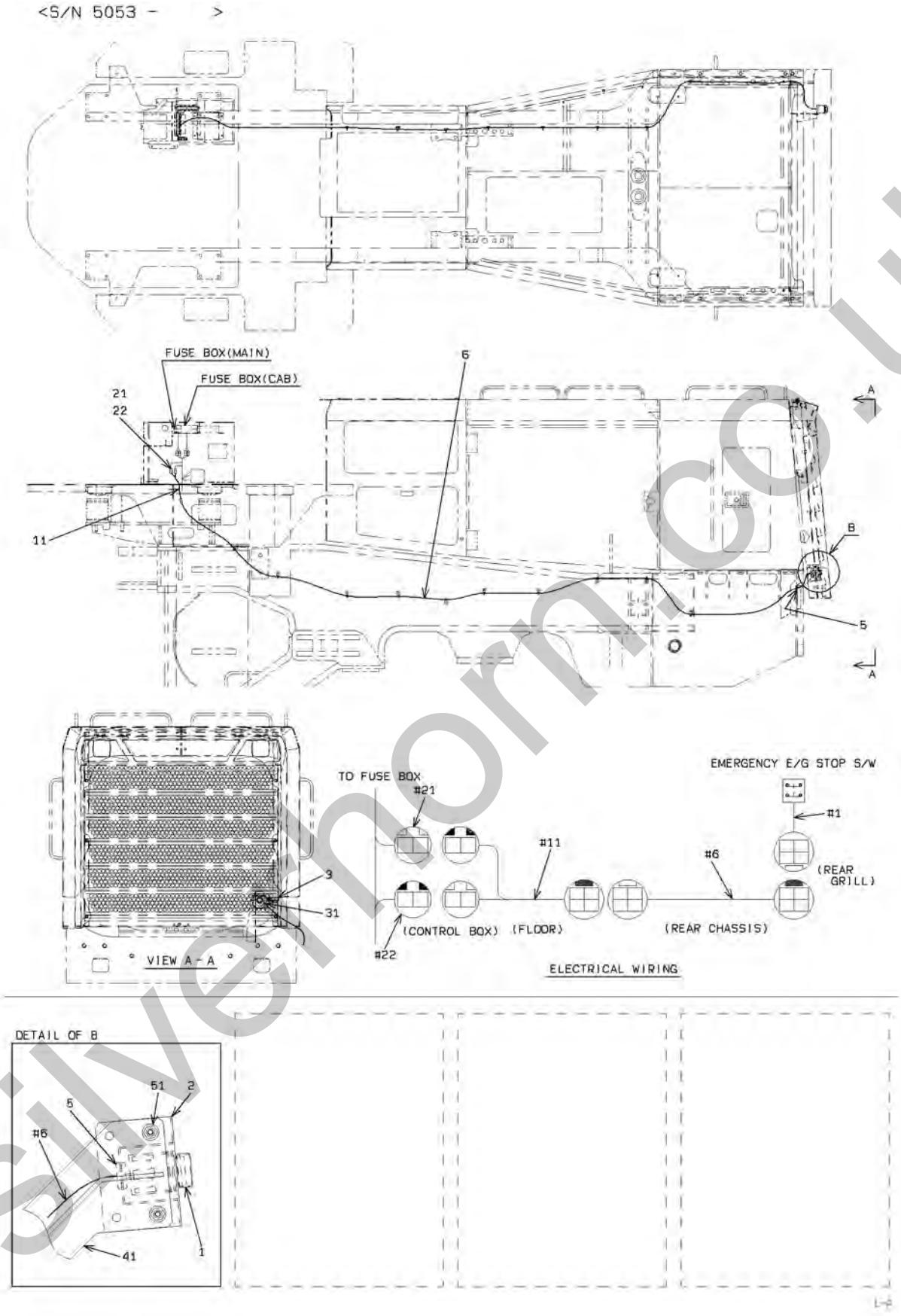

silverthorn.co.uk

SWITCH MOUNT (FOR EMERGENCY E/G STOP)

<S/N 5053 - >

(NOTE):REFER TO STANDARD CATALOG(REF. YX9-133) FOR NO SYMBOL PARTS.

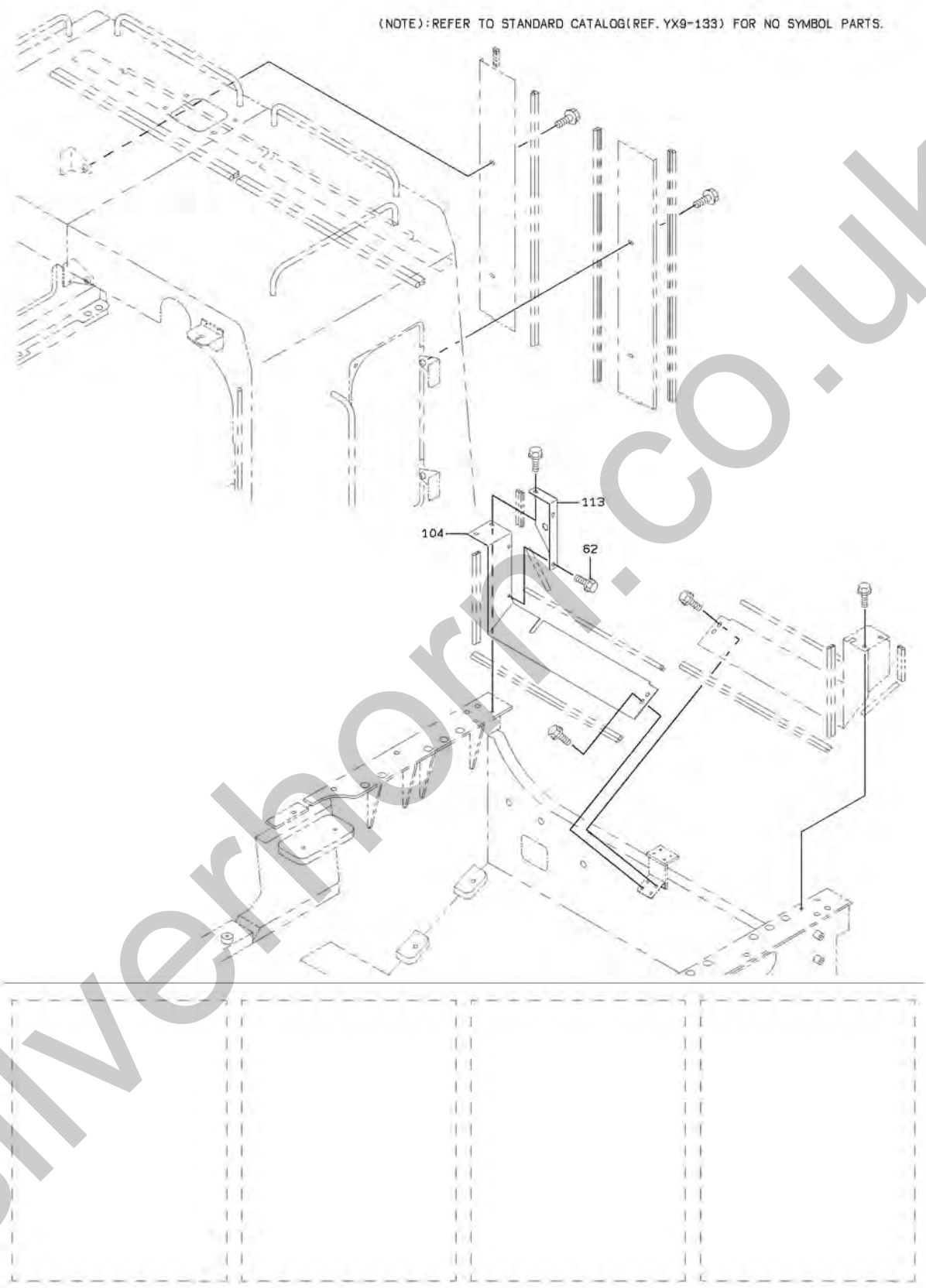

silverhorn.co.uk

SWITCH MOUNT (FOR EMERGENCY E/G STOP)

SYM-BOL	PART NUMBER	PART NAME	UNIT Q,TY	SERIAL (A) - (B)	REMARKS N P D	(A) (B)	(C) (D)	REMARK
1A	35055-20200	SWITCH,BUTTON	1	5053 -				
2A	41750-31800	PLATE	1	5053 -				
3A	44770-51920	LABEL	1	5053 -				
5A	65801-16160	BUSHING,ELASTIC	2	5053 - 5098				
5B	65801-16016	BUSHING,ELASTIC	2	5099 -	C			
6A	33193-35660	CABLE ASSY	1	5053 -				
11A	33193-46610	CABLE ASSY	1	5053 -				
21A	33305-20190	CONNECTOR ASSY	1	5053 -				
22A	33305-20250	CONNECTOR ASSY	1	5053 -				
31A	41710-46040	PLATE	1	5053 -				WELDING
41A	40902-40280	BRACKET	1	5053 -				WELDING
51A	61802-06016	BOLT,FLANGED	2	5053 -				
62A	61802-08025	BOLT,FLANGED	2	5053 -				
104A	41637-29730	PLATE	1	5053 -				FR RH
113A	41637-29740	PLATE	1	5053 -				FR RH

silverhorn.co.uk

MEMO

silverhorn.co.uk

RADIATOR GROUP

<S/N 5031 - >

(NOTE):REFER TO STANDARD CATALOG(REF. YX9-233A) FOR NO SYMBOL PARTS.

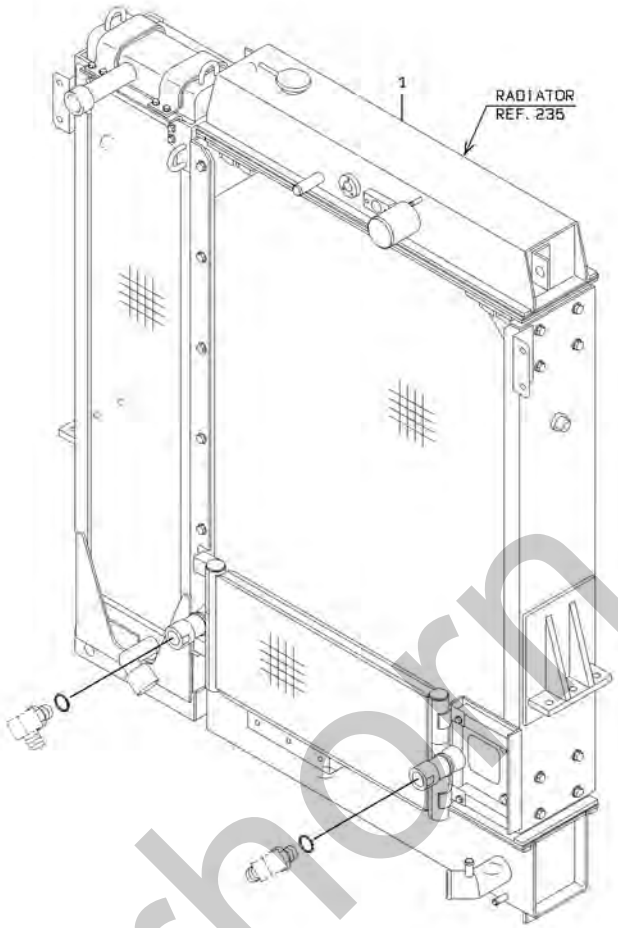

silverhorn.co.uk

RADIATOR GROUP

SYM-BOL	PART NUMBER	PART NAME	UNIT Q,TY	SERIAL (A) - (B)	REMARKS N P D	(A) (B)	(C) (D)	REMARK
1A	44721-63720	RADIATOR ASSY	1	5031 -				REF.235

silverhorn.co.uk

RADIATOR

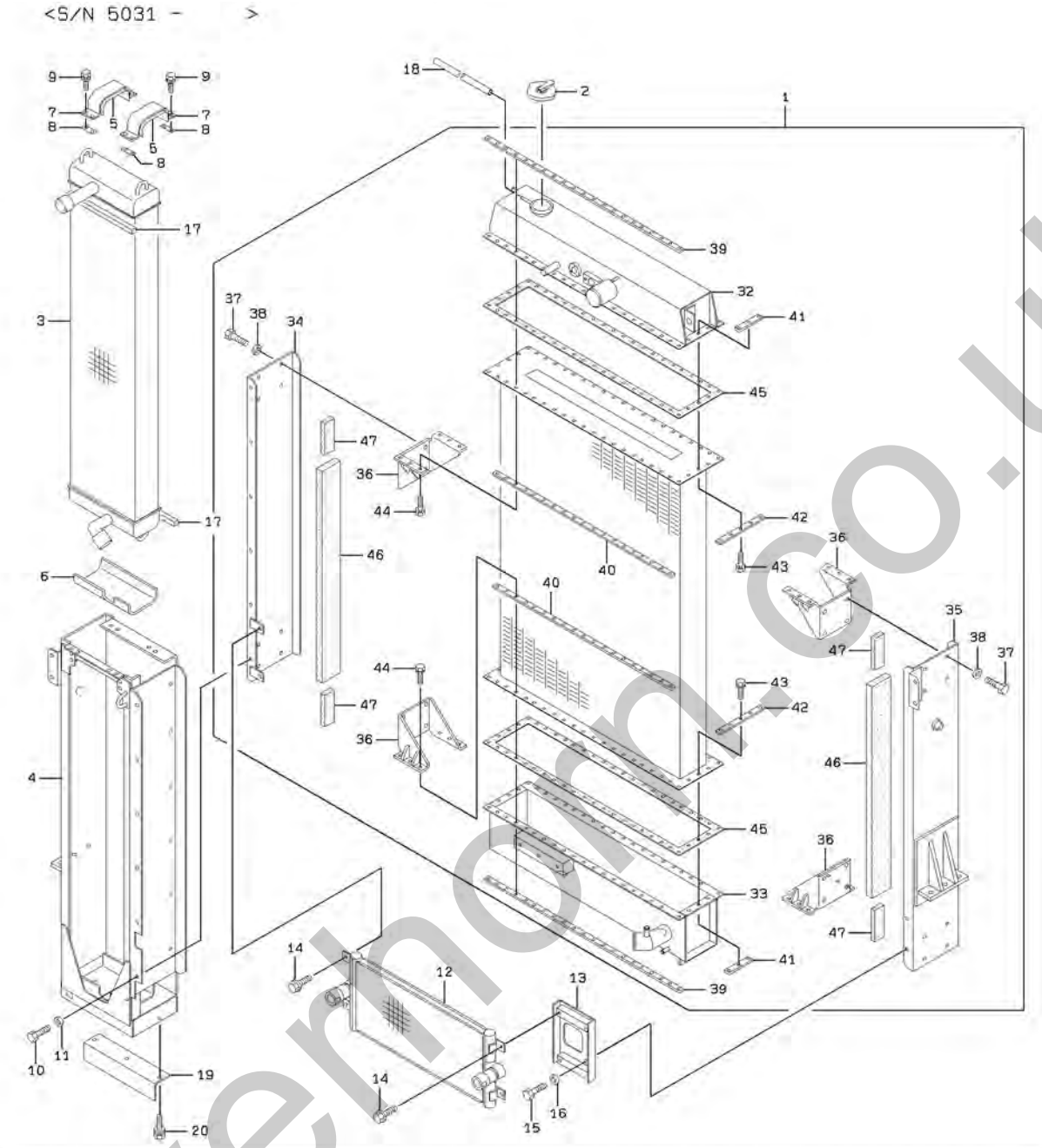

silvermoon.co.uk

RADIATOR

SYM-BOL	PART NUMBER	PART NAME	UNIT Q,TY	SERIAL (A) - (B)	REMARKS N P D	(A) (B)	(C) (D)	REMARK
000A	44721-63720	RADIATOR ASSY	1	5031 -				
1A	33281-71750	CORE ASSY	1	5031 -		Y01		
2A	32211-70230	CAP ASSY	1	5031 -				
3A	32816-70420	COOLER,OIL	1	5031 -				
4A	40600-70910	FRAME	1	5031 -				
5A	33713-70240	SHEET,RUBBER	2	5031 -				
6A	33713-70260	SHEET,RUBBER	1	5031 -				
7A	32920-70760	CLAMP	2	5031 -				
8A	34200-71620	SHIM	A/R	5031 -				
9A	43925-70190	BOLT SET	8	5031 -				
10A	43900-73830	BOLT	12	5031 -				
11A	46000-70860	WASHER	12	5031 -				
12A	32810-70020	COOLER	1	5031 -				
13A	40900-71650	BRACKET	1	5031 -				
14A	43963-70160	BOLT,FLANGED	4	5031 -				
15A	43900-73490	BOLT	2	5031 -				
16A	46000-70860	WASHER	2	5031 -				
17A	39600-72690	PACKING	2	5031 -				
18A	36733-70090	TUBE,VINYL	1	5031 -				L=2600
19A	40900-71660	BRACKET	1	5031 -				
20A	43925-70230	BOLT,W/WASHER	3	5031 -				
32A	36200-71260	TANK	1	5031 -		01		
33A	36200-70940	TANK	1	5031 -		01		
34A	33610-70290	SUPPORT ASSY	1	5031 -		01		FR RH
35A	33610-70300	SUPPORT ASSY	1	5031 -		01		FR LH
36A	45090-70030	RIB	4	5031 -		01		
37A	43900-73490	BOLT	16	5031 -		01		
38A	46000-70860	WASHER	16	5031 -		01		
39A	41600-71380	PLATE	4	5031 -		01		
40A	41600-71370	PLATE	4	5031 -		01		
41A	41611-70440	PLATE	4	5031 -		01		
42A	41600-70440	PLATE	4	5031 -		01		
43A	43925-70170	BOLT SET	72	5031 -		01		
44A	43925-70210	BOLT SET	24	5031 -		01		
45A	31990-71730	GASKET	2	5031 -		01		
46A	39600-71910	PACKING	2	5031 -		01		
47A	39600-72490	PACKING	4	5031 -		01		

silverhorn.co.uk

WATER LINE

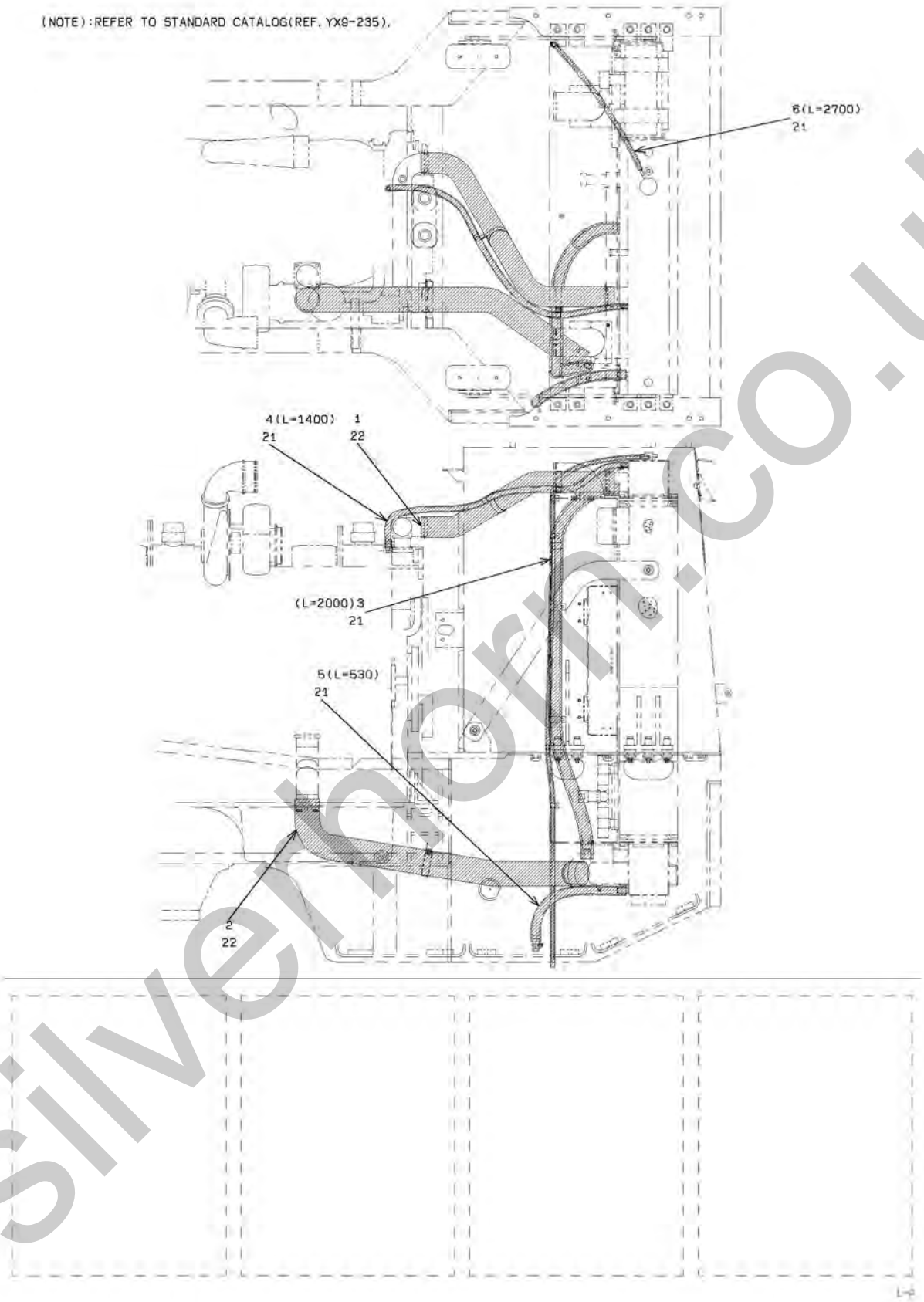

silvermorn.co.uk

WATER LINE

SYM-BOL	PART NUMBER	PART NAME	UNIT Q,TY	SERIAL (A) - (B)	REMARKS N P D	(A) (B)	(C) (D)	REMARK
1A	30610-20890-7	INSULATOR	1	5001 -				
2A	30610-20880-7	INSULATOR	1	5001 -				
3A	30610-20760-7	INSULATOR	1	5001 -				L=2000
4A	30610-20730-7	INSULATOR	1	5001 -				L=1400
5A	30610-20750-7	INSULATOR	1	5001 -				L=530
6A	30610-20720-7	INSULATOR	1	5001 -				L=2700
21A	32923-70140	CLAMP,HOSE	A/R	5001 -				L=202
22A	32923-70150	CLAMP,HOSE	A/R	5001 -				L=382

silverhorn.co.uk

AIR CLEANER GROUP - PRECLEANER

(NOTE):REFER TO STANDARD CATALOG(REF. YX9-241) FOR NO SYMBOL PARTS.

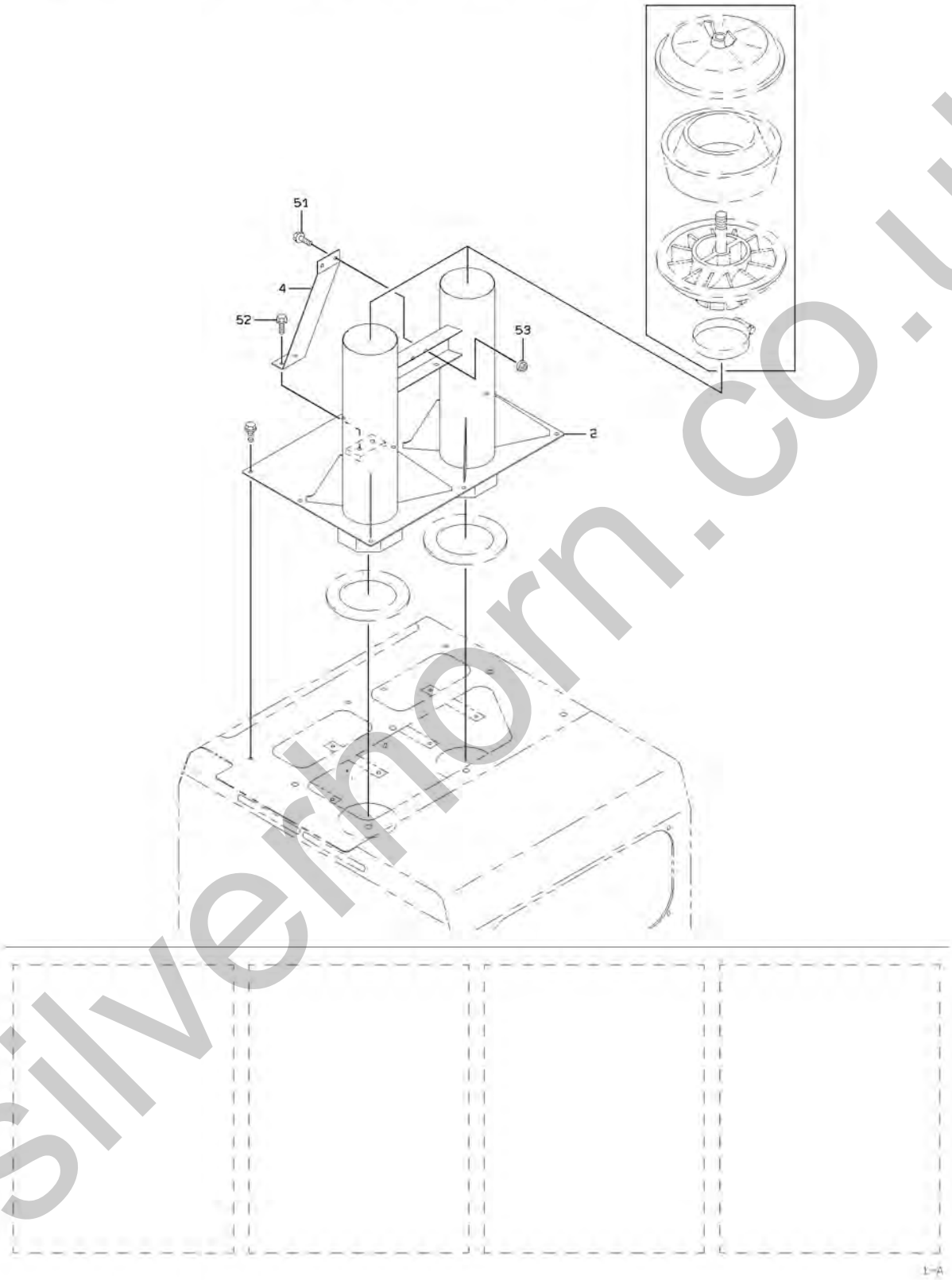

silverhorn.co.uk

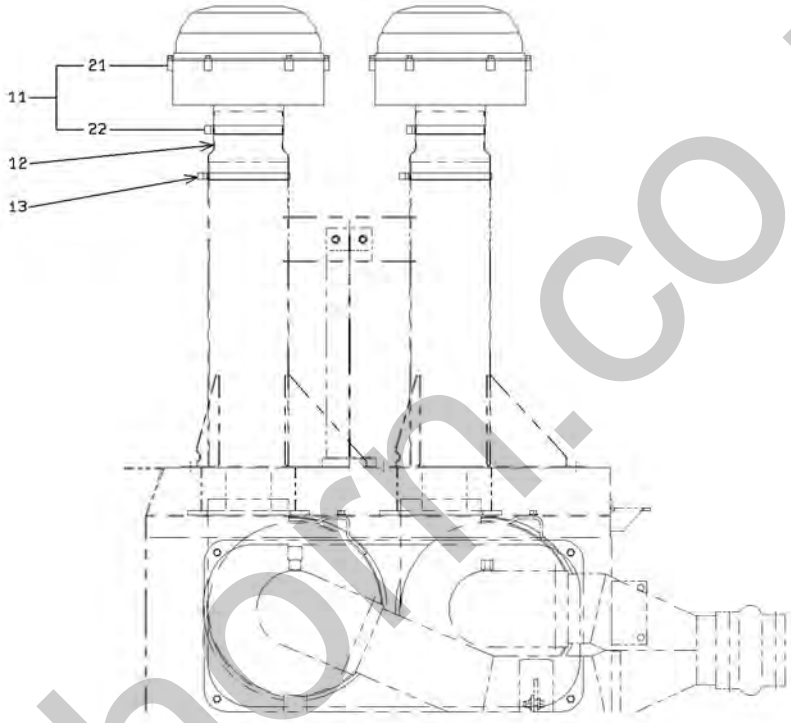

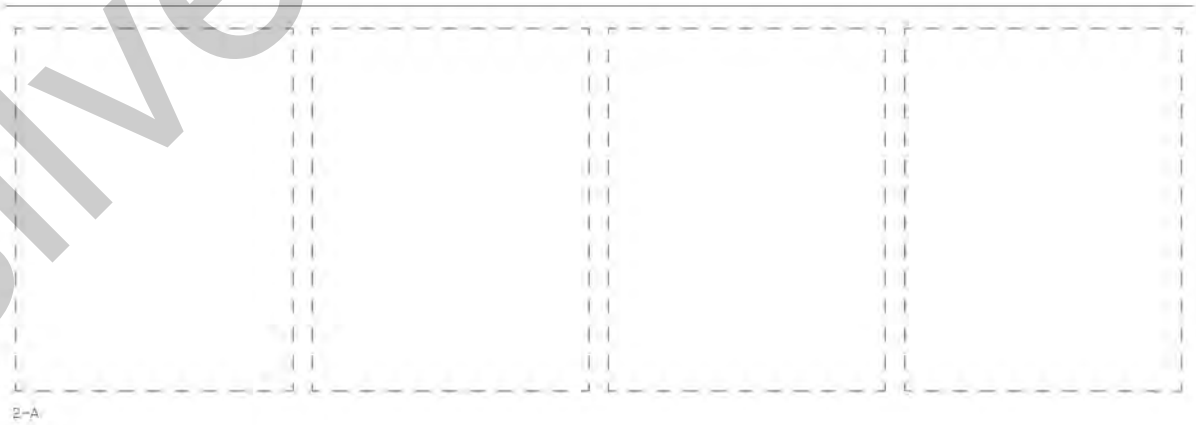

silverhorn.co.uk

AIR CLEANER GROUP - PRECLEANER

SYM-BOL	PART NUMBER	PART NAME	UNIT Q,TY	SERIAL (A) - (B)	REMARKS N P D	(A)	(B)	(C)	(D)	REMARK
2A	36430-23950	DUCT	1	5001 - 5072						
2B	36430-24180	DUCT	1	5073 -	B					
4A	40902-29560	BRACKET	1	5001 - 5072						
4B	40902-42900	BRACKET	1	5073 -	B					
11A	42730-20020-7	PRECLEANER	2	5001 -		Y01				
12A	36430-60090-7	DUCT	2	5001 -						
13A	32920-60080-7	CLAMP	2	5001 -						
21A	42730-70110-7	PRECLEANER	1	5001 -		01				
22A	32920-70870-7	CLAMP	1	5001 -		01				
51A	61802-10025	BOLT,FLANGED	2	5001 -						
52A	61802-10016	BOLT,FLANGED	2	5001 - 5072						
52B	61802-10020	BOLT,FLANGED	2	5073 -	B					
53A	62480-21101	NUT,FLANGED	2	5001 -						

silverhorn.co.uk

MEMO

silverhorn.co.uk

FUEL LINE

(NOTE):REFER TO STANDARD CATALOG(REF. YX9-251).

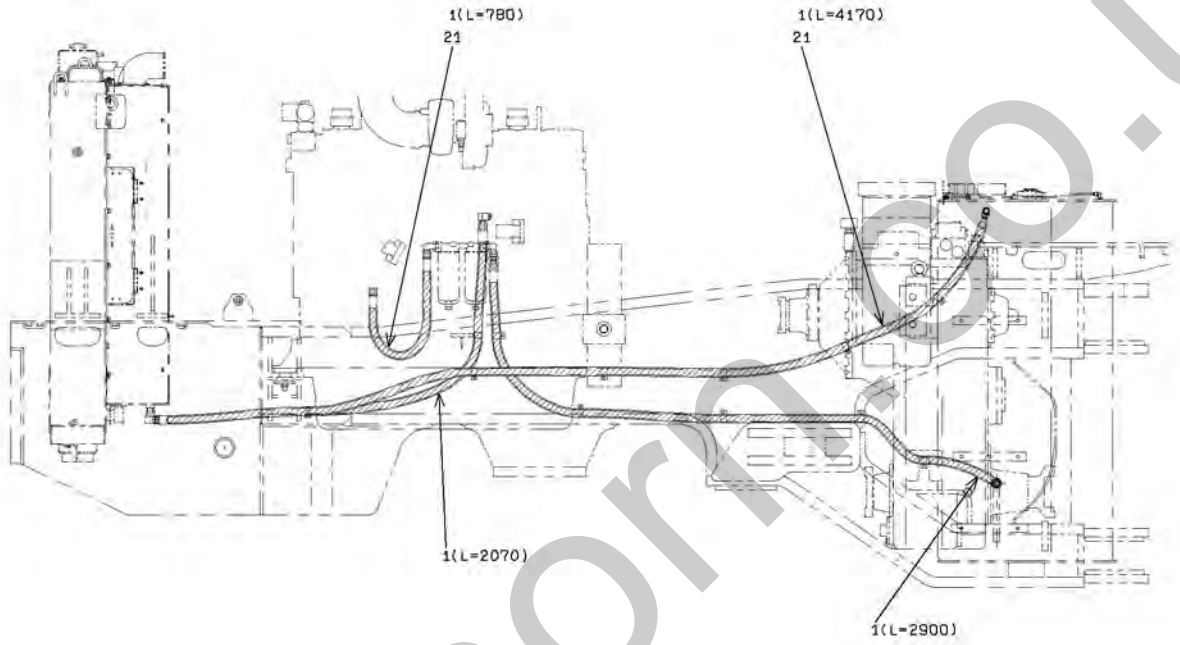

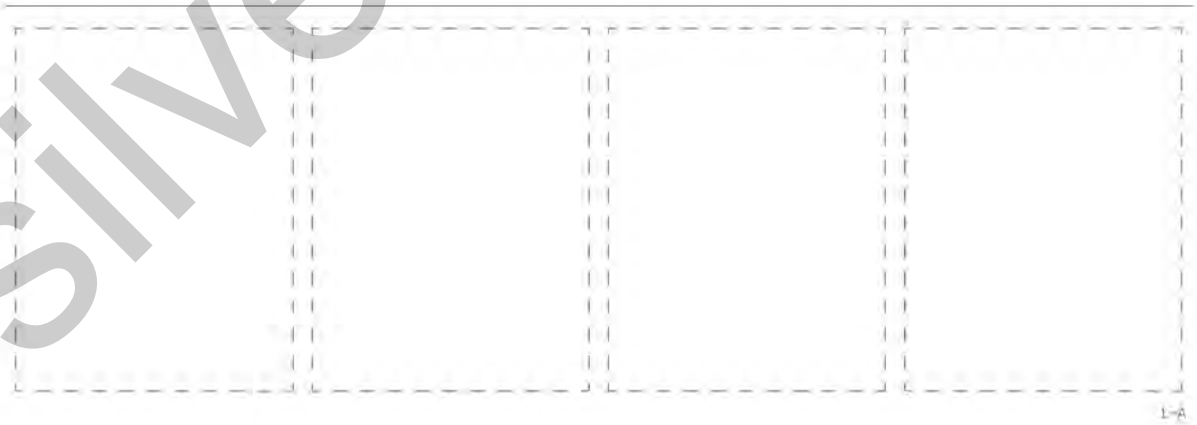

silverhorn.co.uk

FUEL LINE

SYM-BOL	PART NUMBER	PART NAME	UNIT Q,TY	SERIAL (A) - (B)	REMARKS N P D	(A) (B)	(C) (D)	REMARK
1A	30610-20750-7	INSULATOR	1	5001 -				L=9920
21A	32923-70140	CLAMP,HOSE	A/R	5001 -				L=202

silverhorn.co.uk

FAN MOTOR HYDRAULIC LINE (FOR REVERSING FAN)

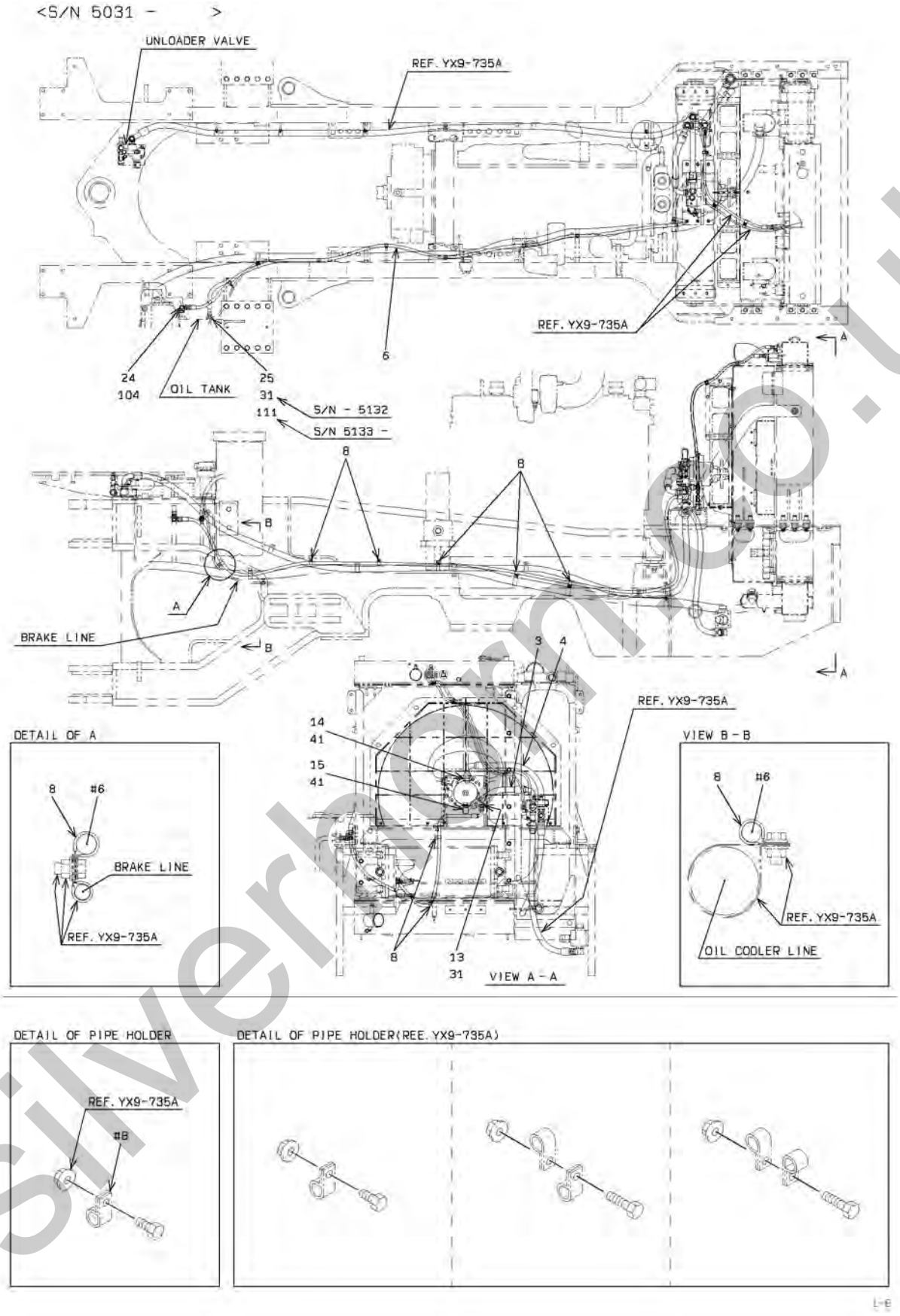

silverhorn.co.uk

FAN MOTOR HYDRAULIC LINE (FOR REVERSING FAN)

SYM-BOL	PART NUMBER	PART NAME	UNIT Q,TY	SERIAL (A) - (B)	REMARKS N P D	(A)	(B)	(C)	(D)	REMARK
3A	43113-46960	HOSE,HIGH PRESSURE	1	5031 - 5036						
3B	43113-48120	HOSE,HIGH PRESSURE	1	5037 -	C					
4A	68635-60070	HOSE,HIGH PRESSURE	1	5031 -						
6A	68035-30470	HOSE,HIGH PRESSURE	1	5031 -						
8A	72001-11800	HOLDER,PIPE	9	5031 -						D=18
13A	88201-06708	ADAPTER	1	5031 -		Y01				
14A	30230-21250	ADAPTER	1	5031 - 5036			Y02			
14B	88201-06716	ADAPTER	1	5037 -	C		Y02			
15A	88241-07112	ADAPTER,ELBOW	1	5031 - 5036			Y02			
15B	88241-07116	ADAPTER,ELBOW	1	5037 -	C		Y02			
24A	30246-24190	ADAPTER,TEE	1	5031 - 5082				Y03		
24B	30246-24720	ADAPTER,TEE	1	5083 -	B			Y03		
25A	30230-27040	ADAPTER	1	5031 - 5132		Y01				
25B	30230-26390	ADAPTER	1	5133 -	C				Y04	
31A	65210-12018	RING,O	1	5031 -		01				
41A	65210-12024	RING,O	1	5031 - 5036			02			
41B	65210-12029	RING,O	1	5037 -	C		02			
104A	65210-12024	RING,O	1	5031 -				03		
111A	65210-12014	RING,O	1	5133 -					04	

silverhorn.co.uk

RELIEF VALVE MOUNT (FOR REVERSING FAN)

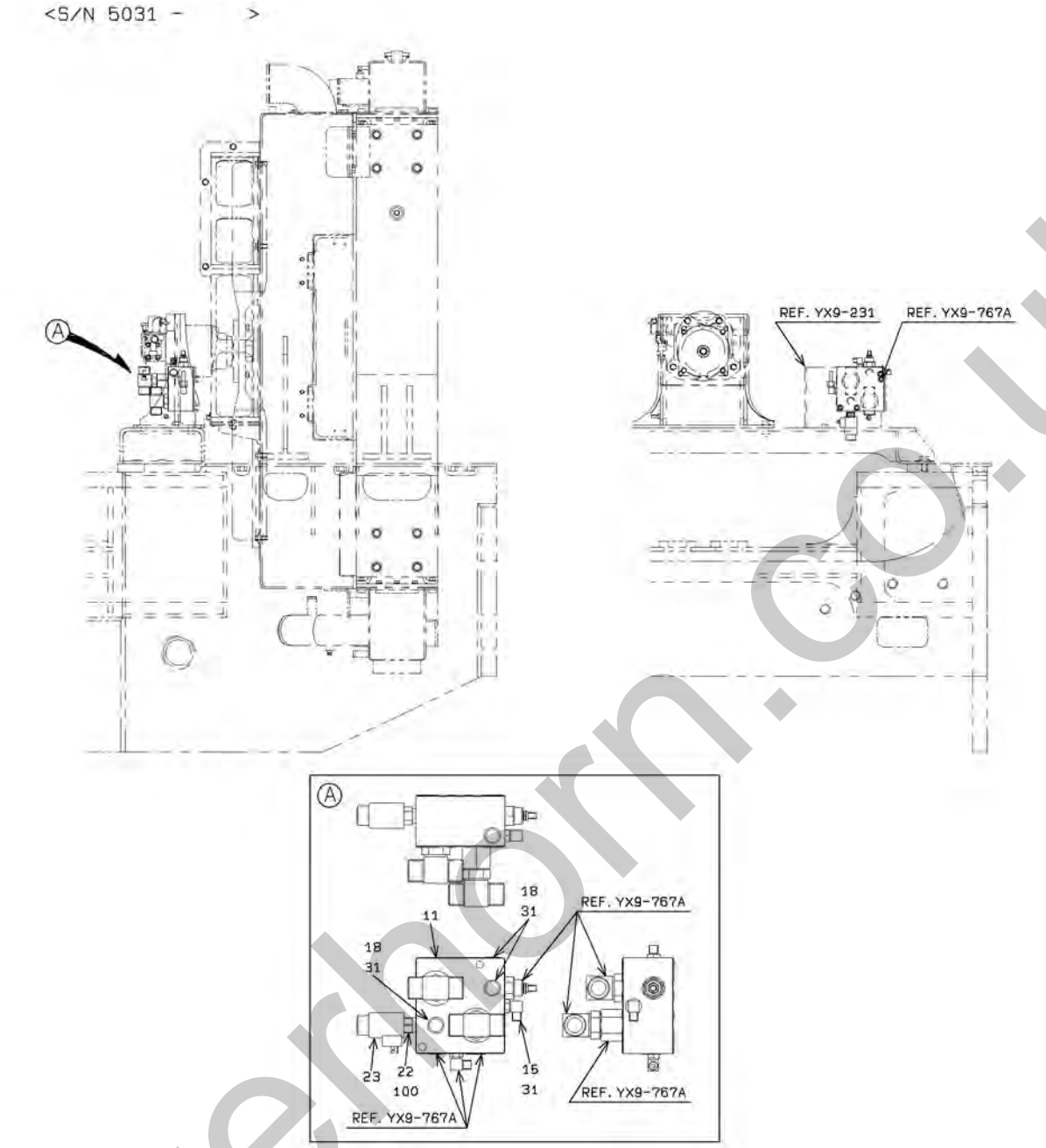

silverhorn.co.uk

RELIEF VALVE MOUNT (FOR REVERSING FAN)

SYM-BOL	PART NUMBER	PART NAME	UNIT Q,TY	SERIAL (A) - (B)	REMARKS N P D	(A)	(B)	(C)	(D)	REMARK
11A	41410-36090	BLOCK	1	5031 -						
15A	88241-07104	ADAPTER,ELBOW	1	5031 -		Y01				
18A	88390-21504	PLUG	3	5031 -		Y01				
22A	38511-71000	VALVE ASSY	1	5031 -			Y02			
23A	35910-70260	SOLENOID	1	5031 -						
31A	65210-12011	RING,O	1	5031 -		01				
100A	49327-72070	SEAL KIT	1	5031 -			02			

silverhorn.co.uk

MOTOR MOUNT (FOR REVERSING FAN)

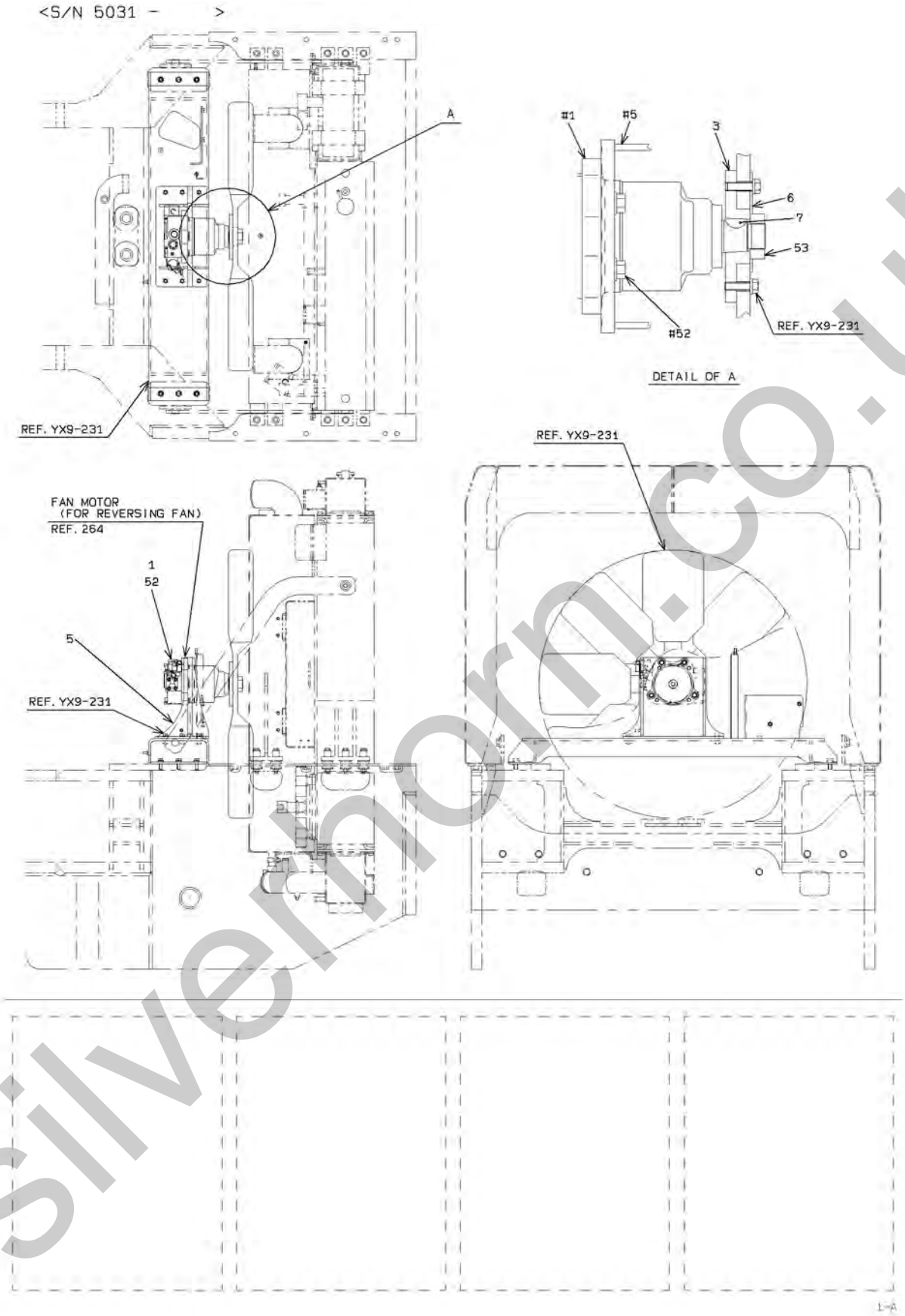

silvernorn.co.uk

MOTOR MOUNT (FOR REVERSING FAN)

SYM-BOL	PART NUMBER	PART NAME	UNIT Q,TY	SERIAL (A) - (B)	REMARKS N P D	(A) (B)	(C) (D)	REMARK
1A	48976-60780	MOTOR,OIL	1	5031 - 5062				REF.264
1B	48976-60810	MOTOR,OIL	1	5063 -	C			REF.264A
3A	40510-25230	FLANGE	1	5031 -				
5A	40902-35740	BRACKET	1	5031 - 5046				
5B	40902-38430	BRACKET	1	5047 -	A			
6A	41615-32030	PLATE	1	5031 -				
7A	32112-20010	KEY,WOODRUFF	1	5031 -				
52A	61802-16040	BOLT,FLANGED	4	5031 -				
53A	37600-25140	NUT	1	5031 - 5046				
53B	37600-25320	NUT	1	5047 -	C			

silverhorn.co.uk

FAN MOTOR (FOR REVERSING FAN)

<S/N 5031 - 5062>

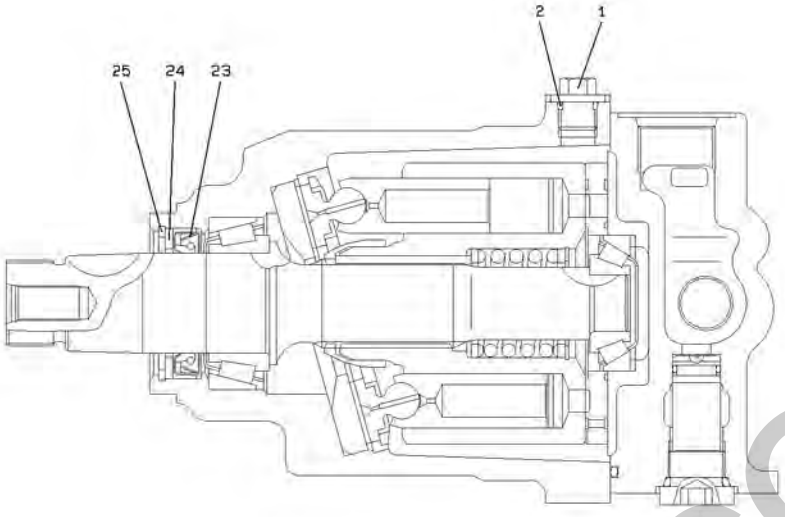

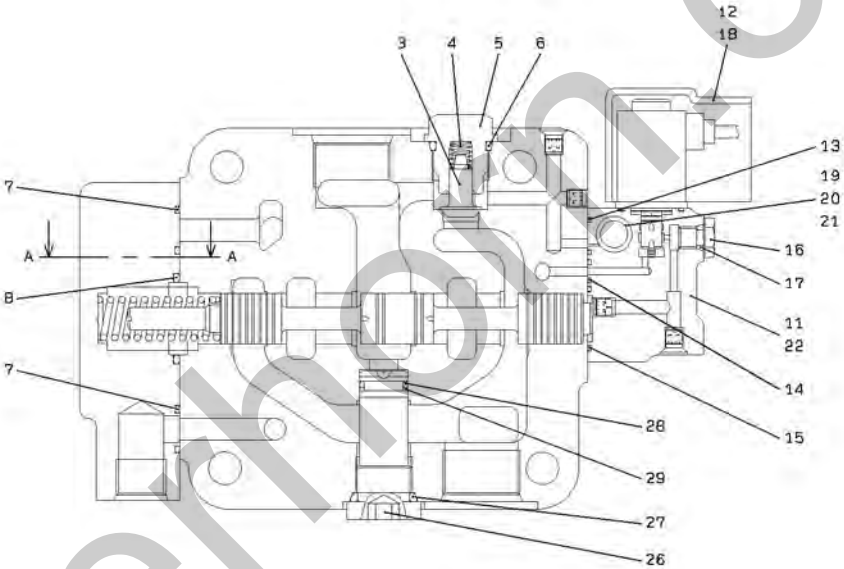

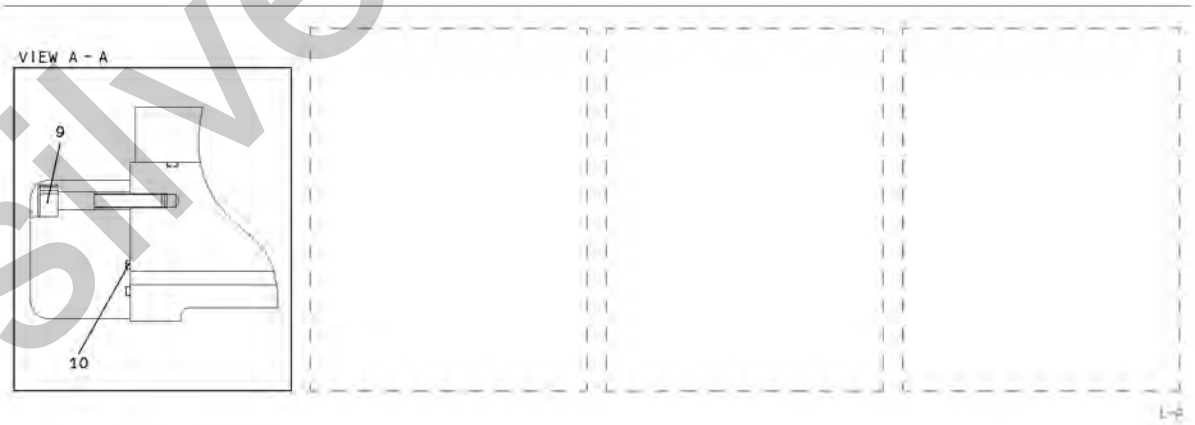

silverhorn.co.uk

FAN MOTOR (FOR REVERSING FAN)

SYM-BOL	PART NUMBER	PART NAME	UNIT Q,TY	SERIAL (A) - (B)	REMARKS N P D	(A) (B)	(C) (D)	REMARK
000A	48976-60780	MOTOR,OIL	1	5031 - 5062				
1A	41530-75420	PLUG	1	5031 - 5062				
2A	47131-77260	RING,O	1	5031 - 5062				
3A	38554-71520	VALVE,CHECK	1	5031 - 5062				
4A	35600-77950	SPRING	1	5031 - 5062				
5A	41530-75430	PLUG	1	5031 - 5062				
6A	47131-77270	RING,O	1	5031 - 5062				
7A	47131-77280	RING,O	2	5031 - 5062				
8A	47131-77290	RING,O	1	5031 - 5062				
9A	43900-74380	BOLT	4	5031 - 5062				
10A	47131-77300	RING,O	1	5031 - 5062				
11A	38560-70100	VALVE,PILOT	1	5031 - 5062				
12A	43900-74360	BOLT	2	5031 - 5062				
13A	47131-77210	RING,O	1	5031 - 5062				
14A	47131-77220	RING,O	1	5031 - 5062				
15A	47131-77230	RING,O	1	5031 - 5062				
16A	41530-75380	PLUG	1	5031 - 5062				
17A	47131-77170	RING,O	1	5031 - 5062				
18A	31205-70240	COVER	1	5031 - 5062				
19A	40330-70660	FILTER	1	5031 - 5062				
20A	47131-77190	RING,O	1	5031 - 5062				
21A	47131-77240	RING,O	1	5031 - 5062				
22A	43900-74370	BOLT	4	5031 - 5062				
23A	34042-71550	SEAL,OIL	1	5031 - 5062				
24A	35700-72030	SPACER	1	5031 - 5062				
25A	45200-71610	RING	1	5031 - 5062				
26A	41530-75440	PLUG	1	5031 - 5062				
27A	47131-77270	RING,O	1	5031 - 5062				
28A	47131-77280	RING,O	1	5031 - 5062				
29A	45200-71620	RING	1	5031 - 5062				

silverhorn.co.uk

FAN MOTOR (FOR REVERSING FAN)

<S/N 5063 - >

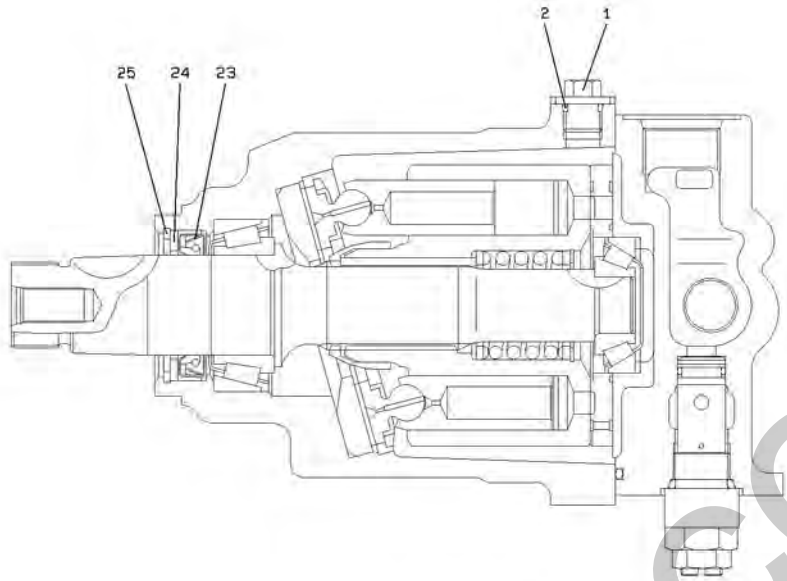

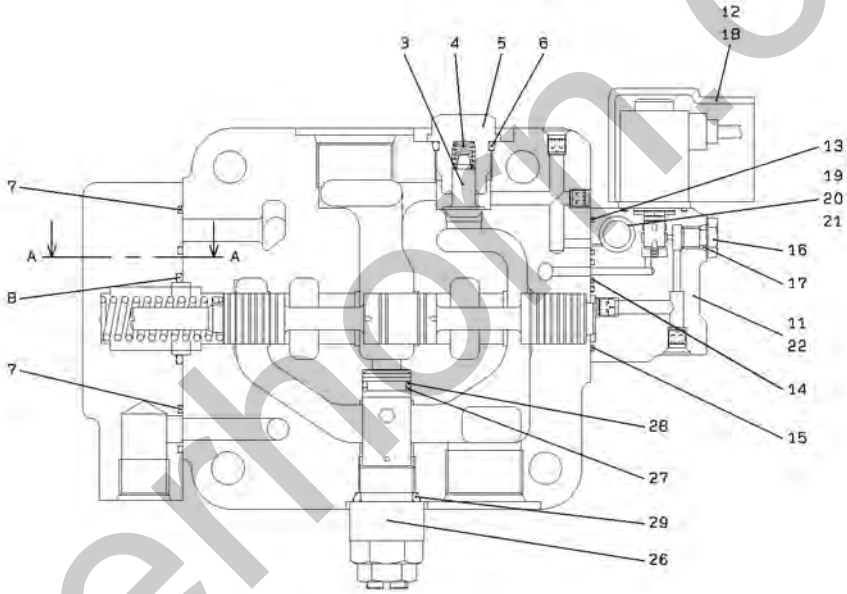

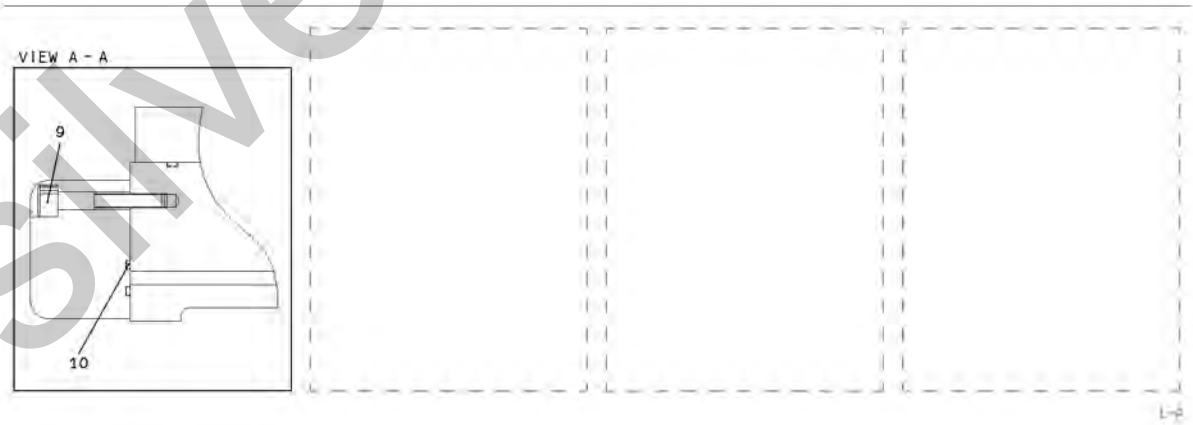

silverhorn.co.uk

FAN MOTOR (FOR REVERSING FAN)

SYM-BOL	PART NUMBER	PART NAME	UNIT Q,TY	SERIAL (A) - (B)	REMARKS N P D	(A) (B)	(C) (D)	REMARK
000A	48976-60810	MOTOR,OIL	1	5063 -				
1A	41530-75420	PLUG	1	5063 -				
2A	47131-77260	RING,O	1	5063 -				
3A	38554-71520	VALVE,CHECK	1	5063 -				
4A	35600-77950	SPRING	1	5063 -				
5A	41530-75430	PLUG	1	5063 -				
6A	47131-77270	RING,O	1	5063 -				
7A	47131-77280	RING,O	2	5063 -				
8A	47131-77290	RING,O	1	5063 -				
9A	43900-74380	BOLT	4	5063 -				
10A	47131-77300	RING,O	1	5063 -				
11A	38560-70100	VALVE,PILOT	1	5063 -				
12A	43900-74360	BOLT	2	5063 -				
13A	47131-77210	RING,O	1	5063 -				
14A	47131-77220	RING,O	1	5063 -				
15A	47131-77230	RING,O	1	5063 -				
16A	41530-75380	PLUG	1	5063 -				
17A	47131-77170	RING,O	1	5063 -				
18A	31205-70240	COVER	1	5063 -				
19A	40330-70660	FILTER	1	5063 -				
20A	47131-77190	RING,O	1	5063 -				
21A	47131-77240	RING,O	1	5063 -				
22A	43900-74370	BOLT	4	5063 -				
23A	34042-71550	SEAL,OIL	1	5063 -				
24A	35700-72030	SPACER	1	5063 -				
25A	45200-71610	RING	1	5063 -				
26A	38565-72000	VALVE,RELIEF	1	5063 -				
27A	47194-71750	RING,BACK-UP	1	5063 -				47194-71250
28A	47131-77280	RING,O	1	5063 -				
29A	47131-77270	RING,O	1	5063 -				
50A	35910-60070	SOLENOID	1	5063 -				

silverhorn.co.uk

ELECTRICAL EQUIPMENT MOUNT (FOR REVERSING FAN)

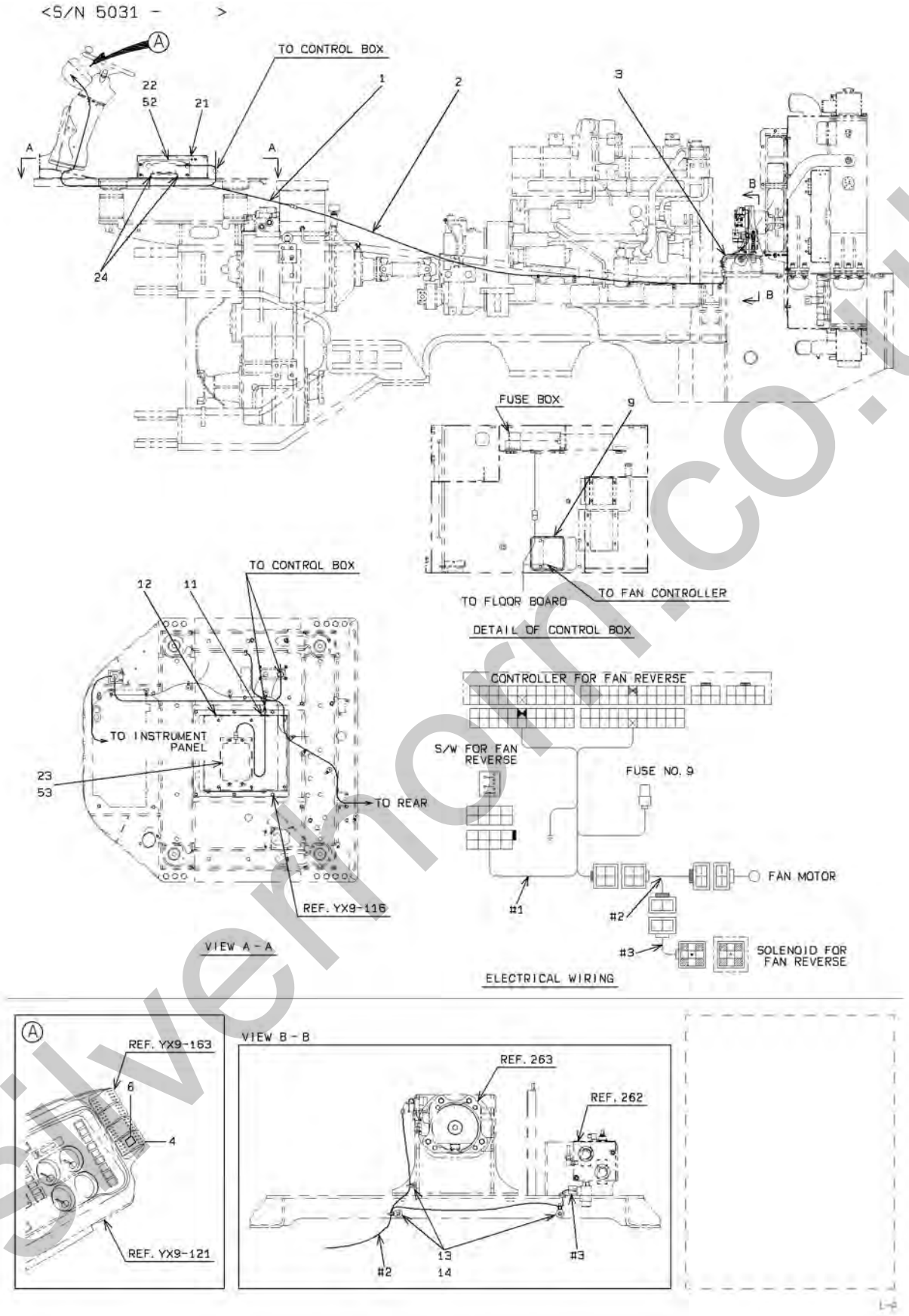

silvermorn.co.uk

ELECTRICAL EQUIPMENT MOUNT (FOR REVERSING FAN)

SYM-BOL	PART NUMBER	PART NAME	UNIT Q,TY	SERIAL (A) - (B)	REMARKS N P D	(A) (B)	(C) (D)	REMARK
1A	33193-41720	CABLE ASSY	1	5031 - 5046				
1B	33193-45870	CABLE ASSY	1	5047 -	C			
2A	33193-40670	CABLE ASSY	1	5031 -				
3A	33193-22030	CABLE ASSY	1	5031 -				
4A	35010-20340	SWITCH	1	5031 -				
6A	44770-51880	LABEL	1	5031 -				
9A	40850-70280	BUSHING,ELASTIC	1	5031 -				
11A	65801-25032	BUSHING,ELASTIC	1	5031 -				
12A	33057-70010	GROMMET	1	5031 -				
13A	32923-70120	CLAMP,HOSE	3	5031 -				FR M8
14A	32923-70100	CLAMP,HOSE	3	5031 -				L=382
21A	35195-20810	STAND,SEAT	1	5031 -				
22A	41620-21000	PLATE	1	5031 -				
23A	33410-61650	CONTROLLER UNIT	1	5031 -				
24A	34041-25210	STRIP, SEAL	2	5031 -				
52A	61802-08020	BOLT,FLANGED	4	5031 -				
53A	61802-08016	BOLT,FLANGED	4	5031 -				

silverhorn.co.uk

TRANSMISSION HYDRAULIC LINE

<S/N 5001 - 5030>

(NOTE):REFER TO STANDARD CATALOG(REF. YX9-301) FOR NO SYMBOL PARTS.

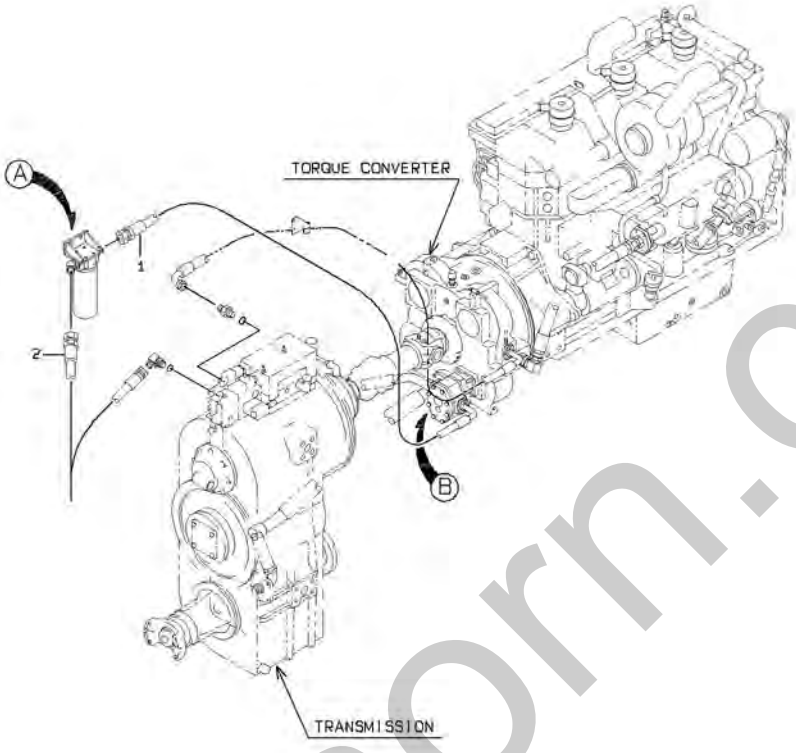

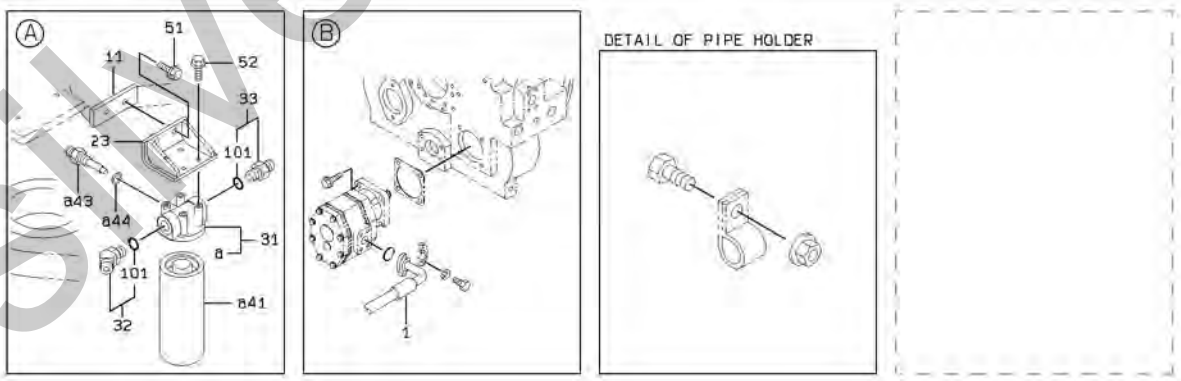

silverhorn.co.uk

TRANSMISSION HYDRAULIC LINE

SYM-BOL	PART NUMBER	PART NAME	UNIT Q,TY	SERIAL (A) - (B)	REMARKS N P D	(A)	(B)	(C)	(D)	REMARK
1A	68658-60140	HOSE,HIGH PRESSURE	1	5001 - 5030						
2A	68655-60090	HOSE,HIGH PRESSURE	1	5001 - 5030						
11A	41609-36000	PLATE	1	5001 - 5030						WELDING
23A	40902-33630	BRACKET	1	5001 - 5030						
31A	40337-60450	FILTER ASSY,LINE	1	5001 - 5030		Y01				
32A	88201-06716	ADAPTER	1	5001 - 5030			Y02			
33A	88241-07216	ADAPTER,ELBOW	1	5001 - 5030			Y02			
41A	31115-70010	CARTRIDGE ASSY	1	5001 - 5030		01				
43A	30654-70060	INDICATOR,FILTER	1	5001 - 5030		01				
44A	46023-70270	WASHER,SEAL	1	5001 - 5030		01				
51A	61802-12020	BOLT,FLANGED	2	5001 - 5030						
52A	61802-10025	BOLT,FLANGED	4	5001 - 5030						
101A	65210-12029	RING,O	1	5001 - 5030			02			

silverhorn.co.uk

FRONT AXLE GROUP

(NOTE):REFER TO STANDARD CATALOG(REF. YX9-401) FOR NO SYMBOL PARTS.
THIS ILLUSTRATION SHOWS "LEFT HAND".
SYMBOL 1 - 3 ARE INCLUDED IN (REF. YX9-411).

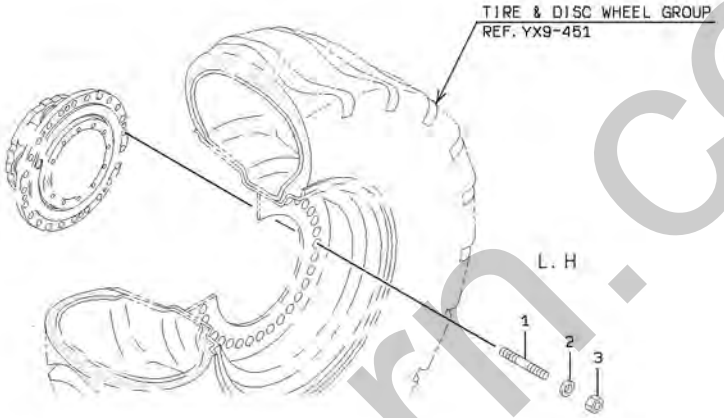

silverhorn.co.uk

FRONT AXLE GROUP

SYM-BOL	PART NUMBER	PART NAME	UNIT Q,TY	SERIAL (A) - (B)	REMARKS N P D	(A) (B)	(C) (D)	REMARK
1A	43955-60010	BOLT,STUD	124	5001 -				WITH REF.411
2A	46011-20600	WASHER,PLANE	124	5001 -				WITH REF.411
3A	62401-81242	NUT	124	5001 -				WITH REF.411

silverhorn.co.uk

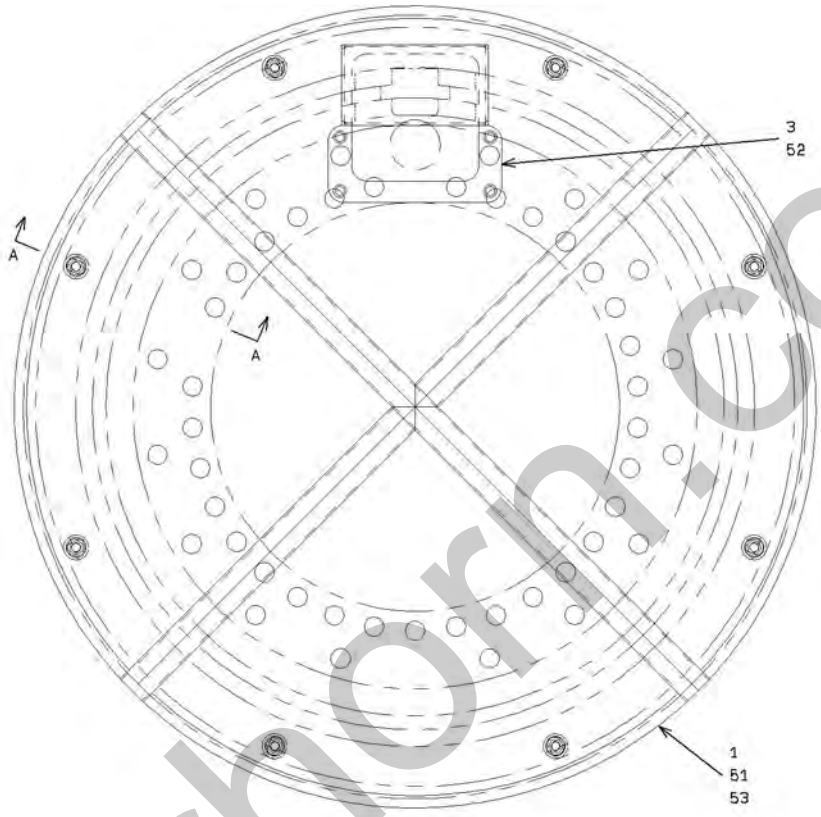

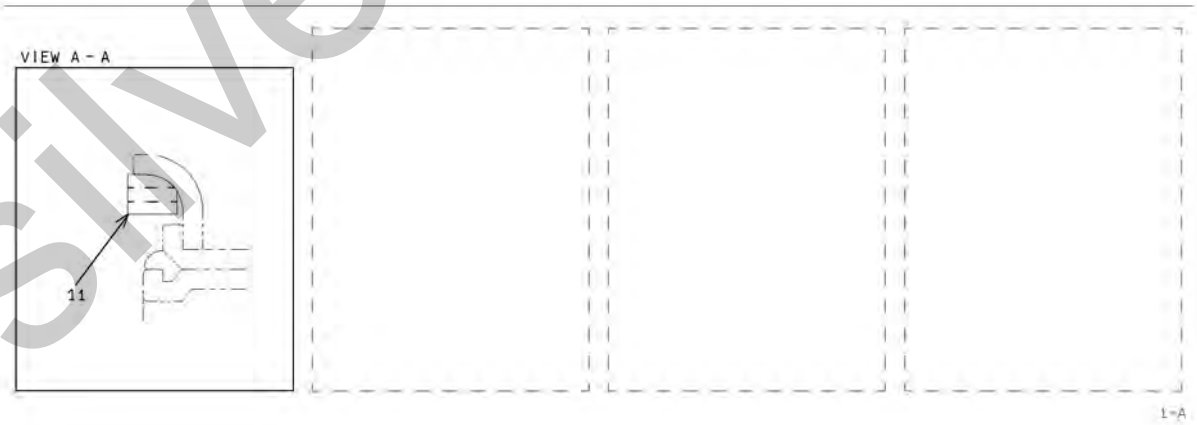

silverhorn.co.uk

TIRE & DISC WHEEL GROUP

SYM-BOL	PART NUMBER	PART NAME	UNIT Q,TY	SERIAL (A) - (B)	REMARKS N P D	(A) (B)	(C) (D)	REMARK
1A	31210-22920	COVER	4	5001 -				
3A	41603-42360	PLATE	4	5001 -				
11A	43780-34130	BOSS	32	5001 -				WELDING
51A	61802-12020	BOLT,FLANGED	32	5001 -				
52A	61802-08020	BOLT,FLANGED	16	5001 -				
53A	62710-18129	WASHER,PLANE	32	5001 -				

silverhorn.co.uk

BRAKE LINE - FRONT CHASSIS

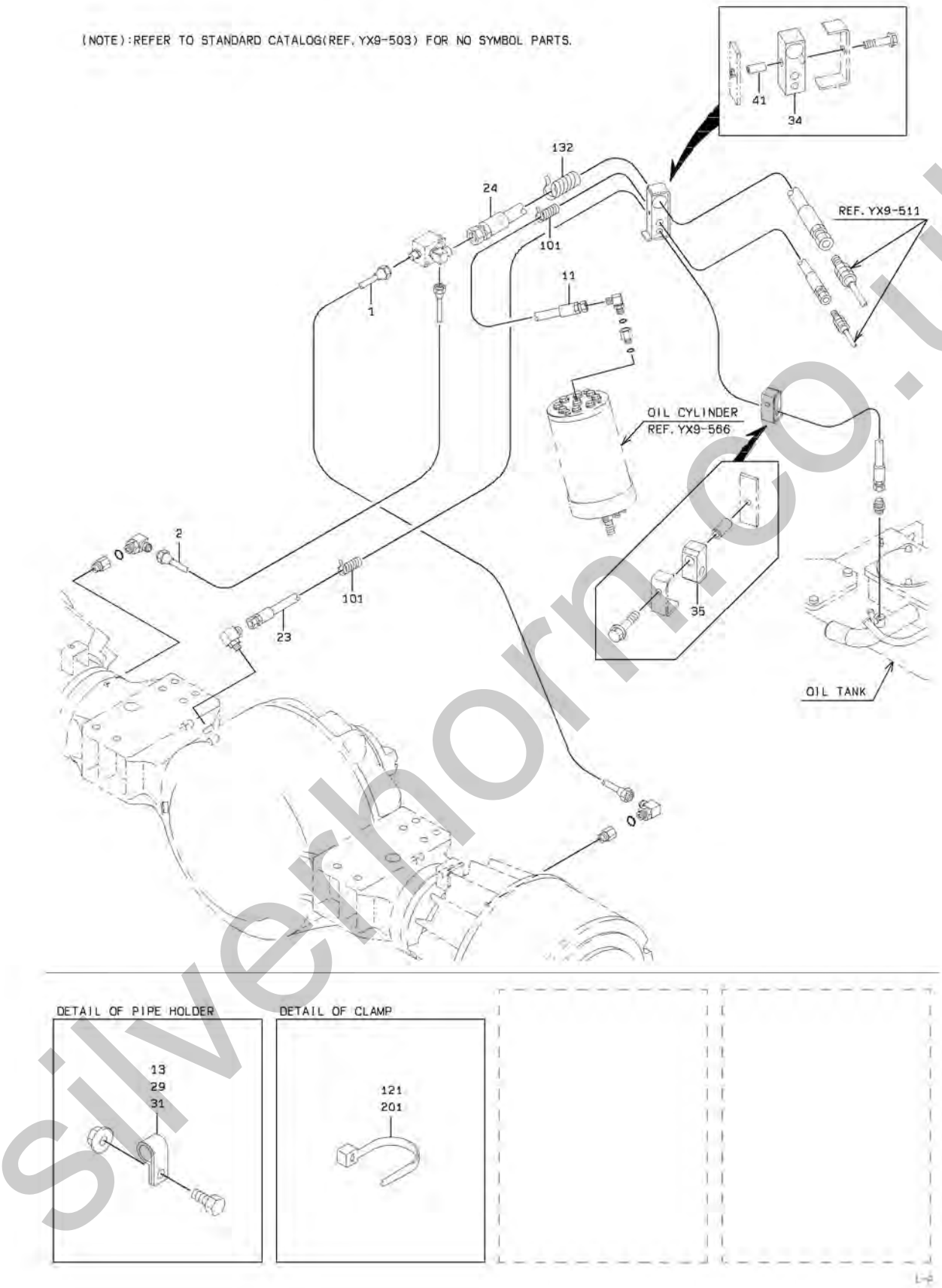

silverthorn.co.uk

BRAKE LINE - FRONT CHASSIS

SYM-BOL	PART NUMBER	PART NAME	UNIT Q,TY	SERIAL (A) - (B)	REMARKS N P D	(A) (B)	(C) (D)	REMARK
1A	38705-55800	PIPE ASSY,FLARED	1	5001 -				
2A	38705-55790	PIPE ASSY,FLARED	1	5001 -				
11A	43113-45290	HOSE,HIGH PRESSURE	1	5001 -				
13A	72001-12000	HOLDER,PIPE	A/R	5001 -				D=20
23A	43113-45300	HOSE,HIGH PRESSURE	1	5001 -				
24A	43113-45310	HOSE,HIGH PRESSURE	1	5001 -				
29A	72001-11800	HOLDER,PIPE	A/R	5001 -				D=18
31A	72010-37000	HOLDER,HOSE	A/R	5001 -				D=37
34A	33057-21350	GROMMET	1	5001 -				
35A	33713-27950	SHEET,RUBBER	1	5001 -				
41A	38720-58760	PIPE	1	5001 -				
101A	30610-20720-7	INSULATOR	1	5001 -				L=1690
121A	32923-70140	CLAMP,HOSE	A/R	5001 -				L=202
131A	30610-20720-7	INSULATOR	1	5001 -				L=4090
132A	30610-20750-7	INSULATOR	1	5001 -				L=1830
201A	32923-70140	CLAMP,HOSE	A/R	5001 -				L=202

silverhorn.co.uk

BRAKE LINE - FLOOR BOARD

(NOTE):REFER TO STANDARD CATALOG(REF. YX9-505) FOR NO SYMBOL PARTS.

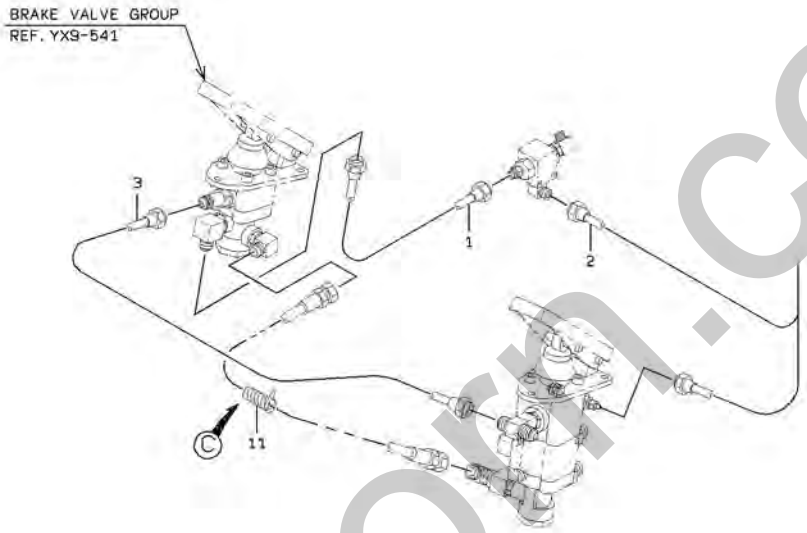

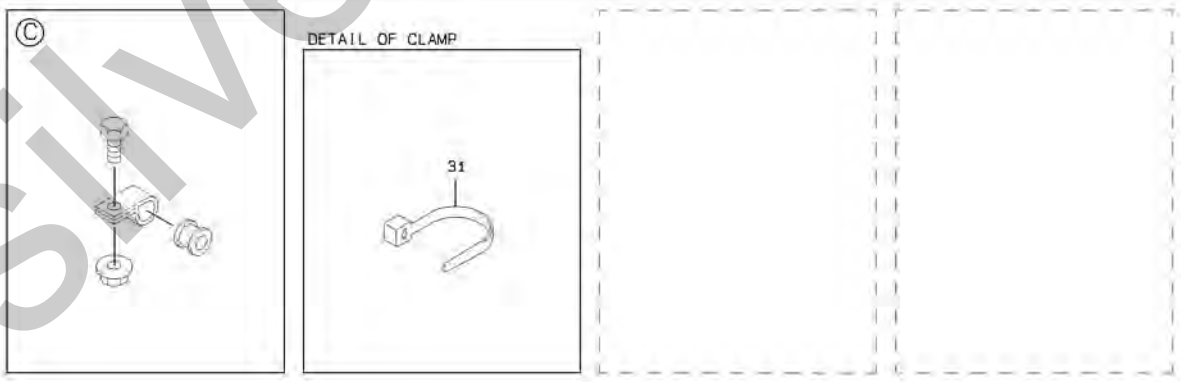

silverhorn.co.uk

BRAKE LINE - FLOOR BOARD

SYM-BOL	PART NUMBER	PART NAME	UNIT Q,TY	SERIAL (A) - (B)	REMARKS N P D	(A) (B)	(C) (D)	REMARK
1A	38705-55810	PIPE ASSY,FLARED	1	5001 -				
2A	38705-55820	PIPE ASSY,FLARED	1	5001 -				
3A	38705-55830	PIPE ASSY,FLARED	1	5001 -				
11A	30610-20730-7	INSULATOR	1	5001 -				L=340
31A	32923-70140	CLAMP,HOSE	A/R	5001 -				L=202

silverhorn.co.uk

BRAKE LINE - REAR CHASSIS

(NOTE):REFER TO STANDARD CATALOG(REF. YX9-511) FOR NO SYMBOL PARTS.

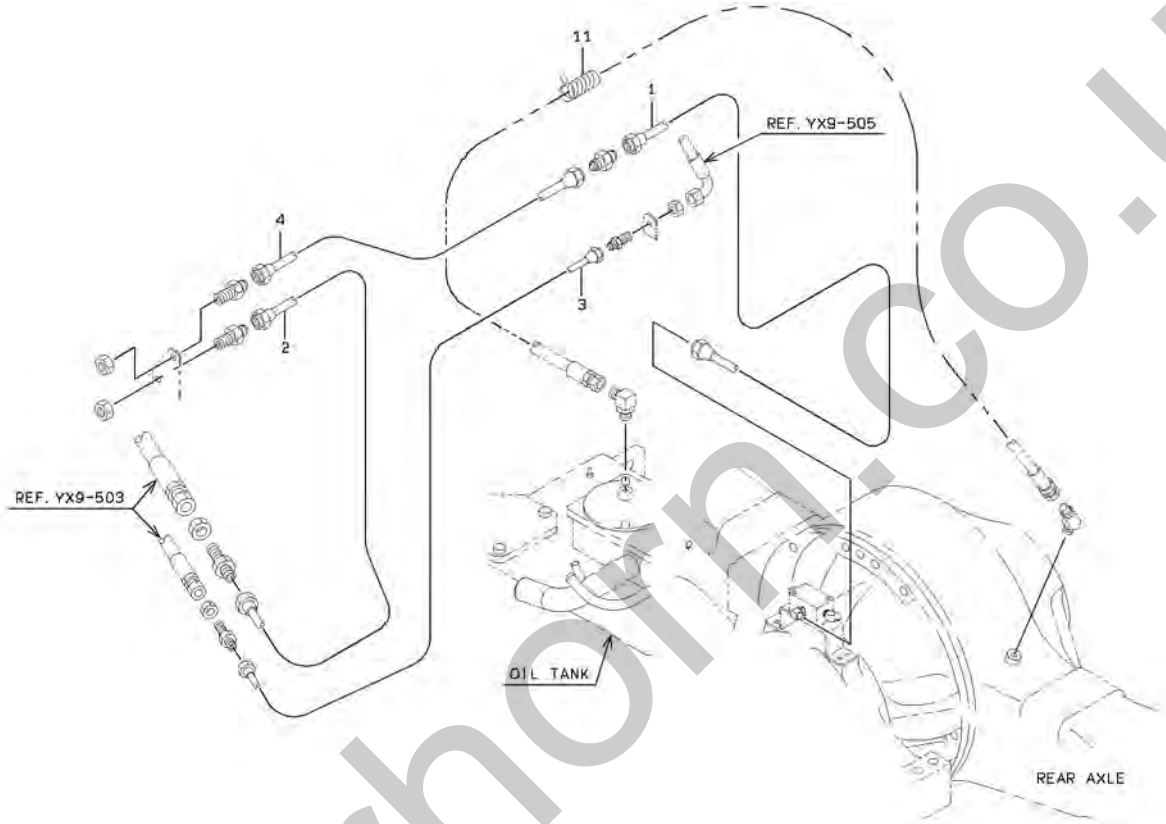

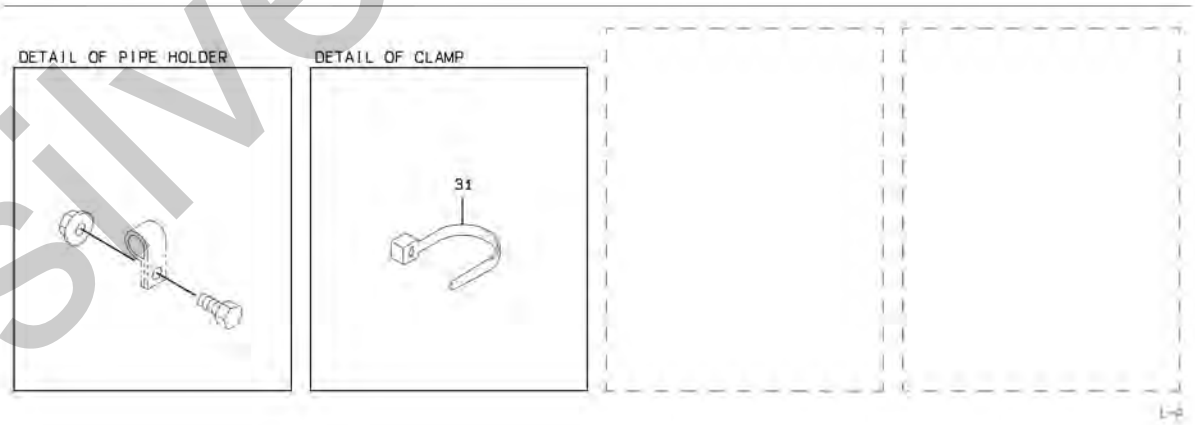

silverhorn.co.uk

BRAKE LINE - REAR CHASSIS

SYM-BOL	PART NUMBER	PART NAME	UNIT Q,TY	SERIAL (A) - (B)	REMARKS N P D	(A) (B)	(C) (D)	REMARK
1A	38705-55720	PIPE ASSY,FLARED	1	5001 -				
2A	38705-55730	PIPE ASSY,FLARED	1	5001 -				
3A	38705-55740	PIPE ASSY,FLARED	1	5001 -				
4A	38705-55750	PIPE ASSY,FLARED	1	5001 -				
11A	30610-20720-7	INSULATOR	1	5001 -				L=2240
31A	32923-70140	CLAMP,HOSE	A/R	5001 -				L=202

silverhorn.co.uk

BRAKE LINE - AXLE

(NOTE):REFER TO STANDARD CATALOG(REF. YX9-513) FOR NO SYMBOL PARTS.

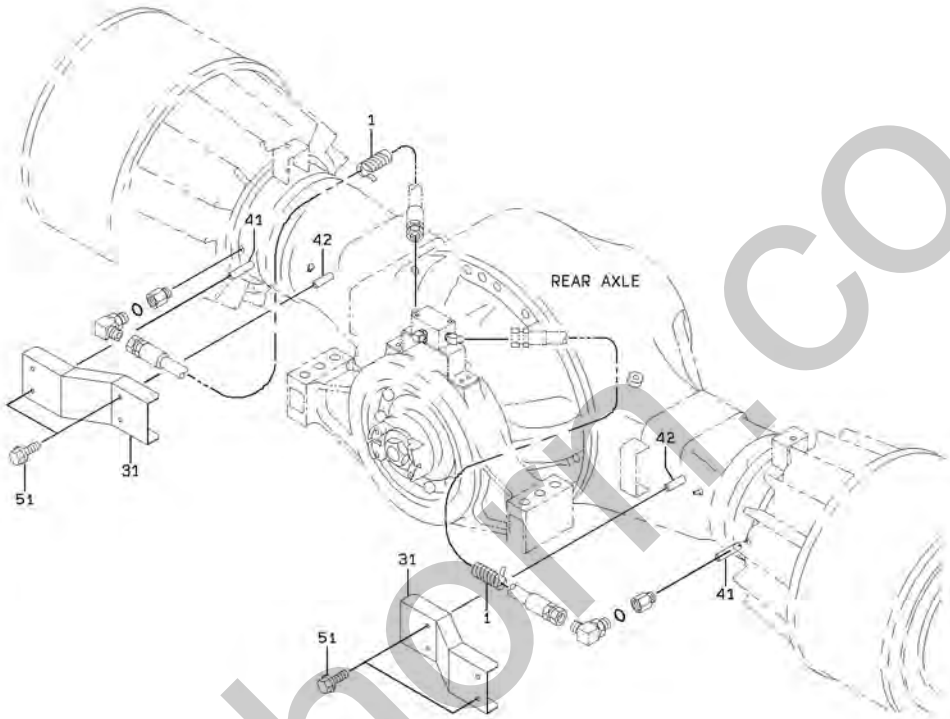

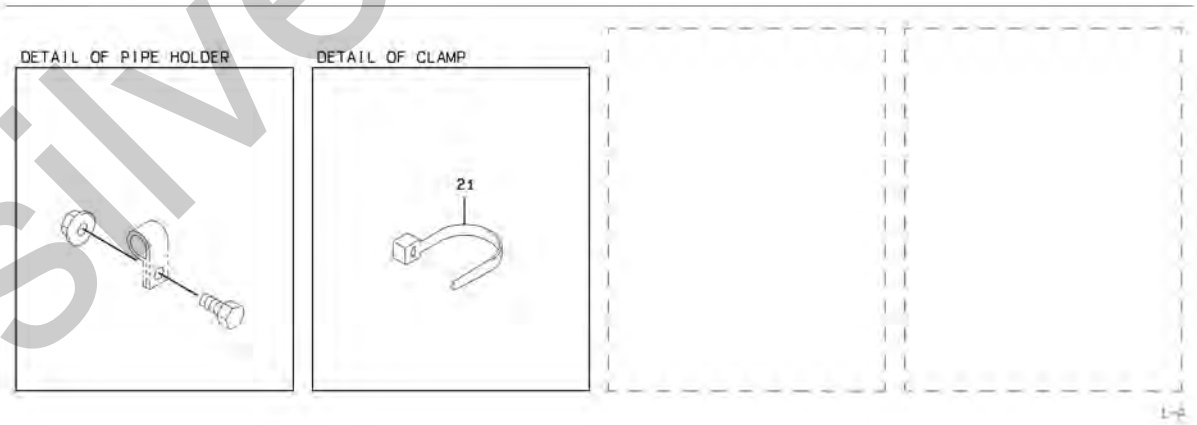

silverhorn.co.uk

BRAKE LINE - AXLE

SYM-BOL	PART NUMBER	PART NAME	UNIT Q,TY	SERIAL (A) - (B)	REMARKS N P D	(A) (B)	(C) (D)	REMARK
1A	30610-20730-7	INSULATOR	2	5001 -				L=1190
21A	32923-70140	CLAMP,HOSE	A/R	5001 -				L=202
31A	31205-29110	COVER	2	5001 -				
41A	43780-24240	BOSS	2	5001 -				WELDING
42A	43780-22020	BOSS	2	5001 -				WELDING
51A	61802-10016	BOLT,FLANGED	4	5001 -				

silverhorn.co.uk

BRAKE LINE - ACCUMULATOR

(NOTE):REFER TO STANDARD CATALOG(REF. YX9-515) FOR NO SYMBOL PARTS.

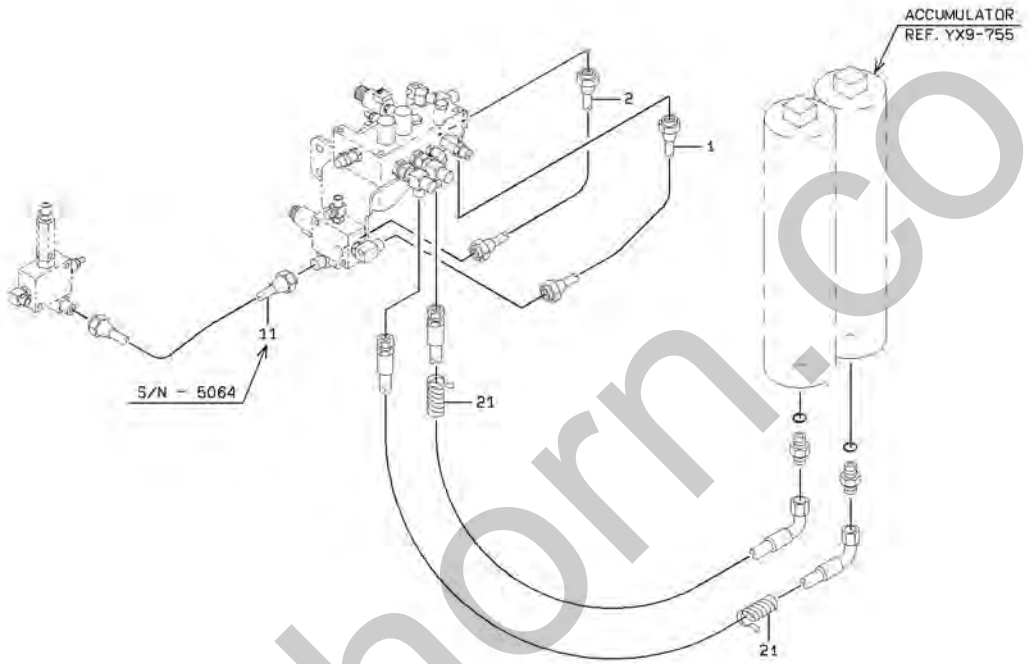

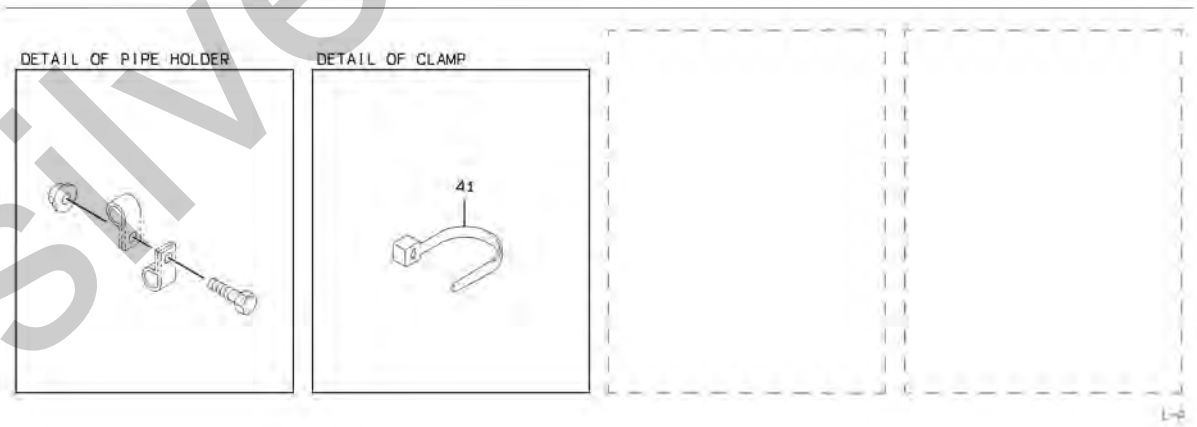

silverhorn.co.uk

BRAKE LINE - ACCUMULATOR

SYM-BOL	PART NUMBER	PART NAME	UNIT Q,TY	SERIAL (A) - (B)	REMARKS N P D	(A) (B)	(C) (D)	REMARK
1A	38705-55770	PIPE ASSY,FLARED	1	5001 -				
2A	38705-55780	PIPE ASSY,FLARED	1	5001 -				
11A	38705-55760	PIPE ASSY,FLARED	1	5001 - 5064	D			
21A	30610-20730-7	INSULATOR	1	5001 -				L=1730
41A	32923-70140	CLAMP,HOSE	A/R	5001 -				L=202

silverhorn.co.uk

BRAKE LINE - REAR CHASSIS (FOR PARKING BRAKE RELEASE SYSTE

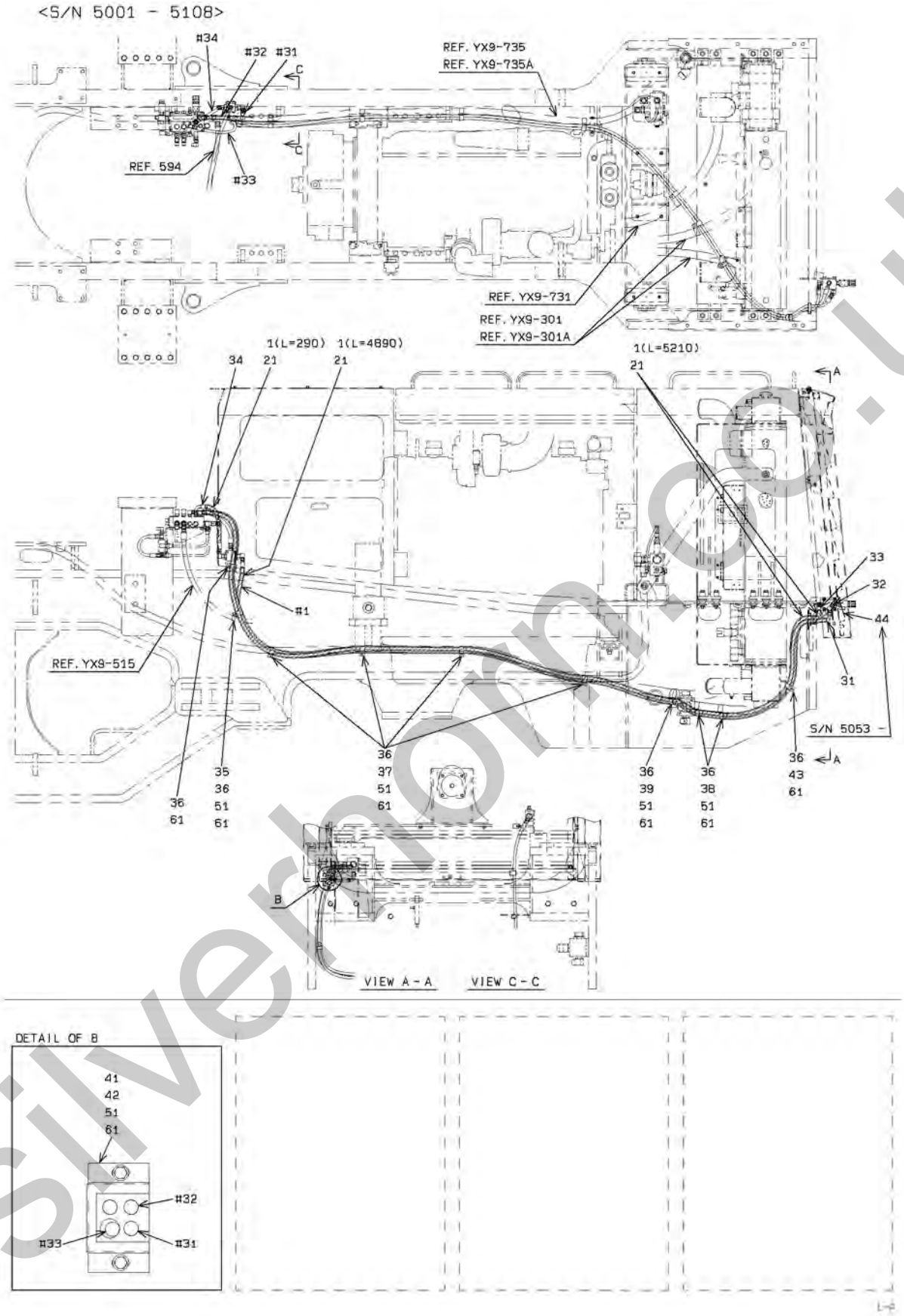

silverhorn.co.uk

BRAKE LINE - REAR CHASSIS (FOR PARKING BRAKE RELEASE SYSTE

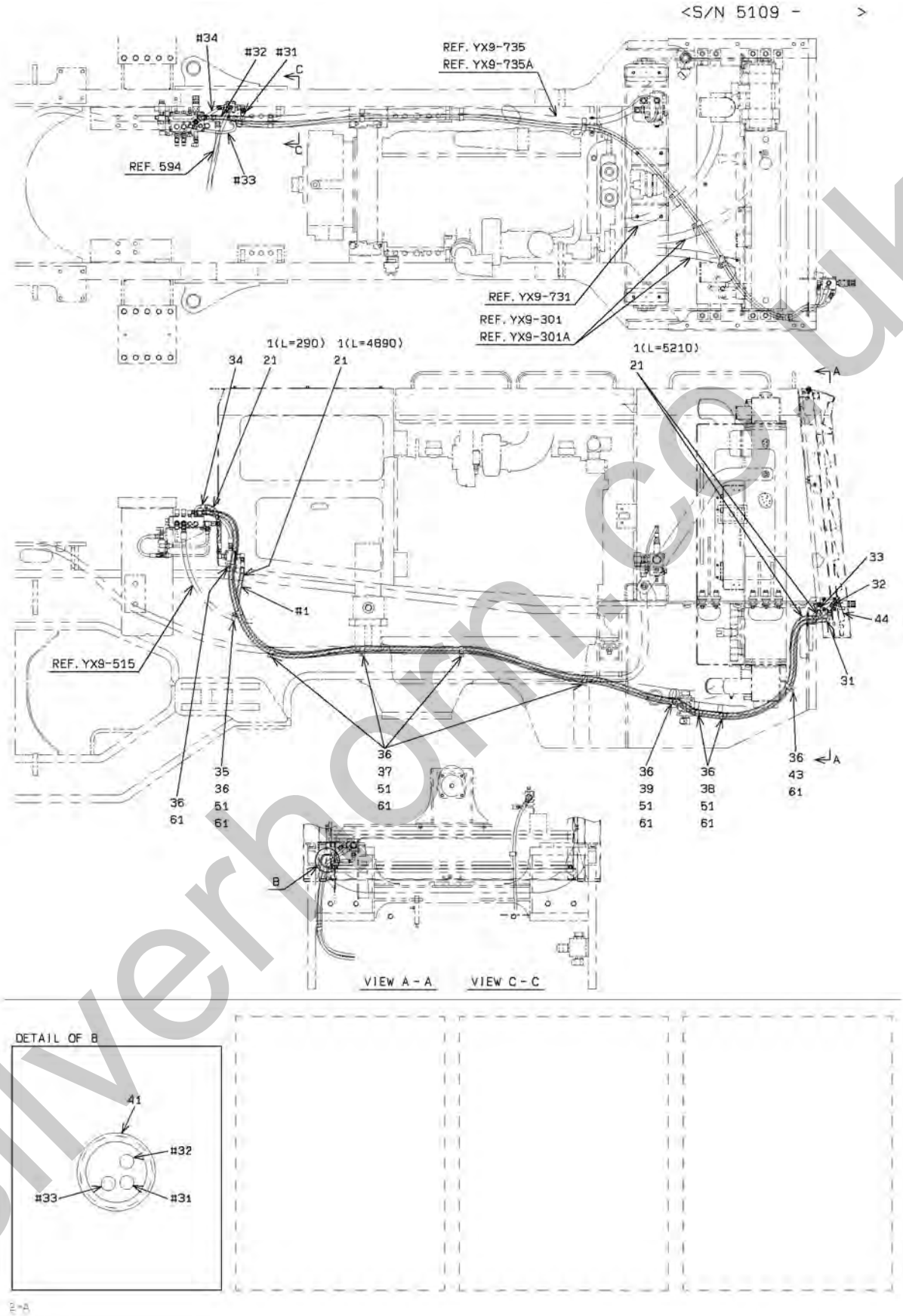

silverhorn.co.uk

BRAKE LINE - REAR CHASSIS (FOR PARKING BRAKE RELEASE SYSTE

SYM-BOL	PART NUMBER	PART NAME	UNIT Q,TY	SERIAL (A) - (B)	REMARKS N P D	(A) (B)	(C) (D)	REMARK
1A	30610-20730-7	INSULATOR	1	5001 -				L=15600
21A	32923-70140	CLAMP,HOSE	A/R	5001 -				L=202
31A	68035-20500	HOSE,HIGH PRESSURE	1	5001 -				
32A	68055-20532	HOSE,HIGH PRESSURE	1	5001 -				
33A	68035-20532	HOSE,HIGH PRESSURE	1	5001 -				
34A	68035-20040	HOSE,HIGH PRESSURE	1	5001 -				
35A	72001-12500	HOLDER,PIPE	1	5001 -				D=25
36A	72010-34000	HOLDER,HOSE	10	5001 -				D=34
37A	72010-37000	HOLDER,HOSE	4	5001 -				D=37
38A	72010-46000	HOLDER,HOSE	2	5001 -				D=46
39A	72010-55000	HOLDER,HOSE	1	5001 -				D=55
41A	33057-21290	GROMMET	1	5001 - 5108				
41B	65801-63032	BUSHING,ELASTIC	1	5109 -	C			
42A	41620-24450	PLATE	1	5001 - 5108	D			
43A	03501-57100	CHASSIS ASSY,REAR	1	5001 -				
44A	03501-71020	FRAME	1	5053 -				
51A	61802-08016	BOLT,FLANGED	10	5001 - 5108				
51B	61802-08016	BOLT,FLANGED	8	5109 -				
61A	62480-21081	NUT,FLANGED	12	5001 - 5108				
61B	62480-21081	NUT,FLANGED	10	5109 -				

silverhorn.co.uk

MEMO

silverhorn.co.uk

VALVE MOUNT (FOR PARKING BRAKE RELEASE SYSTEM)

(NOTE):REFER TO STANDARD CATALOG(REF. YX9-515) FOR NO SYMBOL PARTS.

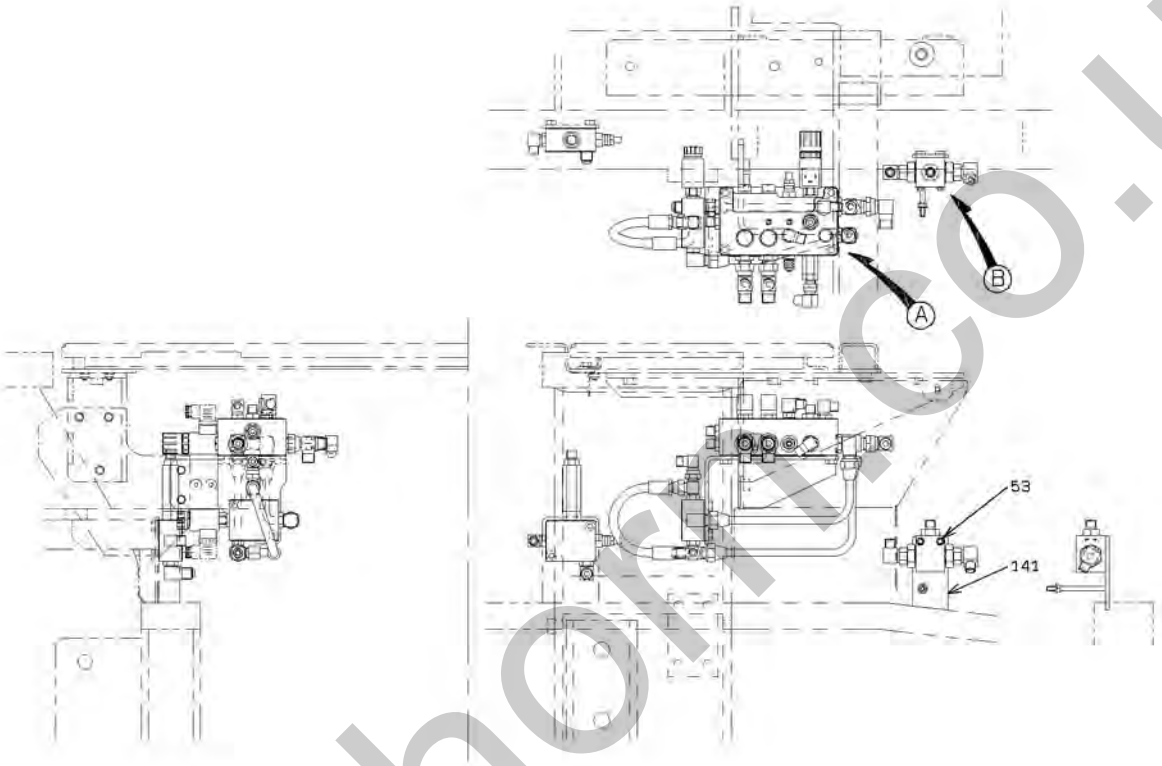

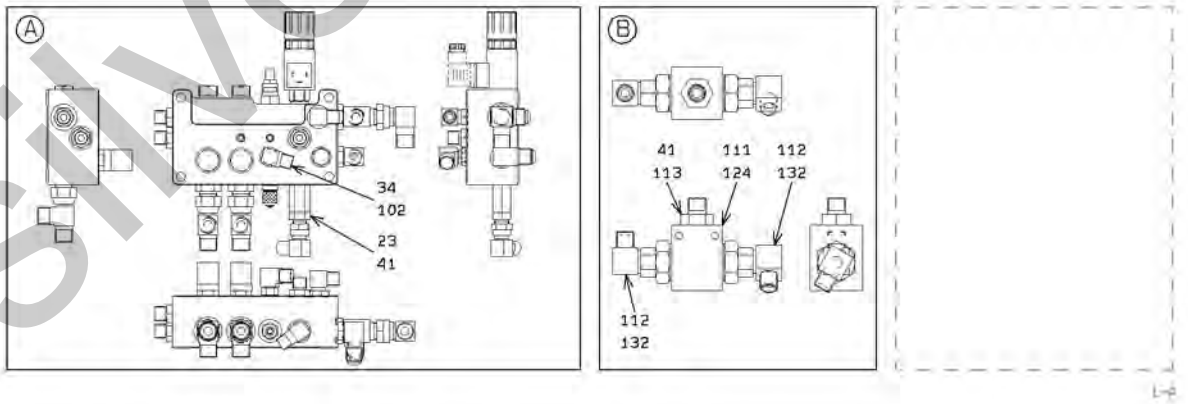

silverhorn.co.uk

VALVE MOUNT (FOR PARKING BRAKE RELEASE SYSTEM)

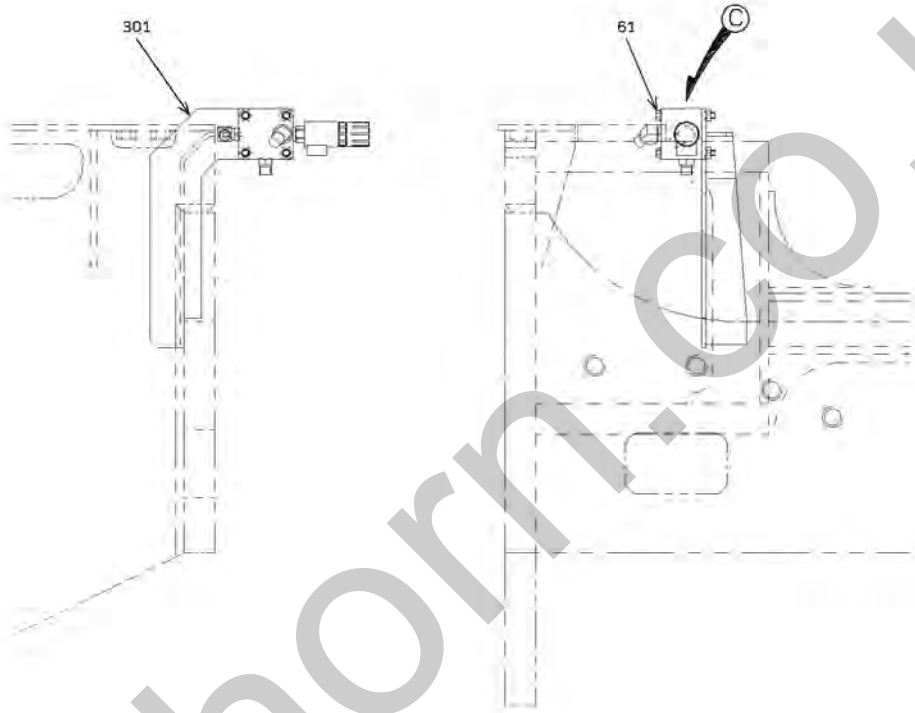

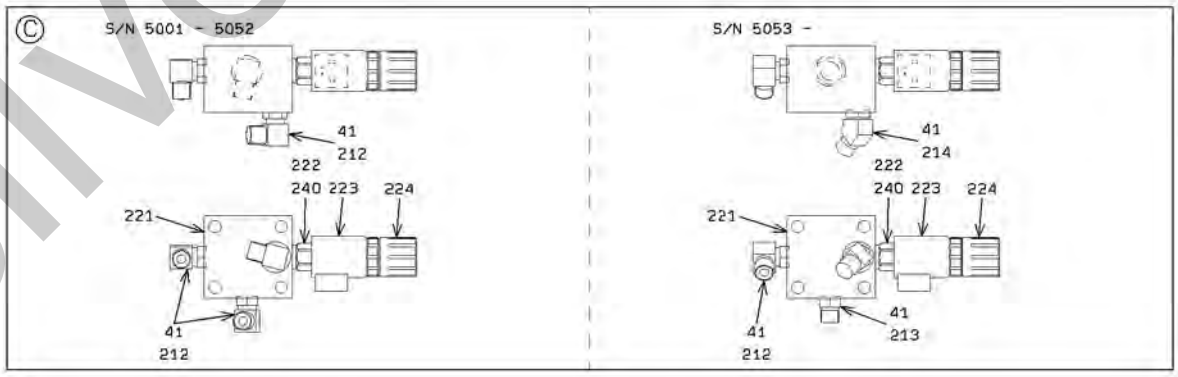

silverhorn.co.uk

VALVE MOUNT (FOR PARKING BRAKE RELEASE SYSTEM)

SYM-BOL	PART NUMBER	PART NAME	UNIT Q,TY	SERIAL (A)	-	(B)	REMARKS N P D	(A)	(B)	(C)	(D)	REMARK
23A	88201-06706	ADAPTER	1	5001	-			Y01				
34A	30241-20890	ADAPTER,ELBOW	1	5001	-				Y02			
41A	65210-12014	RING,O	1	5001	-			01				
53A	61802-06065	BOLT,FLANGED	2	5001	-							
61A	61802-10080	BOLT,FLANGED	4	5001	-							
102A	65210-12011	RING,O	1	5001	-				02			
111A	38554-20110	VALVE,CHECK	1	5001	-					Y03		
112A	30241-21330	ADAPTER,ELBOW	2	5001	-						Y04	
113A	30230-22450	ADAPTER	1	5001	-					Y06		
124A	65210-12028	RING,O	2	5001	-					03		
132A	65210-12018	RING,O	1	5001	-						04	
141A	41620-33750	PLATE	1	5001	-	5128						WELDING
141B	41751-30240	PLATE	1	5129	-		B					
151A	65210-12018	RING,O	1	5001	-					06		
212A	88241-07106	ADAPTER,ELBOW	3	5001	-	5052		Y01				
212B	88241-07106	ADAPTER,ELBOW	1	5053	-			Y01				
213A	88201-06706	ADAPTER	1	5053	-			Y01				
214A	88241-07206	ADAPTER,ELBOW	1	5053	-			Y01				
221A	41410-35470	BLOCK	1	5001	-							
222A	38511-71020	VALVE ASSY	1	5001	-			Y05				
223A	35910-70260	SOLENOID	1	5001	-							
224A	37810-60200	KNOB	1	5001	-							
240A	49327-74570	SEAL KIT	1	5001	-			05				49327-72080
301A	40902-34090	BRACKET	1	5001	-	5052						WELDING
301B	40902-40270	BRACKET	1	5053	-		B					WELDING

silverhorn.co.uk

MEMO

silverhorn.co.uk

BRAKE LINE - FLOOR BOARD (FOR PARKING BRAKE RELEASE SYSTEM)

(NOTE):REFER TO STANDARD CATALOG(REF. YX9-505) FOR NO SYMBOL PARTS.

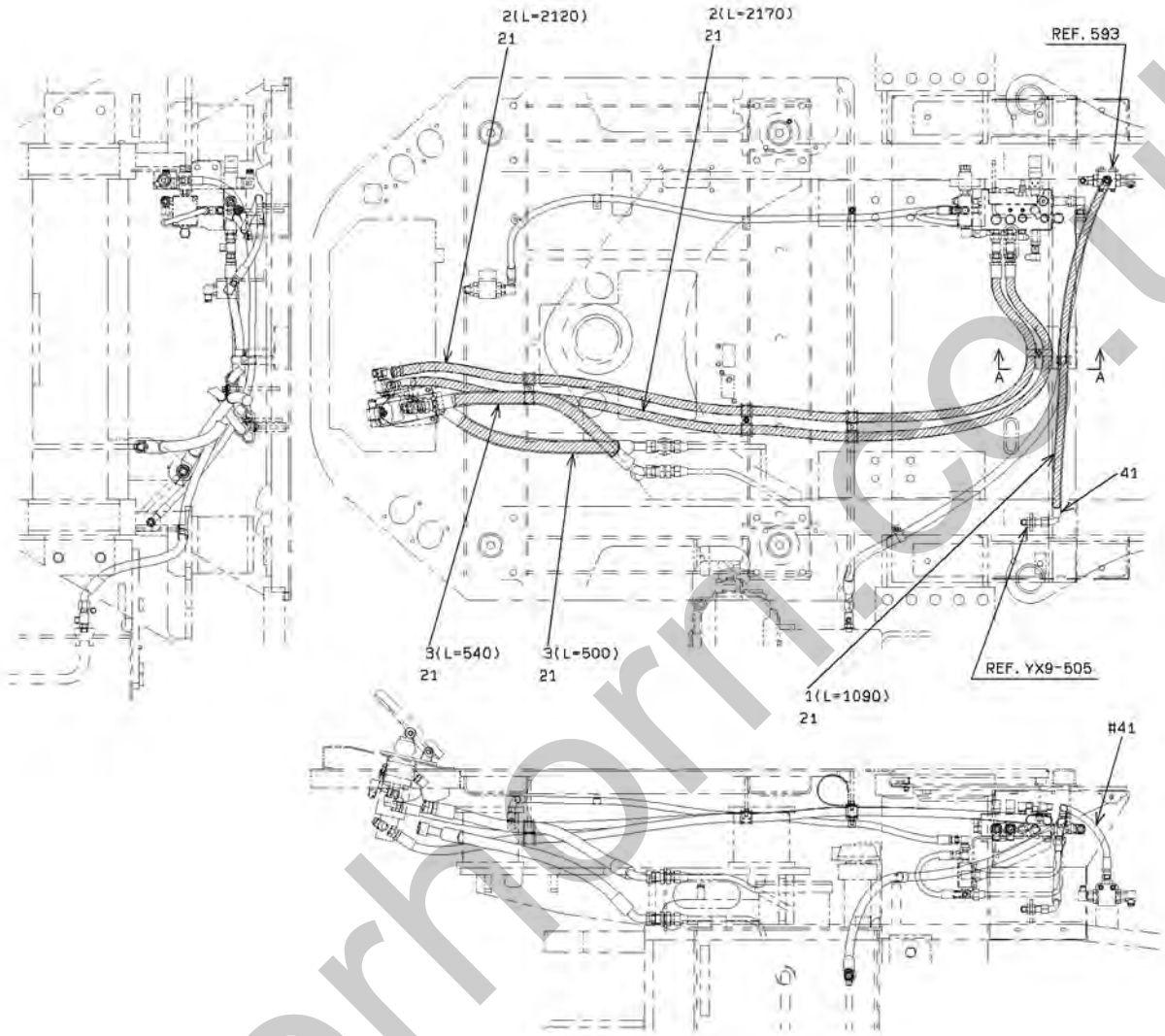

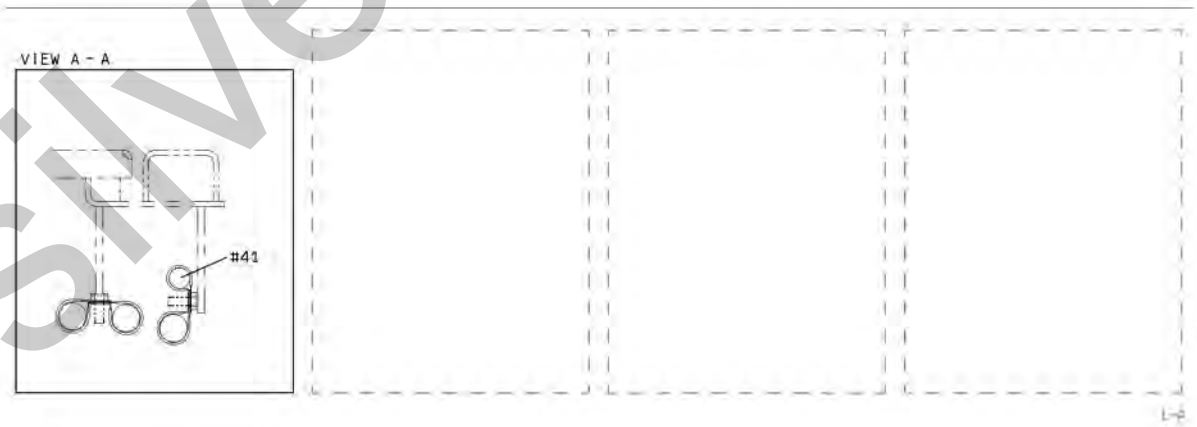

silverhorn.co.uk

UX6-594

BRAKE LINE - FLOOR BOARD (FOR PARKING BRAKE RELEASE SYSTEM)

SYM-BOL	PART NUMBER	PART NAME	UNIT Q,TY	SERIAL (A) - (B)	REMARKS N P D	(A) (B)	(C) (D)	REMARK
1A	30610-20730-7	INSULATOR	1	5001 -				L=1090
2A	30610-20740-7	INSULATOR	1	5001 -				L=4290
3A	30610-20750-7	INSULATOR	1	5001 -				L=1040
21A	32923-70140	CLAMP,HOSE	A/R	5001 -				L=202
41A	68635-20120	HOSE,HIGH PRESSURE	1	5001 -				

silverhorn.co.uk

LABEL MOUNT (FOR PARKING BRAKE RELEASE SYSTEM)

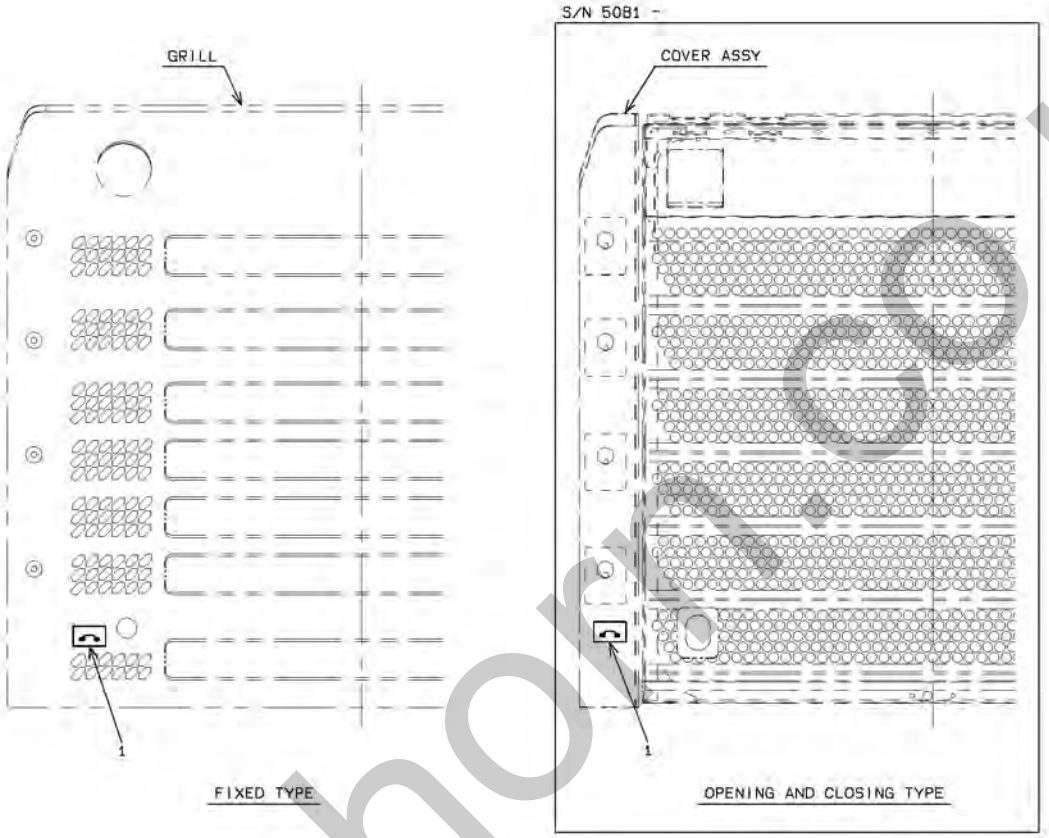

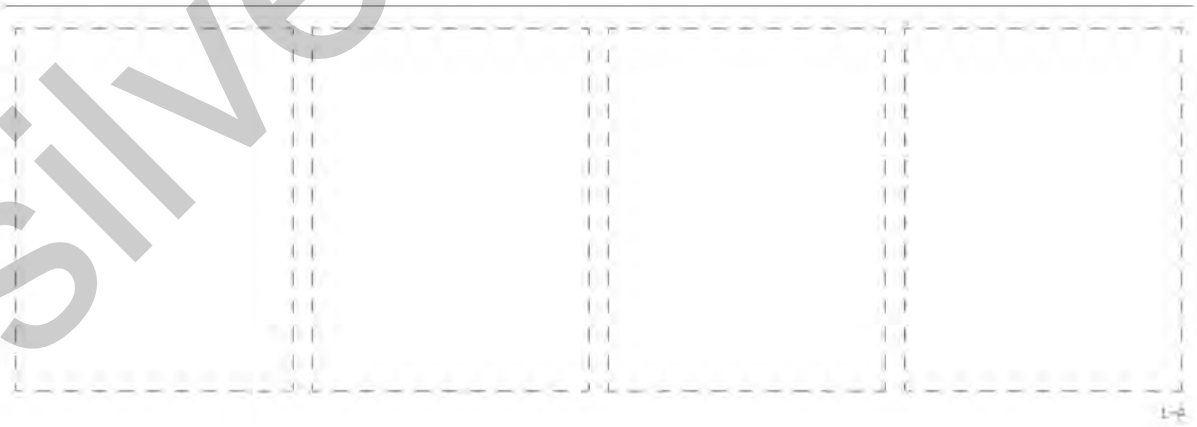

silverhorse.co.uk

LABEL MOUNT (FOR PARKING BRAKE RELEASE SYSTEM)

SYM-BOL	PART NUMBER	PART NAME	UNIT Q,TY	SERIAL (A) - (B)	REMARKS N P D	(A) (B)	(C) (D)	REMARK
1A	44770-52340	LABEL	1	5001 -				

silverhorn.co.uk

WIND SHIELD GROUP (FOR PARKING BRAKE RELEASE SYSTEM)

(NOTE):REFER TO STANDARD CATALOG(REF. YX9-133) FOR NO SYMBOL PARTS.

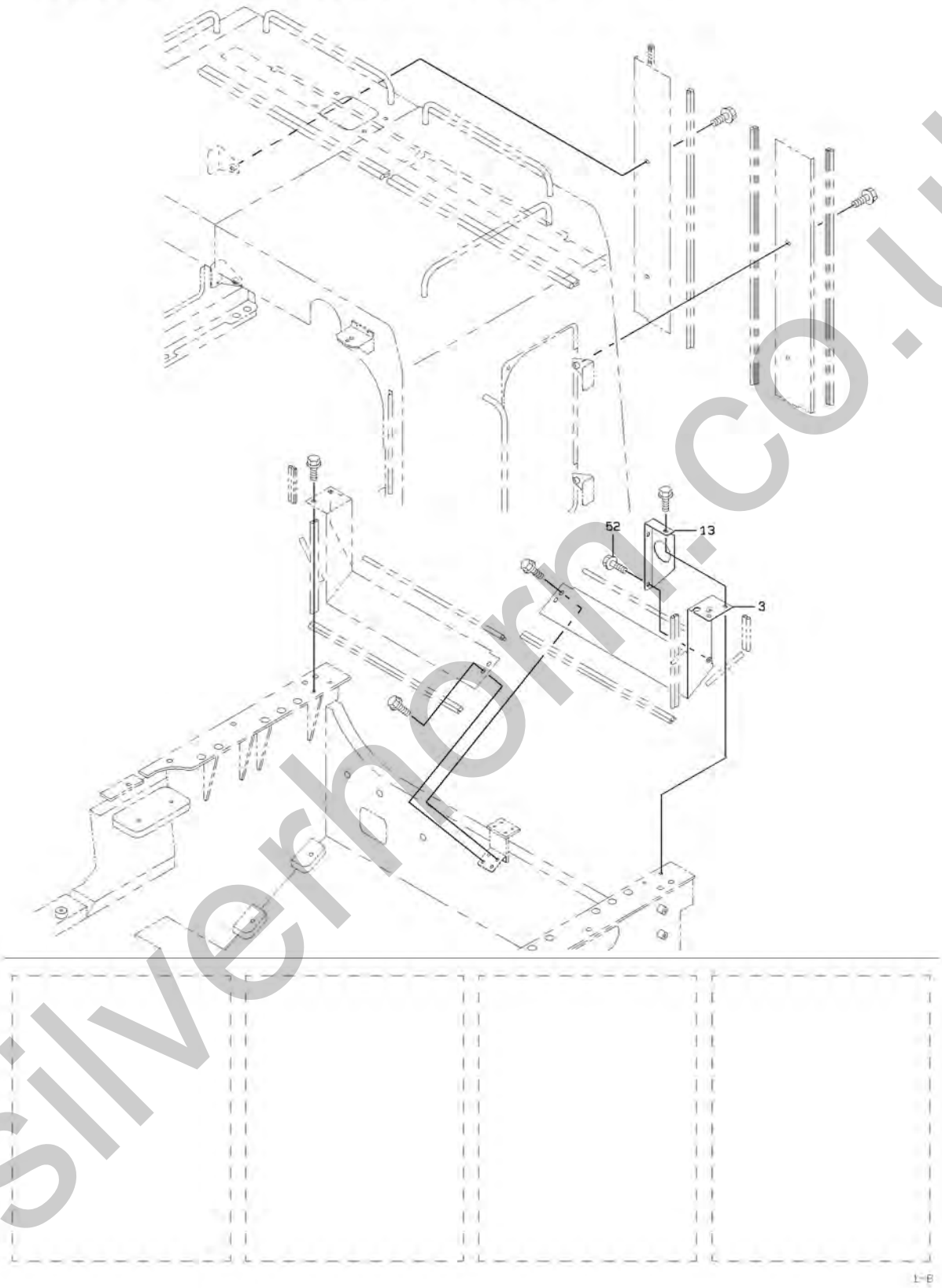

silverhorn.co.uk

WIND SHIELD GROUP (FOR PARKING BRAKE RELEASE SYSTEM)

SYM-BOL	PART NUMBER	PART NAME	UNIT Q,TY	SERIAL (A) - (B)	REMARKS N P D	(A) (B)	(C) (D)	REMARK
3A	41637-22250	PLATE	1	5001 - 5052				FR LH
3B	41637-29720	PLATE	1	5053 -	B			FR LH
13A	41637-22260	PLATE	1	5001 - 5108				FR LH
13B	41637-36590	PLATE	1	5109 -	C			FR LH
52A	61802-08025	BOLT,FLANGED	2	5001 -				

silverhorn.co.uk

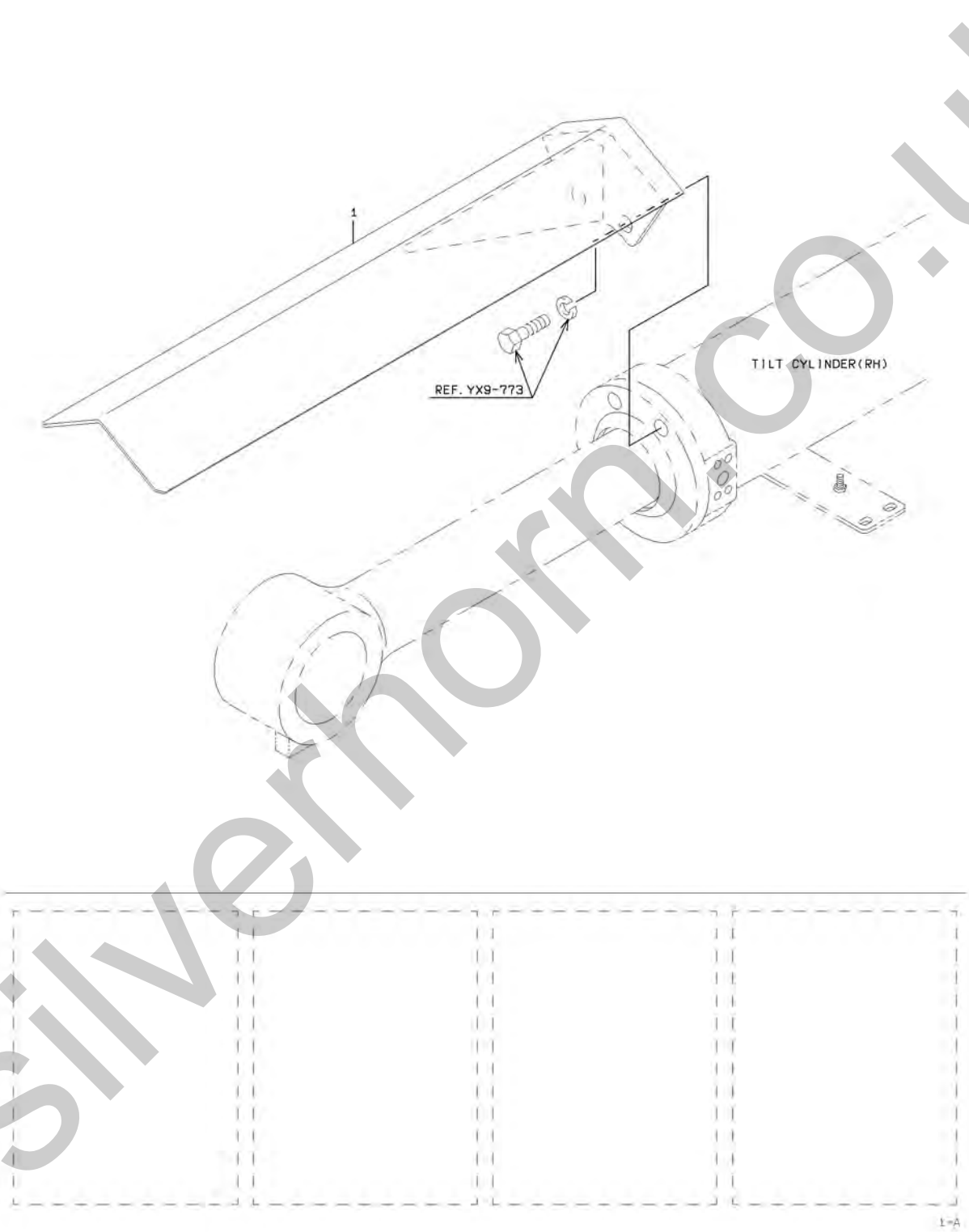

silverhorn.co.uk

BUCKET POSITIONER GROUP

SYM-BOL	PART NUMBER	PART NAME	UNIT Q,TY	SERIAL (A) - (B)	REMARKS N P D	(A) (B)	(C) (D)	REMARK
1A	31205-42060	COVER	2	5001 -				

silverhorn.co.uk

LOADING HYDRAULIC LINE - FRONT CHASSIS

(NOTE):REFER TO STANDARD CATALOG(REF. YX9-701) FOR NO SYMBOL PARTS.

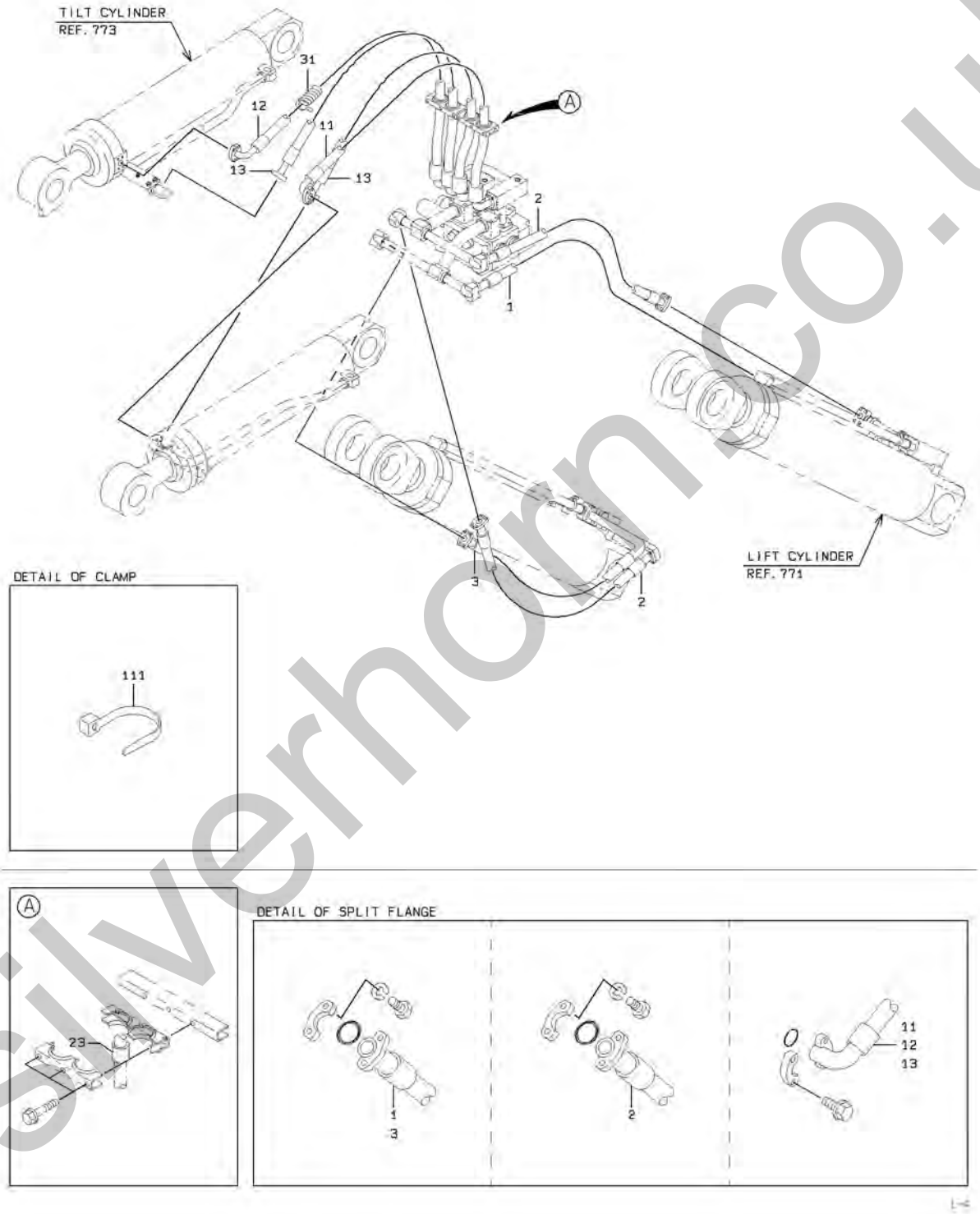

silverhorn.co.uk

LOADING HYDRAULIC LINE - FRONT CHASSIS

SYM-BOL	PART NUMBER	PART NAME	UNIT Q,TY	SERIAL (A) - (B)	REMARKS N P D	(A) (B)	(C) (D)	REMARK
1A	43113-45350	HOSE,HIGH PRESSURE	1	5001 -				FR LH
2A	43113-45360	HOSE,HIGH PRESSURE	2	5001 -				
3A	43113-45370	HOSE,HIGH PRESSURE	1	5001 -				FR RH
11A	43113-45320	HOSE,HIGH PRESSURE	1	5001 -				FR LH
12A	43113-45330	HOSE,HIGH PRESSURE	1	5001 -				FR RH
13A	43113-45340	HOSE,HIGH PRESSURE	2	5001 -				
23A	40850-70180	BUSHING,ELASTIC	4	5001 -				
31A	30610-20760-7	INSULATOR	1	5001 -				L=1630
111A	32923-70140	CLAMP,HOSE	A/R	5001 -				L=202

silverhorn.co.uk

LOADING HYDRAULIC LINE - REAR CHASSIS (FOR PUMP)

(NOTE):REFER TO STANDARD CATALOG(REF. YX9-715).

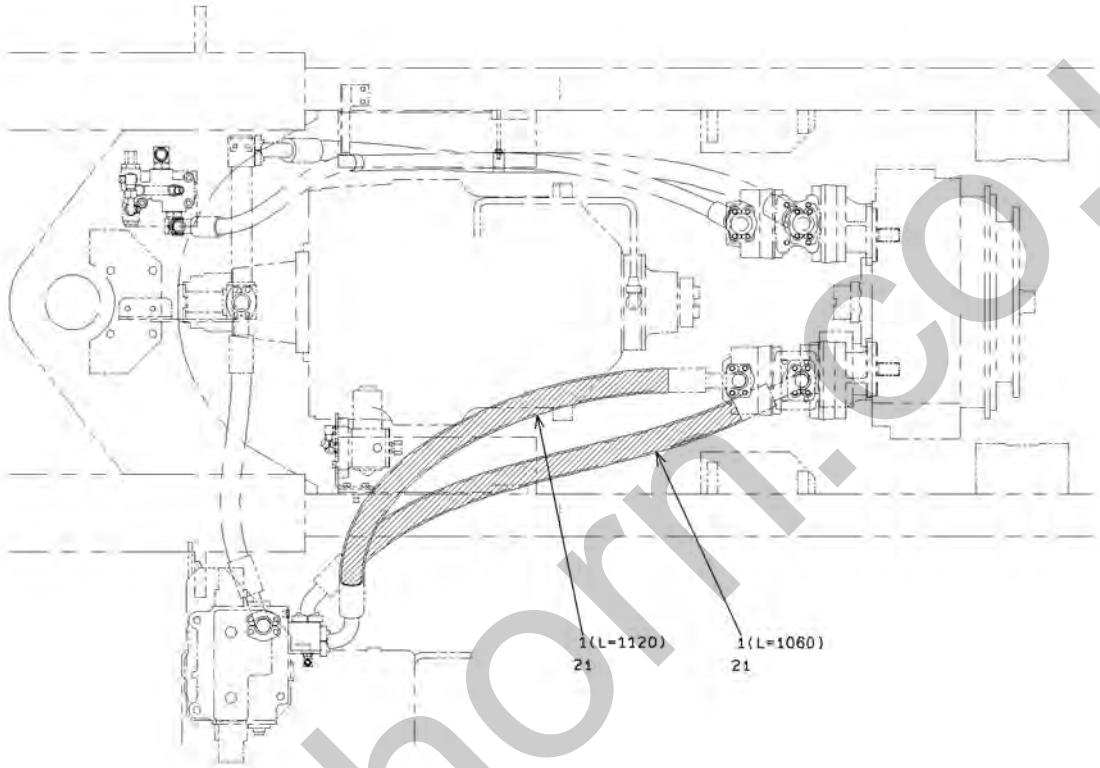

silverhorn.co.uk

LOADING HYDRAULIC LINE - REAR CHASSIS (FOR PUMP)

SYM-BOL	PART NUMBER	PART NAME	UNIT Q,TY	SERIAL (A) - (B)	REMARKS N P D	(A) (B)	(C) (D)	REMARK
1A	30610-20770-7	INSULATOR	1	5001 -				L=2180
21A	32923-70140	CLAMP,HOSE	A/R	5001 -				L=202

silverhorn.co.uk

LOADING HYDRAULIC LINE - STEERING CYLINDER

(NOTE):REFER TO STANDARD CATALOG(REF. YX9-721).

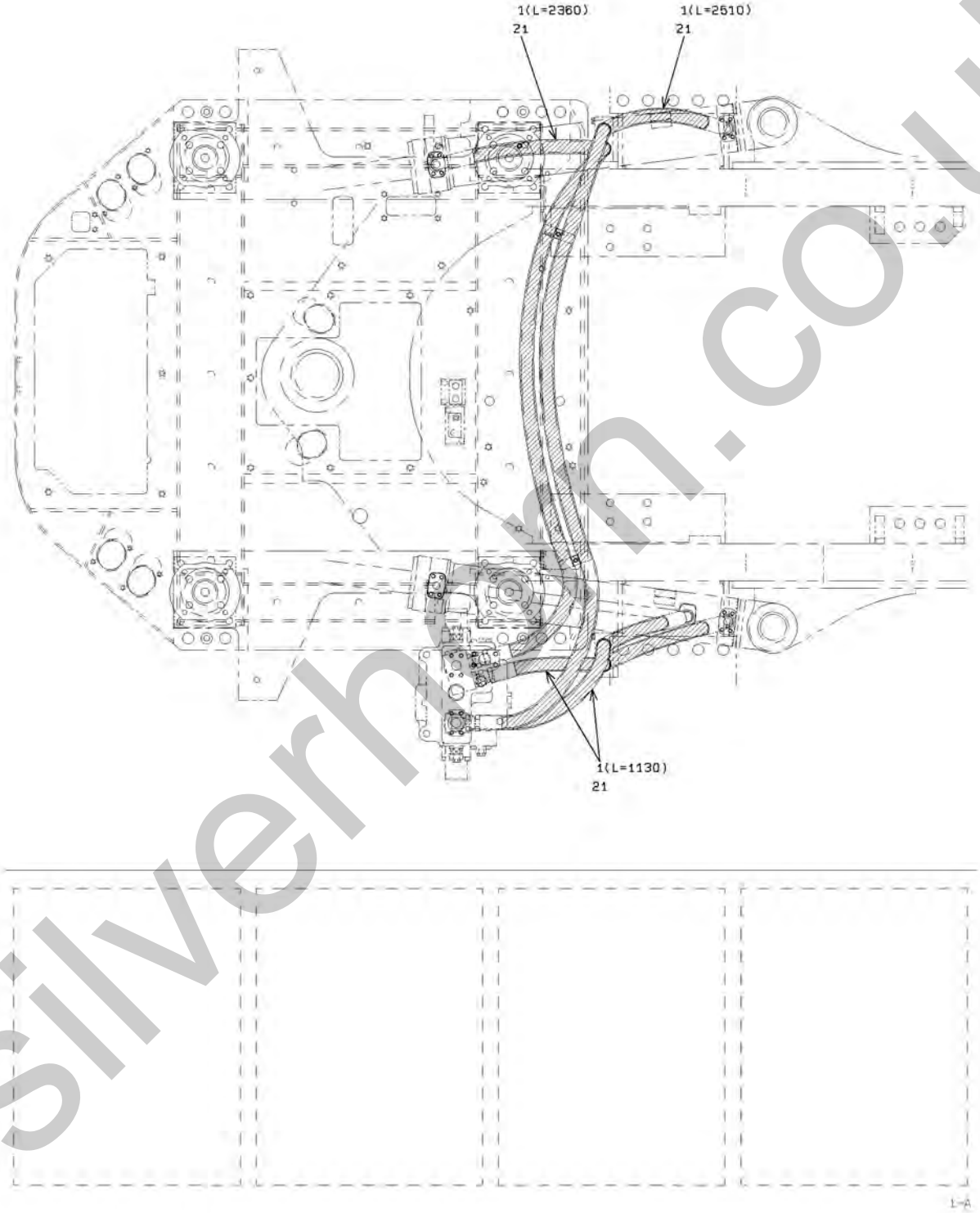

silverhorn.co.uk

LOADING HYDRAULIC LINE - STEERING CYLINDER

SYM-BOL	PART NUMBER	PART NAME	UNIT Q,TY	SERIAL (A) - (B)	REMARKS N P D	(A) (B)	(C) (D)	REMARK
1A	30610-20750-7	INSULATOR	1	5001 -				L=7130
21A	32923-70140	CLAMP,HOSE	A/R	5001 -				L=202

silverhorn.co.uk

LOADING HYDRAULIC LINE - CENTER PIN

(NOTE):REFER TO STANDARD CATALOG(REF. YX9-723) FOR NO SYMBOL PARTS.

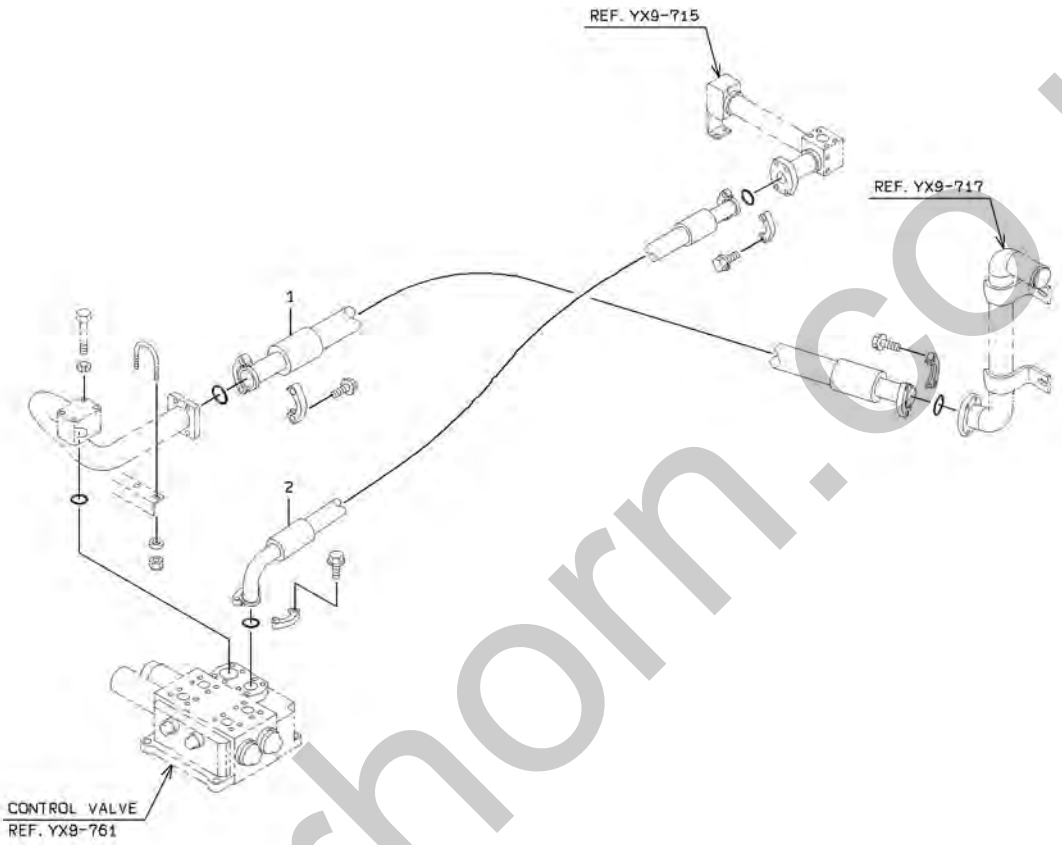

silverhorn.co.uk

LOADING HYDRAULIC LINE - CENTER PIN

SYM-BOL	PART NUMBER	PART NAME	UNIT Q,TY	SERIAL (A) - (B)	REMARKS N P D	(A) (B)	(C) (D)	REMARK
1A	43113-45380	HOSE,HIGH PRESSURE	1	5001 -				
2A	43113-45390	HOSE,HIGH PRESSURE	1	5001 -				

silverhorn.co.uk

PILOT HYDRAULIC LINE

(NOTE):REFER TO STANDARD CATALOG(REF. YX9-741, REF. YX9-741A).

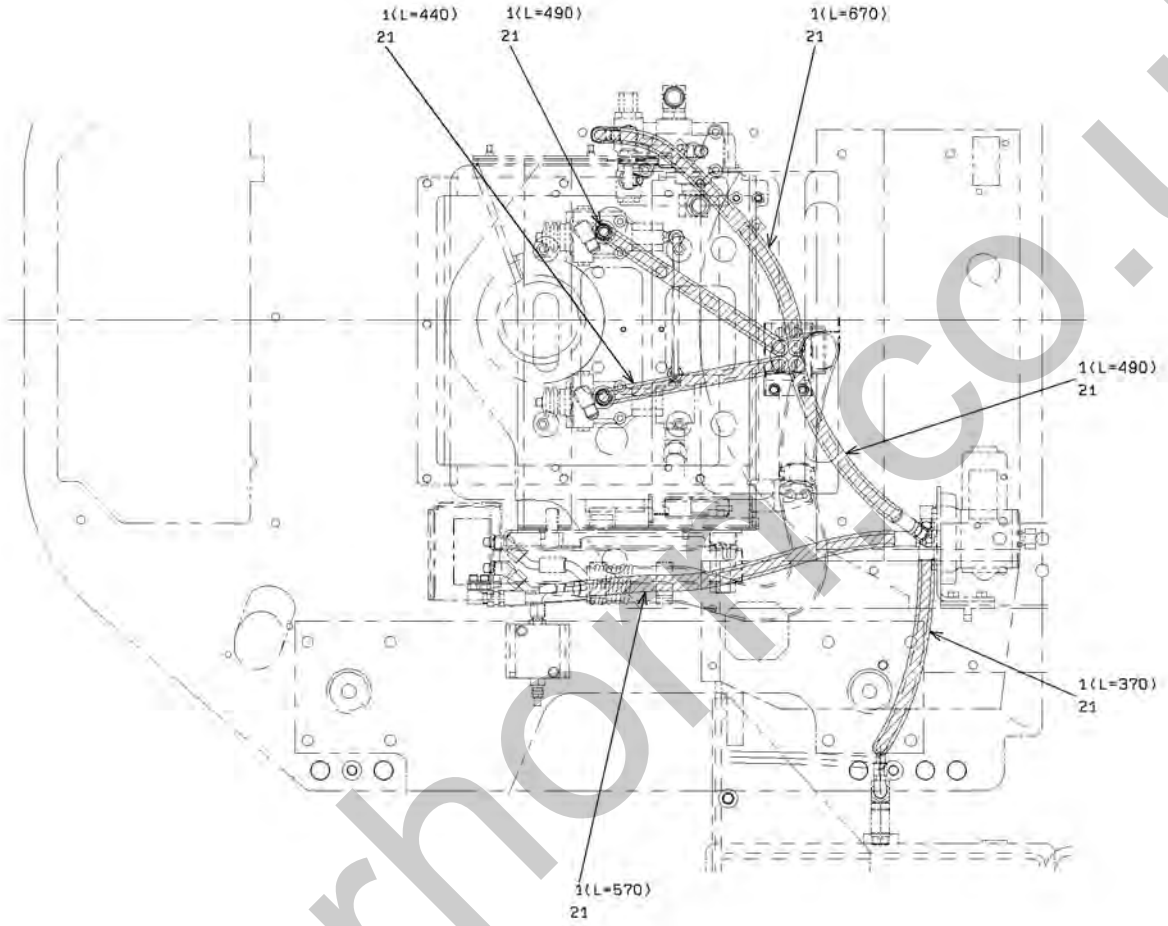

silverhorn.co.uk

PILOT HYDRAULIC LINE

SYM-BOL	PART NUMBER	PART NAME	UNIT Q,TY	SERIAL (A) - (B)	REMARKS N P D	(A) (B)	(C) (D)	REMARK
1A	30610-20730-7	INSULATOR	1	5001 -				L=3030
21A	32923-70140	CLAMP,HOSE	A/R	5001 -				L=202

silverhorn.co.uk

PILOT HYDRAULIC LINE - FRONT CHASSIS

(NOTE):REFER TO STANDARD CATALOG(REF. YX9-743) FOR NO SYMBOL PARTS.

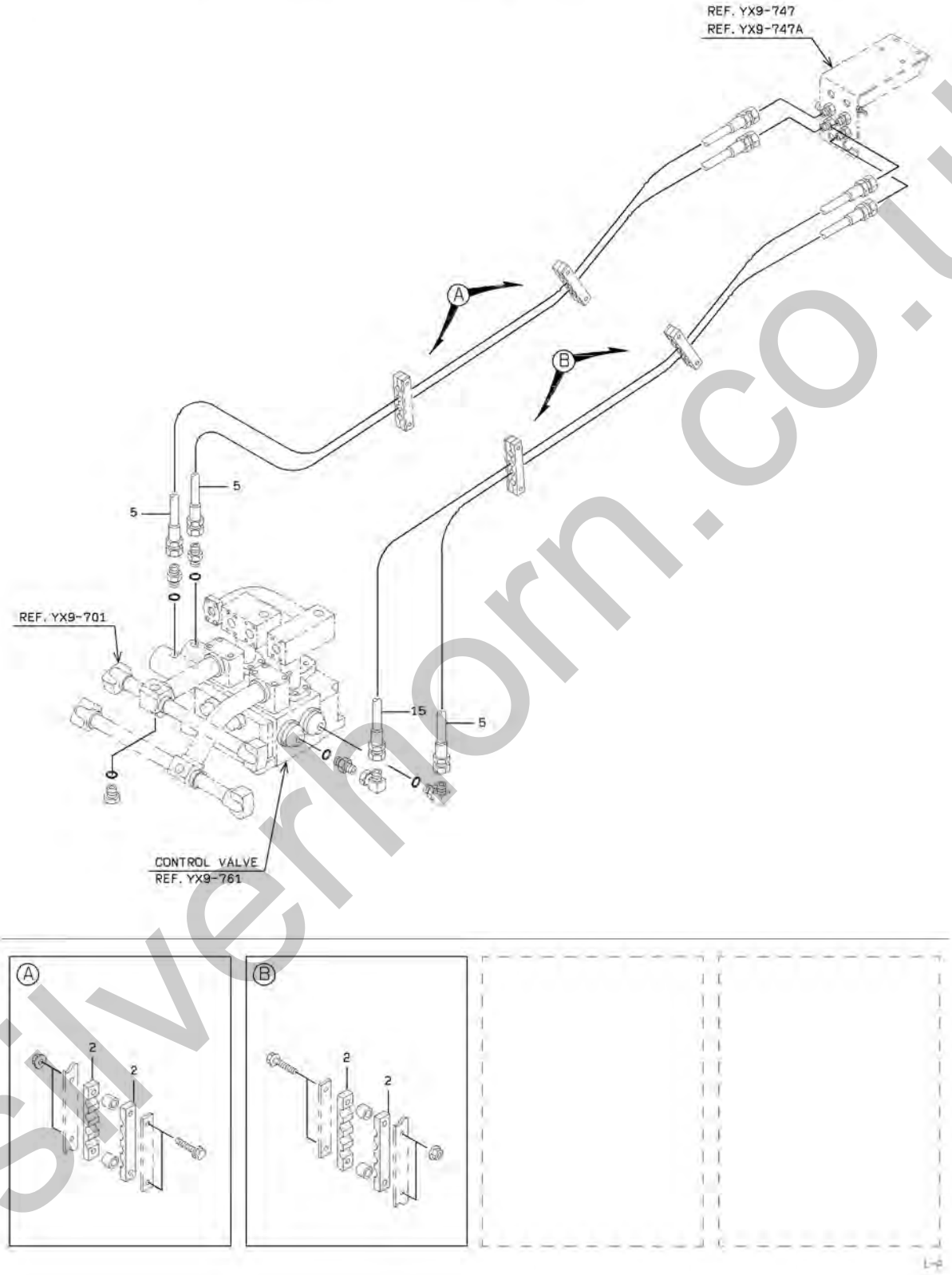

silverhorn.co.uk

PILOT HYDRAULIC LINE - FRONT CHASSIS

SYM-BOL	PART NUMBER	PART NAME	UNIT Q,TY	SERIAL (A) - (B)	REMARKS N P D	(A) (B)	(C) (D)	REMARK
2A	32923-20900	CLAMP,HOSE	8	5001 -				
5A	43113-45400	HOSE,HIGH PRESSURE	3	5001 -				
15A	43113-45410	HOSE,HIGH PRESSURE	1	5001 -				

silverhorn.co.uk

PILOT HYDRAULIC LINE - REAR CHASSIS

(NOTE):REFER TO STANDARD CATALOG(REF. YX9-745).

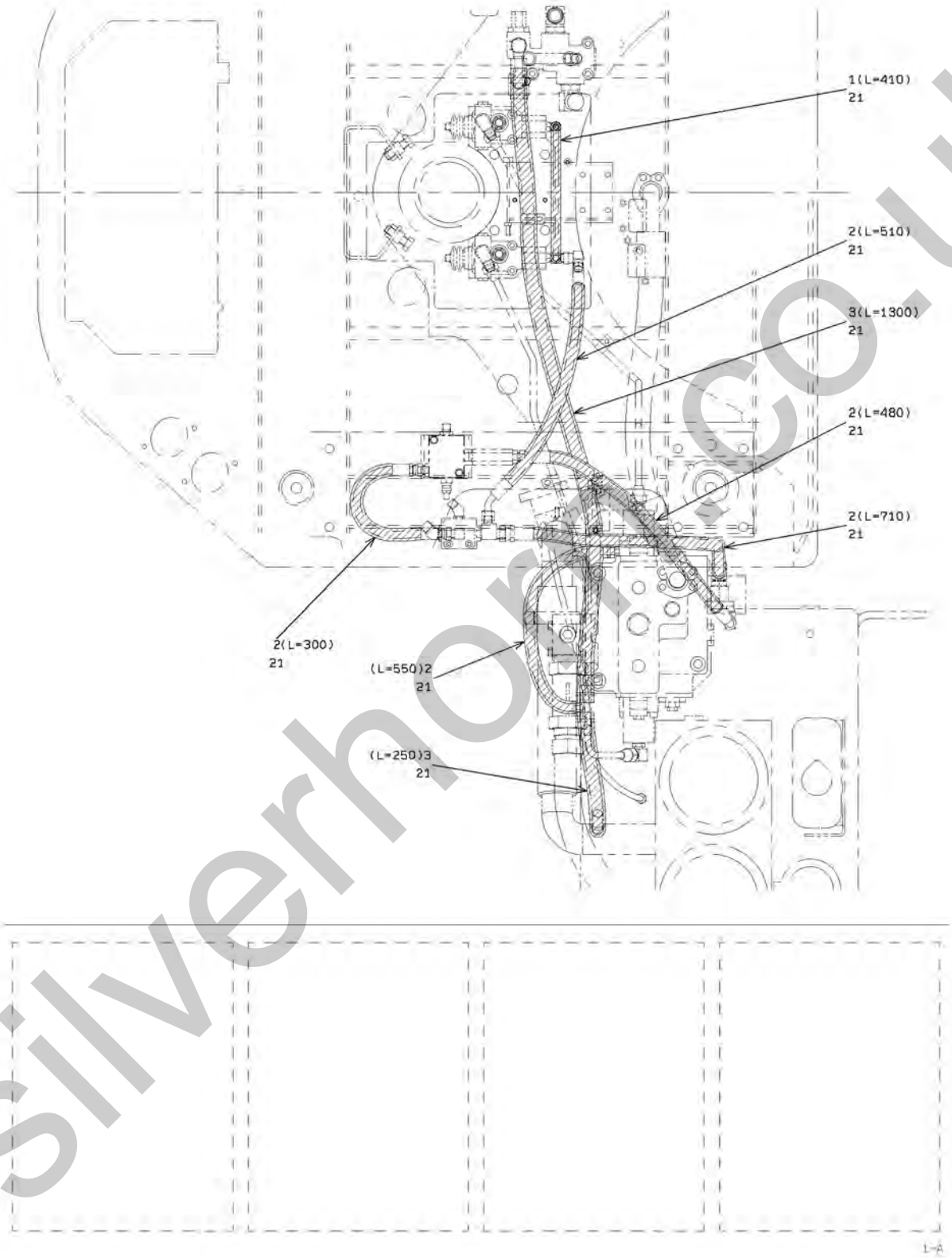

silverhorse.co.uk

PILOT HYDRAULIC LINE - REAR CHASSIS

SYM-BOL	PART NUMBER	PART NAME	UNIT Q,TY	SERIAL (A) - (B)	REMARKS N P D	(A) (B)	(C) (D)	REMARK
1A	30610-20720-7	INSULATOR	1	5001 -				L=410
2A	30610-20730-7	INSULATOR	1	5001 -				L=2550
3A	30610-20740-7	INSULATOR	1	5001 -				L=1550
21A	32923-70140	CLAMP,HOSE	A/R	5001 -				L=202

silverhorn.co.uk

MARKING GROUP

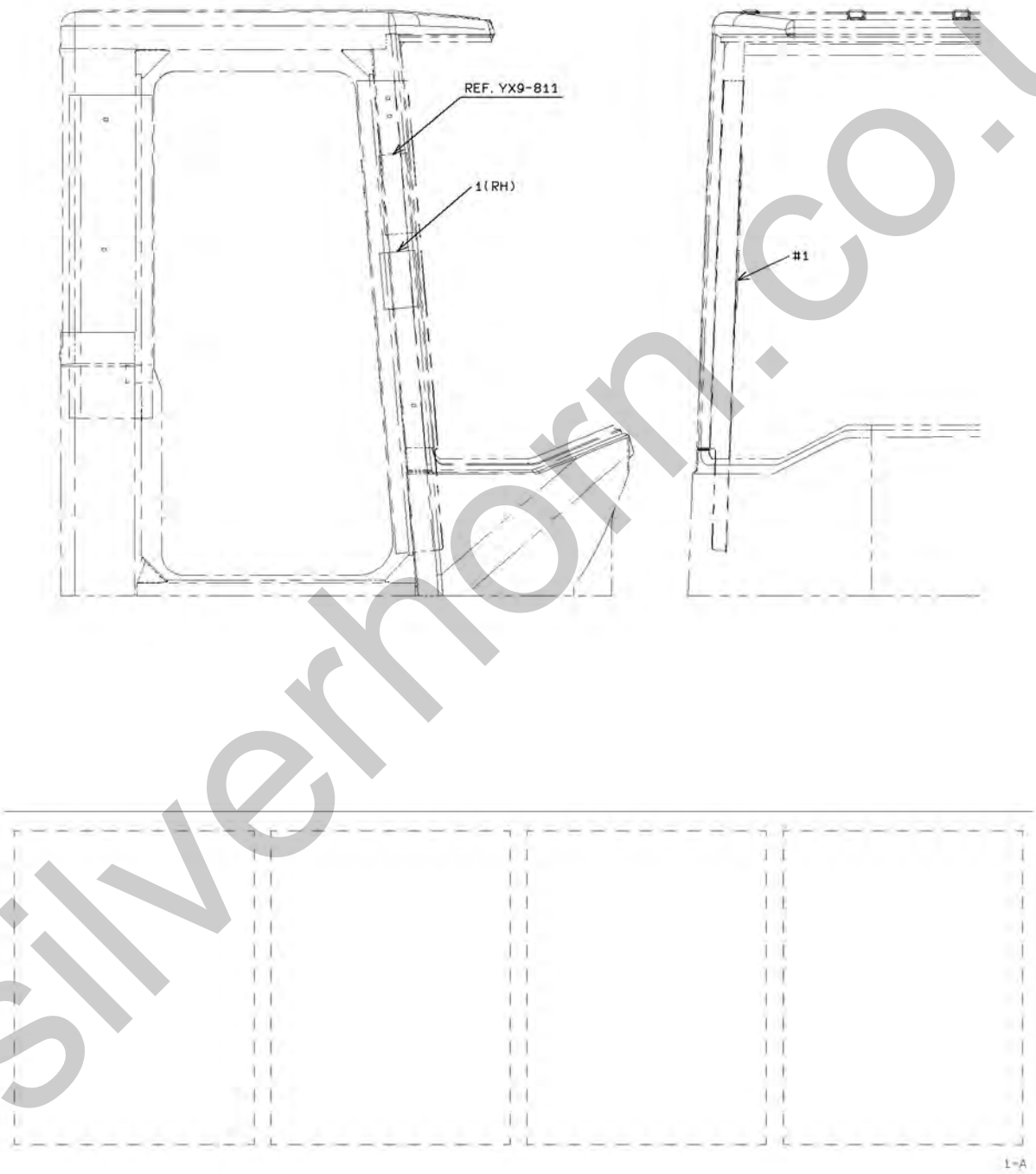

silverhorn.co.uk

MARKING GROUP

SYM-BOL	PART NUMBER	PART NAME	UNIT Q,TY	SERIAL (A) - (B)	REMARKS N P D	(A) (B)	(C) (D)	REMARK
1A	44841-21050	LABEL	1	5001 -				

silverhorn.co.uk

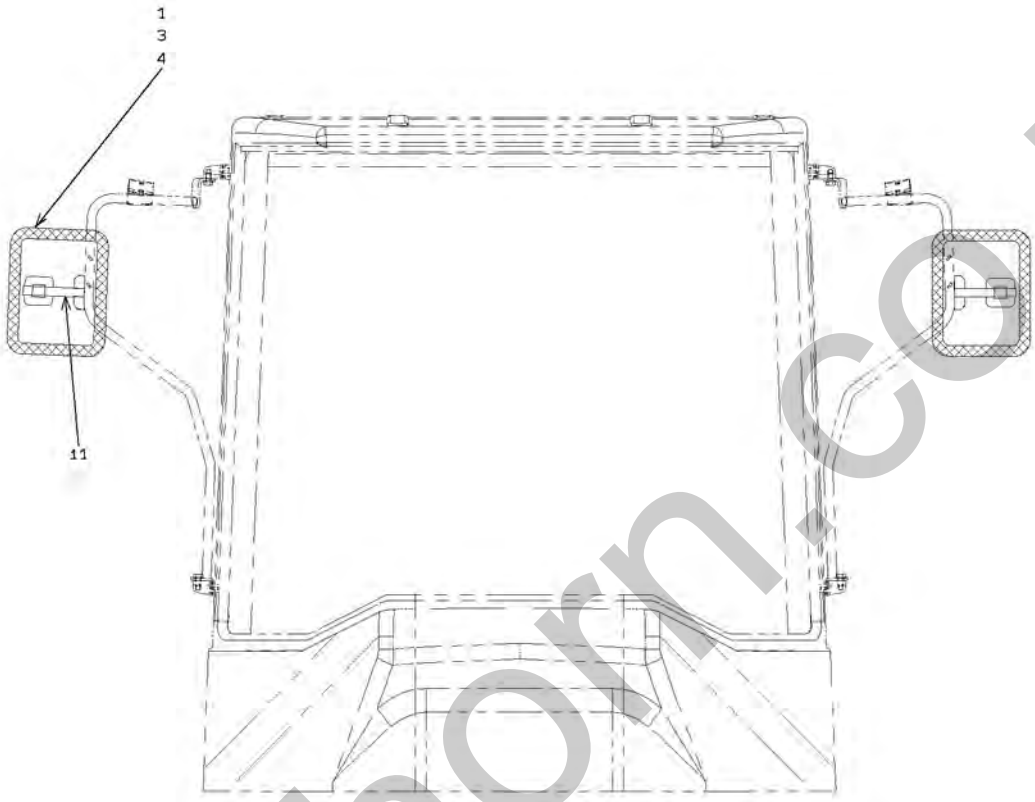

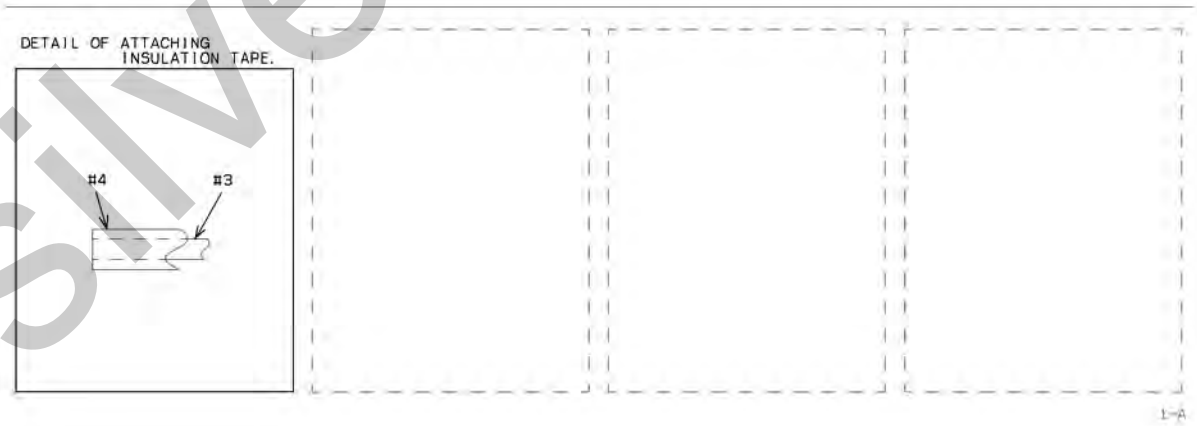

silverhorn.co.uk

MIRROR GROUP

SYM-BOL	PART NUMBER	PART NAME	UNIT Q,TY	SERIAL (A) - (B)	REMARKS N P D	(A) (B)	(C) (D)	REMARK
1A	44340-70020	MIRROR	2	5001 -				
3A	37014-70040	TAPE,INSULATION	1	5001 -				
4A	37014-70060	TAPE,INSULATION	1	5001 -				
11A	35210-21340	STAY	2	5001 -				WELDING

silverhorn.co.uk

WINDOW GLASS MOUNT

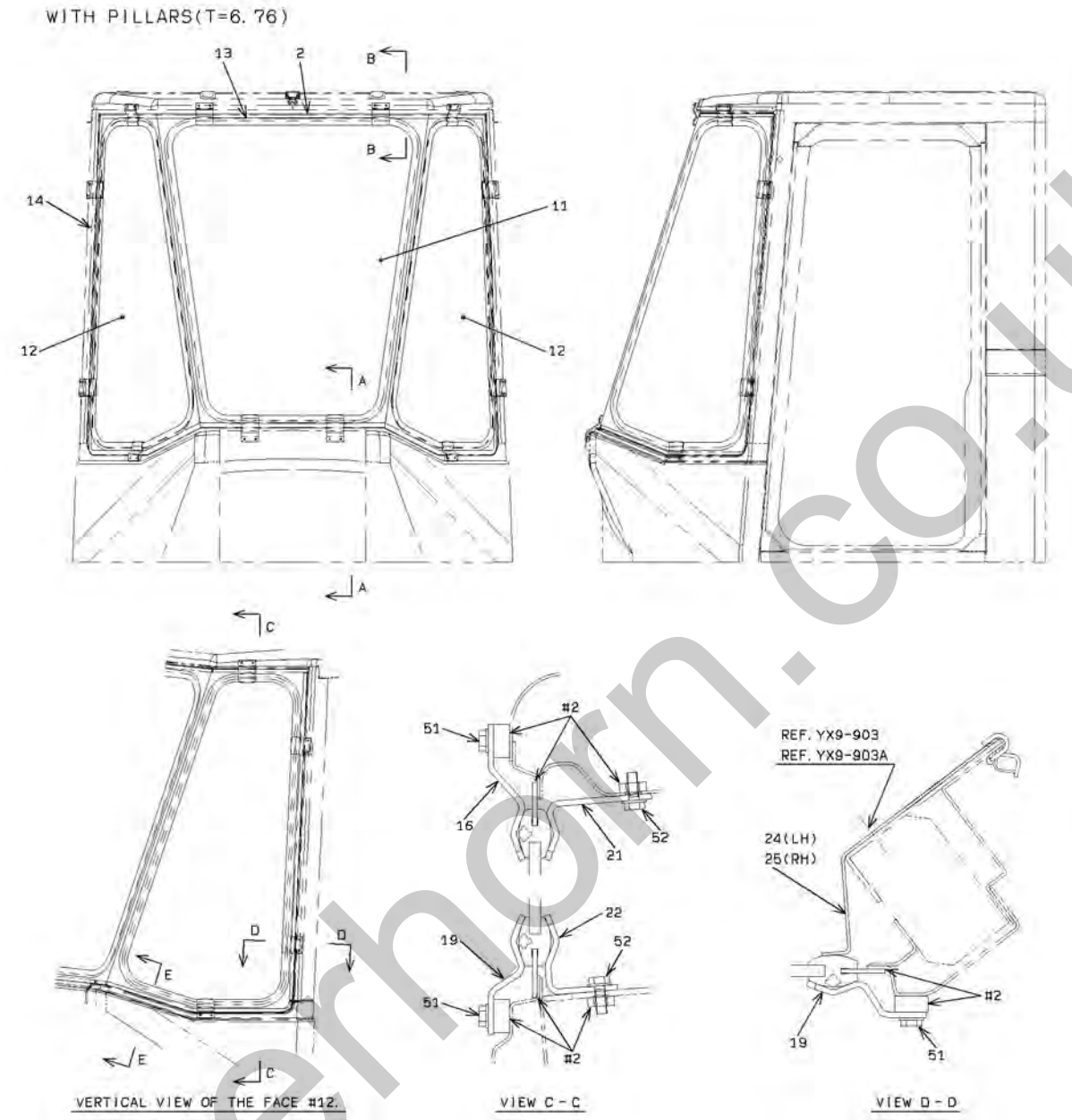

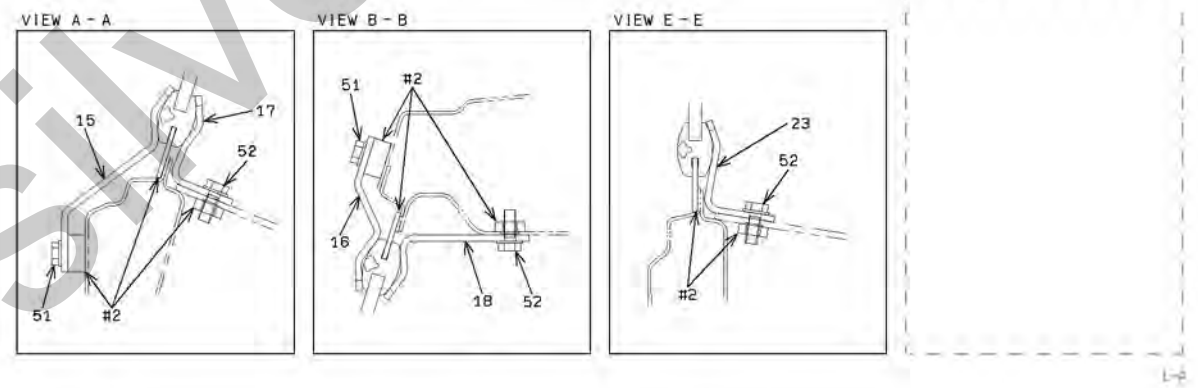

silverhorn.co.uk

WINDOW GLASS MOUNT

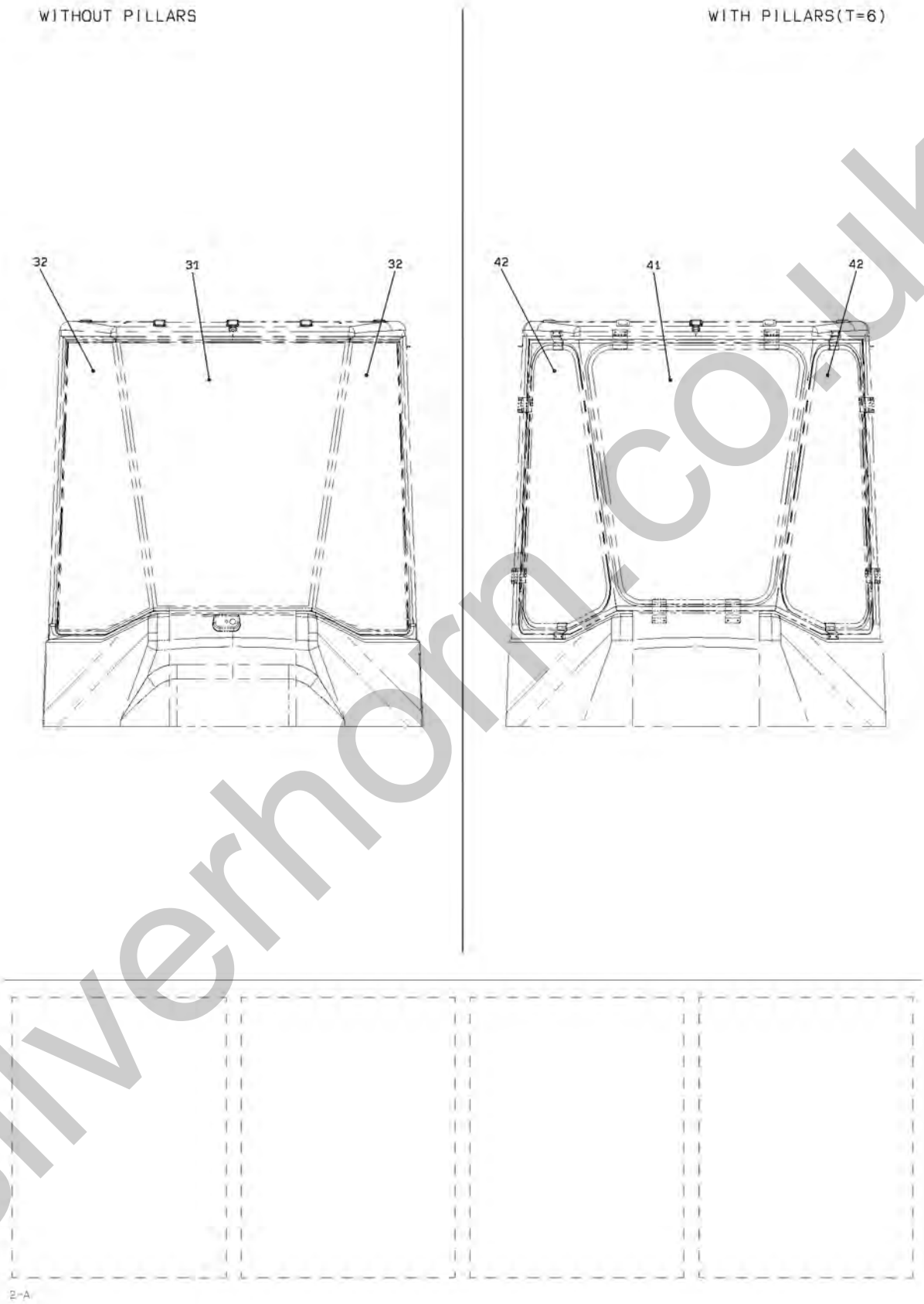

silverhorn.co.uk

WINDOW GLASS MOUNT

SYM-BOL	PART NUMBER	PART NAME	UNIT Q,TY	SERIAL (A) - (B)	REMARKS N P D	(A) (B)	(C) (D)	REMARK
2A	03501-54870	CAB ASSY,ROPS	1	5001 -				
11A	32011-22290-7	GLASS,WINDOW	1	5001 -				T=6.76
12A	32011-22300-7	GLASS,WINDOW	2	5001 -				T=6.76
13A	34041-25170	STRIP, SEAL	1	5001 -				L=3600
14A	34041-25180	STRIP, SEAL	2	5001 -				L=3050
15A	41609-21150	PLATE	2	5001 -				
16A	41609-21160	PLATE	4	5001 -				
17A	41609-21170	PLATE	2	5001 -				
18A	41609-21180	PLATE	2	5001 -				
19A	41609-21190	PLATE	6	5001 -				
21A	41609-21200	PLATE	2	5001 -				
22A	41609-21210	PLATE	2	5001 -				
23A	41609-21220	PLATE	2	5001 -				
24A	41619-58770	PLATE	1	5001 -				FR LH
25A	41619-58780	PLATE	1	5001 -				FR RH
31A	32011-21540-7	GLASS,WINDOW	1	5001 -				W/O PILLARS
32A	32011-21550-7	GLASS,WINDOW	2	5001 -				W/O PILLARS
41A	32011-22380-7	GLASS,WINDOW	1	5001 -				T=6
42A	32011-22390-7	GLASS,WINDOW	2	5001 -				T=6
51A	61802-06012	BOLT,FLANGED	24	5001 -				
52A	61802-06016	BOLT,FLANGED	20	5001 -				

silverhorn.co.uk

MEMO

silverhorn.co.uk

CAB ACCESSORIES MOUNT

<S/N 5001 - 5052>

CAB FILTRATION SYSTEM

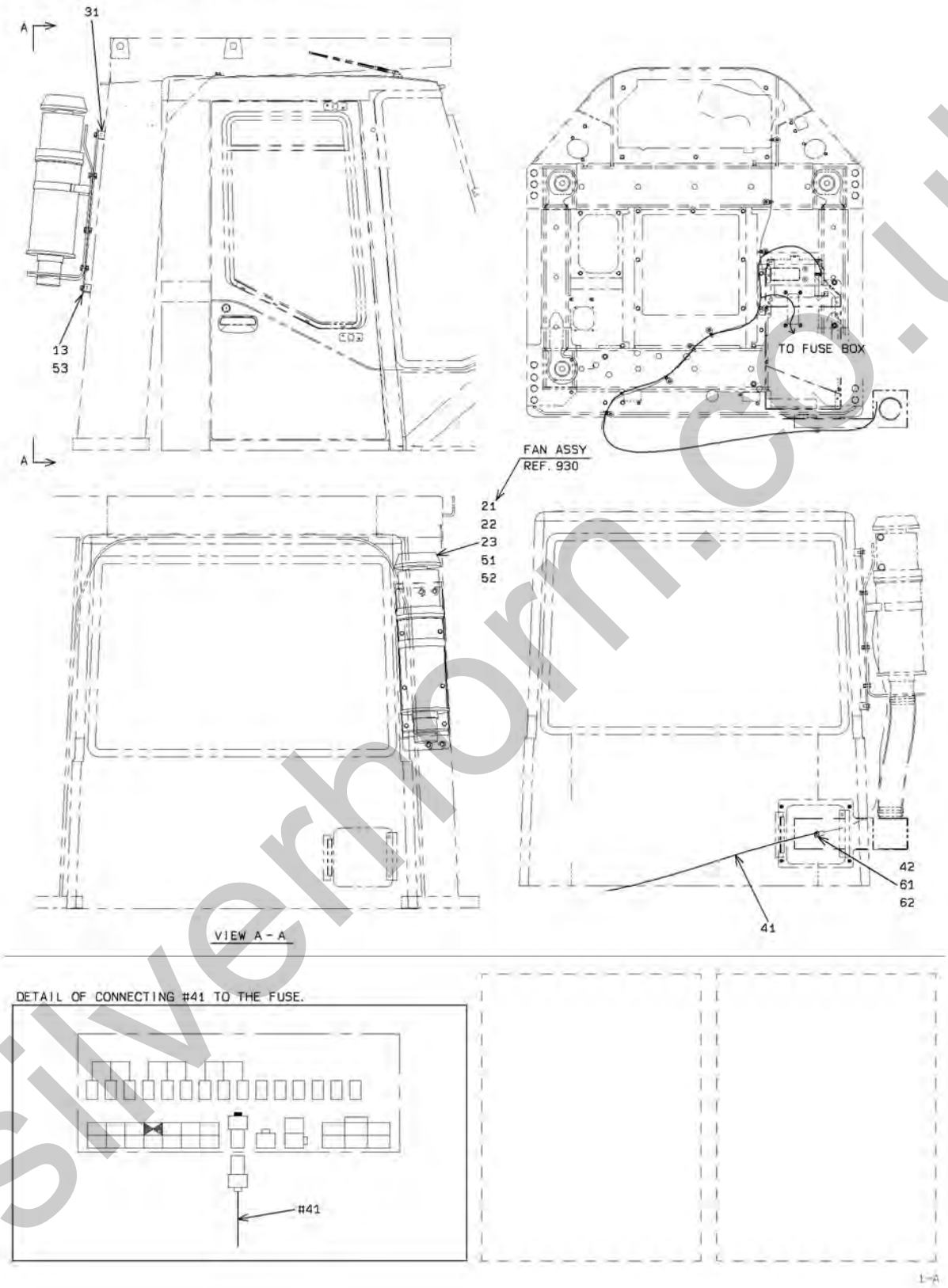

silverhorn.co.uk

CAB ACCESSORIES MOUNT

<S/N 5053 - >

CAB FILTRATION SYSTEM

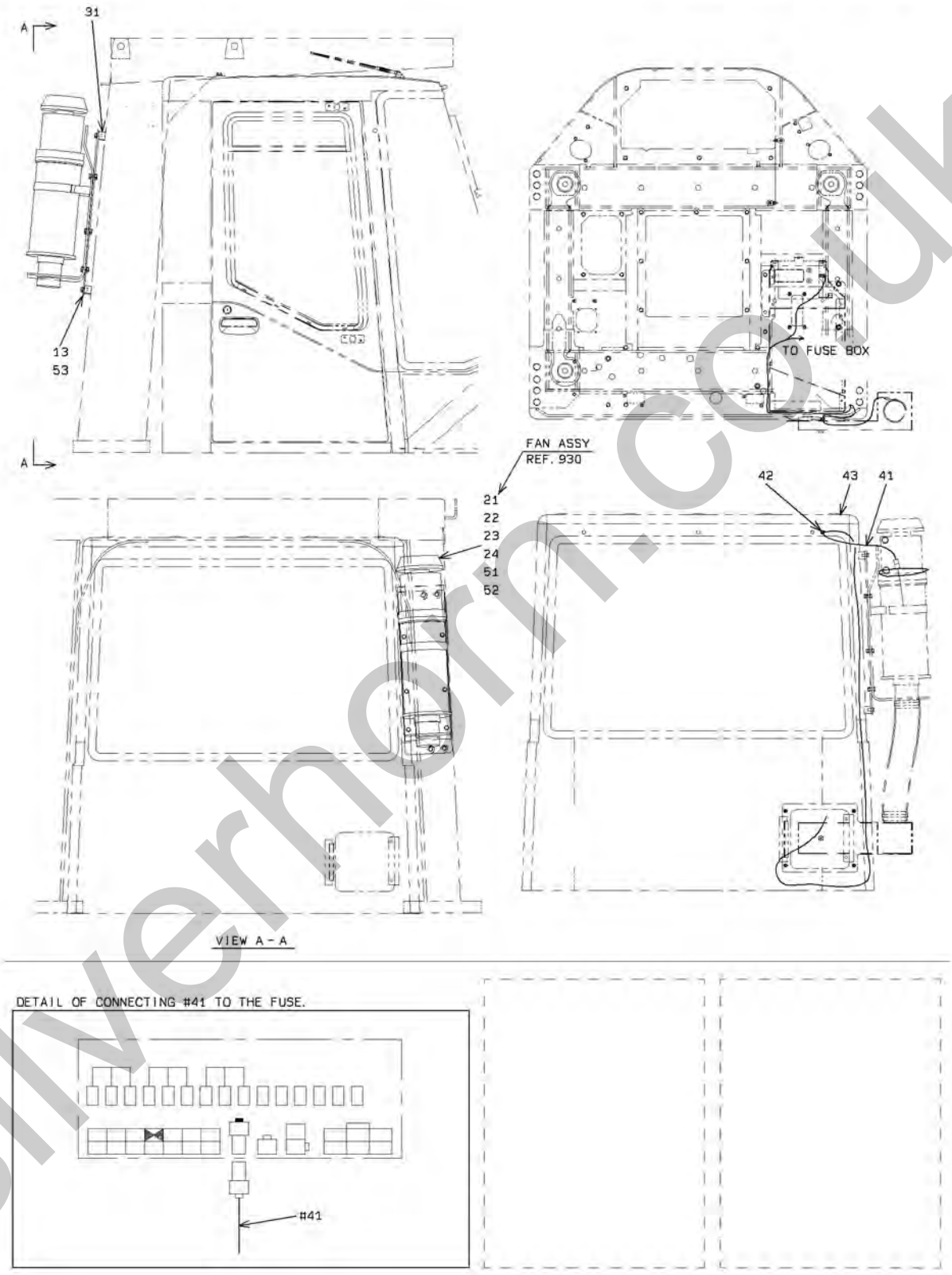

silverhorn.co.uk

CAB FILTRATION SYSTEM

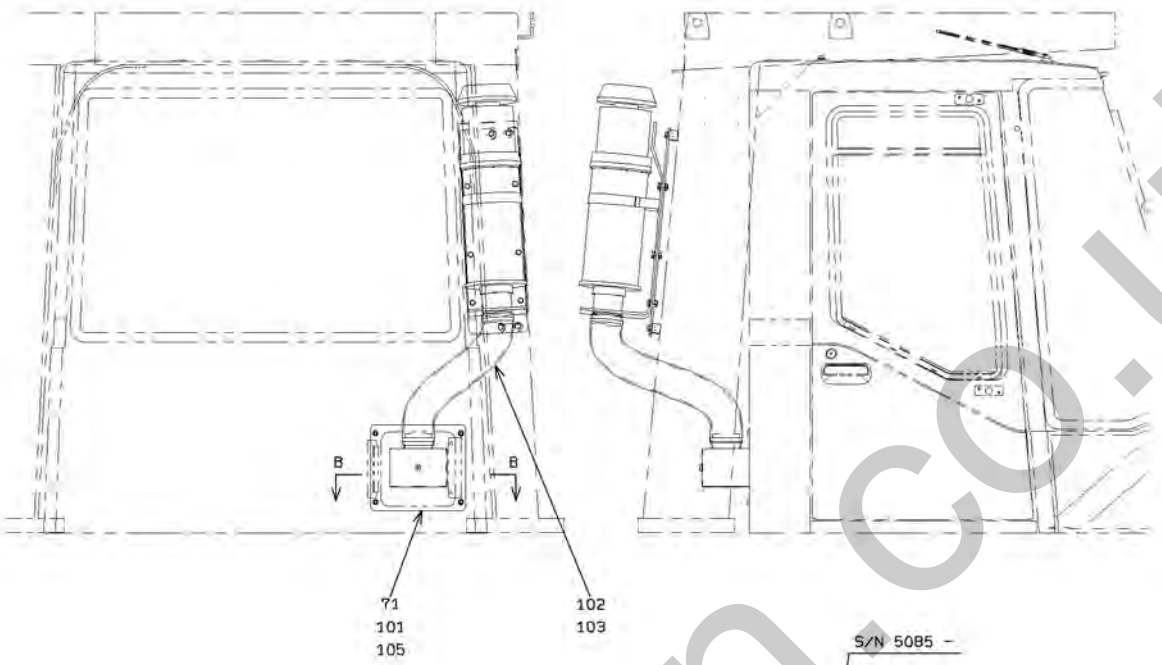

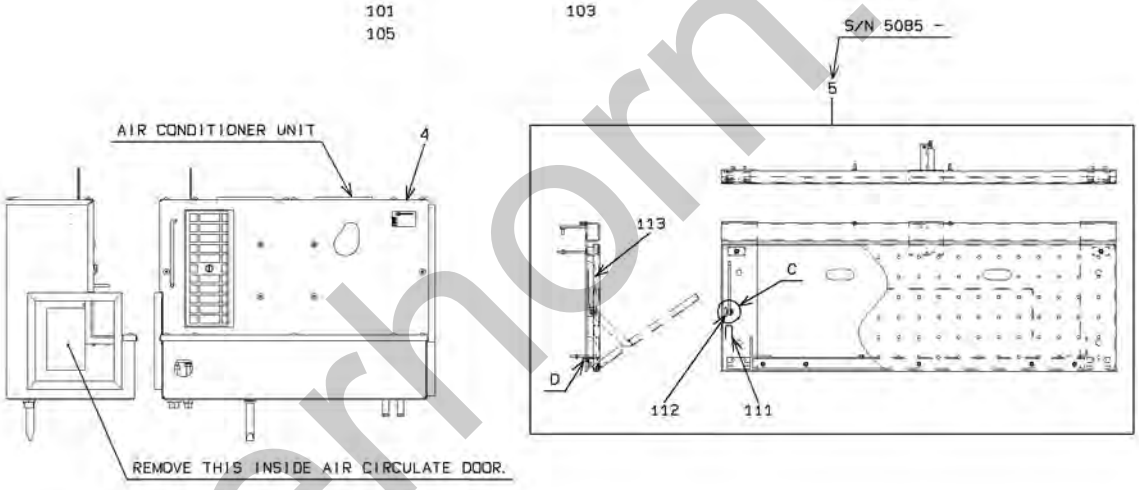

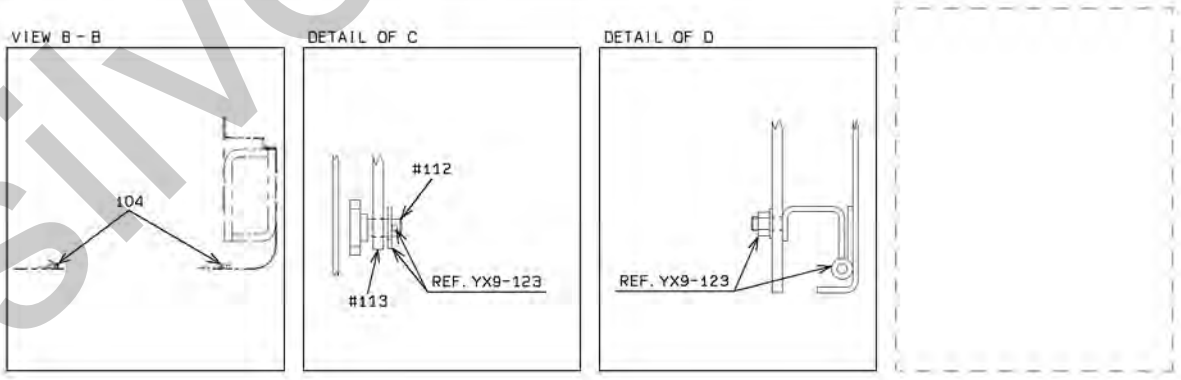

silverhorn.co.uk

CAB ACCESSORIES MOUNT

SYM-BOL	PART NUMBER	PART NAME	UNIT Q,TY	SERIAL (A) - (B)	REMARKS N P D	(A) (B)	(C) (D)	REMARK
4A	03501-54880	AIR CONDITIONER UN	1	5001 -				
5A	37290-30480	DECK	1	5085 -		Y01		
13A	41619-54980	PLATE	1	5001 -				
21A	40205-60010-7	FAN ASSY	1	5001 -				REF.930
22A	31523-70190	COUPLER,CABLE	1	5001 -				
23A	35930-70350	TERMINAL	2	5001 -				
24A	30930-23820	EDGE	1	5053 -				
31A	43780-24700	BOSS	4	5001 -				WELDING
41A	33193-36060	CABLE ASSY	1	5001 - 5052				
41B	33193-48670	CABLE ASSY	1	5053 -	C			
42A	43550-60100	HOLDER	1	5001 - 5052				
42B	65801-08016	BUSHING,ELASTIC	1	5053 -	B			
43A	03501-72700	CAB ASSY,ROPS	1	5053 -				
51A	61802-10025	BOLT,FLANGED	6	5001 -				
52A	62480-21101	NUT,FLANGED	6	5001 -				
53A	61802-10020	BOLT,FLANGED	4	5001 -				
61A	62256-51610	SCREW	1	5001 - 5052	D			
62A	62721-06100	WASHER,SPRING	1	5001 - 5052	D			
71A	61802-10020	BOLT,FLANGED	4	5001 -				
101A	36430-23990	DUCT	1	5001 -				
102A	43111-23560	HOSE,AIR	1	5001 -				
103A	69002-12700	BAND,HOSE	2	5001 -				
104A	03501-55680	CAB ASSY,ROPS	1	5001 -				
105A	31990-25980	GASKET	1	5001 -				
111A	03501-76250	COVER	1	5085 -		01		
112A	03501-76260	BRACKET	1	5085 -		01		
113A	03501-76270	PLATE	1	5085 -		01		

silverhorn.co.uk

FAN ASSY

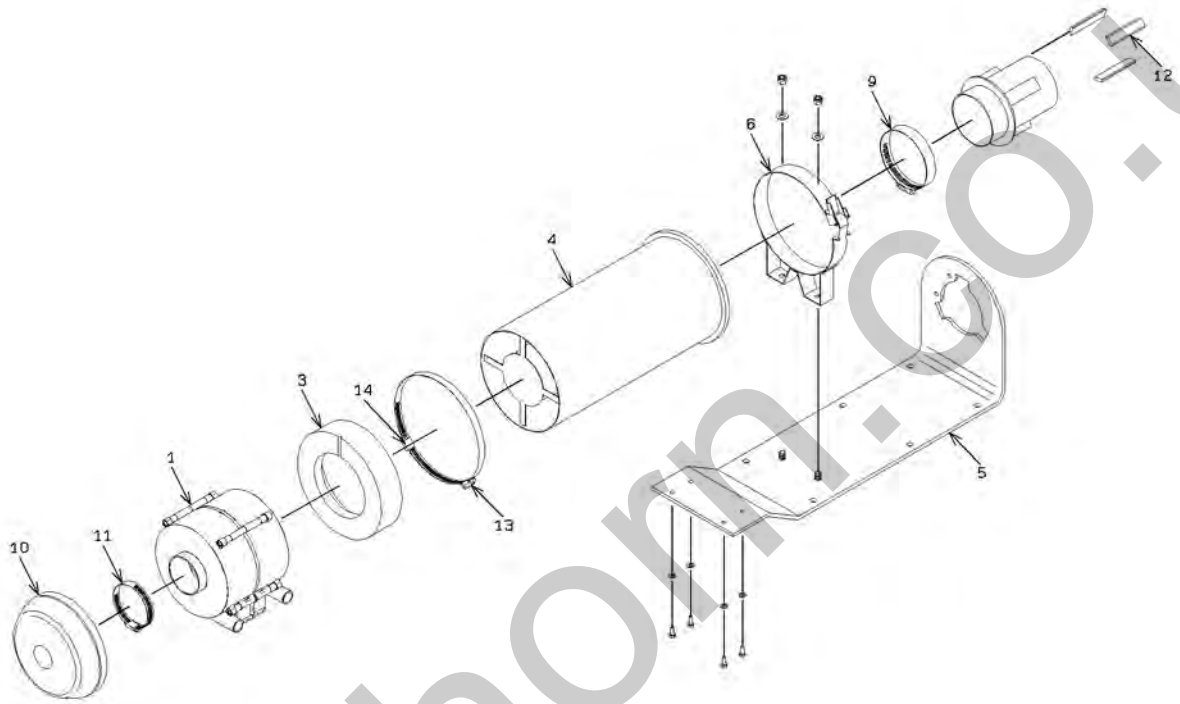

silverhorn.co.uk

FAN ASSY

SYM-BOL	PART NUMBER	PART NAME	UNIT Q,TY	SERIAL (A) - (B)	REMARKS N P D	(A) (B)	(C) (D)	REMARK
000A	40205-60010-7	FAN ASSY	1	5001 -				
1A	42730-70150-7	PRECLEANER	1	5001 -				
3A	30230-70600-7	ADAPTER	1	5001 -				
4A	40330-70640-7	FILTER	1	5001 -				
5A	41600-71870-7	PLATE	1	5001 -				
6A	32920-70990-7	CLAMP	1	5001 -				
9A	32920-71000-7	CLAMP	1	5001 -				
10A	32210-72810-7	CAP	1	5001 -				
11A	32920-70960-7	CLAMP	1	5001 -				
12A	44820-70840-7	RUBBER	1	5001 -				
13A	32920-70980-7	CLAMP	1	5001 -				
14A	32920-70970-7	CLAMP	1	5001 -				

silverhorn.co.uk

CAB OPTION PARTS

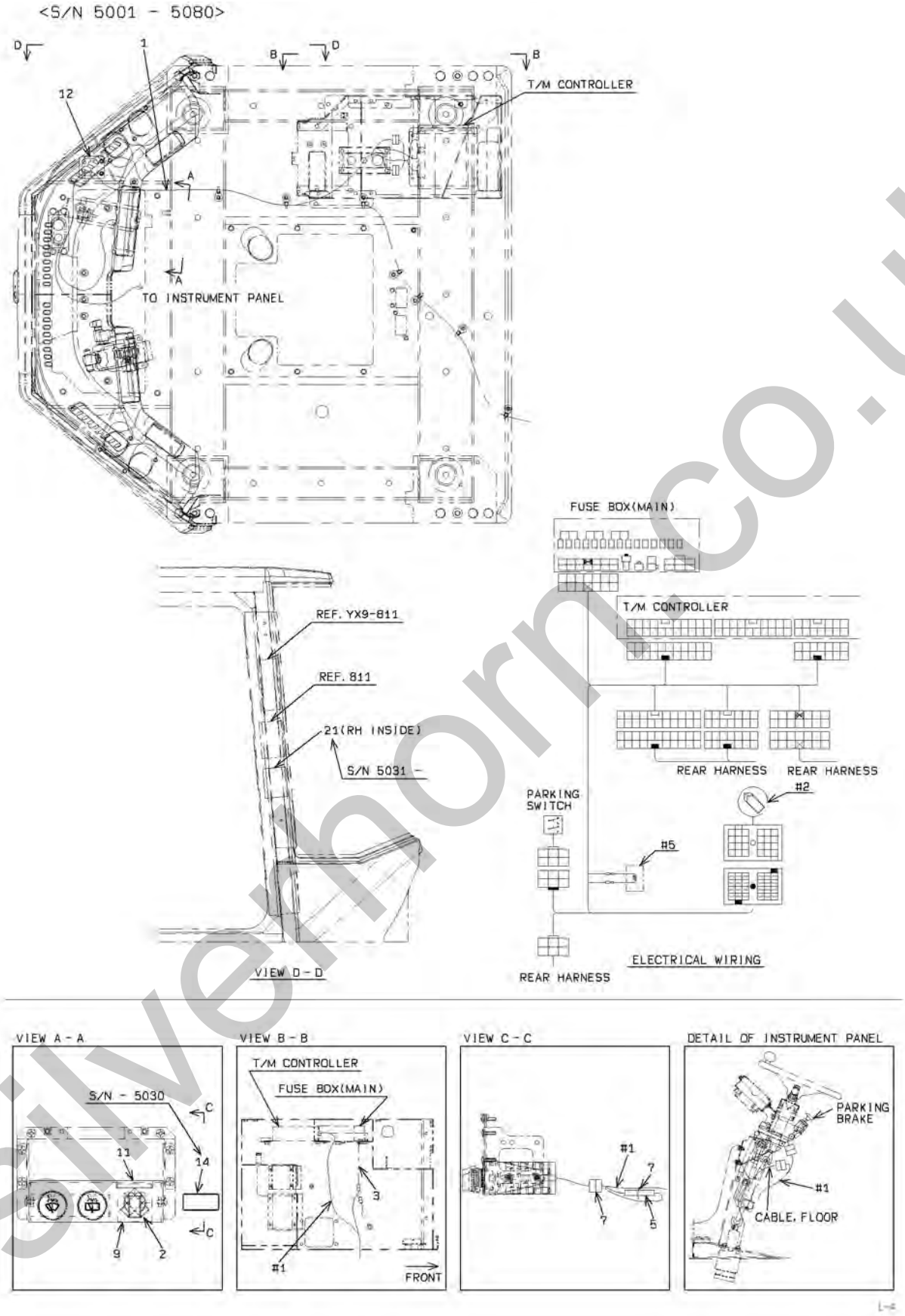

silverhorn.co.uk

CAB OPTION PARTS

<S/N 5081 - >

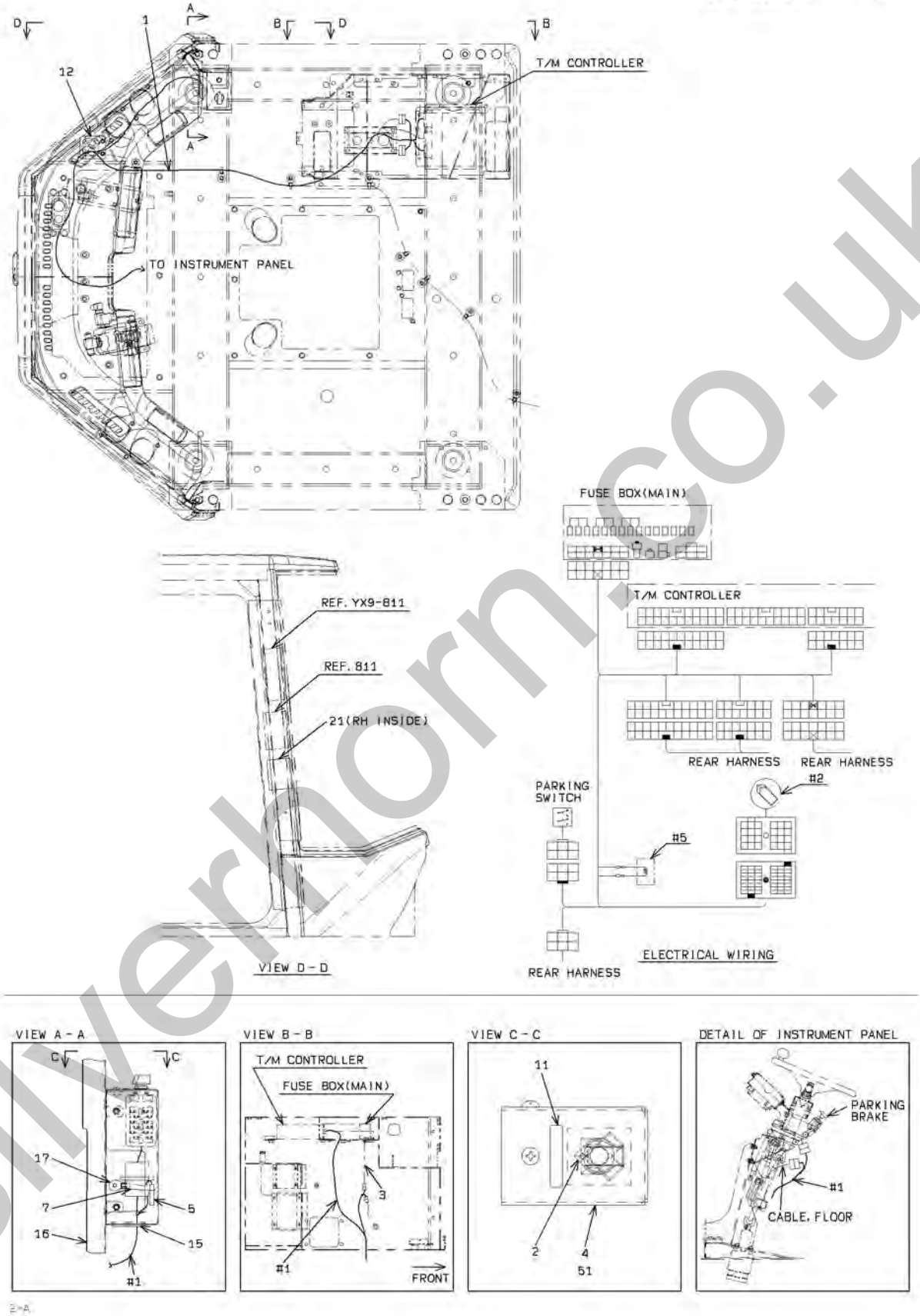

silverhorn.co.uk

CAB OPTION PARTS

SYM-BOL	PART NUMBER	PART NAME	UNIT Q,TY	SERIAL (A) - (B)	REMARKS N P D	(A) (B)	(C) (D)	REMARK
1A	33193-35670	CABLE ASSY	1	5001 - 5080				
1B	33193-50110	CABLE ASSY	1	5081 -	B			
2A	35020-20870	SWITCH ASSY	1	5001 -				
3A	03501-56630	FUSE	1	5001 -				24V10A
4A	41750-42960	PLATE	1	5081 -				
5A	45531-20120	RESISTOR	1	5001 -				
7A	32923-70100	CLAMP,HOSE	2	5001 -				L=382
9A	41620-26340	PLATE	1	5001 - 5080	D			
11A	44770-52750	LABEL	1	5001 -				
12A	33057-21340	GROMMET	1	5001 -				
14A	44770-52230	LABEL	1	5001 - 5030	D			
15A	65801-31032	BUSHING,ELASTIC	1	5081 -				
16A	03501-74200	PLATE	1	5081 -				
17A	32923-70120	CLAMP,HOSE	1	5081 -				FR M8
21A	44841-21060	LABEL	1	5031 - 5032				
21B	44841-21070	LABEL	1	5033 -	C			
51A	62256-51816	SCREW	3	5081 -				

silverhorn.co.uk

MEMO

silverhorn.co.uk

AIR DUCT GROUP - FLOOR BOARD

(NOTE):REFER TO STANDARD CATALOG(REF. YX9-943, REF. YW9-951).

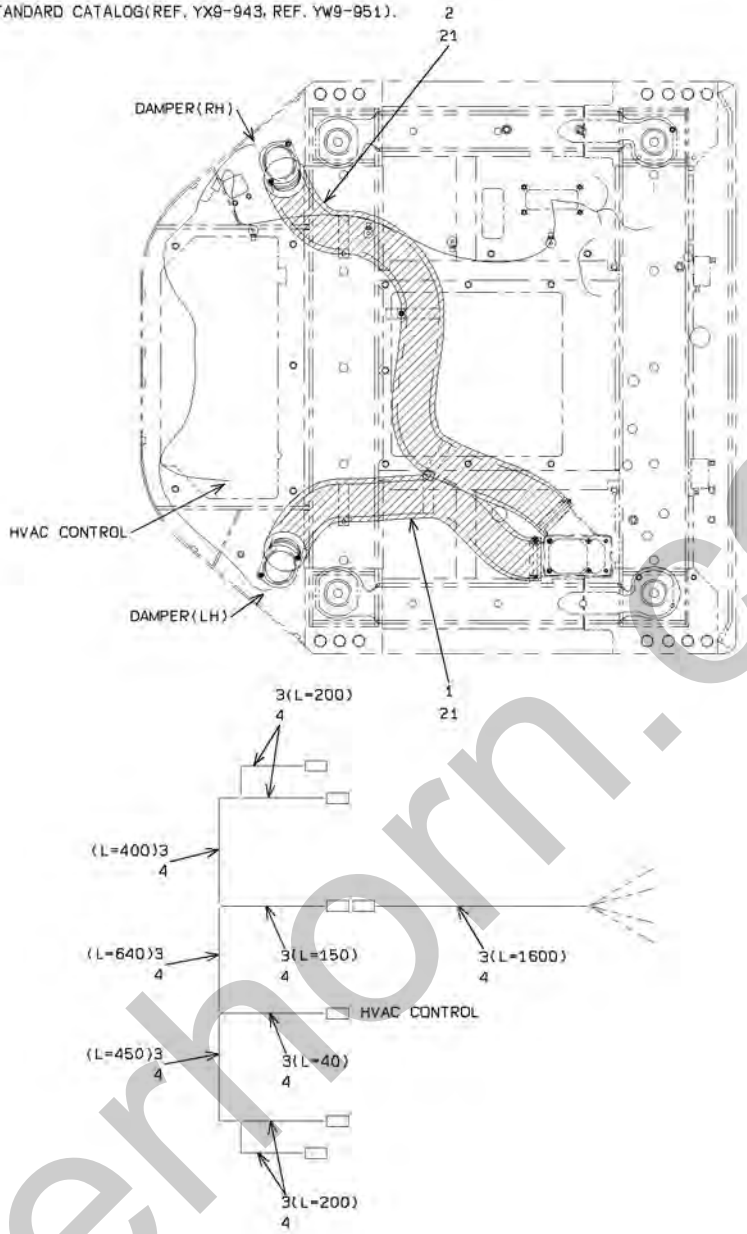

silverhorn.co.uk

AIR DUCT GROUP - FLOOR BOARD

SYM-BOL	PART NUMBER	PART NAME	UNIT Q,TY	SERIAL (A) - (B)	REMARKS N P D	(A) (B)	(C) (D)	REMARK
1A	30610-20790-7	INSULATOR	1	5001 -				
2A	30610-20840-7	INSULATOR	1	5001 -				
3A	30610-20760-7	INSULATOR	1	5001 -				L=4080
4A	37014-70080-7	TAPE,INSULATION	1	5001 -				
21A	32923-70150	CLAMP,HOSE	A/R	5001 -				L=382

silverhorn.co.uk

LIFT ARM GROUP

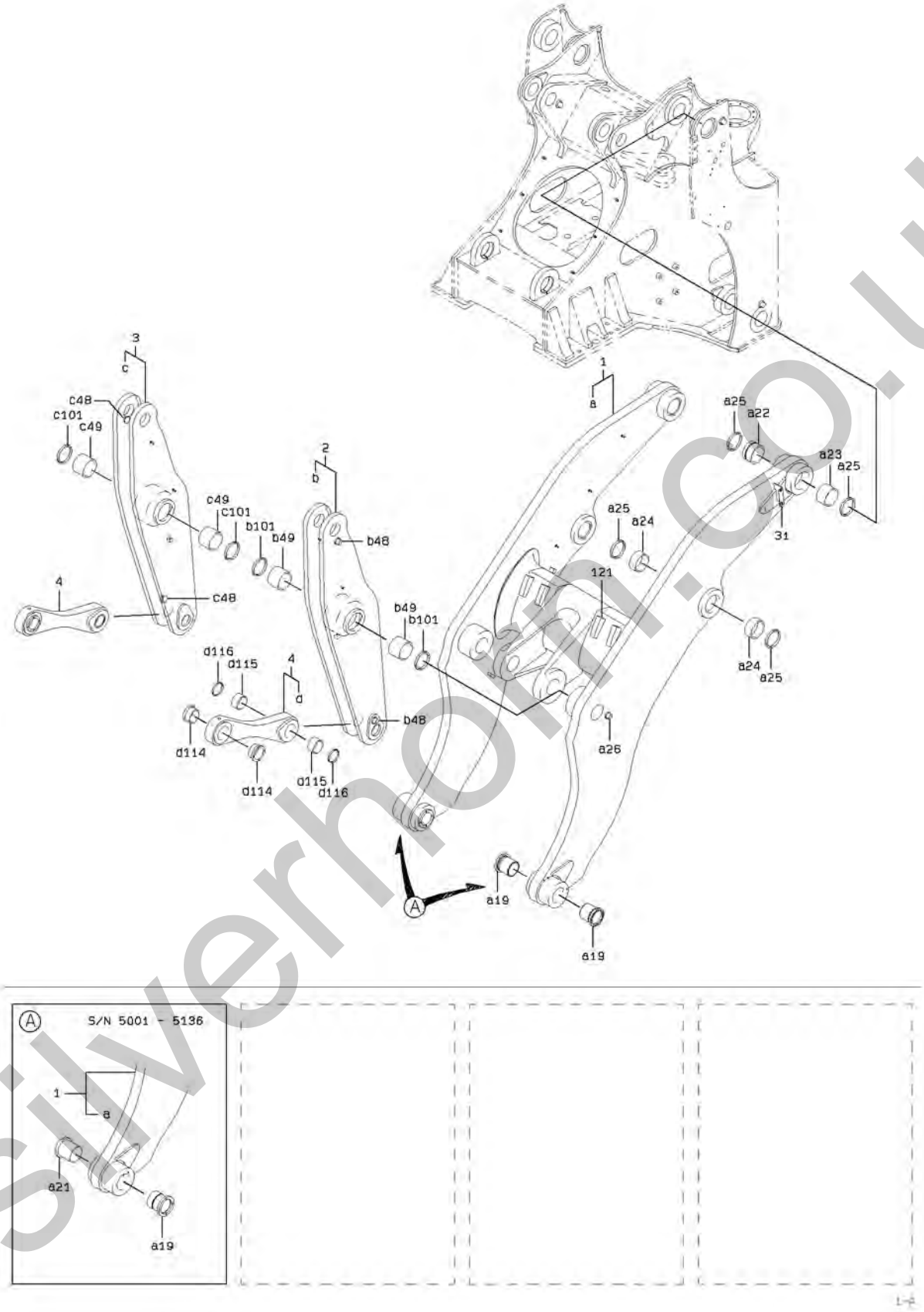

silverhorn.co.uk

LIFT ARM GROUP

SYM-BOL	PART NUMBER	PART NAME	UNIT Q,TY	SERIAL (A)	-	(B)	REMARKS N P D	(A)	(B)	(C)	(D)	REMARK
1A	30040-23530	ARM ASSY,LIFT	1	5001	-	5034		Y01				
1B	30040-24020	ARM ASSY,LIFT	1	5035	-	5136	C	Y01				
1C	30040-25120	ARM ASSY,LIFT	1	5137	-		C	Y01				
2A	45610-22890	LEVER ASSY	1	5001	-	5034			Y02			FR LH
2B	45610-23280	LEVER ASSY	1	5035	-		C		Y02			FR LH
3A	45610-22900	LEVER ASSY	1	5001	-	5034			Y02			FR RH
3B	45610-23290	LEVER ASSY	1	5035	-		C		Y02			FR RH
4A	45125-21400	LINK,BUCKET	2	5001	-					Y03		
19A	40840-25440	BUSHING	2	5001	-	5034						
19B	40840-25910	BUSHING	2	5035	-	5136	C	01				
19C	40840-26210	BUSHING	4	5137	-		B	01				
21A	40840-25450	BUSHING	2	5001	-	5034		01				
21B	40840-25920	BUSHING	2	5035	-	5136	C D	01				
22A	40840-20800	BUSHING	2	5001	-			01				
23A	63422-48780	BUSHING	2	5001	-			01				
24A	63422-48540	BUSHING	4	5001	-			01				
25A	65051-02510	SEAL,DUST	8	5001	-			01				
26A	41621-20340	BOSS	2	5001	-			01				WELDING
31A	41608-33660	PLATE	1	5001	-							WELDING
48A	41621-20340	BOSS	2	5001	-					02		WELDING
49A	63422-48980	BUSHING	2	5001	-	5034				02		
49B	40840-25930	BUSHING	2	5035	-		C			02		
101A	65051-02510	SEAL,DUST	2	5001	-					02		
114A	40840-20850	BUSHING	2	5001	-						03	
115A	63422-45490	BUSHING	2	5001	-						03	
116A	65051-01906	SEAL,DUST	2	5001	-						03	
121A	41600-25840	PLATE	4	5001	-							WELDING

silverhorn.co.uk

PIN MOUNT

(NOTE):REFER TO STANDARD CATALOG(REF. YX9-103) FOR NO SYMBOL PARTS.

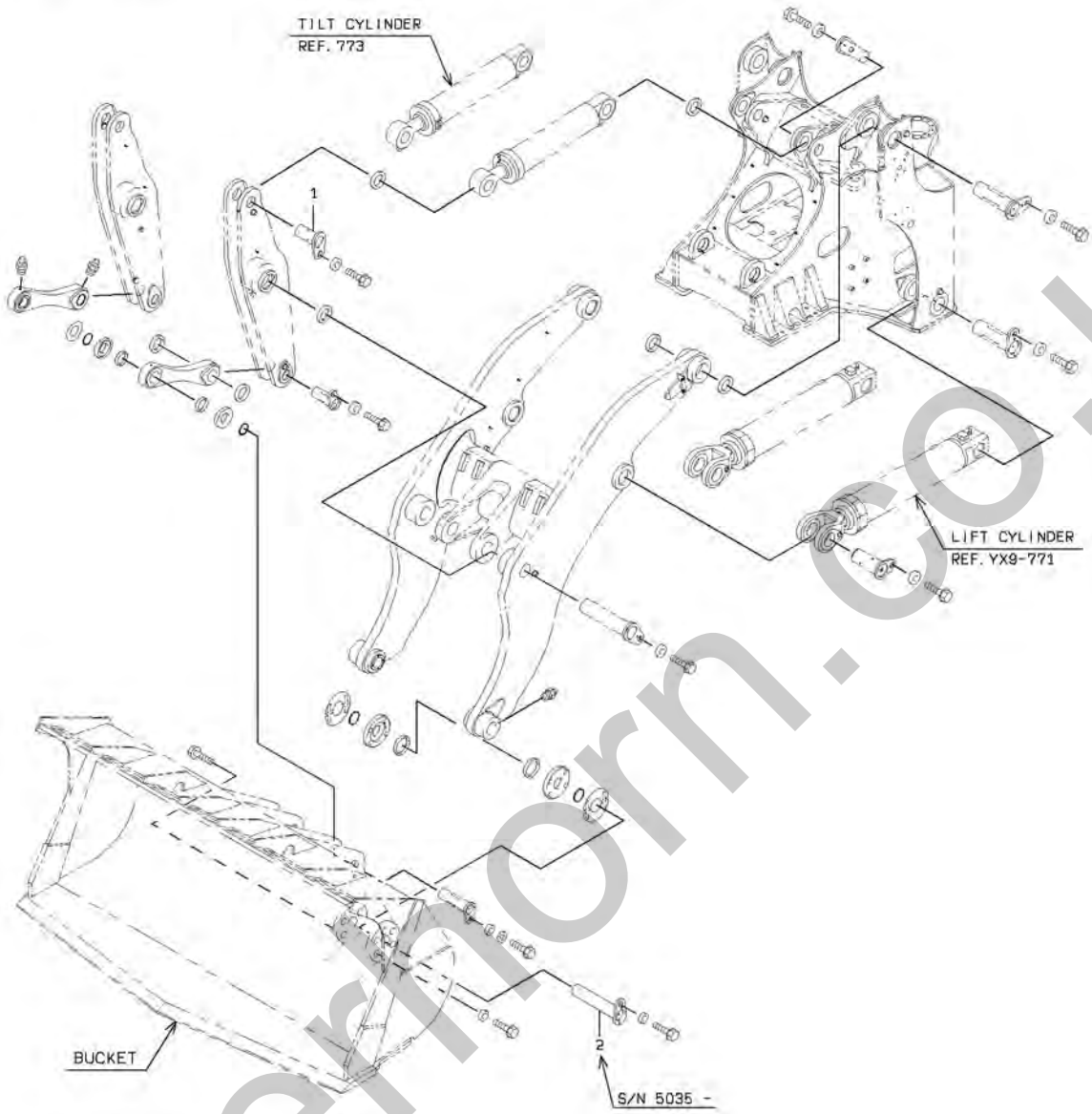

silvermorn.co.uk

PIN MOUNT

SYM-BOL	PART NUMBER	PART NAME	UNIT Q,TY	SERIAL (A) - (B)	REMARKS N P D	(A) (B)	(C) (D)	REMARK
1A	40000-40550	PIN	2	5001 -				D=100X213L
2A	40000-42220	PIN	2	5035 -				D=100X493L

silverhorn.co.uk

REAR CHASSIS GROUP

(NOTE):REFER TO STANDARD CATALOG(REF. YX9-105) FOR NO SYMBOL PARTS.

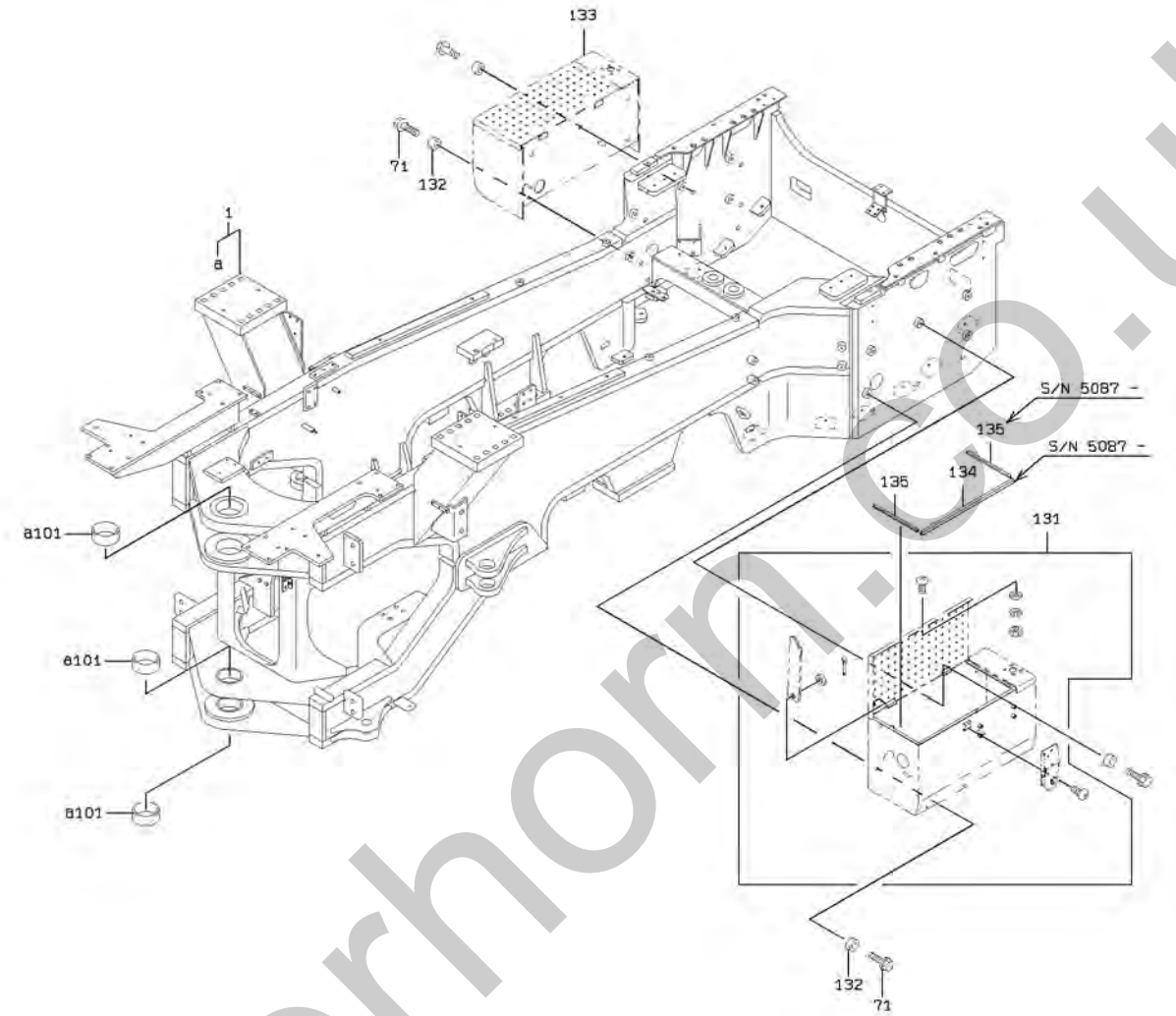

silverhorn.co.uk

REAR CHASSIS GROUP

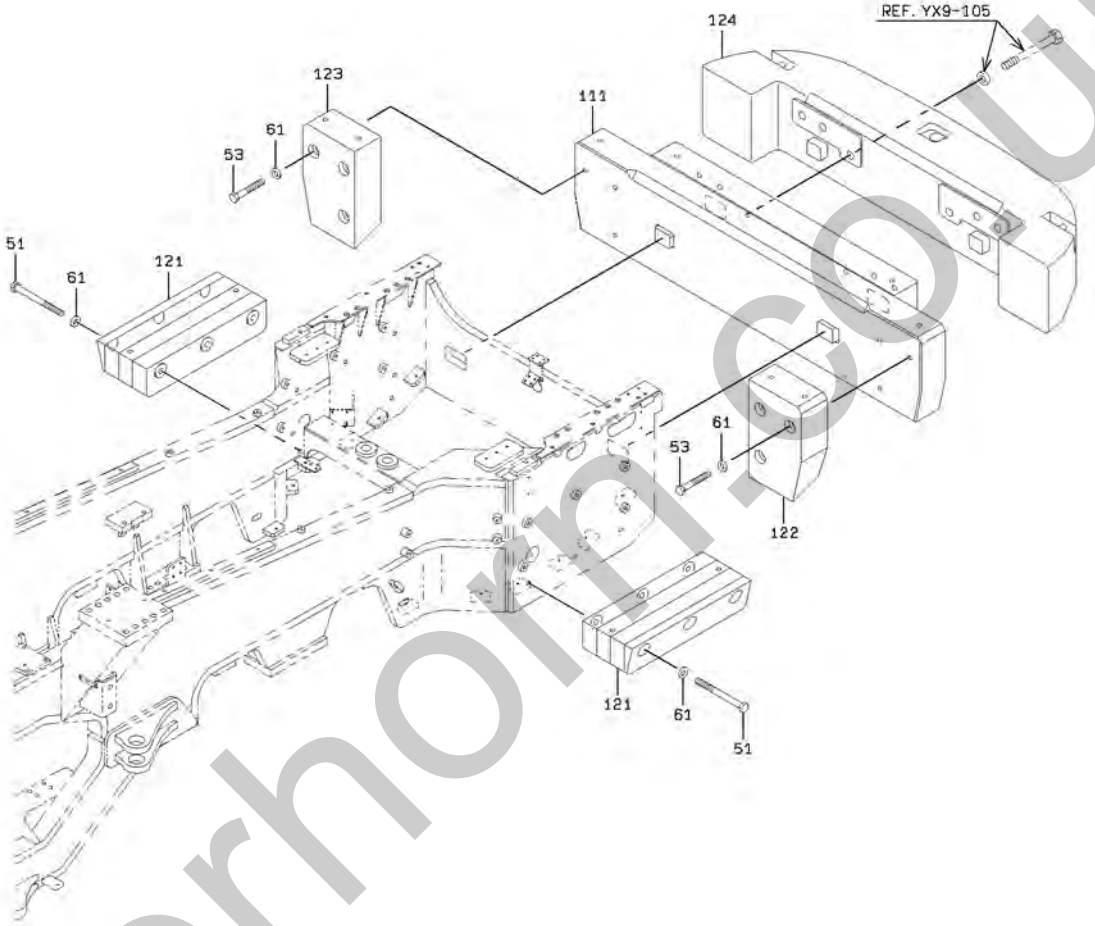

silverhorn.co.uk

REAR CHASSIS GROUP

SYM-BOL	PART NUMBER	PART NAME	UNIT Q,TY	SERIAL (A) - (B)	REMARKS N P D	(A) (B)	(C) (D)	REMARK
1A	34257-26060	CHASSIS ASSY,REAR	1	5001 - 5066		Y01		
1B	34257-26820	CHASSIS ASSY,REAR	1	5067 - 5114	B	Y01		
1C	34257-27060	CHASSIS ASSY,REAR	1	5115 -	B	Y01		
51A	61033-24350	BOLT	6	5001 -				
53A	61033-24200	BOLT	6	5001 -				
61A	46011-21980	WASHER,PLANE	12	5001 -				
71A	61802-16040	BOLT,FLANGED	4	5001 -				
101A	40840-20690	BUSHING	3	5001 -		01		
111A	30780-24020	WEIGHT	1	5001 -				
121A	30780-24010	WEIGHT	2	5001 -				
122A	41619-35570	PLATE	1	5001 -				FR LH
123A	41619-40890	PLATE	1	5001 -				FR RH
124A	30780-23260-7	WEIGHT	1	5001 -				
131A	03501-49480	BOX	1	5001 - 5086				FR LH
131B	03501-77120	BOX	1	5087 -	B			FR LH
132A	35700-20660	SPACER	4	5001 -				
133A	03501-75820	BOX	1	5001 - 5086				FR RH
133B	03501-77130	BOX	1	5087 -	B			FR RH
134A	34041-25450	STRIP, SEAL	2	5087 -				
135A	34041-25890	STRIP, SEAL	4	5087 -				

silverhorn.co.uk

MEMO

silverhorn.co.uk

CONTROL BOX COVER MOUNT

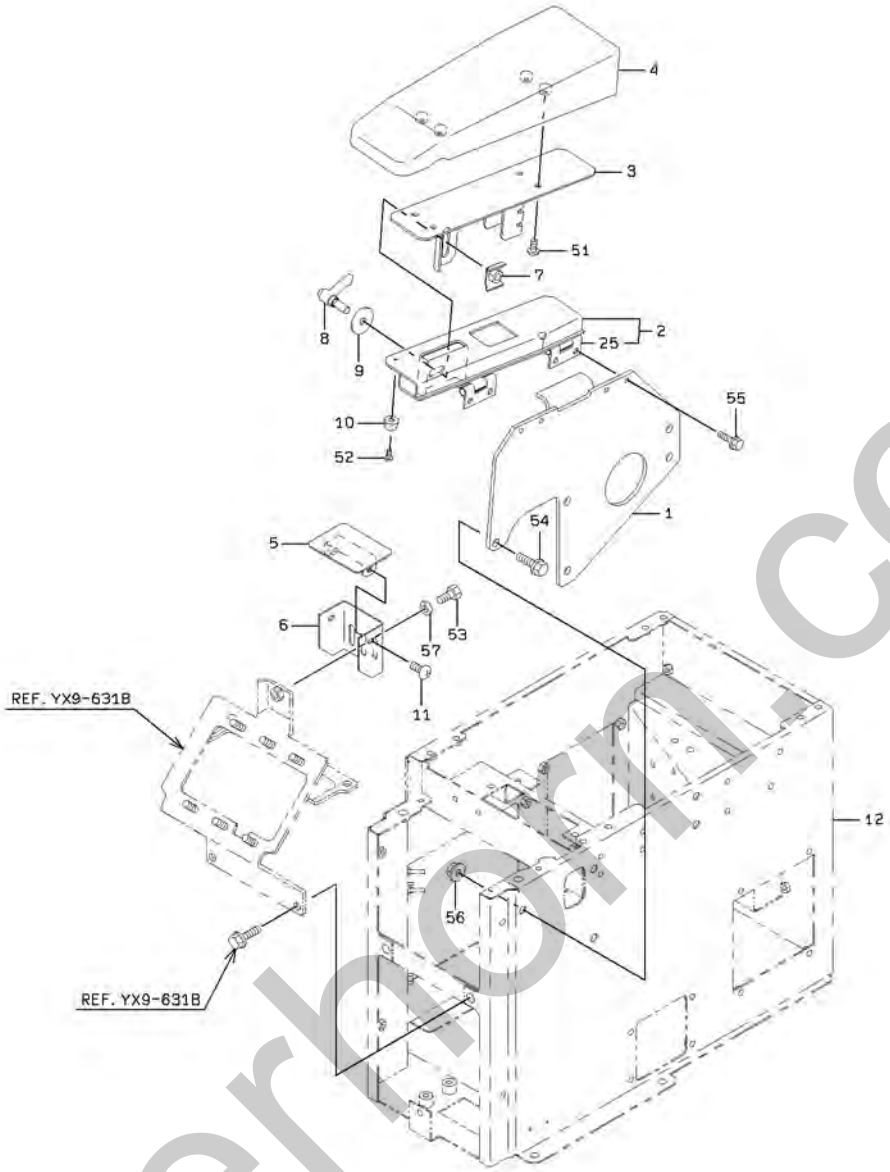

silverhorn.co.uk

CONTROL BOX COVER MOUNT

SYM-BOL	PART NUMBER	PART NAME	UNIT Q,TY	SERIAL (A) - (B)	REMARKS N P D	(A) (B)	(C) (D)	REMARK
1A	40902-44910	BRACKET	1	5001 -				
2A	40902-36050	BRACKET	1	5001 -		Y01		
3A	40902-36060	BRACKET	1	5001 -				
4A	30062-20060	ARMREST	1	5001 -				
5A	41620-46970	PLATE	1	5001 -				
6A	41609-55820	PLATE	1	5001 -				
7A	41620-46980	PLATE	1	5001 -				
8A	45600-24960	LEVER	1	5001 -				
9A	46011-20050	WASHER,PLANE	1	5001 -				
10A	35440-20960	STOPPER	1	5001 -				
11A	35100-20200	SCREW	2	5001 -				
12A	03501-77180	BOX ASSY	1	5001 -				
25A	39890-22570	HINGE	2	5001 -		01		WELDING
51A	62256-51620	SCREW	4	5001 -				
52A	62256-29310	SCREW	1	5001 -				
53A	61033-10020	BOLT	1	5001 -				
54A	61802-10020	BOLT,FLANGED	5	5001 -				
55A	61802-06016	BOLT,FLANGED	4	5001 -				
56A	62480-21101	NUT,FLANGED	5	5001 -				
57A	62710-18101	WASHER,PLANE	1	5001 -				

silverhorn.co.uk

DECK & FENDER GROUP

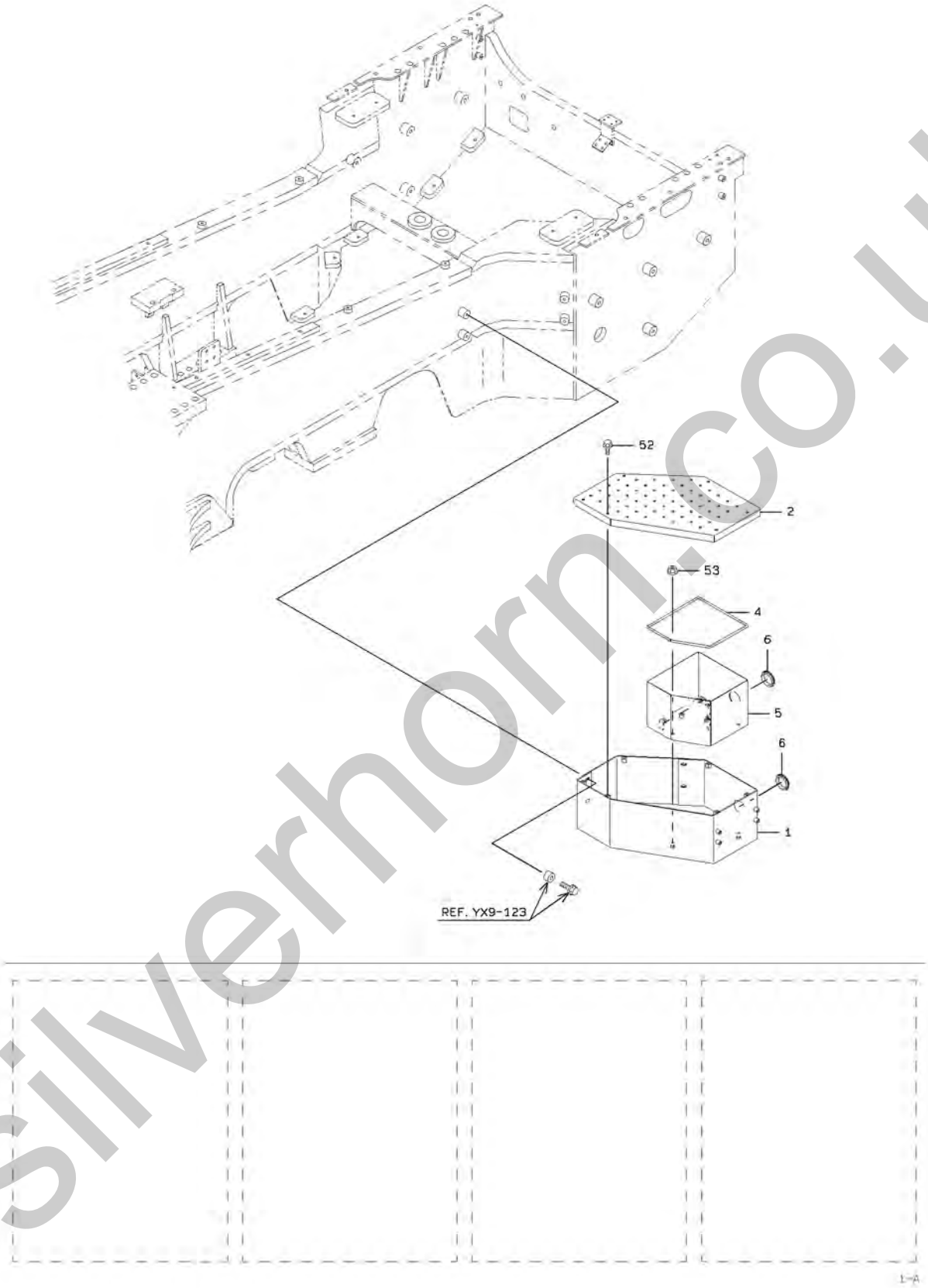

silverhorn.co.uk

DECK & FENDER GROUP

SYM-BOL	PART NUMBER	PART NAME	UNIT Q,TY	SERIAL (A) - (B)	REMARKS N P D	(A) (B)	(C) (D)	REMARK
1A	43800-28960	BOX	1	5001 -				
2A	31200-42020	COVER	1	5001 -				
4A	34041-25090	STRIP, SEAL	1	5001 -				
5A	43800-28970	BOX	1	5001 -				
6A	33057-20960	GROMMET	2	5001 -				
52A	61802-10025	BOLT,FLANGED	6	5001 -				
53A	62480-21101	NUT,FLANGED	2	5001 -				

silverhorn.co.uk

RADIATOR GUARD MOUNT

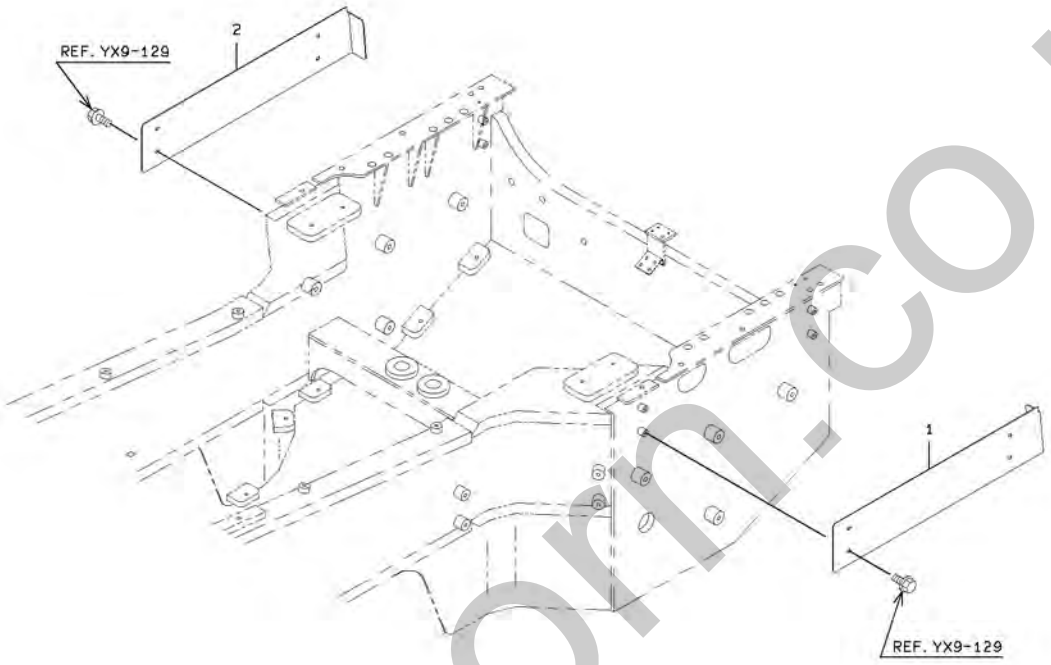

silverhorn.co.uk

RADIATOR GUARD MOUNT

SYM-BOL	PART NUMBER	PART NAME	UNIT Q,TY	SERIAL (A) - (B)	REMARKS N P D	(A) (B)	(C) (D)	REMARK
1A	41619-35620	PLATE	1	5001 -				FR LH
2A	41619-35630	PLATE	1	5001 -				FR RH

silverhorn.co.uk

COVER MOUNT

(NOTE):REFER TO STANDARD CATALOG(REF. YX9-135) FOR NO SYMBOL PARTS.

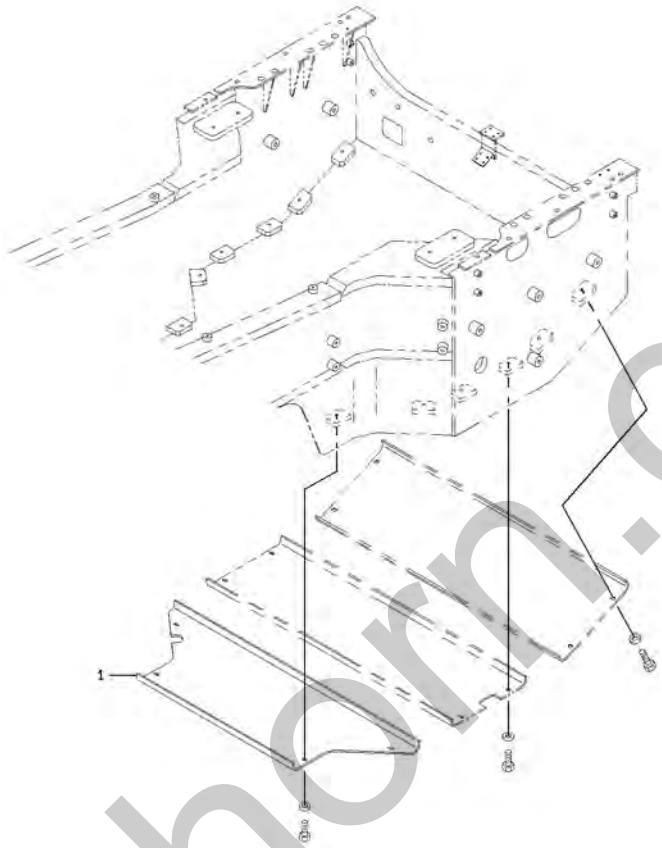

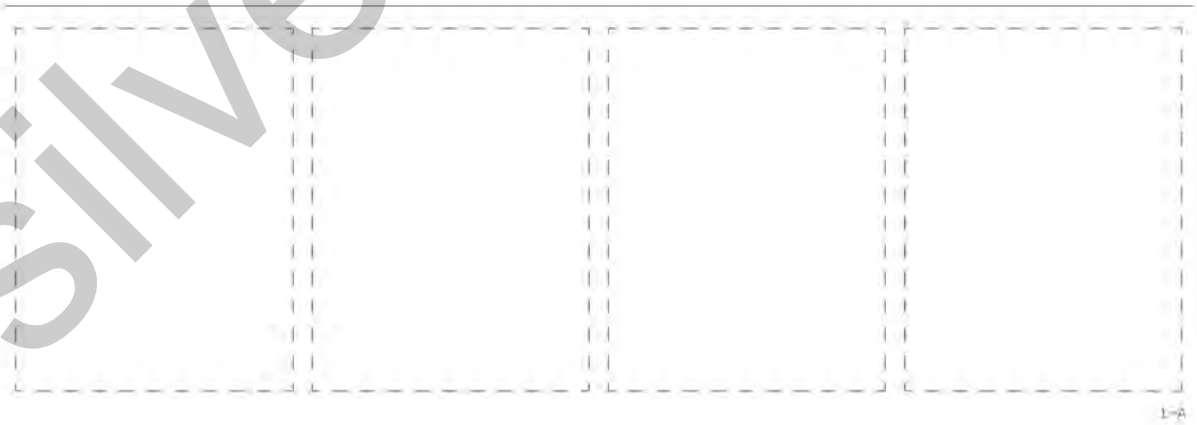

silverhorn.co.uk

COVER MOUNT

SYM-BOL	PART NUMBER	PART NAME	UNIT Q,TY	SERIAL (A) - (B)	REMARKS N P D	(A) (B)	(C) (D)	REMARK
1A	41636-56350	PLATE	1	5001 -				

silverhorn.co.uk

GREASE PIPING (FOR FRONT CHASSIS)

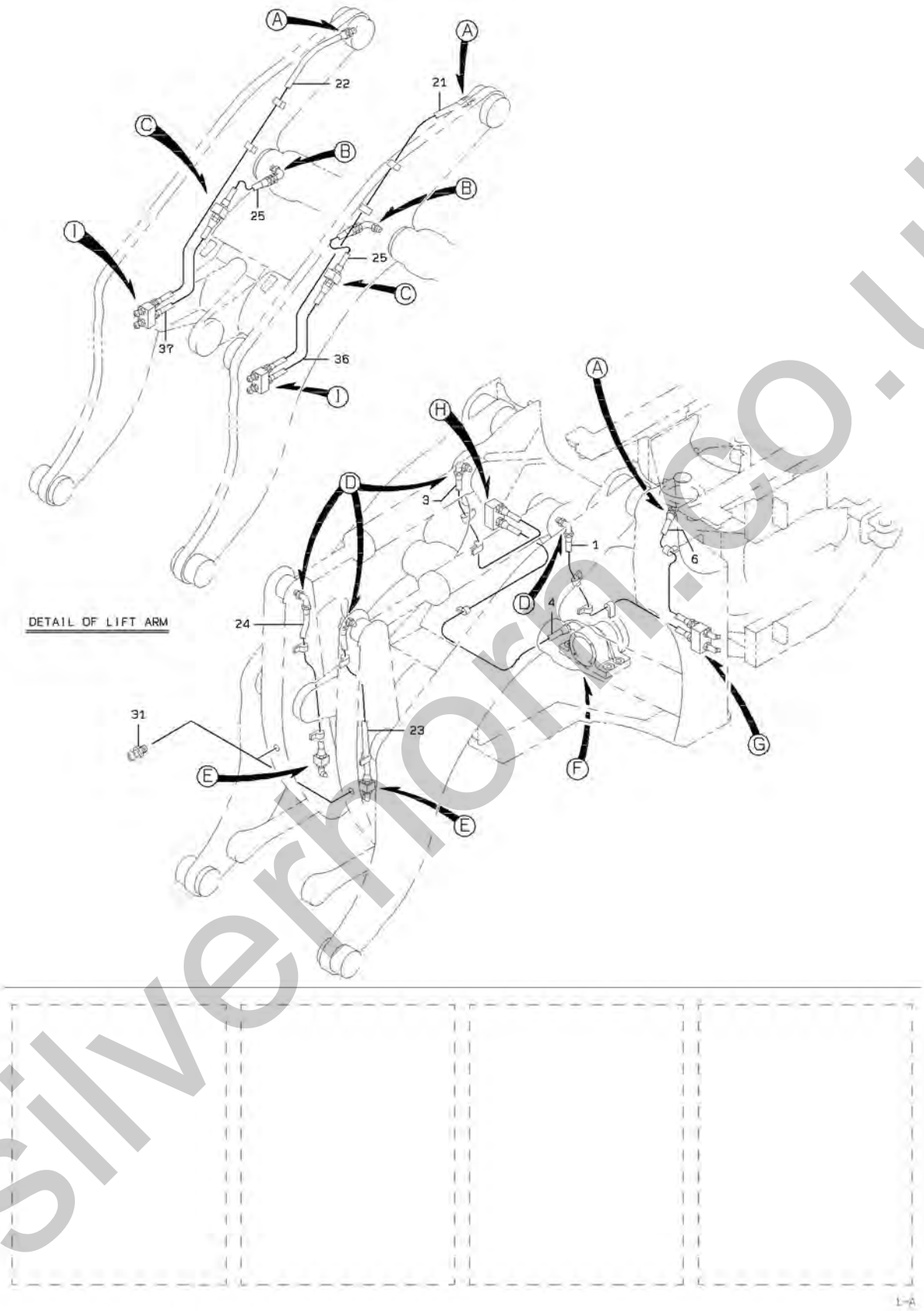

silverhorn.co.uk

GREASE PIPING (FOR FRONT CHASSIS)

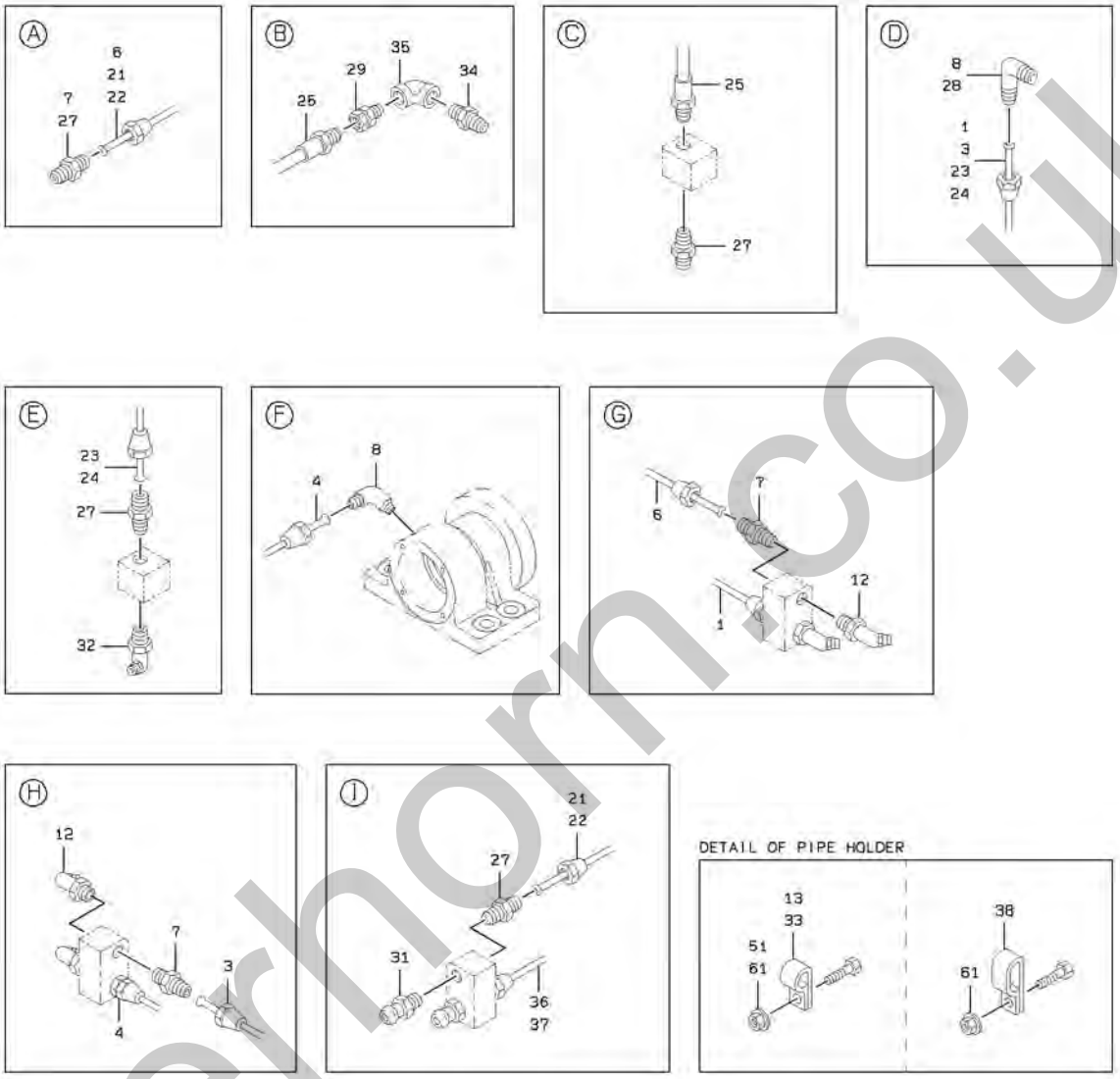

silverhorn.co.uk

GREASE PIPING (FOR FRONT CHASSIS)

SYM-BOL	PART NUMBER	PART NAME	UNIT Q,TY	SERIAL (A) - (B)	REMARKS N P D	(A) (B)	(C) (D)	REMARK
1A	38705-54180	PIPE ASSY,FLARED	1	5001 -				TILT CYL.(LH)
3A	38705-54190	PIPE ASSY,FLARED	1	5001 -				TILT CYL.(RH)
4A	38705-46410	PIPE ASSY,FLARED	1	5001 -				PARKING BRAKE
6A	38705-46420	PIPE ASSY,FLARED	1	5001 -				CENTER PIN(UPP
7A	69100-10600	FLARED FITTING	5	5001 -				
8A	69100-20600	FLARED FITTING,ELB	3	5001 -				
12A	75011-45400	NIPPLE,GREASE	4	5001 -				
13A	72001-10600	HOLDER,PIPE	A/R	5001 -				D=6.35
21A	38705-56090	PIPE ASSY,FLARED	1	5001 -				LIFT ARM(LH)
22A	38705-56100	PIPE ASSY,FLARED	1	5001 -				LIFT ARM(RH)
23A	38705-56070	PIPE ASSY,FLARED	1	5001 -				LEVER(LH)
24A	38705-56080	PIPE ASSY,FLARED	1	5001 -				LEVER(RH)
25A	68612-10060	HOSE,HIGH PRESSURE	2	5001 -				LIFT CYL.
27A	69100-10600	FLARED FITTING	10	5001 -				
28A	69100-20600	FLARED FITTING,ELB	2	5001 -				
29A	88221-00604	ADAPTER,UNION	2	5001 -				
31A	75011-25400	NIPPLE,GREASE	6	5001 -				
32A	75011-45400	NIPPLE,GREASE	2	5001 -				
33A	72001-10600	HOLDER,PIPE	A/R	5001 -				D=6.35
34A	88302-40402	FITTING,NIPPLE	2	5001 -				
35A	88340-12604	FITTING,ELBOW	2	5001 -				
36A	38705-54200	PIPE ASSY,FLARED	1	5001 -				LIFT ARM(LH)
37A	38705-54210	PIPE ASSY,FLARED	1	5001 -				LIFT ARM(RH)
38A	72001-20600	HOLDER,PIPE	A/R	5001 -				D=6.35 X Q'TY
51A	62480-21081	NUT,FLANGED	A/R	5001 -				
61A	62480-21081	NUT,FLANGED	A/R	5001 -				

silverhorn.co.uk

MEMO

silverhorn.co.uk

TRANSMISSION HYDRAULIC LINE

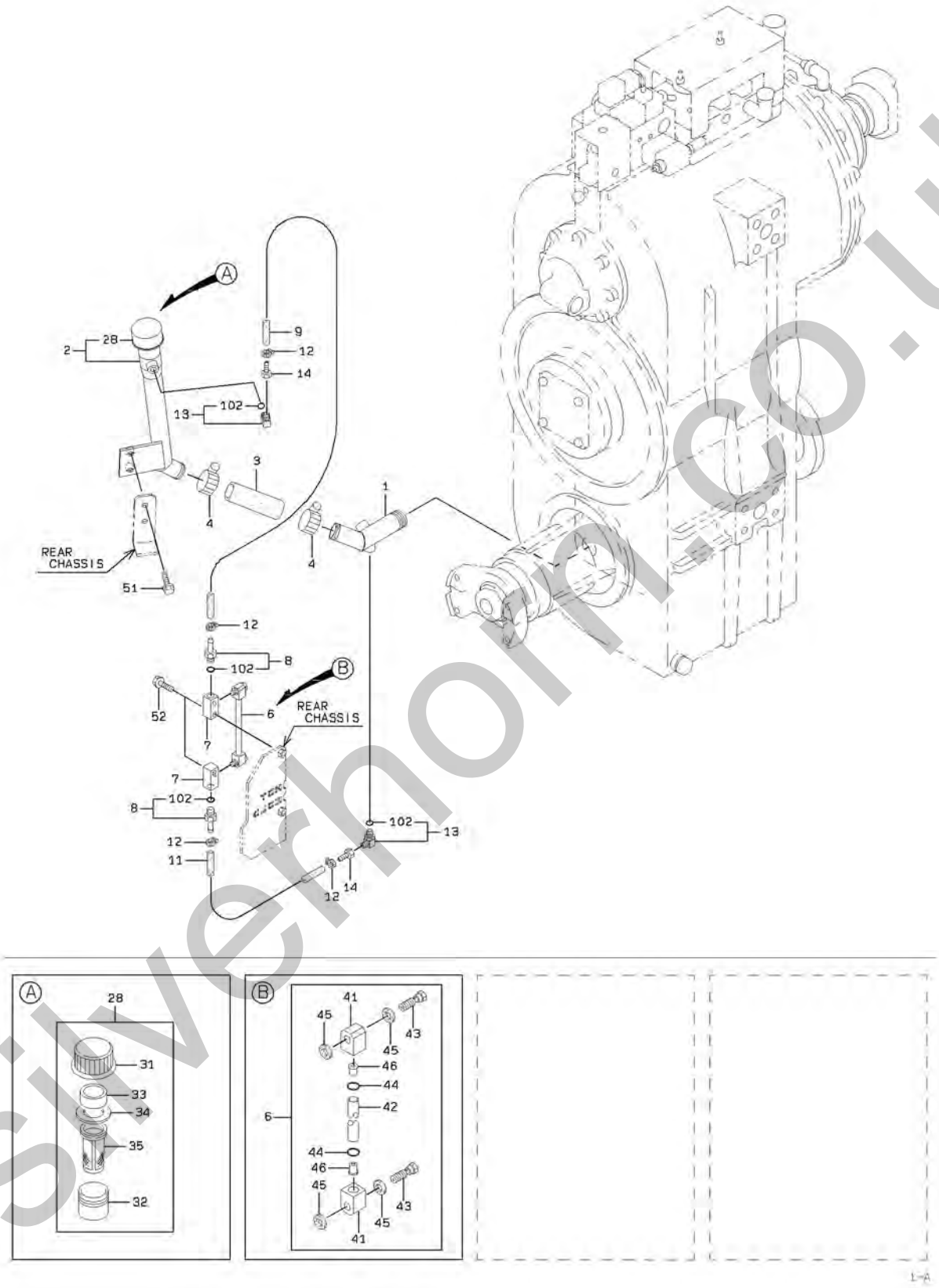

silverhorn.co.uk

TRANSMISSION HYDRAULIC LINE

SYM-BOL	PART NUMBER	PART NAME	UNIT Q,TY	SERIAL (A) - (B)	REMARKS N P D	(A) (B)	(C) (D)	REMARK
1A	38775-33660	PIPE,OIL	1	5001 -				
2A	38775-33650	PIPE,OIL	1	5001 -		Y01		
3A	67040-38000	HOSE,HEAT RESISTIN	1 M	5001 -				L=130
4A	69002-05700	BAND,HOSE	2	5001 -				
6A	33258-20250	GAUGE,LEVEL	1	5001 -			Y03	
7A	41410-30090	BLOCK	2	5001 -				
8A	37715-21350	NIPPLE,HOSE	2	5001 -			Y04	
9A	67040-06000	HOSE,HEAT RESISTIN	1 M	5001 -				L=750
11A	67040-06000	HOSE,HEAT RESISTIN	1 M	5001 -				L=300
12A	69002-01500	BAND,HOSE	4	5001 -				
13A	88241-07104	ADAPTER,ELBOW	2	5001 -			Y04	
14A	88511-03040	NIPPLE,HOSE	2	5001 -				
28A	40312-20020	FILLER ASSY,OIL	1	5001 -		01 Y02		
31A	32210-20560	CAP	1	5001 -		02		
32A	38730-40300	PIPE	1	5001 -		02		
33A	30981-20130	ELEMENT,FILTER	1	5001 -		02		
34A	31990-23060	GASKET	1	5001 -		02		
35A	40330-20220	FILTER	1	5001 -		02		
41A	41410-90010	BLOCK	2	5001 -			03	
42A	36700-90030	TUBE	1	5001 -			03	
43A	43953-90010	BOLT,JOINT	2	5001 -			03	
44A	47131-90010	RING,O	2	5001 -			03	
45A	46023-90010	WASHER,SEAL	4	5001 -			03	
46A	33258-20010	GAUGE,LEVEL	2	5001 -			03	
51A	61802-10020	BOLT,FLANGED	2	5001 -				
52A	61802-10040	BOLT,FLANGED	2	5001 -				
102A	65210-12011	RING,O	1	5001 -			04	

silverhorn.co.uk

FRONT CHASSIS HYDRAULIC LINE (3-WAY PIPING)

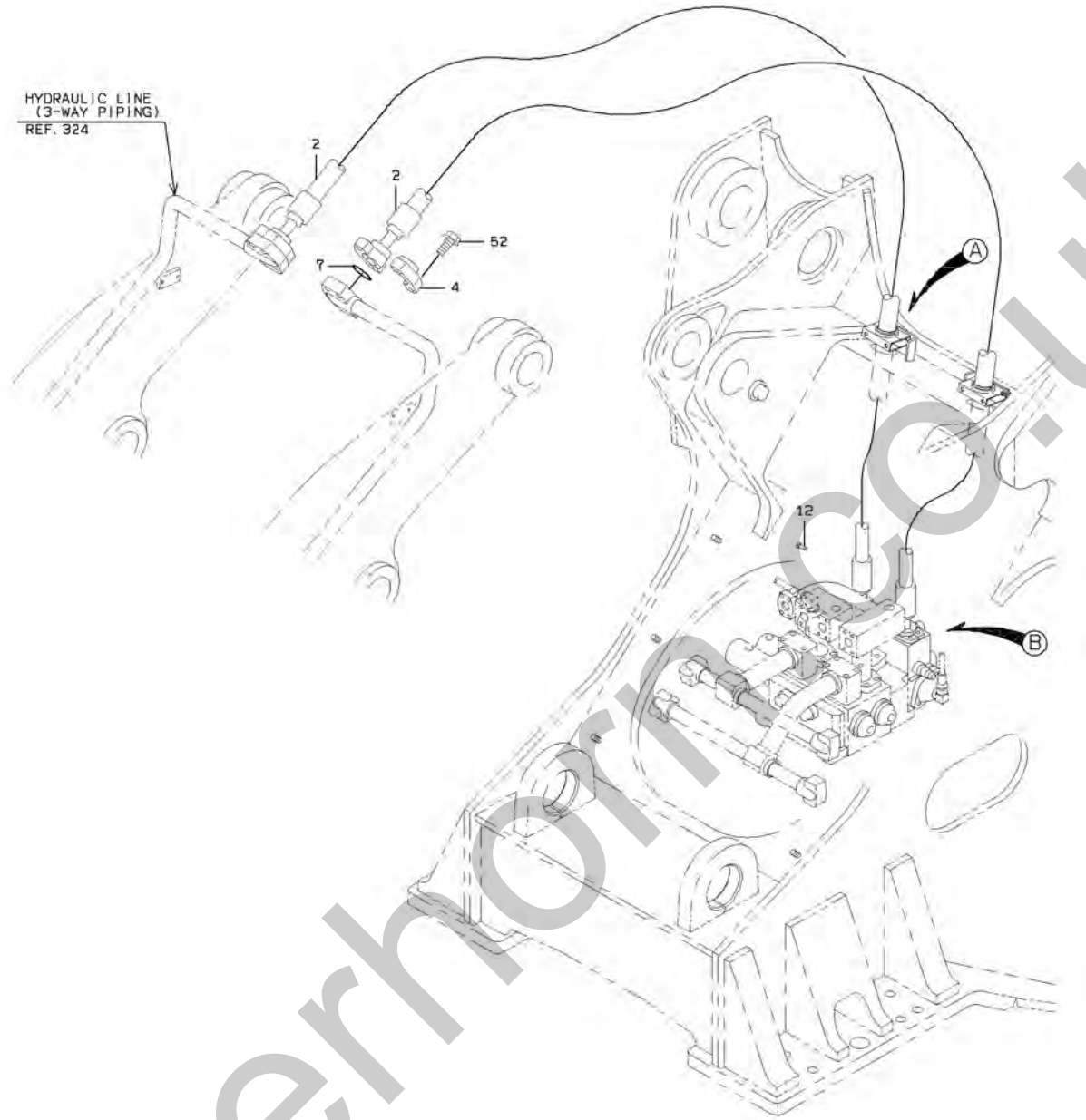

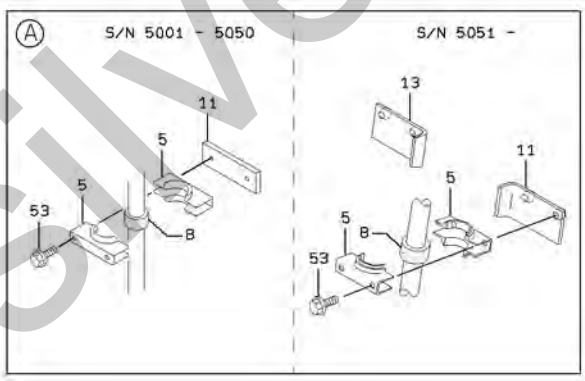

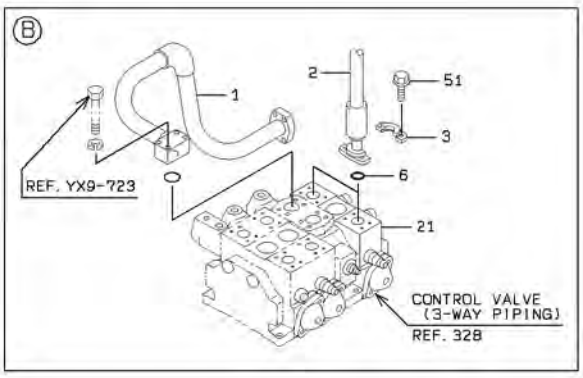

1-A

silverhorn.co.uk

FRONT CHASSIS HYDRAULIC LINE (3-WAY PIPING)

SYM-BOL	PART NUMBER	PART NAME	UNIT Q,TY	SERIAL (A) - (B)	REMARKS N P D	(A) (B)	(C) (D)	REMARK
1A	38755-39440	PIPE,OIL	1	5001 -				
2A	43113-26700	HOSE,HIGH PRESSURE	2	5001 - 5050				
2B	43113-48980	HOSE,HIGH PRESSURE	2	5051 -	C			
3A	69811-38210	FLANGE,SPLIT	4	5001 -				
4A	69811-25210	FLANGE,SPLIT	4	5001 -				
5A	32924-20050	CLAMP,MULTIPLE	4	5001 -				
6A	65220-41003	RING,O	2	5001 -				
7A	65220-31024	RING,O	2	5001 -				
8A	40850-70090	BUSHING,ELASTIC	2	5001 -				
11A	41611-26580	PLATE	2	5001 - 5050				WELDING
11B	41619-55550	PLATE	1	5051 -	C			(WELDING) LH
12A	61033-08020	BOLT	1	5001 -				WELDING
13A	41619-55570	PLATE	1	5051 -				(WELDING) RH
21A	38532-60690	VALVE ASSY,MULTIPL	1	5001 -				REF.328
51A	61802-12030	BOLT,FLANGED	8	5001 -				
52A	61802-10030	BOLT,FLANGED	8	5001 -				
53A	61802-10100	BOLT,FLANGED	4	5001 -				

silverhorn.co.uk

FRONT PILOT HYDRAULIC LINE (3-WAY PIPING)

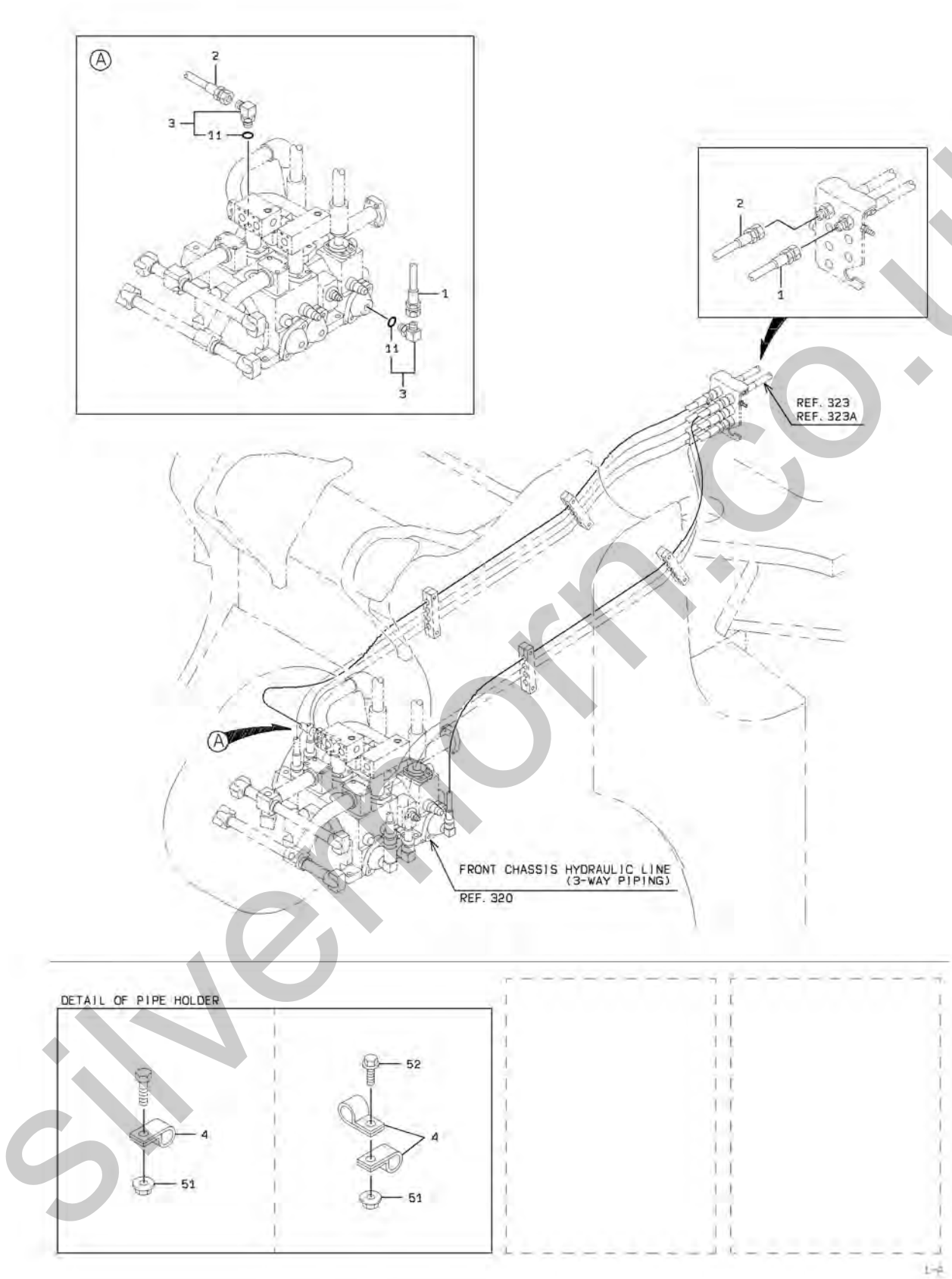

silverthorn.co.uk

FRONT PILOT HYDRAULIC LINE (3-WAY PIPING)

SYM-BOL	PART NUMBER	PART NAME	UNIT Q,TY	SERIAL (A) - (B)	REMARKS N P D	(A) (B)	(C) (D)	REMARK
1A	68055-20180	HOSE,HIGH PRESSURE	1	5001 -				
2A	68055-20195	HOSE,HIGH PRESSURE	1	5001 -				
3A	88241-07106	ADAPTER,ELBOW	2	5001 -		Y01		
4A	72001-11500	HOLDER,PIPE	A/R	5001 -				D=15
11A	65210-12014	RING,O	1	5001 -		01		
51A	62480-21081	NUT,FLANGED	A/R	5001 -				
52A	61802-08020	BOLT,FLANGED	A/R	5001 -				

silverhorn.co.uk

PILOT HYDRAULIC LINE (3-WAY PIPING)

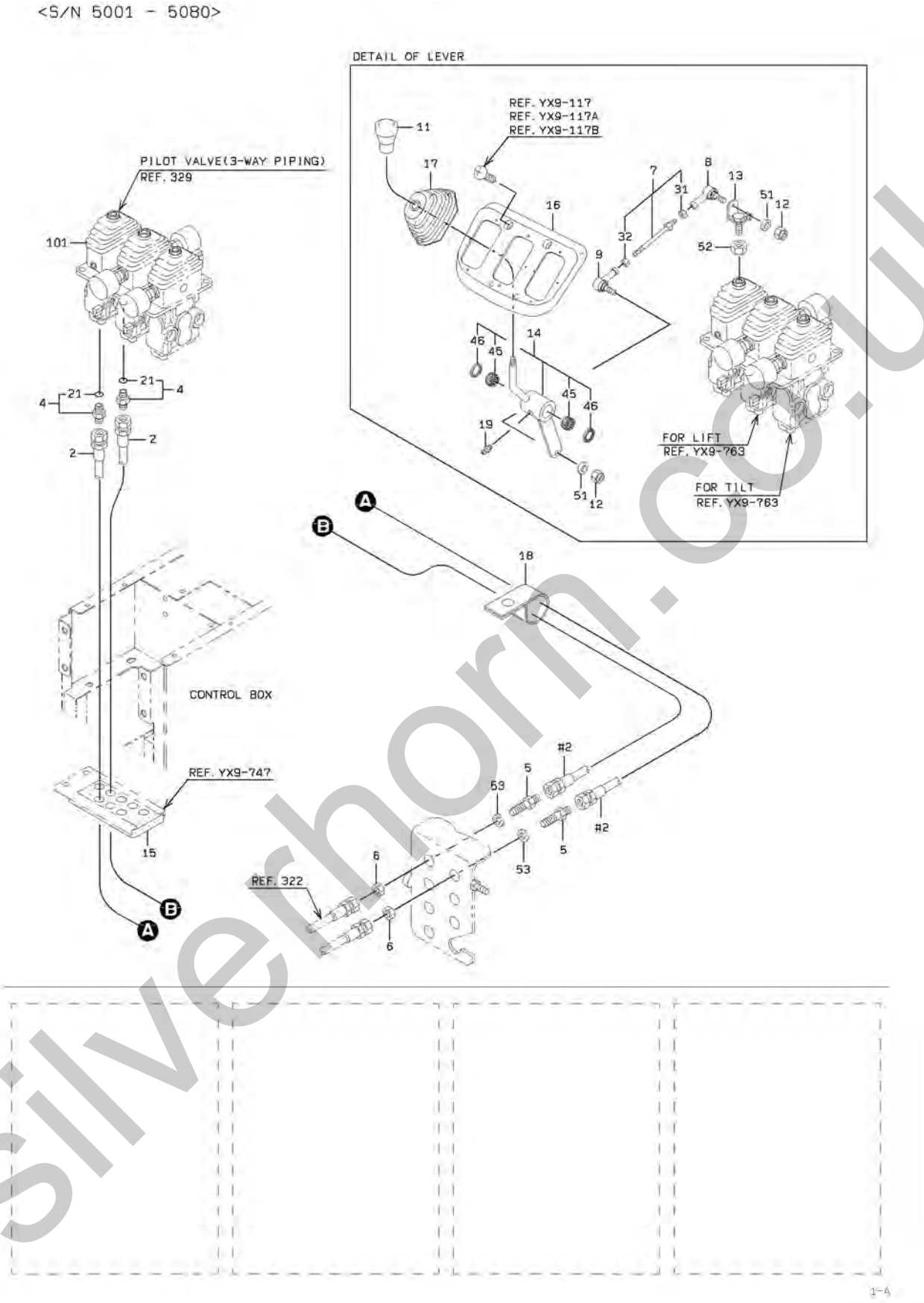

silverhorn.co.uk

PILOT HYDRAULIC LINE (3-WAY PIPING)

SYM-BOL	PART NUMBER	PART NAME	UNIT Q,TY	SERIAL (A) - (B)	REMARKS N P D	(A)	(B)	(C)	(D)	REMARK
2A	43113-23230	HOSE,HIGH PRESSURE	2	5001 - 5080						
4A	88201-06704	ADAPTER	2	5001 - 5080		Y01				
5A	30230-20600	ADAPTER	2	5001 - 5080						
6A	37600-20680	NUT	2	5001 - 5080						
7A	64111-01001	ROD	1	5001 - 5080			Y02			
8A	34950-20010	JOINT,BALL	1	5001 - 5080						
9A	34950-20020	JOINT,BALL	1	5001 - 5080						
11A	37810-60060	KNOB	1	5001 - 5080						
12A	88031-06061	NUT,SELF-LOCKING	2	5001 - 5080						
13A	30020-24600	ARM	1	5001 - 5056						
13B	30020-25840	ARM	1	5057 - 5080	C					
14A	45600-23850	LEVER	1	5001 - 5080				Y03		
15A	33057-20610	GROMMET	1	5001 - 5080						
16A	03501-19200	COVER	1	5001 - 5080						
17A	40790-60070	BOOT	1	5001 - 5080						
18A	72010-62000	HOLDER,HOSE	1	5001 - 5080						D=62
19A	75011-25400	NIPPLE,GREASE	1	5001 - 5080						
21A	65210-12011	RING,O	1	5001 - 5080		01				
31A	62401-81061	NUT	1	5001 - 5080			02			
32A	62401-81067	NUT	1	5001 - 5080			02			
45A	42006-70060	BEARING,NEEDLE	2	5001 - 5080				03		
46A	34000-70030	SEAL	2	5001 - 5080				03		
51A	62701-40061	WASHER,PLANE	2	5001 - 5080						
52A	62402-81121	NUT	1	5001 - 5080						
53A	62721-18100	WASHER,SPRING	2	5001 - 5080						
101A	38560-60320	VALVE,PILOT	1	5001 - 5080						REF.329

silverhorn.co.uk

PILOT HYDRAULIC LINE (3-WAY PIPING)

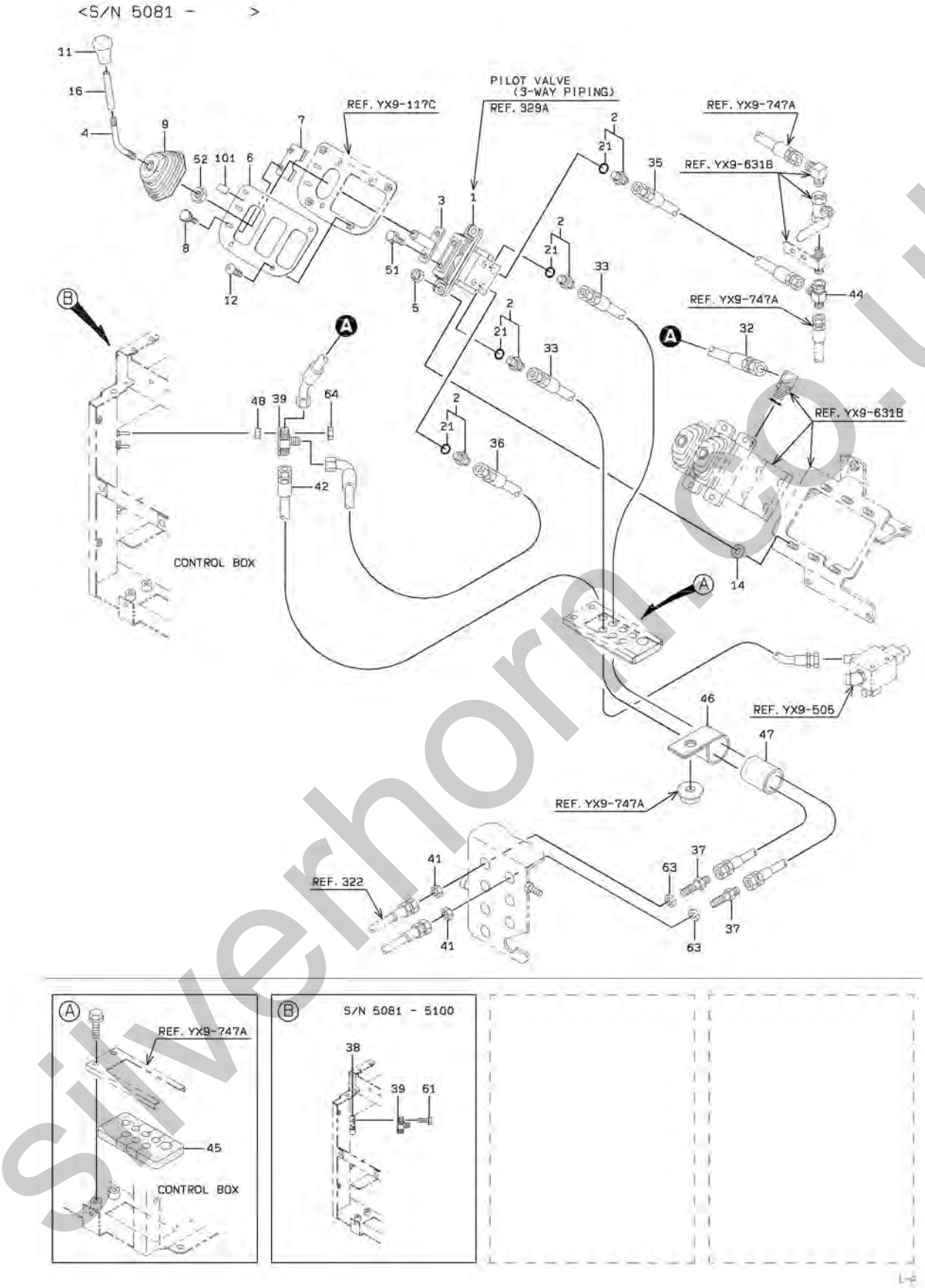

silverhorn.co.uk

PILOT HYDRAULIC LINE (3-WAY PIPING)

SYM-BOL	PART NUMBER	PART NAME	UNIT Q,TY	SERIAL (A) - (B)	REMARKS N P D	(A) (B)	(C) (D)	REMARK
1A	38560-60640	VALVE,PILOT	1	5081 -				REF.329A
2A	88201-06704	ADAPTER	4	5081 -		Y01		
3A	40902-42060	BRACKET	1	5081 -				
4A	45870-28920	ROD	1	5081 -				
5A	88031-06101	NUT,SELF-LOCKING	2	5081 -				
6A	41711-21910	PLATE	1	5081 -				
7A	41750-47380	PLATE	1	5081 -				
8A	35100-20830	SCREW	2	5081 -				
9A	03501-74740	BOOT	1	5081 -				
11A	37810-60060	KNOB	1	5081 -				
12A	35100-20200	SCREW	4	5081 -				
14A	33713-29770	SHEET,RUBBER	2	5081 -				
16A	36733-20200	TUBE,VINYL	1	5081 -				L=85
21A	65210-12011	RING,O	1	5081 -		01		
32A	68045-10022	HOSE,HIGH PRESSURE	1	5081 -				
33A	43113-23770	HOSE,HIGH PRESSURE	2	5081 -				
35A	68055-10025	HOSE,HIGH PRESSURE	1	5081 -				
36A	68035-10023	HOSE,HIGH PRESSURE	1	5081 -				
37A	30230-20600	ADAPTER	2	5081 -				
38A	03501-70400	BOX ASSY	1	5081 - 5100	D			
39A	30246-24450	ADAPTER,TEE	1	5081 -				
41A	37600-20680	NUT	2	5081 -				
42A	43113-37490	HOSE,HIGH PRESSURE	1	5081 -				
44A	30246-23060	ADAPTER,TEE	1	5081 -				
45A	33057-20610	GROMMET	1	5081 -				
46A	72010-73000	HOLDER,HOSE	1	5081 -				D=73
47A	65801-63250	BUSHING,ELASTIC	1	5081 -				
48A	45200-24190	RING	2	5101 - 5132				
48B	45200-29730	RING	2	5133 -	C			
51A	61802-08012	BOLT,FLANGED	2	5081 -				
52A	62403-81121	NUT	1	5081 -				
61A	61802-06012	BOLT,FLANGED	2	5081 - 5100	D			
63A	62721-18100	WASHER,SPRING	2	5081 -				
64A	62480-21061	NUT,FLANGED	2	5101 -				
101A	44771-22590	LABEL KIT	1	5081 -				44770-56040

silverhorn.co.uk

HYDRAULIC LINE (3-WAY PIPING)

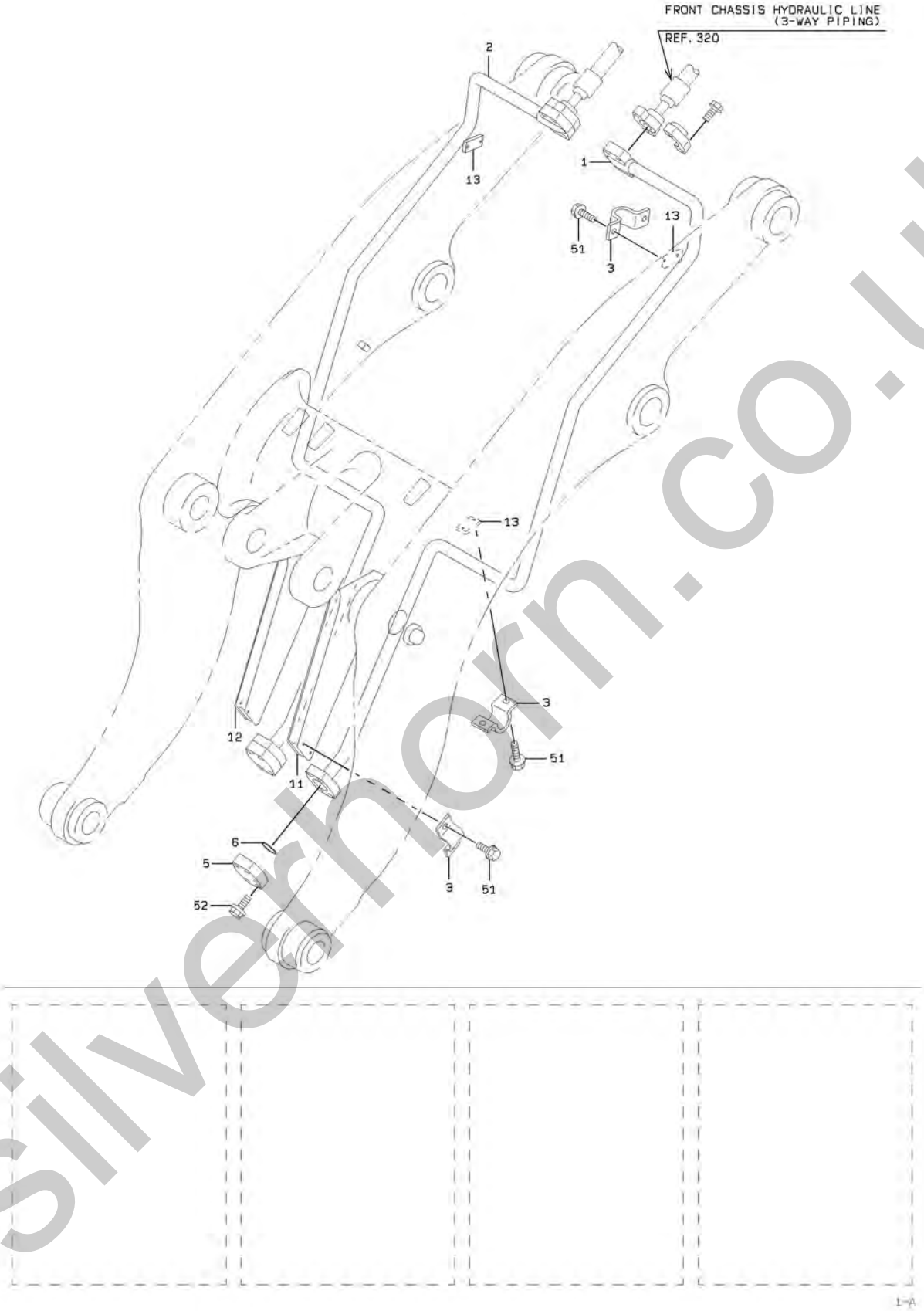

silverhorn.co.uk

HYDRAULIC LINE (3-WAY PIPING)

SYM-BOL	PART NUMBER	PART NAME	UNIT Q,TY	SERIAL (A) - (B)	REMARKS N P D	(A) (B)	(C) (D)	REMARK
1A	38775-26150	PIPE,OIL	1	5001 -				FR LH
2A	38775-26160	PIPE,OIL	1	5001 -				FR RH
3A	43573-20070	HOLDER,PIPE	6	5001 -				
5A	41641-20450	PLATE	2	5001 -				
6A	65220-31024	RING,O	2	5001 -				
11A	40902-28670	BRACKET	1	5001 -				FR LH (WELDING
12A	40902-28680	BRACKET	1	5001 -				FR RH (WELDING
13A	41600-27510	PLATE	4	5001 -				WELDING
51A	61802-10016	BOLT,FLANGED	12	5001 -				
52A	61802-10035	BOLT,FLANGED	8	5001 -				

silverhorn.co.uk

OIL PIPE MOUNT (3-WAY PIPING)

(NOTE):REFER TO STANDARD CATALOG(REF. 701) FOR NO SYMBOL PARTS.

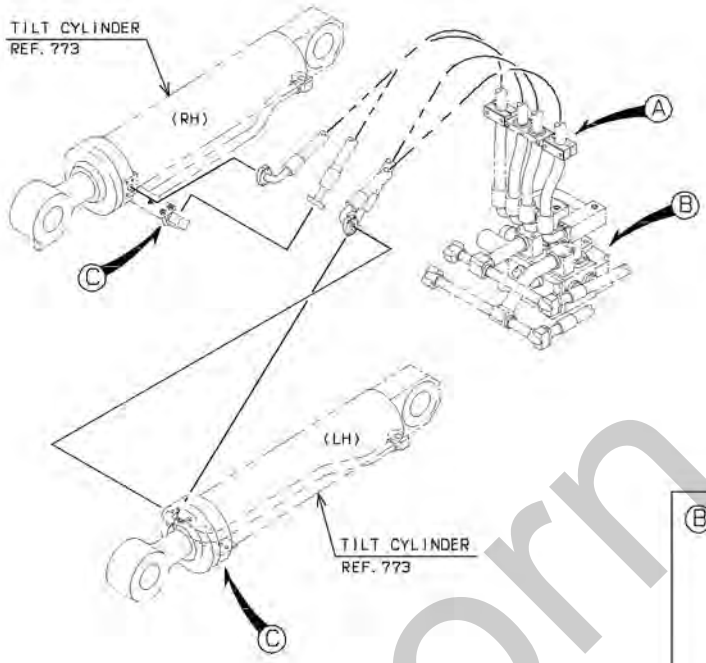

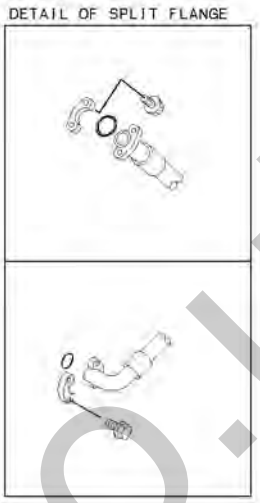

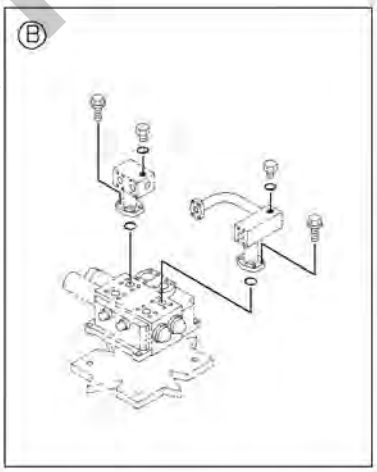

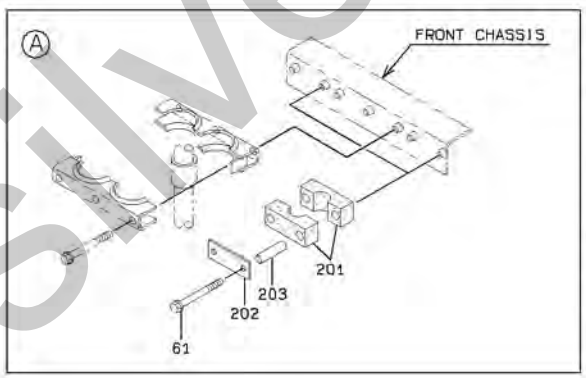

silverhorn.co.uk

OIL PIPE MOUNT (3-WAY PIPING)

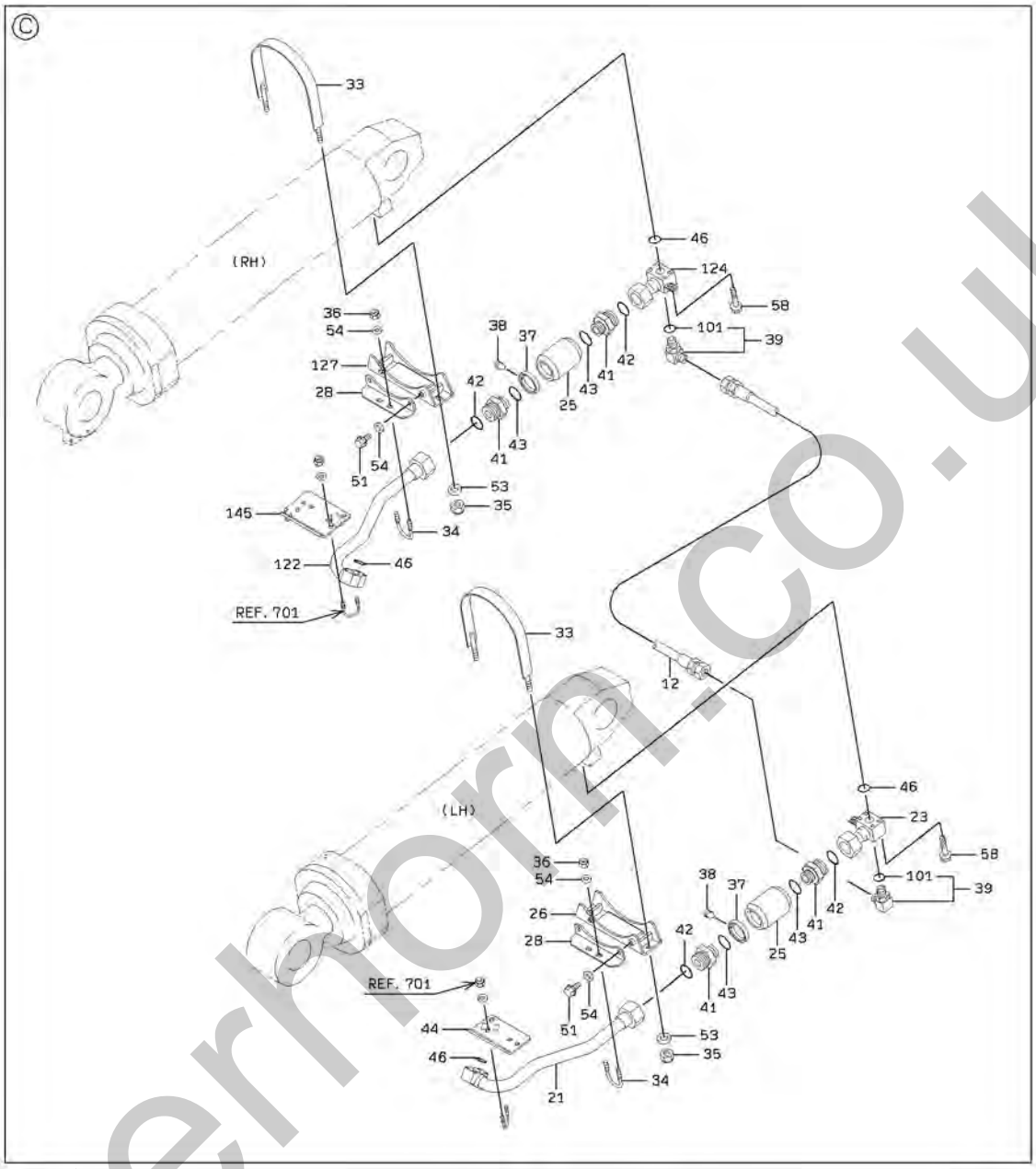

silverhorn.co.uk

OIL PIPE MOUNT (3-WAY PIPING)

SYM-BOL	PART NUMBER	PART NAME	UNIT Q,TY	SERIAL (A) - (B)	REMARKS N P D	(A) (B)	(C) (D)	REMARK
12A	68655-10075	HOSE,HIGH PRESSURE	1	5001 -				
21A	38775-26190	PIPE,OIL	1	5001 - 5066				FR LH
21B	38775-27010	PIPE,OIL	1	5067 - 5086	B			FR LH
21C	38775-33600	PIPE,OIL	1	5087 -	B			FR LH
23A	38755-50020	PIPE,OIL	1	5001 -				FR LH
25A	38554-70830	VALVE,CHECK	2	5001 -				
26A	40900-90840	BRACKET	1	5001 -				FR LH
28A	41635-28210	PLATE	2	5001 -				
33A	43962-20990	BOLT,U	2	5001 -				
34A	43962-20030	BOLT,U	2	5001 -				
35A	88031-06121	NUT,SELF-LOCKING	4	5001 -				
36A	88031-06101	NUT,SELF-LOCKING	4	5001 -				
37A	35700-20470	SPACER	2	5001 -				
38A	62216-05008	SCREW,SET	2	5001 -				
39A	88241-07104	ADAPTER,ELBOW	2	5001 -		Y01		
41A	38900-20720	FITTING	4	5001 -				
42A	65210-22040	RING,O	4	5001 -				
43A	65210-22045	RING,O	4	5001 -				
44A	41619-45060	PLATE	1	5001 - 5066				FR LH
44B	41619-56420	PLATE	1	5067 - 5086	B			FR LH
44C	41750-59340	PLATE	1	5087 -	B			FR LH
46A	65220-31024	RING,O	4	5001 -				
51A	61802-10030	BOLT,FLANGED	4	5001 -				
53A	62701-40121	WASHER,PLANE	4	5001 -				
54A	62710-18109	WASHER,PLANE	8	5001 -				
58A	61802-10065	BOLT,FLANGED	8	5001 -				
61A	61802-10090	BOLT,FLANGED	4	5001 -				
101A	65210-12011	RING,O	1	5001 -		01		
122A	38775-26200	PIPE,OIL	1	5001 - 5066				FR RH
122B	38775-27020	PIPE,OIL	1	5067 - 5086	B			FR RH
122C	38775-33610	PIPE,OIL	1	5087 -	B			FR RH
124A	38755-50030	PIPE,OIL	1	5001 -				FR RH
127A	40900-90850	BRACKET	1	5001 -				FR RH
145A	41619-45070	PLATE	1	5001 - 5066	B			FR RH
145B	41619-56430	PLATE	1	5067 - 5086	B			FR RH
145C	41750-59350	PLATE	1	5087 -				FR RH
201A	32923-20070	CLAMP,HOSE	4	5001 -				
202A	41611-42170	PLATE	2	5001 -				
203A	38720-20390	PIPE	4	5001 -				

silverhorn.co.uk

MEMO

silverhorn.co.uk

CONTROL VALVE (3-WAY PIPING)

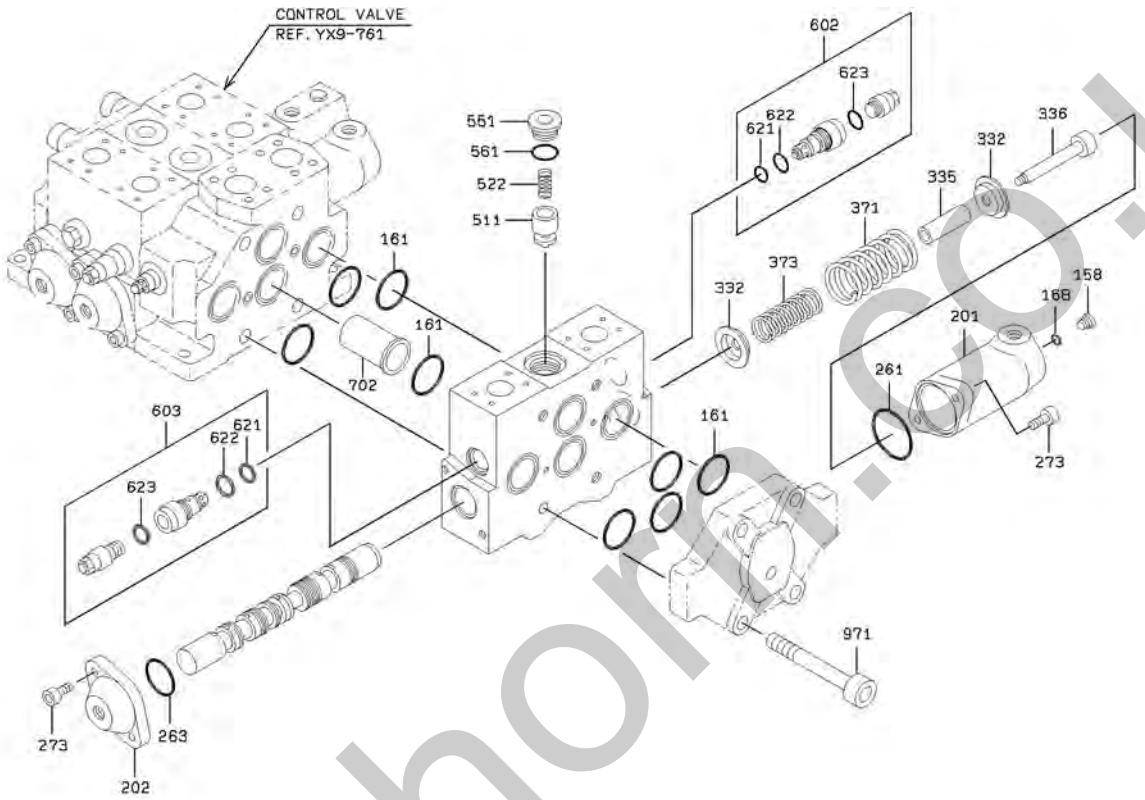

silverhorn.co.uk

CONTROL VALVE (3-WAY PIPING)

SYM-BOL	PART NUMBER	PART NAME	UNIT Q,TY	SERIAL (A) - (B)	REMARKS N P D	(A) (B)	(C) (D)	REMARK
000A	38532-60690	VALVE ASSY,MULTIPL	1	5001 -				
158A	41530-71190	PLUG	1	5001 -				
161A	65210-12050	RING,O	8	5001 -				
168A	65210-12008	RING,O	1	5001 -				
201A	31200-71030	COVER	1	5001 -				
202A	31200-71040	COVER	1	5001 -				
261A	65210-22065	RING,O	1	5001 -				
263A	65210-22055	RING,O	1	5001 -				
273A	61101-10025	BOLT,SOCKET	4	5001 -				
332A	44955-70180	RETAINER,SPRING	2	5001 -				
335A	35440-70220	STOPPER	1	5001 -				
336A	43900-71280	BOLT	1	5001 -				
371A	35600-73340	SPRING	1	5001 -				
373A	35600-71810	SPRING	1	5001 -				
511A	44074-70110	POPPET	1	5001 -				
522A	35600-71820	SPRING	1	5001 -				
551A	41530-71220	PLUG	1	5001 -				
561A	65210-12029	RING,O	1	5001 -				
602A	38565-70740	VALVE,RELIEF	1	5001 -		Y01		
603A	38565-71630	VALVE,RELIEF	1	5001 -		Y01		
621A	65210-12018	RING,O	1	5001 -		01		
622A	65210-12024	RING,O	1	5001 -		01		
623A	65210-12022	RING,O	1	5001 -		01		
702A	35750-70470	SLEEVE	1	5001 -				
971A	43956-70650	BOLT,SOCKET	4	5001 -				

silverhorn.co.uk

PILOT VALVE (3-WAY PIPING)

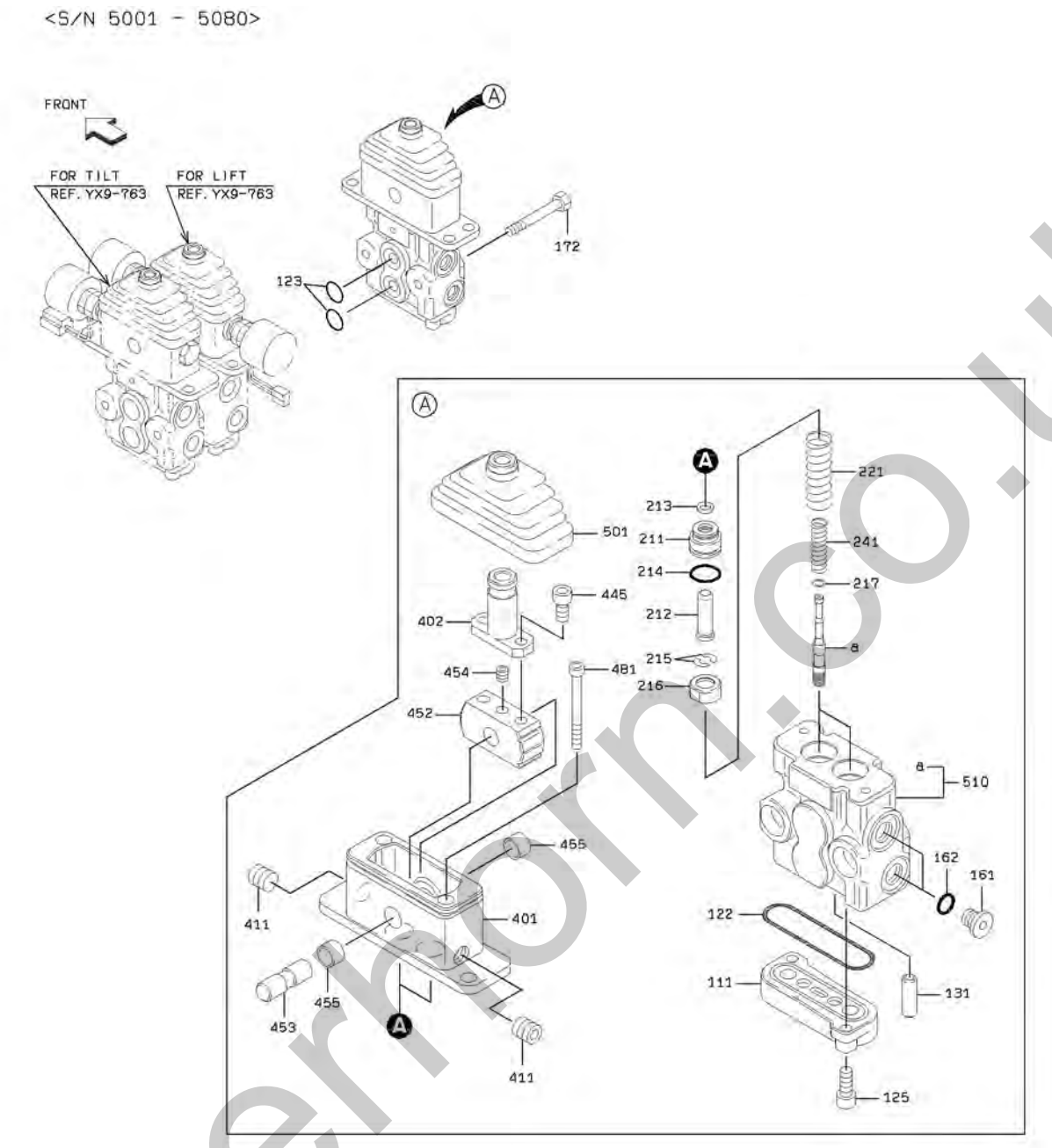

silverhorn.co.uk

PILOT VALVE (3-WAY PIPING)

SYM-BOL	PART NUMBER	PART NAME	UNIT Q,TY	SERIAL (A) - (B)	REMARKS N P D	(A) (B)	(C) (D)	REMARK
000A	38560-60320	VALVE,PILOT	1	5001 - 5080				
111A	41600-70890	PLATE	1	5001 - 5080				
122A	65210-22060	RING,O	1	5001 - 5080				
123A	65210-12018	RING,O	2	5001 - 5080				
125A	61101-08020	BOLT,SOCKET	2	5001 - 5080				
131A	40840-71600	BUSHING	2	5001 - 5080				
161A	41530-72790	PLUG	2	5001 - 5080				
162A	65210-12011	RING,O	2	5001 - 5080				
172A	61033-08050	BOLT	2	5001 - 5080				
211A	41530-72410	PLUG	2	5001 - 5080				
212A	45887-70280	ROD,PUSH	2	5001 - 5080				
213A	34000-70600	SEAL	2	5001 - 5080				
214A	65210-12020	RING,O	2	5001 - 5080				
215A	46011-70380	WASHER,PLANE	2	5001 - 5080				
216A	33930-70330	SEAT,SPRING	2	5001 - 5080				
217A	34200-70850	SHIM	2	5001 - 5080				
221A	35600-73940	SPRING	2	5001 - 5080				
241A	35600-73950	SPRING	2	5001 - 5080				
401A	31200-72130	COVER	1	5001 - 5080				
402A	45600-70190	LEVER	1	5001 - 5080				
411A	43956-70690	BOLT,SOCKET	2	5001 - 5080				
445A	61101-08016	BOLT,SOCKET	2	5001 - 5080				
452A	37200-70070	DISC	1	5001 - 5080				
453A	31611-70020	CAMSHAFT	1	5001 - 5080				
454A	43956-70680	BOLT,SOCKET	1	5001 - 5080				
455A	88811-01410	BUSHING	2	5001 - 5080				
481A	61101-06060	BOLT,SOCKET	2	5001 - 5080				
501A	40790-70200	BOOT	1	5001 - 5080				
510A	33110-70400	CASE ASSY	1	5001 - 5080				

silverhorn.co.uk

PILOT VALVE (3-WAY PIPING)

<S/N 5081 - >

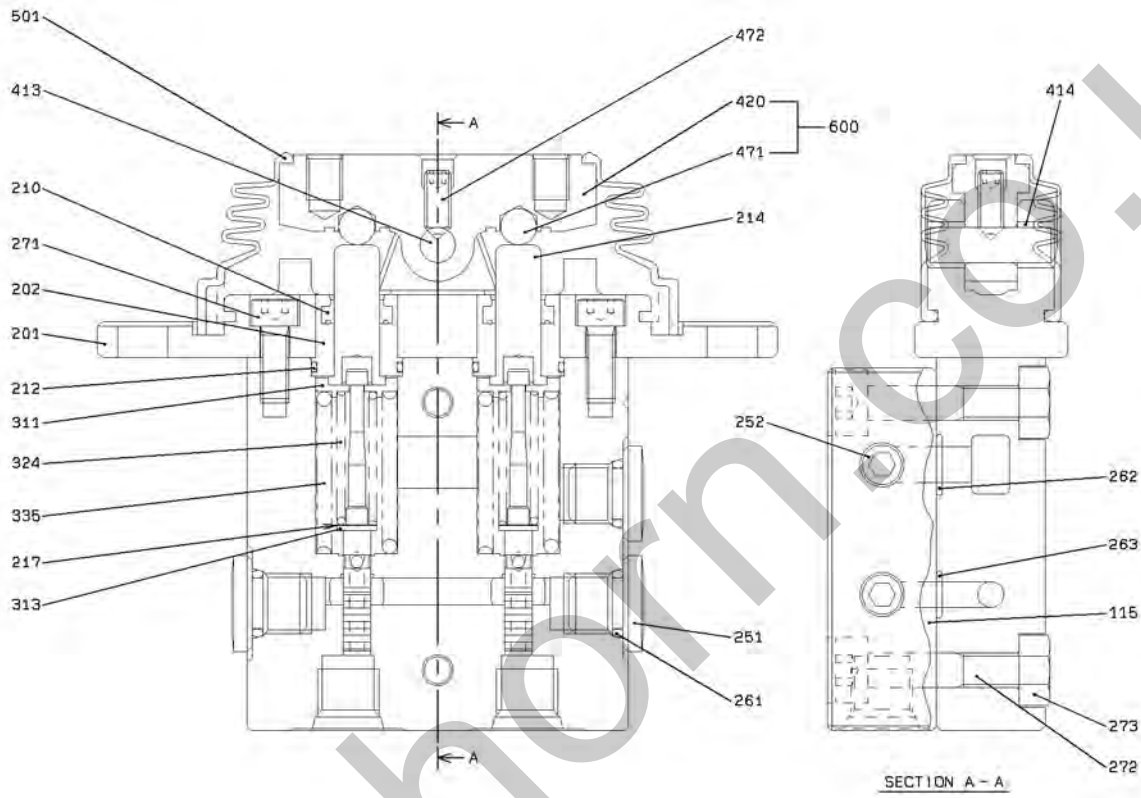

silverhorn.co.uk

PILOT VALVE (3-WAY PIPING)

SYM-BOL	PART NUMBER	PART NAME	UNIT Q,TY	SERIAL (A) - (B)	REMARKS N P D	(A) (B)	(C) (D)	REMARK
000A	38560-60640	VALVE,PILOT	1	5081 -				
115A	41600-71770	PLATE	1	5081 -				
201A	31205-70220	COVER	1	5081 -				
202A	41530-75150	PLUG	2	5081 -				
210A	39600-72960	PACKING	2	5081 -				
212A	47131-76700	RING,O	2	5081 -				
214A	45887-70380	ROD,PUSH	2	5081 -				
217A	34200-71720	SHIM	2	5081 -				
251A	41530-72790	PLUG	3	5081 -				
252A	41530-73550	PLUG	2	5081 -				
261A	65210-12011	RING,O	3	5081 -				
262A	65210-12010	RING,O	1	5081 -				
263A	65210-12008	RING,O	1	5081 -				
271A	61101-06016	BOLT,SOCKET	2	5081 -				
272A	61101-08040	BOLT,SOCKET	2	5081 -				
273A	62401-81081	NUT	2	5081 -				
311A	33930-70980	SEAT,SPRING	2	5081 -				
313A	46000-71760	WASHER	2	5081 -				
324A	35600-77560	SPRING	2	5081 -				
335A	35600-77350	SPRING	2	5081 -				
413A	31611-70040	CAMSHAFT	1	5081 -				
414A	40840-72670	BUSHING	2	5081 -				
420A	31600-70020	CAM	1	5081 -		01		
471A	43751-70300	BALL	2	5081 -		01		
472A	35104-70170	SCREW,SET	1	5081 -				
501A	40790-70540	BOOT	1	5081 -				
600A	31605-70010	CAM ASSY	1	5081 -		Y01		

silverhorn.co.uk

FRONT AXLE GROUP

(NOTE):THIS ILLUSTRATION SHOWS "LEFT HAND".
:SYMBOL 11, 12 ARE NOT INCLUDED IN SYMBOL (000).
:REFER TO STANDARD CATALOG(REF. YX9-401) FOR NO SYMBOL PARTS.

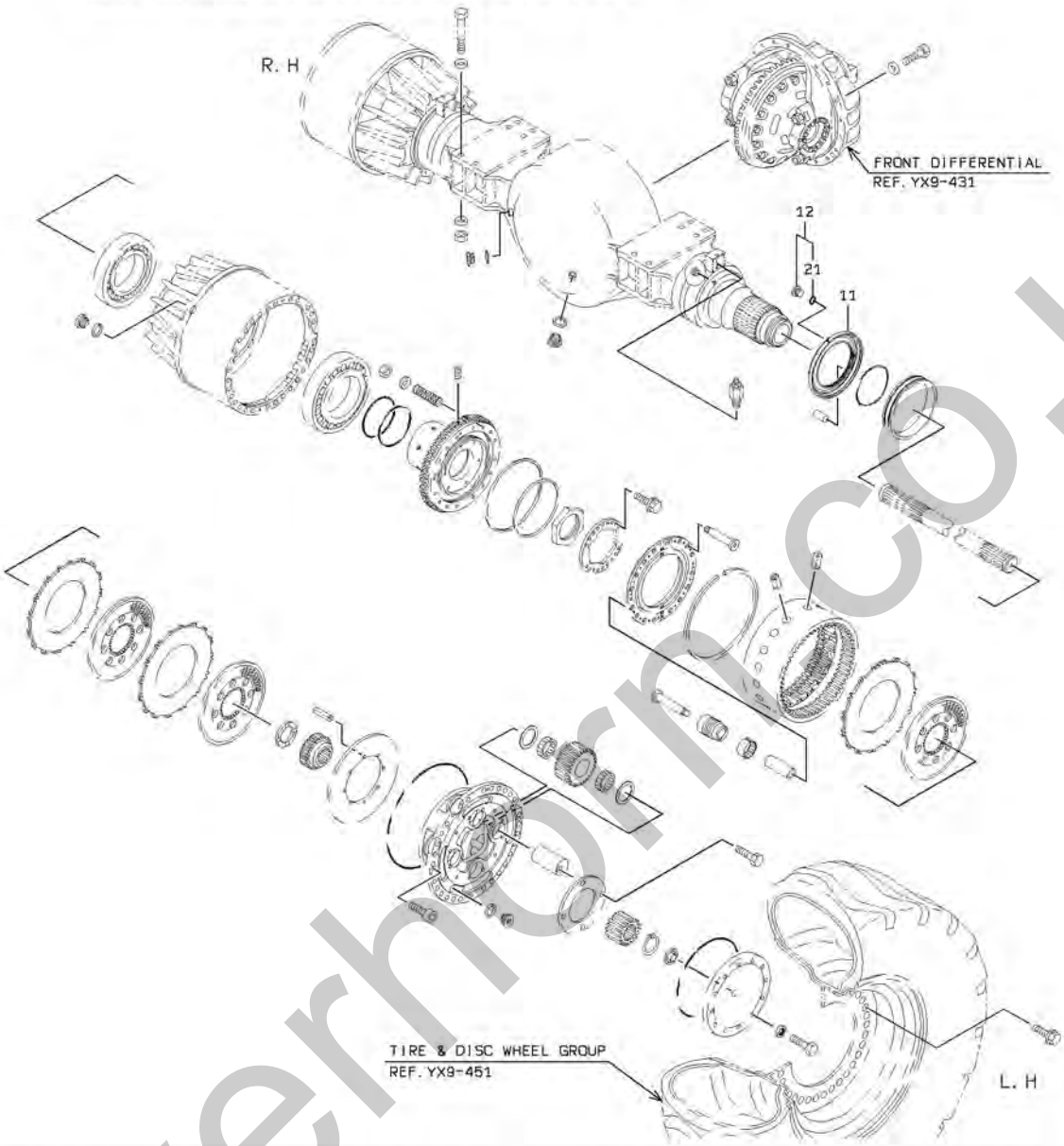

silverhorn.co.uk

FRONT AXLE GROUP

SYM-BOL	PART NUMBER	PART NAME	UNIT Q,TY	SERIAL (A) - (B)	REMARKS N P D	(A) (B)	(C) (D)	REMARK
000A	03501-83570	AXLE ASSY,FRONT	1	5001 -				
11A	45200-27800	RING	2	5001 -				
12A	88390-21502	PLUG	4	5001 -		Y01		
21A	65210-12008	RING,O	1	5001 -		01		

silverhorn.co.uk

REAR AXLE GROUP

(NOTE):THIS ILLUSTRATION SHOWS "LEFT HAND".
:SYMBOL 11, 12 ARE NOT INCLUDED IN SYMBOL (000).
:REFER TO STANDARD CATALOG(REF. YX9-411) FOR NO SYMBOL PARTS.

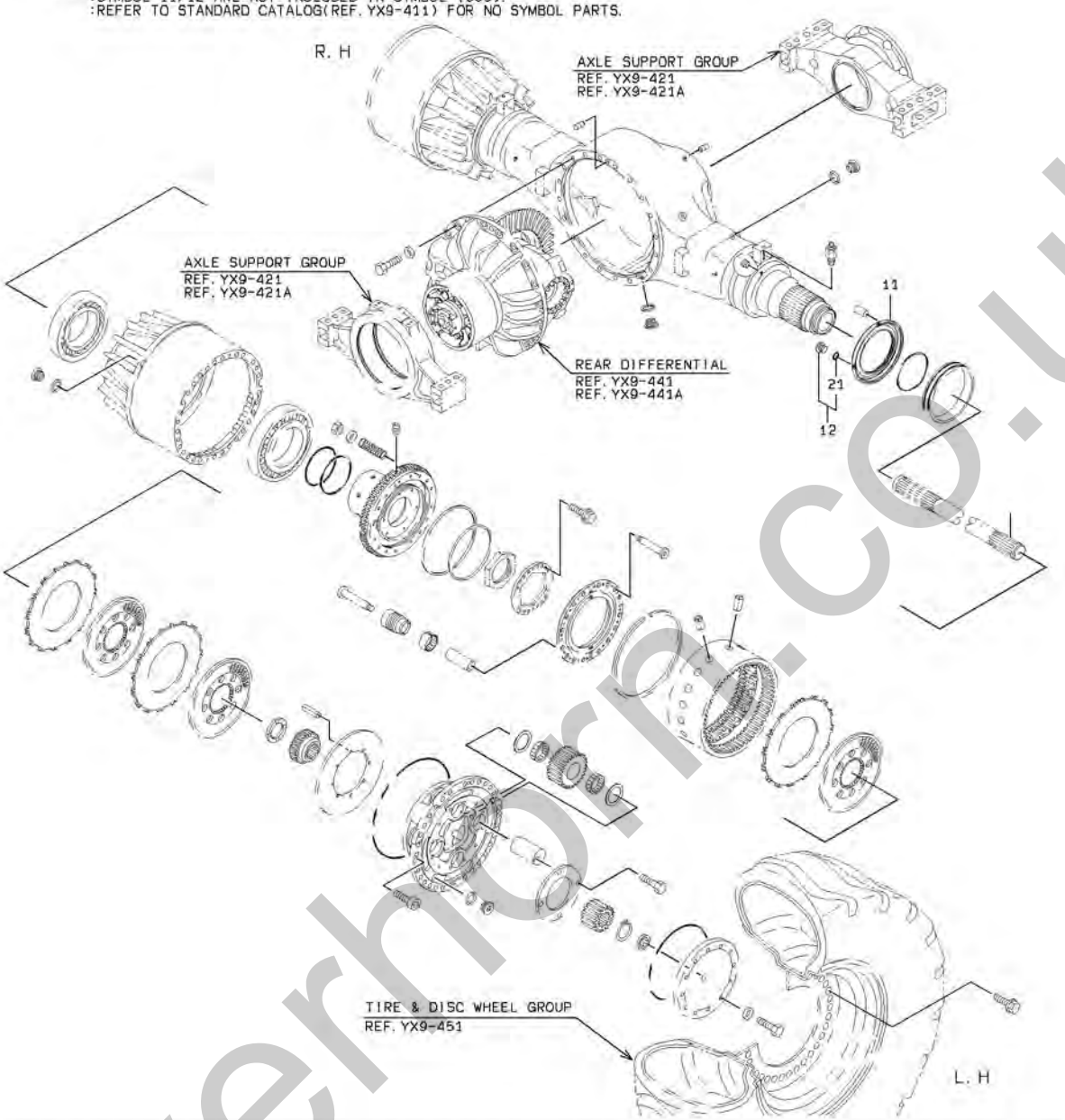

silverhorn.co.uk

REAR AXLE GROUP

SYM-BOL	PART NUMBER	PART NAME	UNIT Q,TY	SERIAL (A) - (B)	REMARKS N P D	(A) (B)	(C) (D)	REMARK
000A	03501-83580	AXLE ASSY,REAR	1	5001 -				
11A	45200-27800	RING	2	5001 -				
12A	88390-21502	PLUG	4	5001 -		Y01		
21A	65210-12008	RING,O	1	5001 -		01		

silverhorn.co.uk

BUCKET POSITIONER GROUP

(NOTE):REFER TO STANDARD CATALOG(REF. YX9-664) FOR NO SYMBOL PARTS.

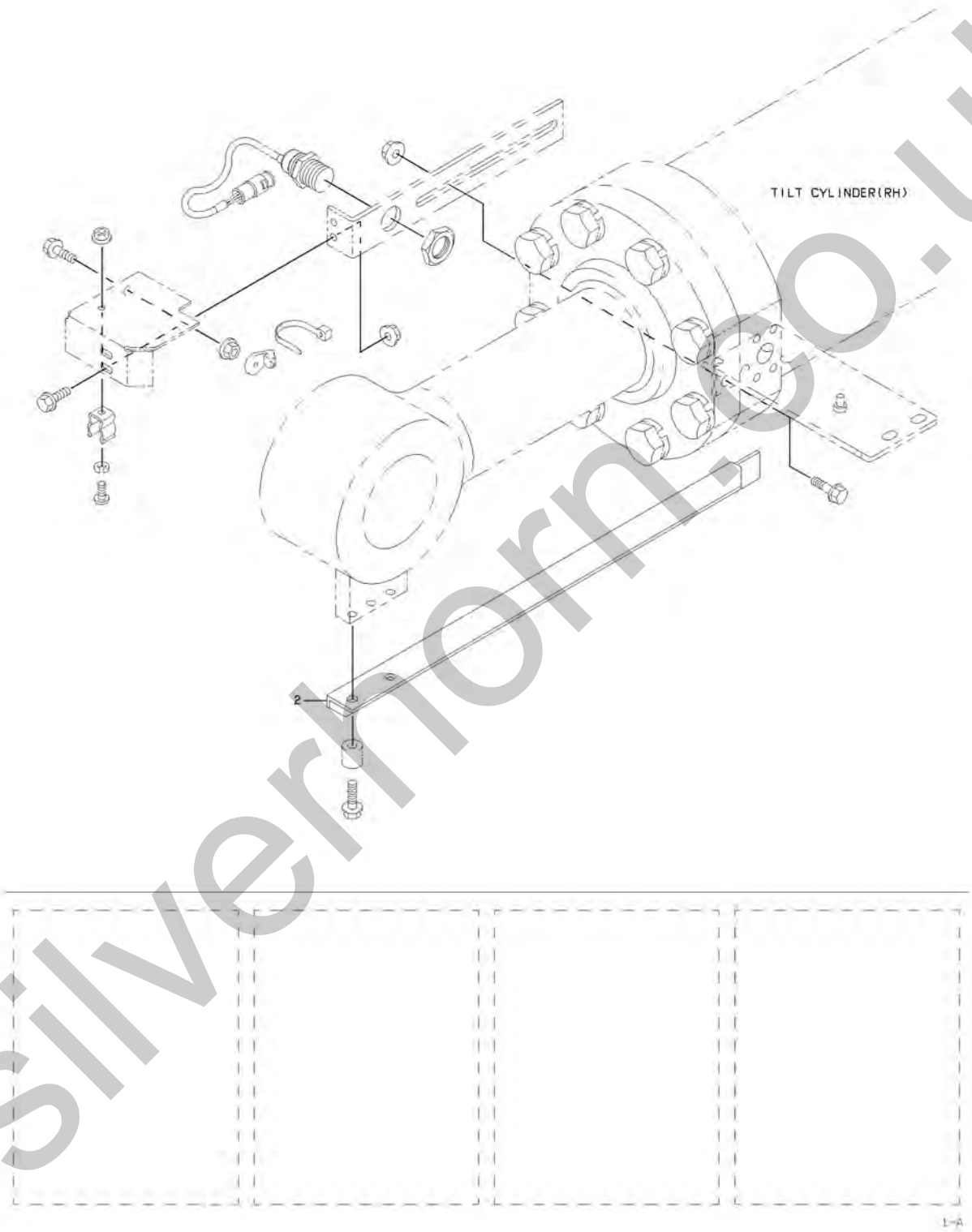

silverhorn.co.uk

BUCKET POSITIONER GROUP

SYM-BOL	PART NUMBER	PART NAME	UNIT Q,TY	SERIAL (A) - (B)	REMARKS N P D	(A) (B)	(C) (D)	REMARK
2A	30502-43660	ANGLE	1	5001 -				

silverhorn.co.uk

LOADING HYDRAULIC LINE - FRONT CHASSIS

(NOTE):REFER TO STANDARD CATALOG(REF. YX9-701) FOR NO SYMBOL PARTS.

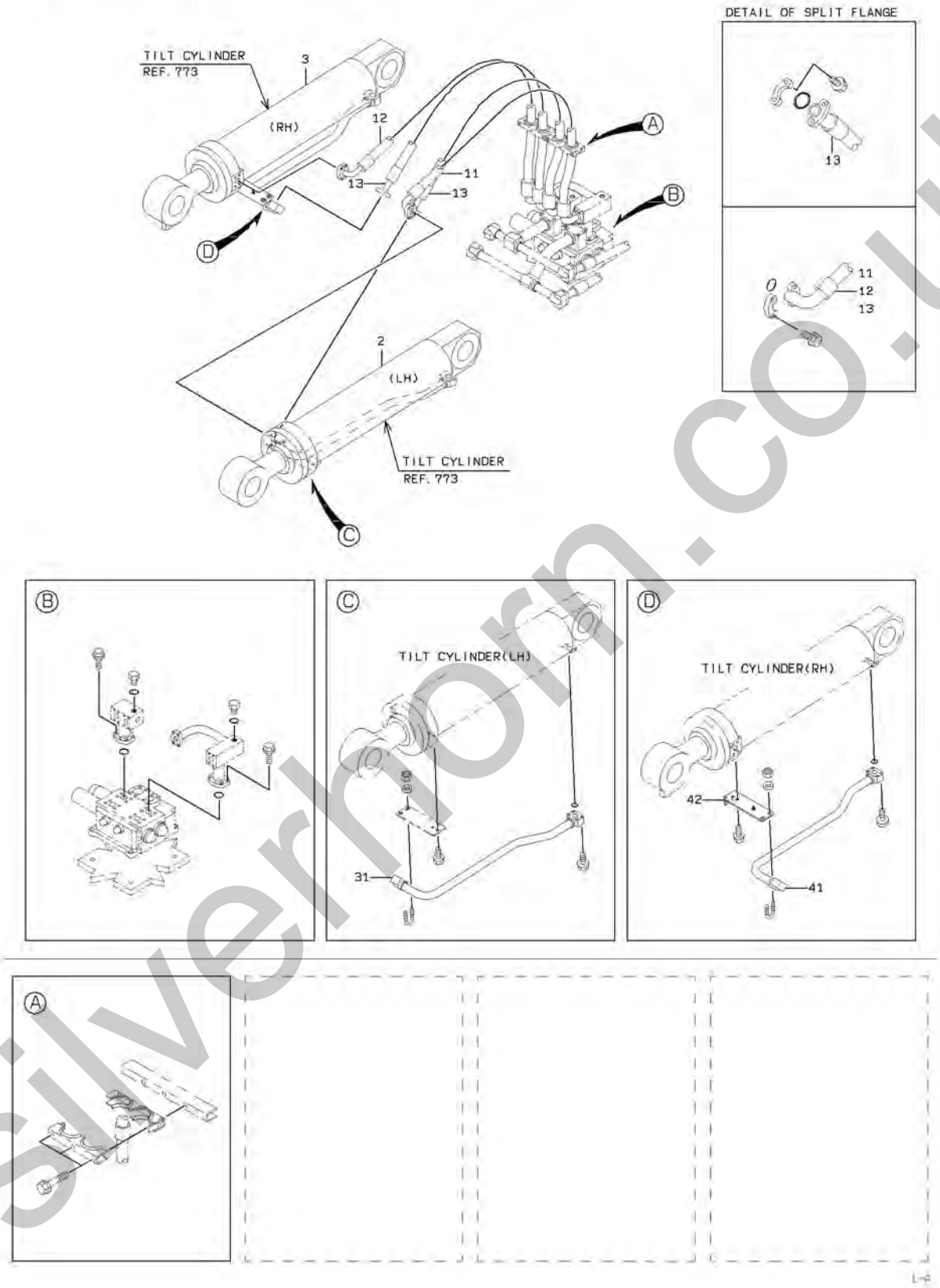

silverhorn.co.uk

LOADING HYDRAULIC LINE - FRONT CHASSIS

SYM-BOL	PART NUMBER	PART NAME	UNIT Q,TY	SERIAL (A) - (B)	REMARKS N P D	(A) (B)	(C) (D)	REMARK
2A	34820-65310	CYLINDER ASSY,OIL	1	5001 -				REF.773-1(LH)
3A	34820-65380	CYLINDER ASSY,OIL	1	5001 -				FSF.773-101(RH
11A	43113-40610	HOSE,HIGH PRESSURE	1	5001 -				
12A	43113-40620	HOSE,HIGH PRESSURE	1	5001 -				
13A	43113-40630	HOSE,HIGH PRESSURE	2	5001 -				
31A	38775-24730	PIPE,OIL	1	5001 -				FR LH
41A	38775-24740	PIPE,OIL	1	5001 -				FR RH
42A	41619-45080	PLATE	1	5001 -				FR RH

silverhorn.co.uk

TILT CYLINDER

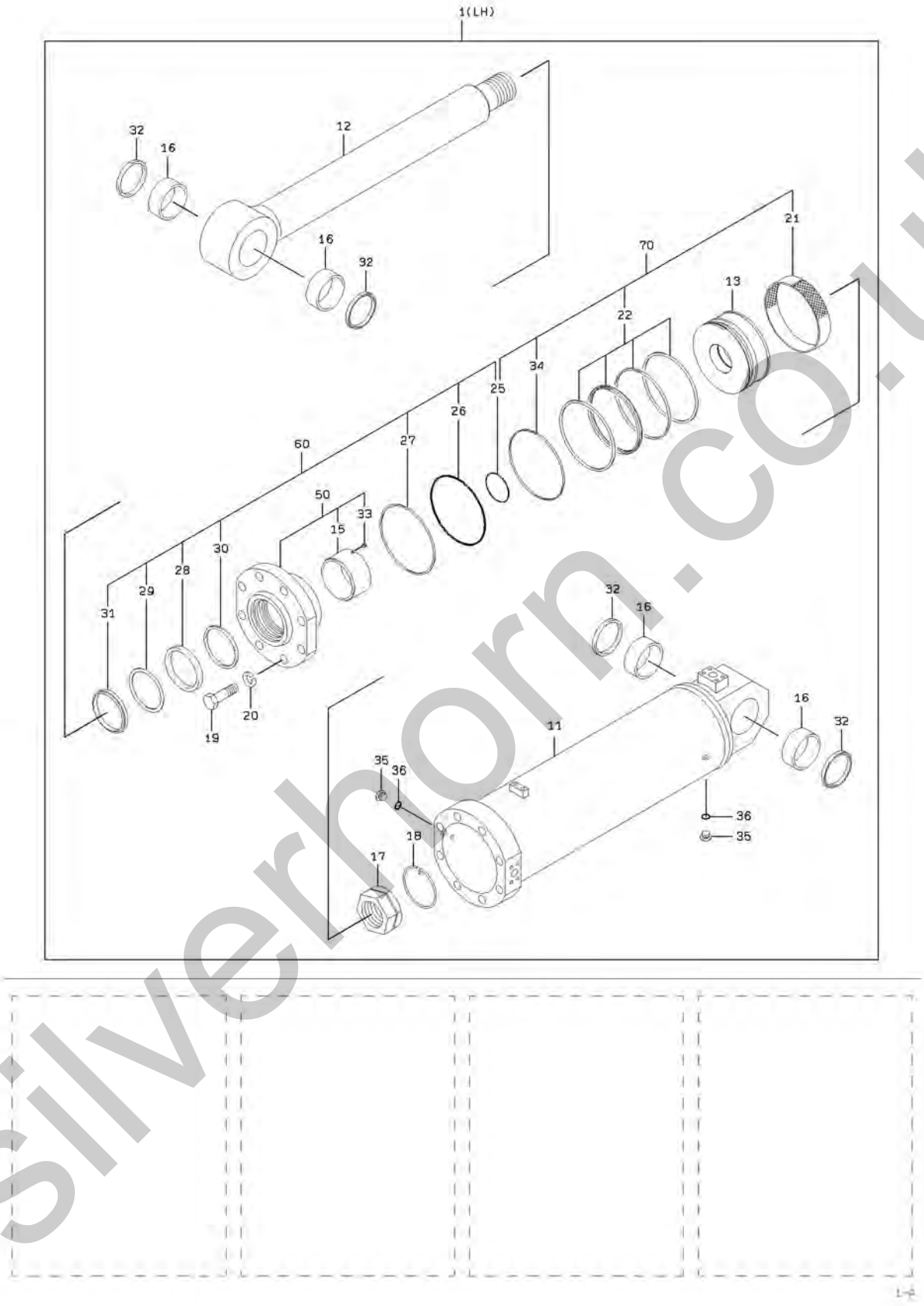

silverhorn.co.uk

TILT CYLINDER

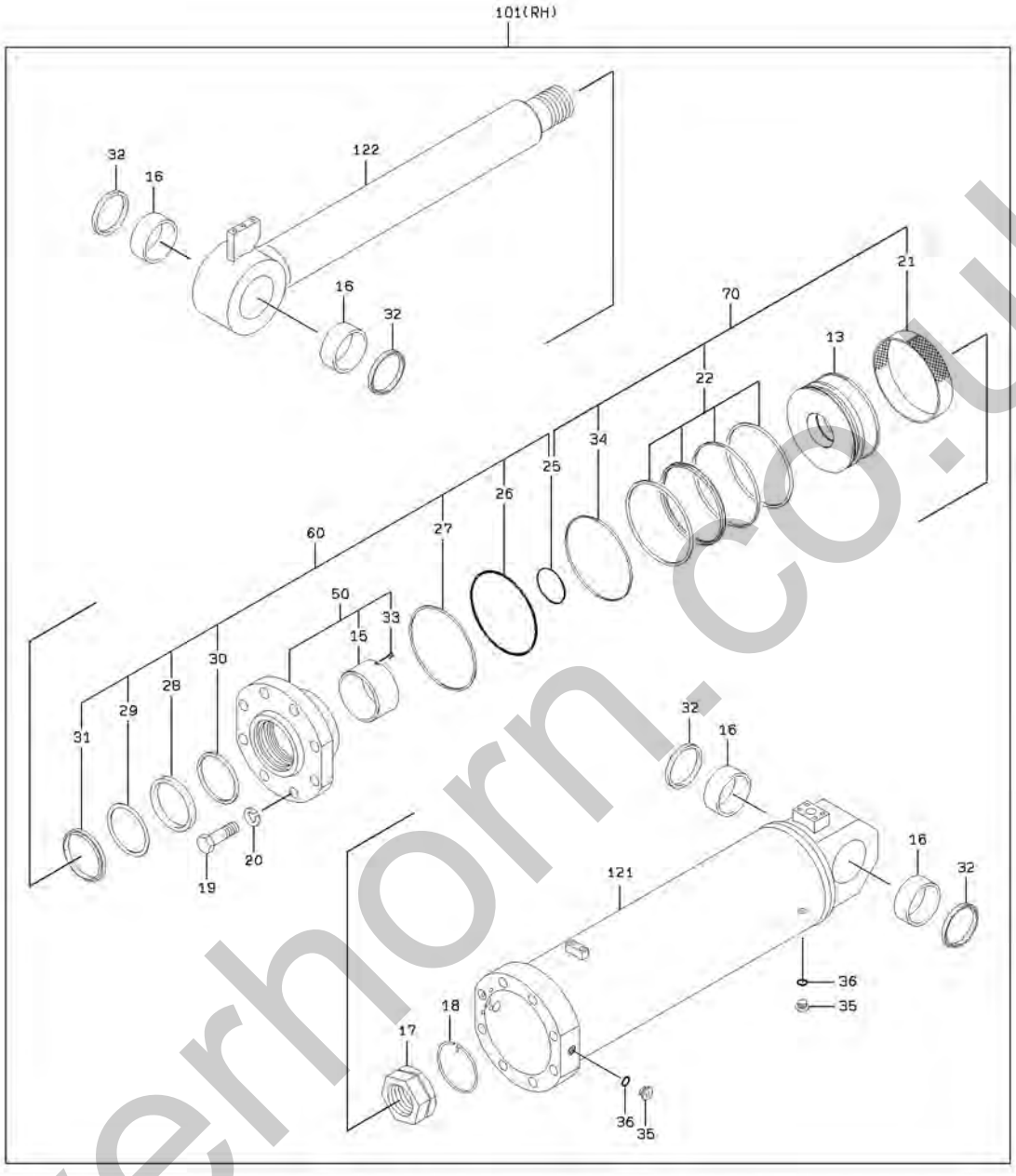

silverhorn.co.uk

TILT CYLINDER

SYM-BOL	PART NUMBER	PART NAME	UNIT Q,TY	SERIAL (A) - (B)	REMARKS N P D	(A)	(B)	(C)	(D)	REMARK
1A	34820-65310	CYLINDER ASSY,OIL	1	5001 -		Y01				FR LH
11A	36725-73000	TUBE,CYLINDER	1	5001 -		01				FR LH
12A	45886-72800	ROD,PISTON	1	5001 -		01				FR LH
13A	39960-70800	PISTON	1	5001 -		01			04	
15A	40840-22160	BUSHING	1	5001 -			02			
16A	63422-46440	BUSHING	4	5001 -		01			04	
17A	37636-70040	NUT,PISTON	1	5001 -		01			04	
18A	45315-70080	RING,STOP	1	5001 -		01			04	
19A	43900-71060	BOLT	8	5001 -		01			04	
20A	62721-27100	WASHER,SPRING	8	5001 -		01			04	
21A	65431-31298	RING,WEAR	1	5001 -				K2		
22A	49328-70020	SEAL SET	1	5001 -				K2		
25A	65210-22090	RING,O	1	5001 -			K1			
26A	65210-22215	RING,O	1	5001 -			K1			
27A	65240-32215	RING,BACK-UP	1	5001 -			K1			
28A	65446-06615	PACKING,U	1	5001 -			K1			
29A	65473-07930	RING,BACK-UP	1	5001 -			K1			
30A	65464-06660	RING,BUFFER	1	5001 -			K1			
31A	65455-04908	SEAL,DUST	1	5001 -			K1			
32A	65051-02510	SEAL,DUST	4	5001 -		01			04	
33A	62214-06010	SCREW	1	5001 -			02			
34A	47171-70150	RING,WEAR	1	5001 -				K2		
35A	41530-71210	PLUG	2	5001 -		01			04	
36A	65210-12011	RING,O	2	5001 -		01			04	
50A	31265-60240	COVER ASSY,ROD	1	5001 -		01	Y02		04	
60A	49327-60750	SEAL KIT	1	5001 -		01	QK1		04	FR ROD COVER
70A	49327-60390	SEAL KIT	1	5001 -		01		QK2	04	FR PISTON
101A	34820-65380	CYLINDER ASSY,OIL	1	5001 -					Y04	FR RH
121A	36725-73010	TUBE,CYLINDER	1	5001 -					04	FR RH
122A	45886-72810	ROD,PISTON	1	5001 -					04	FR RH

silverhorn.co.uk

MEMO

silverhorn.co.uk

MIRROR GROUP

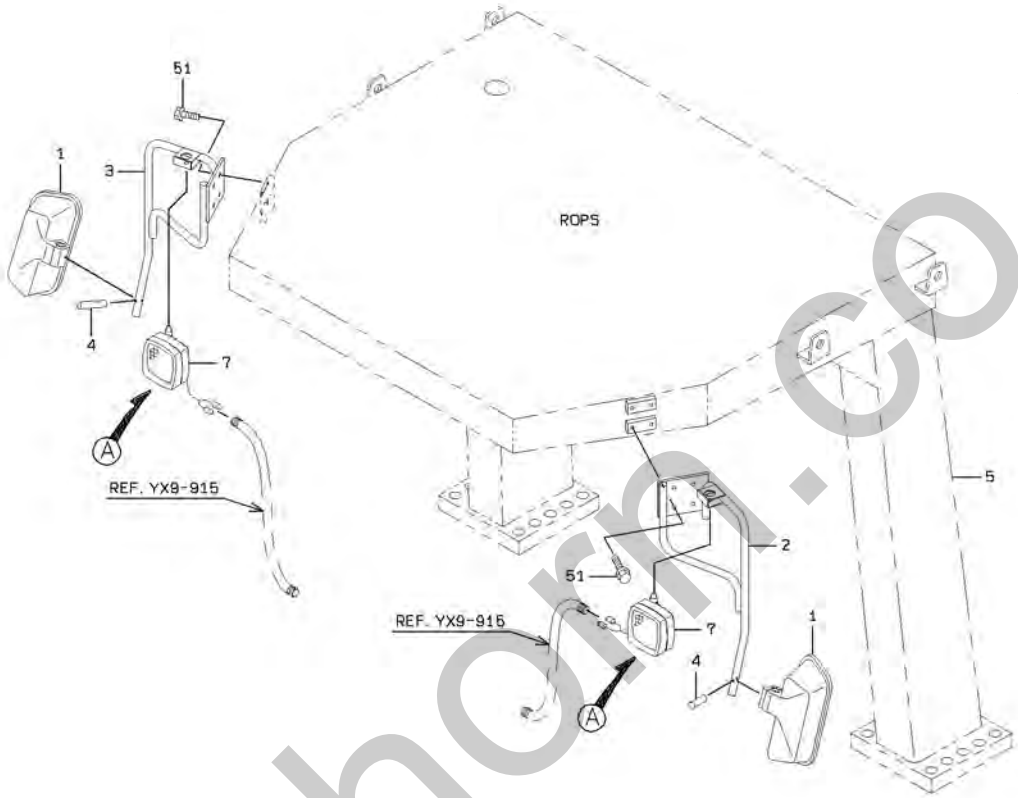

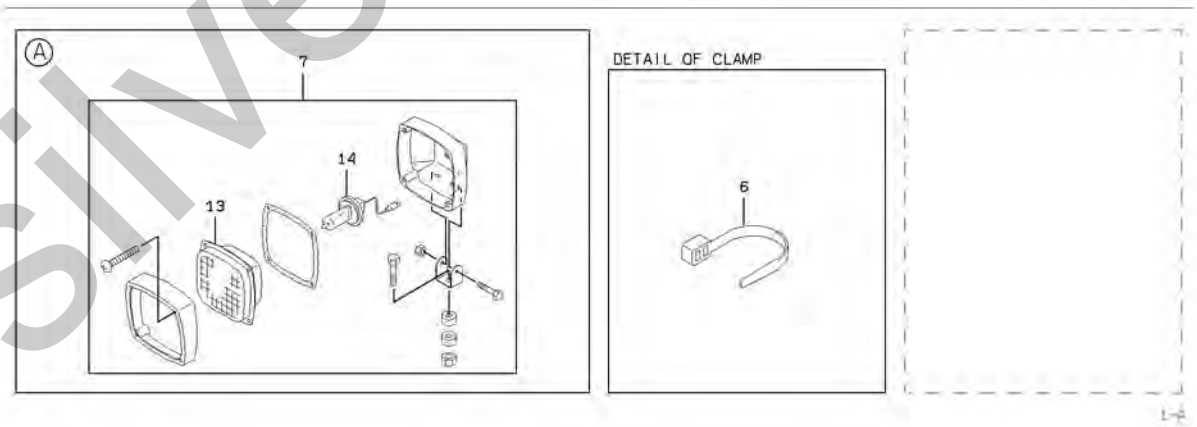

silverhorn.co.uk

MIRROR GROUP

SYM-BOL	PART NUMBER	PART NAME	UNIT Q,TY	SERIAL (A) - (B)	REMARKS N P D	(A) (B)	(C) (D)	REMARK
1A	44340-60130	MIRROR	2	5001 -				
2A	35210-23880	STAY	1	5001 -				FR LH
3A	35210-23890	STAY	1	5001 -				FR RH
4A	40000-27270	PIN	2	5001 -				
5A	03501-65610	ROPS	1	5001 -				
6A	32923-70210	CLAMP,HOSE	2	5001 -				L=397
7A	44890-70140	LAMP,HEAD	2	5001 -		Y01		
13A	45701-70650	LENS	1	5001 -		01		
14A	38480-70800	BULB	1	5001 -		01		
51A	61802-10020	BOLT,FLANGED	8	5001 -				

silverhorn.co.uk

MEMO

silverhorn.co.uk

PARTS No. INDEX

silverhorn.co.uk

PART NUMBER	PAGE-SYM	PART NUMBER	PAGE-SYM	PART NUMBER	PAGE-SYM	PART NUMBER	PAGE-SYM
03501 -19200	452- 16A	30020 -25840	452- 13B	30230 -26100	62- 5A	30502 -28280	92- 5A
-19200	706- 16A	-25840	706- 13B	-26100	62- 5B	-28950	224- 2A
-36880	228- 105A	30021 -20820	339- 81A	-26390	428- 25B	-41570	88- 7A
-36880	232- 103A	-20890	335- 21A	-26390	602- 25B	-43660	726- 2A
-36880	236- 48A	-20890	343- 111A	-27040	428- 25A	-43860	556- 11A
-36880	236- 103A	30035 -60040	362- 2A	-27040	602- 25A	30510 -60090-7	354- 11A
-49480	685- 131A	-60060	351- 2A	-27130	481- 6A	30582 -20490	161- 112A
-54740	468- 12A	30040 -22890	4- 1A	-27150	481- 12A	-20490	165- 111A
-54740	470- 12A	-23000	420- 1A	-70210	156- 40A	30590 -70030-7	502- 21A
-54870	665- 2A	-23530	680- 1A	-70600-7	368- 3A	30610 -20720-7	575- 111A
-54880	366- 41A	-24020	680- 1B	-70600-7	672- 3A	-20720-7	579- 1A
-54880	670- 4A	-25120	680- 1C	30241 -20890	272- 8A	-20720-7	579- 11A
-55680	366- 34A	30062 -20060	688- 4A	-20890	275- 8A	-20720-7	594- 6A
-55680	670- 104A	-60050	22- 41A	-20890	635- 34A	-20720-7	620- 101A
-56600	562- 2A	-60050	24- 111A	-21100	490- 15A	-20720-7	620- 131A
-56610	562- 5A	-60050	26- 111A	-21320	212- 9B	-20720-7	624- 11A
-56620	584- 4A	-60050	28- 101A	-21330	182- 14A	-20720-7	658- 1A
-56630	675- 3A	-60050	228- 121A	-21330	635- 112A	-20730-7	575- 112A
-57100	631- 43A	-60050	232- 131A	-22550	194- 44A	-20730-7	579- 2A
-60590	366- 2A	-60050	237- 141A	-23400	272- 9A	-20730-7	579- 12A
-61590	406- 1A	-70380-7	52- 31A	-23400	275- 9A	-20730-7	582- 1A
-61600	406- 2A	-70390-7	52- 32A	-23620	103- 12A	-20730-7	594- 4A
-63010	418- 17A	30100 -60510-7	189- 1A	-23620	107- 12A	-20730-7	622- 11A
-63990	406- 45A	-60510-7	290- 000A	-23660	280- 19B	-20730-7	626- 1A
-64000	406- 46A	-60550	481- 121A	-23660	508- 35A	-20730-7	628- 21A
-64010	406- 47A	-60550	484- 000A	-25790	275- 8B	-20730-7	631- 1A
-64020	406- 48A	30111 -21330	160- 000A	30242 -20020	103- 7A	-20730-7	638- 1A
-64030	406- 49A	30112 -21660	164- 000A	-20020	107- 7A	-20730-7	654- 1A
-65610	734- 5A	-22030	164- 000B	-20100	472- 23A	-20730-7	658- 2A
-65820	565- 21A	-22610	164- 000C	-20100	474- 23A	-20740-7	575- 113A
-66390	544- 6A	30201 -70040-7	379- 28A	-20100	490- 38A	-20740-7	579- 3A
-70040	544- 7A	-70050-7	379- 68A	-20120	249- 17A	-20740-7	579- 13A
-70400	454- 38A	30212 -70030	206- 17A	-20120	272- 16A	-20740-7	582- 2A
-70400	708- 38A	30215 -70250-7	52- 28A	-20120	275- 16A	-20740-7	638- 2A
-71020	631- 44A	30230 -20150	508- 18A	-20120	513- 15A	-20740-7	658- 3A
-71910	410- 5A	-20490	182- 104A	-20180	127- 109A	-20750-7	579- 4A
-71910	413- 5A	-20600	282- 9A	-20180	131- 129A	-20750-7	579- 14A
-71920	410- 6A	-20600	284- 9A	-20190	189- 42A	-20750-7	582- 3A
-71920	413- 6A	-20600	452- 5A	-20190	189- 145A	-20750-7	594- 5A
-71930	410- 7A	-20600	454- 37A	-20190	278- 17A	-20750-7	600- 1A
-71930	413- 7A	-20600	706- 5A	-20210	184- 6A	-20750-7	620- 132A
-71940	410- 8A	-20600	708- 37A	-20210	189- 43A	-20750-7	638- 3A
-71940	413- 8A	-21060	258- 25A	-20240	263- 11A	-20750-7	650- 1A
-71950	410- 25A	-21180	180- 104A	-20440	124- 8A	-20760-7	575- 114A
-71950	413- 25A	-21240	263- 12A	30246 -20340	189- 34A	-20760-7	579- 5A
-72700	670- 43A	-21240	263- 15A	-20360	306- 2A	-20760-7	582- 4A
-72910	570- 1C	-21250	428- 14A	-20360	308- 2A	-20760-7	594- 3A
-72920	570- 2C	-21250	602- 14A	-20470	315- 2A	-20760-7	646- 31A
-74200	675- 16A	-21300	180- 6A	-20720	182- 103A	-20760-7	678- 3A
-74740	454- 9A	-21300	186- 5A	-20720	184- 4A	-20770-7	579- 6A
-74740	708- 9A	-21520	249- 14A	-21480	249- 12A	-20770-7	582- 5A
-75820	685- 133A	-21720	212- 102A	-21480	513- 12A	-20770-7	648- 1A
-76250	670- 111A	-21720	472- 18A	-22270	194- 49A	-20790-7	678- 1A
-76260	670- 112A	-21720	474- 18A	-22560	280- 19A	-20840-7	678- 2A
-76270	670- 113A	-21780	531- 12A	-22950	189- 144A	-20880-7	594- 2A
-77120	685- 131B	-21890	306- 3A	-23060	454- 44A	-20890-7	594- 1A
-77130	685- 133B	-21890	308- 3A	-23060	708- 44A	-20930-7	572- 1A
-77180	688- 12A	-21980	103- 14A	-24190	428- 24A	-70410-7	396- 18A
-83570	722- 000A	-21980	107- 14A	-24190	602- 24A	30650 -70020	127- 12A
-83580	724- 000A	-22450	635- 113A	-24450	454- 39A	30654 -70060	131- 23A
30020 -23800	192- 15A	-23300	531- 23A	-24450	708- 39A	-70060	614- 43A
-24600	208- 14A	-23430	140- 83A	-24720	428- 24B	30721 -20050	136- 5A
-24600	210- 14A	-23900	278- 7A	-24720	602- 24B	30725 -20150	136- 1A
-24600	452- 13A	-23990	184- 27A	-60030	182- 33A	-20380	136- 1B
-24600	706- 13A	-24160	189- 37A	30250 -20250	124- 14A	30771 -60010	362- 11A
-24770	228- 142A	-24630	194- 48A	30320 -60030	22- 23A	30780 -23180-7	8- 111A
-24770	232- 202A	-24800	266- 13A	-60030	24- 23A	-23260-7	685- 124A
-24770	237- 212A	-24800	269- 13A	-60030	26- 23A	-24010	685- 121A
-25840	210- 14B	-25720	62- 6A	-60030	28- 23A	-24020	685- 111A

silverpoint.co.uk

PART NUMBER	PAGE-SYM	PART NUMBER	PAGE-SYM	PART NUMBER	PAGE-SYM	PART NUMBER	PAGE-SYM
30890 -60090-7	382- 1A	31200 -60140	24- 1A	31210 -21510	134- 4A	31828 -20490	69- 5A
-60090-7	394- 000A	-60140	26- 1A	-22490	69- 101A	-20600	69- 5B
-60120-7	384- 1A	-60140	28- 1A	-22510	152- 9A	31930 -20510	136- 13A
-60120-7	396- 000A	-60270	22- 2A	-22920	618- 1A	31990 -20020	12- 13A
30930 -23820	366- 14A	-60270	24- 2A	-70320	299- 401A	-20030	14- 14A
-23820	670- 24A	-60300	372- 41A	31231 -20840	44- 1A	-20320	12- 14A
-70150-7	318- 11A	-60310	372- 42A	-21540	418- 1A	-20370	152- 50A
-70160-7	320- 11A	-60320	22- 4A	-21550	418- 15A	-20370	158- 45A
-70170-7	322- 11A	-60320	24- 4A	-70150-7	119- 111A	-20370	488- 2A
30938 -70150-7	318- 12A	-60320	26- 4A	-70170	14- 142A	-20380	140- 44A
-70160-7	320- 12A	-60320	28- 4A	-70210	206- 50A	-20380	158- 43A
-70160-7	322- 12A	-60340	504- 23A	31236 -24920	39- 11A	-20410	140- 17A
-70170-7	320- 13A	-60410	504- 25A	-24930	39- 12A	-20410	158- 39A
-70170-7	322- 13A	-60420	26- 2A	-24980	339- 27A	-20420	140- 16A
30981 -20130	700- 33A	-60420	28- 2A	-24990	42- 16A	-20420	158- 37A
-70330	14- 143A	-60450	28- 4B	-26370	343- 27A	-20970	62- 8A
-70340-7	127- 11A	-71020	119- 16A	-70030-7	394- 36A	-20970	140- 27A
-70480	119- 13A	-71030	460- 201A	-70030-7	396- 46A	-20970	158- 40A
-70490	119- 12A	-71030	716- 201A	-70040-7	398- 15A	-21970	140- 30A
-70720	190- 233A	-71040	292- 202A	-70040-7	400- 19A	-21970	158- 41A
-70720	280- 133A	-71040	460- 202A	-70050-7	398- 16A	-22100	127- 143A
30999 -60010-7	396- 2A	-71040	716- 202A	-70050-7	400- 21A	-22100	131- 213A
-70100-7	394- 2A	-72080	295- 401A	-70060-7	398- 17A	-22140	134- 43A
31000 -62940-7	90- 1A	-72080	295- 401B	-70080-7	400- 20A	-22140	158- 6A
-63480-7	90- 1B	-72130	240- 401A	-70100-7	398- 17B	-22210	140- 61A
31050 -60240-7	496- 3A	-72130	462- 401A	31241 -20190	330- 11A	-22210	158- 44A
-60240-7	500- 000A	-72130	718- 401A	-20320	160- 5A	-22840	208- 6A
-60240-7	502- 000A	-72310-7	288- 5A	-20320	164- 5A	-22840	210- 6A
31053 -70200	204- 6A	-72570	292- 201A	31265 -20330	310- 4A	-22880	134- 18A
-70650	510- 221A	-73110-7	288- 8A	-20440	310- 4B	-22880	158- 5A
-70700	204- 7A	-73180-7	110- 1A	-60070	312- 50A	-22900	134- 5A
-70730-7	398- 2A	-73260	295- 421A	-60240	731- 50A	-22900	158- 2A
-70730-7	400- 2A	-73300	242- 401A	-70230	222- 4A	-23060	700- 34A
31102 -60040	372- 1A	-73480-7	110- 11A	31267 -20030	136- 4A	-23090	134- 15A
31115 -70010	131- 32A	31205 -20600	10- 4A	31281 -20080	136- 111A	-23090	158- 3A
-70010	614- 41A	-29110	626- 31A	-20440	136- 111B	-23180	466- 4A
31140 -60010	347- 25A	-36110	540- 5A	31285 -70060	202- 8A	-24620	119- 103A
31200 -21660	140- 25A	-36120	540- 6A	31289 -70570	202- 9A	-25940	468- 4A
-28220	140- 24A	-39000	2- 101A	31523 -70190	366- 12A	-25980	366- 35A
-29720	553- 21A	-40640	103- 5A	-70190	670- 22A	-25980	670- 105A
-31470	32- 27A	-41870	228- 113A	-70280	524- 4A	-27420	140- 17B
-31530	32- 115A	-41870	232- 123A	31600 -70020	464- 420A	-27420	158- 39B
-36330	226- 3A	-41870	237- 133A	-70020	720- 420A	-27500	134- 43B
-37110	228- 111A	-42060	644- 1A	31605 -70010	464- 600A	-27500	158- 6B
-37110	232- 121A	-42300	362- 41A	-70010	720- 600A	-27560	134- 5B
-37110	236- 131A	-42320	362- 43A	31611 -70010	206- 16A	-27560	158- 2B
-37120	228- 112A	-42360	362- 42A	-70020	240- 453A	-27570	134- 18B
-37120	232- 122A	-42480	39- 15A	-70020	242- 453A	-27570	158- 5B
-37120	236- 132A	-42490	39- 16A	-70020	295- 453A	-70710	119- 19A
-38270	36- 23A	-42580	32- 121A	-70020	462- 453A	-71280	140- 42A
-38380	30- 21A	-46770	537- 11A	-70020	718- 453A	-71280	158- 42A
-39480	30- 25A	-46780	537- 31A	-70040	464- 413A	-71300	69- 21A
-40650	548- 1A	-46790	537- 1A	-70040	720- 413A	-71420	335- 2A
-40820	565- 1A	-46800	537- 21A	31701 -70550	206- 13A	-71580	69- 146A
-40830	565- 2A	-46820	537- 41A	-70850	198- 26A	-71730	104- 135A
-40840	565- 5A	-46830	537- 101A	-70850	200- 27A	-71730	108- 135A
-40850	565- 8A	-46840	537- 111A	31823 -22080	100- 21A	-71730	441- 105A
-41990	548- 1B	-46850	537- 121A	-22090	100- 22A	-71730	444- 105A
-42020	690- 2A	-50510	107- 5A	-22100	100- 23A	-71730	592- 45A
-60030	30- 23A	-50520	107- 34A	-22150	100- 21B	-71770-7	394- 6A
-60030	504- 21A	-70120	74- 12A	-22160	100- 22B	-71770-7	396- 6A
-60040	30- 24A	-70220	464- 201A	-22170	100- 23B	-71780-7	394- 7A
-60040	504- 22A	-70220	720- 201A	-22440	100- 22C	-71780-7	396- 7A
-60060	504- 24A	-70240	434- 18A	-22450	100- 21C	-71790-7	394- 8A
-60100	372- 43A	-70240	436- 18A	31827 -21640	42- 1A	-71790-7	396- 8A
-60110	22- 3A	-70240	608- 18A	-21650	42- 2A	-71800-7	394- 43A
-60110	24- 3A	-70240	610- 18A	-22120	42- 1B	-71800-7	396- 5A
-60110	26- 3A	31210 -20070	140- 8A	-22130	42- 2B	-71810-7	398- 5A
-60140	22- 1A	-20990	14- 3A	31828 -20420	570- 5A	-71820-7	398- 6A

silverhorn.co.uk

PART NUMBER	PAGE-SYM	PART NUMBER	PAGE-SYM	PART NUMBER	PAGE-SYM	PART NUMBER	PAGE-SYM
31990 -71830-7	386- 1A	32210 -72210	510- 202A	32431 -20100	147- 36A	32923 -70100	675- 7A
-71840-7	379- 13A	-72240-7	290- 2A	-20470	160- 9A	-70120	76- 1A
-71850-7	379- 14A	-72250-7	290- 3A	-20470	164- 9A	-70120	80- 1A
-71860-7	379- 15A	-72380	484- 2A	32433 -20130	172- 17A	-70120	85- 1A
-71920-7	400- 5A	-72390	484- 3A	-20130	174- 17A	-70120	124- 45A
-71930-7	400- 6A	-72420	232- 104B	-20130	176- 17A	-70120	224- 8A
32011 -21500-7	339- 43A	-72420	236- 104A	-20140	172- 16A	-70120	356- 4A
-21500-7	343- 43A	-72810-7	368- 10A	-20140	174- 16A	-70120	375- 35A
-21540-7	665- 31A	-72810-7	672- 10A	-20140	176- 16A	-70120	438- 13A
-21550-7	665- 32A	32211 -70230	103- 42A	32437 -20140	136- 18A	-70120	534- 3A
-21690-7	339- 41A	-70230	107- 42A	32810 -70020	103- 102A	-70120	584- 8A
-21690-7	343- 41A	-70230	441- 12A	-70020	107- 102A	-70120	612- 13A
-21700-7	339- 42A	-70230	444- 12A	-70020	441- 22A	-70120	675- 17A
-21700-7	343- 42A	-70230	592- 2A	-70020	444- 22A	-70140	575- 2A
-22290-7	665- 11A	-70330	14- 130A	-70020	592- 12A	-70140	579- 21A
-22300-7	665- 12A	32215 -20040	81- 204A	32815 -60110	103- 2A	-70140	584- 9A
-22380-7	665- 41A	-20050	81- 203A	-60110	107- 2A	-70140	594- 21A
-22390-7	665- 42A	-20080	85- 9A	32816 -70350	103- 43A	-70140	600- 21A
-60240-7	347- 12A	-70040	81- 207A	-70410	441- 13B	-70140	620- 121A
-60250-7	347- 132A	-70050	81- 201A	-70420	107- 43A	-70140	620- 201A
-60260-7	347- 13A	-70070	81- 206A	-70420	444- 13A	-70140	622- 31A
32110 -60010	39- 19A	-70080	544- 11A	-70420	592- 3A	-70140	624- 31A
-60010	42- 7A	-70150	81- 208A	-70450	441- 13A	-70140	626- 21A
-60010	42- 32A	32223 -70050	198- 28A	32860 -70030-7	52- 21A	-70140	628- 41A
-70150	74- 103A	-70050	200- 32A	32920 -21110	122- 7A	-70140	631- 21A
-70150	522- 13A	32224 -20040	12- 32A	-60070-7	390- 15A	-70140	638- 21A
32112 -20010	432- 7A	-20140	228- 145A	-60080-7	597- 13A	-70140	646- 111A
-20010	606- 7A	-20140	232- 205A	-70760	103- 47A	-70140	648- 21A
32150 -20210	22- 16A	-20140	237- 215A	-70760	107- 47A	-70140	650- 21A
-20210	24- 16A	-20160-7	328- 1A	-70760	441- 17A	-70140	654- 21A
-20210	26- 16A	-20170	208- 44A	-70760	444- 17A	-70140	658- 21A
-20210	28- 16A	-20170	210- 44A	-70760	592- 7A	-70150	579- 22A
-20250	339- 47A	-20220	498- 42A	-70790-7	119- 114A	-70150	594- 22A
-20340	44- 3A	-60020	372- 31A	-70800-7	394- 20A	-70150	678- 21A
-20390	343- 47A	32264 -21320	335- 1A	-70800-7	396- 26A	-70190	356- 2A
-60020	8- 201A	-21320	339- 000A	-70800-7	402- 4A	-70210	734- 6A
-60020	32- 203A	-21490	335- 1B	-70870-7	597- 22A	-70220-7	394- 19A
-60020	36- 41A	-21490	343- 000A	-70960-7	368- 11A	-70220-7	396- 23A
-60020	330- 13A	-21880	335- 1C	-70960-7	672- 11A	-70230-7	379- 27A
-60020	407- 333A	-21880	343- 000B	-70970-7	368- 14A	32924 -20010	258- 12A
-60030	339- 44A	32400 -21680	138- 29A	-70970-7	672- 14A	-20040	245- 12A
-60030	343- 44A	-21800	136- 32A	-70980-7	368- 13A	-20050	447- 5A
-60040	410- 9A	-21930	136- 112A	-70980-7	672- 13A	-20050	702- 5A
-60040	413- 9A	-22220	150- 29A	-70990-7	368- 6A	32962 -60300	119- 1A
-60050	8- 201B	-22230	152- 6A	-70990-7	672- 6A	-60320	119- 8A
-60050	32- 203B	-22240	154- 5A	-71000-7	368- 9A	32970 -70020	119- 18A
32151 -60080	228- 23A	-22270	138- 21A	-71000-7	672- 9A	-70040	347- 36A
-60080	232- 23A	-22280	138- 25A	32923 -20070	269- 25A	-70210	351- 36A
-60080	236- 23A	-23100	160- 8A	-20070	713- 201A	-70210	354- 13A
-60100	44- 2A	-23100	164- 8A	-20100	112- 19A	-70210	356- 5A
32153 -60030	39- 25A	32405 -20020	147- 27A	-20690	278- 2A	-70370-7	398- 7A
-60030	42- 22B	-20030	147- 28A	-20900	656- 2A	-70370-7	400- 7A
-60150	42- 22A	-20040	144- 30A	-70090	74- 112A	33057 -20610	452- 15A
-60170	42- 22C	-20050	147- 31A	-70090	74- 132A	-20610	454- 45A
-60180	39- 25B	-20250	147- 26A	-70090	76- 2A	-20610	706- 15A
-60180	42- 22D	32420 -20300	172- 9A	-70090	80- 2A	-20610	708- 45A
-60190	107- 33A	-20300	174- 9A	-70090	85- 2A	-20790	85- 141A
32155 -70020	24- 35A	-20300	176- 9A	-70090	124- 46A	-20810	282- 6A
-70020	26- 35A	32421 -20090	147- 25A	-70090	224- 9A	-20810	284- 6A
-70020	28- 35A	-20350	160- 10A	-70090	356- 1A	-20850	275- 14A
32210 -20560	700- 31A	-20350	164- 10A	-70090	534- 12A	-20960	690- 6A
-20690	88- 10A	32425 -20080	147- 34A	-70100	80- 3A	-21020	362- 16A
-70060	119- 31A	-20090	147- 33A	-70100	85- 3A	-21050	85- 131A
-70360	81- 205A	-20350	160- 7A	-70100	356- 3A	-21070	388- 12B
-70450	81- 202A	-20350	164- 7A	-70100	359- 14A	-21110	85- 131B
-71370	74- 104A	32429 -70380-7	110- 18A	-70100	375- 34A	-21150	272- 14A
-71370	522- 14A	32431 -20070	147- 97A	-70100	438- 14A	-21160	180- 15A
-71960	204- 26A	-20080	147- 37A	-70100	534- 4A	-21170	180- 14A
-72200	510- 201A	-20090	144- 35A	-70100	612- 14A	-21290	631- 41A

silverpoint.co.uk

PART NUMBER	PAGE-SYM	PART NUMBER	PAGE-SYM	PART NUMBER	PAGE-SYM	PART NUMBER	PAGE-SYM
33057 -21300	362- 16B	33191 -34820	85- 105A	33193 -43430	76- 101C	33460 -60190-7	354- 21C
-21340	675- 12A	-42030	426- 2A	-45230	85- 101F	-60210-7	354- 21B
-21350	620- 34A	-44210	546- 32A	-45870	438- 1B	33470 -60120-7	392- 1B
-21470	85- 131C	-47010	85- 103A	-45870	612- 1B	-60170-7	392- 1A
-21520	85- 131D	-55400	534- 2A	-46610	584- 11B	-70080-7	54- 56A
-21530	362- 16C	-56830	80- 126A	-46610	587- 11A	33500 -70040-7	52- 1A
-60030	347- 38A	-60450-7	382- 6A	-46720	544- 5A	-70040-7	54- 000A
-70010	438- 12A	-60470-7	382- 7A	-46820	544- 4A	-70050-7	54- 1A
-70010	612- 12A	-60480-7	394- 34A	-47420	85- 101G	33530 -20010	347- 15A
-70240	372- 102A	-60520-7	384- 6A	-47440	356- 101E	33610 -70290	103- 124A
-70550	206- 30A	-60530-7	384- 7A	-48670	366- 21B	-70290	107- 124A
-70680-7	394- 4A	-70260	74- 124A	-48670	670- 41B	-70290	441- 44A
-70680-7	396- 4A	-70260	74- 144A	-49290	80- 101G	-70290	444- 44A
-70690-7	394- 5A	-70260	534- 24A	-50110	675- 1B	-70290	592- 34A
-70700-7	379- 12A	-70520-7	54- 36A	-50510	356- 101F	-70300	103- 125A
33065 -60040	147- 82A	33193 -22030	80- 118A	-50550	356- 102A	-70300	107- 125A
-60110	144- 81A	-22030	438- 3A	-50790	85- 101H	-70300	441- 45A
-60120	147- 83A	-22030	612- 3A	-50840	575- 101B	-70300	444- 45A
-60250	160- 25A	-22040	80- 119A	-51550	85- 104D	-70300	592- 35A
-60250	164- 25A	-22080	81- 128A	-52880	85- 104E	33621 -21210	168- 2A
33070 -22600	562- 1A	-25720	356- 101A	33197 -70040-7	402- 7A	-21260	168- 3A
-22720	562- 1B	-25880	80- 106A	-70100-7	396- 44A	-21260	170- 3A
-22830	562- 1C	-25890	80- 107A	33220 -70090-7	394- 1A	-21970	170- 2A
-60020	339- 173A	-25930	249- 117A	-70090-7	396- 1A	33712 -20070	347- 19A
-60020	343- 213A	-25950	76- 101A	33241 -70060	74- 22A	33713 -20030	72- 4A
-70100	372- 131A	-26010	85- 104A	33243 -70050	74- 20A	-20110	72- 5A
-70110	372- 212A	-26250	85- 106A	33245 -70080	74- 21A	-20110	522- 21A
33100 -20100	172- 5A	-26980	80- 104A	33258 -20010	14- 8A	-22540	189- 5A
-20100	174- 5A	-26990	80- 105A	-20010	700- 46A	-22540	481- 125A
-70300	74- 121A	-27290	80- 101A	-20250	700- 6A	-22680	80- 76A
-70300	74- 141A	-27300	85- 101A	-60070	127- 135A	-22680	388- 21A
-70300	534- 21A	-29590	80- 101B	-60070	131- 205A	-22820	34- 13A
-70350	202- 4A	-29600	85- 101B	33280 -70180	103- 121A	-22820	406- 103A
-70690	190- 231A	-29960	492- 1A	-70180	444- 41A	-22830	112- 31A
-70690	280- 131A	-29970	492- 2A	-70250	441- 41A	-25110	537- 6A
-70740	478- 402A	-30500	356- 101B	33281 -71150	103- 41A	-25110	537- 122A
-70890	299- 631A	-31390	76- 101B	-71590	441- 11B	-25800	44- 31A
-70900	299- 632A	-31510	85- 104B	-71630	107- 41A	-25810	44- 32A
33110 -60020-7	396- 48A	-31600	80- 105B	-71740	441- 11A	-26310	537- 42A
-60050-7	400- 22A	-31610	80- 106B	-71750	444- 11A	-26310	537- 123A
-70370	295- 520A	-31620	80- 107B	-71750	592- 1A	-26920	537- 113A
-70380	295- 510A	-31980	356- 101C	33300 -70050	81- 212A	-26950	537- 26A
-70400	462- 510A	-32320	80- 101C	-70050	85- 122A	-27120	537- 43A
-70400	718- 510A	-32800	85- 101C	-70200	232- 106B	-27130	537- 44A
-70630-7	394- 37A	-34510	534- 1A	-70200	236- 106A	-27140	537- 102A
-70640-7	398- 18A	-35470	85- 104C	-70880-7	402- 9A	-27150	537- 103A
-70680	295- 510B	-35660	584- 6A	-71250	236- 104B	-27160	537- 112A
33190 -24690	85- 102A	-35660	587- 6A	33305 -20190	584- 21A	-27170	537- 25A
-26830	80- 113A	-35670	675- 1A	-20190	587- 21A	-27190	537- 124A
-27180	80- 116A	-36060	366- 21A	-20250	584- 22A	-27230	537- 2A
-27870	80- 122A	-36060	670- 41A	-20250	587- 22A	-27230	537- 22A
-33760	80- 108A	-36330	524- 1A	33311 -70020	498- 11A	-27240	537- 3A
-34280	81- 127A	-36630	80- 101D	33360 -60070-7	390- 13A	-27240	537- 23A
-35600	80- 109A	-36640	85- 101D	-60070-7	402- 000A	-27270	537- 24A
-35610	80- 111A	-36840	584- 11A	-70130-7	402- 1A	-27280	537- 4A
-35620	80- 112A	-38380	575- 101A	33365 -20040-7	390- 1A	-27380	537- 5A
-35630	80- 114A	-40670	438- 2A	33410 -61330	524- 2A	-27390	537- 8A
-35680	80- 121A	-40670	612- 2A	-61340	64- 1A	-27400	537- 7A
-35690	80- 124A	-40860	85- 106B	-61340	66- 1A	-27920	8- 124B
-35700	80- 125A	-40970	85- 101E	-61650	438- 23A	-27950	620- 35A
-35750	546- 4A	-41090	80- 101E	-61650	612- 23A	-28050	562- 21A
-35980	80- 115A	-41420	356- 101D	33411 -60120	64- 5A	-28060	418- 32A
-37640	546- 23A	-41720	438- 1A	-60120	66- 5A	-28060	562- 22A
-39560	80- 122B	-41720	612- 1A	33435 -60280-7	400- 18A	-28560	407- 143A
-60100	354- 12A	-43350	80- 101F	-70130-7	398- 19A	-28570	406- 133A
-60150	354- 12B	-43370	80- 105C	33460 -60070	64- 7A	-28590	407- 203A
-70650	299- 420A	-43380	80- 106C	-60150	64- 7B	-28620	406- 123A
33191 -20770	80- 117A	-43390	80- 107C	-60150	66- 7A	-28630	407- 214A
-28650	80- 123A	-43420	85- 106C	-60190-7	354- 21A	-28670	418- 31A

silverhorn.co.uk

PART NUMBER	PAGE-SYM	PART NUMBER	PAGE-SYM	PART NUMBER	PAGE-SYM	PART NUMBER	PAGE-SYM
33713 -28780	407- 215A	34000 -70920-7	396- 22A	34042 -71550	608- 23A	34541 -70460	192- 22A
-28790	407- 233A	-70920-7	398- 21A	-71550	610- 23A	-70590	96- 2A
-28800	407- 303A	-70920-7	400- 24A	34044 -70660	303- 25A	34715 -70040	206- 22A
-29360	410- 19A	-70930-7	398- 4A	-70660	517- 15A	-70050	206- 21A
-29360	413- 19A	-70930-7	400- 4A	-70780	96- 21A	34800 -70210	347- 35A
-29370	410- 21A	-70940	484- 7A	34047 -60050	160- 29A	-70220	347- 205A
-29370	413- 21A	-71010-7	502- 3A	-60050	164- 29A	-70380-7	290- 1A
-29380	410- 22A	-71020	299- 213A	34200 -20960	10- 6A	34820 -22160	310- 000A
-29380	413- 22A	-71040-7	110- 12A	-21090	6- 23A	-62730	312- 1A
-29390	410- 23A	34041 -21650	8- 124A	-21120	6- 43A	-63090	422- 000A
-29390	413- 23A	-21650	32- 144A	-21150	172- 24A	-63470	192- 3A
-29770	212- 4A	-21650	407- 324A	-21150	174- 24A	-63470	202- 000A
-29770	454- 14A	-21760	466- 11A	-22770	208- 13A	-63970	216- 1A
-29770	708- 14A	-22660	64- 6A	-22770	210- 13A	-63970	222- 000A
-29790	470- 22A	-22660	66- 6A	-23170	136- 27A	-64300	312- 101A
-29930	413- 21B	-22770	39- 31A	-24730	136- 28A	-65310	728- 2A
-29940	413- 22B	-23430	103- 13A	-24740	136- 29A	-65310	731- 1A
-70240	103- 45A	-23430	107- 13A	-25370	228- 22A	-65380	728- 3A
-70240	107- 45A	-23610	46- 6A	-25370	232- 22A	-65380	731- 101A
-70240	441- 15A	-23620	46- 7A	-25370	236- 22A	34940 -70270	478- 301A
-70240	444- 15A	-23640	46- 8A	-27340	136- 27B	34944 -70020	498- 12A
-70240	592- 5A	-23670	46- 9A	-27350	136- 28B	34950 -20010	208- 8B
-70260	103- 46A	-23680	46- 11A	-27360	136- 29B	-20010	210- 8A
-70260	107- 46A	-23690	46- 12A	-27700	176- 24A	-20010	452- 8A
-70260	441- 16A	-23700	46- 5A	-70850	240- 217A	-20010	706- 8A
-70260	444- 16A	-23970	339- 74A	-70850	242- 217A	-20020	208- 9A
-70260	592- 6A	-23970	343- 204A	-70850	295- 217A	-20020	210- 9A
33920 -70100	198- 25A	-23990	39- 33A	-70850	462- 217A	-20020	452- 9A
-70100	200- 30A	-24280	39- 34A	-70850	478- 217A	-20020	706- 9A
33921 -60590-7	50- 1A	-24320	228- 32B	-70850	718- 217A	-60020	208- 8A
-60590-7	52- 000A	-24320	232- 32A	-71620	103- 48A	34956 -21140	192- 14A
-70180-7	52- 3A	-24320	236- 32A	-71620	107- 48A	35010 -20340	438- 4A
33930 -70330	240- 216A	-25010	540- 8A	-71620	441- 18A	-20340	612- 4A
-70330	242- 216A	-25020	540- 9A	-71620	444- 18A	-60010	228- 19A
-70330	295- 601A	-25030	540- 11A	-71620	592- 8A	-60010	232- 19A
-70330	462- 216A	-25090	690- 4A	-71720	464- 217A	-60010	236- 19A
-70330	478- 663A	-25170	665- 13A	-71720	720- 217A	-60260	546- 21A
-70330	718- 216A	-25180	665- 14A	34256 -23100	2- 1A	-60270	74- 31A
-70370	202- 5A	-25210	438- 24A	-23430	2- 1B	-60280	74- 32A
-70380	202- 6A	-25210	612- 24A	34257 -25740	8- 1A	-60340	486- 11A
-70430	295- 218A	-25450	685- 134A	-26060	685- 1A	-60460	74- 33A
-70430	478- 218A	-25890	685- 135A	-26380	8- 1B	-60550	546- 22A
-70440	295- 604A	-60070	339- 36A	-26500	8- 1C	-60570	74- 35A
-70440	478- 664A	-60070	343- 36A	-26820	685- 1B	-70660-7	396- 41A
-70450	295- 603A	-60080	347- 209A	-27060	685- 1C	35020 -20870	675- 2A
-70460	295- 602A	-60090	347- 39A	34500 -21280	142- 32A	-60070	74- 111A
-70460	478- 661A	-60100	347- 214A	-23380	208- 42A	-60070	74- 131B
-70600	204- 18A	-60110	347- 44A	-24580	168- 1A	-60070	534- 11A
-70840	478- 405A	-60120	347- 41A	-24580	170- 1A	-70210	228- 102A
-70960	478- 404A	-60140	347- 43A	-24620	138- 22A	-70210	232- 114A
-70970	478- 442A	-60180	347- 42A	-25790	228- 104A	-70210	236- 114A
-70980	464- 311A	-60250	339- 38A	-25790	232- 102A	-70220	228- 103A
-70980	720- 311A	-60250	343- 38A	-25790	236- 102A	-70220	232- 115A
-71000	299- 261A	-60270	339- 39A	-70080-7	500- 7A	-70220	236- 115A
-71010	299- 262A	-60270	343- 39A	-70740-7	398- 1A	35021 -60020	74- 43A
-71020	299- 218A	-60280	339- 37A	-70740-7	400- 1A	-60020	522- 2A
34000 -70030	208- 32A	-60280	343- 37A	-70770-7	502- 7A	35035 -60080	74- 41A
-70030	210- 32A	34042 -60400	172- 30A	-70790	299- 453A	35037 -20020	62- 4A
-70030	452- 42A	-60400	174- 30A	34501 -20300	154- 4A	-20200	62- 3A
-70030	706- 46A	-60600	172- 3B	-21990	498- 1A	-60030	62- 11A
-70330-7	502- 17A	-60600	174- 3B	-22550	498- 1B	35043 -60010	544- 1A
-70600	240- 213A	-60600	176- 3A	-60170	496- 2A	35045 -60020	496- 5A
-70600	242- 213A	-70440	192- 9A	34511 -20790	160- 6A	35046 -70080	74- 127A
-70600	295- 213A	-70450	192- 11A	-20790	164- 6A	-70080	74- 147A
-70600	462- 213A	-71030	206- 4A	34522 -20100	136- 21A	-70080	534- 27A
-70600	478- 213A	-71440	198- 18A	34527 -20080	136- 22A	35047 -20080	490- 16A
-70600	718- 213A	-71440	200- 22A	34528 -70270-7	110- 17A	-20270	194- 101A
-70850-7	290- 7A	-71550	434- 23A	34541 -70440	98- 2A	-20270	194- 101B
-70910-7	110- 2A	-71550	436- 23A	-70450	94- 2A	-20270	194- 101C

silverpoint.co.uk

PART NUMBER	PAGE-SYM	PART NUMBER	PAGE-SYM	PART NUMBER	PAGE-SYM	PART NUMBER	PAGE-SYM
35047 -60250	189- 116A	35100 -71970	484- 17A	35371 -20100	34- 3A	35600 -71450	204- 2A
-60260	194- 102A	-71970-7	290- 17A	-20530	34- 2A	-71540	156- 12A
-60610	194- 122A	-71980-7	394- 22A	-20730	406- 38A	-71810	460- 373A
-70190-7	394- 32A	-71980-7	396- 27A	-20740	406- 39A	-71810	716- 373A
-70190-7	396- 42A	-71980-7	398- 10A	-20860	406- 5A	-71820	292- 522A
-70200-7	394- 33A	-71980-7	400- 10A	-20870	406- 6A	-71820	460- 522A
-70200-7	396- 43A	-72010-7	394- 23A	35440 -20230	406- 73A	-71820	716- 522A
35048 -60040	74- 42A	-72010-7	396- 29A	-20960	44- 9A	-72760	292- 373A
-60040	522- 1A	-72020-7	394- 29A	-20960	228- 21A	-73340	292- 371A
35051 -60080	62- 7A	-72020-7	396- 39A	-20960	232- 21A	-73340	460- 371A
-60080	140- 26A	-72030-7	394- 44A	-20960	236- 21A	-73340	716- 371A
-70040	224- 1A	-72030-7	396- 9A	-20960	688- 10A	-73440	292- 372A
-70040	226- 4A	-72040-7	379- 21A	-21400	347- 22A	-73450	292- 374A
35055 -20110	584- 1A	-72040-7	398- 11A	-21810	335- 23A	-73510	202- 7A
-20200	584- 1B	-72040-7	400- 11A	-21810	343- 113A	-73520	206- 23A
-20200	587- 1A	-72050-7	402- 5A	-70210	292- 337A	-73890	478- 762A
35065 -60060	12- 15A	-72240-7	502- 1A	-70220	292- 335A	-73900	478- 711A
35067 -60060	372- 19A	-72290-7	396- 37A	-70220	460- 335A	-73910	295- 614A
-60070	372- 21A	35104 -70030	74- 123A	-70220	716- 335A	-73910	478- 614A
35100 -20010	30- 27A	-70030	74- 143A	-70810	198- 24A	-73920	295- 613A
-20010	88- 11A	-70030	534- 23A	-70810	200- 29A	-73920	478- 612A
-20010	362- 44A	-70170	464- 472A	35510 -20160	147- 21A	-73930	295- 612A
-20020	372- 3A	-70170	720- 472A	-20510	172- 18A	-73940	295- 611A
-20020	372- 16A	-70180	299- 411A	-20510	174- 18A	-73940	462- 221A
-20020	504- 27A	35106 -20020	22- 21A	-20510	176- 18A	-73940	478- 613A
-20030	546- 16A	-20020	24- 21A	-20580	147- 22A	-73940	718- 221A
-20180	362- 52A	-20020	26- 21A	-20590	144- 20A	-73950	295- 641A
-20200	22- 19A	-20020	28- 21A	35513 -70210	96- 1A	-73950	462- 241A
-20200	22- 45A	-20020	30- 28A	-70210	192- 21A	-73950	718- 241A
-20200	24- 19A	-20020	504- 29A	-70260	94- 1A	-73970	295- 246A
-20200	24- 115A	-70170	22- 101A	-70270	98- 1A	-74270	295- 642A
-20200	26- 19A	-70170	24- 121A	35550 -20070	354- 1B	-74340	295- 643A
-20200	28- 19A	-70170	228- 131A	-60030	354- 1A	-74350	478- 712A
-20200	30- 26A	-70170	232- 141A	35570 -20050	517- 2A	-74360	295- 644A
-20200	228- 115A	-70170	237- 201A	-20320	517- 2B	-74850	204- 14A
-20200	232- 125A	-70180	69- 202A	-70540	204- 3A	-74860	204- 19A
-20200	237- 135A	35107 -20030	194- 46A	-70960	510- 302B	-74870	204- 20A
-20200	372- 48A	-20040	160- 42A	-71090	219- 302B	-74920	526- 511A
-20200	375- 33A	-20040	164- 42A	-71090	510- 302A	-74930	526- 211A
-20200	375- 52A	-60010	194- 112A	-71120	219- 301A	-75630	219- 321A
-20200	454- 12A	-70030	160- 42B	-71130	219- 302A	-75640	219- 322A
-20200	468- 16A	-70030	164- 42B	-71530-7	502- 9A	-75650	219- 323A
-20200	504- 33A	35110 -70050	299- 418A	35575 -70060	156- 11A	-75680	240- 221A
-20200	688- 11A	35175 -20430	504- 1A	-70180	510- 300A	-75680	242- 221A
-20200	708- 12A	-20540	30- 1A	-70190	219- 300A	-75690	240- 241A
-20280	339- 167A	35195 -20440-7	18- 1A	-70200	510- 300B	-75690	242- 241A
-20280	343- 307A	-20750	18- 1B	-70240	219- 300B	-75880	510- 321A
-20280	372- 17A	-20750	20- 1A	-70250	510- 300C	-75890	219- 323B
-20280	372- 49A	-20810	438- 21A	35600 -20120	14- 6A	-75890	510- 323A
-20280	375- 53A	-20810	612- 21A	-20150	272- 11A	-76030	14- 144A
-20280	382- 56A	35200 -20070	136- 17A	-20150	272- 11B	-76060	198- 8A
-20280	384- 56A	35210 -21340	662- 11A	-20200	147- 66A	-76060	200- 9A
-20310	339- 104A	-22940	359- 3A	-20200	150- 66A	-76060	200- 109A
-20310	343- 104A	-22950	359- 2A	-20210	144- 67A	-76070	200- 12A
-20330	28- 27A	-23160	359- 3C	-20210	147- 67A	-76240	198- 14A
-20330	228- 114A	-23170	359- 2C	-20220	144- 98A	-76240	200- 15A
-20330	232- 124A	-23250	359- 3B	-20240	160- 36A	-76250	198- 15A
-20330	237- 134A	-23260	359- 2B	-20240	164- 36A	-76250	200- 16A
-20330	470- 23A	-23880	734- 2A	-21700	303- 19A	-76260	200- 17A
-20400	339- 166A	-23890	734- 3A	-21700	517- 9A	-76270	198- 13A
-20400	343- 306A	-24130	359- 2D	-21710	517- 8A	-76620	299- 408A
-20620	18- 32A	-24140	359- 3D	-21770	134- 13A	-76620	478- 408A
-20620	20- 32A	35211 -60050	44- 5A	-21900	208- 45B	-77080-7	502- 11A
-20680	504- 28A	35370 -20060	34- 11A	-21900	208- 46A	-77250	478- 713A
-20830	454- 8A	-20070	34- 12A	-21900	210- 45A	-77260	478- 714A
-20830	708- 8A	-20070	406- 102A	-22930	249- 44A	-77320	200- 17B
-20850	470- 24A	-20590	34- 21A	-23030	249- 45A	-77350	464- 335A
-70010-7	500- 26A	-22060	406- 101A	-60150	160- 56A	-77350	720- 335A
-71200-7	500- 1A	-22070	406- 111A	-60150	164- 56A	-77510	299- 221A

silverhorn.co.uk

PARTS No. INDEX

PART NUMBER	PAGE-SYM	PART NUMBER	PAGE-SYM	PART NUMBER	PAGE-SYM	PART NUMBER	PAGE-SYM
35600 -77510	299- 222A	35680 -48320	103- 22A	35700 -70970-7	500- 5A	35750 -24920	134- 14B
-77540	299- 246A	-48320	107- 22A	-70970-7	502- 5A	-24990	172- 117A
-77550	299- 414A	-48330	103- 23A	-71000	206- 32A	-24990	176- 117A
-77560	464- 324A	-48330	107- 23A	-71860	204- 9A	-25000	172- 118A
-77560	720- 324A	-48340	103- 24A	-71870-7	379- 25A	-25000	176- 118A
-77580	299- 241A	-48340	107- 24A	-71950-7	502- 12A	-25010	172- 119A
-77590	299- 242A	-48350	103- 25A	-71970	299- 263A	-25010	176- 119A
-77600	299- 243A	-48350	107- 25A	-72030	434- 24A	-25020	176- 120A
-77610	299- 244A	-48360	103- 29A	-72030	436- 24A	-25030	172- 121A
-77700	299- 221B	-48360	107- 29A	-72030	608- 24A	-25030	176- 121A
-77950	434- 4A	-48370	103- 31A	-72030	610- 24A	-70470	460- 702A
-77950	436- 4A	-48370	107- 31A	35750 -20380	90- 24A	-70470	716- 702A
-77950	608- 4A	-50160	375- 22A	-20440	147- 48A	-90010	14- 26A
-77950	610- 4A	-51230	339- 73B	-20460	140- 11A	35755 -70160-7	119- 113A
35617 -60050	228- 15A	-51230	343- 203A	-20930	147- 106A	35820 -70190-7	214- 14A
-60050	232- 15A	-51710	335- 5A	-21200	142- 107A	35822 -70010-7	394- 30A
-60050	236- 15A	-52840	335- 2B	-21430	154- 21A	35824 -20010	62- 1A
-60090	496- 7A	-52890	24- 38A	-22780	362- 17A	35829 -60050	62- 2A
-60120	335- 22A	-52890	26- 38A	-23050	172- 101A	-70050-7	394- 31A
-60120	343- 112A	-52890	28- 38A	-23050	174- 101A	35830 -70010	119- 21A
-60140	335- 22B	-53810	24- 101A	-23050	176- 101A	35902 -60020-7	372- 22A
35680 -33340	18- 23A	-53810	26- 101A	-23060	172- 102A	35910 -60070	436- 50A
-33340	20- 23A	-53810	28- 41A	-23060	174- 102A	-60070	610- 50A
-33340	24- 34A	-53820	24- 102A	-23060	176- 102A	-70010	156- 14A
-33340	26- 34A	-53820	26- 102A	-23070	172- 103A	-70120	295- 623A
-33340	28- 34A	-53820	28- 42A	-23070	174- 103A	-70130	295- 622A
-35560	18- 22A	-53830	24- 103A	-23070	176- 103A	-70140	295- 621A
-35560	20- 22A	-53830	26- 103A	-23080	172- 104A	-70200	295- 621B
-43840	339- 91A	-53830	28- 43A	-23080	174- 104A	-70210	295- 623B
-43840	343- 121A	-53840	24- 104A	-23080	176- 104A	-70220	295- 622B
-43850	339- 92A	-53840	26- 104A	-23090	172- 105A	-70250	306- 14A
-43850	343- 122A	-53840	28- 44A	-23090	174- 105A	-70260	189- 113A
-43860	339- 93A	-53850	24- 105A	-23090	176- 105A	-70260	189- 203A
-43860	343- 123A	-53850	26- 105A	-23100	172- 106A	-70260	430- 13A
-43900	339- 112A	-53850	28- 45A	-23100	174- 106A	-70260	604- 23A
-43900	343- 132A	-54510	343- 202A	-23100	176- 106A	-70260	635- 223A
-43910	339- 111A	-55300	542- 7A	-23110	172- 107A	-70390	189- 113B
-43910	343- 131A	-55310	542- 8A	-23110	174- 107A	-70390	190- 203B
-44010	339- 72A	-55320	542- 9A	-23110	176- 107A	-70410	299- 662A
-45520	228- 44A	-55330	542- 3A	-23120	172- 108A	-70420	299- 663A
-45520	232- 44A	-55340	542- 4A	-23120	174- 108A	-70430	299- 661A
-46310	339- 73A	-55350	542- 5A	-23120	176- 108A	-70440	478- 591A
-47570	339- 113A	-55910	232- 44B	-23130	172- 109A	-70450	478- 592A
-47570	343- 133A	-55910	236- 44A	-23130	174- 109A	-70460	478- 593A
-47920	375- 42A	-70100	372- 135A	-23130	176- 109A	35930 -70010	81- 213A
-47930	339- 94A	35700 -20230	418- 16A	-23140	172- 111A	-70010	85- 123A
-47930	343- 124A	-20230	562- 3A	-23140	174- 111A	-70350	366- 13A
-47940	339- 95A	-20470	458- 37A	-23140	176- 111A	-70350	670- 23A
-47940	343- 125A	-20470	713- 37A	-23150	172- 112A	-70420-7	402- 8A
-47950	339- 96A	-20520	115- 17A	-23150	174- 112A	-70590	236- 106B
-47950	343- 126A	-20660	8- 123A	-23150	176- 112A	36011 -70020-7	178- 3A
-47960	339- 97A	-20660	685- 132A	-23160	172- 113A	36200 -60030-7	390- 14A
-47960	343- 127A	-20720	406- 124A	-23160	174- 113A	-70930	103- 122A
-47970	339- 98A	-20720	406- 134A	-23160	176- 113A	-70930	441- 42A
-47970	343- 128A	-20720	407- 144A	-23170	172- 114A	-70940	103- 123A
-47980	339- 99A	-20720	407- 204A	-23170	174- 114A	-70940	107- 123A
-47980	343- 129A	-20720	407- 216A	-23170	176- 114A	-70940	441- 43A
-48090	103- 17A	-20720	407- 234A	-23180	172- 115A	-70940	444- 43A
-48090	107- 17A	-20720	407- 304A	-23180	174- 115A	-70940	592- 33A
-48130	103- 18A	-20720	410- 24A	-23180	176- 115A	-71260	107- 122A
-48130	107- 18A	-20720	413- 24A	-23190	172- 116A	-71260	441- 42B
-48260	103- 15A	-20810	303- 22A	-23190	174- 116A	-71260	444- 42A
-48260	107- 15A	-20810	517- 12A	-23190	176- 116A	-71260	592- 32A
-48270	103- 16A	-20910	136- 8A	-23220	134- 14A	36229 -22820	14- 1A
-48270	107- 16A	-20920	136- 41A	-23740	160- 57A	-23130	14- 1B
-48280	103- 19A	-20940	138- 19A	-23740	164- 57A	36233 -23200	12- 11A
-48280	107- 19A	-21050	32- 143A	-23790	85- 133A	-24020	12- 11B
-48290	103- 21A	-21050	407- 323A	-24680	160- 57B	36405 -70020	81- 211A
-48290	107- 21A	-25020	172- 120A	-24680	164- 57B	-70020	85- 121A

silvernorn.co.uk

PART NUMBER	PAGE-SYM	PART NUMBER	PAGE-SYM	PART NUMBER	PAGE-SYM	PART NUMBER	PAGE-SYM
36406 -20030	81- 129A	37212 -20210	160- 17A	37600 -20360	172- 1A	37636 -70040	731- 17A
-20090	85- 111A	-20210	164- 17A	-20360	174- 1A	-70050	312- 17A
36430 -23270	119- 102A	-20220	160- 24A	-20360	176- 1A	-70050	422- 7A
-23360	375- 16A	-20220	164- 24A	-20360	192- 17A	37643 -70080-7	50- 17A
-23830	520- 8A	-60020	144- 18A	-20420	150- 101A	37652 -70130	202- 20A
-23950	597- 2A	-60020	147- 18A	-20550	150- 91A	37710 -70390	190- 232A
-23990	366- 31A	37213 -20050	144- 15A	-20680	182- 105A	-70390	280- 132A
-23990	670- 101A	-20050	150- 15A	-20680	282- 11A	37713 -60020	94- 11A
-24180	597- 2B	-20180	160- 18A	-20680	284- 11A	-60020	96- 11A
-60070-7	379- 18A	-20180	164- 18A	-20680	452- 6A	-60020	98- 11A
-60080-7	379- 58A	-20450	410- 14A	-20680	454- 41A	-60020	192- 24A
-60090-7	597- 12A	-20450	413- 14A	-20680	706- 6A	-70260	206- 27A
-70170-7	386- 2A	-60070	147- 19A	-20680	708- 41A	37715 -20020	362- 13A
-70220-7	386- 2B	-60340	144- 17A	-20790	184- 28A	-20600	388- 18A
36431 -21120	375- 17A	-60340	147- 163A	-20790	531- 13A	-20960	112- 18A
-60070-7	382- 3A	-60600	160- 18B	-21080	468- 15A	-21150	263- 14A
-60070-7	386- 000A	-60600	164- 18B	-21080	470- 15A	-21280	112- 23A
-60080-7	382- 3B	37290 -26310	32- 1A	-21210	212- 105A	-21350	700- 8A
-60080-7	384- 3A	-26320	32- 2A	-21210	472- 22A	-22640	92- 3A
-60080-7	386- 000B	-27180	32- 3A	-21210	474- 22A	-23050	280- 21A
36436 -20580	103- 3A	-27940	32- 1B	-21330	103- 26A	37740 -20080	351- 31A
-20680	103- 3B	-27950	32- 2B	-21330	107- 26A	-20080	362- 4A
-20870	107- 3A	-28860	32- 1D	-21330	184- 29A	37743 -20010	375- 32A
-20940	107- 3B	-28870	32- 2C	-21740	136- 25A	-60030	375- 31A
36500 -20010	147- 112A	-29940	410- 1A	-21750	22- 22A	37810 -20270	74- 131A
36505 -60060-7	375- 36A	-29940	413- 1A	-21750	24- 22A	-20460	228- 17A
-60060-7	379- 1A	-29950	410- 2A	-21750	26- 22A	-20460	232- 17A
-60070-7	375- 37A	-29950	413- 2A	-21750	28- 22A	-20460	236- 17A
-60070-7	379- 41A	-30480	670- 5A	-24460	498- 36A	-20480	228- 122A
-60080-7	375- 36B	37301 -21600	160- 1A	-24550	66- 38A	-20480	232- 132A
-60080-7	379- 1B	-21600	172- 000A	-25140	432- 53A	-20480	237- 142A
-60090-7	375- 37B	-21610	164- 1A	-25140	606- 53A	-60060	208- 11A
-60090-7	379- 41B	-21610	174- 000A	-25250	136- 25B	-60060	210- 11A
36700 -70380-7	394- 14A	-22020	164- 1B	-25320	432- 53B	-60060	212- 5A
-70380-7	396- 15A	-22020	174- 000B	-25320	606- 53B	-60060	452- 11A
-90010	14- 22A	-22700	164- 1C	-70510	156- 16A	-60060	454- 11A
-90030	700- 42A	-22700	176- 000A	-71330	478- 312A	-60060	466- 22A
36724 -70080	356- 13A	37381 -20090	176- 26A	-71790-7	110- 9A	-60060	468- 11A
-70100	356- 13B	37419 -20080	136- 100A	-71930	69- 207A	-60060	470- 11A
36725 -20860	310- 1A	37421 -20660	90- 3A	-71940	69- 209A	-60060	706- 11A
-71390	312- 11A	-20660	140- 000A	-71990	526- 611A	-60060	708- 11A
-71400	202- 1A	37430 -20310	134- 000A	-72000	526- 612A	-60090	347- 37A
-71980	222- 1A	-20490	90- 2A	-72140	198- 22A	-60140	494- 60A
-72280	312- 111A	37520 -70160-7	394- 47A	-72140	200- 23A	-60180	228- 101A
-73000	731- 11A	-70160-7	396- 47A	-72340	69- 37A	-60180	232- 101A
-73010	731- 121A	-70170-7	379- 29A	-72350	69- 120A	-60180	236- 101A
36733 -20200	212- 11A	-70180-7	379- 32A	-72380-7	394- 25A	-60200	189- 122A
-20200	454- 16A	37521 -20730	339- 2A	-72380-7	396- 32A	-60200	635- 224A
-20200	708- 16A	-20730	347- 1A	-72390-7	394- 26A	-60280	236- 101B
-70090	103- 109A	-20740	339- 3A	-72390-7	396- 34A	-60340	236- 101C
-70090	107- 108A	-20740	347- 121A	-72400-7	394- 41A	-70560-7	54- 51A
-70090	441- 28A	-21080	339- 2B	-72400-7	396- 33A	37900 -20350	140- 3A
-70090	444- 28A	-21080	347- 1B	-72410-7	398- 13A	-21110	154- 10A
-70090	592- 18A	-21090	339- 3B	-72410-7	400- 13A	-21700	192- 2A
37014 -70040	575- 14A	-21090	343- 3A	-72680	299- 412A	-22170	517- 1A
-70040	662- 3A	-21090	347- 121B	37616 -20030	160- 21A	-22280	160- 4A
-70060	662- 4A	-21130	343- 2A	-20030	164- 21A	-22280	164- 4A
-70080-7	575- 115A	-21130	347- 1C	37618 -70010	119- 14A	-23180	134- 2A
-70080-7	579- 7A	37582 -20010	144- 24A	-70070	119- 15A	-23570	147- 2A
-70080-7	579- 15A	37584 -20010	150- 23A	37628 -70010	119- 17A	-23580	147- 4A
-70080-7	582- 6A	-20020	144- 44A	-70170	198- 9A	-23940	140- 2A
-70080-7	678- 4A	37585 -20130	192- 6A	-70170	200- 10A	-25660	176- 5A
37200 -70060	295- 452A	37600 -20150	228- 20A	37634 -60010-7	390- 30A	-70880-7	502- 8A
-70070	240- 452A	-20150	232- 20A	-60010-7	398- 14A	37904 -20150	172- 19A
-70070	462- 452A	-20150	236- 20A	-70020-7	379- 23A	-20150	174- 19A
-70070	718- 452A	-20250	154- 47A	-70020-7	400- 15A	-20150	176- 19A
-70130	242- 452A	-20300	172- 11A	-70030-7	400- 14A	-20350	172- 10A
37212 -20010	144- 16A	-20300	174- 11A	37636 -20250	310- 6A	-20480	174- 10A
-20010	150- 16A	-20300	176- 11A	-60010	222- 8A	-20710	144- 1A

silverton.co.uk

PART NUMBER	PAGE-SYM	PART NUMBER	PAGE-SYM	PART NUMBER	PAGE-SYM	PART NUMBER	PAGE-SYM
37904 -20850	174- 10B	38510 -60500	212- 104A	38553 -20400	156- 23A	38567 -70020	156- 33A
-21020	176- 10A	-60500	472- 21B	-60050	156- 2A	-70130	189- 114A
37910 -20890	164- 2A	-60500	474- 21A	-60220	249- 111A	-70150	190- 222A
-21050	160- 2A	-71010	306- 13A	-60630	531- 121A	-70170	189- 114B
38050 -20040	150- 7A	-71090-7	54- 45A	-70440	156- 34A	-70170	280- 122A
-20540	144- 6A	38511 -22990	189- 141A	38554 -20110	182- 11A	-70290	189- 114C
-20670	136- 6A	-23000	280- 111A	-20110	196- 1A	38670 -21730	189- 3A
38052 -20570	160- 11A	-23050	190- 211A	-20110	635- 111A	-21760	481- 123A
-20570	164- 11A	-24140	189- 31A	-60310	189- 115A	-21850	189- 3B
38055 -20390	160- 3A	-24680	306- 1A	-60420	308- 7A	-70250	74- 126A
-20390	164- 3A	-24890	189- 22A	-70030-7	500- 23A	-70250	74- 146A
38110 -70040	339- 165A	-24930	189- 21A	-70810	351- 32A	-70250	534- 26A
-70040	343- 305A	-26230	189- 21B	-70830	458- 25A	38677 -70740-7	115- 8A
38120 -20410	347- 27A	-27710	189- 22B	-70830	713- 25A	-70740-7	115- 8B
-60050	347- 26A	-60090-7	481- 2A	-70970	490- 113A	-70740-7	115- 8C
38126 -60010	347- 24A	-60100-7	481- 3A	-71110	490- 112A	-70750-7	115- 7A
-60020	347- 23A	-60180	263- 101A	-71140	490- 12A	-70750-7	115- 7B
-60030	347- 143A	-71000	430- 12A	-71520	434- 3A	38691 -70040-7	54- 41A
38130 -22570	34- 41B	-71000	604- 22A	-71520	436- 3A	38705 -22520	140- 4A
-26650-7	34- 33A	-71020	189- 112A	-71520	608- 3A	-35160	508- 17A
-26660-7	34- 34A	-71020	189- 202A	-71520	610- 3A	-35170	508- 16A
-26670-7	34- 41A	-71020	635- 222A	38559 -70010	119- 20A	-35400	57- 23A
-27210	228- 5A	-71080	14- 145A	38560 -20180	466- 1A	-35410	57- 24A
-27210	232- 5A	-71130-7	290- 8A	-60320	452- 101A	-35650	57- 21A
-27210	236- 5A	-71200	200- 40A	-60320	462- 000A	-35660	57- 22A
-27990	34- 31A	-71230	198- 36A	-60320	706- 101A	-46410	57- 4A
-28000	34- 32A	-71260	200- 42A	-60320	718- 000A	-46410	697- 4A
-28080	88- 1A	-71270	200- 41A	-60360	208- 1A	-46420	57- 6A
-28090	88- 6A	-71280	198- 37A	-60360	210- 1A	-46420	697- 6A
-30480	406- 9A	-71290-7	394- 10A	-60360	295- 000A	-46430	60- 1A
-30490	406- 11A	-71290-7	396- 11A	-60530	228- 41A	-46450	60- 5A
-30700	406- 16A	-71300-7	394- 35A	-60530	232- 41A	-49210	184- 21A
-30710	406- 17A	-71300-7	396- 45A	-60530	240- 000A	-49220	184- 22A
-30720	406- 37A	-71330	484- 8A	-60580	236- 41A	-49250	180- 2A
-30730	406- 26A	38523 -60510	219- 000A	-60580	242- 000A	-49550	122- 21A
-30990	406- 12A	-60510	258- 41A	-60610	468- 1A	-49560	12- 19A
-31000	406- 13A	-60580	219- 000B	-60610	470- 1A	-50670	280- 6A
38171 -21920	347- 32A	-60580	258- 41B	-60610	478- 000A	-50680	280- 7A
-21930	347- 202A	-60600	508- 1A	-60640	454- 1A	-51940	182- 3A
-30690	347- 201A	-60600	510- 000A	-60640	464- 000A	-51950	182- 1A
-30740	347- 31A	-60610	219- 000C	-60640	708- 1A	-52190	189- 25A
-33060	39- 13A	-60610	258- 41C	-60640	720- 000A	-52200	189- 24A
38191 -20060	339- 34A	-60660	508- 1B	-60650	212- 1A	-52240	184- 23A
-20060	343- 34A	-60660	510- 000B	-60650	299- 000A	-52260	190- 248A
38311 -60620-7	322- 1A	-60790	508- 1C	-60710	212- 1B	-52280	184- 36A
-60630-7	320- 1A	-60790	510- 000C	-60710	299- 000B	-52430	180- 1A
-60640-7	318- 1A	-60800	219- 000D	-70080	204- 17A	-52910	60- 2A
38450 -60050-7	72- 1A	-60800	258- 41D	-70100	434- 11A	-52920	60- 3A
38480 -70410	69- 148A	38530 -60080	14- 13A	-70100	436- 11A	-52930	60- 4A
-70420	74- 25A	38531 -60290	194- 41A	-70100	608- 11A	-53270	57- 1A
-70440	74- 26A	-60290	200- 000A	-70100	610- 11A	-53280	57- 3A
-70560	570- 11A	-60300	194- 11A	38565 -20040	14- 5A	-53460	182- 2A
-70570	570- 31A	-60300	198- 000A	-60720	526- 1A	-54180	697- 1A
-70630	351- 22A	-60610	194- 41B	-60850	306- 12A	-54190	697- 3A
-70770	69- 40A	-60610	200- 000B	-70740	460- 602A	-54200	697- 36A
-70800	734- 14A	38532 -60690	447- 21A	-70740	716- 602A	-54210	697- 37A
-70800-7	359- 24A	-60690	460- 000A	-70760	292- 601A	-55720	624- 1A
-70850	69- 23A	-60690	702- 21A	-71020	292- 602A	-55730	624- 2A
-70870	69- 123A	-60690	716- 000A	-71270	528- 1A	-55740	624- 3A
-70920	69- 124A	-61520	292- 000A	-71440	292- 603A	-55750	624- 4A
-70930	69- 122A	38534 -60180	256- 4A	-71460	219- 601A	-55760	628- 11A
-70930	546- 12A	-60330	256- 4B	-71460	510- 601A	-55770	628- 1A
-70940	546- 13A	38538 -70040	156- 220A	-71470	219- 602A	-55780	628- 2A
38510 -20160	513- 11A	38542 -60050	178- 8A	-71470	510- 602A	-55790	620- 2A
-20160	517- 000A	-70020	156- 32A	-71630	460- 603A	-55800	620- 1A
-20280	249- 11A	-70060	156- 31A	-71630	716- 603A	-55810	622- 1A
-20280	303- 1A	-70070	156- 39A	-71820	308- 6A	-55820	622- 2A
-60030	472- 21A	38543 -60160	184- 1A	-72000	436- 26A	-55830	622- 3A
-60470-7	178- 7A	-60160	204- 000A	-72000	610- 26A	-56070	697- 23A

silverporn.co.uk

PART NUMBER	PAGE-SYM	PART NUMBER	PAGE-SYM	PART NUMBER	PAGE-SYM	PART NUMBER	PAGE-SYM
38705 -56080	697- 24A	38765 -26450	122- 5B	39754 -70020-7	384- 11A	40000 -42220	682- 2A
-56090	697- 21A	-28160	122- 4B	39880 -70090	64- 16A	-42830	410- 12A
-56100	697- 22A	38775 -20150	488- 22A	-70090	66- 16A	-42830	413- 12A
38720 -20390	269- 26A	-20290	488- 21A	-70100	64- 15A	-43070	413- 27A
-20390	713- 203A	-22110	258- 5A	-70100	66- 15A	-43330	413- 27B
-21590	192- 12A	-22250	280- 8A	-70110	64- 14A	-70010-7	500- 10A
-41870	208- 15A	-24730	728- 31A	-70110	66- 14A	-71310	198- 31A
-41870	210- 15A	-24740	728- 41A	-70120	64- 23A	-71310	200- 35A
-43480	278- 16A	-26150	710- 1A	-70120	66- 23A	-71320	198- 32A
-45120	180- 18A	-26160	710- 2A	-70130	64- 13A	-71320	200- 36A
-49290	180- 21A	-26190	713- 21A	-70130	66- 13A	-71530-7	502- 10A
-58760	620- 41A	-26200	713- 122A	-70220	64- 46A	-71540-7	502- 23A
38730 -40300	700- 32A	-26310	531- 18A	-70220	66- 46A	40010 -20080	150- 53A
-50930	466- 21A	-26330	531- 19A	-70250	64- 45A	-20090	147- 96A
38731 -28460	468- 9A	-27010	713- 21B	-70250	66- 45A	-20100	165- 113A
-28460	470- 9A	-27020	713- 122B	39890 -20780	36- 36A	-20380	172- 42A
38752 -20520	112- 24A	-28550	245- 4B	-20790	39- 28A	-20380	174- 42A
-21550	388- 7A	-28570	245- 5B	-20930	416- 13A	-20380	176- 42A
38753 -22560	119- 5A	-33600	713- 21C	-20930	548- 14A	-20580	144- 51A
-22620	115- 1A	-33610	713- 122C	-21000	347- 16A	-20580	147- 51A
-22630	115- 2A	-33650	700- 2A	-21220	104- 143A	-20590	147- 52A
-23620	119- 5B	-33660	700- 1A	-21220	108- 143A	40021 -70010	206- 5A
-23710	115- 1B	38900 -20720	458- 41A	-21790	42- 23A	40033 -20030	161- 132A
-23720	115- 2B	-20720	713- 41A	-21870	32- 28A	-20030	165- 132A
38755 -21370	127- 29A	-23510-7	315- 1A	-21870	32- 305A	-20060	192- 13A
-21370	131- 49A	-23510-7	315- 1B	-21910	407- 345A	-20100	8- 244A
-21570	252- 1A	-24160	194- 111A	-22570	688- 25A	-70050	478- 126A
-21580	252- 2A	38901 -20140	140- 18A	-70010	8- 149A	40034 -20180	10- 1A
-23750	127- 32A	-20890	256- 3A	-70040	44- 22A	-20190	10- 7A
-23750	131- 102A	38903 -20830	194- 47A	-70040	418- 22A	40035 -20030	100- 31A
-26340	260- 3A	38904 -21380	266- 8A	-70050	32- 131A	-20030	254- 21A
-31720	127- 131A	38905 -20150	189- 142A	-70320	22- 34A	40037 -20030	90- 35A
-31720	131- 201A	-20420	189- 142B	-70570	330- 21A	40040 -20070	160- 13A
-37650	254- 9A	38906 -20130	140- 31A	39953 -70090-7	318- 13A	-20070	164- 13A
-37720	127- 33A	-20140	140- 32A	-70100-7	318- 14A	-20160	144- 38A
-37720	131- 103A	-20810	280- 22A	39960 -20490	150- 8A	-20270	147- 39A
-37820	245- 4A	-21350	490- 41A	-20950	144- 9A	-20280	147- 40A
-37830	245- 5A	39600 -60320	168- 7A	-21460	160- 16A	-20490	147- 39B
-37970	258- 11A	-60360	168- 9A	-21460	164- 16A	-20550	144- 38B
-38240	252- 4A	-60360	170- 9A	-21810	147- 12A	40044 -20350	168- 25A
-39440	447- 1A	-60480	170- 7A	-21890	144- 11A	-20350	170- 25A
-39440	702- 1A	-71670	14- 39A	-21910	147- 10A	-21630	228- 18A
-39450	456- 1A	-71910	104- 136A	-70330	222- 3A	-21780	228- 18B
-39460	456- 2A	-71910	108- 136A	-70780	312- 13A	-21780	232- 18A
-39470	458- 21A	-71910	441- 106A	-70780	422- 3A	-21780	236- 18A
-39480	458- 111A	-71910	444- 106A	-70800	310- 3A	-21840	24- 36A
-44040	127- 132A	-71910	592- 46A	-70800	731- 13A	-21840	26- 36A
-44040	131- 202A	-72310	204- 25A	-71310	202- 3A	-21840	28- 36A
-48620	258- 18A	-72490	104- 137A	-72130-7	290- 4A	40045 -20010	406- 33A
-49190	245- 126A	-72490	108- 137A	-72150	198- 17A	-20150	406- 43A
-49200	245- 127A	-72490	441- 107A	-72210	484- 4A	-20150	413- 28A
-50020	458- 23A	-72490	444- 107A	40000 -26860	216- 2A	-20180	8- 302A
-50020	713- 23A	-72490	592- 47A	-26870	6- 41A	-20200	410- 13A
-50030	458- 114A	-72690	103- 108A	-26890	6- 1A	-20200	413- 13A
-50030	713- 124A	-72690	107- 107A	-26900	6- 3A	-20220	8- 243A
-52350	531- 3A	-72690	441- 27A	-27270	359- 4A	-70130	198- 33A
-52360	531- 22A	-72690	444- 27A	-27270	734- 4A	-70130	200- 37A
-52770	252- 3A	-72690	592- 17A	-35110	8- 242A	40061 -70030-7	214- 28A
-56490	245- 105A	-72960	464- 210A	-35940	208- 5A	40200 -60010-7	100- 12A
-56520	245- 104A	-72960	720- 210A	-35940	210- 5A	40205 -60010-7	366- 11A
-57720	127- 31A	39651 -70010	332- 21A	-36510	6- 7A	-60010-7	368- 000A
-57720	131- 101A	39661 -70390	303- 24A	-36520	6- 8A	-60010-7	670- 21A
-58960	256- 1A	-70390	517- 14A	-38730	6- 21A	-60010-7	672- 000A
-90250	245- 31A	39750 -22380-7	347- 18A	-38740	6- 4A	-70070-7	402- 2A
-90260	245- 41A	-22390-7	347- 138A	-38760	6- 6A	40312 -20020	700- 28A
-90270	245- 131A	-70900	28- 111A	-38910	8- 301A	40314 -60060	12- 18A
-90280	245- 141A	39753 -60450	74- 1A	-40550	682- 1A	40330 -20220	700- 35A
38765 -22260	122- 5A	39754 -60060-7	382- 4A	-41810	406- 4A	-60040	140- 9A
-25910	122- 4A	-60080-7	384- 4A	-42000	406- 7A	-60060	202- 12A

silverhorn.co.uk

PART NUMBER	PAGE-SYM	PART NUMBER	PAGE-SYM	PART NUMBER	PAGE-SYM	PART NUMBER	PAGE-SYM
40330 -60170	14- 2A	40732 -20140	189- 143A	40840 -60300	168- 13B	40901 -21700	124- 31A
-60180	466- 6A	-20140	190- 213A	-60300	170- 13A	-28910	80- 66A
-60180	468- 6A	-20140	249- 16A	-60340	170- 12A	-30680	458- 26A
-60200	12- 17A	-20150	186- 22A	-71400	156- 15A	-30690	458- 27A
-60270	375- 1A	-20380	194- 13A	-71500	478- 131A	-32000	456- 11A
-60400	12- 17B	-20440	182- 13A	-71530	206- 11A	-32010	456- 12A
-70640-7	368- 4A	40733 -20840	194- 43A	-71600	240- 131A	-38030	472- 17A
-70640-7	672- 4A	-20880	189- 39A	-71600	242- 131A	-44620	22- 42A
-70660	434- 19A	40735 -20090	184- 26A	-71600	295- 131A	-44620	24- 112A
-70660	436- 19A	40740 -20010	12- 33A	-71600	462- 131A	-45090	226- 2A
-70660	608- 19A	40790 -20010	468- 14A	-71600	718- 131A	-47440	466- 2A
-70660	610- 19A	-20010	470- 14A	-72550	198- 20A	-52810	392- 3A
40332 -70100-7	394- 9A	-20210	303- 23A	-72550	200- 26A	-53570	282- 8A
-70100-7	396- 10A	-20210	517- 13A	-72560	198- 30A	-53570	284- 8A
40335 -60020	14- 15A	-20430	28- 28A	-72560	200- 33A	-54220	64- 41A
40337 -60210-7	127- 1A	-60070	22- 7A	-72580-7	379- 19A	-54460	228- 14A
-60370	190- 215A	-60070	24- 7A	-72670	299- 417A	-54460	232- 14A
-60370	280- 114A	-60070	26- 7A	-72670	464- 414A	-54460	236- 14A
-60450	131- 11A	-60070	28- 7A	-72670	478- 411A	-54520	228- 123A
-60450	614- 31A	-60070	452- 17A	-72670	720- 414A	-54520	232- 133A
40338 -20020	14- 4A	-60070	706- 17A	-72730	242- 455A	-54520	237- 143A
40410 -24810	2- 41A	-70180	74- 128A	-72960-7	318- 44A	-54710	228- 12A
-24820	2- 42A	-70180	74- 148A	-72960-7	320- 24A	-54810	228- 30A
-25740	2- 41B	-70180	534- 28A	-72960-7	322- 24A	-54810	232- 30A
-25750	2- 42B	-70200	295- 501A	-72970-7	318- 45A	-55170	228- 11A
-28650	2- 41C	-70200	462- 501A	-72970-7	320- 30A	-56440	392- 2A
-28660	2- 42C	-70200	718- 501A	-72970-7	322- 30A	-56470	189- 2A
-28800	410- 3A	-70400-7	54- 12A	-73020	299- 131A	-57900	498- 4A
-28810	410- 4A	-70460	478- 501A	-73040	299- 455A	-57970	372- 45A
-28880	413- 3A	-70500	198- 23A	-73080	299- 413A	-57980	189- 23A
-28890	413- 4A	-70500	200- 28A	-73140-7	110- 10A	-57990	122- 11A
-29270	413- 3B	-70540	464- 501A	40845 -70050	498- 108A	-58000	122- 3A
-29280	413- 4B	-70540	720- 501A	40850 -20110	90- 17A	-58030	115- 12A
40495 -60020	546- 31B	-70560	299- 501A	-20110	100- 3A	-58040	32- 6A
-70010	546- 31A	40810 -20020	64- 34A	-20140	90- 9A	-58050	32- 7A
40510 -20150	152- 12A	-20020	66- 34A	-20160	90- 11A	-58210	372- 44A
-20160	140- 54A	-60030	69- 221A	-20550	498- 5A	-58320	359- 5A
-21410	127- 44A	40840 -20690	8- 101A	-70090	245- 13A	-58460	90- 6A
-21410	131- 114A	-20690	685- 101A	-70090	447- 8A	-58540	100- 14A
-22130	303- 17A	-20700	10- 3A	-70090	702- 8A	-58890	16- 3A
-22130	517- 7A	-20800	4- 22A	-70160	258- 13A	-58970	32- 122A
-23060	136- 34A	-20800	420- 22A	-70180	646- 23A	-60090	496- 6A
-24070	100- 13A	-20800	680- 22A	-70280	438- 9A	-60130-7	379- 30B
-24940	481- 16A	-20810	172- 14A	-70280	612- 9A	-70050-7	379- 11A
-25230	432- 3A	-20810	174- 14A	40900 -52700	122- 6A	-70060-7	379- 30A
-25230	606- 3A	-20810	176- 14A	-53940	254- 8A	-70070-7	379- 31A
40511 -20010	127- 46A	-20850	4- 114A	-55240	90- 16A	-70080-7	402- 3A
-20010	131- 116A	-20850	680- 114A	-55250	90- 4A	40902 -20030	498- 2A
-20010	254- 14A	-22160	310- 32A	-55260	90- 5A	-20050	100- 15A
-20010	488- 42A	-22160	731- 15A	-56880-7	416- 12A	-20060	232- 12A
40600 -37560	44- 4A	-23050	161- 121A	-56890-7	416- 11A	-20120	127- 111A
-40730	418- 4A	-23050	165- 121A	-60110	372- 133A	-20120	131- 131A
-70510	69- 22A	-24810	160- 58A	-71650	103- 103A	-20150	103- 4A
-70910	103- 44A	-24810	164- 58A	-71650	107- 103A	-20150	107- 4A
-70910	107- 44A	-25440	4- 19A	-71650	441- 23A	-20360	115- 11A
-70910	441- 14A	-25440	420- 19A	-71650	444- 23A	-21350	122- 2A
-70910	444- 14A	-25440	680- 19A	-71650	592- 13A	-22380	474- 17A
-70910	592- 4A	-25450	4- 21A	-71660	103- 110A	-22590-7	390- 11A
40604 -70190-7	384- 12A	-25450	420- 21A	-71660	107- 109A	-22600-7	390- 2A
40730 -20040	180- 44A	-25450	680- 21A	-71660	441- 29A	-22710	189- 23B
-20040	280- 16A	-25580	147- 160A	-71660	444- 29A	-22750	228- 12B
-20040	513- 14A	-25910	680- 19B	-71660	592- 19A	-22760	50- 2A
-20320	194- 45A	-25920	680- 21B	-71760-7	398- 3A	-24370	124- 43B
-20360	182- 12A	-25930	680- 49B	-71830-7	398- 3B	-25210	124- 43C
-20530	194- 12A	-26050	160- 58B	-71830-7	400- 3A	-25430	50- 2B
40732 -20070	280- 17A	-26050	164- 58B	-90840	713- 26A	-25550	100- 14B
-20140	180- 7A	-26210	680- 19C	-90850	713- 127A	-25560	100- 15B
-20140	180- 43A	-60090	168- 12A	40901 -20110	498- 32A	-26090	228- 11B
-20140	189- 41A	-60130	168- 13A	-20960	124- 43A	-26090	232- 11A

silverpoint.co.uk

PART NUMBER	PAGE-SYM	PART NUMBER	PAGE-SYM	PART NUMBER	PAGE-SYM	PART NUMBER	PAGE-SYM
40902 -26110	124- 43D	41101 -60010	140- 10A	41530 -22530	160- 55B	41530 -75420	610- 1A
-26870	122- 2B	41195 -70010	64- 4A	-22530	164- 55B	-75430	434- 5A
-28670	710- 11A	-70010	66- 4A	-22740	28- 29A	-75430	436- 5A
-28680	710- 12A	41210 -60030	192- 1A	-22780	303- 14B	-75430	608- 5A
-29020	64- 41B	-60030	206- 000A	-22790	517- 4B	-75430	610- 5A
-29020	66- 41A	41262 -70020	332- 15A	-60080	28- 112A	-75440	434- 26A
-29290	584- 2A	41321 -60020	351- 3A	-60080	74- 34A	-75440	608- 26A
-29560	597- 4A	-60040	362- 3A	-71190	460- 158A	41533 -20040	85- 17A
-30150	50- 2C	-70090	362- 3B	-71190	716- 158A	-20080	85- 134A
-31030	481- 122A	41350 -70020-7	398- 8A	-71210	292- 253A	-20140	335- 4A
-31050	531- 4A	-70020-7	400- 8A	-71210	312- 136A	-20160	335- 3A
-31820	236- 11A	-70030-7	398- 9A	-71210	422- 26A	-70300	524- 5A
-31860	236- 12A	-70030-7	400- 9A	-71210	731- 35A	-70320	232- 105B
-31880	100- 15C	41351 -60010-7	382- 2A	-71220	292- 551A	-70320	236- 105A
-33050	26- 112A	-60010-7	398- 000A	-71220	460- 551A	41535 -20010	12- 16A
-33060	468- 2A	-60020-7	382- 2B	-71220	716- 551A	-20010	14- 11A
-33260	115- 11B	-60020-7	398- 000B	-71250	295- 161B	-20040	160- 39A
-33420	100- 14C	-60040-7	384- 2A	-72360	140- 38A	-20040	164- 39A
-33630	131- 33A	-60040-7	400- 000A	-72410	240- 211A	-20080	160- 39B
-33630	614- 23A	41410 -20480	156- 1A	-72410	242- 211A	-20080	164- 39B
-34090	635- 301A	-27740	245- 132A	-72410	295- 211A	41585 -20020	134- 12A
-34200	50- 2D	-27750	245- 142A	-72410	299- 211B	-20080	236- 45A
-35740	432- 5A	-30090	700- 7A	-72410	462- 211A	-70270	204- 13A
-35740	606- 5A	-31950	189- 201A	-72410	478- 211A	41600 -25840	4- 121A
-35830	100- 14D	-31950	190- 221A	-72410	718- 211A	-25840	680- 121A
-36050	688- 2A	-31950	280- 121A	-72780	295- 466A	-27510	456- 13A
-36060	688- 3A	-32030	92- 6A	-72790	219- 151A	-27510	710- 13A
-37120	584- 2B	-32190	256- 2A	-72790	295- 161A	-36100	8- 241A
-37880	406- 15A	-32280	186- 21A	-72790	462- 161A	-48260	64- 42A
-38130	406- 72A	-32310	182- 31A	-72790	464- 251A	-48260	66- 42A
-38430	432- 5B	-32320	490- 131A	-72790	510- 151A	-53130	39- 14A
-38430	606- 5B	-32340	490- 111A	-72790	718- 161A	-54800	134- 42A
-38630	359- 15A	-32350	488- 3A	-72790	720- 251A	-57670	140- 41A
-38750	359- 16A	-32530	180- 41A	-73550	464- 252A	-70440	103- 132A
-40270	635- 301B	-33400	90- 12A	-73550	720- 252A	-70440	108- 132A
-40280	587- 41A	-33430	306- 11A	-73560	219- 152A	-70440	441- 102A
-40700	410- 11A	-33440	189- 111A	-73560	510- 152A	-70440	444- 102A
-41080	236- 11B	-33490	263- 31A	-73910	204- 4A	-70440	592- 42A
-41090	236- 12B	-33610	254- 11A	-73930	204- 12A	-70750	295- 105A
-41790	413- 11A	-34270	189- 201B	-73940	204- 15A	-70890	295- 111A
-41800	413- 26A	-34270	190- 221B	-73950	204- 21A	-70890	462- 111A
-42040	212- 2A	-34270	280- 121B	-74150	219- 153A	-70890	718- 111A
-42060	454- 3A	-35470	635- 221A	-74150	510- 153A	-71190	240- 111A
-42060	708- 3A	-35650	308- 1A	-74240	219- 154A	-71190	242- 111A
-42090	470- 17A	-36090	430- 1A	-74240	510- 154A	-71370	103- 130A
-42360	413- 26B	-36090	604- 11A	-74250	219- 155A	-71370	107- 130A
-42370	413- 29A	-60130	531- 122A	-74280	240- 151A	-71370	441- 100A
-42900	597- 4B	-60170	249- 112A	-74280	242- 151A	-71370	444- 100A
-44910	688- 1A	-70260	292- 102A	-74480	219- 156A	-71370	592- 40A
40910 -70040	206- 1A	-90010	14- 21A	-74480	510- 156A	-71380	103- 129A
-70050	206- 9A	-90010	700- 41A	-74570	103- 107A	-71380	107- 129A
-70080	200- 44A	41411 -21050	490- 11A	-74580	204- 10A	-71380	441- 49A
-70090	198- 39A	-21210	249- 15A	-74610	219- 157A	-71380	444- 49A
-70090	200- 44B	41530 -20090	531- 47A	-74620	219- 351A	-71380	592- 39A
-70100-7	402- 10A	-20110	90- 25A	-74830	219- 155B	-71410-7	402- 11A
-70120	198- 39B	-20530	92- 7A	-74830	510- 155A	-71450	478- 413A
-70120	200- 44C	-20560	258- 24A	-74850	242- 466A	-71460	478- 401A
40968 -24110	570- 1A	-20750	140- 60A	-75150	464- 202A	-71470	478- 302A
-24120	570- 2A	-20920	303- 16A	-75150	720- 202A	-71480	478- 111A
-24830	69- 1A	-20920	517- 6A	-75250	299- 161A	-71500	478- 412A
-24840	69- 2A	-20930	517- 4A	-75260	299- 211A	-71660-7	318- 27A
-26480	570- 1B	-21050	520- 9A	-75290	299- 161B	-71660-7	320- 31A
-26490	570- 2B	-21070	134- 16A	-75380	434- 16A	-71660-7	322- 31A
41100 -60020	168- 11A	-21100	134- 61A	-75380	436- 16A	-71670-7	318- 28A
-60020	170- 11A	-21600	160- 55A	-75380	608- 16A	-71670-7	320- 32A
-60030	172- 29A	-21600	164- 55A	-75380	610- 16A	-71670-7	322- 32A
-60030	174- 29A	-21610-7	245- 128A	-75420	434- 1A	-71680-7	318- 30A
-60030	176- 29A	-21650-7	245- 129A	-75420	436- 1A	-71690-7	318- 42A
41101 -60010	134- 6A	-21700	303- 14A	-75420	608- 1A	-71690-7	320- 47A

silverhorn.co.uk

PART NUMBER	PAGE-SYM	PART NUMBER	PAGE-SYM	PART NUMBER	PAGE-SYM	PART NUMBER	PAGE-SYM
41600 -71690-7	322- 47A	41608 -33660	680- 31A	41612 -47570	208- 41A	41618 -33140	48- 13A
-71700-7	318- 43A	-39930	468- 7A	-49940	388- 9A	-33220	64- 31A
-71700-7	320- 48A	-46520	542- 1A	-50600-7	392- 4A	-33220	66- 31A
-71700-7	322- 48A	-46530	542- 2A	-50790-7	416- 1A	-33460	388- 8A
-71740	299- 111A	-48740	413- 101A	-51390	330- 2A	-33480	272- 13A
-71750	299- 671A	41609 -21150	665- 15A	-54680	245- 42A	-33960	100- 2A
-71760	299- 672A	-21160	665- 16A	41613 -33950	208- 45A	-35030	42- 3A
-71770	464- 115A	-21170	665- 17A	-34920	22- 9A	-35040	42- 4A
-71770	720- 115A	-21180	665- 18A	-34920	24- 9A	-35720	30- 22A
-71870-7	368- 5A	-21190	665- 19A	-34920	26- 9A	-36120-7	416- 2A
-71870-7	672- 5A	-21200	665- 21A	-35410	22- 8A	-36150	540- 2A
41601 -23510	245- 32A	-21210	665- 22A	-35410	24- 8A	-36150-7	416- 3A
-35410	347- 21A	-21220	665- 23A	-35410	26- 8A	-38230-7	180- 12A
-48190	22- 11A	-21670	275- 7A	-35410	28- 8A	-39210	254- 6A
-48190	24- 11A	-22070	508- 36A	-37210	85- 142A	-39240	388- 11A
-48190	26- 11A	-36000	614- 11A	-40210	362- 15A	-39250	122- 27A
-60010-7	396- 49A	-45310	548- 21A	-51300	372- 12A	-51320	208- 42B
41602 -20170	36- 42A	-51020	85- 81A	41615 -22330	90- 18A	-51320	210- 42A
-24590	245- 118A	-53660	406- 142A	-22330	100- 4A	-51330	208- 43B
-24600	245- 119A	-53670	406- 122A	-24340	339- 57A	-51330	210- 43A
-24600	531- 21A	-53710	407- 202A	-24340	343- 57A	-57350	272- 7B
41603 -39850	531- 123A	-53740	407- 212A	-29610	147- 164A	41619 -20100	562- 11A
-42360	618- 3A	-53800	406- 132A	-32030	432- 6A	-20110	562- 12A
-42860	252- 8A	-54240	565- 4A	-32030	606- 6A	-26380	24- 32A
-45670	339- 58A	-54260	565- 6A	41616 -39070	22- 44A	-26380	26- 32A
-45670	343- 58A	-54270	565- 7A	-39070	24- 114A	-26380	28- 32A
-58860	275- 13A	-55820	688- 6A	-39080	22- 43A	-30270	388- 26A
41604 -21170	4- 31A	-58170	406- 34A	-39080	24- 113A	-30270	388- 32A
-21170	420- 31A	-59320	406- 44A	-45240	208- 2A	-35570	685- 122A
-33390	540- 22A	-59750	406- 106A	-45240	210- 2A	-35620	692- 1A
-42450	42- 5A	-59780	407- 213A	41617 -30180	339- 163A	-35630	692- 2A
-60040-7	382- 8A	-59820	406- 19A	-30190	339- 164A	-36060	26- 114A
-60040-7	384- 8A	-59940	407- 232A	-30190	343- 304A	-36060	28- 104A
-60050-7	375- 38A	41610 -26860	372- 13A	-31160	186- 4A	-39010	26- 115A
-60060-7	375- 39A	-26870	372- 14A	-31910	18- 31A	-39010	28- 102A
-60070-7	375- 38B	-30180	22- 12A	-32040	22- 13A	-40890	685- 123A
-60080-7	375- 39B	-30180	24- 12A	-32040	24- 13A	-42380	468- 8A
41605 -41290	339- 59A	-30180	26- 12A	-32040	26- 13A	-43450	343- 302A
-41290	343- 59A	-36050	372- 18A	-32040	28- 13A	-45060	713- 44A
-43580	278- 3A	-36700	372- 46A	-32050	22- 14A	-45070	713- 145A
-43690	12- 23A	-50960	466- 3A	-32050	24- 14A	-45080	728- 42A
-50850	36- 45A	-50980	466- 8A	-32050	26- 14A	-47120	556- 3A
-51370	224- 4A	-70010	299- 404A	-32050	28- 14A	-47440	540- 7A
-53600	85- 132A	41611 -20140	12- 12A	-32650	22- 6A	-48260	236- 121A
-57120	8- 144A	-20150	72- 2A	-32650	24- 6A	-49700	540- 3A
-57120	32- 204A	-22180	14- 9A	-32650	26- 6A	-54980	366- 3A
-57120	407- 334A	-23220	245- 136A	-32650	28- 6A	-54980	670- 13A
-59700	180- 17A	-23230	258- 15A	-34940	504- 31A	-55550	447- 11B
-59730	32- 17A	-23340	34- 14A	-35180	339- 161A	-55550	702- 11B
41606 -20660	36- 44A	-23340	406- 104A	-35180	343- 301A	-55570	447- 13A
-30750	272- 7A	-24440	152- 51A	-35190	339- 162A	-55570	702- 13A
-30750	272- 7C	-25170	2- 11A	-46070	85- 8A	-56420	713- 44B
-31630	46- 1A	-26580	447- 11A	-46560	258- 22A	-56430	713- 145B
-52350	180- 16A	-26580	702- 11A	-46580	258- 21A	-58090	468- 3A
-56200	498- 6A	-26980	224- 3A	-46620	490- 4A	-58770	665- 24A
-58640	46- 2A	-42170	269- 24A	-48510	228- 31A	-58780	665- 25A
-59420	103- 11A	-42170	713- 202A	-48510	232- 31A	-58980	236- 31A
-59420	107- 11A	-70440	103- 131A	-59770	372- 2A	-59830	372- 13B
41607 -20590	103- 9A	-70440	107- 131A	41618 -22310	249- 102A	-59840	372- 14B
-20590	107- 9A	-70440	441- 101A	-22840	88- 8A	41620 -21000	438- 22A
-20600	103- 27A	-70440	444- 101A	-25840	546- 2A	-21000	612- 22A
-20600	107- 27A	-70440	592- 41A	-26050	22- 5A	-21780	565- 12A
-20610	103- 28A	41612 -22950	282- 7A	-26050	24- 5A	-24450	631- 42A
-20610	107- 28A	-22950	284- 7A	-26050	26- 5A	-24500	26- 113A
-21240	69- 102A	-33370	531- 221A	-26050	28- 5A	-25190	550- 1A
-23700	32- 5A	-33760	330- 12A	-26570	64- 32A	-25240	540- 4A
-29800	115- 13A	-35690	127- 107A	-26570	66- 32A	-26340	675- 9A
-39850-7	390- 3A	-35690	131- 127A	-30180	343- 303A	-27250	565- 11A
-51020	16- 21A	-37620	76- 16A	-33130	48- 12A	-28220	550- 2A

silvernorn.co.uk

PART NUMBER	PAGE-SYM	PART NUMBER	PAGE-SYM	PART NUMBER	PAGE-SYM	PART NUMBER	PAGE-SYM
41620 -28230	550- 3A	41636 -45660	48- 2A	41710 -51590	413- 17A	42753 -60440	98- 000A
-28240	550- 4A	-45680	46- 3A	-51600	410- 18A	42761 -70010-7	52- 61A
-28250	550- 6A	-45690	46- 4A	-51600	413- 18A	43000 -70060-7	54- 42A
-28260	550- 5A	-45870	48- 11A	-54100	546- 2B	43001 -60010	392- 5A
-28270	550- 7A	-45900	32- 123A	-56870	28- 3A	43005 -60050-7	50- 3B
-28280	553- 1A	-56350	694- 1A	41711 -21910	454- 6A	-70060-7	50- 3A
-28290	553- 2A	41637 -21210	556- 1A	-21910	708- 6A	43020 -70070	198- 27A
-28300	553- 3A	-21220	556- 2A	-22050	470- 19A	-70070	200- 31A
-28310	553- 4A	-22250	642- 3A	-22850	85- 81B	43022 -20180	214- 1D
-28320	553- 5A	-22260	642- 13A	-26750	548- 3B	-60050	214- 1A
-28330	553- 6A	-23740	407- 332A	-34700	413- 16B	-60060	214- 1B
-33750	635- 141A	-23750	407- 342A	-34710	413- 17B	-60070	214- 1C
-34410	275- 22A	-23750	407- 402A	41750 -27140	18- 31B	43100 -71380-7	394- 13A
-44050	406- 121A	-29720	642- 3B	-27290	372- 18B	-71380-7	396- 14A
-44060	406- 141A	-29730	587- 104A	-28230	28- 103A	-71390-7	379- 20A
-44070	406- 131A	-29740	587- 113A	-31800	587- 2A	43110 -24350	112- 1A
-44090	407- 201A	-36590	642- 13B	-33960	66- 8A	-24360	112- 2A
-44100	407- 211A	41641 -20450	456- 5A	-34750	212- 101A	43111 -21700	375- 12A
-45410	565- 13A	-20450	710- 5A	-39600	18- 31C	-21750	375- 11A
-45420	565- 3A	-26420	249- 3A	-39600	20- 31A	-22090	272- 5A
-46970	688- 5A	-26420	513- 3A	-42960	675- 4A	-22090	272- 5C
-46980	688- 7A	-38770	226- 1A	-43990	28- 9A	-22610	115- 3A
-50780	407- 221A	-40500	16- 11A	-44010	28- 11A	-22620	115- 4A
-50850	407- 231A	-40510	16- 12A	-44220	470- 18A	-22630	115- 5A
-50860	407- 241A	-43690	208- 41B	-47380	454- 7A	-22640	115- 6A
-50890	407- 301A	-43690	210- 41A	-47380	708- 7A	-23100	272- 5B
-50900	407- 311A	-45020	275- 19A	-47440	28- 12A	-23390	520- 2A
-53760	359- 17A	-51690	16- 11B	-59340	713- 44C	-23410	275- 5A
-57130	275- 22B	-51750	16- 12B	-59350	713- 145C	-23560	366- 32A
41621 -20040	540- 21A	-70470	292- 204A	41751 -30240	635- 141B	-23560	670- 102A
-20140	216- 3A	41650 -70190-7	394- 3A	-30270	224- 3B	-70140	119- 4A
-20200	6- 15A	-70190-7	396- 3A	42001 -60030	147- 84A	-70220	119- 3A
-20230	6- 14A	41656 -70220-7	500- 6A	-60130	136- 15A	43113 -23230	452- 2A
-20250	6- 13A	-70250-7	110- 6A	-60140	136- 44A	-23230	706- 2A
-20340	2- 31A	-70260-7	110- 7A	-60150	136- 7A	-23770	454- 33A
-20340	4- 26A	-70280-7	502- 6A	-70530	498- 106A	-23770	708- 33A
-20340	4- 47A	-70350-7	318- 26A	42003 -60030	172- 20A	-23880	472- 1A
-20340	420- 26A	-70350-7	320- 29A	-60030	174- 20A	-24450	127- 24A
-20340	680- 26A	-70350-7	322- 29A	-60030	176- 20A	-24450	131- 44A
-20340	680- 48A	41657 -70140-7	500- 2A	-70180	192- 8A	-24980	245- 3A
-20920	10- 2A	-70160	292- 103A	42004 -20080	160- 22A	-24990	245- 1A
-21060	144- 14A	-70190	219- 202A	-20080	164- 22A	-25000	245- 2A
-21060	150- 14A	-70220-7	502- 2A	-60060	10- 9A	-25090	254- 2A
-21070	147- 47A	41677 -70010	14- 307A	-60360	172- 6A	-25370	260- 2A
-21100	168- 5A	41678 -70040	484- 10A	-60360	174- 6A	-25420	476- 2A
-21100	170- 5A	-70040-7	290- 10A	-60360	176- 6A	-26430	254- 1A
-21170	548- 31A	41681 -70170	299- 103A	-70080	172- 7A	-26700	447- 2A
-21470	160- 20A	-70180	299- 103B	-70080	174- 7A	-26700	702- 2A
-21470	164- 20A	41694 -20060	172- 12A	-70080	176- 7A	-27980	424- 2A
-21480	147- 3A	-20060	174- 12A	-70120	160- 23A	-27990	424- 3A
-21500	142- 17A	-20060	176- 12A	-70120	164- 23A	-28000	424- 1A
-21510	154- 18A	-21020	136- 35A	42006 -70060	208- 31A	-28110	245- 101A
-22720	142- 108A	-21020	158- 10A	-70060	210- 31A	-28130	245- 103A
-23330	168- 6A	-70170	206- 6A	-70060	452- 41A	-28130	531- 17A
-23330	170- 6A	41700 -20210	347- 46A	-70060	706- 45A	-30270	472- 4A
-24550	192- 7A	41710 -20020	407- 302A	-70280	147- 45A	-30270	474- 3A
-24820	6- 12A	-22550	406- 71A	-70760-7	502- 14A	-30270	476- 3A
-29810	147- 5A	-25090	548- 3A	42017 -60040	10- 10A	-32780	472- 3B
-31000	168- 14B	-25100	565- 22A	42730 -20020-7	597- 11A	-35410	282- 3A
41635 -28210	458- 28A	-25110	565- 23A	-70090-7	119- 101A	-35470	282- 4A
-28210	713- 28A	-35550	498- 7A	-70110-7	597- 21A	-36280	488- 23A
-38650	22- 18A	-36590	406- 74A	-70150-7	368- 1A	-37490	282- 1A
-38650	24- 18A	-36600	406- 75A	-70150-7	672- 1A	-37490	454- 42A
-38650	26- 18A	-46040	587- 31A	42751 -60180	90- 34A	-37490	708- 42A
-38650	28- 18A	-51570	410- 15A	-60180	94- 000A	-37750	254- 3A
-70010	206- 18A	-51570	413- 15A	42752 -60890	90- 32A	-37760	254- 5A
41636 -43500	32- 202A	-51580	410- 16A	-60890	96- 000A	-37860	182- 48A
-43510	32- 402A	-51580	413- 16A	-60900	192- 4A	-38060	488- 25A
-45650	48- 1A	-51590	410- 17A	42753 -60440	90- 33A	-38280	127- 21A

silverton.co.uk

PART NUMBER	PAGE-SYM	PART NUMBER	PAGE-SYM	PART NUMBER	PAGE-SYM	PART NUMBER	PAGE-SYM
43113 -38310	306- 7A	43550 -70160	534- 22A	43871 -20450	66- 3A	43925 -21370	160- 111A
-38320	263- 9A	-70210	295- 462A	43890 -70360-7	119- 112A	-70170	104- 133A
-38730	282- 2A	-70420	198- 12A	-70380	14- 31A	-70170	108- 133A
-38910	284- 4A	-70420	200- 14A	-70420	69- 20A	-70170	441- 103A
-39790	472- 2A	43571 -20140	80- 11A	-70970-7	110- 16A	-70170	444- 103A
-39790	474- 2A	-20150	80- 12A	43900 -20610	280- 201A	-70170	592- 43A
-39800	472- 3A	-20150	85- 11A	-20630	392- 6A	-70190	103- 49A
-40610	728- 11A	-20150	224- 5A	-21520	142- 109A	-70190	107- 49A
-40620	728- 12A	-20150	226- 5A	-23070	303- 21A	-70190	441- 19A
-40630	728- 13A	-20160	12- 24A	-23070	517- 11A	-70190	444- 19A
-43420	481- 15A	-20160	80- 13A	-23980	10- 13A	-70190	592- 9A
-45210	269- 6A	-60040	80- 17A	-24230	498- 35A	-70210	104- 134A
-45290	620- 11A	-60050	85- 13A	-24300	228- 141A	-70210	108- 134A
-45300	620- 23A	-60060	85- 14A	-24300	232- 201A	-70210	441- 104A
-45310	620- 24A	43573 -20070	456- 3A	-24300	237- 211A	-70210	444- 104A
-45320	646- 11A	-20070	710- 3A	-24420	44- 14A	-70210	592- 44A
-45330	646- 12A	-20300	182- 8B	-24610	498- 34A	-70230	103- 111A
-45340	646- 13A	-20350	282- 15B	-25010	335- 24A	-70230	107- 110A
-45350	646- 1A	-20350	284- 15A	-25010	343- 114A	-70230	441- 30A
-45360	646- 2A	-20370	182- 45A	-25040	14- 63B	-70230	444- 30A
-45370	646- 3A	-20460	182- 45B	-60130-7	390- 28A	-70230	592- 20A
-45380	652- 1A	43711 -22350	36- 11A	-70690	98- 3A	43931 -20090	90- 51A
-45390	652- 2A	-22890	36- 11B	-71050	312- 19A	43953 -90010	14- 23A
-45400	656- 5A	-23080	36- 11C	-71050	422- 9A	-90010	700- 43A
-45410	656- 15A	43718 -21890	16- 1A	-71060	731- 19A	43955 -20040	172- 41A
-45420	568- 5A	-22050	16- 1B	-71280	292- 336A	-20040	174- 41A
-45850	474- 4A	-22170	16- 1C	-71280	460- 336A	-20040	176- 41A
-45850	476- 4A	43751 -20020	134- 11A	-71280	716- 336A	-60010	616- 1A
-45940	474- 1A	-70030-7	500- 22A	-72430	96- 3A	-70370-7	110- 19A
-45940	476- 1A	-70110	295- 463A	-72430	192- 23A	43956 -20020	160- 35A
-46960	428- 3A	-70300	464- 471A	-72450	206- 8A	-20020	164- 35A
-46960	602- 3A	-70300	720- 471A	-72460	206- 14A	-20210	160- 59A
-47980	481- 15B	-70450-7	502- 22A	-73040	69- 208A	-20210	164- 59A
-48120	428- 3B	-70470	299- 416A	-73250	206- 31A	-70300	156- 37A
-48120	602- 3B	-70480-7	110- 13A	-73260-7	50- 16A	-70310	156- 38A
-48980	447- 2B	43780 -22020	626- 42A	-73490	103- 105A	-70590	478- 125A
-48980	702- 2B	-23200	100- 5A	-73490	103- 127A	-70640	156- 41A
-49780	284- 1A	-23200	122- 17A	-73490	107- 105A	-70650	460- 971A
-49970	284- 2A	-23540	115- 14A	-73490	107- 127A	-70650	716- 971A
-49980	284- 3A	-24110	556- 21A	-73490	441- 25A	-70680	240- 454A
43124 -60090-7	390- 16A	-24240	626- 41A	-73490	441- 47A	-70680	295- 454A
-60100	388- 2A	-24700	670- 31A	-73490	444- 25A	-70680	462- 454A
-60110	388- 3A	-24850	553- 31A	-73490	444- 47A	-70680	718- 454A
-60120	388- 1A	-34130	618- 11A	-73490	592- 15A	-70690	240- 411A
43300 -60060	64- 111A	-37490	224- 7A	-73490	592- 37A	-70690	242- 411A
-60060	66- 111A	-38520	88- 2A	-73530-7	52- 9A	-70690	295- 411A
-60070	64- 112A	-39070	481- 17A	-73830	103- 100A	-70690	462- 411A
-60070	66- 112A	43783 -20030	136- 16A	-73830	107- 100A	-70690	718- 411A
-60090	66- 111B	43800 -23080	504- 11A	-73830	441- 20A	-71190	200- 38A
-60100	66- 112B	-26160	22- 24A	-73830	444- 20A	-71340	299- 419A
43301 -70050	494- 20A	-26400	8- 121A	-73830	592- 10A	-71350	299- 481A
43415 -60020	494- 1A	-26410	8- 122A	-73910	198- 21A	43962 -20020	245- 121A
43420 -70030	494- 50A	-26960	24- 31A	-74190	198- 21B	-20020	258- 16A
43424 -60500-7	178- 2B	-26960	26- 31A	-74190	200- 24C	-20030	245- 34A
-61260-7	178- 2A	-26960	28- 31A	-74360	434- 12A	-20030	245- 134A
43550 -20590	347- 102A	-27010	30- 11A	-74360	436- 12A	-20030	458- 34A
-20680	80- 14A	-28960	690- 1A	-74360	608- 12A	-20030	713- 34A
-21010	236- 46A	-28970	690- 5A	-74360	610- 12A	-20040	245- 125A
-60040	347- 227A	43805 -20900	18- 11A	-74370	434- 22A	-20100	112- 17A
-60050	347- 112A	-21060	32- 201A	-74370	436- 22A	-20780	260- 8A
-60060	347- 228A	-21070	32- 401A	-74370	608- 22A	-20910	458- 33A
-60070	347- 113A	-21470	407- 321A	-74370	610- 22A	-20960	122- 13A
-60100	80- 16A	-21480	407- 322A	-74380	434- 9A	-20990	713- 33A
-60100	85- 12A	-21780	20- 11A	-74380	436- 9A	-21190	115- 9A
-60100	85- 12B	43871 -20190	64- 47A	-74380	608- 9A	43963 -70160	103- 104A
-60100	366- 22A	-20190	66- 47A	-74380	610- 9A	-70160	107- 104A
-60100	670- 42A	-20440	64- 2A	43925 -20210	147- 95A	-70160	441- 24A
-70160	74- 122A	-20440	66- 2A	-21180	168- 24A	-70160	444- 24A
-70160	74- 142A	-20450	64- 3A	-21180	170- 24A	-70160	592- 14A

silverpoint.co.uk

PART NUMBER	PAGE-SYM	PART NUMBER	PAGE-SYM	PART NUMBER	PAGE-SYM	PART NUMBER	PAGE-SYM
44074 -20040	517- 3A	44770 -70540-7	394- 46A	44960 -20270	138- 28A	45200 -71610	610- 25A
-70110	460- 511A	44771 -21990	325- 90A	45020 -70160	339- 172A	-71620	434- 29A
-70110	716- 511A	-22080	325- 100A	-70160	343- 212A	-71620	608- 29A
-70220	292- 511A	-22200	325- 80A	-70160	347- 45A	45282 -60350-7	178- 18B
-70460	219- 311A	-22540	325- 80B	-70220-7	394- 40A	-70170-7	178- 18A
44081 -70070	362- 30A	-22590	454- 101A	-70220-7	396- 28A	45301 -60090	142- 58A
44083 -61140-7	288- 000A	-22590	708- 101A	-70220-7	398- 22A	-60090	158- 52A
-61530-7	286- 000B	44785 -20100	466- 31A	-70220-7	400- 16A	-60100	150- 59A
-61540-7	288- 000B	-22160	468- 31A	-70230-7	394- 42A	-60100	158- 53A
44085 -70050-7	286- 60A	-22160	470- 41A	-70230-7	396- 36A	-60110	140- 43A
-70080-7	286- 70A	44794 -22600	325- 45A	45040 -60370-7	178- 16B	-60110	158- 51A
-70250-7	288- 60A	44810 -70050	32- 31A	-70110-7	178- 16A	-60180	136- 19A
-70260-7	288- 70A	-70050	103- 8A	45050 -60070-7	382- 5A	-60180	158- 7A
44093 -60460	488- 1A	-70050	107- 8A	-60070-7	384- 5A	-60190	136- 24A
-61220-7	286- 000A	-70110-7	398- 23A	-60080-7	396- 40A	-60190	158- 8A
44094 -60010	127- 142A	44820 -20520	28- 26A	-70290	524- 3A	45311 -20070	12- 34A
-60010	131- 212A	-20520	470- 21A	-70310	64- 33A	-20170	144- 73A
44160 -60010	140- 37A	-70840-7	368- 12A	-70310	64- 33B	-20280	160- 12A
44184 -23570	335- 12A	-70840-7	672- 12A	-70310	66- 33A	-20280	164- 12A
-23580	335- 11A	44822 -20660	39- 32A	-70310	486- 1A	-20320	144- 111A
44300 -60620	122- 1A	-20800	39- 2A	-70350	64- 35A	-20320	150- 111A
44340 -60130	359- 1A	-21450	228- 32A	-70350	64- 35B	-20340	147- 69A
-60130	734- 1A	-21640	236- 124A	-70350	66- 35A	-20350	144- 68A
-70020	662- 1A	-60140	16- 2A	45051 -60020	351- 4A	-20350	147- 68A
44344 -70020	339- 35A	-70090	275- 11A	45058 -20010	64- 102A	-20360	144- 70A
-70020	343- 35A	44841 -21050	660- 1A	-20010	66- 102A	-20370	147- 72A
44361 -70050	74- 24A	-21060	675- 21A	45090 -70030	103- 126A	-20380	147- 74A
44370 -70070	74- 23A	-21070	675- 21B	-70030	107- 126A	-20390	147- 71A
44450 -20020	147- 121A	-21100	325- 6A	-70030	441- 46A	-20550	168- 14A
44487 -60070	362- 1A	-21120	413- 41A	-70030	444- 46A	-20570	168- 15A
-60100	351- 1A	44860 -20070	351- 11A	-70030	592- 36A	-20570	170- 15A
44621 -20360	154- 15A	44881 -60300	69- 103A	45125 -21170	4- 4A	-20580	136- 9A
-20370	154- 14A	-60310	69- 104A	-21400	680- 4A	-20590	138- 26A
-20380	172- 2A	-60320	546- 1A	45200 -20730	10- 5A	-20600	136- 11A
-20390	174- 2A	-60330	546- 1B	-20740	10- 8A	-70240	94- 12A
-20390	176- 2A	44890 -60090	570- 4A	-20800	147- 49A	-70800	14- 146A
-20500	192- 5A	-60100	570- 3A	-20810	152- 19A	-70950	206- 19A
-20710	142- 13A	-60190	69- 131A	-20820	152- 20A	-71480	198- 6A
44721 -20510	100- 1A	-60240	69- 3A	-23640	36- 2A	-71480	200- 7A
-62720	103- 1A	-60260	69- 4A	-23640	42- 6A	45315 -20020	222- 9A
-63070	441- 1A	-70140	734- 7A	-23670	6- 101A	-20190	312- 33A
-63560	107- 1A	-70140-7	359- 11A	-24190	454- 48A	-20250	310- 23A
-63620	441- 1B	44950 -70010-7	500- 21A	-24190	708- 48A	-70080	731- 18A
-63720	444- 1A	-70520	198- 5A	-24210	122- 14A	-70090	312- 18A
-63720	590- 1A	-70520	200- 6A	-25600	6- 31A	-70090	422- 8A
-63720	592- 000A	-70530	200- 18A	-25960	160- 52A	-70110	222- 10A
44730 -20460	34- 1A	-70540	200- 21A	-25960	164- 52A	-70120	422- 23A
44770 -34230	325- 61A	-70550	198- 16A	-26750	228- 143A	45323 -70010-7	500- 19A
-47390-7	325- 69A	-70610	236- 107A	-26750	232- 203A	-70250-7	110- 3A
-49210	325- 66A	-70680	236- 107B	-26750	237- 213A	-70290-7	502- 19A
-49280	325- 62A	44951 -20060	172- 26A	-26760	228- 144A	45324 -60360-7	178- 19B
-49280	325- 62B	-20060	174- 26A	-26760	232- 204A	-70190-7	178- 19A
-49290	325- 63A	44953 -20160	154- 11A	-26760	237- 214A	45360 -70040-7	386- 3A
-49300	325- 64A	-20320	142- 43A	-27110	44- 8A	-70040-7	398- 20A
-49310	325- 65A	-20340	140- 7A	-27600	168- 17A	-70040-7	400- 23A
-51250	546- 24A	-70230-7	500- 18A	-27800	722- 11A	45370 -60060	339- 171A
-51330	544- 3A	-70340-7	110- 5A	-27800	724- 11A	-60090	343- 211A
-51880	438- 6A	-70380-7	110- 4A	-29140	170- 14A	45375 -23990	39- 1A
-51880	612- 6A	-70390-7	502- 18A	-29730	454- 48B	-25090	39- 1B
-51920	584- 3A	44955 -20010	144- 13A	-29730	708- 48B	45410 -70030-7	502- 13A
-51920	587- 3A	-20010	150- 13A	-60110-7	178- 17B	45433 -20120	347- 137A
-52230	675- 14A	-70180	292- 332A	-70870	206- 33A	-20130	347- 17A
-52340	640- 1A	-70180	460- 332A	-71280-7	290- 6A	45460 -60030	347- 14A
-52750	675- 11A	-70180	716- 332A	-71300-7	178- 17A	-60040	347- 134A
-55830	28- 25A	-70380	219- 331A	-71330	484- 6A	45531 -20100	81- 171A
-60050-7	325- 67A	-70380	510- 331A	-71570	299- 415A	-20120	675- 5A
-70520-7	394- 17A	44956 -20200	160- 19A	-71610	434- 25A	45600 -22010	208- 43A
-70520-7	396- 19A	-20200	164- 19A	-71610	436- 25A	-23740	208- 3A
-70530-7	394- 21A	44960 -20200	150- 46A	-71610	608- 25A	-23740	210- 3A

silverhorn.co.uk

PARTS No. INDEX

PART NUMBER	PAGE-SYM	PART NUMBER	PAGE-SYM	PART NUMBER	PAGE-SYM	PART NUMBER	PAGE-SYM
45600 -23750	208- 4A	45886 -72800	731- 12A	46011 -20050	28- 106A	46017 -70050-7	396- 38A
-23750	210- 4A	-72810	731- 122A	-20050	688- 9A	46023 -70190	478- 121A
-23850	452- 14A	45887 -70270	295- 632A	-20150	100- 6A	-70270	131- 24A
-23850	706- 14A	-70270	478- 212A	-20150	216- 4A	-70270	614- 44A
-23980	228- 43A	-70280	240- 212A	-20150	406- 8A	-90010	700- 45A
-23980	232- 43A	-70280	242- 212A	-20160	540- 62A	46031 -20220	160- 26A
-23980	236- 43A	-70280	295- 631A	-20160	542- 52A	-20220	164- 26A
-24210	498- 33A	-70280	462- 212A	-20170	6- 9A	46926 -70190	206- 7A
-24960	26- 116A	-70280	478- 571A	-20170	10- 15A	-70240-7	394- 27A
-24960	28- 105A	-70280	718- 212A	-20180	16- 13A	-70240-7	396- 35A
-24960	688- 8A	-70320	478- 406A	-20180	44- 11A	47131 -20240	62- 21A
-70190	295- 402A	-70380	464- 214A	-20180	228- 6A	-20360	160- 33A
-70190	462- 402A	-70380	720- 214A	-20180	232- 6A	-20360	164- 33A
-70190	718- 402A	-70390	299- 212A	-20180	236- 6A	-20370	160- 34A
-70480	299- 402A	-70400	299- 651A	-20180	272- 12A	-20370	164- 34A
45610 -22350	4- 2A	-70410	299- 652A	-20180	272- 12B	-20380	172- 25A
-22370	4- 3A	-70420	299- 653A	-20190	8- 202A	-20380	174- 25A
-22890	680- 2A	45953 -20470	370- 1A	-20190	32- 205A	-20380	176- 25A
-22900	680- 3A	46000 -20020	90- 7A	-20190	407- 335A	-20720	150- 48A
-23280	680- 2B	-20310	147- 42A	-20200	100- 24A	-20720	158- 30A
-23290	680- 3B	-20420	144- 41A	-20200	122- 15A	-20800	140- 35A
45625 -60140	496- 4A	-20760	122- 12A	-20510	44- 13A	-20800	158- 23A
45701 -70030	546- 14A	-20920	303- 15A	-20600	616- 2A	-20810	152- 36A
-70040	546- 15A	-20920	517- 5A	-20630	39- 3A	-20810	158- 31A
-70650	734- 13A	-21020	22- 17A	-20630	228- 24A	-20820	152- 39A
-70650-7	359- 23A	-21020	24- 17A	-20630	232- 24A	-20820	158- 32A
-70670	69- 147A	-21020	24- 37A	-20630	236- 24A	-20830	154- 42A
-71030	546- 14B	-21020	26- 17A	-20870	115- 15A	-20830	158- 35A
-71040	546- 15B	-21020	26- 37A	-20950	6- 11A	-20840	142- 41A
45715 -70130-7	500- 4A	-21020	28- 17A	-20950	6- 24A	-20840	158- 26A
-70130-7	502- 4A	-21020	28- 37A	-20950	6- 44A	-20850	154- 52A
45785 -20090	559- 1A	-21020	339- 49A	-21170	90- 26A	-20850	158- 36A
-20270	559- 1B	-21020	343- 49A	-21300	34- 73A	-20860	140- 40A
45810 -70020	200- 43A	-21100	136- 12A	-21300	39- 88A	-20860	158- 24A
-70030	198- 38A	-21120	136- 36A	-21300	119- 2A	-20870	140- 53A
-70030	200- 43B	-23760	343- 48A	-21300	406- 14A	-20870	158- 25A
-70040-7	214- 29A	-70860	103- 101A	-21450	32- 4A	-20880	154- 38A
45830 -20050	330- 1A	-70860	103- 106A	-21640	575- 57A	-20880	158- 34A
45850 -60010	347- 148A	-70860	103- 128A	-21650	36- 65A	-20890	154- 37A
-60020	347- 28A	-70860	107- 101A	-21650	76- 53A	-20890	158- 33A
45860 -70010	332- 23A	-70860	107- 106A	-21650	80- 53A	-21050	160- 32A
-70020	332- 27A	-70860	107- 128A	-21650	85- 53A	-21050	164- 32A
-70030	332- 28A	-70860	441- 21A	-21650	245- 63A	-21510	134- 17A
-70040	332- 29A	-70860	441- 26A	-21650	245- 97A	-21510	158- 4A
45870 -20010	72- 3A	-70860	441- 48A	-21650	356- 53A	-21870	263- 102A
-23320	347- 29A	-70860	444- 21A	-21980	685- 61A	-60120	168- 16A
-26450	228- 16A	-70860	444- 26A	-21990	8- 112A	-60220	160- 53A
-26450	232- 16A	-70860	444- 48A	-22030	107- 32A	-60220	164- 53A
-26450	236- 16A	-70860	592- 11A	-22030	115- 16A	-71230	178- 6A
-26590	504- 26A	-70860	592- 16A	-22080	90- 95A	-71290	249- 121A
-26730	88- 9A	-70860	592- 38A	-22190	136- 3A	-72140	156- 42A
-28180	236- 122A	-71490-7	290- 14A	-22320	90- 96A	-72140	156- 121A
-28200	236- 123A	-71500-7	290- 15A	-22680	406- 61A	-72140	156- 143A
-28530	236- 22B	-71510	204- 8A	-60040	390- 29A	-72150	156- 118A
-28530	236- 122B	-71550-7	394- 24A	-60040-7	398- 12A	-72160	156- 146A
-28920	212- 3A	-71550-7	396- 30A	-60040-7	402- 6A	-72160	156- 204A
-28920	454- 4A	-71560-7	379- 22A	-70350	156- 17A	-73470	478- 122A
-28920	708- 4A	-71570-7	379- 24A	-70380	240- 215A	-75740	14- 711A
-70580	204- 23A	-71580-7	379- 26A	-70380	242- 215A	-75750-7	290- 5A
-70720	198- 10A	-71600-7	400- 12A	-70380	295- 215A	-75760	484- 16A
-70720	200- 13A	-71620	484- 14A	-70380	462- 215A	-75760-7	290- 16A
-70730-7	379- 16A	-71660	484- 15A	-70380	478- 215A	-75780	204- 11A
-70740-7	379- 17A	-71760	464- 313A	-70380	718- 215A	-75790	204- 16A
45886 -20620	310- 2A	-71760	720- 313A	-70630-7	50- 19A	-75900-7	110- 20A
-70840	222- 2A	-71780	299- 217A	-70650-7	52- 16A	-75910-7	110- 21A
-71310	312- 112A	-71800-7	396- 31A	46013 -70440	206- 15A	-75920-7	394- 15A
-71310	422- 2A	-71800-7	400- 17A	-70530-7	110- 8A	-75920-7	396- 16A
-71320	312- 12A	46011 -20020	90- 8A	46017 -20020	570- 6A	-75930-7	394- 16A
-71570	202- 2A	-20050	26- 117A	-70050-7	394- 28A	-75930-7	396- 17A

silverpoint.co.uk

PART NUMBER	PAGE-SYM	PART NUMBER	PAGE-SYM	PART NUMBER	PAGE-SYM	PART NUMBER	PAGE-SYM
47131 -75940-7	394- 18A	47142 -20190	144- 62A	49327 -60760	312- 60A	61005 -24070	335- 52A
-75940-7	396- 20A	-20190	147- 62A	-60760	422- 120A	-30095	370- 51A
-76010	484- 5A	-20190	158- 56A	-71900-7	500- 30A	61006 -24055	172- 52A
-76550-7	502- 15A	-20190	158- 58A	-72070	189- 132A	-24055	174- 52A
-76700	464- 212A	-20200	147- 64A	-72070	430- 30A	-24055	176- 52A
-76700	720- 212A	-20200	158- 59A	-72070	604- 100A	61013 -10025	136- 51A
-76900	299- 122A	-20210	144- 65A	-72080	189- 131A	-16135	172- 4A
-77170	434- 17A	-20210	147- 65A	-72340	308- 120A	-16135	174- 4A
-77170	436- 17A	-20210	158- 57A	-72420-7	286- 50A	-16135	176- 4A
-77170	608- 17A	-20210	158- 60A	-72420-7	288- 50A	-24032	160- 40A
-77170	610- 17A	-60120	147- 161A	-72490	490- 121A	-24032	164- 40A
-77190	434- 20A	47148 -60080	160- 31A	-72500	490- 122A	61014 -12055	90- 92A
-77190	436- 20A	-60080	164- 31A	-72510	490- 21A	-12075	90- 93A
-77190	608- 20A	-60090	160- 30A	-72590	222- 40A	-14080	90- 91A
-77190	610- 20A	-60090	164- 30A	-72900	308- 110A	61033 -08020	140- 55A
-77210	434- 13A	47171 -20260	168- 4A	-73020	306- 21A	-08020	447- 12A
-77210	436- 13A	-20260	170- 4A	-73240	219- 700A	-08020	702- 12A
-77210	608- 13A	-21080	160- 14A	-73570	510- 700A	-08025	295- 172A
-77210	610- 13A	-21080	164- 14A	-73580	219- 700B	-08025	496- 58A
-77220	434- 14A	-21130	160- 15A	-74220-7	110- 50A	-08025	498- 21A
-77220	436- 14A	-21130	164- 15A	-74570	190- 249A	-08050	295- 171A
-77220	608- 14A	-21140	172- 15A	-74570	635- 240A	-08050	462- 172A
-77220	610- 14A	-21140	174- 15A	49328 -70010	312- 22A	-08050	718- 172A
-77230	434- 15A	-21140	176- 15A	-70010	422- 12A	-10016	413- 57A
-77230	436- 15A	-21530	160- 14C	-70020	310- 11A	-10016	565- 61A
-77230	608- 15A	-21530	164- 14C	-70020	731- 22A	-10020	172- 53A
-77230	610- 15A	-21540	160- 14B	-70050	202- 14A	-10020	174- 53A
-77240	434- 21A	-21540	164- 14B	49457 -60070-7	178- 20B	-10020	176- 53A
-77240	436- 21A	-70130	312- 34A	-70090-7	178- 20A	-10020	688- 53A
-77240	608- 21A	-70130	422- 24A	49501 -70010-7	54- 43A	-10025	140- 52A
-77240	610- 21A	-70150	310- 21A	49511 -70010	332- 12A	-10025	413- 61A
-77260	434- 2A	-70150	731- 34A	49612 -70010-7	500- 13A	-10025	413- 61B
-77260	436- 2A	-70350	202- 15A	49621 -70020-7	286- 80A	-10035	192- 55A
-77260	608- 2A	-70370	202- 16A	-70020-7	288- 80A	-12020	202- 23A
-77260	610- 2A	-70380	202- 17A	-70030-7	286- 90A	-12030	100- 66A
-77270	434- 6A	47194 -71750	436- 27A	-70140-7	288- 90A	-12032	144- 102A
-77270	434- 27A	-71750	610- 27A	49691 -70260	156- 13A	-12040	48- 61B
-77270	436- 6A	47196 -70180	206- 12A	-70760	488- 10A	-12040	160- 102A
-77270	436- 29A	48976 -60400-7	100- 11A	-90210	158- 1A	-12040	164- 102A
-77270	608- 6A	-60620-7	100- 11B	-90410	158- 20A	-12040	256- 52B
-77270	608- 27A	-60780	432- 1A	-91560	158- 1B	-12040	416- 51B
-77270	610- 6A	-60780	434- 000A	-91570	158- 20B	-12085	140- 51A
-77270	610- 29A	-60780	606- 1A	50201 -00110	112- 15A	-12110	498- 51A
-77280	434- 7A	-60780	608- 000A	-02070	112- 16A	-12150	147- 152A
-77280	434- 28A	-60810	432- 1B	50401 -00100-7	64- 44A	-14035	100- 62A
-77280	436- 7A	-60810	436- 000A	-00100-7	66- 44A	-14050	100- 62B
-77280	436- 28A	-60810	606- 1B	-00140-7	64- 43A	-16040	136- 54A
-77280	608- 7A	-60810	610- 000A	-00140-7	66- 43A	-16040	136- 73A
-77280	608- 28A	-60910-7	100- 11C	-00650	112- 25A	-18115	90- 59A
-77280	610- 7A	-61170-7	100- 11D	-02540	388- 12A	-20035	6- 71A
-77280	610- 28A	-61170-7	110- 000A	-02860-7	100- 7A	-24030	172- 54A
-77290	434- 8A	48977 -20020	332- 20A	-03550-7	124- 41A	-24030	174- 54A
-77290	436- 8A	-20060	332- 17A	-03610	62- 13A	-24030	176- 54A
-77290	608- 8A	48979 -70060	484- 9A	-03670	112- 26A	-24200	685- 53A
-77290	610- 8A	-70060-7	290- 9A	61001 -06050	69- 36A	-24350	685- 51A
-77300	434- 10A	49190 -70020-7	54- 31A	-08020	69- 33A	-30350	8- 51A
-77300	436- 10A	49212 -70040-7	500- 11A	61005 -10050	192- 53A	61034 -10028	69- 206A
-77300	608- 10A	-70070-7	54- 27A	-12035	150- 151A	61057 -10030	245- 82A
-77300	610- 10A	49290 -70190-7	394- 11A	-14040	192- 51A	-10050	138- 54A
-90010	14- 24A	-70190-7	396- 12A	-16050	202- 11A	-12030	245- 86A
-90010	700- 44A	-70200-7	394- 12A	-16060	160- 101A	61089 -12090	260- 51A
47142 -20170	144- 61A	-70200-7	396- 13A	-16060	172- 51A	61101 -05010	136- 52A
-20170	150- 61A	49327 -60130	222- 30A	-16060	174- 51A	-05010	136- 52B
-20170	158- 55A	-60390	310- 100A	-16065	176- 51A	-05045	531- 203A
-20170	158- 62A	-60390	731- 70A	-24065	164- 101A	-06012	478- 403A
-20180	144- 60A	-60410	312- 70A	-24065	168- 51A	-06016	464- 271A
-20180	150- 60A	-60410	422- 130A	-24065	170- 51A	-06016	720- 271A
-20180	158- 54A	-60750	310- 200A	-24070	168- 52A	-06030	156- 35A
-20180	158- 61A	-60750	731- 60A	-24070	170- 52A	-06045	156- 36A

silverhorn.co.uk

PARTS No. INDEX

PART NUMBER	PAGE-SYM	PART NUMBER	PAGE-SYM	PART NUMBER	PAGE-SYM	PART NUMBER	PAGE-SYM
61101 -06060	240- 481A	61802 -06010	212- 61A	61802 -08016	85- 71A	61802 -08025	236- 71A
-06060	242- 481A	-06010	347- 53A	-08016	131- 76A	-08025	410- 52A
-06060	295- 481A	-06010	472- 54A	-08016	254- 55A	-08025	413- 52A
-06060	462- 481A	-06010	474- 54A	-08016	269- 52A	-08025	587- 62A
-06060	718- 481A	-06012	69- 71A	-08016	272- 52A	-08025	642- 52A
-06080	478- 414A	-06012	208- 65A	-08016	272- 52B	-08030	85- 61A
-08016	14- 38A	-06012	228- 77A	-08016	272- 52C	-08030	228- 51A
-08016	240- 445A	-06012	232- 77A	-08016	275- 52A	-08030	232- 51A
-08016	242- 445A	-06012	236- 77A	-08016	339- 101A	-08030	236- 51A
-08016	295- 445A	-06012	454- 61A	-08016	343- 101A	-08030	375- 61A
-08016	462- 445A	-06012	665- 51A	-08016	347- 51A	-08040	180- 52A
-08016	718- 445A	-06012	708- 61A	-08016	410- 51A	-08040	228- 74A
-08020	295- 125A	-06016	26- 51B	-08016	413- 51A	-08040	232- 74A
-08020	299- 125A	-06016	26- 72A	-08016	438- 53A	-08040	236- 74A
-08020	462- 125A	-06016	28- 51A	-08016	498- 52A	-08050	92- 52A
-08020	718- 125A	-06016	28- 71A	-08016	504- 61A	-08055	249- 51A
-08025	200- 24B	-06016	32- 65A	-08016	531- 51A	-08055	513- 51A
-08040	240- 125A	-06016	32- 155A	-08016	612- 53A	-08060	180- 53A
-08040	242- 125A	-06016	64- 51A	-08016	631- 51A	-08060	189- 72A
-08040	464- 272A	-06016	66- 51A	-08016	631- 51B	-08060	189- 82A
-08040	720- 272A	-06016	69- 53A	-08016-7	22- 61A	-08060	258- 63A
-08090	299- 171A	-06016	85- 56A	-08016-7	24- 71A	-08060	280- 54A
-08115	292- 973A	-06016	85- 56B	-08016-7	32- 64A	-08065	180- 54A
-10025	198- 35A	-06016	208- 61B	-08016-7	64- 91A	-08075	186- 52A
-10025	200- 39A	-06016	210- 61A	-08016-7	66- 91A	-08110	263- 52A
-10025	292- 273A	-06016	228- 72A	-08016-7	69- 62A	-10012	42- 54A
-10025	460- 273A	-06016	232- 72A	-08016-7	127- 76A	-10016	32- 51A
-10025	716- 273A	-06016	236- 72A	-08016-7	189- 92A	-10016	39- 82A
-10040	198- 34A	-06016	237- 161A	-08016-7	359- 51A	-10016	39- 82B
-10045	219- 271A	-06016	272- 51A	-08016-7	372- 51A	-10016	48- 51A
-10045	249- 62A	-06016	351- 54A	-08020	12- 65A	-10016	100- 71A
-10045	510- 271A	-06016	362- 61A	-08020	16- 81A	-10016	124- 95A
-10060	136- 71A	-06016	382- 54A	-08020	26- 71A	-10016	134- 56A
-12025	160- 103A	-06016	384- 54A	-08020	30- 31A	-10016	160- 104A
-12025	164- 103A	-06016	390- 61A	-08020	32- 52A	-10016	165- 104A
-12040	150- 105A	-06016	407- 295A	-08020	39- 81A	-10016	180- 51A
-12080	136- 55A	-06016	508- 64A	-08020	44- 52A	-10016	226- 52A
-18060	292- 972A	-06016	584- 51A	-08020	50- 51A	-10016	254- 53A
-18160	292- 971A	-06016	584- 51B	-08020	64- 82A	-10016	258- 66A
61103 -06016	531- 71A	-06016	587- 51A	-08020	66- 82A	-10016	263- 81A
61121 -05008	236- 47A	-06016	665- 52A	-08020	80- 61A	-10016	359- 61A
-06015	88- 54A	-06016	688- 55A	-08020	85- 58A	-10016	392- 53A
-08008	242- 454A	-06020	228- 151A	-08020	92- 82A	-10016	410- 57A
-12008	228- 147A	-06020	232- 151A	-08020	112- 51A	-10016	456- 51A
-12008	233- 207A	-06020	237- 151A	-08020	122- 82A	-10016	490- 51A
-12008	237- 217A	-06025	212- 71A	-08020	194- 51A	-10016	553- 51A
61131 -05010	140- 57A	-06025	272- 53A	-08020	214- 51A	-10016	556- 51A
-05020	14- 63A	-06025	362- 63A	-08020	224- 53A	-10016	565- 51A
-06008	299- 454A	-06025	388- 51A	-08020	263- 51A	-10016	597- 52A
61261 -06020	115- 52A	-06025	466- 51A	-08020	280- 52A	-10016	626- 51A
-07020	115- 53A	-06025	468- 51A	-08020	384- 55A	-10016	710- 51A
-07030	90- 52A	-06025	472- 55A	-08020	388- 52A	-10020	16- 51A
-07030	115- 53B	-06025	474- 55A	-08020	438- 52A	-10020	16- 61A
61275 -06016	124- 81A	-06040	88- 51A	-08020	450- 52A	-10020	18- 51A
-06020	127- 51A	-06065	182- 51A	-08020	496- 52A	-10020	18- 61A
-06025	496- 51A	-06065	635- 53A	-08020	612- 52A	-10020	20- 51A
-06030	127- 63A	-08012	12- 61A	-08020	618- 52A	-10020	20- 61A
-06030	131- 63A	-08012	64- 52A	-08020	704- 52A	-10020	30- 32A
-08035	127- 65A	-08012	66- 52A	-08025	30- 61A	-10020	34- 81A
-08035	131- 65A	-08012	92- 51A	-08025	44- 55A	-10020	36- 63A
-08040	127- 77A	-08012	184- 61A	-08025	46- 52A	-10020	39- 87A
-08040	131- 77A	-08012	282- 51A	-08025	88- 52A	-10020	46- 51A
-10050	90- 53A	-08012	284- 51A	-08025	103- 53A	-10020	50- 52A
61802 -05020	228- 76B	-08012	362- 51A	-08025	107- 53A	-10020	64- 81A
-05020	232- 76A	-08012	390- 71A	-08025	127- 74A	-10020	66- 81A
-05020	236- 76A	-08012	454- 51A	-08025	131- 74A	-10020	100- 72A
-06010	22- 51A	-08012	498- 53A	-08025	224- 72A	-10020	115- 51A
-06010	24- 51A	-08012	708- 51A	-08025	228- 71A	-10020	127- 81A
-06010	26- 51A	-08016	66- 63A	-08025	232- 71A	-10020	131- 81A

silverpart.co.uk

PART NUMBER	PAGE-SYM	PART NUMBER	PAGE-SYM	PART NUMBER	PAGE-SYM	PART NUMBER	PAGE-SYM
-10020	168- 54A	-10030	266- 61A	-12020	559- 2A	-16018	335- 54A
-10020	170- 54A	-10030	269- 51A	-12020	614- 51A	-16020	100- 52A
-10020	186- 51A	-10030	447- 52A	-12020	618- 51A	-16020	216- 51A
-10020	208- 52A	-10030	458- 51A	-12025	32- 54A	-16020	406- 59A
-10020	210- 52A	-10030	488- 61A	-12025	34- 51A	-16025	90- 55A
-10020	212- 51A	-10030	490- 52A	-12025	42- 52A	-16025	406- 57A
-10020	226- 51A	-10030	702- 52A	-12025	69- 51A	-16030	90- 81A
-10020	275- 51A	-10030	713- 51A	-12025	69- 61A	-16030	249- 52A
-10020	330- 51A	-10035	34- 61A	-12025	100- 73A	-16030	513- 53A
-10020	366- 71A	-10035	44- 54A	-12025	152- 103A	-16040	8- 61A
-10020	382- 51A	-10035	50- 54A	-12025	154- 103A	-16040	432- 52A
-10020	384- 51A	-10035	50- 54B	-12025	189- 71A	-16040	606- 52A
-10020	388- 54A	-10035	119- 52A	-12025	229- 162A	-16040	685- 71A
-10020	388- 57A	-10035	122- 54A	-12025	245- 64A	-16055	16- 71A
-10020	390- 52A	-10035	208- 51A	-12025	252- 52A	-16060	406- 58A
-10020	406- 51A	-10035	407- 151A	-12025	254- 71A	-16080	36- 51A
-10020	466- 52A	-10035	456- 52A	-12025	258- 61A	-16090	42- 51A
-10020	468- 52A	-10035	710- 52A	-12025	481- 51A	-16110	258- 51A
-10020	470- 52A	-10040	115- 55A	-12025	488- 51A	-16110	508- 51A
-10020	540- 52A	-10040	140- 107A	-12025	488- 64A	-20032	6- 51A
-10020	542- 51A	-10040	392- 51A	-12030	103- 51A	-20032	6- 63A
-10020	565- 71A	-10040	406- 52A	-12030	107- 51A	-20032	10- 52A
-10020	597- 52B	-10040	700- 52A	-12030	122- 52A	-20035	90- 57A
-10020	670- 53A	-10045	115- 51B	-12030	127- 62A	-20040	90- 58A
-10020	670- 71A	-10045	134- 52A	-12030	131- 62A	-20045	10- 51A
-10020	688- 54A	-10045	224- 52A	-12030	136- 151A	-20195	90- 56A
-10020	700- 51A	-10050	8- 71A	-12030	224- 51A	-24050	12- 51A
-10020	734- 51A	-10050	245- 61A	-12030	245- 51A	-24050	14- 51A
-10025	30- 51A	-10050	245- 91A	-12030	252- 53A	-24085	6- 61B
-10025	30- 51B	-10050	258- 62A	-12030	254- 51A	-24095	6- 61A
-10025	34- 71A	-10055	258- 67A	-12030	260- 52A	-24110	90- 94A
-10025	50- 53A	-10055	278- 51A	-12030	447- 51A	61805 -24075	310- 8A
-10025	115- 54A	-10060	140- 109A	-12030	488- 62A	-24080	161- 151A
-10025	115- 54B	-10065	184- 51A	-12030	548- 51A	-24080	165- 151A
-10025	119- 51A	-10065	458- 58A	-12030	548- 51B	62214 -06010	310- 33A
-10025	119- 61A	-10065	713- 58A	-12030	702- 51A	-06010	731- 33A
-10025	127- 61A	-10080	256- 51A	-12035	32- 55A	62216 -05008	458- 38A
-10025	131- 52A	-10080	635- 61A	-12035	42- 53A	-05008	713- 38A
-10025	131- 61A	-10085	30- 52A	-12035	80- 62A	-06006	202- 19A
-10025	136- 53A	-10085	189- 81A	-12035	100- 61A	-06008	202- 22A
-10025	154- 106A	-10085	504- 52A	-12035	100- 61B	62256 -29310	228- 75A
-10025	210- 51A	-10090	245- 92A	-12035	100- 61C	-29310	232- 75A
-10025	245- 52A	-10090	713- 61A	-12035	127- 151A	-29310	236- 75A
-10025	258- 65A	-10095	245- 53A	-12035	131- 151A	-29310	496- 54A
-10025	366- 51A	-10095	306- 51A	-12035	152- 104A	-29310	688- 52A
-10025	406- 53A	-10095	308- 51A	-12035	416- 51A	-51308	24- 61A
-10025	407- 161A	-10100	269- 72A	-12035	490- 54A	-51308	26- 61A
-10025	407- 171A	-10100	447- 53A	-12040	48- 61A	-51308	28- 61A
-10025	407- 181A	-10100	702- 53A	-12040	256- 52A	-51310	24- 62A
-10025	407- 191A	-10135	392- 52A	-12040	488- 63A	-51310	26- 62A
-10025	407- 251A	-12016	127- 78A	-12040	540- 51A	-51310	28- 62A
-10025	407- 261A	-12016	131- 78A	-12045	32- 91A	-51312	80- 56A
-10025	407- 271A	-12016	390- 51A	-12045	122- 51A	-51312	85- 82A
-10025	410- 53A	-12020	2- 51A	-12045	140- 101A	-51406	330- 52A
-10025	413- 53A	-12020	14- 61A	-12045	245- 151A	-51410	32- 61A
-10025	504- 51A	-12020	34- 52A	-12045	407- 281A	-51410	32- 151A
-10025	537- 51A	-12020	124- 83A	-12050	32- 53A	-51410	407- 291A
-10025	537- 61A	-12020	131- 51A	-12050	32- 53B	-51412	8- 231A
-10025	597- 51A	-12020	189- 51A	-12050	418- 63A	-51412	64- 62A
-10025	614- 52A	-12020	228- 73A	-12050	562- 51A	-51412	66- 62A
-10025	670- 51A	-12020	232- 73A	-12055	122- 52B	-51412	74- 51A
-10025	690- 52A	-12020	236- 73A	-12055	481- 52A	-51416	36- 62A
-10030	34- 53A	-12020	245- 93A	-12065	122- 51B	-51416	44- 58A
-10030	122- 53A	-12020	359- 52A	-12070	90- 54A	-51416	64- 53A
-10030	245- 52B	-12020	366- 53A	-12085	488- 52A	-51420	64- 53B
-10030	249- 61A	-12020	390- 62A	-12090	100- 51A	-51420	66- 53A
-10030	254- 54A	-12020	406- 56A	-12100	245- 81A	-51420	74- 125A
-10030	258- 64A	-12020	410- 54A	-12105	254- 52A	-51420	74- 145A
-10030	258- 64B	-12020	413- 54A	-12135	490- 53A	-51420	534- 25A

silverhoin.co.uk

PART NUMBER	PAGE-SYM	PART NUMBER	PAGE-SYM	PART NUMBER	PAGE-SYM	PART NUMBER	PAGE-SYM
62256 -51512	103- 55A	62401 -81067	210- 34A	62480 -21081	180- 71A	62480 -21121	224- 55A
-51512	107- 55A	-81067	452- 32A	-21081	182- 62A	-21121	228- 81A
-51512	354- 51A	-81067	706- 32A	-21081	182- 71A	-21121	232- 81A
-51520	228- 76A	-81081	69- 34A	-21081	184- 71A	-21121	236- 81A
-51520	351- 61A	-81081	464- 273A	-21081	184- 71B	-21161	16- 52A
-51520	496- 53A	-81081	575- 54A	-21081	186- 61A	-21161	192- 56A
-51530	69- 119A	-81081	720- 273A	-21081	189- 91A	-21241	90- 98A
-51608	12- 67A	-81101	76- 51A	-21081	224- 71A	-21241	100- 63A
-51610	62- 51A	-81101	80- 51A	-21081	228- 61A	62701 -20041	28- 73A
-51610	64- 61A	-81101	85- 51A	-21081	228- 82A	-20041	32- 63A
-51610	66- 61A	-81101	356- 51A	-21081	232- 61A	-20041	32- 154A
-51610	80- 54A	-81101	413- 58A	-21081	232- 82A	-20041	44- 61A
-51610	85- 54A	-81121	72- 51A	-21081	236- 61A	-20041	64- 66A
-51610	347- 57A	-81121	208- 56A	-21081	236- 82A	-20041	66- 66A
-51610	366- 61A	-81121	210- 56A	-21081	254- 61A	-20041	74- 52A
-51610	382- 52A	-81121	498- 62A	-21081	258- 71A	-20041	407- 294A
-51610	486- 51A	-81141	468- 53A	-21081	263- 71A	-20051	354- 52A
-51610	524- 51A	-81141	470- 53A	-21081	266- 71A	-40031	24- 63A
-51610	546- 51A	-81142	69- 17A	-21081	269- 71A	-40031	26- 63A
-51610	670- 61A	-81142	570- 12A	-21081	272- 61A	-40031	28- 63A
-51612	224- 54A	-81181	90- 71A	-21081	275- 61A	-40031	80- 58A
-51612	226- 53A	-81201	90- 72A	-21081	280- 53A	-40031	85- 84A
-51612	351- 51C	-81242	616- 3A	-21081	282- 52A	-40041	8- 235A
-51612	354- 61C	62402 -81081	204- 24A	-21081	284- 52A	-40041	26- 74A
-51616	64- 71A	-81121	452- 52A	-21081	362- 62A	-40061	64- 73A
-51616	66- 71A	-81121	706- 52A	-21081	375- 51A	-40061	66- 73A
-51616	124- 91A	62403 -81121	212- 52A	-21081	388- 53A	-40061	124- 93A
-51616	351- 51A	-81121	454- 52A	-21081	410- 55A	-40061	208- 54A
-51616	351- 51B	-81121	708- 52A	-21081	413- 55A	-40061	210- 54A
-51616	354- 61B	-81142	498- 61A	-21081	450- 51A	-40061	228- 92A
-51616	382- 52B	-81161	280- 202A	-21081	488- 71A	-40061	232- 92A
-51616	384- 52A	-81242	192- 58A	-21081	496- 57A	-40061	236- 92A
-51620	64- 54A	62443 -31081	208- 61A	-21081	508- 63A	-40061	347- 62A
-51620	688- 51A	-31081	506- 55A	-21081	520- 51A	-40061	351- 52A
-51625	64- 54B	62480 -21051	103- 71A	-21081	631- 61A	-40061	452- 51A
-51625	66- 54A	-21051	107- 71A	-21081	631- 61B	-40061	706- 51A
-51816	675- 51A	-21061	28- 52A	-21081	697- 51A	-40081	12- 64A
-51820	22- 63A	-21061	66- 57A	-21081	697- 61A	-40081	22- 64A
-51820	24- 73A	-21061	182- 61A	-21081	704- 51A	-40081	24- 74A
-51825	200- 24A	-21061	208- 62B	-21101	2- 61A	-40081	44- 53A
62257 -51512	347- 59A	-21061	208- 71A	-21101	12- 62A	-40081	44- 53B
-51616	303- 51A	-21061	210- 62A	-21101	14- 62A	-40081	88- 5A
-51616	517- 51A	-21061	224- 56A	-21101	44- 56A	-40081	208- 63A
-51620	339- 121A	-21061	237- 162A	-21101	100- 74A	-40081	228- 91A
-51620	343- 161A	-21061	347- 54A	-21101	115- 71A	-40081	232- 91A
-51620	347- 58A	-21061	354- 61A	-21101	115- 71B	-40081	236- 91A
-51820	339- 103A	-21061	454- 64A	-21101	119- 53A	-40081	410- 56A
-51820	343- 103A	-21061	708- 64A	-21101	208- 55A	-40081	413- 56A
62261 -14018	69- 45A	-21081	12- 52A	-21101	210- 55A	-40101	88- 71A
-14020	26- 73A	-21081	12- 63A	-21101	269- 73A	-40101	212- 53A
-14020	28- 72A	-21081	32- 81A	-21101	278- 52A	-40101	492- 51A
-15025	69- 25A	-21081	44- 57A	-21101	335- 61A	-40101	565- 53A
-16016	347- 61A	-21081	57- 51A	-21101	343- 151A	-40101	565- 73A
62262 -14010	504- 32A	-21081	60- 51A	-21101	366- 52A	-40121	208- 62A
62401 -61081	299- 172A	-21081	64- 63A	-21101	392- 71A	-40121	458- 53A
-81031	24- 65A	-21081	76- 56A	-21101	406- 76A	-40121	481- 61A
-81031	26- 65A	-21081	80- 59A	-21101	410- 58A	-40121	531- 61A
-81031	28- 65A	-21081	85- 57A	-21101	565- 52A	-40121	713- 53A
-81041	8- 232A	-21081	88- 61A	-21101	565- 72A	-40121-7	32- 71A
-81041	32- 152A	-21081	92- 71A	-21101	597- 53A	-40121-7	189- 61A
-81041	36- 61A	-21081	92- 81A	-21101	670- 52A	-40121-7	202- 24A
-81041	44- 59A	-21081	92- 81B	-21101	688- 56A	-40141	498- 71A
-81041	407- 292A	-21081	112- 71A	-21101	690- 53A	-40141	570- 13A
-81061	124- 94A	-21081	122- 81A	-21121	32- 58A	-40161	192- 61A
-81061	208- 33A	-21081	124- 71A	-21121	39- 71A	-40161	229- 181A
-81061	210- 33A	-21081	127- 73A	-21121	44- 51A	-40161	282- 53A
-81061	452- 31A	-21081	131- 73A	-21121	69- 63A	-40161	284- 53A
-81061	706- 31A	-21081	140- 58A	-21121	72- 52A	62702 -40031	124- 82A
-81067	208- 34A	-21081	180- 61A	-21121	122- 71A	62710 -18101	2- 71A

silverpoint.co.uk

PART NUMBER	PAGE-SYM	PART NUMBER	PAGE-SYM	PART NUMBER	PAGE-SYM	PART NUMBER	PAGE-SYM
62710 -18101	26- 75A	62721 -04100	64- 56A	62761 -37061	347- 64A	63811 -00100	152- 28A
-18101	28- 74A	-04100	64- 65A	-37081	339- 106A	63812 -00048	147- 50A
-18101	39- 85A	-04100	66- 56A	-37081	343- 106A	-00080	138- 27A
-18101	39- 85B	-04100	66- 65A	63002 -01612	228- 29A	-00085	142- 29A
-18101	115- 61C	-04100	74- 53A	-01612	232- 29A	-00090	138- 24A
-18101	122- 61A	-04100	330- 53A	-01612	236- 29A	-00100	154- 30A
-18101	122- 61B	-04100	407- 293A	-02016	44- 6A	64111 -01001	208- 7A
-18101	160- 105A	-05100	351- 62A	-02016	228- 28A	-01001	210- 7A
-18101	165- 105A	-05100	354- 53A	-02016	232- 28A	-01001	452- 7A
-18101	192- 54A	-05100	496- 56A	-02016	236- 28A	-01001	706- 7A
-18101	245- 85A	-06100	12- 66A	-03020	8- 234A	65040 -01808	154- 34A
-18101	260- 54A	-06100	62- 52A	-03020	32- 206A	-01808	158- 50A
-18101	392- 61A	-06100	64- 55A	-03020	407- 336A	65051 -01208	222- 23A
-18101	413- 59A	-06100	64- 64A	-03220	32- 124A	-01906	4- 116A
-18101	413- 59B	-06100	64- 72A	-04025	39- 84A	-01906	680- 116A
-18101	688- 57A	-06100	66- 55A	-04025	208- 64A	-02007	312- 32A
-18109	115- 61A	-06100	66- 64A	-04032	192- 59A	-02007	422- 22A
-18109	115- 61B	-06100	66- 72A	-05035	406- 42A	-02510	4- 25A
-18109	458- 54A	-06100	80- 55A	63011 -02008	136- 39A	-02510	4- 103A
-18109	713- 54A	-06100	85- 55A	-04016	142- 110A	-02510	6- 102A
-18121	39- 86A	-06100	124- 92A	-05010	295- 547A	-02510	10- 12A
-18121	48- 71A	-06100	224- 57A	-05020	160- 54A	-02510	310- 18A
-18121	100- 65A	-06100	226- 54A	-05020	164- 54A	-02510	420- 25A
-18121	100- 65B	-06100	347- 63A	-05025	144- 80A	-02510	680- 25A
-18121	140- 56A	-06100	351- 53A	-05025	147- 80A	-02510	680- 101A
-18121	144- 108A	-06100	351- 53B	-06025	147- 105A	-02510	731- 32A
-18121	150- 153A	-06100	354- 62A	-06028	136- 14A	-02810	6- 32A
-18121	256- 53A	-06100	366- 62A	-10016	160- 49A	-02810	10- 11A
-18121	406- 55A	-06100	382- 53A	-10016	164- 49A	65054 -06313	142- 33A
-18121	416- 52A	-06100	384- 53A	-10050	134- 9A	-06313	158- 47A
-18121	488- 81A	-06100	486- 52A	63021 -08012	172- 13A	-06514	154- 56A
-18121	498- 151A	-06100	524- 52A	-08012	174- 13A	-06514	158- 49A
-18121	540- 61A	-06100	546- 52A	-08012	176- 13A	-06914	172- 3A
-18121	548- 52A	-06100	670- 62A	63024 -12020	144- 49A	-06914	174- 3A
-18121	548- 52B	-08100	69- 35A	-12020	154- 49A	65084 -06013	136- 33A
-18129	115- 62A	-08100	496- 59A	63026 -10025	136- 38A	-06013	158- 9A
-18129	618- 53A	-08100	575- 58A	63051 -20045	406- 41A	-06313	142- 31A
-18141	100- 64A	-10100	76- 52A	63055 -16051	192- 16A	-06313	158- 46A
-18141	192- 52A	-10100	80- 52A	63057 -06016	228- 26A	-06514	154- 32A
-18141	498- 152A	-10100	85- 52A	-06016	232- 26A	-06514	158- 48A
-18161	90- 61A	-10100	245- 84A	-06016	236- 26A	65210 -12007	510- 264A
-18161	160- 106A	-10100	356- 52A	63422 -40590	222- 6A	-12008	219- 270A
-18161	172- 55A	-12100	245- 87A	-45490	4- 115A	-12008	280- 101A
-18161	174- 55A	-12100	260- 53A	-45490	680- 115A	-12008	460- 168A
-18161	176- 55A	-14100	69- 16A	-46440	312- 16A	-12008	464- 263A
-18161	202- 10A	-14100	498- 72A	-46440	422- 6A	-12008	531- 112A
-18161	406- 62A	-14100	570- 14A	-46440	731- 16A	-12008	716- 168A
-18181	90- 62A	-16100	216- 52A	-48540	4- 24A	-12008	720- 263A
-18201	10- 54A	-16100	406- 54A	-48540	420- 24A	-12008	722- 21A
-18201	90- 64A	-18100	452- 53A	-48540	680- 24A	-12008	724- 21A
-18241	6- 62A	-18100	454- 63A	-48780	4- 23A	-12009	526- 163A
-18241	165- 106A	-18100	706- 53A	-48780	310- 5A	-12009	531- 202A
-18241	168- 53A	-18100	708- 63A	-48780	420- 23A	-12010	219- 263A
-18241	170- 53A	-20100	6- 72A	-48780	680- 23A	-12010	464- 262A
-18241	172- 56A	-20100	10- 53A	-48980	4- 102A	-12010	510- 263A
-18241	174- 56A	-24100	172- 57A	-48980	680- 49A	-12010	720- 262A
-18241	176- 56A	-24100	174- 57A	63811 -00017	498- 107A	-12011	140- 71A
-18241	335- 53A	-24100	176- 57A	-00050	172- 27A	-12011	180- 111A
-18301	370- 52A	-24100	312- 20A	-00050	174- 27A	-12011	189- 103A
62721 -03100	24- 64A	-24100	422- 10A	-00050	176- 27A	-12011	208- 35A
-03100	26- 64A	-27100	731- 20A	-00055	147- 79A	-12011	210- 35A
-03100	28- 64A	62722 -03100	127- 52A	-00065	144- 76A	-12011	212- 21A
-03100	80- 57A	-03100	127- 66A	-00065	147- 76A	-12011	219- 262A
-03100	85- 83A	-03100	131- 66A	-00078	144- 75A	-12011	245- 21A
-04100	8- 233A	-03100	496- 55A	-00078	150- 75A	-12011	249- 23A
-04100	32- 62A	-04100	127- 68A	-00080	154- 26A	-12011	252- 21A
-04100	32- 153A	-04100	131- 68A	-00085	160- 28A	-12011	258- 32A
-04100	36- 64A	62731 -06100	531- 81A	-00085	164- 28A	-12011	269- 41A
-04100	44- 62A	62761 -17081	498- 22A	-00090	152- 27A	-12011	272- 21A

silverhorn.co.uk

PART NUMBER	PAGE-SYM	PART NUMBER	PAGE-SYM	PART NUMBER	PAGE-SYM	PART NUMBER	PAGE-SYM
65210 -12011	275- 31A	65210 -12018	292- 701A	65210 -12030	528- 13A	65211 -32470	172- 23A
-12011	292- 264A	-12018	292- 801A	-12032	198- 7A	-32470	174- 23A
-12011	295- 162A	-12018	295- 123A	-12032	200- 8A	-32470	176- 23A
-12011	303- 26A	-12018	308- 31A	-12038	127- 123A	65219 -12012	299- 421A
-12011	306- 31A	-12018	428- 31A	-12038	131- 143A	65220 -31019	258- 6A
-12011	308- 41A	-12018	460- 621A	-12038	490- 101A	-31024	127- 48A
-12011	312- 135A	-12018	462- 123A	-12040	219- 260A	-31024	131- 118A
-12011	422- 25A	-12018	510- 163A	-12040	510- 260A	-31024	245- 9A
-12011	430- 21A	-12018	526- 121A	-12042	219- 269A	-31024	245- 33A
-12011	452- 21A	-12018	528- 11A	-12042	219- 269B	-31024	245- 133A
-12011	454- 21A	-12018	602- 31A	-12042	510- 269A	-31024	256- 12A
-12011	458- 101A	-12018	635- 132A	-12044	256- 32A	-31024	258- 19A
-12011	462- 162A	-12018	635- 151A	-12044	256- 33A	-31024	266- 14A
-12011	464- 261A	-12018	716- 621A	-12044	263- 21A	-31024	269- 14A
-12011	468- 21A	-12018	718- 123A	-12044	490- 141A	-31024	447- 7A
-12011	470- 31A	-12020	240- 214A	-12050	292- 161A	-31024	456- 6A
-12011	490- 24A	-12020	242- 214A	-12050	460- 161A	-31024	458- 46A
-12011	510- 262A	-12020	295- 214A	-12050	716- 161A	-31024	488- 41A
-12011	513- 23A	-12020	299- 214A	-12090	6- 103A	-31024	702- 7A
-12011	517- 16A	-12020	462- 214A	-12100	6- 33A	-31024	710- 6A
-12011	531- 31A	-12020	478- 214A	-18018	147- 100A	-31024	713- 46A
-12011	531- 212A	-12020	526- 151A	-18018	158- 29A	-31027	127- 49A
-12011	604- 31A	-12020	718- 214A	-18020	140- 13A	-31027	131- 119A
-12011	635- 102A	-12022	292- 803A	-18020	158- 22A	-31027	245- 123A
-12011	700- 102A	-12022	460- 623A	-18024	140- 12A	-31027	254- 12A
-12011	706- 21A	-12022	716- 623A	-18024	158- 21A	-31027	488- 4A
-12011	708- 21A	-12024	124- 21A	-18060	136- 37A	-31027	488- 39A
-12011	713- 101A	-12024	219- 162A	-18060	158- 11A	-31027	490- 5A
-12011	718- 162A	-12024	219- 266A	-22030	202- 21A	-41003	245- 11A
-12011	720- 261A	-12024	258- 31A	-22040	458- 42A	-41003	260- 7A
-12011	731- 36A	-12024	280- 141A	-22040	713- 42A	-41003	447- 6A
-12012	219- 265A	-12024	292- 802A	-22045	198- 11A	-41003	702- 6A
-12012	510- 265A	-12024	306- 101A	-22045	200- 11A	-41006	127- 47A
-12012	526- 161A	-12024	428- 41A	-22045	219- 261A	-41006	131- 117A
-12014	180- 31A	-12024	428- 104A	-22045	222- 16A	-41006	252- 12A
-12014	182- 21A	-12024	460- 622A	-22045	458- 43A	-41006	260- 6A
-12014	184- 11A	-12024	508- 104A	-22045	510- 261A	-41006	481- 19A
-12014	186- 11A	-12024	510- 162A	-22045	713- 43A	-41010	252- 9A
-12014	189- 102A	-12024	510- 266A	-22055	292- 263A	-41010	252- 9B
-12014	190- 235A	-12024	602- 41A	-22055	460- 263A	-41010	488- 38A
-12014	194- 34A	-12024	602- 104A	-22055	716- 263A	-43013	144- 103A
-12014	212- 31A	-12024	716- 622A	-22060	240- 122A	-43013	158- 28A
-12014	249- 21A	-12026	204- 22A	-22060	242- 122A	65231 -00041	266- 81A
-12014	249- 22A	-12026	219- 267A	-22060	295- 122A	-00041	269- 31A
-12014	278- 21A	-12026	510- 267A	-22060	462- 122A	-00041	481- 25A
-12014	280- 41A	-12028	196- 11A	-22060	718- 122A	-00061	481- 24A
-12014	280- 135A	-12028	635- 124A	-22065	202- 18A	-00061	481- 41A
-12014	299- 123A	-12029	104- 204A	-22065	292- 261A	-00081	62- 31A
-12014	428- 111A	-12029	108- 204A	-22065	460- 261A	-00081	508- 42A
-12014	450- 11A	-12029	127- 121A	-22065	716- 261A	-00121	92- 21A
-12014	481- 111A	-12029	131- 31A	-22080	312- 25A	-00161	127- 122A
-12014	488- 11A	-12029	184- 12A	-22080	422- 15A	-00201	481- 31A
-12014	490- 23A	-12029	204- 5A	-22090	310- 12A	-00201	481- 104A
-12014	513- 21A	-12029	219- 268A	-22090	731- 25A	65240 -21026	219- 501A
-12014	531- 102A	-12029	263- 41A	-22100	172- 22A	-21026	510- 501A
-12014	602- 111A	-12029	292- 561A	-22100	174- 22A	-31018	292- 702A
-12014	635- 41A	-12029	303- 27A	-22100	176- 22A	-31018	526- 122A
-12014	704- 11A	-12029	306- 41A	-22105	222- 17A	-32105	222- 18A
-12016	295- 471A	-12029	308- 21A	-22110	222- 21A	-32180	312- 27A
-12016	295- 471B	-12029	428- 41B	-22165	14- 7A	-32180	422- 17A
-12016	526- 162A	-12029	460- 561A	-22180	312- 26A	-32215	310- 14A
-12018	182- 22A	-12029	490- 22A	-22180	422- 16A	-32215	731- 27A
-12018	186- 31A	-12029	510- 268A	-22215	310- 13A	65412 -14143	222- 15A
-12018	189- 11A	-12029	517- 17A	-22215	731- 26A	65421 -14147	222- 14A
-12018	189- 101A	-12029	602- 41B	-22240	172- 21A	65431 -14144	222- 13A
-12018	190- 234A	-12029	614- 101A	-22240	174- 21A	-24248	312- 21A
-12018	194- 22A	-12029	716- 561A	-22240	176- 21A	-24248	422- 11A
-12018	219- 163A	-12030	292- 703A	-28070	142- 104A	-31298	310- 9A
-12018	280- 134A	-12030	526- 141A	-28070	158- 27A	-31298	731- 21A

silverpm.co.uk

PART NUMBER	PAGE-SYM	PART NUMBER	PAGE-SYM	PART NUMBER	PAGE-SYM	PART NUMBER	PAGE-SYM
65446 -02509	222- 19A	67040 -06000	12- 2A	68055 -10050	284- 16A	68650 -58260	258- 2A
-05712	312- 28A	-06000	280- 2A	-10052	280- 5A	-58270	258- 2B
-05712	422- 18A	-06000	700- 9A	-10067	266- 5A	68655 -10075	458- 12A
-06615	310- 15A	-06000	700- 11A	-10150	269- 22B	-10075	713- 12A
-06615	731- 28A	-08000	269- 22A	-10235	184- 32A	-10155	531- 9A
65455 -03008	222- 22A	-09000	112- 4A	-10343	266- 7A	-10180	180- 101A
-04308	312- 31A	-09000	488- 33A	-10420	180- 3A	-20045	182- 4A
-04308	422- 21A	-12000	280- 3A	-20040	190- 248B	-20102	190- 246A
-04908	310- 17A	-12000	280- 4A	-20042	280- 31A	-20148	182- 49A
-04908	731- 31A	-12000	508- 14A	-20098	508- 13A	-28130	186- 1A
65462 -05860	222- 24A	-15000	92- 31A	-20103	508- 12A	-30225	182- 41A
65464 -06460	312- 30A	-15000	92- 32A	-20170	272- 3A	-30230	182- 42A
-06460	422- 20A	-15000	92- 33A	-20170	272- 3C	-50200	180- 4A
-06660	310- 22A	-19000	92- 1A	-20180	450- 1A	-60090	131- 42A
-06660	731- 30A	-19000	92- 8A	-20180	704- 1A	-60090	614- 2A
65471 -10430	222- 20A	-19000	112- 5A	-20190	275- 3A	-60105	488- 29A
65473 -07130	312- 29A	-25000	112- 3A	-20190	278- 5A	68658 -58255	258- 3A
-07130	422- 19A	-32000	127- 25A	-20195	278- 15A	-60076	488- 24A
-07930	310- 16A	-32000	127- 26A	-20195	450- 2A	-60117	266- 4A
-07930	731- 29A	-32000	131- 45A	-20195	704- 2A	-60117	269- 4A
65801 -08016	356- 12A	-32000	131- 46A	-20207	272- 3B	-60140	131- 41A
-08016	366- 22B	-38000	127- 133A	-20207	272- 4A	-60140	614- 1A
-08016	670- 42B	-38000	131- 203A	-20207	272- 4C	68677 -70155	245- 102A
-10016	356- 11A	-38000	263- 2A	-20220	275- 4A	68688 -70078	254- 4A
-10032	80- 77A	-38000	700- 3A	-20244	272- 4B	-70118	488- 34A
-10032	124- 44A	-50000	127- 28A	-20447	266- 6A	69002 -01500	700- 12A
-10060	80- 75A	-50000	131- 48A	-20532	631- 32A	-01500-7	280- 9A
-12032	80- 72A	-60000	256- 7A	-30084	280- 1A	-02200-7	112- 11A
-16016	587- 5B	67041 -32032	488- 32A	68235 -80163	263- 9B	-02200-7	122- 25A
-16032	44- 7A	-38030	256- 8A	68237 -60035	266- 3A	-02200-7	269- 23A
-16032	124- 44B	-75085	252- 6A	-60035	269- 3A	-02200-7	488- 49A
-16060	85- 16A	-75092	252- 5A	68245 -60120	266- 2A	-02300-7	12- 3A
-16160	584- 5A	67059 -38000	127- 27A	-60120	269- 2A	-02300-7	388- 23A
-16160	587- 5A	-38000	131- 47A	-60450	488- 31A	-03100-7	92- 34A
-16220	182- 9A	67230 -15000	388- 4A	68255 -50034	103- 6A	-03100-7	280- 12A
-16220	282- 12A	-15000	388- 5A	-50034	107- 6A	-03800-7	92- 4A
-16220	508- 28A	-15000	388- 6A	-50225	124- 3A	-03800-7	112- 9A
-25032	438- 11A	68035 -10023	454- 36A	-50308	124- 1A	-05200-7	76- 4A
-25032	612- 11A	-10023	708- 36A	-50435	124- 5A	-05200-7	127- 103A
-25190	76- 17A	-10061	531- 7A	-70068	127- 23A	-05200-7	131- 123A
-25250	182- 106A	-20035	189- 26A	-70068	131- 43A	-05200-7	488- 48A
-31032	675- 15A	-20040	631- 34A	-70098	488- 27A	-05700	700- 4A
-31060	76- 13A	-20050	272- 18A	-80060	488- 26A	-05700-7	127- 104A
-31060	80- 73A	-20050	275- 18A	-80435	488- 35A	-05700-7	127- 134A
-31250	76- 12A	-20070	272- 17A	-80510	263- 1A	-05700-7	131- 124A
-40060	80- 71A	-20070	275- 17A	68277 -90143	260- 1A	-05700-7	131- 204A
-40060	112- 22A	-20110	508- 11A	68612 -10060	57- 25A	-05700-7	263- 6A
-50060	85- 18A	-20210	275- 3B	-10060	697- 25A	-07600-7	127- 105A
-50250	76- 11A	-20500	631- 31A	68635 -10036	531- 6A	-07600-7	131- 125A
-50250	282- 13A	-20532	631- 33A	-10120	488- 28A	-07600-7	275- 21A
-50250	284- 13A	-30470	428- 6A	-10155	269- 21A	-09800-7	375- 14A
-63032	2- 102A	-30470	602- 6A	-10173	531- 8A	-12700	366- 33A
-63032	32- 9A	68045 -10022	454- 32A	-20040	190- 247A	-12700	670- 103A
-63032	36- 43A	-10022	708- 32A	-20080	190- 244A	69030 -04400	112- 8A
-63032	631- 41B	-10050	474- 16A	-20098	182- 101A	-06700	256- 11A
-63060	80- 74A	-10050	476- 16A	-20120	638- 41A	-07900	256- 9A
-63060	85- 19A	-20065	280- 13A	-20150	481- 14A	-09200	112- 7A
-63060	112- 21A	-20175	272- 2A	-30085	182- 5A	-10500	252- 7A
-63250	454- 47A	-20175	272- 2C	-30087	190- 241A	-10500	252- 7B
-63250	708- 47A	-20185	272- 1A	-30108	190- 242A	-11800	112- 6A
67015 -00001	22- 15A	-20185	272- 1C	-60064	127- 22A	-16800	119- 6A
-00001	24- 15A	-20190	275- 1A	-60070	428- 4A	-18100	119- 7A
-00001	26- 15A	-20200	275- 2A	-60070	602- 4A	-18100	119- 7B
-00001	28- 15A	-20214	272- 2B	-60440	266- 1A	69081 -23100-7	76- 14A
67031 -07000	351- 33A	-20223	272- 1B	-60440	269- 1A	69100 -10600	57- 7A
-07000	351- 34A	-30163	182- 46A	68645 -20052	488- 103A	-10600	60- 9A
-07000	351- 35A	68055 -10025	454- 35A	-20062	280- 23A	-10600	697- 7A
-07000	362- 12A	-10025	708- 35A	-50075	182- 43A	-10600	697- 27A
-39000	122- 22A	-10044	472- 16A	68650 -58132	258- 1A	-11500	140- 6A

silverhorn.co.uk

PART NUMBER	PAGE-SYM	PART NUMBER	PAGE-SYM	PART NUMBER	PAGE-SYM	PART NUMBER	PAGE-SYM
69100 -20600	12- 21A	72001 -11800	282- 14A	73225 -00360	232- 105A	88111 -11200	164- 45A
-20600	57- 8A	-11800	284- 14A	75011 -22300	310- 19A	-11200	466- 7A
-20600	60- 11A	-11800	390- 12A	-25400	6- 16A	-11490	189- 121A
-20600	170- 11B	-11800	428- 8A	-25400	57- 31A	-11690	62- 9A
-20600	697- 8A	-11800	488- 101A	-25400	60- 6A	-11690	62- 9B
-20600	697- 28A	-11800	602- 8A	-25400	96- 22A	-12490	12- 25A
-21000	122- 23A	-11800	620- 29A	-25400	172- 28A	-12490	14- 12A
-21500	140- 5A	-12000	124- 12A	-25400	208- 21A	-13090	160- 44A
-60600	60- 8A	-12000	186- 6A	-25400	210- 21A	-13090	164- 44A
-61500	184- 37A	-12000	388- 22A	-25400	228- 27A	-21000	14- 25A
69200 -04000	388- 15A	-12000	620- 13A	-25400	232- 27A	88120 -11200	228- 146A
69202 -04000	388- 14A	-12200	280- 11A	-25400	236- 27A	-11200	233- 206A
-04000	388- 14B	-12500	80- 5A	-25400	452- 19A	-11200	237- 216A
69203 -14000	127- 41A	-12500	92- 36A	-25400	697- 31A	88201 -00904	180- 5A
-14000	131- 111A	-12500	182- 8A	-25400	706- 19A	-06704	208- 16A
69205 -04000	388- 13B	-12500	182- 44A	-45400	57- 12A	-06704	210- 16A
-04000	388- 16A	-12500	190- 243A	-45400	60- 7A	-06704	269- 19A
-06000	92- 13A	-12500	282- 15A	-45400	174- 28A	-06704	308- 5A
69207 -04000	388- 13A	-12500	388- 25A	-45400	176- 28A	-06704	452- 4A
69811 -19210	258- 4A	-12500	508- 19A	-45400	216- 5A	-06704	454- 2A
-25210	131- 115A	-12500	631- 35A	-45400	406- 18A	-06704	454- 2B
-25210	245- 8A	-20600	362- 14A	-45400	697- 12A	-06704	466- 5A
-25210	266- 15A	-20600	697- 38A	-45400	697- 32A	-06704	468- 5A
-25210	269- 15A	72010 -28000	124- 13A	78101 -06013	147- 85A	-06704	470- 5A
-25210	447- 4A	-31000	180- 11A	-06210	138- 23A	-06704	490- 37A
-25210	488- 36A	-31000	182- 47A	-06218	152- 24A	-06704	531- 11A
-25210	702- 4A	-31000	182- 47B	-06307	138- 31A	-06704	531- 125A
-25210-7	127- 45A	-31000	258- 14A	-06316	154- 25A	-06704	706- 4A
-32210	245- 124A	-31000	531- 15A	-06922	144- 86A	-06704	708- 2A
-32210	254- 7A	-34000	127- 106A	78112 -06217	142- 87A	-06706	189- 33A
-32210	488- 37A	-34000	131- 126A	78203 -00220	152- 23A	-06706	190- 214A
-38210	260- 5A	-34000	488- 45A	78251 -22216	154- 22A	-06706	249- 13A
-38210	447- 3A	-34000	631- 36A	78255 -32020	150- 88A	-06706	249- 116A
-38210	702- 3A	-37000	112- 13A	-32021	150- 89A	-06706	278- 6A
-50210	260- 4A	-37000	127- 101A	88001 -41101	34- 15A	-06706	280- 112A
72001 -10600	12- 4A	-37000	131- 121A	-61101	160- 38A	-06706	481- 13A
-10600	12- 22A	-37000	254- 13A	-61101	164- 38A	-06706	513- 13A
-10600	57- 13A	-37000	266- 11A	88031 -06061	208- 12A	-06706	635- 23A
-10600	60- 12A	-37000	269- 11A	-06061	210- 12A	-06706	635- 213A
-10600	697- 13A	-37000	488- 46A	-06061	275- 12A	-06708	189- 32A
-10600	697- 33A	-37000	620- 31A	-06061	452- 12A	-06708	428- 13A
-11000	80- 4A	-37000	631- 37A	-06061	470- 54A	-06708	602- 13A
-11000	112- 14A	-43000	488- 47A	-06061	706- 12A	-06712	124- 6A
-11000	122- 26A	-46000	80- 7A	-06081	112- 72A	-06712	258- 7A
-11000	184- 38A	-46000	127- 102A	-06101	36- 46A	-06716	127- 35A
-11200	180- 9A	-46000	131- 122A	-06101	115- 72A	-06716	131- 12A
-11200	184- 33A	-46000	388- 24A	-06101	119- 9A	-06716	131- 105A
-11200	184- 33B	-46000	631- 38A	-06101	122- 8A	-06716	428- 14B
-11200	266- 12A	-49000	254- 15A	-06101	212- 6A	-06716	490- 13A
-11200	269- 12A	-49000	263- 5A	-06101	245- 35A	-06716	490- 36A
-11200	280- 24A	-52000	263- 7A	-06101	245- 122A	-06716	602- 14B
-11200	531- 16A	-52000	269- 16A	-06101	245- 135A	-06716	614- 32A
-11500	85- 4A	-55000	92- 35A	-06101	258- 17A	-06720	127- 108A
-11500	180- 103A	-55000	631- 39A	-06101	260- 9A	-06720	131- 128A
-11500	184- 31A	-58000	272- 6A	-06101	406- 105A	-06720	490- 133A
-11500	266- 9A	-58000	275- 6A	-06101	454- 5A	-06724	256- 5A
-11500	269- 9A	-62000	282- 5A	-06101	458- 36A	-06724	263- 3A
-11500	272- 15A	-62000	284- 5A	-06101	708- 5A	-06724	263- 3B
-11500	275- 15A	-62000	452- 18A	-06101	713- 36A	-06724	263- 32A
-11500	280- 15A	-62000	706- 18A	-06121	90- 19A	-06724	263- 32B
-11500	450- 4A	-73000	280- 18B	-06121	100- 53A	-06724	490- 132A
-11500	488- 102A	-73000	454- 46A	-06121	189- 6A	-06804	269- 13B
-11500	704- 4A	-73000	708- 46A	-06121	458- 35A	-06806	481- 9A
-11800	85- 5A	-86000	112- 12A	-06121	481- 124A	-06808	189- 4A
-11800	112- 27A	-86000	280- 18A	-06121	713- 35A	-06816	127- 36A
-11800	122- 24A	-86000	375- 13A	-06301	172- 43A	88214 -31708	388- 19A
-11800	182- 102A	-86000	520- 3A	-06301	174- 43A	-31712	92- 12A
-11800	190- 245A	73213 -00100	232- 106A	-06301	176- 43A	88221 -00604	57- 29A
-11800	280- 28A	73225 -00310	232- 104A	88111 -11200	160- 45A	-00604	697- 29A

silverpoint.co.uk

PART NUMBER	PAGE-SYM	PART NUMBER	PAGE-SYM	PART NUMBER	PAGE-SYM	PART NUMBER	PAGE-SYM
88241 -03404	180- 8A	88241 -07220	131- 109A	88811 -02225	228- 25A		
-03404	184- 35A	-07220	490- 32A	-02225	232- 25A		
-03404	212- 103A	-07224	263- 33A	-02225	236- 25A		
-03404	472- 19A	88302 -40402	57- 34A	-06040	222- 5A		
-03404	474- 19A	-40402	697- 34A	-10050	312- 15A		
-03604	184- 34A	88340 -12604	57- 35A	-10050	422- 5A		
-06916	481- 11A	-12604	697- 35A				
-06920	481- 7A	-13504	140- 82A				
-07104	180- 102A	88372 -50604	140- 81A				
-07104	189- 38A	88390 -16102	134- 62A				
-07104	208- 17A	-16102	161- 116A				
-07104	210- 17A	-16102	165- 112A				
-07104	212- 8A	-16102	189- 119A				
-07104	249- 32A	-16102	190- 204A				
-07104	269- 18A	-16102	190- 223A				
-07104	306- 6A	-16102	280- 123A				
-07104	308- 9A	-16104	134- 63A				
-07104	430- 5A	-16104	136- 61A				
-07104	458- 39A	-16106	134- 64A				
-07104	513- 32A	-16106	140- 33A				
-07104	531- 5A	-16106	156- 3A				
-07104	604- 15A	-16112	134- 65A				
-07104	700- 13A	-16116	134- 66A				
-07104	713- 39A	-16116	256- 22A				
-07106	182- 35A	-21304	140- 39A				
-07106	186- 3A	-21304	140- 84A				
-07106	189- 35A	-21304	189- 38B				
-07106	190- 212A	-21304	189- 118A				
-07106	190- 212B	-21304	245- 14A				
-07106	194- 14A	-21304	249- 46A				
-07106	194- 42A	-21304	252- 11A				
-07106	212- 9A	-21304	258- 9A				
-07106	249- 114A	-21304	306- 17A				
-07106	278- 11A	-21304	531- 124A				
-07106	280- 14A	-21306	278- 14A				
-07106	450- 3A	-21316	488- 104A				
-07106	488- 5A	-21316	490- 114A				
-07106	488- 44A	-21502	722- 12A				
-07106	635- 212A	-21502	724- 12A				
-07106	635- 212B	-21504	308- 8A				
-07106	704- 3A	-21504	430- 8A				
-07112	180- 42A	-21504	604- 18A				
-07112	258- 8A	-21506	189- 36A				
-07112	428- 15A	-21506	249- 115A				
-07112	602- 15A	-21506	280- 32A				
-07116	127- 37A	-21508	308- 4A				
-07116	131- 107A	-21516	306- 4A				
-07116	184- 5A	88511 -01081	388- 17A				
-07116	263- 34A	-01081	388- 17B				
-07116	428- 15B	-01121	92- 2A				
-07116	490- 34A	-01240	127- 42A				
-07116	602- 15B	-01240	131- 112A				
-07120	127- 38A	-02020	280- 33A				
-07120	131- 108A	-03040	700- 14A				
-07120	490- 35A	-03041	269- 17A				
-07204	212- 7A	-03041	308- 11A				
-07204	306- 5A	-03060	488- 6A				
-07204	454- 13A	-03060	488- 43A				
-07206	182- 32A	-03080	184- 2A				
-07206	184- 3A	-03200	127- 43A				
-07206	186- 23A	-03200	131- 113A				
-07206	249- 113A	-03200	490- 39A				
-07206	490- 14A	-03240	256- 6A				
-07206	635- 214A	-03240	263- 4A				
-07208	182- 34A	-03240	263- 4B				
-07212	124- 7A	88811 -01410	240- 455A				
-07216	131- 13A	-01410	295- 455A				
-07216	614- 33A	-01410	462- 455A				
-07220	127- 39A	-01410	718- 455A				

silverhorn.co.uk

KAWASAKI HEAVY INDUSTRIES, LTD.

Rolling Stock, Construction Machinery & Crushing Plant Company
Construction Machinery Division

Tokyo Head Office	W.T.C.Bldg.,2-4-1 Hamamatsu-cho Minato-ku, Tokyo 105-6116
Kobe Head Office	Kobe Crystal Tower, 1-1-3 Higashi Kawasaki-cho Chuo-ku, Kobe, Hyogo 650-0044
Banshu Works	2680 Oka Inami-cho Kako-gun, Hyogo 675-1113

93316-00106

silverhorn.co.uk

silverhorn.co.uk

Kawasaki

silverhorn.co.uk

© 2008 Kawasaki Heavy Industries, Ltd. All rights reserved. Printed in Japan