YANMAR

PARTS CATALOG

0CK20-M36003EN

Last update Nov., 2017

PREFACE

1. This parts catalog is the 3rd revised edition of Yanmar wheel loader V3-5(M/C), V4-5(A), V5(-A).

2. Parts catalog history

	Parts catalog No.	Date of issue	Remarks
First edition	000Y00K3600	Nov., 1998	No need
1st revised edition	000Y00K3601	Nov., 1999	No need
2nd revised edition	000Y00K3602	Sep., 2003	No need
3rd revised edition	000Y00K3603	July, 2005	

3. Model name

SECTION	Column	Model name	Manufactured	M/#	Remarks
Ⅰ(Vehicle)	A	V3-5	1998/7～	50501～	
	B	V3-5(M/C)	2003/3～	52501～	
	C	V4-5	1998/7～	50501～	
	D	V4-5A	2003/3～	52001～	
	E	V5	1998/7～	00501～	
	F	V5-A	2003/3～	02001～	
Ⅱ(Engine)	A	3TNE84-KAH	1998/6～	39528～	for V3-5
	B	3TNE84T-KAH	1998/6～	39310～	for V4-5 & V5
	C	3TNE84-EKAH	1999/1～	43595～	for V3-5(EPA)
	D	3TNE84T-EKAH	1999/1～	43645～	for V4-5 & V5(EPA)
Ⅲ(Engine)	A	3TNV84T-XKAH	2003/3～	03222～	for V4-5A & V5-A

4. This parts catalog does not contain the technical data needed for maintenance service.

   The illustrations used in this parts catalog have been simplified for clarity.

   The contents of this parts catalog are subject to change without notice.

   Be sure to use only Yanmar genuine part for repairs. If imitation parts are used, it may cause engine defects.

Directions for the Parts Catalog.

1.This Parts Catalog shows both standard and optional parts.
2.Parts may change without prior notice.
3.The following is an example of the Parts Catalog format.

0CF10-G21601 29. FUEL INJECTION PUMP(W/BOOST)

(A)=4JH-DT
(B)=4JH-DTZ
(C)=4JH-DTZP
(D)=4JH-DTZA
(E)=4JH-DTZY
(F)=

① REF.	② LEV.	PARTS NO.	DESCRIPTION	Q'TY (A)	(B)	(C)	(D)	(E)	(F)	③ I	⑤ R
1	1	729595-51390	FUEL INJECTION PUMP	1	1	1	1	1			1
1-1	1	729595-51391	FUEL INJECTION PUMP	1	1	1	1	1		N	1
	(A=E00185)	(B=E00200)									
3	2	26022-060162	SCREW M 6X 16	9	9	9	9	9			
3-1 ④	2	26022-060162	SCREW M 6X 16	4	4	4	4	4		K	
	(A=E00156)	(B=E00156)	(C=E00156) (D=E00156)	(E=E00156)							
4	2	129470-51040	CAMSHAFT	1	1	1	1	1			
5	2	122710-51050	BEARING, ROLLER	2	2	2	2	2			
6	2	129470-51060	RETAINER	1	1	1	1	1			

Remarks
(1) BOOST COMPEMSATOR TYPE. OPTIONAL
PART, TO E00155,(4JH-DT, 4JH-DTZ

① Ref. No.

The Ref. No. listed may not be in accordance with the illustration Ref. No.

(Ex.) Illustration No. List Ref No.
1 1 (Before change) → 1- 1 (After change)

For interchangeable symbols N, R and K, illustrations for new parts may be abbreviated.

② Lev. (Level)

Level indication
The numbers below indicate the level of relativity towards the main part.
1 ----- Main parts (Assembly parts)
2 ----- Sub component included in ” 1 ”.
3 ----- Sub component included in ” 2 “.
Note) Parts that are not for sale are partially illustrated but not listed.

③ Interchangeability Symbol

When a part change takes place, one of the following interchangeability symbols is indicated beside the part.

Symbol	Interchangeability	Contents note
N	Old ←Yes→ New (No)	New Part is interchangeable for Old Part but Old Part is not interchangeable for New Part.
Q	Old ←No→ New (Yes)	New Part is not interchangeable for Old Part but Old Part is interchangeable for New Part.
R	Old ←Yes→ New (Yes)	New/ Old Parts are both interchangeable.
S	Old ←No→ New (No)	New/ Old Parts are both not interchangeable.
W		Part newly added.
Z		Part discontinued.
F		Not interchangeable by a single part but interchangeable together with related parts.
K		Changes only for used parts quantities.

④ Effective Machine No.

When a part changes, the effective Machine No. will be indicated in the (A)-(F) column.

Product Symbol	Product No.	Product Symbol	Product No.
C	Clutch No. Compressor No.	F	Machine No. (Agricultural Equip.)
D	Drive No.	M	Machine No.
E	Engine No.		

Note 1) A date may follow the symbol. (Ex.) 1996.01
Note 2) ” XXXXX ” and ” ZZZZZ ” are for parts that could not be predicted or for engine models that could not be identified.
Note 3) (A=E00185) is the E (Engine Serial Number) for the column (A) model (in this case 4JH-DT) after the parts design change.

⑤ Remarks

Figures or alphabets (symbols) are entered in the remarks column.
The comments (remarks) on parts that are indicated at the bottom of the illustration are the same symbols as those stated above.

1 [本機塗装色]
[PAINTED COLOR LIST]

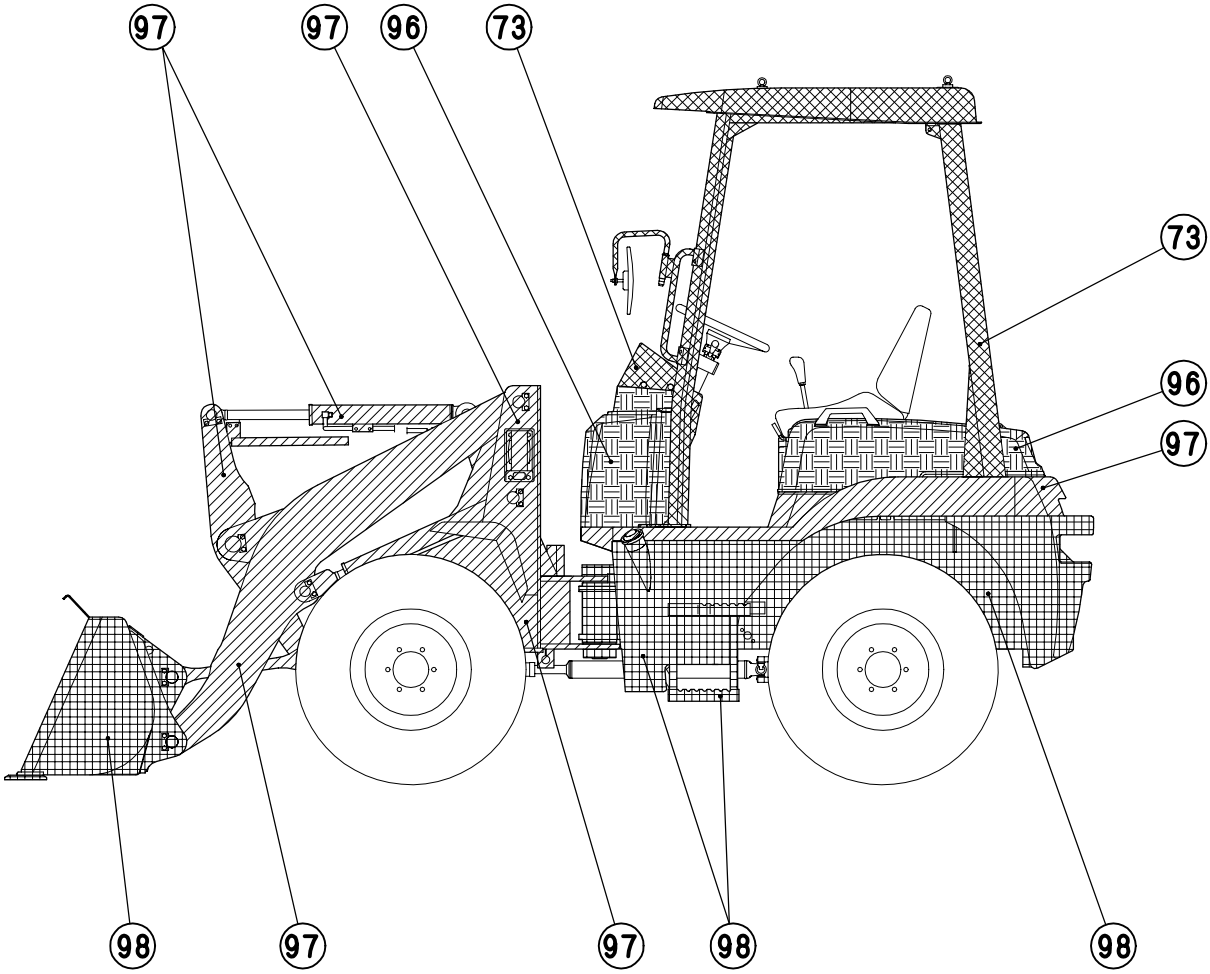

色区分 COLOR CODE	表示 DESCRIPTION	塗装色 マンセル記号 PAINTED COLOR MUNSEL No.1	塗料部品番号 PAINT PART No.		
			16ℓ缶 16ℓCAN	4ℓ缶 4ℓCAN	スプレー SPRAY
97		ヤンマーピーコックグリーン YANMAR PEACOCK GREEN 3.8BG5.31/9.15	981101-09597	977620-40970	977620-30971
96		ヤンマーシトラスグリーン YANMAR CITRUS GREEN 4.84GY8.42/6.99	981101-09599	977620-40990	977620-30991
98		ヤンマーオーシャングリーン YANMAR OCEAN GREEN 5.52Y4.91/1.09	981101-09598	977620-40980	977620-30981
73		ヤンマーワームグレー YANMAR WARM GRAY 7Y5.3/0.8	----------	----------	TOR-90450003

銘板・・・FIG.1,2
LABEL
安全銘板・・・FIG.3
SAFETY LABEL
工具・・・FIG.4
TOOL

フートアクセル・・・FIG.8,9
FOOT ACCELERATOR
インチングペダル・・・FIG.40
INCHING PEDAL
ブレーキペダル・・・FIG.41,42
BRAKE PEDAL
パーキングブレーキレバー・・・FIG.43
PARK BRAKE LEVER
油圧コントロールレバー・・・FIG.44,45
HYDRAULIC OIL CONTROL LEVER
3RDバルブコントロール・・FIG.46,47
3RD VALVE CONTROL
ステアリング&コラム・・・FIG.48,49
STEERING WHEEL & COLUMN
コントロールカバー・・FIG.50,51,52
CONTROL COVER
フロントフレーム・・・FIG.53
FRONT FRAME

サイレンサ・・・FIG.6
SILENCER
エアクリーナ&エンジンドレン・・・FIG.7
AIR CLEANER & ENGINE DRAIN
エンジンマウント・・・FIG.10
ENGINE MOUNT
ラジエータ・・・FIG.11,12,13
RADIATOR
バッテリ・・・FIG.16
BATTERY
ワイヤリング・・・FIG.17,18
WIRING
電装品・・・FIG.19,20,21
ELECTRIC PART
作動油タンク・・・FIG.92,93
HYDRAULIC OIL TANK

シガライタ&灰皿・・・FIG.72
CIGAR LIGHTER & ASHTRAY
エアコンセット・・・FIG.73
AIR-CON.SET
エアコン改造キット・・・FIG.74
AIR-CON.REMODEL KIT
エアコン改造Bキット・・・FIG.75
AIR-CON.REMODEL B KIT

リアフレーム・・・FIG.54,55
REAR FRAME
オペフレーム&カバー・・・FIG.56
OPERATION FRAME & COVER
シート&ボンネット・・FIG.57,58
SEAT & BONNET
ボンネット防音材・・・FIG.59
BONNET SOUNDPROOF MATERIAL
フレーム防音材・・・FIG.60
FRAME SOUNDPROOF MATERIAL

バックミラー・・・FIG.5
BACK MIRROR

ダンプシリンダ・・・FIG.78,79
DUMP CYLINDER

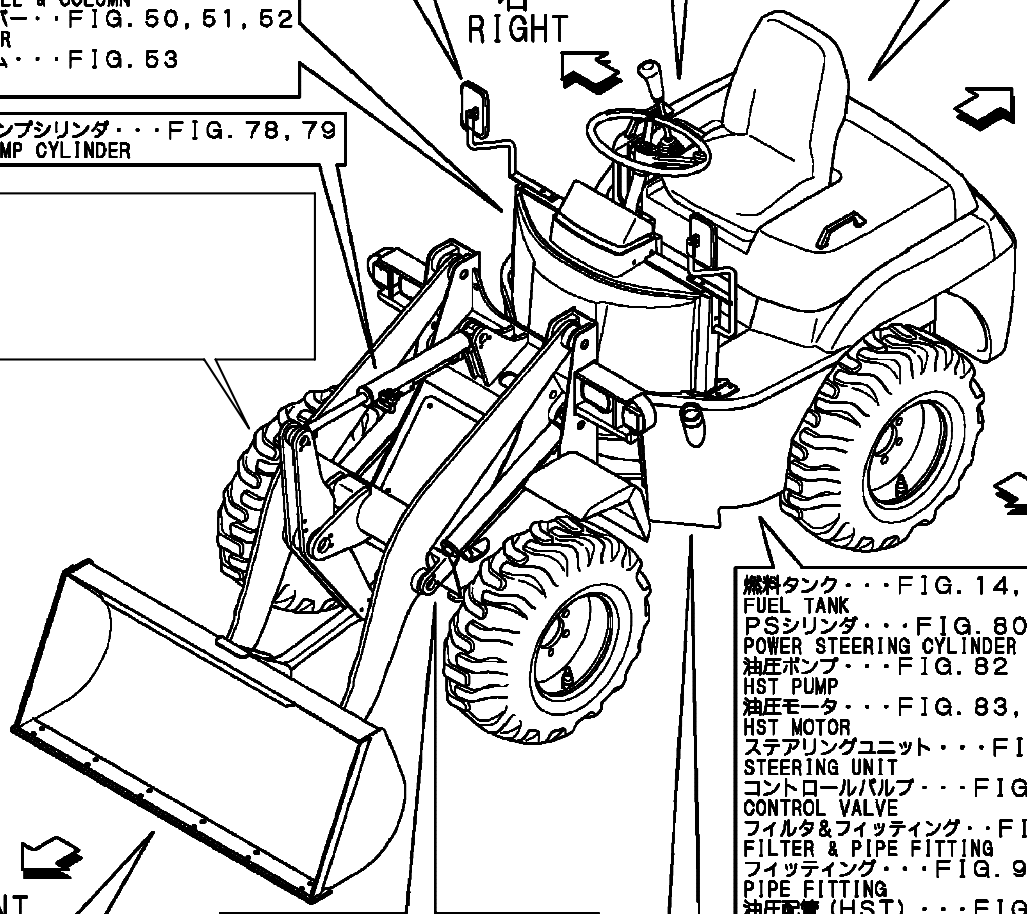

燃料タンク・・・FIG.14,15
FUEL TANK
PSシリンダ・・・FIG.80,81
POWER STEERING CYLINDER
油圧ポンプ・・・FIG.82
HST PUMP
油圧モータ・・・FIG.83,84
HST MOTOR
ステアリングユニット・・・FIG.85
STEERING UNIT
コントロールバルブ・・・FIG.86~91
CONTROL VALVE
フィルタ&フィッティング・・FIG.94,95
FILTER & PIPE FITTING
フィッティング・・・FIG.96
PIPE FITTING
油圧配管（HST）・・・FIG.97,98
HYD.OIL PIPING(HST)
油圧配管（ローダー）・・FIG.99,100
HYD.OIL PIPING(LOADER)
油圧配管（FPTO）・・・FIG.101
HYD.OIL PIPING(FPTO)
油圧配管（3RD）・・FIG.102,103
HYD.OIL PIPING(3RD)

リフトシリンダ・・・FIG.76,77
LIFT CYLINDER

リフトアーム・・・FIG.104,105,106
LIFT ARM
ローダーリンク・・・FIG.107,108
LOADER LINK
バケット・・・
BUCKET
アタッチホルダー（アタッチメント）・・・FIG.110
ATTACH HOLDER(ATTACHMENT)
バケット&マニアフォーク（アタッチメント）・・FIG.111
BUCKET & MANIAFORK(ATTACHMENT)
パレットフォーク（アタッチメント）・・・FIG.112
PALLET FORK(ATTACHMENT)

クラッチハウジング&ドライブシャフト・・・FIG.22
CLUTCH HOUSING & DRIVE SHAFT
トランスファケース・・・FIG.23
TRANSFER CASE
スパイラルベベルギヤ・・・FIG.24,25
SPIRAL BEVEL GEAR
デファレンシャルギヤ・・・FIG.26,27
DIFFERENTIAL GEAR
アクスルシャフト・・・FIG.28,29
AXLE SHAFT
ファイナルギヤ・・・FIG.30,31
FINAL GEAR
アクスルケース・・・FIG.32,33
AXLE CASE
アクスルホルダ・・・FIG.34
AXLE HOLDER
センターブレーキ・・・FIG.35
CENTER BRAKE

キャノピ・・・FIG.61
CANOPY
キャビン・・・FIG.62
CABIN
キャビンドア・・・FIG.63
CABIN DOOR
電装品&ワイパー・・・FIG.64,67
ELECTRIC PART & WIPER
ヒータ・・・FIG.65
HEATER

簡易キャビン・・・FIG.66
SIMPLICITY CABIN
ヒータ&デフロスタ・・・FIG.68
HEATER & DEFROSTER
ワークランプ・・・FIG.69
WORK LAMP
ウインドウォッシャ・・・FIG.70
WINDOW WASHER
ラジオ・・・FIG.71
RADIO

絵目次（2）・・・・・・・・・・・・・油圧関係
PICTURESQUE INDEX(2)・・・・・・HYDRAULIC SECTION

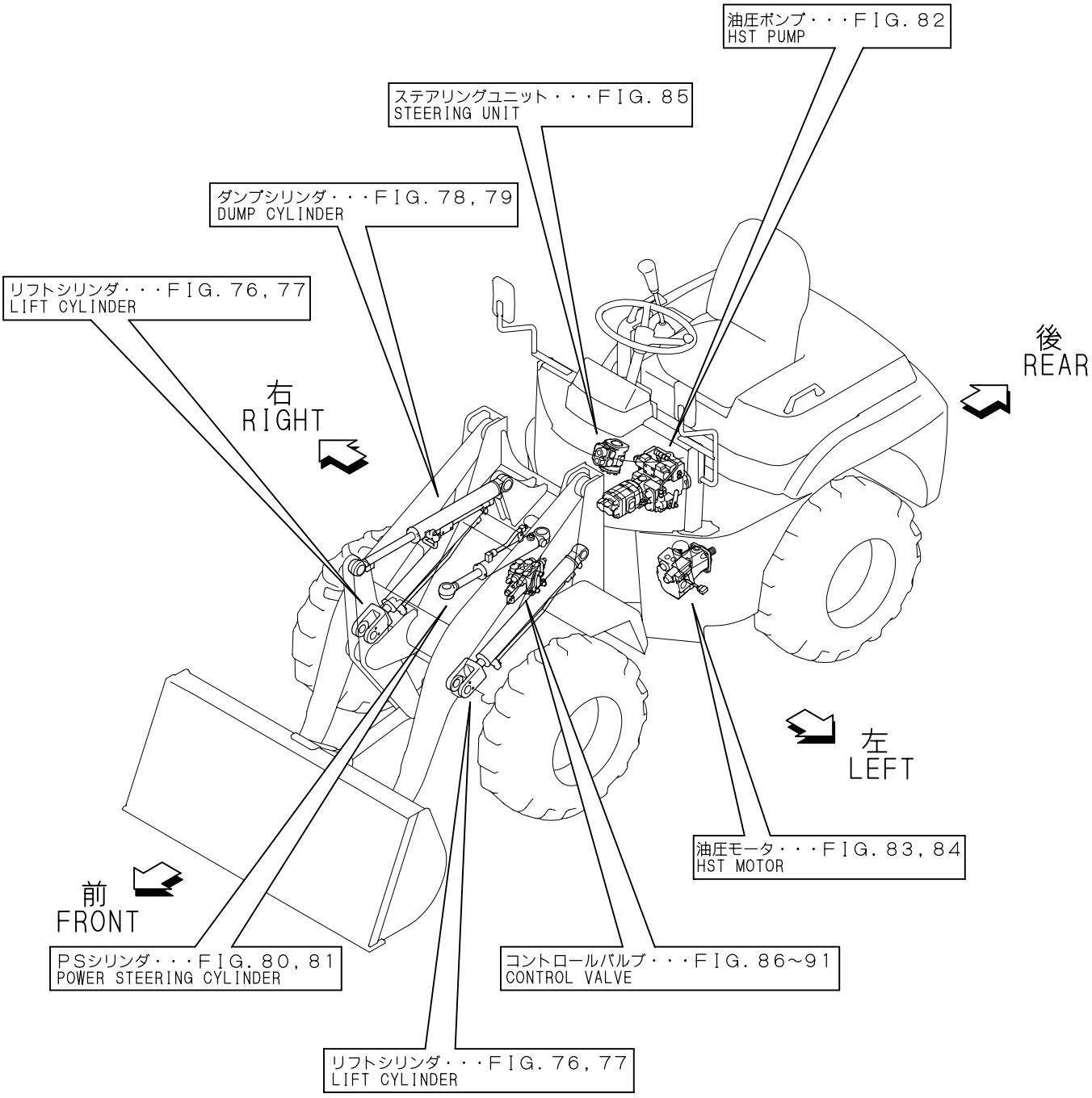

Contents

0CK20-M36003

Fig. No.	Fig. Name
V3/V4-5(A),V5(-A)(JP)	
1.	LABEL(1)
2.	LABEL(2)
3.	SAFETY LABEL
4.	TOOL
5.	BACK MIRROR
6.	SILENCER
7.	AIR CLEANER & ENGINE DRAIN
8.	FOOT ACCELERATOR(1)
9.	FOOT ACCELERATOR(2)
10.	ENGINE MOUNT
11.	RADIATOR(1)
12.	RADIATOR(2)
13.	RADIATOR(STOCK BREEDING SPEC.)
14.	FUEL TANK(1)
15.	FUEL TANK(2)
16.	BATTERY
17.	WIRING
18.	WIRING(V4-5A,V5-A NEW)
19.	ELECTRIC PART(1)
20.	ELECTRIC PART(2)
21.	ELECTRIC PART(AUTO LEBELLER)
22.	CLUTCH HOUSING & DRIVE SHAFT
23.	TRANSFER CASE
24.	SPIRAL BEVEL GEAR(1)
25.	SPIRAL BEVEL GEAR(2)
26.	DIFFERENTIAL GEAR(1)
27.	DIFFERENTIAL GEAR(2)
28.	AXLE SHAFT(1)
29.	AXLE SHAFT(2)
30.	FINAL GEAR(1)
31.	FINAL GEAR(2)
32.	AXLE CASE(1)
33.	AXLE CASE(2)
34.	AXLE HOLDER
35.	CENTER BRAKE
36.	TIRE & DISK
37.	UNIQUE TIRE(OPTIONAL)
38.	SNOW TIRE(OPTIONAL)
39.	TIRE(PLATED)(OPTIONAL)
40.	INCHING PEDAL
41.	BRAKE PEDAL(1)
42.	BRAKE PEDAL(2)
43.	PARK BRAKE LEVER
44.	HYD.OIL CONTROL LEVER(1)
45.	HYD.OIL CONTROL LEVER(2)
46.	3RD VALVE CONTROL(1)
47.	3RD VALVE CONTROL(2)
48.	STEERING WHEEL & COLUMN(1)
49.	STEERING WHEEL & COLUMN(2)

Contents

0CK20-M36003

Fig. No.	Fig. Name
50.	CONTROL COVER
51.	CONTROL COVER(3RD 1)
52.	CONTROL COVER(3RD 2)
53.	FRONT FRAME
54.	REAR FRAME(1)
55.	REAR FRAME(2)
56.	OPERATION FRAME & COVER
57.	SEAT & BONNET(1)
58.	SEAT & BONNET(2)
59.	BONNET SOUNDPROOF MATERIAL
60.	FRAME SOUNDPROOF MATERIAL
61.	CANOPY
62.	CABIN
63.	CABIN DOOR
64.	ELECTRIC PART & WIPER(CABIN)
65.	HEATER(CABIN)
66.	SIMPLICITY CABIN
67.	ELECTRIC PART & WIPER
68.	HEATER & DEFROSTER
69.	WORK LAMP(OPTIONAL)
70.	WINDOW WASHER(OPTIONAL)
71.	RADIO(CABIN)(OPTIONAL)
72.	CIGAR LIGHTER & ASHTRAY(CABIN)(OPTIONAL)
73.	AIR CONDITIONER SET
74.	AIR CONDITIONER REMODEL KIT
75.	AIR CONDITIONER REMODEL B KIT
76.	LIFT CYLINDER(1)
77.	LIFT CYLINDER(2)
78.	DUMP CYLINDER(1)
79.	DUMP CYLINDER(2)
80.	POWER STEERING CYLINDER(1)
81.	POWER STEERING CYLINDER(2)
82.	HST PUMP
83.	HST MOTOR(1)
84.	HST MOTOR(2)
85.	STEERING UNIT
86.	CONTROL VALVE(2-WAY)
87.	CONTROL VALVE(2-WAY OPTIONAL)
88.	CONTROL VALVE(3-WAY)
89.	CONTROL VALVE(3-WAY OPTIONAL)
90.	CONTROL VALVE(4-WAY)
91.	CONTROL VALVE(4-WAY OPTIONAL)
92.	HYD.OIL TANK(1)
93.	HYD.OIL TANK(2)
94.	FILTER & FITTING(1)
95.	FILTER & FITTING(2)
96.	FITTING(FPTO)
97.	HYD.OIL PIPING(HST 1)
98.	HYD.OIL PIPING(HST 2)
99.	HYD.OIL PIPING(LOADER 1)

Contents

0CK20-M36003

Fig. No.	Fig. Name
100.	HYD.OIL PIPING(LOADER 2)
101.	HYD.OIL PIPING(FPTO)
102.	HYD.OIL PIPING(3RD 1)
103.	HYD.OIL PIPING(3RD 2)
104.	LIFT ARM(1)
105.	LIFT ARM(2)
106.	LIFT ARM(3RD)
107.	LOADER LINK(1)
108.	LOADER LINK(2)
109.	BUCKET
114.	(109A)BUCKET(0.4)
115.	(109B)BUCKET(0.5)
116.	(109C)BUCKET(0.6)
110.	ATTACH HOLDER(ATTACHMENT)
111.	BUCKET&MANIA FORK(OPTIONAL)
112.	PALLET FORK(ATTACHMENT)
113.	TIRE CHAIN(OPTIONAL)
117.	BUCKET(0.5) KIT(OPTIONAL)
118.	BUCKET(0.6)KIT(OPTIONAL)
119.	BUCKET(0.8)KIT(OPTIONAL)
120.	BUCKET(0.9) KIT(OPTIONAL)
121.	BUCKET(0.6)(PLATING)KIT(OPTIONAL)
122.	BUCKET(0.8)(PLATING) KIT(OPTIONAL)
123.	BUCKET(0.9)(PLATING) KIT(OPTIONAL)
124.	BUCKET(0.4)(QUICK HOLDER) KIT(OPTIONAL)
125.	BUCKET(0.5)(QUICK HOLDER) KIT(OPTIONAL)
126.	BUCKET(0.6)(QUICK HOLDER) KIT(OPTIONAL)
127.	BUCKET(0.5)(QUICK HOLDER)KIT(OPTIONAL)
128.	BUCKET(0.6)(QUICK HOLDER) KIT(OPTIONAL)
129.	BUCKET(0.8)(QUICK HOLDER) KIT(OPTIONAL)
130.	BUCKET(0.9)(QUICK HOLDER) KIT(OPTIONAL)

Fig.1. LABEL(1)

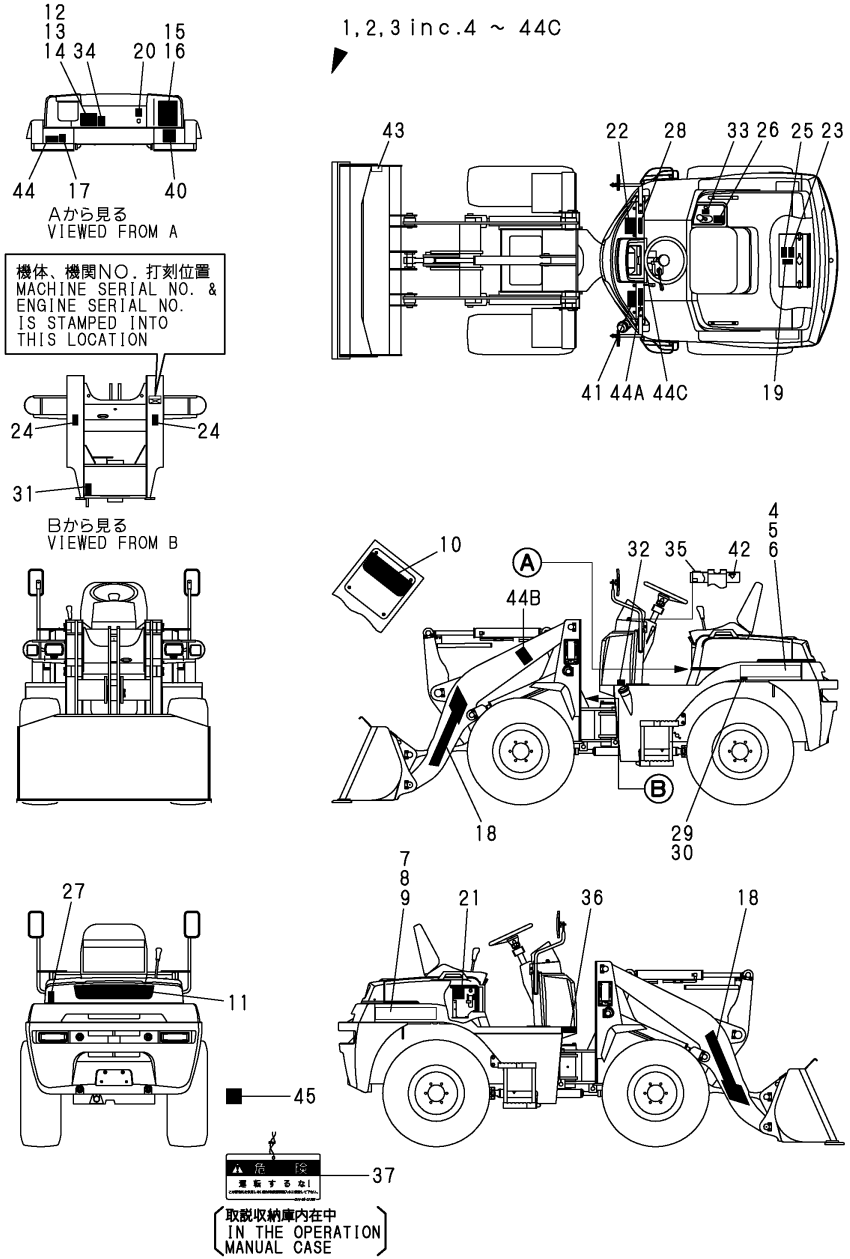

(A)=V3-5 (D)=V4-5A
(B)=V3-5(M/C) (E)=V5
(C)=V4-5 (F)=V5-A

No.	Lev.	Parts No.	Description	Q'ty (A)	(B)	(C)	(D)	(E)	(F)	I	R
1	1	772527-03100	LABEL ASSY	1							
2	1	772528-03100	LABEL ASSY			1					
3	1	772529-03100	LABEL ASSY					1			
4	2	172527-03110	LABEL	1							
5	2	172528-03110	LABEL			1					
6	2	172529-03110	LABEL					1			
7	2	172527-03120	LABEL	1							
8	2	172528-03120	LABEL			1					
9	2	172529-03120	LABEL					1			
10	2	172527-03130	LABEL	1		1		1			
11	2	172527-03140	LABEL	1		1		1			
12	2	172527-03160	LABEL	1							
12-1	2	172527-03161	LABEL	1						N	
	(A=M/#51121)										
13	2	172528-03160	LABEL			1					
13-1	2	172528-03161	LABEL			1				N	
			(C=M/#51031)								
14	2	172529-03160	LABEL					1			
14-1	2	172529-03161	LABEL					1		N	
				(E=M/#01001)							
15	2	172527-03170	LABEL	1							
16	2	172528-03170	LABEL			1		1			
17	2	172141-03182	LABEL	1		1		1			
18	2	172169-03180	LABEL	2		2		2			
19	2	172444-03190	LABEL	1		1		1			
20	2	172141-03202	LABEL,CAUTION	1		1		1			
21	2	172444-03200	LABEL,BATTERY	1		1		1			
22	2	172527-03210	LABEL	1		1		1			
23	2	172444-03220	LABEL	1		1		1			
24	2	172527-03220	LABEL	2		2		2			
25	2	172444-03230	LABEL	1		1		1			
26	2	172511-03230	LABEL	1		1		1			
27	2	172527-03230	LABEL	1		1		1			
28	2	172444-03240	LABEL	1		1		1			
29	2	172513-03240	LABEL, AIR PRESS.	1							
29-1	2	172527-03340	LABEL	1						S	
	(A=M/#51121)										
30	2	172522-03240	LABEL, AIR PRESSURE			1		1			
30-1	2	172528-03340	LABEL			1		1		S	
			(C=M/#51031)	(E=M/#01001)							
31	2	172527-03240	LABEL	1		1		1			
32	2	172183-03250	LABEL,FUEL	1		1		1			
33	2	172524-03290	LABEL, LEVER LOCK	1		1		1			
34	2	172155-03310	LABEL, OILING	1		1		1			
35	2	172527-03310	LABEL	1		1		1			
36	2	172519-03341	LABEL	1		1		1			
37	2	172964-03481	TAG ASSY, CAUTION	1		1		1			
40	2	172164-03510	LABEL,LOADING	1		1		1			
41	2	172164-03540	LABEL	1		1		1			
42	2	933112-20100	LABEL, SWITCH	1		1		1			
43	2	172527-03250	LABEL	1		1		1			

N:Old $\xleftarrow[\text{No}]{\text{Yes}}$ New, Q:Old $\xleftarrow[\text{Yes}]{\text{No}}$ New, R:Old $\xleftarrow[\text{Yes}]{\text{Yes}}$ New, S:Old $\xleftarrow[\text{No}]{\text{No}}$ New, W:Add, Z:Discontinued, F:Interchangeable by set, K:Q'ty Change

++ CONTINUE ++

Copyright (C) YANMAR CO., LTD. All RightsReserved.

Fig.1. LABEL(1)

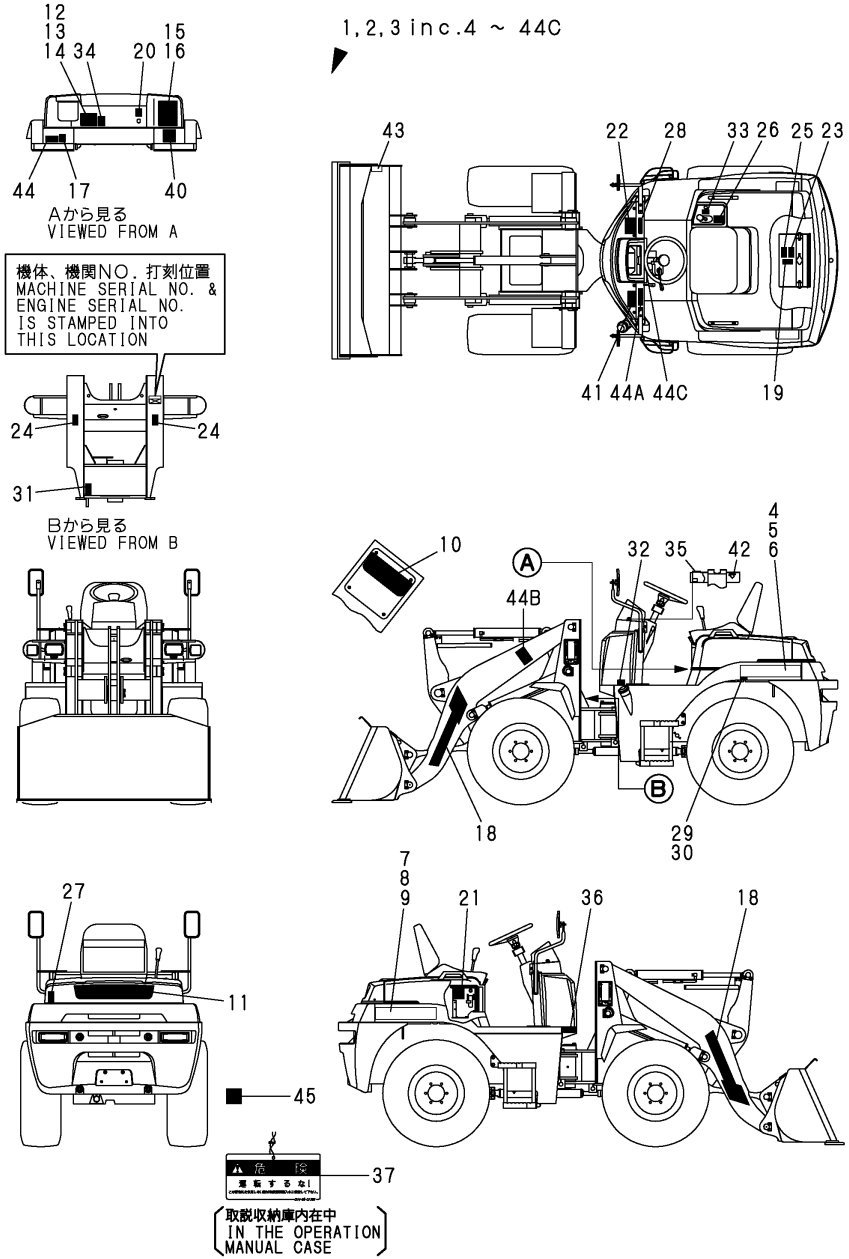

(A)=V3-5 (D)=V4-5A
(B)=V3-5(M/C) (E)=V5
(C)=V4-5 (F)=V5-A

No.	Lev.	Parts No.	Description	Q'ty (A)	(B)	(C)	(D)	(E)	(F)	I	R
44	2	172142-03302	LABEL,CAUTION	1		1		1			
44A	2	172530-03210	LABEL	1		1		1			W
	(A=*2004.04)		(C=*2004.04)	(E=*2004.04)							
44B	2	172530-03220	LABEL	2		2		2			W
	(A=*2004.04)		(C=*2004.04)	(E=*2004.04)							
44C	2	172530-03230	LABEL	1		1		1			W
	(A=*2004.04)		(C=*2004.04)	(E=*2004.04)							
45	1	172478-03900	LABEL (FRON GAS	1		1		1			

N:Old $\frac{\text{Yes}}{\text{No}}$ New, Q:Old $\frac{\text{No}}{\text{Yes}}$ New, R:Old $\frac{\text{Yes}}{\text{Yes}}$ New, S:Old $\frac{\text{No}}{\text{No}}$ New, W:Add, Z:Discontinued, F:Interchangeable by set, K:Q'ty Change

Copyright (C) YANMAR CO., LTD. All RightsReserved.

Fig.2. LABEL(2)

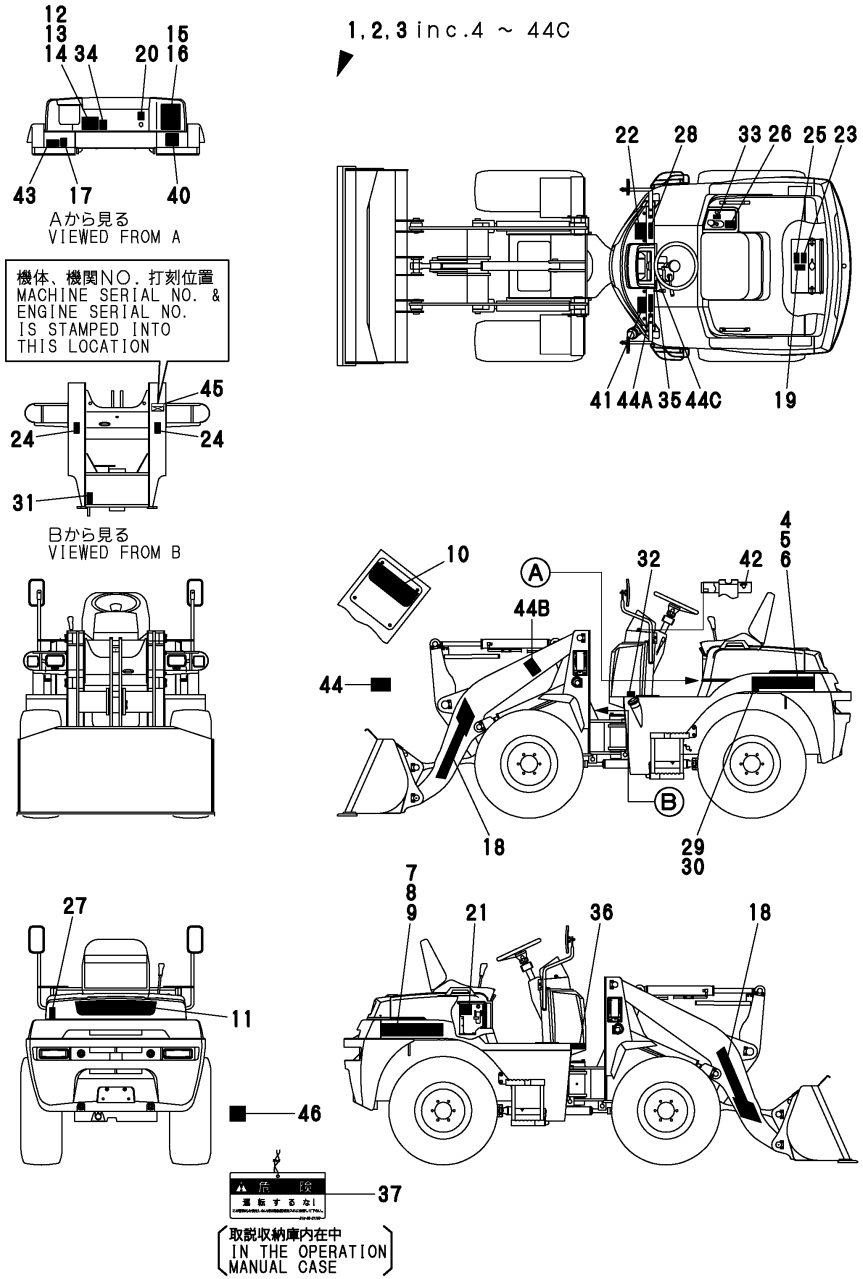

(A)=V3-5 (B)=V3-5(M/C) (C)=V4-5 (D)=V4-5A (E)=V5 (F)=V5-A

No.	Lev.	Parts No.	Description	Q'ty (A)	(B)	(C)	(D)	(E)	(F)	I	R
1	1	772527-03101	LABEL ASSY		1						
2	1	772528-03101	LABEL ASSY				1				
3	1	772529-03101	LABEL ASSY						1		
4	2	172527-03110	LABEL		1						
5	2	172528-03110	LABEL				1				
6	2	172529-03110	LABEL						1		
7	2	172527-03120	LABEL		1						
8	2	172528-03120	LABEL				1				
9	2	172529-03120	LABEL						1		
10	2	172527-03130	LABEL		1		1		1		
11	2	172527-03140	LABEL		1		1		1		
12	2	172527-03162	LABEL		1						
13	2	172528-03162	LABEL				1				
13-1	2	172528-03163	LABEL, SPECIFICATION (D=M/#52150)				1			S	
14	2	172529-03162	LABEL						1		
14-1	2	172529-03163	LABEL, SPECIFICATION (F=M/#02058)						1	S	
15	2	172527-03170	LABEL		1						
16	2	172528-03170	LABEL				1		1		
17	2	172141-03182	LABEL		1		1		1		
18	2	172169-03180	LABEL		2		2		2		
19	2	172444-03190	LABEL		1		1		1		
20	2	172141-03202	LABEL,CAUTION		1		1		1		
21	2	172444-03200	LABEL,BATTERY		1		1		1		
22	2	172527-03210	LABEL		1		1		1		
23	2	172444-03220	LABEL		1		1		1		
24	2	172527-03220	LABEL		2		2		2		
25	2	172444-03230	LABEL		1		1		1		
26	2	172511-03230	LABEL		1		1		1		
27	2	172527-03230	LABEL		1		1		1		
28	2	172444-03240	LABEL		1		1		1		
29	2	172527-03340	LABEL		1						
30	2	172528-03340	LABEL				1		1		
31	2	172527-03240	LABEL		1		1		1		
32	2	172183-03250	LABEL,FUEL		1		1		1		
33	2	172524-03290	LABEL, LEVER LOCK		1		1		1		
34	2	172155-03310	LABEL, OILING		1		1		1		
35	2	172527-03310	LABEL		1		1		1		
36	2	172519-03341	LABEL		1		1		1		
37	2	172964-03481	TAG ASSY, CAUTION		1		1		1		
40	2	172164-03510	LABEL,LOADING		1		1		1		
41	2	172164-03540	LABEL		1		1		1		
42	2	172141-03360	LABEL, START SWITCH		1		1		1		
43	2	172142-03302	LABEL,CAUTION		1		1		1		
44	2	172490-03160	LABEL				1		1		
44A	2	172530-03210	LABEL (B=M/#52616) (D=M/#52091) (F=M/#02043)		1		1		1	W	
44B	2	172530-03220	LABEL (B=M/#52616) (D=M/#52091) (F=M/#02043)		2		2		2	W	
44C	2	172530-03230	LABEL		1		1		1	W	

N:Old $\xleftarrow[\text{No}]{\text{Yes}}$ New, Q:Old $\xleftarrow[\text{Yes}]{\text{No}}$ New, R:Old $\xleftarrow[\text{Yes}]{\text{Yes}}$ New, S:Old $\xleftarrow[\text{No}]{\text{No}}$ New, W:Add, Z:Discontinued, F:Interchangeable by set, K:Q'ty Change

++ CONTINUE ++

Copyright (C) YANMAR CO., LTD. All RightsReserved.

Fig.2. LABEL(2)

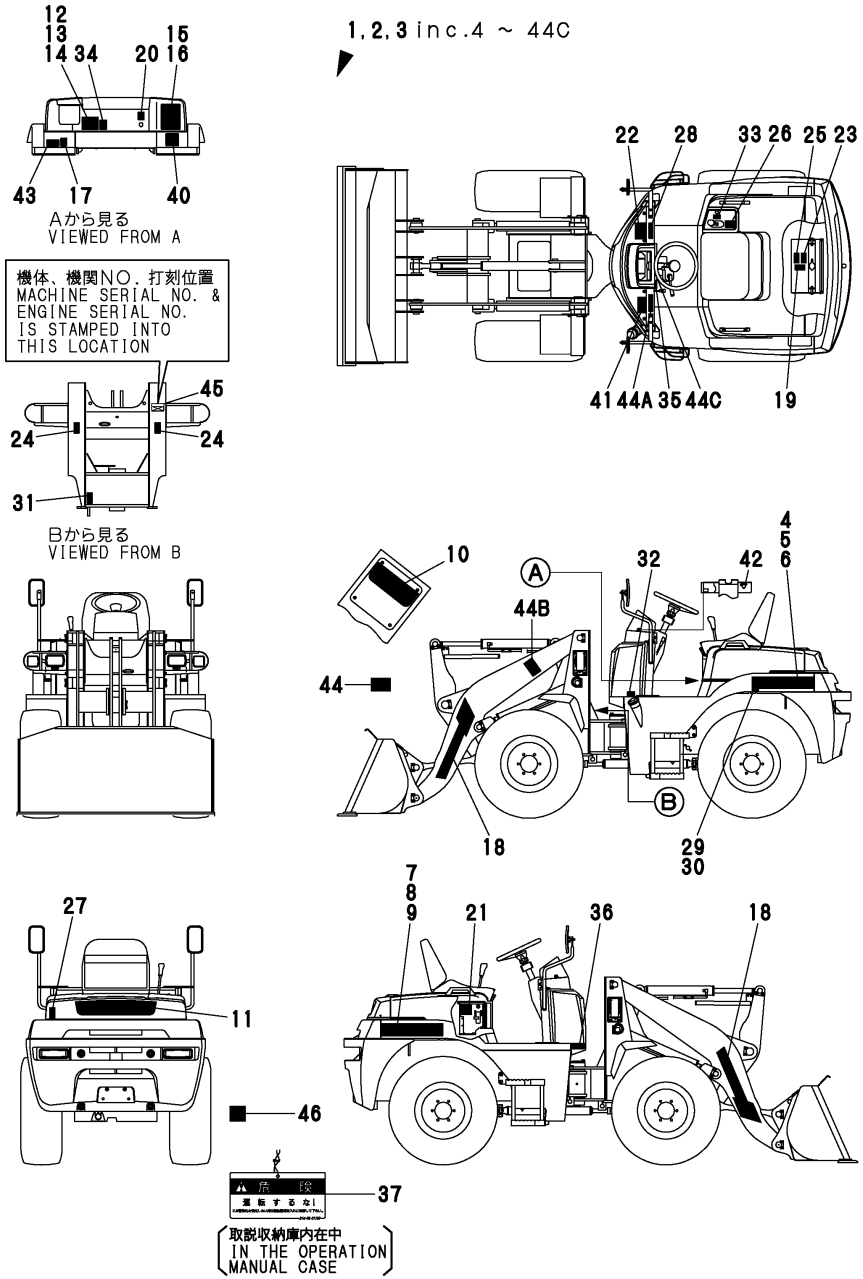

(A)=V3-5 (D)=V4-5A
(B)=V3-5(M/C) (E)=V5
(C)=V4-5 (F)=V5-A

No.	Lev.	Parts No.	Description	Q'ty (A)	(B)	(C)	(D)	(E)	(F)	I	R
		(B=M/#52616)	(D=M/#52091)					(F=M/#02043)			
45	1	172519-04350	SCREW		4		4		4		
46	1	172478-03900	LABEL (FRON GAS		1		1		1		

N:Old ◄Yes/No► New, Q:Old ◄No/Yes► New, R:Old ◄Yes/Yes► New, S:Old ◄No/No► New, W:Add, Z:Discontinued, F:Interchangeable by set, K:Q'ty Change

Copyright (C) YANMAR CO., LTD. All RightsReserved.

Fig.3. SAFETY LABEL

(A)=V3-5
(B)=V3-5(M/C)
(C)=V4-5
(D)=V4-5A
(E)=V5
(F)=V5-A

No.	Lev.	Parts No.	Description	Q'ty (A)	(B)	(C)	(D)	(E)	(F)	I	R
1	1	172527-03210	LABEL	1	1	1	1	1	1		
2	1	172444-03240	LABEL	1	1	1	1	1	1		
3	1	172164-03540	LABEL	1	1	1	1	1	1		
4	1	172527-03220	LABEL	2	2	2	2	2	2		
5	1	172164-03510	LABEL,LOADING	1	1	1	1	1	1		
6	1	172141-03202	LABEL,CAUTION	1	1	1	1	1	1		
7	1	172141-03182	LABEL	1	1	1	1	1	1		
8	1	172142-03302	LABEL,CAUTION	1	1	1	1	1	1		
9	1	172519-03341	LABEL	1	1	1	1	1	1		
10	1	172527-03240	LABEL	1	1	1	1	1	1		
11	1	172444-03220	LABEL	1	1	1	1	1	1		
12	1	172444-03190	LABEL	1	1	1	1	1	1		
13	1	172444-03200	LABEL,BATTERY	1	1	1	1	1	1		
14	1	172444-03230	LABEL	1	1	1	1	1	1		
15	1	172527-03230	LABEL	1	1	1	1	1	1		
16	1	172964-03481	TAG ASSY, CAUTION	1	1	1	1	1	1		
17	1	172530-03220	LABEL	2	2	2	2	2	2	W	
	(A=*2004.04)	(B=M/#52616)	(C=*2004.04) (D=M/#52091)	(E=*2004.04)				(F=M/#02043)			
18	1	172530-03230	LABEL	1	1	1	1	1	1	W	
	(A=*2004.04)	(B=M/#52616)	(C=*2004.04) (D=M/#52091)	(E=*2004.04)				(F=M/#02043)			

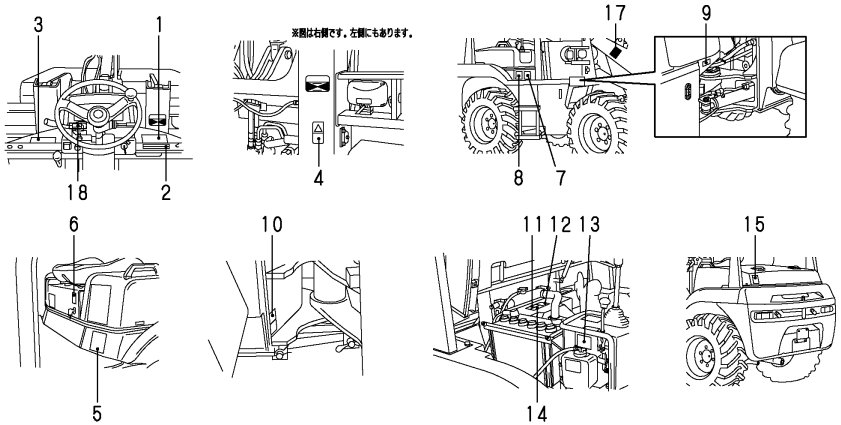

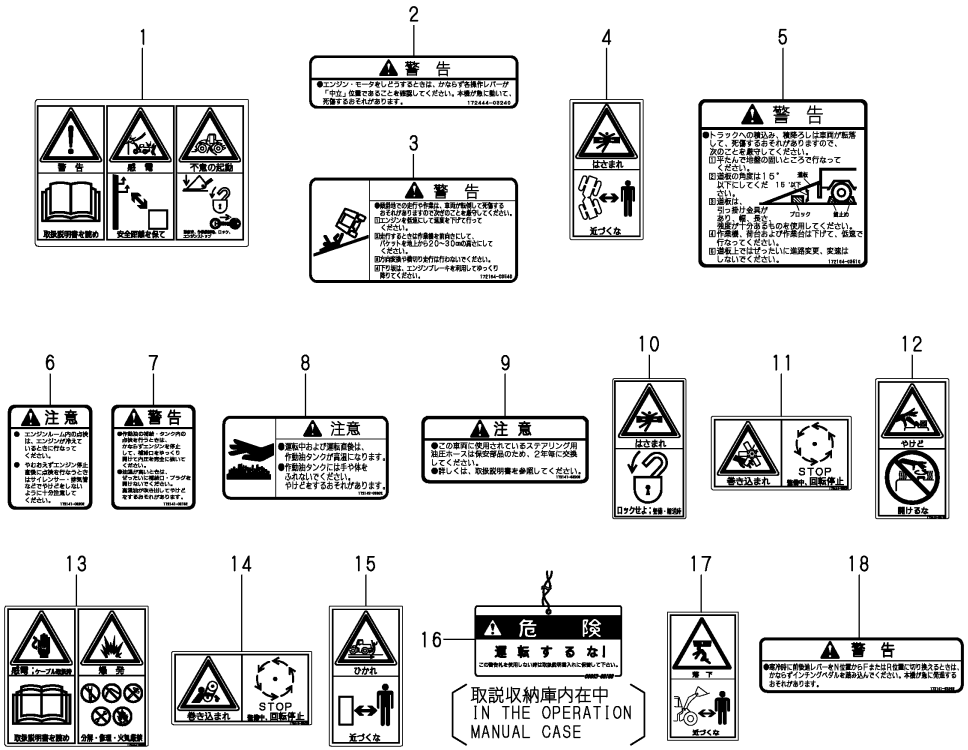

N:Old ⇄(Yes/No) New, Q:Old ⇄(No/Yes) New, R:Old ⇄(Yes/Yes) New, S:Old ⇄(No/No) New, W:Add, Z:Discontinued, F:Interchangeable by set, K:Q'ty Change

Copyright (C) YANMAR CO., LTD. All RightsReserved.

Fig.4. TOOL

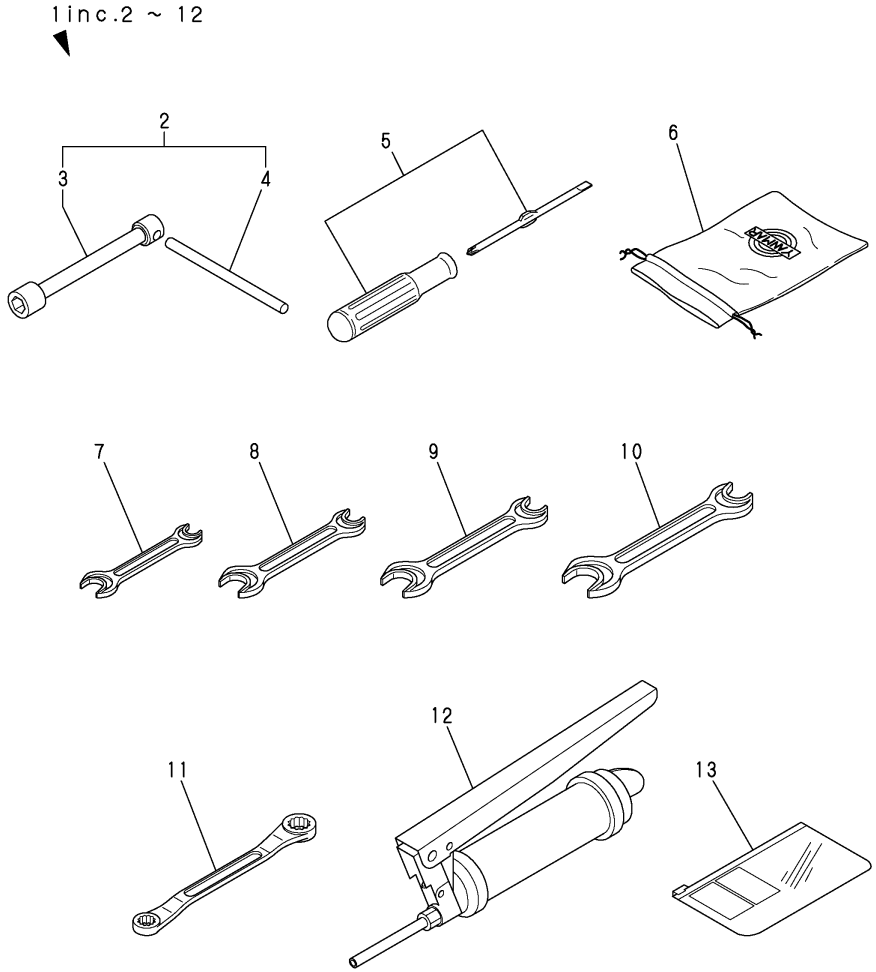

(A)=V3-5
(B)=V3-5(M/C)
(C)=V4-5
(D)=V4-5A
(E)=V5
(F)=V5-A

No.	Lev.	Parts No.	Description	Q'ty (A)	(B)	(C)	(D)	(E)	(F)	I	R
1	1	772527-05100	TOOL ASSY	1	1	1	1	1	1		
2	2	172527-05110	WRENCH ASSY 30	1	1	1	1	1	1		
3	3	172527-05120	WRENCH 30	1	1	1	1	1	1		
4	3	172527-05130	SHAFT, WRENCH	1	1	1	1	1	1		
5	2	104200-92350	DRIVER, SCREW	1	1	1	1	1	1		
6	2	121400-92690	BAG, TOOL	1	1	1	1	1	1		
7	2	28110-100120	SPANNER, 10X12	1	1	1	1	1	1		
8	2	28110-120140	SPANNER, 12X14	1	1	1	1	1	1		
9	2	28110-190220	SPANNER, 19X22	1	1	1	1	1	1		
10	2	28110-220240	SPANNER, 22X24	1	1	1	1	1	1		
11	2	28160-140170	WRENCH, 14X17	1	1	1	1	1	1		
12	2	933110-09800	GUN, GREASE	1	1	1	1	1	1		
13	1	172176-07330	BAG, MANUAL	1	1	1	1	1	1		

N:Old $\xleftrightarrow[\text{No}]{\text{Yes}}$ New, Q:Old $\xleftrightarrow[\text{Yes}]{\text{No}}$ New, R:Old $\xleftrightarrow[\text{Yes}]{\text{Yes}}$ New, S:Old $\xleftrightarrow[\text{No}]{\text{No}}$ New, W:Add, Z:Discontinued, F:Interchangeable by set, K:Q'ty Change

Copyright (C) YANMAR CO., LTD. All RightsReserved.

Fig.5. BACK MIRROR

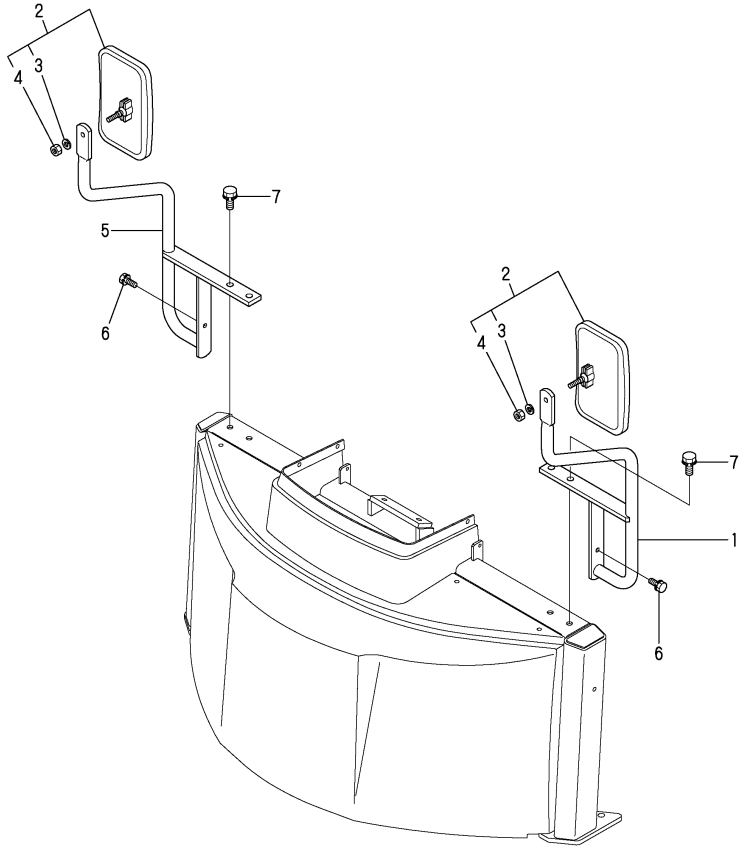

Remarks
(1)FOR STANDARD VEHICLE SPEC.(W/O CANOPY & CABIN)
PLEASE REFER TO FIG.61(CANOPY SPEC.)OR FIG62(CABIN SPEC.).

(A)=V3-5
(B)=V3-5(M/C)
(C)=V4-5
(D)=V4-5A
(E)=V5
(F)=V5-A

No.	Lev.	Parts No.	Description	Q'ty (A)	(B)	(C)	(D)	(E)	(F)	I	R
1	1	172527-06510	STAY, MIRROR	1	1	1	1	1	1		1
2	1	172524-06750	MIRROR COMP.	2	2	2	2	2	2		1
3	1	22217-080000	WASHER, SPRING 8	2	2	2	2	2	2		1
4	1	26716-080002	NUT, M8	4	4	4	4	4	4		1
5	1	172527-06610	STAY, MIRROR	1	1	1	1	1	1		1
6	1	26013-080202	BOLT, M8X 20	2	2	2	2	2	2		1
7	1	26013-100302	BOLT, M10X 30	4	4	4	4	4	4		1

N:Old $\xleftarrow[\text{No}]{\text{Yes}}$ New, Q:Old $\xleftarrow[\text{Yes}]{\text{No}}$ New, R:Old $\xleftarrow[\text{Yes}]{\text{Yes}}$ New, S:Old $\xleftarrow[\text{No}]{\text{No}}$ New, W:Add, Z:Discontinued, F:Interchangeable by set, K:Q'ty Change

Copyright (C) YANMAR CO., LTD. All RightsReserved.

Fig.6. SILENCER

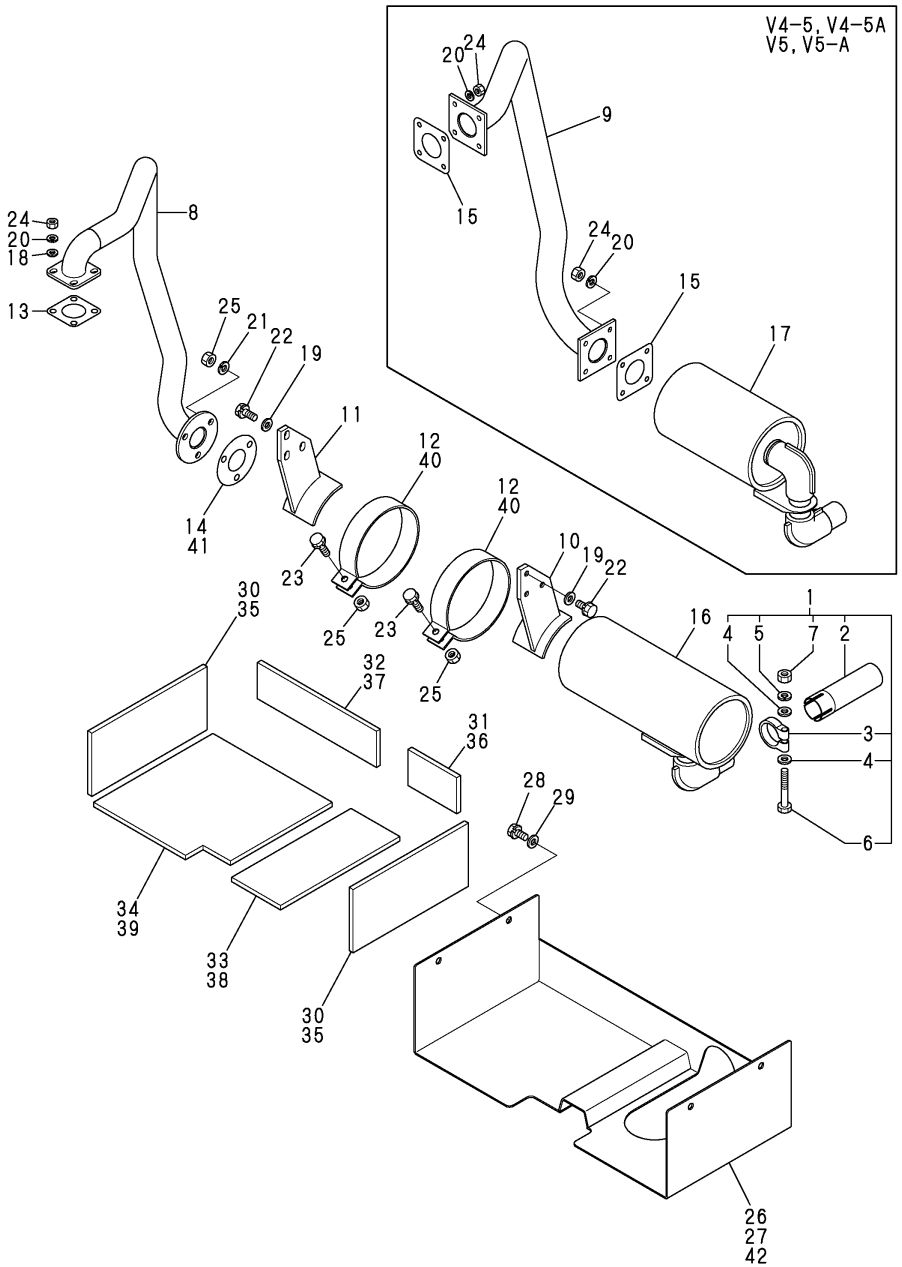

(A)=V3-5
(B)=V3-5(M/C)
(C)=V4-5
(D)=V4-5A
(E)=V5
(F)=V5-A

No.	Lev.	Parts No.	Description	Q'ty (A)	(B)	(C)	(D)	(E)	(F)	I	R
1	1	172520-11300	PIPE, TAIL	1	1	1	1	1	1		
2	2	172520-11350	PIPE, TAIL	1	1	1	1	1	1		
3	2	121120-13580	CLAMP	1	1	1	1	1	1		
4	2	22137-100000	WASHER, 10	2	2	2	2	2	2		
5	2	22217-100000	WASHER, SPRING 10	1	1	1	1	1	1		
6	2	26116-100652	BOLT, M10X 65 PLATED	1	1	1	1	1	1		
7	2	26716-100002	NUT, M10	1	1	1	1	1	1		
8	1	172527-11310	PIPE, CONNECTING	1	1						
9	1	172528-11310	PIPE, CONNECTING			1	1	1	1		
10	1	172527-11320	BRACKET L	1	1	1	1	1	1		
11	1	172527-11330	BRACKET R	1	1	1	1	1	1		
12	1	172513-11340	BAND, SILENCER	2		2		2			
13	1	124701-11911	GASKET, SILENCER	1	1						
14	1	103954-13200	GASKET, SILENCER	1							
15	1	129400-13201	GASKET, SILENCER			2	2	2	2		
16	1	119869-13501	SILENCER	1	1						
17	1	129012-13500	SILENCER			1	1	1	1		
18	1	22137-080000	WASHER, 8	4	4						
19	1	22137-100000	WASHER, 10	6	6	6	6	6	6		
20	1	22217-080000	WASHER, SPRING 8	4	4	8	8	8	8		
21	1	22217-100000	WASHER, SPRING 10	3	3						
22	1	26013-100302	BOLT, M10X 30	6	6	6	6	6	6		
23	1	26013-100352	BOLT, M10X 35	2	2	2	2	2	2		
24	1	26716-080002	NUT, M8	4	4	8	8	8	8		
25	1	26716-100002	NUT, M10	5	5	2	2	2	2		
26	1	172527-11390	COVER ASSY, MUFFLER	1							
27	1	172528-11390	COVER, MUFFLER			1	1	1	1		
28	1	26013-100252	BOLT, M10X 25	4	4	4	4	4	4		
29	1	22137-100000	WASHER, 10	4	4	4	4	4	4		
30	1	172527-62350	SOUND-PROOF MFC-S	2	2						
31	1	172527-62360	SOUND-PROOF MFC-RL	1	1						
32	1	172527-62370	SOUND-PROOF MFC-RR	1	1						
33	1	172527-62380	SOUND-PROOF MFC-BL	1	1						
34	1	172527-62390	SOUND-PROOF MFC-BR	1	1						
35	1	172528-62350	SOUND-PROOF MFC-S			2	2	2	2		
35-1	1	172528-63350	SOUND-PROOF MFC-S			2	2	2	2	R	
			(C=*2004.11) (D=M/#52168)			(E=*2004.11)		(F=M/#02060)			
36	1	172528-62360	SOUND-PROOF MFC-RL			1	1	1	1		
36-1	1	172528-63360	SOUND-PROOF MFC-RL			1	1	1	1	R	
			(C=*2004.11) (D=M/#52168)			(E=*2004.11)		(F=M/#02060)			
37	1	172528-62370	SOUND-PROOF MFC-RR			1	1	1	1		
37-1	1	172528-63370	SOUND-PROOF MFC-RR			1	1	1	1	R	
			(C=*2004.11) (D=M/#52168)			(E=*2004.11)		(F=M/#02060)			
38	1	172528-62380	SOUND-PROOF MFC-BL			1	1	1	1		
38-1	1	172528-63380	SOUND PROOF MFC-BL			1	1	1	1	R	
			(C=*2004.11) (D=M/#52168)			(E=*2004.11)		(F=M/#02060)			
39	1	172528-62390	SOUND-PROOF MFC-BR			1	1	1	1		
39-1	1	172528-63390	SOUND PROOF MFC-BR			1	1	1	1	R	
			(C=*2004.11) (D=M/#52168)			(E=*2004.11)		(F=M/#02060)			
40	1	172527-11340	BAND, SILENCER			2		2		2	
41	1	103954-13201	GASKET, SILENCER			1					

N:Old $\overset{\text{Yes}}{\underset{\text{No}}{\leftrightarrow}}$ New, Q:Old $\overset{\text{No}}{\underset{\text{Yes}}{\leftrightarrow}}$ New, R:Old $\overset{\text{Yes}}{\underset{\text{Yes}}{\leftrightarrow}}$ New, S:Old $\overset{\text{No}}{\underset{\text{No}}{\leftrightarrow}}$ New, W:Add, Z:Discontinued, F:Interchangeable by set, K:Q'ty Change

++ CONTINUE ++

Copyright (C) YANMAR CO., LTD. All RightsReserved.

Fig.6. SILENCER

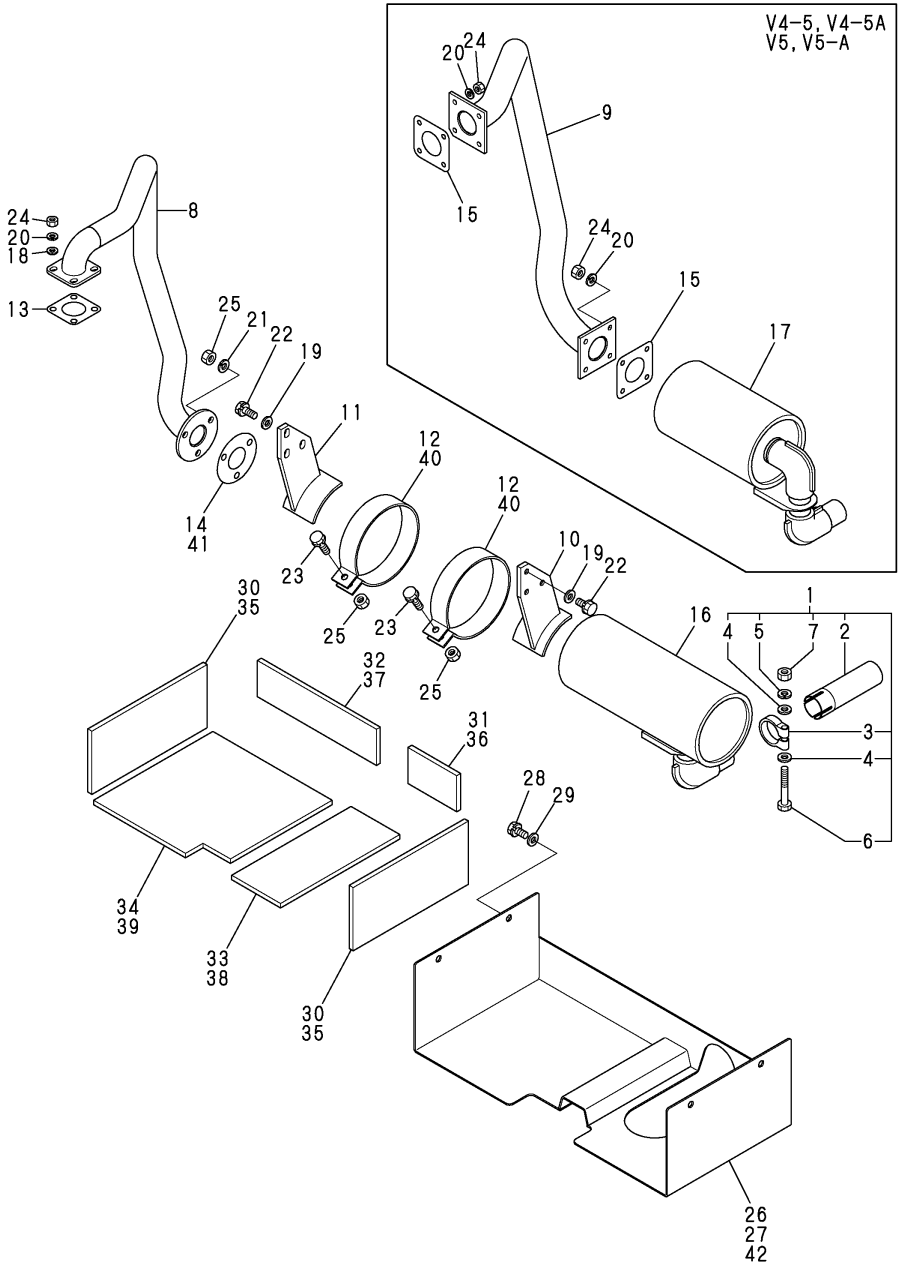

0CK20-M36003 Fig.6

(A)=V3-5
(B)=V3-5(M/C)
(C)=V4-5
(D)=V4-5A
(E)=V5
(F)=V5-A

No.	Lev.	Parts No.	Description	Q'ty (A)	(B)	(C)	(D)	(E)	(F)	I	R
42	1	172527-11391	COVER ASSY, MUFFLER		1						

N:Old ←Yes/No→ New, Q:Old ←No/Yes→ New, R:Old ←Yes/Yes→ New, S:Old ←No/No→ New, W:Add, Z:Discontinued, F:Interchangeable by set, K:Q'ty Change

Copyright (C) YANMAR CO., LTD. All RightsReserved.

Fig.7. AIR CLEANER & ENGINE DRAIN

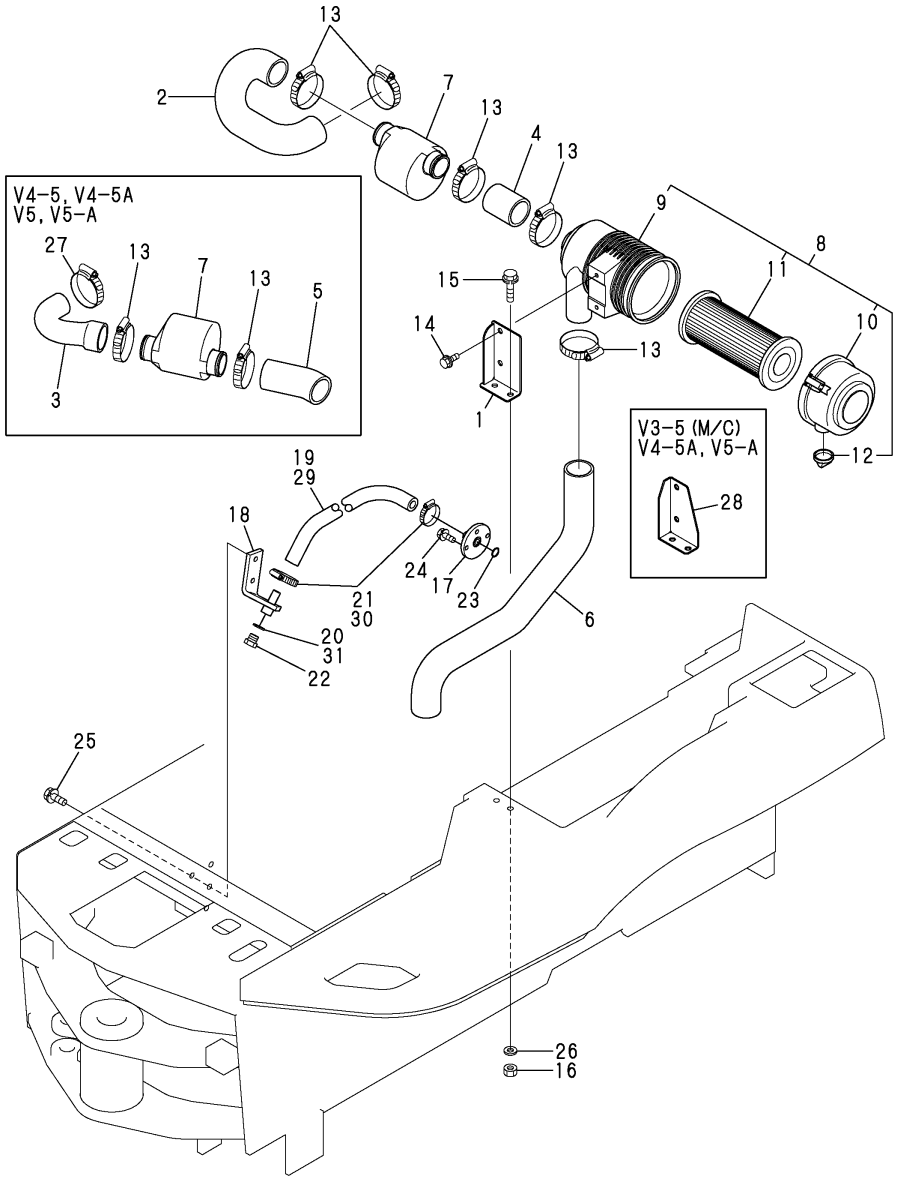

(A)=V3-5
(B)=V3-5(M/C)
(C)=V4-5
(D)=V4-5A
(E)=V5
(F)=V5-A

No.	Lev.	Parts No.	Description	Q'ty (A)	(B)	(C)	(D)	(E)	(F)	I	R
1	1	172527-11511	BRACKET, AIR CLEANER	1		1		1			
2	1	172527-11560	HOSE A	1	1						
3	1	172528-11561	HOSE A			1	1	1	1		
4	1	172527-11570	HOSE B	1	1						
5	1	172528-11571	HOSE B			1	1	1	1		
6	1	172527-11580	HOSE C	1	1	1	1	1	1		
7	1	121855-12060	SILENCER ASSY	1	1	1	1	1	1		
8	1	129012-12500	CLEANER ASSY, AIR	1	1	1	1	1	1		
9	2	129012-12510	BODY, AIR CLEANER	1	1	1	1	1	1		
10	2	129012-12530	COVER ASSY	1	1	1	1	1	1		
11	2	119808-12520	ELEMENT	1	1	1	1	1	1		
12	2	119808-12540	VALVE, UNLOADER	1	1	1	1	1	1		
13	1	23000-060000	CLAMP, 60	5	5	4	4	4	4		
14	1	26013-080202	BOLT, M8X 20	2	2	2	2	2	2		
15	1	26013-100402	BOLT, M10X 40	2	2	2	2	2	2		
16	1	26716-100002	NUT, M10	2	2	2	2	2	2		
17	1	172527-11910	PLATE	1	1	1	1	1	1		
18	1	172527-11920	STAY	1	1	1	1	1	1		
19	1	172527-11930	HOSE	1		1		1			
20	1	1C6900-23150	WASHER, PLUG	1		1		1			
21	1	23000-028000	CLAMP, 28	2		2		2			
22	1	23491-140002	PLUG, 14	1	1	1	1	1	1		
23	1	24311-000180	O-RING, 1AP18.0	1	1	1	1	1	1		
24	1	26013-080202	BOLT, M8X 20	3	3	3	3	3	3		
25	1	26013-100252	BOLT, M10X 25	2	2	2	2	2	2		
26	1	22137-100000	WASHER, 10	2	2	2	2	2	2		
27	1	23000-048000	CLAMP, 48			1	1	1	1		
28	1	172527-11512	BRACKET, CLEANER		1		1		1		
29	1	172527-11931	HOSE,LO DRAIN		1		1		1		
30	1	23001-025000	CLAMP, HOSE 25		2		2		2		
31	1	24311-000160	O-RING, 1AP16.0		1		1		1		

N:Old $\xleftarrow[\text{No}]{\text{Yes}}$ New, Q:Old $\xleftarrow[\text{Yes}]{\text{No}}$ New, R:Old $\xleftarrow[\text{Yes}]{\text{Yes}}$ New, S:Old $\xleftarrow[\text{No}]{\text{No}}$ New, W:Add, Z:Discontinued, F:Interchangeable by set, K:Q'ty Change

Copyright (C) YANMAR CO., LTD. All RightsReserved.

Fig.8. FOOT ACCELERATOR(1)

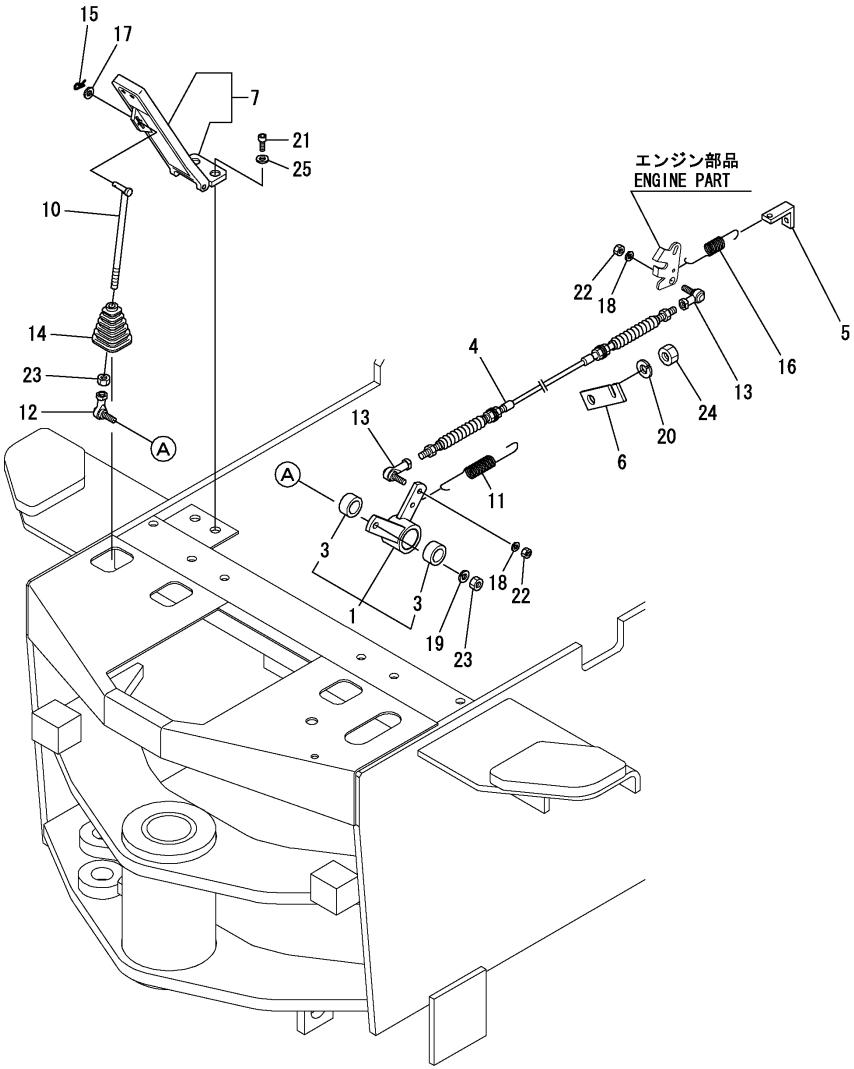

(A)=V3-5
(B)=V3-5(M/C)
(C)=V4-5
(D)=V4-5A
(E)=V5
(F)=V5-A

No.	Lev.	Parts No.	Description	Q'ty (A)	(B)	(C)	(D)	(E)	(F)	I	R
1	1	172527-12200	LEVER	1		1		1			
1-1	1	172527-12201	LEVER ASSY,AXLE CAM	1		1		1			N
	(A=*2013.10)		(C=*2013.10)	(E=*2013.10)							
3	2	172513-42420	LINER M 2515	2		2		2			
3-1	2	24550-025150	BUSH, 25X15	2		2		2			S
	(A=MXXX)		(C=MXXX)	(E=MXXX)							
4	1	172527-12250	WIRE	1		1		1			
5	1	172521-12260	HOOK, SPRING	1		1		1			
6	1	172524-12260	BRACKET E,WIRE	1		1		1			
7	1	172520-12310	PEDAL ASSY, THROTTLE	1		1		1			
7-1	1	172538-12310	PEDAL ASSY,ACCEL	1		1		1			N
	(A=*2010.02)		(C=*2010.02)	(E=*2010.02)							
10	1	172524-12360	ROD, LINK	1		1		1			
11	1	172524-12380	SPRING, RETURN	1		1		1			
12	1	172527-42220	BEARING, ROD-END	1		1		1			
13	1	172527-42230	LINK BALL,6D	2		2		2			
14	1	172520-46150	BOOT	1		1		1			
15	1	1C6281-52310	PIN, SNAP 6	1		1		1			
16	1	1C6320-66451	SPRING, SIDE FLOAT	1		1		1			
17	1	22137-060000	WASHER, 6	1		1		1			
18	1	22217-060000	WASHER, SPRING 6	2		2		2			
19	1	22217-080000	WASHER, SPRING 8	1		1		1			
20	1	22217-120000	WASHER, SPRING 12	1		1		1			
21	1	26450-060162	BOLT, M6X 16	2		2		2			
22	1	26716-060002	NUT, M6	2		2		2			
23	1	26716-080002	NUT, M8	2		2		2			
24	1	26716-120002	NUT, M12	1		1		1			
25	1	22137-060000	WASHER, 6	2		2		2			W
	(A=*2010.02)		(C=*2010.02)	(E=*2010.02)							

N:Old $\frac{\text{Yes}}{\text{No}}$ New, Q:Old $\frac{\text{No}}{\text{Yes}}$ New, R:Old $\frac{\text{Yes}}{\text{Yes}}$ New, S:Old $\frac{\text{No}}{\text{No}}$ New, W:Add, Z:Discontinued, F:Interchangeable by set, K:Q'ty Change

Copyright (C) YANMAR CO., LTD. All RightsReserved.

Fig.9. FOOT ACCELERATOR(2)

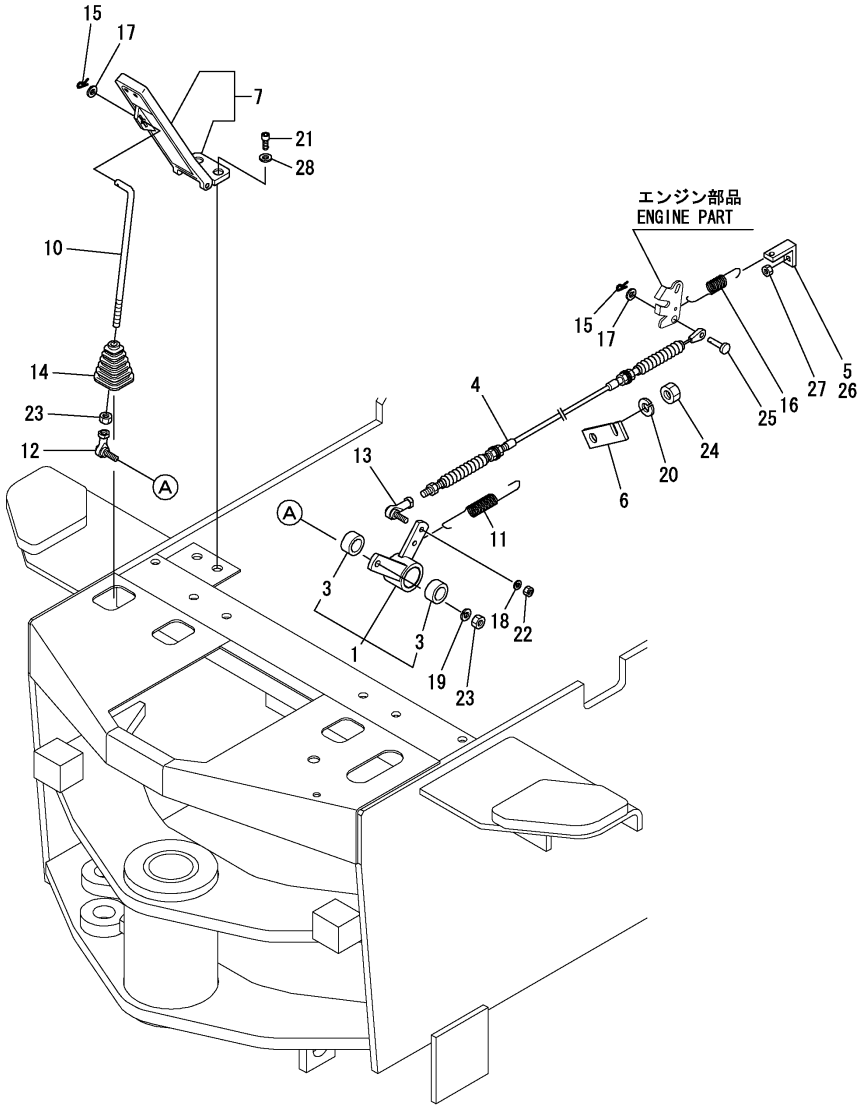

(A)=V3-5 (D)=V4-5A
(B)=V3-5(M/C) (E)=V5
(C)=V4-5 (F)=V5-A

No.	Lev.	Parts No.	Description	Q'ty (A)	(B)	(C)	(D)	(E)	(F)	I	R
1	1	172527-12200	LEVER		1		1		1		
1-1	1	172527-12201	LEVER ASSY,AXLE CAM		1		1		1	N	
		(B=*2013.10)	(D=*2013.10)					(F=*2013.10)			
3	2	24550-025150	BUSH, 25X15		2		2		2		
4	1	172527-12251	WIRE		1		1		1		
5	1	172521-12260	HOOK, SPRING		1						
6	1	172524-12260	BRACKET E,WIRE		1		1		1		
7	1	172520-12310	PEDAL ASSY, THROTTLE		1		1		1		
7-1	1	172538-12310	PEDAL ASSY,ACCEL		1		1		1	N	
		(B=*2010.02)	(D=*2010.02)					(F=*2010.02)			
10	1	172524-12362	ROD A ASSY, LINK		1		1		1		
11	1	172524-12380	SPRING, RETURN		1		1		1		
12	1	1E4760-43090	BALL RBL8,LINK		1		1		1		
13	1	172446-45820	LINK BALL 6		1		1		1		
14	1	172520-46150	BOOT		1		1		1		
15	1	1C6281-52310	PIN, SNAP 6		2		2		2		
16	1	1C6320-66451	SPRING, SIDE FLOAT		1		1		1		
17	1	22137-060000	WASHER, 6		3		3		3		
18	1	22217-060000	WASHER, SPRING 6		1		1		1		
19	1	22217-080000	WASHER, SPRING 8		1		1		1		
20	1	22217-120000	WASHER, SPRING 12		1		1		1		
21	1	26450-060162	BOLT, M6X 16		2		2		2		
22	1	26716-060002	NUT, M6		1		1		1		
23	1	26716-080002	NUT, M8		2		2		2		
24	1	26716-120002	NUT, M12		1		1		1		
25	1	172113-12522	PIN, CABLE		1		1		1		
26	1	172528-12260	HOOK, SPRING				1		1		
27	1	26716-080002	NUT, M8				1		1		
28	1	22137-060000	WASHER, 6		2		2		2	W	
		(B=*2010.02)	(D=*2010.02)					(F=*2010.02)			

N:Old $\xleftarrow[\text{No}]{\text{Yes}}$ New, Q:Old $\xleftarrow[\text{Yes}]{\text{No}}$ New, R:Old $\xleftarrow[\text{Yes}]{\text{Yes}}$ New, S:Old $\xleftarrow[\text{No}]{\text{No}}$ New, W:Add, Z:Discontinued, F:Interchangeable by set, K:Q'ty Change

Copyright (C) YANMAR CO., LTD. All RightsReserved.

Fig.10. ENGINE MOUNT

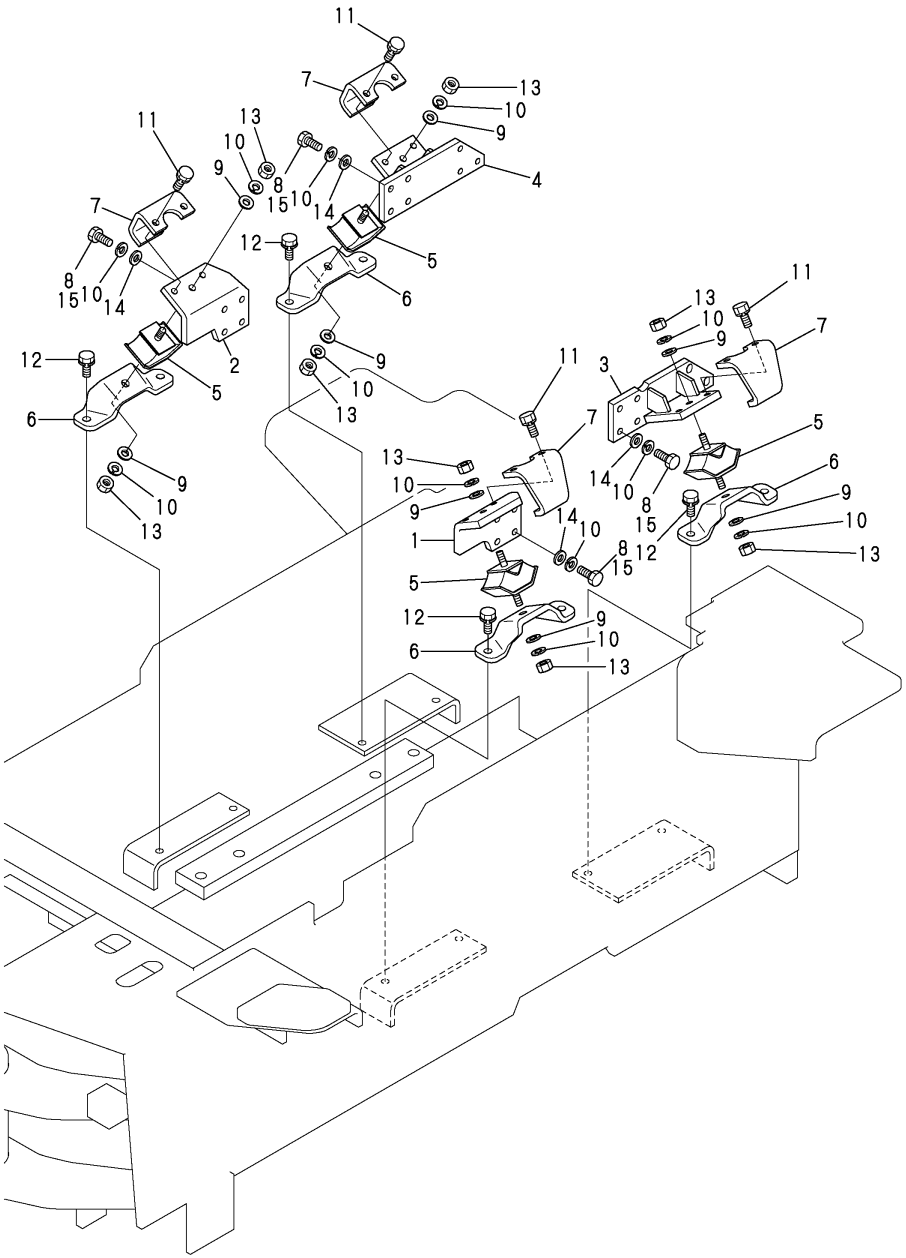

(A)=V3-5
(B)=V3-5(M/C)
(C)=V4-5
(D)=V4-5A
(E)=V5
(F)=V5-A

No.	Lev.	Parts No.	Description	Q'ty (A)	(B)	(C)	(D)	(E)	(F)	I	R
1	1	172527-13130	BRACKET, ENGINE	1	1	1	1	1	1		
2	1	172527-13140	BRACKET, ENGINE	1	1	1	1	1	1		
3	1	172527-13150	BRACKET, ENGINE	1	1	1	1	1	1		
4	1	172527-13160	BRACKET, ENGINE	1	1	1	1	1	1		
5	1	172524-13180	ABSORBER, SHOCK	4	4	4	4	4	4		
6	1	172527-13180	BRACKET,ENGINE	4	4	4	4	4	4		
7	1	172527-13190	STOPPER	4	4	4	4	4	4		
8	1	195216-15470	BOLT, M10X25 11T	16		16		16			
8-1	1	172527-13120	BOLT M10X 28	16		16		16			N
	(A=M/#51113)		(C=M/#51028)	(E=M/#01001)							
9	1	22137-100000	WASHER, 10	8	8	8	8	8	8		
10	1	22217-100000	WASHER, SPRING 10	24	24	24	24	24	24		
11	1	26013-100202	BOLT, M10X 20	8	8	8	8	8	8		
12	1	26013-100352	BOLT, M10X 35	8	8	8	8	8	8		
13	1	26716-100002	NUT, M10	8	8	8	8	8	8		
14	1	22137-100000	WASHER, 10		16		16		16		
15	1	26076-100302	BOLT, 10.910X 30		16		16		16		

N:Old $\frac{\text{Yes}}{\text{No}}$ New, Q:Old $\frac{\text{No}}{\text{Yes}}$ New, R:Old $\frac{\text{Yes}}{\text{Yes}}$ New, S:Old $\frac{\text{No}}{\text{No}}$ New, W:Add, Z:Discontinued, F:Interchangeable by set, K:Q'ty Change

Copyright (C) YANMAR CO., LTD. All RightsReserved.

Fig.11. RADIATOR(1)

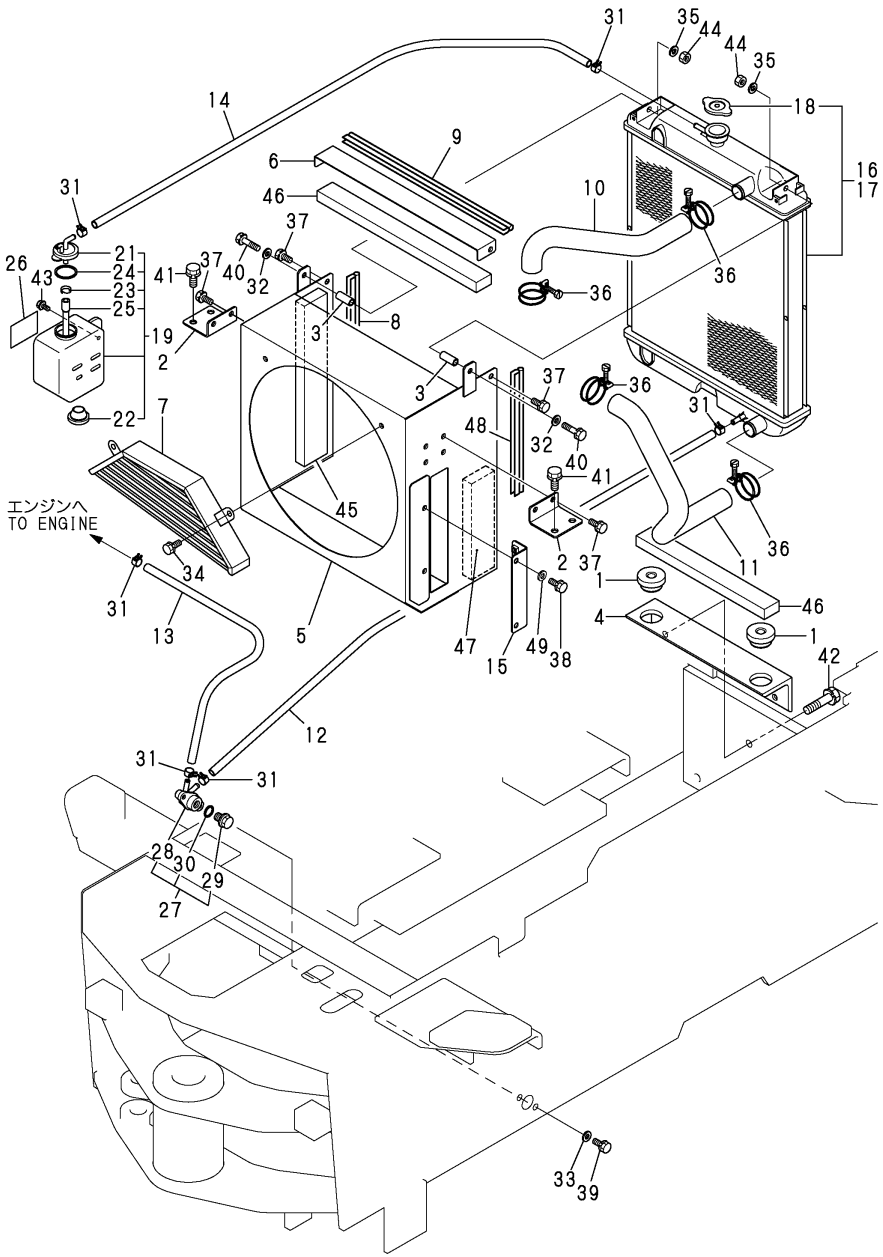

(A)=V3-5
(B)=V3-5(M/C)
(C)=V4-5
(D)=V4-5A
(E)=V5
(F)=V5-A

No.	Lev.	Parts No.	Description	Q'ty (A)	(B)	(C)	(D)	(E)	(F)	I	R
1	1	198162-00640	SUPPORT, RADIATOR	2		2		2			
2	1	172527-13310	STAY, RADIATOR	2		2		2			
3	1	172527-13320	COLLAR	2		2		2			
4	1	172527-13330	STAY, RADIATOR	1		1		1			
5	1	172527-13350	SHROUD ASSY	1		1		1			
6	1	172527-13360	COVER, SHROUD	1		1		1			
7	1	172527-13370	GUARD, FAN	1		1		1			
8	1	172527-13380	SEAL	1		1		1			
9	1	172527-13390	SEAL	1		1		1			
10	1	172527-13410	PIPE, WATER	1		1		1			
11	1	172527-13420	PIPE, WATER	1		1		1			
12	1	172527-13510	PIPE, DRAIN	1		1		1			
13	1	172527-13520	PIPE, DRAIN	1		1		1			
14	1	172527-13530	PIPE, DRAIN	1		1		1			
15	1	172527-13610	STAY	1		1		1			
16	1	172527-13910	RADIATOR	1							
17	1	172528-13910	RADIATOR			1		1			
18	2	129107-44590	CAP, RADIATOR	1		1		1			
19	1	121468-44510	TANK ASSY	1		1		1			
21	2	121450-44531	CAP	1		1		1			
22	2	121468-44540	PLUG	1		1		1			
23	2	124450-44560	RETAINER	1		1		1			
24	2	121470-44581	GASKET	1		1		1			
25	2	23065-070130	PIPE, 7X 130	1		1		1			
26	1	121470-44540	LABEL, SUB-TANK	1		1		1			
27	1	121450-49110	COCK ASSY, 3-WAY	1		1		1			
28	2	121450-49100	BODY, 3-WAY COCK	1		1		1			
29	2	121250-49121	PLUG, DRAIN	1		1		1			
30	2	24311-000160	O-RING, 1AP16.0	1		1		1			
31	1	124766-59050	CLIP, HOSE 12	6		6		6			
32	1	22137-080000	WASHER, 8	2		2		2			
33	1	22137-080000	WASHER, 8	2		2		2			
34	1	26013-080162	BOLT, M8X 16	2		2		2			
35	1	22217-080000	WASHER, SPRING 8	2		2		2			
36	1	23010-038000	CLAMP, 38	4		4		4			
37	1	26013-080162	BOLT, M8X 16	6		6		6			
38	1	26013-080202	BOLT, M8X 20	2		2		2			
39	1	26013-080352	BOLT, M8X 35	2		2		2			
40	1	26013-080552	BOLT, M8X 55	2		2		2			
41	1	26013-100202	BOLT, M10X 20	4		4		4			
42	1	26013-120502	BOLT, M12X 50	2		2		2			
43	1	26018-060162	BOLT, M6X 16	2		2		2			
44	1	26716-080002	NUT, M8	2		2		2			
45	1	172527-62450	SOUND-PROOF SRD-R	1		1		1			
45-1	1	172527-63450	SOUND-PROOF SRD-R	1		1		1			R
	(A=*2004.11)		(C=*2004.11)	(E=*2004.11)							
46	1	172527-62460	SOUND-PROOF SRD-M	2		2		2			
46-1	1	172527-63460	SOUND-PROOF SRD-M	2		2		2			R
	(A=*2004.11)		(C=*2004.11)	(E=*2004.11)							
47	1	172527-62470	SOUND-PROOF SRD-L	1		1		1			
47-1	1	172527-63470	SOUND-PROOF SRD-L	1		1		1			R

N:Old $\xleftarrow[\text{No}]{\text{Yes}}$ New, Q:Old $\xleftarrow[\text{Yes}]{\text{No}}$ New, R:Old $\xleftarrow[\text{Yes}]{\text{Yes}}$ New, S:Old $\xleftarrow[\text{No}]{\text{No}}$ New, W:Add, Z:Discontinued, F:Interchangeable by set, K:Q'ty Change

++ CONTINUE ++

Copyright (C) YANMAR CO., LTD. All RightsReserved.

Fig.11. RADIATOR(1)

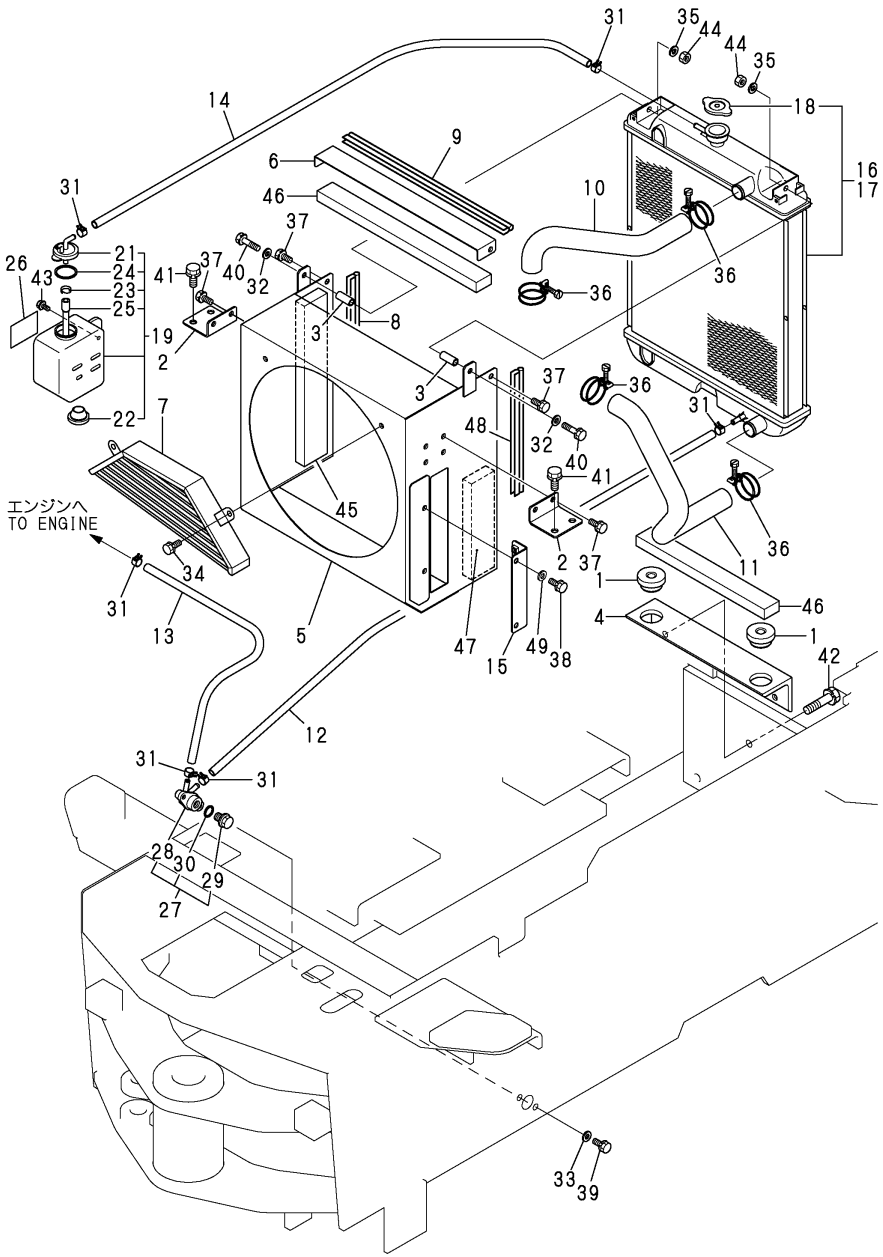

(A)=V3-5
(B)=V3-5(M/C)
(C)=V4-5
(D)=V4-5A
(E)=V5
(F)=V5-A

No.	Lev.	Parts No.	Description	Q'ty (A)	(B)	(C)	(D)	(E)	(F)	I	R
	(A=*2004.11)		(C=*2004.11)	(E=*2004.11)							
48	1	172527-13480	SEAL	1		1		1			
49	1	22137-080000	WASHER, 8			2		2			

N:Old $\xleftarrow[\text{No}]{\text{Yes}}$ New, Q:Old $\xleftarrow[\text{Yes}]{\text{No}}$ New, R:Old $\xleftarrow[\text{Yes}]{\text{Yes}}$ New, S:Old $\xleftarrow[\text{No}]{\text{No}}$ New, W:Add, Z:Discontinued, F:Interchangeable by set, K:Q'ty Change

Copyright (C) YANMAR CO., LTD. All RightsReserved.

Fig.12. RADIATOR(2)

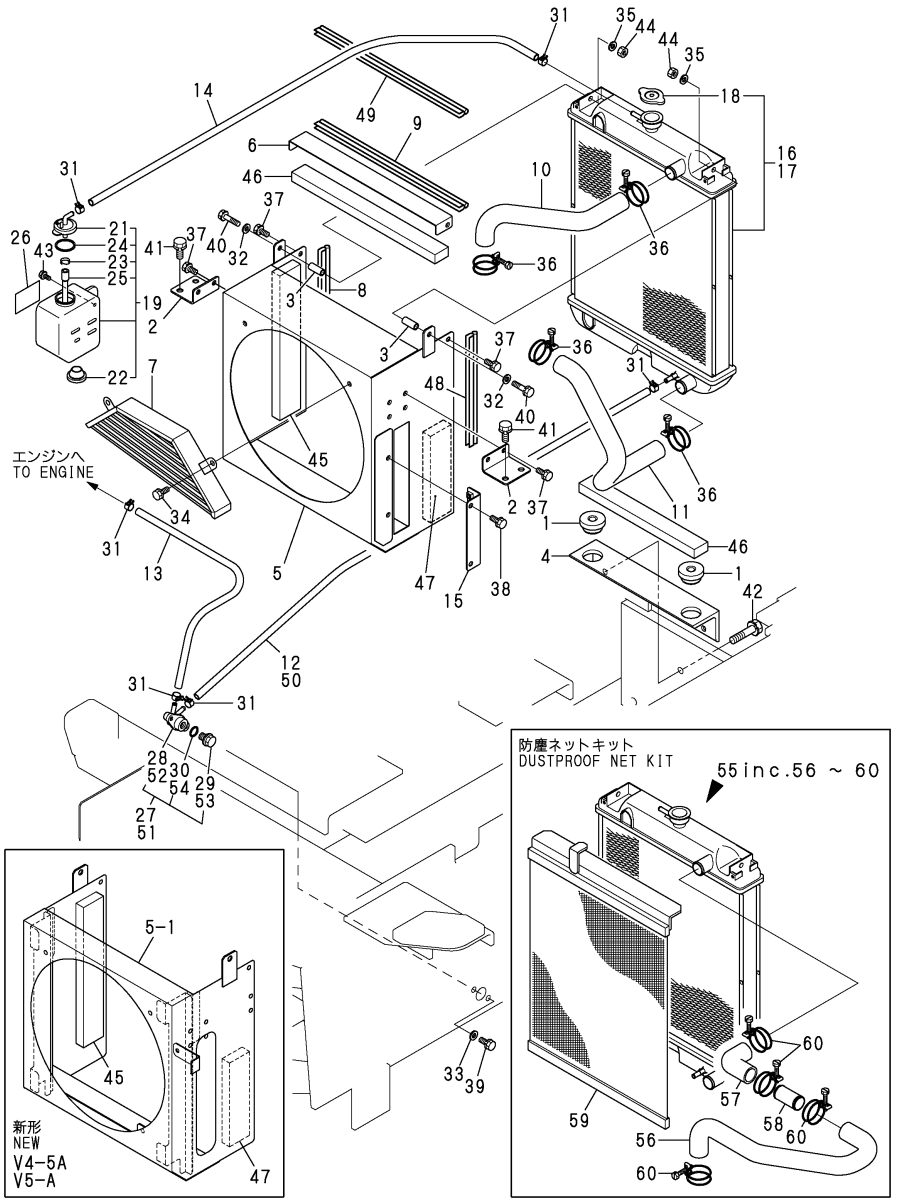

Remarks
(1)INTERCHANGEABLE BY SIMULTANEOUS REPLACEMENT WITH REF.NO.5-1 AND FIG.98 REF.NO.2-1.

(A)=V3-5 (B)=V3-5(M/C) (C)=V4-5 (D)=V4-5A (E)=V5 (F)=V5-A

No.	Lev.	Parts No.	Description	Q'ty (A)	(B)	(C)	(D)	(E)	(F)	I	R
1	1	198162-00640	SUPPORT, RADIATOR		2		2		2		
2	1	172527-13310	STAY, RADIATOR		2		2		2		
3	1	172527-13320	COLLAR		2		2		2		
4	1	172527-13330	STAY, RADIATOR		1		1		1		
4-1	1	172527-13330	STAY, RADIATOR				1		1	Z	
			(D=M/#52168)						(F=M/#02060)		
5	1	172527-13352	SHROUD ASSY		1		1		1		
5-1	1	172527-13700	SHROUD ASSY				1		1	F	1
			(D=M/#52168)						(F=M/#02060)		
6	1	172527-13361	COVER, SHROUD		1		1		1		
7	1	172527-13370	GUARD, FAN		1		1		1		
8	1	172162-61380	SEAL, COVER		1		1		1		
9	1	172164-65730	RUBBER, SEAL		1		1		1		
9-1	1	172164-66640	RUBBER, SEAL		1		1		1	R	
		(B=*2004.10)	(D=M/#52150)						(F=M/#02058)		
10	1	172527-13410	PIPE, WATER		1		1		1		
11	1	172527-13420	PIPE, WATER		1		1		1		
12	1	1E6299-03000	PIPE, FUEL RETURN		1						
13	1	172137-14620	PIPE, FUEL		1						
14	1	172124-14650	HOSE L=1100, FUEL		1		1		1		
15	1	172527-13611	STAY		1		1		1		
15-1	1	172527-13611	STAY				1		1	Z	
			(D=M/#52168)						(F=M/#02060)		
16	1	172527-13910	RADIATOR		1						
17	1	172528-13910	RADIATOR				1		1		
18	2	129107-44590	CAP, RADIATOR		1		1		1		
19	1	121468-44510	TANK ASSY		1		1		1		
21	2	121450-44531	CAP		1		1		1		
22	2	121468-44540	PLUG		1		1		1		
23	2	124450-44560	RETAINER		1		1		1		
24	2	121470-44581	GASKET		1		1		1		
25	2	23065-070130	PIPE, 7X 130		1		1		1		
26	1	121470-44540	LABEL, SUB-TANK		1		1		1		
27	1	121450-49110	COCK ASSY, 3-WAY		1		1		1		
28	2	121450-49100	BODY, 3-WAY COCK		1		1		1		
29	2	121250-49121	PLUG, DRAIN		1		1		1		
29-1	2	23491-140002	PLUG, 14		1		1		1	R	
		(B=*2004.09)	(D=M/#52135)						(F=M/#02052)		
30	2	24311-000160	O-RING, 1AP16.0		1		1		1		
31	1	124766-59050	CLIP, HOSE 12		6		4		4		
32	1	22137-080000	WASHER, 8		2		2		2		
33	1	22137-080000	WASHER, 8		2		2		2		
34	1	26013-080162	BOLT, M8X 16		2		2		2		
35	1	22217-080000	WASHER, SPRING 8		2		2		2		
36	1	23001-041000	CLAMP, HOSE 41		4		4		4		
37	1	26013-080162	BOLT, M8X 16		6		6		6		
38	1	26013-080202	BOLT, M8X 20		2		2		2		
38-1	1	26013-080202	BOLT, M8X 20				2		2	Z	
			(D=M/#52168)						(F=M/#02060)		
39	1	26013-080452	BOLT, M8X 45		2		2		2		
40	1	26013-080552	BOLT, M8X 55		2		2		2		

N:Old $\xleftarrow[\text{No}]{\text{Yes}}$ New, Q:Old $\xleftarrow[\text{Yes}]{\text{No}}$ New, R:Old $\xleftarrow[\text{Yes}]{\text{Yes}}$ New, S:Old $\xleftarrow[\text{No}]{\text{No}}$ New, W:Add, Z:Discontinued, F:Interchangeable by set, K:Q'ty Change

++ CONTINUE ++

Copyright (C) YANMAR CO., LTD. All RightsReserved.

Fig.12. RADIATOR(2)

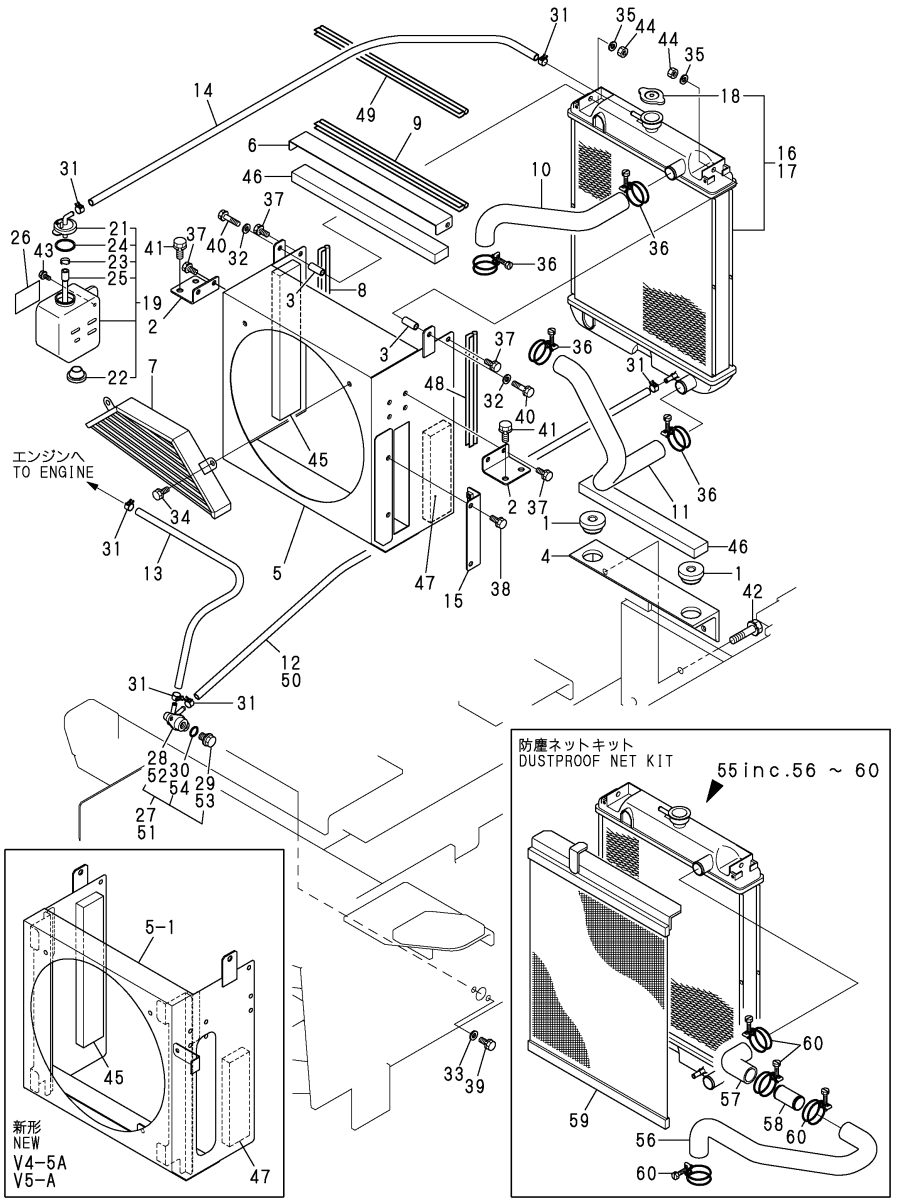

(A)=V3-5 (B)=V3-5(M/C) (C)=V4-5 (D)=V4-5A (E)=V5 (F)=V5-A

No.	Lev.	Parts No.	Description	Q'ty (A)	(B)	(C)	(D)	(E)	(F)	I	R
41	1	26013-100202	BOLT, M10X 20		4		4		4		
42	1	26013-120502	BOLT, M12X 50		2		2		2		
42-1	1	26013-120502	BOLT, M12X 50				2		2	Z	
			(D=M/#52168)						(F=M/#02060)		
43	1	26014-060162	BOLT, M6X 16		2		2		2		
44	1	26716-080002	NUT, M8		2		2		2		
45	1	172527-62450	SOUND-PROOF SRD-R		1		1		1		
45-1	1	172527-63450	SOUND-PROOF SRD-R		1		1		1	R	
		(B=*2004.11)	(D=M/#52168)						(F=M/#02060)		
46	1	172527-62460	SOUND-PROOF SRD-M		2		2		2		
46-1	1	172527-63460	SOUND-PROOF SRD-M		2		2		2	R	
		(B=*2004.11)	(D=M/#52168)						(F=M/#02060)		
47	1	172527-62470	SOUND-PROOF SRD-L		1		1		1		
47-1	1	172527-63470	SOUND-PROOF SRD-L		1		1		1	R	
		(B=*2004.11)	(D=M/#52168)						(F=M/#02060)		
48	1	172455-65970	RUBBER, SEAL		1		1		1		
49	1	184015-03250	SEAL, DOOR		1		1		1		
50	1	172120-14660	HOSE		1		1		1		
51	1	172444-13210	COCK ASSY, 2-WAY				1		1		
52	2	172444-13220	BODY				1		1		
53	2	121250-49121	PLUG, DRAIN				1		1		
54	2	24311-000160	O-RING, 1AP16.0				1		1		
55	1	172527-08500	NET KIT, DUST		1		1		1		
56	2	172527-13810	PIPE, WATER		1		1		1		
57	2	172527-13820	PIPE, WATER		1		1		1		
58	2	172527-13830	JOINT, HOSE		1		1		1		
59	2	129126-44570	PROTECTOR		1		1		1		
60	2	23001-041000	CLAMP, HOSE 41		4		4		4		

Remarks
(1)INTERCHANGEABLE BY SIMULTANEOUS REPLACEMENT WITH REF.NO.5-1 AND FIG.98 REF.NO.2-1.

N:Old $\xleftarrow[\text{No}]{\text{Yes}}$ New, Q:Old $\xleftarrow[\text{Yes}]{\text{No}}$ New, R:Old $\xleftarrow[\text{Yes}]{\text{Yes}}$ New, S:Old $\xleftarrow[\text{No}]{\text{No}}$ New, W:Add, Z:Discontinued, F:Interchangeable by set, K:Q'ty Change

Copyright (C) YANMAR CO., LTD. All RightsReserved.

Fig.13. RADIATOR(STOCK BREEDING SPEC.)

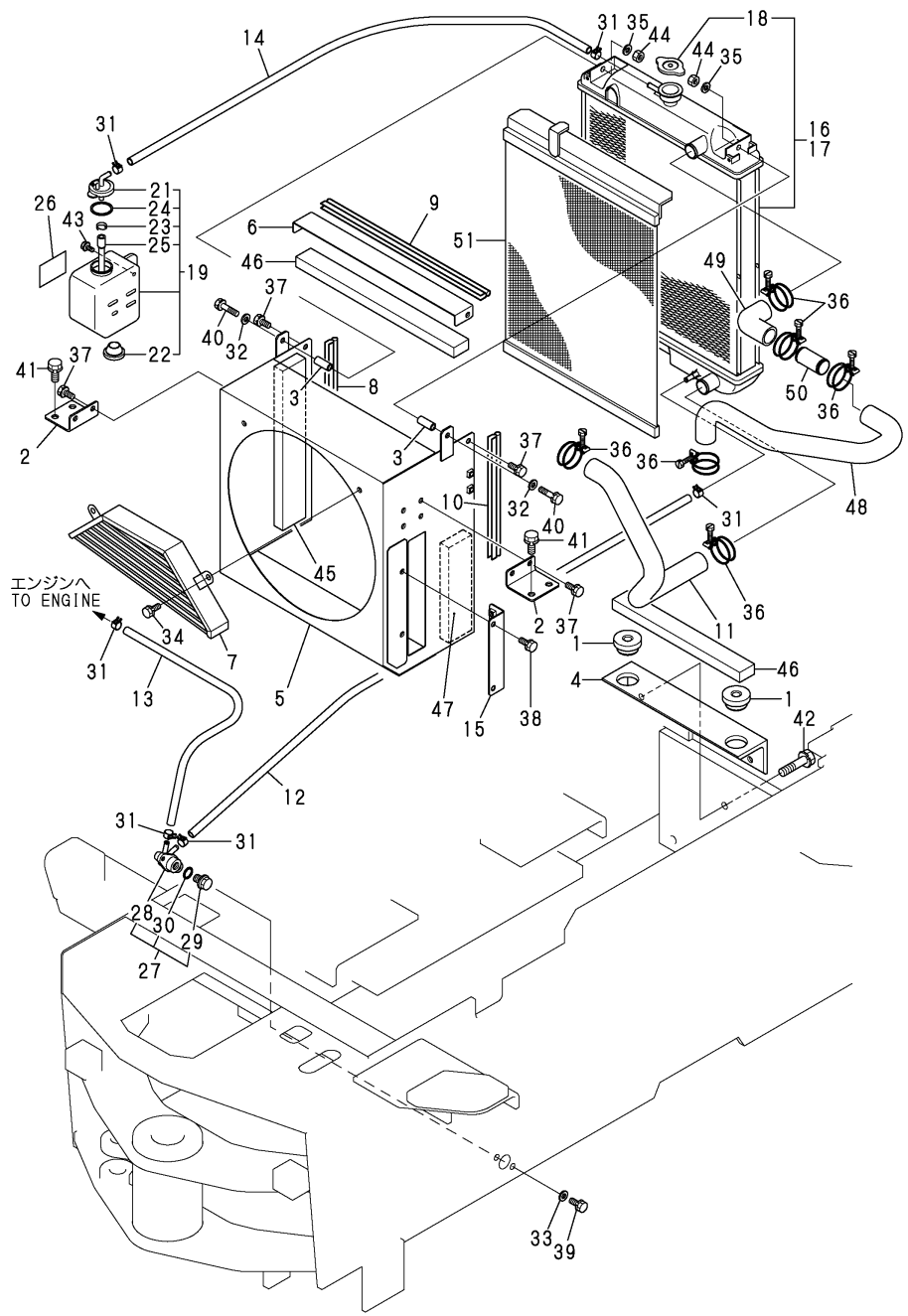

(A)=V3-5
(B)=V3-5(M/C)
(C)=V4-5
(D)=V4-5A
(E)=V5
(F)=V5-A

No.	Lev.	Parts No.	Description	Q'ty (A)	(B)	(C)	(D)	(E)	(F)	I	R
1	1	198162-00640	SUPPORT, RADIATOR	2		2		2			
2	1	172527-13310	STAY, RADIATOR	2		2		2			
3	1	172527-13320	COLLAR	2		2		2			
4	1	172527-13330	STAY, RADIATOR	1		1		1			
5	1	172527-13850	SHROUD	1		1		1			
6	1	172527-13360	COVER, SHROUD	1		1		1			
7	1	172527-13370	GUARD, FAN	1		1		1			
8	1	172527-13380	SEAL	1		1		1			
9	1	172527-13390	SEAL	1		1		1			
10	1	172527-13480	SEAL	1		1		1			
11	1	172527-13420	PIPE, WATER	1		1		1			
12	1	172527-13510	PIPE, DRAIN	1		1		1			
13	1	172527-13520	PIPE, DRAIN	1		1		1			
14	1	172527-13530	PIPE, DRAIN	1		1		1			
15	1	172527-13610	STAY	1		1		1			
16	1	172527-13910	RADIATOR	1							
17	1	172528-13910	RADIATOR			1		1			
18	2	129107-44590	CAP, RADIATOR	1		1		1			
19	1	121468-44510	TANK ASSY	1		1		1			
21	2	121450-44531	CAP	1		1		1			
22	2	121468-44540	PLUG	1		1		1			
23	2	124450-44560	RETAINER	1		1		1			
24	2	121470-44581	GASKET	1		1		1			
25	2	23065-070130	PIPE, 7X 130	1		1		1			
26	1	121470-44540	LABEL, SUB-TANK	1		1		1			
27	1	121450-49110	COCK ASSY, 3-WAY	1		1		1			
28	2	121450-49100	BODY, 3-WAY COCK	1		1		1			
29	2	121250-49121	PLUG, DRAIN	1		1		1			
29-1	2	23491-140002	PLUG, 14	1		1		1			R
	(A=*2004.09)		(C=*2004.09)	(E=*2004.09)							
30	2	24311-000160	O-RING, 1AP16.0	1		1		1			
31	1	124766-59050	CLIP, HOSE 12	6		6		6			
32	1	22137-080000	WASHER, 8	2		2		2			
33	1	22137-080000	WASHER, 8	2		2		2			
34	1	26013-080162	BOLT, M8X 16	2		2		2			
35	1	22217-080000	WASHER, SPRING 8	2		2		2			
36	1	23010-038000	CLAMP, 38	6		6		6			
37	1	26013-080162	BOLT, M8X 16	6		6		6			
38	1	26013-080202	BOLT, M8X 20	2		2		2			
39	1	26013-080352	BOLT, M8X 35	2		2		2			
40	1	26013-080552	BOLT, M8X 55	2		2		2			
41	1	26013-100202	BOLT, M10X 20	4		4		4			
42	1	26013-120502	BOLT, M12X 50	2		2		2			
43	1	26018-060162	BOLT, M6X 16	2		2		2			
44	1	26716-080002	NUT, M8	2		2		2			
45	1	172527-62450	SOUND-PROOF SRD-R	1		1		1			
45-1	1	172527-63450	SOUND-PROOF SRD-R	1		1		1			R
	(A=*2004.11)		(C=*2004.11)	(E=*2004.11)							
46	1	172527-62460	SOUND-PROOF SRD-M	2		2		2			
46-1	1	172527-63460	SOUND-PROOF SRD-M	2		2		2			R
	(A=*2004.11)		(C=*2004.11)	(E=*2004.11)							

N:Old $\overset{\text{Yes}}{\underset{\text{No}}{\leftrightarrows}}$ New, Q:Old $\overset{\text{No}}{\underset{\text{Yes}}{\leftrightarrows}}$ New, R:Old $\overset{\text{Yes}}{\underset{\text{Yes}}{\leftrightarrows}}$ New, S:Old $\overset{\text{No}}{\underset{\text{No}}{\leftrightarrows}}$ New, W:Add, Z:Discontinued, F:Interchangeable by set, K:Q'ty Change

++ CONTINUE ++

Copyright (C) YANMAR CO., LTD. All RightsReserved.

Fig.13. RADIATOR(STOCK BREEDING SPEC.)

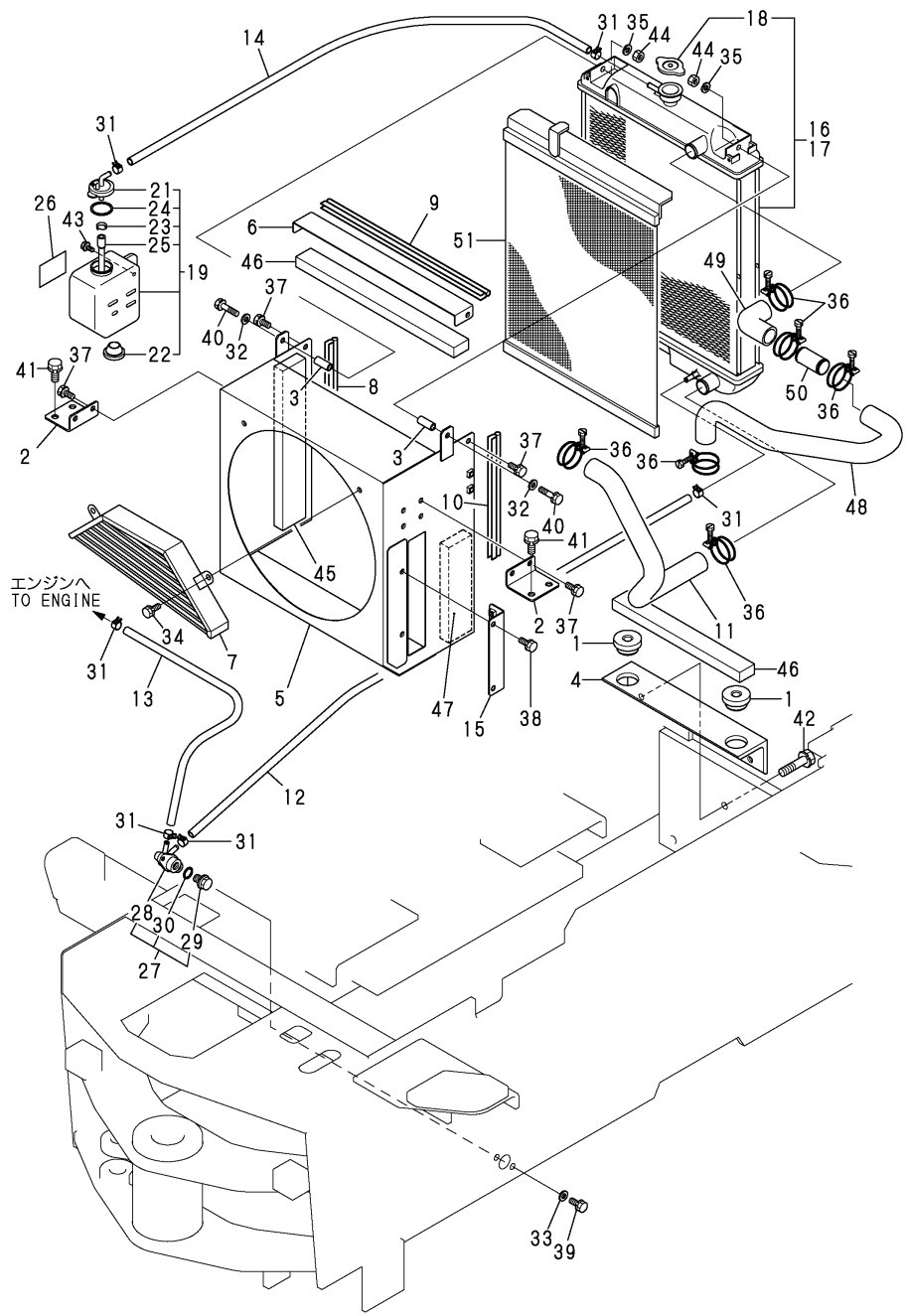

(A)=V3-5
(B)=V3-5(M/C)
(C)=V4-5
(D)=V4-5A
(E)=V5
(F)=V5-A

No.	Lev.	Parts No.	Description	Q'ty (A)	(B)	(C)	(D)	(E)	(F)	I	R
47	1	172527-62470	SOUND-PROOF SRD-L	1		1		1			
47-1	1	172527-63470	SOUND-PROOF SRD-L	1		1		1			R
	(A=*2004.11)		(C=*2004.11)	(E=*2004.11)							
48	1	172527-13810	PIPE, WATER	1		1		1			
49	1	172527-13820	PIPE, WATER	1		1		1			
50	1	172527-13830	JOINT, HOSE	1		1		1			
51	1	129126-44570	PROTECTOR	1		1		1			

N:Old $\xleftarrow[\text{No}]{\text{Yes}}$ New, Q:Old $\xleftarrow[\text{Yes}]{\text{No}}$ New, R:Old $\xleftarrow[\text{Yes}]{\text{Yes}}$ New, S:Old $\xleftarrow[\text{No}]{\text{No}}$ New, W:Add, Z:Discontinued, F:Interchangeable by set, K:Q'ty Change

Copyright (C) YANMAR CO., LTD. All RightsReserved.

Fig.14. FUEL TANK(1)

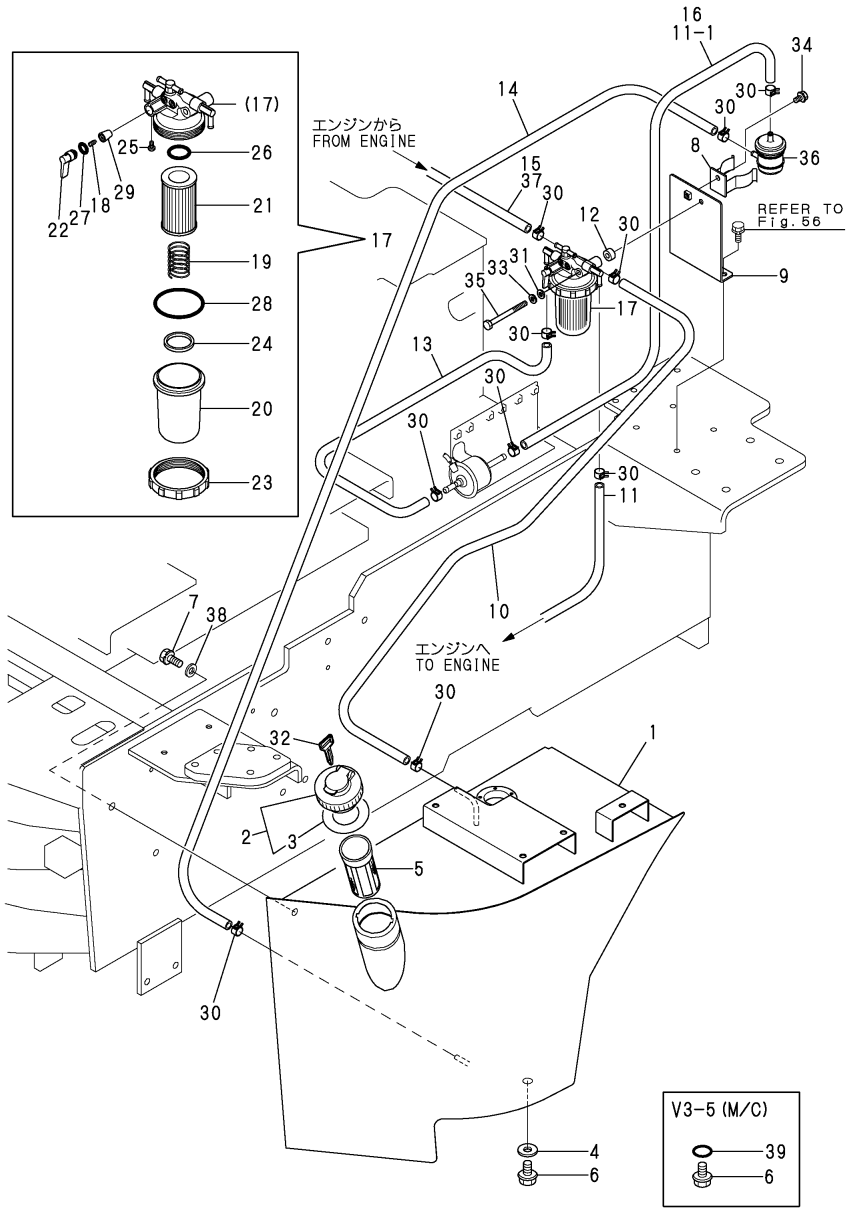

(A)=V3-5 (D)=V4-5A
(B)=V3-5(M/C) (E)=V5
(C)=V4-5 (F)=V5-A

No.	Lev.	Parts No.	Description	Q'ty (A)	(B)	(C)	(D)	(E)	(F)	I	R
1	1	172527-14100	TANK ASSY, FUEL	1		1		1			
1A	1	172527-14101	TANK ASSY, FUEL		1						
2	1	172122-14301	CAP ASSY, TANK	1	1	1		1			
3	2	172122-14350	GASKET	1	1	1		1			
4	1	1C6900-23150	WASHER, PLUG	1		1		1			
5	1	101504-55101	STRAINER, FUEL	1	1	1		1			
6	1	23491-140002	PLUG, 14	1	1	1		1			
7	1	26013-120252	BOLT, M12X 25	3		3		3			
7-1	1	26013-120302	BOLT, M12X 30	3	3	3		3		N	
	(A=M/#51262)		(C=M/#51095)	(E=M/#01027)							
8	1	198072-04320	CLAMP, FILTER	1	1	1		1			
9	1	172527-14610	STAY	1		1		1			
9A	1	172527-14611	STAY		1						
10	1	172524-14621	PIPE, FUEL L=1050	1		1		1			
10A	1	172120-14660	HOSE		1						
11	1	172523-14640	PIPE, FUEL L=500	1		1		1			
11-1	1	172523-14640	PIPE, FUEL L=500	2		2		2		K	
	(A=M/#51167)		(C=M/#51048)	(E=M/#01001)							
11A	1	172116-14620	PIPE, FUEL		2						
12	1	172512-14660	SPACER	1	1	1		1			
13	1	172524-14660	PIPE, FUEL L=600	1		1		1			
13A	1	172137-14620	PIPE, FUEL		1						
14	1	172527-14710	PIPE, FUEL	1		1		1			
14A	1	172122-14620	PIPE, FUEL		1						
15	1	172527-14720	PIPE, FUEL L=350	1		1		1			
15A	1	172183-14640	HOSE, FUEL		1						
16	1	172527-14740	PIPE, FUEL L=450	1		1		1		Z	
	(A=M/#51167)		(C=M/#51048)	(E=M/#01001)							
17	1	129612-55620	FILTER ASSY, FUEL	1	1	1		1			
18	2	104200-55330	SPRING, VALVE	1	1	1		1			
19	2	105900-55330	SPRING	1	1	1		1			
20	2	129612-55510	CUP	1	1	1		1			
21	2	129100-55650	ELEMENT	1	1	1		1			
22	2	129100-55670	LEVER	1	1	1		1			
23	2	129100-55690	RING, RETAINING	1	1	1		1			
24	2	121257-55731	FLOAT	1	1	1		1			
25	2	104200-55750	SCREW, M4	1	1	1		1			
26	2	24311-000160	O-RING, 1AP16.0	1	1	1		1			
27	2	24311-240100	O-RING, 1AP10A	1	1	1		1			
28	2	24321-000650	O-RING, 1AG65.0	1	1	1		1			
29	2	104200-55321	VALVE, TAPER	1	1	1		1			
30	1	124766-59050	CLIP, HOSE 12	12	12	12		12			
31	1	22137-080000	WASHER, 8	1	1	1		1			
32	1	933110-07101	KEY	1	1	1		1			
33	1	22217-080000	WASHER, SPRING 8	1	1	1		1			
34	1	26018-080162	BOLT, M8X 16	1		1		1			
34A	1	26014-080162	BOLT, M8X 16		1						
35	1	26116-080902	BOLT, M8X 90 PLATED	1	1	1		1			
36	1	129052-55630	FILTER, FUEL	1	1	1		1			
37	1	172212-14640	PIPE, FUEL L=410	1		1		1			1
38	1	22137-120000	WASHER, 12	3	3	3		3		W	

N:Old $\overset{\text{Yes}}{\underset{\text{No}}{\leftrightarrow}}$ New, Q:Old $\overset{\text{No}}{\underset{\text{Yes}}{\leftrightarrow}}$ New, R:Old $\overset{\text{Yes}}{\underset{\text{Yes}}{\leftrightarrow}}$ New, S:Old $\overset{\text{No}}{\underset{\text{No}}{\leftrightarrow}}$ New, W:Add, Z:Discontinued, F:Interchangeable by set, K:Q'ty Change

Remarks
(1)AIR-CON. SPEC.

++ CONTINUE ++

Copyright (C) YANMAR CO., LTD. All RightsReserved.

Fig.14. FUEL TANK(1)

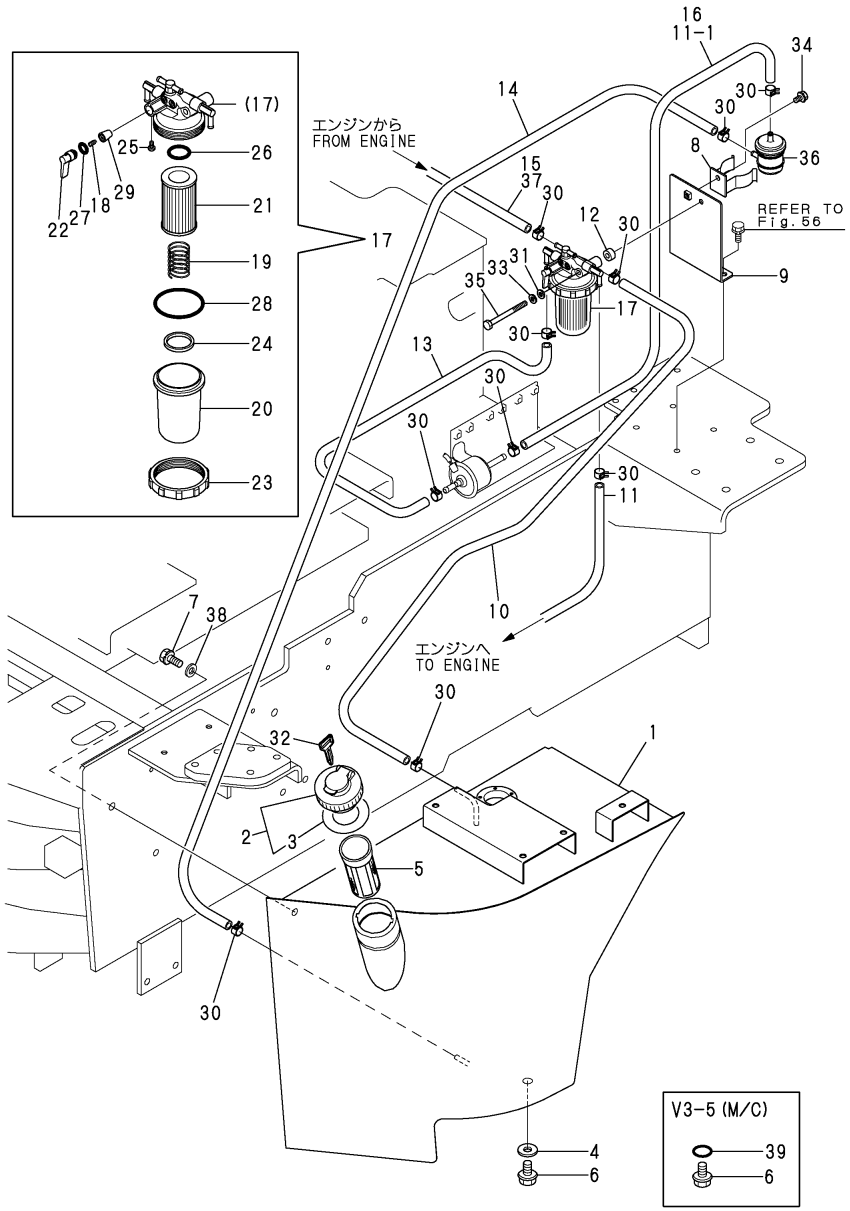

(A)=V3-5
(B)=V3-5(M/C)
(C)=V4-5
(D)=V4-5A
(E)=V5
(F)=V5-A

No.	Lev.	Parts No.	Description	Q'ty (A)	(B)	(C)	(D)	(E)	(F)	I	R
		(A=M/#51262)	(C=M/#51095)	(E=M/#01027)							
39	1	24311-000160	O-RING, 1AP16.0	1							

Remarks
(1)AIR-CON. SPEC.

N:Old $\xleftarrow[\text{No}]{\text{Yes}}$ New, Q:Old $\xleftarrow[\text{Yes}]{\text{No}}$ New, R:Old $\xleftarrow[\text{Yes}]{\text{Yes}}$ New, S:Old $\xleftarrow[\text{No}]{\text{No}}$ New, W:Add, Z:Discontinued, F:Interchangeable by set, K:Q'ty Change

Copyright (C) YANMAR CO., LTD. All RightsReserved.

Fig.15. FUEL TANK(2)

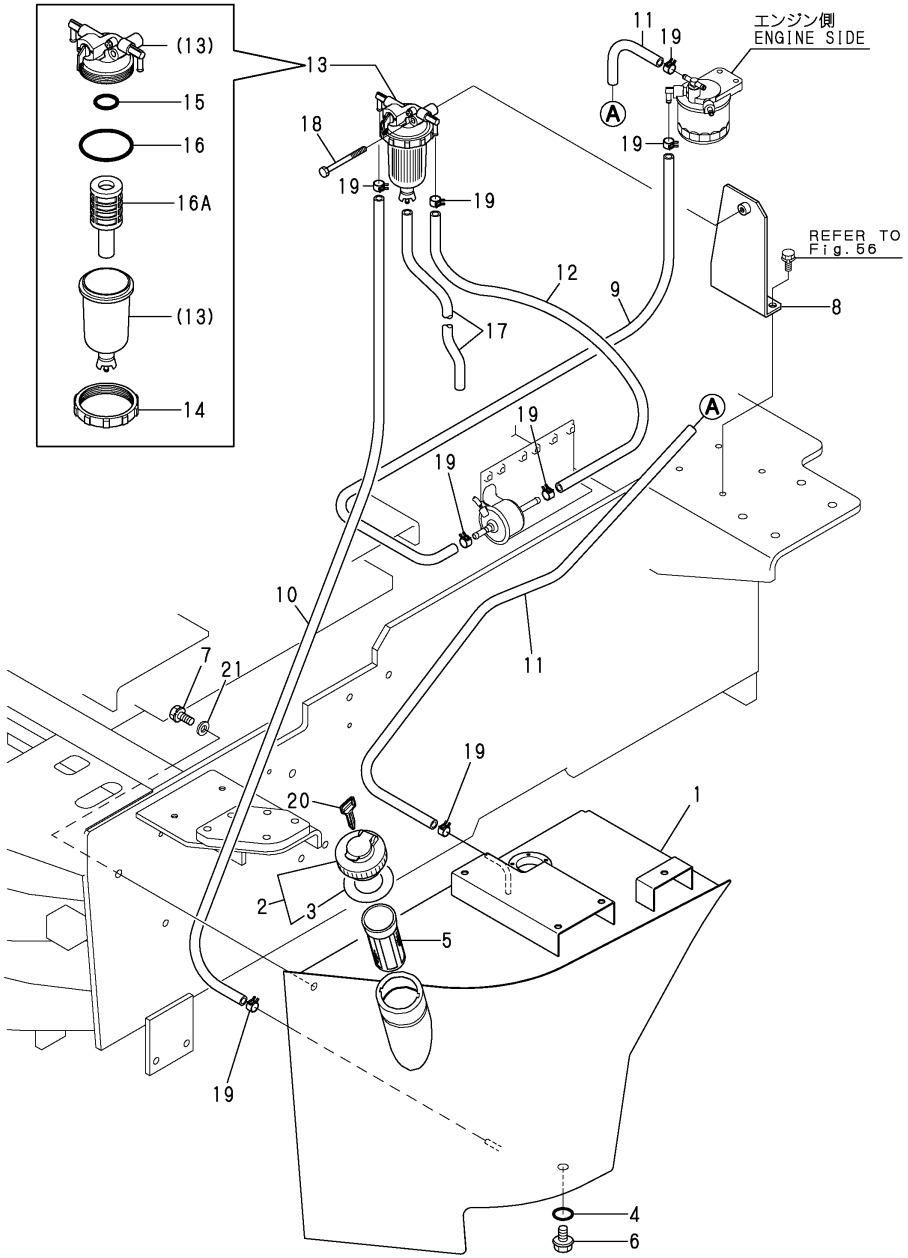

(A)=V3-5 (B)=V3-5(M/C) (C)=V4-5 (D)=V4-5A (E)=V5 (F)=V5-A

No.	Lev.	Parts No.	Description	Q'ty (A)	(B)	(C)	(D)	(E)	(F)	I	R
1	1	172527-14101	TANK ASSY, FUEL				1		1		
2	1	172122-14301	CAP ASSY, TANK				1		1		
3	2	172122-14350	GASKET				1		1		
4	1	24311-000160	O-RING, 1AP16.0				1		1		
5	1	101504-55101	STRAINER, FUEL				1		1		
6	1	23491-140002	PLUG, 14				1		1		
7	1	26013-120302	BOLT, M12X 30				3		3		
8	1	172528-14610	BRACKET				1		1		
9	1	172137-14620	PIPE, FUEL				1		1		
10	1	172122-14620	PIPE, FUEL				1		1		
11	1	172141-14610	HOSE, FUEL				1		1		
12	1	172141-14620	HOSE, FUEL				1		1		
12-1	1	172183-14640	HOSE, FUEL				1		1	N	
			(D=M/#52135)						(F=M/#02052)		
13	1	184016-55700	SEPARATOR ASSY,WATER				1		1		
13-1	1	184016-55701	SEPARATOR ASSY				1		1	N	
			(D=M60985)						(F=MXXXXX)		
14	2	129100-55690	RING, RETAINING				1		1		
15	2	24311-000160	O-RING, 1AP16.0				1		1		
16	2	24321-000650	O-RING, 1AG65.0				1		1		
16A	2	119802-55710	ELEMENT				1		1	W	
			(D=FROM 1ST)						(F=FROM 1ST)		
17	1	23061-050300	PIPE, 5X 300				1		1		
18	1	26106-080652	BOLT, M8X 65 PLATED				1		1		
19	1	124766-59050	CLIP, HOSE 12				8		8		
20	1	933110-07101	KEY				1		1		
21	1	22137-120000	WASHER, 12				3		3		

N:Old $\xleftrightarrow[\text{No}]{\text{Yes}}$ New, Q:Old $\xleftrightarrow[\text{Yes}]{\text{No}}$ New, R:Old $\xleftrightarrow[\text{Yes}]{\text{Yes}}$ New, S:Old $\xleftrightarrow[\text{No}]{\text{No}}$ New, W:Add, Z:Discontinued, F:Interchangeable by set, K:Q'ty Change

Copyright (C) YANMAR CO., LTD. All RightsReserved.

Fig.16. BATTERY

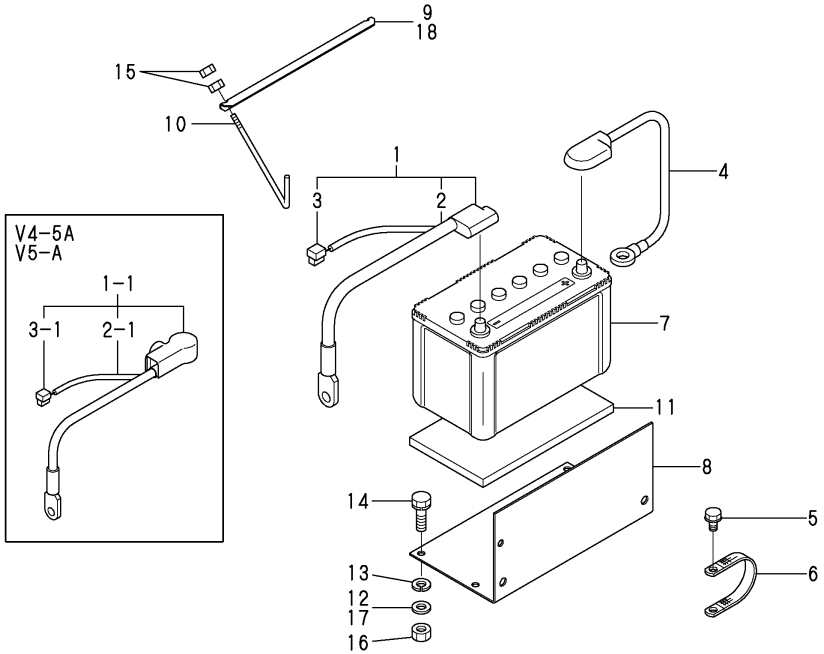

(A)=V3-5 (D)=V4-5A
(B)=V3-5(M/C) (E)=V5
(C)=V4-5 (F)=V5-A

No.	Lev.	Parts No.	Description	Q'ty (A)	(B)	(C)	(D)	(E)	(F)	I	R
1	1	172524-16110	CABLE ASSY, BATTERY	1	1	1	1	1	1		
1-1	1	172527-16100	CABLE ASSY, BATTERY				1		1	N	
			(D=M/#52168)					(F=M/#02060)			
2	2	172524-16130	CORD, BATTERY	1	1	1	1	1	1		
2-1	2	172527-16130	CORD, BATTERY				1		1	S	
			(D=M/#52168)					(F=M/#02060)			
3	2	172527-16140	HARNESS C,WIRE	1	1	1	1	1	1		
3-1	2	172527-16150	HARNESS C,WIRE				1		1	S	
			(D=M/#52168)					(F=M/#02060)			
4	1	172527-16120	CABLE, BATTERY EARTH	1	1	1	1	1	1		
5	1	26013-100162	BOLT, M10X 16	2	2	2	2	2	2		
6	1	933171-15801	CORD, ENGINE EARTH	1	1	1	1	1	1		
7	1	981122-15020	BATTERY (75D31R)	1		1		1			
7-1	1	198010-51500	BATTERY	1	1	1	1	1	1	N	
	(A=M/#51486)		(C=M/#51225)	(E=M/#01092)							
8	1	172527-16310	HOLDER, BATTERY	1	1	1	1	1	1		
9	1	172511-16320	CLAMP, BATTERY	1		1	1	1	1		
10	1	172521-16320	ROD, CLAMP	2	2	2	2	2	2		
11	1	172510-16410	RUBBER	1		1		1			
12	1	172527-61640	WASHER	4		4		4			
13	1	22217-100000	WASHER, SPRING 10	4	4	4	4	4	4		
14	1	26013-100352	BOLT, M10X 35	4	4	4	4	4	4		
15	1	26716-080002	NUT, M8	4	4	4	4	4	4		
16	1	26716-100002	NUT, M10	4	4	4	4	4	4		
17	1	194145-04810	WASHER		4		4		4		
18	1	172116-16310	RETAINER, BATTERY		1		1		1		

N:Old $\frac{\text{Yes}}{\text{No}}$ New, Q:Old $\frac{\text{No}}{\text{Yes}}$ New, R:Old $\frac{\text{Yes}}{\text{Yes}}$ New, S:Old $\frac{\text{No}}{\text{No}}$ New, W:Add, Z:Discontinued, F:Interchangeable by set, K:Q'ty Change

Copyright (C) YANMAR CO., LTD. All RightsReserved.

Fig.17. WIRING

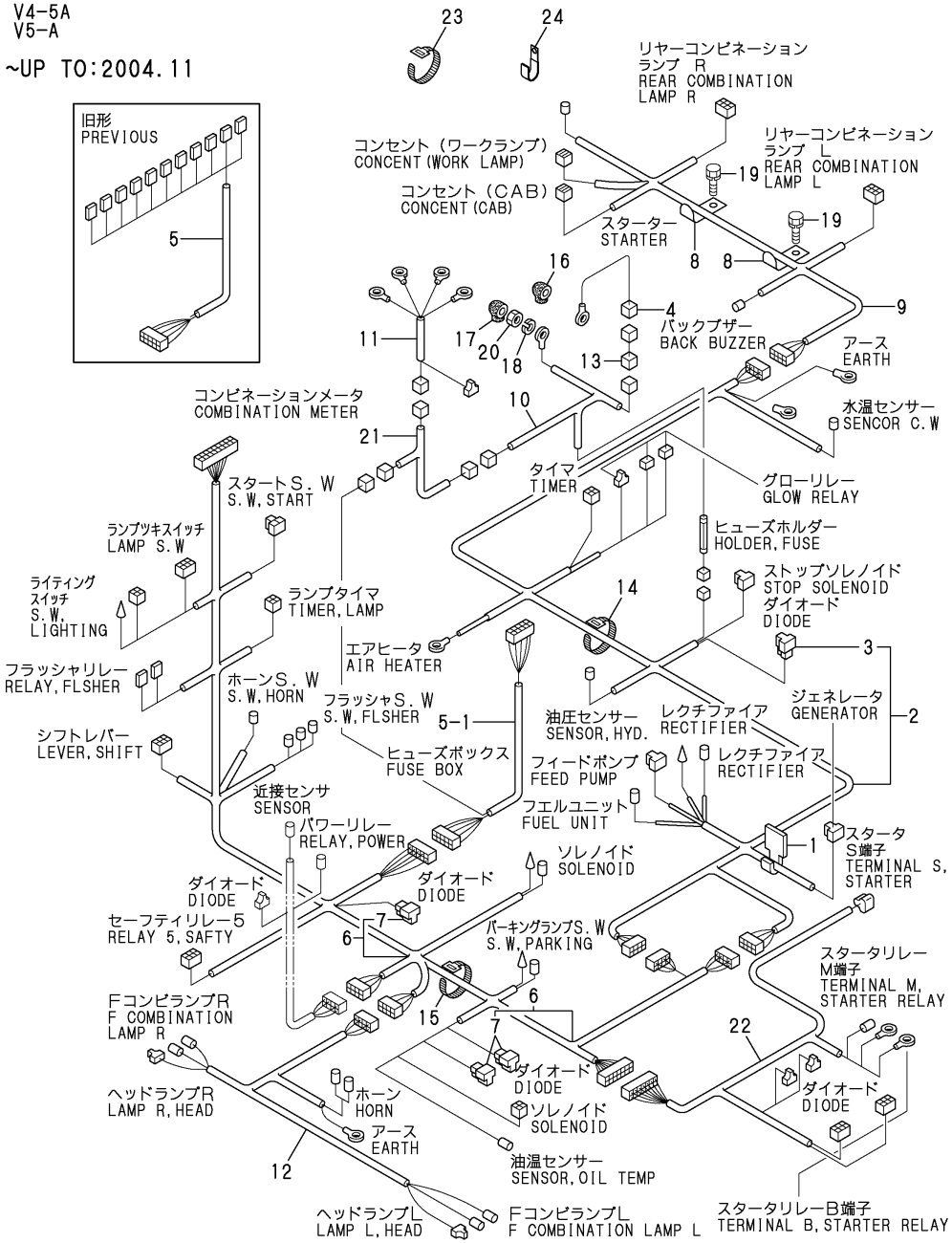

(A)=V3-5 (B)=V3-5(M/C) (C)=V4-5 (D)=V4-5A (E)=V5 (F)=V5-A

No.	Lev.	Parts No.	Description	Q'ty (A)	(B)	(C)	(D)	(E)	(F)	I	R
1	1	1C6450-07900	KEEP, CORD	1	1	1	1	1	1	Z	
	(A=M/#52565)	(B=M/#52565)	(C=M/#52064) (D=M/#52064)	(E=M/#02019)			(F=M/#02019)				
1A	1	933169-15231	STEP	1	1	1	1	1	1	W	
	(A=M/#52565)	(B=M/#52565)	(C=M/#52064) (D=M/#52064)	(E=M/#02019)			(F=M/#02019)				
2	1	172527-16260	HARNESS,WIRE R2	1		1		1			
2-1	1	172527-16261	HARNESS,WIRE R2	1	1	1	1	1	1	S	
	(A=M/#50576)		(C=M/#50533)	(E=M/#00519)							
3	2	119643-66900	DIODE	1	1	1	1	1	1		
4	1	172512-16530	HARNESS (D), WIRE	1	1	1	1	1	1		
5	1	172524-16531	HARNESS F, WIRE	1		1		1			
5-1	1	172524-16532	HARNESS, WIRE (F	1	1	1	1	1	1	S	
	(A=*2003.03)		(C=*2003.03)	(E=*2003.03)							
6	1	172527-16540	HARNESS,WIRE M	1	1	1	1	1	1		
7	2	119643-66900	DIODE	3	3	3	3	3	3		
8	1	172512-16560	CLAMP, HARNESS	5	5	5	5	5	5		
9	1	172527-16570	HARNESS,WIRE R3	1	1	1	1	1	1		
10	1	172524-16580	HARNESS R0,WIRE	1	1	1	1	1	1		
11	1	172524-16590	HARNESS S,WIRE	1	1	1	1	1	1		
12	1	172527-16610	HARNESS,WIRE E	1	1	1	1	1	1		
13	1	194312-51220	LINK, FUSIBLE	1	1	1	1	1	1		
14	1	194250-51660	BAND, NYLON	7		7		7			
14-1	1	172122-79930	CLAMP, HOSE	7	7	7	7	7	7	S	
	(A=MXXX)		(C=MXXX)	(E=MXXX)							
15	1	1A1380-56500	BAND, WIRE LOCK	6		6		6			
15-1	1	172122-79940	CLIP, HOSE	6	6	6	6	6	6	S	
	(A=MXXX)		(C=MXXX)	(E=MXXX)							
16	1	124550-77030	COVER, TERMINAL		1		1		1	Z	
		(B=M/#52610)	(D=M/#52091)				(F=M/#02041)				
17	1	124756-77040	COVER, TERMINAL		3		3		3	Z	
		(B=M/#52610)	(D=M/#52091)				(F=M/#02041)				
18	1	22217-060000	WASHER, SPRING 6	1	1	1	1	1	1		
19	1	26013-080162	BOLT, M8X 16	5	5	5	5	5	5		
20	1	26716-060002	NUT, M6	1	1	1	1	1	1		
21	1	172524-16511	HARNESS, WIRE	1	1	1	1	1	1		
22	1	172524-16550	HARNESS R1,WIRE	1	1	1	1	1	1		
23	1	172137-16560	BAND		5		5		5	W	
		(B=M/#52610)	(D=M/#52091)				(F=M/#02041)				
24	1	1A1380-59480	CLAMP, CORD		1		1		1	W	
		(B=M/#52610)	(D=M/#52091)				(F=M/#02041)				

N:Old ←Yes/No→ New, Q:Old ←No/Yes→ New, R:Old ←Yes/Yes→ New, S:Old ←No/No→ New, W:Add, Z:Discontinued, F:Interchangeable by set, K:Q'ty Change

Copyright (C) YANMAR CO., LTD. All RightsReserved.

Fig.18. WIRING(V4-5A,V5-A NEW)

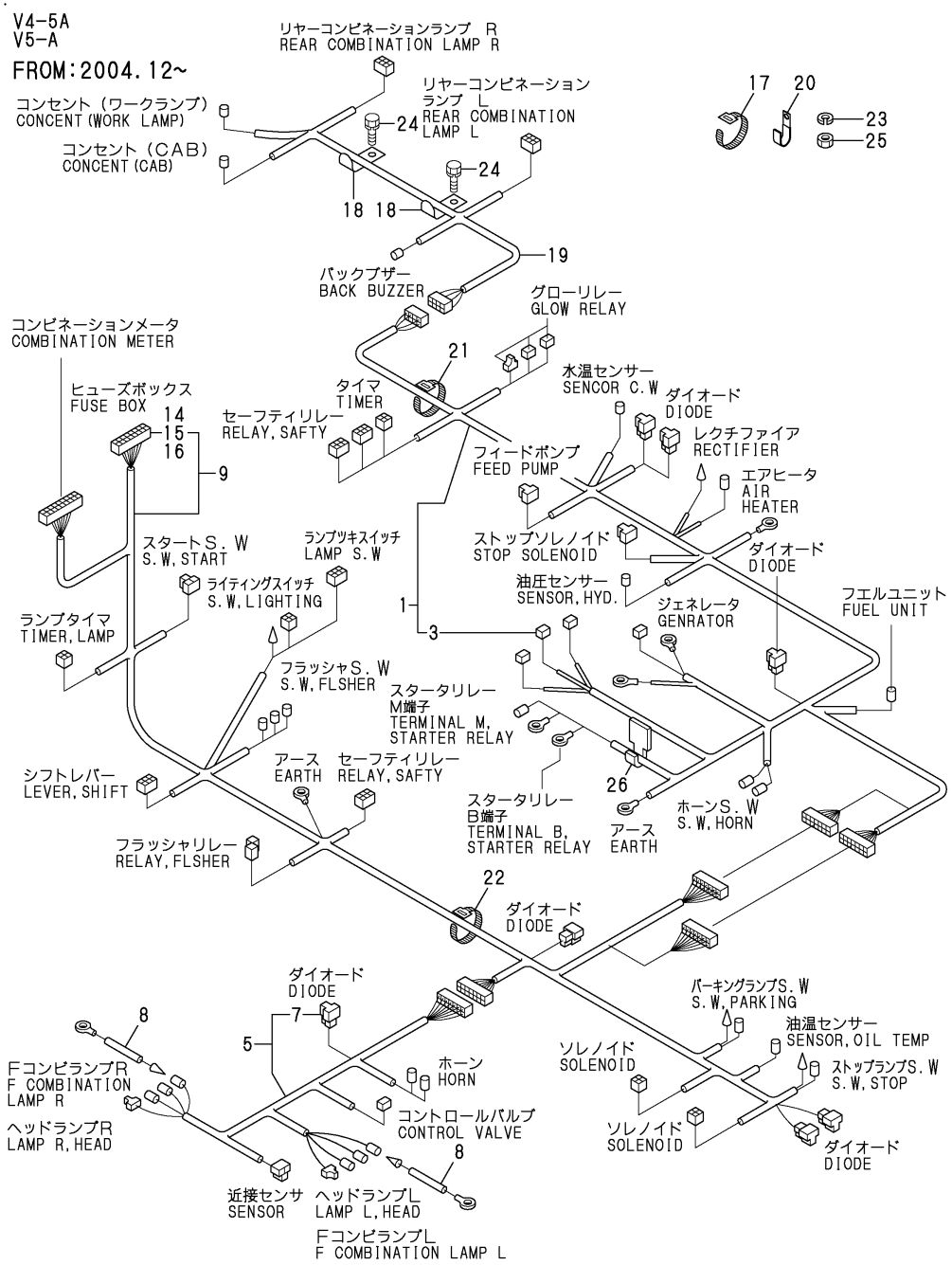

(A)=V3-5 (B)=V3-5(M/C) (C)=V4-5 (D)=V4-5A (E)=V5 (F)=V5-A

No.	Lev.	Parts No.	Description	Q'ty (A)	(B)	(C)	(D)	(E)	(F)	I	R
1	1	172527-16200	HARNESS ASSY,REAR				1		1		
3	2	172458-16550	FUSE, SLOWBLOW				1		1		
5	1	172527-16300	HARNESS ASSY,F				1		1		
7	2	172648-16600	DIODE				1		1		
8	1	172527-16320	HARNESS,FC				2		2		
9	1	172527-16500	HARNESS ASSY,M				1		1	W	
			(D=M/#52168)						(F=M/#02060)		
14	2	29420-050000	FUSE, B 5A				2		2		
15	2	29420-150000	FUSE, B 15A				6		6		
16	2	29420-300000	FUSE, B 30A				2		2		
17	1	172137-16560	BAND				5		5		
18	1	172512-16560	CLAMP, HARNESS				5		5		
19	1	172527-16570	HARNESS,WIRE R3				1		1		
20	1	1A1380-59480	CLAMP, CORD				1		1		
21	1	172122-79930	CLAMP, HOSE				10		10		
22	1	172122-79940	CLIP, HOSE				10		10		
23	1	22217-060000	WASHER, SPRING 6				1		1		
24	1	26013-080162	BOLT, M8X 16				5		5		
25	1	26716-060002	NUT, M6				1		1		
26	1	933169-15231	STEP				1		1		

N:Old $\xleftarrow[\text{No}]{\text{Yes}}$ New, Q:Old $\xleftarrow[\text{Yes}]{\text{No}}$ New, R:Old $\xleftarrow[\text{Yes}]{\text{Yes}}$ New, S:Old $\xleftarrow[\text{No}]{\text{No}}$ New, W:Add, Z:Discontinued, F:Interchangeable by set, K:Q'ty Change

Copyright (C) YANMAR CO., LTD. All RightsReserved.

Fig.19. ELECTRIC PART(1)

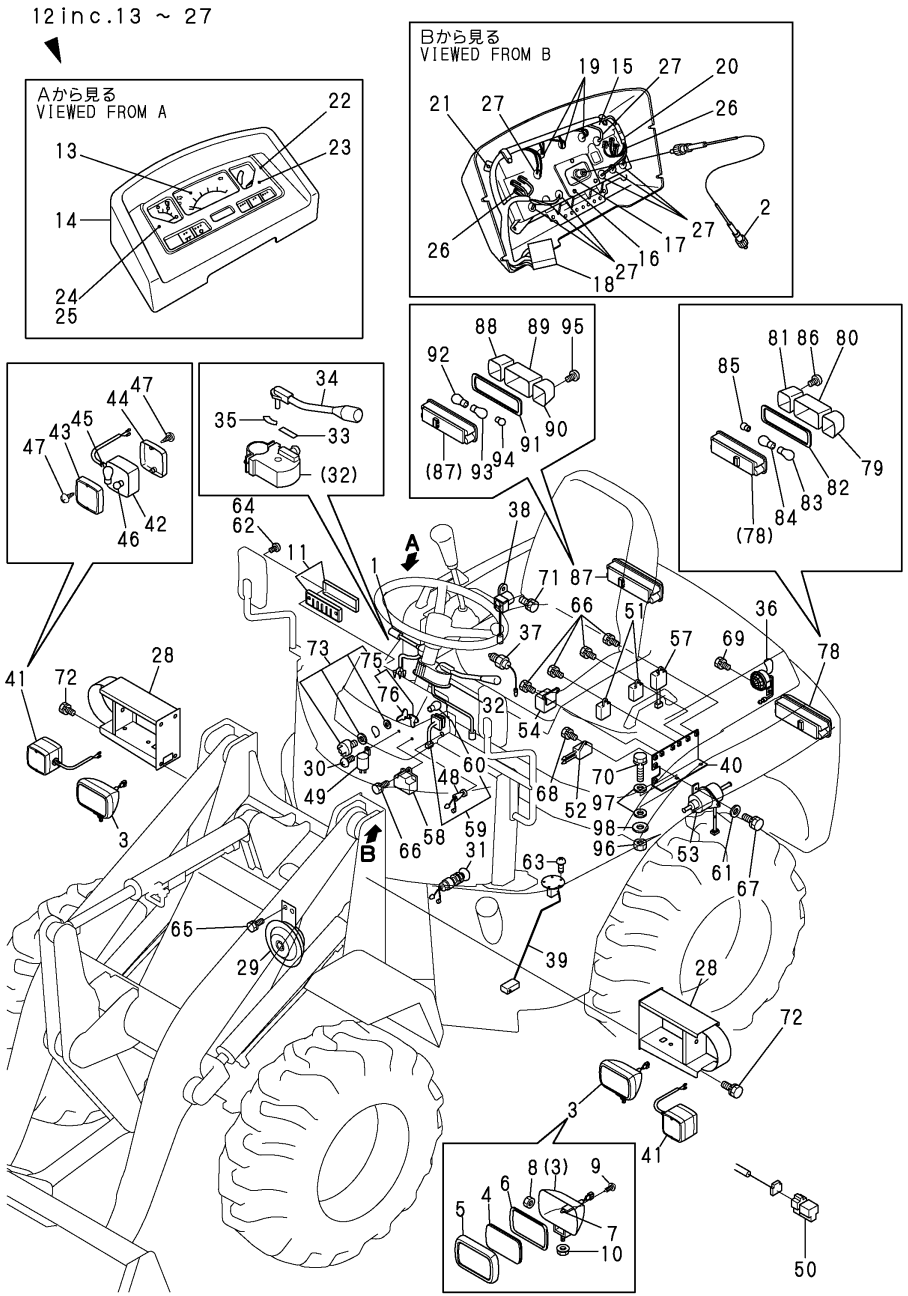

(A)=V3-5
(B)=V3-5(M/C)
(C)=V4-5
(D)=V4-5A
(E)=V5
(F)=V5-A

No.	Lev.	Parts No.	Description	Q'ty (A)	(B)	(C)	(D)	(E)	(F)	I	R
1	1	172515-08790	SWITCH, FLASHER	1		1		1			
2	1	172527-17080	CABLE ASSY, METER	1		1		1			
3	1	172527-17110	LAMP,HEAD	2		2		2			
4	2	172527-17250	LENS	2		2		2			
5	2	172527-17260	LIM	2		2		2			
6	2	172527-17280	GASKET	2		2		2			
7	2	172527-17290	BULB, 12V 55W	2		2		2			
8	2	172527-17310	NUT	2		2		2			
9	2	172527-17340	SCREW	8		8		8			
10	2	172527-17350	NUT	2		2		2			
11	1	172524-17130	BOX, FUSE	1		1		1			
12	1	172527-17200	METER,COMBINATION	1		1		1			
13	2	172524-17210	METERS CMP,HR.&TACHO	1		1		1			
14	2	172524-17220	VISOR	1		1		1			
15	2	172527-17360	CASE COMPL.	1		1		1			
16	3	198220-53170	SCREW	3		3		3			
17	2	172524-17240	SCREW,BODY LOCK	2		2		2			
18	2	172524-17250	HARNESS, WIRE	1		1		1			
19	2	172524-17260	LAMP 12V-11.7W	3		3		3			
20	2	172524-17270	CLAMP, CORD	1		1		1			
21	2	198220-53170	SCREW	11		11		11			
22	2	198220-56130	PACKING	1		1		1			
23	2	198220-56140	GLASS	1		1		1			
24	2	198220-56150	REFLECTOR	1		1		1			
25	2	198220-56160	PACKING	1		1		1			
26	2	198220-56230	SCREW, M3X22	6		6		6			
27	2	124617-91920	BULB, 12V-3W	8		8		8			
28	1	172527-17150	SUPPORT, LAMP	2		2		2			
29	1	172310-17220	HORN	1		1		1			
30	1	26022-060162	SCREW, M6X16	1		1		1			
31	1	172524-17280	SWITCH, STOP LAMP	2		2		2			
32	1	172524-17310	LEVER, SHIFT	1		1		1			
33	2	172524-17320	LABEL	1		1		1			
34	2	172524-17380	LEVER ASSY	1		1		1			
35	2	172520-17390	LABEL	1		1		1			
36	1	172511-17351	BUZZER, BACK	1		1		1			
37	1	172520-17351	SWITCH, THERMO	1		1		1			
38	1	172524-17360	RELY,STARTER	1		1		1			
39	1	172527-17410	GAUGE, FUEL	1		1		1			
40	1	172527-17450	STAY, RELAY	1		1		1			
41	1	172524-17660	LAMP,FRONT COMBI.	2		2		2			
42	2	172524-17670	BODY	2		2		2			
43	2	172524-17680	LENS	2		2		2			
44	2	172524-17690	LENS	2		2		2			
45	2	172524-17810	BULB, 12V 21W	2		2		2			
46	2	172524-17820	BULB, 12V 5W	2		2		2			
47	2	172524-17830	SCREW	4		4		4			
48	1	194420-52120	SWITCH, LIGHTING	1		1		1			
49	1	194080-57202	RELAY, FLASHER	1		1		1			
50	1	119643-66900	DIODE	1		1		1			
51	1	119247-77100	RELAY, SAFETY	2		2		2			

N:Old $\overset{\text{Yes}}{\underset{\text{No}}{\leftrightarrow}}$ New, Q:Old $\overset{\text{No}}{\underset{\text{Yes}}{\leftrightarrow}}$ New, R:Old $\overset{\text{Yes}}{\underset{\text{Yes}}{\leftrightarrow}}$ New, S:Old $\overset{\text{No}}{\underset{\text{No}}{\leftrightarrow}}$ New, W:Add, Z:Discontinued, F:Interchangeable by set, K:Q'ty Change

++ CONTINUE ++

Copyright (C) YANMAR CO., LTD. All RightsReserved.

Fig.19. ELECTRIC PART(1)

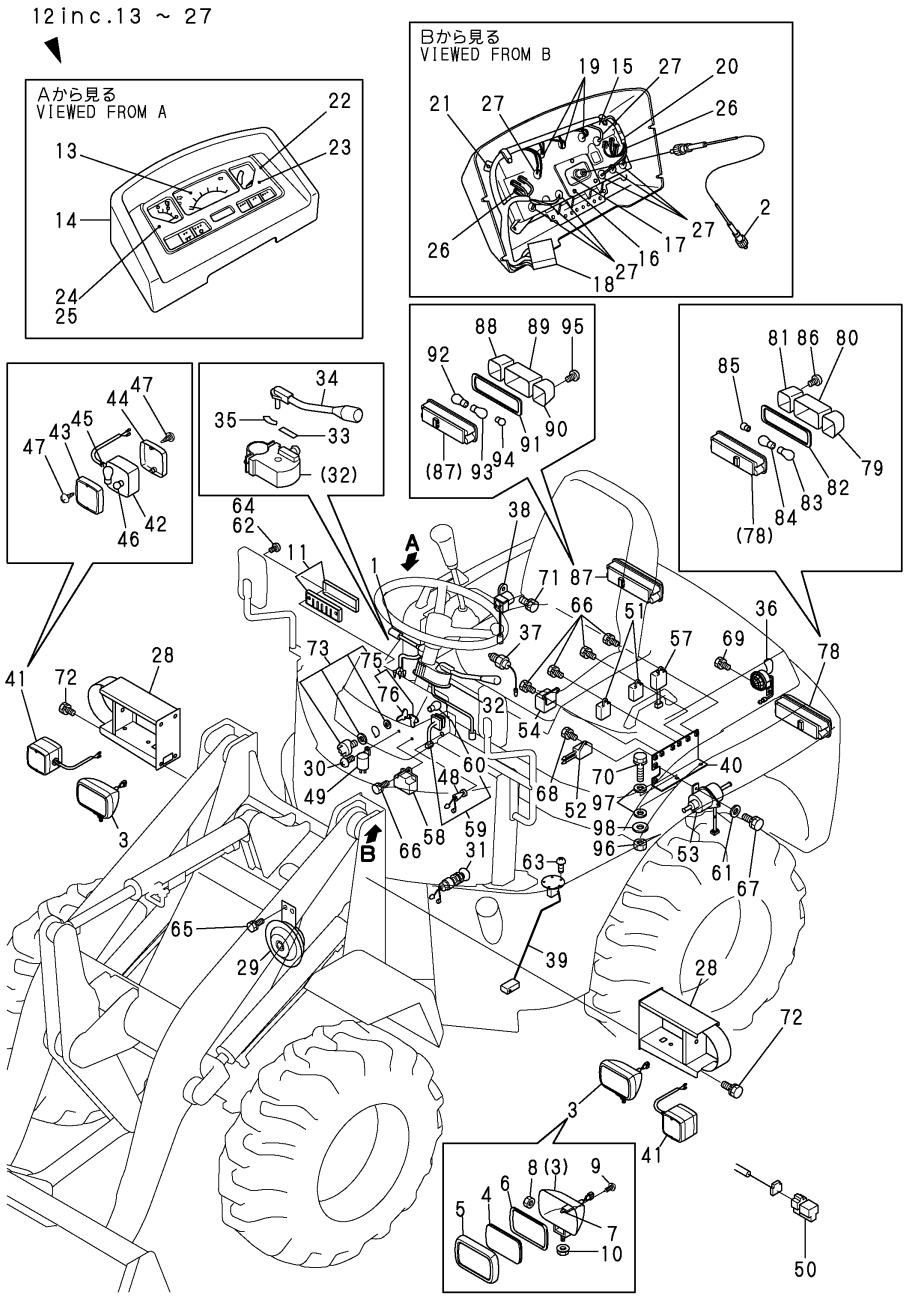

(A)=V3-5
(B)=V3-5(M/C)
(C)=V4-5
(D)=V4-5A
(E)=V5
(F)=V5-A

No.	Lev.	Parts No.	Description	Q'ty (A)	(B)	(C)	(D)	(E)	(F)	I	R
52	1	160970-77350	RECTIFIER, ZR2117	1		1		1			
53	1	129322-77401	PUMP ASSY, FUEL FEED	1		1		1			
54	1	119650-77910	RELAY ASSY, GLOW	1		1		1			
57	1	119632-77920	TIMER	1		1		1			
57-1	1	129211-77920	TIMER	1		1		1		N	
	(A=M/#51249)		(C=M/#51091)	(E=M/#01022)							
58	1	124970-77920	TIMER	1		1		1			
59	1	1E6690-81530	SWITCH	1		1		1			
60	2	1E6480-82280	BULB,12V-34W	1		1		1			
61	1	22137-060000	WASHER, 6	2		2		2			
62	1	26022-050162	SCREW, M5X16	1		1		1			
63	1	26022-050162	SCREW, M5X16	5		5		5			
64	1	22857-500200	SCREW 5X20	1		1		1			
65	1	26013-060162	BOLT, M6X 16	2		2		2			
66	1	26013-060162	BOLT, M6X 16	4		4		4			
67	1	26013-060162	BOLT, M6X 16	2		2		2			
68	1	26013-060252	BOLT, M6X 25	1		1		1			
69	1	26013-080122	BOLT, M8X 12	1		1		1			
70	1	26013-100352	BOLT, M10X 35	2		2		2			
71	1	26013-080202	BOLT, M8X 20	1		1		1			
72	1	26013-100252	BOLT, M10X 25	8		8		8			
73	1	933110-00100	SWITCH ASSY, STARTER	1		1		1			
75	2	933110-00301	KEY ASSY	1		1		1			
76	3	933110-07101	KEY	2		2		2			
78	1	172527-17210	LAMP,REAR COMBI.L	1		1		1			
79	2	172527-17420	LENS L	1		1		1			
80	2	172527-17440	LENS L	1		1		1			
81	2	172527-17470	LENS L	1		1		1			
82	2	172527-17560	GASKET	1		1		1			
83	2	172527-17520	BULB, 12V 23W	1		1		1			
84	2	172527-17540	BULB, 12V 23/8W	1		1		1			
85	2	172527-17550	BULB, 12V 10W	1		1		1			
86	2	172527-17570	SCREW	2		2		2			
87	1	172527-17220	LAMP,REAR COMBI.R	1		1		1			
88	2	172527-17430	LENS R	1		1		1			
89	2	172527-17460	LENS R	1		1		1			
90	2	172527-17480	LENS R	1		1		1			
91	2	172527-17560	GASKET	1		1		1			
92	2	172527-17520	BULB, 12V 23W	1		1		1			
93	2	172527-17540	BULB, 12V 23/8W	1		1		1			
94	2	172527-17550	BULB, 12V 10W	1		1		1			
95	2	172527-17570	SCREW	2		2		2			
96	1	26716-100002	NUT, M10	2		2		2			
97	1	22137-100000	WASHER, 10	4		4		4			
98	1	172527-61640	WASHER	2		2		2			

N:Old $\frac{\text{Yes}}{\text{No}}$ New, Q:Old $\frac{\text{No}}{\text{Yes}}$ New, R:Old $\frac{\text{Yes}}{\text{Yes}}$ New, S:Old $\frac{\text{No}}{\text{No}}$ New, W:Add, Z:Discontinued, F:Interchangeable by set, K:Q'ty Change

Copyright (C) YANMAR CO., LTD. All RightsReserved.

Fig.20. ELECTRIC PART(2)

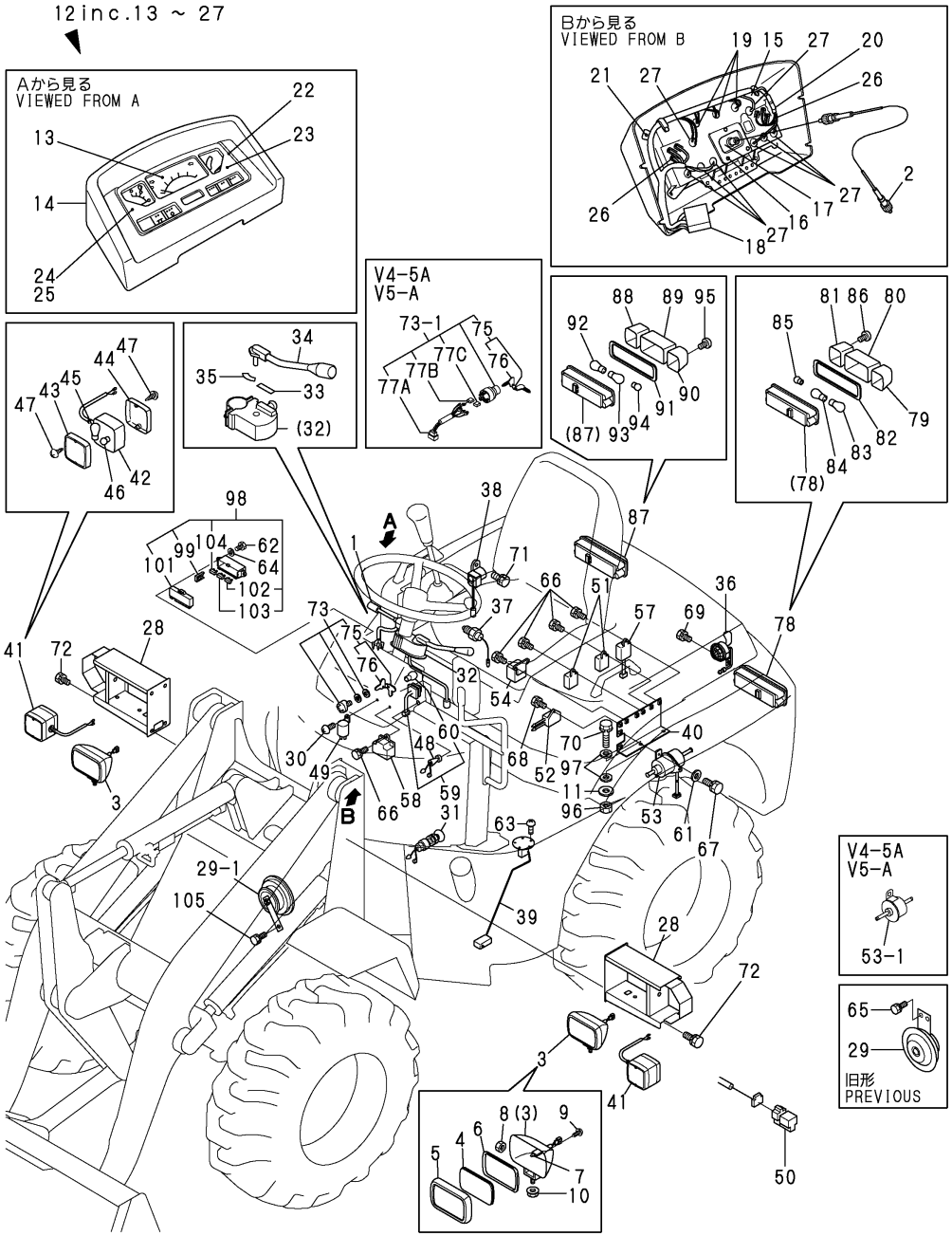

(A)=V3-5 (B)=V3-5(M/C) (C)=V4-5 (D)=V4-5A (E)=V5 (F)=V5-A

No.	Lev.	Parts No.	Description	Q'ty (A)	(B)	(C)	(D)	(E)	(F)	I	R
1	1	172515-08790	SWITCH, FLASHER		1		1		1		
2	1	172527-17080	CABLE ASSY, METER		1		1		1		
3	1	172527-17110	LAMP,HEAD		2		2		2		
4	2	172527-17250	LENS		2		2		2		
5	2	172527-17260	LIM		2		2		2		
6	2	172527-17280	GASKET		2		2		2		
7	2	172527-17290	BULB, 12V 55W		2		2		2		
8	2	172527-17310	NUT		2		2		2		
9	2	172527-17340	SCREW		8		8		8		
10	2	172527-17350	NUT		2		2		2		
11	1	194145-04810	WASHER		2		2		2		
12	1	172527-17200	METER,COMBINATION		1		1		1		
13	2	172524-17210	METERS CMP,HR.&TACHO		1		1		1		
14	2	172524-17220	VISOR		1		1		1		
15	2	172527-17360	CASE COMPL.		1		1		1		
16	3	198220-53170	SCREW		3		3		3		
17	2	172524-17240	SCREW,BODY LOCK		2		2		2		
18	2	172524-17250	HARNESS, WIRE		1		1		1		
19	2	172524-17260	LAMP 12V-11.7W		3		3		3		
20	2	172524-17270	CLAMP, CORD		1		1		1		
21	2	198220-53170	SCREW		11		11		11		
22	2	198220-56130	PACKING		1		1		1		
23	2	198220-56140	GLASS		1		1		1		
24	2	198220-56150	REFLECTOR		1		1		1		
25	2	198220-56160	PACKING		1		1		1		
26	2	198220-56230	SCREW, M3X22		6		6		6		
27	2	124617-91920	BULB, 12V-3W		8		8		8		
28	1	172527-17151	SUPPORT, LAMP		2		2		2		
28-1	1	172530-17150	SUPPORT, LAMP				2		2	N	
			(D=M/#52168)						(F=M/#02060)		
29	1	172310-17220	HORN		1		1		1		
29-1	1	1A6780-57110	HORN ASSY		1		1		1	N	
		(B=M/#52610)	(D=M/#52091)						(F=M/#02041)		
30	1	26022-060162	SCREW, M6X16		1		1		1		
31	1	172524-17280	SWITCH, STOP LAMP		2		2		2		
32	1	172524-17310	LEVER, SHIFT		1		1		1		
32-1	1	172524-17311	LEVER, SHIFT		1		1		1	N	
		(B=MZZZZZ)	(D=MZZZZZ)						(F=MZZZZZ)		
33	2	172524-17320	LABEL		1		1		1		
34	2	172524-17380	LEVER ASSY		1		1		1		
34-1	2	172524-17381	LEVER ASSY		1		1		1	S	
		(B=MZZZZZ)	(D=MZZZZZ)						(F=MZZZZZ)		
35	2	172520-17390	LABEL		1		1		1		
36	1	172511-17351	BUZZER, BACK		1		1		1		
37	1	172520-17351	SWITCH, THERMO		1		1		1		
38	1	172524-17360	RELY,STARTER		1		1		1		
39	1	172527-17411	GAUGE, FUEL		1		1		1		
40	1	172527-17451	STAY, RELAY		1		1		1		
41	1	172524-17660	LAMP,FRONT COMBI.		2		2		2		
42	2	172524-17670	BODY		2		2		2		
43	2	172524-17680	LENS		2		2		2		

N:Old $\xleftarrow[\text{No}]{\text{Yes}}$ New, Q:Old $\xleftarrow[\text{Yes}]{\text{No}}$ New, R:Old $\xleftarrow[\text{Yes}]{\text{Yes}}$ New, S:Old $\xleftarrow[\text{No}]{\text{No}}$ New, W:Add, Z:Discontinued, F:Interchangeable by set, K:Q'ty Change

++ CONTINUE ++

Copyright (C) YANMAR CO., LTD. All RightsReserved.

Fig.20. ELECTRIC PART(2)

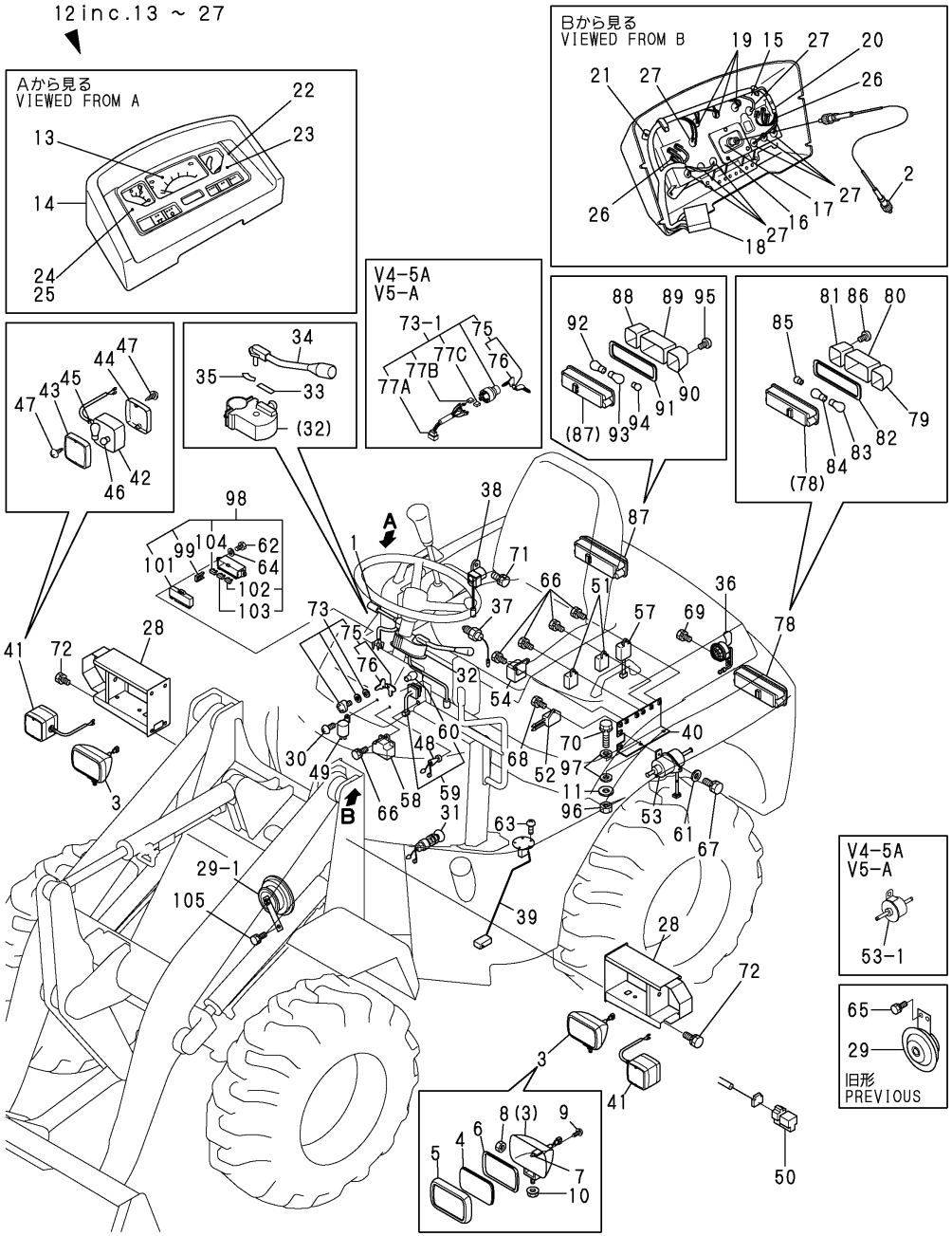

(A)=V3-5 (B)=V3-5(M/C) (C)=V4-5 (D)=V4-5A (E)=V5 (F)=V5-A

No.	Lev.	Parts No.	Description	Q'ty (A)	(B)	(C)	(D)	(E)	(F)	I	R
44	2	172524-17690	LENS		2		2		2		
45	2	172524-17810	BULB, 12V 21W		2		2		2		
46	2	172524-17820	BULB, 12V 5W		2		2		2		
47	2	172524-17830	SCREW		4		4		4		
48	1	194420-52120	SWITCH, LIGHTING		1		1		1		
49	1	194080-57202	RELAY, FLASHER		1		1		1		
50	1	119643-66900	DIODE		1		1		1		
51	1	119247-77100	RELAY, SAFETY		2		2		2		
52	1	160970-77350	RECTIFIER, ZR2117		1		1		1		
53	1	129322-77401	PUMP ASSY, FUEL FEED		1		1		1		
53-1	1	129612-52100	PUMP ASSY, FUEL FEED				1		1	N	
			(D=M/#52168)						(F=M/#02060)		
54	1	119650-77910	RELAY ASSY, GLOW		1		1		1		
57	1	129211-77920	TIMER		1		1		1		
58	1	124970-77920	TIMER		1		1		1		
59	1	1E6690-81530	SWITCH		1		1		1		
60	2	1E6480-82280	BULB,12V-34W		1		1		1		
61	1	22137-060000	WASHER, 6		2		2		2		
62	1	26013-060162	BOLT, M6X 16		2		2		2		
63	1	26022-050162	SCREW, M5X16		5		5		5		
64	1	22137-060000	WASHER, 6		2		2		2		
65	1	26013-060162	BOLT, M6X 16		2		2		2	Z	
		(B=M/#52610)	(D=M/#52091)						(F=M/#02041)		
66	1	26013-060162	BOLT, M6X 16		4		4		4		
67	1	26013-060162	BOLT, M6X 16		2		2		2		
68	1	26013-060252	BOLT, M6X 25		1		1		1		
69	1	26013-080122	BOLT, M8X 12		1		1		1		
70	1	26013-100352	BOLT, M10X 35		2		2		2		
71	1	26013-080202	BOLT, M8X 20		1		1		1		
72	1	26013-100252	BOLT, M10X 25		8		8		8		
73	1	933110-00100	SWITCH ASSY, STARTER		1		1		1		
73-1	1	172187-17100	SWITCH ASSY, STARTER				1		1	N	
			(D=M/#52168)						(F=M/#02060)		
75	2	933110-00301	KEY ASSY		1		1		1		
76	3	933110-07101	KEY		2		2		2		
78	1	172527-17210	LAMP,REAR COMBI.L		1		1		1		
79	2	172527-17420	LENS L		1		1		1		
80	2	172527-17440	LENS L		1		1		1		
81	2	172527-17470	LENS L		1		1		1		
82	2	172527-17560	GASKET		1		1		1		
83	2	172527-17520	BULB, 12V 23W		1		1		1		
84	2	172527-17540	BULB, 12V 23/8W		1		1		1		
85	2	172527-17550	BULB, 12V 10W		1		1		1		
86	2	172527-17570	SCREW		2		2		2		
87	1	172527-17220	LAMP,REAR COMBI.R		1		1		1		
88	2	172527-17430	LENS R		1		1		1		
89	2	172527-17460	LENS R		1		1		1		
90	2	172527-17480	LENS R		1		1		1		
91	2	172527-17560	GASKET		1		1		1		
92	2	172527-17520	BULB, 12V 23W		1		1		1		
93	2	172527-17540	BULB, 12V 23/8W		1		1		1		

N:Old $\overset{\text{Yes}}{\underset{\text{No}}{\leftrightarrow}}$ New, Q:Old $\overset{\text{No}}{\underset{\text{Yes}}{\leftrightarrow}}$ New, R:Old $\overset{\text{Yes}}{\underset{\text{Yes}}{\leftrightarrow}}$ New, S:Old $\overset{\text{No}}{\underset{\text{No}}{\leftrightarrow}}$ New, W:Add, Z:Discontinued, F:Interchangeable by set, K:Q'ty Change

++ CONTINUE ++

Copyright (C) YANMAR CO., LTD. All RightsReserved.

Fig.20. ELECTRIC PART(2)

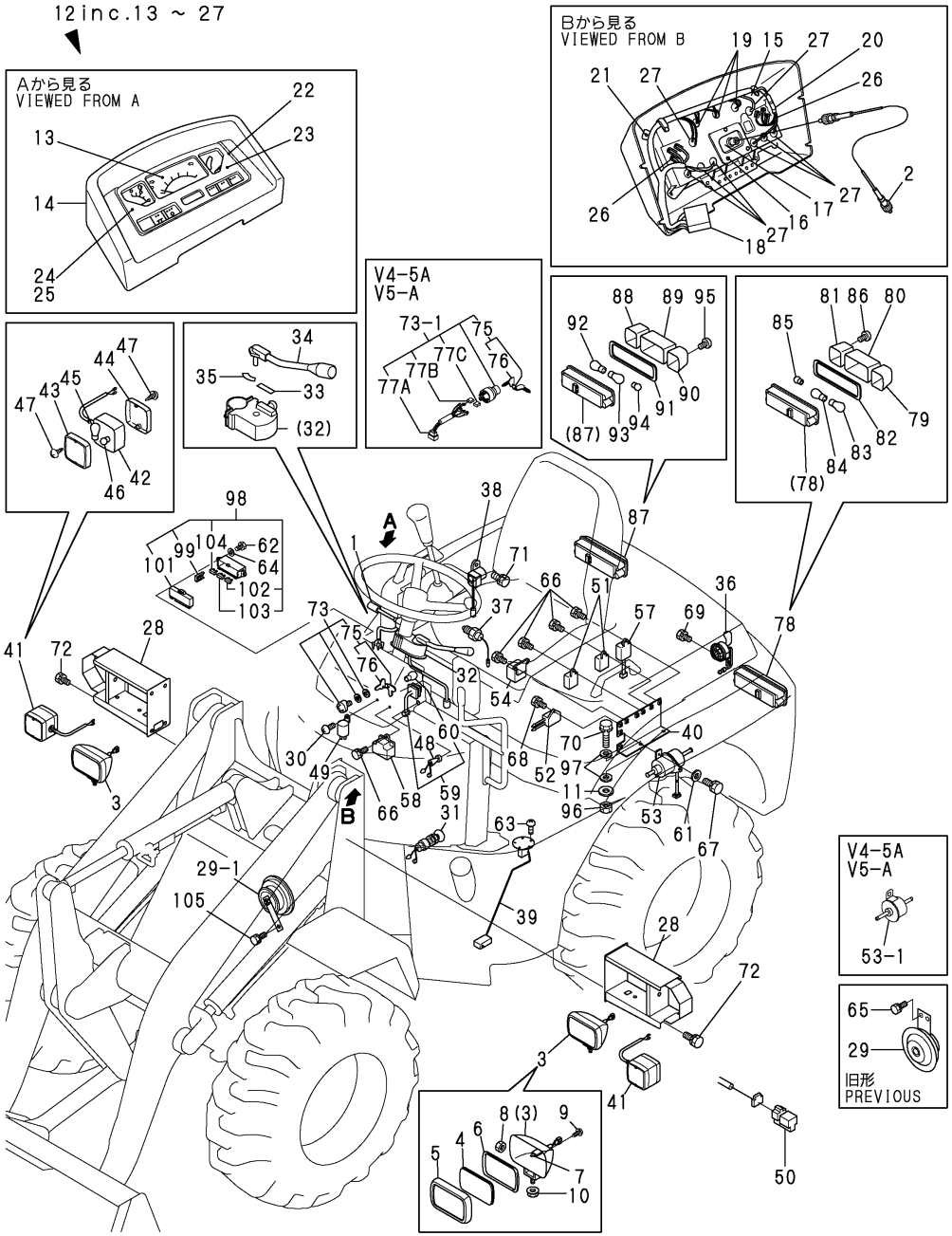

(A)=V3-5 (D)=V4-5A
(B)=V3-5(M/C) (E)=V5
(C)=V4-5 (F)=V5-A

No.	Lev.	Parts No.	Description	Q'ty (A)	(B)	(C)	(D)	(E)	(F)	I	R
94	2	172527-17550	BULB, 12V 10W		1		1		1		
95	2	172527-17570	SCREW		2		2		2		
96	1	26716-100002	NUT, M10		2		2		2		
97	1	22137-100000	WASHER, 10		4		4		4		
98	1	172187-17200	BOX, FUSE		1		1		1		
99	2	172175-17120	PULLER		1		1		1		
101	2	172187-17220	COVER		1		1		1		
102	2	29420-050000	FUSE, B 5A		2		2		2		
103	2	29420-150000	FUSE, B 15A		6		6		6		
104	2	29420-300000	FUSE, B 30A		2		2		2		
105	1	26013-080162	BOLT, M8X 16		1		1		1	W	
			(B=M/#52610) (D=M/#52091) (F=M/#02041)								

N:Old $\xleftarrow[\text{No}]{\text{Yes}}$ New, Q:Old $\xleftarrow[\text{Yes}]{\text{No}}$ New, R:Old $\xleftarrow[\text{Yes}]{\text{Yes}}$ New, S:Old $\xleftarrow[\text{No}]{\text{No}}$ New, W:Add, Z:Discontinued, F:Interchangeable by set, K:Q'ty Change

Copyright (C) YANMAR CO., LTD. All RightsReserved.

Fig.21. ELECTRIC PART(AUTO LEBELLER)

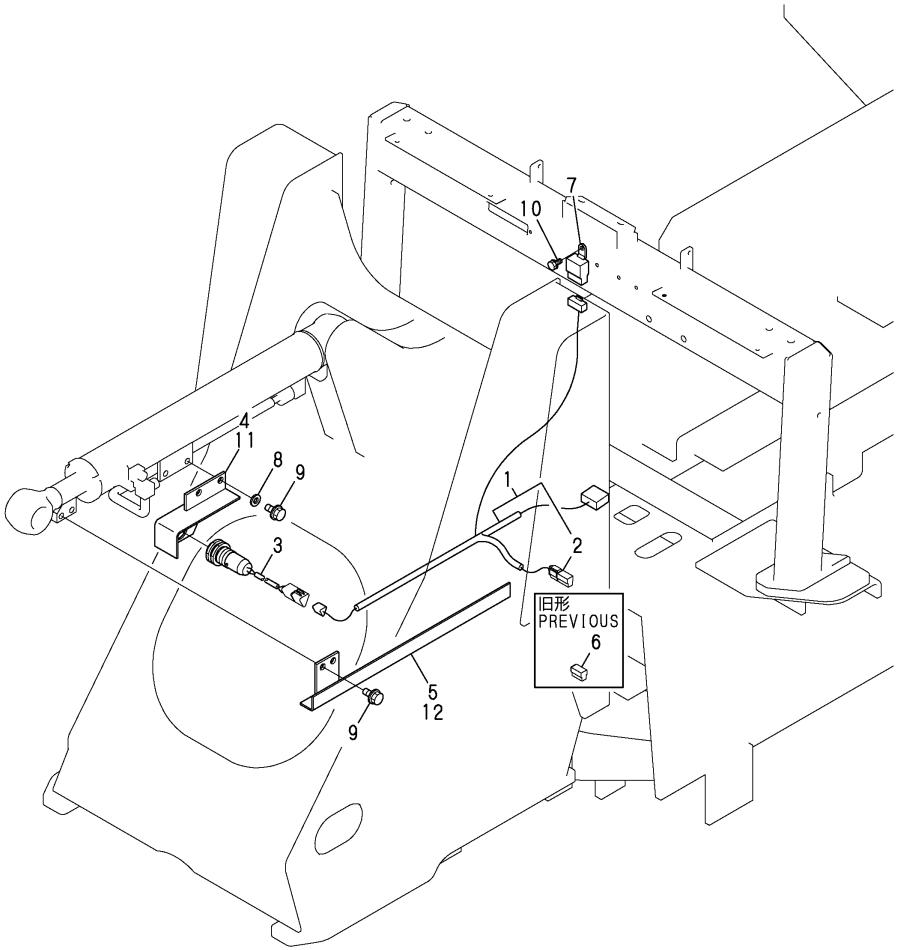

(A)=V3-5 (D)=V4-5A
(B)=V3-5(M/C) (E)=V5
(C)=V4-5 (F)=V5-A

No.	Lev.	Parts No.	Description	Q'ty (A)	(B)	(C)	(D)	(E)	(F)	I	R
1	1	172527-16650	HARNESS,WIRE O	1	1	1	1	1	1		
2	2	119643-66900	DIODE	1	1	1	1	1	1	W	
	(A=M/#50645)		(C=M/#50586)	(E=M/#01001)							
3	1	172527-17510	SENSOR, PROXIMITY	1	1	1	1	1	1		
4	1	172524-17521-4	STAY ASSY, SENSOR	1		1		1			
5	1	172527-17530	BAR, SENSING	1		1		1			
6	1	119643-66900	DIODE	1		1		1		Z	
	(A=M/#50645)		(C=M/#50586)	(E=M/#01001)							
7	1	119247-77100	RELAY, SAFETY	1	1	1	1	1	1		
8	1	22137-100000	WASHER, 10	2	2	2	2	2	2		
9	1	26013-100202	BOLT, M10X 20	4	4	4	4	4	4		
10	1	26013-060162	BOLT, M6X 16	1	1	1	1	1	1		
11	1	172524-17522	STAY ASSY, SENSOR		1		1		1		
12	1	172527-17531	BAR, SENSING		1		1		1		

N:Old $\frac{\text{Yes}}{\text{No}}$ New, Q:Old $\frac{\text{No}}{\text{Yes}}$ New, R:Old $\frac{\text{Yes}}{\text{Yes}}$ New, S:Old $\frac{\text{No}}{\text{No}}$ New, W:Add, Z:Discontinued, F:Interchangeable by set, K:Q'ty Change

Copyright (C) YANMAR CO., LTD. All RightsReserved.

Fig.22. CLUTCH HOUSING & DRIVE SHAFT

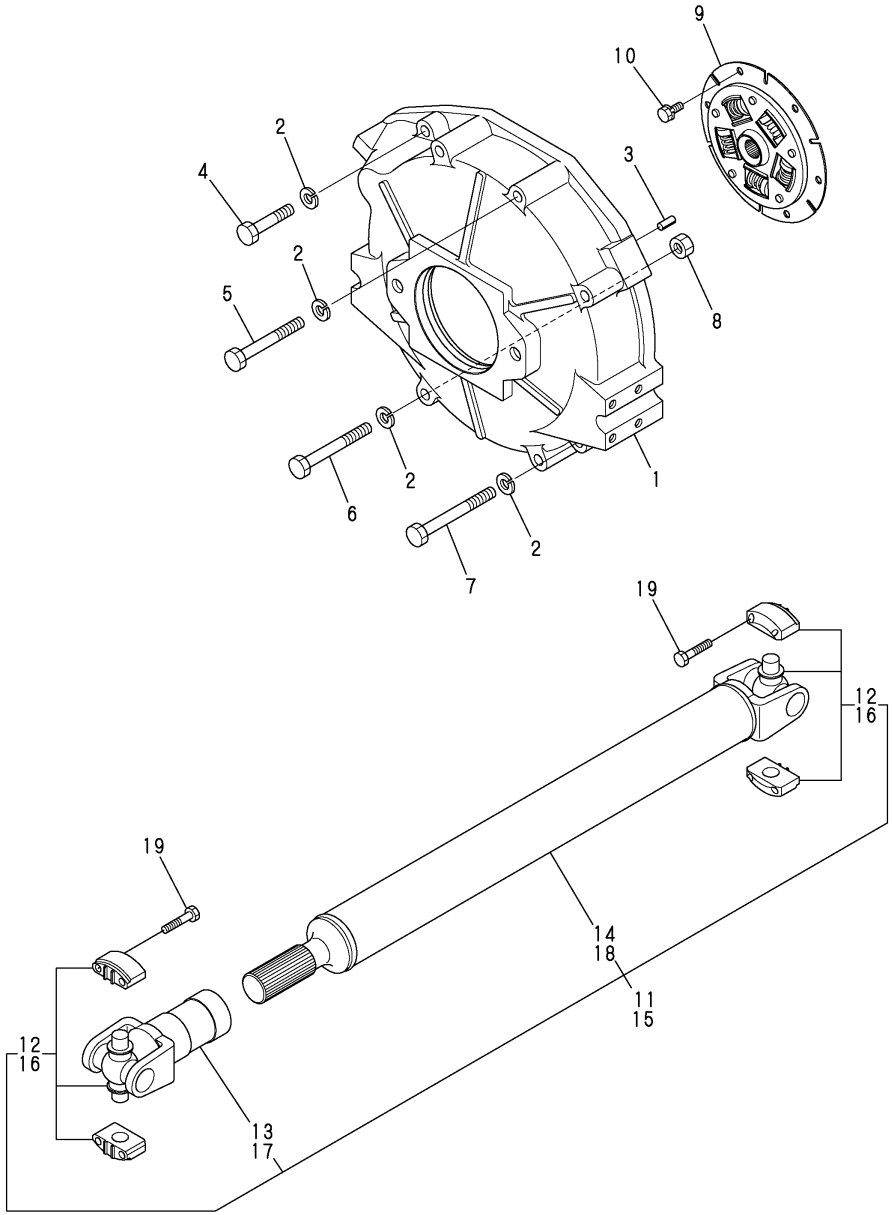

(A)=V3-5
(B)=V3-5(M/C)
(C)=V4-5
(D)=V4-5A
(E)=V5
(F)=V5-A

No.	Lev.	Parts No.	Description	Q'ty (A)	(B)	(C)	(D)	(E)	(F)	I	R
1	1	172527-21210	COVER, FLYWHEEL	1	1	1	1	1	1		
2	1	22217-120000	WASHER, SPRING 12	8	8	8	8	8	8		
3	1	22351-080020	PIN, SPRING 8.0X20	2	2	2	2	2	2		
4	1	26116-120602	BOLT, M12X 60 PLATED	1	1	1	1	1	1		
5	1	26116-120952	BOLT, M12X 95 PLATED	2	2	2	2	2	2		
6	1	26116-121002	BOLT, M12X100 PLATED	2	2	2	2	2	2		
7	1	26116-121102	BOLT, M12X110 PLATED	3	3	3	3	3	3		
8	1	26716-120002	NUT, M12	2	2	2	2	2	2		
9	1	172527-21510	DISK, DAMPER	1	1	1	1	1	1		
10	1	26013-080162	BOLT, M8X 16	6	6	6	6	6	6		
11	1	172527-21800	SHAFT ASSY,PROPELLER	1	1						
12	2	172527-21810	JOINT, UNIVERSAL	2	2						
13	2	172527-21820	YOKE,SLEEVE	1	1						
14	2	172527-21830	YOKE,SHAFT	1	1						
15	1	172528-21800	SHAFT ASSY,PROPELLER			1	1	1	1		
16	2	172527-21810	JOINT, UNIVERSAL			2	2	2	2		
17	2	172528-21820	YOKE,SLEEVE			1	1	1	1		
18	2	172528-21830	YOKE, SHAFT			1	1	1	1		
19	1	26116-080402	BOLT, M8X 40 PLATED	8	8	8	8	8	8		

N:Old $\xleftrightarrow[\text{No}]{\text{Yes}}$ New, Q:Old $\xleftrightarrow[\text{Yes}]{\text{No}}$ New, R:Old $\xleftrightarrow[\text{Yes}]{\text{Yes}}$ New, S:Old $\xleftrightarrow[\text{No}]{\text{No}}$ New, W:Add, Z:Discontinued, F:Interchangeable by set, K:Q'ty Change

Copyright (C) YANMAR CO., LTD. All RightsReserved.

Fig.23. TRANSFER CASE

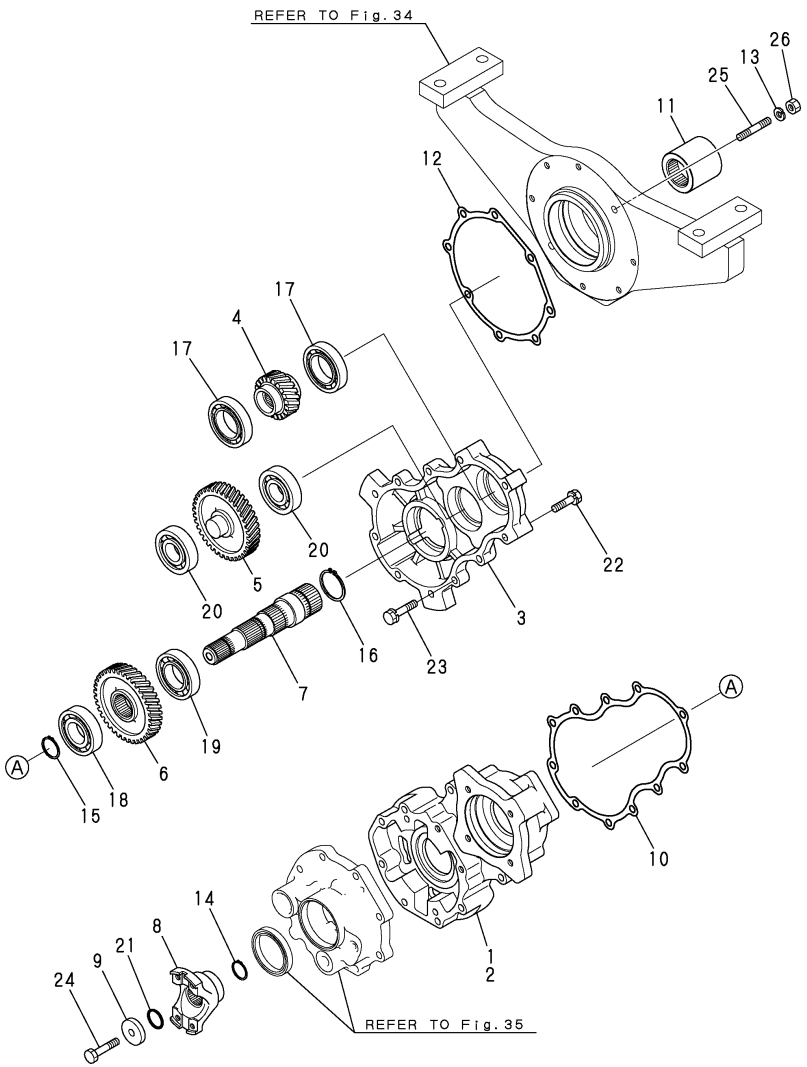

Remarks
(1)Interchangeable by simultaneous replacement with Ref.No.7-1,11-1.

(A)=V3-5 (D)=V4-5A
(B)=V3-5(M/C) (E)=V5
(C)=V4-5 (F)=V5-A

No.	Lev.	Parts No.	Description	Q'ty (A)	(B)	(C)	(D)	(E)	(F)	I	R
1	1	172527-25710	CASE	1	1						
2	1	172528-25710	CASE			1	1	1	1		
3	1	172527-25720	CASE	1	1	1	1	1	1		
4	1	172527-25730	GEAR, INPUT	1	1	1	1	1	1		
5	1	172527-25740	GEAR, IDLE N=35	1	1	1	1	1	1		
6	1	172527-25750	GEAR, N=36	1	1	1	1	1	1		
7	1	172527-25770	SHAFT, BRAKE	1	1	1	1	1	1		
7-1	1	172527-25771	SHAFT, BRAKE	1	1	1	1	1	1	F	1
	(A=MZZZZZ)	(B=MZZZZZ)	(C=MZZZZZ) (D=MZZZZZ)	(E=MZZZZZ)				(F=MZZZZZ)			
8	1	172527-25790	FLANGE, JOINT	1	1	1	1	1	1		
9	1	172527-25810	WASHER, 11X40.5X9	1	1	1	1	1	1		
10	1	172527-25820	GASKET	1	1	1	1	1	1		
11	1	172527-25840	COUPLING	1	1	1	1	1	1		
11-1	1	172527-25841	COUPLING, SPLINE	1	1	1	1	1	1	F	1
	(A=MZZZZZ)	(B=MZZZZZ)	(C=MZZZZZ) (D=MZZZZZ)	(E=MZZZZZ)				(F=MZZZZZ)			
12	1	172527-25850	GASKET	1	1	1	1	1	1		
13	1	22217-100000	WASHER, SPRING 10	2	2	2	2	2	2		
14	1	22242-000300	RING, 30	1	1	1	1	1	1		
15	1	22242-000350	RING, 35	1	1	1	1	1	1		
16	1	22242-000450	RING, 45	1	1	1	1	1	1		
17	1	24101-060094	BEARING, BALL 6009	2	2	2	2	2	2		
18	1	24101-062074	BEARING, BALL 6207	1	1	1	1	1	1		
19	1	24101-062084	BEARING, BALL 6208	1	1	1	1	1	1		
20	1	24101-063064	BEARING, BALL 6306	2	2	2	2	2	2		
21	1	24311-000240	O-RING, 1AP24.0	1	1	1	1	1	1		
22	1	26013-100452	BOLT, M10X 45	3	3	3	3	3	3		
23	1	26013-100452	BOLT, M10X 45	6	6	6	6	6	6		
24	1	26156-100502	BOLT, M10X 5 PLATED0	1	1	1	1	1	1		
25	1	26216-100452	STUD, M10X 45	2	2	2	2	2	2		
26	1	26716-100002	NUT, M10	2	2	2	2	2	2		

N:Old $\xleftarrow[\text{No}]{\text{Yes}}$ New, Q:Old $\xleftarrow[\text{Yes}]{\text{No}}$ New, R:Old $\xleftarrow[\text{Yes}]{\text{Yes}}$ New, S:Old $\xleftarrow[\text{No}]{\text{No}}$ New, W:Add, Z:Discontinued, F:Interchangeable by set, K:Q'ty Change

Copyright (C) YANMAR CO., LTD. All RightsReserved.

Fig.24. SPIRAL BEVEL GEAR(1)

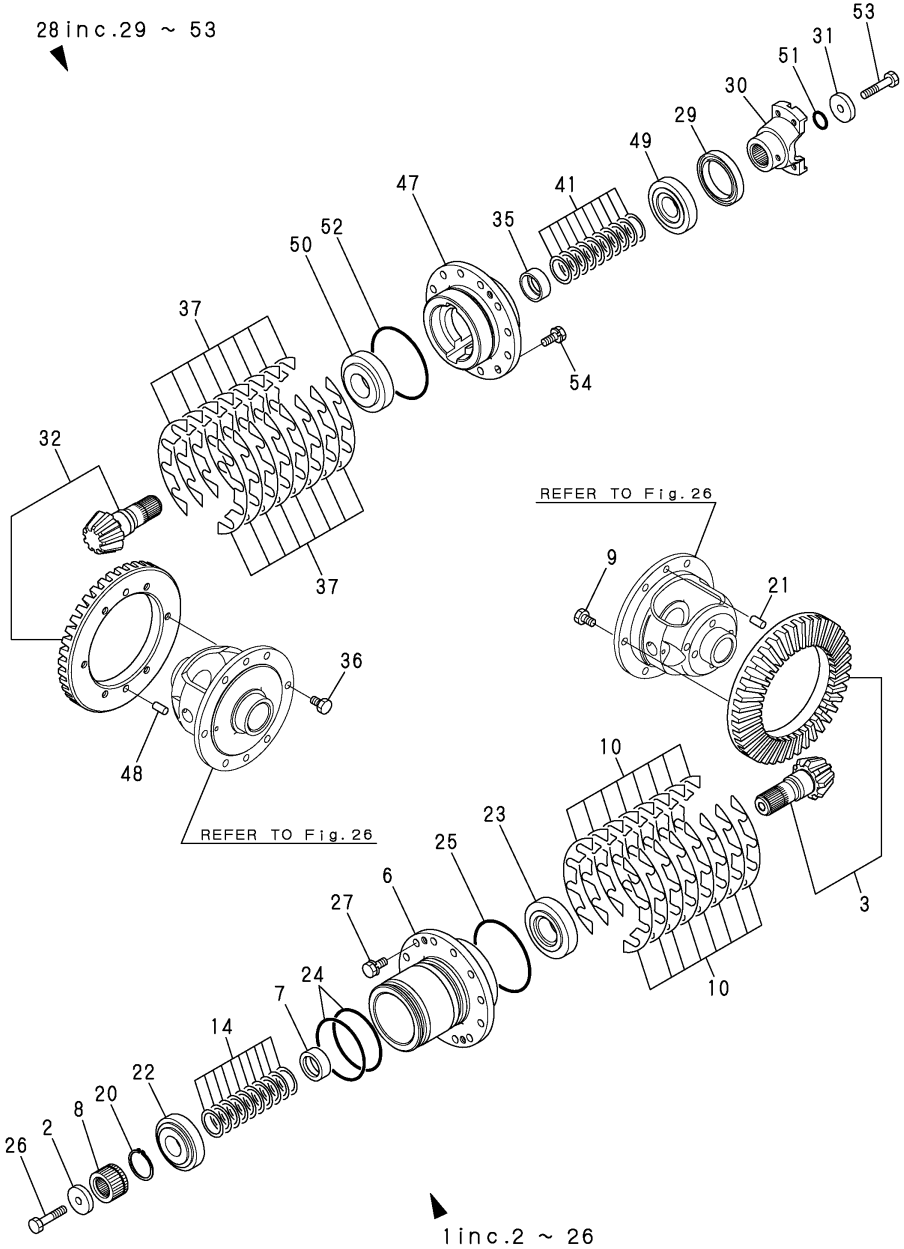

(A)=V3-5
(B)=V3-5(M/C)
(C)=V4-5
(D)=V4-5A
(E)=V5
(F)=V5-A

No.	Lev.	Parts No.	Description	Q'ty (A)	(B)	(C)	(D)	(E)	(F)	I	R
1	1	172527-26000	GEAR ASSY, BEVEL	1	1						
2	2	172527-25810	WASHER, 11X40.5X9	1	1						
3	2	172527-26010	GEAR SET, BEVEL	1	1						
6	2	172527-26040	HOLDER, BEARING	1	1						
7	2	172527-26050	COLLAR	1	1						
8	2	172527-26060	COLLAR, SPLINE	1	1						
9	2	172527-26070	BOLT, M10X18	6	6						
10	2	172527-26080	SHIM SET	1	1						
14	2	172527-26130	SHIM SET	1	1						
20	2	22242-000450	RING, 45	1	1						
21	2	22312-100200	PIN, PARALLEL M10X20	2	2						
22	2	24143-303060	BEARING, 30306D	1	1						
23	2	24144-303070	BEARING, 30307DH	1	1						
24	2	24311-000900	O-RING, 1AP90.0	2	2						
25	2	24321-001050	O-RING, 1AG105.0	1	1						
26	2	26156-100502	BOLT, M10X 5 PLATED0	1	1						
27	1	26013-100252	BOLT, M10X 25	12	12						
28	1	172527-26200	GEAR ASSY, BEVEL	1	1						
29	2	194447-14140	SEAL, OIL TC6Y577512	1	1						
30	2	172527-25790	FLANGE, JOINT	1	1						
31	2	172527-25810	WASHER, 11X40.5X9	1	1						
32	2	172527-26010	GEAR SET, BEVEL	1	1						
35	2	172527-26050	COLLAR	1	1						
36	2	172527-26070	BOLT, M10X18	6	6						
37	2	172527-26080	SHIM SET	1	1						
41	2	172527-26130	SHIM SET	1	1						
47	2	172527-26310	HOLDER, BEARING	1	1						
48	2	22312-100200	PIN, PARALLEL M10X20	2	2						
49	2	24143-303060	BEARING, 30306D	1	1						
50	2	24144-303070	BEARING, 30307DH	1	1						
51	2	24311-000240	O-RING, 1AP24.0	1	1						
52	2	24321-001050	O-RING, 1AG105.0	1	1						
53	2	26156-100502	BOLT, M10X 5 PLATED0	1	1						
54	1	26013-100252	BOLT, M10X 25	12	12						

N:Old $\frac{\text{Yes}}{\text{No}}$ New, Q:Old $\frac{\text{No}}{\text{Yes}}$ New, R:Old $\frac{\text{Yes}}{\text{Yes}}$ New, S:Old $\frac{\text{No}}{\text{No}}$ New, W:Add, Z:Discontinued, F:Interchangeable by set, K:Q'ty Change

Copyright (C) YANMAR CO., LTD. All RightsReserved.

Fig.25. SPIRAL BEVEL GEAR(2)

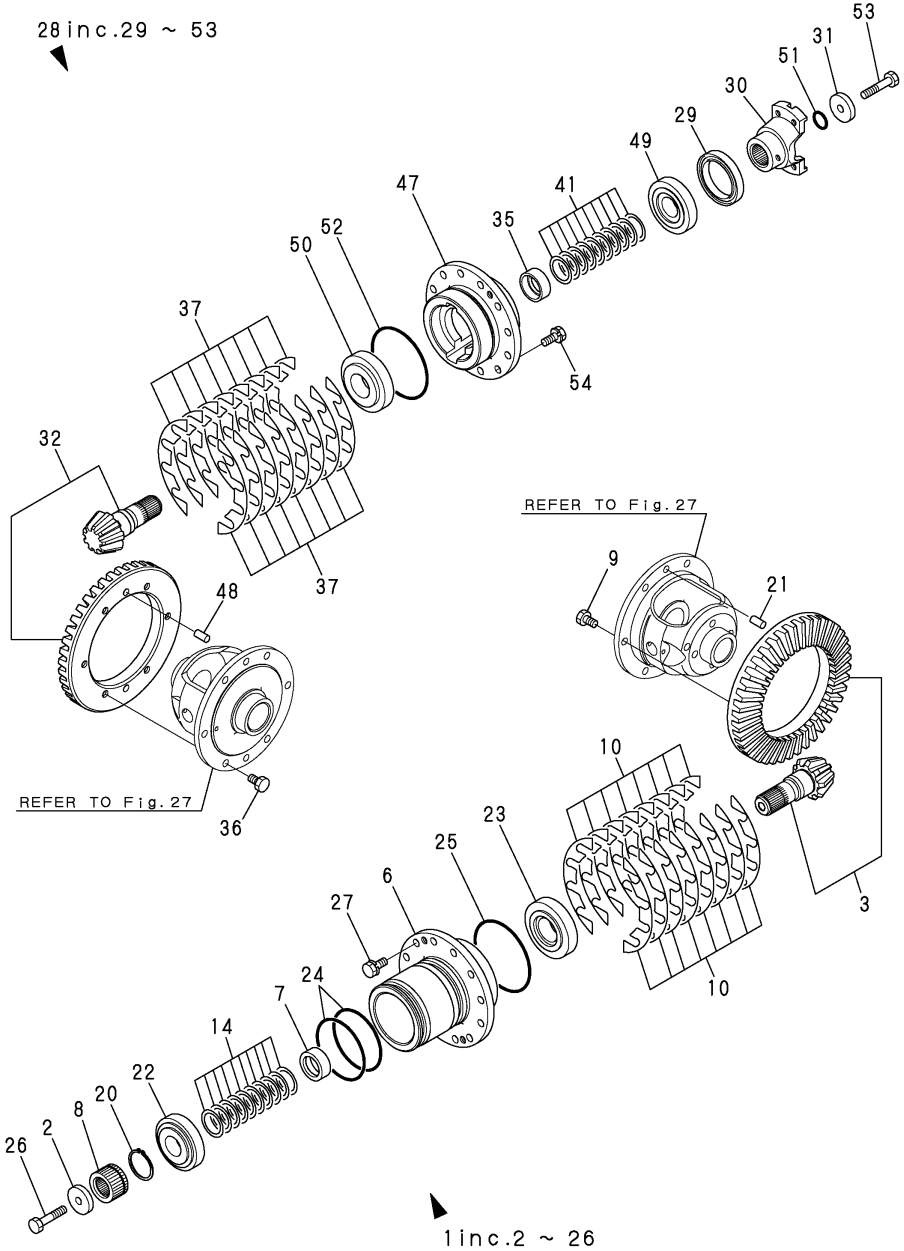

(A)=V3-5
(B)=V3-5(M/C)
(C)=V4-5
(D)=V4-5A
(E)=V5
(F)=V5-A

No.	Lev.	Parts No.	Description	Q'ty (A)	(B)	(C)	(D)	(E)	(F)	I	R
1	1	172528-26000	GEAR ASSY, BEVEL			1	1	1	1		
2	2	172527-25810	WASHER, 11X40.5X9			2	2	2	2		
3	2	172528-26010	GEAR SET, BEVEL			1	1	1	1		
6	2	172527-26040	HOLDER, BEARING			1	1	1	1		
7	2	172527-26050	COLLAR			1	1	1	1		
8	2	172527-26060	COLLAR, SPLINE			1	1	1	1		
9	2	172527-26070	BOLT, M10X18			6	6	6	6		
10	2	172527-26080	SHIM SET			1	1	1	1		
14	2	172527-26130	SHIM SET			1	1	1	1		
20	2	22242-000450	RING, 45			1	1	1	1		
21	2	22312-100200	PIN, PARALLEL M10X20			2	2	2	2		
22	2	24143-303060	BEARING, 30306D			1	1	1	1		
23	2	24144-303070	BEARING, 30307DH			1	1	1	1		
24	2	24311-000900	O-RING, 1AP90.0			2	2	2	2		
25	2	24321-001050	O-RING, 1AG105.0			1	1	1	1		
26	2	26156-100502	BOLT, M10X 5 PLATED0			1	1	1	1		
27	1	26013-100252	BOLT, M10X 25			12	12	12	12		
28	1	172528-26200	GEAR ASSY, BEVEL			1	1	1	1		
29	2	194447-14140	SEAL, OIL TC6Y577512			1	1	1	1		
30	2	172527-25790	FLANGE, JOINT			1	1	1	1		
31	2	172527-25810	WASHER, 11X40.5X9			1	1	1	1		
32	2	172528-26010	GEAR SET, BEVEL			1	1	1	1		
35	2	172527-26050	COLLAR			1	1	1	1		
36	2	172527-26070	BOLT, M10X18			6	6	6	6		
37	2	172527-26080	SHIM SET			1	1	1	1		
41	2	172527-26130	SHIM SET			1	1	1	1		
47	2	172527-26310	HOLDER, BEARING			1	1	1	1		
48	2	22312-100200	PIN, PARALLEL M10X20			2	2	2	2		
49	2	24143-303060	BEARING, 30306D			1	1	1	1		
50	2	24144-303070	BEARING, 30307DH			1	1	1	1		
51	2	24311-000240	O-RING, 1AP24.0			1	1	1	1		
52	2	24321-001050	O-RING, 1AG105.0			1	1	1	1		
53	2	26156-100502	BOLT, M10X 5 PLATED0			1	1	1	1		
54	1	26013-100252	BOLT, M10X 25			12	12	12	12		

N:Old $\frac{\text{Yes}}{\text{No}}$ New, Q:Old $\frac{\text{No}}{\text{Yes}}$ New, R:Old $\frac{\text{Yes}}{\text{Yes}}$ New, S:Old $\frac{\text{No}}{\text{No}}$ New, W:Add, Z:Discontinued, F:Interchangeable by set, K:Q'ty Change

Copyright (C) YANMAR CO., LTD. All RightsReserved.

Fig.26. DIFFERENTIAL GEAR(1)

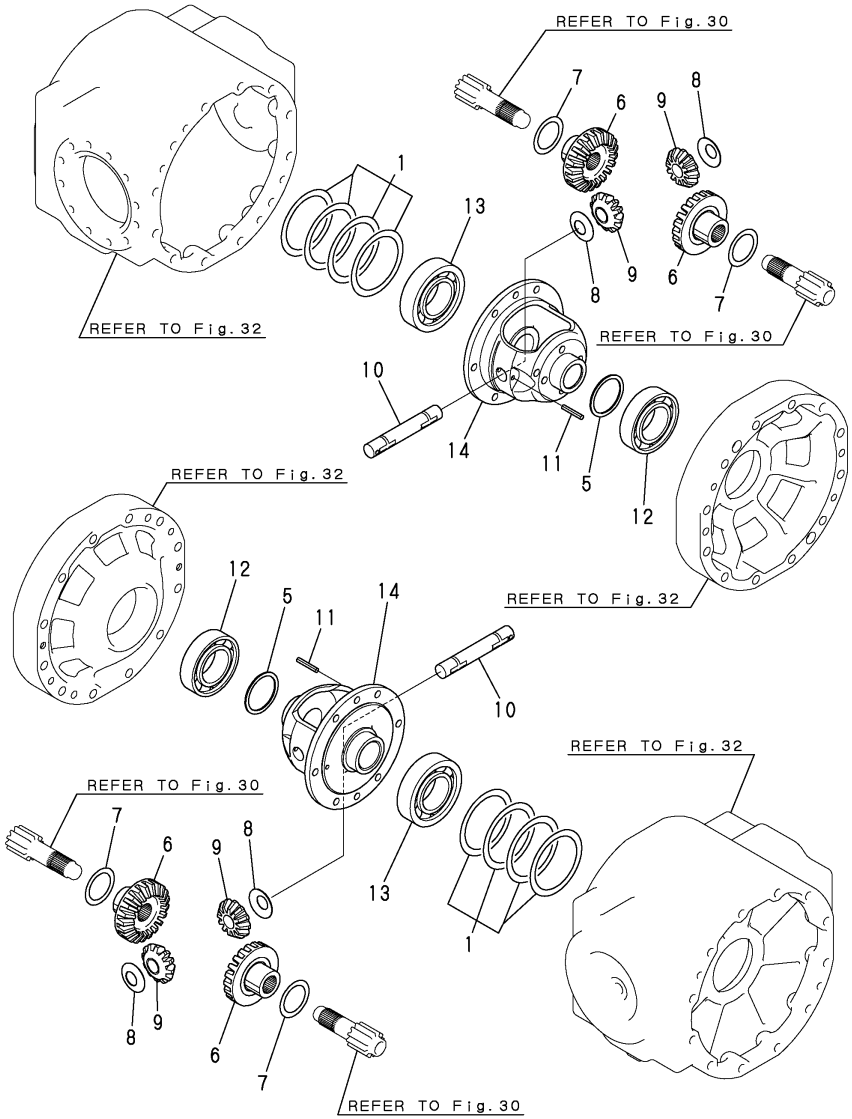

(A)=V3-5
(B)=V3-5(M/C)
(C)=V4-5
(D)=V4-5A
(E)=V5
(F)=V5-A

No.	Lev.	Parts No.	Description	Q'ty (A)	(B)	(C)	(D)	(E)	(F)	I	R
1	1	172527-26350	SHIM SET	4	4						
5	1	172527-26410	WASHER, W52X62X2	2	2						
6	1	194145-31520	GEAR, DIFFERENTIAL	4	4						
7	1	198360-31530	LINER, PINION	4	4						
8	1	198250-31630	WASHER, DIFFERENTIAL	4	4						
9	1	198250-31810	PINION, DIFFERENTIAL	4	4						
10	1	198250-31820	SHAFT, DIFFERENTIAL	2	2						
11	1	22351-060036	PIN, SPRING 6.0X36	2	2						
12	1	24101-062104	BEARING, BALL 6210	2	2						
13	1	24101-062114	BEARING, BALL 6211	2	2						
14	1	172527-26320	CASE, DIFFERENTIAL	2	2						

N:Old $\xleftrightarrow[\text{No}]{\text{Yes}}$ New, Q:Old $\xleftrightarrow[\text{Yes}]{\text{No}}$ New, R:Old $\xleftrightarrow[\text{Yes}]{\text{Yes}}$ New, S:Old $\xleftrightarrow[\text{No}]{\text{No}}$ New, W:Add, Z:Discontinued, F:Interchangeable by set, K:Q'ty Change

Copyright (C) YANMAR CO., LTD. All RightsReserved.

Fig.27. DIFFERENTIAL GEAR(2)

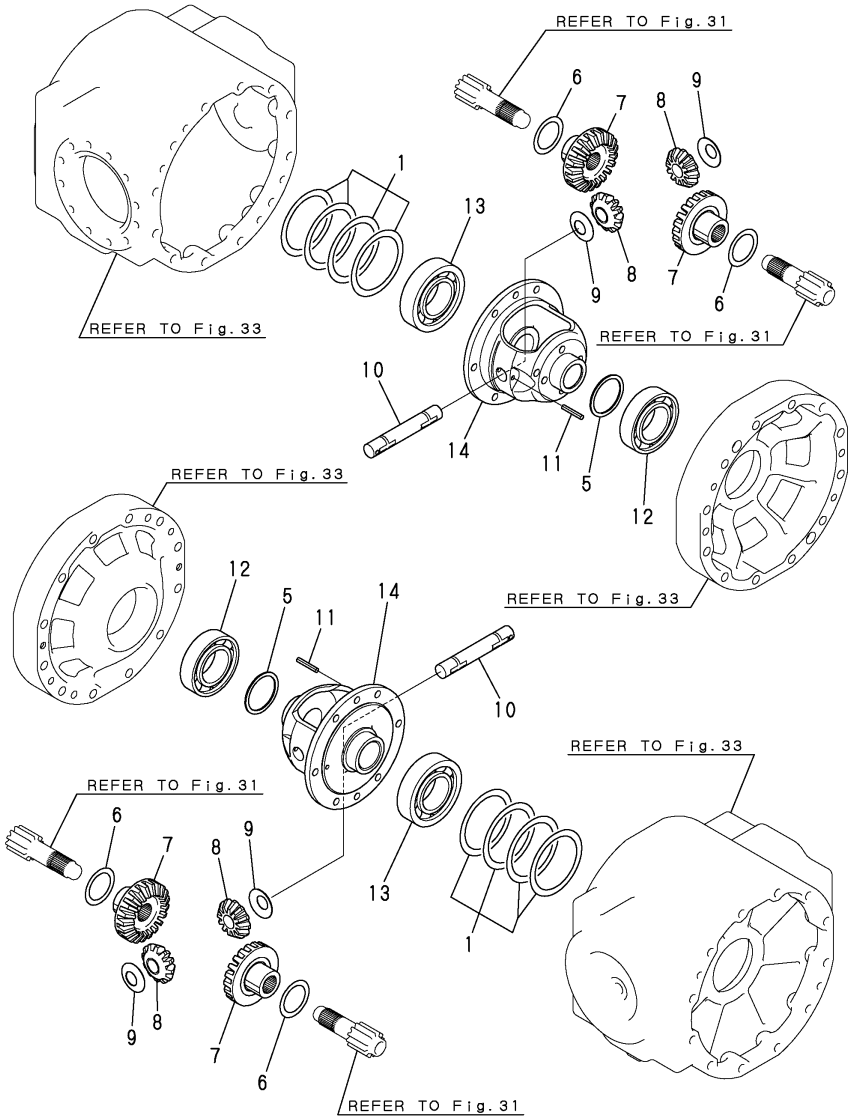

(A)=V3-5
(B)=V3-5(M/C)
(C)=V4-5
(D)=V4-5A
(E)=V5
(F)=V5-A

No.	Lev.	Parts No.	Description	Q'ty (A)	(B)	(C)	(D)	(E)	(F)	I	R
1	1	172527-26350	SHIM SET			4	4	4	4		
5	1	172528-26330	WASHER, W57X68X2			2	2	2	2		
6	1	198320-31530	WASHER, DIFFERENTIAL			4	4	4	4		
7	1	194320-31560	GEAR, DIFFERENTIAL			4	4	4	4		
8	1	198320-31570	PINION, DIFFERENTIAL			4	4	4	4		
9	1	198320-31630	WASHER, DIFFERENTIAL			4	4	4	4		
10	1	198320-31820	SHAFT, DIFFERENTIAL			2	2	2	2		
11	1	22351-060050	PIN, SPRING 6.0X50			2	2	2	2		
12	1	24101-060114	BEARING, BALL 6011			2	2	2	2		
13	1	24101-062114	BEARING, BALL 6211			2	2	2	2		
14	1	172528-26320	CASE, DIFFERENTIAL			2	2	2	2		

N:Old ◄Yes/No► New, Q:Old ◄No/Yes► New, R:Old ◄Yes/Yes► New, S:Old ◄No/No► New, W:Add, Z:Discontinued, F:Interchangeable by set, K:Q'ty Change

Copyright (C) YANMAR CO., LTD. All RightsReserved.

Fig.28. AXLE SHAFT(1)

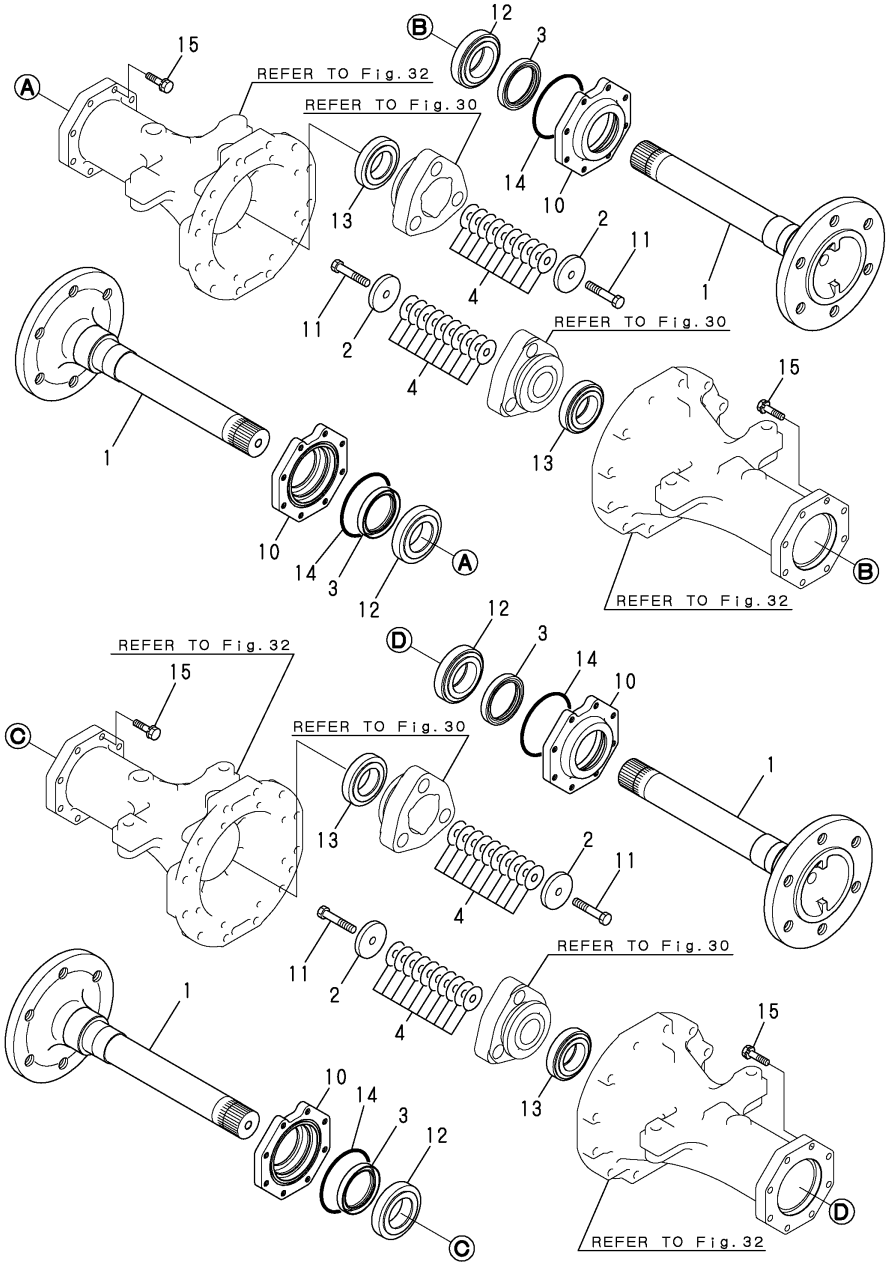

(A)=V3-5
(B)=V3-5(M/C)
(C)=V4-5
(D)=V4-5A
(E)=V5
(F)=V5-A

No.	Lev.	Parts No.	Description	Q'ty (A)	(B)	(C)	(D)	(E)	(F)	I	R
1	1	172527-26710	SHAFT, AXLE	4	4						
2	1	172527-26730	WASHER, W13X63X9	4	4						
3	1	172520-26740	SEAL TC6Y 70X88X12	4	4						
4	1	172527-26740	SHIM SET	4	4						
10	1	172520-26780	COVER, AXLE	4	4						
11	1	172527-26910	BOLT, M12X65	4	4						
12	1	24141-302110	BEARING, 30211	4	4						
13	1	24141-322100	BEARING, 32210	4	4						
14	1	24321-001100	O-RING, 1AG110.0	4	4						
15	1	26013-100402	BOLT, M10X 40	24	24						

N:Old $\frac{\text{Yes}}{\text{No}}$ New, Q:Old $\frac{\text{No}}{\text{Yes}}$ New, R:Old $\frac{\text{Yes}}{\text{Yes}}$ New, S:Old $\frac{\text{No}}{\text{No}}$ New, W:Add, Z:Discontinued, F:Interchangeable by set, K:Q'ty Change

Copyright (C) YANMAR CO., LTD. All RightsReserved.

Fig.29. AXLE SHAFT(2)

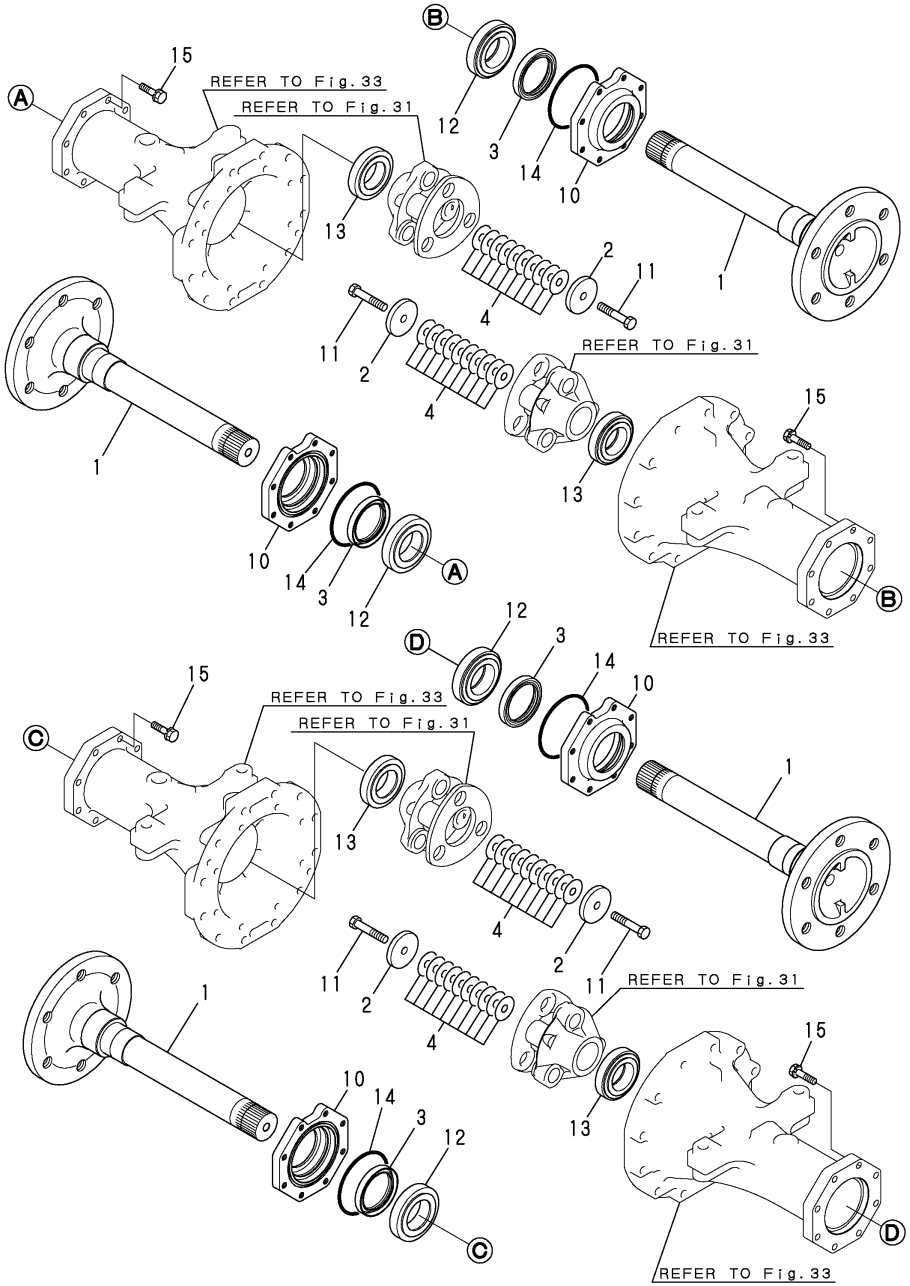

(A)=V3-5
(B)=V3-5(M/C)
(C)=V4-5
(D)=V4-5A
(E)=V5
(F)=V5-A

No.	Lev.	Parts No.	Description	Q'ty (A)	(B)	(C)	(D)	(E)	(F)	I	R
1	1	172528-26710	SHAFT, AXLE			4	4	4	4		
2	1	172527-26730	WASHER, W13X63X9			4	4	4	4		
3	1	172520-26740	SEAL TC6Y 70X88X12			4	4	4	4		
4	1	172527-26740	SHIM SET			4	4	4	4		
10	1	172520-26780	COVER, AXLE			4	4	4	4		
11	1	172527-26910	BOLT, M12X65			4	4	4	4		
12	1	24141-302110	BEARING, 30211			4	4	4	4		
13	1	24141-320110	BEARING, 32011			4	4	4	4		
14	1	24321-001100	O-RING, 1AG110.0			4	4	4	4		
15	1	26013-100402	BOLT, M10X 40			24	24	24	24		

N:Old ◄Yes/No► New, Q:Old ◄No/Yes► New, R:Old ◄Yes/Yes► New, S:Old ◄No/No► New, W:Add, Z:Discontinued, F:Interchangeable by set, K:Q'ty Change

Copyright (C) YANMAR CO., LTD. All RightsReserved.

Fig.30. FINAL GEAR(1)

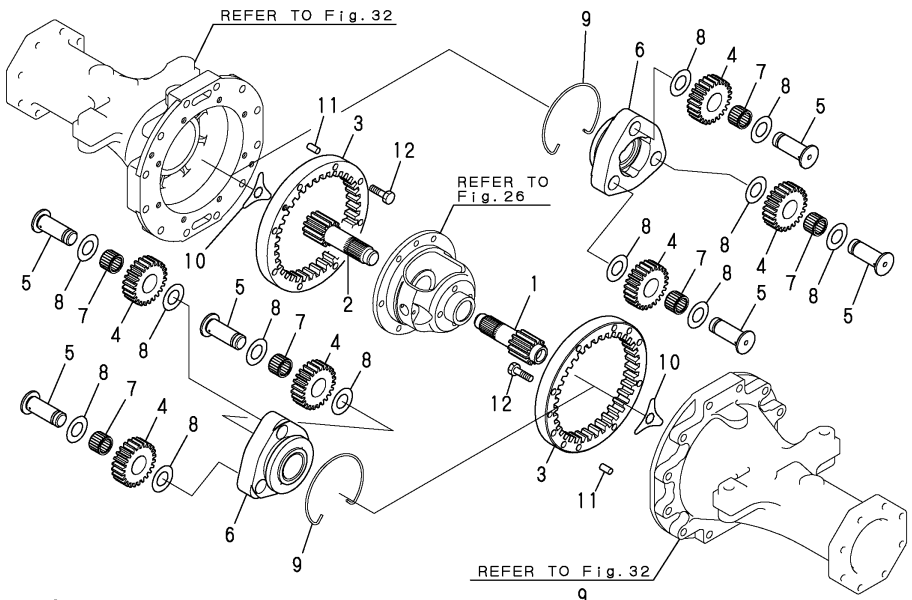

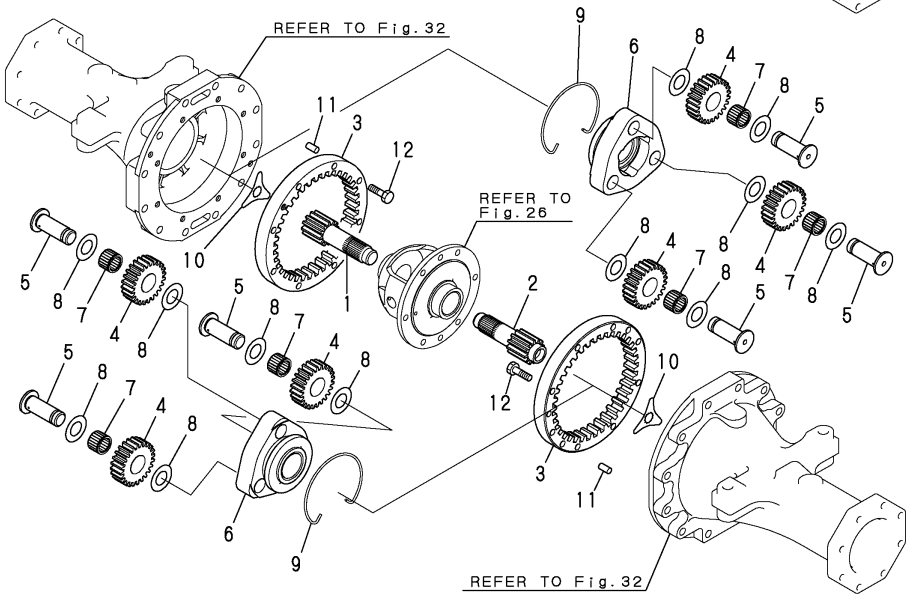

(A)=V3-5
(B)=V3-5(M/C)
(C)=V4-5
(D)=V4-5A
(E)=V5
(F)=V5-A

No.	Lev.	Parts No.	Description	Q'ty (A)	(B)	(C)	(D)	(E)	(F)	I	R
1	1	172527-28310	GEAR, SUN	2	2						
2	1	172527-28320	GEAR, SUN	2	2						
3	1	172527-28330	GEAR, INTERNAL	4	4						
4	1	198250-33540	PINION, PLANETARY	12	12						
5	1	198250-33550	SHAFT, PLANETARY	12	12						
6	1	198240-33570	CARRIER, PLANETARY	4	4						
7	1	198250-33570	NEEDLE, T253324	12	12						
8	1	194640-33590	WASHER, 25X42X1	24	24						
9	1	198240-33630	CIRCLIP, 124	4	4						
10	1	194640-34150	WASHER, THRUST	4	4						
11	1	22312-100200	PIN, PARALLEL M10X20	8	8						
12	1	26116-100352	BOLT, M10X 35 PLATED	32	32						

N:Old $\xleftarrow[\text{No}]{\text{Yes}}$ New, Q:Old $\xleftarrow[\text{Yes}]{\text{No}}$ New, R:Old $\xleftarrow[\text{Yes}]{\text{Yes}}$ New, S:Old $\xleftarrow[\text{No}]{\text{No}}$ New, W:Add, Z:Discontinued, F:Interchangeable by set, K:Q'ty Change

Copyright (C) YANMAR CO., LTD. All RightsReserved.

Fig.31. FINAL GEAR(2)

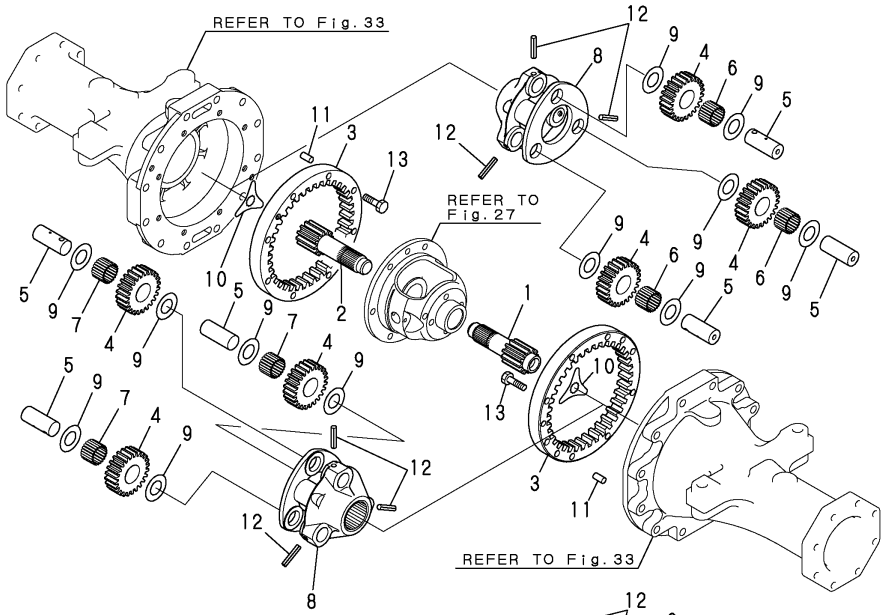

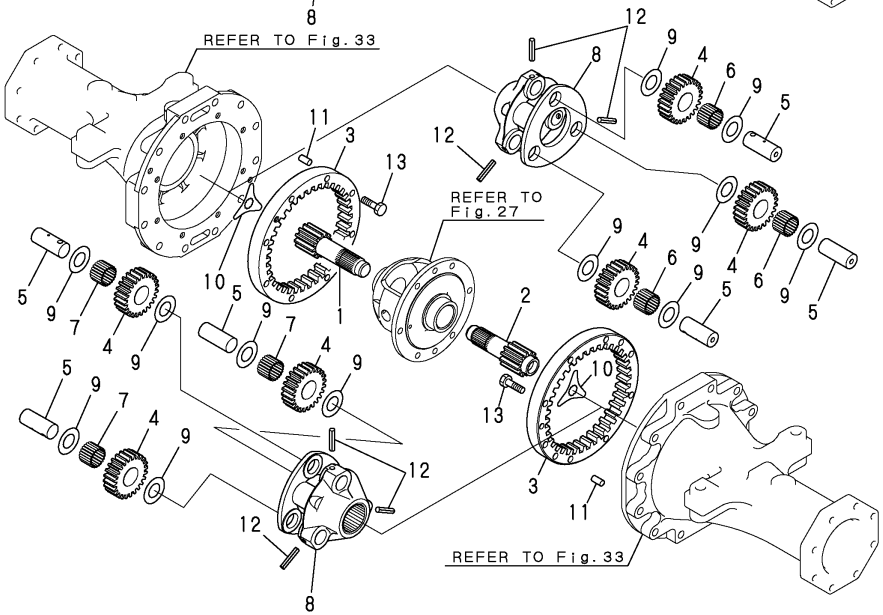

(A)=V3-5
(B)=V3-5(M/C)
(C)=V4-5
(D)=V4-5A
(E)=V5
(F)=V5-A

No.	Lev.	Parts No.	Description	Q'ty (A)	(B)	(C)	(D)	(E)	(F)	I	R
1	1	172528-28310	GEAR, SUN			2	2	2	2		
2	1	172528-28320	GEAR, SUN			2	2	2	2		
3	1	172528-28330	GEAR, INTERNAL			4	4	4	4		
4	1	198320-33540	PINION, PLANETARY			12	12	12	12		
5	1	198320-33550	SHAFT, PLANETARY			12	12	12	12		
6	1	198320-33560	NEEDLE, 4.5X31.8			6	6	6	6		
7	1	198320-33560	NEEDLE, 4.5X31.8			6	6	6	6		
8	1	198320-33570	CARRIER, PLANETARY			4	4	4	4		
9	1	198320-33620	WASHER, 26X42X1			24	24	24	24		
10	1	194640-34150	WASHER, THRUST			4	4	4	4		
11	1	22312-100200	PIN, PARALLEL M10X20			8	8	8	8		
12	1	22351-080040	PIN, SPRING 8.0X40			12	12	12	12		
13	1	26116-100452	BOLT, M10X 45 PLATED			32	32	32	32		

N:Old $\frac{\text{Yes}}{\text{No}}$ New, Q:Old $\frac{\text{No}}{\text{Yes}}$ New, R:Old $\frac{\text{Yes}}{\text{Yes}}$ New, S:Old $\frac{\text{No}}{\text{No}}$ New, W:Add, Z:Discontinued, F:Interchangeable by set, K:Q'ty Change

Copyright (C) YANMAR CO., LTD. All RightsReserved.

Fig.32. AXLE CASE(1)

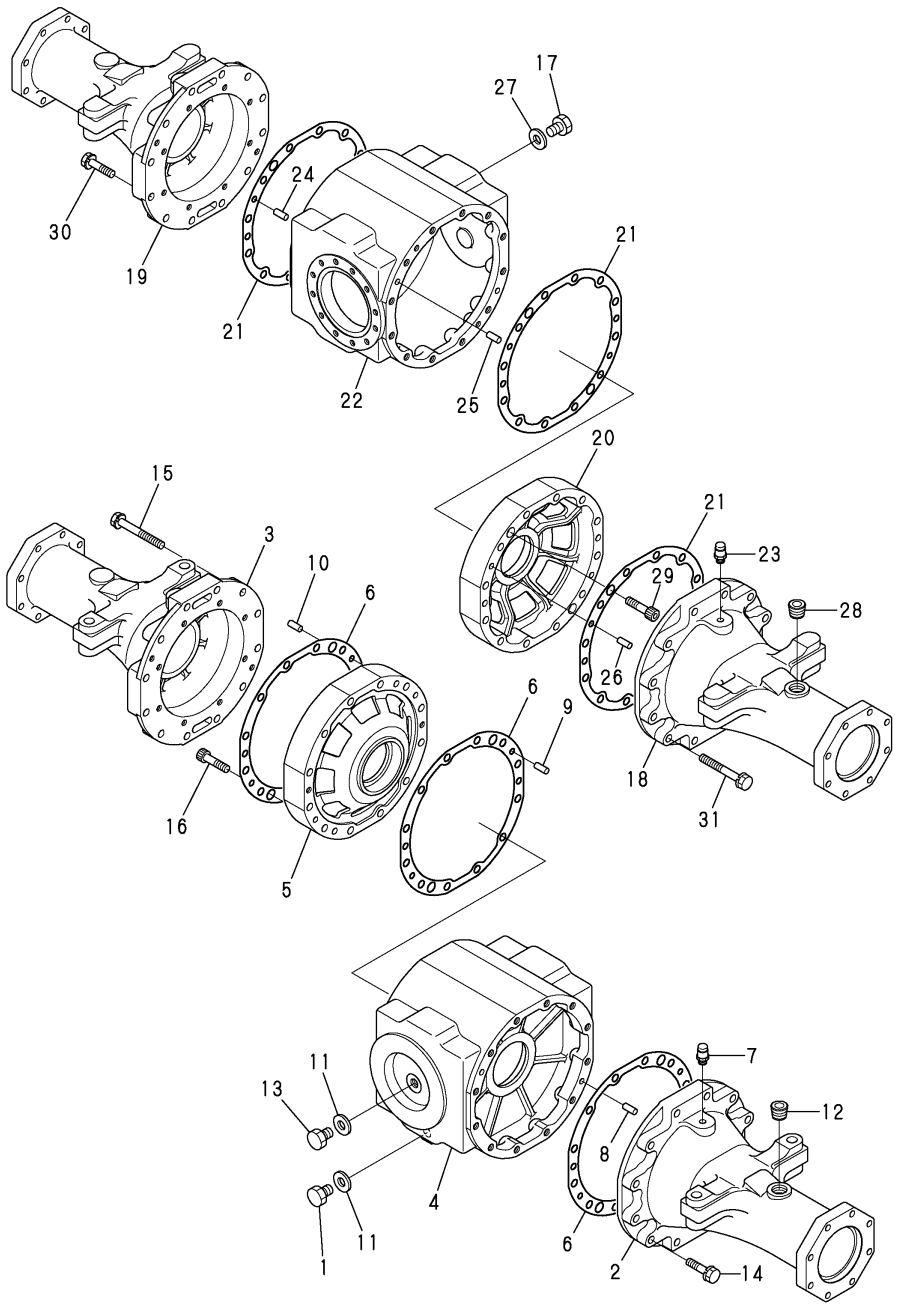

(A)=V3-5
(B)=V3-5(M/C)
(C)=V4-5
(D)=V4-5A
(E)=V5
(F)=V5-A

No.	Lev.	Parts No.	Description	Q'ty (A)	(B)	(C)	(D)	(E)	(F)	I	R
1	1	177035-02920	PLUG, MAGNET M16X1.5	1	1						
2	1	172527-31110	CASE, AXLE	1	1						
3	1	172527-31120	CASE, AXLE	1	1						
4	1	172527-31150	CASE	1	1						
5	1	172527-31160	HOLDER, BEARING	1	1						
6	1	172527-31170	GASKET, AXLE CASE	3	3						
7	1	1E6681-56621	BREATHER	1	1						
7-1	1	172527-35900	BREATHER(ACCEL.	1	1					N	
	(A=*2005.02)	(B=*2005.02)									
8	1	22312-100200	PIN, PARALLEL M10X20	2	2						
9	1	22312-100200	PIN, PARALLEL M10X20	2	2						
10	1	22312-100200	PIN, PARALLEL M10X20	2	2						
11	1	23414-160000	GASKET, 16X1.0	2	2						
12	1	23871-060000	PLUG, R06	1	1						
13	1	23887-160002	PLUG, 16	1	1						
14	1	26013-120502	BOLT, M12X 50	12	12						
15	1	26013-120952	BOLT, M12X 95	12	12						
16	1	26450-100452	BOLT, M10X 45	2	2						
17	1	177035-02920	PLUG, MAGNET M16X1.5	1	1						
18	1	172527-31130	CASE, AXLE	1	1						
19	1	172527-31140	CASE, AXLE	1	1						
20	1	172527-31160	HOLDER, BEARING	1	1						
21	1	172527-31170	GASKET, AXLE CASE	3	3						
22	1	172527-31250	CASE	1	1						
23	1	1E6681-56621	BREATHER	1	1						
23-1	1	172527-35900	BREATHER(ACCEL.	1	1					N	
	(A=*2005.02)	(B=*2005.02)									
24	1	22312-100200	PIN, PARALLEL M10X20	2	2						
25	1	22312-100200	PIN, PARALLEL M10X20	2	2						
26	1	22312-100200	PIN, PARALLEL M10X20	2	2						
27	1	23414-160000	GASKET, 16X1.0	1	1						
28	1	23871-060000	PLUG, R06	1	1						
29	1	26450-100452	BOLT, M10X 45	2	2						
30	1	26013-120502	BOLT, M12X 50	12	12						
31	1	26013-120952	BOLT, M12X 95	12	12						

N:Old $\frac{\text{Yes}}{\text{No}}$ New, Q:Old $\frac{\text{No}}{\text{Yes}}$ New, R:Old $\frac{\text{Yes}}{\text{Yes}}$ New, S:Old $\frac{\text{No}}{\text{No}}$ New, W:Add, Z:Discontinued, F:Interchangeable by set, K:Q'ty Change

Copyright (C) YANMAR CO., LTD. All RightsReserved.

Fig.33. AXLE CASE(2)

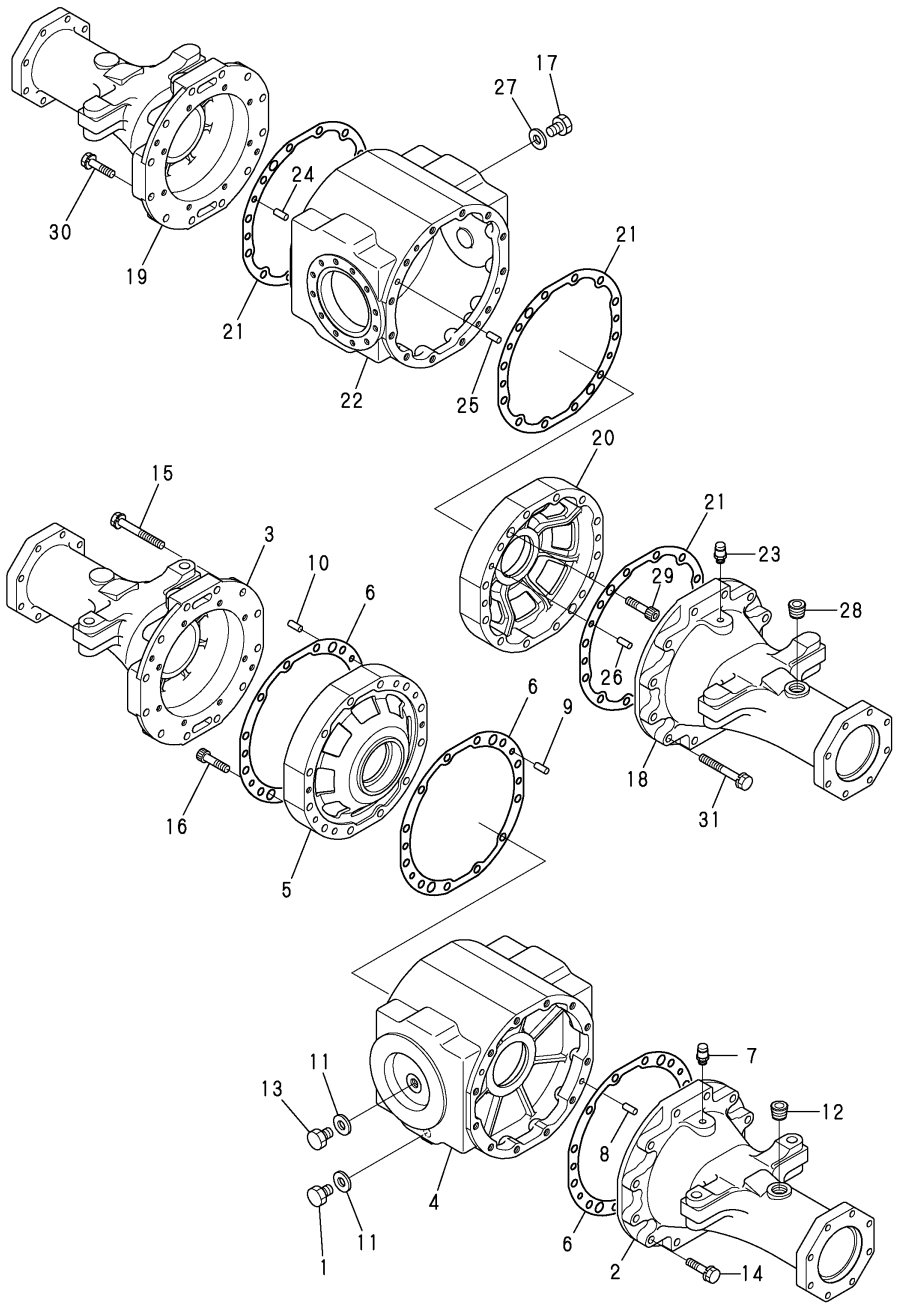

(A)=V3-5 (D)=V4-5A
(B)=V3-5(M/C) (E)=V5
(C)=V4-5 (F)=V5-A

No.	Lev.	Parts No.	Description	Q'ty (A)	(B)	(C)	(D)	(E)	(F)	I	R
1	1	177035-02920	PLUG, MAGNET M16X1.5			1	1	1	1		
2	1	172528-31110	CASE, AXLE			1	1	1	1		
3	1	172528-31120	CASE, AXLE			1	1	1	1		
4	1	172527-31150	CASE			1	1	1	1		
5	1	172527-31160	HOLDER, BEARING			1	1	1	1		
6	1	172527-31170	GASKET, AXLE CASE			3	3	3	3		
7	1	1E6681-56621	BREATHER			1	1	1	1		
7-1	1	172527-35900	BREATHER(ACCEL.			1	1	1	1	N	
			(C=*2005.02) (D=M/#52193)		(E=*2005.02)			(F=M/#02067)			
8	1	22312-100200	PIN, PARALLEL M10X20			2	2	2	2		
9	1	22312-100200	PIN, PARALLEL M10X20			2	2	2	2		
10	1	22312-100200	PIN, PARALLEL M10X20			2	2	2	2		
11	1	23414-160000	GASKET, 16X1.0			2	2	2	2		
12	1	23871-060000	PLUG, R06			1	1	1	1		
13	1	23887-160002	PLUG, 16			1	1	1	1		
14	1	26013-120502	BOLT, M12X 50			12	12	12	12		
15	1	26013-120952	BOLT, M12X 95			12	12	12	12		
16	1	26450-100452	BOLT, M10X 45			2	2	2	2		
17	1	177035-02920	PLUG, MAGNET M16X1.5			1	1	1	1		
18	1	172528-31130	CASE, AXLE			1	1	1	1		
19	1	172528-31140	CASE, AXLE			1	1	1	1		
20	1	172527-31160	HOLDER, BEARING			1	1	1	1		
21	1	172527-31170	GASKET, AXLE CASE			3	3	3	3		
22	1	172527-31250	CASE			1	1	1	1		
23	1	1E6681-56621	BREATHER			1	1	1	1		
23-1	1	172527-35900	BREATHER(ACCEL.			1	1	1	1	N	
			(C=*2005.02) (D=M/#52193)		(E=*2005.02)			(F=M/#02067)			
24	1	22312-100200	PIN, PARALLEL M10X20			2	2	2	2		
25	1	22312-100200	PIN, PARALLEL M10X20			2	2	2	2		
26	1	22312-100200	PIN, PARALLEL M10X20			2	2	2	2		
27	1	23414-160000	GASKET, 16X1.0			1	1	1	1		
28	1	23871-060000	PLUG, R06			1	1	1	1		
29	1	26450-100452	BOLT, M10X 45			2	2	2	2		
30	1	26013-120502	BOLT, M12X 50			12	12	12	12		
31	1	26013-120952	BOLT, M12X 95			12	12	12	12		

N:Old $\frac{\text{Yes}}{\text{No}}$ New, Q:Old $\frac{\text{No}}{\text{Yes}}$ New, R:Old $\frac{\text{Yes}}{\text{Yes}}$ New, S:Old $\frac{\text{No}}{\text{No}}$ New, W:Add, Z:Discontinued, F:Interchangeable by set, K:Q'ty Change

Copyright (C) YANMAR CO., LTD. All RightsReserved.

Fig.34. AXLE HOLDER

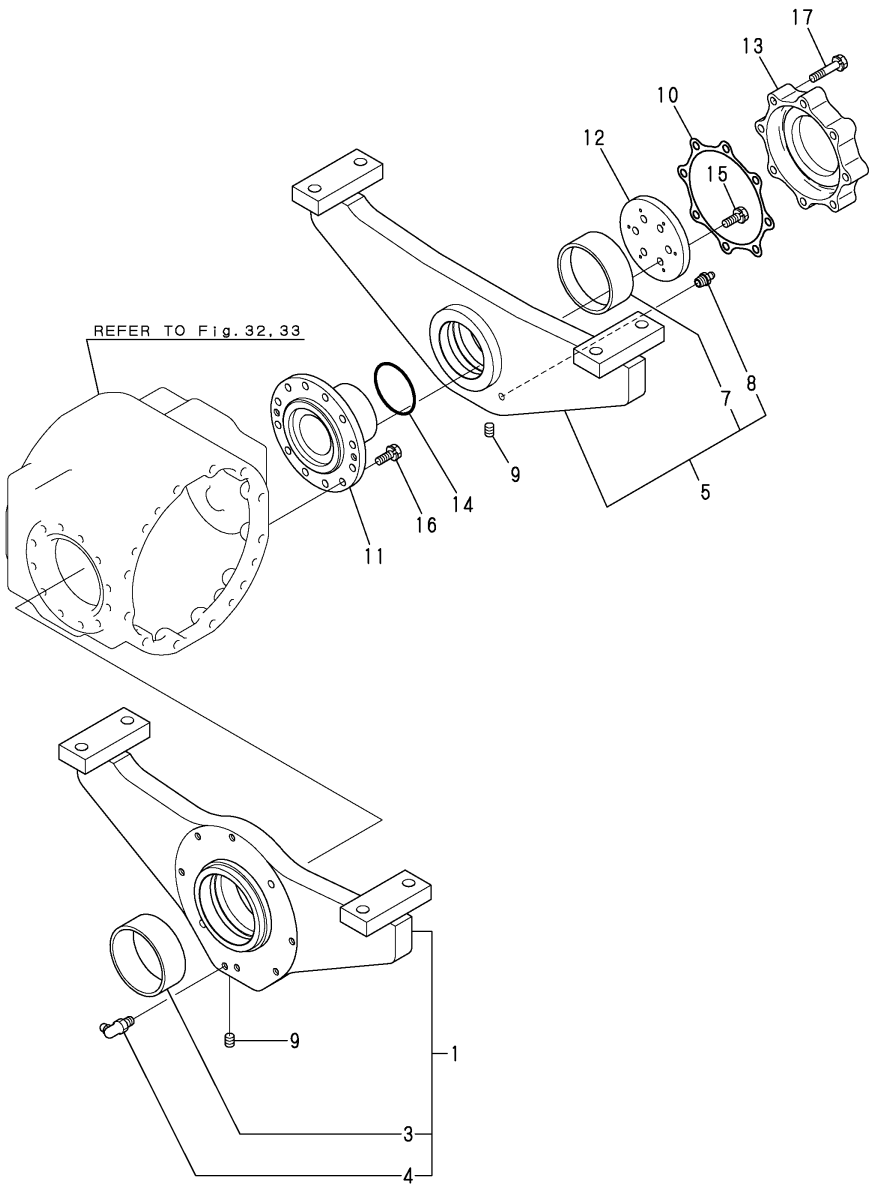

(A)=V3-5
(B)=V3-5(M/C)
(C)=V4-5
(D)=V4-5A
(E)=V5
(F)=V5-A

No.	Lev.	Parts No.	Description	Q'ty (A)	(B)	(C)	(D)	(E)	(F)	I	R
1	1	172527-33100	HOLDER ASSY, AXLE	1	1	1	1	1	1		
3	2	172513-52541	BUSH	1	1	1	1	1	1		
4	2	24764-040000	NIPPLE, GREASE B	1	1	1	1	1	1		
5	1	172527-33200	HOLDER, AXEL R	1	1	1	1	1	1		
7	2	172527-33260	BUSH, 85X40	1	1	1	1	1	1		
8	2	24764-020000	NIPPLE, GREASE R1/8	1	1	1	1	1	1		
9	1	23871-010000	PLUG, R01	2	2	2	2	2	2		
10	1	172527-31190	GASKET	1	1	1	1	1	1		
11	1	172527-33510	PIN	1	1	1	1	1	1		
12	1	172527-33520	PLATE	1	1	1	1	1	1		
13	1	172527-33530	COVER	1	1	1	1	1	1		
14	1	24311-000750	O-RING, 1AP75.0	1	1	1	1	1	1		
15	1	26013-100252	BOLT, M10X 25	6	6	6	6	6	6		
16	1	26013-100252	BOLT, M10X 25	12	12	12	12	12	12		
17	1	26013-100502	BOLT, M10X 50	8	8	8	8	8	8		

N:Old $\xleftarrow[\text{No}]{\text{Yes}}$ New, Q:Old $\xleftarrow[\text{Yes}]{\text{No}}$ New, R:Old $\xleftarrow[\text{Yes}]{\text{Yes}}$ New, S:Old $\xleftarrow[\text{No}]{\text{No}}$ New, W:Add, Z:Discontinued, F:Interchangeable by set, K:Q'ty Change

Copyright (C) YANMAR CO., LTD. All RightsReserved.

Fig.35. CENTER BRAKE

P/C NEWS No.:Y00K3603-1
PUBLISHED :2007/5

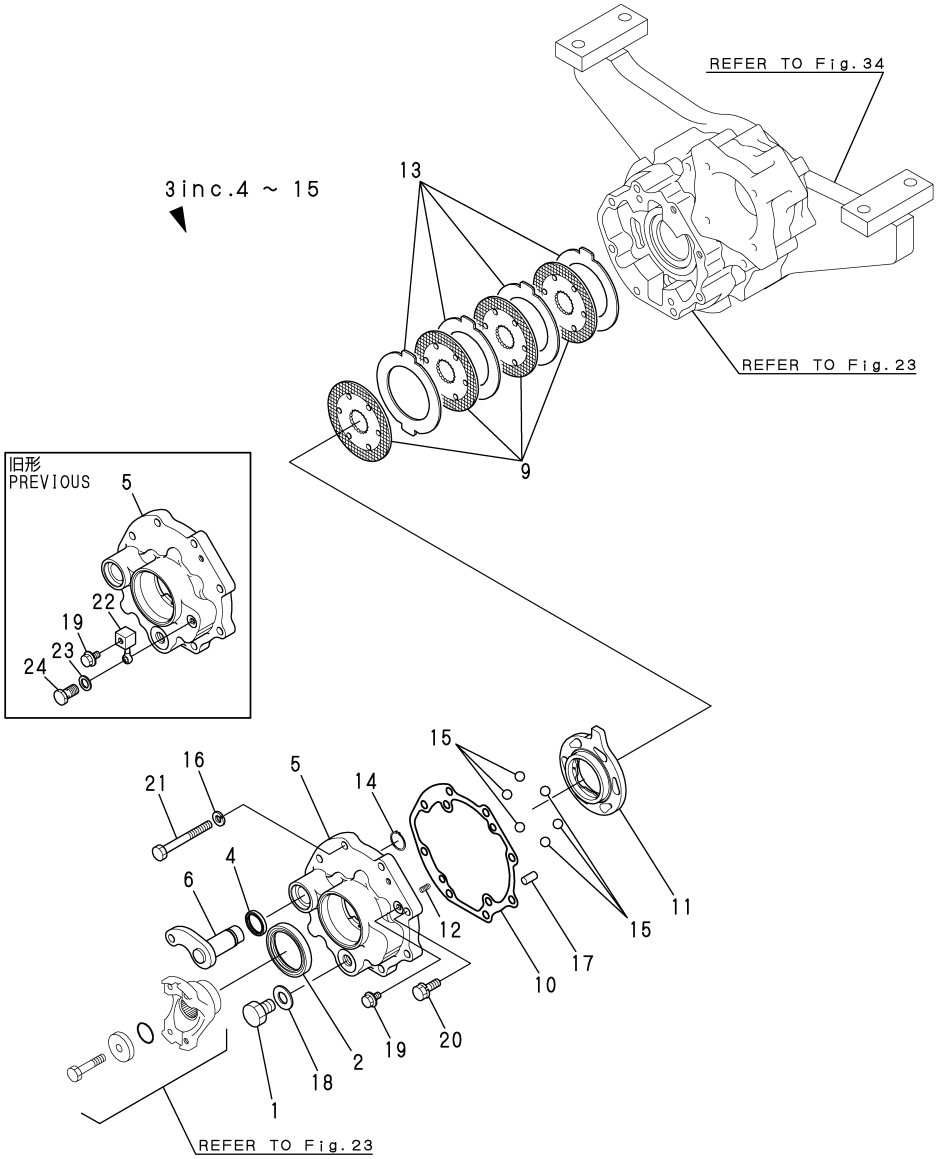

(A)=V3-5 (D)=V4-5A
(B)=V3-5(M/C) (E)=V5
(C)=V4-5 (F)=V5-A

No.	Lev.	Parts No.	Description	Q'ty (A)	(B)	(C)	(D)	(E)	(F)	I	R
1	1	177035-02920	PLUG, MAGNET M16X1.5	1	1	1	1	1	1		
2	1	194447-14140	SEAL, OIL TC6Y577512	1	1	1	1	1	1		
3	1	172527-34400	BRAKE ASSY	1	1	1	1	1	1		
4	2	198290-32750	SEAL, OIL TC253506	1	1	1	1	1	1		
5	2	172527-34410	CASE, BRAKE	1	1	1	1	1	1		
6	2	172527-34420	CAMSHAFT, BRAKE	1	1	1	1	1	1		
9	2	172527-34430	DISK, FRICTION	4	4	4	4	4	4		
10	2	172527-34440	GASKET, CASE	1	1	1	1	1	1		
11	2	198010-36310	ACTUATOR	1	1	1	1	1	1		
12	2	194205-36320	SPRING, ACTUATOR	2	2	2	2	2	2		
13	2	198010-36390	PLATE, STEEL 118	4	4	4	4	4	4		
14	2	22242-000250	RING, 25	1	1	1	1	1	1		
15	2	24190-160001	BALL, STEEL 1/2	6	6	6	6	6	6		
16	1	22217-100000	WASHER, SPRING 10	6	6	6	6	6	6		
17	1	22312-100200	PIN, PARALLEL M10X20	2	2	2	2	2	2		
18	1	23414-160000	GASKET, 16X1.0	1	1	1	1	1	1		
19	1	23490-080002	PLUG, 8	1	1	1	1	1	1		
20	1	26013-100302	BOLT, M10X 30	2	2	2	2	2	2		
21	1	26116-100902	BOLT, M10X 90 PLATED	6	6	6	6	6	6		
22	1	172527-34470	JOINT	1	1	1	1	1	1	Z	
	(A=M/#52501)	(B=M/#52501)	(C=M/#52001) (D=M/#52001)	(E=M/#02001)				(F=M/#02001)			
23	1	23414-080000	GASKET, 8X1.0	2	2	2	2	2	2	Z	
	(A=M/#52501)	(B=M/#52501)	(C=M/#52001) (D=M/#52001)	(E=M/#02001)				(F=M/#02001)			
24	1	23857-030000	BOLT, JOINT 3	1	1	1	1	1	1	Z	
	(A=M/#52501)	(B=M/#52501)	(C=M/#52001) (D=M/#52001)	(E=M/#02001)				(F=M/#02001)			

N:Old ←Yes/No→ New, Q:Old ←No/Yes→ New, R:Old ←Yes/Yes→ New, S:Old ←No/No→ New, W:Add, Z:Discontinued, F:Interchangeable by set, K:Q'ty Change

Copyright (C) YANMAR CO., LTD. All RightsReserved.

Fig.36. TIRE & DISK

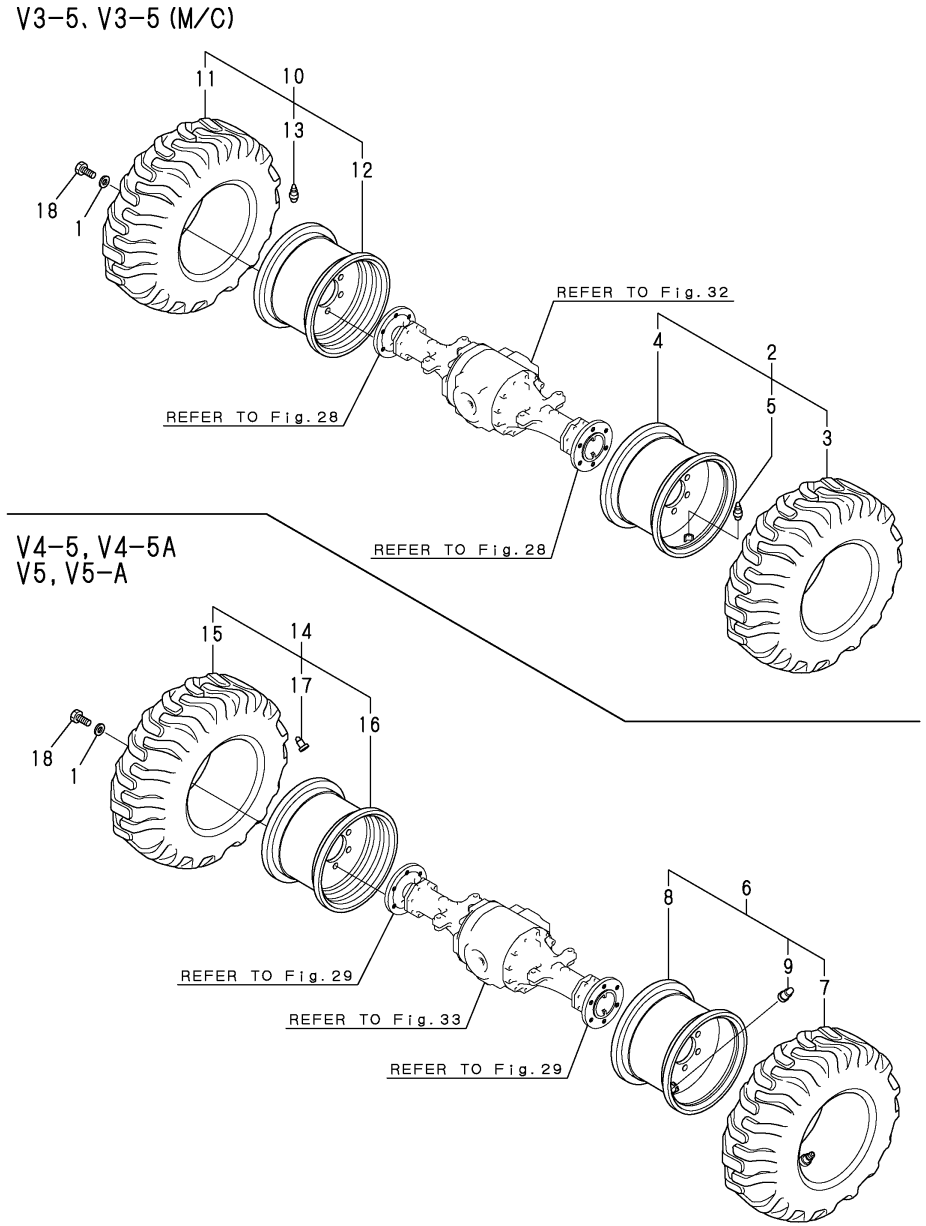

(A)=V3-5
(B)=V3-5(M/C)
(C)=V4-5
(D)=V4-5A
(E)=V5
(F)=V5-A

No.	Lev.	Parts No.	Description	Q'ty (A)	(B)	(C)	(D)	(E)	(F)	I	R
1	1	172520-31210	WASHER	24	24	24	24	24	24		
2	1	172527-35110	TIRE ASSY, L	2	2						
3	2	172516-35130	TIRE	2	2						
4	2	172527-35150	DISK	2	2						
5	2	172513-35161	VALVE	2	2						
6	1	172528-35110	TIRE ASSY, L			2	2	2	2		
7	2	172522-35130	TIRE			2	2	2	2		
8	2	172528-35150	DISK			2	2	2	2		
9	2	172513-35161	VALVE			2	2	2	2		
10	1	172527-35120	TIRE ASSY, R	2	2						
11	2	172516-35130	TIRE	2	2						
12	2	172527-35150	DISK	2	2						
13	2	172513-35161	VALVE	2	2						
14	1	172528-35120	TIRE ASSY, R			2	2	2	2		
15	2	172522-35130	TIRE			2	2	2	2		
16	2	172528-35150	DISK			2	2	2	2		
17	2	172513-35161	VALVE			2	2	2	2		
18	1	26156-200352	BOLT, M20X 35 PLATED	24	24	24	24	24	24		

N:Old $\xleftrightarrow[\text{No}]{\text{Yes}}$ New, Q:Old $\xleftrightarrow[\text{Yes}]{\text{No}}$ New, R:Old $\xleftrightarrow[\text{Yes}]{\text{Yes}}$ New, S:Old $\xleftrightarrow[\text{No}]{\text{No}}$ New, W:Add, Z:Discontinued, F:Interchangeable by set, K:Q'ty Change

Copyright (C) YANMAR CO., LTD. All RightsReserved.

Fig.37. UNIQUE TIRE(OPTIONAL)

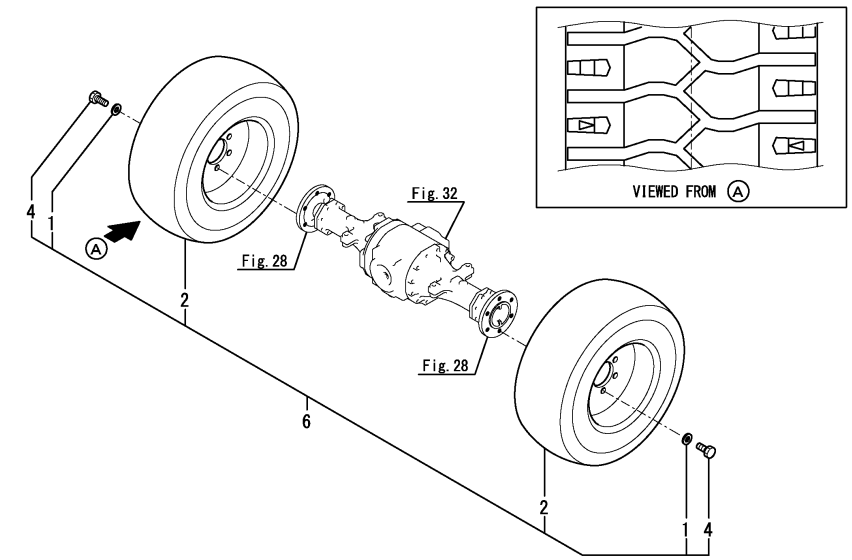

V3-5, V3-5(M/C)

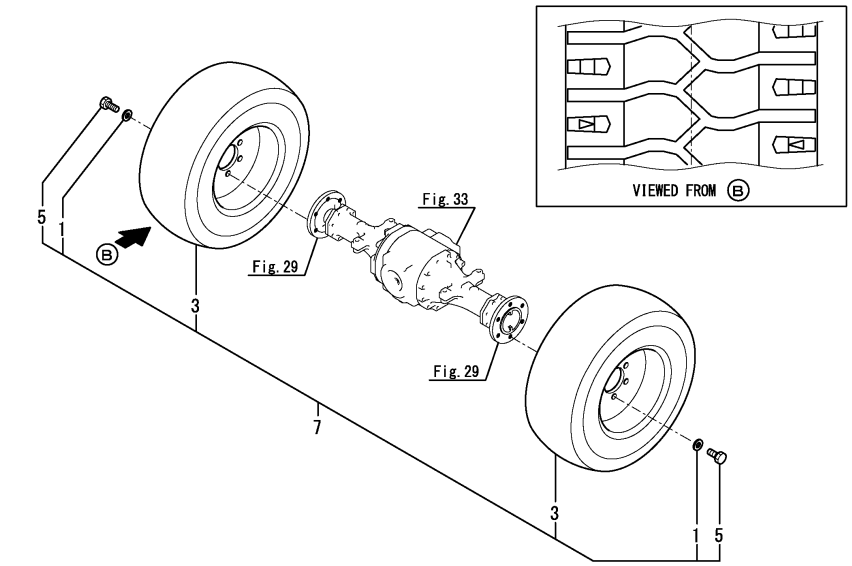

V4-5, V4-5A
V5, V5-A

Remarks
(1)Include No.1, 2 & 4.
(2)Include No.1, 3 & 5.

(A)=V3-5
(B)=V3-5(M/C)
(C)=V4-5
(D)=V4-5A
(E)=V5
(F)=V5-A

No.	Lev.	Parts No.	Description	Q'ty (A)	(B)	(C)	(D)	(E)	(F)	I	R
1	1	172520-31210	WASHER	24	24	24	24	24	24		
2	1	172527-35210	TIRE ASSY, UNIQUE	4	4						
3	1	172528-35210	TIRE, UNIQUE			4	4	4	4		
4	1	26156-200352	BOLT, M20X 35 PLATED	24	24						
5	1	26156-200402	BOLT, M20X 40 PLATED			24	24	24	24		
6	1	172538-08560	TIRE KIT, NO-PUNC	1	1						1
7	1	172539-08560	TIRE KIT, NO-PUNC			1	1	1	1		2

N:Old $\frac{\text{Yes}}{\text{No}}$ New, Q:Old $\frac{\text{No}}{\text{Yes}}$ New, R:Old $\frac{\text{Yes}}{\text{Yes}}$ New, S:Old $\frac{\text{No}}{\text{No}}$ New, W:Add, Z:Discontinued, F:Interchangeable by set, K:Q'ty Change

Copyright (C) YANMAR CO., LTD. All RightsReserved.

Fig.38. SNOW TIRE(OPTIONAL)

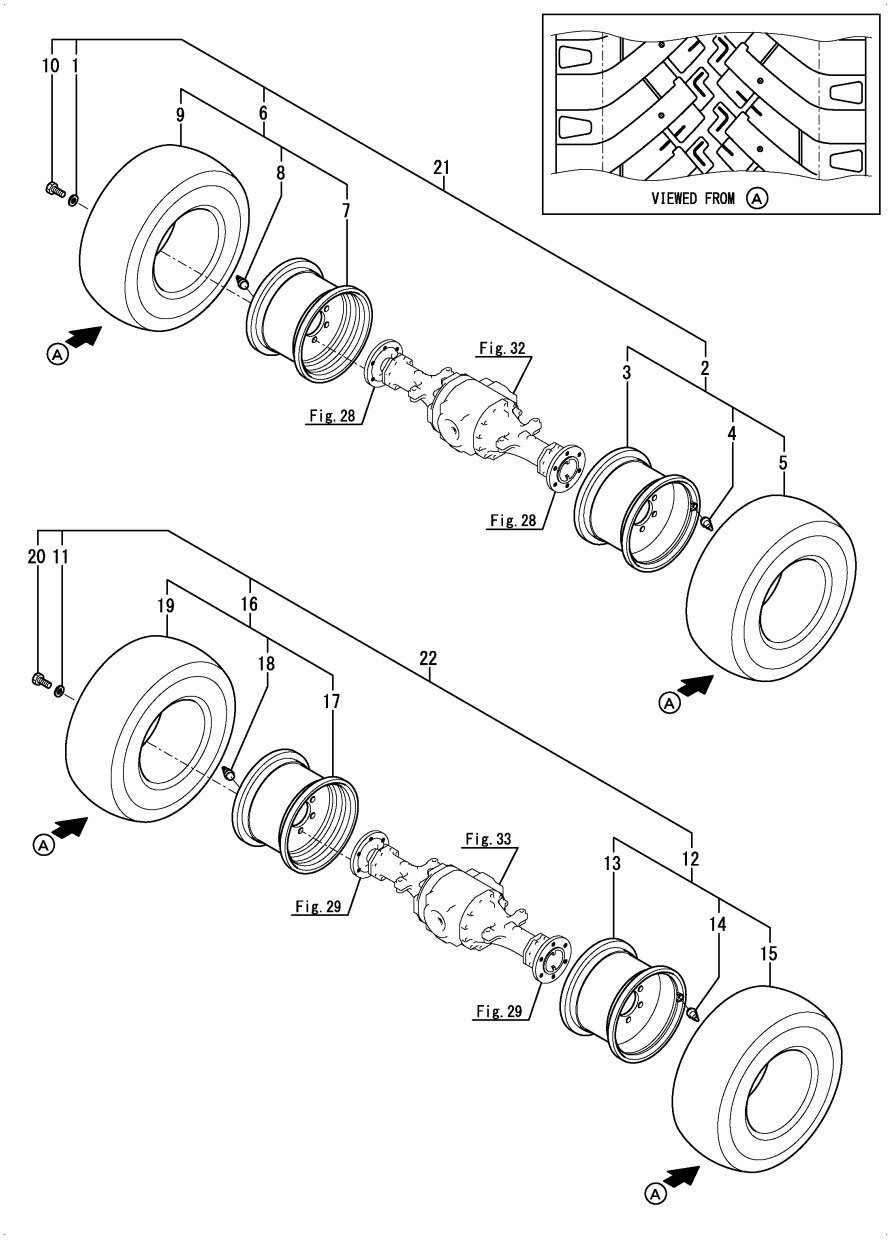

(A)=V3-5
(B)=V3-5(M/C)
(C)=V4-5
(D)=V4-5A
(E)=V5
(F)=V5-A

No.	Lev.	Parts No.	Description	Q'ty (A)	(B)	(C)	(D)	(E)	(F)	I	R
1	1	172520-31210	WASHER	24	24						
2	1	172527-35310	TIRE ASSY, SNOW L	2	2						
3	2	172527-35150	DISK	2	2						
4	2	172513-35161	VALVE	2	2						
5	2	172527-35330	SNOW TIRE	2	2						
6	1	172527-35320	TIRE ASSY, SNOW R	2	2						
7	2	172527-35150	DISK	2	2						
8	2	172513-35161	VALVE	2	2						
9	2	172527-35330	SNOW TIRE	2	2						
10	1	26156-200352	BOLT, M20X 35 PLATED	24	24						
11	1	172520-31210	WASHER				24		24		
12	1	172528-35310	TIRE ASSY, SNOW L				2		2		
13	2	172528-35150	DISK				2		2		
14	2	172522-35160	VALVE (TR618A				2		2		
15	2	172528-35330	TIRE, SNOW				2		2		
16	1	172528-35320	TIRE ASSY, SNOW R				2		2		
17	2	172528-35150	DISK				2		2		
18	2	172522-35160	VALVE (TR618A				2		2		
19	2	172528-35330	TIRE, SNOW				2		2		
20	1	26156-200352	BOLT, M20X 35 PLATED				24		24		
21	1	172538-08550	TIRE KIT, SNOW	1	1						1
22	1	172539-08550	TIRE KIT, SNOW				1		1		2

Remarks
(1)Include No.1 to No.10.
(2)Include No.11 to No.20.

N:Old $\overset{\text{Yes}}{\underset{\text{No}}{\leftrightarrow}}$ New, Q:Old $\overset{\text{No}}{\underset{\text{Yes}}{\leftrightarrow}}$ New, R:Old $\overset{\text{Yes}}{\underset{\text{Yes}}{\leftrightarrow}}$ New, S:Old $\overset{\text{No}}{\underset{\text{No}}{\leftrightarrow}}$ New, W:Add, Z:Discontinued, F:Interchangeable by set, K:Q'ty Change

Copyright (C) YANMAR CO., LTD. All RightsReserved.

Fig.39. TIRE(PLATED)(OPTIONAL)

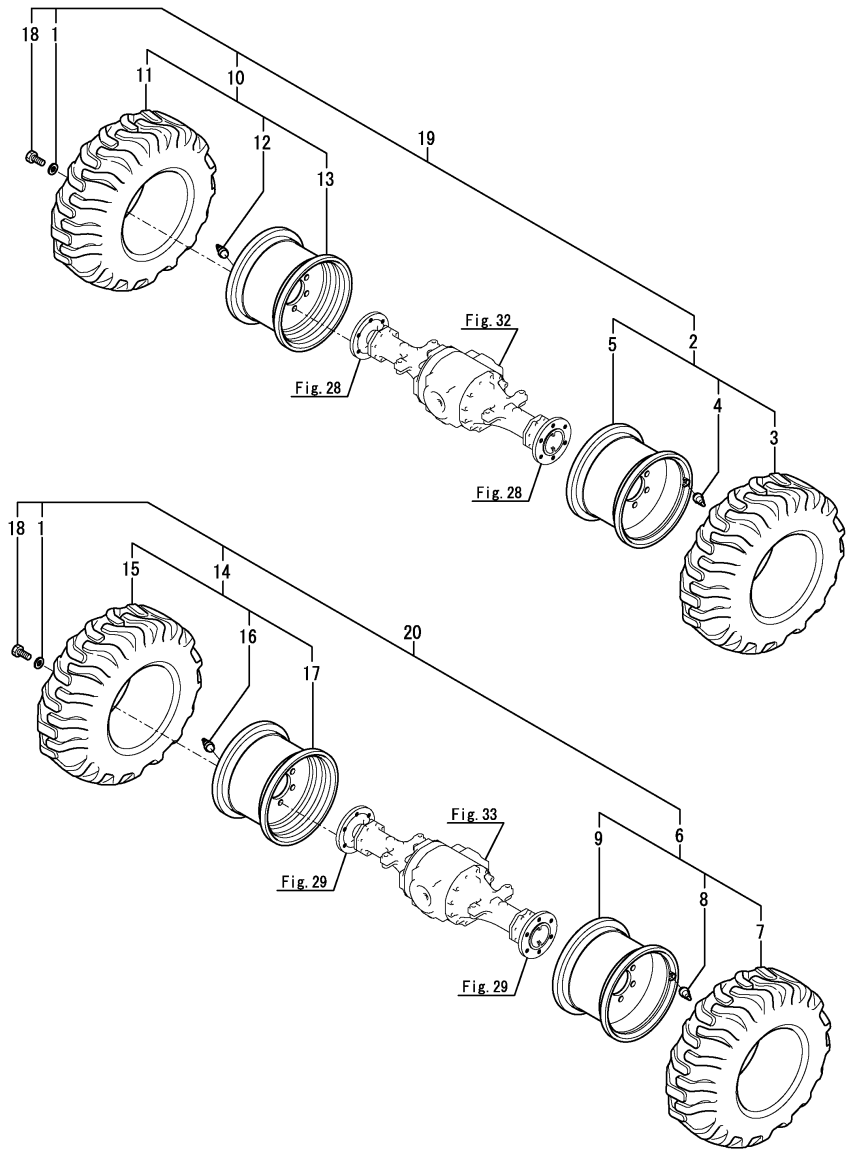

(A)=V3-5 (D)=V4-5A
(B)=V3-5(M/C) (E)=V5
(C)=V4-5 (F)=V5-A

No.	Lev.	Parts No.	Description	Q'ty (A)	(B)	(C)	(D)	(E)	(F)	I	R
1	1	172520-31210	WASHER	24	24	24	24	24	24		
2	1	172527-35410	TIRE M ASSY L	2							
2-1	1	172527-35411	TIRE ASSY, L	2	2					N	
	(A=M/#51514)										
3	2	172516-35130	TIRE	2	2						
4	2	172513-35161	VALVE	2	2						
5	2	172527-35450	DISK M	2							
5-1	2	172527-35451	DISK	2	2					N	
	(A=M/#51514)										
6	1	172528-35410	TIRE M ASSY L			2		2			
6-1	1	172528-35411	TIRE ASSY			2	2	2	2	N	
			(C=*2002.07.)	(E=M/#01099)							
7	2	172522-35130	TIRE			2	2	2	2		
8	2	172522-35160	VALVE (TR618A			2	2	2	2		
9	2	172528-35450	DISK			2		2			
9-1	2	172528-35451	DISK			2	2	2	2	N	
			(C=*2002.07.)	(E=M/#01099)							
10	1	172527-35420	TIRE ASSY, R	2							
10-1	1	172527-35421	TIRE ASSY, R	2	2					N	
	(A=M/#51514)										
11	2	172516-35130	TIRE	2	2						
12	2	172513-35161	VALVE	2	2						
13	2	172527-35450	DISK M	2							
13-1	2	172527-35451	DISK	2	2					N	
	(A=M/#51514)										
14	1	172528-35420	TIRE M ASSY R			2		2			
14-1	1	172528-35421	TIRE ASSY			2	2	2	2	N	
			(C=*2002.07.)	(E=M/#01099)							
15	2	172522-35130	TIRE			2	2	2	2		
16	2	172522-35160	VALVE (TR618A			2	2	2	2		
17	2	172528-35450	DISK			2		2			
17-1	2	172528-35451	DISK			2	2	2	2	N	
			(C=*2002.07.)	(E=M/#01099)							
18	1	26156-200352	BOLT, M20X 35 PLATED	24	24	24	24	24	24		
19	1	172538-08570	TIRE KIT, PLATING	1	1						1
20	1	172539-08570	TIRE KIT, PLATING			1	1	1	1		2

Remarks
(1)Include No.1, 2-1, 10-1 & 18.
(2)Include No.1, 6-1, 14-1 & 18.

N:Old $\frac{\text{Yes}}{\text{No}}$ New, Q:Old $\frac{\text{No}}{\text{Yes}}$ New, R:Old $\frac{\text{Yes}}{\text{Yes}}$ New, S:Old $\frac{\text{No}}{\text{No}}$ New, W:Add, Z:Discontinued, F:Interchangeable by set, K:Q'ty Change

Copyright (C) YANMAR CO., LTD. All RightsReserved.

Fig.40. INCHING PEDAL

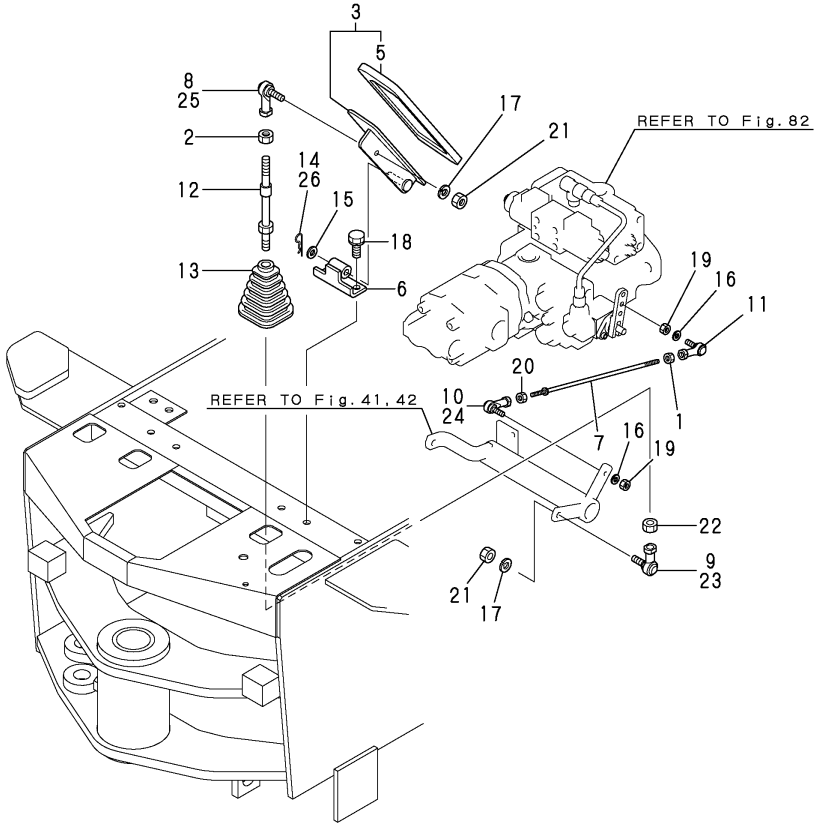

(A)=V3-5 (D)=V4-5A
(B)=V3-5(M/C) (E)=V5
(C)=V4-5 (F)=V5-A

No.	Lev.	Parts No.	Description	Q'ty (A)	(B)	(C)	(D)	(E)	(F)	I	R
1	1	194130-01390	NUT, M6	1	1	1	1	1	1		
2	1	194990-20170	NUT, M8	1	1	1	1	1	1		
3	1	172527-42100	PEDAL ASSY, INCHING	1	1	1	1	1	1		
5	2	172524-42180	PAD, PEDAL	1	1	1	1	1	1		
6	1	172527-42140	STAY	1	1	1	1	1	1		
7	1	172527-42170	LINK ROD	1	1	1	1	1	1		
8	1	172527-42210	END, ROD	1		1		1			
9	1	172527-42220	BEARING, ROD-END	1		1		1			
10	1	172527-42230	LINK BALL,6D	1		1		1			
11	1	172527-42240	BALL, LINK 6L	1	1	1	1	1	1		
12	1	172524-42360	LINK ROD	1	1	1	1	1	1		
13	1	172520-46150	BOOT	1	1	1	1	1	1		
14	1	1C6360-65700	PIN, SNAP 10	1		1		1			
15	1	22137-100000	WASHER, 10	1	1	1	1	1	1		
16	1	22217-060000	WASHER, SPRING 6	2	2	2	2	2	2		
17	1	22217-080000	WASHER, SPRING 8	2	2	2	2	2	2		
18	1	26013-100252	BOLT, M10X 25	2	2	2	2	2	2		
19	1	26716-060002	NUT, M6	2	2	2	2	2	2		
20	1	26716-060002	NUT, M6	1	1	1	1	1	1		
21	1	26716-080002	NUT, M8	2	2	2	2	2	2		
22	1	26716-080002	NUT, M8	1	1	1	1	1	1		
23	1	1E4760-43090	BALL RBL8,LINK		1		1		1		
24	1	172446-45820	LINK BALL 6		1		1		1		
25	1	1E6740-64200	BALL, LINK		1		1		1		
26	1	22372-100000	PIN, SNAP 10		1		1		1		

N:Old $\xleftrightarrow[\text{No}]{\text{Yes}}$ New, Q:Old $\xleftrightarrow[\text{Yes}]{\text{No}}$ New, R:Old $\xleftrightarrow[\text{Yes}]{\text{Yes}}$ New, S:Old $\xleftrightarrow[\text{No}]{\text{No}}$ New, W:Add, Z:Discontinued, F:Interchangeable by set, K:Q'ty Change

Copyright (C) YANMAR CO., LTD. All RightsReserved.

Fig.41. BRAKE PEDAL(1)

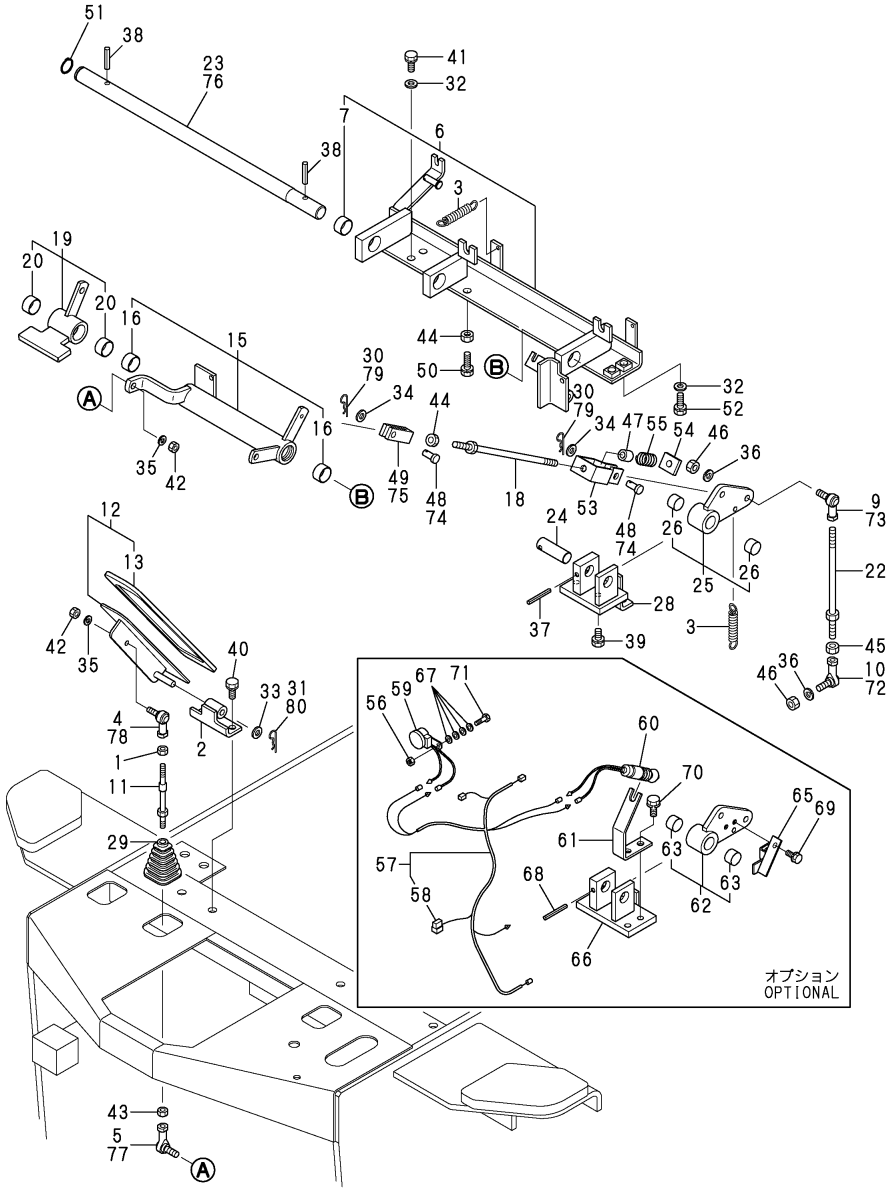

(A)=V3-5
(B)=V3-5(M/C)
(C)=V4-5
(D)=V4-5A
(E)=V5
(F)=V5-A

No.	Lev.	Parts No.	Description	Q'ty (A)	(B)	(C)	(D)	(E)	(F)	I	R
1	1	194990-20170	NUT, M8	1	1						
2	1	172527-42140	STAY	1	1						
3	1	172524-42190	SPRING, RETURN	2	2						
4	1	172527-42210	END, ROD	1							
5	1	172527-42220	BEARING, ROD-END	1							
6	1	172527-42300	HOLDER,CAM	1	1						
7	2	172513-42420	LINER M 2515	3							
7-1	2	24550-025150	BUSH, 25X15	3	3					N	
	(A=MXXX)										
9	1	172527-42330	LINK BALL,10LD	1							
10	1	172527-42340	LINK BALL,10D	1							
11	1	172524-42360	LINK ROD	1	1						
12	1	172527-42400	PEDAL, BRAKE	1	1						
13	2	172524-42180	PAD, PEDAL	1	1						
15	1	172527-42500	CAM ASSY, LINK	1	1						
16	2	172513-42420	LINER M 2515	2							
16-1	2	24550-025150	BUSH, 25X15	2	2					N	
	(A=MXXX)										
18	1	172524-42520	ROD B,LINK	1	1						
19	1	172527-42600	CAM ASSY, LINK	1	1						
20	2	172513-42420	LINER M 2515	2							
20-1	2	24550-025150	BUSH, 25X15	2	2					N	
	(A=MXXX)										
22	1	172522-42620	LINK ROD	1	1						
23	1	172527-42670	SHAFT, 25X556	1							
24	1	172527-42680	SHAFT	1	1						
25	1	172527-42700	CAM ASSY, LINK	1	1						
26	2	172511-12220	LINER M 2015	2							
26-1	2	24550-020150	BUSH, 20X15	2	2					N	
	(A=MXXX)										
28	1	172527-42730	HOLDER,CAM B	1	1						
29	1	172520-46150	BOOT	1	1						
30	1	1C6360-65700	PIN, SNAP 10	2							
31	1	1C6360-65700	PIN, SNAP 10	1							
32	1	22137-100000	WASHER, 10	4	4						
33	1	22137-100000	WASHER, 10	1	1						
34	1	22137-100000	WASHER, 10	2	2						
35	1	22217-080000	WASHER, SPRING 8	2	2						
36	1	22217-100000	WASHER, SPRING 10	2	2						
37	1	22351-060050	PIN, SPRING 6.0X50	1	1						
38	1	22351-080040	PIN, SPRING 8.0X40	2	2						
39	1	26013-100202	BOLT, M10X 20	2	2						
40	1	26013-100252	BOLT, M10X 25	2	2						
41	1	26013-100252	BOLT, M10X 25	2	2						
42	1	26716-080002	NUT, M8	2	2						
43	1	26716-080002	NUT, M8	1	1						
44	1	26716-100002	NUT, M10	2	2						
45	1	26736-100002	NUT, M10	1	1						
46	1	26736-100002	NUT, M10	2	2						
47	1	1C6410-52690	COLLAR, 11X14X27	1	1						
48	1	981083-27340	PIN 10X22	2							

Remarks
(1)OPTIONAL

N:Old $\xleftrightarrow[\text{No}]{\text{Yes}}$ New, Q:Old $\xleftrightarrow[\text{Yes}]{\text{No}}$ New, R:Old $\xleftrightarrow[\text{Yes}]{\text{Yes}}$ New, S:Old $\xleftrightarrow[\text{No}]{\text{No}}$ New, W:Add, Z:Discontinued, F:Interchangeable by set, K:Q'ty Change

++ CONTINUE ++

Copyright (C) YANMAR CO., LTD. All RightsReserved.

Fig.41. BRAKE PEDAL(1)

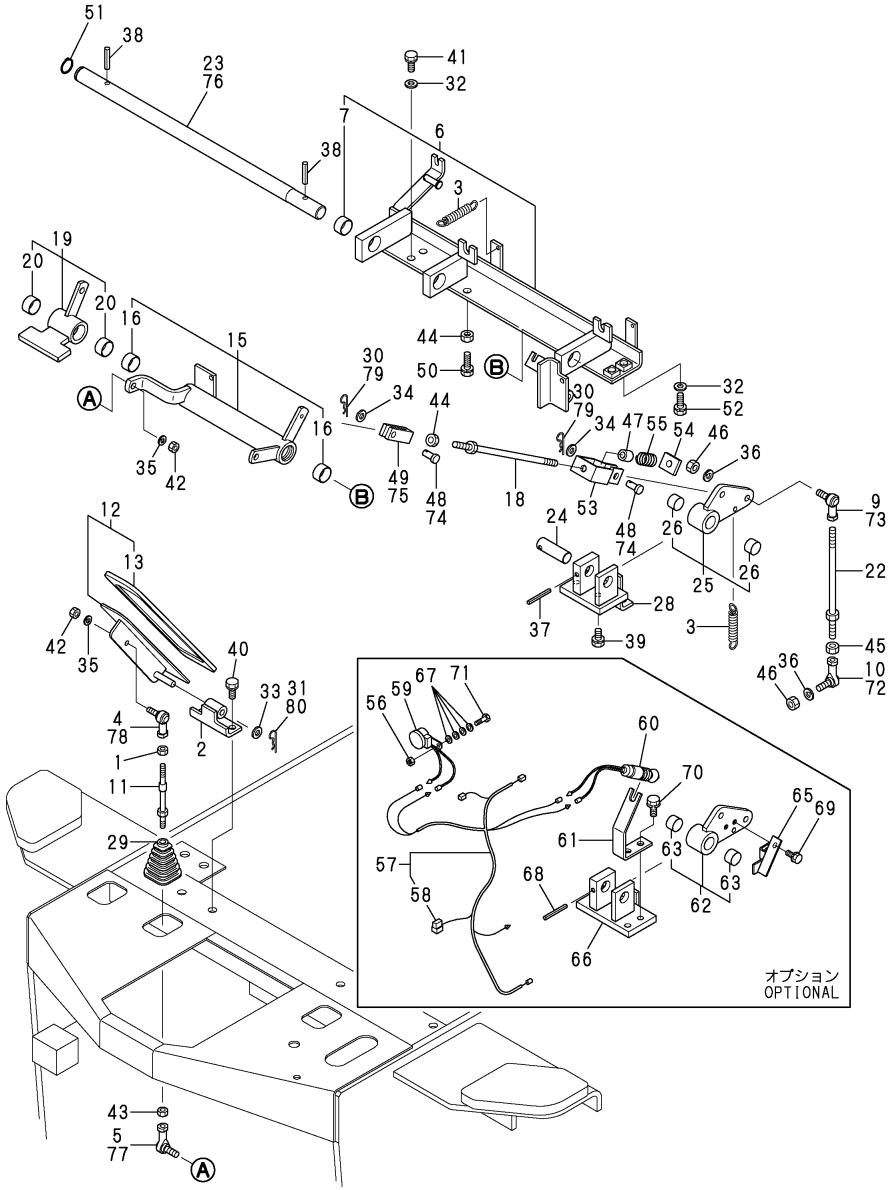

(A)=V3-5
(B)=V3-5(M/C)
(C)=V4-5
(D)=V4-5A
(E)=V5
(F)=V5-A

No.	Lev.	Parts No.	Description	Q'ty (A)	(B)	(C)	(D)	(E)	(F)	I	R
49	1	981083-27520	JOINT, FORKED	1							
50	1	26116-100454	BOLT, M10X 45 PLATED	1	1						
51	1	22242-000250	RING, 25	1	1						
52	1	26013-100352	BOLT, M10X 35	2	2						
53	1	172527-42010	CONNECTOR	1	1						
54	1	172527-42020	NUT	1	1						
55	1	172527-42030	SPRING, 415X19.5X32	1	1						
56	1	26716-060002	NUT, M6	1							1
57	1	172527-16360	HARNESS,WIRE P	1							1
58	2	119643-66900	DIODE	1							1
59	1	172141-17150	BUZZER	1							1
60	1	172524-17280	SWITCH, STOP LAMP	1							1
61	1	172527-43110	HOLDER	1							1
62	1	172527-43120	CAM ASSY, LINK	1							1
63	2	172511-12220	LINER M 2015	2							1
63-1	2 (A=MXXX)	24550-020150	BUSH, 20X15	2						S	1
65	1	172527-43150	PLATE	1							1
66	1	172527-43160	HOLDER	1							1
67	1	22137-060000	WASHER, 6	4							1
68	1	22351-060050	PIN, SPRING 6.0X50	1							1
69	1	26013-080162	BOLT, M8X 16	2							1
70	1	26013-100202	BOLT, M10X 20	2							1
71	1	26116-060202	BOLT, M6X 20 PLATED	1							1
72	1	1A6210-16150	BALL, LINK BL10D		1						
73	1	1A6210-16160	BALL, LINK BL10DL		1						
74	1	172527-42190	PIN, 10X22		2						
75	1	172527-42200	JOINT		1						
76	1	172527-42671	SHAFT, 25X566		1						
77	1	1E4760-43090	BALL RBL8,LINK		1						
78	1	1E6740-64200	BALL, LINK		1						
79	1	22372-100000	PIN, SNAP 10		2						
80	1	22372-100000	PIN, SNAP 10		1						

Remarks
(1)OPTIONAL

N:Old $\xleftrightarrow[\text{No}]{\text{Yes}}$ New, Q:Old $\xleftrightarrow[\text{Yes}]{\text{No}}$ New, R:Old $\xleftrightarrow[\text{Yes}]{\text{Yes}}$ New, S:Old $\xleftrightarrow[\text{No}]{\text{No}}$ New, W:Add, Z:Discontinued, F:Interchangeable by set, K:Q'ty Change

Copyright (C) YANMAR CO., LTD. All RightsReserved.

Fig.42. BRAKE PEDAL(2)

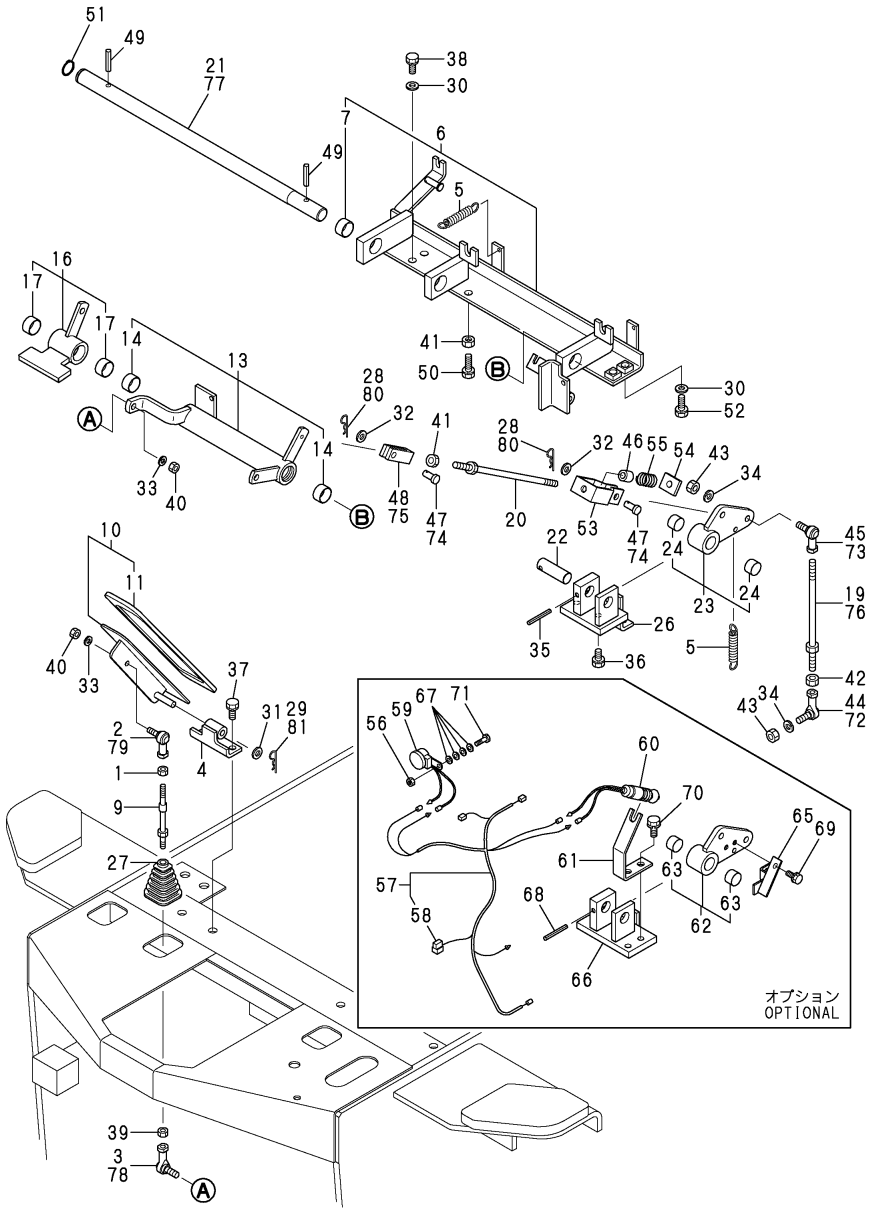

(A)=V3-5 (B)=V3-5(M/C) (C)=V4-5 (D)=V4-5A (E)=V5 (F)=V5-A

No.	Lev.	Parts No.	Description	Q'ty (A)	(B)	(C)	(D)	(E)	(F)	I	R
1	1	194990-20170	NUT, M8			1	1	1	1		
2	1	172527-42210	END, ROD			1		1			
3	1	172527-42220	BEARING, ROD-END			1		1			
4	1	172527-42140	STAY			1	1	1	1		
5	1	172524-42190	SPRING, RETURN			2	2	2	2		
6	1	172527-42300	HOLDER,CAM			1	1	1	1		
7	2	172513-42420	LINER M 2515			3		3			
7-1	2	24550-025150	BUSH, 25X15			3	3	3	3	S	
			(C=MXXX)		(E=MXXX)						
9	1	172524-42360	LINK ROD			1	1	1	1		
10	1	172527-42400	PEDAL, BRAKE			1	1	1	1		
11	2	172524-42180	PAD, PEDAL			1	1	1	1		
13	1	172527-42500	CAM ASSY, LINK			1	1	1	1		
14	2	172513-42420	LINER M 2515			2		2			
14-1	2	24550-025150	BUSH, 25X15			2	2	2	2	S	
			(C=MXXX)		(E=MXXX)						
16	1	172527-42600	CAM ASSY, LINK			1	1	1	1		
17	2	172513-42420	LINER M 2515			2		2			
17-1	2	24550-025150	BUSH, 25X15			2	2	2	2	S	
			(C=MXXX)		(E=MXXX)						
19	1	172528-42620	LINK ROD			1		1			
20	1	172524-42520	ROD B,LINK			1	1	1	1		
21	1	172527-42670	SHAFT, 25X556			1		1			
22	1	172527-42680	SHAFT			1	1	1	1		
23	1	172527-42700	CAM ASSY, LINK			1	1	1	1		
24	2	172511-12220	LINER M 2015			2		2			
24-1	2	24550-020150	BUSH, 20X15			2	2	2	2	S	
			(C=MXXX)		(E=MXXX)						
26	1	172527-42730	HOLDER,CAM B			1	1	1	1		
27	1	172520-46150	BOOT			1	1	1	1		
28	1	1C6360-65700	PIN, SNAP 10			2		2			
29	1	1C6360-65700	PIN, SNAP 10			1		1			
30	1	22137-100000	WASHER, 10			4	4	4	4		
31	1	22137-100000	WASHER, 10			1	1	1	1		
32	1	22137-100000	WASHER, 10			2	2	2	2		
33	1	22217-080000	WASHER, SPRING 8			2	2	2	2		
34	1	22217-100000	WASHER, SPRING 10			2	2	2	2		
35	1	22351-060050	PIN, SPRING 6.0X50			1	1	1	1		
36	1	26013-100202	BOLT, M10X 20			2	2	2	2		
37	1	26013-100252	BOLT, M10X 25			2	2	2	2		
38	1	26013-100252	BOLT, M10X 25			2	2	2	2		
39	1	26716-080002	NUT, M8			1	1	1	1		
40	1	26716-080002	NUT, M8			2	2	2	2		
41	1	26716-100002	NUT, M10			2	2	2	2		
42	1	26736-100002	NUT, M10			1	1	1	1		
43	1	26736-100002	NUT, M10			2	2	2	2		
44	1	172527-42340	LINK BALL,10D			1		1			
45	1	172527-42330	LINK BALL,10LD			1		1			
46	1	1C6410-52690	COLLAR, 11X14X27			1	1	1	1		
47	1	981083-27340	PIN 10X22			2		2			
48	1	981083-27520	JOINT, FORKED			1		1			

Remarks
(1)OPTIONAL

N:Old $\xleftrightarrow[\text{No}]{\text{Yes}}$ New, Q:Old $\xleftrightarrow[\text{Yes}]{\text{No}}$ New, R:Old $\xleftrightarrow[\text{Yes}]{\text{Yes}}$ New, S:Old $\xleftrightarrow[\text{No}]{\text{No}}$ New, W:Add, Z:Discontinued, F:Interchangeable by set, K:Q'ty Change

++ CONTINUE ++

Copyright (C) YANMAR CO., LTD. All RightsReserved.

Fig.42. BRAKE PEDAL(2)

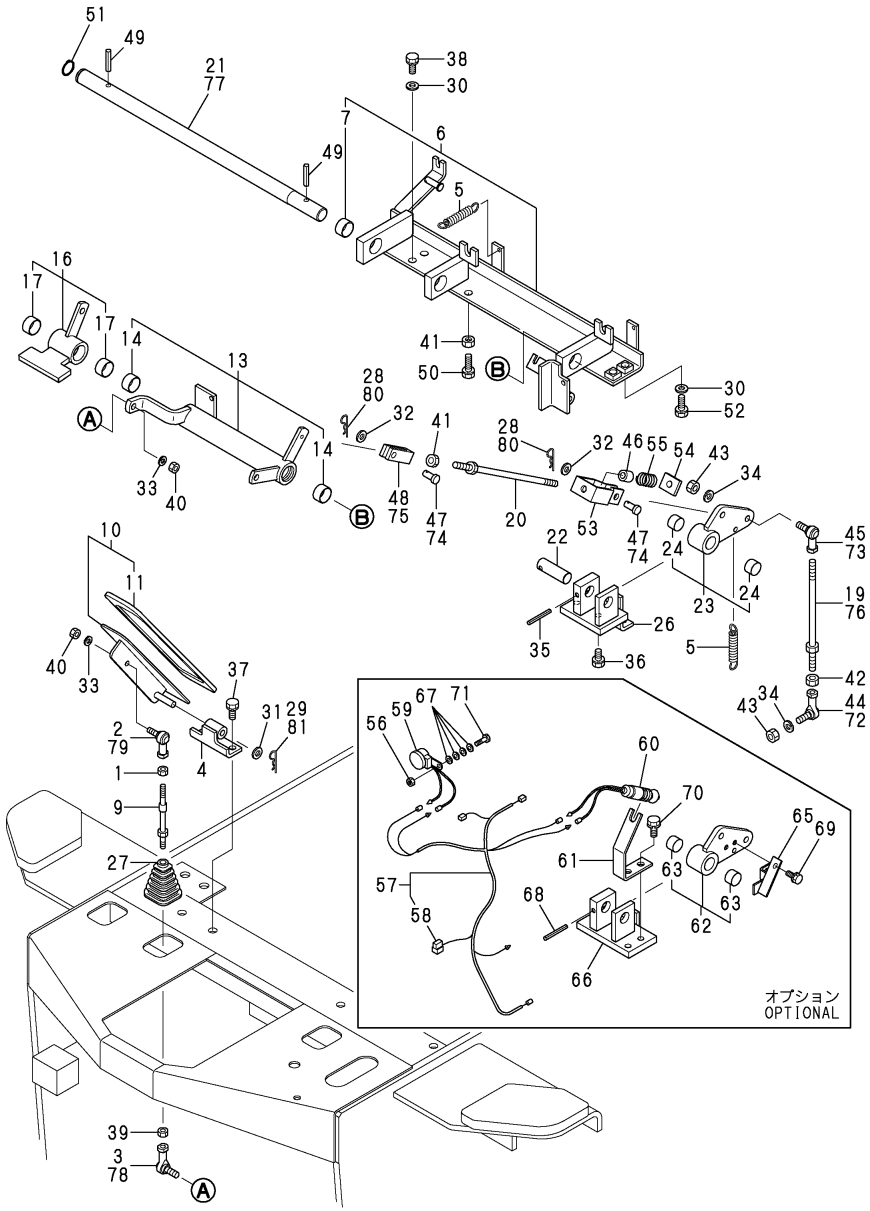

(A)=V3-5 (D)=V4-5A
(B)=V3-5(M/C) (E)=V5
(C)=V4-5 (F)=V5-A

No.	Lev.	Parts No.	Description	Q'ty (A)	(B)	(C)	(D)	(E)	(F)	I	R
49	1	22351-080040	PIN, SPRING 8.0X40			2	2	2	2		
50	1	26116-100454	BOLT, M10X 45 PLATED			1	1	1	1		
51	1	22242-000250	RING, 25			1	1	1	1		
52	1	26013-100352	BOLT, M10X 35			2	2	2	2		
53	1	172527-42010	CONNECTOR			1	1	1	1		
54	1	172527-42020	NUT			1	1	1	1		
55	1	172527-42030	SPRING, 415X19.5X32			1	1	1	1		
56	1	26716-060002	NUT, M6			1		1			1
57	1	172527-16360	HARNESS,WIRE P			1		1			1
58	2	119643-66900	DIODE			1		1			1
59	1	172141-17150	BUZZER			1		1			1
60	1	172524-17280	SWITCH, STOP LAMP			1		1			1
61	1	172527-43110	HOLDER			1		1			1
62	1	172527-43120	CAM ASSY, LINK			1		1			1
63	2	172511-12220	LINER M 2015			2		2			1
63-1	2	24550-020150	BUSH, 20X15			2		2		S	1
			(C=MXXX)		(E=MXXX)						
65	1	172527-43150	PLATE			1		1			1
66	1	172527-43160	HOLDER			1		1			1
67	1	22137-060000	WASHER, 6			4		4			1
68	1	22351-060050	PIN, SPRING 6.0X50			1		1			1
69	1	26013-080162	BOLT, M8X 16			2		2			1
70	1	26013-100202	BOLT, M10X 20			2		2			1
71	1	26116-060202	BOLT, M6X 20 PLATED			1		1			1
72	1	1A6210-16150	BALL, LINK BL10D				1		1		
73	1	1A6210-16160	BALL, LINK BL10DL				1		1		
74	1	172527-42190	PIN, 10X22				2		2		
75	1	172527-42200	JOINT				1		1		
76	1	172528-42621	ROD ASSY,LINK B				1		1		
77	1	172527-42671	SHAFT, 25X566				1		1		
78	1	1E4760-43090	BALL RBL8,LINK				1		1		
79	1	1E6740-64200	BALL, LINK				1		1		
80	1	22372-100000	PIN, SNAP 10				2		2		
81	1	22372-100000	PIN, SNAP 10				1		1		

Remarks
(1)OPTIONAL

N:Old $\xleftrightarrow[\text{No}]{\text{Yes}}$ New, Q:Old $\xleftrightarrow[\text{Yes}]{\text{No}}$ New, R:Old $\xleftrightarrow[\text{Yes}]{\text{Yes}}$ New, S:Old $\xleftrightarrow[\text{No}]{\text{No}}$ New, W:Add, Z:Discontinued, F:Interchangeable by set, K:Q'ty Change

Copyright (C) YANMAR CO., LTD. All RightsReserved.

Fig.43. PARK BRAKE LEVER

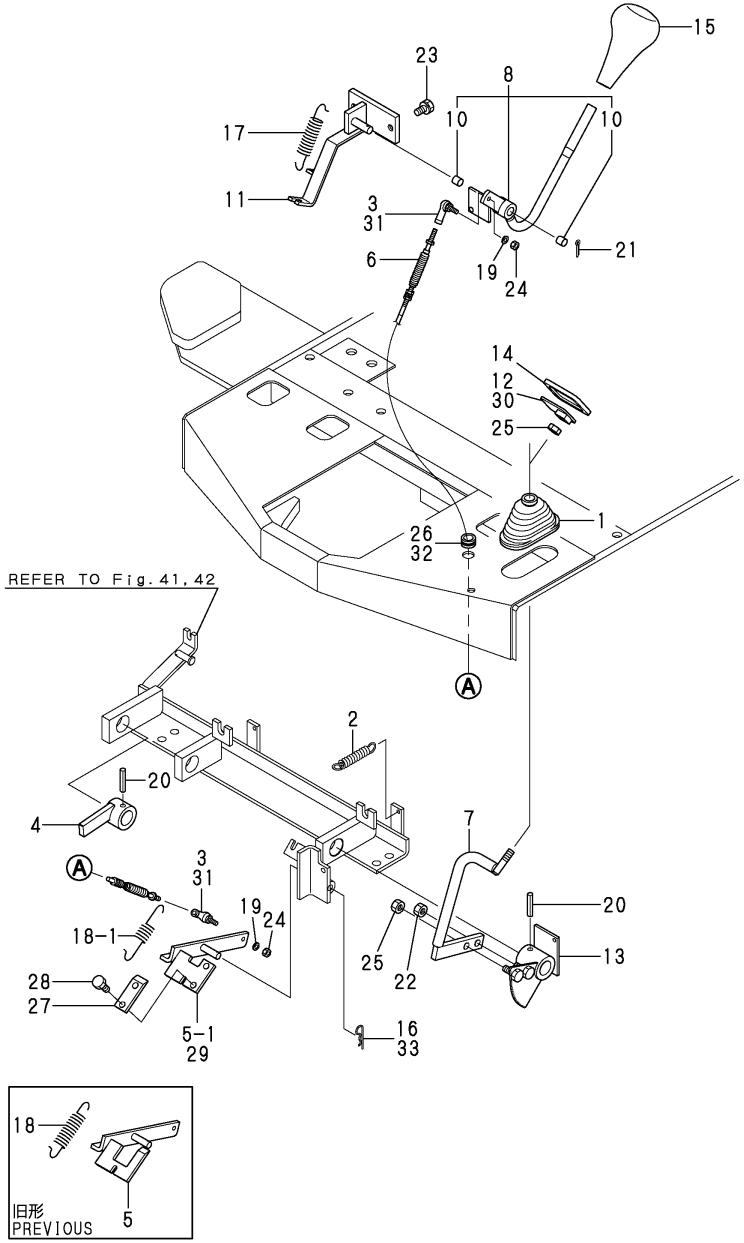

(A)=V3-5 (D)=V4-5A
(B)=V3-5(M/C) (E)=V5
(C)=V4-5 (F)=V5-A

No.	Lev.	Parts No.	Description	Q'ty (A)	(B)	(C)	(D)	(E)	(F)	I	R
1	1	172141-41340	BOOT	1	1	1	1	1	1		
2	1	172524-42190	SPRING, RETURN	1	1	1	1	1	1		
3	1	172527-42230	LINK BALL,6D	2		2		2			
4	1	172527-42250	CAM, PARKING	1	1	1	1	1	1		
5	1	172527-42280	PEDAL ROCK	1		1		1			
5-1	1	172527-42282	PEDAL ROCK	1		1		1		S	
	(A=M/#51083)		(C=M/#51025)	(E=M/#01001)							
6	1	172527-42320	WIRE	1	1	1	1	1	1		
7	1	172527-42350	LEVER, PEDAL	1	1	1	1	1	1		
8	1	172527-42800	LEVER	1	1	1	1	1	1		
8-1	1	172530-42800	LEVER, PARKING		1		1		1	N	
		(B=M/#52616)	(D=M/#52091)					(F=M/#02043)			
10	2	24550-012120	BUSH, 12X12	2	2	2	2	2	2		
11	1	172527-42860	HOLDER,CAM	1	1	1	1	1	1		
12	1	172527-42920	HEAD	1		1		1			
13	1	172527-42962	CAM, RATCHET	1	1	1	1	1	1		
14	1	172122-45830	PAD, METAL	1	1	1	1	1	1		
15	1	1C6560-47000	GRIP, LEVER	1	1	1	1	1	1		
16	1	1C6360-65700	PIN, SNAP 10	1		1		1			
17	1	1C6710-83170	SPRING, TENSION	1	1	1	1	1	1		
18	1	1C6710-83170	SPRING, TENSION	1		1		1			
18-1	1	172527-42390	SPRING, 1.4X12X69.5	1		1		1		S	
	(A=M/#51083)		(C=M/#51025)	(E=M/#01001)							
18-2	1	172527-42391	SPRING, 1.4X12X61.5	1	1	1	1	1	1	N	
	(A=M/#51249)		(C=M/#51091)	(E=M/#01022)							
19	1	22217-060000	WASHER, SPRING 6	2	2	2	2	2	2		
20	1	22351-080050	PIN, SPRING 8.0X50	2	2	2	2	2	2		
21	1	22411-250200	COTTER PIN 2.5X20	1	1	1	1	1	1		
22	1	26716-100002	NUT, M10	1	1	1	1	1	1		
23	1	26013-100202	BOLT, M10X 20	2	2	2	2	2	2		
24	1	26716-060002	NUT, M6	2	2	2	2	2	2		
25	1	26716-100002	NUT, M10	2	2	2	2	2	2		
26	1	29311-124000	GROMET, 12.0X4	1		1		1			
27	1	172527-43390	PLATE	1	1	1	1	1	1	W	
	(A=M/#51083)		(C=M/#51025)	(E=M/#01001)							
28	1	26013-080202	BOLT, M8X 20	2	2	2	2	2	2	W	
	(A=M/#51083)		(C=M/#51025)	(E=M/#01001)							
29	1	172527-42283	PEDAL LOCK ASSY		1		1		1		
30	1	172527-42921	PEDAL, HEAD		1		1		1		
31	1	172446-45820	LINK BALL 6		2		2		2		
32	1	172162-61850	GROMMET		1		1		1		
33	1	22372-100000	PIN, SNAP 10		1		1		1		

N:Old $\overset{\text{Yes}}{\underset{\text{No}}{\leftrightarrow}}$ New, Q:Old $\overset{\text{No}}{\underset{\text{Yes}}{\leftrightarrow}}$ New, R:Old $\overset{\text{Yes}}{\underset{\text{Yes}}{\leftrightarrow}}$ New, S:Old $\overset{\text{No}}{\underset{\text{No}}{\leftrightarrow}}$ New, W:Add, Z:Discontinued, F:Interchangeable by set, K:Q'ty Change

Copyright (C) YANMAR CO., LTD. All RightsReserved.

Fig.44. HYD.OIL CONTROL LEVER(1)

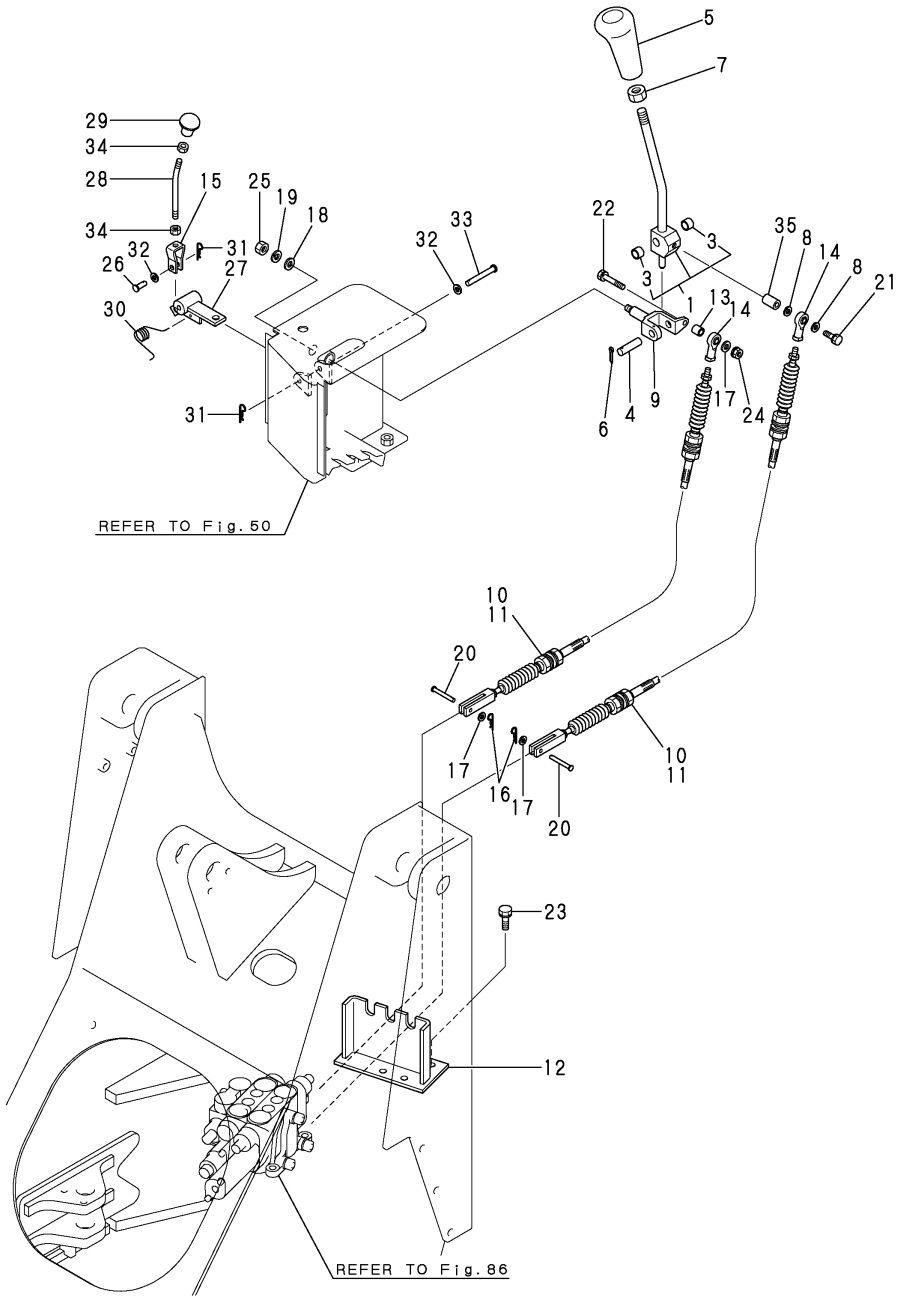

(A)=V3-5
(B)=V3-5(M/C)
(C)=V4-5
(D)=V4-5A
(E)=V5
(F)=V5-A

No.	Lev.	Parts No.	Description	Q'ty (A)	(B)	(C)	(D)	(E)	(F)	I	R
1	1	172527-45100	LEVER, LOADER	1		1		1			
3	2	24550-012120	BUSH, 12X12	2		2		2			
4	1	172512-45160	PIN	1		1		1			
5	1	172165-47880	KNOB ASSY	1		1		1			
6	1	22417-250320	PIN, COTTER 2.5X32	1		1		1			
7	1	26736-140002	NUT, M14	1		1		1			
8	1	172524-45190	COLLAR, 8X12X2	2		2		2			
8-1	1	172524-45190	COLLAR, 8X12X2	1		1		1		K	
	(A=M/#51228)		(C=M/#51081)	(E=M/#01013)							
9	1	172512-45201	LINK, LEVER	1		1		1			
10	1	172527-45210	CABLE, LOADER LINK	2							
11	1	172528-45210	CABLE, LOADER LINK			2		2			
12	1	172527-45220	STAY, CABLE	1		1		1			
13	1	172524-45250	SPACER	1		1		1			
14	1	172527-45310	END, ROD	2		2		2			
15	1	981083-21120	JOINT	1		1		1			
16	1	1C6281-52310	PIN, SNAP 6	2		2		2			
17	1	22137-080000	WASHER, 8	3		3		3			
18	1	22137-100000	WASHER, 10	1		1		1			
19	1	22217-100000	WASHER, SPRING 10	1		1		1			
20	1	22486-060180	PIN, H 6X 18	2		2		2			
21	1	26013-080252	BOLT, M8X 25	1		1		1			
21-1	1	26013-080352	BOLT, M8X 35	1		1		1		N	
	(A=M/#51228)		(C=M/#51087)	(E=M/#01013)							
22	1	26013-080452	BOLT, M8X 45	1		1		1			
23	1	26013-100252	BOLT, M10X 25	4		4		4			
24	1	26716-080002	NUT, M8	1		1		1			
25	1	26716-100002	NUT, M10	1		1		1			
26	1	1C6052-24090	PIN, 8X20	1		1		1			
27	1	172524-45510	LEVER COMP.,CAM LOCK	1		1		1			
28	1	172524-45550	ROD,LOCK LEVER	1		1		1			
29	1	172524-45560	KNOB	1		1		1			
30	1	172524-45580	SPRING	1		1		1			
31	1	1C6281-52320	PIN, SNAP 8	2		2		2			
32	1	22137-080000	WASHER, 8	2		2		2			
33	1	22487-080600	PIN 8X 60	1		1		1			
34	1	26716-080002	NUT, M8	2		2		2			
35	1	1C6650-44090	COLLAR, 8X12X10	1		1		1		W	
	(A=M/#51228)		(C=M/#51087)	(E=M/#01013)							

N:Old $\frac{\text{Yes}}{\text{No}}$ New, Q:Old $\frac{\text{No}}{\text{Yes}}$ New, R:Old $\frac{\text{Yes}}{\text{Yes}}$ New, S:Old $\frac{\text{No}}{\text{No}}$ New, W:Add, Z:Discontinued, F:Interchangeable by set, K:Q'ty Change

Copyright (C) YANMAR CO., LTD. All RightsReserved.

Fig.45. HYD.OIL CONTROL LEVER(2)

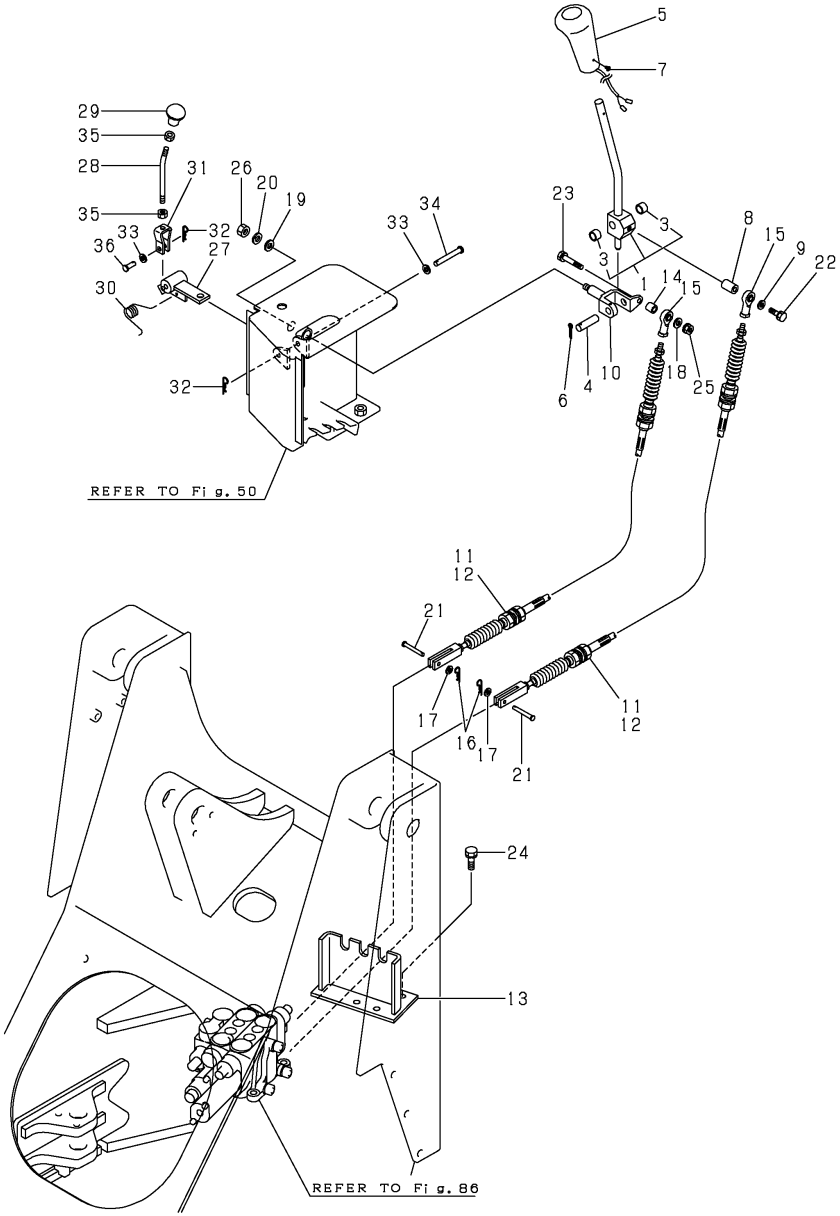

(A)=V3-5
(B)=V3-5(M/C)
(C)=V4-5
(D)=V4-5A
(E)=V5
(F)=V5-A

No.	Lev.	Parts No.	Description	Q'ty (A)	(B)	(C)	(D)	(E)	(F)	I	R
1	1	172527-45101	LEVER ASSY, LOADER		1		1		1		
3	2	24550-012120	BUSH, 12X12		2		2		2		
4	1	172512-45160	PIN		1		1		1		
5	1	172165-47871	KNOB ASSY		1		1		1		1
6	1	22417-250320	PIN, COTTER 2.5X32		1		1		1		
7	1	26587-040062	SCREW, M4X 6		1		1		1		
8	1	1C6650-44090	COLLAR, 8X12X10		1		1		1		
9	1	172524-45190	COLLAR, 8X12X2		1		1		1		
10	1	172512-45201	LINK, LEVER		1		1		1		
11	1	172527-45210	CABLE, LOADER LINK		2						
12	1	172528-45210	CABLE, LOADER LINK				2		2		
13	1	172527-45221	STAY, CABLE		1		1		1		
14	1	172524-45250	SPACER		1		1		1		
15	1	172122-46571	END, ROD		2		2		2		
16	1	1C6281-52310	PIN, SNAP 6		2		2		2		
17	1	22137-060000	WASHER, 6		2		2		2		
18	1	22137-080000	WASHER, 8		1		1		1		
19	1	22137-100000	WASHER, 10		1		1		1		
20	1	22217-100000	WASHER, SPRING 10		1		1		1		
21	1	22486-060180	PIN, H 6X 18		2		2		2		
22	1	26013-080352	BOLT, M8X 35		1		1		1		
23	1	26013-080452	BOLT, M8X 45		1		1		1		
24	1	26013-100252	BOLT, M10X 25		4		4		4		
25	1	26716-080002	NUT, M8		1		1		1		
26	1	26716-100002	NUT, M10		1		1		1		
27	1	172524-45511	LEVER ASSY, CAM LOCK		1		1		1		
28	1	172524-45550	ROD,LOCK LEVER		1		1		1		
29	1	172524-45560	KNOB		1		1		1		
30	1	172524-45580	SPRING		1		1		1		
31	1	172527-45580	JOINT ASSY		1		1		1		
32	1	1C6281-52320	PIN, SNAP 8		2		2		2		
33	1	22137-080000	WASHER, 8		2		2		2		
34	1	22487-080600	PIN 8X 60		1		1		1		
35	1	26716-080002	NUT, M8		2		2		2		
36	1	933171-21700	PIN (B), SPOOL LINK		1		1		1		

Remarks
(1)A KNOB WITH A BUILT-IN HORN SWITCH.

N:Old $\frac{\text{Yes}}{\text{No}}$ New, Q:Old $\frac{\text{No}}{\text{Yes}}$ New, R:Old $\frac{\text{Yes}}{\text{Yes}}$ New, S:Old $\frac{\text{No}}{\text{No}}$ New, W:Add, Z:Discontinued, F:Interchangeable by set, K:Q'ty Change

Copyright (C) YANMAR CO., LTD. All RightsReserved.

Fig.46. 3RD VALVE CONTROL(1)

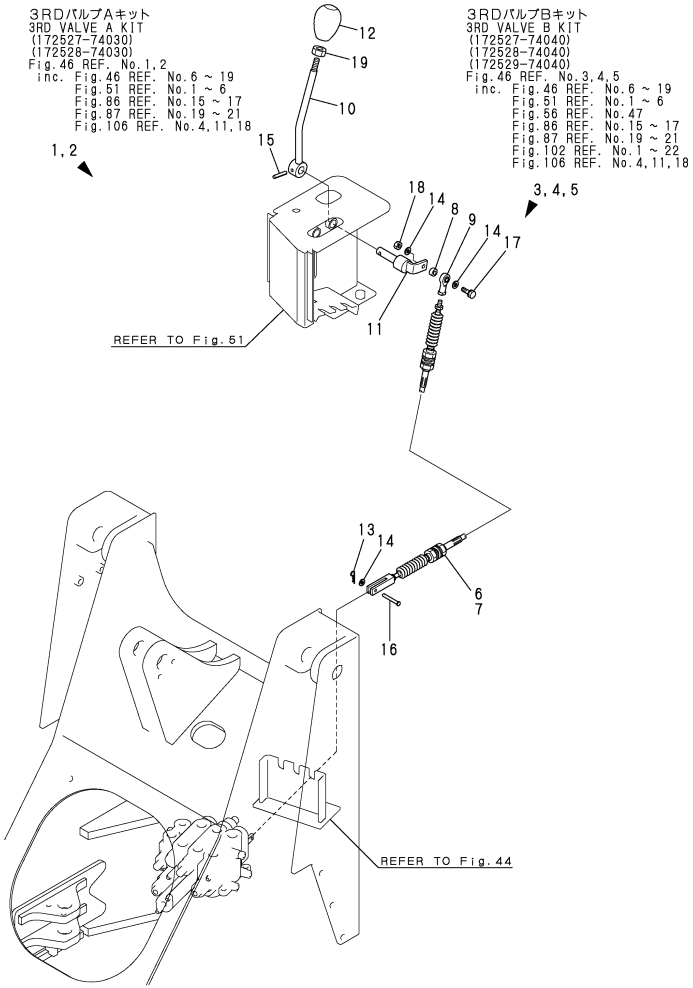

Remarks
(1)INC.FIG.46 REF.NO.6- 19,
FIG.51 REF.NO.1-6,
FIG.86 REF.NO.15-17,
FIG.87 REF.NO.19-21 &
FIG.106 REF.NO.4,11,18.
(2)INC.FIG.46 REF.NO.6- 19,
FIG.51 REF.NO.1-6, FIG.56 REF.NO.47,
FIG.86 REF.NO.15-17,
FIG.87 REF.NO.19-21,
FIG.102 REF.NO.1-22 &
FIG.106 REF.NO.4,11,18.

(A)=V3-5
(B)=V3-5(M/C)
(C)=V4-5
(D)=V4-5A
(E)=V5
(F)=V5-A

No.	Lev.	Parts No.	Description	Q'ty (A)	(B)	(C)	(D)	(E)	(F)	I	R
1	1	172527-74030	3RD VALVE KIT	1							1
2	1	172528-74030	3RD VALVE KIT			1		1			1
3	1	172527-74040	3RD VALVE B KIT	1							2
4	1	172528-74040	3RD VALVE B KIT			1					2
5	1	172529-74040	3RD VALVE B KIT					1			2
6	2	172527-45210	CABLE, LOADER LINK	1							
7	2	172528-45210	CABLE, LOADER LINK			1		1			
8	2	172524-45250	SPACER	1		1		1			
9	2	172527-45310	END, ROD	1		1		1			
10	2	172527-46100	LEVER ASSY, 3RD	1		1		1			
11	2	172524-46120	PIN, LEVER	1		1		1			
12	2	172312-46321	KNOB	1		1		1			
13	2	1C6281-52310	PIN, SNAP 6	1		1		1			
14	2	22137-080000	WASHER, 8	3		3		3			
15	2	22351-060032	PIN, SPRING 6.0X32	1		1		1			
16	2	22486-060180	PIN, H 6X 18	1		1		1			
17	2	26013-080502	BOLT, M8X 50	1		1		1			
18	2	26716-080002	NUT, M8	1		1		1			
19	2	26756-100002	NUT, LOCK M10	1		1		1			

N:Old $\xleftarrow[\text{No}]{\text{Yes}}$ New, Q:Old $\xleftarrow[\text{Yes}]{\text{No}}$ New, R:Old $\xleftarrow[\text{Yes}]{\text{Yes}}$ New, S:Old $\xleftarrow[\text{No}]{\text{No}}$ New, W:Add, Z:Discontinued, F:Interchangeable by set, K:Q'ty Change

Copyright (C) YANMAR CO., LTD. All RightsReserved.

Fig.47. 3RD VALVE CONTROL(2)

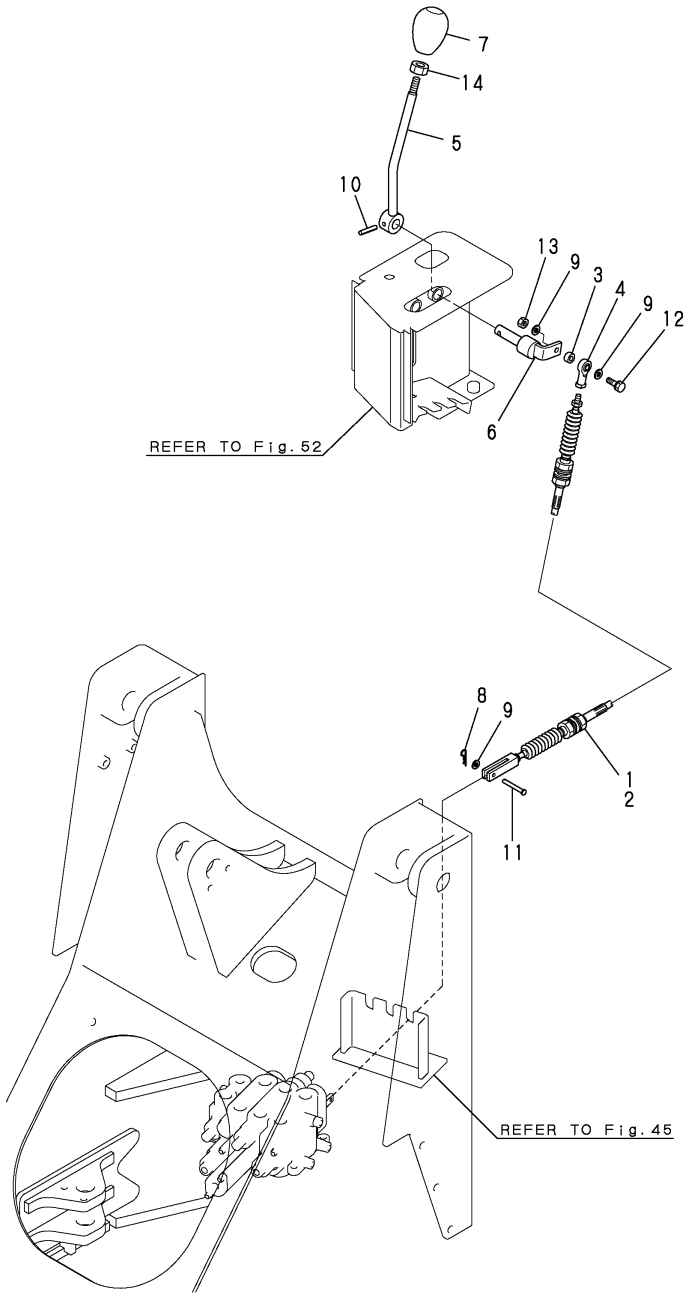

(A)=V3-5
(B)=V3-5(M/C)
(C)=V4-5
(D)=V4-5A
(E)=V5
(F)=V5-A

No.	Lev.	Parts No.	Description	Q'ty (A)	(B)	(C)	(D)	(E)	(F)	I	R
1	1	172527-45210	CABLE, LOADER LINK		1						
2	1	172528-45210	CABLE, LOADER LINK				1		1		
3	1	172524-45250	SPACER		1		1		1		
4	1	172122-46571	END, ROD		1		1		1		
5	1	172527-46110	LEVER ASSY, 3RD		1		1		1		
6	1	172527-46140	PIN, LEVER ASSY		1		1		1		
7	1	172312-46321	KNOB		1		1		1		
8	1	1C6281-52310	PIN, SNAP 6		1		1		1		
9	1	22137-080000	WASHER, 8		3		3		3		
10	1	22351-060032	PIN, SPRING 6.0X32		1		1		1		
11	1	22486-060180	PIN, H 6X 18		1		1		1		
12	1	26013-080502	BOLT, M8X 50		1		1		1		
13	1	26716-080002	NUT, M8		1		1		1		
14	1	26756-100002	NUT, LOCK M10		1		1		1		

N:Old $\xleftrightarrow[\text{No}]{\text{Yes}}$ New, Q:Old $\xleftrightarrow[\text{Yes}]{\text{No}}$ New, R:Old $\xleftrightarrow[\text{Yes}]{\text{Yes}}$ New, S:Old $\xleftrightarrow[\text{No}]{\text{No}}$ New, W:Add, Z:Discontinued, F:Interchangeable by set, K:Q'ty Change

Copyright (C) YANMAR CO., LTD. All RightsReserved.

Fig.48. STEERING WHEEL & COLUMN(1)

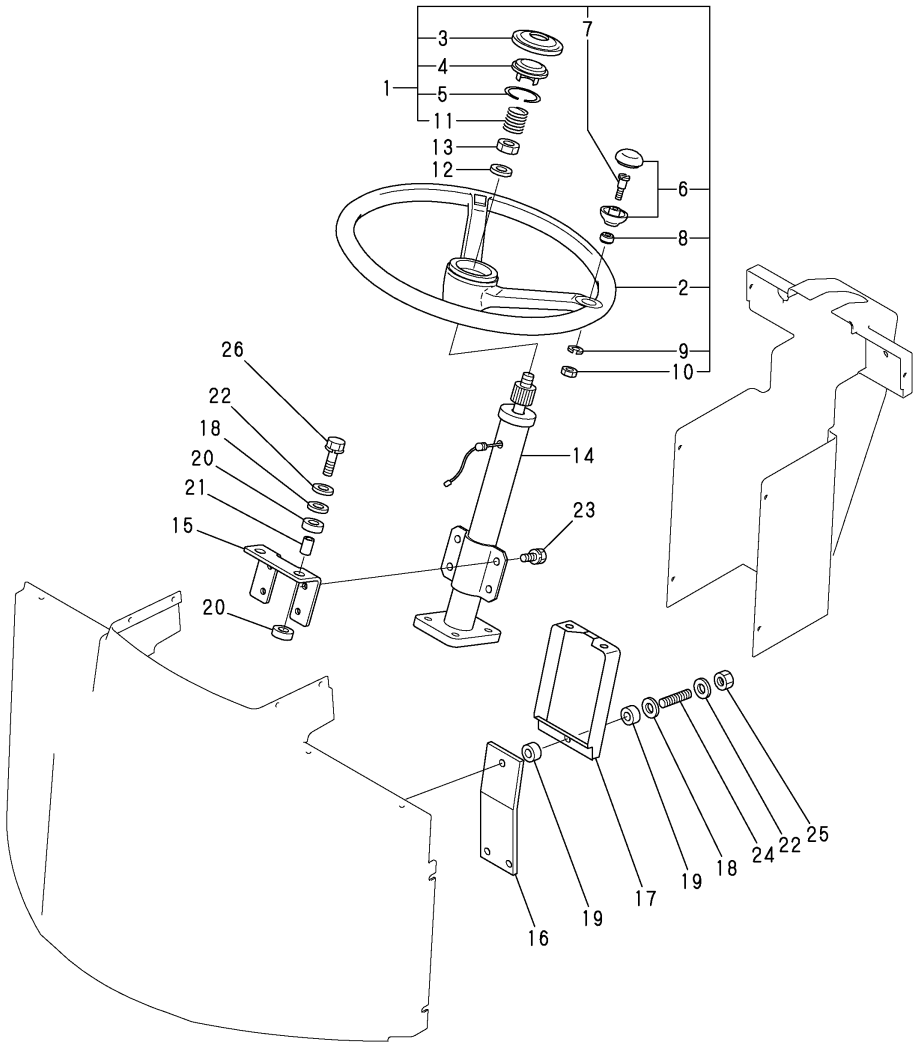

(A)=V3-5
(B)=V3-5(M/C)
(C)=V4-5
(D)=V4-5A
(E)=V5
(F)=V5-A

No.	Lev.	Parts No.	Description	Q'ty (A)	(B)	(C)	(D)	(E)	(F)	I	R
1	1	172515-47600	WHEEL ASSY, STEERING	1		1		1			
2	2	172515-47610	WHEEL, STEERING	1		1		1			
3	2	172515-47620	CAP, HORN	1		1		1			
4	2	172515-47630	NEEDLE ASSY, CONTACT	1		1		1			
5	2	172515-47640	SPRING, LOCK	1		1		1			
6	2	172515-47650	KNOB	1		1		1			
7	2	172515-47660	SHAFT	1		1		1			
8	2	172515-47670	BUSH	1		1		1			
9	2	172515-47680	SPRING WASHER	1		1		1			
10	2	172515-47690	NUT	1		1		1			
11	2	172515-47700	SPRING, HORN	1		1		1			
12	1	22137-140000	WASHER, 14	1		1		1			
13	1	26776-140002	NUT, LOCK M14	1		1		1			
14	1	172524-47800	COLUMN ASSY	1		1		1			
15	1	172527-47910	HOLDER, COLUMN	1		1		1			
16	1	172527-47920	SUPPORT	1		1		1			
17	1	172524-47930	HOLDER ST	1		1		1			
18	1	172524-47970	WASHER	3		3		3			
19	1	172524-47980	RUBBER	2		2		2			
20	1	172527-47980	RUBBER	4		4		4			
21	1	172527-47990	COLLAR, 11X17X25.5	2		2		2			
22	1	22137-100000	WASHER, 10	3		3		3			
23	1	26013-100202	BOLT, M10X 20	4		4		4			
24	1	26216-100402	STUD, M10X 40	1		1		1			
25	1	26716-100002	NUT, M10	1		1		1			
26	1	26013-100502	BOLT, M10X 50	2		2		2			

N:Old ◄Yes/No► New, Q:Old ◄No/Yes► New, R:Old ◄Yes/Yes► New, S:Old ◄No/No► New, W:Add, Z:Discontinued, F:Interchangeable by set, K:Q'ty Change

Copyright (C) YANMAR CO., LTD. All RightsReserved.

Fig.49. STEERING WHEEL & COLUMN(2)

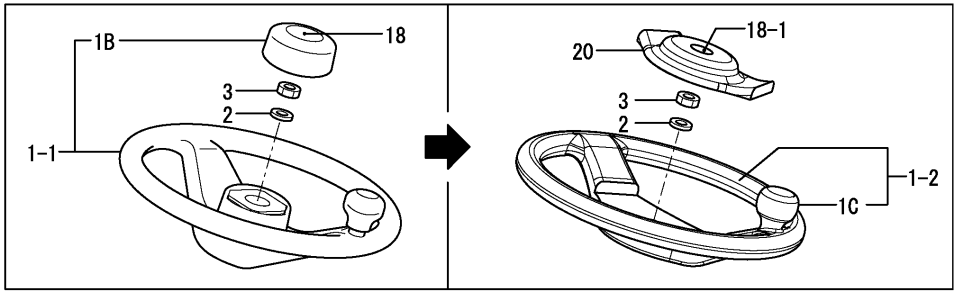

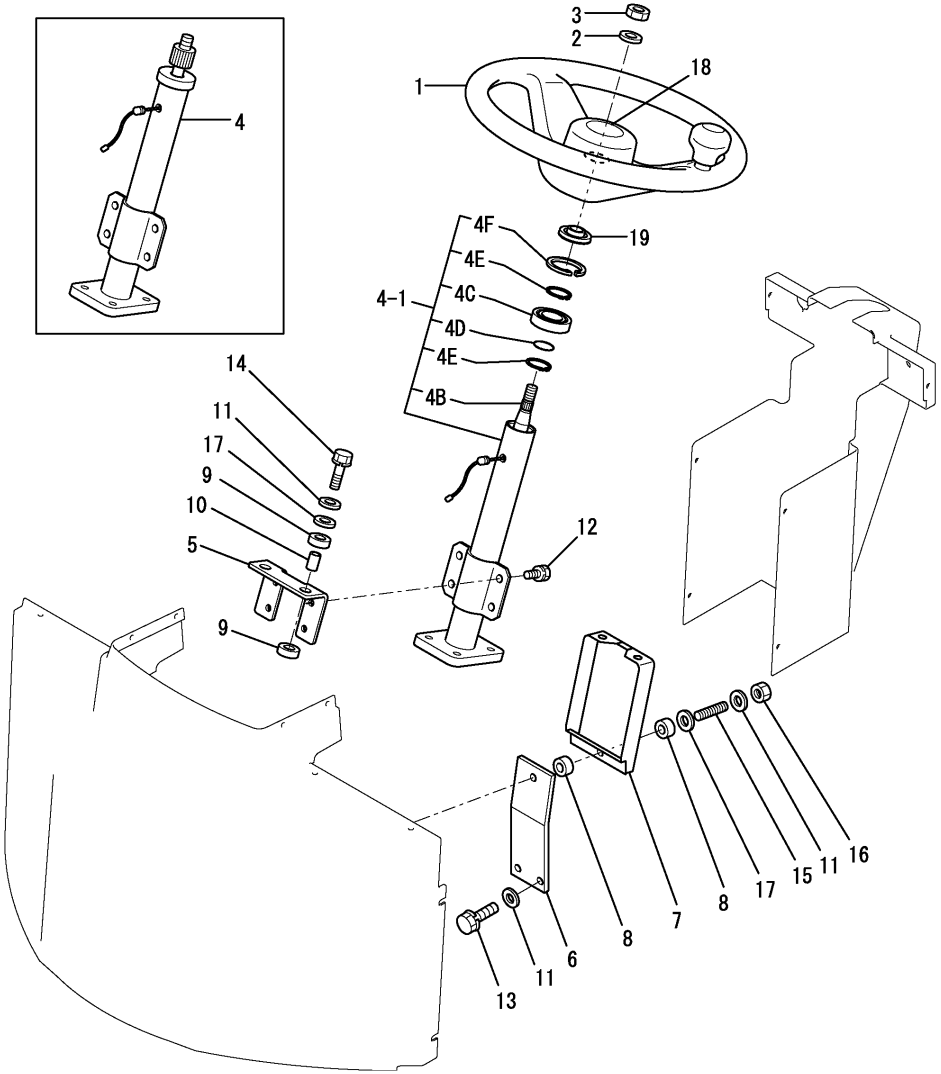

(A)=V3-5 (B)=V3-5(M/C) (C)=V4-5 (D)=V4-5A (E)=V5 (F)=V5-A

No.	Lev.	Parts No.	Description	Q'ty (A)	(B)	(C)	(D)	(E)	(F)	I	R
1	1	172527-47600	HANDLE ASSY, STEER.		1		1		1		
1-1	1	172527-47601	HANDLE ASSY, STEER.		1		1		1	R	
		(B=M/#54082)	(D=M/#53260)					(F=M/#03064)			
1-2	1	172538-47600	HANDLE,STEERING		1		1		1	N	
		(B=MZZZZZ)	(D=MZZZZZ)					(F=MZZZZZ)			
1B	2	172527-47620	COVER, HORN		1		1		1	W	
		(B=M/#54082)	(D=M/#53260)					(F=M/#03064)			
1B-1	2	172527-47620	COVER, HORN		1		1		1	Z	
		(B=MZZZZZ)	(D=MZZZZZ)					(F=MZZZZZ)			
1C	2	172538-47630	KNOB ASSY		1		1		1	W	
		(B=MZZZZZ)	(D=MZZZZZ)					(F=MZZZZZ)			
2	1	22137-140000	WASHER, 14		1		1		1		
3	1	26776-140002	NUT, LOCK M14		1		1		1		
4	1	172524-47800	COLUMN ASSY		1		1		1		
4-1	1	172527-47810	COLUMN ASSY				1		1	N	
			(D=M/#52168)					(F=M/#02060)			
4B	2	172527-47860	SHAFT, STEERING				1		1		
4C	2	172527-47870	BEARING 20X37X9				1		1		
4D	2	172527-47890	O-RING, 18				1		1		
4E	2	22242-000200	RING, 20				2		2		
4F	2	22252-000370	RING, 37				1		1		
5	1	172527-47910	HOLDER, COLUMN		1		1		1		
6	1	172527-47920	SUPPORT		1		1		1		
7	1	172524-47931	HOLDER, ST		1		1		1		
8	1	172524-47980	RUBBER		2		2		2		
9	1	172527-47980	RUBBER		4		4		4		
10	1	172527-47990	COLLAR, 11X17X25.5		2		2		2		
11	1	22137-100000	WASHER, 10		5		5		5		
12	1	26013-100202	BOLT, M10X 20		4		4		4		
13	1	26013-100302	BOLT, M10X 30		2		2		2		
14	1	26013-100502	BOLT, M10X 50		2		2		2		
15	1	26216-100402	STUD, M10X 40		1		1		1		
16	1	26716-100002	NUT, M10		1		1		1		
17	1	933147-03400	WASHER, BRAKE ARM		3		3		3		
18	1	172527-47630	SEAL, HORN		1		1		1	W	
		(B=M/#52616)	(D=M/#52091)					(F=M/#02043)			
18-1	1	172537-03100	LABEL		1		1		1	S	
		(B=MZZZZZ)	(D=MZZZZZ)					(F=MZZZZZ)			
19	1	172527-47880	CAP, COLUMN				1		1	W	
			(D=M/#52168)					(F=M/#02060)			
20	1	172538-47610	CAP, HANDLE		1		1		1	W	
		(B=MZZZZZ)	(D=MZZZZZ)					(F=MZZZZZ)			

N:Old $\frac{\text{Yes}}{\text{No}}$ New, Q:Old $\frac{\text{No}}{\text{Yes}}$ New, R:Old $\frac{\text{Yes}}{\text{Yes}}$ New, S:Old $\frac{\text{No}}{\text{No}}$ New, W:Add, Z:Discontinued, F:Interchangeable by set, K:Q'ty Change

Copyright (C) YANMAR CO., LTD. All RightsReserved.

Fig.50. CONTROL COVER

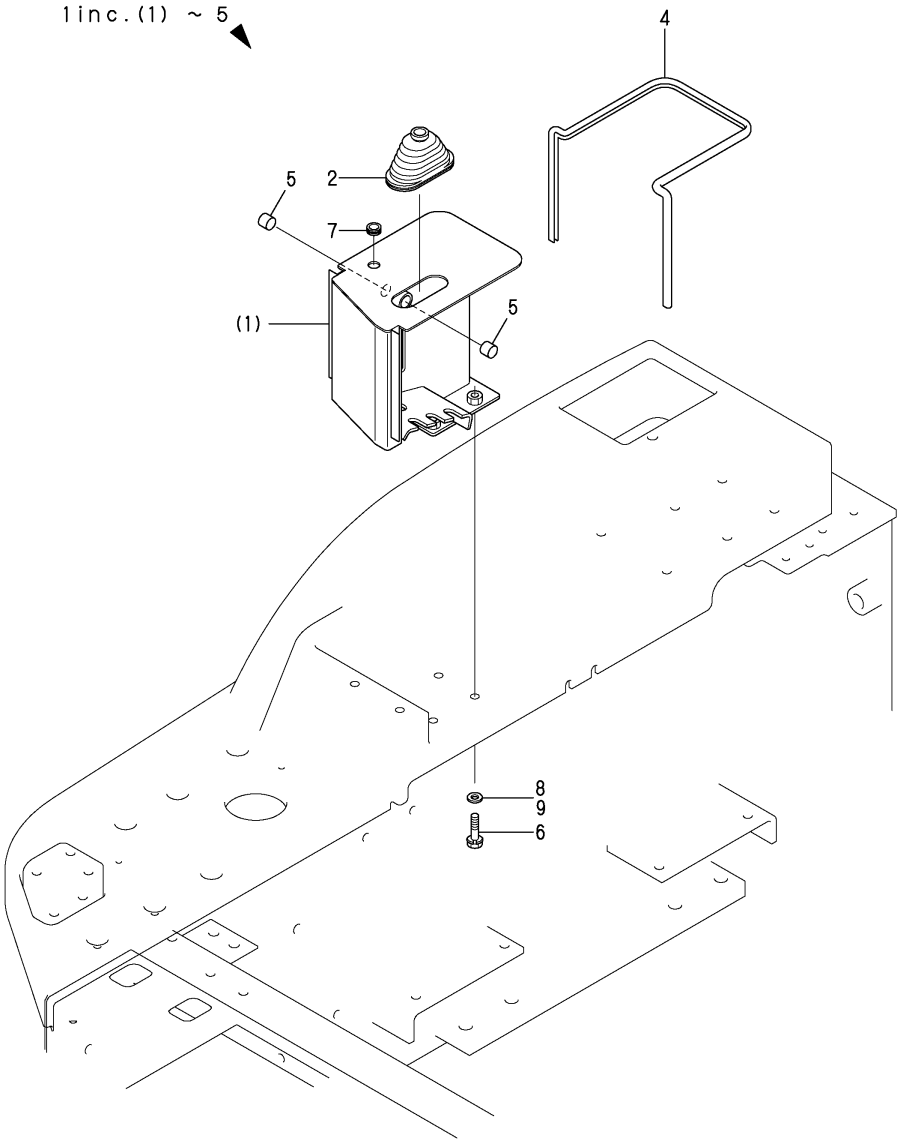

(A)=V3-5
(B)=V3-5(M/C)
(C)=V4-5
(D)=V4-5A
(E)=V5
(F)=V5-A

No.	Lev.	Parts No.	Description	Q'ty (A)	(B)	(C)	(D)	(E)	(F)	I	R
1	1	172527-49100	STAY ASSY, LEVER	1	1	1	1	1	1		
1-1	1	172527-49500	STAY ASSY, LEVER (D=M/#52168) (F=M/#02060)				1		1	N	
2	2	172141-41340	BOOT	1	1	1	1	1	1		
4	2	172527-49190	SEAL	1		1		1			
4-1	2	172458-61660	RUBBER, SEAL 930	1	1	1	1	1	1	S	
	(A=MXXX)		(C=MXXX) (E=MXXX)								
5	2	24550-016150	BUSH, 16X15	2	2	2	2	2	2		
6	1	26013-100352	BOLT, M10X 35	6	6	6	6	6	6		
7	1	29311-124000	GROMET, 12.0X4	1		1		1			
7-1	1	172162-61850	GROMMET	1	1	1	1	1	1	S	
	(A=MXXX)		(C=MXXX) (E=MXXX)								
8	1	172527-61640	WASHER	6		6		6			
9	1	194145-04810	WASHER		6		6		6		

N:Old $\frac{\text{Yes}}{\text{No}}$ New, Q:Old $\frac{\text{No}}{\text{Yes}}$ New, R:Old $\frac{\text{Yes}}{\text{Yes}}$ New, S:Old $\frac{\text{No}}{\text{No}}$ New, W:Add, Z:Discontinued, F:Interchangeable by set, K:Q'ty Change

Copyright (C) YANMAR CO., LTD. All RightsReserved.

Fig.51. CONTROL COVER(3RD 1)

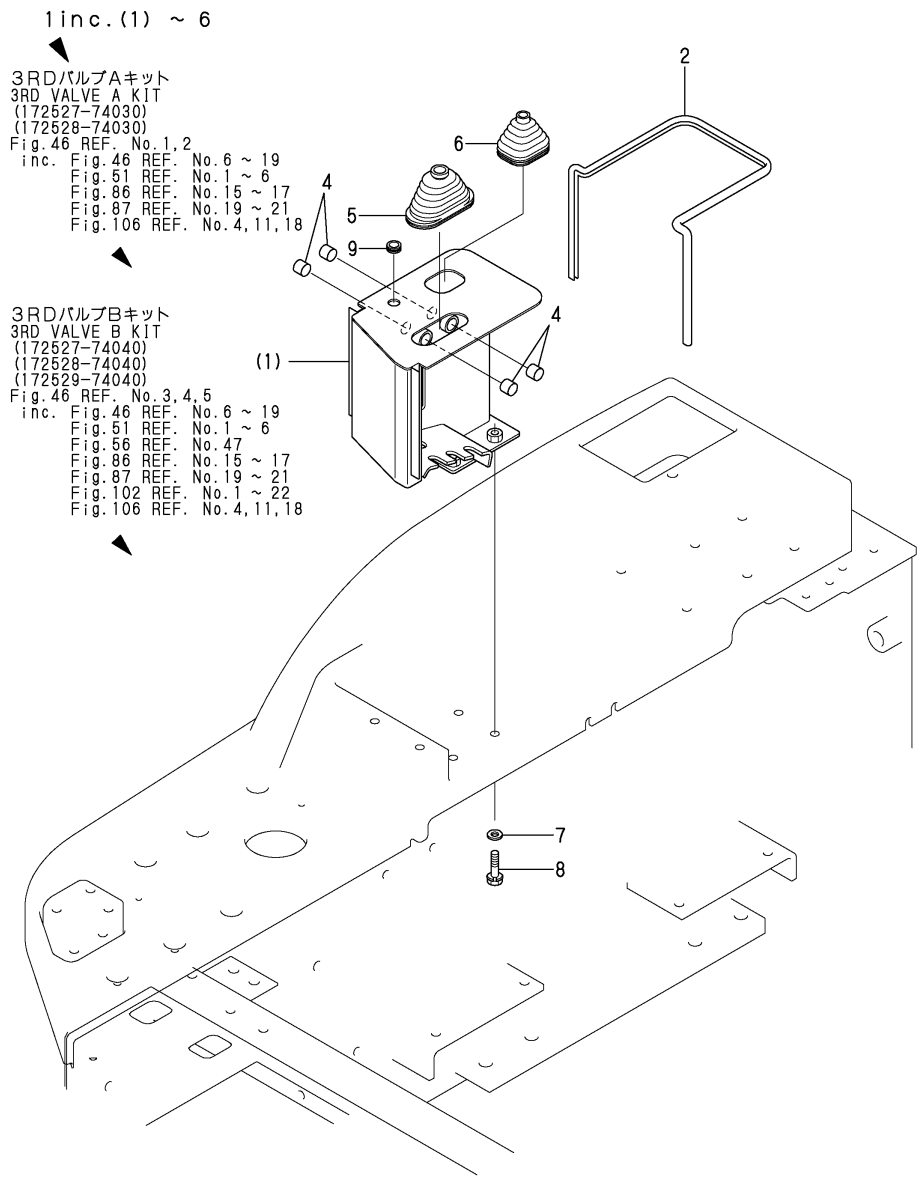

(A)=V3-5
(B)=V3-5(M/C)
(C)=V4-5
(D)=V4-5A
(E)=V5
(F)=V5-A

No.	Lev.	Parts No.	Description	Q'ty (A)	(B)	(C)	(D)	(E)	(F)	I	R
1	1	172527-49300	STAY, LEVER	1		1		1			
2	2	172527-49190	SEAL	1		1		1			
4	2	24550-016150	BUSH, 16X15	4		4		4			
5	2	172141-41340	BOOT	1		1		1			
6	2	172520-46150	BOOT	1		1		1			
7	1	172527-61640	WASHER	6		6		6			
8	1	26013-100352	BOLT, M10X 35	6		6		6			
9	1	29311-124000	GROMET, 12.0X4	1		1		1			

N:Old ←Yes/No→ New, Q:Old ←No/Yes→ New, R:Old ←Yes/Yes→ New, S:Old ←No/No→ New, W:Add, Z:Discontinued, F:Interchangeable by set, K:Q'ty Change

Copyright (C) YANMAR CO., LTD. All RightsReserved.

Fig.52. CONTROL COVER(3RD 2)

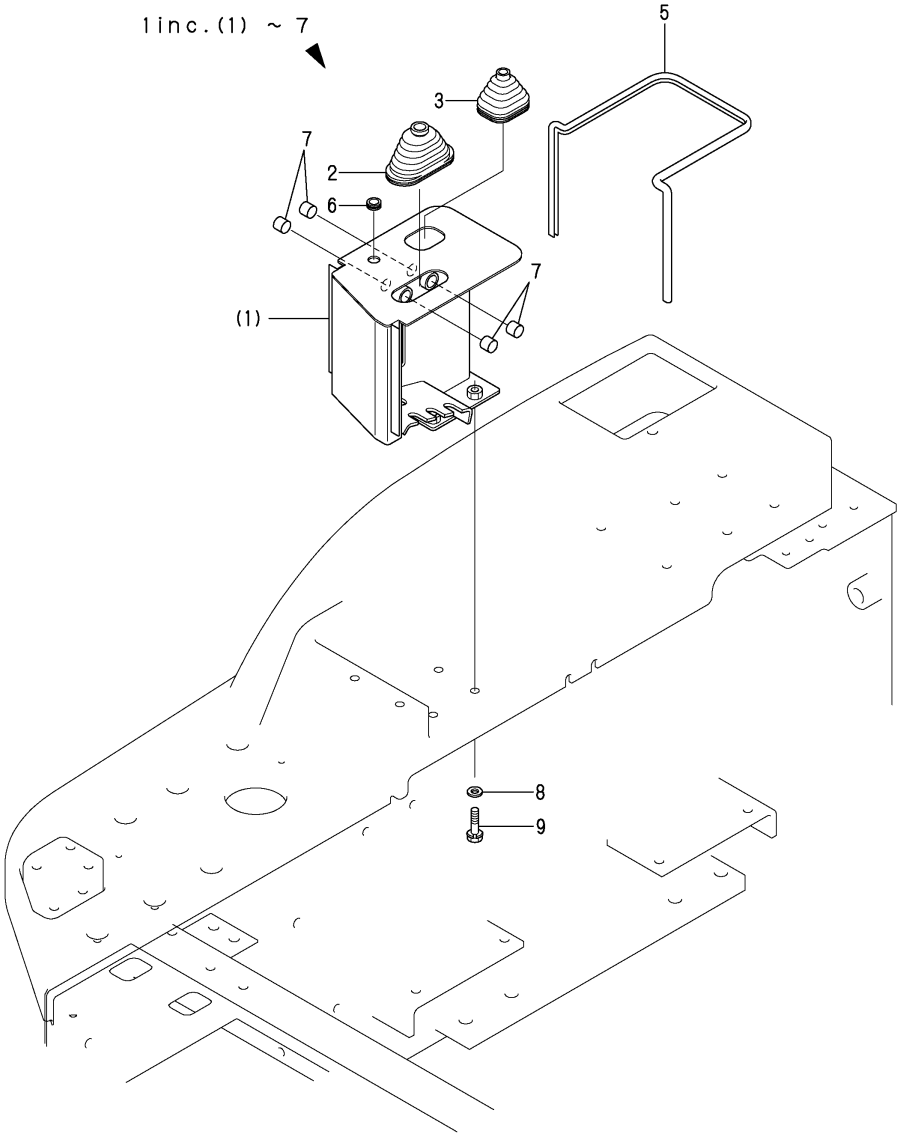

(A)=V3-5
(B)=V3-5(M/C)
(C)=V4-5
(D)=V4-5A
(E)=V5
(F)=V5-A

No.	Lev.	Parts No.	Description	Q'ty (A)	(B)	(C)	(D)	(E)	(F)	I	R
1	1	172527-49400	STAY ASSY, LEVER		1		1		1		
1-1	1	172527-49600	STAY ASSY, LEVER (D=M/#52168) (F=M/#02060)				1		1	N	
2	2	172141-41340	BOOT		1		1		1		
3	2	172520-46150	BOOT		1		1		1		
5	2	172458-61660	RUBBER, SEAL 930		1		1		1		
6	2	172162-61850	GROMMET		1		1		1		
7	2	24550-016150	BUSH, 16X15		4		4		4		
8	1	194145-04810	WASHER		6		6		6		
9	1	26013-100352	BOLT, M10X 35		6		6		6		

N:Old $\xleftarrow[\text{No}]{\text{Yes}}$ New, Q:Old $\xleftarrow[\text{Yes}]{\text{No}}$ New, R:Old $\xleftarrow[\text{Yes}]{\text{Yes}}$ New, S:Old $\xleftarrow[\text{No}]{\text{No}}$ New, W:Add, Z:Discontinued, F:Interchangeable by set, K:Q'ty Change

Copyright (C) YANMAR CO., LTD. All RightsReserved.

Fig.53. FRONT FRAME

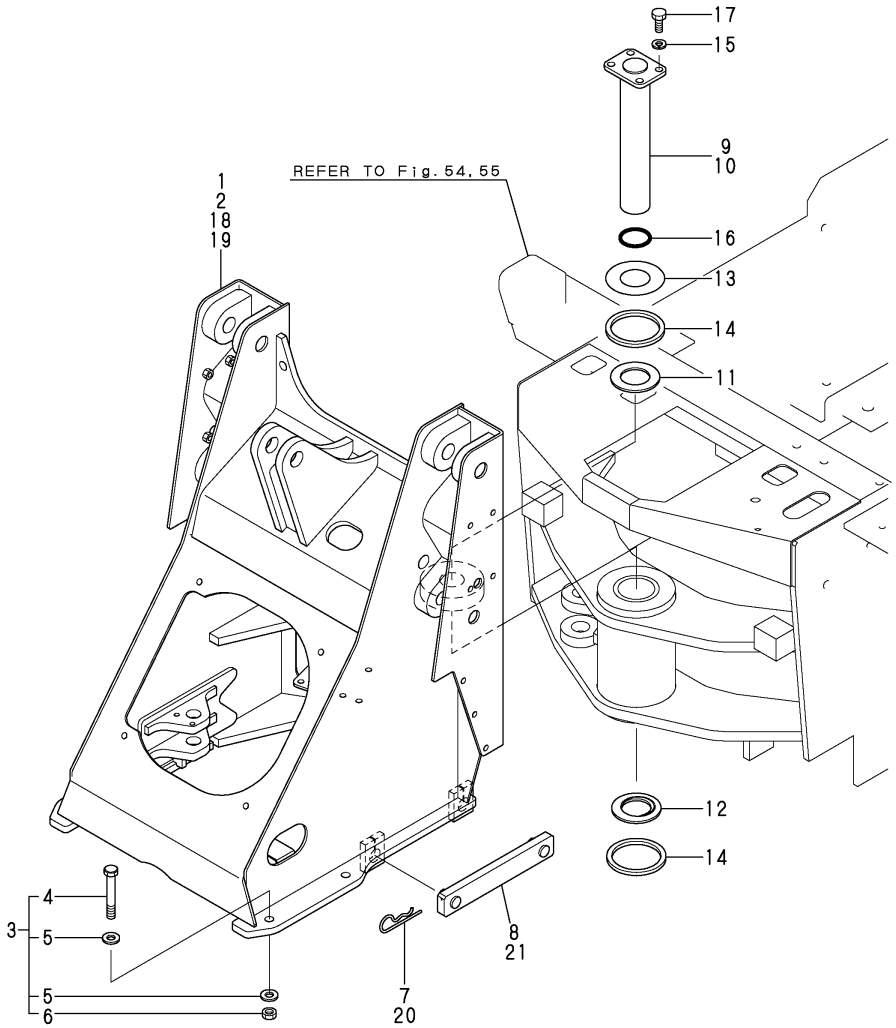

(A)=V3-5
(B)=V3-5(M/C)
(C)=V4-5
(D)=V4-5A
(E)=V5
(F)=V5-A

No.	Lev.	Parts No.	Description	Q'ty (A)	(B)	(C)	(D)	(E)	(F)	I	R
1	1	172527-52100	FRAME ASSY, FRONT	1							
2	1	172528-52100	FRAME ASSY, FRONT			1		1			
3	1	172527-52410	BOLT F SET	4		4		4			
3-1	1	172527-52411	BOLT F SET	4	4	4	4	4	4	N	
	(A=*2000.08)		(C=*2000.08)	(E=*2000.08)							
4	2	172527-52421	BOLT 16X110	4	4	4	4	4	4		
5	2	172527-52431	WASHER 17X35X4.5	8	8	8	8	8	8		
6	2	172527-52451	NUT, M16	4	4	4	4	4	4		
7	1	172511-52880	SNAP PIN	2		2		2			
8	1	172527-52880	STOPPER ASSY, FRAME	1		1		1			
9	1	172527-52800	PIN 60X346.5	1	1						
10	1	172528-52800	PIN 60X357.5			1	1	1	1		
11	1	172524-52830	COLLAR, THRUST	1	1	1	1	1	1		
12	1	172524-52840	PLATE,THRUST	1	1	1	1	1	1		
13	1	172524-52850	SHIM	1	1	1	1	1	1		
14	1	172524-52870	GASKET	2	2	2	2	2	2		
15	1	22217-140000	WASHER, SPRING 14	4	4	4	4	4	4		
16	1	24321-000600	O-RING, 1AG60.0	1	1	1	1	1	1		
17	1	26116-140352	BOLT, M14X 35 PLATED	4	4	4	4	4	4		
18	1	172527-52101	FRAME ASSY, FRONT		1						
19	1	172528-52101	FRAME ASSY, FRONT				1		1		
20	1	194080-75790	PIN, SNAP 28		2		2		2		
21	1	172527-52881	STOPPER ASSY, FRAME		1		1		1		

N:Old $\frac{\text{Yes}}{\text{No}}$ New, Q:Old $\frac{\text{No}}{\text{Yes}}$ New, R:Old $\frac{\text{Yes}}{\text{Yes}}$ New, S:Old $\frac{\text{No}}{\text{No}}$ New, W:Add, Z:Discontinued, F:Interchangeable by set, K:Q'ty Change

Copyright (C) YANMAR CO., LTD. All RightsReserved.

Fig.54. REAR FRAME(1)

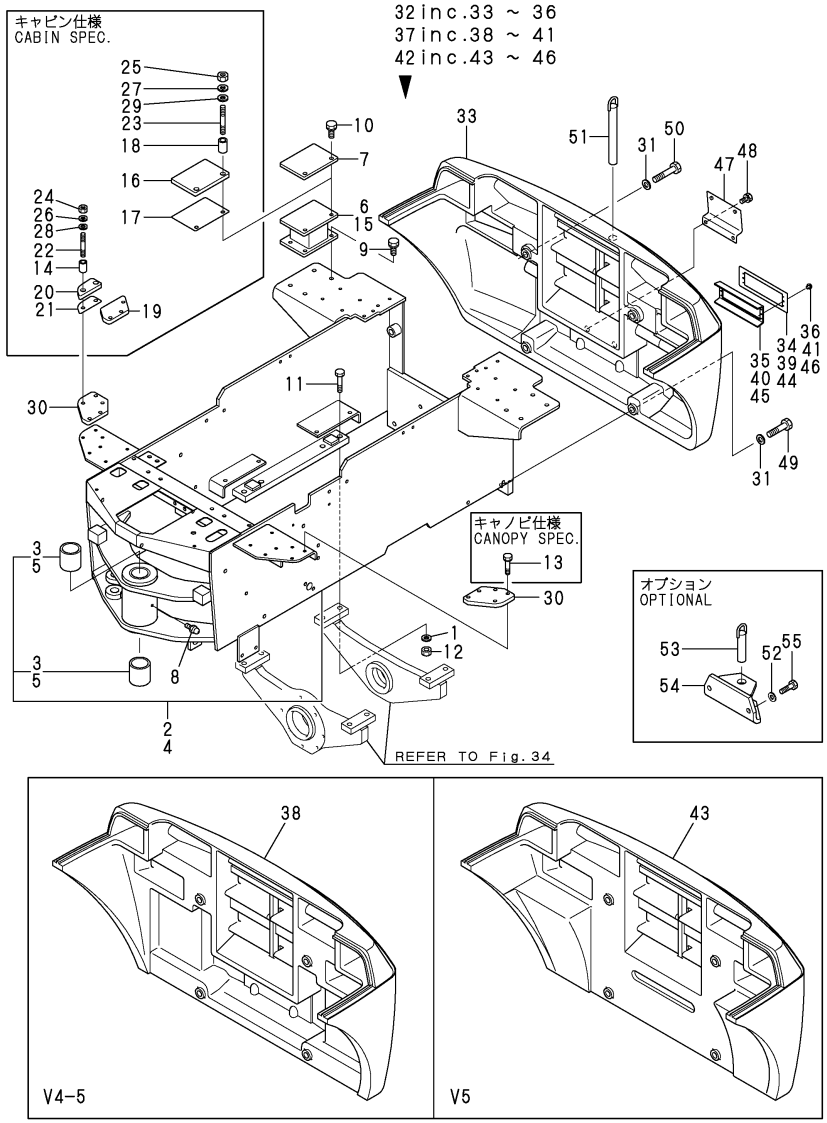

Remarks
(1)CANOPY SPEC.
(2)CABIN SPEC.
(3)OPTIONAL

(A)=V3-5 (D)=V4-5A
(B)=V3-5(M/C) (E)=V5
(C)=V4-5 (F)=V5-A

No.	Lev.	Parts No.	Description	Q'ty (A)	(B)	(C)	(D)	(E)	(F)	I	R
1	1	172527-52430	WASHER 17X35X4.5	8		8		8			
1-1	1	172527-52431	WASHER 17X35X4.5	8		8		8		N	
	(A=*2000.08)		(C=*2000.08)	(E=*2000.08)							
2	1	172527-52500	FRAME ASSY, REAR	1							
3	2	172524-33520	BUSH	2							
4	1	172528-52500	FRAME ASSY, REAR			1		1			
5	2	172524-33520	BUSH			2		2			
6	1	172527-54510	BASE,CANOPY	2		2		2			
7	1	172527-54710	PLATE	2		2		2			
8	1	24764-020000	NIPPLE, GREASE R1/8	1		1		1			
9	1	26013-120302	BOLT, M12X 30	8		8		8			
10	1	26013-120302	BOLT, M12X 30	4		4		4			
11	1	26116-160752	BOLT, M16X 75 PLATED	8		8		8			
11-1	1	172527-52920	BOLT 16X75	8		8		8		N	
	(A=*2000.08)		(C=*2000.08)	(E=*2000.08)							
12	1	26716-160002	NUT, M16	8		8		8			
12-1	1	172527-52451	NUT, M16	8		8		8		N	
	(A=*2000.08)		(C=*2000.08)	(E=*2000.08)							
13	1	26013-100402	BOLT, M10X 40	4		4		4			1
13-1	1	26013-100502	BOLT, M10X 50	4		4		4		N	1
	(A=M/#51365)		(C=M/#51153)	(E=M/#01060)							
14	1	172527-47990	COLLAR, 11X17X25.5	4		4		4			2
14-1	1	172527-47991	COLLAR, 11X17X32.5	4		4		4		N	2
	(A=M/#51365)		(C=M/#51153)	(E=M/#01060)							
15	1	172527-54810	BASE,CABIN	2		2		2			2
16	1	172527-54850	RUBBER	2		2		2			2
17	1	172527-54870	SHIM, 3.2 R	2		2		2			2
18	1	172527-54880	COLLAR, 12X17X28.5	2		2		2			2
19	1	172527-54930	PLATE	2		2		2			2
20	1	172527-54950	RUBBER	2		2		2			2
21	1	172527-54970	SHIM, 3.2 F	2		2		2			2
22	1	26216-100452	STUD, M10X 45	4		4		4			2
22-1	1	26216-100502	STUD, M10X 50	4		4		4		N	2
	(A=M/#51365)		(C=M/#51153)	(E=M/#01060)							
23	1	26216-120502	STUD, M12X 50	4		4		4			2
24	1	26716-100002	NUT, M10	4		4		4			2
25	1	26716-120002	NUT, M12	4		4		4			2
26	1	22217-100000	WASHER, SPRING 10	4		4		4			2
27	1	22217-120000	WASHER, SPRING 12	4		4		4			2
28	1	22137-100000	WASHER, 10	4		4		4			2
29	1	22137-120000	WASHER, 12	4		4		4			2
30	1	172527-54230	PLATE	2		2		2			
31	1	172520-31210	WASHER	4		4		4			
32	1	172527-53300	WEIGHT ASSY, COUNTER	1							
33	2	172527-53310	WEIGHT, COUNTER	1							
34	2	172527-53350	PLATE,LAMP	2							
35	2	172527-53361	HOLDER ASSY, LAMP	2							
36	2	22695-320641	RIVET, 3.2X 6.4	8							
37	1	172528-53300	WEIGHT ASSY, COUNTER			1					
38	2	172528-53310	WEIGHT, COUNTER			1					
39	2	172527-53350	PLATE,LAMP			2					

N:Old $\xleftarrow[\text{No}]{\text{Yes}}$ New, Q:Old $\xleftarrow[\text{Yes}]{\text{No}}$ New, R:Old $\xleftarrow[\text{Yes}]{\text{Yes}}$ New, S:Old $\xleftarrow[\text{No}]{\text{No}}$ New, W:Add, Z:Discontinued, F:Interchangeable by set, K:Q'ty Change

++ CONTINUE ++

Copyright (C) YANMAR CO., LTD. All RightsReserved.

Fig.54. REAR FRAME(1)

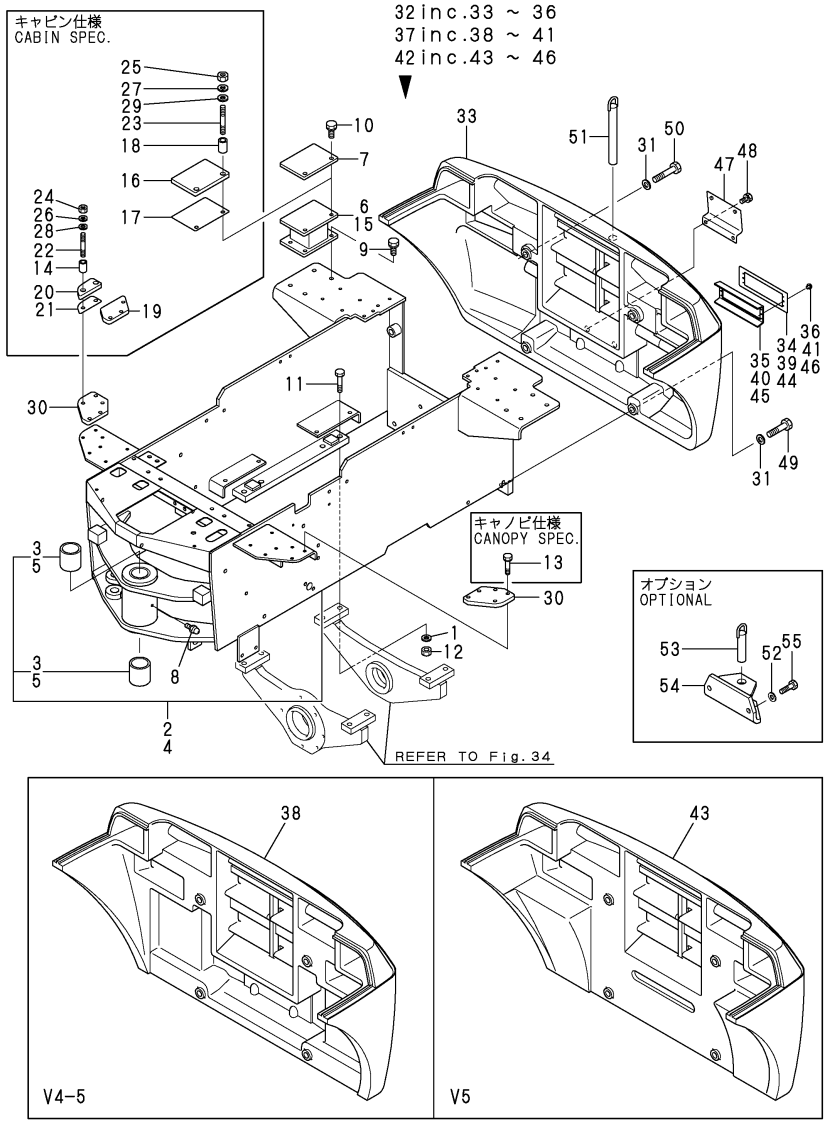

Remarks
(1)CANOPY SPEC.
(2)CABIN SPEC.
(3)OPTIONAL

(A)=V3-5 (D)=V4-5A
(B)=V3-5(M/C) (E)=V5
(C)=V4-5 (F)=V5-A

No.	Lev.	Parts No.	Description	Q'ty (A)	(B)	(C)	(D)	(E)	(F)	I	R
40	2	172527-53361	HOLDER ASSY, LAMP			2					
41	2	22695-320641	RIVET, 3.2X 6.4			8					
42	1	172529-53300	WEIGHT ASSY, COUNTER					1			
43	2	172529-53310	WEIGHT ASSY, COUNTER					1			
44	2	172527-53350	PLATE,LAMP					2			
45	2	172527-53360	HOLDER,LAMP					2			
46	2	22695-320641	RIVET, 3.2X 6.4					8			
47	1	172527-53370	PLATE, NUMBER	1		1		1			
48	1	26013-100202	BOLT, M10X 20	2		2		2			
49	1	26116-200852	BOLT, M20X 85 PLATED	2		2		2			
50	1	26116-201002	BOLT, M20X100 PLATED	2		2		2			
51	1	172527-53510	PIN, HITCH	1		1		1			
52	1	172527-52430	WASHER 17X35X4.5	2		2		2			3
52-1	1	172527-52431	WASHER 17X35X4.5	2		2		2		N	
	(A=*2003.08)		(C=*2003.08)	(E=*2003.08)							
53	1	172527-53610	PIN, HITCH	1		1		1			3
54	1	172527-53620	HITCH	1		1		1			3
55	1	26116-160552	BOLT, M16X 55 PLATED	2		2		2			3

N:Old $\overset{\text{Yes}}{\underset{\text{No}}{\leftrightarrow}}$ New, Q:Old $\overset{\text{No}}{\underset{\text{Yes}}{\leftrightarrow}}$ New, R:Old $\overset{\text{Yes}}{\underset{\text{Yes}}{\leftrightarrow}}$ New, S:Old $\overset{\text{No}}{\underset{\text{No}}{\leftrightarrow}}$ New, W:Add, Z:Discontinued, F:Interchangeable by set, K:Q'ty Change

Copyright (C) YANMAR CO., LTD. All RightsReserved.

Fig.55. REAR FRAME(2)

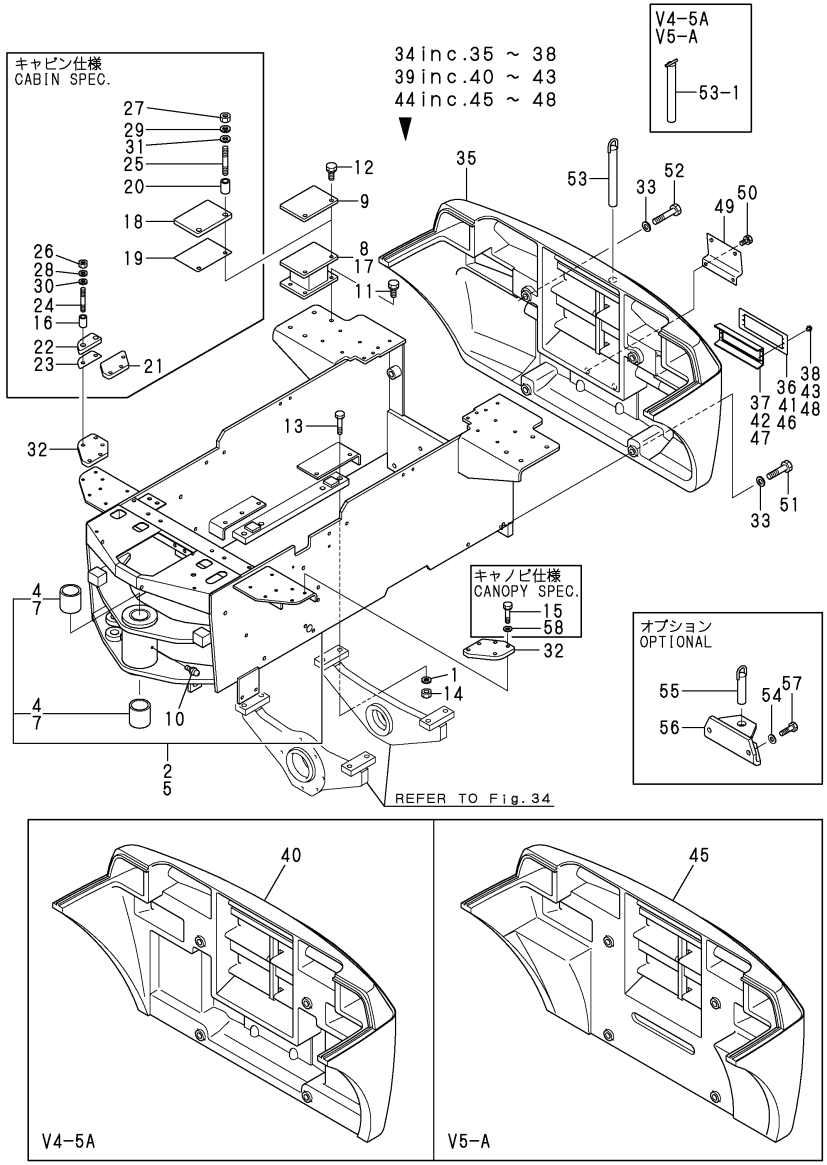

Remarks
(1)CANOPY SPEC.
(2)CABIN SPEC.
(3)OPTIONAL

(A)=V3-5 (D)=V4-5A
(B)=V3-5(M/C) (E)=V5
(C)=V4-5 (F)=V5-A

No.	Lev.	Parts No.	Description	Q'ty (A)	(B)	(C)	(D)	(E)	(F)	I	R
1	1	172527-52431	WASHER 17X35X4.5		8		8		8		
2	1	172527-52050	FRAME ASSY, REAR		1						
4	2	172524-33521	BUSH		2						
5	1	172528-52050	FRAME ASSY, REAR				1		1		
5-1	1	172528-52070	FRAME ASSY, REAR				1		1	R	
			(D=M/#52168)						(F=M/#02060)		
7	2	172524-33521	BUSH				2		2		
8	1	172527-54510	BASE,CANOPY		2		2		2		
9	1	172527-54710	PLATE		2		2		2		
10	1	24764-020000	NIPPLE, GREASE R1/8		1		1		1		
11	1	26013-120302	BOLT, M12X 30		8		8		8		
12	1	26013-120302	BOLT, M12X 30		4		4		4		
13	1	172527-52920	BOLT 16X75		8		8		8		
14	1	172527-52451	NUT, M16		8		8		8		
15	1	26013-100502	BOLT, M10X 50		4		4		4		1
16	1	172527-54890	COLLAR, 11X17X32.5		4		4		4		2
17	1	172527-54810	BASE,CABIN		2		2		2		2
18	1	172527-54850	RUBBER		2		2		2		2
19	1	172527-54870	SHIM, 3.2 R		2		2		2		2
20	1	172527-54880	COLLAR, 12X17X28.5		2		2		2		2
21	1	172527-54930	PLATE		2		2		2		2
22	1	172527-54950	RUBBER		2		2		2		2
23	1	172527-54970	SHIM, 3.2 F		2		2		2		2
24	1	26216-100502	STUD, M10X 50		4		4		4		2
25	1	26216-120502	STUD, M12X 50		4		4		4		2
26	1	26716-100002	NUT, M10		4		4		4		2
27	1	26716-120002	NUT, M12		4		4		4		2
28	1	22217-100000	WASHER, SPRING 10		4		4		4		2
29	1	22217-120000	WASHER, SPRING 12		4		4		4		2
30	1	22137-100000	WASHER, 10		4		4		4		2
31	1	22137-120000	WASHER, 12		4		4		4		2
32	1	172527-54230	PLATE		2		2		2		
33	1	172520-31210	WASHER		4		4		4		
34	1	172527-53300	WEIGHT ASSY, COUNTER		1						
35	2	172527-53310	WEIGHT, COUNTER		1						
36	2	172527-53350	PLATE,LAMP		2						
37	2	172527-53361	HOLDER ASSY, LAMP		2						
38	2	22695-320641	RIVET, 3.2X 6.4		8						
39	1	172528-53300	WEIGHT ASSY, COUNTER				1				
40	2	172528-53310	WEIGHT, COUNTER				1				
41	2	172527-53350	PLATE,LAMP				2				
42	2	172527-53361	HOLDER ASSY, LAMP				2				
43	2	22695-320641	RIVET, 3.2X 6.4				8				
44	1	172529-53300	WEIGHT ASSY, COUNTER						1		
45	2	172529-53310	WEIGHT ASSY, COUNTER						1		
46	2	172527-53350	PLATE,LAMP						2		
47	2	172527-53361	HOLDER ASSY, LAMP						2		
48	2	22695-320641	RIVET, 3.2X 6.4						8		
49	1	172527-53371	PLATE, NUMBER		1		1		1		
50	1	26013-100202	BOLT, M10X 20		2		2		2		
51	1	26116-200852	BOLT, M20X 85 PLATED		2		2		2		

N:Old $\overset{\text{Yes}}{\underset{\text{No}}{\leftrightarrow}}$ New, Q:Old $\overset{\text{No}}{\underset{\text{Yes}}{\leftrightarrow}}$ New, R:Old $\overset{\text{Yes}}{\underset{\text{Yes}}{\leftrightarrow}}$ New, S:Old $\overset{\text{No}}{\underset{\text{No}}{\leftrightarrow}}$ New, W:Add, Z:Discontinued, F:Interchangeable by set, K:Q'ty Change

++ CONTINUE ++

Copyright (C) YANMAR CO., LTD. All RightsReserved.

Fig.55. REAR FRAME(2)

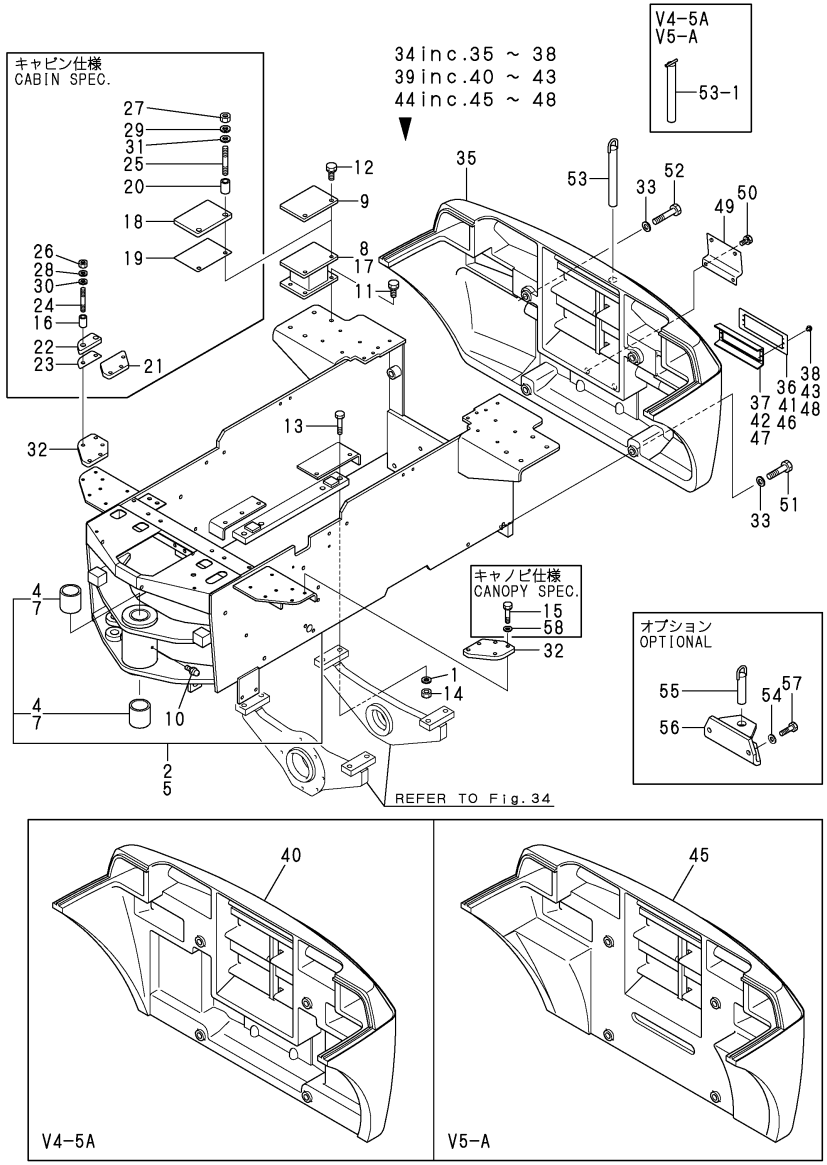

Remarks
(1)CANOPY SPEC.
(2)CABIN SPEC.
(3)OPTIONAL

(A)=V3-5
(B)=V3-5(M/C)
(C)=V4-5
(D)=V4-5A
(E)=V5
(F)=V5-A

No.	Lev.	Parts No.	Description	Q'ty (A)	(B)	(C)	(D)	(E)	(F)	I	R
52	1	26116-201002	BOLT, M20X100 PLATED		2		2		2		
53	1	172527-53511	PIN ASSY, HITCH		1		1		1		
53-1	1	172527-53550	PIN ASSY, HITCH				1		1	N	
			(D=M/#52168)						(F=M/#02060)		
54	1	172527-52431	WASHER 17X35X4.5		2		2		2		3
55	1	172527-53610	PIN, HITCH		1		1		1		3
56	1	172527-53620	HITCH		1		1		1		3
57	1	26116-160552	BOLT, M16X 55 PLATED		2		2		2		3
58	1	1A1102-51460	WASHER,HANDLE		4		4		4		1

N:Old $\xleftarrow[\text{No}]{\text{Yes}}$ New, Q:Old $\xleftarrow[\text{Yes}]{\text{No}}$ New, R:Old $\xleftarrow[\text{Yes}]{\text{Yes}}$ New, S:Old $\xleftarrow[\text{No}]{\text{No}}$ New, W:Add, Z:Discontinued, F:Interchangeable by set, K:Q'ty Change

Copyright (C) YANMAR CO., LTD. All RightsReserved.

Fig.56. OPERATION FRAME & COVER

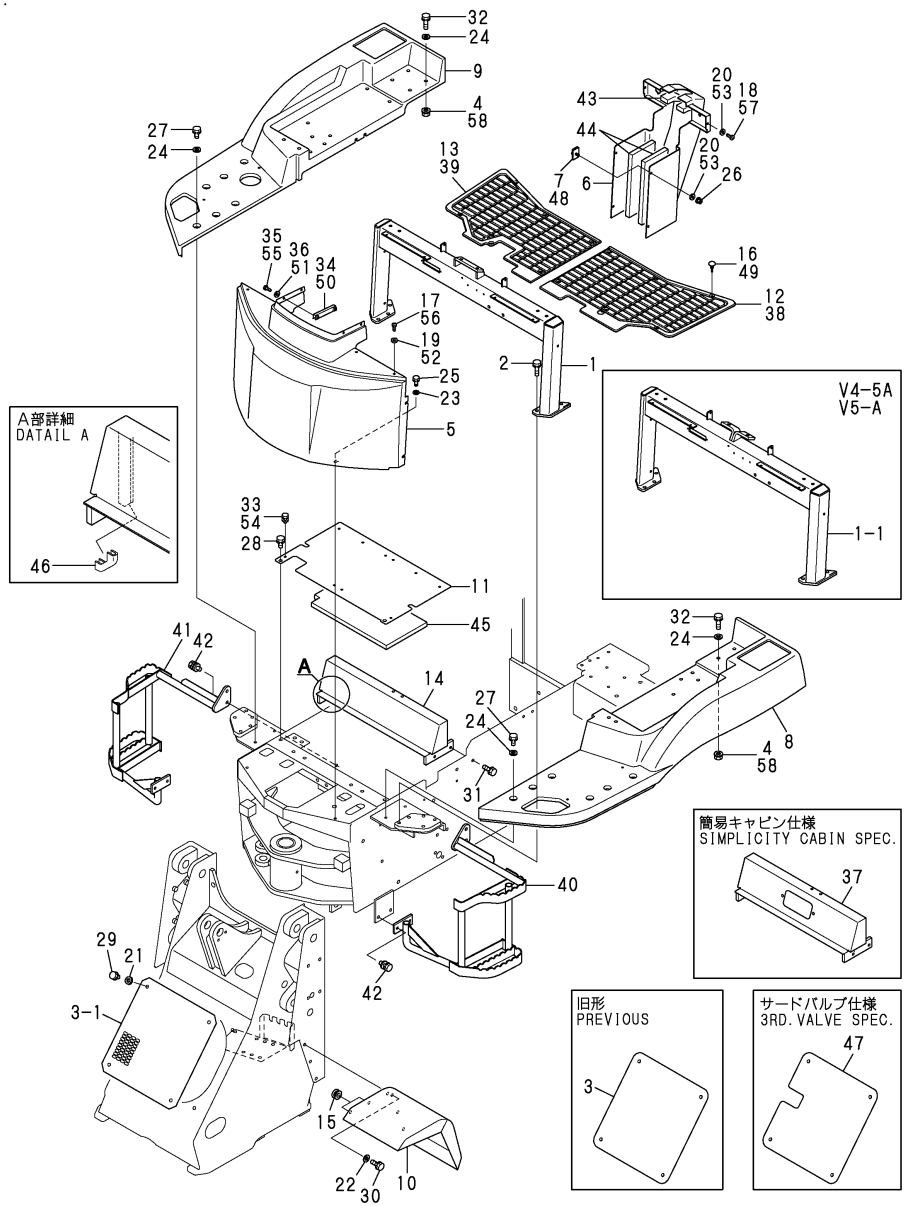

Remarks
(1)SIMPLICITY CABIN SPEC.
(2)CABIN SPEC.
(3)3RD VALVE SPEC.

(A)=V3-5 (D)=V4-5A
(B)=V3-5(M/C) (E)=V5
(C)=V4-5 (F)=V5-A

No.	Lev.	Parts No.	Description	Q'ty (A)	(B)	(C)	(D)	(E)	(F)	I	R
1	1	172527-55110	FRAME ASSY, OPERATOR	1	1	1	1	1	1		
1-1	1	172527-55510	FRAME ASSY, OPERATOR				1		1	N	
			(D=M/#52168)					(F=M/#02060)			
2	1	26013-100502	BOLT, M10X 50	6	6	6	6	6	6		
3	1	172527-61110	COVER	1	1	1	1	1	1		
3-1	1	172527-61120	COVER	1	1	1	1	1	1	N	
	(A=*2004.03)	(B=M/#52610)	(C=*2004.03) (D=M/#52091)	(E=*2004.03)				(F=M/#02041)			
4	1	194990-22060	NUT	8		8		8			
5	1	172527-61210	COVER, OPERATOR	1	1	1	1	1	1		
6	1	172527-61410	COVER, COLUMN	1	1	1	1	1	1		
7	1	172527-61420	CLAMP	4		4		4			
8	1	172527-61610	FENDER, REAR	1	1	1	1	1	1		
9	1	172527-61630	FENDER, REAR	1	1	1	1	1	1		
10	1	172527-61750	FENDER	2	2	2	2	2	2		
11	1	172527-61810	FLOOR	1	1	1	1	1	1		
12	1	172527-61850	FLOOR MAT L	1	1	1	1	1	1		
13	1	172527-61860	FLOOR MAT R	1	1	1	1	1	1		
14	1	172527-61910	MEMBER ASSY, CROSS	1	1	1	1	1	1		
14-1	1	172527-61540	MEMBER ASSY, CROSS				1		1	N	
			(D=M/#52168)					(F=M/#02060)			
15	1	194630-62360	GROMMET	4	4	4	4	4	4		
16	1	198162-62630	FASNER	12		12		12			
17	1	172524-63210	SCREW, M6X16	4		4		4			
18	1	172524-63210	SCREW, M6X16	2		2		2			
19	1	172524-63230	WASHER	4		4		4			
20	1	172524-63230	WASHER	6		6		6			
21	1	22137-100000	WASHER, 10	4	4	4	4	4	4		
22	1	22137-100000	WASHER, 10	6	6	6	6	6	6		
23	1	22157-080000	WASHER, 8	6	6	6	6	6	6		
24	1	22157-100000	WASHER, 10	20	20	20	20	20	20		
25	1	26013-080202	BOLT, M8X 20	6	6	6	6	6	6		
26	1	194990-22130	NUT, M6	4	4	4	4	4	4		
27	1	26013-100202	BOLT, M10X 20	12	12	12	12	12	12		
28	1	26013-100202	BOLT, M10X 20	2	2	2	2	2	2		
29	1	26013-100202	BOLT, M10X 20	4	4	4	4	4	4		
30	1	26013-100252	BOLT, M10X 25	6	6	6	6	6	6		
31	1	26013-100302	BOLT, M10X 30	4	4	4	4	4	4		
32	1	26013-100452	BOLT, M10X 45	8	8	8	8	8	8		
33	1	26016-060162	BOLT, M6X 16	2		2		2			
34	1	172524-63150	CLAMP, VISOR	2		2		2			
35	1	172524-63210	SCREW, M6X16	4		4		4			
36	1	172524-63230	WASHER	4		4		4			
37	1	172527-61510	MEMBER, CROSS	1		1		1			1
38	1	172527-61880	FLOOR MAT L CAB	1	1	1	1	1	1		2
39	1	172527-61890	FLOOR MAT R CAB	1	1	1	1	1	1		2
40	1	172527-62110	STEP	1	1	1	1	1	1		
41	1	172527-62120	STEP	1	1	1	1	1	1		
42	1	26014-100302	BOLT, M10X 30	8	8	8	8	8	8		
43	1	172527-62750	SOUND-PROOF CC-M-20	1	1	1	1	1	1		
43-1	1	172527-63750	SOUND-PROOF CC-M-20	1	1	1	1	1	1	R	
	(A=*2004.11)	(B=*2004.11)	(C=*2004.11) (D=M/#52168)	(E=*2004.11)				(F=M/#02060)			

N:Old $\xleftarrow[\text{No}]{\text{Yes}}$ New, Q:Old $\xleftarrow[\text{Yes}]{\text{No}}$ New, R:Old $\xleftarrow[\text{Yes}]{\text{Yes}}$ New, S:Old $\xleftarrow[\text{No}]{\text{No}}$ New, W:Add, Z:Discontinued, F:Interchangeable by set, K:Q'ty Change

++ CONTINUE ++

Copyright (C) YANMAR CO., LTD. All RightsReserved.

Fig.56. OPERATION FRAME & COVER

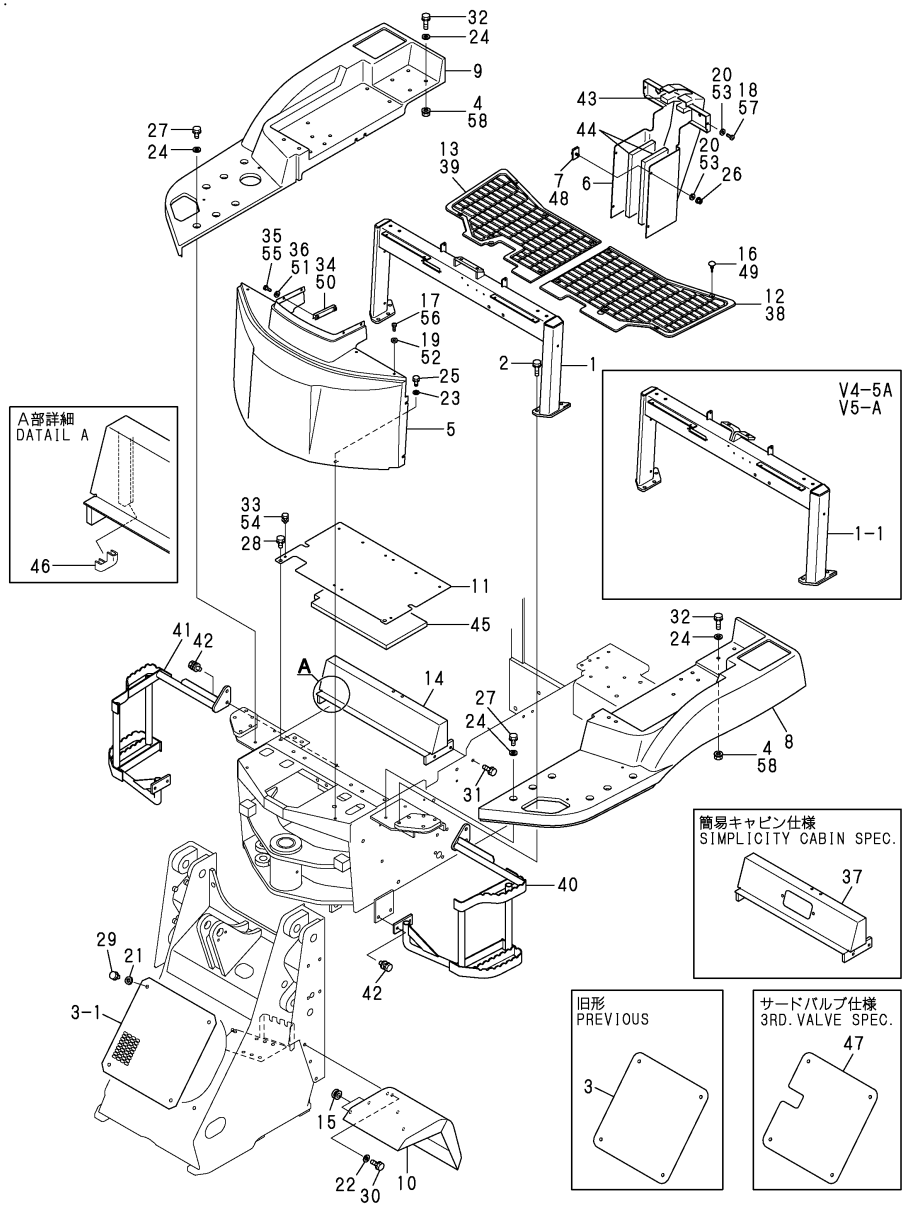

Remarks
(1)SIMPLICITY CABIN SPEC.
(2)CABIN SPEC.
(3)3RD VALVE SPEC.

(A)=V3-5 (D)=V4-5A
(B)=V3-5(M/C) (E)=V5
(C)=V4-5 (F)=V5-A

No.	Lev.	Parts No.	Description	Q'ty (A)	(B)	(C)	(D)	(E)	(F)	I	R
44	1	172527-62760	SOUND-PROOF CC-S-20	2	2	2	2	2	2		
44-1	1	172527-63760	SOUND-PROOF CC-S-20	2	2	2	2	2	2	R	
	(A=*2004.11)	(B=*2004.11)	(C=*2004.11) (D=M/#52168)	(E=*2004.11)				(F=M/#02060)			
45	1	172527-62770	SOUND-PROOF FLR-20	1	1	1	1	1	1		
45-1	1	172527-63770	SOUND-PROOF FLR-20	1	1	1	1	1	1	R	
	(A=*2004.11)	(B=*2004.11)	(C=*2004.11) (D=M/#52168)	(E=*2004.11)				(F=M/#02060)			
46	1	172527-61530	TRIM	1		1		1		W	
	(A=M/#50645)		(C=M/#50586)	(E=M/#01001)							
47	1	172527-61150	COVER	1		1		1			3
47-1	1	172527-61150	COVER	1		1		1		Z	3
	(A=M/#51083)		(C=M/#51025)	(E=M/#01001)							
48	1	172527-61421	CLAMP ASSY, COLUMN		4		4		4		
49	1	172527-61980	CLIP		12		12		12		
50	1	172524-63151	CLAMP ASSY, VISOR		2		2		2		
51	1	22157-060000	WASHER, 6		4		4		4		
52	1	22157-060000	WASHER, 6		4		4		4		
53	1	22157-060000	WASHER, 6		6		6		6		
54	1	26014-060162	BOLT, M6X 16		2		2		2		
55	1	26022-060162	SCREW, M6X16		4		4		4		
56	1	26022-060162	SCREW, M6X16		4		4		4		
57	1	26022-060162	SCREW, M6X16		2		2		2		
58	1	26366-100002	NUT, M10		8		8		8		

N:Old ◄Yes/No► New, Q:Old ◄No/Yes► New, R:Old ◄Yes/Yes► New, S:Old ◄No/No► New, W:Add, Z:Discontinued, F:Interchangeable by set, K:Q'ty Change

Copyright (C) YANMAR CO., LTD. All RightsReserved.

Fig.57. SEAT & BONNET(1)

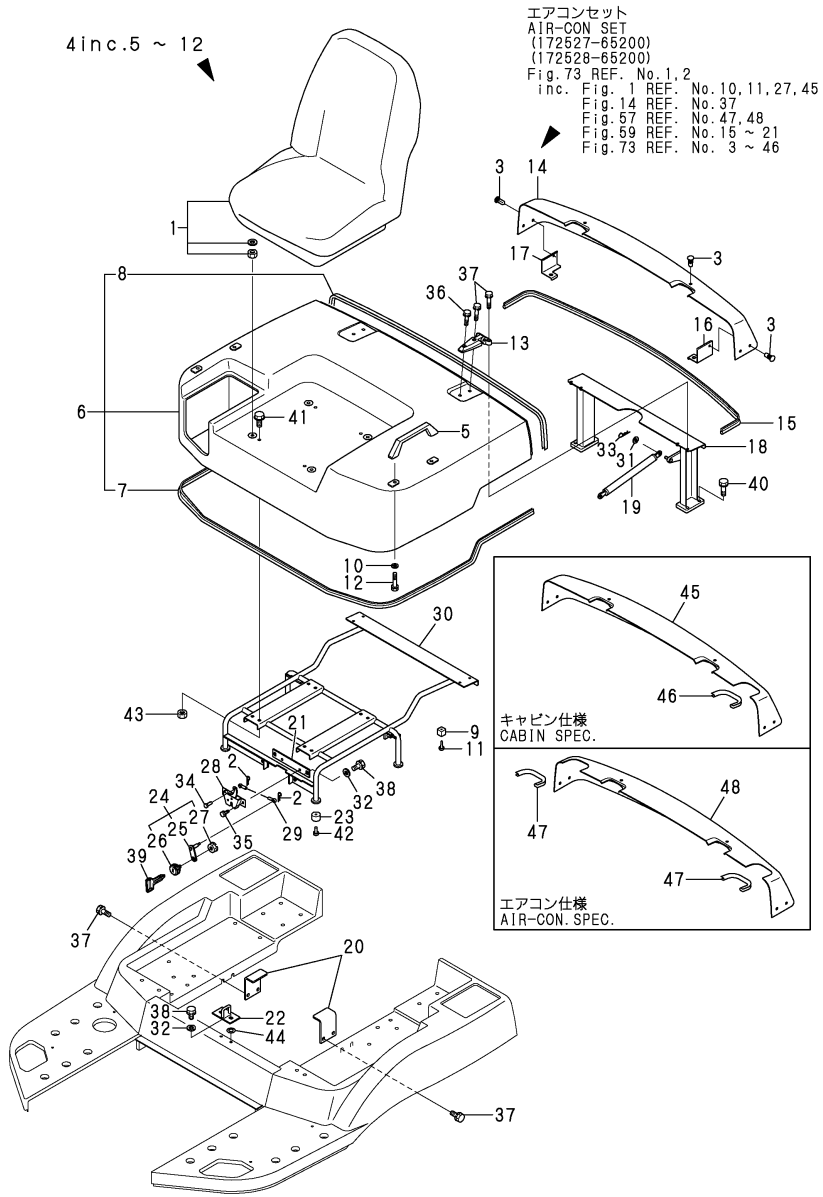

Remarks
(1)SELECT PART.
(2)CABIN SPEC.
(3)AIR-CON.SPEC.

(A)=V3-5 (D)=V4-5A
(B)=V3-5(M/C) (E)=V5
(C)=V4-5 (F)=V5-A

No.	Lev.	Parts No.	Description	Q'ty (A)	(B)	(C)	(D)	(E)	(F)	I	R
1	1	172527-64200	SEAT ASSY	1		1		1			
2	1	1C6281-52310	PIN, SNAP 6	2		2		2			
3	1	172527-61990	FASTENER	6		6		6			
4	1	172527-65100	BONNET ASSY	1		1		1			
5	2	198220-62410	BAR, ASSIST	2		2		2			
6	2	172527-65110	BONNET	1		1		1			
7	3	172527-65130	SEAL, BONNET	1		1		1			
8	3	172527-65140	SEAL, BONNET	1		1		1			
9	2	172524-65140	RUBBER	4		4		4			
10	2	22137-080000	WASHER, 8	4		4		4			
11	2	22857-500160	SCREW, 5X16	4		4		4			
12	2	26013-080302	BOLT, M8X 30	4		4		4			
13	1	172520-65151	HINGE	2		2		2			
14	1	172527-65150	COVER	1		1		1			
15	1	172527-65170	SEAL, COVER	1		1		1			
16	1	172527-65180	BRACKET L	1		1		1			
17	1	172527-65190	BRACKET R	1		1		1			
18	1	172527-65210	STAY ASSY, HINGE	1		1		1			
19	1	172527-65270	SPRING, GAS	1		1		1			
20	1	172527-65310	STAY, BONNET	2		2		2			
21	1	172527-65350	PLATE,ROCK	1		1		1			
22	1	172527-65360	PLATE,CATCH	1		1		1			
23	1	172524-65670	CUSHION, RUBBER	4		4		4			
24	1	172524-65700	KEY ASSY, CYLINDER	1		1		1			
25	2	172524-65710	PLATE,KEY	1		1		1			
25-1	2	172524-65711	PLATE ASSY, KEY	1		1		1		R	
	(A=MXXX)		(C=MXXX)	(E=MXXX)							
26	2	172524-65720	KEY SET, CYLINDER	1		1		1			
26-1	2	172164-66170	KEY ASSY, CYLINDER	1		1		1		R	
	(A=MXXX)		(C=MXXX)	(E=MXXX)							
27	2	26346-100002	NUT, M10	1		1		1			
28	1	172527-65730	ROCK, BONNET	1		1		1			
29	1	172527-65750	WIRE, BONNET	1		1		1			
30	1	172527-65810	FRAME, BONNET	1		1		1			
31	1	22137-080000	WASHER, 8	2		2		2			
32	1	22137-100000	WASHER, 10	4		4		4			
33	1	22360-080000	SNAP PIN 8	2		2		2			
34	1	22487-060160	PIN, H 6X 16	1		1		1			
35	1	26013-080162	BOLT, M8X 16	2		2		2			
36	1	26013-080302	BOLT, M8X 30	2		2		2			
37	1	26013-080352	BOLT, M8X 35	10		10		10			
38	1	26013-100252	BOLT, M10X 25	4		4		4			
39	1	933110-07101	KEY	1		1		1			
40	1	26013-100302	BOLT, M10X 30	4		4		4			
41	1	26018-080202	BOLT, M8X 20	4		4		4			
42	1	26023-060162	SCREW, M6X16	4		4		4			
43	1	26366-080002	NUT, M8	4		4		4			
44	1	172527-65370	SHIM	1		1		1		W	1
	(A=M/#50645)		(C=M/#50586)	(E=M/#01001)							
45	1	172527-65550	COVER	1		1		1			2
46	1	172527-65560	TRIM, COVER	1		1		1			2

N:Old $\xleftrightarrow[\text{No}]{\text{Yes}}$ New, Q:Old $\xleftrightarrow[\text{Yes}]{\text{No}}$ New, R:Old $\xleftrightarrow[\text{Yes}]{\text{Yes}}$ New, S:Old $\xleftrightarrow[\text{No}]{\text{No}}$ New, W:Add, Z:Discontinued, F:Interchangeable by set, K:Q'ty Change

++ CONTINUE ++

Copyright (C) YANMAR CO., LTD. All RightsReserved.

Fig.57. SEAT & BONNET(1)

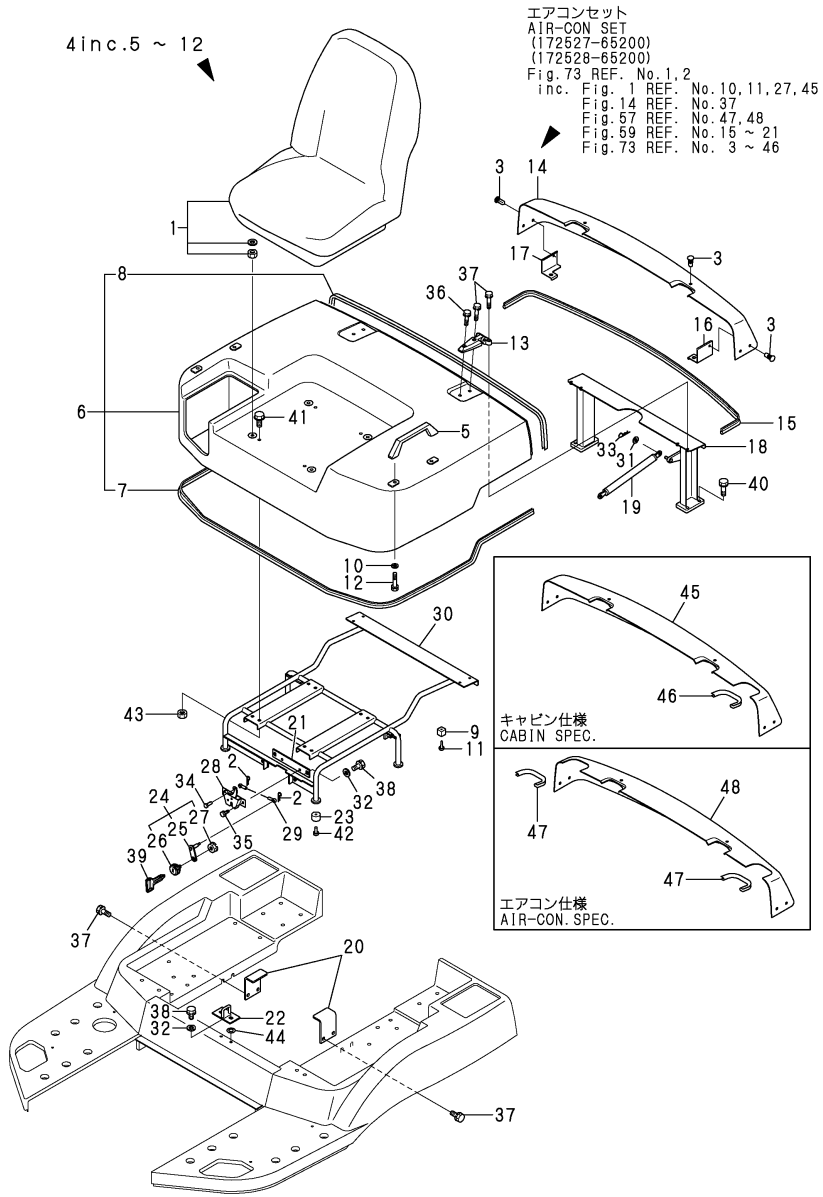

Remarks
(1)SELECT PART.
(2)CABIN SPEC.
(3)AIR-CON.SPEC.

(A)=V3-5
(B)=V3-5(M/C)
(C)=V4-5
(D)=V4-5A
(E)=V5
(F)=V5-A

No.	Lev.	Parts No.	Description	Q'ty (A)	(B)	(C)	(D)	(E)	(F)	I	R
47	1	172527-65560	TRIM, COVER	2		2		2			3
48	1	172527-65570	COVER	1		1		1			3

N:Old ←Yes/No→ New, Q:Old ←No/Yes→ New, R:Old ←Yes/Yes→ New, S:Old ←No/No→ New, W:Add, Z:Discontinued, F:Interchangeable by set, K:Q'ty Change

Copyright (C) YANMAR CO., LTD. All RightsReserved.

Fig.58. SEAT & BONNET(2)

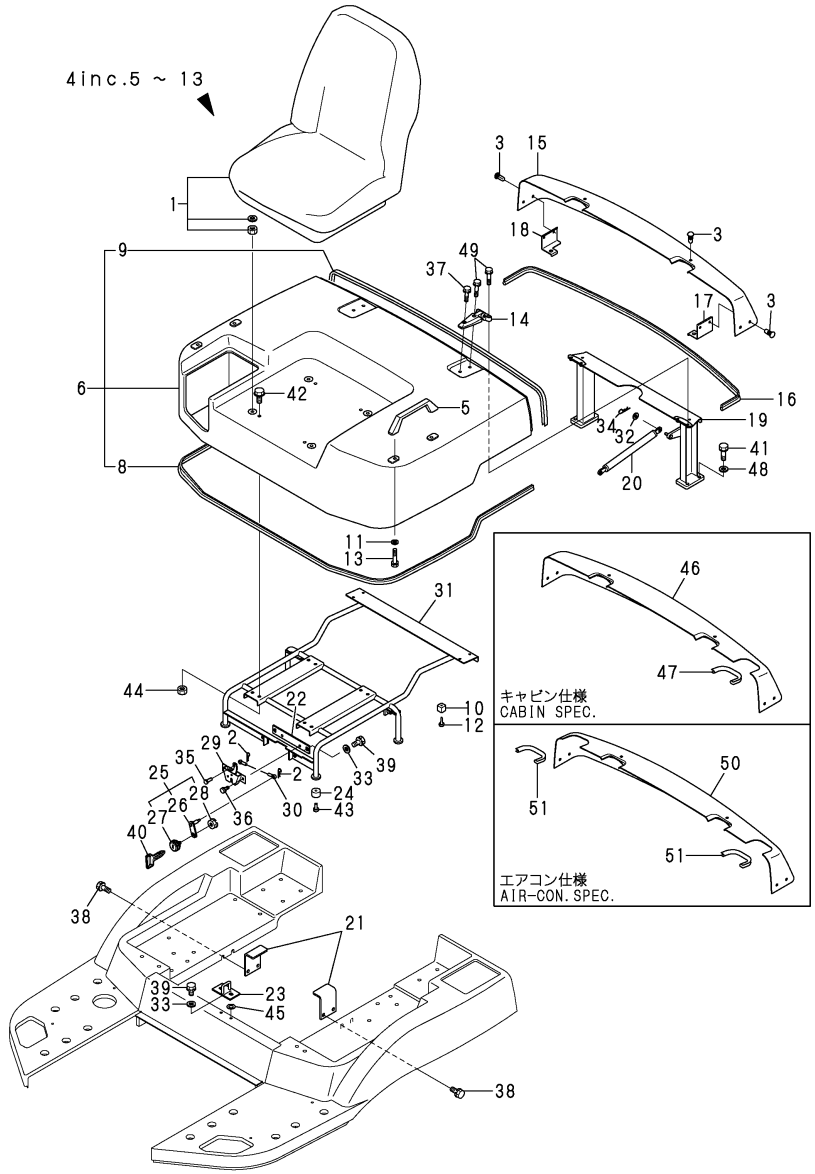

Remarks
(1)SELECT PART.
(2)CABIN SPEC.
(3)AIR-CON SPEC.

(A)=V3-5 (D)=V4-5A
(B)=V3-5(M/C) (E)=V5
(C)=V4-5 (F)=V5-A

No.	Lev.	Parts No.	Description	Q'ty (A)	(B)	(C)	(D)	(E)	(F)	I	R
1	1	172527-64200	SEAT ASSY		1		1		1		
2	1	1C6281-52310	PIN, SNAP 6		2		2		2		
3	1	172527-61990	FASTENER		6		6		6		
4	1	172527-65100	BONNET ASSY		1		1		1		
5	2	198220-62410	BAR, ASSIST		2		2		2		
6	2	172527-65120	BONNET ASSY, W/PAD		1		1		1		
8	3	172527-65130	SEAL, BONNET		1		1		1		
9	3	172527-65140	SEAL, BONNET		1		1		1		
10	2	172524-65140	RUBBER		4		4		4		
11	2	22137-080000	WASHER, 8		4		4		4		
12	2	22857-500160	SCREW, 5X16		4		4		4		
13	2	26013-080302	BOLT, M8X 30		4		4		4		
14	1	172520-65151	HINGE		2		2		2		
15	1	172527-65150	COVER		1		1		1		
16	1	172527-65170	SEAL, COVER		1		1		1		
17	1	172527-65181	BRACKET L,REAR COVER		1		1		1		
18	1	172527-65191	BRACKET R,REAR COVER		1		1		1		
19	1	172527-65211	STAY ASSY, HINGE		1		1		1		
20	1	172527-65270	SPRING, GAS		1		1		1		
21	1	172527-65312	STAY, BONNET		2		2		2		
22	1	172527-65351	PLATE ASSY, ROCK		1		1		1		
23	1	172527-65361	PLATE ASSY, CATCH		1		1		1		
24	1	172524-65670	CUSHION, RUBBER		4		4		4		
25	1	172524-65700	KEY ASSY, CYLINDER		1		1		1		
26	2	172524-65711	PLATE ASSY, KEY		1		1		1		
27	2	172164-66170	KEY ASSY, CYLINDER		1		1		1		
28	2	26346-100002	NUT, M10		1		1		1		
29	1	172527-65730	ROCK, BONNET		1		1		1		
30	1	172527-65750	WIRE, BONNET		1		1		1		
31	1	172527-65811	FRAME, BONNET		1		1		1		
32	1	22137-080000	WASHER, 8		2		2		2		
33	1	22137-100000	WASHER, 10		4		4		4		
34	1	22360-080000	SNAP PIN 8		2		2		2		
35	1	22487-060160	PIN, H 6X 16		1		1		1		
36	1	26013-080162	BOLT, M8X 16		2		2		2		
37	1	26014-080302	BOLT, M8X 30		2		2		2		
38	1	26013-080352	BOLT, M8X 35		4		4		4		
39	1	26013-100252	BOLT, M10X 25		4		4		4		
40	1	933110-07101	KEY		1		1		1		
41	1	26013-100302	BOLT, M10X 30		4		4		4		
42	1	26014-080252	BOLT, M8X 25		4		4		4		
43	1	26023-060162	SCREW, M6X16		4		4		4		
44	1	26366-080002	NUT, M8		4		4		4		
45	1	172527-65370	SHIM		1		1		1		1
46	1	172527-65550	COVER		1		1		1		2
47	1	172527-65560	TRIM, COVER		1		1		1		2
48	1	22137-100000	WASHER, 10		4		4		4		
49	1	26014-080352	BOLT, M8X 35		6		6		6		
50	1	172527-65570	COVER				1		1	W	3
			(D=M/#52064)						(F=M/#02019)		
51	1	172527-65560	TRIM, COVER				2		2	W	3

N:Old $\xleftarrow[\text{No}]{\text{Yes}}$ New, Q:Old $\xleftarrow[\text{Yes}]{\text{No}}$ New, R:Old $\xleftarrow[\text{Yes}]{\text{Yes}}$ New, S:Old $\xleftarrow[\text{No}]{\text{No}}$ New, W:Add, Z:Discontinued, F:Interchangeable by set, K:Q'ty Change

++ CONTINUE ++

Copyright (C) YANMAR CO., LTD. All RightsReserved.

Fig.58. SEAT & BONNET(2)

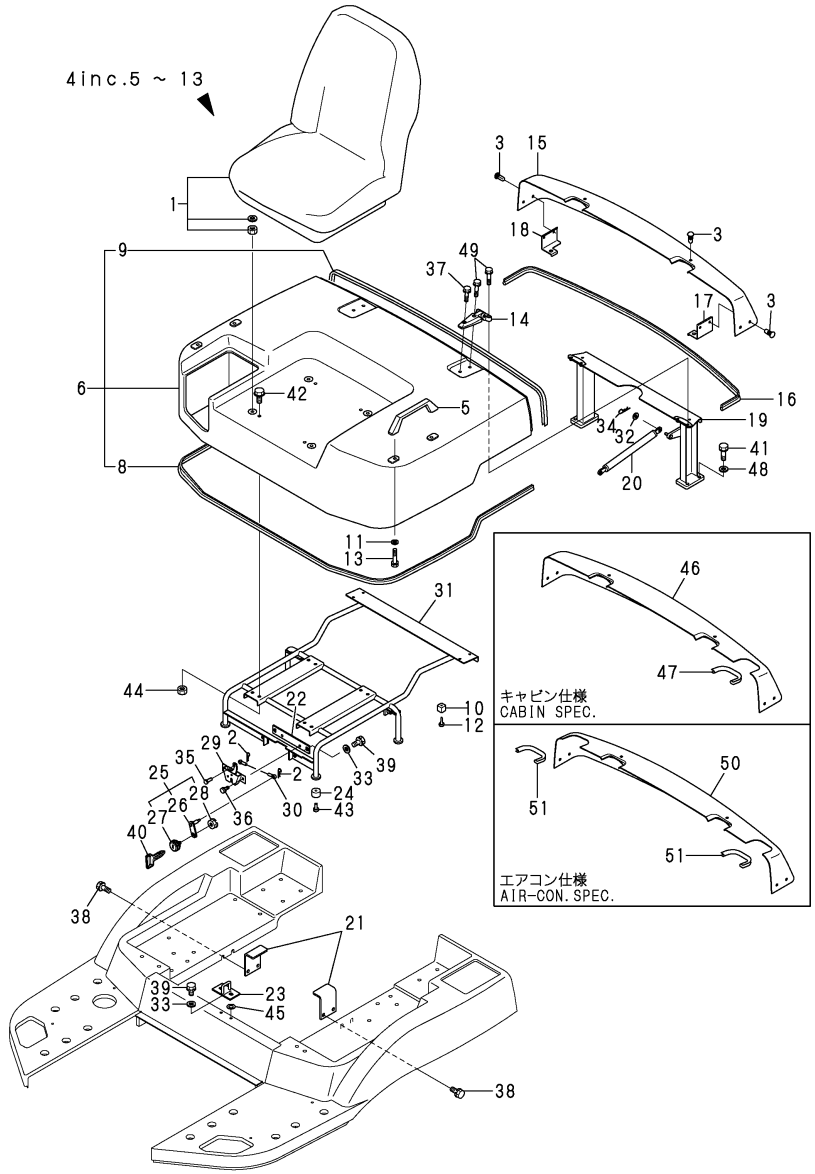

Remarks
(1)SELECT PART.
(2)CABIN SPEC.
(3)AIR-CON SPEC.

(A)=V3-5
(B)=V3-5(M/C)
(C)=V4-5
(D)=V4-5A
(E)=V5
(F)=V5-A

No.	Lev.	Parts No.	Description	Q'ty (A)	(B)	(C)	(D)	(E)	(F)	I	R
			(D=M/#52064)						(F=M/#02019)		

N:Old ◄Yes/No► New, Q:Old ◄No/Yes► New, R:Old ◄Yes/Yes► New, S:Old ◄No/No► New, W:Add, Z:Discontinued, F:Interchangeable by set, K:Q'ty Change

Copyright (C) YANMAR CO., LTD. All RightsReserved.

Fig.59. BONNET SOUNDPROOF MATERIAL

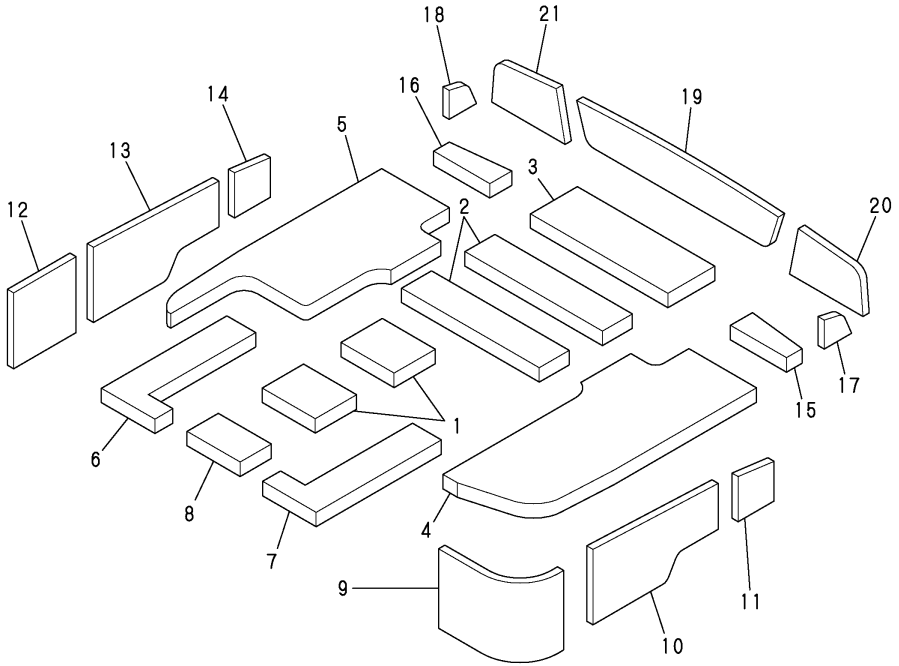

(A)=V3-5
(B)=V3-5(M/C)
(C)=V4-5
(D)=V4-5A
(E)=V5
(F)=V5-A

No.	Lev.	Parts No.	Description	Q'ty (A)	(B)	(C)	(D)	(E)	(F)	I	R
1	1	172527-62510	SOUNDPROOFBNT-UC1-20	2	2	1	1	1	1		
1-1	1	172527-63510	SOUNDPROOFBNT-UC1-20	2	2	1	1	1	1		R
	(A=*2004.11)	(B=*2004.11)	(C=*2004.11) (D=M/#52168)	(E=*2004.11)				(F=M/#02060)			
2	1	172527-62520	SOUNDPROOFBNT-UC2-40	2	2	2	2	2	2		
2-1	1	172527-63520	SOUNDPROOFBNT-UC2-40	2	2	2	2	2	2		R
	(A=*2004.11)	(B=*2004.11)	(C=*2004.11) (D=M/#52168)	(E=*2004.11)				(F=M/#02060)			
3	1	172527-62530	SOUNDPROOFBNT-UC3-20	1	1	1	1	1	1		
3-1	1	172527-63530	SOUNDPROOFBNT-UC3-20	1	1	1	1	1	1		R
	(A=*2004.11)	(B=*2004.11)	(C=*2004.11) (D=M/#52168)	(E=*2004.11)				(F=M/#02060)			
4	1	172527-62540	SOUNDPROOFBNT-UL1-20	1	1	1	1	1	1		
4-1	1	172527-63540	SOUNDPROOFBNT-UL1-20	1	1	1	1	1	1		R
	(A=*2004.11)	(B=*2004.11)	(C=*2004.11) (D=M/#52168)	(E=*2004.11)				(F=M/#02060)			
5	1	172527-62550	SOUNDPROOFBNT-UR-20	1	1	1	1	1	1		
5-1	1	172527-63550	SOUNDPROOFBNT-UR-20	1	1	1	1	1	1		R
	(A=*2004.11)	(B=*2004.11)	(C=*2004.11) (D=M/#52168)	(E=*2004.11)				(F=M/#02060)			
6	1	172527-62560	SOUNDPROOFBNT-UCL-20	1	1	1	1	1	1		
6-1	1	172527-63560	SOUNDPROOFBNT-UCL-20	1	1	1	1	1	1		R
	(A=*2004.11)	(B=*2004.11)	(C=*2004.11) (D=M/#52168)	(E=*2004.11)				(F=M/#02060)			
7	1	172527-62570	SOUNDPROOFBNT-UCR-20	1	1	1	1	1	1		
7-1	1	172527-63570	SOUNDPROOFBNT-UCR-20	1	1	1	1	1	1		R
	(A=*2004.11)	(B=*2004.11)	(C=*2004.11) (D=M/#52168)	(E=*2004.11)				(F=M/#02060)			
8	1	172527-62580	SOUNDPROOFBNT-UCF-20	1	1	1	1	1	1		
8-1	1	172527-63580	SOUNDPROOFBNT-UCF-20	1	1	1	1	1	1		R
	(A=*2004.11)	(B=*2004.11)	(C=*2004.11) (D=M/#52168)	(E=*2004.11)				(F=M/#02060)			
9	1	172527-62590	SOUNDPROOF BNT-LF-20	1	1	1	1	1	1		
9-1	1	172527-63590	SOUNDPROOF BNT-LF-20	1	1	1	1	1	1		R
	(A=*2004.11)	(B=*2004.11)	(C=*2004.11) (D=M/#52168)	(E=*2004.11)				(F=M/#02060)			
10	1	172527-62610	SOUNDPROOF BNT-LC-20	1	1	1	1	1	1		
10-1	1	172527-63610	SOUNDPROOF BNT-LC-20	1	1	1	1	1	1		R
	(A=*2004.11)	(B=*2004.11)	(C=*2004.11) (D=M/#52168)	(E=*2004.11)				(F=M/#02060)			
11	1	172527-62620	SOUNDPROOF BNT-LR-20	1	1	1	1	1	1		
11-1	1	172527-63620	SOUNDPROOF BNT-LR-20	1	1	1	1	1	1		R
	(A=*2004.11)	(B=*2004.11)	(C=*2004.11) (D=M/#52168)	(E=*2004.11)				(F=M/#02060)			
12	1	172527-62630	SOUNDPROOF BNT-RF-20	1	1	1	1	1	1		
12-1	1	172527-63630	SOUNDPROOF BNT-RF-20	1	1	1	1	1	1		R
	(A=*2004.11)	(B=*2004.11)	(C=*2004.11) (D=M/#52168)	(E=*2004.11)				(F=M/#02060)			
13	1	172527-62640	SOUNDPROOFBNT-RC-20	1	1	1	1	1	1		
13-1	1	172527-63640	SOUNDPROOFBNT-RC-20	1	1	1	1	1	1		R
	(A=*2004.11)	(B=*2004.11)	(C=*2004.11) (D=M/#52168)	(E=*2004.11)				(F=M/#02060)			
14	1	172527-62650	SOUNDPROOFBNT-RR-20	1	1	1	1	1	1		
14-1	1	172527-63650	SOUNDPROOFBNT-RR-20	1	1	1	1	1	1		R
	(A=*2004.11)	(B=*2004.11)	(C=*2004.11) (D=M/#52168)	(E=*2004.11)				(F=M/#02060)			
15	1	172527-62660	SOUNDPROOF RC-UL-20	1	1	1	1	1	1		
15-1	1	172527-63660	SOUNDPROOF RC-UL-20	1	1	1	1	1	1		R
	(A=*2004.11)	(B=*2004.11)	(C=*2004.11) (D=M/#52168)	(E=*2004.11)				(F=M/#02060)			
16	1	172527-62670	SOUNDPROOF RC-UR-20	1	1	1	1	1	1		
16-1	1	172527-63670	SOUNDPROOF RC-UR-20	1	1	1	1	1	1		R
	(A=*2004.11)	(B=*2004.11)	(C=*2004.11) (D=M/#52168)	(E=*2004.11)				(F=M/#02060)			
17	1	172527-62680	SOUNDPROOF RC-LS-20	1	1	1	1	1	1		
17-1	1	172527-63680	SOUNDPROOF RC-LS-20	1	1	1	1	1	1		R
	(A=*2004.11)	(B=*2004.11)	(C=*2004.11) (D=M/#52168)	(E=*2004.11)				(F=M/#02060)			

N:Old $\overset{\text{Yes}}{\underset{\text{No}}{\leftrightarrow}}$ New, Q:Old $\overset{\text{No}}{\underset{\text{Yes}}{\leftrightarrow}}$ New, R:Old $\overset{\text{Yes}}{\underset{\text{Yes}}{\leftrightarrow}}$ New, S:Old $\overset{\text{No}}{\underset{\text{No}}{\leftrightarrow}}$ New, W:Add, Z:Discontinued, F:Interchangeable by set, K:Q'ty Change

++ CONTINUE ++

Copyright (C) YANMAR CO., LTD. All RightsReserved.

Fig.59. BONNET SOUNDPROOF MATERIAL

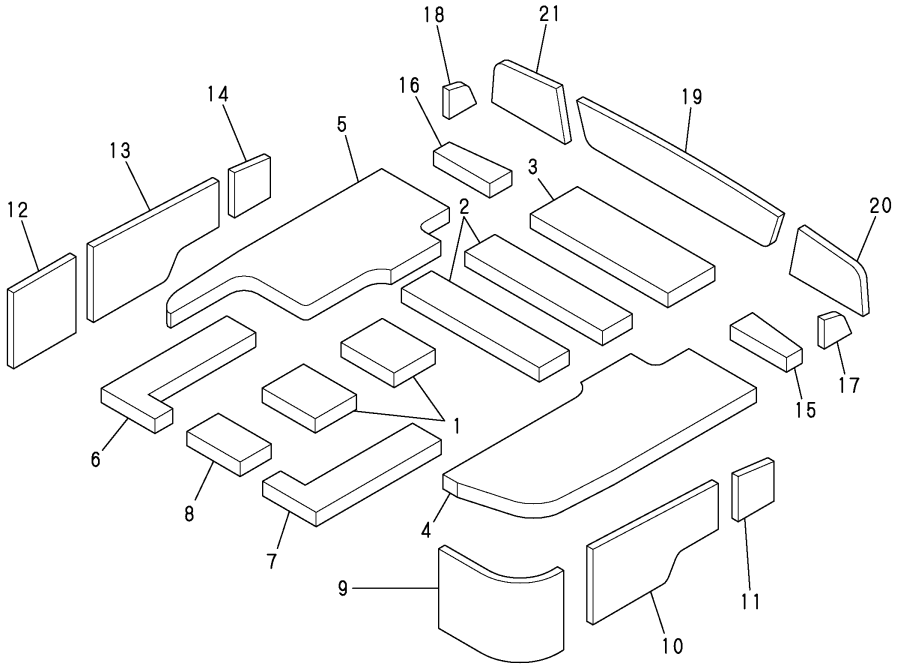

(A)=V3-5 (D)=V4-5A
(B)=V3-5(M/C) (E)=V5
(C)=V4-5 (F)=V5-A

No.	Lev.	Parts No.	Description	Q'ty (A)	(B)	(C)	(D)	(E)	(F)	I	R
18	1	172527-62690	SOUNDPROOF RC-RS-20	1	1	1	1	1	1		
18-1	1	172527-63690	SOUNDPROOF RC-RS-20	1	1	1	1	1	1		R
	(A=*2004.11)	(B=*2004.11)	(C=*2004.11) (D=M/#52168)	(E=*2004.11)				(F=M/#02060)			
19	1	172527-62710	SOUNDPROOF RC-R-20	1	1	1	1	1	1		
19-1	1	172527-63710	SOUNDPROOF RC-R-20	1	1	1	1	1	1		R
	(A=*2004.11)	(B=*2004.11)	(C=*2004.11) (D=M/#52168)	(E=*2004.11)				(F=M/#02060)			
20	1	172527-62720	SOUNDPROOF RC-RL-20	1	1	1	1	1	1		
20-1	1	172527-63720	SOUNDPROOF RC-RL-20	1	1	1	1	1	1		R
	(A=*2004.11)	(B=*2004.11)	(C=*2004.11) (D=M/#52168)	(E=*2004.11)				(F=M/#02060)			
21	1	172527-62730	SOUNDPROOF RC-RR-20	1	1	1	1	1	1		
21-1	1	172527-63730	SOUNDPROOF RC-RR-20	1	1	1	1	1	1		R
	(A=*2004.11)	(B=*2004.11)	(C=*2004.11) (D=M/#52168)	(E=*2004.11)				(F=M/#02060)			

N:Old $\xleftrightarrow[\text{No}]{\text{Yes}}$ New, Q:Old $\xleftrightarrow[\text{Yes}]{\text{No}}$ New, R:Old $\xleftrightarrow[\text{Yes}]{\text{Yes}}$ New, S:Old $\xleftrightarrow[\text{No}]{\text{No}}$ New, W:Add, Z:Discontinued, F:Interchangeable by set, K:Q'ty Change

Copyright (C) YANMAR CO., LTD. All RightsReserved.

Fig.60. FRAME SOUNDPROOF MATERIAL

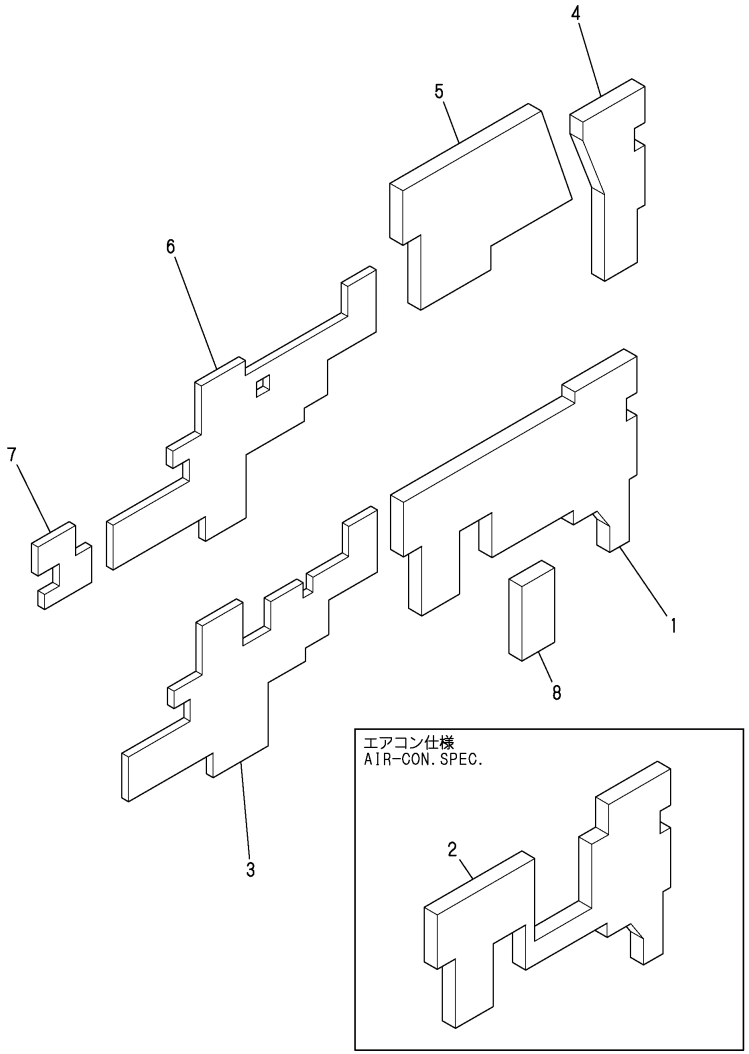

(A)=V3-5
(B)=V3-5(M/C)
(C)=V4-5
(D)=V4-5A
(E)=V5
(F)=V5-A

No.	Lev.	Parts No.	Description	Q'ty (A)	(B)	(C)	(D)	(E)	(F)	I	R
1	1	172527-62910	SOUND-PR00F SF-L(R1)	1	1	1	1	1	1		
1-1	1	172527-63910	SOUND-PR00F SF-L(R1)	1	1	1	1	1	1	R	
	(A=*2004.11)	(B=*2004.11)	(C=*2004.11) (D=M/#52168)	(E=*2004.11)				(F=M/#02060)			
2	1	172527-62810	SOUND-PR00F SF-L(AC)	1		1		1			1
3	1	172527-62920	SOUND-PR00F SF-L(M)	1	1	1	1	1	1		
3-1	1	172527-63920	SOUND-PR00F SF-L(M)	1	1	1	1	1	1	R	
	(A=*2004.11)	(B=*2004.11)	(C=*2004.11) (D=M/#52168)	(E=*2004.11)				(F=M/#02060)			
4	1	172527-62950	SOUND-PR00F SF-R(R)	1	1	1	1	1	1		
4-1	1	172527-63950	SOUND-PR00F SF-R(R)	1	1	1	1	1	1	R	
	(A=*2004.11)	(B=*2004.11)	(C=*2004.11) (D=M/#52168)	(E=*2004.11)				(F=M/#02060)			
5	1	172527-62960	SOUND-PR00F SF-R(M)	1	1	1	1	1	1		
5-1	1	172527-63960	SOUND-PR00F SF-R(M)	1	1	1	1	1	1	R	
	(A=*2004.11)	(B=*2004.11)	(C=*2004.11) (D=M/#52168)	(E=*2004.11)				(F=M/#02060)			
6	1	172527-62970	SOUND-PR00F SF-R(F2)	1	1	1	1	1	1		
6-1	1	172527-63970	SOUND-PR00F SF-R(F2)	1	1	1	1	1	1	R	
	(A=*2004.11)	(B=*2004.11)	(C=*2004.11) (D=M/#52168)	(E=*2004.11)				(F=M/#02060)			
7	1	172527-62980	SOUND-PR00F SF-R(F1)	1	1	1	1	1	1		
7-1	1	172527-63980	SOUND-PR00F SF-R(F1)	1	1	1	1	1	1	R	
	(A=*2004.11)	(B=*2004.11)	(C=*2004.11) (D=M/#52168)	(E=*2004.11)				(F=M/#02060)			
8	1	172527-62990	SOUND-PR00F SF-L(R2)	1	1						

Remarks
(1)AIR-CON.SPEC.

N:Old $\xleftrightarrow[\text{No}]{\text{Yes}}$ New, Q:Old $\xleftrightarrow[\text{Yes}]{\text{No}}$ New, R:Old $\xleftrightarrow[\text{Yes}]{\text{Yes}}$ New, S:Old $\xleftrightarrow[\text{No}]{\text{No}}$ New, W:Add, Z:Discontinued, F:Interchangeable by set, K:Q'ty Change

Copyright (C) YANMAR CO., LTD. All RightsReserved.

Fig.61. CANOPY

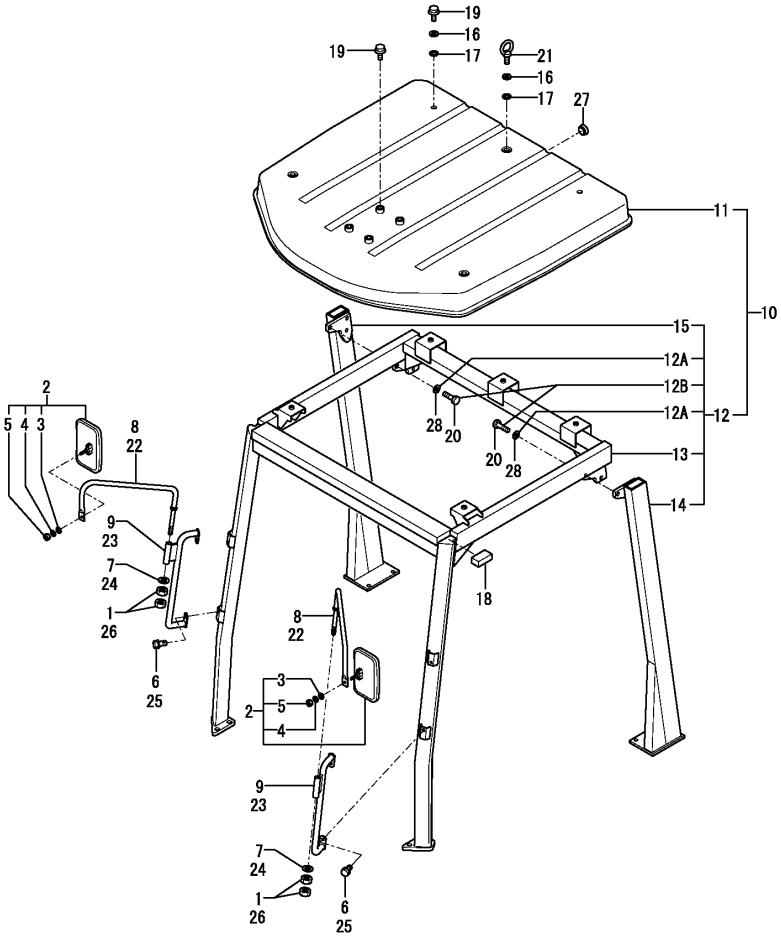

(A)=V3-5 (D)=V4-5A
(B)=V3-5(M/C) (E)=V5
(C)=V4-5 (F)=V5-A

No.	Lev.	Parts No.	Description	Q'ty (A)	(B)	(C)	(D)	(E)	(F)	I	R
1	1	172524-06830	NUT, M14	4	4	4	4	4	4		
2	1	172524-06900	MIRROR ASSY	2	2	2	2	2	2		
3	2	22137-080000	WASHER, 8	2	2	2	2	2	2		
4	2	22217-080000	WASHER, SPRING 8	2	2	2	2	2	2		
5	2	26716-080002	NUT, M8	2	2	2	2	2	2		
6	1	172515-41180	BOLT M10X 20	4		4		4			
7	1	172524-69460	BOLT W/WASHER M10X25	2		2		2			
8	1	172527-68670	STAY ASSY, MIRROR	2		2		2			
9	1	172524-69410-1	GRIP ASSY, CABIN	2		2		2			
10	1	172527-68100	CANOPY ASSY	1		1		1			
10-1	1	172527-68101	CANOPY ASSY	1	1	1	1	1	1	S	1
	(A=M/#51365)		(C=M/#51153)	(E=M/#01060)							
10-2	1	172527-68102	CANOPY ASSY	1	1	1	1	1	1	R	
	(A=*2005.06.)	(B=*2005.06.)	(C=*2005.06.) (D=*2005.06.)	(E=*2005.06.)				(F=*2005.06.)			
11	2	172527-68510	ROOF ASSY	1		1		1			
11-1	2	172527-68511	ROOF ASSY	1	1	1	1	1	1	N	
	(A=M/#51365)		(C=M/#51153)	(E=M/#01060)							
11-2	2	172527-68512-1	ROOF ASSY(WARMGRAY)	1	1	1	1	1	1	R	
	(A=*2005.06.)	(B=*2005.06.)	(C=*2005.06.) (D=*2005.06.)	(E=*2005.06.)				(F=*2005.06.)			
12	2	172533-68100	FRAME ASSY, CANOPY	1	1	1	1	1	1	W	2
	(A=*2011.08.)	(B=*2011.08.)	(C=*2011.08.) (D=*2011.08.)	(E=*2011.08.)				(F=*2011.08.)			
12A	3	22137-120000	WASHER, 12	6	6	6	6	6	6	W	
	(A=*2016.09.)	(B=*2016.09.)	(C=*2016.09.) (D=*2016.09.)	(E=*2016.09.)				(F=*2016.09.)			
12B	3	26076-120302	BOLT, 10.912X 30	6	6	6	6	6	6	W	
	(A=*2016.09.)	(B=*2016.09.)	(C=*2016.09.) (D=*2016.09.)	(E=*2016.09.)				(F=*2016.09.)			
13	3	172527-68110	FRAME	1		1		1			
13-1	3	172527-68111	FRAME ASSY	1	1	1	1	1	1	S	
	(A=M/#51365)		(C=M/#51153)	(E=M/#01060)							
13-2	3	172527-68112	FRAME ASSY	1	1	1	1	1	1	R	
	(A=*2005.06.)	(B=*2005.06.)	(C=*2005.06.) (D=*2005.06.)	(E=*2005.06.)				(F=*2005.06.)			
14	3	172527-68530	POLE L	1	1	1	1	1	1		
14-1	3	172527-68531	PROP ASSY	1	1	1	1	1	1	R	
	(A=*2005.06.)	(B=*2005.06.)	(C=*2005.06.) (D=*2005.06.)	(E=*2005.06.)				(F=*2005.06.)			
15	3	172527-68540	POLE R	1	1	1	1	1	1		
15-1	3	172527-68541	PROP ASSY	1	1	1	1	1	1	R	
	(A=*2005.06.)	(B=*2005.06.)	(C=*2005.06.) (D=*2005.06.)	(E=*2005.06.)				(F=*2005.06.)			
16	1	172524-68710	WASHER	5	5	5	5	5	5		
17	1	172524-68720	SEAL	10	10	10	10	10	10		
18	1	172527-69280	SEAL	2	2	2	2	2	2		
19	1	172527-69630	BOLT	6	6	6	6	6	6		
19-1	1	26116-080162	BOLT, M8X 16 PLATED	6	6	6	6	6	6	R	
	(A=*2005.10.)	(B=*2005.10.)	(C=*2005.10.) (D=*2005.10.)	(E=*2005.10.)				(F=*2005.10.)			
20	1	172527-69710	BOLT	6	6	6	6	6	6		
20-1	1	26076-120302	BOLT, 10.912X 30	6	6	6	6	6	6	R	
	(A=*2005.10.)	(B=*2005.10.)	(C=*2005.10.) (D=*2005.10.)	(E=*2005.10.)				(F=*2005.10.)			
20-2	1	26076-120302	BOLT, 10.912X 30	6	6	6	6	6	6	Z	
	(A=*2016.09.)	(B=*2016.09.)	(C=*2016.09.) (D=*2016.09.)	(E=*2016.09.)				(F=*2016.09.)			
21	1	26617-080002	BOLT, EYE M8	3	3	3	3	3	3		
22	1	172527-68671	STAY ASSY, MIRROR		2		2		2		
23	1	172524-69411	GRIP ASSY, CABIN		2		2		2		
24	1	22137-140000	WASHER, 14		2		2		2		

N:Old $\xleftarrow[\text{No}]{\text{Yes}}$ New, Q:Old $\xleftarrow[\text{Yes}]{\text{No}}$ New, R:Old $\xleftarrow[\text{Yes}]{\text{Yes}}$ New, S:Old $\xleftarrow[\text{No}]{\text{No}}$ New, W:Add, Z:Discontinued, F:Interchangeable by set, K:Q'ty Change

Remarks
* I changed an Ref.No. and a level.
(1)INTERCHANGEABLE BY SIMULTANEOUS REPLACEMENT WITH FIG.54.REF.NO. 13-1.
(2)I changed the constitution of the repair parts.

++ CONTINUE ++

Copyright (C) YANMAR CO., LTD. All RightsReserved.

Fig.61. CANOPY

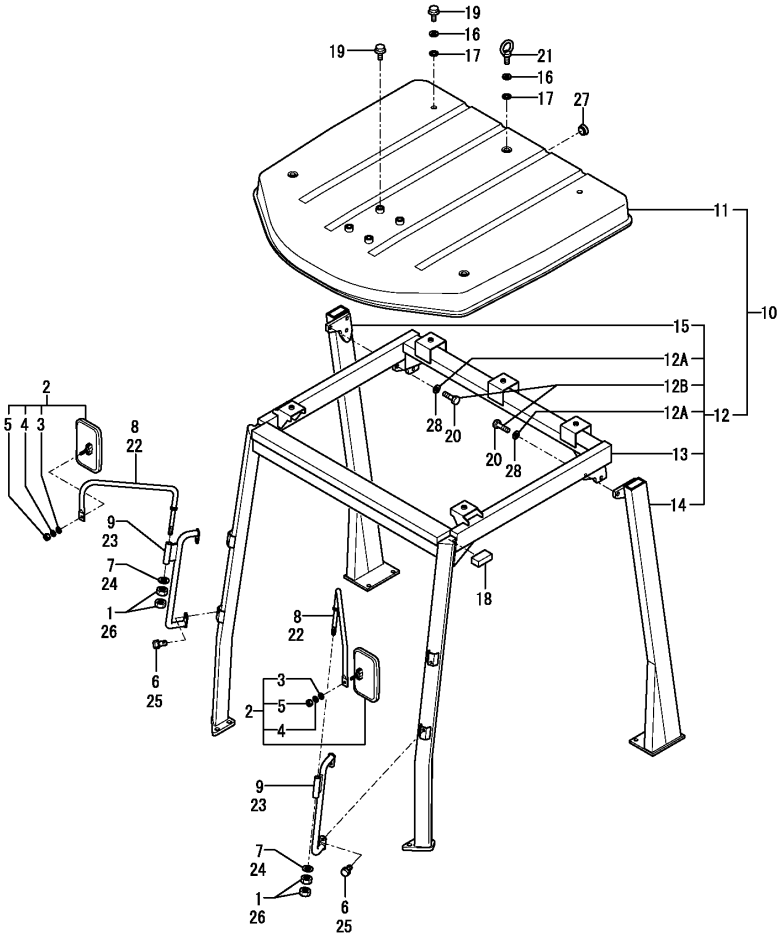

Remarks
* I changed an Ref.No. and a level.
(1)INTERCHANGEABLE BY SIMULTANEOUS REPLACEMENT WITH FIG.54.REF.NO. 13-1.
(2)I changed the constitution of the repair parts.

(A)=V3-5 (D)=V4-5A
(B)=V3-5(M/C) (E)=V5
(C)=V4-5 (F)=V5-A

No.	Lev.	Parts No.	Description	Q'ty (A)	(B)	(C)	(D)	(E)	(F)	I	R
25	1	26013-100202	BOLT, SPRING M10X 20		4		4		4		
26	1	26736-140002	NUT, M14		4		4		4		
27	1	172527-17830	CAP	1	1	1	1	1	1		
28	1	22137-120000	WASHER, 12	6	6	6	6	6	6	W	
	(A=*2005.10.)	(B=*2005.10.)	(C=*2005.10.)	(D=*2005.10.)	(E=*2005.10.)		(F=*2005.10.)				
28-1	1	22137-120000	WASHER, 12	6	6	6	6	6	6	Z	
	(A=*2016.09.)	(B=*2016.09.)	(C=*2016.09.)	(D=*2016.09.)	(E=*2016.09.)		(F=*2016.09.)				

N:Old ←Yes/No→ New, Q:Old ←No/Yes→ New, R:Old ←Yes/Yes→ New, S:Old ←No/No→ New, W:Add, Z:Discontinued, F:Interchangeable by set, K:Q'ty Change

Copyright (C) YANMAR CO., LTD. All RightsReserved.

Fig.62. CABIN

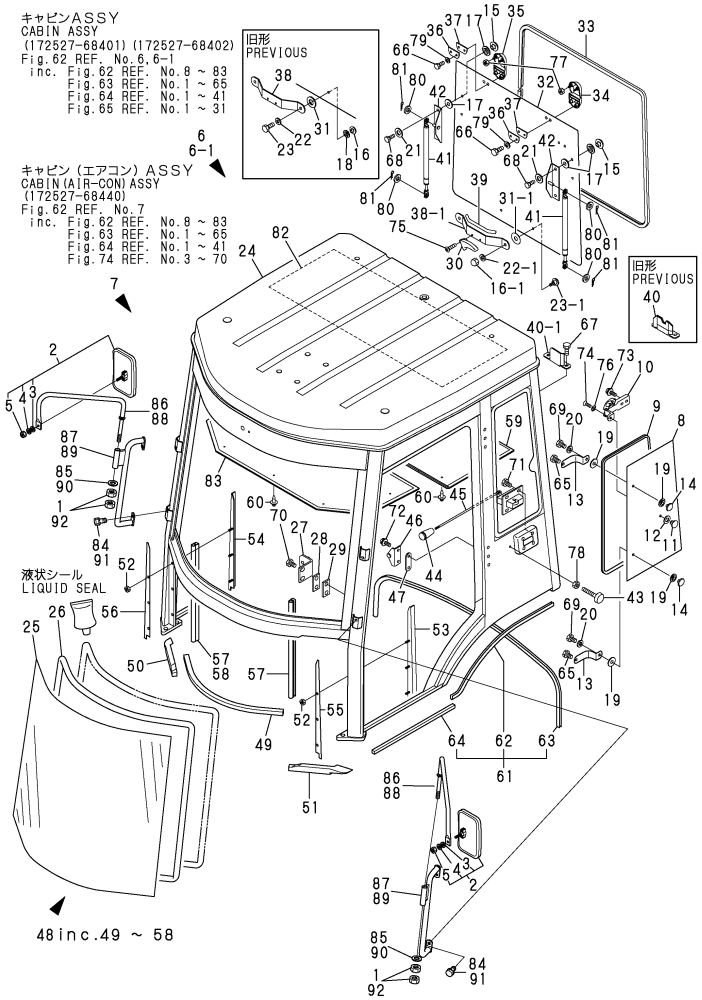

Remarks
(1)INC.FIG.62 REF.NO.8- 83,
FIG.63 REF.NO.1- 65,
FIG.64 REF.NO.1- 41 &
FIG.65 REF.NO.1- 31.
(2)INC.FIG.62 REF.NO.8- 83,
FIG.63 REF.NO.1- 65,
FIG.64 REF.NO.1- 41 &
FIG.74 REF.NO.3- 70.
(3)INTERCHANGEABLE BY SIMULTANEOUS
REPLACEMENT WITH FIG.54
REF.NO.14-1,22-1.

(A)=V3-5 (D)=V4-5A
(B)=V3-5(M/C) (E)=V5
(C)=V4-5 (F)=V5-A

No.	Lev.	Parts No.	Description	Q'ty (A)	(B)	(C)	(D)	(E)	(F)	I	R
1	1	172524-06830	NUT, M14	4		4		4			
2	1	172524-06900	MIRROR ASSY	2	2	2	2	2	2		
3	2	22137-080000	WASHER, 8	2	2	2	2	2	2		
4	2	22217-080000	WASHER, SPRING 8	2	2	2	2	2	2		
5	2	26716-080002	NUT, M8	2	2	2	2	2	2		
6	1	172527-68401	CABIN ASSY	1		1		1			1
6-1	1	172527-68402	CABIN ASSY	1	1	1	1	1	1	S	3
	(A=M/#51365)		(C=M/#51153)	(E=M/#01060)							
7	1	172527-68440	CABIN ASSY	1		1		1			2
7A	1	172527-68600	CABIN ASSY				1		1	W	2
			(D=M/#52064)					(F=M/#02019)			
8	2	172527-68210	GLASS	2		2		2			
8-1	2	172527-67180	GLASS	2	2	2	2	2	2	N	
	(A=M/#51365)		(C=M/#51153)	(E=M/#01060)							
9	2	172527-68220	TRIM	2	2	2	2	2	2		
10	2	172527-68230	HANDLE	2	2	2	2	2	2		
11	2	172527-68240	RETAINER	2	2	2	2	2	2		
12	2	172527-68250	CUSHION	2		2		2			
12-1	2	172527-68251	CUSHION	2	2	2	2	2	2	N	
	(A=M/#51365)		(C=M/#51153)	(E=M/#01060)							
13	2	172527-68260	SPRING	4	4	4	4	4	4		
14	2	172527-68270	RETAINER	4	4	4	4	4	4		
15	2	172527-68270	RETAINER	4	4	4	4	4	4		
16	2	172527-68270	RETAINER	2		2		2			
16-1	2	172527-69570	NUT	2	2	2	2	2	2	S	
	(A=M/#51365)		(C=M/#51153)	(E=M/#01060)							
17	2	172527-68280	CUSHION	8	8	8	8	8	8		
18	2	172527-68280	CUSHION	2		2		2		Z	
	(A=M/#51365)		(C=M/#51153)	(E=M/#01060)							
19	2	172527-68280	CUSHION	8	8	8	8	8	8		
20	2	172527-68290	WASHER	4	4	4	4	4	4		
21	2	172527-68290	WASHER	4	4	4	4	4	4		
22	2	172527-68290	WASHER	2		2		2			
22-1	2	172527-69830	WASHER	2	2	2	2	2	2	N	
	(A=M/#51365)		(C=M/#51153)	(E=M/#01060)							
23	2	172527-68360	BOLT M 6X 12	2		2		2			
23-1	2	172527-68870	BOLT	2	2	2	2	2	2	N	
	(A=M/#51365)		(C=M/#51153)	(E=M/#01060)							
24	2	172527-68411	CABIN	1		1		1			
24-1	2	172527-68412	BODY ASSY, CABIN	1	1	1	1	1	1	S	
	(A=M/#51365)		(C=M/#51153)	(E=M/#01060)							
25	2	172527-68420	GLASS	1		1		1			
25-1	2	172527-67170	GLASS	1	1	1	1	1	1	N	
	(A=M/#51365)		(C=M/#51153)	(E=M/#01060)							
26	2	172527-68430	RUBBER	1	1	1	1	1	1		
27	2	172527-68450	STRIKER	2	2	2	2	2	2		
28	2	172527-68460	PLATE	2	2	2	2	2	2		
29	2	172527-68470	PLATE	6	6	6	6	6	6		
30	2	172527-68480	HANDLE	1	1	1	1	1	1		
31	2	172527-68490	CUSHION	2		2		2			
31-1	2	172527-68491	CUSHION	2	2	2	2	2	2	N	

N:Old $\overset{\text{Yes}}{\underset{\text{No}}{\leftrightarrow}}$ New, Q:Old $\overset{\text{No}}{\underset{\text{Yes}}{\leftrightarrow}}$ New, R:Old $\overset{\text{Yes}}{\underset{\text{Yes}}{\leftrightarrow}}$ New, S:Old $\overset{\text{No}}{\underset{\text{No}}{\leftrightarrow}}$ New, W:Add, Z:Discontinued, F:Interchangeable by set, K:Q'ty Change

++ CONTINUE ++

Copyright (C) YANMAR CO., LTD. All RightsReserved.

Fig.62. CABIN

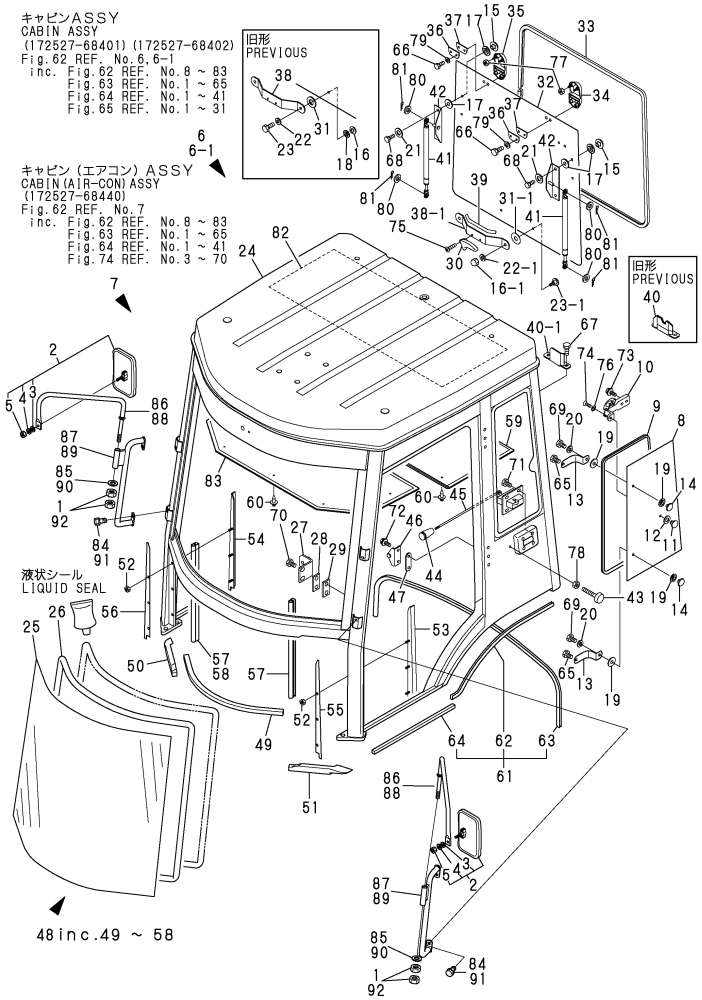

Remarks
(1)INC.FIG.62 REF.NO.8- 83,
FIG.63 REF.NO.1- 65,
FIG.64 REF.NO.1- 41 &
FIG.65 REF.NO.1- 31.
(2)INC.FIG.62 REF.NO.8- 83,
FIG.63 REF.NO.1- 65,
FIG.64 REF.NO.1- 41 &
FIG.74 REF.NO.3- 70.
(3)INTERCHANGEABLE BY SIMULTANEOUS
REPLACEMENT WITH FIG.54
REF.NO.14-1,22-1.

(A)=V3-5 (D)=V4-5A
(B)=V3-5(M/C) (E)=V5
(C)=V4-5 (F)=V5-A

No.	Lev.	Parts No.	Description	Q'ty (A)	(B)	(C)	(D)	(E)	(F)	I	R
	(A=M/#51365)		(C=M/#51153)	(E=M/#01060)							
32	2	172527-68610	GLASS	1		1		1			
32-1	2	172527-67190	GLASS	1	1	1	1	1	1	N	
	(A=M/#51365)		(C=M/#51153)	(E=M/#01060)							
33	2	172527-68620	TRIM	1	1	1	1	1	1		
34	2	172527-68630	HINGE L	1	1	1	1	1	1		
35	2	172527-68640	HINGE R	1	1	1	1	1	1		
36	2	172527-68650	PLATE	2	2	2	2	2	2		
37	2	172527-68660	CUSHION	2	2	2	2	2	2		
38	2	172527-68680	BRACKET	1		1		1			
38-1	2	172527-68681	BRACKET, RGH	1	1	1	1	1	1	N	
	(A=M/#51365)		(C=M/#51153)	(E=M/#01060)							
39	2	172527-68690	TRIM	1	1	1	1	1	1		
40	2	172527-68710	STOPPER	1		1		1			
40-1	2	172527-68711	STOPPER	1	1	1	1	1	1	N	
	(A=M/#51365)		(C=M/#51153)	(E=M/#01060)							
41	2	172527-68720	SPRING, GAS	2	2	2	2	2	2		
42	2	172527-68730	STAY	2	2	2	2	2	2		
43	2	172527-68750	STOPPER	2	2	2	2	2	2		
44	2	172527-68760	GRIP	2	2	2	2	2	2		
45	2	172527-68770	LATCH	2	2	2	2	2	2		
46	2	172527-68780	BRACKET	2	2	2	2	2	2		
47	2	172527-68790	PLATE	4		4		4		Z	
	(A=M/#51365)		(C=M/#51153)	(E=M/#01060)							
48	2	172527-69101	SEAL	1	1	1	1	1	1		
49	3	172527-69130	SEAL	1	1	1	1	1	1		
50	3	172527-69140	SEAL	1	1	1	1	1	1		
51	3	172527-69150	SEAL	1	1	1	1	1	1		
52	3	172527-69850	NUT, 6H	6	6	6	6	6	6		
53	3	172527-69950	PLATE	1		1		1			
53-1	3	172527-69951	PLATE, SEAL L	1	1	1	1	1	1	S	
	(A=M/#51365)		(C=M/#51153)	(E=M/#01060)							
54	3	172527-69960	PLATE	1		1		1			
54-1	3	172527-69961	PLATE, SEAL R	1	1	1	1	1	1	S	
	(A=M/#51365)		(C=M/#51153)	(E=M/#01060)							
55	3	172527-69970	SEAL	1		1		1			
55-1	3	172527-69971	SEAL	1	1	1	1	1	1	S	
	(A=M/#51365)		(C=M/#51153)	(E=M/#01060)							
56	3	172527-69980	SEAL	1		1		1			
56-1	3	172527-69981	SEAL	1	1	1	1	1	1	S	
	(A=M/#51365)		(C=M/#51153)	(E=M/#01060)							
57	3	172527-69990	RUBBER	2		2		2			
57-1	3	172527-69991	RUBBER, TRIM	1	1	1	1	1	1	S	
	(A=M/#51365)		(C=M/#51153)	(E=M/#01060)							
58	3	172527-69090	RUBBER, TRIM R	1	1	1	1	1	1	W	
	(A=M/#51365)		(C=M/#51153)	(E=M/#01060)							
59	2	172527-69181	COVER	1	1	1	1	1	1		
60	2	172527-69190	RIVET	13	13	13	13	13	13		
61	2	172527-69200	SEAL	1	1	1	1	1	1		
62	3	172527-69210	SEAL	2	2	2	2	2	2		
63	3	172527-69220	SEAL	1	1	1	1	1	1		

N:Old $\overset{\text{Yes}}{\underset{\text{No}}{\leftrightarrow}}$ New, Q:Old $\overset{\text{No}}{\underset{\text{Yes}}{\leftrightarrow}}$ New, R:Old $\overset{\text{Yes}}{\underset{\text{Yes}}{\leftrightarrow}}$ New, S:Old $\overset{\text{No}}{\underset{\text{No}}{\leftrightarrow}}$ New, W:Add, Z:Discontinued, F:Interchangeable by set, K:Q'ty Change

++ CONTINUE ++

Copyright (C) YANMAR CO., LTD. All RightsReserved.

Fig.62. CABIN

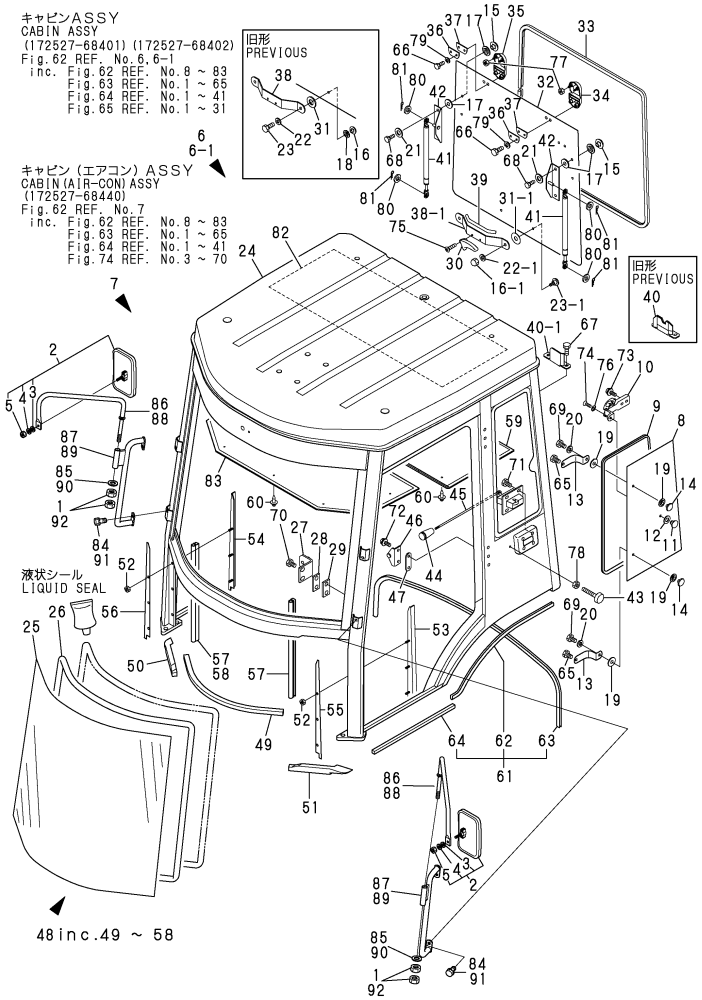

Remarks
(1)INC.FIG.62 REF.NO.8- 83,
FIG.63 REF.NO.1- 65,
FIG.64 REF.NO.1- 41 &
FIG.65 REF.NO.1- 31.
(2)INC.FIG.62 REF.NO.8- 83,
FIG.63 REF.NO.1- 65,
FIG.64 REF.NO.1- 41 &
FIG.74 REF.NO.3- 70.
(3)INTERCHANGEABLE BY SIMULTANEOUS
REPLACEMENT WITH FIG.54
REF.NO.14-1,22-1.

(A)=V3-5
(B)=V3-5(M/C)
(C)=V4-5
(D)=V4-5A
(E)=V5
(F)=V5-A

No.	Lev.	Parts No.	Description	Q'ty (A)	(B)	(C)	(D)	(E)	(F)	I	R
64	3	172527-69230	SEAL	2	2	2	2	2	2		
65	2	172527-69610	BOLT M6X16	4	4	4	4	4	4		
66	2	172527-69610	BOLT M6X16	4	4	4	4	4	4		
67	2	172527-69610	BOLT M6X16	2	2	2	2	2	2		
68	2	172527-69620	BOLT	4	4	4	4	4	4		
69	2	172527-69620	BOLT	4	4	4	4	4	4		
70	2	172527-69630	BOLT	4	4	4	4	4	4		
71	2	172527-69640	BOLT	8	8	8	8	8	8		
72	2	172527-69720	SCREW, M6X16	4	4	4	4	4	4		
73	2	172527-69720	SCREW, M6X16	4	4	4	4	4	4		
74	2	172527-69730	SCREW, M5X12	2	2	2	2	2	2		
75	2	172527-69740	SCREW, M5X16	2	2	2	2	2	2		
76	2	172527-69820	WASHER, 5	2	2	2	2	2	2		
77	2	172527-69850	NUT, 6H	4	4	4	4	4	4		
78	2	172527-69860	NUT, 10H	2	2	2	2	2	2		
79	2	22217-060000	WASHER, SPRING 6	4	4	4	4	4	4		
80	2	22217-080000	WASHER, SPRING 8	4	4	4	4	4	4		
81	2	22372-080000	PIN, SNAP 8	4	4	4	4	4	4		
82	2	172527-69940	INSULATOR	1	1	1	1	1	1		
83	2	172527-69170	COVER	1	1	1	1	1	1		
84	1	172515-41180	BOLT M10X 20	4		4		4			
85	1	172524-69460	BOLT W/WASHER M10X25	2		2		2			
86	1	172527-68670	STAY ASSY, MIRROR	2		2		2			
87	1	172524-69410-1	GRIP ASSY, CABIN	2		2		2			
88	1	172527-68671	STAY ASSY, MIRROR		2		2		2		
89	1	172524-69411	GRIP ASSY, CABIN		2		2		2		
90	1	22137-140000	WASHER, 14		2		2		2		
91	1	26013-100202	BOLT, M10X 20		4		4		4		
92	1	26736-140002	NUT, M14		4		4		4		

N:Old $\xleftarrow[\text{No}]{\text{Yes}}$ New, Q:Old $\xleftarrow[\text{Yes}]{\text{No}}$ New, R:Old $\xleftarrow[\text{Yes}]{\text{Yes}}$ New, S:Old $\xleftarrow[\text{No}]{\text{No}}$ New, W:Add, Z:Discontinued, F:Interchangeable by set, K:Q'ty Change

Copyright (C) YANMAR CO., LTD. All RightsReserved.

Fig.63. CABIN DOOR

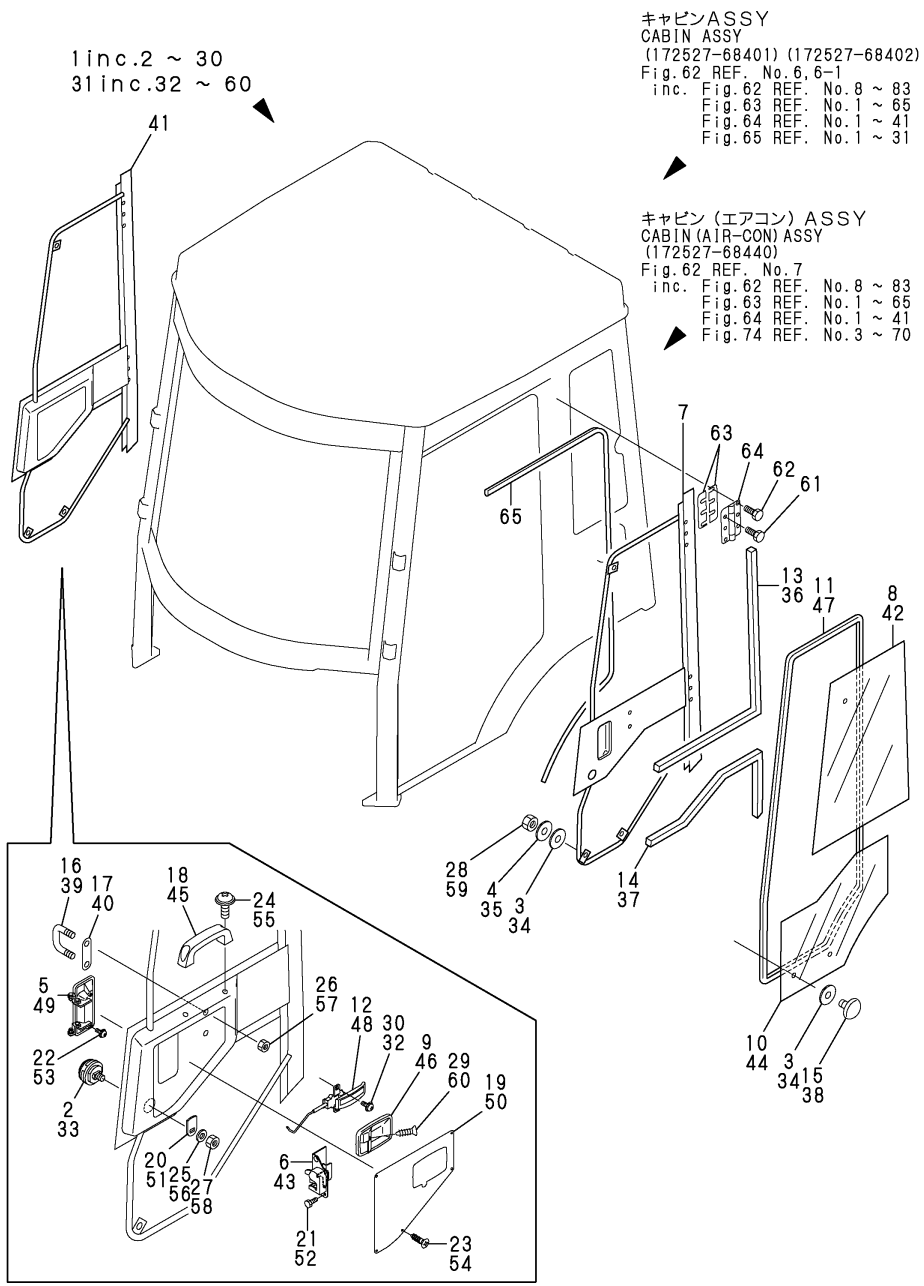

(A)=V3-5 (D)=V4-5A
(B)=V3-5(M/C) (E)=V5
(C)=V4-5 (F)=V5-A

No.	Lev.	Parts No.	Description	Q'ty (A)	(B)	(C)	(D)	(E)	(F)	I	R
1	2	172527-68800	DOOR ASSY	1		1		1			
1-1	2	172527-68801	DOOR ASSY	1	1	1	1	1	1	S	
	(A=M/#51365)		(C=M/#51153)	(E=M/#01060)							
2	3	172524-65720	KEY SET, CYLINDER	1	1	1	1	1	1		
3	3	172527-68250	CUSHION	6		6		6			
3-1	3	172527-68251	CUSHION	6	6	6	6	6	6	N	
	(A=M/#51365)		(C=M/#51153)	(E=M/#01060)							
4	3	172527-68290	WASHER	3	3	3	3	3	3		
5	3	172524-68781	HANDLE	1	1	1	1	1	1		
6	3	172524-68810	LATCH L	1	1	1	1	1	1		
7	3	172527-68810	BODY, DOOR	1		1		1			
7-1	3	172527-68811	BODY, DOOR	1	1	1	1	1	1	N	
	(A=M/#51365)		(C=M/#51153)	(E=M/#01060)							
8	3	172527-68820	GLASS, DOOR	1		1		1			
8-1	3	172527-67230	GLASS	1	1	1	1	1	1	N	
	(A=M/#51365)		(C=M/#51153)	(E=M/#01060)							
9	3	172524-68830	HANDLE L,ESC	1	1	1	1	1	1		
10	3	172527-68830	GLASS, DOOR	1		1		1			
10-1	3	172527-67240	GLASS	1	1	1	1	1	1	S	
	(A=M/#51365)		(C=M/#51153)	(E=M/#01060)							
11	3	172527-68840	TRIM	1		1		1			
11-1	3	172527-67950	TRIM	1	1	1	1	1	1	S	
	(A=M/#51365)		(C=M/#51153)	(E=M/#01060)							
12	3	172524-68850	HANDLE L,IS	1	1	1	1	1	1		
13	3	172527-68850	RUBBER	1	1	1	1	1	1		
14	3	172527-68860	RUBBER	1	1	1	1	1	1		
15	3	172527-68870	BOLT	3	3	3	3	3	3		
16	3	172527-68880	STRIKER	1	1	1	1	1	1		
17	3	172527-68890	PLATE	1	1	1	1	1	1		
18	3	172520-68940	HANDLE	1	1	1	1	1	1		
19	3	172527-68960	PLATE	1	1	1	1	1	1		
20	3	172524-69360	PLATE	1	1	1	1	1	1		
21	3	172527-69650	BOLT M6X16	3	3	3	3	3	3		
22	3	26023-060162	SCREW, M6X16	2	2	2	2	2	2		
23	3	172527-69790	SCREW, M4X16	5	5	5	5	5	5		
24	3	172527-69810	SCREW, M6X16	2	2	2	2	2	2		
25	3	172527-69840	WASHER	1	1	1	1	1	1		
26	3	172527-69860	NUT, 10H	4	4	4	4	4	4		
27	3	172527-69860	NUT, 10H	1	1	1	1	1	1		
28	3	172527-69870	NUT	3	3	3	3	3	3		
29	3	172527-69880	SCREW, M4X20	2	2	2	2	2	2		
30	3	26023-060162	SCREW, M6X16	2	2	2	2	2	2		
31	2	172527-68900	DOOR ASSY	1		1		1			
31-1	2	172527-68901	DOOR ASSY	1	1	1	1	1	1	S	
	(A=M/#51365)		(C=M/#51153)	(E=M/#01060)							
32	3	26023-060162	SCREW, M6X16	2	2	2	2	2	2		
33	3	172524-65720	KEY SET, CYLINDER	1	1	1	1	1	1		
34	3	172527-68250	CUSHION	6		6		6			
34-1	3	172527-68251	CUSHION	6	6	6	6	6	6	N	
	(A=M/#51365)		(C=M/#51153)	(E=M/#01060)							
35	3	172527-68290	WASHER	3	3	3	3	3	3		

N:Old $\overset{\text{Yes}}{\underset{\text{No}}{\leftrightarrow}}$ New, Q:Old $\overset{\text{No}}{\underset{\text{Yes}}{\leftrightarrow}}$ New, R:Old $\overset{\text{Yes}}{\underset{\text{Yes}}{\leftrightarrow}}$ New, S:Old $\overset{\text{No}}{\underset{\text{No}}{\leftrightarrow}}$ New, W:Add, Z:Discontinued, F:Interchangeable by set, K:Q'ty Change

++ CONTINUE ++

Copyright (C) YANMAR CO., LTD. All RightsReserved.

Fig.63. CABIN DOOR

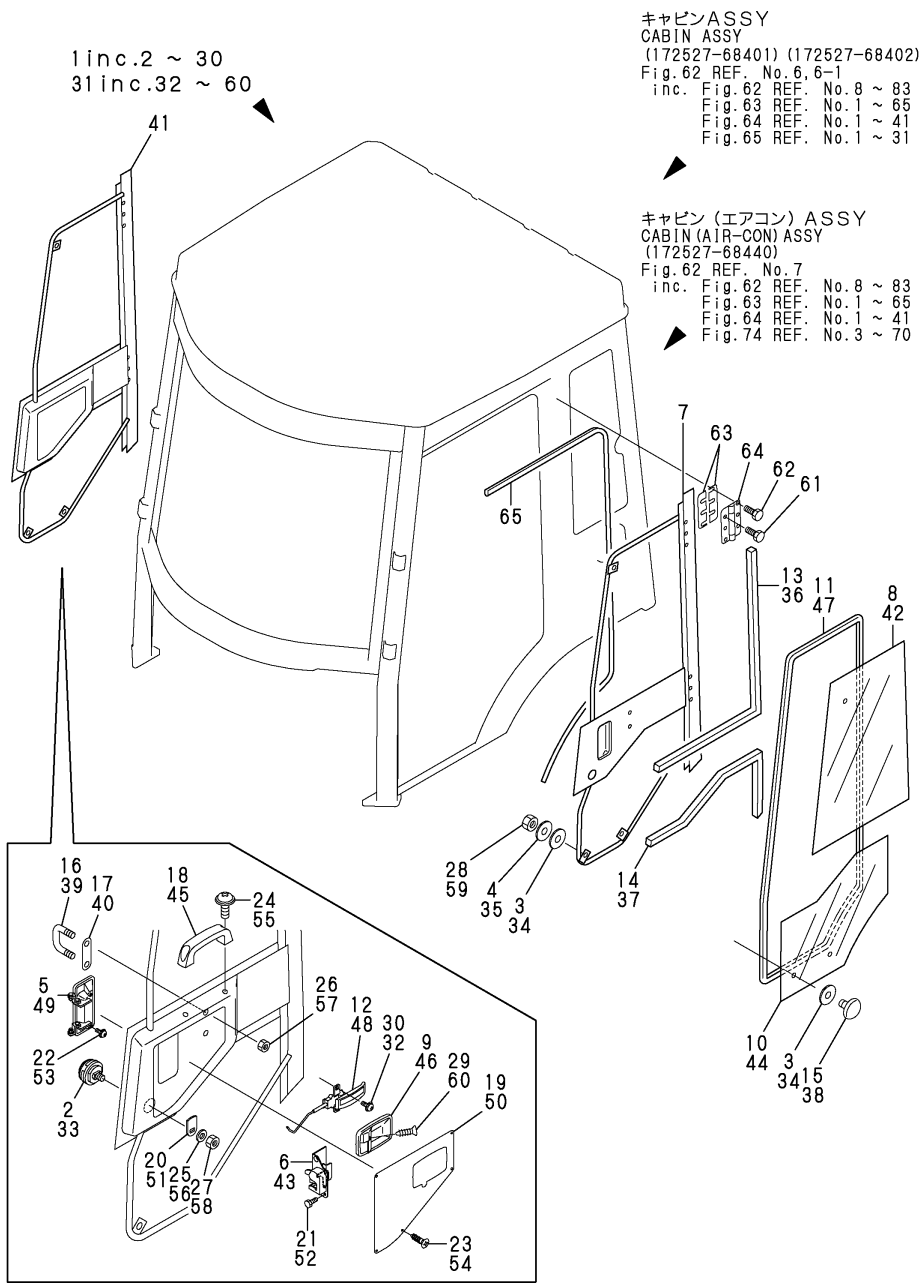

(A)=V3-5 (D)=V4-5A
(B)=V3-5(M/C) (E)=V5
(C)=V4-5 (F)=V5-A

No.	Lev.	Parts No.	Description	Q'ty (A)	(B)	(C)	(D)	(E)	(F)	I	R
36	3	172527-68850	RUBBER	1	1	1	1	1	1		
37	3	172527-68860	RUBBER	1	1	1	1	1	1		
38	3	172527-68870	BOLT	3	3	3	3	3	3		
39	3	172527-68880	STRIKER	1	1	1	1	1	1		
40	3	172527-68890	PLATE	1	1	1	1	1	1		
41	3	172527-68910	BODY, DOOR	1		1		1			
41-1	3	172527-68911	BODY, DOOR	1	1	1	1	1	1	N	
	(A=M/#51365)		(C=M/#51153)	(E=M/#01060)							
42	3	172527-68920	GLASS, DOOR	1		1		1			
42-1	3	172527-67270	GLASS	1	1	1	1	1	1	N	
	(A=M/#51365)		(C=M/#51153)	(E=M/#01060)							
43	3	172524-68930	LATCH R	1	1	1	1	1	1		
44	3	172527-68930	GLASS, DOOR	1		1		1			
44-1	3	172527-67280	GLASS	1	1	1	1	1	1	S	
	(A=M/#51365)		(C=M/#51153)	(E=M/#01060)							
45	3	172520-68940	HANDLE	1	1	1	1	1	1		
46	3	172524-68940	HANDLE R,ESC	1	1	1	1	1	1		
47	3	172527-68940	TRIM	1		1		1			
47-1	3	172527-67850	TRIM	1	1	1	1	1	1	S	
	(A=M/#51365)		(C=M/#51153)	(E=M/#01060)							
48	3	172524-68950	HANDLE R,IS	1	1	1	1	1	1		
49	3	172527-68950	HANDLE	1	1	1	1	1	1		
50	3	172527-68960	PLATE	1	1	1	1	1	1		
51	3	172524-69360	PLATE	1	1	1	1	1	1		
52	3	172527-69650	BOLT M6X16	3	3	3	3	3	3		
53	3	26023-060162	SCREW, M6X16	2	2	2	2	2	2		
54	3	172527-69790	SCREW, M4X16	5	5	5	5	5	5		
55	3	172527-69810	SCREW, M6X16	2	2	2	2	2	2		
56	3	172527-69840	WASHER	1	1	1	1	1	1		
57	3	172527-69860	NUT, 10H	4	4	4	4	4	4		
58	3	172527-69860	NUT, 10H	1	1	1	1	1	1		
59	3	172527-69870	NUT	3	3	3	3	3	3		
60	3	172527-69880	SCREW, M4X20	2	2	2	2	2	2		
61	2	172527-69670	BOLT	12	12	12	12	12	12		
62	2	172527-69680	BOLT	12	12	12	12	12	12		
63	2	172527-68970	SHIM	8		8		8			
63-1	2	172527-68970	SHIM	4	4	4	4	4	4	K	
	(A=M/#51365)		(C=M/#51153)	(E=M/#01060)							
64	2	172527-68980	HINGE, DOOR	4	4	4	4	4	4		
65	2	172527-68990	TRIM	2	2	2	2	2	2		

N:Old $\overset{\text{Yes}}{\underset{\text{No}}{\leftrightarrow}}$ New, Q:Old $\overset{\text{No}}{\underset{\text{Yes}}{\leftrightarrow}}$ New, R:Old $\overset{\text{Yes}}{\underset{\text{Yes}}{\leftrightarrow}}$ New, S:Old $\overset{\text{No}}{\underset{\text{No}}{\leftrightarrow}}$ New, W:Add, Z:Discontinued, F:Interchangeable by set, K:Q'ty Change

Copyright (C) YANMAR CO., LTD. All RightsReserved.

Fig.64. ELECTRIC PART & WIPER(CABIN)

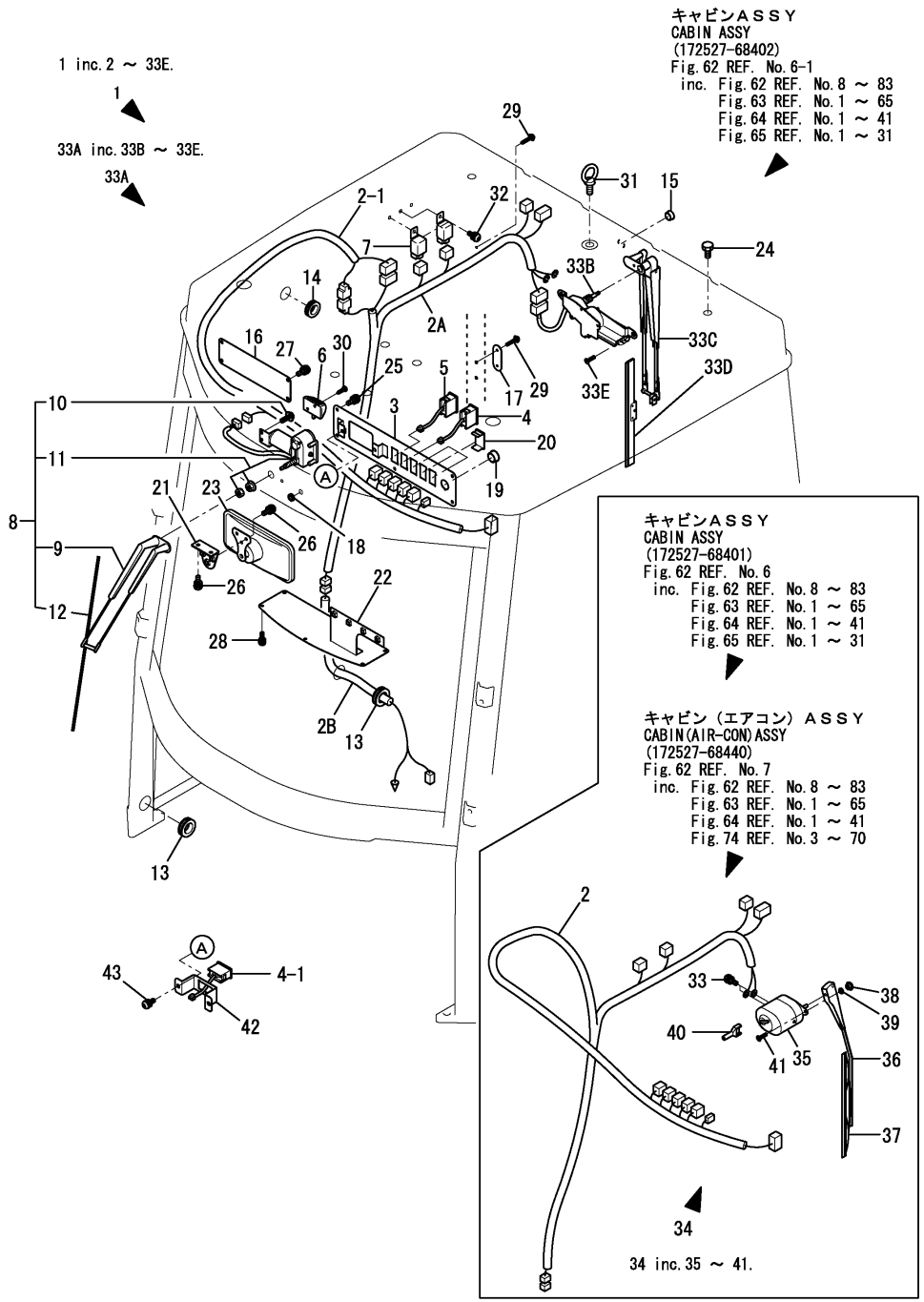

(A)=V3-5 (D)=V4-5A
(B)=V3-5(M/C) (E)=V5
(C)=V4-5 (F)=V5-A

No.	Lev.	Parts No.	Description	Q'ty (A)	(B)	(C)	(D)	(E)	(F)	I	R
1	2	172527-17601	ELECTRIC PARTS ASSY	1	1	1	1	1	1		
2	3	172527-17611	HARNESS, WIRE	1	1	1	1	1	1		
2-1	3	172528-17610	HARNESS, WIRE CABIN	1	1	1	1	1	1	S	
	(A=MXXXXX)	(B=MXXXXX)	(C=MXXXXX) (D=MXXXXX)	(E=MXXXXX)				(F=MXXXXX)			
2A	3	172528-17620	HARNESS, WIRE	1	1	1	1	1	1	W	
	(A=MXXXXX)	(B=MXXXXX)	(C=MXXXXX) (D=MXXXXX)	(E=MXXXXX)				(F=MXXXXX)			
2B	3	172528-17630	WIRING HARNESS A	1	1	1	1	1	1	W	
	(A=MXXXXX)	(B=MXXXXX)	(C=MXXXXX) (D=MXXXXX)	(E=MXXXXX)				(F=MXXXXX)			
3	3	172527-17620	PANEL	1	1	1	1	1	1		
4	3	172527-17630	SWITCH, WIPER	1							
4-1	3	172527-17630	SWITCH, WIPER	2	2	2	2	2	2	K	
	(A=MXXXXX)	(B=MXXXXX)	(C=MXXXXX) (D=MXXXXX)	(E=MXXXXX)				(F=MXXXXX)			
5	3	172527-17640	SWITCH, HEATER	1	1	1	1	1	1		
6	3	172527-17650	LAMP	1	1	1	1	1	1		
7	3	172520-17690	RELAY	2	2	2	2	2	2		
8	3	172527-17710	WIPER ASSY,FRONT	1	1	1	1	1	1		
9	4	172527-17720	ARM, WIPER	1	1	1	1	1	1		
10	4	172527-69810	SCREW, M6X16	2	2	2	2	2	2		
11	4	172524-17741	MOTOR,WIPER	1	1	1	1	1	1		
12	4	172527-17730	BLADE,WIPER	1	1	1	1	1	1		
13	3	172527-17810	GROMMET, 22X28	2	2	2	2	2	2		
14	3	172527-17820	GROMMET, 32	1	1	1	1	1	1		
15	3	172527-17830	CAP	1	1	1	1	1	1		
16	3	172527-17840	PLATE	1	1	1	1	1	1		
17	3	172527-17850	PLATE	1	1	1	1	1	1		
18	3	172527-17860	CAP	1	1	1	1	1	1		
19	3	172527-17870	PLUG	1	1	1	1	1	1		
20	3	172527-17880	CAP	3	3	3	3	3	3		
21	3	172527-69250	STAY	1	1	1	1	1	1		
22	3	172527-69260	COVER	1	1	1	1	1	1		
23	3	172524-69600	MIRROR	1	1	1	1	1	1		
24	3	172527-69630	BOLT	6	6	6	6	6	6		
25	3	172527-69720	SCREW, M6X16	5	5	5	5	5	5		
26	3	172527-69720	SCREW, M6X16	5	5	5	5	5	5		
27	3	172527-69720	SCREW, M6X16	4	4	4	4	4	4		
28	3	172527-69760	SCREW, M5X16	6	6	6	6	6	6		
29	3	172527-69780	SCREW, M4X20	3	3	3	3	3	3		
30	3	172527-69790	SCREW, M4X16	2	2	2	2	2	2		
31	3	26617-080002	BOLT, EYE M8	3	3	3	3	3	3		
32	3	172527-69720	SCREW, M6X16	2	2	2	2	2	2		
33	3	172527-69720	SCREW, M6X16	2	2	2	2	2	2	Z	
	(A=MXXXXX)	(B=MXXXXX)	(C=MXXXXX) (D=MXXXXX)	(E=MXXXXX)				(F=MXXXXX)			
33A	3	172528-17750	WIPER,REAR ASSY	1	1	1	1	1	1	W	
	(A=MXXXXX)	(B=MXXXXX)	(C=MXXXXX) (D=MXXXXX)	(E=MXXXXX)				(F=MXXXXX)			
33B	4	172528-17760	MOTOR, WIPPER	1	1	1	1	1	1	W	
	(A=MXXXXX)	(B=MXXXXX)	(C=MXXXXX) (D=MXXXXX)	(E=MXXXXX)				(F=MXXXXX)			
33C	4	172528-17770	ARM, WIPER	1	1	1	1	1	1	W	
	(A=MXXXXX)	(B=MXXXXX)	(C=MXXXXX) (D=MXXXXX)	(E=MXXXXX)				(F=MXXXXX)			
33D	4	172528-17780	BLADE,WIPER	1	1	1	1	1	1	W	
	(A=MXXXXX)	(B=MXXXXX)	(C=MXXXXX) (D=MXXXXX)	(E=MXXXXX)				(F=MXXXXX)			
33E	4	172528-69920	SCREW 8X12	2	2	2	2	2	2	W	

N:Old $\overset{\text{Yes}}{\underset{\text{No}}{\leftrightarrow}}$ New, Q:Old $\overset{\text{No}}{\underset{\text{Yes}}{\leftrightarrow}}$ New, R:Old $\overset{\text{Yes}}{\underset{\text{Yes}}{\leftrightarrow}}$ New, S:Old $\overset{\text{No}}{\underset{\text{No}}{\leftrightarrow}}$ New, W:Add, Z:Discontinued, F:Interchangeable by set, K:Q'ty Change

++ CONTINUE ++

Copyright (C) YANMAR CO., LTD. All RightsReserved.

Fig.64. ELECTRIC PART & WIPER(CABIN)

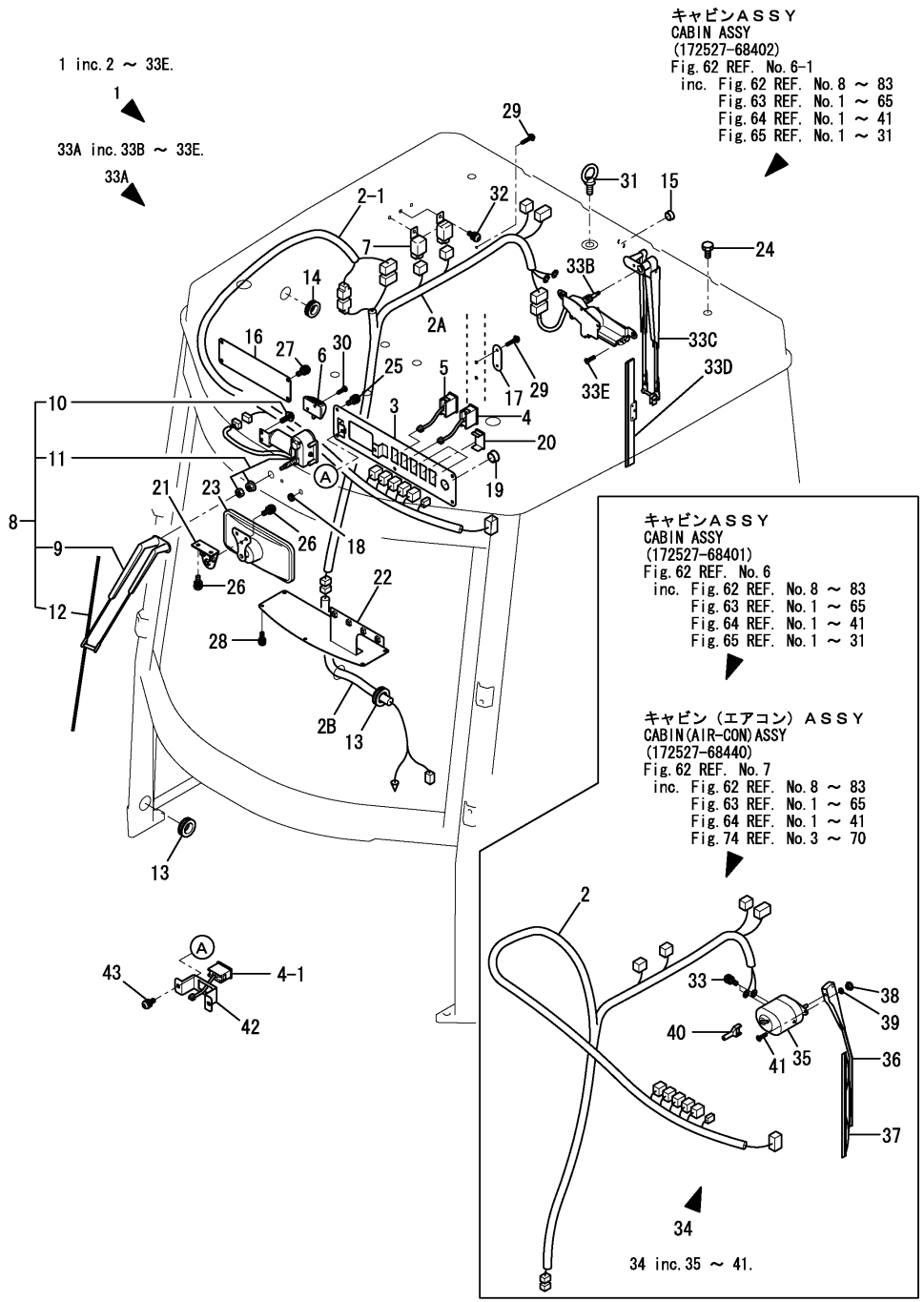

(A)=V3-5
(B)=V3-5(M/C)
(C)=V4-5
(D)=V4-5A
(E)=V5
(F)=V5-A

No.	Lev.	Parts No.	Description	Q'ty (A)	(B)	(C)	(D)	(E)	(F)	I	R
		(A=MXXXXX)	(B=MXXXXX) (C=MXXXXX) (D=MXXXXX)	(E=MXXXXX)			(F=MXXXXX)				
34	2	172527-17750	WIPER,REAR ASSY	1	1	1	1	1	1	Z	
		(A=MXXXXX)	(B=MXXXXX) (C=MXXXXX) (D=MXXXXX)	(E=MXXXXX)			(F=MXXXXX)				
35	3	172527-17760	MOTOR, WIPER	1	1	1	1	1	1	Z	
		(A=MXXXXX)	(B=MXXXXX) (C=MXXXXX) (D=MXXXXX)	(E=MXXXXX)			(F=MXXXXX)				
36	3	172527-17770	ARM, WIPER	1	1	1	1	1	1	Z	
		(A=MXXXXX)	(B=MXXXXX) (C=MXXXXX) (D=MXXXXX)	(E=MXXXXX)			(F=MXXXXX)				
37	3	172527-17780	BLADE,WIPER	1	1	1	1	1	1	Z	
		(A=MXXXXX)	(B=MXXXXX) (C=MXXXXX) (D=MXXXXX)	(E=MXXXXX)			(F=MXXXXX)				
38	3	172527-68240	RETAINER	1	1	1	1	1	1	Z	
		(A=MXXXXX)	(B=MXXXXX) (C=MXXXXX) (D=MXXXXX)	(E=MXXXXX)			(F=MXXXXX)				
39	3	172527-68250	CUSHION	1		1		1			
39-1	3	172527-68251	CUSHION	1	1	1	1	1	1	N	
		(A=MXXXXX)	(C=MXXXXX)	(E=MXXXXX)							
39-2	3	172527-68251	CUSHION	1	1	1	1	1	1	Z	
		(A=MXXXXX)	(B=MXXXXX) (C=MXXXXX) (D=MXXXXX)	(E=MXXXXX)			(F=MXXXXX)				
40	3	172527-17790	COVER	1	1	1	1	1	1	Z	
		(A=MXXXXX)	(B=MXXXXX) (C=MXXXXX) (D=MXXXXX)	(E=MXXXXX)			(F=MXXXXX)				
41	3	172527-69740	SCREW, M5X16	1	1	1	1	1	1	Z	
		(A=MXXXXX)	(B=MXXXXX) (C=MXXXXX) (D=MXXXXX)	(E=MXXXXX)			(F=MXXXXX)				
42	2	172528-17800	BRACKET	1	1	1	1	1	1	W	
		(A=MXXXXX)	(B=MXXXXX) (C=MXXXXX) (D=MXXXXX)	(E=MXXXXX)			(F=MXXXXX)				
43	2	172527-69720	SCREW, M6X16	2	2	2	2	2	2	W	
		(A=MXXXXX)	(B=MXXXXX) (C=MXXXXX) (D=MXXXXX)	(E=MXXXXX)			(F=MXXXXX)				

N:Old ←Yes/No→ New, Q:Old ←No/Yes→ New, R:Old ←Yes/Yes→ New, S:Old ←No/No→ New, W:Add, Z:Discontinued, F:Interchangeable by set, K:Q'ty Change

Copyright (C) YANMAR CO., LTD. All RightsReserved.

Fig.65. HEATER(CABIN)

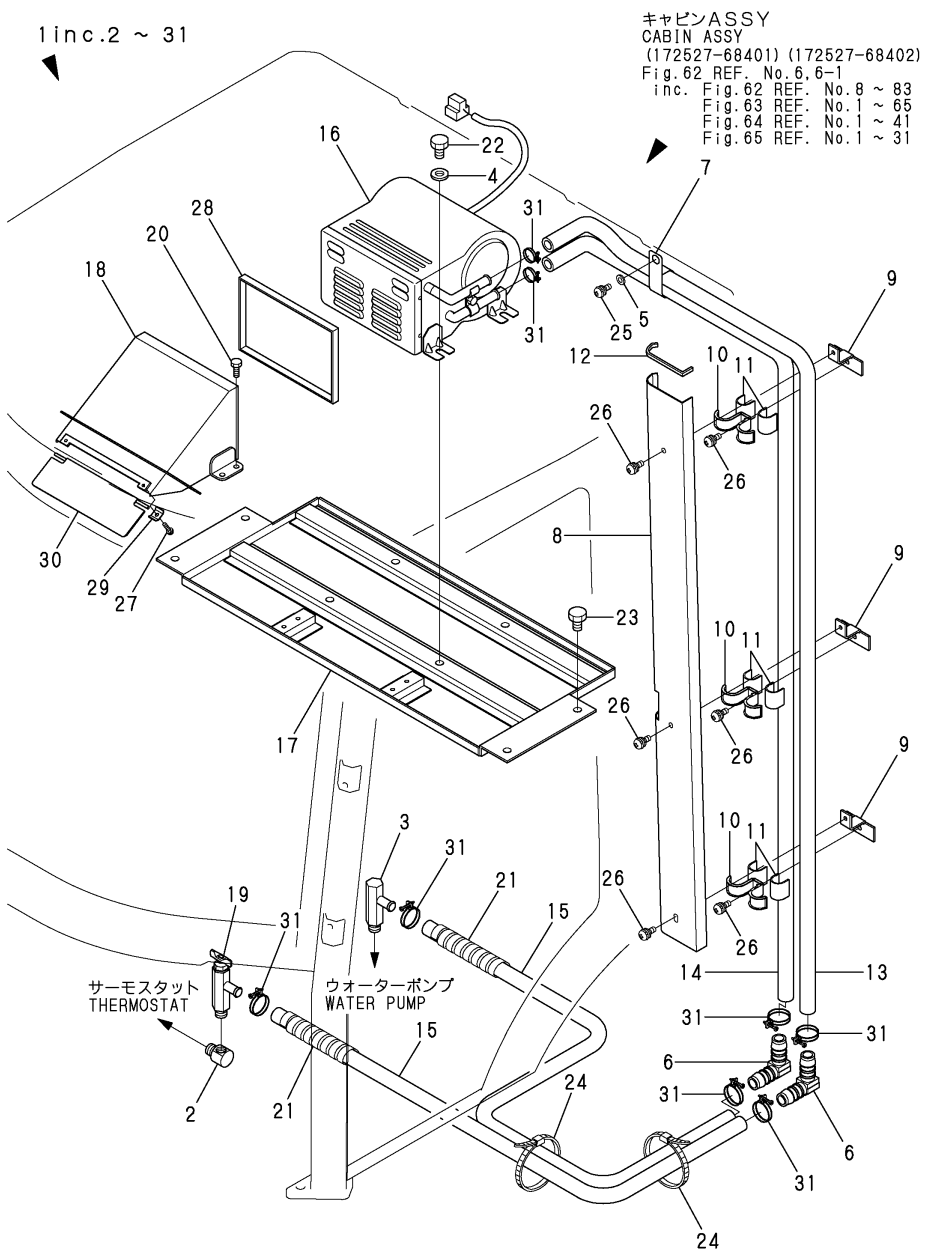

(A)=V3-5 (D)=V4-5A
(B)=V3-5(M/C) (E)=V5
(C)=V4-5 (F)=V5-A

No.	Lev.	Parts No.	Description	Q'ty (A)	(B)	(C)	(D)	(E)	(F)	I	R
1	2	172527-69400	HEATER ASSY	1	1	1	1	1	1		
2	3	172524-68280	ELBOW	1	1	1	1	1	1		
3	3	172524-68290	CONNECTOR	1	1	1	1	1	1		
4	3	172527-68370	WASHER	4	4	4	4	4	4		
5	3	172527-68380	WASHER	2		2		2			
5-1	3	172527-68380	WASHER	1	1	1	1	1	1	K	
	(A=M/#51365)		(C=M/#51153)	(E=M/#01060)							
6	3	172527-68550	CONNECTOR	2	2	2	2	2	2		
7	3	172527-68560	CLAMP	2		2		2			
7-1	3	172527-68560	CLAMP	1	1	1	1	1	1	K	
	(A=M/#51365)		(C=M/#51153)	(E=M/#01060)							
8	3	172527-68570	COVER, HOSE	1	1	1	1	1	1		
9	3	172527-68580	PLATE	3	3	3	3	3	3		
10	3	172527-68590	CLAMP, HOSE	3	3	3	3	3	3		
11	3	172527-68740	RUBBER	6	6	6	6	6	6		
12	3	172527-69360	GROMMET	1	1	1	1	1	1		
13	3	172527-69371	HOSE	1	1	1	1	1	1		
14	3	172527-69381	HOSE	1	1	1	1	1	1		
15	3	172527-69390	HOSE G808Y040	2	2	2	2	2	2		
16	3	172527-69410	HEATER	1	1	1	1	1	1		
17	3	172527-69430	BASE	1	1	1	1	1	1		
18	3	172527-69440	DUCT, HEATER	1	1	1	1	1	1		
19	3	172520-69580	COCK	1	1	1	1	1	1		
20	3	172527-69610	BOLT M6X16	4	4	4	4	4	4		
21	3	172520-69650	TUBE, SPIRAL	2	2	2	2	2	2		
22	3	172527-69670	BOLT	4	4	4	4	4	4		
23	3	172527-69670	BOLT	4	4	4	4	4	4		
24	3	172520-69690	CLAMP	3		3		3		Z	
	(A=M/#51365)		(C=M/#51153)	(E=M/#01060)							
25	3	172527-69720	SCREW, M6X16	2		2		2			
25-1	3	172527-69720	SCREW, M6X16	1	1	1	1	1	1	K	
	(A=M/#51365)		(C=M/#51153)	(E=M/#01060)							
26	3	172527-69720	SCREW, M6X16	6	6	6	6	6	6		
27	3	172527-69770	SCREW, M4X16	2	2	2	2	2	2		
28	3	172527-69910	SEAL, HEATER	1	1	1	1	1	1		
29	3	172527-69920	CLAMP	2	2	2	2	2	2		
30	3	172527-69930	PLATE	1	1	1	1	1	1		
31	3	23000-022000	CLAMP, 22	8	8	8	8	8	8		

N:Old ⇄(Yes/No) New, Q:Old ⇄(No/Yes) New, R:Old ⇄(Yes/Yes) New, S:Old ⇄(No/No) New, W:Add, Z:Discontinued, F:Interchangeable by set, K:Q'ty Change

Copyright (C) YANMAR CO., LTD. All RightsReserved.

Fig.66. SIMPLICITY CABIN

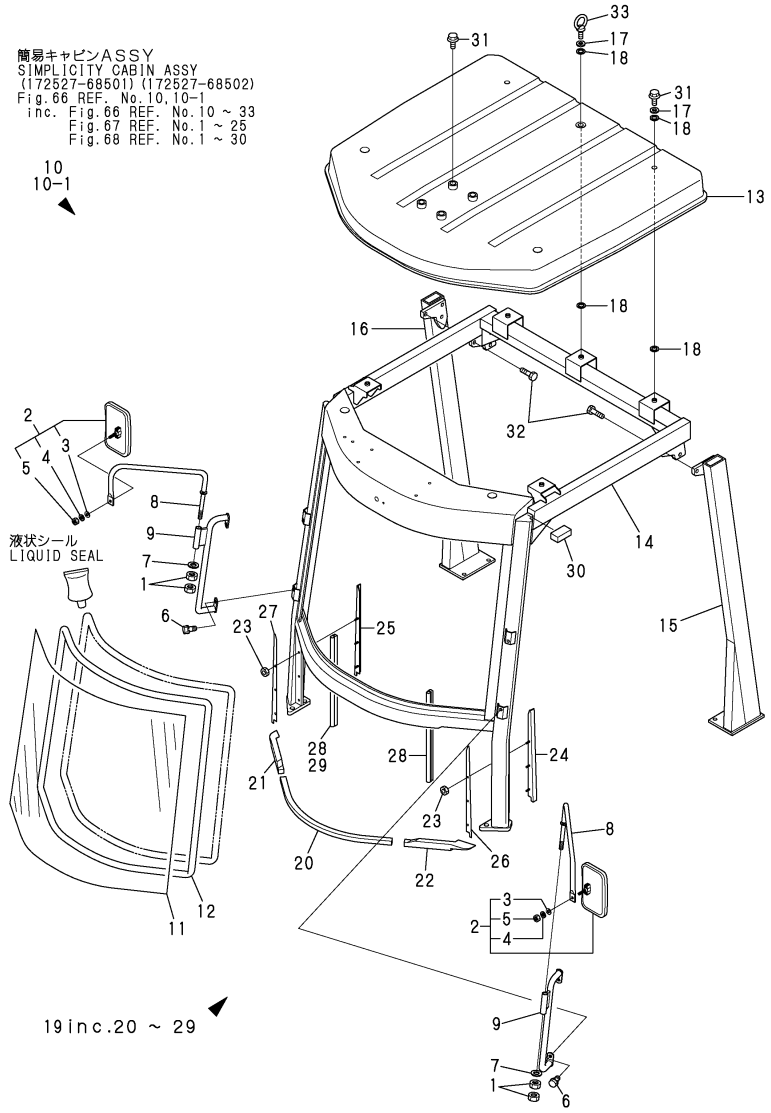

Remarks
(1)INC.FIG.66 REF.NO.10- 33,
FIG.67 REF.NO.1- 25,
FIG.68 REF.NO.1- 30.
(2)INTERCHANGEABLE BY SIMULTANEOUS
REPLACEMENT WITH FIG.54
REF.NO.14-1,22-1.

(A)=V3-5 (D)=V4-5A
(B)=V3-5(M/C) (E)=V5
(C)=V4-5 (F)=V5-A

No.	Lev.	Parts No.	Description	Q'ty (A)	(B)	(C)	(D)	(E)	(F)	I	R
1	1	172524-06830	NUT, M14	4		4		4			
2	1	172524-06900	MIRROR ASSY	2		2		2			
3	2	22137-080000	WASHER, 8	1		1		1			
4	2	22217-080000	WASHER, SPRING 8	1		1		1			
5	2	26716-080002	NUT, M8	1		1		1			
6	1	172515-41180	BOLT M10X 20	4		4		4			
7	1	172524-69460	BOLT W/WASHER M10X25	2		2		2			
8	1	172527-68670	STAY ASSY, MIRROR	2		2		2			
9	1	172524-69410-1	GRIP ASSY, CABIN	2		2		2			
10	1	172527-68501	CABIN ASSY, SIMPLE	1		1		1			1
10-1	1	172527-68502	CABIN ASSY, SIMPLE	1		1		1		S	2
	(A=M/#51365)		(C=M/#51153)	(E=M/#01060)							
11	2	172527-68420	GLASS	1		1		1			
11-1	2	172527-67170	GLASS	1		1		1		N	
	(A=M/#51365)		(C=M/#51153)	(E=M/#01060)							
12	2	172527-68430	RUBBER	1		1		1			
13	2	172527-68510	ROOF ASSY	1		1		1			
13-1	2	172527-68511	ROOF ASSY	1		1		1		N	
	(A=M/#51365)		(C=M/#51153)	(E=M/#01060)							
13-2	2	172527-68512	ROOF ASSY(YELLOW:2J)	1		1		1		R	
	(A=*2005.06)		(C=*2005.06)	(E=*2005.06)							
14	2	172527-68521	FRAME ASSY	1		1		1			
14-1	2	172527-68522	FRAME ASSY	1		1		1		S	
	(A=M/#51365)		(C=M/#51153)	(E=M/#01060)							
15	2	172527-68530	POLE L	1		1		1			
15-1	2	172527-68531	PROP ASSY	1		1		1		R	
	(A=*2005.06)		(C=*2005.06)	(E=*2005.06)							
16	2	172527-68540	POLE R	1		1		1			
16-1	2	172527-68541	PROP ASSY	1		1		1		R	
	(A=*2005.06)		(C=*2005.06)	(E=*2005.06)							
17	2	172524-68710	WASHER	5		5		5			
18	2	172524-68720	SEAL	10		10		10			
19	2	172527-69101	SEAL	1		1		1			
20	3	172527-69130	SEAL	1		1		1			
21	3	172527-69140	SEAL	1		1		1			
22	3	172527-69150	SEAL	1		1		1			
23	3	172527-69850	NUT, 6H	6		6		6			
24	3	172527-69950	PLATE	1		1		1			
24-1	3	172527-69951	PLATE, SEAL L	1		1		1		S	
	(A=M/#51365)		(C=M/#51153)	(E=M/#01060)							
25	3	172527-69960	PLATE	1		1		1			
25-1	3	172527-69961	PLATE, SEAL R	1		1		1		S	
	(A=M/#51365)		(C=M/#51153)	(E=M/#01060)							
26	3	172527-69970	SEAL	1		1		1			
26-1	3	172527-69971	SEAL	1		1		1		S	
	(A=M/#51365)		(C=M/#51153)	(E=M/#01060)							
27	3	172527-69980	SEAL	1		1		1			
27-1	3	172527-69981	SEAL	1		1		1		S	
	(A=M/#51365)		(C=M/#51153)	(E=M/#01060)							
28	3	172527-69990	RUBBER	2		2		2			
28-1	3	172527-69991	RUBBER, TRIM	1		1		1		S	

N:Old $\overset{\text{Yes}}{\underset{\text{No}}{\leftrightarrow}}$ New, Q:Old $\overset{\text{No}}{\underset{\text{Yes}}{\leftrightarrow}}$ New, R:Old $\overset{\text{Yes}}{\underset{\text{Yes}}{\leftrightarrow}}$ New, S:Old $\overset{\text{No}}{\underset{\text{No}}{\leftrightarrow}}$ New, W:Add, Z:Discontinued, F:Interchangeable by set, K:Q'ty Change

++ CONTINUE ++

Copyright (C) YANMAR CO., LTD. All RightsReserved.

Fig.66. SIMPLICITY CABIN

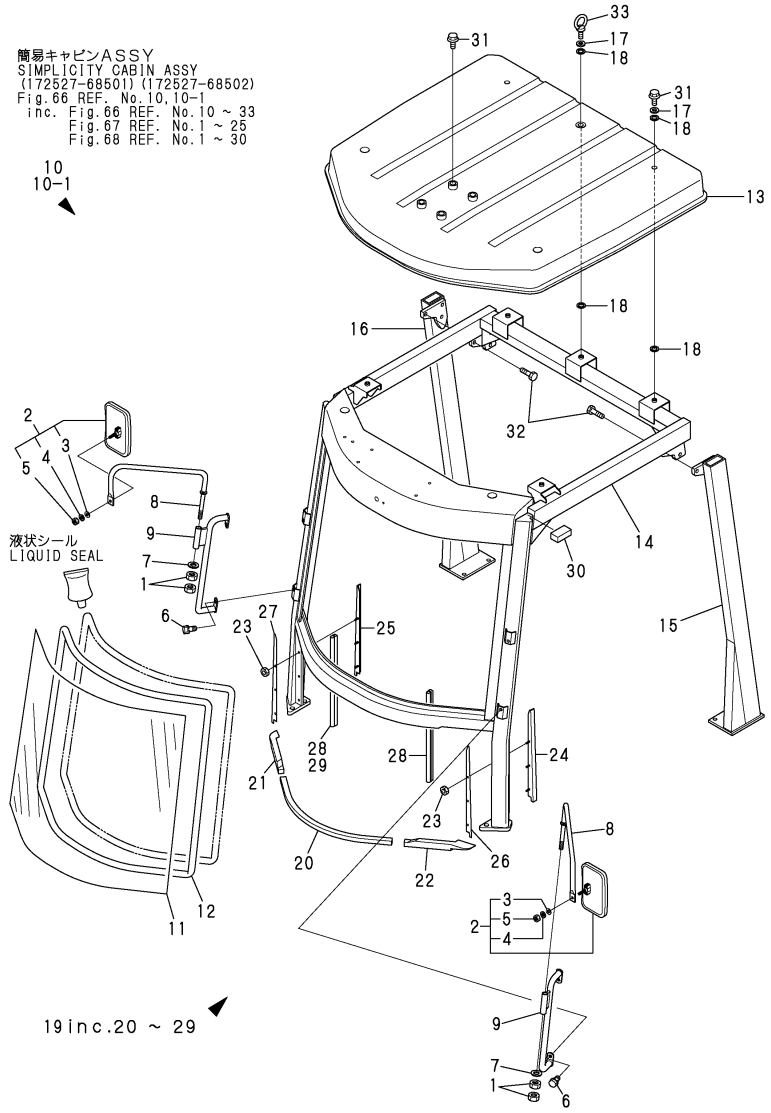

(A)=V3-5
(B)=V3-5(M/C)
(C)=V4-5
(D)=V4-5A
(E)=V5
(F)=V5-A

No.	Lev.	Parts No.	Description	Q'ty (A)	(B)	(C)	(D)	(E)	(F)	I	R
		(A=M/#51365)	(C=M/#51153)	(E=M/#01060)							
29	3	172527-69090	RUBBER, TRIM R	1		1		1		W	
		(A=M/#51365)	(C=M/#51153)	(E=M/#01060)							
30	2	172527-69280	SEAL	2		2		2			
31	2	172527-69630	BOLT	6		6		6			
32	2	172527-69710	BOLT	6		6		6			
33	2	26617-080002	BOLT, EYE M8	3		3		3			

Remarks
(1)INC.FIG.66 REF.NO.10- 33,
FIG.67 REF.NO.1- 25,
FIG.68 REF.NO.1- 30.
(2)INTERCHANGEABLE BY SIMULTANEOUS
REPLACEMENT WITH FIG.54
REF.NO.14-1,22-1.

N:Old $\xleftarrow[\text{No}]{\text{Yes}}$ New, Q:Old $\xleftarrow[\text{Yes}]{\text{No}}$ New, R:Old $\xleftarrow[\text{Yes}]{\text{Yes}}$ New, S:Old $\xleftarrow[\text{No}]{\text{No}}$ New, W:Add, Z:Discontinued, F:Interchangeable by set, K:Q'ty Change

Copyright (C) YANMAR CO., LTD. All RightsReserved.

Fig.67. ELECTRIC PART & WIPER

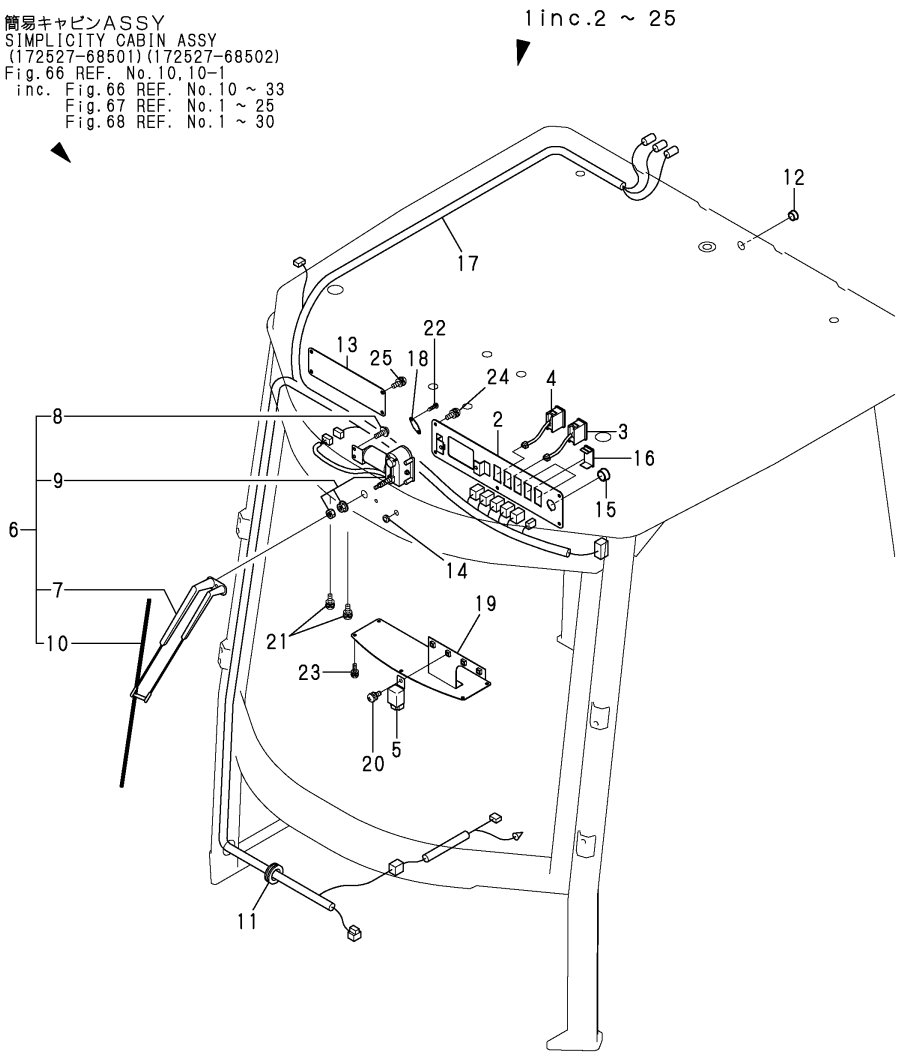

(A)=V3-5
(B)=V3-5(M/C)
(C)=V4-5
(D)=V4-5A
(E)=V5
(F)=V5-A

No.	Lev.	Parts No.	Description	Q'ty (A)	(B)	(C)	(D)	(E)	(F)	I	R
1	2	172527-17901	ELEC.ASSY,SIMPLE CAB	1		1		1			
2	3	172527-17620	PANEL	1		1		1			
3	3	172527-17630	SWITCH, WIPER	1		1		1			
4	3	172527-17640	SWITCH, HEATER	1		1		1			
5	3	172520-17690	RELAY	1		1		1			
6	3	172527-17710	WIPER ASSY,FRONT	1		1		1			
7	4	172527-17720	ARM, WIPER	1		1		1			
8	4	172527-69810	SCREW, M6X16	2		2		2			
9	4	172524-17741	MOTOR,WIPER	1		1		1			
10	4	172527-17730	BLADE,WIPER	1		1		1			
11	3	172527-17810	GROMMET, 22X28	1		1		1			
12	3	172527-17830	CAP	1		1		1			
13	3	172527-17840	PLATE	1		1		1			
14	3	172527-17860	CAP	1		1		1			
15	3	172527-17870	PLUG	1		1		1			
16	3	172527-17880	CAP	3		3		3			
17	3	172527-17980	HARNESS	1		1		1			
18	3	172527-17990	PLATE	1		1		1			
19	3	172527-69260	COVER	1		1		1			
20	3	172527-69650	BOLT M6X16	1		1		1			
21	3	172527-69720	SCREW, M6X16	2		2		2			
22	3	172527-69790	SCREW, M4X16	2		2		2			
23	3	26023-050162	SCREW, M5X16	6		6		6			
24	3	26023-060162	SCREW, M6X16	5		5		5			
25	3	26023-060162	SCREW, M6X16	4		4		4			

N:Old $\xleftarrow[\text{No}]{\text{Yes}}$ New, Q:Old $\xleftarrow[\text{Yes}]{\text{No}}$ New, R:Old $\xleftarrow[\text{Yes}]{\text{Yes}}$ New, S:Old $\xleftarrow[\text{No}]{\text{No}}$ New, W:Add, Z:Discontinued, F:Interchangeable by set, K:Q'ty Change

Copyright (C) YANMAR CO., LTD. All RightsReserved.

Fig.68. HEATER & DEFROSTER

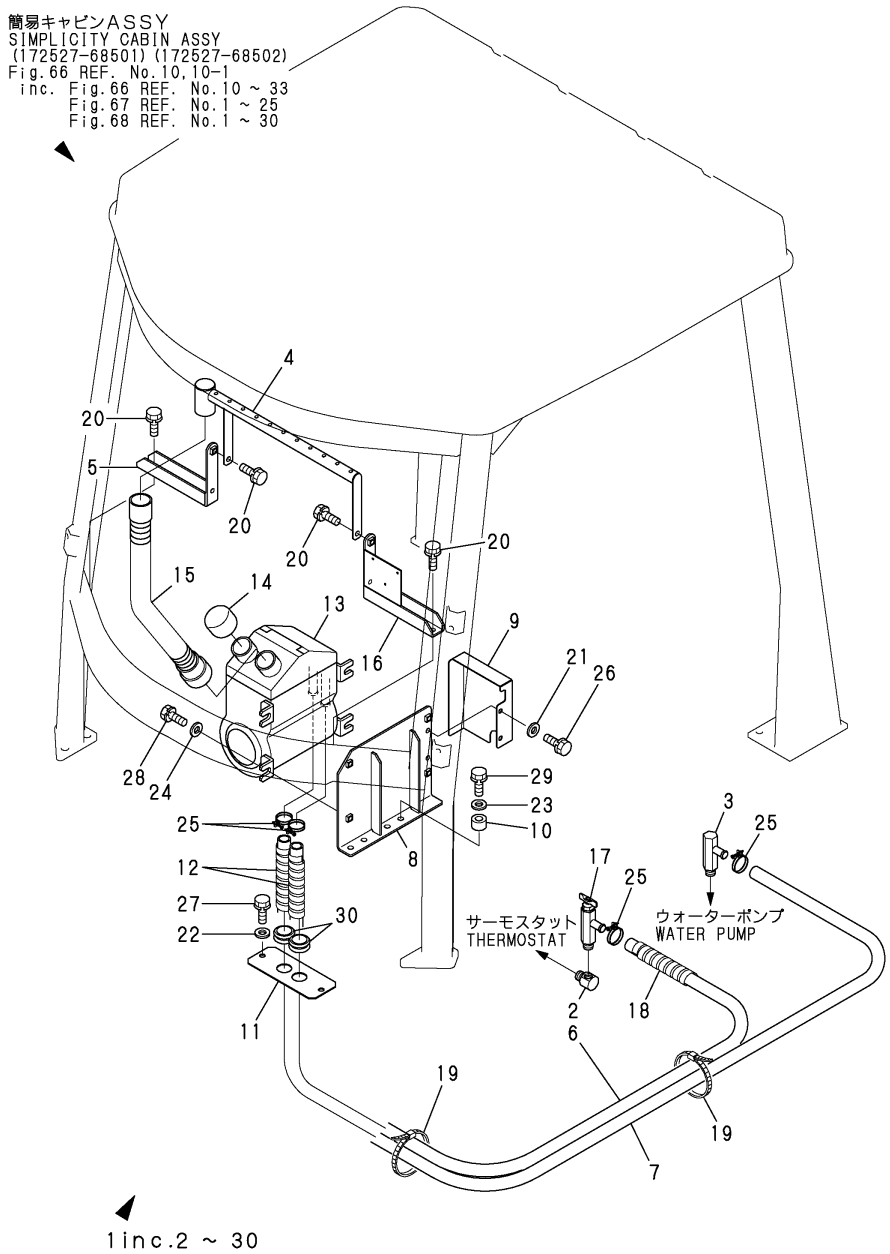

(A)=V3-5 (B)=V3-5(M/C) (C)=V4-5 (D)=V4-5A (E)=V5 (F)=V5-A

No.	Lev.	Parts No.	Description	Q'ty (A)	(B)	(C)	(D)	(E)	(F)	I	R
1	2	172527-69500	HEATER ASSY	1		1		1			
2	3	172524-68280	ELBOW	1		1		1			
3	3	172524-68290	CONNECTOR	1		1		1			
4	3	172527-69310	DEFROSTER	1		1		1			
5	3	172524-69320	STAY	1		1		1			
6	3	172524-69370	HOSE,HEATER INLET	1		1		1			
7	3	172524-69380	HOSE,HEATER OUTLET	1		1		1			
8	3	172527-69450	BRACKET, HEATER	1		1		1			
9	3	172527-69460	COVER, HOSE	1		1		1			
10	3	172527-69470	COLLAR, 12.7X17.3X11	2		2		2			
11	3	172527-69480	PLATE	1		1		1			
12	3	172527-69490	PLUMBER	2		2		2			
13	3	172520-69510	HEATER ASSY	1		1		1			
14	3	172520-69520	COVER, DEFROSTER	1		1		1			
15	3	172520-69530	DUCT	1		1		1			
16	3	172527-69560	STAY	1		1		1			
17	3	172520-69580	COCK	1		1		1			
18	3	172520-69650	TUBE, SPIRAL	2		2		2			
19	3	172520-69690	CLAMP	3		3		3		Z	
	(A=M/#51365)		(C=M/#51153)	(E=M/#01060)							
20	3	172527-69690	BOLT	4		4		4			
21	3	22137-080000	WASHER, 8	2		2		2			
22	3	22137-080000	WASHER, 8	2		2		2			
23	3	22137-100000	WASHER, 10	2		2		2			
24	3	22137-100000	WASHER, 10	4		4		4			
25	3	23000-022000	CLAMP, 22	4		4		4			
26	3	26013-080162	BOLT, M8X 16	2		2		2			
27	3	26013-080162	BOLT, M8X 16	2		2		2			
28	3	26013-100202	BOLT, M10X 20	4		4		4			
29	3	26013-100352	BOLT, M10X 35	2		2		2			
30	3	29311-253000	GROMET, 25.0X3	2		2		2			

N:Old ←Yes/No→ New, Q:Old ←No/Yes→ New, R:Old ←Yes/Yes→ New, S:Old ←No/No→ New, W:Add, Z:Discontinued, F:Interchangeable by set, K:Q'ty Change

Copyright (C) YANMAR CO., LTD. All RightsReserved.

Fig.69. WORK LAMP(OPTIONAL)

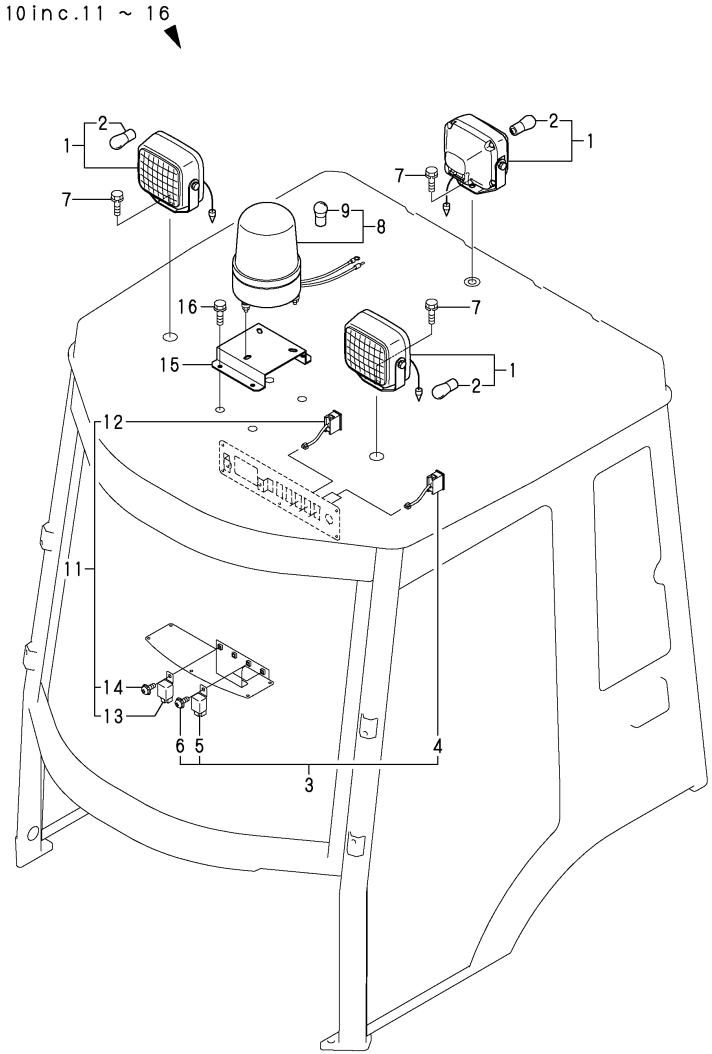

(A)=V3-5
(B)=V3-5(M/C)
(C)=V4-5
(D)=V4-5A
(E)=V5
(F)=V5-A

No.	Lev.	Parts No.	Description	Q'ty (A)	(B)	(C)	(D)	(E)	(F)	I	R
1	1	172156-17401	LAMP, WORK	3	3	3	3	3	3		
1-1	1	172156-17400	LAMP, WORK	3	3	3	3	3	3		
2	2	172156-17420	BULB, 12V 27W	3	3	3	3	3	3		
3	1	172527-17970	SWITCH SET	2	2	2	2	2	2		1
4	2	172524-17290	SWITCH	2	2	2	2	2	2		
5	2	172520-17690	RELAY	2	2	2	2	2	2		
6	2	172527-69720	SCREW, M6X16	2	2	2	2	2	2		
7	1	26013-080162	BOLT, M8X 16	3	3	3	3	3	3		
8	1	172520-17850	LAMP, ROTATING	1	1	1	1	1	1		
9	2	172520-17860	LAMP	1	1	1	1	1	1		
10	1	172527-17890	LAMP SET, ROTATING	1	1	1	1	1	1		
11	2	172527-17970	SWITCH SET	1	1	1	1	1	1		2
12	3	172524-17290	SWITCH	1	1	1	1	1	1		
13	3	172520-17690	RELAY	1	1	1	1	1	1		
14	3	172527-69720	SCREW, M6X16	1	1	1	1	1	1		
15	2	172527-69290	BRACKET	1	1	1	1	1	1		
16	2	26013-080162	BOLT, M8X 16	4	4	4	4	4	4		

Remarks
(1)For working lamp.
(2)For rotating lamp.

N:Old $\overset{\text{Yes}}{\underset{\text{No}}{\leftrightarrow}}$ New, Q:Old $\overset{\text{No}}{\underset{\text{Yes}}{\leftrightarrow}}$ New, R:Old $\overset{\text{Yes}}{\underset{\text{Yes}}{\leftrightarrow}}$ New, S:Old $\overset{\text{No}}{\underset{\text{No}}{\leftrightarrow}}$ New, W:Add, Z:Discontinued, F:Interchangeable by set, K:Q'ty Change

Copyright (C) YANMAR CO., LTD. All RightsReserved.

Fig.70. WINDOW WASHER(OPTIONAL)

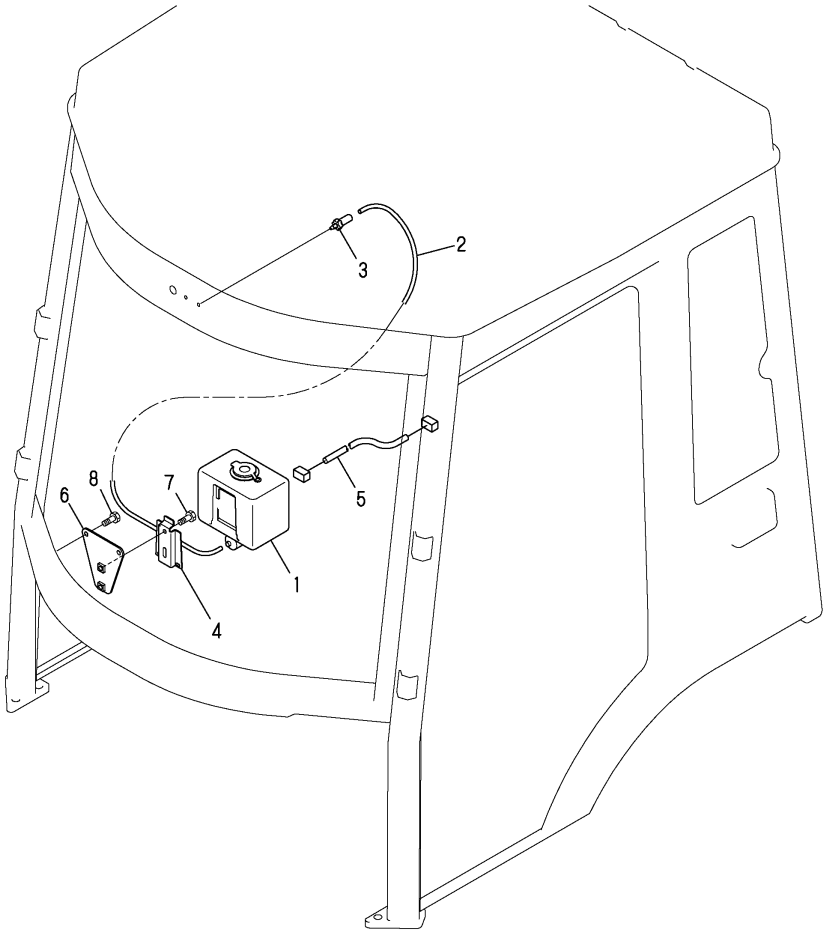

(A)=V3-5
(B)=V3-5(M/C)
(C)=V4-5
(D)=V4-5A
(E)=V5
(F)=V5-A

No.	Lev.	Parts No.	Description	Q'ty (A)	(B)	(C)	(D)	(E)	(F)	I	R
1	1	172527-17910	TANK, WASHER	1		1		1			
2	1	172527-17920	HOSE	1		1		1			
3	1	172527-17930	NOZZLE, WASHER	1		1		1			
4	1	172527-17940	BRACKET	1		1		1			
5	1	172527-17950	HARNESS, WIRE	1		1		1			
6	1	172527-69590	STAY, TANK	1		1		1			
7	1	172527-69650	BOLT M6X16	2		2		2			
8	1	26018-060162	BOLT, M6X 16	2		2		2			

N:Old $\xleftrightarrow[\text{No}]{\text{Yes}}$ New, Q:Old $\xleftrightarrow[\text{Yes}]{\text{No}}$ New, R:Old $\xleftrightarrow[\text{Yes}]{\text{Yes}}$ New, S:Old $\xleftrightarrow[\text{No}]{\text{No}}$ New, W:Add, Z:Discontinued, F:Interchangeable by set, K:Q'ty Change

Copyright (C) YANMAR CO., LTD. All RightsReserved.

Fig.71. RADIO(CABIN)(OPTIONAL)

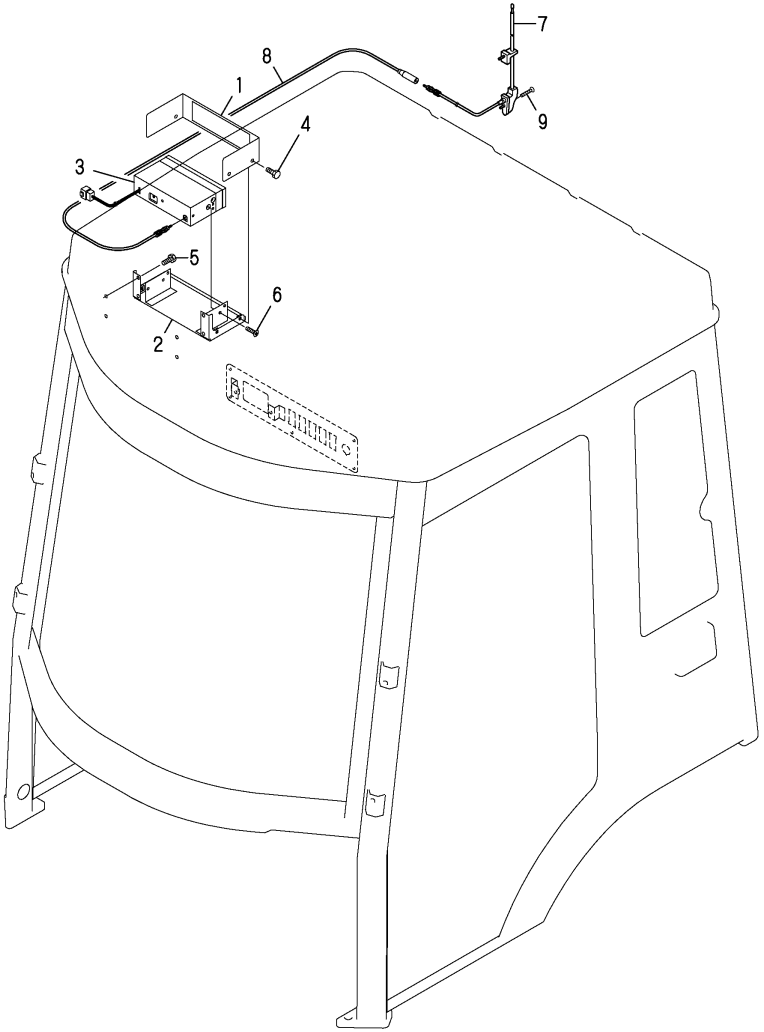

(A)=V3-5
(B)=V3-5(M/C)
(C)=V4-5
(D)=V4-5A
(E)=V5
(F)=V5-A

No.	Lev.	Parts No.	Description	Q'ty (A)	(B)	(C)	(D)	(E)	(F)	I	R
1	1	172527-17580	COVER, RADIO	1		1		1			
2	1	172527-17590	BRACKET (RADIO	1		1		1			
3	1	172524-17710	RADIO SET	1		1		1			
4	1	172527-69610	BOLT M6X16	3		3		3			
5	1	172527-69610	BOLT M6X16	4		4		4			
6	1	172527-69740	SCREW, M5X16	6		6		6			
7	1	172524-17730	ANTENNA	1		1		1			
8	1	172524-17780	CORD	1		1		1			
9	1	172527-69780	SCREW, M4X20	3		3		3			

N:Old $\frac{\text{Yes}}{\text{No}}$ New, Q:Old $\frac{\text{No}}{\text{Yes}}$ New, R:Old $\frac{\text{Yes}}{\text{Yes}}$ New, S:Old $\frac{\text{No}}{\text{No}}$ New, W:Add, Z:Discontinued, F:Interchangeable by set, K:Q'ty Change

Copyright (C) YANMAR CO., LTD. All RightsReserved.

Fig.72. CIGAR LIGHTER & ASHTRAY(CABIN)(OPTIONAL)

(A)=V3-5
(B)=V3-5(M/C)
(C)=V4-5
(D)=V4-5A
(E)=V5
(F)=V5-A

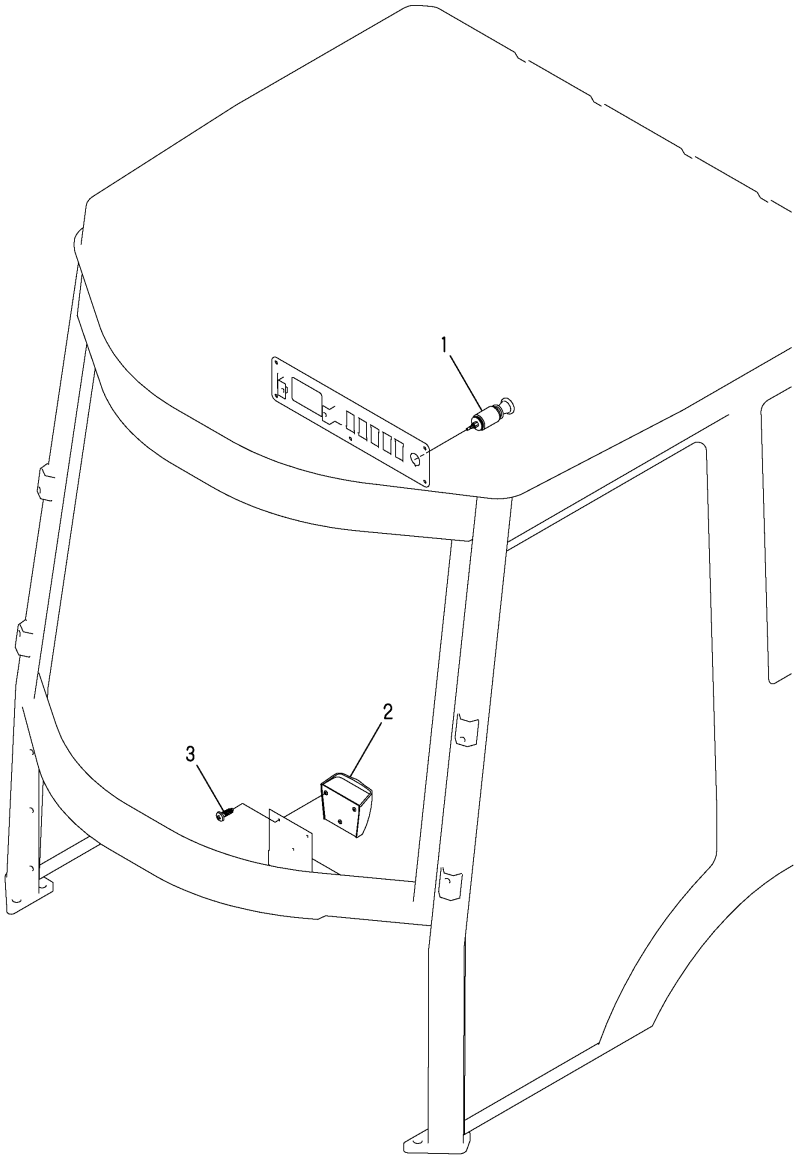

No.	Lev.	Parts No.	Description	Q'ty (A)	(B)	(C)	(D)	(E)	(F)	I	R
1	1	172520-17680	LIGHTER, CIGAR	1		1		1			
2	1	172524-69610	ASHTRAY	1		1		1			
3	1	172527-69890	SCREW, M4X16	3		3		3			

N:Old ◄Yes/No► New, Q:Old ◄No/Yes► New, R:Old ◄Yes/Yes► New, S:Old ◄No/No► New, W:Add, Z:Discontinued, F:Interchangeable by set, K:Q'ty Change

Copyright (C) YANMAR CO., LTD. All RightsReserved.

Fig.73. AIR CONDITIONER SET

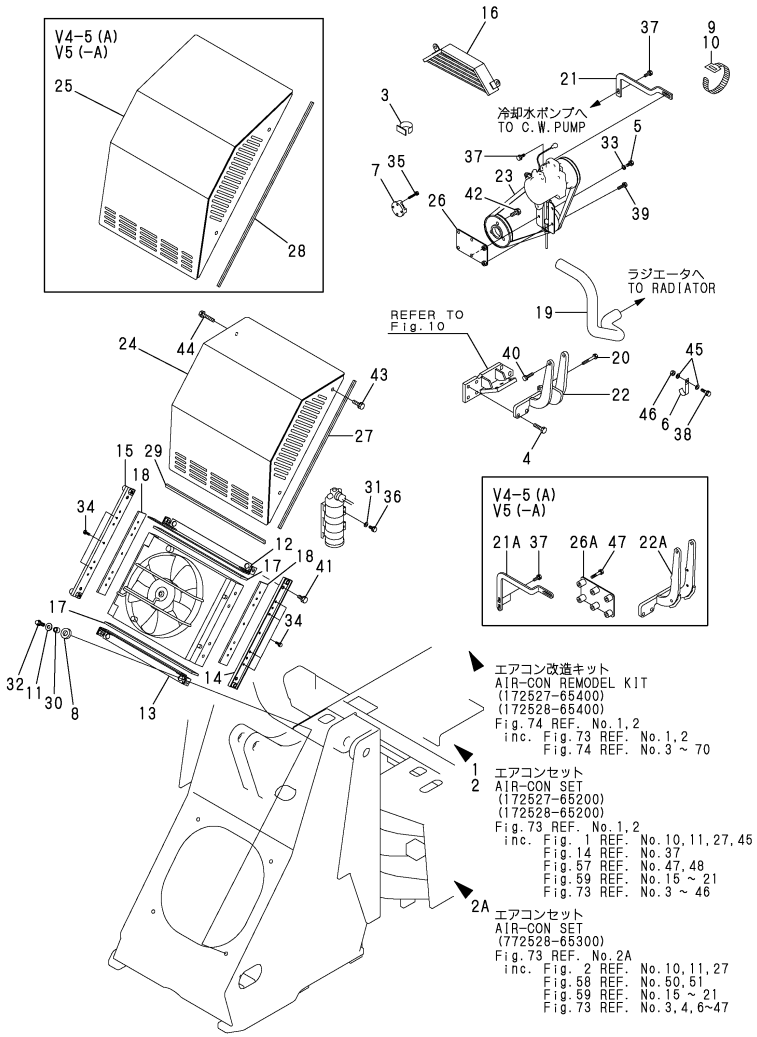

Remarks
(1)INC.FIG.1 REF.NO.10,11,27,45,
FIG.14 REF.NO.37,
FIG.57 REF.NO.47,48,
FIG.59 REF.NO.15-21 &
FIG.73 REF.NO.3-46.
(2)INC.FIG.1 REF.NO.10,11,27,
FIG.58 REF.NO.50,51,
FIG.59 REF.NO.15-21 &
FIG.73 REF.NO.3,4,6-47.

(A)=V3-5 (D)=V4-5A
(B)=V3-5(M/C) (E)=V5
(C)=V4-5 (F)=V5-A

No.	Lev.	Parts No.	Description	Q'ty (A)	(B)	(C)	(D)	(E)	(F)	I	R
1	1	172527-65200	CONDITIONER SET, AIR	1							1
2	1	172528-65200	CONDITIONER SET, AIR			1		1			1
2A	1	772528-65300	CONDITIONER SET, AIR				1		1	W	2
3	2	1C6450-07900	KEEP, CORD (D=M/#52064) (F=M/#02019)	2		2	2	2	2	W	
4	2	194465-11940	BOLT, M10X40 (D=M/#52064) (F=M/#02019)	2		2	2	2	2	W	
5	2	26016-080162	BOLT, M8X 16	2		2		2			
6	2	172512-16560	CLAMP, HARNESS (D=M/#52064) (F=M/#02019)	1		1	1	1	1	W	
7	2	121267-44760	SPACER	1		1	1	1	1	W	
8	2	172527-47980	RUBBER (D=M/#52064) (F=M/#02019)	4		4	4	4	4	W	
9	2	194250-51660	BAND, NYLON (D=M/#52064) (F=M/#02019)	10		10	10	10	10	W	
10	2	1A1380-56500	BAND, WIRE LOCK	10		10	10	10	10	W	
11	2	172527-61640	WASHER (D=M/#52064) (F=M/#02019)	4		4	4	4	4	W	
12	2	172527-67750	STAY (D=M/#52064) (F=M/#02019)	1		1	1	1	1	W	
13	2	172527-67760	STAY	1		1	1	1	1	W	
14	2	172527-67770	PLATE (D=M/#52064) (F=M/#02019)	1		1	1	1	1	W	
15	2	172527-67780	PLATE (D=M/#52064) (F=M/#02019)	1		1	1	1	1	W	
16	2	172527-67790	GUARD, FAN	1		1	1	1	1	W	
17	2	172527-67810	SEAT (D=M/#52064) (F=M/#02019)	2		2	2	2	2	W	
18	2	172527-67820	SEAT (D=M/#52064) (F=M/#02019)	2		2	2	2	2	W	
19	2	172527-67830	TUBE, WATER	1		1	1	1	1	W	
20	2	26016-080552	BOLT, M8X 55 (D=M/#52064) (F=M/#02019)	2		2	2	2	2	W	
21	2	172527-68120	STAY	1		1		1			
21A	2	172527-66890	STAY (D=M/#52064) (F=M/#02019)				1		1	W	
22	2	172527-68130	BRACKET	1		1		1			
22A	2	172527-66960	BRACKET (D=M/#52064) (F=M/#02019)				1		1	W	
23	2	172527-68140	BELT	1		1		1			
23A	2	172527-66850	BELT (D=M/#52064) (F=M/#02019)				1		1	W	
24	2	172527-68150	COVER, CONDENSER	1							
25	2	172528-68150	COVER, CONDENSER (D=M/#52064) (F=M/#02019)			1	1	1	1	W	

N:Old $\xleftarrow[\text{No}]{\text{Yes}}$ New, Q:Old $\xleftarrow[\text{Yes}]{\text{No}}$ New, R:Old $\xleftarrow[\text{Yes}]{\text{Yes}}$ New, S:Old $\xleftarrow[\text{No}]{\text{No}}$ New, W:Add, Z:Discontinued, F:Interchangeable by set, K:Q'ty Change

++ CONTINUE ++

Copyright (C) YANMAR CO., LTD. All RightsReserved.

Fig.73. AIR CONDITIONER SET

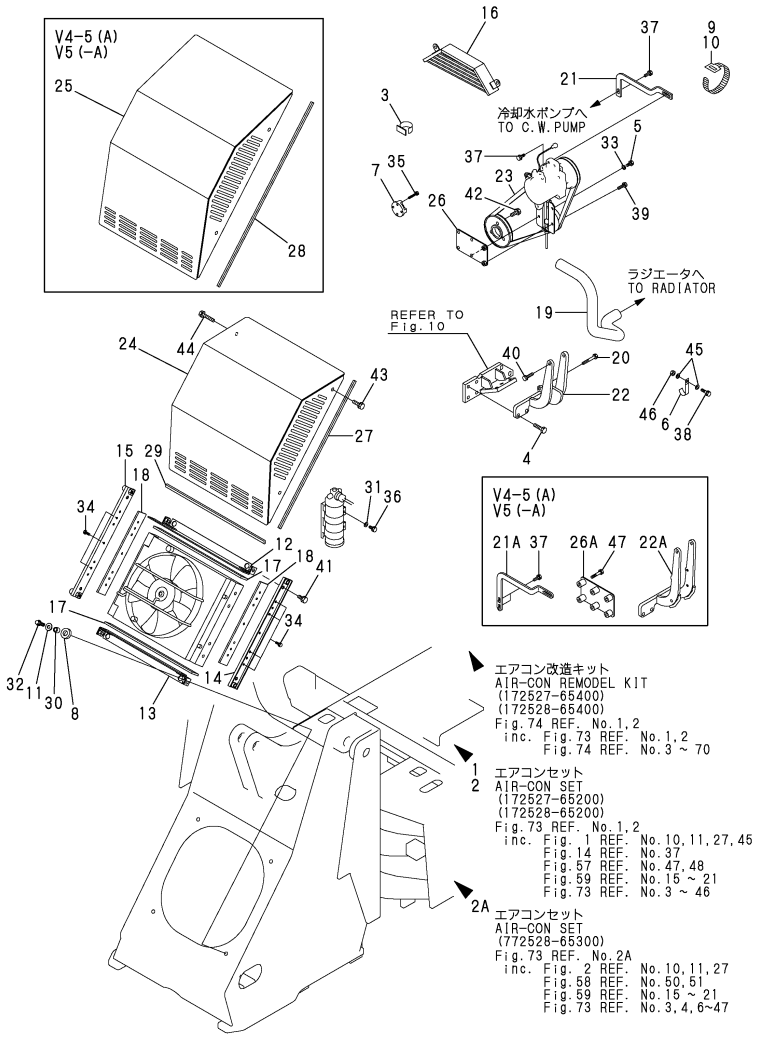

Remarks
(1)INC.FIG.1 REF.NO.10,11,27,45,
FIG.14 REF.NO.37,
FIG.57 REF.NO.47,48,
FIG.59 REF.NO.15-21 &
FIG.73 REF.NO.3-46.
(2)INC.FIG.1 REF.NO.10,11,27,
FIG.58 REF.NO.50,51,
FIG.59 REF.NO.15-21 &
FIG.73 REF.NO.3,4,6-47.

(A)=V3-5 (D)=V4-5A
(B)=V3-5(M/C) (E)=V5
(C)=V4-5 (F)=V5-A

No.	Lev.	Parts No.	Description	Q'ty (A)	(B)	(C)	(D)	(E)	(F)	I	R
26	2	172527-68160	STAY	1		1		1			
26A	2	172527-66900	STAY (D=M/#52064)				1	(F=M/#02019)	1	W	
27	2	172527-68340	TRIM	2							
28	2	172528-68340	TRIM (D=M/#52064)			2	2	(F=M/#02019) 2	2	W	
29	2	172527-68350	TRIM (D=M/#52064)	2		2	2	(F=M/#02019) 2	2	W	
30	2	172527-68390	COLLAR, 10X17X13.5 (D=M/#52064)	4		4	4	(F=M/#02019) 4	4	W	
31	2	22137-080000	WASHER, 8 (D=M/#52064)	2		2	2	(F=M/#02019) 2	2	W	
32	2	26013-100352	BOLT, M10X 35 (D=M/#52064)	4		4	4	(F=M/#02019) 4	4	W	
33	2	22190-080002	WASHER, SEAL 6	2		2		2			
34	2	26013-060162	BOLT, M6X 16 (D=M/#52064)	7		7	7	(F=M/#02019) 7	7	W	
35	2	26013-060352	BOLT, M6X 35 (D=M/#52064)	4		4	4	(F=M/#02019) 4	4	W	
36	2	26013-080162	BOLT, M8X 16 (D=M/#52064)	2		2	2	(F=M/#02019) 2	2	W	
37	2	26013-080202	BOLT, M8X 20 (D=M/#52064)	2		2	2	(F=M/#02019) 2	2	W	
38	2	26013-080202	BOLT, M8X 20 (D=M/#52064)	1		1	1	(F=M/#02019) 1	1	W	
39	2	26013-080252	BOLT, M8X 25	2		2		2			
40	2	26013-080302	BOLT, M8X 30 (D=M/#52064)	2		2	2	(F=M/#02019) 2	2	W	
41	2	26013-100202	BOLT, M10X 20 (D=M/#52064)	4		4	4	(F=M/#02019) 4	4	W	
42	2	26013-100252	BOLT, M10X 25 (D=M/#52064)	3		3	3	(F=M/#02019) 3	3	W	
43	2	26013-100302	BOLT, M10X 30 (D=M/#52064)	2		2	2	(F=M/#02019) 2	2	W	
44	2	26013-100502	BOLT, M10X 50 (D=M/#52064)	2		2	2	(F=M/#02019) 2	2	W	
45	2	22157-080000	WASHER, 8 (D=M/#52064)	2		2	2	(F=M/#02019) 2	2	W	
46	2	26716-080002	NUT, M8 (D=M/#52064)	1		1	1	(F=M/#02019) 1	1	W	
47	2	26013-080402	BOLT, M8X 40 (D=M/#52064)				6	(F=M/#02019)	6	W	

N:Old ◄Yes/No► New, Q:Old ◄No/Yes► New, R:Old ◄Yes/Yes► New, S:Old ◄No/No► New, W:Add, Z:Discontinued, F:Interchangeable by set, K:Q'ty Change

Copyright (C) YANMAR CO., LTD. All RightsReserved.

Fig.74. AIR CONDITIONER REMODEL KIT

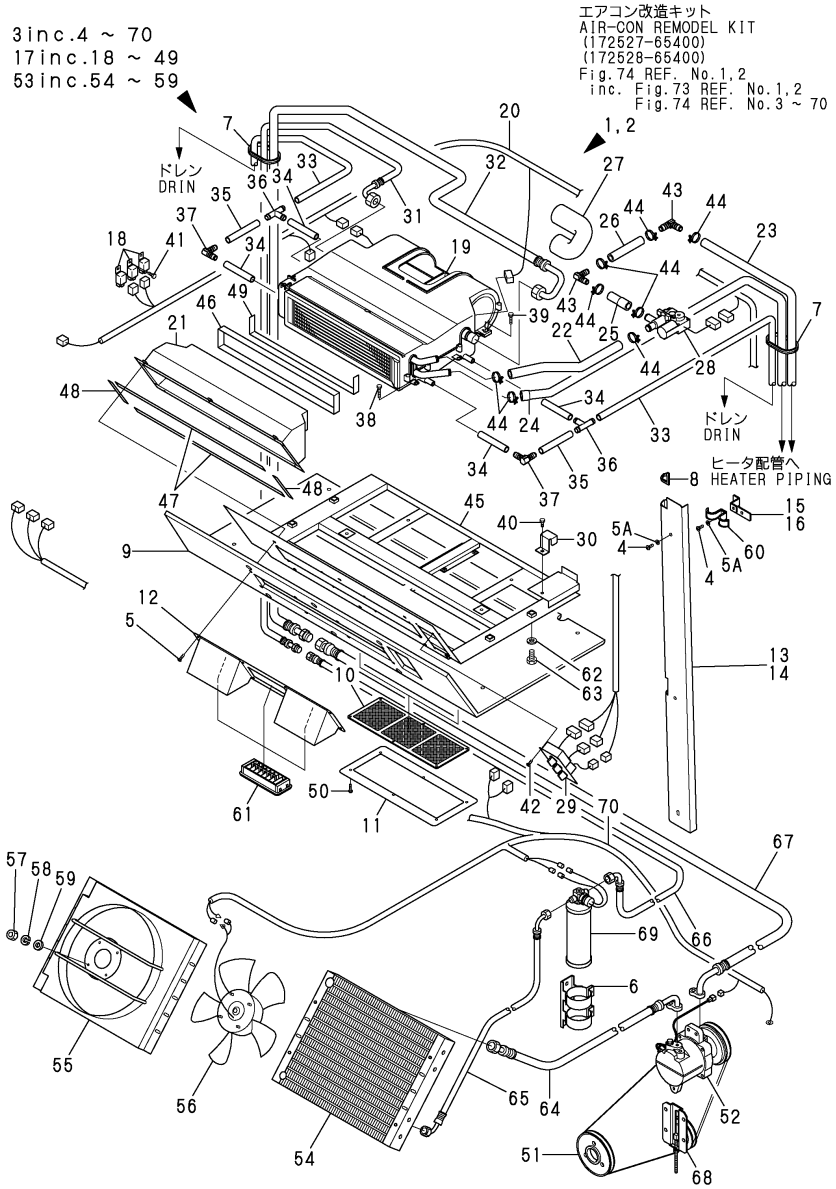

(A)=V3-5 (B)=V3-5(M/C) (C)=V4-5 (D)=V4-5A (E)=V5 (F)=V5-A

No.	Lev.	Parts No.	Description	Q'ty (A)	(B)	(C)	(D)	(E)	(F)	I	R
1	1	172527-65400	REMODEL KIT	1							1
2	1	172528-65400	REMODEL KIT			1		1			1
3	2	172527-67500	CONDITIONER KIT, AIR	1		1	1	1	1	W	
			(D=M/#52064) (F=M/#02019)								
4	3	172524-63210	SCREW, M6X16	6		6	6	6	6	W	
			(D=M/#52064) (F=M/#02019)								
5	3	172524-63220	SCREW, M5X20	8		8	8	8	8	W	
			(D=M/#52064) (F=M/#02019)								
5A	3	172524-63230	WASHER	6		6	6	6	6	W	
			(A=M/#52565) (B=M/#52565) (C=M/#52064) (D=M/#52064) (E=M/#02019) (F=M/#02019)								
6	3	172527-67910	BRACKET	1		1	1	1	1	W	
			(D=M/#52064) (F=M/#02019)								
7	3	172527-66380	RUBBER	2		2	2	2	2	W	
			(D=M/#52064) (F=M/#02019)								
8	3	172527-66390	RUBBER	2		2	2	2	2	W	
			(D=M/#52064) (F=M/#02019)								
9	3	172527-66410	COVER	1		1	1	1	1	W	
			(D=M/#52064) (F=M/#02019)								
10	3	172527-66420	FILTER	2		2	2	2	2	W	
			(D=M/#52064) (F=M/#02019)								
11	3	172527-66430	PLATE	2		2	2	2	2	W	
			(D=M/#52064) (F=M/#02019)								
12	3	172527-66440	PLATE	1		1	1	1	1	W	
			(D=M/#52064) (F=M/#02019)								
13	3	172527-66450	COVER	1		1	1	1	1	W	
			(D=M/#52064) (F=M/#02019)								
14	3	172527-66460	COVER	1		1	1	1	1	W	
			(D=M/#52064) (F=M/#02019)								
15	3	172527-66470	PLATE	3		3	3	3	3	W	
			(D=M/#52064) (F=M/#02019)								
16	3	172527-66480	PLATE	3		3	3	3	3	W	
			(D=M/#52064) (F=M/#02019)								
17	3	172527-66500	AIR-CON UNIT KIT	1		1	1	1	1	W	
			(D=M/#52064) (F=M/#02019)								
18	4	172520-17690	RELAY	3		3		3			
18-1	4	172527-17690	RELAY	3		3		3		S	
			(A=*2002.08) (C=*2002.08) (E=*2002.08)								
18-2	4	172527-17690	RELAY				3		3	W	
			(D=M/#52064) (F=M/#02019)								
19	4	172527-66100	AIR-CON UNIT	2		2	2	2	2	W	
			(D=M/#52064) (F=M/#02019)								
20	4	172527-66110	HARNESS	1		1	1	1	1	W	
			(D=M/#52064) (F=M/#02019)								
21	4	172527-66120	DUCT	1		1	1	1	1	W	
			(D=M/#52064) (F=M/#02019)								
22	4	172527-66130	HOSE	1		1	1	1	1	W	
			(D=M/#52064) (F=M/#02019)								
23	4	172527-66140	HOSE	1		1	1	1	1	W	
			(D=M/#52064) (F=M/#02019)								
24	4	172527-66150	HOSE	1		1	1	1	1	W	
			(D=M/#52064) (F=M/#02019)								

Remarks
(1)INC.FIG.73 REF.NO.1,2 &
FIG.74 REF.NO.3- 70.

N:Old $\overset{\text{Yes}}{\underset{\text{No}}{\leftrightarrow}}$ New, Q:Old $\overset{\text{No}}{\underset{\text{Yes}}{\leftrightarrow}}$ New, R:Old $\overset{\text{Yes}}{\underset{\text{Yes}}{\leftrightarrow}}$ New, S:Old $\overset{\text{No}}{\underset{\text{No}}{\leftrightarrow}}$ New, W:Add, Z:Discontinued, F:Interchangeable by set, K:Q'ty Change

++ CONTINUE ++

Copyright (C) YANMAR CO., LTD. All RightsReserved.

Fig.74. AIR CONDITIONER REMODEL KIT

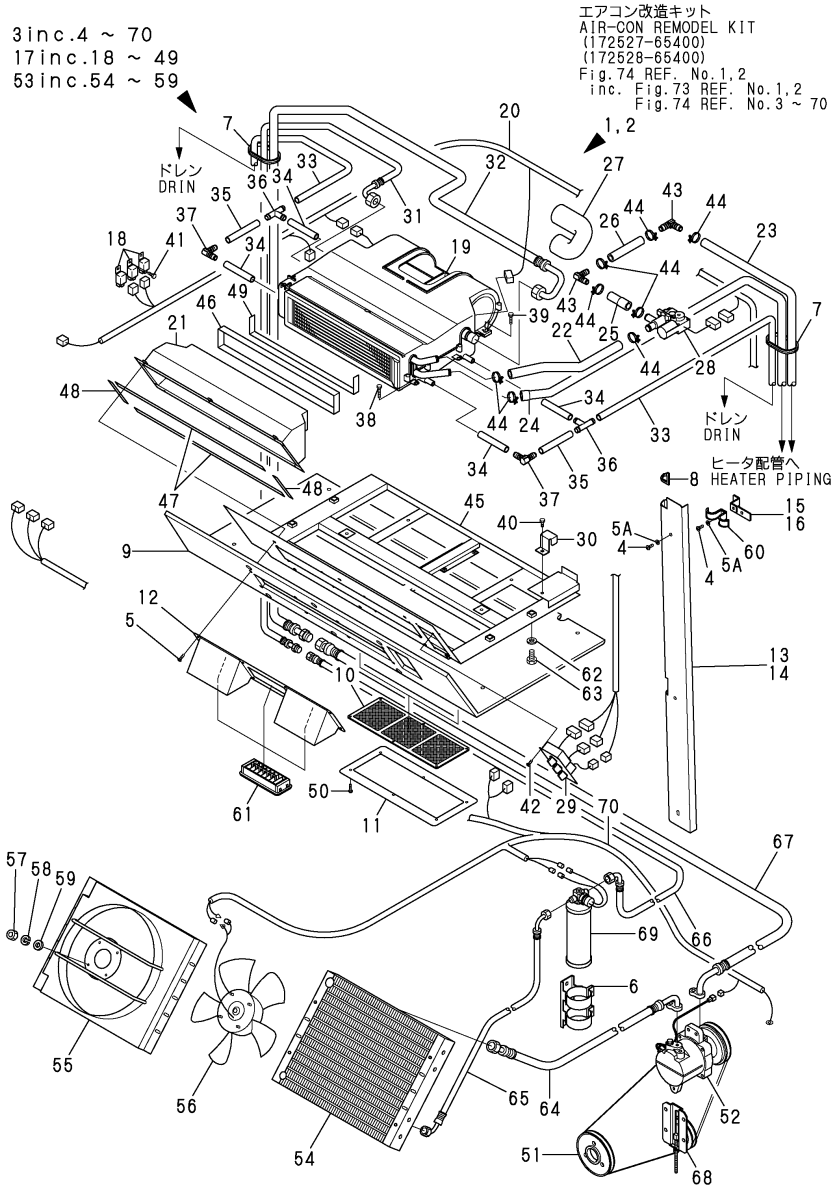

Remarks
(1)INC.FIG.73 REF.NO.1,2 &
FIG.74 REF.NO.3- 70.

(A)=V3-5 (B)=V3-5(M/C) (C)=V4-5 (D)=V4-5A (E)=V5 (F)=V5-A

No.	Lev.	Parts No.	Description	Q'ty (A)	(B)	(C)	(D)	(E)	(F)	I	R
25	4	172527-66160	HOSE (D=M/#52064)	1		1	1	1	1 (F=M/#02019)	W	
26	4	172527-66170	HOSE (D=M/#52064)	1		1	1	1	1 (F=M/#02019)	W	
27	4	172527-66180	TAPE (D=M/#52064)	3		3	3	3	3 (F=M/#02019)	W	
28	4	172527-66190	VALVE (D=M/#52064)	1		1	1	1	1 (F=M/#02019)	W	
29	4	172527-66200	SWITCH (D=M/#52064)	1		1	1	1	1 (F=M/#02019)	W	
30	4	172527-66210	CLAMP (D=M/#52064)	1		1	1	1	1 (F=M/#02019)	W	
31	4	172527-66220	HOSE (D=M/#52064)	1		1	1	1	1 (F=M/#02019)	W	
32	4	172527-66230	HOSE (D=M/#52064)	1		1	1	1	1 (F=M/#02019)	W	
33	4	172527-66240	HOSE (D=M/#52064)	2		2	2	2	2 (F=M/#02019)	W	
34	4	172527-66250	HOSE (D=M/#52064)	4		4	4	4	4 (F=M/#02019)	W	
35	4	172527-66260	HOSE (D=M/#52064)	2		2	2	2	2 (F=M/#02019)	W	
36	4	172527-66270	CONNECTOR (D=M/#52064)	2		2	2	2	2 (F=M/#02019)	W	
37	4	172527-66280	CONNECTOR (D=M/#52064)	2		2	2	2	2 (F=M/#02019)	W	
38	4	172527-66610	BOLT (D=M/#52064)	4		4	4	4	4 (F=M/#02019)	W	
39	4	172527-66620	BOLT (D=M/#52064)	2		2	2	2	2 (F=M/#02019)	W	
40	4	172527-66630	BOLT (D=M/#52064)	1		1	1	1	1 (F=M/#02019)	W	
41	4	172527-66630	BOLT (D=M/#52064)	3		3	3	3	3 (F=M/#02019)	W	
42	4	172527-66640	SCREW (D=M/#52064)	4		4	4	4	4 (F=M/#02019)	W	
43	4	172527-68550	CONNECTOR (D=M/#52064)	2		2	2	2	2 (F=M/#02019)	W	
44	4	23000-022000	CLAMP, 22 (D=M/#52064)	8		8	8	8	8 (F=M/#02019)	W	
45	4	172527-66290	CASE (D=M/#52064)	1		1	1	1	1 (F=M/#02019)	W	
46	4	172527-66310	SEAL (D=M/#52064)	2		2	2	2	2 (F=M/#02019)	W	
47	4	172527-66320	SEAL (D=M/#52064)	2		2	2	2	2 (F=M/#02019)	W	
48	4	172527-66330	SEAL (D=M/#52064)	2		2	2	2	2 (F=M/#02019)	W	
49	4	172527-66340	SEAL (D=M/#52064)	2		2	2	2	2 (F=M/#02019)	W	
50	3	172527-66680	SCREW	12		12	12	12	12	W	

N:Old $\xleftarrow[\text{No}]{\text{Yes}}$ New, Q:Old $\xleftarrow[\text{Yes}]{\text{No}}$ New, R:Old $\xleftarrow[\text{Yes}]{\text{Yes}}$ New, S:Old $\xleftarrow[\text{No}]{\text{No}}$ New, W:Add, Z:Discontinued, F:Interchangeable by set, K:Q'ty Change

++ CONTINUE ++

Copyright (C) YANMAR CO., LTD. All RightsReserved.

Fig.74. AIR CONDITIONER REMODEL KIT

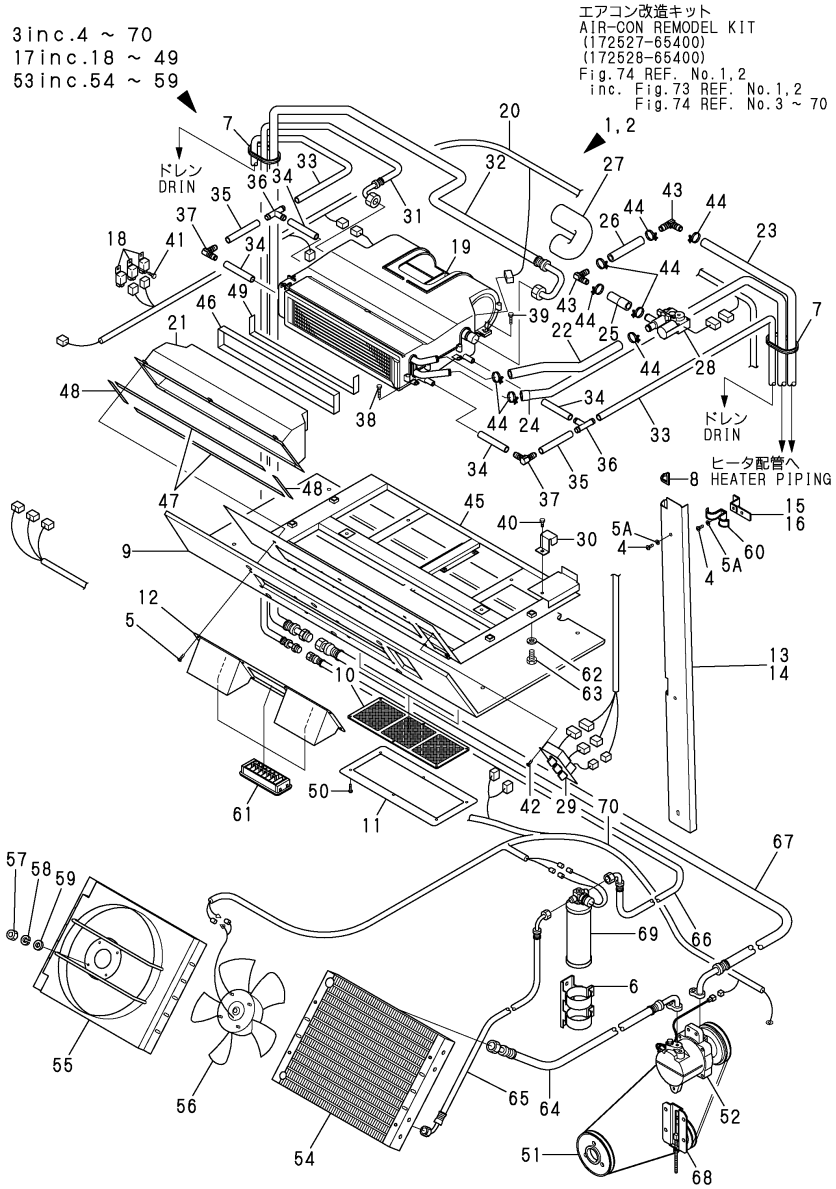

Remarks
(1)INC.FIG.73 REF.NO.1,2 &
FIG.74 REF.NO.3- 70.

(A)=V3-5
(B)=V3-5(M/C)
(C)=V4-5
(D)=V4-5A
(E)=V5
(F)=V5-A

No.	Lev.	Parts No.	Description	Q'ty (A)	(B)	(C)	(D)	(E)	(F)	I	R
51	3	172527-67550	PULLEY (D=M/#52064) (F=M/#02019)	1		1	1	1	1	W	
52	3	172527-67600	COMPRESSOR (D=M/#52064) (F=M/#02019)	1		1	1	1	1	W	
53	3	172527-67700	CONDENSER ASSY (D=M/#52064) (F=M/#02019)	1		1	1	1	1	W	
54	4	172527-66350	CONDENSER (D=M/#52064) (F=M/#02019)	1		1	1	1	1	W	
55	4	172527-66360	SHROUD (D=M/#52064) (F=M/#02019)	1		1	1	1	1	W	
56	4	172527-66370	MOTOR, FAN (D=M/#52064) (F=M/#02019)	1		1	1	1	1	W	
57	4	172527-66650	NUT (D=M/#52064) (F=M/#02019)	4		4	4	4	4	W	
58	4	172527-66660	SPRING WASHER (D=M/#52064) (F=M/#02019)	4		4	4	4	4	W	
59	4	172527-66670	WASHER (D=M/#52064) (F=M/#02019)	4		4	4	4	4	W	
60	3	172527-68590	CLAMP, HOSE (D=M/#52064) (F=M/#02019)	3		3	3	3	3	W	
61	3	172527-69320	WING (D=M/#52064) (F=M/#02019)	3		3	3	3	3	W	
62	3	22137-120000	WASHER, 12 (D=M/#52064) (F=M/#02019)	4		4	4	4	4	W	
63	3	26116-120252	BOLT, M12X 25 PLATED (D=M/#52064) (F=M/#02019)	4		4	4	4	4	W	
64	3	172527-66510	HOSE (D=M/#52064) (F=M/#02019)	1		1	1	1	1	W	
65	3	172527-66520	HOSE (D=M/#52064) (F=M/#02019)	1		1	1	1	1	W	
66	3	172527-66530	HOSE (D=M/#52064) (F=M/#02019)	1		1	1	1	1	W	
67	3	172527-66540	HOSE (D=M/#52064) (F=M/#02019)	1		1	1	1	1	W	
68	3	172527-67800	PULLEY (D=M/#52064) (F=M/#02019)	1		1	1	1	1	W	
69	3	172527-67900	DRIER (D=M/#52064) (F=M/#02019)	1		1	1	1	1	W	
70	3	172527-66590	HARNESS (D=M/#52064) (F=M/#02019)	1		1	1	1	1	W	

N:Old ◄Yes/No► New, Q:Old ◄No/Yes► New, R:Old ◄Yes/Yes► New, S:Old ◄No/No► New, W:Add, Z:Discontinued, F:Interchangeable by set, K:Q'ty Change

Copyright (C) YANMAR CO., LTD. All RightsReserved.

Fig.75. AIR CONDITIONER REMODEL B KIT

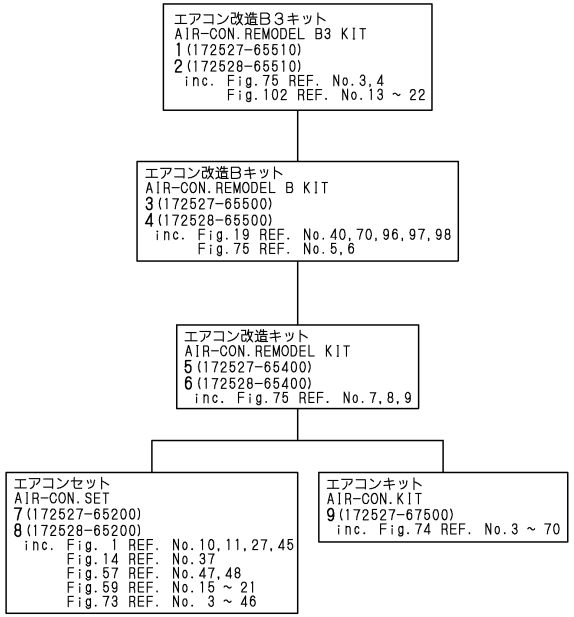

Remarks
(1)INC.FIG.75 REF.NO.3,4 &
FIG.102 REF.NO.13-22.
(2)INC.FIG.19 REF.NO.40,70,96,97,98,
FIG.73 REF.NO.1,2 &
FIG.74 REF.NO.1,2.

(A)=V3-5
(B)=V3-5(M/C)
(C)=V4-5
(D)=V4-5A
(E)=V5
(F)=V5-A

No.	Lev.	Parts No.	Description	Q'ty (A)	(B)	(C)	(D)	(E)	(F)	I	R
1	1	172527-65510	REMODEL KIT	1							1
2	1	172528-65510	AIR-CON REMODEL B3			1		1			1
3	2	172527-65500	REMODEL KIT	1							2
4	2	172528-65500	AIR-CON REMODEL B			1		1			2
5	3	172527-65400	REMODEL KIT	1							
6	3	172528-65400	REMODEL KIT			1		1			
7	4	172527-65200	CONDITIONER SET, AIR	1							
8	4	172528-65200	CONDITIONER SET, AIR			1		1			
9	4	172527-67500	CONDITIONER KIT, AIR	1		1		1			

N:Old $\xleftarrow[\text{No}]{\text{Yes}}$ New, Q:Old $\xleftarrow[\text{Yes}]{\text{No}}$ New, R:Old $\xleftarrow[\text{Yes}]{\text{Yes}}$ New, S:Old $\xleftarrow[\text{No}]{\text{No}}$ New, W:Add, Z:Discontinued, F:Interchangeable by set, K:Q'ty Change

Copyright (C) YANMAR CO., LTD. All RightsReserved.

Fig.76. LIFT CYLINDER(1)

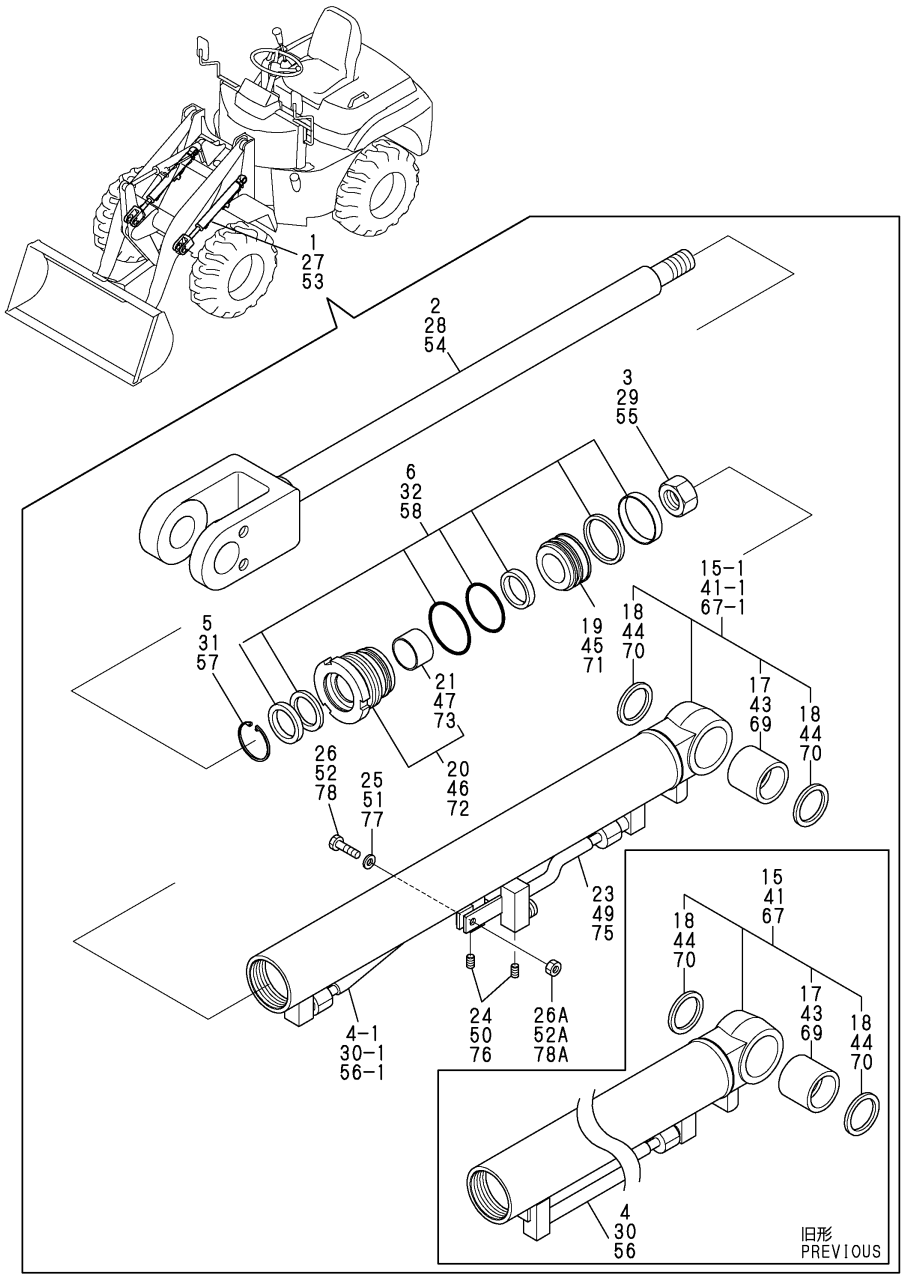

(A)=V3-5 (D)=V4-5A
(B)=V3-5(M/C) (E)=V5
(C)=V4-5 (F)=V5-A

No.	Lev.	Parts No.	Description	Q'ty (A)	(B)	(C)	(D)	(E)	(F)	I	R
1	1	172527-72500	CYLINDER ASSY, LIFT	2							
1-1	1	172527-72501	CYLINDER ASSY, LIFT	2						S	
	(A=M/#50595)										
2	2	172527-72520	ROD, PISTON	2							
3	2	172524-72530	NUT	2							
4	2	172527-72530	TUBE	2							
4-1	2	172527-72531	TUBE	2						S	
	(A=M/#50595)										
5	2	172520-72550	SNAP RING	2							
6	2	172527-72550	SEAL SET, 60X35	2							
15	2	172527-72560	CYLINDER SET	2							
15-1	2	172527-72561	CYLINDER SET	2						S	
	(A=M/#50595)										
17	3	172527-72540	BUSH	2							
18	3	172510-81510	SEAL, DUST 40X50X4	4							
19	2	172520-72570	PISTON	2							
20	2	172527-72570	HEAD, CYLINDER	2							
21	3	172511-72570	BUSH	2							
23	2	172527-72580	TUBE	2						W	
	(A=M/#50595)										
24	2	172524-72590	PLUG	4							
25	2	22137-080000	WASHER, 8	2							
26	2	26116-080302	BOLT, M8X 30 PLATED	2							
26A	2	26716-080002	NUT, M8	2							
27	1	172528-72500	CYLINDER ASSY, LIFT			2					
27-1	1	172528-72501	CYLINDER ASSY, LIFT			2				S	
			(C=M/#50563)								
28	2	172528-72520	ROD, PISTON			2					
29	2	172524-72690	NUT			2					
30	2	172528-72530	TUBE			2					
30-1	2	172528-72531	TUBE			2				S	
			(C=M/#50563)								
31	2	172522-72760	SNAP RING			2					
32	2	172528-72550	SEAL SET, 70X40			2					
41	2	172528-72560	CYLINDER SET			2					
41-1	2	172528-72561	CYLINDER SET			2				S	
			(C=M/#50563)								
43	3	172527-72540	BUSH			2					
44	3	172510-81510	SEAL, DUST 40X50X4			4					
45	2	172522-72580	PISTON			2					
46	2	172528-72540	HEAD, CYLINDER			2					
47	3	24550-040250	BUSH, 40X25			2					
49	2	172527-72580	TUBE			2				W	
			(C=M/#50563)								
50	2	172524-72590	PLUG			4					
51	2	22137-080000	WASHER, 8			2					
52	2	26116-080302	BOLT, M8X 30 PLATED			2					
52A	2	26716-080002	NUT, M8			2					
53	1	172529-72500	CYLINDER ASSY, LIFT					2			
53-1	1	172529-72501	CYLINDER ASSY, LIFT					2		S	
			(E=M/#00533)								

N:Old $\xleftrightarrow[\text{No}]{\text{Yes}}$ New, Q:Old $\xleftrightarrow[\text{Yes}]{\text{No}}$ New, R:Old $\xleftrightarrow[\text{Yes}]{\text{Yes}}$ New, S:Old $\xleftrightarrow[\text{No}]{\text{No}}$ New, W:Add, Z:Discontinued, F:Interchangeable by set, K:Q'ty Change

++ CONTINUE ++

Copyright (C) YANMAR CO., LTD. All RightsReserved.

Fig.76. LIFT CYLINDER(1)

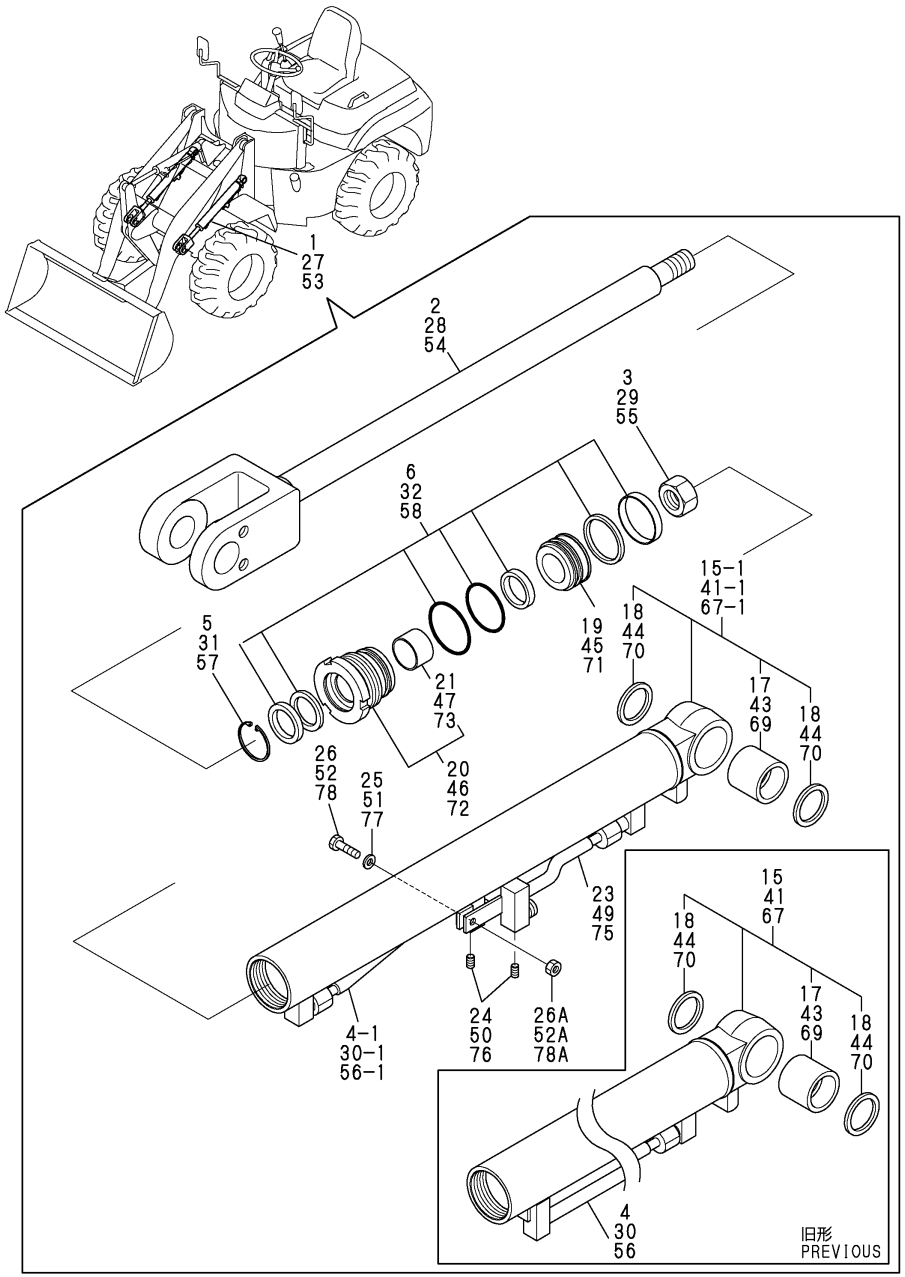

(A)=V3-5
(B)=V3-5(M/C)
(C)=V4-5
(D)=V4-5A
(E)=V5
(F)=V5-A

No.	Lev.	Parts No.	Description	Q'ty (A)	(B)	(C)	(D)	(E)	(F)	I	R
54	2	172529-72520	ROD, PISTON					2			
55	2	172529-72660	NUT					2			
56	2	172529-72670	TUBE					2			
56-1	2	172529-72671	TUBE					2		S	
				(E=M/#00533)							
57	2	172529-72530	SNAPLING					2			
58	2	172529-72680	SEAL SET, 75X45					2			
67	2	172529-72690	CYLINDER SET					2			
67-1	2	172529-72691	CYLINDER SET					2		S	
				(E=M/#00533)							
69	3	172527-72540	BUSH					2			
70	3	172510-81510	SEAL, DUST 40X50X4					4			
71	2	172529-72580	PISTON					2			
72	2	172529-72700	HEAD, CYLINDER					2			
73	3	24550-045300	BUSH, 45X30					2			
75	2	172527-72580	TUBE					2		W	
				(E=M/#00533)							
76	2	172524-72590	PLUG					4			
77	2	22137-080000	WASHER, 8					2			
78	2	26116-080302	BOLT, M8X 30 PLATED					2			
78A	2	26716-080002	NUT, M8					2			

N:Old ◄Yes/No► New, Q:Old ◄No/Yes► New, R:Old ◄Yes/Yes► New, S:Old ◄No/No► New, W:Add, Z:Discontinued, F:Interchangeable by set, K:Q'ty Change

Copyright (C) YANMAR CO., LTD. All RightsReserved.

Fig.77. LIFT CYLINDER(2)

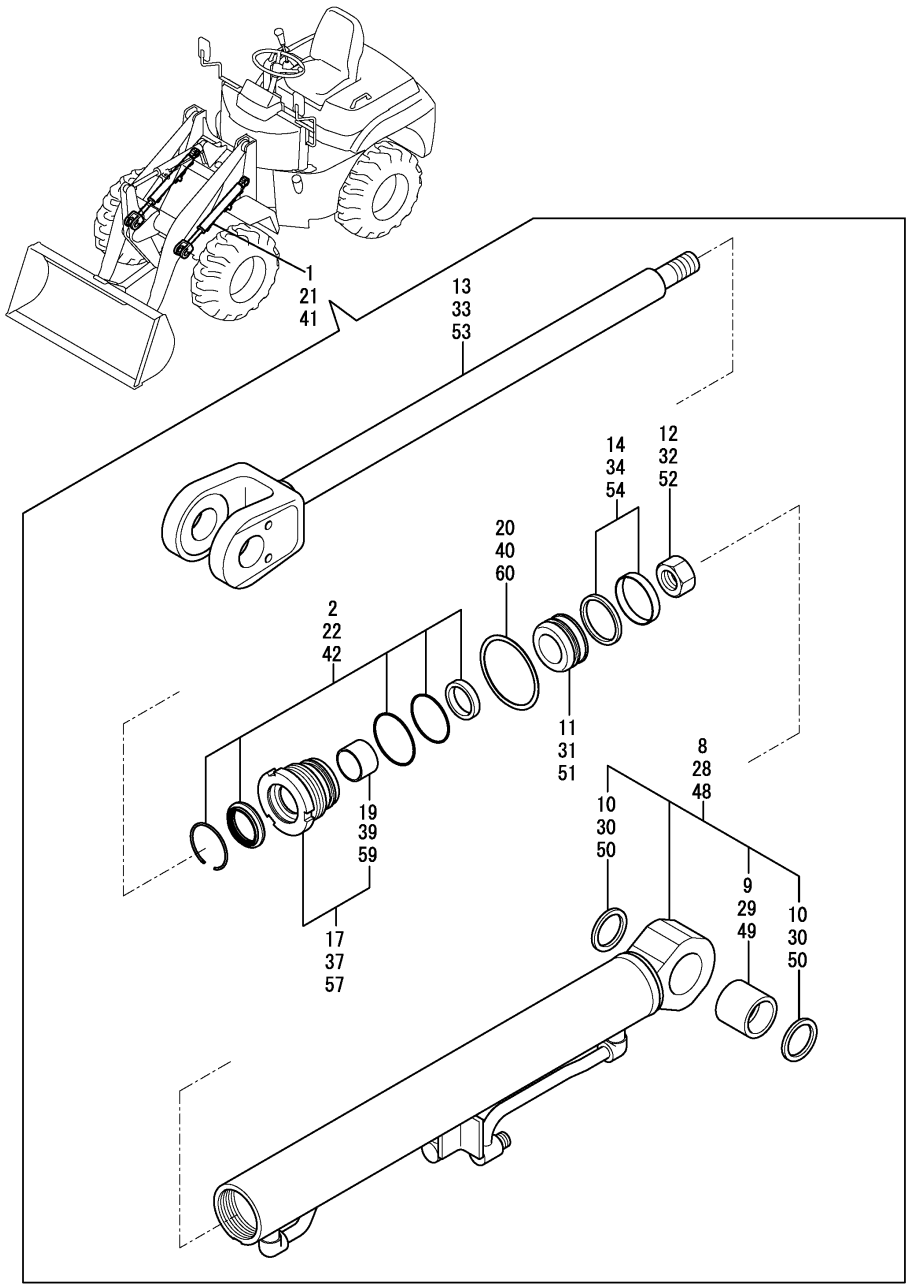

(A)=V3-5
(B)=V3-5(M/C)
(C)=V4-5
(D)=V4-5A
(E)=V5
(F)=V5-A

No.	Lev.	Parts No.	Description	Q'ty (A)	(B)	(C)	(D)	(E)	(F)	I	R
1	1	172527-72502	CYLINDER ASSY, LIFT		2						
2	2	172457-72050	SEAL SET, HEAD		2						
8	2	172527-72110	TUBE ASSY, LIFT		2						
9	3	172168-72410	BUSH		2						
10	3	172448-72650	SEAL, DUST		4						
11	2	172171-72120	PISTON		2						
12	2	172171-72130	NUT, M24		2						
13	2	172527-72310	ROD ASSY, LIFT		2						
14	2	172137-72453	SEAL SET, PISTON 60A		2						
17	2	172141-72540	HEAD 6035, CYLINDER		2						
19	3	24550-035300	BUSH, 35X30		2						
20	2	933125-59600	WASHER 60 B, LOCK		2						
21	1	172528-72502	CYLINDER ASSY, LIFT				2				
22	2	172456-72050	SEAL SET, HEAD				2				
28	2	172528-72700	TUBE ASSY, LIFT				2				
29	3	172168-72410	BUSH				2				
30	3	172448-72650	SEAL, DUST				4				
31	2	172456-72190	PISTON				2				
32	2	172141-72250	NUT				2				
33	2	172528-72750	ROD ASSY, LIFT				2				
34	2	172460-72070	SEAL SET, PISTON				2				
37	2	172143-72400	HEAD 70 40				2				
39	3	24550-040300	BUSH, 40X30				2				
40	2	172141-72420	WASHER, LOCK				2				
41	1	172529-72502	CYLINDER ASSY, LIFT						2		
42	2	172457-72010	SEAL SET, HEAD						2		
48	2	172529-72110	TUBE ASSY, LIFT						2		
49	3	172168-72410	BUSH						2		
50	3	172448-72650	SEAL, DUST						4		
51	2	172148-72050	PISTON						2		
52	2	933111-20200	NUT						2		
53	2	172529-72150	ROD ASSY, LIFT						2		
54	2	172444-72961	SEAL SET, 75 40						2		
57	2	172148-72390	HEAD 75 45						2		
59	3	24550-045300	BUSH, 45X30						2		
60	2	172141-72190	WASHER, LOCK						2		

N:Old $\xleftrightarrow[\text{No}]{\text{Yes}}$ New, Q:Old $\xleftrightarrow[\text{Yes}]{\text{No}}$ New, R:Old $\xleftrightarrow[\text{Yes}]{\text{Yes}}$ New, S:Old $\xleftrightarrow[\text{No}]{\text{No}}$ New, W:Add, Z:Discontinued, F:Interchangeable by set, K:Q'ty Change

Copyright (C) YANMAR CO., LTD. All RightsReserved.

Fig.78. DUMP CYLINDER(1)

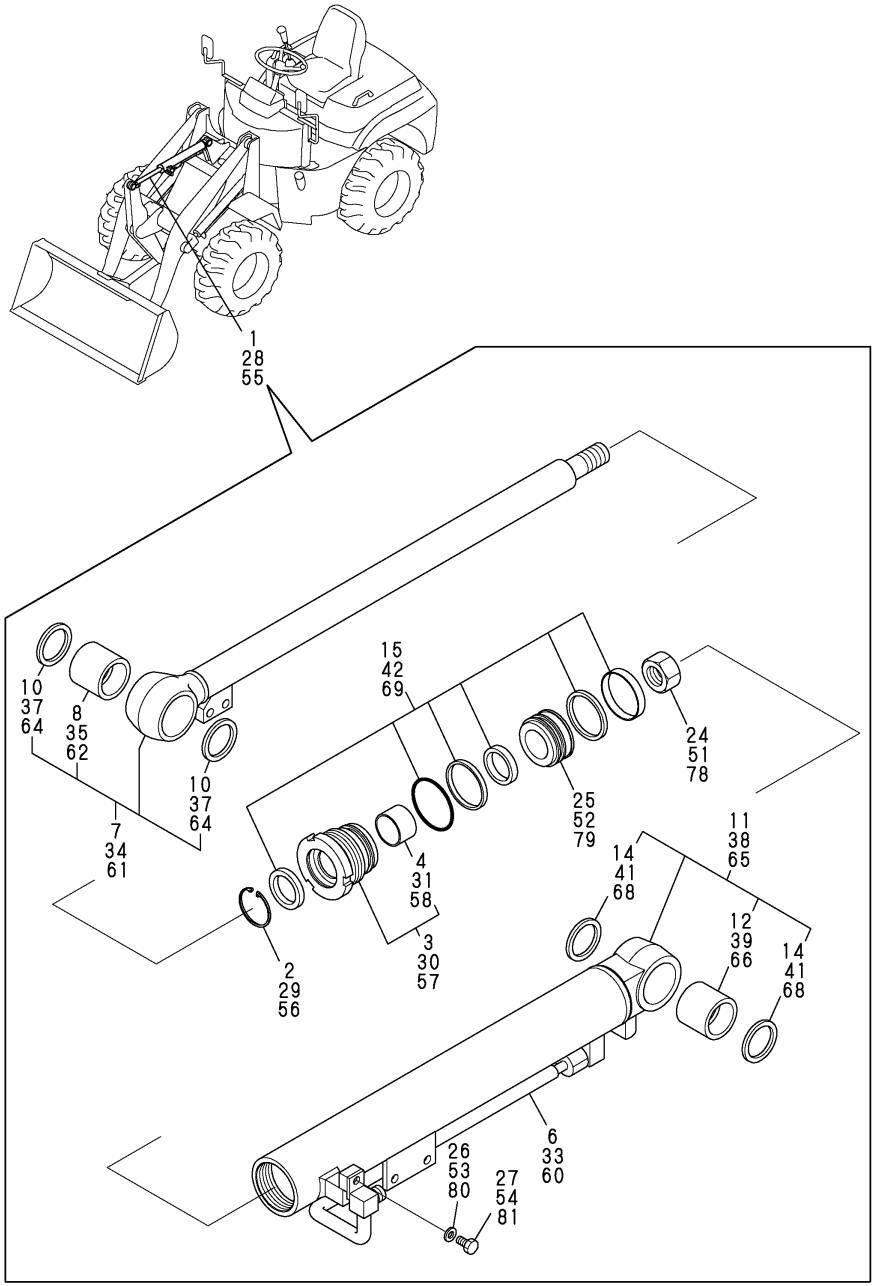

(A)=V3-5
(B)=V3-5(M/C)
(C)=V4-5
(D)=V4-5A
(E)=V5
(F)=V5-A

No.	Lev.	Parts No.	Description	Q'ty (A)	(B)	(C)	(D)	(E)	(F)	I	R
1	1	172527-72600	CYLINDER ASSY, DUMP	1							
2	2	172520-72550	SNAP RING	1							
3	2	172527-72570	HEAD, CYLINDER	1							
4	3	172511-72570	BUSH	1							
6	2	172527-72630	TUBE	1							
7	2	172527-72640	ROD BUSH SET	1							
8	3	172527-72540	BUSH	1							
10	3	172510-81510	SEAL, DUST 40X50X4	2							
11	2	172527-72650	CYLINDER SET	1							
12	3	172527-72540	BUSH	1							
14	3	172510-81510	SEAL, DUST 40X50X4	2							
15	2	172527-72660	SEAL SET, 60X35	1							
24	2	172524-72690	NUT	1							
25	2	172520-72720	PISTON	1							
26	2	22137-080000	WASHER, 8	1							
27	2	26116-080202	BOLT, M8X 20 PLATED	1							
28	1	172528-72600	CYLINDER ASSY, DUMP			1					
29	2	172522-72760	SNAP RING			1					
30	2	172528-72540	HEAD, CYLINDER			1					
31	3	24550-040250	BUSH, 40X25			1					
33	2	172528-72630	TUBE			1					
34	2	172528-72660	ROD BUSH SET			1					
35	3	172527-72540	BUSH			1					
37	3	172510-81510	SEAL, DUST 40X50X4			2					
38	2	172528-72650	CYLINDER SET			1					
39	3	172527-72540	BUSH			1					
41	3	172510-81510	SEAL, DUST 40X50X4			2					
42	2	172528-72640	SEAL SET			1					
51	2	172524-72690	NUT			1					
52	2	172528-72670	PISTON			1					
53	2	22137-080000	WASHER, 8			1					
54	2	26116-080202	BOLT, M8X 20 PLATED			1					
55	1	172529-72600	CYLINDER ASSY, DUMP					1			
56	2	172529-72530	SNAPLING					1			
57	2	172529-72700	HEAD, CYLINDER					1			
58	3	24550-045300	BUSH, 45X30					1			
60	2	172529-72630	TUBE					1			
61	2	172529-72640	ROD BUSH SET					1			
62	3	172527-72540	BUSH					1			
64	3	172510-81510	SEAL, DUST 40X50X4					2			
65	2	172529-72750	CYLINDER SET					1			
66	3	172527-72540	BUSH					1			
68	3	172510-81510	SEAL, DUST 40X50X4					2			
69	2	172529-72740	SEAL SET, 75X45					1			
78	2	172529-72730	NUT					1			
79	2	172529-72710	PISTON					1			
80	2	22137-080000	WASHER, 8					1			
81	2	26116-080202	BOLT, M8X 20 PLATED					1			

N:Old $\overset{\text{Yes}}{\underset{\text{No}}{\leftrightarrows}}$ New, Q:Old $\overset{\text{No}}{\underset{\text{Yes}}{\leftrightarrows}}$ New, R:Old $\overset{\text{Yes}}{\underset{\text{Yes}}{\leftrightarrows}}$ New, S:Old $\overset{\text{No}}{\underset{\text{No}}{\leftrightarrows}}$ New, W:Add, Z:Discontinued, F:Interchangeable by set, K:Q'ty Change

Copyright (C) YANMAR CO., LTD. All RightsReserved.

Fig.79. DUMP CYLINDER(2)

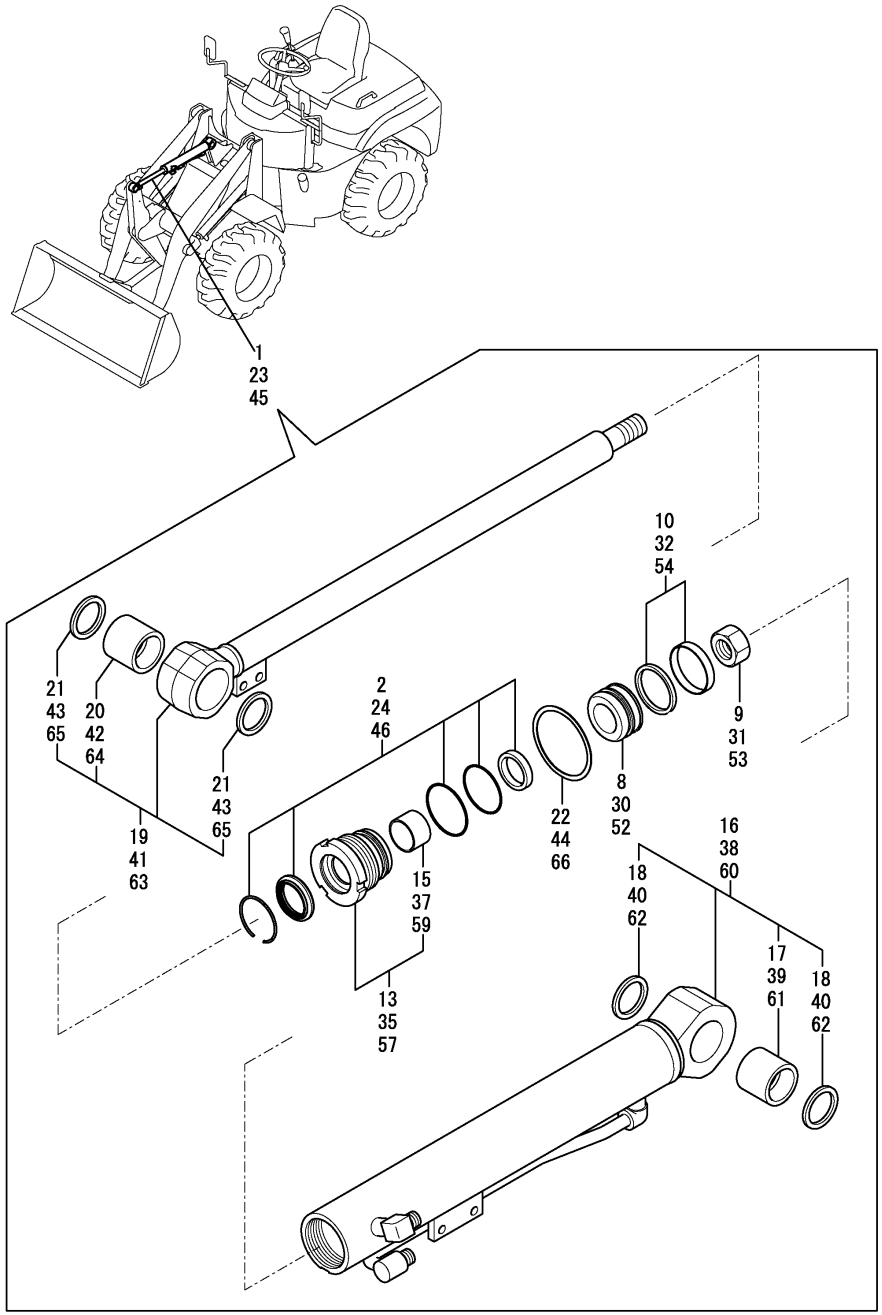

(A)=V3-5
(B)=V3-5(M/C)
(C)=V4-5
(D)=V4-5A
(E)=V5
(F)=V5-A

No.	Lev.	Parts No.	Description	Q'ty (A)	(B)	(C)	(D)	(E)	(F)	I	R
1	1	172527-72601	CYLINDER ASSY, DUMP		1						
2	2	172457-72050	SEAL SET, HEAD		1						
8	2	172171-72120	PISTON		1						
9	2	172171-72130	NUT, M24		1						
10	2	172137-72453	SEAL SET, PISTON 60A		1						
13	2	172141-72540	HEAD 6035, CYLINDER		1						
15	3	24550-035300	BUSH, 35X30		1						
16	2	172527-72670	TUBE ASSY, DUMP		1						
17	3	172168-72410	BUSH		1						
18	3	172448-72650	SEAL, DUST		2						
19	2	172527-72750	ROD ASSY, DUMP		1						
20	3	172168-72410	BUSH		1						
21	3	172448-72650	SEAL, DUST		2						
22	2	933125-59600	WASHER 60 B, LOCK		1						
23	1	172528-72601	CYLINDER ASSY, DUMP				1				
24	2	172456-72050	SEAL SET, HEAD				1				
30	2	172456-72190	PISTON				1				
31	2	172141-72250	NUT				1				
32	2	172460-72070	SEAL SET, PISTON				1				
35	2	172143-72400	HEAD 70 40				1				
37	3	24550-040300	BUSH, 40X30				1				
38	2	172528-72800	TUBE ASSY, DUMP				1				
39	3	172168-72410	BUSH				1				
40	3	172448-72650	SEAL, DUST				2				
41	2	172528-72840	ROD ASSY, DUMP				1				
42	3	172168-72410	BUSH				1				
43	3	172448-72650	SEAL, DUST				2				
44	2	172141-72420	WASHER, LOCK				1				
45	1	172529-72601	CYLINDER ASSY, DUMP						1		
46	2	172457-72010	SEAL SET, HEAD						1		
52	2	172148-72050	PISTON						1		
53	2	933111-20200	NUT						1		
54	2	172444-72961	SEAL SET, 75 40						1		
57	2	172148-72390	HEAD 75 45						1		
59	3	24550-045300	BUSH, 45X30						1		
60	2	172529-72210	TUBE ASSY, DUMP						1		
61	3	172168-72410	BUSH						1		
62	3	172448-72650	SEAL, DUST						2		
63	2	172529-72260	ROD ASSY, DUMP						1		
64	3	172168-72410	BUSH						1		
65	3	172448-72650	SEAL, DUST						2		
66	2	172141-72190	WASHER, LOCK						1		

N:Old ◄Yes/No► New, Q:Old ◄No/Yes► New, R:Old ◄Yes/Yes► New, S:Old ◄No/No► New, W:Add, Z:Discontinued, F:Interchangeable by set, K:Q'ty Change

Copyright (C) YANMAR CO., LTD. All RightsReserved.

Fig.80. POWER STEERING CYLINDER(1)

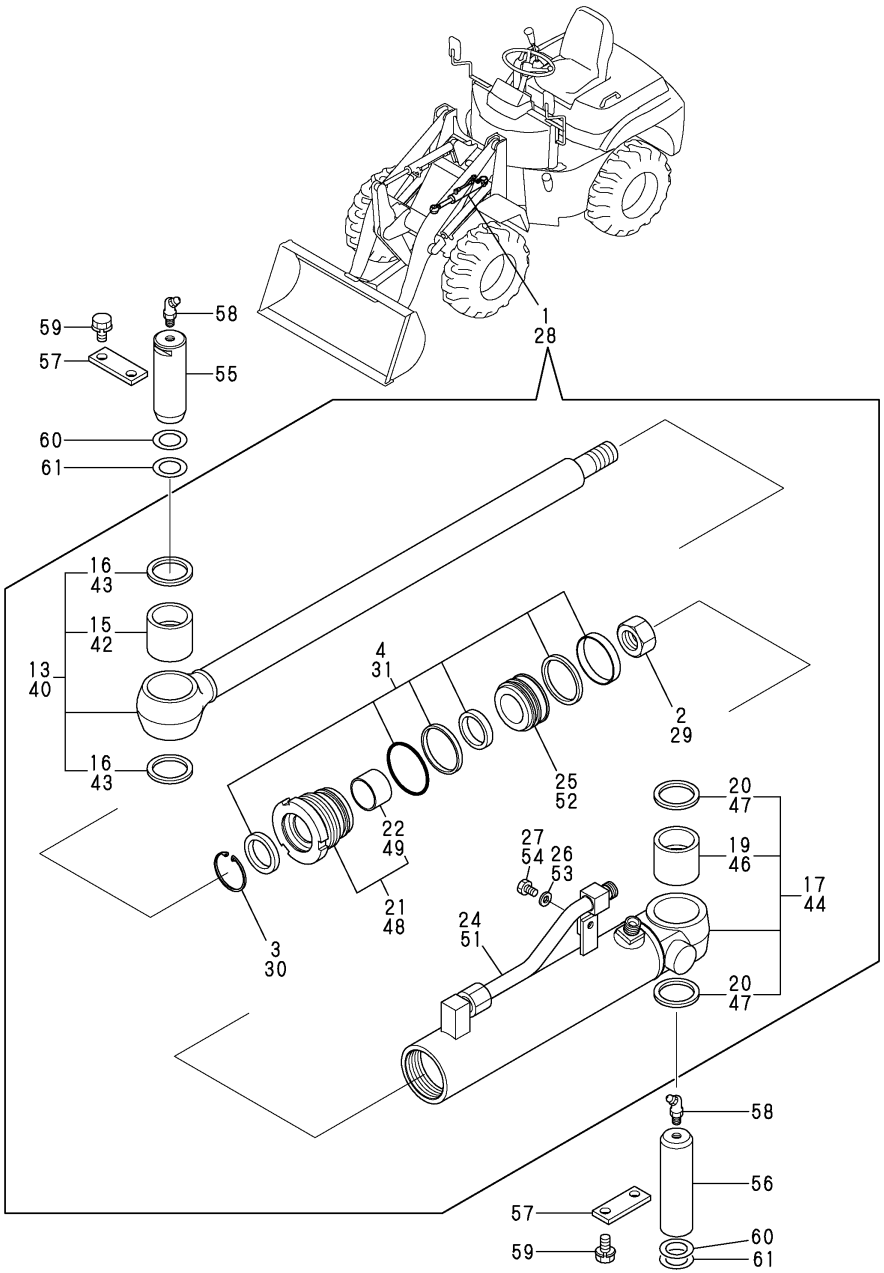

(A)=V3-5
(B)=V3-5(M/C)
(C)=V4-5
(D)=V4-5A
(E)=V5
(F)=V5-A

No.	Lev.	Parts No.	Description	Q'ty (A)	(B)	(C)	(D)	(E)	(F)	I	R
1	1	172527-72800	CYLINDER ASSY	1		1					
2	2	172511-72680	NUT, NYLON	1		1					
3	2	172521-72680	SNAP RING	1		1					
4	2	172527-72840	SEAL SET, 60X30	1		1					
13	2	172527-72850	ROD BUSH SET	1		1					
15	3	172527-72830	BUSH	1		1					
16	3	172510-93950	SEAL, DUST 35X45X4	2		2					
17	2	172527-72861	CYLINDER SET	1		1					
19	3	172527-72830	BUSH	1		1					
20	3	172510-93950	SEAL, DUST 35X45X4	2		2					
21	2	172527-72870	HEAD, CYLINDER	1		1					
22	3	172511-72870	BUSH	1		1					
24	2	172527-72881	TUBE	1		1					
25	2	172527-72890	PISTON	1		1					
26	2	22137-100000	WASHER, 10	1		1					
27	2	26116-100202	BOLT, M10X 20 PLATED	1		1					
28	1	172529-72800	CYLINDER ASSY					1			
29	2	172529-72870	NUT					1			
30	2	172520-72550	SNAP RING					1			
31	2	172529-72880	SEAL SET, 65X35					1			
40	2	172529-72890	ROD BUSH SET					1			
42	3	172527-72830	BUSH					1			
43	3	172510-93950	SEAL, DUST 35X45X4					2			
44	2	172529-72911	CYLINDER SET					1			
46	3	172527-72830	BUSH					1			
47	3	172510-93950	SEAL, DUST 35X45X4					2			
48	2	172529-72920	HEAD, CYLINDER					1			
49	3	172511-72570	BUSH					1			
51	2	172527-72881	TUBE					1			
52	2	172529-72840	PISTON					1			
53	2	22137-100000	WASHER, 10					1			
54	2	26116-100202	BOLT, M10X 20 PLATED					1			
55	1	172524-72420	PIN 35X103	1		1		1			
56	1	172527-72420	PIN 35X122	1		1		1			
57	1	172512-91210	PLATE, PIN LOCK	2		2		2			
58	1	24764-040000	NIPPLE, GREASE B	2		2		2			
59	1	26013-100202	BOLT, M10X 20	4		4		4			
60	1	172527-72430	SHIM, 35X55X0.5	1		1		1			
61	1	172520-91270	SHIM, 35X1.2	1		1		1			

N:Old ◄Yes/No► New, Q:Old ◄No/Yes► New, R:Old ◄Yes/Yes► New, S:Old ◄No/No► New, W:Add, Z:Discontinued, F:Interchangeable by set, K:Q'ty Change

Copyright (C) YANMAR CO., LTD. All RightsReserved.

Fig.81. POWER STEERING CYLINDER(2)

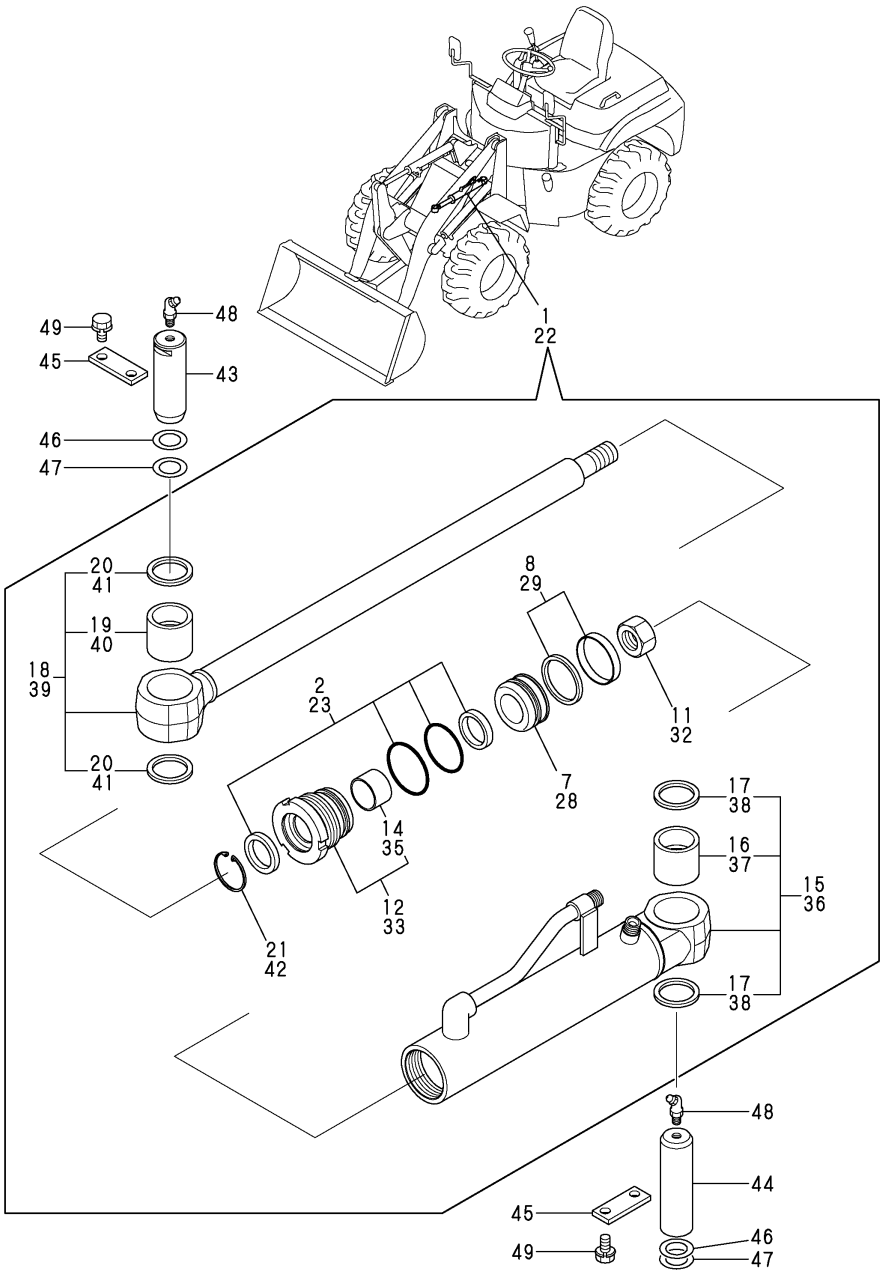

(A)=V3-5
(B)=V3-5(M/C)
(C)=V4-5
(D)=V4-5A
(E)=V5
(F)=V5-A

No.	Lev.	Parts No.	Description	Q'ty (A)	(B)	(C)	(D)	(E)	(F)	I	R
1	1	172527-72801	CYLINDER ASSY		1		1				
2	2	172447-72020	SEAL SET, HEAD 60 30		1		1				
7	2	172137-72431	PISTON 60G		1		1				
8	2	172137-72453	SEAL SET, PISTON 60A		1		1				
11	2	172141-72580	NUT, M20		1		1				
12	2	172447-72860	HEAD 60 30		1		1				
14	3	24550-030300	BUSH, 30X30		1		1				
15	2	172527-72900	TUBE ASSY, STEERING		1		1				
16	3	172527-72960	PIN BUSH,35 35		1		1				
17	3	172448-81610	SEAL, DUST 35X45X4		2		2				
18	2	172527-72970	ROD ASSY, STEERING		1		1				
19	3	172527-72960	PIN BUSH,35 35		1		1				
20	3	172448-81610	SEAL, DUST 35X45X4		2		2				
21	2	933125-59600	WASHER 60 B, LOCK		1		1				
22	1	172529-72801	CYLINDER ASSY						1		
23	2	172449-72040	SEAL SET, HEAD 65 35						1		
28	2	172173-72352	PISTON 65 24						1		
29	2	172148-72941	SEAL SET, PISTON						1		
32	2	172171-72130	NUT, M24						1		
33	2	172449-72810	HEAD CMP 65-35						1		
35	3	24550-035300	BUSH, 35X30						1		
36	2	172529-72310	TUBE ASSY, STEERING						1		
37	3	172527-72960	PIN BUSH,35 35						1		
38	3	172448-81610	SEAL, DUST 35X45X4						2		
39	2	172529-72350	ROD ASSY, STEERING						1		
40	3	172527-72960	PIN BUSH,35 35						1		
41	3	172448-81610	SEAL, DUST 35X45X4						2		
42	2	172142-72560	WASHER, LOCK						1		
43	1	172524-72420	PIN 35X103		1		1		1		
44	1	172527-72420	PIN 35X122		1		1		1		
45	1	172456-82400	PLATE, LOCK		2		2		2		
45-1	1	172512-91210	PLATE, PIN LOCK		2		2		2		R
		(B=M/#52565)	(D=M/#52064)						(F=M/#02019)		
46	1	172141-84610	SHIM, 35X1.2		1		1		1		
47	1	172141-84620	SHIM, 35X0.8		1		1		1		
48	1	24764-040000	NIPPLE, GREASE B		2		2		2		
49	1	26013-100202	BOLT, M10X 20		4		4		4		

N:Old $\xleftarrow[\text{No}]{\text{Yes}}$ New, Q:Old $\xleftarrow[\text{Yes}]{\text{No}}$ New, R:Old $\xleftarrow[\text{Yes}]{\text{Yes}}$ New, S:Old $\xleftarrow[\text{No}]{\text{No}}$ New, W:Add, Z:Discontinued, F:Interchangeable by set, K:Q'ty Change

Copyright (C) YANMAR CO., LTD. All RightsReserved.

Fig.82. HST PUMP

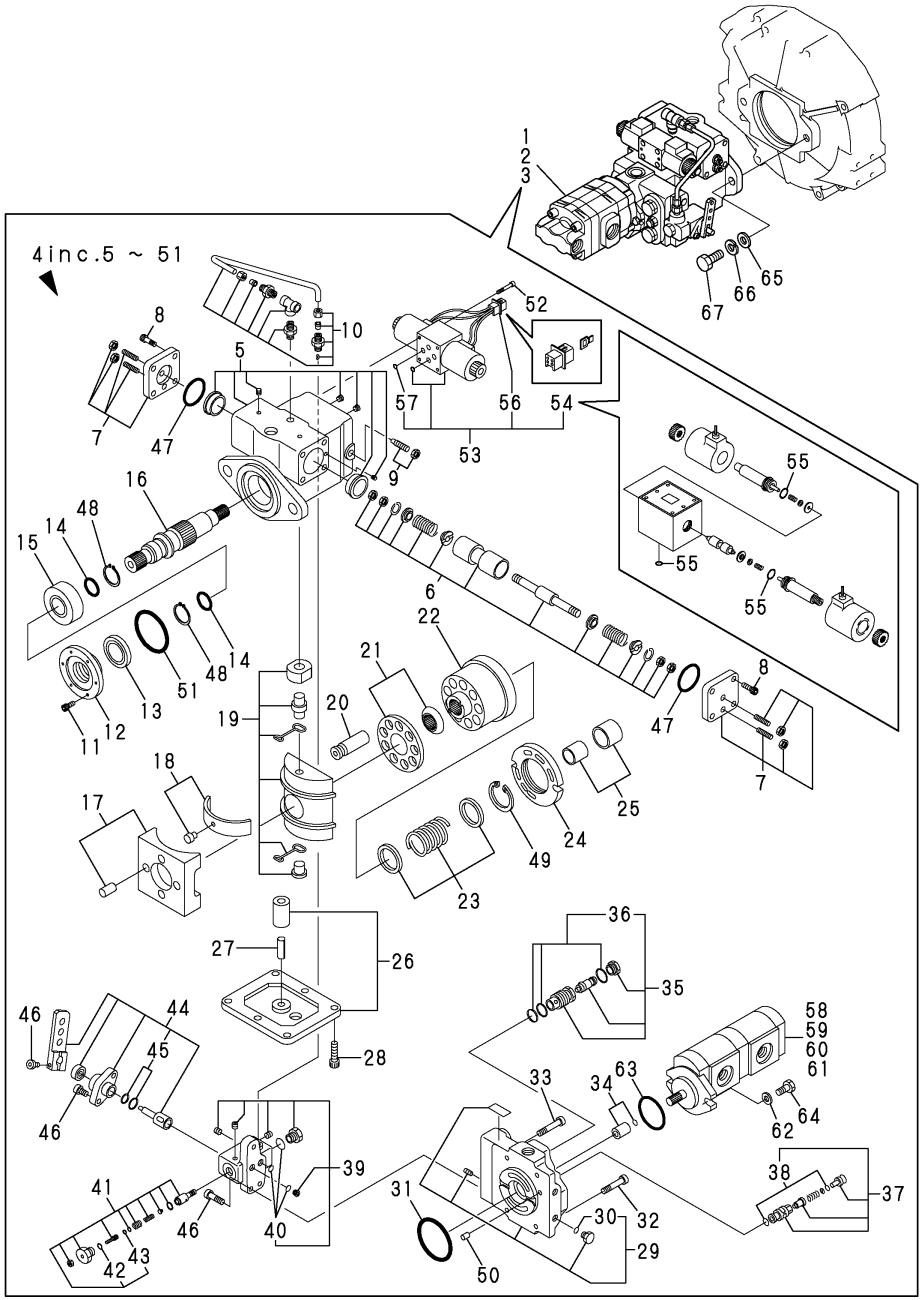

(A)=V3-5
(B)=V3-5(M/C)
(C)=V4-5
(D)=V4-5A
(E)=V5
(F)=V5-A

No.	Lev.	Parts No.	Description	Q'ty (A)	(B)	(C)	(D)	(E)	(F)	I	R
1	1	172527-73100	PUMP ASSY H.S.T.	1	1						
2	1	172528-73100	PUMP ASSY H.S.T.			1	1				
3	1	172529-73100	PUMP ASSY H.S.T.					1	1		
4	2	172527-73110	PUMP H.S.T.	1	1	1	1	1	1		
5	3	172527-73120	HOUSING	1	1	1	1	1	1		
6	3	172527-73130	PISTON SET	1	1	1	1	1	1		
7	3	172527-73140	COVER	2	2	2	2	2	2		
8	3	172527-73150	BOLT	8	8	8	8	8	8		
9	3	172527-73160	BOLT	1	1	1	1	1	1		
10	3	172527-73170	PIPE	1	1	1	1	1	1		
11	3	172527-73180	BOLT M5X16-12.9	3	3	3	3	3	3		
12	3	172527-73190	COVER,OIL SEAL	1	1	1	1	1	1		
13	3	172527-73210	SEAL, 30427	1	1	1	1	1	1		
14	3	172527-73220	WASHER	2	2	2	2	2	2		
15	3	172527-73230	BEARING	1	1	1	1	1	1		
16	3	172527-73240	SHAFT	1	1	1	1	1	1		
17	3	172527-73250	HOLDER	1	1	1	1	1	1		
18	3	172527-73260	BEARING	2	2	2	2	2	2		
19	3	172527-73270	PLATE	1	1	1	1	1	1		
20	3	172527-73280	PISTON	9	9	9	9	9	9		
21	3	172527-73290	RETAINER	1	1	1	1	1	1		
22	3	172527-73350	BLOCK	1	1	1	1	1	1		
23	3	172527-73360	SPRING	1	1	1	1	1	1		
24	3	172527-73370	PLATE	1	1	1	1	1	1		
25	3	172527-73380	BEARING	1	1	1	1	1	1		
26	3	172527-73390	COVER	1	1	1	1	1	1		
27	3	172527-73410	SPRING PIN	1	1	1	1	1	1		
28	3	172527-73420	BOLT	6	6	6	6	6	6		
29	3	172527-73430	COVER	1	1	1	1	1	1		
30	4	172527-73580	O-RING	2	2	2	2	2	2		
31	3	172527-73440	O-RING	1	1	1	1	1	1		
32	3	172527-73450	BOLT	2	2	2	2	2	2		
33	3	172527-73460	BOLT	2	2	2	2	2	2		
34	3	172527-73470	CUPRING	1	1	1	1	1	1		
35	3	172527-73480	VALVE,RELIFE 420K	2	2	2	2	2	2		
36	4	172527-73540	O-RING, 121	4	4	4	4	4	4		
37	3	172527-73490	VALVE,RELIFE 16K	2	2	2	2	2	2		
38	4	172527-73590	O-RING KIT	4	4	4	4	4	4		
39	3	172527-73510	BODY	1	1	1	1	1	1		
40	4	172527-73880	O-RING KIT	1	1	1	1	1	1		
41	3	172527-73520	VALVE	1	1	1	1	1	1		
42	4	172527-73650	O-RING 1B P 18	1	1	1	1	1	1		
43	4	24311-000060	O-RING, 1AP6.0	1	1	1	1	1	1		
44	3	172527-73530	VALVE SET, INCHING	1	1	1	1	1	1		
45	4	172527-73890	O-RING KIT	1	1	1	1	1	1		
46	3	172527-73570	BOLT SET	1	1	1	1	1	1		
47	3	172527-73560	O-RING	2	2	2	2	2	2		
48	3	22242-000300	RING, 30	2	2	2	2	2	2		
49	3	22252-000350	RING, 35	1	1	1	1	1	1		
50	3	22312-060100	PIN, PARALLEL M6X10	1	1	1	1	1	1		
51	3	24341-000750	O-RING, 1AS75.0	1	1	1	1	1	1		

N:Old $\overset{\text{Yes}}{\underset{\text{No}}{\leftrightarrow}}$ New, Q:Old $\overset{\text{No}}{\underset{\text{Yes}}{\leftrightarrow}}$ New, R:Old $\overset{\text{Yes}}{\underset{\text{Yes}}{\leftrightarrow}}$ New, S:Old $\overset{\text{No}}{\underset{\text{No}}{\leftrightarrow}}$ New, W:Add, Z:Discontinued, F:Interchangeable by set, K:Q'ty Change

++ CONTINUE ++

Copyright (C) YANMAR CO., LTD. All RightsReserved.

Fig.82. HST PUMP

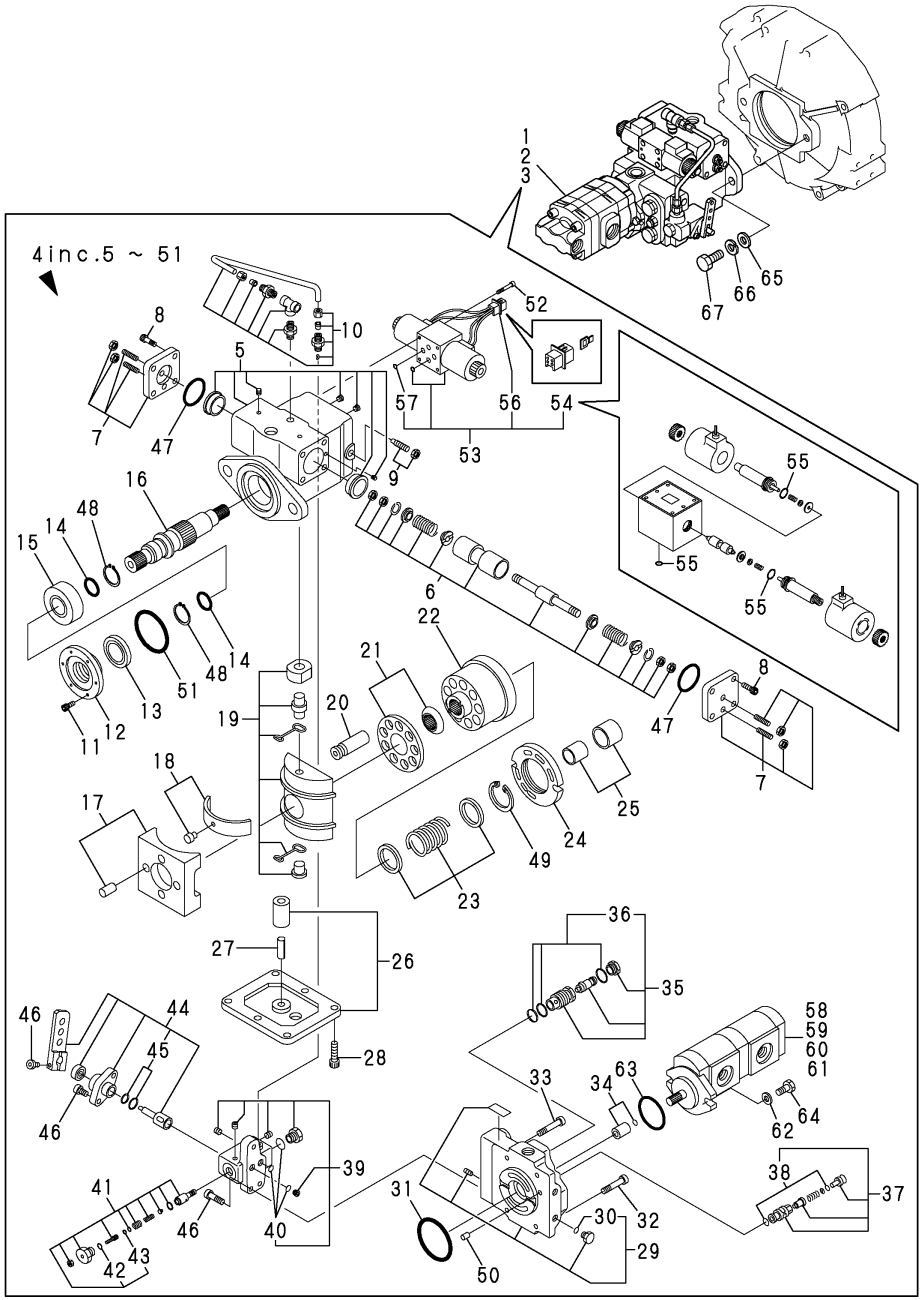

(A)=V3-5
(B)=V3-5(M/C)
(C)=V4-5
(D)=V4-5A
(E)=V5
(F)=V5-A

No.	Lev.	Parts No.	Description	Q'ty (A)	(B)	(C)	(D)	(E)	(F)	I	R
52	2	172527-73550	BOLT M5X45-12.9	4	4	4	4	4	4		
53	2	172527-73600	SOLENOID ASSY	1	1	1	1	1	1		
54	3	172527-73610	SOLENOID	1	1	1	1	1	1		
55	4	172527-73910	O-RING KIT	1	1	1	1	1	1		
56	3	172527-73620	HOUSING	1	1	1	1	1	1		
57	3	172527-73630	PLATE	2	2	2	2	2	2		
58	2	172527-73640	PUMP 14.3X8.1	1	1						
59	2	172528-73640	PUMP 19.2X8.1			1	1				
60	2	172529-73640	PUMP 22.9X8.1					1	1		
61	3	172527-73840	SEAL SET	1	1	1	1	1	1		
62	2	22117-100000	WASHER, 10	2	2	2	2	2	2		
63	2	24341-000850	O-RING, 1AS85.0	1	1	1	1	1	1		
64	2	26076-100252	BOLT, 10.910X 25	2	2	2	2	2	2		
65	1	22137-160000	WASHER, 16	2	2	2	2	2	2		
66	1	22217-160000	WASHER, SPRING 16	2	2	2	2	2	2		
67	1	26156-160402	BOLT, M16X 40 PLATED	2	2	2	2	2	2		

N:Old ←Yes/No→ New, Q:Old ←No/Yes→ New, R:Old ←Yes/Yes→ New, S:Old ←No/No→ New, W:Add, Z:Discontinued, F:Interchangeable by set, K:Q'ty Change

Copyright (C) YANMAR CO., LTD. All RightsReserved.

Fig.83. HST MOTOR(1)

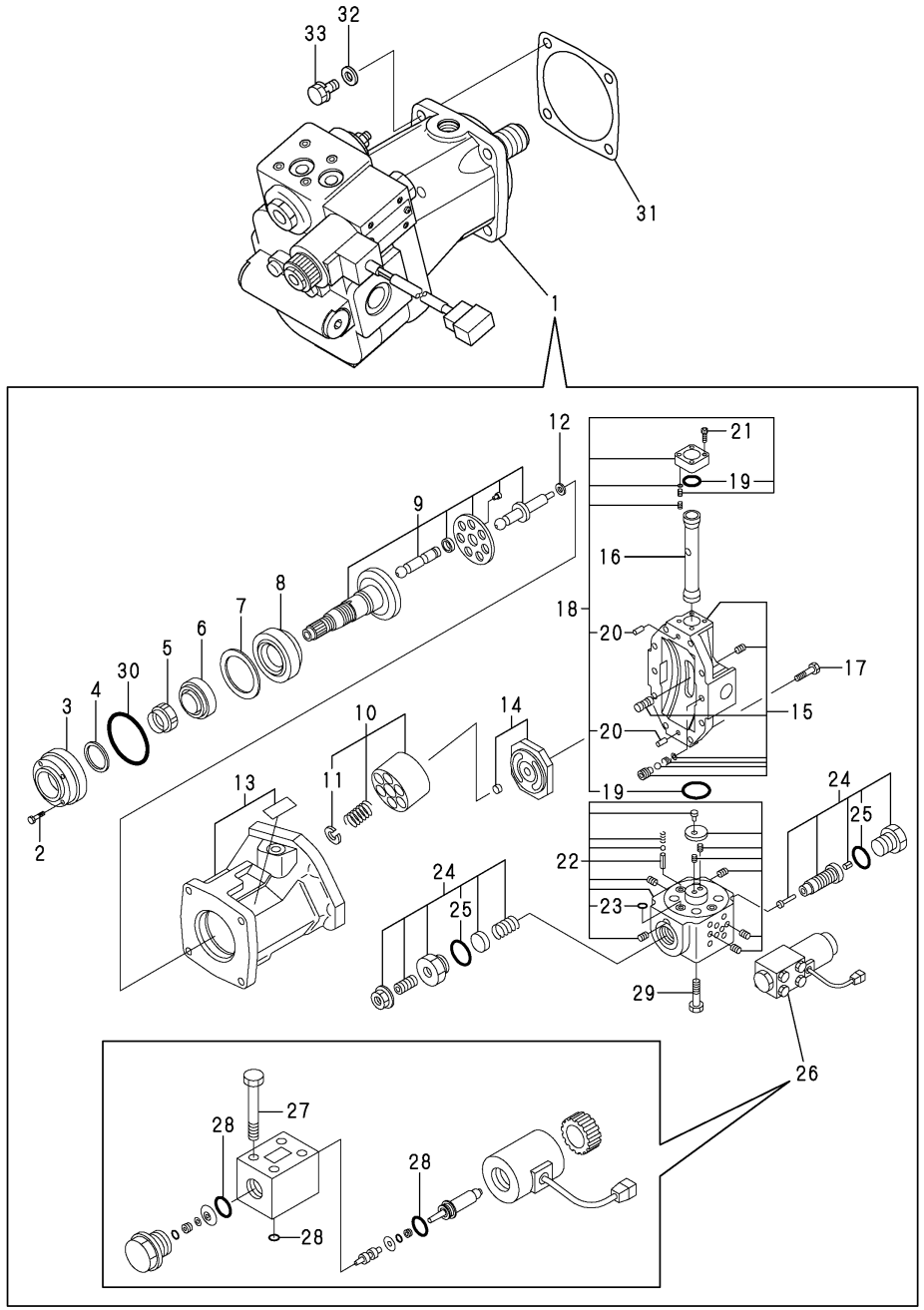

(A)=V3-5
(B)=V3-5(M/C)
(C)=V4-5
(D)=V4-5A
(E)=V5
(F)=V5-A

No.	Lev.	Parts No.	Description	Q'ty (A)	(B)	(C)	(D)	(E)	(F)	I	R
1	1	172527-73300	MOTOR ASSY H.S.T.	1	1						
2	2	172527-73180	BOLT M5X16-12.9	3	3						
3	2	172527-73190	COVER,OIL SEAL	1	1						
4	2	172527-73210	SEAL, 30427	1	1						
5	2	172527-73320	NUT M35X1	1	1						
6	2	172527-73330	BEARING	1	1						
7	2	172527-73340	SHIM SET	1	1						
8	2	172527-73660	BEARING 4T-30308D	1	1						
9	2	172527-73670	SHAFT SET	1	1						
10	2	172527-73680	CYLINDER BLOCK	1	1						
11	3	22252-000250	RING, 25	2	2						
12	2	172527-73690	SHIM SET	1	1						
13	2	172527-73710	HOUSING	1	1						
14	2	172527-73720	PORT PLATE SET	1	1						
15	2	172527-73730	COVER SET	1	1						
16	2	172527-73740	PISTON 0.25	1	1						
17	2	172527-73750	BOLT M8X30-12.9	8	8						
18	2	172527-73760	COVER SET	1	1						
19	3	172527-73920	O-RING KIT	1	1						
20	3	22312-060100	PIN, PARALLEL M6X10	2	2						
21	2	172527-73770	BOLT M6X30-12.9	4	4						
22	2	172527-73780	BODY SET	1	1						
23	3	172527-73940	O-RING	4	4						
24	2	172527-73790	SPOOL SET	1	1						
25	3	172527-73650	O-RING 1B P 18	2	2						
26	2	172527-73800	SOLENOID VALVE ASSY	1	1						
27	3	172527-73550	BOLT M5X45-12.9	4	4						
28	3	172527-73960	O-RING KIT	1	1						
29	2	172527-73810	BOLT M6X60X12.9	4	4						
30	2	24341-000750	O-RING, 1AS75.0	1	1						
31	1	172527-73310	GASKET, MOTOR	1	1						
32	1	22137-100000	WASHER, 10	4	4						
33	1	26013-100302	BOLT, M10X 30	4	4						

N:Old $\frac{\text{Yes}}{\text{No}}$ New, Q:Old $\frac{\text{No}}{\text{Yes}}$ New, R:Old $\frac{\text{Yes}}{\text{Yes}}$ New, S:Old $\frac{\text{No}}{\text{No}}$ New, W:Add, Z:Discontinued, F:Interchangeable by set, K:Q'ty Change

Copyright (C) YANMAR CO., LTD. All RightsReserved.

Fig.84. HST MOTOR(2)

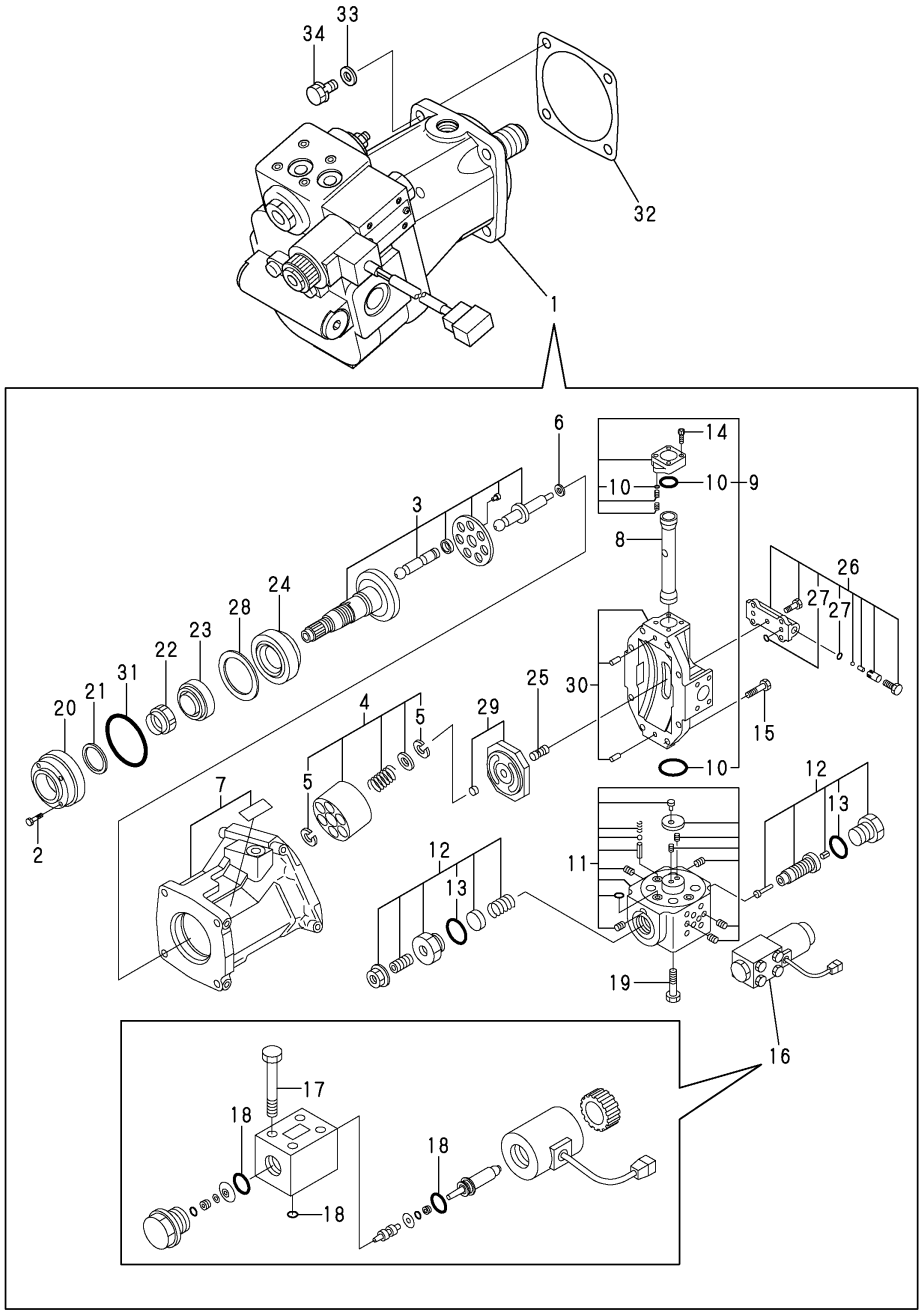

(A)=V3-5
(B)=V3-5(M/C)
(C)=V4-5
(D)=V4-5A
(E)=V5
(F)=V5-A

No.	Lev.	Parts No.	Description	Q'ty (A)	(B)	(C)	(D)	(E)	(F)	I	R
1	1	172528-73300	MOTOR ASSY H.S.T.			1	1	1	1		
2	2	172527-73150	BOLT			1	1	1	1		
3	2	172528-73320	SHAFT SET			1	1	1	1		
4	2	172528-73330	BLOCK			1	1	1	1		
5	3	22252-000260	RING, 26			2	2	2	2		
6	2	172528-73340	SHIM SET			1	1	1	1		
7	2	172528-73350	HOUSING			1	1	1	1		
8	2	172528-73360	PISTON			1	1	1	1		
9	2	172528-73370	COVER			1	1	1	1		
10	3	172524-74760	SEAL SET			1	1	1	1		
11	2	172528-73380	BODY			1	1	1	1		
12	2	172528-73390	SPOOL SET			1	1	1	1		
13	3	172527-73650	O-RING 1B P 18			2	2	2	2		
14	2	172528-73410	BOLT			4	4	4	4		
15	2	172527-73750	BOLT M8X30-12.9			8	8	8	8		
16	2	172527-73800	SOLENOID VALVE ASSY			1	1	1	1		
17	3	172527-73550	BOLT M5X45-12.9			4	4	4	4		
18	3	172527-73960	O-RING KIT			1	1	1	1		
19	2	172527-73810	BOLT M6X60X12.9			4	4	4	4		
20	2	172520-74340	RETAINER, SEAL			1	1	1	1		
21	2	172520-74350	SEAL, OIL			1	1	1	1		
22	2	172520-74360	NUT, 40X1.5			1	1	1	1		
23	2	172520-74370	BEARING			1	1	1	1		
24	2	172520-74390	BEARING			1	1	1	1		
25	2	172520-74460	PIN			1	1	1	1		
26	2	172520-74520	BLOCK ASSY, VALVE			1	1	1	1		
27	3	172520-74530	SEAL SET			1	1	1	1		
28	2	172524-74610	SHIM KIT			1	1	1	1		
29	2	172524-74630	PLATE, VALVE			1	1	1	1		
30	2	172524-74640	HOLDER, VALVE			1	1	1	1		
31	2	24341-000700	O-RING, 1AS70.0			1	1	1	1		
32	1	172528-73310	GASKET, MOTOR			1	1	1	1		
33	1	22137-100000	WASHER, 10			4	4	4	4		
34	1	26013-100352	BOLT, M10X 35			4	4	4	4		

N:Old ◄Yes/No► New, Q:Old ◄No/Yes► New, R:Old ◄Yes/Yes► New, S:Old ◄No/No► New, W:Add, Z:Discontinued, F:Interchangeable by set, K:Q'ty Change

Copyright (C) YANMAR CO., LTD. All RightsReserved.

Fig.85. STEERING UNIT

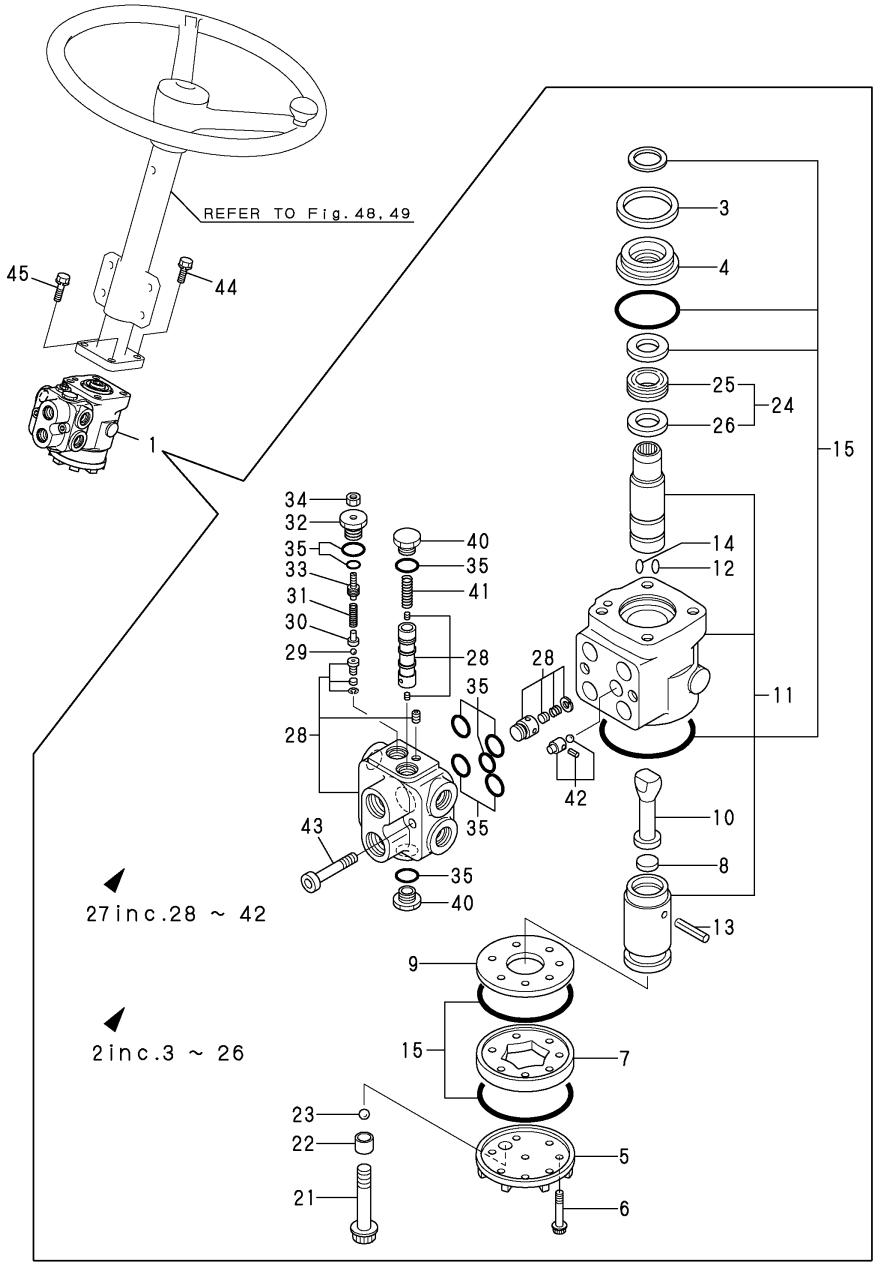

(A)=V3-5
(B)=V3-5(M/C)
(C)=V4-5
(D)=V4-5A
(E)=V5
(F)=V5-A

No.	Lev.	Parts No.	Description	Q'ty (A)	(B)	(C)	(D)	(E)	(F)	I	R
1	1	172524-73512	STEERING ASSY	1	1	1	1	1	1		
2	2	172524-73522	ROLL ASSY, ORBITAL	1	1	1	1	1	1		
3	3	172312-73110	RETAINING RING	1	1	1	1	1	1		
4	3	172524-73530	BUSH,SEAL GLAND	1	1	1	1	1	1		
5	3	172312-73520	CAP, END	1	1	1	1	1	1		
6	3	172520-73530	SCREW	6	6	6	6	6	6		
7	3	172520-73540	GEROTOR	1	1	1	1	1	1		
8	3	172524-73550	SPACER	1	1	1	1	1	1		
9	3	172312-73560	PLATE, SPACER	1	1	1	1	1	1		
10	3	172520-73560	DRIVE	1	1	1	1	1	1		
11	3	172524-73571	PARTS SET, CONTROL	1	1	1	1	1	1		
12	3	172519-73590	SPRING, CENTERING	4	4	4	4	4	4		
13	3	172519-73610	PIN	1	1	1	1	1	1		
14	3	172524-73650	SPRING	2	2	2	2	2	2		
15	3	172524-73582	SEAL SET	1	1	1	1	1	1		
21	3	172524-73540	SCREW, RETAINER	1	1	1	1	1	1		
22	3	172524-73780	SCREW, ADAPTER	1	1	1	1	1	1		
23	3	172524-73790	BALL	1	1	1	1	1	1		
24	3	172524-73640	BEARING SET, NEEDLE	1	1	1	1	1	1		
25	4	172312-73660	RACE BEARING	1	1	1	1	1	1		
26	4	172312-73670	NEEDLE, THRUST	1	1	1	1	1	1		
27	2	172524-73610	VALVE COMPL.	1	1	1	1	1	1		
28	3	172524-73620	HOUSING ASSY	1	1	1	1	1	1		
29	3	172520-73630	BALL	1	1	1	1	1	1		
30	3	172520-73640	GUIDE, BALL	1	1	1	1	1	1		
31	3	172520-73650	SPRING, RELIEF	1	1	1	1	1	1		
32	3	172520-73660	PLUG, RELIEF	1	1	1	1	1	1		
33	3	172520-73670	SCREW, ADJUST	1	1	1	1	1	1		
34	3	172520-73680	NUT, LOCK	1	1	1	1	1	1		
35	3	172524-73590	SEAL SET	1	1	1	1	1	1		
40	3	172520-73740	PLUG, SPOOL	2	2	2	2	2	2		
41	3	172524-73750	SPRING, CONTROL	1	1	1	1	1	1		
42	3	172520-73770	ORIFICE SET	1	1	1	1	1	1		
43	2	26450-100502	BOLT, M10X 50	2	2	2	2	2	2		
44	1	26013-100352	BOLT, M10X 35	2	2	2	2	2	2		
45	1	26013-100302	BOLT, M10X 30	2	2	2	2	2	2		

N:Old $\frac{\text{Yes}}{\text{No}}$ New, Q:Old $\frac{\text{No}}{\text{Yes}}$ New, R:Old $\frac{\text{Yes}}{\text{Yes}}$ New, S:Old $\frac{\text{No}}{\text{No}}$ New, W:Add, Z:Discontinued, F:Interchangeable by set, K:Q'ty Change

Copyright (C) YANMAR CO., LTD. All RightsReserved.

Fig.86. CONTROL VALVE(2-WAY)

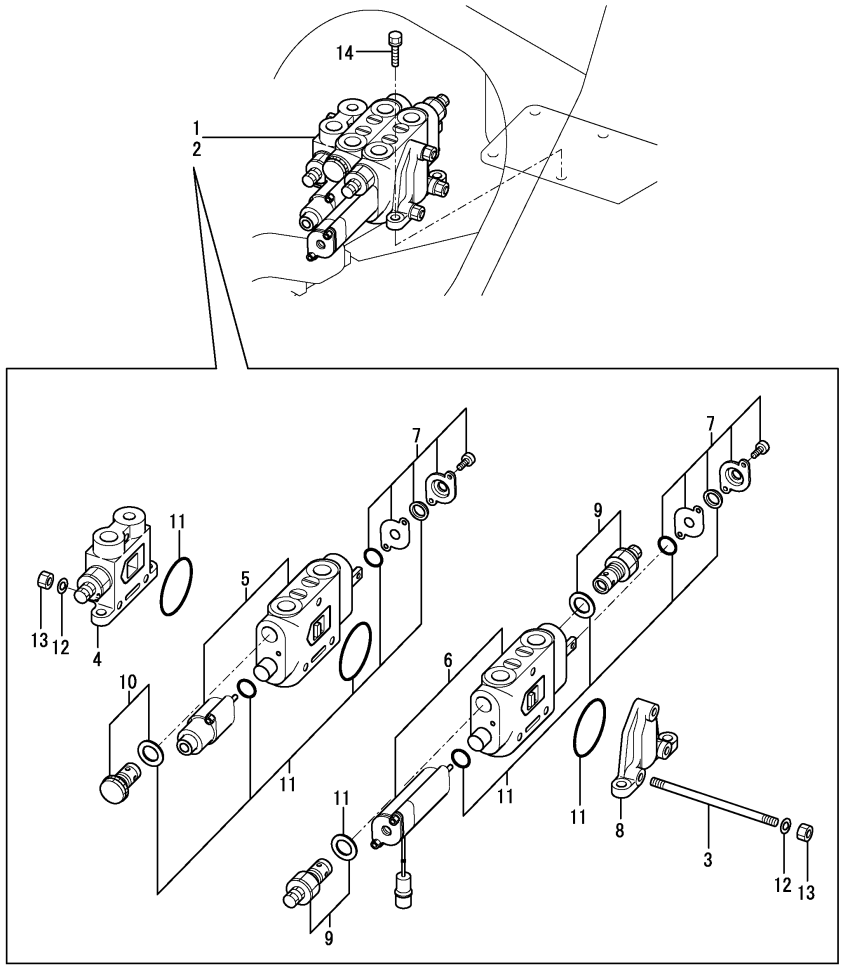

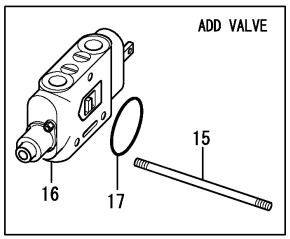

(A)=V3-5
(B)=V3-5(M/C)
(C)=V4-5
(D)=V4-5A
(E)=V5
(F)=V5-A

No.	Lev.	Parts No.	Description	Q'ty (A)	(B)	(C)	(D)	(E)	(F)	I	R
1	1	172527-74110	VALVE, CONTROL	1	1						
2	1	172528-74110	VALVE, CONTROL			1	1	1	1		
3	2	172527-74120	ROD, TIE	3	3	3	3	3	3		
4	2	172527-74130	COVER ASSY, INLET	1	1	1	1	1	1		
5	2	172527-74140	F BLOCK ASSY	1	1	1	1	1	1		
6	2	172527-74150	ED BLOCK ASSY	1	1	1	1	1	1		
7	2	172527-74160	L BLOCK ASSY	2	2	2	2	2	2		
8	2	172527-74170	CONER, END	1	1	1	1	1	1		
9	2	172527-74180	VALVE, O.L.R.	2	2	2	2	2	2		
10	2	172527-74190	VALVE, SUC.	1	1	1	1	1	1		
11	2	172527-74210	SEAL SET	1	1	1	1	1	1		
12	2	22217-100000	WASHER, SPRING 10	6	6	6	6	6	6		
13	2	26716-100002	NUT, M10	6	6	6	6	6	6		
14	1	26013-100352	BOLT, M10X 35	4	4	4	4	4	4		
15	1	172527-74410	ROD, TIE	3		3		3			1
16	1	172527-74420	DM BLOCK ASSY	1		1		1			1
17	1	24321-000550	O-RING, 1AG55.0	1		1		1			1

Remarks
(1)ADD VALVE(3-WAY)

N:Old $\frac{\text{Yes}}{\text{No}}$ New, Q:Old $\frac{\text{No}}{\text{Yes}}$ New, R:Old $\frac{\text{Yes}}{\text{Yes}}$ New, S:Old $\frac{\text{No}}{\text{No}}$ New, W:Add, Z:Discontinued, F:Interchangeable by set, K:Q'ty Change

Copyright (C) YANMAR CO., LTD. All RightsReserved.

Fig.87. CONTROL VALVE(2-WAY OPTIONAL)

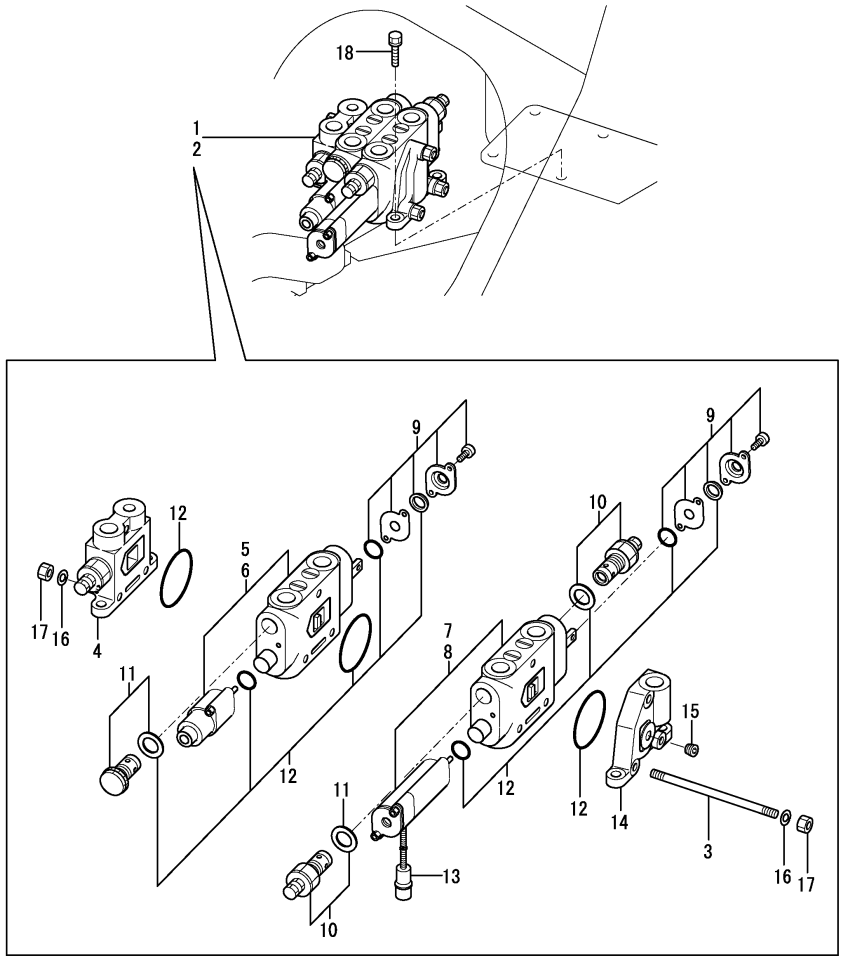

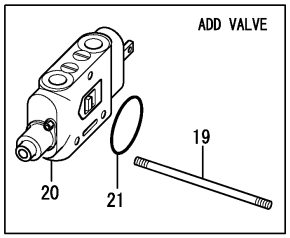

(A)=V3-5
(B)=V3-5(M/C)
(C)=V4-5
(D)=V4-5A
(E)=V5
(F)=V5-A

No.	Lev.	Parts No.	Description	Q'ty (A)	(B)	(C)	(D)	(E)	(F)	I	R
1	1	172527-74300	VALVE 2-WAY C	1							
2	1	172528-74300	VALVE 2-WAY C			1		1			
3	2	172527-74120	ROD, TIE	3		3		3			
4	2	172527-74130	COVER ASSY, INLET	1		1		1			
5	2	172527-74140	F BLOCK ASSY	1							
6	2	172528-74140	F BLOCK ASSY			1		1			
7	2	172527-74150	ED BLOCK ASSY	1							
8	2	172528-74150	ED BLOCK ASSY			1		1			
9	2	172527-74160	L BLOCK ASSY	2		2		2			
10	2	172527-74180	VALVE, O.L.R.	2		2		2			
11	2	172527-74190	VALVE, SUC.	1		1		1			
12	2	172527-74210	SEAL SET	1		1		1			
13	2	172527-74220	TUBE, CORRUGATED	1		1		1			
14	2	172527-74330	COVER	1		1		1			
15	2	172527-74340	PLUG	1		1		1			
16	2	22217-100000	WASHER, SPRING 10	6		6		6			
17	2	26716-100002	NUT, M10	6		6		6			
18	1	26013-100252	BOLT, M10X 25	3		3		3			
19	1	172527-74410	ROD, TIE	3		3		3			1
20	1	172527-74420	DM BLOCK ASSY	1		1		1			1
21	1	24321-000550	O-RING, 1AG55.0	1		1		1			1

Remarks
(1)ADD VALVE(3-WAY)

N:Old $\frac{\text{Yes}}{\text{No}}$ New, Q:Old $\frac{\text{No}}{\text{Yes}}$ New, R:Old $\frac{\text{Yes}}{\text{Yes}}$ New, S:Old $\frac{\text{No}}{\text{No}}$ New, W:Add, Z:Discontinued, F:Interchangeable by set, K:Q'ty Change

Copyright (C) YANMAR CO., LTD. All RightsReserved.

Fig.88. CONTROL VALVE(3-WAY)

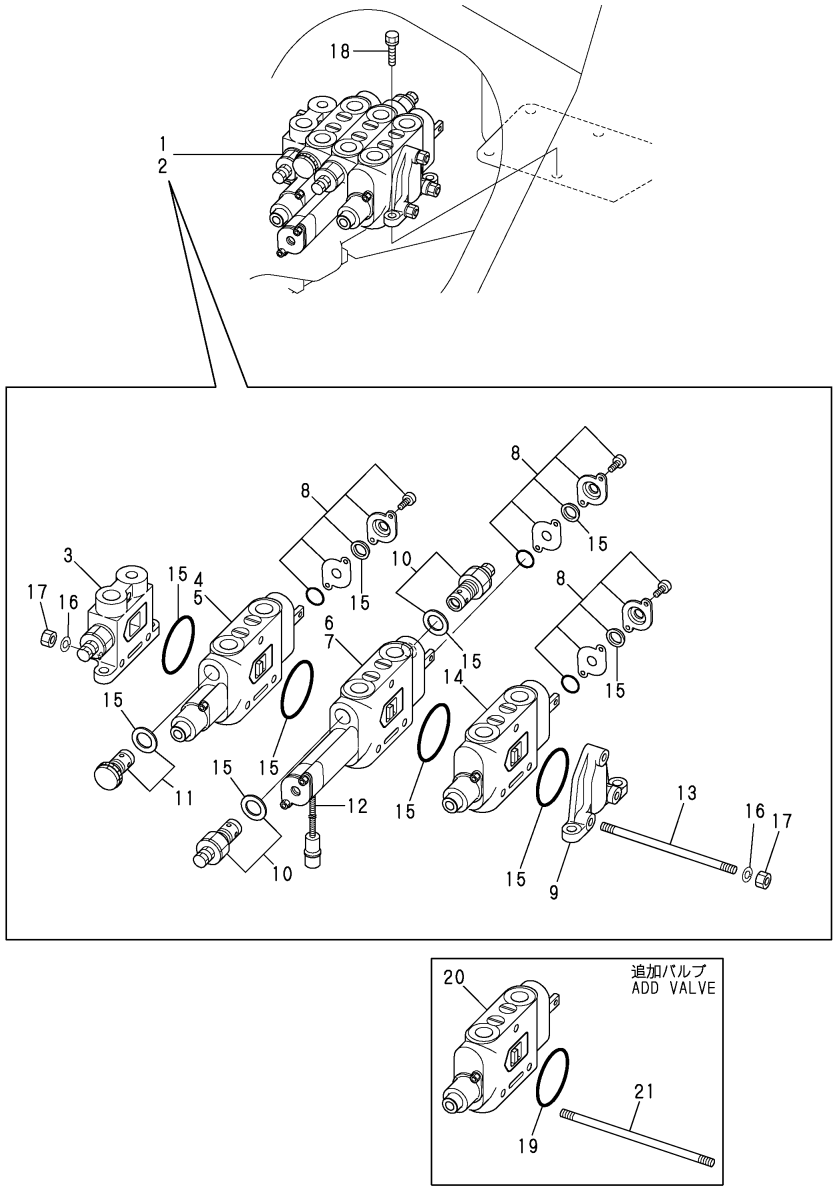

(A)=V3-5
(B)=V3-5(M/C)
(C)=V4-5
(D)=V4-5A
(E)=V5
(F)=V5-A

No.	Lev.	Parts No.	Description	Q'ty (A)	(B)	(C)	(D)	(E)	(F)	I	R
1	1	172527-74400	VALVE 3-WAY	1	1						
2	1	172528-74400	VALVE 3-WAY			1	1	1	1		
3	2	172527-74130	COVER ASSY, INLET	1	1	1	1	1	1		
4	2	172527-74140	F BLOCK ASSY	1	1						
5	2	172528-74140	F BLOCK ASSY			1	1	1	1		
6	2	172527-74150	ED BLOCK ASSY	1	1						
7	2	172528-74150	ED BLOCK ASSY			1	1	1	1		
8	2	172527-74160	L BLOCK ASSY	3	3	3	3	3	3		
9	2	172527-74170	CONER, END	1	1	1	1	1	1		
10	2	172527-74180	VALVE, O.L.R.	2	2	2	2	2	2		
11	2	172527-74190	VALVE, SUC.	1	1	1	1	1	1		
12	2	172527-74220	TUBE, CORRUGATED	1	1	1	1	1	1		
13	2	172527-74410	ROD, TIE	3	3	3	3	3	3		
14	2	172527-74420	DM BLOCK ASSY	1	1	1	1	1	1		
15	2	172527-74430	SEAL SET	1	1	1	1	1	1		
16	2	22217-100000	WASHER, SPRING 10	6	6	6	6	6	6		
17	2	26716-100002	NUT, M10	6	6	6	6	6	6		
18	1	26013-100352	BOLT, M10X 35	4	4	4	4	4	4		
19	1	24321-000550	O-RING, 1AG55.0	1		1		1			1
20	1	172527-74420	DM BLOCK ASSY	1		1		1			1
21	1	172527-74610	TIE-ROD	3		3		3			1

Remarks
(1)ADD VALVE(4-WAY)

N:Old $\xleftarrow[\text{No}]{\text{Yes}}$ New, Q:Old $\xleftarrow[\text{Yes}]{\text{No}}$ New, R:Old $\xleftarrow[\text{Yes}]{\text{Yes}}$ New, S:Old $\xleftarrow[\text{No}]{\text{No}}$ New, W:Add, Z:Discontinued, F:Interchangeable by set, K:Q'ty Change

Copyright (C) YANMAR CO., LTD. All RightsReserved.

Fig.89. CONTROL VALVE(3-WAY OPTIONAL)

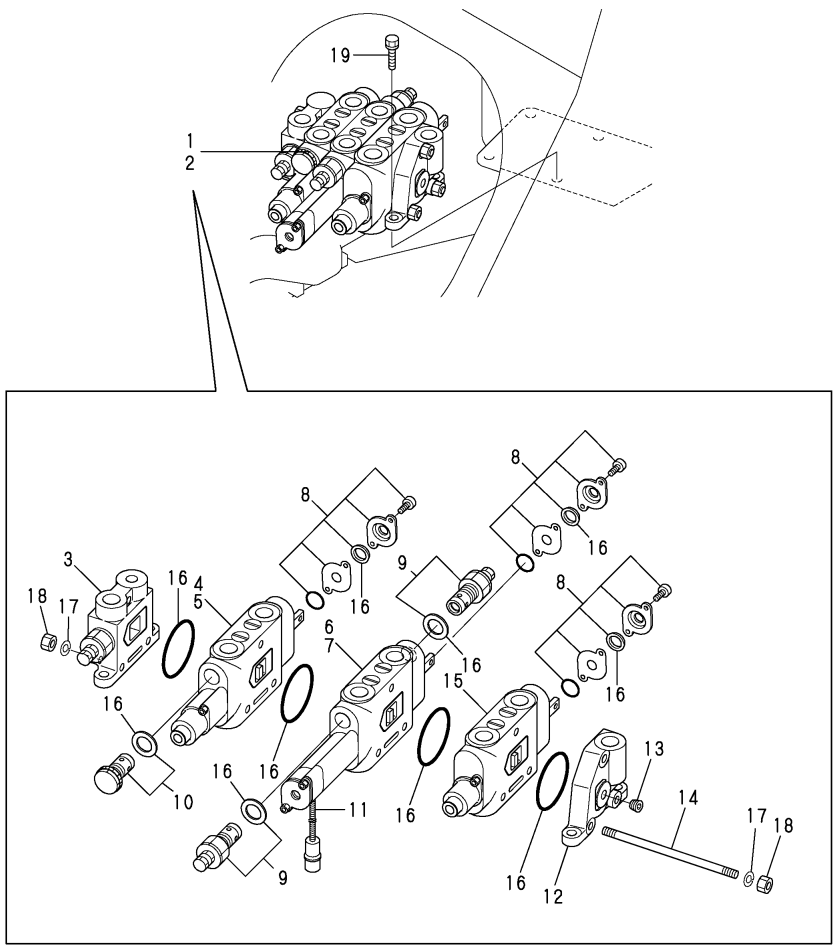

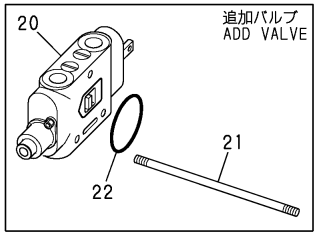

(A)=V3-5
(B)=V3-5(M/C)
(C)=V4-5
(D)=V4-5A
(E)=V5
(F)=V5-A

No.	Lev.	Parts No.	Description	Q'ty (A)	(B)	(C)	(D)	(E)	(F)	I	R
1	1	172527-74500	VALVE 3-WAY C	1							
2	1	172528-74500	VALVE 3-WAY C			1		1			
3	2	172527-74130	COVER ASSY, INLET	1		1		1			
4	2	172527-74140	F BLOCK ASSY	1							
5	2	172528-74140	F BLOCK ASSY			1		1			
6	2	172527-74150	ED BLOCK ASSY	1							
7	2	172528-74150	ED BLOCK ASSY			1		1			
8	2	172527-74160	L BLOCK ASSY	3		3		3			
9	2	172527-74180	VALVE, O.L.R.	2		2		2			
10	2	172527-74190	VALVE, SUC.	1		1		1			
11	2	172527-74220	TUBE, CORRUGATED	1		1		1			
12	2	172527-74330	COVER	1		1		1			
13	2	172527-74340	PLUG	1		1		1			
14	2	172527-74410	ROD, TIE	3		3		3			
15	2	172527-74420	DM BLOCK ASSY	1		1		1			
16	2	172527-74430	SEAL SET	1		1		1			
17	2	22217-100000	WASHER, SPRING 10	6		6		6			
18	2	26716-100002	NUT, M10	6		6		6			
19	1	26013-100252	BOLT, M10X 25	3		3		3			
20	1	172527-74420	DM BLOCK ASSY	1		1		1			1
21	1	172527-74610	TIE-ROD	3		3		3			1
22	1	24321-000550	O-RING, 1AG55.0	1		1		1			1

Remarks
(1)ADD VALVE(4-WAY)

N:Old $\xleftarrow[\text{No}]{\text{Yes}}$ New, Q:Old $\xleftarrow[\text{Yes}]{\text{No}}$ New, R:Old $\xleftarrow[\text{Yes}]{\text{Yes}}$ New, S:Old $\xleftarrow[\text{No}]{\text{No}}$ New, W:Add, Z:Discontinued, F:Interchangeable by set, K:Q'ty Change

Copyright (C) YANMAR CO., LTD. All RightsReserved.

Fig.90. CONTROL VALVE(4-WAY)

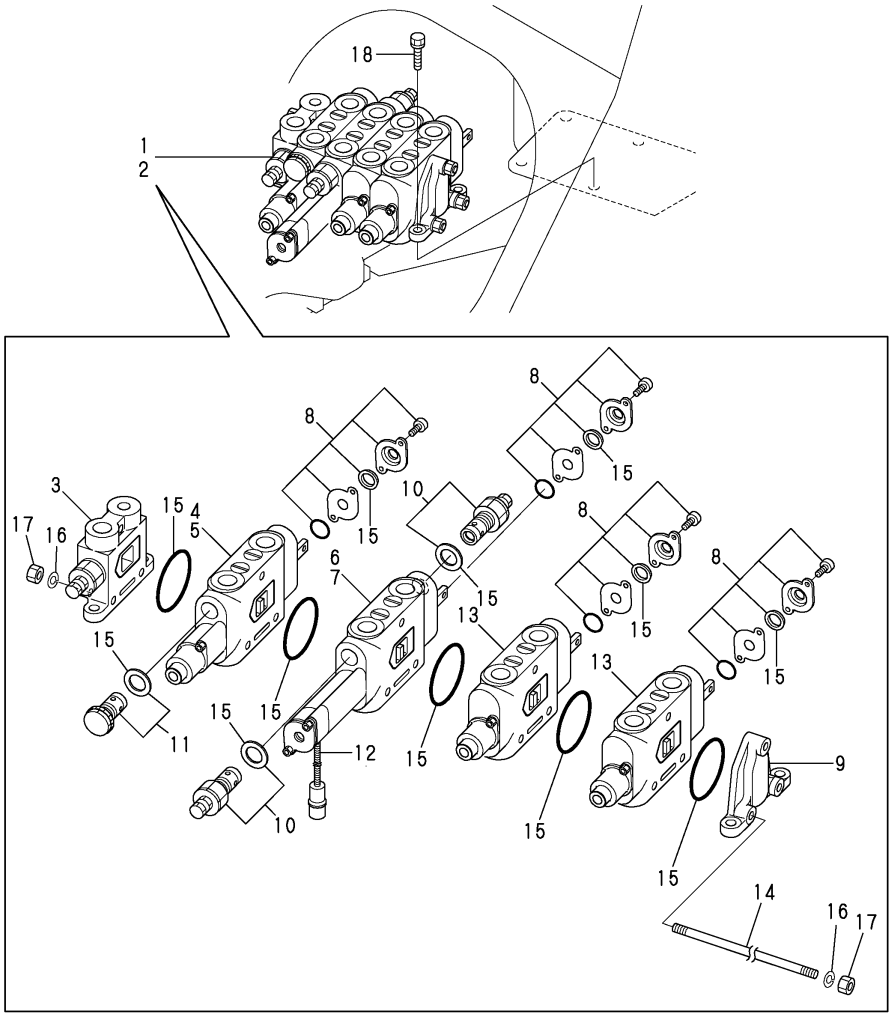

(A)=V3-5
(B)=V3-5(M/C)
(C)=V4-5
(D)=V4-5A
(E)=V5
(F)=V5-A

No.	Lev.	Parts No.	Description	Q'ty (A)	(B)	(C)	(D)	(E)	(F)	I	R
1	1	172527-74600	VALVE 4-WAY	1							
2	1	172528-74600	VALVE 4-WAY			1		1			
3	2	172527-74130	COVER ASSY, INLET	1		1		1			
4	2	172527-74140	F BLOCK ASSY	1							
5	2	172528-74140	F BLOCK ASSY			1		1			
6	2	172527-74150	ED BLOCK ASSY	1							
7	2	172528-74150	ED BLOCK ASSY			1		1			
8	2	172527-74160	L BLOCK ASSY	4		4		4			
9	2	172527-74170	CONER, END	1		1		1			
10	2	172527-74180	VALVE, O.L.R.	2		2		2			
11	2	172527-74190	VALVE, SUC.	1		1		1			
12	2	172527-74220	TUBE, CORRUGATED	1		1		1			
13	2	172527-74420	DM BLOCK ASSY	2		2		2			
14	2	172527-74610	TIE-ROD	3		3		3			
15	2	172527-74620	SEAL KIT	1		1		1			
16	2	22217-100000	WASHER, SPRING 10	6		6		6			
17	2	26716-100002	NUT, M10	6		6		6			
18	1	26013-100352	BOLT, M10X 35	4		4		4			

N:Old $\xleftrightarrow[\text{No}]{\text{Yes}}$ New, Q:Old $\xleftrightarrow[\text{Yes}]{\text{No}}$ New, R:Old $\xleftrightarrow[\text{Yes}]{\text{Yes}}$ New, S:Old $\xleftrightarrow[\text{No}]{\text{No}}$ New, W:Add, Z:Discontinued, F:Interchangeable by set, K:Q'ty Change

Copyright (C) YANMAR CO., LTD. All RightsReserved.

Fig.91. CONTROL VALVE(4-WAY OPTIONAL)

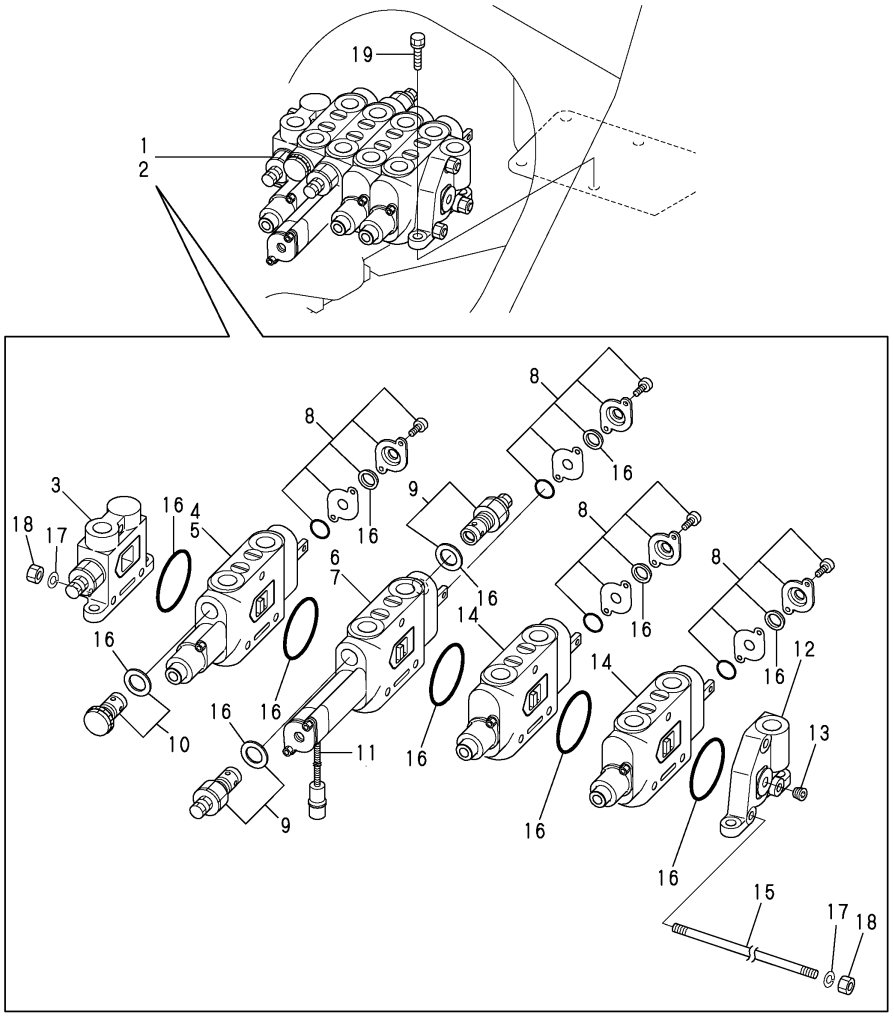

(A)=V3-5
(B)=V3-5(M/C)
(C)=V4-5
(D)=V4-5A
(E)=V5
(F)=V5-A

No.	Lev.	Parts No.	Description	Q'ty (A)	(B)	(C)	(D)	(E)	(F)	I	R
1	1	172527-74700	VALVE 4-WAY C	1							
2	1	172528-74700	VALVE 4-WAY C			1		1			
3	2	172527-74130	COVER ASSY, INLET	1		1		1			
4	2	172527-74140	F BLOCK ASSY	1							
5	2	172528-74140	F BLOCK ASSY			1		1			
6	2	172527-74150	ED BLOCK ASSY	1							
7	2	172528-74150	ED BLOCK ASSY			1		1			
8	2	172527-74160	L BLOCK ASSY	4		4		4			
9	2	172527-74180	VALVE, O.L.R.	2		2		2			
10	2	172527-74190	VALVE, SUC.	1		1		1			
11	2	172527-74220	TUBE, CORRUGATED	1		1		1			
12	2	172527-74330	COVER	1		1		1			
13	2	172527-74340	PLUG	1		1		1			
14	2	172527-74420	DM BLOCK ASSY	2		2		2			
15	2	172527-74610	TIE-ROD	3		3		3			
16	2	172527-74620	SEAL KIT	1		1		1			
17	2	22217-100000	WASHER, SPRING 10	6		6		6			
18	2	26716-100002	NUT, M10	6		6		6			
19	1	26013-100252	BOLT, M10X 25	3		3		3			

N:Old $\frac{\text{Yes}}{\text{No}}$ New, Q:Old $\frac{\text{No}}{\text{Yes}}$ New, R:Old $\frac{\text{Yes}}{\text{Yes}}$ New, S:Old $\frac{\text{No}}{\text{No}}$ New, W:Add, Z:Discontinued, F:Interchangeable by set, K:Q'ty Change

Copyright (C) YANMAR CO., LTD. All RightsReserved.

Fig.92. HYD.OIL TANK(1)

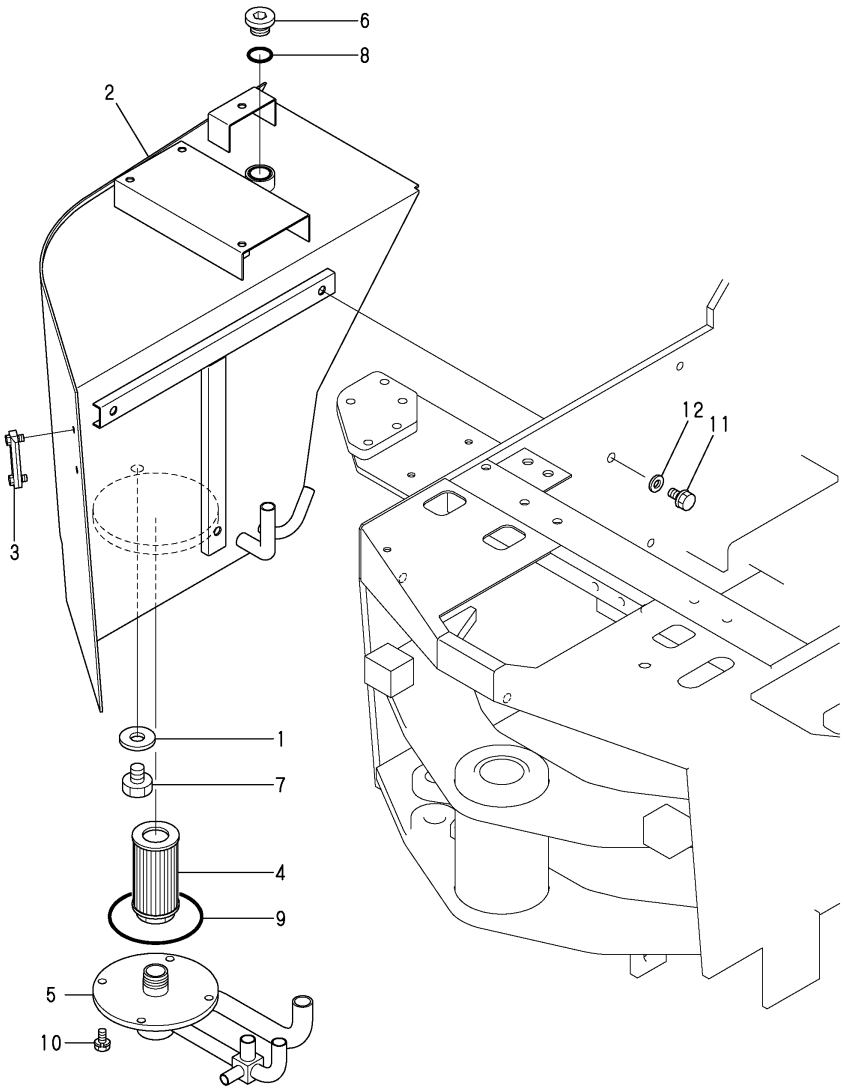

(A)=V3-5 (D)=V4-5A
(B)=V3-5(M/C) (E)=V5
(C)=V4-5 (F)=V5-A

No.	Lev.	Parts No.	Description	Q'ty (A)	(B)	(C)	(D)	(E)	(F)	I	R
1	1	1C6900-23150	WASHER, PLUG	1		1		1			
2	1	172527-75110	TANK ASSY, RESERVOIR	1		1		1			
3	1	172524-75190	GAUGE, OIL LEVEL	1		1		1			
4	1	172520-75320	FILTER, SUCTION	1		1		1			
5	1	172527-75410	FLANGE	1		1		1			
6	1	172524-75710	PLUG PF1	1		1		1			
7	1	23491-140002	PLUG, 14	1		1		1			
8	1	24311-000290	O-RING, 1AP29.0	1		1		1			
9	1	24321-001250	O-RING, 1AG125.0	1		1		1			
10	1	26013-100202	BOLT, M10X 20	4		4		4			
11	1	26013-120252	BOLT, M12X 25	3		3		3			
11-1	1	26013-120302	BOLT, M12X 30	3		3		3		N	
	(A=M/#51262)		(C=M/#51095)	(E=M/#01027)							
12	1	22137-120000	WASHER, 12	3		3		3		W	
	(A=M/#51262)		(C=M/#51095)	(E=M/#01027)							

N:Old $\xleftarrow[\text{No}]{\text{Yes}}$ New, Q:Old $\xleftarrow[\text{Yes}]{\text{No}}$ New, R:Old $\xleftarrow[\text{Yes}]{\text{Yes}}$ New, S:Old $\xleftarrow[\text{No}]{\text{No}}$ New, W:Add, Z:Discontinued, F:Interchangeable by set, K:Q'ty Change

Copyright (C) YANMAR CO., LTD. All RightsReserved.

Fig.93. HYD.OIL TANK(2)

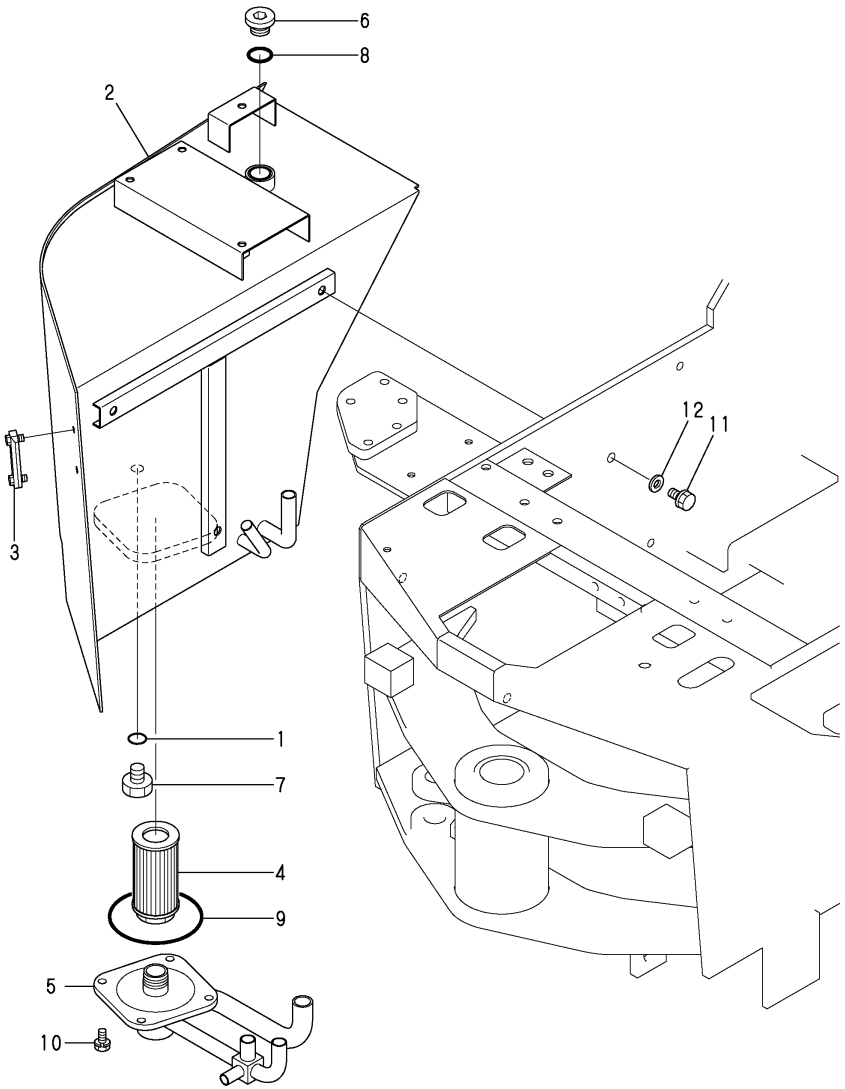

(A)=V3-5
(B)=V3-5(M/C)
(C)=V4-5
(D)=V4-5A
(E)=V5
(F)=V5-A

No.	Lev.	Parts No.	Description	Q'ty (A)	(B)	(C)	(D)	(E)	(F)	I	R
1	1	24311-000160	O-RING, 1AP16.0		1		1		1		
2	1	172527-75111	TANK ASSY, RESERVOIR		1		1		1		
3	1	172524-75190	GAUGE, OIL LEVEL		1		1		1		
4	1	172520-75320	FILTER, SUCTION		1		1		1		
5	1	172527-75411	FLANGE		1		1		1		
6	1	172116-75850-8	PLUG, OIL FEED		1		1		1		
7	1	23491-140002	PLUG, 14		1		1		1		
8	1	24311-000380	O-RING, 1AP38.0		1		1		1		
9	1	24321-001050	O-RING, 1AG105.0		1		1		1		
10	1	26013-100202	BOLT, M10X 20		4		4		4		
11	1	26013-120302	BOLT, M12X 30		3		3		3		
12	1	22137-120000	WASHER, 12		3		3		3		

N:Old $\xleftarrow[\text{No}]{\text{Yes}}$ New, Q:Old $\xleftarrow[\text{Yes}]{\text{No}}$ New, R:Old $\xleftarrow[\text{Yes}]{\text{Yes}}$ New, S:Old $\xleftarrow[\text{No}]{\text{No}}$ New, W:Add, Z:Discontinued, F:Interchangeable by set, K:Q'ty Change

Copyright (C) YANMAR CO., LTD. All RightsReserved.

Fig.94. FILTER & FITTING(1)

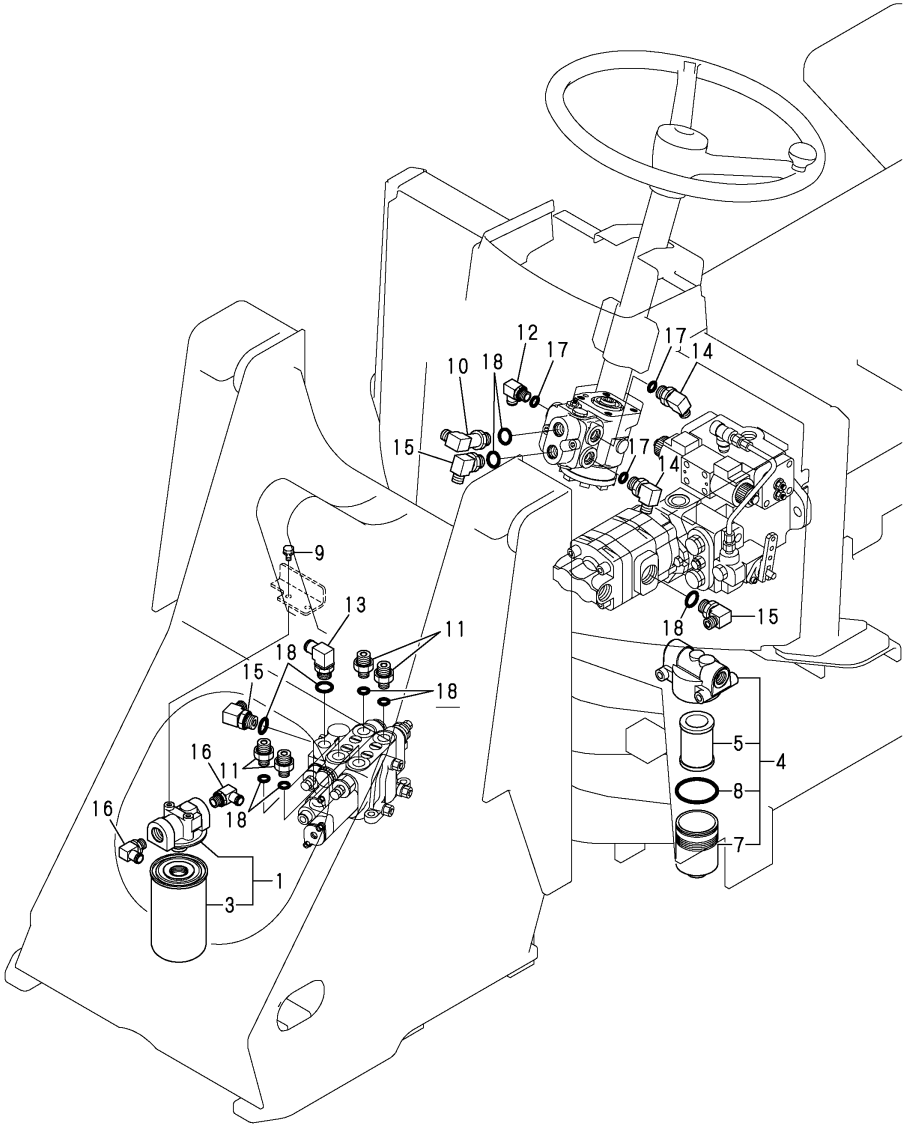

(A)=V3-5 (D)=V4-5A
(B)=V3-5(M/C) (E)=V5
(C)=V4-5 (F)=V5-A

No.	Lev.	Parts No.	Description	Q'ty (A)	(B)	(C)	(D)	(E)	(F)	I	R
1	1	172527-73850	FILTER, OIL	1		1		1			
3	2	172527-73870	ELEMENT	1		1		1			
4	1	172527-73950	FILTER, LINE	1		1		1			
5	2	172527-73970	ELEMENT, FILTER	1		1		1		W	
	(A=*2002.07)		(C=*2002.07)	(E=*2002.07)							
7	2	172527-73990	CASE	1		1		1		W	
	(A=*2002.07)		(C=*2002.07)	(E=*2002.07)							
8	2	24321-000600	O-RING, 1AG60.0	1		1		1		W	
	(A=*2002.07)		(C=*2002.07)	(E=*2002.07)							
9	1	26013-080162	BOLT, M8X 16	2		2		2			
10	1	172524-76110	ELBOW	1		1		1			
11	1	172527-76110	ADAPTER, 3/8X1/2	4		4		4			
12	1	172524-76130	NIPPLE, ELBOW	1		1		1			
13	1	172520-76260	ELBOW, NIPPLE	1		1		1			
14	1	172510-76310	ELBOW	2		2		2			
15	1	172510-76320	ELBOW, 1/2	3		3		3			
16	1	172524-76480	ELBOW	2		2		2			
17	1	24311-000140	O-RING, 1AP14.0	3		3		3			
18	1	24311-000180	O-RING, 1AP18.0	9		9		9			

N:Old $\xleftarrow[\text{No}]{\text{Yes}}$ New, Q:Old $\xleftarrow[\text{Yes}]{\text{No}}$ New, R:Old $\xleftarrow[\text{Yes}]{\text{Yes}}$ New, S:Old $\xleftarrow[\text{No}]{\text{No}}$ New, W:Add, Z:Discontinued, F:Interchangeable by set, K:Q'ty Change

Copyright (C) YANMAR CO., LTD. All RightsReserved.

Fig.95. FILTER & FITTING(2)

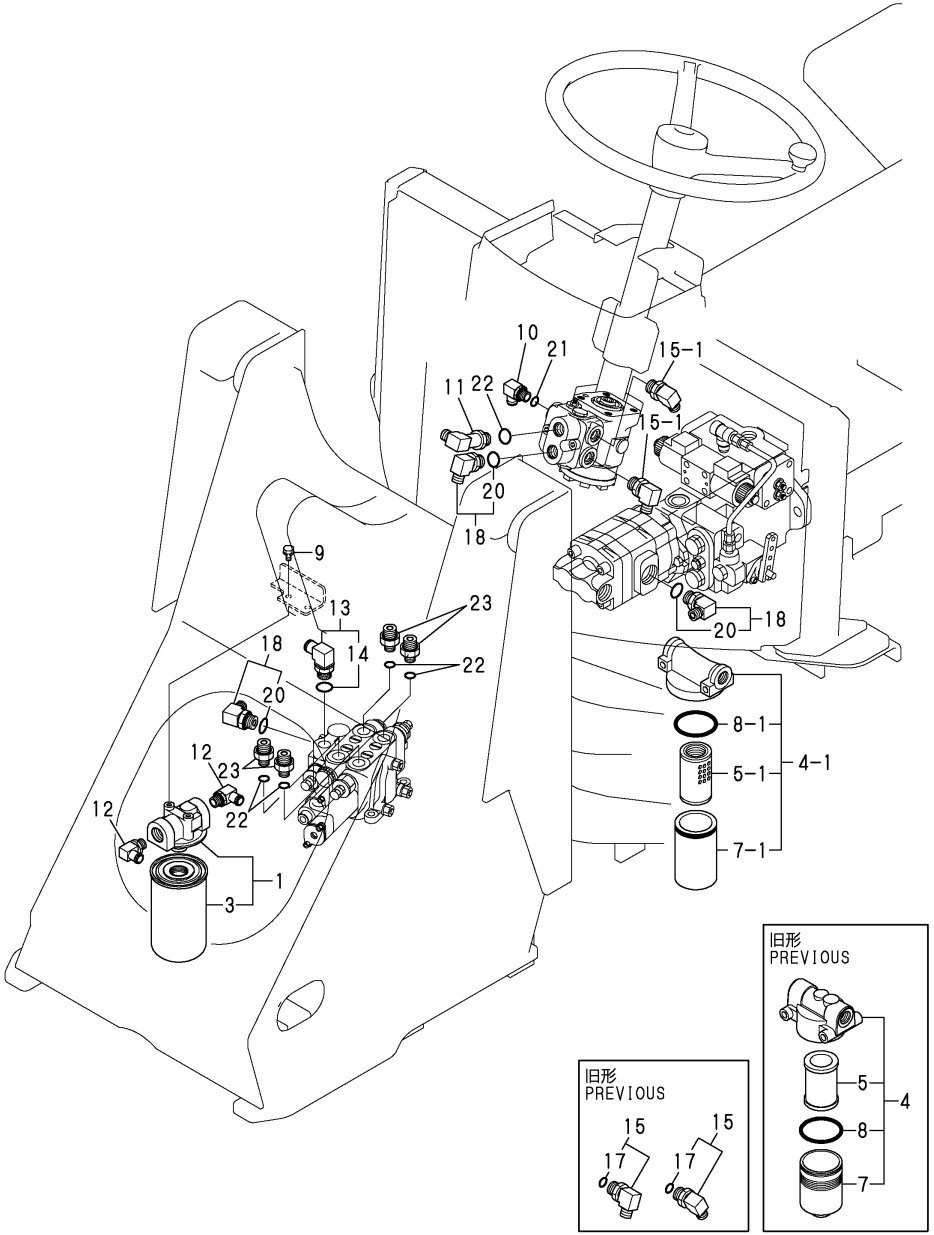

(A)=V3-5 (D)=V4-5A
(B)=V3-5(M/C) (E)=V5
(C)=V4-5 (F)=V5-A

No.	Lev.	Parts No.	Description	Q'ty (A)	(B)	(C)	(D)	(E)	(F)	I	R
1	1	172527-73850	FILTER, OIL		1		1		1		
3	2	172527-73870	ELEMENT		1		1		1		
4	1	172527-73950	FILTER, LINE		1		1		1		
4-1	1	172652-73750	FILTER,LINE				1		1	R	
			(D=M/#52168)						(F=M/#02060)		
5	2	172527-73970	ELEMENT, FILTER		1		1		1		
5-1	2	172652-73770	ELEMENT, FILTER				1		1	S	
			(D=M/#52168)						(F=M/#02060)		
7	2	172527-73990	CASE		1		1		1		
7-1	2	172652-73780	CASE				1		1	S	
			(D=M/#52168)						(F=M/#02060)		
8	2	24321-000600	O-RING, 1AG60.0		1		1		1		
8-1	2	172652-73790	O-RING, JAS02053				1		1	S	
			(D=M/#52168)						(F=M/#02060)		
9	1	26013-080162	BOLT, M8X 16		2		2		2		
10	1	1A6380-24080	NIPPLE, 3/8X16 90		1		1		1		
11	1	172524-76110	ELBOW		1		1		1		
12	1	172467-76120	ELBOW		2		2		2		
13	1	172164-76131	ELBOW		1		1		1		
14	2	24315-000180	O-RING, 1BP18.0		1		1		1		
15	1	172142-76180	JOINT		2		2		2		
15-1	1	172142-76181	JOINT ASSY		2		2		2	R	
		(B=M/#52565)	(D=M/#52064)						(F=M/#02019)		
17	2	24315-000140	O-RING, 1BP14.0		2		2		2		
18	1	172141-76900	CONNECTOR ASSY		3		3		3		
20	2	24315-000180	O-RING, 1BP18.0		3		3		3		
21	1	24311-000140	O-RING, 1AP14.0		1		1		1		
22	1	24311-000180	O-RING, 1AP18.0		5		5		5		
23	1	933160-01370	CONNECTOR,PF1/2PF3/8		4		4		4		

N:Old $\frac{\text{Yes}}{\text{No}}$ New, Q:Old $\frac{\text{No}}{\text{Yes}}$ New, R:Old $\frac{\text{Yes}}{\text{Yes}}$ New, S:Old $\frac{\text{No}}{\text{No}}$ New, W:Add, Z:Discontinued, F:Interchangeable by set, K:Q'ty Change

Copyright (C) YANMAR CO., LTD. All RightsReserved.

Fig.96. FITTING(FPTO)

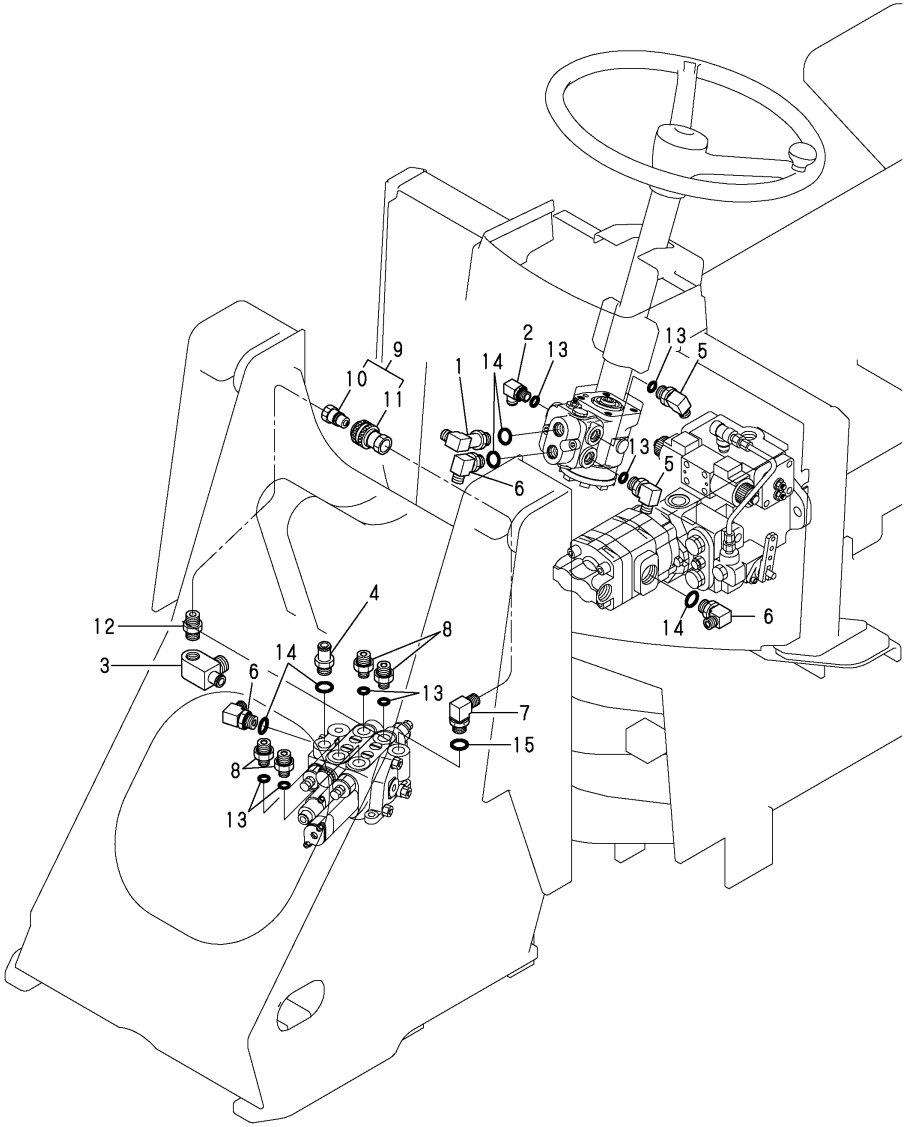

(A)=V3-5
(B)=V3-5(M/C)
(C)=V4-5
(D)=V4-5A
(E)=V5
(F)=V5-A

No.	Lev.	Parts No.	Description	Q'ty (A)	(B)	(C)	(D)	(E)	(F)	I	R
1	1	172524-76110	ELBOW	1		1		1			
2	1	172524-76130	NIPPLE, ELBOW	1		1		1			
3	1	172527-76150	CONNECTOR, 3/4X1/2	1		1		1			
4	1	172524-76170	ADAPTER, 1/2- 19	1		1		1			
5	1	172510-76310	ELBOW	2		2		2			
6	1	172510-76320	ELBOW, 1/2	3		3		3			
7	1	172510-76320	ELBOW, 1/2	1		1		1			
8	1	172510-76360	FITTING 3/8	4		4		4			
9	1	172512-77770	COUPLER ASSY	1		1		1			
10	2	172512-77780	NOSE	1		1		1			
11	2	172512-77790	BODY	1		1		1			
12	1	172510-78210	ADAPTER	1		1		1			
13	1	24311-000140	O-RING, 1AP14.0	7		7		7			
14	1	24311-000180	O-RING, 1AP18.0	5		5		5			
15	1	24311-000180	O-RING, 1AP18.0	1		1		1			

N:Old $\xleftarrow[\text{No}]{\text{Yes}}$ New, Q:Old $\xleftarrow[\text{Yes}]{\text{No}}$ New, R:Old $\xleftarrow[\text{Yes}]{\text{Yes}}$ New, S:Old $\xleftarrow[\text{No}]{\text{No}}$ New, W:Add, Z:Discontinued, F:Interchangeable by set, K:Q'ty Change

Copyright (C) YANMAR CO., LTD. All RightsReserved.

Fig.97. HYD.OIL PIPING(HST 1)

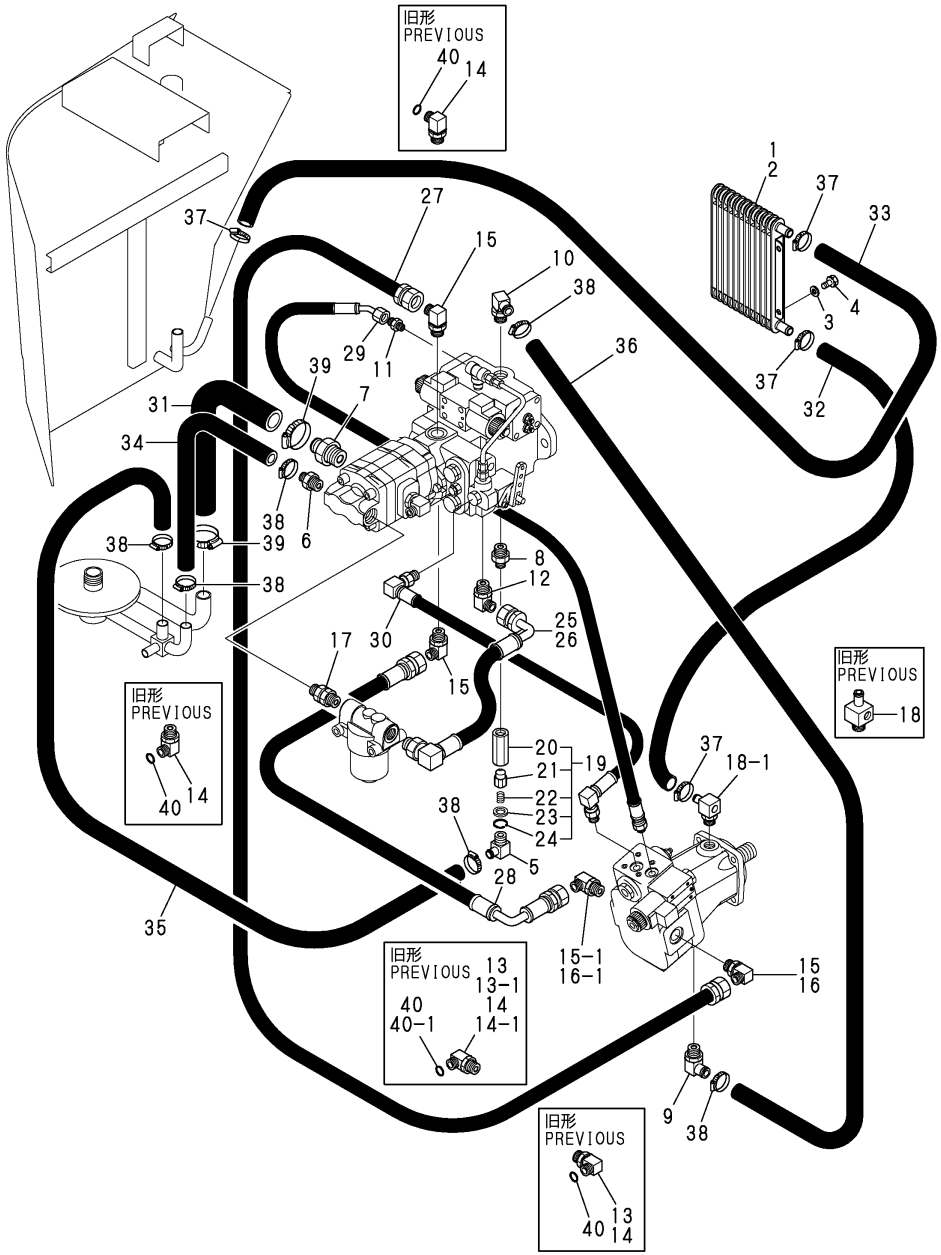

(A)=V3-5 (D)=V4-5A
(B)=V3-5(M/C) (E)=V5
(C)=V4-5 (F)=V5-A

No.	Lev.	Parts No.	Description	Q'ty (A)	(B)	(C)	(D)	(E)	(F)	I	R
1	1	172524-74810	COOLER, OIL	1							
2	1	172528-74810	COOLER ASSY, OIL			1		1			
3	1	22137-080000	WASHER, 8	2		2		2			
4	1	26013-080202	BOLT, M8X 20	2		2		2			
5	1	172524-76480	ELBOW	1		1		1			
6	1	172524-76210	NIPPLE, HOSE 3/4	1		1		1			
7	1	172527-76210	NIPPLE, 1-25	1		1		1			
8	1	172524-76230	NIPPLE, PF1/2-PT1/2	1		1		1			
9	1	172520-76260	ELBOW, NIPPLE	1		1		1			
10	1	172520-76260	ELBOW, NIPPLE	1		1		1			
11	1	172527-76261	NIPPLE, 1/4-1/4	1		1		1			
12	1	172510-76320	ELBOW, 1/2	1		1		1			
13	1	172528-76320	ELBOW			2		2			
13-1	1	172528-76320	ELBOW			1		1		K	
			(C=M/#50503)	(E=M/#00503)							
13-2	1	172528-76320	ELBOW			1		1		Z	
			(C=M/#50534)	(E=M/#00520)							
14	1	172527-76320	ELBOW	4		2		2			
14-1A	1	172527-76320	ELBOW	1						K	
(A=M/#50505)											
14-1B	1	172527-76320	ELBOW			2		2		Z	
			(C=M/#50503)	(E=M/#00503)							
14-2	1	172527-76320	ELBOW	1						Z	
(A=M/#50558)											
15	1	172527-76330	ELBOW	3		2		2		W	
(A=M/#50505)			(C=M/#50503)	(E=M/#00503)							
15-1	1	172527-76330	ELBOW	4						K	
(A=M/#50558)											
16	1	172528-76330	ELBOW			1		1		W	
			(C=M/#50503)	(E=M/#00503)							
16-1	1	172528-76330	ELBOW			2		2		K	
			(C=M/#50534)	(E=M/#00520)							
17	1	172527-76350	CONNECTOR, PF1/2X1/2	1		1		1			
18	1	172527-76360	CONNECTOR, 1/2X16	1		1		1			
18-1	1	172527-76460	CONNECTOR, 1/2X16	1		1		1		R	
(A=M/#51282)			(C=M/#51106)	(E=M/#01038)							
19	1	172524-76800	RELIEF COMP.,2ND	1		1		1			
20	2	172524-76810	BODY,VALVE	1		1		1			
21	2	172524-76820	POPPET	1		1		1			
22	2	172524-76830	SPRING, VALVE	1		1		1			
23	2	172524-76840	SEAT, SPRING	1		1		1			
24	2	22252-000220	RING, 22	1		1		1			
25	1	172527-78310	HOSE	1		1					
26	1	172529-78310	HOSE					1			
27	1	172527-78330	HOSE A	1		1		1			
28	1	172527-78340	HOSE B	1		1		1			
28-1	1	172527-78380	HOSE B	1		1		1		N	
(A=M/#50558)			(C=M/#50534)	(E=M/#00520)							
29	1	172527-78351	HOSE C1	1		1		1			
30	1	172527-78360	HOSE C2	1		1		1			
31	1	172527-78390	HOSE	1		1		1			

N:Old $\overset{\text{Yes}}{\underset{\text{No}}{\leftrightarrow}}$ New, Q:Old $\overset{\text{No}}{\underset{\text{Yes}}{\leftrightarrow}}$ New, R:Old $\overset{\text{Yes}}{\underset{\text{Yes}}{\leftrightarrow}}$ New, S:Old $\overset{\text{No}}{\underset{\text{No}}{\leftrightarrow}}$ New, W:Add, Z:Discontinued, F:Interchangeable by set, K:Q'ty Change

++ CONTINUE ++

Copyright (C) YANMAR CO., LTD. All RightsReserved.

Fig.97. HYD.OIL PIPING(HST 1)

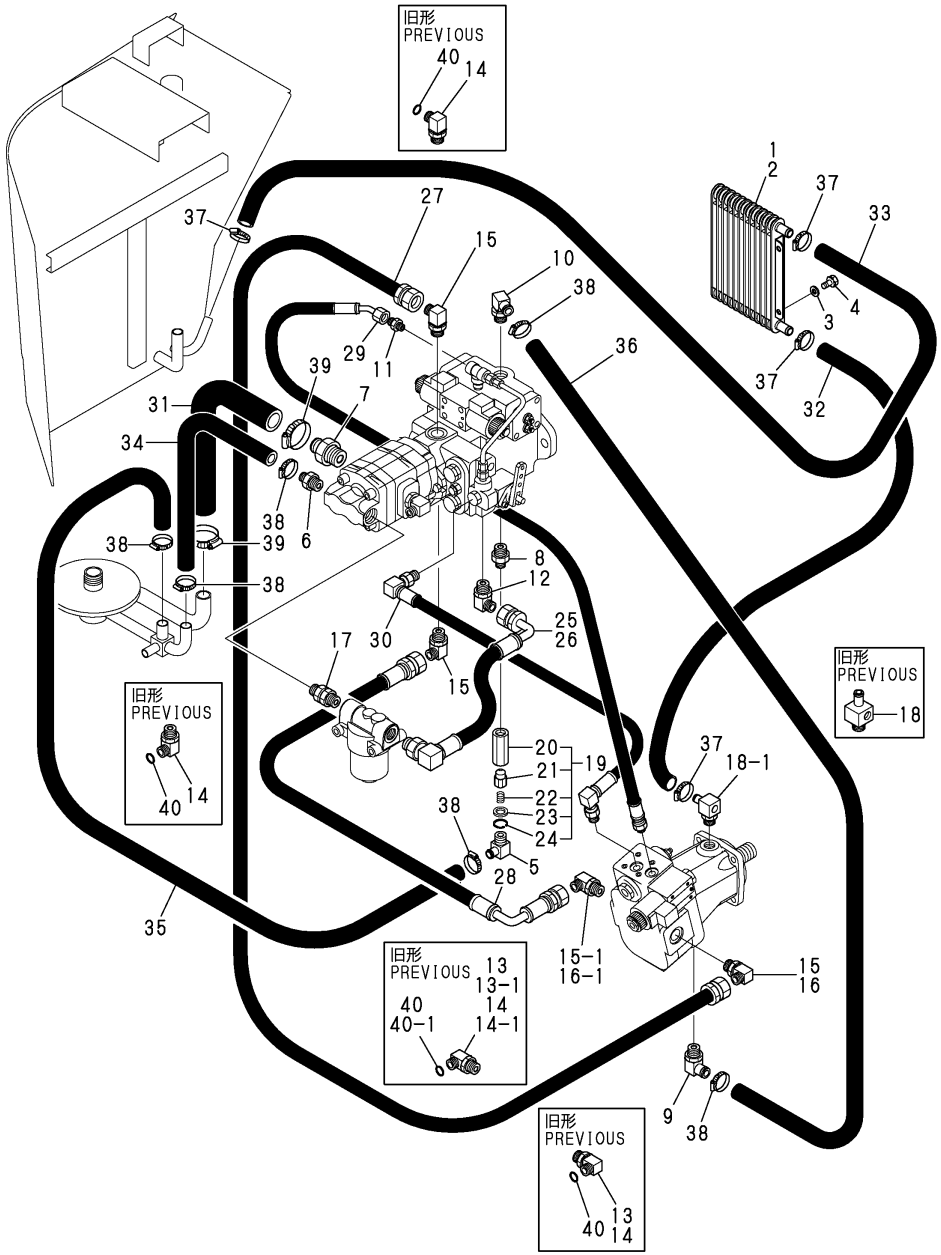

(A)=V3-5 (D)=V4-5A
(B)=V3-5(M/C) (E)=V5
(C)=V4-5 (F)=V5-A

No.	Lev.	Parts No.	Description	Q'ty (A)	(B)	(C)	(D)	(E)	(F)	I	R
32	1	172523-78750	HOSE	1		1		1			
32-1	1	172527-78490	HOSE	1		1		1		N	
(A=M/#51282)			(C=M/#51106)	(E=M/#01038)							
33	1	172527-78440	HOSE	1		1		1			
34	1	172524-78450	HOSE G812Y050	1		1		1			
35	1	172527-78460	HOSE	1		1		1			
36	1	172527-78470	HOSE	1		1		1			
37	1	23000-025000	CLAMP, 25	4		4		4			
38	1	23000-028000	CLAMP, 28	6		6		6			
39	1	23000-041000	CLAMP, 41	2		2		2			
40	1	172527-76340	O-RING, AS568-016	4		4		4			
40-1	1	172527-76340	O-RING, AS568-016	1		1		1		K	
(A=M/#50505)			(C=M/#50503)	(E=M/#00503)							
40-2	1	172527-76340	O-RING, AS568-016	1		1		1		Z	
(A=M/#50558)			(C=M/#50534)	(E=M/#00520)							

N:Old ◄Yes/No► New, Q:Old ◄No/Yes► New, R:Old ◄Yes/Yes► New, S:Old ◄No/No► New, W:Add, Z:Discontinued, F:Interchangeable by set, K:Q'ty Change

Copyright (C) YANMAR CO., LTD. All RightsReserved.

Fig.98. HYD.OIL PIPING(HST 2)

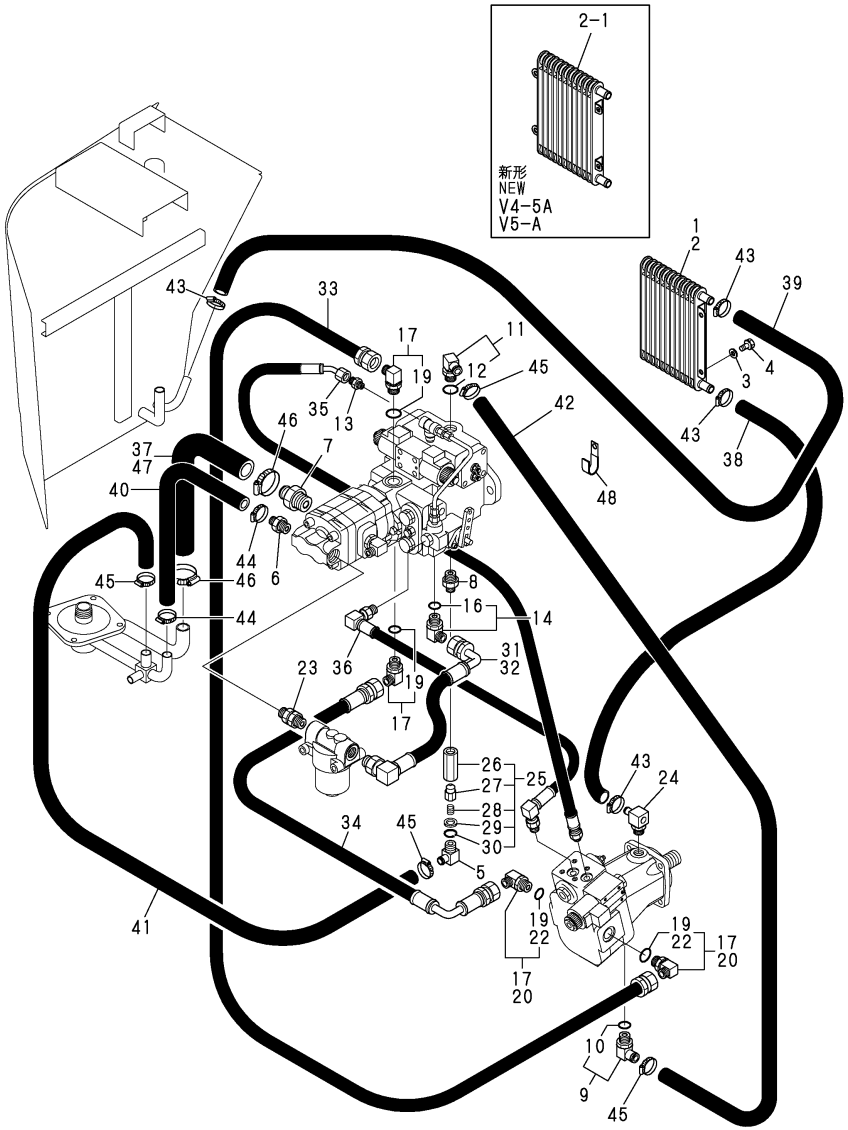

Remarks
(1)INTERCHANGEABLE BY SIMULTANEOUS REPLACEMENT WITH REF.NO.2-1 AND FIG.12 REF.NO.5-1.

(A)=V3-5 (B)=V3-5(M/C) (C)=V4-5 (D)=V4-5A (E)=V5 (F)=V5-A

No.	Lev.	Parts No.	Description	Q'ty (A)	(B)	(C)	(D)	(E)	(F)	I	R
1	1	172524-74810	COOLER, OIL		1						
2	1	172528-74810	COOLER ASSY, OIL				1		1		
2-1	1	198138-49100	COOLER ASSY, OIL				1		1	F	1
			(D=M/#52168)						(F=M/#02060)		
3	1	22137-080000	WASHER, 8		2		2		2		
3-1	1	22137-080000	WASHER, 8				3		3	K	
			(D=M/#52168)						(F=M/#02060)		
4	1	26013-080202	BOLT, M8X 20		2		2		2		
4-1	1	26013-080202	BOLT, M8X 20				3		3	K	
			(D=M/#52168)						(F=M/#02060)		
5	1	172467-76120	ELBOW		1		1		1		
6	1	172524-76210	NIPPLE, HOSE 3/4		1		1		1		
7	1	172527-76210	NIPPLE, 1-25		1		1		1		
8	1	172524-76230	NIPPLE, PF1/2-PT1/2		1		1		1		
9	1	172164-76131	ELBOW		1		1		1		
10	2	24315-000180	O-RING, 1BP18.0		1		1		1		
11	1	172164-76131	ELBOW		1		1		1		
12	2	24315-000180	O-RING, 1BP18.0		1		1		1		
13	1	23391-020000	JOINT, RGI-1/4		1		1		1		
14	1	172645-76560	CONNECTOR ASSY		1		1		1		
16	2	24315-000180	O-RING, 1BP18.0		1		1		1		
17	1	172151-76160	ELBOW ASSY		4		2		2		
17-1	1	172151-76161	ELBOW ASSY		4		2		2	R	
		(B=M/#52529)	(D=M/#52028)						(F=M/#02008)		
19	2	24315-000180	O-RING, 1BP18.0		4		2		2		
20	1	172165-76380	CONNECTOR ASSY				2		2		
22	2	24315-000240	O-RING, 1BP24.0				2		2		
23	1	172527-76350	CONNECTOR, PF1/2X1/2		1		1		1		
24	1	172527-76460	CONNECTOR, 1/2X16		1		1		1		
25	1	172524-76801	RELIEF COMP.,2ND		1		1		1		
26	2	172524-76810	BODY,VALVE		1		1		1		
27	2	172649-74470	POPPET VALVE		1		1		1		
28	2	172649-74480	SPRING, VALVE		1		1		1		
29	2	172649-74490	SEAT, SPRING		1		1		1		
30	1	22252-000220	RING, 22		1		1		1		
31	1	172527-78310	HOSE		1		1				
32	1	172529-78310	HOSE						1		
33	1	172527-78330	HOSE A		1		1		1		
34	1	172527-78380	HOSE B		1		1		1		
35	1	172527-78351	HOSE C1		1		1		1		
36	1	172527-78360	HOSE C2		1		1		1		
37	1	172527-78391	HOSE G616YY045		1						
38	1	172527-78491	HOSE G610YY090		1		1		1		
38-1	1	172527-78492	HOSE G610YY098		1		1		1	N	
		(B=*2004.09)	(D=M/#52135)						(F=M/#02052)		
39	1	172527-78441	HOSE G610YY160		1		1		1		
39-1	1	172527-78442	HOSE G610YY163S		1		1		1	N	
		(B=*2004.09)	(D=M/#52135)						(F=M/#02052)		
40	1	172175-78121	HOSE		1		1		1		
41	1	172527-78461	HOSE G612YY048		1		1		1		
42	1	172527-78471	HOSE G612YY075		1		1		1		

N:Old $\overset{\text{Yes}}{\underset{\text{No}}{\leftrightarrow}}$ New, Q:Old $\overset{\text{No}}{\underset{\text{Yes}}{\leftrightarrow}}$ New, R:Old $\overset{\text{Yes}}{\underset{\text{Yes}}{\leftrightarrow}}$ New, S:Old $\overset{\text{No}}{\underset{\text{No}}{\leftrightarrow}}$ New, W:Add, Z:Discontinued, F:Interchangeable by set, K:Q'ty Change

++ CONTINUE ++

Copyright (C) YANMAR CO., LTD. All RightsReserved.

Fig.98. HYD.OIL PIPING(HST 2)

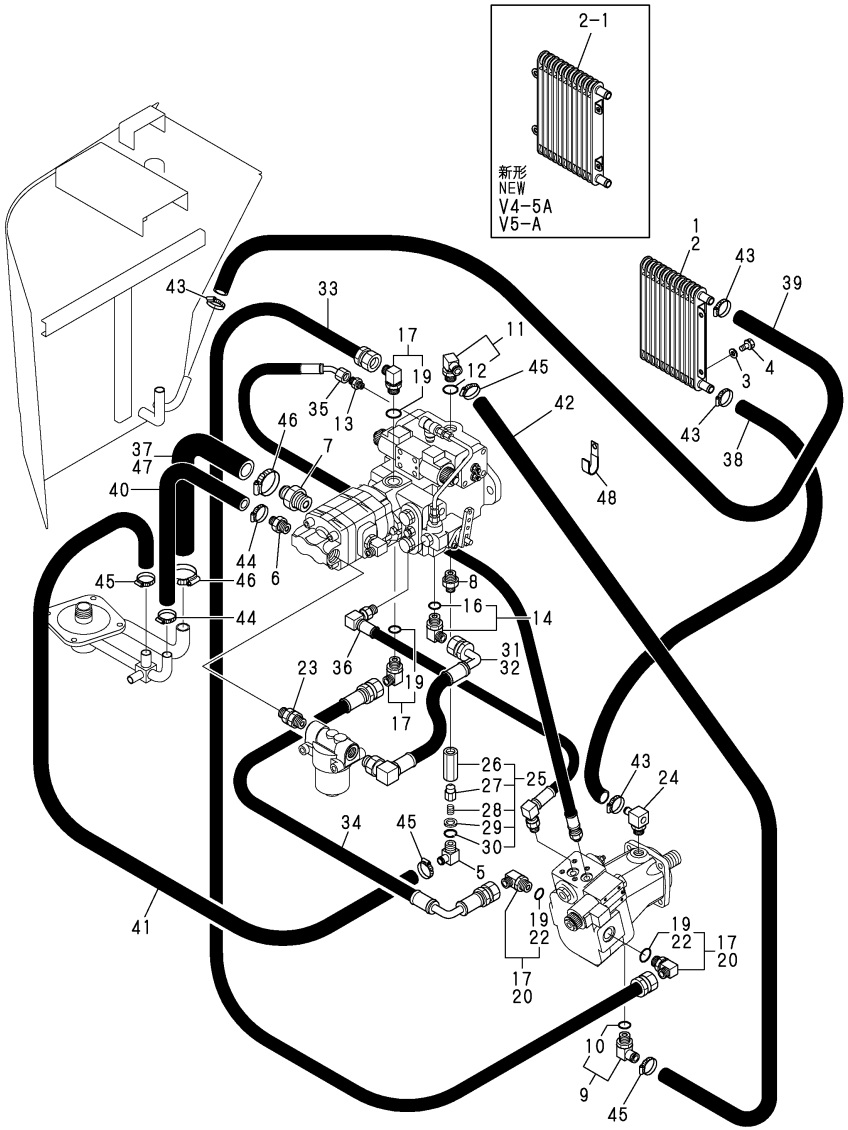

Remarks
(1)INTERCHANGEABLE BY SIMULTANEOUS REPLACEMENT WITH REF.NO.2-1 AND FIG.12 REF.NO.5-1.

(A)=V3-5
(B)=V3-5(M/C)
(C)=V4-5
(D)=V4-5A
(E)=V5
(F)=V5-A

No.	Lev.	Parts No.	Description	Q'ty (A)	(B)	(C)	(D)	(E)	(F)	I	R
43	1	23001-022000	CLAMP, HOSE 22		4		4		4		
44	1	23001-025000	CLAMP, HOSE 25		2		2		2		
45	1	23001-035000	CLAMP, HOSE 35		4		4		4		
46	1	23001-041000	CLAMP, HOSE 41		2		2		2		
47	1	172528-78390	HOSE G616YY041				1		1		
48	1	1A1380-59480	CLAMP, CORD		1		1		1	W	
			(B=M/#52529) (D=M/#52028) (F=M/#02008)								

N:Old ←Yes/No→ New, Q:Old ←No/Yes→ New, R:Old ←Yes/Yes→ New, S:Old ←No/No→ New, W:Add, Z:Discontinued, F:Interchangeable by set, K:Q'ty Change

Copyright (C) YANMAR CO., LTD. All RightsReserved.

Fig.99. HYD.OIL PIPING(LOADER 1)

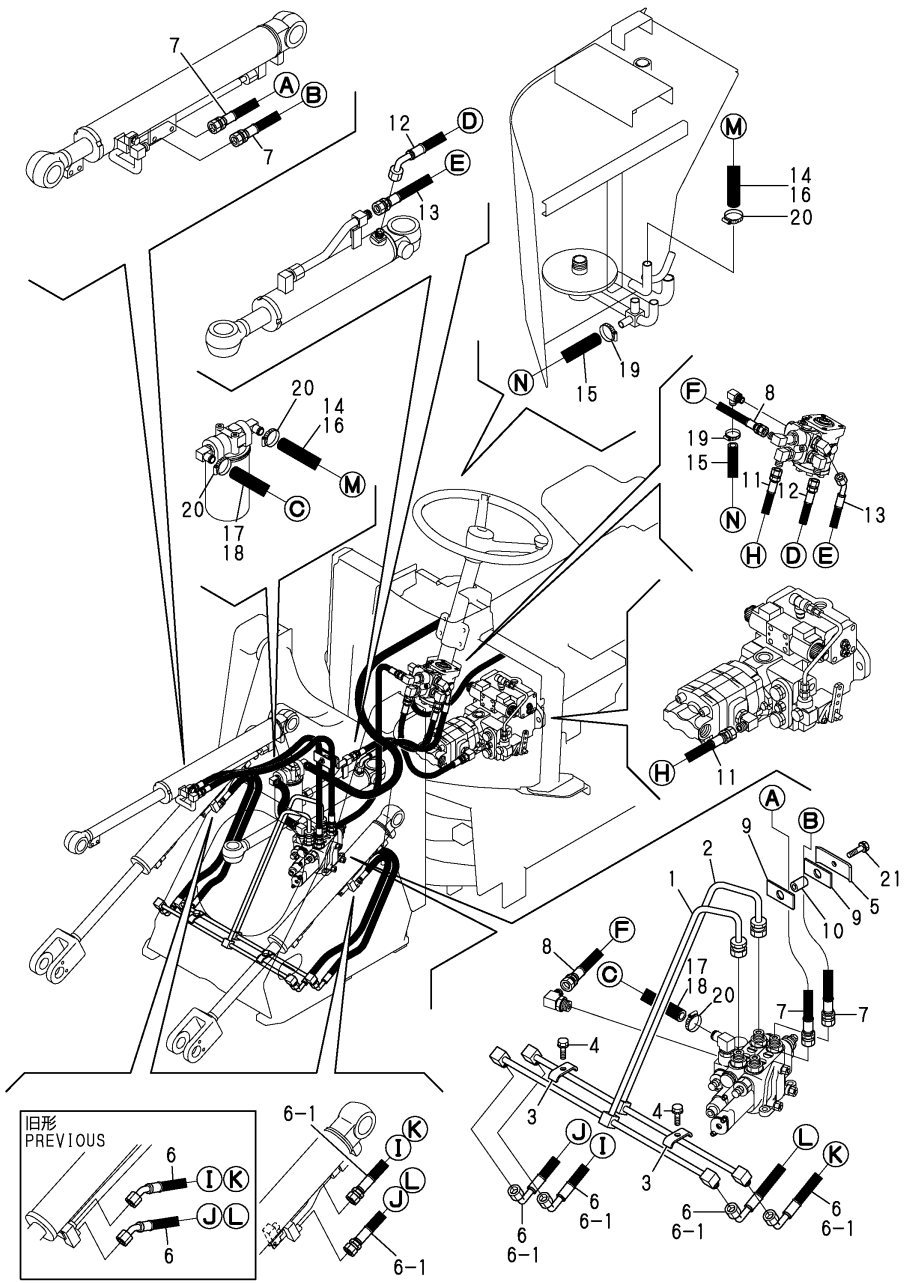

(A)=V3-5
(B)=V3-5(M/C)
(C)=V4-5
(D)=V4-5A
(E)=V5
(F)=V5-A

No.	Lev.	Parts No.	Description	Q'ty (A)	(B)	(C)	(D)	(E)	(F)	I	R
1	1	172527-76510	PIPE, LIFT	1		1		1			
2	1	172527-76520	PIPE ASSY, LIFT	1		1		1			
3	1	981083-71840	CLAMP, PIPE	2		2		2			
4	1	26013-100352	BOLT, M10X 35	2		2		2			
5	1	172520-77380	W.P BACH PLATE	1		1		1			
6	1	172527-78110	H0SE	4		4		4			
6-1	1	172527-78111	H0SE	4		4		4		S	
	(A=M/#50595)		(C=M/#50563)	(E=M/#00533)							
7	1	172527-78130	H0SE	2		2		2			
8	1	172527-78140	H0SE	1		1		1			
9	1	172524-78150	RUBBER	2		2		2			
10	1	172524-78170	PIPE	1		1		1			
11	1	172527-78210	H0SE	1		1		1			
12	1	172527-78230	H0SE	1		1		1			
13	1	172527-78240	H0SE	1		1		1			
14	1	172527-78250	H0SE	1							
15	1	172523-78750	HOSE	1		1		1			
16	1	172528-78720	H0SE			1		1			
17	1	172527-78730	H0SE	1							
18	1	172528-78730	H0SE			1		1			
19	1	23000-025000	CLAMP, 25	2		2		2			
20	1	23000-028000	CLAMP, 28	4		4		4			
21	1	26013-100452	BOLT, M10X 45	1		1		1			

N:Old $\frac{\text{Yes}}{\text{No}}$ New, Q:Old $\frac{\text{No}}{\text{Yes}}$ New, R:Old $\frac{\text{Yes}}{\text{Yes}}$ New, S:Old $\frac{\text{No}}{\text{No}}$ New, W:Add, Z:Discontinued, F:Interchangeable by set, K:Q'ty Change

Copyright (C) YANMAR CO., LTD. All RightsReserved.

Fig.100. HYD.OIL PIPING(LOADER 2)

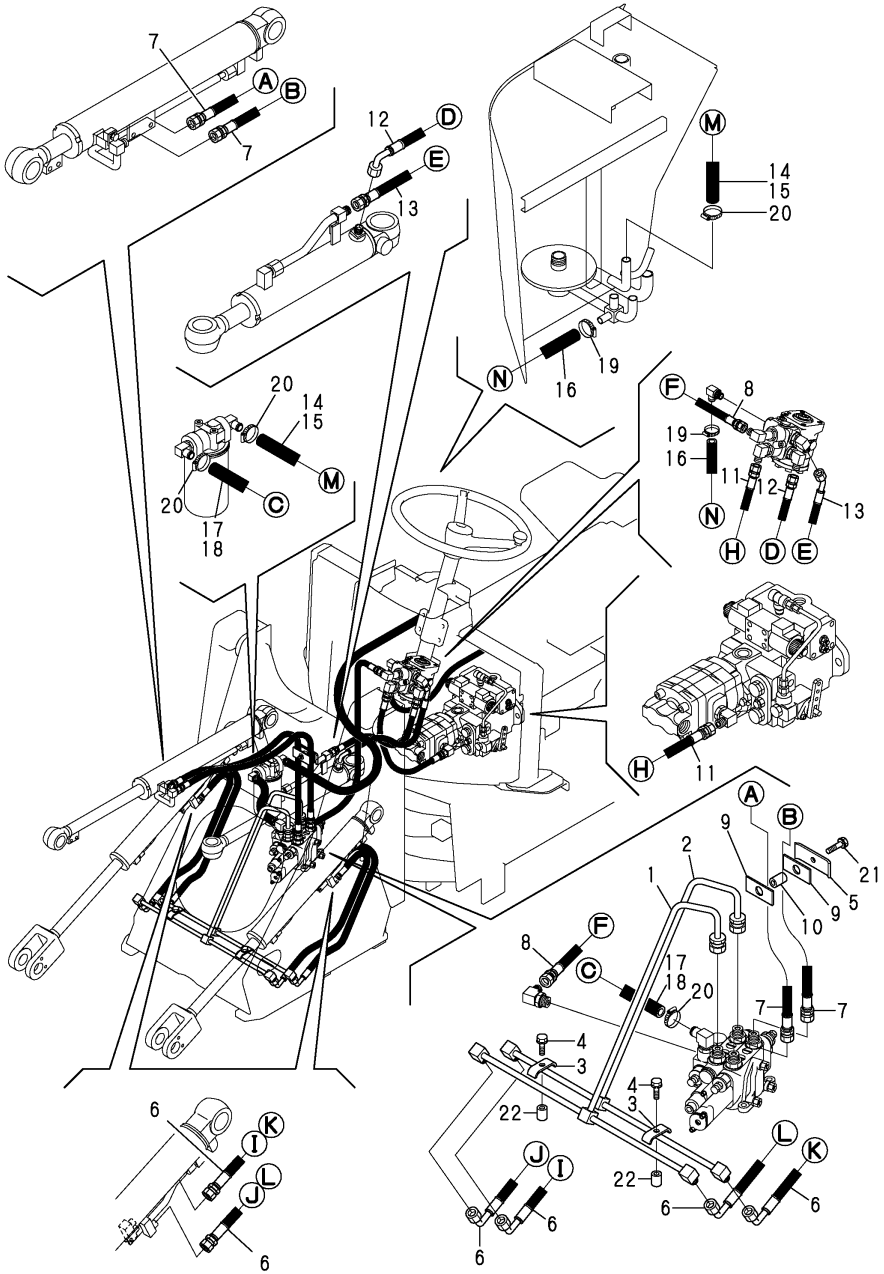

(A)=V3-5 (D)=V4-5A
(B)=V3-5(M/C) (E)=V5
(C)=V4-5 (F)=V5-A

No.	Lev.	Parts No.	Description	Q'ty (A)	(B)	(C)	(D)	(E)	(F)	I	R
1	1	172527-76511	PIPE ASSY, LIFT		1		1		1		
2	1	172527-76521	PIPE ASSY, LIFT		1		1		1		
3	1	172110-76170	PLATE		2		2		2		
4	1	26013-080352	BOLT, M8X 35		2		2		2		
5	1	172520-77380	W.P BACH PLATE		1		1		1		
6	1	172527-78111	H0SE		4		4		4		
7	1	172527-78130	H0SE		2		2		2		
8	1	172527-78140	H0SE		1		1		1		
9	1	172524-78150	RUBBER		2		2		2		
10	1	172524-78170	PIPE		1		1		1		
11	1	172527-78210	H0SE		1		1		1		
12	1	172527-78230	H0SE		1		1		1		
13	1	172527-78240	H0SE		1		1		1		
14	1	172527-78251	H0SE G612YY090S		1						
15	1	172444-78310	HOSE				1		1		
16	1	172527-78750	HOSE G610YY105		1		1		1		
17	1	172527-78731	H0SE G612YY027		1						
18	1	172448-75300	HOSE G612YY032				1		1		
19	1	23001-022000	CLAMP, HOSE 22		2		2		2		
20	1	23001-035000	CLAMP, HOSE 35		4		4		4		
21	1	26013-100452	BOLT, M10X 45		1		1		1		
21-1	1	26013-100502	BOLT, M10X 50		1		1		1	N	
		(B=M/#52529)	(D=M/#52028)						(F=M/#02008)		
22	1	194630-15520	COLLAR, 9.2X13.8X11		2		2		2		

N:Old ←Yes/No→ New, Q:Old ←No/Yes→ New, R:Old ←Yes/Yes→ New, S:Old ←No/No→ New, W:Add, Z:Discontinued, F:Interchangeable by set, K:Q'ty Change

Copyright (C) YANMAR CO., LTD. All RightsReserved.

Fig.101. HYD.OIL PIPING(FPTO)

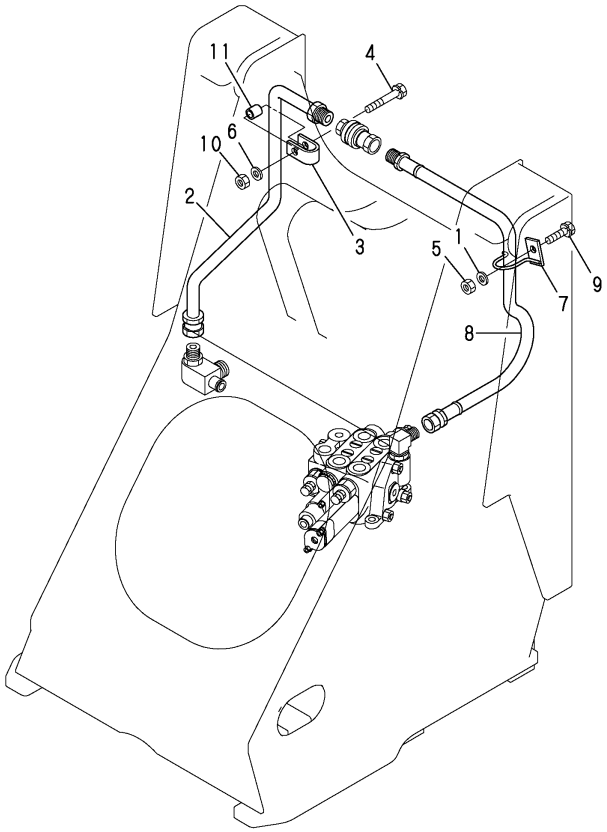

(A)=V3-5
(B)=V3-5(M/C)
(C)=V4-5
(D)=V4-5A
(E)=V5
(F)=V5-A

No.	Lev.	Parts No.	Description	Q'ty (A)	(B)	(C)	(D)	(E)	(F)	I	R
1	1	172527-61640	WASHER	1		1		1			
2	1	172527-76170	PIPE	1		1		1			
3	1	172511-76770	CLAMP, PIPE	1		1		1			
4	1	26013-100602	BOLT, M10X 60	1		1		1			
5	1	26716-100002	NUT, M10	1		1		1			
6	1	172527-61640	WASHER	1		1		1			
7	1	172527-76160	CLAMP	1		1		1			
8	1	172527-78180	HOSE	1		1		1			
9	1	26013-100352	BOLT, M10X 35	1		1		1			
10	1	26716-100002	NUT, M10	1		1		1			
11	1	172524-77350	COLLAR, 10X16X17	1		1		1			

N:Old $\xleftrightarrow[\text{No}]{\text{Yes}}$ New, Q:Old $\xleftrightarrow[\text{Yes}]{\text{No}}$ New, R:Old $\xleftrightarrow[\text{Yes}]{\text{Yes}}$ New, S:Old $\xleftrightarrow[\text{No}]{\text{No}}$ New, W:Add, Z:Discontinued, F:Interchangeable by set, K:Q'ty Change

Copyright (C) YANMAR CO., LTD. All RightsReserved.

Fig.102. HYD.OIL PIPING(3RD 1)

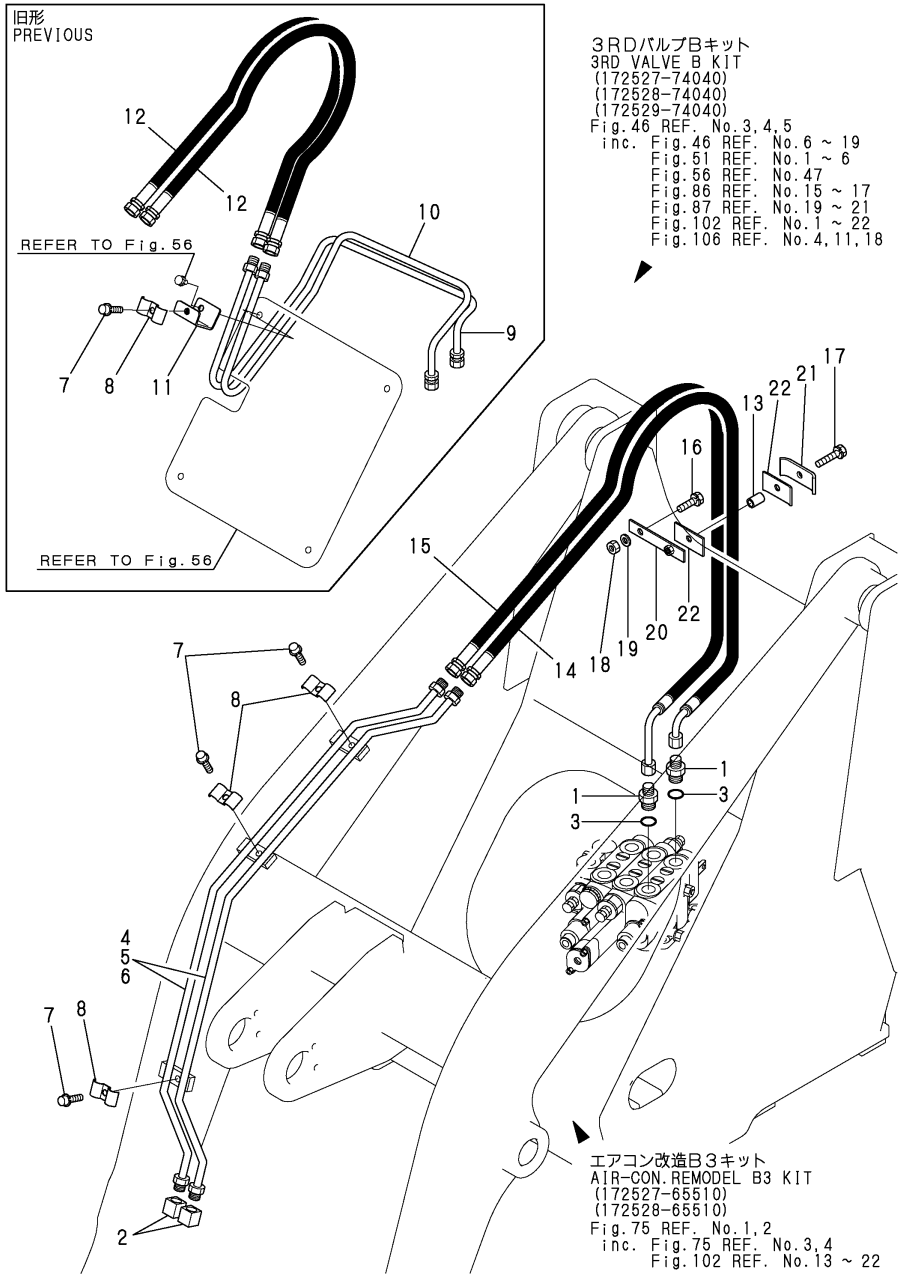

(A)=V3-5 (D)=V4-5A
(B)=V3-5(M/C) (E)=V5
(C)=V4-5 (F)=V5-A

No.	Lev.	Parts No.	Description	Q'ty (A)	(B)	(C)	(D)	(E)	(F)	I	R
1	1	172527-76110	ADAPTER, 3/8X1/2	2		2		2			
2	1	172516-77560	PLUG PT3/8	2		2		2			
3	1	24311-000180	O-RING, 1AP18.0	2		2		2			
4	1	172527-77360	PIPE	2							
5	1	172528-77360	PIPE			2					
6	1	172529-77360	PIPE					2			
7	1	26013-100352	BOLT, M10X 35	4		4		4			
7-1	1	26013-100352	BOLT, M10X 35	3		3		3		K	
	(A=M/#51083)		(C=M/#51025)	(E=M/#01001)							
8	1	981083-71840	CLAMP, PIPE	4		4		4			
8-1	1	981083-71840	CLAMP, PIPE	3		3		3		K	
	(A=M/#51083)		(C=M/#51025)	(E=M/#01001)							
9	1	172527-77110	PIPE	1		1		1		Z	
	(A=M/#51083)		(C=M/#51025)	(E=M/#01001)							
10	1	172527-77120	PIPE	1		1		1		Z	
	(A=M/#51083)		(C=M/#51025)	(E=M/#01001)							
11	1	172527-77150	STAY	1		1		1		Z	
	(A=M/#51083)		(C=M/#51025)	(E=M/#01001)							
12	1	172527-78290	HOSE	2		2		2		Z	
	(A=M/#51083)		(C=M/#51025)	(E=M/#01001)							
13	1	172524-78170	PIPE	1		1		1		W	
	(A=M/#51083)		(C=M/#51025)	(E=M/#01001)							
14	1	172527-78550	HOSE	1		1		1		W	
	(A=M/#51083)		(C=M/#51025)	(E=M/#01001)							
15	1	172527-78560	HOSE	1		1		1		W	
	(A=M/#51083)		(C=M/#51025)	(E=M/#01001)							
16	1	26013-100352	BOLT, M10X 35	1		1		1		W	
	(A=M/#51083)		(C=M/#51025)	(E=M/#01001)							
17	1	26013-100452	BOLT, M10X 45	1		1		1		W	
	(A=M/#51083)		(C=M/#51025)	(E=M/#01001)							
18	1	26716-100002	NUT, M10	1		1		1		W	
	(A=M/#51083)		(C=M/#51025)	(E=M/#01001)							
19	1	172527-61640	WASHER	1		1		1		W	
	(A=M/#51083)		(C=M/#51025)	(E=M/#01001)							
20	1	172524-77360	PLATE	1		1		1		W	
	(A=M/#51083)		(C=M/#51025)	(E=M/#01001)							
21	1	172520-77380	W.P BACH PLATE	1		1		1		W	
	(A=M/#51083)		(C=M/#51025)	(E=M/#01001)							
22	1	172524-78150	RUBBER	2		2		2		W	
	(A=M/#51083)		(C=M/#51025)	(E=M/#01001)							

N:Old $\xleftarrow[\text{No}]{\text{Yes}}$ New, Q:Old $\xleftarrow[\text{Yes}]{\text{No}}$ New, R:Old $\xleftarrow[\text{Yes}]{\text{Yes}}$ New, S:Old $\xleftarrow[\text{No}]{\text{No}}$ New, W:Add, Z:Discontinued, F:Interchangeable by set, K:Q'ty Change

Copyright (C) YANMAR CO., LTD. All RightsReserved.

Fig.103. HYD.OIL PIPING(3RD 2)

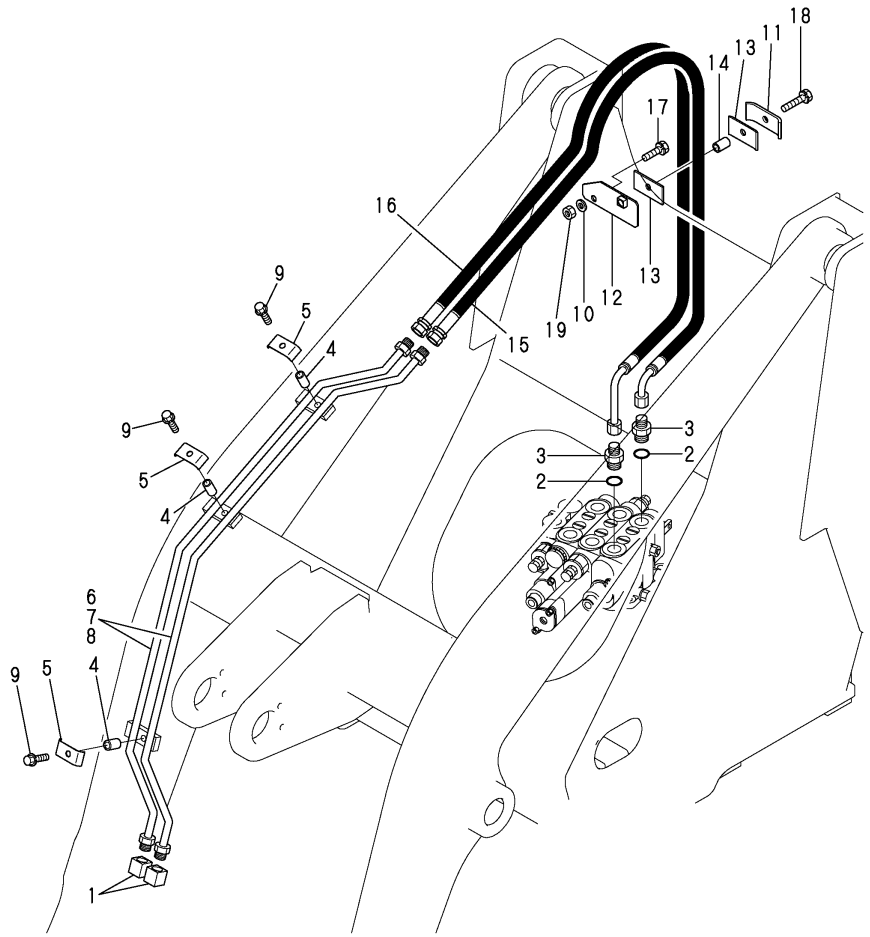

(A)=V3-5
(B)=V3-5(M/C)
(C)=V4-5
(D)=V4-5A
(E)=V5
(F)=V5-A

No.	Lev.	Parts No.	Description	Q'ty (A)	(B)	(C)	(D)	(E)	(F)	I	R
1	1	1A6380-48870	CAP, G3/8		2		2		2		
2	1	24311-000180	O-RING, 1AP18.0		2		2		2		
3	1	933160-01370	CONNECTOR,PF1/2PF3/8		2		2		2		
4	1	194630-15520	COLLAR, 9.2X13.8X11		3		3		3		
5	1	172110-76170-4	PLATE		3		3		3		
6	1	172527-77370	PIPE ASSY, 3RD		2						
7	1	172528-77370	PIPE ASSY, 3RD				2				
8	1	172529-77370	PIPE ASSY, 3RD						2		
9	1	26013-080352	BOLT, M8X 35		3		3		3		
10	1	194145-04810	WASHER		1		1		1		
11	1	172520-77380	W.P BACH PLATE		1		1		1		
12	1	172527-77400	STAY ASSY, HOSE		1		1		1		
13	1	172524-78150	RUBBER		2		2		2		
14	1	172524-78170	PIPE		1		1		1		
15	1	172527-78570	HOSE,H206BC135		1		1		1		
16	1	172527-78580	HOSE,H206BC145		1		1		1		
17	1	26013-100352	BOLT, M10X 35		1		1		1		
18	1	26013-100452	BOLT, M10X 45		1		1		1		
19	1	26716-100002	NUT, M10		1		1		1		

N:Old $\xleftarrow[\text{No}]{\text{Yes}}$ New, Q:Old $\xleftarrow[\text{Yes}]{\text{No}}$ New, R:Old $\xleftarrow[\text{Yes}]{\text{Yes}}$ New, S:Old $\xleftarrow[\text{No}]{\text{No}}$ New, W:Add, Z:Discontinued, F:Interchangeable by set, K:Q'ty Change

Copyright (C) YANMAR CO., LTD. All RightsReserved.

Fig.104. LIFT ARM(1)

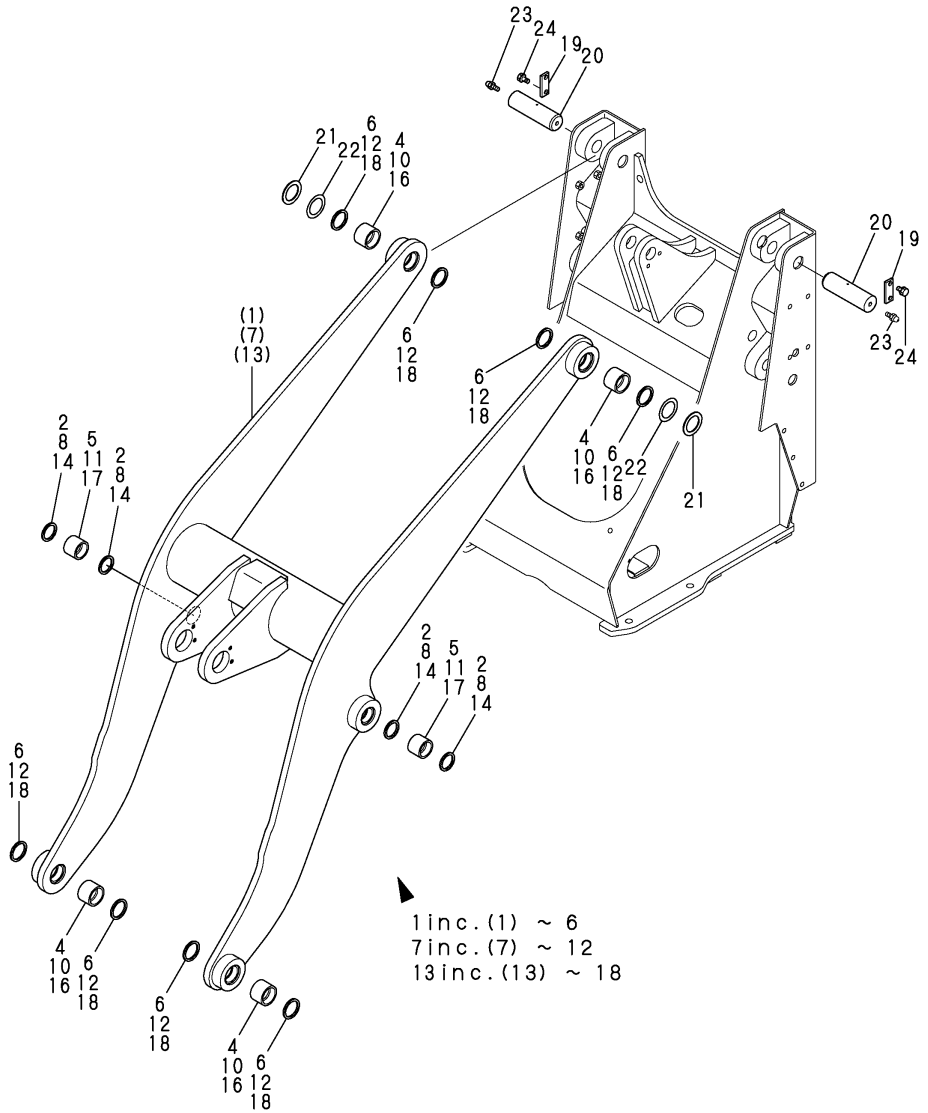

(A)=V3-5
(B)=V3-5(M/C)
(C)=V4-5
(D)=V4-5A
(E)=V5
(F)=V5-A

No.	Lev.	Parts No.	Description	Q'ty (A)	(B)	(C)	(D)	(E)	(F)	I	R
1	1	172527-91100	ARM ASSY, LIFT	1							
2	2	172510-81510	SEAL, DUST 40X50X4	4							
4	2	172527-91180	BUSH	4							
5	2	172527-91190	BUSH	2							
6	2	172513-91290	SEAL, DUST 45X55X4	8							
7	1	172528-91100	ARM ASSY, LIFT			1					
8	2	172510-81510	SEAL, DUST 40X50X4			4					
10	2	172527-91180	BUSH			4					
11	2	172527-91190	BUSH			2					
12	2	172513-91290	SEAL, DUST 45X55X4			8					
13	1	172529-91100	ARM LIFT					1			
14	2	172510-81510	SEAL, DUST 40X50X4					4			
16	2	172527-91180	BUSH					4			
17	2	172527-91190	BUSH					2			
18	2	172513-91290	SEAL, DUST 45X55X4					8			
19	1	172512-91210	PLATE, PIN LOCK	2		2		2			
20	1	172527-91210	PIN 45X153	2		2		2			
21	1	172527-91220	SHIM, 45X65X1.2	2		2		2			
22	1	172527-91230	SHIM, 45X65X2.6	2		2		2			
23	1	24764-020000	NIPPLE, GREASE R1/8	2		2		2			
24	1	26013-100202	BOLT, M10X 20	4		4		4			

N:Old $\xleftarrow[\text{No}]{\text{Yes}}$ New, Q:Old $\xleftarrow[\text{Yes}]{\text{No}}$ New, R:Old $\xleftarrow[\text{Yes}]{\text{Yes}}$ New, S:Old $\xleftarrow[\text{No}]{\text{No}}$ New, W:Add, Z:Discontinued, F:Interchangeable by set, K:Q'ty Change

Copyright (C) YANMAR CO., LTD. All RightsReserved.

Fig.105. LIFT ARM(2)

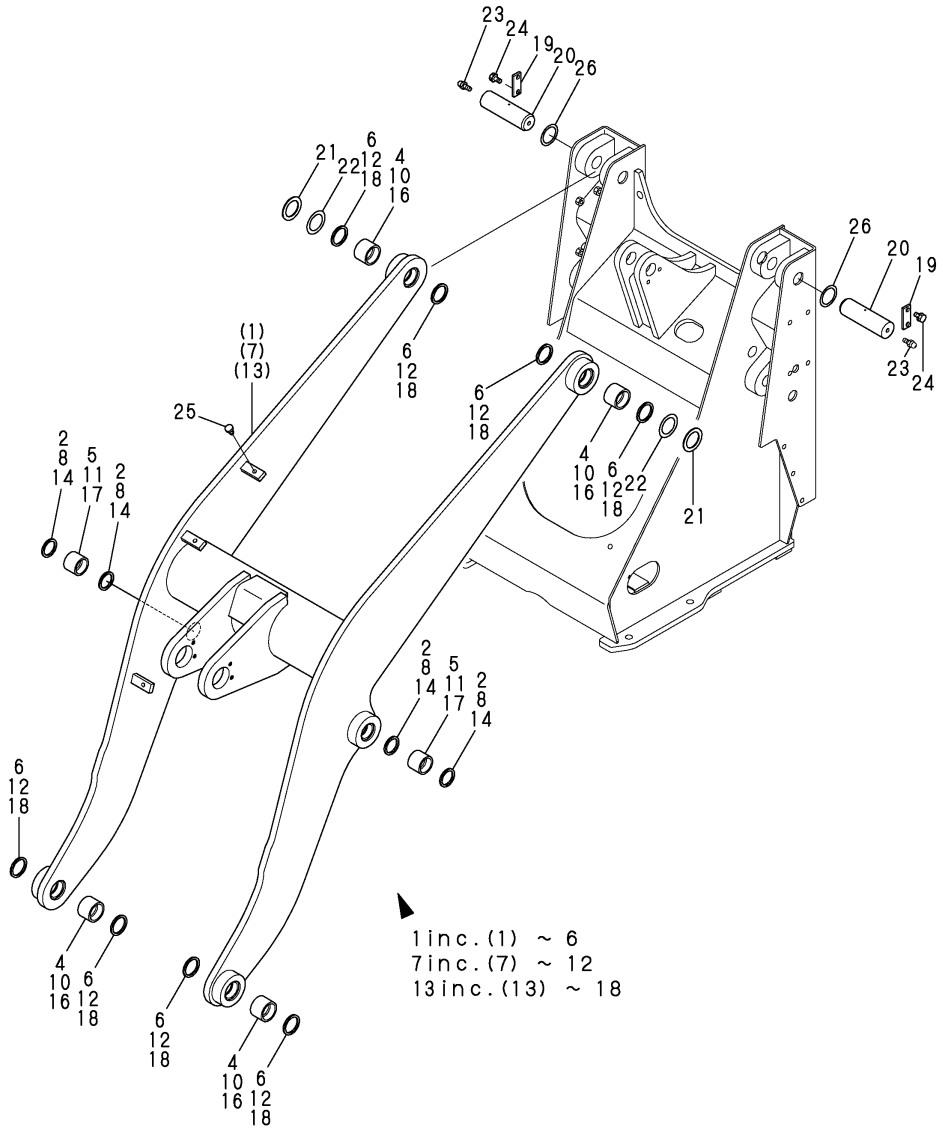

(A)=V3-5
(B)=V3-5(M/C)
(C)=V4-5
(D)=V4-5A
(E)=V5
(F)=V5-A

No.	Lev.	Parts No.	Description	Q'ty (A)	(B)	(C)	(D)	(E)	(F)	I	R
1	1	172527-91101	ARM ASSY, LIFT		1						
2	2	172448-72650	SEAL, DUST		4						
4	2	172527-91180	BUSH		4						
5	2	172527-91190	BUSH		2						
6	2	172168-81410	SEAL, DUST		8						
7	1	172528-91101	ARM ASSY, LIFT				1				
7-1	1	172528-92100	ARM ASSY, LIFT (D=M/#52168)				1				R
8	2	172448-72650	SEAL, DUST				4				
10	2	172527-91180	BUSH				4				
11	2	172527-91190	BUSH				2				
12	2	172168-81410	SEAL, DUST				8				
13	1	172529-91101	ARM ASSY, LIFT						1		
13-1	1	172529-92100	ARM ASSY, LIFT (F=M/#02060)						1		R
14	2	172448-72650	SEAL, DUST						4		
16	2	172527-91180	BUSH						4		
17	2	172527-91190	BUSH						2		
18	2	172168-81410	SEAL, DUST						8		
19	1	172512-91210	PLATE, PIN LOCK		2		2		2		
20	1	172527-91210	PIN 45X153		2		2		2		
21	1	172527-91220	SHIM, 45X65X1.2		2		2		2		
22	1	172527-91230	SHIM, 45X65X2.6		2		2		2		
23	1	24764-020000	NIPPLE, GREASE R1/8		2		2		2		
24	1	26013-100202	BOLT, M10X 20		4		4		4		
25	1	172444-17660	CLIP, TREE		3		3		3		
26	1	172176-81660	COLLAR, 45.5X65X1		2		2		2		

N:Old $\xleftarrow[\text{No}]{\text{Yes}}$ New, Q:Old $\xleftarrow[\text{Yes}]{\text{No}}$ New, R:Old $\xleftarrow[\text{Yes}]{\text{Yes}}$ New, S:Old $\xleftarrow[\text{No}]{\text{No}}$ New, W:Add, Z:Discontinued, F:Interchangeable by set, K:Q'ty Change

Copyright (C) YANMAR CO., LTD. All RightsReserved.

Fig.106. LIFT ARM(3RD)

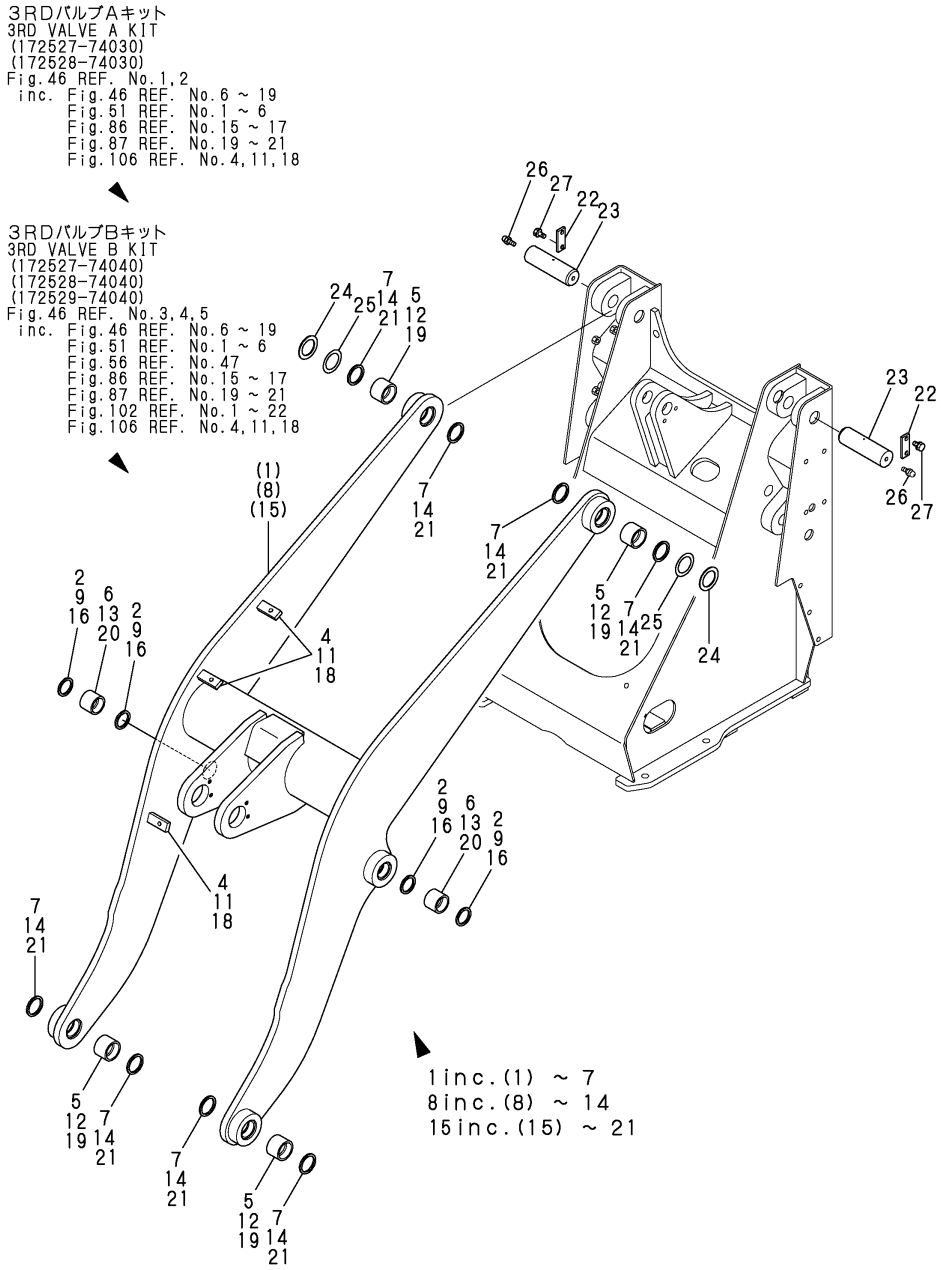

(A)=V3-5
(B)=V3-5(M/C)
(C)=V4-5
(D)=V4-5A
(E)=V5
(F)=V5-A

No.	Lev.	Parts No.	Description	Q'ty (A)	(B)	(C)	(D)	(E)	(F)	I	R
1	1	172527-91050	ARM,LIFT 3-WAY	1							
2	2	172510-81510	SEAL, DUST 40X50X4	4							
4	2	172520-91090	PLATE	3							
5	2	172527-91180	BUSH	4							
6	2	172527-91190	BUSH	2							
7	2	172513-91290	SEAL, DUST 45X55X4	8							
8	1	172528-91050	ARM,LIFT 3-WAY			1					
9	2	172510-81510	SEAL, DUST 40X50X4			4					
11	2	172520-91090	PLATE			3					
12	2	172527-91180	BUSH			4					
13	2	172527-91190	BUSH			2					
14	2	172513-91290	SEAL, DUST 45X55X4			8					
15	1	172529-91050	ARM,LIFT 3-WAY					1			
16	2	172510-81510	SEAL, DUST 40X50X4					4			
18	2	172520-91090	PLATE					3			
19	2	172527-91180	BUSH					4			
20	2	172527-91190	BUSH					2			
21	2	172513-91290	SEAL, DUST 45X55X4					8			
22	1	172512-91210	PLATE, PIN LOCK	2		2		2			
23	1	172527-91210	PIN 45X153	2		2		2			
24	1	172527-91220	SHIM, 45X65X1.2	2		2		2			
25	1	172527-91230	SHIM, 45X65X2.6	2		2		2			
26	1	24764-020000	NIPPLE, GREASE R1/8	2		2		2			
27	1	26013-100202	BOLT, M10X 20	4		4		4			

N:Old $\xleftarrow[\text{No}]{\text{Yes}}$ New, Q:Old $\xleftarrow[\text{Yes}]{\text{No}}$ New, R:Old $\xleftarrow[\text{Yes}]{\text{Yes}}$ New, S:Old $\xleftarrow[\text{No}]{\text{No}}$ New, W:Add, Z:Discontinued, F:Interchangeable by set, K:Q'ty Change

Copyright (C) YANMAR CO., LTD. All RightsReserved.

Fig.107. LOADER LINK(1)

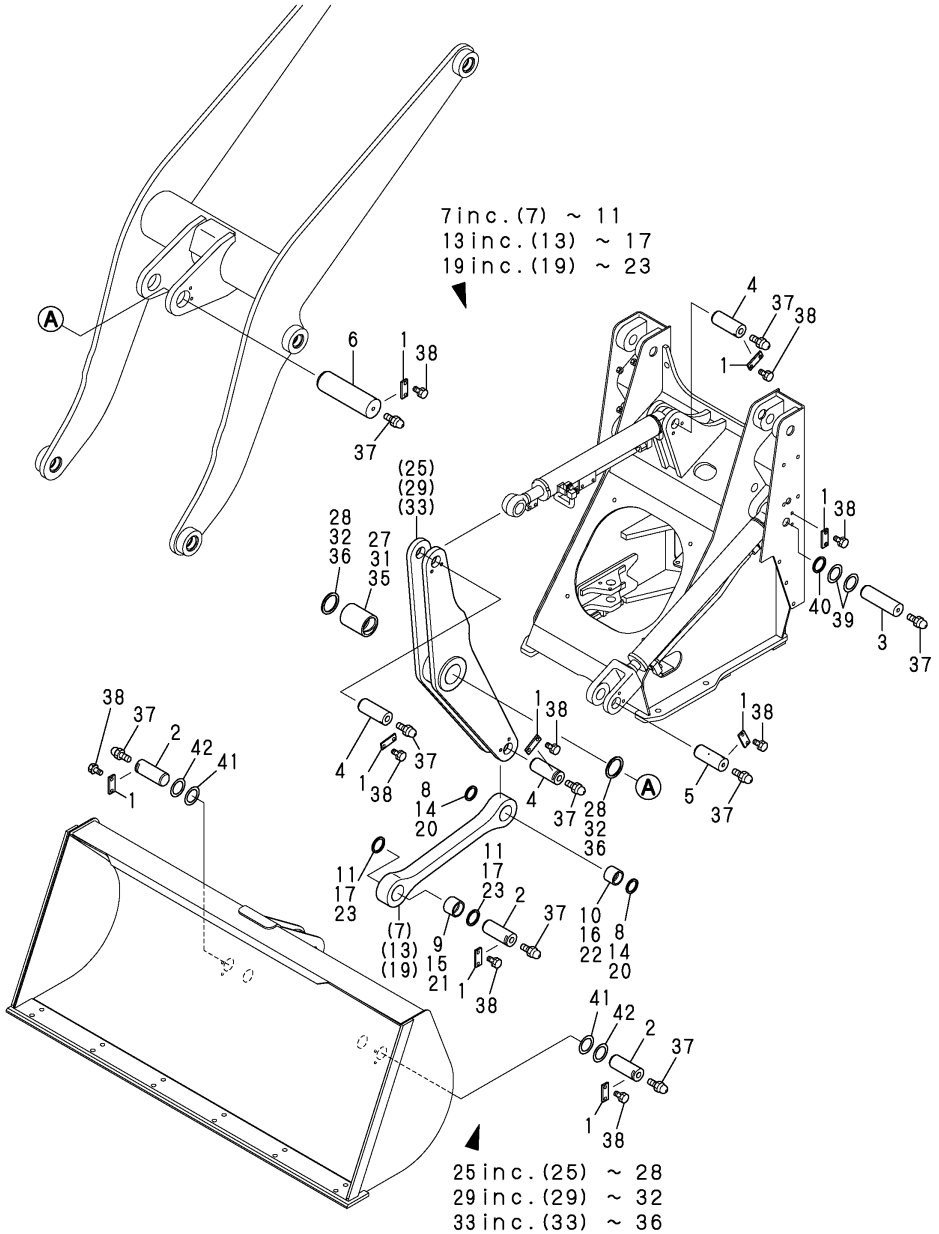

(A)=V3-5
(B)=V3-5(M/C)
(C)=V4-5
(D)=V4-5A
(E)=V5
(F)=V5-A

No.	Lev.	Parts No.	Description	Q'ty (A)	(B)	(C)	(D)	(E)	(F)	I	R
1	1	172512-91210	PLATE, PIN LOCK	11		11		11			
2	1	172527-91250	PIN 45X115	3		3		3			
3	1	172527-91260	PIN 40X153	2		2		2			
4	1	172527-91270	PIN 40X107	3		3		3			
5	1	172527-91280	PIN 40X114.5	2		2		2			
6	1	172527-91290	PIN 60X172	1		1		1			
7	1	172527-91300	LINK ASSY	1							
8	2	172510-81510	SEAL, DUST 40X50X4	2							
9	2	172527-91180	BUSH	1							
10	2	172527-91190	BUSH	1							
11	2	172513-91290	SEAL, DUST 45X55X4	2							
13	1	172528-91300	LINK ASSY			1					
14	2	172510-81510	SEAL, DUST 40X50X4			2					
15	2	172527-91180	BUSH			1					
16	2	172527-91190	BUSH			1					
17	2	172513-91290	SEAL, DUST 45X55X4			2					
19	1	172529-91300	LINK ASSY					1			
20	2	172510-81510	SEAL, DUST 40X50X4					2			
21	2	172527-91180	BUSH					1			
22	2	172527-91190	BUSH					1			
23	2	172513-91290	SEAL, DUST 45X55X4					2			
25	1	172527-91600	BELL CRANK ASSY	1							
27	2	172527-91650	BUSH	1							
28	2	172527-91660	SEAL, DUST 60X75X4	2							
28-1	2	172020-10620	SEAL, DUST	2							R
	(A=*2003.03)										
29	1	172528-91600	BELL CRANK ASSY			1					
31	2	172527-91650	BUSH			1					
32	2	172527-91660	SEAL, DUST 60X75X4			2					
32-1	2	172020-10620	SEAL, DUST			2					R
			(C=*2003.03)								
33	1	172529-91600	BELL-CRANK ASSY					1			
35	2	172527-91650	BUSH					1			
36	2	172527-91660	SEAL, DUST 60X75X4					2			
36-1	2	172020-10620	SEAL, DUST					2			R
			(E=*2003.03)								
37	1	24764-020000	NIPPLE, GREASE R1/8	11		11		11			
38	1	26013-100202	BOLT, M10X 20	22		22		22			
39	1	981083-71110	SHIM, LIFT ARM	4		4		4			
40	1	981083-71120	SHIM, LIFT ARM	2		2		2			
41	1	172527-91220	SHIM, 45X65X1.2	2		2		2			
42	1	172527-91230	SHIM, 45X65X2.6	2		2		2			

N:Old $\xleftarrow[\text{No}]{\text{Yes}}$ New, Q:Old $\xleftarrow[\text{Yes}]{\text{No}}$ New, R:Old $\xleftarrow[\text{Yes}]{\text{Yes}}$ New, S:Old $\xleftarrow[\text{No}]{\text{No}}$ New, W:Add, Z:Discontinued, F:Interchangeable by set, K:Q'ty Change

Copyright (C) YANMAR CO., LTD. All RightsReserved.

Fig.108. LOADER LINK(2)

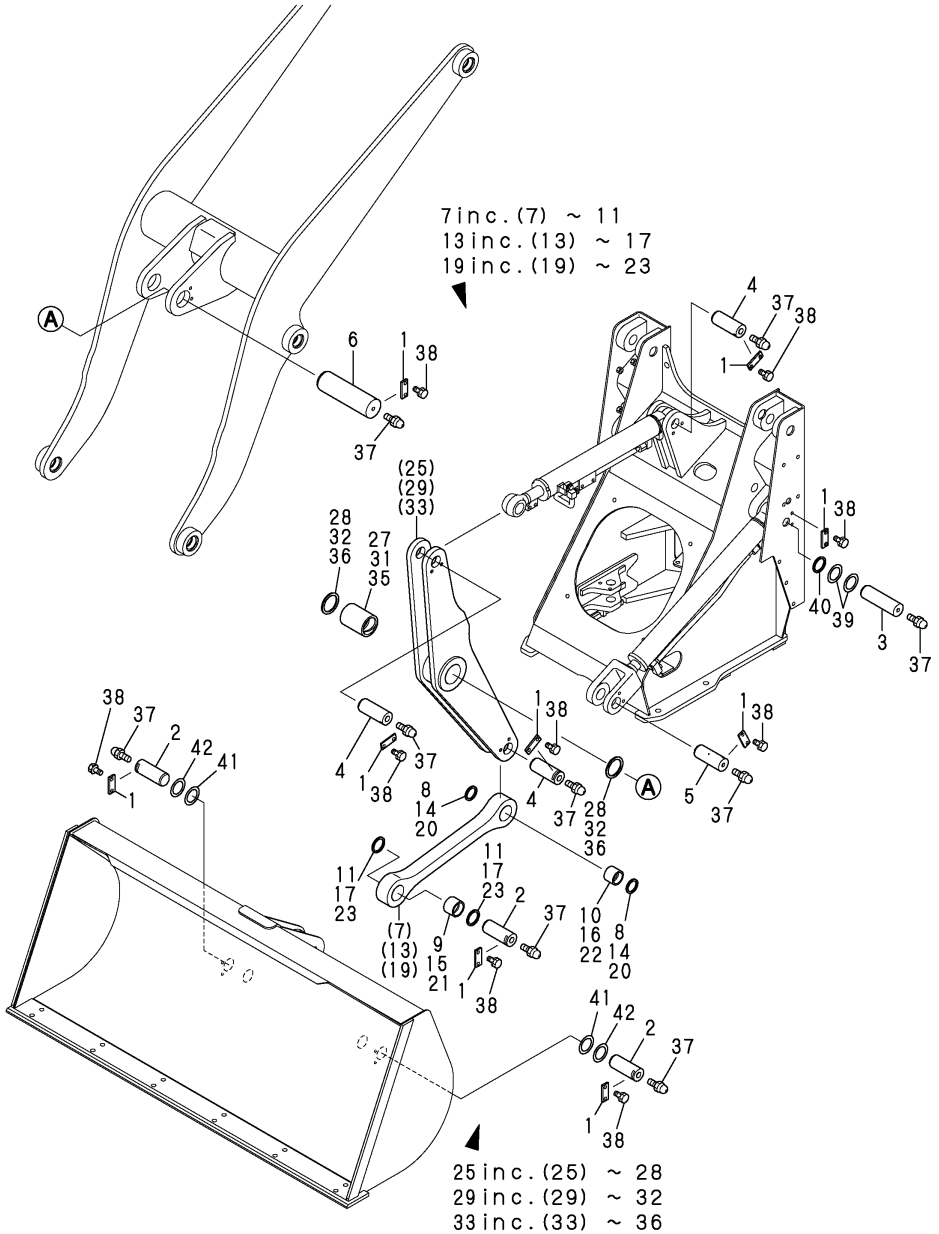

(A)=V3-5
(B)=V3-5(M/C)
(C)=V4-5
(D)=V4-5A
(E)=V5
(F)=V5-A

No.	Lev.	Parts No.	Description	Q'ty (A)	(B)	(C)	(D)	(E)	(F)	I	R
1	1	172456-82400	PLATE, LOCK		11		11		11		
1-1	1	172512-91210	PLATE, PIN LOCK		11		11		11	R	
		(B=M/#52565)	(D=M/#52064)						(F=M/#02019)		
2	1	172527-91250	PIN 45X115		3		3		3		
3	1	172527-91260	PIN 40X153		2		2		2		
4	1	172527-91270	PIN 40X107		3		3		3		
5	1	172527-91280	PIN 40X114.5		2		2		2		
6	1	172527-91290	PIN 60X172		1		1		1		
7	1	172527-91301	LINK ASSY		1						
8	2	172448-72650	SEAL, DUST		2						
9	2	172527-91180	BUSH		1						
10	2	172527-91190	BUSH		1						
11	2	172168-81410	SEAL, DUST		2						
13	1	172528-91301	LINK ASSY				1				
14	2	172448-72650	SEAL, DUST				2				
15	2	172527-91180	BUSH				1				
16	2	172527-91190	BUSH				1				
17	2	172168-81410	SEAL, DUST				2				
19	1	172529-91301	LINK ASSY						1		
20	2	172448-72650	SEAL, DUST						2		
21	2	172527-91180	BUSH						1		
22	2	172527-91190	BUSH						1		
23	2	172168-81410	SEAL, DUST						2		
25	1	172527-91600	BELL CRANK ASSY		1						
27	2	172527-91650	BUSH		1						
28	2	172020-10620	SEAL, DUST		2						
29	1	172528-91600	BELL CRANK ASSY				1				
31	2	172527-91650	BUSH				1				
32	2	172020-10620	SEAL, DUST				2				
33	1	172529-91600	BELL-CRANK ASSY						1		
35	2	172527-91650	BUSH						1		
36	2	172020-10620	SEAL, DUST						2		
37	1	24764-020000	NIPPLE, GREASE R1/8		11		11		11		
38	1	26013-100202	BOLT, M10X 20		22		22		22		
39	1	172164-81770	COLLAR, 40.5X60X1		4		4		4		
40	1	172176-81660	COLLAR, 45.5X65X1		2		2		2		
41	1	172527-91220	SHIM, 45X65X1.2		2		2		2		
42	1	172527-91230	SHIM, 45X65X2.6		2		2		2		

N:Old $\xleftarrow[\text{No}]{\text{Yes}}$ New, Q:Old $\xleftarrow[\text{Yes}]{\text{No}}$ New, R:Old $\xleftarrow[\text{Yes}]{\text{Yes}}$ New, S:Old $\xleftarrow[\text{No}]{\text{No}}$ New, W:Add, Z:Discontinued, F:Interchangeable by set, K:Q'ty Change

Copyright (C) YANMAR CO., LTD. All RightsReserved.

Fig.109. BUCKET

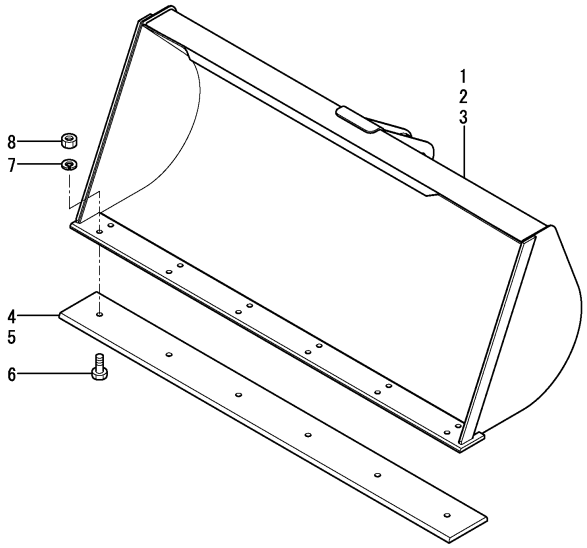

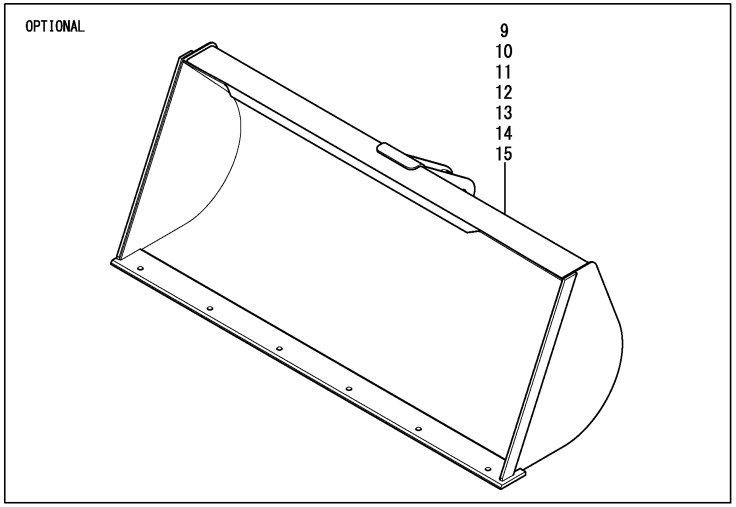

(A)=V3-5
(B)=V3-5(M/C)
(C)=V4-5
(D)=V4-5A
(E)=V5
(F)=V5-A

No.	Lev.	Parts No.	Description	Q'ty (A)	(B)	(C)	(D)	(E)	(F)	I	R
1	1	172527-91400	BUCKET ASSY	1	1						1
2	1	172528-91400	BUCKET ASSY			1	1				1
3	1	172529-91400	BUCKET ASSY					1	1		1
4	1	172527-91390	CRAW	1	1						
5	1	172528-91390	CRAW			1	1	1	1		
6	1	172524-91520	BOLT M14X 35 PLATED	6	6	6	6	6	6		
7	1	22217-140000	WASHER, SPRING 14	6	6	6	6	6	6		
8	1	26736-140002	NUT, M14	6	6	6	6	6	6		
9	1	172527-91700	BUCKET ASSY	1	1						2
10	1	172528-91700	BUCKET ASSY			1	1		1		2
11	1	172529-91700	BUCKET ASSY					1	1		2
12	1	172527-91900	BUCKET ASSY	1	1						2
13	1	172527-91201	BUCKET ASSY	1	1						3
14	1	172528-91201	BUCKET ASSY			1	1		1		3
15	1	172529-91201	BUCKET ASSY					1	1		3

Remarks
(1)Kit are shown in Fig.116(109C) from Fig.114(109A).
(2)Kit are shown in Fig.120 from Fig.117
(3)Kit are shown in Fig.123 from Fig.121.

N:Old $\xleftarrow[\text{No}]{\text{Yes}}$ New, Q:Old $\xleftarrow[\text{Yes}]{\text{No}}$ New, R:Old $\xleftarrow[\text{Yes}]{\text{Yes}}$ New, S:Old $\xleftarrow[\text{No}]{\text{No}}$ New, W:Add, Z:Discontinued, F:Interchangeable by set, K:Q'ty Change

Copyright (C) YANMAR CO., LTD. All RightsReserved.

Fig.114. (109A)BUCKET(0.4)

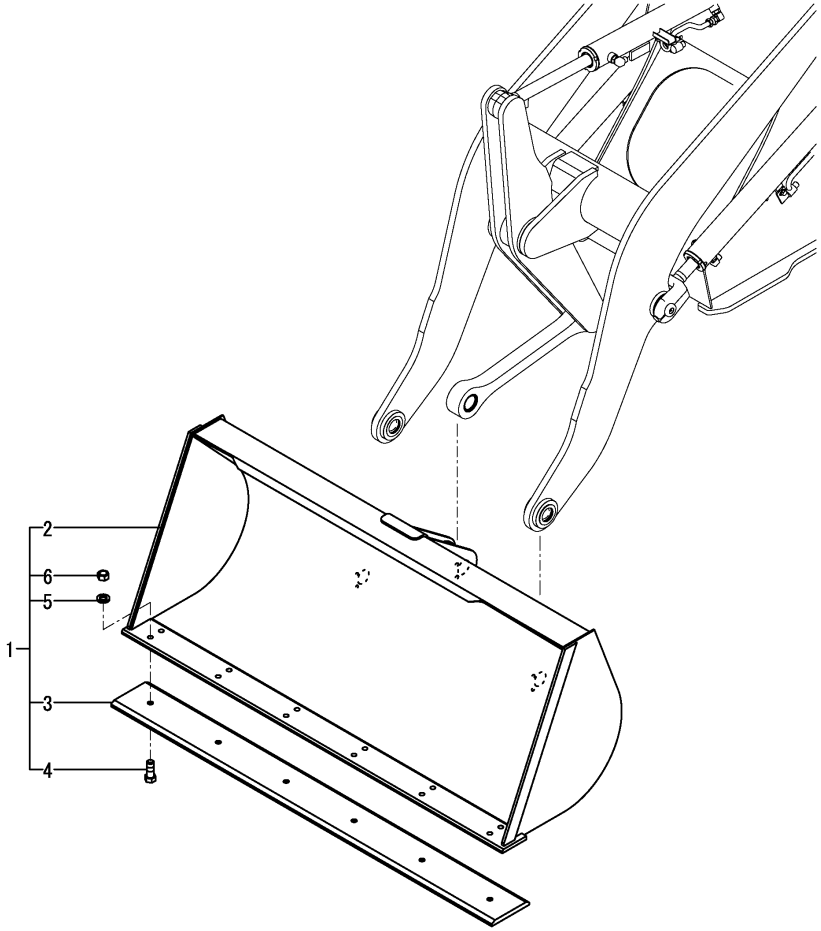

(A)=V3-5
(B)=V3-5(M/C)
(C)=V4-5
(D)=V4-5A
(E)=V5
(F)=V5-A

No.	Lev.	Parts No.	Description	Q'ty (A)	(B)	(C)	(D)	(E)	(F)	I	R
1	1	172538-08400	BUCKET KIT	1	1						
2	2	172527-91400-2	BUCKET ASSY	1	1						
3	2	172527-91390-2	CRAW	1	1						
4	2	172524-91520	BOLT M14X 35 PLATED	6	6						
5	2	22217-140000	WASHER, SPRING 14	6	6						
6	2	26736-140002	NUT, M14	6	6						

N:Old $\xleftrightarrow[\text{No}]{\text{Yes}}$ New, Q:Old $\xleftrightarrow[\text{Yes}]{\text{No}}$ New, R:Old $\xleftrightarrow[\text{Yes}]{\text{Yes}}$ New, S:Old $\xleftrightarrow[\text{No}]{\text{No}}$ New, W:Add, Z:Discontinued, F:Interchangeable by set, K:Q'ty Change

Copyright (C) YANMAR CO., LTD. All RightsReserved.

Fig.115. (109B)BUCKET(0.5)

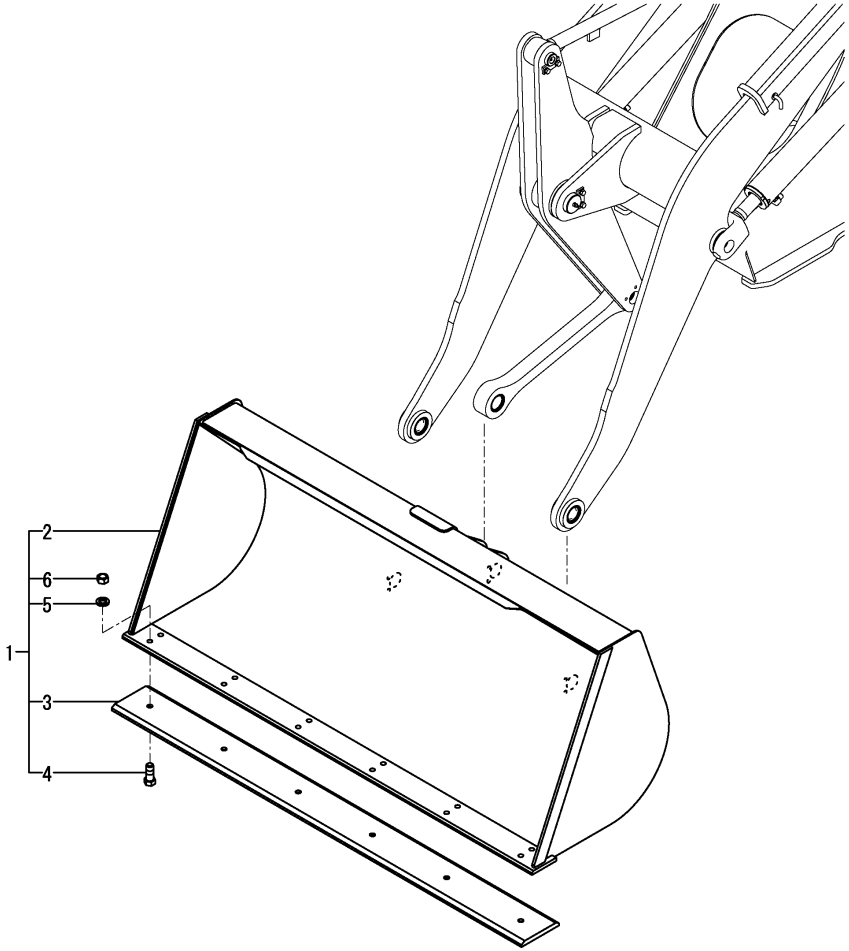

(A)=V3-5
(B)=V3-5(M/C)
(C)=V4-5
(D)=V4-5A
(E)=V5
(F)=V5-A

No.	Lev.	Parts No.	Description	Q'ty (A)	(B)	(C)	(D)	(E)	(F)	I	R
1	1	172539-08400	BUCKET KIT			1	1				
2	2	172528-91400-1	BUCKET ASSY			1	1				
3	2	172528-91390-1	CRAW			1	1				
4	2	172524-91520	BOLT M14X 35 PLATED			6	6				
5	2	22217-140000	WASHER, SPRING 14			6	6				
6	2	26736-140002	NUT, M14			6	6				

N:Old $\xleftrightarrow[\text{No}]{\text{Yes}}$ New, Q:Old $\xleftrightarrow[\text{Yes}]{\text{No}}$ New, R:Old $\xleftrightarrow[\text{Yes}]{\text{Yes}}$ New, S:Old $\xleftrightarrow[\text{No}]{\text{No}}$ New, W:Add, Z:Discontinued, F:Interchangeable by set, K:Q'ty Change

Copyright (C) YANMAR CO., LTD. All RightsReserved.

Fig.116. (109C)BUCKET(0.6)

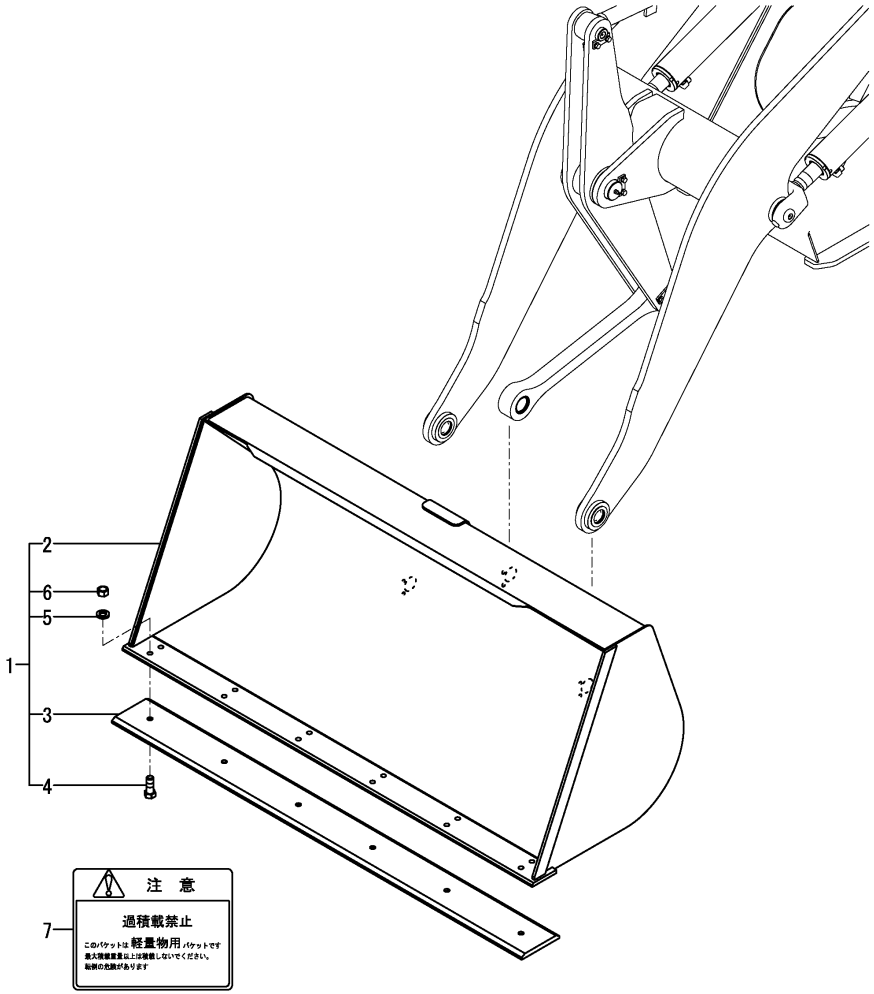

(A)=V3-5
(B)=V3-5(M/C)
(C)=V4-5
(D)=V4-5A
(E)=V5
(F)=V5-A

No.	Lev.	Parts No.	Description	Q'ty (A)	(B)	(C)	(D)	(E)	(F)	I	R
1	1	172543-08400	BUCKET KIT					1	1		
2	2	172529-91400-1	BUCKET ASSY					1	1		
3	2	172528-91390-1	CRAW					1	1		
4	2	172524-91520	BOLT M14X 35 PLATED					6	6		
5	2	22217-140000	WASHER, SPRING 14					6	6		
6	2	26736-140002	NUT, M14					6	6		
7	1	172519-03360	LABEL					1	1		

N:Old $\frac{\text{Yes}}{\text{No}}$ New, Q:Old $\frac{\text{No}}{\text{Yes}}$ New, R:Old $\frac{\text{Yes}}{\text{Yes}}$ New, S:Old $\frac{\text{No}}{\text{No}}$ New, W:Add, Z:Discontinued, F:Interchangeable by set, K:Q'ty Change

Copyright (C) YANMAR CO., LTD. All RightsReserved.

Fig.110. ATTACH HOLDER(ATTACHMENT)

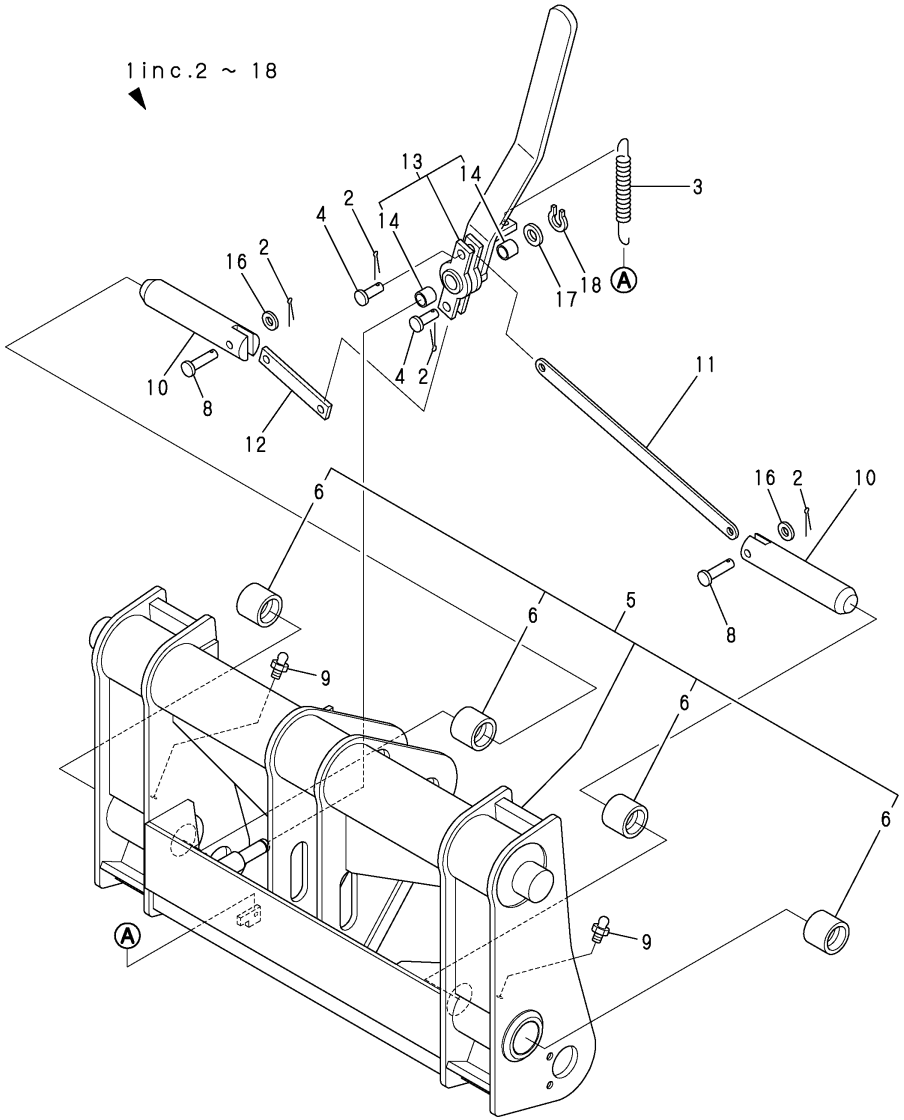

(A)=V3-5
(B)=V3-5(M/C)
(C)=V4-5
(D)=V4-5A
(E)=V5
(F)=V5-A

No.	Lev.	Parts No.	Description	Q'ty (A)	(B)	(C)	(D)	(E)	(F)	I	R
1	1	772527-96200	HOLDER, ATTACHMENT	1	1	1	1	1	1		
2	2	1C6360-65700	PIN, SNAP 10	4	4	4	4	4	4		
3	2	172511-42190	SPRING, RETURN	1	1	1	1	1	1		
4	2	172210-70750	PIN 10X26	2	2	2	2	2	2		
5	2	172527-96200	HOLDER, ATTACHMENT	1	1	1	1	1	1		
6	3	172520-91210	BUSH 35X45X33	4	4	4	4	4	4		
8	2	22487-100400	PIN 10X 40	2	2	2	2	2	2		
9	2	24764-020000	NIPPLE, GREASE R1/8	2	2	2	2	2	2		
10	2	172520-96450	PIN 35X175	2	2	2	2	2	2		
11	2	172516-96460	LINK L=365, LEVER	1	1	1	1	1	1		
12	2	172520-96460	LINK L=82	1	1	1	1	1	1		
13	2	172520-96480	LEVER, ATTACH.	1	1	1	1	1	1		
14	3	1E4130-73040	COLLAR 15X20X15	2	2	2	2	2	2		
16	2	22137-100000	WASHER, 10	2	2	2	2	2	2		
17	2	22137-140000	WASHER, 14	1	1	1	1	1	1		
18	2	22242-000140	RING, 14	1	1	1	1	1	1		

N:Old $\frac{\text{Yes}}{\text{No}}$ New, Q:Old $\frac{\text{No}}{\text{Yes}}$ New, R:Old $\frac{\text{Yes}}{\text{Yes}}$ New, S:Old $\frac{\text{No}}{\text{No}}$ New, W:Add, Z:Discontinued, F:Interchangeable by set, K:Q'ty Change

Copyright (C) YANMAR CO., LTD. All RightsReserved.

Fig.111. BUCKET&MANIA FORK(OPTIONAL)

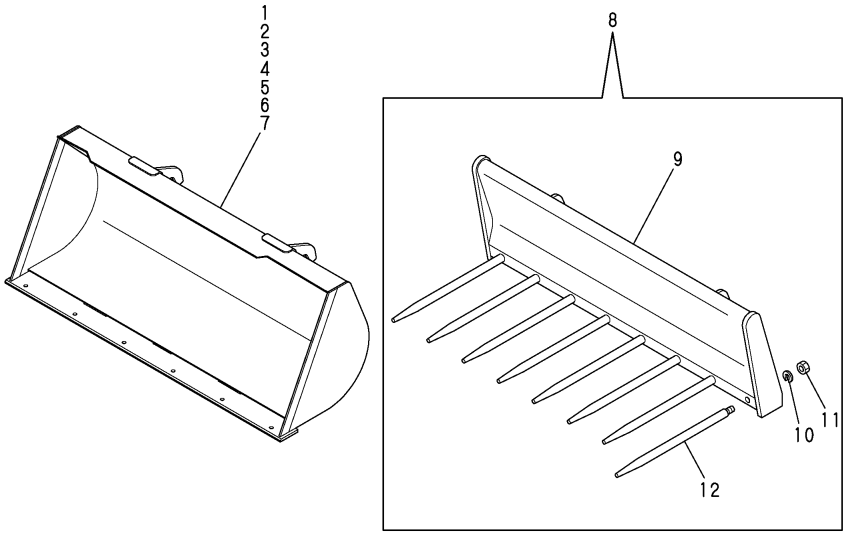

(A)=V3-5
(B)=V3-5(M/C)
(C)=V4-5
(D)=V4-5A
(E)=V5
(F)=V5-A

No.	Lev.	Parts No.	Description	Q'ty (A)	(B)	(C)	(D)	(E)	(F)	I	R
1	1	172527-96400	BUCKET ASSY	1	1						1
2	1	172528-96400	BUCKET ASSY			1	1				1
3	1	172529-96400	BUCKET ASSY				1	1	1		1
4	1	172527-96500	BUCKET ASSY	1	1						1
5	1	172528-96500	BUCKET ASSY			1	1		1		1
6	1	172529-96500	BUCKET ASSY					1	1		1
7	1	172527-96600	BUCKET ASSY	1	1						1
8	1	772520-96700-3	FORK ASSY, MANURE	1		1		1			
9	2	172520-96710-3	FORK, MANURE	1		1		1			
10	2	22217-200000	WASHER, SPRING 20	8		8		8			
11	2	26716-200002	NUT, M20	8		8		8			
12	2	981085-91510-3	TINE	8		8		8			

Remarks
(1)Kit are shown in Fig.130 from Fig.124.

N:Old $\overset{\text{Yes}}{\underset{\text{No}}{\leftrightarrows}}$ New, Q:Old $\overset{\text{No}}{\underset{\text{Yes}}{\leftrightarrows}}$ New, R:Old $\overset{\text{Yes}}{\underset{\text{Yes}}{\leftrightarrows}}$ New, S:Old $\overset{\text{No}}{\underset{\text{No}}{\leftrightarrows}}$ New, W:Add, Z:Discontinued, F:Interchangeable by set, K:Q'ty Change

Copyright (C) YANMAR CO., LTD. All RightsReserved.

Fig.112. PALLET FORK(ATTACHMENT)

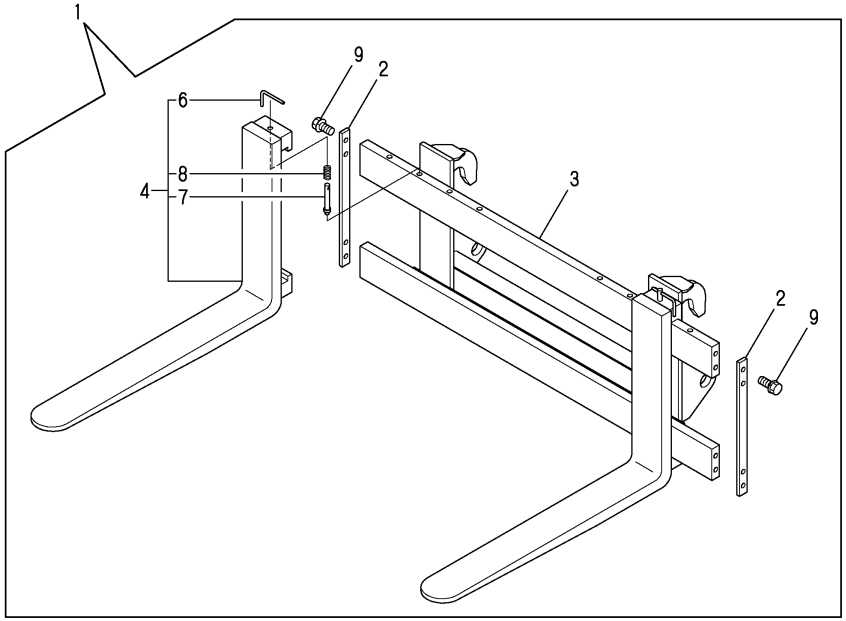

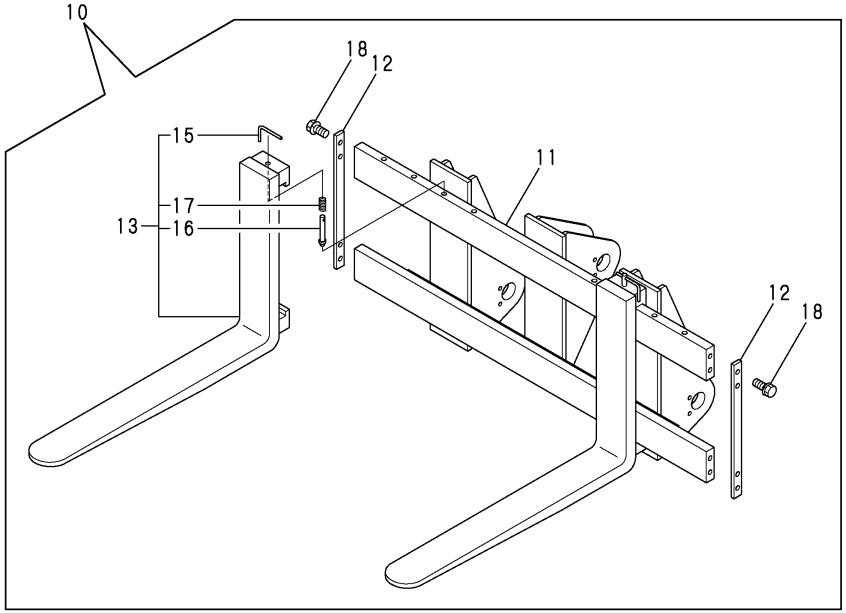

(A)=V3-5
(B)=V3-5(M/C)
(C)=V4-5
(D)=V4-5A
(E)=V5
(F)=V5-A

No.	Lev.	Parts No.	Description	Q'ty (A)	(B)	(C)	(D)	(E)	(F)	I	R
1	1	772527-96700	FORK, PALLET Q	1		1		1			
2	2	172511-96250-3	PLATE, SIDE	2		2		2			
3	2	172527-96700	FORK, PALLET Q	1		1		1			
4	2	172520-96830-3	FORK ASSY	2		2		2			
6	3	981085-91230	LEVER	2		2		2			
7	3	981085-91240	PIN, FORK	2		2		2			
8	3	981085-91250	SPRING	2		2		2			
9	2	26013-120252	BOLT, M12X 25	8		8		8			
10	1	772527-96100	FORK, PALLET P	1		1		1			
11	2	172527-96100	FORK, PALLER P	1		1		1			
12	2	172511-96250	PLATE, SIDE	2		2		2			
13	2	172520-96830	FORK ASSY	2		2		2			
15	3	981085-91230	LEVER	2		2		2			
16	3	981085-91240	PIN, FORK	2		2		2			
17	3	981085-91250	SPRING	2		2		2			
18	2	26013-120252	BOLT, M12X 25	8		8		8			

N:Old $\frac{\text{Yes}}{\text{No}}$ New, Q:Old $\frac{\text{No}}{\text{Yes}}$ New, R:Old $\frac{\text{Yes}}{\text{Yes}}$ New, S:Old $\frac{\text{No}}{\text{No}}$ New, W:Add, Z:Discontinued, F:Interchangeable by set, K:Q'ty Change

Copyright (C) YANMAR CO., LTD. All RightsReserved.

Fig.113. TIRE CHAIN(OPTIONAL)

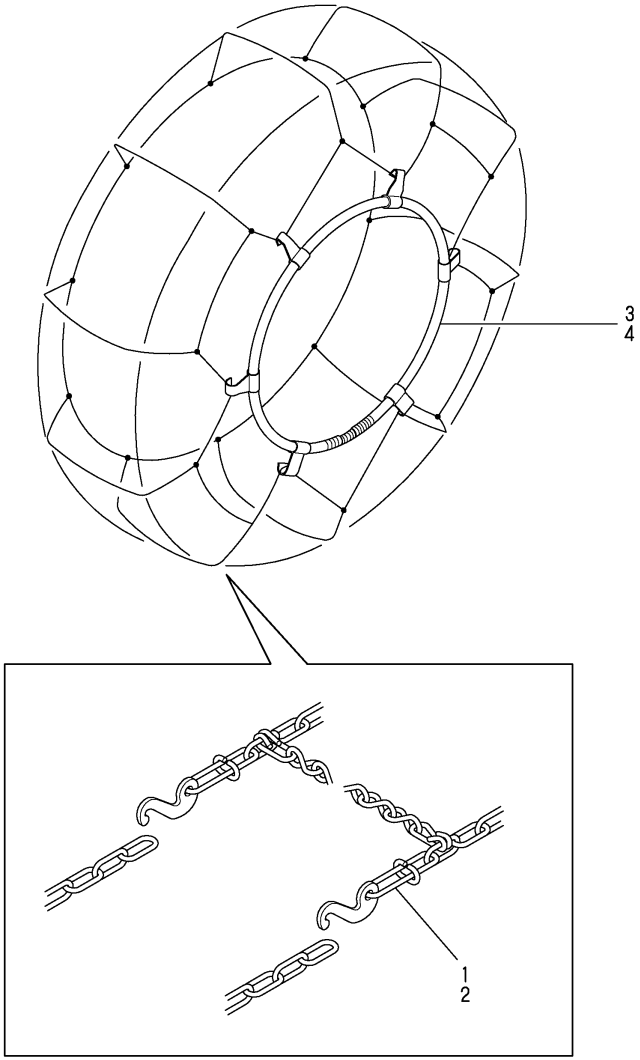

(A)=V3-5
(B)=V3-5(M/C)
(C)=V4-5
(D)=V4-5A
(E)=V5
(F)=V5-A

No.	Lev.	Parts No.	Description	Q'ty (A)	(B)	(C)	(D)	(E)	(F)	I	R
1	1	172520-35250	CHAIN 12.5/70, TIRE	2	2						
2	1	172522-35250	CHAIN 15.5/60, TIRE			2	2	2	2		
3	1	172521-35260	BAND R-16, CHAIN	2	2						
4	1	172522-35260	BAND ORS-17, CHAIN			2	2	2	2		

N:Old ◄Yes/No► New, Q:Old ◄No/Yes► New, R:Old ◄Yes/Yes► New, S:Old ◄No/No► New, W:Add, Z:Discontinued, F:Interchangeable by set, K:Q'ty Change

Copyright (C) YANMAR CO., LTD. All RightsReserved.

Fig.117. BUCKET(0.5) KIT(OPTIONAL)

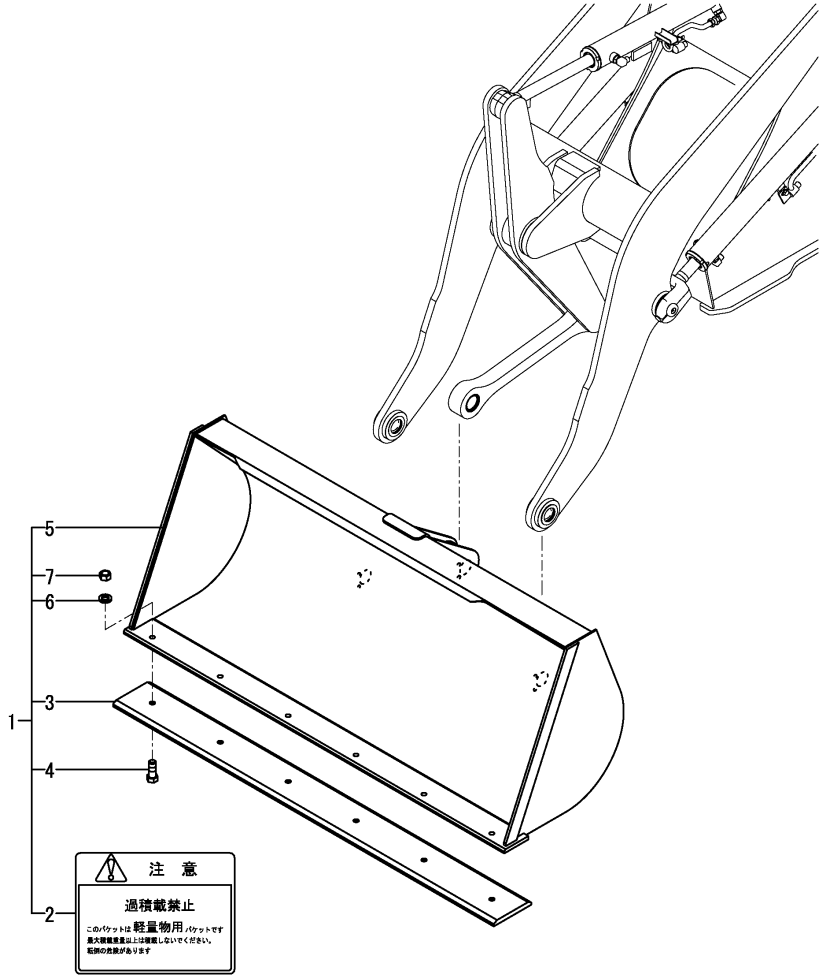

(A)=V3-5
(B)=V3-5(M/C)
(C)=V4-5
(D)=V4-5A
(E)=V5
(F)=V5-A

No.	Lev.	Parts No.	Description	Q'ty (A)	(B)	(C)	(D)	(E)	(F)	I	R
1	1	172538-08410	BUCKET KIT	1	1						
2	2	172519-03360	LABEL	1	1						
3	2	172527-91390-2	CRAW	1	1						
4	2	172524-91520	BOLT M14X 35 PLATED	6	6						
5	2	172527-91700-1	BUCKET ASSY	1	1						
6	2	22217-140000	WASHER, SPRING 14	6	6						
7	2	26736-140002	NUT, M14	6	6						

N:Old $\xleftarrow[\text{No}]{\text{Yes}}$ New, Q:Old $\xleftarrow[\text{Yes}]{\text{No}}$ New, R:Old $\xleftarrow[\text{Yes}]{\text{Yes}}$ New, S:Old $\xleftarrow[\text{No}]{\text{No}}$ New, W:Add, Z:Discontinued, F:Interchangeable by set, K:Q'ty Change

Copyright (C) YANMAR CO., LTD. All RightsReserved.

Fig.118. BUCKET(0.6)KIT(OPTIONAL)

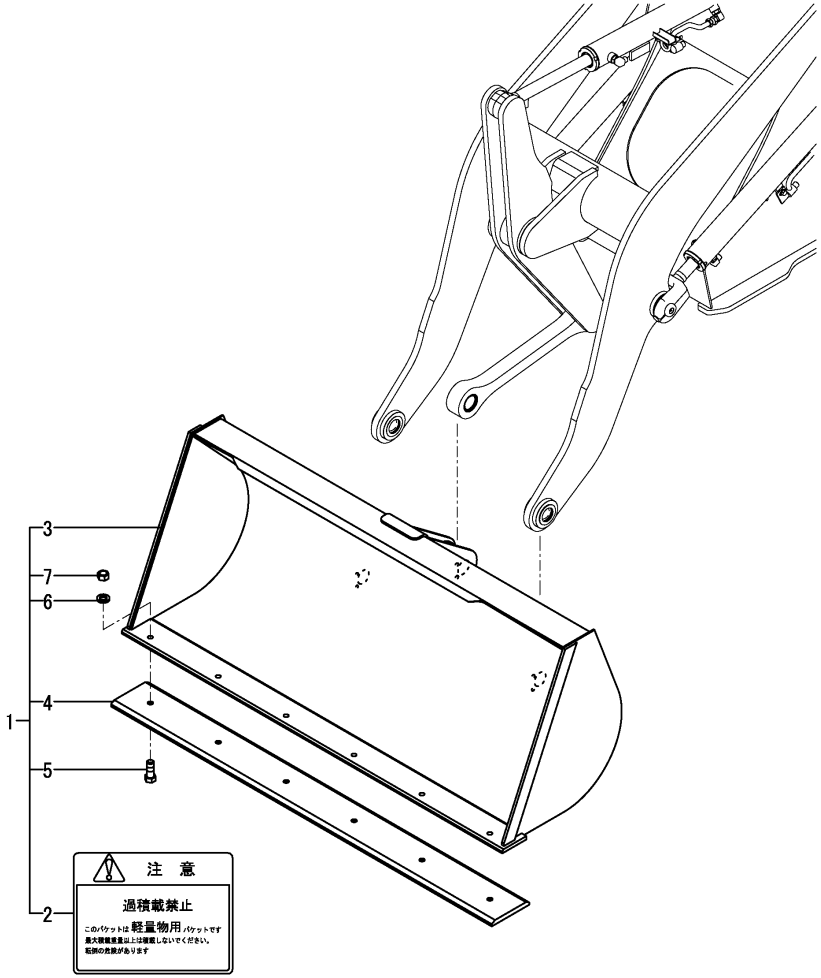

(A)=V3-5
(B)=V3-5(M/C)
(C)=V4-5
(D)=V4-5A
(E)=V5
(F)=V5-A

No.	Lev.	Parts No.	Description	Q'ty (A)	(B)	(C)	(D)	(E)	(F)	I	R
1	1	172538-08420	BUCKET KIT	1	1						
2	2	172519-03360	LABEL	1	1						
3	2	172527-91900-1	BUCKET ASSY	1	1						
4	2	172527-91390-2	CRAW	1	1						
5	2	172524-91520	BOLT M14X 35 PLATED	6	6						
6	2	22217-140000	WASHER, SPRING 14	6	6						
7	2	26736-140002	NUT, M14	6	6						

N:Old $\frac{\text{Yes}}{\text{No}}$ New, Q:Old $\frac{\text{No}}{\text{Yes}}$ New, R:Old $\frac{\text{Yes}}{\text{Yes}}$ New, S:Old $\frac{\text{No}}{\text{No}}$ New, W:Add, Z:Discontinued, F:Interchangeable by set, K:Q'ty Change

Copyright (C) YANMAR CO., LTD. All RightsReserved.

Fig.119. BUCKET(0.8)KIT(OPTIONAL)

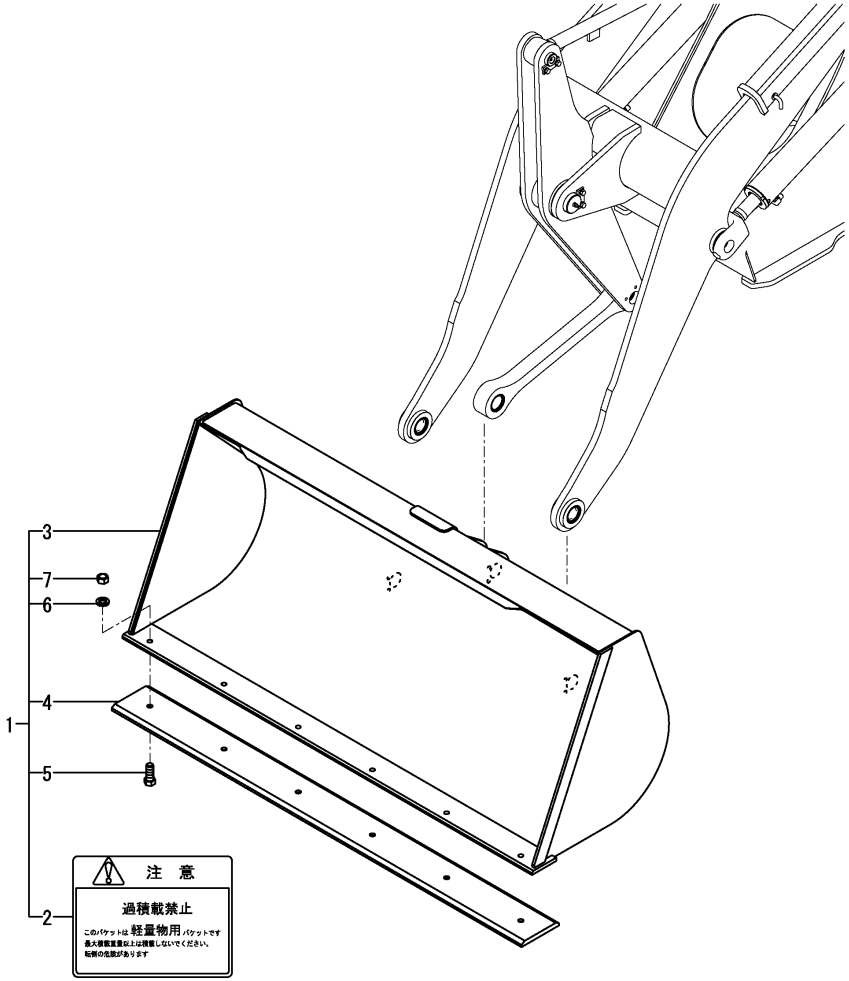

(A)=V3-5
(B)=V3-5(M/C)
(C)=V4-5
(D)=V4-5A
(E)=V5
(F)=V5-A

No.	Lev.	Parts No.	Description	Q'ty (A)	(B)	(C)	(D)	(E)	(F)	I	R
1	1	172539-08410	BUCKET KIT			1	1				
2	2	172519-03360	LABEL			1	1				
3	2	172528-91700-1	BUCKET ASSY			1	1				
4	2	172528-91390-1	CRAW			1	1				
5	2	172524-91520	BOLT M14X 35 PLATED			6	6				
6	2	22217-140000	WASHER, SPRING 14			6	6				
7	2	26736-140002	NUT, M14			6	6				

N:Old $\overset{\text{Yes}}{\underset{\text{No}}{\leftrightarrows}}$ New, Q:Old $\overset{\text{No}}{\underset{\text{Yes}}{\leftrightarrows}}$ New, R:Old $\overset{\text{Yes}}{\underset{\text{Yes}}{\leftrightarrows}}$ New, S:Old $\overset{\text{No}}{\underset{\text{No}}{\leftrightarrows}}$ New, W:Add, Z:Discontinued, F:Interchangeable by set, K:Q'ty Change

Copyright (C) YANMAR CO., LTD. All RightsReserved.

Fig.120. BUCKET(0.9) KIT(OPTIONAL)

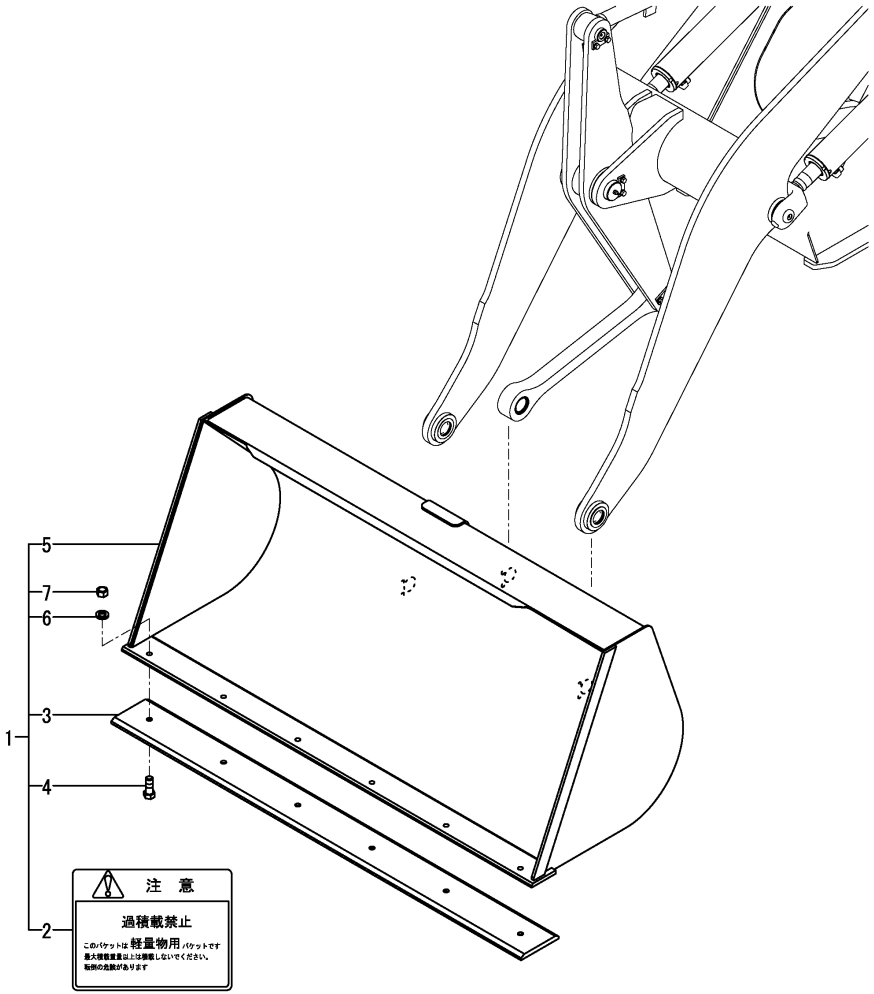

(A)=V3-5
(B)=V3-5(M/C)
(C)=V4-5
(D)=V4-5A
(E)=V5
(F)=V5-A

No.	Lev.	Parts No.	Description	Q'ty (A)	(B)	(C)	(D)	(E)	(F)	I	R
1	1	172543-08410	BUCKET KIT					1	1		
2	2	172519-03360	LABEL					1	1		
3	2	172528-91390-1	CRAW					1	1		
4	2	172524-91520	BOLT M14X 35 PLATED					6	6		
5	2	172529-91700-1	BUCKET ASSY					1	1		
6	2	22217-140000	WASHER, SPRING 14					6	6		
7	2	26736-140002	NUT, M14					6	6		

N:Old $\xleftarrow[\text{No}]{\text{Yes}}$ New, Q:Old $\xleftarrow[\text{Yes}]{\text{No}}$ New, R:Old $\xleftarrow[\text{Yes}]{\text{Yes}}$ New, S:Old $\xleftarrow[\text{No}]{\text{No}}$ New, W:Add, Z:Discontinued, F:Interchangeable by set, K:Q'ty Change

Copyright (C) YANMAR CO., LTD. All RightsReserved.

Fig.121. BUCKET(0.6)(PLATING)KIT(OPTIONAL)

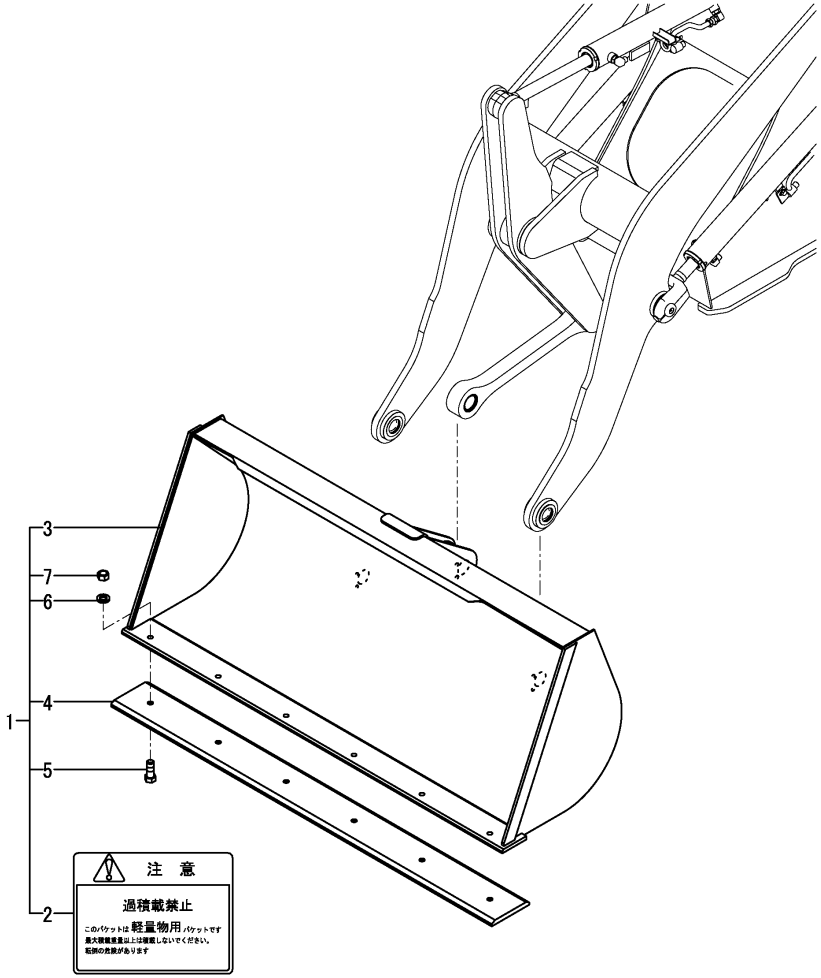

(A)=V3-5
(B)=V3-5(M/C)
(C)=V4-5
(D)=V4-5A
(E)=V5
(F)=V5-A

No.	Lev.	Parts No.	Description	Q'ty (A)	(B)	(C)	(D)	(E)	(F)	I	R
1	1	172538-08510	BUCKET KIT	1	1						
2	2	172519-03360	LABEL	1	1						
3	2	172527-91201	BUCKET ASSY	1	1						
4	2	172527-91390-3	EDGE 1570	1	1						
5	2	172524-91520	BOLT M14X 35 PLATED	6	6						
6	2	22217-140000	WASHER, SPRING 14	6	6						
7	2	26736-140002	NUT, M14	6	6						

N:Old $\xleftrightarrow[\text{No}]{\text{Yes}}$ New, Q:Old $\xleftrightarrow[\text{Yes}]{\text{No}}$ New, R:Old $\xleftrightarrow[\text{Yes}]{\text{Yes}}$ New, S:Old $\xleftrightarrow[\text{No}]{\text{No}}$ New, W:Add, Z:Discontinued, F:Interchangeable by set, K:Q'ty Change

Copyright (C) YANMAR CO., LTD. All RightsReserved.

Fig.122. BUCKET(0.8)(PLATING) KIT(OPTIONAL)

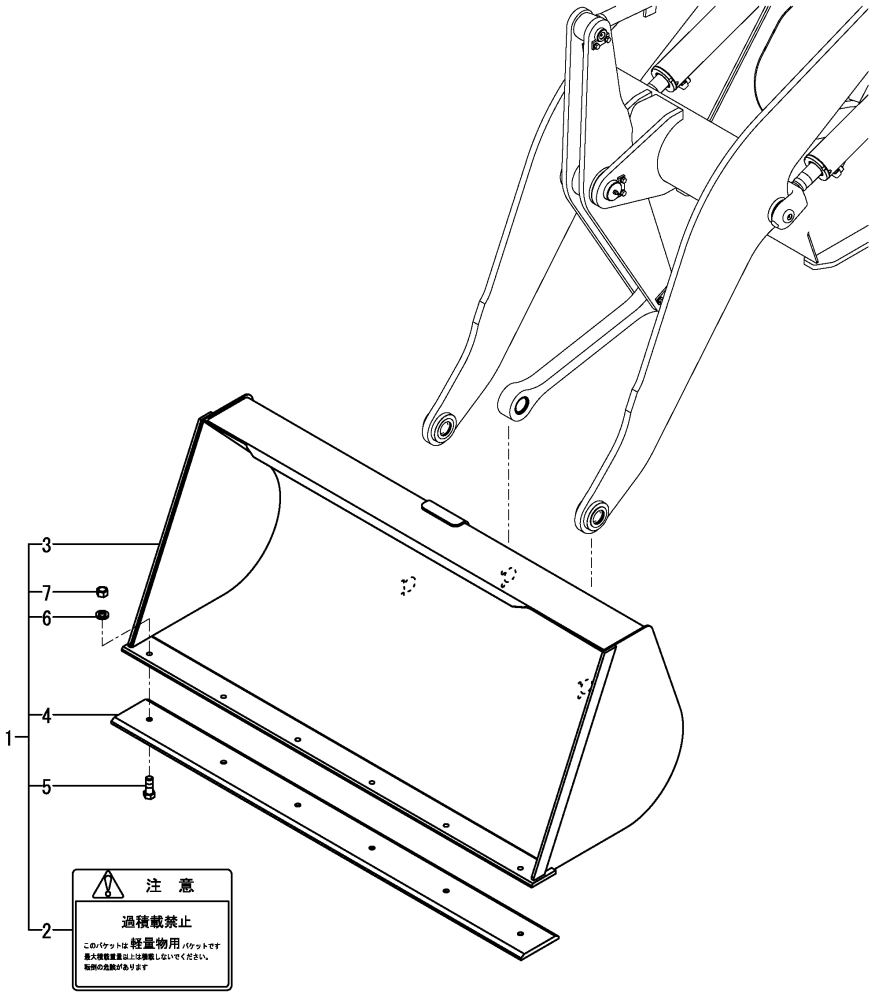

(A)=V3-5
(B)=V3-5(M/C)
(C)=V4-5
(D)=V4-5A
(E)=V5
(F)=V5-A

No.	Lev.	Parts No.	Description	Q'ty (A)	(B)	(C)	(D)	(E)	(F)	I	R
1	1	172539-08510	BUCKET KIT,0.8 M			1	1				
2	2	172519-03360	LABEL			1	1				
3	2	172528-91201-2	BUCKET ASSY			1	1				
4	2	172528-91390-2	EDGE 1690			1	1				
5	2	172524-91520	BOLT, M14X35			6	6				
6	2	22217-140000	WASHER, 14			6	6				
7	2	26736-140002	NUT, 14			6	6				

N:Old $\xleftarrow[\text{No}]{\text{Yes}}$ New, Q:Old $\xleftarrow[\text{Yes}]{\text{No}}$ New, R:Old $\xleftarrow[\text{Yes}]{\text{Yes}}$ New, S:Old $\xleftarrow[\text{No}]{\text{No}}$ New, W:Add, Z:Discontinued, F:Interchangeable by set, K:Q'ty Change

Copyright (C) YANMAR CO., LTD. All RightsReserved.

Fig.123. BUCKET(0.9)(PLATING) KIT(OPTIONAL)

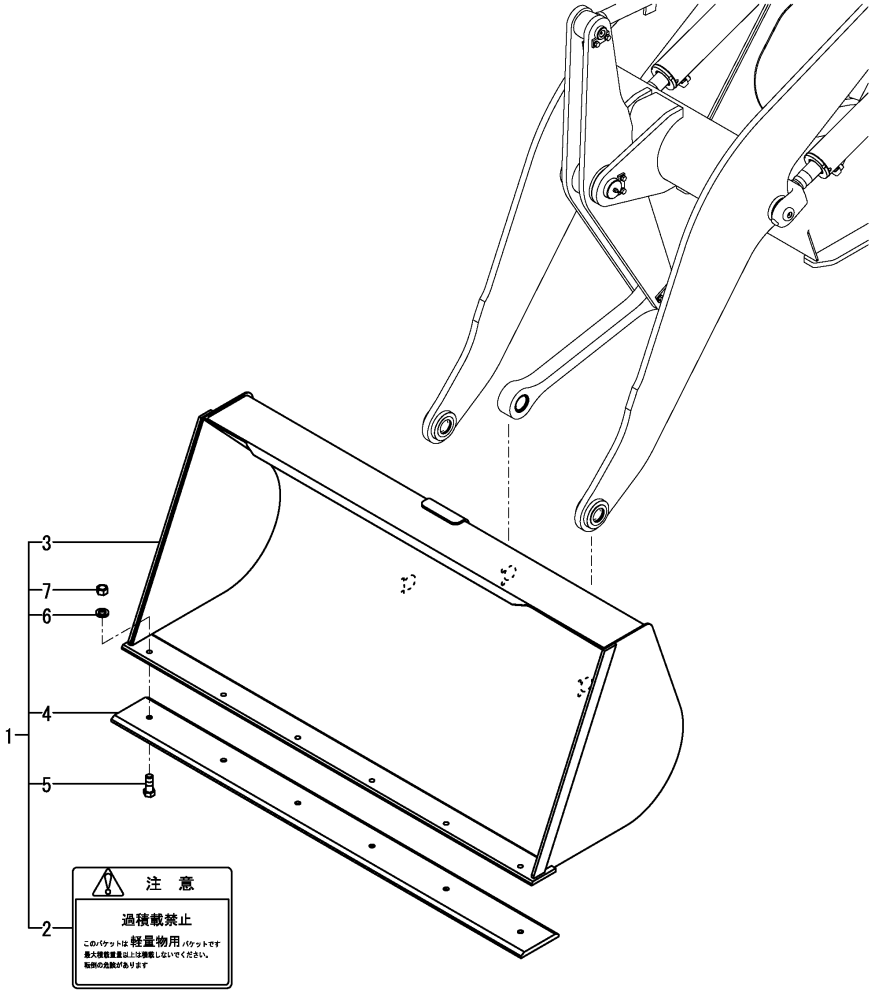

(A)=V3-5
(B)=V3-5(M/C)
(C)=V4-5
(D)=V4-5A
(E)=V5
(F)=V5-A

No.	Lev.	Parts No.	Description	Q'ty (A)	(B)	(C)	(D)	(E)	(F)	I	R
1	1	172543-08510	BUCKET KIT					1	1		
2	2	172519-03360	LABEL					1	1		
3	2	172529-91201-2	BUCKET ASSY					1	1		
4	2	172528-91390-2	CRAW					1	1		
5	2	172524-91520	BOLT M14X 35 PLATED					6	6		
6	2	22217-140000	WASHER, SPRING 14					6	6		
7	2	26736-140002	NUT, M14					6	6		

N:Old $\overset{\text{Yes}}{\underset{\text{No}}{\leftrightarrows}}$ New, Q:Old $\overset{\text{No}}{\underset{\text{Yes}}{\leftrightarrows}}$ New, R:Old $\overset{\text{Yes}}{\underset{\text{Yes}}{\leftrightarrows}}$ New, S:Old $\overset{\text{No}}{\underset{\text{No}}{\leftrightarrows}}$ New, W:Add, Z:Discontinued, F:Interchangeable by set, K:Q'ty Change

Copyright (C) YANMAR CO., LTD. All RightsReserved.

Fig.124. BUCKET(0.4)(QUICK HOLDER) KIT(OPTIONAL)

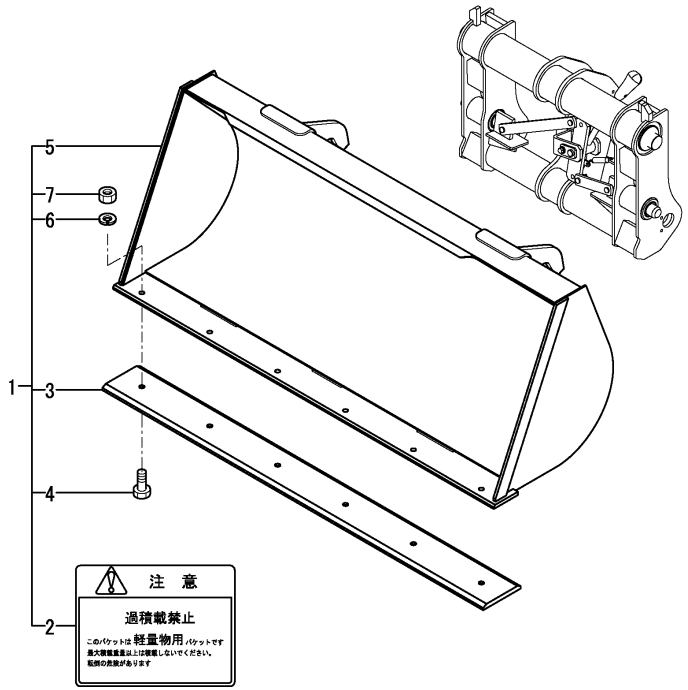

(A)=V3-5
(B)=V3-5(M/C)
(C)=V4-5
(D)=V4-5A
(E)=V5
(F)=V5-A

No.	Lev.	Parts No.	Description	Q'ty (A)	(B)	(C)	(D)	(E)	(F)	I	R
1	1	172538-08450	BUCKET KIT,0.4 Q	1	1						
2	2	172519-03360	LABEL	1	1						
3	2	172527-91390-2	CRAW	1	1						
4	2	172524-91520	BOLT, M14X35	6	6						
5	2	172527-96400-1	BUCKET ASSY	1	1						
6	2	22217-140000	WASHER, 14	6	6						
7	2	26736-140002	NUT, 14	6	6						

N:Old $\frac{\text{Yes}}{\text{No}}$ New, Q:Old $\frac{\text{No}}{\text{Yes}}$ New, R:Old $\frac{\text{Yes}}{\text{Yes}}$ New, S:Old $\frac{\text{No}}{\text{No}}$ New, W:Add, Z:Discontinued, F:Interchangeable by set, K:Q'ty Change

Copyright (C) YANMAR CO., LTD. All RightsReserved.

Fig.125. BUCKET(0.5)(QUICK HOLDER) KIT(OPTIONAL)

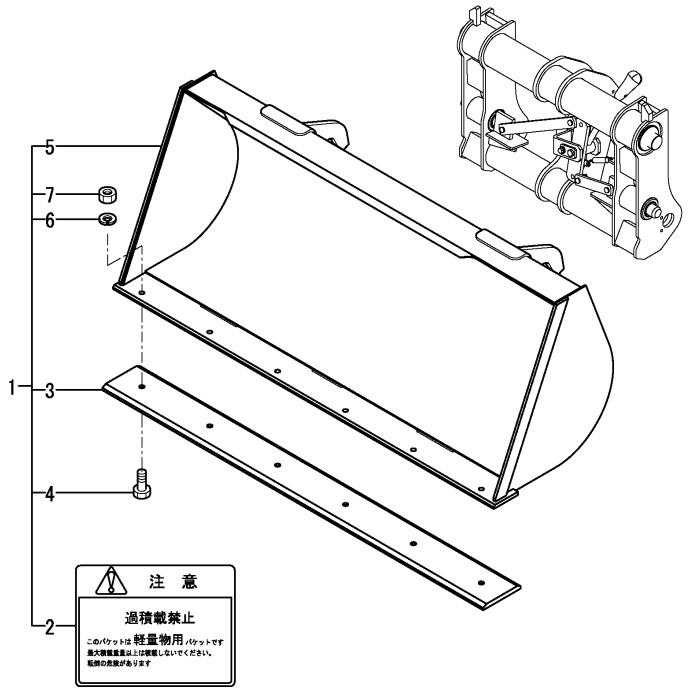

(A)=V3-5
(B)=V3-5(M/C)
(C)=V4-5
(D)=V4-5A
(E)=V5
(F)=V5-A

No.	Lev.	Parts No.	Description	Q'ty (A)	(B)	(C)	(D)	(E)	(F)	I	R
1	1	172538-08460	BUCKET KIT,0.5 Q	1	1						
2	2	172519-03360	LABEL	1	1						
3	2	172527-91390-2	CRAW	1	1						
4	2	172524-91520	BOLT, M14X35	6	6						
5	2	172527-96500-1	BUCKET ASSY	1	1						
6	2	22217-140000	WASHER, 14	6	6						
7	2	26736-140002	NUT, 14	6	6						

N:Old $\frac{\text{Yes}}{\text{No}}$ New, Q:Old $\frac{\text{No}}{\text{Yes}}$ New, R:Old $\frac{\text{Yes}}{\text{Yes}}$ New, S:Old $\frac{\text{No}}{\text{No}}$ New, W:Add, Z:Discontinued, F:Interchangeable by set, K:Q'ty Change

Copyright (C) YANMAR CO., LTD. All RightsReserved.

Fig.126. BUCKET(0.6)(QUICK HOLDER) KIT(OPTIONAL)

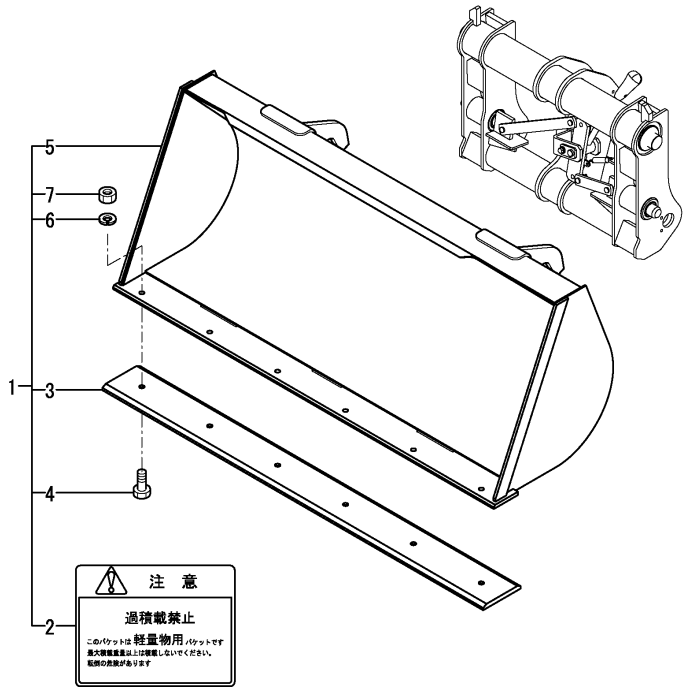

(A)=V3-5
(B)=V3-5(M/C)
(C)=V4-5
(D)=V4-5A
(E)=V5
(F)=V5-A

No.	Lev.	Parts No.	Description	Q'ty (A)	(B)	(C)	(D)	(E)	(F)	I	R
1	1	172538-08470	BUCKET KIT	1	1						
2	2	172519-03360	LABEL	1	1						
3	2	172527-91390-2	CRAW	1	1						
4	2	172524-91520	BOLT M14X 35 PLATED	6	6						
5	2	172527-96600-1	BUCKET ASSY	1	1						
6	2	22217-140000	WASHER, SPRING 14	6	6						
7	2	26736-140002	NUT, M14	6	6						

N:Old ◄Yes/No► New, Q:Old ◄No/Yes► New, R:Old ◄Yes/Yes► New, S:Old ◄No/No► New, W:Add, Z:Discontinued, F:Interchangeable by set, K:Q'ty Change

Copyright (C) YANMAR CO., LTD. All RightsReserved.

Fig.127. BUCKET(0.5)(QUICK HOLDER)KIT(OPTIONAL)

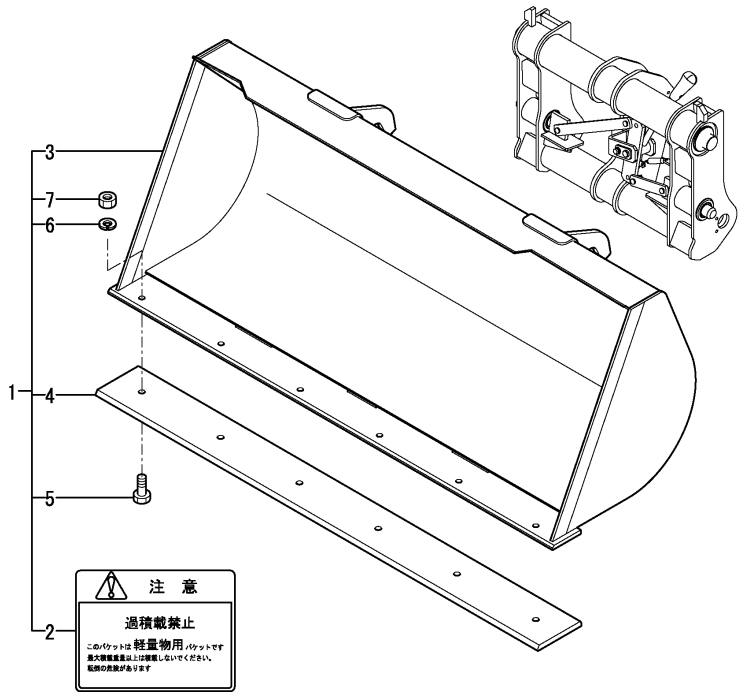

(A)=V3-5
(B)=V3-5(M/C)
(C)=V4-5
(D)=V4-5A
(E)=V5
(F)=V5-A

No.	Lev.	Parts No.	Description	Q'ty (A)	(B)	(C)	(D)	(E)	(F)	I	R
1	1	172539-08450	BUCKET KIT			1	1				
2	2	172519-03360	LABEL			1	1				
3	2	172528-96400-1	BUCKET ASSY			1	1				
4	2	172528-91390-1	CRAW			1	1				
5	2	172524-91520	BOLT M14X 35 PLATED			6	6				
6	2	22217-140000	WASHER, SPRING 14			6	6				
7	2	26736-140002	NUT, M14			6	6				

N:Old $\xleftrightarrow[\text{No}]{\text{Yes}}$ New, Q:Old $\xleftrightarrow[\text{Yes}]{\text{No}}$ New, R:Old $\xleftrightarrow[\text{Yes}]{\text{Yes}}$ New, S:Old $\xleftrightarrow[\text{No}]{\text{No}}$ New, W:Add, Z:Discontinued, F:Interchangeable by set, K:Q'ty Change

Copyright (C) YANMAR CO., LTD. All RightsReserved.

Fig.128. BUCKET(0.6)(QUICK HOLDER) KIT(OPTIONAL)

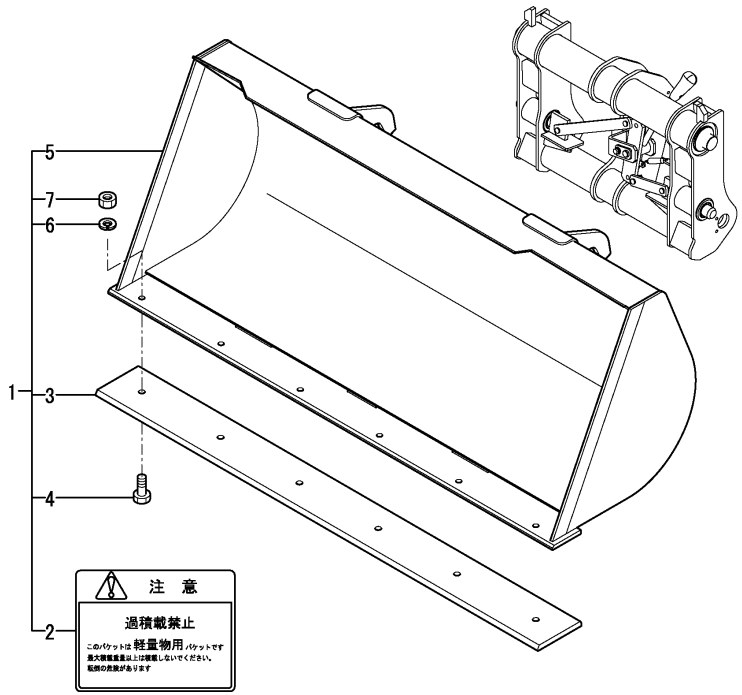

(A)=V3-5
(B)=V3-5(M/C)
(C)=V4-5
(D)=V4-5A
(E)=V5
(F)=V5-A

No.	Lev.	Parts No.	Description	Q'ty (A)	(B)	(C)	(D)	(E)	(F)	I	R
1	1	172543-08450	BUCKET KIT				1	1	1		
2	2	172519-03360	LABEL				1	1	1		
3	2	172528-91390-1	CRAW				1	1	1		
4	2	172524-91520	BOLT M14X 35 PLATED				6	6	6		
5	2	172529-96400-1	BUCKET ASSY				1	1	1		
6	2	22217-140000	WASHER, SPRING 14				6	6	6		
7	2	26736-140002	NUT, M14				6	6	6		

N:Old $\xleftarrow[\text{No}]{\text{Yes}}$ New, Q:Old $\xleftarrow[\text{Yes}]{\text{No}}$ New, R:Old $\xleftarrow[\text{Yes}]{\text{Yes}}$ New, S:Old $\xleftarrow[\text{No}]{\text{No}}$ New, W:Add, Z:Discontinued, F:Interchangeable by set, K:Q'ty Change

Copyright (C) YANMAR CO., LTD. All RightsReserved.

Fig.129. BUCKET(0.8)(QUICK HOLDER) KIT(OPTIONAL)

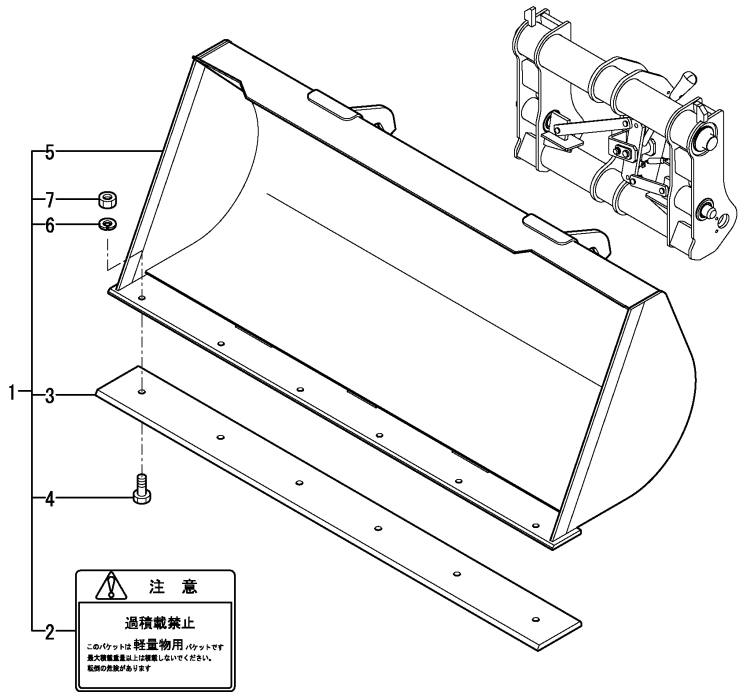

(A)=V3-5
(B)=V3-5(M/C)
(C)=V4-5
(D)=V4-5A
(E)=V5
(F)=V5-A

No.	Lev.	Parts No.	Description	Q'ty (A)	(B)	(C)	(D)	(E)	(F)	I	R
1	1	172539-08460	BUCKET KIT,0.8 Q			1	1		1		
2	2	172519-03360	LABEL			1	1		1		
3	2	172528-91390-1	CRAW			1	1		1		
4	2	172524-91520	BOLT, M14X35			6	6		6		
5	2	172528-96500-1	BUCKET ASSY			1	1		1		
6	2	22217-140000	WASHER, 14			6	6		6		
7	2	26736-140002	NUT, 14			6	6		6		

N:Old $\xleftrightarrow[\text{No}]{\text{Yes}}$ New, Q:Old $\xleftrightarrow[\text{Yes}]{\text{No}}$ New, R:Old $\xleftrightarrow[\text{Yes}]{\text{Yes}}$ New, S:Old $\xleftrightarrow[\text{No}]{\text{No}}$ New, W:Add, Z:Discontinued, F:Interchangeable by set, K:Q'ty Change

Copyright (C) YANMAR CO., LTD. All RightsReserved.

Fig.130. BUCKET(0.9)(QUICK HOLDER) KIT(OPTIONAL)

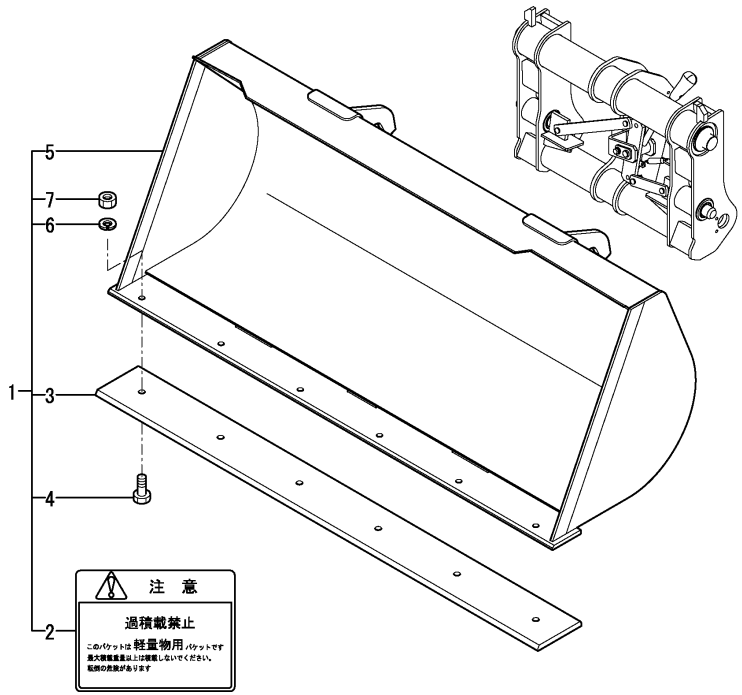

(A)=V3-5
(B)=V3-5(M/C)
(C)=V4-5
(D)=V4-5A
(E)=V5
(F)=V5-A

No.	Lev.	Parts No.	Description	Q'ty (A)	(B)	(C)	(D)	(E)	(F)	I	R
1	1	172543-08460	BUCKET KIT,0.9 Q					1	1		
2	2	172519-03360	LABEL					1	1		
3	2	172528-91390-1	CRAW					1	1		
4	2	172524-91520	BOLT, M14X35					6	6		
5	2	172529-96500-1	BUCKET ASSY					1	1		
6	2	22217-140000	WASHER, 14					6	6		
7	2	26736-140002	NUT, 14					6	6		

N:Old $\frac{\text{Yes}}{\text{No}}$ New, Q:Old $\frac{\text{No}}{\text{Yes}}$ New, R:Old $\frac{\text{Yes}}{\text{Yes}}$ New, S:Old $\frac{\text{No}}{\text{No}}$ New, W:Add, Z:Discontinued, F:Interchangeable by set, K:Q'ty Change

Copyright (C) YANMAR CO., LTD. All RightsReserved.

Parts No. Index

Parts No.	Fig. No.	Ref. No.
101504-55101	14	5
	15	5
103954-13200	6	14
103954-13201	6	41
104200-55321	14	29
104200-55330	14	18
104200-55750	14	25
104200-92350	4	5
105900-55330	14	19
119247-77100	19	51
	20	51
	21	7
119632-77920	19	57
119643-66900	17	3
		7
	19	50
	20	50
	21	2
		6
	41	58
	42	58
119650-77910	19	54
	20	54
119802-55710	15	16 A
119808-12520	7	11
119808-12540	7	12
119869-13501	6	16
121120-13580	6	3
121250-49121	11	29
	12	29
		53
	13	29
121257-55731	14	24
121267-44760	73	7
121400-92690	4	6
121450-44531	11	21
	12	21
	13	21
121450-49100	11	28
	12	28
	13	28
121450-49110	11	27
	12	27
	13	27
121468-44510	11	19
	12	19
	13	19
121468-44540	11	22
	12	22
	13	22

Parts No.	Fig. No.	Ref. No.
121470-44540	11	26
	12	26
	13	26
121470-44581	11	24
	12	24
	13	24
121855-12060	7	7
124450-44560	11	23
	12	23
	13	23
124550-77030	17	16
124617-91920	19	27
	20	27
124701-11911	6	13
124756-77040	17	17
124766-59050	11	31
	12	31
	13	31
	14	30
	15	19
124970-77920	19	58
	20	58
129012-12500	7	8
129012-12510	7	9
129012-12530	7	10
129012-13500	6	17
129052-55630	14	36
129100-55650	14	21
129100-55670	14	22
129100-55690	14	23
	15	14
129107-44590	11	18
	12	18
	13	18
129126-44570	12	59
	13	51
129211-77920	19	57 -1
	20	57
129322-77401	19	53
	20	53
129400-13201	6	15
129612-52100	20	53 -1
129612-55510	14	20
129612-55620	14	17
160970-77350	19	52
	20	52
172020-10620	107	28 -1
		32 -1
		36 -1
	108	28

Parts No.	Fig. No.	Ref. No.
172020-10620	108	32
		36
172110-76170	100	3
172110-76170-4	103	5
172113-12522	9	25
172116-14620	14	11 A
172116-16310	16	18
172116-75850-8	93	6
172120-14660	12	50
	14	10 A
172122-14301	14	2
	15	2
172122-14350	14	3
	15	3
172122-14620	14	14 A
	15	10
172122-45830	43	14
172122-46571	45	15
	47	4
172122-79930	17	14 -1
	18	21
172122-79940	17	15 -1
	18	22
172124-14650	12	14
172137-14620	12	13
	14	13 A
	15	9
172137-16560	17	23
	18	17
172137-72431	81	7
172137-72453	77	14
	79	10
	81	8
172141-03182	1	17
	2	17
	3	7
172141-03202	1	20
	2	20
	3	6
172141-03360	2	42
172141-14610	15	11
172141-14620	15	12
172141-17150	41	59
	42	59
172141-41340	43	1
	50	2
	51	5
	52	2
172141-72190	77	60
	79	66

Parts No.	Fig. No.	Ref. No.
172141-72250	77	32
	79	31
172141-72420	77	40
	79	44
172141-72540	77	17
	79	13
172141-72580	81	11
172141-76900	95	18
172141-84610	81	46
172141-84620	81	47
172142-03302	1	44
	2	43
	3	8
172142-72560	81	42
172142-76180	95	15
172142-76181	95	15 -1
172143-72400	77	37
	79	35
172148-72050	77	51
	79	52
172148-72390	77	57
	79	57
172148-72941	81	29
172151-76160	98	17
172151-76161	98	17 -1
172155-03310	1	34
	2	34
172156-17400	69	1 -1
172156-17401	69	1
172156-17420	69	2
172162-61380	12	8
172162-61850	43	32
	50	7 -1
	52	6
172164-03510	1	40
	2	40
	3	5
172164-03540	1	41
	2	41
	3	3
172164-65730	12	9
172164-66170	57	26 -1
	58	27
172164-66640	12	9 -1
172164-76131	95	13
	98	9
		11
172164-81770	108	39
172165-47871	45	5
172165-47880	44	5

Parts No. Index

Parts No.	Fig. No.	Ref. No.
172165-76380	98	20
172168-72410	77	9
		29
		49
	79	17
		20
		39
		42
		61
		64
172168-81410	105	6
		12
		18
	108	11
		17
		23
172169-03180	1	18
	2	18
172171-72120	77	11
	79	8
172171-72130	77	12
	79	9
	81	32
172173-72352	81	28
172175-17120	20	99
172175-78121	98	40
172176-07330	4	13
172176-81660	105	26
	108	40
172183-03250	1	32
	2	32
172183-14640	14	15 A
	15	12 -1
172187-17100	20	73 -1
172187-17200	20	98
172187-17220	20	101
172210-70750	110	4
172212-14640	14	37
172310-17220	19	29
	20	29
172312-46321	46	12
	47	7
172312-73110	85	3
172312-73520	85	5
172312-73560	85	9
172312-73660	85	25
172312-73670	85	26
172444-03190	1	19
	2	19
	3	12

Parts No.	Fig. No.	Ref. No.
172444-03200	1	21
	2	21
	3	13
172444-03220	1	23
	2	23
	3	11
172444-03230	1	25
	2	25
	3	14
172444-03240	1	28
	2	28
	3	2
172444-13210	12	51
172444-13220	12	52
172444-17660	105	25
172444-72961	77	54
	79	54
172444-78310	100	15
172446-45820	9	13
	40	24
	43	31
172447-72020	81	2
172447-72860	81	12
172448-72650	77	10
		30
		50
	79	18
		21
		40
		43
		62
		65
	105	2
		8
		14
	108	8
		14
		20
172448-75300	100	18
172448-81610	81	17
		20
		38
		41
172449-72040	81	23
172449-72810	81	33
172455-65970	12	48
172456-72050	77	22
	79	24
172456-72190	77	31
	79	30

Parts No.	Fig. No.	Ref. No.
172456-82400	81	45
	108	1
172457-72010	77	42
	79	46
172457-72050	77	2
	79	2
172458-16550	18	3
172458-61660	50	4 -1
	52	5
172460-72070	77	34
	79	32
172467-76120	95	12
	98	5
172478-03900	1	45
	2	46
172490-03160	2	44
172510-16410	16	11
172510-76310	94	14
	96	5
172510-76320	94	15
	96	6
		7
	97	12
172510-76360	96	8
172510-78210	96	12
172510-81510	76	18
		44
		70
	78	10
		14
		37
		41
		64
		68
	104	2
		8
		14
	106	2
		9
		16
	107	8
		14
		20
172510-93950	80	16
		20
		43
		47
172511-03230	1	26
	2	26
172511-12220	41	26

Parts No.	Fig. No.	Ref. No.
172511-12220	41	63
	42	24
		63
172511-16320	16	9
172511-17351	19	36
	20	36
172511-42190	110	3
172511-52880	53	7
172511-72570	76	21
	78	4
	80	49
172511-72680	80	2
172511-72870	80	22
172511-76770	101	3
172511-96250	112	12
172511-96250-3	112	2
172512-14660	14	12
172512-16530	17	4
172512-16560	17	8
	18	18
	73	6
172512-45160	44	4
	45	4
172512-45201	44	9
	45	10
172512-77770	96	9
172512-77780	96	10
172512-77790	96	11
172512-91210	80	57
	81	45 -1
	104	19
	105	19
	106	22
	107	1
	108	1 -1
172513-03240	1	29
172513-11340	6	12
172513-35161	36	5
		9
		13
		17
	38	4
		8
	39	4
		12
172513-42420	8	3
	41	7
		16
		20
	42	7

Parts No. Index

Parts No.	Fig. No.	Ref. No.
172513-42420	42	14
		17
172513-52541	34	3
172513-91290	104	6
		12
		18
	106	7
		14
		21
	107	11
		17
		23
172515-08790	19	1
	20	1
172515-41180	61	6
	62	84
	66	6
172515-47600	48	1
172515-47610	48	2
172515-47620	48	3
172515-47630	48	4
172515-47640	48	5
172515-47650	48	6
172515-47660	48	7
172515-47670	48	8
172515-47680	48	9
172515-47690	48	10
172515-47700	48	11
172516-35130	36	3
		11
	39	3
		11
172516-77560	102	2
172516-96460	110	11
172519-03341	1	36
	2	36
	3	9
172519-03360	116	7
	117	2
	118	2
	119	2
	120	2
	121	2
	122	2
	123	2
	124	2
	125	2
	126	2
	127	2
	128	2

Parts No.	Fig. No.	Ref. No.
172519-03360	129	2
	130	2
172519-04350	2	45
172519-73590	85	12
172519-73610	85	13
172520-11300	6	1
172520-11350	6	2
172520-12310	8	7
	9	7
172520-17351	19	37
	20	37
172520-17390	19	35
	20	35
172520-17680	72	1
172520-17690	64	7
	67	5
	69	5
		13
	74	18
172520-17850	69	8
172520-17860	69	9
172520-26740	28	3
	29	3
172520-26780	28	10
	29	10
172520-31210	36	1
	37	1
	38	1
		11
	39	1
	54	31
	55	33
172520-35250	113	1
172520-46150	8	14
	9	14
	40	13
	41	29
	42	27
	51	6
	52	3
172520-65151	57	13
	58	14
172520-68940	63	18
		45
172520-69510	68	13
172520-69520	68	14
172520-69530	68	15
172520-69580	65	19
	68	17
172520-69650	65	21

Parts No.	Fig. No.	Ref. No.
172520-69650	68	18
172520-69690	65	24
	68	19
172520-72550	76	5
	78	2
	80	30
172520-72570	76	19
172520-72720	78	25
172520-73530	85	6
172520-73540	85	7
172520-73560	85	10
172520-73630	85	29
172520-73640	85	30
172520-73650	85	31
172520-73660	85	32
172520-73670	85	33
172520-73680	85	34
172520-73740	85	40
172520-73770	85	42
172520-74340	84	20
172520-74350	84	21
172520-74360	84	22
172520-74370	84	23
172520-74390	84	24
172520-74460	84	25
172520-74520	84	26
172520-74530	84	27
172520-75320	92	4
	93	4
172520-76260	94	13
	97	9
		10
172520-77380	99	5
	100	5
	102	21
	103	11
172520-91090	106	4
		11
		18
172520-91210	110	6
172520-91270	80	61
172520-96450	110	10
172520-96460	110	12
172520-96480	110	13
172520-96710-3	111	9
172520-96830	112	13
172520-96830-3	112	4
172521-12260	8	5
	9	5
172521-16320	16	10

Parts No.	Fig. No.	Ref. No.
172521-35260	113	3
172521-72680	80	3
172522-03240	1	30
172522-35130	36	7
		15
	39	7
		15
172522-35160	38	14
		18
	39	8
		16
172522-35250	113	2
172522-35260	113	4
172522-42620	41	22
172522-72580	76	45
172522-72760	76	31
	78	29
172523-14640	14	11
		11 -1
172523-78750	97	32
	99	15
172524-03290	1	33
	2	33
172524-06750	5	2
172524-06830	61	1
	62	1
	66	1
172524-06900	61	2
	62	2
	66	2
172524-12260	8	6
	9	6
172524-12360	8	10
172524-12362	9	10
172524-12380	8	11
	9	11
172524-13180	10	5
172524-14621	14	10
172524-14660	14	13
172524-16110	16	1
172524-16130	16	2
172524-16511	17	21
172524-16531	17	5
172524-16532	17	5 -1
172524-16550	17	22
172524-16580	17	10
172524-16590	17	11
172524-17130	19	11
172524-17210	19	13
	20	13

Parts No. Index

Parts No.	Fig. No.	Ref. No.
172524-17220	19	14
	20	14
172524-17240	19	17
	20	17
172524-17250	19	18
	20	18
172524-17260	19	19
	20	19
172524-17270	19	20
	20	20
172524-17280	19	31
	20	31
	41	60
	42	60
172524-17290	69	4
		12
172524-17310	19	32
	20	32
172524-17311	20	32 -1
172524-17320	19	33
	20	33
172524-17360	19	38
	20	38
172524-17380	19	34
	20	34
172524-17381	20	34 -1
172524-17521-4	21	4
172524-17522	21	11
172524-17660	19	41
	20	41
172524-17670	19	42
	20	42
172524-17680	19	43
	20	43
172524-17690	19	44
	20	44
172524-17710	71	3
172524-17730	71	7
172524-17741	64	11
	67	9
172524-17780	71	8
172524-17810	19	45
	20	45
172524-17820	19	46
	20	46
172524-17830	19	47
	20	47
172524-33520	54	3
		5
172524-33521	55	4

Parts No.	Fig. No.	Ref. No.
172524-33521	55	7
172524-42180	40	5
	41	13
	42	11
172524-42190	41	3
	42	5
	43	2
172524-42360	40	12
	41	11
	42	9
172524-42520	41	18
	42	20
172524-45190	44	8
		8 -1
	45	9
172524-45250	44	13
	45	14
	46	8
	47	3
172524-45510	44	27
172524-45511	45	27
172524-45550	44	28
	45	28
172524-45560	44	29
	45	29
172524-45580	44	30
	45	30
172524-46120	46	11
172524-47800	48	14
	49	4
172524-47930	48	17
172524-47931	49	7
172524-47970	48	18
172524-47980	48	19
	49	8
172524-52830	53	11
172524-52840	53	12
172524-52850	53	13
172524-52870	53	14
172524-63150	56	34
172524-63151	56	50
172524-63210	56	17
		18
		35
	74	4
172524-63220	74	5
172524-63230	56	19
		20
		36
	74	5 A

Parts No.	Fig. No.	Ref. No.
172524-65140	57	9
	58	10
172524-65670	57	23
	58	24
172524-65700	57	24
	58	25
172524-65710	57	25
172524-65711	57	25 -1
	58	26
172524-65720	57	26
	63	2
		33
172524-68280	65	2
	68	2
172524-68290	65	3
	68	3
172524-68710	61	16
	66	17
172524-68720	61	17
	66	18
172524-68781	63	5
172524-68810	63	6
172524-68830	63	9
172524-68850	63	12
172524-68930	63	43
172524-68940	63	46
172524-68950	63	48
172524-69320	68	5
172524-69360	63	20
		51
172524-69370	68	6
172524-69380	68	7
172524-69410-1	61	9
	62	87
	66	9
172524-69411	61	23
	62	89
172524-69460	61	7
	62	85
	66	7
172524-69600	64	23
172524-69610	72	2
172524-72420	80	55
	81	43
172524-72530	76	3
172524-72590	76	24
		50
		76
172524-72690	76	29
	78	24

Parts No.	Fig. No.	Ref. No.
172524-72690	78	51
172524-73512	85	1
172524-73522	85	2
172524-73530	85	4
172524-73540	85	21
172524-73550	85	8
172524-73571	85	11
172524-73582	85	15
172524-73590	85	35
172524-73610	85	27
172524-73620	85	28
172524-73640	85	24
172524-73650	85	14
172524-73750	85	41
172524-73780	85	22
172524-73790	85	23
172524-74610	84	28
172524-74630	84	29
172524-74640	84	30
172524-74760	84	10
172524-74810	97	1
	98	1
172524-75190	92	3
	93	3
172524-75710	92	6
172524-76110	94	10
	95	11
	96	1
172524-76130	94	12
	96	2
172524-76170	96	4
172524-76210	97	6
	98	6
172524-76230	97	8
	98	8
172524-76480	94	16
	97	5
172524-76800	97	19
172524-76801	98	25
172524-76810	97	20
	98	26
172524-76820	97	21
172524-76830	97	22
172524-76840	97	23
172524-77350	101	11
172524-77360	102	20
172524-78150	99	9
	100	9
	102	22
	103	13

Parts No. Index

Parts No.	Fig. No.	Ref. No.
172524-78170	99	10
	100	10
	102	13
	103	14
172524-78450	97	34
172524-91520	109	6
	114	4
	115	4
	116	4
	117	4
	118	5
	119	5
	120	4
	121	5
	122	5
	123	5
	124	4
	125	4
	126	4
	127	5
	128	4
	129	4
	130	4
172527-03110	1	4
	2	4
172527-03120	1	7
	2	7
172527-03130	1	10
	2	10
172527-03140	1	11
	2	11
172527-03160	1	12
172527-03161	1	12 -1
172527-03162	2	12
172527-03170	1	15
	2	15
172527-03210	1	22
	2	22
	3	1
172527-03220	1	24
	2	24
	3	4
172527-03230	1	27
	2	27
	3	15
172527-03240	1	31
	2	31
	3	10
172527-03250	1	43
172527-03310	1	35

Parts No.	Fig. No.	Ref. No.
172527-03310	2	35
172527-03340	1	29 -1
	2	29
172527-05110	4	2
172527-05120	4	3
172527-05130	4	4
172527-06510	5	1
172527-06610	5	5
172527-08500	12	55
172527-11310	6	8
172527-11320	6	10
172527-11330	6	11
172527-11340	6	40
172527-11390	6	26
172527-11391	6	42
172527-11511	7	1
172527-11512	7	28
172527-11560	7	2
172527-11570	7	4
172527-11580	7	6
172527-11910	7	17
172527-11920	7	18
172527-11930	7	19
172527-11931	7	29
172527-12200	8	1
	9	1
172527-12201	8	1 -1
	9	1 -1
172527-12250	8	4
172527-12251	9	4
172527-13120	10	8 -1
172527-13130	10	1
172527-13140	10	2
172527-13150	10	3
172527-13160	10	4
172527-13180	10	6
172527-13190	10	7
172527-13310	11	2
	12	2
	13	2
172527-13320	11	3
	12	3
	13	3
172527-13330	11	4
	12	4
		4 -1
	13	4
172527-13350	11	5
172527-13352	12	5
172527-13360	11	6

Parts No.	Fig. No.	Ref. No.
172527-13360	13	6
172527-13361	12	6
172527-13370	11	7
	12	7
	13	7
172527-13380	11	8
	13	8
172527-13390	11	9
	13	9
172527-13410	11	10
	12	10
172527-13420	11	11
	12	11
	13	11
172527-13480	11	48
	13	10
172527-13510	11	12
	13	12
172527-13520	11	13
	13	13
172527-13530	11	14
	13	14
172527-13610	11	15
	13	15
172527-13611	12	15
		15 -1
172527-13700	12	5 -1
172527-13810	12	56
	13	48
172527-13820	12	57
	13	49
172527-13830	12	58
	13	50
172527-13850	13	5
172527-13910	11	16
	12	16
	13	16
172527-14100	14	1
172527-14101	14	1 A
	15	1
172527-14610	14	9
172527-14611	14	9 A
172527-14710	14	14
172527-14720	14	15
172527-14740	14	16
172527-16100	16	1 -1
172527-16120	16	4
172527-16130	16	2 -1
172527-16140	16	3
172527-16150	16	3 -1

Parts No.	Fig. No.	Ref. No.
172527-16200	18	1
172527-16260	17	2
172527-16261	17	2 -1
172527-16300	18	5
172527-16310	16	8
172527-16320	18	8
172527-16360	41	57
	42	57
172527-16500	18	9
172527-16540	17	6
172527-16570	17	9
	18	19
172527-16610	17	12
172527-16650	21	1
172527-17080	19	2
	20	2
172527-17110	19	3
	20	3
172527-17150	19	28
172527-17151	20	28
172527-17200	19	12
	20	12
172527-17210	19	78
	20	78
172527-17220	19	87
	20	87
172527-17250	19	4
	20	4
172527-17260	19	5
	20	5
172527-17280	19	6
	20	6
172527-17290	19	7
	20	7
172527-17310	19	8
	20	8
172527-17340	19	9
	20	9
172527-17350	19	10
	20	10
172527-17360	19	15
	20	15
172527-17410	19	39
172527-17411	20	39
172527-17420	19	79
	20	79
172527-17430	19	88
	20	88
172527-17440	19	80
	20	80

Parts No. Index

Parts No.	Fig. No.	Ref. No.
172527-17450	19	40
172527-17451	20	40
172527-17460	19	89
	20	89
172527-17470	19	81
	20	81
172527-17480	19	90
	20	90
172527-17510	21	3
172527-17520	19	83
		92
	20	83
		92
172527-17530	21	5
172527-17531	21	12
172527-17540	19	84
		93
	20	84
		93
172527-17550	19	85
		94
	20	85
		94
172527-17560	19	82
		91
	20	82
		91
172527-17570	19	86
		95
	20	86
		95
172527-17580	71	1
172527-17590	71	2
172527-17601	64	1
172527-17611	64	2
172527-17620	64	3
	67	2
172527-17630	64	4
		4 -1
	67	3
172527-17640	64	5
	67	4
172527-17650	64	6
172527-17690	74	18 -1
		18 -2
172527-17710	64	8
	67	6
172527-17720	64	9
	67	7
172527-17730	64	12

Parts No.	Fig. No.	Ref. No.
172527-17730	67	10
172527-17750	64	34
172527-17760	64	35
172527-17770	64	36
172527-17780	64	37
172527-17790	64	40
172527-17810	64	13
	67	11
172527-17820	64	14
172527-17830	61	27
	64	15
	67	12
172527-17840	64	16
	67	13
172527-17850	64	17
172527-17860	64	18
	67	14
172527-17870	64	19
	67	15
172527-17880	64	20
	67	16
172527-17890	69	10
172527-17901	67	1
172527-17910	70	1
172527-17920	70	2
172527-17930	70	3
172527-17940	70	4
172527-17950	70	5
172527-17970	69	3
		11
172527-17980	67	17
172527-17990	67	18
172527-21210	22	1
172527-21510	22	9
172527-21800	22	11
172527-21810	22	12
		16
172527-21820	22	13
172527-21830	22	14
172527-25710	23	1
172527-25720	23	3
172527-25730	23	4
172527-25740	23	5
172527-25750	23	6
172527-25770	23	7
172527-25771	23	7 -1
172527-25790	23	8
	24	30
	25	30
172527-25810	23	9

Parts No.	Fig. No.	Ref. No.
172527-25810	24	2
		31
	25	2
		31
172527-25820	23	10
172527-25840	23	11
172527-25841	23	11 -1
172527-25850	23	12
172527-26000	24	1
172527-26010	24	3
		32
172527-26040	24	6
	25	6
172527-26050	24	7
		35
	25	7
		35
172527-26060	24	8
	25	8
172527-26070	24	9
		36
	25	9
		36
172527-26080	24	10
		37
	25	10
		37
172527-26130	24	14
		41
	25	14
		41
172527-26200	24	28
172527-26310	24	47
	25	47
172527-26320	26	14
172527-26350	26	1
	27	1
172527-26410	26	5
172527-26710	28	1
172527-26730	28	2
	29	2
172527-26740	28	4
	29	4
172527-26910	28	11
	29	11
172527-28310	30	1
172527-28320	30	2
172527-28330	30	3
172527-31110	32	2
172527-31120	32	3

Parts No.	Fig. No.	Ref. No.
172527-31130	32	18
172527-31140	32	19
172527-31150	32	4
	33	4
172527-31160	32	5
		20
	33	5
		20
172527-31170	32	6
		21
	33	6
		21
172527-31190	34	10
172527-31250	32	22
	33	22
172527-33100	34	1
172527-33200	34	5
172527-33260	34	7
172527-33510	34	11
172527-33520	34	12
172527-33530	34	13
172527-34400	35	3
172527-34410	35	5
172527-34420	35	6
172527-34430	35	9
172527-34440	35	10
172527-34470	35	22
172527-35110	36	2
172527-35120	36	10
172527-35150	36	4
		12
	38	3
		7
172527-35210	37	2
172527-35310	38	2
172527-35320	38	6
172527-35330	38	5
		9
172527-35410	39	2
172527-35411	39	2 -1
172527-35420	39	10
172527-35421	39	10 -1
172527-35450	39	5
		13
172527-35451	39	5 -1
		13 -1
172527-35900	32	7 -1
		23 -1
	33	7 -1
		23 -1

Parts No. Index

Parts No.	Fig. No.	Ref. No.
172527-42010	41	53
	42	53
172527-42020	41	54
	42	54
172527-42030	41	55
	42	55
172527-42100	40	3
172527-42140	40	6
	41	2
	42	4
172527-42170	40	7
172527-42190	41	74
	42	74
172527-42200	41	75
	42	75
172527-42210	40	8
	41	4
	42	2
172527-42220	8	12
	40	9
	41	5
	42	3
172527-42230	8	13
	40	10
	43	3
172527-42240	40	11
172527-42250	43	4
172527-42280	43	5
172527-42282	43	5 -1
172527-42283	43	29
172527-42300	41	6
	42	6
172527-42320	43	6
172527-42330	41	9
	42	45
172527-42340	41	10
	42	44
172527-42350	43	7
172527-42390	43	18 -1
172527-42391	43	18 -2
172527-42400	41	12
	42	10
172527-42500	41	15
	42	13
172527-42600	41	19
	42	16
172527-42670	41	23
	42	21
172527-42671	41	76
	42	77

Parts No.	Fig. No.	Ref. No.
172527-42680	41	24
	42	22
172527-42700	41	25
	42	23
172527-42730	41	28
	42	26
172527-42800	43	8
172527-42860	43	11
172527-42920	43	12
172527-42921	43	30
172527-42962	43	13
172527-43110	41	61
	42	61
172527-43120	41	62
	42	62
172527-43150	41	65
	42	65
172527-43160	41	66
	42	66
172527-43390	43	27
172527-45100	44	1
172527-45101	45	1
172527-45210	44	10
	45	11
	46	6
	47	1
172527-45220	44	12
172527-45221	45	13
172527-45310	44	14
	46	9
172527-45580	45	31
172527-46100	46	10
172527-46110	47	5
172527-46140	47	6
172527-47600	49	1
172527-47601	49	1 -1
172527-47620	49	1 B
		1 B-1
172527-47630	49	18
172527-47810	49	4 -1
172527-47860	49	4 B
172527-47870	49	4 C
172527-47880	49	19
172527-47890	49	4 D
172527-47910	48	15
	49	5
172527-47920	48	16
	49	6
172527-47980	48	20
	49	9

Parts No.	Fig. No.	Ref. No.
172527-47980	73	8
172527-47990	48	21
	49	10
	54	14
172527-47991	54	14 -1
172527-49100	50	1
172527-49190	50	4
	51	2
172527-49300	51	1
172527-49400	52	1
172527-49500	50	1 -1
172527-49600	52	1 -1
172527-52050	55	2
172527-52100	53	1
172527-52101	53	18
172527-52410	53	3
172527-52411	53	3 -1
172527-52421	53	4
172527-52430	54	1
		52
172527-52431	53	5
	54	1 -1
		52 -1
	55	1
		54
172527-52451	53	6
	54	12 -1
	55	14
172527-52500	54	2
172527-52800	53	9
172527-52880	53	8
172527-52881	53	21
172527-52920	54	11 -1
	55	13
172527-53300	54	32
	55	34
172527-53310	54	33
	55	35
172527-53350	54	34
		39
		44
	55	36
		41
		46
172527-53360	54	45
172527-53361	54	35
		40
	55	37
		42
		47

Parts No.	Fig. No.	Ref. No.
172527-53370	54	47
172527-53371	55	49
172527-53510	54	51
172527-53511	55	53
172527-53550	55	53 -1
172527-53610	54	53
	55	55
172527-53620	54	54
	55	56
172527-54230	54	30
	55	32
172527-54510	54	6
	55	8
172527-54710	54	7
	55	9
172527-54810	54	15
	55	17
172527-54850	54	16
	55	18
172527-54870	54	17
	55	19
172527-54880	54	18
	55	20
172527-54890	55	16
172527-54930	54	19
	55	21
172527-54950	54	20
	55	22
172527-54970	54	21
	55	23
172527-55110	56	1
172527-55510	56	1 -1
172527-61110	56	3
172527-61120	56	3 -1
172527-61150	56	47
		47 -1
172527-61210	56	5
172527-61410	56	6
172527-61420	56	7
172527-61421	56	48
172527-61510	56	37
172527-61530	56	46
172527-61540	56	14 -1
172527-61610	56	8
172527-61630	56	9
172527-61640	16	12
	19	98
	50	8
	51	7
	73	11

Parts No. Index

Parts No.	Fig. No.	Ref. No.
172527-61640	101	1
		6
	102	19
172527-61750	56	10
172527-61810	56	11
172527-61850	56	12
172527-61860	56	13
172527-61880	56	38
172527-61890	56	39
172527-61910	56	14
172527-61980	56	49
172527-61990	57	3
	58	3
172527-62110	56	40
172527-62120	56	41
172527-62350	6	30
172527-62360	6	31
172527-62370	6	32
172527-62380	6	33
172527-62390	6	34
172527-62450	11	45
	12	45
	13	45
172527-62460	11	46
	12	46
	13	46
172527-62470	11	47
	12	47
	13	47
172527-62510	59	1
172527-62520	59	2
172527-62530	59	3
172527-62540	59	4
172527-62550	59	5
172527-62560	59	6
172527-62570	59	7
172527-62580	59	8
172527-62590	59	9
172527-62610	59	10
172527-62620	59	11
172527-62630	59	12
172527-62640	59	13
172527-62650	59	14
172527-62660	59	15
172527-62670	59	16
172527-62680	59	17
172527-62690	59	18
172527-62710	59	19
172527-62720	59	20
172527-62730	59	21

Parts No.	Fig. No.	Ref. No.
172527-62750	56	43
172527-62760	56	44
172527-62770	56	45
172527-62810	60	2
172527-62910	60	1
172527-62920	60	3
172527-62950	60	4
172527-62960	60	5
172527-62970	60	6
172527-62980	60	7
172527-62990	60	8
172527-63450	11	45 -1
	12	45 -1
	13	45 -1
172527-63460	11	46 -1
	12	46 -1
	13	46 -1
172527-63470	11	47 -1
	12	47 -1
	13	47 -1
172527-63510	59	1 -1
172527-63520	59	2 -1
172527-63530	59	3 -1
172527-63540	59	4 -1
172527-63550	59	5 -1
172527-63560	59	6 -1
172527-63570	59	7 -1
172527-63580	59	8 -1
172527-63590	59	9 -1
172527-63610	59	10 -1
172527-63620	59	11 -1
172527-63630	59	12 -1
172527-63640	59	13 -1
172527-63650	59	14 -1
172527-63660	59	15 -1
172527-63670	59	16 -1
172527-63680	59	17 -1
172527-63690	59	18 -1
172527-63710	59	19 -1
172527-63720	59	20 -1
172527-63730	59	21 -1
172527-63750	56	43 -1
172527-63760	56	44 -1
172527-63770	56	45 -1
172527-63910	60	1 -1
172527-63920	60	3 -1
172527-63950	60	4 -1
172527-63960	60	5 -1
172527-63970	60	6 -1
172527-63980	60	7 -1

Parts No.	Fig. No.	Ref. No.
172527-64200	57	1
	58	1
172527-65100	57	4
	58	4
172527-65110	57	6
172527-65120	58	6
172527-65130	57	7
	58	8
172527-65140	57	8
	58	9
172527-65150	57	14
	58	15
172527-65170	57	15
	58	16
172527-65180	57	16
172527-65181	58	17
172527-65190	57	17
172527-65191	58	18
172527-65200	73	1
	75	7
172527-65210	57	18
172527-65211	58	19
172527-65270	57	19
	58	20
172527-65310	57	20
172527-65312	58	21
172527-65350	57	21
172527-65351	58	22
172527-65360	57	22
172527-65361	58	23
172527-65370	57	44
	58	45
172527-65400	74	1
	75	5
172527-65500	75	3
172527-65510	75	1
172527-65550	57	45
	58	46
172527-65560	57	46
		47
	58	47
		51
172527-65570	57	48
	58	50
172527-65730	57	28
	58	29
172527-65750	57	29
	58	30
172527-65810	57	30
172527-65811	58	31

Parts No.	Fig. No.	Ref. No.
172527-66100	74	19
172527-66110	74	20
172527-66120	74	21
172527-66130	74	22
172527-66140	74	23
172527-66150	74	24
172527-66160	74	25
172527-66170	74	26
172527-66180	74	27
172527-66190	74	28
172527-66200	74	29
172527-66210	74	30
172527-66220	74	31
172527-66230	74	32
172527-66240	74	33
172527-66250	74	34
172527-66260	74	35
172527-66270	74	36
172527-66280	74	37
172527-66290	74	45
172527-66310	74	46
172527-66320	74	47
172527-66330	74	48
172527-66340	74	49
172527-66350	74	54
172527-66360	74	55
172527-66370	74	56
172527-66380	74	7
172527-66390	74	8
172527-66410	74	9
172527-66420	74	10
172527-66430	74	11
172527-66440	74	12
172527-66450	74	13
172527-66460	74	14
172527-66470	74	15
172527-66480	74	16
172527-66500	74	17
172527-66510	74	64
172527-66520	74	65
172527-66530	74	66
172527-66540	74	67
172527-66590	74	70
172527-66610	74	38
172527-66620	74	39
172527-66630	74	40
		41
172527-66640	74	42
172527-66650	74	57
172527-66660	74	58

Parts No. Index

Parts No.	Fig. No.	Ref. No.
172527-66670	74	59
172527-66680	74	50
172527-66850	73	23 A
172527-66890	73	21 A
172527-66900	73	26 A
172527-66960	73	22 A
172527-67170	62	25 -1
	66	11 -1
172527-67180	62	8 -1
172527-67190	62	32 -1
172527-67230	63	8 -1
172527-67240	63	10 -1
172527-67270	63	42 -1
172527-67280	63	44 -1
172527-67500	74	3
	75	9
172527-67550	74	51
172527-67600	74	52
172527-67700	74	53
172527-67750	73	12
172527-67760	73	13
172527-67770	73	14
172527-67780	73	15
172527-67790	73	16
172527-67800	74	68
172527-67810	73	17
172527-67820	73	18
172527-67830	73	19
172527-67850	63	47 -1
172527-67900	74	69
172527-67910	74	6
172527-67950	63	11 -1
172527-68100	61	10
172527-68101	61	10 -1
172527-68102	61	10 -2
172527-68110	61	13
172527-68111	61	13 -1
172527-68112	61	13 -2
172527-68120	73	21
172527-68130	73	22
172527-68140	73	23
172527-68150	73	24
172527-68160	73	26
172527-68210	62	8
172527-68220	62	9
172527-68230	62	10
172527-68240	62	11
	64	38
172527-68250	62	12
	63	3

Parts No.	Fig. No.	Ref. No.
172527-68250	63	34
	64	39
172527-68251	62	12 -1
	63	3 -1
		34 -1
	64	39 -1
		39 -2
172527-68260	62	13
172527-68270	62	14
		15
		16
172527-68280	62	17
		18
		19
172527-68290	62	20
		21
		22
	63	4
		35
172527-68340	73	27
172527-68350	73	29
172527-68360	62	23
172527-68370	65	4
172527-68380	65	5
		5 -1
172527-68390	73	30
172527-68401	62	6
172527-68402	62	6 -1
172527-68411	62	24
172527-68412	62	24 -1
172527-68420	62	25
	66	11
172527-68430	62	26
	66	12
172527-68440	62	7
172527-68450	62	27
172527-68460	62	28
172527-68470	62	29
172527-68480	62	30
172527-68490	62	31
172527-68491	62	31 -1
172527-68501	66	10
172527-68502	66	10 -1
172527-68510	61	11
	66	13
172527-68511	61	11 -1
	66	13 -1
172527-68512	66	13 -2
172527-68512-1	61	11 -2
172527-68521	66	14

Parts No.	Fig. No.	Ref. No.
172527-68522	66	14 -1
172527-68530	61	14
	66	15
172527-68531	61	14 -1
	66	15 -1
172527-68540	61	15
	66	16
172527-68541	61	15 -1
	66	16 -1
172527-68550	65	6
	74	43
172527-68560	65	7
		7 -1
172527-68570	65	8
172527-68580	65	9
172527-68590	65	10
	74	60
172527-68600	62	7 A
172527-68610	62	32
172527-68620	62	33
172527-68630	62	34
172527-68640	62	35
172527-68650	62	36
172527-68660	62	37
172527-68670	61	8
	62	86
	66	8
172527-68671	61	22
	62	88
172527-68680	62	38
172527-68681	62	38 -1
172527-68690	62	39
172527-68710	62	40
172527-68711	62	40 -1
172527-68720	62	41
172527-68730	62	42
172527-68740	65	11
172527-68750	62	43
172527-68760	62	44
172527-68770	62	45
172527-68780	62	46
172527-68790	62	47
172527-68800	63	1
172527-68801	63	1 -1
172527-68810	63	7
172527-68811	63	7 -1
172527-68820	63	8
172527-68830	63	10
172527-68840	63	11
172527-68850	63	13

Parts No.	Fig. No.	Ref. No.
172527-68850	63	36
172527-68860	63	14
		37
172527-68870	62	23 -1
	63	15
		38
172527-68880	63	16
		39
172527-68890	63	17
		40
172527-68900	63	31
172527-68901	63	31 -1
172527-68910	63	41
172527-68911	63	41 -1
172527-68920	63	42
172527-68930	63	44
172527-68940	63	47
172527-68950	63	49
172527-68960	63	19
		50
172527-68970	63	63
		63 -1
172527-68980	63	64
172527-68990	63	65
172527-69090	62	58
	66	29
172527-69101	62	48
	66	19
172527-69130	62	49
	66	20
172527-69140	62	50
	66	21
172527-69150	62	51
	66	22
172527-69170	62	83
172527-69181	62	59
172527-69190	62	60
172527-69200	62	61
172527-69210	62	62
172527-69220	62	63
172527-69230	62	64
172527-69250	64	21
172527-69260	64	22
	67	19
172527-69280	61	18
	66	30
172527-69290	69	15
172527-69310	68	4
172527-69320	74	61
172527-69360	65	12

Parts No. Index

Parts No.	Fig. No.	Ref. No.
172527-69371	65	13
172527-69381	65	14
172527-69390	65	15
172527-69400	65	1
172527-69410	65	16
172527-69430	65	17
172527-69440	65	18
172527-69450	68	8
172527-69460	68	9
172527-69470	68	10
172527-69480	68	11
172527-69490	68	12
172527-69500	68	1
172527-69560	68	16
172527-69570	62	16 -1
172527-69590	70	6
172527-69610	62	65
		66
		67
	65	20
	71	4
		5
172527-69620	62	68
		69
172527-69630	61	19
	62	70
	64	24
	66	31
172527-69640	62	71
172527-69650	63	21
		52
	67	20
	70	7
172527-69670	63	61
	65	22
		23
172527-69680	63	62
172527-69690	68	20
172527-69710	61	20
	66	32
172527-69720	62	72
		73
	64	25
		26
		27
		32
		33
		43
	65	25
		25 -1

Parts No.	Fig. No.	Ref. No.
172527-69720	65	26
	67	21
	69	6
		14
172527-69730	62	74
172527-69740	62	75
	64	41
	71	6
172527-69760	64	28
172527-69770	65	27
172527-69780	64	29
	71	9
172527-69790	63	23
		54
	64	30
	67	22
172527-69810	63	24
		55
	64	10
	67	8
172527-69820	62	76
172527-69830	62	22 -1
172527-69840	63	25
		56
172527-69850	62	52
		77
	66	23
172527-69860	62	78
	63	26
		27
		57
		58
172527-69870	63	28
		59
172527-69880	63	29
		60
172527-69890	72	3
172527-69910	65	28
172527-69920	65	29
172527-69930	65	30
172527-69940	62	82
172527-69950	62	53
	66	24
172527-69951	62	53 -1
	66	24 -1
172527-69960	62	54
	66	25
172527-69961	62	54 -1
	66	25 -1
172527-69970	62	55

Parts No.	Fig. No.	Ref. No.
172527-69970	66	26
172527-69971	62	55 -1
	66	26 -1
172527-69980	62	56
	66	27
172527-69981	62	56 -1
	66	27 -1
172527-69990	62	57
	66	28
172527-69991	62	57 -1
	66	28 -1
172527-72110	77	8
172527-72310	77	13
172527-72420	80	56
	81	44
172527-72430	80	60
172527-72500	76	1
172527-72501	76	1 -1
172527-72502	77	1
172527-72520	76	2
172527-72530	76	4
172527-72531	76	4 -1
172527-72540	76	17
		43
		69
	78	8
		12
		35
		39
		62
		66
172527-72550	76	6
172527-72560	76	15
172527-72561	76	15 -1
172527-72570	76	20
	78	3
172527-72580	76	23
		49
		75
172527-72600	78	1
172527-72601	79	1
172527-72630	78	6
172527-72640	78	7
172527-72650	78	11
172527-72660	78	15
172527-72670	79	16
172527-72750	79	19
172527-72800	80	1
172527-72801	81	1
172527-72830	80	15

Parts No.	Fig. No.	Ref. No.
172527-72830	80	19
		42
		46
172527-72840	80	4
172527-72850	80	13
172527-72861	80	17
172527-72870	80	21
172527-72881	80	24
		51
172527-72890	80	25
172527-72900	81	15
172527-72960	81	16
		19
		37
		40
172527-72970	81	18
172527-73100	82	1
172527-73110	82	4
172527-73120	82	5
172527-73130	82	6
172527-73140	82	7
172527-73150	82	8
	84	2
172527-73160	82	9
172527-73170	82	10
172527-73180	82	11
	83	2
172527-73190	82	12
	83	3
172527-73210	82	13
	83	4
172527-73220	82	14
172527-73230	82	15
172527-73240	82	16
172527-73250	82	17
172527-73260	82	18
172527-73270	82	19
172527-73280	82	20
172527-73290	82	21
172527-73300	83	1
172527-73310	83	31
172527-73320	83	5
172527-73330	83	6
172527-73340	83	7
172527-73350	82	22
172527-73360	82	23
172527-73370	82	24
172527-73380	82	25
172527-73390	82	26
172527-73410	82	27

Parts No. Index

Parts No.	Fig. No.	Ref. No.
172527-73420	82	28
172527-73430	82	29
172527-73440	82	31
172527-73450	82	32
172527-73460	82	33
172527-73470	82	34
172527-73480	82	35
172527-73490	82	37
172527-73510	82	39
172527-73520	82	41
172527-73530	82	44
172527-73540	82	36
172527-73550	82	52
	83	27
	84	17
172527-73560	82	47
172527-73570	82	46
172527-73580	82	30
172527-73590	82	38
172527-73600	82	53
172527-73610	82	54
172527-73620	82	56
172527-73630	82	57
172527-73640	82	58
172527-73650	82	42
	83	25
	84	13
172527-73660	83	8
172527-73670	83	9
172527-73680	83	10
172527-73690	83	12
172527-73710	83	13
172527-73720	83	14
172527-73730	83	15
172527-73740	83	16
172527-73750	83	17
	84	15
172527-73760	83	18
172527-73770	83	21
172527-73780	83	22
172527-73790	83	24
172527-73800	83	26
	84	16
172527-73810	83	29
	84	19
172527-73840	82	61
172527-73850	94	1
	95	1
172527-73870	94	3
	95	3

Parts No.	Fig. No.	Ref. No.
172527-73880	82	40
172527-73890	82	45
172527-73910	82	55
172527-73920	83	19
172527-73940	83	23
172527-73950	94	4
	95	4
172527-73960	83	28
	84	18
172527-73970	94	5
	95	5
172527-73990	94	7
	95	7
172527-74030	46	1
172527-74040	46	3
172527-74110	86	1
172527-74120	86	3
	87	3
172527-74130	86	4
	87	4
	88	3
	89	3
	90	3
	91	3
172527-74140	86	5
	87	5
	88	4
	89	4
	90	4
	91	4
172527-74150	86	6
	87	7
	88	6
	89	6
	90	6
	91	6
172527-74160	86	7
	87	9
	88	8
	89	8
	90	8
	91	8
172527-74170	86	8
	88	9
	90	9
172527-74180	86	9
	87	10
	88	10
	89	9
	90	10

Parts No.	Fig. No.	Ref. No.
172527-74180	91	9
172527-74190	86	10
	87	11
	88	11
	89	10
	90	11
	91	10
172527-74210	86	11
	87	12
172527-74220	87	13
	88	12
	89	11
	90	12
	91	11
172527-74300	87	1
172527-74330	87	14
	89	12
	91	12
172527-74340	87	15
	89	13
	91	13
172527-74400	88	1
172527-74410	86	15
	87	19
	88	13
	89	14
172527-74420	86	16
	87	20
	88	14
		20
	89	15
		20
	90	13
	91	14
172527-74430	88	15
	89	16
172527-74500	89	1
172527-74600	90	1
172527-74610	88	21
	89	21
	90	14
	91	15
172527-74620	90	15
	91	16
172527-74700	91	1
172527-75110	92	2
172527-75111	93	2
172527-75410	92	5
172527-75411	93	5
172527-76110	94	11

Parts No.	Fig. No.	Ref. No.
172527-76110	102	1
172527-76150	96	3
172527-76160	101	7
172527-76170	101	2
172527-76210	97	7
	98	7
172527-76261	97	11
172527-76320	97	14
		14 -1A
		14 -1B
		14 -2
172527-76330	97	15
		15 -1
172527-76340	97	40
		40 -1
		40 -2
172527-76350	97	17
	98	23
172527-76360	97	18
172527-76460	97	18 -1
	98	24
172527-76510	99	1
172527-76511	100	1
172527-76520	99	2
172527-76521	100	2
172527-77110	102	9
172527-77120	102	10
172527-77150	102	11
172527-77360	102	4
172527-77370	103	6
172527-77400	103	12
172527-78110	99	6
172527-78111	99	6 -1
	100	6
172527-78130	99	7
	100	7
172527-78140	99	8
	100	8
172527-78180	101	8
172527-78210	99	11
	100	11
172527-78230	99	12
	100	12
172527-78240	99	13
	100	13
172527-78250	99	14
172527-78251	100	14
172527-78290	102	12
172527-78310	97	25
	98	31

Parts No. Index

Parts No.	Fig. No.	Ref. No.
172527-78330	97	27
	98	33
172527-78340	97	28
172527-78351	97	29
	98	35
172527-78360	97	30
	98	36
172527-78380	97	28 -1
	98	34
172527-78390	97	31
172527-78391	98	37
172527-78440	97	33
172527-78441	98	39
172527-78442	98	39 -1
172527-78460	97	35
172527-78461	98	41
172527-78470	97	36
172527-78471	98	42
172527-78490	97	32 -1
172527-78491	98	38
172527-78492	98	38 -1
172527-78550	102	14
172527-78560	102	15
172527-78570	103	15
172527-78580	103	16
172527-78730	99	17
172527-78731	100	17
172527-78750	100	16
172527-91050	106	1
172527-91100	104	1
172527-91101	105	1
172527-91180	104	4
		10
		16
	105	4
		10
		16
	106	5
		12
		19
	107	9
		15
		21
	108	9
		15
		21
172527-91190	104	5
		11
		17
	105	5

Parts No.	Fig. No.	Ref. No.
172527-91190	105	11
		17
	106	6
		13
		20
	107	10
		16
		22
	108	10
		16
		22
172527-91201	109	13
	121	3
172527-91210	104	20
	105	20
	106	23
172527-91220	104	21
	105	21
	106	24
	107	41
	108	41
172527-91230	104	22
	105	22
	106	25
	107	42
	108	42
172527-91250	107	2
	108	2
172527-91260	107	3
	108	3
172527-91270	107	4
	108	4
172527-91280	107	5
	108	5
172527-91290	107	6
	108	6
172527-91300	107	7
172527-91301	108	7
172527-91390	109	4
172527-91390-2	114	3
	117	3
	118	4
	124	3
	125	3
	126	3
172527-91390-3	121	4
172527-91400	109	1
172527-91400-2	114	2
172527-91600	107	25
	108	25

Parts No.	Fig. No.	Ref. No.
172527-91650	107	27
		31
		35
	108	27
		31
		35
172527-91660	107	28
		32
		36
172527-91700	109	9
172527-91700-1	117	5
172527-91900	109	12
172527-91900-1	118	3
172527-96100	112	11
172527-96200	110	5
172527-96400	111	1
172527-96400-1	124	5
172527-96500	111	4
172527-96500-1	125	5
172527-96600	111	7
172527-96600-1	126	5
172527-96700	112	3
172528-03110	1	5
	2	5
172528-03120	1	8
	2	8
172528-03160	1	13
172528-03161	1	13 -1
172528-03162	2	13
172528-03163	2	13 -1
172528-03170	1	16
	2	16
172528-03340	1	30 -1
	2	30
172528-11310	6	9
172528-11390	6	27
172528-11561	7	3
172528-11571	7	5
172528-12260	9	26
172528-13910	11	17
	12	17
	13	17
172528-14610	15	8
172528-17610	64	2 -1
172528-17620	64	2 A
172528-17630	64	2 B
172528-17750	64	33 A
172528-17760	64	33 B
172528-17770	64	33 C
172528-17780	64	33 D

Parts No.	Fig. No.	Ref. No.
172528-17800	64	42
172528-21800	22	15
172528-21820	22	17
172528-21830	22	18
172528-25710	23	2
172528-26000	25	1
172528-26010	25	3
		32
172528-26200	25	28
172528-26320	27	14
172528-26330	27	5
172528-26710	29	1
172528-28310	31	1
172528-28320	31	2
172528-28330	31	3
172528-31110	33	2
172528-31120	33	3
172528-31130	33	18
172528-31140	33	19
172528-35110	36	6
172528-35120	36	14
172528-35150	36	8
		16
	38	13
		17
172528-35210	37	3
172528-35310	38	12
172528-35320	38	16
172528-35330	38	15
		19
172528-35410	39	6
172528-35411	39	6 -1
172528-35420	39	14
172528-35421	39	14 -1
172528-35450	39	9
		17
172528-35451	39	9 -1
		17 -1
172528-42620	42	19
172528-42621	42	76
172528-45210	44	11
	45	12
	46	7
	47	2
172528-52050	55	5
172528-52070	55	5 -1
172528-52100	53	2
172528-52101	53	19
172528-52500	54	4
172528-52800	53	10

Parts No. Index

Parts No.	Fig. No.	Ref. No.
172528-53300	54	37
	55	39
172528-53310	54	38
	55	40
172528-62350	6	35
172528-62360	6	36
172528-62370	6	37
172528-62380	6	38
172528-62390	6	39
172528-63350	6	35 -1
172528-63360	6	36 -1
172528-63370	6	37 -1
172528-63380	6	38 -1
172528-63390	6	39 -1
172528-65200	73	2
	75	8
172528-65400	74	2
	75	6
172528-65500	75	4
172528-65510	75	2
172528-68150	73	25
172528-68340	73	28
172528-69920	64	33 E
172528-72500	76	27
172528-72501	76	27 -1
172528-72502	77	21
172528-72520	76	28
172528-72530	76	30
172528-72531	76	30 -1
172528-72540	76	46
	78	30
172528-72550	76	32
172528-72560	76	41
172528-72561	76	41 -1
172528-72600	78	28
172528-72601	79	23
172528-72630	78	33
172528-72640	78	42
172528-72650	78	38
172528-72660	78	34
172528-72670	78	52
172528-72700	77	28
172528-72750	77	33
172528-72800	79	38
172528-72840	79	41
172528-73100	82	2
172528-73300	84	1
172528-73310	84	32
172528-73320	84	3
172528-73330	84	4

Parts No.	Fig. No.	Ref. No.
172528-73340	84	6
172528-73350	84	7
172528-73360	84	8
172528-73370	84	9
172528-73380	84	11
172528-73390	84	12
172528-73410	84	14
172528-73640	82	59
172528-74030	46	2
172528-74040	46	4
172528-74110	86	2
172528-74140	87	6
	88	5
	89	5
	90	5
	91	5
172528-74150	87	8
	88	7
	89	7
	90	7
	91	7
172528-74300	87	2
172528-74400	88	2
172528-74500	89	2
172528-74600	90	2
172528-74700	91	2
172528-74810	97	2
	98	2
172528-76320	97	13
		13 -1
		13 -2
172528-76330	97	16
		16 -1
172528-77360	102	5
172528-77370	103	7
172528-78390	98	47
172528-78720	99	16
172528-78730	99	18
172528-91050	106	8
172528-91100	104	7
172528-91101	105	7
172528-91201	109	14
172528-91201-2	122	3
172528-91300	107	13
172528-91301	108	13
172528-91390	109	5
172528-91390-1	115	3
	116	3
	119	4
	120	3

Parts No.	Fig. No.	Ref. No.
172528-91390-1	127	4
	128	3
	129	3
	130	3
172528-91390-2	122	4
	123	4
172528-91400	109	2
172528-91400-1	115	2
172528-91600	107	29
	108	29
172528-91700	109	10
172528-91700-1	119	3
172528-92100	105	7 -1
172528-96400	111	2
172528-96400-1	127	3
172528-96500	111	5
172528-96500-1	129	5
172529-03110	1	6
	2	6
172529-03120	1	9
	2	9
172529-03160	1	14
172529-03161	1	14 -1
172529-03162	2	14
172529-03163	2	14 -1
172529-53300	54	42
	55	44
172529-53310	54	43
	55	45
172529-72110	77	48
172529-72150	77	53
172529-72210	79	60
172529-72260	79	63
172529-72310	81	36
172529-72350	81	39
172529-72500	76	53
172529-72501	76	53 -1
172529-72502	77	41
172529-72520	76	54
172529-72530	76	57
	78	56
172529-72580	76	71
172529-72600	78	55
172529-72601	79	45
172529-72630	78	60
172529-72640	78	61
172529-72660	76	55
172529-72670	76	56
172529-72671	76	56 -1
172529-72680	76	58

Parts No.	Fig. No.	Ref. No.
172529-72690	76	67
172529-72691	76	67 -1
172529-72700	76	72
	78	57
172529-72710	78	79
172529-72730	78	78
172529-72740	78	69
172529-72750	78	65
172529-72800	80	28
172529-72801	81	22
172529-72840	80	52
172529-72870	80	29
172529-72880	80	31
172529-72890	80	40
172529-72911	80	44
172529-72920	80	48
172529-73100	82	3
172529-73640	82	60
172529-74040	46	5
172529-77360	102	6
172529-77370	103	8
172529-78310	97	26
	98	32
172529-91050	106	15
172529-91100	104	13
172529-91101	105	13
172529-91201	109	15
172529-91201-2	123	3
172529-91300	107	19
172529-91301	108	19
172529-91400	109	3
172529-91400-1	116	2
172529-91600	107	33
	108	33
172529-91700	109	11
172529-91700-1	120	5
172529-92100	105	13 -1
172529-96400	111	3
172529-96400-1	128	5
172529-96500	111	6
172529-96500-1	130	5
172530-03210	1	44 A
	2	44 A
172530-03220	1	44 B
	2	44 B
	3	17
172530-03230	1	44 C
	2	44 C
	3	18
172530-17150	20	28 -1

Parts No. Index

Parts No.	Fig. No.	Ref. No.
172530-42800	43	8 -1
172533-68100	61	12
172537-03100	49	18 -1
172538-08400	114	1
172538-08410	117	1
172538-08420	118	1
172538-08450	124	1
172538-08460	125	1
172538-08470	126	1
172538-08510	121	1
172538-08550	38	21
172538-08560	37	6
172538-08570	39	19
172538-12310	8	7 -1
	9	7 -1
172538-47600	49	1 -2
172538-47610	49	20
172538-47630	49	1 C
172539-08400	115	1
172539-08410	119	1
172539-08450	127	1
172539-08460	129	1
172539-08510	122	1
172539-08550	38	22
172539-08560	37	7
172539-08570	39	20
172543-08400	116	1
172543-08410	120	1
172543-08450	128	1
172543-08460	130	1
172543-08510	123	1
172645-76560	98	14
172648-16600	18	7
172649-74470	98	27
172649-74480	98	28
172649-74490	98	29
172652-73750	95	4 -1
172652-73770	95	5 -1
172652-73780	95	7 -1
172652-73790	95	8 -1
172964-03481	1	37
	2	37
	3	16
177035-02920	32	1
		17
	33	1
		17
	35	1
184015-03250	12	49
184016-55700	15	13

Parts No.	Fig. No.	Ref. No.
184016-55701	15	13 -1
194080-57202	19	49
	20	49
194080-75790	53	20
194130-01390	40	1
194145-04810	16	17
	20	11
	50	9
	52	8
	103	10
194145-31520	26	6
194205-36320	35	12
194250-51660	17	14
	73	9
194312-51220	17	13
194320-31560	27	7
194420-52120	19	48
	20	48
194447-14140	24	29
	25	29
	35	2
194465-11940	73	4
194630-15520	100	22
	103	4
194630-62360	56	15
194640-33590	30	8
194640-34150	30	10
	31	10
194990-20170	40	2
	41	1
	42	1
194990-22060	56	4
194990-22130	56	26
195216-15470	10	8
198010-36310	35	11
198010-36390	35	13
198010-51500	16	7 -1
198072-04320	14	8
198138-49100	98	2 -1
198162-00640	11	1
	12	1
	13	1
198162-62630	56	16
198220-53170	19	16
		21
	20	16
		21
198220-56130	19	22
	20	22
198220-56140	19	23

Parts No.	Fig. No.	Ref. No.
198220-56140	20	23
198220-56150	19	24
	20	24
198220-56160	19	25
	20	25
198220-56230	19	26
	20	26
198220-62410	57	5
	58	5
198240-33570	30	6
198240-33630	30	9
198250-31630	26	8
198250-31810	26	9
198250-31820	26	10
198250-33540	30	4
198250-33550	30	5
198250-33570	30	7
198290-32750	35	4
198320-31530	27	6
198320-31570	27	8
198320-31630	27	9
198320-31820	27	10
198320-33540	31	4
198320-33550	31	5
198320-33560	31	6
		7
198320-33570	31	8
198320-33620	31	9
198360-31530	26	7
1A1102-51460	55	58
1A1380-56500	17	15
	73	10
1A1380-59480	17	24
	18	20
	98	48
1A6210-16150	41	72
	42	72
1A6210-16160	41	73
	42	73
1A6380-24080	95	10
1A6380-48870	103	1
1A6780-57110	20	29 -1
1C6052-24090	44	26
1C6281-52310	8	15
	9	15
	44	16
	45	16
	46	13
	47	8
	57	2

Parts No.	Fig. No.	Ref. No.
1C6281-52310	58	2
1C6281-52320	44	31
	45	32
1C6320-66451	8	16
	9	16
1C6360-65700	40	14
	41	30
		31
	42	28
		29
	43	16
	110	2
1C6410-52690	41	47
	42	46
1C6450-07900	17	1
	73	3
1C6560-47000	43	15
1C6650-44090	44	35
	45	8
1C6710-83170	43	17
		18
1C6900-23150	7	20
	14	4
	92	1
1E4130-73040	110	14
1E4760-43090	9	12
	40	23
	41	77
	42	78
1E6299-03000	12	12
1E6480-82280	19	60
	20	60
1E6681-56621	32	7
		23
	33	7
		23
1E6690-81530	19	59
	20	59
1E6740-64200	40	25
	41	78
	42	79
22117-100000	82	62
22137-060000	8	17
		25
	9	17
		28
	19	61
	20	61
		64
	41	67

Parts No. Index

Parts No.	Fig. No.	Ref. No.
22137-060000	42	67
	45	17
22137-080000	6	18
	11	32
		33
		49
	12	32
		33
	13	32
		33
	14	31
	44	17
		32
	45	18
		33
	46	14
	47	9
	57	10
		31
	58	11
		32
	61	3
	62	3
	66	3
	68	21
		22
	73	31
	76	25
		51
		77
	78	26
		53
		80
	97	3
	98	3
		3 -1
22137-100000	6	4
		19
		29
	7	26
	10	9
		14
	19	97
	20	97
	21	8
	40	15
	41	32
		33
		34
	42	30

Parts No.	Fig. No.	Ref. No.
22137-100000	42	31
		32
	44	18
	45	19
	48	22
	49	11
	54	28
	55	30
	56	21
		22
	57	32
	58	33
		48
	68	23
		24
	80	26
		53
	83	32
	84	33
	110	16
22137-120000	14	38
	15	21
	54	29
	55	31
	61	12 A
		28
		28 -1
	74	62
	92	12
	93	12
22137-140000	48	12
	49	2
	61	24
	62	90
	110	17
22137-160000	82	65
22157-060000	56	51
		52
		53
22157-080000	56	23
	73	45
22157-100000	56	24
22190-080002	73	33
22217-060000	8	18
	9	18
	17	18
	18	23
	40	16
	43	19
	62	79

Parts No.	Fig. No.	Ref. No.
22217-080000	5	3
	6	20
	8	19
	9	19
	11	35
	12	35
	13	35
	14	33
	40	17
	41	35
	42	33
	61	4
	62	4
		80
	66	4
22217-100000	6	5
		21
	10	10
	16	13
	23	13
	35	16
	41	36
	42	34
	44	19
	45	20
	54	26
	55	28
	86	12
	87	16
	88	16
	89	17
	90	16
	91	17
22217-120000	8	20
	9	20
	22	2
	54	27
	55	29
22217-140000	53	15
	109	7
	114	5
	115	5
	116	5
	117	6
	118	6
	119	6
	120	6
	121	6
	122	6
	123	6

Parts No.	Fig. No.	Ref. No.
22217-140000	124	6
	125	6
	126	6
	127	6
	128	6
	129	6
	130	6
22217-160000	82	66
22217-200000	111	10
22242-000140	110	18
22242-000200	49	4 E
22242-000250	35	14
	41	51
	42	51
22242-000300	23	14
	82	48
22242-000350	23	15
22242-000450	23	16
	24	20
	25	20
22252-000220	97	24
	98	30
22252-000250	83	11
22252-000260	84	5
22252-000350	82	49
22252-000370	49	4 F
22312-060100	82	50
	83	20
22312-100200	24	21
		48
	25	21
		48
	30	11
	31	11
	32	8
		9
		10
		24
		25
		26
	33	8
		9
		10
		24
		25
		26
	35	17
22351-060032	46	15
	47	10
22351-060036	26	11

Parts No. Index

Parts No.	Fig. No.	Ref. No.
22351-060050	27	11
	41	37
		68
	42	35
		68
22351-080020	22	3
22351-080040	31	12
	41	38
	42	49
22351-080050	43	20
22360-080000	57	33
	58	34
22372-080000	62	81
22372-100000	40	26
	41	79
		80
	42	80
		81
	43	33
22411-250200	43	21
22417-250320	44	6
	45	6
22486-060180	44	20
	45	21
	46	16
	47	11
22487-060160	57	34
	58	35
22487-080600	44	33
	45	34
22487-100400	110	8
22695-320641	54	36
		41
		46
	55	38
		43
		48
22857-500160	57	11
	58	12
22857-500200	19	64
23000-022000	65	31
	68	25
	74	44
23000-025000	97	37
	99	19
23000-028000	7	21
	97	38
	99	20
23000-041000	97	39
23000-048000	7	27

Parts No.	Fig. No.	Ref. No.
23000-060000	7	13
23001-022000	98	43
	100	19
23001-025000	7	30
	98	44
23001-035000	98	45
	100	20
23001-041000	12	36
		60
	98	46
23010-038000	11	36
	13	36
23061-050300	15	17
23065-070130	11	25
	12	25
	13	25
23391-020000	98	13
23414-080000	35	23
23414-160000	32	11
		27
	33	11
		27
	35	18
23490-080002	35	19
23491-140002	7	22
	12	29 -1
	13	29 -1
	14	6
	15	6
	92	7
	93	7
23857-030000	35	24
23871-010000	34	9
23871-060000	32	12
		28
	33	12
		28
23887-160002	32	13
	33	13
24101-060094	23	17
24101-060114	27	12
24101-062074	23	18
24101-062084	23	19
24101-062104	26	12
24101-062114	26	13
	27	13
24101-063064	23	20
24141-302110	28	12
	29	12
24141-320110	29	13

Parts No.	Fig. No.	Ref. No.
24141-322100	28	13
24143-303060	24	22
		49
	25	22
		49
24144-303070	24	23
		50
	25	23
		50
24190-160001	35	15
24311-000060	82	43
24311-000140	94	17
	95	21
	96	13
24311-000160	7	31
	11	30
	12	30
		54
	13	30
	14	26
		39
	15	4
		15
	93	1
24311-000180	7	23
	94	18
	95	22
	96	14
		15
	102	3
	103	2
24311-000240	23	21
	24	51
	25	51
24311-000290	92	8
24311-000380	93	8
24311-000750	34	14
24311-000900	24	24
	25	24
24311-240100	14	27
24315-000140	95	17
24315-000180	95	14
		20
	98	10
		12
		16
		19
24315-000240	98	22
24321-000550	86	17
	87	21

Parts No.	Fig. No.	Ref. No.
24321-000550	88	19
	89	22
24321-000600	53	16
	94	8
	95	8
24321-000650	14	28
	15	16
24321-001050	24	25
		52
	25	25
		52
	93	9
24321-001100	28	14
	29	14
24321-001250	92	9
24341-000700	84	31
24341-000750	82	51
	83	30
24341-000850	82	63
24550-012120	43	10
	44	3
	45	3
24550-016150	50	5
	51	4
	52	7
24550-020150	41	26 -1
		63 -1
	42	24 -1
		63 -1
24550-025150	8	3 -1
	9	3
	41	7 -1
		16 -1
		20 -1
	42	7 -1
		14 -1
		17 -1
24550-030300	81	14
24550-035300	77	19
	79	15
	81	35
24550-040250	76	47
	78	31
24550-040300	77	39
	79	37
24550-045300	76	73
	77	59
	78	58
	79	59
24764-020000	34	8

Parts No. Index

Parts No.	Fig. No.	Ref. No.
24764-020000	54	8
	55	10
	104	23
	105	23
	106	26
	107	37
	108	37
	110	9
24764-040000	34	4
	80	58
	81	48
26013-060162	19	65
		66
		67
	20	62
		65
		66
		67
	21	10
	73	34
26013-060252	19	68
	20	68
26013-060352	73	35
26013-080122	19	69
	20	69
26013-080162	11	34
		37
	12	34
		37
	13	34
		37
	17	19
	18	24
	20	105
	22	10
	41	69
	42	69
	57	35
	58	36
	68	26
		27
	69	7
		16
	73	36
	94	9
	95	9
26013-080202	5	6
	7	14
		24
	11	38

Parts No.	Fig. No.	Ref. No.
26013-080202	12	38
		38 -1
	13	38
	19	71
	20	71
	43	28
	56	25
	73	37
		38
	97	4
	98	4
		4 -1
26013-080252	44	21
	73	39
26013-080302	57	12
		36
	58	13
	73	40
26013-080352	11	39
	13	39
	44	21 -1
	45	22
	57	37
	58	38
	100	4
	103	9
26013-080402	73	47
26013-080452	12	39
	44	22
	45	23
26013-080502	46	17
	47	12
26013-080552	11	40
	12	40
	13	40
26013-100162	16	5
26013-100202	10	11
	11	41
	12	41
	13	41
	21	9
	41	39
		70
	42	36
		70
	43	23
	48	23
	49	12
	54	48
	55	50

Parts No.	Fig. No.	Ref. No.
26013-100202	56	27
		28
		29
	61	25
	62	91
	68	28
	73	41
	80	59
	81	49
	92	10
	93	10
	104	24
	105	24
	106	27
	107	38
	108	38
26013-100252	6	28
	7	25
	19	72
	20	72
	24	27
		54
	25	27
		54
	34	15
		16
	40	18
	41	40
		41
	42	37
		38
	44	23
	45	24
	56	30
	57	38
	58	39
	73	42
	87	18
	89	19
	91	19
26013-100302	5	7
	6	22
	35	20
	49	13
	56	31
	57	40
	58	41
	73	43
	83	33
	85	45

Parts No.	Fig. No.	Ref. No.
26013-100352	6	23
	10	12
	16	14
	19	70
	20	70
	41	52
	42	52
	50	6
	51	8
	52	9
	68	29
	73	32
	84	34
	85	44
	86	14
	88	18
	90	18
	99	4
	101	9
	102	7
		7 -1
		16
	103	17
26013-100402	7	15
	28	15
	29	15
	54	13
26013-100452	23	22
		23
	56	32
	99	21
	100	21
	102	17
	103	18
26013-100502	34	17
	48	26
	49	14
	54	13 -1
	55	15
	56	2
	73	44
	100	21 -1
26013-100602	101	4
26013-120252	14	7
	92	11
	112	9
		18
26013-120302	14	7 -1
	15	7
	54	9

Parts No. Index

Parts No.	Fig. No.	Ref. No.
26013-120302	54	10
	55	11
		12
	92	11 -1
	93	11
26013-120502	11	42
	12	42
		42 -1
	13	42
	32	14
		30
	33	14
		30
26013-120952	32	15
		31
	33	15
		31
26014-060162	12	43
	56	54
26014-080162	14	34 A
26014-080252	58	42
26014-080302	58	37
26014-080352	58	49
26014-100302	56	42
26016-060162	56	33
26016-080162	73	5
26016-080552	73	20
26018-060162	11	43
	13	43
	70	8
26018-080162	14	34
26018-080202	57	41
26022-050162	19	62
		63
	20	63
26022-060162	19	30
	20	30
	56	55
		56
		57
26023-050162	67	23
26023-060162	57	42
	58	43
	63	22
		30
		32
		53
	67	24
		25
26076-100252	82	64

Parts No.	Fig. No.	Ref. No.
26076-100302	10	15
26076-120302	61	12 B
		20 -1
		20 -2
26106-080652	15	18
26116-060202	41	71
	42	71
26116-080162	61	19 -1
26116-080202	78	27
		54
		81
26116-080302	76	26
		52
		78
26116-080402	22	19
26116-080902	14	35
26116-100202	80	27
		54
26116-100352	30	12
26116-100452	31	13
26116-100454	41	50
	42	50
26116-100652	6	6
26116-100902	35	21
26116-120252	74	63
26116-120602	22	4
26116-120952	22	5
26116-121002	22	6
26116-121102	22	7
26116-140352	53	17
26116-160552	54	55
	55	57
26116-160752	54	11
26116-200852	54	49
	55	51
26116-201002	54	50
	55	52
26156-100502	23	24
	24	26
		53
	25	26
		53
26156-160402	82	67
26156-200352	36	18
	37	4
	38	10
		20
	39	18
26156-200402	37	5
26216-100402	48	24

Parts No.	Fig. No.	Ref. No.
26216-100402	49	15
26216-100452	23	25
	54	22
26216-100502	54	22 -1
	55	24
26216-120502	54	23
	55	25
26346-100002	57	27
	58	28
26366-080002	57	43
	58	44
26366-100002	56	58
26450-060162	8	21
	9	21
26450-100452	32	16
		29
	33	16
		29
26450-100502	85	43
26587-040062	45	7
26617-080002	61	21
	64	31
	66	33
26716-060002	8	22
	9	22
	17	20
	18	25
	40	19
		20
	41	56
	42	56
	43	24
26716-080002	5	4
	6	24
	8	23
	9	23
		27
	11	44
	12	44
	13	44
	16	15
	40	21
		22
	41	42
		43
	42	39
		40
	44	24
		34
	45	25

Parts No.	Fig. No.	Ref. No.
26716-080002	45	35
	46	18
	47	13
	61	5
	62	5
	66	5
	73	46
	76	26 A
		52 A
		78 A
26716-100002	6	7
		25
	7	16
	10	13
	16	16
	19	96
	20	96
	23	26
	41	44
	42	41
	43	22
		25
	44	25
	45	26
	48	25
	49	16
	54	24
	55	26
	86	13
	87	17
	88	17
	89	18
	90	17
	91	18
	101	5
		10
	102	18
	103	19
26716-120002	8	24
	9	24
	22	8
	54	25
	55	27
26716-160002	54	12
26716-200002	111	11
26736-100002	41	45
		46
	42	42
		43
26736-140002	44	7

Parts No. Index

Parts No.	Fig. No.	Ref. No.
26736-140002	61	26
	62	92
	109	8
	114	6
	115	6
	116	6
	117	7
	118	7
	119	7
	120	7
	121	7
	122	7
	123	7
	124	7
	125	7
	126	7
	127	7
	128	7
	129	7
	130	7
26756-100002	46	19
	47	14
26776-140002	48	13
	49	3
28110-100120	4	7
28110-120140	4	8
28110-190220	4	9
28110-220240	4	10
28160-140170	4	11
29311-124000	43	26
	50	7
	51	9
29311-253000	68	30
29420-050000	18	14
	20	102
29420-150000	18	15
	20	103
29420-300000	18	16
	20	104
772520-96700-3	111	8
772527-03100	1	1
772527-03101	2	1
772527-05100	4	1
772527-96100	112	10
772527-96200	110	1
772527-96700	112	1
772528-03100	1	2
772528-03101	2	2
772528-65300	73	2 A
772529-03100	1	3

Parts No.	Fig. No.	Ref. No.
772529-03101	2	3
933110-00100	19	73
	20	73
933110-00301	19	75
	20	75
933110-07101	14	32
	15	20
	19	76
	20	76
	57	39
	58	40
933110-09800	4	12
933111-20200	77	52
	79	53
933112-20100	1	42
933125-59600	77	20
	79	22
	81	21
933147-03400	49	17
933160-01370	95	23
	103	3
933169-15231	17	1 A
	18	26
933171-15801	16	6
933171-21700	45	36
981083-21120	44	15
981083-27340	41	48
	42	47
981083-27520	41	49
	42	48
981083-71110	107	39
981083-71120	107	40
981083-71840	99	3
	102	8
		8 -1
981085-91230	112	6
		15
981085-91240	112	7
		16
981085-91250	112	8
		17
981085-91510-3	111	12
981122-15020	16	7

Parts No.	Fig. No.	Ref. No.

Parts No.	Fig. No.	Ref. No.