YANMAR

PARTS CATALOG

0CS10-M53402EN

Last update Aug., 2017

PREFACE

1. This parts catalog is the 2nd revised edition of Yanmar Wheel loader V4-6 for U.S.A. & the 1st edition of Australia, New Zealand.

2. Parts catalog history

	Parts catalog No.		Date of issue	Remarks
First edition	Vehicle	000Y00S5340	May.,2008	No need
	Engine	000Y00B7550	Nov.,2007	
1st revised edition	Vehicle	0CS10-G53401	Dec.,2008	No need
	Engine	0CB10-G75500	Nov.,2007	
2nd edition(supplement)	Vehicle	0CS10-G53402	July,2010	
	Engine	0CB10-G75500	Nov.,2007	

3. Model name

SECTION	Column	Model name	Manufactured	M/#	Remarks
Ⅰ(Vehicle)	A	V4-6(US)	2008/3～	60573～	
	B	V4-6(AS)	2010/7～		
	C	V4-6(NZ)	2010/7～		
Ⅱ(Engine)	A	4TNV88-BNKAH	2008/1～	81532～	for V4-6

(Note)US:U.S.A., AS:Australia, NZ:New Zealand

4. This parts catalog does not contain the technical data needed for maintenance service.

   The illustrations used in this parts catalog have been simplified for clarity.

   The contents of this parts catalog are subject to change without notice.

   Be sure to use only Yanmar genuine parts for repairs. If imitation parts are used, it may cause engine defects.

VEHICLE PAINTED COLOR(TO M61500)

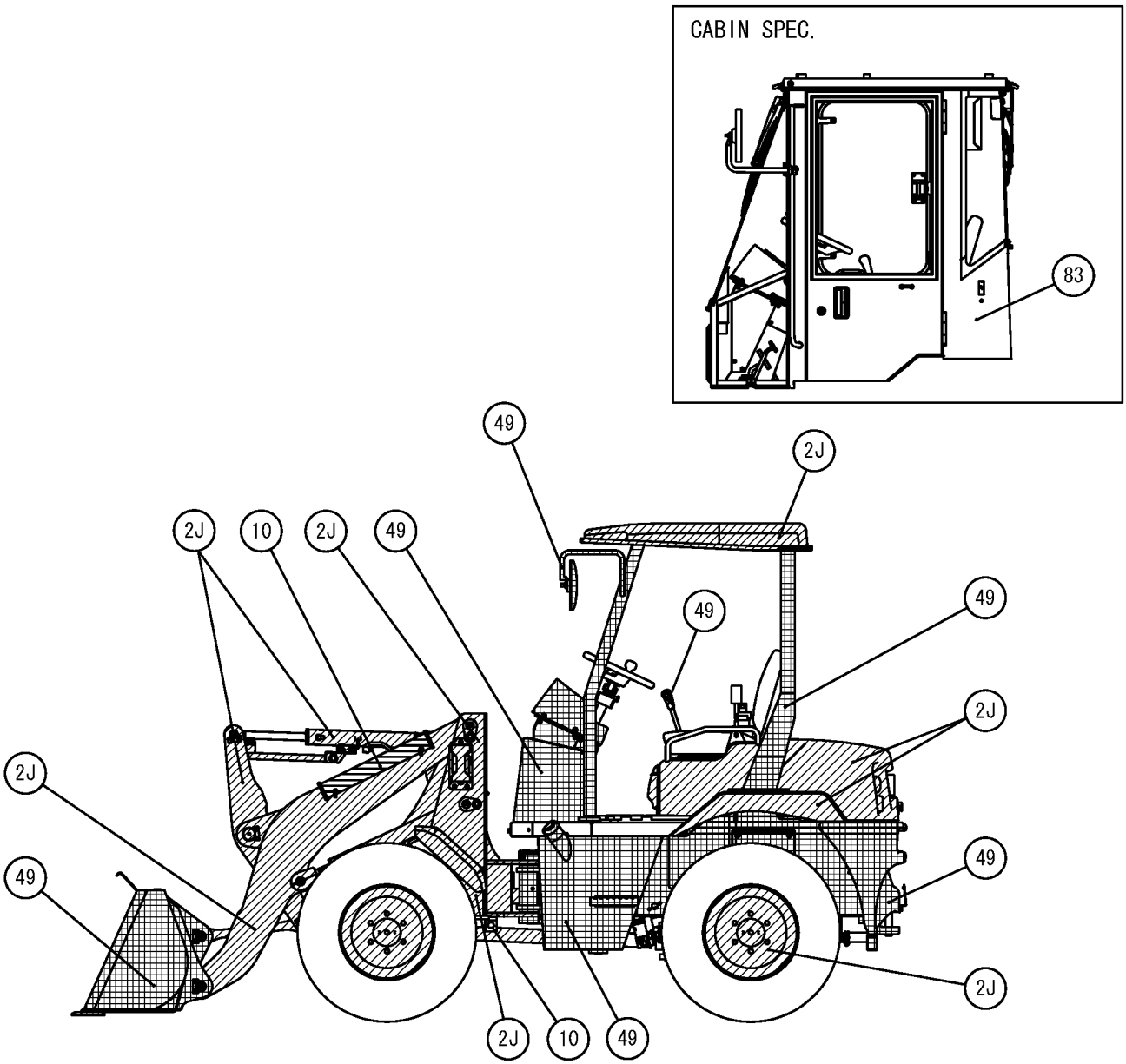

Color Code	Description	Painted Color	Paint Part No.		
			16L Can	4L Can	SPRAY
2J		YANMAR New Permanent Yellow 2	981101-09520	977620-40871	977620-30872
49		YANMAR Navy Gray	----------	TOR-91390000	TOR-94800490
10		YANMAR Red 2	----------	TOR-91000002	TOR-94800100
83		YANMAR Grayish Green	981101-09615	977620-40830	977620-30N41

VEHICLE PAINTED COLOR(FROM M61501)

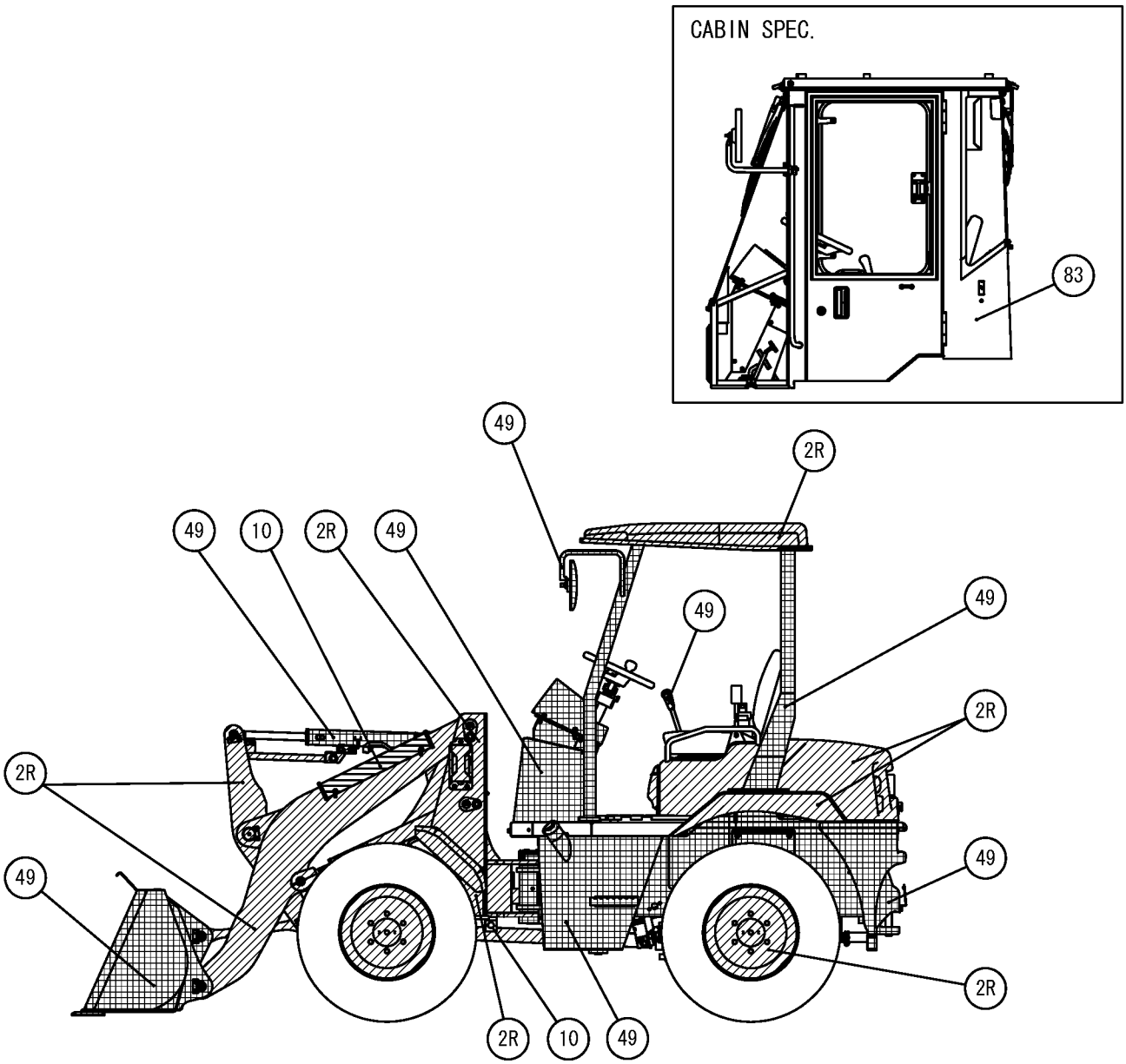

Color Code	Description	Painted Color	Paint Part No.		
			16L Can	4L Can	SPRAY
2R		YANMAR Turmeric Yellow	----------	977620-41001	977620-41002
49		YANMAR Navy Gray	----------	TOR-91390000	TOR-94800490
10		YANMAR Red 2	----------	TOR-91000002	TOR-94800100
83		YANMAR Grayish Green	981101-09615	977620-40830	977620-30N41

PICTURESQUE INDEX(1) ・・・MAIN PARTS

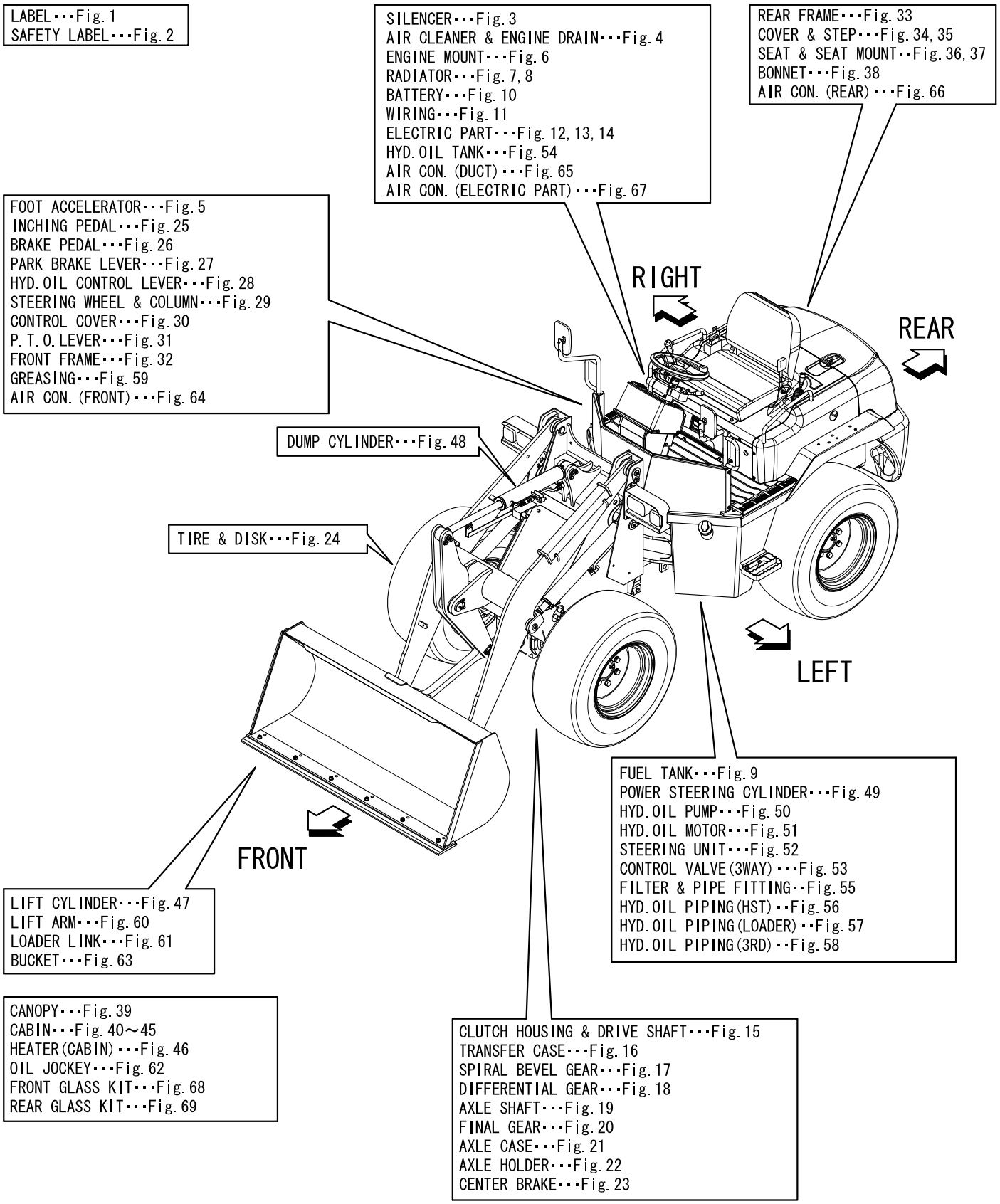

PICTURESQUE INDEX(2) ・・・HYDRAULIC SECTION

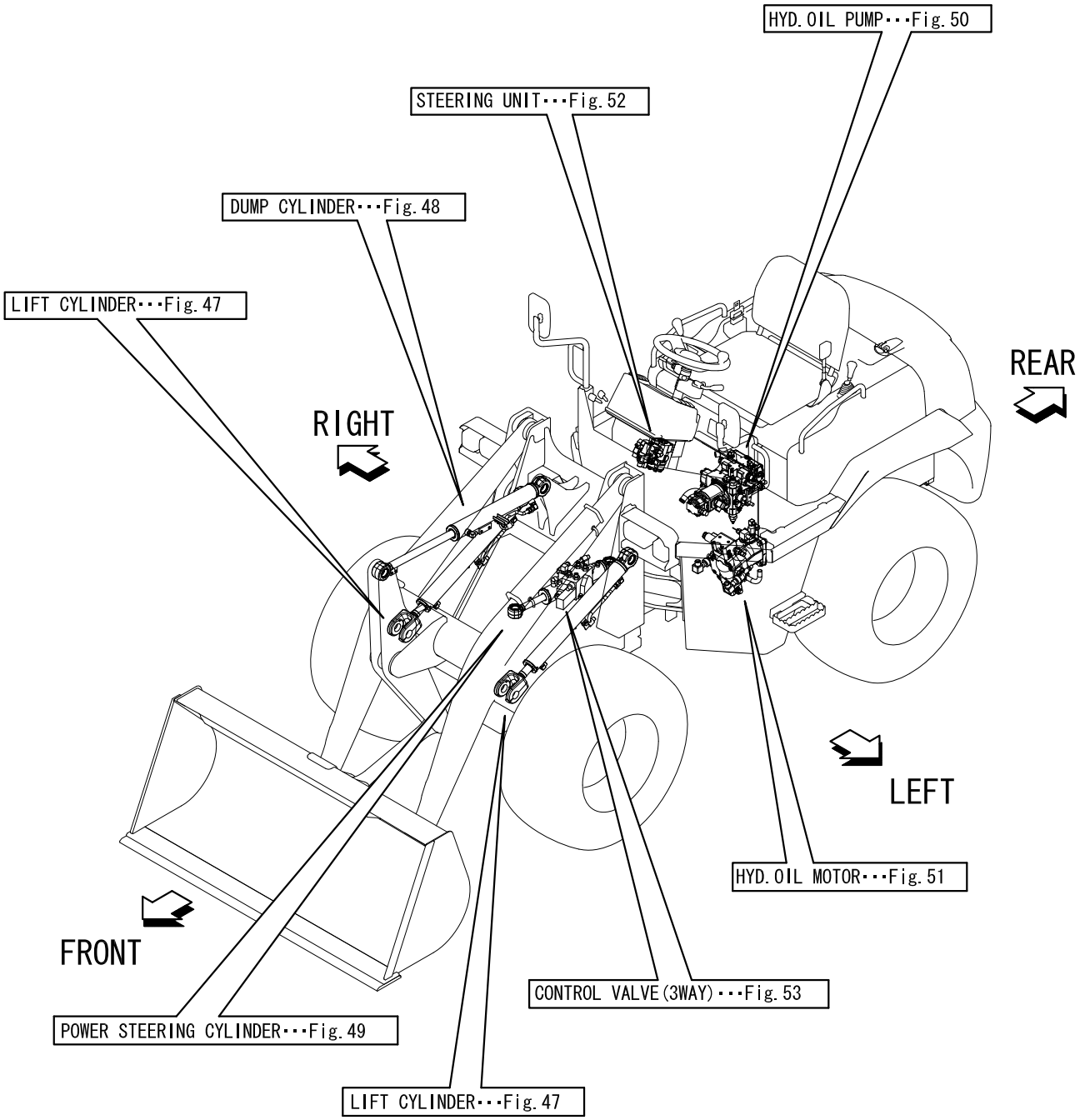

Contents

0CS10-M53402

Fig. No. Fig. Name

LABEL & ACCESSORY

1. LABEL
2. LABEL(SAFETY)
62. ACCESSORY

ENGINE RELATED

3. SILENCER
4. AIR CLEANER & ENGINE DRAIN
5. FOOT ACCEL
6. ENGINE MOUNT
7. RADIATOR
8. RADIATOR(AIR CON. SPEC.)
9. FUEL TANK

ELECTRICAL PARTS

10. BATTERY
11. WIRING(TO M61130)
72. (11A)WIRING(FROM M61131)
12. ELECTRIC PART(1)
13. ELECTRIC PART(2)
14. ELECTRIC PART(AUTO LEVELLER)

TRANSMISSION

15. CLUTCH HOUSING & DRIVE SHAFT
16. TRANSFER CASE

Fig. No. Fig. Name

17. SPIRAL BEVEL GEAR
18. DIFFERENTIAL GEAR
19. AXLE SHAFT
20. FINAL GEAR
21. AXLE SHAFT CASE
22. AXLE SHAFT CASE SUPPORT
23. CENTER BRAKE

TRAVELING

24. TIRE

CONTROL EQUIPMENT

25. BRAKE PEDAL(LEFT)
26. BRAKE PEDAL(RIGHT)
27. PARK BRAKE LEVER
28. HYDRAULIC CONTROL LEVER
29. STEERING WHEEL & COLUMN
30. LEVER STAND(P.T.O.)
31. P.T.O.LEVER

FRAME

32. FRONT FRAME
33. REAR FRAME

Contents

0CS10-M53402

Fig. No. Fig. Name

COVER

34. COVER & STEP
35. COVER & STEP(AIR CONDITONER SPEC.)

AROUND SEAT

36. SEAT & SEAT MOUNT
37. SEAT & SEAT MOUNT(AIR CONDITONER SPEC.)

BONNET

38. BONNET

CANOPY

39. CANOPY

CABIN

40. CABIN(CENTER DEFROSTER SPEC.)
41. CABIN(DOOR)(CENTER DEFROSTER SPEC.)
42. CABIN(GLASS)(CENTER DEFROSTER SPEC.)
43. CABIN(SUNVISOR)(CENTER DEFROSTER SPEC.)
44. CABIN(WINDOW WASHER)(CENTER DEFROSTER SPEC.)
45. CABIN(LAMP)(CENTER DEFROSTER SPEC.)
73. (45A)CABIN(SIDE DEFROSTER SPEC.)
74. (45B)CABIN(FRAME)(SIDE DEFROSTER SPEC.)
75. (45C)CABIN(DOOR)(SIDE DEFROSTER SPEC.)
76. (45D)CABIN(GRASS)(SIDE DEFROSTER SPEC.)

Fig. No. Fig. Name

77. (45E)CABIN(ELECTRIC,WIPER)(SIDE DEFROSTER SPEC.)

AIR CONDITIONER & HEATER

46. HEATER
64. AIR CONDITIONER(FRONT)
65. AIR CONDITIONER(DUCT)
78. (65A)AIR CON.(DUCT)(ENHANCED DEFROSTER SPEC.)
66. AIR CONDITIONER(REAR)
67. AIR CONDITIONER(ELECTRIC PART)

HYDRAULIC OIL EQUIPMENT

47. LIFT CYLINDER
48. DUMP CYLINDER
49. STEERING CYLINDER
50. HYDRAULIC PUMP
70. (50A)HYDRAULIC PUMP(COMPONENT PART)
51. HYDRAULIC MOTOR
71. (51A)HYDRAULIC MOTOR(COMPONENT PART)
52. STEERING UNIT
53. CONTROL VALVE
54. HYD. OIL TANK

HYDRAULIC OIL PIPING

55. FILTER & PIPE FITTING
56. PUMP - MOTOR - COOLER - TANK

Contents

0CS10-M53402

Fig. No.	Fig. Name
57.	PUMP - STEERING - CONTROL VALVE - EQUIPMENT
58.	CONTROL VALVE - P.T.O.
59.	GREASING

IMPLEMENT

Fig. No.	Fig. Name
60.	LIFT ARM
61.	LOADER LINK
63.	BUCKET

OPTIONAL & KIT

Fig. No.	Fig. Name
68.	FRONT GLASS KIT
69.	REAR GLASS KIT
79.	LABEL(FOR CANADA)(OPTIONAL)

Fig.1. LABEL

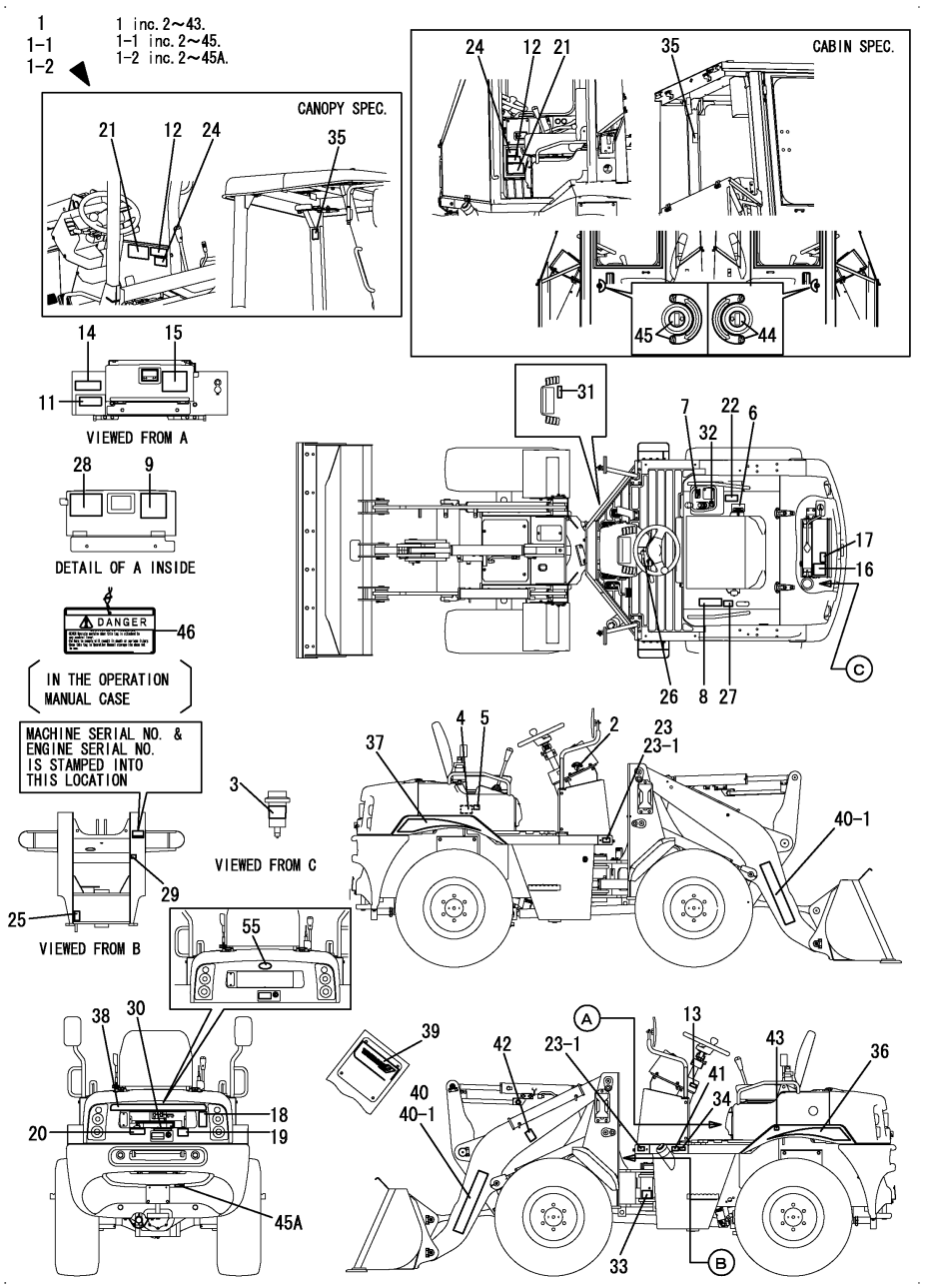

Remarks
(1)Cabin specification.

(A)=V4-6(US) (D)=
(B)=V4-6(AS) (E)=
(C)=V4-6(NZ) (F)=

No.	Lev.	Parts No.	Description	Q'ty (A)	(B)	(C)	(D)	(E)	(F)	I	R
1	1	172539-08710	LABEL KIT(V4 US	1							
1-1	1	172539-08711	LABEL KIT	1						S	
(A=M/#60699)											
1-2	1	172539-08712	LABEL KIT	1	1	1				S	
(A=M/#60930)											
1-3	1	172539-08713	LABEL KIT(V4 US	1	1	1				S	
(A=M61501)		(B=M61501)	(C=M61501)								
2	2	172A64-03700	LABEL, START SWITCH	1	1	1					
3	2	172A07-03160	LABEL	1	1	1					
4	2	172A38-03201	LABEL, SUB TANK	1	1	1					
5	2	172A38-03211	LABEL, ANTI-FREEZING	1	1	1					
6	2	172511-03230	LABEL	1	1	1					
7	2	172538-03230	LABEL,LOCK	1	1	1					
8	2	172524-03471	LABEL	1	1	1					
9	2	172538-03780	LABEL,FUSE CAB US	1							1
9-1	2	172538-03781	LABEL,FUSE CAB US	1	1	1				S	1
(A=M/#60699)											
11	2	172463-03290	LABEL, HYD.OIL	1	1	1					
12	2	172437-03302	LABEL, MANUAL	1	1	1					
13	2	172437-03312	LABEL, SLOPE	1	1	1					
14	2	172437-03322	LABEL, RESEVOIR	1	1	1					
15	2	172437-03343	LABEL, TRANSPORT	1	1	1					
16	2	172437-03361	LABEL, BATTERY	1	1	1					
17	2	172437-03391	LABEL, RADIATOR	1	1	1					
18	2	172437-03402	LABEL, ENGINE COVER	1	1	1					
19	2	172A36-03411	LABEL, ENGINE ROOM	1	1	1					
20	2	172437-03422	LABEL, MUFFLER	1	1	1					
21	2	172524-03621	LABEL	1	1	1					
22	2	172527-03620	LABEL	1	1	1					
23	2	172524-03631	LABEL	1							
23-1	2	172524-03631	LABEL	2	2	2				K	
(A=M/#60573)											
24	2	172524-03642	LABEL, CONTACT US	1	1	1					
25	2	172524-03671	LABEL	1	1	1					
26	2	172524-03690	LABEL	1	1	1					
27	2	172538-03720	LABEL,P.BRAKE US	1	1	1					
28	2	172538-03730	LABEL,FUSE US	1							
28-1	2	172538-03731	LABEL,FUSE US	1	1	1				S	
(A=M/#60699)											
29	2	172538-03740	LABEL,GREASE US	1	1	1					
30	2	172538-03750	LABEL,CAUTION US	1	1	1					
31	2	172538-03760	LABEL,P BRAKE US	1	1	1					
32	2	172538-03790	LABEL,PTO ROCK US	1	1	1					
33	2	172519-03820	LABEL	2	2	2					
34	2	114110-07760	LABEL, FUEL CAUTION	1	1	1					
35	2	172437-03441	LABEL, ROPS	1	1	1					
36	2	172539-03110	LABEL,MODEL L	1	1	1					
36-1	2	172539-03030	LABEL,MODEL L	1	1	1				S	
(A=M61501)		(B=M61501)	(C=M61501)								
37	2	172539-03120	LABEL,MODEL R	1	1	1					
37-1	2	172539-03040	LABEL,MODEL R	1	1	1				S	

N:Old $\frac{\text{Yes}}{\text{No}}$ New, Q:Old $\frac{\text{No}}{\text{Yes}}$ New, R:Old $\frac{\text{Yes}}{\text{Yes}}$ New, S:Old $\frac{\text{No}}{\text{No}}$ New, W:Add, Z:Discontinued, F:Interchangeable by set, K:Q'ty Change

++ CONTINUE ++

Copyright (C) YANMAR CO., LTD. All RightsReserved.

Fig.1. LABEL

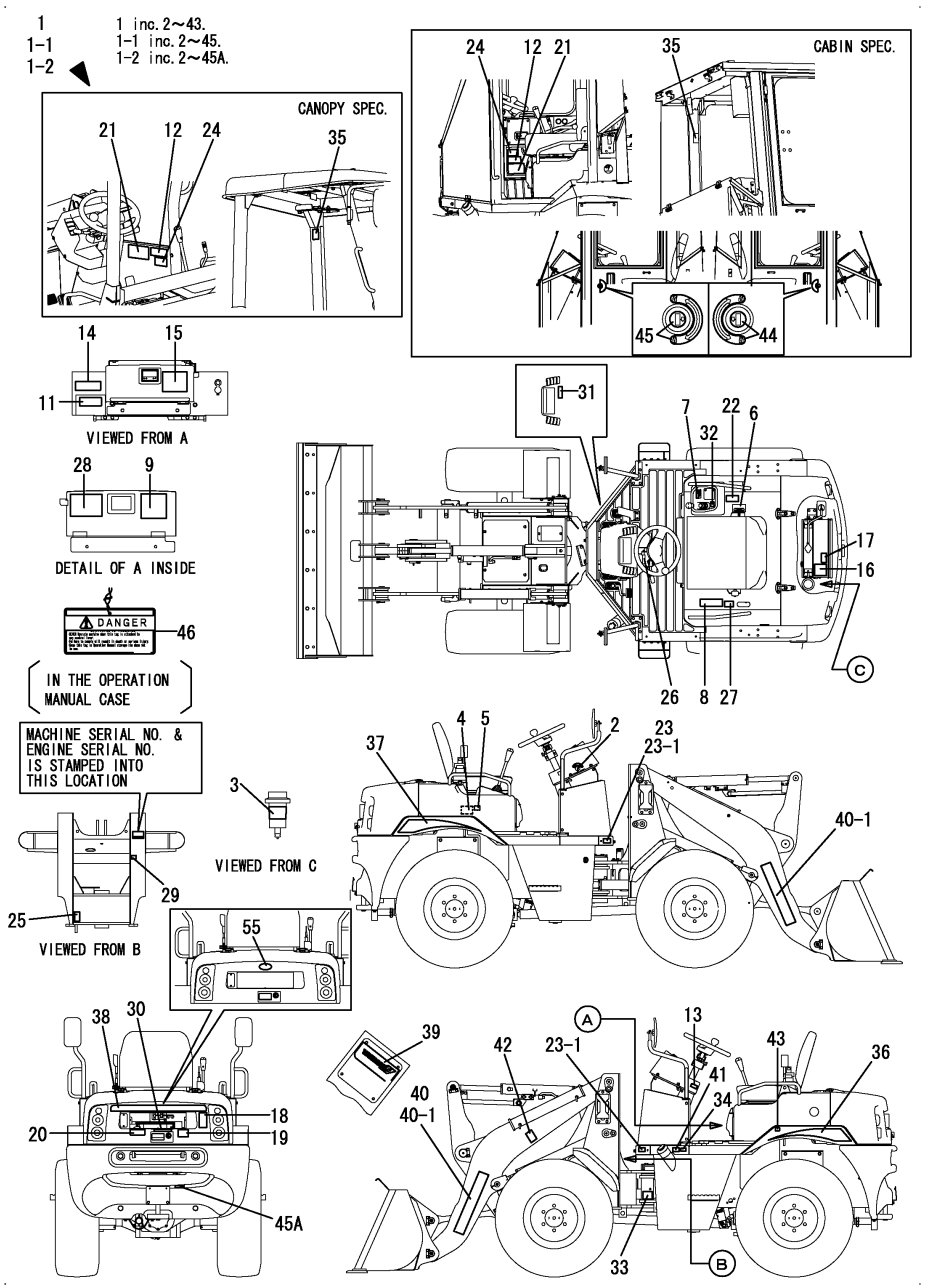

(A)=V4-6(US) (D)=
(B)=V4-6(AS) (E)=
(C)=V4-6(NZ) (F)=

No.	Lev.	Parts No.	Description	Q'ty (A)	(B)	(C)	(D)	(E)	(F)	I	R
	(A=M61501)	(B=M61501)	(C=M61501)								
38	2	172538-03130	LABEL,REAR	1	1	1				Z	
	(A=M61501)	(B=M61501)	(C=M61501)								
39	2	172534-03160	LABEL, FRONT	1	1	1					
40	2	172A22-03220	LABEL, BRAND 670	1							
40-1	2	172A22-03220	LABEL, BRAND 670	2	2	2				K	
	(A=M/#60657)										
40-2	2	172A66-03220	LABEL,YANMAR 442	2	2	2				S	
	(A=M61501)	(B=M61501)	(C=M61501)								
41	2	172437-03501	LABEL, FUEL	1	1	1					
42	2	172524-03652	LABEL, LIFT ARM LOCK	1	1	1					
43	2	172528-03770	LABEL,AIR PRESS. US	1	1	1					
44	2	172538-03330	LABEL,LOCK R	1	1	1				W	1
	(A=M/#60879)										
45	2	172458-03601	LABEL, DOOR LOCK	1	1	1				W	1
	(A=M/#60879)										
45A	2	172538-03060	LABEL,HITCHPIN US	1	1	1				W	
	(A=M/#60930)										
46	1	172437-03252	TAG ASSY, CAUTION	1	1	1					
55	1	172538-03070	EMBLEM ASSY	1	1					W	
	(A=M61501)	(B=M61501)									

Remarks
(1)Cabin specification.

N:Old $\frac{\text{Yes}}{\text{No}}$ New, Q:Old $\frac{\text{No}}{\text{Yes}}$ New, R:Old $\frac{\text{Yes}}{\text{Yes}}$ New, S:Old $\frac{\text{No}}{\text{No}}$ New, W:Add, Z:Discontinued, F:Interchangeable by set, K:Q'ty Change

Copyright (C) YANMAR CO., LTD. All RightsReserved.

Fig.2. LABEL(SAFETY)

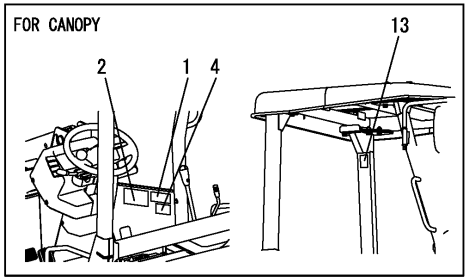

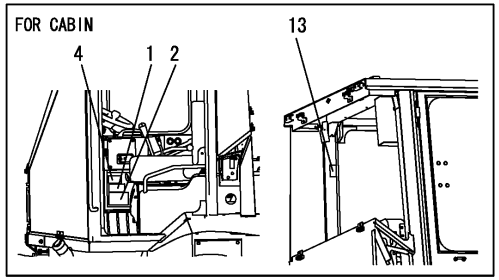

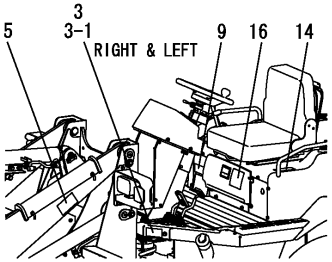

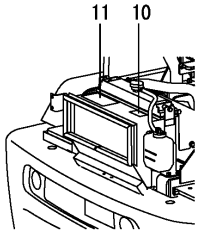

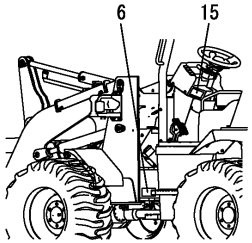

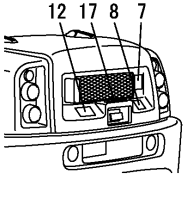

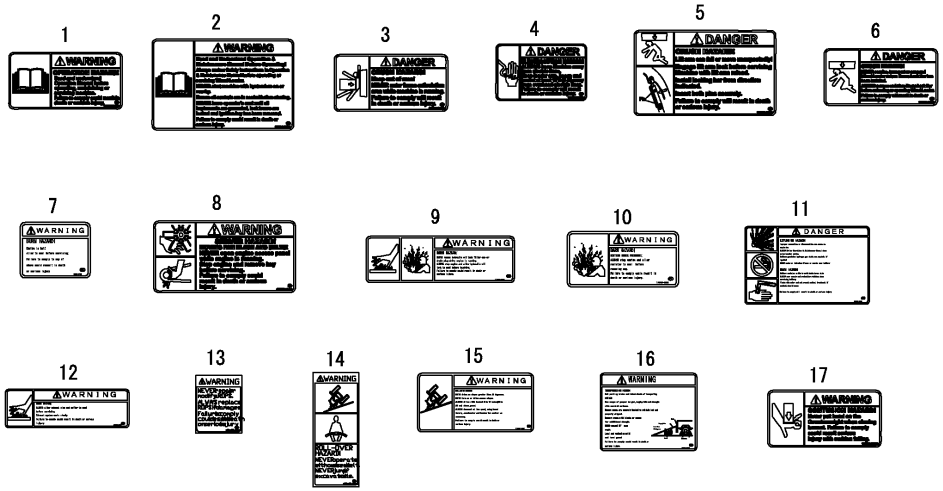

(A)=V4-6(US) (D)=
(B)=V4-6(AS) (E)=
(C)=V4-6(NZ) (F)=

No.	Lev.	Parts No.	Description	Q'ty (A)	(B)	(C)	(D)	(E)	(F)	I	R
1	1	172437-03302	LABEL, MANUAL	1	1	1					
2	1	172524-03621	LABEL	1	1	1					
3	1	172524-03631	LABEL	1							
3-1	2	172524-03631	LABEL	2	2	2				K	
	(A=M/#60573)										
4	1	172524-03642	LABEL, CONTACT US	1	1	1					
5	1	172524-03652	LABEL, LIFT ARM LOCK	1	1	1					
6	1	172524-03671	LABEL	1	1	1					
7	1	172437-03402	LABEL, ENGINE COVER	1	1	1					
8	1	172A36-03411	LABEL, ENGINE ROOM	1	1	1					
9	1	172437-03322	LABEL, RESEVOIR	1	1	1					
10	1	172437-03391	LABEL, RADIATOR	1	1	1					
11	1	172437-03361	LABEL, BATTERY	1	1	1					
12	1	172437-03422	LABEL, MUFFLER	1	1	1					
13	1	172437-03441	LABEL, ROPS	1	1	1					
14	1	172524-03471	LABEL	1	1	1					
15	1	172437-03312	LABEL, SLOPE	1	1	1					
16	1	172437-03343	LABEL, TRANSPORT	1	1	1					
17	1	172538-03750	LABEL,CAUTION US	1	1	1					

N:Old $\frac{\text{Yes}}{\text{No}}$ New, Q:Old $\frac{\text{No}}{\text{Yes}}$ New, R:Old $\frac{\text{Yes}}{\text{Yes}}$ New, S:Old $\frac{\text{No}}{\text{No}}$ New, W:Add, Z:Discontinued, F:Interchangeable by set, K:Q'ty Change

Copyright (C) YANMAR CO., LTD. All RightsReserved.

Fig.62. ACCESSORY

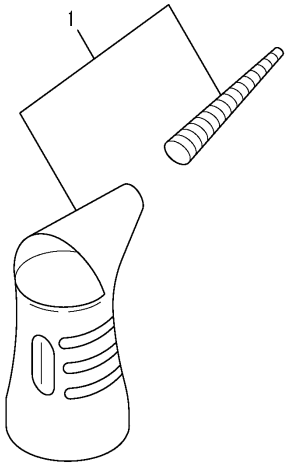

(A)=V4-6(US) (D)=
(B)=V4-6(AS) (E)=
(C)=V4-6(NZ) (F)=

No.	Lev.	Parts No.	Description	Q'ty (A)	(B)	(C)	(D)	(E)	(F)	I	R
1	1	172538-05150	JOCKEY, OIL	1	1	1					

N:Old ◄Yes/No► New, Q:Old ◄No/Yes► New, R:Old ◄Yes/Yes► New, S:Old ◄No/No► New, W:Add, Z:Discontinued, F:Interchangeable by set, K:Q'ty Change

Copyright (C) YANMAR CO., LTD. All RightsReserved.

Fig.3. SILENCER

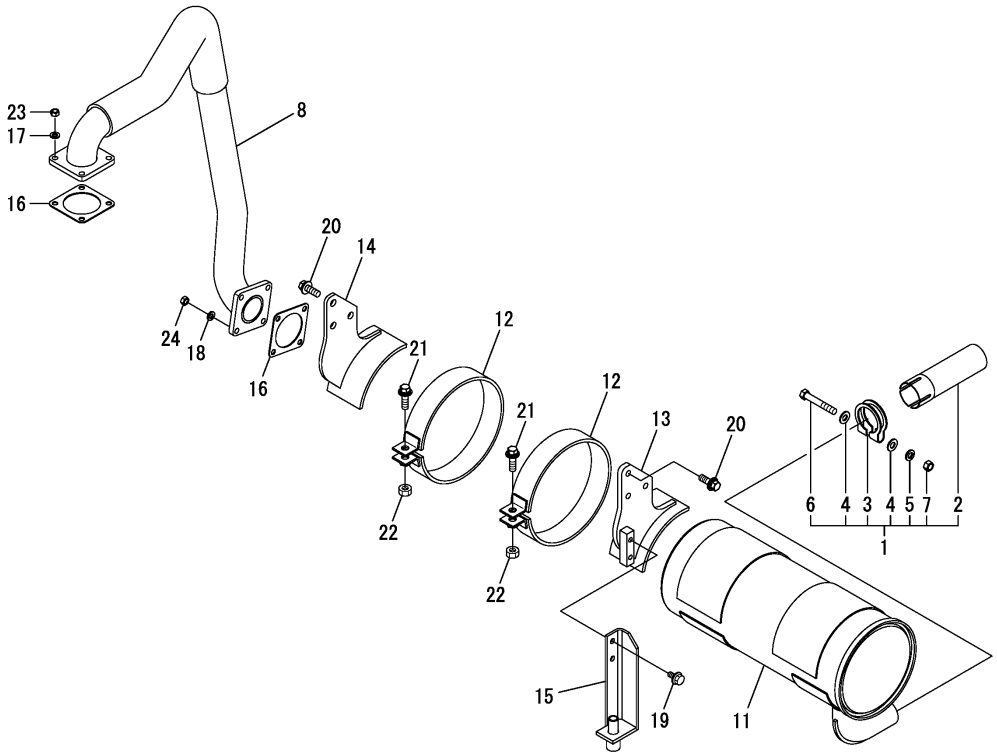

(A)=V4-6(US) (D)=
(B)=V4-6(AS) (E)=
(C)=V4-6(NZ) (F)=

No.	Lev.	Parts No.	Description	Q'ty (A)	(B)	(C)	(D)	(E)	(F)	I	R
1	1	172520-11300	PIPE, TAIL	1	1	1					
2	2	172520-11350	PIPE, TAIL	1	1	1					
3	2	121120-13580	CLAMP	1	1	1					
4	2	22137-100000	WASHER, 10	2	2	2					
5	2	22217-100000	WASHER, SPRING 10	1	1	1					
6	2	26116-100652	BOLT, M10X 65 PLATED	1	1	1					
7	2	26716-100002	NUT, M10	1	1	1					
8	1	172539-11301	TUBR ASSY, EXHAUST	1	1	1					
11	1	172541-11380	SILENCER ASSY	1	1	1					
12	1	172541-11460	BAND ASSY,SILENCER	2	2	2					
13	1	172539-11700	BRACKET ASSY,MUF L	1	1	1					
14	1	172539-11750	BRACKET ASSY,MUF R	1	1	1					
15	1	172538-11920-1	BRACKET,DRAIN (49)	1	1	1					
16	1	129400-13201	GASKET, SILENCER	2	2	2					
17	1	22217-080000	WASHER, SPRING 8	4	4	4					
18	1	22217-080000	WASHER, SPRING 8	4	4	4					
19	1	26014-080162	BOLT, M8X 16	2	2	2					
20	1	26014-100302	BOLT, M10X 30	6	6	6					
21	1	26014-100352	BOLT 10X35	2	2	2					
22	1	26702-100002	NUT, M10	2	2	2					
23	1	26716-080002	NUT, M8	4	4	4					
24	1	26716-080002	NUT, M8	4	4	4					

N:Old $\overset{\text{Yes}}{\underset{\text{No}}{\leftrightarrows}}$ New, Q:Old $\overset{\text{No}}{\underset{\text{Yes}}{\leftrightarrows}}$ New, R:Old $\overset{\text{Yes}}{\underset{\text{Yes}}{\leftrightarrows}}$ New, S:Old $\overset{\text{No}}{\underset{\text{No}}{\leftrightarrows}}$ New, W:Add, Z:Discontinued, F:Interchangeable by set, K:Q'ty Change

Copyright (C) YANMAR CO., LTD. All RightsReserved.

Fig.4. AIR CLEANER & ENGINE DRAIN

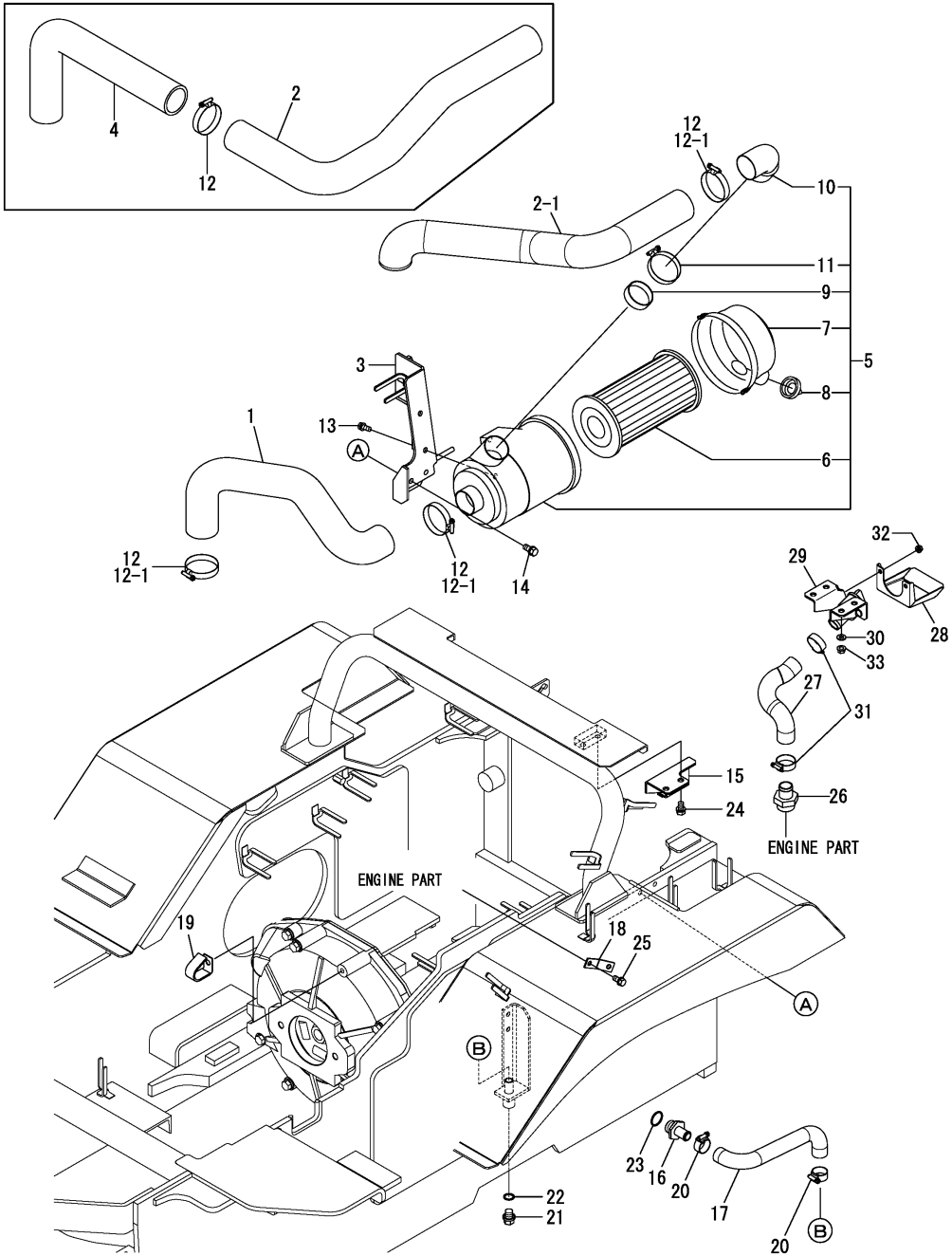

(A)=V4-6(US) (D)=
(B)=V4-6(AS) (E)=
(C)=V4-6(NZ) (F)=

No.	Lev.	Parts No.	Description	Q'ty (A)	(B)	(C)	(D)	(E)	(F)	I	R
1	1	172539-11500	HOSE A,AIR	1	1	1					
2	1	172539-11510	HOSE A,IN	1							
2-1	1	172539-11580	HOSE,IN	1	1	1				S	
	(A=M/#60699)										
3	1	172538-11520-1	STAY ASSY, AIR	1							
3-1	1	172538-11521	STAY ASSY, AIR	1	1	1				N	
	(A=M/#60699)										
4	1	172538-11600	HOSE B(IN	1						Z	
	(A=M/#60699)										
5	1	172538-11651	CLEANER ASSY, AIR	1	1	1					
6	2	129004-12520	ELEMENT, AIR CLEANER	1	1	1					
7	2	119866-12541	COVER ASSY	1	1	1					
8	2	119808-12540	VALVE, UNLOAD	1	1	1					
9	2	129259-12570	RING, AIR CLEANER	1	1	1					
10	2	129612-12560	ELBOW, INTAKE	1	1	1					
11	2	23000-060000	CLAMP, 60	1	1	1					
12	1	23000-060000	CLAMP, 60	4							
12-1	1	23000-060000	CLAMP, 60	3	3	3				K	
	(A=M/#60699)										
13	1	26013-080202	BOLT, M8X 20	2	2	2					
14	1	26014-100252	BOLT, M10X 25	2	2	2					
15	1	172539-11900-1	BRACKET ASSY,F/F(49)	1							
15-1	1	172539-11901-1	BRACKET ASSY,F/F(49)	1	1	1				N	
	(A=M/#60642)										
16	1	172541-11900	JOINT, DRAIN	1	1	1					
17	1	172539-11950	HOSE,LO DRAIN	1	1	1					
17-1	1	172539-11951	HOSE, LO DRAIN	1	1	1				S	
	(A=MZZZZZ)	(B=MZZZZZ)	(C=MZZZZZ)								
18	1	172538-11960	STAY, GAUGE	1	1	1					
19	1	1A1380-59480	CLAMP, CORD	1							
19-1	1	1A1380-59480	CLAMP, CORD	2	2	2				K	
	(A=*2008.11)										
20	1	23001-025000	CLAMP, HOSE 25	2	2	2					
21	1	23491-140002	PLUG, 14	1	1	1					
22	1	24311-000160	O-RING, 1AP16.0	1	1	1					
23	1	24341-000240	O-RING, 1AS24.0	1	1	1					
24	1	26013-100162	BOLT, M10X 16	2	2	2					
25	1	26106-080162	BOLT, M8X 16 PLATED	2	2	2					
26	1	1E8941-01650	CONNECTOR, M33-25	1	1	1				W	
	(A=M/#60699)										
27	1	172538-11800	HOSE,OIL FEED	1	1	1				W	
	(A=M/#60699)										
28	1	172538-11810	SUMP	1	1	1				W	
	(A=M/#60699)										
29	1	172538-11820	STAY ASSY, OIL FEED	1	1	1				W	
	(A=M/#60699)										
30	1	22137-080000	WASHER, 8	4	4	4				W	
	(A=M/#60699)										
31	1	23001-035000	CLAMP, HOSE 35	2	2	2				W	
	(A=M/#60699)										
32	1	26051-060002	NUT, M6	2	2	2				W	

N:Old $\xleftrightarrow[\text{No}]{\text{Yes}}$ New, Q:Old $\xleftrightarrow[\text{Yes}]{\text{No}}$ New, R:Old $\xleftrightarrow[\text{Yes}]{\text{Yes}}$ New, S:Old $\xleftrightarrow[\text{No}]{\text{No}}$ New, W:Add, Z:Discontinued, F:Interchangeable by set, K:Q'ty Change

++ CONTINUE ++

Copyright (C) YANMAR CO., LTD. All RightsReserved.

Fig.4. AIR CLEANER & ENGINE DRAIN

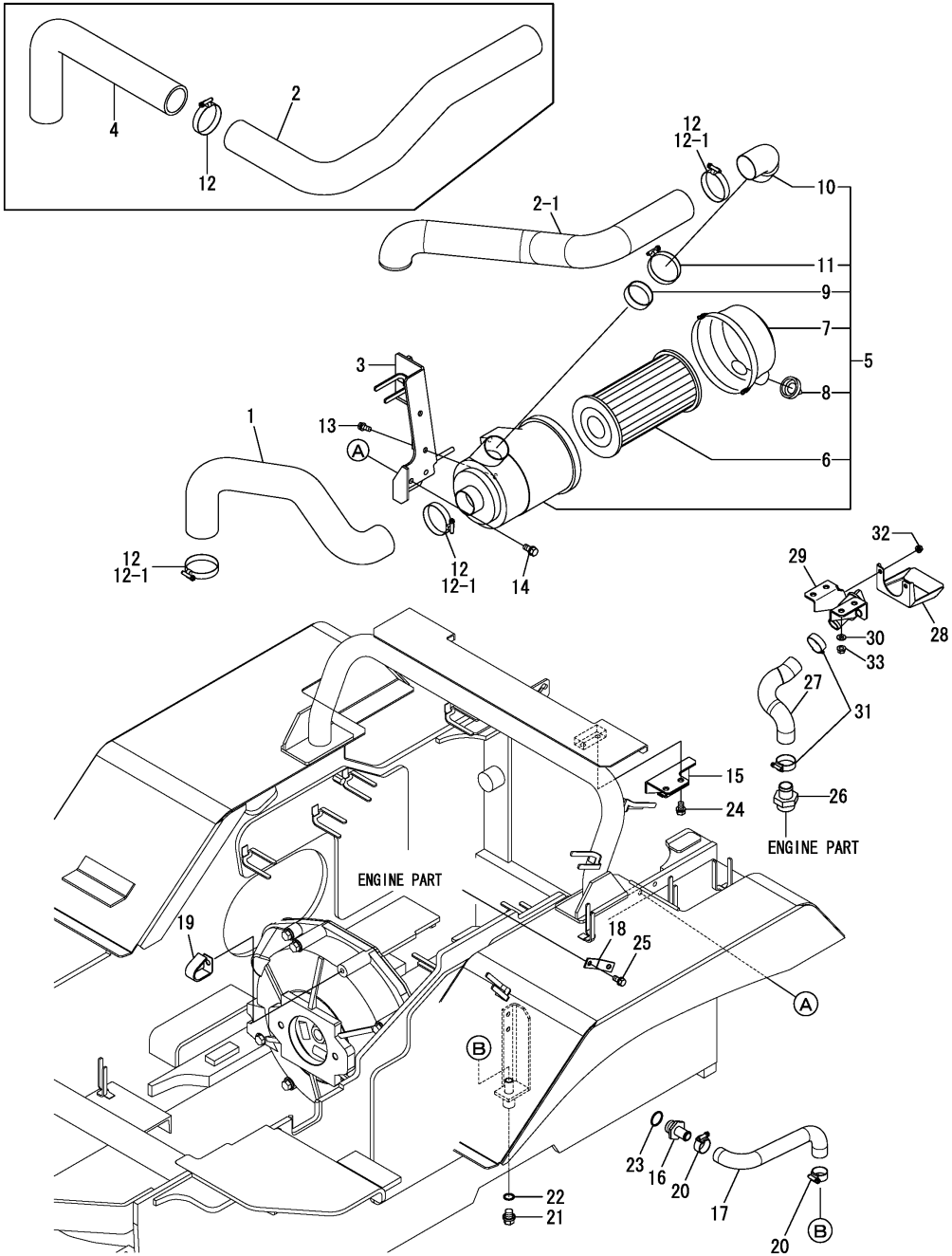

(A)=V4-6(US) (D)=
(B)=V4-6(AS) (E)=
(C)=V4-6(NZ) (F)=

No.	Lev.	Parts No.	Description	Q'ty (A)	(B)	(C)	(D)	(E)	(F)	I	R
	(A=M/#60699)										
33	1	26051-080002	NUT, M8	4	4	4				W	
	(A=M/#60699)										

N:Old ◄Yes/No► New, Q:Old ◄No/Yes► New, R:Old ◄Yes/Yes► New, S:Old ◄No/No► New, W:Add, Z:Discontinued, F:Interchangeable by set, K:Q'ty Change

Copyright (C) YANMAR CO., LTD. All RightsReserved.

Fig.5. FOOT ACCEL

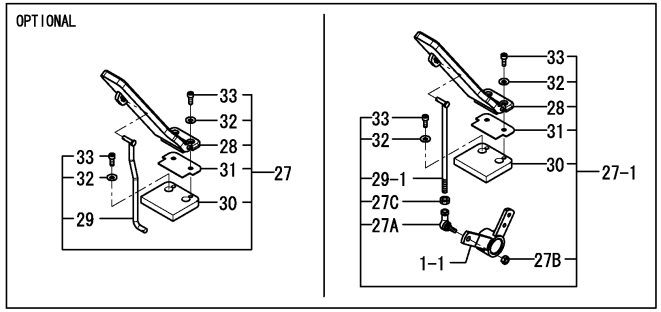

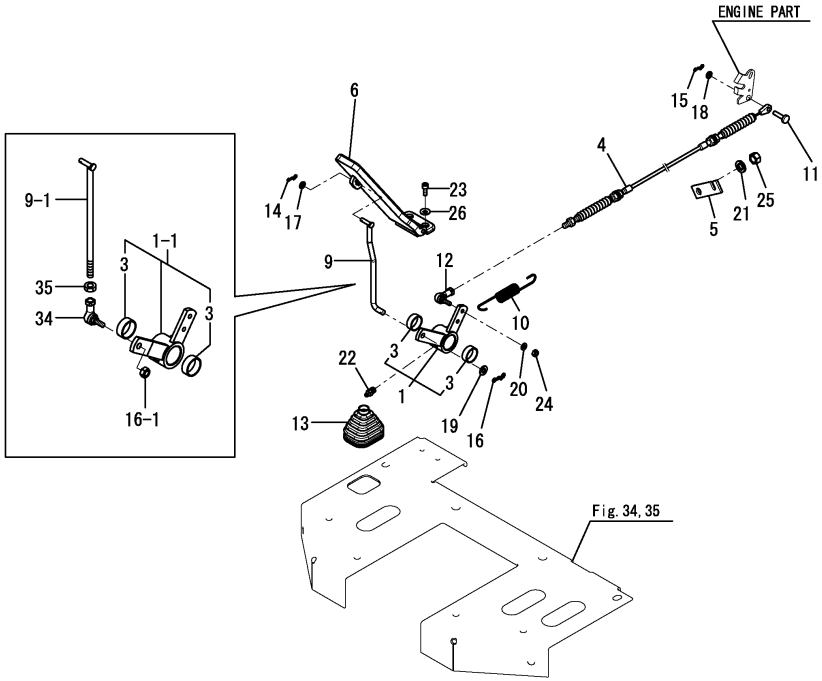

Remarks
(1)Optional parts.
(2)Interchangeable by simultaneous replacement with Fig.34 No.1-1 (or Fig.35 No.1-1).

(A)=V4-6(US) (D)=
(B)=V4-6(AS) (E)=
(C)=V4-6(NZ) (F)=

No.	Lev.	Parts No.	Description	Q'ty (A)	(B)	(C)	(D)	(E)	(F)	I	R
1	1	172538-12200-1	LEVER ,AXEL CAM (49)	1	1	1					
1-1	1	172538-12201-1	LEVER ASSY,AXEL CAM	1	1	1				S	
	(A=*2013.10)	(B=*2013.10)	(C=*2013.10)								
3	2	24550-025100	BUSH, 25X10	2	2	2					
4	1	172541-12250	WIRE	1	1	1					
5	1	172541-12260	BRACKET,ACCEL WIRE	1	1	1					
6	1	172520-12310	PEDAL ASSY, THROTTLE	1							
6-1	1	172538-12310	PEDAL ASSY,ACCEL	1	1	1				N	
	(A=M/#60873)										
9	1	172538-12361	ROD A ASSY,LINK	1							
9-1	1	172538-12362	ROD A ASSY,LINK	1	1	1				S	2
	(A=M/#60860)										
9-2	1	172538-12363	ROD ASSY,LINK A	1	1	1				S	
	(A=*2013.10)	(B=*2013.10)	(C=*2013.10)								
10	1	172524-12380	SPRING, RETURN	1	1	1					
11	1	172113-12522	PIN, CABLE	1	1	1					
12	1	172446-45820	LINK BALL 6	1	1	1					
13	1	172520-46150	BOOT	1	1	1					
14	1	1C6281-52310	PIN, SNAP 6	1	1	1					
15	1	1C6281-52310	PIN, SNAP 6	1	1	1					
16	1	1C6281-52320	PIN, SNAP 8	1	1	1					
16-1	1	26347-080002	NUT, M8	1	1	1				S	
	(A=*2013.10)	(B=*2013.10)	(C=*2013.10)								
17	1	22137-060000	WASHER, 6	1	1	1					
18	1	22137-060000	WASHER, 6	1	1	1					
19	1	22137-080000	WASHER, 8	1	1	1				Z	
	(A=*2013.10)	(B=*2013.10)	(C=*2013.10)								
20	1	22217-060000	WASHER, SPRING 6	1	1	1					
21	1	22217-120000	WASHER, SPRING 12	1	1	1					
22	1	24761-020000	NIPPLE, GREASE PT1/8	1	1	1					
23	1	26450-060162	BOLT, M6X 16	2	2	2					
24	1	26716-060002	NUT, M6	1	1	1					
25	1	26716-120002	NUT, M12	1	1	1					
26	1	22137-060000	WASHER, 6	2	2	2				W	2
	(A=M/#60860)										
27	1	172538-08880	PARTS ASSY, PEDAL	1	1	1				W	1
	(A=M/#60873)										
27-1	1	172538-08881	PEDAL ASSY,ACCEL	1	1	1				S	1
	(A=*2013.10)	(B=*2013.10)	(C=*2013.10)								
27A	2	1E4760-43090	BALL, LINK BL8D	1	1	1				W	
	(A=*2013.10)	(B=*2013.10)	(C=*2013.10)								
27B	2	26347-080002	NUT, M8	1	1	1				W	
	(A=*2013.10)	(B=*2013.10)	(C=*2013.10)								
27C	2	26716-080002	NUT, M8	1	1	1				W	
	(A=*2013.10)	(B=*2013.10)	(C=*2013.10)								
28	2	172538-12310	PEDAL ASSY,ACCEL	1	1	1				W	
	(A=M/#60873)										
29	2	172538-12362	ROD A ASSY,LINK	1	1	1				W	
	(A=M/#60873)										
29-1	2	172538-12363	ROD ASSY,LINK A	1	1	1				S	
	(A=*2013.10)	(B=*2013.10)	(C=*2013.10)								

N:Old $\overset{\text{Yes}}{\underset{\text{No}}{\leftrightarrow}}$ New, Q:Old $\overset{\text{No}}{\underset{\text{Yes}}{\leftrightarrow}}$ New, R:Old $\overset{\text{Yes}}{\underset{\text{Yes}}{\leftrightarrow}}$ New, S:Old $\overset{\text{No}}{\underset{\text{No}}{\leftrightarrow}}$ New, W:Add, Z:Discontinued, F:Interchangeable by set, K:Q'ty Change

++ CONTINUE ++

Copyright (C) YANMAR CO., LTD. All RightsReserved.

Fig.5. FOOT ACCEL

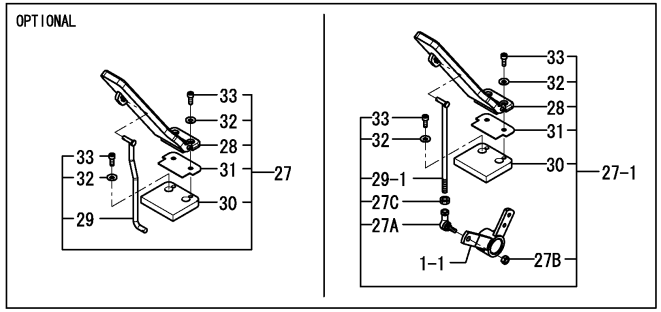

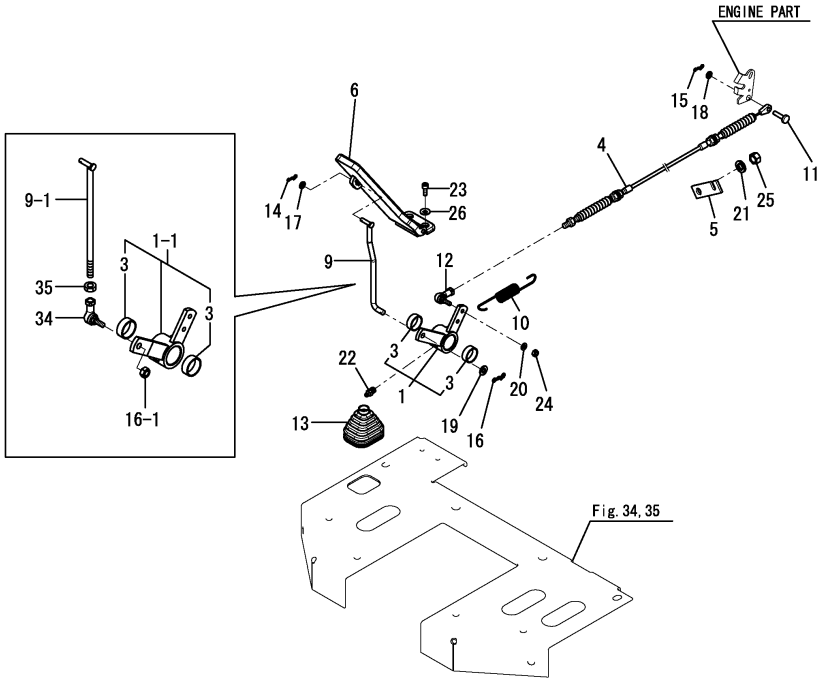

(A)=V4-6(US) (D)=
(B)=V4-6(AS) (E)=
(C)=V4-6(NZ) (F)=

No.	Lev.	Parts No.	Description	Q'ty (A)	(B)	(C)	(D)	(E)	(F)	I	R
30	2	172538-12450	PLATE ,73X64X12	1	1	1				W	
	(A=M/#60873)										
31	2	172538-12500	PLATE,PEDAL	1	1	1				W	
	(A=M/#60873)										
32	2	22137-060000	WASHER, 6	4	4	4				W	
	(A=M/#60873)										
33	2	26450-060162	BOLT, M6X 16	4	4	4				W	
	(A=M/#60873)										
34	1	1E4760-43090	BALL, LINK BL8D	1	1	1				W	
	(A=*2013.10)	(B=*2013.10)	(C=*2013.10)								
35	1	26716-080002	NUT, M8	1	1	1				W	
	(A=*2013.10)	(B=*2013.10)	(C=*2013.10)								

Remarks
(1)Optional parts.
(2)Interchangeable by simultaneous replacement with Fig.34 No.1-1 (or Fig.35 No.1-1).

N:Old $\xleftarrow[\text{No}]{\text{Yes}}$ New, Q:Old $\xleftarrow[\text{Yes}]{\text{No}}$ New, R:Old $\xleftarrow[\text{Yes}]{\text{Yes}}$ New, S:Old $\xleftarrow[\text{No}]{\text{No}}$ New, W:Add, Z:Discontinued, F:Interchangeable by set, K:Q'ty Change

Copyright (C) YANMAR CO., LTD. All RightsReserved.

Fig.6. ENGINE MOUNT

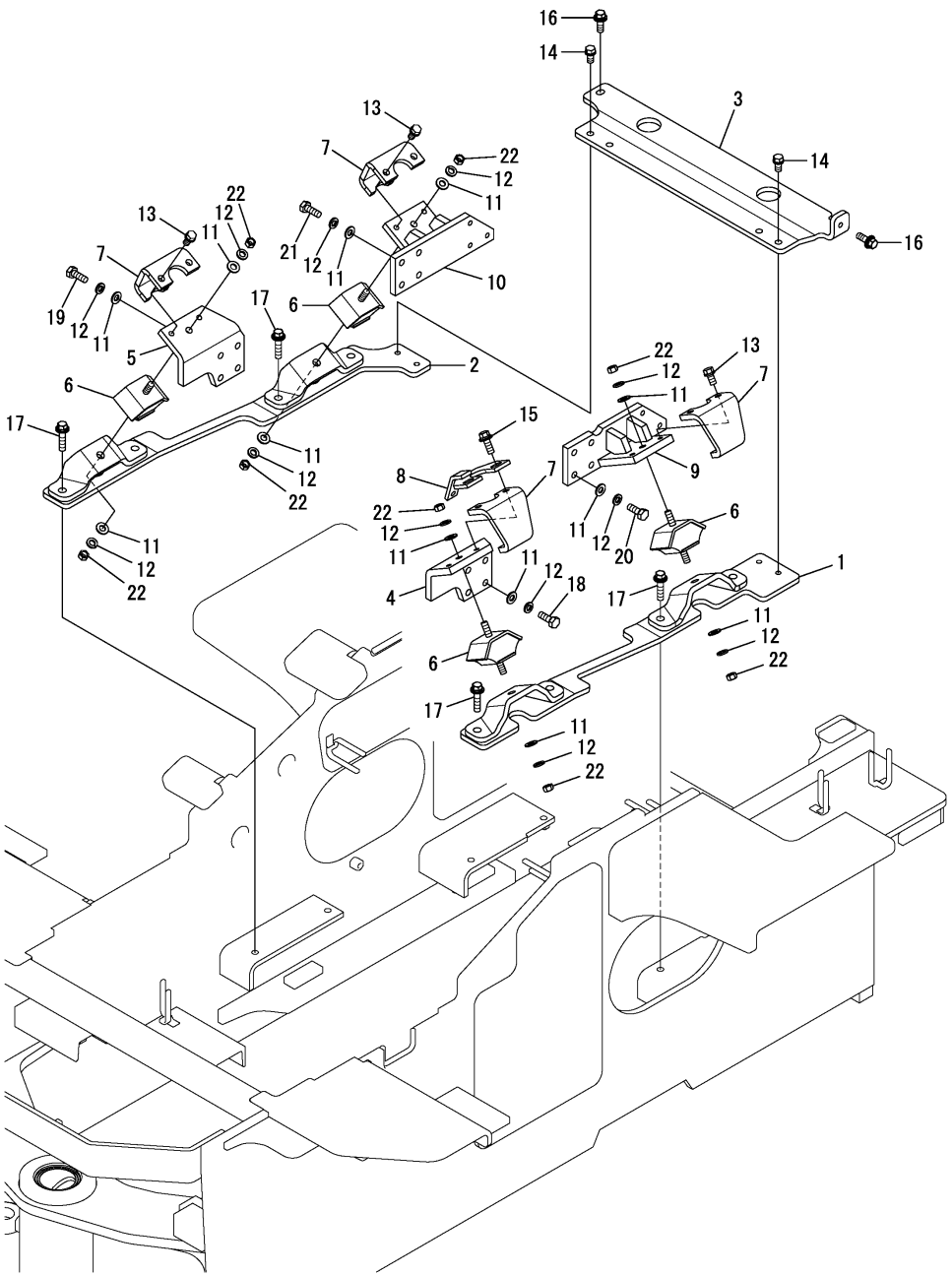

(A)=V4-6(US) (D)=
(B)=V4-6(AS) (E)=
(C)=V4-6(NZ) (F)=

No.	Lev.	Parts No.	Description	Q'ty (A)	(B)	(C)	(D)	(E)	(F)	I	R
1	1	172539-13100	BRACKET, ENGINE	1	1	1					
2	1	172539-13120	BRACKET, ENGINE	1	1	1					
3	1	172538-13140-1	PLATE REAR (GRAY:49)	1	1	1					
4	1	172538-13150	BRACKET, ENGINE	1	1	1					
5	1	172538-13160	BRACKET, ENGINE	1	1	1					
6	1	172524-13180	ABSORBER, SHOCK	4	4	4					
7	1	172527-13190-1	STOPPER	4	4	4					
8	1	172538-13250-1	BASE,SPPRING(GRAY:49	1	1	1					
9	1	172538-13900	BRACKET, ENGINE	1	1	1					
10	1	172538-13950	BRACKET, ENGINE	1	1	1					
11	1	22137-100000	WASHER, 10	24	24	24					
12	1	22217-100000	WASHER, SPRING 10	24	24	24					
13	1	26013-100202	BOLT, M10X 20	6	6	6					
14	1	26013-100202	BOLT, M10X 20	4	4	4					
15	1	26014-100302	BOLT, M10X 30	2	2	2					
16	1	26014-100302	BOLT, M10X 30	2	2	2					
17	1	26014-100452	BOLT, M10X 45	8	8	8					
18	1	26076-100302	BOLT, 10.910X 30	4	4	4					
19	1	26076-100302	BOLT, 10.910X 30	4	4	4					
20	1	26076-100302	BOLT, 10.910X 30	4	4	4					
21	1	26076-100302	BOLT, 10.910X 30	4	4	4					
22	1	26716-100002	NUT, M10	8	8	8					

N:Old $\frac{\text{Yes}}{\text{No}}$ New, Q:Old $\frac{\text{No}}{\text{Yes}}$ New, R:Old $\frac{\text{Yes}}{\text{Yes}}$ New, S:Old $\frac{\text{No}}{\text{No}}$ New, W:Add, Z:Discontinued, F:Interchangeable by set, K:Q'ty Change

Copyright (C) YANMAR CO., LTD. All RightsReserved.

Fig.7. RADIATOR

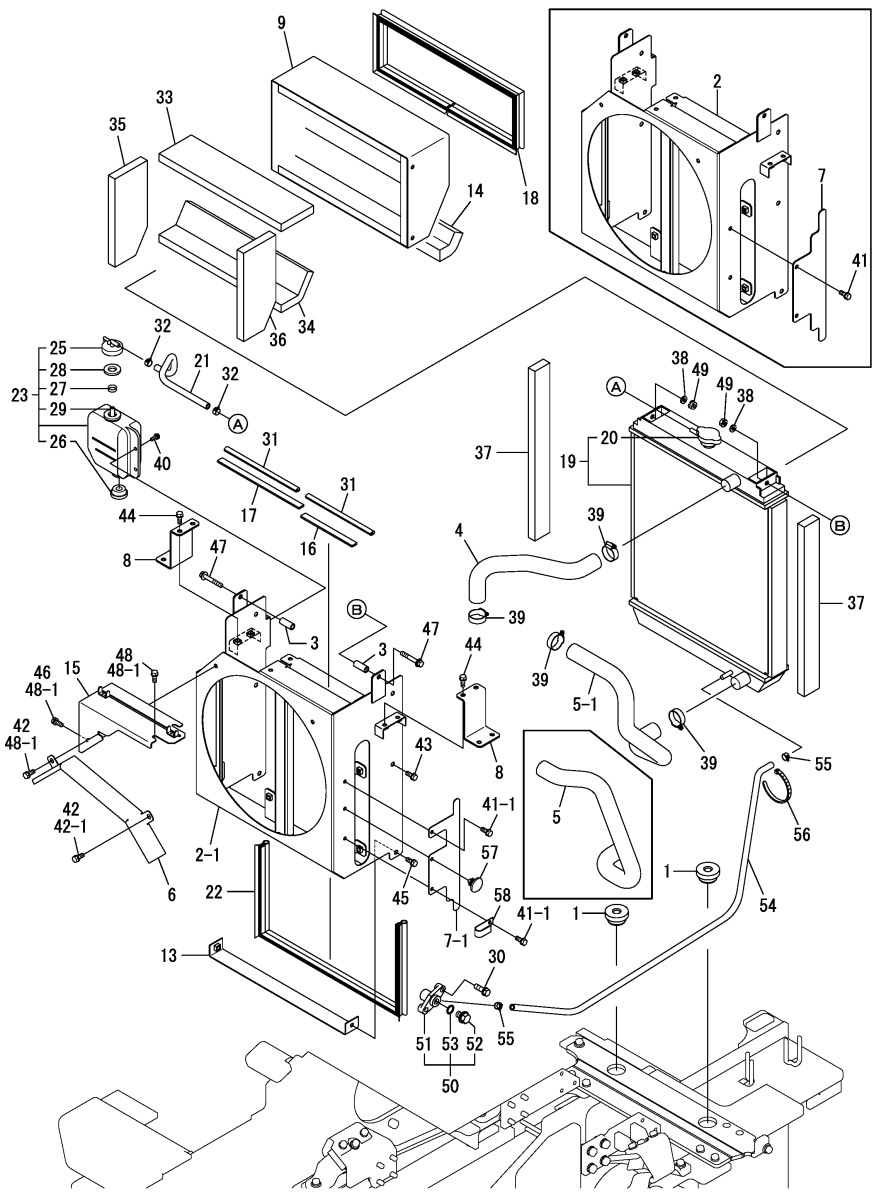

Remarks
(1)Attach the No.2A & 2B label to this part.
(2)Attach the No.29A & 29B label to this part.
(3)Label is not illustrated.
(4)Interchangeable by simultaneous replacement with Fig.56 No.1-1, 19, 20.

(A)=V4-6(US) (D)=
(B)=V4-6(AS) (E)=
(C)=V4-6(NZ) (F)=

No.	Lev.	Parts No.	Description	Q'ty (A)	(B)	(C)	(D)	(E)	(F)	I	R
1	1	198162-00640	SUPPORT, RADIATOR	2	2	2					
2	1	172538-13311	SHROUD ASSY	1							1
2-1	1	172538-13312	SHROUD ASSY	1	1	1				S	4
	(A=M/#60699)										
2A	1	172437-03361	LABEL, BATTERY	1	1	1					3
2B	1	172437-03391	LABEL, RADIATOR	1	1	1					3
3	1	172527-13320	COLLAR	2	2	2					
4	1	172538-13500	PIPE, WATER	1	1	1					
5	1	172538-13510	PIPE, WATER	1							
5-1	1	172538-13511	PIPE, WATER	1	1	1				S	
	(A=M/#60699)										
6	1	172538-13550	GUARD, FAN	1	1	1					
7	1	172538-13560-1	COVER, OIL	1							
7-1	1	172538-13561	COVER, OIL	1	1	1				S	4
	(A=M/#60699)										
8	1	172538-13580-1	STAY, RADIATOR	2	2	2					
9	1	172538-13600-1	COVER ASSY	1	1	1					
13	1	172538-13650-1	COVER ASSY	1	1	1					
14	1	172538-13680	SEAL, 60X30X414	1	1	1					
15	1	172538-13700-1	COVER ASSY, SHROUD	1	1	1					
16	1	172538-13750	RUBBER, SEAL 160	1							
16-1	1	172538-13751	RUBBER, SEAL 175	1	1	1				S	
	(A=M/#60699)										
17	1	172538-13760	RUBBER, SEAL 250	1	1	1					
18	1	172538-13770	RUBBER, SEAL 1060	1	1	1					
19	1	172538-13800	RADIATOR ASSY	1	1	1					
20	2	129107-44590	CAP, RADIATOR	1	1	1					
21	1	172141-14620	HOSE, FUEL	1	1	1					
22	1	172460-19060	RUBBER, SEAL	1	1	1					
23	1	121468-44510	TANK ASSY, SUB	1							2
23-1	1	121468-44520	TANK ASSY, SUB	1	1	1				N	2
	(A=M/#60861)										
25	2	121450-44531	CAP	1	1	1					
26	2	121468-44540	PLUG	1						Z	
	(A=M/#60861)										
27	2	124450-44560	CLAMP, HOSE	1	1	1					
28	2	121470-44581	GASKET	1	1	1					
29	2	23065-070130	PIPE, 7X 130	1	1	1					
29A	1	172A38-03201	LABEL, SUB TANK	1	1	1					3
29B	1	172A38-03211	LABEL, ANTI-FREEZING	1	1	1					3
30	1	26013-100302	BOLT, M10X 30	2	2	2					
31	1	172186-45690	RUBBER	2	2	2					
32	1	124766-59050	CLAMP, HOSE 11.5	2	2	2					
33	1	172538-60100	SPONGE	1	1	1					
34	1	172538-60110	SPONGE	1	1	1					
35	1	172538-60120	SPONGE	1	1	1					
36	1	172538-60130	SPONGE	1	1	1					
37	1	172538-60230	SPONGE	2	2	2					
38	1	22137-080000	WASHER, 8	2	2	2					
39	1	23001-041000	CLAMP, HOSE 41	4	4	4					
40	1	26013-060162	BOLT, M6X 16	2	2	2					

N:Old $\xleftarrow[\text{No}]{\text{Yes}}$ New, Q:Old $\xleftarrow[\text{Yes}]{\text{No}}$ New, R:Old $\xleftarrow[\text{Yes}]{\text{Yes}}$ New, S:Old $\xleftarrow[\text{No}]{\text{No}}$ New, W:Add, Z:Discontinued, F:Interchangeable by set, K:Q'ty Change

++ CONTINUE ++

Copyright (C) YANMAR CO., LTD. All RightsReserved.

Fig.7. RADIATOR

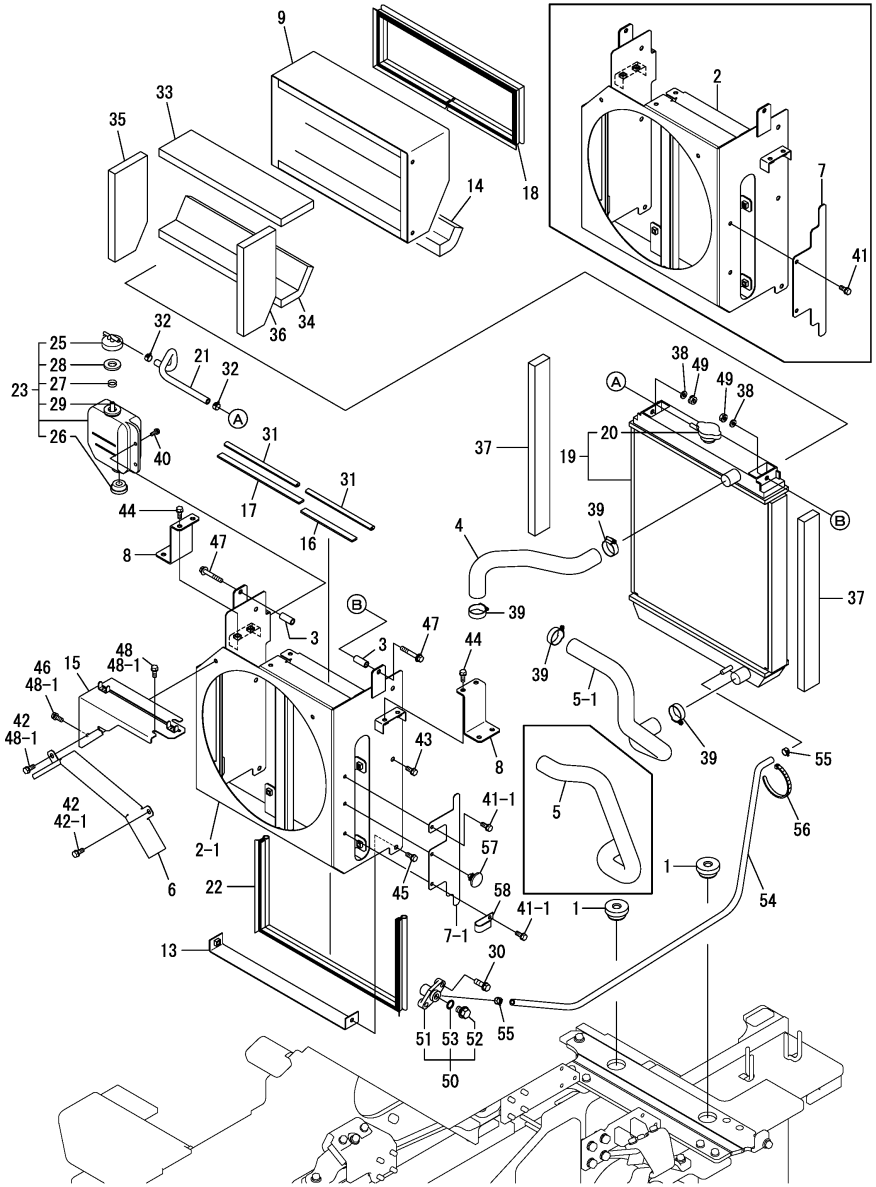

Remarks
(1)Attach the No.2A & 2B label to this part.
(2)Attach the No.29A & 29B label to this part.
(3)Label is not illustrated.
(4)Interchangeable by simultaneous replacement with Fig.56 No.1-1, 19, 20.

(A)=V4-6(US) (D)=
(B)=V4-6(AS) (E)=
(C)=V4-6(NZ) (F)=

No.	Lev.	Parts No.	Description	Q'ty (A)	(B)	(C)	(D)	(E)	(F)	I	R
41	1	26013-080162	BOLT, M8X 16	2							
41-1	1	26013-080202	BOLT, M8X 20	2	2	2				R	4
	(A=*2008.11)										
42	1	26013-080202	BOLT, M8X 20	2							
42-1	1	26013-080202	BOLT, M8X 20	1	1	1				K	
	(A=*2008.11)										
43	1	26013-080202	BOLT, M8X 20	4	4	4					
44	1	26013-080202	BOLT, M8X 20	8	8	8					
45	1	26013-080202	BOLT, M8X 20	2	2	2					
46	1	26013-080202	BOLT, M8X 20	1						Z	
	(A=*2008.11)										
47	1	26013-080552	BOLT, M8X 55	2	2	2					
48	1	26014-080162	BOLT, M8X 16	2							
48-1	1	26014-080162	BOLT, M8X 16	4	4	4				K	
	(A=*2008.11)										
49	1	26051-080002	NUT, M8	2	2	2					
50	1	172444-13210	COCK ASSY, 2-WAY	1	1	1					
51	2	172444-13220	BODY	1	1	1					
52	2	121250-49121	PLUG, DRAIN M16	1	1	1					
53	2	24311-000160	O-RING, 1AP16.0	1	1	1					
54	1	172164-14620	HOSE 1200	1							
54-1	1	172539-14400	TUBE, BLADE	1	1	1				N	
	(A=M/#60691)										
55	1	124766-59050	CLAMP, HOSE 11.5	2	2	2					
56	1	172122-79930	CLAMP, HOSE	1	1	1					
57	1	172444-17660	CLIP, TREE	1	1	1				W	
	(A=*2008.11)										
58	1	1A1686-57850	CLAMP, 80	1	1	1				W	
	(A=*2008.11)										

N:Old $\xleftarrow[\text{No}]{\text{Yes}}$ New, Q:Old $\xleftarrow[\text{Yes}]{\text{No}}$ New, R:Old $\xleftarrow[\text{Yes}]{\text{Yes}}$ New, S:Old $\xleftarrow[\text{No}]{\text{No}}$ New, W:Add, Z:Discontinued, F:Interchangeable by set, K:Q'ty Change

Copyright (C) YANMAR CO., LTD. All RightsReserved.

Fig.8. RADIATOR(AIR CON. SPEC.)

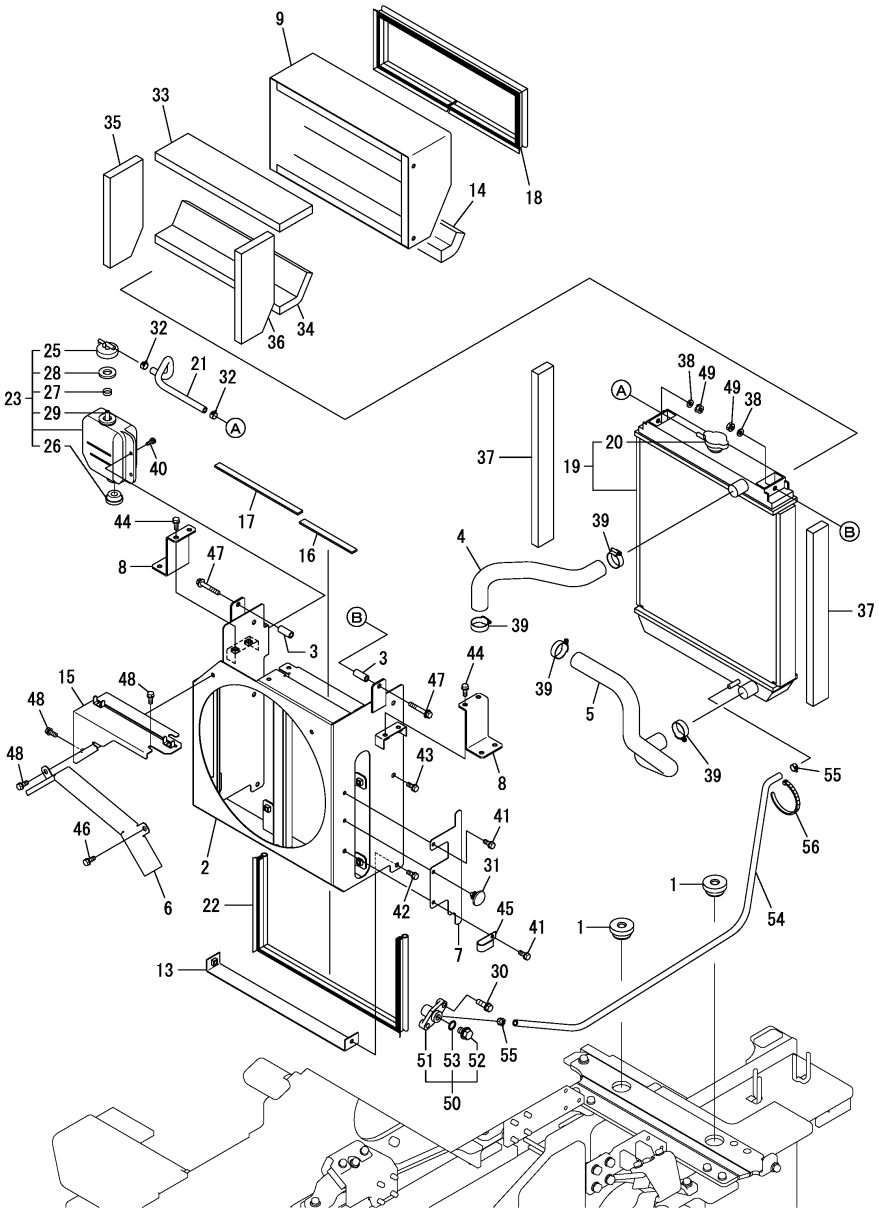

Remarks
(1)Attach the No.2A & 2B label to this part.
(2)Attach the No.29A & 29B label to this part.
(3)Label is not illustrated.

(A)=V4-6(US) (D)=
(B)=V4-6(AS) (E)=
(C)=V4-6(NZ) (F)=

No.	Lev.	Parts No.	Description	Q'ty (A)	(B)	(C)	(D)	(E)	(F)	I	R
1	1	198162-00640	SUPPORT, RADIATOR	2	2	2					
2	1	172539-13310	SHROUD ASSY	1	1	1					1
2A	1	172437-03361	LABEL, BATTERY	1	1	1					3
2B	1	172437-03391	LABEL, RADIATOR	1	1	1					3
3	1	172527-13320	COLLAR	2	2	2					
4	1	172538-13500	PIPE, WATER	1	1	1					
5	1	172538-13511	PIPE, WATER	1	1	1					
6	1	172539-13550	GUARD, FAN	1	1	1					
7	1	172538-13561	COVER, OIL	1	1	1					
8	1	172538-13580-1	STAY, RADIATOR	2	2	2					
9	1	172538-13600-1	COVER ASSY	1	1	1					
13	1	172538-13650-1	COVER ASSY	1	1	1					
14	1	172538-13680	SEAL, 60X30X414	1	1	1					
15	1	172539-13700-1	COVER, SHROUD	1	1	1					
16	1	172538-13751	RUBBER, SEAL 175	1	1	1					
17	1	172538-13760	RUBBER, SEAL 250	1	1	1					
18	1	172538-13770	RUBBER, SEAL 1060	1	1	1					
19	1	172538-13800	RADIATOR ASSY	1	1	1					
20	2	129107-44590	CAP, RADIATOR	1	1	1					
21	1	172141-14620	HOSE, FUEL	1	1	1					
22	1	172460-19060	RUBBER, SEAL	1	1	1					
23	1	121468-44510	TANK ASSY, SUB	1							2
23-1	1	121468-44520	TANK ASSY, SUB	1	1	1				N	2
	(A=M/#60861)										
25	2	121450-44531	CAP	1	1	1					
26	2	121468-44540	PLUG	1						Z	
	(A=M/#60861)										
27	2	124450-44560	CLAMP, HOSE	1	1	1					
28	2	121470-44581	GASKET	1	1	1					
29	2	23065-070130	PIPE, 7X 130	1	1	1					
29A	1	172A38-03201	LABEL, SUB TANK	1	1	1					3
29B	1	172A38-03211	LABEL, ANTI-FREEZING	1	1	1					3
30	1	26013-100302	BOLT, M10X 30	2	2	2					
31	1	172444-17660	CLIP, TREE	1	1	1					
32	1	124766-59050	CLAMP, HOSE 11.5	2	2	2					
33	1	172538-60100	SPONGE	1	1	1					
34	1	172538-60110	SPONGE	1	1	1					
35	1	172538-60120	SPONGE	1	1	1					
36	1	172538-60130	SPONGE	1	1	1					
37	1	172538-60230	SPONGE	2	2	2					
38	1	22137-080000	WASHER, 8	2	2	2					
39	1	23001-041000	CLAMP, HOSE 41	4	4	4					
40	1	26014-060202	BOLT, M6X 20	2	2	2					
41	1	26013-080202	BOLT, M8X 20	2	2	2					
42	1	26013-080202	BOLT, M8X 20	2	2	2					
43	1	26013-080202	BOLT, M8X 20	4	4	4					
44	1	26013-080202	BOLT, M8X 20	8	8	8					
45	1	1A1686-57850	CLAMP, 80	1	1	1					
46	1	26013-080202	BOLT, M8X 20	1	1	1					
47	1	26013-080552	BOLT, M8X 55	2	2	2					
48	1	26014-080162	BOLT, M8X 16	4	4	4					

N:Old $\xleftarrow[\text{No}]{\text{Yes}}$ New, Q:Old $\xleftarrow[\text{Yes}]{\text{No}}$ New, R:Old $\xleftarrow[\text{Yes}]{\text{Yes}}$ New, S:Old $\xleftarrow[\text{No}]{\text{No}}$ New, W:Add, Z:Discontinued, F:Interchangeable by set, K:Q'ty Change

++ CONTINUE ++

Copyright (C) YANMAR CO., LTD. All RightsReserved.

Fig.8. RADIATOR(AIR CON. SPEC.)

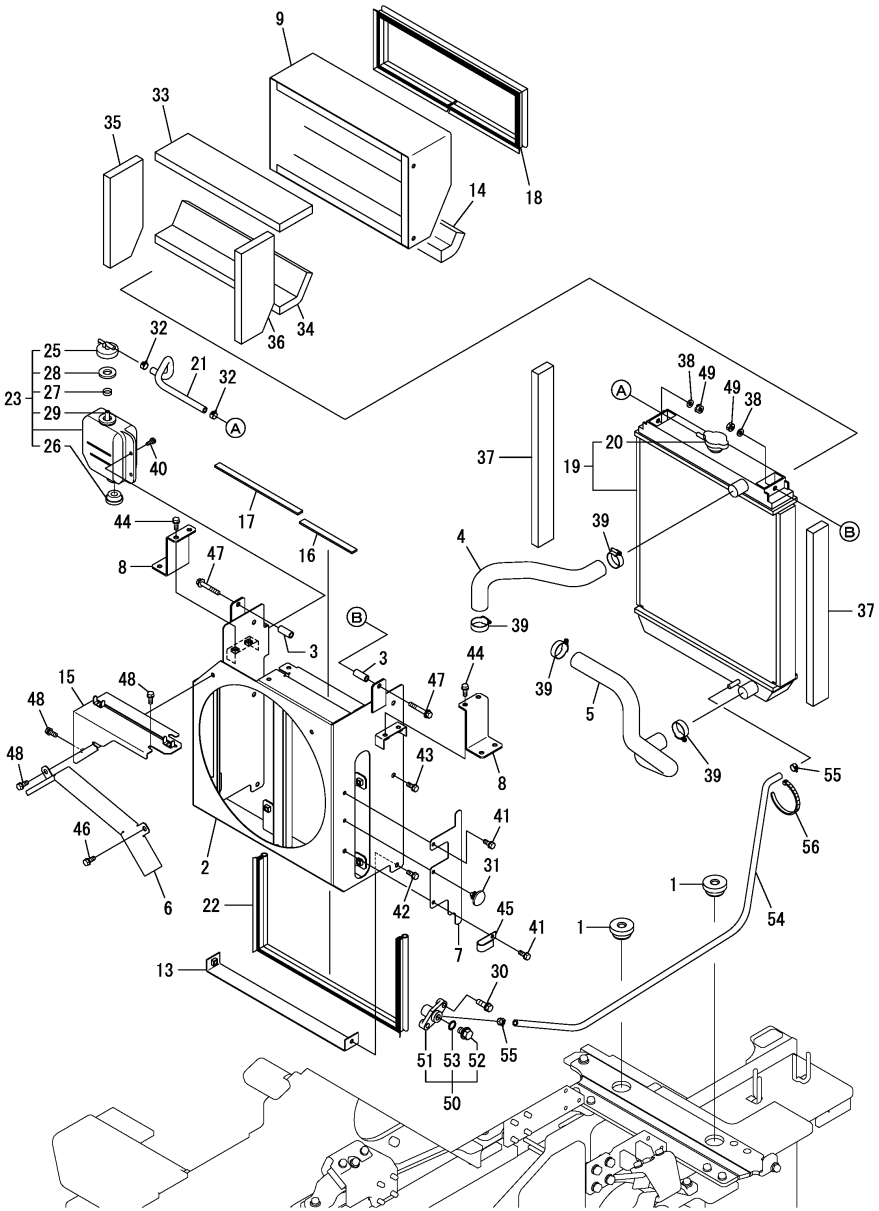

(A)=V4-6(US) (D)=
(B)=V4-6(AS) (E)=
(C)=V4-6(NZ) (F)=

No.	Lev.	Parts No.	Description	Q'ty (A)	(B)	(C)	(D)	(E)	(F)	I	R
49	1	26051-080002	NUT, M8	2	2	2					
50	1	172444-13210	COCK ASSY, 2-WAY	1	1	1					
51	2	172444-13220	BODY	1	1	1					
52	2	121250-49121	PLUG, DRAIN M16	1	1	1					
53	2	24311-000160	O-RING, 1AP16.0	1	1	1					
54	1	172539-14400	TUBE, BLADE	1	1	1					
55	1	124766-59050	CLAMP, HOSE 11.5	2	2	2					
56	1	172122-79930	CLAMP, HOSE	1	1	1					

Remarks
(1)Attach the No.2A & 2B label to this part.
(2)Attach the No.29A & 29B label to this part.
(3)Label is not illustrated.

N:Old $\frac{\text{Yes}}{\text{No}}$ New, Q:Old $\frac{\text{No}}{\text{Yes}}$ New, R:Old $\frac{\text{Yes}}{\text{Yes}}$ New, S:Old $\frac{\text{No}}{\text{No}}$ New, W:Add, Z:Discontinued, F:Interchangeable by set, K:Q'ty Change

Copyright (C) YANMAR CO., LTD. All RightsReserved.

Fig.9. FUEL TANK

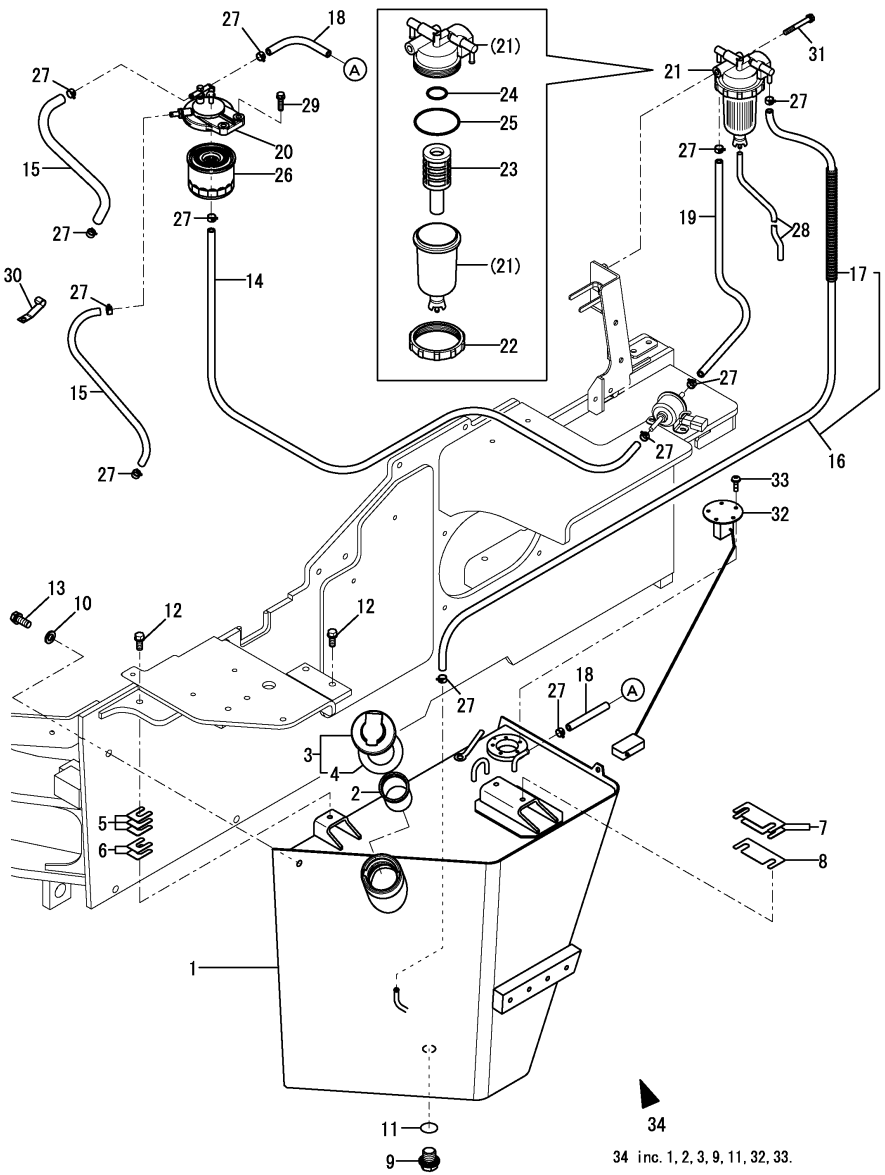

Remarks
(1)Attach the No.25A label to this part.
(2)Label is not illustrated.

(A)=V4-6(US) (D)=
(B)=V4-6(AS) (E)=
(C)=V4-6(NZ) (F)=

No.	Lev.	Parts No.	Description	Q'ty (A)	(B)	(C)	(D)	(E)	(F)	I	R
1	1	172539-14010	TANK ASSY, FUEL	1	1	1					
2	1	172183-14250	FILTER, FUEL	1	1	1					
3	1	172122-14301	CAP ASSY, TANK	1	1	1					
4	2	172122-14350	GASKET	1	1	1					
5	1	172538-14311	SHIM, TANK T=1.0	3	3	3					
6	1	172538-14321	SHIM, TANK T=0.5	2	2	2					
7	1	172538-14341	SHIM, TANK T=1.0	2	2	2					
8	1	172538-14351	SHIM, TANK T=0.5	1	1	1					
9	1	172455-75330	PLUG, DRAIN	1	1	1					
10	1	22137-120000	WASHER, 12	4	4	4					
11	1	24341-000300	O-RING, 1AS30.0	1	1	1					
12	1	26013-100252	BOLT, M10X 25	3	3	3					
13	1	26013-120302	BOLT, M12X 30	4	4	4					
14	1	1E6299-03000	PIPE, FUEL RETURN	1	1	1					
15	1	1E6686-03050	PIPE, FUEL L=390	2	2	2					
16	1	172538-14050	HOSE	1	1	1					
17	2	184014-59510	TUBE, CORRUGATED	1	1	1					
18	1	172458-14640	HOSE	1	1	1					
19	1	172120-14680	HOSE	1	1	1					
20	1	129004-55612	BRACKET, FILTER	1	1	1					
21	1	184016-55700	SEPARATOR ASSY,WATER	1	1	1					1
21-1	1	184016-55701	SEPARATOR ASSY	1	1	1				N	1
	(A=M60985)	(B=M60985)	(C=M60985)								
22	2	129100-55690	RING, CUP RETAINING	1	1	1					
23	2	119802-55710	ELEMENT	1	1	1					
24	2	24311-000160	O-RING, 1AP16.0	1	1	1					
25	2	24321-000650	O-RING, 1AG65.0	1	1	1					
25A	1	172A07-03160	LABEL	1	1	1					2
26	1	119802-55810	FILTER,FO	1	1	1					
27	1	124766-59050	CLAMP, HOSE 11.5	12	12	12					
28	1	23061-050300	PIPE, 5X 300	1	1	1					
29	1	26013-080252	BOLT, M8X 25	2	2	2					
30	1	1A1686-57850	CLAMP, 80	1	1	1					
31	1	26106-080652	BOLT, M8X 65 PLATED	1	1	1					
32	1	172538-17430	GAUGE, FUEL	1	1	1					
33	1	26022-050162	SCREW, M5X16	5	5	5					
34	1	172539-08010	TANK KIT, FUEL	1	1	1				W	
	(A=MXXXXX)	(B=MXXXXX)	(C=MXXXXX)								

N:Old $\frac{\text{Yes}}{\text{No}}$ New, Q:Old $\frac{\text{No}}{\text{Yes}}$ New, R:Old $\frac{\text{Yes}}{\text{Yes}}$ New, S:Old $\frac{\text{No}}{\text{No}}$ New, W:Add, Z:Discontinued, F:Interchangeable by set, K:Q'ty Change

Copyright (C) YANMAR CO., LTD. All RightsReserved.

Fig.10. BATTERY

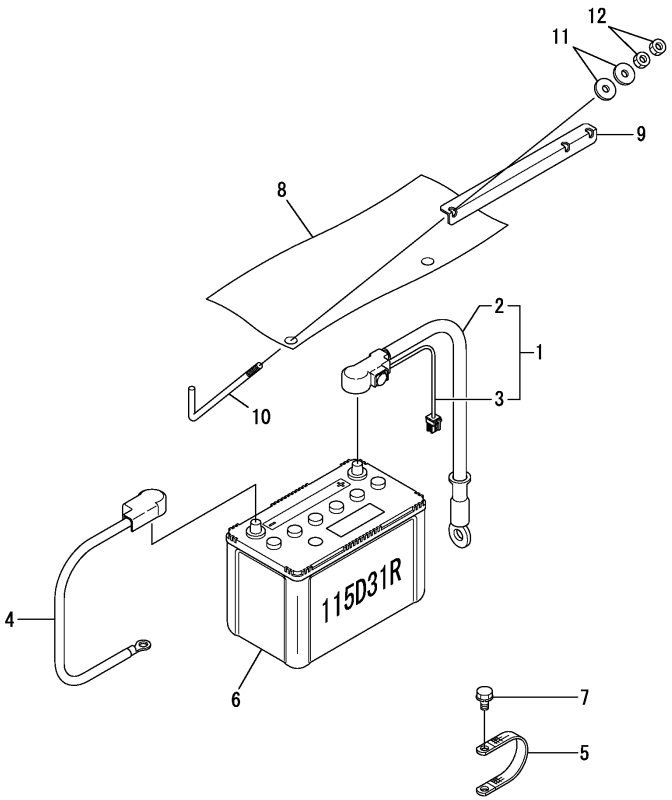

(A)=V4-6(US) (D)=
(B)=V4-6(AS) (E)=
(C)=V4-6(NZ) (F)=

No.	Lev.	Parts No.	Description	Q'ty (A)	(B)	(C)	(D)	(E)	(F)	I	R
1	1	172527-16100	CABLE ASSY, BATTERY	1	1	1					
2	2	172527-16130	CORD, BATTERY	1	1	1					
3	2	172527-16150	HARNESS C,WIRE	1	1	1					
4	1	172527-16120	CABLE, BATTERY EARTH	1	1	1					
5	1	172A47-16130	CORD, ENGINE EARTH	1	1	1					
6	1	172460-16130	BATTERY	1	1	1					
7	1	26013-100162	BOLT, M10X 16	2	2	2					
8	1	172538-16250	COVER, BATTERY	1	1	1					
9	1	172116-16310-3	RETAINER, BATTERY	1	1	1					
10	1	172538-16320	ROD, CLAMP	2	2	2					
11	1	22157-080000	WASHER, 8	4	4	4					
12	1	26716-080002	NUT, M8	4	4	4					

N:Old $\xleftrightarrow[\text{No}]{\text{Yes}}$ New, Q:Old $\xleftrightarrow[\text{Yes}]{\text{No}}$ New, R:Old $\xleftrightarrow[\text{Yes}]{\text{Yes}}$ New, S:Old $\xleftrightarrow[\text{No}]{\text{No}}$ New, W:Add, Z:Discontinued, F:Interchangeable by set, K:Q'ty Change

Copyright (C) YANMAR CO., LTD. All RightsReserved.

Fig.11. WIRING(TO M61130)

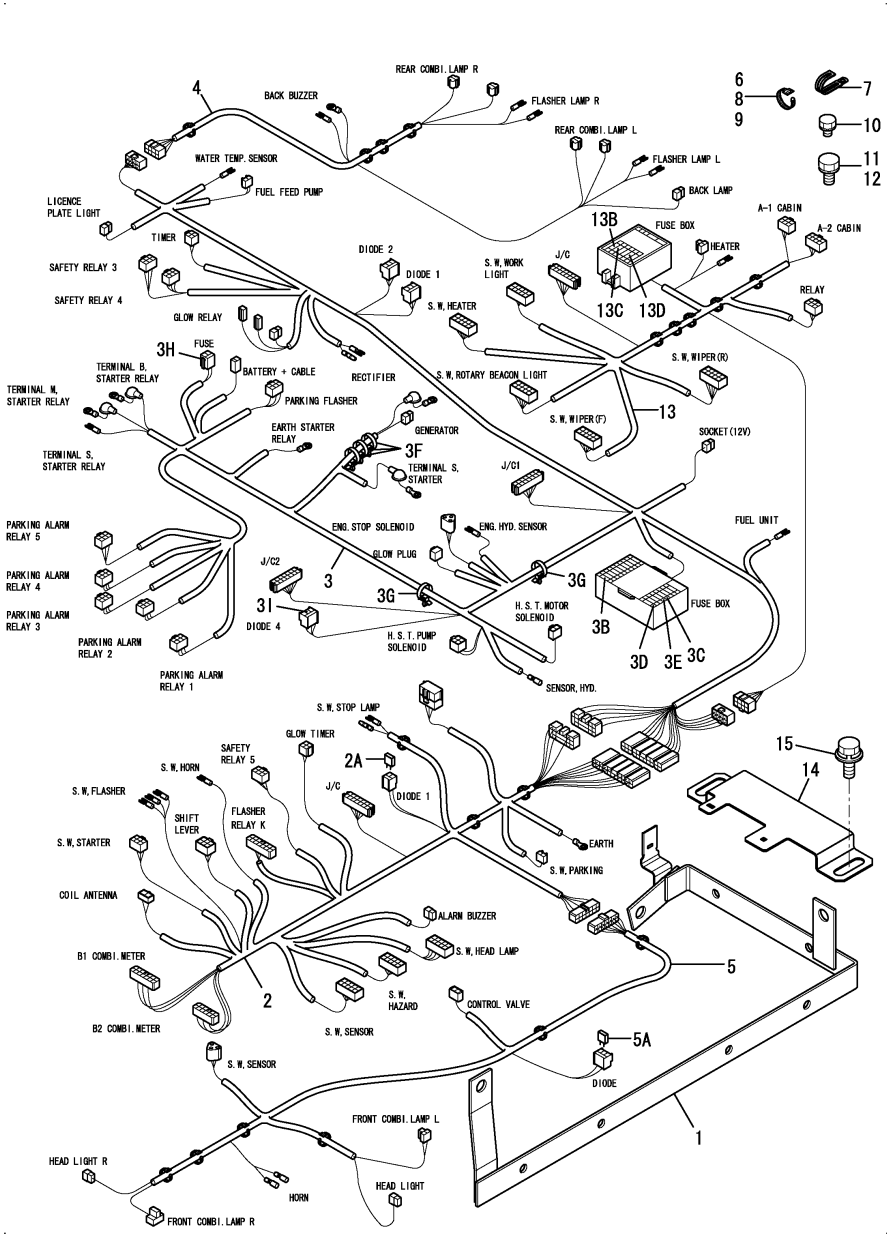

(A)=V4-6(US) (D)=
(B)=V4-6(AS) (E)=
(C)=V4-6(NZ) (F)=

No.	Lev.	Parts No.	Description	Q'ty (A)	(B)	(C)	(D)	(E)	(F)	I	R
1	1	172539-16101-1	SUPPORT ASSY	1	1	1					
2	1	172538-16700	HARNESS ASSY,M(US	1							
2-1	1	172538-16701	HARNESS ASSY,M(US	1						S	2
	(A=M/#60699)										
2-2	1	172538-16702	HARNESS ASSY,M(US	1	1	1				N	
	(A=*2008.11)										
2A	2	172648-16600	DIODE, 1.5-2P	1	1	1				W	
	(A=*2008.11)										
3	1	172538-16511	HARNESS ASSY,REAR	1							
3-1	1	172538-16512	HARNESS ASSY,REAR	1						S	1
	(A=M/#60699)										
3-2	1	172538-16513	HARNESS ASSY,REAR	1	1	1				N	
	(A=*2008.11)										
3B	2	198535-52110	FUSE, 5A	5	5	5				W	
	(A=*2008.11)										
3C	2	198535-52120	FUSE, 10A	2	2	2				W	
	(A=*2008.11)										
3D	2	198535-52130	FUSE, 15A	6	6	6				W	
	(A=*2008.11)										
3E	2	198535-52170	FUSE, 30A	2	2	2				W	
	(A=*2008.11)										
3F	2	1E8775-84120	CLAMP, BAND	3	3	3				W	
	(A=*2008.11)										
3G	2	1E8490-84130	CLAMP, BAND	2	2	2				W	
	(A=*2008.11)										
3H	2	172458-16550	FUSE, SLOWBLOW	1	1	1				W	
	(A=*2008.11)										
3I	2	1E8465-83170	DIODE, 090,1.5A	3	3	3				W	
	(A=*2008.11)										
4	1	172538-16521	HARNESS ASSY,R3	1							
4-1	1	172538-16522	HARNESS ASSY,R3	1						S	1
	(A=M/#60699)										
4-2	1	172538-16523	HARNESS ASSY,R3	1	1	1				N	
	(A=*2008.11)										
5	1	172538-16531	HARNESS ASSY,F	1							
5-1	1	172538-16532	HARNESS ASSY,F	1						S	2
	(A=M/#60699)										
5-2	1	172538-16533	HARNESS ASSY,F	1	1	1				N	
	(A=*2008.11)										
5A	2	172648-16600	DIODE, 1.5-2P	1	1	1				W	
	(A=*2008.11)										
6	1	194680-51670	BAND, CLIP	1	1	1					
7	1	1A1686-57850	CLAMP, 80	3	3	3					
7-1	1	1A1686-57850	CLAMP, 80	4	4	4				K	
	(A=M/#60716)										
8	1	172122-79930	CLAMP, HOSE	1	1	1					
9	1	172122-79940	CLIP, HOSE	2	2	2					
10	1	26013-080122	BOLT, M8X 12	3	3	3					
11	1	26013-100202	BOLT, M10X 20	2	2	2					
12	1	26013-100202	BOLT, M10X 20	3	3	3					
13	1	172538-16541	HARNESS ASSY,C	1							1

N:Old $\xleftarrow[\text{No}]{\text{Yes}}$ New, Q:Old $\xleftarrow[\text{Yes}]{\text{No}}$ New, R:Old $\xleftarrow[\text{Yes}]{\text{Yes}}$ New, S:Old $\xleftarrow[\text{No}]{\text{No}}$ New, W:Add, Z:Discontinued, F:Interchangeable by set, K:Q'ty Change

Remarks
(1)Cabin specification.
Interchangeable by simultaneous replacement with No.2-1, 3-1, 4-1, 13-1.
(2)Interchangeable by simultaneous replacement with No.2-1, 3-1, 5-1.

++ CONTINUE ++

Copyright (C) YANMAR CO., LTD. All RightsReserved.

Fig.11. WIRING(TO M61130)

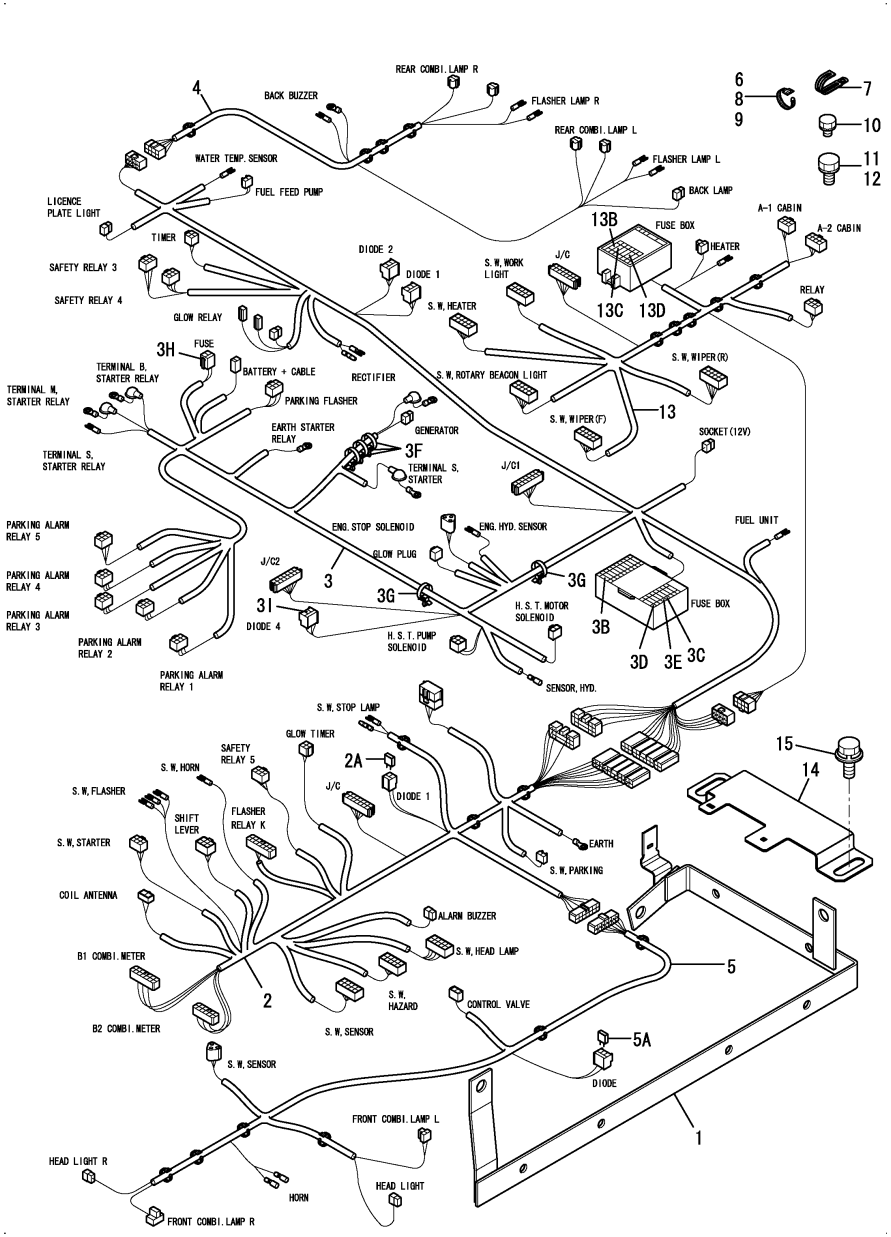

Remarks
(1)Cabin specification.
Interchangeable by simultaneous replacement with No.2-1, 3-1, 4-1, 13-1.
(2)Interchangeable by simultaneous replacement with No.2-1, 3-1, 5-1.

(A)=V4-6(US) (D)=
(B)=V4-6(AS) (E)=
(C)=V4-6(NZ) (F)=

No.	Lev.	Parts No.	Description	Q'ty (A)	(B)	(C)	(D)	(E)	(F)	I	R
13-1	1	172538-16542	HARNESS ASSY,C	1						S	1
	(A=M/#60699)										
13-2	1	172538-16543	HARNESS ASSY,C	1	1	1				N	
	(A=*2008.11)										
13B	2	198535-52110	FUSE, 5A	2	2	2				W	
	(A=*2008.11)										
13C	2	198535-52130	FUSE, 15A	2	2	2				W	
	(A=*2008.11)										
13D	2	198535-52170	FUSE, 30A	3	3	3				W	
	(A=*2008.11)										
14	1	172538-16900	PLATE,COUPLER	1	1	1				W	
	(A=M/#60716)										
15	1	26014-080202	BOLT, M8X 20	2	2	2				W	
	(A=M/#60716)										

N:Old $\xleftarrow[\text{No}]{\text{Yes}}$ New, Q:Old $\xleftarrow[\text{Yes}]{\text{No}}$ New, R:Old $\xleftarrow[\text{Yes}]{\text{Yes}}$ New, S:Old $\xleftarrow[\text{No}]{\text{No}}$ New, W:Add, Z:Discontinued, F:Interchangeable by set, K:Q'ty Change

Copyright (C) YANMAR CO., LTD. All RightsReserved.

Fig.72. (11A)WIRING(FROM M61131)

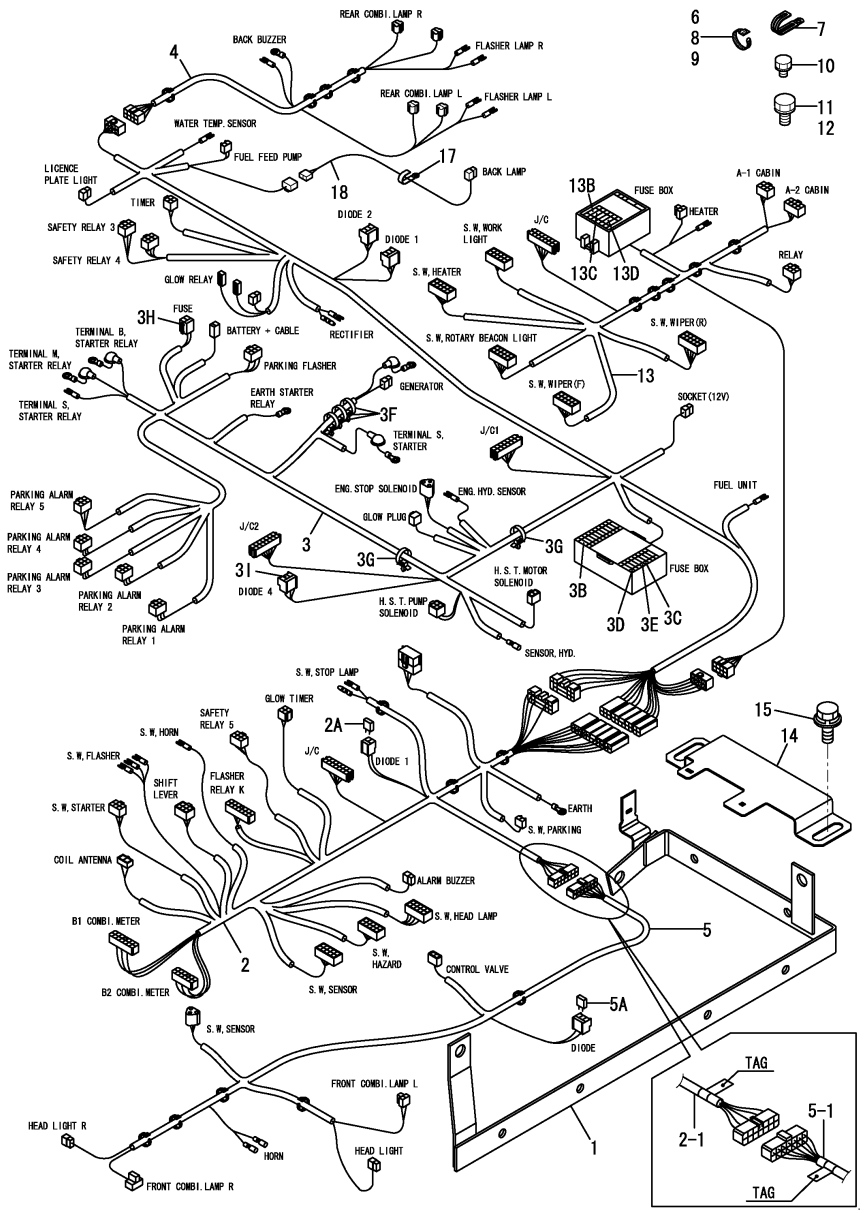

(A)=V4-6(US) (D)=
(B)=V4-6(AS) (E)=
(C)=V4-6(NZ) (F)=

No.	Lev.	Parts No.	Description	Q'ty (A)	(B)	(C)	(D)	(E)	(F)	I	R
1	1	172539-16101-1	SUPPORT ASSY	1	1	1					
2	1	172538-16702	HARNESS ASSY,M(US	1	1	1					
2-1	1	172538-16703	HARNESS ASSY,MAIN US	1	1	1				S	2
	(A=M61724)	(B=M61724)	(C=M61724)								
2A	2	172648-16600	DIODE, 1.5-2P	1	1	1					
3	1	172538-16514	HARNESS ASSY,REAR	1	1	1					
3-1	1	172538-16515	HARNESS ASSY,REAR	1	1	1				S	
	(A=M61724)	(B=M61724)	(C=M61724)								
3B	2	198535-52110	FUSE, 5A	5	5	5					
3C	2	198535-52120	FUSE, 10A	2	2	2					
3D	2	198535-52130	FUSE, 15A	6	6	6					
3E	2	198535-52170	FUSE, 30A	2	2	2					
3F	2	1E8775-84120	CLAMP, BAND	3	3	3					
3G	2	1E8490-84130	CLAMP, BAND	2	2	2					
3H	2	172458-16550	FUSE, SLOWBLOW	1	1	1					
3I	2	1E8465-83170	DIODE, 090,1.5A	3	3	3					
4	1	172538-16524	HARNESS ASSY,R3	1	1	1					
5	1	172538-16533	HARNESS ASSY,F	1	1	1					
5-1	1	172538-16534	HARNESS ASSY,FRONT	1	1	1				S	2
	(A=M61724)	(B=M61724)	(C=M61724)								
5A	2	172648-16600	DIODE, 1.5-2P	1	1	1					
6	1	194680-51670	BAND, CLIP	1	1	1					
7	1	1A1686-57850	CLAMP, 80	4	4	4					
8	1	172122-79930	CLAMP, HOSE	1	1	1					
9	1	172122-79940	CLIP, HOSE	2	2	2					
10	1	26013-080122	BOLT, M8X 12	3	3	3					
11	1	26013-100202	BOLT, M10X 20	2	2	2					
12	1	26013-100202	BOLT, M10X 20	3	3	3					
13	1	172538-16543	HARNESS ASSY,C	1	1	1					1
13B	2	198535-52110	FUSE, 5A	2	2	2					
13C	2	198535-52130	FUSE, 15A	2	2	2					
13D	2	198535-52170	FUSE, 30A	3	3	3					
14	1	172538-16900	PLATE,COUPLER	1	1	1					
15	1	26014-080202	BOLT, M8X 20	2	2	2					
17	1	172126-16540	CLAMP	1	1	1					
18	1	172538-16850	HARNESS,BACK LAMP	1	1	1					

Remarks
(1)Cabin specification.
(2)A=No.2, 5 : No Tag, No.2-1, 5-1 : with tag

N:Old $\xleftarrow[\text{No}]{\text{Yes}}$ New, Q:Old $\xleftarrow[\text{Yes}]{\text{No}}$ New, R:Old $\xleftarrow[\text{Yes}]{\text{Yes}}$ New, S:Old $\xleftarrow[\text{No}]{\text{No}}$ New, W:Add, Z:Discontinued, F:Interchangeable by set, K:Q'ty Change

Copyright (C) YANMAR CO., LTD. All RightsReserved.

Fig.12. ELECTRIC PART(1)

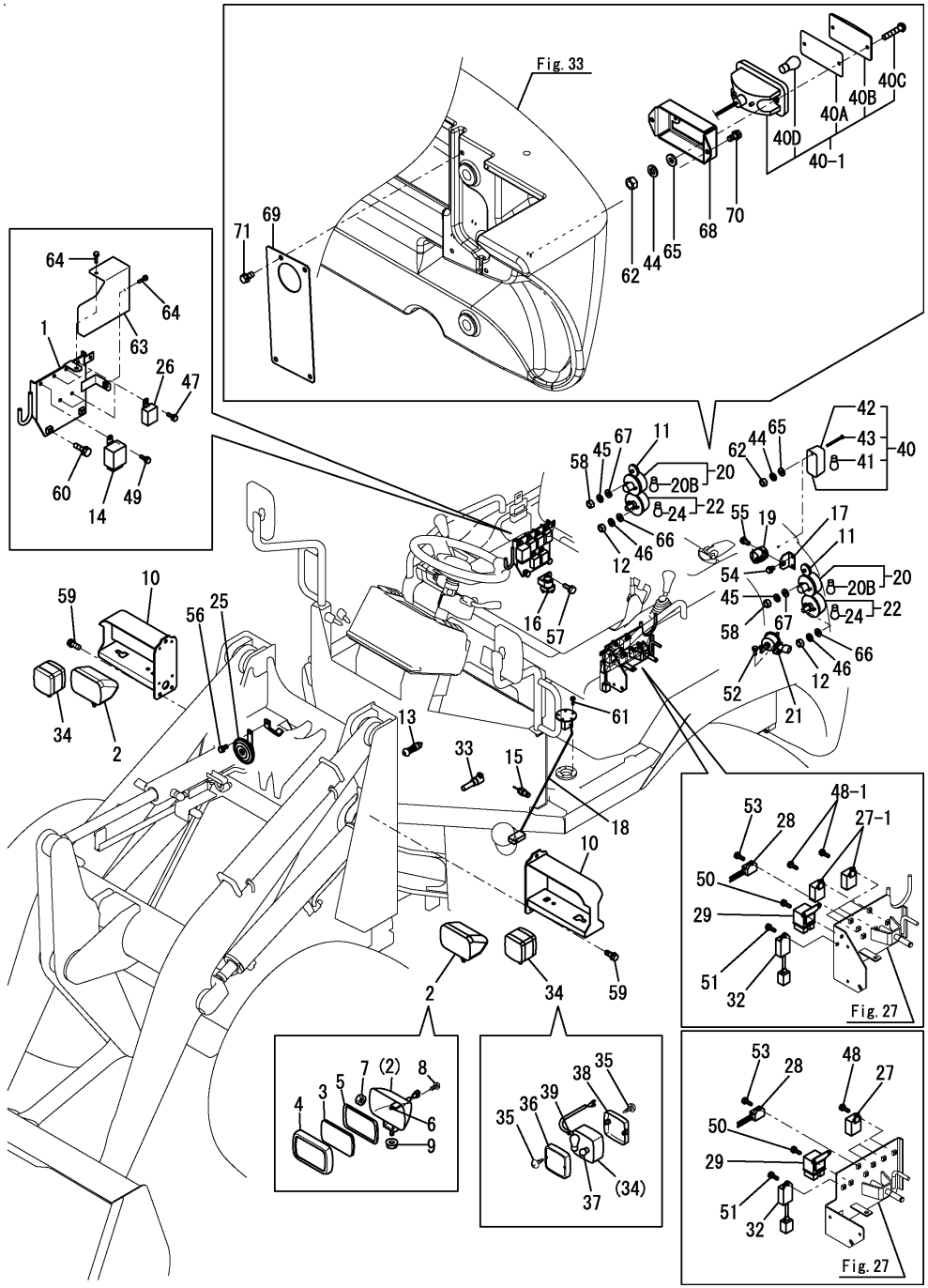

(A)=V4-6(US) (D)=
(B)=V4-6(AS) (E)=
(C)=V4-6(NZ) (F)=

No.	Lev.	Parts No.	Description	Q'ty (A)	(B)	(C)	(D)	(E)	(F)	I	R
1	1	172538-16602-1	BASE ASSY,RELAY (49)	1	1	1					
2	1	172527-17110	LAMP,HEAD	2	2	2					
3	2	172527-17250	LENS	2	2	2					
4	2	172527-17260	LIM	2	2	2					
5	2	172527-17280	GASKET	2	2	2					
6	2	172527-17290	BULB, 12V 55W	2	2	2					
7	2	172527-17310	NUT	2	2	2					
8	2	172527-17340	SCREW	8	8	8					
9	2	172527-17350	NUT	2	2	2					
10	1	172538-17150-2	SUPPORT, LAMP	2	2	2					
10-1	1	172538-17150-Y	SUPPORT, LAMP	2	2	2				S	
	(A=M61501)	(B=M61501)	(C=M61501)								
11	1	172532-17170	REFLECTOR	2	2	2					
12	1	26716-050002	NUT, M5	4	4	4					
13	1	172524-17280	SWITCH, STOP LAMP	1	1	1					
14	1	172538-17300	RELAY,FLASHER	1	1	1					
15	1	172520-17351	SWITCH, THERMO	1	1	1					
16	1	172524-17360	RELY,STARTER	1	1	1					
17	1	172538-17400-1	BASE,BUZZER(GRAY:49)	1	1	1					
18	1	172538-17430	GAUGE, FUEL	1	1	1					
19	1	172538-17600	BUZZER,BACK(COVER	1	1	1					
20	1	172538-17750	LAMP,WINKER	2	2	2					
20B	2	172538-17770	BULB, 12V P21W	2	2	2				W	
	(A=FROM 1ST)										
21	1	129612-52100	PUMP, FUEL FEED	1	1	1					
22	1	1A8100-53300	LAMP, BRAKE	2	2	2					
24	2	1A8100-53320	BULB, 12V5W/21W	2	2	2					
25	1	1A6780-57110	HORN ASSY	1	1	1					
26	1	119247-77100	RELAY, POWER	5	5	5					
27	1	119247-77100	RELAY, POWER	3							
27-1	1	119247-77100	RELAY, POWER	4	4	4				K	
	(A=M/#60699)										
28	1	160970-77350	RECTIFIER, ZR2117	1	1	1					
29	1	119650-77910	RELAY ASSY, GLOW	1	1	1					
32	1	129211-77920	TIMER	1	1	1					
33	1	1E8322-81050	SWITCH, SAFETY	1	1	1					
34	1	1E9110-81100	LAMP, COMBINATION F	2	2	2					
35	2	194320-53440	SCREW	8	8	8					
36	2	1E9110-81110	LENS, FRONT	2	2	2					
37	2	1E6680-81120	BULB,12V-5W	2	2	2					
38	2	1E9110-81120	LENS, REAR	2	2	2					
39	2	1E6680-81130	BULB,12V-21W	2	2	2					
40	1	1E9000-82000	LAMP, BACK	1	1	1					
40-1	1	172538-17700	BACK LAMP ASSY	1	1	1				S	
	(A=M61131)	(B=M61131)	(C=M61131)								
40A	2	172538-17710	GASKET	1	1	1				W	
	(A=M61131)	(B=M61131)	(C=M61131)								
40B	2	172538-17720	LENS	1	1	1				W	
	(A=M61131)	(B=M61131)	(C=M61131)								
40C	2	172538-17730	SCREW	2	2	2				W	
	(A=M61131)	(B=M61131)	(C=M61131)								

N:Old $\xleftarrow[\text{No}]{\text{Yes}}$ New, Q:Old $\xleftarrow[\text{Yes}]{\text{No}}$ New, R:Old $\xleftarrow[\text{Yes}]{\text{Yes}}$ New, S:Old $\xleftarrow[\text{No}]{\text{No}}$ New, W:Add, Z:Discontinued, F:Interchangeable by set, K:Q'ty Change

++ CONTINUE ++

Copyright (C) YANMAR CO., LTD. All RightsReserved.

Fig.12. ELECTRIC PART(1)

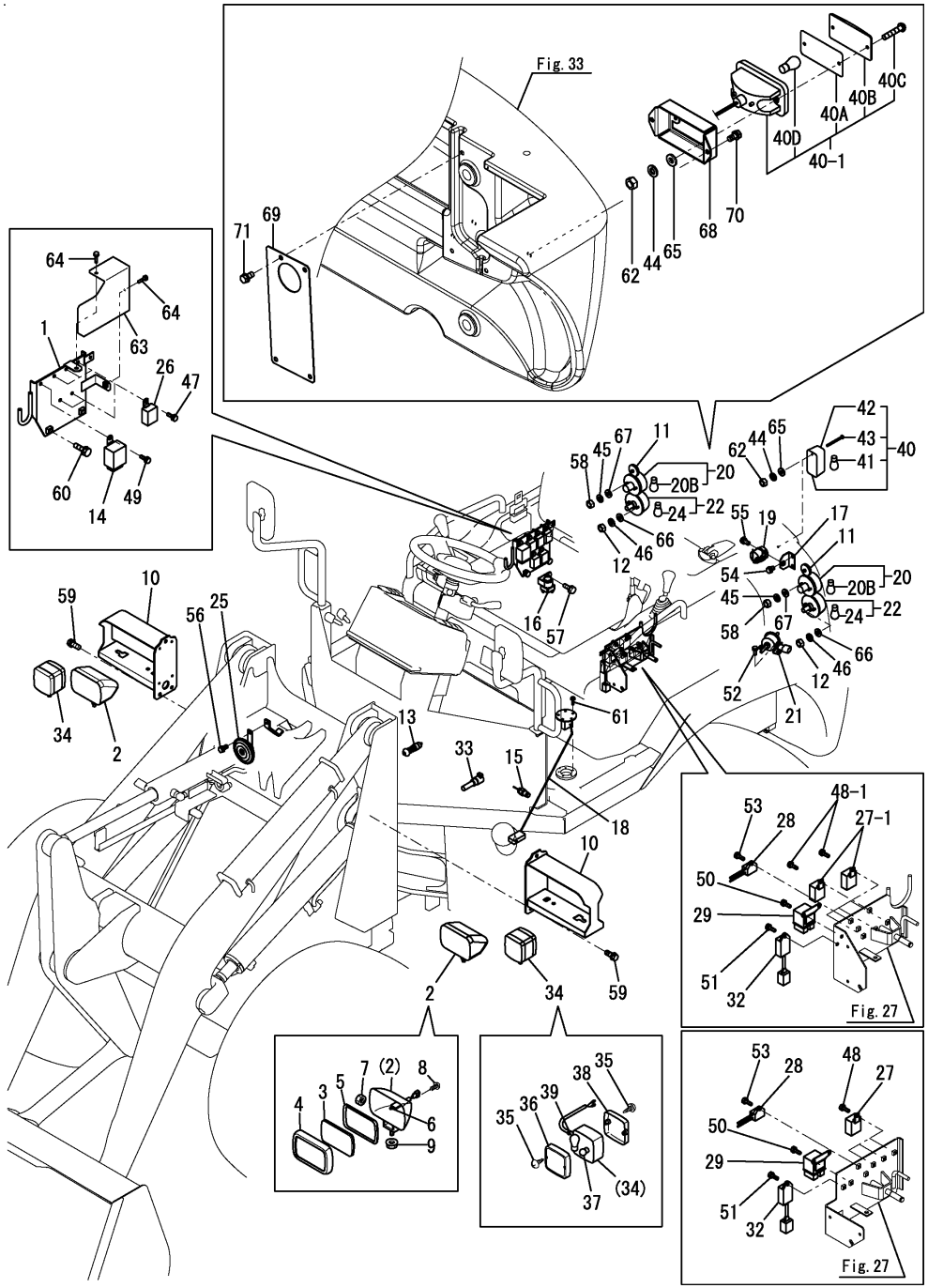

(A)=V4-6(US) (D)=
(B)=V4-6(AS) (E)=
(C)=V4-6(NZ) (F)=

No.	Lev.	Parts No.	Description	Q'ty (A)	(B)	(C)	(D)	(E)	(F)	I	R
40D	2	172524-17810	BULB, 12V 21W	1	1	1				W	
	(A=M61131)	(B=M61131)	(C=M61131)								
41	2	1E6680-81130	BULB,12V-21W	1	1	1				Z	
	(A=M61131)	(B=M61131)	(C=M61131)								
42	2	1E9000-82010	LENS	1	1	1				Z	
	(A=M61131)	(B=M61131)	(C=M61131)								
43	2	1E9000-82020	SCREW	2	2	2				Z	
	(A=M61131)	(B=M61131)	(C=M61131)								
44	1	22217-040000	WASHER, SPRING 4	2	2	2					
45	1	22217-050000	WASHER, SPRING 5	4	4	4					
46	1	22217-050000	WASHER, SPRING 5	4	4	4					
47	1	26013-060162	BOLT, M6X 16	5	5	5					
48	1	26013-060162	BOLT, M6X 16	3							
48-1	1	26013-060162	BOLT, M6X 16	4	4	4				K	
	(A=M/#60699)										
49	1	26013-060162	BOLT, M6X 16	1	1	1					
50	1	26013-060162	BOLT, M6X 16	2	2	2					
51	1	26013-060162	BOLT, M6X 16	1	1	1					
52	1	26013-060162	BOLT, M6X 16	2	2	2					
53	1	26013-060252	BOLT, M6X 25	1	1	1					
54	1	26013-080122	BOLT, M8X 12	2	2	2					
55	1	26013-080162	BOLT, M8X 16	1	1	1					
56	1	26013-080162	BOLT, M8X 16	1	1	1					
57	1	26013-080202	BOLT, M8X 20	1	1	1					
58	1	26716-050002	NUT, M5	4	4	4					
59	1	26013-100252	BOLT, M10X 25	6	6	6					
60	1	26013-100302	BOLT, M10X 30	2	2	2					
61	1	26022-050162	SCREW, M5X16	5	5	5					
62	1	26716-040002	NUT, M4	2	2	2					
63	1	172538-16690-1	COVER, RELAY	1	1	1					
64	1	26013-060122	BOLT, M6X 12	2	2	2					
65	1	22137-040000	WASHER, 4	2	2	2				W	
	(A=MZZZZZ)										
66	1	22137-050000	WASHER, 5	4	4	4				W	
	(A=MZZZZZ)										
67	1	22137-050000	WASHER, 5	4	4	4				W	
	(A=MZZZZZ)										
68	1	172538-17650	BASE,BACK LAMP	1	1	1				W	
	(A=M61131)	(B=M61131)	(C=M61131)								
69	1	172538-17680	COVER, WEIGHT	1	1	1				W	
	(A=M61131)	(B=M61131)	(C=M61131)								
70	1	26013-080162	BOLT, M8X 16	2	2	2				W	
	(A=M61131)	(B=M61131)	(C=M61131)								
71	1	26013-080162	BOLT, M8X 16	4	4	4				W	
	(A=M61131)	(B=M61131)	(C=M61131)								

N:Old $\frac{\text{Yes}}{\text{No}}$ New, Q:Old $\frac{\text{No}}{\text{Yes}}$ New, R:Old $\frac{\text{Yes}}{\text{Yes}}$ New, S:Old $\frac{\text{No}}{\text{No}}$ New, W:Add, Z:Discontinued, F:Interchangeable by set, K:Q'ty Change

Copyright (C) YANMAR CO., LTD. All RightsReserved.

Fig.13. ELECTRIC PART(2)

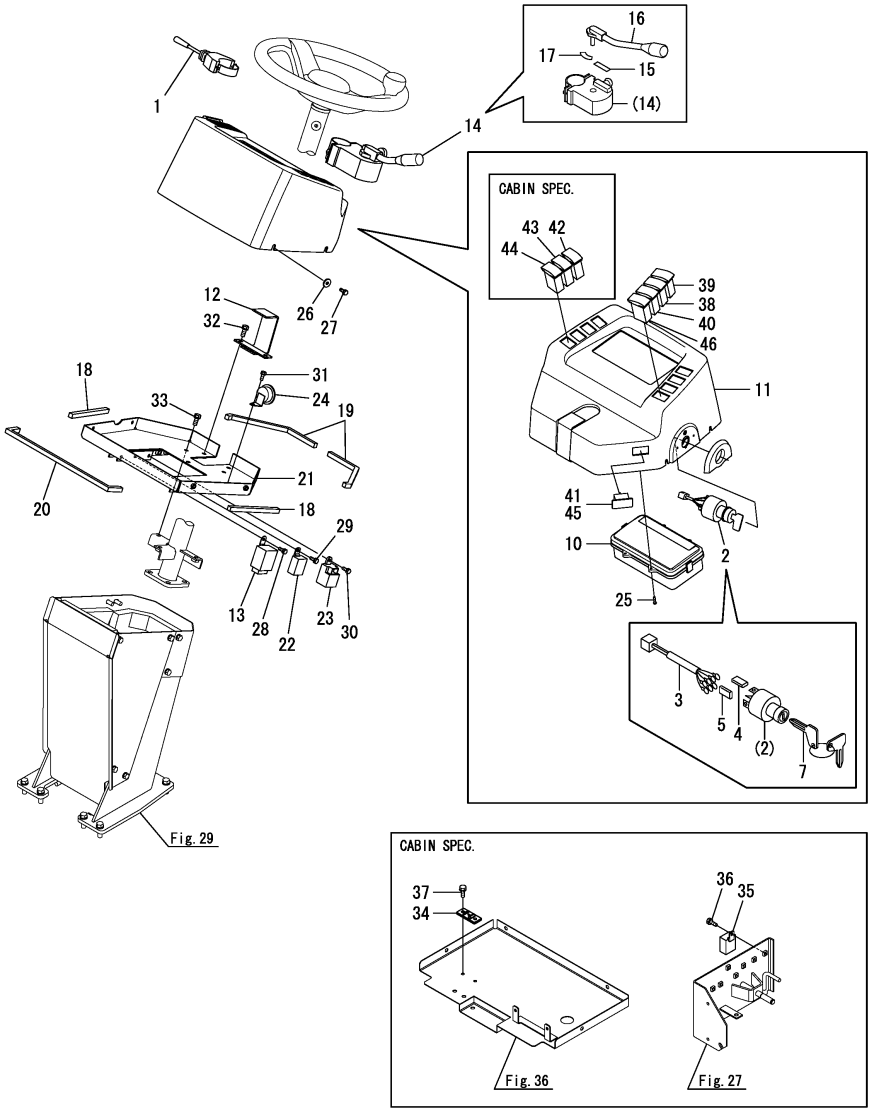

(A)=V4-6(US) (D)=
(B)=V4-6(AS) (E)=
(C)=V4-6(NZ) (F)=

No.	Lev.	Parts No.	Description	Q'ty (A)	(B)	(C)	(D)	(E)	(F)	I	R
1	1	172515-08790	SWITCH, FLASHER	1	1	1					
2	1	172187-17100	SWITCH ASSY, STARTER	1	1	1					
3	2	172187-17070	CORD ASSY	1	1	1					
4	2	172187-17080	COVER	3	3	3					
5	2	172187-17090	COVER	2	2	2					
7	2	933110-00301	KEY ASSY	1	1	1					
10	1	172538-17200	METER,COMBINATION	1	1	1					
11	1	172538-17250	COVER, METER	1	1	1					2
11A	1	172A64-03700	LABEL, START SWITCH	1	1	1					4
11B	1	172437-03312	LABEL, SLOPE	1	1	1					4
11C	1	172538-03760	LABEL,P BRAKE US	1	1	1					4
12	1	172538-17270-1	COVER, METER	1	1	1					
13	1	1A6780-57200	FLASHER	1	1	1					
14	1	172524-17310	LEVER, SHIFT	1	1	1					3
14-1	1	172524-17311	LEVER, SHIFT	1	1	1				N	3
	(A=MZZZZZ)	(B=MZZZZZ)	(C=MZZZZZ)								
15	2	172524-17320	LABEL	1	1	1					
16	2	172524-17380	LEVER ASSY	1	1	1					
16-1	2	172524-17381	LEVER ASSY	1	1	1				S	
	(A=MZZZZZ)	(B=MZZZZZ)	(C=MZZZZZ)								
17	2	172520-17390	LABEL	1	1	1					
17A	1	172524-03690	LABEL	1	1	1					4
18	1	172538-17350	SEAL,10X10X155	2	2	2					
19	1	172538-17360	SEAL,10X10X245	2	2	2					
20	1	172538-17370	SEAL,10X10X395	1	1	1					
21	1	172538-17500-1	BASE,METER (GRAY;49)	1	1	1					
22	1	119247-77100	RELAY, POWER	1	1	1					
23	1	124970-77920	TIMER	1	1	1					
24	1	1A1531-83400	BUZZER, ND-S	1	1	1					
25	1	1E4440-99160	SCREW, SMALL 4X16	4	4	4					
26	1	22157-060000	WASHER, 6	4	4	4					
27	1	26013-060162	BOLT, M6X 16	4	4	4					
28	1	26013-060162	BOLT, M6X 16	1	1	1					
29	1	26013-060162	BOLT, M6X 16	1	1	1					
30	1	26013-060162	BOLT, M6X 16	1	1	1					
31	1	26013-060162	BOLT, M6X 16	1	1	1					
32	1	26013-080202	BOLT, M8X 20	2	2	2					
33	1	26013-080202	BOLT, M8X 20	3	3	3					
34	1	172183-16550	BRACKET,FUSE	1	1	1					1
35	1	119247-77100	RELAY, POWER	1	1	1					1
36	1	26013-060162	BOLT, M6X 16	1	1	1					1
37	1	26013-060162	BOLT, M6X 16	2	2	2					1
38	1	172538-17000	SWITCH, LIGHT	1	1	1					
39	1	172538-17010	SWITCH, SPEED FIXING	1	1	1					
40	1	172538-17020	SWITCH, HAZARD	1	1	1					
41	1	172538-17100	PLUG, PANEL	6	6	6					
42	1	172538-17040	SWITCH, HEATER	1	1	1					1
43	1	172538-17060	SWITCH, WIPER	1	1	1					1
44	1	172538-17070	SWITCH, WIPER	1	1	1					1
45	1	172538-17100	PLUG, PANEL	3	3	3					
46	1	172538-17030	SWITCH, WORK LAMP	1	1	1					1

N:Old $\xleftarrow[\text{No}]{\text{Yes}}$ New, Q:Old $\xleftarrow[\text{Yes}]{\text{No}}$ New, R:Old $\xleftarrow[\text{Yes}]{\text{Yes}}$ New, S:Old $\xleftarrow[\text{No}]{\text{No}}$ New, W:Add, Z:Discontinued, F:Interchangeable by set, K:Q'ty Change

Remarks
(1)Cabin specification.
(2)Attach the No.11A, 11B & 11C label to this part.
(3)Attach the No.17A label to this part.
(4)Label is not illustrated.

Copyright (C) YANMAR CO., LTD. All RightsReserved.

Fig.14. ELECTRIC PART(AUTO LEVELLER)

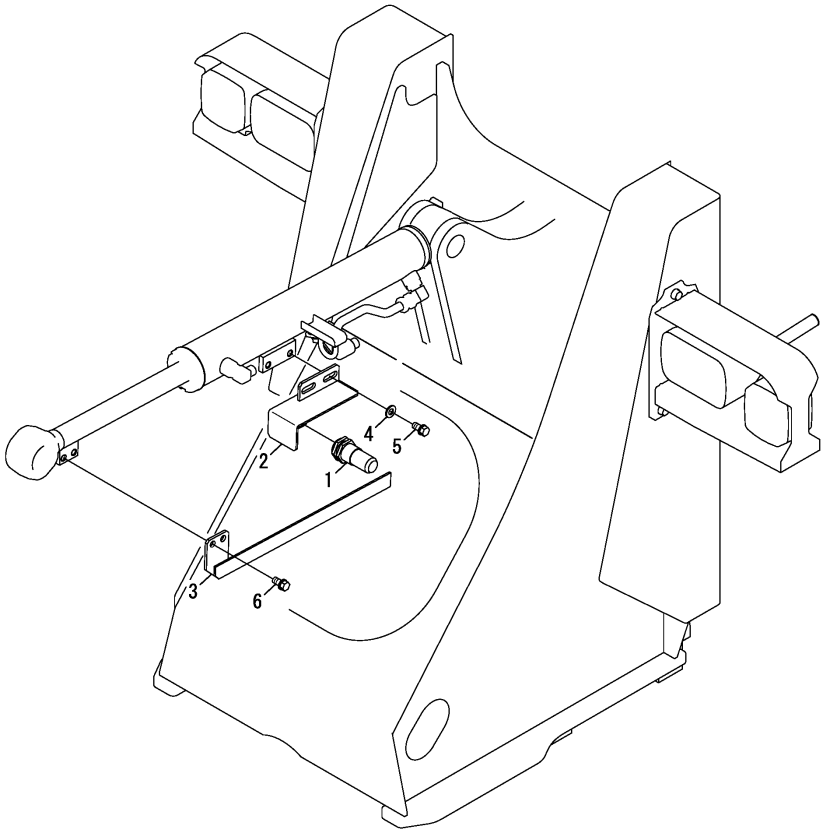

(A)=V4-6(US) (D)=
(B)=V4-6(AS) (E)=
(C)=V4-6(NZ) (F)=

No.	Lev.	Parts No.	Description	Q'ty (A)	(B)	(C)	(D)	(E)	(F)	I	R
1	1	172538-17450	SENSOR, PROXIMITY	1	1	1					
2	1	172524-17522-2	STAY ASSY, SENSOR	1	1	1					
2-1	1	172524-17522-N	STAY ASSY, SENSOR	1	1	1				S	
	(A=M61501)	(B=M61501)	(C=M61501)								
3	1	172538-17800-2	BAR ASSY, SENSING	1	1	1					
3-1	1	172538-17800-N	BAR ASSY, SENSING	1	1	1				S	
	(A=M61501)	(B=M61501)	(C=M61501)								
4	1	22137-100000	WASHER, 10	2	2	2					
5	1	26013-100202	BOLT, M10X 20	2	2	2					
6	1	26013-100202	BOLT, M10X 20	2	2	2					

N:Old $\xleftrightarrow[\text{No}]{\text{Yes}}$ New, Q:Old $\xleftrightarrow[\text{Yes}]{\text{No}}$ New, R:Old $\xleftrightarrow[\text{Yes}]{\text{Yes}}$ New, S:Old $\xleftrightarrow[\text{No}]{\text{No}}$ New, W:Add, Z:Discontinued, F:Interchangeable by set, K:Q'ty Change

Copyright (C) YANMAR CO., LTD. All RightsReserved.

Fig.15. CLUTCH HOUSING & DRIVE SHAFT

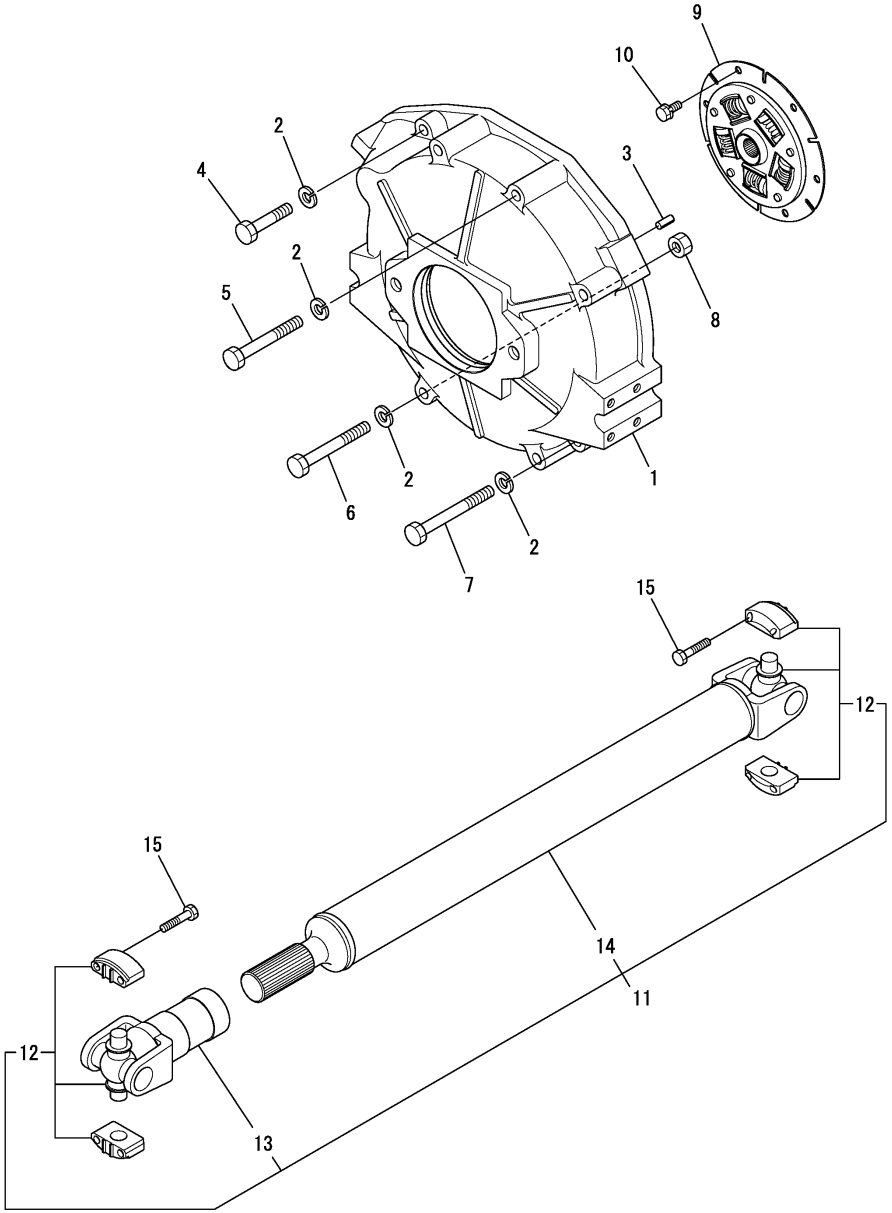

(A)=V4-6(US) (D)=
(B)=V4-6(AS) (E)=
(C)=V4-6(NZ) (F)=

No.	Lev.	Parts No.	Description	Q'ty (A)	(B)	(C)	(D)	(E)	(F)	I	R
1	1	172534-21210-1	COVER, FLYWHEEL	1	1	1					
2	1	22217-120000	WASHER, SPRING 12	8	8	8					
3	1	22351-080020	PIN, SPRING 8.0X20	2	2	2					
4	1	26116-120602	BOLT, M12X 60 PLATED	1	1	1					
5	1	26116-120952	BOLT, M12X 95 PLATED	2	2	2					
6	1	26116-121002	BOLT, M12X100 PLATED	2	2	2					
7	1	26116-121102	BOLT, M12X110 PLATED	3	3	3					
8	1	26716-120002	NUT, M12	2	2	2					
9	1	172534-21510	DISK, DAMPER	1	1	1					
10	1	26013-080162	BOLT, M8X 16	6	6	6					
11	1	172528-21800	SHAFT ASSY,PROPELLER	1	1	1					
12	2	172527-21810	JOINT, UNIVERSAL	2	2	2					
13	2	172528-21820	YOKE,SLEEVE	1	1	1					
14	2	172528-21830	YOKE, SHAFT	1	1	1					
15	1	26116-080402	BOLT, M8X 40 PLATED	8	8	8					

N:Old $\overset{\text{Yes}}{\underset{\text{No}}{\leftrightarrow}}$ New, Q:Old $\overset{\text{No}}{\underset{\text{Yes}}{\leftrightarrow}}$ New, R:Old $\overset{\text{Yes}}{\underset{\text{Yes}}{\leftrightarrow}}$ New, S:Old $\overset{\text{No}}{\underset{\text{No}}{\leftrightarrow}}$ New, W:Add, Z:Discontinued, F:Interchangeable by set, K:Q'ty Change

Copyright (C) YANMAR CO., LTD. All RightsReserved.

Fig.16. TRANSFER CASE

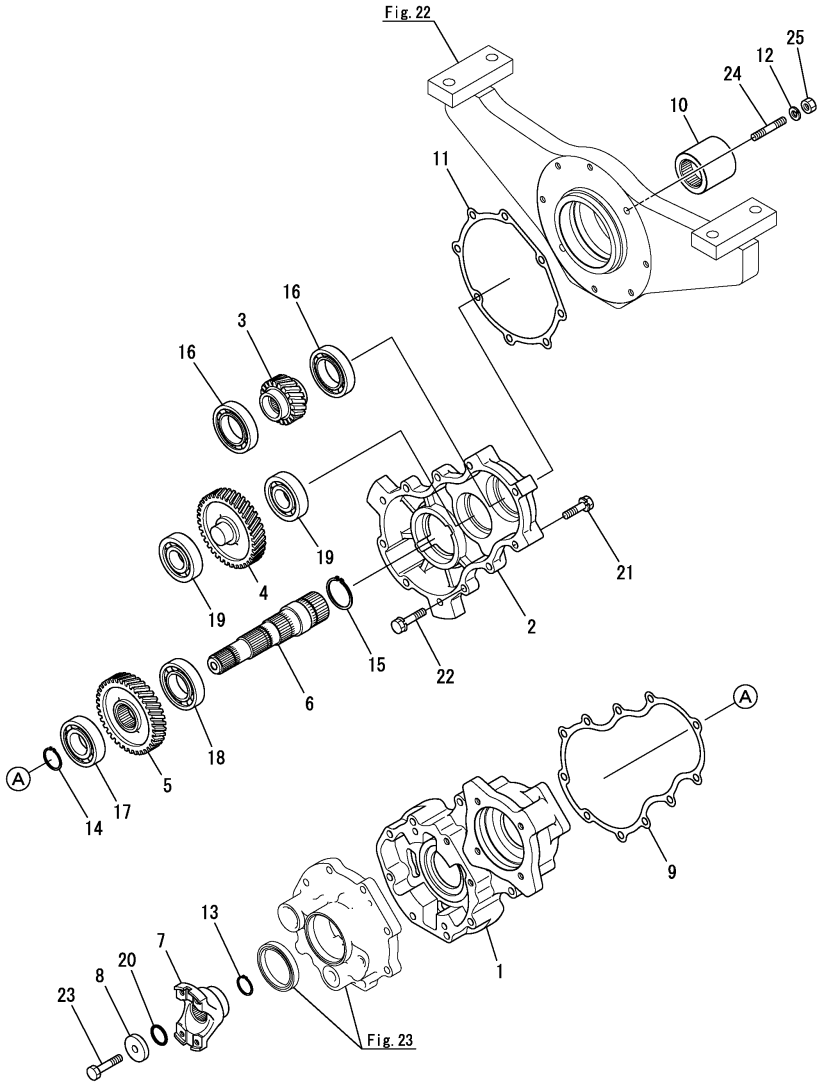

(A)=V4-6(US) (D)=
(B)=V4-6(AS) (E)=
(C)=V4-6(NZ) (F)=

No.	Lev.	Parts No.	Description	Q'ty (A)	(B)	(C)	(D)	(E)	(F)	I	R
1	1	187B01-25710	CASE	1	1	1					
2	1	172527-25720	CASE	1	1	1					
3	1	187B01-25910	GEAR, INPUT Z=26T	1	1	1					
4	1	172527-25920	GEAR, IDLE Z=26	1	1	1					
5	1	172527-25930	GEAR, N=42	1	1	1					
6	1	172527-25770	SHAFT, BRAKE	1							
6-1	1	172527-25771	SHAFT, BRAKE	1	1	1				F	1
	(A=MZZZZZ)										
7	1	172527-25790	FLANGE, JOINT	1	1	1					
8	1	172527-25810	WASHER, 11X40.5X9	1	1	1					
9	1	172527-25820	GASKET	1	1	1					
10	1	172527-25840	COUPLING	1							
10-1	1	172527-25841	COUPLING, SPLINE	1	1	1				F	1
	(A=MZZZZZ)										
11	1	172527-25850	GASKET	1	1	1					
12	1	22217-100000	WASHER, SPRING 10	2	2	2					
13	1	22242-000300	RING, 30	1	1	1					
14	1	22242-000350	RING, 35	1	1	1					
15	1	22242-000450	RING, 45	1	1	1					
16	1	24101-060094	BEARING, BALL 6009	2	2	2					
17	1	24101-062074	BEARING, BALL 6207	1	1	1					
18	1	24101-062084	BEARING, BALL 6208	1	1	1					
19	1	24101-063064	BEARING, BALL 6306	2	2	2					
20	1	24311-000240	O-RING, 1AP24.0	1	1	1					
21	1	26013-100452	BOLT, M10X 45	3	3	3					
22	1	26013-100452	BOLT, M10X 45	6	6	6					
23	1	26156-100502	BOLT, M10X50 PLATED	1	1	1					
24	1	26216-100452	STUD, M10X 45	2	2	2					
25	1	26716-100002	NUT, M10	2	2	2					

Remarks
(1)Interchangeable by simultaneous replacement with No.6-1, 10-1.

N:Old $\overset{\text{Yes}}{\underset{\text{No}}{\leftrightarrow}}$ New, Q:Old $\overset{\text{No}}{\underset{\text{Yes}}{\leftrightarrow}}$ New, R:Old $\overset{\text{Yes}}{\underset{\text{Yes}}{\leftrightarrow}}$ New, S:Old $\overset{\text{No}}{\underset{\text{No}}{\leftrightarrow}}$ New, W:Add, Z:Discontinued, F:Interchangeable by set, K:Q'ty Change

Copyright (C) YANMAR CO., LTD. All RightsReserved.

Fig.17. SPIRAL BEVEL GEAR

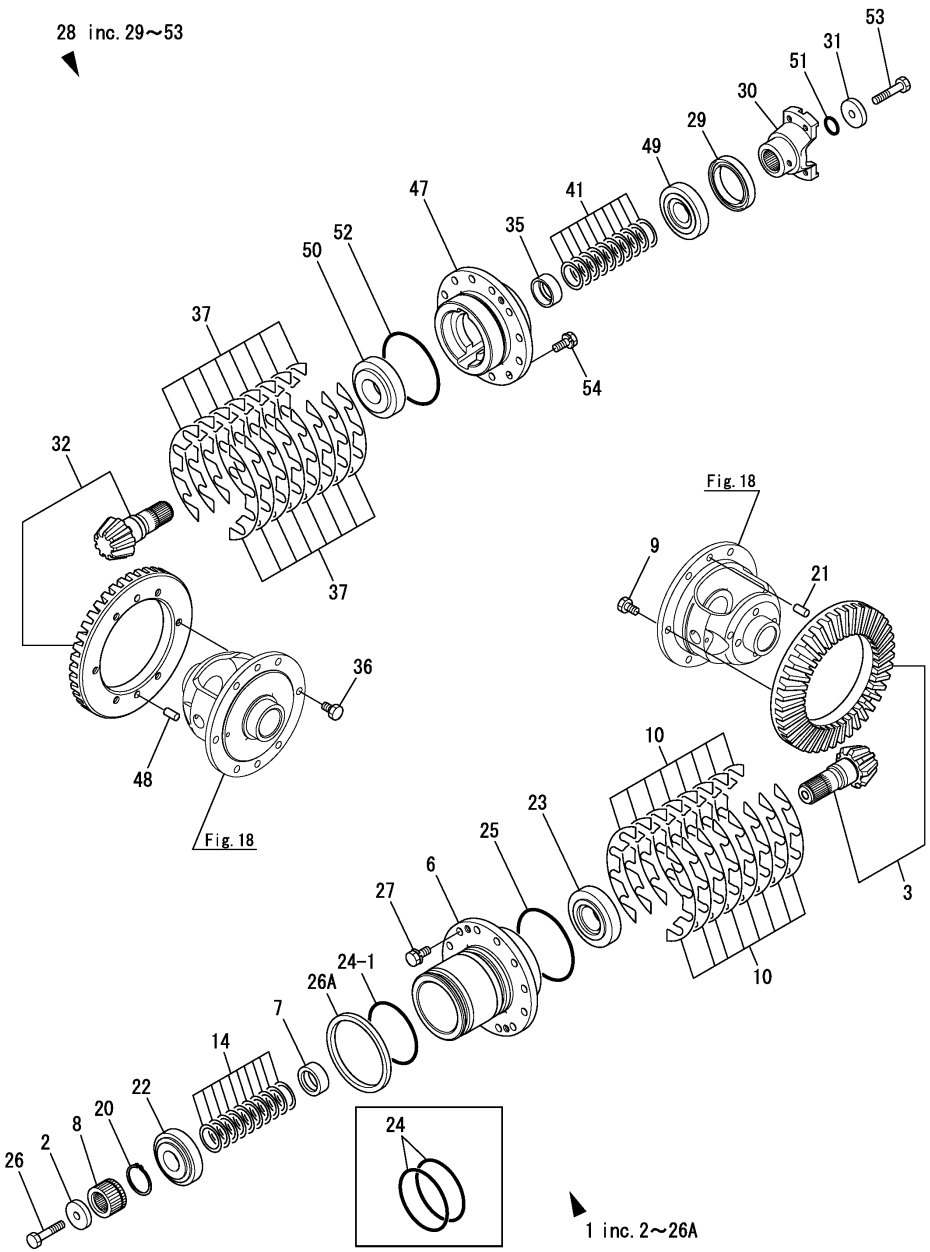

(A)=V4-6(US) (D)=
(B)=V4-6(AS) (E)=
(C)=V4-6(NZ) (F)=

No.	Lev.	Parts No.	Description	Q'ty (A)	(B)	(C)	(D)	(E)	(F)	I	R
1	1	172528-26300	GEAR ASSY, BEVEL	1	1	1					
2	2	172527-25810	WASHER, 11X40.5X9	1	1	1					
3	2	172528-26210	GEAR SET, BEVEL	1	1	1					
6	2	172527-26041	HOLDER, BEARING	1	1	1					
7	2	172527-26050	COLLAR	1	1	1					
8	2	172527-26060	COLLAR, SPLINE	1	1	1					
9	2	172527-26070	BOLT, M10X18	6	6	6					
10	2	172527-26080	SHIM SET	1	1	1					
14	2	172527-26130	SHIM SET	1	1	1					
20	2	22242-000450	RING, 45	1	1	1					
21	2	22312-100180	PIN, PARALLEL M10X18	2	2	2					
22	2	24143-303060	BEARING, 30306D	1	1	1					
23	2	24144-303070	BEARING, 30307DH	1	1	1					
24	2	24311-000900	O-RING, 1AP90.0	2	2	2					
24-1	2	24311-000900	O-RING, 1AP90.0	1	1	1				K	
	(A=MZZZZZ)										
25	2	24321-001050	O-RING, 1AG105.0	1	1	1					
26	2	26156-100502	BOLT, M10X50 PLATED	1	1	1					
26A	1	187B01-26100	SEAL, DLI100X115X8	1	1	1				W	
	(A=MZZZZZ)										
27	1	26013-100252	BOLT, M10X 25	12	12	12					
28	1	172528-26400	GEAR ASSY, BEVEL	1	1	1					
29	2	194447-14140	SEAL, OIL TC6Y577512	1	1	1					
30	2	172527-25790	FLANGE, JOINT	1	1	1					
31	2	172527-25810	WASHER, 11X40.5X9	1	1	1					
32	2	172528-26210	GEAR SET, BEVEL	1	1	1					
35	2	172527-26050	COLLAR	1	1	1					
36	2	172527-26070	BOLT, M10X18	6	6	6					
37	2	172527-26080	SHIM SET	1	1	1					
41	2	172527-26130	SHIM SET	1	1	1					
47	2	172527-26310	HOLDER, BEARING	1	1	1					
48	2	22312-100180	PIN, PARALLEL M10X18	2	2	2					
49	2	24143-303060	BEARING, 30306D	1	1	1					
50	2	24144-303070	BEARING, 30307DH	1	1	1					
51	2	24311-000240	O-RING, 1AP24.0	1	1	1					
52	2	24321-001050	O-RING, 1AG105.0	1	1	1					
53	2	26156-100502	BOLT, M10X50 PLATED	1	1	1					
54	1	26013-100252	BOLT, M10X 25	12	12	12					

N:Old $\overset{\text{Yes}}{\underset{\text{No}}{\leftrightarrow}}$ New, Q:Old $\overset{\text{No}}{\underset{\text{Yes}}{\leftrightarrow}}$ New, R:Old $\overset{\text{Yes}}{\underset{\text{Yes}}{\leftrightarrow}}$ New, S:Old $\overset{\text{No}}{\underset{\text{No}}{\leftrightarrow}}$ New, W:Add, Z:Discontinued, F:Interchangeable by set, K:Q'ty Change

Copyright (C) YANMAR CO., LTD. All RightsReserved.

Fig.18. DIFFERENTIAL GEAR

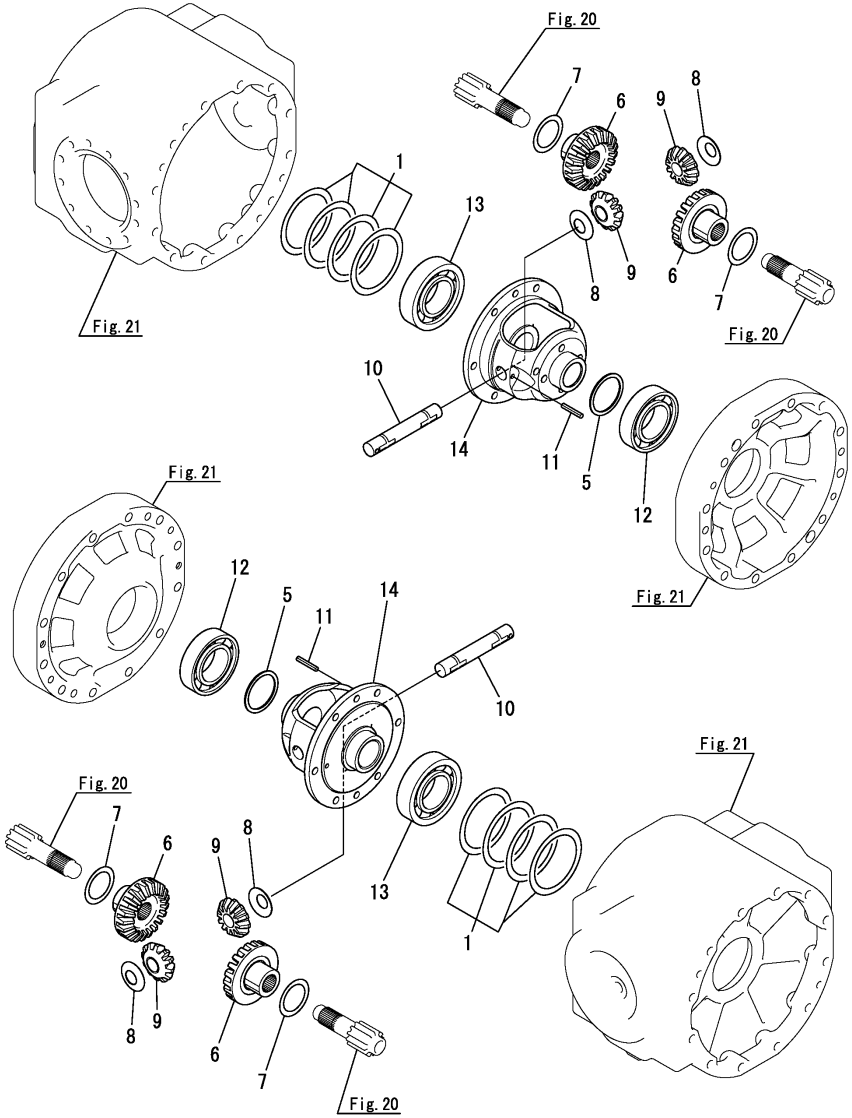

(A)=V4-6(US) (D)=
(B)=V4-6(AS) (E)=
(C)=V4-6(NZ) (F)=

No.	Lev.	Parts No.	Description	Q'ty (A)	(B)	(C)	(D)	(E)	(F)	I	R
1	1	794251-13910	SHIM SET, GEAR	4	4	4					
5	1	172528-26330	WASHER, W57X68X2	2	2	2					
6	1	194320-31560	GEAR, DIFF.SIDE	4	4	4					
7	1	198320-31530	LINER, SIDE GEAR	4	4	4					
8	1	198320-31630	LINER, DIFF.PINION	4	4	4					
9	1	198320-31570	PINION, DIFFERENTIAL	4	4	4					
10	1	198320-31820	SHAFT, DIFF.PINION	2	2	2					
11	1	22351-060050	PIN, SPRING 6.0X50	2	2	2					
12	1	24101-060114	BEARING, BALL 6011	2	2	2					
13	1	24101-062114	BEARING, BALL 6211	2	2	2					
14	1	172528-26320	CASE, DIFFERENTIAL	2	2	2					

N:Old $\xleftarrow[\text{No}]{\text{Yes}}$ New, Q:Old $\xleftarrow[\text{Yes}]{\text{No}}$ New, R:Old $\xleftarrow[\text{Yes}]{\text{Yes}}$ New, S:Old $\xleftarrow[\text{No}]{\text{No}}$ New, W:Add, Z:Discontinued, F:Interchangeable by set, K:Q'ty Change

Copyright (C) YANMAR CO., LTD. All RightsReserved.

Fig.19. AXLE SHAFT

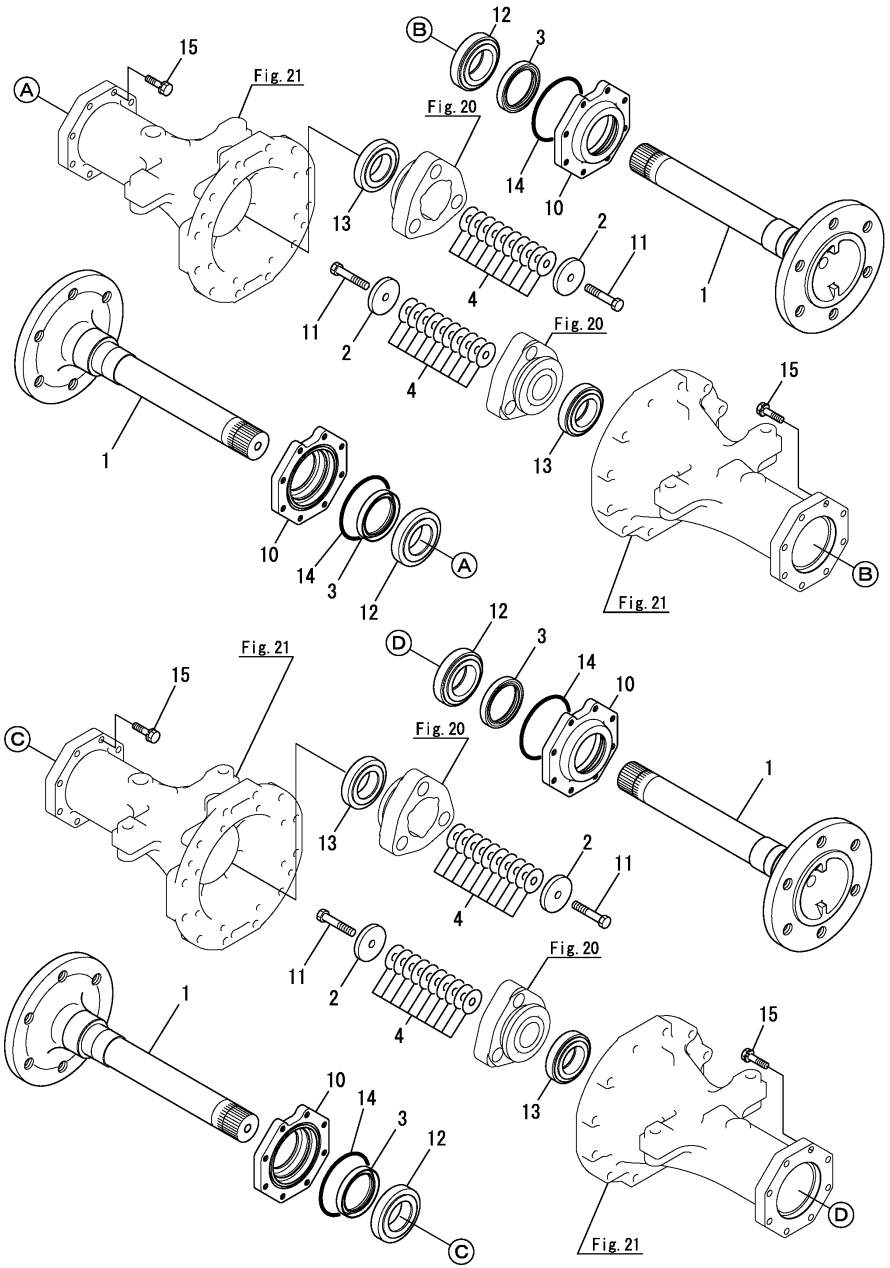

(A)=V4-6(US) (D)=
(B)=V4-6(AS) (E)=
(C)=V4-6(NZ) (F)=

No.	Lev.	Parts No.	Description	Q'ty (A)	(B)	(C)	(D)	(E)	(F)	I	R
1	1	172528-26710	SHAFT, AXLE	4	4	4					
2	1	172527-26730	WASHER, W13X63X9	4	4	4					
3	1	172520-26740	SEAL TC6Y 70X88X12	4	4	4					
4	1	172527-26740	SHIM SET	4	4	4					
10	1	172520-26780	COVER, AXLE	4	4	4					
11	1	172527-26910	BOLT, M12X65	4	4	4					
12	1	24141-302110	BEARING, 30211	4	4	4					
13	1	24141-320110	BEARING, 32011	4	4	4					
14	1	24321-001100	O-RING, 1AG110.0	4	4	4					
15	1	26013-100402	BOLT, M10X 40	32	32	32					

N:Old $\overset{\text{Yes}}{\underset{\text{No}}{\leftrightarrow}}$ New, Q:Old $\overset{\text{No}}{\underset{\text{Yes}}{\leftrightarrow}}$ New, R:Old $\overset{\text{Yes}}{\underset{\text{Yes}}{\leftrightarrow}}$ New, S:Old $\overset{\text{No}}{\underset{\text{No}}{\leftrightarrow}}$ New, W:Add, Z:Discontinued, F:Interchangeable by set, K:Q'ty Change

Copyright (C) YANMAR CO., LTD. All RightsReserved.

Fig.20. FINAL GEAR

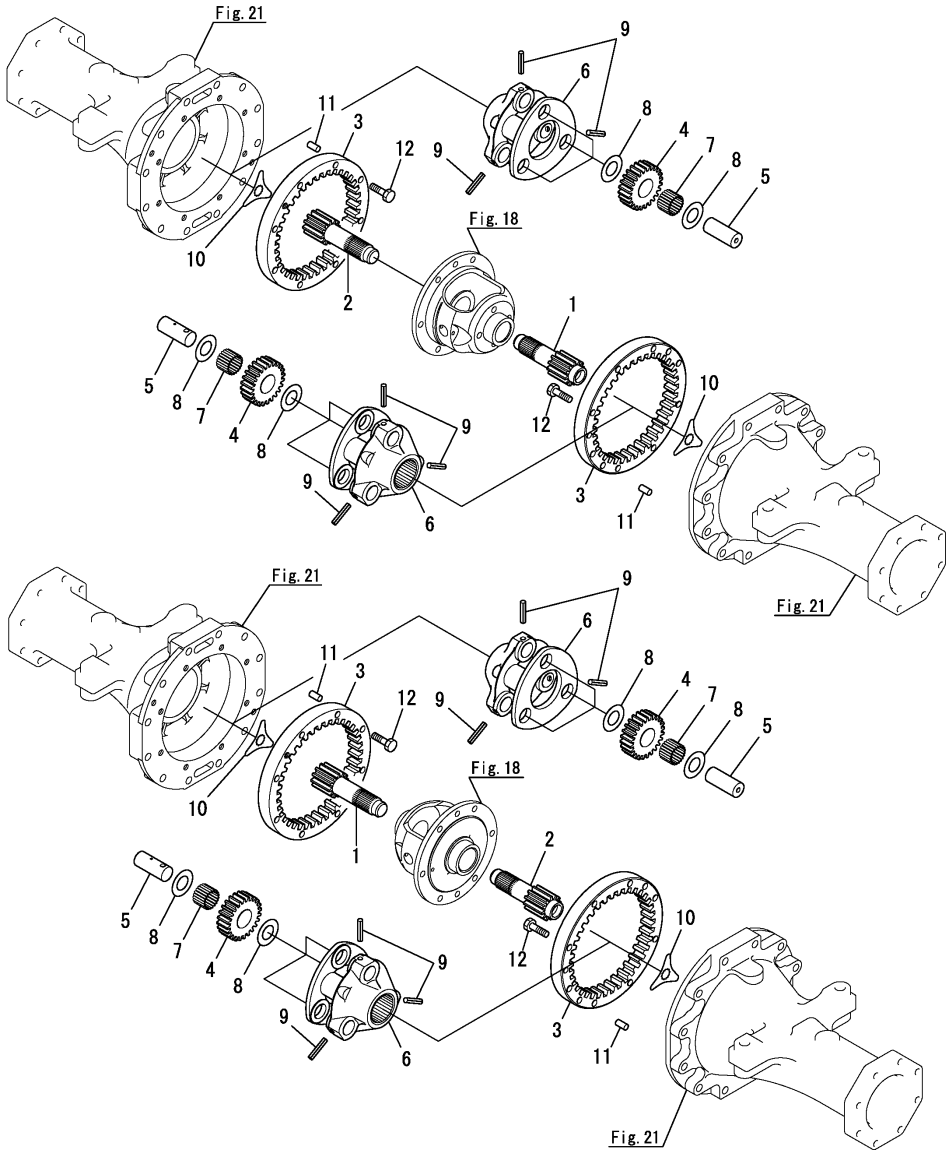

(A)=V4-6(US) (D)=
(B)=V4-6(AS) (E)=
(C)=V4-6(NZ) (F)=

No.	Lev.	Parts No.	Description	Q'ty (A)	(B)	(C)	(D)	(E)	(F)	I	R
1	1	172528-28310	GEAR, SUN	2	2	2					
2	1	172528-28320	GEAR, SUN	2	2	2					
3	1	172528-28330	GEAR, INTERNAL	4	4	4					
4	1	198320-33540	PINION, PLANETARY	12	12	12					
5	1	198320-33550	SHAFT, PLANETARY	12	12	12					
6	1	198320-33570	CARRIER, PLANETARY	4	4	4					
7	1	198320-33560	NEEDLE, 4.5X31.8	12	12	12					
8	1	198320-33620	WASHER, 26X42X1	24	24	24					
9	1	22351-080040	PIN, SPRING 8.0X40	12	12	12					
10	1	194640-34150	WASHER, THRUST	4	4	4					
11	1	22312-100200	PIN, PARALLEL M10X20	8						Z	
	(A=FROM 1ST)										
11-1	1	22312-100180	PIN, PARALLEL M10X18	8	8	8				W	
	(A=FROM 1ST)										
12	1	26116-100452	BOLT, M10X 45 PLATED	32	32	32					

N:Old $\xleftarrow[\text{No}]{\text{Yes}}$ New, Q:Old $\xleftarrow[\text{Yes}]{\text{No}}$ New, R:Old $\xleftarrow[\text{Yes}]{\text{Yes}}$ New, S:Old $\xleftarrow[\text{No}]{\text{No}}$ New, W:Add, Z:Discontinued, F:Interchangeable by set, K:Q'ty Change

Copyright (C) YANMAR CO., LTD. All RightsReserved.

Fig.21. AXLE SHAFT CASE

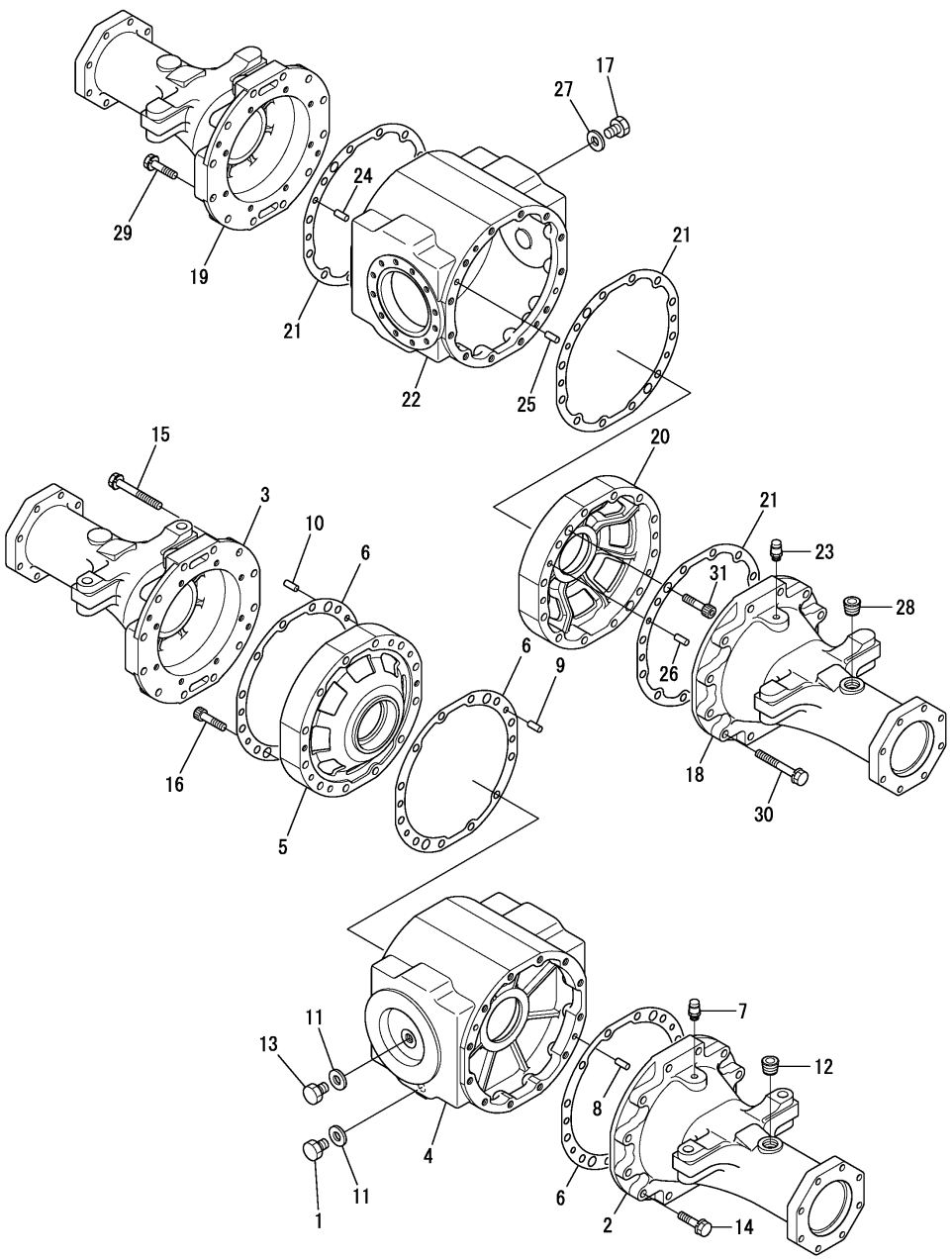

(A)=V4-6(US) (D)=
(B)=V4-6(AS) (E)=
(C)=V4-6(NZ) (F)=

No.	Lev.	Parts No.	Description	Q'ty (A)	(B)	(C)	(D)	(E)	(F)	I	R
1	1	177035-02920	PLUG, MAGNET M16X1.5	1	1	1					
2	1	172528-31110	CASE, AXLE	1	1	1					
3	1	172528-31120	CASE, AXLE	1	1	1					
4	1	172527-31150	CASE	1	1	1					
5	1	172527-31160	HOLDER, BEARING	1	1	1					
6	1	172527-31170	GASKET, AXLE CASE	3	3	3					
7	1	172527-35900	BREATHER(ACCEL.	1	1	1					
8	1	22312-100200	PIN, PARALLEL M10X20	2						Z	
	(A=FROM 1ST)										
8-1	1	22312-100180	PIN, PARALLEL M10X18	2	2	2				W	
	(A=FROM 1ST)										
9	1	22312-100200	PIN, PARALLEL M10X20	2						Z	
	(A=FROM 1ST)										
9-1	1	22312-100180	PIN, PARALLEL M10X18	2	2	2				W	
	(A=FROM 1ST)										
10	1	22312-100200	PIN, PARALLEL M10X20	2						Z	
	(A=FROM 1ST)										
10-1	1	22312-100180	PIN, PARALLEL M10X18	2	2	2				W	
	(A=FROM 1ST)										
11	1	23414-160000	GASKET, 16X1.0	2	2	2					
12	1	23871-060000	PLUG, R06	1	1	1					
13	1	23887-160002	PLUG, 16	1	1	1					
14	1	26013-120502	BOLT, M12X 50	12	12	12					
15	1	26013-120952	BOLT, M12X 95	12	12	12					
16	1	26450-100452	BOLT, M10X 45	2	2	2					
17	1	177035-02920	PLUG, MAGNET M16X1.5	1	1	1					
18	1	172528-31130	CASE, AXLE	1	1	1					
19	1	172528-31140	CASE, AXLE	1	1	1					
20	1	172527-31160	HOLDER, BEARING	1	1	1					
21	1	172527-31170	GASKET, AXLE CASE	3	3	3					
22	1	172527-31250	CASE	1	1	1					
23	1	172527-35900	BREATHER(ACCEL.	1	1	1					
24	1	22312-100200	PIN, PARALLEL M10X20	2						Z	
	(A=FROM 1ST)										
24-1	1	22312-100180	PIN, PARALLEL M10X18	2	2	2				W	
	(A=FROM 1ST)										
25	1	22312-100200	PIN, PARALLEL M10X20	2						Z	
	(A=FROM 1ST)										
25-1	1	22312-100180	PIN, PARALLEL M10X18	2	2	2				W	
	(A=FROM 1ST)										
26	1	22312-100200	PIN, PARALLEL M10X20	2						Z	
	(A=FROM 1ST)										
26-1	1	22312-100180	PIN, PARALLEL M10X18	2	2	2				W	
	(A=FROM 1ST)										
27	1	23414-160000	GASKET, 16X1.0	1	1	1					
28	1	23871-060000	PLUG, R06	1	1	1					
29	1	26013-120502	BOLT, M12X 50	12	12	12					
30	1	26013-120952	BOLT, M12X 95	12	12	12					
31	1	26450-100452	BOLT, M10X 45	2	2	2					

N:Old $\overset{\text{Yes}}{\underset{\text{No}}{\leftrightarrows}}$ New, Q:Old $\overset{\text{No}}{\underset{\text{Yes}}{\leftrightarrows}}$ New, R:Old $\overset{\text{Yes}}{\underset{\text{Yes}}{\leftrightarrows}}$ New, S:Old $\overset{\text{No}}{\underset{\text{No}}{\leftrightarrows}}$ New, W:Add, Z:Discontinued, F:Interchangeable by set, K:Q'ty Change

Copyright (C) YANMAR CO., LTD. All RightsReserved.

Fig.22. AXLE SHAFT CASE SUPPORT

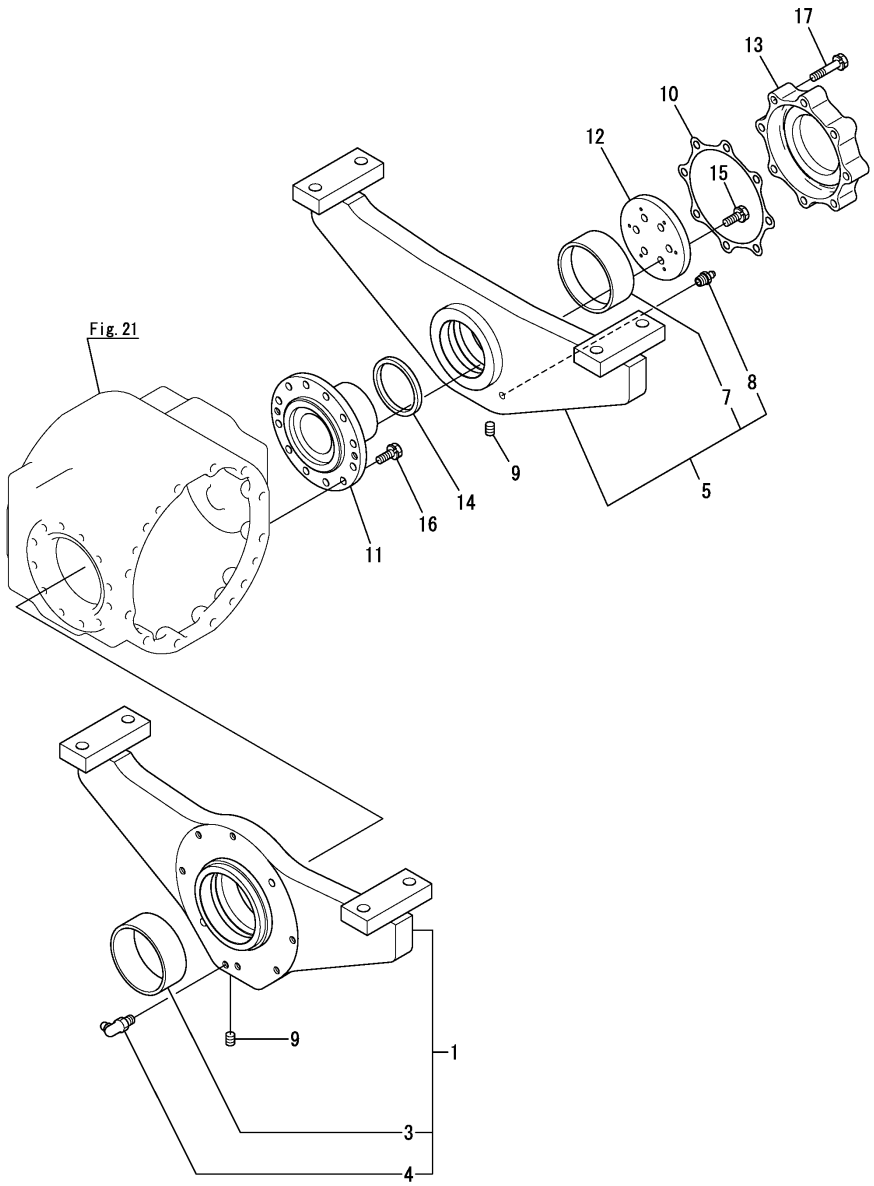

(A)=V4-6(US) (D)=
(B)=V4-6(AS) (E)=
(C)=V4-6(NZ) (F)=

No.	Lev.	Parts No.	Description	Q'ty (A)	(B)	(C)	(D)	(E)	(F)	I	R
1	1	172527-33100	HOLDER ASSY, AXLE	1							
1-1	1	172527-33101	HOLDER ASSY, AXLE	1	1	1				S	
	(A=MZZZZZ)										
3	2	172513-52541	BUSH	1	1	1					
4	2	24764-040000	NIPPLE, GREASE B	1	1	1					
5	1	172527-33201	HOLDER ASSY, AXLE R	1	1	1					
7	2	172527-33260	BUSH, 85X40	1	1	1					
8	2	24764-020000	NIPPLE, GREASE R1/8	1	1	1					
9	1	23871-010000	PLUG, R01	2	2	2					
10	1	172527-31190	GASKET	1	1	1					
11	1	172527-33511	PIN, SWING	1	1	1					
12	1	172527-33520	PLATE	1	1	1					
13	1	172527-33530	COVER	1	1	1					
14	1	24430-850009	SEAL, OIL VC851009	1	1	1					
15	1	26013-100252	BOLT, M10X 25	6	6	6					
16	1	26013-100252	BOLT, M10X 25	12	12	12					
17	1	26013-100502	BOLT, M10X 50	8	8	8					

N:Old $\overset{\text{Yes}}{\underset{\text{No}}{\leftrightarrows}}$ New, Q:Old $\overset{\text{No}}{\underset{\text{Yes}}{\leftrightarrows}}$ New, R:Old $\overset{\text{Yes}}{\underset{\text{Yes}}{\leftrightarrows}}$ New, S:Old $\overset{\text{No}}{\underset{\text{No}}{\leftrightarrows}}$ New, W:Add, Z:Discontinued, F:Interchangeable by set, K:Q'ty Change

Copyright (C) YANMAR CO., LTD. All RightsReserved.

Fig.23. CENTER BRAKE

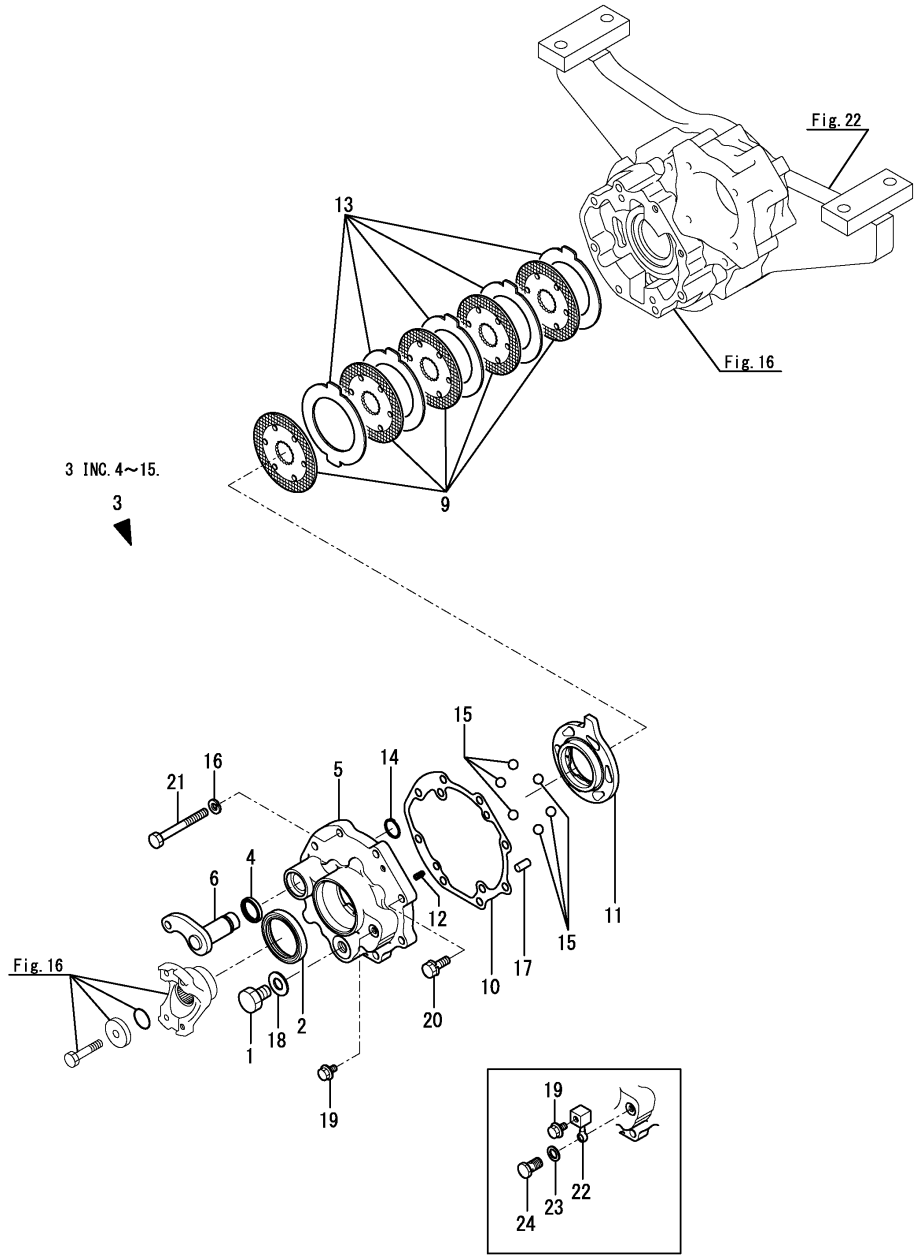

(A)=V4-6(US) (D)=
(B)=V4-6(AS) (E)=
(C)=V4-6(NZ) (F)=

No.	Lev.	Parts No.	Description	Q'ty (A)	(B)	(C)	(D)	(E)	(F)	I	R
1	1	177035-02920	PLUG, MAGNET M16X1.5	1	1	1					
2	1	194447-14140	SEAL, OIL TC6Y577512	1	1	1					
3	1	172527-34400	BRAKE ASSY	1	1	1					
4	2	198290-32750	SEAL, OIL TC253506	1	1	1					
5	2	172527-34410	CASE, BRAKE	1	1	1					
6	2	172527-34420	CAMSHAFT, BRAKE	1	1	1					
9	2	172527-34430	DISK, FRICTION	5	5	5					
10	2	172527-34440	GASKET, CASE	1	1	1					
11	2	198010-36310	ACTUATOR, L	1	1	1					
12	2	194205-36320	SPRING, ACTUATOR	2	2	2					
13	2	187B03-36390	PLATE 118, STEEL	5	5	5					
14	2	22242-000250	RING, 25	1	1	1					
15	2	24190-160001	BALL, STEEL 1/2	6	6	6					
16	1	22217-100000	WASHER, SPRING 10	6	6	6					
17	1	22312-100200	PIN, PARALLEL M10X20	2						Z	
	(A=FROM 1ST)										
17-1	1	22312-100180	PIN, PARALLEL M10X18	2	2	2				W	
	(A=FROM 1ST)										
18	1	23414-160000	GASKET, 16X1.0	1	1	1					
19	1	23490-080002	PLUG, 8	1	1	1					
20	1	26013-100302	BOLT, M10X 30	2	2	2					
21	1	26116-100902	BOLT, M10X 90 PLATED	6	6	6					
22	1	172527-34470	JOINT	1						Z	
	(A=FROM 1ST)										
23	1	23414-080000	GASKET, 8X1.0	2						Z	
	(A=FROM 1ST)										
24	1	23857-030000	BOLT, JOINT 3	1						Z	
	(A=FROM 1ST)										

N:Old $\xleftarrow[\text{No}]{\text{Yes}}$ New, Q:Old $\xleftarrow[\text{Yes}]{\text{No}}$ New, R:Old $\xleftarrow[\text{Yes}]{\text{Yes}}$ New, S:Old $\xleftarrow[\text{No}]{\text{No}}$ New, W:Add, Z:Discontinued, F:Interchangeable by set, K:Q'ty Change

Copyright (C) YANMAR CO., LTD. All RightsReserved.

Fig.24. TIRE

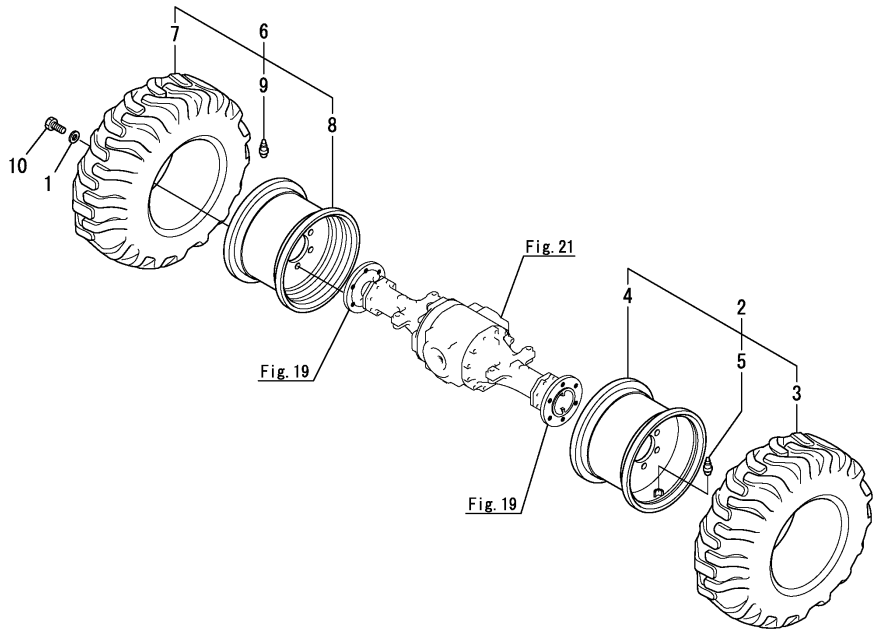

(A)=V4-6(US) (D)=
(B)=V4-6(AS) (E)=
(C)=V4-6(NZ) (F)=

No.	Lev.	Parts No.	Description	Q'ty (A)	(B)	(C)	(D)	(E)	(F)	I	R
1	1	172520-31210	WASHER	24	24	24					
2	1	172539-35210	TIRE ASSY, L	2							
2-1	1	172539-35211	TIRE ASSY, L	2	2	2				R	
	(A=M/#60716)										
2-2	1	172539-35510	TIRE ASSY, L	2	2	2				S	
	(A=M61501)	(B=M61501)	(C=M61501)								
3	2	172522-35130	TIRE	2	2	2					
4	2	172539-35250-1	DISK	2							
4-1	2	172539-35251	DISK	2	2	2				R	
	(A=M/#60716)										
4-2	2	172539-35550	DISK	2	2	2				S	
	(A=M61501)	(B=M61501)	(C=M61501)								
5	2	172513-35161	VALVE	2	2	2					
6	1	172539-35220	TIRE ASSY	2							
6-1	1	172539-35221	TIRE ASSY	2	2	2				R	
	(A=M/#60716)										
6-2	1	172539-35520	TIRE ASSY, R	2	2	2				S	
	(A=M61501)	(B=M61501)	(C=M61501)								
7	2	172522-35130	TIRE	2	2	2					
8	2	172539-35250-1	DISK	2							
8-1	2	172539-35251	DISK	2	2	2				R	
	(A=M/#60716)										
8-2	2	172539-35550	DISK	2	2	2				S	
	(A=M61501)	(B=M61501)	(C=M61501)								
9	2	172513-35161	VALVE	2	2	2					
10	1	26156-200352	BOLT, M20X 35 PLATED	24	24	24					

N:Old ◄Yes/No► New, Q:Old ◄No/Yes► New, R:Old ◄Yes/Yes► New, S:Old ◄No/No► New, W:Add, Z:Discontinued, F:Interchangeable by set, K:Q'ty Change

Copyright (C) YANMAR CO., LTD. All RightsReserved.

Fig.25. BRAKE PEDAL(LEFT)

(A)=V4-6(US)
(B)=V4-6(AS)
(C)=V4-6(NZ)
(D)=
(E)=
(F)=

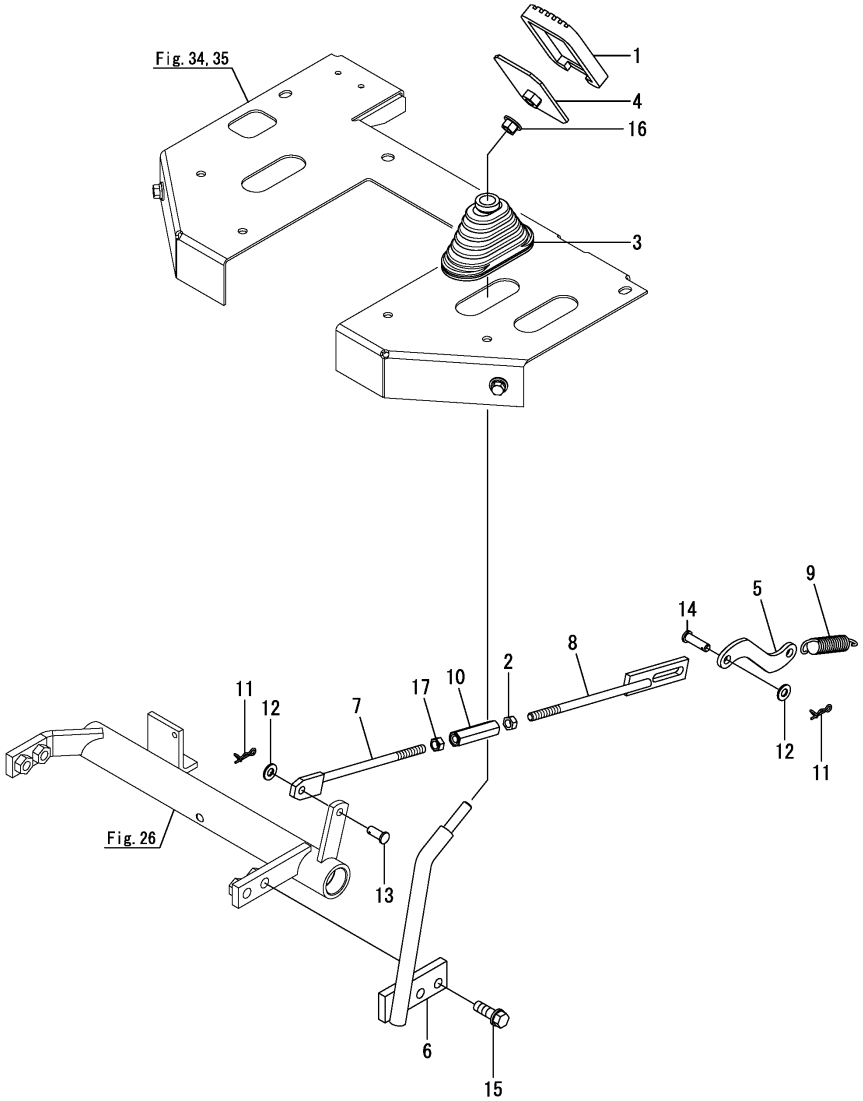

No.	Lev.	Parts No.	Description	Q'ty (A)	(B)	(C)	(D)	(E)	(F)	I	R
1	1	172649-12390	PEDAL PAD	1	1	1					
2	1	194990-20170	NUT, M8	1	1	1					
3	1	172141-41340	BOOT	1	1	1					
4	1	172538-42000-1	PLATE ASSY,PEDAL(49)	1	1	1					
5	1	172538-42030	PLATE,INCHING (49)	1	1	1					
6	1	172538-42050	PEDAL, INCHING	1	1	1					
7	1	172538-42100	ROD A,INCHING ASSY	1	1	1					
8	1	172538-42150	ROD B,INCHING ASSY	1	1	1					
9	1	172524-42190	SPRING, RETURN	1	1	1					
10	1	172165-46860	TURNBUCKLE ASSY	1	1	1					
11	1	1C6281-52320	PIN, SNAP 8	2	2	2					
12	1	22137-080000	WASHER, 8	2	2	2					
13	1	22486-080160	PIN, H 8X 16	1	1	1					
14	1	22486-080240	PIN, H 8X 24	1	1	1					
15	1	26013-100302	BOLT, M10X 30	2	2	2					
16	1	26051-100002	NUT, M10	1	1	1					
17	1	26716-080002	NUT, M8	1	1	1					

N:Old $\frac{\text{Yes}}{\text{No}}$ New, Q:Old $\frac{\text{No}}{\text{Yes}}$ New, R:Old $\frac{\text{Yes}}{\text{Yes}}$ New, S:Old $\frac{\text{No}}{\text{No}}$ New, W:Add, Z:Discontinued, F:Interchangeable by set, K:Q'ty Change

Copyright (C) YANMAR CO., LTD. All RightsReserved.

Fig.26. BRAKE PEDAL(RIGHT)

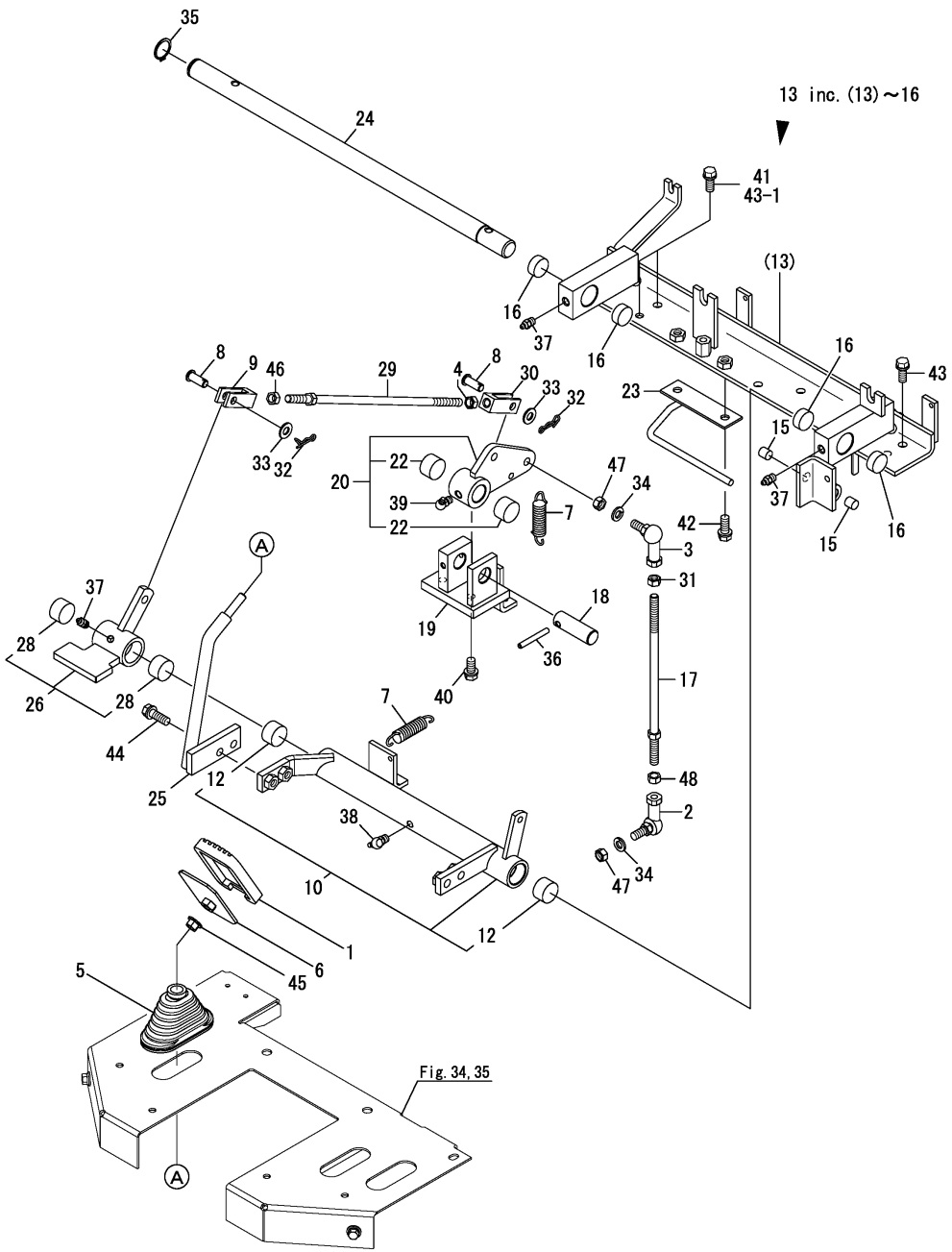

(A)=V4-6(US) (D)=
(B)=V4-6(AS) (E)=
(C)=V4-6(NZ) (F)=

No.	Lev.	Parts No.	Description	Q'ty (A)	(B)	(C)	(D)	(E)	(F)	I	R
1	1	172649-12390	PEDAL PAD	1	1	1					
2	1	1A6210-16150	BALL, LINK BL10D	1	1	1					
3	1	1A6210-16160	BALL, LINK BL100L	1	1	1					
4	1	194150-22480	NUT, M10	1	1	1					
5	1	172141-41340	BOOT	1	1	1					
6	1	172538-42000-1	PLATE ASSY,PEDAL(49)	1	1	1					
7	1	172524-42190	SPRING, RETURN	2	2	2					
8	1	172527-42190	PIN, 10X22	2	2	2					
9	1	172527-42200	JOINT	1	1	1					
10	1	172538-42501-1	CAM ASSY, LINK	1	1	1					
12	2	24550-025150	BUSH, 25X15	2	2	2					
13	1	172538-42600-1	HOLDER ASSY,CAM A(49	1	1	1					
15	2	24550-012120	BUSH, 12X12	2	2	2					
16	2	24550-025100	BUSH, 25X10	4	4	4					
17	1	172528-42621	ROD ASSY,LINK B	1	1	1					
18	1	172527-42680	SHAFT	1	1	1					
19	1	172527-42730-1	HOLDER,CAM B(GRAY:49	1	1	1					
20	1	172538-42800-1	CAM ASSY, LINK	1	1	1					
22	2	24550-020150	BUSH, 20X15	2	2	2					
23	1	172538-42850-1	GUIDE ASSY, CABLE	1	1	1					
24	1	172538-42890	SHAFT, 25X566	1	1	1					
25	1	172538-42900	PEDAL, BRAKE	1	1	1					
26	1	172538-42951-1	CAM ASSY, LINK	1	1	1					
28	2	24550-025150	BUSH, 25X15	2	2	2					
29	1	172538-43600	ROD ASSY,BRAKE	1	1	1					
30	1	172538-43650	JOINT	1	1	1					
31	1	172738-47900	NUT, M10 L	1	1	1					
32	1	1C6360-65700	PIN, SNAP 10	2	2	2					
33	1	22137-100000	WASHER, 10	2	2	2					
34	1	22217-100000	WASHER, SPRING 10	2	2	2					
35	1	22242-000250	RING, 25	1	1	1					
36	1	22351-060050	PIN, SPRING 6.0X50	1	1	1					
37	1	24761-020000	NIPPLE, GREASE PT1/8	3	3	3					
38	1	24761-020000	NIPPLE, GREASE PT1/8	1							
38-1	1	24761-040000	NIPPLE, GREASE B	1	1	1				N	
	(A=M/#60691)										
39	1	24761-050000	NIPPLE, GREASE C	1	1	1					
40	1	26013-100202	BOLT, M10X 20	2	2	2					
41	1	26013-100252	BOLT, M10X 25	2						Z	
	(A=M/#60691)										
42	1	26013-100252	BOLT, M10X 25	2	2	2					
43	1	26013-100302	BOLT, M10X 30	2							
43-1	1	26013-100302	BOLT, M10X 30	4	4	4				K	
	(A=M/#60691)										
44	1	26013-100302	BOLT, M10X 30	2	2	2					
45	1	26051-100002	NUT, M10	1	1	1					
46	1	26716-100002	NUT, M10	1	1	1					
47	1	26736-100002	NUT, M10	2	2	2					
48	1	26736-100002	NUT, M10	1	1	1					

N:Old $\xleftrightarrow[\text{No}]{\text{Yes}}$ New, Q:Old $\xleftrightarrow[\text{Yes}]{\text{No}}$ New, R:Old $\xleftrightarrow[\text{Yes}]{\text{Yes}}$ New, S:Old $\xleftrightarrow[\text{No}]{\text{No}}$ New, W:Add, Z:Discontinued, F:Interchangeable by set, K:Q'ty Change

Copyright (C) YANMAR CO., LTD. All RightsReserved.

Fig.27. PARK BRAKE LEVER

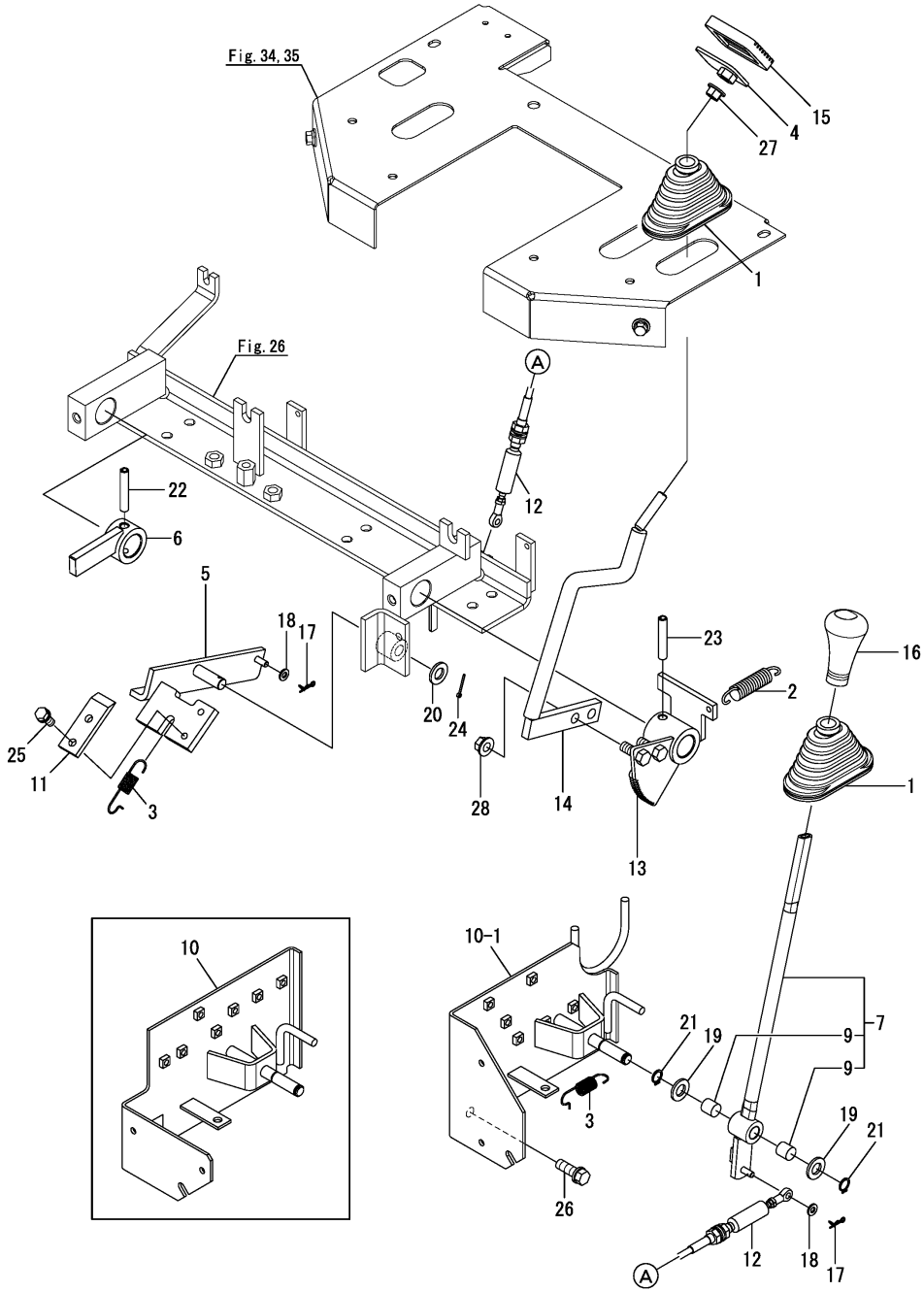

(A)=V4-6(US) (D)=
(B)=V4-6(AS) (E)=
(C)=V4-6(NZ) (F)=

No.	Lev.	Parts No.	Description	Q'ty (A)	(B)	(C)	(D)	(E)	(F)	I	R
1	1	172141-41340	BOOT	2	2	2					
2	1	172524-42190	SPRING, RETURN	1	1	1					
3	1	172527-42391	SPRING, 1.4X12X61.5	2	2	2					
4	1	172527-42921-1	PEDAL, HEAD	1	1	1					
5	1	172538-43150-1	PEDAL LOCK ASSY (49)	1							
5-1	1	172538-43151	PEDAL LOCK ASSY (49)	1	1	1				N	
	(A=M/#60699)										
6	1	172538-43200-1	CAM, PARKING	1	1	1					
7	1	172538-43240	LEVER ASSY, PARKING	1	1	1					
9	2	24550-012120	BUSH, 12X12	2	2	2					
10	1	172538-43300-1	BASE ASSY,BRAKE (49)	1							
10-1	1	172538-43301	BASE ASSY,BRAKE (49)	1	1	1				S	
	(A=M/#60699)										
11	1	172527-43390-1	PLATE T (GRAY:49)	1	1	1					
12	1	172538-43400	WIER,PARKING	1	1	1					
13	1	172538-43420-1	CAM, RATCHET	1	1	1					
14	1	172538-43450-1	LEVER ASSY,BRAKE(49)	1	1	1					
15	1	172122-45830	PAD, METAL	1	1	1					
16	1	1C6560-47000	GRIP, CHANGE LEVER	1	1	1					
17	1	1C6281-52310	PIN, SNAP 6	2	2	2					
18	1	22137-060000	WASHER, 6	2	2	2					
19	1	22137-120000	WASHER, 12	2	2	2					
20	1	22137-120000	WASHER, 12	1	1	1					
21	1	22242-000120	RING, 12	2	2	2					
22	1	22351-080050	PIN, SPRING 8.0X50	1	1	1					
23	1	22351-080050	PIN, SPRING 8.0X50	1	1	1					
24	1	22411-250200	COTTER PIN 2.5X20	1	1	1					
25	1	26013-080202	BOLT, M8X 20	2	2	2					
26	1	26013-100302	BOLT, M10X 30	2	2	2					
27	1	26051-100002	NUT, M10	1	1	1					
28	1	26051-100002	NUT, M10	2	2	2					

N:Old $\frac{\text{Yes}}{\text{No}}$ New, Q:Old $\frac{\text{No}}{\text{Yes}}$ New, R:Old $\frac{\text{Yes}}{\text{Yes}}$ New, S:Old $\frac{\text{No}}{\text{No}}$ New, W:Add, Z:Discontinued, F:Interchangeable by set, K:Q'ty Change

Copyright (C) YANMAR CO., LTD. All RightsReserved.

Fig.28. HYDRAULIC CONTROL LEVER

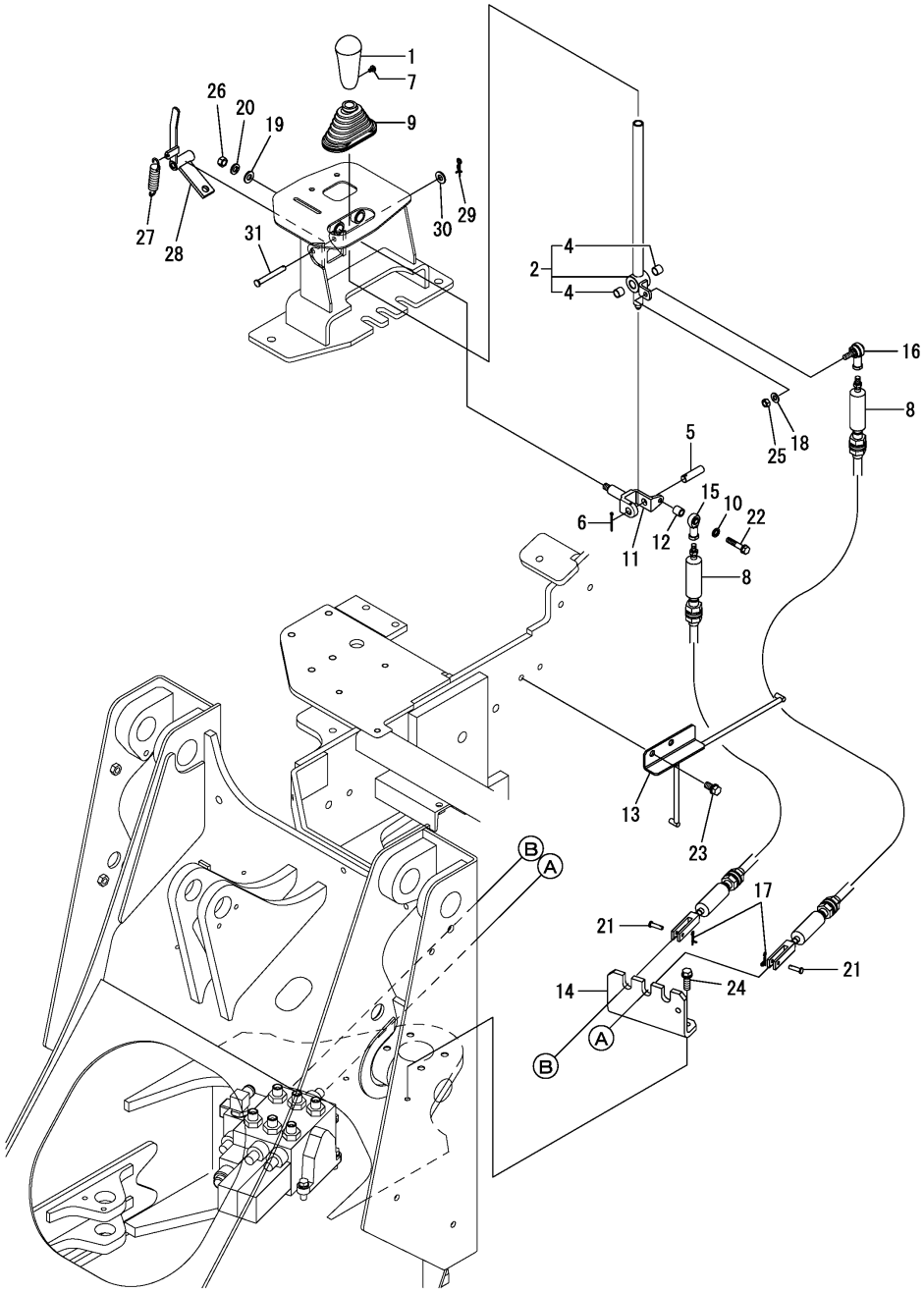

(A)=V4-6(US) (D)=
(B)=V4-6(AS) (E)=
(C)=V4-6(NZ) (F)=

No.	Lev.	Parts No.	Description	Q'ty (A)	(B)	(C)	(D)	(E)	(F)	I	R
1	1	172165-45071	KNOB ASSY	1	1	1					
2	1	172538-45100	LEVER, LOADER	1	1	1					
4	2	24550-012120	BUSH, 12X12	2	2	2					
5	1	172512-45160	PIN	1	1	1					
6	1	22417-250320	PIN, COTTER 2.5X32	1	1	1					
7	1	26587-040062	SCREW, M4X 6	1	1	1					
8	1	172538-45220	CABLE, LOADER LINK	2	2	2					
9	1	172141-41340	BOOT	1	1	1					
10	1	172524-45190	COLLAR, 8X12X2	1	1	1					
11	1	172538-45200-1	LINK, LEVER(GRAY:49)	1	1	1					
12	1	172524-45250	SPACER	1	1	1					
13	1	172538-45601-1	GUIDE ASSY	1	1	1					
14	1	172538-45650-1	BRACKET,CABLE (2J)	1	1	1					
14-1	1	172538-45650-Y	BRACKET,CABLE	1	1	1				S	
	(A=M61501)	(B=M61501)	(C=M61501)								
15	1	172122-46571	END, ROD	1	1	1					
16	1	172122-46590	ELBOW	1	1	1					
17	1	1C6281-52310	PIN, SNAP 6	2	2	2					
18	1	22137-080000	WASHER, 8	1						Z	
	(A=FROM 1ST)										
19	1	22137-100000	WASHER, 10	1	1	1					
20	1	22217-100000	WASHER, SPRING 10	1	1	1					
21	1	22486-060180	PIN, H 6X 18	2	2	2					
22	1	26013-080402	BOLT, M8X 40	1	1	1					
23	1	26013-100202	BOLT, M10X 20	2	2	2					
24	1	26013-100302	BOLT, M10X 30	2	2	2					
25	1	26716-080002	NUT, M8	1							
25-1	1	26051-080002	NUT, M8	1	1	1				R	
	(A=FROM 1ST)										
25-2	1	26347-080002	NUT, M8	1	1	1				N	
	(A=MZZZZZ)	(B=MZZZZZ)	(C=MZZZZZ)								
26	1	26716-100002	NUT, M10	1	1	1					
27	1	172524-42190	SPRING, RETURN	1	1	1					
28	1	172538-45500-1	LEVER,LOCK ASSY (10)	1	1	1					
29	1	1C6281-52320	PIN, SNAP 8	1	1	1					
30	1	22137-080000	WASHER, 8	1	1	1					
31	1	22487-080600	PIN 8X 60	1	1	1					

N:Old $\xleftarrow[\text{No}]{\text{Yes}}$ New, Q:Old $\xleftarrow[\text{Yes}]{\text{No}}$ New, R:Old $\xleftarrow[\text{Yes}]{\text{Yes}}$ New, S:Old $\xleftarrow[\text{No}]{\text{No}}$ New, W:Add, Z:Discontinued, F:Interchangeable by set, K:Q'ty Change

Copyright (C) YANMAR CO., LTD. All RightsReserved.

Fig.29. STEERING WHEEL & COLUMN

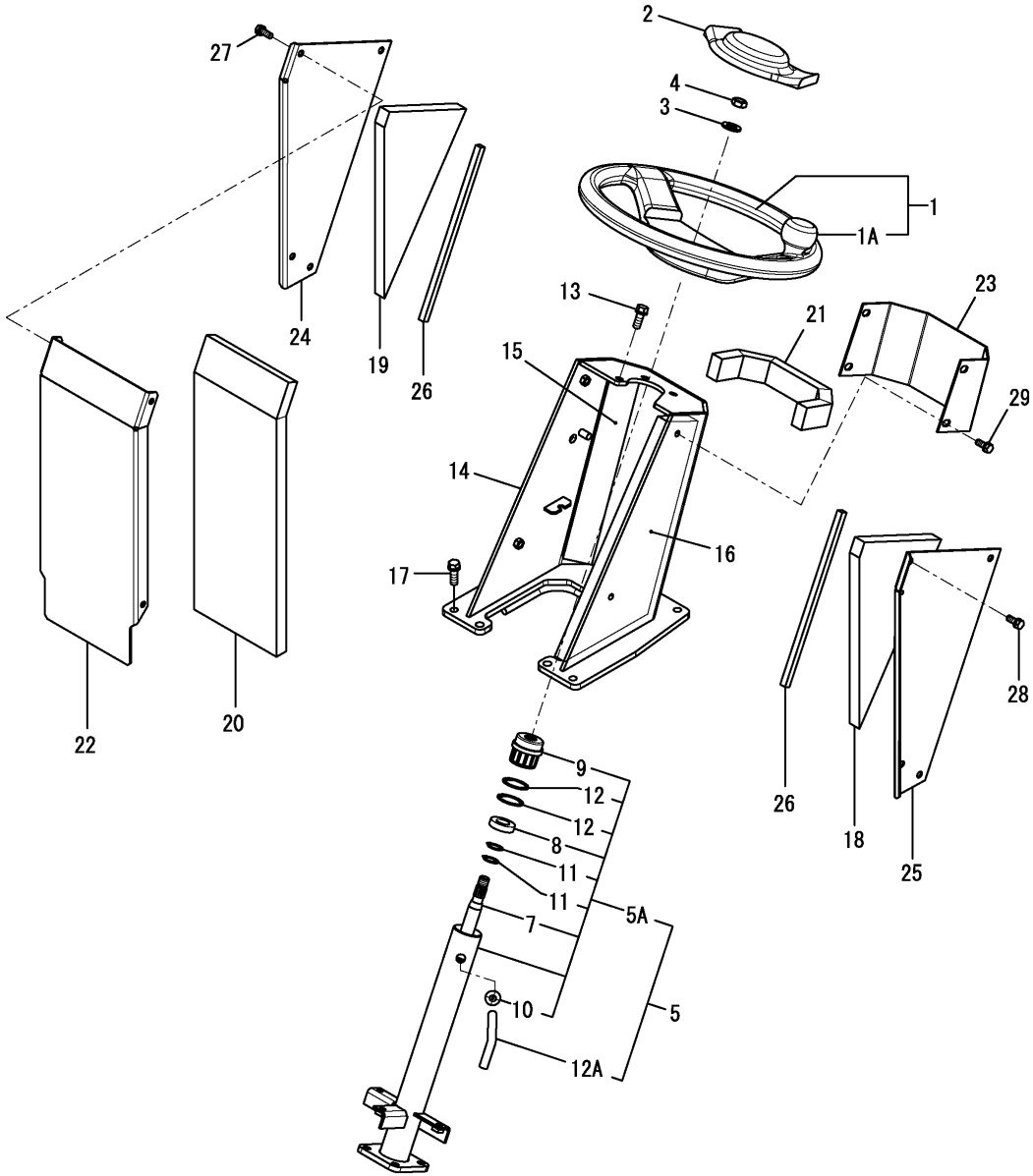

(A)=V4-6(US) (D)=
(B)=V4-6(AS) (E)=
(C)=V4-6(NZ) (F)=

No.	Lev.	Parts No.	Description	Q'ty (A)	(B)	(C)	(D)	(E)	(F)	I	R
1	1	172538-47600	HANDLE,STEERING	1	1	1					
1A	2	172538-47630	KNOB ASSY	1	1	1				W	
	(A=MZZZZZ)	(B=MZZZZZ)	(C=MZZZZZ)								
2	1	172538-47610	CAP, HANDLE	1	1	1					
3	1	22137-140000	WASHER, 14	1	1	1					
4	1	26776-140002	NUT, LOCK M14	1	1	1					
5	1	172538-47750	COLUMN ASSY	1	1	1					
5A	2	172538-47801	COLUMN ASSY	1	1	1					
7	3	172538-47860	SHAFT, STEERING	1	1	1					
8	3	172527-47870	BEARING 20X37X9	1	1	1					
9	3	172538-47870	BUSH,COLUMN	1	1	1					
10	3	172538-47880	GROMMET, 13	1	1	1					
11	3	22242-000200	RING, 20	2	2	2					
12	3	22252-000370	RING, 37	2	2	2					
12A	2	172538-47760	PIPE, CORRUGATED	1	1	1					
13	1	26013-100252	BOLT, M10X 25	3	3	3					
14	1	172538-55501	FRAME, STEERING	1	1	1					
15	1	172538-60860	EV A,COLUMN	1	1	1					
16	1	172538-60870	EV B,COLUMN	1	1	1					
17	1	26014-100302	BOLT, M10X 30	6	6	6					
18	1	172538-60890	EV A,COVER	1	1	1					
19	1	172538-60900	EV B,COVER	1	1	1					
20	1	172538-60910	EV C,COVER	1	1	1					
21	1	172538-60920	EV D,COVER	1	1	1					
22	1	172538-63400	COVER, COLUMN	1	1	1					
23	1	172538-63420	COVER, COLUMN	1	1	1					
24	1	172538-63430	COVER, COLUMN	1	1	1					
25	1	172538-63440	COVER, COLUMN	1	1	1					
26	1	172538-63450	SEAL,10X10X280	2	2	2					
27	1	26013-080202	BOLT, M8X 20	4	4	4					
28	1	26013-080202	BOLT, M8X 20	4	4	4					
29	1	26013-080202	BOLT, M8X 20	4	4	4					

N:Old $\xleftarrow[\text{No}]{\text{Yes}}$ New, Q:Old $\xleftarrow[\text{Yes}]{\text{No}}$ New, R:Old $\xleftarrow[\text{Yes}]{\text{Yes}}$ New, S:Old $\xleftarrow[\text{No}]{\text{No}}$ New, W:Add, Z:Discontinued, F:Interchangeable by set, K:Q'ty Change

Copyright (C) YANMAR CO., LTD. All RightsReserved.

Fig.30. LEVER STAND(P.T.O.)

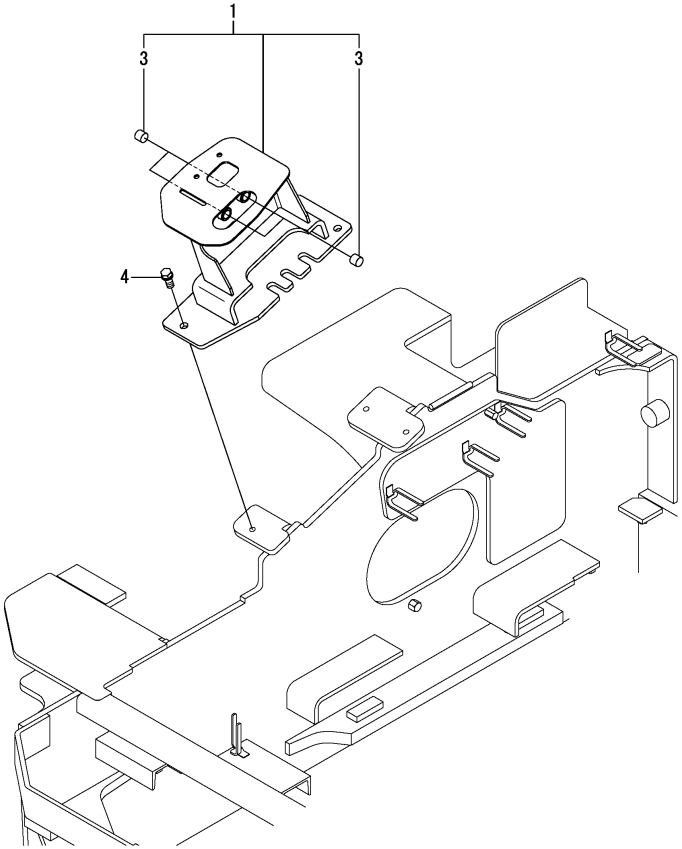

(A)=V4-6(US) (D)=
(B)=V4-6(AS) (E)=
(C)=V4-6(NZ) (F)=

No.	Lev.	Parts No.	Description	Q'ty (A)	(B)	(C)	(D)	(E)	(F)	I	R
1	1	172538-45400	STAND, LEVER	1	1	1					1
3	2	24550-016150	BUSH, 16X15	4	4	4					
3A	1	172538-03230	LABEL,LOCK	1	1	1					2
3B	1	172538-03790	LABEL,PTO ROCK US	1	1	1					2
4	1	26013-120302	BOLT, M12X 30	3	3	3					

Remarks
(1)Attach the No.3A & 3B label to this part.
(2)Label is not illustrated.

N:Old $\xleftrightarrow[\text{No}]{\text{Yes}}$ New, Q:Old $\xleftrightarrow[\text{Yes}]{\text{No}}$ New, R:Old $\xleftrightarrow[\text{Yes}]{\text{Yes}}$ New, S:Old $\xleftrightarrow[\text{No}]{\text{No}}$ New, W:Add, Z:Discontinued, F:Interchangeable by set, K:Q'ty Change

Copyright (C) YANMAR CO., LTD. All RightsReserved.

Fig.31. P.T.O.LEVER

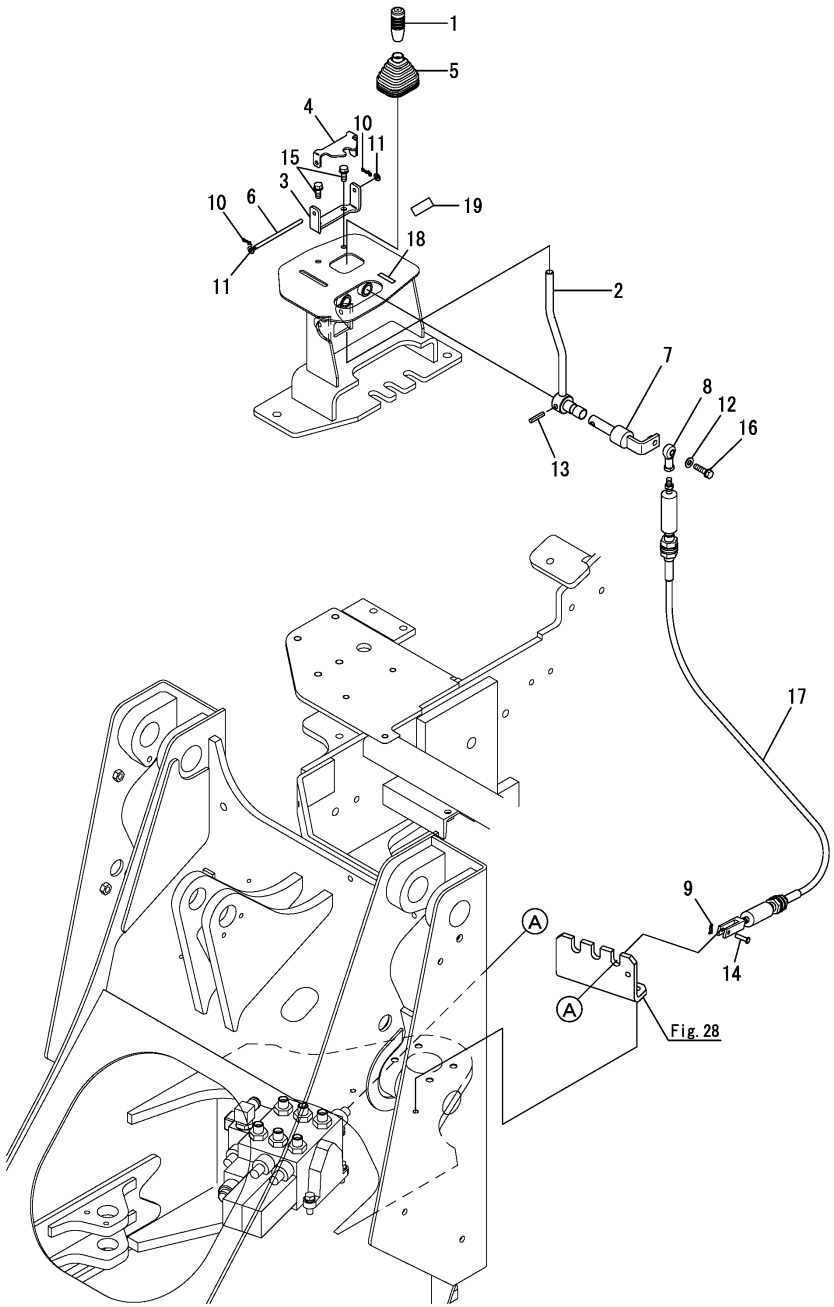

(A)=V4-6(US) (D)=
(B)=V4-6(AS) (E)=
(C)=V4-6(NZ) (F)=

No.	Lev.	Parts No.	Description	Q'ty (A)	(B)	(C)	(D)	(E)	(F)	I	R
1	1	172498-12250	GRIP, ACCELERATOR	1	1	1					
2	1	172538-46110-1	LEVER ASSY,3RD (49)	1	1	1					
3	1	172538-46131	BRACKET,3RD	1	1	1					
4	1	172538-46141-1	STOPPER, 3RD	1	1	1					
5	1	172520-46150	BOOT	1	1	1					
6	1	172538-46150	PIN,3RD	1	1	1					
7	1	172538-46200-1	LEVER PIN ASSY (49)	1	1	1					
8	1	172122-46571	END, ROD	1	1	1					
9	1	1C6281-52310	PIN, SNAP 6	1	1	1					
10	1	1C6281-52310	PIN, SNAP 6	2	2	2					
11	1	22137-060000	WASHER, 6	2	2	2					
12	1	22137-080000	WASHER, 8	1	1	1					
13	1	22351-060032	PIN, SPRING 6.0X32	1	1	1					
14	1	22486-060180	PIN, H 6X 18	1	1	1					
15	1	26013-080202	BOLT, M8X 20	2	2	2					
16	1	26013-080302	BOLT, M8X 30	1	1	1					
17	1	172539-45230	CABLE, LOADER LINK	1	1	1					
18	1	172538-03320	LABEL,PTO ROCK	1	1	1					
19	1	172527-03620	LABEL	1	1	1					

N:Old $\xleftrightarrow[\text{No}]{\text{Yes}}$ New, Q:Old $\xleftrightarrow[\text{Yes}]{\text{No}}$ New, R:Old $\xleftrightarrow[\text{Yes}]{\text{Yes}}$ New, S:Old $\xleftrightarrow[\text{No}]{\text{No}}$ New, W:Add, Z:Discontinued, F:Interchangeable by set, K:Q'ty Change

Copyright (C) YANMAR CO., LTD. All RightsReserved.

Fig.32. FRONT FRAME

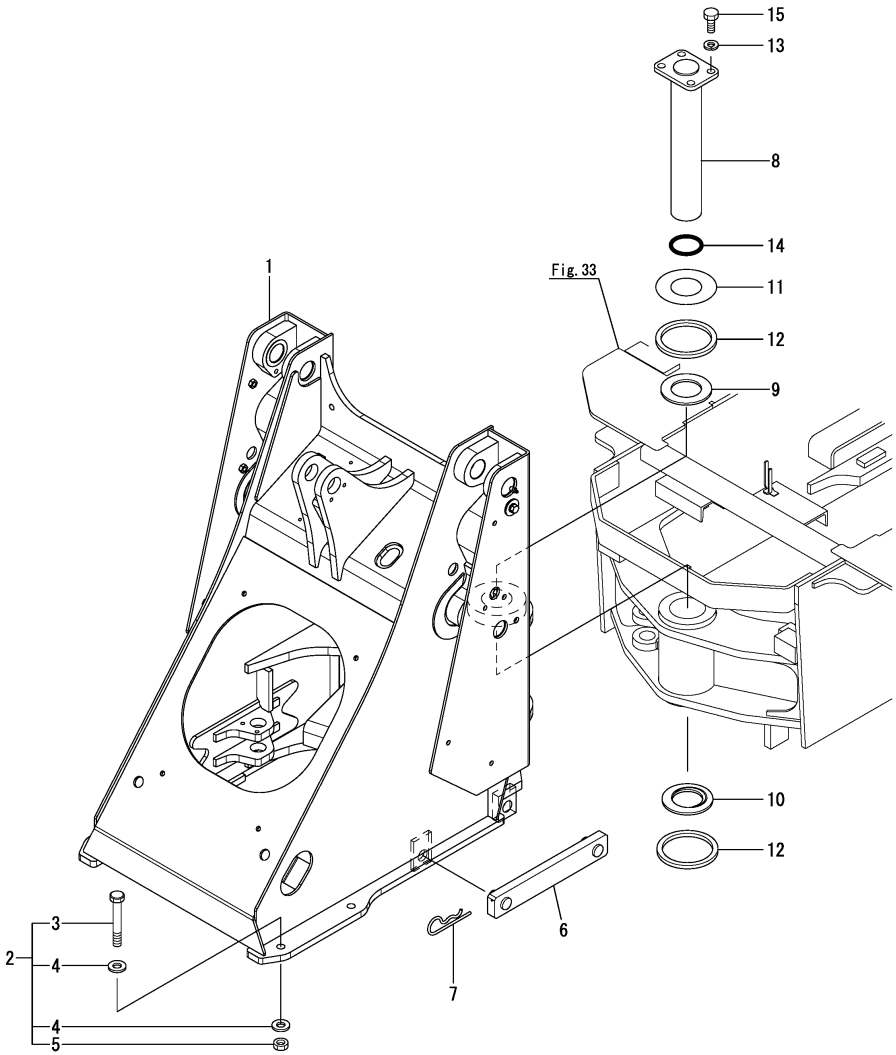

(A)=V4-6(US) (D)=
(B)=V4-6(AS) (E)=
(C)=V4-6(NZ) (F)=

No.	Lev.	Parts No.	Description	Q'ty (A)	(B)	(C)	(D)	(E)	(F)	I	R
1	1	172539-52101-2	FRAME ASSY,FRONT(2J)	1							1
1-1	1	172539-52102	FRAME ASSY,FRONT(2J)	1	1	1				N	1
	(A=M/#60699)										
1-2	1	172539-52102-Y	FRAME ASSY,FRONT	1	1	1				S	1
	(A=M61501)	(B=M61501)	(C=M61501)								
1A	1	172524-03671	LABEL	1	1	1					2
1B	1	172538-03740	LABEL,GREASE US	1	1	1					2
2	1	172527-52411	BOLT F SET	4	4	4					
3	2	172527-52421	BOLT 16X110	4	4	4					
4	2	172527-52431	WASHER 17X35X4.5	8	8	8					
5	2	172527-52451	NUT, M16	4	4	4					
6	1	172527-52881-1	STOPPER ASSY, FRAME	1	1	1					
7	1	194080-75790	PIN, SNAP 28	2	2	2					
8	1	172528-52800-2	PIN 60X357.5 (2J)	1	1	1					
8-1	1	172528-52800-Y	PIN 60X357.5	1	1	1				S	
	(A=M61501)	(B=M61501)	(C=M61501)								
9	1	172524-52830	COLLAR, THRUST	1	1	1					
10	1	172524-52840	PLATE,THRUST	1	1	1					
11	1	172524-52850	SHIM	1	1	1					
12	1	172524-52870	GASKET	2	2	2					
13	1	22217-140000	WASHER, SPRING 14	4	4	4					
14	1	24321-000600	O-RING, 1AG60.0	1	1	1					
15	1	26116-140352	BOLT, M14X 35 PLATED	4	4	4					

Remarks
(1)Attach the No.1A & 1B label to this part.
(2)Label is not illustrated.

N:Old $\xleftrightarrow[\text{No}]{\text{Yes}}$ New, Q:Old $\xleftrightarrow[\text{Yes}]{\text{No}}$ New, R:Old $\xleftrightarrow[\text{Yes}]{\text{Yes}}$ New, S:Old $\xleftrightarrow[\text{No}]{\text{No}}$ New, W:Add, Z:Discontinued, F:Interchangeable by set, K:Q'ty Change

Copyright (C) YANMAR CO., LTD. All RightsReserved.

Fig.33. REAR FRAME

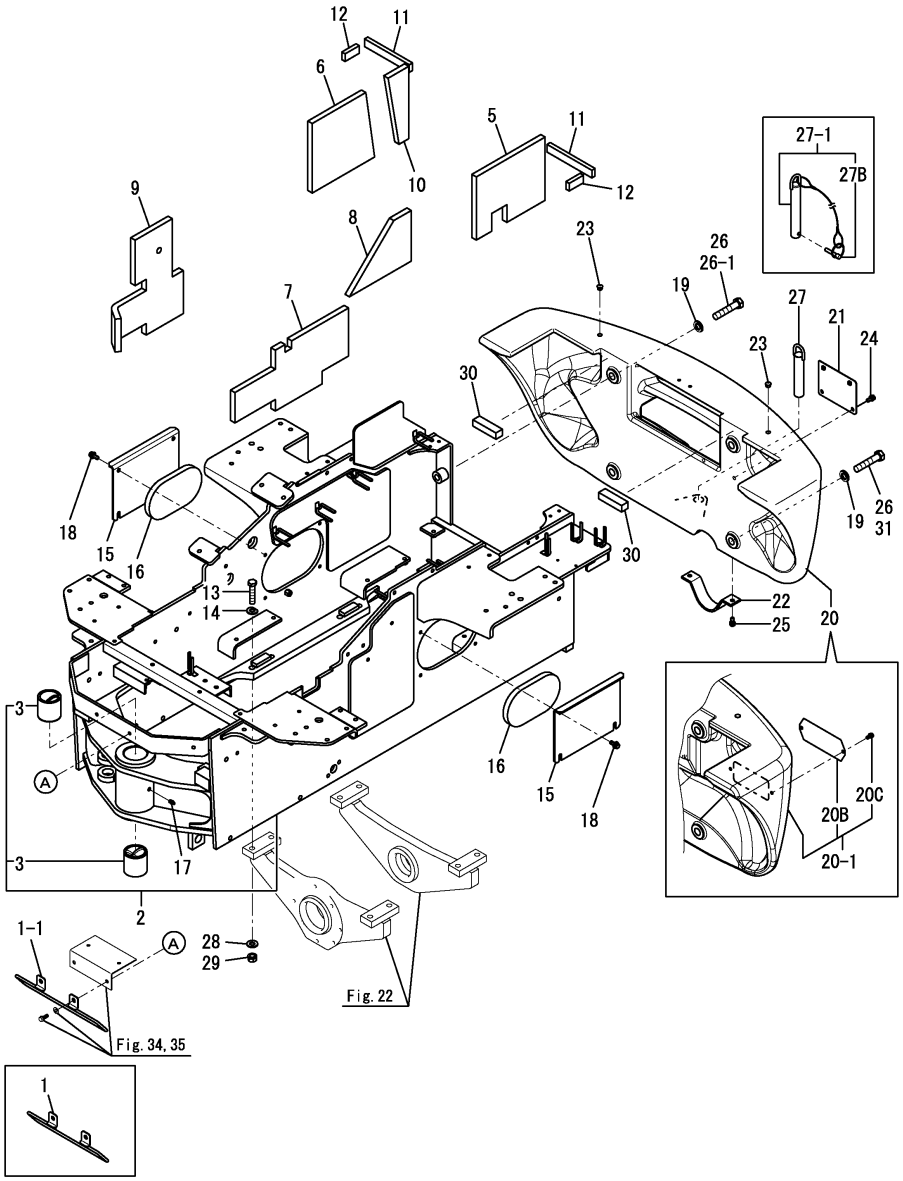

Remarks
(1)Attach the No.12A label to this part.
(2)Label is not illustrated.

(A)=V4-6(US) (D)=
(B)=V4-6(AS) (E)=
(C)=V4-6(NZ) (F)=

No.	Lev.	Parts No.	Description	Q'ty (A)	(B)	(C)	(D)	(E)	(F)	I	R
1	1	172538-43502	GUIDE ASSY	1							
1-1	1	172538-43503	GUIDE ASSY	1	1	1				S	
	(A=M/#60699)										
2	1	172539-52502	FRAME ASSY, REAR	1							1
2-1	1	172539-52503	REAR FRAME ASSY (49)	1						N	1
	(A=M/#60691)										
2-2	1	172539-52504	REAR FRAME ASSY (49)	1	1	1				S	1
	(A=M/#60716)										
2-3	1	172539-52505	REAR FRAME ASSY	1	1	1				N	
	(A=M61131)	(B=M61131)	(C=M61131)								
3	2	172524-33521	BUSH	2	2	2					
5	2	172539-60101	SPONGE	1	1	1					
6	2	172539-60110	SPONGE	1	1	1					
7	2	172538-60250	SPONGE	1							
7-1	2	172538-60251	SPONGE	1	1	1				S	
	(A=M/#60716)										
8	2	172538-60260	SPONGE	1	1	1					
9	2	172538-60280	SPONGE	1	1	1					
10	2	172538-60300	SPONGE	1	1	1					
11	2	172538-60311	SPONGE	2	2	2					
12	2	172538-60320	SPONGE	2	2	2					
12A	1	172519-03820	LABEL	2	2	2					2
13	1	172527-52920	BOLT 16X75	8	8	8					
14	1	172527-52940	WASHER (R	8	8	8					
15	1	172538-53660-1	COVER, FRAME	2	2	2					
16	1	172538-60240	SPONGE	2	2	2					
17	1	24761-020000	NIPPLE, GREASE PT1/8	1	1	1					
18	1	26014-100252	BOLT, M10X 25	8	8	8					
19	1	172520-31210	WASHER	4	4	4					
20	1	172543-53310	WEIGHT, COUNTER	1	1	1					
20-1	1	172543-08050	WEIGHT KIT, COUNTER	1	1	1				N	
	(A=M61131)	(B=M61131)	(C=M61131)								
20B	2	172538-53330	COVER, LAMP	1	1	1				W	
	(A=M61131)	(B=M61131)	(C=M61131)								
20C	2	26013-080162	BOLT, M8X 16	2	2	2				W	
	(A=M61131)	(B=M61131)	(C=M61131)								
21	1	172538-53350	PLATE, NUMBER	1	1	1					
22	1	172538-53370	GUARD, MUFFLER	1	1	1					
23	1	172543-53400	CLIP, ANCHOR	2	2	2					
24	1	26013-100202	BOLT, M10X 20	2	2	2					
25	1	26013-100202	BOLT, M10X 20	2	2	2					
26	1	26116-201002	BOLT, M20X100 PLATED	4							
26-1	1	26116-201002	BOLT, M20X100 PLATED	2	2	2				K	
	(A=M/#60657)										
27	1	172538-53510	HITCH PIN ASSY	1							
27-1	1	172538-53390	PIN ASSY	1	1	1				N	
	(A=*2010.05)										
27B	2	794130-71410	PIN ASSY, BALL	1	1	1				W	
	(A=*2010.05)										
28	1	172527-52431	WASHER 17X35X4.5	8	8	8					
29	1	172527-52451	NUT, M16	8	8	8					

N:Old $\overset{\text{Yes}}{\underset{\text{No}}{\leftrightarrow}}$ New, Q:Old $\overset{\text{No}}{\underset{\text{Yes}}{\leftrightarrow}}$ New, R:Old $\overset{\text{Yes}}{\underset{\text{Yes}}{\leftrightarrow}}$ New, S:Old $\overset{\text{No}}{\underset{\text{No}}{\leftrightarrow}}$ New, W:Add, Z:Discontinued, F:Interchangeable by set, K:Q'ty Change

++ CONTINUE ++

Copyright (C) YANMAR CO., LTD. All RightsReserved.

Fig.33. REAR FRAME

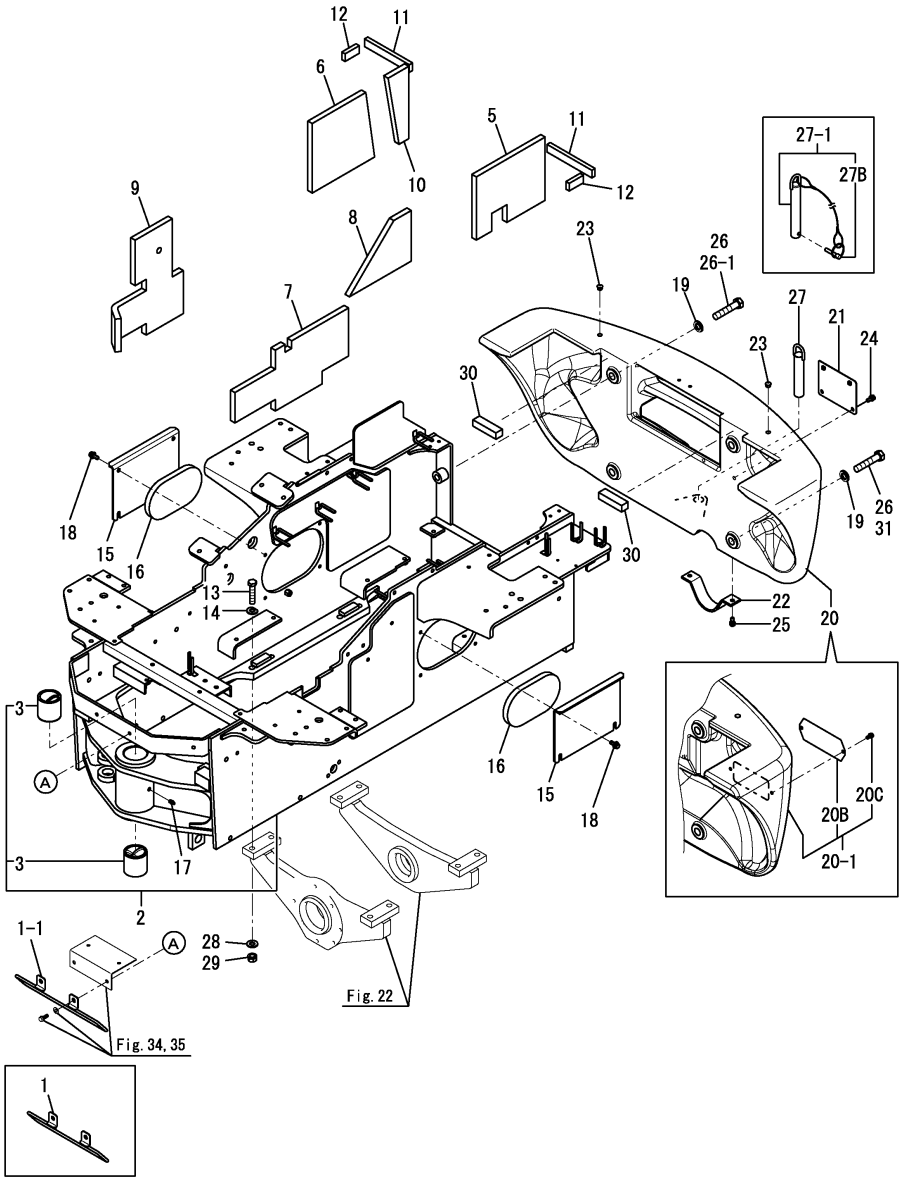

Remarks
(1)Attach the No.12A label to this part.
(2)Label is not illustrated.

(A)=V4-6(US) (D)=
(B)=V4-6(AS) (E)=
(C)=V4-6(NZ) (F)=

No.	Lev.	Parts No.	Description	Q'ty (A)	(B)	(C)	(D)	(E)	(F)	I	R
30	1	172538-60960	SEAL, WEIGHT	2	2	2					
31	1	26116-200852	BOLT, M20X 85 PLATED	2	2	2				W	
	(A=M/#60657)										

N:Old ◄Yes/No► New, Q:Old ◄No/Yes► New, R:Old ◄Yes/Yes► New, S:Old ◄No/No► New, W:Add, Z:Discontinued, F:Interchangeable by set, K:Q'ty Change

Copyright (C) YANMAR CO., LTD. All RightsReserved.

Fig.34. COVER & STEP

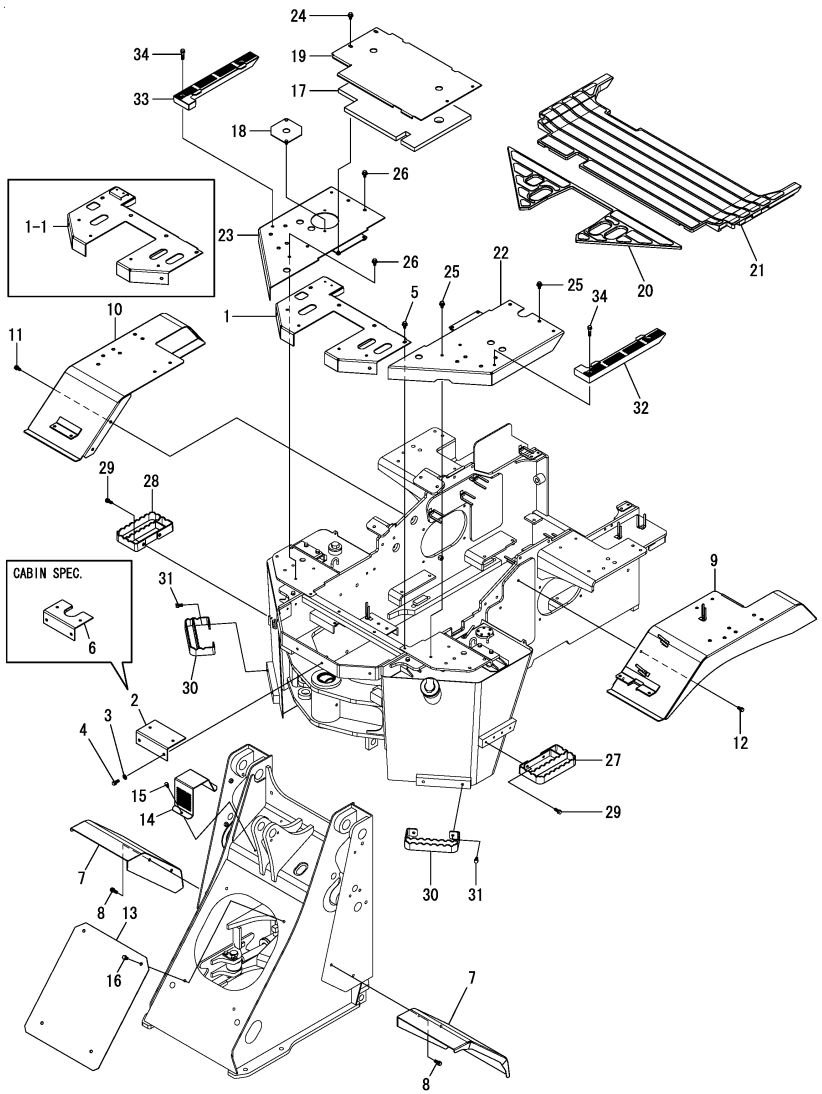

Remarks
(1)Attach the No.9A & 9B label to this part.
(2)Attach the No.10A label to this part.
(3)Attach the No.22A & 22B label to this part.
(4)Attach the No.13A label to this part.
(5)Attach the No.1A label to this part.
(6)Label is not illustrated.
(7)Cabin specification.
(8)Interchangeable by simultaneous replacement with Fig.5 No.9-1 & 26.

(A)=V4-6(US) (D)=
(B)=V4-6(AS) (E)=
(C)=V4-6(NZ) (F)=

No.	Lev.	Parts No.	Description	Q'ty (A)	(B)	(C)	(D)	(E)	(F)	I	R
1	1	172538-43000-2	FLOOR A ,FRONT (49)	1							5
1-1	1	172538-43001-1	FLOOR A ,FRONT (49)	1	1	1				S	8
	(A=M/#60860)										
1A	1	172524-03631	LABEL	1							6
1A-1	1	172524-03631	LABEL	2	2	2				K	6
	(A=M/#60573)										
2	1	172538-43050-2	FLOOR B ,FRONT (49)	1	1	1					
3	1	22137-100000	WASHER, 10	2	2	2					
4	1	26013-100252	BOLT, M10X 25	2	2	2					
5	1	26014-100202	BOLT, M10X 20	4	4	4					
6	1	172538-43101-1	FLOOR B(C,FRONT (49)	1	1	1					7
7	1	172538-61600-2	FENDER F ASSY (2J)	2	2	2					
7-1	1	172538-61600-Y	FENDER F ASSY	2	2	2				S	
	(A=M61501)	(B=M61501)	(C=M61501)								
8	1	26013-100252	BOLT, M10X 25	4	4	4					
9	1	172539-61303-2	FENDER L ASSY (2J)	1	1	1					1
9-1	1	172539-61304-1	FENDER L ASSY	1						N	1
	(A=M61131)										
9-2	1	172539-61304-Y	FENDER L ASSY	1						S	1
	(A=M61501)	(B=M61501)	(C=M61501)								
9A	1	172539-03110	LABEL,MODEL L	1	1	1					6
9B	1	172528-03770	LABEL,AIR PRESS. US	1	1	1					6
10	1	172539-61452-2	FENDER R ASSY (2J)	1	1	1					2
10-1	1	172539-61452-Y	FENDER R ASSY	1	1	1				S	2
	(A=M61501)	(B=M61501)	(C=M61501)								
10A	1	172539-03120	LABEL,MODEL R	1	1	1					6
11	1	26013-100202	BOLT, M10X 20	2	2	2					
12	1	26013-100202	BOLT, M10X 20	2	2	2					
13	1	172539-61120-2	COVER	1	1	1					4
13-1	1	172539-61120-Y	COVER	1	1	1				S	4
	(A=M61501)	(B=M61501)	(C=M61501)								
13A	1	172534-03160	LABEL, FRONT	1	1	1					6
14	1	172538-61150-2	COVER, HORN	1	1	1					
14-1	1	172538-61150-Y	COVER, HORN	1	1	1				S	
	(A=M61501)	(B=M61501)	(C=M61501)								
15	1	26013-080202	BOLT, M8X 20	2	2	2					
16	1	26013-100202	BOLT, M10X 20	4	4	4					
17	1	172538-60940	SPONGE	1	1	1					
18	1	172538-61750-2	PLATE,FLOOR (2J)	1	1	1					
18-1	1	172538-61750-Y	PLATE,FLOOR	1	1	1				S	
	(A=M61501)	(B=M61501)	(C=M61501)								
19	1	172538-61780-2	FLOOR (C (2J)	1	1	1					
19-1	1	172538-61780-N	FLOOR (C	1	1	1				S	
	(A=M61501)	(B=M61501)	(C=M61501)								
20	1	172538-61800	FLOOR MAT ,F	1	1	1					
21	1	172538-61810	FLOOR MAT	1	1	1					
22	1	172538-61840-2	FLOOR (L CMP (2J)	1	1	1					3
22-1	1	172538-61840-Y	FLOOR (L CMP	1	1	1				S	3
	(A=M61501)	(B=M61501)	(C=M61501)								
22A	1	114110-07760	LABEL, FUEL CAUTION	1	1	1					6
22B	1	172437-03501	LABEL, FUEL	1	1	1					6

N:Old $\xleftarrow[\text{No}]{\text{Yes}}$ New, Q:Old $\xleftarrow[\text{Yes}]{\text{No}}$ New, R:Old $\xleftarrow[\text{Yes}]{\text{Yes}}$ New, S:Old $\xleftarrow[\text{No}]{\text{No}}$ New, W:Add, Z:Discontinued, F:Interchangeable by set, K:Q'ty Change

++ CONTINUE ++

Copyright (C) YANMAR CO., LTD. All RightsReserved.

Fig.34. COVER & STEP

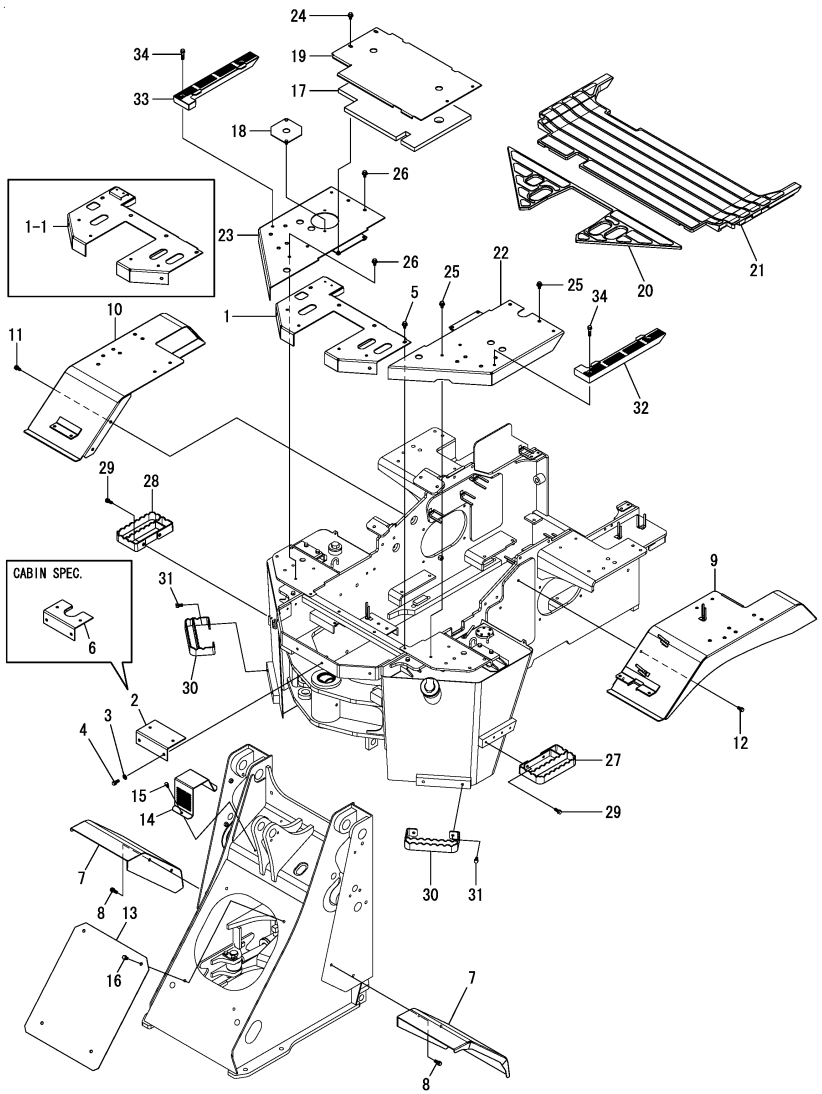

Remarks
(1)Attach the No.9A & 9B label to this part.
(2)Attach the No.10A label to this part.
(3)Attach the No.22A & 22B label to this part.
(4)Attach the No.13A label to this part.
(5)Attach the No.1A label to this part.
(6)Label is not illustrated.
(7)Cabin specification.
(8)Interchangeable by simultaneous replacement with Fig.5 No.9-1 & 26.

(A)=V4-6(US) (D)=
(B)=V4-6(AS) (E)=
(C)=V4-6(NZ) (F)=

No.	Lev.	Parts No.	Description	Q'ty (A)	(B)	(C)	(D)	(E)	(F)	I	R
23	1	172538-61891-2	FLOOR (R CMP (2J)	1							
23-1	1	172538-61892	FLOOR (R CMP (2J)	1	1	1				N	
	(A=M/#60699)										
23-2	1	172538-61892-Y	FLOOR (R CMP	1	1	1				S	
	(A=M61501)	(B=M61501)	(C=M61501)								
24	1	26014-100202	BOLT, M10X 20	4	4	4					
25	1	26014-100202	BOLT, M10X 20	4	4	4					
26	1	26014-100202	BOLT, M10X 20	4	4	4					
27	1	172538-62100	STEP ASSY	1	1	1					
28	1	172538-62150	STEP ASSY	1	1	1					
29	1	26013-100252	BOLT, M10X 25	4							
29-1	1	26014-100252	BOLT, M10X 25	4	4	4				N	
	(A=M/#60691)										
30	1	172539-62200	STEP ASSY	2	2	2					
31	1	26013-100202	BOLT, M10X 20	4	4	4					
32	1	172538-61951-1	STEP, FLOOR	1	1	1					
33	1	172538-61961-1	STEP, FLOOR	1	1	1					
34	1	26013-100402	BOLT, M10X 40	4	4	4					

N:Old $\xleftrightarrow[\text{No}]{\text{Yes}}$ New, Q:Old $\xleftrightarrow[\text{Yes}]{\text{No}}$ New, R:Old $\xleftrightarrow[\text{Yes}]{\text{Yes}}$ New, S:Old $\xleftrightarrow[\text{No}]{\text{No}}$ New, W:Add, Z:Discontinued, F:Interchangeable by set, K:Q'ty Change

Copyright (C) YANMAR CO., LTD. All RightsReserved.

Fig.35. COVER & STEP(AIR CONDITONER SPEC.)

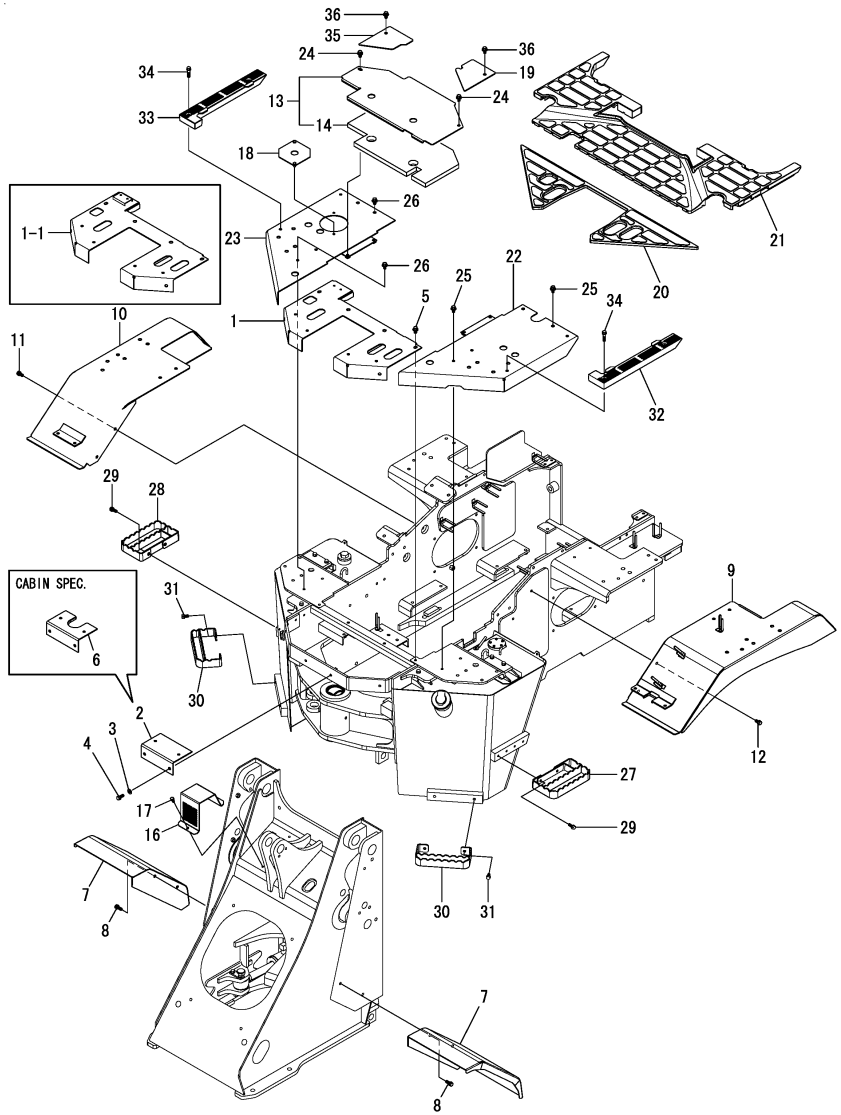

Remarks
(1)Attach the No.9A & 9B label to this part.
(2)Attach the No.10A label to this part.
(3)Attach the No.22A & 22B label to this part.
(4)Attach the No.1A-1 label to this part.
(5)Label is not illustrated.
(6)Cabin specification.
(7)Interchangeable by simultaneous replacement with Fig.5 No.9-1 & 26.

(A)=V4-6(US) (D)=
(B)=V4-6(AS) (E)=
(C)=V4-6(NZ) (F)=

No.	Lev.	Parts No.	Description	Q'ty (A)	(B)	(C)	(D)	(E)	(F)	I	R
1	1	172538-43000-2	FLOOR A ,FRONT (49)	1							4
1-1	1	172538-43001-1	FLOOR A ,FRONT (49)	1	1	1				S	7
	(A=M/#60860)										
1A	1	172524-03631	LABEL	1							5
1A-1	1	172524-03631	LABEL	2	2	2				K	5
	(A=M/#60573)										
2	1	172538-43050-2	FLOOR B ,FRONT (49)	1	1	1					
3	1	22137-100000	WASHER, 10	2	2	2					
4	1	26013-100252	BOLT, M10X 25	2	2	2					
5	1	26014-100202	BOLT, M10X 20	4	4	4					
6	1	172538-43101-1	FLOOR B(C,FRONT (49)	1	1	1					6
7	1	172538-61600-2	FENDER F ASSY (2J)	2	2	2					
7-1	1	172538-61600-Y	FENDER F ASSY	2	2	2				S	
	(A=M61501)	(B=M61501)	(C=M61501)								
8	1	26013-100252	BOLT, M10X 25	4	4	4					
9	1	172539-61303-2	FENDER L ASSY (2J)	1	1	1					1
9-1	1	172539-61304-1	FENDER L ASSY	1						N	1
	(A=M61131)										
9-2	1	172539-61304-Y	FENDER L ASSY	1						S	1
	(A=M61501)	(B=M61501)	(C=M61501)								
9A	1	172538-03110	LABEL,MODEL L	1	1	1					5
9B	1	172524-03770	LABEL	1	1	1					5
10	1	172539-61452-2	FENDER R ASSY (2J)	1	1	1					2
10-1	1	172539-61452-Y	FENDER R ASSY	1	1	1				S	2
	(A=M61501)	(B=M61501)	(C=M61501)								
10A	1	172538-03120	LABEL,MODEL R	1	1	1					5
11	1	26013-100202	BOLT, M10X 20	2	2	2					
12	1	26013-100202	BOLT, M10X 20	2	2	2					
13	1	172539-61740	FLOOR ASSY,A/C (49)	1	1	1					
14	2	172539-60940	SPONGE	1	1	1					
16	1	172538-61150-2	COVER, HORN	1	1	1					
16-1	1	172538-61150-Y	COVER, HORN	1	1	1				S	
	(A=M61501)	(B=M61501)	(C=M61501)								
17	1	26013-080202	BOLT, M8X 20	2	2	2					
18	1	172538-61750-2	PLATE,FLOOR (2J)	1	1	1					
18-1	1	172538-61750-Y	PLATE,FLOOR	1	1	1				S	
	(A=M61501)	(B=M61501)	(C=M61501)								
19	1	172539-61820	FLOOR L,A/C (49)	1	1	1					
20	1	172538-61800	FLOOR MAT ,F	1	1	1					
21	1	172539-61810	FLOOR MAT,A/C	1	1	1					
22	1	172538-61840-2	FLOOR (L CMP (2J)	1	1	1					3
22-1	1	172538-61840-Y	FLOOR (L CMP	1	1	1				S	3
	(A=M61501)	(B=M61501)	(C=M61501)								
22A	1	114110-07760	LABEL, FUEL CAUTION	1	1	1					5
22B	1	172437-03501	LABEL, FUEL	1	1	1					5
23	1	172538-61892	FLOOR (R CMP (2J)	1	1	1					
23-1	1	172538-61892-Y	FLOOR (R CMP	1	1	1				S	
	(A=M61501)	(B=M61501)	(C=M61501)								
24	1	26014-100202	BOLT, M10X 20	2	2	2					
25	1	26014-100202	BOLT, M10X 20	4	4	4					
26	1	26014-100202	BOLT, M10X 20	4	4	4					

N:Old $\xleftarrow[\text{No}]{\text{Yes}}$ New, Q:Old $\xleftarrow[\text{Yes}]{\text{No}}$ New, R:Old $\xleftarrow[\text{Yes}]{\text{Yes}}$ New, S:Old $\xleftarrow[\text{No}]{\text{No}}$ New, W:Add, Z:Discontinued, F:Interchangeable by set, K:Q'ty Change

++ CONTINUE ++

Copyright (C) YANMAR CO., LTD. All RightsReserved.

Fig.35. COVER & STEP(AIR CONDITONER SPEC.)

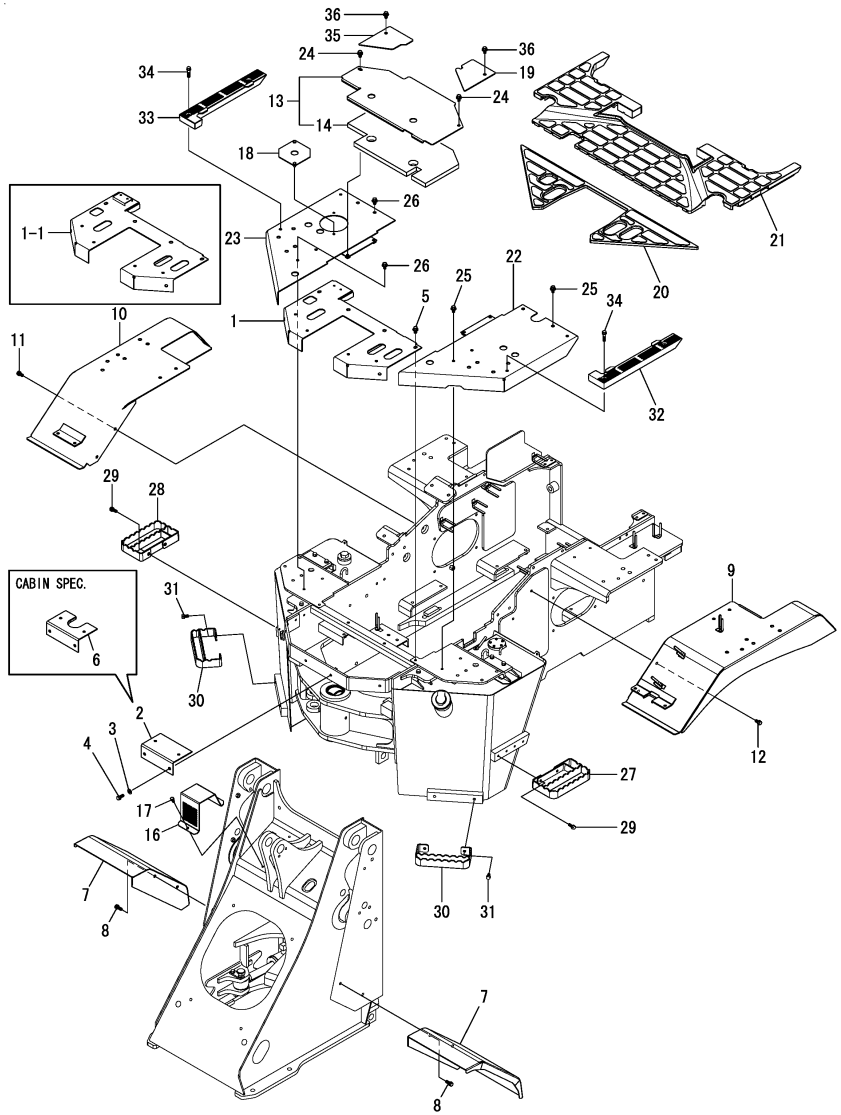

(A)=V4-6(US) (D)=
(B)=V4-6(AS) (E)=
(C)=V4-6(NZ) (F)=

No.	Lev.	Parts No.	Description	Q'ty (A)	(B)	(C)	(D)	(E)	(F)	I	R
27	1	172538-62100	STEP ASSY	1	1	1					
28	1	172538-62150	STEP ASSY	1	1	1					
29	1	26014-100252	BOLT, M10X 25	4	4	4					
30	1	172539-62200	STEP ASSY	2	2	2					
31	1	26013-100202	BOLT, M10X 20	4	4	4					
32	1	172538-61951-1	STEP, FLOOR	1	1	1					
33	1	172538-61961-1	STEP, FLOOR	1	1	1					
34	1	26013-100402	BOLT, M10X 40	4	4	4					
35	1	172539-61830	FLOOR R,A/C (49)	1	1	1					
36	1	26014-100202	BOLT, M10X 20	2	2	2					

Remarks
(1)Attach the No.9A & 9B label to this part.
(2)Attach the No.10A label to this part.
(3)Attach the No.22A & 22B label to this part.
(4)Attach the No.1A-1 label to this part.
(5)Label is not illustrated.
(6)Cabin specification.
(7)Interchangeable by simultaneous replacement with Fig.5 No.9-1 & 26.

N:Old ◄Yes/No► New, Q:Old ◄No/Yes► New, R:Old ◄Yes/Yes► New, S:Old ◄No/No► New, W:Add, Z:Discontinued, F:Interchangeable by set, K:Q'ty Change

Copyright (C) YANMAR CO., LTD. All RightsReserved.

Fig.36. SEAT & SEAT MOUNT

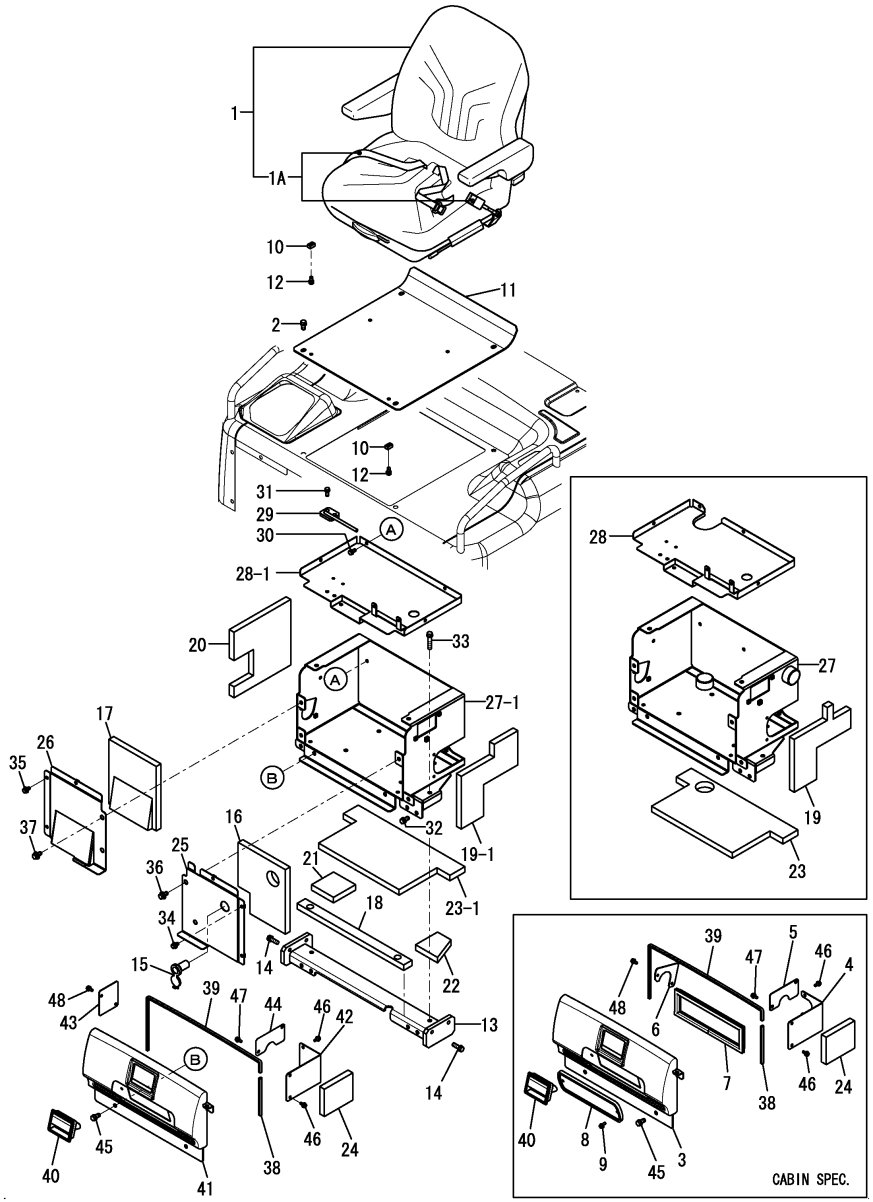

Remarks
(1)Cabin specification.
(2)Attach the No.26A & 26B label to this part.
(3)Attach the No.41A, 41B-1 & 41C-1 label to this part.
(4)Label is not illustrated.

(A)=V4-6(US) (D)=
(B)=V4-6(AS) (E)=
(C)=V4-6(NZ) (F)=

No.	Lev.	Parts No.	Description	Q'ty (A)	(B)	(C)	(D)	(E)	(F)	I	R
1	1	172538-64050	SEAT ASSY	1	1	1					
1A	2	172538-64060	SEATBELT ASSY	1	1	1				W	
	(A=MXXXXX)	(B=MXXXXX)	(C=MXXXXX)								
2	1	26013-100202	BOLT, M10X 20	4	4	4					
3	1	172538-19502-2	GRILLE ASSY	1	1	1					1
3-1	1	172538-19502-Y	GRILLE ASSY	1	1	1				S	1
	(A=M61501)	(B=M61501)	(C=M61501)								
4	1	172538-19600-1	COVER, HOSE	1	1	1					1
5	1	172538-19610-1	COVER, HARNESS	1	1	1					1
6	1	172538-19620-1	COVER, DEFFRENCAL	1	1	1					1
7	1	172538-19730	RUBBER SEAL 655	1	1	1					1
8	1	172187-61690	VENTILATOR	1	1	1					1
9	1	26014-060162	BOLT, M6X 16	2	2	2					1
10	1	172527-64350	PLATE	4	4	4					
11	1	172538-64470-1	PLATE ,SEAT A AS(2J)	1	1	1					
11-1	1	172538-64470-Y	PLATE ASSY,SEAT A AS	1	1	1				S	
	(A=M61501)	(B=M61501)	(C=M61501)								
12	1	26013-080162	BOLT, M8X 16	4	4	4					
13	1	172538-64101-1	CHANNEL ASSY	1	1	1					
14	1	26013-100302	BOLT, M10X 30	4	4	4					
15	1	172A64-17250	SOCKET ASSY	1	1	1					
16	1	172538-60140	SPONGE	1	1	1					
17	1	172538-60150	SPONGE	1	1	1					
18	1	172538-60160	SPONGE	1	1	1					
19	1	172538-60170	SPONGE	1							
19-1	1	172538-60171	EV B,BOX	1	1	1				S	
	(A=M/#60699)										
20	1	172538-60180	SPONGE	1	1	1					
21	1	172538-60190	SPONGE	1	1	1					
22	1	172538-60200	SPONGE	1	1	1					
23	1	172538-60210	SPONGE	1							
23-1	1	172538-60211	SPONGE	1	1	1				S	
	(A=M/#60699)										
24	1	172538-60220	EV A,COVER	1	1	1					
25	1	172538-64301-2	PLATE ASSY,A (2J)	1	1	1					
25-1	1	172538-64301-Y	PLATE ASSY,A	1	1	1				S	
	(A=M61501)	(B=M61501)	(C=M61501)								
26	1	172538-64320-2	PLATE ASSY,B (2J)	1	1	1					2
26-1	1	172538-64320-Y	PLATE ASSY,B	1	1	1				S	2
	(A=M61501)	(B=M61501)	(C=M61501)								
26A	1	172463-03290	LABEL, HYD.OIL	1	1	1					4
26B	1	172437-03322	LABEL, RESEVOIR	1	1	1					4
27	1	172538-64500-1	SEAT MOUNT ASSY (49)	1							
27-1	1	172538-64501	SEAT MOUNT ASSY (49)	1	1	1				S	
	(A=M/#60699)										
28	1	172538-64640-1	COVER ASSY, SEAT	1							
28-1	1	172538-64641	COVER ASSY, SEAT	1	1	1				S	
	(A=M/#60699)										
29	1	172538-64690-1	CATCH ASSY, GRILLE	1	1	1					
30	1	26013-080162	BOLT, M8X 16	3	3	3					
31	1	26013-080202	BOLT, M8X 20	2	2	2					

N:Old $\overset{\text{Yes}}{\underset{\text{No}}{\leftrightarrow}}$ New, Q:Old $\overset{\text{No}}{\underset{\text{Yes}}{\leftrightarrow}}$ New, R:Old $\overset{\text{Yes}}{\underset{\text{Yes}}{\leftrightarrow}}$ New, S:Old $\overset{\text{No}}{\underset{\text{No}}{\leftrightarrow}}$ New, W:Add, Z:Discontinued, F:Interchangeable by set, K:Q'ty Change

++ CONTINUE ++

Copyright (C) YANMAR CO., LTD. All RightsReserved.

Fig.36. SEAT & SEAT MOUNT

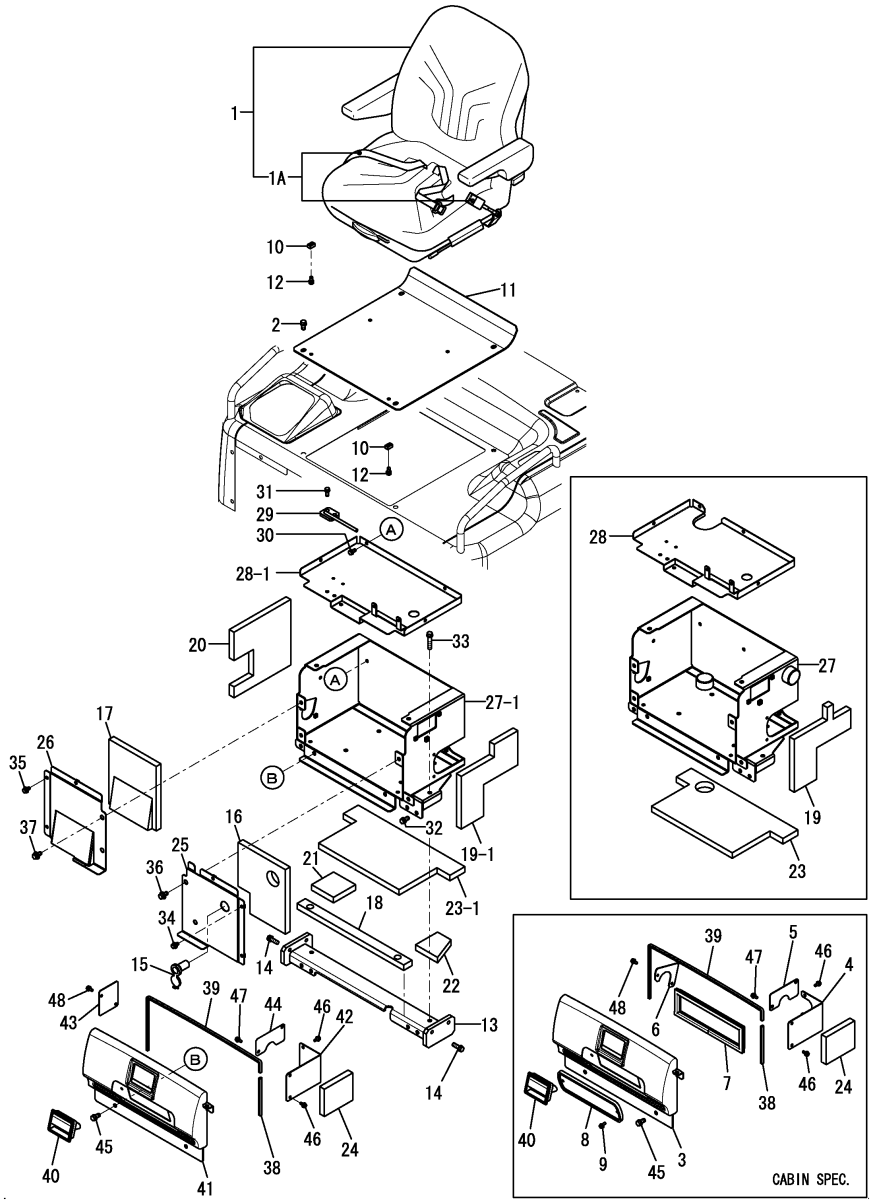

Remarks
(1)Cabin specification.
(2)Attach the No.26A & 26B label to this part.
(3)Attach the No.41A, 41B-1 & 41C-1 label to this part.
(4)Label is not illustrated.

(A)=V4-6(US) (D)=
(B)=V4-6(AS) (E)=
(C)=V4-6(NZ) (F)=

No.	Lev.	Parts No.	Description	Q'ty (A)	(B)	(C)	(D)	(E)	(F)	I	R
32	1	26013-100202	BOLT, M10X 20	4	4	4					
33	1	26013-100502	BOLT, M10X 50	2	2	2					
34	1	26014-080162	BOLT, M8X 16	3	3	3					
35	1	26014-080162	BOLT, M8X 16	3	3	3					
36	1	26014-100202	BOLT, M10X 20	2	2	2					
37	1	26014-100202	BOLT, M10X 20	2	2	2					
38	1	172538-19700	SEAL,135	1	1	1					
39	1	172538-19710	SEAL,690	1	1	1					
40	1	172187-61421	HANDLE, LOCK	1	1	1					
41	1	172538-64751-2	GRILLE ASSY	1	1	1					3
41-1	1	172538-64751-Y	GRILLE ASSY	1	1	1				S	3
	(A=M61501)	(B=M61501)	(C=M61501)								
41A	1	172437-03343	LABEL, TRANSPORT	1	1	1					4
41B	1	172538-03730	LABEL,FUSE US	1							4
41B-1	1	172538-03731	LABEL,FUSE US	1	1	1				S	4
	(A=M/#60699)										
41C	1	172538-03780	LABEL,FUSE CAB US	1							4
41C-1	1	172538-03781	LABEL,FUSE CAB US	1	1	1				S	4
	(A=M/#60699)										
42	1	172538-64790-1	COVER	1	1	1					
43	1	172538-64800-1	COVER	1	1	1					
44	1	172538-19610-1	COVER, HARNESS	1	1	1					
45	1	26013-100202	BOLT, M10X 20	2	2	2					
46	1	26014-060162	BOLT, M6X 16	4	4	4					
47	1	26014-060162	BOLT, M6X 16	2	2	2					
48	1	26014-060162	BOLT, M6X 16	2	2	2					

N:Old $\xleftarrow[\text{No}]{\text{Yes}}$ New, Q:Old $\xleftarrow[\text{Yes}]{\text{No}}$ New, R:Old $\xleftarrow[\text{Yes}]{\text{Yes}}$ New, S:Old $\xleftarrow[\text{No}]{\text{No}}$ New, W:Add, Z:Discontinued, F:Interchangeable by set, K:Q'ty Change

Copyright (C) YANMAR CO., LTD. All RightsReserved.

Fig.37. SEAT & SEAT MOUNT(AIR CONDITONER SPEC.)

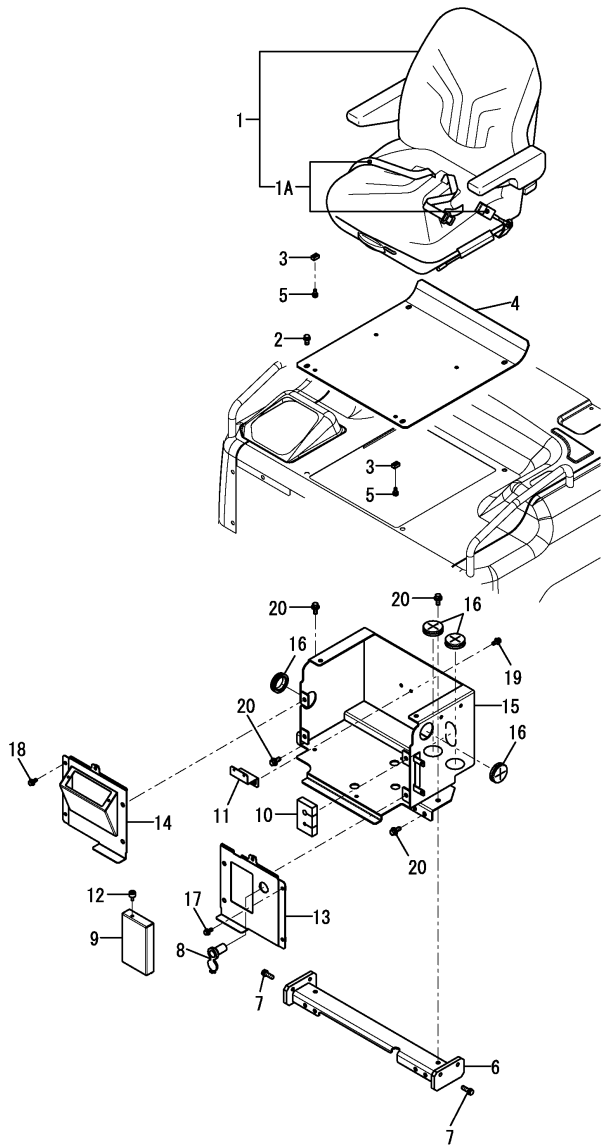

(A)=V4-6(US) (D)=
(B)=V4-6(AS) (E)=
(C)=V4-6(NZ) (F)=

No.	Lev.	Parts No.	Description	Q'ty (A)	(B)	(C)	(D)	(E)	(F)	I	R
1	1	172538-64050	SEAT ASSY	1	1	1					
1A	2	172538-64060	SEATBELT ASSY	1	1	1				W	
	(A=*2011.08)	(B=*2011.08)	(C=*2011.08)								
2	1	26013-100202	BOLT, M10X 20	4	4	4					
3	1	172527-64350	PLATE	4	4	4					
4	1	172538-64470-1	PLATE ,SEAT A AS(2J)	1	1	1					
4-1	1	172538-64470-Y	PLATE ASSY,SEAT A AS	1	1	1				S	
	(A=M61501)	(B=M61501)	(C=M61501)								
5	1	26013-080162	BOLT, M8X 16	4	4	4					
6	1	172538-64101-1	CHANNEL ASSY	1	1	1					
7	1	26013-100302	BOLT, M10X 30	4	4	4					
8	1	172A64-17250	SOCKET ASSY	1	1	1					
9	1	172539-18650	COVER ASSY	1	1	1					
9-1	1	172539-18650-Y	COVER ASSY	1	1	1				S	
	(A=M61501)	(B=M61501)	(C=M61501)								
10	1	172539-18670	SEAL, HOSE	1	1	1					
11	1	172539-18700	BRACKET,ASSY (49)	1	1	1					
12	1	1F4190-41040	WING BOLT, 6X15	1	1	1					
13	1	172539-64300	PLATE A,A/C ASSY(2J)	1	1	1					
13-1	1	172539-64300-Y	PLATE A,A/C ASSY	1	1	1				S	
	(A=M61501)	(B=M61501)	(C=M61501)								
14	1	172539-64320	PLATE B,A/C ASSY(2J)	1	1	1					1
14-1	1	172539-64320-Y	PLATE B,A/C ASSY	1	1	1				S	1
	(A=M61501)	(B=M61501)	(C=M61501)								
14A	1	172463-03290	LABEL, HYD.OIL	1	1	1					2
14B	1	172437-03322	LABEL, RESEVOIR	1	1	1					2
15	1	172539-64500	SEAT MOUNT,A/C (49)	1	1	1					
16	1	1A6260-85270	GROMMET, 51	4	4	4					
17	1	26014-080202	BOLT, M8X 20	3	3	3					
18	1	26014-080202	BOLT, M8X 20	3	3	3					
19	1	26014-080202	BOLT, M8X 20	2	2	2					
20	1	26014-100252	BOLT, M10X 25	6	6	6					

Remarks
(1)Attach the No.14A & 14B label to this part.
(2)Label is not illustrated.

N:Old $\overset{\text{Yes}}{\underset{\text{No}}{\leftrightarrow}}$ New, Q:Old $\overset{\text{No}}{\underset{\text{Yes}}{\leftrightarrow}}$ New, R:Old $\overset{\text{Yes}}{\underset{\text{Yes}}{\leftrightarrow}}$ New, S:Old $\overset{\text{No}}{\underset{\text{No}}{\leftrightarrow}}$ New, W:Add, Z:Discontinued, F:Interchangeable by set, K:Q'ty Change

Copyright (C) YANMAR CO., LTD. All RightsReserved.

Fig.38. BONNET

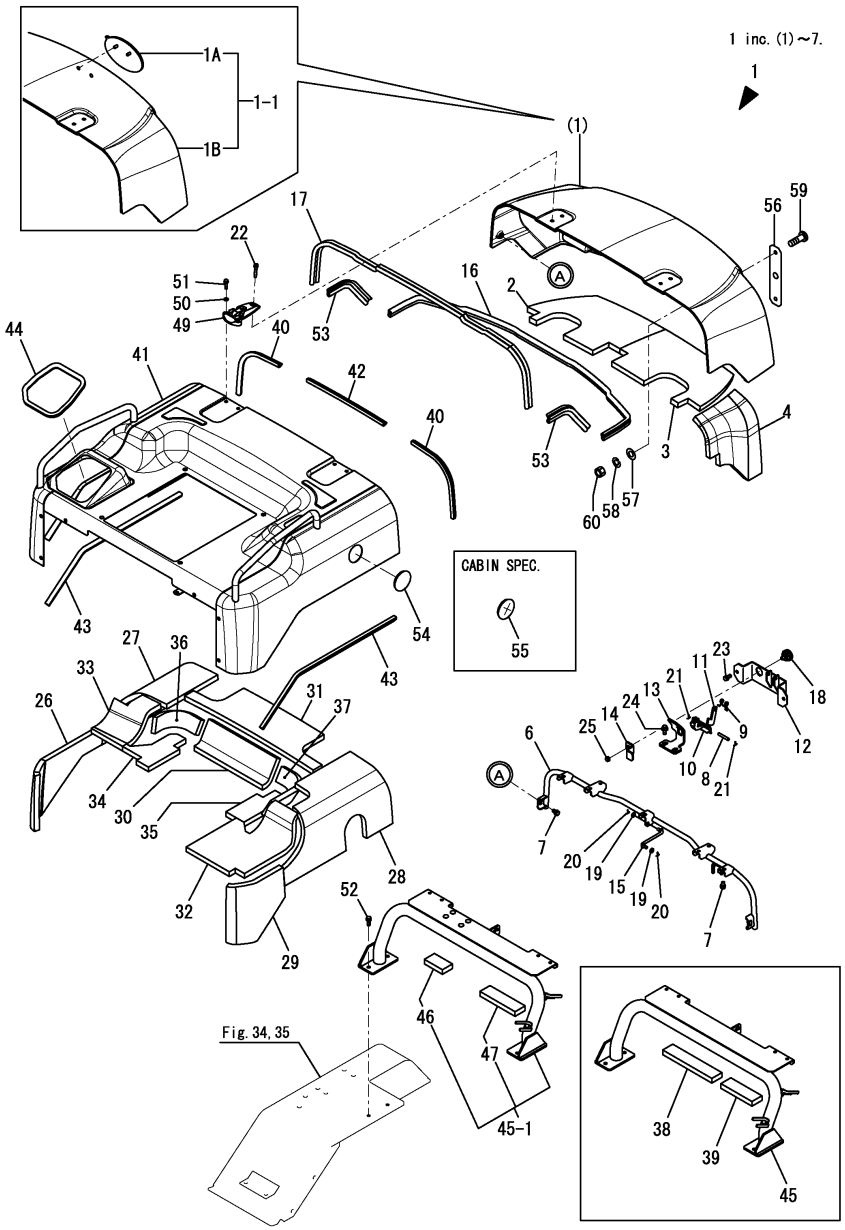

Remarks
(1)Attach the No.No.7A, 7B, 7C, 7D & 7E label to this part.
(2)Attach the No.41A, 41B, 41C & 41D label to this part.
(3)Label is not illustrated.

(A)=V4-6(US) (D)=
(B)=V4-6(AS) (E)=
(C)=V4-6(NZ) (F)=

No.	Lev.	Parts No.	Description	Q'ty (A)	(B)	(C)	(D)	(E)	(F)	I	R
1	1	172538-65630-1	BONNET R ASSY,US(2J)	1	1	1					1
1-1	1	172538-08620	BONNET KIT,EMBLEM	1	1	1				S	
	(A=M61501)	(B=M61501)	(C=M61501)								
1A	2	172538-03070	EMBLEM ASSY	1	1	1				W	
	(A=M61501)	(B=M61501)	(C=M61501)								
1B	2	172539-65600	BONNET ASSY, REAR	1	1	1				W	
	(A=M61501)	(B=M61501)	(C=M61501)								
2	3	172538-60750	SPONGE	1	1	1					
3	3	172538-60760	SPONGE	1	1	1					
4	3	172538-60770	SPONGE	1	1	1					
6	3	172538-66000-1	FRAME,BONNET (2J)	1	1	1					
6-1	3	172538-66000	FRAME, BONNET	1	1	1				S	
	(A=M61501)	(B=M61501)	(C=M61501)								
7	3	26013-100162	BOLT, M10X 16	5							
7-1	3	26014-100162	BOLT, M10X 16	5	5	5				N	
	(A=M/#60731)										
7A	1	172437-03402	LABEL, ENGINE COVER	1	1	1					3
7B	1	172A36-03411	LABEL, ENGINE ROOM	1	1	1					3
7C	1	172437-03422	LABEL, MUFFLER	1	1	1					3
7D	1	172538-03130	LABEL,REAR	1	1	1					3
7E	1	172538-03750	LABEL,CAUTION US	1	1	1					3
8	1	172734-65260	PIN, BONNET LEVER	1	1	1					
9	1	172734-65270	SPRING, CATCH	1	1	1					
10	1	172124-65450	LEVER ASSY, LOCK	1	1	1					
11	1	172124-65480	CATCHER	1	1	1					
12	1	172538-65740-2	PLATE ASSY,CATCH(2J)	1	1	1					
12-1	1	172538-65740-Y	PLATE ASSY,CATCH	1	1	1				S	
	(A=M61501)	(B=M61501)	(C=M61501)								
13	1	172538-65780	PLATE,CATCH	1	1	1					
14	1	172538-65800	PLATE,ROCK	1	1	1					
15	1	172538-65821	ROD,STOPPER	1	1	1					
16	1	172538-65850	RUBBER, SEAL 1330	1	1	1					
17	1	172538-65860	RUBBER, SEAL 1415	1	1	1					
18	1	172164-66170	KEY ASSY, CYLINDER	1	1	1					
19	1	22137-080000	WASHER, 8	2	2	2					
20	1	22417-200200	PIN, COTTER 2.0X20	2	2	2					
21	1	22417-200200	PIN, COTTER 2.0X20	2	2	2					
22	1	26013-080452	BOLT, M8X 45	4	4	4					
23	1	26013-100202	BOLT, M10X 20	2	2	2					
24	1	26014-100252	BOLT, M10X 25	2	2	2					
25	1	26347-100002	NUT, M10	1	1	1					
26	1	172538-60600	EV A(F BONNET	1	1	1					
27	1	172539-60600	SPONGE	1	1	1					
28	1	172539-60610	SPONGE	1	1	1					
29	1	172538-60620	EV C(F BONNET	1	1	1					
30	1	172539-60620	SPONGE	1	1	1					
31	1	172539-60630	SPONGE	1	1	1					
32	1	172538-60640	EV E(F BONNET	1	1	1					
33	1	172538-60650	SPONGE	1	1	1					
34	1	172538-60660	EV G(F BONNET	1	1	1					
35	1	172538-60670	SPONGE	1	1	1					

N:Old $\overset{\text{Yes}}{\underset{\text{No}}{\leftrightarrow}}$ New, Q:Old $\overset{\text{No}}{\underset{\text{Yes}}{\leftrightarrow}}$ New, R:Old $\overset{\text{Yes}}{\underset{\text{Yes}}{\leftrightarrow}}$ New, S:Old $\overset{\text{No}}{\underset{\text{No}}{\leftrightarrow}}$ New, W:Add, Z:Discontinued, F:Interchangeable by set, K:Q'ty Change

++ CONTINUE ++

Copyright (C) YANMAR CO., LTD. All RightsReserved.

Fig.38. BONNET

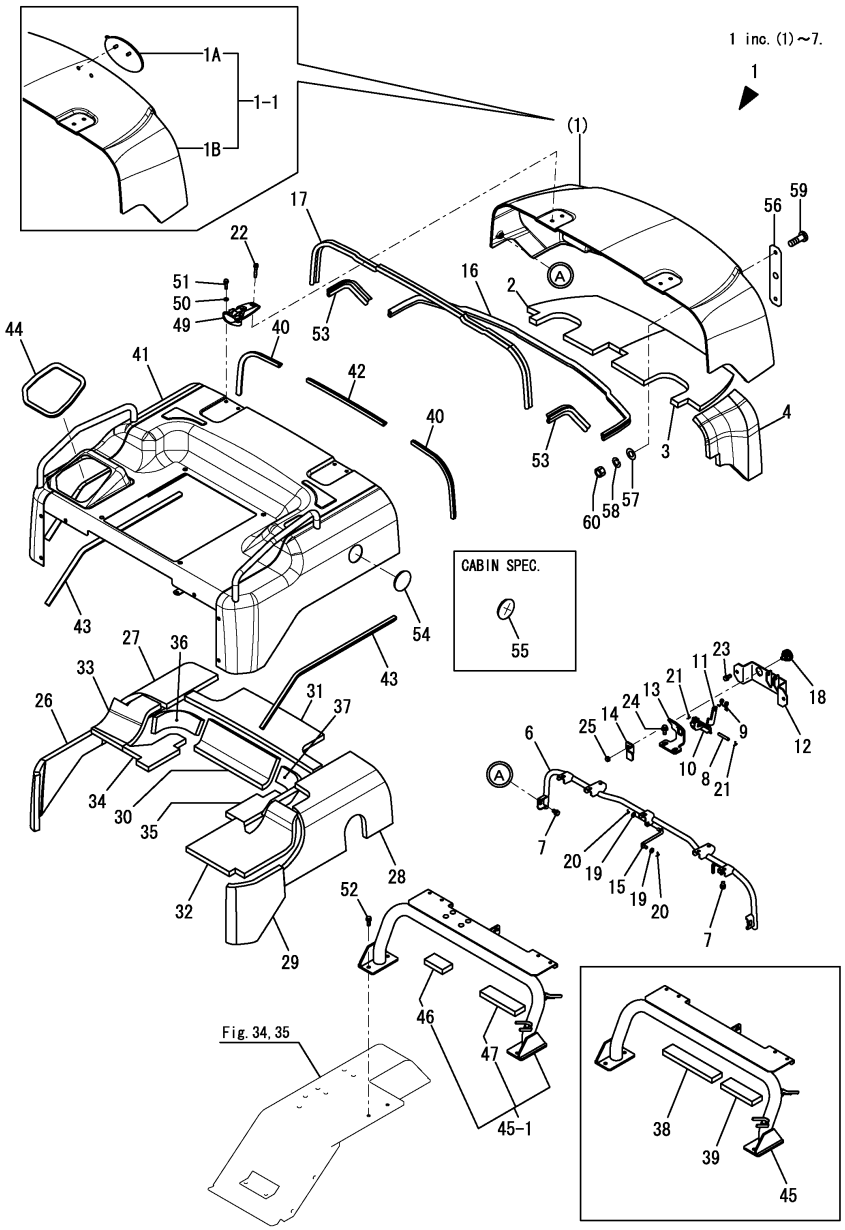

Remarks
(1)Attach the No.No.7A, 7B, 7C, 7D & 7E label to this part.
(2)Attach the No.41A, 41B, 41C & 41D label to this part.
(3)Label is not illustrated.

(A)=V4-6(US) (D)=
(B)=V4-6(AS) (E)=
(C)=V4-6(NZ) (F)=

No.	Lev.	Parts No.	Description	Q'ty (A)	(B)	(C)	(D)	(E)	(F)	I	R
36	1	172538-60690	EV K(F BONNET	1	1	1					
37	1	172538-60700	EV L(F BONNET	1	1	1					
38	1	172538-60721	SPONGE	1						Z	
	(A=M/#60699)										
39	1	172538-60731	SPONGE	1						Z	
	(A=M/#60699)										
40	1	172487-64780	RUBBER, SEAL 365	2	2	2					
41	1	172539-65111-2	BONNET ASSY,F (2J)	1	1	1					2
41-1	1	172539-65111-Y	BONNET ASSY,F	1	1	1				S	2
	(A=M61501)	(B=M61501)	(C=M61501)								
41A	1	172511-03230	LABEL	1	1	1					3
41B	1	172527-03620	LABEL	1	1	1					3
41C	1	172538-03720	LABEL,P.BRAKE US	1	1	1					3
41D	1	172524-03471	LABEL	1	1	1					3
42	1	172538-65310	RUBBER, SEAL 380	1	1	1					
43	1	172539-65310	RUBBER, SEAL 720	2	2	2					
44	1	172538-65320	RUBBER, SEAL 625	1	1	1					
45	1	172538-65401	FRAME,BONNET ASY(49)	1							
45-1	1	172538-65380	FRAME ASSY,BONNET(49	1	1	1				N	
	(A=M/#60699)										
46	2	172538-60722	SPONGE	1	1	1				W	
	(A=M/#60699)										
47	2	172538-60731	SPONGE	1	1	1				W	
	(A=M/#60699)										
49	1	172538-65650-2	HINGE (YELLOW:2J)	2	2	2					
49-1	1	172538-65650-Y	HINGE	2	2	2				S	
	(A=M61501)	(B=M61501)	(C=M61501)								
50	1	22137-080000	WASHER, 8	4	4	4					
51	1	26013-080302	BOLT, M8X 30	4	4	4					
52	1	26013-100302	BOLT, M10X 30	4	4	4					
53	1	172183-13480	RUBBER, SEAL	2	2	2					
54	1	172730-61890	CAP, ENGINE COVER	1	1	1					
55	1	172538-65300	COVER, ENGINE	1	1	1					
56	1	172538-65950-1	PLATE,BONNET	1	1	1				W	
	(A=M61131)	(B=M61131)	(C=M61131)								
57	1	22137-040000	WASHER, 4	2	2	2				W	
	(A=M61131)	(B=M61131)	(C=M61131)								
58	1	22217-040000	WASHER, SPRING 4	2	2	2				W	
	(A=M61131)	(B=M61131)	(C=M61131)								
59	1	26587-040122	SCREW, M4X12	2	2	2				W	
	(A=M61131)	(B=M61131)	(C=M61131)								
60	1	26716-040002	NUT, M4	2	2	2				W	
	(A=M61131)	(B=M61131)	(C=M61131)								

N:Old $\xleftarrow[\text{No}]{\text{Yes}}$ New, Q:Old $\xleftarrow[\text{Yes}]{\text{No}}$ New, R:Old $\xleftarrow[\text{Yes}]{\text{Yes}}$ New, S:Old $\xleftarrow[\text{No}]{\text{No}}$ New, W:Add, Z:Discontinued, F:Interchangeable by set, K:Q'ty Change

Copyright (C) YANMAR CO., LTD. All RightsReserved.

Fig.39. CANOPY

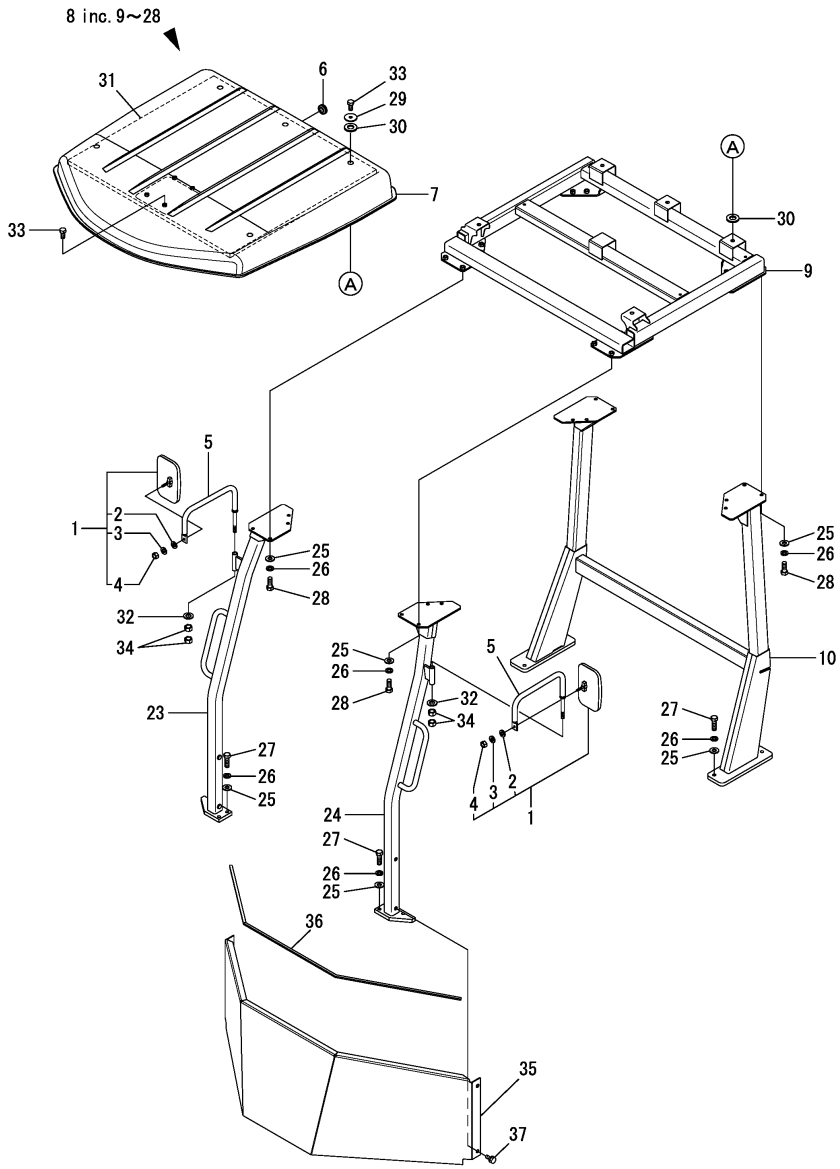

(A)=V4-6(US) (D)=
(B)=V4-6(AS) (E)=
(C)=V4-6(NZ) (F)=

No.	Lev.	Parts No.	Description	Q'ty (A)	(B)	(C)	(D)	(E)	(F)	I	R
1	1	172524-06901	MIRROR ASSY, BACK	2	2	2					
2	2	22137-080000	WASHER, 8	2	2	2					
3	2	22217-080000	WASHER, SPRING 8	2	2	2					
4	2	26716-080002	NUT, M8	2	2	2					
5	1	172538-67900	FRAME ASSY,MIRROR(49	2	2	2					
6	1	172527-17830	CAP	1	1	1					
7	1	172527-68512	ROOF ASSY(YELLOW:2J)	1	1	1					
7-1	1	172527-68512-Y	ROOF ASSY	1	1	1				S	
	(A=M61501)	(B=M61501)	(C=M61501)								
8	1	172538-69590	FRAME ASSY,ROPS (49)	1	1	1					1
9	2	172538-69600-1	FRAME ,ROOF(ROPS(49)	1	1	1					
10	2	172538-69750-1	FRAME ,REAR(ROPS(49)	1	1	1					
23	2	172538-69880-1	FRAME ,FL(ROPS (49)	1	1	1					
24	2	172538-69960-1	FRAME ,FR(ROPS (49)	1	1	1					
25	2	22137-120000	WASHER, 12	28	28	28					
26	2	22217-120000	WASHER, SPRING 12	28	28	28					
27	2	26076-120352	BOLT, 10.912X 35	12	12	12					
28	2	26076-120402	BOLT, 10.912X 40	16	16	16					
28A	1	172437-03302	LABEL, MANUAL	1	1	1					2
28B	1	172524-03621	LABEL	1	1	1					2
28C	1	172524-03642	LABEL, CONTACT US	1	1	1					2
28D	1	172437-03441	LABEL, ROPS	1	1	1					2
29	1	172524-68710	WASHER	5	5	5					
30	1	172524-68720	SEAL	10	10	10					
31	1	172527-62850	SEAL	1	1	1					
32	1	22137-140000	WASHER, 14	2	2	2					
33	1	26116-080162	BOLT, M8X 16 PLATED	9	9	9					
34	1	26736-140002	NUT, M14	4	4	4					
35	1	172538-61200-1	COVER, OPERATOR	1	1	1					
35-1	1	172538-61200-Y	COVER, OPERATOR	1	1	1				S	
	(A=M61501)	(B=M61501)	(C=M61501)								
36	1	172538-61250	SEAL,1250	1	1	1					
37	1	26013-100202	BOLT, M10X 20	6	6	6					

Remarks
(1)Attach the No.28A, 28B, 28C & 28D label to this part.
(2)Label is not illustrated.

N:Old $\xleftarrow[\text{No}]{\text{Yes}}$ New, Q:Old $\xleftarrow[\text{Yes}]{\text{No}}$ New, R:Old $\xleftarrow[\text{Yes}]{\text{Yes}}$ New, S:Old $\xleftarrow[\text{No}]{\text{No}}$ New, W:Add, Z:Discontinued, F:Interchangeable by set, K:Q'ty Change

Copyright (C) YANMAR CO., LTD. All RightsReserved.

Fig.40. CABIN(CENTER DEFROSTER SPEC.)

CABIN ASSY
Fig.40 REF. NO.2-2
inc. Fig.41 REF. No.2～109B
Fig.42 REF. No.1～36A
Fig.43 REF. No.2～5
Fig.44 REF. No.2～10
Fig.45 REF. No.1～4

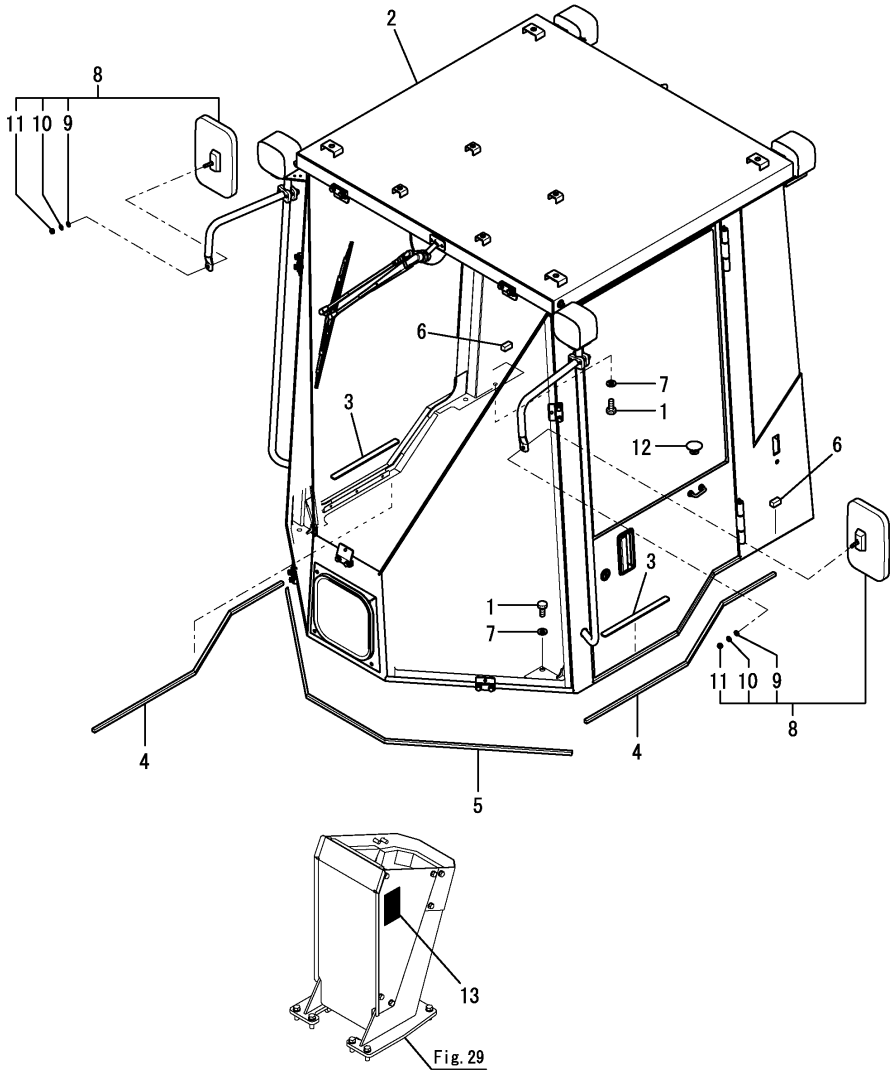

(A)=V4-6(US) (D)=
(B)=V4-6(AS) (E)=
(C)=V4-6(NZ) (F)=

No.	Lev.	Parts No.	Description	Q'ty (A)	(B)	(C)	(D)	(E)	(F)	I	R
1	1	172131-37170	BOLT M12X 30	12							
1-1	1	26076-120402	BOLT, 10.912X 40	12	12	12				N	
	(A=FROM 1ST)										
2	1	172538-68410	CABIN ASSY	1							1
2-1	1	172538-68411	CABIN ASSY	1	1	1				N	
	(A=M/#60977)										
2-2	1	172538-68412-1	CABIN ASSY	1	1	1				N	
	(A=MZZZZZ)	(B=MZZZZZ)	(C=MZZZZZ)								
2B	1	172437-03302	LABEL, MANUAL	1	1	1					2
2C	1	172524-03621	LABEL	1	1	1					2
2D	1	172524-03642	LABEL, CONTACT US	1	1	1					2
2E	1	172437-03441	LABEL, ROPS	1	1	1					2
3	1	172538-68450	SHEET, NON SLIP	2	2	2					
4	1	172538-68460	SEAL,10X10X1000	2	2	2					
5	1	172538-68470	SEAL,10X10X1770	1	1	1					
6	1	172538-68480	SEAL, 15X15X30	2	2	2					
7	1	22217-120000	WASHER, SPRING 12	12	12	12					
8	1	172524-06901	MIRROR ASSY, BACK	2	2	2					
9	2	22137-080000	WASHER, 8	2	2	2					
10	2	22217-080000	WASHER, SPRING 8	2	2	2					
11	2	26716-080002	NUT, M8	2	2	2					
12	1	172176-68210	CLIP, TREE	2	2	2					
13	1	172538-03850	LABEL,DEFROSTER US	1	1	1				W	
	(A=*2008.10)										

Remarks
(1)Attach the No.2B, 2C, 2D & 2E label to this part.
(2)Label is not illustrated.

N:Old $\xleftarrow[\text{No}]{\text{Yes}}$ New, Q:Old $\xleftarrow[\text{Yes}]{\text{No}}$ New, R:Old $\xleftarrow[\text{Yes}]{\text{Yes}}$ New, S:Old $\xleftarrow[\text{No}]{\text{No}}$ New, W:Add, Z:Discontinued, F:Interchangeable by set, K:Q'ty Change

Copyright (C) YANMAR CO., LTD. All RightsReserved.

Fig.41. CABIN(DOOR)(CENTER DEFROSTER SPEC.)

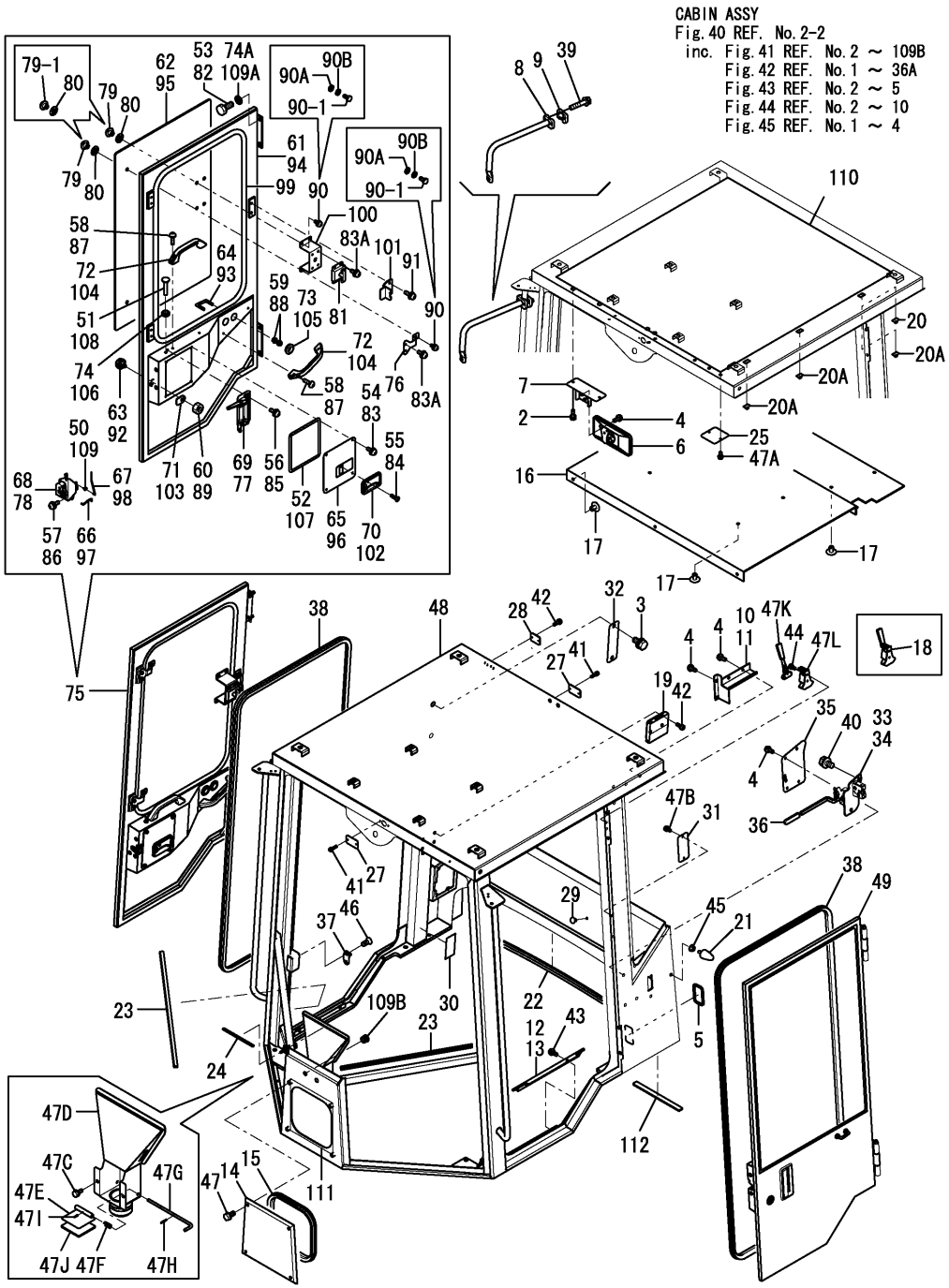

(A)=V4-6(US) (D)=
(B)=V4-6(AS) (E)=
(C)=V4-6(NZ) (F)=

No.	Lev.	Parts No.	Description	Q'ty (A)	(B)	(C)	(D)	(E)	(F)	I	R
2	3	172538-67770	BOLT,M6X16 BK	2	2	2					
3	3	172538-67750	BOLT,M10X20 BK	2	2	2					
4	3	172538-67720	SCREW	23	23	23					
4-1	3	172538-67720	SCREW	19	19	19				K	
	(A=MZZZZZ)	(B=MZZZZZ)	(C=MZZZZZ)								
5	3	172538-67010	GROMMET	1	1	1					
6	3	172538-67030	ROOM MIRROR	1	1	1					
7	3	172538-67040	BRACKET	1	1	1					
8	3	172538-67060	STAY, MIRROR	2	2	2					
9	3	172538-67070	CLAMP	2	2	2					
10	3	172538-67090	COVER	1	1	1					
11	3	172538-67100	COVER	1	1	1					
12	3	172538-67120	DOOR	1	1	1					
13	3	172538-67130	DOOR	1	1	1					
14	3	172538-67150	COVER	1	1	1					
15	3	172538-67160	RUBBER,S OC 01	1	1	1					
16	3	172538-67180	SEAT, INTERIOR	1	1	1					
17	3	172538-67190	CLIP	13	13	13					
18	3	172538-67210	HUMMER ASSY	1						Z	
	(A=*2008.12)										
19	3	172538-67230	DRINK HOLDER	1	1	1					
20	3	172538-67250	CLIP	5	5	5					
20-1	3	172538-67250	CLIP	2	2	2				K	
	(A=MZZZZZ)	(B=MZZZZZ)	(C=MZZZZZ)								
20A	3	172538-67260	CLIP	3	3	3				W	
	(A=MZZZZZ)	(B=MZZZZZ)	(C=MZZZZZ)								
21	3	172538-67270	STOPPER, BUBBER	2	2	2					
22	3	172538-67290	RUBBER,P	1	1	1					
23	3	172538-67310	RUBBER,G	2	2	2					
24	3	172538-67330	RUBBER	1	1	1					
25	3	172538-67350	COVER	1	1	1					
27	3	172538-67390	BRACKET	2	2	2					
28	3	172538-67410	BRACKET	1	1	1					
29	3	172538-67430	CLIP	2	2	2					
30	3	172538-67450	PLATE,NAME	1	1	1					
31	3	172538-67470	COVER	1	1	1					
32	3	172538-67490	COVER	1	1	1					
33	3	172538-67510	CATCH ASSY	1	1	1					
34	3	172538-67520	CATCH ASSY	1	1	1					
35	3	172538-67530	CATCH, COVER	2	2	2					
36	3	172538-67540	COVER, LEVER	2	2	2					
37	3	172538-67560	STRIKER	2	2	2					
38	3	172538-67590	RUBBER S	2	2	2					
39	3	172538-67610	BOLT,M8X40	4							
39-1	3	26014-080402	BOLT, M8X 40	4	4	4				N	
	(A=*2008.12)										
40	3	172538-67620	BOLT,M10X20	8							
40-1	3	26014-100202	BOLT, M10X 20	8	8	8				N	
	(A=*2008.12)										
41	3	172538-67640	SCREW	4	4	4					
42	3	172538-67650	SCREW	6	6	6					

N:Old $\xleftarrow[\text{No}]{\text{Yes}}$ New, Q:Old $\xleftarrow[\text{Yes}]{\text{No}}$ New, R:Old $\xleftarrow[\text{Yes}]{\text{Yes}}$ New, S:Old $\xleftarrow[\text{No}]{\text{No}}$ New, W:Add, Z:Discontinued, F:Interchangeable by set, K:Q'ty Change

++ CONTINUE ++

Copyright (C) YANMAR CO., LTD. All RightsReserved.

Fig.41. CABIN(DOOR)(CENTER DEFROSTER SPEC.)

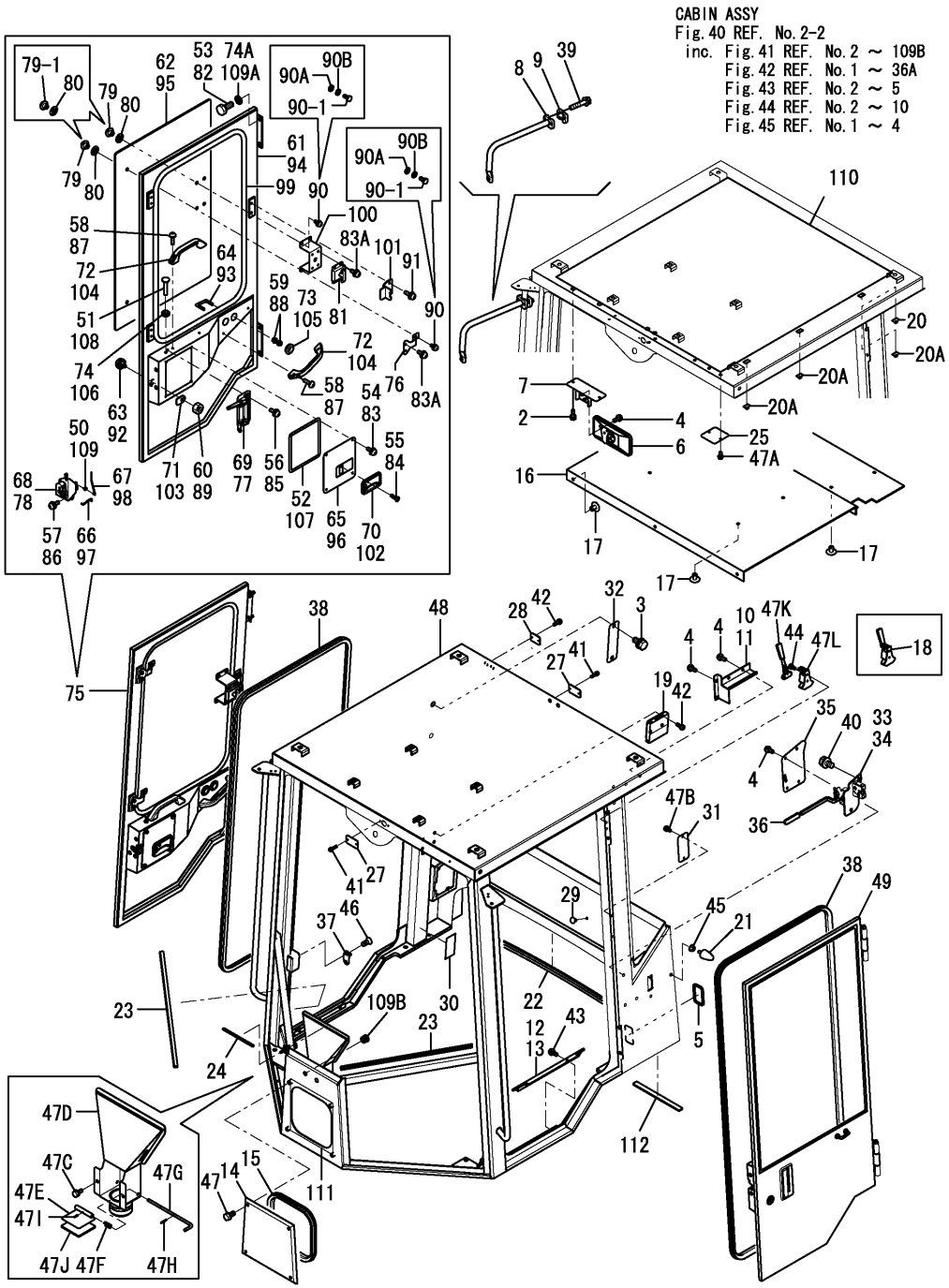

(A)=V4-6(US) (D)=
(B)=V4-6(AS) (E)=
(C)=V4-6(NZ) (F)=

No.	Lev.	Parts No.	Description	Q'ty (A)	(B)	(C)	(D)	(E)	(F)	I	R
43	3	172538-67660	SCREW	4	4	4					
44	3	172538-67670	SCREW, M5X12	8	8	8					
45	3	172538-67680	NUT, FLANGE	2	2	2					
46	3	172538-67690	SCREW, M8	4	4	4					
47	3	172538-67710	BOLT,M8 BK	4	4	4					
47A	3	172538-67670	SCREW, M5X12	2	2	2				W	
	(A=*2008.12)										
47B	3	172538-67670	SCREW, M5X12	2	2	2				W	
	(A=*2008.12)										
47C	3	172538-67710	BOLT,M8 BK	2	2	2				W	
	(A=*2008.12)										
47C-1	3	172A69-69180	BOLT	2	2	2				N	
	(A=MZZZZZ)	(B=MZZZZZ)	(C=MZZZZZ)								
47D	3	172538-68620	DEFROSTER CMP	1	1	1				W	
	(A=*2008.12)										
47E	3	172538-68630	SHIELD ASSY, AIR	1	1	1				W	
	(A=*2008.12)										
47F	3	172538-68640	SPRING	1	1	1				W	
	(A=*2008.12)										
47G	3	172538-68650	LEVER	1	1	1				W	
	(A=*2008.12)										
47H	3	172538-68660	PIN	1	1	1				W	
	(A=*2008.12)										
47I	3	172538-68670	PIN	1	1	1				W	
	(A=*2008.12)										
47J	3	172538-68680	URETHANE	1	1	1				W	
	(A=*2008.12)										
47K	3	172A69-69790	HAMMER	1	1	1				W	
	(A=*2008.12)										
47L	3	172A69-69800	BRACKET, HAMMER	1	1	1				W	
	(A=*2008.12)										
48	2	172538-68010	PANEL ASSY,CAB	1	1	1					
49	2	172538-68700	DOOR ASSY	1	1	1					
50	3	172538-68960	HOLDER, LINK	2	2	2					
51	3	172538-68950	KNOB	1	1	1					
52	3	172538-68940	SEAL, PACKING	1	1	1					
53	3	172538-67630	BOLT	4							
53-1	3	26076-100252	BOLT, 10.910X 25	4	4	4				N	
	(A=*2008.12)										
54	3	172538-67720	SCREW	4	4	4					
55	3	172538-67780	SCREW	1	1	1					
56	3	172538-67790	SCREW, M6X14	2							
56-1	3	26023-060142	SCREW, M6X14	2	2	2				N	
	(A=*2008.12)										
56-2	3	172538-67660	SCREW	2	2	2				N	
	(A=MZZZZZ)	(B=MZZZZZ)	(C=MZZZZZ)								
57	3	172538-67800	SCREW, M6X16	3							
57-1	3	26023-060162	SCREW, M6X16	3	3	3				N	
	(A=*2008.12)										
57-2	3	172538-67720	SCREW	3	3	3				N	
	(A=MZZZZZ)	(B=MZZZZZ)	(C=MZZZZZ)								

N:Old $\xleftarrow[\text{No}]{\text{Yes}}$ New, Q:Old $\xleftarrow[\text{Yes}]{\text{No}}$ New, R:Old $\xleftarrow[\text{Yes}]{\text{Yes}}$ New, S:Old $\xleftarrow[\text{No}]{\text{No}}$ New, W:Add, Z:Discontinued, F:Interchangeable by set, K:Q'ty Change

++ CONTINUE ++

Copyright (C) YANMAR CO., LTD. All RightsReserved.

Fig.41. CABIN(DOOR)(CENTER DEFROSTER SPEC.)

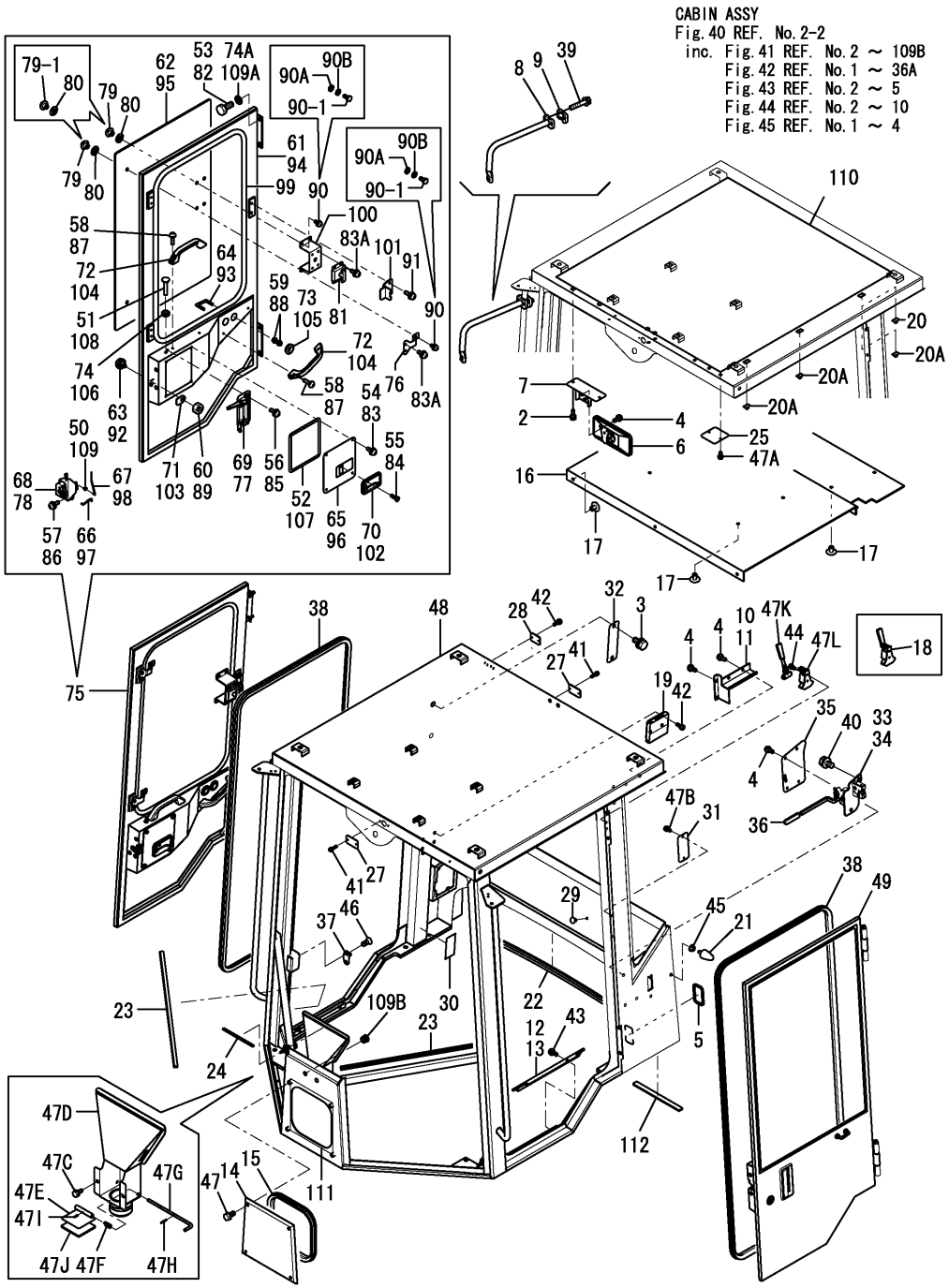

(A)=V4-6(US) (D)=
(B)=V4-6(AS) (E)=
(C)=V4-6(NZ) (F)=

No.	Lev.	Parts No.	Description	Q'ty (A)	(B)	(C)	(D)	(E)	(F)	I	R
58	3	172538-67810	SCREW, M6X20	2							
58-1	3	26023-060202	SCREW, M6X20	4	4	4				N	
	(A=*2008.12)										
58-2	3	172538-67860	SCREW, M6X20 BK	4	4	4				N	
	(A=MZZZZZ)	(B=MZZZZZ)	(C=MZZZZZ)								
59	3	172538-67820	NUT, M8 BK	4	4	4					
60	3	172538-67830	NUT, M10	1	1	1					
61	3	172538-68710	PANEL ASSY,DOOR LH	1	1	1					
62	3	172538-68720	GLASS, DOOR	1	1	1					
63	3	172538-68730	CYLINDER ASSY, KEY	1	1	1					
64	3	172538-68740	BOLT,U	1	1	1					
65	3	172538-68750	COVER	1	1	1					
66	3	172538-68760	ROD,LH	1	1	1					
67	3	172538-68770	ROD,LH	1	1	1					
68	3	172538-68780	LOCK ASSY	1	1	1					
69	3	172538-68790	HANDLE ASSY LH	1	1	1					
70	3	172538-68890	HANDLE, INNER	1	1	1					
71	3	172538-68900	PLATE	1	1	1					
72	3	172538-68910	GRIP	1	1	1					
73	3	172538-68920	GROMMET	2	2	2					
74	3	172538-68930	GROMMET	1	1	1					
74A	3	22217-100000	WASHER, SPRING 10	4	4	4				W	
	(A=*2008.12)										
75	2	172538-68800	DOOR ASSY	1							
75-1	2	172538-68801	DOOR ASSY	1	1	1				N	
	(A=M/#60977)										
76	3	172538-68990	SPRINNGHINGE	2							
76-1	3	172538-68991	SPRINNGHINGE	2	2	2				N	
	(A=M/#60977)										
77	3	172538-68980	HANDLE ASSY RH	1	1	1					
78	3	172538-68970	LOCK ASSY RH	1	1	1					
79	3	172538-67550	RETAINER	6							
79-1	3	172538-67600	RETAINER,M6	6	6	6				S	
	(A=M/#60977)										
80	3	172538-67570	PACKING	6	6	6					
81	3	172538-67580	DOORLOCK	1	1	1					
82	3	172538-67630	BOLT	4							
82-1	3	26076-100252	BOLT, 10.910X 25	4	4	4				N	
	(A=*2008.12)										
83	3	172538-67720	SCREW	4	4	4					
83A	3	172538-67720	SCREW	8							
83A-1	3	172538-67980	BOLT,6X16 BK	8	8	8				N	
	(A=M/#60977)										
84	3	172538-67780	SCREW	1	1	1					
85	3	172538-67790	SCREW, M6X14	2							
85-1	3	26023-060142	SCREW, M6X14	2	2	2				N	
	(A=*2008.12)										
85-2	3	172538-67660	SCREW	2	2	2				N	
	(A=MZZZZZ)	(B=MZZZZZ)	(C=MZZZZZ)								
86	3	172538-67800	SCREW, M6X16	3							
86-1	3	26023-060162	SCREW, M6X16	3	3	3				N	

N:Old $\overset{\text{Yes}}{\underset{\text{No}}{\leftrightarrow}}$ New, Q:Old $\overset{\text{No}}{\underset{\text{Yes}}{\leftrightarrow}}$ New, R:Old $\overset{\text{Yes}}{\underset{\text{Yes}}{\leftrightarrow}}$ New, S:Old $\overset{\text{No}}{\underset{\text{No}}{\leftrightarrow}}$ New, W:Add, Z:Discontinued, F:Interchangeable by set, K:Q'ty Change

++ CONTINUE ++

Copyright (C) YANMAR CO., LTD. All RightsReserved.

Fig.41. CABIN(DOOR)(CENTER DEFROSTER SPEC.)

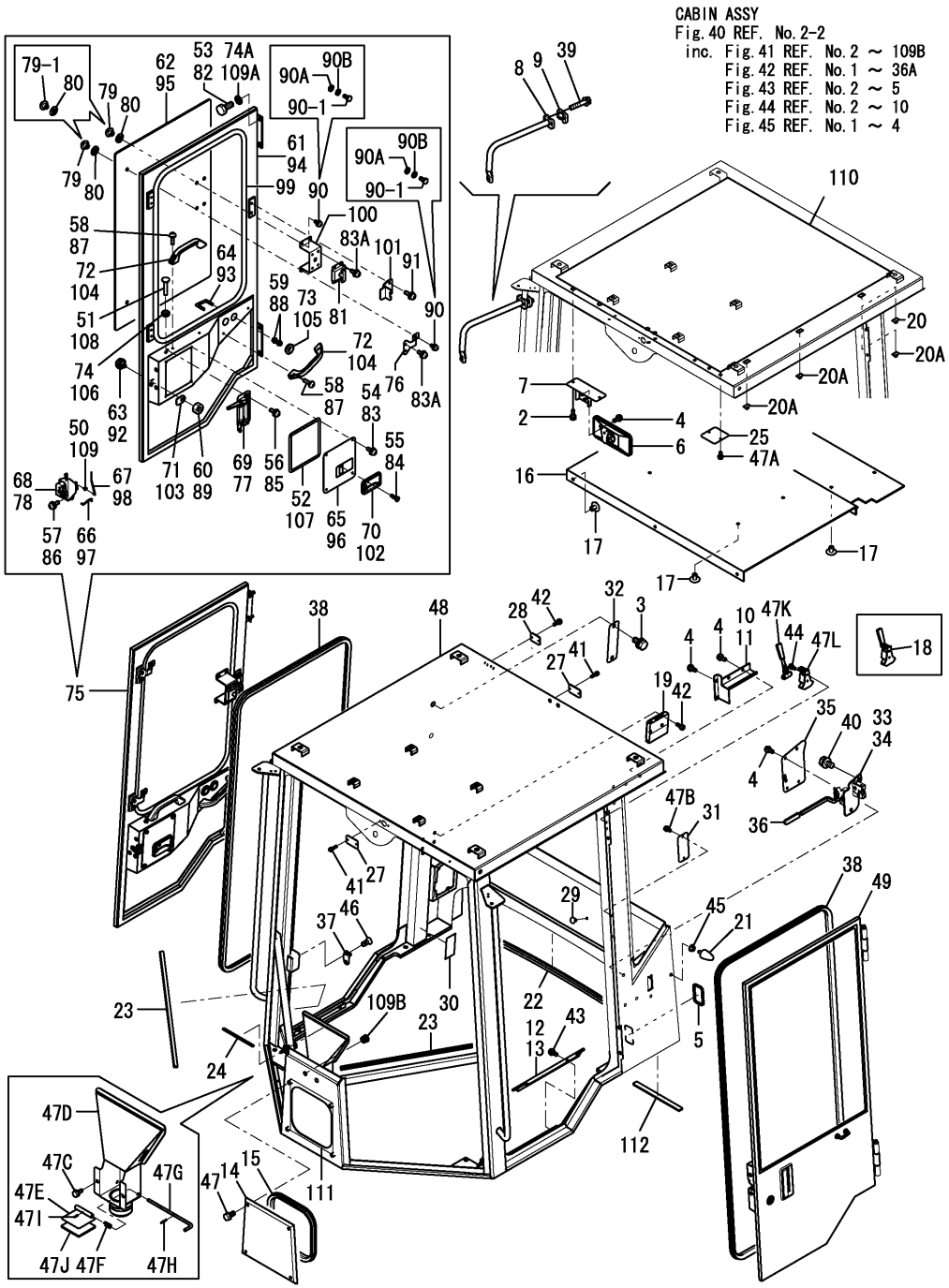

(A)=V4-6(US) (D)=
(B)=V4-6(AS) (E)=
(C)=V4-6(NZ) (F)=

No.	Lev.	Parts No.	Description	Q'ty (A)	(B)	(C)	(D)	(E)	(F)	I	R
	(A=*2008.12)										
86-2	3	172538-67720	SCREW	3	3	3					N
	(A=MZZZZZ)	(B=MZZZZZ)	(C=MZZZZZ)								
87	3	172538-67810	SCREW, M6X20	4							
87-1	3	26023-060202	SCREW, M6X20	4	4	4					N
	(A=*2008.12)										
87-2	3	172538-67860	SCREW, M6X20 BK	4	4	4					N
	(A=MZZZZZ)	(B=MZZZZZ)	(C=MZZZZZ)								
88	3	172538-67820	NUT, M8 BK	4	4	4					
89	3	172538-67830	NUT, M10	1	1	1					
90	3	172538-67840	SCREW, M5X10 BK	6							
90-1	3	172538-67950	BOLT,6X12 BK	6	6	6					S
	(A=M/#60977)										
90A	3	172538-67960	WASHER, 6	6	6	6					W
	(A=M/#60977)										
90B	3	172538-67970	WASHER,6 BK	6	6	6					W
	(A=M/#60977)										
91	3	172538-67850	SCREW, M6X20 BK	2							
91-1	3	172538-67990	BOLT,6X20 BK	2	2	2					N
	(A=M/#60977)										
92	3	172538-68730	CYLINDER ASSY, KEY	1	1	1					
93	3	172538-68740	BOLT,U	1	1	1					
94	3	172538-68810	PANEL ASSY,DOOR RH	1	1	1					
95	3	172538-68820	GLASS, DOOR	1	1	1					
96	3	172538-68830	COVER	1	1	1					
97	3	172538-68840	ROD,RH	1	1	1					
98	3	172538-68850	ROD,RH	1	1	1					
99	3	172538-68860	RUBBER,S	1	1	1					
100	3	172538-68870	BRACKET	1	1	1					
101	3	172538-68880	BRACKET	1	1	1					
102	3	172538-68890	HANDLE, INNER	1	1	1					
103	3	172538-68900	PLATE	1	1	1					
104	3	172538-68910	GRIP	2	2	2					
105	3	172538-68920	GROMMET	2	2	2					
106	3	172538-68930	GROMMET	1	1	1					
107	3	172538-68940	SEAL, PACKING	1	1	1					
108	3	172538-68950	KNOB	1	1	1					
109	3	172538-68960	HOLDER, LINK	2	2	2					
109A	3	22217-100000	WASHER, SPRING 10	4	4	4					W
	(A=*2008.12)										
109B	2	172538-68230	GROMMET	2	2	2					W
	(A=MZZZZZ)	(B=MZZZZZ)	(C=MZZZZZ)								
110	1	172538-60350	SPONGE	1	1	1					
111	1	172538-60360	SPONGE	1	1	1					
112	1	172538-60970	SEAL, 15X200X5	2	2	2					

N:Old $\xleftarrow[\text{No}]{\text{Yes}}$ New, Q:Old $\xleftarrow[\text{Yes}]{\text{No}}$ New, R:Old $\xleftarrow[\text{Yes}]{\text{Yes}}$ New, S:Old $\xleftarrow[\text{No}]{\text{No}}$ New, W:Add, Z:Discontinued, F:Interchangeable by set, K:Q'ty Change

Copyright (C) YANMAR CO., LTD. All RightsReserved.

Fig.42. CABIN(GLASS)(CENTER DEFROSTER SPEC.)

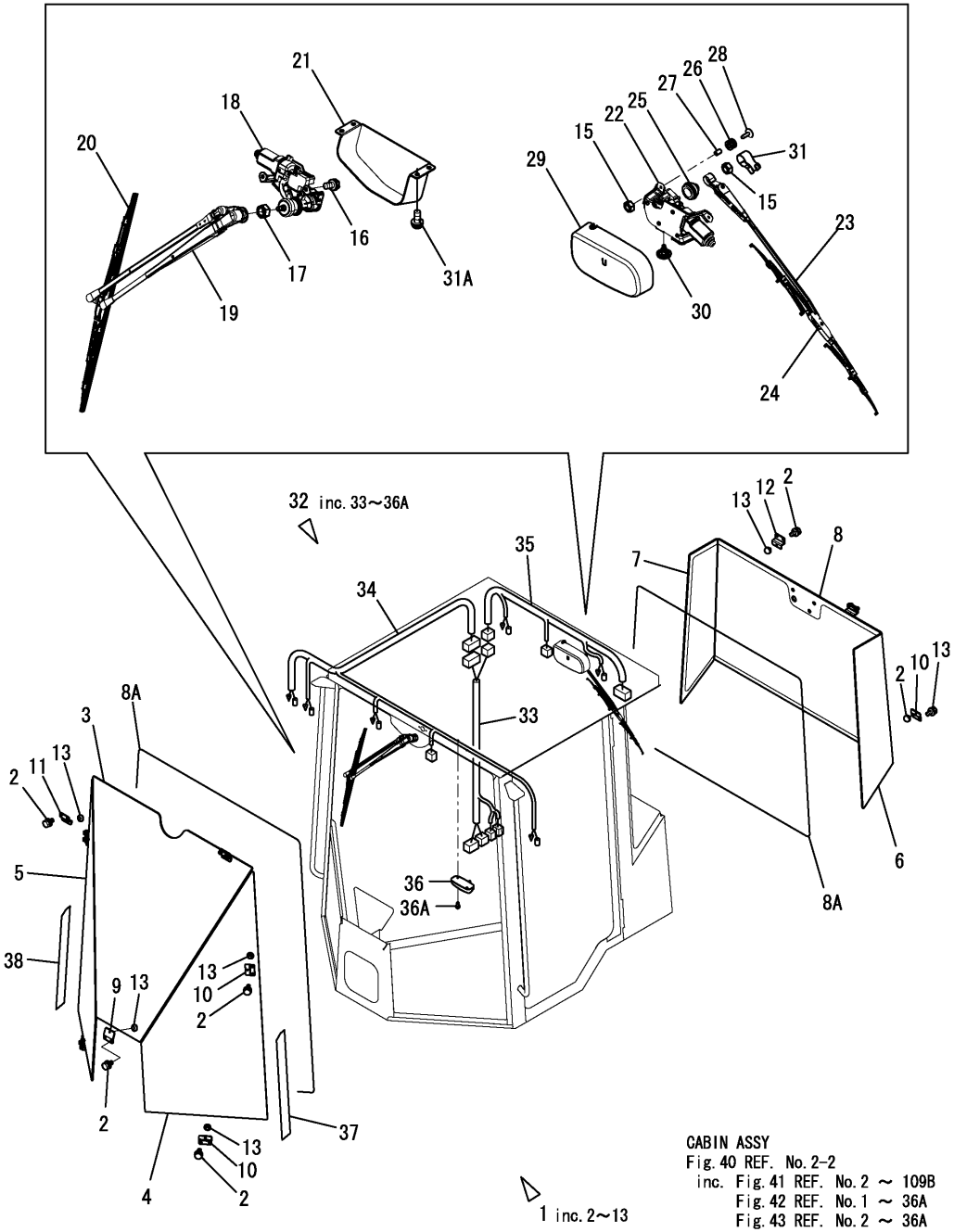

(A)=V4-6(US) (D)=
(B)=V4-6(AS) (E)=
(C)=V4-6(NZ) (F)=

No.	Lev.	Parts No.	Description	Q'ty (A)	(B)	(C)	(D)	(E)	(F)	I	R
1	2	172538-68100	GLASS ASSY	1	1	1					
2	3	172538-67760	BOLT,M8X14 BK	22	22	22					
2-1	3	172538-67870	BOLT,M8X14 BK	22	22	22				N	
(A=MZZZZZ)		(B=MZZZZZ)	(C=MZZZZZ)								
3	3	172538-68110	GLASS	1	1	1					
4	3	172538-68120	GLASS	1	1	1					
5	3	172538-68130	GLASS	1	1	1					
6	3	172538-68140	GLASS	1	1	1					
7	3	172538-68150	GLASS	1	1	1					
8	3	172538-68160	GLASS	1	1	1					
8A	3	172538-68220	RUBBER	2	2	2					
9	3	172538-68170	BRACKET	1	1	1					
10	3	172538-68180	BRACKET	6	6	6					
11	3	172538-68190	BRACKET	2	2	2					
12	3	172538-68200	BRACKET	2	2	2					
13	3	172538-68210	STOPPER	11	11	11					
15	2	172538-67700	NUT, M6	4	4	4					
16	2	172538-67730	BOLT,M6X12	2							
16-1	2	26014-060122	BOLT, M6X 12	2	2	2				N	
(A=*2008.12)											
17	2	172538-67740	NUT, M8	1	1	1					
18	2	172538-68260	WIPER MOTOR	1	1	1					
19	2	172538-68270	ARM, WIPER	1	1	1					
20	2	172538-68280	WIPER BLADE	1	1	1					
21	2	172538-68290	COVER, MOTOR	1	1	1					
22	2	172538-68300	WIPER MOTOR,RR	1	1	1					
23	2	172538-68310	ARM, WIPER	1	1	1					
24	2	172538-68320	WIPER BLADE	1	1	1					
25	2	172538-68330	CAP, PIVOT	1	1	1					
26	2	172538-68340	RUBBER	3	3	3					
27	2	172538-68350	COLLAR	3	3	3					
28	2	172538-68360	BOLT	3	3	3					
29	2	172538-68370	COVER, MOTOR	1	1	1					
30	2	172538-68380	PUSH RIVET	1	1	1					
31	2	172538-68390	COVER, ARM	1	1	1					
31A	2	172538-67720	SCREW	4	4	4				W	
(A=*2008.12)											
32	2	172538-68500	ELECTRICAL ASSY, CAB	1	1	1					
33	3	172538-68510	HARNESS,WIRE	1	1	1					
34	3	172538-68520	HARNESS,WIRE FRONT	1	1	1					
35	3	172538-68530	HARNESS,WIRE REAR	1	1	1					
36	3	172538-68540	LAMP ASSY, ROOM	1	1	1					
36A	3	172538-67670	SCREW, M5X12	2	2	2				W	
(A=*2008.12)											
37	1	172538-03450	LABEL,GLASS L	1	1	1					
38	1	172538-03460	LABEL,GLASS R	1	1	1					

N:Old ←Yes/No→ New, Q:Old ←No/Yes→ New, R:Old ←Yes/Yes→ New, S:Old ←No/No→ New, W:Add, Z:Discontinued, F:Interchangeable by set, K:Q'ty Change

Copyright (C) YANMAR CO., LTD. All RightsReserved.

Fig.43. CABIN(SUNVISOR)(CENTER DEFROSTER SPEC.)

(A)=V4-6(US) (D)=
(B)=V4-6(AS) (E)=
(C)=V4-6(NZ) (F)=

CABIN ASSY
Fig.40 REF. No.2-2
inc. Fig.41 REF. No.2 ~ 109B
Fig.42 REF. No.1 ~ 36A
Fig.43 REF. No.2 ~ 5
Fig.44 REF. No.2 ~ 10
Fig.45 REF. No.1 ~ 4

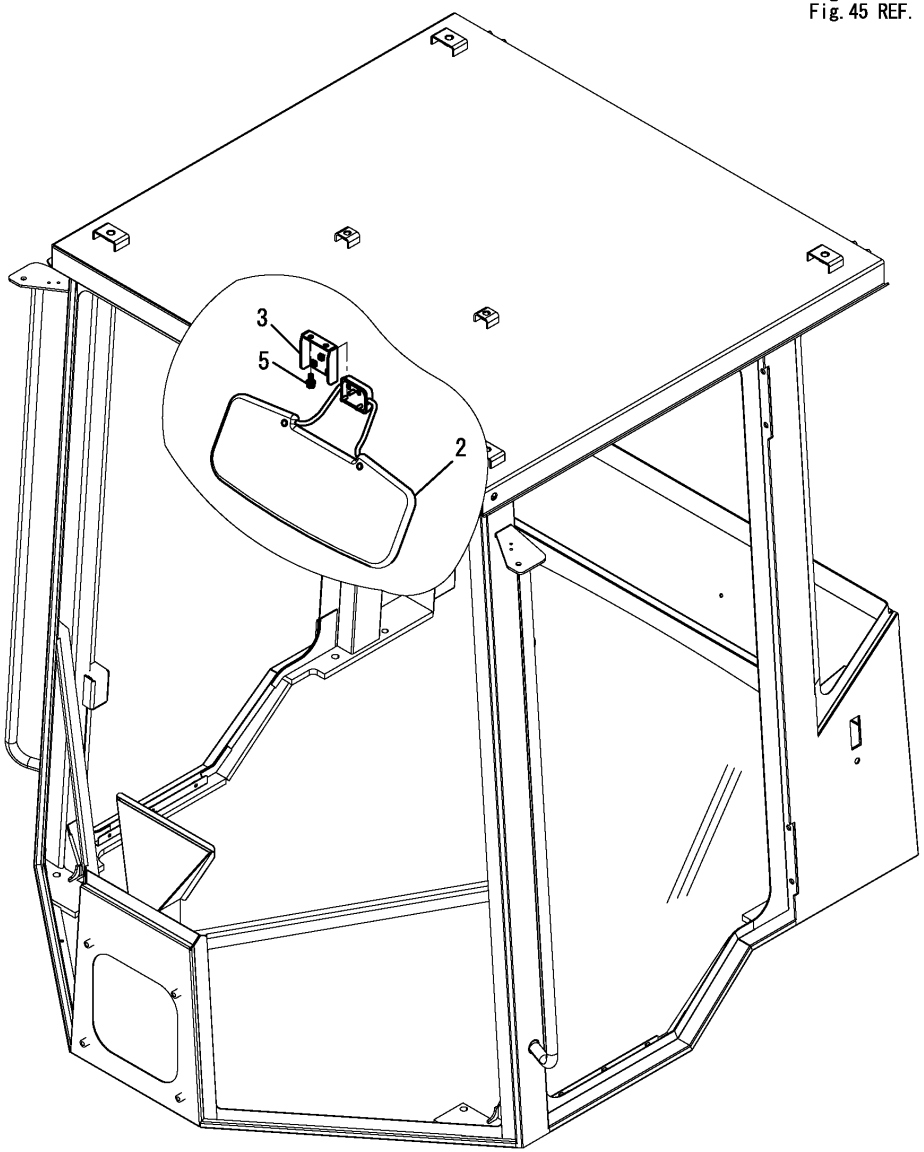

No.	Lev.	Parts No.	Description	Q'ty (A)	(B)	(C)	(D)	(E)	(F)	I	R
2	2	172538-66710	SUNVISOR	1	1	1					
3	2	172538-66720	BRACKET(GG	1	1	1					
5	2	172538-66740	BOLT,M8X20 BK	2	2	2					

N:Old ◄Yes/No► New, Q:Old ◄No/Yes► New, R:Old ◄Yes/Yes► New, S:Old ◄No/No► New, W:Add, Z:Discontinued, F:Interchangeable by set, K:Q'ty Change

Copyright (C) YANMAR CO., LTD. All RightsReserved.

Fig.44. CABIN(WINDOW WASHER)(CENTER DEFROSTER SPEC.)

CABIN ASSY
Fig.40 REF. No.2-2
inc. Fig.41 REF. No.2 ~ 109B
Fig.42 REF. No.1 ~ 36A
Fig.43 REF. No.2 ~ 5
Fig.44 REF. No.2 ~ 10
Fig.45 REF. No.1 ~ 4

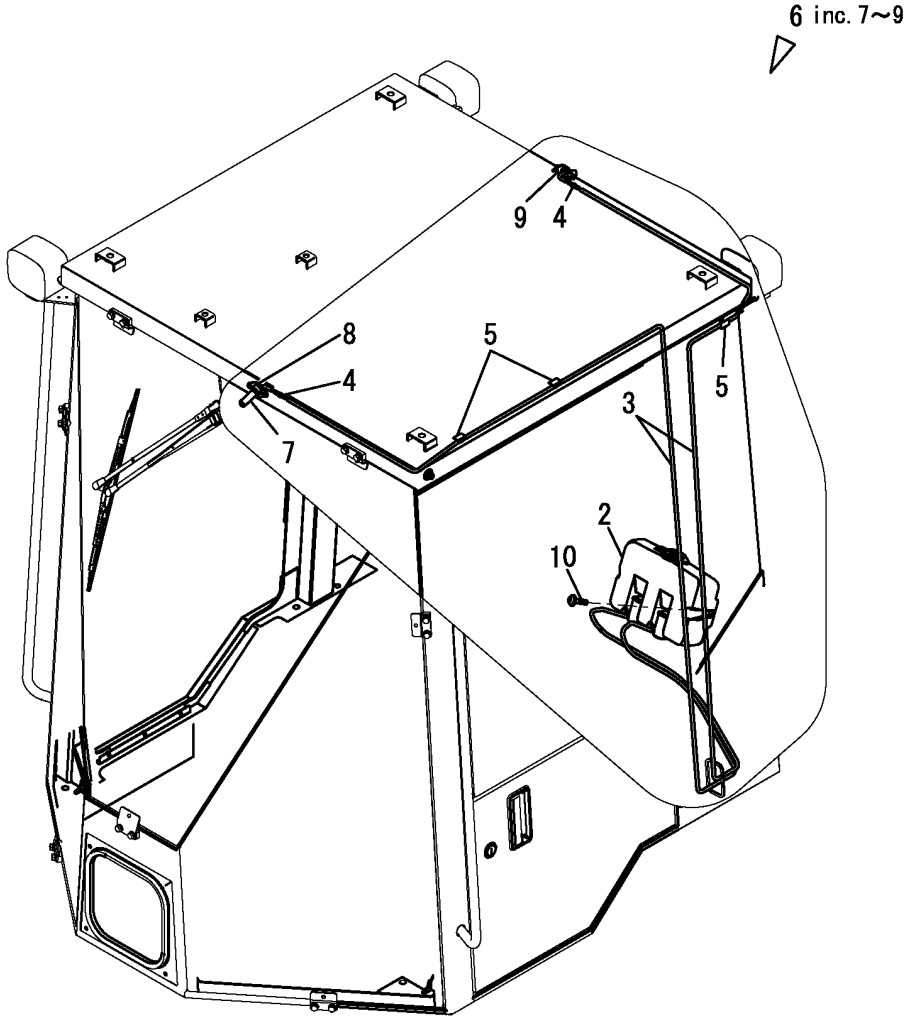

(A)=V4-6(US) (D)=
(B)=V4-6(AS) (E)=
(C)=V4-6(NZ) (F)=

No.	Lev.	Parts No.	Description	Q'ty (A)	(B)	(C)	(D)	(E)	(F)	I	R
2	2	172538-66460	TANK, WASHER	1	1	1					
3	2	172538-66470	HOSE	2	2	2					
4	2	172538-66480	VALVE ASSY, CHECK	2	2	2					
5	2	172538-66490	CLIP	3	3	3					
6	2	172538-66500	NOZZLE ASSY	2	2	2					
7	3	172538-66510	NOZZLE, WASHER	2	2	2					
8	3	172538-66520	ADAPTER, NOZZLE	2	2	2					
9	3	172538-66530	PACKING	2	2	2					
10	2	172538-67800	SCREW, M6X16	4							
10-1	2	26023-060162	SCREW, M6X16	4	4	4				N	
	(A=MZZZZZ)										

N:Old $\xleftarrow[\text{No}]{\text{Yes}}$ New, Q:Old $\xleftarrow[\text{Yes}]{\text{No}}$ New, R:Old $\xleftarrow[\text{Yes}]{\text{Yes}}$ New, S:Old $\xleftarrow[\text{No}]{\text{No}}$ New, W:Add, Z:Discontinued, F:Interchangeable by set, K:Q'ty Change

Copyright (C) YANMAR CO., LTD. All RightsReserved.

Fig.45. CABIN(LAMP)(CENTER DEFROSTER SPEC.)

(A)=V4-6(US) (D)=
(B)=V4-6(AS) (E)=
(C)=V4-6(NZ) (F)=

CABIN ASSY
Fig.40 REF. No.2-2
inc. Fig.41 REF. No.2 ～ 109B
Fig.42 REF. No.1 ～ 36A
Fig.43 REF. No.2 ～ 5
Fig.44 REF. No.2 ～ 10
Fig.45 REF. No.1 ～ 4

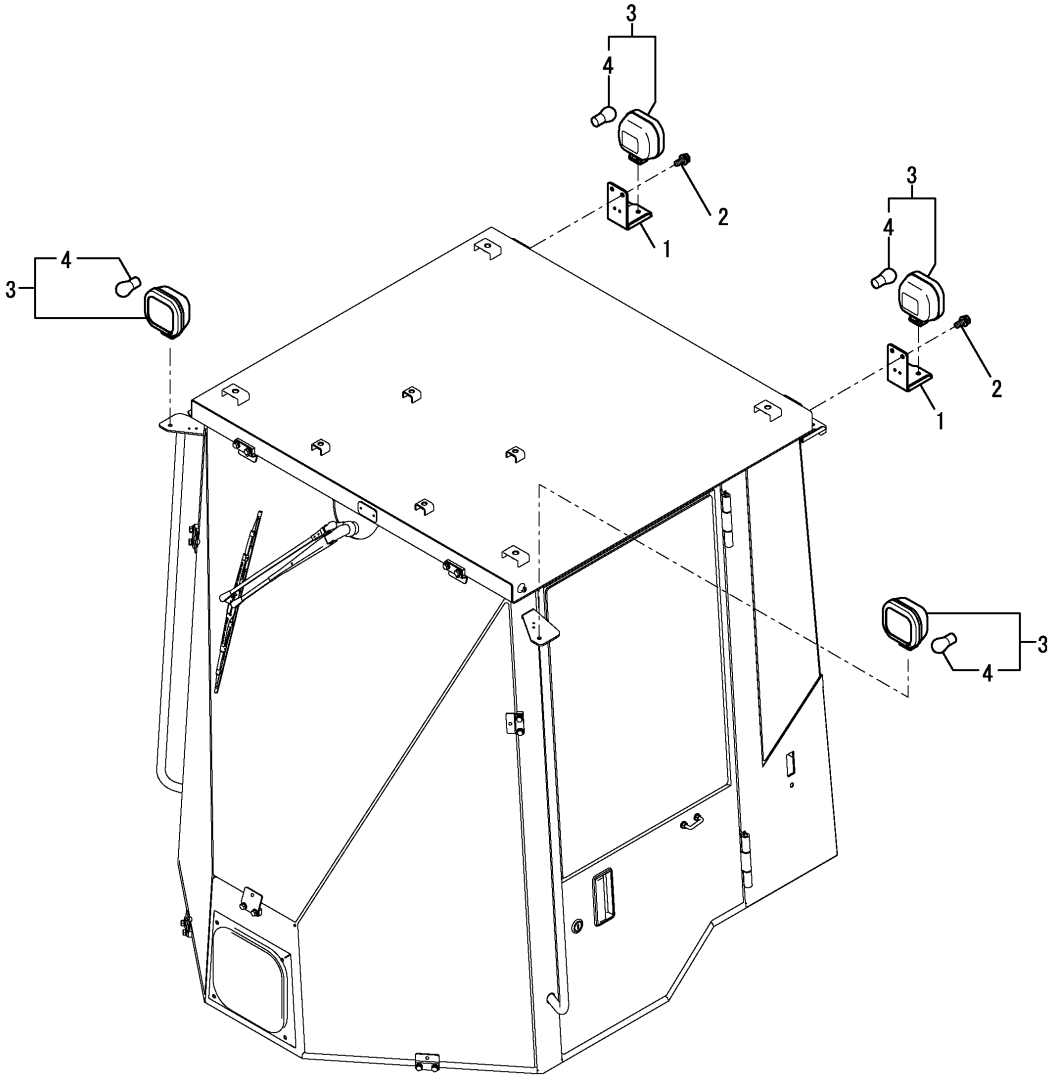

No.	Lev.	Parts No.	Description	Q'ty (A)	(B)	(C)	(D)	(E)	(F)	I	R
1	2	172538-66320-1	BRACKET (GRAY:49)	2	2	2					
2	2	26014-080202	BOLT, M8X 20	4	4	4					
3	2	172458-17450	LAMP, WORK	4	4	4					
4	3	172187-17540	BULB	4	4	4					

N:Old ◄Yes/No► New, Q:Old ◄No/Yes► New, R:Old ◄Yes/Yes► New, S:Old ◄No/No► New, W:Add, Z:Discontinued, F:Interchangeable by set, K:Q'ty Change

Copyright (C) YANMAR CO., LTD. All RightsReserved.

Fig.73. (45A)CABIN(SIDE DEFROSTER SPEC.)

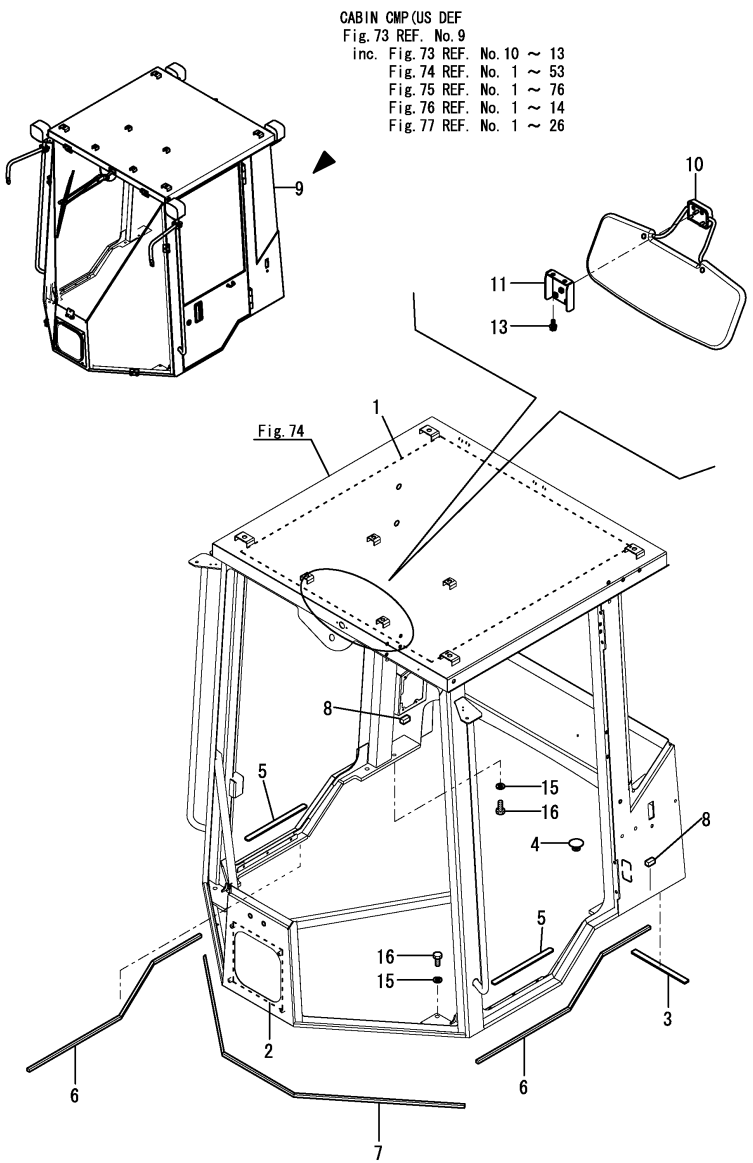

(A)=V4-6(US) (D)=
(B)=V4-6(AS) (E)=
(C)=V4-6(NZ) (F)=

No.	Lev.	Parts No.	Description	Q'ty (A)	(B)	(C)	(D)	(E)	(F)	I	R
1	1	172538-60350	SPONGE	1	1	1					
2	1	172538-60360	SPONGE	1	1	1					
3	1	172538-60970	SEAL, 15X200X5	2	2	2					
4	1	172176-68210	CLIP, TREE	2	2	2				Z	
	(A=MZZZZZ)	(B=MZZZZZ)	(C=MZZZZZ)								
5	1	172538-68450	SHEET, NON SLIP	2	2	2					
6	1	172538-68460	SEAL,10X10X1000	2	2	2					
7	1	172538-68470	SEAL,10X10X1770	1	1	1					
8	1	172538-68480	SEAL, 15X15X30	2	2	2					
9	1	172538-68550	CABIN ASSY	1	1	1					1
9A	1	172437-03302	LABEL, MANUAL	1	1	1					2
9B	1	172524-03621	LABEL	1	1	1					2
9C	1	172524-03642	LABEL, CONTACT US	1	1	1					2
9D	1	172437-03441	LABEL, ROPS	1	1	1					2
10	2	172538-66710	SUNVISOR	1	1	1					
11	2	172538-66720	BRACKET(GG	1	1	1					
13	2	172538-66740	BOLT,M8X20 BK	2	2	2					
15	1	22217-120000	WASHER, SPRING 12	12	12	12					
16	1	26076-120402	BOLT, 10.912X 40	12	12	12					

Remarks
(1)Attach the No.9A, 9B, 9C & 9D label to this part.
(2)Label is not illustrated.

N:Old $\frac{\text{Yes}}{\text{No}}$ New, Q:Old $\frac{\text{No}}{\text{Yes}}$ New, R:Old $\frac{\text{Yes}}{\text{Yes}}$ New, S:Old $\frac{\text{No}}{\text{No}}$ New, W:Add, Z:Discontinued, F:Interchangeable by set, K:Q'ty Change

Copyright (C) YANMAR CO., LTD. All RightsReserved.

Fig.74. (45B)CABIN(FRAME)(SIDE DEFROSTER SPEC.)

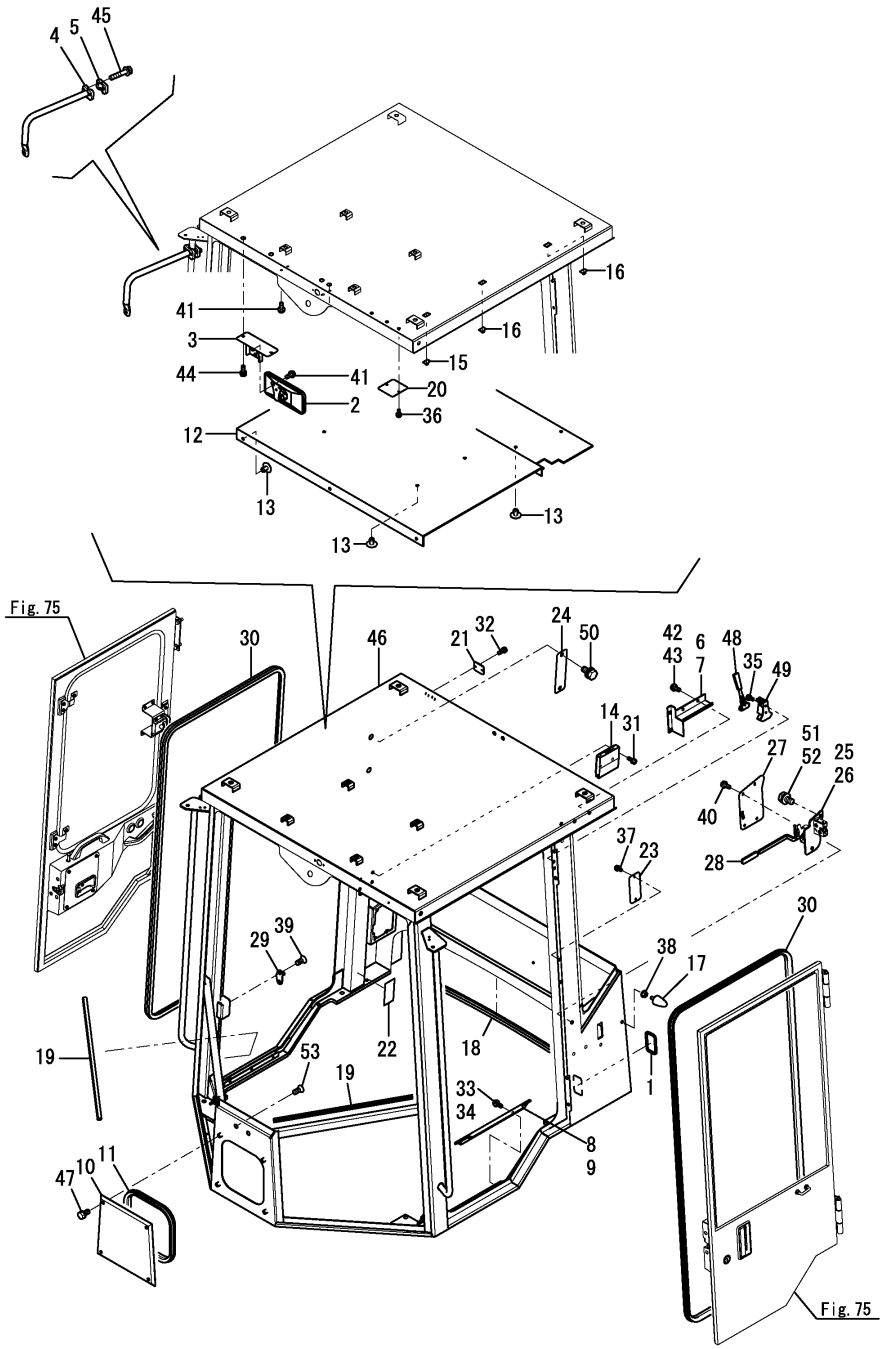

(A)=V4-6(US) (D)=
(B)=V4-6(AS) (E)=
(C)=V4-6(NZ) (F)=

No.	Lev.	Parts No.	Description	Q'ty (A)	(B)	(C)	(D)	(E)	(F)	I	R
1	3	172538-67010	GROMMET	1	1	1					
2	3	172538-67030	ROOM MIRROR	1	1	1					
3	3	172538-67040	BRACKET	1	1	1					
4	3	172538-67060	STAY, MIRROR	2	2	2					
5	3	172538-67070	CLAMP	2	2	2					
6	3	172538-67090	COVER	1	1	1					
7	3	172538-67100	COVER	1	1	1					
8	3	172538-67120	DOOR	1	1	1					
9	3	172538-67130	DOOR	1	1	1					
10	3	172538-67150	COVER	1	1	1					
11	3	172538-67160	RUBBER,S OC 01	1	1	1					
12	3	172538-67180	SEAT, INTERIOR	1	1	1					
13	3	172538-67190	CLIP	13	13	13					
14	3	172538-67230	DRINK HOLDER	1	1	1					
15	3	172538-67250	CLIP	2	2	2					
16	3	172538-67260	CLIP	3	3	3					
17	3	172538-67270	STOPPER, BUBBER	2	2	2					
18	3	172538-67290	RUBBER,P	1	1	1					
19	3	172538-67310	RUBBER,G	2	2	2					
20	3	172538-67350	COVER	1	1	1					
21	3	172538-67410	BRACKET	1	1	1					
22	3	172538-67450	PLATE,NAME	1	1	1					
23	3	172538-67470	COVER	1	1	1					
24	3	172538-67490	COVER	1	1	1					
25	3	172538-67510	CATCH ASSY	1	1	1					
26	3	172538-67520	CATCH ASSY	1	1	1					
27	3	172538-67530	CATCH, COVER	2	2	2					
28	3	172538-67540	COVER, LEVER	2	2	2					
29	3	172538-67560	STRIKER	2	2	2					
30	3	172538-67590	RUBBER S	2	2	2					
31	3	172538-67650	SCREW	4	4	4					
32	3	172538-67650	SCREW	2	2	2					
33	3	172538-67660	SCREW	2	2	2					
34	3	172538-67660	SCREW	2	2	2					
35	3	172538-67670	SCREW, M5X12	8	8	8					
36	3	172538-67670	SCREW, M5X12	2	2	2					
37	3	172538-67670	SCREW, M5X12	2	2	2					
38	3	172538-67680	NUT, FLANGE	2	2	2					
39	3	172538-67690	SCREW, M8	4	4	4					
40	3	172538-67720	SCREW	8	8	8					
41	3	172538-67720	SCREW	3	3	3					
42	3	172538-67720	SCREW	4	4	4					
43	3	172538-67720	SCREW	4	4	4					
44	3	172538-67770	BOLT,M6X16 BK	2	2	2					
45	3	172538-67880	BOLT,M8X40 BK	4	4	4					
46	3	172538-68010	PANEL ASSY,CAB	1	1	1					
47	3	172A69-69180	BOLT	4	4	4					
48	3	172A69-69790	HAMMER	1	1	1					
49	3	172A69-69800	BRACKET, HAMMER	1	1	1					
50	3	26014-100202	BOLT, M10X 20	2	2	2					
51	3	26014-100202	BOLT, M10X 20	4	4	4					

N:Old $\overset{\text{Yes}}{\underset{\text{No}}{\leftrightarrow}}$ New, Q:Old $\overset{\text{No}}{\underset{\text{Yes}}{\leftrightarrow}}$ New, R:Old $\overset{\text{Yes}}{\underset{\text{Yes}}{\leftrightarrow}}$ New, S:Old $\overset{\text{No}}{\underset{\text{No}}{\leftrightarrow}}$ New, W:Add, Z:Discontinued, F:Interchangeable by set, K:Q'ty Change

++ CONTINUE ++

Copyright (C) YANMAR CO., LTD. All RightsReserved.

Fig.74. (45B)CABIN(FRAME)(SIDE DEFROSTER SPEC.)

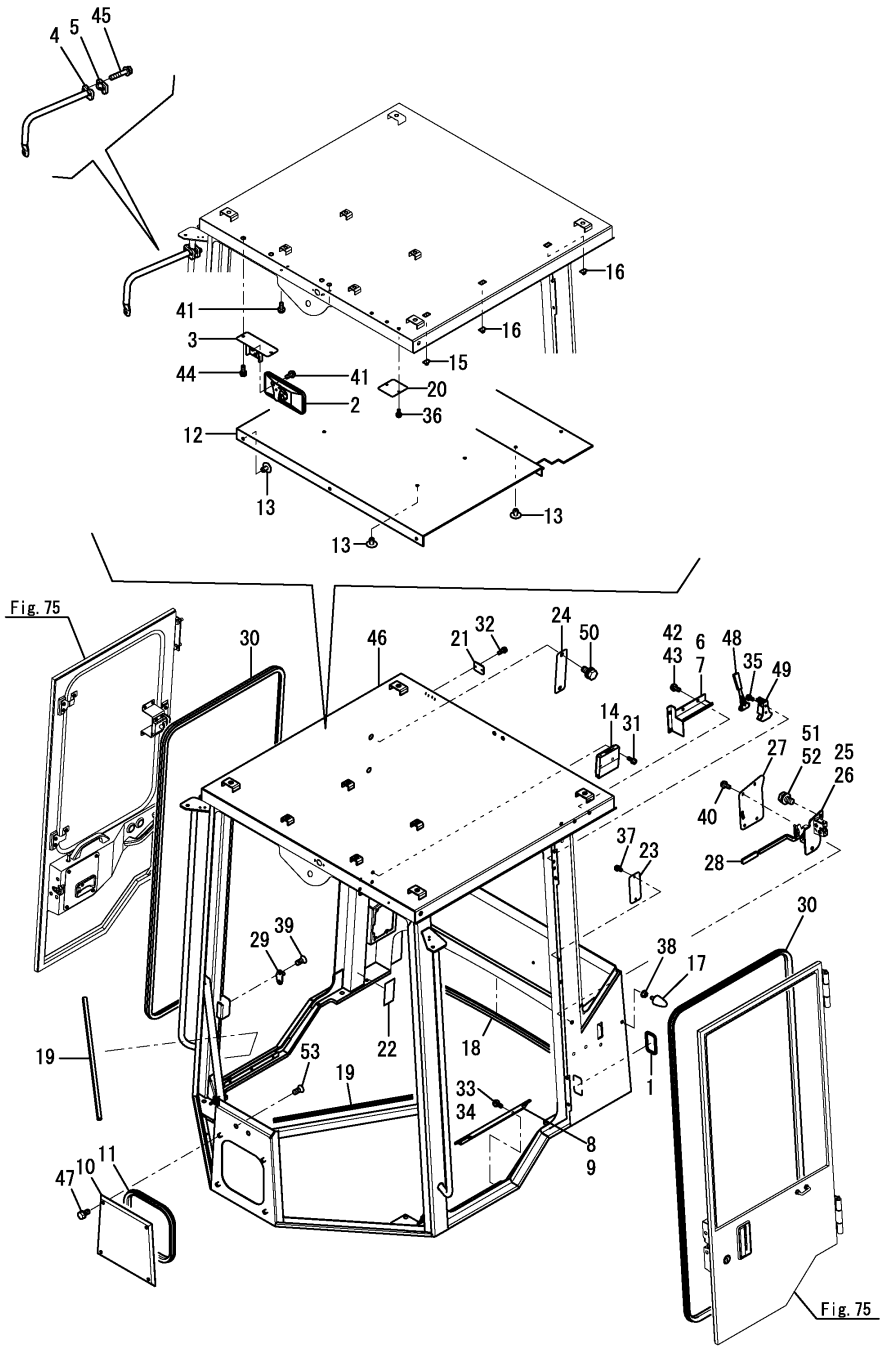

(A)=V4-6(US) (D)=
(B)=V4-6(AS) (E)=
(C)=V4-6(NZ) (F)=

No.	Lev.	Parts No.	Description	Q'ty (A)	(B)	(C)	(D)	(E)	(F)	I	R
52	3	26014-100202	BOLT, M10X 20	4	4	4					
53	2	172538-68230	GROMMET	2	2	2					

N:Old $\frac{\text{Yes}}{\text{No}}$ New, Q:Old $\frac{\text{No}}{\text{Yes}}$ New, R:Old $\frac{\text{Yes}}{\text{Yes}}$ New, S:Old $\frac{\text{No}}{\text{No}}$ New, W:Add, Z:Discontinued, F:Interchangeable by set, K:Q'ty Change

Copyright (C) YANMAR CO., LTD. All RightsReserved.

Fig.75. (45C)CABIN(DOOR)(SIDE DEFROSTER SPEC.)

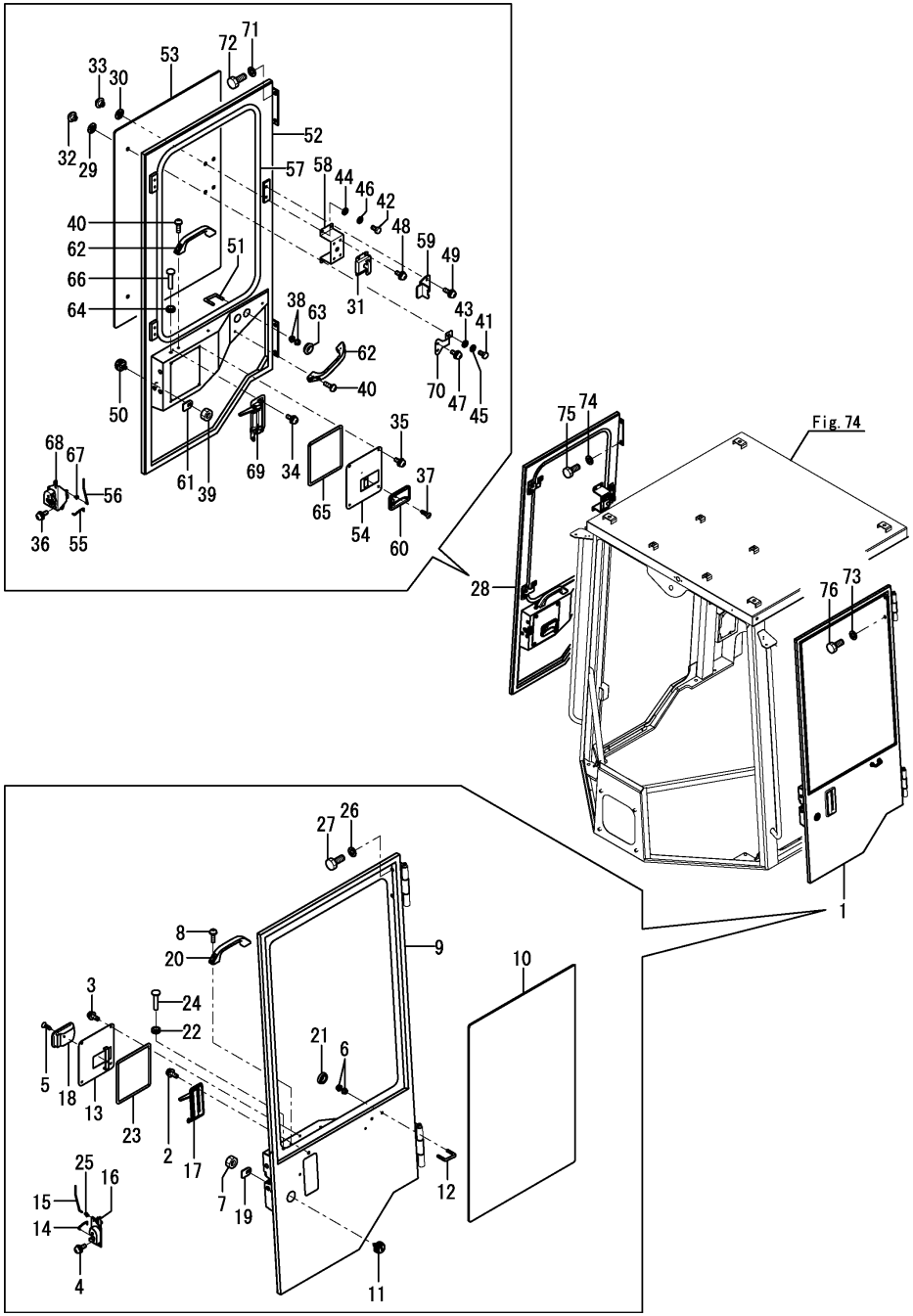

(A)=V4-6(US)
(B)=V4-6(AS)
(C)=V4-6(NZ)
(D)=
(E)=
(F)=

No.	Lev.	Parts No.	Description	Q'ty (A)	(B)	(C)	(D)	(E)	(F)	I	R
1	2	172538-68700	DOOR ASSY	1	1	1					
2	3	172538-67660	SCREW	2	2	2					
3	3	172538-67720	SCREW	4	4	4					
4	3	172538-67720	SCREW	3	3	3					
5	3	172538-67780	SCREW	1	1	1					
6	3	172538-67820	NUT, M8 BK	4	4	4					
7	3	172538-67830	NUT, M10	1	1	1					
8	3	172538-67860	SCREW, M6X20 BK	2	2	2					
9	3	172538-68710	PANEL ASSY,DOOR LH	1	1	1					
10	3	172538-68720	GLASS, DOOR	1	1	1					
11	3	172538-68730	CYLINDER ASSY, KEY	1	1	1					
12	3	172538-68740	BOLT,U	1	1	1					
13	3	172538-68750	COVER	1	1	1					
14	3	172538-68760	ROD,LH	1	1	1					
15	3	172538-68770	ROD,LH	1	1	1					
16	3	172538-68780	LOCK ASSY	1	1	1					
17	3	172538-68790	HANDLE ASSY LH	1	1	1					
18	3	172538-68890	HANDLE, INNER	1	1	1					
19	3	172538-68900	PLATE	1	1	1					
20	3	172538-68910	GRIP	1	1	1					
21	3	172538-68920	GROMMET	2	2	2					
22	3	172538-68930	GROMMET	1	1	1					
23	3	172538-68940	SEAL, PACKING	1	1	1					
24	3	172538-68950	KNOB	1	1	1					
25	3	172538-68960	HOLDER, LINK	2	2	2					
26	3	22217-100000	WASHER, SPRING 10	4	4	4					
27	3	26076-100252	BOLT, 10.910X 25	4	4	4					
28	2	172538-68801	DOOR ASSY	1	1	1					
29	3	172538-67570	PACKING	2	2	2					
30	3	172538-67570	PACKING	4	4	4					
31	3	172538-67580	DOORLOCK	1	1	1					
32	3	172538-67600	RETAINER,M6	2	2	2					
33	3	172538-67600	RETAINER,M6	4	4	4					
34	3	172538-67660	SCREW	2	2	2					
35	3	172538-67720	SCREW	4	4	4					
36	3	172538-67720	SCREW	3	3	3					
37	3	172538-67780	SCREW	1	1	1					
38	3	172538-67820	NUT, M8 BK	4	4	4					
39	3	172538-67830	NUT, M10	1	1	1					
40	3	172538-67860	SCREW, M6X20 BK	4	4	4					
41	3	172538-67950	BOLT,6X12 BK	2	2	2					
42	3	172538-67950	BOLT,6X12 BK	4	4	4					
43	3	172538-67960	WASHER, 6	2	2	2					
44	3	172538-67960	WASHER, 6	4	4	4					
45	3	172538-67970	WASHER,6 BK	2	2	2					
46	3	172538-67970	WASHER,6 BK	4	4	4					
47	3	172538-67980	BOLT,6X16 BK	4	4	4					
48	3	172538-67980	BOLT,6X16 BK	4	4	4					
49	3	172538-67990	BOLT,6X20 BK	2	2	2					
50	3	172538-68730	CYLINDER ASSY, KEY	1	1	1					
51	3	172538-68740	BOLT,U	1	1	1					

N:Old $\xleftarrow[\text{No}]{\text{Yes}}$ New, Q:Old $\xleftarrow[\text{Yes}]{\text{No}}$ New, R:Old $\xleftarrow[\text{Yes}]{\text{Yes}}$ New, S:Old $\xleftarrow[\text{No}]{\text{No}}$ New, W:Add, Z:Discontinued, F:Interchangeable by set, K:Q'ty Change

++ CONTINUE ++

Copyright (C) YANMAR CO., LTD. All RightsReserved.

Fig.75. (45C)CABIN(DOOR)(SIDE DEFROSTER SPEC.)

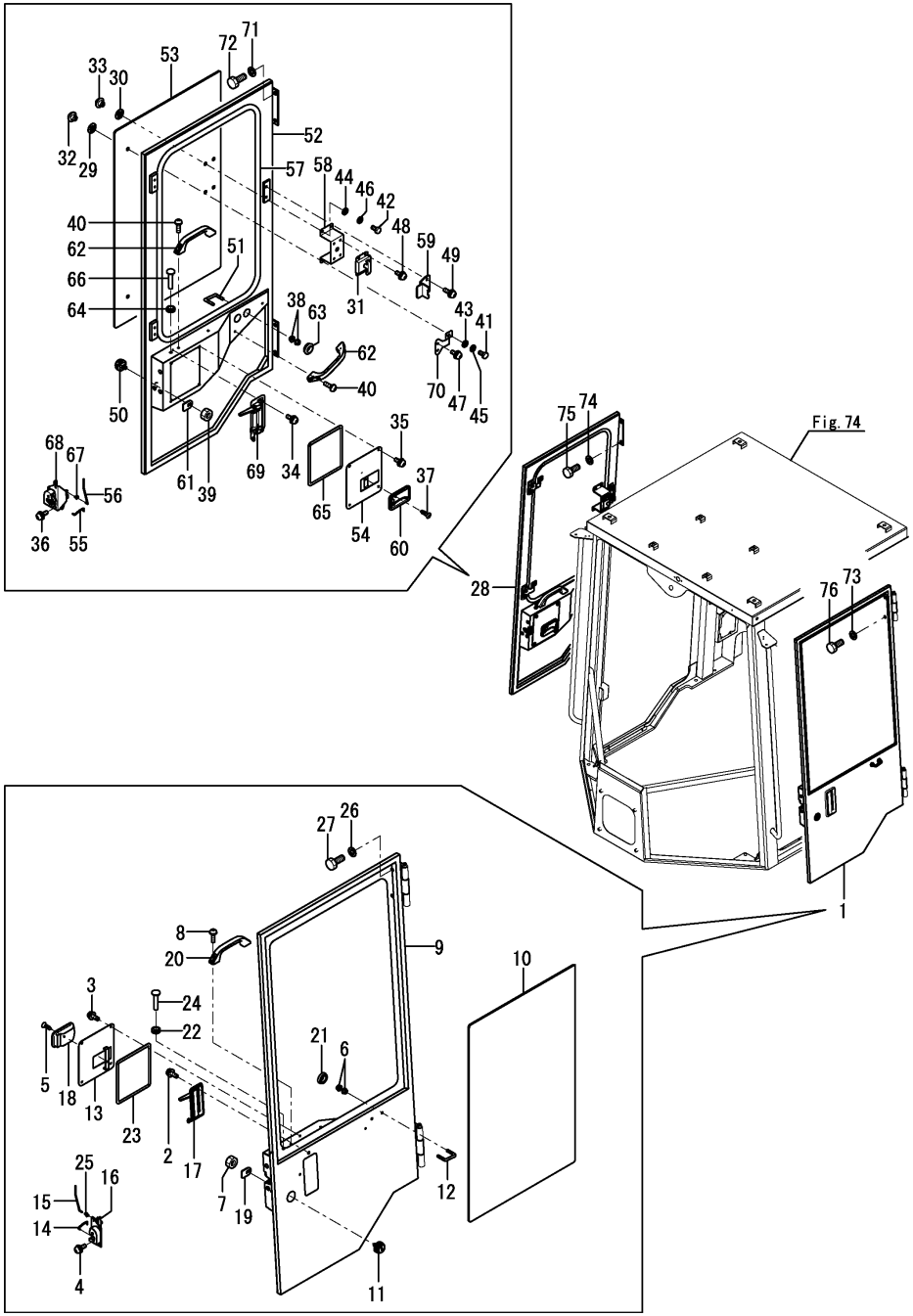

(A)=V4-6(US) (D)=
(B)=V4-6(AS) (E)=
(C)=V4-6(NZ) (F)=

No.	Lev.	Parts No.	Description	Q'ty (A)	(B)	(C)	(D)	(E)	(F)	I	R
52	3	172538-68810	PANEL ASSY,DOOR RH	1	1	1					
53	3	172538-68820	GLASS, DOOR	1	1	1					
54	3	172538-68830	COVER	1	1	1					
55	3	172538-68840	ROD,RH	1	1	1					
56	3	172538-68850	ROD,RH	1	1	1					
57	3	172538-68860	RUBBER,S	1	1	1					
58	3	172538-68870	BRACKET	1	1	1					
59	3	172538-68880	BRACKET	1	1	1					
60	3	172538-68890	HANDLE, INNER	1	1	1					
61	3	172538-68900	PLATE	1	1	1					
62	3	172538-68910	GRIP	2	2	2					
63	3	172538-68920	GROMMET	2	2	2					
64	3	172538-68930	GROMMET	1	1	1					
65	3	172538-68940	SEAL, PACKING	1	1	1					
66	3	172538-68950	KNOB	1	1	1					
67	3	172538-68960	HOLDER, LINK	2	2	2					
68	3	172538-68970	LOCK ASSY RH	1	1	1					
69	3	172538-68980	HANDLE ASSY RH	1	1	1					
70	3	172538-68991	SPRINNGHINGE	2	2	2					
71	3	22217-100000	WASHER, SPRING 10	4	4	4					
72	3	26076-100252	BOLT, 10.910X 25	4	4	4					
73	2	22217-100000	WASHER, SPRING 10	4	4	4					
74	2	22217-100000	WASHER, SPRING 10	4	4	4					
75	2	26076-100252	BOLT, 10.910X 25	4	4	4					
76	2	26076-100252	BOLT, 10.910X 25	4	4	4					

N:Old $\frac{\text{Yes}}{\text{No}}$ New, Q:Old $\frac{\text{No}}{\text{Yes}}$ New, R:Old $\frac{\text{Yes}}{\text{Yes}}$ New, S:Old $\frac{\text{No}}{\text{No}}$ New, W:Add, Z:Discontinued, F:Interchangeable by set, K:Q'ty Change

Copyright (C) YANMAR CO., LTD. All RightsReserved.

Fig.76. (45D)CABIN(GRASS)(SIDE DEFROSTER SPEC.)

(A)=V4-6(US)
(B)=V4-6(AS)
(C)=V4-6(NZ)
(D)=
(E)=
(F)=

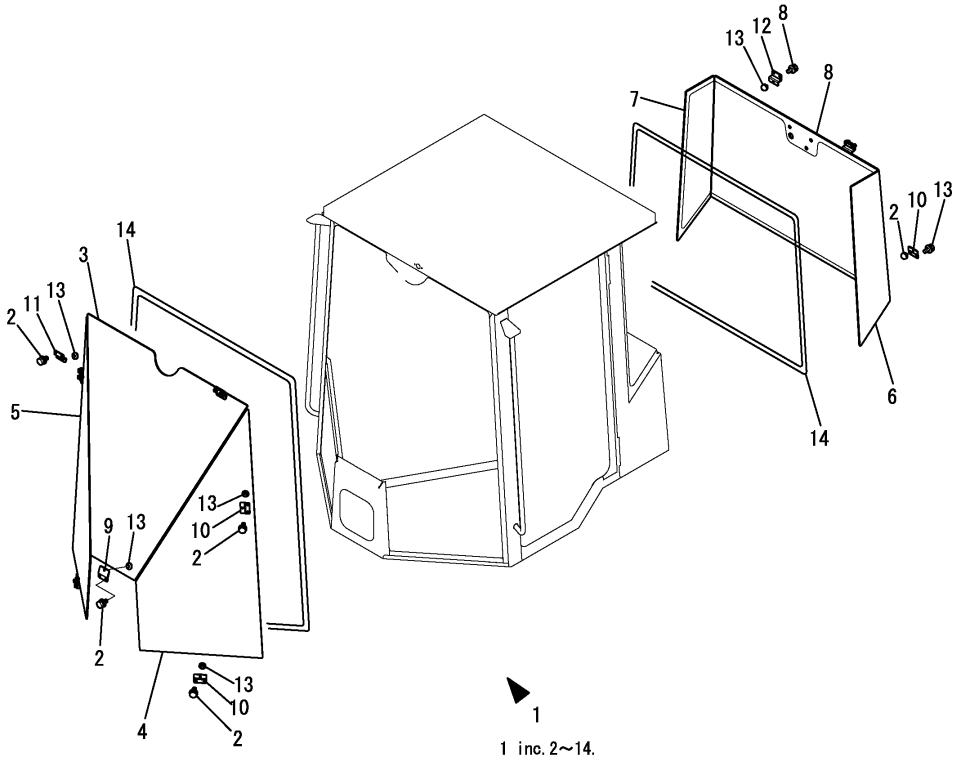

No.	Lev.	Parts No.	Description	Q'ty (A)	(B)	(C)	(D)	(E)	(F)	I	R
1	3	172538-68100	GLASS ASSY	1	1	1					
2	4	172538-67870	BOLT,M8X14 BK	22	22	22					
3	4	172538-68110	GLASS	1	1	1					
4	4	172538-68120	GLASS	1	1	1					
5	4	172538-68130	GLASS	1	1	1					
6	4	172538-68140	GLASS	1	1	1					
7	4	172538-68150	GLASS	1	1	1					
8	4	172538-68160	GLASS	1	1	1					
9	4	172538-68170	BRACKET	1	1	1					
10	4	172538-68180	BRACKET	6	6	6					
11	4	172538-68190	BRACKET	2	2	2					
12	4	172538-68200	BRACKET	2	2	2					
13	4	172538-68210	STOPPER	11	11	11					
14	4	172538-68220	RUBBER	2	2	2					

N:Old $\xleftarrow[\text{No}]{\text{Yes}}$ New, Q:Old $\xleftarrow[\text{Yes}]{\text{No}}$ New, R:Old $\xleftarrow[\text{Yes}]{\text{Yes}}$ New, S:Old $\xleftarrow[\text{No}]{\text{No}}$ New, W:Add, Z:Discontinued, F:Interchangeable by set, K:Q'ty Change

Copyright (C) YANMAR CO., LTD. All RightsReserved.

Fig.77. (45E)CABIN(ELECTRIC,WIPER)(SIDE DEFROSTER SPEC.)

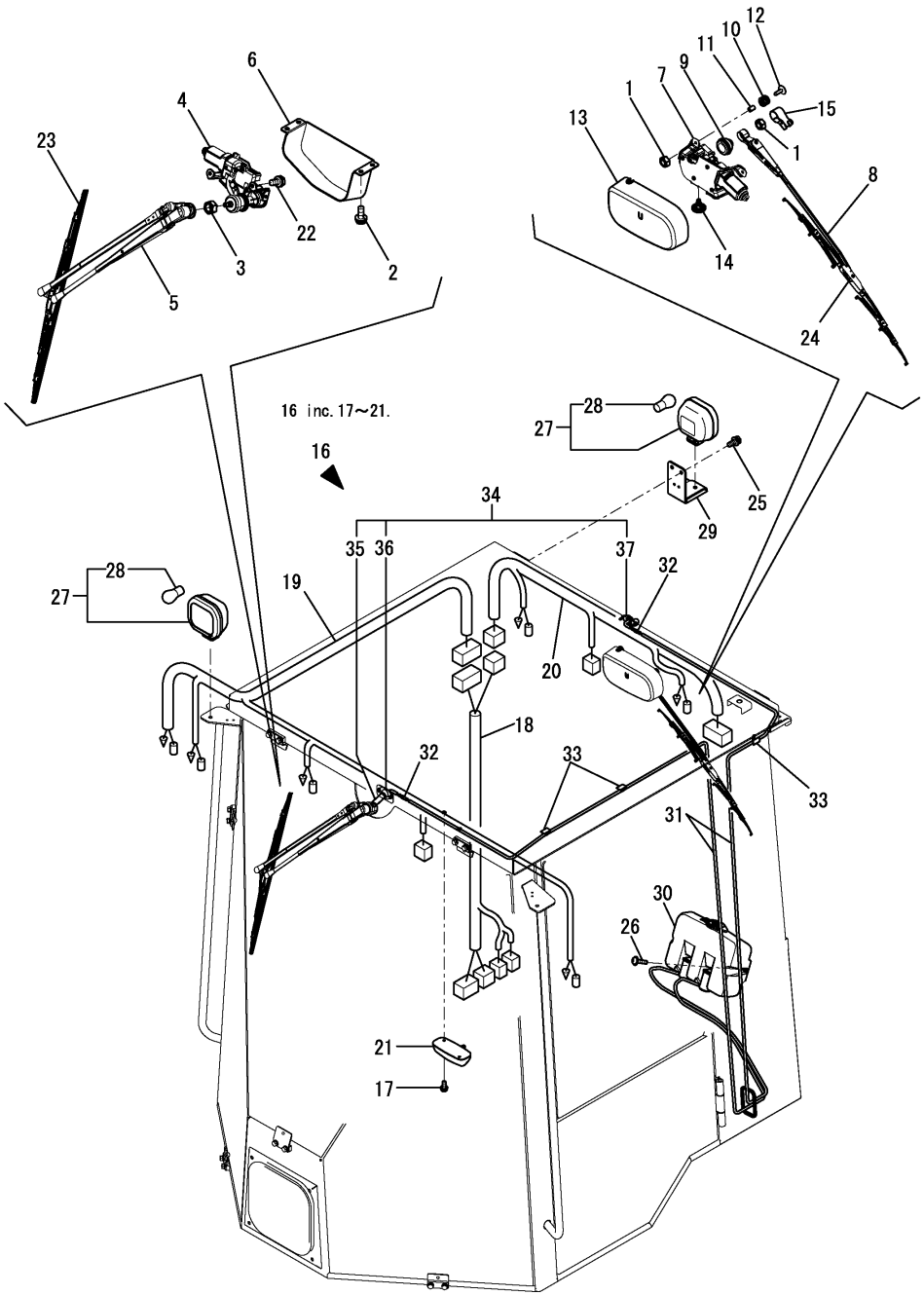

(A)=V4-6(US) (D)=
(B)=V4-6(AS) (E)=
(C)=V4-6(NZ) (F)=

No.	Lev.	Parts No.	Description	Q'ty (A)	(B)	(C)	(D)	(E)	(F)	I	R
1	3	172538-67700	NUT, M6	4	4	4					
2	3	172538-67720	SCREW	4	4	4					
3	3	172538-67740	NUT, M8	1	1	1					
4	3	172538-68260	WIPER MOTOR	1	1	1					
5	3	172538-68270	ARM, WIPER	1	1	1					
6	3	172538-68290	COVER, MOTOR	1	1	1					
7	3	172538-68300	WIPER MOTOR,RR	1	1	1					
8	3	172538-68310	ARM, WIPER	1	1	1					
9	3	172538-68330	CAP, PIVOT	1	1	1					
10	3	172538-68340	RUBBER	3	3	3					
11	3	172538-68350	COLLAR	3	3	3					
12	3	172538-68360	BOLT	3	3	3					
13	3	172538-68370	COVER, MOTOR	1	1	1					
14	3	172538-68380	PUSH RIVET	1	1	1					
15	3	172538-68390	COVER, ARM	1	1	1					
16	3	172538-68500	ELECTRICAL ASSY, CAB	1	1	1					
17	4	172538-67670	SCREW, M5X12	2	2	2					
18	4	172538-68510	HARNESS,WIRE	1	1	1					
19	4	172538-68520	HARNESS,WIRE FRONT	1	1	1					
20	4	172538-68530	HARNESS,WIRE REAR	1	1	1					
21	4	172538-68540	LAMP ASSY, ROOM	1	1	1					
22	3	172538-68690	BOLT, M6X12	2	2	2					
23	2	172538-68280	WIPER BLADE	1	1	1					
24	2	172538-68320	WIPER BLADE	1	1	1					
25	2	26014-080202	BOLT, M8X 20	8	8	8					
26	2	26023-060162	SCREW, M6X16	4	4	4					
27	2	172458-17450	LAMP, WORK	4	4	4					
28	3	172187-17540	BULB	1	1	1					
29	2	172538-66320	BRACKET	4	4	4					
30	2	172538-66460	TANK, WASHER	1	1	1					
31	2	172538-66470	HOSE	2	2	2					
32	2	172538-66480	VALVE ASSY, CHECK	2	2	2					
33	2	172538-66490	CLIP	3	3	3					
34	2	172538-66500	NOZZLE ASSY	2	2	2					
35	3	172538-66510	NOZZLE, WASHER	1	1	1					
36	3	172538-66520	ADAPTER, NOZZLE	1	1	1					
37	3	172538-66530	PACKING	1	1	1					

N:Old $\frac{\text{Yes}}{\text{No}}$ New, Q:Old $\frac{\text{No}}{\text{Yes}}$ New, R:Old $\frac{\text{Yes}}{\text{Yes}}$ New, S:Old $\frac{\text{No}}{\text{No}}$ New, W:Add, Z:Discontinued, F:Interchangeable by set, K:Q'ty Change

Copyright (C) YANMAR CO., LTD. All RightsReserved.

Fig.46. HEATER

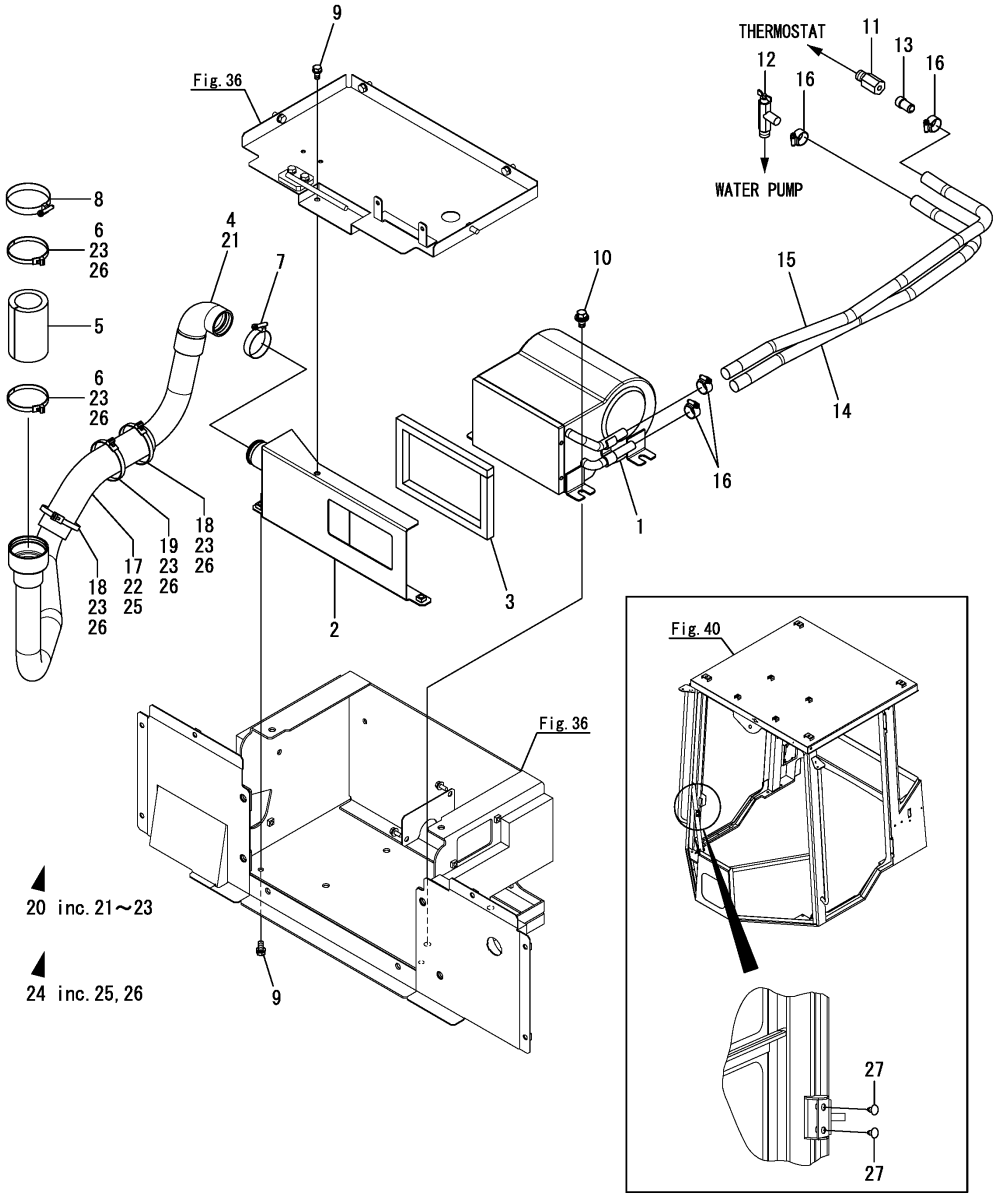

(A)=V4-6(US) (D)=
(B)=V4-6(AS) (E)=
(C)=V4-6(NZ) (F)=

No.	Lev.	Parts No.	Description	Q'ty (A)	(B)	(C)	(D)	(E)	(F)	I	R
1	1	172458-17551	HEATER	1	1	1					
2	1	172538-19550-1	DUCT,HEATER ASSY(49)	1	1	1					
3	1	172538-19650	SEAL, DUCT	1	1	1					
4	1	172538-19901	HOSE ASSY, DEFROSTER	1	1	1					
5	1	172538-19950	SPONGE, HOSE 100	1	1	1					
6	1	172122-79930	CLAMP, HOSE	2	2	2					
7	1	23000-048000	CLAMP, 48	1	1	1					
8	1	23000-070000	CLAMP, 70	1						Z	
	(A=MXXXXX)										
9	1	26013-080162	BOLT, M8X 16	3	3	3					
10	1	26014-100202	BOLT, M10X 20	3	3	3					
11	1	172460-17611	JOINT, HEATER	1	1	1					
12	1	172425-17630	VALVE ASSY, HEATER	1	1	1					
13	1	172124-17640	JOINT, PIPE	1	1	1					
14	1	172538-19840	HOSE ASSY, HEATER	1	1	1					
15	1	172539-19870	HOSE ASSY, HEATER	1	1	1					
16	1	23001-022000	CLAMP, HOSE 22	4	4	4					
17	1	172538-19970	COVER, HOSE	1	1	1				W	
	(A=M/#60691)										
18	1	172122-79930	CLAMP, HOSE	2	2	2				W	
	(A=M/#60691)										
19	1	172122-79930	CLAMP, HOSE	1	1	1				W	
	(A=M/#60691)										
20	1	172538-08850	HOSE KIT,DEFROSTER	1	1	1				W	
	(A=M/#60848)										
21	2	172538-19901	HOSE ASSY, DEFROSTER	1	1	1				W	
	(A=M/#60848)										
22	2	172538-19970	COVER, HOSE	1	1	1				W	
	(A=M/#60848)										
23	2	172122-79930	CLAMP, HOSE	5	5	5				W	
	(A=M/#60848)										
24	1	172538-08860	COVER KIT, HOSE	1	1	1				W	
	(A=M/#60848)										
25	2	172538-19970	COVER, HOSE	1	1	1				W	
	(A=M/#60848)										
26	2	172122-79930	CLAMP, HOSE	5	5	5				W	
	(A=M/#60848)										
27	1	172122-17190	CLIP, TREE	4	4	4				W	
	(A=MZZZZZ)	(B=MZZZZZ)	(C=MZZZZZ)								

N:Old $\frac{\text{Yes}}{\text{No}}$ New, Q:Old $\frac{\text{No}}{\text{Yes}}$ New, R:Old $\frac{\text{Yes}}{\text{Yes}}$ New, S:Old $\frac{\text{No}}{\text{No}}$ New, W:Add, Z:Discontinued, F:Interchangeable by set, K:Q'ty Change

Copyright (C) YANMAR CO., LTD. All RightsReserved.

Fig.64. AIR CONDITIONER(FRONT)

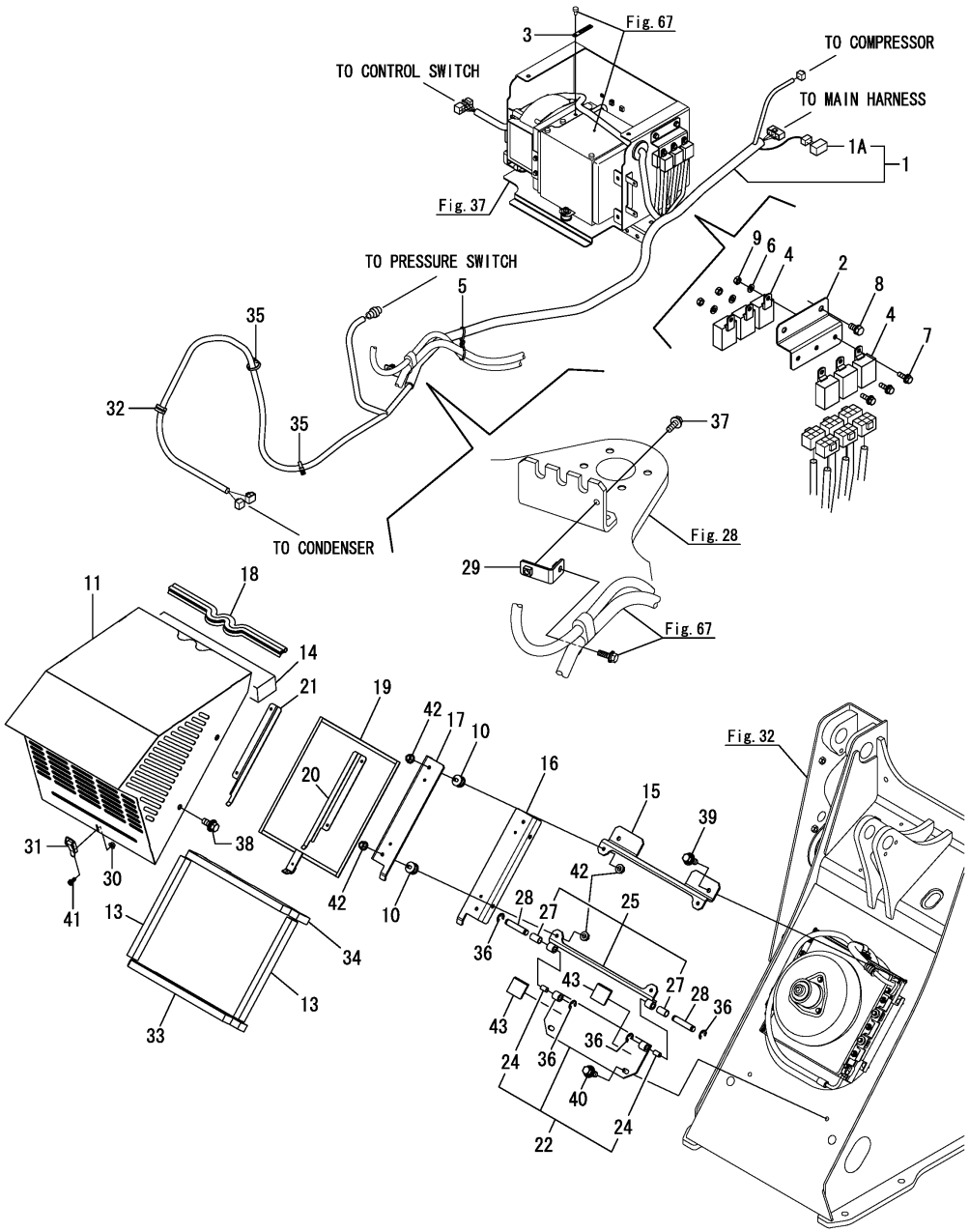

(A)=V4-6(US) (D)=
(B)=V4-6(AS) (E)=
(C)=V4-6(NZ) (F)=

No.	Lev.	Parts No.	Description	Q'ty (A)	(B)	(C)	(D)	(E)	(F)	I	R
1	1	172539-16800	HARNESS,A/C	1							
1-1	1	172539-16801	HARNESS ASSY,A/C	1	1	1				N	
	(A=M/#60869)										
1A	2	172648-16600	DIODE, 1.5-2P	1	1	1				W	
	(A=M/#60776)										
2	1	172539-18680	BASE,A/C (GRAY:49)	1	1	1					
3	1	194440-51630	CLAMP, HARNESS C	1	1	1					
4	1	119247-77100	RELAY, POWER	6	6	6					
5	1	172187-78580	BAND	1	1	1					
6	1	22137-060000	WASHER, 6	3	3	3					
7	1	26014-060202	BOLT, M6X 20	3	3	3					
8	1	26014-080162	BOLT, M8X 16	2	2	2					
9	1	26716-060002	NUT, M6	3	3	3					
10	1	172447-13550	MOUNT, PAD	4	4	4					
11	1	172539-18090	COVER, CONDENSER	1	1	1					
11-1	1	172539-18090-Y	COVER, CONDENSER	1	1	1				S	
	(A=M61501)	(B=M61501)	(C=M61501)								
13	2	172539-60430	SPONGE	2	2	2					
14	2	172539-60490	SPONGE	1	1	1					
15	1	172539-18270	STAY ASSY	1	1	1					
16	1	172539-18300	STAY	1	1	1					
17	1	172539-18310	STAY	1	1	1					
18	1	172539-18800	RUBBER, SEAL 470	1	1	1					
19	1	172539-19220	SCREEN	1	1	1					
20	1	172539-19600	PLATE L,RAIL (49)	1	1	1					
21	1	172539-19610	PLATE R,RAIL (49)	1	1	1					
22	1	172539-19620	STAY ASSY	1	1	1					
24	2	24550-010200	BUSH, 10X20	2	2	2					
25	1	172539-19630	STAY	1	1	1					
27	2	24550-010200	BUSH, 10X20	2	2	2					
28	1	172539-19690	PIN 10X51	2	2	2					
29	1	172539-19750	STAY, CLAMP	1	1	1					
30	1	194990-22120	NUT, M5	2	2	2					
31	1	1C6860-37030	LOCK, SNAP B	1	1	1					
32	1	1A1686-57850	CLAMP, 80	1	1	1					
33	1	172539-60400	SPONGE	1	1	1					
34	1	172539-60410	SPONGE	1	1	1					
35	1	172122-79930	CLAMP, HOSE	3	3	3					
36	1	22272-000090	RING, E- 9	4	4	4					
37	1	26014-080252	BOLT, M8X 25	1	1	1					
38	1	26014-100252	BOLT, M10X 25	4	4	4					
39	1	26014-100252	BOLT, M10X 25	2	2	2					
40	1	26014-100252	BOLT, M10X 25	2	2	2					
41	1	26023-050122	SCREW, M5X12	2	2	2					
42	1	26051-080002	NUT, M8	8	8	8					
43	1	172539-19700	RUBBER,50X50X3	2	2	2					

N:Old $\frac{\text{Yes}}{\text{No}}$ New, Q:Old $\frac{\text{No}}{\text{Yes}}$ New, R:Old $\frac{\text{Yes}}{\text{Yes}}$ New, S:Old $\frac{\text{No}}{\text{No}}$ New, W:Add, Z:Discontinued, F:Interchangeable by set, K:Q'ty Change

Copyright (C) YANMAR CO., LTD. All RightsReserved.

Fig.65. AIR CONDITIONER(DUCT)

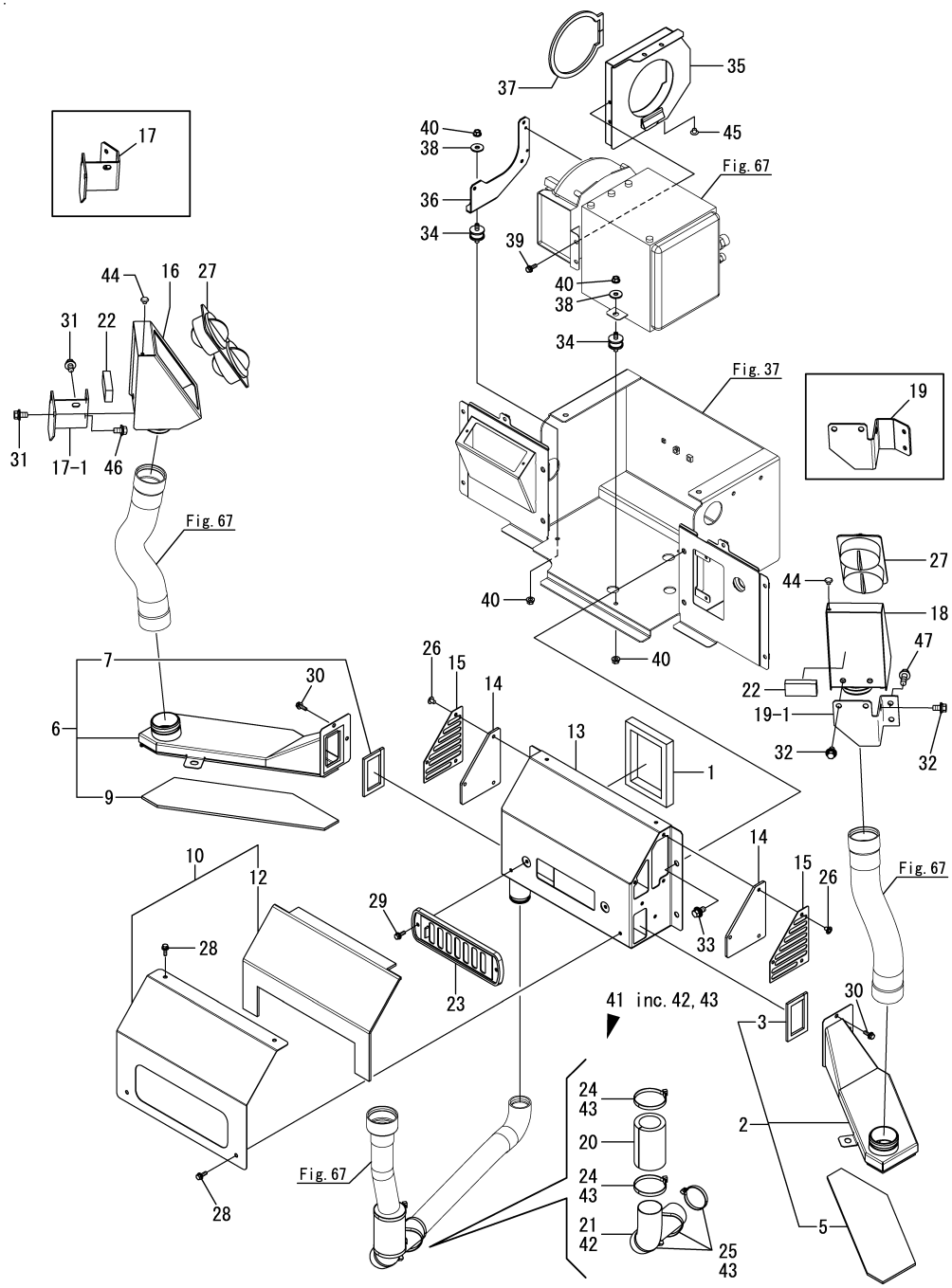

(A)=V4-6(US) (D)=
(B)=V4-6(AS) (E)=
(C)=V4-6(NZ) (F)=

No.	Lev.	Parts No.	Description	Q'ty (A)	(B)	(C)	(D)	(E)	(F)	I	R
1	1	172499-13750	SEAL, DUCT	1	1	1					
2	1	172539-18060	DUCT, GRILLE	1	1	1					
3	2	172539-18980	SEAL, 5X10X265	1	1	1					
5	2	172539-60470	INSULATOR	1	1	1					
6	1	172539-18070	DUCT, GRILLE	1	1	1					
7	2	172539-18980	SEAL, 5X10X265	1	1	1					
9	2	172539-60480	INSULATOR	1	1	1					
10	1	172539-18080	COVER, DUCT	1	1	1					
12	2	172539-60440	INSULATOR	1	1	1					
13	1	172539-18380	DUCT	1	1	1					
14	1	172539-18910	FILTER,A/C	2	2	2					
15	1	172539-18920	PLATE,FILTER (49)	2	2	2					
16	1	172539-19470	GRILLE	1	1	1					
17	1	172539-19480	BRACKET FR,GRILL(49)	1	1	1					
17-1	1	172538-19400-1	BRACKET FR,GRILL(49)	1	1	1				S	
	(A=MZZZZZ)	(B=MZZZZZ)	(C=MZZZZZ)								
18	1	172539-19520	GRILLE	1	1	1					
19	1	172539-19530	BRACKET FL,GRILL(49)	1	1	1					
19-1	1	172538-19410-1	BRACKET FL,GRILL(49)	1	1	1				S	
	(A=MZZZZZ)	(B=MZZZZZ)	(C=MZZZZZ)								
20	1	172538-19950	SPONGE, HOSE 100	1	1	1					
21	1	172538-19970	COVER, HOSE	1	1	1					
22	1	172538-60320	SPONGE	2	2	2					
23	1	172187-61690	VENTILATOR	1	1	1					
24	1	172122-79930	CLAMP, HOSE	2	2	2					
25	1	172122-79930	CLAMP, HOSE	3	3	3					
26	1	1A8110-84210	RIVET	6	6	6					
27	1	1A7030-87411	GRILLE ASSY, FRONT	2	2	2					
28	1	26014-060202	BOLT, M6X 20	4	4	4					
29	1	26014-060202	BOLT, M6X 20	2	2	2					
30	1	26014-060202	BOLT, M6X 20	4	4	4					
31	1	26014-100202	BOLT, M10X 20	3	3	3					
32	1	26014-100202	BOLT, M10X 20	3	3	3					
33	1	26014-100202	BOLT, M10X 20	4	4	4					
34	1	172447-13550	MOUNT, PAD	3	3	3					
35	1	172539-18450	DUCT	1	1	1					
36	1	172539-18500	BRACKET,UNIT (49)	1	1	1					
37	1	172539-18730	SEAL	1	1	1					
38	1	22157-080000	WASHER, 8	3	3	3					
39	1	26014-060202	BOLT, M6X 20	2	2	2					
40	1	26051-080002	NUT, M8	6	6	6					
41	1	172538-08860	COVER KIT, HOSE	1	1	1				W	
	(A=M/#60848)										
42	2	172538-19970	COVER, HOSE	1	1	1				W	
	(A=M/#60848)										
43	2	172122-79930	CLAMP, HOSE	5	5	5				W	
	(A=M/#60848)										
44	1	172176-67790	PLUG	2	2	2				W	
	(A=MXXXXX)										
45	1	172176-67790	PLUG	1	1	1				W	
	(A=MXXXXX)										

N:Old $\overset{\text{Yes}}{\underset{\text{No}}{\leftrightarrow}}$ New, Q:Old $\overset{\text{No}}{\underset{\text{Yes}}{\leftrightarrow}}$ New, R:Old $\overset{\text{Yes}}{\underset{\text{Yes}}{\leftrightarrow}}$ New, S:Old $\overset{\text{No}}{\underset{\text{No}}{\leftrightarrow}}$ New, W:Add, Z:Discontinued, F:Interchangeable by set, K:Q'ty Change

++ CONTINUE ++

Copyright (C) YANMAR CO., LTD. All RightsReserved.

Fig.65. AIR CONDITIONER(DUCT)

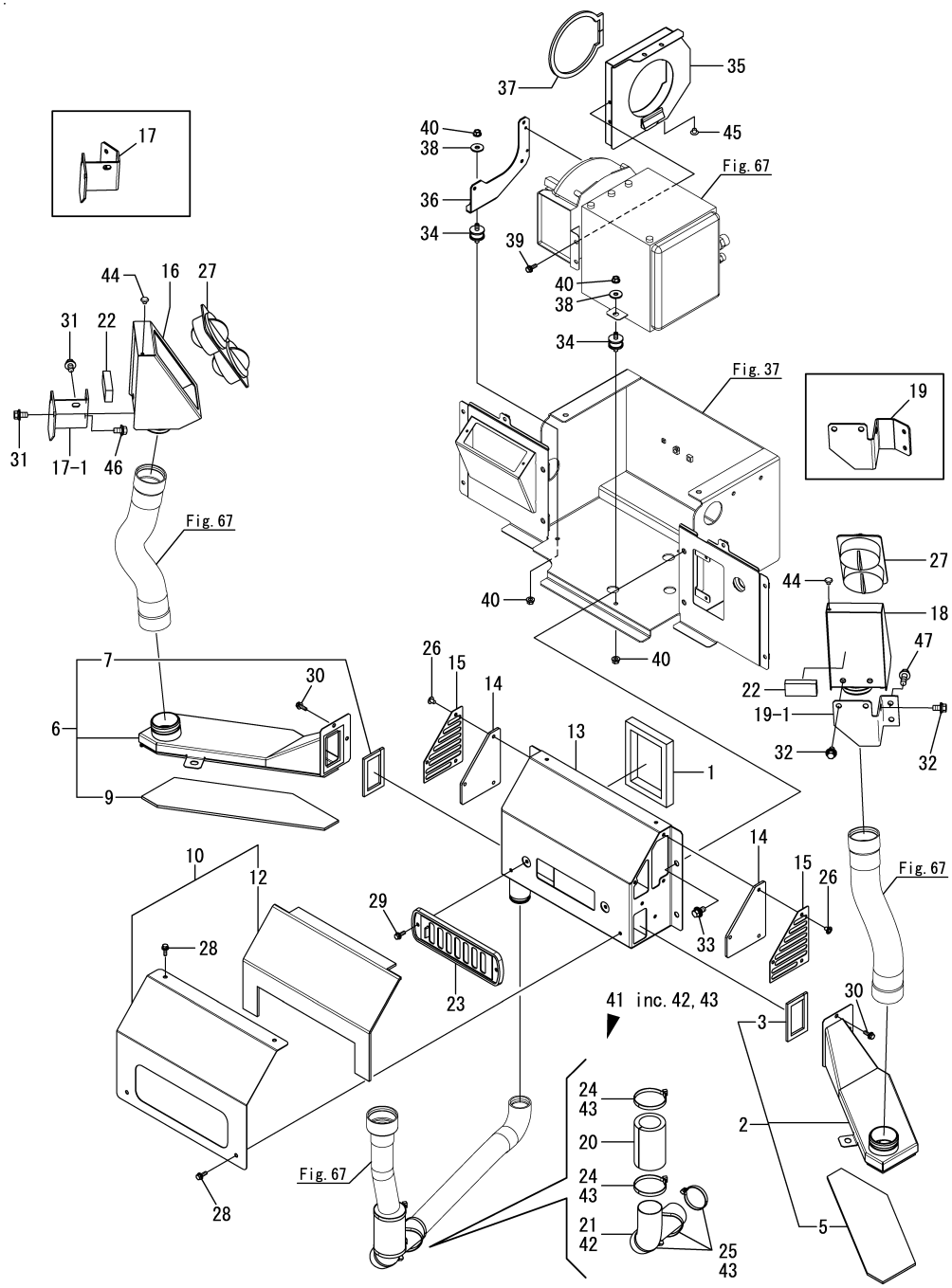

(A)=V4-6(US) (D)=
(B)=V4-6(AS) (E)=
(C)=V4-6(NZ) (F)=

No.	Lev.	Parts No.	Description	Q'ty (A)	(B)	(C)	(D)	(E)	(F)	I	R
46	1	26014-100202	BOLT, M10X 20	2	2	2				W	
	(A=MZZZZZ)	(B=MZZZZZ)	(C=MZZZZZ)								
47	1	26014-100202	BOLT, M10X 20	2	2	2				W	
	(A=MZZZZZ)	(B=MZZZZZ)	(C=MZZZZZ)								

N:Old ←Yes/No→ New, Q:Old ←No/Yes→ New, R:Old ←Yes/Yes→ New, S:Old ←No/No→ New, W:Add, Z:Discontinued, F:Interchangeable by set, K:Q'ty Change

Copyright (C) YANMAR CO., LTD. All RightsReserved.

Fig.78. (65A)AIR CON.(DUCT)(ENHANCED DEFROSTER SPEC.)

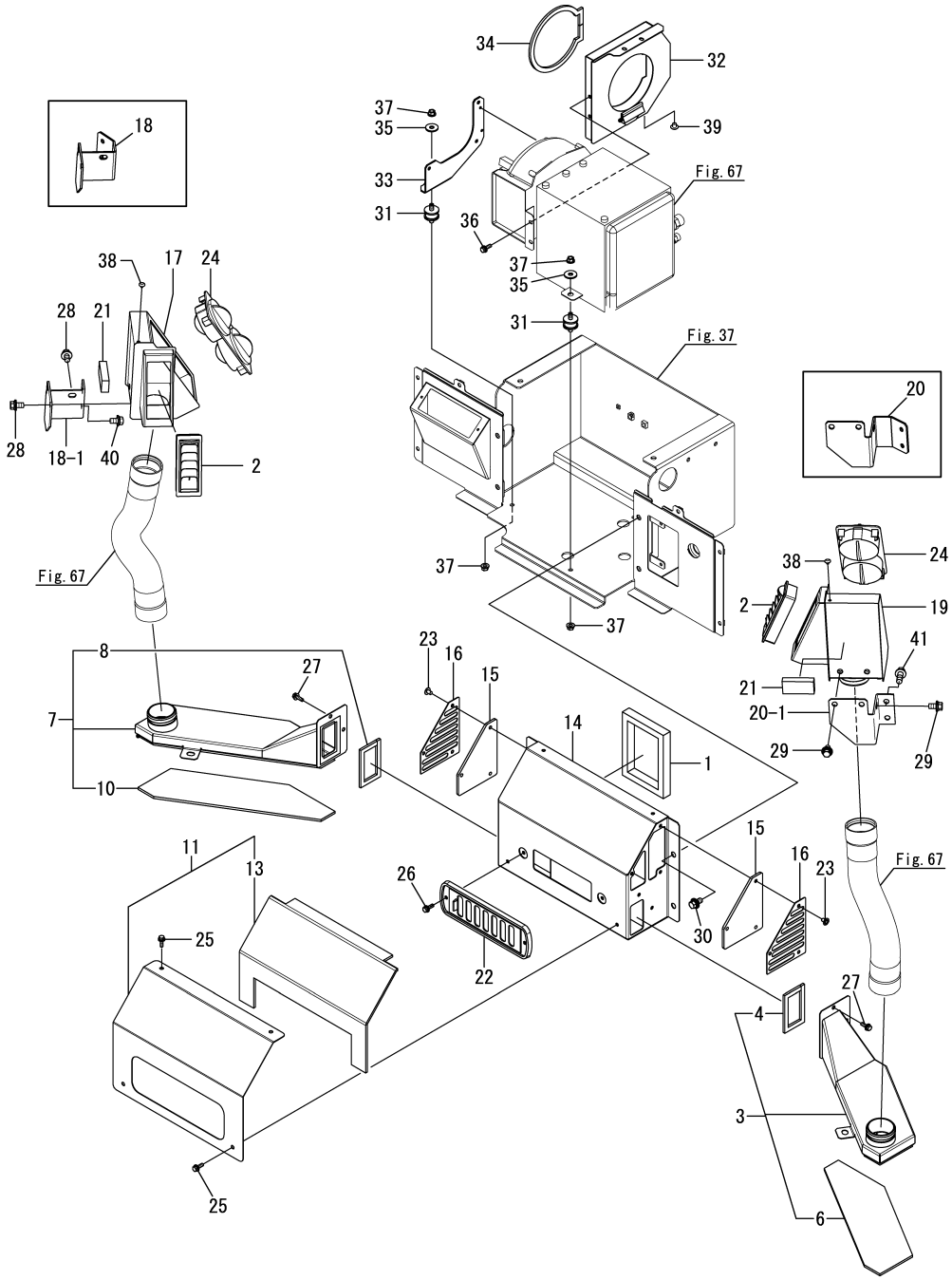

(A)=V4-6(US) (D)=
(B)=V4-6(AS) (E)=
(C)=V4-6(NZ) (F)=

No.	Lev.	Parts No.	Description	Q'ty (A)	(B)	(C)	(D)	(E)	(F)	I	R
1	1	172499-13750	SEAL, DUCT	1	1	1					
2	1	172458-17700	GRILLE	2	2	2					
3	1	172539-18060	DUCT, GRILLE	1	1	1					
4	2	172539-18980	SEAL, 5X10X265	1	1	1					
6	2	172539-60470	INSULATOR	1	1	1					
7	1	172539-18070	DUCT, GRILLE	1	1	1					
8	2	172539-18980	SEAL, 5X10X265	1	1	1					
10	2	172539-60480	INSULATOR	1	1	1					
11	1	172539-18080	COVER, DUCT	1	1	1					
13	2	172539-60440	INSULATOR	1	1	1					
14	1	172539-18850	DUCT,A/C DEF (49)	1	1	1					
15	1	172539-18910	FILTER,A/C	2	2	2					
16	1	172539-18920	PLATE,FILTER (49)	2	2	2					
17	1	172539-19950	GRILLE,R A/C DE (49)	1	1	1					
18	1	172539-19480	BRACKET FR,GRILL(49)	1	1	1					
18-1	1	172538-19400-1	BRACKET FR,GRILL(49)	1	1	1				S	
	(A=MZZZZZ)	(B=MZZZZZ)	(C=MZZZZZ)								
19	1	172539-19100	GRILLE,L A/C DE (49)	1	1	1					
20	1	172539-19530	BRACKET FL,GRILL(49)	1	1	1					
20-1	1	172538-19410-1	BRACKET FL,GRILL(49)	1	1	1				S	
	(A=MZZZZZ)	(B=MZZZZZ)	(C=MZZZZZ)								
21	1	172538-60320	SPONGE	2	2	2					
22	1	172187-61690	VENTILATOR	1	1	1					
23	1	1A8110-84210	RIVET	6	6	6					
24	1	1A7030-87411	GRILLE ASSY, FRONT	2	2	2					
25	1	26014-060202	BOLT, M6X 20	4	4	4					
26	1	26014-060202	BOLT, M6X 20	2	2	2					
27	1	26014-060202	BOLT, M6X 20	4	4	4					
28	1	26014-100202	BOLT, M10X 20	3	3	3					
29	1	26014-100202	BOLT, M10X 20	3	3	3					
30	1	26014-100202	BOLT, M10X 20	4	4	4					
31	1	172447-13550	MOUNT, PAD	3	3	3					
32	1	172539-18450	DUCT	1	1	1					
33	1	172539-18500	BRACKET,UNIT (49)	1	1	1					
34	1	172539-18730	SEAL	1	1	1					
35	1	22157-080000	WASHER, 8	3	3	3					
36	1	26014-060202	BOLT, M6X 20	2	2	2					
37	1	26051-080002	NUT, M8	6	6	6					
38	1	172176-67790	PLUG	2	2	2					
39	1	172176-67790	PLUG	1	1	1					
40	1	26014-100202	BOLT, M10X 20	2	2	2				W	
	(A=MZZZZZ)	(B=MZZZZZ)	(C=MZZZZZ)								
41	1	26014-100202	BOLT, M10X 20	2	2	2				W	
	(A=MZZZZZ)	(B=MZZZZZ)	(C=MZZZZZ)								

N:Old $\xleftarrow[\text{No}]{\text{Yes}}$ New, Q:Old $\xleftarrow[\text{Yes}]{\text{No}}$ New, R:Old $\xleftarrow[\text{Yes}]{\text{Yes}}$ New, S:Old $\xleftarrow[\text{No}]{\text{No}}$ New, W:Add, Z:Discontinued, F:Interchangeable by set, K:Q'ty Change

Copyright (C) YANMAR CO., LTD. All RightsReserved.

Fig.66. AIR CONDITIONER(REAR)

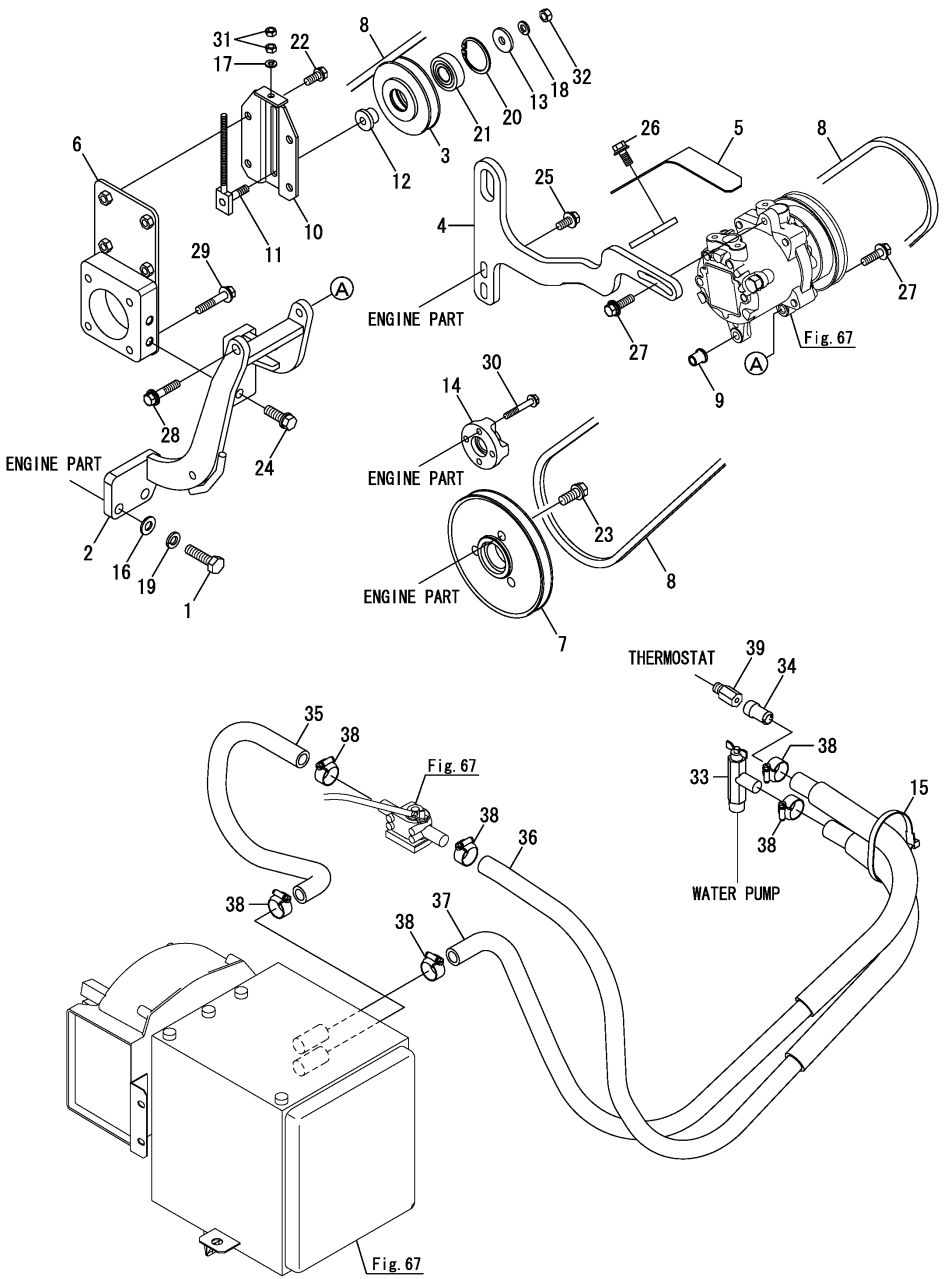

(A)=V4-6(US) (D)=
(B)=V4-6(AS) (E)=
(C)=V4-6(NZ) (F)=

No.	Lev.	Parts No.	Description	Q'ty (A)	(B)	(C)	(D)	(E)	(F)	I	R
1	1	194465-11940	BOLT, M10X40	2	2	2					
2	1	172539-18100	BRACKET,COM ASSY(49)	1	1	1					
3	1	172445-18131	PULLEY, TENSION	1	1	1					
4	1	172539-18170	STAY, COMPRESSOR	1	1	1					
5	1	172539-18190	COVER, BELT	1	1	1					
6	1	172539-18200	STAY, IDLER	1	1	1					
7	1	172539-18240	PULLY,146	1	1	1					
8	1	172539-18250	BELT A/C,CONPRESSOR	1	1	1					
9	1	172A69-18430	COLLAR, COMPRESSOR	1	1	1					
10	1	172165-18601	BRACKET ASSY, PULLEY	1	1	1					
11	1	172165-18630	ADJUSTER ASSY	1	1	1					
12	1	172165-18670	BOSS	1	1	1					
13	1	1A1040-43900	WASHER, SPRING	1	1	1					
14	1	121267-44760-1	SPACER, FAN 18MM	1	1	1					
15	1	172122-79930	CLAMP, HOSE	1	1	1					
16	1	22137-100000	WASHER, 10	2	2	2					
17	1	22217-060000	WASHER, SPRING 6	1	1	1					
18	1	22217-080000	WASHER, SPRING 8	1	1	1					
19	1	22217-100000	WASHER, SPRING 10	2	2	2					
20	1	22252-000400	RING, 40	1	1	1					
21	1	24104-062030	BEARING, 6203UUC3	1	1	1					
22	1	26013-080202	BOLT, M8X 20	4	4	4					
23	1	26013-100252	BOLT, M10X 25	3	3	3					
24	1	26013-100302	BOLT, M10X 30	2	2	2					
25	1	26014-080202	BOLT, M8X 20	2	2	2					
26	1	26014-080202	BOLT, M8X 20	2	2	2					
27	1	26014-080302	BOLT, M8X 30	2	2	2					
28	1	26014-080402	BOLT, M8X 40	1	1	1					
29	1	26014-080452	BOLT, M8X 45	4	4	4					
30	1	26106-060402	BOLT, M6X 40 PLATED	4	4	4					
31	1	26716-060002	NUT, M6	2	2	2					
32	1	26716-080002	NUT, M8	1	1	1					
33	1	172425-17630	VALVE ASSY, HEATER	1	1	1					
34	1	172124-17640	JOINT, PIPE	1	1	1					
35	1	172539-19820	HOSE,HEATER 400	1	1	1					
36	1	172539-19840	HOSE ASSY,HEATER1140	1	1	1					
37	1	172539-19930	HOSE ASSY,HEATER1100	1	1	1					
38	1	23001-022000	CLAMP, HOSE 22	6	6	6					
39	1	172460-17611	JOINT, HEATER	1	1	1					

N:Old $\xleftarrow[\text{No}]{\text{Yes}}$ New, Q:Old $\xleftarrow[\text{Yes}]{\text{No}}$ New, R:Old $\xleftarrow[\text{Yes}]{\text{Yes}}$ New, S:Old $\xleftarrow[\text{No}]{\text{No}}$ New, W:Add, Z:Discontinued, F:Interchangeable by set, K:Q'ty Change

Copyright (C) YANMAR CO., LTD. All RightsReserved.

Fig.67. AIR CONDITIONER(ELECTRIC PART)

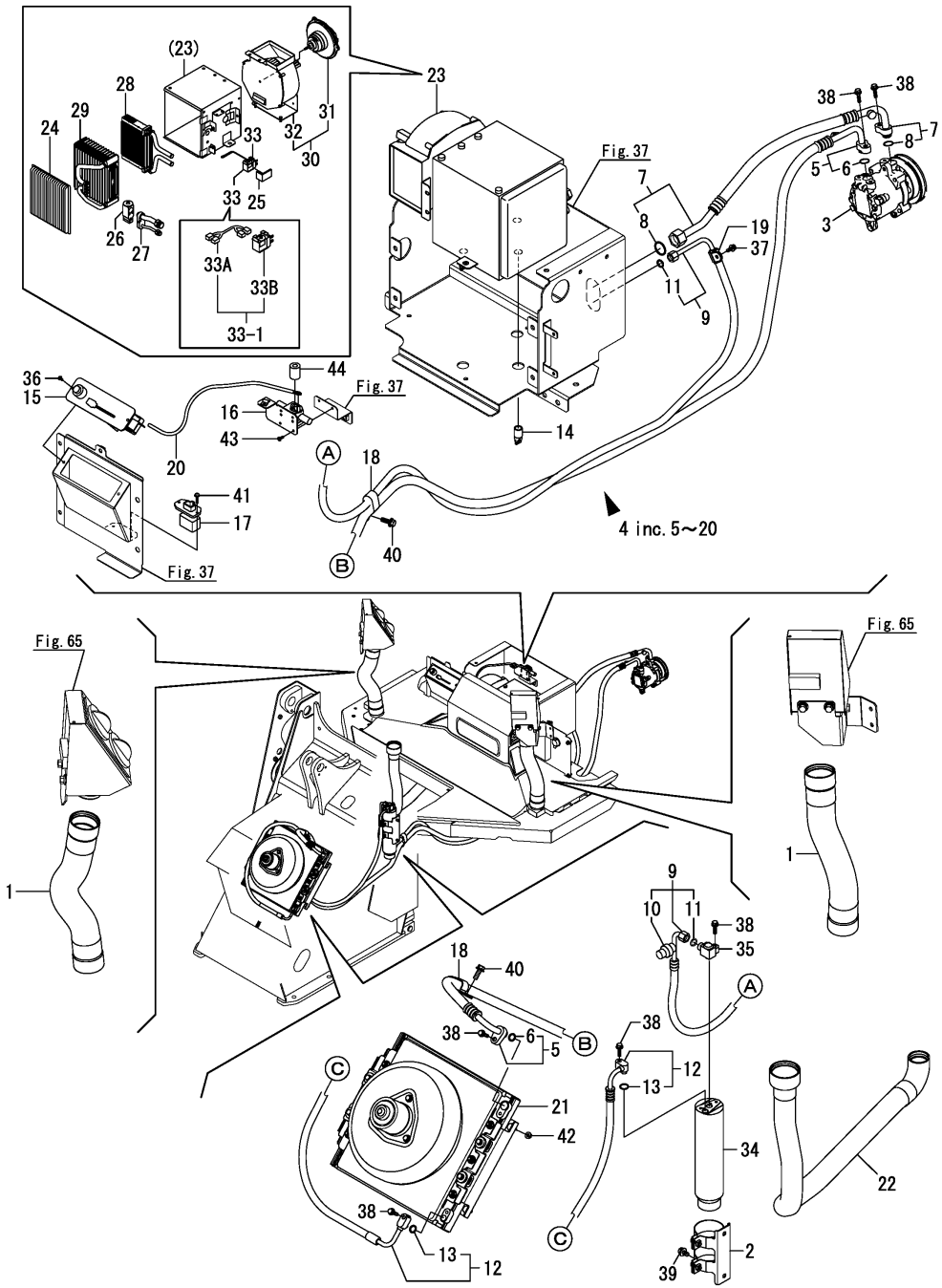

(A)=V4-6(US) (D)=
(B)=V4-6(AS) (E)=
(C)=V4-6(NZ) (F)=

No.	Lev.	Parts No.	Description	Q'ty (A)	(B)	(C)	(D)	(E)	(F)	I	R
1	1	172499-17850	HOSE ASSY	2	2	2					
2	1	172162-18040	BRACKET, RADIATOR	1	1	1					
3	1	172A69-18100	COMPRESSOR ASSY	1	1	1					
4	1	172539-19010	CONDITIONER KIT, AIR	1	1	1					
5	2	172539-19020	HOSE ASSY,COMP-COND	1	1	1					
6	3	1A7030-88820	O-RING	2	2	2					
7	2	172539-19040	HOSE ASSY,COMP-UNIT	1	1	1					
8	3	1A7030-88840	O-RING	2	2	2					
9	2	172539-19060	HOSE ASSY,R/D-UNIT	1	1	1					
10	3	172A47-18230	SWITCH, PRESSURE	1	1	1					
11	3	1A7030-88760	O-RING	2	2	2					
12	2	172539-19080	HOSE ASSY,COND-R/D	1	1	1					
13	3	1A7030-88760	O-RING	2	2	2					
14	2	172539-19200	TUBE, DRAIN	3	3	3					
15	2	1D4220-58150	PANEL, CONTROL	1	1	1					
16	2	1E8685-79920	VALVE, WATER	1	1	1					
17	2	1E8685-79940	RESISTOR	1	1	1					
18	2	1A7410-87610	CLAMP, 19-23	2	2	2					
19	2	1A7410-87630	CLAMP, 17.5	1	1	1					
20	2	1A7470-88420	CABLE, W/V	1	1	1					
21	1	172A69-19680	CONDENSER ASSY	1	1	1					
22	1	172539-19900	HOSE ASSY,DEF 1000	1	1	1				Z	
	(A=MXXXXX)	(B=MXXXXX)	(C=MXXXXX)								
23	1	1E9110-79610	CONDITIONER ASSY,AIR	1							
23-1	1	1E9110-79611	CONDITIONER ASSY,AIR	1						N	
	(A=MXXXXX)										
23-2	1	172A78-18100	CONDITIONER ASSY,AIR	1	1	1				N	
	(A=M/#60892)										
24	2	1E9110-79680	FILTER, AIR-CON	1	1	1					
25	2	1E9110-80100	GASKET	1	1	1					
26	2	1E9110-80130	VALVE, EXPANSION	1	1	1					
27	2	1E9110-80140	TUBE ASSY	1	1	1					
28	2	1E9110-80150	CORE, HEATER	1	1	1					
29	2	1E9110-80160	EVAPORATOR	1	1	1					
30	2	1E9110-80170	BLOWER ASSY	1							
30-1	2	172A78-18110	BLOWER ASSY	1	1	1				N	
	(A=M/#60892)										
31	3	1E9110-80110	MOTOR	1	1	1					
32	3	1E9110-80180	FAN, BLOWER	1	1	1					
33	2	1A7030-88100	THERMOSTAT ASSY	1							
33-1	2	1A7030-87090	THERMOSTAT KIT	1	1	1				N	
	(A=M/#60869)										
33A	3	1A7951-51300	CABLE, THERMOSTAT	1	1	1				W	
	(A=M/#60869)										
33B	3	1A7030-88101	THERMOSTAT ASSY	1	1	1				W	
	(A=M/#60869)										
34	1	1E8545-80210	DRYER, RECEIVER	1	1	1					
35	1	1E8545-80250	JOINT, RECEIVER	1	1	1					
36	1	22867-400101	SCREW, 4X10	2							
36-1	1	26587-040122	SCREW, M4X12	2	2	2				R	
	(A=FROM 1ST)										

N:Old $\xleftarrow[\text{No}]{\text{Yes}}$ New, Q:Old $\xleftarrow[\text{Yes}]{\text{No}}$ New, R:Old $\xleftarrow[\text{Yes}]{\text{Yes}}$ New, S:Old $\xleftarrow[\text{No}]{\text{No}}$ New, W:Add, Z:Discontinued, F:Interchangeable by set, K:Q'ty Change

++ CONTINUE ++

Copyright (C) YANMAR CO., LTD. All RightsReserved.

Fig.67. AIR CONDITIONER(ELECTRIC PART)

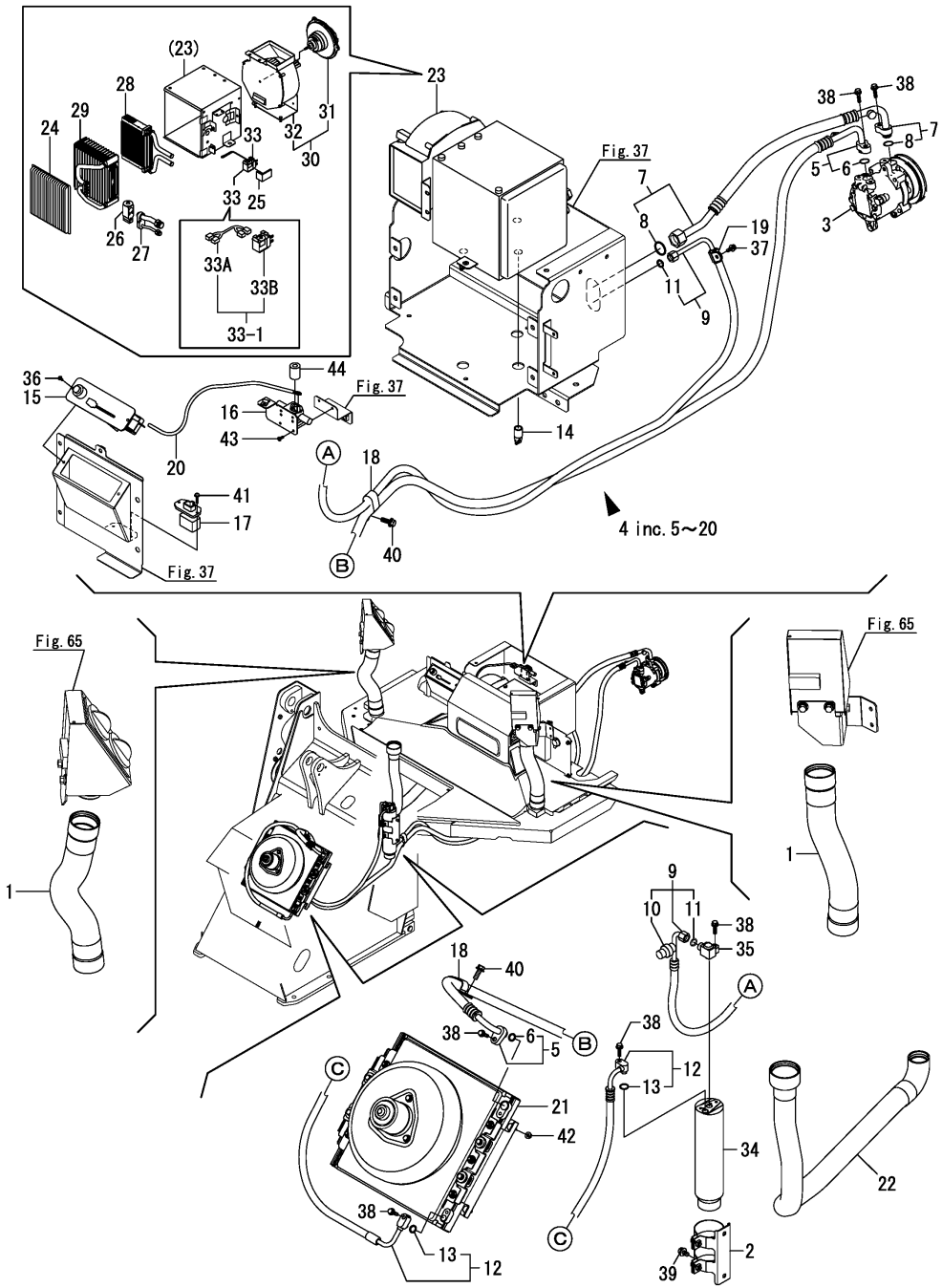

(A)=V4-6(US)
(B)=V4-6(AS)
(C)=V4-6(NZ)
(D)=
(E)=
(F)=

No.	Lev.	Parts No.	Description	Q'ty (A)	(B)	(C)	(D)	(E)	(F)	I	R
37	1	26014-060162	BOLT, M6X 16	1	1	1					
38	1	26014-060252	BOLT, M6X 25	6	6	6					
39	1	26014-080162	BOLT, M8X 16	2	2	2					
40	1	26014-080252	BOLT, M8X 25	2	2	2					
41	1	26033-040202	SCREW, M4X20	2	2	2					
42	1	26051-060002	NUT, M6	4	4	4					
43	1	26587-040102	SCREW, M4X10	2	2	2					
44	1	172A47-18300	BUSH	1	1	1				W	
	(A=MXXXXX)										

N:Old $\overset{\text{Yes}}{\underset{\text{No}}{\leftrightarrow}}$ New, Q:Old $\overset{\text{No}}{\underset{\text{Yes}}{\leftrightarrow}}$ New, R:Old $\overset{\text{Yes}}{\underset{\text{Yes}}{\leftrightarrow}}$ New, S:Old $\overset{\text{No}}{\underset{\text{No}}{\leftrightarrow}}$ New, W:Add, Z:Discontinued, F:Interchangeable by set, K:Q'ty Change

Copyright (C) YANMAR CO., LTD. All RightsReserved.

Fig.47. LIFT CYLINDER

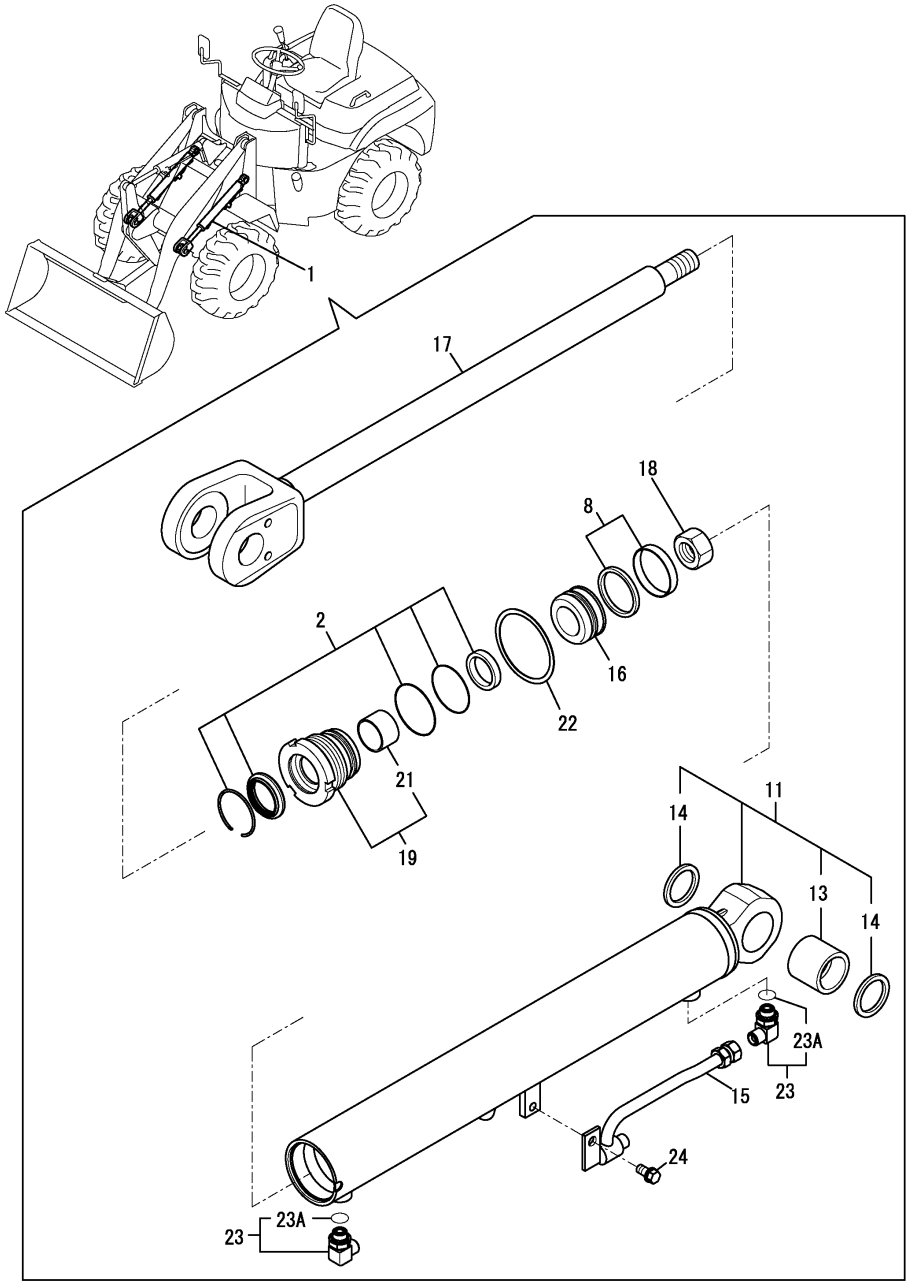

(A)=V4-6(US) (D)=
(B)=V4-6(AS) (E)=
(C)=V4-6(NZ) (F)=

No.	Lev.	Parts No.	Description	Q'ty (A)	(B)	(C)	(D)	(E)	(F)	I	R
1	1	172539-72100-2	CYLINDER ASSY, LIFT	2	2	2					
1-1	1	172539-72100-N	CYLINDER ASSY, LIFT	2	2	2				S	
	(A=M61501)	(B=M61501)	(C=M61501)								
2	2	172456-72050	SEAL SET, HEAD	2	2	2					
8	2	172460-72070	SEAL SET, PISTON	2	2	2					
11	2	172539-72110-2	TUBE ASSY, LIFT	2	2	2					
11-1	2	172539-72110-N	TUBE ASSY, LIFT	2	2	2				S	
	(A=M61501)	(B=M61501)	(C=M61501)								
13	3	172168-72410	BUSH	2	2	2					
14	3	172448-72650	SEAL, DUST	4	4	4					
15	2	172538-72150-2	PIPE ASSY	2	2	2					
15-1	2	172538-72150-N	PIPE ASSY	2	2	2				S	
	(A=M61501)	(B=M61501)	(C=M61501)								
16	2	172456-72190	PISTON	2	2	2					
17	2	172539-72200	ROD ASSY, LIFT	2	2	2					
18	2	172141-72250	NUT	2	2	2					
19	2	172143-72400	HEAD 70 40	2	2	2					
21	3	24550-040300	BUSH, 40X30	2	2	2					
22	2	172141-72420	WASHER, LOCK	2	2	2					
23	2	172142-76181	JOINT ASSY	4	4	4					
23-1	2	172A64-76190	ELBOW,G3/8-3/8	4	4	4				N	
	(A=*2016.02.)	(B=*2016.02.)	(C=*2016.02.)								
23A	3	24315-000140	O-RING, 1BP14.0	4	4	4				W	
	(A=*2016.02.)	(B=*2016.02.)	(C=*2016.02.)								
24	2	26013-100202	BOLT, M10X 20	2	2	2					

N:Old $\xleftrightarrow[\text{No}]{\text{Yes}}$ New, Q:Old $\xleftrightarrow[\text{Yes}]{\text{No}}$ New, R:Old $\xleftrightarrow[\text{Yes}]{\text{Yes}}$ New, S:Old $\xleftrightarrow[\text{No}]{\text{No}}$ New, W:Add, Z:Discontinued, F:Interchangeable by set, K:Q'ty Change

Copyright (C) YANMAR CO., LTD. All RightsReserved.

Fig.48. DUMP CYLINDER

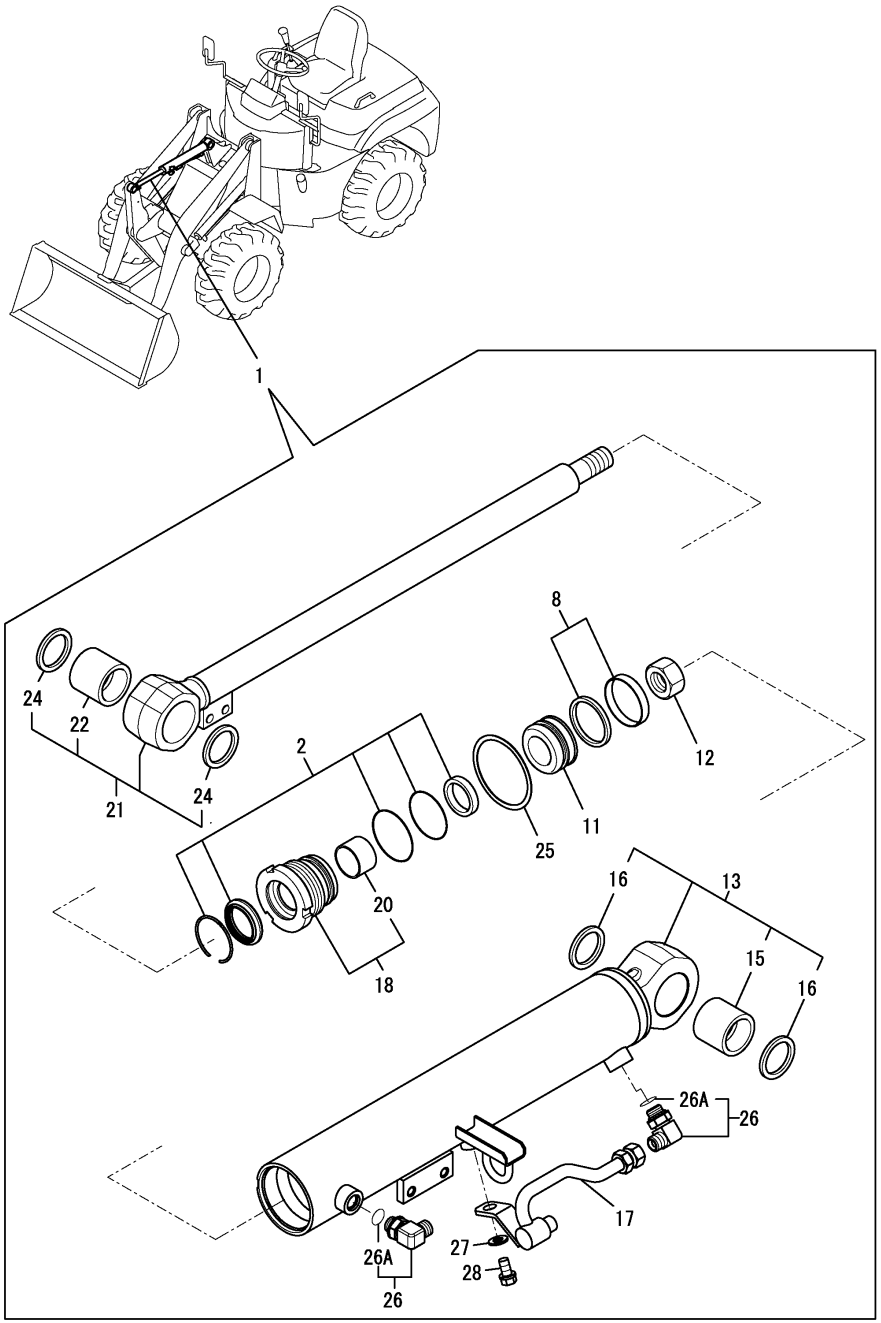

(A)=V4-6(US) (D)=
(B)=V4-6(AS) (E)=
(C)=V4-6(NZ) (F)=

No.	Lev.	Parts No.	Description	Q'ty (A)	(B)	(C)	(D)	(E)	(F)	I	R
1	1	172539-72300-2	CYLINDER ASSY, DUMP	1	1	1					
1-1	1	172539-72300-N	CYLINDER ASSY, DUMP	1	1	1				S	
	(A=M61501)	(B=M61501)	(C=M61501)								
2	2	172456-72050	SEAL SET, HEAD	1	1	1					
8	2	172460-72070	SEAL SET, PISTON	1	1	1					
11	2	172456-72190	PISTON	1	1	1					
12	2	172141-72250	NUT	1	1	1					
13	2	172539-72310-2	TUBE ASSY, DUMP	1	1	1					
13-1	2	172539-72310-N	TUBE ASSY, DUMP	1	1	1				S	
	(A=M61501)	(B=M61501)	(C=M61501)								
15	3	172168-72410	BUSH	1	1	1					
16	3	172448-72650	SEAL, DUST	2	2	2					
17	2	172538-72350-2	PIPE ASSY, DUMP	1	1	1					
17-1	2	172538-72350-N	PIPE ASSY, DUMP	1	1	1				S	
	(A=M61501)	(B=M61501)	(C=M61501)								
18	2	172143-72400	HEAD 70 40	1	1	1					
20	3	24550-040300	BUSH, 40X30	1	1	1					
21	2	172539-72400	ROD ASSY, DUMP	1	1	1					
22	3	172168-72410	BUSH	1	1	1					
24	3	172448-72650	SEAL, DUST	2	2	2					
25	2	172141-72420	WASHER, LOCK	1	1	1					
26	2	172142-76181	JOINT ASSY	2	2	2					
26-1	2	172A64-76190	ELBOW,G3/8-3/8	2	2	2				N	
	(A=*2016.02.)	(B=*2016.02.)	(C=*2016.02.)								
26A	3	24315-000140	O-RING, 1BP14.0	2	2	2				W	
	(A=*2016.02.)	(B=*2016.02.)	(C=*2016.02.)								
27	2	22137-100000	WASHER, 10	1	1	1					
28	2	26013-100202	BOLT, M10X 20	1	1	1					

N:Old $\xleftarrow[\text{No}]{\text{Yes}}$ New, Q:Old $\xleftarrow[\text{Yes}]{\text{No}}$ New, R:Old $\xleftarrow[\text{Yes}]{\text{Yes}}$ New, S:Old $\xleftarrow[\text{No}]{\text{No}}$ New, W:Add, Z:Discontinued, F:Interchangeable by set, K:Q'ty Change

Copyright (C) YANMAR CO., LTD. All RightsReserved.

Fig.49. STEERING CYLINDER

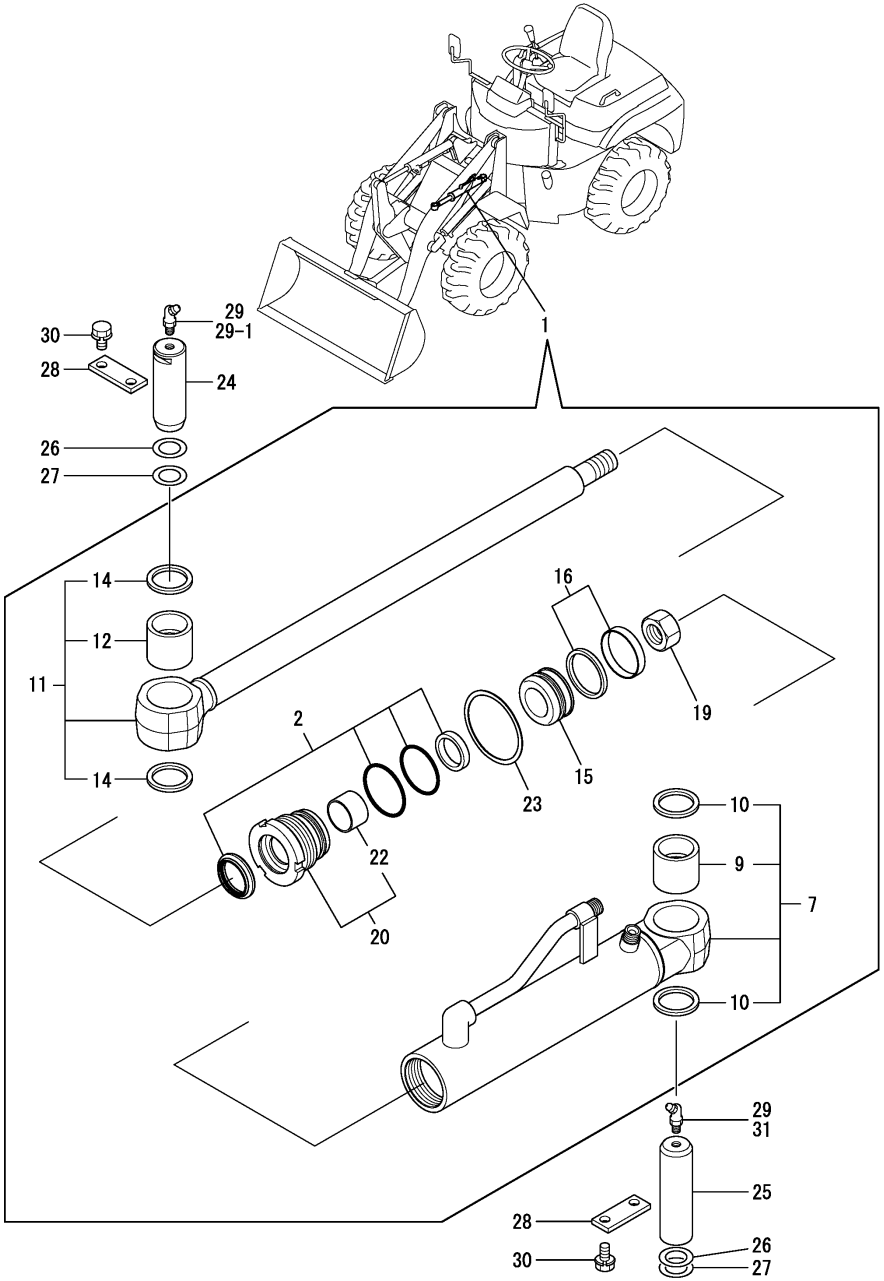

(A)=V4-6(US) (D)=
(B)=V4-6(AS) (E)=
(C)=V4-6(NZ) (F)=

No.	Lev.	Parts No.	Description	Q'ty (A)	(B)	(C)	(D)	(E)	(F)	I	R
1	1	172527-72801-2	CYLINDER ASSY	1	1	1					
1-1	1	172527-72801-N	CYLINDER ASSY, STEER	1	1	1				S	
	(A=M61501)	(B=M61501)	(C=M61501)								
2	2	172A64-72020	SEAL SET, HEAD 60 30	1	1	1					
7	2	172527-72080-2	TUBE ASSY, STEERING	1	1	1					
7-1	2	172527-72080-N	TUBE ASSY, STEERING	1	1	1				S	
	(A=M61501)	(B=M61501)	(C=M61501)								
9	3	172527-72960	PIN BUSH,35 35	1	1	1					
10	3	172448-81610	SEAL, DUST 35X45X4	2	2	2					
11	2	172527-72090	ROD ASSY,PS	1	1	1					
12	3	172527-72960	PIN BUSH,35 35	1	1	1					
14	3	172448-81610	SEAL, DUST 35X45X4	2	2	2					
15	2	172137-72431	PISTON 60G	1	1	1					
16	2	172137-72453	SEAL SET, PISTON 60A	1	1	1					
19	2	172141-72580	NUT, M20	1	1	1					
20	2	172447-72860	HEAD 60 30	1	1	1					
22	3	24550-030300	BUSH, 30X30	1	1	1					
23	2	933125-59600	WASHER 60 B, LOCK	1	1	1					
24	1	172524-72420	PIN 35X103	1	1	1					
25	1	172527-72420	PIN 35X122	1	1	1					
26	1	172141-84610	SHIM, 35X1.2	2	2	2					
27	1	172141-84620	SHIM, 35X0.8	2	2	2					
28	1	172512-91210-3	PLATE,PIN(YELLOW:2J)	2	2	2					
28-1	1	172512-91210-N	PLATE,PIN	2	2	2				S	
	(A=M61501)	(B=M61501)	(C=M61501)								
29	1	24761-040000	NIPPLE, GREASE B	2							
29-1	1	24761-040000	NIPPLE, GREASE B	1	1	1				K	
	(A=M/#60657)										
30	1	26013-100202	BOLT, M10X 20	4	4	4					
31	1	24764-050000	NIPPLE, GREASE C	1						W	
	(A=M/#60657)										
31-1	1	24761-050000	NIPPLE, GREASE C	1	1	1				N	
	(A=M/#60691)										

N:Old $\xleftarrow[\text{No}]{\text{Yes}}$ New, Q:Old $\xleftarrow[\text{Yes}]{\text{No}}$ New, R:Old $\xleftarrow[\text{Yes}]{\text{Yes}}$ New, S:Old $\xleftarrow[\text{No}]{\text{No}}$ New, W:Add, Z:Discontinued, F:Interchangeable by set, K:Q'ty Change

Copyright (C) YANMAR CO., LTD. All RightsReserved.

Fig.50. HYDRAULIC PUMP

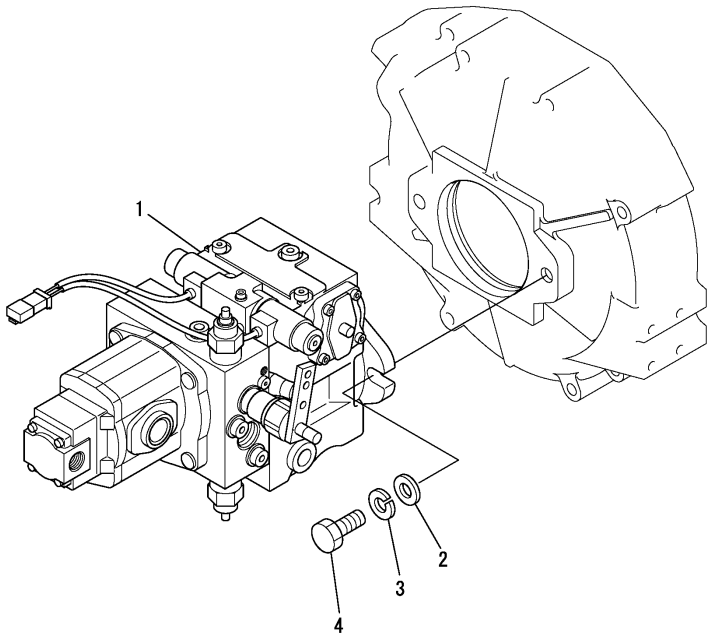

(A)=V4-6(US) (D)=
(B)=V4-6(AS) (E)=
(C)=V4-6(NZ) (F)=

No.	Lev.	Parts No.	Description	Q'ty (A)	(B)	(C)	(D)	(E)	(F)	I	R
1	1	172535-73100	PUMP ASSY, HST	1	1	1					
2	1	22137-140000	WASHER, 14	2	2	2					
3	1	22217-140000	WASHER, SPRING 14	2	2	2					
4	1	26156-140402	BOLT, M14X 40 PLATED	2	2	2					

N:Old $\xleftrightarrow[\text{No}]{\text{Yes}}$ New, Q:Old $\xleftrightarrow[\text{Yes}]{\text{No}}$ New, R:Old $\xleftrightarrow[\text{Yes}]{\text{Yes}}$ New, S:Old $\xleftrightarrow[\text{No}]{\text{No}}$ New, W:Add, Z:Discontinued, F:Interchangeable by set, K:Q'ty Change

Copyright (C) YANMAR CO., LTD. All RightsReserved.

Fig.70. (50A)HYDRAULIC PUMP(COMPONENT PART)

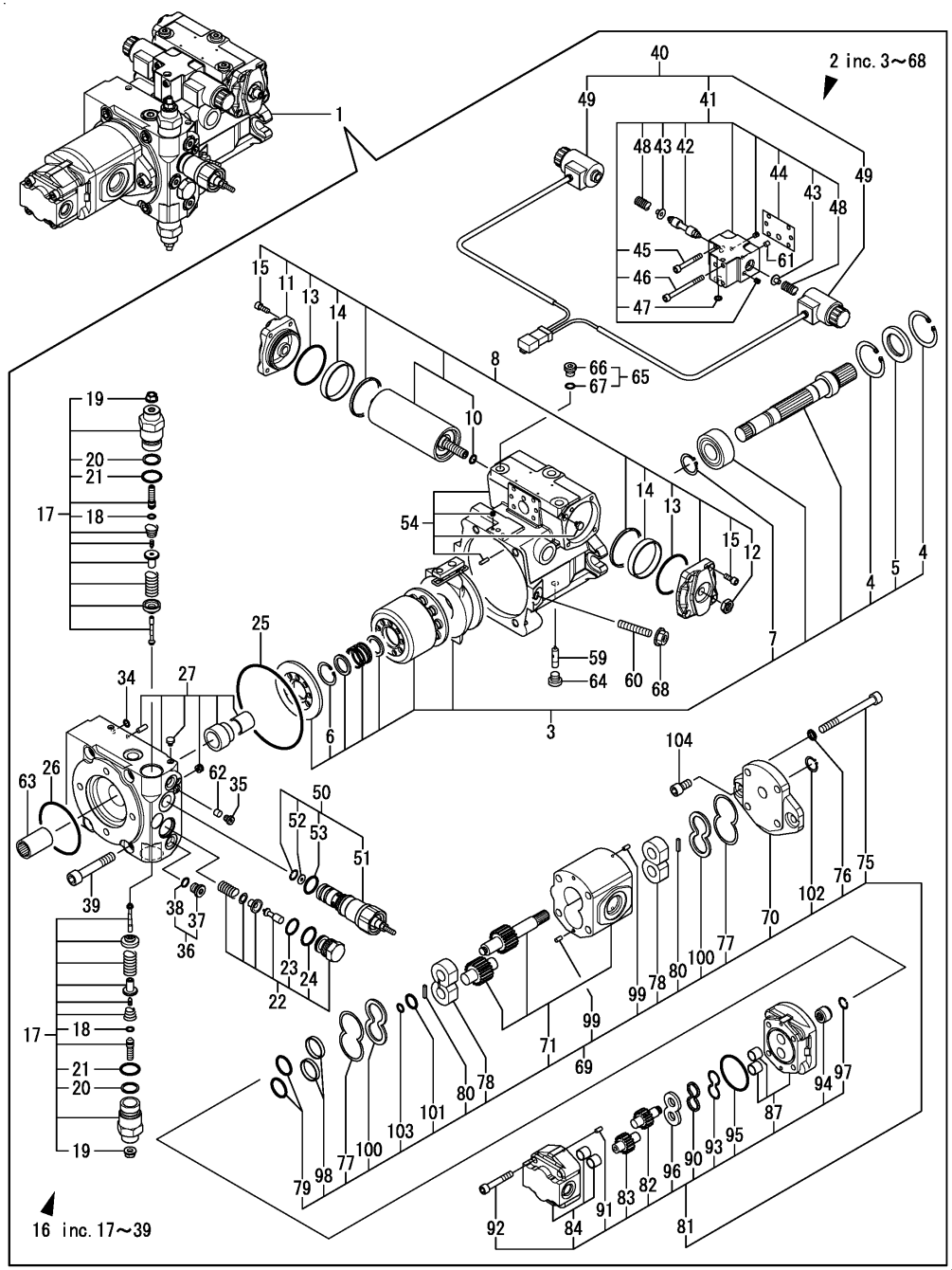

(A)=V4-6(US) (D)=
(B)=V4-6(AS) (E)=
(C)=V4-6(NZ) (F)=

No.	Lev.	Parts No.	Description	Q'ty (A)	(B)	(C)	(D)	(E)	(F)	I	R
1	1	172535-73100	PUMP ASSY, HST	1	1	1					
2	2	172535-73110	PISTON PUMP ASSY	1	1	1					
3	3	172653-71310	ROTARY GROUP	1	1	1					
4	4	172653-71420	RING,RETANING	2	2	2					
5	4	172653-71430	RING,SEAL	1	1	1					
6	4	172653-71440	RING,RETANING	1	1	1					
7	4	22242-000250	RING, 25	1	1	1					
8	3	172653-71320	CONTROL, HYDRAULIC	1	1	1					
10	5	172179-73540	O-RING	1	1	1					
11	4	172653-71460	COVER	1	1	1					
12	4	172653-71470	NUT,M12	1	1	1					
13	4	172653-71480	O-RING	2	2	2					
14	4	172653-71490	RING,GUIDE	2	2	2					
15	4	26450-060162	BOLT, M6X 16	8	8	8					
16	3	172534-71330	PORT PLATE ASSY	1	1	1					
17	4	172534-71500	RELIEF VALVE	2	2	2					
18	5	172534-71510	O-RING, AS 568A	2	2	2					
19	5	172482-73490	NUT	2	2	2					
20	5	172651-73610	BACK-UP RING	2	2	2					
21	5	172650-73640	O-RING, NBR HS90	2	2	2					
22	4	172653-71520	VALVE	1	1	1					
23	5	172653-71550	PISTON RING	1	1	1					
24	5	172650-73640	O-RING, NBR HS90	1	1	1					
25	4	172653-71530	O-RING	1	1	1					
26	4	172653-71540	O-RING	1	1	1					
27	4	172534-71600	PORT PLATE ASSY	1	1	1					
34	4	172179-73540	O-RING	1	1	1					
35	4	172162-73630	PLUG	1	1	1					
36	4	172142-74600	PLUG	2	2	2					
37	5	172142-74660	PLUG	2	2	2					
38	5	24315-000110	O-RING, 1BP11.0	2	2	2					
39	4	26450-120702	BOLT, M12X 70	4	4	4					
40	3	172534-71340	CONTROL MODULE ASSY	1	1	1					
41	4	172653-71560	HOUSING, VALVE	1	1	1					
42	5	172653-71580	PISTON,CONTROL	1	1	1					
43	5	172653-71590	COLLAR, SPRING	2	2	2					
44	5	172653-71600	GASKET	1	1	1					
45	5	172653-71610	BOLT	3	3	3					
46	5	172653-71620	BOLT	2	2	2					
47	5	172653-71630	O-RING	1	1	1					
48	5	172649-72600	SPRING	2	2	2					
49	4	172534-71700	SOLENOID, CONTROL	2	2	2					
50	3	172535-71350	CONTROL ASSY	1	1	1					
51	4	172534-71410	CONTROL, CARTRIDGE	1	1	1					
52	4	172535-71420	ORIFICE	1	1	1					
53	4	172650-73640	O-RING, NBR HS90	1	1	1					
54	3	172534-71360	HOUSING ASSY	1	1	1					
59	3	172653-71360	PIN,JOINT	1	1	1					
60	3	172534-71380	SCREW	1	1	1					
61	3	172534-71390	ORIFICE	1	1	1					
62	3	172653-71390	ORIFICE	1	1	1					

N:Old $\xleftrightarrow[\text{No}]{\text{Yes}}$ New, Q:Old $\xleftrightarrow[\text{Yes}]{\text{No}}$ New, R:Old $\xleftrightarrow[\text{Yes}]{\text{Yes}}$ New, S:Old $\xleftrightarrow[\text{No}]{\text{No}}$ New, W:Add, Z:Discontinued, F:Interchangeable by set, K:Q'ty Change

++ CONTINUE ++

Copyright (C) YANMAR CO., LTD. All RightsReserved.

Fig.70. (50A)HYDRAULIC PUMP(COMPONENT PART)

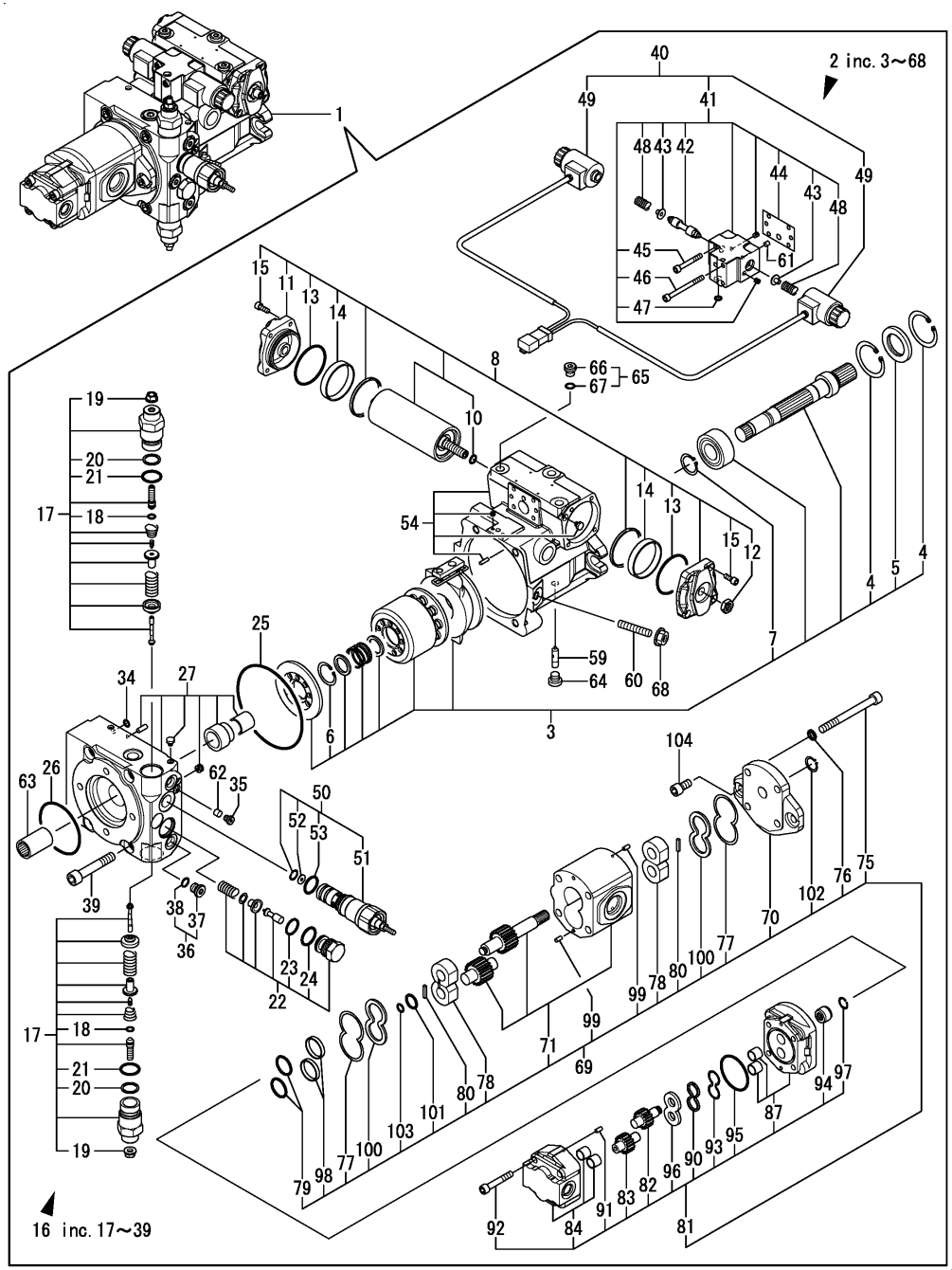

(A)=V4-6(US) (D)=
(B)=V4-6(AS) (E)=
(C)=V4-6(NZ) (F)=

No.	Lev.	Parts No.	Description	Q'ty (A)	(B)	(C)	(D)	(E)	(F)	I	R
63	3	172653-71410	JOINT	1	1	1					
64	3	172649-73680	PLUG	1	1	1					
65	3	172142-74600	PLUG	3	3	3					
66	4	172142-74660	PLUG	3	3	3					
67	4	24315-000110	O-RING, 1BP11.0	3	3	3					
68	3	172162-74870	NUT, M10X1	1	1	1					
69	2	172535-73120	PUMP ASSY, GEAR	1	1	1					
70	3	172534-71430	FRAME	1	1	1					
71	3	172535-71440	CASE ASSY	1	1	1					
75	3	172534-71480	CAP SCREW 10X105	4	4	4					
76	3	172534-71490	SEAL,FASTENER	4	4	4					
77	3	172141-71520	RING	2	2	2					
78	3	172535-71520	SIDE PLATE ASSY	2	2	2					
79	3	172141-71550	O-RING	2	2	2					
80	3	172141-71560	RING	2	2	2					
81	3	172534-73140	PUMP,GEAR	1	1	1					
82	4	172534-71540	GEAR, DRIVE	1	1	1					
83	4	172534-71550	GEAR, IDLE	1	1	1					
84	4	172534-71560	FRAME ASSY	1	1	1					
87	4	172534-71570	HOUSING ASSY	1	1	1					
90	4	172649-72750	RING	1	1	1					
91	4	172141-73240	PIN, PARALLEL	2	2	2					
92	4	172651-73730	SOCKET BOLT M 8X 50	4	4	4					
93	4	172165-73850	RING, BUCK UP	1	1	1					
94	4	172164-73870	COUPLING	1	1	1					
95	4	172165-73870	O-RING	1	1	1					
96	4	172164-73950	PLATE	1	1	1					
97	4	22252-000120	RING, 12	1	1	1					
98	3	172141-73230	GUIDE	2	2	2					
99	3	172141-73240	PIN, PARALLEL	4	4	4					
100	3	172482-73570	PLATE	2	2	2					
101	3	172164-73880	O-RING, NBR HS70	1	1	1					
102	3	22242-000180	RING, 18	1	1	1					
103	3	24315-000100	O-RING, 1BP10.0	1	1	1					
104	2	172534-73130	BOLT, 10X20HE	2	2	2					

N:Old $\frac{\text{Yes}}{\text{No}}$ New, Q:Old $\frac{\text{No}}{\text{Yes}}$ New, R:Old $\frac{\text{Yes}}{\text{Yes}}$ New, S:Old $\frac{\text{No}}{\text{No}}$ New, W:Add, Z:Discontinued, F:Interchangeable by set, K:Q'ty Change

Copyright (C) YANMAR CO., LTD. All RightsReserved.

Fig.51. HYDRAULIC MOTOR

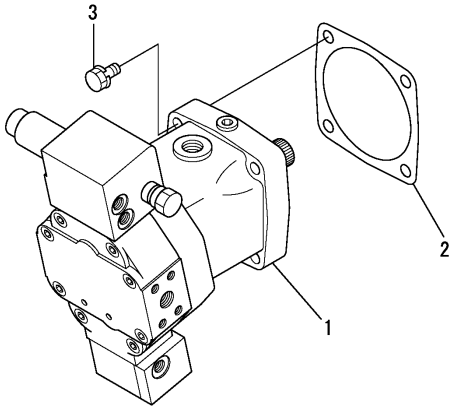

(A)=V4-6(US) (D)=
(B)=V4-6(AS) (E)=
(C)=V4-6(NZ) (F)=

No.	Lev.	Parts No.	Description	Q'ty (A)	(B)	(C)	(D)	(E)	(F)	I	R
1	1	172539-73400	MOTOR ASSY, HST US	1	1	1					
2	1	172534-73310	GASKET, MOTOR	1	1	1					
3	1	26013-120402	BOLT, M12X 40	4	4	4					

N:Old $\xleftrightarrow[\text{No}]{\text{Yes}}$ New, Q:Old $\xleftrightarrow[\text{Yes}]{\text{No}}$ New, R:Old $\xleftrightarrow[\text{Yes}]{\text{Yes}}$ New, S:Old $\xleftrightarrow[\text{No}]{\text{No}}$ New, W:Add, Z:Discontinued, F:Interchangeable by set, K:Q'ty Change

Copyright (C) YANMAR CO., LTD. All RightsReserved.

Fig.71. (51A)HYDRAULIC MOTOR(COMPONENT PART)

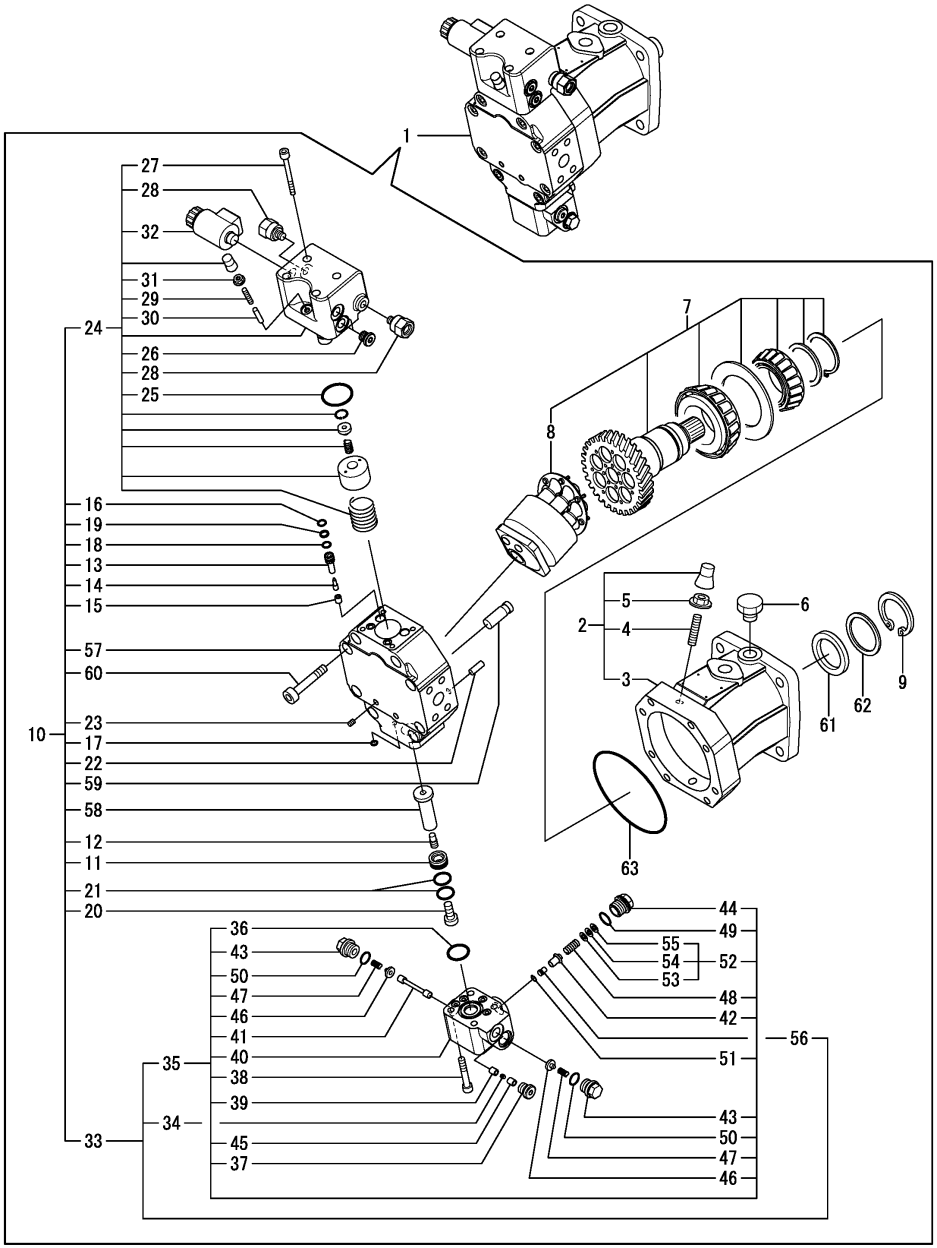

(A)=V4-6(US) (D)=
(B)=V4-6(AS) (E)=
(C)=V4-6(NZ) (F)=

No.	Lev.	Parts No.	Description	Q'ty (A)	(B)	(C)	(D)	(E)	(F)	I	R
1	1	172539-73400	MOTOR ASSY, HST US	1	1	1					
2	2	172534-73320	HOUSING ASSY	1	1	1					
3	3	172534-73610	HOUSING	1	1	1					
4	3	172534-73620	THREADED PIN	2	2	2					
5	3	172534-73630	NUT, SEAL LOCK	2	2	2					
6	2	172653-73320	PLUG ASSY	1	1	1					
7	2	172534-73330	ROTARY GROUP	1	1	1					
8	3	172534-73640	CYLINDER BLOCK ASSY	1	1	1					
9	2	172653-73330	RING,62	1	1	1					
10	2	172534-73340	CONTROL	1	1	1					
11	3	172653-73390	PISTON	1	1	1					
12	3	172653-73400	PIN,THREAD	1	1	1					
13	3	172653-73410	GUIDE,VALVE	2	2	2					
14	3	172653-73420	POPPET	2	2	2					
15	3	172653-73430	SEAT,VALVE	2	2	2					
16	3	172653-73440	O-RING	2	2	2					
17	3	172653-73450	O-RING	6	6	6					
18	3	172653-73460	O-RING	2	2	2					
19	3	172653-73470	RING,BACKUP	2	2	2					
20	3	172653-73480	BOLT,10X25	1	1	1					
21	3	172653-73490	RING,PISTON	3	3	3					
22	3	172653-73500	PIN, 8H6X16	2	2	2					
23	3	172164-73650	PLUG, M6	1	1	1					
24	3	172534-73650	PARTS, CONTROL	1	1	1					
25	4	172653-73530	O-RING	1	1	1					
26	4	172653-73580	PLUG ASSY	2	2	2					
27	4	172650-73690	SOCKET BOLT M 6X 70	4	4	4					
28	4	172534-73700	BUSHING ASSY	1	1	1					
29	4	172534-73710	SCREW M6X30	1	1	1					
30	4	172534-73720	CYLINDER PIN	1	1	1					
31	4	172534-73730	NUT, SEAL LOCK	1	1	1					
32	4	172534-73740	SOLENOID, CONTROL	1	1	1					
33	3	172534-73660	FLUSH & BOOST VALVE	1	1	1					
34	4	172653-73550	ORIFICE	1	1	1					
35	4	172534-73750	FLUSH & BOOST VALVE	1	1	1					
36	5	172653-73570	O-RING	1	1	1					
37	5	172653-73580	PLUG ASSY	1	1	1					
38	5	172651-73730	SOCKET BOLT M 8X 50	4	4	4					
39	5	172649-73740	GUIDE	1	1	1					
40	5	172534-73770	HOUSING, VALVE	1	1	1					
41	5	172534-73780	PISTON,FLUSHING	1	1	1					
42	5	172534-73790	PLUNGER	1	1	1					
43	5	172534-73800	PLUG	2	2	2					
44	5	172534-73810	PLUG	1	1	1					
45	5	172649-73810	GUIDE	1	1	1					
46	5	172534-73820	SEAT, SPRING	2	2	2					
47	5	172534-73830	SPRING	2	2	2					
48	5	172534-73840	SPRING	1	1	1					
49	5	172534-73850	O-RING	1	1	1					
50	5	172534-73860	O-RING	2	2	2					
51	5	172534-73870	CIRCLIP	1	1	1					

Remarks
(1)Selective parts.

N:Old $\xleftarrow[\text{No}]{\text{Yes}}$ New, Q:Old $\xleftarrow[\text{Yes}]{\text{No}}$ New, R:Old $\xleftarrow[\text{Yes}]{\text{Yes}}$ New, S:Old $\xleftarrow[\text{No}]{\text{No}}$ New, W:Add, Z:Discontinued, F:Interchangeable by set, K:Q'ty Change

++ CONTINUE ++

Copyright (C) YANMAR CO., LTD. All RightsReserved.

Fig.71. (51A)HYDRAULIC MOTOR(COMPONENT PART)

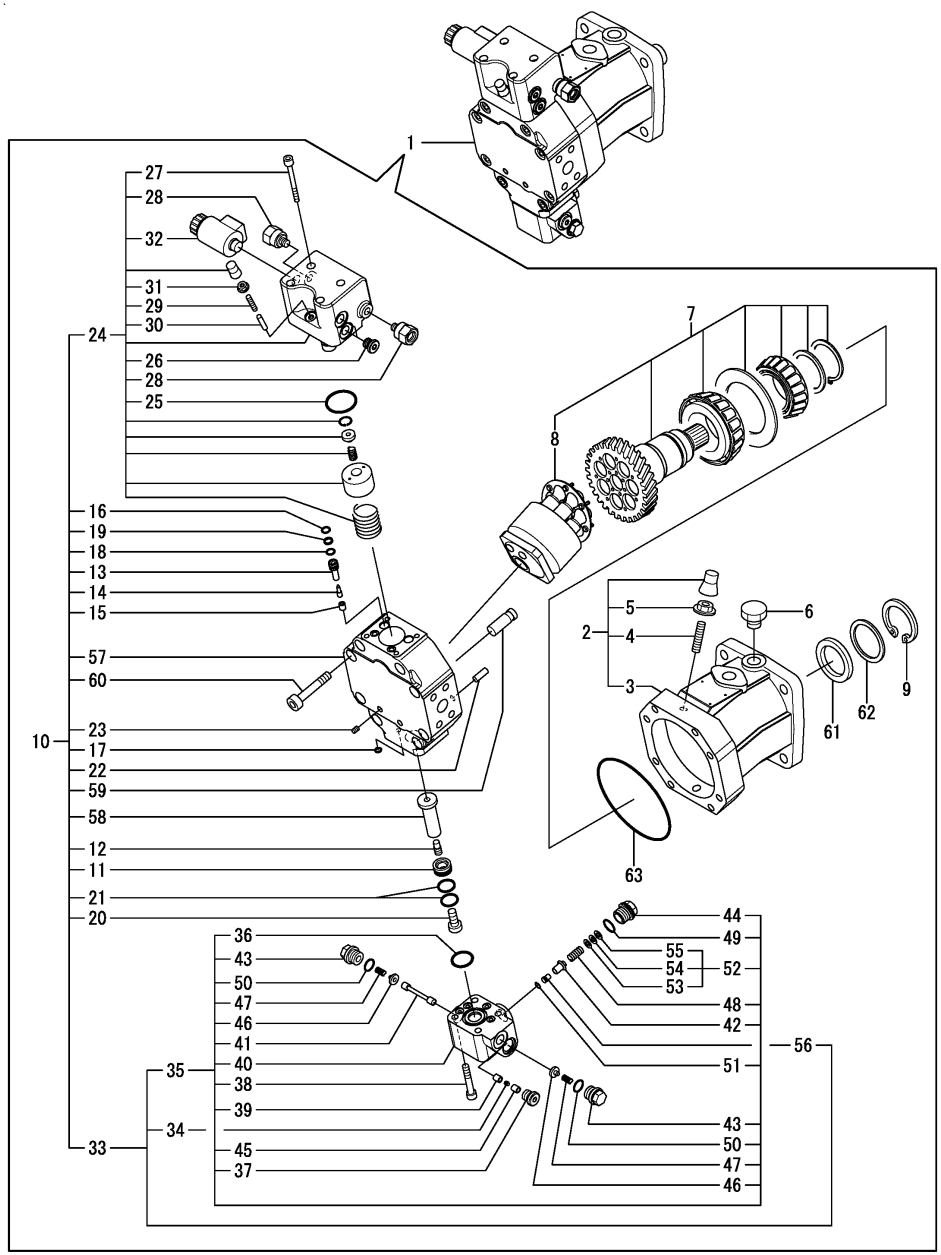

(A)=V4-6(US) (D)=
(B)=V4-6(AS) (E)=
(C)=V4-6(NZ) (F)=

No.	Lev.	Parts No.	Description	Q'ty (A)	(B)	(C)	(D)	(E)	(F)	I	R
52	5	172534-73900	SHIM SET	1	1	1					
53	6	172534-73880	SHIM	1	1	1					1
54	6	172534-73890	SHIM	1	1	1					1
55	6	172534-73910	SHIM	1	1	1					1
56	4	172534-73760	ORIFICE	1	1	1					
57	3	172534-73670	PORT PLATE	1	1	1					
58	3	172534-73680	POSITIONING PISTON	1	1	1					
59	3	172534-73690	POSITIONING TRANNION	1	1	1					
60	3	172650-73870	SOCKET BOLT M10X 60	8	8	8					
61	2	172653-73340	SEAL, OIL	1	1	1					
62	2	172653-73350	SHIM	1	1	1					
63	2	172653-73360	O-RING	1	1	1					

Remarks
(1)Selective parts.

N:Old $\frac{\text{Yes}}{\text{No}}$ New, Q:Old $\frac{\text{No}}{\text{Yes}}$ New, R:Old $\frac{\text{Yes}}{\text{Yes}}$ New, S:Old $\frac{\text{No}}{\text{No}}$ New, W:Add, Z:Discontinued, F:Interchangeable by set, K:Q'ty Change

Copyright (C) YANMAR CO., LTD. All RightsReserved.

Fig.52. STEERING UNIT

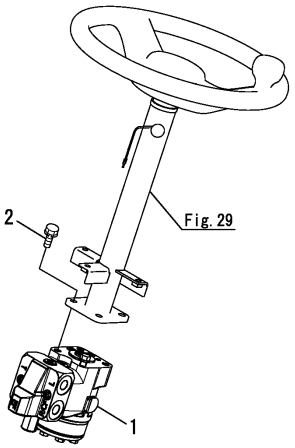

(A)=V4-6(US)
(B)=V4-6(AS)
(C)=V4-6(NZ)
(D)=
(E)=
(F)=

No.	Lev.	Parts No.	Description	Q'ty (A)	(B)	(C)	(D)	(E)	(F)	I	R
1	1	172538-73510	STEERING ASSY	1	1	1					
2	1	26013-100252	BOLT, M10X 25	1	1	1					

N:Old ◄Yes/No► New, Q:Old ◄No/Yes► New, R:Old ◄Yes/Yes► New, S:Old ◄No/No► New, W:Add, Z:Discontinued, F:Interchangeable by set, K:Q'ty Change

Copyright (C) YANMAR CO., LTD. All RightsReserved.

Fig.53. CONTROL VALVE

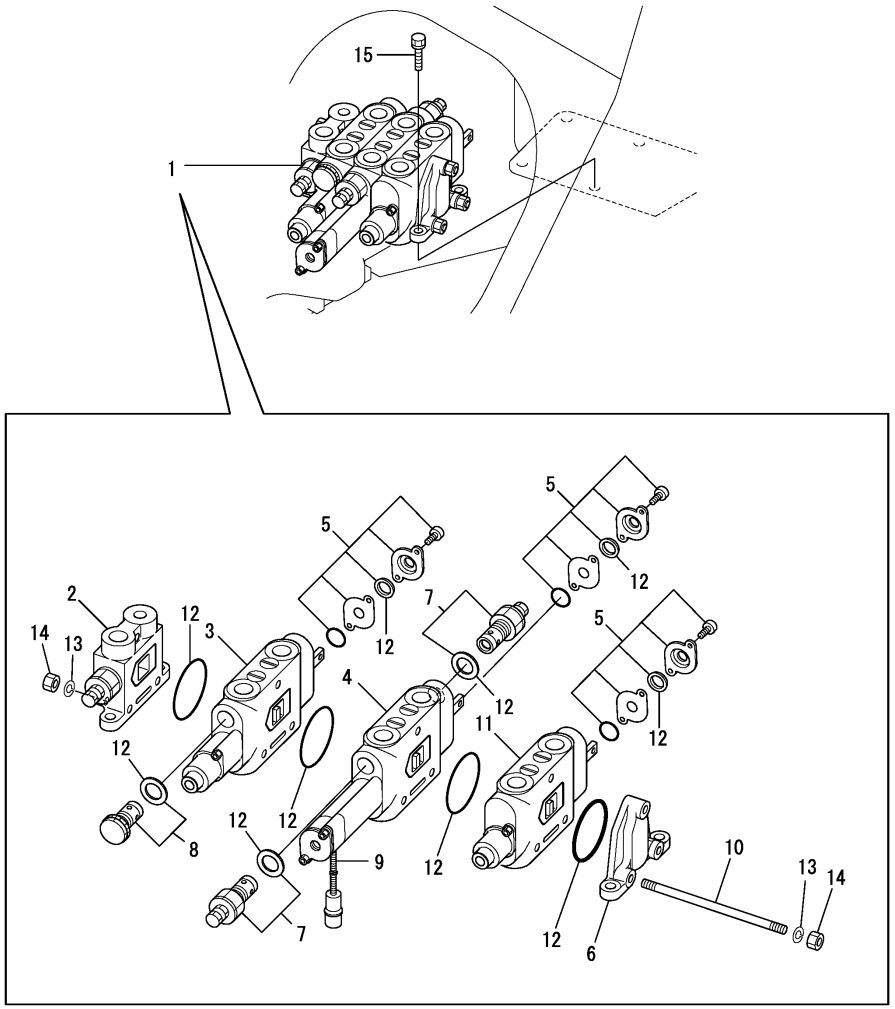

(A)=V4-6(US) (D)=
(B)=V4-6(AS) (E)=
(C)=V4-6(NZ) (F)=

No.	Lev.	Parts No.	Description	Q'ty (A)	(B)	(C)	(D)	(E)	(F)	I	R
1	1	172528-74800	VALVE ASSY, 3-WAY	1	1	1					
2	2	172527-74130	COVER ASSY, INLET	1	1	1					
3	2	172528-74140	F BLOCK ASSY	1	1	1					
4	2	172528-74150	ED BLOCK ASSY	1	1	1					
5	2	172527-74160	L BLOCK ASSY	3	3	3					
6	2	172527-74170	CONER, END	1	1	1					
7	2	172527-74180	VALVE ASSY	2	2	2					
8	2	172527-74190	VALVE, SUC.	1	1	1					
9	2	172527-74220	TUBE, CORRUGATED	1	1	1					
10	2	172527-74410	ROD, TIE	3	3	3					
11	2	172527-74420	DM BLOCK ASSY	1	1	1					
12	2	172527-74430	SEAL SET	1	1	1					
13	2	22217-100000	WASHER, SPRING 10	6	6	6					
14	2	26716-100002	NUT, M10	6	6	6					
15	1	26013-100352	BOLT, M10X 35	4							
15-1	1	26013-100302	BOLT, M10X 30	4	4	4					R
	(A=MXXXXX)										

N:Old $\xleftarrow[\text{No}]{\text{Yes}}$ New, Q:Old $\xleftarrow[\text{Yes}]{\text{No}}$ New, R:Old $\xleftarrow[\text{Yes}]{\text{Yes}}$ New, S:Old $\xleftarrow[\text{No}]{\text{No}}$ New, W:Add, Z:Discontinued, F:Interchangeable by set, K:Q'ty Change

Copyright (C) YANMAR CO., LTD. All RightsReserved.

Fig.54. HYD. OIL TANK

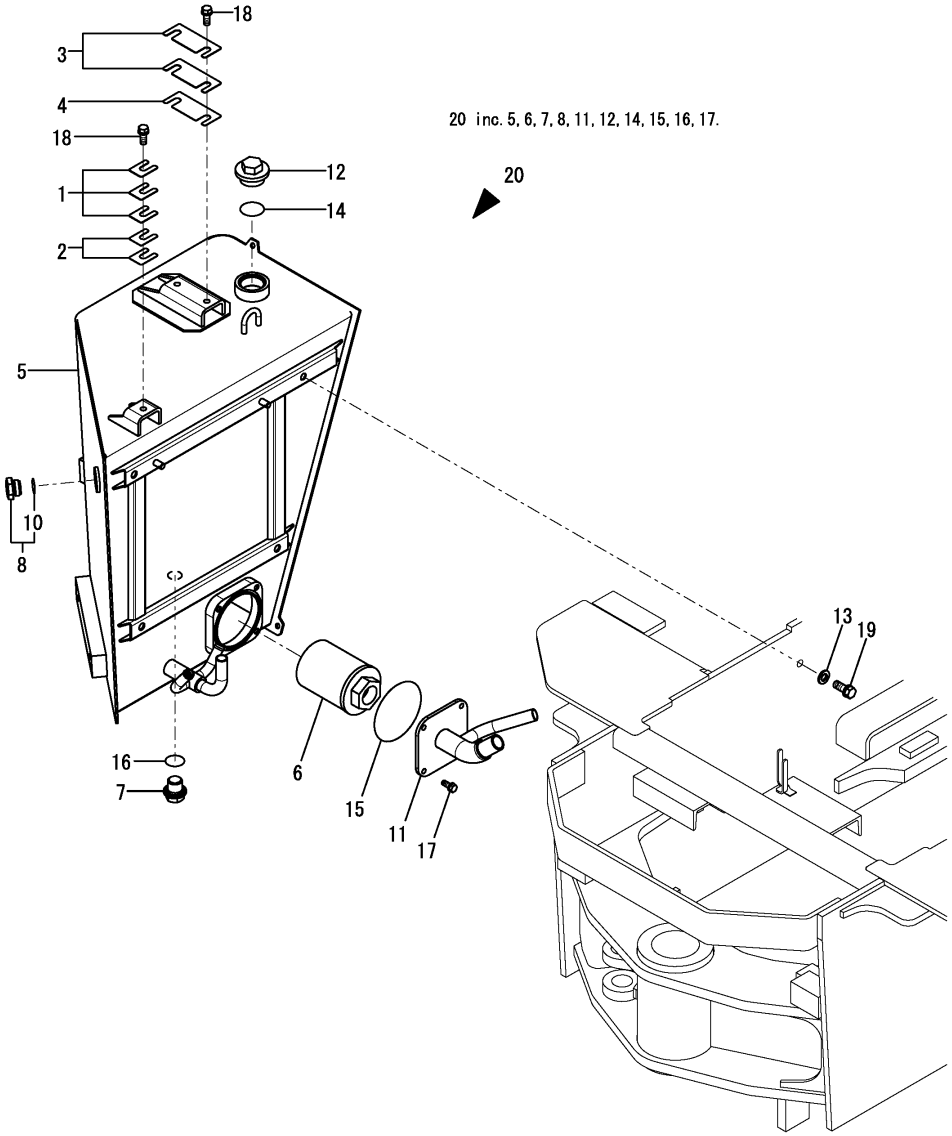

(A)=V4-6(US) (D)=
(B)=V4-6(AS) (E)=
(C)=V4-6(NZ) (F)=

No.	Lev.	Parts No.	Description	Q'ty (A)	(B)	(C)	(D)	(E)	(F)	I	R
1	1	172538-14311	SHIM, TANK T=1.0	3	3	3					
2	1	172538-14321	SHIM, TANK T=0.5	2	2	2					
3	1	172538-14341	SHIM, TANK T=1.0	2	2	2					
4	1	172538-14351	SHIM, TANK T=0.5	1	1	1					
5	1	172539-75010	TANK ASSY, RESERVOIR	1	1	1					
6	1	172520-75320	FILTER, SUCTION	1	1	1					
7	1	172455-75330	PLUG, DRAIN	1	1	1					
8	1	172480-75350	GAUGE ASSY	1	1	1					
10	2	24311-350220	O-RING, 1AP22A	1	1	1					
11	1	172538-75400	FLANGE ASSY, SUCTION	1	1	1					
12	1	172116-75850-B	PLUG, OIL FEED	1	1	1					
13	1	22137-120000	WASHER, 12	4	4	4					
14	1	24311-000380	O-RING, 1AP38.0	1	1	1					
15	1	24321-001050	O-RING, 1AG105.0	1	1	1					
16	1	24341-000300	O-RING, 1AS30.0	1	1	1					
17	1	26013-080202	BOLT, M8X 20	4	4	4					
18	1	26013-100252	BOLT, M10X 25	3	3	3					
19	1	26013-120302	BOLT, M12X 30	4	4	4					
20	1	172539-08020	TANK KIT,RESERVOIR	1	1	1				W	
	(A=MXXXXX)	(B=MXXXXX)	(C=MXXXXX)								

N:Old $\frac{\text{Yes}}{\text{No}}$ New, Q:Old $\frac{\text{No}}{\text{Yes}}$ New, R:Old $\frac{\text{Yes}}{\text{Yes}}$ New, S:Old $\frac{\text{No}}{\text{No}}$ New, W:Add, Z:Discontinued, F:Interchangeable by set, K:Q'ty Change

Copyright (C) YANMAR CO., LTD. All RightsReserved.

Fig.55. FILTER & PIPE FITTING

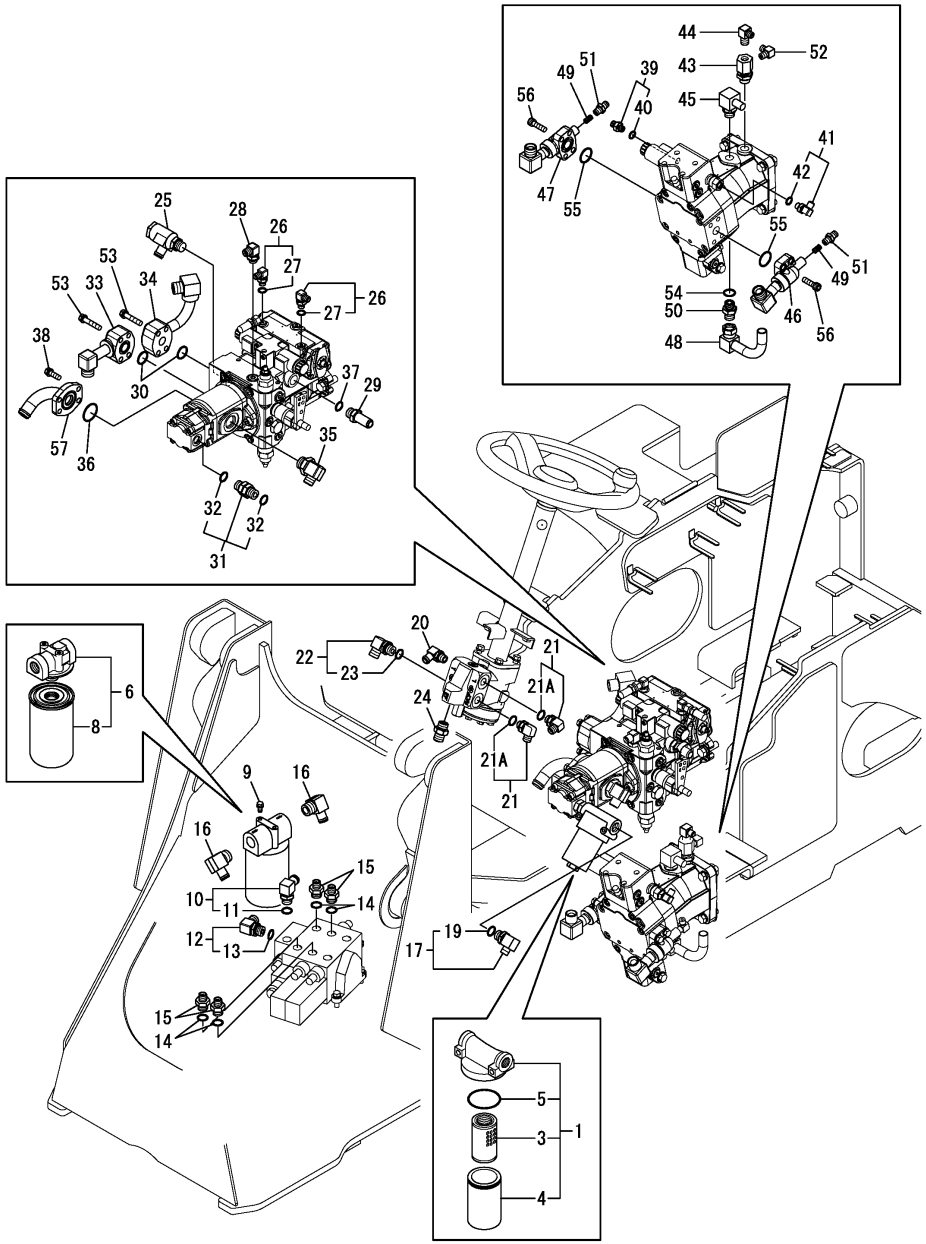

(A)=V4-6(US) (D)=
(B)=V4-6(AS) (E)=
(C)=V4-6(NZ) (F)=

No.	Lev.	Parts No.	Description	Q'ty (A)	(B)	(C)	(D)	(E)	(F)	I	R
1	1	172652-73750	FILTER,LINE	1	1	1					
3	2	172652-73770	ELEMENT, FILTER	1	1	1					
4	2	172652-73780	CASE	1	1	1					
5	2	172652-73790	O-RING, JAS02053	1	1	1					
6	1	172527-73850	FILTER, OIL	1	1	1					
8	2	172527-73870	ELEMENT	1	1	1					
9	1	26013-080162	BOLT, M8X 16	2	2	2					
10	1	172164-76131	ELBOW	1	1	1					
11	2	24315-000180	O-RING, 1BP18.0	1	1	1					
12	1	172141-76900	CONNECTOR ASSY	1	1	1					
13	2	24315-000180	O-RING, 1BP18.0	1	1	1					
14	1	24311-000180	O-RING, 1AP18.0	4	4	4					
15	1	933160-01370	CONNECTOR,PF1/2PF3/8	4	4	4					
16	1	172467-76120	ELBOW	2	2	2					
17	1	172157-76300	ELBOW ASSY	1	1	1					
19	2	24315-000180	O-RING, 1BP18.0	1	1	1					
20	1	1A6380-24080	NIPPLE, 3/8X16 90	1	1	1					
21	1	172142-76181	JOINT ASSY	2	2	2					
21A	2	24315-000140	O-RING, 1BP14.0	2	2	2				W	
	(A=MXXXXX)										
22	1	172141-76900	CONNECTOR ASSY	1	1	1					
23	2	24315-000180	O-RING, 1BP18.0	1	1	1					
24	1	172112-77361	CONNECTOR	1	1	1					
25	1	172450-76100	ELBOW	1	1	1					
26	1	172141-76181	CONNECTOR ASSY, 02FF	2	2	2					
27	2	41851-000110	O-RING	2	2	2					
28	1	172142-76181	JOINT ASSY	1	1	1					
28A	2	24315-000140	O-RING, 1BP14.0	1	1	1				W	
	(A=MXXXXX)										
29	1	172183-76190	JOINT, PF1/2	1	1	1					
30	1	172520-76240	O-RING, AN6227-19	2							
30-1	1	24315-000300	O-RING, 1BP30.0	2	2	2				S	1
	(A=M/#60691)										
31	1	172527-76350	CONNECTOR, PF1/2X1/2	1	1	1					
32	2	24315-000180	O-RING, 1BP18.0	2	2	2					
33	1	172534-76710-1	PIPE, MAIN	1							
33-1	1	172534-76711-1	FRANGE PA (GRAY:49)	1	1	1				S	1
	(A=M/#60691)										
34	1	172534-76720-1	PIPE, MAIN	1							
34-1	1	172534-76721-1	PIPE, MAIN	1	1	1				S	1
	(A=M/#60691)										
35	1	172534-76760	ELBOW	1	1	1					
36	1	172534-76770	O-RING, AN6227-27	1	1	1					
37	1	24315-000180	O-RING, 1BP18.0	1							
37-1	1	41851-000180	O-RING	1	1	1				N	
	(A=M/#60642)										
38	1	26013-100302	BOLT, M10X 30	4	4	4					
39	1	172173-76102	CONNECTOR ASSY	1	1	1					
40	2	41851-000110	O-RING	1	1	1					
41	1	172141-76181	CONNECTOR ASSY, 02FF	1	1	1					
42	2	41851-000110	O-RING	1	1	1					

Remarks
(1)Interchangeable by simultaneous replacement with No.30-1, 33-1 & 34-1.

N:Old $\frac{\text{Yes}}{\text{No}}$ New, Q:Old $\frac{\text{No}}{\text{Yes}}$ New, R:Old $\frac{\text{Yes}}{\text{Yes}}$ New, S:Old $\frac{\text{No}}{\text{No}}$ New, W:Add, Z:Discontinued, F:Interchangeable by set, K:Q'ty Change

++ CONTINUE ++

Copyright (C) YANMAR CO., LTD. All RightsReserved.

Fig.55. FILTER & PIPE FITTING

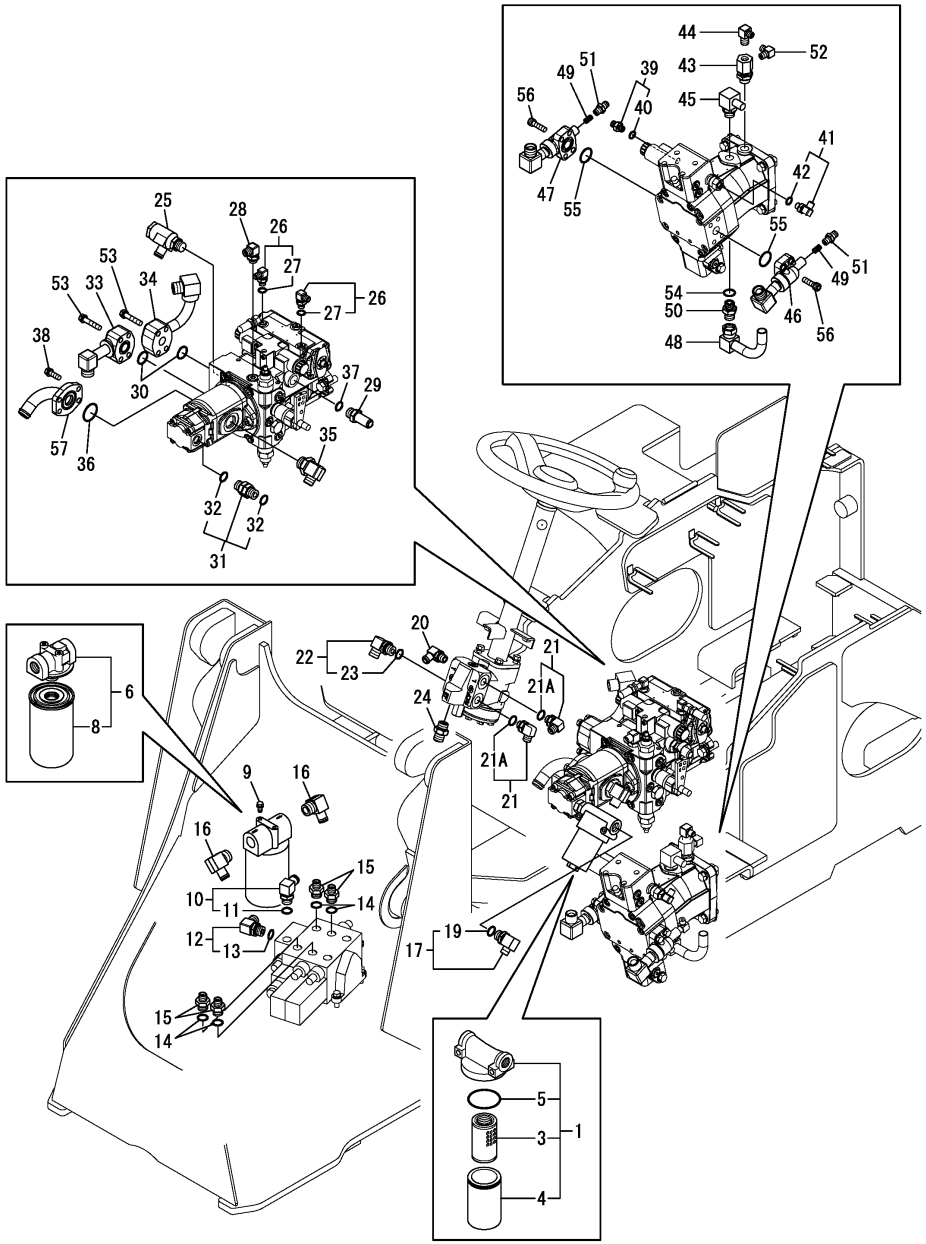

(A)=V4-6(US) (D)=
(B)=V4-6(AS) (E)=
(C)=V4-6(NZ) (F)=

No.	Lev.	Parts No.	Description	Q'ty (A)	(B)	(C)	(D)	(E)	(F)	I	R
43	1	172519-76180	CONNECTOR	1	1	1					
44	1	172312-76290	ELBOW	1	1	1					
45	1	172527-76460	CONNECTOR, 1/2X16	1	1	1					
46	1	172538-76730-1	PIPE, MAIN	1	1	1					
47	1	172538-76740-1	PIPE, MAIN	1	1	1					
48	1	172534-76750-1	PIPE, DRAIN	1							
48-1	1	172534-76751-1	PIPE, DRAIN	1	1	1				N	
	(A=M/#60691)										
49	1	172538-76800	VALVE ASSY, CHECK	2	2	2					
50	1	172112-77361	CONNECTOR	1	1	1					
51	1	23391-020000	JOINT, RGI-1/4	2	2	2					
52	1	23393-020000	JOINT, 90RGI-1/4	1	1	1					
53	1	26013-100502	BOLT, M10X 50	8							
53-1	1	26450-100352	BOLT, M10X 35	8	8	8				S	
	(A=M/#60691)										
54	1	24315-000180	O-RING, 1BP18.0	1							
54-1	1	41851-000180	O-RING	1	1	1				N	
	(A=M/#60642)										
55	1	24315-000300	O-RING, 1BP30.0	2	2	2					
56	1	26013-100352	BOLT, M10X 35	8	8	8					
57	1	172534-76700-1	PIPE, SUCTION	1							
57-1	1	172534-76701-1	PIPE, SUCTION	1	1	1				N	
	(A=M/#60691)										

Remarks
(1)Interchangeable by simultaneous replacement with No.30-1, 33-1 & 34-1.

N:Old $\frac{\text{Yes}}{\text{No}}$ New, Q:Old $\frac{\text{No}}{\text{Yes}}$ New, R:Old $\frac{\text{Yes}}{\text{Yes}}$ New, S:Old $\frac{\text{No}}{\text{No}}$ New, W:Add, Z:Discontinued, F:Interchangeable by set, K:Q'ty Change

Copyright (C) YANMAR CO., LTD. All RightsReserved.

Fig.56. PUMP - MOTOR - COOLER - TANK

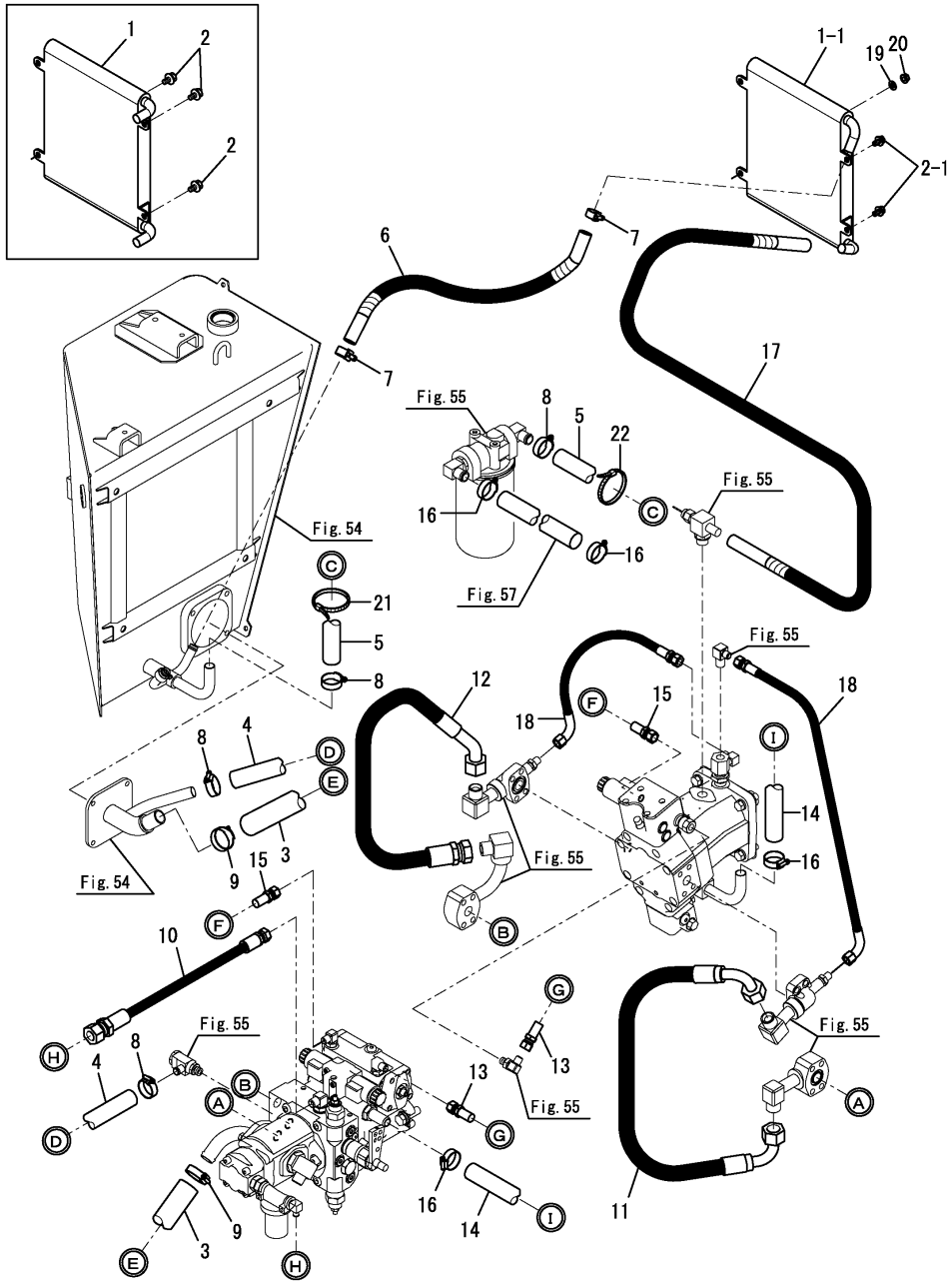

(A)=V4-6(US) (D)=
(B)=V4-6(AS) (E)=
(C)=V4-6(NZ) (F)=

No.	Lev.	Parts No.	Description	Q'ty (A)	(B)	(C)	(D)	(E)	(F)	I	R
1	1	172538-74800	COOLER, OIL	1							
1-1	1	172539-74800	COOLER, OIL	1	1	1				S	1
	(A=M/#60699)										
2	1	26014-080162	BOLT, M8X 16	3							
2-1	1	26014-080162	BOLT, M8X 16	2	2	2				K	
	(A=M/#60699)										
3	1	172538-78120	HOSE	1	1	1					
4	1	172538-78160	HOSE	1	1	1					
5	1	172538-78230	HOSE	1							
5-1	1	172444-78310	HOSE	1	1	1				N	
	(A=M/#60642)										
6	1	172A47-78330	HOSE	1							
6-1	1	172539-78280	HOSE,G610YY183S	1	1	1				S	
	(A=M/#60699)										
7	1	23001-022000	CLAMP, HOSE 22	2	2	2					
8	1	23001-035000	CLAMP, HOSE 35	4	4	4					
9	1	23001-041000	CLAMP, HOSE 41	2	2	2					
10	1	172538-78130	HOSE	1	1	1					
11	1	172538-78100	HOSE	1	1	1					
12	1	172538-78110	HOSE	1	1	1					
13	1	172539-78140	HOSE	1	1	1					
14	1	172539-78170	HOSE	1	1	1					
15	1	172480-78970	HOSE	1	1	1					
16	1	23001-035000	CLAMP, HOSE 35	4	4	4					
17	1	172530-78190	HOSE	1							
17-1	1	172496-78470	HOSE	1	1	1				S	
	(A=M/#60699)										
18	1	172538-78761	HOSE	2	2	2					
19	1	22137-080000	WASHER, 8	1	1	1				W	1
	(A=M/#60699)										
20	1	26051-080002	NUT, M8	1	1	1				W	1
	(A=M/#60699)										
21	1	172122-79930	CLAMP, HOSE	1	1	1				W	
	(A=M/#60731)										
22	1	172122-79930	CLAMP, HOSE	1	1	1				W	
	(A=MZZZZZ)	(B=MZZZZZ)	(C=MZZZZZ)								

Remarks
(1)Interchangeable by simultaneous replacement with No.1-1, 19, 20 & Fig.7 No.2-1, 7-1.

N:Old $\xleftarrow[\text{No}]{\text{Yes}}$ New, Q:Old $\xleftarrow[\text{Yes}]{\text{No}}$ New, R:Old $\xleftarrow[\text{Yes}]{\text{Yes}}$ New, S:Old $\xleftarrow[\text{No}]{\text{No}}$ New, W:Add, Z:Discontinued, F:Interchangeable by set, K:Q'ty Change

Copyright (C) YANMAR CO., LTD. All RightsReserved.

Fig.57. PUMP - STEERING - CONTROL VALVE - EQUIPMENT

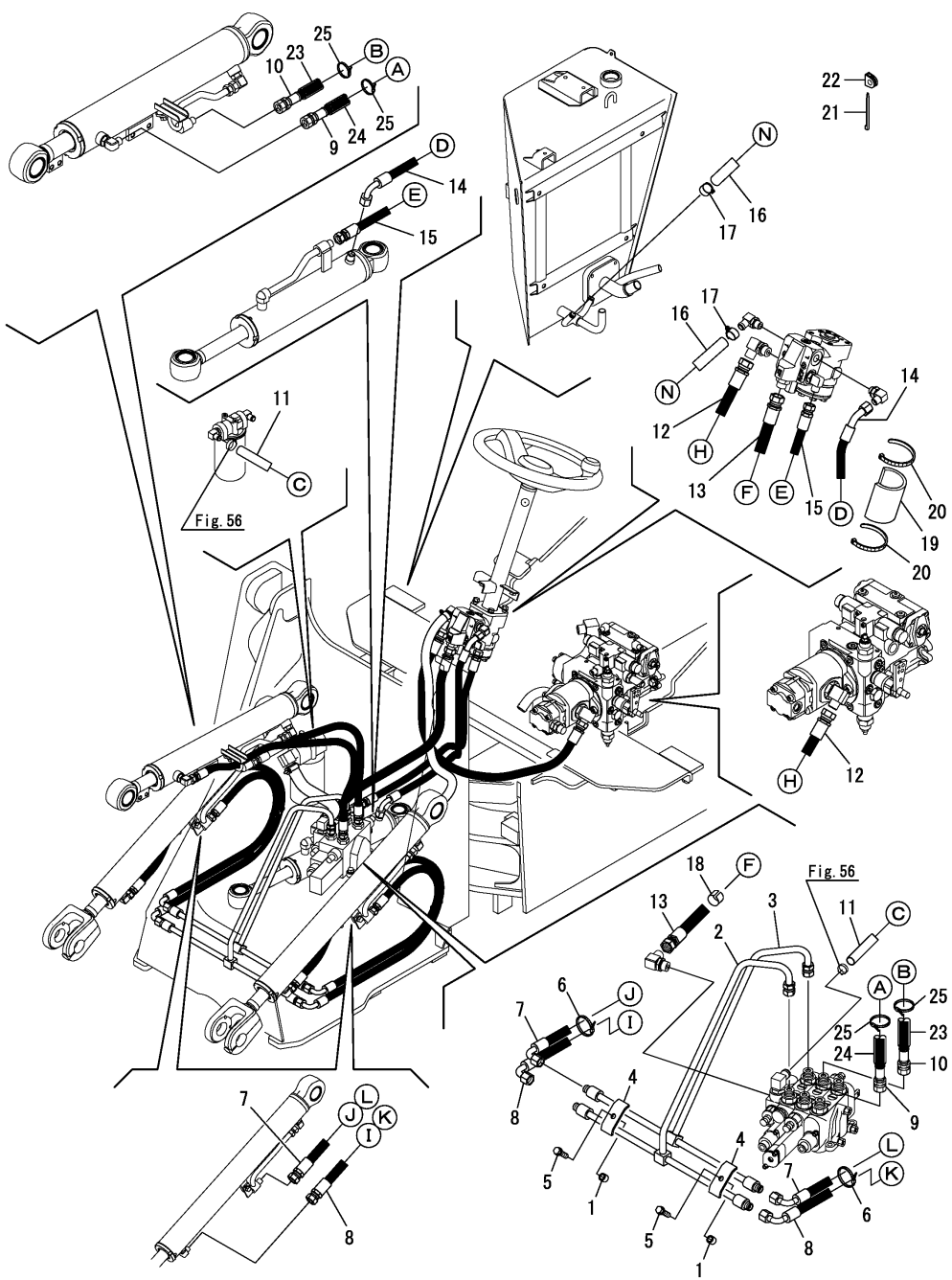

(A)=V4-6(US) (D)=
(B)=V4-6(AS) (E)=
(C)=V4-6(NZ) (F)=

No.	Lev.	Parts No.	Description	Q'ty (A)	(B)	(C)	(D)	(E)	(F)	I	R
1	1	172183-37510	COLLAR, 11X16X13	2	2	2					
2	1	172538-76500-2	PIPE ASSY, LIFT	1	1	1					
2-1	1	172538-76500-Y	PIPE ASSY, LIFT	1	1	1				S	
	(A=M61501)	(B=M61501)	(C=M61501)								
3	1	172538-76550-2	PIPE ASSY, LIFT	1	1	1					
3-1	1	172538-76550-Y	PIPE ASSY, LIFT	1	1	1				S	
	(A=M61501)	(B=M61501)	(C=M61501)								
4	1	172520-77380	W.P BACH PLATE	2	2	2					
5	1	26013-100352	BOLT, M10X 35	2	2	2					
6	1	172137-16560	BAND	2	2	2					
7	1	172527-78111	HOSE	2	2	2					
8	1	172538-78300	HOSE	2	2	2					
9	1	172538-78240	HOSE	1	1	1					
10	1	172538-78250	HOSE	1	1	1					
11	1	172448-75300	HOSE	1	1	1					
12	1	172173-78120	HOSE	1	1	1					
13	1	172539-78200	HOSE	1	1	1					
14	1	172538-78210	HOSE	1	1	1					
15	1	172538-78260	HOSE	1	1	1					
16	1	172527-78750	HOSE	1	1	1					
17	1	23001-022000	CLAMP, HOSE 22	2	2	2					
18	1	1A7400-06310	SEAL, DISK	1	1	1					
19	1	172538-19950	SPONGE, HOSE 100	1	1	1					
20	1	172122-79930	CLAMP, HOSE	2	2	2					
21	1	172126-11510	BAND	1	1	1					
22	1	172444-68690	RUBBER	1	1	1					
23	1	172538-78610	COVER, HOSE	1	1	1					
24	1	172151-79430	COVER, HOSE	1	1	1					
25	1	933168-55770	BAND	4	4	4					

N:Old $\frac{\text{Yes}}{\text{No}}$ New, Q:Old $\frac{\text{No}}{\text{Yes}}$ New, R:Old $\frac{\text{Yes}}{\text{Yes}}$ New, S:Old $\frac{\text{No}}{\text{No}}$ New, W:Add, Z:Discontinued, F:Interchangeable by set, K:Q'ty Change

Copyright (C) YANMAR CO., LTD. All RightsReserved.

Fig.58. CONTROL VALVE - P.T.O.

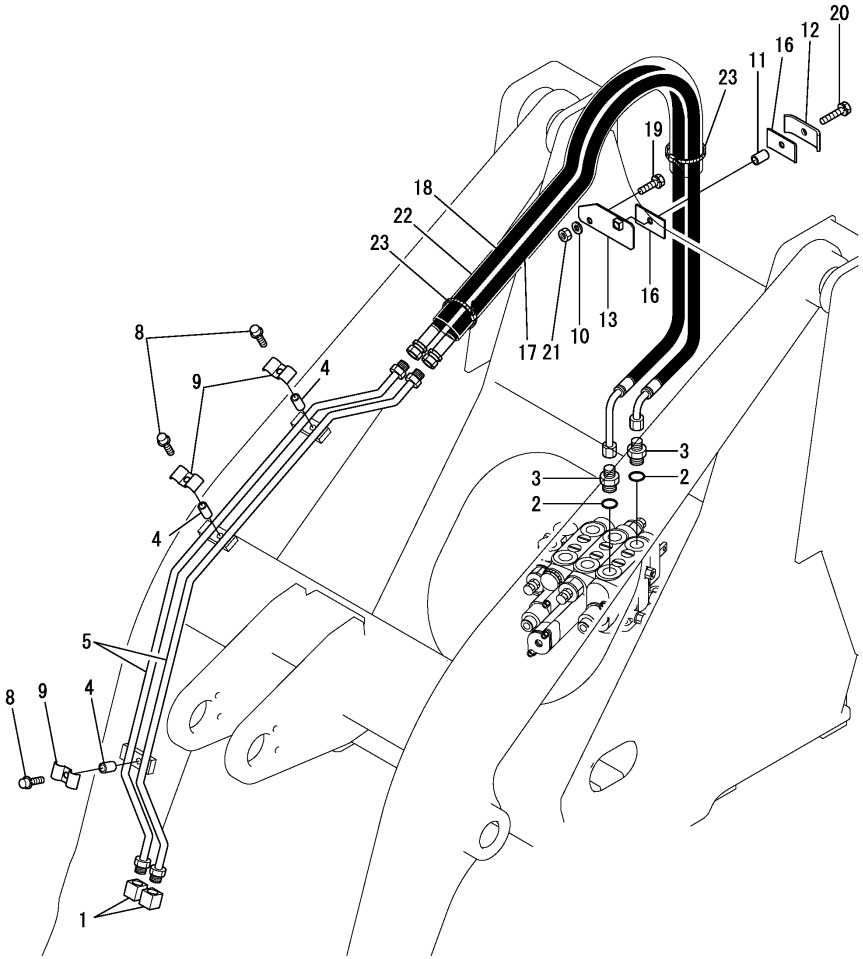

(A)=V4-6(US) (D)=
(B)=V4-6(AS) (E)=
(C)=V4-6(NZ) (F)=

No.	Lev.	Parts No.	Description	Q'ty (A)	(B)	(C)	(D)	(E)	(F)	I	R
1	1	172137-75570	ADAPTER, PF1/2	2	2	2					
2	1	24311-000180	O-RING, 1AP18.0	2	2	2					
3	1	172112-77361	CONNECTOR	2	2	2					
4	1	172490-69760	COLLAR, 16X2.5X13	3	3	3					
4-1	1	172490-69760-Y	COLLAR, 16X2.5X13	3	3	3				S	
	(A=M61501)	(B=M61501)	(C=M61501)								
5	1	172539-76400-1	PIPE ASSY, 3RD	2	2	2					
5-1	1	172539-76400-Y	PIPE ASSY, 3RD	2	2	2				S	
	(A=M61501)	(B=M61501)	(C=M61501)								
8	1	26013-100452	BOLT, M10X 45	3	3	3					
9	1	933155-09670	CLAMP, PIPE	3	3	3					
10	1	194145-04810	WASHER, 10	1	1	1					
11	1	172187-76520	COLLAR, CLAMP	1	1	1					
12	1	172520-77380	W.P BACH PLATE	1	1	1					
13	1	172527-77400	STAY ASSY, HOSE	1	1	1					
16	1	172524-78150	RUBBER	2	2	2					
17	1	172538-78570	HOSE	1	1	1					
18	1	172538-78580	HOSE	1	1	1					
19	1	26013-100352	BOLT, M10X 35	1	1	1					
20	1	26013-100452	BOLT, M10X 45	1							
20-1	1	26013-100502	BOLT, M10X 50	1	1	1				N	
	(A=MXXXXX)										
21	1	26716-100002	NUT, M10	1	1	1					
22	1	172538-78600	COVER, HOSE	1	1	1					
23	1	172122-79930	CLAMP, HOSE	2	2	2					

N:Old $\xleftarrow[\text{No}]{\text{Yes}}$ New, Q:Old $\xleftarrow[\text{Yes}]{\text{No}}$ New, R:Old $\xleftarrow[\text{Yes}]{\text{Yes}}$ New, S:Old $\xleftarrow[\text{No}]{\text{No}}$ New, W:Add, Z:Discontinued, F:Interchangeable by set, K:Q'ty Change

Copyright (C) YANMAR CO., LTD. All RightsReserved.

Fig.59. GREASING

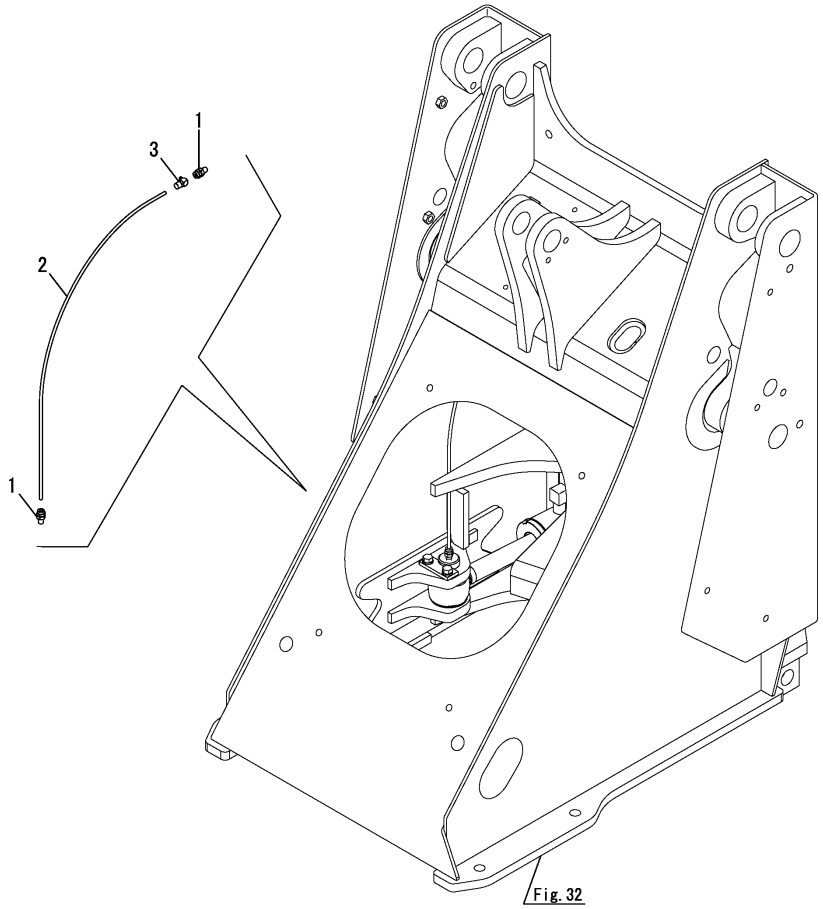

(A)=V4-6(US) (D)=
(B)=V4-6(AS) (E)=
(C)=V4-6(NZ) (F)=

No.	Lev.	Parts No.	Description	Q'ty (A)	(B)	(C)	(D)	(E)	(F)	I	R
1	1	172141-77800	JOINT, GREASE	2	2	2					
2	1	172146-77801	HOSE	1	1	1					
3	1	24761-040000	NIPPLE, GREASE B	1	1	1					

N:Old $\xleftrightarrow[\text{No}]{\text{Yes}}$ New, Q:Old $\xleftrightarrow[\text{Yes}]{\text{No}}$ New, R:Old $\xleftrightarrow[\text{Yes}]{\text{Yes}}$ New, S:Old $\xleftrightarrow[\text{No}]{\text{No}}$ New, W:Add, Z:Discontinued, F:Interchangeable by set, K:Q'ty Change

Copyright (C) YANMAR CO., LTD. All RightsReserved.

Fig.60. LIFT ARM

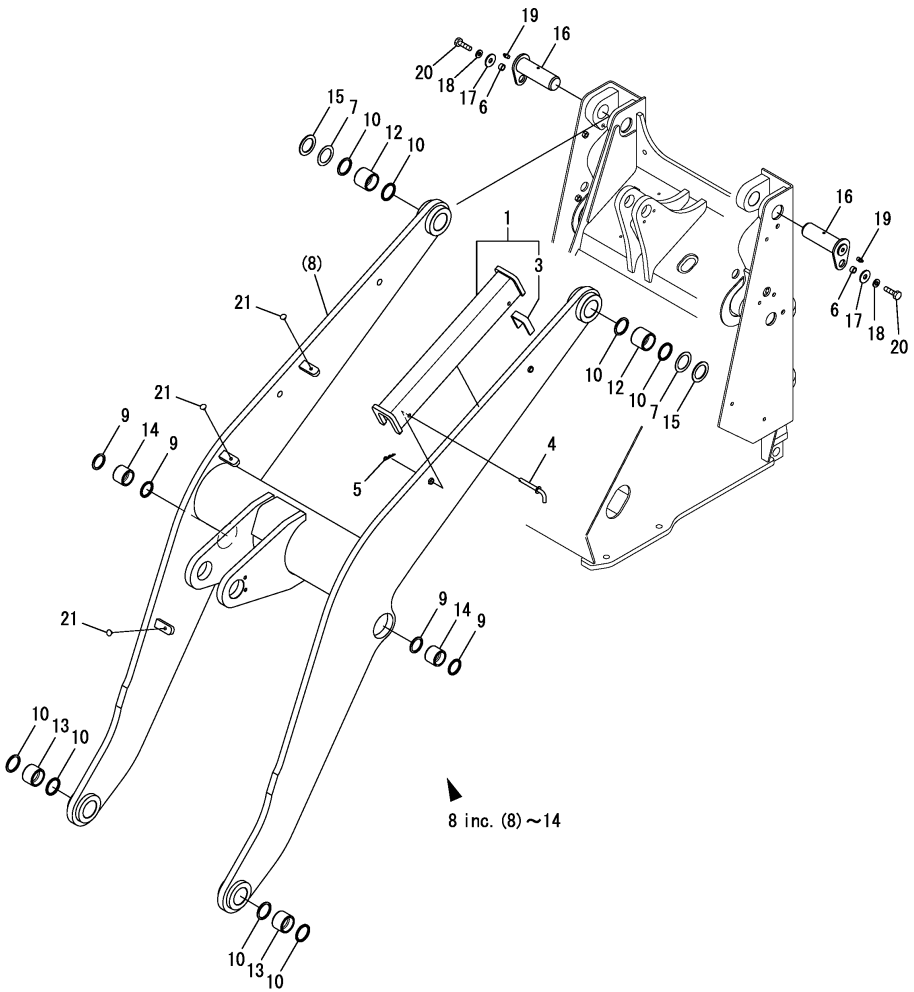

(A)=V4-6(US) (D)=
(B)=V4-6(AS) (E)=
(C)=V4-6(NZ) (F)=

No.	Lev.	Parts No.	Description	Q'ty (A)	(B)	(C)	(D)	(E)	(F)	I	R
1	1	172538-45700	LOCK ASSY, LIFT ARM	1	1	1					
3	2	172527-45820	RUBBER	2	2	2					
4	1	172527-45860	PIN ASSY,ARM LOCK	2	2	2					
5	1	22360-100000	PIN, SNAP 10	2	2	2					
6	1	172155-45790	SPACER	2	2	2					
7	1	172176-81660	COLLAR, 45.5X65X1	2	2	2					
8	1	172539-91101-2	ARM ASSY, LIFT	1							1
8-1	1	172539-91102-3	ARM ASSY, LIFT	1	1	1				N	1
	(A=M/#60691)										
8-2	1	172539-91102-Y	ARM ASSY,LIFT	1	1	1				S	1
	(A=M61501)	(B=M61501)	(C=M61501)								
9	2	172448-72650	SEAL, DUST	4	4	4					
10	2	172168-81410	SEAL, DUST	8	8	8					
12	2	172538-91181	BUSH 45X55X48	2	2	2					
13	2	172538-91210	BUSH, 45X55X39	2	2	2					
14	2	172527-91190	BUSH	2	2	2					
14A	1	172A22-03220	LABEL, BRAND 670	1							2
14A-1	1	172A22-03220	LABEL, BRAND 670	2	2	2				K	2
	(A=M/#60657)										
14B	1	172524-03652	LABEL, LIFT ARM LOCK	1	1	1					2
15	1	172527-91230	SHIM, 45X65X2.6	2	2	2					
16	1	172538-91301	PIN ASSY,45X141	2	2	2					
17	1	22157-120000	WASHER, 12	2	2	2					
18	1	22217-120000	WASHER, SPRING 12	2	2	2					
19	1	24761-020000	NIPPLE, GREASE PT1/8	2	2	2					
20	1	26076-120452	BOLT, 10.912X 45	2	2	2					
21	1	172183-81160	CLIP, TREE	3	3	3					

Remarks
(1)Attach the No.14A-1 & 14B label to this part.
(2)Label is not illustrated.

N:Old $\frac{\text{Yes}}{\text{No}}$ New, Q:Old $\frac{\text{No}}{\text{Yes}}$ New, R:Old $\frac{\text{Yes}}{\text{Yes}}$ New, S:Old $\frac{\text{No}}{\text{No}}$ New, W:Add, Z:Discontinued, F:Interchangeable by set, K:Q'ty Change

Copyright (C) YANMAR CO., LTD. All RightsReserved.

Fig.61. LOADER LINK

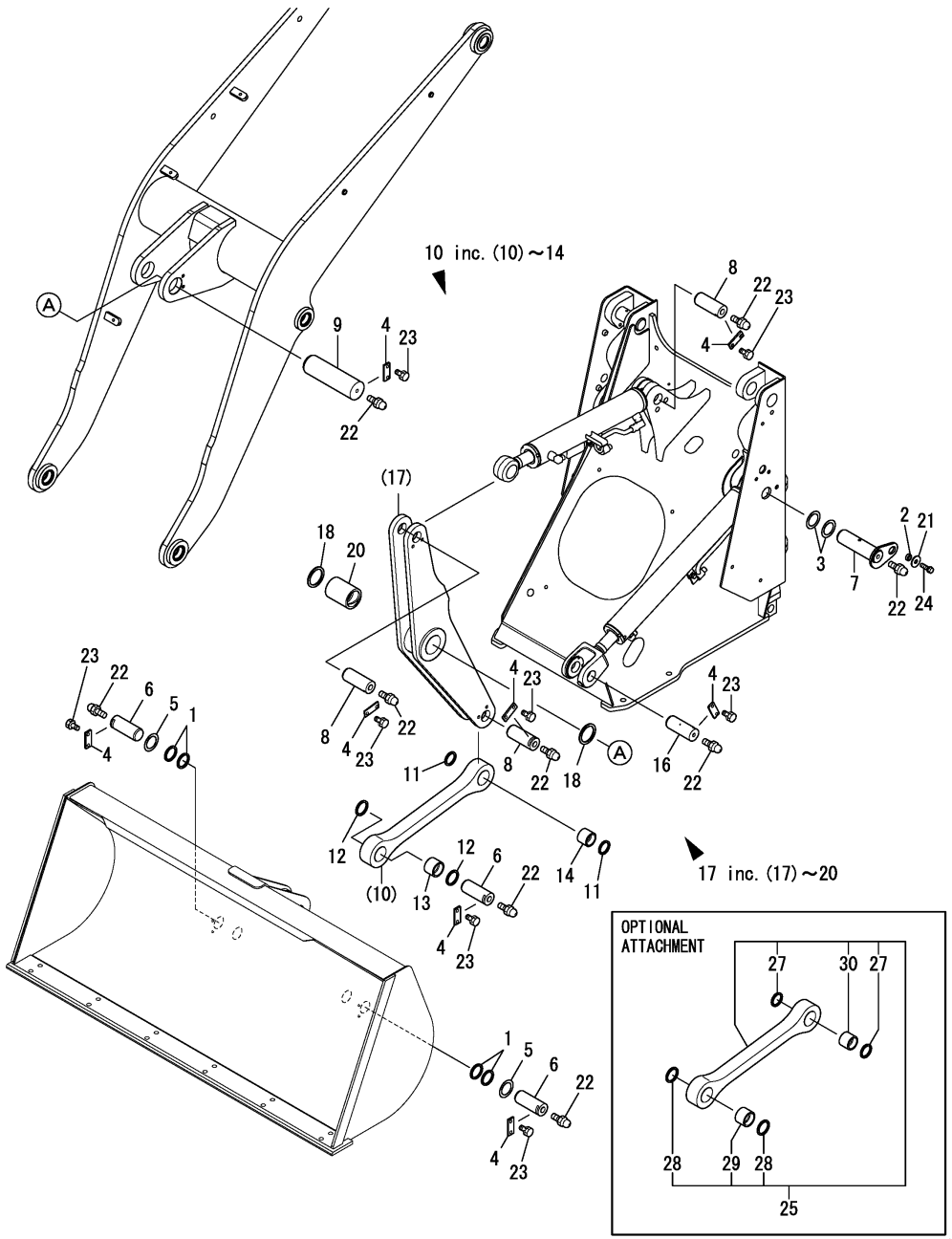

(A)=V4-6(US) (B)=V4-6(AS) (C)=V4-6(NZ) (D)= (E)= (F)=

No.	Lev.	Parts No.	Description	Q'ty (A)	(B)	(C)	(D)	(E)	(F)	I	R
1	1	172176-81660	COLLAR, 45.5X65X1	2							
1-1	1	172176-81660	COLLAR, 45.5X65X1	4	4	4				K	
	(A=M/#60691)										
2	1	172164-81670	SPACER	2	2	2					
3	1	172164-81770	COLLAR, 40.5X60X1	4	4	4					
4	1	172512-91210-3	PLATE,PIN(YELLOW:2J)	9	9	9					
4-1	1	172512-91210-Y	PLATE,PIN	9	9	9				S	
	(A=M61501)	(B=M61501)	(C=M61501)								
5	1	172527-91230	SHIM, 45X65X2.6	2	2	2					
6	1	172527-91250	PIN 45X115	3	3	3					
7	1	172538-91260	PIN ASSY,40X141	2	2	2					
8	1	172527-91270	PIN 40X107	3	3	3					
9	1	172527-91290	PIN 60X172	1	1	1					
10	1	172528-91301-2	LINK (YELLOW:2J)	1							
10-1	1	172539-91500	LINK ASSY,US (2J)	1						N	
	(A=M/#60573)										
10-2	1	172539-91500-Y	LINK ASSY,US	1						S	
	(A=M61501)	(B=M61501)	(C=M61501)								
10A	1	172528-91301-2	LINK (YELLOW:2J)		1	1					
10A-1	1	172528-91301-Y	LINK		1	1				S	
	(A=M61501)	(B=M61501)	(C=M61501)								
11	2	172448-72650	SEAL, DUST	2	2	2					
12	2	172168-81410	SEAL, DUST	2	2	2					
13	2	172527-91180	BUSH	1	1	1					
14	2	172527-91190	BUSH	1	1	1					
16	1	172538-91350	PIN,40X118	2	2	2					
17	1	172528-91600-2	BELL-CRANK ASSY (2J)	1	1	1					
17-1	1	172528-91600-Y	BELL-CRANK ASSY	1	1	1				S	
	(A=M61501)	(B=M61501)	(C=M61501)								
18	2	172020-10620	SEAL, DUST	2	2	2					
20	2	172527-91650	BUSH	1	1	1					
21	1	22157-120000	WASHER, 12	2	2	2					
22	1	24761-020000	NIPPLE, GREASE PT1/8	11	11	11					
23	1	26013-100202	BOLT, M10X 20	18	18	18					
24	1	26013-120402	BOLT, M12X 40	2	2	2					
25	1	172539-08950	LINK KIT,BACKET	1		1				W	
	(A=M/#60573)										
25-1	1	172539-08950-Y	LINK KIT,BACKET	1		1				S	
	(A=M61501)	(B=M61501)	(C=M61501)								
27	3	172448-72650	SEAL, DUST	2		2				W	
	(A=M/#60573)										
28	3	172168-81410	SEAL, DUST	2		2				W	
	(A=M/#60573)										
29	3	172527-91180	BUSH	1		1				W	
	(A=M/#60573)										
30	3	172527-91190	BUSH	1		1				W	
	(A=M/#60573)										

N:Old $\frac{\text{Yes}}{\text{No}}$ New, Q:Old $\frac{\text{No}}{\text{Yes}}$ New, R:Old $\frac{\text{Yes}}{\text{Yes}}$ New, S:Old $\frac{\text{No}}{\text{No}}$ New, W:Add, Z:Discontinued, F:Interchangeable by set, K:Q'ty Change

Copyright (C) YANMAR CO., LTD. All RightsReserved.

Fig.63. BUCKET

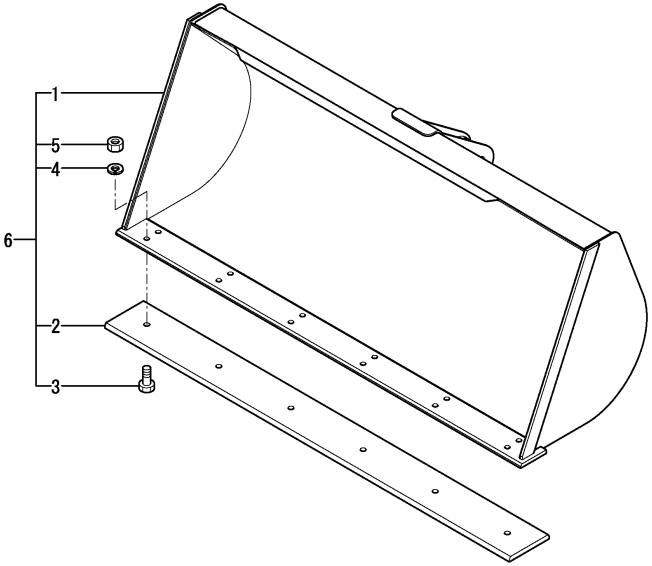

(A)=V4-6(US) (D)=
(B)=V4-6(AS) (E)=
(C)=V4-6(NZ) (F)=

No.	Lev.	Parts No.	Description	Q'ty (A)	(B)	(C)	(D)	(E)	(F)	I	R
1	1	172528-91400-1	BUCKET ASSY	1		1					
2	1	172528-91391	EDGE 1690 (49)	1		1					
3	1	172524-91520	BOLT M14X 35 PLATED	6		6					
4	1	22217-140000	WASHER, SPRING 14	6		6					
5	1	26736-140002	NUT, M14	6		6					
6	1	172539-08400	BUCKET KIT	1		1					1

Remarks
(1)Include No.1 to No.5.

N:Old $\frac{\text{Yes}}{\text{No}}$ New, Q:Old $\frac{\text{No}}{\text{Yes}}$ New, R:Old $\frac{\text{Yes}}{\text{Yes}}$ New, S:Old $\frac{\text{No}}{\text{No}}$ New, W:Add, Z:Discontinued, F:Interchangeable by set, K:Q'ty Change

Copyright (C) YANMAR CO., LTD. All RightsReserved.

Fig.68. FRONT GLASS KIT

.

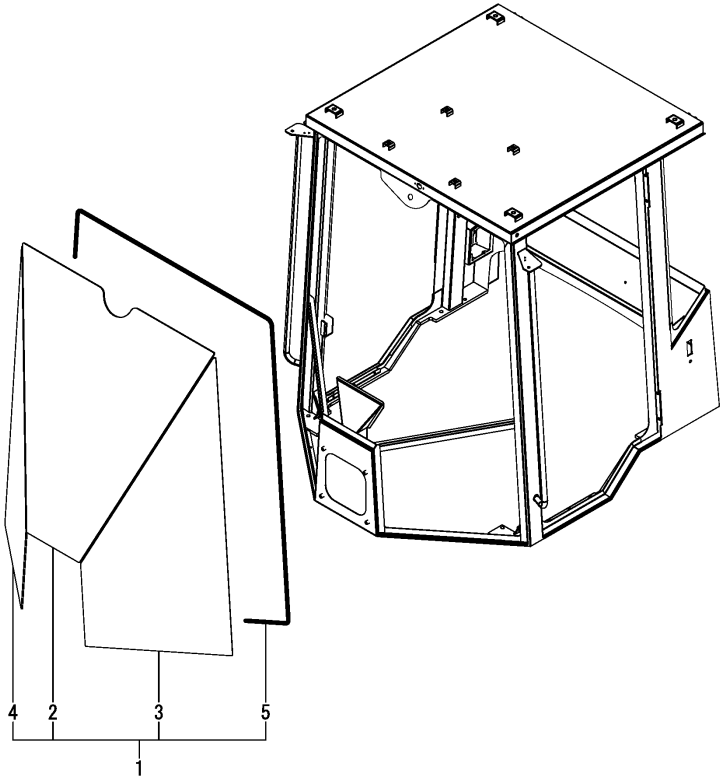

(A)=V4-6(US) (D)=
(B)=V4-6(AS) (E)=
(C)=V4-6(NZ) (F)=

No.	Lev.	Parts No.	Description	Q'ty (A)	(B)	(C)	(D)	(E)	(F)	I	R
1	1	172538-08800	GLASS KIT	1	1	1					
2	2	172538-68110	GLASS	1	1	1					
3	2	172538-68120	GLASS	1	1	1					
4	2	172538-68130	GLASS	1	1	1					
5	2	172538-68220	RUBBER	1	1	1					

N:Old $\xleftrightarrow[\text{No}]{\text{Yes}}$ New, Q:Old $\xleftrightarrow[\text{Yes}]{\text{No}}$ New, R:Old $\xleftrightarrow[\text{Yes}]{\text{Yes}}$ New, S:Old $\xleftrightarrow[\text{No}]{\text{No}}$ New, W:Add, Z:Discontinued, F:Interchangeable by set, K:Q'ty Change

Copyright (C) YANMAR CO., LTD. All RightsReserved.

Fig.69. REAR GLASS KIT

.

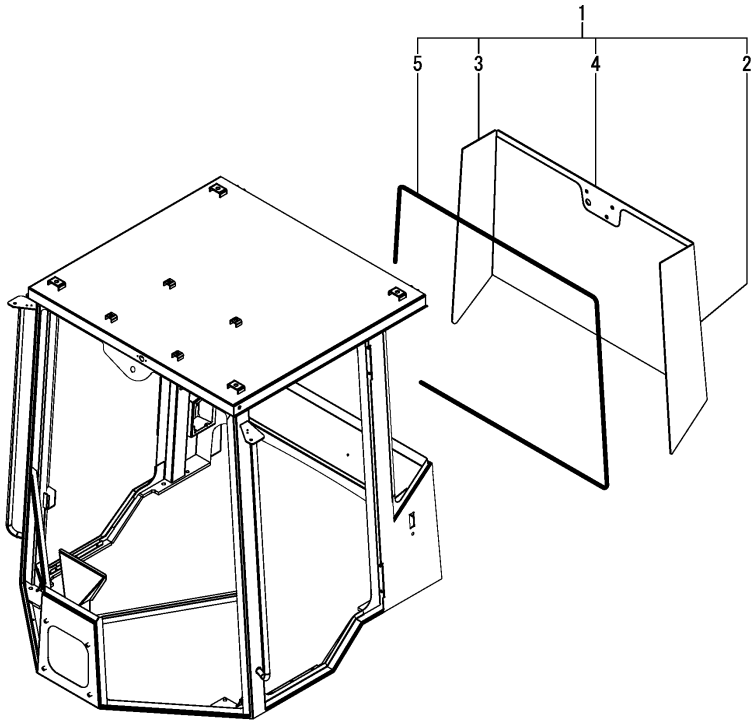

(A)=V4-6(US) (D)=
(B)=V4-6(AS) (E)=
(C)=V4-6(NZ) (F)=

No.	Lev.	Parts No.	Description	Q'ty (A)	(B)	(C)	(D)	(E)	(F)	I	R
1	1	172538-08810	GLASS KIT	1	1	1					
2	2	172538-68140	GLASS	1	1	1					
3	2	172538-68150	GLASS	1	1	1					
4	2	172538-68160	GLASS	1	1	1					
5	2	172538-68220	RUBBER	1	1	1					

N:Old $\xleftrightarrow[\text{No}]{\text{Yes}}$ New, Q:Old $\xleftrightarrow[\text{Yes}]{\text{No}}$ New, R:Old $\xleftrightarrow[\text{Yes}]{\text{Yes}}$ New, S:Old $\xleftrightarrow[\text{No}]{\text{No}}$ New, W:Add, Z:Discontinued, F:Interchangeable by set, K:Q'ty Change

Copyright (C) YANMAR CO., LTD. All RightsReserved.

Fig.79. LABEL(FOR CANADA)(OPTIONAL)

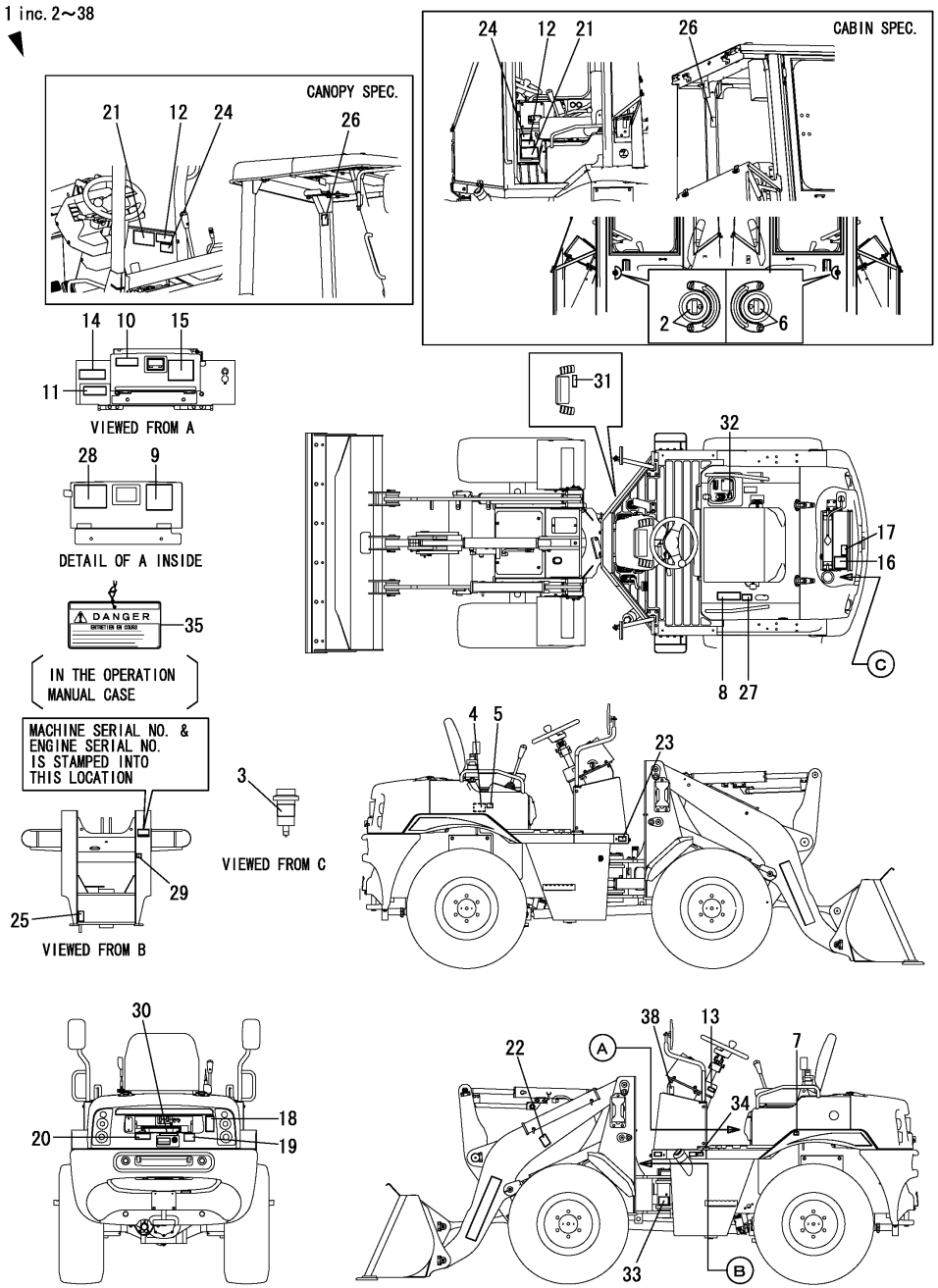

(A)=V4-6(US) (D)=
(B)=V4-6(AS) (E)=
(C)=V4-6(NZ) (F)=

No.	Lev.	Parts No.	Description	Q'ty (A)	(B)	(C)	(D)	(E)	(F)	I	R
1	1	172539-08730	LABEL KIT(V4 F	1	1	1				W	
	(A=MXXXXX)	(B=MXXXXX)	(C=MXXXXX)								
2	2	172458-03601	LABEL, DOOR LOCK	1	1	1					
3	2	172A07-03410	LABEL,WATER DRAIN	1	1	1					
4	2	172A37-03150	LABEL,SUB-TANK CA	1	1	1					
5	2	172A37-03160	LABEL,ANTI-FREEZE CA	1	1	1					
6	2	172538-03330	LABEL,LOCK R	1	1	1					
7	2	172539-03970	LABEL,AIR PRESS.F	1	1	1					
8	2	172531-03950	LABEL, SEAT BELT FR.	1	1	1					
9	2	172538-03980	LABEL,FUSE C F	1	1	1					
10	2	172539-03910	LABEL,SPEC.F	1	1	1					
11	2	172469-03360	LABEL,OIL	1	1	1					
12	2	172A37-03231	LABEL,MANUAL CA.	1	1	1					
13	2	172A37-03241	LABEL,SLOPE CA.	1	1	1					
14	2	172A37-03250	LABEL,RESERVOIR CA	1	1	1					
15	2	172A37-03271	LABEL,TRANSPORT CA.	1	1	1					
16	2	172A37-03290	LABEL,BATTERY CA	1	1	1					
17	2	172A37-03410	LABEL,RADIATOR CA	1	1	1					
18	2	172A37-03330	LABEL,ENGINE COVER	1	1	1					
19	2	172A37-03710	LABEL,ENGROOM CA	1	1	1					
20	2	172A37-03350	LABEL,SILENCER CA	1	1	1					
21	2	172A37-03300	LABEL,NEWTRAL CA	1	1	1					
22	2	172531-03970	LABEL,ARM LOCK FR.	1	1	1					
23	2	172527-03030	LANEL,ARTICULATE	1	1	1					
24	2	172531-03960	LABEL, CONTACT FR.	1	1	1					
25	2	172527-03081	LABEL,SAFETY BAR F	1	1	1					
26	2	172A37-03370	LABEL,ROPS CA	1	1	1					
27	2	172538-03920	LABEL,P.BRAKE F	1	1	1					
28	2	172538-03930	LABEL,FUSE F	1	1	1					
29	2	172538-03940	LABEL,GREASE F	1	1	1					
30	2	172538-03950	LABEL,CAUTION F	1	1	1					
31	2	172538-03960	LABEL,PARKING BRAKE	1	1	1					
32	2	172538-03990	LABEL,PTO LOCK F	1	1	1					
33	2	172538-03880	LABEL,GREASING F	2	2	2					
34	2	129942-07761	LABEL, FUEL OIL CAUT	1	1	1					
35	2	172469-03261	TAG ASSY, SERVICING	1	1	1					
38	2	172538-03890	LABEL,DEFROSTER F	1	1	1					

N:Old $\xleftarrow[\text{No}]{\text{Yes}}$ New, Q:Old $\xleftarrow[\text{Yes}]{\text{No}}$ New, R:Old $\xleftarrow[\text{Yes}]{\text{Yes}}$ New, S:Old $\xleftarrow[\text{No}]{\text{No}}$ New, W:Add, Z:Discontinued, F:Interchangeable by set, K:Q'ty Change

Copyright (C) YANMAR CO., LTD. All RightsReserved.

Parts No. Index

Parts No.	Fig. No.	Ref. No.
114110-07760	1	34
	34	22 A
	35	22 A
119247-77100	12	26
		27
		27 -1
	13	22
		35
	64	4
119650-77910	12	29
119802-55710	9	23
119802-55810	9	26
119808-12540	4	8
119866-12541	4	7
121120-13580	3	3
121250-49121	7	52
	8	52
121267-44760-1	66	14
121450-44531	7	25
	8	25
121468-44510	7	23
	8	23
121468-44520	7	23 -1
	8	23 -1
121468-44540	7	26
	8	26
121470-44581	7	28
	8	28
124450-44560	7	27
	8	27
124766-59050	7	32
		55
	8	32
		55
	9	27
124970-77920	13	23
129004-12520	4	6
129004-55612	9	20
129100-55690	9	22
129107-44590	7	20
	8	20
129211-77920	12	32
129259-12570	4	9
129400-13201	3	16
129612-12560	4	10
129612-52100	12	21
129942-07761	79	34
160970-77350	12	28
172020-10620	61	18
172112-77361	55	24

Parts No.	Fig. No.	Ref. No.
172112-77361	55	50
	58	3
172113-12522	5	11
172116-16310-3	10	9
172116-75850-B	54	12
172120-14680	9	19
172122-14301	9	3
172122-14350	9	4
172122-17190	46	27
172122-45830	27	15
172122-46571	28	15
	31	8
172122-46590	28	16
172122-79930	7	56
	8	56
	11	8
	46	6
		18
		19
		23
		26
	56	21
		22
	57	20
	58	23
	64	35
	65	24
		25
		43
	66	15
	72	8
172122-79940	11	9
	72	9
172124-17640	46	13
	66	34
172124-65450	38	10
172124-65480	38	11
172126-11510	57	21
172126-16540	72	17
172131-37170	40	1
172137-16560	57	6
172137-72431	49	15
172137-72453	49	16
172137-75570	58	1
172141-14620	7	21
	8	21
172141-41340	25	3
	26	5
	27	1
	28	9

Parts No.	Fig. No.	Ref. No.
172141-71520	70	77
172141-71550	70	79
172141-71560	70	80
172141-72250	47	18
	48	12
172141-72420	47	22
	48	25
172141-72580	49	19
172141-73230	70	98
172141-73240	70	91
		99
172141-76181	55	26
		41
172141-76900	55	12
		22
172141-77800	59	1
172141-84610	49	26
172141-84620	49	27
172142-74600	70	36
		65
172142-74660	70	37
		66
172142-76181	47	23
	48	26
	55	21
		28
172143-72400	47	19
	48	18
172146-77801	59	2
172151-79430	57	24
172155-45790	60	6
172157-76300	55	17
172162-18040	67	2
172162-73630	70	35
172162-74870	70	68
172164-14620	7	54
172164-66170	38	18
172164-73650	71	23
172164-73870	70	94
172164-73880	70	101
172164-73950	70	96
172164-76131	55	10
172164-81670	61	2
172164-81770	61	3
172165-18601	66	10
172165-18630	66	11
172165-18670	66	12
172165-45071	28	1
172165-46860	25	10
172165-73850	70	93

Parts No.	Fig. No.	Ref. No.
172165-73870	70	95
172168-72410	47	13
	48	15
		22
172168-81410	60	10
	61	12
		28
172173-76102	55	39
172173-78120	57	12
172176-67790	65	44
		45
	78	38
		39
172176-68210	40	12
	73	4
172176-81660	60	7
	61	1
		1 -1
172179-73540	70	10
		34
172183-13480	38	53
172183-14250	9	2
172183-16550	13	34
172183-37510	57	1
172183-76190	55	29
172183-81160	60	21
172186-45690	7	31
172187-17070	13	3
172187-17080	13	4
172187-17090	13	5
172187-17100	13	2
172187-17540	45	4
	77	28
172187-61421	36	40
172187-61690	36	8
	65	23
	78	22
172187-76520	58	11
172187-78580	64	5
172312-76290	55	44
172425-17630	46	12
	66	33
172437-03252	1	46
172437-03302	1	12
	2	1
	39	28 A
	40	2 B
	73	9 A
172437-03312	1	13
	2	15

Parts No. Index

Parts No.	Fig. No.	Ref. No.
172437-03312	13	11 B
172437-03322	1	14
	2	9
	36	26 B
	37	14 B
172437-03343	1	15
	2	16
	36	41 A
172437-03361	1	16
	2	11
	7	2 A
	8	2 A
172437-03391	1	17
	2	10
	7	2 B
	8	2 B
172437-03402	1	18
	2	7
	38	7 A
172437-03422	1	20
	2	12
	38	7 C
172437-03441	1	35
	2	13
	39	28 D
	40	2 E
	73	9 D
172437-03501	1	41
	34	22 B
	35	22 B
172444-13210	7	50
	8	50
172444-13220	7	51
	8	51
172444-17660	7	57
	8	31
172444-68690	57	22
172444-78310	56	5 -1
172445-18131	66	3
172446-45820	5	12
172447-13550	64	10
	65	34
	78	31
172447-72860	49	20
172448-72650	47	14
	48	16
		24
	60	9
	61	11
		27

Parts No.	Fig. No.	Ref. No.
172448-75300	57	11
172448-81610	49	10
		14
172450-76100	55	25
172455-75330	9	9
	54	7
172456-72050	47	2
	48	2
172456-72190	47	16
	48	11
172458-03601	1	45
	79	2
172458-14640	9	18
172458-16550	11	3 H
	72	3 H
172458-17450	45	3
	77	27
172458-17551	46	1
172458-17700	78	2
172460-16130	10	6
172460-17611	46	11
	66	39
172460-19060	7	22
	8	22
172460-72070	47	8
	48	8
172463-03290	1	11
	36	26 A
	37	14 A
172467-76120	55	16
172469-03261	79	35
172469-03360	79	11
172480-75350	54	8
172480-78970	56	15
172482-73490	70	19
172482-73570	70	100
172487-64780	38	40
172490-69760	58	4
172490-69760-Y	58	4 -1
172496-78470	56	17 -1
172498-12250	31	1
172499-13750	65	1
	78	1
172499-17850	67	1
172511-03230	1	6
	38	41 A
172512-45160	28	5
172512-91210-3	49	28
	61	4
172512-91210-N	49	28 -1

Parts No.	Fig. No.	Ref. No.
172512-91210-Y	61	4 -1
172513-35161	24	5
		9
172513-52541	22	3
172515-08790	13	1
172519-03820	1	33
	33	12 A
172519-76180	55	43
172520-11300	3	1
172520-11350	3	2
172520-12310	5	6
172520-17351	12	15
172520-17390	13	17
172520-26740	19	3
172520-26780	19	10
172520-31210	24	1
	33	19
172520-46150	5	13
	31	5
172520-75320	54	6
172520-76240	55	30
172520-77380	57	4
	58	12
172522-35130	24	3
		7
172524-03471	1	8
	2	14
	38	41 D
172524-03621	1	21
	2	2
	39	28 B
	40	2 C
	73	9 B
172524-03631	1	23
		23 -1
	2	3
		3 -1
	34	1 A
		1 A-1
	35	1 A
		1 A-1
172524-03642	1	24
	2	4
	39	28 C
	40	2 D
	73	9 C
172524-03652	1	42
	2	5
	60	14 B
172524-03671	1	25

Parts No.	Fig. No.	Ref. No.
172524-03671	2	6
	32	1 A
172524-03690	1	26
	13	17 A
172524-03770	35	9 B
172524-06901	39	1
	40	8
172524-12380	5	10
172524-13180	6	6
172524-17280	12	13
172524-17310	13	14
172524-17311	13	14 -1
172524-17320	13	15
172524-17360	12	16
172524-17380	13	16
172524-17381	13	16 -1
172524-17522-2	14	2
172524-17522-N	14	2 -1
172524-17810	12	40 D
172524-33521	33	3
172524-42190	25	9
	26	7
	27	2
	28	27
172524-45190	28	10
172524-45250	28	12
172524-52830	32	9
172524-52840	32	10
172524-52850	32	11
172524-52870	32	12
172524-68710	39	29
172524-68720	39	30
172524-72420	49	24
172524-78150	58	16
172524-91520	63	3
172527-03030	79	23
172527-03081	79	25
172527-03620	1	22
	31	19
	38	41 B
172527-13190-1	6	7
172527-13320	7	3
	8	3
172527-16100	10	1
172527-16120	10	4
172527-16130	10	2
172527-16150	10	3
172527-17110	12	2
172527-17250	12	3
172527-17260	12	4

Parts No. Index

Parts No.	Fig. No.	Ref. No.
172527-17280	12	5
172527-17290	12	6
172527-17310	12	7
172527-17340	12	8
172527-17350	12	9
172527-17830	39	6
172527-21810	15	12
172527-25720	16	2
172527-25770	16	6
172527-25771	16	6 -1
172527-25790	16	7
	17	30
172527-25810	16	8
	17	2
		31
172527-25820	16	9
172527-25840	16	10
172527-25841	16	10 -1
172527-25850	16	11
172527-25920	16	4
172527-25930	16	5
172527-26041	17	6
172527-26050	17	7
		35
172527-26060	17	8
172527-26070	17	9
		36
172527-26080	17	10
		37
172527-26130	17	14
		41
172527-26310	17	47
172527-26730	19	2
172527-26740	19	4
172527-26910	19	11
172527-31150	21	4
172527-31160	21	5
		20
172527-31170	21	6
		21
172527-31190	22	10
172527-31250	21	22
172527-33100	22	1
172527-33101	22	1 -1
172527-33201	22	5
172527-33260	22	7
172527-33511	22	11
172527-33520	22	12
172527-33530	22	13
172527-34400	23	3

Parts No.	Fig. No.	Ref. No.
172527-34410	23	5
172527-34420	23	6
172527-34430	23	9
172527-34440	23	10
172527-34470	23	22
172527-35900	21	7
		23
172527-42190	26	8
172527-42200	26	9
172527-42391	27	3
172527-42680	26	18
172527-42730-1	26	19
172527-42921-1	27	4
172527-43390-1	27	11
172527-45820	60	3
172527-45860	60	4
172527-47870	29	8
172527-52411	32	2
172527-52421	32	3
172527-52431	32	4
	33	28
172527-52451	32	5
	33	29
172527-52881-1	32	6
172527-52920	33	13
172527-52940	33	14
172527-62850	39	31
172527-64350	36	10
	37	3
172527-68512	39	7
172527-68512-Y	39	7 -1
172527-72080-2	49	7
172527-72080-N	49	7 -1
172527-72090	49	11
172527-72420	49	25
172527-72801-2	49	1
172527-72801-N	49	1 -1
172527-72960	49	9
		12
172527-73850	55	6
172527-73870	55	8
172527-74130	53	2
172527-74160	53	5
172527-74170	53	6
172527-74180	53	7
172527-74190	53	8
172527-74220	53	9
172527-74410	53	10
172527-74420	53	11
172527-74430	53	12

Parts No.	Fig. No.	Ref. No.
172527-76350	55	31
172527-76460	55	45
172527-77400	58	13
172527-78111	57	7
172527-78750	57	16
172527-91180	61	13
		29
172527-91190	60	14
	61	14
		30
172527-91230	60	15
	61	5
172527-91250	61	6
172527-91270	61	8
172527-91290	61	9
172527-91650	61	20
172528-03770	1	43
	34	9 B
172528-21800	15	11
172528-21820	15	13
172528-21830	15	14
172528-26210	17	3
		32
172528-26300	17	1
172528-26320	18	14
172528-26330	18	5
172528-26400	17	28
172528-26710	19	1
172528-28310	20	1
172528-28320	20	2
172528-28330	20	3
172528-31110	21	2
172528-31120	21	3
172528-31130	21	18
172528-31140	21	19
172528-42621	26	17
172528-52800-2	32	8
172528-52800-Y	32	8 -1
172528-74140	53	3
172528-74150	53	4
172528-74800	53	1
172528-91301-2	61	10
		10 A
172528-91301-Y	61	10 A-1
172528-91391	63	2
172528-91400-1	63	1
172528-91600-2	61	17
172528-91600-Y	61	17 -1
172530-78190	56	17
172531-03950	79	8

Parts No.	Fig. No.	Ref. No.
172531-03960	79	24
172531-03970	79	22
172532-17170	12	11
172534-03160	1	39
	34	13 A
172534-21210-1	15	1
172534-21510	15	9
172534-71330	70	16
172534-71340	70	40
172534-71360	70	54
172534-71380	70	60
172534-71390	70	61
172534-71410	70	51
172534-71430	70	70
172534-71480	70	75
172534-71490	70	76
172534-71500	70	17
172534-71510	70	18
172534-71540	70	82
172534-71550	70	83
172534-71560	70	84
172534-71570	70	87
172534-71600	70	27
172534-71700	70	49
172534-73130	70	104
172534-73140	70	81
172534-73310	51	2
172534-73320	71	2
172534-73330	71	7
172534-73340	71	10
172534-73610	71	3
172534-73620	71	4
172534-73630	71	5
172534-73640	71	8
172534-73650	71	24
172534-73660	71	33
172534-73670	71	57
172534-73680	71	58
172534-73690	71	59
172534-73700	71	28
172534-73710	71	29
172534-73720	71	30
172534-73730	71	31
172534-73740	71	32
172534-73750	71	35
172534-73760	71	56
172534-73770	71	40
172534-73780	71	41
172534-73790	71	42
172534-73800	71	43

Parts No. Index

Parts No.	Fig. No.	Ref. No.
172534-73810	71	44
172534-73820	71	46
172534-73830	71	47
172534-73840	71	48
172534-73850	71	49
172534-73860	71	50
172534-73870	71	51
172534-73880	71	53
172534-73890	71	54
172534-73900	71	52
172534-73910	71	55
172534-76700-1	55	57
172534-76701-1	55	57 -1
172534-76710-1	55	33
172534-76711-1	55	33 -1
172534-76720-1	55	34
172534-76721-1	55	34 -1
172534-76750-1	55	48
172534-76751-1	55	48 -1
172534-76760	55	35
172534-76770	55	36
172535-71350	70	50
172535-71420	70	52
172535-71440	70	71
172535-71520	70	78
172535-73100	50	1
	70	1
172535-73110	70	2
172535-73120	70	69
172538-03060	1	45 A
172538-03070	1	55
	38	1 A
172538-03110	35	9 A
172538-03120	35	10 A
172538-03130	1	38
	38	7 D
172538-03230	1	7
	30	3 A
172538-03320	31	18
172538-03330	1	44
	79	6
172538-03450	42	37
172538-03460	42	38
172538-03720	1	27
	38	41 C
172538-03730	1	28
	36	41 B
172538-03731	1	28 -1
	36	41 B-1
172538-03740	1	29

Parts No.	Fig. No.	Ref. No.
172538-03740	32	1 B
172538-03750	1	30
	2	17
	38	7 E
172538-03760	1	31
	13	11 C
172538-03780	1	9
	36	41 C
172538-03781	1	9 -1
	36	41 C-1
172538-03790	1	32
	30	3 B
172538-03850	40	13
172538-03880	79	33
172538-03890	79	38
172538-03920	79	27
172538-03930	79	28
172538-03940	79	29
172538-03950	79	30
172538-03960	79	31
172538-03980	79	9
172538-03990	79	32
172538-05150	62	1
172538-08620	38	1 -1
172538-08800	68	1
172538-08810	69	1
172538-08850	46	20
172538-08860	46	24
	65	41
172538-08880	5	27
172538-08881	5	27 -1
172538-11520-1	4	3
172538-11521	4	3 -1
172538-11600	4	4
172538-11651	4	5
172538-11800	4	27
172538-11810	4	28
172538-11820	4	29
172538-11920-1	3	15
172538-11960	4	18
172538-12200-1	5	1
172538-12201-1	5	1 -1
172538-12310	5	6 -1
		28
172538-12361	5	9
172538-12362	5	9 -1
		29
172538-12363	5	9 -2
		29 -1
172538-12450	5	30

Parts No.	Fig. No.	Ref. No.
172538-12500	5	31
172538-13140-1	6	3
172538-13150	6	4
172538-13160	6	5
172538-13250-1	6	8
172538-13311	7	2
172538-13312	7	2 -1
172538-13500	7	4
	8	4
172538-13510	7	5
172538-13511	7	5 -1
	8	5
172538-13550	7	6
172538-13560-1	7	7
172538-13561	7	7 -1
	8	7
172538-13580-1	7	8
	8	8
172538-13600-1	7	9
	8	9
172538-13650-1	7	13
	8	13
172538-13680	7	14
	8	14
172538-13700-1	7	15
172538-13750	7	16
172538-13751	7	16 -1
	8	16
172538-13760	7	17
	8	17
172538-13770	7	18
	8	18
172538-13800	7	19
	8	19
172538-13900	6	9
172538-13950	6	10
172538-14050	9	16
172538-14311	9	5
	54	1
172538-14321	9	6
	54	2
172538-14341	9	7
	54	3
172538-14351	9	8
	54	4
172538-16250	10	8
172538-16320	10	10
172538-16511	11	3
172538-16512	11	3 -1
172538-16513	11	3 -2

Parts No.	Fig. No.	Ref. No.
172538-16514	72	3
172538-16515	72	3 -1
172538-16521	11	4
172538-16522	11	4 -1
172538-16523	11	4 -2
172538-16524	72	4
172538-16531	11	5
172538-16532	11	5 -1
172538-16533	11	5 -2
	72	5
172538-16534	72	5 -1
172538-16541	11	13
172538-16542	11	13 -1
172538-16543	11	13 -2
	72	13
172538-16602-1	12	1
172538-16690-1	12	63
172538-16700	11	2
172538-16701	11	2 -1
172538-16702	11	2 -2
	72	2
172538-16703	72	2 -1
172538-16850	72	18
172538-16900	11	14
	72	14
172538-17000	13	38
172538-17010	13	39
172538-17020	13	40
172538-17030	13	46
172538-17040	13	42
172538-17060	13	43
172538-17070	13	44
172538-17100	13	41
		45
172538-17150-2	12	10
172538-17150-Y	12	10 -1
172538-17200	13	10
172538-17250	13	11
172538-17270-1	13	12
172538-17300	12	14
172538-17350	13	18
172538-17360	13	19
172538-17370	13	20
172538-17400-1	12	17
172538-17430	9	32
	12	18
172538-17450	14	1
172538-17500-1	13	21
172538-17600	12	19
172538-17650	12	68

Parts No. Index

Parts No.	Fig. No.	Ref. No.
172538-17680	12	69
172538-17700	12	40 -1
172538-17710	12	40 A
172538-17720	12	40 B
172538-17730	12	40 C
172538-17750	12	20
172538-17770	12	20 B
172538-17800-2	14	3
172538-17800-N	14	3 -1
172538-19400-1	65	17 -1
	78	18 -1
172538-19410-1	65	19 -1
	78	20 -1
172538-19502-2	36	3
172538-19502-Y	36	3 -1
172538-19550-1	46	2
172538-19600-1	36	4
172538-19610-1	36	5
		44
172538-19620-1	36	6
172538-19650	46	3
172538-19700	36	38
172538-19710	36	39
172538-19730	36	7
172538-19840	46	14
172538-19901	46	4
		21
172538-19950	46	5
	57	19
	65	20
172538-19970	46	17
		22
		25
	65	21
		42
172538-42000-1	25	4
	26	6
172538-42030	25	5
172538-42050	25	6
172538-42100	25	7
172538-42150	25	8
172538-42501-1	26	10
172538-42600-1	26	13
172538-42800-1	26	20
172538-42850-1	26	23
172538-42890	26	24
172538-42900	26	25
172538-42951-1	26	26
172538-43000-2	34	1
	35	1

Parts No.	Fig. No.	Ref. No.
172538-43001-1	34	1 -1
	35	1 -1
172538-43050-2	34	2
	35	2
172538-43101-1	34	6
	35	6
172538-43150-1	27	5
172538-43151	27	5 -1
172538-43200-1	27	6
172538-43240	27	7
172538-43300-1	27	10
172538-43301	27	10 -1
172538-43400	27	12
172538-43420-1	27	13
172538-43450-1	27	14
172538-43502	33	1
172538-43503	33	1 -1
172538-43600	26	29
172538-43650	26	30
172538-45100	28	2
172538-45200-1	28	11
172538-45220	28	8
172538-45400	30	1
172538-45500-1	28	28
172538-45601-1	28	13
172538-45650-1	28	14
172538-45650-Y	28	14 -1
172538-45700	60	1
172538-46110-1	31	2
172538-46131	31	3
172538-46141-1	31	4
172538-46150	31	6
172538-46200-1	31	7
172538-47600	29	1
172538-47610	29	2
172538-47630	29	1 A
172538-47750	29	5
172538-47760	29	12 A
172538-47801	29	5 A
172538-47860	29	7
172538-47870	29	9
172538-47880	29	10
172538-53330	33	20 B
172538-53350	33	21
172538-53370	33	22
172538-53390	33	27 -1
172538-53510	33	27
172538-53660-1	33	15
172538-55501	29	14
172538-60100	7	33

Parts No.	Fig. No.	Ref. No.
172538-60100	8	33
172538-60110	7	34
	8	34
172538-60120	7	35
	8	35
172538-60130	7	36
	8	36
172538-60140	36	16
172538-60150	36	17
172538-60160	36	18
172538-60170	36	19
172538-60171	36	19 -1
172538-60180	36	20
172538-60190	36	21
172538-60200	36	22
172538-60210	36	23
172538-60211	36	23 -1
172538-60220	36	24
172538-60230	7	37
	8	37
172538-60240	33	16
172538-60250	33	7
172538-60251	33	7 -1
172538-60260	33	8
172538-60280	33	9
172538-60300	33	10
172538-60311	33	11
172538-60320	33	12
	65	22
	78	21
172538-60350	41	110
	73	1
172538-60360	41	111
	73	2
172538-60600	38	26
172538-60620	38	29
172538-60640	38	32
172538-60650	38	33
172538-60660	38	34
172538-60670	38	35
172538-60690	38	36
172538-60700	38	37
172538-60721	38	38
172538-60722	38	46
172538-60731	38	39
		47
172538-60750	38	2
172538-60760	38	3
172538-60770	38	4
172538-60860	29	15

Parts No.	Fig. No.	Ref. No.
172538-60870	29	16
172538-60890	29	18
172538-60900	29	19
172538-60910	29	20
172538-60920	29	21
172538-60940	34	17
172538-60960	33	30
172538-60970	41	112
	73	3
172538-61150-2	34	14
	35	16
172538-61150-Y	34	14 -1
	35	16 -1
172538-61200-1	39	35
172538-61200-Y	39	35 -1
172538-61250	39	36
172538-61600-2	34	7
	35	7
172538-61600-Y	34	7 -1
	35	7 -1
172538-61750-2	34	18
	35	18
172538-61750-Y	34	18 -1
	35	18 -1
172538-61780-2	34	19
172538-61780-N	34	19 -1
172538-61800	34	20
	35	20
172538-61810	34	21
172538-61840-2	34	22
	35	22
172538-61840-Y	34	22 -1
	35	22 -1
172538-61891-2	34	23
172538-61892	34	23 -1
	35	23
172538-61892-Y	34	23 -2
	35	23 -1
172538-61951-1	34	32
	35	32
172538-61961-1	34	33
	35	33
172538-62100	34	27
	35	27
172538-62150	34	28
	35	28
172538-63400	29	22
172538-63420	29	23
172538-63430	29	24
172538-63440	29	25

Parts No. Index

Parts No.	Fig. No.	Ref. No.
172538-63450	29	26
172538-64050	36	1
	37	1
172538-64060	36	1 A
	37	1 A
172538-64101-1	36	13
	37	6
172538-64301-2	36	25
172538-64301-Y	36	25 -1
172538-64320-2	36	26
172538-64320-Y	36	26 -1
172538-64470-1	36	11
	37	4
172538-64470-Y	36	11 -1
	37	4 -1
172538-64500-1	36	27
172538-64501	36	27 -1
172538-64640-1	36	28
172538-64641	36	28 -1
172538-64690-1	36	29
172538-64751-2	36	41
172538-64751-Y	36	41 -1
172538-64790-1	36	42
172538-64800-1	36	43
172538-65300	38	55
172538-65310	38	42
172538-65320	38	44
172538-65380	38	45 -1
172538-65401	38	45
172538-65630-1	38	1
172538-65650-2	38	49
172538-65650-Y	38	49 -1
172538-65740-2	38	12
172538-65740-Y	38	12 -1
172538-65780	38	13
172538-65800	38	14
172538-65821	38	15
172538-65850	38	16
172538-65860	38	17
172538-65950-1	38	56
172538-66000	38	6 -1
172538-66000-1	38	6
172538-66320	77	29
172538-66320-1	45	1
172538-66460	44	2
	77	30
172538-66470	44	3
	77	31
172538-66480	44	4
	77	32

Parts No.	Fig. No.	Ref. No.
172538-66490	44	5
	77	33
172538-66500	44	6
	77	34
172538-66510	44	7
	77	35
172538-66520	44	8
	77	36
172538-66530	44	9
	77	37
172538-66710	43	2
	73	10
172538-66720	43	3
	73	11
172538-66740	43	5
	73	13
172538-67010	41	5
	74	1
172538-67030	41	6
	74	2
172538-67040	41	7
	74	3
172538-67060	41	8
	74	4
172538-67070	41	9
	74	5
172538-67090	41	10
	74	6
172538-67100	41	11
	74	7
172538-67120	41	12
	74	8
172538-67130	41	13
	74	9
172538-67150	41	14
	74	10
172538-67160	41	15
	74	11
172538-67180	41	16
	74	12
172538-67190	41	17
	74	13
172538-67210	41	18
172538-67230	41	19
	74	14
172538-67250	41	20
		20 -1
	74	15
172538-67260	41	20 A
	74	16

Parts No.	Fig. No.	Ref. No.
172538-67270	41	21
	74	17
172538-67290	41	22
	74	18
172538-67310	41	23
	74	19
172538-67330	41	24
172538-67350	41	25
	74	20
172538-67390	41	27
172538-67410	41	28
	74	21
172538-67430	41	29
172538-67450	41	30
	74	22
172538-67470	41	31
	74	23
172538-67490	41	32
	74	24
172538-67510	41	33
	74	25
172538-67520	41	34
	74	26
172538-67530	41	35
	74	27
172538-67540	41	36
	74	28
172538-67550	41	79
172538-67560	41	37
	74	29
172538-67570	41	80
	75	29
		30
172538-67580	41	81
	75	31
172538-67590	41	38
	74	30
172538-67600	41	79 -1
	75	32
		33
172538-67610	41	39
172538-67620	41	40
172538-67630	41	53
		82
172538-67640	41	41
172538-67650	41	42
	74	31
		32
172538-67660	41	43
		56 -2

Parts No.	Fig. No.	Ref. No.
172538-67660	41	85 -2
	74	33
		34
	75	2
		34
172538-67670	41	44
		47 A
		47 B
	42	36 A
	74	35
		36
		37
	77	17
172538-67680	41	45
	74	38
172538-67690	41	46
	74	39
172538-67700	42	15
	77	1
172538-67710	41	47
		47 C
172538-67720	41	4
		4 -1
		54
		57 -2
		83
		83 A
		86 -2
	42	31 A
	74	40
		41
		42
		43
	75	3
		4
		35
		36
	77	2
172538-67730	42	16
172538-67740	42	17
	77	3
172538-67750	41	3
172538-67760	42	2
172538-67770	41	2
	74	44
172538-67780	41	55
		84
	75	5
		37
172538-67790	41	56

Parts No. Index

Parts No.	Fig. No.	Ref. No.
172538-67790	41	85
172538-67800	41	57
		86
	44	10
172538-67810	41	58
		87
172538-67820	41	59
		88
	75	6
		38
172538-67830	41	60
		89
	75	7
		39
172538-67840	41	90
172538-67850	41	91
172538-67860	41	58 -2
		87 -2
	75	8
		40
172538-67870	42	2 -1
	76	2
172538-67880	74	45
172538-67900	39	5
172538-67950	41	90 -1
	75	41
		42
172538-67960	41	90 A
	75	43
		44
172538-67970	41	90 B
	75	45
		46
172538-67980	41	83 A-1
	75	47
		48
172538-67990	41	91 -1
	75	49
172538-68010	41	48
	74	46
172538-68100	42	1
	76	1
172538-68110	42	3
	68	2
	76	3
172538-68120	42	4
	68	3
	76	4
172538-68130	42	5
	68	4

Parts No.	Fig. No.	Ref. No.
172538-68130	76	5
172538-68140	42	6
	69	2
	76	6
172538-68150	42	7
	69	3
	76	7
172538-68160	42	8
	69	4
	76	8
172538-68170	42	9
	76	9
172538-68180	42	10
	76	10
172538-68190	42	11
	76	11
172538-68200	42	12
	76	12
172538-68210	42	13
	76	13
172538-68220	42	8 A
	68	5
	69	5
	76	14
172538-68230	41	109 B
	74	53
172538-68260	42	18
	77	4
172538-68270	42	19
	77	5
172538-68280	42	20
	77	23
172538-68290	42	21
	77	6
172538-68300	42	22
	77	7
172538-68310	42	23
	77	8
172538-68320	42	24
	77	24
172538-68330	42	25
	77	9
172538-68340	42	26
	77	10
172538-68350	42	27
	77	11
172538-68360	42	28
	77	12
172538-68370	42	29
	77	13

Parts No.	Fig. No.	Ref. No.
172538-68380	42	30
	77	14
172538-68390	42	31
	77	15
172538-68410	40	2
172538-68411	40	2 -1
172538-68412-1	40	2 -2
172538-68450	40	3
	73	5
172538-68460	40	4
	73	6
172538-68470	40	5
	73	7
172538-68480	40	6
	73	8
172538-68500	42	32
	77	16
172538-68510	42	33
	77	18
172538-68520	42	34
	77	19
172538-68530	42	35
	77	20
172538-68540	42	36
	77	21
172538-68550	73	9
172538-68620	41	47 D
172538-68630	41	47 E
172538-68640	41	47 F
172538-68650	41	47 G
172538-68660	41	47 H
172538-68670	41	47 I
172538-68680	41	47 J
172538-68690	77	22
172538-68700	41	49
	75	1
172538-68710	41	61
	75	9
172538-68720	41	62
	75	10
172538-68730	41	63
		92
	75	11
		50
172538-68740	41	64
		93
	75	12
		51
172538-68750	41	65
	75	13

Parts No.	Fig. No.	Ref. No.
172538-68760	41	66
	75	14
172538-68770	41	67
	75	15
172538-68780	41	68
	75	16
172538-68790	41	69
	75	17
172538-68800	41	75
172538-68801	41	75 -1
	75	28
172538-68810	41	94
	75	52
172538-68820	41	95
	75	53
172538-68830	41	96
	75	54
172538-68840	41	97
	75	55
172538-68850	41	98
	75	56
172538-68860	41	99
	75	57
172538-68870	41	100
	75	58
172538-68880	41	101
	75	59
172538-68890	41	70
		102
	75	18
		60
172538-68900	41	71
		103
	75	19
		61
172538-68910	41	72
		104
	75	20
		62
172538-68920	41	73
		105
	75	21
		63
172538-68930	41	74
		106
	75	22
		64
172538-68940	41	52
		107
	75	23

Parts No. Index

Parts No.	Fig. No.	Ref. No.
172538-68940	75	65
172538-68950	41	51
		108
	75	24
		66
172538-68960	41	50
		109
	75	25
		67
172538-68970	41	78
	75	68
172538-68980	41	77
	75	69
172538-68990	41	76
172538-68991	41	76 -1
	75	70
172538-69590	39	8
172538-69600-1	39	9
172538-69750-1	39	10
172538-69880-1	39	23
172538-69960-1	39	24
172538-72150-2	47	15
172538-72150-N	47	15 -1
172538-72350-2	48	17
172538-72350-N	48	17 -1
172538-73510	52	1
172538-74800	56	1
172538-75400	54	11
172538-76500-2	57	2
172538-76500-Y	57	2 -1
172538-76550-2	57	3
172538-76550-Y	57	3 -1
172538-76730-1	55	46
172538-76740-1	55	47
172538-76800	55	49
172538-78100	56	11
172538-78110	56	12
172538-78120	56	3
172538-78130	56	10
172538-78160	56	4
172538-78210	57	14
172538-78230	56	5
172538-78240	57	9
172538-78250	57	10
172538-78260	57	15
172538-78300	57	8
172538-78570	58	17
172538-78580	58	18
172538-78600	58	22
172538-78610	57	23

Parts No.	Fig. No.	Ref. No.
172538-78761	56	18
172538-91181	60	12
172538-91210	60	13
172538-91260	61	7
172538-91301	60	16
172538-91350	61	16
172539-03030	1	36 -1
172539-03040	1	37 -1
172539-03110	1	36
	34	9 A
172539-03120	1	37
	34	10 A
172539-03910	79	10
172539-03970	79	7
172539-08010	9	34
172539-08020	54	20
172539-08400	63	6
172539-08710	1	1
172539-08711	1	1 -1
172539-08712	1	1 -2
172539-08713	1	1 -3
172539-08730	79	1
172539-08950	61	25
172539-08950-Y	61	25 -1
172539-11301	3	8
172539-11500	4	1
172539-11510	4	2
172539-11580	4	2 -1
172539-11700	3	13
172539-11750	3	14
172539-11900-1	4	15
172539-11901-1	4	15 -1
172539-11950	4	17
172539-11951	4	17 -1
172539-13100	6	1
172539-13120	6	2
172539-13310	8	2
172539-13550	8	6
172539-13700-1	8	15
172539-14010	9	1
172539-14400	7	54 -1
	8	54
172539-16101-1	11	1
	72	1
172539-16800	64	1
172539-16801	64	1 -1
172539-18060	65	2
	78	3
172539-18070	65	6
	78	7

Parts No.	Fig. No.	Ref. No.
172539-18080	65	10
	78	11
172539-18090	64	11
172539-18090-Y	64	11 -1
172539-18100	66	2
172539-18170	66	4
172539-18190	66	5
172539-18200	66	6
172539-18240	66	7
172539-18250	66	8
172539-18270	64	15
172539-18300	64	16
172539-18310	64	17
172539-18380	65	13
172539-18450	65	35
	78	32
172539-18500	65	36
	78	33
172539-18650	37	9
172539-18650-Y	37	9 -1
172539-18670	37	10
172539-18680	64	2
172539-18700	37	11
172539-18730	65	37
	78	34
172539-18800	64	18
172539-18850	78	14
172539-18910	65	14
	78	15
172539-18920	65	15
	78	16
172539-18980	65	3
		7
	78	4
		8
172539-19010	67	4
172539-19020	67	5
172539-19040	67	7
172539-19060	67	9
172539-19080	67	12
172539-19100	78	19
172539-19200	67	14
172539-19220	64	19
172539-19470	65	16
172539-19480	65	17
	78	18
172539-19520	65	18
172539-19530	65	19
	78	20
172539-19600	64	20

Parts No.	Fig. No.	Ref. No.
172539-19610	64	21
172539-19620	64	22
172539-19630	64	25
172539-19690	64	28
172539-19700	64	43
172539-19750	64	29
172539-19820	66	35
172539-19840	66	36
172539-19870	46	15
172539-19900	67	22
172539-19930	66	37
172539-19950	78	17
172539-35210	24	2
172539-35211	24	2 -1
172539-35220	24	6
172539-35221	24	6 -1
172539-35250-1	24	4
		8
172539-35251	24	4 -1
		8 -1
172539-35510	24	2 -2
172539-35520	24	6 -2
172539-35550	24	4 -2
		8 -2
172539-45230	31	17
172539-52101-2	32	1
172539-52102	32	1 -1
172539-52102-Y	32	1 -2
172539-52502	33	2
172539-52503	33	2 -1
172539-52504	33	2 -2
172539-52505	33	2 -3
172539-60101	33	5
172539-60110	33	6
172539-60400	64	33
172539-60410	64	34
172539-60430	64	13
172539-60440	65	12
	78	13
172539-60470	65	5
	78	6
172539-60480	65	9
	78	10
172539-60490	64	14
172539-60600	38	27
172539-60610	38	28
172539-60620	38	30
172539-60630	38	31
172539-60940	35	14
172539-61120-2	34	13

Parts No. Index

Parts No.	Fig. No.	Ref. No.
172539-61120-Y	34	13 -1
172539-61303-2	34	9
	35	9
172539-61304-1	34	9 -1
	35	9 -1
172539-61304-Y	34	9 -2
	35	9 -2
172539-61452-2	34	10
	35	10
172539-61452-Y	34	10 -1
	35	10 -1
172539-61740	35	13
172539-61810	35	21
172539-61820	35	19
172539-61830	35	35
172539-62200	34	30
	35	30
172539-64300	37	13
172539-64300-Y	37	13 -1
172539-64320	37	14
172539-64320-Y	37	14 -1
172539-64500	37	15
172539-65111-2	38	41
172539-65111-Y	38	41 -1
172539-65310	38	43
172539-65600	38	1 B
172539-72100-2	47	1
172539-72100-N	47	1 -1
172539-72110-2	47	11
172539-72110-N	47	11 -1
172539-72200	47	17
172539-72300-2	48	1
172539-72300-N	48	1 -1
172539-72310-2	48	13
172539-72310-N	48	13 -1
172539-72400	48	21
172539-73400	51	1
	71	1
172539-74800	56	1 -1
172539-75010	54	5
172539-76400-1	58	5
172539-76400-Y	58	5 -1
172539-78140	56	13
172539-78170	56	14
172539-78200	57	13
172539-78280	56	6 -1
172539-91101-2	60	8
172539-91102-3	60	8 -1
172539-91102-Y	60	8 -2
172539-91500	61	10 -1

Parts No.	Fig. No.	Ref. No.
172539-91500-Y	61	10 -2
172541-11380	3	11
172541-11460	3	12
172541-11900	4	16
172541-12250	5	4
172541-12260	5	5
172543-08050	33	20 -1
172543-53310	33	20
172543-53400	33	23
172648-16600	11	2 A
		5 A
	64	1 A
	72	2 A
		5 A
172649-12390	25	1
	26	1
172649-72600	70	48
172649-72750	70	90
172649-73680	70	64
172649-73740	71	39
172649-73810	71	45
172650-73640	70	21
		24
		53
172650-73690	71	27
172650-73870	71	60
172651-73610	70	20
172651-73730	70	92
	71	38
172652-73750	55	1
172652-73770	55	3
172652-73780	55	4
172652-73790	55	5
172653-71310	70	3
172653-71320	70	8
172653-71360	70	59
172653-71390	70	62
172653-71410	70	63
172653-71420	70	4
172653-71430	70	5
172653-71440	70	6
172653-71460	70	11
172653-71470	70	12
172653-71480	70	13
172653-71490	70	14
172653-71520	70	22
172653-71530	70	25
172653-71540	70	26
172653-71550	70	23
172653-71560	70	41

Parts No.	Fig. No.	Ref. No.
172653-71580	70	42
172653-71590	70	43
172653-71600	70	44
172653-71610	70	45
172653-71620	70	46
172653-71630	70	47
172653-73320	71	6
172653-73330	71	9
172653-73340	71	61
172653-73350	71	62
172653-73360	71	63
172653-73390	71	11
172653-73400	71	12
172653-73410	71	13
172653-73420	71	14
172653-73430	71	15
172653-73440	71	16
172653-73450	71	17
172653-73460	71	18
172653-73470	71	19
172653-73480	71	20
172653-73490	71	21
172653-73500	71	22
172653-73530	71	25
172653-73550	71	34
172653-73570	71	36
172653-73580	71	26
		37
172730-61890	38	54
172734-65260	38	8
172734-65270	38	9
172738-47900	26	31
172A07-03160	1	3
	9	25 A
172A07-03410	79	3
172A22-03220	1	40
		40 -1
	60	14 A
		14 A-1
172A36-03411	1	19
	2	8
	38	7 B
172A37-03150	79	4
172A37-03160	79	5
172A37-03231	79	12
172A37-03241	79	13
172A37-03250	79	14
172A37-03271	79	15
172A37-03290	79	16
172A37-03300	79	21

Parts No.	Fig. No.	Ref. No.
172A37-03330	79	18
172A37-03350	79	20
172A37-03370	79	26
172A37-03410	79	17
172A37-03710	79	19
172A38-03201	1	4
	7	29 A
	8	29 A
172A38-03211	1	5
	7	29 B
	8	29 B
172A47-16130	10	5
172A47-18230	67	10
172A47-18300	67	44
172A47-78330	56	6
172A64-03700	1	2
	13	11 A
172A64-17250	36	15
	37	8
172A64-72020	49	2
172A64-76190	47	23 -1
	48	26 -1
172A66-03220	1	40 -2
172A69-18100	67	3
172A69-18430	66	9
172A69-19680	67	21
172A69-69180	41	47 C-1
	74	47
172A69-69790	41	47 K
	74	48
172A69-69800	41	47 L
	74	49
172A78-18100	67	23 -2
172A78-18110	67	30 -1
177035-02920	21	1
		17
	23	1
184014-59510	9	17
184016-55700	9	21
184016-55701	9	21 -1
187B01-25710	16	1
187B01-25910	16	3
187B01-26100	17	26 A
187B03-36390	23	13
194080-75790	32	7
194145-04810	58	10
194150-22480	26	4
194205-36320	23	12
194320-31560	18	6
194320-53440	12	35

Parts No. Index

Parts No.	Fig. No.	Ref. No.
194440-51630	64	3
194447-14140	17	29
	23	2
194465-11940	66	1
194640-34150	20	10
194680-51670	11	6
	72	6
194990-20170	25	2
194990-22120	64	30
198010-36310	23	11
198162-00640	7	1
	8	1
198290-32750	23	4
198320-31530	18	7
198320-31570	18	9
198320-31630	18	8
198320-31820	18	10
198320-33540	20	4
198320-33550	20	5
198320-33560	20	7
198320-33570	20	6
198320-33620	20	8
198535-52110	11	3 B
		13 B
	72	3 B
		13 B
198535-52120	11	3 C
	72	3 C
198535-52130	11	3 D
		13 C
	72	3 D
		13 C
198535-52170	11	3 E
		13 D
	72	3 E
		13 D
1A1040-43900	66	13
1A1380-59480	4	19
		19 -1
1A1531-83400	13	24
1A1686-57850	7	58
	8	45
	9	30
	11	7
		7 -1
	64	32
	72	7
1A6210-16150	26	2
1A6210-16160	26	3
1A6260-85270	37	16

Parts No.	Fig. No.	Ref. No.
1A6380-24080	55	20
1A6780-57110	12	25
1A6780-57200	13	13
1A7030-87090	67	33 -1
1A7030-87411	65	27
	78	24
1A7030-88100	67	33
1A7030-88101	67	33 B
1A7030-88760	67	11
		13
1A7030-88820	67	6
1A7030-88840	67	8
1A7400-06310	57	18
1A7410-87610	67	18
1A7410-87630	67	19
1A7470-88420	67	20
1A7951-51300	67	33 A
1A8100-53300	12	22
1A8100-53320	12	24
1A8110-84210	65	26
	78	23
1C6281-52310	5	14
		15
	27	17
	28	17
	31	9
		10
1C6281-52320	5	16
	25	11
	28	29
1C6360-65700	26	32
1C6560-47000	27	16
1C6860-37030	64	31
1D4220-58150	67	15
1E4440-99160	13	25
1E4760-43090	5	27 A
		34
1E6299-03000	9	14
1E6680-81120	12	37
1E6680-81130	12	39
		41
1E6686-03050	9	15
1E8322-81050	12	33
1E8465-83170	11	3 I
	72	3 I
1E8490-84130	11	3 G
	72	3 G
1E8545-80210	67	34
1E8545-80250	67	35
1E8685-79920	67	16

Parts No.	Fig. No.	Ref. No.
1E8685-79940	67	17
1E8775-84120	11	3 F
	72	3 F
1E8941-01650	4	26
1E9000-82000	12	40
1E9000-82010	12	42
1E9000-82020	12	43
1E9110-79610	67	23
1E9110-79611	67	23 -1
1E9110-79680	67	24
1E9110-80100	67	25
1E9110-80110	67	31
1E9110-80130	67	26
1E9110-80140	67	27
1E9110-80150	67	28
1E9110-80160	67	29
1E9110-80170	67	30
1E9110-80180	67	32
1E9110-81100	12	34
1E9110-81110	12	36
1E9110-81120	12	38
1F4190-41040	37	12
22137-040000	12	65
	38	57
22137-050000	12	66
		67
22137-060000	5	17
		18
		26
		32
	27	18
	31	11
	64	6
22137-080000	4	30
	5	19
	7	38
	8	38
	25	12
	28	18
		30
	31	12
	38	19
		50
	39	2
	40	9
	56	19
22137-100000	3	4
	6	11
	14	4
	26	33

Parts No.	Fig. No.	Ref. No.
22137-100000	28	19
	34	3
	35	3
	48	27
	66	16
22137-120000	9	10
	27	19
		20
	39	25
	54	13
22137-140000	29	3
	39	32
	50	2
22157-060000	13	26
22157-080000	10	11
	65	38
	78	35
22157-120000	60	17
	61	21
22217-040000	12	44
	38	58
22217-050000	12	45
		46
22217-060000	5	20
	66	17
22217-080000	3	17
		18
	39	3
	40	10
	66	18
22217-100000	3	5
	6	12
	16	12
	23	16
	26	34
	28	20
	41	74 A
		109 A
	53	13
	66	19
	75	26
		71
		73
		74
22217-120000	5	21
	15	2
	39	26
	40	7
	60	18
	73	15

Parts No. Index

Parts No.	Fig. No.	Ref. No.
22217-140000	32	13
	50	3
	63	4
22242-000120	27	21
22242-000180	70	102
22242-000200	29	11
22242-000250	23	14
	26	35
	70	7
22242-000300	16	13
22242-000350	16	14
22242-000450	16	15
	17	20
22252-000120	70	97
22252-000370	29	12
22252-000400	66	20
22272-000090	64	36
22312-100180	17	21
		48
	20	11 -1
	21	8 -1
		9 -1
		10 -1
		24 -1
		25 -1
		26 -1
	23	17 -1
22312-100200	20	11
	21	8
		9
		10
		24
		25
		26
	23	17
22351-060032	31	13
22351-060050	18	11
	26	36
22351-080020	15	3
22351-080040	20	9
22351-080050	27	22
		23
22360-100000	60	5
22411-250200	27	24
22417-200200	38	20
		21
22417-250320	28	6
22486-060180	28	21
	31	14
22486-080160	25	13

Parts No.	Fig. No.	Ref. No.
22486-080240	25	14
22487-080600	28	31
22867-400101	67	36
23000-048000	46	7
23000-060000	4	11
		12
		12 -1
23000-070000	46	8
23001-022000	46	16
	56	7
	57	17
	66	38
23001-025000	4	20
23001-035000	4	31
	56	8
		16
23001-041000	7	39
	8	39
	56	9
23061-050300	9	28
23065-070130	7	29
	8	29
23391-020000	55	51
23393-020000	55	52
23414-080000	23	23
23414-160000	21	11
		27
	23	18
23490-080002	23	19
23491-140002	4	21
23857-030000	23	24
23871-010000	22	9
23871-060000	21	12
		28
23887-160002	21	13
24101-060094	16	16
24101-060114	18	12
24101-062074	16	17
24101-062084	16	18
24101-062114	18	13
24101-063064	16	19
24104-062030	66	21
24141-302110	19	12
24141-320110	19	13
24143-303060	17	22
		49
24144-303070	17	23
		50
24190-160001	23	15
24311-000160	4	22

Parts No.	Fig. No.	Ref. No.
24311-000160	7	53
	8	53
	9	24
24311-000180	55	14
	58	2
24311-000240	16	20
	17	51
24311-000380	54	14
24311-000900	17	24
		24 -1
24311-350220	54	10
24315-000100	70	103
24315-000110	70	38
		67
24315-000140	47	23 A
	48	26 A
	55	21 A
		28 A
24315-000180	55	11
		13
		19
		23
		32
		37
		54
24315-000300	55	30 -1
		55
24321-000600	32	14
24321-000650	9	25
24321-001050	17	25
		52
	54	15
24321-001100	19	14
24341-000240	4	23
24341-000300	9	11
	54	16
24430-850009	22	14
24550-010200	64	24
		27
24550-012120	26	15
	27	9
	28	4
24550-016150	30	3
24550-020150	26	22
24550-025100	5	3
	26	16
24550-025150	26	12
		28
24550-030300	49	22
24550-040300	47	21

Parts No.	Fig. No.	Ref. No.
24550-040300	48	20
24761-020000	5	22
	26	37
		38
	33	17
	60	19
	61	22
24761-040000	26	38 -1
	49	29
		29 -1
	59	3
24761-050000	26	39
	49	31 -1
24764-020000	22	8
24764-040000	22	4
24764-050000	49	31
26013-060122	12	64
26013-060162	7	40
	12	47
		48
		48 -1
		49
		50
		51
		52
	13	27
		28
		29
		30
		31
		36
		37
26013-060252	12	53
26013-080122	11	10
	12	54
	72	10
26013-080162	7	41
	12	55
		56
		70
		71
	15	10
	33	20 C
	36	12
		30
	37	5
	46	9
	55	9
26013-080202	4	13
	7	41 -1

Parts No. Index

Parts No.	Fig. No.	Ref. No.
26013-080202	7	42
		42 -1
		43
		44
		45
		46
	8	41
		42
		43
		44
		46
	12	57
	13	32
		33
	27	25
	29	27
		28
		29
	31	15
	34	15
	35	17
	36	31
	54	17
	66	22
26013-080252	9	29
26013-080302	31	16
	38	51
26013-080402	28	22
26013-080452	38	22
26013-080552	7	47
	8	47
26013-100162	4	24
	10	7
	38	7
26013-100202	6	13
		14
	11	11
		12
	14	5
		6
	26	40
	28	23
	33	24
		25
	34	11
		12
		16
		31
	35	11
		12

Parts No.	Fig. No.	Ref. No.
26013-100202	35	31
	36	2
		32
		45
	37	2
	38	23
	39	37
	47	24
	48	28
	49	30
	61	23
	72	11
		12
26013-100252	9	12
	12	59
	17	27
		54
	22	15
		16
	26	41
		42
	29	13
	34	4
		8
		29
	35	4
		8
	52	2
	54	18
	66	23
26013-100302	7	30
	8	30
	12	60
	23	20
	25	15
	26	43
		43 -1
		44
	27	26
	28	24
	36	14
	37	7
	38	52
	53	15 -1
	55	38
	66	24
26013-100352	53	15
	55	56
	57	5
	58	19

Parts No.	Fig. No.	Ref. No.
26013-100402	19	15
	34	34
	35	34
26013-100452	16	21
		22
	58	8
		20
26013-100502	22	17
	36	33
	55	53
	58	20 -1
26013-120302	9	13
	30	4
	54	19
26013-120402	51	3
	61	24
26013-120502	21	14
		29
26013-120952	21	15
		30
26014-060122	42	16 -1
26014-060162	36	9
		46
		47
		48
	67	37
26014-060202	8	40
	64	7
	65	28
		29
		30
		39
	78	25
		26
		27
		36
26014-060252	67	38
26014-080162	3	19
	7	48
		48 -1
	8	48
	36	34
		35
	56	2
		2 -1
	64	8
	67	39
26014-080202	11	15
	37	17
		18

Parts No.	Fig. No.	Ref. No.
26014-080202	37	19
	45	2
	66	25
		26
	72	15
	77	25
26014-080252	64	37
	67	40
26014-080302	66	27
26014-080402	41	39 -1
	66	28
26014-080452	66	29
26014-100162	38	7 -1
26014-100202	34	5
		24
		25
		26
	35	5
		24
		25
		26
		36
	36	36
		37
	41	40 -1
	46	10
	65	31
		32
		33
		46
		47
	74	50
		51
		52
	78	28
		29
		30
		40
		41
26014-100252	4	14
	33	18
	34	29 -1
	35	29
	37	20
	38	24
	64	38
		39
		40
26014-100302	3	20
	6	15

Parts No. Index

Parts No.	Fig. No.	Ref. No.
26014-100302	6	16
	29	17
26014-100352	3	21
26014-100452	6	17
26022-050162	9	33
	12	61
26023-050122	64	41
26023-060142	41	56 -1
		85 -1
26023-060162	41	57 -1
		86 -1
	44	10 -1
	77	26
26023-060202	41	58 -1
		87 -1
26033-040202	67	41
26051-060002	4	32
	67	42
26051-080002	4	33
	7	49
	8	49
	28	25 -1
	56	20
	64	42
	65	40
	78	37
26051-100002	25	16
	26	45
	27	27
		28
26076-100252	41	53 -1
		82 -1
	75	27
		72
		75
		76
26076-100302	6	18
		19
		20
		21
26076-120352	39	27
26076-120402	39	28
	40	1 -1
	73	16
26076-120452	60	20
26106-060402	66	30
26106-080162	4	25
26106-080652	9	31
26116-080162	39	33
26116-080402	15	15

Parts No.	Fig. No.	Ref. No.
26116-100452	20	12
26116-100652	3	6
26116-100902	23	21
26116-120602	15	4
26116-120952	15	5
26116-121002	15	6
26116-121102	15	7
26116-140352	32	15
26116-200852	33	31
26116-201002	33	26
		26 -1
26156-100502	16	23
	17	26
		53
26156-140402	50	4
26156-200352	24	10
26216-100452	16	24
26347-080002	5	16 -1
		27 B
	28	25 -2
26347-100002	38	25
26450-060162	5	23
		33
	70	15
26450-100352	55	53 -1
26450-100452	21	16
		31
26450-120702	70	39
26587-040062	28	7
26587-040102	67	43
26587-040122	38	59
	67	36 -1
26702-100002	3	22
26716-040002	12	62
	38	60
26716-050002	12	12
		58
26716-060002	5	24
	64	9
	66	31
26716-080002	3	23
		24
	5	27 C
		35
	10	12
	25	17
	28	25
	39	4
	40	11
	66	32

Parts No.	Fig. No.	Ref. No.
26716-100002	3	7
	6	22
	16	25
	26	46
	28	26
	53	14
	58	21
26716-120002	5	25
	15	8
26736-100002	26	47
		48
26736-140002	39	34
	63	5
26776-140002	29	4
41851-000110	55	27
		40
		42
41851-000180	55	37 -1
		54 -1
794130-71410	33	27 B
794251-13910	18	1
933110-00301	13	7
933125-59600	49	23
933155-09670	58	9
933160-01370	55	15
933168-55770	57	25

Parts No.	Fig. No.	Ref. No.