YANMAR

PARTS CATALOG

0CK50-M01410EN

Last update Dec., 2017

Contents

0CK50-M01410

Fig. No. Fig. Name

MAINTENANCE

1. FILTERS / BELTS(SN: 461001 AND UP)
2. FILTERS / BELTS(SN: 461000 AND BEFORE)

CAB

3. STANDARD
4. REAR CAB - HVAC COVER
5. CAB INTERIOR
6. CAB INTERIOR W/HVAC(COMMON COMPONENTS)
7. CAB INTERIOR W/HVAC(FOLD-UP DOOR)
8. CAB INTERIOR W/HVAC(SWING-OUT DOOR)
9. CAB DOOR - SWING-OUT(SERIES III)
10. CAB DOOR - SWING-OUT(SERIES I AND II)
11. SWING-OUT DOOR LATCHES(SERIES I, II, AND III)
12. CAB DOOR - FOLD-UP(TOP DOOR ASSEMBLY)
13. CAB DOOR - FOLD-UP(BOTTOM DOOR ASSEMBLY)
14. CAB DOOR - FOLD-UP(DOOR FRAME ASSEMBLY)
15. REAR WINDOW WITH WIPER
16. WINDOW WASHER(LATE SERIES)
17. WINDOW WASHER(EARLY SERIES)
18. SIDE WINDOWS
19. FLOOR PAN / FOOT THROTTLE(LATE SERIES)
20. FLOOR PAN / FOOT THROTTLE(EARLY SERIES)
21. SEAT
22. CONSOLE - RIGHT-SIDE(LATE AND INTERMEDIATE SERIES)

Fig. No. Fig. Name

23. CONSOLE - LEFT-SIDE(LATE SERIES)
24. CONSOLE - LEFT-SIDE(1ST AND 2ND INTERMEDIATE SERIES)
25. CONSOLE - RIGHT-SIDE(EARLY SERIES)
26. CONSOLE - LEFT-SIDE(EARLY SERIES)
27. CONSOLE CONTROLS - LEFT SIDE(SN: 461151 AND UP)
28. CONSOLE CONTROLS - RIGHT SIDE(SN: 461151 AND UP)
29. CONSOLE CONTROLS - LEFT SIDE(SN: 461150 AND BEFORE)
30. CONSOLE CONTROLS - RIGHT SIDE(SN: 461150 AND BEFORE)
31. MIRROR
32. RADIO
33. BACKUP CAMERA GROUP
34. HEATER / AIR CONDITIONING BLOWER
35. HEATER HOSE CIRCUIT(LATE SERIES)
36. HEATER HOSE CIRCUIT(INTERMEDIATE SERIES)
37. HEATER HOSE CIRCUIT(EARLY-INTERMEDIATE AND EARLY SERIES)
38. AIR CONDITIONING CIRCUIT(LATE SERIES)
39. AIR CONDITIONING CIRCUIT(EARLY SERIES)
40. AIR CONDITIONING COMPRESSOR(SN: 461151 AND UP)
41. AIR CONDITIONING COMPRESSOR(SN: 461001 - 461150)
42. AIR CONDITIONING COMPRESSOR(SN: 461000 AND BEFORE)

CHASSIS

43. FRAME - FRONT / UNDER(LATE SERIES)
44. FRAME - FRONT / UNDER(EARLY SERIES)
45. COUNTERWEIGHTS / CENTER FRAME(SN: 461151 AND UP)

Contents

0CK50-M01410

Fig. No. Fig. Name

46. COUNTERWEIGHTS / CENTER FRAME(SN: 461150 AND BEFORE)
47. REAR DOOR(SN: 461001 AND UP)
48. REAR DOOR(SN: 461001 AND UP)
49. REAR ACCESS DOORS(SN: 461151 AND UP)
50. REAR ACCESS DOORS(SN: 461001 - 461150)
51. REAR ACCESS DOORS(SN: 461000 AND BEFORE)
52. REAR HOOD(SN: 461001 AND UP)
53. REAR HOOD - AIR CONDITIONING CONDENSER ASSEMBLY(SN: 461001 AND UP)
54. REAR HOOD(SN: 461000 AND BEFORE)
55. REAR HOOD - AIR CONDITIONING CONDENSER ASSEMBLY(SN: 461000 AND BEFORE)

ELECTRICAL

56. CHASSIS WIRE HARNESS / COMPONENTS(SN: 461101 AND UP)
57. CHASSIS WIRE HARNESS / COMPONENTS(SN: 461001 - 461100)
58. CHASSIS WIRE HARNESS / COMPONENTS(SN: 461000 AND BEFORE)
59. FUSE BOXES / FUSES / RELAYS(SN: 461101 AND UP)
60. FUSE BOXES / FUSES / RELAYS(SN: 461001- 461100)
61. FUSE BOXES / FUSES / RELAYS(SN: 461000 AND BEFORE)
62. BATTERY CIRCUIT / ENGINE WIRE HARNESS(SN: 461001 AND UP)
63. BATTERY CIRCUIT / ENGINE WIRE HARNESS(SN: 461000 AND BEFORE)
64. CAB - OPERATOR WIRE HARNESS
65. CAB - ROPS WIRE HARNESS / WORK LIGHTS

ENGINE

66. EXTERNAL COMPONENTS - LEFT SIDE(SN: 461001 AND UP)

Fig. No. Fig. Name

67. EXTERNAL COMPONENTS - REMOTE OIL FILTER - HIGH-FLOW(SN: 461030 AND UP)
68. EXTERNAL COMPONENTS - REMOTE OIL FILTER - HIGH-FLOW(SN: 461029 AND BEFORE)
69. EXTERNAL COMPONENTS - RIGHT SIDE(SN: 461001 AND UP)
70. EXTERNAL COMPONENTS - RIGHT SIDE(SN: 461000 AND BEFORE)
71. EXTERNAL COMPONENTS - LEFT SIDE(SN: 461000 AND BEFORE)
72. EXTERNAL COMPONENTS - MOUNTS(SN: 461000 AND BEFORE)
73. EXTERNAL COMPONENTS - FLYWHEEL HOUSING(SN: 461000 AND BEFORE)
74. FUEL CIRCUIT(SN: 461001 AND UP)
75. FUEL CIRCUIT(SN: 461000 AND BEFORE)
76. FUEL TANK(SERIES III)
77. FUEL TANK(SERIES II)
78. FUEL TANK(SERIES I)
79. AIR INTAKE / EXHAUST(SN: 461001 AND UP)
80. AIR INTAKE - (INTERIM TIER IV - LATE)(SN: 461000 AND BEFORE)
81. AIR INTAKE - (INTERIM TIER IV - EARLY AND TIER III)(SN: 461000 AND BEFORE)
82. AIR CLEANER ASSEMBLY - (PRE-TIER IV)(SN: 461000 AND BEFORE)
83. EXHAUST - (PRE-TIER IV)(SN: 461000 AND BEFORE)
84. RADIATOR / HYDRAULIC COOLER(SN: 461001 AND UP)
85. RADIATOR / HYDRAULIC COOLER(SN: 461000 AND BEFORE)

TRACKS

86. TRACK ASSEMBLY(SN: 461151 AND UP)
87. TRACK ASSEMBLY(SN: 461150 AND BEFORE)
88. DUAL-FLANGE IDLER ASSEMBLY - REAR(LATE SERIES)
89. DUAL-FLANGE IDLER ASSEMBLY - REAR(EARLY SERIES)

Contents

0CK50-M01410

Fig. No. Fig. Name

90. BOGIE WHEEL ASSEMBLY
91. FRONT IDLER ASSEMBLY
92. TRACK DRIVE MOTOR AND SPROCKET
93. TRACK DRIVE MOTOR COMPONENTS
94. TRACK DRIVE MOTOR COMPONENTS

LOADER ARM

95. BOLT-ON COMPONENTS(SN: 461001 AND UP)
96. BOLT-ON COMPONENTS(SN: 461000 AND BEFORE)
97. ATTACHMENT BRACKET - MANUAL (STANDARD) AND BUCKET(SN: 461151 AND UP)
98. ATTACHMENT BRACKET - MANUAL AND BUCKET(SN: 461150 AND BEFORE)
99. ATTACHMENT BRACKET - Q COUPLER (PART 1 OF 2)(SN: 461151 AND UP)
100. ATTACHMENT BRACKET - Q COUPLER (PART 2 OF 2)(SN: 461151 AND UP)
101. ATTACHMENT BRACKET - Q COUPLER (PART 1 OF 2)(SN: 461150 AND BEFORE)
102. ATTACHMENT BRACKET - Q COUPLER (PART 2 OF 2)(SN: 461150 AND BEFORE)
103. 14-PIN CONNECTOR

LOADER ARM HYDRAULICS

104. TILT CIRCUIT
105. LIFT CIRCUIT
106. AUXILIARY HYDRAULICS CIRCUIT
107. HIGH-FLOW HYDRAULICS CIRCUIT(SN: 461001 AND UP)
108. HIGH-FLOW HYDRAULICS CIRCUIT(SN: 461000 AND BEFORE)

Fig. No. Fig. Name

HYDRAULICS

109. HYDRAULIC TANK
110. HYDROSTATIC DRIVE PUMP CIRCUIT(SN: 461101 AND UP)
111. HYDROSTATIC DRIVE PUMP CIRCUIT(SN: 060372 - 461100)
112. HYDROSTATIC DRIVE PUMP CIRCUIT(SN: 060371 AND BEFORE)
113. TRACK DRIVE CIRCUIT - RIGHT SIDE(SN: 461101 AND UP)
114. TRACK DRIVE CIRCUIT - LEFT SIDE(SN: 461101 AND UP)
115. TRACK DRIVE CIRCUIT - RIGHT SIDE(SN: 060372 - 461100)
116. TRACK DRIVE CIRCUIT - LEFT SIDE(SN: 060372 - 461100)
117. TRACK DRIVE CIRCUIT - RIGHT SIDE(SN: 060371 AND BEFORE)
118. TRACK DRIVE CIRCUIT - LEFT SIDE(SN: 060371 AND BEFORE)
119. HYDRAULIC PUMP CIRCUIT - (STANDARD HYDRAULICS)(SN: 461001 AND UP)
120. HYDRAULIC PUMP CIRCUIT - STANDARD HYDRAULICS(SN: 461000 AND BEFORE)
121. HYDRAULIC PUMP CIRCUIT - HIGH-FLOW HYDRAULICS(SN: 461001 AND UP)
122. HYDRAULIC PUMP CIRCUIT - HIGH-FLOW HYDRAULICS(SN: 461000 AND BEFORE)
123. SELF-LEVEL CIRCUIT - LIFT / TILT(SN:461001 AND UP)
124. SELF-LEVEL VALVE CIRCUIT - LIFT / TILT(SN: 461000 AND BEFORE)
125. STANDARD AND HIGH-FLOW AUXILIARY HYDRAULICS CIRCUIT(SN: 461001 AND UP)
126. STANDARD AND HIGH-FLOW AUXILIARY HYDRAULICS CIRCUIT(SN: 461000 AND BEFORE)
127. PILOT PRESSURE MANIFOLD CIRCUIT(SN: 461001 AND UP)
128. PILOT PRESSURE MANIFOLD CIRCUIT(SN: 461000 AND BEFORE)
129. FLOAT CIRCUIT / RIDE CONTROL(SN: 461001 AND UP)
130. FLOAT CIRCUIT / RIDE CONTROL(SN: 461000 AND BEFORE)

Contents

Fig. No. Fig. Name

HYDRAULIC COMPONENTS

131. HYDROSTATIC DRIVE PUMP(SN: 461101 AND UP)
132. HYDROSTATIC DRIVE PUMP(SN: 461100 AND BEFORE)
133. HYDRAULIC PUMP - STANDARD HYDRAULICS
134. HYDRAULIC PUMP - HIGH-FLOW HYDRAULICS
135. HYDRAULIC MAIN VALVE - STANDARD HYDRAULICS
136. HYDRAULIC MAIN VALVE - HIGH-FLOW HYDRAULICS
137. SELF-LEVEL VALVE - NON-SWITCHABLE
138. SELF-LEVEL VALVE - SWITCHABLE
139. FLOAT MANIFOLD
140. RIDE CONTROL MANIFOLD
141. PILOT PRESSURE MANIFOLD
142. TRACK TENSION CYLINDER
143. TILT CYLINDER
144. LIFT CYLINDER

DECALS

145. FRONT
146. RIGHT SIDE
147. LEFT SIDE
148. REAR
149. ENGINE COMPARTMENT

Fig. No. Fig. Name

Fig.1. FILTERS / BELTS(SN: 461001 AND UP)

(A)=T210-1(VERSION C
(B)=
(C)=
(D)=
(E)=
(F)=

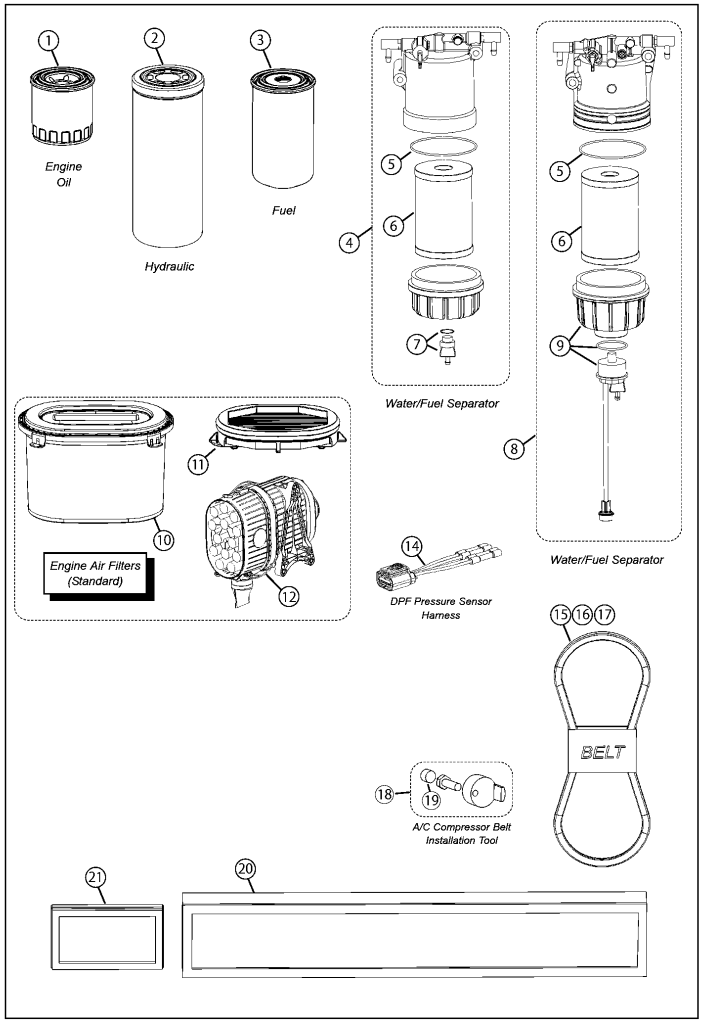

No.	Lev.	Parts No.	Description	Q'ty (A)	(B)	(C)	(D)	(E)	(F)	I	R
1	1	172216-20100	FILTER, LO 80X80L	1							
2	1	172559-00120	FILTER, HYDRAULIC	1							
3	1	172559-00110	FUEL FILTER	1							
4	1	172559-00090	SEPARATOR ASSY	1							1
5	1	172559-00030	O-RING	1							
6	1	172559-00100	FILTER, FUEL/WATER	1							
7	1	172559-00010	PLUG, DRAIN W/O-RING	1							
8	1	172559-00080	WATER SEPARATOR	1							1
9	1	172559-00020	FUEL SENSOR	1							
10	1	172217-05140	FILTER, MAIN	1							
11	1	172217-05150	FILTER, SECONDARY	1							
12	1	172216-14171	CLEANER, AIR	1							
14	1	172559-00050	HARNESS, DPF SENSOR	1							2
15	1	172217-15130	V-BELT, B44	1							
16	1	172551-03830	BELT, A/C COMPRESSOR	1							3
17	1	172559-00040	BELT, A/C	1							4
18	1	172559-00060	BELT TOOL KIT	1							5
19	1	172559-00070	MAGNET,1/2X3/8	1							6
20	1	172551-00010	FILTER, FRESH AIR	1							
21	1	172551-03090	FILTER,AIR	2							

Remarks
(1)(includes all items shown in box)
(2)(included in service kit)
(3)(standard v-belt)
(4)(micro 'V' serpentine)
(5)Used to install belt (item#14)
(6)(included w/item 18)

N:Old $\xleftarrow[\text{No}]{\text{Yes}}$ New, Q:Old $\xleftarrow[\text{Yes}]{\text{No}}$ New, R:Old $\xleftarrow[\text{Yes}]{\text{Yes}}$ New, S:Old $\xleftarrow[\text{No}]{\text{No}}$ New, W:Add, Z:Discontinued, F:Interchangeable by set, K:Q'ty Change

Copyright (C) 2017 YANMAR CO., LTD. All RightsReserved.

Fig.2. FILTERS / BELTS(SN: 461000 AND BEFORE)

(A)=T210-1(VERSION C (D)=
(B)= (E)=
(C)= (F)=

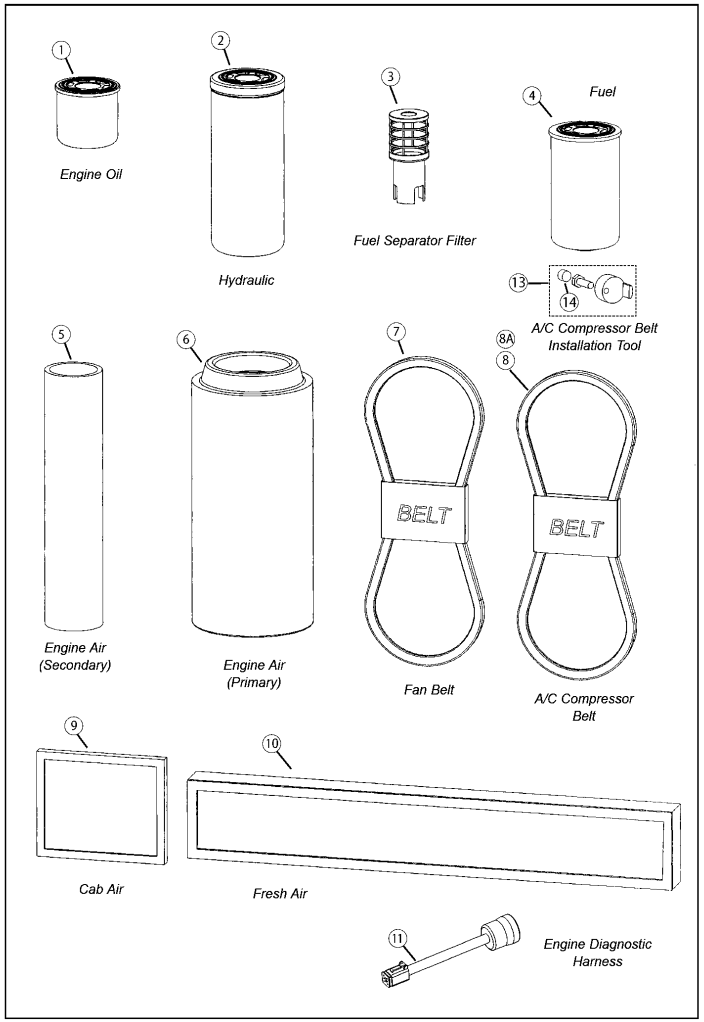

No.	Lev.	Parts No.	Description	Q'ty (A)	(B)	(C)	(D)	(E)	(F)	I	R
1	1	172216-20100	FILTER, LO 80X80L	1							
2	1	172559-00120	FILTER, HYDRAULIC	1							
3	1	172217-15120	ELEMENT, SEPARATOR	1							1
4	1	172216-20110	FILTER, FUEL OIL	1							
5	1	172551-02060	FILTER,AIR	1							
6	1	172551-02050	FILTER,AIR	1							
7	1	172217-15130	V-BELT, B44	1							
8	1	172551-03830	BELT, A/C COMPRESSOR	1							2
8A	1	172559-00040	BELT, A/C COMPRESSOR	1							3
9	1	172551-03090	FILTER,AIR	2							
10	1	172551-00010	FILTER, FRESH AIR	1							
11	1	172552-15230	CABLE	1							4
13	1	172559-00060	BELT TOOL KIT	1							5
14	1	172559-00070	MAGNET,1/2X3/8	1							6

Remarks
(1)(used in fuel separator assembly)
(2)(standard v-belt)
(3)(micro 'V' serpentine)
(4)(iT4 Engine Diagnostics)
(5)Used to install belt (item12)
(6)(included with item13)

N:Old ←Yes/No→ New, Q:Old ←No/Yes→ New, R:Old ←Yes/Yes→ New, S:Old ←No/No→ New, W:Add, Z:Discontinued, F:Interchangeable by set, K:Q'ty Change

Copyright (C) 2017 YANMAR CO., LTD. All RightsReserved.

Fig.3. STANDARD

(A)=T210-1(VERSION C
(B)=
(C)=
(D)=
(E)=
(F)=

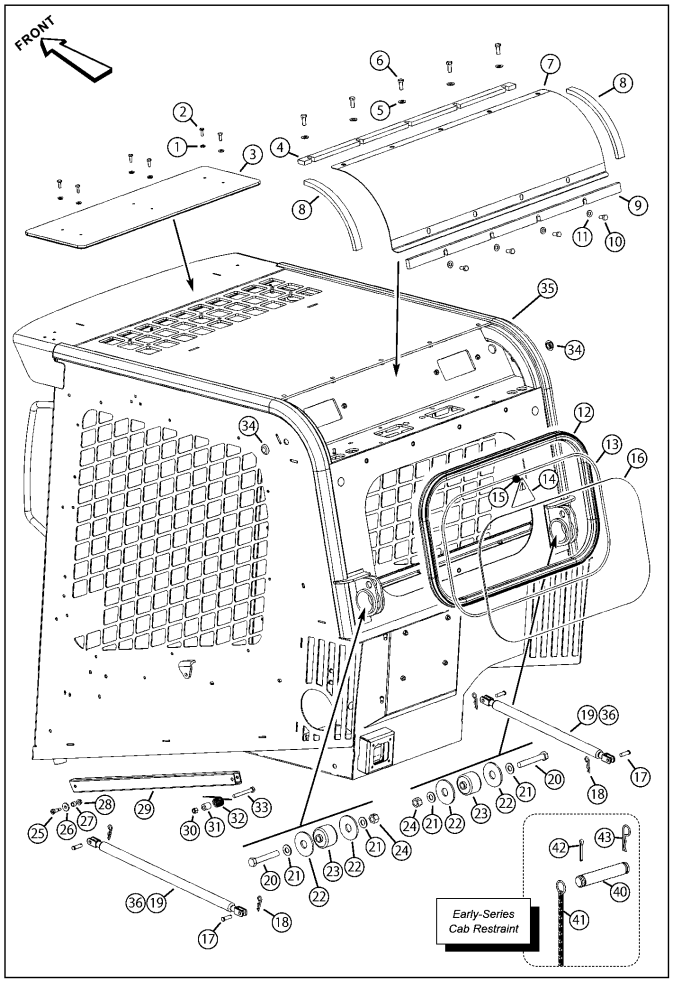

No.	Lev.	Parts No.	Description	Q'ty (A)	(B)	(C)	(D)	(E)	(F)	I	R
1	1	172551-01430	WASHER	6							
2	1	172551-09520	SCREW	6							
3	1	172551-03470	WINDOW, TOP	1							
4	1	172551-11230	SEAL	1							
5	1	172551-01210	WASHER	5							
6	1	172551-09530	SCREW	5							
7	1	172559-00140	REAR BILL COVER	1							1
8	1	172551-03960	SEAL	2							
9	1	172551-05880	SEAL	1							
10	1	172551-09520	SCREW	4							
11	1	172551-10400	WASHER	4							
12	1	172551-02870	WEATHER STRIP	1							
13	1	172551-02940	RIPCORD	1							
14	1	172551-01110	TAG, RIP-CORD	1							
15	1	172215-00650	RING	1							
16	1	172551-03140	WINDOW	1							2
17	1	172559-00150	CLEVIS PIN	4							
18	1	172559-00180	COTTER	4							
19	1	172552-15510	GAS CYLINDER, CAB	2							3
20	1	172551-09690	SCREW	2							
21	1	172551-09960	WASHER	4							
22	1	172551-05280	WASHER	4							
23	1	172551-02900	ISOLATOR	4							
24	1	172559-00170	NUT	2							
25	1	172215-03800	BOLT	1							
26	1	172552-15290	WASHER	1							
27	1	172552-15270	BUSHING	1							
28	1	172551-02760	NUT	1							
29	1	172552-15260	WELDMENT, CAB	1							
30	1	172559-00160	NUT	1							
31	1	172552-15250	SPACER	1							
32	1	172552-15240	SPRING	1							
33	1	172215-02950	SCREW	1							
34	1	172551-02430	PLUG	2							
35	1	172559-00130	ROPS (CAB)	1							4
36	1	172552-15500	GAS CYLINDER, CAB	2							5
40	1	172551-06180	PIN	1							
41	1	172551-05740	SASH,CHAIN	1							
42	1	172215-03000	PIN, COTTER	1							
43	1	172551-09430	COTTER	1							

Remarks
(1)NOTE: Early units were equipped witha rear bill that looked similar to the rear bill shown on the REAR CAB - HVACCOVER page. The early-style rear bill isno longer available.
(2)(Optional rear wiper shown on REAR WINDOW with WIPER page.)
(3)(purchase in pairs)
(4)(frame work only ? does not includeany other items)
NOTE: If ordering a cab for an early unit that has four bolt holes on the top of thecab to secure the rear bill, it will also benecessary to order items 7-9. Also, please refer to the "NOTE" in item 7.
(5)(used when machine is equipped with optional cab door)(purchase in pairs)

N:Old $\frac{\text{Yes}}{\text{No}}$ New, Q:Old $\frac{\text{No}}{\text{Yes}}$ New, R:Old $\frac{\text{Yes}}{\text{Yes}}$ New, S:Old $\frac{\text{No}}{\text{No}}$ New, W:Add, Z:Discontinued, F:Interchangeable by set, K:Q'ty Change

Copyright (C) 2017 YANMAR CO., LTD. All RightsReserved.

Fig.4. REAR CAB - HVAC COVER

(A)=T210-1(VERSION C
(B)=
(C)=
(D)=
(E)=
(F)=

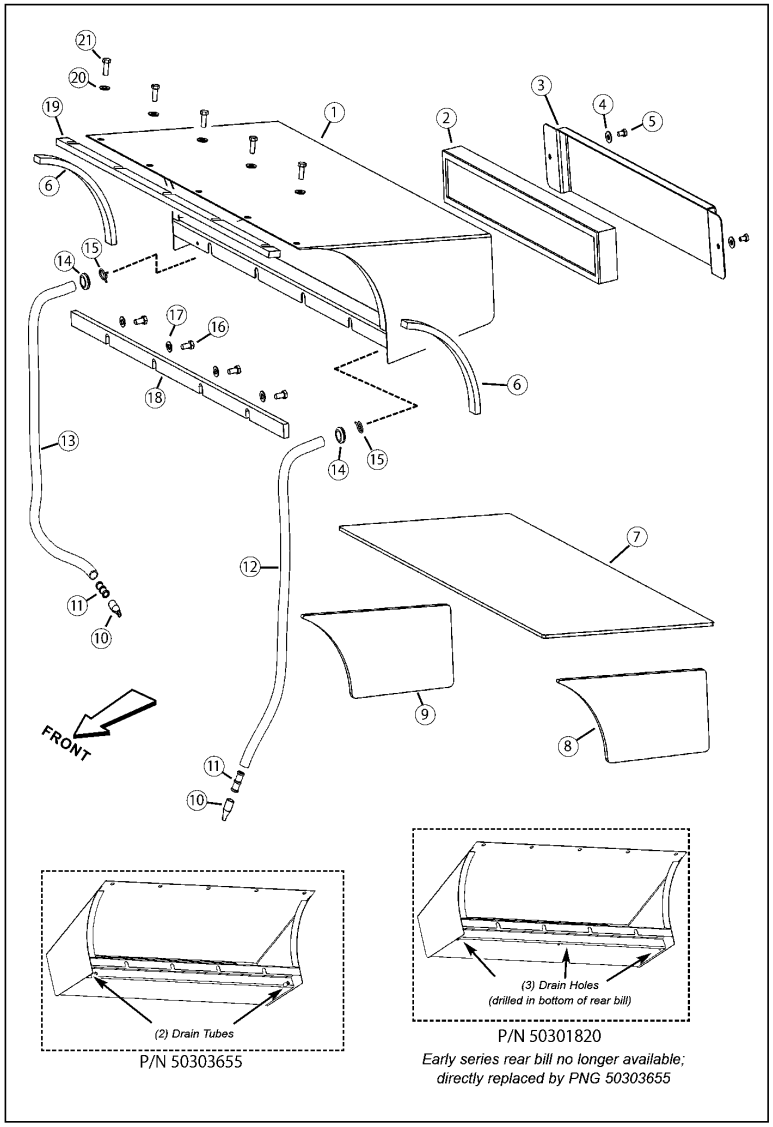

No.	Lev.	Parts No.	Description	Q'ty (A)	(B)	(C)	(D)	(E)	(F)	I	R
1	1	172559-00190	WELDMENT, REAR BILL	1							
2	1	172551-00010	FILTER, FRESH AIR	1							
3	1	172551-06390	COVER,FILTER	1							
4	1	172551-10370	WASHER	2							
5	1	172551-09500	SCREW	2							
6	1	172551-03960	SEAL	2							
7	1	172551-06420	PAD	1							
8	1	172551-06400	PAD	1							
9	1	172551-06410	PAD	1							
10	1	172216-04240	CAP, DRIP	2							
11	1	172218-04730	HOSE	2							1
12	1	172559-00200	HOSE,DRAIN	1							1
13	1	172559-00200	HOSE,DRAIN	1							1
14	1	172559-00210	GROMMET	2							1
15	1	172218-04860	CLAMP	2							1
16	1	172551-09520	SCREW	4							
17	1	172551-10400	WASHER	4							
18	1	172551-05880	SEAL	1							
19	1	172551-11230	SEAL	1							
20	1	172551-01210	WASHER	5							
21	1	172551-09530	SCREW	5							

Remarks
(1)(not used with rear bill PNG 50301820)

N:Old $\frac{\text{Yes}}{\text{No}}$ New, Q:Old $\frac{\text{No}}{\text{Yes}}$ New, R:Old $\frac{\text{Yes}}{\text{Yes}}$ New, S:Old $\frac{\text{No}}{\text{No}}$ New, W:Add, Z:Discontinued, F:Interchangeable by set, K:Q'ty Change

Copyright (C) 2017 YANMAR CO., LTD. All RightsReserved.

Fig.5. CAB INTERIOR

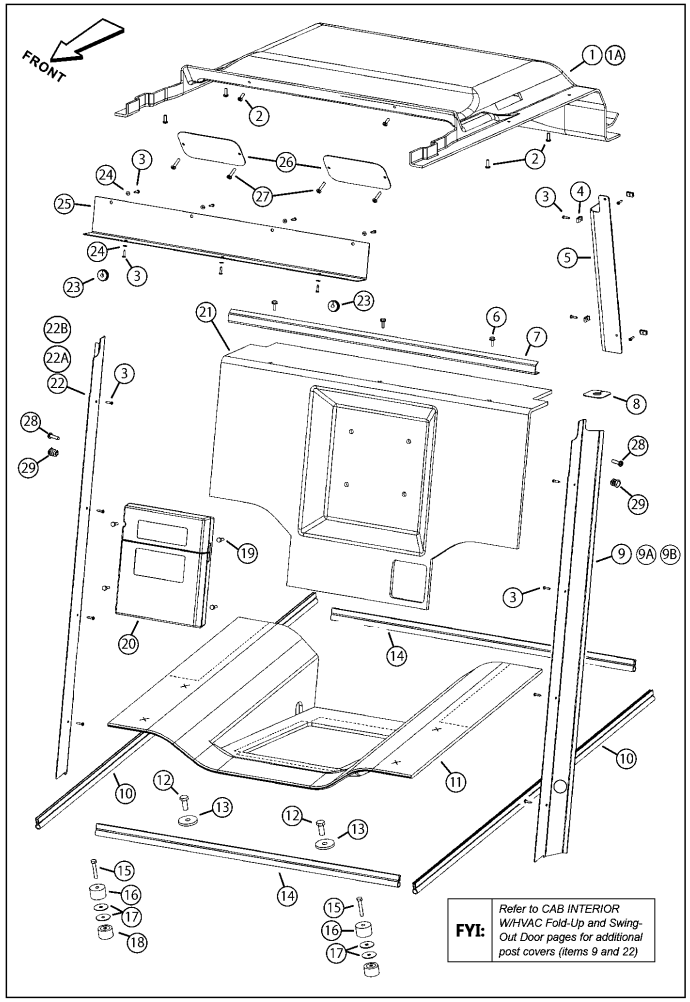

(A)=T210-1(VERSION C
(B)=
(C)=
(D)=
(E)=
(F)=

No.	Lev.	Parts No.	Description	Q'ty (A)	(B)	(C)	(D)	(E)	(F)	I	R
1	1	172551-06010	HEADLINER	1							1
1A	1	172559-00280	HEADLINER	1							2
2	1	172559-00240	SCREW	6							
3	1	172551-10180	SCREW	19							
4	1	172551-04440	TINNERMAN	4							
5	1	172551-06140	COVER	1							
6	1	172559-00360	SCREW	3							
7	1	172559-00250	PLATE, REAR STORAGE	1							
8	1	172559-00300	GROMMET	1							
9	1	172559-00310	COVER, A POST LH	1							3
9A	1	172559-00330	COVER, A POST LH	1							4
9B	1	172559-00260	COVER, A POST LH	1							5
10	1	172551-09330	SEAL	2							
11	1	172551-04450	LINER, SEAT DECK	1							
12	1	172551-09570	SCREW	2							
13	1	172559-00350	FW 17/32 ZY	2							
14	1	172551-09340	SEAL	2							
15	1	172551-09620	SCREW	2							
16	1	172551-09030	SPACER	2							
17	1	172551-09220	SPACER	4							
18	1	172551-05970	ISOLATOR	2							
19	1	172551-09480	SCREW	4							
20	1	172551-10680	HOLDER	1							
21	1	172559-00290	FOAM, REAR WALL	1							
22	1	172559-00320	COVER A POST RH	1							3
22A	1	172559-00340	COVER, A POST RH	1							4
22B	1	172559-00270	COVER, A POST RH	1							5
23	1	172551-03040	GROMMET	2							
24	1	172215-02840	WASHER	7							
25	1	172551-08280	COVER, DOOR HEADER	1							
26	1	172559-00230	PLATE, FILTER COVER	2							
27	1	172551-10240	SCREW	4							
28	1	172559-00240	SCREW	8							6
29	1	172559-00220	PLUG, PLASTIC	8							7

Remarks
(1)(used with no door or swing-out door)
(2)(fold-up door no HVAC; not shown)
(3)(no door)
(4)(swing-out door - no HVAC; not shown)
(5)(fold-up door - no HVAC; not shown)
(6)(used with fold-up door cover posts)
(7)(when not equipped with fold-up door;used in place of item 28)

N:Old $\xleftrightarrow[\text{No}]{\text{Yes}}$ New, Q:Old $\xleftrightarrow[\text{Yes}]{\text{No}}$ New, R:Old $\xleftrightarrow[\text{Yes}]{\text{Yes}}$ New, S:Old $\xleftrightarrow[\text{No}]{\text{No}}$ New, W:Add, Z:Discontinued, F:Interchangeable by set, K:Q'ty Change

Copyright (C) 2017 YANMAR CO., LTD. All RightsReserved.

Fig.6. CAB INTERIOR W/HVAC(COMMON COMPONENTS)

(A)=T210-1(VERSION C
(B)=
(C)=
(D)=
(E)=
(F)=

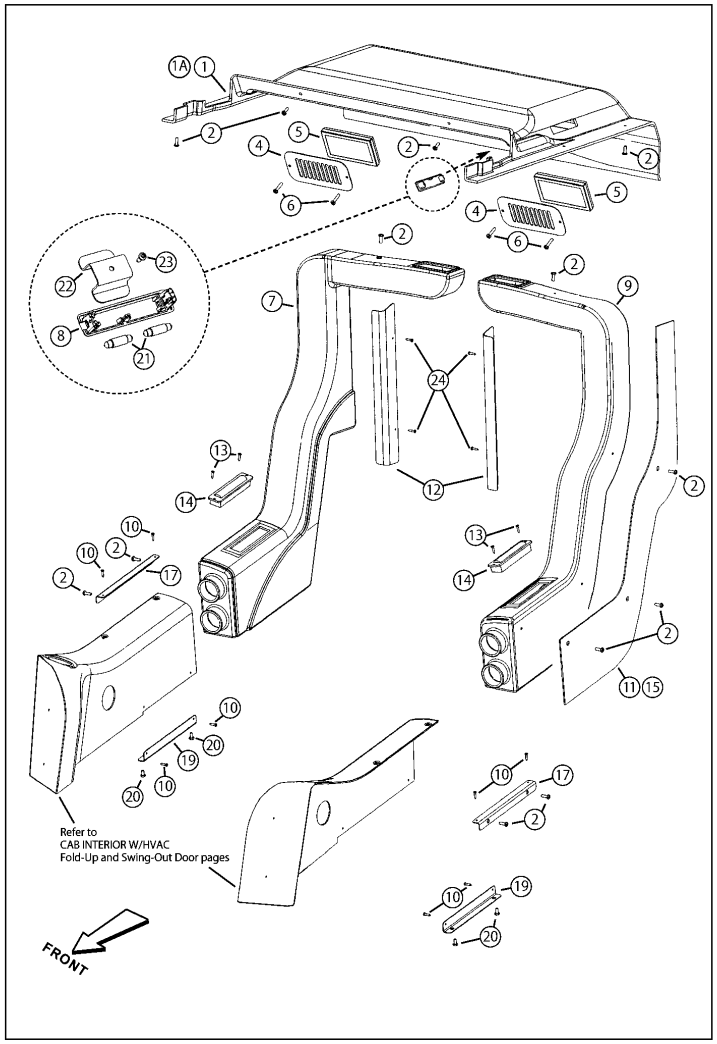

No.	Lev.	Parts No.	Description	Q'ty (A)	(B)	(C)	(D)	(E)	(F)	I	R
1	1	172551-06130	HEADLINER	1							1
1A	1	172559-00370	HEADLINER	1							
2	1	172551-10010	SCREW	1							
4	1	172551-05920	PLATE, FILTER	2							2
5	1	172551-03090	FILTER,AIR	2							
6	1	172551-10240	SCREW	4							
7	1	172551-06150	DUCT, REAR	1							
8	1	172551-04100	LIGHT,DOME	1							3
9	1	172551-04270	DUCT, REAR	1							
10	1	172551-10180	SCREW	12							
11	1	172551-06170	INSULATION, DUCT	1							4
12	1	172551-03460	COVER	2							
13	1	172551-10730	SCREW	4							
14	1	172551-01440	LOUVER, ROLL NOZZLE	2							
15	1	172551-03290	INSULATION, DUCT	1							5
17	1	172551-03990	BRACKET, FRONT COVER	2							
19	1	172551-04000	BRACKET, FRONT COVER	2							
20	1	172551-09480	SCREW	4							
21	1	172551-06580	BULB	2							
22	1	172551-08390	BRACE, DOME LIGHT	1							
23	1	172551-10110	SCREW	1							
24	1	172215-03120	SCREW	4							

Remarks
(1)(swing-out door w/HVAC)
(2)(with heat-A/C)
(3)(does not include bulbs)
(4)(left side; shown)
(5)(right side; not shown)

N:Old $\xleftrightarrow[\text{No}]{\text{Yes}}$ New, Q:Old $\xleftrightarrow[\text{Yes}]{\text{No}}$ New, R:Old $\xleftrightarrow[\text{Yes}]{\text{Yes}}$ New, S:Old $\xleftrightarrow[\text{No}]{\text{No}}$ New, W:Add, Z:Discontinued, F:Interchangeable by set, K:Q'ty Change

Copyright (C) 2017 YANMAR CO., LTD. All RightsReserved.

Fig.7. CAB INTERIOR W/HVAC(FOLD-UP DOOR)

(A)=T210-1(VERSION C
(B)=
(C)=
(D)=
(E)=
(F)=

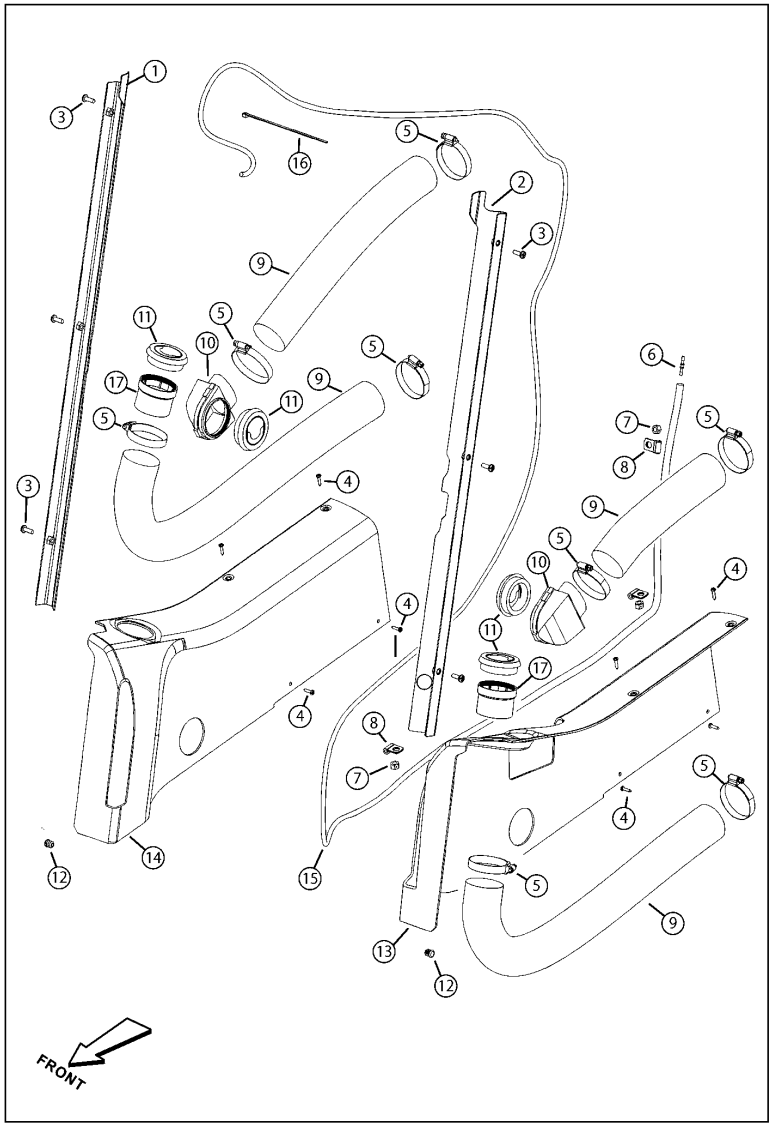

No.	Lev.	Parts No.	Description	Q'ty (A)	(B)	(C)	(D)	(E)	(F)	I	R
1	1	172559-00400	COVER,A POST RH	1							
2	1	172559-00410	COVER,A POST LH	1							
3	1	172559-00240	SCREW	6							
4	1	172551-10180	SCREW	8							
5	1	172559-00460	CLAMP	8							
6	1	172551-00850	CONNECTOR,TUBING	1							
7	1	172559-00450	NUT	4							
8	1	172559-00440	CLAMP	4							
9	1	172551-04170	HOSE	4							1
10	1	172551-03770	ADAPTER,HOSE	2							
11	1	172551-03720	LOUVER	4							
12	1	172559-00220	PLUG, PLASTIC	8							
13	1	172559-00380	COVER,RH EH TIRMFOLD	1							
14	1	172559-00420	COVER,LH EH TIRMFOLD	1							
15	1	172559-00390	HOSE,ROPS FRONTWIPER	1							
16	1	172559-00430	TIE, CABLE	2							
17	1	172551-03730	LOUVER, HOSE ADAPTER	2							

Remarks
(1)(2-1/2" x 31")

N:Old $\xleftrightarrow[\text{No}]{\text{Yes}}$ New, Q:Old $\xleftrightarrow[\text{Yes}]{\text{No}}$ New, R:Old $\xleftrightarrow[\text{Yes}]{\text{Yes}}$ New, S:Old $\xleftrightarrow[\text{No}]{\text{No}}$ New, W:Add, Z:Discontinued, F:Interchangeable by set, K:Q'ty Change

Copyright (C) 2017 YANMAR CO., LTD. All RightsReserved.

Fig.8. CAB INTERIOR W/HVAC(SWING-OUT DOOR)

(A)=T210-1(VERSION C
(B)=
(C)=
(D)=
(E)=
(F)=

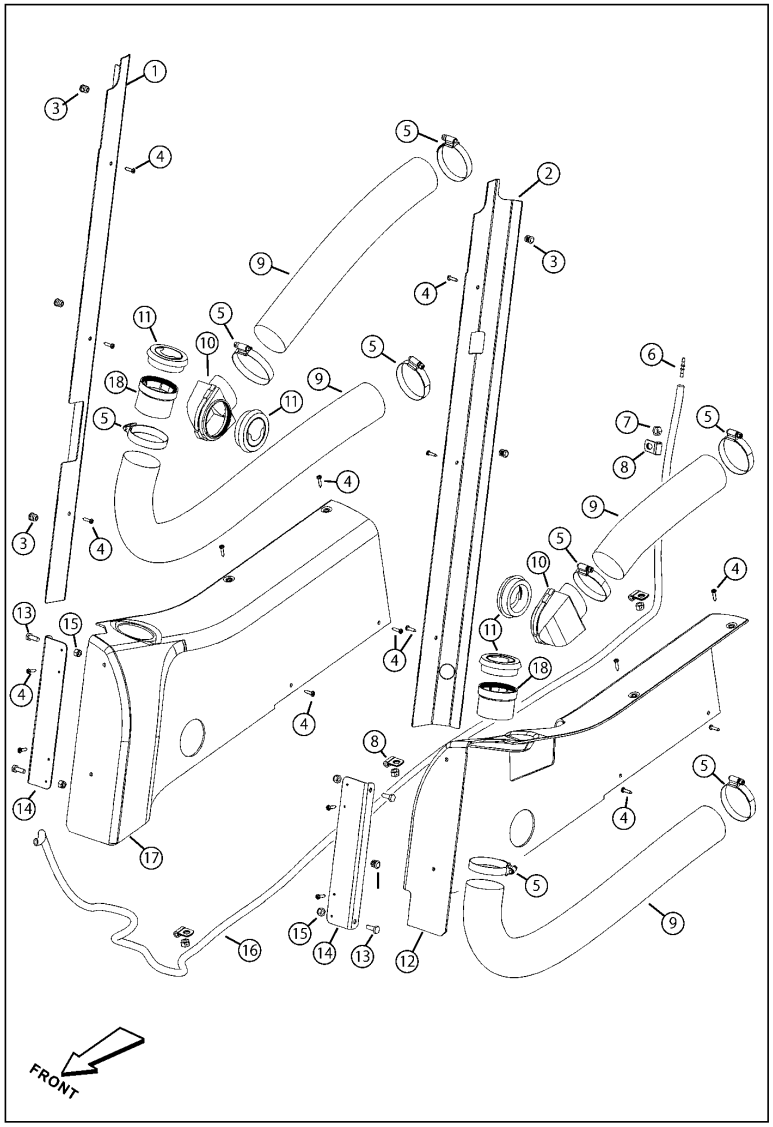

No.	Lev.	Parts No.	Description	Q'ty (A)	(B)	(C)	(D)	(E)	(F)	I	R
1	1	172559-00490	COVER, A POST RH	1							
2	1	172559-00470	COVER, A POST LH	1							
3	1	172559-00220	PLUG, PLASTIC	8							
4	1	172551-10180	SCREW	1							
5	1	172559-00460	CLAMP	8							
6	1	172551-00850	CONNECTOR,TUBING	1							
7	1	172559-00450	NUT	4							
8	1	172559-00440	CLAMP	4							
9	1	172551-04170	HOSE	4							1
10	1	172551-03770	ADAPTER,HOSE	2							
11	1	172551-03720	LOUVER	4							
12	1	172559-00480	COVER,RH EH TIRM	1							
13	1	172551-09480	SCREW	4							
14	1	172551-05800	BRAKET,SIDE COVER	2							
15	1	172559-00510	NUT	4							
16	1	172551-06520	HOSE	1							
17	1	172559-00500	COVER,LH EH TIRM	1							
18	1	172551-03730	LOUVER, HOSE ADAPTER	2							

Remarks
(1)(2-1/2" x 31")

N:Old $\frac{\text{Yes}}{\text{No}}$ New, Q:Old $\frac{\text{No}}{\text{Yes}}$ New, R:Old $\frac{\text{Yes}}{\text{Yes}}$ New, S:Old $\frac{\text{No}}{\text{No}}$ New, W:Add, Z:Discontinued, F:Interchangeable by set, K:Q'ty Change

Copyright (C) 2017 YANMAR CO., LTD. All RightsReserved.

Fig.9. CAB DOOR - SWING-OUT(SERIES III)

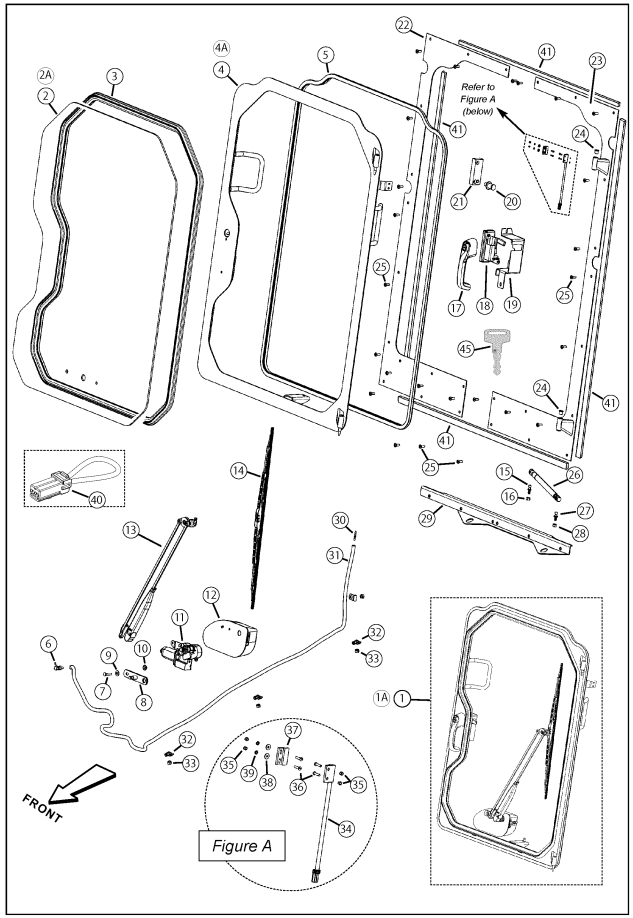

(A)=T210-1(VERSION C
(B)=
(C)=
(D)=
(E)=
(F)=

No.	Lev.	Parts No.	Description	Q'ty (A)	(B)	(C)	(D)	(E)	(F)	I	R
1	1	172559-00540	DOOR ASSY,STANDARD	1							1
1A	1	172559-00600	DOOR ASSY,H-IMPACT	1							2
2	1	172559-00560	GLASS, DOOR	1							3
2A	1	172559-00610	GLASS, DOOR	1							4
3	1	172559-00570	SEAL, GLASS WINDOW	1							5
4	1	172559-00580	DOOR FRAME WELDMENT	1							6
4A	1	172559-00620	DOOR FRAME WELDMENT	1							7
5	1	172559-00550	SEAL, DOOR	1							8
6	1	172552-15420	SCREW	1							
7	1	172551-09460	SCREW	1							
8	1	172551-08170	MOUNT, WIPER ARM	1							
9	1	172551-10360	WASHER	1							
10	1	172559-00650	NUT	1							
11	1	172551-04820	MOTOR,WIPER	1							
12	1	172551-04840	COVER, WIPER MOTOR	1							
13	1	172551-04830	ARM,WIPER	1							
14	1	172551-05560	WIPER BLADE	1							
15	1	172551-10700	STUD, BALL	1							
16	1	172559-00450	NUT	1							
17	1	172551-04780	HANDLE	1							9
18	1	172552-15450	LATCH	1							9
19	1	172552-15460	COVER	1							9
20	1	172552-15430	STRIKER	1							
21	1	172552-15440	MOUNT, STRIKER	1							9
22	1	172559-00530	PLATE, DOOR FRAME	1							A
23	1	172559-00520	PLATE, DOOR FRAME	1							A
24	1	172559-00630	BEARING	2							A
25	1	172551-10010	SCREW	28							
26	1	172552-15360	GAS CYLINDER	1							
27	1	172551-10700	STUD, BALL	1							
28	1	172559-00450	NUT	1							
29	1	172559-00590	DOOR FRAME BRACE	1							
30	1	172551-00850	CONNECTOR,TUBING	1							
31	1	172551-06520	HOSE	1							
32	1	172559-00440	CLAMP	4							
33	1	172559-00450	NUT	4							
34	1	172551-06690	SWITCH, PROXIMITY	1							
35	1	172551-10020	NUT	4							
36	1	172551-10000	SCREW	4							
37	1	172551-02480	MAGNET,SWITCH	1							
38	1	172216-09620	WASHER	2							
39	1	172559-00640	LW #5 RZY	2							
40	1	172551-08990	HARNESS	1							B
41	1	172552-15340	SEAL, FOAM	1							B
45	1	172551-07990	KEY	1							

Remarks
(1)(Standard) (shown)(Includes items 2 - 21)Refer to "IMPORTANT" message.
(2)(High-impact/Option) (not shown) (Includes items 2, 4 - 21)Refer to "IMPORTANT" message.Refer to "NOTE" message.
(3)Standard (shown)Refer to "IMPORTANT" message.
(4)Polycarbonate - High-Impact Refer to "IMPORTANT" message.Refer to "NOTE" message.
(5)(Not used with high-impact window)
(6)(Standard) (shown)Refer to "IMPORTANT" message.
(7)(High-impact/Option) Refer to "IMPORTANT" message.Refer to "NOTE" message.
(8)(0.48 x 149.5 IN.)
(9)Fastening hardware located on "Swing-Out Door Latches" page.
(A)Refer to "IMPORTANT" message.
(B)(Used when door is removed-option)

N:Old ←Yes/No→ New, Q:Old ←No/Yes→ New, R:Old ←Yes/Yes→ New, S:Old ←No/No→ New, W:Add, Z:Discontinued, F:Interchangeable by set, K:Q'ty Change

Copyright (C) 2017 YANMAR CO., LTD. All RightsReserved.

Fig.10. CAB DOOR - SWING-OUT(SERIES I AND II)

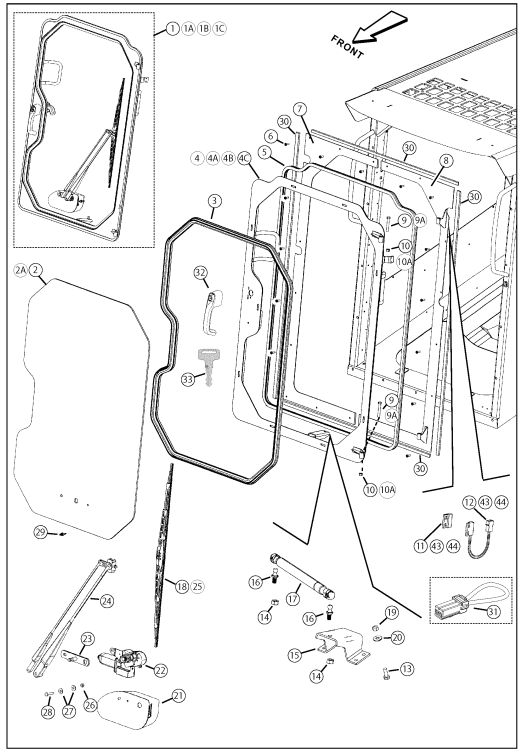

(A)=T210-1(VERSION C
(B)=
(C)=
(D)=
(E)=
(F)=

No.	Lev.	Parts No.	Description	Q'ty (A)	(B)	(C)	(D)	(E)	(F)	I	R
1	1	172552-15370	DOOR ASSY, SWING-OUT	1							1
1A	1	172552-15390	DOOR ASSY, SWING-OUT	1							2
1B	1	172551-11240	DOOR ASSY	1							3
1C	1	172559-00660	DOOR ASSY, SWING-OUT	1							4
2	1	172551-08560	WINDOW, DOOR	1							5
2A	1	172552-15320	DOOR ASSY, SWING-OUT	1							6
3	1	172551-04770	SEAL	1							7
4	1	172552-15380	FRAME, DOOR	1							8
4A	1	172552-15400	FRAME, DOOR	1							9
4B	1	172551-08360	FRAME,DOOR	1							3
4C	1	172552-15330	FRAME, DOOR	1							A
5	1	172551-08610	SEAL	1							B
6	1	172551-10010	SCREW	20							
7	1	172551-08620	DOOR FRAME ,WELDMENT	1							C
8	1	172551-08630	PLATE, DOOR	1							C
9	1	172551-09550	SCREW	2							D
9A	1	172552-15410	BOLT	2							E
10	1	172559-00670	NUT	2							D
10A	1	172551-10070	NUT	2							E
11	1	172551-02480	MAGNET,SWITCH	1							
12	1	172551-06690	SWITCH, PROXIMITY	1							
13	1	172551-09480	SCREW	4							
14	1	172559-00450	NUT	2							
15	1	172551-05430	BRACKET	1							
16	1	172551-10700	STUD, BALL	2							
17	1	172552-15360	GAS CYLINDER	1							
18	1	172551-05560	WIPER BLADE	1							
19	1	172559-00650	NUT	4							
20	1	172551-10360	WASHER	4							
21	1	172551-04840	COVER, WIPER MOTOR	1							
22	1	172551-04820	MOTOR,WIPER	1							
23	1	172551-08170	MOUNT, WIPER ARM	1							
24	1	172551-04830	ARM,WIPER	1							
25	1	172551-05560	WIPER BLADE	1							
26	1	172559-00650	NUT	1							
27	1	172551-10360	WASHER	2							
28	1	172551-09460	SCREW	1							
29	1	172552-15420	SCREW	1							
30	1	172552-15340	SEAL, FOAM	1							F
31	1	172551-08990	HARNESS	1							G
32	1	172551-04780	HANDLE	1							H
33	1	172551-07990	KEY	1							I
43	1	172551-10000	SCREW	1							J
44	1	172551-10020	NUT	1							J

Remarks
(1)(Series II) - (Standard) (shown)Refer to "IMPORTANT" message.
(2)(Series II) - High-impact/Option)Refer to "IMPORTANT" message.
(3)(Series I) - (Standard)Refer to "IMPORTANT" message.
(4)(Series I) - High-impact/Option)Refer to "IMPORTANT" message.
(5)Standard Glass (shown)Refer to "IMPORTANT" message.
(6)Polycarbonate (option - not shown) Refer to "IMPORTANT" message.
(7)(Not used with high-impact window)
(8)(Series II) - (Standard) (shown)Refer to "IMPORTANT" message.
(9)(Series II) - High-impact/Option) Refer to "IMPORTANT" message.Refer to "NOTE" message.
(A)(Series I) - High-impact/Option)Refer to "IMPORTANT" message.Refer to "NOTE" message.
(B)(0.48 IN. x 155.5 IN.)
(C)Refer to "IMPORTANT" message.
(D)(Series I)
(E)(Series II)
(F)(Used to seal the door frame?items #7 and 8?to the cab.)
(G)(Used when door is removed.)
(H)Inside latch and hardware is located on Swing-Out Door Latches page.
(I)8001 (14603)
(J)(not shown)

N:Old $\xleftarrow[\text{No}]{\text{Yes}}$ New, Q:Old $\xleftarrow[\text{Yes}]{\text{No}}$ New, R:Old $\xleftarrow[\text{Yes}]{\text{Yes}}$ New, S:Old $\xleftarrow[\text{No}]{\text{No}}$ New, W:Add, Z:Discontinued, F:Interchangeable by set, K:Q'ty Change

Copyright (C) 2017 YANMAR CO., LTD. All RightsReserved.

Fig.11. SWING-OUT DOOR LATCHES(SERIES I, II, AND III)

(A)=T210-1(VERSION C
(B)=
(C)=
(D)=
(E)=
(F)=

SERIES I DOOR LATCH

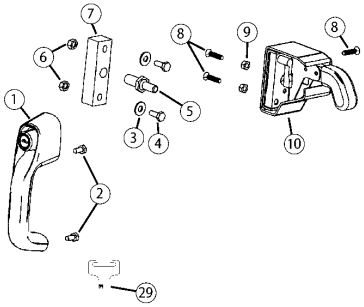

SERIES II and III DOOR LATCH

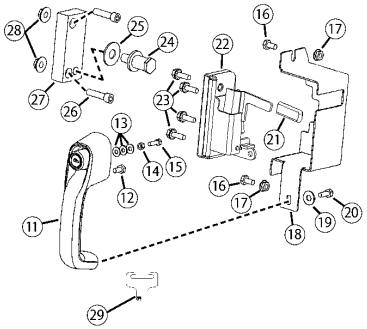

No.	Lev.	Parts No.	Description	Q'ty (A)	(B)	(C)	(D)	(E)	(F)	I	R
1	1	172551-04780	HANDLE	1							
2	1	172551-10450	SCREW	2							
3	1	172551-10360	WASHER	1							
4	1	172551-09460	SCREW	2							
5	1	172551-02330	STRIKER, CAM LATCH	1							
6	1	172559-00650	NUT	1							
7	1	172551-05680	MOUNT, STRIKER	1							
8	1	172551-10200	SCREW	3							
9	1	172551-10080	NUT	2							
10	1	172551-01970	LATCH, CAM	1							
11	1	172551-04780	HANDLE	1							
12	1	172551-10450	SCREW	1							
13	1	172551-09660	WASHER	3							
14	1	172551-10470	NUT	1							
15	1	172552-15480	SCREW	1							
16	1	172551-09590	SCREW	2							
17	1	172216-10880	NUT	2							
18	1	172552-15460	COVER	1							
19	1	172551-10360	WASHER	1							
20	1	172551-10510	SCREW	1							
21	1	172552-15470	GRIP, LATCH HANDLE	1							
22	1	172552-15450	LATCH	1							
23	1	172559-00360	SCREW	4							
24	1	172552-15430	STRIKER	1							
25	1	172215-03340	WASHER	1							
26	1	172551-09900	SCREW	2							
27	1	172552-15440	MOUNT, STRIKER	1							
28	1	172551-02760	NUT	2							
29	1	172551-07990	KEY	1							1

Remarks
(1)(not included with handle)

N:Old $\xleftrightarrow[\text{No}]{\text{Yes}}$ New, Q:Old $\xleftrightarrow[\text{Yes}]{\text{No}}$ New, R:Old $\xleftrightarrow[\text{Yes}]{\text{Yes}}$ New, S:Old $\xleftrightarrow[\text{No}]{\text{No}}$ New, W:Add, Z:Discontinued, F:Interchangeable by set, K:Q'ty Change

Copyright (C) 2017 YANMAR CO., LTD. All RightsReserved.

Fig.12. CAB DOOR - FOLD-UP(TOP DOOR ASSEMBLY)

(A)=T210-1(VERSION C
(B)=
(C)=
(D)=
(E)=
(F)=

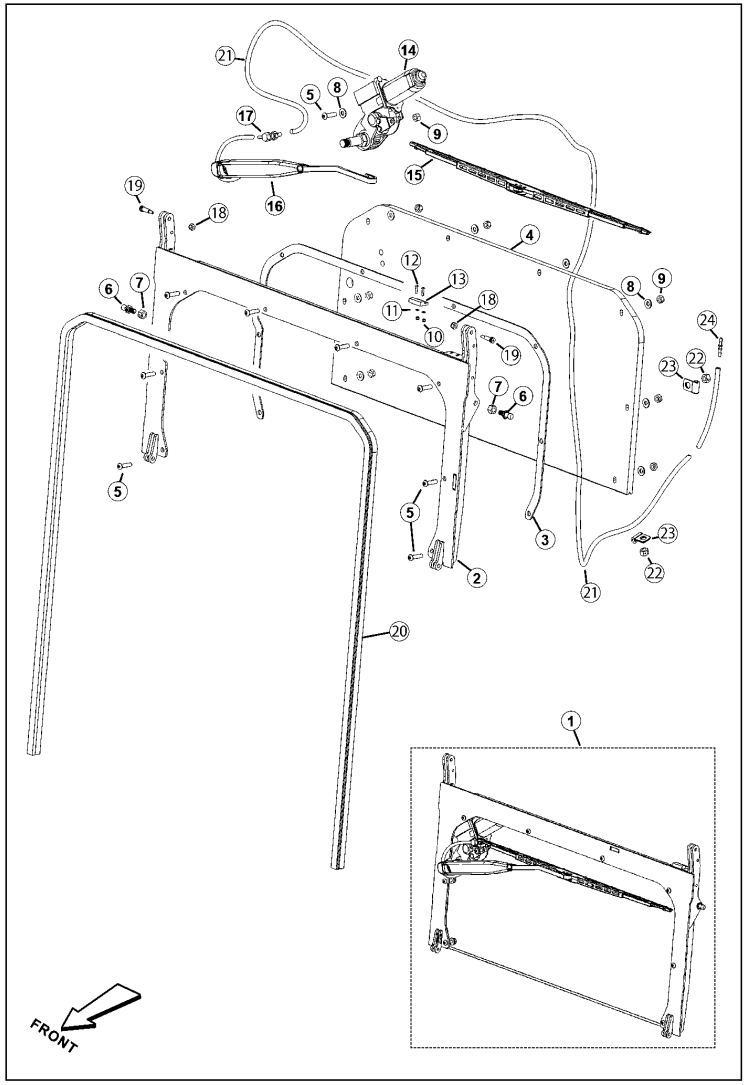

No.	Lev.	Parts No.	Description	Q'ty (A)	(B)	(C)	(D)	(E)	(F)	I	R
1	1	172559-00690	ASSEMBLY, TOP DOOR	1							1
2	1	172559-00680	DOOR FRAME, TOP	1							
3	1	172559-00740	SEAL, TOP WINDOW	1							
4	1	172559-00730	WINDOW, TOP DOOR	1							
5	1	172559-00770	BHSCS 1/4X1 CZB	9							
6	1	172551-10700	STUD, BALL	2							
7	1	172559-00450	NUT	2							
8	1	172551-09890	WASHER	9							
9	1	172559-00780	NUT	9							
10	1	172551-10020	NUT	2							
11	1	172559-00640	LW #5 RZY	2							
12	1	172551-10000	SCREW	2							
13	1	172551-02480	MAGNET,SWITCH	1							
14	1	172559-00760	WIPER MOTOR	1							2
15	1	172559-00710	WIPER BLADE, 24	1							
16	1	172559-00720	ARM,WIPER	1							3
17	1	172552-15420	SCREW	1							
18	1	172559-00790	NUT	2							
19	1	172559-00750	SCREW	2							
20	1	172559-00700	SEAL,DOOR	1							
21	1	172559-00390	HOSE,ROPS FRONTWIPER	1							
22	1	172559-00450	NUT	4							
23	1	172559-00440	CLAMP	4							
24	1	172551-00850	CONNECTOR,TUBING	1							

Remarks
(1)(includes items 2-9, 14-17)
(2)(includes shaft nut, washer, and seal)
(3)(with integrated washer nozzle)

N:Old ←Yes/No→ New, Q:Old ←No/Yes→ New, R:Old ←Yes/Yes→ New, S:Old ←No/No→ New, W:Add, Z:Discontinued, F:Interchangeable by set, K:Q'ty Change

Copyright (C) 2017 YANMAR CO., LTD. All RightsReserved.

Fig.13. CAB DOOR - FOLD-UP(BOTTOM DOOR ASSEMBLY)

(A)=T210-1(VERSION C
(B)=
(C)=
(D)=
(E)=
(F)=

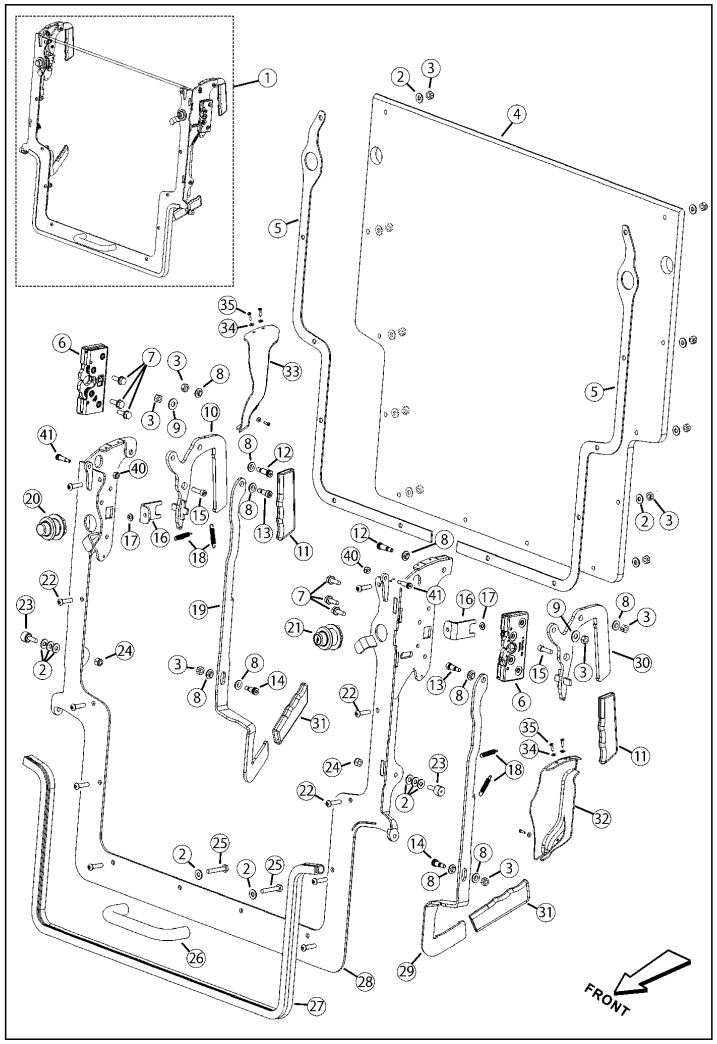

No.	Lev.	Parts No.	Description	Q'ty (A)	(B)	(C)	(D)	(E)	(F)	I	R
1	1	172559-00810	BOTTOM DOOR ASSY	1							1
2	1	172551-09890	WASHER	18							
3	1	172559-00780	NUT	16							
4	1	172559-00870	WINDOW, BOTTOM DOOR	1							
5	1	172559-00900	SEAL, BOTTOM DOOR	2							
6	1	172559-00850	LATCH	2							
7	1	172559-00360	SCREW	6							
8	1	172559-00980	SPACER	10							
9	1	172559-00880	WASHER, NYLON 5/16	2							
10	1	172559-00910	TRIGGER	1							2
11	1	172559-00950	HANDLE GRIP	2							
12	1	172559-01000	SCREW	2							
13	1	172551-08550	SHOULDER BOLT	2							
14	1	172559-00990	SCREW	2							
15	1	172559-01040	SCREW	2							
16	1	172559-00860	EXTENSION BUTTON	2							
17	1	172216-09840	WASHER	2							
18	1	172559-00840	SPRING	4							
19	1	172559-00930	PULL HANDLE	1							3
20	1	172559-00890	PUSH BUTTON, NO LOCK	1							
21	1	172559-00800	PUSH BUTTON, LOCK	1							
22	1	172559-00770	BHCS 1/4X1 CZB	10							
23	1	172559-01030	BEARING	2							
24	1	172216-00540	NUT	2							
25	1	172551-09680	SCREW	2							
26	1	172559-01020	PULL HANDLE	1							
27	1	172559-00830	SEAL, BOOR 0.6X50.0	1							
28	1	172559-00820	FRAME, BOTTOM DOOR	1							
29	1	172559-00920	PULL HANDLE	1							4
30	1	172559-00970	TRIGGER	1							4
31	1	172559-01010	HANDLE GRIP	2							5
32	1	172559-00960	COVER, LH	1							
33	1	172559-00940	COVER, RH	1							
34	1	172215-02840	WASHER	6							
35	1	172551-10180	SCREW	6							
40	1	172559-00790	NUT	2							
41	1	172559-00750	SCREW	2							

Remarks
(1)(includes 2-35)
(2)(RIGHT)
(3)(RIGHT)
(4)(LEFT)
(5)(short)

N:Old $\xleftrightarrow[\text{No}]{\text{Yes}}$ New, Q:Old $\xleftrightarrow[\text{Yes}]{\text{No}}$ New, R:Old $\xleftrightarrow[\text{Yes}]{\text{Yes}}$ New, S:Old $\xleftrightarrow[\text{No}]{\text{No}}$ New, W:Add, Z:Discontinued, F:Interchangeable by set, K:Q'ty Change

Copyright (C) 2017 YANMAR CO., LTD. All RightsReserved.

Fig.14. CAB DOOR - FOLD-UP(DOOR FRAME ASSEMBLY)

(A)=T210-1(VERSION C
(B)=
(C)=
(D)=
(E)=
(F)=

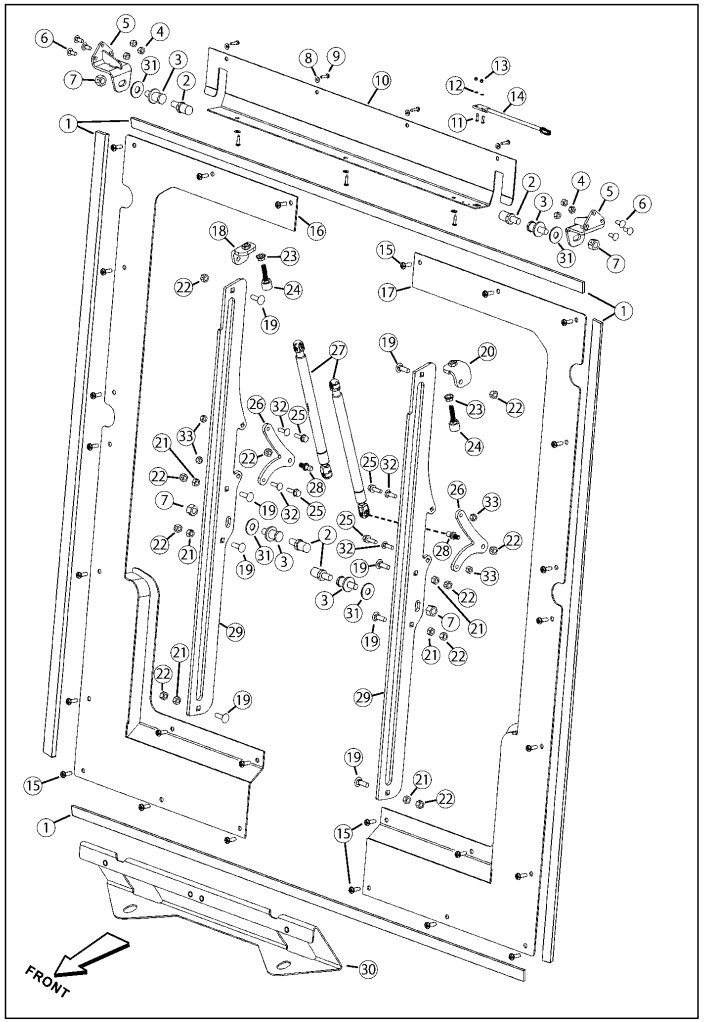

No.	Lev.	Parts No.	Description	Q'ty (A)	(B)	(C)	(D)	(E)	(F)	I	R
1	1	172552-15340	SEAL, FOAM	1							
2	1	172559-01160	STRIKE, DOOR LATCH	4							1
3	1	172559-01180	STRIKE, DOOR LATCH	4							2
4	1	172559-00780	NUT	6							
5	1	172559-01100	BRACKET, STRIKER	2							
6	1	172216-03170	BOLT	6							
7	1	172559-01170	NUT	4							
8	1	172215-02840	WASHER	7							
9	1	172551-10180	SCREW	7							
10	1	172559-01060	COVER, DOOR HEADER	1							
11	1	172551-10000	SCREW	2							
12	1	172559-00640	LW #5 RZY	2							
13	1	172551-10020	NUT	2							
14	1	172551-06690	SWITCH, PROXIMITY	1							
15	1	172551-10010	SCREW	32							
16	1	172559-01050	DOOR FRAME	1							3
17	1	172559-01090	DOOR FRAME	1							4
18	1	172559-01150	MOUNT, BUMPER	1							3
19	1	172215-02820	BOLT	8							
20	1	172559-01140	MOUNT, BUMPER	1							4
21	1	172215-03230	NUT	6							
22	1	172559-00450	NUT	10							
23	1	172215-06620	NUT	2							
24	1	172559-01130	BUMPER	2							
25	1	172559-00360	SCREW	4							
26	1	172559-01110	MOUNT, GAS SHOCK	2							5
27	1	172559-01120	CYLINDER,GAS	2							
28	1	172551-10700	STUD, BALL	2							
29	1	172559-01070	TRACK, DOOR	2							
30	1	172559-01080	BRACE,DOOR FRAME	1							
31	1	172215-03340	WASHER	4							
32	1	172218-05870	BOLT	4							6
33	1	172559-00780	NUT	4							6

Remarks
(1)(late series)
(2)(early series)
(3)(RIGHT)
(4)(LEFT)
(5)(replaces early-series mount, which used items 32 and 33; if replacing, order item 25)
(6)(used with early-series mount)

N:Old ◄Yes/No► New, Q:Old ◄No/Yes► New, R:Old ◄Yes/Yes► New, S:Old ◄No/No► New, W:Add, Z:Discontinued, F:Interchangeable by set, K:Q'ty Change

Copyright (C) 2017 YANMAR CO., LTD. All RightsReserved.

Fig.15. REAR WINDOW WITH WIPER

(A)=T210-1(VERSION C
(B)=
(C)=
(D)=
(E)=
(F)=

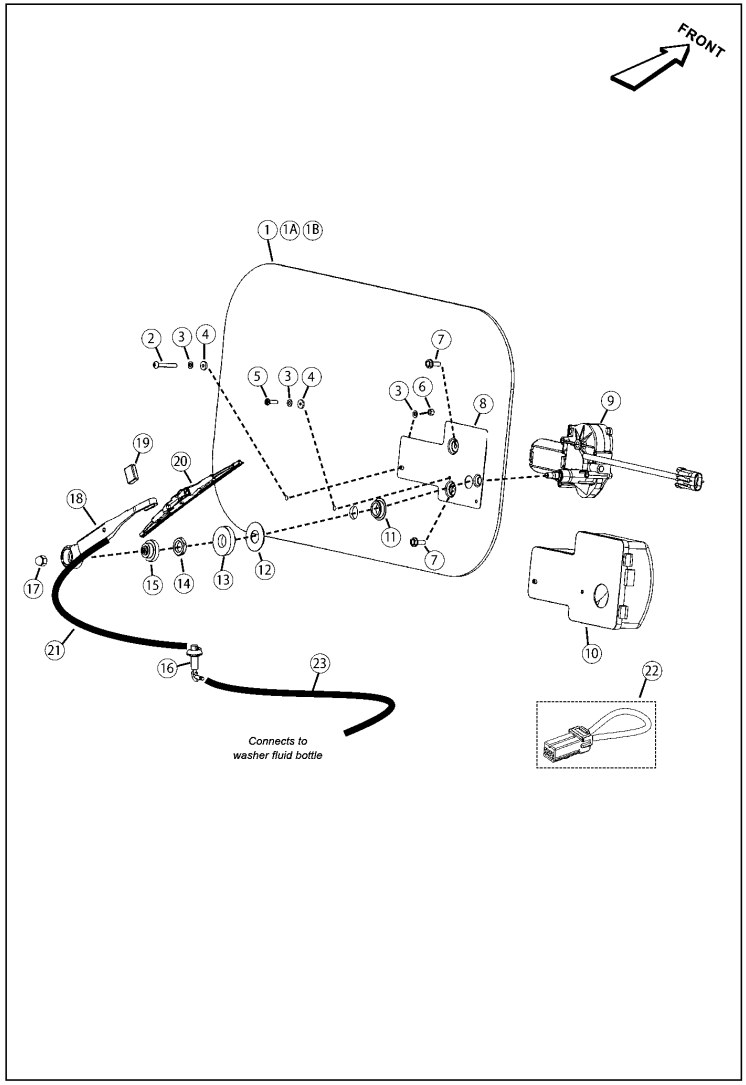

No.	Lev.	Parts No.	Description	Q'ty (A)	(B)	(C)	(D)	(E)	(F)	I	R
1	1	172551-02820	WINDOW	1							1
1A	1	172551-02870	WEATHER STRIP	1							2
1B	1	172551-02940	RIPCORD	1							2
2	1	172551-10230	SCREW	1							
3	1	172551-10220	WASHER	3							
4	1	172551-03210	WASHER	2							
5	1	172551-10660	SCREW	1							
6	1	172551-10470	NUT	1							
7	1	172551-03190	SCREW	2							
8	1	172551-03080	PLATE,WIPER MOTOR	1							
9	1	172559-01200	MOTOR REAR WIPER	1							
10	1	172551-10610	COVER, WIPER MOTOR	1							
11	1	172551-10640	TOWER SEAL, WIPER	1							
12	1	172551-03180	WASHER	1							
13	1	172216-17040	SPACER, SHAFT	1							
14	1	172551-10620	NUT	1							
15	1	172551-10650	RAIN SHIELD	1							
16	1	172551-03200	FITTING,WIPER HOSE	1							
17	1	172551-10630	NUT	1							
18	1	172551-03160	ARM, WIPER	1							
19	1	172551-03100	HEAD, SPRITZER	1							3
20	1	172551-03150	BLADE, WIPER	1							
21	1	172551-08900	HOSE	1							
22	1	172551-08990	HARNESS	1							
23	1	172559-01190	HOSE,WASHER	1							

Remarks
(1)(used with rear wiper option)
(2)(not shown)
(3)(spray nozzle)

N:Old $\xleftarrow[\text{No}]{\text{Yes}}$ New, Q:Old $\xleftarrow[\text{Yes}]{\text{No}}$ New, R:Old $\xleftarrow[\text{Yes}]{\text{Yes}}$ New, S:Old $\xleftarrow[\text{No}]{\text{No}}$ New, W:Add, Z:Discontinued, F:Interchangeable by set, K:Q'ty Change

Copyright (C) 2017 YANMAR CO., LTD. All RightsReserved.

Fig.16. WINDOW WASHER(LATE SERIES)

(A)=T210-1(VERSION C
(B)=
(C)=
(D)=
(E)=
(F)=

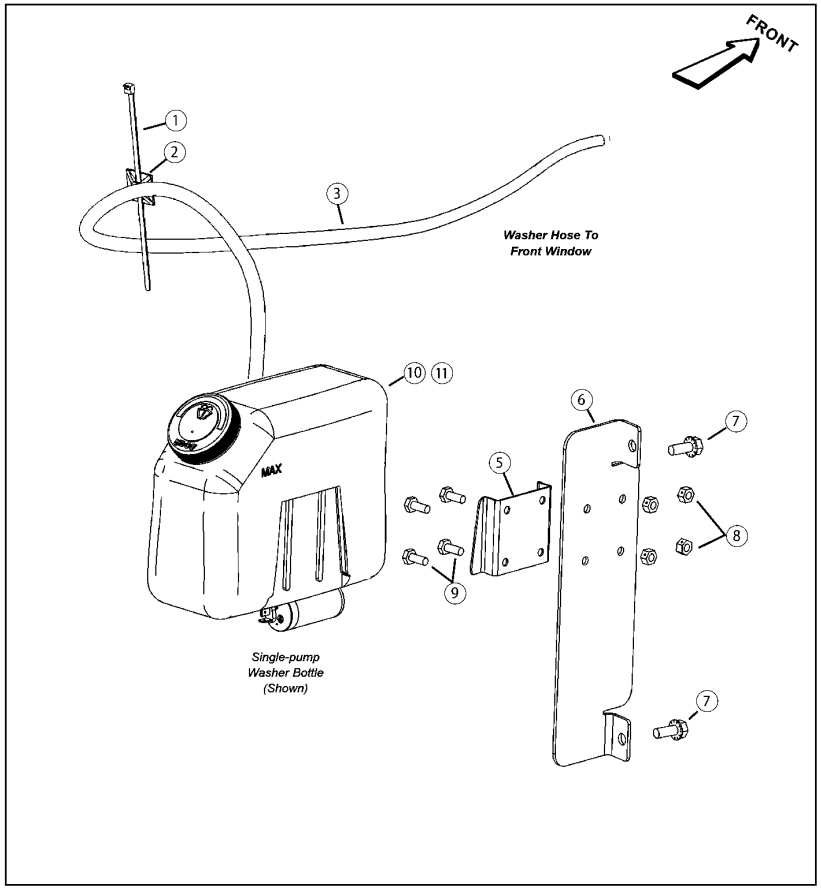

No.	Lev.	Parts No.	Description	Q'ty (A)	(B)	(C)	(D)	(E)	(F)	I	R
1	1	172559-00430	TIE, CABLE	1							
2	1	172551-04810	MOUNT, CABLE TIE	1							
3	1	172559-01210	HOSE,WASHER	1							
5	1	172551-04110	BRACKET	1							
6	1	172552-15490	BRACKET	1							
7	1	172559-01220	SCREW	2							
8	1	172559-00780	NUT	4							
9	1	172551-09710	SCREW	4							
10	1	172551-08980	PUMP,SINGLE	1							
11	1	172551-04420	PUMP,DUAL	1							

N:Old $\frac{\text{Yes}}{\text{No}}$ New, Q:Old $\frac{\text{No}}{\text{Yes}}$ New, R:Old $\frac{\text{Yes}}{\text{Yes}}$ New, S:Old $\frac{\text{No}}{\text{No}}$ New, W:Add, Z:Discontinued, F:Interchangeable by set, K:Q'ty Change

Copyright (C) 2017 YANMAR CO., LTD. All RightsReserved.

Fig.17. WINDOW WASHER(EARLY SERIES)

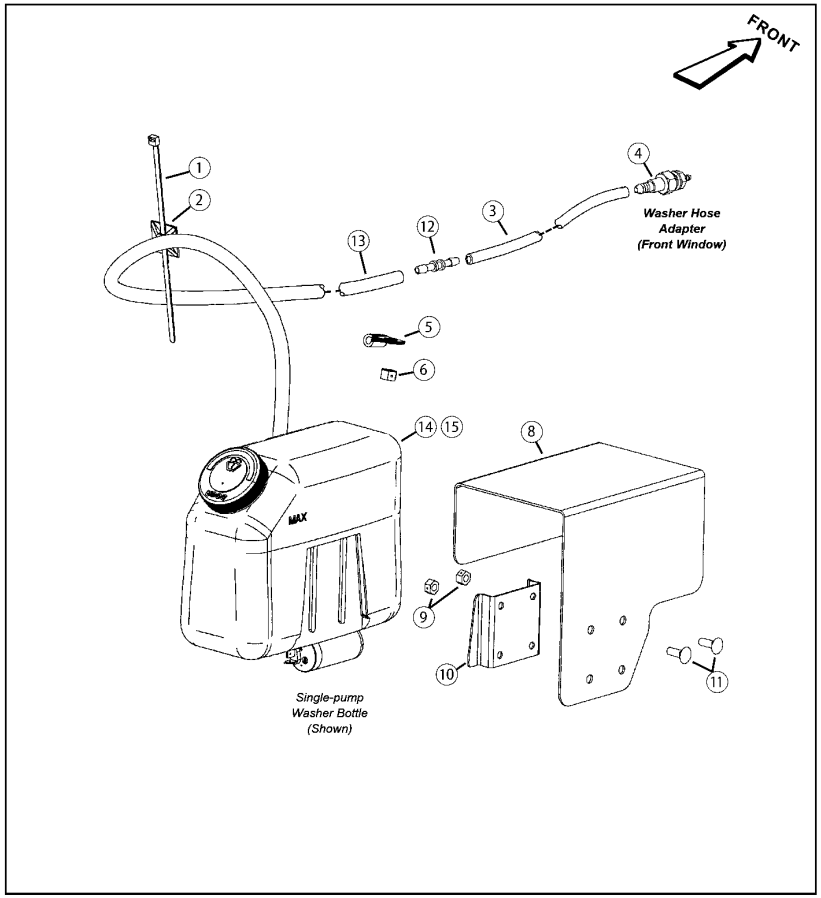

(A)=T210-1(VERSION C
(B)=
(C)=
(D)=
(E)=
(F)=

No.	Lev.	Parts No.	Description	Q'ty (A)	(B)	(C)	(D)	(E)	(F)	I	R
1	1	172559-00430	TIE, CABLE	2							
2	1	172551-04810	MOUNT, CABLE TIE	2							
3	1	172551-06520	HOSE	1							
4	1	172552-15420	SCREW	1							
5	1	172559-00440	CLAMP	3							
6	1	172559-00450	NUT	3							
8	1	172551-06440	HEAT SHIELD	1							
9	1	172559-00780	NUT	2							
10	1	172551-04110	BRACKET	1							
11	1	172551-09830	BOLT	2							
12	1	172551-00850	CONNECTOR,TUBING	1							
13	1	172551-08930	HOSE	1							
14	1	172551-08980	PUMP,SINGLE	1							
15	1	172551-04420	PUMP,DUAL	1							

N:Old $\xleftarrow[\text{No}]{\text{Yes}}$ New, Q:Old $\xleftarrow[\text{Yes}]{\text{No}}$ New, R:Old $\xleftarrow[\text{Yes}]{\text{Yes}}$ New, S:Old $\xleftarrow[\text{No}]{\text{No}}$ New, W:Add, Z:Discontinued, F:Interchangeable by set, K:Q'ty Change

Copyright (C) 2017 YANMAR CO., LTD. All RightsReserved.

Fig.18. SIDE WINDOWS

(A)=T210-1(VERSION C
(B)=
(C)=
(D)=
(E)=
(F)=

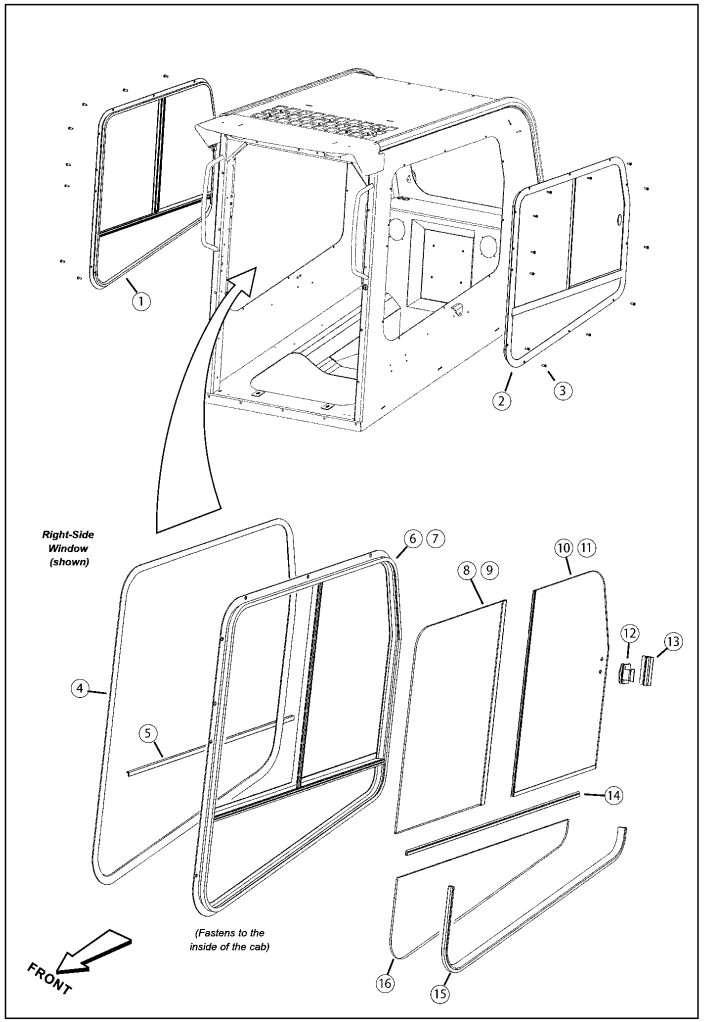

No.	Lev.	Parts No.	Description	Q'ty (A)	(B)	(C)	(D)	(E)	(F)	I	R
1	1	172551-03691	WINDOW ASSY	1							1
2	1	172551-03701	WINDOW ASSY	1							2
3	1	172551-10010	SCREW	24							
4	1	172559-01230	SEAL, WINDOW	2							3
5	1	172551-07610	SEAL	2							3
6	1	172551-07590	FRAME, WINDOW	1							4
7	1	172551-07580	FRAME, WINDOW	1							5
8	1	172551-07650	WINDOW	1							4
9	1	172551-07640	WINDOW	1							5
10	1	172551-07630	WINDOW	1							4
11	1	172551-07620	WINDOW	1							5
12	1	172551-03060	STRIKER	2							6
13	1	172551-03070	LATCH ASSY	2							6
14	1	172551-07670	RAIL, PVC SLIDER	2							6
15	1	172551-07600	SEAL	2							6
16	1	172551-07660	WINDOW	2							6

Remarks
(1)(RIGHT)(includes one each of items 4-13)
(2)(LEFT)(includes one each of items 4-13)
(3)(one per side)
(4)(right side)
(5)(left side) - (not shown in illustration)
(6)(one per side)

N:Old $\xleftrightarrow[\text{No}]{\text{Yes}}$ New, Q:Old $\xleftrightarrow[\text{Yes}]{\text{No}}$ New, R:Old $\xleftrightarrow[\text{Yes}]{\text{Yes}}$ New, S:Old $\xleftrightarrow[\text{No}]{\text{No}}$ New, W:Add, Z:Discontinued, F:Interchangeable by set, K:Q'ty Change

Copyright (C) 2017 YANMAR CO., LTD. All RightsReserved.

Fig.19. FLOOR PAN / FOOT THROTTLE(LATE SERIES)

(A)=T210-1(VERSION C
(B)=
(C)=
(D)=
(E)=
(F)=

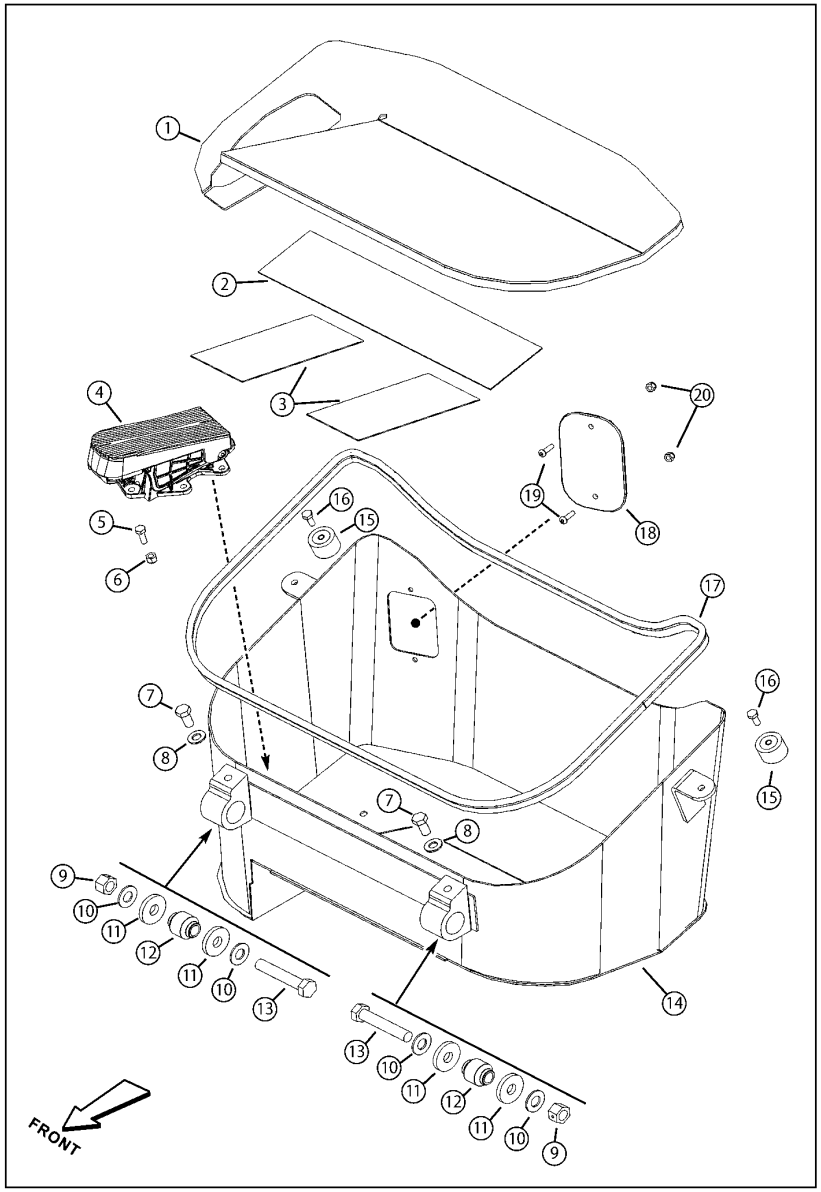

No.	Lev.	Parts No.	Description	Q'ty (A)	(B)	(C)	(D)	(E)	(F)	I	R
1	1	172559-01250	FLOOR MAT, STEEL POD	1							
2	1	172551-08740	NON-SLIP	1							
3	1	172551-08730	NON-SLIP	2							
4	1	172551-03760	THROTTLE, FOOT	1							
5	1	172551-09850	SCREW	5							
6	1	172559-01280	LOCK NUT	5							
7	1	172551-09570	SCREW	2							
8	1	172559-01270	WASHER	2							
9	1	172559-00170	NUT	2							
10	1	172551-09960	WASHER	4							
11	1	172551-03980	WASHER	4							
12	1	172551-03970	ISOLATOR	2							
13	1	172551-09740	SCREW	2							
14	1	172559-01240	POD, FOOT	1							
15	1	172551-05970	ISOLATOR	2							
16	1	172551-09510	SCREW	2							
17	1	172551-06200	BULBSEAL	1							
18	1	172559-01260	COVER, WINDOW	1							
19	1	172559-01290	BHSCS 1/4X7/8 C8 OCG	2							
20	1	172559-00510	NUT	2							

N:Old $\xleftrightarrow[\text{No}]{\text{Yes}}$ New, Q:Old $\xleftrightarrow[\text{Yes}]{\text{No}}$ New, R:Old $\xleftrightarrow[\text{Yes}]{\text{Yes}}$ New, S:Old $\xleftrightarrow[\text{No}]{\text{No}}$ New, W:Add, Z:Discontinued, F:Interchangeable by set, K:Q'ty Change

Copyright (C) 2017 YANMAR CO., LTD. All RightsReserved.

Fig.20. FLOOR PAN / FOOT THROTTLE(EARLY SERIES)

(A)=T210-1(VERSION C
(B)=
(C)=
(D)=
(E)=
(F)=

No.	Lev.	Parts No.	Description	Q'ty (A)	(B)	(C)	(D)	(E)	(F)	I	R
1	1	172551-06230	FLOOR MAT	1							1
2	1	172551-06200	BULBSEAL	1							
3	1	172551-09510	SCREW	2							
4	1	172551-05970	ISOLATOR	2							
5	1	172551-08260	POD, FOOT	1							
6	1	172551-09740	SCREW	2							
7	1	172551-09960	WASHER	4							
8	1	172551-03980	WASHER	4							
9	1	172551-03970	ISOLATOR	2							
10	1	172559-00170	NUT	2							
11	1	172551-09950	WASHER	2							
12	1	172551-09560	SCREW	2							
13	1	172559-01280	LOCK NUT	5							
14	1	172551-09850	SCREW	5							
15	1	172551-03760	THROTTLE, FOOT	1							
16	1	172551-08730	NON-SLIP	2							
17	1	172551-08740	NON-SLIP	1							

Remarks
(1)(Up to three floor mats can be stacked on top of each other to adjust the floor height for the operator.)

N:Old $\xleftarrow[\text{No}]{\text{Yes}}$ New, Q:Old $\xleftarrow[\text{Yes}]{\text{No}}$ New, R:Old $\xleftarrow[\text{Yes}]{\text{Yes}}$ New, S:Old $\xleftarrow[\text{No}]{\text{No}}$ New, W:Add, Z:Discontinued, F:Interchangeable by set, K:Q'ty Change

Copyright (C) 2017 YANMAR CO., LTD. All RightsReserved.

Fig.21. SEAT

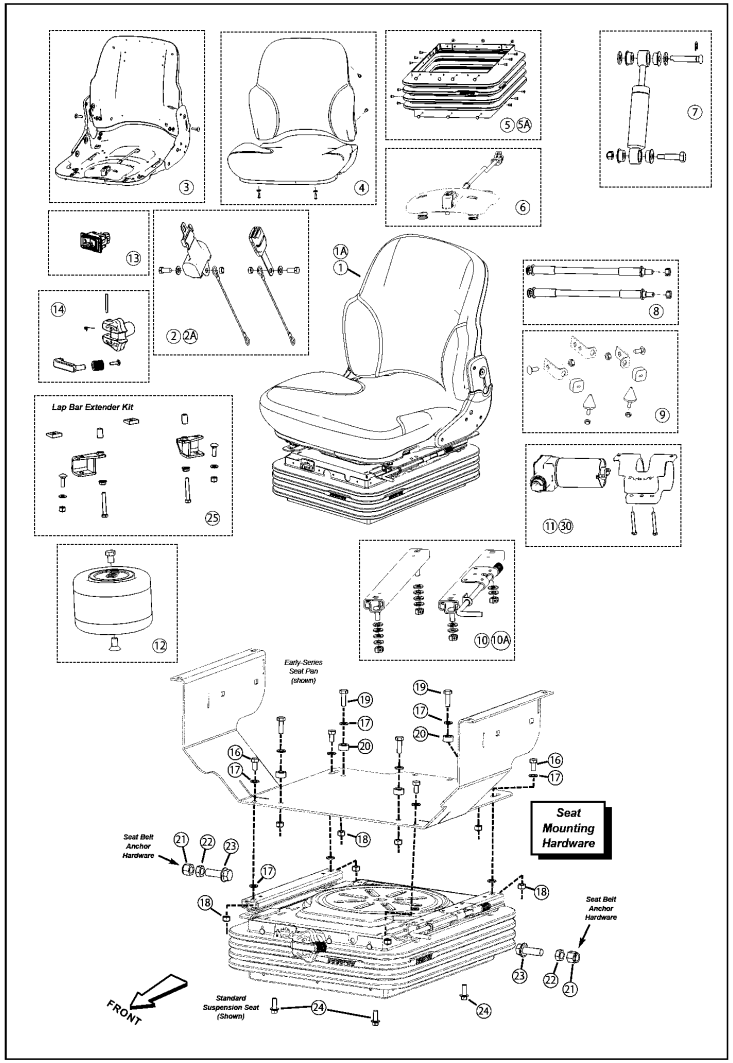

(A)=T210-1(VERSION C
(B)=
(C)=
(D)=
(E)=
(F)=

No.	Lev.	Parts No.	Description	Q'ty (A)	(B)	(C)	(D)	(E)	(F)	I	R
1	1	172551-06280	SEAT, SUSPENSION	1							1
1A	1	172551-06320	SEAT, SUSPENSION	1							2
2	1	172551-08010	SEAT BELT KIT	1							3
2A	1	172216-11090	BELT ASSY, SEAT	1							4
3	1	172551-08020	SEAT TOP KIT	1							
4	1	172551-08050	SEAT CUSHON KIT	1							5
5	1	172551-08120	BOOT KIT	1							6
5A	1	172551-08100	BOOT KIT	1							7
6	1	172551-08040	SEAT SWITCH KIT	1							8
7	1	172551-08090	SHOCK KIT	1							
8	1	172551-08110	BEARING SHAFT KIT	1							
9	1	172551-08060	BUMPERS KIT	1							
10	1	172551-08030	SLIDES KIT	1							6
10A	1	172551-08130	SLIDES KIT	1							7
11	1	172551-08070	CMPRESSOR KIT	1							7
12	1	172551-08080	AIR SPRING KIT	1							7
13	1	172551-08140	SWITCH	1							7
14	1	172551-08150	KIT,KNOB SEAT	1							9
16	1	172551-10460	SCREW	4							
17	1	172551-10500	WASHER	12							
18	1	172551-10150	NUT	8							
19	1	172551-10490	SCREW	4							
20	1	172551-08750	SPACER	4							
21	1	172559-01310	NUT	2							
22	1	172551-10340	NUT	2							
23	1	172559-01320	SCREW	2							
24	1	172551-10130	SCREW	4							
25	1	172552-15640	ELEVATION KIT, BAR	1							A
30	1	172559-01300	WIRE HARNESS,COMP	1							B

Remarks
(1)Mechanical (standard) (2)Air (3)(standard) (4)(option) (5)(includes both seat cushions) (6)(mechanical suspensio
(7)(air suspension seat only) (8)(w/ harness) (9)(mechanical suspension seat only)
(A)(Provides additional room between seat and lap bar for operator.)
(B)(not shown) (not included with item #11)

N:Old $\frac{\text{Yes}}{\text{No}}$ New, Q:Old $\frac{\text{No}}{\text{Yes}}$ New, R:Old $\frac{\text{Yes}}{\text{Yes}}$ New, S:Old $\frac{\text{No}}{\text{No}}$ New, W:Add, Z:Discontinued, F:Interchangeable by set, K:Q'ty Change

Copyright (C) 2017 YANMAR CO., LTD. All RightsReserved.

Fig.22. CONSOLE - RIGHT-SIDE(LATE AND INTERMEDIATE SERIES)

(A)=T210-1(VERSION C (D)=
(B)= (E)=
(C)= (F)=

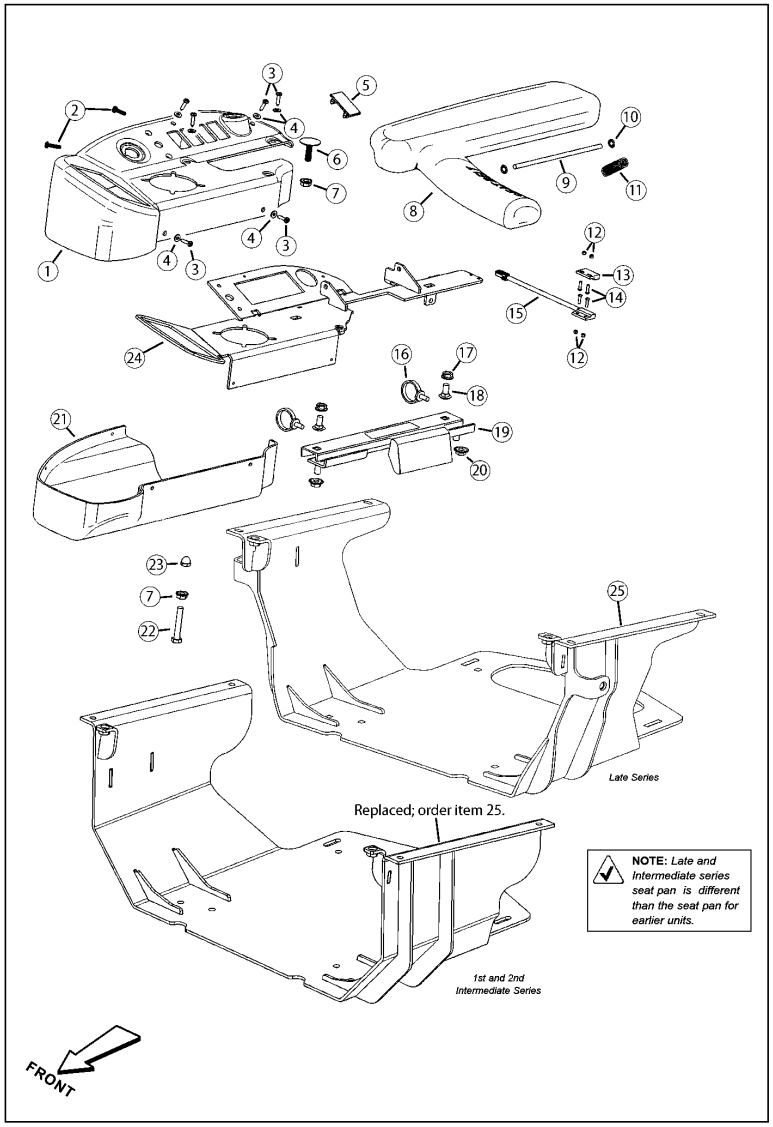

No.	Lev.	Parts No.	Description	Q'ty (A)	(B)	(C)	(D)	(E)	(F)	I	R
1	1	172552-15600	COVER, JOYSTICK RH	1							
2	1	172551-04690	SCREW	2							
3	1	172551-10180	SCREW	6							
4	1	172215-02840	WASHER	6							
5	1	172551-03050	PLUG	1							
6	1	172552-15590	STOP, ARM BAR	1							
7	1	172215-06620	NUT	2							
8	1	172551-04730	ARM REST	1							1
9	1	172551-04390	BAR	1							
10	1	172551-04400	KEEPER	2							
11	1	172551-06670	SPRING	1							
12	1	172551-10020	NUT	4							
13	1	172551-02480	MAGNET,SWITCH	1							
14	1	172551-10000	SCREW	4							
15	1	172551-06690	SWITCH, PROXIMITY	1							
16	1	172551-04800	TIE,CABLE	2							
17	1	172551-02760	NUT	2							
18	1	172551-09720	BOLT	2							
19	1	172551-04130	SLIDE, ARM REST	1							
20	1	172559-01340	NUT	2							
21	1	172551-08430	COVER	1							
22	1	172552-15610	BOLT	1							
23	1	172552-15570	CAP, SLIDER	1							
24	1	172552-15580	WELDMENT, MOUNT	1							
25	1	172559-01330	WELDMENT, SEAT PAN	1							

Remarks
(1)(right) -Refer to "SEAT" page for optional increased seating room for operator.

N:Old $\frac{\text{Yes}}{\text{No}}$ New, Q:Old $\frac{\text{No}}{\text{Yes}}$ New, R:Old $\frac{\text{Yes}}{\text{Yes}}$ New, S:Old $\frac{\text{No}}{\text{No}}$ New, W:Add, Z:Discontinued, F:Interchangeable by set, K:Q'ty Change

Copyright (C) 2017 YANMAR CO., LTD. All RightsReserved.

Fig.23. CONSOLE - LEFT-SIDE(LATE SERIES)

(A)=T210-1(VERSION C
(B)=
(C)=
(D)=
(E)=
(F)=

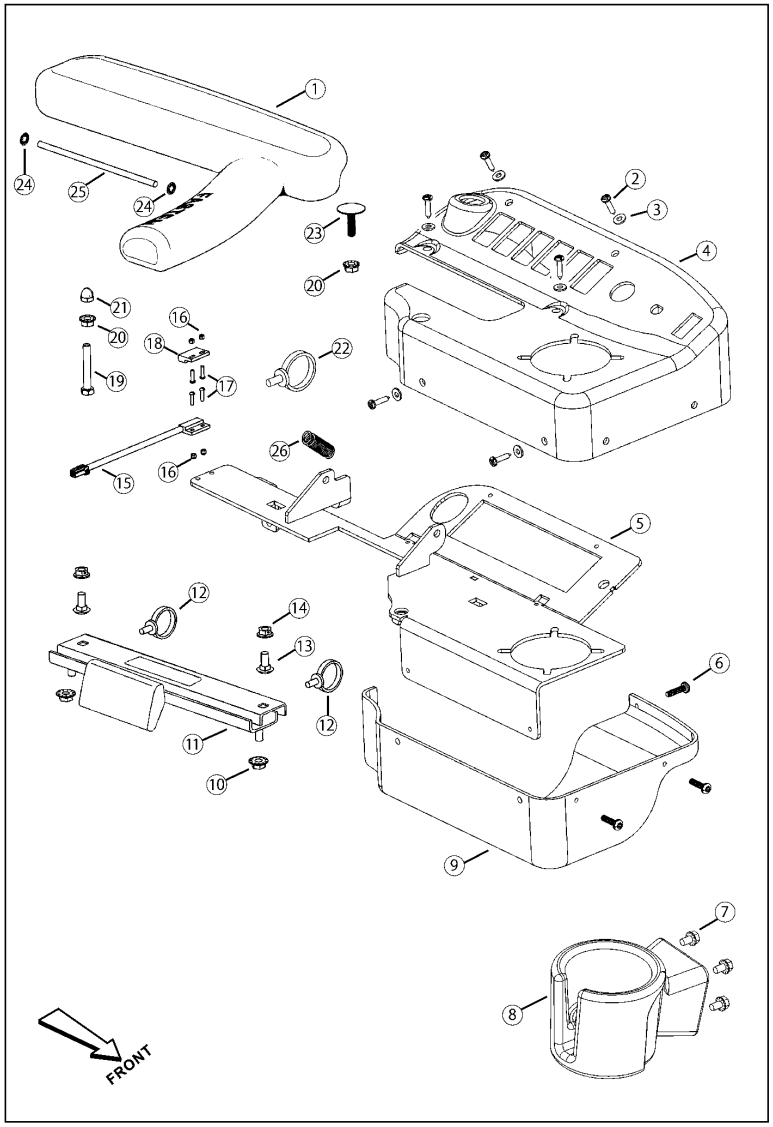

No.	Lev.	Parts No.	Description	Q'ty (A)	(B)	(C)	(D)	(E)	(F)	I	R
1	1	172551-04890	ARM REST	1							1
2	1	172551-10180	SCREW	6							
3	1	172215-02840	WASHER	6							
4	1	172559-01350	COVER JOYSTICK LH	1							
5	1	172559-01360	MOUNT JOYSTICK LH	1							
6	1	172551-04690	SCREW	3							
7	1	172216-17380	SCREW	3							
8	1	172559-01380	CUP HOLDER	1							
9	1	172559-01370	EH, COVER	1							
10	1	172559-01340	NUT	2							
11	1	172551-04120	SLIDE, ARM REST	1							
12	1	172551-04800	TIE,CABLE	2							
13	1	172551-09720	BOLT	2							
14	1	172551-02760	NUT	2							
15	1	172551-06690	SWITCH, PROXIMITY	1							
16	1	172551-10020	NUT	4							
17	1	172551-10000	SCREW	4							
18	1	172551-02480	MAGNET,SWITCH	1							
19	1	172552-15610	BOLT	1							
20	1	172215-06620	NUT	2							
21	1	172552-15570	CAP, SLIDER	1							
22	1	172551-04800	TIE,CABLE	1							
23	1	172552-15590	STOP, ARM BAR	1							
24	1	172551-04400	KEEPER	2							
25	1	172551-04390	BAR	1							
26	1	172551-06670	SPRING	1							

Remarks
(1)(left) - Refer to "SEAT" page for optionalincreased seating room for operator.

N:Old ←Yes/No→ New, Q:Old ←No/Yes→ New, R:Old ←Yes/Yes→ New, S:Old ←No/No→ New, W:Add, Z:Discontinued, F:Interchangeable by set, K:Q'ty Change

Copyright (C) 2017 YANMAR CO., LTD. All RightsReserved.

Fig.24. CONSOLE - LEFT-SIDE(1ST AND 2ND INTERMEDIATE SERIES)

(A)=T210-1(VERSION C (D)=
(B)= (E)=
(C)= (F)=

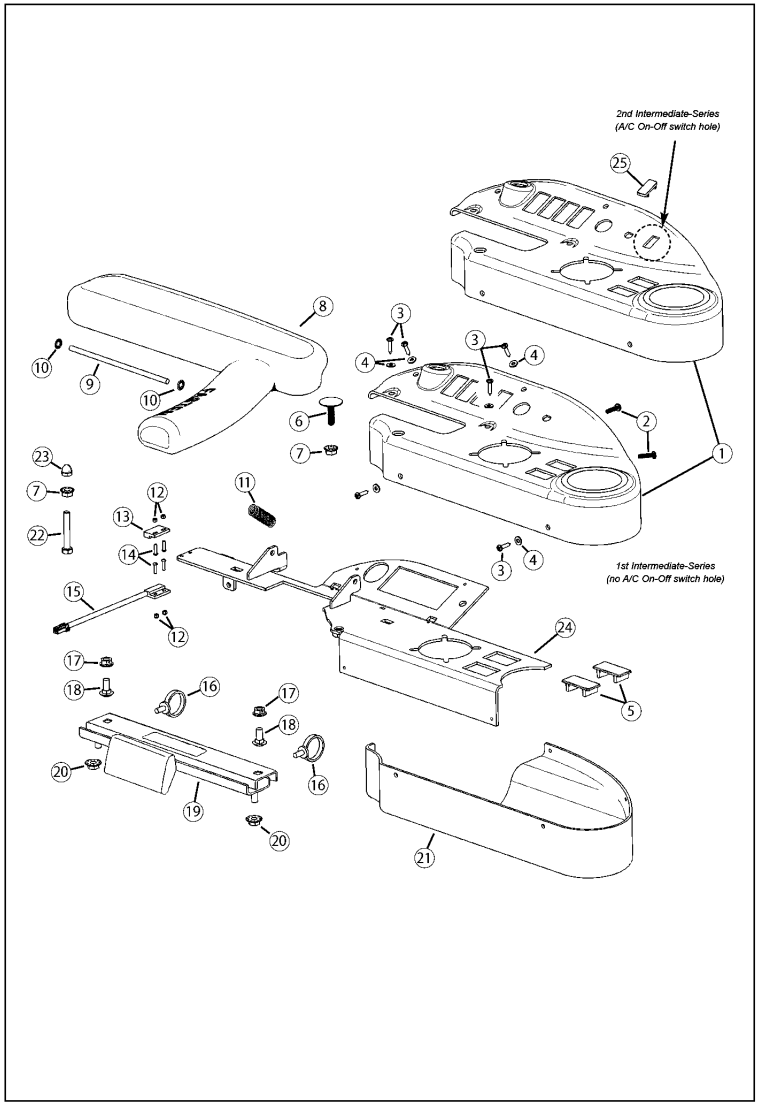

No.	Lev.	Parts No.	Description	Q'ty (A)	(B)	(C)	(D)	(E)	(F)	I	R
1	1	172552-15630	COVER, JOYSTICK LH	1							
2	1	172551-04690	SCREW	2							
3	1	172551-10180	SCREW	6							
4	1	172215-02840	WASHER	6							
5	1	172551-03050	PLUG	1							
6	1	172552-15590	STOP, ARM BAR	1							
7	1	172215-06620	NUT	2							
8	1	172551-04890	ARM REST	1							1
9	1	172551-04390	BAR	1							
10	1	172551-04400	KEEPER	2							
11	1	172551-06670	SPRING	1							
12	1	172551-10020	NUT	4							
13	1	172551-02480	MAGNET,SWITCH	1							
14	1	172551-10000	SCREW	4							
15	1	172551-06690	SWITCH, PROXIMITY	1							
16	1	172551-04800	TIE,CABLE	2							
17	1	172551-02760	NUT	2							
18	1	172551-09720	BOLT	2							
19	1	172551-04120	SLIDE, ARM REST	1							
20	1	172559-01340	NUT	2							
21	1	172551-06650	COVER	1							
22	1	172552-15610	BOLT	1							
23	1	172552-15570	CAP, SLIDER	1							
24	1	172552-15620	WELDMENT, MOUNT	1							
25	1	172559-01390	PLUG, PLASTIC	1							2

Remarks
(1)(left) - Refer to "SEAT" page for optionalincreased seating room for operator.
(2)(A/C On-Off)

N:Old $\xleftrightarrow[\text{No}]{\text{Yes}}$ New, Q:Old $\xleftrightarrow[\text{Yes}]{\text{No}}$ New, R:Old $\xleftrightarrow[\text{Yes}]{\text{Yes}}$ New, S:Old $\xleftrightarrow[\text{No}]{\text{No}}$ New, W:Add, Z:Discontinued, F:Interchangeable by set, K:Q'ty Change

Copyright (C) 2017 YANMAR CO., LTD. All RightsReserved.

Fig.25. CONSOLE - RIGHT-SIDE(EARLY SERIES)

(A)=T210-1(VERSION C
(B)=
(C)=
(D)=
(E)=
(F)=

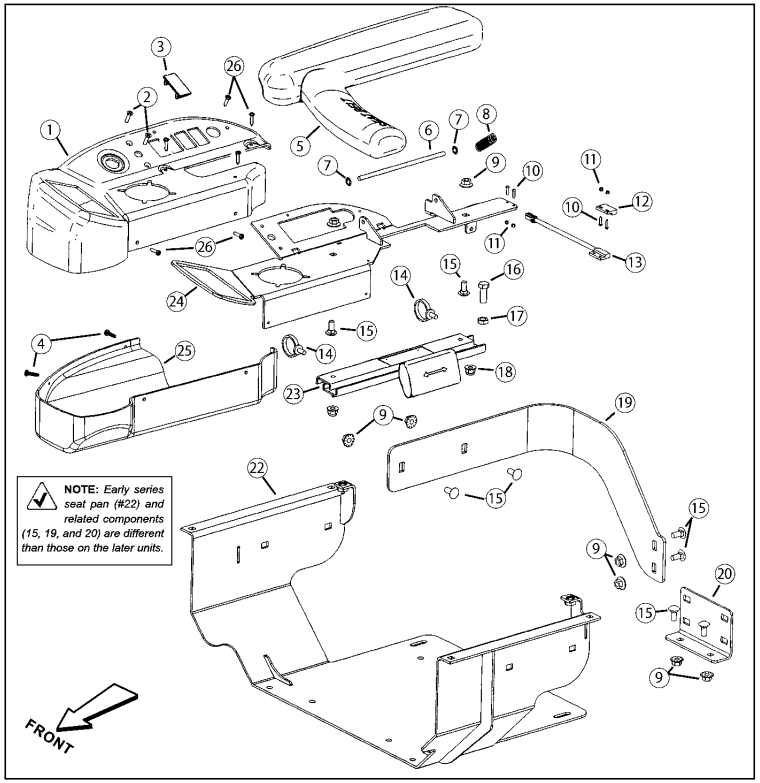

No.	Lev.	Parts No.	Description	Q'ty (A)	(B)	(C)	(D)	(E)	(F)	I	R
1	1	172551-05370	COVER, JOYSTICK	1							
2	1	172551-10250	SCREW	2							1
3	1	172551-03050	PLUG	1							
4	1	172551-04690	SCREW	1							
5	1	172551-04730	ARM REST	1							2
6	1	172551-04390	BAR	1							
7	1	172551-04400	KEEPER	2							
8	1	172551-06670	SPRING	1							
9	1	172559-01340	NUT	1							
10	1	172551-10000	SCREW	4							
11	1	172551-10020	NUT	4							
12	1	172551-02480	MAGNET,SWITCH	1							
13	1	172551-06690	SWITCH, PROXIMITY	1							
14	1	172551-04800	TIE,CABLE	2							
15	1	172551-09720	BOLT	1							
16	1	172551-09530	SCREW	1							
17	1	172551-10330	NUT	1							
18	1	172559-01340	NUT	2							
19	1	172551-06310	BRACKET	1							
20	1	172551-06660	BRACKET	1							
22	1	172551-06290	WELDMENT,MOUNT	1							
23	1	172551-04130	SLIDE, ARM REST	1							
24	1	172551-05950	WELDMENT,MOUNT	1							
25	1	172551-08430	COVER	1							
26	1	172551-10180	SCREW	5							

Remarks
(1)(secures electronic hand throttle)
(2)Refer to "SEAT" page for optionalincreased seating room for operator.

N:Old $\xleftrightarrow[\text{No}]{\text{Yes}}$ New, Q:Old $\xleftrightarrow[\text{Yes}]{\text{No}}$ New, R:Old $\xleftrightarrow[\text{Yes}]{\text{Yes}}$ New, S:Old $\xleftrightarrow[\text{No}]{\text{No}}$ New, W:Add, Z:Discontinued, F:Interchangeable by set, K:Q'ty Change

Copyright (C) 2017 YANMAR CO., LTD. All RightsReserved.

Fig.26. CONSOLE - LEFT-SIDE(EARLY SERIES)

(A)=T210-1(VERSION C
(B)=
(C)=
(D)=
(E)=
(F)=

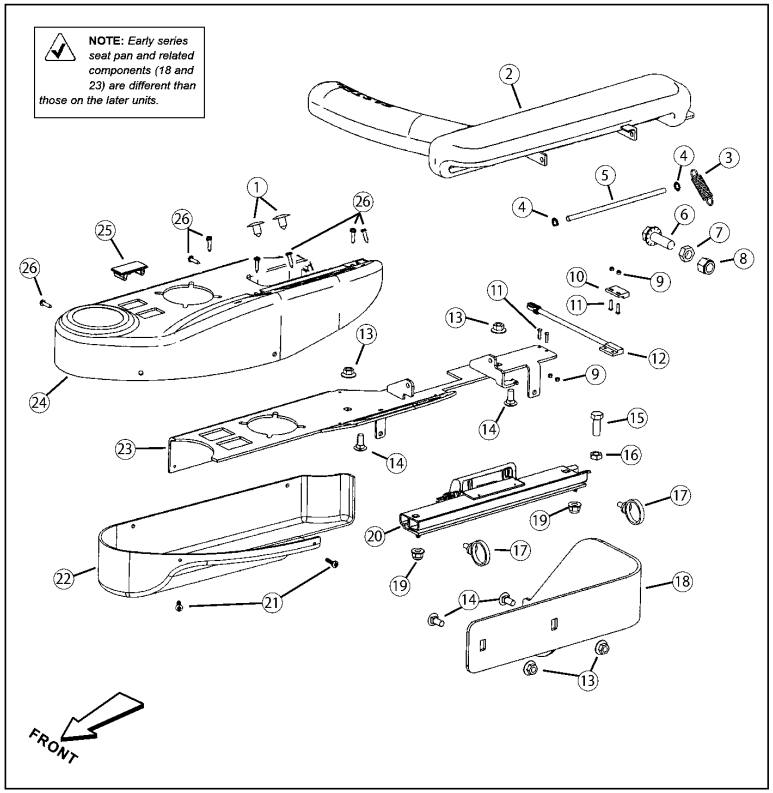

No.	Lev.	Parts No.	Description	Q'ty (A)	(B)	(C)	(D)	(E)	(F)	I	R
1	1	172551-04010	PLUG	1							
2	1	172551-04890	ARM REST	1							1
3	1	172551-06670	SPRING	1							
4	1	172551-04400	KEEPER	2							
5	1	172551-04390	BAR	1							
6	1	172559-01320	SCREW	2							
7	1	172551-10340	NUT	2							
8	1	172559-01310	NUT	2							
9	1	172551-10020	NUT	4							
10	1	172551-02480	MAGNET,SWITCH	1							
11	1	172551-10000	SCREW	4							
12	1	172551-06690	SWITCH, PROXIMITY	1							
13	1	172559-01340	NUT	4							
14	1	172551-09720	BOLT	4							
15	1	172551-09530	SCREW	1							
16	1	172551-10330	NUT	1							
17	1	172551-03240	CABLE TIE	2							
18	1	172551-06300	BRACKET	1							
19	1	172559-01340	NUT	2							
20	1	172551-04120	SLIDE, ARM REST	1							
21	1	172551-04690	SCREW	1							
22	1	172551-06650	COVER	1							
23	1	172551-05960	WELDMENT,MOUNT	1							
24	1	172551-04670	COVER, JOYSTICK	1							
25	1	172551-03050	PLUG	1							
26	1	172551-10180	SCREW	5							

Remarks
(1)Refer to "SEAT" page for optionalincreased seating room for operator.

N:Old $\frac{\text{Yes}}{\text{No}}$ New, Q:Old $\frac{\text{No}}{\text{Yes}}$ New, R:Old $\frac{\text{Yes}}{\text{Yes}}$ New, S:Old $\frac{\text{No}}{\text{No}}$ New, W:Add, Z:Discontinued, F:Interchangeable by set, K:Q'ty Change

Copyright (C) 2017 YANMAR CO., LTD. All RightsReserved.

Fig.27. CONSOLE CONTROLS - LEFT SIDE(SN: 461151 AND UP)

(A)=T210-1(VERSION C (D)=
(B)= (E)=
(C)= (F)=

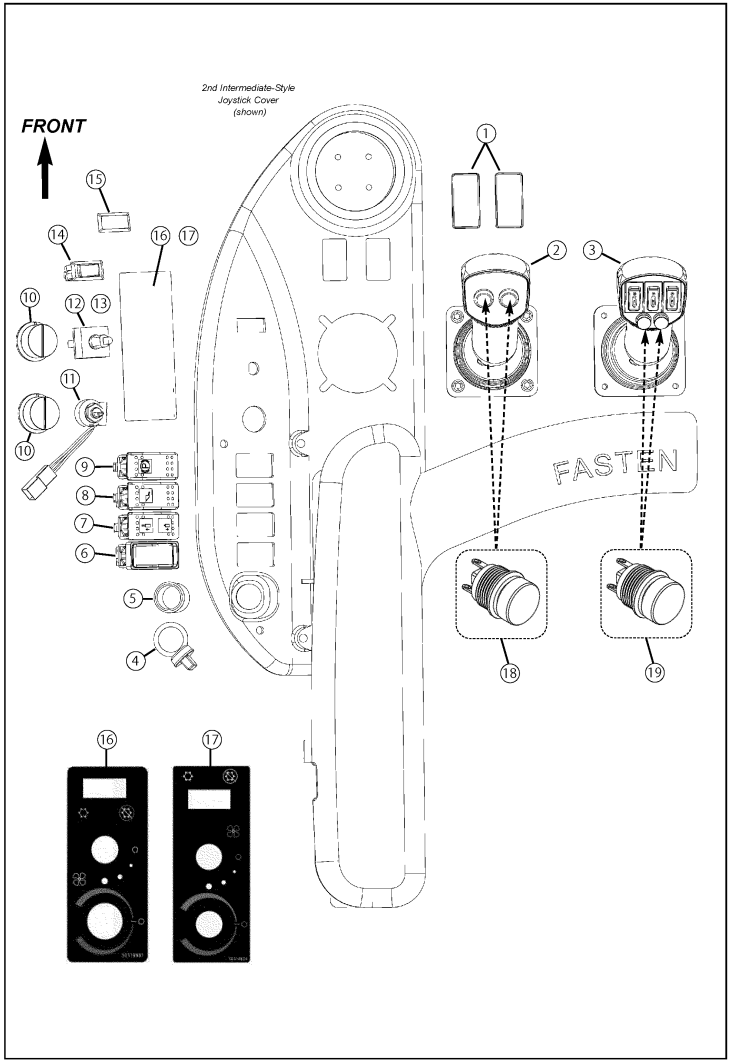

No.	Lev.	Parts No.	Description	Q'ty (A)	(B)	(C)	(D)	(E)	(F)	I	R
1	1	172551-03050	PLUG	1							
2	1	172551-06330	CONTROLLER	1							
3	1	172552-16510	JOYSTICK, 14-PIN	1							1
4	1	172551-01470	COVER	1							
5	1	172551-01460	POWER,AUXILIARY	1							
6	1	172551-08780	SWITCH	1							
7	1	172551-04090	SWITCH, HIGH FLOW	1							
8	1	172551-04060	SWITCH	1							
9	1	172551-03880	SWITCH, PARK BRAKE	1							
10	1	172551-05190	KNOB	2							
11	1	172559-01400	POTENTIOMETER	1							2
12	1	172551-01280	SWITCH, HEATER	1							3
13	1	172551-08320	NUT	2							4
14	1	172559-01410	SWITCH, A/C ON-OFF	1							
15	1	172559-01390	PLUG, PLASTIC	1							5
16	1	172559-01440	DECAL, BLOWER-TEMP	1							6
17	1	172559-01430	DECAL, BLOWER-TEMP	1							7
18	1	172551-08670	SWITCH KIT	1							8
19	1	172559-01420	KIT, SWITCH	1							9

Remarks
(1)(Used with 14-pin connector option) (2)(HVAC control) (3)(fan speed) (includes item #18) (4)(out of view)
(5)(used when switch is absent) (6)(late series) (7)(early series)
(8)for use with item #2 only; includes one round button switch, two screws, two sealing grommets and one handle gasket.)
(9)+E146for use with item #3 only, and only includes one round button switch and installation instructions)

N:Old $\xleftrightarrow[\text{No}]{\text{Yes}}$ New, Q:Old $\xleftrightarrow[\text{Yes}]{\text{No}}$ New, R:Old $\xleftrightarrow[\text{Yes}]{\text{Yes}}$ New, S:Old $\xleftrightarrow[\text{No}]{\text{No}}$ New, W:Add, Z:Discontinued, F:Interchangeable by set, K:Q'ty Change

Copyright (C) 2017 YANMAR CO., LTD. All RightsReserved.

Fig.28. CONSOLE CONTROLS - RIGHT SIDE(SN: 461151 AND UP)

(A)=T210-1(VERSION C
(B)=
(C)=
(D)=
(E)=
(F)=

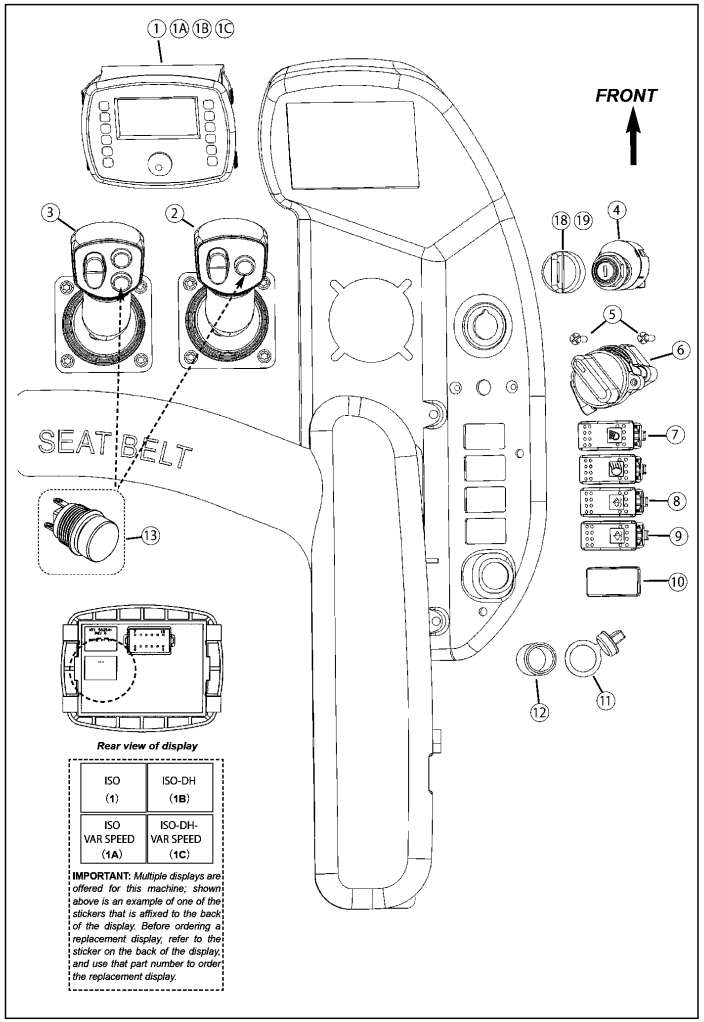

No.	Lev.	Parts No.	Description	Q'ty (A)	(B)	(C)	(D)	(E)	(F)	I	R
1	1	172552-15520	DISPLAY	1							1
1A	1	172552-15530	DISPLAY	1							2
1B	1	172552-15540	DISPLAY	1							3
1C	1	172552-15550	DISPLAY	1							4
2	1	172551-06260	CONTROLLER	1							5
3	1	172551-06270	JOYSTICK	1							6
4	1	172551-04431	SWITCH, IGNITION	1							7
5	1	172551-10250	SCREW	2							
6	1	172551-04370	THROTTLE CONTROL	1							
7	1	172551-03850	SWITCH	1							
8	1	172551-10740	SWITCH, WIPER/WASHER	1							
9	1	172551-10740	SWITCH, WIPER/WASHER	1							
10	1	172551-03050	PLUG	1							8
11	1	172551-01470	COVER	1							
12	1	172551-01460	POWER,AUXILIARY	1							
13	1	172551-08670	SWITCH KIT	1							9
17	1	172551-08680	RUBBER BOOT, BUTTON	1							A
18	1	172551-07990	KEY	1							B
19	1	172551-08000	KEY COVER	1							C

Remarks
(1)(ISO)Refer to back of display before ordering (2)(ISO VAR)Refer to back of display before ordering
(3)(ISO-DH)Refer to back of display before ordering (4)(ISO-DH-VAR)Refer to back of display before ordering
(5)(One-button) - (standard float) (6)(Two-button) - (Ride Control float) (7)(includes key)
(8)(use when switch is absent)
(9)(Includes one round button switch, two screws,two sealing grommets and one handle gasket.)
(A)(not shown) (B)(does not include item #19) (C)(optional)

N:Old ←Yes/No→ New, Q:Old ←No/Yes→ New, R:Old ←Yes/Yes→ New, S:Old ←No/No→ New, W:Add, Z:Discontinued, F:Interchangeable by set, K:Q'ty Change

Copyright (C) 2017 YANMAR CO., LTD. All RightsReserved.

Fig.29. CONSOLE CONTROLS - LEFT SIDE(SN: 461150 AND BEFORE)

(A)=T210-1(VERSION C (D)=
(B)= (E)=
(C)= (F)=

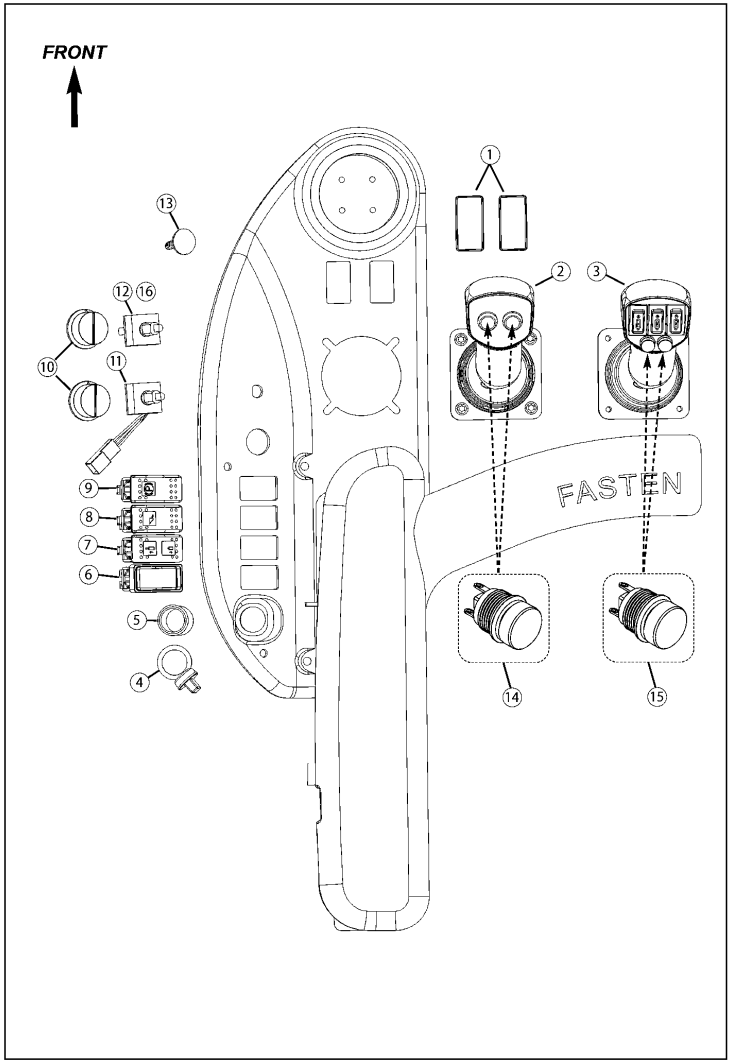

No.	Lev.	Parts No.	Description	Q'ty (A)	(B)	(C)	(D)	(E)	(F)	I	R
1	1	172551-03050	PLUG	1							
2	1	172551-06330	CONTROLLER	1							
3	1	172552-16510	JOYSTICK, 14-PIN	1							1
4	1	172551-01470	COVER	1							
5	1	172551-01460	POWER,AUXILIARY	1							
6	1	172551-08780	SWITCH	1							
7	1	172551-04090	SWITCH, HIGH FLOW	1							
8	1	172551-04060	SWITCH	1							
9	1	172551-03880	SWITCH, PARK BRAKE	1							
10	1	172551-05190	KNOB	2							
11	1	172551-02380	A/C CONTROL MODULE	1							2
12	1	172551-01280	SWITCH, HEATER	1							3
13	1	172551-04010	PLUG	1							
14	1	172551-08670	SWITCH KIT	1							4
15	1	172559-01420	KIT, SWITCH	1							5
16	1	172551-08320	NUT	2							6

Remarks
(1)(Used with 14-pin connector option)
(4)for use with item #2 only; includes one round button switch, two screws, two sealing grommets and one handle gasket.
(5)for use with item #3 only, and only includes one round button switch and installation instructions
(6)(not shown)

N:Old $\xleftrightarrow[\text{No}]{\text{Yes}}$ New, Q:Old $\xleftrightarrow[\text{Yes}]{\text{No}}$ New, R:Old $\xleftrightarrow[\text{Yes}]{\text{Yes}}$ New, S:Old $\xleftrightarrow[\text{No}]{\text{No}}$ New, W:Add, Z:Discontinued, F:Interchangeable by set, K:Q'ty Change

Copyright (C) 2017 YANMAR CO., LTD. All RightsReserved.

Fig.30. CONSOLE CONTROLS - RIGHT SIDE(SN: 461150 AND BEFORE)

(A)=T210-1(VERSION C (D)=
(B)= (E)=
(C)= (F)=

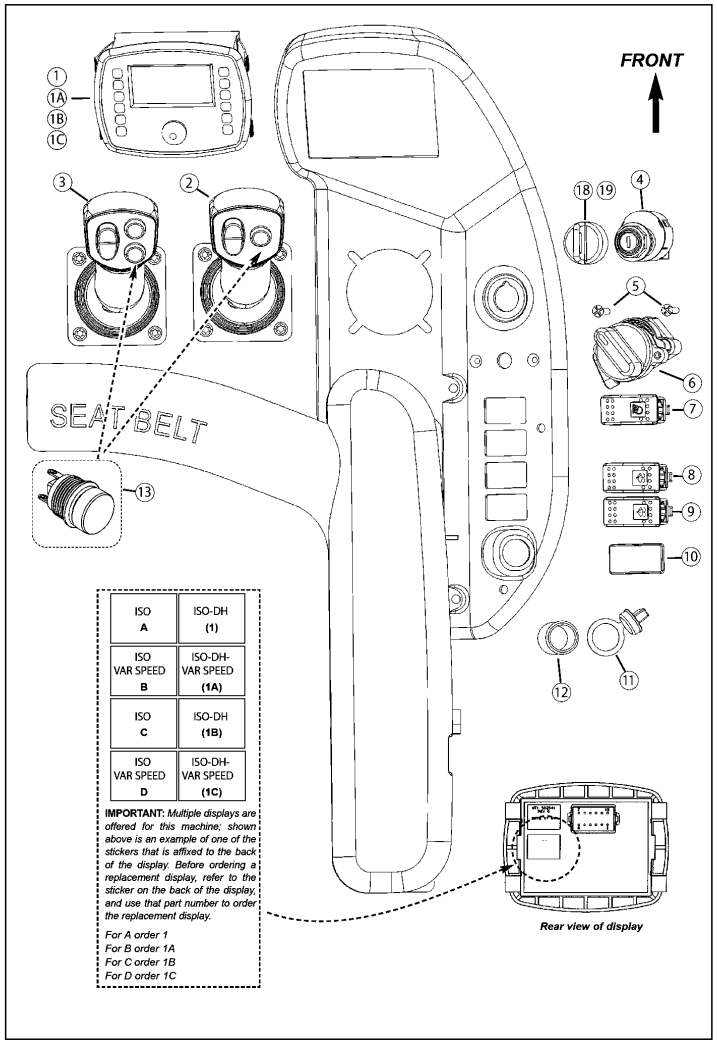

No.	Lev.	Parts No.	Description	Q'ty (A)	(B)	(C)	(D)	(E)	(F)	I	R
1	1	172559-01450	DISPLAY,ISO	1							1
1A	1	172559-01460	DISPLAY	1							2
1B	1	172559-01470	DISPLAY	1							3
1C	1	172559-01480	DISPLAY,ISO-DH-VAR	1							4
2	1	172551-06260	CONTROLLER	1							5
3	1	172551-06270	JOYSTICK	1							6
4	1	172551-04431	SWITCH, IGNITION	1							7
5	1	172551-10250	SCREW	2							
6	1	172551-04370	THROTTLE CONTROL	1							
7	1	172551-03850	SWITCH	1							
8	1	172551-10740	SWITCH, WIPER/WASHER	1							
9	1	172551-10740	SWITCH, WIPER/WASHER	1							
10	1	172551-03050	PLUG	1							
11	1	172551-01470	COVER	1							
12	1	172551-01460	POWER,AUXILIARY	1							
13	1	172551-08670	SWITCH KIT	1							8
17	1	172551-08680	RUBBER BOOT, BUTTON	1							9
18	1	172551-07990	KEY	1							A
19	1	172551-08000	KEY COVER	1							B

Remarks
(1)(ISO)Refer to back of display before ordering (2)(ISO VAR)Refer to back of display before ordering
(3)(ISO-DH)Refer to back of display before ordering (4)(ISO-DH-VAR)Refer to back of display before ordering
(5)(One-button) - (standard float) (6)(Two-button) - (Ride Control float) (7)(includes key)
(8)(Includes one button switch, two screws, two sealing grommets and one handle gasket.)
(9)(not shown) (A)(does not include item #19) (B)(optional)

N:Old $\xleftrightarrow[\text{No}]{\text{Yes}}$ New, Q:Old $\xleftrightarrow[\text{Yes}]{\text{No}}$ New, R:Old $\xleftrightarrow[\text{Yes}]{\text{Yes}}$ New, S:Old $\xleftrightarrow[\text{No}]{\text{No}}$ New, W:Add, Z:Discontinued, F:Interchangeable by set, K:Q'ty Change

Copyright (C) 2017 YANMAR CO., LTD. All RightsReserved.

Fig.31. MIRROR

(A)=T210-1(VERSION C
(B)=
(C)=
(D)=
(E)=
(F)=

No.	Lev.	Parts No.	Description	Q'ty (A)	(B)	(C)	(D)	(E)	(F)	I	R
1	1	172551-09010	BRACKET, MIRROR	1							1
2	1	172552-15650	MIRROR, CONVEX	2							2
2A	1	172551-09000	MIRROR, CONVEX	2							3
3	1	172551-10090	SCREW	4							
4	1	172551-09040	BRACKET, MIRROR	1							
5	1	172551-09860	WASHER	2							

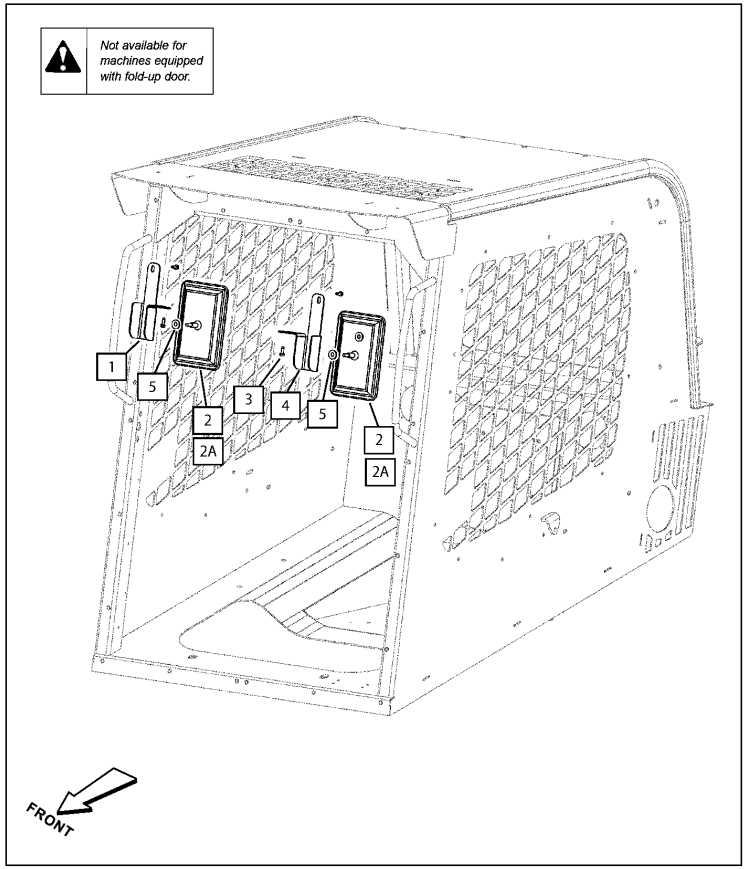

Remarks
(1)(not for use with fold-up door)
(2)(standard DOM/RW)
(3)(standard EU - option DOM/RW)

N:Old $\xleftrightarrow[\text{No}]{\text{Yes}}$ New, Q:Old $\xleftrightarrow[\text{Yes}]{\text{No}}$ New, R:Old $\xleftrightarrow[\text{Yes}]{\text{Yes}}$ New, S:Old $\xleftrightarrow[\text{No}]{\text{No}}$ New, W:Add, Z:Discontinued, F:Interchangeable by set, K:Q'ty Change

Copyright (C) 2017 YANMAR CO., LTD. All RightsReserved.

Fig.32. RADIO

(A)=T210-1(VERSION C
(B)=
(C)=
(D)=
(E)=
(F)=

No.	Lev.	Parts No.	Description	Q'ty (A)	(B)	(C)	(D)	(E)	(F)	I	R
1	1	172551-10190	SCREW	4							
2	1	172551-03680	PLATE, RADIO	1							
3	1	172551-09590	SCREW	4							
4	1	172551-02440	RADIO	1							
5	1	172551-02150	ANTENNA, RADIO	1							
6	1	172551-10170	SCREW	8							
7	1	172551-04210	SPEAKER GRILLE	2							
8	1	172551-02140	SPEAKER, RADIO	2							

N:Old $\xleftarrow[\text{No}]{\text{Yes}}$ New, Q:Old $\xleftarrow[\text{Yes}]{\text{No}}$ New, R:Old $\xleftarrow[\text{Yes}]{\text{Yes}}$ New, S:Old $\xleftarrow[\text{No}]{\text{No}}$ New, W:Add, Z:Discontinued, F:Interchangeable by set, K:Q'ty Change

Copyright (C) 2017 YANMAR CO., LTD. All RightsReserved.

Fig.33. BACKUP CAMERA GROUP

(A)=T210-1(VERSION C
(B)=
(C)=
(D)=
(E)=
(F)=

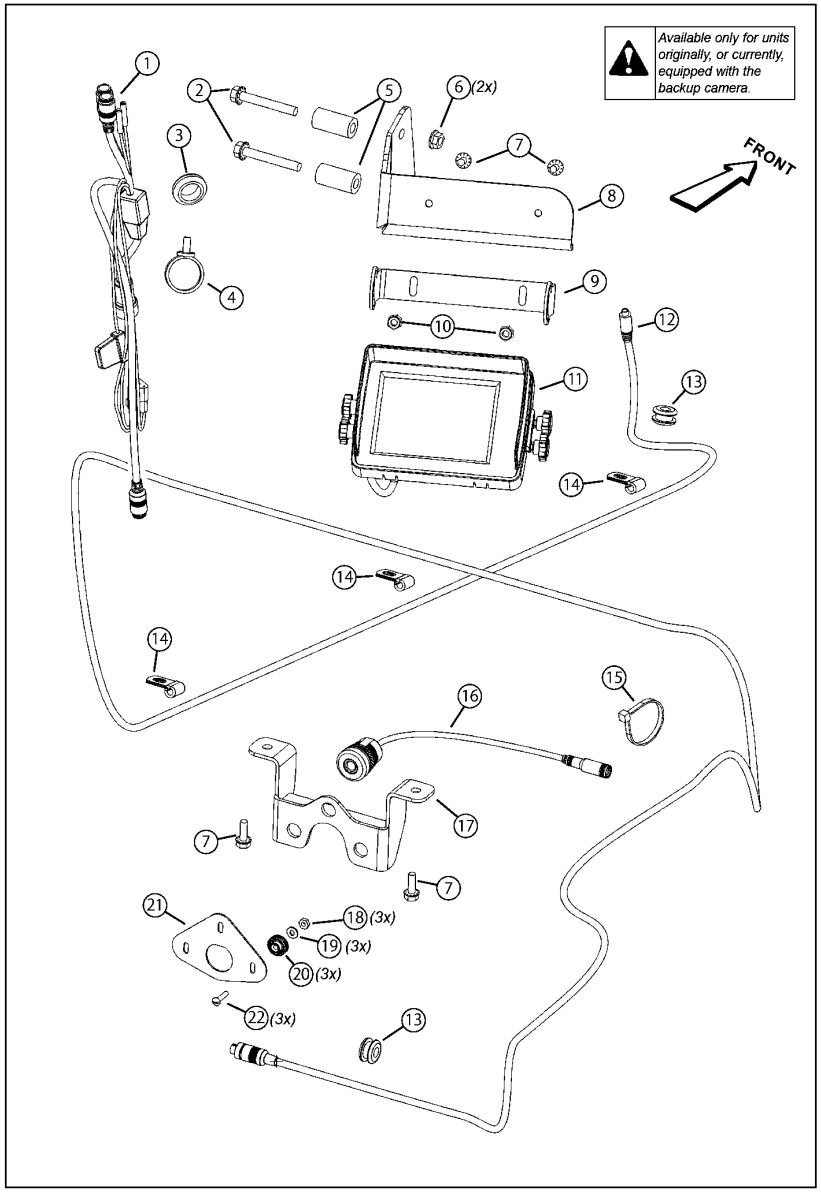

No.	Lev.	Parts No.	Description	Q'ty (A)	(B)	(C)	(D)	(E)	(F)	I	R
1	1	172559-01610	18 DISPLAY CABLE	1							
2	1	172559-01510	SCREW	2							
3	1	172559-00210	GROMMET	1							
4	1	172551-04800	TIE,CABLE	1							
5	1	172559-01580	SPACER	2							
6	1	172559-01500	LN FL SERR 5/16 CZY	2							
7	1	172559-00360	SCREW	4							
8	1	172559-01600	DISPLAY BRACKET	1							
9	1	172559-01590	DISPLAY CLAMP	1							
10	1	172559-00510	NUT	2							
11	1	172559-01530	MONITOR,WEATHERPROOF	1							
12	1	172559-01570	CABLE, CAMERA 15 FT	1							
13	1	172559-01490	GROMMET	2							
14	1	172559-00440	CLAMP	3							
15	1	172559-00430	TIE, CABLE	8							
16	1	172559-01520	CAMERA CMOS	1							
17	1	172559-01560	BASE MOUNT,CAMERA	1							
18	1	172215-03220	NUT	3							
19	1	172215-02840	WASHER	3							
20	1	172559-01540	GROMMET	3							
21	1	172559-01550	PLATE, MTG CAMERA	1							
22	1	172215-07650	SCREW	3							

N:Old $\frac{\text{Yes}}{\text{No}}$ New, Q:Old $\frac{\text{No}}{\text{Yes}}$ New, R:Old $\frac{\text{Yes}}{\text{Yes}}$ New, S:Old $\frac{\text{No}}{\text{No}}$ New, W:Add, Z:Discontinued, F:Interchangeable by set, K:Q'ty Change

Copyright (C) 2017 YANMAR CO., LTD. All RightsReserved.

Fig.34. HEATER / AIR CONDITIONING BLOWER

(A)=T210-1(VERSION C (D)=
(B)= (E)=
(C)= (F)=

No.	Lev.	Parts No.	Description	Q'ty (A)	(B)	(C)	(D)	(E)	(F)	I	R
1	1	172551-06380	COVER	1							
2	1	172551-09590	SCREW	1							
3	1	172551-10360	WASHER	1							
4	1	172551-02580	BLOWER	1							
5	1	172551-02260	BLOWER ASSY	1							
6	1	172551-05940	WELDMENT, BLOWER BOX	1							
7	1	172551-04140	HEATER CORE	1							
8	1	172551-04150	EVAPORATOR	1							1
9	1	172551-09610	SCREW	1							
10	1	172551-01670	SWITCH,PRESET	1							1
11	1	172551-06780	GROMMET	1							
12	1	172551-01590	FLANGE	1							2
13	1	172551-01580	STUD, CLINCHING	1							2
14	1	172551-02321	RECTIFIER PACK	1							3
16	1	172551-09710	SCREW	4							
17	1	172551-06430	SEAL	1							
18	1	172551-10570	VALVE,EXPANSION	1							
19	1	172551-10600	O-RING	1							
20	1	172551-01730	O-RING	1							
21	1	172551-08960	GASKET	1							

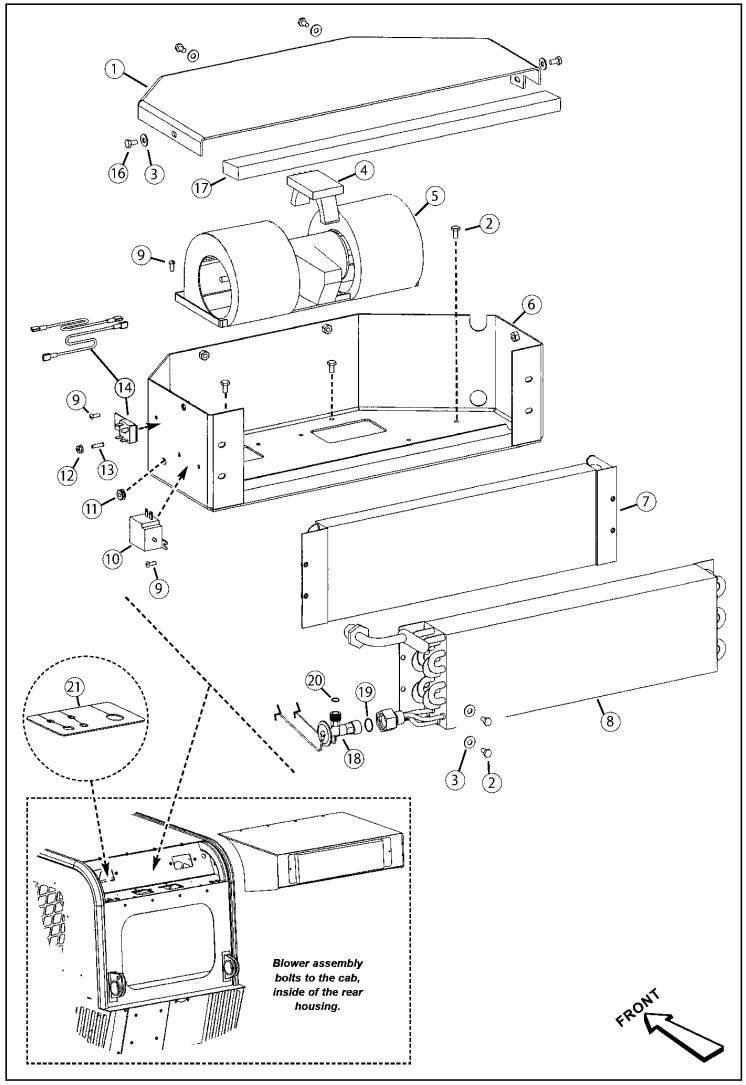

Remarks
(1)(when equipped with A/C)
(2)(included with item #14)
(3)(includes items 12-15)

N:Old $\xleftarrow[\text{No}]{\text{Yes}}$ New, Q:Old $\xleftarrow[\text{Yes}]{\text{No}}$ New, R:Old $\xleftarrow[\text{Yes}]{\text{Yes}}$ New, S:Old $\xleftarrow[\text{No}]{\text{No}}$ New, W:Add, Z:Discontinued, F:Interchangeable by set, K:Q'ty Change

Copyright (C) 2017 YANMAR CO., LTD. All RightsReserved.

Fig.35. HEATER HOSE CIRCUIT(LATE SERIES)

(A)=T210-1(VERSION C
(B)=
(C)=
(D)=
(E)=
(F)=

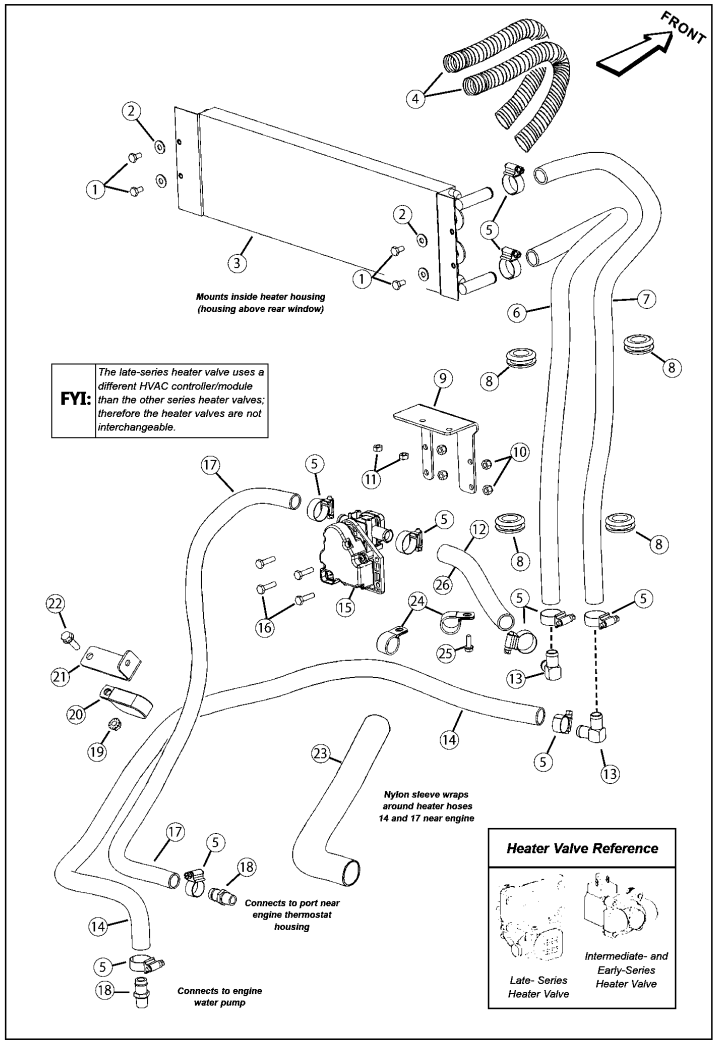

No.	Lev.	Parts No.	Description	Q'ty (A)	(B)	(C)	(D)	(E)	(F)	I	R
1	1	172551-09590	SCREW	4							
2	1	172551-10360	WASHER	4							
3	1	172551-04140	HEATER CORE	1							
4	1	172551-04410	FLANGE	2							
5	1	172559-01710	CLAMP	1							
6	1	172559-01640	HOSE,HEATER	1							
7	1	172559-01630	HOSE,HEATER	1							
8	1	172559-01700	GROMMET	4							
9	1	172559-01660	BRACKET,HEATER VALVE	1							
10	1	172559-00510	NUT	4							
11	1	172551-10290	NUT	2							
12	1	172559-01670	HOSE,HEATER	1							1
13	1	172559-01690	FITTING,HOSE	2							
14	1	172551-08810	HOSE	1							
15	1	172559-01620	VALVE, HEATER	1							2
16	1	172551-09880	SCREW	4							
17	1	172552-15670	HOSE, HEATER	1							
18	1	172552-15660	CONNECTOR	1							
19	1	172551-01060	NUT	1							
20	1	172218-04900	CLAMP	1							
21	1	172559-01650	BRACKET, HOSE CLAMP	1							
22	1	172218-05150	SCREW	1							
23	1	172216-12920	SLEEVE	1							
24	1	172551-11380	CLAMP	2							3
25	1	172559-00360	SCREW	1							4
26	1	172559-01680	HOSE,HEATER	1							5

Remarks
(1)(measure length before ordering)
(2)(not interchangeable with other series)Refer to "Heater Valve Reference"
(3)(used with later units that use item 26)
(4)(used with one of item 24)
(5)(measure length before ordering; used on later units)

N:Old ◄Yes/No► New, Q:Old ◄No/Yes► New, R:Old ◄Yes/Yes► New, S:Old ◄No/No► New, W:Add, Z:Discontinued, F:Interchangeable by set, K:Q'ty Change

Copyright (C) 2017 YANMAR CO., LTD. All RightsReserved.

Fig.36. HEATER HOSE CIRCUIT(INTERMEDIATE SERIES)

(A)=T210-1(VERSION C
(B)=
(C)=
(D)=
(E)=
(F)=

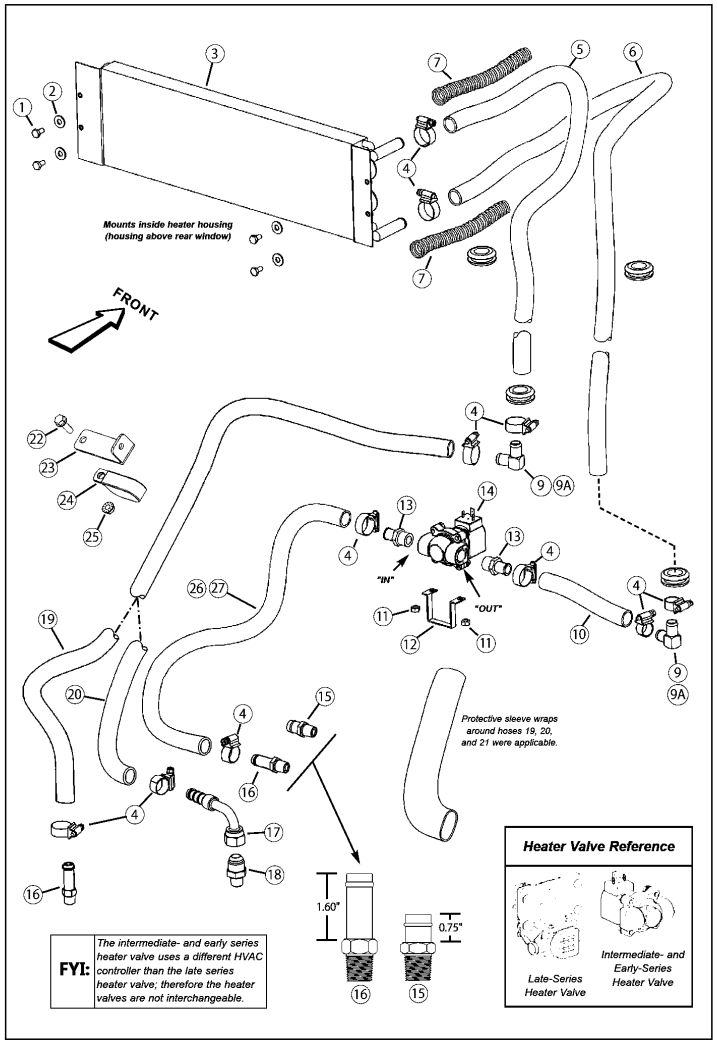

No.	Lev.	Parts No.	Description	Q'ty (A)	(B)	(C)	(D)	(E)	(F)	I	R
1	1	172551-09590	SCREW	4							
2	1	172551-10360	WASHER	4							
3	1	172551-04140	HEATER CORE	1							
4	1	172559-01710	CLAMP	10							
5	1	172559-01630	HOSE,HEATER	1							
6	1	172559-01640	HOSE,HEATER	1							
7	1	172551-04410	FLANGE	2							
9	1	172559-01700	GROMMET	4							
9A	1	172559-01690	FITTING,HOSE	2							
10	1	172559-01720	HOSE,HEATER	1							
11	1	172551-10290	NUT	2							
12	1	172551-02310	BRACKET,VALVE	1							
13	1	172551-02270	CONNECTOR	2							
14	1	172551-02300	VALVE,SOLENOID	1							1
15	1	172552-15660	CONNECTOR	1							2
16	1	172551-00840	CONNECTOR	2							3
17	1	172552-15680	CONNECTOR	1							
18	1	172552-15690	CONNECTOR	1							
19	1	172559-01730	HOSE,HEATER	1							
20	1	172551-08810	HOSE	1							
22	1	172218-05150	SCREW	1							
23	1	172559-01650	BRACKET, HOSE CLAMP	1							
24	1	172218-04900	CLAMP	1							
25	1	172551-01060	NUT	1							
26	1	172551-08820	HOSE	1							4
27	1	172552-15670	HOSE, HEATER	1							5

Remarks
(1)(not interchangeable with late series)Refer to "Heater Valve Reference"
(2)(short)
(3)(long)
(4)(when equipped with item #16)
(5)(when equipped with item #15)

N:Old ◄Yes/No► New, Q:Old ◄No/Yes► New, R:Old ◄Yes/Yes► New, S:Old ◄No/No► New, W:Add, Z:Discontinued, F:Interchangeable by set, K:Q'ty Change

Copyright (C) 2017 YANMAR CO., LTD. All RightsReserved.

Fig.37. HEATER HOSE CIRCUIT(EARLY-INTERMEDIATE AND EARLY SERIES)

(A)=T210-1(VERSION C
(B)=
(C)=
(D)=
(E)=
(F)=

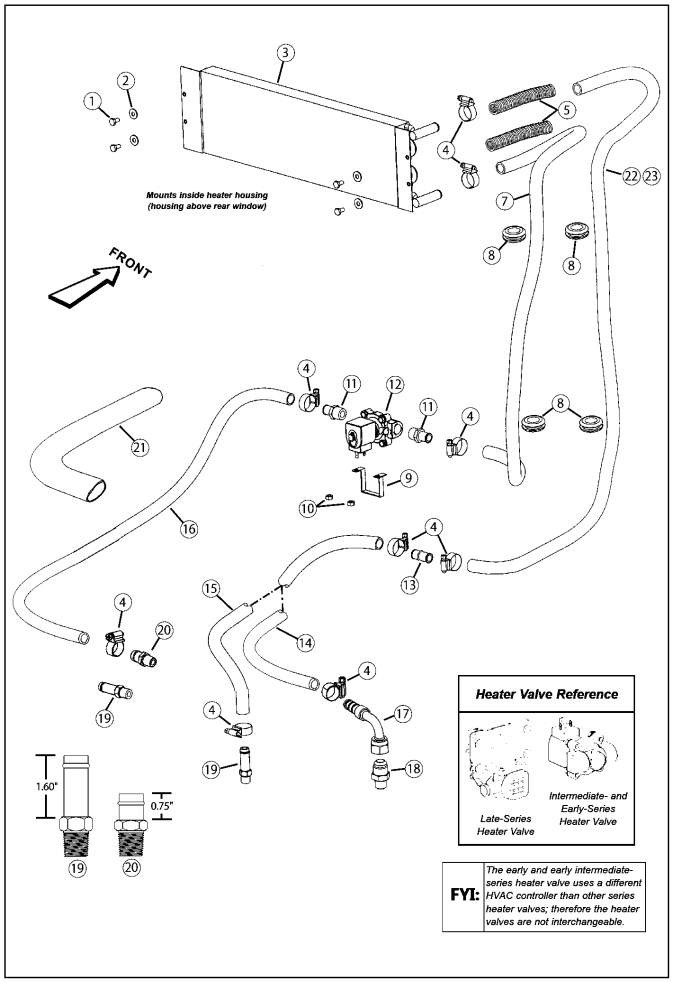

No.	Lev.	Parts No.	Description	Q'ty (A)	(B)	(C)	(D)	(E)	(F)	I	R
1	1	172551-09590	SCREW	4							
2	1	172551-10360	WASHER	4							
3	1	172551-04140	HEATER CORE	1							
4	1	172559-01710	CLAMP	1							
5	1	172551-04410	FLANGE	2							
7	1	172551-03580	HOSE	1							
8	1	172559-01700	GROMMET	4							
9	1	172551-02310	BRACKET,VALVE	1							
10	1	172551-10290	NUT	2							
11	1	172551-02270	CONNECTOR	2							
12	1	172551-02300	VALVE,SOLENOID	1							1
13	1	172551-08790	CONNECTOR	1							
14	1	172552-15670	HOSE, HEATER	1							2
15	1	172551-08800	HOSE	1							3
16	1	172551-08820	HOSE	1							
17	1	172552-15680	CONNECTOR	1							4
18	1	172552-15690	CONNECTOR	1							4
19	1	172551-00840	CONNECTOR	1							5
20	1	172552-15660	CONNECTOR	1							5
21	1	172216-12920	SLEEVE	1							
22	1	172551-03650	HOSE	1							6
23	1	172551-08810	HOSE	1							

Remarks
(1)(not interchangeable with later series)Refer to "Heater Valve Reference"
(2)(when equipped with item 17 and 18)
(3)(when equipped with 19 and 23)
(4)used with hose item 14
(5)(long)
(5)(short)
(6)Early units used one length of hose which did not include items 13 or 15.
Early units can be converted to early intermediate style by ordering item 13, 15, 23, and two each of item 4.

N:Old ◄Yes/No► New, Q:Old ◄No/Yes► New, R:Old ◄Yes/Yes► New, S:Old ◄No/No► New, W:Add, Z:Discontinued, F:Interchangeable by set, K:Q'ty Change

Copyright (C) 2017 YANMAR CO., LTD. All RightsReserved.

Fig.38. AIR CONDITIONING CIRCUIT(LATE SERIES)

(A)=T210-1(VERSION C
(B)=
(C)=
(D)=
(E)=
(F)=

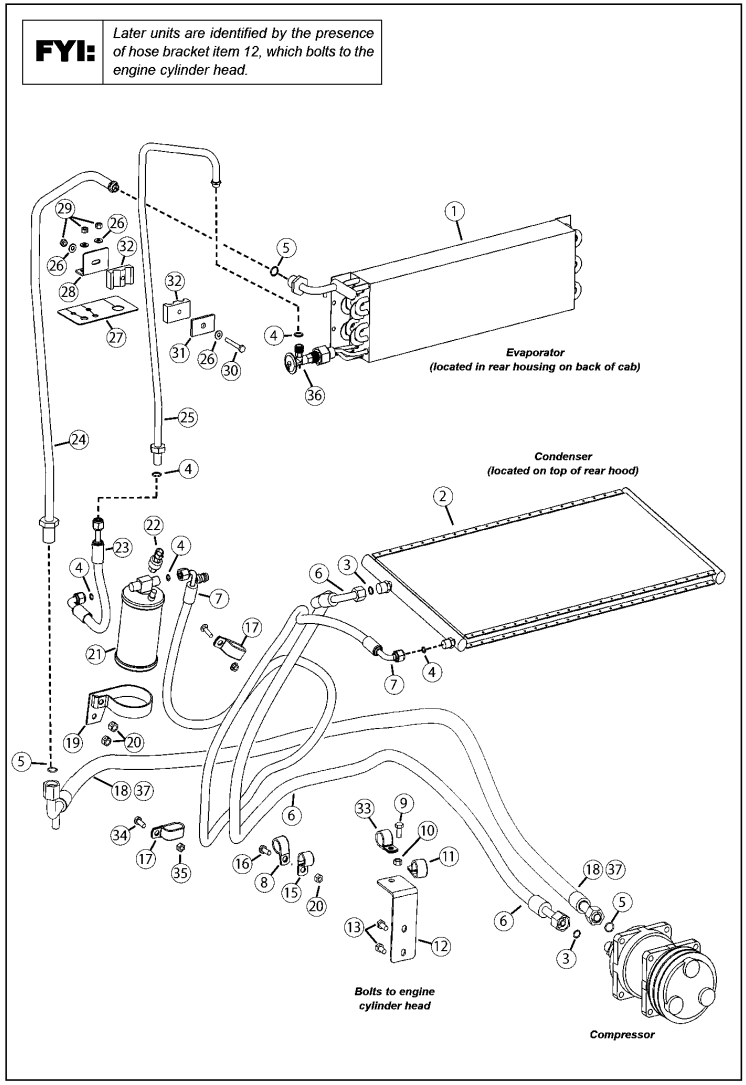

No.	Lev.	Parts No.	Description	Q'ty (A)	(B)	(C)	(D)	(E)	(F)	I	R
1	1	172551-04150	EVAPORATOR	1							1
2	1	172551-10590	CONDENSER	1							
3	1	172551-01740	O-RING	1							
4	1	172551-01730	O-RING	1							
5	1	172551-01750	O-RING	1							
6	1	172552-15710	HOSE	1							
7	1	172552-15700	HOSE	1							
8	1	172216-15910	CLAMP, HOSE	1							
9	1	172215-02720	SCREW	1							
10	1	172552-15750	NUT	2							
11	1	172559-01750	CLAMP	1							
12	1	172552-15720	BRACKET, A/C HOSES	1							
13	1	172551-01960	SCREW	2							
15	1	172216-15910	CLAMP, HOSE	1							
16	1	172551-09520	SCREW	2							
17	1	172552-15760	CLANP, HOSE	2							
18	1	172552-15730	HOSE	1							
19	1	172551-01690	CLAMP	1							
20	1	172559-00670	NUT	3							
21	1	172551-01680	RECEIVER DRIER	1							
22	1	172551-01710	SWITCH, BINARY	1							
23	1	172551-04240	HOSE	1							
24	1	172551-06100	TUBE	1							
25	1	172551-06110	TUBE	1							
26	1	172551-09890	WASHER	4							
27	1	172551-08960	GASKET	1							
28	1	172551-06120	BRACKET, CLAMP MOUNT	1							
29	1	172559-00780	NUT	3							
30	1	172215-02890	SCREW	1							
31	1	172559-01740	PLATE	1							
32	1	172551-03120	CLAMP	2							
33	1	172559-01750	CLAMP	1							
34	1	172551-09930	BOLT	1							
35	1	172215-06610	NUT	1							
36	1	172551-10570	VALVE,EXPANSION	1							2
37	1	172552-15740	GUARD, POLY	1							3

Remarks
(1)(includes item 36 - Expansion Valve)
(2)(included with item 1)
(3)(not shown)

N:Old ◄Yes/No► New, Q:Old ◄No/Yes► New, R:Old ◄Yes/Yes► New, S:Old ◄No/No► New, W:Add, Z:Discontinued, F:Interchangeable by set, K:Q'ty Change

Copyright (C) 2017 YANMAR CO., LTD. All RightsReserved.

Fig.39. AIR CONDITIONING CIRCUIT(EARLY SERIES)

(A)=T210-1(VERSION C
(B)=
(C)=
(D)=
(E)=
(F)=

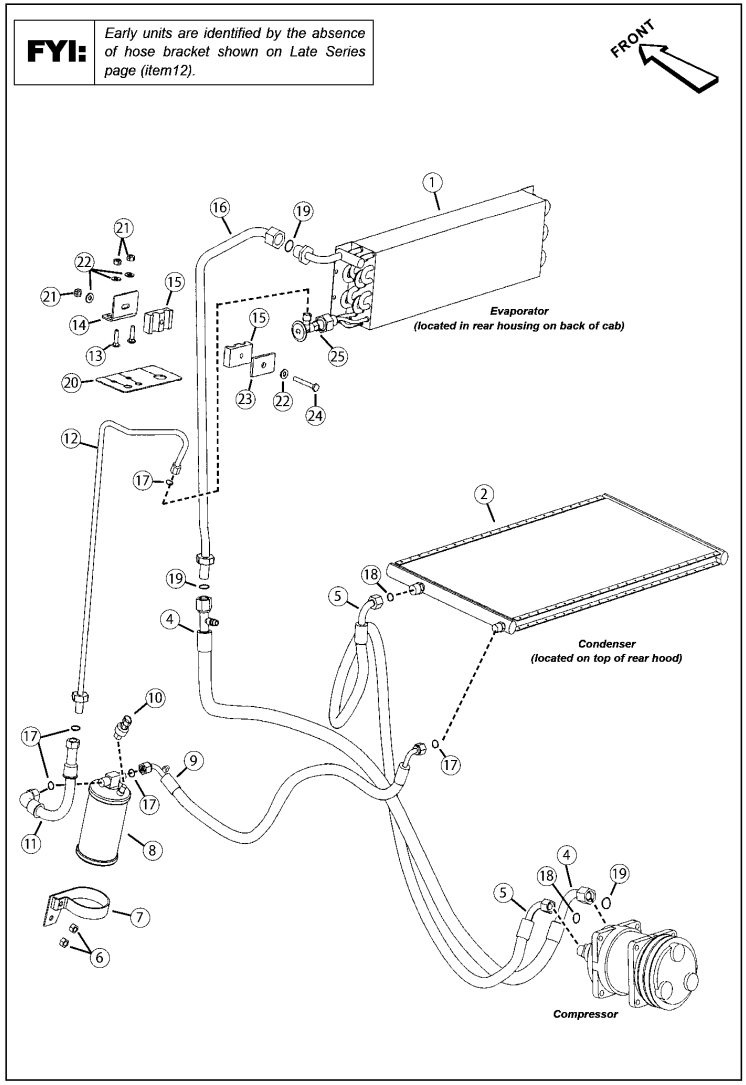

No.	Lev.	Parts No.	Description	Q'ty (A)	(B)	(C)	(D)	(E)	(F)	I	R
1	1	172551-04150	EVAPORATOR	1							1
2	1	172551-10590	CONDENSER	1							
4	1	172551-03780	HOSE	1							
5	1	172551-03710	HOSE	1							
6	1	172559-00670	NUT	2							
7	1	172551-01690	CLAMP	1							
8	1	172551-01680	RECEIVER DRIER	1							
9	1	172551-08830	HOSE	1							
10	1	172551-01710	SWITCH, BINARY	1							
11	1	172551-04240	HOSE	1							
12	1	172551-06110	TUBE	1							
13	1	172551-09930	BOLT	2							2
14	1	172551-06120	BRACKET, CLAMP MOUNT	1							
15	1	172551-03120	CLAMP	2							
16	1	172551-06100	TUBE	1							
17	1	172551-01730	O-RING	1							
18	1	172551-01740	O-RING	1							
19	1	172551-01750	O-RING	1							
20	1	172551-08960	GASKET	1							
21	1	172559-00780	NUT	3							
22	1	172551-09890	WASHER	4							
23	1	172559-01740	PLATE	1							
24	1	172215-02890	SCREW	1							
25	1	172551-10570	VALVE,EXPANSION	1							3

Remarks
(1)(includes item 25 - Expansion Valve)
(2)(used on earlier machines)
(3)(included with item 1)

N:Old ←Yes/No→ New, Q:Old ←No/Yes→ New, R:Old ←Yes/Yes→ New, S:Old ←No/No→ New, W:Add, Z:Discontinued, F:Interchangeable by set, K:Q'ty Change

Copyright (C) 2017 YANMAR CO., LTD. All RightsReserved.

Fig.40. AIR CONDITIONING COMPRESSOR(SN: 461151 AND UP)

(A)=T210-1(VERSION C
(B)=
(C)=
(D)=
(E)=
(F)=

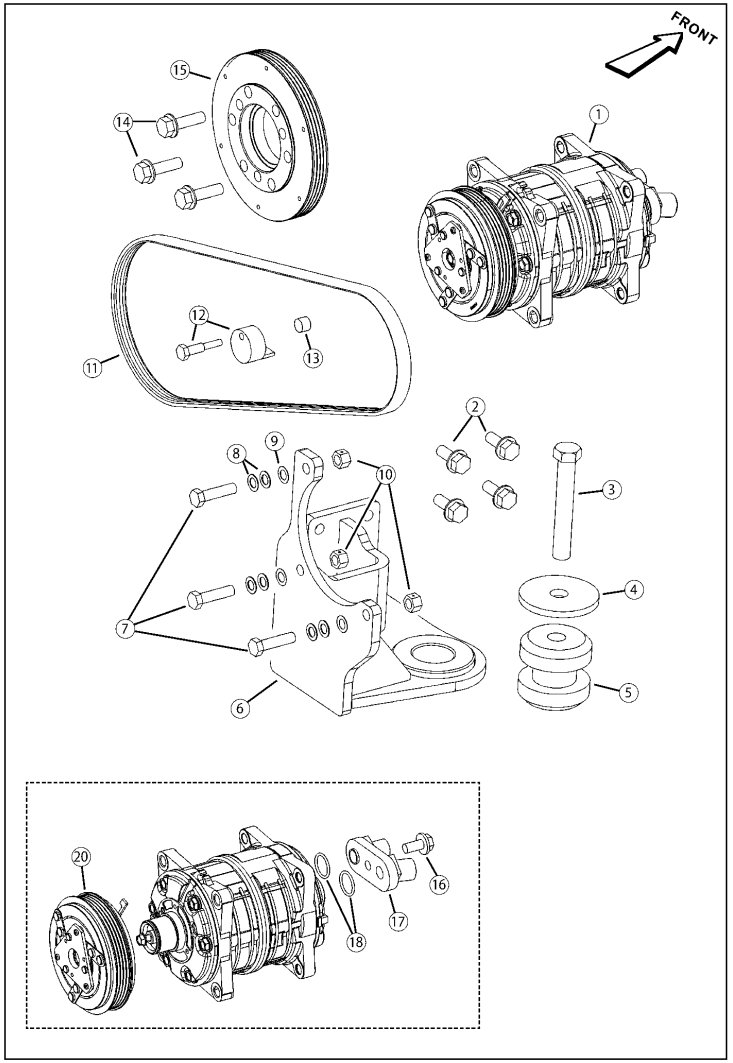

No.	Lev.	Parts No.	Description	Q'ty (A)	(B)	(C)	(D)	(E)	(F)	I	R
1	1	172559-01820	COMPRESSOR,A/C	1							
2	1	172551-08340	SCREW	4							
3	1	172551-03930	SCREW	1							
4	1	172551-01240	WASHER	1							
5	1	172551-01310	ISOLATOR	1							
6	1	172559-01800	MOUNT KIT,COMPRESSOR	1							
7	1	172551-10040	SCREW	7							
8	1	172559-01790	SHIM	6							1
9	1	172559-01780	SHIM	3							1
10	1	172559-00670	NUT	4							
11	1	172559-00040	BELT, A/C	1							2
12	1	172559-00060	BELT TOOL KIT	1							3
13	1	172559-00070	MAGNET	1							4
14	1	172559-01760	SCREW	3							
15	1	172559-01810	PULLEY,A/C	1							
16	1	172551-01760	SCREW	1							
17	1	172551-01860	MANIFOLD, COMPRESSOR	1							
18	1	172551-01870	O-RING SET	1							
20	1	172559-01770	CLUTCH,A/C	1							

Remarks
(1)(required for compressor alignment)
(2)(micro "V" serpentine)
(3)(includes item 13 and instructions)
(4)(included with item 12)

N:Old $\xleftrightarrow[\text{No}]{\text{Yes}}$ New, Q:Old $\xleftrightarrow[\text{Yes}]{\text{No}}$ New, R:Old $\xleftrightarrow[\text{Yes}]{\text{Yes}}$ New, S:Old $\xleftrightarrow[\text{No}]{\text{No}}$ New, W:Add, Z:Discontinued, F:Interchangeable by set, K:Q'ty Change

Copyright (C) 2017 YANMAR CO., LTD. All RightsReserved.

Fig.41. AIR CONDITIONING COMPRESSOR(SN: 461001 - 461150)

(A)=T210-1(VERSION C
(B)=
(C)=
(D)=
(E)=
(F)=

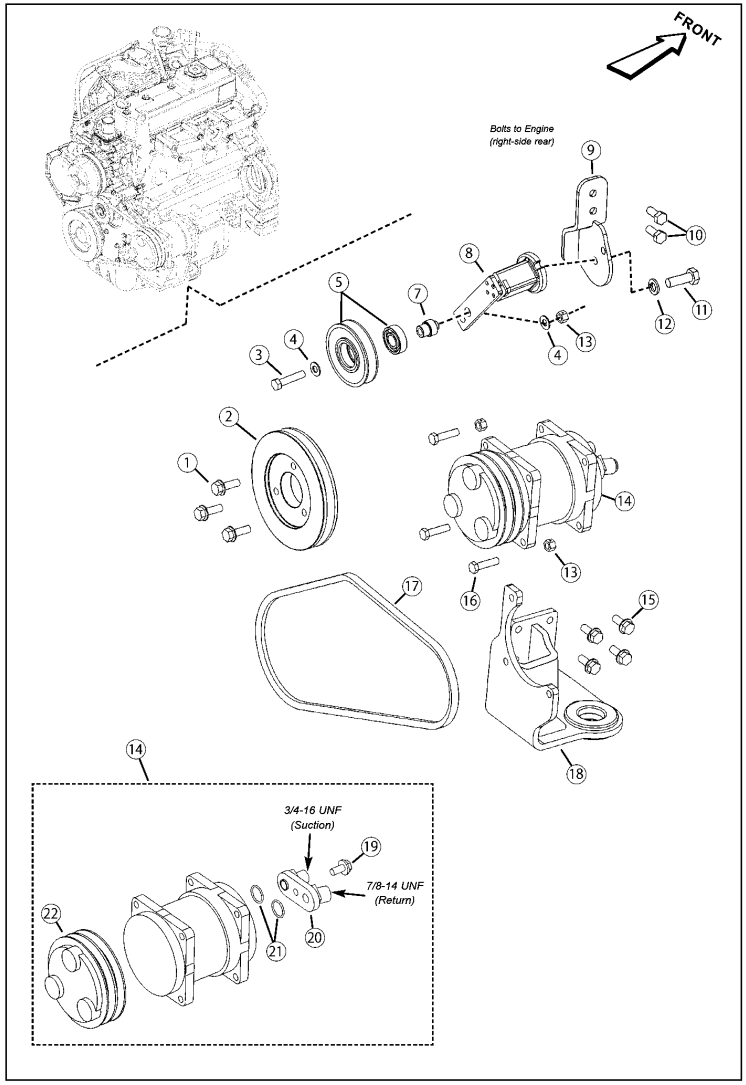

No.	Lev.	Parts No.	Description	Q'ty (A)	(B)	(C)	(D)	(E)	(F)	I	R
1	1	172551-01950	SCREW BOLT	3							
2	1	172551-02880	PULLEY, CRANKSHAFT	1							
3	1	172551-09630	SCREW	1							
4	1	172551-10400	WASHER	1							
5	1	172551-01831	PULLEY W/BEARING	1							1
7	1	172551-02910	SPACER, PULLEY	1							
8	1	172551-02891	TENSIONER	1							
9	1	172552-16400	MOUNT, TENSIONER	1							
10	1	172559-01830	SCREW	2							
11	1	172551-10060	SCREW	1							2
12	1	172551-10480	WASHER	1							2
13	1	172559-00670	NUT	4							
14	1	172551-01850	COMPRESSOR ASSY,A/C	1							
15	1	172551-08340	SCREW	4							
16	1	172551-10040	SCREW	3							
17	1	172551-03830	BELT, A/C COMPRESSOR	1							
18	1	172559-01800	MOUNT KIT,COMPRESSOR	1							3
19	1	172551-01760	SCREW	1							
20	1	172551-01860	MANIFOLD, COMPRESSOR	1							
21	1	172551-01870	O-RING SET	1							
22	1	172551-01800	CLUTCH, COMPRESSOR	1							

Remarks
(1)(includes 6)
(2)(included with item 8)
(3)(replaces original A/C mount)

N:Old $\xleftrightarrow[\text{No}]{\text{Yes}}$ New, Q:Old $\xleftrightarrow[\text{Yes}]{\text{No}}$ New, R:Old $\xleftrightarrow[\text{Yes}]{\text{Yes}}$ New, S:Old $\xleftrightarrow[\text{No}]{\text{No}}$ New, W:Add, Z:Discontinued, F:Interchangeable by set, K:Q'ty Change

Copyright (C) 2017 YANMAR CO., LTD. All RightsReserved.

Fig.42. AIR CONDITIONING COMPRESSOR(SN: 461000 AND BEFORE)

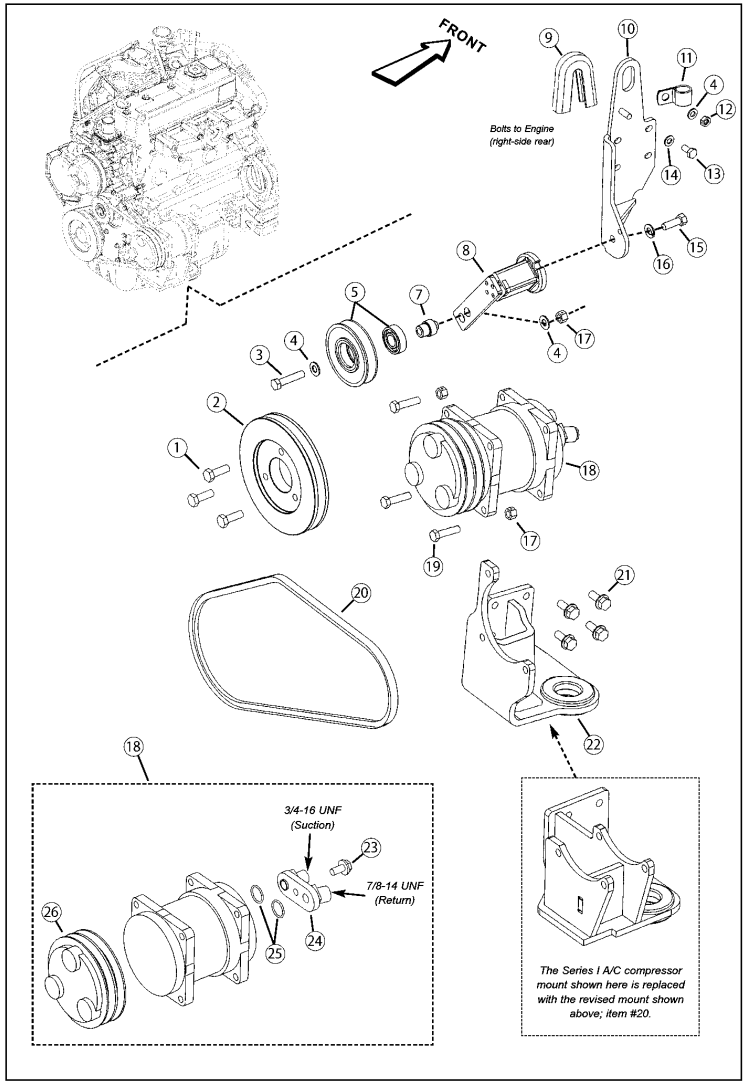

(A)=T210-1(VERSION C
(B)=
(C)=
(D)=
(E)=
(F)=

No.	Lev.	Parts No.	Description	Q'ty (A)	(B)	(C)	(D)	(E)	(F)	I	R
1	1	172551-01950	SCREW BOLT	3							
2	1	172551-02880	PULLEY, CRANKSHAFT	1							
3	1	172551-09630	SCREW	1							
4	1	172551-10400	WASHER	1							
5	1	172551-01831	PULLEY W/BEARING	1							1
7	1	172551-02910	SPACER, PULLEY	1							
8	1	172551-02891	TENSIONER	1							
9	1	172551-08700	TRIM	1							
10	1	172551-03940	TENSIONER MOUNT	1							
11	1	172551-02160	HOSE, CLAMP	1							
12	1	172559-00670	NUT	1							
13	1	172551-01960	SCREW	4							
14	1	172551-10500	WASHER	4							
15	1	172551-10060	SCREW	1							2
16	1	172551-10480	WASHER	1							2
17	1	172559-00670	NUT	5							
18	1	172551-01850	COMPRESSOR ASSY,A/C	1							
19	1	172551-10040	SCREW	3							
20	1	172551-03830	BELT, A/C COMPRESSOR	1							
21	1	172551-08340	SCREW	4							
22	1	172559-01800	MOUNT KIT,COMPRESSOR	1							3
23	1	172551-01760	SCREW	1							
24	1	172551-01860	MANIFOLD, COMPRESSOR	1							
25	1	172551-01870	O-RING SET	1							
26	1	172551-01800	CLUTCH, COMPRESSOR	1							

Remarks
(1)(includes item 6)
(2)(included with item 8)
(3)(replaces original A/C mount)

N:Old $\xleftrightarrow[\text{No}]{\text{Yes}}$ New, Q:Old $\xleftrightarrow[\text{Yes}]{\text{No}}$ New, R:Old $\xleftrightarrow[\text{Yes}]{\text{Yes}}$ New, S:Old $\xleftrightarrow[\text{No}]{\text{No}}$ New, W:Add, Z:Discontinued, F:Interchangeable by set, K:Q'ty Change

Copyright (C) 2017 YANMAR CO., LTD. All RightsReserved.

Fig.43. FRAME - FRONT / UNDER(LATE SERIES)

(A)=T210-1(VERSION C
(B)=
(C)=
(D)=
(E)=
(F)=

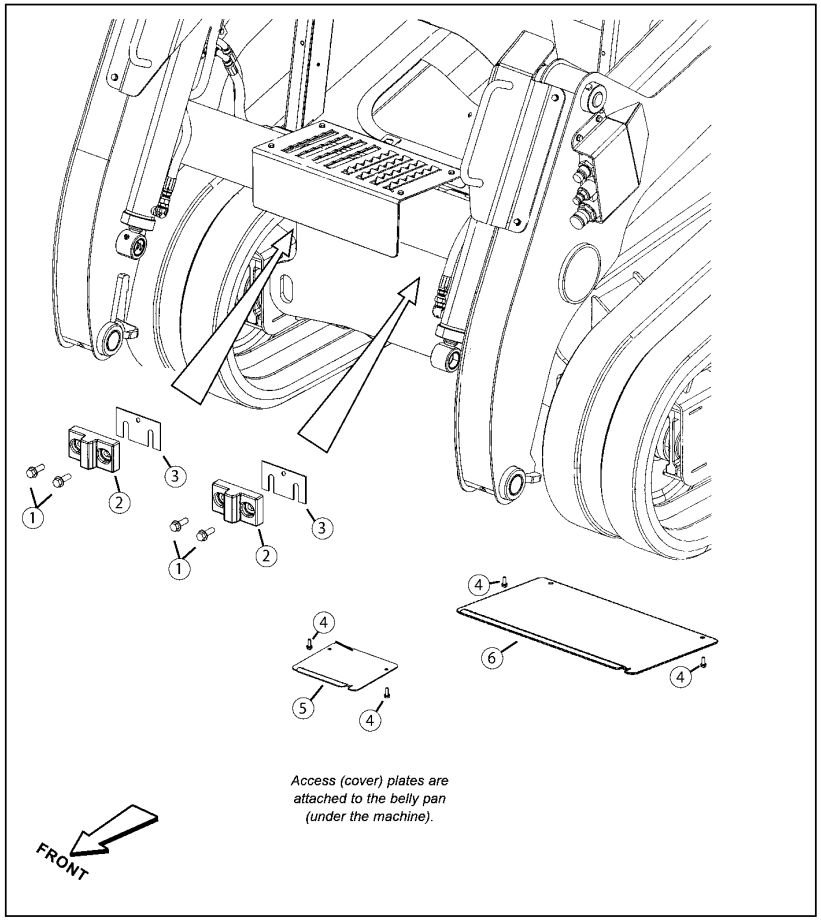

No.	Lev.	Parts No.	Description	Q'ty (A)	(B)	(C)	(D)	(E)	(F)	I	R
1	1	172559-01320	SCREW	4							
2	1	172551-04910	BLOCK,CYLINDER STOP	2							
3	1	172551-08870	SHIM	2							
4	1	172559-00360	SCREW	1							
5	1	172552-15770	PLATE, COVER	1							
6	1	172559-01840	PLATE, COVER	1							

N:Old $\xleftrightarrow[\text{No}]{\text{Yes}}$ New, Q:Old $\xleftrightarrow[\text{Yes}]{\text{No}}$ New, R:Old $\xleftrightarrow[\text{Yes}]{\text{Yes}}$ New, S:Old $\xleftrightarrow[\text{No}]{\text{No}}$ New, W:Add, Z:Discontinued, F:Interchangeable by set, K:Q'ty Change

Copyright (C) 2017 YANMAR CO., LTD. All RightsReserved.

Fig.44. FRAME - FRONT / UNDER(EARLY SERIES)

(A)=T210-1(VERSION C
(B)=
(C)=
(D)=
(E)=
(F)=

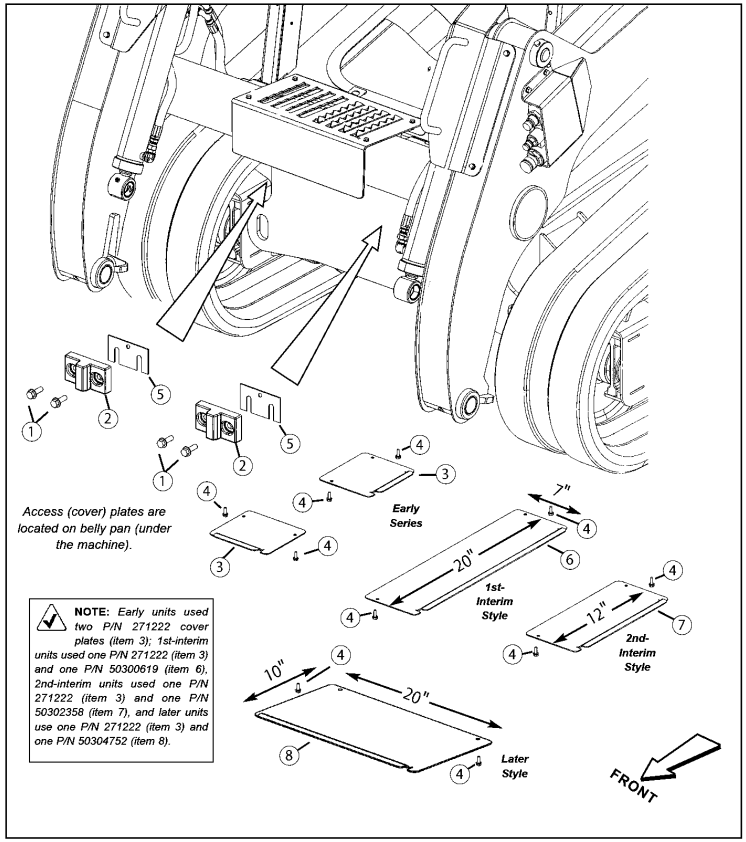

No.	Lev.	Parts No.	Description	Q'ty (A)	(B)	(C)	(D)	(E)	(F)	I	R
1	1	172551-08770	CS FL LOCK	4							
2	1	172551-04910	BLOCK,CYLINDER STOP	2							
3	1	172552-15770	PLATE, COVER	1							
4	1	172559-00360	SCREW	1							
5	1	172551-08870	SHIM	1							
6	1	172551-08850	PLATE, COVER	1							1
7	1	172559-01850	PLATE, COVER	1							2
8	1	172559-01840	PLATE, COVER	1							3

Remarks
(1)(20 inches long X 7 inches wide)
(2)(12 inches long X 7.0 inches wide)
(3)(20 inches long X 10 inches wide)

N:Old $\xleftrightarrow[\text{No}]{\text{Yes}}$ New, Q:Old $\xleftrightarrow[\text{Yes}]{\text{No}}$ New, R:Old $\xleftrightarrow[\text{Yes}]{\text{Yes}}$ New, S:Old $\xleftrightarrow[\text{No}]{\text{No}}$ New, W:Add, Z:Discontinued, F:Interchangeable by set, K:Q'ty Change

Copyright (C) 2017 YANMAR CO., LTD. All RightsReserved.

Fig.45. COUNTERWEIGHTS / CENTER FRAME(SN: 461151 AND UP)

(A)=T210-1(VERSION C (D)=
(B)= (E)=
(C)= (F)=

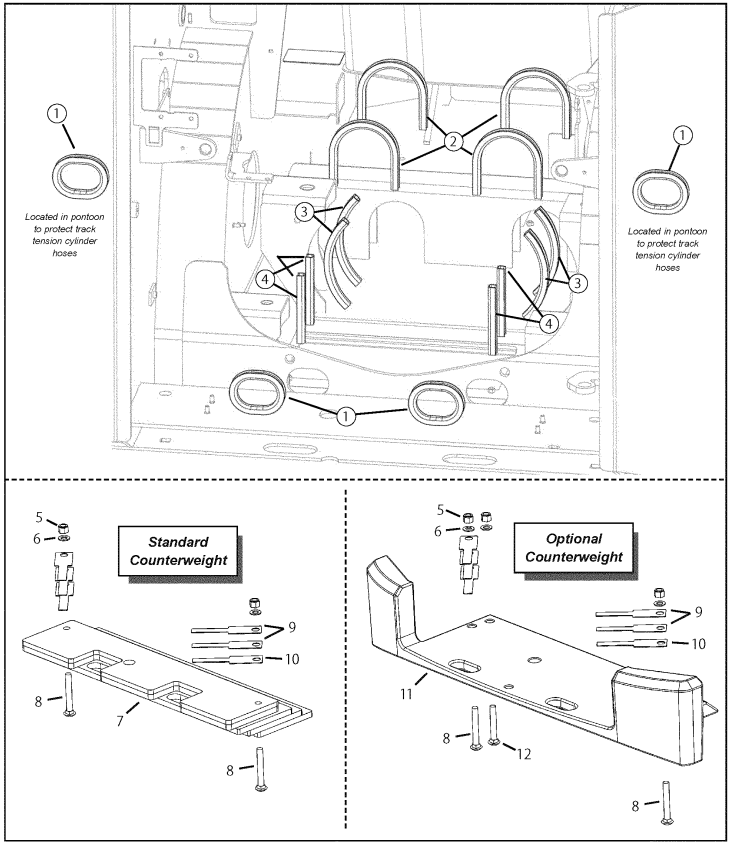

No.	Lev.	Parts No.	Description	Q'ty (A)	(B)	(C)	(D)	(E)	(F)	I	R
1	1	172551-08420	TRIM,EDGE	4							
2	1	172559-01860	TRIM EDGE	4							
3	1	172551-08600	TRIM,EDGE	4							
4	1	172551-08700	TRIM	4							
5	1	172559-01870	NUT	1							
6	1	172216-09640	WASHER	1							
7	1	172552-00570	COUNTER WEIGHT	1							1
8	1	172551-10210	BOLT	2							
9	1	172551-08890	SHIM	1							2
10	1	172551-08880	SHIM	1							3
11	1	172552-00770	COUNTER WEIGHT	1							4
12	1	172551-10210	BOLT	2							

Remarks
(1)(standard)
(2)(0.0598")
(3)(0.1046")
(4)(option)

N:Old $\frac{\text{Yes}}{\text{No}}$ New, Q:Old $\frac{\text{No}}{\text{Yes}}$ New, R:Old $\frac{\text{Yes}}{\text{Yes}}$ New, S:Old $\frac{\text{No}}{\text{No}}$ New, W:Add, Z:Discontinued, F:Interchangeable by set, K:Q'ty Change

Copyright (C) 2017 YANMAR CO., LTD. All RightsReserved.

Fig.46. COUNTERWEIGHTS / CENTER FRAME(SN: 461150 AND BEFORE)

(A)=T210-1(VERSION C
(B)=
(C)=
(D)=
(E)=
(F)=

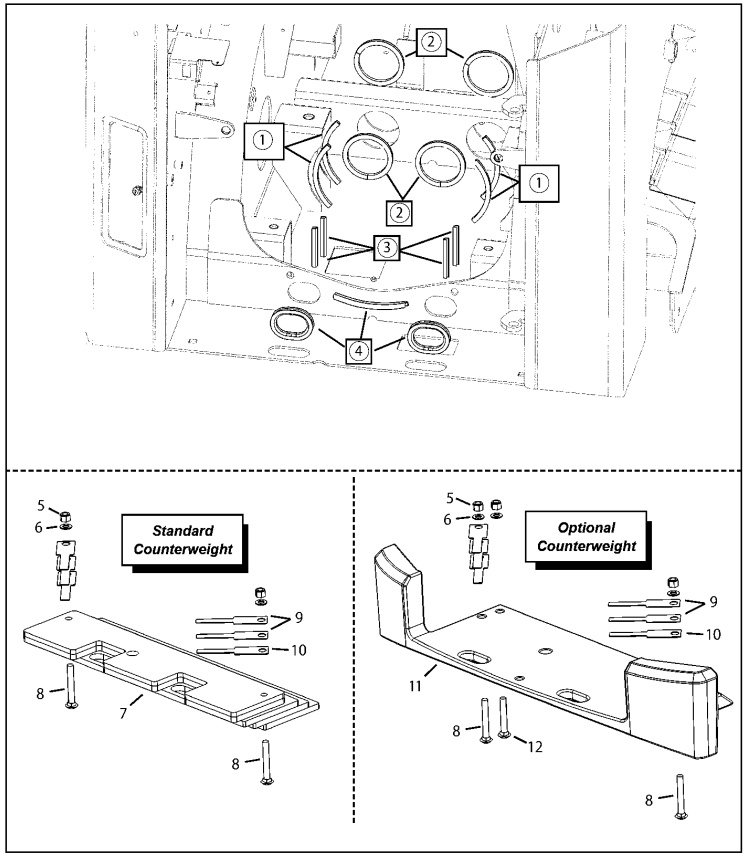

No.	Lev.	Parts No.	Description	Q'ty (A)	(B)	(C)	(D)	(E)	(F)	I	R
1	1	172551-08600	TRIM,EDGE	4							
2	1	172551-08590	TRIM,EDGE	4							
3	1	172551-08700	TRIM	4							
4	1	172551-08420	TRIM,EDGE	3							
5	1	172559-01870	NUT	1							
6	1	172216-09640	WASHER	1							
7	1	172552-00570	COUNTER WEIGHT	1							
8	1	172551-10210	BOLT	2							
9	1	172551-08890	SHIM	1							1
10	1	172551-08880	SHIM	1							2
11	1	172552-00770	COUNTER WEIGHT	1							3
12	1	172552-00870	BOLT	1							

Remarks
(1)(0.0598")
(2)(0.1046")
(3)(option)

N:Old $\xleftarrow[\text{No}]{\text{Yes}}$ New, Q:Old $\xleftarrow[\text{Yes}]{\text{No}}$ New, R:Old $\xleftarrow[\text{Yes}]{\text{Yes}}$ New, S:Old $\xleftarrow[\text{No}]{\text{No}}$ New, W:Add, Z:Discontinued, F:Interchangeable by set, K:Q'ty Change

Copyright (C) 2017 YANMAR CO., LTD. All RightsReserved.

Fig.47. REAR DOOR(SN: 461001 AND UP)

(A)=T210-1(VERSION C
(B)=
(C)=
(D)=
(E)=
(F)=

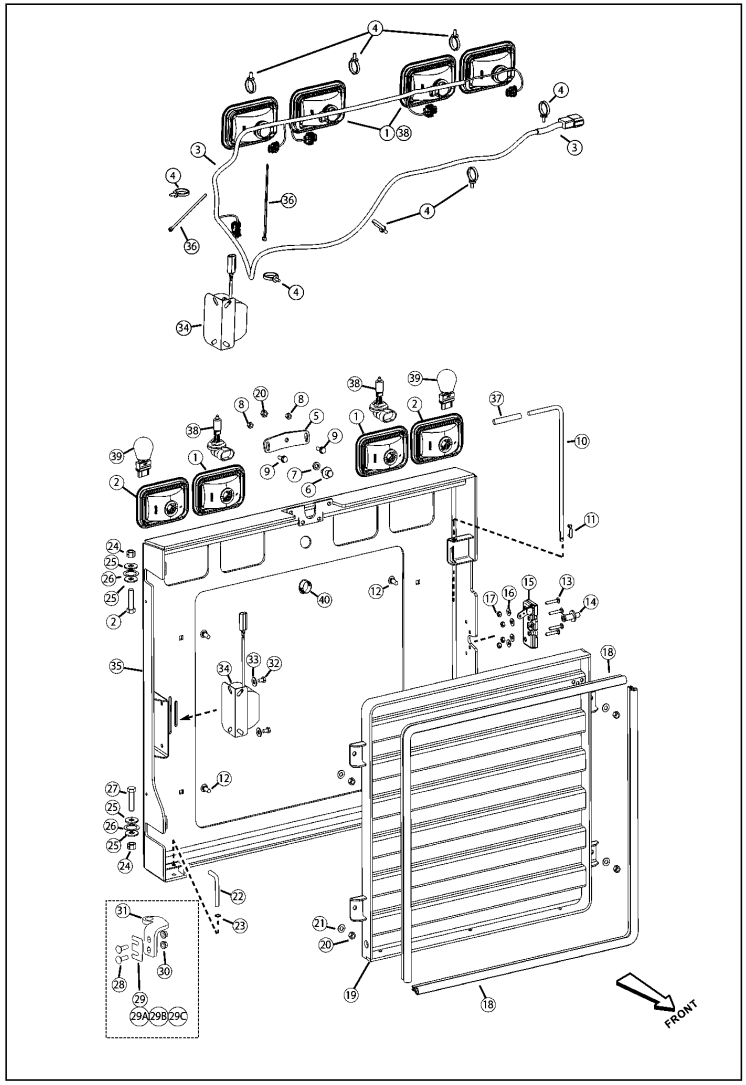

No.	Lev.	Parts No.	Description	Q'ty (A)	(B)	(C)	(D)	(E)	(F)	I	R
1	1	172551-04081	LIGHTS, WORK	2							1
2	1	172551-03871	LIGHTS, TAIL	2							2
3	1	172552-15780	HARNESS, REAR DOOR	1							
4	1	172551-04800	TIE,CABLE	8							
5	1	172559-01900	PLATE, STRIKER BOLT	1							
6	1	172551-00860	STRIKER	1							
7	1	172552-15820	SPACER	1							
8	1	172551-02760	NUT	2							
9	1	172218-05150	SCREW	2							
10	1	172551-04540	HANDLE, REAR DOOR	1							
11	1	172551-04650	CLIP	1							
12	1	172551-09750	BOLT	4							
13	1	172551-01650	BOLT	4							
14	1	172551-04590	STRIKER	1							
15	1	172551-03520	LATCH, REAR DOOR	1							
16	1	172551-10360	WASHER	4							
17	1	172559-00780	NUT	4							
18	1	172551-06190	BULBSEAL	2							
19	1	172552-15800	GRILL, REAR DOOR	1							
20	1	172559-00670	NUT	5							
21	1	172551-10400	WASHER	4							
22	1	172551-04740	ROD, DOOR STOP	1							
23	1	172551-04750	RETAINING RING	1							
24	1	172559-01920	LOCK NUT	2							
25	1	172551-10390	WASHER	4							
26	1	172551-05780	WASHER	2							
27	1	172551-09670	SCREW	2							
28	1	172551-09870	BOLT	2							
29	1	172551-06040	SHIM	1							
29A	1	172551-06050	SHIM	1							
29B	1	172551-06060	SHIM	1							
29C	1	172551-06070	SHIM	1							
30	1	172559-01930	NUT	2							
31	1	172551-06020	BRACKET, REAR DOOR	1							3
32	1	172551-09500	SCREW	2							
33	1	172551-10370	WASHER	2							
34	1	172551-01260	BACK-UP ALARM	1							
35	1	172552-15790	WELDMENT, REAR DOOR	1							
36	1	172559-00430	TIE, CABLE	2							
37	1	172559-01890	SLEEVE, PLASTIC	1							
38	1	172215-00560	BULB	2							
39	1	172559-01880	BULB, 12V-27WATT	2							
40	1	172559-01910	ANEL PLUG PLUG	1							

Remarks
(1)(clear lens) (includes bezel and bulb)
(2)(red lens) (includes bezel and bulb)
(3)(hinge)

N:Old ◄Yes/No► New, Q:Old ◄No/Yes► New, R:Old ◄Yes/Yes► New, S:Old ◄No/No► New, W:Add, Z:Discontinued, F:Interchangeable by set, K:Q'ty Change

Copyright (C) 2017 YANMAR CO., LTD. All RightsReserved.

Fig.48. REAR DOOR(SN: 461001 AND UP)

(A)=T210-1(VERSION C
(B)=
(C)=
(D)=
(E)=
(F)=

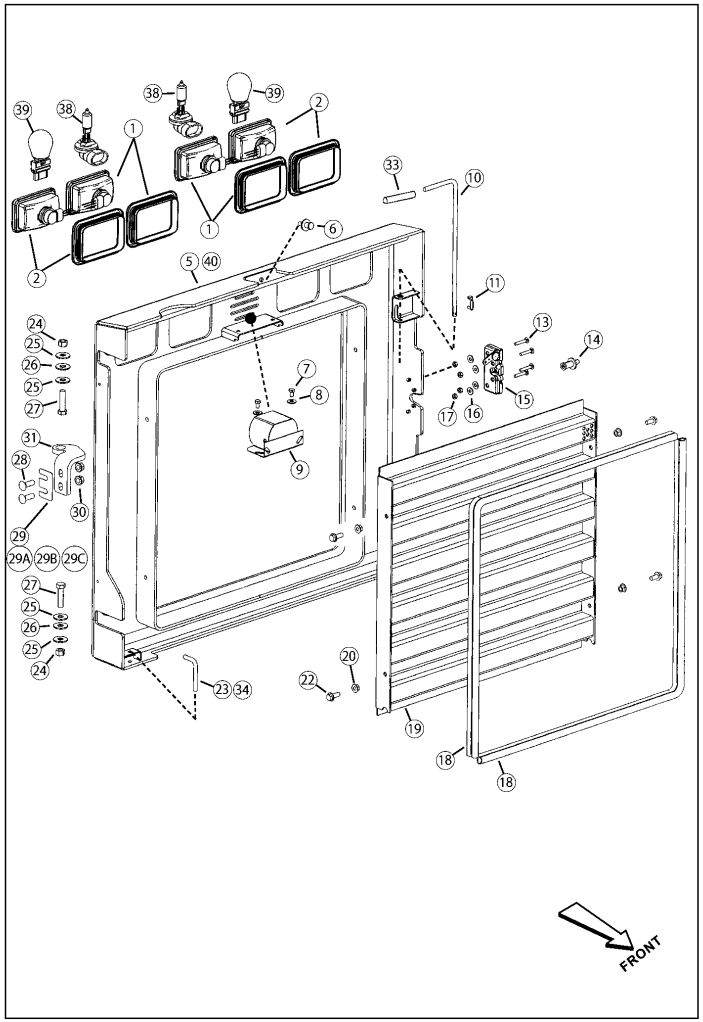

No.	Lev.	Parts No.	Description	Q'ty (A)	(B)	(C)	(D)	(E)	(F)	I	R
1	1	172551-04081	LIGHTS, WORK	2							1
2	1	172551-03871	LIGHTS, TAIL	2							2
5	1	172552-00290	DOOR	1							
6	1	172551-00860	STRIKER	1							
7	1	172551-09500	SCREW	2							
8	1	172551-10370	WASHER	2							
9	1	172551-01260	BACK-UP ALARM	1							
10	1	172551-04540	HANDLE, REAR DOOR	1							
11	1	172551-04650	CLIP	1							
13	1	172551-01650	BOLT	4							
14	1	172551-04590	STRIKER	1							
15	1	172551-03520	LATCH, REAR DOOR	1							
16	1	172551-10360	WASHER	4							
17	1	172559-00780	NUT	4							
18	1	172551-06190	BULBSEAL	2							
19	1	172551-04570	GRILLE, REAR DOOR	1							3
20	1	172551-02750	NUT	4							
22	1	172559-01940	SCREW	4							
23	1	172551-04740	ROD, DOOR STOP	1							
24	1	172559-01920	LOCK NUT	2							
25	1	172551-10390	WASHER	4							
26	1	172551-05780	WASHER	2							
27	1	172551-09670	SCREW	2							
28	1	172551-09870	BOLT	2							
29	1	172551-06040	SHIM	1							
29A	1	172551-06050	SHIM	1							
29B	1	172551-06060	SHIM	1							
29C	1	172551-06070	SHIM	1							
30	1	172559-01930	NUT	2							
31	1	172551-06020	BRACKET, REAR DOOR	1							4
33	1	172559-01890	SLEEVE, PLASTIC	1							
34	1	172551-04750	RETAINING RING	1							5
38	1	172215-00560	BULB	2							
39	1	172559-01880	BULB, 12V-27WATT	2							
40	1	172551-06000	WIRE HARNESS	1							6

Remarks
(1)(clear lens) (includes bezel and bulb)
(2)(red lens) (includes bezel and bulb)
(3)(not used on EU machines)
(4)(hinge)
(5)(not shown)
(6)(not shown)

N:Old $\xleftarrow[\text{No}]{\text{Yes}}$ New, Q:Old $\xleftarrow[\text{Yes}]{\text{No}}$ New, R:Old $\xleftarrow[\text{Yes}]{\text{Yes}}$ New, S:Old $\xleftarrow[\text{No}]{\text{No}}$ New, W:Add, Z:Discontinued, F:Interchangeable by set, K:Q'ty Change

Copyright (C) 2017 YANMAR CO., LTD. All RightsReserved.

Fig.49. REAR ACCESS DOORS(SN: 461151 AND UP)

(A)=T210-1(VERSION C
(B)=
(C)=
(D)=
(E)=
(F)=

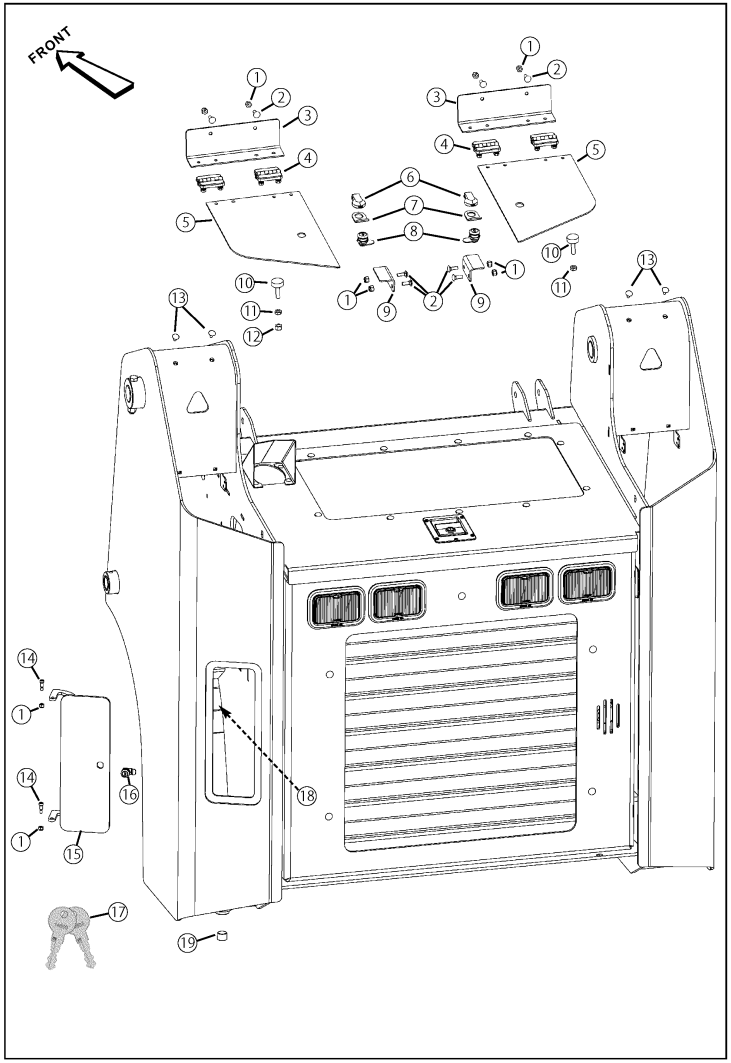

No.	Lev.	Parts No.	Description	Q'ty (A)	(B)	(C)	(D)	(E)	(F)	I	R
1	1	172551-09830	BOLT	8							
2	1	172559-00510	NUT	10							
3	1	172559-01950	HINGE PLATE	2							
4	1	172559-02000	HINGE	4							
5	1	172559-01970	COVER, TOWER	2							
6	1	172559-02010	COVER, CAM LOCK	2							
7	1	172559-01990	PULL TAB	2							
8	1	172559-01980	CAMLOCK	2							1
9	1	172559-01960	BRACKET, CAM LOCK	2							
10	1	172551-01070	BUMPER	2							
11	1	172551-10320	NUT	2							
12	1	172559-01280	LOCK NUT	1							
13	1	172551-08910	PLUG	4							
14	1	172551-08550	SHOULDER BOLT	2							
15	1	172551-03840	WELDMENT	1							
16	1	172551-04162	CAMLOCK	1							2
17	1	172552-15110	KEY	1							3
18	1	172551-02430	PLUG	1							4
19	1	172551-02190	PLUG	1							

Remarks
(1)(Does not include key. For replacementkey, order item 17)
(2)(includes item 16)
(3)(code #14603; used with items 8 & 16)
(4)(Out of view - located inside left tool box under the battery on the front wall of the tool box.)

N:Old $\xleftrightarrow[\text{No}]{\text{Yes}}$ New, Q:Old $\xleftrightarrow[\text{Yes}]{\text{No}}$ New, R:Old $\xleftrightarrow[\text{Yes}]{\text{Yes}}$ New, S:Old $\xleftrightarrow[\text{No}]{\text{No}}$ New, W:Add, Z:Discontinued, F:Interchangeable by set, K:Q'ty Change

Copyright (C) 2017 YANMAR CO., LTD. All RightsReserved.

Fig.50. REAR ACCESS DOORS(SN: 461001 - 461150)

(A)=T210-1(VERSION C
(B)=
(C)=
(D)=
(E)=
(F)=

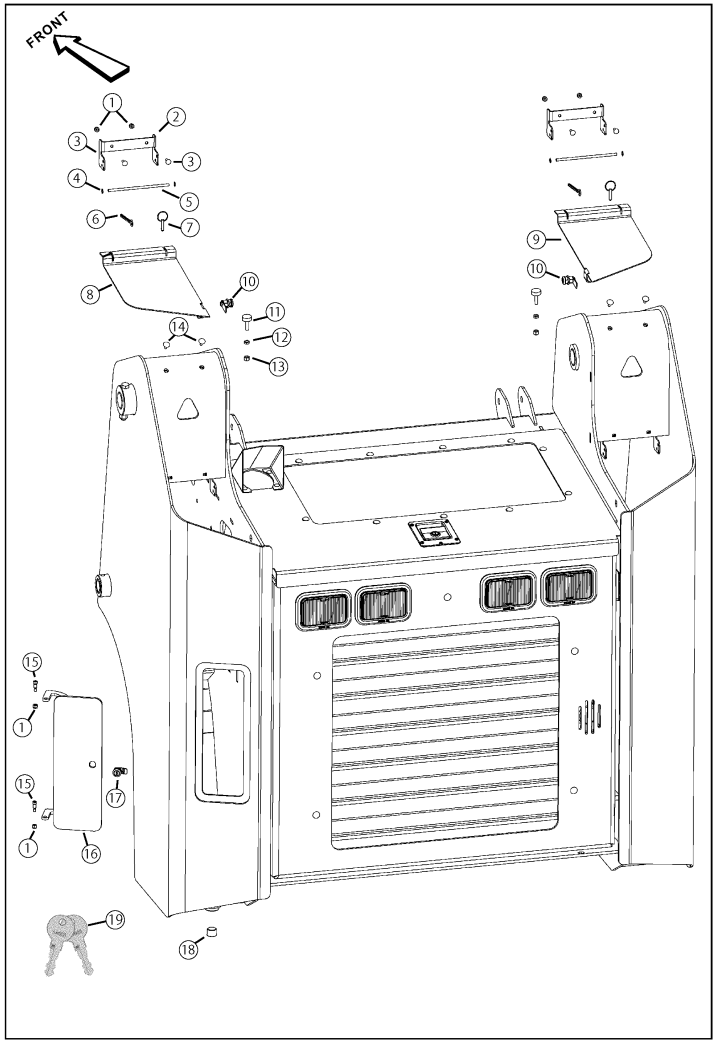

No.	Lev.	Parts No.	Description	Q'ty (A)	(B)	(C)	(D)	(E)	(F)	I	R
1	1	172559-00510	NUT	6							
2	1	172551-05390	BRACKET	2							
3	1	172551-09830	BOLT	4							
4	1	172551-04400	KEEPER	4							
5	1	172551-04390	BAR	2							
6	1	172551-05930	SASH CHAIN	2							
7	1	172551-05730	PIN, CLEVIS W/RING	2							
8	1	172552-00480	WELDMENT	1							1
9	1	172552-00490	WELDMENT	1							2
10	1	172551-04920	CAM LOCK	2							3
11	1	172551-01070	BUMPER	2							
12	1	172551-10320	NUT	2							
13	1	172559-01280	LOCK NUT	2							
14	1	172551-08910	PLUG	4							
15	1	172551-08550	SHOULDER BOLT	2							
16	1	172551-03840	WELDMENT	1							
17	1	172551-04162	CAMLOCK	1							4
18	1	172551-02190	PLUG	1							
19	1	172552-15110	KEY	1							5

Remarks
(1)(left)
(2)(right)
(3)(Does not include key. For replacementkey, order item 19)
(4)(includes item 19)
(5)(code #14603; used with items 10 & 17)

N:Old $\overset{\text{Yes}}{\underset{\text{No}}{\leftrightarrow}}$ New, Q:Old $\overset{\text{No}}{\underset{\text{Yes}}{\leftrightarrow}}$ New, R:Old $\overset{\text{Yes}}{\underset{\text{Yes}}{\leftrightarrow}}$ New, S:Old $\overset{\text{No}}{\underset{\text{No}}{\leftrightarrow}}$ New, W:Add, Z:Discontinued, F:Interchangeable by set, K:Q'ty Change

Copyright (C) 2017 YANMAR CO., LTD. All RightsReserved.

Fig.51. REAR ACCESS DOORS(SN: 461000 AND BEFORE)

(A)=T210-1(VERSION C
(B)=
(C)=
(D)=
(E)=
(F)=

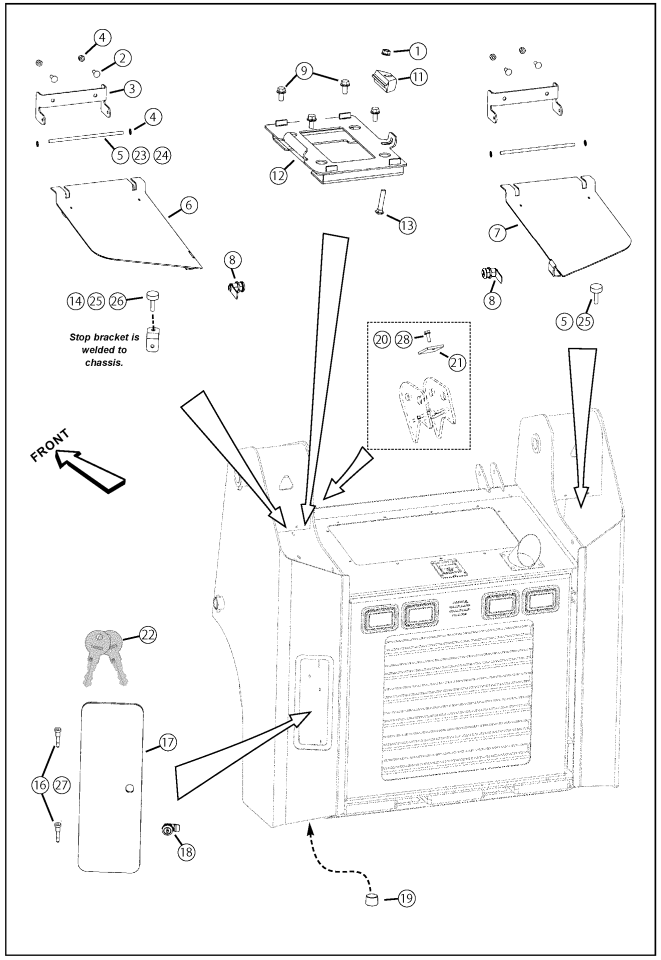

No.	Lev.	Parts No.	Description	Q'ty (A)	(B)	(C)	(D)	(E)	(F)	I	R
1	1	172559-00510	NUT	4							
2	1	172551-09830	BOLT	4							
3	1	172551-05390	BRACKET	2							
4	1	172551-04400	KEEPER	4							
5	1	172551-04390	BAR	2							
6	1	172552-00480	WELDMENT	1							
7	1	172552-00490	WELDMENT	1							
8	1	172551-04920	CAM LOCK	2							1
9	1	172559-02020	CS FL LOCK	4							
11	1	172551-02670	HOLDER, BATTERY	1							
12	1	172551-05120	WELDMENT	1							
13	1	172551-10260	BOLT	1							
14	1	172551-01070	BUMPER	2							
16	1	172551-08550	SHOULDER BOLT	2							
17	1	172551-03840	WELDMENT	1							
18	1	172551-04162	CAMLOCK	1							2
19	1	172551-02190	PLUG	1							
20	1	172551-09880	SCREW	1							
21	1	172551-08580	PLATE, DOWN STOP	4							
22	1	172552-15110	KEY	1							3
23	1	172551-05930	SASH CHAIN	2							4
24	1	172551-05730	PIN, CLEVIS W/RING	2							
25	1	172551-10320	NUT	2							5
26	1	172559-01280	LOCK NUT	1							5
27	1	172559-00510	NUT	2							5
28	1	172551-09890	WASHER	1							

Remarks
(1)(does not include key)Early units used a different key set than later units.
If the ignition key will not open this lock, order P/N L99157 Series I lock);
if, however, the ignition keyopens the lock, order replacement key item 22 (Series II lock).
(2)(includes key?item 22)Early units used a different key set than later units.
If the ignition key will not open this lock, order P/N L99157 Series I lock);
if, however, the ignition keyopens the lock, order replacement key item 22 (Series II lock).
(3)(code #14603; used with items 8 & 18)
(4)(not shown)
(5)(not shown)

N:Old ←Yes/No→ New, Q:Old ←No/Yes→ New, R:Old ←Yes/Yes→ New, S:Old ←No/No→ New, W:Add, Z:Discontinued, F:Interchangeable by set, K:Q'ty Change

Copyright (C) 2017 YANMAR CO., LTD. All RightsReserved.

Fig.52. REAR HOOD(SN: 461001 AND UP)

(A)=T210-1(VERSION C
(B)=
(C)=
(D)=
(E)=
(F)=

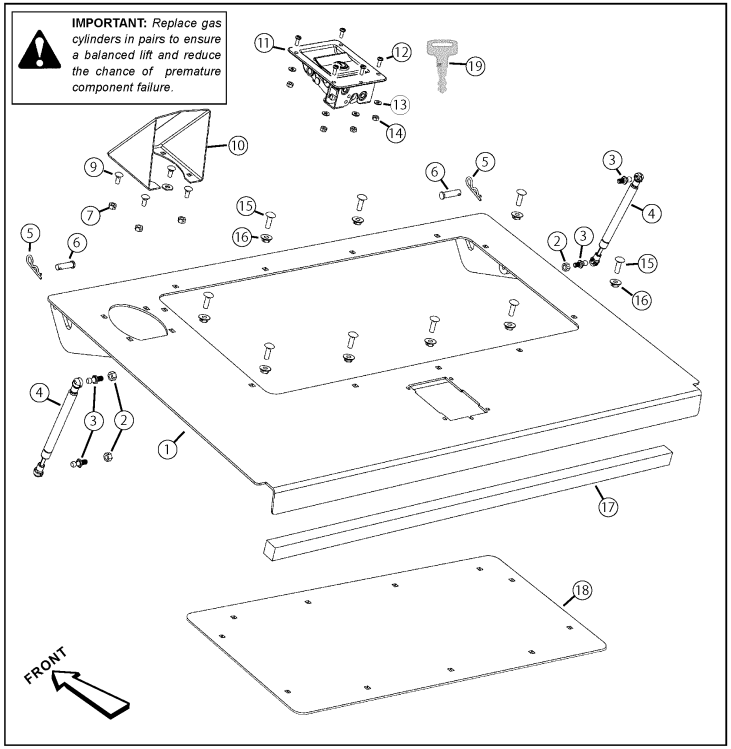

No.	Lev.	Parts No.	Description	Q'ty (A)	(B)	(C)	(D)	(E)	(F)	I	R
1	1	172552-15830	COVER, ENGINE REAR	1							
2	1	172559-00450	NUT	3							
3	1	172551-10700	STUD, BALL	4							
4	1	172551-08710	GAS CYLINDER	2							1
5	1	172559-00180	COTTER	2							
6	1	172559-00150	CLEVIS PIN	2							
7	1	172215-06610	NUT	4							
9	1	172551-09820	BOLT	4							
10	1	172552-15850	HOOD, EXHAUST	1							
11	1	172551-03530	LATCH, HOOD	1							2
12	1	172551-10030	SCREW	5							
13	1	172551-09660	WASHER	5							
14	1	172551-09990	NUT	5							
15	1	172551-09470	BOLT	11							
16	1	172551-02760	NUT	11							
17	1	172552-15840	FOAM STRIP	1							
18	1	172551-04580	SCREEN	1							3
19	1	172551-07990	KEY	1							4

Remarks
(1)(replace in pairs)
(2)(includes one key; item 19)
(3)(not used if the machine is equipped with air conditioning)
(4)-800

N:Old $\xleftarrow[\text{No}]{\text{Yes}}$ New, Q:Old $\xleftarrow[\text{Yes}]{\text{No}}$ New, R:Old $\xleftarrow[\text{Yes}]{\text{Yes}}$ New, S:Old $\xleftarrow[\text{No}]{\text{No}}$ New, W:Add, Z:Discontinued, F:Interchangeable by set, K:Q'ty Change

Copyright (C) 2017 YANMAR CO., LTD. All RightsReserved.

Fig.53. REAR HOOD - AIR CONDITIONING CONDENSER ASSEMBLY(SN: 461001 AND UP)

(A)=T210-1(VERSION C
(B)=
(C)=
(D)=
(E)=
(F)=

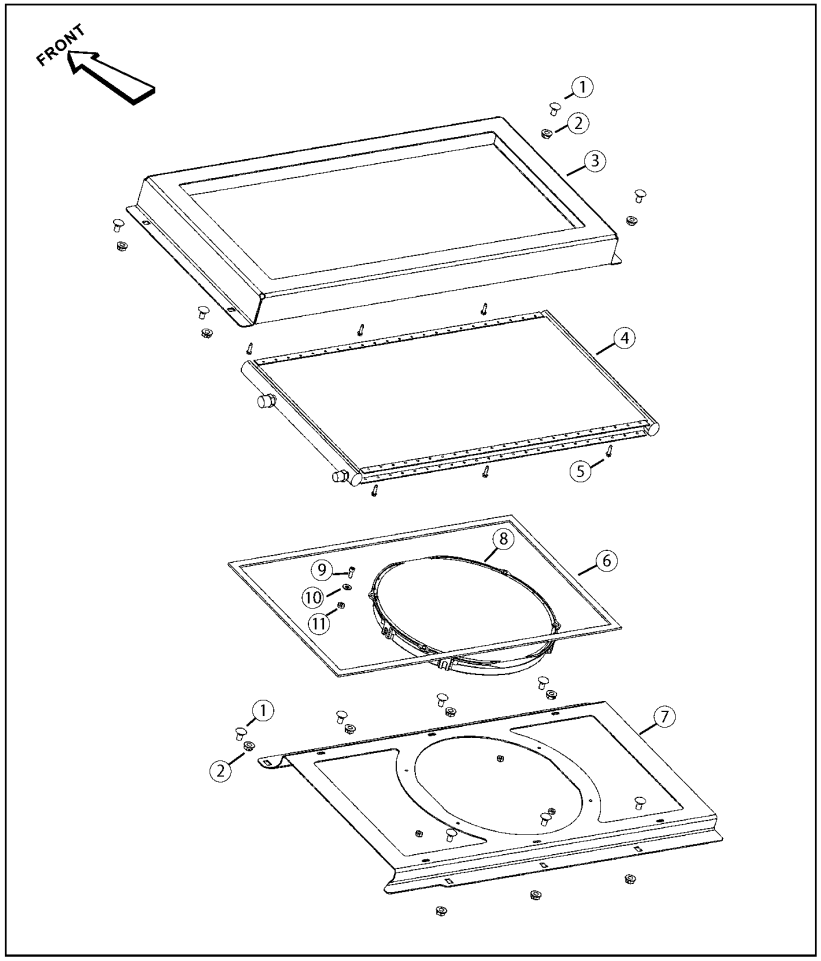

No.	Lev.	Parts No.	Description	Q'ty (A)	(B)	(C)	(D)	(E)	(F)	I	R
1	1	172551-09470	BOLT	11							
2	1	172551-02760	NUT	11							
3	1	172552-15860	COVER, CONDENSOR	1							
4	1	172551-10590	CONDENSER	1							
5	1	172551-06740	SCREW	8							
6	1	172551-04350	TAPE, FOAM SEALING	1							
7	1	172552-15870	MOUNT, CONDENSOR	1							
8	1	172551-10580	FAN, CONDENSER	1							
9	1	172551-09970	SCREW	4							
10	1	172551-09640	WASHER	4							
11	1	172551-09990	NUT	4							

N:Old $\frac{\text{Yes}}{\text{No}}$ New, Q:Old $\frac{\text{No}}{\text{Yes}}$ New, R:Old $\frac{\text{Yes}}{\text{Yes}}$ New, S:Old $\frac{\text{No}}{\text{No}}$ New, W:Add, Z:Discontinued, F:Interchangeable by set, K:Q'ty Change

Copyright (C) 2017 YANMAR CO., LTD. All RightsReserved.

Fig.54. REAR HOOD(SN: 461000 AND BEFORE)

(A)=T210-1(VERSION C
(B)=
(C)=
(D)=
(E)=
(F)=

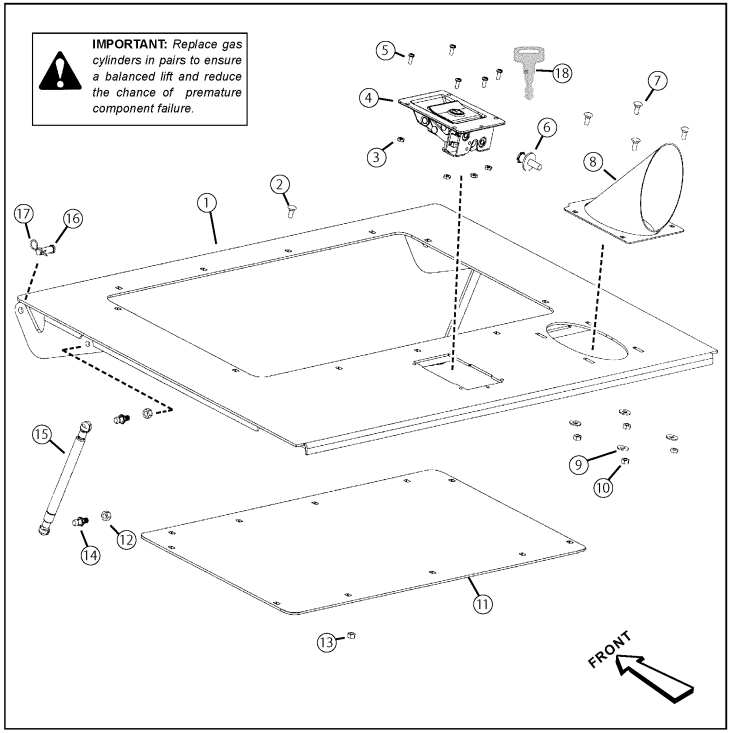

No.	Lev.	Parts No.	Description	Q'ty (A)	(B)	(C)	(D)	(E)	(F)	I	R
1	1	172559-02030	HOOD, REAR	1							
2	1	172218-05000	BOLT	11							
3	1	172551-09990	NUT	5							
4	1	172551-03530	LATCH, HOOD	1							1
5	1	172551-10030	SCREW	5							
6	1	172551-00860	STRIKER	1							
7	1	172551-09820	BOLT	4							
8	1	172551-04330	WELDMENT	1							
9	1	172551-10360	WASHER	4							
10	1	172559-00780	NUT	4							
11	1	172551-04580	SCREEN	1							2
12	1	172559-00450	NUT	1							
13	1	172551-02760	NUT	11							
14	1	172551-10700	STUD, BALL	4							
15	1	172551-08710	GAS CYLINDER	2							3
16	1	172559-00150	CLEVIS PIN	2							
17	1	172559-00180	COTTER	2							
18	1	172551-07990	KEY	1							4

Remarks
(1)(includes one key; item 18)
(2)(not used if the machine is equipped with air conditioning)
(3)(replace in pairs)
(4)8001 (14603)

N:Old $\xleftrightarrow[\text{No}]{\text{Yes}}$ New, Q:Old $\xleftrightarrow[\text{Yes}]{\text{No}}$ New, R:Old $\xleftrightarrow[\text{Yes}]{\text{Yes}}$ New, S:Old $\xleftrightarrow[\text{No}]{\text{No}}$ New, W:Add, Z:Discontinued, F:Interchangeable by set, K:Q'ty Change

Copyright (C) 2017 YANMAR CO., LTD. All RightsReserved.

Fig.55. REAR HOOD - AIR CONDITIONING CONDENSER ASSEMBLY(SN: 461000 AND BEFORE)

(A)=T210-1(VERSION C
(B)=
(C)=
(D)=
(E)=
(F)=

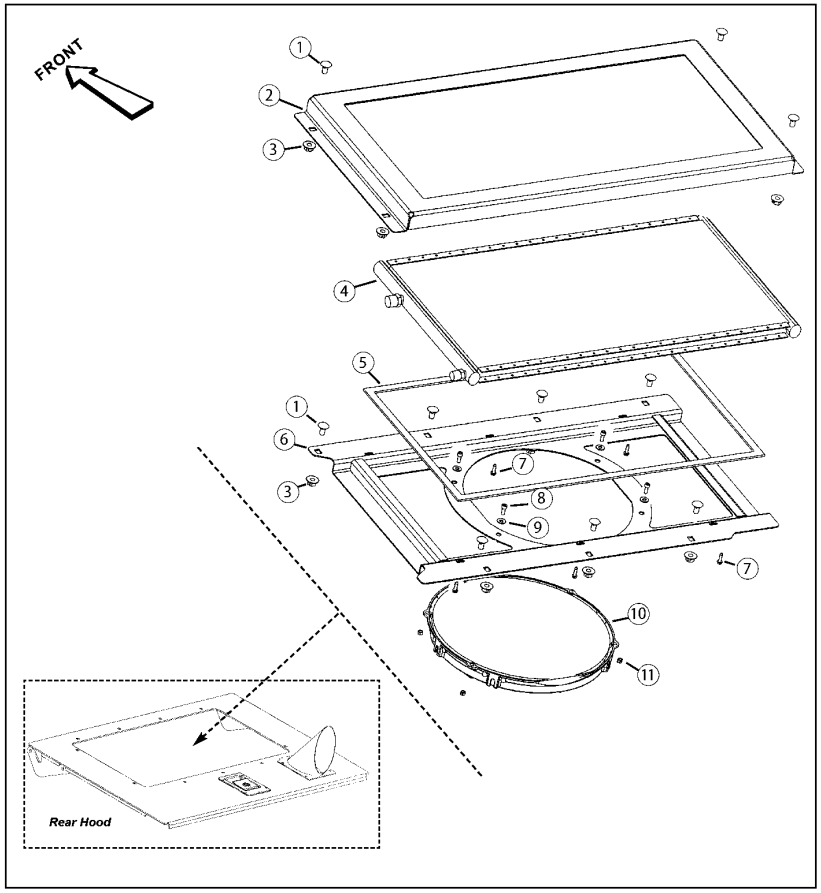

No.	Lev.	Parts No.	Description	Q'ty (A)	(B)	(C)	(D)	(E)	(F)	I	R
1	1	172551-09470	BOLT	11							
2	1	172551-08650	WELDMENT	1							
3	1	172551-02760	NUT	11							
4	1	172551-10590	CONDENSER	1							
5	1	172551-04350	TAPE, FOAM SEALING	1							
6	1	172551-08640	WELDMENT	1							
7	1	172551-06740	SCREW	6							
8	1	172551-09970	SCREW	4							
9	1	172551-09640	WASHER	4							
10	1	172551-10580	FAN, CONDENSER	1							
11	1	172551-09990	NUT	4							

N:Old $\xleftrightarrow[\text{No}]{\text{Yes}}$ New, Q:Old $\xleftrightarrow[\text{Yes}]{\text{No}}$ New, R:Old $\xleftrightarrow[\text{Yes}]{\text{Yes}}$ New, S:Old $\xleftrightarrow[\text{No}]{\text{No}}$ New, W:Add, Z:Discontinued, F:Interchangeable by set, K:Q'ty Change

Copyright (C) 2017 YANMAR CO., LTD. All RightsReserved.

Fig.56. CHASSIS WIRE HARNESS / COMPONENTS(SN: 461101 AND UP)

(A)=T210-1(VERSION C
(B)=
(C)=
(D)=
(E)=
(F)=

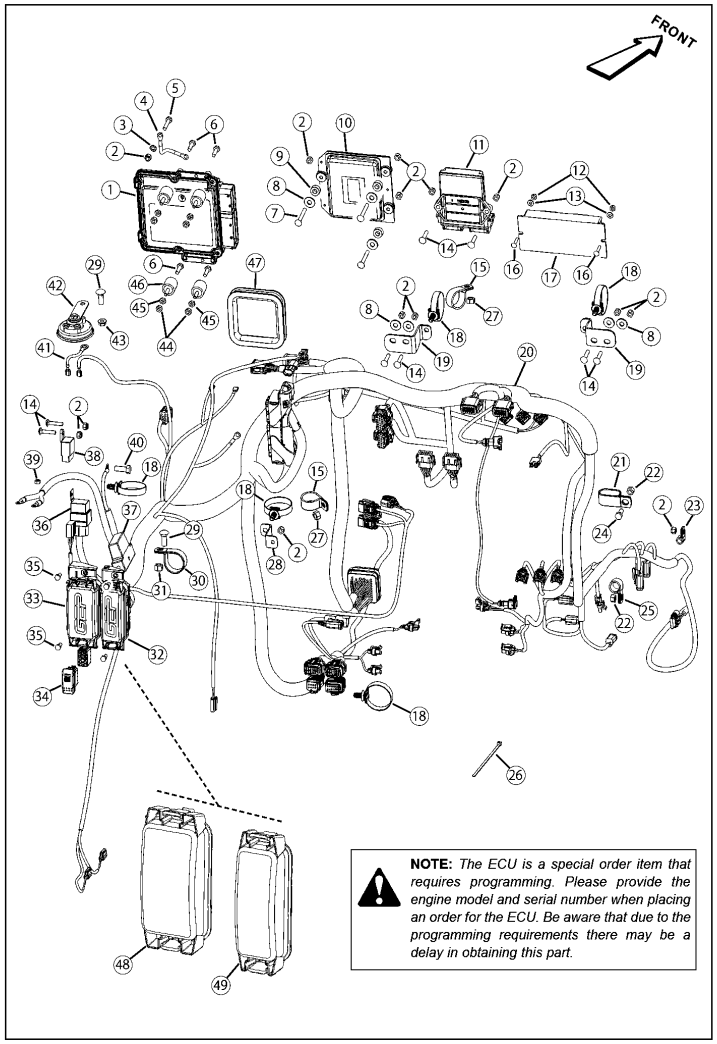

No.	Lev.	Parts No.	Description	Q'ty (A)	(B)	(C)	(D)	(E)	(F)	I	R
1	1	172559-02040	ECU	1							1
2	1	172559-00510	NUT	1							
3	1	172552-15970	NUT	1							
4	1	172552-15940	CABLE, GROUND	1							
5	1	172551-09460	SCREW	1							
6	1	172552-15900	SCREW	4							
7	1	172551-10280	BOLT	3							
8	1	172551-10370	WASHER	1							
9	1	172551-00970	SPACER	3							
10	1	172559-02070	CONTROLLER MAESTRO 2	1							
11	1	172551-05030	CONTROLLER	1							
12	1	172559-00790	NUT	2							
13	1	172551-09660	WASHER	2							
14	1	172551-09940	BOLT	1							
15	1	172559-01750	CLAMP	2							
16	1	172551-09390	BOLT	2							
17	1	172551-15300	MODULE, INTERLOCK	1							
18	1	172551-08760	CABLE TIE AND MOUNT	5							
19	1	172552-15910	BRACKET, HARNESS	2							
20	1	172559-02060	WIRE HARNESS CHASSIS	1							
21	1	172551-01180	CLAMP	1							
22	1	172559-00450	NUT	2							
23	1	172559-02090	CLAMP	1							
24	1	172551-09510	SCREW	1							
25	1	172551-01270	CLAMP	1							
26	1	172559-00430	TIE, CABLE	1							
27	1	172551-10300	NUT	2							
28	1	172552-15930	BRACKET, HARNESS	1							
29	1	172551-09750	BOLT	2							
30	1	172559-02080	CLAMP	1							
31	1	172559-00670	NUT	1							
32	1	172552-16010	COVER,FUSE/RELAY BOX	1							2
33	1	172552-16000	COVER,FUSE/RELAY BOX	1							2
34	1	172551-05050	SWITCH	1							
35	1	172551-10510	SCREW	4							
36	1	172559-02050	RELAY, SEALED ISO	1							2
37	1	172551-03020	MAXI FUSE	1							2
38	1	172217-15150	RELAY, CA TYPE C	1							3
39	1	172551-10430	NUT	1							
40	1	172551-09530	SCREW	1							
41	1	172551-09190	GROUND WIRE	1							2
42	1	172551-01980	HORN	1							
43	1	172551-02760	NUT	1							
44	1	172551-10290	NUT	4							
45	1	172217-03970	NUT	4							
46	1	172552-15920	ISOLATOR	4							
47	1	172552-15950	TRIM, EDGE	1							
48	1	172552-16000	COVER,FUSE/RELAY BOX	1							4
49	1	172552-16010	COVER,FUSE/RELAY BOX	1							5

Remarks
(1)Refer to "NOTE" in illustration.
(2)(included with chassis wire harness)
(3)(included with engine wire harness)
(4)(72-pin)(included with chassis wire harness)
(5)(48-pin) (included with chassis wire harness)

N:Old ←Yes/No→ New, Q:Old ←No/Yes→ New, R:Old ←Yes/Yes→ New, S:Old ←No/No→ New, W:Add, Z:Discontinued, F:Interchangeable by set, K:Q'ty Change

Copyright (C) 2017 YANMAR CO., LTD. All RightsReserved.

Fig.57. CHASSIS WIRE HARNESS / COMPONENTS(SN: 461001 - 461100)

(A)=T210-1(VERSION C
(B)=
(C)=
(D)=
(E)=
(F)=

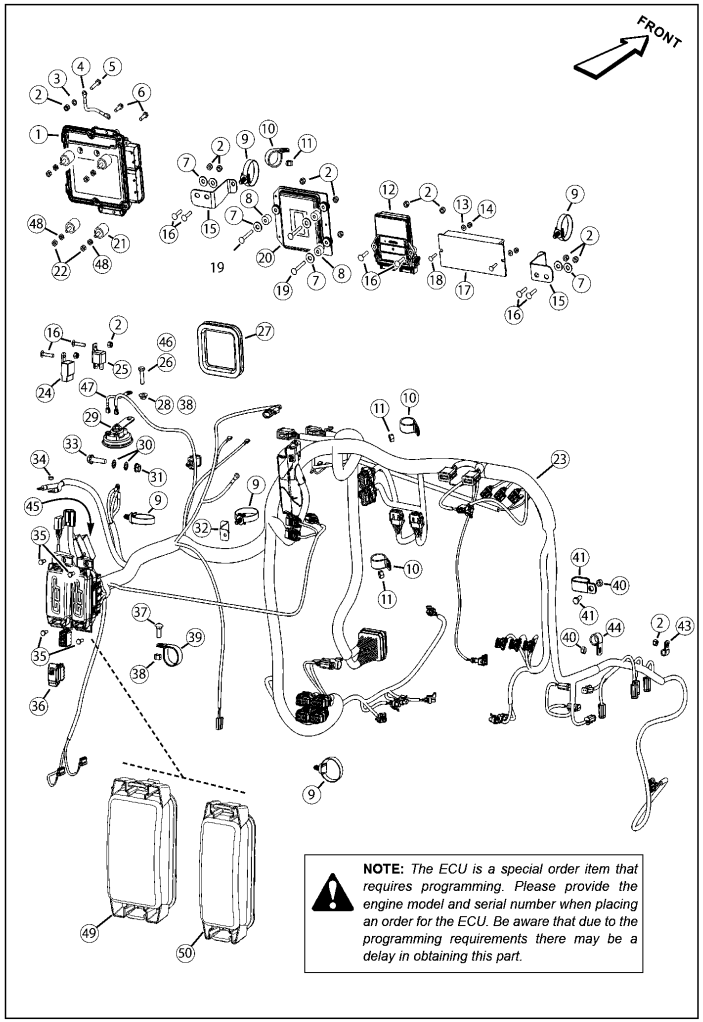

No.	Lev.	Parts No.	Description	Q'ty (A)	(B)	(C)	(D)	(E)	(F)	I	R
1	1	172559-02040	ECU	1							1
2	1	172559-00510	NUT	1							
3	1	172552-15970	NUT	1							
4	1	172552-15940	CABLE, GROUND	1							
5	1	172551-09460	SCREW	1							
6	1	172552-15900	SCREW	4							
7	1	172551-10370	WASHER	1							
8	1	172551-00970	SPACER	3							
9	1	172551-08760	CABLE TIE AND MOUNT	5							
10	1	172559-01750	CLAMP	3							
11	1	172551-10300	NUT	3							
12	1	172551-05030	CONTROLLER	1							
13	1	172551-09660	WASHER	2							
14	1	172559-00790	NUT	2							
15	1	172552-15910	BRACKET, HARNESS	2							
16	1	172551-09940	BOLT	1							
17	1	172551-15300	MODULE, INTERLOCK	1							
18	1	172551-09390	BOLT	2							
19	1	172551-10280	BOLT	3							
20	1	172551-15310	CONTROLLER, MAESTRO	1							
21	1	172552-15920	ISOLATOR	4							
22	1	172551-10290	NUT	4							
23	1	172552-15890	HARNESS, CHASSIS	1							
24	1	172217-15150	RELAY, CA TYPE C	1							
25	1	172551-02990	RELAY	1							
26	1	172551-09600	SCREW	1							
27	1	172552-15950	TRIM, EDGE	1							
28	1	172551-02760	NUT	1							
29	1	172551-01980	HORN	1							
30	1	172215-03330	WASHER	2							
31	1	172559-02110	NUT	1							
32	1	172552-15930	BRACKET, HARNESS	1							
33	1	172559-02100	SCREW	1							
34	1	172551-10430	NUT	1							
35	1	172551-10510	SCREW	4							
36	1	172551-05050	SWITCH	1							
37	1	172551-09750	BOLT	1							
38	1	172559-00670	NUT	1							
39	1	172559-02080	CLAMP	1							
40	1	172559-00450	NUT	2							
41	1	172551-01180	CLAMP	1							
42	1	172551-09510	SCREW	1							
43	1	172559-02090	CLAMP	1							
44	1	172551-01270	CLAMP	1							
45	1	172551-03020	MAXI FUSE	1							2
46	1	172551-09750	BOLT	1							3
47	1	172551-09190	GROUND WIRE	1							
48	1	172217-03970	NUT	4							4
49	1	172552-16000	COVER,FUSE/RELAY BOX	1							5
50	1	172552-16010	COVER,FUSE/RELAY BOX	1							6

Remarks
(1)Refer to "NOTE" in illustration.
(2)(out of view)
(3)(not shown)
(4)(jam nut)
(5)(72-pin)
(6)(48-pin)

N:Old $\xleftarrow[\text{No}]{\text{Yes}}$ New, Q:Old $\xleftarrow[\text{Yes}]{\text{No}}$ New, R:Old $\xleftarrow[\text{Yes}]{\text{Yes}}$ New, S:Old $\xleftarrow[\text{No}]{\text{No}}$ New, W:Add, Z:Discontinued, F:Interchangeable by set, K:Q'ty Change

Copyright (C) 2017 YANMAR CO., LTD. All RightsReserved.

Fig.58. CHASSIS WIRE HARNESS / COMPONENTS(SN: 461000 AND BEFORE)

(A)=T210-1(VERSION C
(B)=
(C)=
(D)=
(E)=
(F)=

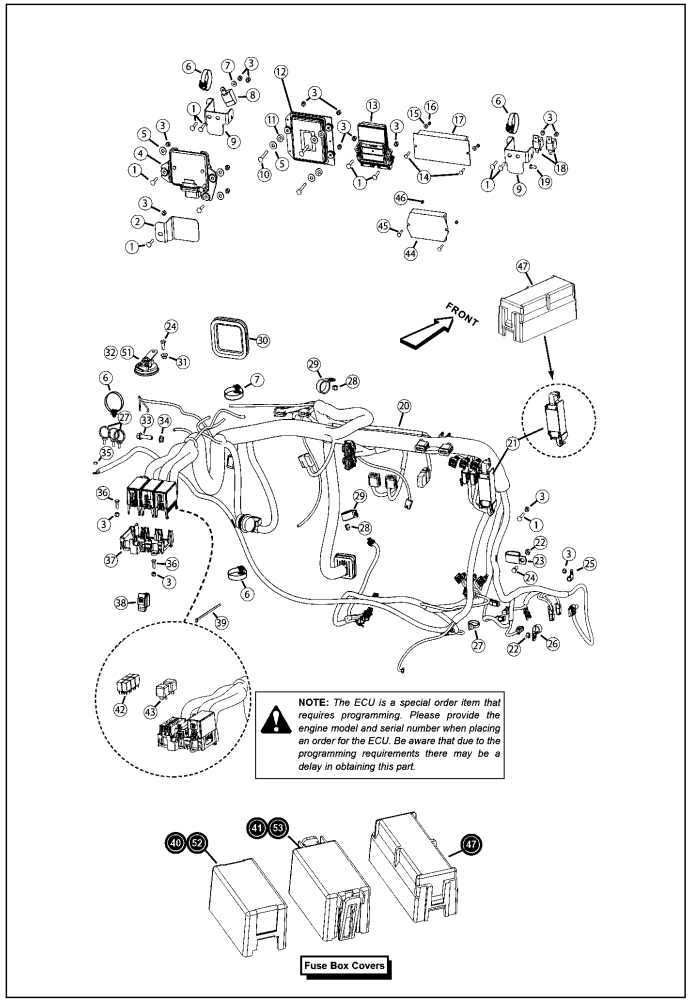

No.	Lev.	Parts No.	Description	Q'ty (A)	(B)	(C)	(D)	(E)	(F)	I	R
1	1	172551-09940	BOLT	1							
2	1	172551-08570	ECU COVER	1							
3	1	172559-00510	NUT	1							
4	1	172551-15130	ECU ASSY, ENGINE	1							
5	1	172551-10370	WASHER	1							
6	1	172551-08760	CABLE TIE AND MOUNT	5							
7	1	172551-09890	WASHER	1							
8	1	172217-15150	RELAY, CA TYPE C	1							
9	1	172551-06250	BRACKET, HARNESS	2							
10	1	172551-10280	BOLT	3							
11	1	172551-00970	SPACER	3							
12	1	172551-15310	CONTROLLER, MAESTRO	1							
13	1	172551-05030	CONTROLLER	1							
14	1	172559-02120	SCREW	2							
15	1	172551-09660	WASHER	2							
16	1	172559-00790	NUT	2							
17	1	172551-15300	MODULE, INTERLOCK	1							
18	1	172559-02050	RELAY, SEALED ISO	2							1
19	1	172551-10510	SCREW	1							
20	1	172551-05990	WIRE HARNESS	1							
21	1	172551-06090	FUSE BOX	1							2
22	1	172559-00450	NUT	2							
23	1	172551-01180	CLAMP	1							
24	1	172551-09510	SCREW	2							
25	1	172559-02090	CLAMP	1							
26	1	172551-01270	CLAMP	2							
27	1	172551-04800	TIE,CABLE	1							
28	1	172551-10300	NUT	2							
29	1	172559-01750	CLAMP	1							
30	1	172551-06350	TRIM EDGE	1							
31	1	172551-02760	NUT	1							
32	1	172551-01980	HORN	1							
33	1	172559-02100	SCREW	1							
34	1	172559-02110	NUT	1							
35	1	172551-10430	NUT	1							
36	1	172551-09480	SCREW	2							
37	1	172551-08690	BRACKET,FUSE BOX	1							
38	1	172551-05050	SWITCH	1							
39	1	172559-00430	TIE, CABLE	1							
40	1	172551-04480	COVER	2							2
41	1	172551-04490	COVER	1							2
42	1	172551-04290	RELAY	1							3
43	1	172551-04040	RELAY	1							3
44	1	172551-04790	CONTROLLER,HIGH-FLOW	1							4
45	1	172559-02120	SCREW	2							
46	1	172551-09990	NUT	2							
47	1	172551-11270	COVER	1							5
51	1	172551-09190	GROUND WIRE	1							6
52	1	172551-04500	COVER	1							6
53	1	172551-04500	COVER	1							6

Remarks
(1)(SN 461001- 461000)
(2)(included with item 20)
(3)(20 AMP)
(3)(40 AMP)
(4)SN 461000 and before when equipped with High-Flow hydraulics
(5)(not included with item #21)
(6)(not shown)

N:Old $\xleftarrow[\text{No}]{\text{Yes}}$ New, Q:Old $\xleftarrow[\text{Yes}]{\text{No}}$ New, R:Old $\xleftarrow[\text{Yes}]{\text{Yes}}$ New, S:Old $\xleftarrow[\text{No}]{\text{No}}$ New, W:Add, Z:Discontinued, F:Interchangeable by set, K:Q'ty Change

Copyright (C) 2017 YANMAR CO., LTD. All RightsReserved.

Fig.59. FUSE BOXES / FUSES / RELAYS(SN: 461101 AND UP)

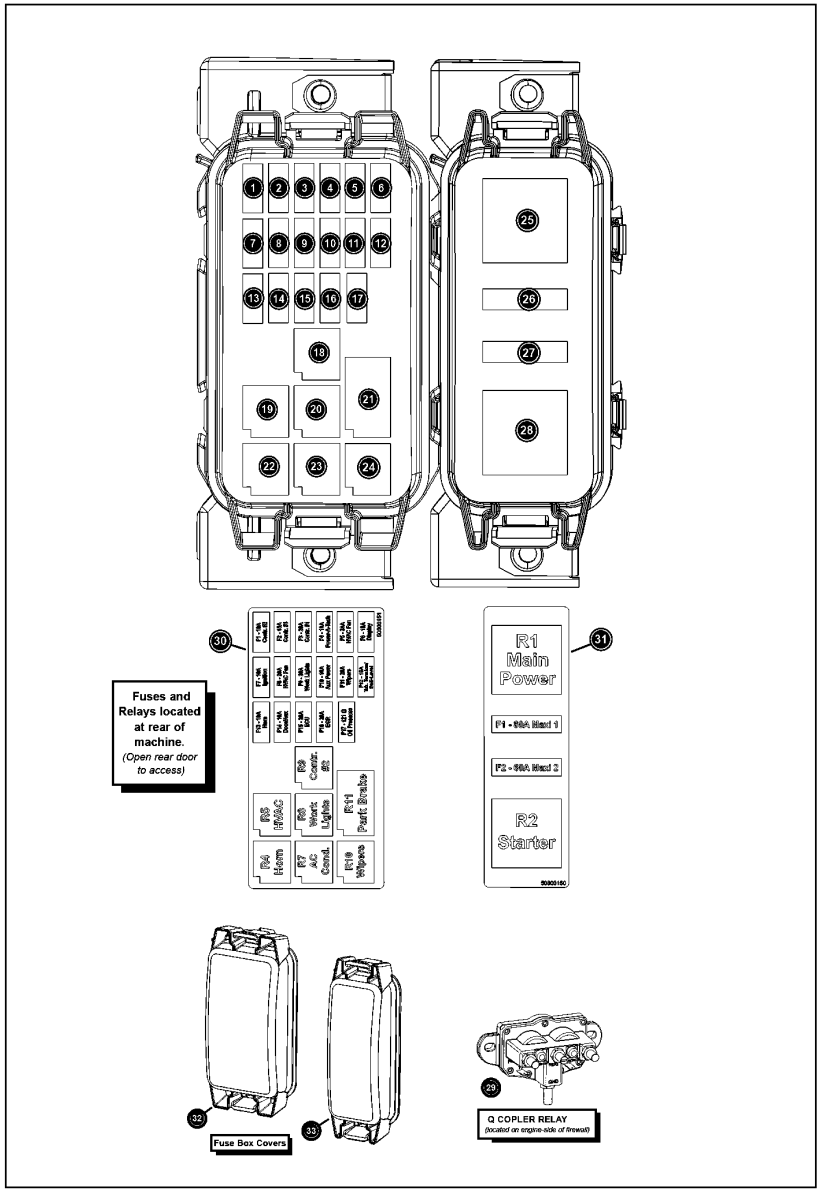

(A)=T210-1(VERSION C (D)=
(B)= (E)=
(C)= (F)=

No.	Lev.	Parts No.	Description	Q'ty (A)	(B)	(C)	(D)	(E)	(F)	I	R
1	1	172551-02180	MINI FUSE	1							
2	1	172551-00830	MINI FUSE	1							
3	1	172551-00870	MINI FUSE	1							
4	1	172551-02180	MINI FUSE	1							
5	1	172552-15980	MINI FUSE	1							
6	1	172551-02180	MINI FUSE	1							
7	1	172551-02180	MINI FUSE	1							
8	1	172551-00870	MINI FUSE	1							
9	1	172551-00870	MINI FUSE	1							
10	1	172551-02180	MINI FUSE	1							
11	1	172551-00870	MINI FUSE	1							
12	1	172551-00830	MINI FUSE	1							
13	1	172551-02180	MINI FUSE	1							
14	1	172551-02180	MINI FUSE	1							
15	1	172551-00870	MINI FUSE	1							
16	1	172551-00870	MINI FUSE	1							
17	1	172551-06820	RESISTOR	1							
18	1	172552-16040	RELAY, MICOR (20A)	1							
19	1	172552-16040	RELAY, MICOR (20A)	1							
20	1	172552-16040	RELAY, MICOR (20A)	1							
21	1	172551-04290	RELAY	1							
22	1	172552-16040	RELAY, MICOR (20A)	1							
23	1	172552-16040	RELAY, MICOR (20A)	1							
24	1	172552-16040	RELAY, MICOR (20A)	1							
25	1	172552-15990	POWER RELAY	1							
26	1	172551-03020	MAXI FUSE	1							
27	1	172551-10560	MAXI FUSE	1							
28	1	172552-15990	POWER RELAY	1							
29	1	172551-06220	RELAY	1							
30	1	172552-16030	LABEL, RELAY&FUSE	1							
31	1	172552-16020	LABEL, RELAY&FUSE	1							
32	1	172552-16000	COVER,FUSE/RELAY BOX	1							
33	1	172552-16010	COVER,FUSE/RELAY BOX	1							

N:Old $\xleftarrow[\text{No}]{\text{Yes}}$ New, Q:Old $\xleftarrow[\text{Yes}]{\text{No}}$ New, R:Old $\xleftarrow[\text{Yes}]{\text{Yes}}$ New, S:Old $\xleftarrow[\text{No}]{\text{No}}$ New, W:Add, Z:Discontinued, F:Interchangeable by set, K:Q'ty Change

Copyright (C) 2017 YANMAR CO., LTD. All RightsReserved.

Fig.60. FUSE BOXES / FUSES / RELAYS(SN: 461001- 461100)

(A)=T210-1(VERSION C
(B)=
(C)=
(D)=
(E)=
(F)=

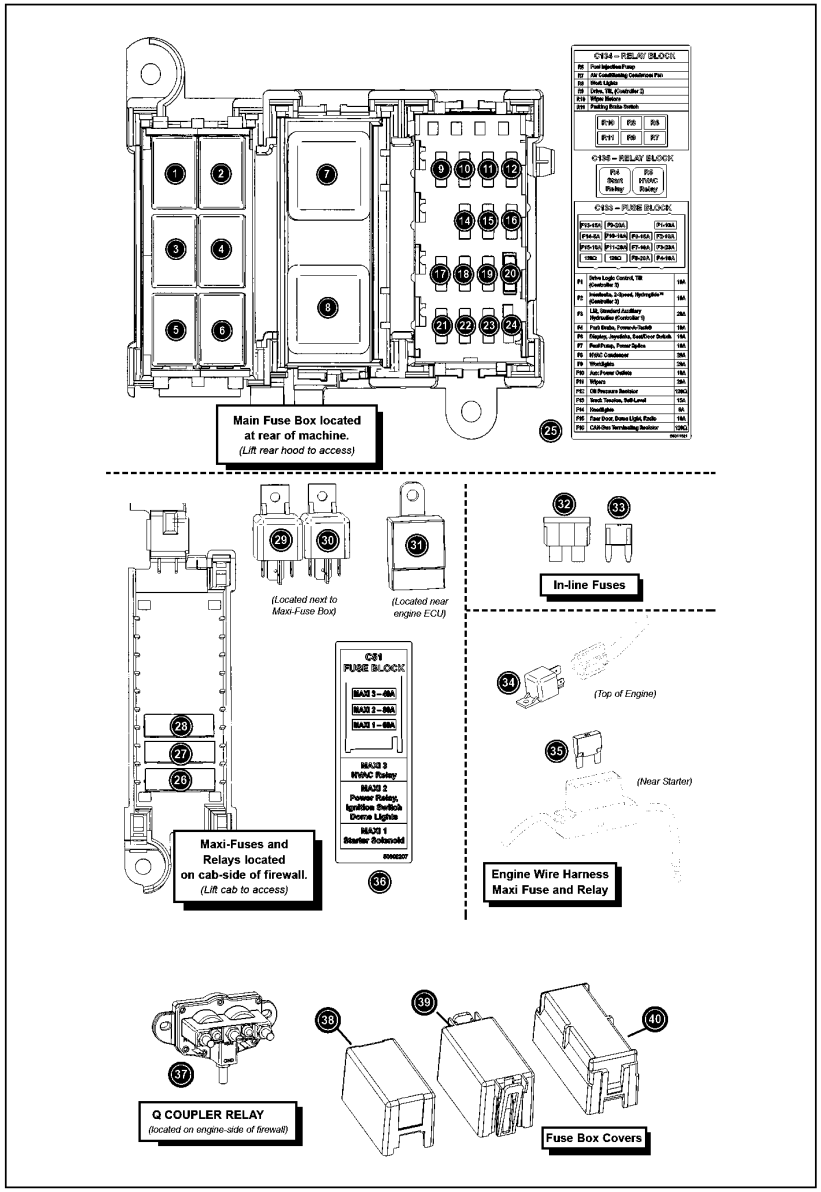

No.	Lev.	Parts No.	Description	Q'ty (A)	(B)	(C)	(D)	(E)	(F)	I	R
1	1	172551-04290	RELAY	1							
2	1	172551-04290	RELAY	1							
3	1	172551-04290	RELAY	1							
4	1	172551-04290	RELAY	1							
5	1	172551-04290	RELAY	1							
6	1	172551-04290	RELAY	1							
7	1	172551-04040	RELAY	1							
8	1	172551-04040	RELAY	1							
9	1	172551-02180	MINI FUSE	1							
10	1	172551-02180	MINI FUSE	1							
11	1	172551-00870	MINI FUSE	1							
12	1	172551-02180	MINI FUSE	1							
14	1	172551-02180	MINI FUSE	1							
15	1	172551-02180	MINI FUSE	1							
16	1	172551-00870	MINI FUSE	1							
17	1	172551-00870	MINI FUSE	1							
18	1	172551-02180	MINI FUSE	1							
19	1	172551-00870	MINI FUSE	1							
20	1	172551-06820	RESISTOR	1							
21	1	172551-00830	MINI FUSE	1							
22	1	172215-17640	FUSE, ATM	1							
23	1	172551-02180	MINI FUSE	1							
24	1	172551-06820	RESISTOR	1							
25	1	172559-02130	DECAL, RELAY&FUSE	1							
26	1	172551-10560	MAXI FUSE	1							
27	1	172551-03020	MAXI FUSE	1							
28	1	172551-06570	MAXI FUSE	1							
29	1	172559-02050	RELAY, SEALED ISO	1							
30	1	172559-02050	RELAY, SEALED ISO	1							
31	1	172217-15150	RELAY, CA TYPE C	1							
32	1	172551-10720	FUSE,ATO/ATC	1							
33	1	172551-06830	MINI FUSE	1							
34	1	172551-02990	RELAY	1							
35	1	172551-10560	MAXI FUSE	1							
36	1	172551-11290	LABEL	1							
37	1	172551-06220	RELAY	1							
38	1	172551-04480	COVER	1							
39	1	172551-04490	COVER	1							
40	1	172551-11270	COVER	1							

N:Old $\xleftarrow[\text{No}]{\text{Yes}}$ New, Q:Old $\xleftarrow[\text{Yes}]{\text{No}}$ New, R:Old $\xleftarrow[\text{Yes}]{\text{Yes}}$ New, S:Old $\xleftarrow[\text{No}]{\text{No}}$ New, W:Add, Z:Discontinued, F:Interchangeable by set, K:Q'ty Change

Copyright (C) 2017 YANMAR CO., LTD. All RightsReserved.

Fig.61. FUSE BOXES / FUSES / RELAYS(SN: 461000 AND BEFORE)

(A)=T210-1(VERSION C (D)=
(B)= (E)=
(C)= (F)=

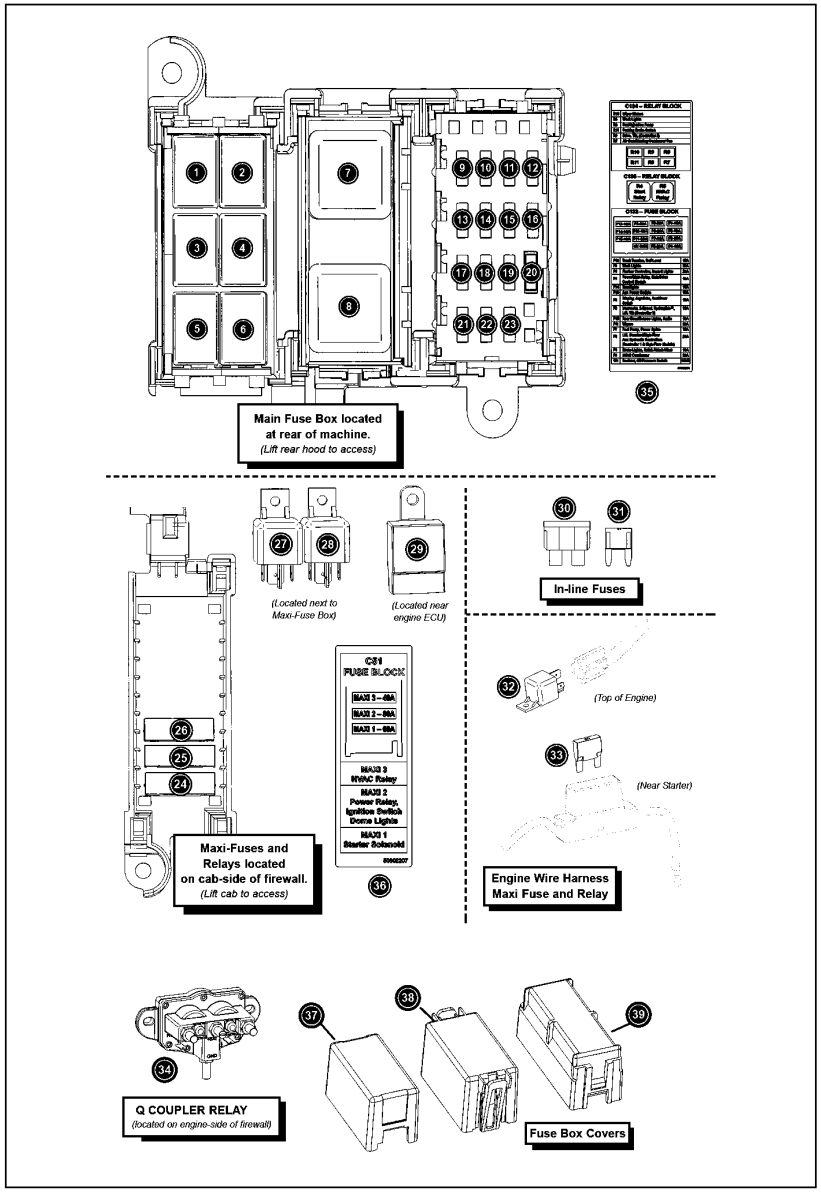

No.	Lev.	Parts No.	Description	Q'ty (A)	(B)	(C)	(D)	(E)	(F)	I	R
1	1	172551-04290	RELAY	1							
2	1	172551-04290	RELAY	1							
3	1	172551-04290	RELAY	1							
4	1	172551-04290	RELAY	1							
5	1	172551-04290	RELAY	1							
6	1	172551-04290	RELAY	1							
7	1	172551-04040	RELAY	1							
8	1	172551-04040	RELAY	1							
9	1	172551-02180	MINI FUSE	1							
10	1	172551-02180	MINI FUSE	1							
11	1	172551-00830	MINI FUSE	1							
12	1	172551-02180	MINI FUSE	1							
13	1	172551-00870	MINI FUSE	1							
14	1	172551-02180	MINI FUSE	1							
15	1	172551-02180	MINI FUSE	1							
16	1	172551-00870	MINI FUSE	1							
17	1	172551-00870	MINI FUSE	1							
18	1	172551-02180	MINI FUSE	1							
19	1	172551-00870	MINI FUSE	1							
20	1	172551-06820	RESISTOR	1							
21	1	172551-00830	MINI FUSE	1							
22	1	172551-00830	MINI FUSE	1							
23	1	172551-02180	MINI FUSE	1							
24	1	172551-10560	MAXI FUSE	1							
25	1	172551-03020	MAXI FUSE	1							
26	1	172551-06570	MAXI FUSE	1							
27	1	172551-02990	RELAY	1							
28	1	172551-02990	RELAY	1							
29	1	172217-15150	RELAY, CA TYPE C	1							
30	1	172551-10720	FUSE,ATO/ATC	1							
31	1	172551-06830	MINI FUSE	1							
32	1	172551-02990	RELAY	1							
33	1	172551-10560	MAXI FUSE	1							
34	1	172551-06220	RELAY	1							
35	1	172551-11280	LABEL	1							
36	1	172551-11290	LABEL	1							
37	1	172551-04480	COVER	1							
38	1	172551-04490	COVER	1							
39	1	172551-11270	COVER	1							

N:Old $\xleftarrow[\text{No}]{\text{Yes}}$ New, Q:Old $\xleftarrow[\text{Yes}]{\text{No}}$ New, R:Old $\xleftarrow[\text{Yes}]{\text{Yes}}$ New, S:Old $\xleftarrow[\text{No}]{\text{No}}$ New, W:Add, Z:Discontinued, F:Interchangeable by set, K:Q'ty Change

Copyright (C) 2017 YANMAR CO., LTD. All RightsReserved.

Fig.62. BATTERY CIRCUIT / ENGINE WIRE HARNESS(SN: 461001 AND UP)

(A)=T210-1(VERSION C
(B)=
(C)=
(D)=
(E)=
(F)=

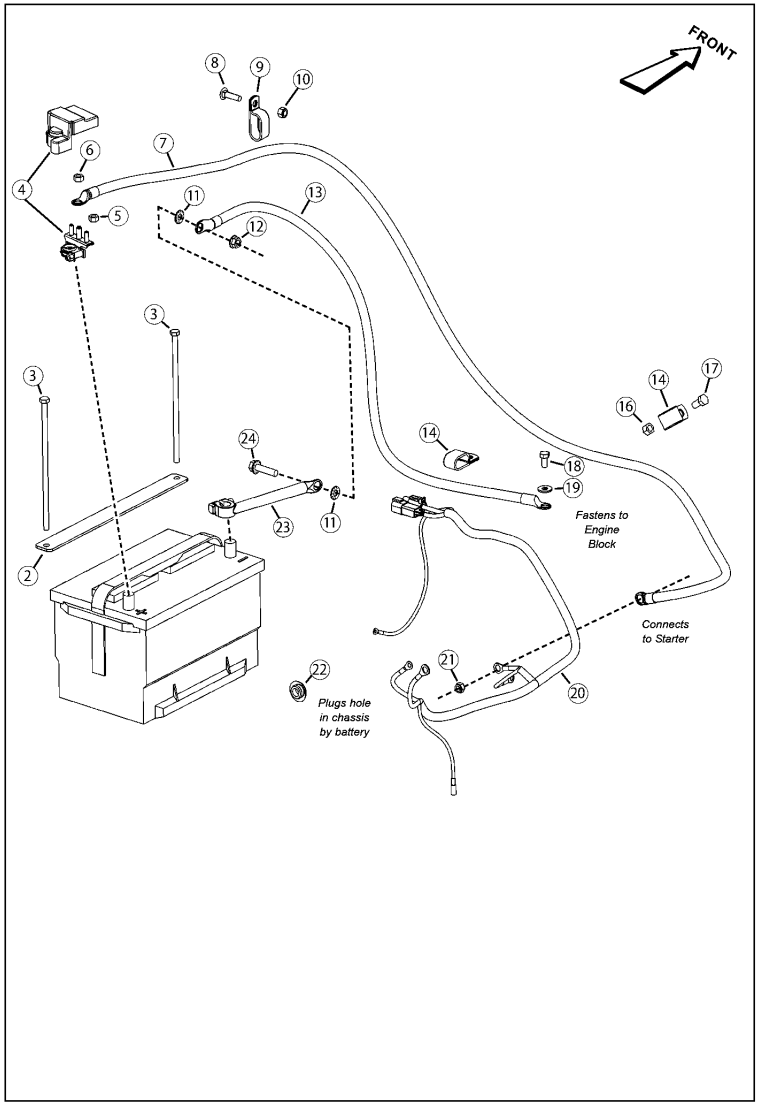

No.	Lev.	Parts No.	Description	Q'ty (A)	(B)	(C)	(D)	(E)	(F)	I	R
2	1	172552-16060	HOLD DOWN, BATTERY	1							
3	1	172552-16070	ROD, BATTERY CLAMP	2							
4	1	172216-08270	POST ASSY, POSITIVE	1							1
5	1	172551-10430	NUT	2							
6	1	172551-10440	NUT	1							
7	1	172551-04051	CABLE,BATTERY +	1							2
8	1	172551-09810	BOLT	1							
9	1	172559-02140	CLAMP	1							
10	1	172559-01280	LOCK NUT	1							
11	1	172215-03330	WASHER	2							
12	1	172559-02110	NUT	1							
13	1	172551-06720	CABLE,BATTERY -	1							
14	1	172551-02560	CLAMP	2							
16	1	172551-02750	NUT	1							
17	1	172559-02020	CS FL LOCK	1							
18	1	172551-10460	SCREW	1							
19	1	172551-10370	WASHER	1							
20	1	172552-16050	HARNESS, ENGINE	1							
21	1	172552-16080	NUT	1							
22	1	172551-02430	PLUG	1							
23	1	172551-06730	CABLE,BATTERY -	1							
24	1	172559-02100	SCREW	1							

Remarks
(1)(includes items 5 and 6)
(2)(includes item 4)

N:Old $\xleftrightarrow[\text{No}]{\text{Yes}}$ New, Q:Old $\xleftrightarrow[\text{Yes}]{\text{No}}$ New, R:Old $\xleftrightarrow[\text{Yes}]{\text{Yes}}$ New, S:Old $\xleftrightarrow[\text{No}]{\text{No}}$ New, W:Add, Z:Discontinued, F:Interchangeable by set, K:Q'ty Change

Copyright (C) 2017 YANMAR CO., LTD. All RightsReserved.

Fig.63. BATTERY CIRCUIT / ENGINE WIRE HARNESS(SN: 461000 AND BEFORE)

(A)=T210-1(VERSION C
(B)=
(C)=
(D)=
(E)=
(F)=

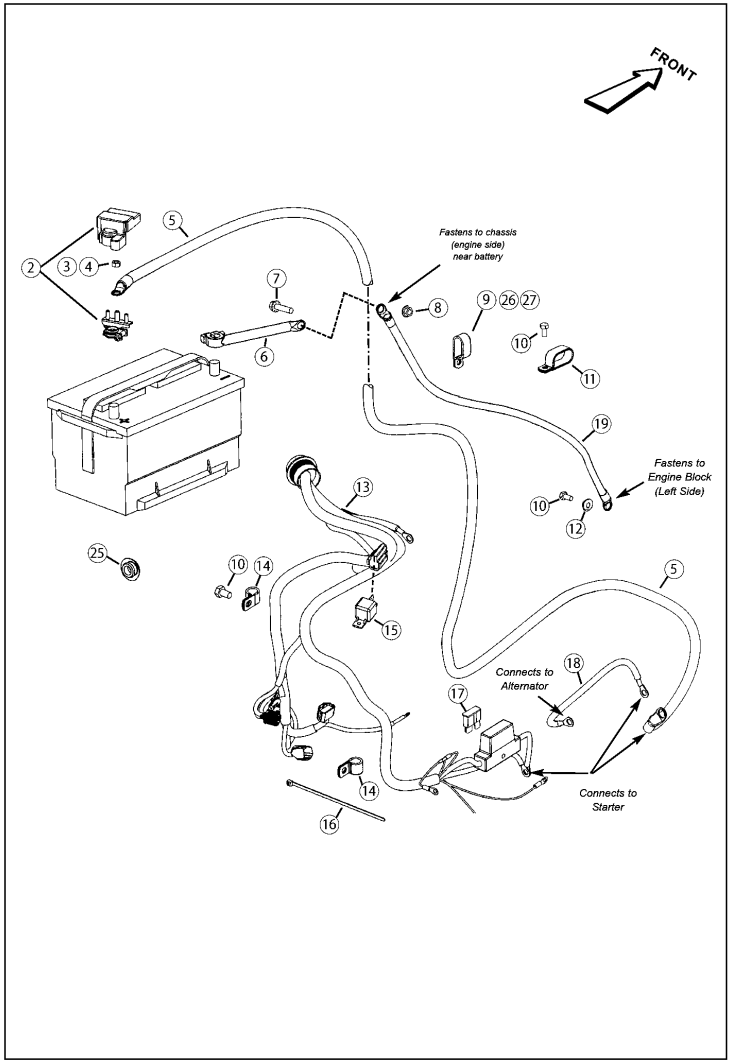

No.	Lev.	Parts No.	Description	Q'ty (A)	(B)	(C)	(D)	(E)	(F)	I	R
2	1	172216-08270	POST ASSY, POSITIVE	1							1
3	1	172551-10430	NUT	2							
4	1	172551-10440	NUT	1							
5	1	172551-04051	CABLE,BATTERY +	1							2
6	1	172551-06730	CABLE,BATTERY -	1							3
7	1	172559-02100	SCREW	1							
8	1	172559-02110	NUT	1							
9	1	172559-02140	CLAMP	1							
10	1	172551-10460	SCREW	3							
11	1	172218-04900	CLAMP	1							
12	1	172551-10370	WASHER	1							
13	1	172551-06030	WIRE HARNESS	1							
14	1	172551-00990	CLAMP	1							
15	1	172551-02990	RELAY	1							
16	1	172559-00430	TIE, CABLE	1							
17	1	172551-10560	MAXI FUSE	1							
18	1	172551-06360	WIRE HARNESS	1							
19	1	172551-06720	CABLE,BATTERY -	1							
25	1	172551-02430	PLUG	1							
26	1	172559-00670	NUT	1							4
27	1	172551-09750	BOLT	1							4

Remarks
(1)(includes items 3 and 4)
(2)(includes item 2)
(3)(not used on EU machines)
(4)(not shown)

N:Old ◄Yes/No► New, Q:Old ◄No/Yes► New, R:Old ◄Yes/Yes► New, S:Old ◄No/No► New, W:Add, Z:Discontinued, F:Interchangeable by set, K:Q'ty Change

Copyright (C) 2017 YANMAR CO., LTD. All RightsReserved.

Fig.64. CAB - OPERATOR WIRE HARNESS

(A)=T210-1(VERSION C
(B)=
(C)=
(D)=
(E)=
(F)=

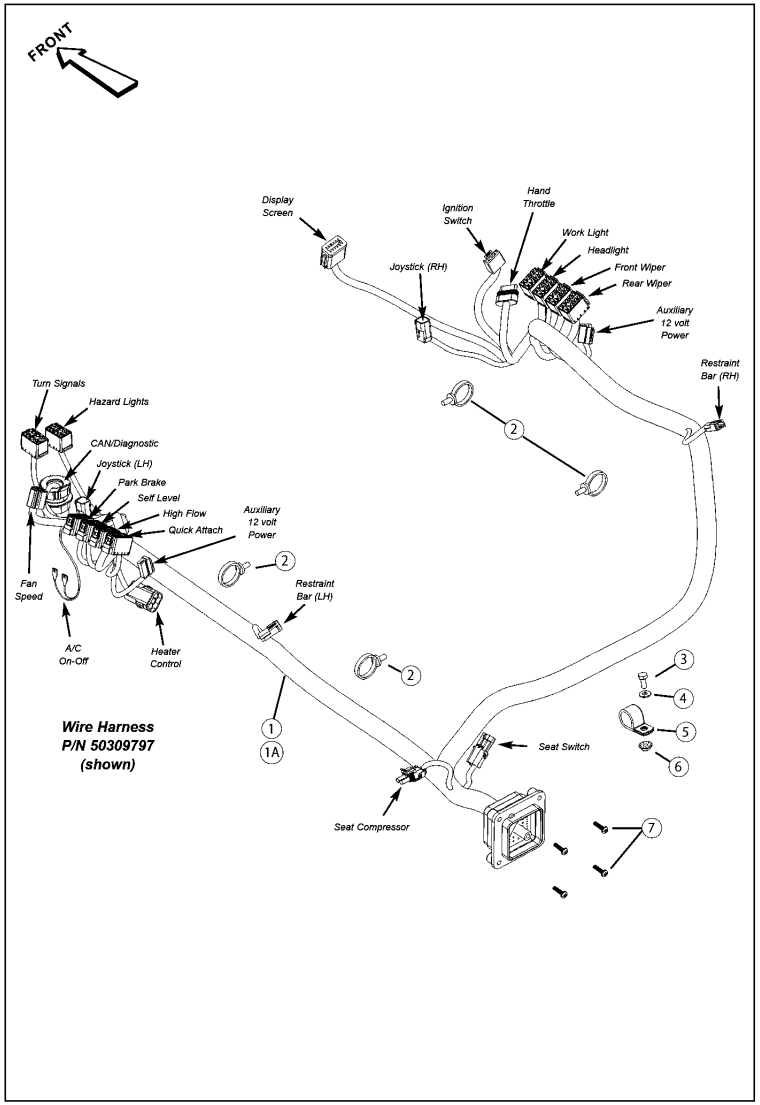

No.	Lev.	Parts No.	Description	Q'ty (A)	(B)	(C)	(D)	(E)	(F)	I	R
1	1	172559-02150	WIRE HARNESS CAB	1							1
1A	1	172551-04260	WIRE HARNESS	1							2
2	1	172551-04800	TIE,CABLE	4							
3	1	172551-09710	SCREW	1							
4	1	172551-09890	WASHER	1							
5	1	172216-15910	CLAMP, HOSE	1							
6	1	172559-00650	NUT	1							
7	1	172551-04690	SCREW	4							

Remarks
(1)S/N 461101 and up
(2)S/N 461100 and before

N:Old $\overset{\text{Yes}}{\underset{\text{No}}{\leftrightarrow}}$ New, Q:Old $\overset{\text{No}}{\underset{\text{Yes}}{\leftrightarrow}}$ New, R:Old $\overset{\text{Yes}}{\underset{\text{Yes}}{\leftrightarrow}}$ New, S:Old $\overset{\text{No}}{\underset{\text{No}}{\leftrightarrow}}$ New, W:Add, Z:Discontinued, F:Interchangeable by set, K:Q'ty Change

Copyright (C) 2017 YANMAR CO., LTD. All RightsReserved.

Fig.65. CAB - ROPS WIRE HARNESS / WORK LIGHTS

(A)=T210-1(VERSION C
(B)=
(C)=
(D)=
(E)=
(F)=

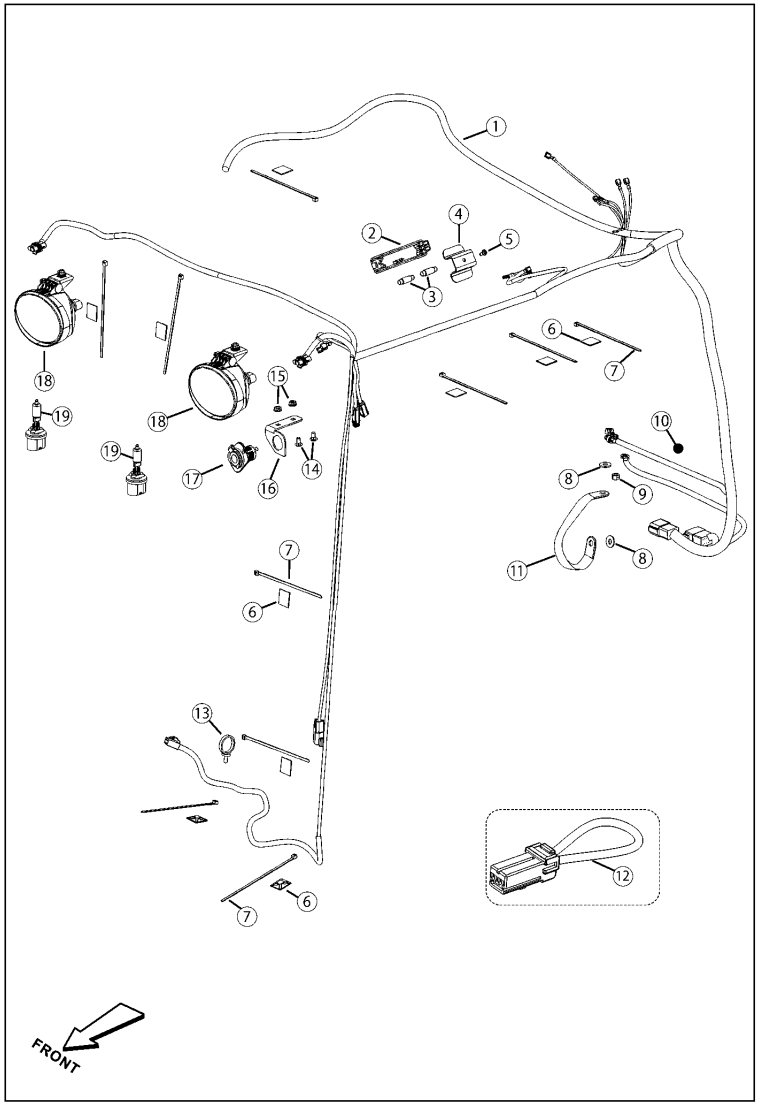

No.	Lev.	Parts No.	Description	Q'ty (A)	(B)	(C)	(D)	(E)	(F)	I	R
1	1	172551-06080	WIRE HARNESS	1							
2	1	172551-04100	LIGHT,DOME	1							
3	1	172551-06580	BULB	2							
4	1	172551-08390	BRACE, DOME LIGHT	1							
5	1	172551-10110	SCREW	1							
6	1	172551-04810	MOUNT, CABLE TIE	10							
7	1	172559-00430	TIE, CABLE	10							
8	1	172551-10370	WASHER	3							
9	1	172559-00450	NUT	3							
10	1	172215-02820	BOLT	2							1
11	1	172551-10690	STRAP, GROUND	1							
12	1	172551-08990	HARNESS	1							
13	1	172551-04800	TIE,CABLE	1							
14	1	172216-09410	BOLT	2							
15	1	172216-10880	NUT	2							
16	1	172559-02170	PLATE, BEACONBRACKET	1							
17	1	172215-17770	SOCKET	1							
18	1	172551-03860	LIGHT, WORK	2							
19	1	172559-02160	BULB, 12V-50WATT	2							2

Remarks
(1)(out of view)
(2)(bulb included with work light)

N:Old $\xleftrightarrow[\text{No}]{\text{Yes}}$ New, Q:Old $\xleftrightarrow[\text{Yes}]{\text{No}}$ New, R:Old $\xleftrightarrow[\text{Yes}]{\text{Yes}}$ New, S:Old $\xleftrightarrow[\text{No}]{\text{No}}$ New, W:Add, Z:Discontinued, F:Interchangeable by set, K:Q'ty Change

Copyright (C) 2017 YANMAR CO., LTD. All RightsReserved.

Fig.66. EXTERNAL COMPONENTS - LEFT SIDE(SN: 461001 AND UP)

(A)=T210-1(VERSION C (D)=
(B)= (E)=
(C)= (F)=

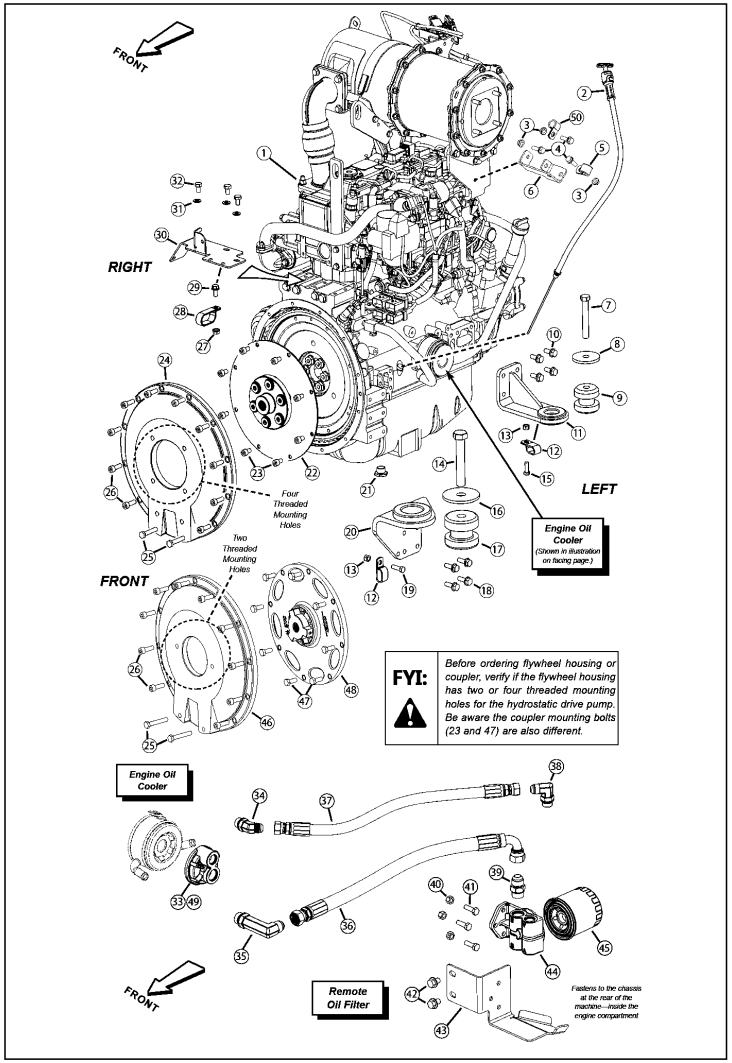

No.	Lev.	Parts No.	Description	Q'ty (A)	(B)	(C)	(D)	(E)	(F)	I	R
1	1	172559-02190	ENGINE 4TNV98CT	1							1
2	1	172551-02600	SIPSTICK ASSY	1							2
3	1	172551-01060	NUT	3							
4	1	172218-05150	SCREW	3							
5	1	172551-01270	CLAMP	1							
6	1	172559-02220	BRACKET, HOSE CLAMP	1							3
7	1	172551-03930	SCREW	1							
8	1	172551-01240	WASHER	1							
9	1	172551-01310	ISOLATOR	1							
10	1	172551-08340	SCREW	4							
11	1	172551-02720	MOUNT, ENGINE	1							
12	1	172551-02560	CLAMP	2							
13	1	172559-00670	NUT	2							
14	1	172551-03950	SCREW	1							
15	1	172551-09530	SCREW	1							
16	1	172551-04380	WASHER, SNUBBING	1							
17	1	172551-02730	ISOLATOR	1							
18	1	172551-08370	SCREW	4							
19	1	172551-09540	SCREW	1							
20	1	172551-02700	MOUNT, ENGINE	1							
21	1	172559-02180	PLUG, DRAIN M22-1.5	1							4
22	1	172551-02460	COUPLER	1							5
23	1	172551-06860	SCREW	8							6
24	1	172551-04280	HOUSING,FLYWHEEL	1							7
25	1	172551-06840	SCREW	2							
26	1	172551-06850	SCREW	10							
27	1	172559-02110	NUT	1							
28	1	172218-04900	CLAMP	1							
29	1	172559-02020	CS FL LOCK	1							
30	1	172552-16090	BRACKET, FLYWHEEL	1							
31	1	172216-09850	WASHER	3							
32	1	172217-04060	SCREW	3							
33	1	172551-02551	ADAPTER, FILTER	1							
34	1	172559-02250	CONNECTOR	1							
35	1	172552-16100	CONNECTOR	1							
36	1	172552-16120	HOSE	1							
37	1	172552-16110	HOSE	1							
38	1	172559-02230	FITTING	1							
39	1	172559-02240	CONNECTOR	1							
40	1	172559-00450	NUT	3							
41	1	172215-02720	SCREW	3							
42	1	172551-06750	SCREW	2							
43	1	172552-16150	BRACKET, OIL FILTER	1							
44	1	172551-02540	MOUNT, FILTER	1							
45	1	172216-20100	FILTER, LO 80X80L	1							
46	1	172559-02210	HOUSING, FLYWHEEL	1							8
47	1	172559-02200	SCREW	8							9
48	1	172216-08330	COUPLER, FLEX	1							9
49	1	172216-11900	O-RING 230 N70	1							A
50	1	172551-00990	CLAMP	1							

Remarks
(1)(includes 140mm fan pulley; does not include any other items listed or shown) (2)(includes dipstick and tube)
(3)(replaces early-style dipstick bracket) (4)(low profile) (5)(used exclusively with #24)
(6)(used exclusively with item 24) (7)(four threaded mounting holes) (8)(two threaded mounting holes)
(9)(used exclusively with item 46) (A)(o-ring included with adapter) (not shown)

N:Old ←Yes/No→ New, Q:Old ←No/Yes→ New, R:Old ←Yes/Yes→ New, S:Old ←No/No→ New, W:Add, Z:Discontinued, F:Interchangeable by set, K:Q'ty Change

Copyright (C) 2017 YANMAR CO., LTD. All RightsReserved.

Fig.67. EXTERNAL COMPONENTS - REMOTE OIL FILTER - HIGH-FLOW(SN: 461030 AND UP)

(A)=T210-1(VERSION C
(B)=
(C)=
(D)=
(E)=
(F)=

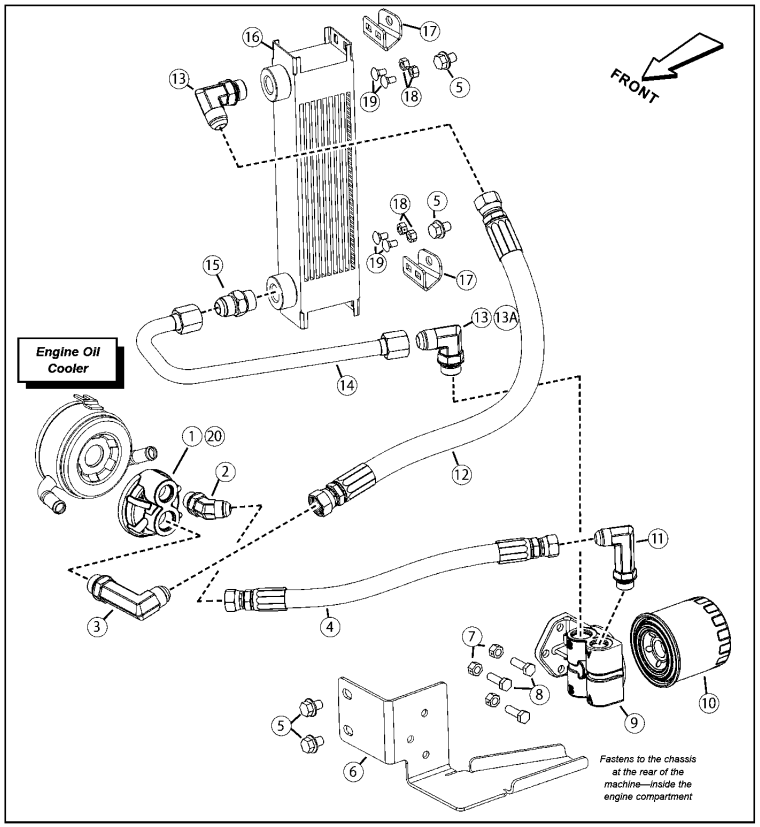

No.	Lev.	Parts No.	Description	Q'ty (A)	(B)	(C)	(D)	(E)	(F)	I	R
1	1	172551-02551	ADAPTER, FILTER	1							
2	1	172559-02250	CONNECTOR	1							
3	1	172552-16100	CONNECTOR	1							
4	1	172552-16110	HOSE	1							
5	1	172551-06750	SCREW	4							
6	1	172552-16150	BRACKET, OIL FILTER	1							
7	1	172559-00450	NUT	3							
8	1	172215-02720	SCREW	3							
9	1	172551-02540	MOUNT, FILTER	1							
10	1	172216-20100	FILTER, LO 80X80L	1							
11	1	172217-00060	FITTING	1							
12	1	172559-02290	HOSE, OIL -10 X 21	1							
13	1	172559-02300	FITTING	2							
13A	1	172552-16160	HOSE	1							
14	1	172559-02280	TUBE,OIL COOLER	1							
15	1	172559-02240	CONNECTOR	1							
16	1	172559-02260	COOLER, OIL	1							1
17	1	172559-02270	BRACKET, OIL COOLER	2							
18	1	172559-00780	NUT	4							
19	1	172216-09410	BOLT	4							
20	1	172216-11900	O-RING 230 N70	1							2

Remarks
(1)(STACKED PLATE)
(2)(included -- not shown)

N:Old $\xleftarrow[\text{No}]{\text{Yes}}$ New, Q:Old $\xleftarrow[\text{Yes}]{\text{No}}$ New, R:Old $\xleftarrow[\text{Yes}]{\text{Yes}}$ New, S:Old $\xleftarrow[\text{No}]{\text{No}}$ New, W:Add, Z:Discontinued, F:Interchangeable by set, K:Q'ty Change

Copyright (C) 2017 YANMAR CO., LTD. All RightsReserved.

Fig.68. EXTERNAL COMPONENTS - REMOTE OIL FILTER - HIGH-FLOW(SN: 461029 AND BEFORE)

(A)=T210-1(VERSION C
(B)=
(C)=
(D)=
(E)=
(F)=

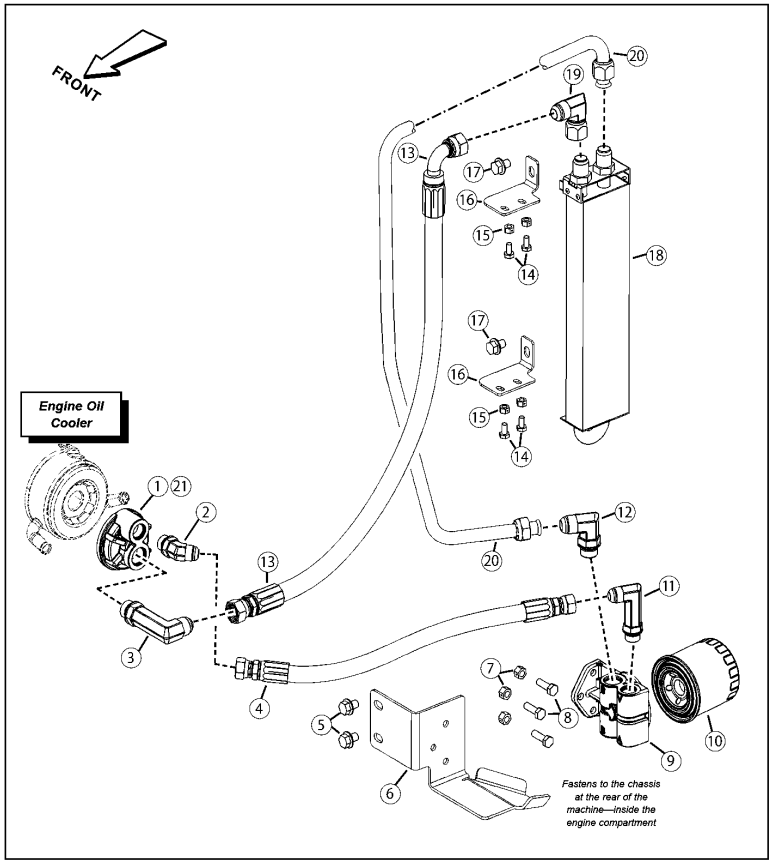

No.	Lev.	Parts No.	Description	Q'ty (A)	(B)	(C)	(D)	(E)	(F)	I	R
1	1	172551-02551	ADAPTER, FILTER	1							
2	1	172559-02250	CONNECTOR	1							
3	1	172552-16100	CONNECTOR	1							
4	1	172552-16110	HOSE	1							
5	1	172551-06750	SCREW	2							
6	1	172552-16150	BRACKET, OIL FILTER	1							
7	1	172559-00450	NUT	3							
8	1	172215-02720	SCREW	3							
9	1	172551-02540	MOUNT, FILTER	1							
10	1	172216-20100	FILTER, LO 80X80L	1							
11	1	172217-00060	FITTING	1							
12	1	172559-02300	FITTING	1							
13	1	172552-16160	HOSE	1							
14	1	172551-09590	SCREW	6							
15	1	172552-16140	NUT	6							
16	1	172552-16190	BRACKET, OIL COOLER	2							
17	1	172551-06750	SCREW	2							
18	1	172552-16170	COOLER, OIL	1							
19	1	172559-02310	FITTING	1							
20	1	172552-16180	TUBE	1							
21	1	172216-11900	O-RING 230 N70	1							1

Remarks
(1)(included -- not shown)

N:Old $\xleftrightarrow[\text{No}]{\text{Yes}}$ New, Q:Old $\xleftrightarrow[\text{Yes}]{\text{No}}$ New, R:Old $\xleftrightarrow[\text{Yes}]{\text{Yes}}$ New, S:Old $\xleftrightarrow[\text{No}]{\text{No}}$ New, W:Add, Z:Discontinued, F:Interchangeable by set, K:Q'ty Change

Copyright (C) 2017 YANMAR CO., LTD. All RightsReserved.

Fig.69. EXTERNAL COMPONENTS - RIGHT SIDE(SN: 461001 AND UP)

(A)=T210-1(VERSION C (D)=
(B)= (E)=
(C)= (F)=

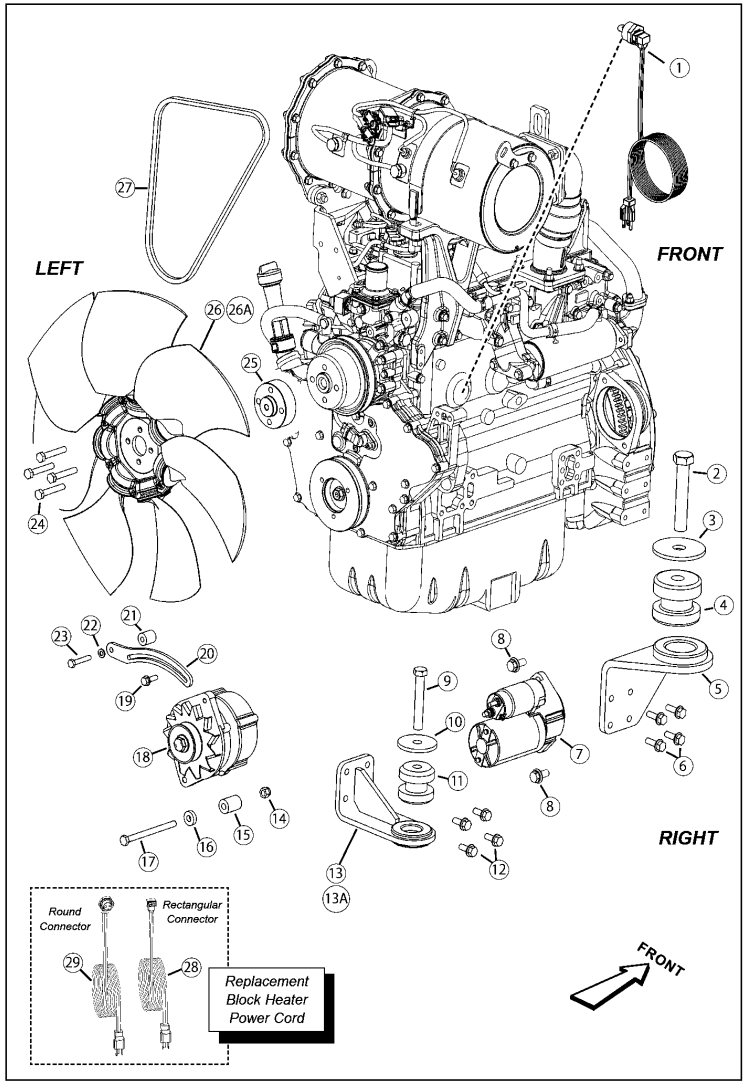

No.	Lev.	Parts No.	Description	Q'ty (A)	(B)	(C)	(D)	(E)	(F)	I	R
1	1	172551-00910	BLOCK HEATER	1							1
2	1	172551-03950	SCREW	1							
3	1	172551-04380	WASHER, SNUBBING	1							
4	1	172551-02730	ISOLATOR	1							
5	1	172551-02710	MOUNT, ENGINE	1							
6	1	172551-08370	SCREW	4							
7	1	172217-15140	STARTER, 12V-3KW	1							
8	1	172551-15140	BOLT, M12X25	2							
9	1	172551-03930	SCREW	2							
10	1	172551-01240	WASHER	2							
11	1	172551-01310	ISOLATOR	2							
12	1	172551-08340	SCREW	4							
13	1	172551-02720	MOUNT, ENGINE	1							2
13A	1	172559-01800	MOUNT KIT,COMPRESSOR	1							3
14	1	172551-10070	NUT	1							
15	1	172551-02960	SPACER	1							
16	1	172551-02980	SPACER	1							
17	1	172551-10530	SCREW	1							
18	1	172551-02920	ALTERNATOR	1							
19	1	172551-10140	SCREW	1							
20	1	172551-02510	BRACKET, ALTERNATOR	1							
21	1	172551-02950	SPACER	1							
22	1	172551-10500	WASHER	1							
23	1	172551-10520	SCREW	1							
24	1	172552-16210	BOLT	4							
25	1	172552-16220	SPACER, FAN	1							4
26	1	172559-02320	FAN, PUSHER	1							5
26A	1	172551-06240	FAN, PUSHER	1							6
27	1	172217-15130	V-BELT, B44	1							7
28	1	172551-00920	CORD, HEATER	1							8
29	1	172215-17540	CORD, BLOCK HEATER	1							9

Remarks
(1)(includes power cord; for replacementpower cord refer to the illustration below)
(3)Equipped with A/C (4)(1.835" thick) (5)(18")S/N 461030 and up (6)(22-1/4")S/N 461001 - 461029
(7)(alternator/fan/water pump) (8)(connector has rectangular end) (9)(connector has round end)

N:Old $\xleftarrow[\text{No}]{\text{Yes}}$ New, Q:Old $\xleftarrow[\text{Yes}]{\text{No}}$ New, R:Old $\xleftarrow[\text{Yes}]{\text{Yes}}$ New, S:Old $\xleftarrow[\text{No}]{\text{No}}$ New, W:Add, Z:Discontinued, F:Interchangeable by set, K:Q'ty Change

Copyright (C) 2017 YANMAR CO., LTD. All RightsReserved.

Fig.70. EXTERNAL COMPONENTS - RIGHT SIDE(SN: 461000 AND BEFORE)

(A)=T210-1(VERSION C
(B)=
(C)=
(D)=
(E)=
(F)=

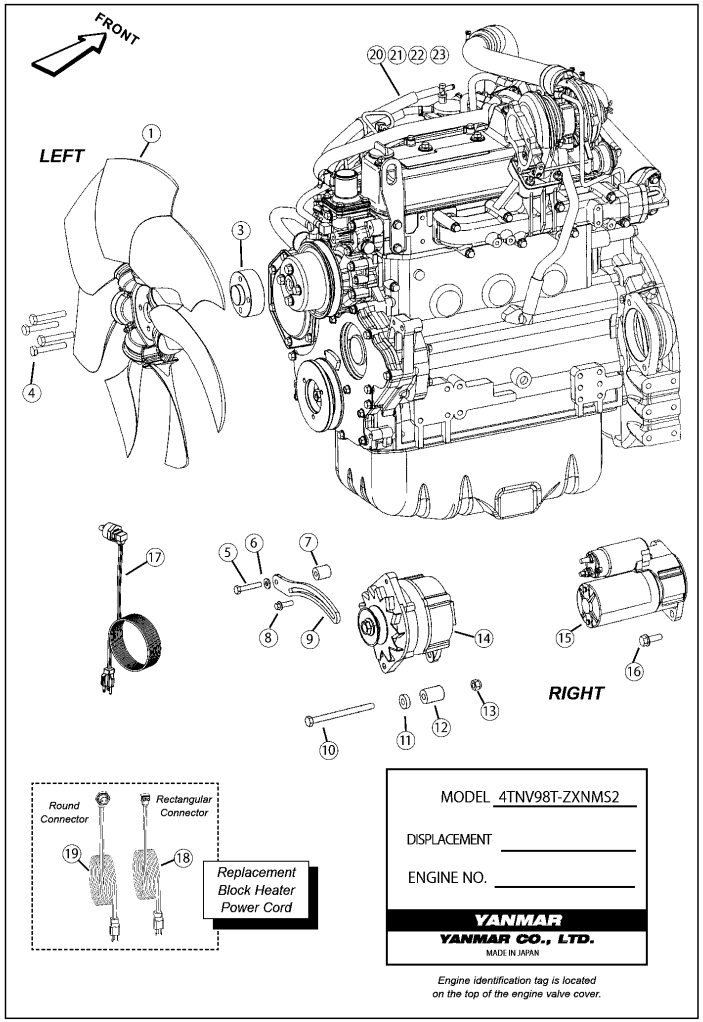

No.	Lev.	Parts No.	Description	Q'ty (A)	(B)	(C)	(D)	(E)	(F)	I	R
1	1	172551-06240	FAN, PUSHER	1							1
3	1	172551-04680	SPACER, FAN	1							
4	1	172551-06840	SCREW	4							
5	1	172551-10520	SCREW	1							
6	1	172551-10500	WASHER	1							
7	1	172551-02950	SPACER	1							
8	1	172551-10140	SCREW	1							
9	1	172551-02510	BRACKET, ALTERNATOR	1							
10	1	172551-10530	SCREW	1							
11	1	172551-02980	SPACER	1							
12	1	172551-02960	SPACER	1							
13	1	172551-10070	NUT	1							
14	1	172551-02920	ALTERNATOR	1							
15	1	172217-15140	STARTER, 12V-3KW	1							
16	1	172551-15140	BOLT, M12X25	2							
17	1	172551-00910	BLOCK HEATER	1							2
18	1	172551-00920	CORD, HEATER	1							3
19	1	172215-17540	CORD, BLOCK HEATER	1							4
20	1	172552-00550	ENGINE	1							5
21	1	172217-03920	4TNV98T-ZXNMS2	1							6
22	1	172217-03920	4TNV98T-ZXNMS2	1							7
23	1	172217-03920	4TNV98T-ZXNMS2	1							8

Remarks
(1)Standard (22-1/4") (2)(option) (includes power cord)
(3)(connector has rectangular end) (4)(connector has round end)
(5)(Does not include items 1 - 14 or 17-19)Engine Model 4TNV98T-ZXNMS (T3)Refer to engine identification tag
(6)(Does not include items 1 - 14 or 17-19)Engine Model 4TNV98T-ZXNMS2 (iT4)Refer to engine identification tag
(7)(Does not include items 1 - 14 or 17-19)Engine Model 4TNV98T-ZXNMSR (iT4)Refer to engine identification tag
(8)(Does not include items 1 - 14 or 17-19)Engine Model 4TNV98T-ZXNMSF (iT4)Refer to engine identification tag

N:Old ←Yes/No→ New, Q:Old ←No/Yes→ New, R:Old ←Yes/Yes→ New, S:Old ←No/No→ New, W:Add, Z:Discontinued, F:Interchangeable by set, K:Q'ty Change

Copyright (C) 2017 YANMAR CO., LTD. All RightsReserved.

Fig.71. EXTERNAL COMPONENTS - LEFT SIDE(SN: 461000 AND BEFORE)

(A)=T210-1(VERSION C
(B)=
(C)=
(D)=
(E)=
(F)=

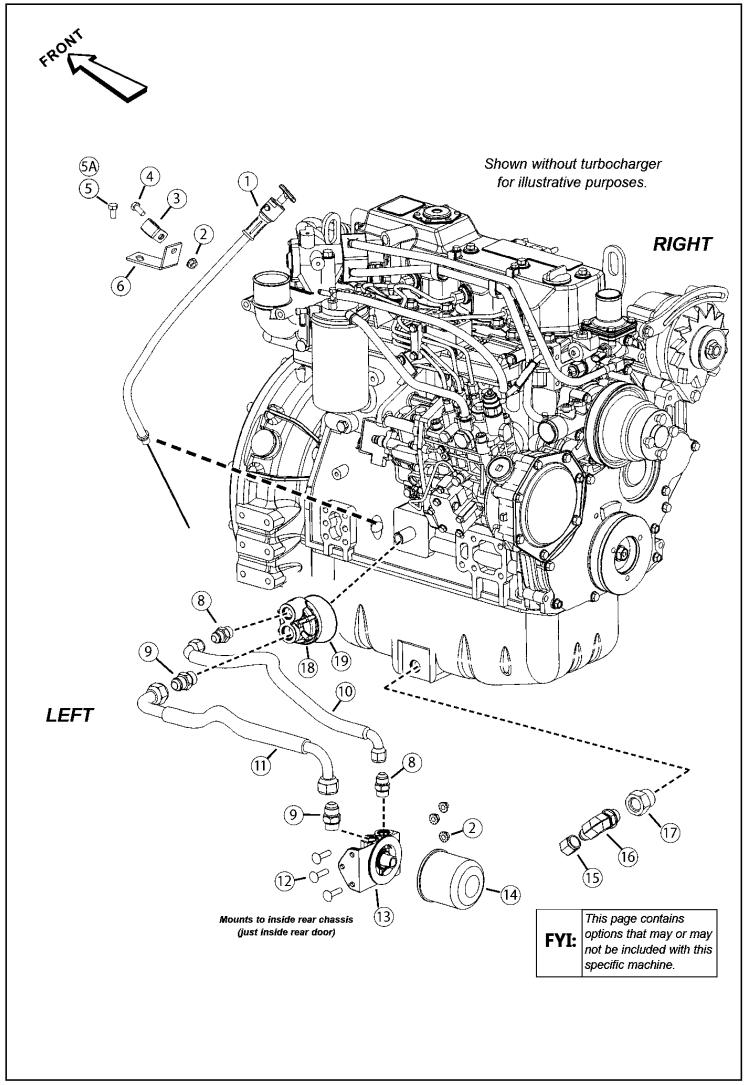

No.	Lev.	Parts No.	Description	Q'ty (A)	(B)	(C)	(D)	(E)	(F)	I	R
1	1	172551-02600	SIPSTICK ASSY	1							1
2	1	172551-01060	NUT	4							
3	1	172551-01270	CLAMP	1							
4	1	172551-09510	SCREW	1							
5	1	172551-10460	SCREW	1							
5A	1	172551-10500	WASHER	1							2
6	1	172551-02610	BRACKET, DIPSTICK	1							
8	1	172559-02360	CONNECTOR	2							
9	1	172559-02240	CONNECTOR	2							
10	1	172559-02350	HOSE, 0.50 X 24.0	1							
11	1	172217-04940	ASSY, CONDENSOR	1							
12	1	172551-09920	BOLT	3							
13	1	172551-02540	MOUNT, FILTER	1							
14	1	172216-20100	FILTER, LO 80X80L	1							
15	1	172559-02370	CAP	1							
16	1	172559-02330	90 MJ06-ISO6149-16	1							
17	1	172559-02340	ST MM22-ISO6149-16	1							
18	1	172551-02551	ADAPTER, FILTER	1							
19	1	172216-11900	O-RING 230 N70	1							3

Remarks
(1)(includes dipstick and tube)
(2)(out of view)
(3)(included with item 18)

N:Old $\xleftarrow[\text{No}]{\text{Yes}}$ New, Q:Old $\xleftarrow[\text{Yes}]{\text{No}}$ New, R:Old $\xleftarrow[\text{Yes}]{\text{Yes}}$ New, S:Old $\xleftarrow[\text{No}]{\text{No}}$ New, W:Add, Z:Discontinued, F:Interchangeable by set, K:Q'ty Change

Copyright (C) 2017 YANMAR CO., LTD. All RightsReserved.

Fig.72. EXTERNAL COMPONENTS - MOUNTS(SN: 461000 AND BEFORE)

(A)=T210-1(VERSION C
(B)=
(C)=
(D)=
(E)=
(F)=

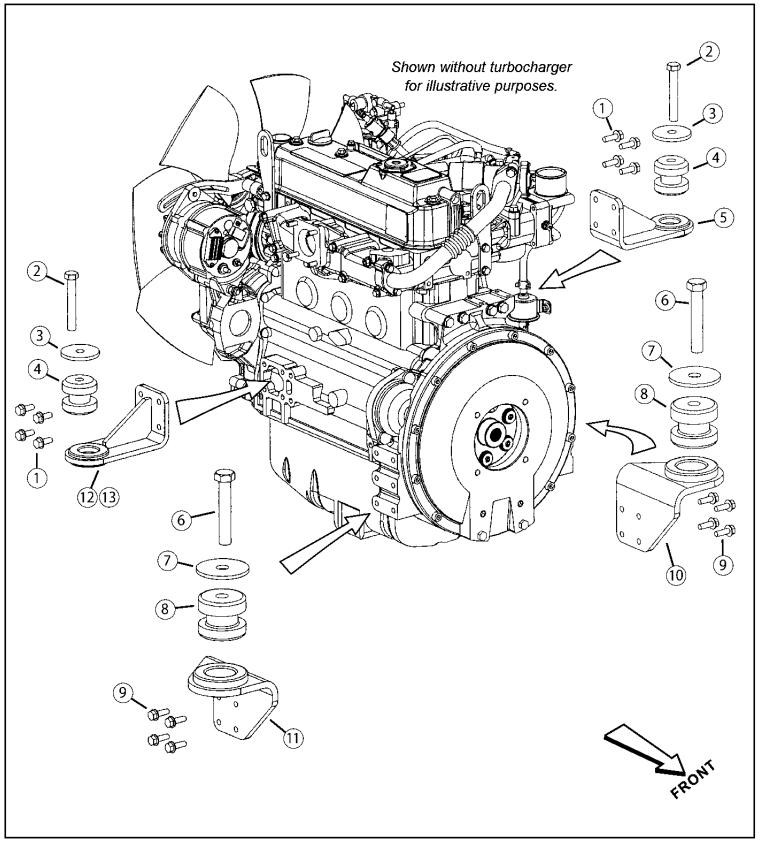

No.	Lev.	Parts No.	Description	Q'ty (A)	(B)	(C)	(D)	(E)	(F)	I	R
1	1	172551-08340	SCREW	8							
2	1	172551-03930	SCREW	2							
3	1	172551-01240	WASHER	2							
4	1	172551-01310	ISOLATOR	2							
5	1	172551-02720	MOUNT, ENGINE	1							
6	1	172551-03950	SCREW	2							
7	1	172551-04380	WASHER, SNUBBING	2							
8	1	172551-02730	ISOLATOR	2							
9	1	172551-08370	SCREW	8							
10	1	172551-02700	MOUNT, ENGINE	1							
11	1	172551-02710	MOUNT, ENGINE	1							
12	1	172551-02720	MOUNT, ENGINE	1							1
13	1	172559-01800	MOUNT KIT,COMPRESSOR	1							2

Remarks
(1)(Standard) (shown)
(2)(when equipped with A/C)

N:Old $\xleftrightarrow[\text{No}]{\text{Yes}}$ New, Q:Old $\xleftrightarrow[\text{Yes}]{\text{No}}$ New, R:Old $\xleftrightarrow[\text{Yes}]{\text{Yes}}$ New, S:Old $\xleftrightarrow[\text{No}]{\text{No}}$ New, W:Add, Z:Discontinued, F:Interchangeable by set, K:Q'ty Change

Copyright (C) 2017 YANMAR CO., LTD. All RightsReserved.

Fig.73. EXTERNAL COMPONENTS - FLYWHEEL HOUSING(SN: 461000 AND BEFORE)

(A)=T210-1(VERSION C
(B)=
(C)=
(D)=
(E)=
(F)=

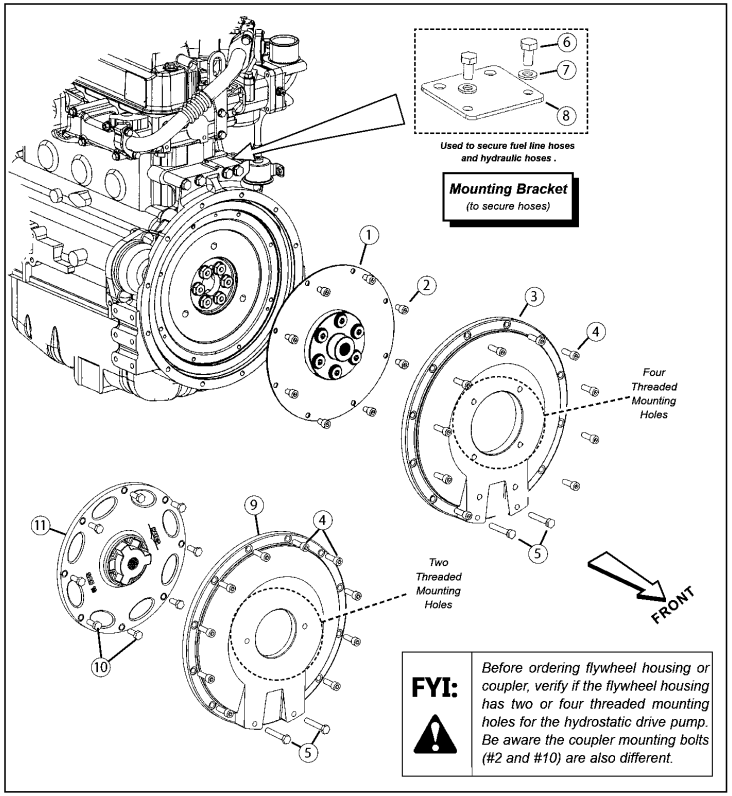

No.	Lev.	Parts No.	Description	Q'ty (A)	(B)	(C)	(D)	(E)	(F)	I	R
1	1	172551-02460	COUPLER	1							1
2	1	172551-06860	SCREW	8							1
3	1	172551-04280	HOUSING,FLYWHEEL	1							2
4	1	172551-06850	SCREW	10							
5	1	172551-06840	SCREW	2							
6	1	172551-10460	SCREW	2							
7	1	172551-10500	WASHER	2							
8	1	172551-08480	PLATE, CLAMP MOUNT	1							
9	1	172559-02210	HOUSING, FLYWHEEL	1							3
10	1	172559-02200	SCREW	8							4
11	1	172216-08330	COUPLER, FLEX	1							4

Remarks
(1)(used exclusively with 3)
(2)(four threaded mounting holes)
(3)(two threaded mounting holes)
(4)(used exclusively with 9)

N:Old ◄Yes/No► New, Q:Old ◄No/Yes► New, R:Old ◄Yes/Yes► New, S:Old ◄No/No► New, W:Add, Z:Discontinued, F:Interchangeable by set, K:Q'ty Change

Copyright (C) 2017 YANMAR CO., LTD. All RightsReserved.

Fig.74. FUEL CIRCUIT(SN: 461001 AND UP)

(A)=T210-1(VERSION C
(B)=
(C)=
(D)=
(E)=
(F)=

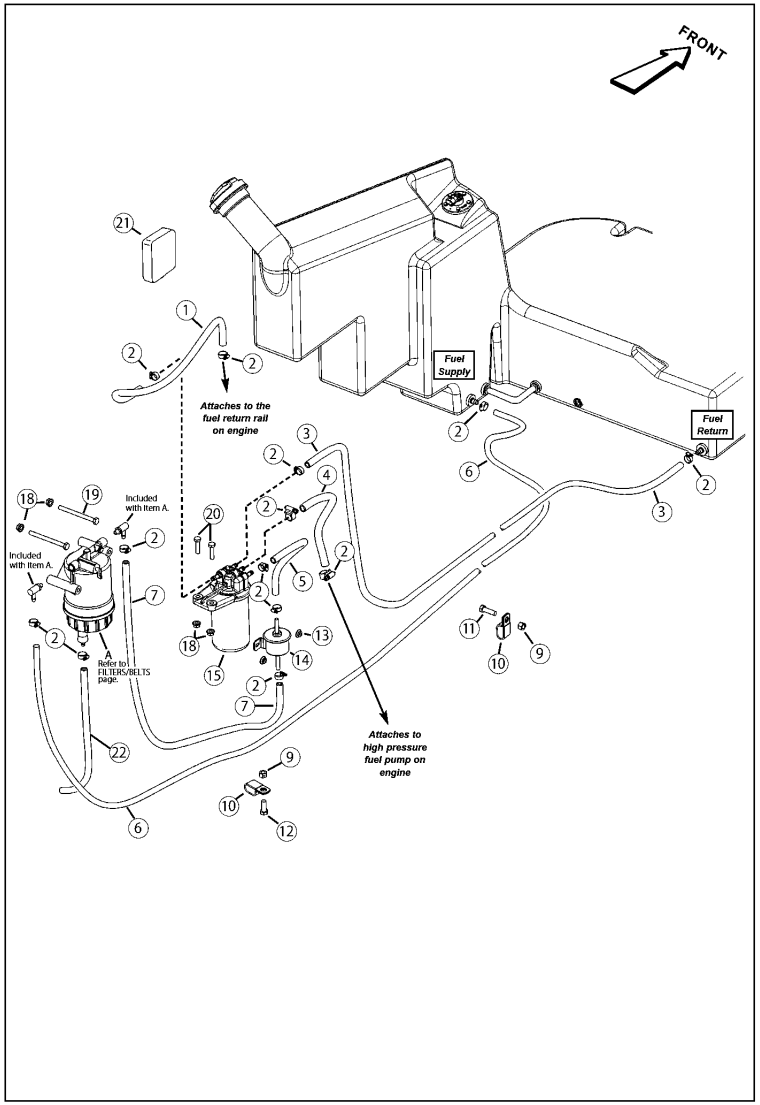

No.	Lev.	Parts No.	Description	Q'ty (A)	(B)	(C)	(D)	(E)	(F)	I	R
1	1	172552-16240	HOSE	1							
2	1	172559-02400	CLAMP	1							
3	1	172552-16260	HOSE	1							
4	1	172552-16270	HOSE	1							
5	1	172552-16250	HOSE	1							
6	1	172551-08250	HOSE	1							
7	1	172559-02410	HOSE	1							
9	1	172559-00670	NUT	4							
10	1	172551-02560	CLAMP	2							
11	1	172551-09540	SCREW	1							
12	1	172551-09530	SCREW	1							
13	1	172559-00650	NUT	2							
14	1	172559-02380	PUMP, FUEL 12 VDC	1							1
15	1	172559-02390	FUEL FILTER ASSEMBLY	1							2
18	1	172551-01060	NUT	4							
19	1	172551-09790	SCREW	2							
20	1	172551-09600	SCREW	2							
21	1	172552-16280	FOAM, FUEL TANK	1							
22	1	172215-17340	HOSE, FUEL	1							

Remarks
(1)(fuel transfer)
(2)(includes filter mounting head and spin-on fuel filter)(refer to FILTERS/BELTS page)

N:Old ←Yes/No→ New, Q:Old ←No/Yes→ New, R:Old ←Yes/Yes→ New, S:Old ←No/No→ New, W:Add, Z:Discontinued, F:Interchangeable by set, K:Q'ty Change

Copyright (C) 2017 YANMAR CO., LTD. All RightsReserved.

Fig.75. FUEL CIRCUIT(SN: 461000 AND BEFORE)

(A)=T210-1(VERSION C
(B)=
(C)=
(D)=
(E)=
(F)=

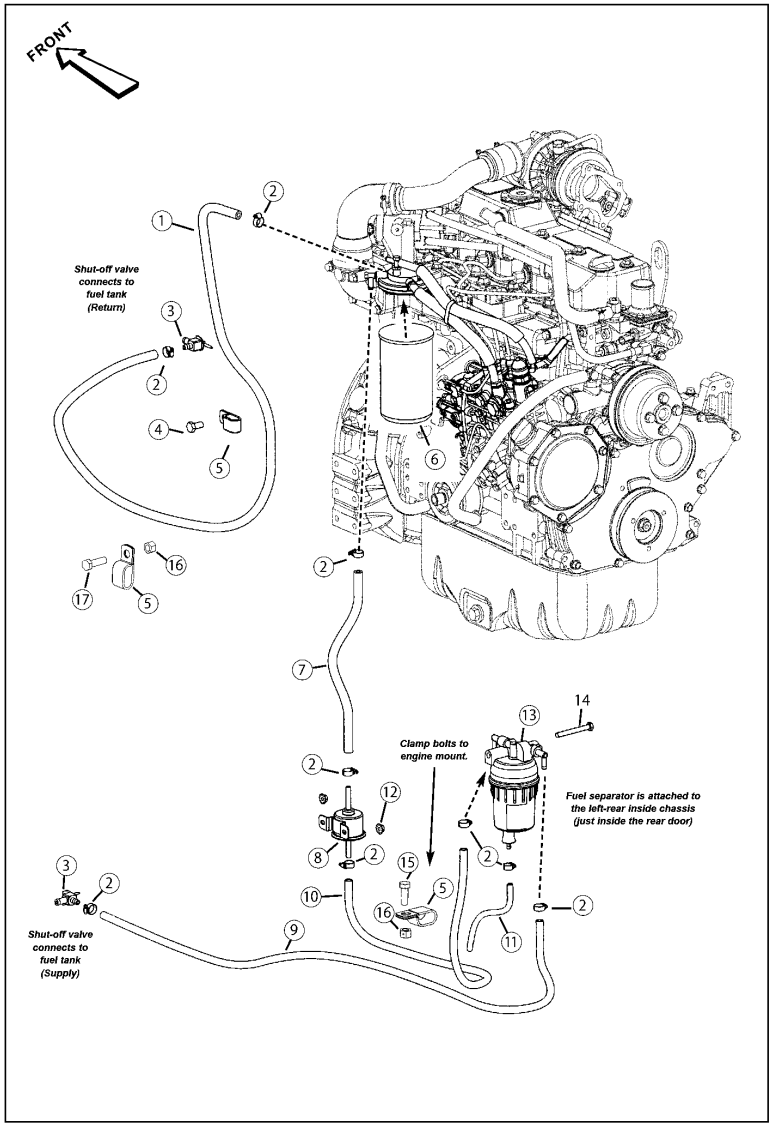

No.	Lev.	Parts No.	Description	Q'ty (A)	(B)	(C)	(D)	(E)	(F)	I	R
1	1	172551-08250	HOSE	1							
2	1	172559-02400	CLAMP	9							
3	1	172551-05080	VALVE	2							
4	1	172551-10420	SCREW	1							
5	1	172551-02560	CLAMP	3							
6	1	172216-20110	FILTER, FUEL OIL	1							
7	1	172551-03350	HOSE	1							
8	1	172215-15100	PUMP, FUEL FEED	1							
9	1	172551-08250	HOSE	1							
10	1	172551-05270	HOSE	1							
11	1	172551-05810	HOSE	1							
12	1	172559-00650	NUT	2							
13	1	172217-15110	SEPARATOR ASSY, OW	1							1
14	1	172551-09840	SCREW	1							
15	1	172551-09530	SCREW	1							
16	1	172559-00670	NUT	2							
17	1	172551-09540	SCREW	1							

Remarks
(1)(refer to FILTERS/BELTS page)

N:Old $\xleftarrow[\text{No}]{\text{Yes}}$ New, Q:Old $\xleftarrow[\text{Yes}]{\text{No}}$ New, R:Old $\xleftarrow[\text{Yes}]{\text{Yes}}$ New, S:Old $\xleftarrow[\text{No}]{\text{No}}$ New, W:Add, Z:Discontinued, F:Interchangeable by set, K:Q'ty Change

Copyright (C) 2017 YANMAR CO., LTD. All RightsReserved.

Fig.76. FUEL TANK(SERIES III)

(A)=T210-1(VERSION C
(B)=
(C)=
(D)=
(E)=
(F)=

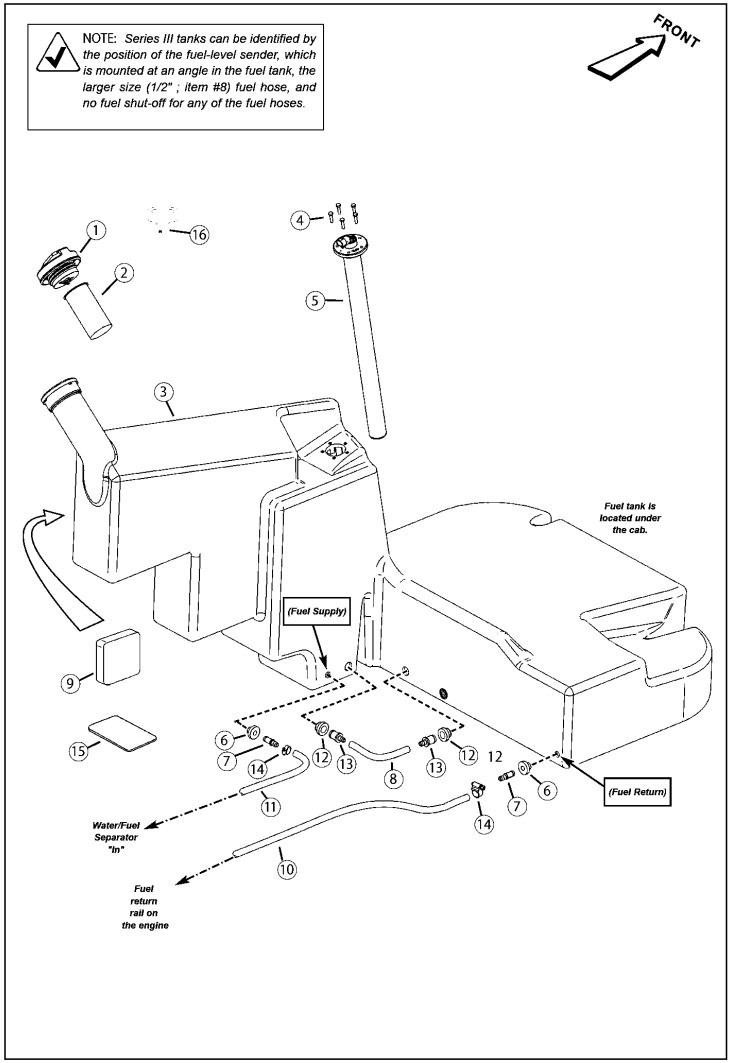

No.	Lev.	Parts No.	Description	Q'ty (A)	(B)	(C)	(D)	(E)	(F)	I	R
1	1	172551-03800	CAP, FUEL	1							1
2	1	172551-04340	STRAINER, FUEL	1							
3	1	172552-16330	TANK, FUEL	1							
4	1	172551-09980	SCREW	5							
5	1	172551-03790	SENDER, FUEL LEVEL	1							2
6	1	172559-02420	BUSHING, FUEL TANK	2							
7	1	172552-16340	FITTING, HOSE	2							
8	1	172552-16310	HOSE	1							
9	1	172552-16280	FOAM, FUEL TANK	1							
10	1	172552-16260	HOSE	1							
11	1	172551-08250	HOSE	1							
12	1	172552-16300	BUSHING	2							
13	1	172552-16320	FITTING, HOSE	2							
14	1	172559-02400	CLAMP	2							
15	1	172551-11300	PAD	1							3
16	1	172551-07990	KEY	1							4

Remarks
(1)(does not include key)
(2)Use dedicated sealant Blue sealant when installing the fuel level sender.
(3)(Prevents chaffing between fuel tank and the fuel tank bracket on the frame.)
(4)-14603

N:Old ◄Yes/No► New, Q:Old ◄No/Yes► New, R:Old ◄Yes/Yes► New, S:Old ◄No/No► New, W:Add, Z:Discontinued, F:Interchangeable by set, K:Q'ty Change

Copyright (C) 2017 YANMAR CO., LTD. All RightsReserved.

Fig.77. FUEL TANK(SERIES II)

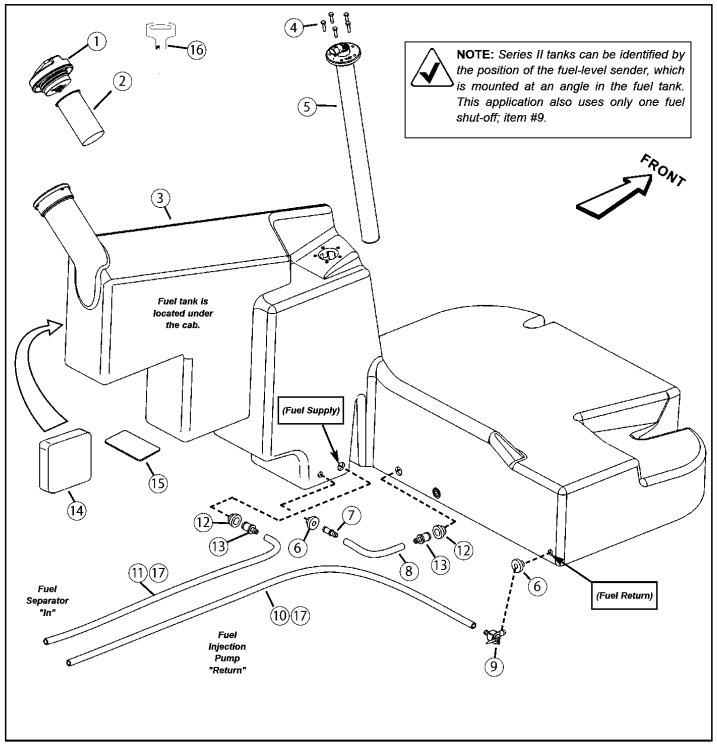

(A)=T210-1(VERSION C
(B)=
(C)=
(D)=
(E)=
(F)=

No.	Lev.	Parts No.	Description	Q'ty (A)	(B)	(C)	(D)	(E)	(F)	I	R
1	1	172551-03800	CAP, FUEL	1							1
2	1	172551-04340	STRAINER, FUEL	1							
3	1	172552-16330	TANK, FUEL	1							
4	1	172551-09980	SCREW	5							
5	1	172551-03790	SENDER, FUEL LEVEL	1							2
6	1	172559-02420	BUSHING, FUEL TANK	4							
7	1	172552-16340	FITTING, HOSE	1							
8	1	172551-06630	HOSE	1							
9	1	172551-05080	VALVE	1							
10	1	172551-08250	HOSE	1							
11	1	172551-08240	HOSE	1							
12	1	172552-16300	BUSHING	2							
13	1	172559-02430	FITTING,HOSE	2							
14	1	172552-16280	FOAM, FUEL TANK	1							3
15	1	172551-11300	PAD	1							
16	1	172551-07990	KEY	1							4
17	1	172559-02400	CLAMP	1							5

Remarks
(1)(does not include key)
(2)Use dedicated sealant Blue sealant when installing the fuel level sender.
(3)(fuel tank anti-shift)
(4)-14603
(5)(out of view)

N:Old ◄Yes/No► New, Q:Old ◄No/Yes► New, R:Old ◄Yes/Yes► New, S:Old ◄No/No► New, W:Add, Z:Discontinued, F:Interchangeable by set, K:Q'ty Change

Copyright (C) 2017 YANMAR CO., LTD. All RightsReserved.

Fig.78. FUEL TANK(SERIES I)

(A)=T210-1(VERSION C
(B)=
(C)=
(D)=
(E)=
(F)=

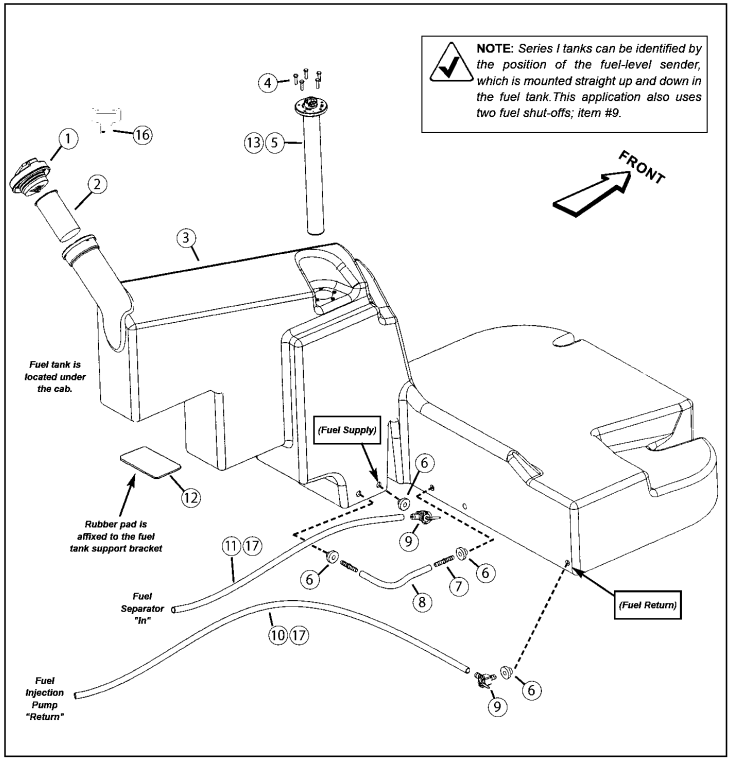

No.	Lev.	Parts No.	Description	Q'ty (A)	(B)	(C)	(D)	(E)	(F)	I	R
1	1	172551-03800	CAP, FUEL	1							1
2	1	172551-04340	STRAINER, FUEL	1							
3	1	172559-02440	TANK, FUEL	1							2
4	1	172551-09980	SCREW	5							
5	1	172551-03790	SENDER, FUEL LEVEL	1							
6	1	172559-02420	BUSHING, FUEL TANK	4							
7	1	172551-06620	FITTING, HOSE	2							
8	1	172551-06630	HOSE	1							
9	1	172551-05080	VALVE	2							
10	1	172551-08250	HOSE	1							
11	1	172551-08240	HOSE	1							
12	1	172551-11300	PAD	1							
13	1	172551-08720	GASKET, FUEL SENDER	1							3
16	1	172551-07990	KEY	1							4
17	1	172559-02400	CLAMP	1							3

Remarks
(1)(does not include key)
(2)(Kit; replaces original fuel tank)
(3)(out of view)
(4)-14603

N:Old $\xleftrightarrow[\text{No}]{\text{Yes}}$ New, Q:Old $\xleftrightarrow[\text{Yes}]{\text{No}}$ New, R:Old $\xleftrightarrow[\text{Yes}]{\text{Yes}}$ New, S:Old $\xleftrightarrow[\text{No}]{\text{No}}$ New, W:Add, Z:Discontinued, F:Interchangeable by set, K:Q'ty Change

Copyright (C) 2017 YANMAR CO., LTD. All RightsReserved.

Fig.79. AIR INTAKE / EXHAUST(SN: 461001 AND UP)

(A)=T210-1(VERSION C
(B)=
(C)=
(D)=
(E)=
(F)=

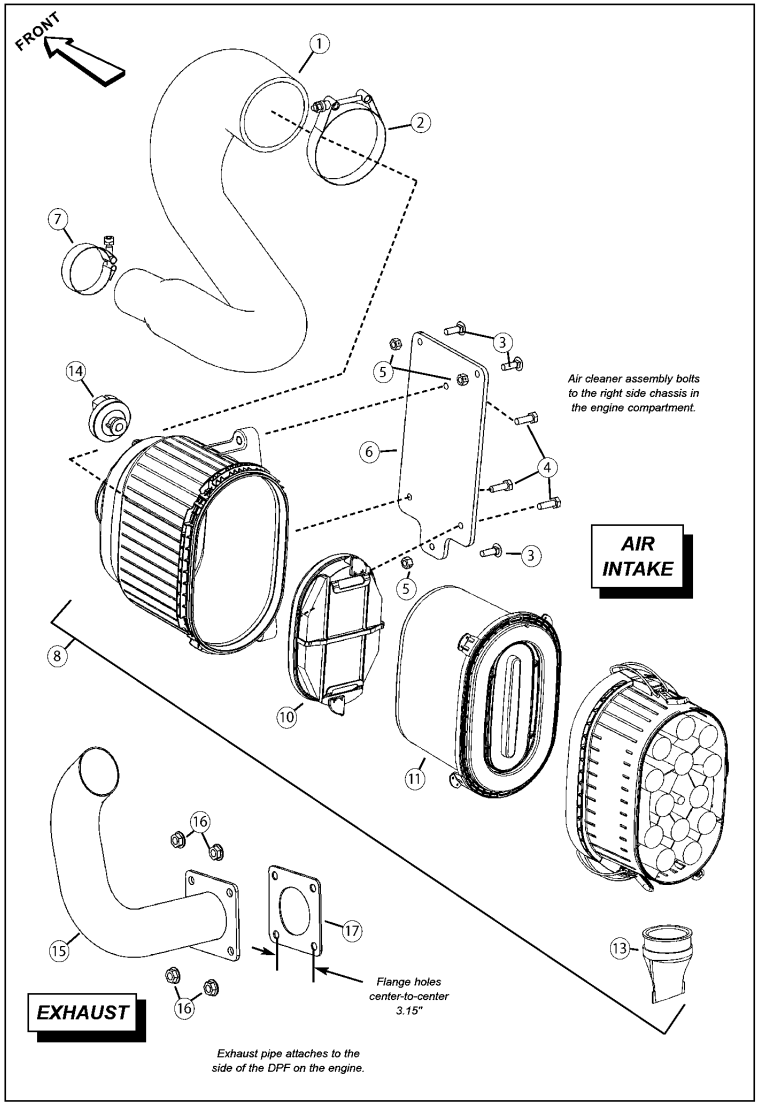

No.	Lev.	Parts No.	Description	Q'ty (A)	(B)	(C)	(D)	(E)	(F)	I	R
1	1	172552-16370	HOSE, INTAKE	1							
2	1	172552-16390	CLAMP	1							
3	1	172215-02820	BOLT	3							
4	1	172551-10490	SCREW	3							
5	1	172559-00450	NUT	3							
6	1	172552-16380	BRACKET, AIR CLEANER	1							
7	1	172217-02870	CLAMP	1							
8	1	172216-14171	CLEANER, AIR	1							1
10	1	172217-05150	FILTER, SECONDARY	1							
11	1	172217-05140	FILTER, MAIN	1							
13	1	172552-15220	EVACUATOR, DUST	1							
14	1	172551-04310	INDICATOR, SERVICE	1							
15	1	172559-02460	EXHAUST PIPE	1							
16	1	172559-02470	NUT	4							
17	1	172559-02450	GASKET, EXHAUST	1							2

Remarks
(1)(includes items 9-13)
(2)(flange holes measure 3.15" C/C)

N:Old $\xleftrightarrow[\text{No}]{\text{Yes}}$ New, Q:Old $\xleftrightarrow[\text{Yes}]{\text{No}}$ New, R:Old $\xleftrightarrow[\text{Yes}]{\text{Yes}}$ New, S:Old $\xleftrightarrow[\text{No}]{\text{No}}$ New, W:Add, Z:Discontinued, F:Interchangeable by set, K:Q'ty Change

Copyright (C) 2017 YANMAR CO., LTD. All RightsReserved.

Fig.80. AIR INTAKE - (INTERIM TIER IV - LATE)(SN: 461000 AND BEFORE)

(A)=T210-1(VERSION C
(B)=
(C)=
(D)=
(E)=
(F)=

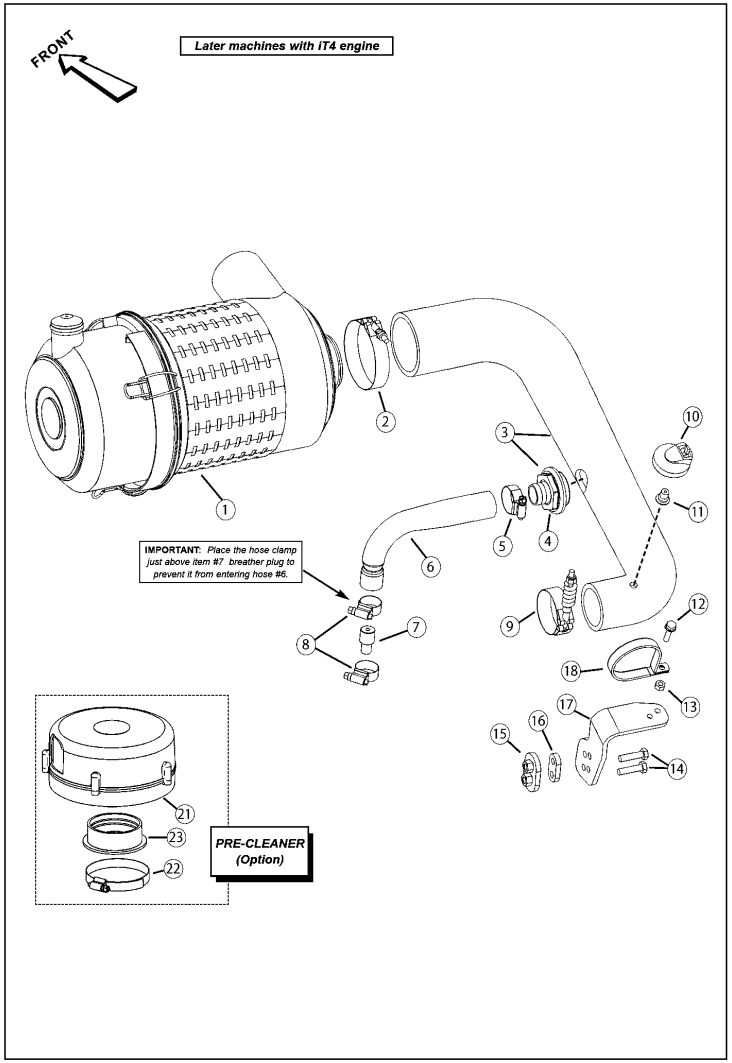

No.	Lev.	Parts No.	Description	Q'ty (A)	(B)	(C)	(D)	(E)	(F)	I	R
1	1	172551-02250	AIR CLEANER ASSY	1							
2	1	172551-02170	CLAMP	1							
3	1	172559-02560	INTAKE HOSE ASSEMBLY	1							1
4	1	172559-02490	ST BH16/THRU HULL	1							
5	1	172559-02580	CLAMP, HOSE #16	1							
6	1	172559-02480	HOSE,BREATHER	1							
7	1	172559-02500	SPACER BREATHER PLUG	1							
8	1	172559-01710	CLAMP	2							
9	1	172559-02520	CLAMP,SPRING	1							
10	1	172551-04310	INDICATOR, SERVICE	1							
11	1	172551-04320	FITTING	1							
12	1	172216-17490	SCREW	1							
13	1	172559-00780	NUT	1							
14	1	172551-09600	SCREW	2							
15	1	172559-02550	CLAMP, WELDMENT	1							
16	1	172559-02540	SPACER PLATE	1							
17	1	172559-02530	BRACKET, SUPPORT	1							
18	1	172559-02510	CLAMP,HOSE	1							
21	1	172552-00120	PRE-CLEANER	1							2
22	1	172559-02570	CLAMP	1							3
23	1	172552-00250	ADAPTOR	1							4

Remarks
(1)(includes item 4)
(2)(includes #22)(Option; not available for EU machines)
(3)(included with #21)(Option; not available for EU machines)
(4)(Option; not available for EU machines)

N:Old ←Yes/No→ New, Q:Old ←No/Yes→ New, R:Old ←Yes/Yes→ New, S:Old ←No/No→ New, W:Add, Z:Discontinued, F:Interchangeable by set, K:Q'ty Change

Copyright (C) 2017 YANMAR CO., LTD. All RightsReserved.

Fig.81. AIR INTAKE - (INTERIM TIER IV - EARLY AND TIER III)(SN: 461000 AND BEFORE)

(A)=T210-1(VERSION C
(B)=
(C)=
(D)=
(E)=
(F)=

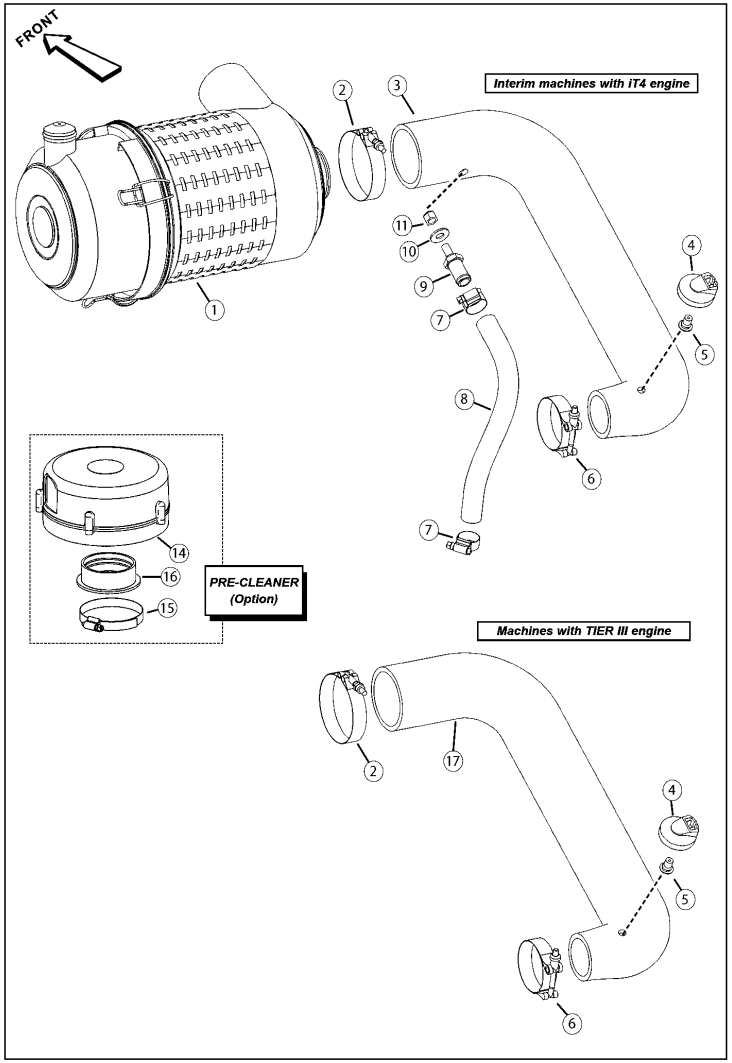

No.	Lev.	Parts No.	Description	Q'ty (A)	(B)	(C)	(D)	(E)	(F)	I	R
1	1	172551-02250	AIR CLEANER ASSY	1							
2	1	172551-02170	CLAMP	1							
3	1	172552-00240	HOSE	1							
4	1	172551-04310	INDICATOR, SERVICE	1							
5	1	172551-04320	FITTING	1							
6	1	172217-02870	CLAMP	1							
7	1	172559-01710	CLAMP	2							
8	1	172552-00780	HOSE	1							
9	1	172552-00560	CONNECTOR	1							
10	1	172551-10380	WASHER	1							
11	1	172559-02600	NUT	1							
14	1	172552-00120	PRE-CLEANER	1							1
15	1	172559-02570	CLAMP	1							2
16	1	172552-00250	ADAPTOR	1							3
17	1	172559-02590	HOSE,AIR INTAKE	1							4

Remarks
(1)(includes item 15)(Option; not available for EU machines)
(2)(included with #14)(Option; not available for EU machines)
(3)(Option; not available for EU machines)
(4)(TIER III engines only)

N:Old $\xleftrightarrow[\text{No}]{\text{Yes}}$ New, Q:Old $\xleftrightarrow[\text{Yes}]{\text{No}}$ New, R:Old $\xleftrightarrow[\text{Yes}]{\text{Yes}}$ New, S:Old $\xleftrightarrow[\text{No}]{\text{No}}$ New, W:Add, Z:Discontinued, F:Interchangeable by set, K:Q'ty Change

Copyright (C) 2017 YANMAR CO., LTD. All RightsReserved.

Fig.82. AIR CLEANER ASSEMBLY - (PRE-TIER IV)(SN: 461000 AND BEFORE)

(A)=T210-1(VERSION C
(B)=
(C)=
(D)=
(E)=
(F)=

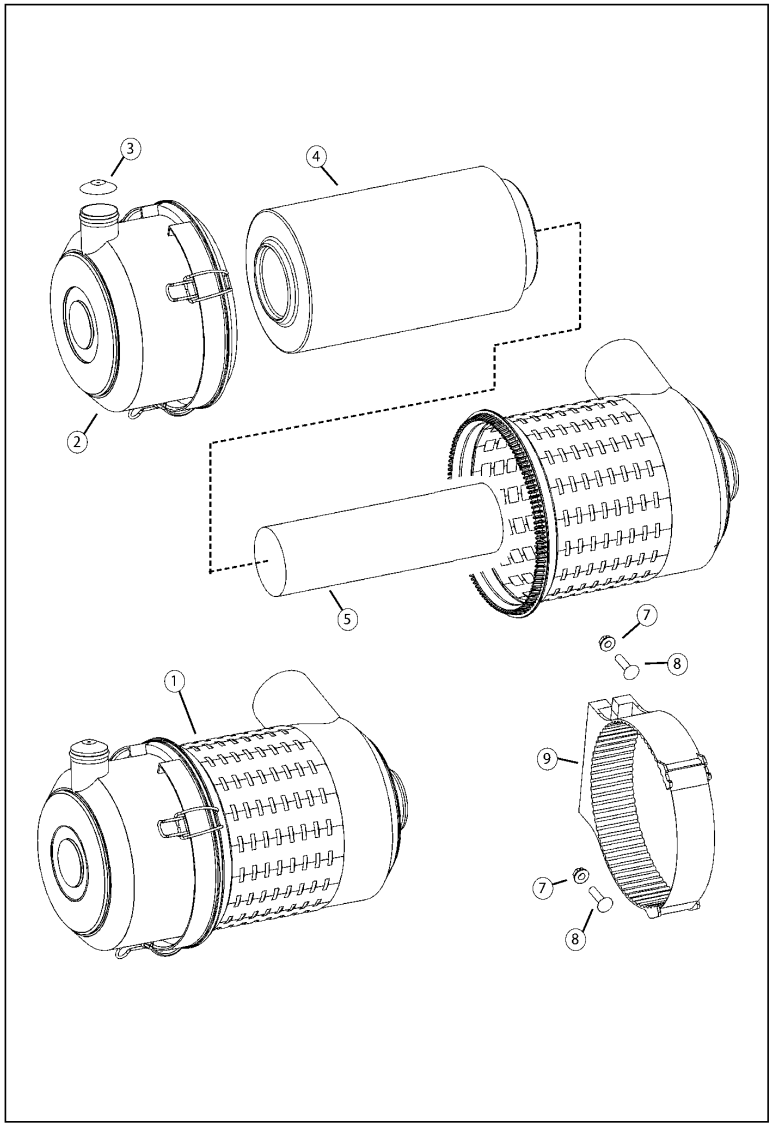

No.	Lev.	Parts No.	Description	Q'ty (A)	(B)	(C)	(D)	(E)	(F)	I	R
1	1	172216-03360	SEAT, SUSPENSION	1							1
2	1	172551-02350	CAP,AIR CLEANER	1							
3	1	172551-02050	FILTER,AIR	1							
4	1	172551-02060	FILTER,AIR	1							
5	1	172551-02340	VALVE,EVACUATOR	1							
7	1	172551-02760	NUT	2							
8	1	172551-09810	BOLT	2							
9	1	172551-02000	CLAMP, AIR CLEANER	1							

Remarks
(1)(includes items 2-6)

N:Old $\frac{\text{Yes}}{\text{No}}$ New, Q:Old $\frac{\text{No}}{\text{Yes}}$ New, R:Old $\frac{\text{Yes}}{\text{Yes}}$ New, S:Old $\frac{\text{No}}{\text{No}}$ New, W:Add, Z:Discontinued, F:Interchangeable by set, K:Q'ty Change

Copyright (C) 2017 YANMAR CO., LTD. All RightsReserved.

Fig.83. EXHAUST - (PRE-TIER IV)(SN: 461000 AND BEFORE)

(A)=T210-1(VERSION C
(B)=
(C)=
(D)=
(E)=
(F)=

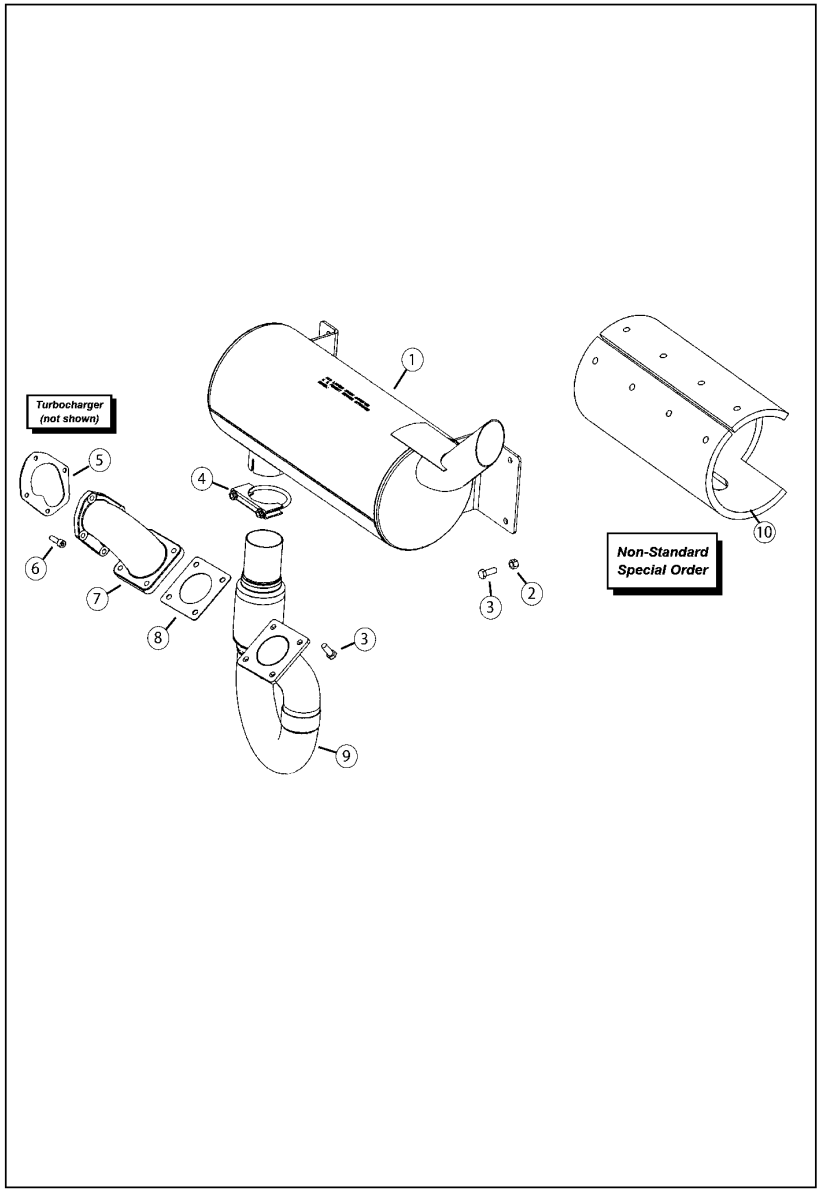

No.	Lev.	Parts No.	Description	Q'ty (A)	(B)	(C)	(D)	(E)	(F)	I	R
1	1	172559-02610	MUFFLER	1							
2	1	172559-00670	NUT	4							
3	1	172551-09530	SCREW	8							
4	1	172552-00060	CLAMP	1							
5	1	172552-15100	GASKET, T/C OUT	1							
6	1	172552-00890	SCREW	4							
7	1	172552-00130	OUTLET, EXHAUST	1							
8	1	172552-00140	GASKET	1							
9	1	172552-00260	PIPE	1							
10	1	172551-09380	MUFFLER,INSULATING	1							

N:Old $\xleftrightarrow[\text{No}]{\text{Yes}}$ New, Q:Old $\xleftrightarrow[\text{Yes}]{\text{No}}$ New, R:Old $\xleftrightarrow[\text{Yes}]{\text{Yes}}$ New, S:Old $\xleftrightarrow[\text{No}]{\text{No}}$ New, W:Add, Z:Discontinued, F:Interchangeable by set, K:Q'ty Change

Copyright (C) 2017 YANMAR CO., LTD. All RightsReserved.

Fig.84. RADIATOR / HYDRAULIC COOLER(SN: 461001 AND UP)

(A)=T210-1(VERSION C
(B)=
(C)=
(D)=
(E)=
(F)=

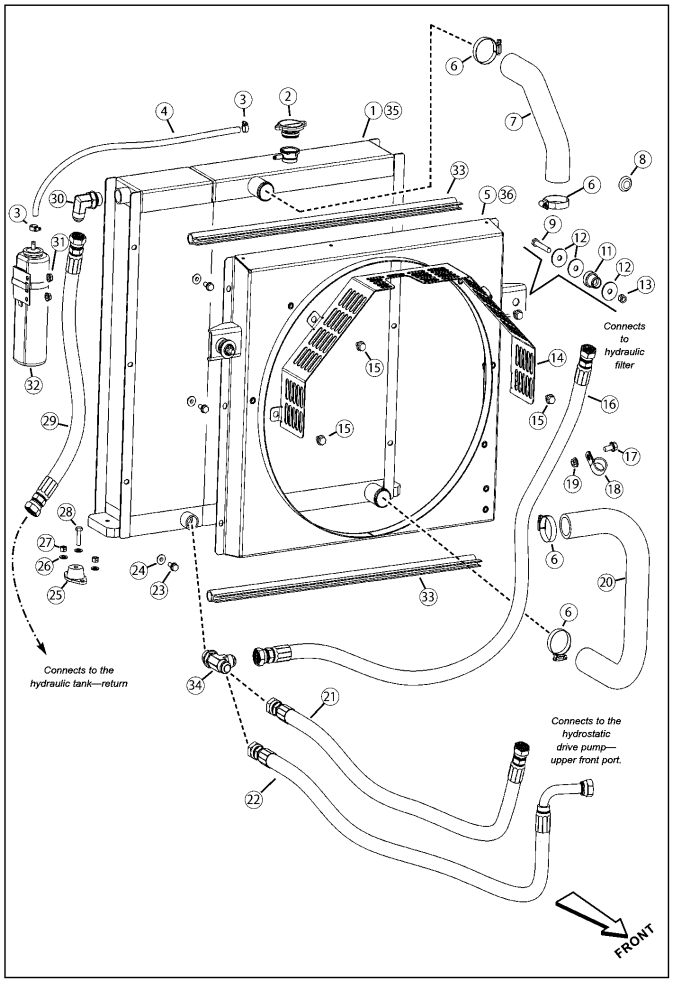

No.	Lev.	Parts No.	Description	Q'ty (A)	(B)	(C)	(D)	(E)	(F)	I	R
1	1	172552-00300	COOLER, RADIATOR	1							1
2	1	172551-07880	RADIATOR CAP	1							
3	1	172559-02400	CLAMP	2							
4	1	172551-06160	HOSE	1							
5	1	172559-02650	FAN SHROUD	1							2
6	1	172559-02670	CLAMP	4							
7	1	172552-16410	HOSE, RAD. UPPER	1							
8	1	172551-02430	PLUG	1							
9	1	172551-09580	SCREW	2							
11	1	172551-03360	MOUNT, RADIATOR	2							3
12	1	172551-03370	WASHER, REBOUND	6							
13	1	172559-00670	NUT	2							
14	1	172552-16430	GUARD, FAN	1							
15	1	172551-06750	SCREW	4							
16	1	172552-16420	HOSE	1							
17	1	172559-02020	CS FL LOCK	1							
18	1	172551-11380	CLAMP	1							
19	1	172551-02750	NUT	1							
20	1	172551-03310	HOSE	1							
21	1	172559-02630	HOSE	1							4
22	1	172551-04220	HOSE	1							5
23	1	172559-01220	SCREW	6							
24	1	172551-02760	NUT	6							
25	1	172551-03280	MOUNT, RADIATOR	2							
26	1	172551-09860	WASHER	1							
27	1	172559-00450	NUT	1							
28	1	172551-09600	SCREW	2							
29	1	172551-04230	HOSE	1							
30	1	172559-02660	CONNECTOR	1							
31	1	172551-01060	NUT	2							
32	1	172217-15100	TANK SUB ASSY	1							6
33	1	172559-02620	BULB SEAL	2							
34	1	172559-02680	CONNECTOR, TEE-RUN	1							
35	1	172551-07890	PLUG,DRAIN	1							7
36	1	172559-02640	FAN SHROUD	1							8

Remarks
(1)(radiator / hydraulic cooler)(includes item 2)
(2)(when equipped with 18" fan)S/N 461030 and up
(3)(rubber)
(4)S/N 461030 and up
(5)S/N 461001 - 461029
(6)(includes band clamp and bracket)
(7)(out of view)
(8)(when equipped with 22-1/4" fan)S/N 461001 - 461029

N:Old ◄Yes/No► New, Q:Old ◄No/Yes► New, R:Old ◄Yes/Yes► New, S:Old ◄No/No► New, W:Add, Z:Discontinued, F:Interchangeable by set, K:Q'ty Change

Copyright (C) 2017 YANMAR CO., LTD. All RightsReserved.

Fig.85. RADIATOR / HYDRAULIC COOLER(SN: 461000 AND BEFORE)

(A)=T210-1(VERSION C
(B)=
(C)=
(D)=
(E)=
(F)=

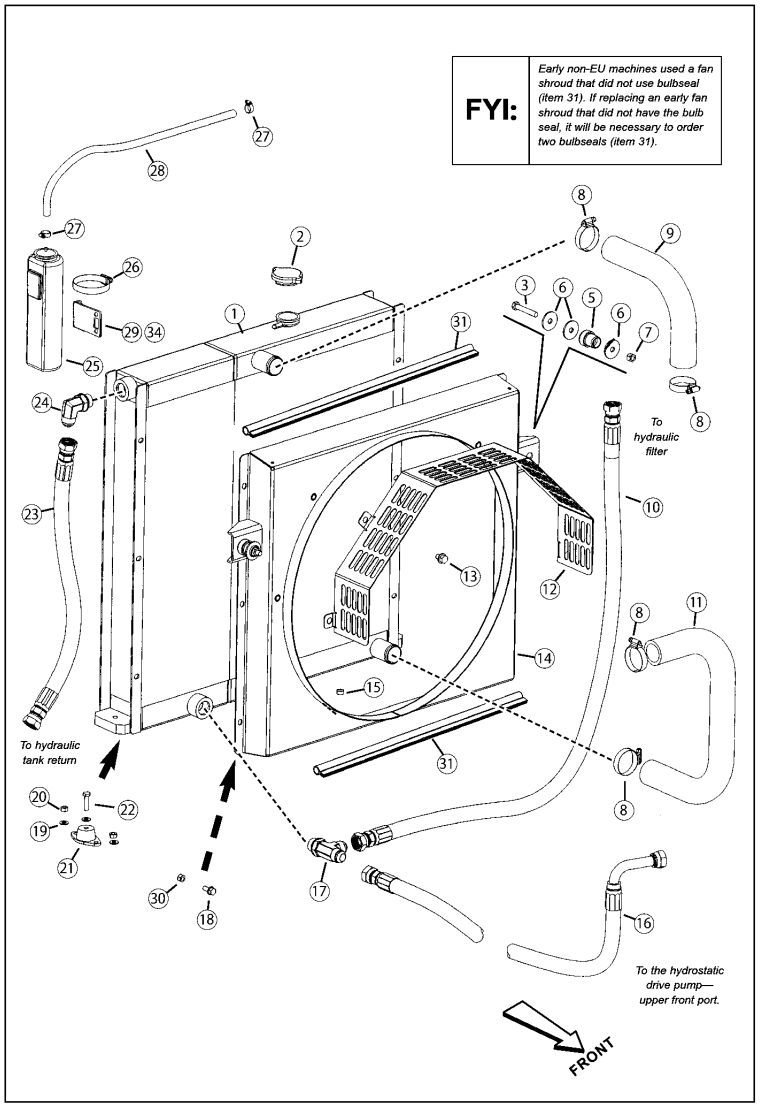

No.	Lev.	Parts No.	Description	Q'ty (A)	(B)	(C)	(D)	(E)	(F)	I	R
1	1	172552-00300	COOLER, RADIATOR	1							1
2	1	172551-07880	RADIATOR CAP	1							
3	1	172551-09580	SCREW	2							
5	1	172551-03360	MOUNT, RADIATOR	2							
6	1	172551-03370	WASHER, REBOUND	6							
7	1	172559-00670	NUT	2							
8	1	172559-02670	CLAMP	4							
9	1	172551-03320	HOSE	1							
10	1	172551-03260	HOSE	1							
11	1	172551-03310	HOSE	1							
12	1	172551-05240	GUARD, FAN	1							2
13	1	172551-06750	SCREW	1							
14	1	172559-02640	FAN SHROUD	1							2
15	1	172551-07890	PLUG,DRAIN	1							
16	1	172551-04220	HOSE	1							
17	1	172559-02680	CONNECTOR, TEE-RUN	1							
18	1	172559-01220	SCREW	6							
19	1	172551-09860	WASHER	1							
20	1	172559-00450	NUT	1							
21	1	172551-03280	MOUNT, RADIATOR	2							
22	1	172551-09600	SCREW	2							
23	1	172551-04230	HOSE	1							
24	1	172559-02660	CONNECTOR	1							
25	1	172217-15100	TANK SUB ASSY	1							
26	1	172551-15120	BAND, SUB TANK	1							
27	1	172559-02400	CLAMP	2							
28	1	172551-06160	HOSE	1							
29	1	172551-15100	BRACKET, SUB TANK	1							
30	1	172551-02760	NUT	6							
31	1	172559-02620	BULB SEAL	2							
34	1	172551-01060	NUT	2							

Remarks
(1)(radiator / hydraulic cooler)(includes item 2)
(2)(not used on EU machines)

N:Old $\xleftarrow[\text{No}]{\text{Yes}}$ New, Q:Old $\xleftarrow[\text{Yes}]{\text{No}}$ New, R:Old $\xleftarrow[\text{Yes}]{\text{Yes}}$ New, S:Old $\xleftarrow[\text{No}]{\text{No}}$ New, W:Add, Z:Discontinued, F:Interchangeable by set, K:Q'ty Change

Copyright (C) 2017 YANMAR CO., LTD. All RightsReserved.

Fig.86. TRACK ASSEMBLY(SN: 461151 AND UP)

(A)=T210-1(VERSION C
(B)=
(C)=
(D)=
(E)=
(F)=

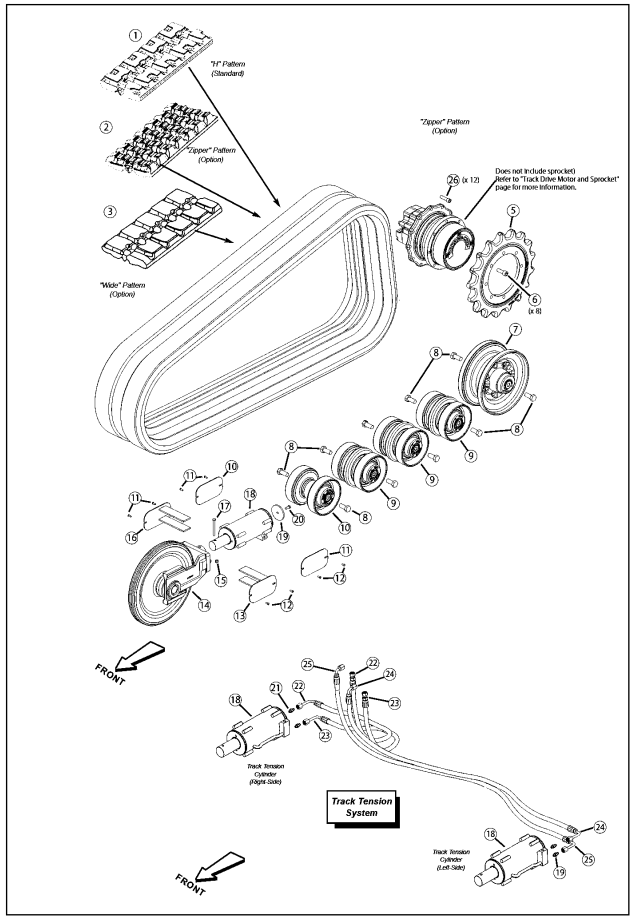

No.	Lev.	Parts No.	Description	Q'ty (A)	(B)	(C)	(D)	(E)	(F)	I	R
1	1	172552-00230	TRACK	2							1
2	1	172559-02710	TRACK 450X86X56 BBE	2							2
3	1	172559-02700	TRACK 450X86X56 HHBE	2							3
5	1	172559-02720	SPROCKET DRIVE 17T	2							4
6	1	172551-05710	SCREW	8							
7	1	172551-06371	IDLER ASSY	2							5
8	1	172551-05700	SCREW	20							
9	1	172559-02730	WHEEL,TRIPLE-BOGIE	6							6
10	1	172551-03511	WHEEL ASSY,BOGIE	2							
11	1	172551-03890	PLATE, SERVICE COVER	2							
12	1	172559-00360	SCREW	8							
13	1	172551-04460	STOP,TENSION CYL.	1							7
14	1	172551-03491	IDLER ASSY,FRONT	2							
15	1	172559-00160	NUT	2							
16	1	172551-04470	STOP,TENSION CYL.	1							8
17	1	172551-10100	SCREW	2							
18	1	172551-03741	CYLINDER, TENSION	2							
19	1	172551-04610	STOP,CYLINDER	2							
20	1	172551-08190	SCREW	2							
21	1	172551-02790	PLUG	4							
22	1	172551-05520	HOSE	1							
23	1	172551-05520	HOSE	1							
24	1	172551-05490	HOSE	1							
25	1	172551-05490	HOSE	1							
26	1	172559-02690	SCREW	24							

Remarks
(1)(Standard)
(2)(Option) This optional traction track is a directional track;
install it in the rotational direction indicated by the arrow that is embossed on the side (inside) of the track.
Tracks are not interchangeable and must be installed with the identical track on the opposite side.
(3)(optional track)
(4)(does not include drive motor)
(5)(rear)
(6)This bogie wheel will not fit on machines prior to SN 461151.
Refer to "Bogie Wheel Assembly" page for earlier bogie wheels.
(7)(left)
(8)(right)

N:Old $\xleftrightarrow[\text{No}]{\text{Yes}}$ New, Q:Old $\xleftrightarrow[\text{Yes}]{\text{No}}$ New, R:Old $\xleftrightarrow[\text{Yes}]{\text{Yes}}$ New, S:Old $\xleftrightarrow[\text{No}]{\text{No}}$ New, W:Add, Z:Discontinued, F:Interchangeable by set, K:Q'ty Change

Copyright (C) 2017 YANMAR CO., LTD. All RightsReserved.

Fig.87. TRACK ASSEMBLY(SN: 461150 AND BEFORE)

(A)=T210-1(VERSION C
(B)=
(C)=
(D)=
(E)=
(F)=

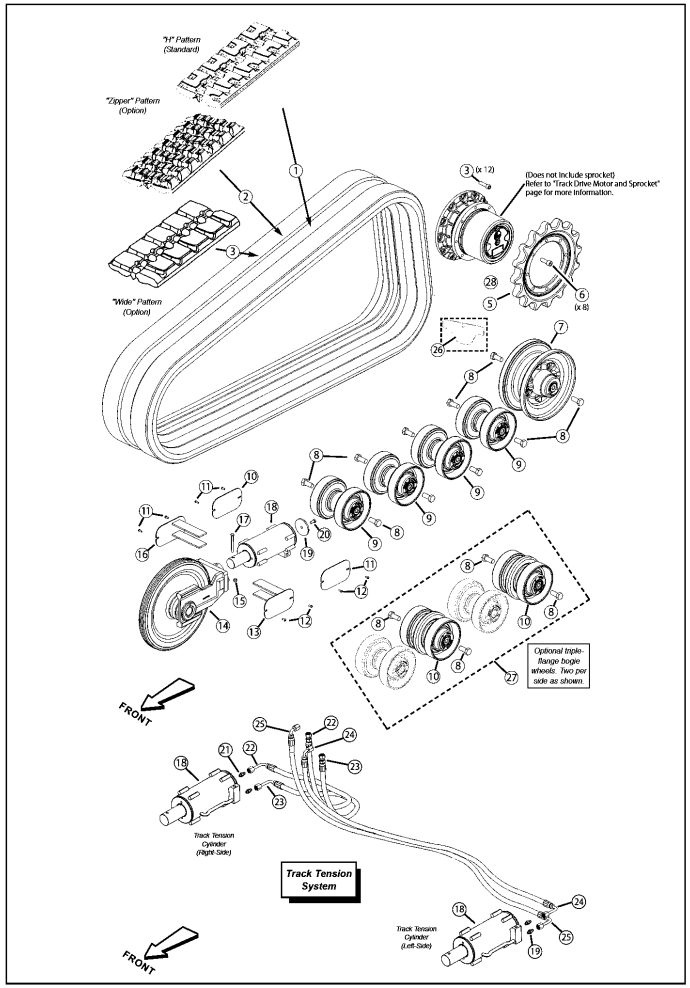

No.	Lev.	Parts No.	Description	Q'ty (A)	(B)	(C)	(D)	(E)	(F)	I	R
1	1	172552-00230	TRACK	2							1
2	1	172559-02710	TRACK 450X86X56 BBE	2							2
3	1	172559-02700	TRACK 450X86X56 HHBE	2							3
5	1	172559-02760	SPROCKET DRIVE 16T	2							4
6	1	172551-05710	SCREW	8							
7	1	172551-06371	IDLER ASSY	2							5
8	1	172551-05700	SCREW	20							
9	1	172551-03511	WHEEL ASSY,BOGIE	8							6
10	1	172559-02770	WHEEL,TRIPLE-BOGIE	4							7
11	1	172551-03890	PLATE, SERVICE COVER	2							
12	1	172559-00360	SCREW	8							
13	1	172551-04460	STOP,TENSION CYL.	1							
14	1	172551-03491	IDLER ASSY,FRONT	2							
15	1	172559-00160	NUT	2							
16	1	172551-04470	STOP,TENSION CYL.	1							
17	1	172551-10100	SCREW	2							
18	1	172551-03741	CYLINDER, TENSION	2							
19	1	172551-04610	STOP,CYLINDER	2							
20	1	172551-08190	SCREW	2							
21	1	172551-02790	PLUG	4							
22	1	172551-05520	HOSE	1							
23	1	172551-05520	HOSE	1							
24	1	172551-05490	HOSE	1							
25	1	172551-05490	HOSE	1							
26	1	172559-02750	GAUGE	1							
27	1	172559-02740	KIT,TRIPLE-BOGIE	1							8
28	1	172551-05720	SCREW	12							

Remarks
(1)(standard)
(2)(Option) This optional traction track is a directional track;
install it in the rotational direction indicated by the arrow that is embossed on the side (inside) of the track.
Tracks are not interchangeable and must be installed with the identical track on the opposite side.
(6)(quantity changes to 4 when machine isequipped with item 10)
(7)(Special Option - This bogie wheel is a special diameter. This bogie wheel will not fit on machines SN 461151 and up.
(8)(includes (8) item 8, (4) item 10, and instructions) This bogie wheel will not fit on machines SN 461151 and up.

N:Old $\frac{\text{Yes}}{\text{No}}$ New, Q:Old $\frac{\text{No}}{\text{Yes}}$ New, R:Old $\frac{\text{Yes}}{\text{Yes}}$ New, S:Old $\frac{\text{No}}{\text{No}}$ New, W:Add, Z:Discontinued, F:Interchangeable by set, K:Q'ty Change

Copyright (C) 2017 YANMAR CO., LTD. All RightsReserved.

Fig.88. DUAL-FLANGE IDLER ASSEMBLY - REAR(LATE SERIES)

(A)=T210-1(VERSION C
(B)=
(C)=
(D)=
(E)=
(F)=

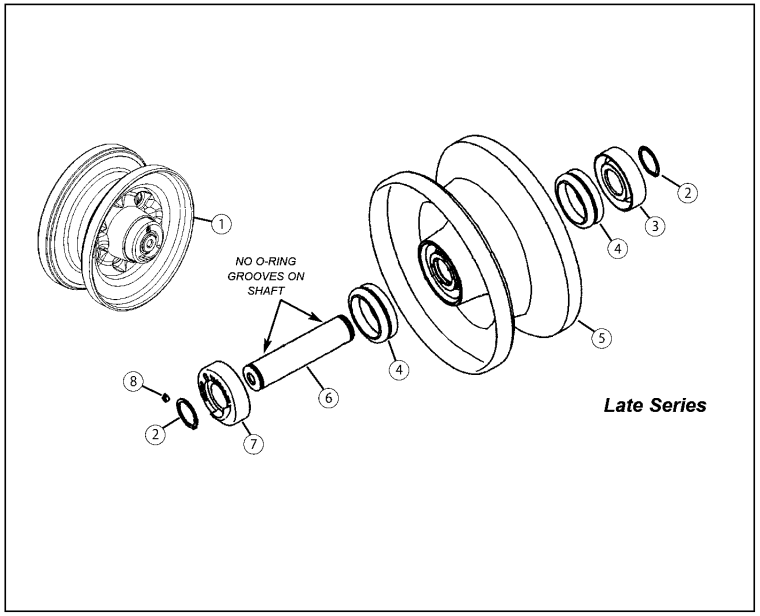

No.	Lev.	Parts No.	Description	Q'ty (A)	(B)	(C)	(D)	(E)	(F)	I	R
1	1	172551-06371	IDLER ASSY	1							1
2	1	172551-07780	SNAP RING	2							
3	1	172559-02800	BRACKET	1							
4	1	172551-07700	SEAL GROUP	2							
5	1	172551-07760	SHELL,IDLER	1							
6	1	172559-02780	SHAFT, REAR IDLER	1							2
7	1	172559-02790	BRACKET W/HOLE	1							
8	1	172551-07750	PLUG	1							

Remarks
(1)(includes all items shown)
(2)(no machined o-ring groove on shaft;early series included a machined o-ringgroove)

N:Old $\xleftrightarrow[\text{No}]{\text{Yes}}$ New, Q:Old $\xleftrightarrow[\text{Yes}]{\text{No}}$ New, R:Old $\xleftrightarrow[\text{Yes}]{\text{Yes}}$ New, S:Old $\xleftrightarrow[\text{No}]{\text{No}}$ New, W:Add, Z:Discontinued, F:Interchangeable by set, K:Q'ty Change

Copyright (C) 2017 YANMAR CO., LTD. All RightsReserved.

Fig.89. DUAL-FLANGE IDLER ASSEMBLY - REAR(EARLY SERIES)

(A)=T210-1(VERSION C
(B)=
(C)=
(D)=
(E)=
(F)=

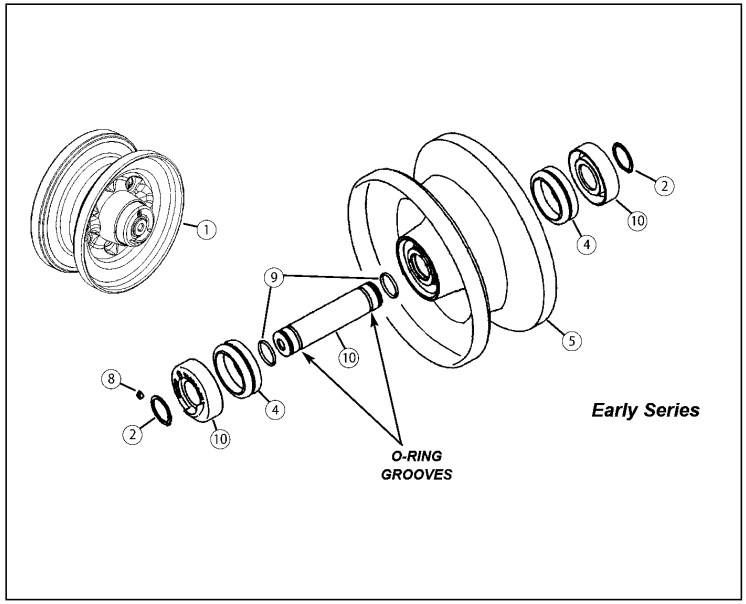

No.	Lev.	Parts No.	Description	Q'ty (A)	(B)	(C)	(D)	(E)	(F)	I	R
1	1	172551-06371	IDLER ASSY	1							1
2	1	172551-07780	SNAP RING	2							
4	1	172551-07700	SEAL GROUP	2							
5	1	172551-07760	SHELL,IDLER	1							
8	1	172551-07750	PLUG	1							
9	1	172551-07810	O-RING	2							
10	1	172559-02810	SHAFT KIT	1							4

Remarks
(1)(includes all items shown)
(4)Updates shaft and brackets (items 3, 6, and 7) to late series.
Kit includes(1) 50291172 Bracket, (1) 50291170 Shaft, and (1) 50291171

N:Old ◄Yes/No► New, Q:Old ◄No/Yes► New, R:Old ◄Yes/Yes► New, S:Old ◄No/No► New, W:Add, Z:Discontinued, F:Interchangeable by set, K:Q'ty Change

Copyright (C) 2017 YANMAR CO., LTD. All RightsReserved.

Fig.90. BOGIE WHEEL ASSEMBLY

(A)=T210-1(VERSION C
(B)=
(C)=
(D)=
(E)=
(F)=

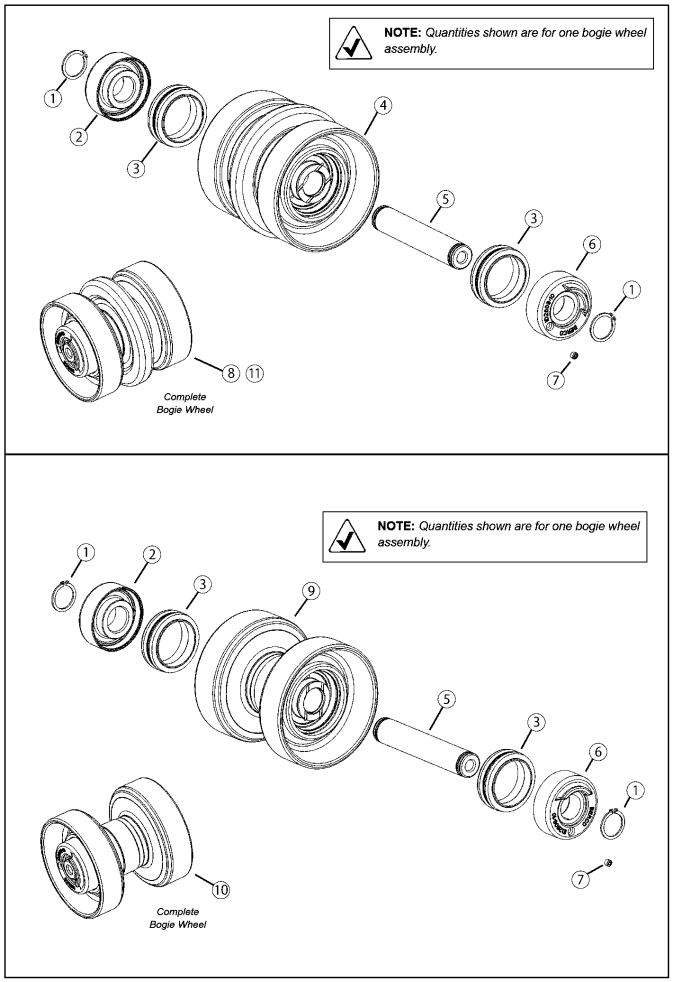

No.	Lev.	Parts No.	Description	Q'ty (A)	(B)	(C)	(D)	(E)	(F)	I	R
1	1	172551-07720	SNAP RING	2							
2	1	172551-07730	BRACKET	1							
3	1	172559-02820	SEAL GROUP	2							
4	1	172559-02830	SHELL,ROLLER	1							1
5	1	172551-07710	SHAFT	1							
6	1	172551-07740	BRACKET	1							
7	1	172551-07750	PLUG	1							
8	1	172559-02730	WHEEL,TRIPLE-BOGIE	1							2
9	1	172551-07690	SHELL, ROLLER	1							3
10	1	172551-03511	WHEEL ASSY,BOGIE	1							4
11	1	172559-02770	WHEEL,TRIPLE-BOGIE	1							5

Remarks
(1)(includes bushings)Available only for machines withSN 461151 and up .
(2)(Late series)Available only for machines withSN 461151 and up.
(3)(includes bushings) (4)(includes items 1-3, 5-7, and 9)
(5)(Early series - special diameter)For machines SN 461150 and before;
all equipped with the triple-flange bogie wheel.
The roller shell is a special diameter and is not available for purchase.
It will be necessary to order P/N 50312634 triple-flange bogie wheel (which is a complete bogie wheel).
Items (1-3 and 5-7) are available for this and all serial number ranges.

N:Old $\frac{\text{Yes}}{\text{No}}$ New, Q:Old $\frac{\text{No}}{\text{Yes}}$ New, R:Old $\frac{\text{Yes}}{\text{Yes}}$ New, S:Old $\frac{\text{No}}{\text{No}}$ New, W:Add, Z:Discontinued, F:Interchangeable by set, K:Q'ty Change

Copyright (C) 2017 YANMAR CO., LTD. All RightsReserved.

Fig.91. FRONT IDLER ASSEMBLY

(A)=T210-1(VERSION C
(B)=
(C)=
(D)=
(E)=
(F)=

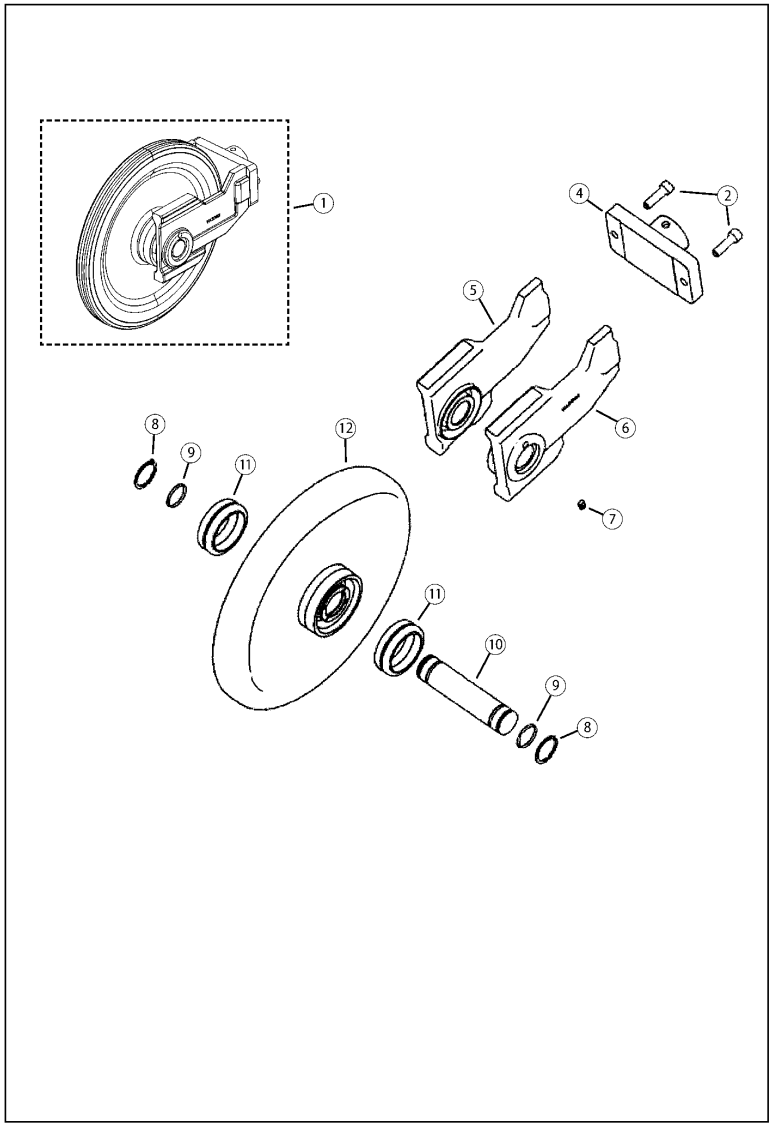

No.	Lev.	Parts No.	Description	Q'ty (A)	(B)	(C)	(D)	(E)	(F)	I	R
1	1	172551-03491	IDLER ASSY,FRONT	1							1
2	1	172551-07870	BOLT	2							
4	1	172551-07860	WELDMENT,TRACK IDLER	1							
5	1	172551-07840	BRACKET	1							
6	1	172551-07850	BRACKET	1							
7	1	172551-07750	PLUG	1							
8	1	172551-07780	SNAP RING	2							
9	1	172551-07810	O-RING	2							
10	1	172551-07830	SHAFT	1							
11	1	172551-07700	SEAL GROUP	2							
12	1	172551-07820	SHELL, IDLER	1							

Remarks
(1)(includes all items shown)

N:Old $\xleftrightarrow[\text{No}]{\text{Yes}}$ New, Q:Old $\xleftrightarrow[\text{Yes}]{\text{No}}$ New, R:Old $\xleftrightarrow[\text{Yes}]{\text{Yes}}$ New, S:Old $\xleftrightarrow[\text{No}]{\text{No}}$ New, W:Add, Z:Discontinued, F:Interchangeable by set, K:Q'ty Change

Copyright (C) 2017 YANMAR CO., LTD. All RightsReserved.

Fig.92. TRACK DRIVE MOTOR AND SPROCKET

(A)=T210-1(VERSION C
(B)=
(C)=
(D)=
(E)=
(F)=

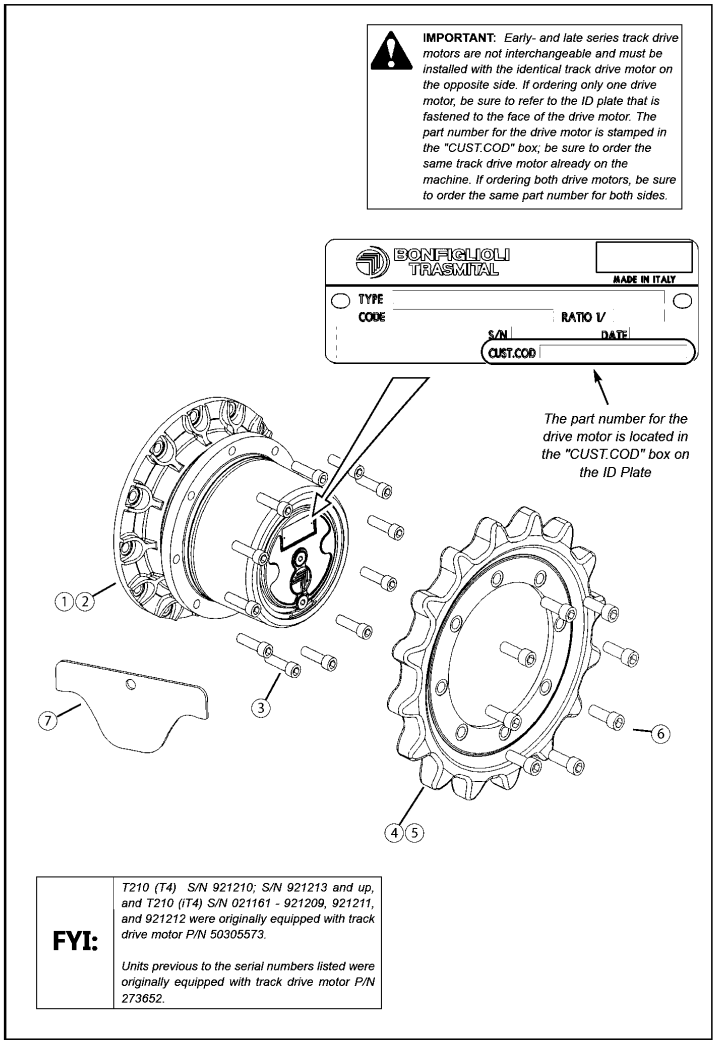

No.	Lev.	Parts No.	Description	Q'ty (A)	(B)	(C)	(D)	(E)	(F)	I	R
1	1	172559-02840	MOTOR, DRIVE	2							1
2	1	172552-00311	MOTOR, DRIVE	2							2
3	1	172551-05720	SCREW	12							
4	1	172559-02720	SPROCKET DRIVE 17T	1							3
5	1	172559-02760	SPROCKET DRIVE 16T	1							4
6	1	172551-05710	SCREW	8							
7	1	172559-02750	GAUGE	1							5

Remarks
(1)(refer to "IMPORTANT" note)(Late Series)
(2)(refer to "IMPORTANT" note)(Early Series)
(3)SN 461151 and up.
(4)SN 461150 and before.
(5)(included with service kit)SN 461150 and before.

N:Old ←Yes/No→ New, Q:Old ←No/Yes→ New, R:Old ←Yes/Yes→ New, S:Old ←No/No→ New, W:Add, Z:Discontinued, F:Interchangeable by set, K:Q'ty Change

Copyright (C) 2017 YANMAR CO., LTD. All RightsReserved.

Fig.93. TRACK DRIVE MOTOR COMPONENTS

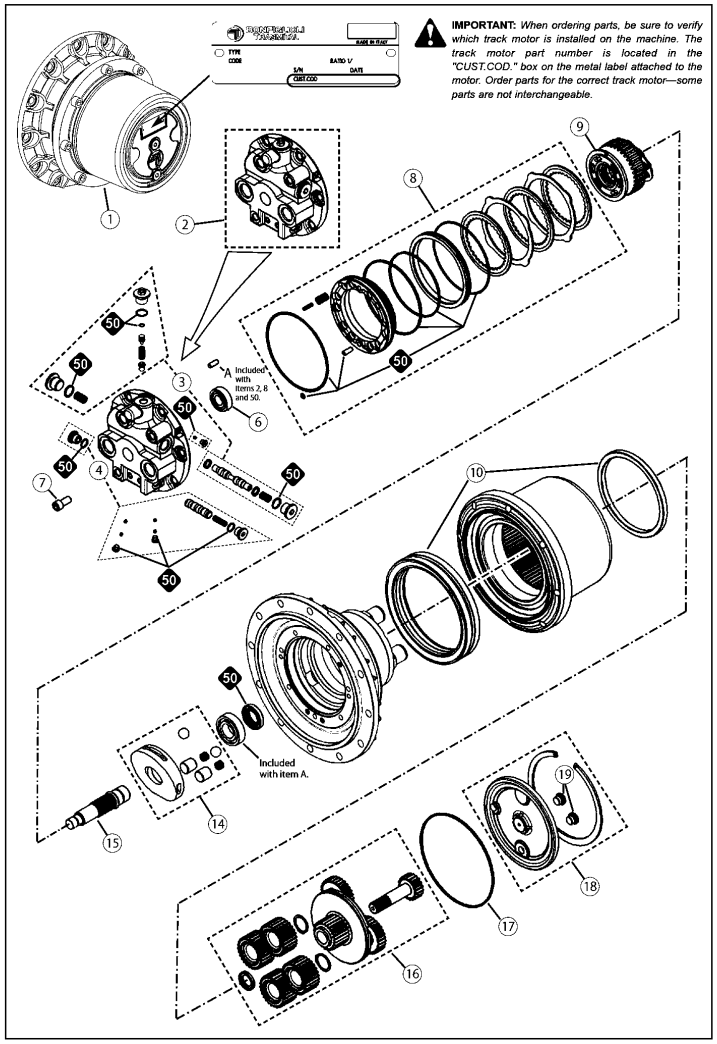

(A)=T210-1(VERSION C
(B)=
(C)=
(D)=
(E)=
(F)=

No.	Lev.	Parts No.	Description	Q'ty (A)	(B)	(C)	(D)	(E)	(F)	I	R
1	1	172559-02840	MOTOR, DRIVE	1							1
2	1	172559-02850	BASE PLATE ASSEMBLY	1							2
3	1	172551-07500	FLUSHING KIT	1							3
4	1	172559-02860	2ND SPEED SPOOL KIT	1							4
6	1	172551-07540	BEARING KIT	1							5
7	1	172551-07440	SCREW	7							
8	1	172551-07550	PARKING BRAKE KIT	1							
9	1	172551-07510	BLOCK ASSY,CYLINDER	1							
10	1	172551-07470	SEAL NUT KIT	1							
14	1	172552-00710	SWASH PLATE KIT	1							
15	1	172551-07530	SHAFT ASSY,MOTOR	1							
16	1	172551-07460	REDUCTION ASSY	1							
17	1	172551-07570	RING,GUARD	1							6
18	1	172551-07450	COVER ASSY	1							
19	1	172551-07680	PLUG	2							7
50	1	172551-07560	REPAIR KIT	1							8

Remarks
(1)Refer to the "CUST.COD" box on themetal label attached to the drive motorto verify the part number of the motorbefore ordering parts from this column.Refer to "Track Drive Motor andSprocket" page for serial number andother important information. Be awaredrive motors are not interchangeable.
(2)(Includes items 3-5 and 50) (3)(Included with item 2) (4)(with 0.35" orifice)(included with item 2)
(5)(includes item 13) (6)(included with items 10, 16 and 18) (7)(included with item 18) (8)(seals as shown)

N:Old $\frac{\text{Yes}}{\text{No}}$ New, Q:Old $\frac{\text{No}}{\text{Yes}}$ New, R:Old $\frac{\text{Yes}}{\text{Yes}}$ New, S:Old $\frac{\text{No}}{\text{No}}$ New, W:Add, Z:Discontinued, F:Interchangeable by set, K:Q'ty Change

Copyright (C) 2017 YANMAR CO., LTD. All RightsReserved.

Fig.94. TRACK DRIVE MOTOR COMPONENTS

(A)=T210-1(VERSION C
(B)=
(C)=
(D)=
(E)=
(F)=

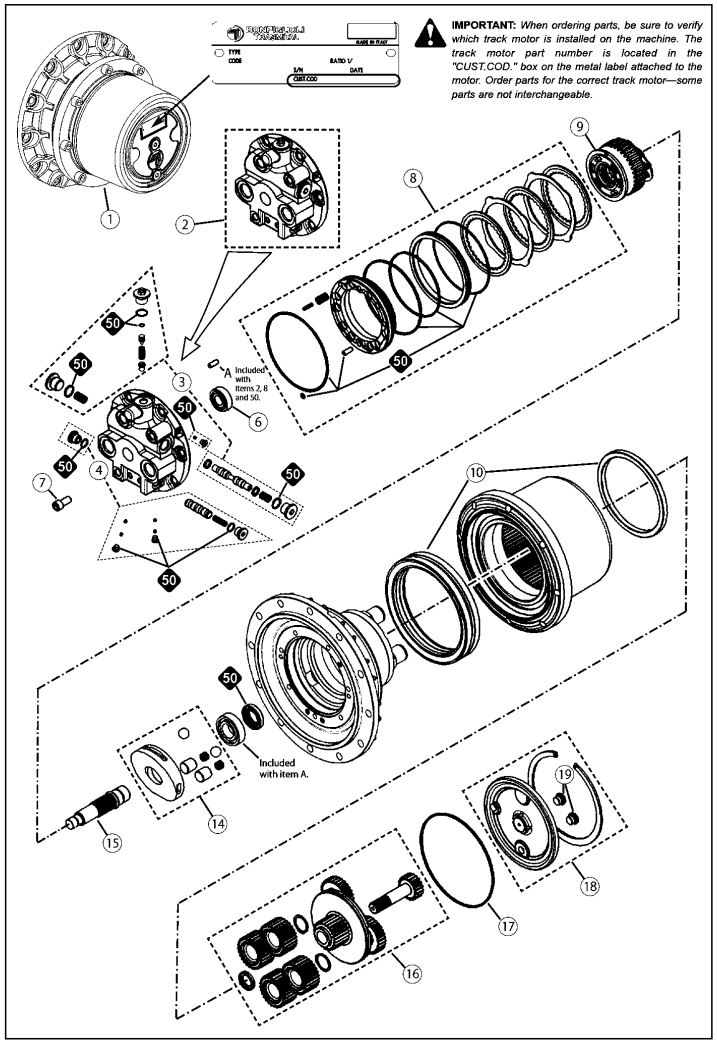

No.	Lev.	Parts No.	Description	Q'ty (A)	(B)	(C)	(D)	(E)	(F)	I	R
1	1	172552-00311	MOTOR, DRIVE	1							1
2	1	172551-07480	BASE PLATE ASSY	1							2
3	1	172551-07500	FLUSHING KIT	1							3
4	1	172551-07490	SPOOL KIT, TWO SPEED	1							3
6	1	172551-07540	BEARING KIT	1							4
7	1	172551-07440	SCREW	7							
8	1	172551-07550	PARKING BRAKE KIT	1							
9	1	172551-07510	BLOCK ASSY,CYLINDER	1							
10	1	172551-07470	SEAL NUT KIT	1							
14	1	172552-00710	SWASH PLATE KIT	1							
15	1	172551-07530	SHAFT ASSY,MOTOR	1							
16	1	172551-07460	REDUCTION ASSY	1							
17	1	172551-07570	RING,GUARD	1							5
18	1	172551-07450	COVER ASSY	1							
19	1	172551-07680	PLUG	2							6
50	1	172551-07560	REPAIR KIT	1							7

Remarks
(1)Refer to the "CUST.COD" box on themetal label attached to the drive motorto verify the part number of the motorbefore ordering parts from this column.Refer to "Track Drive Motor andSprocket" page for serial number andother important information. Be awaredrive motors are not interchangeable.
(2)(Includes items 3-5 and 50) (3)(Included with item 2) (4)(includes item 13)
(5)(included with items 10, 16 and 18) (6)(included with item 18) (7)(seals as shown)

N:Old $\xleftarrow[\text{No}]{\text{Yes}}$ New, Q:Old $\xleftarrow[\text{Yes}]{\text{No}}$ New, R:Old $\xleftarrow[\text{Yes}]{\text{Yes}}$ New, S:Old $\xleftarrow[\text{No}]{\text{No}}$ New, W:Add, Z:Discontinued, F:Interchangeable by set, K:Q'ty Change

Copyright (C) 2017 YANMAR CO., LTD. All RightsReserved.

Fig.95. BOLT-ON COMPONENTS(SN: 461001 AND UP)

(A)=T210-1(VERSION C (D)=
(B)= (E)=
(C)= (F)=

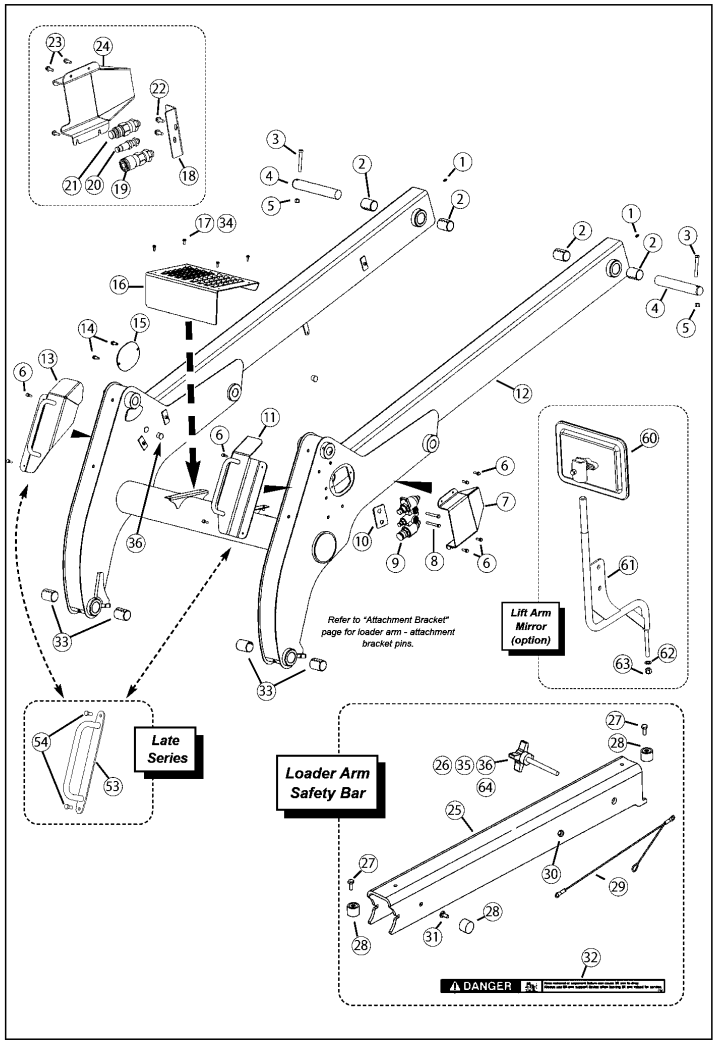

No.	Lev.	Parts No.	Description	Q'ty (A)	(B)	(C)	(D)	(E)	(F)	I	R
1	1	172551-09410	FITTING, GREASE	2							
2	1	172552-00190	BUSHING	4							1
3	1	172552-16500	BOLT	2							
4	1	172552-00170	PIN	2							
5	1	172559-01310	NUT	2							
6	1	172559-02910	SCREW	8							
7	1	172551-04930	SHIELD	1							
8	1	172551-09650	SCREW	2							
9	1	172216-15211	BLOCK, COUPLER	1							
10	1	172551-05690	SPACER	1							
11	1	172551-04550	WELDMENT, HANDLE	1							2
12	1	172552-16490	WELDMENT, LOADER ARM	1							
13	1	172551-04560	WELDMENT, HANDLE	1							3
14	1	172551-09910	SCREW	2							
15	1	172551-05020	COVER, LOADER ARM	1							
16	1	172551-06700	STEP	1							
17	1	172551-09830	BOLT	4							
18	1	172551-06640	PLATE	1							
19	1	172551-01300	COUPLER	1							
20	1	172551-01080	COUPLER	1							
21	1	172551-01290	COUPLER	1							
22	1	172559-01940	SCREW	2							
23	1	172559-02910	SCREW	4							
24	1	172551-06680	SHIELD	1							
25	1	172552-16480	CHANNEL, SAFETY BAR	1							4
26	1	172552-16460	KNOB	1							5
27	1	172551-09710	SCREW	2							
28	1	172552-16450	ISOLATOR	3							
29	1	172552-16470	TETHER	1							
30	1	172559-00780	NUT	1							
31	1	172551-09820	BOLT	1							
32	1	172551-01510	LABEL,KEEP OUT	1							
33	1	172559-02870	BUSH,SPRING	4							6
34	1	172559-00510	NUT	4							7
35	1	172551-10300	NUT	1							8
36	1	172559-00670	NUT	1							7
53	1	172559-02880	HANDLE	2							9
54	1	172551-09510	SCREW	4							
60	1	172559-02890	MIRROR	2							A
61	1	172559-02900	BRACKET, MIRROR	2							A
62	1	172215-03330	WASHER	2							
63	1	172559-00160	NUT	2							
64	1	172551-10300	NUT	1							B

Remarks
(1)2" I.D. x 2-1/2" long (2)(Left) (3)(Right)
(4)(safety bar) When ordering this part, be sure to also order and affix the warning decal item 32.
(5)(does not include nuts) (6)Refer to "Attachment Bracket" page for attachment bracket pins and related parts informat
(7)(not shown) (8)(against knob;not shown) (9)(universal fit) (A)(option; attaches to lift arm)
(B)(against knob; out of view)

N:Old $\overset{\text{Yes}}{\underset{\text{No}}{\leftrightarrow}}$ New, Q:Old $\overset{\text{No}}{\underset{\text{Yes}}{\leftrightarrow}}$ New, R:Old $\overset{\text{Yes}}{\underset{\text{Yes}}{\leftrightarrow}}$ New, S:Old $\overset{\text{No}}{\underset{\text{No}}{\leftrightarrow}}$ New, W:Add, Z:Discontinued, F:Interchangeable by set, K:Q'ty Change

Copyright (C) 2017 YANMAR CO., LTD. All RightsReserved.

Fig.96. BOLT-ON COMPONENTS(SN: 461000 AND BEFORE)

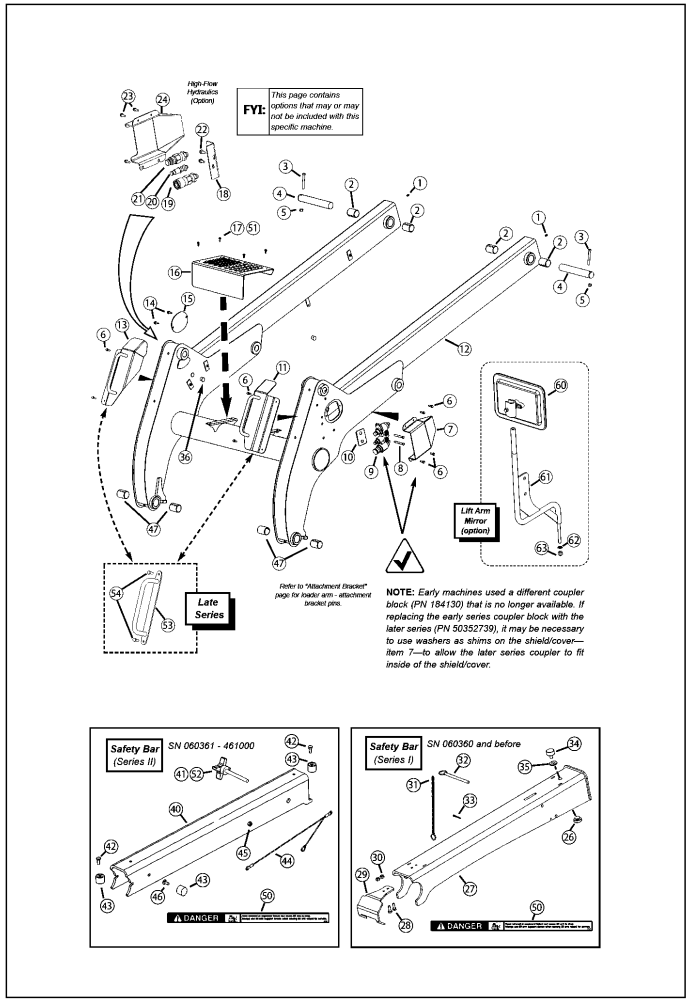

(A)=T210-1(VERSION C (D)=
(B)= (E)=
(C)= (F)=

No.	Lev.	Parts No.	Description	Q'ty (A)	(B)	(C)	(D)	(E)	(F)	I	R
1	1	172551-09410	FITTING, GREASE	2							
2	1	172552-00190	BUSHING	4							1
3	1	172552-16500	BOLT	2							
4	1	172552-00170	PIN	2							
5	1	172559-01310	NUT	2							
6	1	172559-02910	SCREW	8							
7	1	172551-04930	SHIELD	1							
8	1	172551-09650	SCREW	2							
9	1	172216-15211	BLOCK, COUPLER	1							2
10	1	172551-05690	SPACER	1							
11	1	172551-04550	WELDMENT, HANDLE	1							3
12	1	172552-16490	WELDMENT, LOADER ARM	1							4
13	1	172551-04560	WELDMENT, HANDLE	1							5
14	1	172551-09910	SCREW	2							
15	1	172551-05020	COVER, LOADER ARM	1							
16	1	172551-06700	STEP	1							
17	1	172551-09830	BOLT	4							
18	1	172551-06640	PLATE	1							
19	1	172551-01300	COUPLER	1							
20	1	172551-01080	COUPLER	1							
21	1	172551-01290	COUPLER	1							
22	1	172559-01940	SCREW	2							
23	1	172559-02910	SCREW	4							
24	1	172551-06680	SHIELD	1							
26	1	172551-04660	STOPPER, RUBBER	1							
27	1	172551-05590	WELDMENT, SAFETY BAR	1							6
28	1	172551-09480	SCREW	2							
29	1	172551-04530	PLATE	1							
30	1	172559-00780	NUT	2							
31	1	172551-05740	SASH,CHAIN	1							
32	1	172551-05530	PIN	1							
33	1	172551-10410	COTTER PIN	1							
34	1	172551-08410	BUMPER, RUBBER	1							
35	1	172559-02920	SPACER	1							
36	1	172551-03110	GROMMET	2							
40	1	172552-16480	CHANNEL, SAFETY BAR	1							6
41	1	172552-16460	KNOB	1							
42	1	172551-09710	SCREW	2							
43	1	172552-16450	ISOLATOR	3							
44	1	172552-16470	TETHER	1							
45	1	172559-00780	NUT	1							
46	1	172551-09820	BOLT	1							
47	1	172559-02870	BUSH,SPRING	4							7
50	1	172551-01510	LABEL,KEEP OUT	1							
51	1	172559-00510	NUT	4							8
52	1	172559-00670	NUT	1							8
53	1	172559-02880	HANDLE	2							9
54	1	172551-09510	SCREW	4							
60	1	172559-02890	MIRROR	2							A
61	1	172559-02900	BRACKET, MIRROR	2							A
62	1	172215-03330	WASHER	2							

N:Old $\xleftarrow[\text{No}]{\text{Yes}}$ New, Q:Old $\xleftarrow[\text{Yes}]{\text{No}}$ New, R:Old $\xleftarrow[\text{Yes}]{\text{Yes}}$ New, S:Old $\xleftarrow[\text{No}]{\text{No}}$ New, W:Add, Z:Discontinued, F:Interchangeable by set, K:Q'ty Change

Remarks
(1)2" I.D. x 2-1/2" long (2)(see NOTE on illustration) (3)(left)
(4)If replacing the lift arm, be sure that the proper safety bar fits the lift arm.
The"early-series and ""Series II"" safety bars "are not interchangeable.
Be sure to order items 40-46 and decal item 50 when ordering a new lift arm.
(5)(right) (6)When ordering this part, be sure to also order and affix the decal; item 50.
(7)Refer to "Attachment Bracket" page for attachment bracket pins and related parts information.
(8)(not shown) (9)(universal fit) (A)(option; attaches to lift arm)

++ CONTINUE ++

Copyright (C) 2017 YANMAR CO., LTD. All RightsReserved.

Fig.96. BOLT-ON COMPONENTS(SN: 461000 AND BEFORE)

(A)=T210-1(VERSION C
(B)=
(C)=
(D)=
(E)=
(F)=

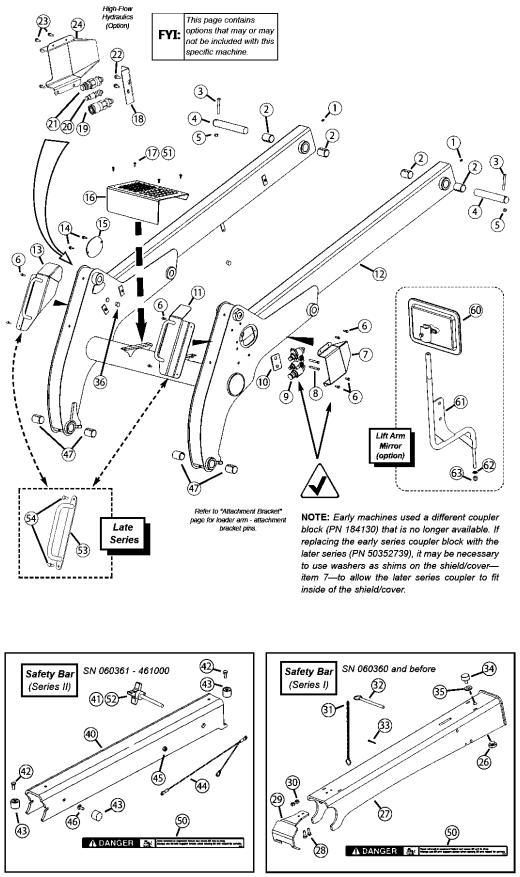

No.	Lev.	Parts No.	Description	Q'ty (A)	(B)	(C)	(D)	(E)	(F)	I	R
63	1	172559-00160	NUT	2							

Remarks
(1)2" I.D. x 2-1/2" long (2)(see NOTE on illustration) (3)(left)
(4)If replacing the lift arm, be sure that the proper safety bar fits the lift arm.
The"early-series and ""Series II"" safety bars "are not interchangeable.
Be sure to order items 40-46 and decal item 50 when ordering a new lift arm.
(5)(right) (6)When ordering this part, be sure to also order and affix the decal; item 50.
(7)Refer to "Attachment Bracket" page for attachment bracket pins and related parts information.
(8)(not shown) (9)(universal fit) (A)(option; attaches to lift arm)

N:Old ←Yes/No→ New, Q:Old ←No/Yes→ New, R:Old ←Yes/Yes→ New, S:Old ←No/No→ New, W:Add, Z:Discontinued, F:Interchangeable by set, K:Q'ty Change

Copyright (C) 2017 YANMAR CO., LTD. All RightsReserved.

Fig.97. ATTACHMENT BRACKET - MANUAL (STANDARD) AND BUCKET(SN: 461151 AND UP)

(A)=T210-1(VERSION C
(B)=
(C)=
(D)=
(E)=
(F)=

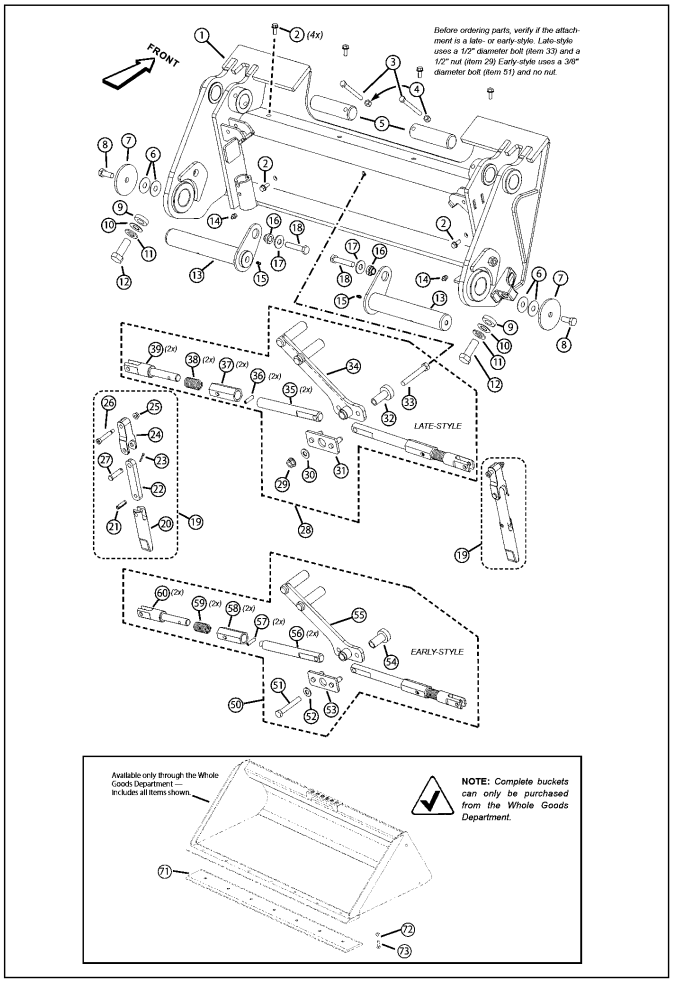

No.	Lev.	Parts No.	Description	Q'ty (A)	(B)	(C)	(D)	(E)	(F)	I	R
1	1	172559-03000	QUICK ATTACH	1							1
2	1	172559-01220	SCREW	6							
3	1	172551-09780	SCREW	2							
4	1	172559-00160	NUT	2							
5	1	172551-03670	PIN	2							2
6	1	172551-06590	SHIM	4							
7	1	172551-05650	WASHER	2							
8	1	172551-06870	SCREW	2							
9	1	172559-02960	FW 3/4 HT ZY	2							3
10	1	172559-02970	SHIM	2							
11	1	172216-09640	WASHER	1							
12	1	172559-02950	CS 3/4X2 C5ZY SP	2							
13	1	172559-02980	PIN ASSEMBLY	2							4
14	1	172551-09410	FITTING, GREASE	2							
15	1	172551-11340	GREASE	2							
16	1	172551-11350	BUSHING	2							
17	1	172551-10390	WASHER	2							
18	1	172551-06890	SCREW	2							
19	1	172559-03020	PIN ASSY,Q-ATTACH	2							5
20	1	172551-01370	LATCH, PIN	2							
21	1	172551-01410	PIN	2							
22	1	172559-03010	LINK, QUICK-ATTACH	2							
23	1	172551-10410	COTTER PIN	2							
24	1	172551-01360	LATCH, LINK	2							
25	1	172551-02760	NUT	2							
26	1	172559-02940	SCREW	2							
27	1	172559-02990	PIN,CLEVIS	2							
28	1	172559-03050	ACTUATOR GROOP MANU	1							6
29	1	172215-06630	NUT	1							
30	1	172551-09950	WASHER	1							
31	1	172551-01390	PIN LINK	1							
32	1	172559-03030	PIVOT, HANDLE	1							
33	1	172559-03060	CS 1/2X3-1/2 C8ZY	1							
34	1	172551-03420	HANDLE	1							
35	1	172559-03040	LINK, ADJUSTABLE END	2							
36	1	172559-03070	PIN, ROLL	2							
37	1	172215-19530	LINK, SPRING STOP	2							
38	1	172551-10550	SPRING	2							
39	1	172551-01330	LINK, SPRING SLIDE	2							
50	1	172551-03430	ACTUATOR ASSY	1							7
51	1	172551-06880	SCREW	1							
52	1	172218-00040	WASHER	1							
53	1	172551-01390	PIN LINK	1							
54	1	172551-01720	HANDLE PIVOT	1							
55	1	172551-03420	HANDLE	1							
56	1	172551-01340	LINK, ADJUSTABLE END	2							
57	1	172551-01400	SPRING PIN	2							
58	1	172551-01320	LINK, SPRING STOP	2							
59	1	172551-10550	SPRING	2							
60	1	172551-01330	LINK, SPRING SLIDE	2							
71	1	172559-02930	CUTTING EDGE	1							

Remarks
(1)(NOTE: Before ordering individual partsverify if the attachment is a late- or early-style. Late-style uses a 1/2" diameter bolt (item 33) and a 1/2" nut (item 29) Early-style uses a 3/8" diameter bolt (item 51) and no nut.
(2)(attaches tilt cylinder) (3)(thick) (4)(attaches to loader arm)
(5)(Each assembly includes one each ofitem 20-27, items are also availableseparately.)
(6)For late-style attachment(Includes items 29-39; items are also available separately.)
(7)For early-style attachment(Includes items 51-60 as shown;items are also available separately.)
(8)The cutting edge and hardware are optional and are not included with the bucket.

N:Old $\xleftrightarrow[\text{No}]{\text{Yes}}$ New, Q:Old $\xleftrightarrow[\text{Yes}]{\text{No}}$ New, R:Old $\xleftrightarrow[\text{Yes}]{\text{Yes}}$ New, S:Old $\xleftrightarrow[\text{No}]{\text{No}}$ New, W:Add, Z:Discontinued, F:Interchangeable by set, K:Q'ty Change

++ CONTINUE ++

Copyright (C) 2017 YANMAR CO., LTD. All RightsReserved.

Fig.97. ATTACHMENT BRACKET - MANUAL (STANDARD) AND BUCKET(SN: 461151 AND UP)

(A)=T210-1(VERSION C
(B)=
(C)=
(D)=
(E)=
(F)=

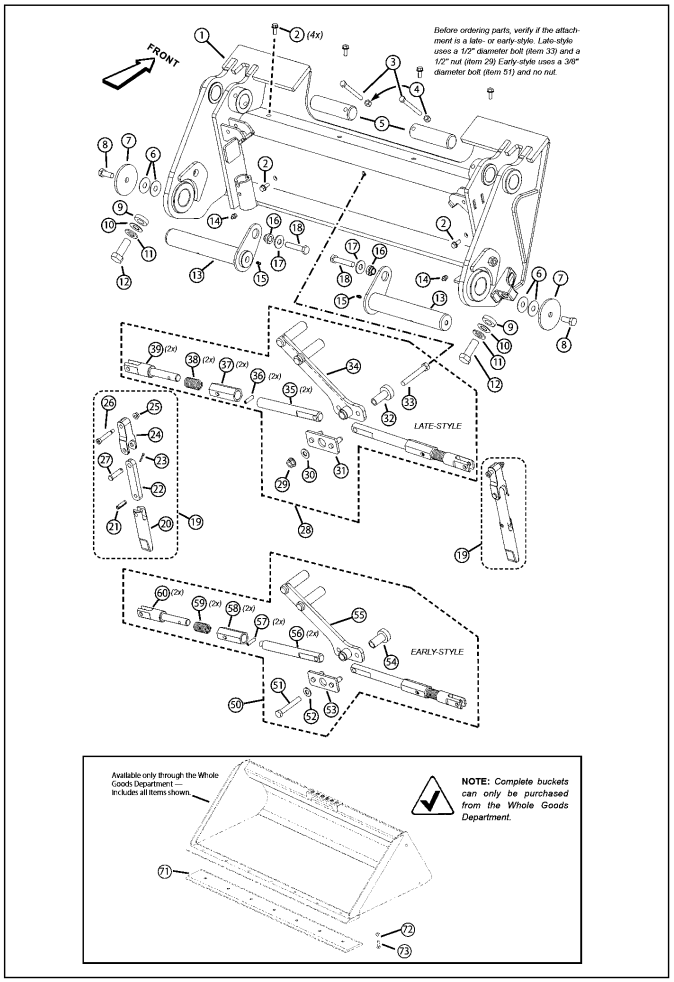

No.	Lev.	Parts No.	Description	Q'ty (A)	(B)	(C)	(D)	(E)	(F)	I	R
72	1	172551-10310	NUT	7							
73	1	172551-10050	BOLT,PLOW	7							8

Remarks
(1)(NOTE: Before ordering individual partsverify if the attachment is a late- or early-style. Late-style uses a 1/2" diameter bolt (item 33) and a 1/2" nut (item 29) Early-style uses a 3/8" diameter bolt (item 51) and no nut.
(2)(attaches tilt cylinder) (3)(thick) (4)(attaches to loader arm)
(5)(Each assembly includes one each ofitem 20-27, items are also availableseparately.)
(6)For late-style attachment(Includes items 29-39; items are also available separately.)
(7)For early-style attachment(Includes items 51-60 as shown;items are also available separately.)
(8)The cutting edge and hardware are optional and are not included with the bucket.

N:Old ◄Yes/No► New, Q:Old ◄No/Yes► New, R:Old ◄Yes/Yes► New, S:Old ◄No/No► New, W:Add, Z:Discontinued, F:Interchangeable by set, K:Q'ty Change

Copyright (C) 2017 YANMAR CO., LTD. All RightsReserved.

Fig.98. ATTACHMENT BRACKET - MANUAL AND BUCKET(SN: 461150 AND BEFORE)

(A)=T210-1(VERSION C
(B)=
(C)=
(D)=
(E)=
(F)=

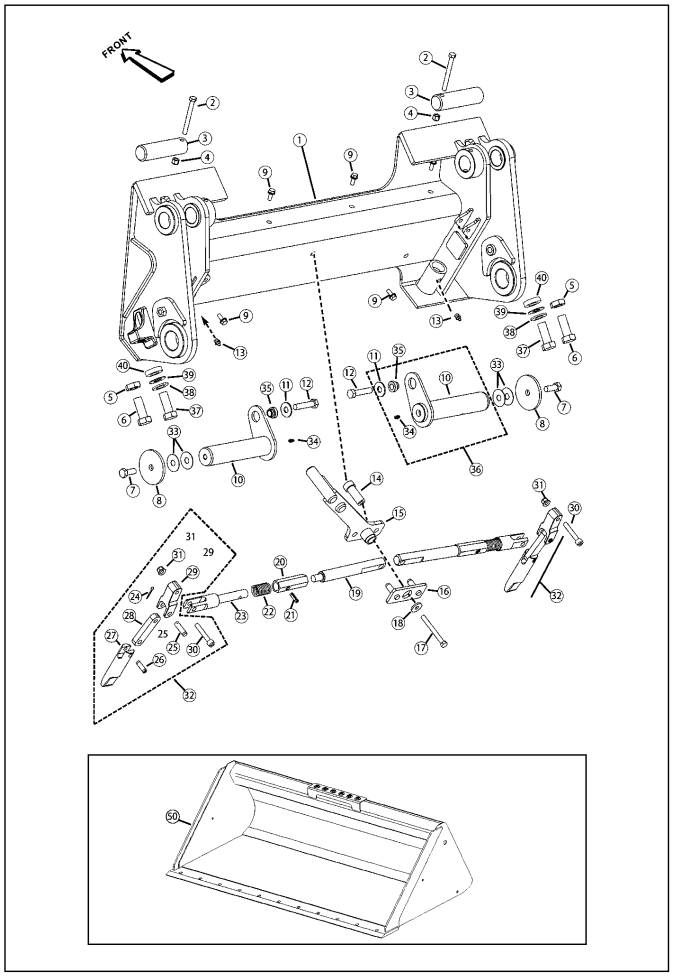

No.	Lev.	Parts No.	Description	Q'ty (A)	(B)	(C)	(D)	(E)	(F)	I	R
1	1	172551-05640	WLELDMENT	1							
2	1	172551-09780	SCREW	2							
3	1	172551-03670	PIN	2							1
4	1	172559-00160	NUT	2							
5	1	172551-10350	NUT	2							2
6	1	172551-09700	SCREW	2							2
7	1	172551-06870	SCREW	2							
8	1	172551-05650	WASHER	2							
9	1	172559-01220	SCREW	6							
10	1	172551-11330	PIN	2							3
11	1	172551-10390	WASHER	2							
12	1	172551-06890	SCREW	2							
13	1	172551-09410	FITTING, GREASE	2							
14	1	172551-01720	HANDLE PIVOT	1							
15	1	172551-03420	HANDLE	1							
16	1	172551-01390	PIN LINK	1							
17	1	172551-06880	SCREW	1							
18	1	172218-00040	WASHER	1							
19	1	172551-01340	LINK, ADJUSTABLE END	2							
20	1	172551-01320	LINK, SPRING STOP	2							
21	1	172551-01400	SPRING PIN	2							
22	1	172551-10550	SPRING	2							
23	1	172551-01330	LINK, SPRING SLIDE	2							
24	1	172551-10410	COTTER PIN	2							
25	1	172559-02990	PIN,CLEVIS	2							
26	1	172551-01410	PIN	2							
27	1	172551-01370	LATCH, PIN	2							
28	1	172551-01350	LINK, PIN	2							
29	1	172551-01360	LATCH, LINK	2							
30	1	172559-02940	SCREW	2							
31	1	172551-02760	NUT	2							
32	1	172551-03251	PIN ASSY	2							4
33	1	172551-06590	SHIM	4							
34	1	172551-11340	GREASE	2							
35	1	172551-11350	BUSHING	2							
36	1	172551-11361	PIN	1							5
37	1	172559-02950	CS 3/4X2 C5ZY SP	2							6
38	1	172216-09640	WASHER	1							6
39	1	172559-02970	SHIM	1							6
40	1	172559-02960	FW 3/4 HT ZY	1							7
50	1	172559-03090	BUCKET, 74 D/C	1							
51	1	172552-00070	CUTTING EDGE	1							
52	1	172551-10050	BOLT,PLOW	12							
53	1	172551-10310	NUT	12							

Remarks
(1)(attaches tilt cylinder)
(2)Used on early units. These units can be updated to the late series bolts (item #37), flat washers (item #38), shims (#39), and thick flat washer (item #40).
(3)(attaches to loader arm)
(4)(includes items 24-31)
(5)(includes 10, 11, 34, and 35)(one pin for each side)
(6)Used on later units?do not substitute with other hardware.
(7)(thick)

N:Old $\xleftrightarrow[\text{No}]{\text{Yes}}$ New, Q:Old $\xleftrightarrow[\text{Yes}]{\text{No}}$ New, R:Old $\xleftrightarrow[\text{Yes}]{\text{Yes}}$ New, S:Old $\xleftrightarrow[\text{No}]{\text{No}}$ New, W:Add, Z:Discontinued, F:Interchangeable by set, K:Q'ty Change

Copyright (C) 2017 YANMAR CO., LTD. All RightsReserved.

Fig.99. ATTACHMENT BRACKET - Q COUPLER (PART 1 OF 2)(SN: 461151 AND UP)

(A)=T210-1(VERSION C
(B)=
(C)=
(D)=
(E)=
(F)=

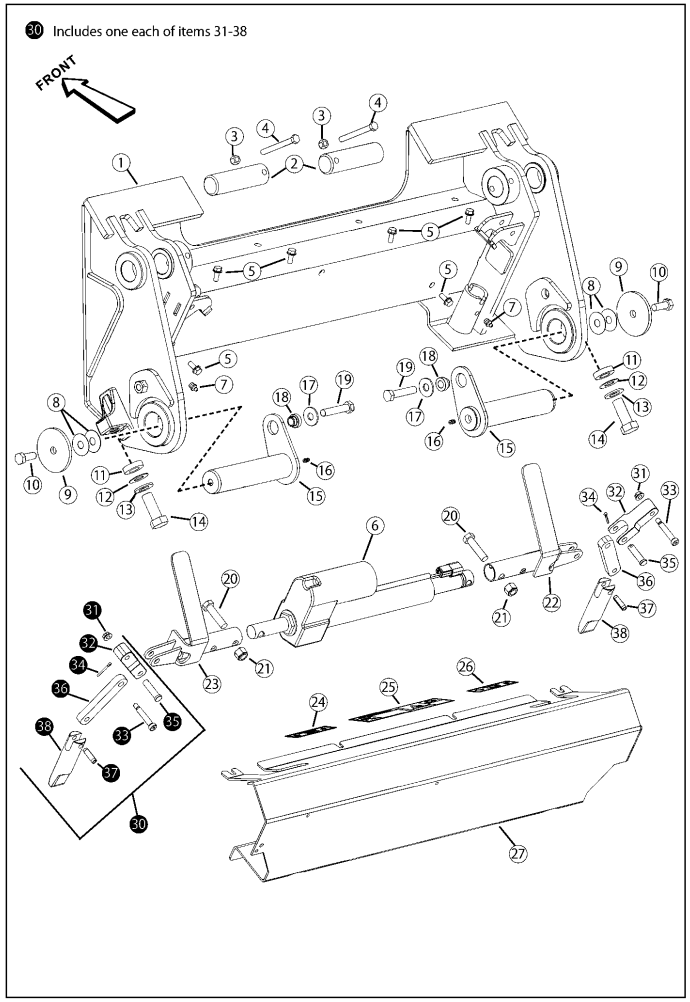

No.	Lev.	Parts No.	Description	Q'ty (A)	(B)	(C)	(D)	(E)	(F)	I	R
1	1	172559-03000	QUICK ATTACH	1							
2	1	172551-03670	PIN	2							1
3	1	172559-00160	NUT	2							
4	1	172551-09780	SCREW	2							
5	1	172559-01220	SCREW	6							
6	1	172559-03120	ACTUATOR,LINEARMOTOR	1							
7	1	172551-09410	FITTING, GREASE	2							
8	1	172551-06590	SHIM	4							
9	1	172551-05650	WASHER	2							
10	1	172551-06870	SCREW	1							
11	1	172559-02960	FW 3/4 HT ZY	2							2
12	1	172559-02970	SHIM	2							
13	1	172216-09640	WASHER	1							
14	1	172559-02950	CS 3/4X2 C5ZY SP	2							
15	1	172551-11330	PIN	2							3
16	1	172551-11340	GREASE	2							
17	1	172551-10390	WASHER	2							
18	1	172551-11350	BUSHING	2							
19	1	172551-06890	SCREW	2							
20	1	172551-09670	SCREW	2							
21	1	172559-01310	NUT	2							
22	1	172559-03110	EXTENSION LINK	1							4
23	1	172559-03100	EXTENSION LINK (LH)	1							5
24	1	172551-01780	LABEL,LATCHING	1							6
25	1	172551-01770	LABEL,POWER-ALL-TACH	1							
26	1	172551-01790	LABEL,LATCHING	1							7
27	1	172559-03130	COVER,POWER ALL-TACH	1							
30	1	172559-03020	PIN ASSY,Q-ATTACH	2							
31	1	172551-02760	NUT	2							
32	1	172551-01360	LATCH, LINK	2							
33	1	172559-02940	SCREW	2							
34	1	172551-10410	COTTER PIN	2							
35	1	172559-02990	PIN,CLEVIS	2							
36	1	172559-03010	LINK, QUICK-ATTACH	2							
37	1	172551-01410	PIN	2							
38	1	172551-01370	LATCH, PIN	2							

Remarks
(1)(attaches tilt cylinder)
(2)(thick)
(3)(attaches to loader arm)
(4)(right side)
(5)(left side)
(6)(left)
(7)(right)

N:Old $\xleftrightarrow[\text{No}]{\text{Yes}}$ New, Q:Old $\xleftrightarrow[\text{Yes}]{\text{No}}$ New, R:Old $\xleftrightarrow[\text{Yes}]{\text{Yes}}$ New, S:Old $\xleftrightarrow[\text{No}]{\text{No}}$ New, W:Add, Z:Discontinued, F:Interchangeable by set, K:Q'ty Change

Copyright (C) 2017 YANMAR CO., LTD. All RightsReserved.

Fig.100. ATTACHMENT BRACKET - Q COUPLER (PART 2 OF 2)(SN: 461151 AND UP)

(A)=T210-1(VERSION C
(B)=
(C)=
(D)=
(E)=
(F)=

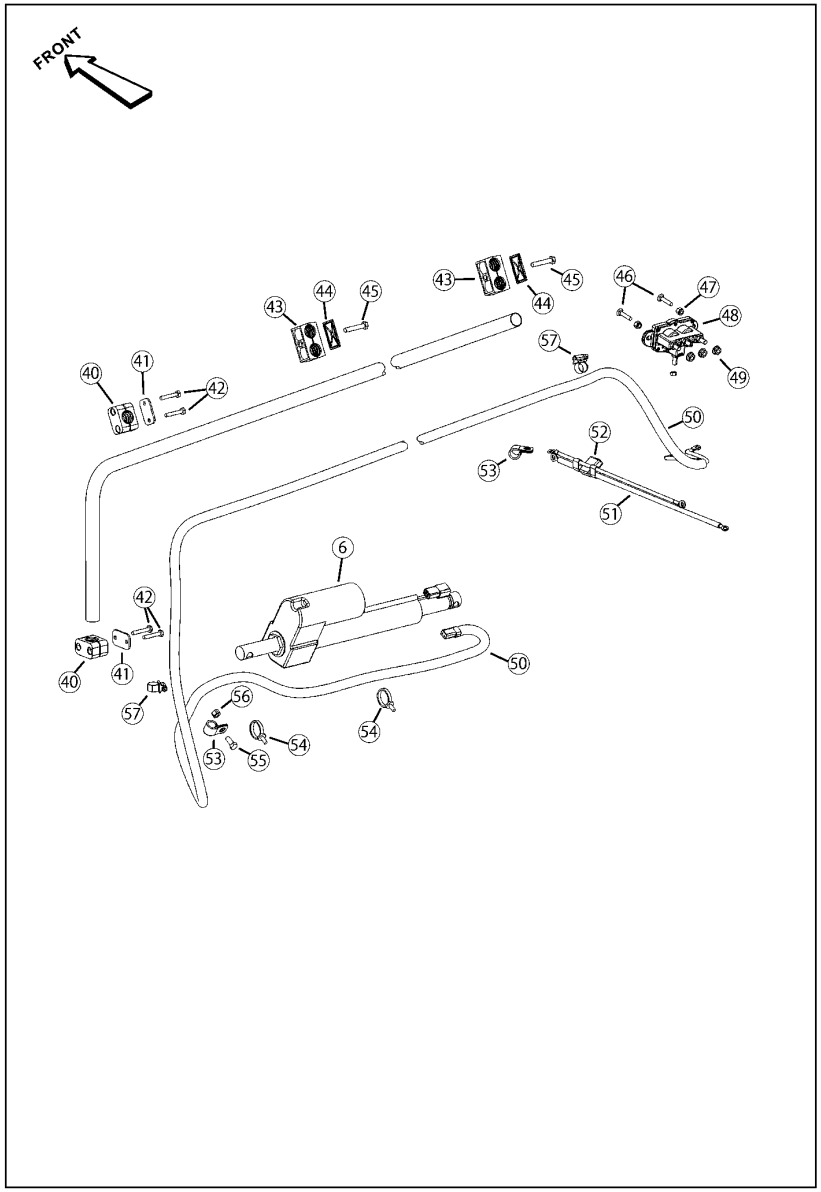

No.	Lev.	Parts No.	Description	Q'ty (A)	(B)	(C)	(D)	(E)	(F)	I	R
6	1	172559-03120	ACTUATOR,LINEARMOTOR	1							
40	1	172551-00790	CLAMP	2							
41	1	172551-00800	PLATE, TOP	2							
42	1	172551-09680	SCREW	4							
43	1	172551-02410	CLAMP	2							
44	1	172551-10710	PLATE, TOP	2							
45	1	172551-09730	SCREW	2							
46	1	172551-09940	BOLT	2							
47	1	172559-00510	NUT	2							
48	1	172551-06220	RELAY	1							
49	1	172551-01200	NUT	4							
50	1	172551-06450	WIRE HARNESS	1							
51	1	172551-06530	WIRE HARNESS	1							
52	1	172551-10720	FUSE,ATO/ATC	1							
53	1	172551-00990	CLAMP	2							
54	1	172551-04800	TIE,CABLE	2							
55	1	172551-09510	SCREW	1							
56	1	172559-00450	NUT	1							
57	1	172559-03140	CLAMP	2							

N:Old $\xleftarrow[\text{No}]{\text{Yes}}$ New, Q:Old $\xleftarrow[\text{Yes}]{\text{No}}$ New, R:Old $\xleftarrow[\text{Yes}]{\text{Yes}}$ New, S:Old $\xleftarrow[\text{No}]{\text{No}}$ New, W:Add, Z:Discontinued, F:Interchangeable by set, K:Q'ty Change

Copyright (C) 2017 YANMAR CO., LTD. All RightsReserved.

Fig.101. ATTACHMENT BRACKET - Q COUPLER (PART 1 OF 2)(SN: 461150 AND BEFORE)

(A)=T210-1(VERSION C
(B)=
(C)=
(D)=
(E)=
(F)=

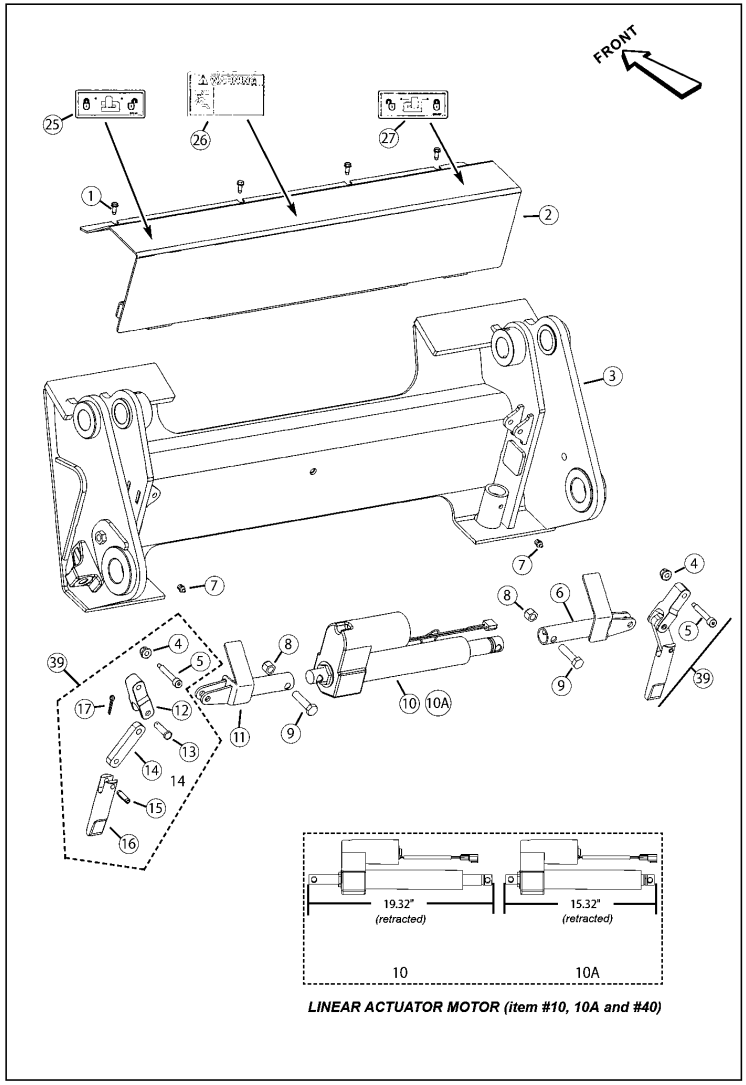

LINEAR ACTUATOR MOTOR (item #10, 10A and #40)

No.	Lev.	Parts No.	Description	Q'ty (A)	(B)	(C)	(D)	(E)	(F)	I	R
1	1	172559-01220	SCREW	6							
2	1	172559-03160	COVER	1							
3	1	172551-05640	WLELDMENT	1							1
4	1	172551-02760	NUT	2							
5	1	172559-02940	SCREW	2							
6	1	172559-03110	EXTEND LINK	1							2
7	1	172551-09410	FITTING, GREASE	2							
8	1	172559-01310	NUT	2							
9	1	172551-09670	SCREW	2							
10	1	172559-03150	ACTUATOR,LINEARMOTOR	1							3
10A	1	172551-08270	ACTUATOR	1							4
11	1	172559-03100	EXTEND LINK	1							5
12	1	172551-01360	LATCH, LINK	1							
13	1	172559-02990	PIN,CLEVIS	1							
14	1	172551-01350	LINK, PIN	1							
15	1	172551-01410	PIN	1							
16	1	172551-01370	LATCH, PIN	1							
17	1	172551-10410	COTTER PIN	1							
20	1	172551-06220	RELAY	1							
21	1	172551-01200	NUT	4							
23	1	172551-04800	TIE,CABLE	2							
25	1	172551-01780	LABEL,LATCHING	1							5
26	1	172216-17230	DECAL, ATTACH BRT.	1							
27	1	172551-01790	LABEL,LATCHING	1							2
39	1	172551-03251	PIN ASSY	2							6

Remarks
(1)Refer to "Attachment Bracket-Manual" pages for pins and hardware. (2)(right)
(3)(Overall retracted length 19.32") (4)(Overall retracted length 15.32")
(5)(left) (6)(includes items 4, 5, and 12-17)

N:Old $\xleftarrow[\text{No}]{\text{Yes}}$ New, Q:Old $\xleftarrow[\text{Yes}]{\text{No}}$ New, R:Old $\xleftarrow[\text{Yes}]{\text{Yes}}$ New, S:Old $\xleftarrow[\text{No}]{\text{No}}$ New, W:Add, Z:Discontinued, F:Interchangeable by set, K:Q'ty Change

Copyright (C) 2017 YANMAR CO., LTD. All RightsReserved.

Fig.102. ATTACHMENT BRACKET - Q COUPLER (PART 2 OF 2)(SN: 461150 AND BEFORE)

(A)=T210-1(VERSION C
(B)=
(C)=
(D)=
(E)=
(F)=

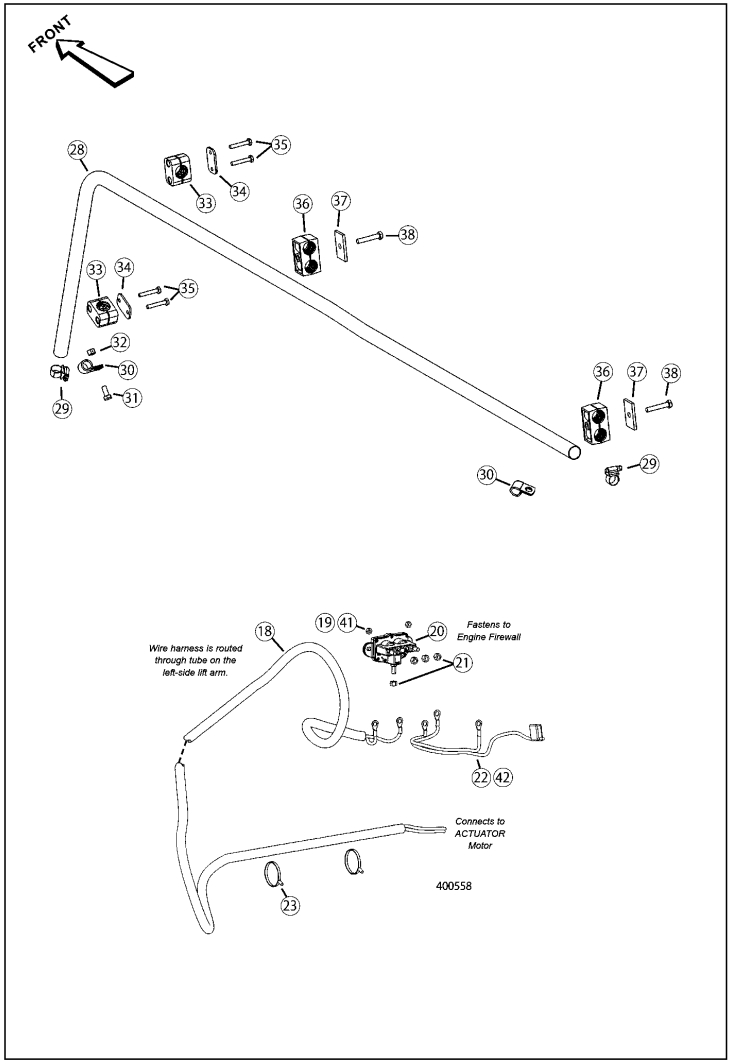

No.	Lev.	Parts No.	Description	Q'ty (A)	(B)	(C)	(D)	(E)	(F)	I	R
18	1	172551-06450	WIRE HARNESS	1							
19	1	172559-00510	NUT	2							
20	1	172551-06220	RELAY	1							
21	1	172551-01200	NUT	4							
22	1	172551-06530	WIRE HARNESS	1							
23	1	172551-04800	TIE,CABLE	2							
28	1	172551-06710	TUBE	1							
29	1	172559-03140	CLAMP	2							
30	1	172551-00990	CLAMP	2							
31	1	172551-09510	SCREW	1							
32	1	172559-00450	NUT	1							
33	1	172551-00790	CLAMP	2							
34	1	172551-00800	PLATE, TOP	2							
35	1	172551-09680	SCREW	4							
36	1	172551-02410	CLAMP	2							1
37	1	172551-10710	PLATE, TOP	2							1
38	1	172551-09730	SCREW	2							1
39	1	172551-03251	PIN ASSY	2							2
40	1	172551-08270	ACTUATOR	1							3
41	1	172551-09940	BOLT	2							4
42	1	172551-10430	NUT	1							4

Remarks
(1)Early machines used items 33-35 inplace of items 36-38, order items 33-35 for early machines.
(2)(includes items 4,5, and 12-17)
(3)(Overall retracted length 15.32")
(4)(not shown)

N:Old $\xleftrightarrow[\text{No}]{\text{Yes}}$ New, Q:Old $\xleftrightarrow[\text{Yes}]{\text{No}}$ New, R:Old $\xleftrightarrow[\text{Yes}]{\text{Yes}}$ New, S:Old $\xleftrightarrow[\text{No}]{\text{No}}$ New, W:Add, Z:Discontinued, F:Interchangeable by set, K:Q'ty Change

Copyright (C) 2017 YANMAR CO., LTD. All RightsReserved.

Fig.103. 14-PIN CONNECTOR

(A)=T210-1(VERSION C
(B)=
(C)=
(D)=
(E)=
(F)=

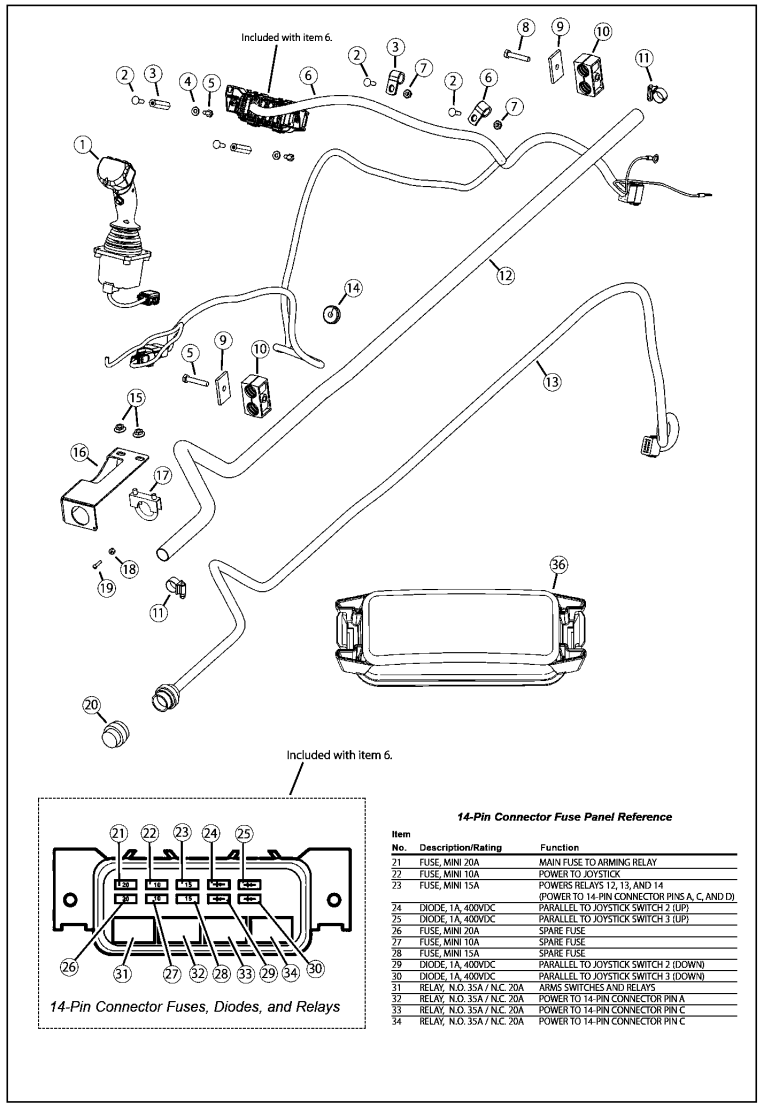

14-Pin Connector Fuse Panel Reference

Item No.	Description/Rating	Function
21	FUSE, MINI 20A	MAIN FUSE TO ARMING RELAY
22	FUSE, MINI 10A	POWER TO JOYSTICK
23	FUSE, MINI 15A	POWERS RELAYS 12, 13, AND 14 (POWER TO 14-PIN CONNECTOR PINS A, C, AND D)
24	DIODE, 1A, 400VDC	PARALLEL TO JOYSTICK SWITCH 2 (UP)
25	DIODE, 1A, 400VDC	PARALLEL TO JOYSTICK SWITCH 3 (UP)
26	FUSE, MINI 20A	SPARE FUSE
27	FUSE, MINI 10A	SPARE FUSE
28	FUSE, MINI 15A	SPARE FUSE
29	DIODE, 1A, 400VDC	PARALLEL TO JOYSTICK SWITCH 2 (DOWN)
30	DIODE, 1A, 400VDC	PARALLEL TO JOYSTICK SWITCH 3 (DOWN)
31	RELAY, N.O. 35A / N.C. 20A	ARMS SWITCHES AND RELAYS
32	RELAY, N.O. 35A / N.C. 20A	POWER TO 14-PIN CONNECTOR PIN A
33	RELAY, N.O. 35A / N.C. 20A	POWER TO 14-PIN CONNECTOR PIN C
34	RELAY, N.O. 35A / N.C. 20A	POWER TO 14-PIN CONNECTOR PIN C

No.	Lev.	Parts No.	Description	Q'ty (A)	(B)	(C)	(D)	(E)	(F)	I	R
1	1	172552-16510	JOYSTICK, 14-PIN	1							
2	1	172551-09930	BOLT	4							
3	1	172552-16600	STAND-OFF	2							
4	1	172551-09890	WASHER	2							
5	1	172551-09710	SCREW	2							
6	1	172552-16550	HARNESS, 14PIN AUX	1							
7	1	172559-00650	NUT	2							
8	1	172551-09730	SCREW	2							
9	1	172551-10710	PLATE, TOP	2							
10	1	172551-02410	CLAMP	2							
11	1	172559-03140	CLAMP	2							
12	1	172552-16580	TUBE, 14-PIN ROUTING	1							
13	1	172552-16560	HARNESS, 14-PIN CONN	1							
14	1	172551-03040	GROMMET	1							
15	1	172551-02760	NUT	2							
16	1	172552-16590	BRACKET, 14-PIN CONN	1							
17	1	172552-16570	CLAMP, MUFFLER	1							
18	1	172216-10870	NUT	1							
19	1	172215-07650	SCREW	1							
20	1	172216-06370	CAP, DUCT	1							1
21	1	172552-16520	FUSE,20A	1							
22	1	172551-02180	MINI FUSE	1							
23	1	172552-16530	FUSE,15A	1							
24	1	172552-16540	DIODE	1							
25	1	172552-16540	DIODE	1							
26	1	172552-16520	FUSE,20A	1							
27	1	172551-02180	MINI FUSE	1							
28	1	172552-16530	FUSE,15A	1							
29	1	172552-16540	DIODE	1							
30	1	172552-16540	DIODE	1							
31	1	172551-04290	RELAY	1							
32	1	172551-04290	RELAY	1							
33	1	172551-04290	RELAY	1							
34	1	172551-04290	RELAY	1							
36	1	172552-16010	COVER,FUSE/RELAY BOX	1							2

Remarks
(1)(with chain-not shown)
(2)(48-pin)

N:Old $\xleftarrow[\text{No}]{\text{Yes}}$ New, Q:Old $\xleftarrow[\text{Yes}]{\text{No}}$ New, R:Old $\xleftarrow[\text{Yes}]{\text{Yes}}$ New, S:Old $\xleftarrow[\text{No}]{\text{No}}$ New, W:Add, Z:Discontinued, F:Interchangeable by set, K:Q'ty Change

Copyright (C) 2017 YANMAR CO., LTD. All RightsReserved.

Fig.104. TILT CIRCUIT

(A)=T210-1(VERSION C
(B)=
(C)=
(D)=
(E)=
(F)=

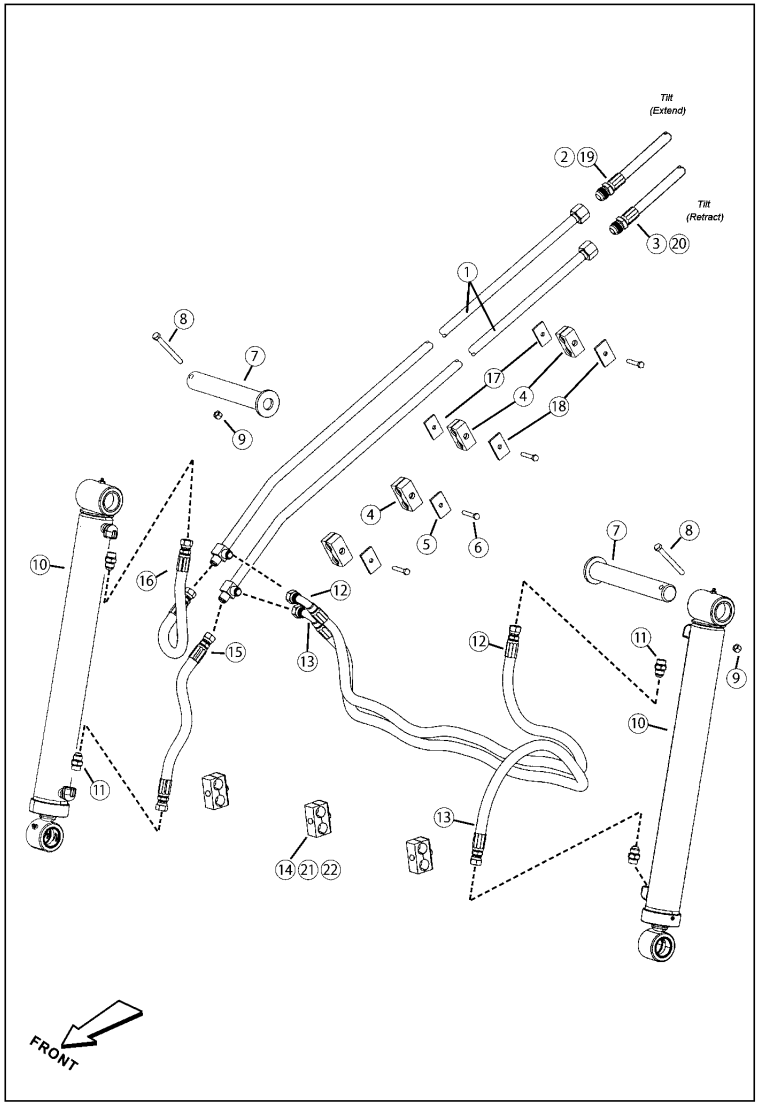

No.	Lev.	Parts No.	Description	Q'ty (A)	(B)	(C)	(D)	(E)	(F)	I	R
1	1	172551-04870	TUBE, TILT - OUTER	2							
2	1	172552-16870	HOSE	1							1
3	1	172552-16860	HOSE	1							1
4	1	172559-03180	CLAMP	4							
5	1	172551-10710	PLATE, TOP	4							
6	1	172551-09730	SCREW	2							
7	1	172551-03570	PIN, TILT CYLINDER	2							
8	1	172551-09780	SCREW	2							
9	1	172559-00160	NUT	2							
10	1	172552-00531	CYLINDER, TILT	2							
11	1	172559-02360	CONNECTOR	4							
12	1	172551-05100	HOSE	1							
13	1	172551-05100	HOSE	1							
14	1	172551-03590	CLAMP	3							
15	1	172551-04990	HOSE	1							
16	1	172551-04990	HOSE	1							
17	1	172559-03170	PLATE, CLAMP SPACER	2							
18	1	172215-02880	NUT	2							
19	1	172552-00450	HOSE	1							2
20	1	172552-00450	HOSE	1							2
21	1	172551-10710	PLATE, TOP	3							
22	1	172551-09730	SCREW	3							

Remarks
(1)S/N 461001 and up
(2)S/N 461000 and before

N:Old $\xleftarrow[\text{No}]{\text{Yes}}$ New, Q:Old $\xleftarrow[\text{Yes}]{\text{No}}$ New, R:Old $\xleftarrow[\text{Yes}]{\text{Yes}}$ New, S:Old $\xleftarrow[\text{No}]{\text{No}}$ New, W:Add, Z:Discontinued, F:Interchangeable by set, K:Q'ty Change

Copyright (C) 2017 YANMAR CO., LTD. All RightsReserved.

Fig.105. LIFT CIRCUIT

(A)=T210-1(VERSION C
(B)=
(C)=
(D)=
(E)=
(F)=

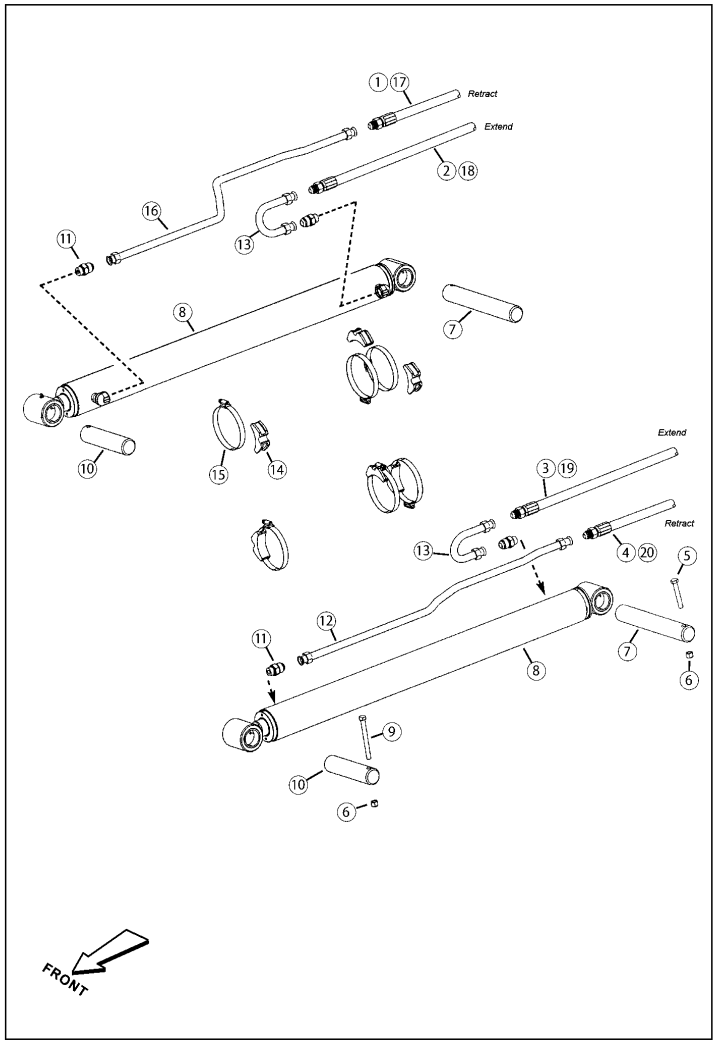

No.	Lev.	Parts No.	Description	Q'ty (A)	(B)	(C)	(D)	(E)	(F)	I	R
1	1	172552-16610	HOSE	1							1
2	1	172552-16620	HOSE	1							1
3	1	172552-16610	HOSE	1							1
4	1	172552-16620	HOSE	1							1
5	1	172215-02950	SCREW	2							
6	1	172559-00160	NUT	4							
7	1	172551-03560	PIN	2							
8	1	172552-00541	CYLINDER, LIFT	2							
9	1	172215-02950	SCREW	2							
10	1	172551-03660	PIN	2							
11	1	172551-02780	CONNECTOR	4							
12	1	172551-08330	TUBE, LIFT CYLINDER	1							2
13	1	172551-05060	TUBE, LIFT CYLINDER	2							
14	1	172551-04860	CLAMP, SADDLE	6							
15	1	172551-06770	CLAMP	6							
16	1	172551-08380	TUBE, LIFT CYLINDER	1							3
17	1	172551-05160	HOSE	1							4
18	1	172551-05150	HOSE	1							4
19	1	172551-05160	HOSE	1							4
20	1	172551-05150	HOSE	1							4

Remarks
(1)SN 461001 and up
(1)SN 461001 and up
(2)(left)
(3)(right)
(4)SN 461000 and before

N:Old $\frac{\text{Yes}}{\text{No}}$ New, Q:Old $\frac{\text{No}}{\text{Yes}}$ New, R:Old $\frac{\text{Yes}}{\text{Yes}}$ New, S:Old $\frac{\text{No}}{\text{No}}$ New, W:Add, Z:Discontinued, F:Interchangeable by set, K:Q'ty Change

Copyright (C) 2017 YANMAR CO., LTD. All RightsReserved.

Fig.106. AUXILIARY HYDRAULICS CIRCUIT

(A)=T210-1(VERSION C
(B)=
(C)=
(D)=
(E)=
(F)=

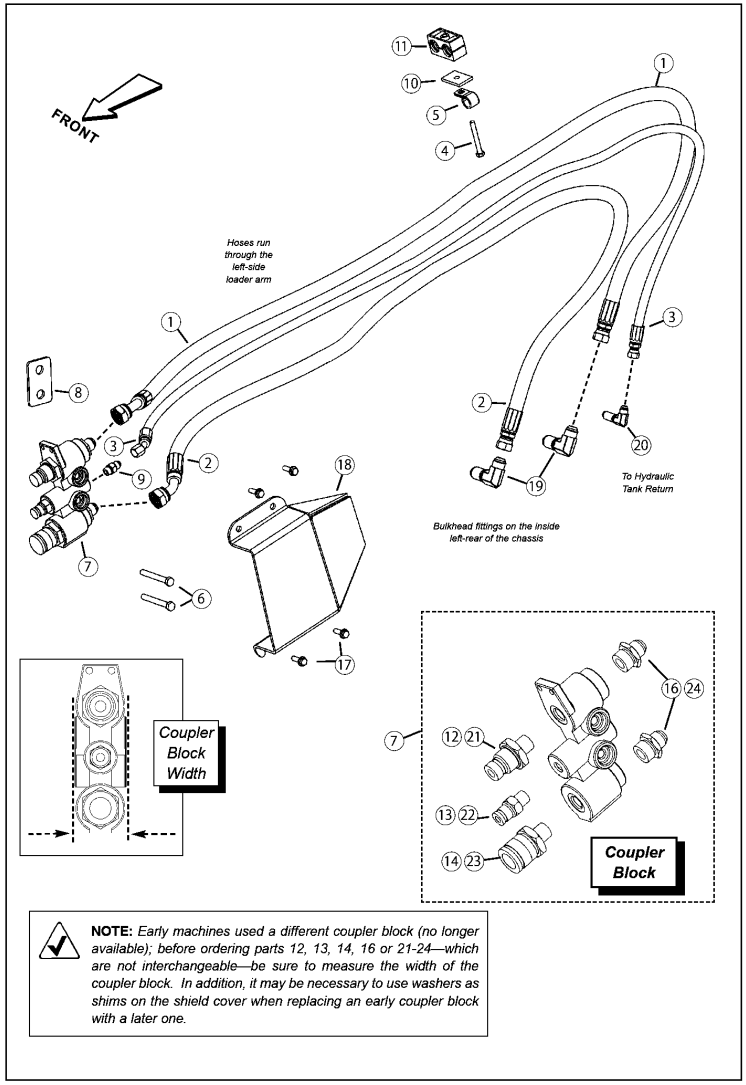

No.	Lev.	Parts No.	Description	Q'ty (A)	(B)	(C)	(D)	(E)	(F)	I	R
1	1	172551-04940	HOSE	1							
2	1	172551-04940	HOSE	1							
3	1	172551-05090	HOSE	1							
4	1	172551-09800	SCREW	1							
5	1	172551-01270	CLAMP	1							
6	1	172551-09650	SCREW	2							
7	1	172216-15211	BLOCK, COUPLER	1							1
8	1	172551-05690	SPACER	1							
9	1	172559-03190	ST MJ06-MORB06	1							
10	1	172559-01740	PLATE	1							
11	1	172551-02410	CLAMP	1							
12	1	172216-16830	Q-COUPLER KIT,MALE	1							2
13	1	172216-16850	Q-COUPLER KIT RETURN	1							2
14	1	172216-16840	Q-COUPLER KIT,FEMALE	1							2
16	1	172216-16860	FITTING KIT, 3/4SAE	2							2
17	1	172559-02910	SCREW	4							
18	1	172551-04930	SHIELD	1							
19	1	172551-01450	CONNECTOR	2							
20	1	172559-03200	CONNECTOR	1							
21	1	172551-02200	COUPLER	1							3
22	1	172551-02220	COUPLER	1							3
23	1	172551-02210	COUPLER	1							3
24	1	172551-02230	FITTINGS	2							3

Remarks
(1)(Includes items 12-16; see "NOTE")
(2)Coupler block width 2.510" (62 mm)
(3)Coupler block width 2.280" (58 mm)

N:Old ◄Yes/No► New, Q:Old ◄No/Yes► New, R:Old ◄Yes/Yes► New, S:Old ◄No/No► New, W:Add, Z:Discontinued, F:Interchangeable by set, K:Q'ty Change

Copyright (C) 2017 YANMAR CO., LTD. All RightsReserved.

Fig.107. HIGH-FLOW HYDRAULICS CIRCUIT(SN: 461001 AND UP)

(A)=T210-1(VERSION C
(B)=
(C)=
(D)=
(E)=
(F)=

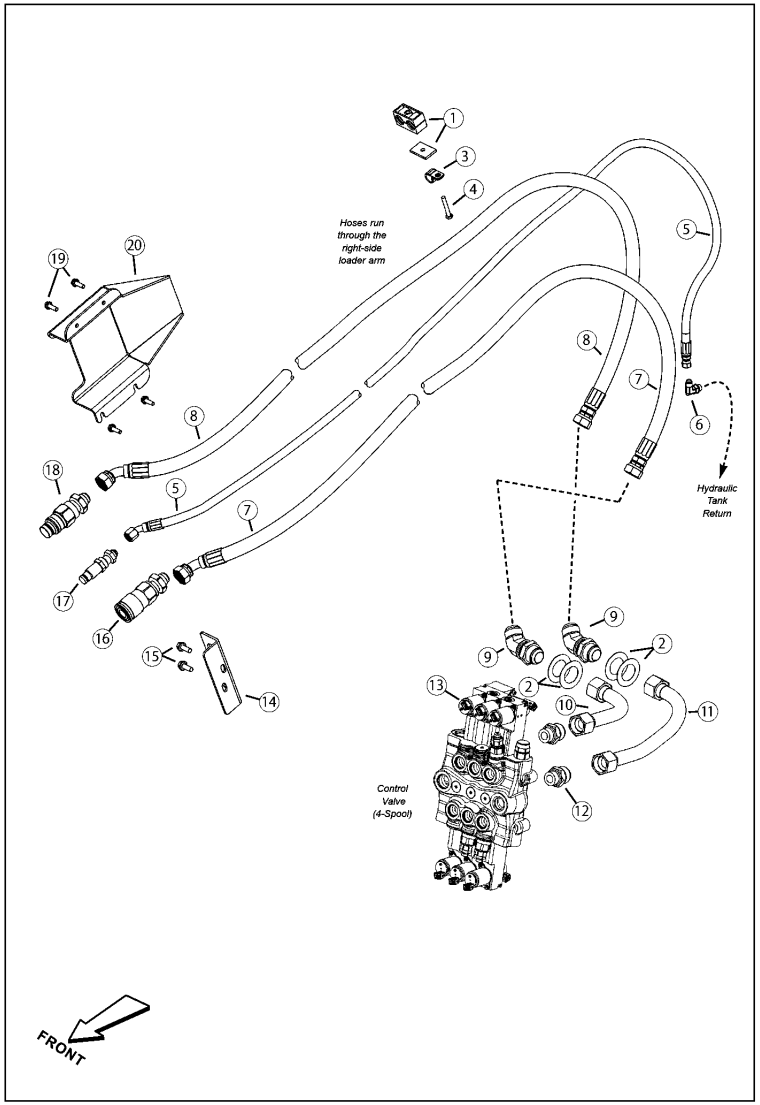

No.	Lev.	Parts No.	Description	Q'ty (A)	(B)	(C)	(D)	(E)	(F)	I	R
1	1	172551-00780	CLAMP	1							1
2	1	172552-16650	WASHER	4							
3	1	172551-01270	CLAMP	1							
4	1	172551-09840	SCREW	1							
5	1	172551-05250	HOSE	1							
6	1	172559-03230	CONNECTOR	1							
7	1	172551-04950	HOSE	1							
8	1	172551-04950	HOSE	1							
9	1	172551-08400	CONNECTOR	2							
10	1	172552-16640	TUBE, HIGH-FLOW	1							
11	1	172552-16630	TUBE, HIGH-FLOW	1							
12	1	172559-03220	CONNECTOR	2							
13	1	172559-03210	VALVE, 4-SPOOL CTRL	1							
14	1	172551-06640	PLATE	1							
15	1	172559-01940	SCREW	2							
16	1	172551-01300	COUPLER	1							
17	1	172551-01080	COUPLER	1							
18	1	172551-01290	COUPLER	1							
19	1	172559-02910	SCREW	4							
20	1	172551-06680	SHIELD	1							

Remarks
(1)PN 100541 comes from the supplier with two cushions, one top plate, and one 5/16"X1-3/4" bolt.
The top plate and bolt are substituted with items 2 and 4 at the factory. Be sure to order items 2 and 4,if needed.

N:Old $\xleftrightarrow[\text{No}]{\text{Yes}}$ New, Q:Old $\xleftrightarrow[\text{Yes}]{\text{No}}$ New, R:Old $\xleftrightarrow[\text{Yes}]{\text{Yes}}$ New, S:Old $\xleftrightarrow[\text{No}]{\text{No}}$ New, W:Add, Z:Discontinued, F:Interchangeable by set, K:Q'ty Change

Copyright (C) 2017 YANMAR CO., LTD. All RightsReserved.

Fig.108. HIGH-FLOW HYDRAULICS CIRCUIT(SN: 461000 AND BEFORE)

(A)=T210-1(VERSION C
(B)=
(C)=
(D)=
(E)=
(F)=

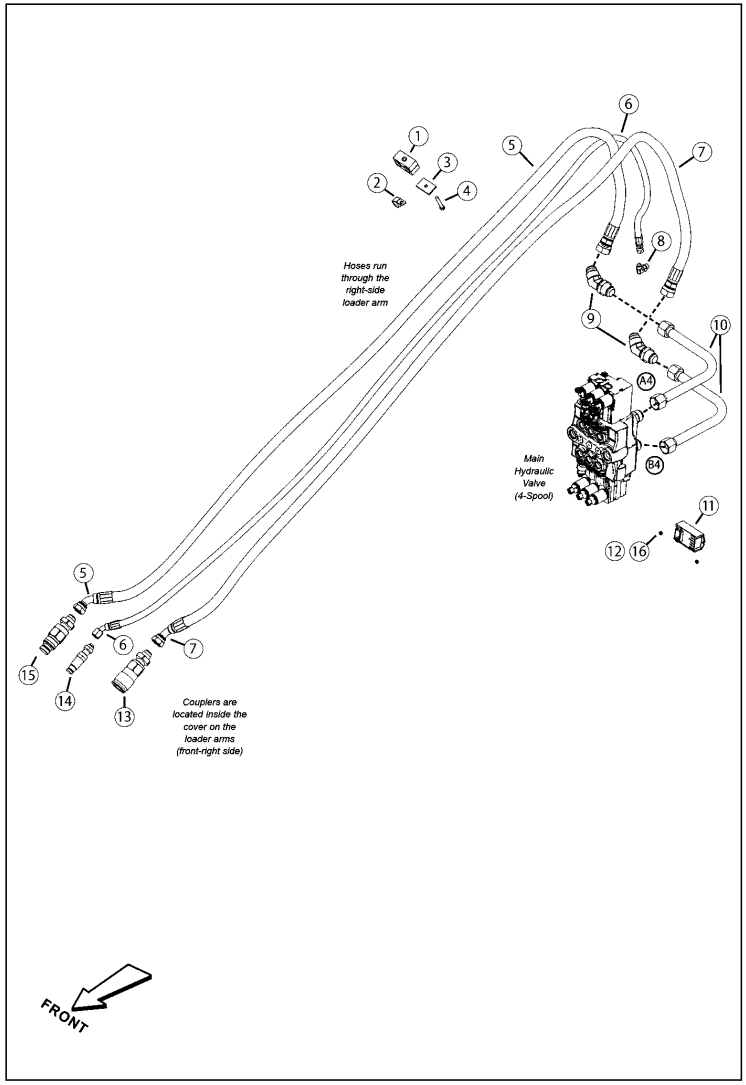

No.	Lev.	Parts No.	Description	Q'ty (A)	(B)	(C)	(D)	(E)	(F)	I	R
1	1	172551-00780	CLAMP	1							1
2	1	172551-01270	CLAMP	1							
3	1	172559-01740	PLATE	1							
4	1	172551-09840	SCREW	1							
5	1	172551-04950	HOSE	1							
6	1	172551-05250	HOSE	1							
7	1	172551-04950	HOSE	1							
8	1	172559-03230	CONNECTOR	1							
9	1	172551-08400	CONNECTOR	2							
10	1	172551-04960	TUBE ASSY	2							
11	1	172551-04790	CONTROLLER,HIGH-FLOW	1							
12	1	172551-09990	NUT	2							
13	1	172551-01300	COUPLER	1							
14	1	172551-01080	COUPLER	1							
15	1	172551-01290	COUPLER	1							
16	1	172559-02120	SCREW	2							2

Remarks
(1)PN 100541 comes from the supplier with two cushions, one top plate, and one 5/16"X1-3/4" bolt.
The top plate and bolt are substituted with items 2 and 4 at the factory. Be sure to order items 2 and 4,if needed.
(2)(not shown)

N:Old ◄Yes/No► New, Q:Old ◄No/Yes► New, R:Old ◄Yes/Yes► New, S:Old ◄No/No► New, W:Add, Z:Discontinued, F:Interchangeable by set, K:Q'ty Change

Copyright (C) 2017 YANMAR CO., LTD. All RightsReserved.

Fig.109. HYDRAULIC TANK

(A)=T210-1(VERSION C
(B)=
(C)=
(D)=
(E)=
(F)=

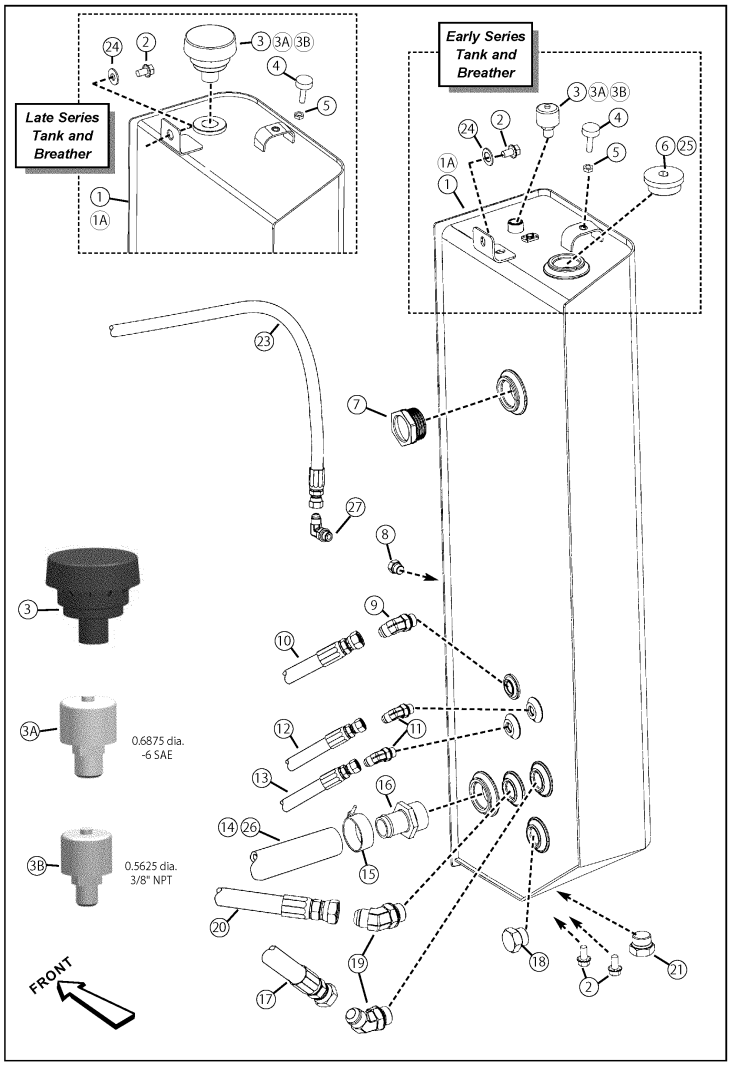

No.	Lev.	Parts No.	Description	Q'ty (A)	(B)	(C)	(D)	(E)	(F)	I	R
1	1	172559-03250	HYDRAULIC TANK	1							1
1A	1	172559-03240	HYDRAULIC TANK	1							2
2	1	172551-01810	SCREW	1							
3	1	172218-00260	FILTER, VENTILATION	1							3
3A	1	172552-16690	BREATHER	1							3
3B	1	172551-01000	BREATHER	1							3
4	1	172551-01070	BUMPER	1							
5	1	172551-10320	NUT	1							
6	1	172551-04030	PLUG	1							4
7	1	172551-01190	SIGHT PORT	1							5
8	1	172551-00960	PLUG	1							6
9	1	172559-02250	CONNECTOR	1							
10	1	172551-05180	HOSE	1							
11	1	172559-03270	CONNECTOR	2							
12	1	172551-05110	HOSE	1							
13	1	172551-05450	HOSE	1							
14	1	172552-16680	HOSE	1							
15	1	172551-02530	CLAMP	1							
16	1	172551-02800	ADAPTOR	1							
17	1	172551-04230	HOSE	1							
18	1	172551-01040	PLUG	2							
19	1	172559-03260	CONNECTOR	2							
20	1	172551-05130	HOSE	1							
21	1	172551-01050	PLUG	1							
23	1	172551-05250	HOSE	1							7
24	1	172551-10380	WASHER	1							
25	1	172551-05260	O-RING	1							8
26	1	172551-08940	GUARD, POLY HOSE	1							9
27	1	172559-03230	CONNECTOR	1							7

Remarks
(1)SN 060331 and up (2)SN 060330 and before(Kit; includes tank and breather) (3)(refer to illustration)
(4)(hydraulic oil fill) (5)(oil level) (6)Used when machine is equipped with standard hydraulics option.
(7)Used when machine is equipped with high-flow hydraulics option.
(8)(included with plug item #06) (9)(not shown)

N:Old ←Yes/No→ New, Q:Old ←No/Yes→ New, R:Old ←Yes/Yes→ New, S:Old ←No/No→ New, W:Add, Z:Discontinued, F:Interchangeable by set, K:Q'ty Change

Copyright (C) 2017 YANMAR CO., LTD. All RightsReserved.

Fig.110. HYDROSTATIC DRIVE PUMP CIRCUIT(SN: 461101 AND UP)

(A)=T210-1(VERSION C
(B)=
(C)=
(D)=
(E)=
(F)=

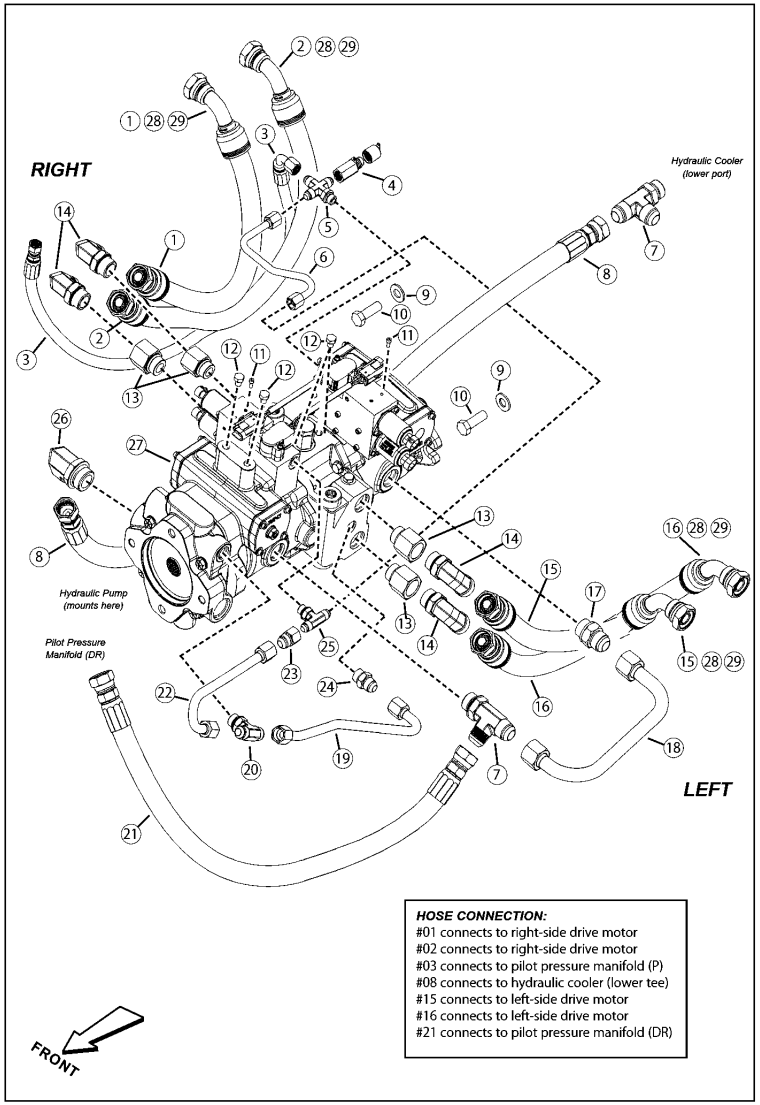

No.	Lev.	Parts No.	Description	Q'ty (A)	(B)	(C)	(D)	(E)	(F)	I	R
1	1	172552-16750	HOSE	1							
2	1	172552-16770	HOSE	1							
3	1	172559-03370	HOSE, -06 X 34 IN.	1							
4	1	172216-05470	PORT, TEST	1							
5	1	172559-03280	CROSS MJ06-MAROB06	1							
6	1	172559-03330	TUBE, HYDRAULIC -6	1							
7	1	172559-02680	CONNECTOR, TEE-RUN	1							
8	1	172559-02630	HOSE	1							
9	1	172551-01880	WASHER	2							
10	1	172559-03300	CS 1/2X1-1/2 CRZY SP	2							
11	1	172559-03380	SCREW	2							
12	1	172559-03400	SCREW	4							
13	1	172559-03310	ST MORB12-FORB12	4							
14	1	172552-16730	CONNECTOR	4							
15	1	172552-16750	HOSE	1							
16	1	172552-16770	HOSE	1							
17	1	172559-03410	CONNECTOR	1							
18	1	172559-03340	TUBE,DRAIN	1							
19	1	172559-03320	TUBE, HYD. -8	1							
20	1	172216-00590	FITTING	1							
21	1	172559-03420	HOSE,HYD	1							
22	1	172559-03350	TUBE, HYD. -8 CHARGE	1							
23	1	172217-01270	ADAPTOR	1							
24	1	172559-02360	CONNECTOR	1							
25	1	172559-03390	FITTING	1							
26	1	172551-00950	CONNECTOR	1							
27	1	172559-03360	POMP,TANDEM HYDRO	1							
28	1	172559-03290	O-RING M20 X 2.0 N90	1							1
29	1	172551-08840	GUARD, HOSE POLY	1							2

Remarks
(1)(not shown) - (two included with hose)
(2)(not shown - one per hose)

N:Old ←Yes/No→ New, Q:Old ←No/Yes→ New, R:Old ←Yes/Yes→ New, S:Old ←No/No→ New, W:Add, Z:Discontinued, F:Interchangeable by set, K:Q'ty Change

Copyright (C) 2017 YANMAR CO., LTD. All RightsReserved.

Fig.111. HYDROSTATIC DRIVE PUMP CIRCUIT(SN: 060372 - 461100)

(A)=T210-1(VERSION C
(B)=
(C)=
(D)=
(E)=
(F)=

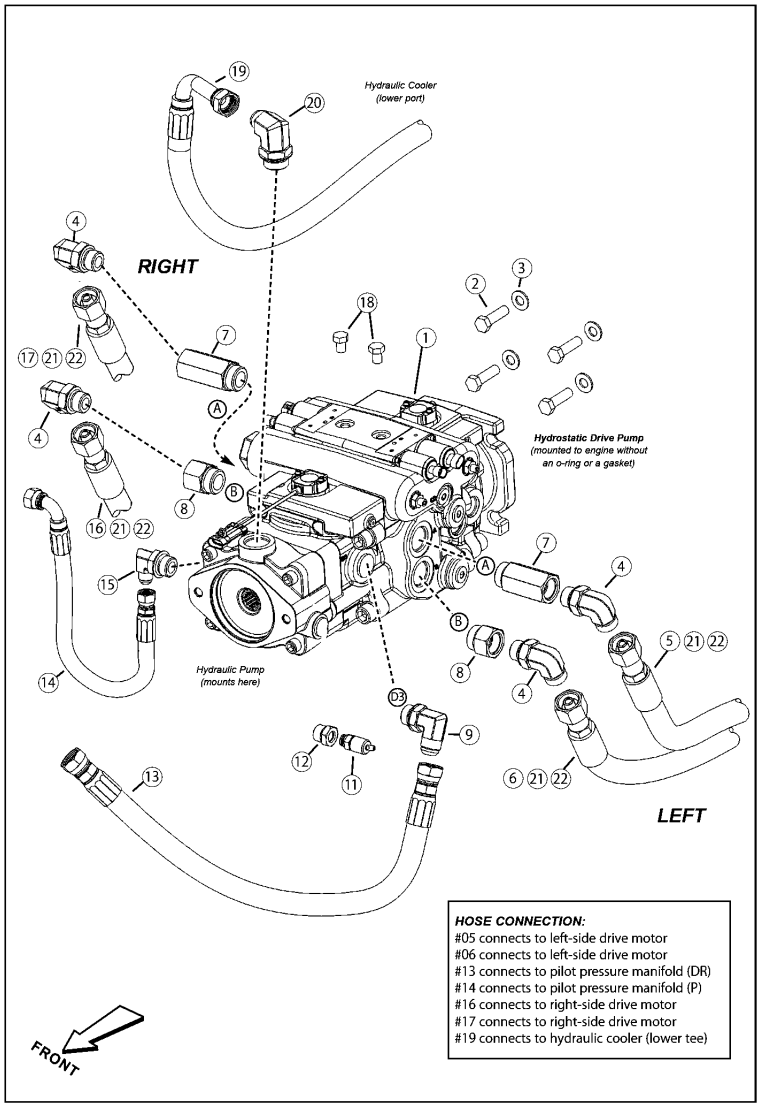

No.	Lev.	Parts No.	Description	Q'ty (A)	(B)	(C)	(D)	(E)	(F)	I	R
1	1	172552-00221	PUMP	1							
2	1	172551-04850	SCREW BOLT	4							
3	1	172551-01880	WASHER	4							
4	1	172552-16730	CONNECTOR	4							
5	1	172552-16750	HOSE	1							
6	1	172552-16770	HOSE	1							
7	1	172552-16740	CONNECTOR	2							
8	1	172551-08440	CONNECTOR	2							
9	1	172559-02660	CONNECTOR	1							
11	1	172551-02500	TEST PORT	1							
12	1	172551-10670	CONNECTOR	1							
13	1	172552-00360	HOSE	1							
14	1	172552-00400	HOSE	1							
15	1	172559-03430	CONNECTOR	1							
16	1	172552-16750	HOSE	1							
17	1	172552-16760	HOSE	1							
18	1	172551-10120	SCREW BOLT	2							
19	1	172551-04220	HOSE	1							
20	1	172551-00950	CONNECTOR	1							
21	1	172559-03290	O-RING M20 X 2.0 N90	1							1
22	1	172551-08840	GUARD, HOSE POLY	1							2

Remarks
(1)(not shown) - (two included with hose)
(2)(not shown)

N:Old $\frac{\text{Yes}}{\text{No}}$ New, Q:Old $\frac{\text{No}}{\text{Yes}}$ New, R:Old $\frac{\text{Yes}}{\text{Yes}}$ New, S:Old $\frac{\text{No}}{\text{No}}$ New, W:Add, Z:Discontinued, F:Interchangeable by set, K:Q'ty Change

Copyright (C) 2017 YANMAR CO., LTD. All RightsReserved.

Fig.112. HYDROSTATIC DRIVE PUMP CIRCUIT(SN: 060371 AND BEFORE)

(A)=T210-1(VERSION C
(B)=
(C)=
(D)=
(E)=
(F)=

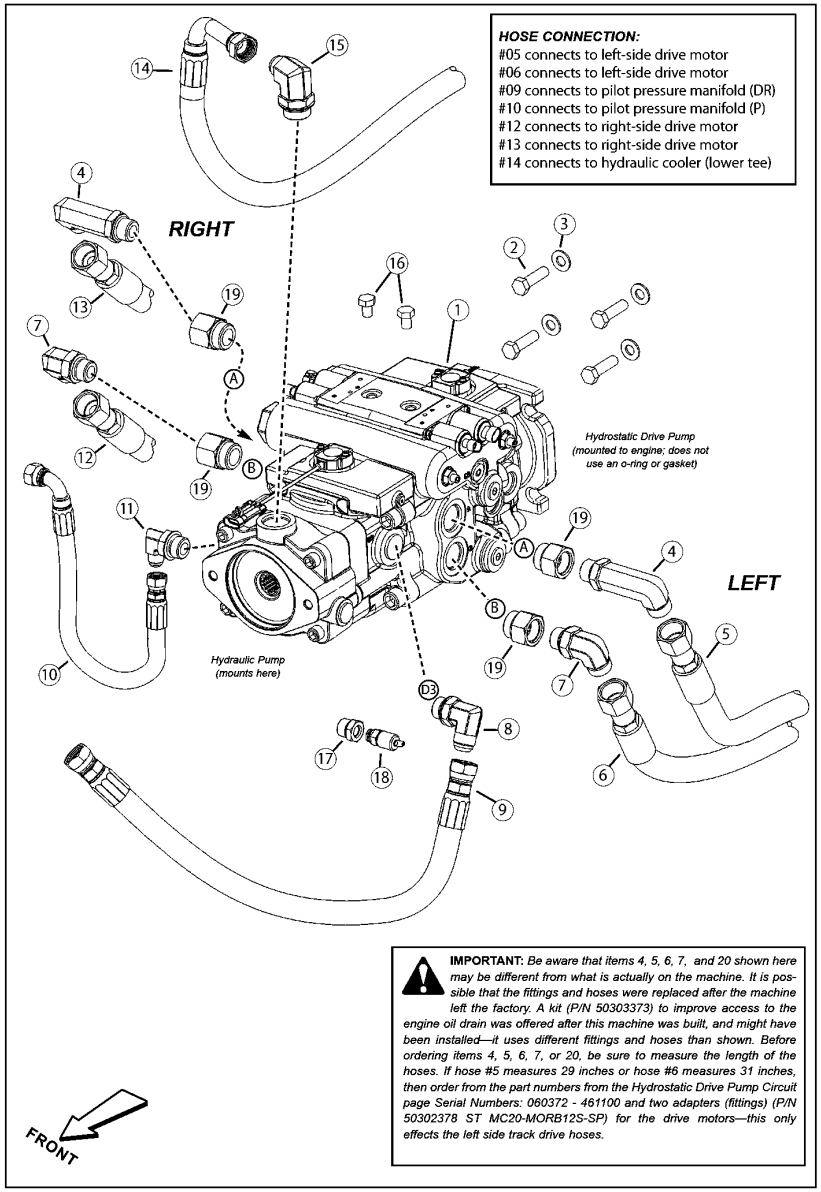

No.	Lev.	Parts No.	Description	Q'ty (A)	(B)	(C)	(D)	(E)	(F)	I	R
1	1	172552-00221	PUMP	1							
2	1	172551-04850	SCREW BOLT	4							
3	1	172551-01880	WASHER	4							
4	1	172551-08450	CONNECTOR	2							
5	1	172551-05350	HOSE	1							
6	1	172551-05360	HOSE	1							
7	1	172551-04190	CONNECTOR	2							
8	1	172559-02660	CONNECTOR	1							
9	1	172552-00360	HOSE	1							
10	1	172552-00400	HOSE	1							
11	1	172559-03430	CONNECTOR	1							
12	1	172551-05350	HOSE	1							
13	1	172551-05380	HOSE	1							
14	1	172551-04220	HOSE	1							
15	1	172551-00950	CONNECTOR	1							
16	1	172551-10120	SCREW BOLT	2							
17	1	172551-10670	CONNECTOR	1							
18	1	172551-02500	TEST PORT	1							
19	1	172551-08440	CONNECTOR	4							

N:Old ◄Yes/No► New, Q:Old ◄No/Yes► New, R:Old ◄Yes/Yes► New, S:Old ◄No/No► New, W:Add, Z:Discontinued, F:Interchangeable by set, K:Q'ty Change

Copyright (C) 2017 YANMAR CO., LTD. All RightsReserved.

Fig.113. TRACK DRIVE CIRCUIT - RIGHT SIDE(SN: 461101 AND UP)

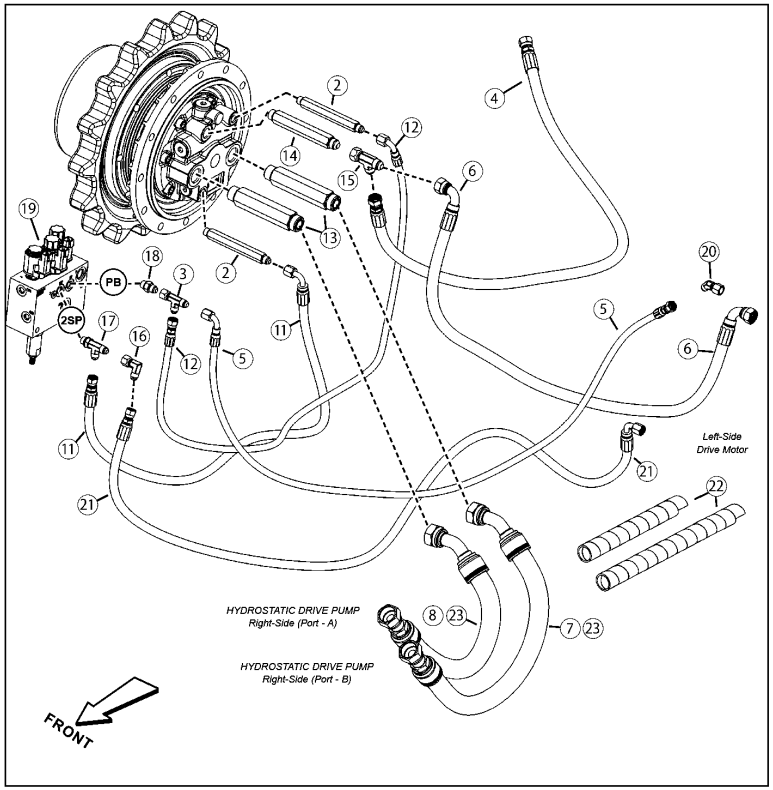

(A)=T210-1(VERSION C
(B)=
(C)=
(D)=
(E)=
(F)=

No.	Lev.	Parts No.	Description	Q'ty (A)	(B)	(C)	(D)	(E)	(F)	I	R
2	1	172551-04970	NUT	2							
3	1	172559-03450	CONNECTOR	1							
4	1	172551-05180	HOSE	1							
5	1	172551-11400	HOSE	1							
6	1	172551-05170	HOSE	1							
7	1	172552-16750	HOSE	1							
8	1	172552-16760	HOSE	1							
11	1	172552-00390	HOSE	1							
12	1	172551-11410	HOSE	1							
13	1	172552-16780	CONNECTOR	2							
14	1	172551-04070	NUT	1							
15	1	172559-03460	CONNECTOR	1							
16	1	172559-03470	FITTING	1							
17	1	172559-03440	FITTING	1							
18	1	172559-03190	ST MJ06-MORB06	1							
19	1	172551-05631	MANIFOLD	1							
20	1	172559-03480	FITTING	1							
21	1	172551-11430	HOSE	1							
22	1	172551-08840	GUARD, HOSE POLY	2							
23	1	172559-03290	O-RING M20 X 2.0 N90	1							1

Remarks
(1)(two included with hose)

N:Old $\xleftrightarrow[\text{No}]{\text{Yes}}$ New, Q:Old $\xleftrightarrow[\text{Yes}]{\text{No}}$ New, R:Old $\xleftrightarrow[\text{Yes}]{\text{Yes}}$ New, S:Old $\xleftrightarrow[\text{No}]{\text{No}}$ New, W:Add, Z:Discontinued, F:Interchangeable by set, K:Q'ty Change

Copyright (C) 2017 YANMAR CO., LTD. All RightsReserved.

Fig.114. TRACK DRIVE CIRCUIT - LEFT SIDE(SN: 461101 AND UP)

(A)=T210-1(VERSION C
(B)=
(C)=
(D)=
(E)=
(F)=

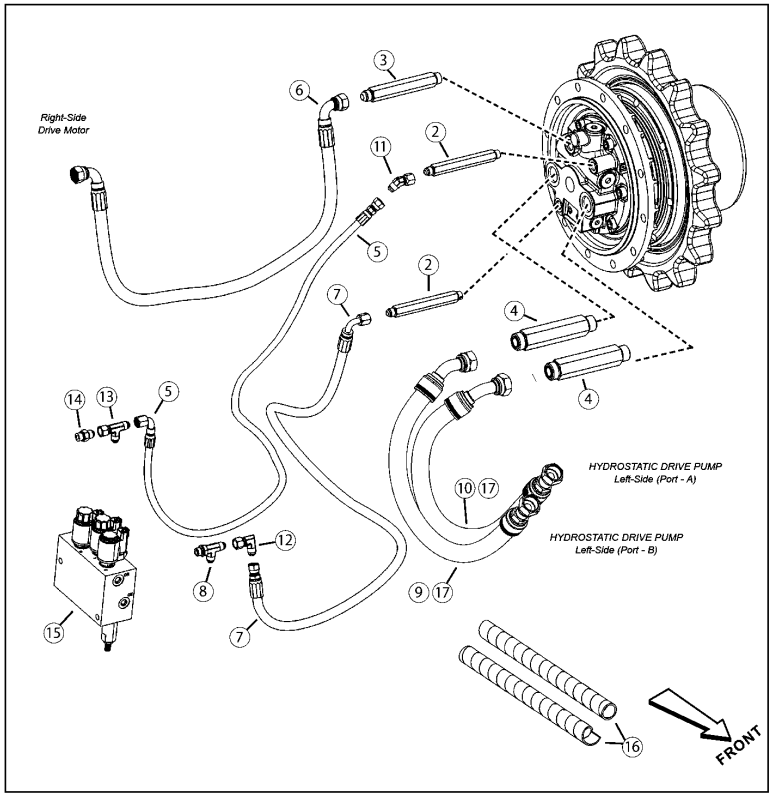

No.	Lev.	Parts No.	Description	Q'ty (A)	(B)	(C)	(D)	(E)	(F)	I	R
2	1	172551-04970	NUT	2							
3	1	172551-04070	NUT	1							
4	1	172552-16780	CONNECTOR	2							
5	1	172551-11400	HOSE	1							
6	1	172551-05170	HOSE	1							
7	1	172551-11430	HOSE	1							
8	1	172559-03440	FITTING	1							
9	1	172552-16770	HOSE	1							
10	1	172552-16750	HOSE	1							
11	1	172559-03480	FITTING	1							
12	1	172559-03470	FITTING	1							
13	1	172559-03450	CONNECTOR	1							
14	1	172559-03190	ST MJ06-MORB06	1							
15	1	172551-05631	MANIFOLD	1							
16	1	172551-08840	GUARD, HOSE POLY	2							
17	1	172559-03290	O-RING M20 X 2.0 N90	1							1

Remarks
(1)(two included with hose)

N:Old $\xleftrightarrow[\text{No}]{\text{Yes}}$ New, Q:Old $\xleftrightarrow[\text{Yes}]{\text{No}}$ New, R:Old $\xleftrightarrow[\text{Yes}]{\text{Yes}}$ New, S:Old $\xleftrightarrow[\text{No}]{\text{No}}$ New, W:Add, Z:Discontinued, F:Interchangeable by set, K:Q'ty Change

Copyright (C) 2017 YANMAR CO., LTD. All RightsReserved.

Fig.115. TRACK DRIVE CIRCUIT - RIGHT SIDE(SN: 060372 - 461100)

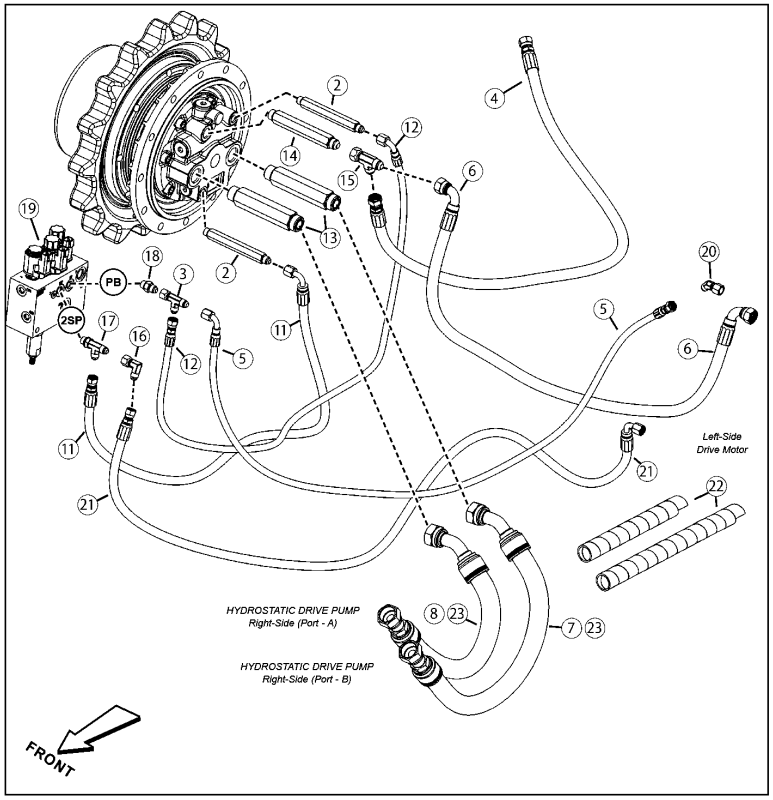

(A)=T210-1(VERSION C
(B)=
(C)=
(D)=
(E)=
(F)=

No.	Lev.	Parts No.	Description	Q'ty (A)	(B)	(C)	(D)	(E)	(F)	I	R
2	1	172551-04970	NUT	2							
3	1	172559-03450	CONNECTOR	1							
4	1	172551-05180	HOSE	1							
5	1	172551-11400	HOSE	1							
6	1	172551-05170	HOSE	1							
7	1	172552-16750	HOSE	1							
8	1	172552-16760	HOSE	1							
11	1	172552-00390	HOSE	1							
12	1	172551-11410	HOSE	1							
13	1	172552-16780	CONNECTOR	2							
14	1	172551-04070	NUT	1							
15	1	172559-03460	CONNECTOR	1							
16	1	172559-03470	FITTING	1							
17	1	172559-03440	FITTING	1							
18	1	172559-03190	ST MJ06-MORB06	1							
19	1	172551-05631	MANIFOLD	1							
20	1	172559-03480	FITTING	1							
21	1	172551-11430	HOSE	1							
22	1	172551-08840	GUARD, HOSE POLY	2							
23	1	172559-03290	O-RING M20 X 2.0 N90	1							1

Remarks
(1)(two included with hose)

N:Old $\xleftrightarrow[\text{No}]{\text{Yes}}$ New, Q:Old $\xleftrightarrow[\text{Yes}]{\text{No}}$ New, R:Old $\xleftrightarrow[\text{Yes}]{\text{Yes}}$ New, S:Old $\xleftrightarrow[\text{No}]{\text{No}}$ New, W:Add, Z:Discontinued, F:Interchangeable by set, K:Q'ty Change

Copyright (C) 2017 YANMAR CO., LTD. All RightsReserved.

Fig.116. TRACK DRIVE CIRCUIT - LEFT SIDE(SN: 060372 - 461100)

(A)=T210-1(VERSION C
(B)=
(C)=
(D)=
(E)=
(F)=

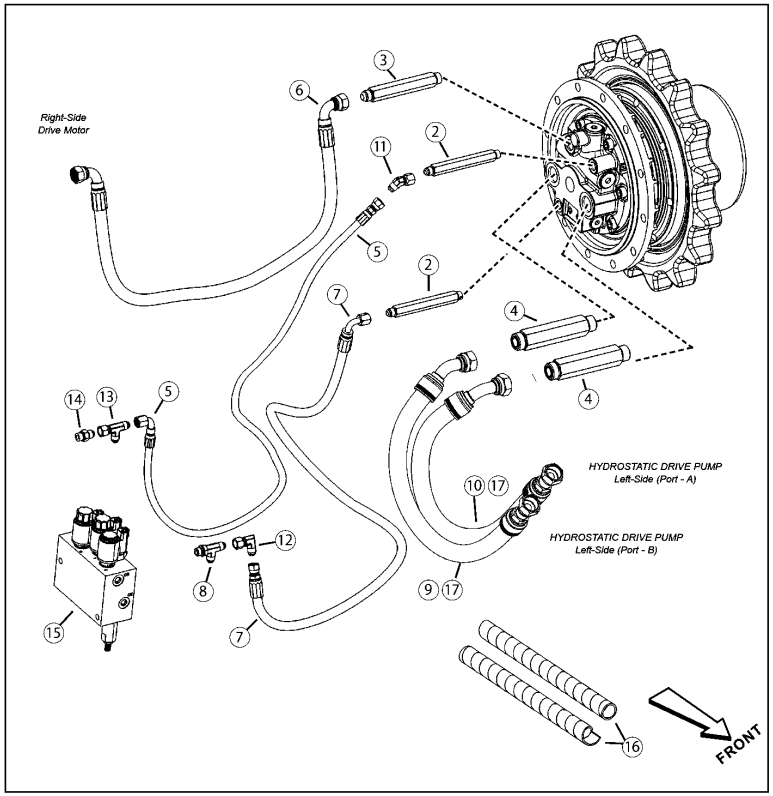

No.	Lev.	Parts No.	Description	Q'ty (A)	(B)	(C)	(D)	(E)	(F)	I	R
2	1	172551-04970	NUT	2							
3	1	172551-04070	NUT	1							
4	1	172552-16780	CONNECTOR	2							
5	1	172551-11400	HOSE	1							
6	1	172551-05170	HOSE	1							
7	1	172551-11430	HOSE	1							
8	1	172559-03440	FITTING	1							
9	1	172552-16770	HOSE	1							
10	1	172552-16750	HOSE	1							
11	1	172559-03480	FITTING	1							
12	1	172559-03470	FITTING	1							
13	1	172559-03450	CONNECTOR	1							
14	1	172559-03190	ST MJ06-MORB06	1							
15	1	172551-05631	MANIFOLD	1							
16	1	172551-08840	GUARD, HOSE POLY	2							
17	1	172559-03290	O-RING M20 X 2.0 N90	1							1

Remarks
(1)(two included with hose)

N:Old $\frac{\text{Yes}}{\text{No}}$ New, Q:Old $\frac{\text{No}}{\text{Yes}}$ New, R:Old $\frac{\text{Yes}}{\text{Yes}}$ New, S:Old $\frac{\text{No}}{\text{No}}$ New, W:Add, Z:Discontinued, F:Interchangeable by set, K:Q'ty Change

Copyright (C) 2017 YANMAR CO., LTD. All RightsReserved.

Fig.117. TRACK DRIVE CIRCUIT - RIGHT SIDE(SN: 060371 AND BEFORE)

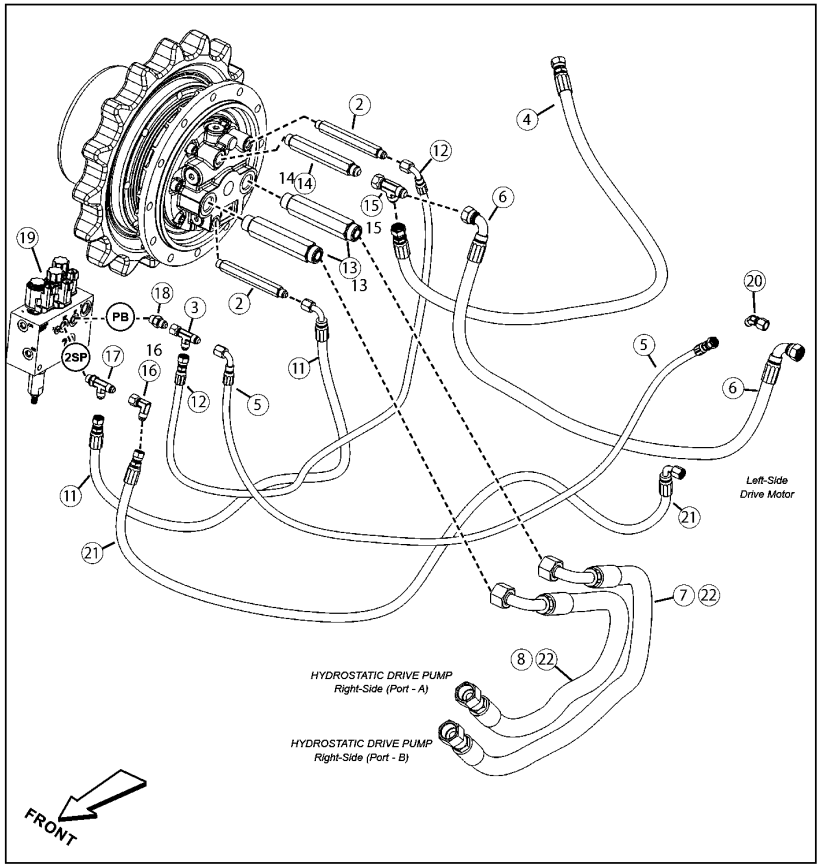

(A)=T210-1(VERSION C
(B)=
(C)=
(D)=
(E)=
(F)=

No.	Lev.	Parts No.	Description	Q'ty (A)	(B)	(C)	(D)	(E)	(F)	I	R
2	1	172551-04970	NUT	2							
3	1	172559-03450	CONNECTOR	1							
4	1	172551-05180	HOSE	1							
5	1	172551-11400	HOSE	1							
6	1	172551-05170	HOSE	1							
7	1	172551-05350	HOSE	1							
8	1	172551-05380	HOSE	1							
11	1	172552-00390	HOSE	1							
12	1	172551-11410	HOSE	1							
13	1	172551-04020	NUT	2							
14	1	172551-04070	NUT	1							
15	1	172559-03460	CONNECTOR	1							
16	1	172559-03470	FITTING	1							
17	1	172559-03440	FITTING	1							
18	1	172559-03190	ST MJ06-MORB06	1							
19	1	172551-05631	MANIFOLD	1							
20	1	172559-03480	FITTING	1							
21	1	172551-11430	HOSE	1							
22	1	172551-08840	GUARD, HOSE POLY	2							

N:Old $\xleftarrow[\text{No}]{\text{Yes}}$ New, Q:Old $\xleftarrow[\text{Yes}]{\text{No}}$ New, R:Old $\xleftarrow[\text{Yes}]{\text{Yes}}$ New, S:Old $\xleftarrow[\text{No}]{\text{No}}$ New, W:Add, Z:Discontinued, F:Interchangeable by set, K:Q'ty Change

Copyright (C) 2017 YANMAR CO., LTD. All RightsReserved.

Fig.118. TRACK DRIVE CIRCUIT - LEFT SIDE(SN: 060371 AND BEFORE)

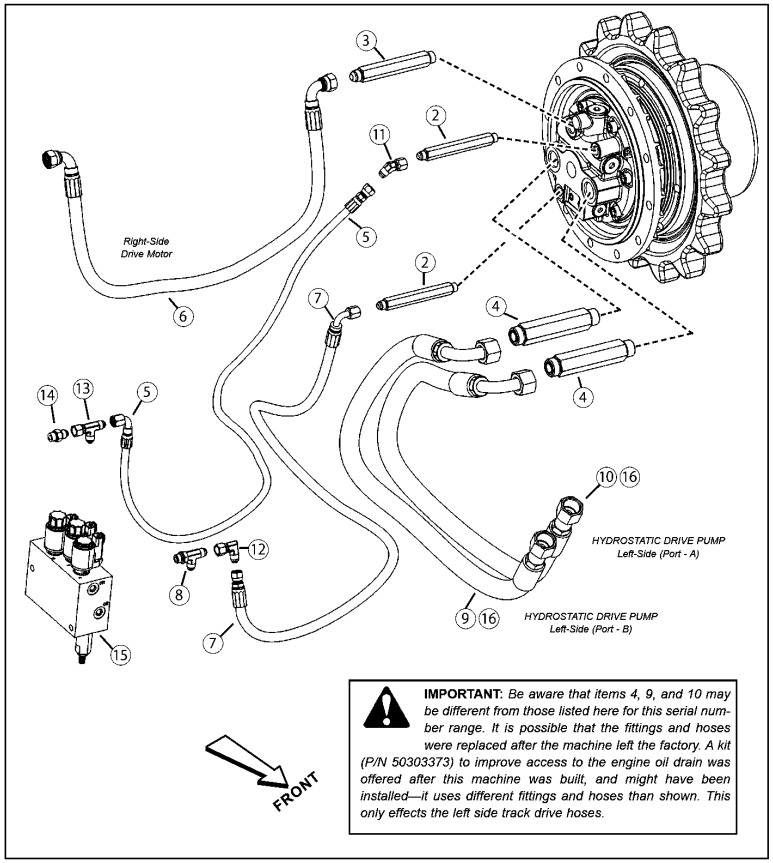

(A)=T210-1(VERSION C (D)=
(B)= (E)=
(C)= (F)=

No.	Lev.	Parts No.	Description	Q'ty (A)	(B)	(C)	(D)	(E)	(F)	I	R
2	1	172551-04970	NUT	2							
3	1	172551-04070	NUT	1							
4	1	172551-04020	NUT	2							
5	1	172551-11400	HOSE	1							
6	1	172551-05170	HOSE	1							
7	1	172551-11430	HOSE	1							
8	1	172559-03440	FITTING	1							
9	1	172551-05360	HOSE	1							
10	1	172551-05350	HOSE	1							
11	1	172559-03480	FITTING	1							
12	1	172559-03470	FITTING	1							
13	1	172559-03450	CONNECTOR	1							
14	1	172559-03190	ST MJ06-MORB06	1							
15	1	172551-05631	MANIFOLD	1							
16	1	172551-08840	GUARD, HOSE POLY	2							1

Remarks
(1)(not shown)

N:Old ←Yes/No→ New, Q:Old ←No/Yes→ New, R:Old ←Yes/Yes→ New, S:Old ←No/No→ New, W:Add, Z:Discontinued, F:Interchangeable by set, K:Q'ty Change

Copyright (C) 2017 YANMAR CO., LTD. All RightsReserved.

Fig.119. HYDRAULIC PUMP CIRCUIT - (STANDARD HYDRAULICS)(SN: 461001 AND UP)

(A)=T210-1(VERSION C
(B)=
(C)=
(D)=
(E)=
(F)=

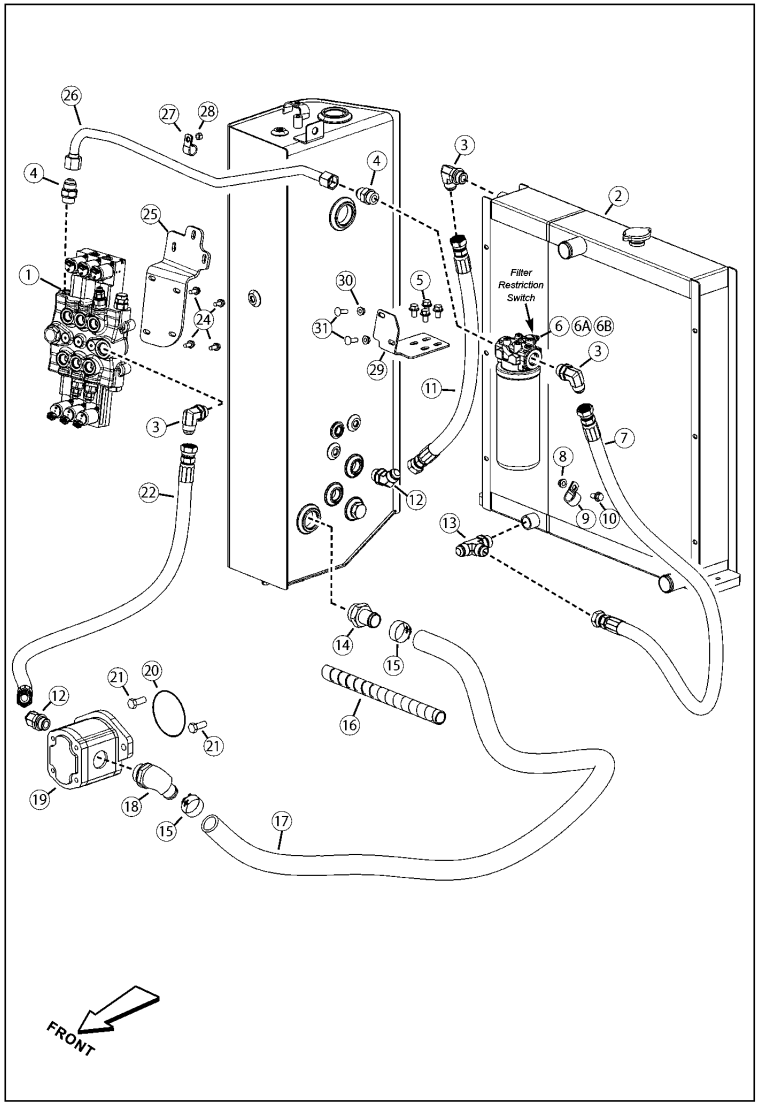

No.	Lev.	Parts No.	Description	Q'ty (A)	(B)	(C)	(D)	(E)	(F)	I	R
1	1	172559-03490	VALVE, 3-SPOOL CTRL	1							
2	1	172552-00300	COOLER, RADIATOR	1							
3	1	172559-02660	CONNECTOR	3							
4	1	172559-03410	CONNECTOR	2							
5	1	172551-01810	SCREW	4							
6	1	172551-04362	FILTER ASSY	1							
6A	1	172559-00120	FILTER, HYDRAULIC	1							1
6B	1	172215-15230	SWITCH, INDICATOR	1							2
7	1	172552-16420	HOSE	1							
8	1	172551-02750	NUT	1							
9	1	172551-11380	CLAMP	1							
10	1	172559-02020	CS FL LOCK	1							
11	1	172551-04230	HOSE	1							
12	1	172559-03260	CONNECTOR	2							
13	1	172559-02680	CONNECTOR, TEE-RUN	1							
14	1	172551-02800	ADAPTOR	1							
15	1	172551-02530	CLAMP	2							
16	1	172551-08940	GUARD, POLY HOSE	1							
17	1	172552-16680	HOSE	1							
18	1	172551-02520	CONNECTOR	1							
19	1	172552-00081	PUMP, GEAR	1							
20	1	172551-01120	O-RING	1							
21	1	172551-06870	SCREW	2							
22	1	172551-04630	HOSE	1							
24	1	172559-01220	SCREW	4							
25	1	172552-16790	BRACKET, CNTRL VALVE	1							
26	1	172552-16820	TUBE, FILTER	1							
27	1	172551-01270	CLAMP	1							
28	1	172559-00450	NUT	1							
29	1	172552-16810	BRACKET, FILTER	1							
30	1	172551-02760	NUT	2							
31	1	172215-02820	BOLT	2							

Remarks
(1)(element only)
(2)(out of view)

N:Old $\overset{\text{Yes}}{\underset{\text{No}}{\leftrightarrow}}$ New, Q:Old $\overset{\text{No}}{\underset{\text{Yes}}{\leftrightarrow}}$ New, R:Old $\overset{\text{Yes}}{\underset{\text{Yes}}{\leftrightarrow}}$ New, S:Old $\overset{\text{No}}{\underset{\text{No}}{\leftrightarrow}}$ New, W:Add, Z:Discontinued, F:Interchangeable by set, K:Q'ty Change

Copyright (C) 2017 YANMAR CO., LTD. All RightsReserved.

Fig.120. HYDRAULIC PUMP CIRCUIT - STANDARD HYDRAULICS(SN: 461000 AND BEFORE)

(A)=T210-1(VERSION C
(B)=
(C)=
(D)=
(E)=
(F)=

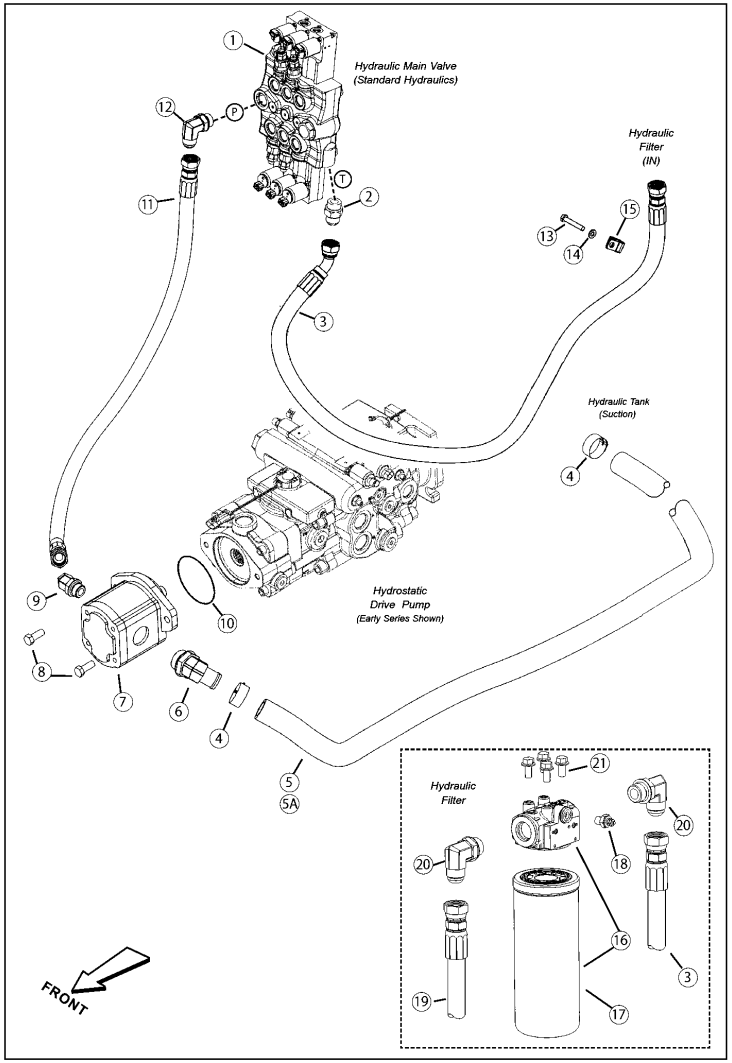

No.	Lev.	Parts No.	Description	Q'ty (A)	(B)	(C)	(D)	(E)	(F)	I	R
1	1	172559-03490	VALVE, 3-SPOOL CTRL	1							
2	1	172559-03410	CONNECTOR	1							
3	1	172552-01350	HOSE	1							1
4	1	172551-02530	CLAMP	2							
5	1	172552-16680	HOSE	1							
5A	1	172551-08940	GUARD, POLY HOSE	1							2
6	1	172551-02520	CONNECTOR	1							
7	1	172552-00081	PUMP, GEAR	1							
8	1	172551-06870	SCREW	2							
9	1	172559-03260	CONNECTOR	1							
10	1	172551-01120	O-RING	1							
11	1	172551-04630	HOSE	1							
12	1	172559-02660	CONNECTOR	1							
13	1	172551-09620	SCREW	1							
14	1	172551-09860	WASHER	1							
15	1	172551-11380	CLAMP	1							
16	1	172551-04362	FILTER ASSY	1							
17	1	172559-00120	FILTER, HYDRAULIC	1							3
18	1	172215-15230	SWITCH, INDICATOR	1							4
19	1	172551-03260	HOSE	1							
20	1	172559-02660	CONNECTOR	2							
21	1	172551-01810	SCREW	4							

Remarks
(1)Early machines used a longer hose, which is now replaced with this hose.
If the machine was originally equippedwith the longer (84") hose,
it will be necessary to re-route and secure this hose.
(2)(not shown) (3)(element only) (4)(included with item 16)

N:Old $\frac{\text{Yes}}{\text{No}}$ New, Q:Old $\frac{\text{No}}{\text{Yes}}$ New, R:Old $\frac{\text{Yes}}{\text{Yes}}$ New, S:Old $\frac{\text{No}}{\text{No}}$ New, W:Add, Z:Discontinued, F:Interchangeable by set, K:Q'ty Change

Copyright (C) 2017 YANMAR CO., LTD. All RightsReserved.

Fig.121. HYDRAULIC PUMP CIRCUIT - HIGH-FLOW HYDRAULICS(SN: 461001 AND UP)

(A)=T210-1(VERSION C
(B)=
(C)=
(D)=
(E)=
(F)=

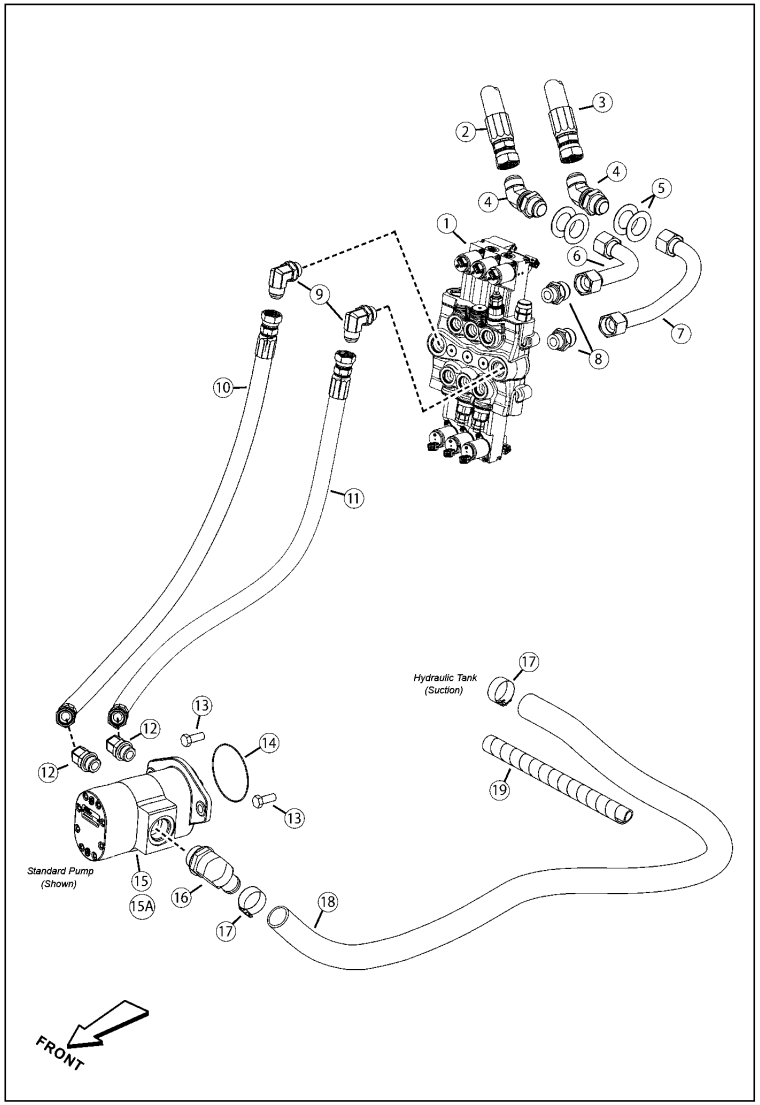

No.	Lev.	Parts No.	Description	Q'ty (A)	(B)	(C)	(D)	(E)	(F)	I	R
1	1	172559-03210	VALVE, 4-SPOOL CTRL	1							
2	1	172551-04950	HOSE	1							
3	1	172551-04950	HOSE	1							
4	1	172551-08400	CONNECTOR	2							
5	1	172552-16650	WASHER	4							
6	1	172552-16640	TUBE, HIGH-FLOW	1							
7	1	172552-16630	TUBE, HIGH-FLOW	1							
8	1	172559-03220	CONNECTOR	2							
9	1	172559-02660	CONNECTOR	4							
10	1	172552-01360	HOSE	1							
11	1	172552-16830	HOSE	1							
12	1	172559-03260	CONNECTOR	2							
13	1	172551-06870	SCREW	2							
14	1	172551-01120	O-RING	1							
15	1	172552-00520	PUMP, GEAR	1							1
15A	1	172217-01090	PUMP, GEAR DOUBLE	1							2
16	1	172551-02370	CONNECTOR	1							
17	1	172551-02530	CLAMP	2							
18	1	172552-16680	HOSE	1							
19	1	172551-08940	GUARD, POLY HOSE	1							

Remarks
(1)31.8+22.5 IRON (shown) (not used on EU machines)
(2)2.0 x 1.4 (not shown)(used on EU machines)

N:Old ◄Yes/No► New, Q:Old ◄No/Yes► New, R:Old ◄Yes/Yes► New, S:Old ◄No/No► New, W:Add, Z:Discontinued, F:Interchangeable by set, K:Q'ty Change

Copyright (C) 2017 YANMAR CO., LTD. All RightsReserved.

Fig.122. HYDRAULIC PUMP CIRCUIT - HIGH-FLOW HYDRAULICS(SN: 461000 AND BEFORE)

(A)=T210-1(VERSION C
(B)=
(C)=
(D)=
(E)=
(F)=

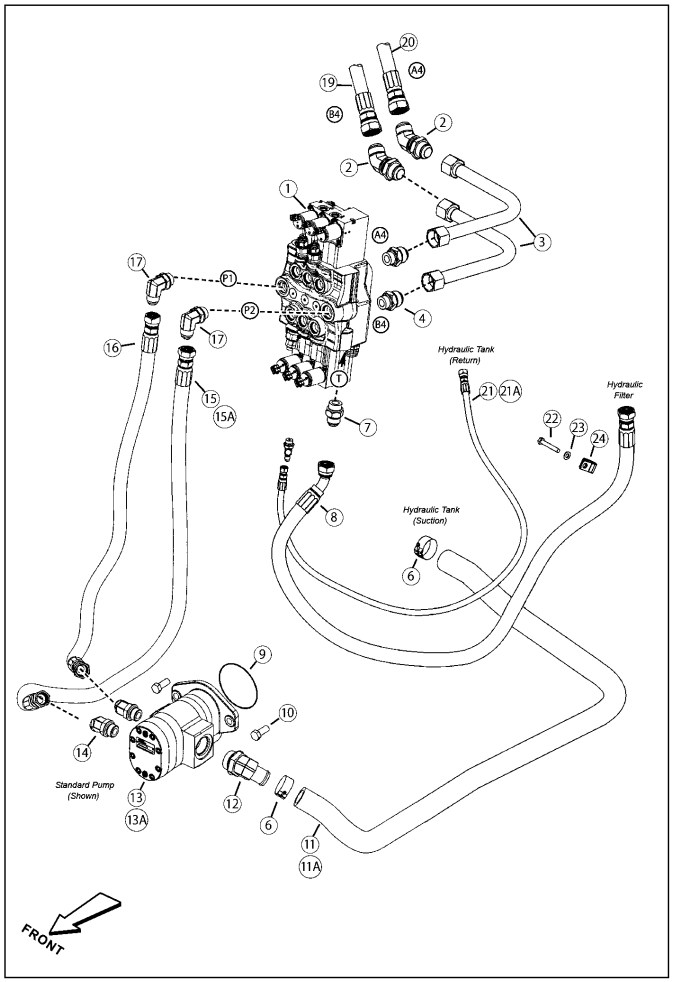

No.	Lev.	Parts No.	Description	Q'ty (A)	(B)	(C)	(D)	(E)	(F)	I	R
1	1	172559-03210	VALVE, 4-SPOOL CTRL	1							
2	1	172551-08400	CONNECTOR	2							
3	1	172551-04960	TUBE ASSY	2							
4	1	172559-03220	CONNECTOR	2							
6	1	172551-02530	CLAMP	2							
7	1	172559-03410	CONNECTOR	1							
8	1	172552-01350	HOSE	1							1
9	1	172551-01120	O-RING	1							
10	1	172551-06870	SCREW	2							
11	1	172552-16680	HOSE	1							
11A	1	172551-08940	GUARD, POLY HOSE	1							2
12	1	172551-02370	CONNECTOR	1							
13	1	172552-00520	PUMP, GEAR	1							3
13A	1	172217-01090	PUMP, GEAR DOUBLE	1							4
14	1	172559-03260	CONNECTOR	2							
15	1	172552-01360	HOSE	1							5
15A	1	172215-17400	HOSE	1							6
16	1	172551-04630	HOSE	1							
17	1	172559-02660	CONNECTOR	2							
19	1	172551-04950	HOSE	1							
20	1	172551-04950	HOSE	1							
21	1	172552-00210	HOSE	1							
21A	1	172551-11390	GUARD,HOSE	1							7
22	1	172551-09620	SCREW	1							
23	1	172551-09860	WASHER	1							
24	1	172551-11380	CLAMP	1							

Remarks
(1)Early machines used a longer hose, which is not replaced with this hose.
If the machine was originally equipped with the longer (84") hose,
it will be necessary to order items 22-24 to re-route and secure the hose.
(2)(not shown) (3)31.8+22.5 IRON (shown)(not used on EU machines)
(4)2.0 x 1.4 (not shown)(used on EU machines) (5)(late series)
(6)(early series) The late series hose PN 50302344 can be used in place of this hose;
however, it will be necessary to reroute and secure the hose.
(7)(not shown) - (not included with hose)

N:Old ◄Yes/No► New, Q:Old ◄No/Yes► New, R:Old ◄Yes/Yes► New, S:Old ◄No/No► New, W:Add, Z:Discontinued, F:Interchangeable by set, K:Q'ty Change

Copyright (C) 2017 YANMAR CO., LTD. All RightsReserved.

Fig.123. SELF-LEVEL CIRCUIT - LIFT / TILT(SN:461001 AND UP)

(A)=T210-1(VERSION C
(B)=
(C)=
(D)=
(E)=
(F)=

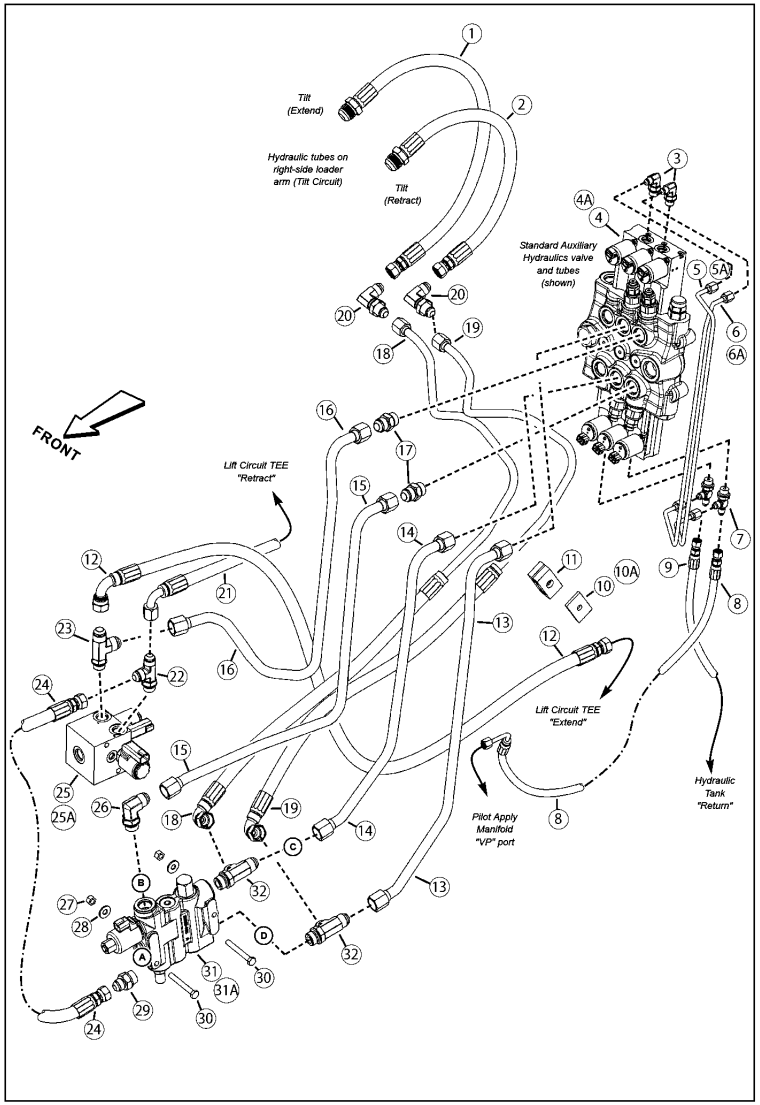

No.	Lev.	Parts No.	Description	Q'ty (A)	(B)	(C)	(D)	(E)	(F)	I	R
1	1	172552-16870	HOSE	1							
2	1	172552-16860	HOSE	1							
3	1	172551-02810	CONNECTOR	2							
4	1	172559-03490	VALVE, 3-SPOOL CTRL	1							1
4A	1	172559-03210	VALVE, 4-SPOOL CTRL	1							2
5	1	172552-16900	TUBE, HYD. STD	1							3
5A	1	172552-16880	TUBE, HYD. HI-FLOW	1							2
6	1	172552-16910	TUBE, HYD. STD	1							3
6A	1	172552-16890	TUBE, HYD. HI-FLOW	1							2
7	1	172551-04300	CONNECTOR	2							
8	1	172551-11440	HOSE	1							
9	1	172551-05450	HOSE	1							
10	1	172559-01740	PLATE	1							
10A	1	172551-09600	SCREW	1							4
11	1	172559-03510	CLAMP	1							
12	1	172552-16960	HOSE	1							
13	1	172552-16940	TUBE,HYD. TILT	1							
14	1	172552-16920	TUBE,HYD. TILT	1							
15	1	172552-16930	TUBE, HYD LIFT	1							
16	1	172552-16950	TUBE, HYD LIFT	1							
17	1	172559-02240	CONNECTOR	4							
18	1	172552-16970	HOSE	1							
19	1	172552-16980	HOSE	1							
20	1	172552-16840	CONNECTOR	2							
21	1	172552-00460	HOSE	1							
22	1	172551-00890	CONNECTOR	1							
23	1	172552-16850	TEE RUN	1							
24	1	172551-05440	HOSE	1							
25	1	172551-05211	MANIFOLD, FLOAT	1							5
25A	1	172551-02090	MANIFOLD, HYDRAGLIDE	1							6
26	1	172559-02300	FITTING	1							
27	1	172551-02760	NUT	2							
28	1	172551-10370	WASHER	2							
29	1	172559-03520	CONNECTOR	1							
30	1	172551-09800	SCREW	2							
31	1	172551-01230	VALVE, SELF-LEVEL	1							7
31A	1	172551-04202	VALVE, SELF-LEVEL	1							8
32	1	172559-03500	FITTING	1							

Remarks
(1)Standard Auxiliary Hydraulics (shown) (2)High-Flow Auxiliary Hydraulics (3)Standard Auxiliary Hydraulics
(4)(not shown) (5)Standard (shown) (6)Ride Control (not shown) (7)Standard (not shown) (8)Switchable - (shown)

N:Old ◄Yes/No► New, Q:Old ◄No/Yes► New, R:Old ◄Yes/Yes► New, S:Old ◄No/No► New, W:Add, Z:Discontinued, F:Interchangeable by set, K:Q'ty Change

Copyright (C) 2017 YANMAR CO., LTD. All RightsReserved.

Fig.124. SELF-LEVEL VALVE CIRCUIT - LIFT / TILT(SN: 461000 AND BEFORE)

(A)=T210-1(VERSION C
(B)=
(C)=
(D)=
(E)=
(F)=

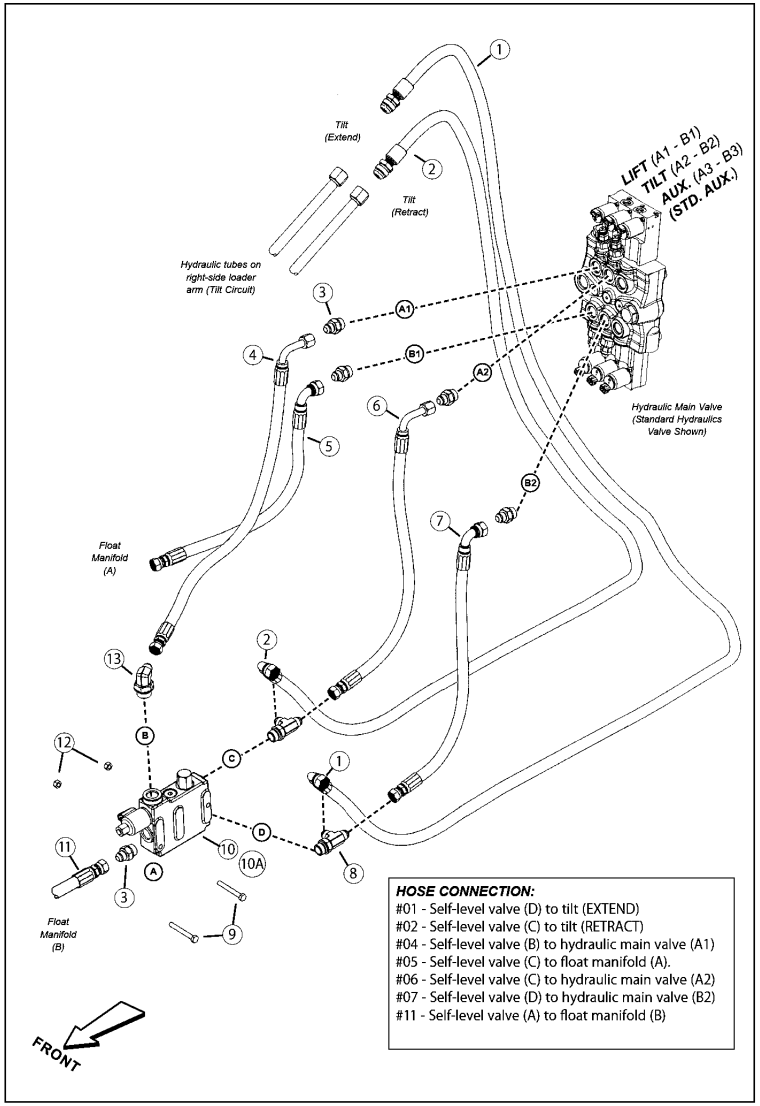

No.	Lev.	Parts No.	Description	Q'ty (A)	(B)	(C)	(D)	(E)	(F)	I	R
1	1	172552-00450	HOSE	1							
2	1	172552-00450	HOSE	1							
3	1	172559-03520	CONNECTOR	4							
4	1	172552-00440	HOSE	1							
5	1	172551-05230	HOSE	1							
6	1	172552-00420	HOSE	1							
7	1	172552-00430	HOSE	1							
8	1	172551-00900	CONNECTOR	2							
9	1	172551-09800	SCREW	2							
10	1	172551-01230	VALVE, SELF-LEVEL	1							1
10A	1	172551-04202	VALVE, SELF-LEVEL	1							2
11	1	172551-05440	HOSE	1							
12	1	172551-10370	WASHER	2							
13	1	172559-03430	CONNECTOR	1							
27	1	172551-02760	NUT	2							

Remarks
(1)(standard) - (not shown)
(2)(switchable) - (shown)

N:Old $\xleftarrow[\text{No}]{\text{Yes}}$ New, Q:Old $\xleftarrow[\text{Yes}]{\text{No}}$ New, R:Old $\xleftarrow[\text{Yes}]{\text{Yes}}$ New, S:Old $\xleftarrow[\text{No}]{\text{No}}$ New, W:Add, Z:Discontinued, F:Interchangeable by set, K:Q'ty Change

Copyright (C) 2017 YANMAR CO., LTD. All RightsReserved.

Fig.125. STANDARD AND HIGH-FLOW AUXILIARY HYDRAULICS CIRCUIT(SN: 461001 AND UP)

(A)=T210-1(VERSION C
(B)=
(C)=
(D)=
(E)=
(F)=

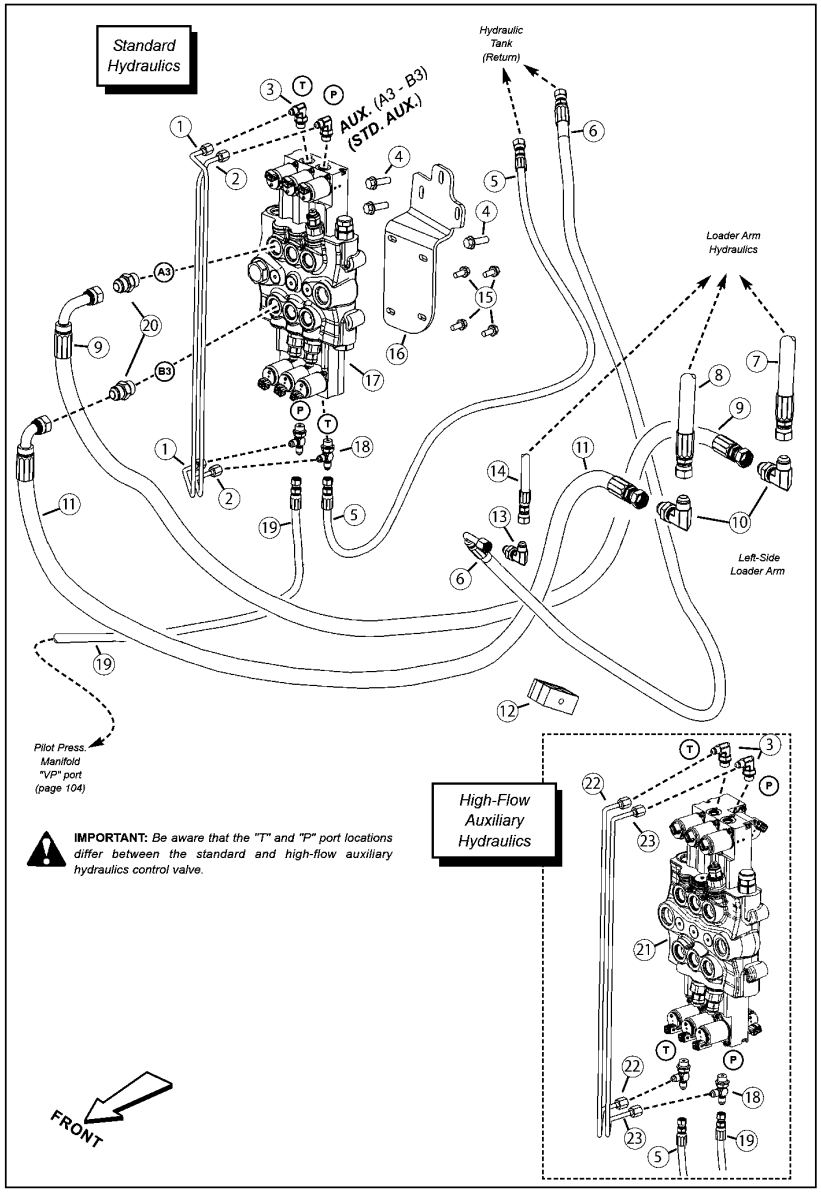

No.	Lev.	Parts No.	Description	Q'ty (A)	(B)	(C)	(D)	(E)	(F)	I	R
1	1	172552-16900	TUBE, HYD. STD	1							
2	1	172552-16910	TUBE, HYD. STD	1							
3	1	172551-02810	CONNECTOR	2							
4	1	172559-01940	SCREW	3							
5	1	172551-05450	HOSE	1							
6	1	172551-05110	HOSE	1							
7	1	172551-04940	HOSE	1							
8	1	172551-04940	HOSE	1							
9	1	172552-16990	HOSE	1							
10	1	172551-01450	CONNECTOR	2							
11	1	172551-06600	HOSE	1							
12	1	172551-00780	CLAMP	1							
13	1	172559-03200	CONNECTOR	1							
14	1	172551-05090	HOSE	1							
15	1	172559-01220	SCREW	4							
16	1	172552-16790	BRACKET, CNTRL VALVE	1							
17	1	172559-03490	VALVE, 3-SPOOL CTRL	1							
18	1	172551-04300	CONNECTOR	2							
19	1	172551-11440	HOSE	1							
20	1	172559-02240	CONNECTOR	2							
21	1	172559-03210	VALVE, 4-SPOOL CTRL	1							
22	1	172552-16880	TUBE, HYD. HI-FLOW	1							
23	1	172552-16890	TUBE, HYD. HI-FLOW	1							

N:Old $\xleftarrow[\text{No}]{\text{Yes}}$ New, Q:Old $\xleftarrow[\text{Yes}]{\text{No}}$ New, R:Old $\xleftarrow[\text{Yes}]{\text{Yes}}$ New, S:Old $\xleftarrow[\text{No}]{\text{No}}$ New, W:Add, Z:Discontinued, F:Interchangeable by set, K:Q'ty Change

Copyright (C) 2017 YANMAR CO., LTD. All RightsReserved.

Fig.126. STANDARD AND HIGH-FLOW AUXILIARY HYDRAULICS CIRCUIT(SN: 461000 AND BEFORE)

(A)=T210-1(VERSION C
(B)=
(C)=
(D)=
(E)=
(F)=

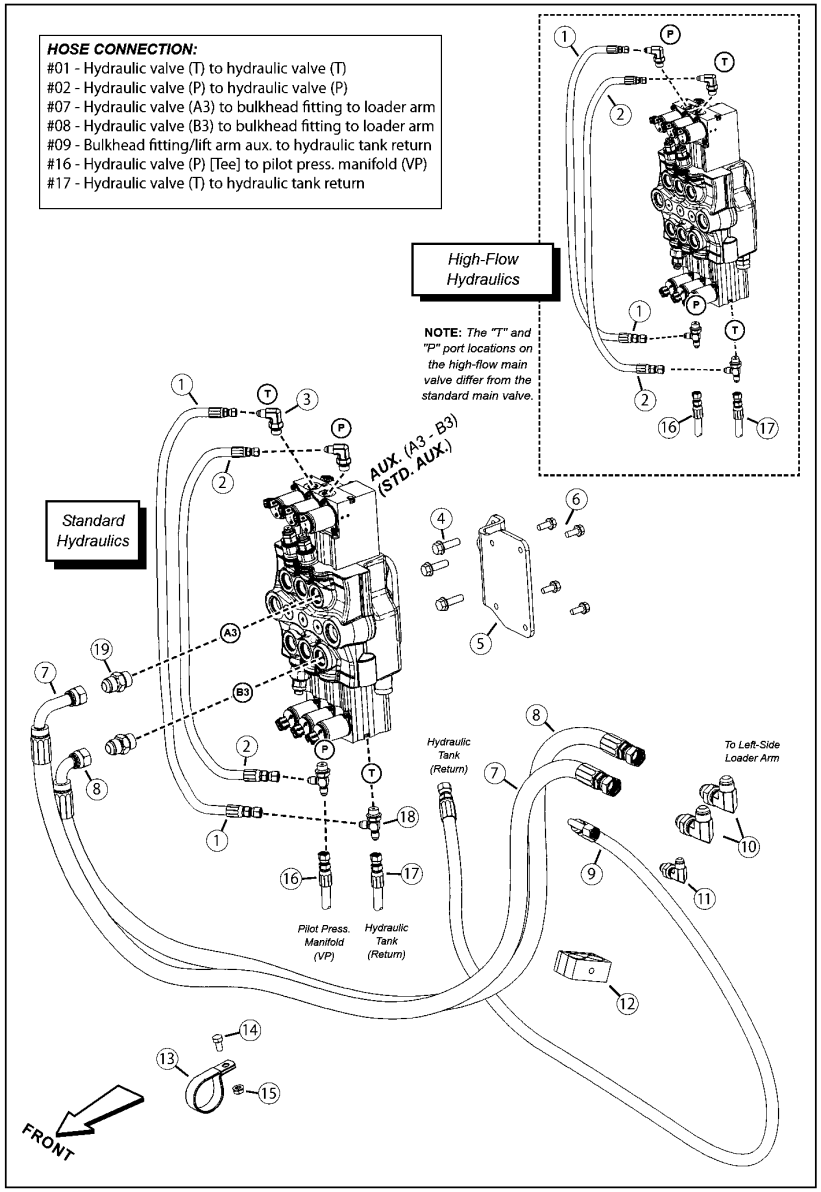

No.	Lev.	Parts No.	Description	Q'ty (A)	(B)	(C)	(D)	(E)	(F)	I	R
1	1	172551-03810	HOSE	1							
2	1	172551-03810	HOSE	1							
3	1	172551-02810	CONNECTOR	2							
4	1	172559-03530	SCREW	3							
5	1	172551-04900	BRACKET	1							
6	1	172559-01220	SCREW	4							
7	1	172551-06610	HOSE	1							
8	1	172551-06600	HOSE	1							
9	1	172551-05110	HOSE	1							
10	1	172551-01450	CONNECTOR	2							
11	1	172559-03200	CONNECTOR	1							
12	1	172551-00780	CLAMP	1							
13	1	172559-03540	CLAMP	1							
14	1	172559-03530	SCREW	1							
15	1	172551-02750	NUT	1							
16	1	172551-11440	HOSE	1							
17	1	172552-00210	HOSE	1							
18	1	172551-04300	CONNECTOR	2							
19	1	172559-02240	CONNECTOR	2							

N:Old $\xleftarrow[\text{No}]{\text{Yes}}$ New, Q:Old $\xleftarrow[\text{Yes}]{\text{No}}$ New, R:Old $\xleftarrow[\text{Yes}]{\text{Yes}}$ New, S:Old $\xleftarrow[\text{No}]{\text{No}}$ New, W:Add, Z:Discontinued, F:Interchangeable by set, K:Q'ty Change

Copyright (C) 2017 YANMAR CO., LTD. All RightsReserved.

Fig.127. PILOT PRESSURE MANIFOLD CIRCUIT(SN: 461001 AND UP)

(A)=T210-1(VERSION C
(B)=
(C)=
(D)=
(E)=
(F)=

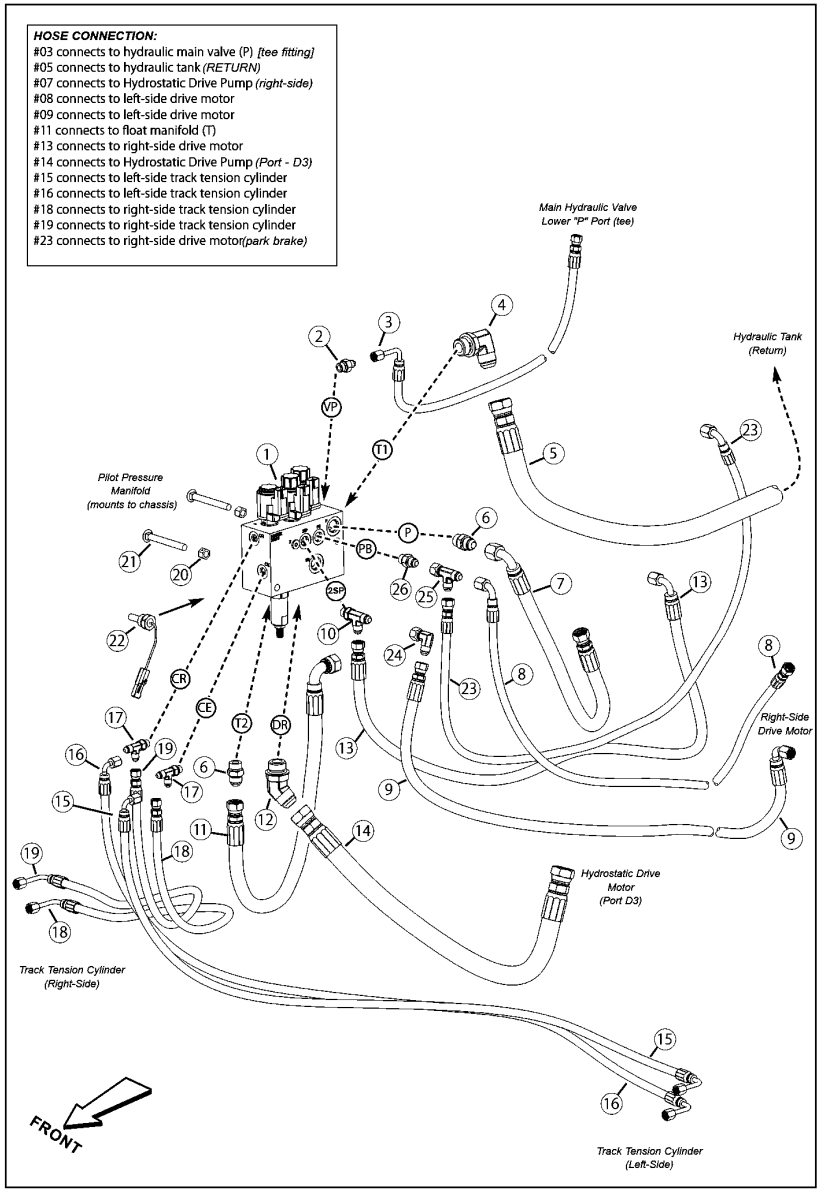

No.	Lev.	Parts No.	Description	Q'ty (A)	(B)	(C)	(D)	(E)	(F)	I	R
1	1	172551-05631	MANIFOLD	1							
2	1	172559-03550	ST MJ04-MORB06/SP	1							
3	1	172551-11440	HOSE	1							
4	1	172559-02660	CONNECTOR	1							
5	1	172551-05130	HOSE	1							
6	1	172559-02360	CONNECTOR	2							
7	1	172552-00400	HOSE	1							
8	1	172551-11400	HOSE	1							
9	1	172551-11430	HOSE	1							
10	1	172559-03440	FITTING	1							
11	1	172551-05220	HOSE	1							
12	1	172559-03260	CONNECTOR	1							
13	1	172552-00390	HOSE	1							
14	1	172551-05330	HOSE	1							
15	1	172551-05490	HOSE	1							
16	1	172551-05490	HOSE	1							
17	1	172551-01940	CONNECTOR	2							
18	1	172551-05520	HOSE	1							
19	1	172551-05520	HOSE	1							
20	1	172559-00670	NUT	2							
21	1	172551-10270	BOLT	2							
22	1	172551-01090	SWITCH,TEMPERATURE	1							
23	1	172551-11410	HOSE	1							
24	1	172559-03470	FITTING	1							
25	1	172559-03450	CONNECTOR	1							
26	1	172559-03190	ST MJ06-MORB06	1							

N:Old $\xleftarrow[\text{No}]{\text{Yes}}$ New, Q:Old $\xleftarrow[\text{Yes}]{\text{No}}$ New, R:Old $\xleftarrow[\text{Yes}]{\text{Yes}}$ New, S:Old $\xleftarrow[\text{No}]{\text{No}}$ New, W:Add, Z:Discontinued, F:Interchangeable by set, K:Q'ty Change

Copyright (C) 2017 YANMAR CO., LTD. All RightsReserved.

Fig.128. PILOT PRESSURE MANIFOLD CIRCUIT(SN: 461000 AND BEFORE)

(A)=T210-1(VERSION C
(B)=
(C)=
(D)=
(E)=
(F)=

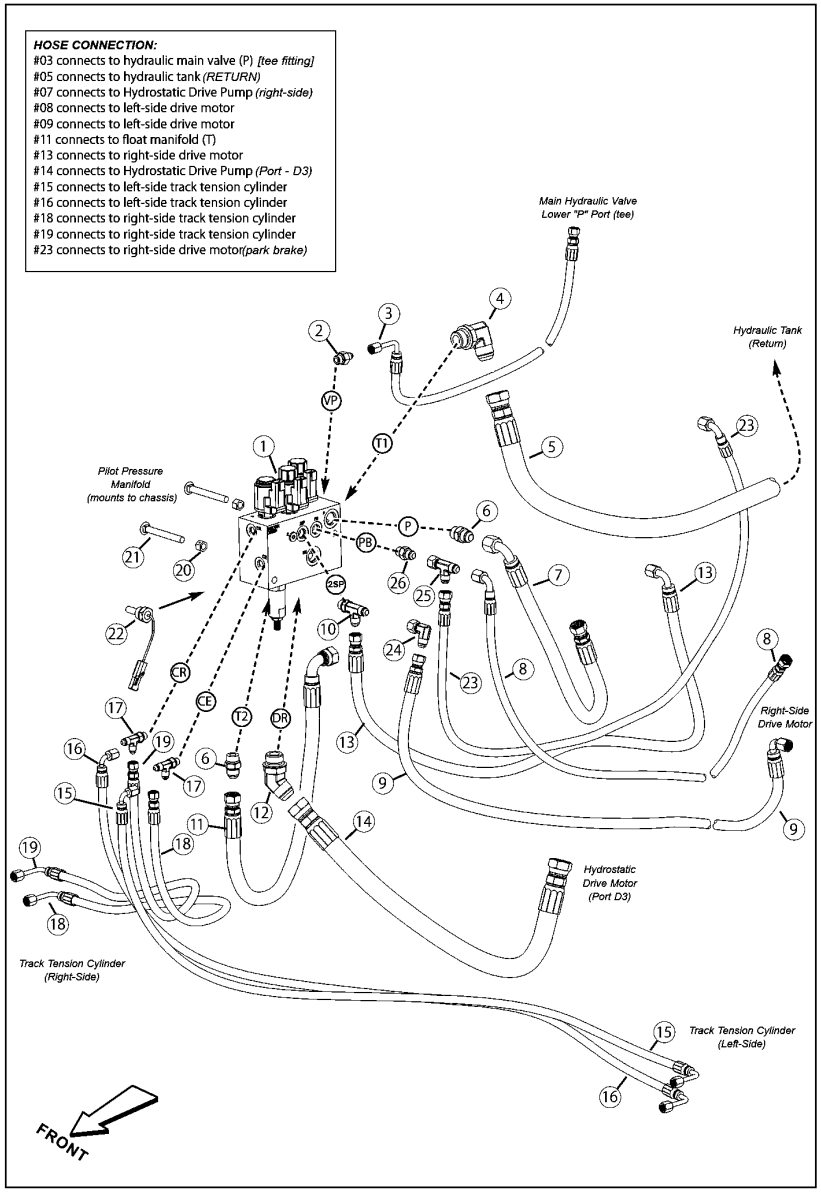

No.	Lev.	Parts No.	Description	Q'ty (A)	(B)	(C)	(D)	(E)	(F)	I	R
1	1	172551-05631	MANIFOLD	1							
2	1	172559-03550	ST MJ04-MORB06/SP	1							
3	1	172551-11440	HOSE	1							
4	1	172559-02660	CONNECTOR	1							
5	1	172551-05130	HOSE	1							
6	1	172559-02360	CONNECTOR	2							
7	1	172552-00400	HOSE	1							
8	1	172551-11400	HOSE	1							
9	1	172551-11430	HOSE	1							
10	1	172559-03440	FITTING	1							
11	1	172551-05220	HOSE	1							
12	1	172559-03260	CONNECTOR	1							
13	1	172552-00390	HOSE	1							
14	1	172552-00360	HOSE	1							
15	1	172551-05490	HOSE	1							
16	1	172551-05490	HOSE	1							
17	1	172551-01940	CONNECTOR	2							
18	1	172551-05510	HOSE	1							
19	1	172551-05520	HOSE	1							
20	1	172559-00670	NUT	2							
21	1	172551-10270	BOLT	2							
22	1	172551-01090	SWITCH,TEMPERATURE	1							
23	1	172551-11410	HOSE	1							
24	1	172559-03470	FITTING	1							
25	1	172559-03450	CONNECTOR	1							
26	1	172559-03190	ST MJ06-MORB06	1							

N:Old $\frac{\text{Yes}}{\text{No}}$ New, Q:Old $\frac{\text{No}}{\text{Yes}}$ New, R:Old $\frac{\text{Yes}}{\text{Yes}}$ New, S:Old $\frac{\text{No}}{\text{No}}$ New, W:Add, Z:Discontinued, F:Interchangeable by set, K:Q'ty Change

Copyright (C) 2017 YANMAR CO., LTD. All RightsReserved.

Fig.129. FLOAT CIRCUIT / RIDE CONTROL(SN: 461001 AND UP)

(A)=T210-1(VERSION C
(B)=
(C)=
(D)=
(E)=
(F)=

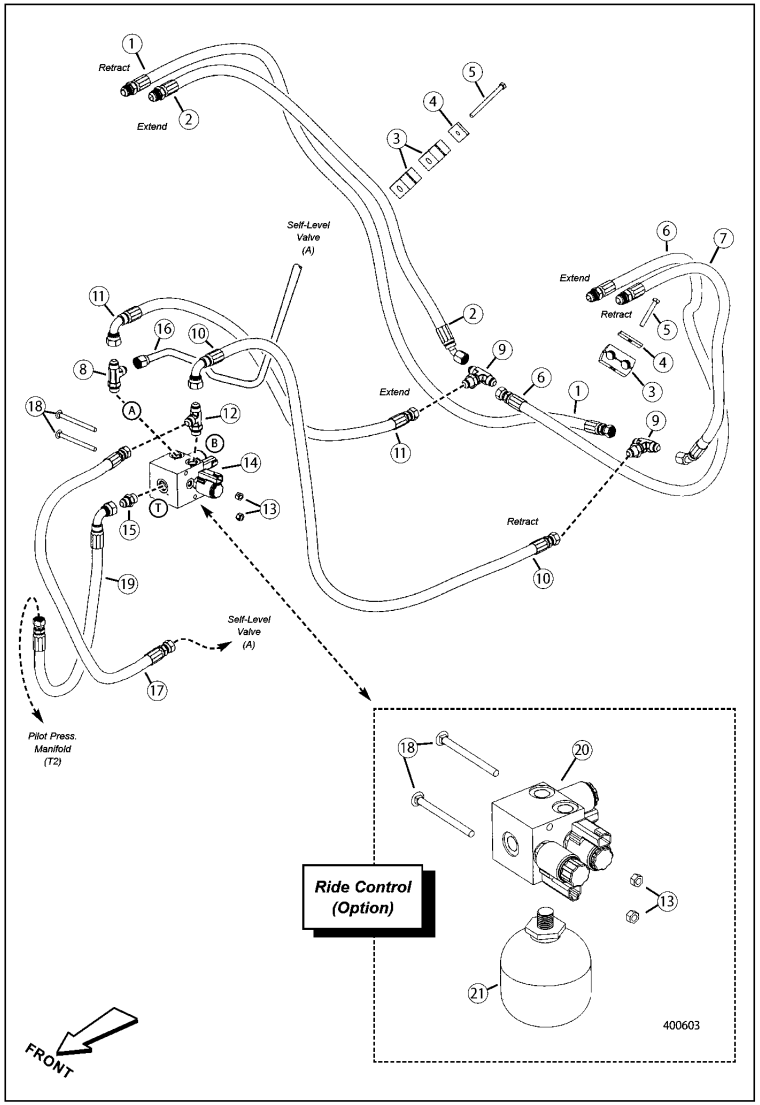

No.	Lev.	Parts No.	Description	Q'ty (A)	(B)	(C)	(D)	(E)	(F)	I	R
1	1	172552-16610	HOSE	1							
2	1	172552-16620	HOSE	1							
3	1	172551-03590	CLAMP	4							
4	1	172551-10710	PLATE, TOP	4							
5	1	172551-09730	SCREW	4							
6	1	172552-16610	HOSE	1							
7	1	172552-16620	HOSE	1							
8	1	172552-16850	TEE RUN	1							
9	1	172551-01250	CONNECTOR	2							
10	1	172552-00460	HOSE	1							
11	1	172552-16960	HOSE	1							
12	1	172551-00890	CONNECTOR	2							
13	1	172559-00450	NUT	2							
14	1	172551-05211	MANIFOLD, FLOAT	1							1
15	1	172559-02360	CONNECTOR	1							
16	1	172552-16950	TUBE, HYD LIFT	1							
17	1	172551-05440	HOSE	1							
18	1	172551-10160	BOLT	2							
19	1	172551-05220	HOSE	1							
20	1	172551-02090	MANIFOLD, HYDRAGLIDE	1							2
21	1	172551-02130	ACCUMULATOR	1							2

Remarks
(1)Used only with the standard float system (one-button joystick); the (optional) Ride Control system uses item 2
(2)Used only for the optional Ride Control system (two-button joystick).

N:Old ←Yes/No→ New, Q:Old ←No/Yes→ New, R:Old ←Yes/Yes→ New, S:Old ←No/No→ New, W:Add, Z:Discontinued, F:Interchangeable by set, K:Q'ty Change

Copyright (C) 2017 YANMAR CO., LTD. All RightsReserved.

Fig.130. FLOAT CIRCUIT / RIDE CONTROL(SN: 461000 AND BEFORE)

(A)=T210-1(VERSION C
(B)=
(C)=
(D)=
(E)=
(F)=

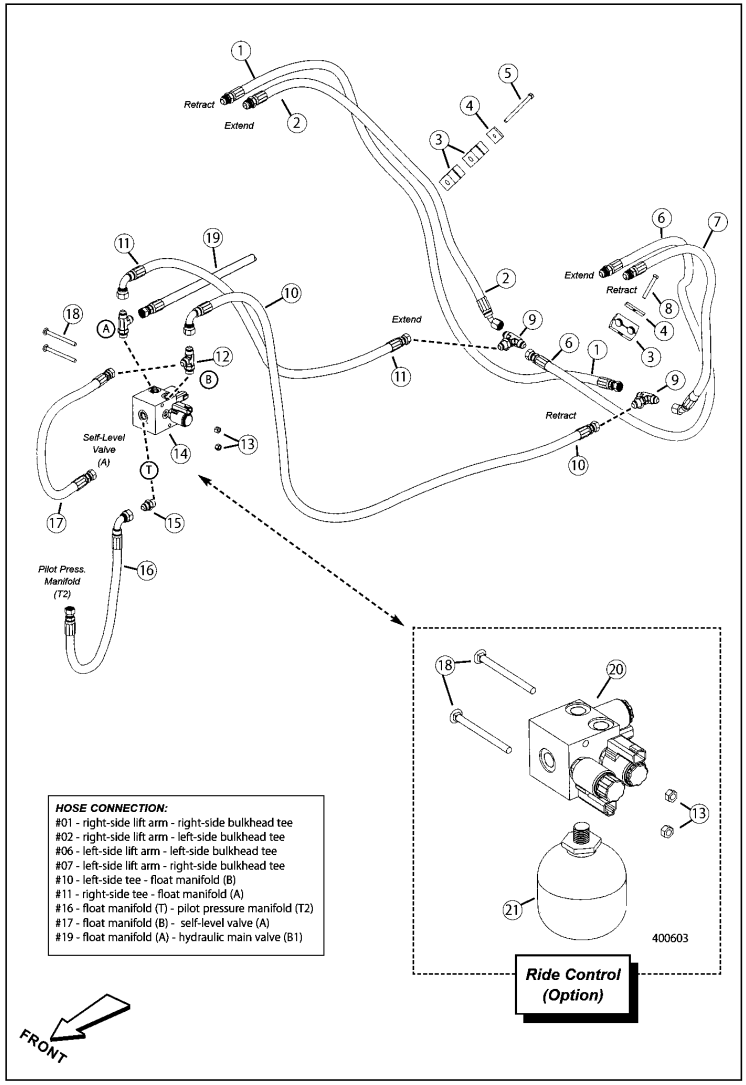

No.	Lev.	Parts No.	Description	Q'ty (A)	(B)	(C)	(D)	(E)	(F)	I	R
1	1	172551-05160	HOSE	1							
2	1	172551-05150	HOSE	1							
3	1	172551-03590	CLAMP	3							1
4	1	172559-01740	PLATE	2							
5	1	172551-09790	SCREW	1							
6	1	172551-05160	HOSE	1							
7	1	172551-05150	HOSE	1							
8	1	172551-09760	SCREW	1							
9	1	172551-01250	CONNECTOR	2							
10	1	172552-00460	HOSE	1							
11	1	172552-00470	HOSE	1							
12	1	172551-00890	CONNECTOR	2							
13	1	172559-00450	NUT	2							
14	1	172551-05211	MANIFOLD, FLOAT	1							2
15	1	172559-02360	CONNECTOR	1							
16	1	172551-05220	HOSE	1							
17	1	172552-00200	HOSE	1							
18	1	172551-10160	BOLT	2							
19	1	172551-05230	HOSE	1							
20	1	172551-02090	MANIFOLD, HYDRAGLIDE	1							3
21	1	172551-02130	ACCUMULATOR	1							3

Remarks
(1)(twin)
(2)Used only with the standard float system (one-button joystick); the (optional) Ride Control system uses item 21.
(3)Used only for the optional Ride Control system (two-button joystick).

N:Old ◄Yes/No► New, Q:Old ◄No/Yes► New, R:Old ◄Yes/Yes► New, S:Old ◄No/No► New, W:Add, Z:Discontinued, F:Interchangeable by set, K:Q'ty Change

Copyright (C) 2017 YANMAR CO., LTD. All RightsReserved.

Fig.131. HYDROSTATIC DRIVE PUMP(SN: 461101 AND UP)

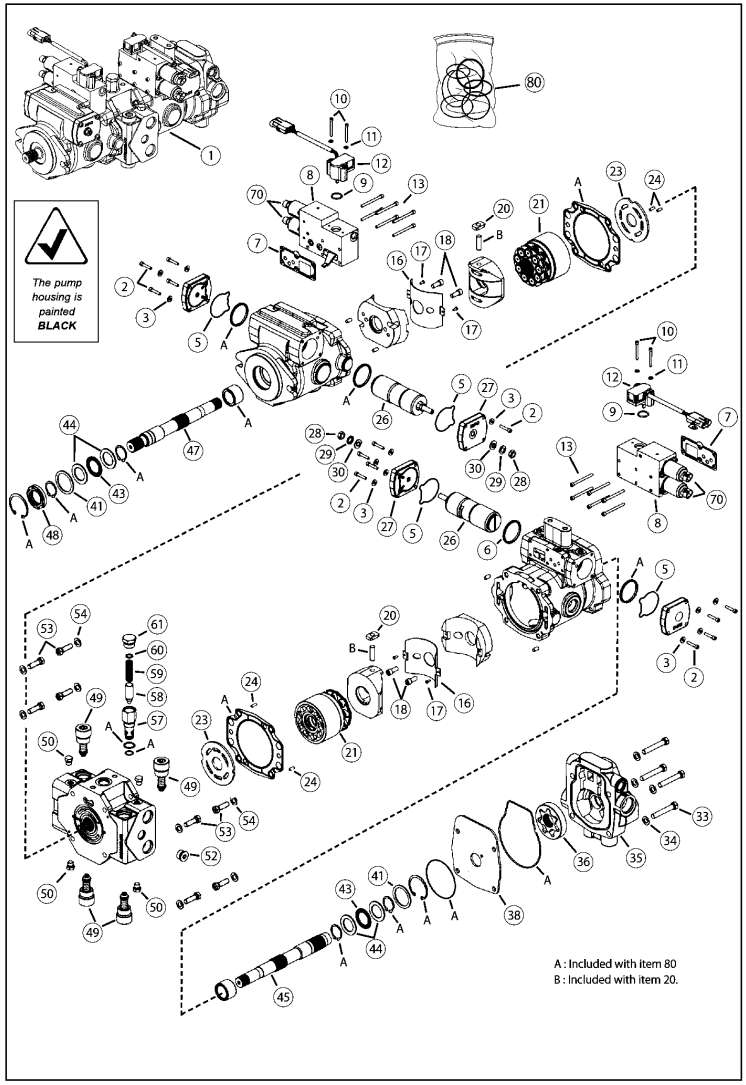

(A)=T210-1(VERSION C
(B)=
(C)=
(D)=
(E)=
(F)=

No.	Lev.	Parts No.	Description	Q'ty (A)	(B)	(C)	(D)	(E)	(F)	I	R
1	1	172559-03360	POMP,TANDEM HYDRO	1							
2	1	172559-03590	CAP,SCREW	16							
3	1	172216-09460	WASHER	16							
5	1	172559-03700	O-RING	4							1
7	1	172216-00840	GASKET	2							
8	1	172559-03690	FEEDBACK MANIFOLD	2							2
9	1	172559-03680	O-RING	2							
10	1	172559-03590	CAP,SCREW	4							
11	1	172551-07290	WASHER	4							
12	1	172559-03560	FEEDBACK SENSOR	2							3
13	1	172559-03600	SHCS	12							
16	1	172216-02160	BUSHING, CAM	2							
17	1	172216-02230	SCREW	4							
18	1	172216-02170	SCREW	4							
20	1	172216-00870	FOLLOWER, PISTON	2							4
21	1	172217-00450	ROTATING KIT	2							
23	1	172217-01000	PLATE, VALVE	2							
24	1	172559-03570	DOWEL PIN	4							
26	1	172216-02140	PISTON, SERVO	2							
27	1	172559-03670	COVER PLATE	2							
28	1	172216-00630	NUT	2							
29	1	172216-00740	WASHER	2							
30	1	172216-00640	WASHER	2							
33	1	172559-03580	CAPSCREW	4							
34	1	172216-02220	WASHER	4							
35	1	172559-03630	ACTUATOR,LINEARMOTOR	1							
36	1	172559-03750	GEARATOR SUB ASY	1							
38	1	172559-03610	SHADOW POCKET PLATE	1							
41	1	172559-03780	WASHER	2							
43	1	172559-03770	BEARING, THRUST	2							
44	1	172559-03760	BEARING, RACE THRUST	4							
45	1	172559-03620	SHAFT	1							
47	1	172559-03640	SHAFT	1							
48	1	172559-03730	SEAL, SHAFT (VITON)	1							
49	1	172551-07200	VALVE,RELIEF	4							
50	1	172559-03660	PLUG	4							
52	1	172215-00620	PLUG	1							
53	1	172559-03650	CAP SCREW	8							
54	1	172216-02220	WASHER	8							
57	1	172559-03710	HOUSING	1							
58	1	172551-07330	POPPET	1							
59	1	172559-03720	SPRING, COMPRESSION	1							
60	1	172551-07350	SHIM	1							
61	1	172551-07360	PLUG SUB-ASSY	1							
70	1	172559-03740	PROPORTIONAL FLOWREG	4							
80	1	172216-00880	SEAL KIT	1							5

Remarks
(1)(formed) (2)(includes two of item 70) (3)(if replacing, order item 10 and 11) (4)(includes item #19)
(5)One kit contains seals, gaskets, and retaining rings for one end of the pump;
if repairing complete pump, order two kits.

N:Old ◄Yes/No► New, Q:Old ◄No/Yes► New, R:Old ◄Yes/Yes► New, S:Old ◄No/No► New, W:Add, Z:Discontinued, F:Interchangeable by set, K:Q'ty Change

Copyright (C) 2017 YANMAR CO., LTD. All RightsReserved.

Fig.132. HYDROSTATIC DRIVE PUMP(SN: 461100 AND BEFORE)

(A)=T210-1(VERSION C (D)=
(B)= (E)=
(C)= (F)=

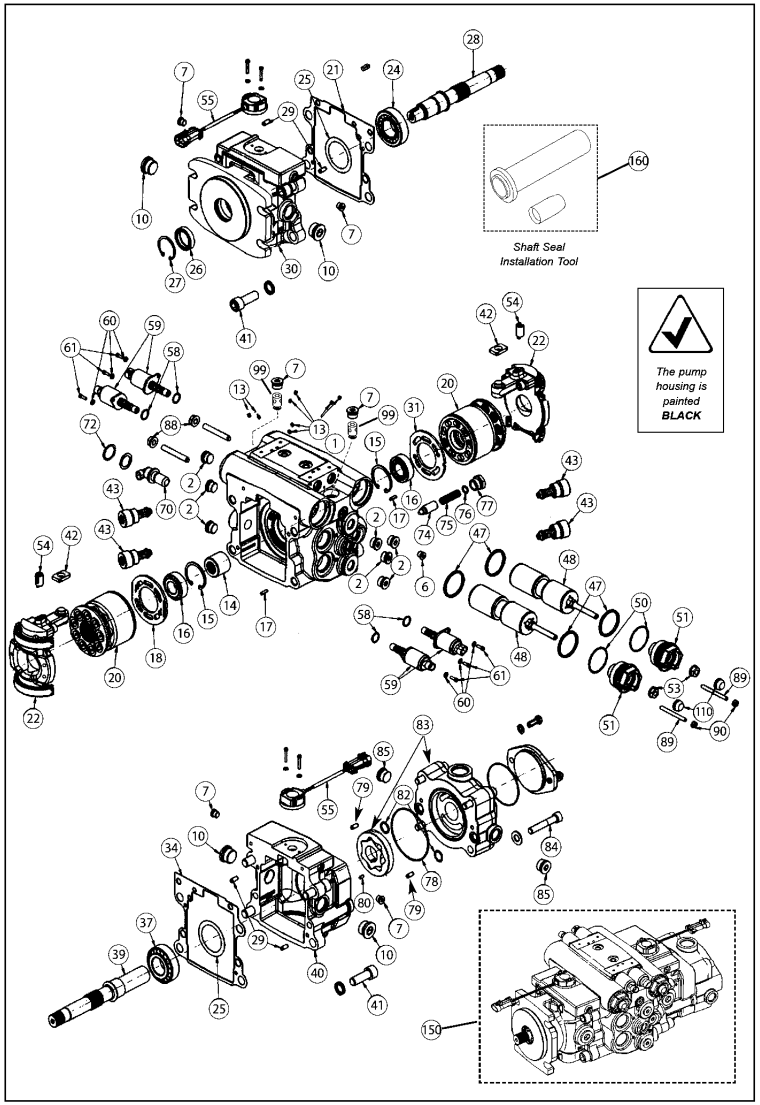

No.	Lev.	Parts No.	Description	Q'ty (A)	(B)	(C)	(D)	(E)	(F)	I	R
1	1	172552-15120	HOUSING	1							
2	1	172551-00980	PLUG	7							
6	1	172551-07050	PLUG	1							
7	1	172551-03230	PLUG	6							
10	1	172551-07060	PLUG	4							
13	1	172551-07070	PLUG	8							
14	1	172551-07080	COUPLER	1							
15	1	172552-15130	RING, RETAINING	2							
16	1	172552-15140	BEARING, TAPER	2							
17	1	172551-02390	PIN, ROLL	2							
18	1	172552-00690	VALVE PLATE	1							
20	1	172552-15150	ROTATING KIT	2							
21	1	172551-07090	GASKET, FLANGE	1							
22	1	172551-07100	PLATE ASSY,SWASH	2							
24	1	172551-07110	BEARING, TAPER	1							
25	1	172552-15160	SHIM	1							1
26	1	172552-15210	SEAL, SHAFT	1							
27	1	172552-15170	RING, RETAINING	1							
28	1	172551-07130	SHAFT,DRIVE	1							
29	1	172551-07140	PIN, ROLL	4							
30	1	172551-07150	FLANGE, FRONT	1							
31	1	172552-00700	VALVE PLATE	1							
34	1	172551-07090	GASKET, FLANGE	1							
37	1	172551-07110	BEARING, TAPER	1							
39	1	172551-07160	SHAFT,DRIVE	1							
40	1	172551-07170	FLANGE, REAR	1							2
41	1	172551-07180	BOLT	8							
42	1	172551-07190	FOLLOWER	2							
43	1	172551-07200	VALVE,RELIEF	4							
47	1	172551-07210	PISTON RING	4							
48	1	172551-07220	PISTON ASSY,SERVO	2							
50	1	172552-15180	O-RING	2							
51	1	172551-07230	PLUG, SERVO CAP	2							
53	1	172551-07240	NUT	2							
54	1	172551-07250	CARRIER,MAGNET	2							
55	1	172551-07260	SENSOR,FEEDBACK	2							
58	1	172551-07270	O-RING	4							
59	1	172551-07280	PROPORTIONAL FLOW	4							
60	1	172551-07290	WASHER	6							
61	1	172551-07300	SCREW	6							
70	1	172551-07310	PLUG	1							
72	1	172551-07320	RING	1							
74	1	172551-07330	POPPET	1							
75	1	172551-07340	SPRING, COMPRESSION	1							
76	1	172551-07350	SHIM	1							
77	1	172551-07360	PLUG SUB-ASSY	1							
78	1	172551-07370	O-RING	1							
79	1	172551-07140	PIN, ROLL	2							
80	1	172551-07380	PIN	1							
82	1	172551-07390	O-RING	2							
83	1	172559-03820	KIT,CHARGE PUMP	1							3

Remarks
(1)(includes five shims of various size) (2)(charge pump side) (3)(Includes items 78-80, 85, and 120)
(4)(includes all items shown; except #160) (5)(included with service kit)

N:Old $\xleftarrow[\text{No}]{\text{Yes}}$ New, Q:Old $\xleftarrow[\text{Yes}]{\text{No}}$ New, R:Old $\xleftarrow[\text{Yes}]{\text{Yes}}$ New, S:Old $\xleftarrow[\text{No}]{\text{No}}$ New, W:Add, Z:Discontinued, F:Interchangeable by set, K:Q'ty Change

++ CONTINUE ++

Copyright (C) 2017 YANMAR CO., LTD. All RightsReserved.

Fig.132. HYDROSTATIC DRIVE PUMP(SN: 461100 AND BEFORE)

(A)=T210-1(VERSION C
(B)=
(C)=
(D)=
(E)=
(F)=

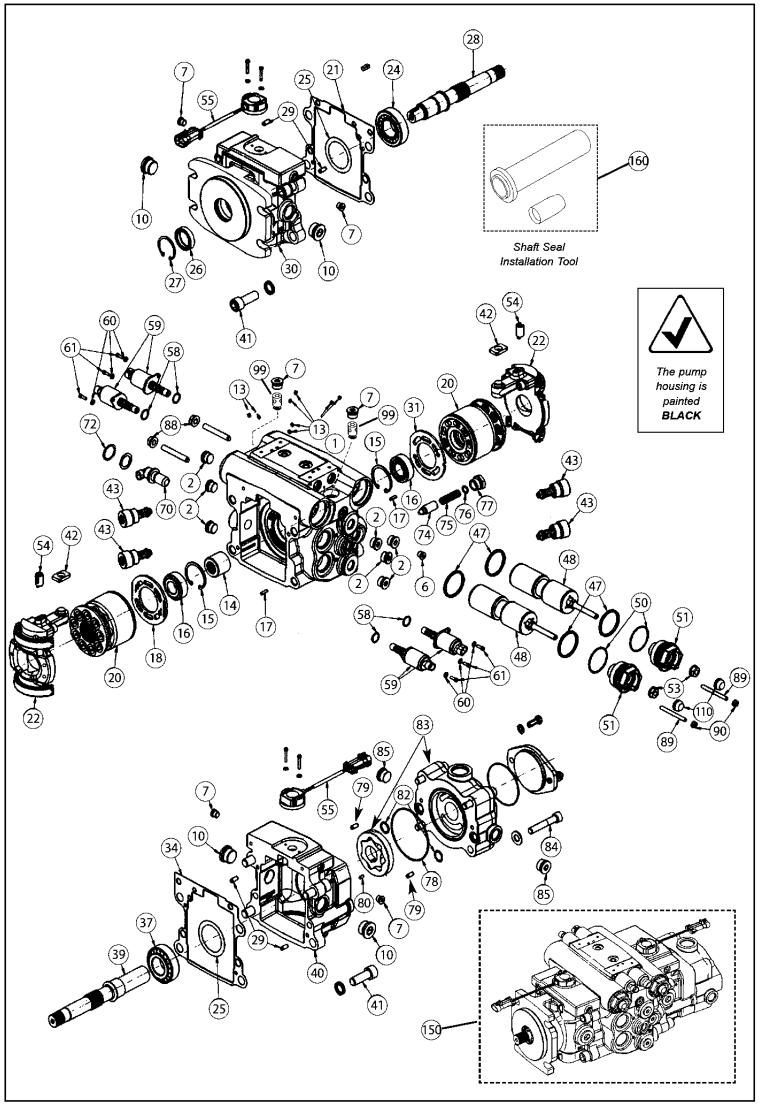

No.	Lev.	Parts No.	Description	Q'ty (A)	(B)	(C)	(D)	(E)	(F)	I	R
84	1	172551-07400	SCREW	4							
85	1	172551-07410	PLUG	2							
88	1	172551-07240	NUT	2							
89	1	172551-07420	SET SCREW	2							
90	1	172551-07430	SEAL	2							
99	1	172559-03800	FITTING	2							
110	1	172559-03790	CAP, NUT (PLASTIC)	2							
150	1	172552-00221	PUMP	1							4
160	1	172559-03810	KIT,SHAFT SEAL	1							5

Remarks
(1)(includes five shims of various size) (2)(charge pump side) (3)(Includes items 78-80, 85, and 120)
(4)(includes all items shown; except #160) (5)(included with service kit)

N:Old $\frac{\text{Yes}}{\text{No}}$ New, Q:Old $\frac{\text{No}}{\text{Yes}}$ New, R:Old $\frac{\text{Yes}}{\text{Yes}}$ New, S:Old $\frac{\text{No}}{\text{No}}$ New, W:Add, Z:Discontinued, F:Interchangeable by set, K:Q'ty Change

Copyright (C) 2017 YANMAR CO., LTD. All RightsReserved.

Fig.133. HYDRAULIC PUMP - STANDARD HYDRAULICS

(A)=T210-1(VERSION C
(B)=
(C)=
(D)=
(E)=
(F)=

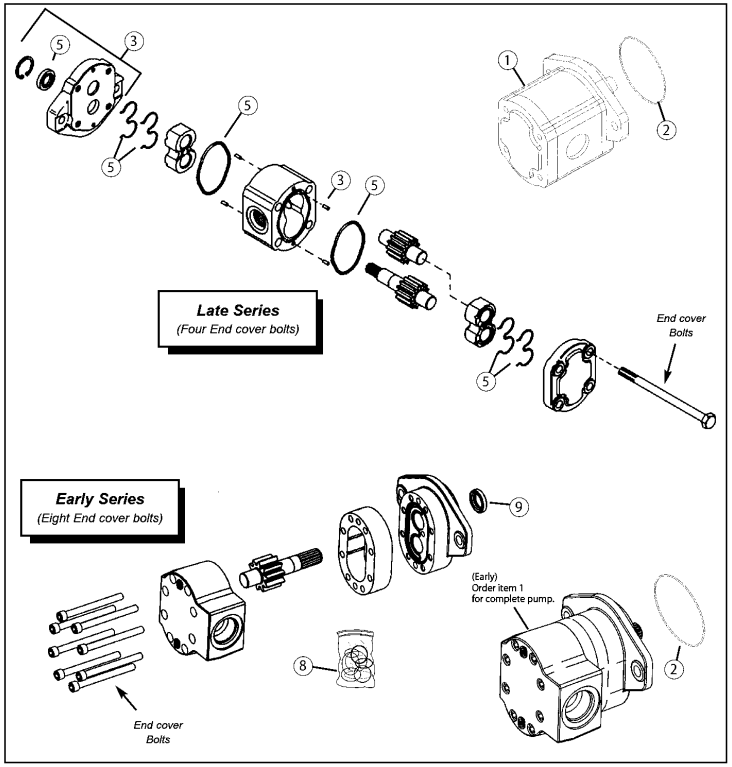

No.	Lev.	Parts No.	Description	Q'ty (A)	(B)	(C)	(D)	(E)	(F)	I	R
1	1	172552-00081	PUMP, GEAR	1							1
2	1	172551-01120	O-RING	1							
3	1	172551-01140	FLANGE KIT	1							2
5	1	172551-01130	SEAL KIT	1							3
8	1	172552-00730	SEAL KIT	1							4
9	1	172551-07010	SEAL,SHAFT	1							

Remarks
(1)(Late Series) (does not include item 2)
(2)(includes flange, shaft seal, snap ring, and down pins)
(3)(includes shaft, back-up ring, e-seals, and two o-rings, does not include item 2)
(4)(not all seals are shown, does not include item 2)

N:Old $\overset{\text{Yes}}{\underset{\text{No}}{\leftrightarrow}}$ New, Q:Old $\overset{\text{No}}{\underset{\text{Yes}}{\leftrightarrow}}$ New, R:Old $\overset{\text{Yes}}{\underset{\text{Yes}}{\leftrightarrow}}$ New, S:Old $\overset{\text{No}}{\underset{\text{No}}{\leftrightarrow}}$ New, W:Add, Z:Discontinued, F:Interchangeable by set, K:Q'ty Change

Copyright (C) 2017 YANMAR CO., LTD. All RightsReserved.

Fig.134. HYDRAULIC PUMP - HIGH-FLOW HYDRAULICS

(A)=T210-1(VERSION C
(B)=
(C)=
(D)=
(E)=
(F)=

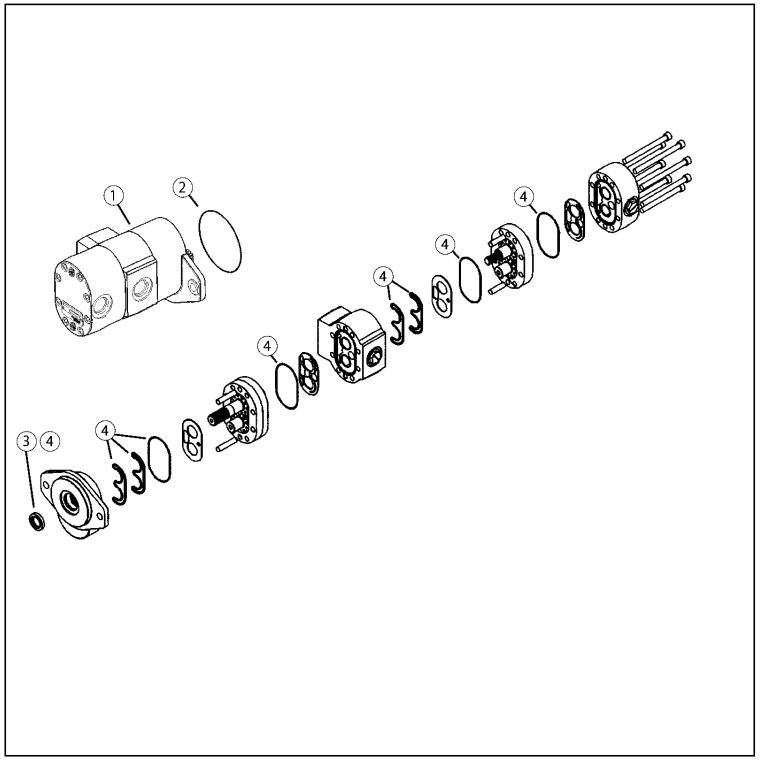

No.	Lev.	Parts No.	Description	Q'ty (A)	(B)	(C)	(D)	(E)	(F)	I	R
1	1	172552-00520	PUMP, GEAR	1							1
2	1	172551-01120	O-RING	1							
3	1	172551-07010	SEAL,SHAFT	1							
4	1	172551-07020	SEAL KIT	1							2

Remarks
(1)31.8+22.5 IRON (not used on EU units)(does not include item 2)
(2)(does not include item 2)

N:Old ◄Yes/No► New, Q:Old ◄No/Yes► New, R:Old ◄Yes/Yes► New, S:Old ◄No/No► New, W:Add, Z:Discontinued, F:Interchangeable by set, K:Q'ty Change

Copyright (C) 2017 YANMAR CO., LTD. All RightsReserved.

Fig.135. HYDRAULIC MAIN VALVE - STANDARD HYDRAULICS

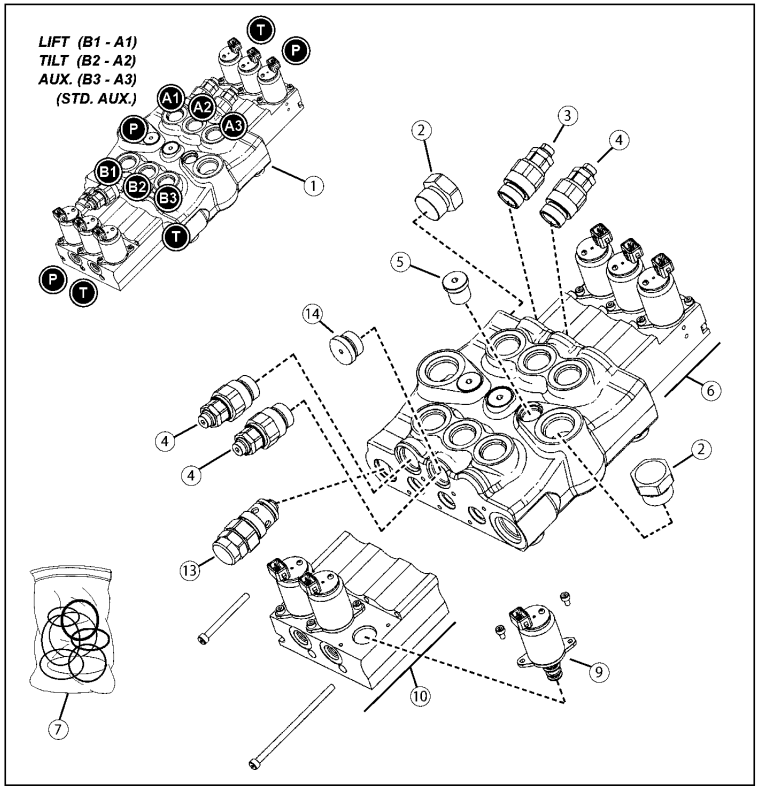

(A)=T210-1(VERSION C
(B)=
(C)=
(D)=
(E)=
(F)=

No.	Lev.	Parts No.	Description	Q'ty (A)	(B)	(C)	(D)	(E)	(F)	I	R
1	1	172559-03490	VALVE, 3-SPOOL CTRL	1							1
2	1	172551-00820	PLUG KIT	2							
3	1	172551-02850	VALVE,COMBINED	1							2
4	1	172551-02860	VALVE,COMBINED	3							3
5	1	172551-02830	VALVE,CHECK	3							
6	1	172551-07961	EH CONTROL	1							4
7	1	172551-07970	SEAL KIT	1							5
9	1	172551-07980	VALVE,PROPORTIONAL	6							6
10	1	172551-07951	EH CONTROL	1							4
13	1	172551-07900	VALVE,MAIN RELIEF	1							7
14	1	172551-02840	PLUG KIT	1							8

Remarks
(1)(includes all items shown) (2)(120 BAR) (port relief) (3)(240-A BAR)(early units used only 2 valves)
(4)(includes (3) item 9; (6) item 8) (5)(not shown) (6)(12 VDC) (7)(210 BAR) (8)(used on early units)

N:Old ◄Yes/No► New, Q:Old ◄No/Yes► New, R:Old ◄Yes/Yes► New, S:Old ◄No/No► New, W:Add, Z:Discontinued, F:Interchangeable by set, K:Q'ty Change

Copyright (C) 2017 YANMAR CO., LTD. All RightsReserved.

Fig.136. HYDRAULIC MAIN VALVE - HIGH-FLOW HYDRAULICS

(A)=T210-1(VERSION C
(B)=
(C)=
(D)=
(E)=
(F)=

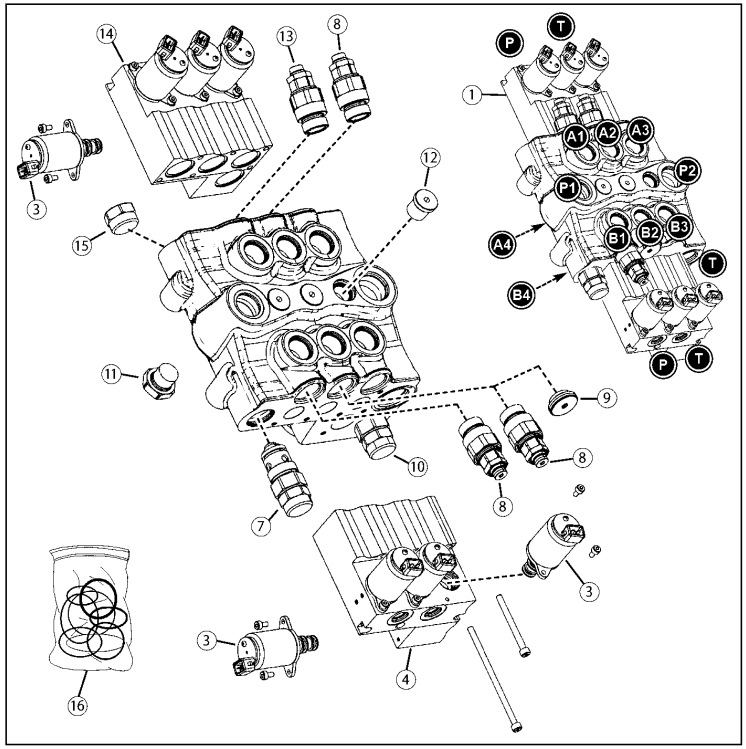

No.	Lev.	Parts No.	Description	Q'ty (A)	(B)	(C)	(D)	(E)	(F)	I	R
1	1	172559-03210	VALVE, 4-SPOOL CTRL	1							1
3	1	172551-07980	VALVE,PROPORTIONAL	8							2
4	1	172551-07911	EH CONTROL	1							3
7	1	172551-07900	VALVE,MAIN RELIEF	1							4
8	1	172551-02860	VALVE,COMBINED	3							5
9	1	172551-02840	PLUG KIT	1							6
10	1	172551-07920	VALVE,MAIN RELIEF	1							7
11	1	172551-00810	VALVE,CHECK	1							
12	1	172551-02830	VALVE,CHECK	3							
13	1	172551-02850	VALVE,COMBINED	1							8
14	1	172551-07931	EH CONTROL	1							3
15	1	172551-00820	PLUG KIT	1							
16	1	172551-07940	SEAL KIT	1							9

Remarks
(1)(includes all items shown) (2)(12 VDC) (3)(includes (4) item 3; (8) item 2) (4)(210 BAR)
(5)(240-A BAR)(early units used only 2 valves) (6)(used on early machines)
(7)(200 BAR) (8)(120 BAR) (port relief) (9)(not shown)

N:Old ◄Yes/No► New, Q:Old ◄No/Yes► New, R:Old ◄Yes/Yes► New, S:Old ◄No/No► New, W:Add, Z:Discontinued, F:Interchangeable by set, K:Q'ty Change

Copyright (C) 2017 YANMAR CO., LTD. All RightsReserved.

Fig.137. SELF-LEVEL VALVE - NON-SWITCHABLE

(A)=T210-1(VERSION C
(B)=
(C)=
(D)=
(E)=
(F)=

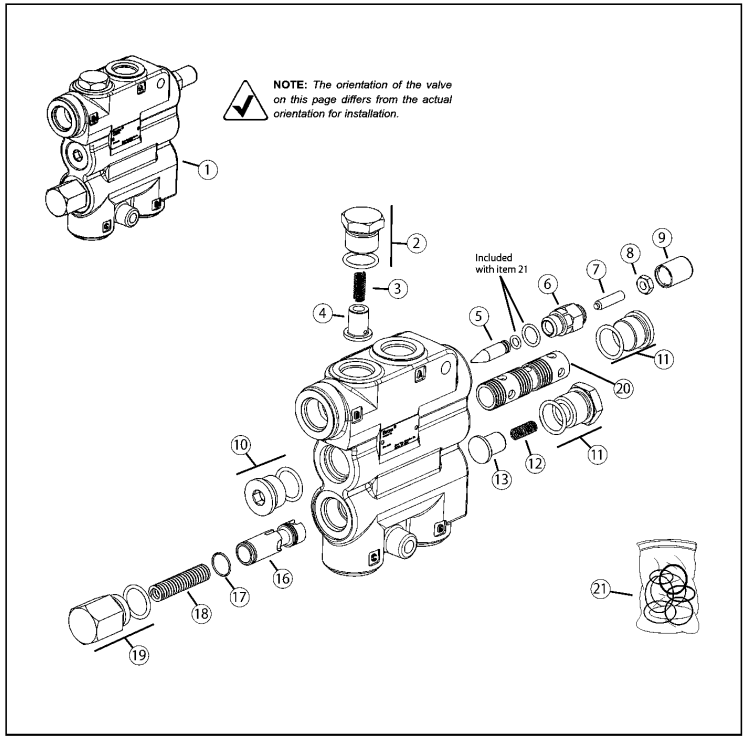

No.	Lev.	Parts No.	Description	Q'ty (A)	(B)	(C)	(D)	(E)	(F)	I	R
1	1	172551-01230	VALVE, SELF-LEVEL	1							1
2	1	172551-00670	PLUG ASSY	1							2
3	1	172551-00660	SPRING	1							
4	1	172551-00680	LOAD CHECK	1							
5	1	172551-00530	PIN	1							
6	1	172551-00540	CAP,ADJUSTMENT	1							
7	1	172551-00560	SCREW SET	1							
8	1	172551-00550	NUT	1							
9	1	172215-09550	COVER, TAMPER PROOF	1							
10	1	172551-00570	PLUG ASSY	2							2
11	1	172551-00670	PLUG ASSY	1							2
12	1	172551-00660	SPRING	1							
13	1	172551-00680	LOAD CHECK	1							
16	1	172215-15220	SPOOL, UNLOADING	1							
17	1	172551-06760	RING,RETAINING	1							
18	1	172215-08890	SPRING	1							
19	1	172551-01010	PLUG ASSY	1							2
20	1	172215-15210	SPOOL, FLOW DIVIDER	1							
21	1	172551-01020	SEAL KIT	1							3

Remarks
(1)(includes all items shown)
(2)(includes o-ring)
(3)(includes item9 and all o-rings shown)

N:Old $\xleftrightarrow[\text{No}]{\text{Yes}}$ New, Q:Old $\xleftrightarrow[\text{Yes}]{\text{No}}$ New, R:Old $\xleftrightarrow[\text{Yes}]{\text{Yes}}$ New, S:Old $\xleftrightarrow[\text{No}]{\text{No}}$ New, W:Add, Z:Discontinued, F:Interchangeable by set, K:Q'ty Change

Copyright (C) 2017 YANMAR CO., LTD. All RightsReserved.

Fig.138. SELF-LEVEL VALVE - SWITCHABLE

(A)=T210-1(VERSION C
(B)=
(C)=
(D)=
(E)=
(F)=

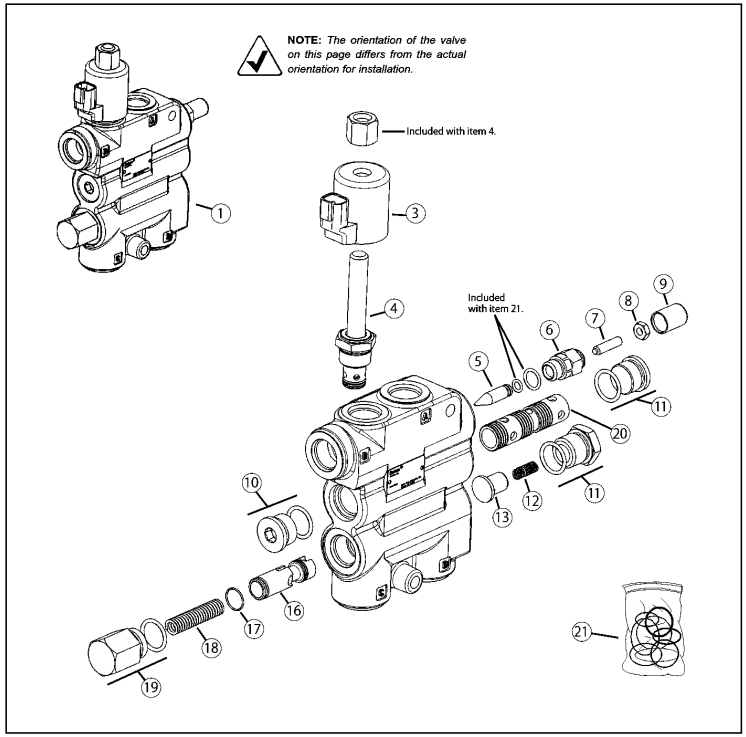

No.	Lev.	Parts No.	Description	Q'ty (A)	(B)	(C)	(D)	(E)	(F)	I	R
1	1	172551-04202	VALVE, SELF-LEVEL	1							1
3	1	172551-07030	COIL	1							
4	1	172551-07040	VALVE	1							
5	1	172551-00530	PIN	1							
6	1	172551-00540	CAP,ADJUSTMENT	1							
7	1	172551-00560	SCREW SET	1							
8	1	172551-00550	NUT	1							
9	1	172215-09550	COVER, TAMPER PROOF	1							
10	1	172551-00570	PLUG ASSY	2							2
11	1	172551-00670	PLUG ASSY	1							2
12	1	172551-00660	SPRING	1							
13	1	172551-00680	LOAD CHECK	1							
16	1	172215-15220	SPOOL, UNLOADING	1							
17	1	172551-06760	RING,RETAINING	1							
18	1	172215-08890	SPRING	1							
19	1	172551-01010	PLUG ASSY	1							2
20	1	172215-15210	SPOOL, FLOW DIVIDER	1							
21	1	172551-01020	SEAL KIT	1							3

Remarks
(1)(includes all items shown)
(2)(includes o-ring)
(3)(includes item 9 and all o-rings shown)

N:Old $\overset{\text{Yes}}{\underset{\text{No}}{\leftrightarrow}}$ New, Q:Old $\overset{\text{No}}{\underset{\text{Yes}}{\leftrightarrow}}$ New, R:Old $\overset{\text{Yes}}{\underset{\text{Yes}}{\leftrightarrow}}$ New, S:Old $\overset{\text{No}}{\underset{\text{No}}{\leftrightarrow}}$ New, W:Add, Z:Discontinued, F:Interchangeable by set, K:Q'ty Change

Copyright (C) 2017 YANMAR CO., LTD. All RightsReserved.

Fig.139. FLOAT MANIFOLD

(A)=T210-1(VERSION C
(B)=
(C)=
(D)=
(E)=
(F)=

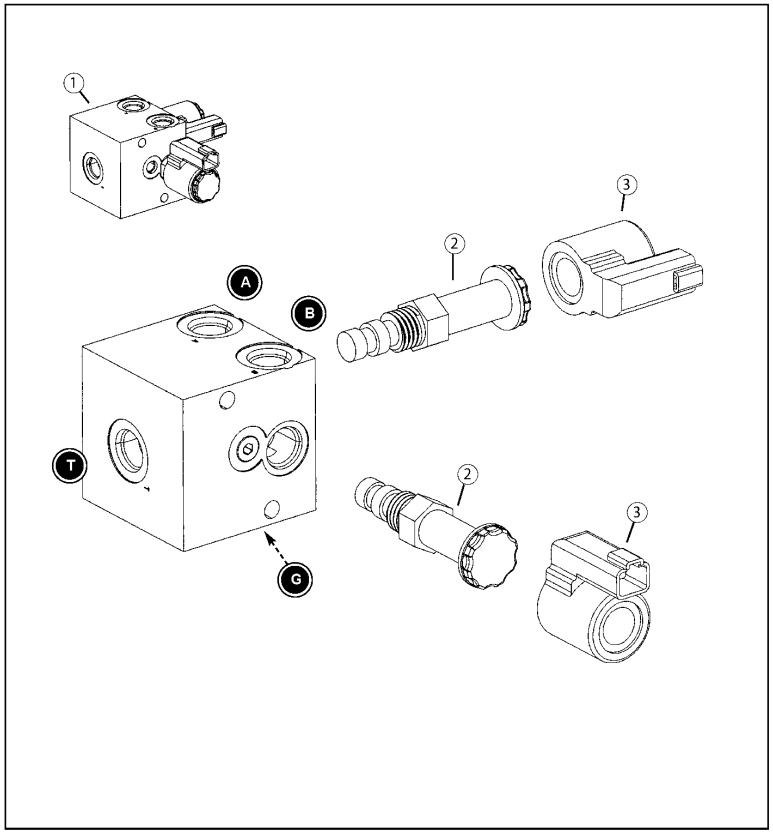

No.	Lev.	Parts No.	Description	Q'ty (A)	(B)	(C)	(D)	(E)	(F)	I	R
1	1	172551-05211	MANIFOLD, FLOAT	1							1
2	1	172551-02120	CARTRIDGE	2							
3	1	172551-02100	COIL	2							

Remarks
(1)(includes all items shown)

N:Old ◄Yes/No► New, Q:Old ◄No/Yes► New, R:Old ◄Yes/Yes► New, S:Old ◄No/No► New, W:Add, Z:Discontinued, F:Interchangeable by set, K:Q'ty Change

Copyright (C) 2017 YANMAR CO., LTD. All RightsReserved.

Fig.140. RIDE CONTROL MANIFOLD

(A)=T210-1(VERSION C
(B)=
(C)=
(D)=
(E)=
(F)=

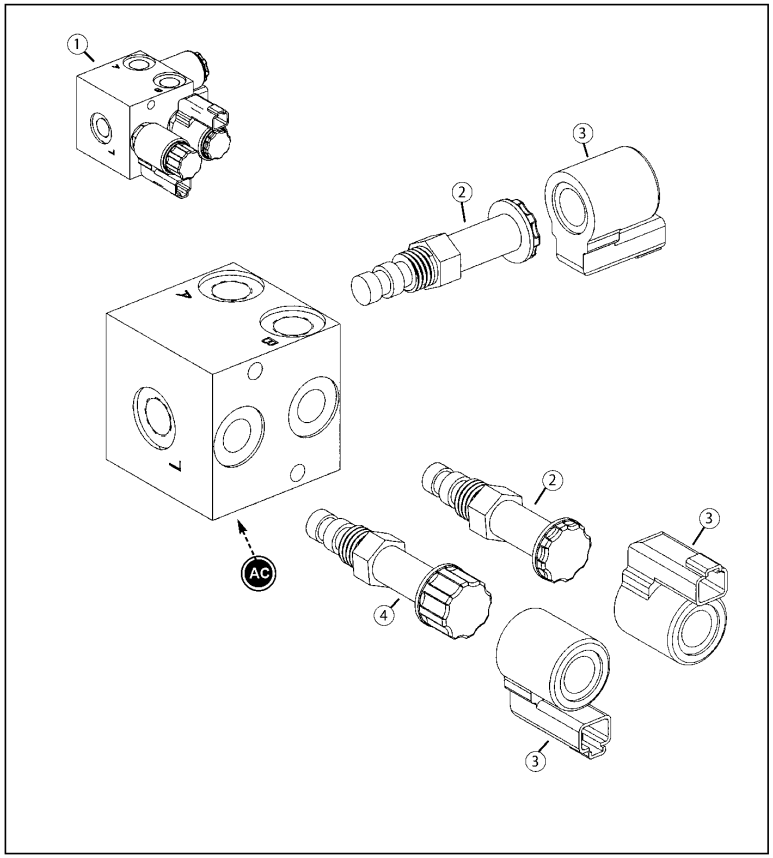

No.	Lev.	Parts No.	Description	Q'ty (A)	(B)	(C)	(D)	(E)	(F)	I	R
1	1	172551-02090	MANIFOLD, HYDRAGLIDE	1							1
2	1	172551-02120	CARTRIDGE	2							
3	1	172551-02100	COIL	3							
4	1	172551-02110	CARTRIDGE	1							

Remarks
(1)(includes all items shown)

N:Old ◄Yes/No► New, Q:Old ◄No/Yes► New, R:Old ◄Yes/Yes► New, S:Old ◄No/No► New, W:Add, Z:Discontinued, F:Interchangeable by set, K:Q'ty Change

Copyright (C) 2017 YANMAR CO., LTD. All RightsReserved.

Fig.141. PILOT PRESSURE MANIFOLD

(A)=T210-1(VERSION C
(B)=
(C)=
(D)=
(E)=
(F)=

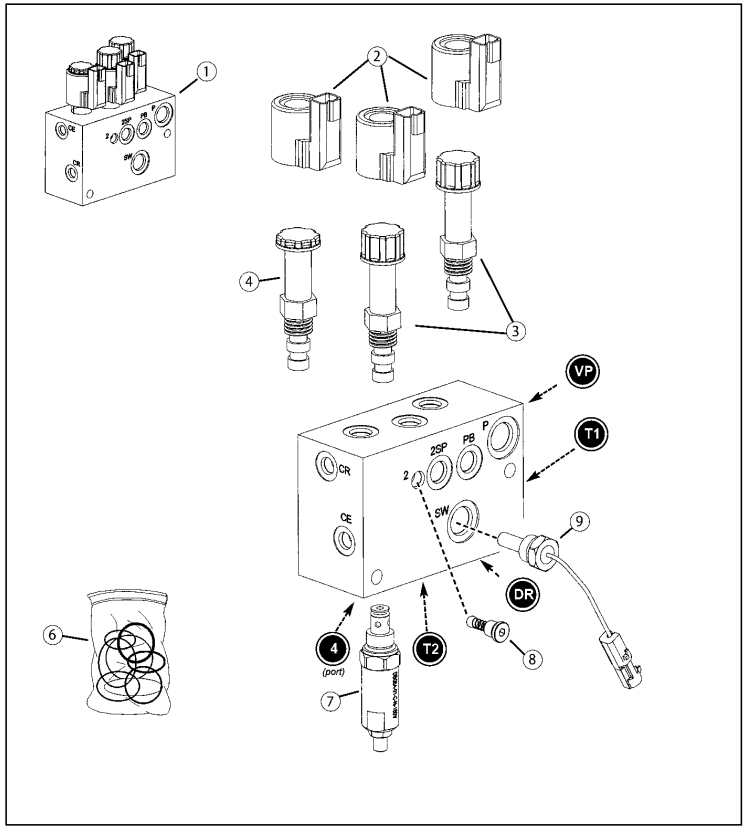

No.	Lev.	Parts No.	Description	Q'ty (A)	(B)	(C)	(D)	(E)	(F)	I	R
1	1	172551-05631	MANIFOLD	1							1
2	1	172551-02100	COIL	3							
3	1	172559-03920	CARTRIDGE, 3-WAY	2							
4	1	172559-03910	CARTRIDGE, 4-WAY	1							
6	1	172551-06990	SEAL KIT	1							2
7	1	172551-06980	VALVE,RELIEF	1							
8	1	172551-07000	VALVE,CHECK	1							
9	1	172551-01090	SWITCH,TEMPERATURE	1							3

Remarks
(1)(includes all items shown?except 9)
(2)(not shown in detail; includes seal for all cartridges and valves)
(3)(not included with item 1)

N:Old $\xleftarrow[\text{No}]{\text{Yes}}$ New, Q:Old $\xleftarrow[\text{Yes}]{\text{No}}$ New, R:Old $\xleftarrow[\text{Yes}]{\text{Yes}}$ New, S:Old $\xleftarrow[\text{No}]{\text{No}}$ New, W:Add, Z:Discontinued, F:Interchangeable by set, K:Q'ty Change

Copyright (C) 2017 YANMAR CO., LTD. All RightsReserved.

Fig.142. TRACK TENSION CYLINDER

(A)=T210-1(VERSION C
(B)=
(C)=
(D)=
(E)=
(F)=

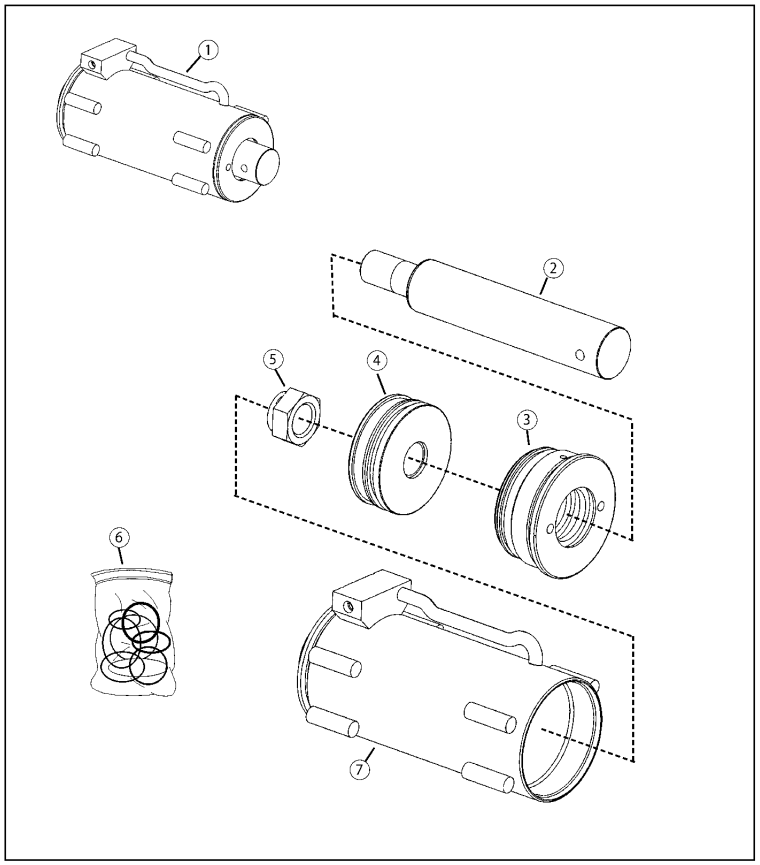

No.	Lev.	Parts No.	Description	Q'ty (A)	(B)	(C)	(D)	(E)	(F)	I	R
1	1	172551-03741	CYLINDER, TENSION	1							1
2	1	172551-06960	CYLINDER ROD	1							
3	1	172551-06950	HEAD GLAND	1							
4	1	172551-06940	PISTON	1							
5	1	172551-10760	NUT	1							
6	1	172551-06970	SEAL KIT	1							2
7	1	172551-06930	TUBE, WELDMENT	1							

Remarks
(1)(includes all items shown)
(2)(not shown)

N:Old $\xleftrightarrow[\text{No}]{\text{Yes}}$ New, Q:Old $\xleftrightarrow[\text{Yes}]{\text{No}}$ New, R:Old $\xleftrightarrow[\text{Yes}]{\text{Yes}}$ New, S:Old $\xleftrightarrow[\text{No}]{\text{No}}$ New, W:Add, Z:Discontinued, F:Interchangeable by set, K:Q'ty Change

Copyright (C) 2017 YANMAR CO., LTD. All RightsReserved.

Fig.143. TILT CYLINDER

(A)=T210-1(VERSION C
(B)=
(C)=
(D)=
(E)=
(F)=

No.	Lev.	Parts No.	Description	Q'ty (A)	(B)	(C)	(D)	(E)	(F)	I	R
1	1	172552-00531	CYLINDER, TILT	1							1
2	1	172551-01030	BUSHING	2							2
3	1	172551-09420	FITTING, GREASE	2							
4	1	172552-00651	WELDMENT, ROD	1							
5	1	172552-00050	CAP, GLAND	1							
6	1	172551-10770	SCREW SET	1							
7	1	172552-00040	GLAND	1							
8	1	172552-00670	PISTON	1							
9	1	172552-00020	NUT	1							
10	1	172551-06900	BEARING,POLYLUBE	2							
11	1	172552-00660	WELDMENT, TUBE	1							
12	1	172552-00680	SEAL KIT	1							

Remarks
(1)(includes all items shown)
(2)(included with item #4)

N:Old $\xleftarrow[\text{No}]{\text{Yes}}$ New, Q:Old $\xleftarrow[\text{Yes}]{\text{No}}$ New, R:Old $\xleftrightarrow[\text{Yes}]{\text{Yes}}$ New, S:Old $\xleftrightarrow[\text{No}]{\text{No}}$ New, W:Add, Z:Discontinued, F:Interchangeable by set, K:Q'ty Change

Copyright (C) 2017 YANMAR CO., LTD. All RightsReserved.

Fig.144. LIFT CYLINDER

(A)=T210-1(VERSION C
(B)=
(C)=
(D)=
(E)=
(F)=

No.	Lev.	Parts No.	Description	Q'ty (A)	(B)	(C)	(D)	(E)	(F)	I	R
1	1	172552-00541	CYLINDER, LIFT	1							1
2	1	172551-06900	BEARING,POLYLUBE	4							2
3	1	172551-09420	FITTING, GREASE	2							
4	1	172552-00601	ROD WELDMENT	1							
5	1	172552-00640	HEAD GLAND	1							
6	1	172552-00630	PISTON	1							
7	1	172551-00390	NUT	1							
9	1	172552-00610	TUBE WELDMENT	1							
10	1	172552-00620	SEAL KIT	1							

Remarks
(1)(includes all items shown)
(2)(two are included with item #4)

N:Old $\xleftrightarrow[\text{No}]{\text{Yes}}$ New, Q:Old $\xleftrightarrow[\text{Yes}]{\text{No}}$ New, R:Old $\xleftrightarrow[\text{Yes}]{\text{Yes}}$ New, S:Old $\xleftrightarrow[\text{No}]{\text{No}}$ New, W:Add, Z:Discontinued, F:Interchangeable by set, K:Q'ty Change

Copyright (C) 2017 YANMAR CO., LTD. All RightsReserved.

Fig.145. FRONT

(A)=T210-1(VERSION C
(B)=
(C)=
(D)=
(E)=
(F)=

No.	Lev.	Parts No.	Description	Q'ty (A)	(B)	(C)	(D)	(E)	(F)	I	R
1	1	172551-06510	LABEL,MULTI-WARNING	1							
2	1	172551-03010	LABEL,IGNITION	1							
3	1	172551-08180	LABEL,ACCELERATOR	1							
4	1	172551-01110	TAG, RIP-CORD	1							
5	1	172551-06500	LABEL,WARNING	1							
6	1	172551-01520	LABEL,NO RIDERS	1							
7	1	172551-01570	LABEL,LIFT POINT	2							1
8	1	172559-03950	DECAL, YANMAR 355MM	1							
9	1	172551-11460	LABEL	1							
10	1	172216-17230	DECAL, ATTACH BRT.	1							
11	1	172551-01780	LABEL,LATCHING	1							
12	1	172551-01790	LABEL,LATCHING	1							
13	1	172551-02040	LABEL,HIGH-FLOW	1							
14	1	172551-01480	LABEL,MANUAL	2							2

Remarks
(1)(clear)
(2)(behind seat - not shown)

N:Old $\xleftarrow[\text{No}]{\text{Yes}}$ New, Q:Old $\xleftarrow[\text{Yes}]{\text{No}}$ New, R:Old $\xleftarrow[\text{Yes}]{\text{Yes}}$ New, S:Old $\xleftarrow[\text{No}]{\text{No}}$ New, W:Add, Z:Discontinued, F:Interchangeable by set, K:Q'ty Change

Copyright (C) 2017 YANMAR CO., LTD. All RightsReserved.

Fig.146. RIGHT SIDE

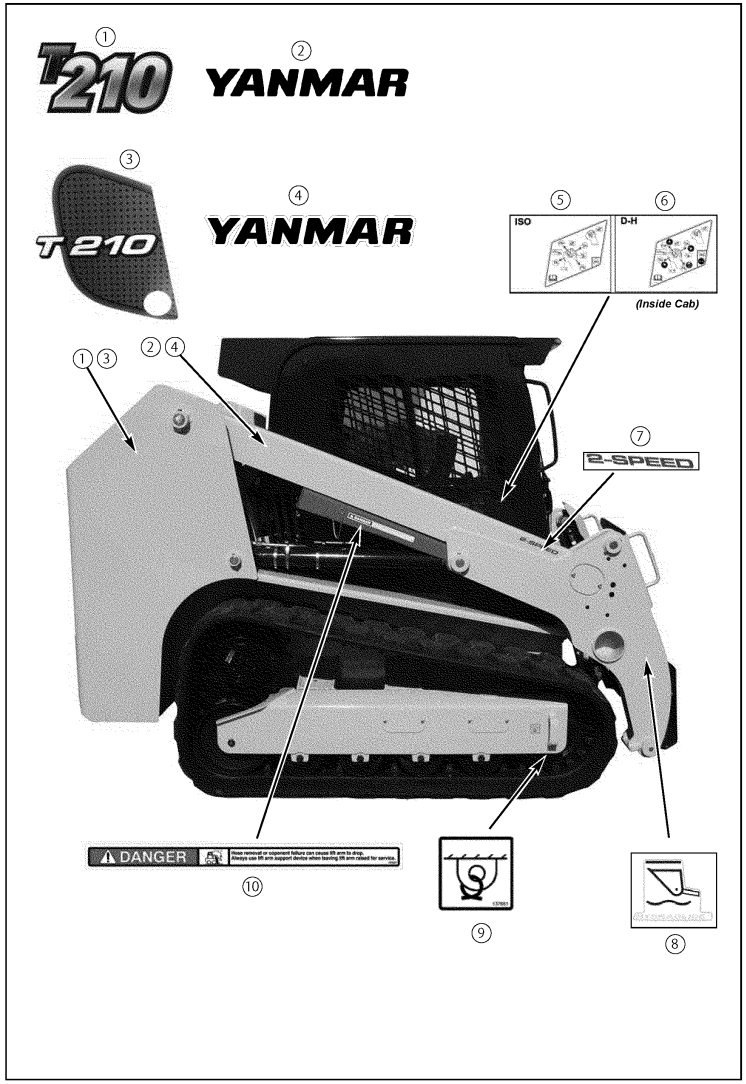

(A)=T210-1(VERSION C
(B)=
(C)=
(D)=
(E)=
(F)=

No.	Lev.	Parts No.	Description	Q'ty (A)	(B)	(C)	(D)	(E)	(F)	I	R
1	1	172559-03970	DECAL, T210	1							
2	1	172559-03960	DECAL,YANMAR BLACK	1							
3	1	172552-01340	LABEL	1							
4	1	172215-11550	LABEL	1							
5	1	172551-06470	LABEL,JOYSTICK	1							1
6	1	172551-06490	LABEL,JOYSTICK	1							2
7	1	172551-02020	LABEL,2-SPEED	1							3
8	1	172551-01700	LABEL,HYDRAGLIDE	1							
9	1	172551-01560	LABEL,TIEDOWN POINT	1							
10	1	172551-01510	LABEL,KEEP OUT	1							

Remarks
(1)ISO (standard)
(2)ISO-DH (option)
(3)(contains two decals?(1) left side and(1) right side)

N:Old $\xleftrightarrow[\text{No}]{\text{Yes}}$ New, Q:Old $\xleftrightarrow[\text{Yes}]{\text{No}}$ New, R:Old $\xleftrightarrow[\text{Yes}]{\text{Yes}}$ New, S:Old $\xleftrightarrow[\text{No}]{\text{No}}$ New, W:Add, Z:Discontinued, F:Interchangeable by set, K:Q'ty Change

Copyright (C) 2017 YANMAR CO., LTD. All RightsReserved.

Fig.147. LEFT SIDE

(A)=T210-1(VERSION C
(B)=
(C)=
(D)=
(E)=
(F)=

No.	Lev.	Parts No.	Description	Q'ty (A)	(B)	(C)	(D)	(E)	(F)	I	R
1	1	172559-03970	DECAL, T210	1							
2	1	172559-03960	DECAL,YANMAR BLACK	1							
3	1	172552-01330	LABEL	1							
4	1	172215-11550	LABEL	1							
5	1	172551-06460	LABEL,JOYSTICK	1							1
6	1	172551-06480	LABEL,JOYSTICK	1							2
7	1	172551-02020	LABEL,2-SPEED	1							3
8	1	172551-01700	LABEL,HYDRAGLIDE	1							
9	1	172551-01560	LABEL,TIEDOWN POINT	1							
10	1	172551-02640	LABEL,LOW SULFUR	1							4
11	1	172551-01500	LABEL,SDIESEL FUEL	1							

Remarks
(1)ISO (standard)
(2)ISO-DH (option)
(3)(contains two decals?(1) left side and(1) right side)
(4)(SN 351000 and before)

N:Old $\xleftrightarrow[\text{No}]{\text{Yes}}$ New, Q:Old $\xleftrightarrow[\text{Yes}]{\text{No}}$ New, R:Old $\xleftrightarrow[\text{Yes}]{\text{Yes}}$ New, S:Old $\xleftrightarrow[\text{No}]{\text{No}}$ New, W:Add, Z:Discontinued, F:Interchangeable by set, K:Q'ty Change

Copyright (C) 2017 YANMAR CO., LTD. All RightsReserved.

Fig.148. REAR

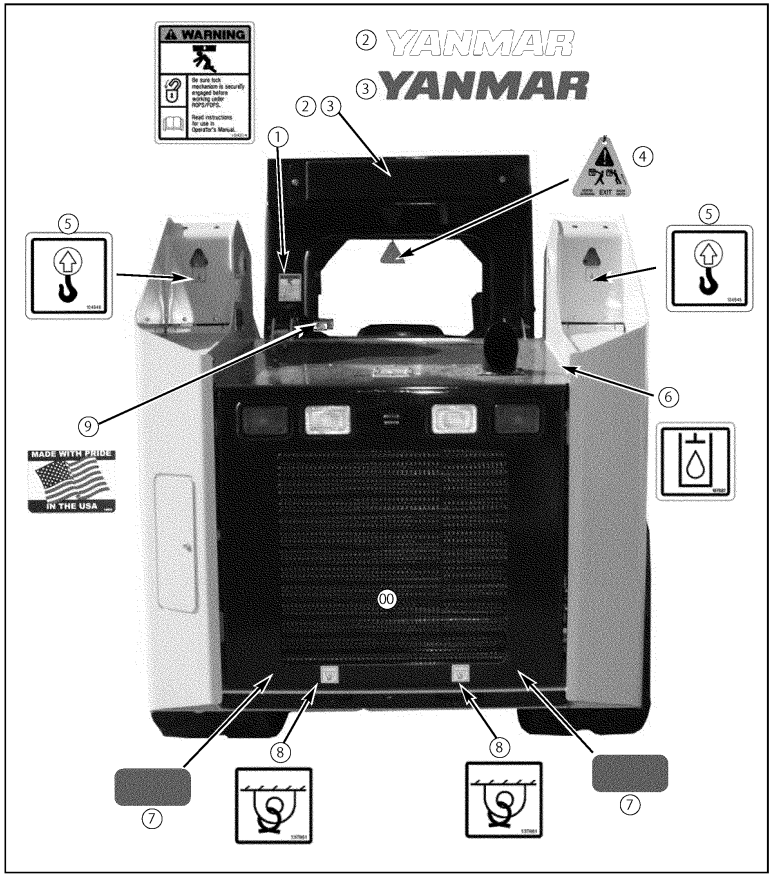

(A)=T210-1(VERSION C (D)=
(B)= (E)=
(C)= (F)=

No.	Lev.	Parts No.	Description	Q'ty (A)	(B)	(C)	(D)	(E)	(F)	I	R
1	1	172551-02070	LABEL.LOCK	2							1
2	1	172559-03980	DECAL,YANMAR WHITE	1							
3	1	172551-11500	LABEL	1							
4	1	172551-01110	TAG, RIP-CORD	1							
5	1	172551-01570	LABEL,LIFT POINT	2							
6	1	172551-01490	LABEL,HYDRAULIC	1							
7	1	172215-00800	REFLECTOR, RED	2							
8	1	172551-00880	LABEL,TIEDOWN POINT	2							
9	1	172551-01840	LABEL,FLAG	1							

Remarks
(1)under-side of the cab (out of view)?visible when the cab is in the raised position).

N:Old $\xleftrightarrow[\text{No}]{\text{Yes}}$ New, Q:Old $\xleftrightarrow[\text{Yes}]{\text{No}}$ New, R:Old $\xleftrightarrow[\text{Yes}]{\text{Yes}}$ New, S:Old $\xleftrightarrow[\text{No}]{\text{No}}$ New, W:Add, Z:Discontinued, F:Interchangeable by set, K:Q'ty Change

Copyright (C) 2017 YANMAR CO., LTD. All RightsReserved.

Fig.149. ENGINE COMPARTMENT

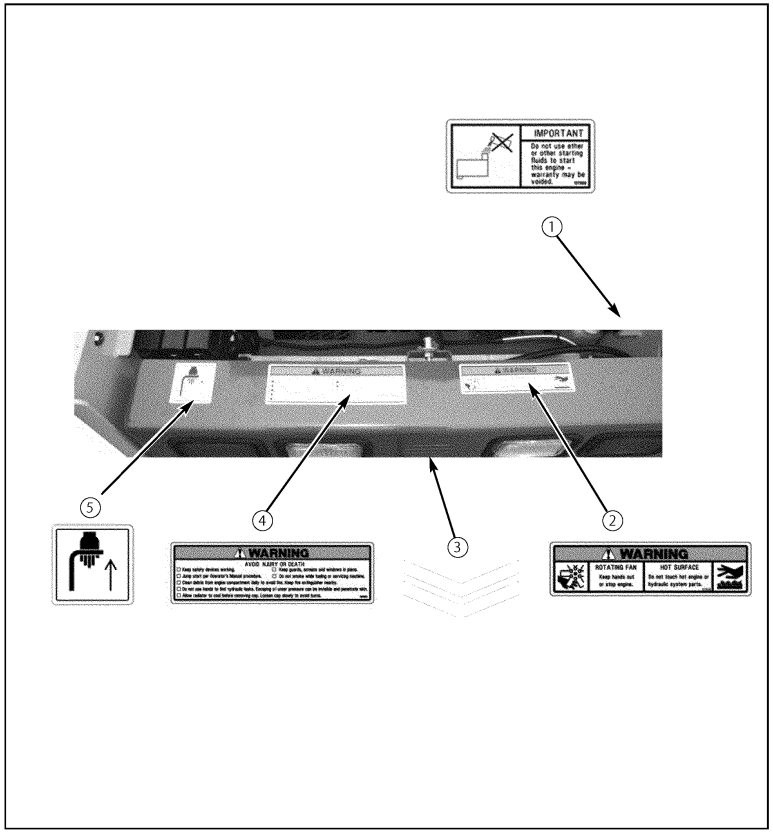

(A)=T210-1(VERSION C
(B)=
(C)=
(D)=
(E)=
(F)=

No.	Lev.	Parts No.	Description	Q'ty (A)	(B)	(C)	(D)	(E)	(F)	I	R
1	1	172551-01550	LABEL,WARNING	1							
2	1	172551-01540	LABEL,WARNING	1							
3	1	172559-03990	DECAL, BADGE/YANMAR	1							1
4	1	172551-01530	LABEL,WARNING	1							
5	1	172551-08350	LABEL,LATCH	1							

Remarks
(1)(used when not equipped with backupcamera)

N:Old $\overset{\text{Yes}}{\underset{\text{No}}{\leftrightarrow}}$ New, Q:Old $\overset{\text{No}}{\underset{\text{Yes}}{\leftrightarrow}}$ New, R:Old $\overset{\text{Yes}}{\underset{\text{Yes}}{\leftrightarrow}}$ New, S:Old $\overset{\text{No}}{\underset{\text{No}}{\leftrightarrow}}$ New, W:Add, Z:Discontinued, F:Interchangeable by set, K:Q'ty Change

Copyright (C) 2017 YANMAR CO., LTD. All RightsReserved.

Parts No. Index

Parts No.	Fig. No.	Ref. No.
172215-00560	47	38
	48	38
172215-00620	131	52
172215-00650	3	15
172215-00800	148	7
172215-02720	38	9
	66	41
	67	8
	68	8
172215-02820	14	19
	65	10
	79	3
	119	31
172215-02840	5	24
	13	34
	14	8
	22	4
	23	3
	24	4
	33	19
172215-02880	104	18
172215-02890	38	30
	39	24
172215-02950	3	33
	105	5
		9
172215-03000	3	42
172215-03120	6	24
172215-03220	33	18
172215-03230	14	21
172215-03330	57	30
	62	11
	95	62
	96	62
172215-03340	11	25
	14	31
172215-03800	3	25
172215-06610	38	35
	52	7
172215-06620	14	23
	22	7
	23	20
	24	7
172215-06630	97	29
172215-07650	33	22
	103	19
172215-08890	137	18
	138	18
172215-09550	137	9
	138	9

Parts No.	Fig. No.	Ref. No.
172215-11550	146	4
	147	4
172215-15100	75	8
172215-15210	137	20
	138	20
172215-15220	137	16
	138	16
172215-15230	119	6 B
	120	18
172215-17340	74	22
172215-17400	122	15 A
172215-17540	69	29
	70	19
172215-17640	60	22
172215-17770	65	17
172215-19530	97	37
172216-00540	13	24
172216-00590	110	20
172216-00630	131	28
172216-00640	131	30
172216-00740	131	29
172216-00840	131	7
172216-00870	131	20
172216-00880	131	80
172216-02140	131	26
172216-02160	131	16
172216-02170	131	18
172216-02220	131	34
		54
172216-02230	131	17
172216-03170	14	6
172216-03360	82	1
172216-04240	4	10
172216-05470	110	4
172216-06370	103	20
172216-08270	62	4
	63	2
172216-08330	66	48
	73	11
172216-09410	65	14
	67	19
172216-09460	131	3
172216-09620	9	38
172216-09640	45	6
	46	6
	97	11
	98	38
	99	13
172216-09840	13	17
172216-09850	66	31

Parts No.	Fig. No.	Ref. No.
172216-10870	103	18
172216-10880	11	17
	65	15
172216-11090	21	2 A
172216-11900	66	49
	67	20
	68	21
	71	19
172216-12920	35	23
	37	21
172216-14171	1	12
	79	8
172216-15211	95	9
	96	9
	106	7
172216-15910	38	8
		15
	64	5
172216-16830	106	12
172216-16840	106	14
172216-16850	106	13
172216-16860	106	16
172216-17040	15	13
172216-17230	101	26
	145	10
172216-17380	23	7
172216-17490	80	12
172216-20100	1	1
	2	1
	66	45
	67	10
	68	10
	71	14
172216-20110	2	4
	75	6
172217-00060	67	11
	68	11
172217-00450	131	21
172217-01000	131	23
172217-01090	121	15 A
	122	13 A
172217-01270	110	23
172217-02870	79	7
	81	6
172217-03920	70	21
		22
		23
172217-03970	56	45
	57	48
172217-04060	66	32

Parts No.	Fig. No.	Ref. No.
172217-04940	71	11
172217-05140	1	10
	79	11
172217-05150	1	11
	79	10
172217-15100	84	32
	85	25
172217-15110	75	13
172217-15120	2	3
172217-15130	1	15
	2	7
	69	27
172217-15140	69	7
	70	15
172217-15150	56	38
	57	24
	58	8
	60	31
	61	29
172218-00040	97	52
	98	18
172218-00260	109	3
172218-04730	4	11
172218-04860	4	15
172218-04900	35	20
	36	24
	63	11
	66	28
172218-05000	54	2
172218-05150	35	22
	36	22
	47	9
	66	4
172218-05870	14	32
172551-00010	1	20
	2	10
	4	2
172551-00390	144	7
172551-00530	137	5
	138	5
172551-00540	137	6
	138	6
172551-00550	137	8
	138	8
172551-00560	137	7
	138	7
172551-00570	137	10
	138	10
172551-00660	137	3
		12

Parts No. Index

Parts No.	Fig. No.	Ref. No.
172551-00660	138	12
172551-00670	137	2
		11
	138	11
172551-00680	137	4
		13
	138	13
172551-00780	107	1
	108	1
	125	12
	126	12
172551-00790	100	40
	102	33
172551-00800	100	41
	102	34
172551-00810	136	11
172551-00820	135	2
	136	15
172551-00830	59	2
		12
	60	21
	61	11
		21
		22
172551-00840	36	16
	37	19
172551-00850	7	6
	8	6
	9	30
	12	24
	17	12
172551-00860	47	6
	48	6
	54	6
172551-00870	59	3
		8
		9
		11
		15
		16
	60	11
		16
		17
		19
	61	13
		16
		17
		19
172551-00880	148	8
172551-00890	123	22

Parts No.	Fig. No.	Ref. No.
172551-00890	129	12
	130	12
172551-00900	124	8
172551-00910	69	1
	70	17
172551-00920	69	28
	70	18
172551-00950	110	26
	111	20
	112	15
172551-00960	109	8
172551-00970	56	9
	57	8
	58	11
172551-00980	132	2
172551-00990	63	14
	66	50
	100	53
	102	30
172551-01000	109	3 B
172551-01010	137	19
	138	19
172551-01020	137	21
	138	21
172551-01030	143	2
172551-01040	109	18
172551-01050	109	21
172551-01060	35	19
	36	25
	66	3
	71	2
	74	18
	84	31
	85	34
172551-01070	49	10
	50	11
	51	14
	109	4
172551-01080	95	20
	96	20
	107	17
	108	14
172551-01090	127	22
	128	22
	141	9
172551-01110	3	14
	145	4
	148	4
172551-01120	119	20
	120	10

Parts No.	Fig. No.	Ref. No.
172551-01120	121	14
	122	9
	133	2
	134	2
172551-01130	133	5
172551-01140	133	3
172551-01180	56	21
	57	41
	58	23
172551-01190	109	7
172551-01200	100	49
	101	21
	102	21
172551-01210	3	5
	4	20
172551-01230	123	31
	124	10
	137	1
172551-01240	40	4
	66	8
	69	10
	72	3
172551-01250	129	9
	130	9
172551-01260	47	34
	48	9
172551-01270	56	25
	57	44
	58	26
	66	5
	71	3
	106	5
	107	3
	108	2
	119	27
172551-01280	27	12
	29	12
172551-01290	95	21
	96	21
	107	18
	108	15
172551-01300	95	19
	96	19
	107	16
	108	13
172551-01310	40	5
	66	9
	69	11
	72	4
172551-01320	97	58

Parts No.	Fig. No.	Ref. No.
172551-01320	98	20
172551-01330	97	39
		60
	98	23
172551-01340	97	56
	98	19
172551-01350	98	28
	101	14
172551-01360	97	24
	98	29
	99	32
	101	12
172551-01370	97	20
	98	27
	99	38
	101	16
172551-01390	97	31
		53
	98	16
172551-01400	97	57
	98	21
172551-01410	97	21
	98	26
	99	37
	101	15
172551-01430	3	1
172551-01440	6	14
172551-01450	106	19
	125	10
	126	10
172551-01460	27	5
	28	12
	29	5
	30	12
172551-01470	27	4
	28	11
	29	4
	30	11
172551-01480	145	14
172551-01490	148	6
172551-01500	147	11
172551-01510	95	32
	96	50
	146	10
172551-01520	145	6
172551-01530	149	4
172551-01540	149	2
172551-01550	149	1
172551-01560	146	9
	147	9

Parts No. Index

Parts No.	Fig. No.	Ref. No.
172551-01570	145	7
	148	5
172551-01580	34	13
172551-01590	34	12
172551-01650	47	13
	48	13
172551-01670	34	10
172551-01680	38	21
	39	8
172551-01690	38	19
	39	7
172551-01700	146	8
	147	8
172551-01710	38	22
	39	10
172551-01720	97	54
	98	14
172551-01730	34	20
	38	4
	39	17
172551-01740	38	3
	39	18
172551-01750	38	5
	39	19
172551-01760	40	16
	41	19
	42	23
172551-01770	99	25
172551-01780	99	24
	101	25
	145	11
172551-01790	99	26
	101	27
	145	12
172551-01800	41	22
	42	26
172551-01810	109	2
	119	5
	120	21
172551-01831	41	5
	42	5
172551-01840	148	9
172551-01850	41	14
	42	18
172551-01860	40	17
	41	20
	42	24
172551-01870	40	18
	41	21
	42	25

Parts No.	Fig. No.	Ref. No.
172551-01880	110	9
	111	3
	112	3
172551-01940	127	17
	128	17
172551-01950	41	1
	42	1
172551-01960	38	13
	42	13
172551-01970	11	10
172551-01980	56	42
	57	29
	58	32
172551-02000	82	9
172551-02020	146	7
	147	7
172551-02040	145	13
172551-02050	2	6
	82	3
172551-02060	2	5
	82	4
172551-02070	148	1
172551-02090	123	25 A
	129	20
	130	20
	140	1
172551-02100	139	3
	140	3
	141	2
172551-02110	140	4
172551-02120	139	2
	140	2
172551-02130	129	21
	130	21
172551-02140	32	8
172551-02150	32	5
172551-02160	42	11
172551-02170	80	2
	81	2
172551-02180	59	1
		4
		6
		7
		10
		13
		14
	60	9
		10
		12
		14

Parts No.	Fig. No.	Ref. No.
172551-02180	60	15
		18
		23
	61	9
		10
		12
		14
		15
		18
		23
	103	22
		27
172551-02190	49	19
	50	18
	51	19
172551-02200	106	21
172551-02210	106	23
172551-02220	106	22
172551-02230	106	24
172551-02250	80	1
	81	1
172551-02260	34	5
172551-02270	36	13
	37	11
172551-02300	36	14
	37	12
172551-02310	36	12
	37	9
172551-02321	34	14
172551-02330	11	5
172551-02340	82	5
172551-02350	82	2
172551-02370	121	16
	122	12
172551-02380	29	11
172551-02390	132	17
172551-02410	100	43
	102	36
	103	10
	106	11
172551-02430	3	34
	49	18
	62	22
	63	25
	84	8
172551-02440	32	4
172551-02460	66	22
	73	1
172551-02480	9	37
	10	11

Parts No.	Fig. No.	Ref. No.
172551-02480	12	13
	22	13
	23	18
	24	13
	25	12
	26	10
172551-02500	111	11
	112	18
172551-02510	69	20
	70	9
172551-02520	119	18
	120	6
172551-02530	109	15
	119	15
	120	4
	121	17
	122	6
172551-02540	66	44
	67	9
	68	9
	71	13
172551-02551	66	33
	67	1
	68	1
	71	18
172551-02560	62	14
	66	12
	74	10
	75	5
172551-02580	34	4
172551-02600	66	2
	71	1
172551-02610	71	6
172551-02640	147	10
172551-02670	51	11
172551-02700	66	20
	72	10
172551-02710	69	5
	72	11
172551-02720	66	11
	69	13
	72	5
		12
172551-02730	66	17
	69	4
	72	8
172551-02750	48	20
	62	16
	84	19
	119	8

Parts No. Index

Parts No.	Fig. No.	Ref. No.
172551-02750	126	15
172551-02760	3	28
	11	28
	22	17
	23	14
	24	17
	47	8
	52	16
	53	2
	54	13
	55	3
	56	43
	57	28
	58	31
	82	7
	84	24
	85	30
	97	25
	98	31
	99	31
	101	4
	103	15
	119	30
	123	27
	124	27
172551-02780	105	11
172551-02790	86	21
	87	21
172551-02800	109	16
	119	14
172551-02810	123	3
	125	3
	126	3
172551-02820	15	1
172551-02830	135	5
	136	12
172551-02840	135	14
	136	9
172551-02850	135	3
	136	13
172551-02860	135	4
	136	8
172551-02870	3	12
	15	1 A
172551-02880	41	2
	42	2
172551-02891	41	8
	42	8
172551-02900	3	23
172551-02910	41	7

Parts No.	Fig. No.	Ref. No.
172551-02910	42	7
172551-02920	69	18
	70	14
172551-02940	3	13
	15	1 B
172551-02950	69	21
	70	7
172551-02960	69	15
	70	12
172551-02980	69	16
	70	11
172551-02990	57	25
	60	34
	61	27
		28
		32
	63	15
172551-03010	145	2
172551-03020	56	37
	57	45
	59	26
	60	27
	61	25
172551-03040	5	23
	103	14
172551-03050	22	5
	24	5
	25	3
	26	25
	27	1
	28	10
	29	1
	30	10
172551-03060	18	12
172551-03070	18	13
172551-03080	15	8
172551-03090	1	21
	2	9
	6	5
172551-03100	15	19
172551-03110	96	36
172551-03120	38	32
	39	15
172551-03140	3	16
172551-03150	15	20
172551-03160	15	18
172551-03180	15	12
172551-03190	15	7
172551-03200	15	16
172551-03210	15	4

Parts No.	Fig. No.	Ref. No.
172551-03230	132	7
172551-03240	26	17
172551-03251	98	32
	101	39
	102	39
172551-03260	85	10
	120	19
172551-03280	84	25
	85	21
172551-03290	6	15
172551-03310	84	20
	85	11
172551-03320	85	9
172551-03350	75	7
172551-03360	84	11
	85	5
172551-03370	84	12
	85	6
172551-03420	97	34
		55
	98	15
172551-03430	97	50
172551-03460	6	12
172551-03470	3	3
172551-03491	86	14
	87	14
	91	1
172551-03511	86	10
	87	9
	90	10
172551-03520	47	15
	48	15
172551-03530	52	11
	54	4
172551-03560	105	7
172551-03570	104	7
172551-03580	37	7
172551-03590	104	14
	129	3
	130	3
172551-03650	37	22
172551-03660	105	10
172551-03670	97	5
	98	3
	99	2
172551-03680	32	2
172551-03691	18	1
172551-03701	18	2
172551-03710	39	5
172551-03720	7	11

Parts No.	Fig. No.	Ref. No.
172551-03720	8	11
172551-03730	7	17
	8	18
172551-03741	86	18
	87	18
	142	1
172551-03760	19	4
	20	15
172551-03770	7	10
	8	10
172551-03780	39	4
172551-03790	76	5
	77	5
	78	5
172551-03800	76	1
	77	1
	78	1
172551-03810	126	1
		2
172551-03830	1	16
	2	8
	41	17
	42	20
172551-03840	49	15
	50	16
	51	17
172551-03850	28	7
	30	7
172551-03860	65	18
172551-03871	47	2
	48	2
172551-03880	27	9
	29	9
172551-03890	86	11
	87	11
172551-03930	40	3
	66	7
	69	9
	72	2
172551-03940	42	10
172551-03950	66	14
	69	2
	72	6
172551-03960	3	8
	4	6
172551-03970	19	12
	20	9
172551-03980	19	11
	20	8
172551-03990	6	17

Parts No. Index

Parts No.	Fig. No.	Ref. No.
172551-04000	6	19
172551-04010	26	1
	29	13
172551-04020	117	13
	118	4
172551-04030	109	6
172551-04040	58	43
	60	7
		8
	61	7
		8
172551-04051	62	7
	63	5
172551-04060	27	8
	29	8
172551-04070	113	14
	114	3
	115	14
	116	3
	117	14
	118	3
172551-04081	47	1
	48	1
172551-04090	27	7
	29	7
172551-04100	6	8
	65	2
172551-04110	16	5
	17	10
172551-04120	23	11
	24	19
	26	20
172551-04130	22	19
	25	23
172551-04140	34	7
	35	3
	36	3
	37	3
172551-04150	34	8
	38	1
	39	1
172551-04162	49	16
	50	17
	51	18
172551-04170	7	9
	8	9
172551-04190	112	7
172551-04202	123	31 A
	124	10 A
	138	1

Parts No.	Fig. No.	Ref. No.
172551-04210	32	7
172551-04220	84	22
	85	16
	111	19
	112	14
172551-04230	84	29
	85	23
	109	17
	119	11
172551-04240	38	23
	39	11
172551-04260	64	1 A
172551-04270	6	9
172551-04280	66	24
	73	3
172551-04290	58	42
	59	21
	60	1
		2
		3
		4
		5
		6
	61	1
		2
		3
		4
		5
		6
	103	31
		32
		33
		34
172551-04300	123	7
	125	18
	126	18
172551-04310	79	14
	80	10
	81	4
172551-04320	80	11
	81	5
172551-04330	54	8
172551-04340	76	2
	77	2
	78	2
172551-04350	53	6
	55	5
172551-04362	119	6
	120	16
172551-04370	28	6

Parts No.	Fig. No.	Ref. No.
172551-04370	30	6
172551-04380	66	16
	69	3
	72	7
172551-04390	22	9
	23	25
	24	9
	25	6
	26	5
	50	5
	51	5
172551-04400	22	10
	23	24
	24	10
	25	7
	26	4
	50	4
	51	4
172551-04410	35	4
	36	7
	37	5
172551-04420	16	11
	17	15
172551-04431	28	4
	30	4
172551-04440	5	4
172551-04450	5	11
172551-04460	86	13
	87	13
172551-04470	86	16
	87	16
172551-04480	58	40
	60	38
	61	37
172551-04490	58	41
	60	39
	61	38
172551-04500	58	52
		53
172551-04530	96	29
172551-04540	47	10
	48	10
172551-04550	95	11
	96	11
172551-04560	95	13
	96	13
172551-04570	48	19
172551-04580	52	18
	54	11
172551-04590	47	14

Parts No.	Fig. No.	Ref. No.
172551-04590	48	14
172551-04610	86	19
	87	19
172551-04630	119	22
	120	11
	122	16
172551-04650	47	11
	48	11
172551-04660	96	26
172551-04670	26	24
172551-04680	70	3
172551-04690	22	2
	23	6
	24	2
	25	4
	26	21
	64	7
172551-04730	22	8
	25	5
172551-04740	47	22
	48	23
172551-04750	47	23
	48	34
172551-04770	10	3
172551-04780	9	17
	10	32
	11	1
		11
172551-04790	58	44
	108	11
172551-04800	22	16
	23	12
		22
	24	16
	25	14
	33	4
	47	4
	58	27
	64	2
	65	13
	100	54
	101	23
	102	23
172551-04810	16	2
	17	2
	65	6
172551-04820	9	11
	10	22
172551-04830	9	13
	10	24

Parts No. Index

Parts No.	Fig. No.	Ref. No.
172551-04840	9	12
	10	21
172551-04850	111	2
	112	2
172551-04860	105	14
172551-04870	104	1
172551-04890	23	1
	24	8
	26	2
172551-04900	126	5
172551-04910	43	2
	44	2
172551-04920	50	10
	51	8
172551-04930	95	7
	96	7
	106	18
172551-04940	106	1
		2
	125	7
		8
172551-04950	107	7
		8
	108	5
		7
	121	2
		3
	122	19
		20
172551-04960	108	10
	122	3
172551-04970	113	2
	114	2
	115	2
	116	2
	117	2
	118	2
172551-04990	104	15
		16
172551-05020	95	15
	96	15
172551-05030	56	11
	57	12
	58	13
172551-05050	56	34
	57	36
	58	38
172551-05060	105	13
172551-05080	75	3
	77	9

Parts No.	Fig. No.	Ref. No.
172551-05080	78	9
172551-05090	106	3
	125	14
172551-05100	104	12
		13
172551-05110	109	12
	125	6
	126	9
172551-05120	51	12
172551-05130	109	20
	127	5
	128	5
172551-05150	105	18
		20
	130	2
		7
172551-05160	105	17
		19
	130	1
		6
172551-05170	113	6
	114	6
	115	6
	116	6
	117	6
	118	6
172551-05180	109	10
	113	4
	115	4
	117	4
172551-05190	27	10
	29	10
172551-05211	123	25
	129	14
	130	14
	139	1
172551-05220	127	11
	128	11
	129	19
	130	16
172551-05230	124	5
	130	19
172551-05240	85	12
172551-05250	107	5
	108	6
	109	23
172551-05260	109	25
172551-05270	75	10
172551-05280	3	22
172551-05330	127	14

Parts No.	Fig. No.	Ref. No.
172551-05350	112	5
		12
	117	7
	118	10
172551-05360	112	6
	118	9
172551-05370	25	1
172551-05380	112	13
	117	8
172551-05390	50	2
	51	3
172551-05430	10	15
172551-05440	123	24
	124	11
	129	17
172551-05450	109	13
	123	9
	125	5
172551-05490	86	24
		25
	87	24
		25
	127	15
		16
	128	15
		16
172551-05510	128	18
172551-05520	86	22
		23
	87	22
		23
	127	18
		19
	128	19
172551-05530	96	32
172551-05560	9	14
	10	18
		25
172551-05590	96	27
172551-05631	113	19
	114	15
	115	19
	116	15
	117	19
	118	15
	127	1
	128	1
	141	1
172551-05640	98	1
	101	3

Parts No.	Fig. No.	Ref. No.
172551-05650	97	7
	98	8
	99	9
172551-05680	11	7
172551-05690	95	10
	96	10
	106	8
172551-05700	86	8
	87	8
172551-05710	86	6
	87	6
	92	6
172551-05720	87	28
	92	3
172551-05730	50	7
	51	24
172551-05740	3	41
	96	31
172551-05780	47	26
	48	26
172551-05800	8	14
172551-05810	75	11
172551-05880	3	9
	4	18
172551-05920	6	4
172551-05930	50	6
	51	23
172551-05940	34	6
172551-05950	25	24
172551-05960	26	23
172551-05970	5	18
	19	15
	20	4
172551-05990	58	20
172551-06000	48	40
172551-06010	5	1
172551-06020	47	31
	48	31
172551-06030	63	13
172551-06040	47	29
	48	29
172551-06050	47	29 A
	48	29 A
172551-06060	47	29 B
	48	29 B
172551-06070	47	29 C
	48	29 C
172551-06080	65	1
172551-06090	58	21
172551-06100	38	24

Parts No. Index

Parts No.	Fig. No.	Ref. No.
172551-06100	39	16
172551-06110	38	25
	39	12
172551-06120	38	28
	39	14
172551-06130	6	1
172551-06140	5	5
172551-06150	6	7
172551-06160	84	4
	85	28
172551-06170	6	11
172551-06180	3	40
172551-06190	47	18
	48	18
172551-06200	19	17
	20	2
172551-06220	59	29
	60	37
	61	34
	100	48
	101	20
	102	20
172551-06230	20	1
172551-06240	69	26 A
	70	1
172551-06250	58	9
172551-06260	28	2
	30	2
172551-06270	28	3
	30	3
172551-06280	21	1
172551-06290	25	22
172551-06300	26	18
172551-06310	25	19
172551-06320	21	1 A
172551-06330	27	2
	29	2
172551-06350	58	30
172551-06360	63	18
172551-06371	86	7
	87	7
	88	1
	89	1
172551-06380	34	1
172551-06390	4	3
172551-06400	4	8
172551-06410	4	9
172551-06420	4	7
172551-06430	34	17
172551-06440	17	8

Parts No.	Fig. No.	Ref. No.
172551-06450	100	50
	102	18
172551-06460	147	5
172551-06470	146	5
172551-06480	147	6
172551-06490	146	6
172551-06500	145	5
172551-06510	145	1
172551-06520	8	16
	9	31
	17	3
172551-06530	100	51
	102	22
172551-06570	60	28
	61	26
172551-06580	6	21
	65	3
172551-06590	97	6
	98	33
	99	8
172551-06600	125	11
	126	8
172551-06610	126	7
172551-06620	78	7
172551-06630	77	8
	78	8
172551-06640	95	18
	96	18
	107	14
172551-06650	24	21
	26	22
172551-06660	25	20
172551-06670	22	11
	23	26
	24	11
	25	8
	26	3
172551-06680	95	24
	96	24
	107	20
172551-06690	9	34
	10	12
	14	14
	22	15
	23	15
	24	15
	25	13
	26	12
172551-06700	95	16
	96	16

Parts No.	Fig. No.	Ref. No.
172551-06710	102	28
172551-06720	62	13
	63	19
172551-06730	62	23
	63	6
172551-06740	53	5
	55	7
172551-06750	66	42
	67	5
	68	5
		17
	84	15
	85	13
172551-06760	137	17
	138	17
172551-06770	105	15
172551-06780	34	11
172551-06820	59	17
	60	20
		24
	61	20
172551-06830	60	33
	61	31
172551-06840	66	25
	70	4
	73	5
172551-06850	66	26
	73	4
172551-06860	66	23
	73	2
172551-06870	97	8
	98	7
	99	10
	119	21
	120	8
	121	13
	122	10
172551-06880	97	51
	98	17
172551-06890	97	18
	98	12
	99	19
172551-06900	143	10
	144	2
172551-06930	142	7
172551-06940	142	4
172551-06950	142	3
172551-06960	142	2
172551-06970	142	6
172551-06980	141	7

Parts No.	Fig. No.	Ref. No.
172551-06990	141	6
172551-07000	141	8
172551-07010	133	9
	134	3
172551-07020	134	4
172551-07030	138	3
172551-07040	138	4
172551-07050	132	6
172551-07060	132	10
172551-07070	132	13
172551-07080	132	14
172551-07090	132	21
		34
172551-07100	132	22
172551-07110	132	24
		37
172551-07130	132	28
172551-07140	132	29
		79
172551-07150	132	30
172551-07160	132	39
172551-07170	132	40
172551-07180	132	41
172551-07190	132	42
172551-07200	131	49
	132	43
172551-07210	132	47
172551-07220	132	48
172551-07230	132	51
172551-07240	132	53
		88
172551-07250	132	54
172551-07260	132	55
172551-07270	132	58
172551-07280	132	59
172551-07290	131	11
	132	60
172551-07300	132	61
172551-07310	132	70
172551-07320	132	72
172551-07330	131	58
	132	74
172551-07340	132	75
172551-07350	131	60
	132	76
172551-07360	131	61
	132	77
172551-07370	132	78
172551-07380	132	80
172551-07390	132	82

Parts No. Index

Parts No.	Fig. No.	Ref. No.
172551-07400	132	84
172551-07410	132	85
172551-07420	132	89
172551-07430	132	90
172551-07440	93	7
	94	7
172551-07450	93	18
	94	18
172551-07460	93	16
	94	16
172551-07470	93	10
	94	10
172551-07480	94	2
172551-07490	94	4
172551-07500	93	3
	94	3
172551-07510	93	9
	94	9
172551-07530	93	15
	94	15
172551-07540	93	6
	94	6
172551-07550	93	8
	94	8
172551-07560	93	50
	94	50
172551-07570	93	17
	94	17
172551-07580	18	7
172551-07590	18	6
172551-07600	18	15
172551-07610	18	5
172551-07620	18	11
172551-07630	18	10
172551-07640	18	9
172551-07650	18	8
172551-07660	18	16
172551-07670	18	14
172551-07680	93	19
	94	19
172551-07690	90	9
172551-07700	88	4
	89	4
	91	11
172551-07710	90	5
172551-07720	90	1
172551-07730	90	2
172551-07740	90	6
172551-07750	88	8
	89	8

Parts No.	Fig. No.	Ref. No.
172551-07750	90	7
	91	7
172551-07760	88	5
	89	5
172551-07780	88	2
	89	2
	91	8
172551-07810	89	9
	91	9
172551-07820	91	12
172551-07830	91	10
172551-07840	91	5
172551-07850	91	6
172551-07860	91	4
172551-07870	91	2
172551-07880	84	2
	85	2
172551-07890	84	35
	85	15
172551-07900	135	13
	136	7
172551-07911	136	4
172551-07920	136	10
172551-07931	136	14
172551-07940	136	16
172551-07951	135	10
172551-07961	135	6
172551-07970	135	7
172551-07980	135	9
	136	3
172551-07990	9	45
	10	33
	11	29
	28	18
	30	18
	52	19
	54	18
	76	16
	77	16
	78	16
172551-08000	28	19
	30	19
172551-08010	21	2
172551-08020	21	3
172551-08030	21	10
172551-08040	21	6
172551-08050	21	4
172551-08060	21	9
172551-08070	21	11
172551-08080	21	12

Parts No.	Fig. No.	Ref. No.
172551-08090	21	7
172551-08100	21	5 A
172551-08110	21	8
172551-08120	21	5
172551-08130	21	10 A
172551-08140	21	13
172551-08150	21	14
172551-08170	9	8
	10	23
172551-08180	145	3
172551-08190	86	20
	87	20
172551-08240	77	11
	78	11
172551-08250	74	6
	75	1
		9
	76	11
	77	10
	78	10
172551-08260	20	5
172551-08270	101	10 A
	102	40
172551-08280	5	25
172551-08320	27	13
	29	16
172551-08330	105	12
172551-08340	40	2
	41	15
	42	21
	66	10
	69	12
	72	1
172551-08350	149	5
172551-08360	10	4 B
172551-08370	66	18
	69	6
	72	9
172551-08380	105	16
172551-08390	6	22
	65	4
172551-08400	107	9
	108	9
	121	4
	122	2
172551-08410	96	34
172551-08420	45	1
	46	4
172551-08430	22	21
	25	25

Parts No.	Fig. No.	Ref. No.
172551-08440	111	8
	112	19
172551-08450	112	4
172551-08480	73	8
172551-08550	13	13
	49	14
	50	15
	51	16
172551-08560	10	2
172551-08570	58	2
172551-08580	51	21
172551-08590	46	2
172551-08600	45	3
	46	1
172551-08610	10	5
172551-08620	10	7
172551-08630	10	8
172551-08640	55	6
172551-08650	55	2
172551-08670	27	18
	28	13
	29	14
	30	13
172551-08680	28	17
	30	17
172551-08690	58	37
172551-08700	42	9
	45	4
	46	3
172551-08710	52	4
	54	15
172551-08720	78	13
172551-08730	19	3
	20	16
172551-08740	19	2
	20	17
172551-08750	21	20
172551-08760	56	18
	57	9
	58	6
172551-08770	44	1
172551-08780	27	6
	29	6
172551-08790	37	13
172551-08800	37	15
172551-08810	35	14
	36	20
	37	23
172551-08820	36	26
	37	16

Parts No. Index

Parts No.	Fig. No.	Ref. No.
172551-08830	39	9
172551-08840	110	29
	111	22
	113	22
	114	16
	115	22
	116	16
	117	22
	118	16
172551-08850	44	6
172551-08870	43	3
	44	5
172551-08880	45	10
	46	10
172551-08890	45	9
	46	9
172551-08900	15	21
172551-08910	49	13
	50	14
172551-08930	17	13
172551-08940	109	26
	119	16
	120	5 A
	121	19
	122	11 A
172551-08960	34	21
	38	27
	39	20
172551-08980	16	10
	17	14
172551-08990	9	40
	10	31
	15	22
	65	12
172551-09000	31	2 A
172551-09010	31	1
172551-09030	5	16
172551-09040	31	4
172551-09190	56	41
	57	47
	58	51
172551-09220	5	17
172551-09330	5	10
172551-09340	5	14
172551-09380	83	10
172551-09390	56	16
	57	18
172551-09410	95	1
	96	1
	97	14

Parts No.	Fig. No.	Ref. No.
172551-09410	98	13
	99	7
	101	7
172551-09420	143	3
	144	3
172551-09430	3	43
172551-09460	9	7
	10	28
	11	4
	56	5
	57	5
172551-09470	52	15
	53	1
	55	1
172551-09480	5	19
	6	20
	8	13
	10	13
	58	36
	96	28
172551-09500	4	5
	47	32
	48	7
172551-09510	19	16
	20	3
	56	24
	57	42
	58	24
	71	4
	95	54
	96	54
	100	55
	102	31
172551-09520	3	2
		10
	4	16
	38	16
172551-09530	3	6
	4	21
	25	16
	26	15
	56	40
	66	15
	74	12
	75	15
	83	3
172551-09540	66	19
	74	11
	75	17
172551-09550	10	9

Parts No.	Fig. No.	Ref. No.
172551-09560	20	12
172551-09570	5	12
	19	7
172551-09580	84	9
	85	3
172551-09590	11	16
	32	3
	34	2
	35	1
	36	1
	37	1
	68	14
172551-09600	57	26
	74	20
	80	14
	84	28
	85	22
	123	10 A
172551-09610	34	9
172551-09620	5	15
	120	13
	122	22
172551-09630	41	3
	42	3
172551-09640	53	10
	55	9
172551-09650	95	8
	96	8
	106	6
172551-09660	11	13
	52	13
	56	13
	57	13
	58	15
172551-09670	47	27
	48	27
	99	20
	101	9
172551-09680	13	25
	100	42
	102	35
172551-09690	3	20
172551-09700	98	6
172551-09710	16	9
	34	16
	64	3
	95	27
	96	42
	103	5
172551-09720	22	18

Parts No.	Fig. No.	Ref. No.
172551-09720	23	13
	24	18
	25	15
	26	14
172551-09730	100	45
	102	38
	103	8
	104	6
		22
	129	5
172551-09740	19	13
	20	6
172551-09750	47	12
	56	29
	57	37
		46
	63	27
172551-09760	130	8
172551-09780	97	3
	98	2
	99	4
	104	8
172551-09790	74	19
	130	5
172551-09800	106	4
	123	30
	124	9
172551-09810	62	8
	82	8
172551-09820	52	9
	54	7
	95	31
	96	46
172551-09830	17	11
	49	1
	50	3
	51	2
	95	17
	96	17
172551-09840	75	14
	107	4
	108	4
172551-09850	19	5
	20	14
172551-09860	31	5
	84	26
	85	19
	120	14
	122	23
172551-09870	47	28

Parts No. Index

Parts No.	Fig. No.	Ref. No.
172551-09870	48	28
172551-09880	35	16
	51	20
172551-09890	12	8
	13	2
	38	26
	39	22
	51	28
	58	7
	64	4
	103	4
172551-09900	11	26
172551-09910	95	14
	96	14
172551-09920	71	12
172551-09930	38	34
	39	13
	103	2
172551-09940	56	14
	57	16
	58	1
	100	46
	102	41
172551-09950	20	11
	97	30
172551-09960	3	21
	19	10
	20	7
172551-09970	53	9
	55	8
172551-09980	76	4
	77	4
	78	4
172551-09990	52	14
	53	11
	54	3
	55	11
	58	46
	108	12
172551-10000	9	36
	10	43
	12	12
	14	11
	22	14
	23	17
	24	14
	25	10
	26	11
172551-10010	6	2
	9	25

Parts No.	Fig. No.	Ref. No.
172551-10010	10	6
	14	15
	18	3
172551-10020	9	35
	10	44
	12	10
	14	13
	22	12
	23	16
	24	12
	25	11
	26	9
172551-10030	52	12
	54	5
172551-10040	40	7
	41	16
	42	19
172551-10050	97	73
	98	52
172551-10060	41	11
	42	15
172551-10070	10	10 A
	69	14
	70	13
172551-10080	11	9
172551-10090	31	3
172551-10100	86	17
	87	17
172551-10110	6	23
	65	5
172551-10120	111	18
	112	16
172551-10130	21	24
172551-10140	69	19
	70	8
172551-10150	21	18
172551-10160	129	18
	130	18
172551-10170	32	6
172551-10180	5	3
	6	10
	7	4
	8	4
	13	35
	14	9
	22	3
	23	2
	24	3
	25	26
	26	26

Parts No.	Fig. No.	Ref. No.
172551-10190	32	1
172551-10200	11	8
172551-10210	45	8
		12
	46	8
172551-10220	15	3
172551-10230	15	2
172551-10240	5	27
	6	6
172551-10250	25	2
	28	5
	30	5
172551-10260	51	13
172551-10270	127	21
	128	21
172551-10280	56	7
	57	19
	58	10
172551-10290	35	11
	36	11
	37	10
	56	44
	57	22
172551-10300	56	27
	57	11
	58	28
	95	35
		64
172551-10310	97	72
	98	53
172551-10320	49	11
	50	12
	51	25
	109	5
172551-10330	25	17
	26	16
172551-10340	21	22
	26	7
172551-10350	98	5
172551-10360	9	9
	10	20
		27
	11	3
		19
	34	3
	35	2
	36	2
	37	2
	47	16
	48	16

Parts No.	Fig. No.	Ref. No.
172551-10360	54	9
172551-10370	4	4
	47	33
	48	8
	56	8
	57	7
	58	5
	62	19
	63	12
	65	8
	123	28
	124	12
172551-10380	81	10
	109	24
172551-10390	47	25
	48	25
	97	17
	98	11
	99	17
172551-10400	3	11
	4	17
	41	4
	42	4
	47	21
172551-10410	96	33
	97	23
	98	24
	99	34
	101	17
172551-10420	75	4
172551-10430	56	39
	57	34
	58	35
	62	5
	63	3
	102	42
172551-10440	62	6
	63	4
172551-10450	11	2
		12
172551-10460	21	16
	62	18
	63	10
	71	5
	73	6
172551-10470	11	14
	15	6
172551-10480	41	12
	42	16
172551-10490	21	19

Parts No. Index

Parts No.	Fig. No.	Ref. No.
172551-10490	79	4
172551-10500	21	17
	42	14
	69	22
	70	6
	71	5 A
	73	7
172551-10510	11	20
	56	35
	57	35
	58	19
172551-10520	69	23
	70	5
172551-10530	69	17
	70	10
172551-10550	97	38
		59
	98	22
172551-10560	59	27
	60	26
		35
	61	24
		33
	63	17
172551-10570	34	18
	38	36
	39	25
172551-10580	53	8
	55	10
172551-10590	38	2
	39	2
	53	4
	55	4
172551-10600	34	19
172551-10610	15	10
172551-10620	15	14
172551-10630	15	17
172551-10640	15	11
172551-10650	15	15
172551-10660	15	5
172551-10670	111	12
	112	17
172551-10680	5	20
172551-10690	65	11
172551-10700	9	15
		27
	10	16
	12	6
	14	28
	52	3

Parts No.	Fig. No.	Ref. No.
172551-10700	54	14
172551-10710	100	44
	102	37
	103	9
	104	5
		21
	129	4
172551-10720	60	32
	61	30
	100	52
172551-10730	6	13
172551-10740	28	8
		9
	30	8
		9
172551-10760	142	5
172551-10770	143	6
172551-11230	3	4
	4	19
172551-11240	10	1 B
172551-11270	58	47
	60	40
	61	39
172551-11280	61	35
172551-11290	60	36
	61	36
172551-11300	76	15
	77	15
	78	12
172551-11330	98	10
	99	15
172551-11340	97	15
	98	34
	99	16
172551-11350	97	16
	98	35
	99	18
172551-11361	98	36
172551-11380	35	24
	84	18
	119	9
	120	15
	122	24
172551-11390	122	21 A
172551-11400	113	5
	114	5
	115	5
	116	5
	117	5
	118	5

Parts No.	Fig. No.	Ref. No.
172551-11400	127	8
	128	8
172551-11410	113	12
	115	12
	117	12
	127	23
	128	23
172551-11430	113	21
	114	7
	115	21
	116	7
	117	21
	118	7
	127	9
	128	9
172551-11440	123	8
	125	19
	126	16
	127	3
	128	3
172551-11460	145	9
172551-11500	148	3
172551-15100	85	29
172551-15120	85	26
172551-15130	58	4
172551-15140	69	8
	70	16
172551-15300	56	17
	57	17
	58	17
172551-15310	57	20
	58	12
172552-00020	143	9
172552-00040	143	7
172552-00050	143	5
172552-00060	83	4
172552-00070	98	51
172552-00081	119	19
	120	7
	133	1
172552-00120	80	21
	81	14
172552-00130	83	7
172552-00140	83	8
172552-00170	95	4
	96	4
172552-00190	95	2
	96	2
172552-00200	130	17
172552-00210	122	21

Parts No.	Fig. No.	Ref. No.
172552-00210	126	17
172552-00221	111	1
	112	1
	132	150
172552-00230	86	1
	87	1
172552-00240	81	3
172552-00250	80	23
	81	16
172552-00260	83	9
172552-00290	48	5
172552-00300	84	1
	85	1
	119	2
172552-00311	92	2
	94	1
172552-00360	111	13
	112	9
	128	14
172552-00390	113	11
	115	11
	117	11
	127	13
	128	13
172552-00400	111	14
	112	10
	127	7
	128	7
172552-00420	124	6
172552-00430	124	7
172552-00440	124	4
172552-00450	104	19
		20
	124	1
		2
172552-00460	123	21
	129	10
	130	10
172552-00470	130	11
172552-00480	50	8
	51	6
172552-00490	50	9
	51	7
172552-00520	121	15
	122	13
	134	1
172552-00531	104	10
	143	1
172552-00541	105	8
	144	1

Parts No. Index

Parts No.	Fig. No.	Ref. No.
172552-00550	70	20
172552-00560	81	9
172552-00570	45	7
	46	7
172552-00601	144	4
172552-00610	144	9
172552-00620	144	10
172552-00630	144	6
172552-00640	144	5
172552-00651	143	4
172552-00660	143	11
172552-00670	143	8
172552-00680	143	12
172552-00690	132	18
172552-00700	132	31
172552-00710	93	14
	94	14
172552-00730	133	8
172552-00770	45	11
	46	11
172552-00780	81	8
172552-00870	46	12
172552-00890	83	6
172552-01330	147	3
172552-01340	146	3
172552-01350	120	3
	122	8
172552-01360	121	10
	122	15
172552-15100	83	5
172552-15110	49	17
	50	19
	51	22
172552-15120	132	1
172552-15130	132	15
172552-15140	132	16
172552-15150	132	20
172552-15160	132	25
172552-15170	132	27
172552-15180	132	50
172552-15210	132	26
172552-15220	79	13
172552-15230	2	11
172552-15240	3	32
172552-15250	3	31
172552-15260	3	29
172552-15270	3	27
172552-15290	3	26
172552-15320	10	2 A
172552-15330	10	4 C

Parts No.	Fig. No.	Ref. No.
172552-15340	9	41
	10	30
	14	1
172552-15360	9	26
	10	17
172552-15370	10	1
172552-15380	10	4
172552-15390	10	1 A
172552-15400	10	4 A
172552-15410	10	9 A
172552-15420	9	6
	10	29
	12	17
	17	4
172552-15430	9	20
	11	24
172552-15440	9	21
	11	27
172552-15450	9	18
	11	22
172552-15460	9	19
	11	18
172552-15470	11	21
172552-15480	11	15
172552-15490	16	6
172552-15500	3	36
172552-15510	3	19
172552-15520	28	1
172552-15530	28	1 A
172552-15540	28	1 B
172552-15550	28	1 C
172552-15570	22	23
	23	21
	24	23
172552-15580	22	24
172552-15590	22	6
	23	23
	24	6
172552-15600	22	1
172552-15610	22	22
	23	19
	24	22
172552-15620	24	24
172552-15630	24	1
172552-15640	21	25
172552-15650	31	2
172552-15660	35	18
	36	15
	37	20
172552-15670	35	17

Parts No.	Fig. No.	Ref. No.
172552-15670	36	27
	37	14
172552-15680	36	17
	37	17
172552-15690	36	18
	37	18
172552-15700	38	7
172552-15710	38	6
172552-15720	38	12
172552-15730	38	18
172552-15740	38	37
172552-15750	38	10
172552-15760	38	17
172552-15770	43	5
	44	3
172552-15780	47	3
172552-15790	47	35
172552-15800	47	19
172552-15820	47	7
172552-15830	52	1
172552-15840	52	17
172552-15850	52	10
172552-15860	53	3
172552-15870	53	7
172552-15890	57	23
172552-15900	56	6
	57	6
172552-15910	56	19
	57	15
172552-15920	56	46
	57	21
172552-15930	56	28
	57	32
172552-15940	56	4
	57	4
172552-15950	56	47
	57	27
172552-15970	56	3
	57	3
172552-15980	59	5
172552-15990	59	25
		28
172552-16000	56	33
		48
	57	49
	59	32
172552-16010	56	32
		49
	57	50
	59	33

Parts No.	Fig. No.	Ref. No.
172552-16010	103	36
172552-16020	59	31
172552-16030	59	30
172552-16040	59	18
		19
		20
		22
		23
		24
172552-16050	62	20
172552-16060	62	2
172552-16070	62	3
172552-16080	62	21
172552-16090	66	30
172552-16100	66	35
	67	3
	68	3
172552-16110	66	37
	67	4
	68	4
172552-16120	66	36
172552-16140	68	15
172552-16150	66	43
	67	6
	68	6
172552-16160	67	13 A
	68	13
172552-16170	68	18
172552-16180	68	20
172552-16190	68	16
172552-16210	69	24
172552-16220	69	25
172552-16240	74	1
172552-16250	74	5
172552-16260	74	3
	76	10
172552-16270	74	4
172552-16280	74	21
	76	9
	77	14
172552-16300	76	12
	77	12
172552-16310	76	8
172552-16320	76	13
172552-16330	76	3
	77	3
172552-16340	76	7
	77	7
172552-16370	79	1
172552-16380	79	6

Parts No. Index

Parts No.	Fig. No.	Ref. No.
172552-16390	79	2
172552-16400	41	9
172552-16410	84	7
172552-16420	84	16
	119	7
172552-16430	84	14
172552-16450	95	28
	96	43
172552-16460	95	26
	96	41
172552-16470	95	29
	96	44
172552-16480	95	25
	96	40
172552-16490	95	12
	96	12
172552-16500	95	3
	96	3
172552-16510	27	3
	29	3
	103	1
172552-16520	103	21
		26
172552-16530	103	23
		28
172552-16540	103	24
		25
		29
		30
172552-16550	103	6
172552-16560	103	13
172552-16570	103	17
172552-16580	103	12
172552-16590	103	16
172552-16600	103	3
172552-16610	105	1
		3
	129	1
		6
172552-16620	105	2
		4
	129	2
		7
172552-16630	107	11
	121	7
172552-16640	107	10
	121	6
172552-16650	107	2
	121	5
172552-16680	109	14

Parts No.	Fig. No.	Ref. No.
172552-16680	119	17
	120	5
	121	18
	122	11
172552-16690	109	3 A
172552-16730	110	14
	111	4
172552-16740	111	7
172552-16750	110	1
		15
	111	5
		16
	113	7
	114	10
	115	7
	116	10
172552-16760	111	17
	113	8
	115	8
172552-16770	110	2
		16
	111	6
	114	9
	116	9
172552-16780	113	13
	114	4
	115	13
	116	4
172552-16790	119	25
	125	16
172552-16810	119	29
172552-16820	119	26
172552-16830	121	11
172552-16840	123	20
172552-16850	123	23
	129	8
172552-16860	104	3
	123	2
172552-16870	104	2
	123	1
172552-16880	123	5 A
	125	22
172552-16890	123	6 A
	125	23
172552-16900	123	5
	125	1
172552-16910	123	6
	125	2
172552-16920	123	14
172552-16930	123	15

Parts No.	Fig. No.	Ref. No.
172552-16940	123	13
172552-16950	123	16
	129	16
172552-16960	123	12
	129	11
172552-16970	123	18
172552-16980	123	19
172552-16990	125	9
172559-00010	1	7
172559-00020	1	9
172559-00030	1	5
172559-00040	1	17
	2	8 A
	40	11
172559-00050	1	14
172559-00060	1	18
	2	13
	40	12
172559-00070	1	19
	2	14
	40	13
172559-00080	1	8
172559-00090	1	4
172559-00100	1	6
172559-00110	1	3
172559-00120	1	2
	2	2
	119	6 A
	120	17
172559-00130	3	35
172559-00140	3	7
172559-00150	3	17
	52	6
	54	16
172559-00160	3	30
	86	15
	87	15
	95	63
	96	63
	97	4
	98	4
	99	3
	104	9
	105	6
172559-00170	3	24
	19	9
	20	10
172559-00180	3	18
	52	5
	54	17

Parts No.	Fig. No.	Ref. No.
172559-00190	4	1
172559-00200	4	12
		13
172559-00210	4	14
	33	3
172559-00220	5	29
	7	12
	8	3
172559-00230	5	26
172559-00240	5	2
		28
	7	3
172559-00250	5	7
172559-00260	5	9 B
172559-00270	5	22 B
172559-00280	5	1 A
172559-00290	5	21
172559-00300	5	8
172559-00310	5	9
172559-00320	5	22
172559-00330	5	9 A
172559-00340	5	22 A
172559-00350	5	13
172559-00360	5	6
	11	23
	13	7
	14	25
	33	7
	35	25
	43	4
	44	4
	86	12
	87	12
172559-00370	6	1 A
172559-00380	7	13
172559-00390	7	15
	12	21
172559-00400	7	1
172559-00410	7	2
172559-00420	7	14
172559-00430	7	16
	16	1
	17	1
	33	15
	47	36
	56	26
	58	39
	63	16
	65	7
172559-00440	7	8

Parts No. Index

Parts No.	Fig. No.	Ref. No.
172559-00440	8	8
	9	32
	12	23
	17	5
	33	14
172559-00450	7	7
	8	7
	9	16
		28
		33
	10	14
	12	7
		22
	14	22
	17	6
	52	2
	54	12
	56	22
	57	40
	58	22
	65	9
	66	40
	67	7
	68	7
	79	5
	84	27
	85	20
	100	56
	102	32
	119	28
	129	13
	130	13
172559-00460	7	5
	8	5
172559-00470	8	2
172559-00480	8	12
172559-00490	8	1
172559-00500	8	17
172559-00510	8	15
	19	20
	33	10
	35	10
	49	2
	50	1
	51	1
		27
	56	2
	57	2
	58	3
	95	34

Parts No.	Fig. No.	Ref. No.
172559-00510	96	51
	100	47
	102	19
172559-00520	9	23
172559-00530	9	22
172559-00540	9	1
172559-00550	9	5
172559-00560	9	2
172559-00570	9	3
172559-00580	9	4
172559-00590	9	29
172559-00600	9	1 A
172559-00610	9	2 A
172559-00620	9	4 A
172559-00630	9	24
172559-00640	9	39
	12	11
	14	12
172559-00650	9	10
	10	19
		26
	11	6
	64	6
	74	13
	75	12
	103	7
172559-00660	10	1 C
172559-00670	10	10
	38	20
	39	6
	40	10
	41	13
	42	12
		17
	47	20
	56	31
	57	38
	63	26
	66	13
	74	9
	75	16
	83	2
	84	13
	85	7
	95	36
	96	52
	127	20
	128	20
172559-00680	12	2
172559-00690	12	1

Parts No.	Fig. No.	Ref. No.
172559-00700	12	20
172559-00710	12	15
172559-00720	12	16
172559-00730	12	4
172559-00740	12	3
172559-00750	12	19
	13	41
172559-00760	12	14
172559-00770	12	5
	13	22
172559-00780	12	9
	13	3
	14	4
		33
	16	8
	17	9
	38	29
	39	21
	47	17
	48	17
	54	10
	67	18
	80	13
	95	30
	96	30
		45
172559-00790	12	18
	13	40
	56	12
	57	14
	58	16
172559-00800	13	21
172559-00810	13	1
172559-00820	13	28
172559-00830	13	27
172559-00840	13	18
172559-00850	13	6
172559-00860	13	16
172559-00870	13	4
172559-00880	13	9
172559-00890	13	20
172559-00900	13	5
172559-00910	13	10
172559-00920	13	29
172559-00930	13	19
172559-00940	13	33
172559-00950	13	11
172559-00960	13	32
172559-00970	13	30
172559-00980	13	8

Parts No.	Fig. No.	Ref. No.
172559-00990	13	14
172559-01000	13	12
172559-01010	13	31
172559-01020	13	26
172559-01030	13	23
172559-01040	13	15
172559-01050	14	16
172559-01060	14	10
172559-01070	14	29
172559-01080	14	30
172559-01090	14	17
172559-01100	14	5
172559-01110	14	26
172559-01120	14	27
172559-01130	14	24
172559-01140	14	20
172559-01150	14	18
172559-01160	14	2
172559-01170	14	7
172559-01180	14	3
172559-01190	15	23
172559-01200	15	9
172559-01210	16	3
172559-01220	16	7
	84	23
	85	18
	97	2
	98	9
	99	5
	101	1
	119	24
	125	15
	126	6
172559-01230	18	4
172559-01240	19	14
172559-01250	19	1
172559-01260	19	18
172559-01270	19	8
172559-01280	19	6
	20	13
	49	12
	50	13
	51	26
	62	10
172559-01290	19	19
172559-01300	21	30
172559-01310	21	21
	26	8
	95	5
	96	5

Parts No. Index

Parts No.	Fig. No.	Ref. No.
172559-01310	99	21
	101	8
172559-01320	21	23
	26	6
	43	1
172559-01330	22	25
172559-01340	22	20
	23	10
	24	20
	25	9
		18
	26	13
		19
172559-01350	23	4
172559-01360	23	5
172559-01370	23	9
172559-01380	23	8
172559-01390	24	25
	27	15
172559-01400	27	11
172559-01410	27	14
172559-01420	27	19
	29	15
172559-01430	27	17
172559-01440	27	16
172559-01450	30	1
172559-01460	30	1 A
172559-01470	30	1 B
172559-01480	30	1 C
172559-01490	33	13
172559-01500	33	6
172559-01510	33	2
172559-01520	33	16
172559-01530	33	11
172559-01540	33	20
172559-01550	33	21
172559-01560	33	17
172559-01570	33	12
172559-01580	33	5
172559-01590	33	9
172559-01600	33	8
172559-01610	33	1
172559-01620	35	15
172559-01630	35	7
	36	5
172559-01640	35	6
	36	6
172559-01650	35	21
	36	23
172559-01660	35	9

Parts No.	Fig. No.	Ref. No.
172559-01670	35	12
172559-01680	35	26
172559-01690	35	13
	36	9 A
172559-01700	35	8
	36	9
	37	8
172559-01710	35	5
	36	4
	37	4
	80	8
	81	7
172559-01720	36	10
172559-01730	36	19
172559-01740	38	31
	39	23
	106	10
	108	3
	123	10
	130	4
172559-01750	38	11
		33
	56	15
	57	10
	58	29
172559-01760	40	14
172559-01770	40	20
172559-01780	40	9
172559-01790	40	8
172559-01800	40	6
	41	18
	42	22
	69	13 A
	72	13
172559-01810	40	15
172559-01820	40	1
172559-01830	41	10
172559-01840	43	6
	44	8
172559-01850	44	7
172559-01860	45	2
172559-01870	45	5
	46	5
172559-01880	47	39
	48	39
172559-01890	47	37
	48	33
172559-01900	47	5
172559-01910	47	40
172559-01920	47	24

Parts No.	Fig. No.	Ref. No.
172559-01920	48	24
172559-01930	47	30
	48	30
172559-01940	48	22
	95	22
	96	22
	107	15
	125	4
172559-01950	49	3
172559-01960	49	9
172559-01970	49	5
172559-01980	49	8
172559-01990	49	7
172559-02000	49	4
172559-02010	49	6
172559-02020	51	9
	62	17
	66	29
	84	17
	119	10
172559-02030	54	1
172559-02040	56	1
	57	1
172559-02050	56	36
	58	18
	60	29
		30
172559-02060	56	20
172559-02070	56	10
172559-02080	56	30
	57	39
172559-02090	56	23
	57	43
	58	25
172559-02100	57	33
	58	33
	62	24
	63	7
172559-02110	57	31
	58	34
	62	12
	63	8
	66	27
172559-02120	58	14
		45
	108	16
172559-02130	60	25
172559-02140	62	9
	63	9
172559-02150	64	1

Parts No.	Fig. No.	Ref. No.
172559-02160	65	19
172559-02170	65	16
172559-02180	66	21
172559-02190	66	1
172559-02200	66	47
	73	10
172559-02210	66	46
	73	9
172559-02220	66	6
172559-02230	66	38
172559-02240	66	39
	67	15
	71	9
	123	17
	125	20
	126	19
172559-02250	66	34
	67	2
	68	2
	109	9
172559-02260	67	16
172559-02270	67	17
172559-02280	67	14
172559-02290	67	12
172559-02300	67	13
	68	12
	123	26
172559-02310	68	19
172559-02320	69	26
172559-02330	71	16
172559-02340	71	17
172559-02350	71	10
172559-02360	71	8
	104	11
	110	24
	127	6
	128	6
	129	15
	130	15
172559-02370	71	15
172559-02380	74	14
172559-02390	74	15
172559-02400	74	2
	75	2
	76	14
	77	17
	78	17
	84	3
	85	27
172559-02410	74	7

Parts No. Index

Parts No.	Fig. No.	Ref. No.
172559-02420	76	6
	77	6
	78	6
172559-02430	77	13
172559-02440	78	3
172559-02450	79	17
172559-02460	79	15
172559-02470	79	16
172559-02480	80	6
172559-02490	80	4
172559-02500	80	7
172559-02510	80	18
172559-02520	80	9
172559-02530	80	17
172559-02540	80	16
172559-02550	80	15
172559-02560	80	3
172559-02570	80	22
	81	15
172559-02580	80	5
172559-02590	81	17
172559-02600	81	11
172559-02610	83	1
172559-02620	84	33
	85	31
172559-02630	84	21
	110	8
172559-02640	84	36
	85	14
172559-02650	84	5
172559-02660	84	30
	85	24
	111	9
	112	8
	119	3
	120	12
		20
	121	9
	122	17
	127	4
	128	4
172559-02670	84	6
	85	8
172559-02680	84	34
	85	17
	110	7
	119	13
172559-02690	86	26
172559-02700	86	3
	87	3

Parts No.	Fig. No.	Ref. No.
172559-02710	86	2
	87	2
172559-02720	86	5
	92	4
172559-02730	86	9
	90	8
172559-02740	87	27
172559-02750	87	26
	92	7
172559-02760	87	5
	92	5
172559-02770	87	10
	90	11
172559-02780	88	6
172559-02790	88	7
172559-02800	88	3
172559-02810	89	10
172559-02820	90	3
172559-02830	90	4
172559-02840	92	1
	93	1
172559-02850	93	2
172559-02860	93	4
172559-02870	95	33
	96	47
172559-02880	95	53
	96	53
172559-02890	95	60
	96	60
172559-02900	95	61
	96	61
172559-02910	95	6
		23
	96	6
		23
	106	17
	107	19
172559-02920	96	35
172559-02930	97	71
172559-02940	97	26
	98	30
	99	33
	101	5
172559-02950	97	12
	98	37
	99	14
172559-02960	97	9
	98	40
	99	11
172559-02970	97	10

Parts No.	Fig. No.	Ref. No.
172559-02970	98	39
	99	12
172559-02980	97	13
172559-02990	97	27
	98	25
	99	35
	101	13
172559-03000	97	1
	99	1
172559-03010	97	22
	99	36
172559-03020	97	19
	99	30
172559-03030	97	32
172559-03040	97	35
172559-03050	97	28
172559-03060	97	33
172559-03070	97	36
172559-03090	98	50
172559-03100	99	23
	101	11
172559-03110	99	22
	101	6
172559-03120	99	6
	100	6
172559-03130	99	27
172559-03140	100	57
	102	29
	103	11
172559-03150	101	10
172559-03160	101	2
172559-03170	104	17
172559-03180	104	4
172559-03190	106	9
	113	18
	114	14
	115	18
	116	14
	117	18
	118	14
	127	26
	128	26
172559-03200	106	20
	125	13
	126	11
172559-03210	107	13
	121	1
	122	1
	123	4 A
	125	21

Parts No.	Fig. No.	Ref. No.
172559-03210	136	1
172559-03220	107	12
	121	8
	122	4
172559-03230	107	6
	108	8
	109	27
172559-03240	109	1 A
172559-03250	109	1
172559-03260	109	19
	119	12
	120	9
	121	12
	122	14
	127	12
	128	12
172559-03270	109	11
172559-03280	110	5
172559-03290	110	28
	111	21
	113	23
	114	17
	115	23
	116	17
172559-03300	110	10
172559-03310	110	13
172559-03320	110	19
172559-03330	110	6
172559-03340	110	18
172559-03350	110	22
172559-03360	110	27
	131	1
172559-03370	110	3
172559-03380	110	11
172559-03390	110	25
172559-03400	110	12
172559-03410	110	17
	119	4
	120	2
	122	7
172559-03420	110	21
172559-03430	111	15
	112	11
	124	13
172559-03440	113	17
	114	8
	115	17
	116	8
	117	17
	118	8

Parts No. Index

Parts No.	Fig. No.	Ref. No.
172559-03440	127	10
	128	10
172559-03450	113	3
	114	13
	115	3
	116	13
	117	3
	118	13
	127	25
	128	25
172559-03460	113	15
	115	15
	117	15
172559-03470	113	16
	114	12
	115	16
	116	12
	117	16
	118	12
	127	24
	128	24
172559-03480	113	20
	114	11
	115	20
	116	11
	117	20
	118	11
172559-03490	119	1
	120	1
	123	4
	125	17
	135	1
172559-03500	123	32
172559-03510	123	11
172559-03520	123	29
	124	3
172559-03530	126	4
		14
172559-03540	126	13
172559-03550	127	2
	128	2
172559-03560	131	12
172559-03570	131	24
172559-03580	131	33
172559-03590	131	2
		10
172559-03600	131	13
172559-03610	131	38
172559-03620	131	45
172559-03630	131	35

Parts No.	Fig. No.	Ref. No.
172559-03640	131	47
172559-03650	131	53
172559-03660	131	50
172559-03670	131	27
172559-03680	131	9
172559-03690	131	8
172559-03700	131	5
172559-03710	131	57
172559-03720	131	59
172559-03730	131	48
172559-03740	131	70
172559-03750	131	36
172559-03760	131	44
172559-03770	131	43
172559-03780	131	41
172559-03790	132	110
172559-03800	132	99
172559-03810	132	160
172559-03820	132	83
172559-03910	141	4
172559-03920	141	3
172559-03950	145	8
172559-03960	146	2
	147	2
172559-03970	146	1
	147	1
172559-03980	148	2
172559-03990	149	3

Parts No.	Fig. No.	Ref. No.

Parts No.	Fig. No.	Ref. No.