YANMAR

PARTS CATALOG

0CD50-M03240EN

Last update Apr., 2019

PREFACE

This parts catalog is the 1st edition of 3TNV88-BDKTF for Tong Yang Moolsan Co., Ltd.

Published : June, 2017

Contents

0CD50-M03240

Fig. No.	Fig. Name
ENGINE	
1.	CYLINDER BLOCK
2.	GEAR HOUSING
3.	FLYWHEEL HOUSING & OIL SUMP
4.	CYLINDER HEAD & BONNET
5.	SUCTION MANIFOLD
6.	EXHAUST MANIFOLD
7.	CAMSHAFT & DRIVING GEAR
8.	CRANKSHAFT & PISTON
9.	LUB. OIL SYSTEM
10.	COOLING WATER SYSTEM
11.	FUEL INJECTION PUMP
12.	GOVERNOR
13.	FUEL INJECTION VALVE
14.	FUEL PIPE
15.	STARTER MOTOR
16.	ACCESSORY

Fig.1. CYLINDER BLOCK

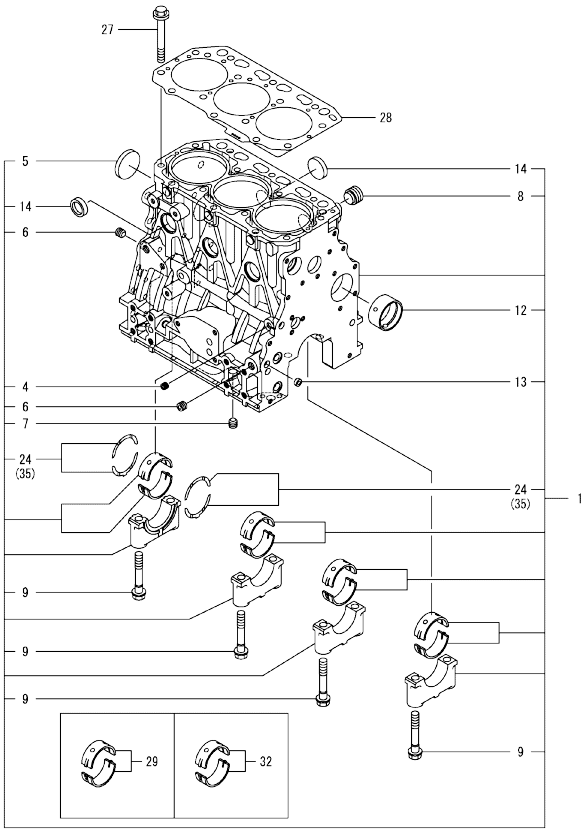

Remarks
(1)Spare parts.
(2)Under-sized(U.S.=0.25) parts.
(3)Over-sized(O.S.=0.25) parts.

(A)=3TNV88-BDKTF
(B)=
(C)=
(D)=
(E)=
(F)=

No.	Lev.	Parts No.	Description	Q'ty (A)	(B)	(C)	(D)	(E)	(F)	I	R
1	1	729005-01560	BLOCK ASSY, CYLINDER	1							
4	2	124060-01050	PLUG, PT1/8	1							
5	2	129001-01250	PLUG, DISH TYPE 50	1							
6	2	124160-01910	PLUG, PT1/4	2							
7	2	124160-01910	PLUG, PT1/4	1							
8	2	171051-01921	PLUG, NPTF1	1							
9	2	129150-02020	BOLT, METAL CAP	8							
12	2	129795-02412	BUSH, CAMSHAFT	1							
13	2	27241-120000	PLUG, 12	2							
14	2	27241-300000	PLUG 30	6							
24	2	129150-02931	BEARING ASSY, THRUST	2							
27	1	129150-01200	BOLT, CYLINDER HEAD	14							
28	1	129001-01340	GASKET, HEAD	1							
29	1	129001-02931	BEARING ASSY, MAIN	4							1
32	1	129150-02871	BEARING ASSY, MAIN	4							2
35	1	129150-02941	BEARING, THRUST 0.25	1							3

N:Old ←Yes/No→ New. Q:Old ←No/Yes→ New. R:Old ←Yes/Yes→ New. S:Old ←No/No→ New. W:Add. Z:Discontinued. F:Interchangeable by set. K:Q'ty Change

Copyright (C) 2017 YANMAR CO., LTD. All RightsReserved.

Fig.2. GEAR HOUSING

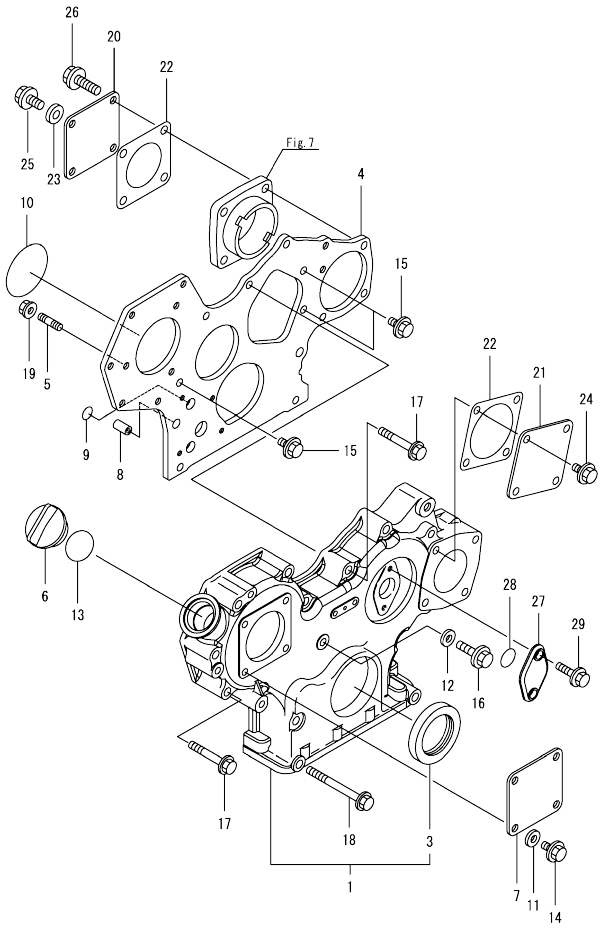

(A)=3TNV88-BDKTF (D)=
(B)= (E)=
(C)= (F)=

No.	Lev.	Parts No.	Description	Q'ty (A)	(B)	(C)	(D)	(E)	(F)	I	R
1	1	729008-01500	CASE ASSY, GEAR	1							
3	2	119934-01800	SEAL, OIL	1							
4	1	129008-01520	FLANGE, GEAR CASE	1							
5	1	119802-01561	BOLT, STUD M8X25	3							
6	1	124160-01751	CAP, FILLER	1							
7	1	124240-01871	COVER, PUMP	1							
8	1	129795-01950	PIPE, DOWEL L=18	2							
9	1	119609-32040	O-RING, P16	2							
10	1	121850-51960	O-RING	1							
11	1	22190-080002	WASHER, SEAL 8	4							
12	1	22190-080002	WASHER, SEAL 8	1							
13	1	24311-000320	O-RING, 1AP32.0	1							
14	1	26106-080162	BOLT, M8X 16 PLATED	4							
15	1	26106-080162	BOLT, M8X 16 PLATED	3							
16	1	26106-080302	BOLT, M8X 30 PLATED	1							
17	1	26106-080552	BOLT, M8X 55 PLATED	10							
18	1	26106-080852	BOLT, M8X 85 PLATED	3							
19	1	26306-080002	NUT, M8	3							
20	1	124240-01871	COVER, PUMP	1							
21	1	124240-01871	COVER, PUMP	1							
22	1	129C26-01890	GASKET, HO-P	2							
23	1	22190-080002	WASHER, SEAL 8	1							
24	1	26106-080162	BOLT, M8X 16 PLATED	4							
25	1	26106-080202	BOLT, M8X 20 PLATED	1							
26	1	26106-080302	BOLT, M8X 30 PLATED	3							
27	1	121023-01551	COVER	1							
28	1	24341-000240	O-RING, 1AS24.0	1							
29	1	26106-060162	BOLT, M6X 16 PLATED	2							

N:Old ←Yes/No→ New. Q:Old ←No/Yes→ New. R:Old ←Yes/Yes→ New. S:Old ←No/No→ New. W:Add. Z:Discontinued. F:Interchangeable by set. K:Q'ty Change

Copyright (C) 2017 YANMAR CO., LTD. All RightsReserved.

Fig.3. FLYWHEEL HOUSING & OIL SUMP

(A)=3TNV88-BDKTF (D)=
(B)= (E)=
(C)= (F)=

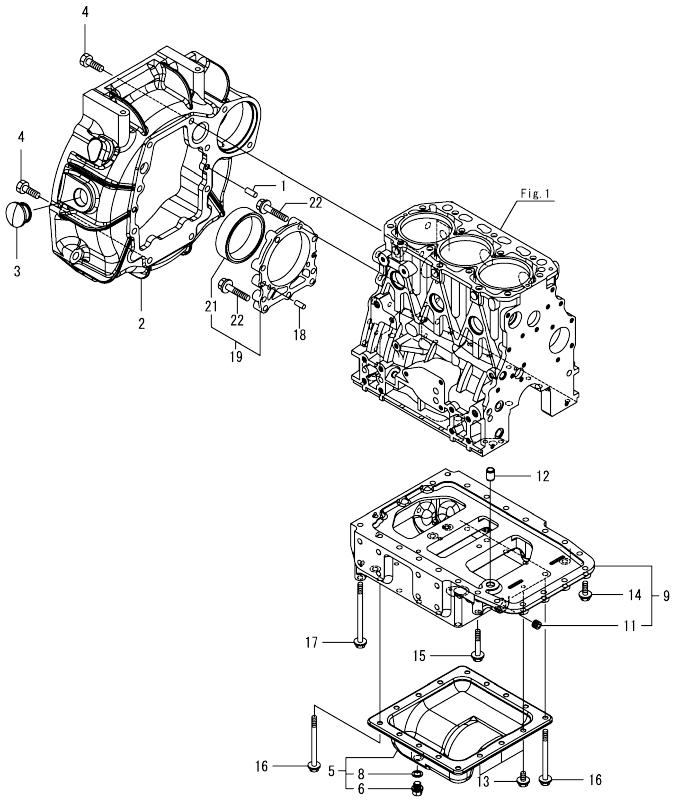

No.	Lev.	Parts No.	Description	Q'ty (A)	(B)	(C)	(D)	(E)	(F)	I	R
1	1	129100-01580	PIN, PARALLEL 8X16	2							
2	1	129267-01630	HOUSING, FLYWHEEL	1							
3	1	119620-01750	CAP	1							
4	1	26206-100252	BOLT, M10X 25 PLATED	8							
5	1	129052-01551	COVER ASSY, OIL SUMP	1							
6	2	129054-01640	PLUG, DRAIN 12	1							
8	2	22190-120002	WASHER, SEAL 12	1							
9	1	129052-01692	SUMP ASSY, OIL	1							
11	2	124160-01910	PLUG, PT1/4	1							
12	1	129555-01750	PIPE, DOWEL 14X19	1							
13	1	26106-080122	BOLT, M8X 12 PLATED	6							
14	1	26106-080252	BOLT, M8X 25 PLATED	6							
15	1	26106-080502	BOLT, M8X 50 PLATED	2							
16	1	26106-081002	BOLT, M8X100 PLATED	10							
17	1	26106-081202	BOLT, M8X120 PLATED	4							
18	1	129100-01580	PIN, PARALLEL 8X16	2							
19	1	129100-01640	CASE ASSY, OIL SEAL	1							
21	2	129795-01780	SEAL, OIL	1							
22	1	129486-01670	BOLT, M8X30	9							

N:Old ◄Yes/No► New. Q:Old ◄No/Yes► New. R:Old ◄Yes/Yes► New. S:Old ◄No/No► New. W:Add. Z:Discontinued. F:Interchangeable by set. K:Q'ty Change

Copyright (C) 2017 YANMAR CO., LTD. All RightsReserved.

Fig.4. CYLINDER HEAD & BONNET

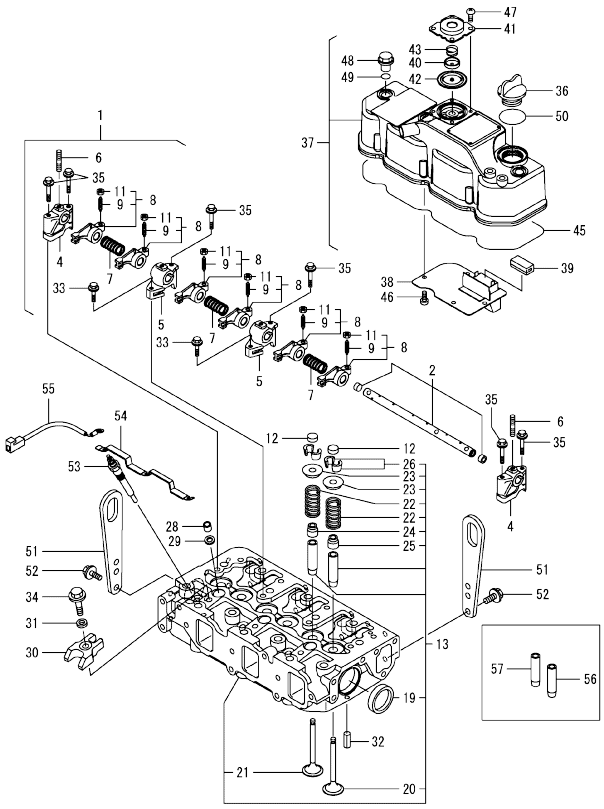

(A)=3TNV88-BDKTF
(B)=
(C)=
(D)=
(E)=
(F)=

No.	Lev.	Parts No.	Description	Q'ty (A)	(B)	(C)	(D)	(E)	(F)	I	R
1	1	129004-11241	SHAFT ASSY, ROCKER	1							
2	2	129004-11251	SHAFT, ROCKER ARM	1							
4	2	119802-11260	SUPPORT, ROCKER ARM	2							
5	2	119802-11270	SUPPORT, ROCKER ARM	2							
6	2	119802-11280	BOLT, STUD	3							
7	2	129150-11280	SPRING, ROCKER	3							
8	2	129004-11650	ARM ASSY, ROCKER	6							
9	3	129150-11230	SCREW, VALVE ADJUST	6							
11	3	129150-11750	NUT, M8	6							
12	1	129150-11370	CAP, VALVE	6							
13	1	129008-11710	HEAD ASSY, CYLINDER	1							
19	3	27241-400000	PLUG, 40	2							
20	2	129005-11100	VALVE, SUCTION	3							
21	2	129100-11112	VALVE, EXHAUST	3							
22	2	129795-11120	SPRING, VALVE	6							
23	2	129795-11180	RETAINER, SPRING	6							
24	2	121400-11340	SEAL, VALVE STEM	3							
25	2	124460-11340	SEAL, VALVE STEM	3							
26	2	27310-080001	COTTER, 8	6							
28	1	119802-11870	PROTECTOR, NOZZLE	3							
29	1	119625-11880	SEAT, NOZZLE	3							
30	1	129004-11900	RETAINER, NOZZLE	3							
31	1	120270-54410	WASHER, INJECTOR	3							
32	1	22351-060012	PIN, SPRING 6.0X12	2							
33	1	26106-080252	BOLT, M8X 25 PLATED	2							
34	1	26106-080352	BOLT, M8X 35 PLATED	3							
35	1	26106-080502	BOLT, M8X 50 PLATED	6							
36	1	124160-01751	CAP, FILLER	1							
37	1	129004-11350	BONNET ASSY, HEAD	1							
38	2	129004-03010	PLATE, BAFFLE	1							
39	2	129150-03070	BAFFLE, BREATHER	1							
40	2	119802-03110	PLATE, DIAPHRAGM	1							
41	2	119802-03121	COVER, DIAPHRAGM	1							
42	2	119802-03130	DIAPHRAGM	1							
43	2	119802-03141	SPRING, DIAPHRAGM	1							
45	2	129004-11310	GASKET, BONNET	1							
46	2	22857-500100	SCREW, 5X10	4							
47	2	22857-500100	SCREW, 5X10	4							
48	1	124160-11360	KNOB	3							
49	1	24311-000120	O-RING, 1AP12.0	3							
50	1	24311-000320	O-RING, 1AP32.0	1							
51	1	129900-07900	LIFTER, ENGINE	2							
52	1	26106-080162	BOLT, M8X 16 PLATED	4							
53	1	129008-77800	PLUG, GLOW	3							
54	1	129008-77820	CONNECTOR, GLOW PLUG	1							
55	1	119803-77830	HARNESS, WIRE	1							
56	1	120130-11860	GUIDE, VALVE	3							1
57	1	129150-11810	GUIDE, VALVE	3							1

Remarks
(1)Spare parts.

N:Old ←Yes/No→ New. Q:Old ←No/Yes→ New. R:Old ←Yes/Yes→ New. S:Old ←No/No→ New. W:Add. Z:Discontinued. F:Interchangeable by set. K:Q'ty Change

Copyright (C) 2017 YANMAR CO., LTD. All RightsReserved.

Fig.5. SUCTION MANIFOLD

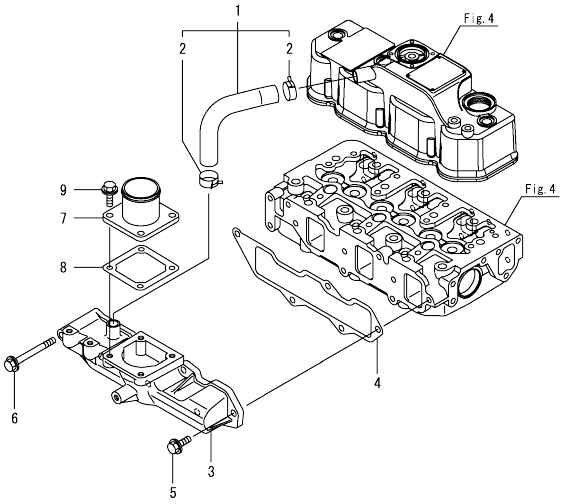

(A)=3TNV88-BDKTF
(B)=
(C)=
(D)=
(E)=
(F)=

No.	Lev.	Parts No.	Description	Q'ty (A)	(B)	(C)	(D)	(E)	(F)	I	R
1	1	129005-03080	HOSE ASSY, BREATHER	1							
2	2	129410-03990	CLAMP, HOSE 21.5	2							
3	1	129005-12101	MANIFOLD, AIR INTAKE	1							
4	1	129001-12110	GASKET, MANIFOLD	1							
5	1	26106-080202	BOLT, M8X 20 PLATED	4							
6	1	26106-080802	BOLT, M8X 80 PLATED	1							
7	1	129486-12581	JOINT, MANIFOLD	1							
8	1	129150-77511	GASKET, AIR HEATER	1							
9	1	26106-080202	BOLT, M8X 20 PLATED	4							

N:Old $\frac{\text{Yes}}{\text{No}}$ New. Q:Old $\frac{\text{No}}{\text{Yes}}$ New. R:Old $\frac{\text{Yes}}{\text{Yes}}$ New. S:Old $\frac{\text{No}}{\text{No}}$ New. W:Add. Z:Discontinued. F:Interchangeable by set. K:Q'ty Change

Copyright (C) 2017 YANMAR CO., LTD. All RightsReserved.

Fig.6. EXHAUST MANIFOLD

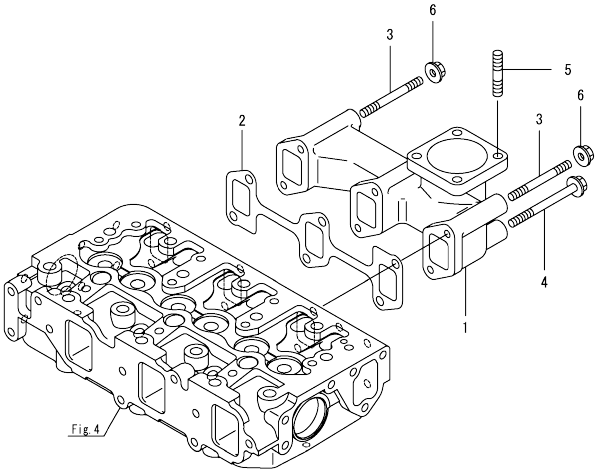

(A)=3TNV88-BDKTF
(B)=
(C)=
(D)=
(E)=
(F)=

No.	Lev.	Parts No.	Description	Q'ty (A)	(B)	(C)	(D)	(E)	(F)	I	R
1	1	171350-13100	MANIFOLD, EXHAUST	1							
2	1	129150-13110	GASKET, EXH.MANIFOLD	1							
3	1	123900-13610	BOLT, STUD M8X80	2							
4	1	129E00-13640	BOLT, M8X80 10.9T	4							
5	1	119131-18320	BOLT, STUD M8X22	4							
6	1	26306-080002	NUT, M8	2							

N:Old ←Yes/No→ New. Q:Old ←No/Yes→ New. R:Old ←Yes/Yes→ New. S:Old ←No/No→ New. W:Add. Z:Discontinued. F:Interchangeable by set. K:Q'ty Change

Copyright (C) 2017 YANMAR CO., LTD. All RightsReserved.

Fig.7. CAMSHAFT & DRIVING GEAR

(A)=3TNV88-BDKTF
(B)=
(C)=
(D)=
(E)=
(F)=

No.	Lev.	Parts No.	Description	Q'ty (A)	(B)	(C)	(D)	(E)	(F)	I	R
1	1	129150-14200	TAPPET	6							
2	1	129150-14400	PUSH-ROD, L=178	6							
3	1	129129-14580	CAMSHAFT ASSY	1							
4	2	129150-02450	BEARING, THRUST	1							
6	2	129150-14101	GEAR, CAMSHAFT	1							
7	2	22512-070140	KEY, 7X 14	1							
8	1	26106-080142	BOLT, M8X 14 PLATED	2							
9	1	119803-25050	SHAFT, IDLE	1							
10	1	119802-25101	GEAR ASSY, IDLE	1							
13	1	26106-080402	BOLT, M8X 40 PLATED	3							
14	1	129150-25301	BOLT	4							
15	1	119802-25901	GEAR, PUMP	1							
16	1	129150-01881	GASKET	1							
17	1	129555-26000	DRIVE ASSY, PUMP	1							
18	2	129150-26050	BRACKET, PUMP	1							
23	2	24105-060064	BEARING, BALL 6006Z	2							
24	1	119802-25071	BUSH, IDLE GEAR	1							1
25	1	158552-51151	FLANGE	1							

Remarks
(1)Spare parts.

N:Old ←Yes/No→ New. Q:Old ←No/Yes→ New. R:Old ←Yes/Yes→ New. S:Old ←No/No→ New. W:Add. Z:Discontinued. F:Interchangeable by set. K:Q'ty Change

Copyright (C) 2017 YANMAR CO., LTD. All RightsReserved.

Fig.8. CRANKSHAFT & PISTON

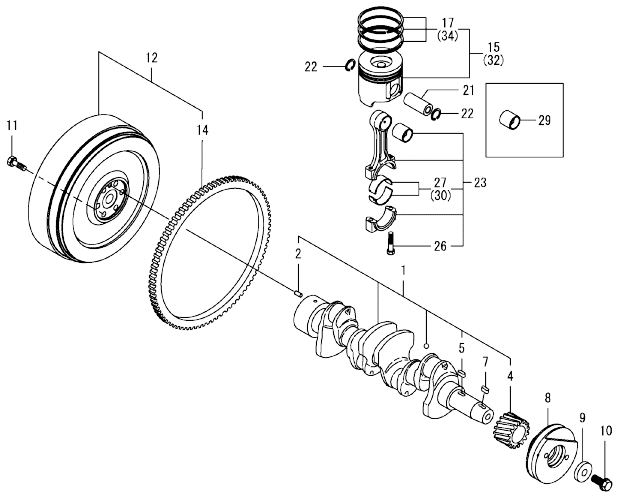

(A)=3TNV88-BDKTF
(B)=
(C)=
(D)=
(E)=
(F)=

No.	Lev.	Parts No.	Description	Q'ty (A)	(B)	(C)	(D)	(E)	(F)	I	R
1	1	129008-21000	CRANKSHAFT ASSY	1							
2	2	129100-01580	PIN, PARALLEL 8X16	1							
4	2	119803-21200	GEAR, CRANKSHAFT	1							
5	2	22512-070140	KEY, 7X 14	1							
7	1	22512-070140	KEY, 7X 14	1							
8	1	129055-21650	V-PULLEY, 120	1							
9	1	129795-21661	WASHER	1							
10	1	121850-21680	BOLT	1							
11	1	121111-21501	BOLT, FLYWHEEL	6							
12	1	129267-21550	FLYWHEEL ASSY	1							
14	2	119865-21600	GEAR, RING Z=116	1							
15	1	129005-22080	PISTON ASSY	3							
17	2	129005-22500	RING SET, PISTON	3							
21	1	129202-22300	PIN, PISTON D26 L70	3							
22	1	22252-000260	RING, 26	6							
23	1	729402-23100	ROD ASSY, CONNECTING	3							
26	2	121550-23200	BOLT, CONNECTING ROD	6							
27	2	129150-23601	BEARING, CRANK PIN	3							
29	1	129100-23910	BEARING, PISTON PIN	3							1
30	1	129150-23611	BEARING, 0.25 US	3							2
32	1	129005-22900	PISTON ASSY, 0.25 OS	3							3
34	2	129005-22950	RING SET, 0.25 OS	3							3

Remarks
(1)Spare parts.
(2)Under-sized(U.S.=0.25) parts.
(3)Over-sized(O.S.=0.25) parts.

N:Old $\frac{\text{Yes}}{\text{No}}$ New. Q:Old $\frac{\text{No}}{\text{Yes}}$ New. R:Old $\frac{\text{Yes}}{\text{Yes}}$ New. S:Old $\frac{\text{No}}{\text{No}}$ New. W:Add. Z:Discontinued. F:Interchangeable by set. K:Q'ty Change

Copyright (C) 2017 YANMAR CO., LTD. All RightsReserved.

Fig.9. LUB. OIL SYSTEM

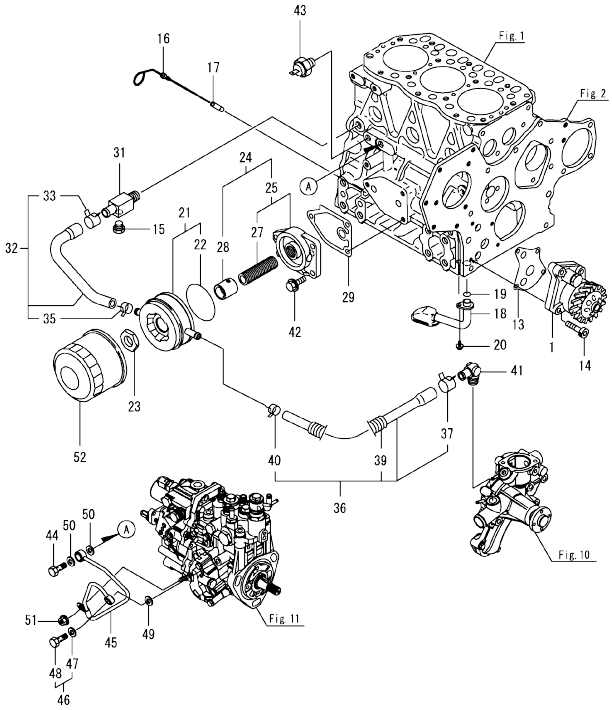

(A)=3TNV88-BDKTF (D)=
(B)= (E)=
(C)= (F)=

No.	Lev.	Parts No.	Description	Q'ty (A)	(B)	(C)	(D)	(E)	(F)	I	R
1	1	129001-32002	PUMP ASSY, OIL	1							
13	1	129150-32020	GASKET, PUMP	1							
14	1	26450-060252	BOLT, M6X 25	4							
15	1	171056-49120	PLUG, DRAIN R1/4	1							
16	1	129263-34811	DIPSTICK, OIL	1							
17	1	121520-34810	GUIDE, DIPSTICK	1							
18	1	129052-35090	PIPE ASSY, OIL INLET	1							
19	1	24311-000160	O-RING, 1AP16.0	1							
20	1	26106-060122	BOLT, M6X 12 PLATED	1							
21	1	129508-33031	COOLER ASSY, OIL	1							
22	2	129508-33060	PACKING, OIL COOLER	1							
23	1	124085-35350	NUT, M20	1							
24	1	129508-35100	BRACKET ASSY,LO FILT	1							
25	2	129006-35100	BRACKET ASSY, FILTER	1							
27	3	129417-35150	BOLT, STUD M20X67	1							
28	2	129508-35150	COLLAR, OIL-COOLER	1							
29	1	129150-35111	GASKET	1							
31	1	129006-44480	JOINT	1							
32	1	129508-49030	HOSE ASSY, WATER	1							
33	2	171008-03990	CLAMP, HOSE 18.5	1							
35	2	23080-015000	CLAMP, 15	1							
36	1	129508-49040	HOSE ASSY, WATER	1							
37	2	171008-03990	CLAMP, HOSE 18.5	1							
39	2	119940-59130	TUBE, CORRUGATED 19	1							
40	2	23080-015000	CLAMP, 15	1							
41	1	129466-49300	ELBOW, PT3/8	1							
42	1	26106-080202	BOLT, M8X 20 PLATED	3							
43	1	119761-39450	SWITCH, HYDRAULIC	1							
44	1	124160-39140	BOLT, PIPE JOINT M10	1							
45	1	119802-39450	PIPE ASSY, OIL	1							
46	1	129005-59830	BOLT ASSY, JOINT M8	1							
47	1	22190-080002	WASHER, SEAL 8	1							
48	2	23857-030000	BOLT, JOINT 3	1							
49	2	22190-080002	WASHER, SEAL 8	1							
50	1	22190-100002	WASHER, SEAL 10	2							
51	1	26366-060002	NUT, M6	1							
52	1	129150-35153	FILTER ASSY, D80X80L	1							1

Remarks
(1)Spare parts.

N:Old $\frac{\text{Yes}}{\text{No}}$ New. Q:Old $\frac{\text{No}}{\text{Yes}}$ New. R:Old $\frac{\text{Yes}}{\text{Yes}}$ New. S:Old $\frac{\text{No}}{\text{No}}$ New. W:Add. Z:Discontinued. F:Interchangeable by set. K:Q'ty Change

Copyright (C) 2017 YANMAR CO., LTD. All RightsReserved.

Fig.10. COOLING WATER SYSTEM

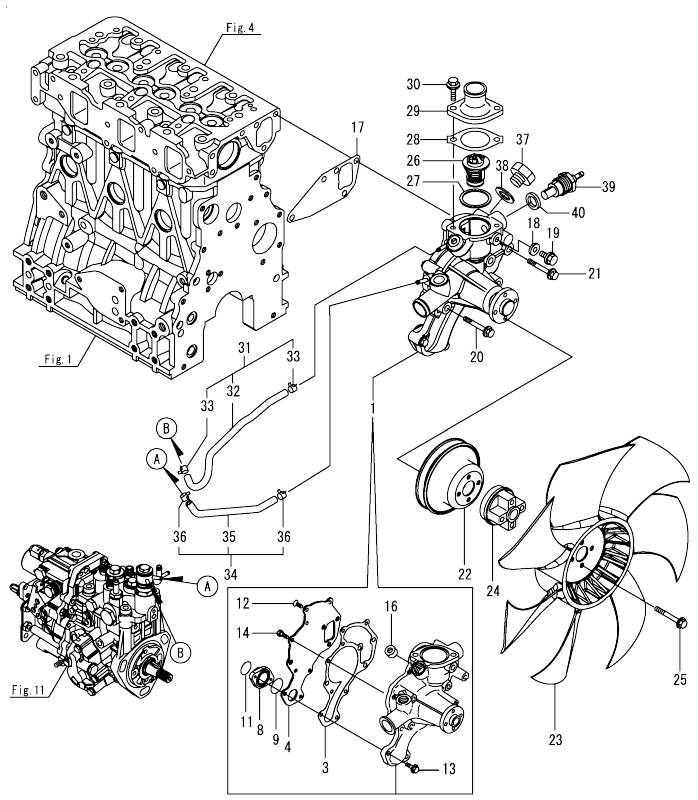

(A)=3TNV88-BDKTF
(B)=
(C)=
(D)=
(E)=
(F)=

No.	Lev.	Parts No.	Description	Q'ty (A)	(B)	(C)	(D)	(E)	(F)	I	R
1	1	129263-42000	PUMP ASSY, WATER	1							
3	2	129150-42059	GASKET	1							
4	2	129263-42120	PLATE, PUMP	1							
8	2	129150-42301	FLANGE	1							
9	2	24358-240310	O-RING, 524031	1							
11	2	129054-42320	O-RING	1							
12	2	26577-060142	SCREW M 6X 14	3							
13	2	26106-060202	BOLT, M6X 20 PLATED	2							
14	2	26116-060162	BOLT, M6X 16 PLATED	3							
16	2	129916-49740	PLUG, R3/8	2							
17	1	129486-42050	GASKET, WATER PUMP	1							
18	1	23414-080000	GASKET, 8X1.0	1							
19	1	26106-080122	BOLT, M8X 12 PLATED	1							
20	1	26106-080552	BOLT, M8X 55 PLATED	3							
21	1	26106-080552	BOLT, M8X 55 PLATED	1							
22	1	129403-42380	V-PULLEY, D=110	1							
22-1	1	129550-42350	V-PULLEY, PUMP	1							N
	(A=E113478)										
23	1	129655-44740	FAN, COOLING D380	1							
24	1	129030-44760	SPACER, FAN L38.5	1							
25	1	26106-060502	BOLT, M6X 50 PLATED	4							
26	1	129155-49801	THERMOSTAT, 71C	1							
27	1	129150-49811	GASKET, THERMOSTAT	1							
28	1	129795-49551	GASKET	1							
29	1	129350-49530	COVER, THERMOSTAT	1							
30	1	26106-080222	BOLT, M8X 22 PLATED	2							
31	1	129263-49610	HOSE ASSY, WATER	1							
32	2	129263-49710	HOSE, WATER	1							
33	2	124722-59050	CLAMP, HOSE 9	2							
34	1	129263-49620	HOSE ASSY, WATER	1							
35	2	129263-49720	HOSE, WATER	1							
36	2	124722-59050	CLAMP, HOSE 9	4							
37	1	121450-42450	PLUG, M16	1							
38	1	124465-44950	GASKET, 16	1							
39	1	124250-49351	SENSOR, WATER TEMP.	1							
40	1	129150-49360	GASKET	1							

N:Old ←Yes/No→ New. Q:Old ←No/Yes→ New. R:Old ←Yes/Yes→ New. S:Old ←No/No→ New. W:Add. Z:Discontinued. F:Interchangeable by set. K:Q'ty Change

Copyright (C) 2017 YANMAR CO., LTD. All RightsReserved.

Fig.11. FUEL INJECTION PUMP

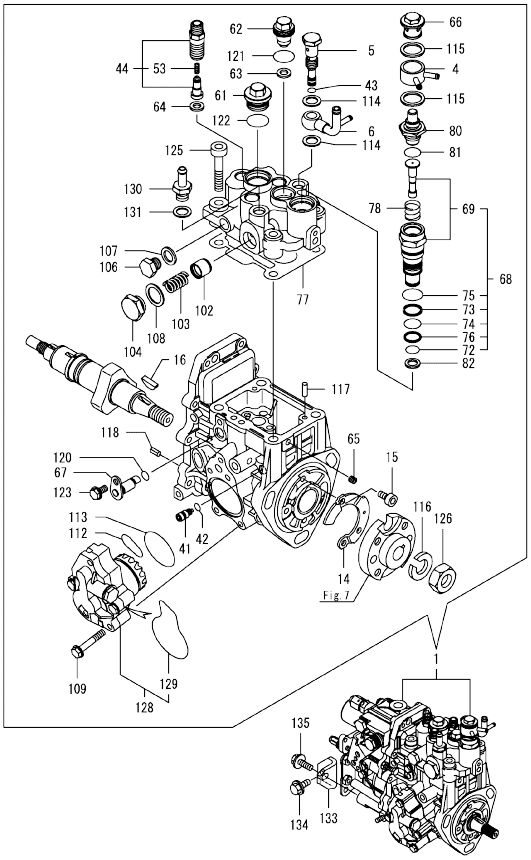

Remarks
(1)Governor(Fig.12) is incorporated in this Fuel Injection Pump(No.1).

(A)=3TNV88-BDKTF (D)=
(B)= (E)=
(C)= (F)=

No.	Lev.	Parts No.	Description	Q'ty (A)	(B)	(C)	(D)	(E)	(F)	I	R
1	1	729267-51370	FIE ASSY	1							1
4	2	158553-51551	JOINT, COOLING WATER	1							
5	2	158601-51650	JOINT, OVER FLOW	1							
6	2	158552-51670	JOINT, OVER FLOW	1							
14	2	129008-51900	COVER, PUMP	1							
15	2	129008-51920	BOLT, SOCKET M6X10	2							
16	2	119802-51090	FEATHER KEY, 4X16	1							
41	2	158600-51270	STOPPER, TAPPET	1							
42	2	158563-51281	O-RING, 4D S6	1							
43	2	158563-51281	O-RING, 4D S6	1							
44	2	129008-51390	VALVE ASSY, DELIVERY	3							
53	3	158563-51330	SPRING, DELIVERY	3							
61	2	158601-51550	PLUG, M22	1							
62	2	119802-51560	PLUG, M14	1							
63	2	158552-51571	GASKET, PLUG	1							
64	2	158552-51571	GASKET, PLUG	3							
65	2	158557-51570	PLUG, RACK	1							
66	2	158601-51570	PLUG	1							
67	2	158552-51580	LIFTER, LINK	1							
68	2	119802-51590	TIMER ASSY	1							
69	3	119802-51600	TIMER ASSY	1							
72	3	158553-51670	O-RING	1							
73	3	119802-51680	RING, BACKUP	1							
74	3	119802-51690	O-RING	1							
75	3	24356-190200	O-RING, 4D19020	1							
76	3	24372-000150	RING, BACK UP T2P15	1							
77	2	158552-51600	GASKET	1							
78	2	158553-51630	SPRING, TIMER	1							
80	2	158553-51650	THERMOELEMENT	1							
81	2	158553-51660	O-RING, P14	1							
82	2	158553-51680	GASKET, TIMER	1							
102	2	158601-51770	PISTON, ACCUMLATOR	1							
103	2	158552-51781	SPRING, ACCUMULATOR	1							
104	2	158601-51790	PLUG	1							
106	2	158553-51930	PLUG, M12	1							
107	2	22190-120002	WASHER, SEAL 12	1							
108	2	22190-180002	WASHER, SEAL 18	1							
109	2	158553-51770	BOLT	4							
112	2	158552-52311	O-RING	1							
113	2	158552-52400	O-RING, 4E S42	1							
114	2	22190-120002	WASHER, SEAL 12	2							
115	2	22190-180002	WASHER, SEAL 18	2							
116	2	22217-140000	WASHER, SPRING 14	1							
117	2	22312-050140	PIN, PARALLEL 5X14	2							
118	2	22351-050010	PIN, SPRING 5.0X10	2							
120	2	24311-000070	O-RING, 1AP7.0	1							
121	2	24356-190180	O-RING, 4D19018	1							
122	2	24356-190200	O-RING, 4D19020	1							
123	2	26106-060102	BOLT, M6X 10 PLATED	1							
125	2	26450-080452	BOLT, M8X 45	4							
126	2	26776-140002	NUT, LOCK M14	1							

N:Old ←Yes/No→ New. Q:Old ←No/Yes→ New. R:Old ←Yes/Yes→ New. S:Old ←No/No→ New. W:Add. Z:Discontinued. F:Interchangeable by set. K:Q'ty Change

++ CONTINUE ++

Copyright (C) 2017 YANMAR CO., LTD. All RightsReserved.

Fig.11. FUEL INJECTION PUMP

(A)=3TNV88-BDKTF
(B)=
(C)=
(D)=
(E)=
(F)=

No.	Lev.	Parts No.	Description	Q'ty (A)	(B)	(C)	(D)	(E)	(F)	I	R
128	2	158552-52100	PUMP ASSY, FUEL FEED	1							
129	3	158552-52500	O-RING	1							
130	2	119934-59910	JOINT, PIPE	1							
131	2	22190-120002	WASHER, SEAL 12	1							
133	1	119802-51250	RETAINER, PUMP	1							
134	1	26106-080162	BOLT, M8X 16 PLATED	1							
135	1	26106-080202	BOLT, M8X 20 PLATED	1							

Remarks
(1)Governor(Fig.12) is incorporated in this Fuel Injection Pump(No.1).

N:Old ←Yes/No→ New. Q:Old ←No/Yes→ New. R:Old ←Yes/Yes→ New. S:Old ←No/No→ New. W:Add. Z:Discontinued. F:Interchangeable by set. K:Q'ty Change

Copyright (C) 2017 YANMAR CO., LTD. All RightsReserved.

Fig.12. GOVERNOR

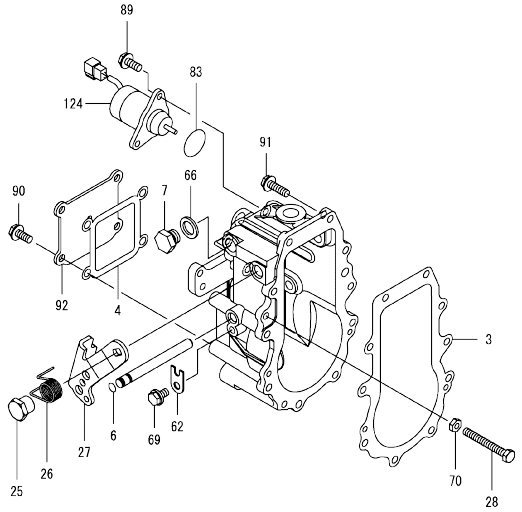

(A)=3TNV88-BDKTF
(B)=
(C)=
(D)=
(E)=
(F)=

No.	Lev.	Parts No.	Description	Q'ty (A)	(B)	(C)	(D)	(E)	(F)	I	R
3	2	158553-61050	GASKET	1							
4	2	158553-61070	GASKET	1							
6	2	129155-51280	O-RING, S6	1							
7	2	158553-51930	PLUG, M12	1							
25	2	129255-61410	NUT, M8	1							
26	2	119807-61420	SPRING, RETURN	1							
27	2	158552-61441	LEVER, REGULATOR	1							
28	2	129155-61461	BOLT,IDLE LIMIT	1							
62	2	119660-61901	STOPPER, SHAFT	1							
66	2	22190-120002	WASHER, SEAL 12	1							
69	2	26106-060102	BOLT, M6X 10 PLATED	1							
70	2	26756-060002	NUT, LOCK M6	1							
83	2	158552-61900	O-RING	1							
89	2	26106-060142	BOLT, M6X 14 PLATED	2							
90	2	26106-060142	BOLT, M6X 14 PLATED	4							
91	2	26106-060202	BOLT, M6X 20 PLATED	10							
92	2	129642-61060	COVER, GOVERNOR CASE	1							
124	2	129630-77910	SOLENOID, STOP	1							

Remarks
* This figure(Governor) is incorporated in the Fuel Injection Pump(Fig.11).

N:Old ←Yes/No→ New. Q:Old ←No/Yes→ New. R:Old ←Yes/Yes→ New. S:Old ←No/No→ New. W:Add. Z:Discontinued. F:Interchangeable by set. K:Q'ty Change

Copyright (C) 2017 YANMAR CO., LTD. All RightsReserved.

Fig.13. FUEL INJECTION VALVE

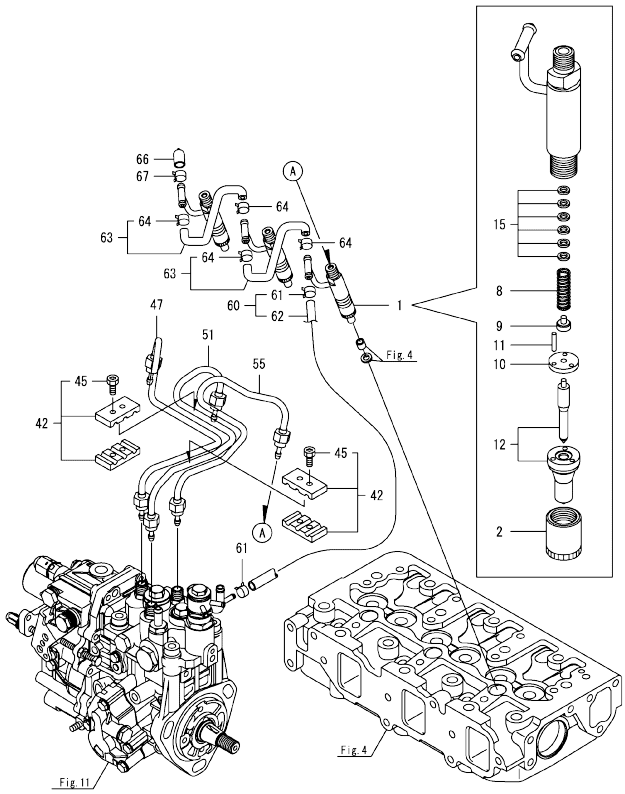

0CD50-M03240 Fig.13

(A)=3TNV88-BDKTF (D)=
(B)= (E)=
(C)= (F)=

No.	Lev.	Parts No.	Description	Q'ty (A)	(B)	(C)	(D)	(E)	(F)	I	R
1	1	729604-53400	VALVE ASSY,INJECTION	3							
2	2	114250-53080	NUT, NOZZLE	3							
8	2	114250-53120	SPRING, NOZZLE	3							
9	2	114250-53130	SEAT, SPRING	3							
10	2	114250-53140	SPACER	3							
11	2	114250-53210	PIN	6							
12	2	129604-53300	NOZZLE ASSY, F.I.	3							
15	2	119803-53400	SHIM SET	3							1
42	1	129150-59120	RETAINER, PIPE	2							
45	2	129150-59131	BOLT, M4X14	4							
47	1	129004-59811	PIPE ASSY, INJECTION	1							
51	1	129004-59821	PIPE ASSY, INJECTION	1							
55	1	129004-59831	PIPE ASSY, INJECTION	1							
60	1	119802-59550	HOSE ASSY, RETURN	1							
61	2	124722-59050	CLAMP, HOSE 9	2							
62	2	119802-59560	HOSE, FUEL RETURN	1							
63	1	129486-59551	HOSE ASSY, RETURN	2							
64	2	124722-59050	CLAMP, HOSE 9	4							
66	1	119593-59581	CAP	1							
67	1	124060-77680	CLAMP, HOSE 10	1							

Remarks
(1)Spare parts.

N:Old ←Yes/No→ New. Q:Old ←No/Yes→ New. R:Old ←Yes/Yes→ New. S:Old ←No/No→ New. W:Add. Z:Discontinued. F:Interchangeable by set. K:Q'ty Change

Copyright (C) 2017 YANMAR CO., LTD. All RightsReserved.

Fig.14. FUEL PIPE

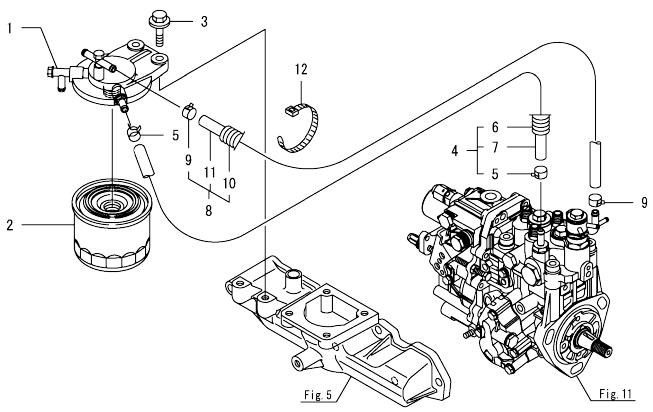

(A)=3TNV88-BDKTF
(B)=
(C)=
(D)=
(E)=
(F)=

No.	Lev.	Parts No.	Description	Q'ty (A)	(B)	(C)	(D)	(E)	(F)	I	R
1	1	129004-55612	BRACKET, FILTER	1							
2	1	119802-55801	FILTER, FUEL	1							
3	1	26106-080302	BOLT, M8X 30 PLATED	2							
4	1	129044-59010	HOSE ASSY, D13XL220	1							
5	2	124766-59050	CLAMP, HOSE 11.5	2							
6	2	129044-59100	TUBE, CORRUGATED 15	1							
7	2	129044-59510	HOSE, FUEL L=220	1							
8	1	129950-59311	HOSE ASSY, FUEL	1							
9	2	124766-59050	CLAMP, HOSE 11.5	2							
10	2	129961-59110	TUBE, CORRUGATED 15	1							
11	2	105025-59580	HOSE, FUEL	1							
12	1	121750-59890	BAND, NYLON	1							

N:Old ←Yes/No→ New. Q:Old ←No/Yes→ New. R:Old ←Yes/Yes→ New. S:Old ←No/No→ New. W:Add. Z:Discontinued. F:Interchangeable by set. K:Q'ty Change

Copyright (C) 2017 YANMAR CO., LTD. All RightsReserved.

Fig.15. STARTER MOTOR

(A)=3TNV88-BDKTF
(B)=
(C)=
(D)=
(E)=
(F)=

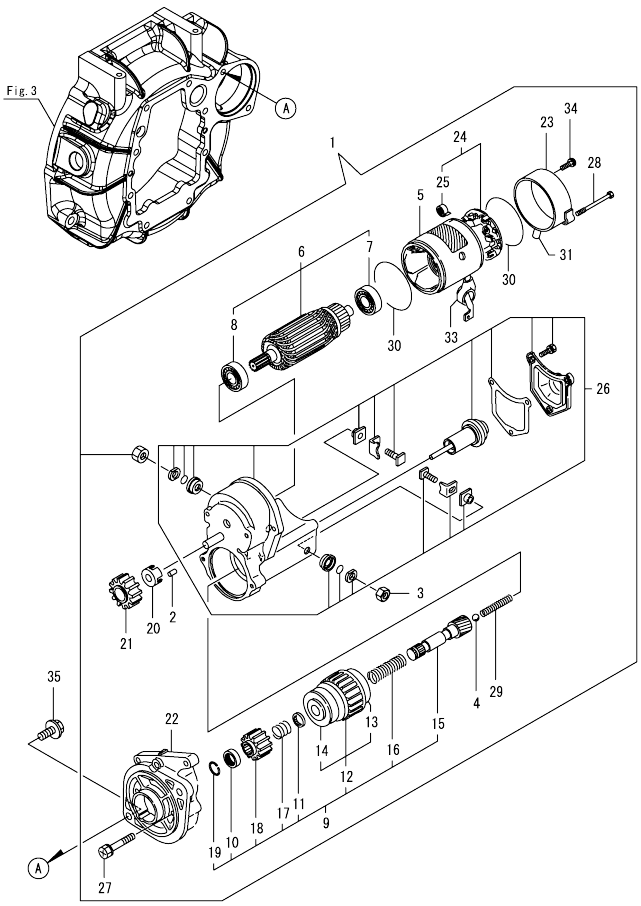

No.	Lev.	Parts No.	Description	Q'ty (A)	(B)	(C)	(D)	(E)	(F)	I	R
1	1	129407-77010	STARTER ASSY	1							
2	2	X0283060061	ROLLER	5							
3	2	X9490561370	NUT	1							
4	2	X9491200240	BALL, STEEL	1							
5	2	129407-77210	YOKE ASSY	1							
6	2	129407-77220	ARMATURE ASSY	1							
7	3	129129-77230	BEARING, BALL	1							
8	3	129129-77240	BEARING, BALL	1							
9	2	129407-77250	STARTER ASSY	1							
10	3	X0280210230	NUT	1							
11	3	X0283270140	RETAINER	1							
12	3	129407-77390	CLUTCH ASSY	1							
13	4	129129-77440	BEARING, BALL	1							
14	4	129129-77450	BEARING, BALL	1							
15	3	129129-77400	SHAFT, STATER	1							
16	3	129129-77410	SPRING	1							
17	3	129407-77410	SPRING	1							
18	3	129129-77420	PINION, STARTER	1							
19	3	129129-77430	RING, SNAP	1							
20	2	129129-77260	RETAINER	1							
21	2	129129-77270	PINION	1							
22	2	129407-77280	HOUSING, STARTOR	1							
23	2	129129-77290	COVER	1							
24	2	129407-77300	HOLDER ASSY	1							
25	3	X9491730461	SPRING	4							
26	2	129407-77310	SWITCH ASSY, MAGNET	1							
27	2	129129-77320	BOLT	2							
28	2	129407-77330	BOLT	2							
29	2	129129-77340	SPRING	1							
30	2	129129-77350	O-RING	2							
31	2	129129-77362	COVER	1							
33	2	129129-77380	CAP	1							
34	2	129129-77460	SCREW	2							
35	1	26106-120252	BOLT, M12X 25 PLATED	2							

N:Old ←Yes/No→ New. Q:Old ←No/Yes→ New. R:Old ←Yes/Yes→ New. S:Old ←No/No→ New. W:Add. Z:Discontinued. F:Interchangeable by set. K:Q'ty Change

Copyright (C) 2017 YANMAR CO., LTD. All RightsReserved.

Fig.16. ACCESSORY

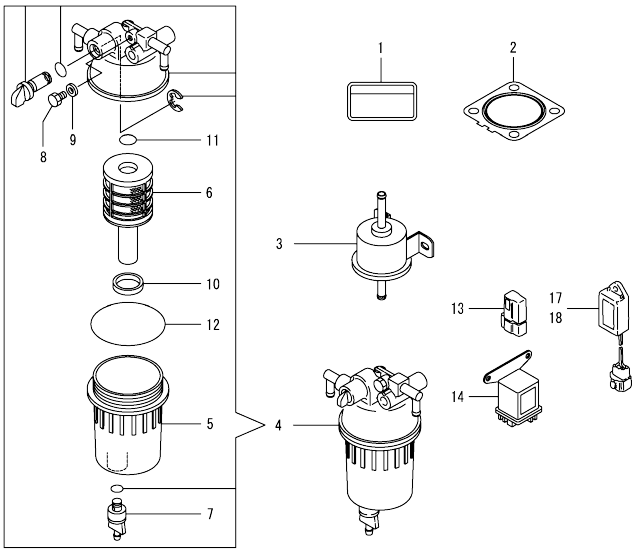

(A)=3TNV88-BDKTF
(B)=
(C)=
(D)=
(E)=
(F)=

No.	Lev.	Parts No.	Description	Q'ty (A)	(B)	(C)	(D)	(E)	(F)	I	R
1	1	114110-07761	LABEL, FUEL OIL CAUT	1							
2	1	129004-13200	GASKET, SILENCER	1							
3	1	119225-52102	PUMP, FUEL FEED	1							
4	1	129242-55711	SEPARATOR ASSY,WATER	1							
5	2	129242-55720	CUP, SEPARATOR	1							
6	2	129242-55730	ELEMENT, FUEL	1							
7	2	129242-55740	PLUG, DRAIN	1							
8	2	129242-55750	VALVE, AIR VENT	1							
9	2	129242-55760	GASKET, PLUG	1							
10	2	129242-55770	FLOAT	1							
11	2	24311-000160	O-RING, 1AP16.0	1							
12	2	24321-000750	O-RING, 1AG75.0	1							
13	1	119643-66900	DIODE	1							
14	1	119650-77911	RELAY ASSY, GLOW	1							
17	1	128300-77920	TIMER	1							
18	1	129211-77920	TIMER	1							

N:Old ←Yes/No→ New. Q:Old ←No/Yes→ New. R:Old ←Yes/Yes→ New. S:Old ←No/No→ New. W:Add. Z:Discontinued. F:Interchangeable by set. K:Q'ty Change

Copyright (C) 2017 YANMAR CO., LTD. All RightsReserved.

Parts No. Index

Parts No.	Fig. No.	Ref. No.
105025-59580	14	11
114110-07761	16	1
114250-53080	13	2
114250-53120	13	8
114250-53130	13	9
114250-53140	13	10
114250-53210	13	11
119131-18320	6	5
119225-52102	16	3
119593-59581	13	66
119609-32040	2	9
119620-01750	3	3
119625-11880	4	29
119643-66900	16	13
119650-77911	16	14
119660-61901	12	62
119761-39450	9	43
119802-01561	2	5
119802-03110	4	40
119802-03121	4	41
119802-03130	4	42
119802-03141	4	43
119802-11260	4	4
119802-11270	4	5
119802-11280	4	6
119802-11870	4	28
119802-25071	7	24
119802-25101	7	10
119802-25901	7	15
119802-39450	9	45
119802-51090	11	16
119802-51250	11	133
119802-51560	11	62
119802-51590	11	68
119802-51600	11	69
119802-51680	11	73
119802-51690	11	74
119802-55801	14	2
119802-59550	13	60
119802-59560	13	62
119803-21200	8	4
119803-25050	7	9
119803-53400	13	15
119803-77830	4	55
119807-61420	12	26
119865-21600	8	14
119934-01800	2	3
119934-59910	11	130
119940-59130	9	39
120130-11860	4	56

Parts No.	Fig. No.	Ref. No.
120270-54410	4	31
121023-01551	2	27
121111-21501	8	11
121400-11340	4	24
121450-42450	10	37
121520-34810	9	17
121550-23200	8	26
121750-59890	14	12
121850-21680	8	10
121850-51960	2	10
123900-13610	6	3
124060-01050	1	4
124060-77680	13	67
124085-35350	9	23
124160-01751	2	6
	4	36
124160-01910	1	6
		7
	3	11
124160-11360	4	48
124160-39140	9	44
124240-01871	2	7
		20
		21
124250-49351	10	39
124460-11340	4	25
124465-44950	10	38
124722-59050	10	33
		36
	13	61
		64
124766-59050	14	5
		9
128300-77920	16	17
129001-01250	1	5
129001-01340	1	28
129001-02931	1	29
129001-12110	5	4
129001-32002	9	1
129004-03010	4	38
129004-11241	4	1
129004-11251	4	2
129004-11310	4	45
129004-11350	4	37
129004-11650	4	8
129004-11900	4	30
129004-13200	16	2
129004-55612	14	1
129004-59811	13	47
129004-59821	13	51

Parts No.	Fig. No.	Ref. No.
129004-59831	13	55
129005-03080	5	1
129005-11100	4	20
129005-12101	5	3
129005-22080	8	15
129005-22500	8	17
129005-22900	8	32
129005-22950	8	34
129005-59830	9	46
129006-35100	9	25
129006-44480	9	31
129008-01520	2	4
129008-11710	4	13
129008-21000	8	1
129008-51390	11	44
129008-51900	11	14
129008-51920	11	15
129008-77800	4	53
129008-77820	4	54
129030-44760	10	24
129044-59010	14	4
129044-59100	14	6
129044-59510	14	7
129052-01551	3	5
129052-01692	3	9
129052-35090	9	18
129054-01640	3	6
129054-42320	10	11
129055-21650	8	8
129100-01580	3	1
		18
	8	2
129100-01640	3	19
129100-11112	4	21
129100-23910	8	29
129129-14580	7	3
129129-77230	15	7
129129-77240	15	8
129129-77260	15	20
129129-77270	15	21
129129-77290	15	23
129129-77320	15	27
129129-77340	15	29
129129-77350	15	30
129129-77362	15	31
129129-77380	15	33
129129-77400	15	15
129129-77410	15	16
129129-77420	15	18
129129-77430	15	19

Parts No.	Fig. No.	Ref. No.
129129-77440	15	13
129129-77450	15	14
129129-77460	15	34
129150-01200	1	27
129150-01881	7	16
129150-02020	1	9
129150-02450	7	4
129150-02871	1	32
129150-02931	1	24
129150-02941	1	35
129150-03070	4	39
129150-11230	4	9
129150-11280	4	7
129150-11370	4	12
129150-11750	4	11
129150-11810	4	57
129150-13110	6	2
129150-14101	7	6
129150-14200	7	1
129150-14400	7	2
129150-23601	8	27
129150-23611	8	30
129150-25301	7	14
129150-26050	7	18
129150-32020	9	13
129150-35111	9	29
129150-35153	9	52
129150-42059	10	3
129150-42301	10	8
129150-49360	10	40
129150-49811	10	27
129150-59120	13	42
129150-59131	13	45
129150-77511	5	8
129155-49801	10	26
129155-51280	12	6
129155-61461	12	28
129202-22300	8	21
129211-77920	16	18
129242-55711	16	4
129242-55720	16	5
129242-55730	16	6
129242-55740	16	7
129242-55750	16	8
129242-55760	16	9
129242-55770	16	10
129255-61410	12	25
129263-34811	9	16
129263-42000	10	1
129263-42120	10	4

Parts No. Index

Parts No.	Fig. No.	Ref. No.
129263-49610	10	31
129263-49620	10	34
129263-49710	10	32
129263-49720	10	35
129267-01630	3	2
129267-21550	8	12
129350-49530	10	29
129403-42380	10	22
129407-77010	15	1
129407-77210	15	5
129407-77220	15	6
129407-77250	15	9
129407-77280	15	22
129407-77300	15	24
129407-77310	15	26
129407-77330	15	28
129407-77390	15	12
129407-77410	15	17
129410-03990	5	2
129417-35150	9	27
129466-49300	9	41
129486-01670	3	22
129486-12581	5	7
129486-42050	10	17
129486-59551	13	63
129508-33031	9	21
129508-33060	9	22
129508-35100	9	24
129508-35150	9	28
129508-49030	9	32
129508-49040	9	36
129550-42350	10	22 -1
129555-01750	3	12
129555-26000	7	17
129604-53300	13	12
129630-77910	12	124
129642-61060	12	92
129655-44740	10	23
129795-01780	3	21
129795-01950	2	8
129795-02412	1	12
129795-11120	4	22
129795-11180	4	23
129795-21661	8	9
129795-49551	10	28
129900-07900	4	51
129916-49740	10	16
129950-59311	14	8
129961-59110	14	10
129C26-01890	2	22

Parts No.	Fig. No.	Ref. No.
129E00-13640	6	4
158552-51151	7	25
158552-51571	11	63
		64
158552-51580	11	67
158552-51600	11	77
158552-51670	11	6
158552-51781	11	103
158552-52100	11	128
158552-52311	11	112
158552-52400	11	113
158552-52500	11	129
158552-61441	12	27
158552-61900	12	83
158553-51551	11	4
158553-51630	11	78
158553-51650	11	80
158553-51660	11	81
158553-51670	11	72
158553-51680	11	82
158553-51770	11	109
158553-51930	11	106
	12	7
158553-61050	12	3
158553-61070	12	4
158557-51570	11	65
158563-51281	11	42
		43
158563-51330	11	53
158600-51270	11	41
158601-51550	11	61
158601-51570	11	66
158601-51650	11	5
158601-51770	11	102
158601-51790	11	104
171008-03990	9	33
		37
171051-01921	1	8
171056-49120	9	15
171350-13100	6	1
22190-080002	2	11
		12
		23
	9	47
		49
22190-100002	9	50
22190-120002	3	8
	11	107
		114
		131

Parts No.	Fig. No.	Ref. No.
22190-120002	12	66
22190-180002	11	108
		115
22217-140000	11	116
22252-000260	8	22
22312-050140	11	117
22351-050010	11	118
22351-060012	4	32
22512-070140	7	7
	8	5
		7
22857-500100	4	46
		47
23080-015000	9	35
		40
23414-080000	10	18
23857-030000	9	48
24105-060064	7	23
24311-000070	11	120
24311-000120	4	49
24311-000160	9	19
	16	11
24311-000320	2	13
	4	50
24321-000750	16	12
24341-000240	2	28
24356-190180	11	121
24356-190200	11	75
		122
24358-240310	10	9
24372-000150	11	76
26106-060102	11	123
	12	69
26106-060122	9	20
26106-060142	12	89
		90
26106-060162	2	29
26106-060202	10	13
	12	91
26106-060502	10	25
26106-080122	3	13
	10	19
26106-080142	7	8
26106-080162	2	14
		15
		24
	4	52
	11	134
26106-080202	2	25
	5	5

Parts No.	Fig. No.	Ref. No.
26106-080202	5	9
	9	42
	11	135
26106-080222	10	30
26106-080252	3	14
	4	33
26106-080302	2	16
		26
	14	3
26106-080352	4	34
26106-080402	7	13
26106-080502	3	15
	4	35
26106-080552	2	17
	10	20
		21
26106-080802	5	6
26106-080852	2	18
26106-081002	3	16
26106-081202	3	17
26106-120252	15	35
26116-060162	10	14
26206-100252	3	4
26306-080002	2	19
	6	6
26366-060002	9	51
26450-060252	9	14
26450-080452	11	125
26577-060142	10	12
26756-060002	12	70
26776-140002	11	126
27241-120000	1	13
27241-300000	1	14
27241-400000	4	19
27310-080001	4	26
729005-01560	1	1
729008-01500	2	1
729267-51370	11	1
729402-23100	8	23
729604-53400	13	1
X0280210230	15	10
X0283060061	15	2
X0283270140	15	11
X9490561370	15	3
X9491200240	15	4
X9491730461	15	25