YANMAR

# PARTS CATALOG

0CD50-M07140EN

Last update Sep., 2021

# PREFACE

This parts catalog is the 1st edition of 3TNV88-BWTY for TRYSUN.

Published : September, 2021

# Contents

0CD50-M07140


| Fig. No. | Fig. Name |
|---|---|
| ENGINE | |
| 1. | CYLINDER BLOCK |
| 2. | GEAR HOUSING |
| 3. | FLYWHEEL HOUSING & OIL SUMP |
| 4. | CYLINDER HEAD & BONNET |
| 5. | SUCTION MANIFOLD |
| 6. | EXHAUST MANIFOLD |
| 7. | CAMSHAFT & DRIVING GEAR |
| 8. | CRANKSHAFT & PISTON |
| 9. | LUB. OIL SYSTEM |
| 10. | COOLING WATER SYSTEM |
| 11. | FUEL INJECTION PUMP |
| 12. | GOVERNOR |
| 13. | FUEL INJECTION VALVE |
| 14. | FUEL PIPE |
| 15. | STARTER MOTOR |
| 16. | GENERATOR |
| 17. | ACCESSORY |

# Fig.1. CYLINDER BLOCK

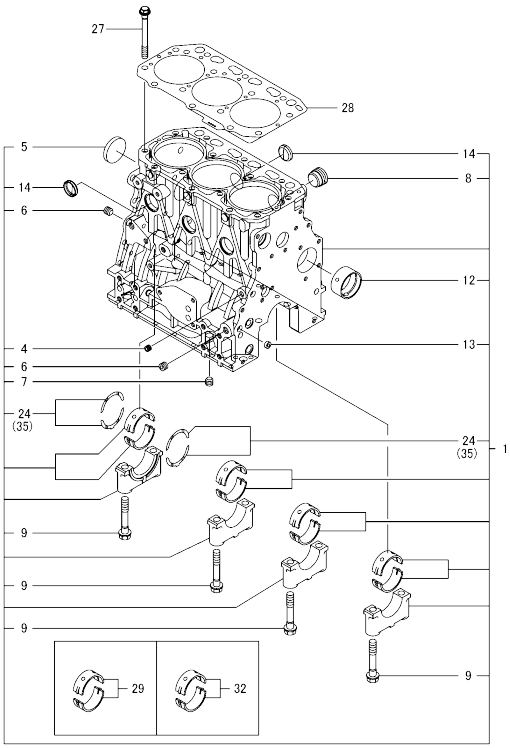


Remarks
(1)Spare parts.
(2)Under-sized(U.S.=0.25) parts.
(3)Over-sized(O.S.=0.25) parts.



(A)=3TNV88-BWTY
(B)=
(C)=
(D)=
(E)=
(F)=

| No. | Lev. | Parts No. | Description | Q'ty (A) | (B) | (C) | (D) | (E) | (F) | I | R |
|---|---|---|---|---|---|---|---|---|---|---|---|
| 1 | 1 | 729005-01560 | BLOCK ASSY, CYLINDER | 1 | | | | | | | |
| 4 | 2 | 124060-01050 | PLUG, PT1/8 | 1 | | | | | | | |
| 5 | 2 | 129001-01250 | PLUG, 50 | 1 | | | | | | | |
| 6 | 2 | 124160-01910 | PLUG, PT1/4 | 2 | | | | | | | |
| 7 | 2 | 124160-01910 | PLUG, PT1/4 | 1 | | | | | | | |
| 8 | 2 | 171051-01921 | PLUG, NPTF1 | 1 | | | | | | | |
| 9 | 2 | 129150-02020 | BOLT, METAL CAP | 8 | | | | | | | |
| 12 | 2 | 129795-02412 | BUSH, CAMSHAFT | 1 | | | | | | | |
| 13 | 2 | 27241-120000 | PLUG, 12 | 2 | | | | | | | |
| 14 | 2 | 27241-300000 | PLUG(30 | 6 | | | | | | | |
| 24 | 2 | 129150-02931 | METAL ASSY, THRUST | 2 | | | | | | | |
| 27 | 1 | 129150-01200 | BOLT, CYLINDER HEAD | 14 | | | | | | | |
| 28 | 1 | 129001-01340 | GASKET, HEAD | 1 | | | | | | | |
| 29 | 1 | 129001-02931 | METAL ASSY, MAIN | 4 | | | | | | | 1 |
| 32 | 1 | 129150-02871 | METAL ASSY, MAIN .25 | 4 | | | | | | | 2 |
| 35 | 1 | 129150-02941 | METAL ASSY, 0.25 OS | 1 | | | | | | | 3 |

N:Old ←Yes/No→ New. Q:Old ←No/Yes→ New, R:Old ←Yes/Yes→ New, S:Old ←No/No→ New. W:Add. Z:Discontinued. F:Interchangeable by set. K:Q'ty Change

Copyright (C) 2021 YANMAR GLOBAL CS CO., LTD. All RightsReserved.

# Fig.2. GEAR HOUSING

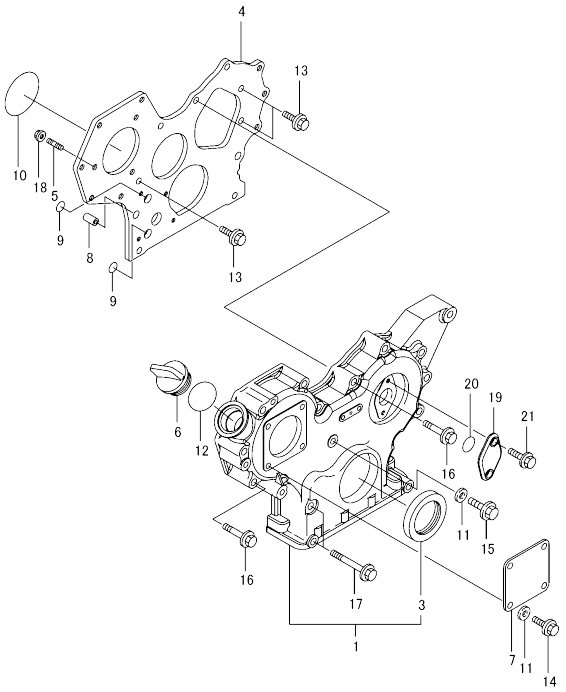




(A)=3TNV88-BWTY (D)=
(B)= (E)=
(C)= (F)=

| No. | Lev. | Parts No. | Description | Q'ty (A) | (B) | (C) | (D) | (E) | (F) | I | R |
|---|---|---|---|---|---|---|---|---|---|---|---|
| 1 | 1 | 729630-01500 | CASE ASSY, GEAR | 1 | | | | | | | |
| 3 | 2 | 119934-01800 | SEAL, OIL | 1 | | | | | | | |
| 4 | 1 | 119803-01520 | FLANGE, GEAR CASE | 1 | | | | | | | |
| 5 | 1 | 119802-01561 | STUD, M8X25 | 3 | | | | | | | |
| 6 | 1 | 124160-01751 | CAP, FILLER | 1 | | | | | | | |
| 7 | 1 | 124240-01871 | COVER,HYDRAULIC PUMP | 1 | | | | | | | |
| 8 | 1 | 129795-01950 | PIPE, KNOCK L=18 | 2 | | | | | | | |
| 9 | 1 | 119609-32040 | O-RING, P16 | 2 | | | | | | | |
| 10 | 1 | 121850-51960 | O-RING, FUEL PUMP | 1 | | | | | | | |
| 11 | 1 | 22190-080002 | WASHER, SEAL 8 | 5 | | | | | | | |
| 12 | 1 | 24311-000320 | O-RING, 1AP32.0 | 1 | | | | | | | |
| 13 | 1 | 26106-080162 | BOLT, M8X 16 PLATED | 3 | | | | | | | |
| 14 | 1 | 26106-080162 | BOLT, M8X 16 PLATED | 4 | | | | | | | |
| 15 | 1 | 26106-080302 | BOLT, M8X 30 PLATED | 1 | | | | | | | |
| 16 | 1 | 26106-080552 | BOLT, M8X 55 PLATED | 12 | | | | | | | |
| 17 | 1 | 26106-080852 | BOLT, M8X 85 PLATED | 3 | | | | | | | |
| 18 | 1 | 26306-080002 | NUT, M8 | 3 | | | | | | | |
| 19 | 1 | 121023-01551 | COVER, TACHOMETER | 1 | | | | | | | |
| 20 | 1 | 24341-000240 | O-RING, 1AS24.0 | 1 | | | | | | | |
| 21 | 1 | 26106-060162 | BOLT, M6X 16 PLATED | 2 | | | | | | | |

N:Old ◄Yes/No► New. Q:Old ◄No/Yes► New. R:Old ◄Yes/Yes► New. S:Old ◄No/No► New. W:Add. Z:Discontinued. F:Interchangeable by set. K:Q'ty Change

Copyright (C) 2021 YANMAR GLOBAL CS CO., LTD. All RightsReserved.

# Fig.3. FLYWHEEL HOUSING & OIL SUMP

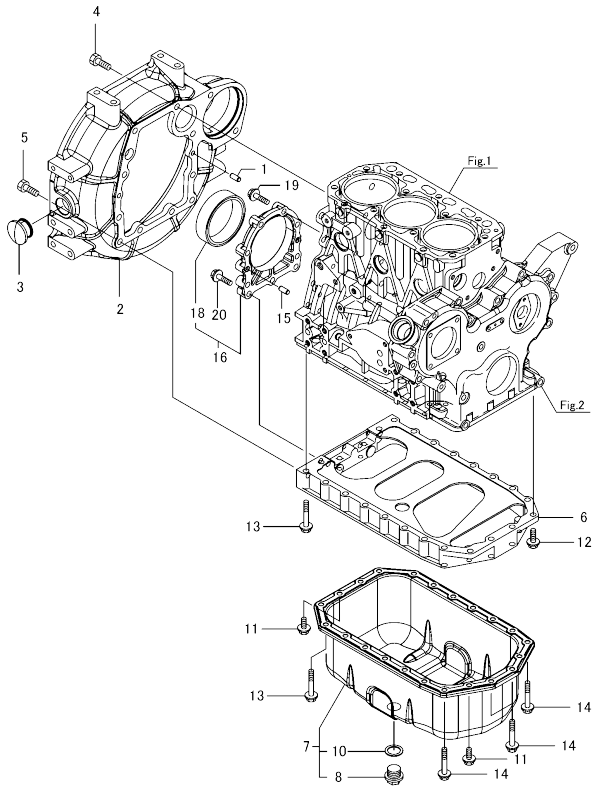




(A)=3TNV88-BWTY (D)=
(B)= (E)=
(C)= (F)=

| No. | Lev. | Parts No. | Description | Q'ty (A) | (B) | (C) | (D) | (E) | (F) | I | R |
|---|---|---|---|---|---|---|---|---|---|---|---|
| 1 | 1 | 129100-01580 | PIN, PARALLEL 8X16 | 2 | | | | | | | |
| 2 | 1 | 129612-01600 | HOUSING, FLYWHEEL | 1 | | | | | | | |
| 3 | 1 | 119620-01750 | CAP, WHEEL COVER | 1 | | | | | | | |
| 4 | 1 | 26206-100252 | BOLT, M10X 25 PLATED | 6 | | | | | | | |
| 5 | 1 | 26206-100302 | BOLT, M10X 30 PLATED | 4 | | | | | | | |
| 6 | 1 | 129100-01730 | SPACER, OIL PAN | 1 | | | | | | | |
| 7 | 1 | 129136-01780 | OIL PAN ASSY | 1 | | | | | | | |
| 8 | 2 | 119640-01640 | PLUG, DRAIN M22 | 1 | | | | | | | |
| 10 | 2 | 22190-220002 | WASHER, SEAL 22 | 1 | | | | | | | |
| 11 | 1 | 26106-080162 | BOLT, M8X 16 PLATED | 4 | | | | | | | |
| 12 | 1 | 26106-080252 | BOLT, M8X 25 PLATED | 2 | | | | | | | |
| 13 | 1 | 26106-080452 | BOLT, M8X 45 PLATED | 16 | | | | | | | |
| 14 | 1 | 26106-080502 | BOLT, M8X 50 PLATED | 4 | | | | | | | |
| 15 | 1 | 129100-01580 | PIN, PARALLEL 8X16 | 2 | | | | | | | |
| 16 | 1 | 129648-01600 | CASE ASSY, OIL SEAL | 1 | | | | | | | |
| 18 | 2 | 129648-01780 | SEAL, OIL | 1 | | | | | | | |
| 19 | 1 | 129486-01670 | BOLT, M8X30 | 6 | | | | | | | |
| 20 | 1 | 26106-080352 | BOLT, M8X 35 PLATED | 3 | | | | | | | |

N:Old ←Yes/No→ New. Q:Old ←No/Yes→ New. R:Old ←Yes/Yes→ New. S:Old ←No/No→ New. W:Add. Z:Discontinued. F:Interchangeable by set. K:Q'ty Change

Copyright (C) 2021 YANMAR GLOBAL CS CO., LTD. All RightsReserved.

# Fig.4. CYLINDER HEAD & BONNET



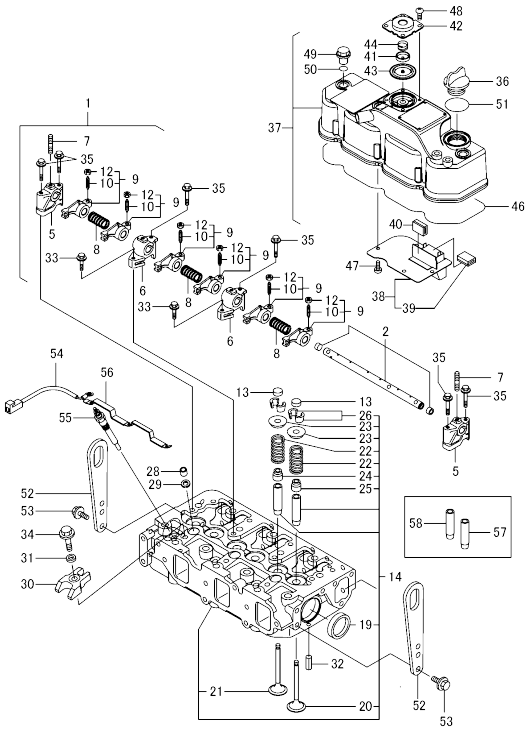


(A)=3TNV88-BWTY
(B)=
(C)=
(D)=
(E)=
(F)=

| No. | Lev. | Parts No. | Description | Q'ty (A) | (B) | (C) | (D) | (E) | (F) | I | R |
|---|---|---|---|---|---|---|---|---|---|---|---|
| 1 | 1 | 129004-11241 | SHAFT ASSY, ROCKER | 1 | | | | | | | |
| 2 | 2 | 129004-11251 | SHAFT, ROCKER ARM | 1 | | | | | | | |
| 5 | 2 | 119802-11260 | SUPPORT, ROCKER ARM | 2 | | | | | | | |
| 6 | 2 | 119802-11270 | SUPPORT, ROCKER ARM | 2 | | | | | | | |
| 7 | 2 | 119802-11280 | BOLT, STUD | 3 | | | | | | | |
| 8 | 2 | 129150-11280 | SPRING, SHAFT | 3 | | | | | | | |
| 9 | 2 | 129004-11650 | ARM ASSY, ROCKER | 6 | | | | | | | |
| 10 | 3 | 129150-11230 | SCREW, VALVE ADJUST | 6 | | | | | | | |
| 12 | 3 | 129150-11750 | NUT, M8XP1.0 | 6 | | | | | | | |
| 13 | 1 | 129150-11370 | CAP, VALVE | 6 | | | | | | | |
| 14 | 1 | 129008-11700 | HEAD ASSY, CYLINDER | 1 | | | | | | | |
| 19 | 2 | 27241-400000 | PLUG, 40 | 2 | | | | | | | |
| 20 | 2 | 129005-11100 | VALVE, INTAKE | 3 | | | | | | | |
| 21 | 2 | 129100-11112 | VALVE, EXHAUST | 3 | | | | | | | |
| 22 | 2 | 129795-11120 | SPRING, VALVE | 6 | | | | | | | |
| 23 | 2 | 129795-11180 | RETAINER, SPRING | 6 | | | | | | | |
| 24 | 2 | 121400-11340 | SEAL, VALVE STEM | 3 | | | | | | | |
| 25 | 2 | 124460-11340 | SEAL, VALVE STEM | 3 | | | | | | | |
| 26 | 2 | 27310-080001 | COTTER, 8 | 6 | | | | | | | |
| 28 | 1 | 119802-11870 | PROTECTOR, NOZZLE | 3 | | | | | | | |
| 29 | 1 | 119625-11880 | SEAT, NOZZLE | 3 | | | | | | | |
| 30 | 1 | 129004-11900 | RETAINER, NOZZLE | 3 | | | | | | | |
| 31 | 1 | 120270-54410 | WASHER, INJECTOR | 3 | | | | | | | |
| 32 | 1 | 22351-060012 | PIN, SPRING 6.0X12 | 2 | | | | | | | |
| 33 | 1 | 26106-080252 | BOLT, M8X 25 PLATED | 2 | | | | | | | |
| 34 | 1 | 26106-080352 | BOLT, M8X 35 PLATED | 3 | | | | | | | |
| 35 | 1 | 26106-080502 | BOLT, M8X 50 PLATED | 6 | | | | | | | |
| 36 | 1 | 124160-01751 | CAP, FILLER | 1 | | | | | | | |
| 37 | 1 | 129004-11350 | BONNET ASSY, HEAD | 1 | | | | | | | |
| 38 | 2 | 129004-03010 | PLATE, BAFFLE | 1 | | | | | | | |
| 39 | 3 | 119802-03070 | BAFFLE, BREATHER | 1 | | | | | | | |
| 40 | 2 | 129150-03070 | BAFFLE, BREATHER | 1 | | | | | | | |
| 41 | 2 | 119802-03110 | PLATE, DIAPHRAGM | 1 | | | | | | | |
| 42 | 2 | 119802-03121 | COVER, DIAPHRAGM | 1 | | | | | | | |
| 43 | 2 | 119802-03130 | DIAPHRAGM, BREATHER | 1 | | | | | | | |
| 44 | 2 | 119802-03141 | SPRING, DIAPHRAGM | 1 | | | | | | | |
| 46 | 2 | 129004-11310 | GASKET, BONNET | 1 | | | | | | | |
| 47 | 2 | 22857-500100 | SCREW, 5X10 | 4 | | | | | | | |
| 48 | 2 | 22857-500100 | SCREW, 5X10 | 4 | | | | | | | |
| 49 | 1 | 124160-11360 | KNOB, BONNET | 3 | | | | | | | |
| 50 | 1 | 24311-000120 | O-RING, 1AP12.0 | 3 | | | | | | | |
| 51 | 1 | 24311-000320 | O-RING, 1AP32.0 | 1 | | | | | | | |
| 52 | 1 | 129900-07900 | LIFTER, ENGINE | 2 | | | | | | | |
| 53 | 1 | 26106-080162 | BOLT, M8X 16 PLATED | 4 | | | | | | | |
| 54 | 1 | 119803-77830 | HARNESS, WIRE | 1 | | | | | | | |
| 55 | 1 | 129008-77800 | PLUG, GLOW | 3 | | | | | | | |
| 56 | 1 | 129008-77820 | CONNECTOR, GLOW PLUG | 1 | | | | | | | |
| 57 | 1 | 120130-11860 | GUIDE, VALVE | 3 | | | | | | | 1 |
| 58 | 1 | 129150-11810 | GUIDE, VALVE | 3 | | | | | | | 1 |

Remarks
(1)Spare parts.

N:Old ←Yes/No→ New. Q:Old ←No/Yes→ New. R:Old ←Yes/Yes→ New. S:Old ←No/No→ New. W:Add. Z:Discontinued. F:Interchangeable by set. K:Q'ty Change

Copyright (C) 2021 YANMAR GLOBAL CS CO., LTD. All RightsReserved.

# Fig.5. SUCTION MANIFOLD

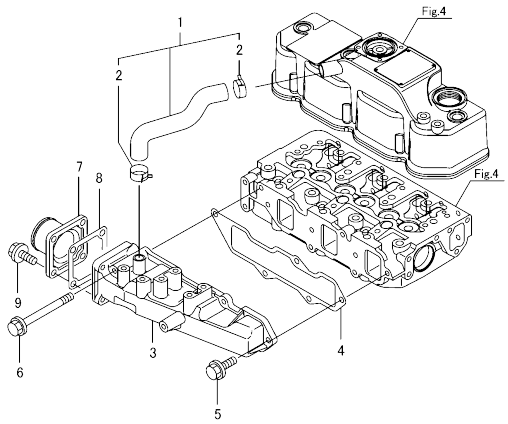




(A)=3TNV88-BWTY
(B)=
(C)=
(D)=
(E)=
(F)=

| No. | Lev. | Parts No. | Description | Q'ty (A) | (B) | (C) | (D) | (E) | (F) | I | R |
|---|---|---|---|---|---|---|---|---|---|---|---|
| 1 | 1 | 129004-03080 | HOSE ASSY, BREATHER | 1 | | | | | | | |
| 2 | 2 | 129410-03990 | CLAMP, HOSE 21.5 | 2 | | | | | | | |
| 3 | 1 | 129004-12101 | MANIFOLD, INTAKE | 1 | | | | | | | |
| 4 | 1 | 129001-12110 | GASKET, MANIFOLD | 1 | | | | | | | |
| 5 | 1 | 26106-080202 | BOLT, M8X 20 PLATED | 4 | | | | | | | |
| 6 | 1 | 26106-080802 | BOLT, M8X 80 PLATED | 1 | | | | | | | |
| 7 | 1 | 129486-12581 | JOINT, MANIFOLD | 1 | | | | | | | |
| 8 | 1 | 129150-77511 | GASKET, AIR HEATER | 1 | | | | | | | |
| 9 | 1 | 26106-080202 | BOLT, M8X 20 PLATED | 4 | | | | | | | |

N:Old $\xleftarrow[\text{No}]{\text{Yes}}$ New. Q:Old $\xleftarrow[\text{Yes}]{\text{No}}$ New. R:Old $\xleftarrow[\text{Yes}]{\text{Yes}}$ New. S:Old $\xleftarrow[\text{No}]{\text{No}}$ New. W:Add. Z:Discontinued. F:Interchangeable by set. K:Q'ty Change

Copyright (C) 2021 YANMAR GLOBAL CS CO., LTD. All RightsReserved.

# Fig.6. EXHAUST MANIFOLD

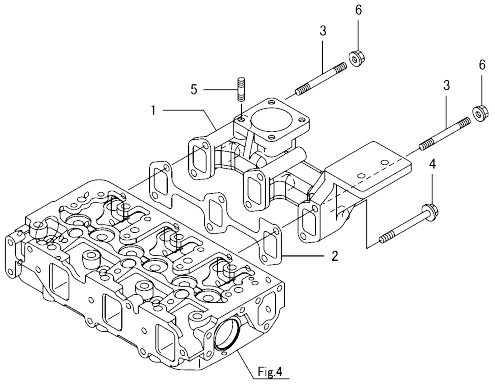




(A)=3TNV88-BWTY
(B)=
(C)=
(D)=
(E)=
(F)=

| No. | Lev. | Parts No. | Description | Q'ty (A) | (B) | (C) | (D) | (E) | (F) | I | R |
|---|---|---|---|---|---|---|---|---|---|---|---|
| 1 | 1 | 129150-13110 | GASKET, MANIFOLD | 1 | | | | | | | |
| 2 | 1 | 129004-13110 | MANIFOLD, EXHAUST | 1 | | | | | | | |
| 3 | 1 | 123900-13610 | STUD, M8X80 | 2 | | | | | | | |
| 4 | 1 | 129E00-13640 | BOLT, M8X80 10.9T | 4 | | | | | | | |
| 5 | 1 | 119131-18320 | STUD, M8X22 | 4 | | | | | | | |
| 6 | 1 | 26306-080002 | NUT, M8 | 2 | | | | | | | |

N:Old ◄Yes/No► New. Q:Old ◄No/Yes► New. R:Old ◄Yes/Yes► New. S:Old ◄No/No► New. W:Add. Z:Discontinued. F:Interchangeable by set. K:Q'ty Change

Copyright (C) 2021 YANMAR GLOBAL CS CO., LTD. All RightsReserved.

# Fig.7. CAMSHAFT & DRIVING GEAR

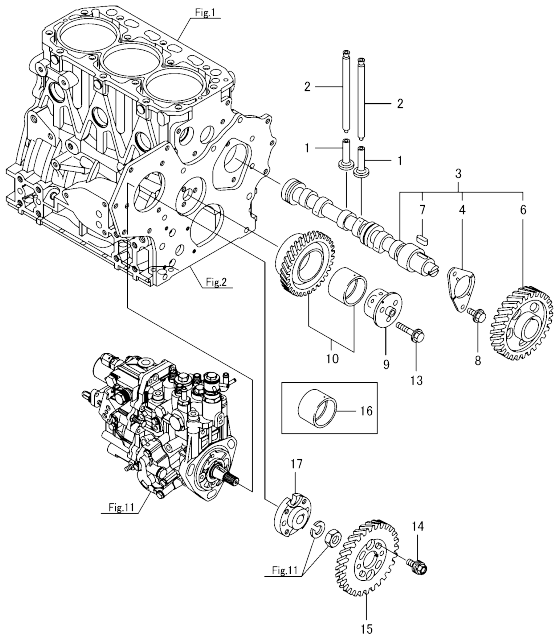


Remarks
(1)Spare parts.



(A)=3TNV88-BWTY (D)=
(B)= (E)=
(C)= (F)=

| No. | Lev. | Parts No. | Description | Q'ty (A) | (B) | (C) | (D) | (E) | (F) | I | R |
|---|---|---|---|---|---|---|---|---|---|---|---|
| 1 | 1 | 129150-14200 | TAPPET | 6 | | | | | | | |
| 2 | 1 | 129150-14400 | ROD, PUSH L=178 | 6 | | | | | | | |
| 3 | 1 | 129129-14580 | CAMSHAFT ASSY | 1 | | | | | | | |
| 4 | 2 | 129150-02450 | METAL, THRUST | 1 | | | | | | | |
| 6 | 2 | 129150-14101 | GEAR, CAMSHAFT | 1 | | | | | | | |
| 7 | 2 | 22512-070140 | KEY, 7X 14 | 1 | | | | | | | |
| 8 | 1 | 26106-080142 | BOLT, M8X 14 PLATED | 2 | | | | | | | |
| 9 | 1 | 119803-25050 | SHAFT, IDLE GEAR | 1 | | | | | | | |
| 10 | 1 | 119802-25101 | GEAR ASSY, IDLE | 1 | | | | | | | |
| 13 | 1 | 26106-080402 | BOLT, M8X 40 PLATED | 3 | | | | | | | |
| 14 | 1 | 129150-25301 | BOLT, INJECTION PUMP | 4 | | | | | | | |
| 15 | 1 | 119802-25901 | GEAR, PUMP | 1 | | | | | | | |
| 16 | 1 | 119802-25071 | BUSH, IDLE GEAR | 1 | | | | | | | 1 |
| 17 | 1 | 158552-51151 | FLANGE, CAMSHAFT | 1 | | | | | | | |

N:Old ←Yes/No→ New. Q:Old ←No/Yes→ New, R:Old ←Yes/Yes→ New. S:Old ←No/No→ New. W:Add. Z:Discontinued. F:Interchangeable by set. K:Q'ty Change

Copyright (C) 2021 YANMAR GLOBAL CS CO., LTD. All RightsReserved.

# Fig.8. CRANKSHAFT & PISTON



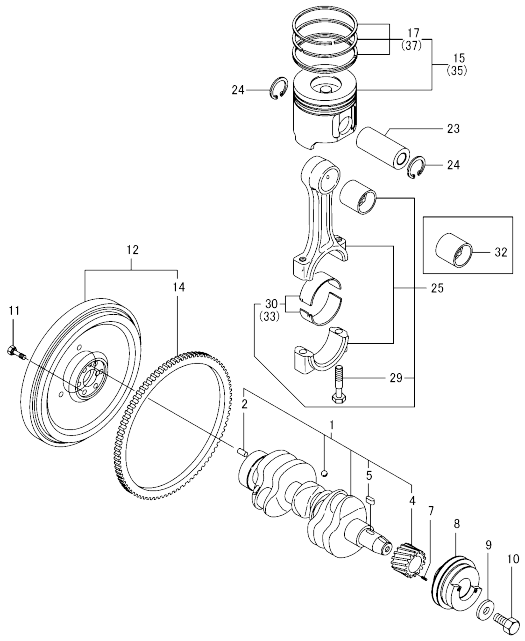


(A)=3TNV88-BWTY
(B)=
(C)=
(D)=
(E)=
(F)=

| No. | Lev. | Parts No. | Description | Q'ty (A) | (B) | (C) | (D) | (E) | (F) | I | R |
|---|---|---|---|---|---|---|---|---|---|---|---|
| 1 | 1 | 129008-21000 | CRANKSHAFT ASSY | 1 | | | | | | | |
| 2 | 2 | 129100-01580 | PIN, PARALLEL 8X16 | 1 | | | | | | | |
| 4 | 2 | 119803-21200 | GEAR, CRANKSHAFT | 1 | | | | | | | |
| 5 | 2 | 22512-070140 | KEY, 7X 14 | 1 | | | | | | | |
| 7 | 1 | 22351-030010 | PIN, SPRING 3.0X10 | 1 | | | | | | | |
| 8 | 1 | 129054-21671 | V-PULLEY, CRANKSHAFT | 1 | | | | | | | |
| 9 | 1 | 129795-21661 | WASHER, 14 | 1 | | | | | | | |
| 10 | 1 | 121850-21680 | BOLT, V-PULLEY | 1 | | | | | | | |
| 11 | 1 | 121111-21501 | BOLT, FLYWHEEL | 6 | | | | | | | |
| 12 | 1 | 129128-21590 | FLYWHEEL ASSY | 1 | | | | | | | |
| 14 | 2 | 119865-21600 | GEAR, RING Z=116 | 1 | | | | | | | |
| 15 | 1 | 129005-22080 | PISTON ASSY | 3 | | | | | | | |
| 17 | 2 | 129005-22500 | RING SET, PISTON | 3 | | | | | | | |
| 23 | 1 | 129202-22300 | PIN, PISTON D26 L70 | 3 | | | | | | | |
| 24 | 1 | 22252-000260 | RING, 26 | 6 | | | | | | | |
| 25 | 1 | 729402-23100 | ROD ASSY, CONNECTING | 3 | | | | | | | |
| 29 | 2 | 121550-23200 | BOLT, CONNECTING ROD | 6 | | | | | | | |
| 30 | 2 | 129150-23601 | METAL ASSY,CRANK PIN | 3 | | | | | | | |
| 32 | 1 | 129100-23910 | METAL, PISTON PIN | 3 | | | | | | | 1 |
| 33 | 1 | 129150-23611 | METAL, CRANK PIN .25 | 3 | | | | | | | 2 |
| 35 | 1 | 129005-22900 | PISTON ASSY, 0.25 OS | 3 | | | | | | | 3 |
| 37 | 2 | 129005-22950 | RING SET, PISTON .25 | 3 | | | | | | | 3 |

Remarks
(1)Spare parts.
(2)Under-sized(U.S.=0.25) parts.
(3)Over-sized(O.S.=0.25) parts.

N:Old $\xleftarrow[\text{No}]{\text{Yes}}$ New. Q:Old $\xleftarrow[\text{Yes}]{\text{No}}$ New. R:Old $\xleftarrow[\text{Yes}]{\text{Yes}}$ New. S:Old $\xleftarrow[\text{No}]{\text{No}}$ New. W:Add. Z:Discontinued. F:Interchangeable by set. K:Q'ty Change

Copyright (C) 2021 YANMAR GLOBAL CS CO., LTD. All RightsReserved.

# Fig.9. LUB. OIL SYSTEM

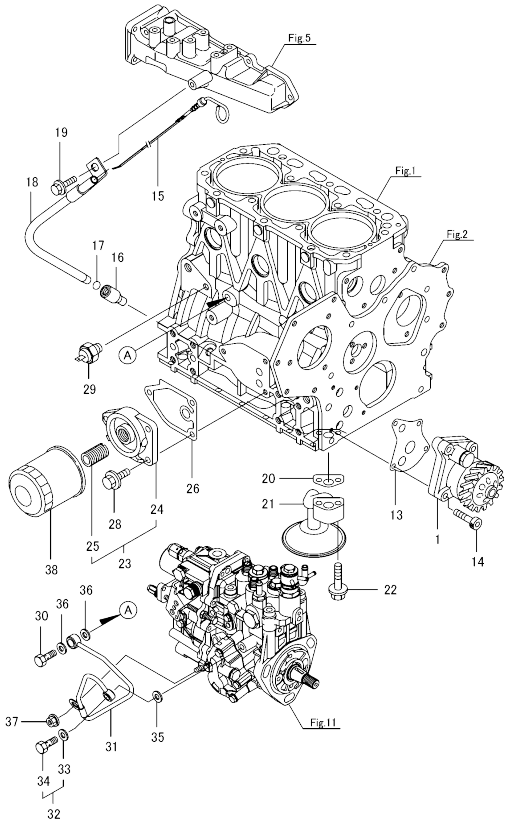


0CD50-M07140 Fig.9

(A)=3TNV88-BWTY
(B)=
(C)=
(D)=
(E)=
(F)=

| No. | Lev. | Parts No. | Description | Q'ty (A) | (B) | (C) | (D) | (E) | (F) | I | R |
|---|---|---|---|---|---|---|---|---|---|---|---|
| 1 | 1 | 129001-32002 | PUMP ASSY, OIL | 1 | | | | | | | |
| 13 | 1 | 129150-32020 | GASKET, PUMP | 1 | | | | | | | |
| 14 | 1 | 26450-060252 | BOLT, M6X 25 | 4 | | | | | | | |
| 15 | 1 | 129601-34801 | DIPSTICK, OIL | 1 | | | | | | | |
| 16 | 1 | 119260-34810 | GUIDE, DIPSTICK | 1 | | | | | | | |
| 17 | 1 | 24316-240100 | O-RING, 4DP10A | 1 | | | | | | | |
| 18 | 1 | 119802-34850 | GUIDE, DIPSTICK | 1 | | | | | | | |
| 19 | 1 | 26106-080162 | BOLT, M8X 16 PLATED | 1 | | | | | | | |
| 20 | 1 | 129150-35042 | GASKET, INLET PIPE | 1 | | | | | | | |
| 21 | 1 | 129100-35301 | PIPE ASSY, OIL INLET | 1 | | | | | | | |
| 22 | 1 | 26106-080352 | BOLT, M8X 35 PLATED | 2 | | | | | | | |
| 23 | 1 | 119802-35100 | BRACKET ASSY, FILTER | 1 | | | | | | | |
| 24 | 2 | 119802-35110 | BRACKET, FILTER | 1 | | | | | | | |
| 25 | 2 | 129100-35140 | STUD | 1 | | | | | | | |
| 26 | 1 | 129150-35111 | GASKET, BRACKET | 1 | | | | | | | |
| 28 | 1 | 26106-080202 | BOLT, M8X 20 PLATED | 3 | | | | | | | |
| 29 | 1 | 114250-39450 | SWITCH, HYDRAULIC | 1 | | | | | | | |
| 30 | 1 | 124160-39140 | BOLT, PIPE JOINT M10 | 1 | | | | | | | |
| 31 | 1 | 119802-39450 | PIPE ASSY, OIL | 1 | | | | | | | |
| 32 | 1 | 129005-59830 | BOLT ASSY, JOINT M8 | 1 | | | | | | | |
| 33 | 2 | 22190-080002 | WASHER, SEAL 8 | 1 | | | | | | | |
| 34 | 2 | 23857-030000 | BOLT, JOINT 3 | 1 | | | | | | | |
| 35 | 1 | 22190-080002 | WASHER, SEAL 8 | 1 | | | | | | | |
| 36 | 1 | 22190-100002 | WASHER, SEAL 10 | 2 | | | | | | | |
| 37 | 1 | 26366-060002 | NUT, M6 | 1 | | | | | | | |
| 38 | 1 | 129150-35153 | FILTER ASSY, D80X80L | 1 | | | | | | | 1 |

Remarks
(1)Spare parts.

N:Old $\frac{\text{Yes}}{\text{No}}$ New. Q:Old $\frac{\text{No}}{\text{Yes}}$ New. R:Old $\frac{\text{Yes}}{\text{Yes}}$ New. S:Old $\frac{\text{No}}{\text{No}}$ New. W:Add. Z:Discontinued. F:Interchangeable by set. K:Q'ty Change

Copyright (C) 2021 YANMAR GLOBAL CS CO., LTD. All RightsReserved.

# Fig.10. COOLING WATER SYSTEM

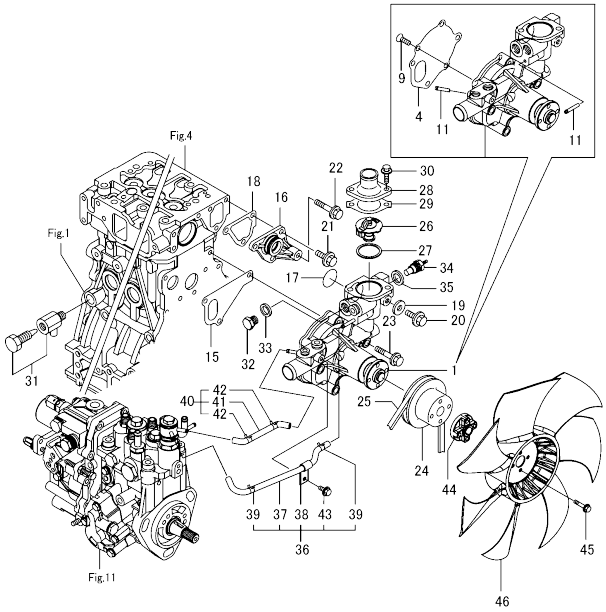




(A)=3TNV88-BWTY (D)=
(B)= (E)=
(C)= (F)=

| No. | Lev. | Parts No. | Description | Q'ty (A) | (B) | (C) | (D) | (E) | (F) | I | R |
|---|---|---|---|---|---|---|---|---|---|---|---|
| 1 | 1 | 129004-42002 | PUMP ASSY, CW | 1 | | | | | | | |
| 4 | 2 | 129100-42051 | GASKET, WATER PUMP | 1 | | | | | | | |
| 9 | 2 | 129150-42280 | SCREW, FLAT M6X12 | 3 | | | | | | | |
| 11 | 2 | 119802-49113 | JOINT, PIPE | 2 | | | | | | | |
| 15 | 1 | 129486-42021 | GASKET, WATER PUMP | 1 | | | | | | | |
| 16 | 1 | 129004-42040 | JOINT, WATER PIPE | 1 | | | | | | | |
| 17 | 1 | 129486-42140 | O-RING, G30 | 1 | | | | | | | |
| 18 | 1 | 124395-49840 | GASKET, THERMOSTAT | 1 | | | | | | | |
| 19 | 1 | 23414-080000 | GASKET, 8X1.0 | 1 | | | | | | | |
| 20 | 1 | 26106-080122 | BOLT, M8X 12 PLATED | 1 | | | | | | | |
| 21 | 1 | 26106-080162 | BOLT, M8X 16 PLATED | 3 | | | | | | | |
| 22 | 1 | 26106-080452 | BOLT, M8X 45 PLATED | 1 | | | | | | | |
| 23 | 1 | 26106-080602 | BOLT, M8X 60 PLATED | 3 | | | | | | | |
| 24 | 1 | 129403-42380 | V-PULLEY, PUMP | 1 | | | | | | | |
| 25 | 1 | 129044-42290 | V-BELT, A38.5 | 1 | | | | | | | |
| 26 | 1 | 129155-49801 | THERMOSTAT, 71C | 1 | | | | | | | |
| 27 | 1 | 129150-49811 | GASKET, THERMOSTAT | 1 | | | | | | | |
| 28 | 1 | 129350-49530 | COVER, THERMOSTAT | 1 | | | | | | | |
| 29 | 1 | 129795-49551 | GASKET, COVER | 1 | | | | | | | |
| 30 | 1 | 26106-080222 | BOLT, M8X 22 PLATED | 2 | | | | | | | |
| 31 | 1 | 171056-49120 | PLUG, DRAIN R1/4 | 1 | | | | | | | |
| 32 | 1 | 121450-42450 | PLUG, M16 | 1 | | | | | | | |
| 33 | 1 | 124465-44950 | GASKET, 16 | 1 | | | | | | | |
| 34 | 1 | 124250-49351 | SENSOR, WATER TEMP. | 1 | | | | | | | |
| 35 | 1 | 129150-49360 | GASKET, 10 | 1 | | | | | | | |
| 36 | 1 | 129004-49610 | HOSE ASSY, WATER A | 1 | | | | | | | |
| 37 | 2 | 129004-49711 | HOSE, WATER A | 1 | | | | | | | |
| 38 | 2 | 119802-49730 | RETAINER, PIPE | 1 | | | | | | | |
| 39 | 2 | 124722-59050 | CLAMP, HOSE 9 | 2 | | | | | | | |
| 40 | 1 | 129004-49620 | HOSE ASSY, WATER B | 1 | | | | | | | |
| 41 | 2 | 129004-49721 | HOSE, WATER B | 1 | | | | | | | |
| 42 | 2 | 124722-59050 | CLAMP, HOSE 9 | 2 | | | | | | | |
| 43 | 1 | 26106-060122 | BOLT, M6X 12 PLATED | 1 | | | | | | | |
| 44 | 1 | 121267-44760 | SPACER, FAN 18MM | 1 | | | | | | | |
| 45 | 1 | 26106-060302 | BOLT, M6X 30 PLATED | 4 | | | | | | | |
| 46 | 1 | 129655-44740 | FAN, COOLING D=380 | 1 | | | | | | | |

N:Old ←Yes/No→ New. Q:Old ←No/Yes→ New. R:Old ←Yes/Yes→ New. S:Old ←No/No→ New. W:Add. Z:Discontinued. F:Interchangeable by set. K:Q'ty Change

Copyright (C) 2021 YANMAR GLOBAL CS CO., LTD. All RightsReserved.

# Fig.11. FUEL INJECTION PUMP

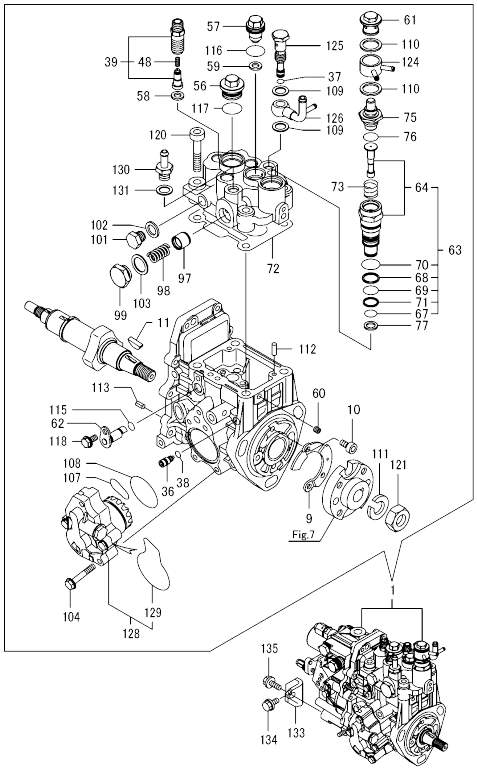


Remarks
(1)Governor(Fig.12) is incorporated in this Fuel Injection Pump(No.1).



(A)=3TNV88-BWTY (D)=
(B)= (E)=
(C)= (F)=

| No. | Lev. | Parts No. | Description | Q'ty (A) | (B) | (C) | (D) | (E) | (F) | I | R |
|---|---|---|---|---|---|---|---|---|---|---|---|
| 1 | 1 | 729288-51300 | FIE ASSY | 1 | | | | | | | 1 |
| 9 | 2 | 129008-51900 | COVER, PUMP | 1 | | | | | | | |
| 10 | 2 | 129008-51920 | BOLT, M6X10 | 2 | | | | | | | |
| 11 | 2 | 119802-51090 | KEY, FEATHER 4X16 | 1 | | | | | | | |
| 36 | 2 | 158600-51270 | STOPPER, TAPPET | 1 | | | | | | | |
| 37 | 2 | 158563-51281 | O-RING, 4D S6 | 1 | | | | | | | |
| 38 | 2 | 158563-51281 | O-RING, 4D S6 | 1 | | | | | | | |
| 39 | 2 | 129008-51390 | VALVE ASSY, DELIVERY | 3 | | | | | | | |
| 48 | 3 | 158563-51330 | SPRING, DELIVERY | 3 | | | | | | | |
| 56 | 2 | 158601-51550 | PLUG, M22 | 1 | | | | | | | |
| 57 | 2 | 119802-51560 | PLUG, BARREL M14 | 1 | | | | | | | |
| 58 | 2 | 158552-51571 | GASKET, BARREL PLUG | 3 | | | | | | | |
| 59 | 2 | 158552-51571 | GASKET, BARREL PLUG | 1 | | | | | | | |
| 60 | 2 | 158557-51570 | PLUG, RACK | 1 | | | | | | | |
| 61 | 2 | 158601-51570 | PLUG | 1 | | | | | | | |
| 62 | 2 | 158552-51580 | LIFTER, LINK | 1 | | | | | | | |
| 63 | 2 | 119802-51590 | TIMER ASSY | 1 | | | | | | | |
| 64 | 3 | 119802-51600 | TIMER ASSY | 1 | | | | | | | |
| 67 | 3 | 158553-51670 | O-RING, PUMP TIMER | 1 | | | | | | | |
| 68 | 3 | 119802-51680 | RING, BACKUP | 1 | | | | | | | |
| 69 | 3 | 119802-51690 | O-RING, 1016 | 1 | | | | | | | |
| 70 | 3 | 24356-190200 | O-RING, 4D19020 | 1 | | | | | | | |
| 71 | 3 | 24372-000150 | RING, BACK UP T2P15 | 1 | | | | | | | |
| 72 | 2 | 158552-51600 | GASKET, HEAD | 1 | | | | | | | |
| 73 | 2 | 158553-51630 | SPRING, TIMER | 1 | | | | | | | |
| 75 | 2 | 158553-51650 | ELEMENT, THERMOSTAT | 1 | | | | | | | |
| 76 | 2 | 158553-51660 | O-RING, P14 | 1 | | | | | | | |
| 77 | 2 | 158553-51680 | GASKET, TIMER | 1 | | | | | | | |
| 97 | 2 | 158601-51770 | PISTON, ACCUMLATOR | 1 | | | | | | | |
| 98 | 2 | 158552-51781 | SPRING, ACCUMULATOR | 1 | | | | | | | |
| 99 | 2 | 158601-51790 | PLUG, ACCUMULATOR | 1 | | | | | | | |
| 101 | 2 | 158553-51930 | PLUG, M12 | 1 | | | | | | | |
| 102 | 2 | 22190-120002 | WASHER, SEAL 12 | 1 | | | | | | | |
| 103 | 2 | 22190-180002 | WASHER, SEAL 18 | 1 | | | | | | | |
| 104 | 2 | 26106-060352 | BOLT, M6X 35 PLATED | 4 | | | | | | | |
| 107 | 2 | 158552-52311 | O-RING, FEED PUMP | 1 | | | | | | | |
| 108 | 2 | 158552-52400 | O-RING, 4E S42 | 1 | | | | | | | |
| 109 | 2 | 22190-120002 | WASHER, SEAL 12 | 2 | | | | | | | |
| 110 | 2 | 22190-180002 | WASHER, SEAL 18 | 2 | | | | | | | |
| 111 | 2 | 22217-140000 | WASHER, SPRING 14 | 1 | | | | | | | |
| 112 | 2 | 22312-050140 | PIN, PARALLEL 5X14 | 2 | | | | | | | |
| 113 | 2 | 22351-050010 | PIN, SPRING 5.0X10 | 2 | | | | | | | |
| 115 | 2 | 24311-000070 | O-RING, 1AP7.0 | 1 | | | | | | | |
| 116 | 2 | 24356-190180 | O-RING, 4D19018 | 1 | | | | | | | |
| 117 | 2 | 24356-190200 | O-RING, 4D19020 | 1 | | | | | | | |
| 118 | 2 | 26106-060102 | BOLT, M6X 10 PLATED | 1 | | | | | | | |
| 120 | 2 | 26450-080452 | BOLT, M8X 45 | 4 | | | | | | | |
| 121 | 2 | 26776-140002 | NUT, LOCK M14 | 1 | | | | | | | |
| 124 | 2 | 158553-51551 | JOINT, COOLING WATER | 1 | | | | | | | |
| 125 | 2 | 158601-51650 | JOINT, OVERFLOW | 1 | | | | | | | |
| 126 | 2 | 158552-51670 | JOINT, OVERFLOW | 1 | | | | | | | |

N:Old ←Yes/No→ New. Q:Old ←No/Yes→ New. R:Old ←Yes/Yes→ New. S:Old ←No/No→ New. W:Add. Z:Discontinued. F:Interchangeable by set. K:Q'ty Change

++ CONTINUE ++

Copyright (C) 2021 YANMAR GLOBAL CS CO., LTD. All RightsReserved.

# Fig.11. FUEL INJECTION PUMP

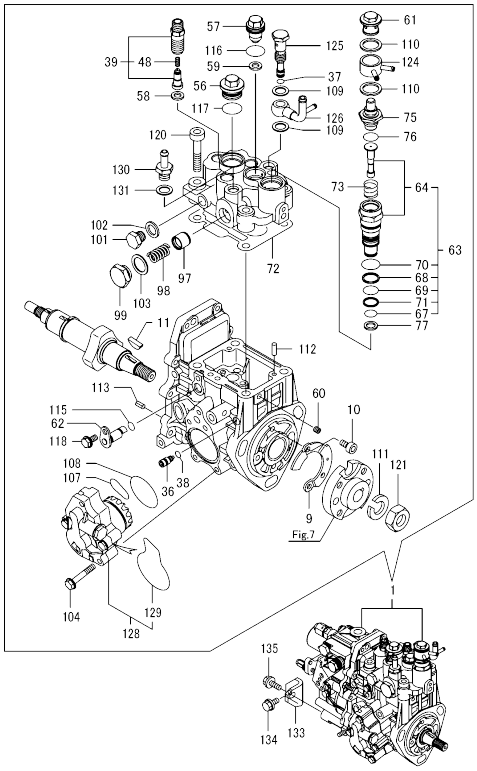




(A)=3TNV88-BWTY
(B)=
(C)=
(D)=
(E)=
(F)=

| No. | Lev. | Parts No. | Description | Q'ty (A) | (B) | (C) | (D) | (E) | (F) | I | R |
|---|---|---|---|---|---|---|---|---|---|---|---|
| 128 | 2 | 158552-52100 | PUMP ASSY, FUEL FEED | 1 | | | | | | | |
| 129 | 3 | 158552-52500 | O-RING, PUMP INNER | 1 | | | | | | | |
| 130 | 2 | 119934-59910 | JOINT, PIPE | 1 | | | | | | | |
| 131 | 2 | 22190-120002 | WASHER, SEAL 12 | 1 | | | | | | | |
| 133 | 1 | 119802-51250 | RETAINER, FUEL PUMP | 1 | | | | | | | |
| 134 | 1 | 26106-080162 | BOLT, M8X 16 PLATED | 1 | | | | | | | |
| 135 | 1 | 26106-080202 | BOLT, M8X 20 PLATED | 1 | | | | | | | |

Remarks
(1)Governor(Fig.12) is incorporated in this Fuel Injection Pump(No.1).

N:Old ←Yes/No→ New. Q:Old ←No/Yes→ New. R:Old ←Yes/Yes→ New. S:Old ←No/No→ New. W:Add. Z:Discontinued. F:Interchangeable by set. K:Q'ty Change

Copyright (C) 2021 YANMAR GLOBAL CS CO., LTD. All RightsReserved.

# Fig.12. GOVERNOR

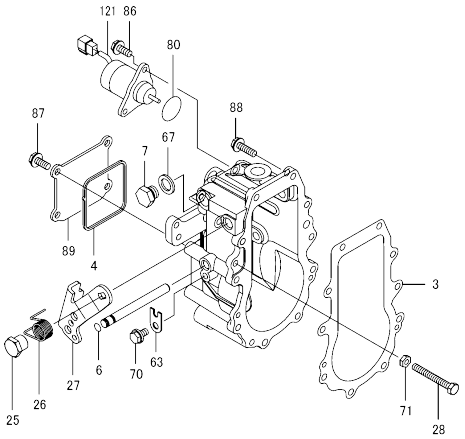




(A)=3TNV88-BWTY (D)=
(B)= (E)=
(C)= (F)=

| No. | Lev. | Parts No. | Description | Q'ty (A) | (B) | (C) | (D) | (E) | (F) | I | R |
|---|---|---|---|---|---|---|---|---|---|---|---|
| 3 | 2 | 158553-61050 | GASKET, CASE | 1 | | | | | | | |
| 4 | 2 | 158553-61070 | GASKET, CASE | 1 | | | | | | | |
| 6 | 2 | 129155-51280 | O-RING, S6 | 1 | | | | | | | |
| 7 | 2 | 158553-51930 | PLUG, M12 | 1 | | | | | | | |
| 25 | 2 | 129255-61410 | NUT, CONTROL LEVER | 1 | | | | | | | |
| 26 | 2 | 119807-61420 | SPRING, RETURN | 1 | | | | | | | |
| 27 | 2 | 158552-61441 | LEVER, REGULATOR | 1 | | | | | | | |
| 28 | 2 | 129155-61461 | BOLT,IDLE LIMIT | 1 | | | | | | | |
| 63 | 2 | 119660-61901 | STOPPER, SHAFT | 1 | | | | | | | |
| 67 | 2 | 22190-120002 | WASHER, SEAL 12 | 1 | | | | | | | |
| 70 | 2 | 26106-060102 | BOLT, M6X 10 PLATED | 1 | | | | | | | |
| 71 | 2 | 119740-61470 | NUT | 1 | | | | | | | |
| 80 | 2 | 158552-61900 | O-RING | 1 | | | | | | | |
| 86 | 2 | 26106-060122 | BOLT, M6X 12 PLATED | 2 | | | | | | | |
| 87 | 2 | 26106-060122 | BOLT, M6X 12 PLATED | 4 | | | | | | | |
| 88 | 2 | 26106-060202 | BOLT, M6X 20 PLATED | 10 | | | | | | | |
| 89 | 2 | 129642-61060 | COVER, GOVERNOR CASE | 1 | | | | | | | |
| 121 | 2 | 129630-77900 | SOLENOID, STOP | 1 | | | | | | | |

Remarks
* This figure(Governor) is incorporated in the Fuel Injection Pump(Fig.11).

N:Old ◄Yes/No► New. Q:Old ◄No/Yes► New, R:Old ◄Yes/Yes► New, S:Old ◄No/No► New. W:Add. Z:Discontinued. F:Interchangeable by set. K:Q'ty Change

Copyright (C) 2021 YANMAR GLOBAL CS CO., LTD. All RightsReserved.

# Fig.13. FUEL INJECTION VALVE



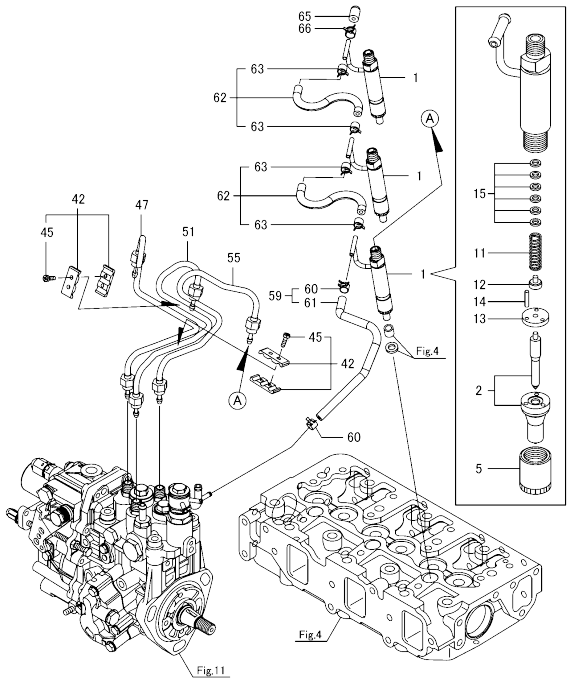


(A)=3TNV88-BWTY
(B)=
(C)=
(D)=
(E)=
(F)=

| No. | Lev. | Parts No. | Description | Q'ty (A) | (B) | (C) | (D) | (E) | (F) | I | R |
|---|---|---|---|---|---|---|---|---|---|---|---|
| 1 | 1 | 729236-53100 | VALVE ASSY,INJECTION | 3 | | | | | | | |
| 2 | 2 | 129236-53000 | VALVE ASSY,INJECTION | 3 | | | | | | | |
| 5 | 2 | 114250-53080 | NUT, NOZZLE | 3 | | | | | | | |
| 11 | 2 | 114250-53120 | SPRING, NOZZLE | 3 | | | | | | | |
| 12 | 2 | 114250-53130 | SEAT, SPRING | 3 | | | | | | | |
| 13 | 2 | 114250-53140 | SPACER, VALVE STOP | 3 | | | | | | | |
| 14 | 2 | 114250-53210 | PIN, POSITIONING | 6 | | | | | | | |
| 15 | 2 | 119803-53400 | SHIM SET | 3 | | | | | | | 1 |
| 42 | 1 | 129150-59120 | RETAINER, PIPE | 2 | | | | | | | |
| 45 | 2 | 129150-59131 | BOLT, M4X14 | 4 | | | | | | | |
| 47 | 1 | 129004-59811 | PIPE ASSY, INJECTION | 1 | | | | | | | |
| 51 | 1 | 129004-59821 | PIPE ASSY, INJECTION | 1 | | | | | | | |
| 55 | 1 | 129004-59831 | PIPE ASSY, INJECTION | 1 | | | | | | | |
| 59 | 1 | 119802-59550 | HOSE ASSY, RETURN | 1 | | | | | | | |
| 60 | 2 | 124722-59050 | CLAMP, HOSE 9 | 2 | | | | | | | |
| 61 | 2 | 119802-59560 | HOSE, FUEL RETURN | 1 | | | | | | | |
| 62 | 1 | 129486-59551 | HOSE ASSY, RETURN | 2 | | | | | | | |
| 63 | 2 | 124722-59050 | CLAMP, HOSE 9 | 4 | | | | | | | |
| 65 | 1 | 119593-59581 | CAP, RETURN PIPE | 1 | | | | | | | |
| 66 | 1 | 124060-77680 | CLAMP, HOSE 10 | 1 | | | | | | | |

Remarks
(1)Spare parts.

N:Old ◄Yes/No► New. Q:Old ◄No/Yes► New. R:Old ◄Yes/Yes► New. S:Old ◄No/No► New. W:Add. Z:Discontinued. F:Interchangeable by set. K:Q'ty Change

Copyright (C) 2021 YANMAR GLOBAL CS CO., LTD. All RightsReserved.

# Fig.14. FUEL PIPE

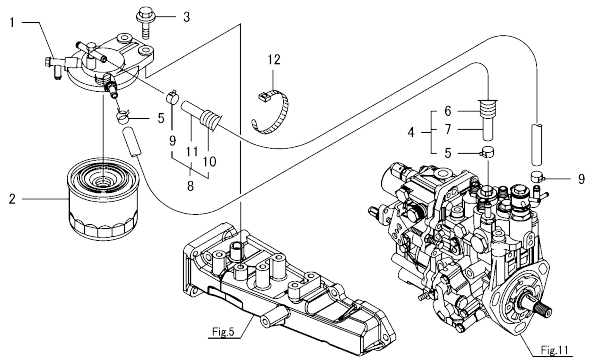




(A)=3TNV88-BWTY (D)=
(B)= (E)=
(C)= (F)=

| No. | Lev. | Parts No. | Description | Q'ty (A) | (B) | (C) | (D) | (E) | (F) | I | R |
|---|---|---|---|---|---|---|---|---|---|---|---|
| 1 | 1 | 129004-55612 | BRACKET, FILTER | 1 | | | | | | | |
| 2 | 1 | 119802-55801 | FILTER, FUEL | 1 | | | | | | | |
| 3 | 1 | 26106-080302 | BOLT, M8X 30 PLATED | 2 | | | | | | | |
| 4 | 1 | 129044-59010 | HOSE ASSY, D13XL220 | 1 | | | | | | | |
| 5 | 2 | 124766-59050 | CLAMP, HOSE 11.5 | 2 | | | | | | | |
| 6 | 2 | 129044-59100 | TUBE, CORRUGATED 15 | 1 | | | | | | | |
| 7 | 2 | 129044-59510 | HOSE, FUEL L=220 | 1 | | | | | | | |
| 8 | 1 | 129950-59311 | HOSE ASSY, FUEL | 1 | | | | | | | |
| 9 | 2 | 124766-59050 | CLAMP, HOSE 11.5 | 2 | | | | | | | |
| 10 | 2 | 129961-59110 | TUBE, CORRUGATED 15 | 1 | | | | | | | |
| 11 | 2 | 105025-59580 | HOSE, FUEL | 1 | | | | | | | |
| 12 | 1 | 121750-59890 | BAND, NYLON | 1 | | | | | | | |

N:Old ←Yes/No→ New. Q:Old ←No/Yes→ New, R:Old ←Yes/Yes→ New, S:Old ←No/No→ New. W:Add. Z:Discontinued. F:Interchangeable by set. K:Q'ty Change

Copyright (C) 2021 YANMAR GLOBAL CS CO., LTD. All RightsReserved.

# Fig.15. STARTER MOTOR

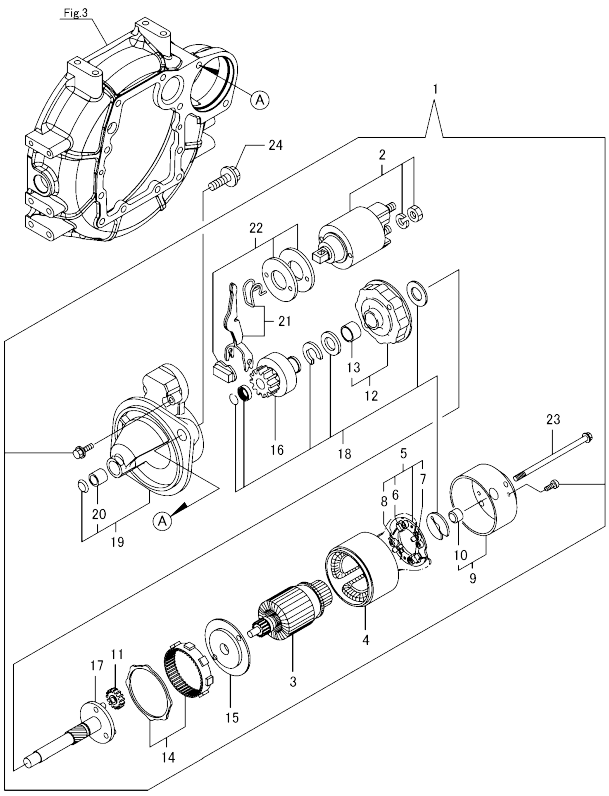




(A)=3TNV88-BWTY
(B)=
(C)=
(D)=
(E)=
(F)=

| No. | Lev. | Parts No. | Description | Q'ty (A) | (B) | (C) | (D) | (E) | (F) | I | R |
|---|---|---|---|---|---|---|---|---|---|---|---|
| 1 | 1 | 129242-77010 | STARTER, 1.7 | 1 | | | | | | | |
| 2 | 2 | 129698-77030 | SWITCH ASSY, MAGNET | 1 | | | | | | | |
| 3 | 2 | 129242-77100 | ARMATURE ASSY | 1 | | | | | | | |
| 4 | 2 | 129242-77110 | YOKE ASSY | 1 | | | | | | | |
| 5 | 2 | 129242-77120 | HOLDER ASSY, BRUSH | 1 | | | | | | | |
| 6 | 3 | 129242-77130 | BRUSH, - | 2 | | | | | | | |
| 7 | 3 | 129242-77140 | BRUSH SET | 1 | | | | | | | |
| 8 | 3 | 129242-77150 | SPRING, BRUSH | 4 | | | | | | | |
| 9 | 2 | 129242-77160 | COVER ASSY, STARTER | 1 | | | | | | | |
| 10 | 3 | 129242-77170 | METAL, REAR COVER | 1 | | | | | | | |
| 11 | 2 | 118400-77230 | GEAR, PLANET | 3 | | | | | | | |
| 12 | 2 | 129242-77180 | BRACKET, CENTER P | 1 | | | | | | | |
| 13 | 3 | 129698-77190 | BRACKET, CENTER | 1 | | | | | | | |
| 14 | 2 | 129698-77200 | GEAR, INTERNAL | 1 | | | | | | | |
| 15 | 2 | 129242-77210 | BRACKET, CENTER A | 1 | | | | | | | |
| 16 | 2 | 129698-77220 | PINION ASSY | 1 | | | | | | | |
| 17 | 2 | 129698-77230 | SHAFT, PINION | 1 | | | | | | | |
| 18 | 2 | 129698-77250 | WASHER SET | 1 | | | | | | | |
| 19 | 2 | 129242-77260 | CASE ASSY, GEAR | 1 | | | | | | | |
| 20 | 3 | X2114535200 | METAL, STARTER | 1 | | | | | | | |
| 21 | 2 | 129242-77270 | LEVER SET, SHIFT | 1 | | | | | | | |
| 22 | 2 | 129242-77280 | COVER KIT, DUST | 1 | | | | | | | |
| 23 | 2 | 124195-77770 | BOLT, THROUGH | 2 | | | | | | | |
| 24 | 1 | 26106-120252 | BOLT, M12X 25 PLATED | 2 | | | | | | | |

N:Old ←Yes/No→ New. Q:Old ←No/Yes→ New. R:Old ←Yes/Yes→ New. S:Old ←No/No→ New. W:Add. Z:Discontinued. F:Interchangeable by set. K:Q'ty Change

Copyright (C) 2021 YANMAR GLOBAL CS CO., LTD. All RightsReserved.

# Fig.16. GENERATOR



(A)=3TNV88-BWTY (D)=
(B)= (E)=
(C)= (F)=

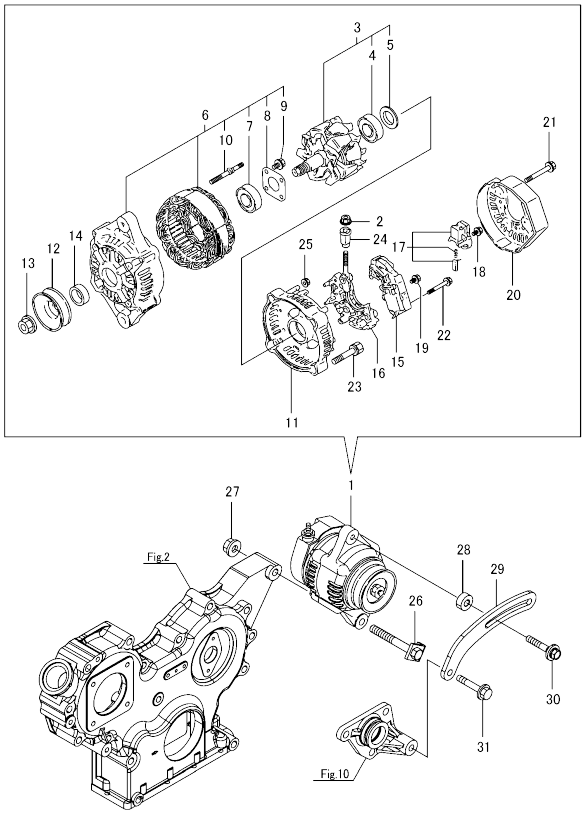


| No. | Lev. | Parts No. | Description | Q'ty (A) | (B) | (C) | (D) | (E) | (F) | I | R |
|---|---|---|---|---|---|---|---|---|---|---|---|
| 1 | 1 | 119626-77220 | ALTERNATOR, 12V-55A | 1 | | | | | | | |
| 2 | 2 | 129240-79310 | NUT | 1 | | | | | | | |
| 3 | 2 | 129052-77380 | ROTOR ASSY | 1 | | | | | | | |
| 4 | 3 | 123501-79240 | BEARING, BALL | 1 | | | | | | | |
| 5 | 3 | 119620-79250 | COVER, BEARING | 1 | | | | | | | |
| 6 | 2 | 129052-77422 | FRAME ASSY | 1 | | | | | | | |
| 7 | 3 | 119620-79200 | BEARING, BALL | 1 | | | | | | | |
| 8 | 3 | 119620-79210 | PLATE, RETAINER | 1 | | | | | | | |
| 9 | 3 | 119620-79220 | SCREW | 4 | | | | | | | |
| 10 | 3 | 119620-79230 | STUD | 2 | | | | | | | |
| 11 | 2 | 128401-77440 | COVER, END | 1 | | | | | | | |
| 12 | 2 | 119620-77461 | PULLEY, GENERATOR | 1 | | | | | | | |
| 13 | 2 | 119620-77471 | NUT | 1 | | | | | | | |
| 14 | 2 | 119620-77490 | COLLAR | 1 | | | | | | | |
| 15 | 2 | 129423-77730 | REGULATOR ASSY | 1 | | | | | | | |
| 16 | 2 | 129052-79260 | HOLDER ASSY | 1 | | | | | | | |
| 17 | 2 | 129052-79270 | HOLDER ASSY, BRUSH | 1 | | | | | | | |
| 18 | 2 | 119620-79290 | SCREW | 6 | | | | | | | |
| 19 | 2 | 119620-79300 | SCREW | 1 | | | | | | | |
| 20 | 2 | 119626-77450 | COVER, END | 1 | | | | | | | |
| 21 | 2 | 119620-79310 | BOLT | 3 | | | | | | | |
| 22 | 2 | 119620-79320 | SCREW, W/WASHER | 2 | | | | | | | |
| 23 | 2 | 119620-79330 | BOLT | 2 | | | | | | | |
| 24 | 2 | 119620-79340 | BUSH, INSULATION | 1 | | | | | | | |
| 25 | 2 | 119620-79350 | NUT | 2 | | | | | | | |
| 26 | 1 | 119740-77251 | BOLT, M10X80 | 1 | | | | | | | |
| 27 | 1 | 26306-100002 | NUT, M10 | 1 | | | | | | | |
| 28 | 1 | 119940-77270 | SPACER, GENERATOR | 1 | | | | | | | |
| 29 | 1 | 119802-77330 | ADJUSTER, BELT | 1 | | | | | | | |
| 30 | 1 | 129972-77341 | BOLT, ADJUSTER L=50 | 1 | | | | | | | |
| 31 | 1 | 26106-080452 | BOLT, M8X 45 PLATED | 1 | | | | | | | |

N:Old ◄Yes/No► New. Q:Old ◄No/Yes► New. R:Old ◄Yes/Yes► New. S:Old ◄No/No► New. W:Add. Z:Discontinued. F:Interchangeable by set. K:Q'ty Change

Copyright (C) 2021 YANMAR GLOBAL CS CO., LTD. All RightsReserved.

# Fig.17. ACCESSORY

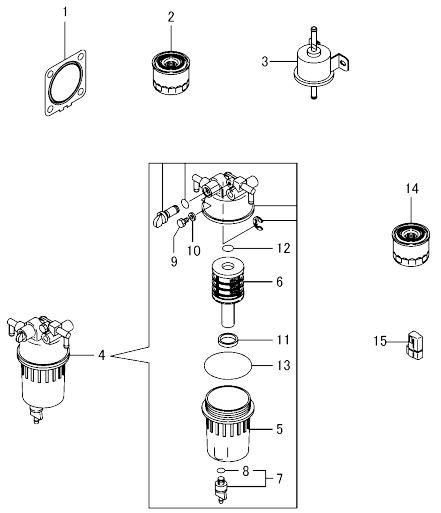




(A)=3TNV88-BWTY (D)=
(B)= (E)=
(C)= (F)=

| No. | Lev. | Parts No. | Description | Q'ty (A) | (B) | (C) | (D) | (E) | (F) | I | R |
|---|---|---|---|---|---|---|---|---|---|---|---|
| 1 | 1 | 129004-13200 | GASKET, SILENCER | 1 | | | | | | | |
| 2 | 1 | 129150-35153 | FILTER ASSY, D80X80L | 1 | | | | | | | |
| 3 | 1 | 129612-52100 | PUMP, FUEL FEED | 1 | | | | | | | |
| 4 | 1 | 129242-55701 | SEPARATOR ASSY,WATER | 1 | | | | | | | |
| 5 | 2 | 129242-55720 | CUP, SEPARATOR | 1 | | | | | | | |
| 6 | 2 | 129242-55730 | ELEMENT, FUEL FILTER | 1 | | | | | | | |
| 7 | 2 | 129242-55740 | PLUG, DRAIN | 1 | | | | | | | |
| 8 | 3 | 129917-55840 | O-RING, DRAIN PLUG | 1 | | | | | | | |
| 9 | 2 | 129242-55750 | VALVE, AIR VENT | 1 | | | | | | | |
| 10 | 2 | 129242-55760 | GASKET, PLUG | 1 | | | | | | | |
| 11 | 2 | 129242-55770 | FLOAT | 1 | | | | | | | |
| 12 | 2 | 24311-000160 | O-RING, 1AP16.0 | 1 | | | | | | | |
| 13 | 2 | 24321-000750 | O-RING, 1AG75.0 | 1 | | | | | | | |
| 14 | 1 | 119802-55801 | FILTER, FUEL | 1 | | | | | | | |
| 15 | 1 | 119802-77200 | RELAY, SAFETY | 1 | | | | | | | |

N:Old ←Yes/No→ New. Q:Old ←No/Yes→ New. R:Old ←Yes/Yes→ New. S:Old ←No/No→ New. W:Add. Z:Discontinued. F:Interchangeable by set. K:Q'ty Change

Copyright (C) 2021 YANMAR GLOBAL CS CO., LTD. All RightsReserved.

# Parts No. Index

| Parts No. | Fig. No. | Ref. No. |
|---|---|---|
| 105025-59580 | 14 | 11 |
| 114250-39450 | 9 | 29 |
| 114250-53080 | 13 | 5 |
| 114250-53120 | 13 | 11 |
| 114250-53130 | 13 | 12 |
| 114250-53140 | 13 | 13 |
| 114250-53210 | 13 | 14 |
| 118400-77230 | 15 | 11 |
| 119131-18320 | 6 | 5 |
| 119260-34810 | 9 | 16 |
| 119593-59581 | 13 | 65 |
| 119609-32040 | 2 | 9 |
| 119620-01750 | 3 | 3 |
| 119620-77461 | 16 | 12 |
| 119620-77471 | 16 | 13 |
| 119620-77490 | 16 | 14 |
| 119620-79200 | 16 | 7 |
| 119620-79210 | 16 | 8 |
| 119620-79220 | 16 | 9 |
| 119620-79230 | 16 | 10 |
| 119620-79250 | 16 | 5 |
| 119620-79290 | 16 | 18 |
| 119620-79300 | 16 | 19 |
| 119620-79310 | 16 | 21 |
| 119620-79320 | 16 | 22 |
| 119620-79330 | 16 | 23 |
| 119620-79340 | 16 | 24 |
| 119620-79350 | 16 | 25 |
| 119625-11880 | 4 | 29 |
| 119626-77220 | 16 | 1 |
| 119626-77450 | 16 | 20 |
| 119640-01640 | 3 | 8 |
| 119660-61901 | 12 | 63 |
| 119740-61470 | 12 | 71 |
| 119740-77251 | 16 | 26 |
| 119802-01561 | 2 | 5 |
| 119802-03070 | 4 | 39 |
| 119802-03110 | 4 | 41 |
| 119802-03121 | 4 | 42 |
| 119802-03130 | 4 | 43 |
| 119802-03141 | 4 | 44 |
| 119802-11260 | 4 | 5 |
| 119802-11270 | 4 | 6 |
| 119802-11280 | 4 | 7 |
| 119802-11870 | 4 | 28 |
| 119802-25071 | 7 | 16 |
| 119802-25101 | 7 | 10 |
| 119802-25901 | 7 | 15 |
| 119802-34850 | 9 | 18 |
| 119802-35100 | 9 | 23 |

| Parts No. | Fig. No. | Ref. No. |
|---|---|---|
| 119802-35110 | 9 | 24 |
| 119802-39450 | 9 | 31 |
| 119802-49113 | 10 | 11 |
| 119802-49730 | 10 | 38 |
| 119802-51090 | 11 | 11 |
| 119802-51250 | 11 | 133 |
| 119802-51560 | 11 | 57 |
| 119802-51590 | 11 | 63 |
| 119802-51600 | 11 | 64 |
| 119802-51680 | 11 | 68 |
| 119802-51690 | 11 | 69 |
| 119802-55801 | 14 | 2 |
| | 17 | 14 |
| 119802-59550 | 13 | 59 |
| 119802-59560 | 13 | 61 |
| 119802-77200 | 17 | 15 |
| 119802-77330 | 16 | 29 |
| 119803-01520 | 2 | 4 |
| 119803-21200 | 8 | 4 |
| 119803-25050 | 7 | 9 |
| 119803-53400 | 13 | 15 |
| 119803-77830 | 4 | 54 |
| 119807-61420 | 12 | 26 |
| 119865-21600 | 8 | 14 |
| 119934-01800 | 2 | 3 |
| 119934-59910 | 11 | 130 |
| 119940-77270 | 16 | 28 |
| 120130-11860 | 4 | 57 |
| 120270-54410 | 4 | 31 |
| 121023-01551 | 2 | 19 |
| 121111-21501 | 8 | 11 |
| 121267-44760 | 10 | 44 |
| 121400-11340 | 4 | 24 |
| 121450-42450 | 10 | 32 |
| 121550-23200 | 8 | 29 |
| 121750-59890 | 14 | 12 |
| 121850-21680 | 8 | 10 |
| 121850-51960 | 2 | 10 |
| 123501-79240 | 16 | 4 |
| 123900-13610 | 6 | 3 |
| 124060-01050 | 1 | 4 |
| 124060-77680 | 13 | 66 |
| 124160-01751 | 2 | 6 |
| | 4 | 36 |
| 124160-01910 | 1 | 6 |
| | | 7 |
| 124160-11360 | 4 | 49 |
| 124160-39140 | 9 | 30 |
| 124195-77770 | 15 | 23 |
| 124240-01871 | 2 | 7 |

| Parts No. | Fig. No. | Ref. No. |
|---|---|---|
| 124250-49351 | 10 | 34 |
| 124395-49840 | 10 | 18 |
| 124460-11340 | 4 | 25 |
| 124465-44950 | 10 | 33 |
| 124722-59050 | 10 | 39 |
| | | 42 |
| | 13 | 60 |
| | | 63 |
| 124766-59050 | 14 | 5 |
| | | 9 |
| 128401-77440 | 16 | 11 |
| 129001-01250 | 1 | 5 |
| 129001-01340 | 1 | 28 |
| 129001-02931 | 1 | 29 |
| 129001-12110 | 5 | 4 |
| 129001-32002 | 9 | 1 |
| 129004-03010 | 4 | 38 |
| 129004-03080 | 5 | 1 |
| 129004-11241 | 4 | 1 |
| 129004-11251 | 4 | 2 |
| 129004-11310 | 4 | 46 |
| 129004-11350 | 4 | 37 |
| 129004-11650 | 4 | 9 |
| 129004-11900 | 4 | 30 |
| 129004-12101 | 5 | 3 |
| 129004-13110 | 6 | 2 |
| 129004-13200 | 17 | 1 |
| 129004-42002 | 10 | 1 |
| 129004-42040 | 10 | 16 |
| 129004-49610 | 10 | 36 |
| 129004-49620 | 10 | 40 |
| 129004-49711 | 10 | 37 |
| 129004-49721 | 10 | 41 |
| 129004-55612 | 14 | 1 |
| 129004-59811 | 13 | 47 |
| 129004-59821 | 13 | 51 |
| 129004-59831 | 13 | 55 |
| 129005-11100 | 4 | 20 |
| 129005-22080 | 8 | 15 |
| 129005-22500 | 8 | 17 |
| 129005-22900 | 8 | 35 |
| 129005-22950 | 8 | 37 |
| 129005-59830 | 9 | 32 |
| 129008-11700 | 4 | 14 |
| 129008-21000 | 8 | 1 |
| 129008-51390 | 11 | 39 |
| 129008-51900 | 11 | 9 |
| 129008-51920 | 11 | 10 |
| 129008-77800 | 4 | 55 |
| 129008-77820 | 4 | 56 |

| Parts No. | Fig. No. | Ref. No. |
|---|---|---|
| 129044-42290 | 10 | 25 |
| 129044-59010 | 14 | 4 |
| 129044-59100 | 14 | 6 |
| 129044-59510 | 14 | 7 |
| 129052-77380 | 16 | 3 |
| 129052-77422 | 16 | 6 |
| 129052-79260 | 16 | 16 |
| 129052-79270 | 16 | 17 |
| 129054-21671 | 8 | 8 |
| 129100-01580 | 3 | 1 |
| | | 15 |
| | 8 | 2 |
| 129100-01730 | 3 | 6 |
| 129100-11112 | 4 | 21 |
| 129100-23910 | 8 | 32 |
| 129100-35140 | 9 | 25 |
| 129100-35301 | 9 | 21 |
| 129100-42051 | 10 | 4 |
| 129128-21590 | 8 | 12 |
| 129129-14580 | 7 | 3 |
| 129136-01780 | 3 | 7 |
| 129150-01200 | 1 | 27 |
| 129150-02020 | 1 | 9 |
| 129150-02450 | 7 | 4 |
| 129150-02871 | 1 | 32 |
| 129150-02931 | 1 | 24 |
| 129150-02941 | 1 | 35 |
| 129150-03070 | 4 | 40 |
| 129150-11230 | 4 | 10 |
| 129150-11280 | 4 | 8 |
| 129150-11370 | 4 | 13 |
| 129150-11750 | 4 | 12 |
| 129150-11810 | 4 | 58 |
| 129150-13110 | 6 | 1 |
| 129150-14101 | 7 | 6 |
| 129150-14200 | 7 | 1 |
| 129150-14400 | 7 | 2 |
| 129150-23601 | 8 | 30 |
| 129150-23611 | 8 | 33 |
| 129150-25301 | 7 | 14 |
| 129150-32020 | 9 | 13 |
| 129150-35042 | 9 | 20 |
| 129150-35111 | 9 | 26 |
| 129150-35153 | 9 | 38 |
| | 17 | 2 |
| 129150-42280 | 10 | 9 |
| 129150-49360 | 10 | 35 |
| 129150-49811 | 10 | 27 |
| 129150-59120 | 13 | 42 |
| 129150-59131 | 13 | 45 |

# Parts No. Index

| Parts No. | Fig. No. | Ref. No. |
|---|---|---|
| 129150-77511 | 5 | 8 |
| 129155-49801 | 10 | 26 |
| 129155-51280 | 12 | 6 |
| 129155-61461 | 12 | 28 |
| 129202-22300 | 8 | 23 |
| 129236-53000 | 13 | 2 |
| 129240-79310 | 16 | 2 |
| 129242-55701 | 17 | 4 |
| 129242-55720 | 17 | 5 |
| 129242-55730 | 17 | 6 |
| 129242-55740 | 17 | 7 |
| 129242-55750 | 17 | 9 |
| 129242-55760 | 17 | 10 |
| 129242-55770 | 17 | 11 |
| 129242-77010 | 15 | 1 |
| 129242-77100 | 15 | 3 |
| 129242-77110 | 15 | 4 |
| 129242-77120 | 15 | 5 |
| 129242-77130 | 15 | 6 |
| 129242-77140 | 15 | 7 |
| 129242-77150 | 15 | 8 |
| 129242-77160 | 15 | 9 |
| 129242-77170 | 15 | 10 |
| 129242-77180 | 15 | 12 |
| 129242-77210 | 15 | 15 |
| 129242-77260 | 15 | 19 |
| 129242-77270 | 15 | 21 |
| 129242-77280 | 15 | 22 |
| 129255-61410 | 12 | 25 |
| 129350-49530 | 10 | 28 |
| 129403-42380 | 10 | 24 |
| 129410-03990 | 5 | 2 |
| 129423-77730 | 16 | 15 |
| 129486-01670 | 3 | 19 |
| 129486-12581 | 5 | 7 |
| 129486-42021 | 10 | 15 |
| 129486-42140 | 10 | 17 |
| 129486-59551 | 13 | 62 |
| 129601-34801 | 9 | 15 |
| 129612-01600 | 3 | 2 |
| 129612-52100 | 17 | 3 |
| 129630-77900 | 12 | 121 |
| 129642-61060 | 12 | 89 |
| 129648-01600 | 3 | 16 |
| 129648-01780 | 3 | 18 |
| 129655-44740 | 10 | 46 |
| 129698-77030 | 15 | 2 |
| 129698-77190 | 15 | 13 |
| 129698-77200 | 15 | 14 |
| 129698-77220 | 15 | 16 |

| Parts No. | Fig. No. | Ref. No. |
|---|---|---|
| 129698-77230 | 15 | 17 |
| 129698-77250 | 15 | 18 |
| 129795-01950 | 2 | 8 |
| 129795-02412 | 1 | 12 |
| 129795-11120 | 4 | 22 |
| 129795-11180 | 4 | 23 |
| 129795-21661 | 8 | 9 |
| 129795-49551 | 10 | 29 |
| 129900-07900 | 4 | 52 |
| 129917-55840 | 17 | 8 |
| 129950-59311 | 14 | 8 |
| 129961-59110 | 14 | 10 |
| 129972-77341 | 16 | 30 |
| 129E00-13640 | 6 | 4 |
| 158552-51151 | 7 | 17 |
| 158552-51571 | 11 | 58 |
| | | 59 |
| 158552-51580 | 11 | 62 |
| 158552-51600 | 11 | 72 |
| 158552-51670 | 11 | 126 |
| 158552-51781 | 11 | 98 |
| 158552-52100 | 11 | 128 |
| 158552-52311 | 11 | 107 |
| 158552-52400 | 11 | 108 |
| 158552-52500 | 11 | 129 |
| 158552-61441 | 12 | 27 |
| 158552-61900 | 12 | 80 |
| 158553-51551 | 11 | 124 |
| 158553-51630 | 11 | 73 |
| 158553-51650 | 11 | 75 |
| 158553-51660 | 11 | 76 |
| 158553-51670 | 11 | 67 |
| 158553-51680 | 11 | 77 |
| 158553-51930 | 11 | 101 |
| | 12 | 7 |
| 158553-61050 | 12 | 3 |
| 158553-61070 | 12 | 4 |
| 158557-51570 | 11 | 60 |
| 158563-51281 | 11 | 37 |
| | | 38 |
| 158563-51330 | 11 | 48 |
| 158600-51270 | 11 | 36 |
| 158601-51550 | 11 | 56 |
| 158601-51570 | 11 | 61 |
| 158601-51650 | 11 | 125 |
| 158601-51770 | 11 | 97 |
| 158601-51790 | 11 | 99 |
| 171051-01921 | 1 | 8 |
| 171056-49120 | 10 | 31 |
| 22190-080002 | 2 | 11 |

| Parts No. | Fig. No. | Ref. No. |
|---|---|---|
| 22190-080002 | 9 | 33 |
| | | 35 |
| 22190-100002 | 9 | 36 |
| 22190-120002 | 11 | 102 |
| | | 109 |
| | | 131 |
| | 12 | 67 |
| 22190-180002 | 11 | 103 |
| | | 110 |
| 22190-220002 | 3 | 10 |
| 22217-140000 | 11 | 111 |
| 22252-000260 | 8 | 24 |
| 22312-050140 | 11 | 112 |
| 22351-030010 | 8 | 7 |
| 22351-050010 | 11 | 113 |
| 22351-060012 | 4 | 32 |
| 22512-070140 | 7 | 7 |
| | 8 | 5 |
| 22857-500100 | 4 | 47 |
| | | 48 |
| 23414-080000 | 10 | 19 |
| 23857-030000 | 9 | 34 |
| 24311-000070 | 11 | 115 |
| 24311-000120 | 4 | 50 |
| 24311-000160 | 17 | 12 |
| 24311-000320 | 2 | 12 |
| | 4 | 51 |
| 24316-240100 | 9 | 17 |
| 24321-000750 | 17 | 13 |
| 24341-000240 | 2 | 20 |
| 24356-190180 | 11 | 116 |
| 24356-190200 | 11 | 70 |
| | | 117 |
| 24372-000150 | 11 | 71 |
| 26106-060102 | 11 | 118 |
| | 12 | 70 |
| 26106-060122 | 10 | 43 |
| | 12 | 86 |
| | | 87 |
| 26106-060162 | 2 | 21 |
| 26106-060202 | 12 | 88 |
| 26106-060302 | 10 | 45 |
| 26106-060352 | 11 | 104 |
| 26106-080122 | 10 | 20 |
| 26106-080142 | 7 | 8 |
| 26106-080162 | 2 | 13 |
| | | 14 |
| | 3 | 11 |
| | 4 | 53 |
| | 9 | 19 |

| Parts No. | Fig. No. | Ref. No. |
|---|---|---|
| 26106-080162 | 10 | 21 |
| | 11 | 134 |
| 26106-080202 | 5 | 5 |
| | | 9 |
| | 9 | 28 |
| | 11 | 135 |
| 26106-080222 | 10 | 30 |
| 26106-080252 | 3 | 12 |
| | 4 | 33 |
| 26106-080302 | 2 | 15 |
| | 14 | 3 |
| 26106-080352 | 3 | 20 |
| | 4 | 34 |
| | 9 | 22 |
| 26106-080402 | 7 | 13 |
| 26106-080452 | 3 | 13 |
| | 10 | 22 |
| | 16 | 31 |
| 26106-080502 | 3 | 14 |
| | 4 | 35 |
| 26106-080552 | 2 | 16 |
| 26106-080602 | 10 | 23 |
| 26106-080802 | 5 | 6 |
| 26106-080852 | 2 | 17 |
| 26106-120252 | 15 | 24 |
| 26206-100252 | 3 | 4 |
| 26206-100302 | 3 | 5 |
| 26306-080002 | 2 | 18 |
| | 6 | 6 |
| 26306-100002 | 16 | 27 |
| 26366-060002 | 9 | 37 |
| 26450-060252 | 9 | 14 |
| 26450-080452 | 11 | 120 |
| 26776-140002 | 11 | 121 |
| 27241-120000 | 1 | 13 |
| 27241-300000 | 1 | 14 |
| 27241-400000 | 4 | 19 |
| 27310-080001 | 4 | 26 |
| 729005-01560 | 1 | 1 |
| 729236-53100 | 13 | 1 |
| 729288-51300 | 11 | 1 |
| 729402-23100 | 8 | 25 |
| 729630-01500 | 2 | 1 |
| X2114535200 | 15 | 20 |