PREFACE

1. This parts catalog is the 2nd revised of Yanmar crawler back-hoe B12-2B & B17-2B.

2. Parts catalog history

	Parts catalog No.	Published	Remarks
1st edition	000Y00K3440	1997/7	Scrap old edition
1st revised	000Y00K3441	1998/10	Scrap old edition
2nd revised	000Y00K3442	1999/12	

3. Model name

SECTION	Column	Model name	M/#	Manufactured
I (Vehicle)	(A)	B12-2B(JP, EX)	30501～	1997/6～
	(B)	B17-2B(JP, EX)	30501～	1997/7～
	(C)	B17-2B(AS)		
	(D)	B17-2B(LOTUS ROOT)		
II (Engine)	(A)	3TNA72L-UBA	C6836～	1997/5～
	(B)	3TNA72L-UBB	C6289～	1997/5～

(NOTE) JP : Japan, EX : Export except Europe, U.S.A. & Australia,
AS : Australia, LOTUS ROOT : for LOTUS ROOT SPEC.
3TNA72L-UBA : for B12-2B engine, 3TNA72L-UBB : for B17-2B engine.

4. Your understanding is asking that this parts catalog is not a technical data manual setting forth as servicing procedures, This parts catalog is using simplified illustration.
Be sure to use Yanmar Genuine Parts in your maintenance servicing of Yanmar products.
Be careful not to use the simple parts available in the market ; otherwise their use in repairing causes such as an early breakage, for instance.

SPECIFICATIONS

Model			YANMAR CRAWLER BACKHOE	
Specification			B12-2B	B17-2B
Engine	Model		3TNA72L-UBA	3TNA72L-UBB
	Type		Vertical 3-cylinder water-cooled diesel	
Dimensions	Transport length	mm	3485	3500
	Transport width	mm	1000	
	Transport height	mm	2070	
Std. bucket capacity		m^3	0.044	0.05
Std. bucket width(Outside)		mm	400	450
Max. digging depth		mm	1900(Blade2000)	2100(Blade2200)
Max. cutting height		mm	3430	3570
Max. dump height		mm	2420	2550
Max. reach at ground level		mm	3320	3500
Min. swing radius		mm	1300(Swing950)	1360(Swing1010)
Boom swing angle		degree	Left 45 & Right 90	
Max. digging force(Std. bucket)		kN(kgf)	11.7 (1195)	
Travel speed		km/h	1.8	2.0
Average ground pressure		kPa(kgf/cm^2)	21.4(0.218)	23.2(0.237)
Track shoe width(Std.)		mm	230	
Blade	Width × height	mm	960 × 250	
	Capacity	m^3	0.06	
Machine mass		kg	1170	1270
Battery			46B24L(NS60-L)/12V, 45Ah	

1 [本機塗装色（B12−2B，B17−2B JP／EX）]
[PAINTED COLOR LIST (B12-2B, B17-2B JP/EX)]

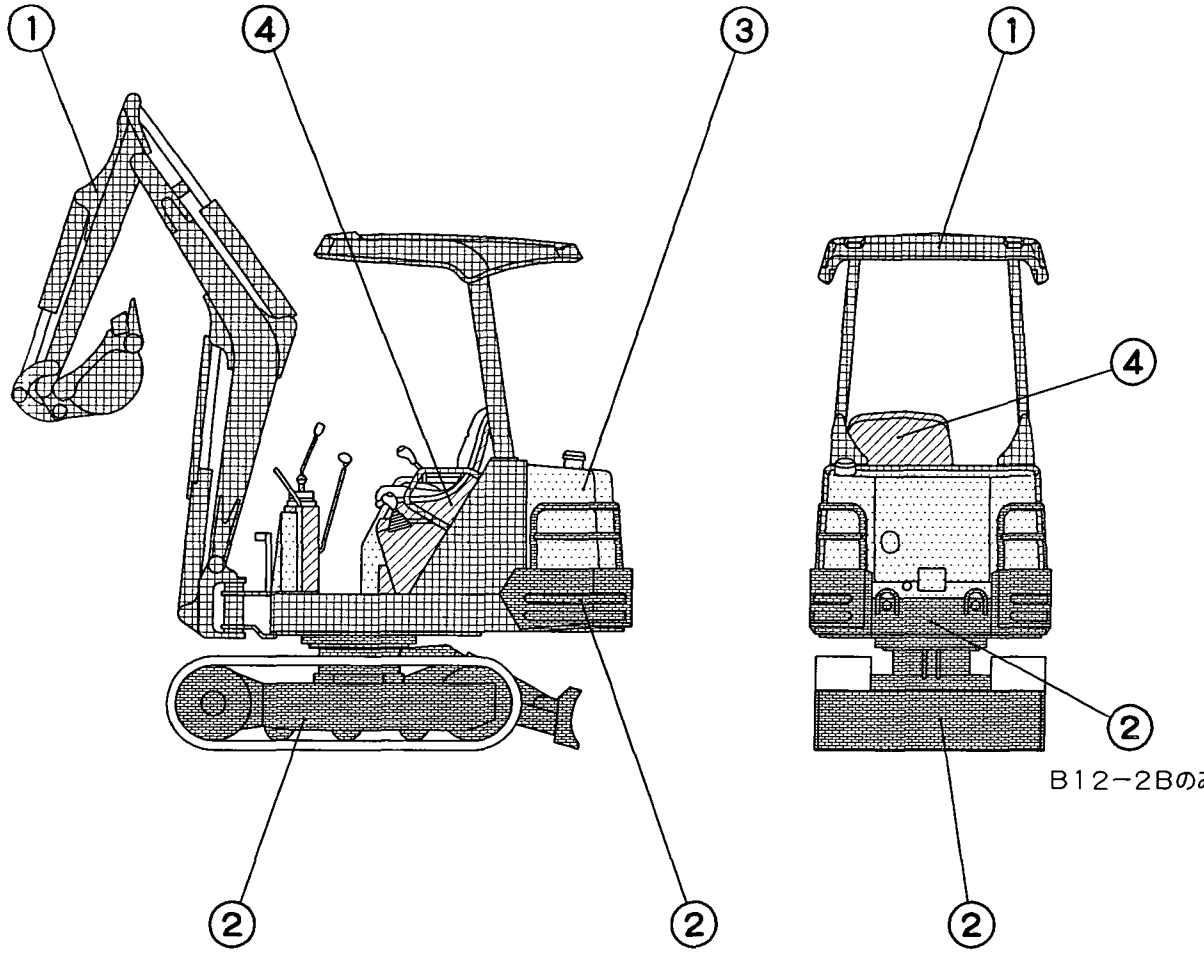

部所 PART	表示 DESCRIPTION	塗装色 マンセル記号	PAINTED COLOR MUNSEL No.	色区分 COLOR CODE
①		ヤンマーピーコックグリーン 3．85BG5．31／9．15	YANMAR PEACOCK GREEN 3.85BG5.31/9.15	97
②		ヤンマー新ディープグリーン 0．6B2．2／4．2	YANMAR NEW DEEP GREEN 0.6B2.2/4.2	88
③		ヤンマーシトラスグリーン 4．84GY8．42／6．99	YANMAR CITRUS GREEN 4.84GY8.42/6.99	96
④		ヤンマーダークオリーブグレー 5．39Y2．92／0．78	YANMAR DARK OLIVE GRAY 5.39Y2.92/0.78	72

2 [塗料部品番号] [PAINT PART No.]

部所 PART	塗装色 PAINTED COLOR	塗料部品番号 PAINT PART No.		
		16ℓ缶 16ℓCAN	4ℓ缶 4ℓCAN	スプレー SPRAY
①	ヤンマーピーコックグリーン YANMAR PEACOCK GREEN	981101-09597	977620-40970	977620-30971
②	ヤンマー新ディープグリーン YANMAR NEW DEEP GREEN	981101-09588	977620-40880	977620-30881
③	ヤンマーシトラスグリーン YANMAR CITRUS GREEN	981101-09599	977620-40990	977620-30991
④	ヤンマーダークオリーブグレー YANMAR DARK OLIVE GRAY	————————	977620-40720	TOR-90460003

3 [塗装色部品の表現] [EXPRESSION OF PAINTED PARTS]

部品番号 PART NO.	部品名 PART NAME	塗装色 PAINTED COLOR
172149-54100	フレームCMP (ターニング) FRAME, TURNING COMP	ヤンマーチャコールグレー YANMAR CHARCOAL GRAY
172149-54100 -4	フレーム (ターニング (グリーン：97 FRAME, TURNING (GREEN) (97)	ヤンマーピーコックグリーン YANMAR PEACOCK GREEN

(注) 部品名末尾の ( ) 内は塗装色を示す。
(NOTE) ( ) at the end of part name shows Paint Color.

4 [主要部品の塗装色] [COLOR OF MAIN PARTS]

部所 PART	塗装色 PAINTED COLOR	主な部品	MAIN PARTS
①	ヤンマーピーコックグリーン YANMAR PEACOCK GREEN	ブーム アーム ブームシリンダ アームシリンダ バケットシリンダ バケット キャノピ 旋回フレーム	BOOM ARM BOOM CYLINDER ARM CYLINDER BUCKET CYLINDER BUCKET CANOPY TURNING FRAME
②	ヤンマー新ディープグリーン YANMAR NEW DEEP GREEN	プロテクタ ブレード ブレードシリンダ カウンターウエイト フレーム (ロア	PROTECTOR BLADE BLADE CYLINDER COUNTER WEIGHT FRAME, LOWER
③	ヤンマーシトラスグリーン YANMAR CITRUS GREEN	燃料タンク 作動油タンク ボンネット フロントカバー	FUEL TANK HYD. OIL TANK BONNET FRONT COVER
④	ヤンマーダークオリーブグレー YANMAR DARK OLIVE GRAY	操作部 シートマウント	CONTROL EQUIPMENT SEAT MOUNT

1 [本機塗装色 (B17−2B AS)]
[PAINTED COLOR LIST (B17-2B AS)]

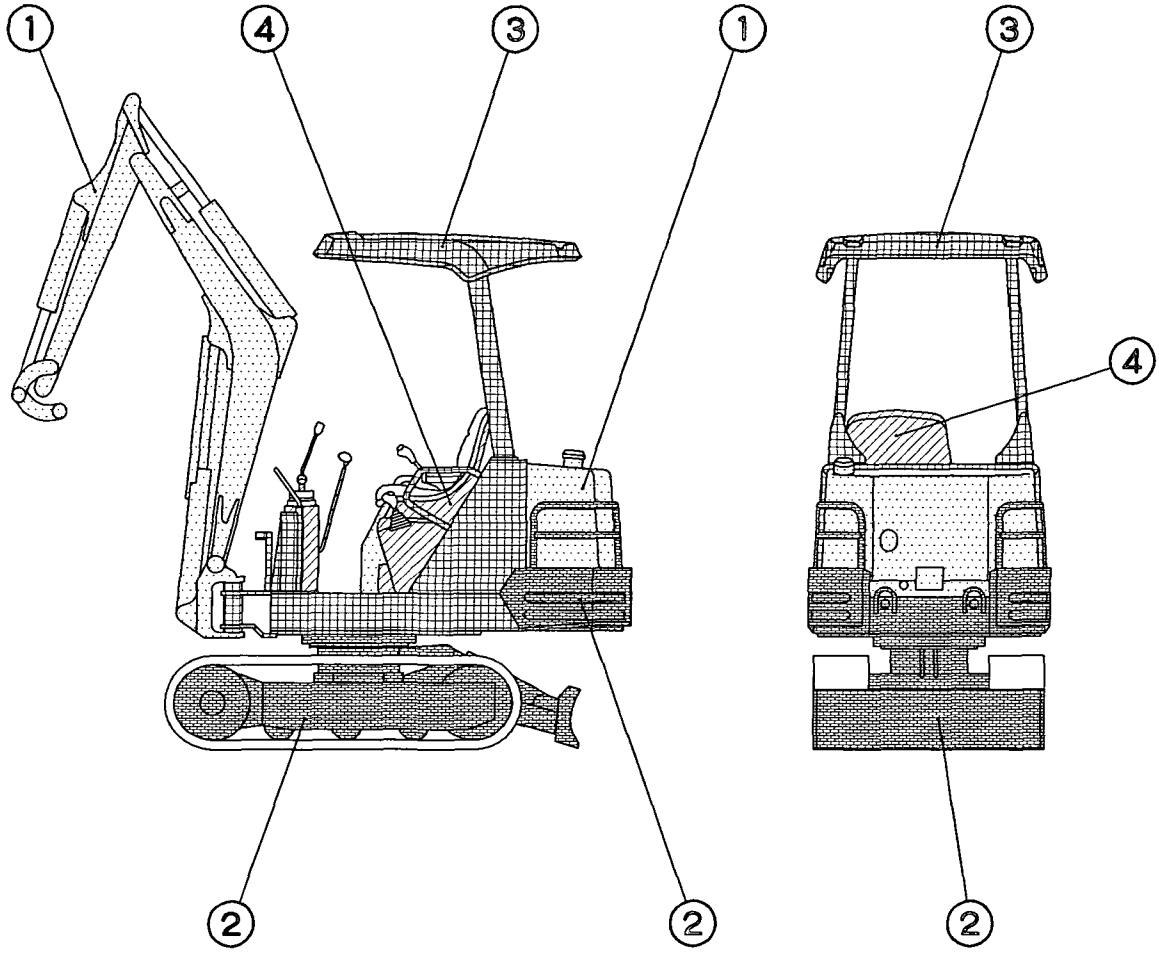

部所 PART	表示 DESCRIPTION	塗装色 マンセル記号	PAINTED COLOR MUNSEL No.	色区分 COLOR CODE
①		ヤンマー新パーマネントイエロー 5．2Y8．5／11	YANMAR NEW PERMANENT YELLOW 5.2Y8.5/11	87
②		ヤンマー新ディープグリーン 0．6B2．2／4．2	YANMAR NEW DEEP GREEN 0.6B2.2/4.2	88
③		ヤンマー新グレイッシュグリーン 2．9BG4．8／3．0	YANMAR NEW GRAYISH GREEN 2.9BG4.8/3.0	86
④		ヤンマーダークオリーブグレー 5．39Y2．92／0．78	YANMAR DARK OLIVE GRAY 5.39Y2.92/0.78	72

2 [塗料部品番号] [PAINT PART No.]

部所 PART	塗装色 PAINTED COLOR	塗料部品番号 PAINT PART No.		
		16ℓ缶 16ℓCAN	4ℓ缶 4ℓCAN	スプレー SPRAY
①	ヤンマー新パーマネントイエロー YANMAR NEW PERMANENT YELLOW	981101-09519	977620-40870	977620-30871
②	ヤンマー新ディープグリーン YANMAR NEW DEEP GREEN	981101-09588	977620-40880	977620-30881
③	ヤンマー新グレイッシュグリーン YANMAR NEW GRAYISH GREEN	981101-09616	977620-40860	977620-30861
④	ヤンマーダークオリーブグレー YANMAR DARK OLIVE GRAY	----------	977620-40720	TOR-90460003

3 [塗装色部品の表現] [EXPRESSION OF PAINTED PARTS]

部品番号 PART NO.	部品名 PART NAME	塗装色 PAINTED COLOR
172149-54100	フレームCMP（ターニング） FRAME, TURNING COMP	ヤンマーチャコールグレー YANMAR CHARCOAL GRAY
172149-54100 -4	フレーム（ターニング（グリーン：97 FRAME, TURNING (GREEN) (97)	ヤンマー新グレイッシュグリーン YANMAR NEW GRAYISH GREEN

（注）部品名末尾の（　）内は塗装色を示す。
(NOTE) ( ) at the end of part name shows Paint Color.

4 [主要部品の塗装色] [COLOR OF MAIN PARTS]

部所 PART	塗装色 PAINTED COLOR	主な部品	MAIN PARTS
①	ヤンマー新パーマネントイエロー YANMAR NEW PERMANENT YELLOW	ブーム アーム ブームシリンダ アームシリンダ バケットシリンダ 燃料タンク 作動油タンク ボンネット	BOOM ARM BOOM CYLINDER ARM CYLINDER BUCKET CYLINDER FUEL TANK HYD. OIL TANK BONNET
②	ヤンマー新ディープグリーン YANMAR NEW DEEP GREEN	ブレード ブレードシリンダ フレーム（ロア カウンターウエイト	BLADE BLADE CYLINDER FRAME, LOWER COUNTER WEIGHT
③	ヤンマー新グレイッシュグリーン YANMAR NEW GRAYISH GREEN	キャノピ 旋回フレーム フロントカバー	CANOPY TURNING FRAME FRONT COVER
④	ヤンマーダークオリーブグレー YANMAR DARK OLIVE GRAY	操作部 シートマウント	CONTROL EQUIPMENT SEAT MOUNT

絵目次(1)・・・・・・・・・・・・・主部品
PICTURESQUE INDEX(1)・・・・・・MAIN PARTS

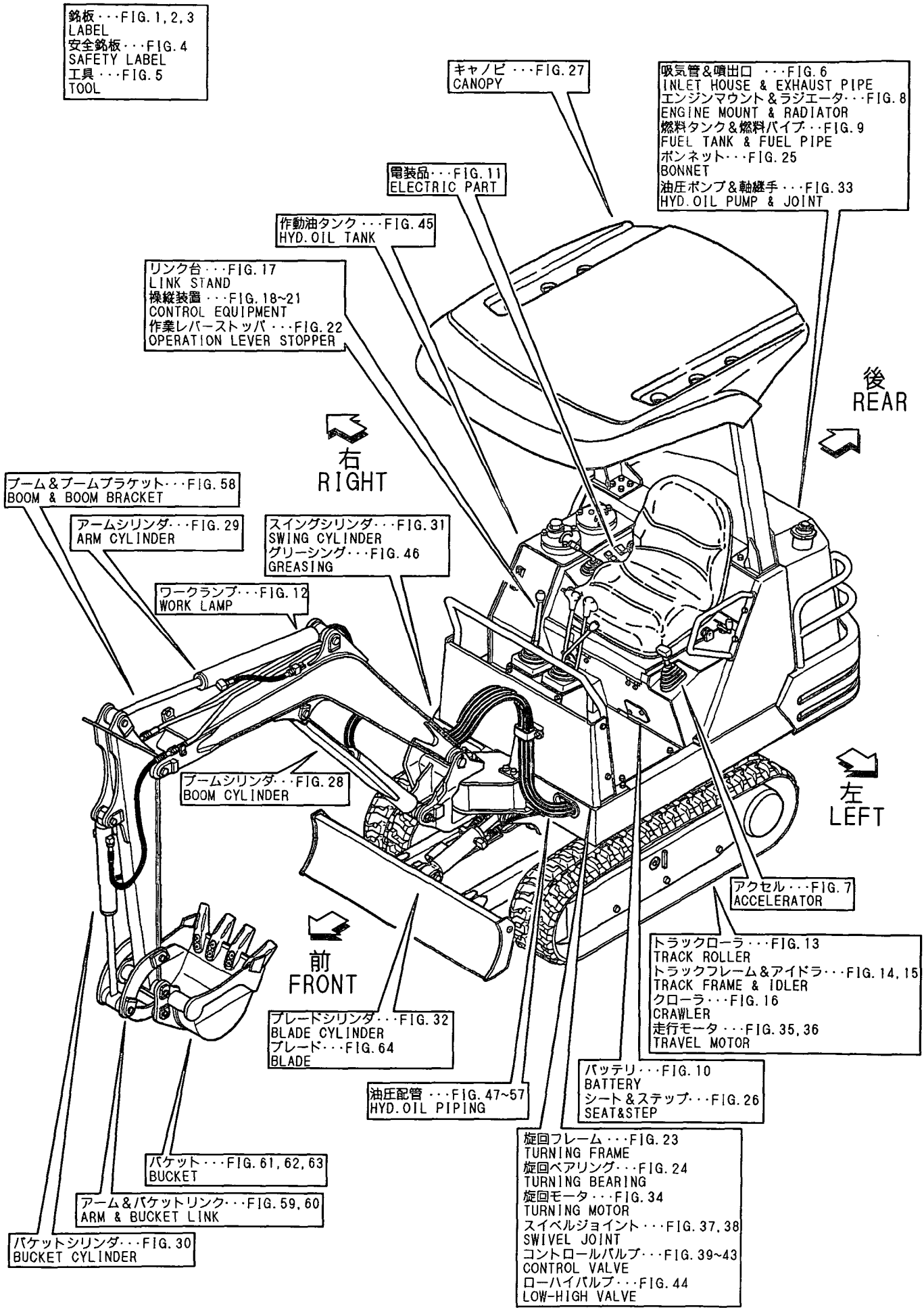

絵目次（2）・・・・・・・・・・・・・油圧関係
PICTURESQUE INDEX(2)・・・・・・HYDRAULIC SECTION

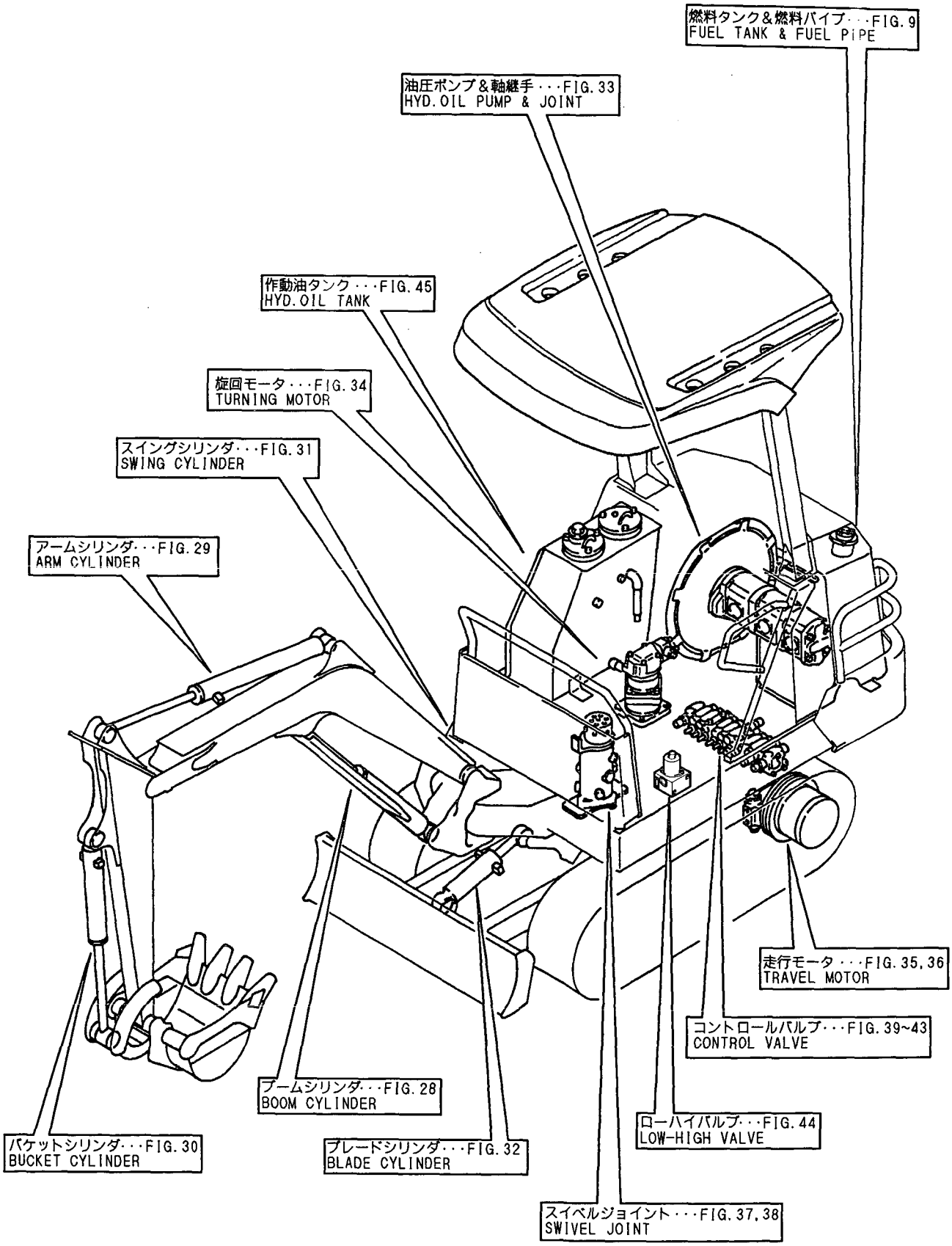

絵目次 (3) ・・・・・・・・・・・・・項目別
PICTURESQUE INDEX (3) ・・・・・・FIGURE

Fig. 1 銘板 (JP)
LABEL (JP)

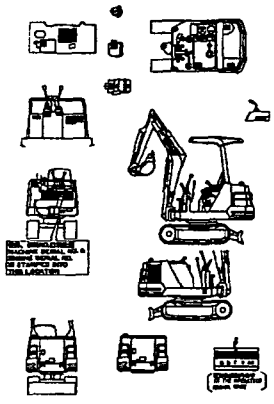

Fig. 2 銘板 (レンコン仕様)
LABEL (LOTUS ROOT SPEC.)

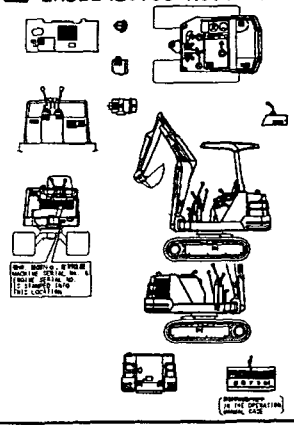

Fig. 3 銘板 (AS, EX)
LABEL (AS, EX)

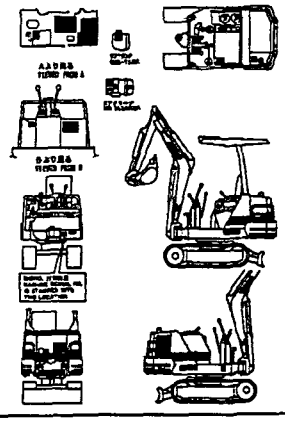

Fig. 4 安全銘板
SAFETY LABEL

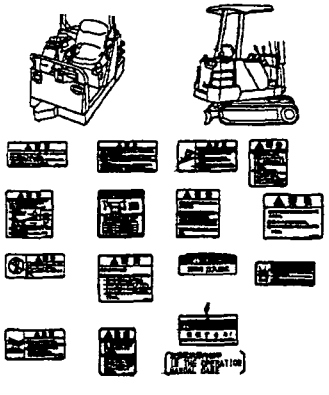

Fig. 5 工具
TOOL

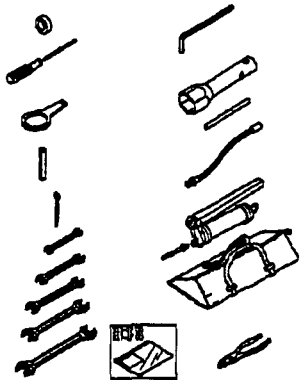

Fig. 6 吸気管&噴出口
INLET HOUSE & EXHAUST PIPE

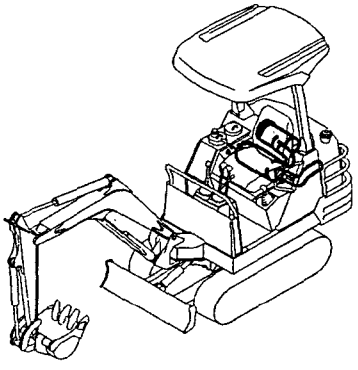

Fig. 7 アクセル
ACCELERATOR

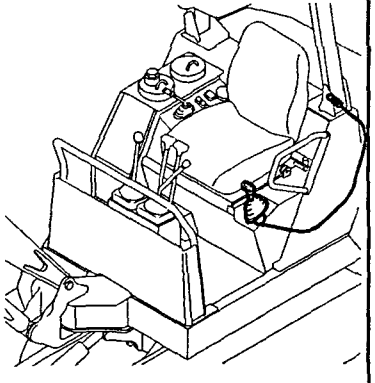

Fig. 8 エンジンマウント&ラジエータ
ENGINE MOUNT & RADIATOR

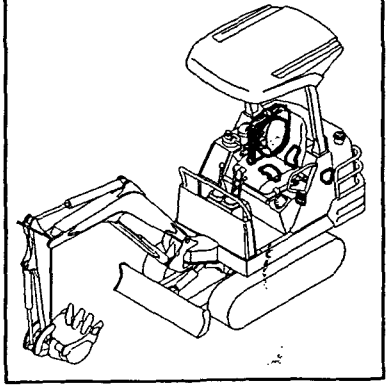

Fig. 9 燃料タンク&燃料パイプ
FUEL TANK & FUEL PIPE

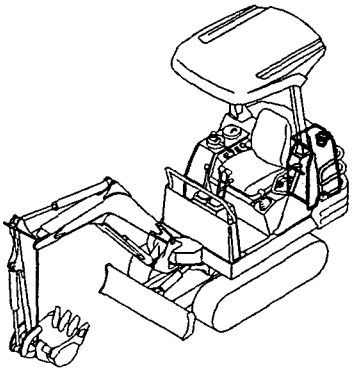

Fig. 10 バッテリ
BATTERY

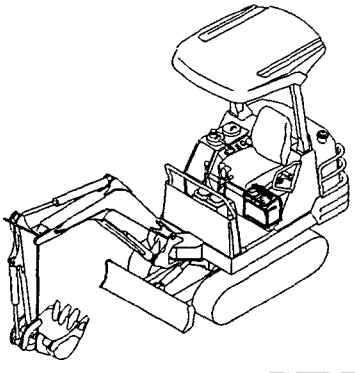

Fig. 11 電装品
ELECTRIC PART

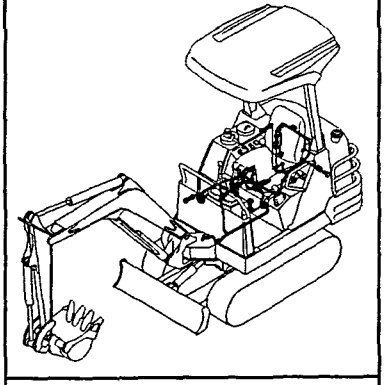

Fig. 12 ワークランプ
WORK LAMP

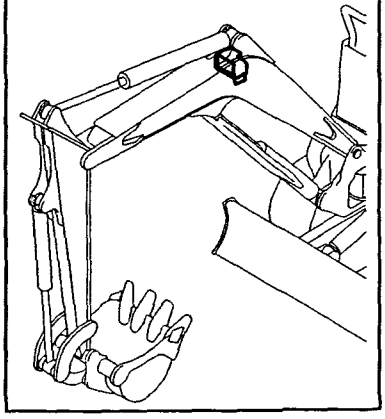

絵目次（3）・・・・・・・・・・・・・項目別
PICTURESQUE INDEX (3)・・・・・・FIGURE

Fig. 13 トラックローラ
TRACK ROLLER

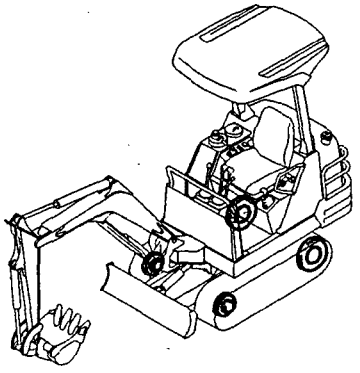

Fig. 14 トラックフレーム&アイドラ
TRACK FRAME & IDLER

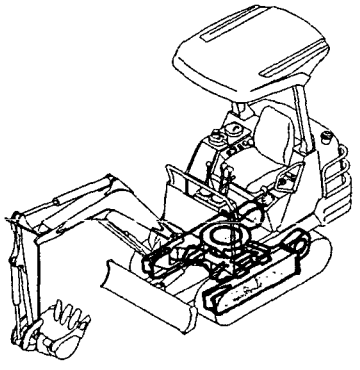

Fig. 15 トラックフレーム&アイドラ（レンコン仕様）
TRACK FRAME & IDLER (LOTUS ROOT SPEC.)

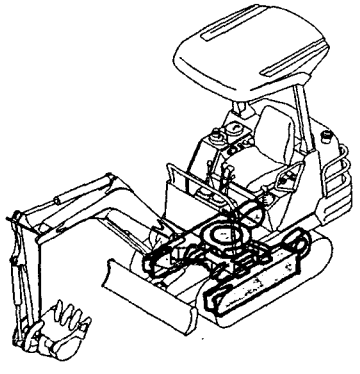

Fig. 16 クローラ
CRAWLER

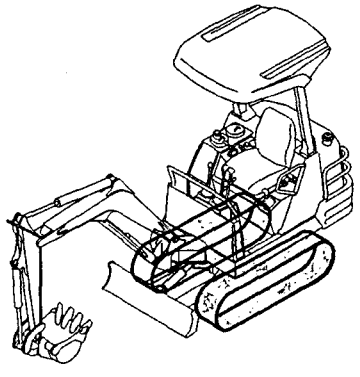

Fig. 17 リンク台
LINK STAND

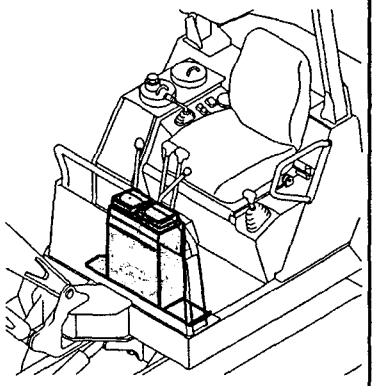

Fig. 18 操縦装置（ブーム&バケット）
CONTROL EQUIPMENT (BOOM & BUCKET)

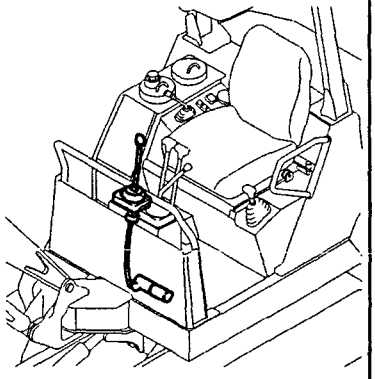

Fig. 19 操縦装置（アーム&旋回）
CONTROL EQUIPMENT (ARM & TURNING)

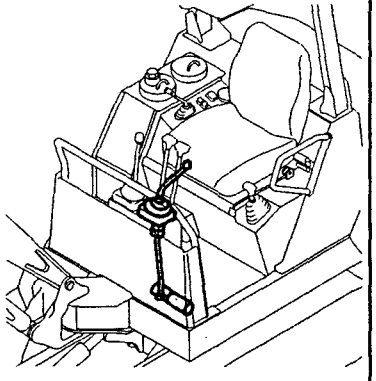

Fig. 20 操縦装置（走行&スイング）
CONTROL EQUIPMENT (TRAVEL & SWING)

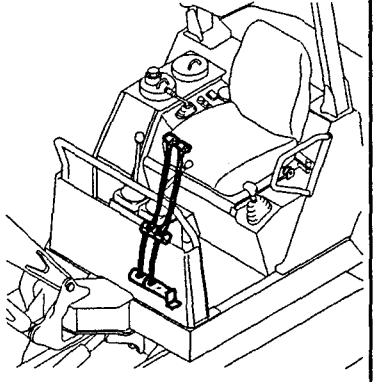

Fig. 21 操縦装置（ブレード）
CONTROL EQUIPMENT (BLADE)

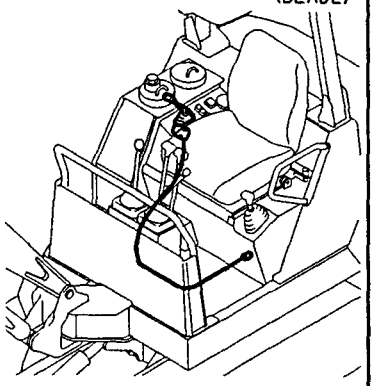

Fig. 22 作業レバーストッパ
OPERATION LEVER STOPPER

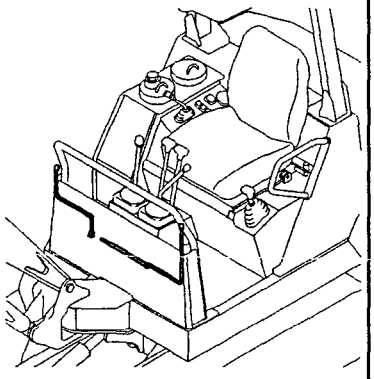

Fig. 23 旋回フレーム
TURNING FRAME

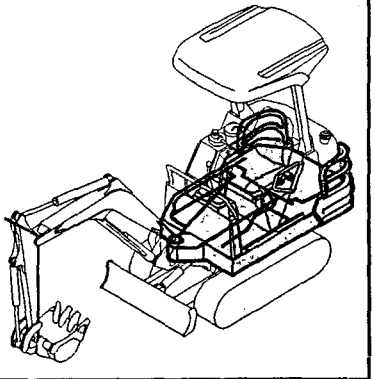

Fig. 24 旋回ベアリング
TURNING BEARING

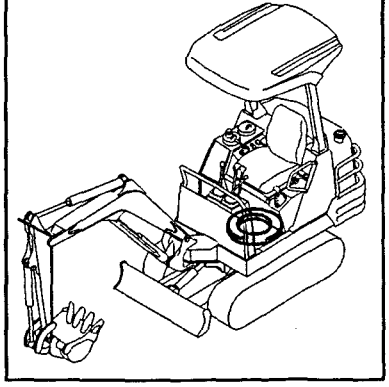

絵目次（3）・・・・・・・・・・・・・項目別
PICTURESQUE INDEX (3)・・・・・・FIGURE

Fig.25 ボンネット BONNET

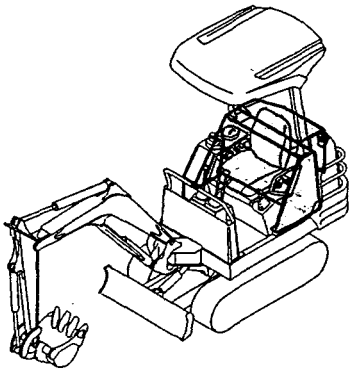

Fig.26 シート＆ステップ SEAT & STEP

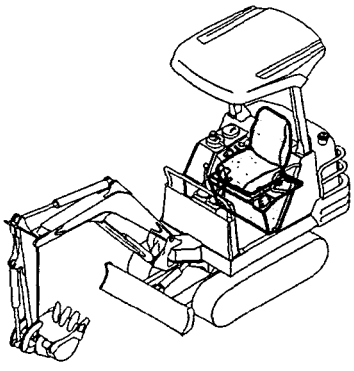

Fig.27 キャノピ CANOPY

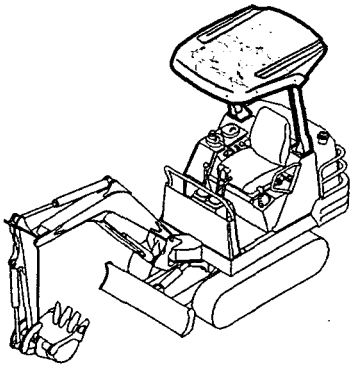

Fig.28 ブームシリンダ BOOM CYLINDER

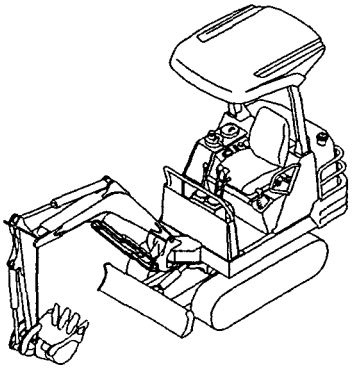

Fig.29 アームシリンダ ARM CYLINDER

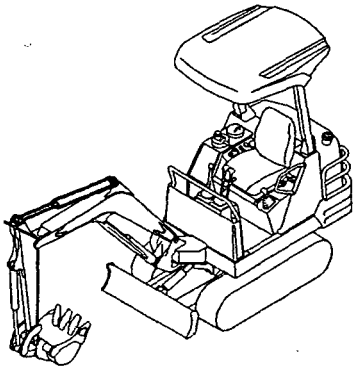

Fig.30 バケットシリンダ BUCKET CYLINDER

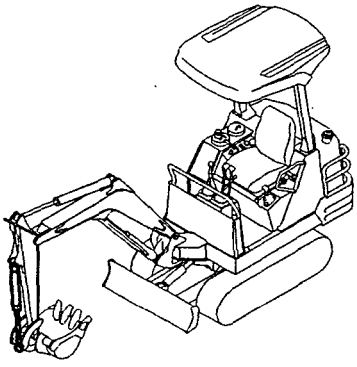

Fig.31 スイングシリンダ SWING CYLINDER

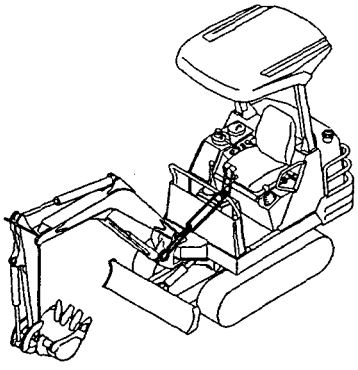

Fig.32 ブレードシリンダ BLADE CYLINDER

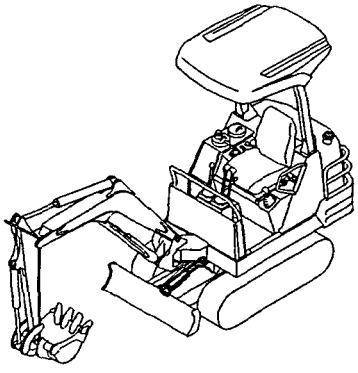

Fig.33 油圧ポンプ＆軸継手 HYD.OIL PUMP & JOINT

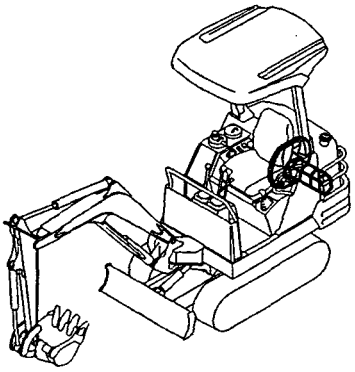

Fig.34 旋回モータ TURNING MOTOR

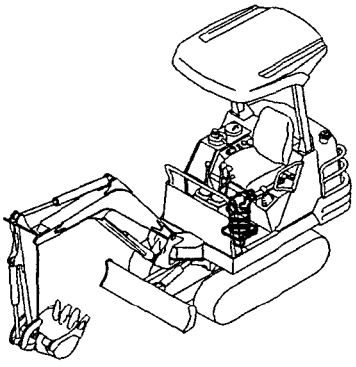

Fig.35 走行モータ TRAVEL MOTOR

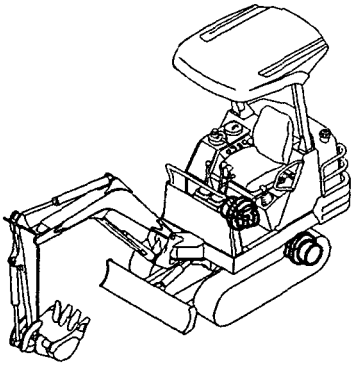

Fig.36 走行モータ（レンコン仕様） TRAVEL MOTOR (LOTUS ROOT SPEC.)

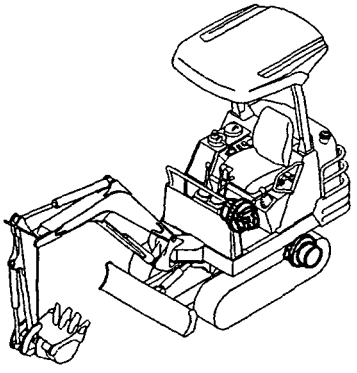

絵目次（3）・・・・・・・・・・・・・項目別
PICTURESQUE INDEX (3)・・・・・・FIGURE

Fig.37 スイベルジョイント
SWIVEL JOINT

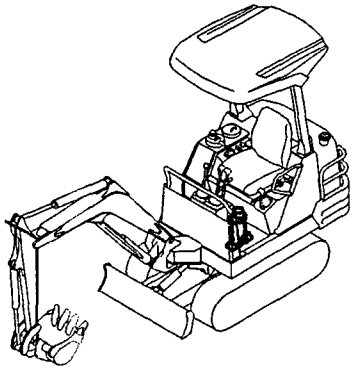

Fig.38 スイベルジョイント（レンコン仕様）
SWIVEL JOINT (LOTUS ROOT SPEC.)

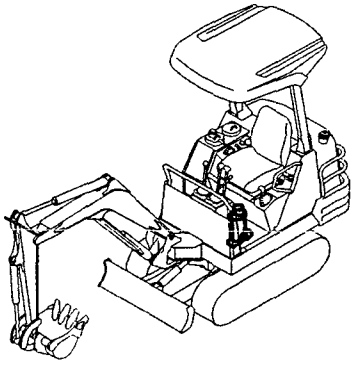

Fig.39 コントロールバルブ（走行，旋回）
CONTROL VALVE (TRAVEL, TURNING)

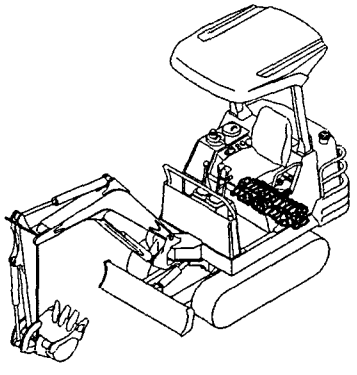

Fig.40 コントロールバルブ（アーム，バケット）
CONTROL VALVE (ARM, BUCKET)

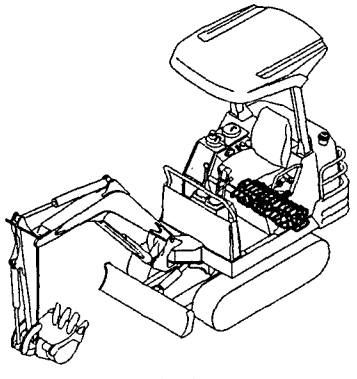

Fig.41 コントロールバルブ（スイング，ブーム）
CONTROL VALVE (SWING, BOOM)

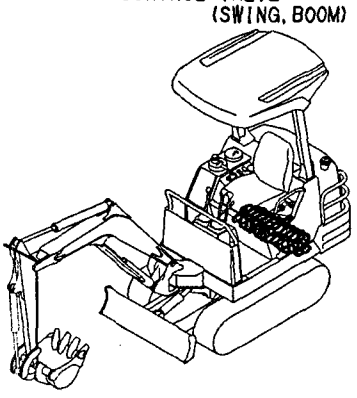

Fig.42 コントロールバルブ（ブレード，PTO）
CONTROL VALVE (BLADE, P.T.O.)

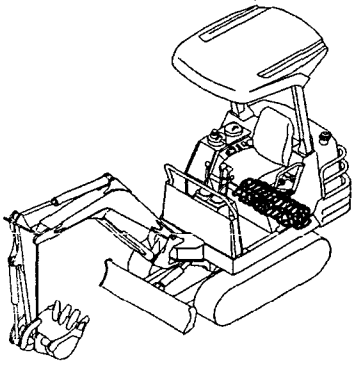

Fig.43 コントロールバルブ（P1，P2，P3）
CONTROL VALVE (P1, P2, P3)

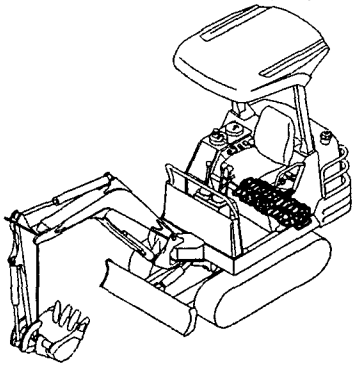

Fig.44 ローハイバルブ
LOW-HIGH VALVE

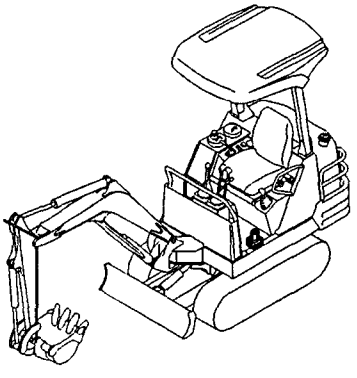

Fig.45 作動油タンク
HYD. OIL TANK

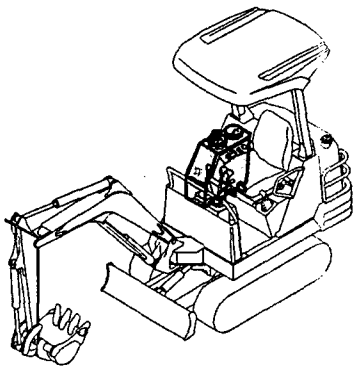

Fig.46 グリーシング
GREASING

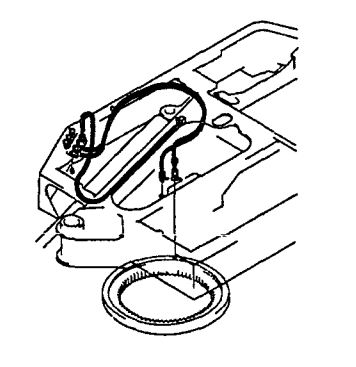

Fig.47 油圧配管（タンク～バルブ）
HYD. OIL PIPING (TANK~VALVE)

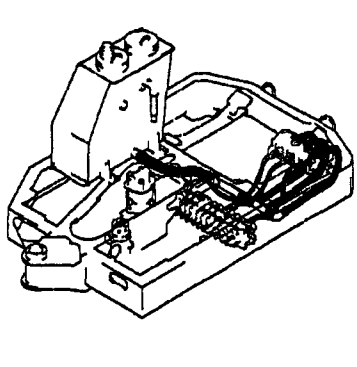

Fig.48 油圧配管（タンク～バルブ）（レンコン仕様）
HYD. OIL PIPING (TANK~VALVE) (LOTUS ROOT SPEC.)

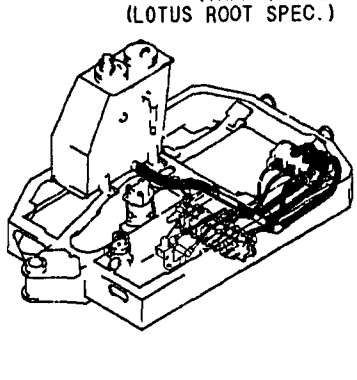

絵目次 (3) ・・・・・・・・・・・・・項目別
PICTURESQUE INDEX (3) ・・・・・・FIGURE

Fig.49 油圧配管 (バルブ～スイベル～モータ) HYD.OIL PIPING (VALVE~SWIVEL~MOTOR)

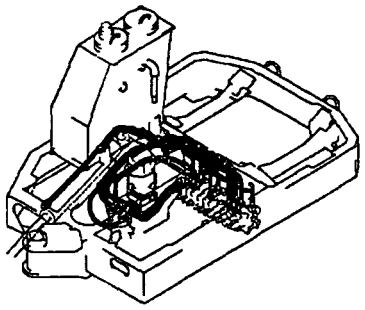

Fig.50 油圧配管 (バルブ～スイベル～モータ) (レンコン仕様) HYD.OIL PIPING (VALVE~SWIVEL~MOTOR) (LOTUS ROOT SPEC.)

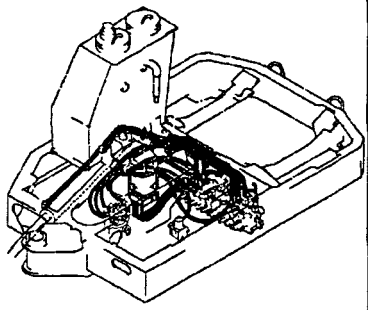

Fig.51 油圧配管 (リターン) HYD.OIL PIPING (RETURN)

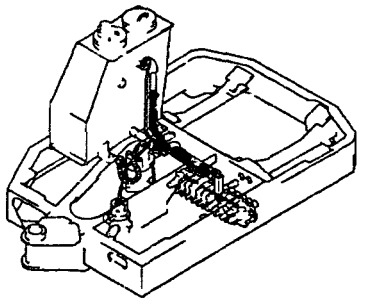

Fig.52 油圧配管 (リターン) (レンコン仕様) HYD.OIL PIPING (RETURN) (LOTUS ROOT SPEC.)

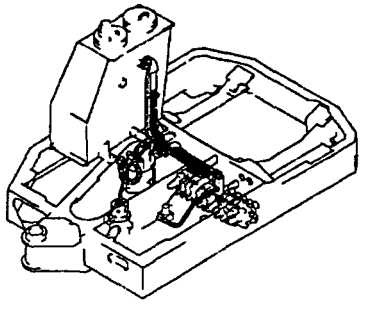

Fig.53 油圧配管 (走行) HYD.OIL PIPING (TRAVEL)

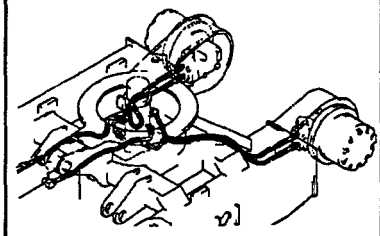

Fig.54 油圧配管 (走行) (レンコン仕様) HYD.OIL PIPING (TRAVEL) (LOTUS ROOT SPEC.)

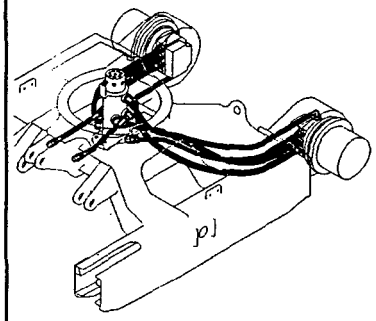

Fig.55 油圧配管 (ブーム) HYD.OIL PIPING (BOOM)

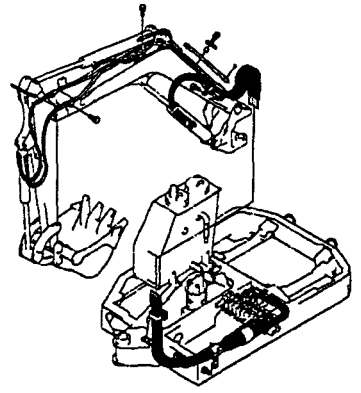

Fig.56 油圧配管 (PTOバルブ～ブームブラケット) HYD.OIL PIPING (P.T.O.VALVE ~BOOM BRACKET)

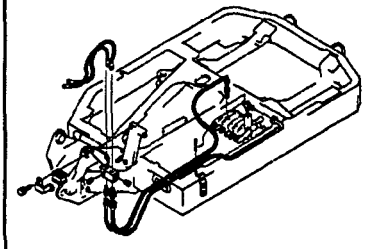

Fig.57 油圧配管 (PTOブームエンド) HYD.OIL PIPING (P.T.O.BOOM END)

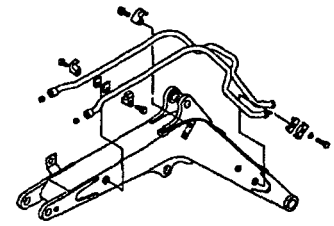

Fig.58 ブーム&ブームブラケット BOOM & BOOM BRACKET

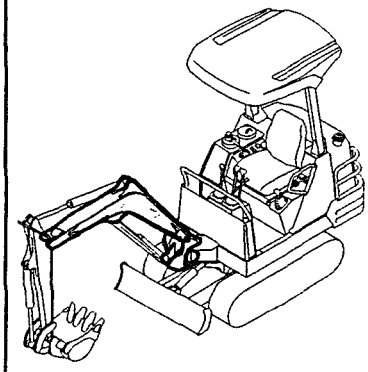

Fig.59 アーム&バケットリンク ARM & BUCKET LINK

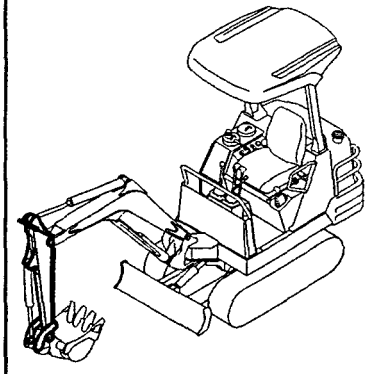

Fig.60 アーム&バケットリンク (レンコン仕様) ARM & BUCKET LINK (LOTUS ROOT SPEC.)

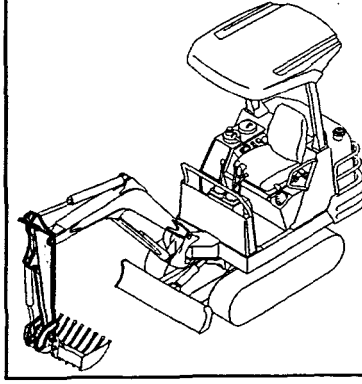

絵目次(3)・・・・・・・・・・・・・項目別
PICTURESQUE INDEX(3)・・・・・・FIGURE

Fig.61 バケット(400)(450)
BUCKET(400)(450)

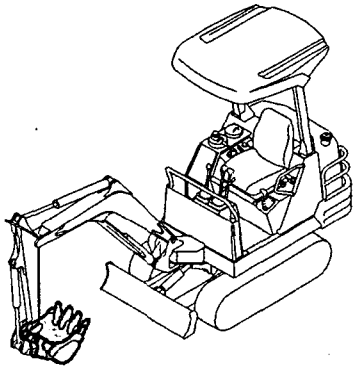

Fig.62 バケット(900)
(レンコン仕様)
BUCKET(900)
(LOTUS ROOT SPEC.)

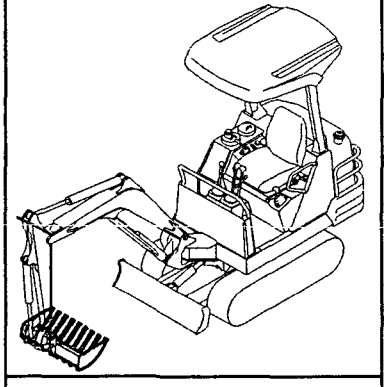

Fig.63 バケット250,300,
350(アタッチメント)
BUCKET250,300,350
(ATTACHMENT)

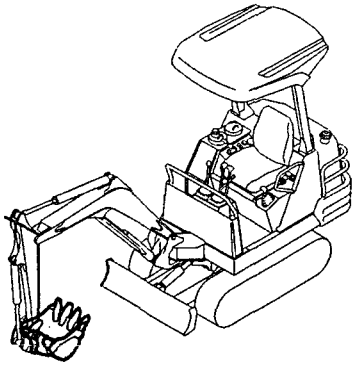

Fig.64 ブレード
BLADE

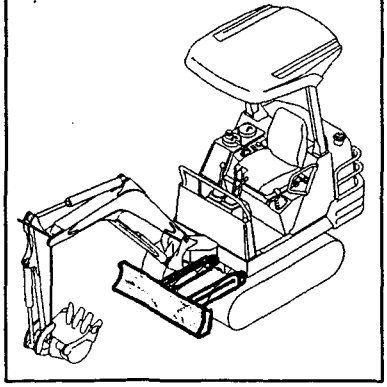

配線図 WIRING DIAGRAM

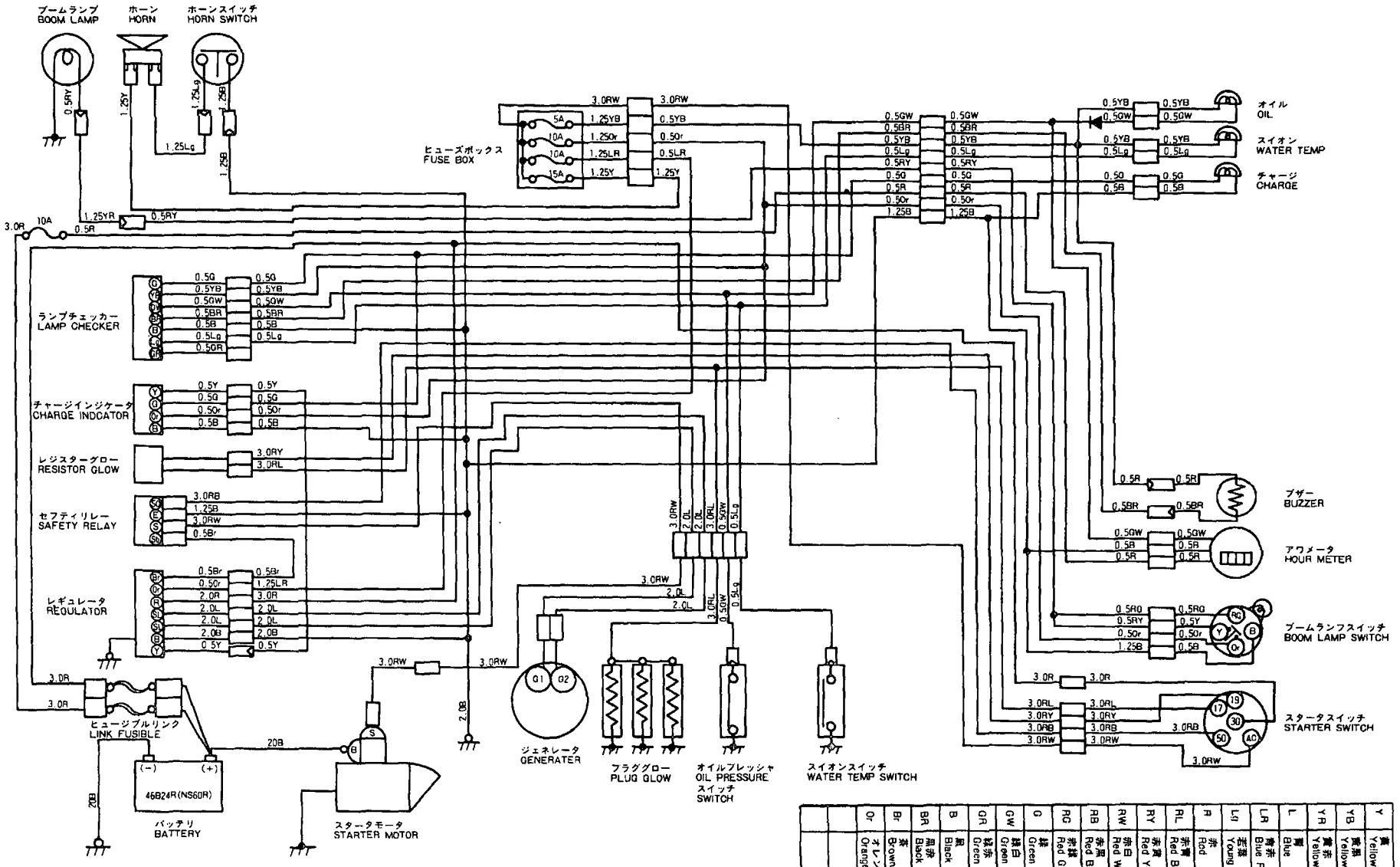

		Or	Br	BR	B	GR	GW	G	RG	RB	RW	RY	RL	R	Lg	LR	L	YR	YB	Y
		オレンジ Orange	茶 Brown	黒赤 Black Red	黒 Black	緑赤 Green Red	緑白 Green White	緑 Green	赤緑 Red Green	赤黒 Red Black	赤白 Red White	赤黄 Red Yellow	赤青 Red Blue	赤 Red	若葉 Young Leaves	青赤 Blue Red	青 Blue	黄赤 Yellow Red	黄黒 Yellow Black	黄 Yellow

配線図（レンコン仕様）
WIRING DIAGRAM (LOTUS ROOT SPEC.)

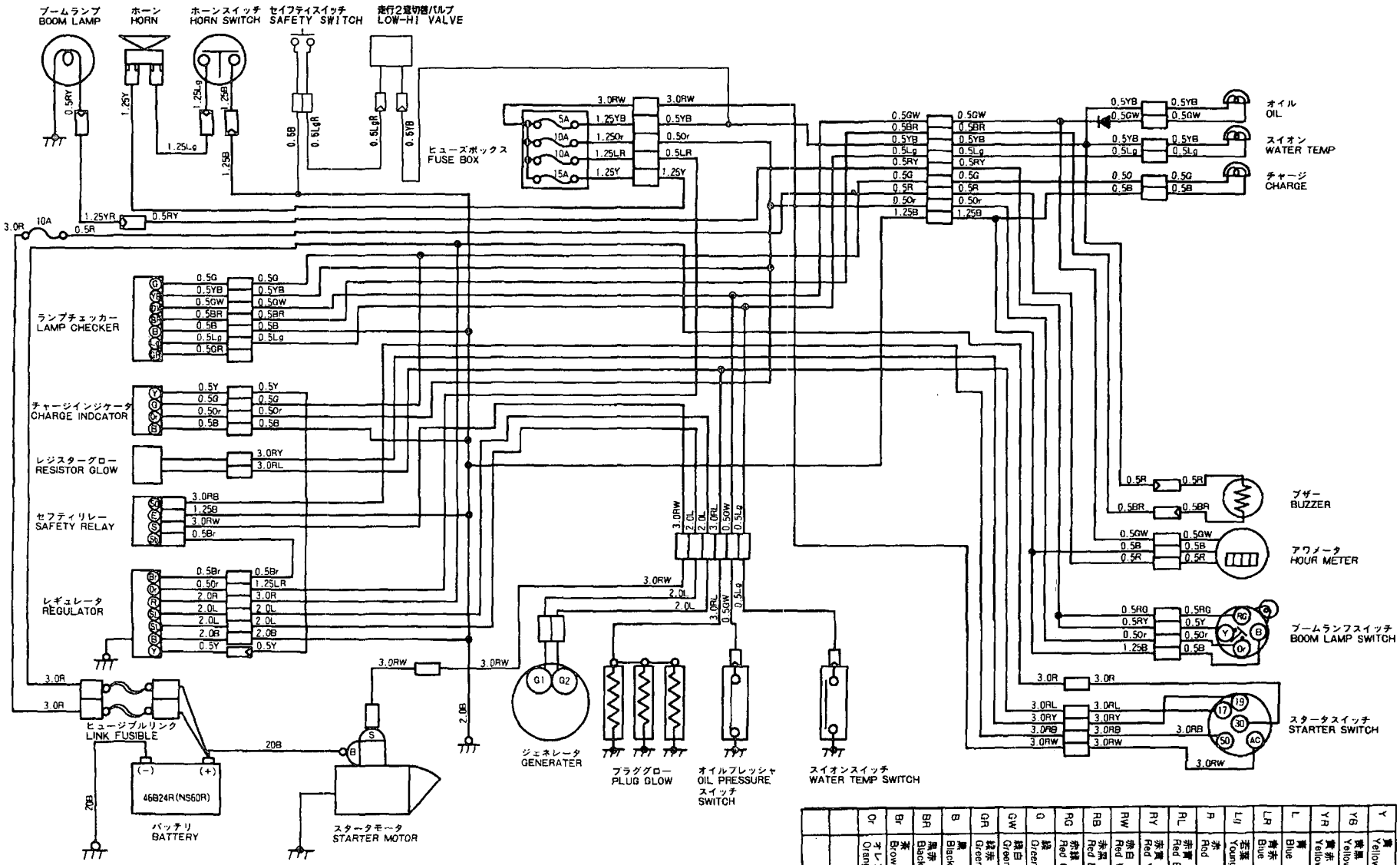

		Or	Br	BR	B	GR	GW	G	RG	RB	RW	RY	RL	R	Lg	LR	L	YR	YB	Y
		オレンジ Orange	茶 Brown	黒赤 Black Red	黒 Black	緑赤 Green Red	緑白 Green White	緑 Green	赤緑 Red Green	赤黒 Red Black	赤白 Red White	赤黄 Red Yellow	赤青 Red Blue	赤 Red	若葉 Young Leaves	青赤 Blue Red	青 Blue	黄赤 Yellow Red	黄黒 Yellow Black	黄 Yellow

```
1,1,,772431-03100,,"LABEL SET",1,,,,,,,,,,,,,,,
2,1,,772430-03100,,"LABEL ASSY",,1,,,,,,,,,,,,,,,
3,2,,172431-03110,,"LABEL, SPECIFICATION",1,,,,,,,,,,,,,,,,
4,2,,172430-03110,,"LABEL, SPECIFICATION",,1,,,,,,,,,,,,,,,,
5,2,,172165-03130,,"LABEL,GREASE FEED",1,1,,,,,,,,,,,,,,,,
6,2,,172149-03131,,"LABEL, OIL & WATER",1,1,,,,,,,,,,,,,,,,
7,2,,172122-03141,,"LABEL, GREASE",1,1,,,,,,,,,,,,,,,,
8,2,,172431-03120,,LABEL,1,,,,,,,,,,,,,,,,
9,2,,172430-03120,,LABEL,,1,,,,,,,,,,,,,,,,
10,2,,172431-03130,,LABEL,1,,,,,,,,,,,,,,,,
11,2,,172430-03130,,LABEL,,1,,,,,,,,,,,,,,,,
12,2,,172141-03170,,"LABEL, RESTART",1,1,,,,,,,,,,,,,,,,
13,2,,172149-03300,,"LABEL,FRONT",1,1,,,,,,,,,,,,,,,,
14,2,,172141-03182,,LABEL,1,1,,,,,,,,,,,,,,,,
15,2,,172431-03140,,LABEL,1,1,,,,,,,,,,,,,,,,
16,2,,172156-03280,,LABEL,1,1,,,,,,,,,,,,,,,,
17,2,,172431-03150,,LABEL,1,,,,,,,,,,,,,,,,
18,2,,933112-21400,,"LABEL(A2), OPERATION",1,1,,,,,,,,,,,,,,,,
19,2,,172141-03202,,"LABEL,CAUTION",1,1,,,,,,,,,,,,,,,,
20,2,,172519-03680,,"LABEL,BRAND",,1,,,,,,,,,,,,,,,,
21,2,,172155-03310,,"LABEL, OILING",1,1,,,,,,,,,,,,,,,,
22,2,,172183-03210,,LABEL,1,1,,,,,,,,,,,,,,,,
23,2,,172519-03680,,"LABEL,BRAND",1,,,,,,,,,,,,,,,,
24,2,,172519-04180,,"LABEL,WARNING",1,1,,,,,,,,,,,,,,,,
25,2,,172137-03300,,"LABEL, TURNING LOCK",1,1,,,,,,,,,,,,,,,,
26,2,,172141-03372,,LABEL,2,2,,,,,,,,,,,,,,,,
27,2,,172137-03780,,"LABEL, THROTTLE",1,1,,,,,,,,,,,,,,,,
28,2,,121470-44540,,"LABEL, SUB-TANK",1,1,,,,,,,,,,,,,,,,
29,2,,933112-20200,,"LABEL, KEY SWITCH",1,1,,,,,,,,,,,,,,,,
30,2,,172183-03250,,LABEL,1,1,,,,,,,,,,,,,,,,
31,2,,172964-03610,,"LABEL A",1,1,,,,,,,,,,,,,,,,
32,2,,172142-03302,,"LABEL,CAUTION",1,1,,,,,,,,,,,,,,,,
33,2,,172183-03280,,"LABEL,LOCK",2,2,,,,,,,,,,,,,,,,
34,2,,172164-03500,,LABEL,1,1,,,,,,,,,,,,,,,,
35,2,,172164-03510,,LABEL,1,1,,,,,,,,,,,,,,,,
36,2,,172164-03520,,"LABEL,DANGER",1,1,,,,,,,,,,,,,,,,
37,2,,172164-03540,,LABEL,1,1,,,,,,,,,,,,,,,,
38,2,,172165-03661,,"LABEL,DANGER",1,1,,,,,,,,,,,,,,,,
39,2,,172519-04300,,LABEL,1,1,,,,,,,,,,,,,,,,
40,2,,172964-03390,,"LABEL,ADJUST",1,1,,,,,,,,,,,,,,,,
41,2,,172964-03481,,LABEL,1,1,,,,,,,,,,,,,,,,
44,1,,172168-03401,,LABEL,1,1,,,,,,1,,,,,,,,,,
45,1,,172131-03421,,"LABEL, 3RD VALVE",1,1,,,,,,1,,,,,,,,,,
```

Fig. 1 銘板（JP） LABEL (JP)

見出しNo．1，2は、見出しNo．3から41を含みます。
1，2inc．3 ～ 41

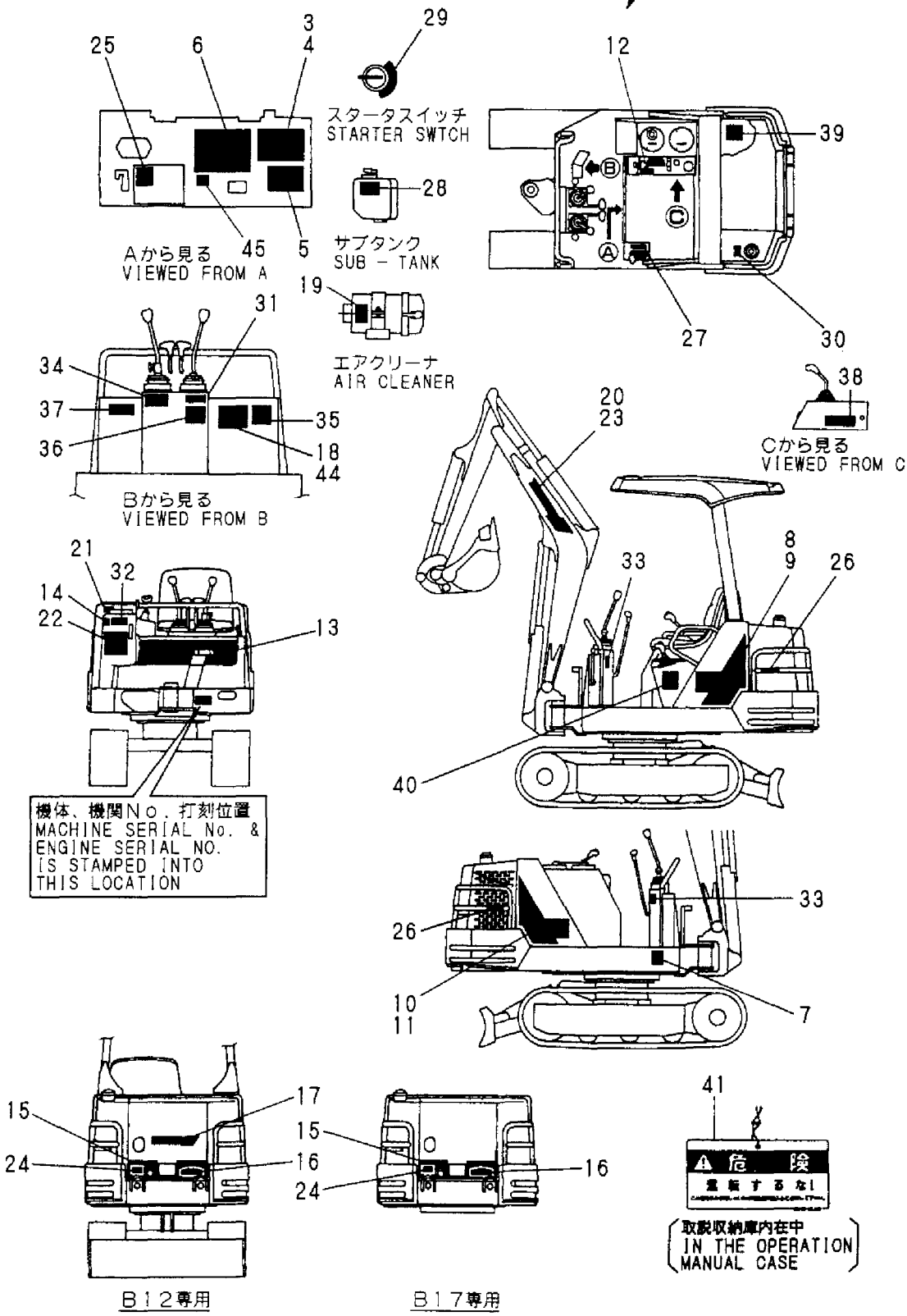

```
1,1,,772454-03100,,"LABEL ASSY",,,,1,,,,,,,,,,,,,
2,2,,172454-03110,,"LABEL, SPECIFICATION",,,,1,,,,,,,,,,,,,
3,2,,172183-03140,,"LABEL,ADJUST CRAWLER",,,,1,,,,,,,,,,,,,
4,2,,172454-03120,,"LABEL, OIL & WATER",,,,1,,,,,,,,,,,,,
5,2,,172122-03141,,"LABEL, GREASE",,,,1,,,,,,,,,,,,,
6,2,,172430-03120,,LABEL,,,,1,,,,,,,,,,,,,
7,2,,172430-03130,,LABEL,,,,1,,,,,,,,,,,,,
8,2,,172141-03170,,"LABEL, RESTART",,,,1,,,,,,,,,,,,,
9,2,,172149-03300,,"LABEL,FRONT",,,,1,,,,,,,,,,,,,
10,2,,172141-03182,,LABEL,,,,1,,,,,,,,,,,,,
11,2,,172431-03140,,LABEL,,,,1,,,,,,,,,,,,,
12,2,,172156-03280,,LABEL,,,,1,,,,,,,,,,,,,
13,2,,172162-03250,,"LABEL,PATTERN A",,,,1,,,,,,,,,,,,,
14,2,,172141-03202,,"LABEL,CAUTION",,,,1,,,,,,,,,,,,,
15,2,,172519-03680,,"LABEL,BRAND",,,,1,,,,,,,,,,,,,
16,2,,172155-03310,,"LABEL, OILING",,,,1,,,,,,,,,,,,,
17,2,,172183-03210,,LABEL,,,,1,,,,,,,,,,,,,
18,2,,172519-04180,,"LABEL,WARNING",,,,1,,,,,,,,,,,,,
19,2,,172137-03300,,"LABEL, TURNING LOCK",,,,1,,,,,,,,,,,,,
20,2,,172141-03372,,LABEL,,,,2,,,,,,,,,,,,,
21,2,,172137-03780,,"LABEL, THROTTLE",,,,1,,,,,,,,,,,,,
22,2,,121470-44540,,"LABEL, SUB-TANK",,,,1,,,,,,,,,,,,,
23,2,,933112-20200,,"LABEL, KEY SWITCH",,,,1,,,,,,,,,,,,,
24,2,,172183-03250,,LABEL,,,,1,,,,,,,,,,,,,
25,2,,172964-03610,,"LABEL A",,,,1,,,,,,,,,,,,,
26,2,,172142-03302,,"LABEL,CAUTION",,,,1,,,,,,,,,,,,,
27,2,,172183-03280,,"LABEL,LOCK",,,,2,,,,,,,,,,,,,
28,2,,172164-03500,,LABEL,,,,1,,,,,,,,,,,,,
29,2,,172164-03510,,LABEL,,,,1,,,,,,,,,,,,,
30,2,,172164-03520,,"LABEL,DANGER",,,,1,,,,,,,,,,,,,
31,2,,172164-03540,,LABEL,,,,1,,,,,,,,,,,,,
32,2,,172165-03661,,"LABEL,DANGER",,,,1,,,,,,,,,,,,,
33,2,,172519-04300,,LABEL,,,,1,,,,,,,,,,,,,
34,2,,172964-03390,,"LABEL,ADJUST",,,,1,,,,,,,,,,,,,
35,2,,172964-03481,,LABEL,,,,1,,,,,,,,,,,,,
38,2,,172165-03130,,"LABEL,GREASE FEED",,,,1,,,,,,,,,,,,,
```

Fig. 2 銘板（レンコン仕様）
LABEL (LOTUS ROOT SPEC.)

見出しNo．1は、見出しNo．2から38を含みます。
1inc.2 ～ 38

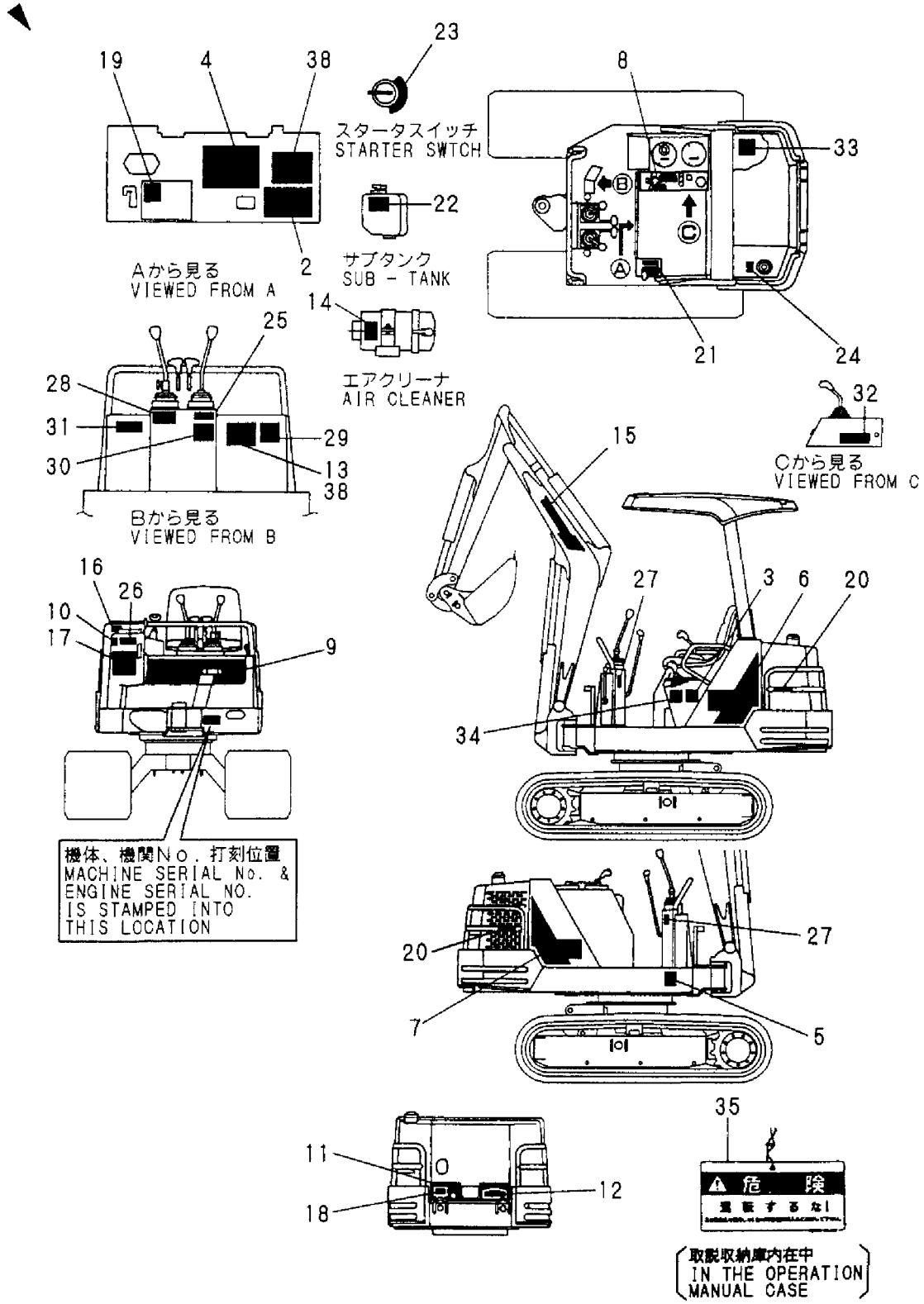

```
1,1,,772432-03100,,"LABEL ASSY",1,,,,,,,,,,,,,,,,
2,1,,772433-03100,,"LABEL SET",,1,1,,,,,,,,,,,,,,
3,2,,172431-03120,,LABEL,1,,,,,,,,,,,,,,,,
4,2,,172430-03120,,LABEL,,1,1,,,,,,,,,,,,,,
5,2,,172431-03130,,LABEL,1,,,,,,,,,,,,,,,,
6,2,,172430-03130,,LABEL,,1,1,,,,,,,,,,,,,,
7,2,,172149-03210,,LABEL,1,1,1,,,,,,,,,,,,,,
8,2,,172183-03210,,LABEL,1,1,1,,,,,,,,,,,,,,
9,2,,172137-03301,,"LABEL, TURNING LOCK",1,1,1,,,,,,,,,,,,,,
10,2,,172149-03300,,"LABEL,FRONT",1,1,1,,,,,,,,,,,,,,
11,2,,172171-03720,,LABEL,1,1,1,,,,,,,,,,,,,,
12,2,,172141-03440,,LABEL,1,1,1,,,,,,,,,,,,,,
13,2,,172183-03450,,"LABEL,FUEL",1,1,1,,,,,,,,,,,,,,
14,2,,172171-03730,,LABEL,2,2,2,,,,,,,,,,,,,,
15,2,,172165-03500,,"LABEL,GREASE FEED",1,1,1,,,,,,,,,,,,,,
16,2,,172149-03521,,LABEL,1,1,1,,,,,,,,,,,,,,
17,2,,172171-03800,,LABEL,1,1,1,,,,,,,,,,,,,,
18,2,,172432-03110,,LABEL,1,,,,,,,,,,,,,,,,
19,2,,172433-03110,,"LABEL, SPECIFICATION",,1,1,,,,,,,,,,,,,,
20,2,,172519-03680,,"LABEL,BRAND",1,1,1,,,,,,,,,,,,,,
21,2,,172122-03740,,"LABEL, GREASE",1,1,1,,,,,,,,,,,,,,
22,2,,172171-03810,,LABEL,1,1,1,,,,,,,,,,,,,,
23,2,,172137-03780,,"LABEL, THROTTLE",1,1,1,,,,,,,,,,,,,,
24,2,,172155-03790,,"LABEL,RE-FUELING",1,1,1,,,,,,,,,,,,,,
25,2,,172125-03950,,"LABEL, AIR CLEANER",1,1,1,,,,,,,,,,,,,,
26,2,,121120-44800,,"LABEL, RADIATOR",1,1,1,,,,,,,,,,,,,,
27,2,,124764-44810,,"LABEL, SUB-TANK",1,1,1,,,,,,,,,,,,,,
28,2,,124764-44920,,"LABEL, ANTI-FREEZING",1,1,1,,,,,,,,,,,,,,
29,2,,933112-20200,,"LABEL, KEY SWITCH",1,1,1,,,,,,,,,,,,,,
30,2,,172183-03280,,"LABEL,LOCK",1,1,1,,,,,,,,,,,,,,
31,2,,172171-03400,,PLATE,1,1,1,,,,,,,,,,,,,,
32,2,,172431-03140,,LABEL,1,1,1,,,,,,,,,,,,,,
33,2,,172431-03150,,LABEL,1,1,1,,,,,,,,,,,,,,
34,2,,172171-03700,,LABEL,1,1,1,,,,,,,,,,,,,,
35,2,,172171-03710,,LABEL,1,1,1,,,,,,,,,,,,,,
36,2,,172171-03740,,LABEL,1,1,1,,,,,,,,,,,,,,
37,2,,172171-03750,,LABEL,2,2,2,,,,,,,,,,,,,,
38,2,,172171-03760,,LABEL,1,1,1,,,,,,,,,,,,,,
39,2,,172171-03770,,LABEL,1,1,1,,,,,,,,,,,,,,
40,2,,172171-03780,,LABEL,1,1,1,,,,,,,,,,,,,,
41,2,,172171-03790,,"LABEL, RADIATOR",1,1,1,,,,,,,,,,,,,,
45,1,,933112-21400,,"LABEL(A2), OPERATION",1,1,1,,,,1,,,,,,,,,
```

Fig.3 銘板（AS，EX） LABEL (AS, EX)

見出しNo．1，2は、見出しNo．3から41を含みます。
1，2inc．3 ～ 41

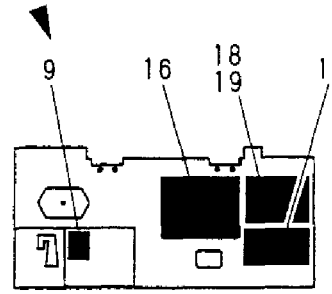

Ⓐから見る
VIEWED FROM Ⓐ

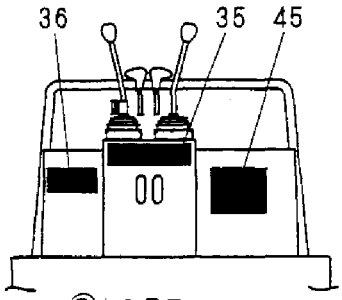

Ⓑから見る
VIEWED FROM Ⓑ

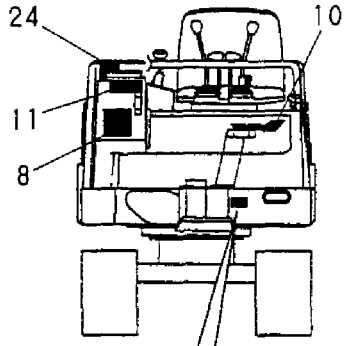

機体、機関NO．打刻位置
MACHINE SERIAL NO. &
ENGINE SERIAL NO.
IS STAMPED INTO
THIS LOCATION

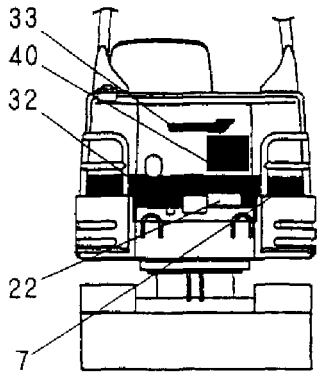

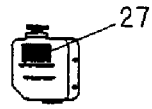

サブタンク
SUB - TANK

スタータスイッチ
STARTER SWITCH

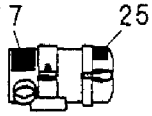

エアクリーナ
AIR CLEANER

ラジエータ
RADIATOR

（取説収納庫内在中
IN THE OPERATION
MANUAL CASE）

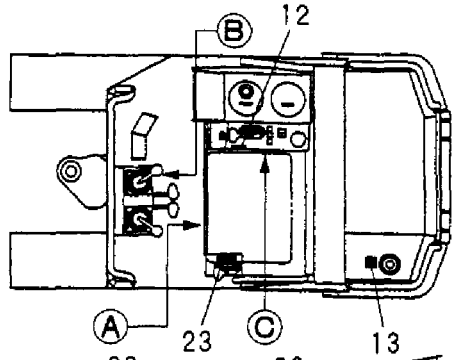

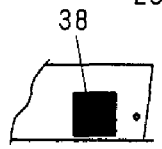

Ⓒから見る
VIEWED FROM Ⓒ

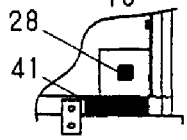

Ⓓから見る
VIEWED FROM Ⓓ

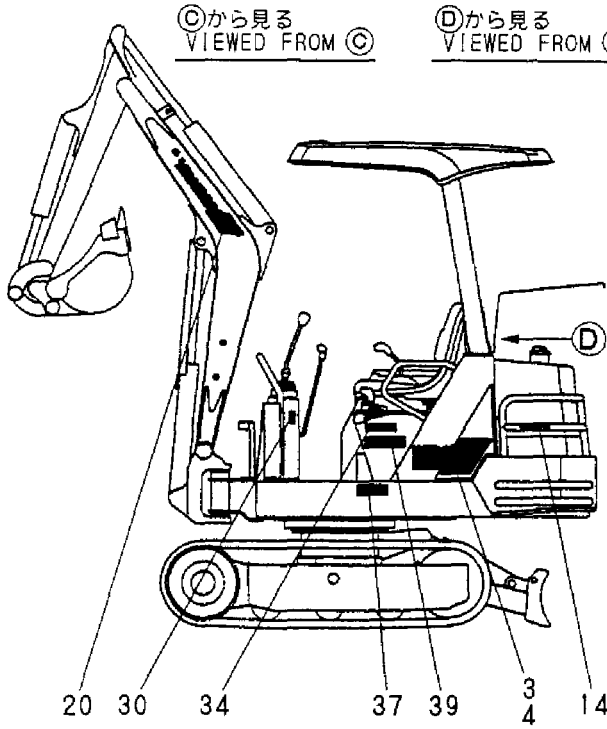

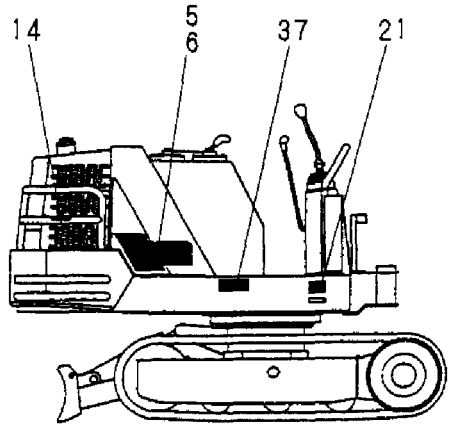

```
1,1,,172964-03610,,"LABEL A",1,1,,1,,,,,,,,,,,,,
2,1,,172164-03500,,LABEL,1,1,,1,,,,,,,,,,,,,
3,1,,172164-03540,,LABEL,1,1,,1,,,,,,,,,,,,,
4,1,,172141-03182,,LABEL,1,1,,1,,,,,,,,,,,,,
5,1,,172164-03510,,LABEL,1,1,,1,,,,,,,,,,,,,
6,1,,172164-03520,,"LABEL,DANGER",1,1,,1,,,,,,,,,,,,,
7,1,,172964-03390,,"LABEL,ADJUST",1,1,,1,,,,,,,,,,,,,
8,1,,172519-04180,,"LABEL,WARNING",1,1,,1,,,,,,,,,,,,,
9,1,,172141-03372,,LABEL,2,2,,2,,,,,,,,,,,,,
10,1,,172519-04300,,LABEL,1,1,,1,,,,,,,,,,,,,
11,1,,172156-03280,,LABEL,1,1,,1,,,,,,,,,,,,,
12,1,,172165-03661,,"LABEL,DANGER",1,1,,1,,,,,,,,,,,,,
13,1,,172142-03302,,"LABEL,CAUTION",1,1,,1,,,,,,,,,,,,,
14,1,,172141-03202,,"LABEL,CAUTION",1,1,,1,,,,,,,,,,,,,
15,1,,172964-03481,,LABEL,1,1,,1,,,,,,,,,,,,,
```

Fig.4 安全銘板 SAFETY LABEL

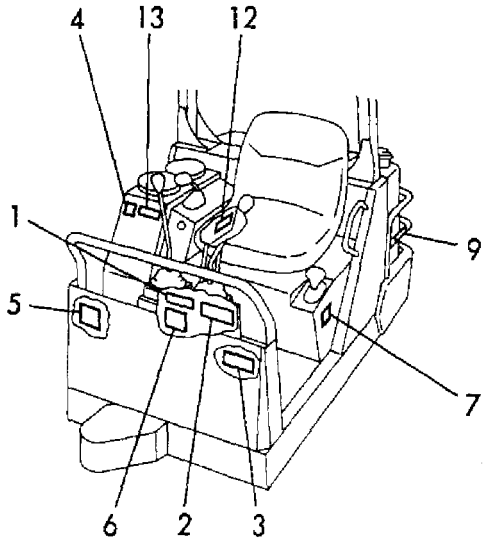

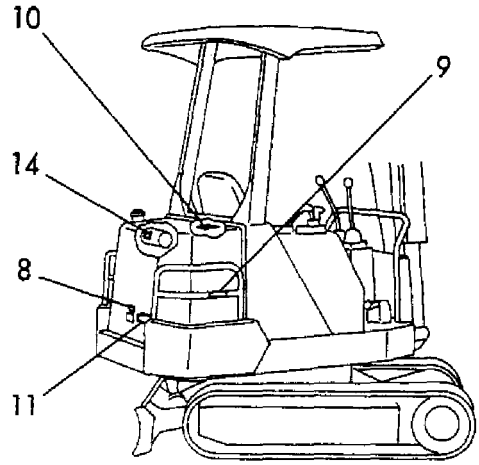

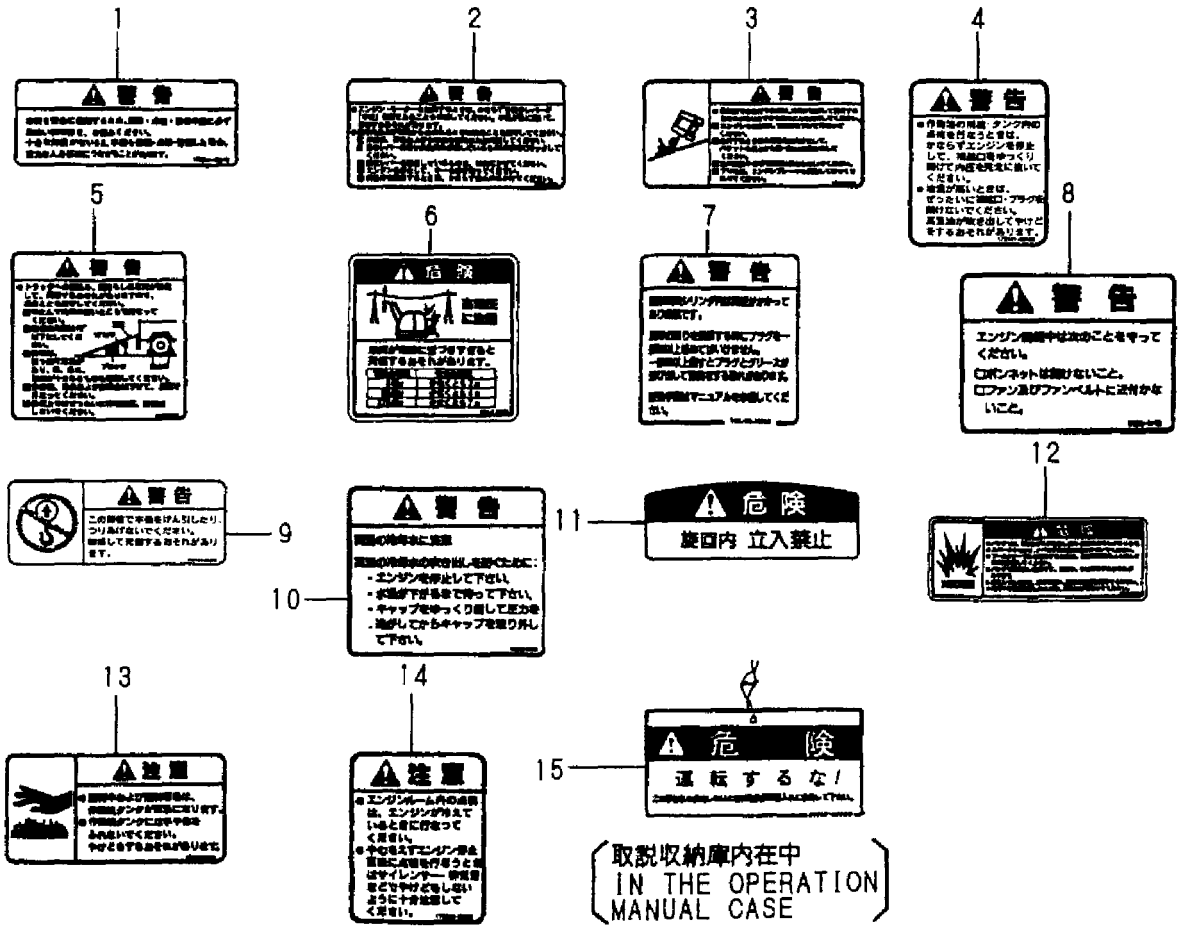

```
1,1,,772149-05101,,"TOOL ASSY",1,1,1,1,,,,,,,,,,,,,
2,2,,172137-38131,,"COLLAR, LINK",4,4,4,4,,,,,,,,,,,,,
3,2,,104200-92350,,"DRIVER, SCREW",1,1,1,1,,,,,,,,,,,,,
4,2,,119640-92750,,"WRENCH, FILTER",1,1,1,1,,,,,,,,,,,,,
5,2,,22351-060020,,"SPRING PIN 6X20",4,4,4,4,,,,,,,,,,,,,
6,2,,28110-080100,,"WRENCH  8X10",1,1,1,1,,,,,,,,,,,,,
7,2,,28110-120140,,"WRENCH 12X14",2,2,2,2,,,,,,,,,,,,,
8,2,,28110-170190,,"WRENCH 17X19",1,1,1,1,,,,,,,,,,,,,
9,2,,28110-220240,,"WRENCH 22X24",1,1,1,1,,,,,,,,,,,,,
10,2,,28110-270300,,"WRENCH 27X30",1,1,1,1,,,,,,,,,,,,,
11,2,,28150-080000,,"BAR WRENCH  8",1,1,1,1,,,,,,,,,,,,,
12,2,,28227-271400,,"BOX WRENCH 27X140",1,1,1,1,,,,,,,,,,,,,
13,2,,28230-120250,,"TURNING HANDLE",1,1,1,1,,,,,,,,,,,,,
14,2,,933110-09701,,"HOSE, GREASE",1,1,1,1,,,,,,,,,,,,,
15,2,,933110-09801,,"GUN 800, GREASE",1,1,1,1,,,,,,,,,,,,,
16,2,,933110-90000,,"BAG, TOOL",1,1,1,1,,,,,,,,,,,,,
17,2,,933171-00470,,"PLIERS 200",1,1,1,1,,,,,,,,,,,,,
18,2,,172122-05101,,NOZZLE,1,1,1,1,,,,,,,,,,,,,
20,1,,172176-07330,,"BAG, MANUAL",1,1,,1,,,,,,,,,,,,,
```

Fig.5 工具 TOOL

見出しNo．1は、見出しNo．2から18を含みます。
1 inc. 2 ～ 18

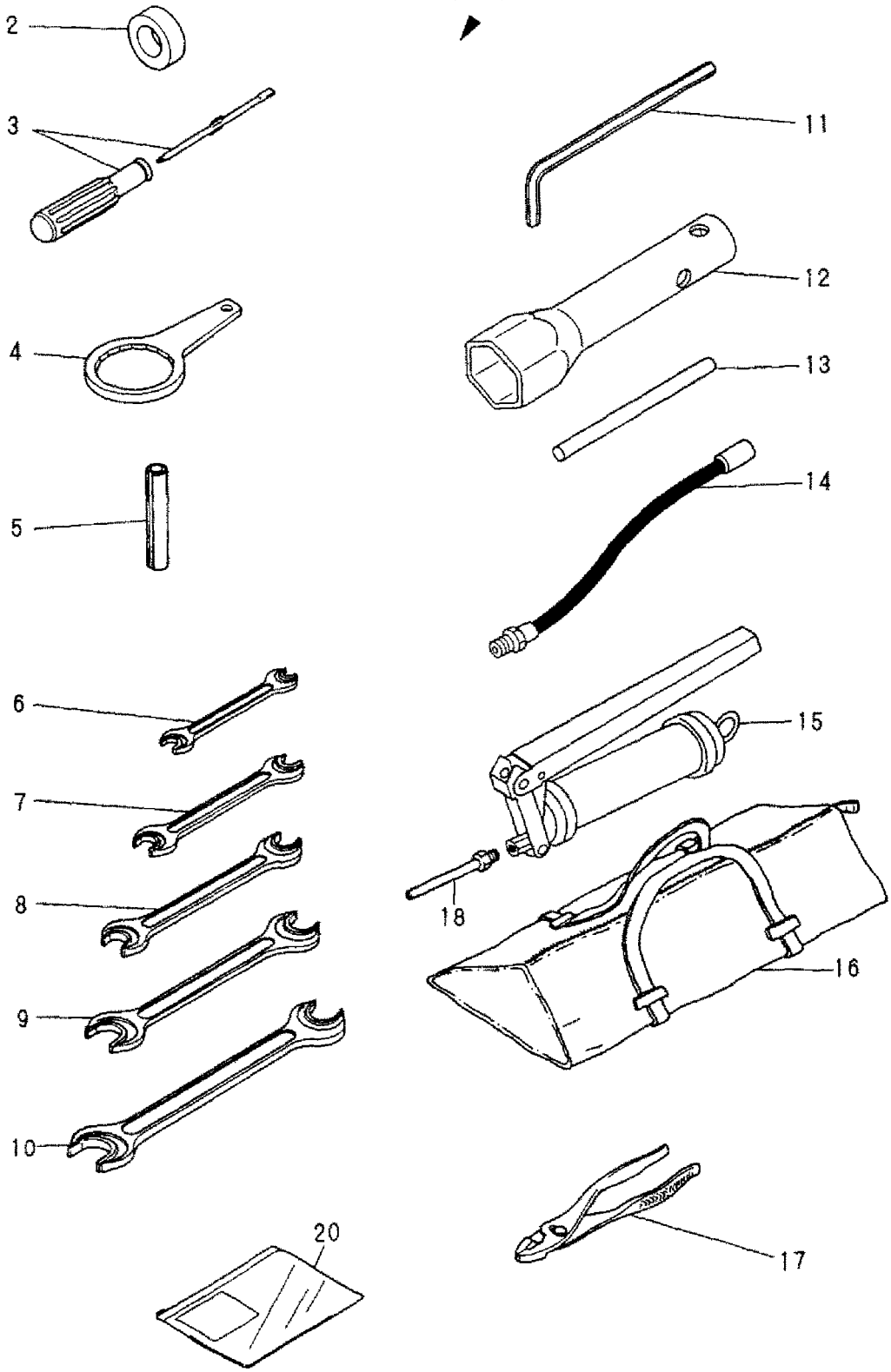

```
1,1,,172149-11290,,"PIPE ASSY, EXTERNAL",1,1,1,1,,,,,,,,,,,,,
2,2,,172149-11300,,"EXTENSION, SILENCER",1,1,1,1,,,,,,,,,,,,,
3,2,,172164-11310,,MAT,1,1,1,1,,,,,,,,,,,,,
4,1,,121120-13580,,CLAMP,1,1,1,1,,,,,,,,,,,,,
5,1,,26106-100652,,"BOLT M10X 65 PLATED",1,1,1,1,,,,,,,,,,,,,
6,1,,26716-100002,,"NUT 10",1,1,1,1,,,,,,,,,,,,,
7,1,,172149-11500,,"PIPE, AIR",1,1,1,1,,,,,,,,,,,,,
8,1,,172149-11530,,HOSE,1,1,1,1,,,,,,,,,,,,,
9,1,,23000-060000,,"CLAMP 60",2,2,2,2,,,,,,,,,,,,,
```

Fig.6 吸気管&噴出口 INLET HOUSE & EXHAUST PIPE

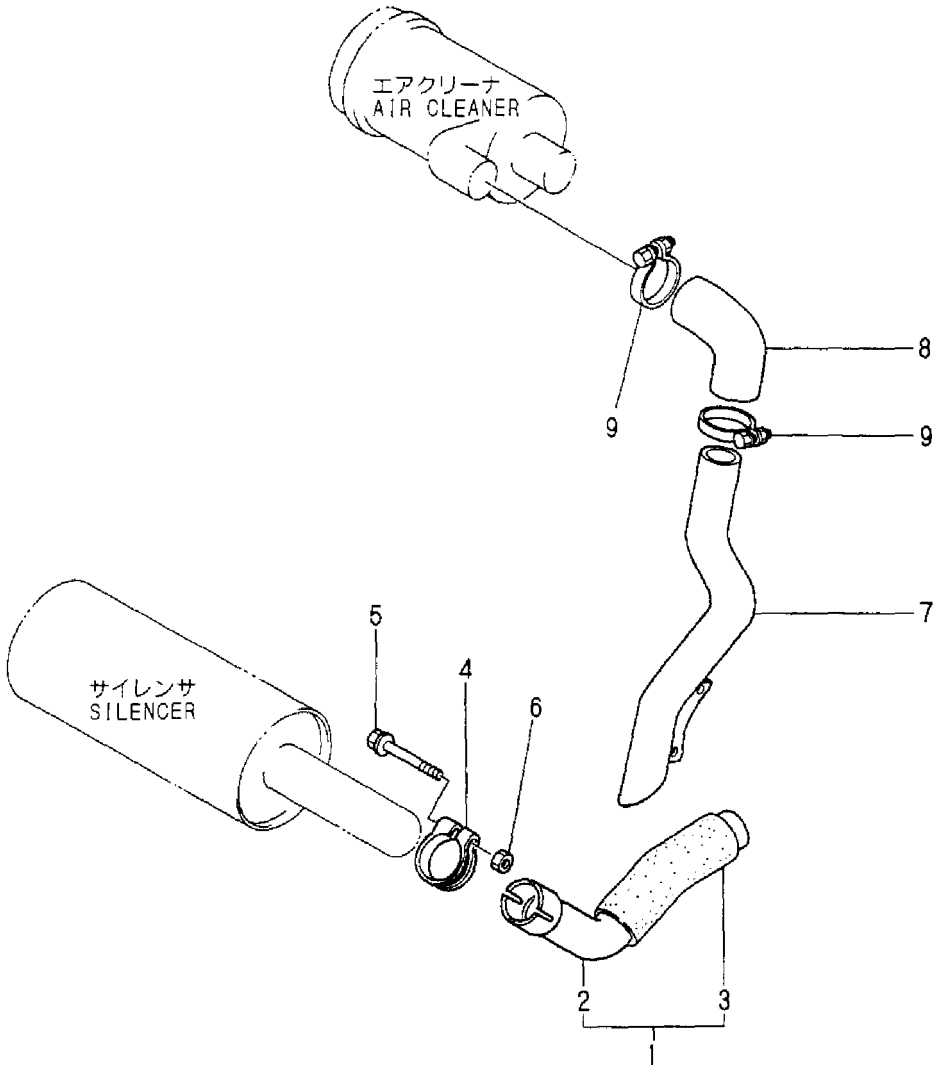

```
1,1,,172149-12150,,"LEVER W/BUSH, ACCEL",1,1,1,1,,,,,,,,,,,,,
3,2,,172141-12220,,"BUSH 30X10",2,2,2,2,,,,,,,,,,,,,
4,1,,172149-12100,,"SUPPORT, CABLE",1,1,1,1,,,,,,,,,,,,,
5,1,,172149-12110,,"CABLE, THROTTLE",1,1,1,1,,,,,,,,,,,,,
6,1,,172141-12160,,BRACKET,1,1,1,1,,,,,,,,,,,,,
7,1,,172141-12232,,SPRING,1,1,1,1,,,,,,,,,,,,,
8,1,,172141-12240,,SPRING,1,1,1,1,,,,,,,,,,,,,
9,1,,172141-12250,,PLATE,1,1,1,1,,,,,,,,,,,,,
10,1,,172141-12260,,PLATE,1,1,1,1,,,,,,,,,,,,,
11,1,,172137-12270,,"JOINT, CABLE",1,1,1,1,,,,,,,,,,,,,
12,1,,172113-12521,,"PIN, CABLE",1,1,1,,,,,,,,,,,,,,
12-1,1,,172113-12522,,PIN,1,1,1,1,,,N,,,M/#30633,,M/#30598,,M/#30598,,,,
13,1,,172141-41340,,BOOTS,1,1,1,1,,,,,,,,,,,,,
14,1,,172146-12150,,"GRIP,ACCELERATOR",1,1,1,1,,,,,,,,,,,,,
15,1,,1C6281-52310,,"PIN 6,COME-OFF SNAP",2,2,2,2,,,,,,,,,,,,,,
16,1,,1A1040-56900,,"PIN  6X 17",1,1,1,1,,,,,,,,,,,,,
17,1,,22137-060000,,"WASHER 6, POLISHED",1,1,1,1,,,,,,,,,,,,,
18,1,,22217-100000,,"SPRING WASHER 10",3,3,3,3,,,,,,,,,,,,,
19,1,,24190-160001,,"BALL 1/2",1,1,1,1,,,,,,,,,,,,,
20,1,,26013-080162,,"BOLT W/WASHER M8X16",2,2,2,2,,,,,,,,,,,,,
21,1,,26116-100202,,"BOLT M10X 20 PLATED",2,2,2,2,,,,,,,,,,,,,,
22,1,,26116-100302,,"BOLT 10X30",1,1,1,1,,,,,,,,,,,,,
23,1,,933171-15680,,"GROMMET 40X13",1,1,1,1,,,,,,,,,,,,,
```

Fig. 7 アクセル ACCELERATOR

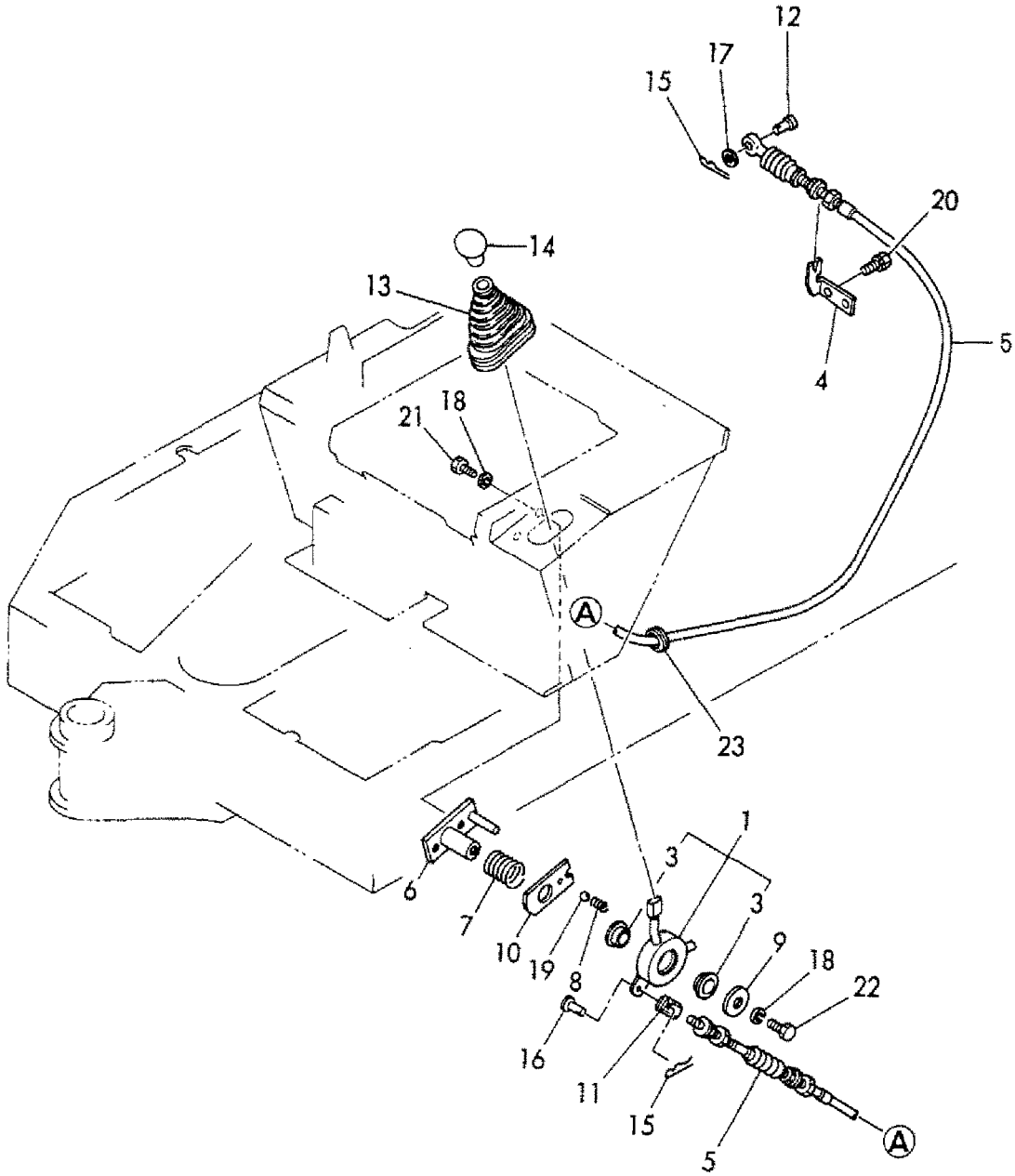

```
1,1,,172137-13111,,"ENGINE BED(A), LEFT",1,1,1,1,,,,,,,,,,,,,
2,1,,172137-13141,,"ENGINE BED(A), RIGHT",1,1,1,1,,,,,,,,,,,,,
3,1,,172137-13161,,"ENGINE BED(B), LEFT",1,1,1,1,,,,,,,,,,,,,
4,1,,172137-13171,,"ENGINE BED(B), RIGHT",1,1,1,1,,,,,,,,,,,,,
5,1,,172137-13180,,"ABSORBER, SHOCK",4,4,4,4,,,,,,,,,,,,,
6,1,,22217-100000,,"SPRING WASHER 10",8,8,8,8,,,,,,,,,,,,,
7,1,,26013-100202,,"BOLT W/WASHER M10X20",16,16,16,16,,,,,,,,,,,,,
8,1,,26716-100002,,"NUT 10",8,8,8,8,,,,,,,,,,,,,
9,1,,172149-13290,,"MOUNT, RADIATOR",1,1,1,1,,,,,,,,,,,,,
10,1,,172164-14630,,"HOSE  400",1,1,1,1,,,,,,,,,,,,,
11,1,,26013-060162,,"BOLT M 6X 16",2,2,2,2,,,,,,,,,,,,,
12,1,,172164-14630,,"HOSE  400",1,1,1,1,,,,,,,,,,,,,
13,1,,119631-44502,,RADIATOR,1,1,1,1,,,,,,,,,,,,,
14,2,,121250-44590,,CLAMP,2,2,2,2,,,,,,,,,,,,,
15,2,,124450-44590,,"CAP, RADIATOR",1,1,1,1,,,,,,,,,,,,,
16,2,,119631-44610,,"SHROUD,RADIATOR",1,1,1,1,,,,,,,,,,,,,
18,2,,119631-44800,,"LABEL, RADIATOR",1,1,1,1,,,,,,,,,,,,,
19,2,,124738-49150,,"PIPE, WATER DRAIN",1,1,1,1,,,,,,,,,,,,,
20,2,,26014-080162,,"BOLT M 8X 16",4,4,4,4,,,,,,,,,,,,,
21,1,,121468-44510,,"SUB-TANK ASSY",1,1,1,1,,,,,,,,,,,,,
23,2,,121450-44531,,CAP,1,1,1,1,,,,,,,,,,,,,
24,2,,121468-44540,,"PLUG, SUB-TANK",1,1,1,1,,,,,,,,,,,,,
25,2,,124450-44560,,CLAMP,1,1,1,1,,,,,,,,,,,,,
26,2,,121470-44581,,GASKET,1,1,1,1,,,,,,,,,,,,,
27,2,,23065-070130,,"PIPE  7X 130",1,1,1,1,,,,,,,,,,,,,
28,1,,121470-44540,,"LABEL, SUB-TANK",1,1,1,1,,,,,,,,,,,,,
29,1,,119645-49010,,"PIPE (A), C. WATER",1,1,1,1,,,,,,,,,,,,,
30,1,,119631-49020,,"PIPE, COOLING WATER",1,1,1,1,,,,,,,,,,,,,
31,1,,121450-49110,,"COCK ASSY, 3-WAY",1,1,1,1,,,,,,,,,,,,,
33,2,,121250-49121,,PLUG,1,1,1,1,,,,,,,,,,,,,
34,2,,24311-000160,,"O-RING 1A P-16.0",1,1,1,1,,,,,,,,,,,,,
35,1,,23010-040000,,"CLAMP 40",2,2,2,2,,,,,,,,,,,,,
36,1,,23080-011000,,"CLAMP 11",4,4,4,4,,,,,,,,,,,,,
37,1,,26013-080162,,"BOLT W/WASHER M8X16",2,2,2,2,,,,,,,,,,,,,
38,1,,26013-080162,,"BOLT W/WASHER M8X16",4,4,4,4,,,,,,,,,,,,,
39,1,,26013-100252,,"BOLT W/WASHER M10X25",4,4,4,4,,,,,,,,,,,,,
40,1,,22137-060000,,"WASHER 6, POLISHED",2,2,2,2,,,,,,,,,,,,,
41,1,,172122-79890,,"CLAMP 350",1,1,1,1,,,,,,,,,,,,,
42,1,,194202-56460,,BAND,1,1,1,1,,,,,,,,,,,,,
43,1,,23010-038000,,"CLAMP 38",2,2,2,2,,,,,,,,,,,,,
44,1,,172149-13400,,"NET, WIRE",1,1,1,1,,,,,,,,,,,,,
45,1,,22137-080000,,"WASHER 8, POLISHED",4,4,4,4,,,,,,,,,,,,,
46,1,,22217-080000,,"SPRING WASHER  8",2,2,2,2,,,,,,,,,,,,,
47,1,,26116-080202,,"BOLT M 8X 20 PLATED",2,2,2,2,,,,,,,,,,,,,
48,1,,26716-080002,,"NUT M 8",2,2,2,2,,,,,,,,,,,,,
49,1,,172126-13370,,"HOSE(C), WATER DRAIN",1,1,1,1,,,W,,,"FROM 1ST",,"FROM
1ST",,"FROM 1ST",,,,
```

Fig.8 エンジンマウント＆ラジエータ ENGINE MOUNT & RADIATOR

見出しNo．13は、見出しNo．（13）から20を含みます。
13inc.（13）～20

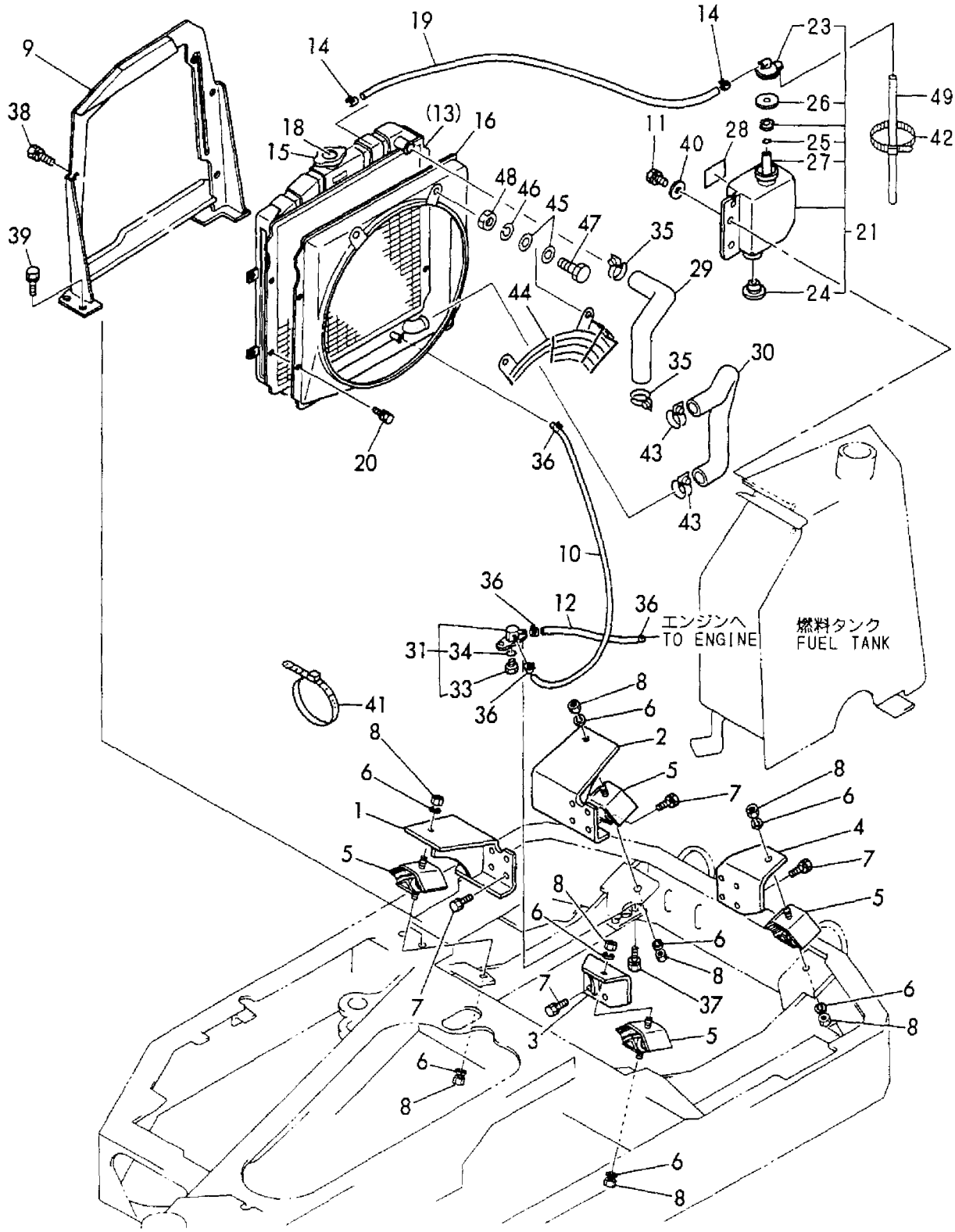

```
1,1,,772149-14102,,"TANK ASSY,FUEL",1,1,,1,,,,,,,,,,,,
1A,1,,772149-14102-2,,"TANK ASSY, FUEL",,,1,,,,,,,,,,,,,,
3,2,,172149-14251,,HOSE,1,1,1,1,,,,,,,,,,,,
4,2,,172141-14260,,FLOAT,1,1,1,1,,,,,,,,,,,,
5,2,,172122-14301,,"CAP, FUEL TANK",1,1,1,1,,,,,,,,,,,,
6,3,,172122-14350,,GASKET,1,1,1,1,,,,,,,,,,,,
7,2,,172183-14250,,"FILTER (FUEL",1,1,1,1,,,,,,,,,,,,
8,2,,23010-014000,,"CLAMP 14",2,2,2,2,,,,,,,,,,,,
9,2,,104200-11920,,COCK,1,1,1,1,,,,,,,,,,,,
10,1,,22137-120000,,"WASHER 12,POLISHED",3,3,3,3,,,,,,,,,,,,
11,1,,23080-013000,,"CLAMP 13,HOSE",1,1,1,1,,,,,,,,,,,,
12,1,,26013-120302,,"BOLT W/WASHER M12X30",3,3,3,3,,,,,,,,,,,,,
13,1,,933171-17770,,"SHIM SET",1,1,1,1,,,,,,,,,,,,
14,1,,172149-14601,,SUPPORT,1,1,1,1,,,,,,,,,,,,
15,1,,172149-14620,,HOSE,1,1,1,1,,,,,,,,,,,,
16,1,,172149-14630,,HOSE,2,2,2,2,,,,,,,,,,,,
17,1,,172126-16540,,"CLAMP 10X70",2,2,2,2,,,,,,,,,,,,
18,1,,129335-55700,,"SEPARATOR, WATER",1,1,1,1,,,,,,,,,,,,
19,2,,104200-55321,,"VALVE, TAPER",1,1,1,1,,,,,,,,,,,,
20,2,,104200-55330,,"SPRING, TAPER VALVE",1,1,1,1,,,,,,,,,,,,,
21,2,,104200-55341,,"HANDLE, COCK",1,1,1,1,,,,,,,,,,,,
22,2,,124064-55510,,"BOWL, FUEL STRAINER",1,1,1,1,,,,,,,,,,,,,
23,2,,102103-55520,,O-RING,1,1,1,1,,,,,,,,,,,,
24,2,,110250-55610,,"RING, RETAINING",1,1,1,1,,,,,,,,,,,,
25,2,,121257-55720,,"SPRING, SCREEN",1,1,1,1,,,,,,,,,,,,
26,2,,121257-55731,,FLOAT,1,1,1,1,,,,,,,,,,,,
28,2,,101720-55750,,"PLUG 6",2,2,2,2,,,,,,,,,,,,
29,2,,104200-55750,,"SCREW M 4",1,1,1,1,,,,,,,,,,,,
30,2,,171081-55910,,SCREEN,1,1,1,1,,,,,,,,,,,,
31,2,,23418-060000,,"GASKET 6, NYLON",2,2,2,2,,,,,,,,,,,,
32,2,,24311-240100,,"O-RING 1A P-10A",1,1,1,1,,,,,,,,,,,,
33,1,,124766-59050,,"CLAMP 12",6,6,6,6,,,,,,,,,,,,
34,1,,22217-080000,,"SPRING WASHER  8",1,1,1,1,,,,,,,,,,,,
35,1,,26116-080652,,"BOLT M 8X 65 PLATED",1,1,1,1,,,,,,,,,,,,,
36,1,,26013-080162,,"BOLT W/WASHER M8X16",2,2,2,2,,,,,,,,,,,,,
37,1,,172149-14190-4,,"PLATE,GAUGE",1,1,,1,,,,,,,,,,,,
37A,1,,172149-14190-2,,"PLATE, GAUGE",,,1,,,,,,,,,,,,,
38,1,,26557-060082,,"SCREW M 6X  8",2,2,2,2,,,,,,,,,,,,
39,1,,22217-060000,,"SPRING WASHER  6",2,2,2,2,,,,,,,,,,,,
40,1,,23061-100250,,"PIPE 10X 250",1,1,1,1,,,,,,,,,,,,
41,1,,194202-56460,,BAND,1,1,1,1,,,,,,,,,,,,
42,1,,933110-00301,,"KEY ASSY",1,1,1,1,,,,,,,,,,,,
```

Fig. 9 燃料タンク＆燃料パイプ FUEL TANK & FUEL PIPE

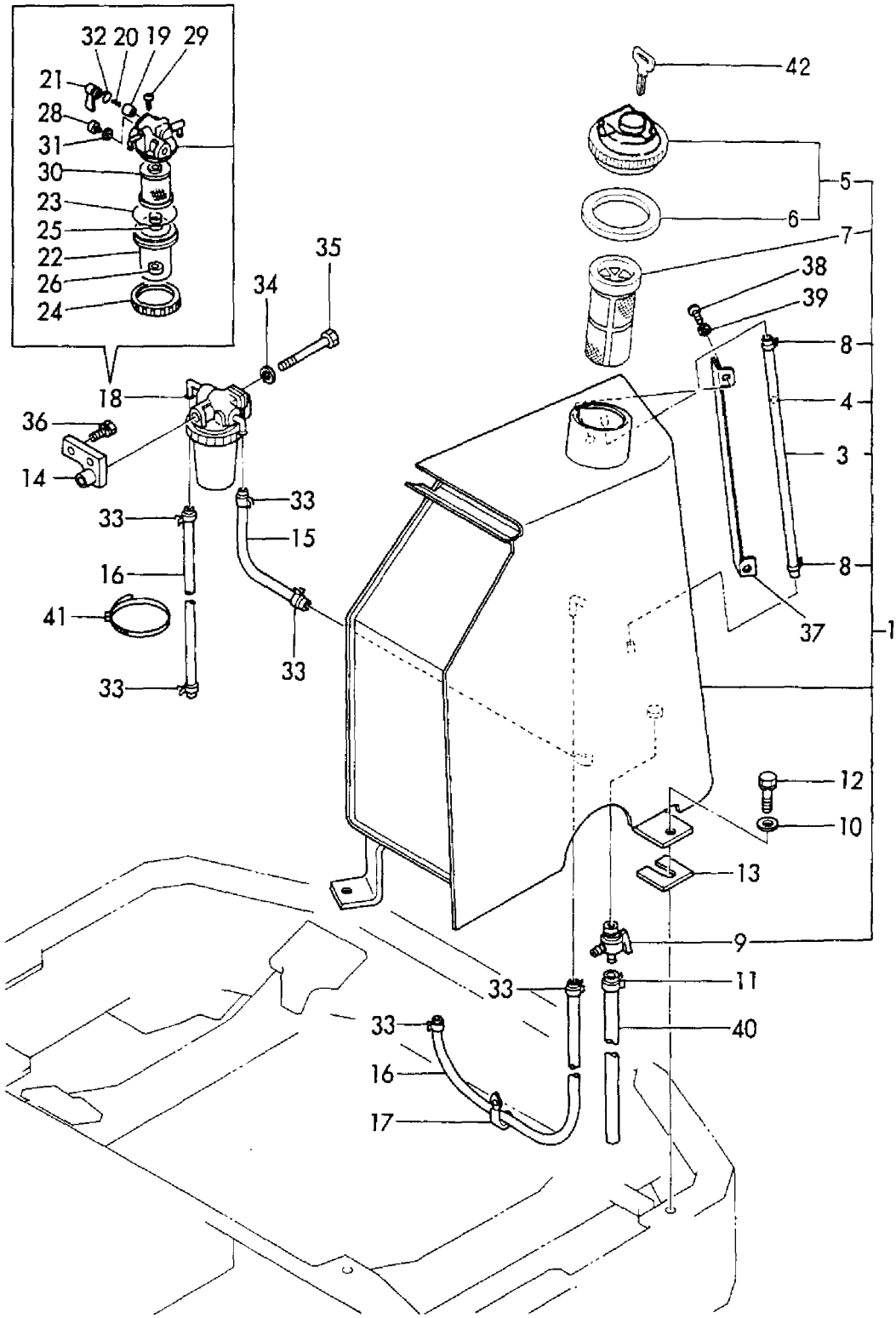

```
1,1,,172149-16100,,"HARNESS, BATTERY",1,1,1,1,,,,,,,,,,,,,
2,1,,172149-16110,,"HARNESS, BATTERY",1,1,1,1,,,,,,,,,,,,,
3,1,,194300-51310,,"BATTERY NS60",1,1,1,1,,,,,,,,,,,,,
4,1,,22137-080000,,"WASHER 8, POLISHED",2,2,2,2,,,,,,,,,,,,,
5,1,,22137-060000,,"WASHER 6, POLISHED",2,2,2,2,,,,,,,,,,,,,
6,1,,26716-080002,,"NUT M 8",2,2,2,2,,,,,,,,,,,,,
7,1,,172149-16301,,"SUPPORT, BATTERY",1,1,1,1,,,,,,,,,,,,,
8,1,,172149-16320,,"STAY, BATTERY",1,1,1,1,,,,,,,,,,,,,
9,1,,194940-64750,,"CLAMP,BATTERY",1,1,1,1,,,,,,,,,,,,,
10,1,,194515-64760,,"ROD, BATTERY CLAMP",2,2,2,2,,,,,,,,,,,,,
11,1,,26013-100202,,"BOLT W/WASHER M10X20",7,7,7,7,,,,,,,,,,,,,,
12,1,,26716-060002,,"NUT 6",4,4,4,4,,,,,,,,,,,,,
13,1,,172149-16382,,"STAY, BATTERY",1,1,1,1,,,,,,,,,,,,,
14,1,,194440-51550,,"COVER, BATTERY",1,1,1,1,,,,,,,,,,,,,
15,1,,172149-16120,,"HARNESS F, EARTH",1,1,1,1,,,,,,,,,,,,,
```

Fig. 10 バッテリ BATTERY

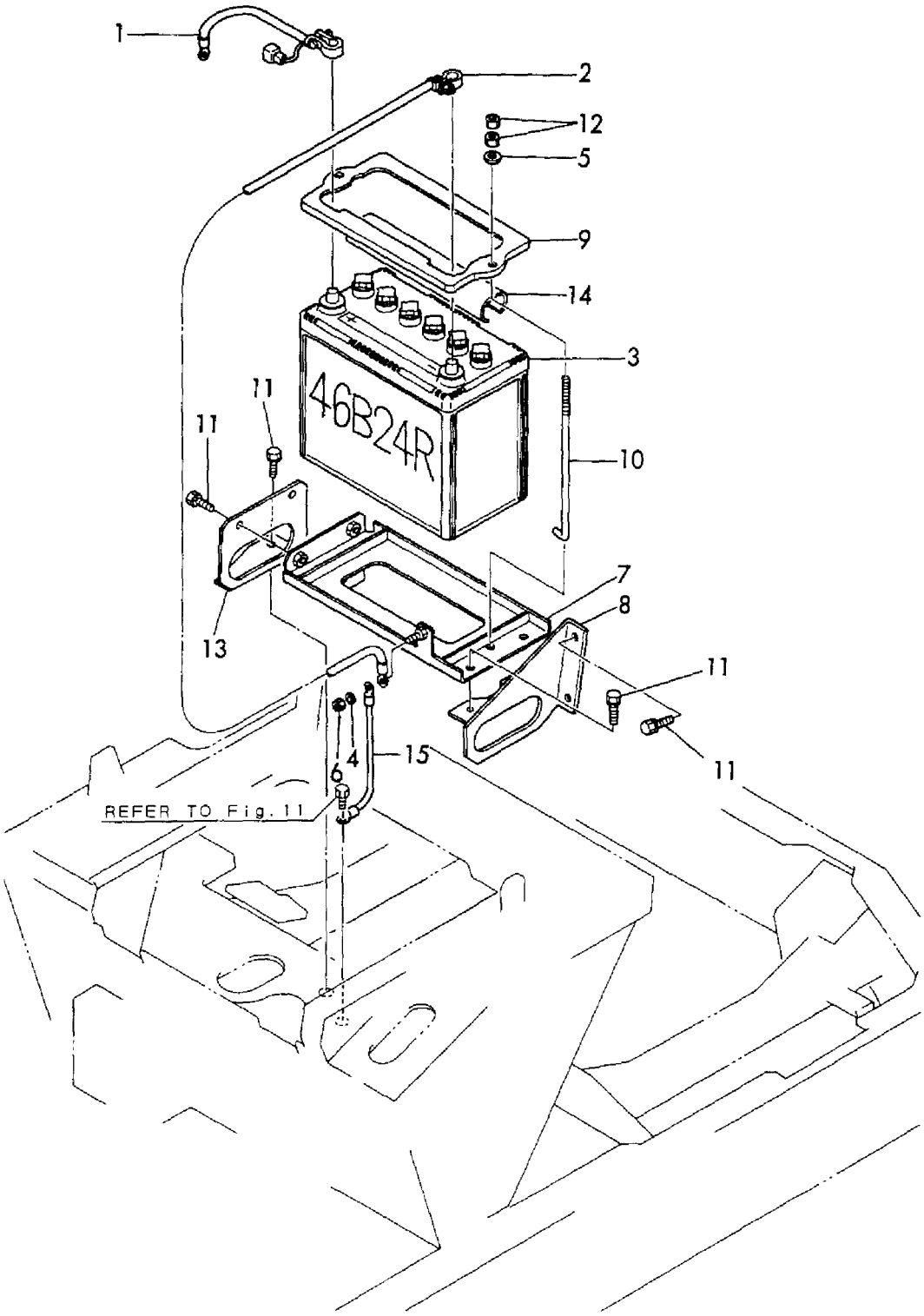

1,1,,172149-16500,,"HARNESS A",1,1,1,1,,,,,,,,,,,,
2,1,,172149-16512,,HARNESS(B,1,1,1,,,,,,,,,,,,,
2A,1,,172454-16500,,"HARNESS A",,,,1,,,,1,,,,,,,,,
3,1,,172149-16520,,"HARNESS, STARTER",1,1,1,1,,,,,,,,,,,,
4,1,,172149-16530,,HARNESS(E,1,1,1,1,,,,,,,,,,,,
5,1,,172122-16570,,"LINK, FUSIBLE",1,1,1,1,,,,,,,,,,,,
6,1,,22137-100000,,"WASHER 10,POLISHED",1,1,1,1,,,,,,,,,,,,
7,1,,26116-100162,,"BOLT M10X 16 PLATED",1,1,1,1,,,,,,,,,,,,,
8,1,,933171-15801,,"WIRE, EARTH",1,1,1,1,,,,,,,,,,,,
9,1,,172149-16540,,HARNESS(F,1,1,1,1,,,,,,,,,,,,
10,1,,172149-16550,,"GROMMET 40X13",1,1,1,1,,,,,,,,,,,,
11,1,,22417-200250,,"COTTER PIN 2.0X25",1,1,1,1,,,,,,,,,,,,
12,1,,933110-58400,,"GROMMET 43",1,1,1,1,,,,,,,,,,,,
13,1,,172126-16540,,"CLAMP 10X70",3,3,3,3,,,,,,,,,,,,
14,1,,194202-56460,,BAND,1,1,1,1,,,,,,,,,,,,
15,1,,26116-120162,,"BOLT M12X 16 PLATED",1,1,1,1,,,,,,,,,,,,
16,1,,22217-120000,,"SPRING WASHER",1,1,1,1,,,,,,,,,,,,
17,1,,22217-100000,,"SPRING WASHER 10",1,1,1,1,,,,,,,,,,,,
18,1,,1A1140-58060,,GROMMET,2,2,2,2,,,,,,,,,,,,
19,1,,933168-55770,,"BAND 146",2,2,2,2,,,,,,,,,,,,
20,1,,172149-17100,,PLATE,1,1,1,1,,,,,,,,,,,,
21,1,,172149-17120,,LAMP,1,1,1,1,,,,,,,,,,,,
22,2,,172149-17140,,BULB(12V-3.4W,1,1,1,1,,,,,,,,,,,,
23,1,,172149-17130,,LAMP,1,1,1,1,,,,,,,,,,,,
24,2,,172149-17140,,BULB(12V-3.4W,1,1,1,1,,,,,,,,,,,,
25,1,,172141-17141,,"UNIT, CHECKER",1,1,1,1,,,,,,,,,,,,
26,1,,172141-17150,,BUZZER,1,1,1,1,,,,,,,,,,,,
27,1,,172141-17161,,"BOX, FUSE",1,1,1,1,,,,,,,,,,,,
28,2,,29411-150000,,"FUSE (15A),CARTRIDGE",5,5,5,5,,,,,,,,,,,,
29,1,,172141-17190,,"SWITCH, WORK LAMP",1,1,1,1,,,,,,,,,,,,
30,2,,172141-17230,,"BULB 24V- 6W",1,1,1,1,,,,,,,,,,,,
31,1,,172147-17200,,"METER, HOUR",1,1,1,1,,,,,,,,,,,,
32,2,,172147-17210,,"CASE, HOUR METER",1,1,1,1,,,,,,,,,,,,
33,2,,172147-17220,,"CAP, HOUR METER",1,1,1,1,,,,,,,,,,,,
34,2,,172147-17230,,NUT,2,2,2,2,,,,,,,,,,,,
35,2,,172147-17240,,SLEEVE,2,2,2,2,,,,,,,,,,,,
36,2,,172147-17250,,"WIRE,LEAD",1,1,1,1,,,,,,,,,,,,
37,2,,22217-050000,,"SPRING WASHER 5",2,2,2,2,,,,,,,,,,,,
38,1,,119247-77100,,"RELAY, SAFETY",1,1,1,1,,,,,,,,,,,,
39,1,,119640-77711,,"LIMITER,CURRENT",1,1,1,1,,,,,,,,,,,,
40,1,,121522-77721,,"INDICATOR, CHARGING",1,1,1,1,,,,,,,,,,,,
41,1,,129155-77810,,RESISTOR,1,1,1,1,,,,,,,,,,,,
42,1,,22217-060000,,"SPRING WASHER 6",6,6,6,6,,,,,,,,,,,,
43,1,,22217-100000,,"SPRING WASHER 10",2,2,2,2,,,,,,,,,,,,
44,1,,26022-050162,,"SCREW M 5X 16",2,2,2,2,,,,,,,,,,,,
45,1,,26116-100162,,"BOLT M10X 16 PLATED",2,2,2,2,,,,,,,,,,,,,
46,1,,26716-060002,,"NUT 6",6,6,6,6,,,,,,,,,,,,
47,1,,933110-00100,,"SWITCH ASSY, STARTER",1,1,1,1,,,,,,,,,,,,,
49,2,,933110-00301,,"KEY ASSY",1,1,1,1,,,,,,,,,,,,
50,1,,933110-05300,,HORN,1,1,1,,,,,,,,,,,,,
50-1,1,,933110-05301,,HORN,1,1,1,1,,,N,,,M/#30616,,M/#30550,,M/#30550,,,,
51,1,,933113-05190,,"LAMP, OIL",1,1,1,1,,,,,,,,,,,,
52,2,,933113-05180,,"BULB 12V 3W",1,1,1,1,,,,,,,,,,,,
53,1,,933113-15900,,"COVER, SWITCH TERMI.",1,1,1,1,,,,,,,,,,,,
54,1,,172149-63100,,"PANEL ASSY",1,1,1,1,,,,,,,,,,,,
55,1,,172141-65970,,"RUBBER, PLATE",1,1,1,1,,,,,,,,,,,,
56,1,,26013-100202,,"BOLT W/WASHER M10X20",2,2,2,2,,,,,,,,,,,,
57,1,,26116-100162,,"BOLT M10X 16 PLATED",1,1,1,1,,,,,,,,,,,,
58,1,,22137-100000,,"WASHER 10,POLISHED",1,1,1,1,,,,,,,,,,,,
59,1,,26022-060122,,"SCREW M 6X 12",1,1,1,1,,,,,,,,,,,,
60,1,,26116-060122,,"BOLT 6X12",2,2,2,2,,,,,,,,,,,,
61,1,,22217-060000,,"SPRING WASHER 6",2,2,2,2,,,,,,,,,,,,
62,1,,26022-060122,,"SCREW M 6X 12",1,1,1,1,,,,,,,,,,,,

63,1,,172454-17200,,BRACKET,,,,1,,,,1,,,,,,,,,
64,1,,172452-17230,,COVER,,,,1,,,,1,,,,,,,,,
65,1,,172454-17230,,COVER,,,,1,,,,1,,,,,,,,,
66,1,,172452-17240,,SLIDER,,,,1,,,,1,,,,,,,,,
67,1,,172452-17250,,SHAFT,,,,1,,,,1,,,,,,,,,
68,1,,172452-17260,,SPRING,,,,1,,,,1,,,,,,,,,
69,1,,172452-17300,,BOOTS,,,,1,,,,1,,,,,,,,,
70,1,,172068-28490,,"SPRING 8",,,,2,,,,1,,,,,,,,,
71,1,,172165-46230,,"SHAFT, SWING",,,,1,,,,1,,,,,,,,,
72,1,,194464-52190,,"SWITCH, SAFETY START",,,,1,,,,1,,,,,,,,,
73,1,,22351-040020,,"SPRING PIN 4X20",,,,1,,,,1,,,,,,,,,
74,1,,26455-040142,,"BOLT 4X14",,,,3,,,,1,,,,,,,,,
75,1,,26756-080002,,"LOCK NUT M 8 PLATED",,,,2,,,,1,,,,,,,,,
76,1,,172112-42090,,"WASHER, STOPPER",,,,1,,,,1,,,,,,,,,
77,1,,22137-080000,,"WASHER 8, POLISHED",,,,1,,,,1,,,,,,,,,

Fig. 11 電装品 ELECTRIC PART

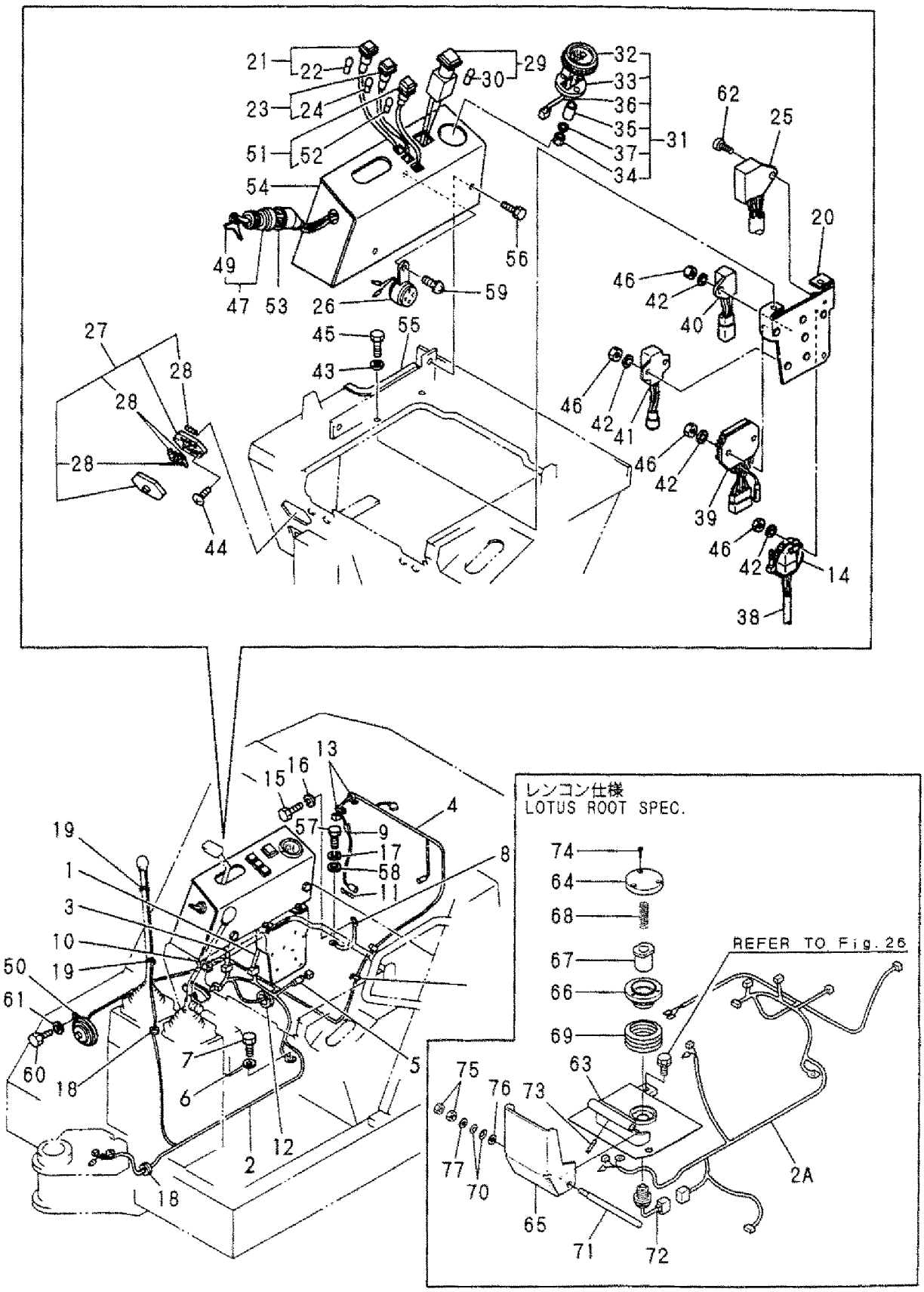

```
1,1,,172137-16531,,"WIRE, LEAD",1,1,1,1,,,,,,,,,,,,,
2,1,,172137-16560,,BAND,4,4,4,4,,,,,,,,,,,,,
3,1,,172137-17401-4,,"COVER, WORK LAMP",1,1,,1,,,,,,,,,,,,,
3A,1,,172137-17401,,"COVER    (YELLOW:87)",,,1,,,,,,,,,,,,,,,
4,1,,26013-120252,,"BOLT M12X 25",1,1,1,1,,,,,,,,,,,,,
5,1,,933113-05200,,"LAMP, WORK",1,1,1,1,,,,,,,,,,,,,
6,2,,933113-05210,,"BULB 12V 27W",1,1,1,1,,,,,,,,,,,,,
7,1,,933152-03700,,"WASHER, SIDE CLUTCH",1,1,1,1,,,,,,,,,,,,,,
8,1,,22137-130000,,"WASHER 13",2,2,2,2,,,,,,,,,,,,,
```

Fig. 12 ワークランプ WORK LAMP

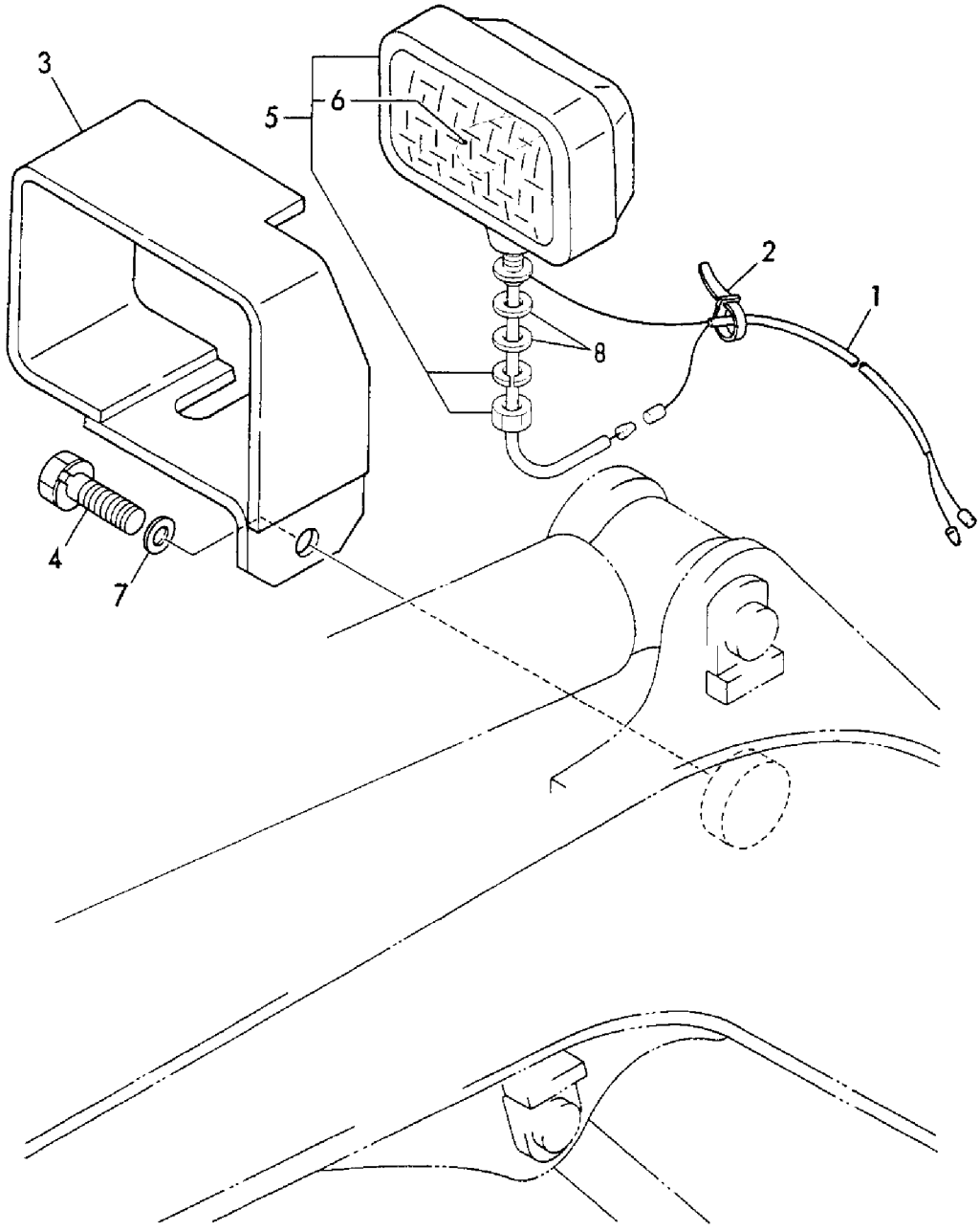

```
1,1,,172137-29111,,"SPROCKET R",2,2,2,2,,,,,,,,,,,,,
2,1,,26013-100252,,"BOLT W/WASHER M10X25",18,18,18,18,,,,,,,,,,,,,,
3,1,,772137-37300,,"ROLLER ASSY, TRUCK",6,6,6,6,,,,,,,,,,,,,,
5,2,,172137-37330,,"SHAFT, TRACK ROLLER",6,6,6,6,,,,,,,,,,,,,,
6,2,,172137-37360,,SEAL,12,12,12,12,,,,,,,,,,,,,,
7,2,,22242-000250,,"CIRCLIP 25S",12,12,12,12,,,,,,,,,,,,,,
8,2,,22252-000470,,"CIRCLIP   47",12,12,12,12,,,,,,,,,,,,,,
9,2,,24101-060054,,"BALL BEARING",12,12,12,12,,,,,,,,,,,,,,
```

Fig. 13 トラックローラ TRACK ROLLER

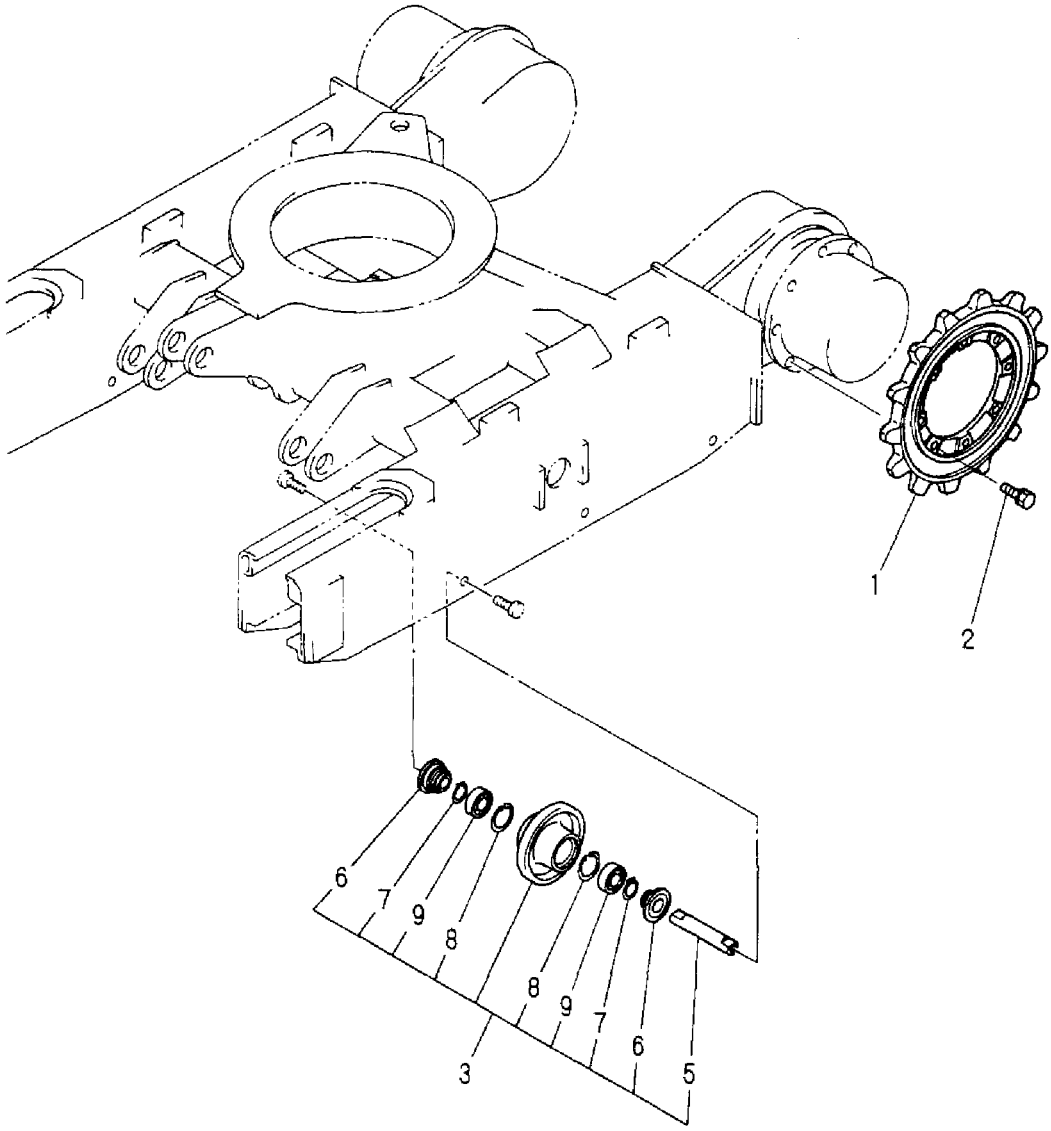

```
1,1,,772137-37100,,"IDLER ASSY",2,2,2,,,,,,,,,,,,,
2,2,,172137-99490,,"IDLER KIT, FRONT",2,2,2,,,,,,,,,,,,,,
3,3,,172137-37110,,"SHAFT, IDLER",2,2,2,,,,,,,,,,,,,,
4,3,,1A1030-48250,,"SEAL QLF30621218,OIL",4,4,4,,,,,,,,,,,,,,
5,3,,22242-000300,,"CIRCLIP   30",2,2,2,,,,,,,,,,,,,,
6,3,,22252-000620,,"CIRCLIP 62(H)",4,4,4,,,,,,,,,,,,,,
7,3,,24101-062064,,"BALL BEARING",4,4,4,,,,,,,,,,,,,,
8,3,,933168-13990,,"COLLAR(B),IDLE.SHAFT",2,2,2,,,,,,,,,,,,,,
9,2,,172137-37100,,"IDLER ASSY",2,2,2,,,,,,,,,,,,,,
10,2,,172137-37130,,"COVER (L), SEAL",2,2,2,,,,,,,,,,,,,,
11,2,,172137-37140,,"COVER (R), SEAL",2,2,2,,,,,,,,,,,,,,
12,1,,172137-37801,,"TUBE, ADJUSTER",2,2,2,,,,,,,,,,,,,,
13,1,,172122-37843,,"VALVE ASSY, NIPPLE",2,2,2,,,,,,,,,,,,,,
14,2,,24315-000140,,"O-RING 1B P-14.0",2,2,2,,,,,,,,,,,,,,
15,2,,24761-020000,,"NIPPLE PT1/8,GREASE",2,2,2,,,,,,,,,,,,,,
16,1,,172137-37850,,"RING, BACK UP",2,2,2,,,,,,,,,,,,,,
17,1,,24315-000300,,"O-RING 1B P-30.0",2,2,2,,,,,,,,,,,,,,
18,1,,26013-100302,,"BOLT M10X 30",8,8,8,,,,,,,,,,,,,,
19,1,,933126-38600,,"SEAL, DUST",2,2,2,,,,,,,,,,,,,,
20,1,,933171-13691,,"PLUG PT1/8",2,2,2,,,,,,,,,,,,,,
21,1,,172149-50102,,FRAME,1,1,1,,,,,,,,,,,,,,
22,1,,172131-50360,,"COVER,UNDER",1,1,1,,,,,,,,,,,,,,
23,1,,172141-50890,,GROMMET,2,2,2,,,,,,,,,,,,,,
24,1,,172137-51700-2,,"COVER, MOTOR",2,2,2,,,,,,,,,,,,,,
25,1,,172137-51900-2,,PLATE,,4,4,,,,,,,,,,,,,,
26,1,,22217-100000,,"SPRING WASHER 10",8,8,8,,,,,,,,,,,,,,
27,1,,22217-100000,,"SPRING WASHER 10",4,4,4,,,,,,,,,,,,,,
28,1,,22217-120000,,"SPRING WASHER",12,12,12,,,,,,,,,,,,,,
29,1,,26013-100302,,"BOLT M10X 30",8,8,8,,,,,,,,,,,,,,
30,1,,26116-100202,,"BOLT M10X 20 PLATED",8,8,8,,,,,,,,,,,,,,
31,1,,26116-100202,,"BOLT M10X 20 PLATED",4,4,4,,,,,,,,,,,,,,
32,1,,26116-120252,,"BOLT M12X 25 PLATED",12,12,12,,,,,,,,,,,,,,,
33,1,,172131-78350,,"GROMMET 13.5",2,2,2,,,,,,,,,,,,,,
34,1,,172137-37710,,"SPRING, ADJUSTING",2,2,2,,,,,,,,,,,,,,,
```

Fig. 14 トラックフレーム&アイドラ TRACK FRAME & IDLER

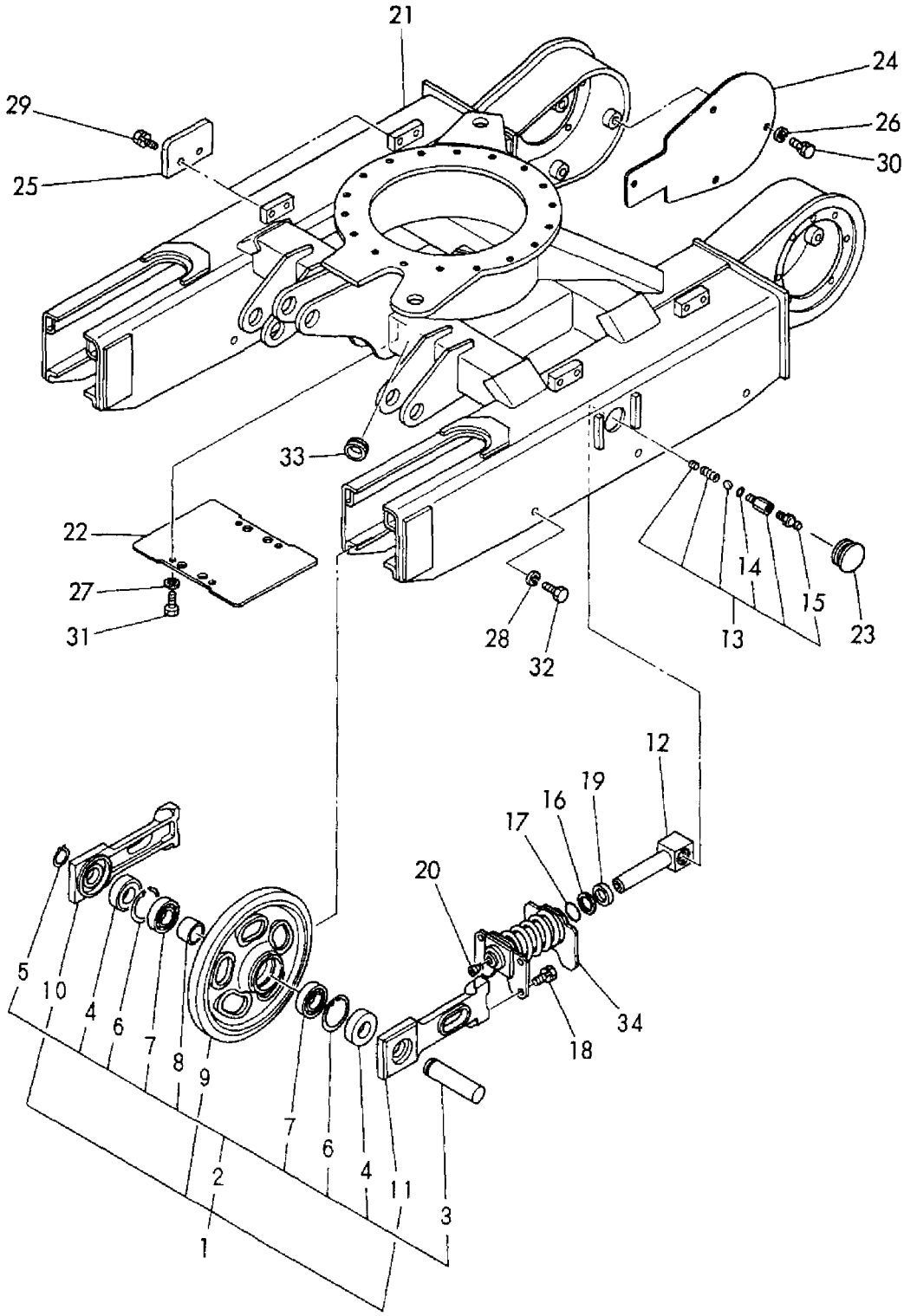

```
1,1,,772137-37100,,"IDLER ASSY",,,,2,,,,,,,,,,,,,
2,2,,172137-99490,,"IDLER KIT, FRONT",,,,2,,,,,,,,,,,,,
3,3,,172137-37110,,"SHAFT, IDLER",,,,2,,,,,,,,,,,,,
4,3,,1A1030-48250,,"SEAL QLF30621218,OIL",,,,4,,,,,,,,,,,,,
5,3,,22242-000300,,"CIRCLIP   30",,,,2,,,,,,,,,,,,,
6,3,,22252-000620,,"CIRCLIP 62(H)",,,,4,,,,,,,,,,,,,
7,3,,24101-062064,,"BALL BEARING",,,,4,,,,,,,,,,,,,
8,3,,933168-13990,,"COLLAR(B),IDLE.SHAFT",,,,2,,,,,,,,,,,,,
9,2,,172137-37100,,"IDLER ASSY",,,,2,,,,,,,,,,,,,
10,2,,172137-37130,,"COVER (L), SEAL",,,,2,,,,,,,,,,,,,
11,2,,172137-37140,,"COVER (R), SEAL",,,,2,,,,,,,,,,,,,
12,1,,172137-37801,,"TUBE, ADJUSTER",,,,2,,,,,,,,,,,,,
13,1,,172122-37843,,"VALVE ASSY, NIPPLE",,,,2,,,,,,,,,,,,,
14,2,,24315-000140,,"O-RING 1B P-14.0",,,,2,,,,,,,,,,,,,
15,2,,24761-020000,,"NIPPLE PT1/8,GREASE",,,,2,,,,,,,,,,,,,
16,1,,172137-37850,,"RING, BACK UP",,,,2,,,,,,,,,,,,,
17,1,,24315-000300,,"O-RING 1B P-30.0",,,,2,,,,,,,,,,,,,
18,1,,26013-100302,,"BOLT M10X 30",,,,8,,,,,,,,,,,,,
19,1,,933126-38600,,"SEAL, DUST",,,,2,,,,,,,,,,,,,
20,1,,933171-13691,,"PLUG PT1/8",,,,2,,,,,,,,,,,,,
21,1,,172454-50100,,FRAME,,,,1,,,,,,,,,,,,,
22,1,,26013-100352,,"BOLT M10X 35",,,,4,,,,,,,,,,,,,
23,1,,172141-50890,,GROMMET,,,,2,,,,,,,,,,,,,
24,1,,172183-61190,,"COVER,TRAVEL",,,,2,,,,,,,,,,,,,
25,1,,172110-36010,,COLLAR,,,,4,,,,,,,,,,,,,
26,1,,22217-100000,,"SPRING WASHER 10",,,,8,,,,,,,,,,,,,
27,1,,172183-37500,,"PLATE,SHOE BAFFLE",,,,2,,,,,,,,,,,,,
28,1,,22217-120000,,"SPRING WASHER",,,,12,,,,,,,,,,,,,
29,1,,172183-37520,,"COLLAR 16X24X13,RBBR",,,,4,,,,,,,,,,,,,
30,1,,26116-100202,,"BOLT M10X 20 PLATED",,,,8,,,,,,,,,,,,,
31,1,,172137-37710,,"SPRING, ADJUSTING",,,,2,,,,,,,,,,,,,
32,1,,26116-120252,,"BOLT M12X 25 PLATED",,,,12,,,,,,,,,,,,,
33,1,,172183-37510,,"COLLAR 11X16X13",,,,4,,,,,,,,,,,,,
```

Fig. 15 トラックフレーム＆アイドラ（レンコン仕様）
TRACK FRAME & IDLER (LOTUS ROOT SPEC.)

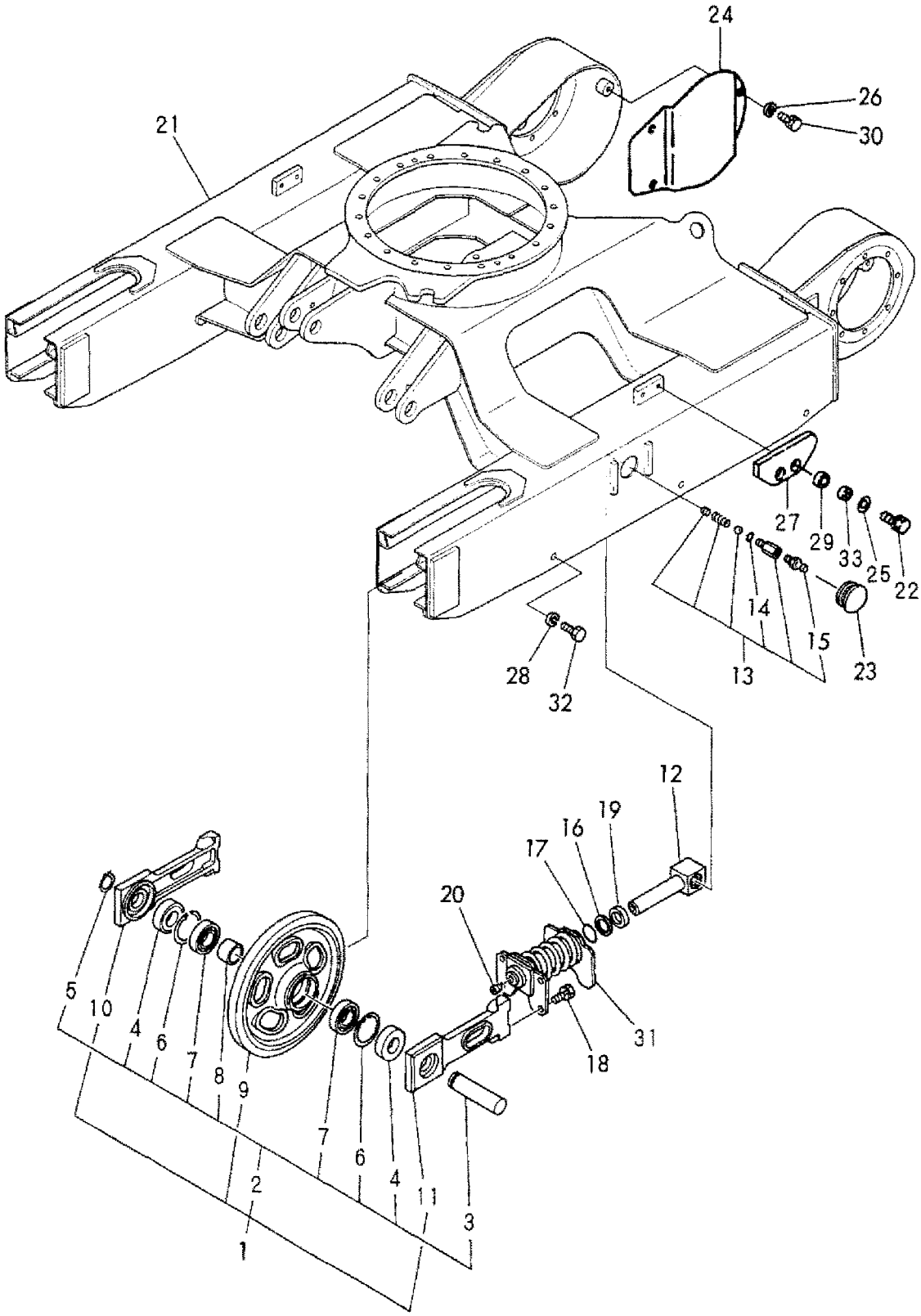

```
1,1,,172137-38600,,"CRAWLER ASSY, RUBBER",2,2,2,,,,,,,,,,,,,,,
2,1,,172454-38600,,"CRAWLER, RUBBER",,,,2,,,,1,,,,,,,,,,
```

Fig. 16 クローラ CRAWLER

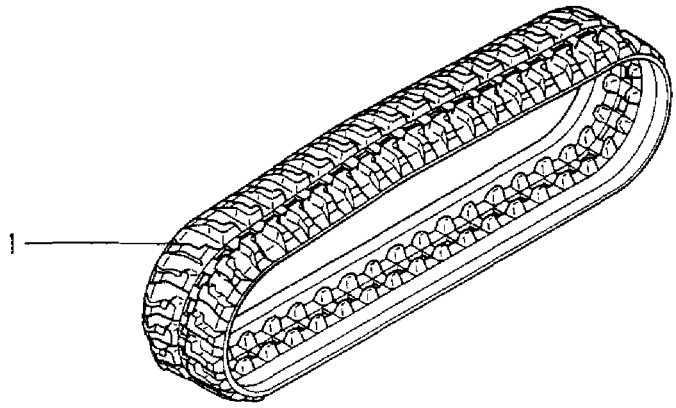

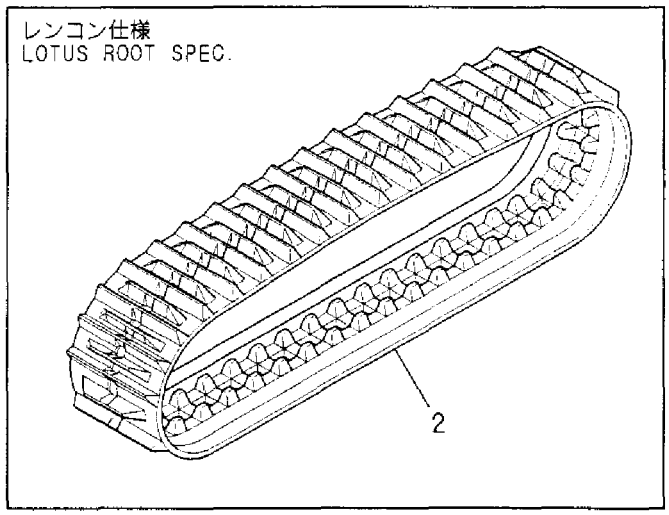

1,1,,172141-41370,,"BUSH 2015",2,2,2,2,,,,,,,,,,,,
2,1,,172149-41830,,"SHAFT(A), TRACK",1,1,1,1,,,,,,,,,,,,,
3,1,,172149-41860,,"PIN, BLADE",1,1,1,1,,,,,,,,,,,,,
4,1,,172149-41900,,"PLATE, LINK",1,1,1,1,,,,,,,,,,,,,
5,1,,172149-41950,,"PLATE, TRACK",1,1,1,1,,,,,,,,,,,,,
6,1,,172149-42011,,BRACKET,1,1,1,1,,,,,,,,,,,,,
7,1,,172149-42101,,"SUPPORT, LINK",1,1,1,1,,,,,,,,,,,,,
8,1,,172149-42250,,"COVER, SUPPORT",1,1,1,1,,,,,,,,,,,,,
9,1,,22217-080000,,"SPRING WASHER 8",4,4,4,4,,,,,,,,,,,,,
10,1,,24761-020000,,"NIPPLE PT1/8,GREASE",1,1,1,1,,,,,,,,,,,,,
11,1,,26013-100202,,"BOLT W/WASHER M10X20",5,5,5,5,,,,,,,,,,,,,
12,1,,26013-100202,,"BOLT W/WASHER M10X20",1,1,1,1,,,,,,,,,,,,,
13,1,,26013-100202,,"BOLT W/WASHER M10X20",1,1,1,1,,,,,,,,,,,,,
14,1,,26013-100202,,"BOLT W/WASHER M10X20",1,1,1,1,,,,,,,,,,,,,
15,1,,26013-100202,,"BOLT W/WASHER M10X20",3,3,3,3,,,,,,,,,,,,,
16,1,,26013-100252,,"BOLT W/WASHER M10X25",4,4,4,4,,,,,,,,,,,,,
17,1,,26116-080162,,"BOLT 8X16",4,4,4,4,,,,,,,,,,,,,
18,1,,26756-100002,,"LOCK NUT M10 PLATED",2,2,2,2,,,,,,,,,,,,,
19,1,,26116-100252,,"BOLT M10X 25 PLATED",2,2,2,2,,,,,,,,,,,,,
20,1,,26116-080304,,"BOLT M8 X 30 PLATED",1,1,1,1,,,,,,,,,,,,,
21,1,,26716-080002,,"NUT M 8",1,1,1,1,,,,,,,,,,,,,
22,1,,172312-12150,,"BUSH 10X10",1,1,1,1,,,,,,,,,,,,,
23,1,,933171-23670,,BUSH,1,1,1,1,,,,,,,,,,,,,

Fig. 17 リンク台 LINK STAND

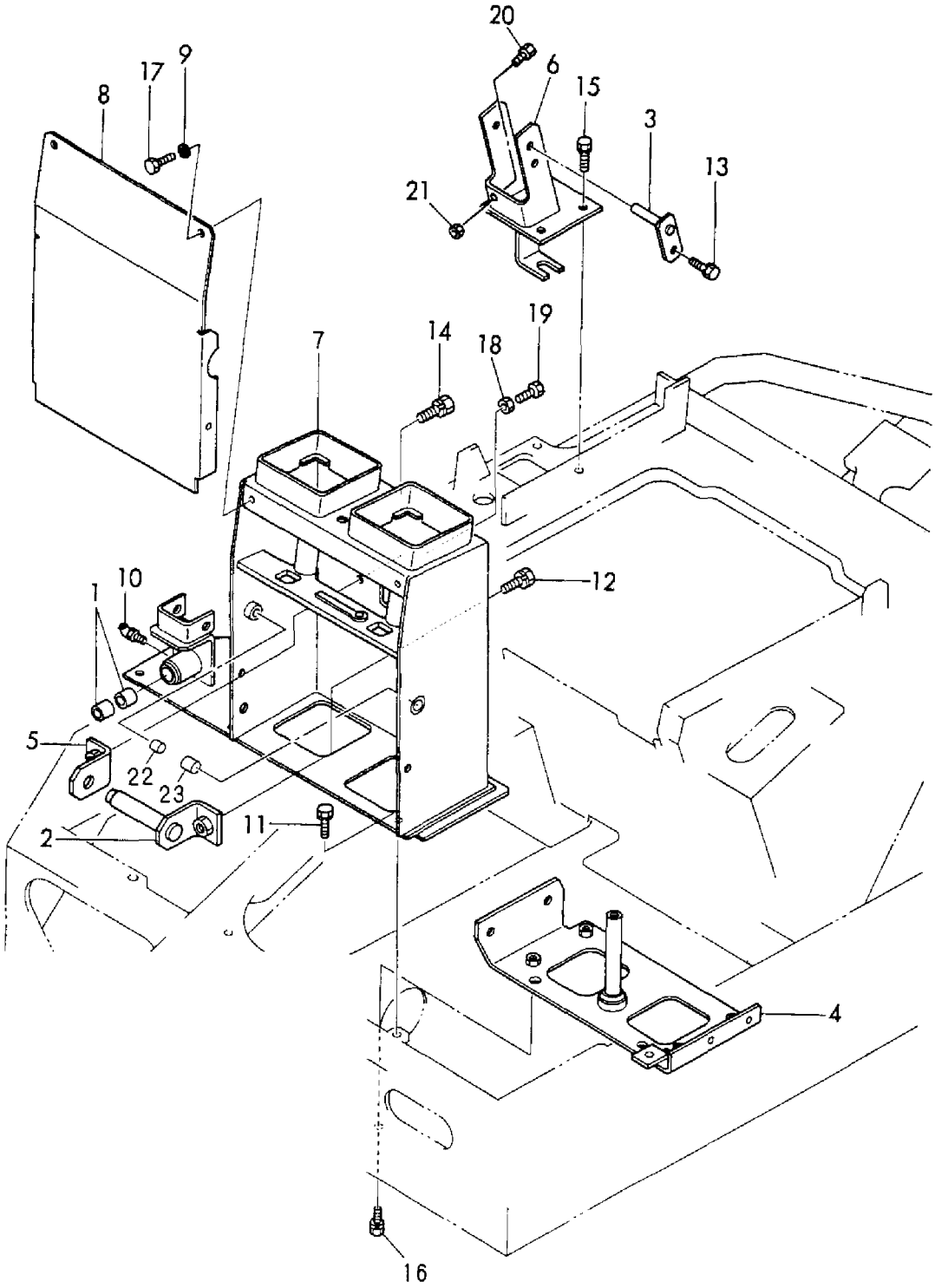

```
1,1,,172149-41051,,LEVER(R),1,1,1,1,,,,,,,,,,,,,
2,1,,172141-41160,,JOINT,1,1,1,1,,,,,,,,,,,,,
3,1,,172141-41311,,GROMMET,1,1,1,1,,,,,,,,,,,,,
4,1,,172141-41331,,"BOOTS, LEVER (GRAY)",1,1,1,1,,,,,,,,,,,,,
5,1,,24761-040000,,"NIPPLE B,GREASE",1,1,1,1,,,,,,,,,,,,,
6,1,,172312-46301,,KNOB(A),1,1,1,1,,,,,,,,,,,,,
7,1,,26757-100002,,"LOCK NUT M10",1,1,1,1,,,,,,,,,,,,,
8,1,,172149-41250,,"LINK(A), BOOM",1,1,1,1,,,,,,,,,,,,,
9,1,,172149-41300,,"LINK(B), BOOM",1,1,1,1,,,,,,,,,,,,,
10,1,,172149-41320,,"LINK, BUCKET",1,1,1,1,,,,,,,,,,,,,
12,2,,172141-41370,,"BUSH 2015",2,2,2,2,,,,,,,,,,,,,
13,1,,172149-41650,,"SHAFT, LINK",1,1,1,1,,,,,,,,,,,,,
14,1,,172149-41790,,"STAY, LINK",1,1,1,1,,,,,,,,,,,,,
15,1,,172122-45720,,"ROD-END 14",1,1,1,1,,,,,,,,,,,,,
16,1,,172124-46200,,"O-RING 27X5.7",4,4,4,4,,,,,,,,,,,,,
17,1,,22157-120000,,"WASHER 12",2,2,2,2,,,,,,,,,,,,,
18,1,,22217-140000,,"SPRING WASHER 14",1,1,1,1,,,,,,,,,,,,,
19,1,,26013-100202,,"BOLT W/WASHER M10X20",2,2,2,2,,,,,,,,,,,,,
20,1,,26716-140002,,"NUT M14",1,1,1,1,,,,,,,,,,,,,
21,1,,172137-46400,,"TURNBUCKLE M10X40",2,2,2,2,,,,,,,,,,,,,
22,1,,194150-22480,,"NUT M10",2,2,2,2,,,,,,,,,,,,,
23,1,,172149-42710,,"ROD C COMP",2,2,2,2,,,,,,,,,,,,,
24,1,,172149-42641,,ROD(RA),2,2,2,2,,,,,,,,,,,,,
25,1,,172149-42651,,ROD(RB),2,2,2,2,,,,,,,,,,,,,
26,1,,172122-46590,,"ELBALL 8",2,2,2,2,,,,,,,,,,,,,
27,1,,172122-46590,,"ELBALL 8",2,2,2,2,,,,,,,,,,,,,
28,1,,172122-46590,,"ELBALL 8",2,2,2,2,,,,,,,,,,,,,
29,1,,1C6281-52310,,"PIN 6,COME-OFF SNAP",2,2,2,2,,,,,,,,,,,,,
30,1,,26051-080002,,"NUT M 8",6,6,6,6,,,,,,,,,,,,,
31,1,,26051-080002,,"NUT M 8",4,4,4,4,,,,,,,,,,,,,
32,1,,26051-080002,,"NUT M 8",4,4,4,4,,,,,,,,,,,,,
33,1,,26716-100002,,"NUT 10",2,2,2,2,,,,,,,,,,,,,
34,1,,933110-54100,,"PIN 4.75X14",2,2,2,2,,,,,,,,,,,,,
35,1,,172149-42450,,"ROD(G), SPOOL",2,2,2,2,,,,,,,,,,,,,
36,1,,26013-100202,,"BOLT W/WASHER M10X20",2,2,2,2,,,,,,,,,,,,,
37,1,,22137-080000,,"WASHER 8, POLISHED",2,2,2,2,,,,,,,,,,,,,
38,1,,22137-080000,,"WASHER 8, POLISHED",2,2,2,2,,,,,,,,,,,,,
39,1,,22137-080000,,"WASHER 8, POLISHED",2,2,2,2,,,,,,,,,,,,,
```

Fig. 18 操縦装置（ブーム＆バケット） CONTROL EQUIPMENT (BOOM & BUCKET)

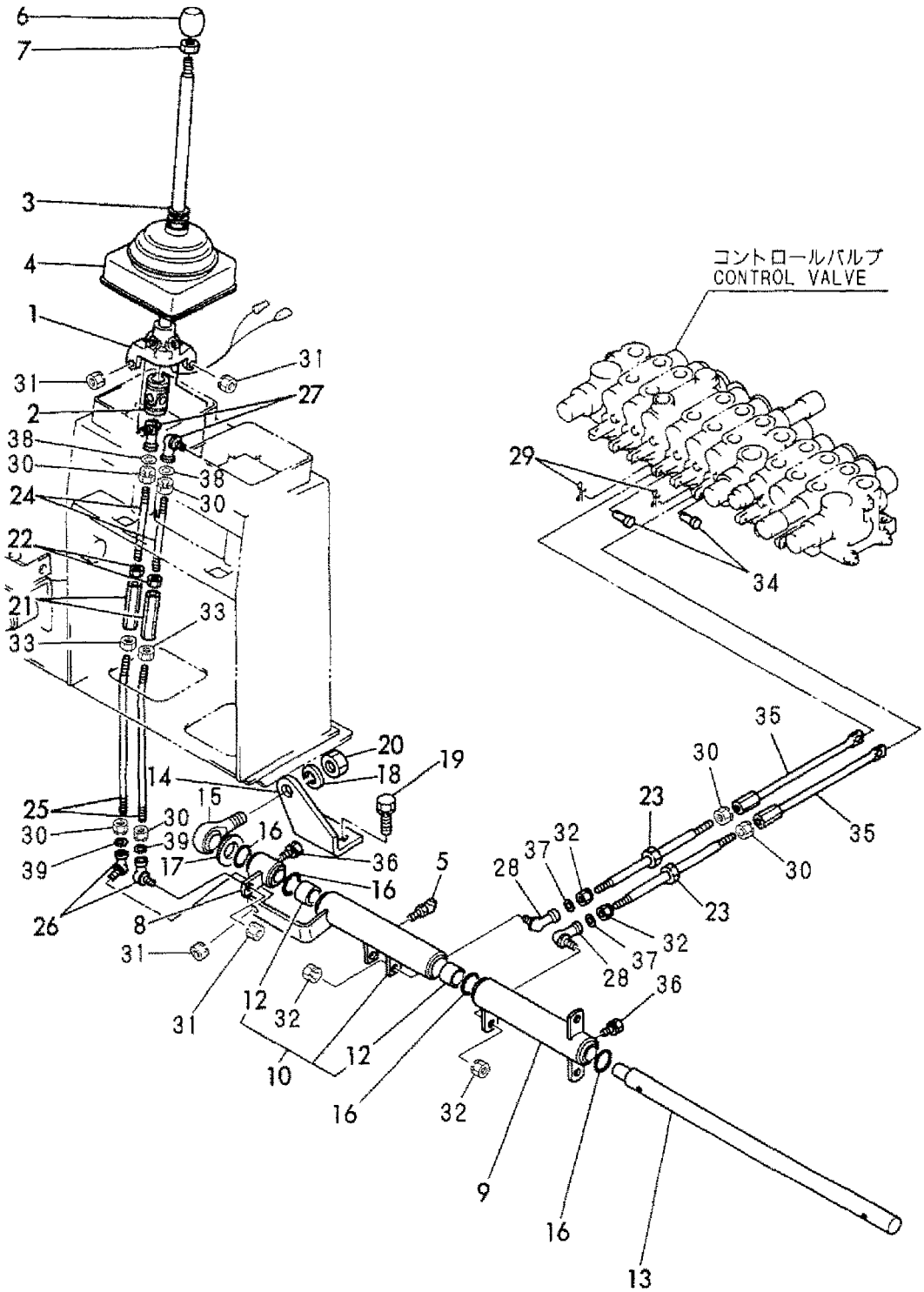

```
1,1,,172149-41101,,"LEVER L",1,1,1,1,,,,,,,,,,,,,
2,1,,172141-41150,,"LINK(L), LEVER",1,1,1,1,,,,,,,,,,,,,
3,1,,172141-41160,,JOINT,1,1,1,1,,,,,,,,,,,,,
4,1,,172141-41331,,"BOOTS, LEVER (GRAY)",1,1,1,1,,,,,,,,,,,,,
5,1,,26756-080002,,"LOCK NUT M 8 PLATED",1,1,1,1,,,,,,,,,,,,,
6,1,,172312-46321,,KNOB(B),1,1,1,1,,,,,,,,,,,,,
7,1,,22351-030010,,"SPRING PIN 3X10",1,1,1,1,,,,,,,,,,,,,
8,1,,24311-000140,,"O-RING 1A P-14.0",1,1,1,1,,,,,,,,,,,,,
9,1,,26979-080162,,"SCREW M 8X16",1,1,1,1,,,,,,,,,,,,,
10,1,,26757-100002,,"LOCK NUT M10",1,1,1,1,,,,,,,,,,,,,
11,1,,1C6281-52320,,"PIN 8,COME-OFF SNAP",2,2,2,2,,,,,,,,,,,,,
12,1,,172149-41370,,"LINK, TURNING",1,1,1,1,,,,,,,,,,,,,
13,2,,172141-41370,,"BUSH 2015",2,2,2,2,,,,,,,,,,,,,
15,1,,172149-41420,,"LINK, ARM",1,1,1,1,,,,,,,,,,,,,
16,2,,172141-41370,,"BUSH 2015",2,2,2,2,,,,,,,,,,,,,
18,1,,172149-41660,,SHAFT(A),1,1,1,1,,,,,,,,,,,,,
19,1,,172124-46200,,"O-RING 27X5.7",3,3,3,3,,,,,,,,,,,,,
20,1,,172149-42450,,"ROD(G), SPOOL",2,2,2,2,,,,,,,,,,,,,
21,1,,26013-100202,,"BOLT W/WASHER M10X20",2,2,2,2,,,,,,,,,,,,,,
22,1,,172149-42690,,"ROD D COMPL.",1,1,1,1,,,,,,,,,,,,,
23,1,,172149-42700,,"ROD E COMPL.",1,1,1,1,,,,,,,,,,,,,
24,1,,172149-42620,,"ROD (L)",2,2,2,2,,,,,,,,,,,,,
25,1,,172122-46590,,"ELBALL 8",2,2,2,2,,,,,,,,,,,,,
26,1,,172122-47250,,"BALL 8, LINK",2,2,2,2,,,,,,,,,,,,,
27,1,,1C6281-52310,,"PIN 6,COME-OFF SNAP",2,2,2,2,,,,,,,,,,,,,
28,1,,26051-080002,,"NUT M 8",8,8,8,8,,,,,,,,,,,,,
29,1,,26051-080002,,"NUT M 8",4,4,4,4,,,,,,,,,,,,,
30,1,,933110-54100,,"PIN 4.75X14",2,2,2,2,,,,,,,,,,,,,
31,1,,172122-46571,,"ROD-END  8",2,2,2,2,,,,,,,,,,,,,
32,1,,22137-080000,,"WASHER 8, POLISHED",2,2,2,2,,,,,,,,,,,,,
33,1,,22137-080000,,"WASHER 8, POLISHED",4,4,4,4,,,,,,,,,,,,,
34,1,,172141-41370,,"BUSH 2015",1,1,1,1,,,,,,,,,,,,,
```

Fig. 19 操縦装置（アーム＆旋回） CONTROL EQUIPMENT (ARM & TURNING)

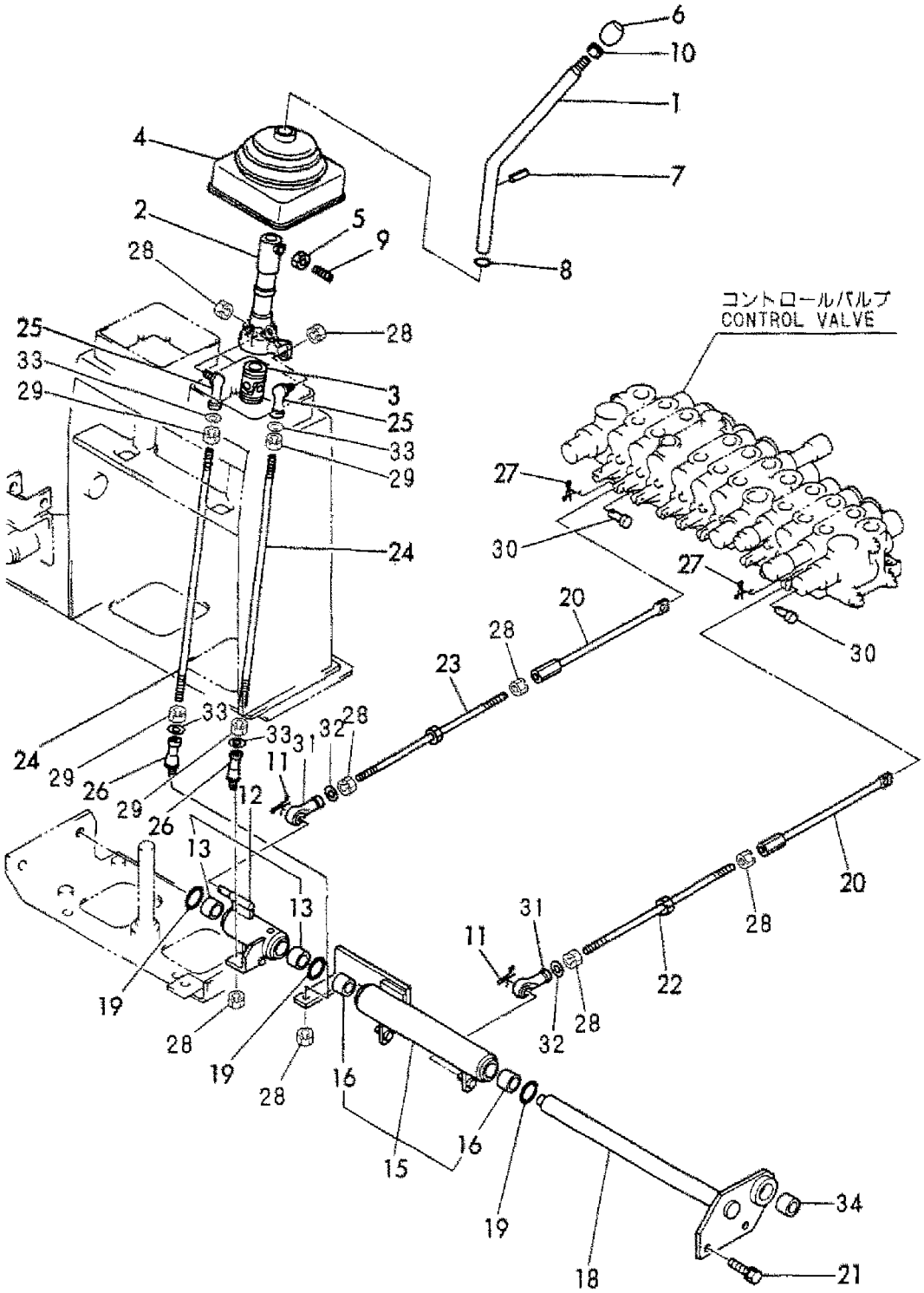

```
1,1,,172149-41121,,"LEVER(R), TRACK",1,1,1,1,,,,,,,,,,,,
3,2,,172141-41370,,"BUSH 2015",2,2,2,2,,,,,,,,,,,,
4,1,,172149-41161,,"LEVER(L),TRACK",1,1,1,1,,,,,,,,,,,,
6,2,,172141-41370,,"BUSH 2015",2,2,2,2,,,,,,,,,,,,
7,1,,172164-45951,,"GRIP L, DRIV.",1,1,1,1,,,,,,,,,,,,
8,1,,172164-45961,,"GRIP R, DRIV.",1,1,1,1,,,,,,,,,,,,
9,1,,24761-040000,,"NIPPLE B,GREASE",4,4,4,4,,,,,,,,,,,,
10,1,,24761-050000,,"NIPPLE C,GREASE",1,1,1,1,,,,,,,,,,,,
11,1,,172149-41480,,"LINK, TRACK(L)",1,1,1,1,,,,,,,,,,,,
12,2,,172141-41370,,"BUSH 2015",2,2,2,2,,,,,,,,,,,,
14,1,,172149-41530,,"LINK, TRACK(R)",1,1,1,1,,,,,,,,,,,,
15,2,,172141-41370,,"BUSH 2015",2,2,2,2,,,,,,,,,,,,
17,1,,172149-41600,,"LINK(B), SWING",1,1,1,1,,,,,,,,,,,,
18,1,,172149-41710,,"SHAFT, TRACK",1,1,1,1,,,,,,,,,,,,
19,1,,172149-41750,,"LINK(A), SWING",1,1,1,1,,,,,,,,,,,,
20,2,,172141-41370,,"BUSH 2015",2,2,2,2,,,,,,,,,,,,
22,1,,1A1040-45890,,"WASHER 10 36 4.5",1,1,1,1,,,,,,,,,,,,
23,1,,172124-46200,,"O-RING 27X5.7",9,9,9,9,,,,,,,,,,,,
24,1,,26013-100202,,"BOLT W/WASHER M10X20",2,2,2,2,,,,,,,,,,,,,
25,1,,172111-16890,,"GROMMET  9",1,1,1,1,,,,,,,,,,,,
26,1,,172149-41800,,"PEDAL, SWING",1,1,1,1,,,,,,,,,,,,
27,1,,172149-42400,,"LOCK, SWING",1,1,1,1,,,,,,,,,,,,
28,1,,172614-45170,,"SPRING 12",1,1,1,1,,,,,,,,,,,,
29,1,,22217-100000,,"SPRING WASHER 10",2,2,2,2,,,,,,,,,,,,
30,1,,22417-250200,,"COTTER PIN 2.5X20",1,1,1,1,,,,,,,,,,,,
31,1,,26716-100002,,"NUT 10",2,2,2,2,,,,,,,,,,,,
32,1,,933171-18390,,"PIN, FOOT BAR",1,1,1,1,,,,,,,,,,,,
33,1,,172149-42500,,"ROD(A), SPOOL",2,2,2,2,,,,,,,,,,,,
34,1,,172149-42520,,"ROD(B), SPOOL",1,1,1,1,,,,,,,,,,,,
35,1,,172149-42590,,ROD(F),1,1,1,1,,,,,,,,,,,,
36,1,,172149-42600,,"ROD, DRIVING",1,1,1,1,,,,,,,,,,,,
37,1,,172149-42610,,"ROD(R) W/BUSH",1,1,1,1,,,,,,,,,,,,
38,1,,172122-46590,,"ELBALL 8",1,1,1,1,,,,,,,,,,,,
39,1,,172122-46590,,"ELBALL 8",3,3,3,3,,,,,,,,,,,,
40,1,,172122-47250,,"BALL 8, LINK",4,4,4,4,,,,,,,,,,,,
41,1,,172122-47250,,"BALL 8, LINK",1,1,1,1,,,,,,,,,,,,
42,1,,1C6281-52310,,"PIN 6,COME-OFF SNAP",3,3,3,3,,,,,,,,,,,,
43,1,,26051-080002,,"NUT M 8",4,4,4,4,,,,,,,,,,,,
44,1,,26051-080002,,"NUT M 8",6,6,6,6,,,,,,,,,,,,
45,1,,26051-080002,,"NUT M 8",8,8,8,8,,,,,,,,,,,,
46,1,,933110-54100,,"PIN 4.75X14",3,3,3,3,,,,,,,,,,,,
47,1,,26013-100202,,"BOLT W/WASHER M10X20",1,1,1,1,,,,,,,,,,,,
48,1,,26116-100602,,"BOLT M10X 60 PLATED",2,2,2,2,,,,,,,,,,,,
49,1,,22137-080000,,"WASHER 8, POLISHED",2,2,2,2,,,,,,,,,,,,
50,1,,22137-080000,,"WASHER 8, POLISHED",3,3,3,3,,,,,,,,,,,,
51,1,,22137-080000,,"WASHER 8, POLISHED",4,4,4,4,,,,,,,,,,,,
52,1,,26716-100002,,"NUT 10",2,2,2,2,,,,,,,,,,,,
53,1,,22417-400400,,"COTTER PIN 4.0X40",1,1,1,1,,,,,,,,,,,,
```

Fig. 20 操縦装置（走行＆スイング） CONTROL EQUIPMENT (TRAVEL & SWING)

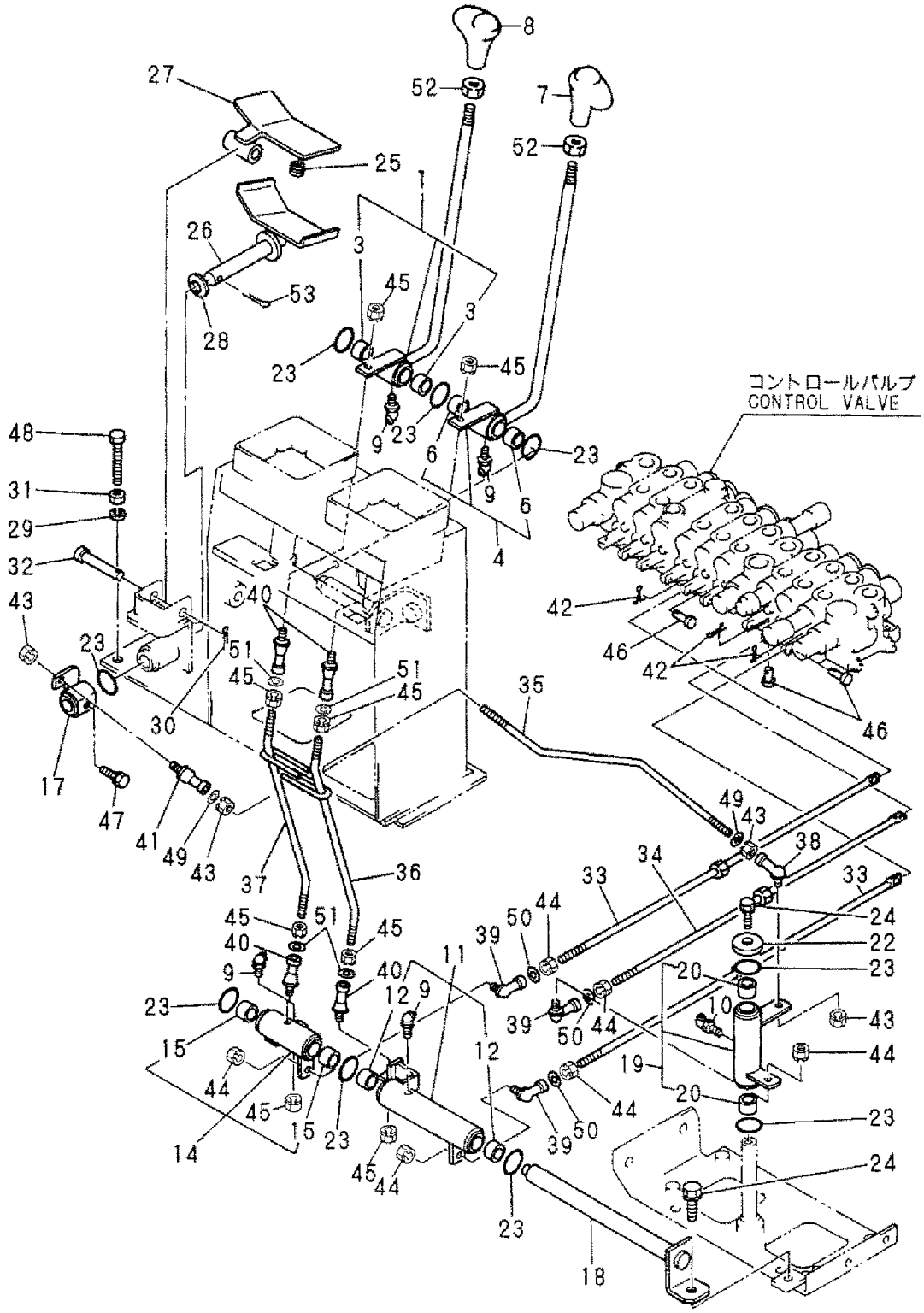

```
1,1,,172149-41192,,"LEVER, BLADE",1,1,1,,,,,,,,,,,,,,
3,2,,172141-41360,,"BUSH 1415",2,2,2,,,,,,,,,,,,,,
4,1,,172141-41340,,BOOTS,1,1,1,,,,,,,,,,,,,,
5,1,,172164-45970,,"GRIP, BLADE",1,1,1,,,,,,,,,,,,,,
6,1,,24311-000210,,"O-RING 1A P-21.0",2,2,2,,,,,,,,,,,,,,
7,1,,26013-100202,,"BOLT W/WASHER M10X20",2,2,2,2,,,,,,,,,,,,,,
8,1,,172149-42670,,"SUPPORT, CABLE",1,1,1,1,,,,,,,,,,,,,
9,1,,172141-42960,,"JOINT, CABLE",1,1,1,1,,,,,,,,,,,,,
10,1,,172122-46590,,"ELBALL 8",1,1,1,1,,,,,,,,,,,,,
11,1,,172116-46910,,"JOINT, SPOOL",1,1,1,1,,,,,,,,,,,,,
12,1,,172149-42680,,"CABLE, BLADE",1,1,1,1,,,,,,,,,,,,,
13,1,,1C6281-52310,,"PIN 6,COME-OFF SNAP",1,1,1,1,,,,,,,,,,,,,,
14,1,,22217-080000,,"SPRING WASHER  8",1,1,1,1,,,,,,,,,,,,,
15,1,,933110-54100,,"PIN 4.75X14",1,1,1,1,,,,,,,,,,,,,
16,1,,26051-080002,,"NUT M 8",1,1,1,1,,,,,,,,,,,,,
```

Fig. 21 操縦装置（ブレード） CONTROL EQUIPMENT (BLADE)

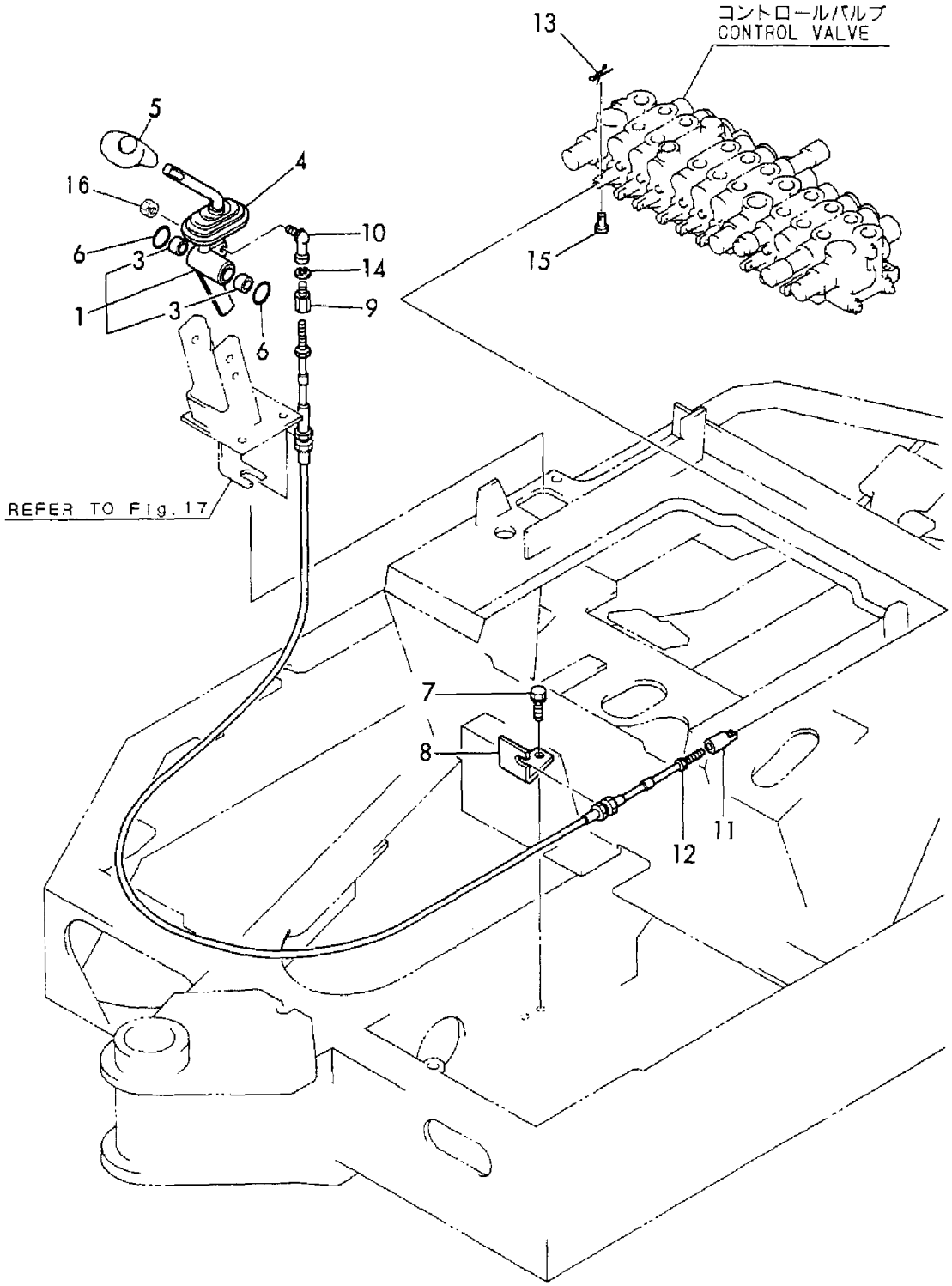

```
1,1,,172149-42301,,"LEVER, LOCK L",1,1,1,,,,,,,,,,,,,,
1-1,1,,172149-42302,,"LEVER,
LOCK",1,1,1,1,,,N,,,M/#30591,,M/#30533,,M/#30533,,,,
2,1,,172149-42351,,"ARM ASSY, LOCK",1,1,1,1,,,,,,,,,,,,,,
3,1,,172141-42600,,"PIPE, LOCK",2,2,2,2,,,,,,,,,,,,,,
4,1,,172141-42701-4,,"LINK,LOCK",4,4,4,4,,,,,,,,,,,,,,
5,1,,172141-42750,,"BOLT, STOPPER",8,8,8,8,,,,,,,,,,,,,,
6,1,,1C6281-52310,,"PIN 6,COME-OFF SNAP",4,4,4,4,,,,,,,,,,,,,,,
7,1,,22137-120000,,"WASHER 12,POLISHED",2,2,2,2,,,,,,,,,,,,,,
8,1,,26756-080002,,"LOCK NUT M 8 PLATED",8,8,8,8,,,,,,,,,,,,,,,
9,1,,26756-120002,,"LOCK NUT 12",2,2,2,2,,,,,,,,,,,,,,
10,1,,933110-54100,,"PIN 4.75X14",4,4,4,4,,,,,,,,,,,,,,
11,1,,933170-01490,,"SPRING 12",2,2,2,2,,,,,,,,,,,,,,
12,1,,172116-46630,,"KNOB, LOCK LEVER",2,2,2,2,,,,,,,,,,,,,,,
13,1,,172149-42320,,"LEVER,LOCK R",1,1,1,1,,,,,,,,,,,,,,
14,1,,26013-060202,,"BOLT M 6X 20",1,1,1,1,,,,,,,,,,,,,,
```

Fig.22 作業レバーストッパ OPERATION LEVER STOPPER

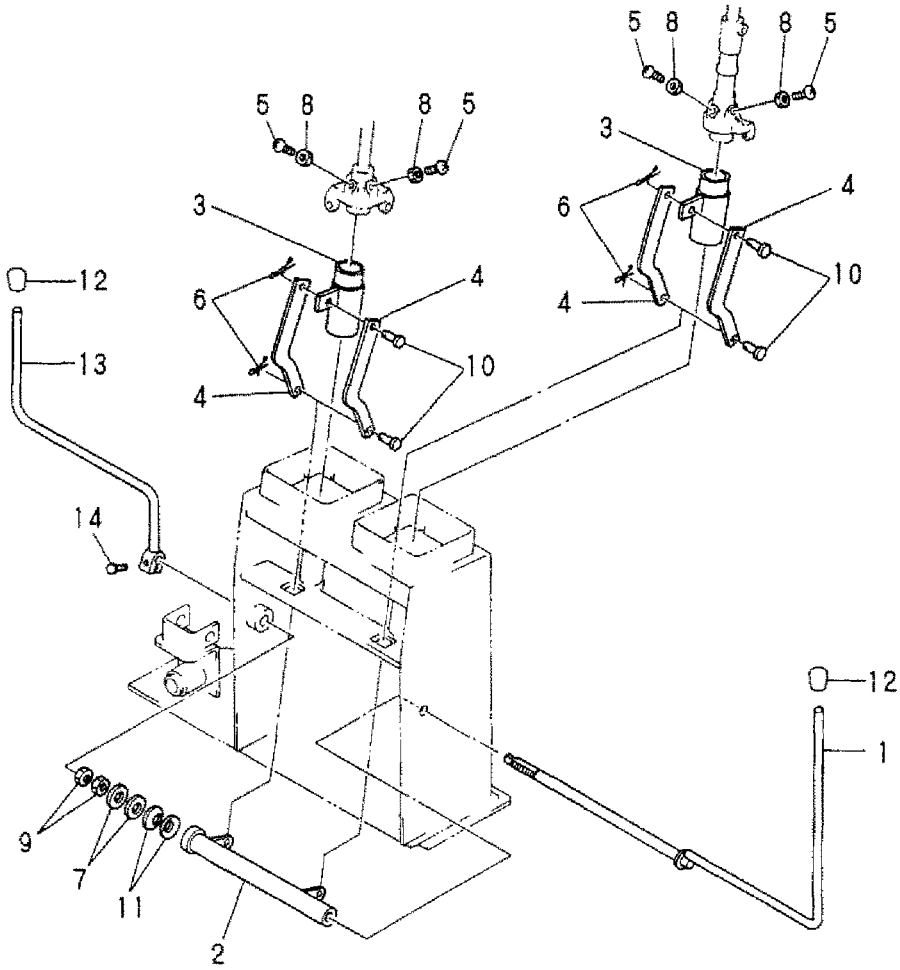

```
1,1,,172149-53100,,PROTECTOR(L),1,1,1,1,,,,,,,,,,,,,
2,1,,172149-53190,,PROTECTOR(R),1,1,1,1,,,,,,,,,,,,,
3,1,,26013-120302,,"BOLT W/WASHER M12X30",8,8,8,8,,,,,,,,,,,,,
4,1,,172111-16890,,"GROMMET  9",,1,1,1,,,,,,,,,,,,,
5,1,,172150-53350,,"WEIGHT, COUNTER",,1,1,1,,,,,,,,,,,,,
6,1,,22137-120000,,"WASHER 12,POLISHED",,2,2,2,,,,,,,,,,,,,
7,1,,22217-120000,,"SPRING WASHER",,2,2,2,,,,,,,,,,,,,
8,1,,26116-120352,,"BOLT M12X 35 PLATED",,2,2,2,,,,,,,,,,,,,
9,1,,172149-54100-4,,"FLAME,TURNING G:97",1,1,,1,,,,,,,,,,,,,
9A,1,,172149-54100-3,,"FLAME,TURNING,G:86",,,1,,,,,,,,,,,,,
10,2,,172149-54050,,BUSH,2,2,2,2,,,,,,,,,,,,,
11,1,,24761-040000,,"NIPPLE B,GREASE",1,1,1,1,,,,,,,,,,,,,
12,1,,172730-05250,,"WASHER 12",8,8,8,8,,,,,,,,,,,,,
```

Fig. 23 旋回フレーム TURNING FRAME

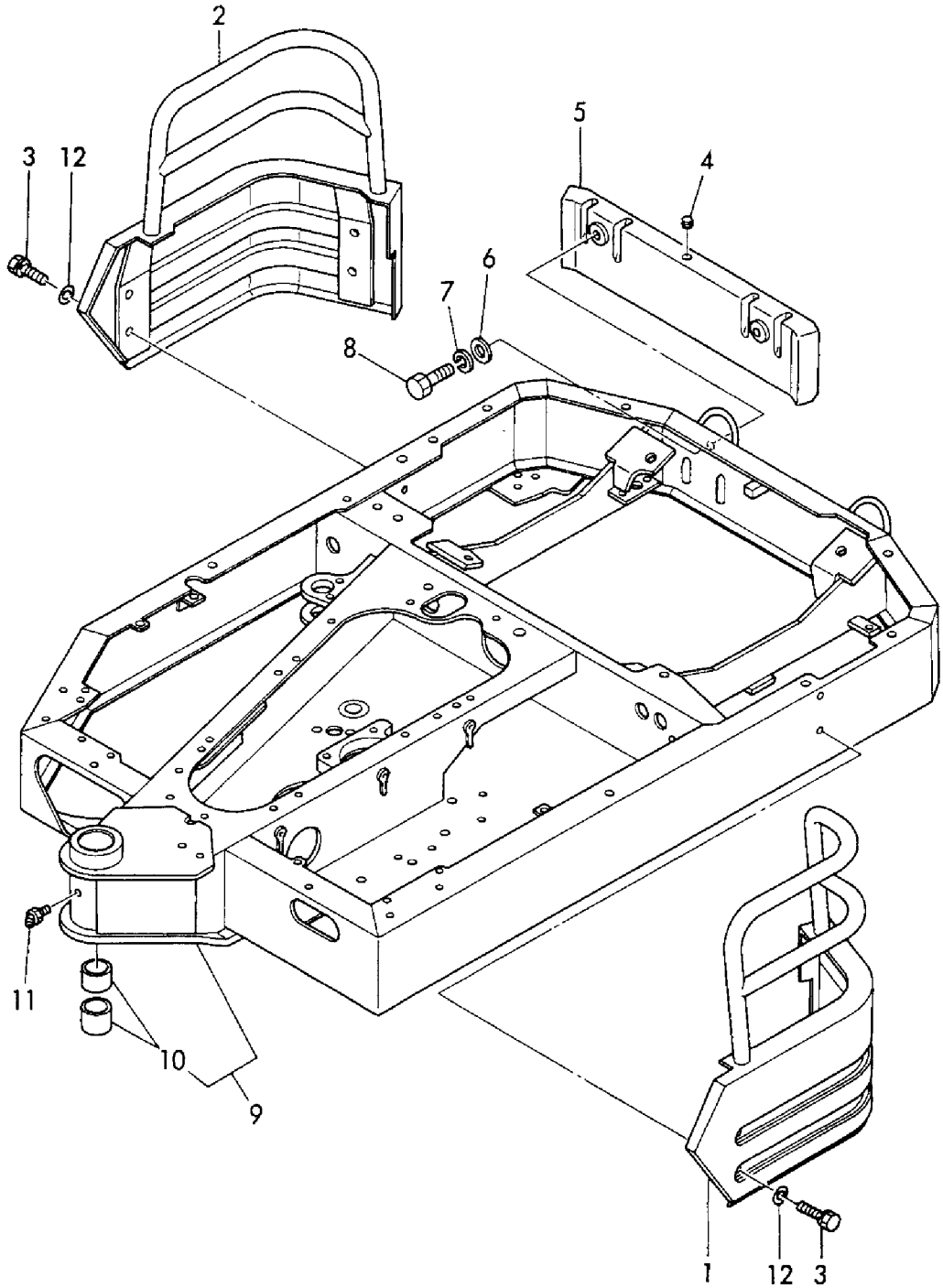

```
1,1,,172149-57601,,"BEARING, TURNING",1,1,1,1,,,,,,,,,,,,,
2,2,,172149-57610,,"SEAL SET",1,1,1,1,,,,,,,,,,,,,
3,3,,172149-57620,,"SEAL, UPPER",1,1,1,1,,,,,,,,,,,,,
4,3,,172149-57630,,"SEAL,LOWER",1,1,1,1,,,,,,,,,,,,,
5,1,,194940-24350,,"PIN 10X28,STRAIGHT",4,4,4,4,,,,,,,,,,,,,
6,1,,26116-120302,,"BOLT M12X 30 PLATED",18,18,18,18,,,,,,,,,,,,,,
7,1,,26116-120452,,"BOLT M12X 45 PLATED",18,18,18,18,,,,,,,,,,,,,,
```

Fig. 24 旋回ベアリング TURNING BEARING

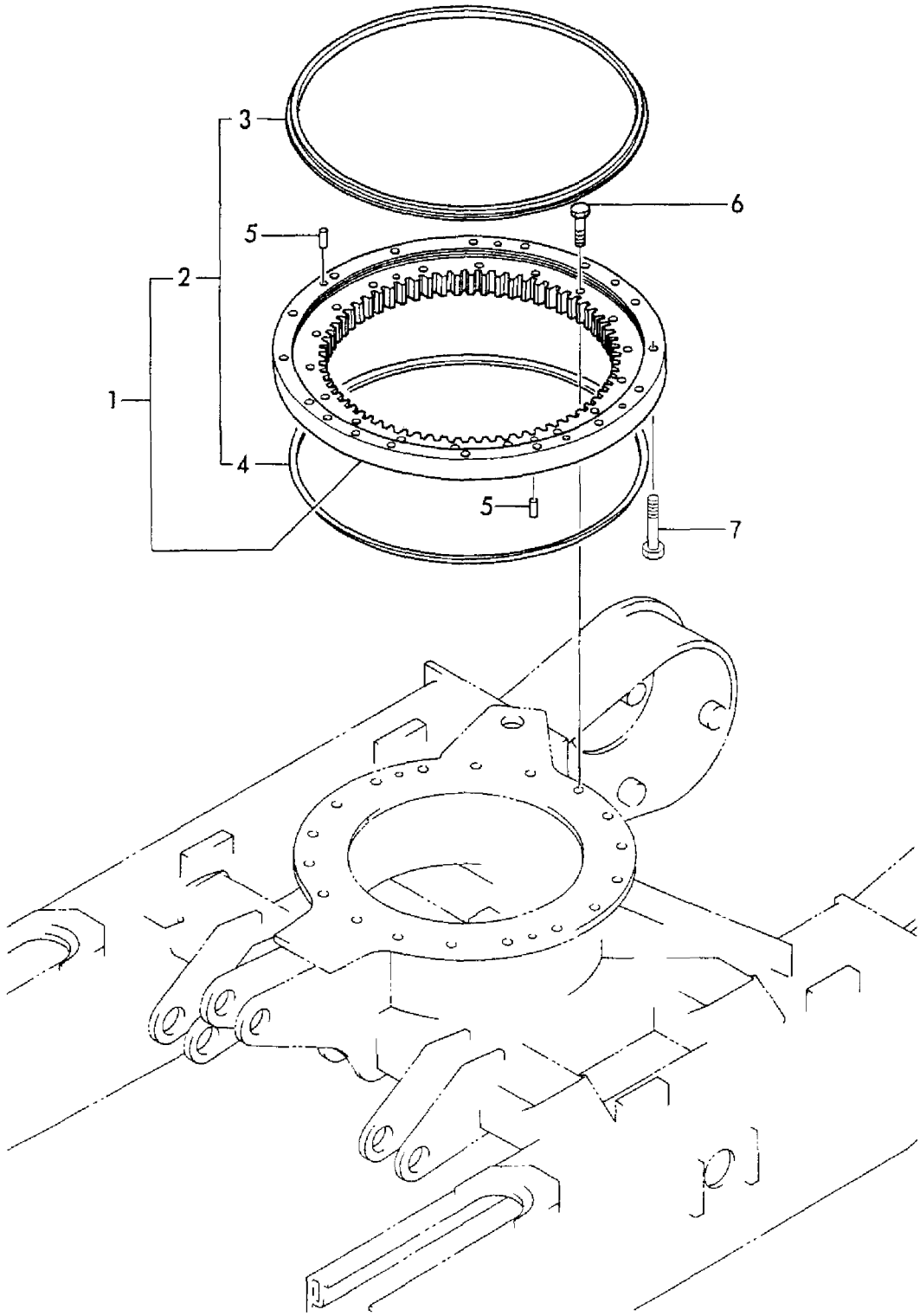

```
1,1,,172149-05300,,"BOX, TOOL",1,1,1,1,,,,,,,,,,,,
2,1,,172122-55061,,"BRACKET, GREASE PUMP",2,2,2,2,,,,,,,,,,,,,
3,1,,22217-060000,,"SPRING WASHER  6",2,2,2,2,,,,,,,,,,,,,
4,1,,26013-100202,,"BOLT W/WASHER M10X20",2,2,2,2,,,,,,,,,,,,,,
5,1,,26557-060102,,"SCREW 6X10",2,2,2,2,,,,,,,,,,,,,
6,1,,172116-46630,,"KNOB, LOCK LEVER",1,1,1,1,,,,,,,,,,,,,
7,1,,172149-58800,,"PIN, LOCK",1,1,1,1,,,,,,,,,,,,,
8,1,,172149-61100,,"COVER(L), UNDER",,1,,1,,,,,,,,,,,,,
8A,1,,172149-61100-1,,"COVER(L), UNDER",,,1,,,,,,,,,,,,,,
9,1,,172149-61110,,"COVER, UNDER(R)",,1,,1,,,,,,,,,,,,,
9A,1,,172149-61110-1,,"COVER, UNDER(R)",,,1,,,,,,,,,,,,,,
10,1,,22217-100000,,"SPRING WASHER 10",8,8,8,8,,,,,,,,,,,,,
11,1,,26116-100162,,"BOLT M10X 16 PLATED",8,8,8,8,,,,,,,,,,,,,,
12,1,,194145-04810,,"WASHER 10",2,2,2,2,,,,,,,,,,,,,
13,1,,194145-04810,,"WASHER 10",4,4,4,4,,,,,,,,,,,,,
14,1,,194145-04810,,"WASHER 10",3,3,3,3,,,,,,,,,,,,,
15,1,,172149-65100-4,,"COVER(B)     (GREEN)",1,1,,1,,,,,,,,,,,,,,
15A,1,,172149-65100-3,,"COVER(B)     (GREEN)",,,1,,,,,,,,,,,,,,,
16,1,,172734-65260,,"PIN, BONNET LEVER",1,1,1,1,,,,,,,,,,,,,
17,1,,172734-65270,,"SPRING, CATCH",1,1,1,1,,,,,,,,,,,,,
18,1,,172124-65450,,"LEVER, LOCK",1,1,1,1,,,,,,,,,,,,,
19,1,,172149-65450,,PLATE(R),1,1,1,1,,,,,,,,,,,,,
20,1,,172124-65480,,CATCHER,1,1,1,1,,,,,,,,,,,,,
21,1,,172124-65490,,"PLATE,CATCH",1,1,1,1,,,,,,,,,,,,,
22,1,,172126-65500,,KEY,1,1,1,1,,,,,,,,,,,,,
23,1,,172149-65500-4,,COVER(C),1,1,,1,,,,,,,,,,,,,
23A,1,,172149-65500-2,,COVER,,,1,,,,,,,,,,,,,,,
24,1,,172137-65700,,"RUBBER, CUSHION",2,2,2,2,,,,,,,,,,,,,
25,1,,172149-65740-4,,COVER(R),1,1,,1,,,,,,,,,,,,,
25A,1,,172149-65740-2,,COVER(R)(YE:87,,,1,,,,,,,,,,,,,,,
26,1,,172149-65840,,HOOK,1,1,1,1,,,,,,,,,,,,,
27,1,,172149-65850,,"PLATE, ROD",1,1,1,1,,,,,,,,,,,,,
28,1,,22137-080000,,"WASHER 8, POLISHED",2,2,2,2,,,,,,,,,,,,,
29,1,,22157-080000,,"WASHER  8",2,2,2,2,,,,,,,,,,,,,
30,1,,22417-200100,,"COTTER PIN 2.0X10",2,2,2,2,,,,,,,,,,,,,
31,1,,22417-200200,,"COTTER PIN 2.0X20",2,2,2,2,,,,,,,,,,,,,
32,1,,26013-080162,,"BOLT W/WASHER M8X16",2,2,2,2,,,,,,,,,,,,,
33,1,,26013-100162,,"BOLT M10X 16",3,3,3,3,,,,,,,,,,,,,
34,1,,26013-100162,,"BOLT M10X 16",8,8,8,8,,,,,,,,,,,,,
35,1,,26013-100252,,"BOLT W/WASHER M10X25",4,4,4,4,,,,,,,,,,,,,
36,1,,26013-120452,,"BOLT M12X 45",4,4,4,4,,,,,,,,,,,,,
37,1,,26013-100202,,"BOLT W/WASHER M10X20",2,2,2,2,,,,,,,,,,,,,
38,1,,172149-64370,,"PLATE, UNDER",1,1,,1,,,,,,,,,,,,,
38A,1,,172149-64370-1,,"PLATE, UNDER",,,1,,,,,,,,,,,,,,,
39,1,,172149-64360,,"PLATE, FRAME(L)",1,1,,1,,,,,,,,,,,,,
39A,1,,172149-64360-1,,"PLATE, FRAME(L)",,,1,,,,,,,,,,,,,,,
40,1,,26116-100162,,"BOLT M10X 16 PLATED",4,4,4,4,,,,,,,,,,,,,
41,1,,22217-100000,,"SPRING WASHER 10",4,4,4,4,,,,,,,,,,,,,
42,1,,172137-69850,,SCREW,2,2,2,2,,,,,,,,,,,,,
43,1,,172149-65430,,PLATE(L),1,1,1,1,,,,,,,,,,,,,
44,1,,172141-68200-4,,"GRIP ASSY",1,1,,1,,,,,,,,,,,,,
44A,1,,172141-68200-3,,"GRIP ASSY",,,1,,,,,,,,,,,,,,,
45,1,,26013-100252,,"BOLT W/WASHER M10X25",2,2,2,2,,,,,,,,,,,,,
46,1,,22190-080000,,"SEAL WASHER  8(BOLT)",1,1,1,1,,,,,,,,,,,,,
47,1,,933110-00301,,"KEY ASSY",1,1,1,1,,,,,,,,,,,,,
48,1,,172454-61100,,PLATE,,,,1,,,,1,,,,,,,,,,
49,1,,22217-100000,,"SPRING WASHER 10",,,,4,,,,1,,,,,,,,,,
50,1,,26116-100162,,"BOLT M10X 16 PLATED",,,,4,,,,1,,,,,,,,,,
```

Fig. 25 ボンネット BONNET

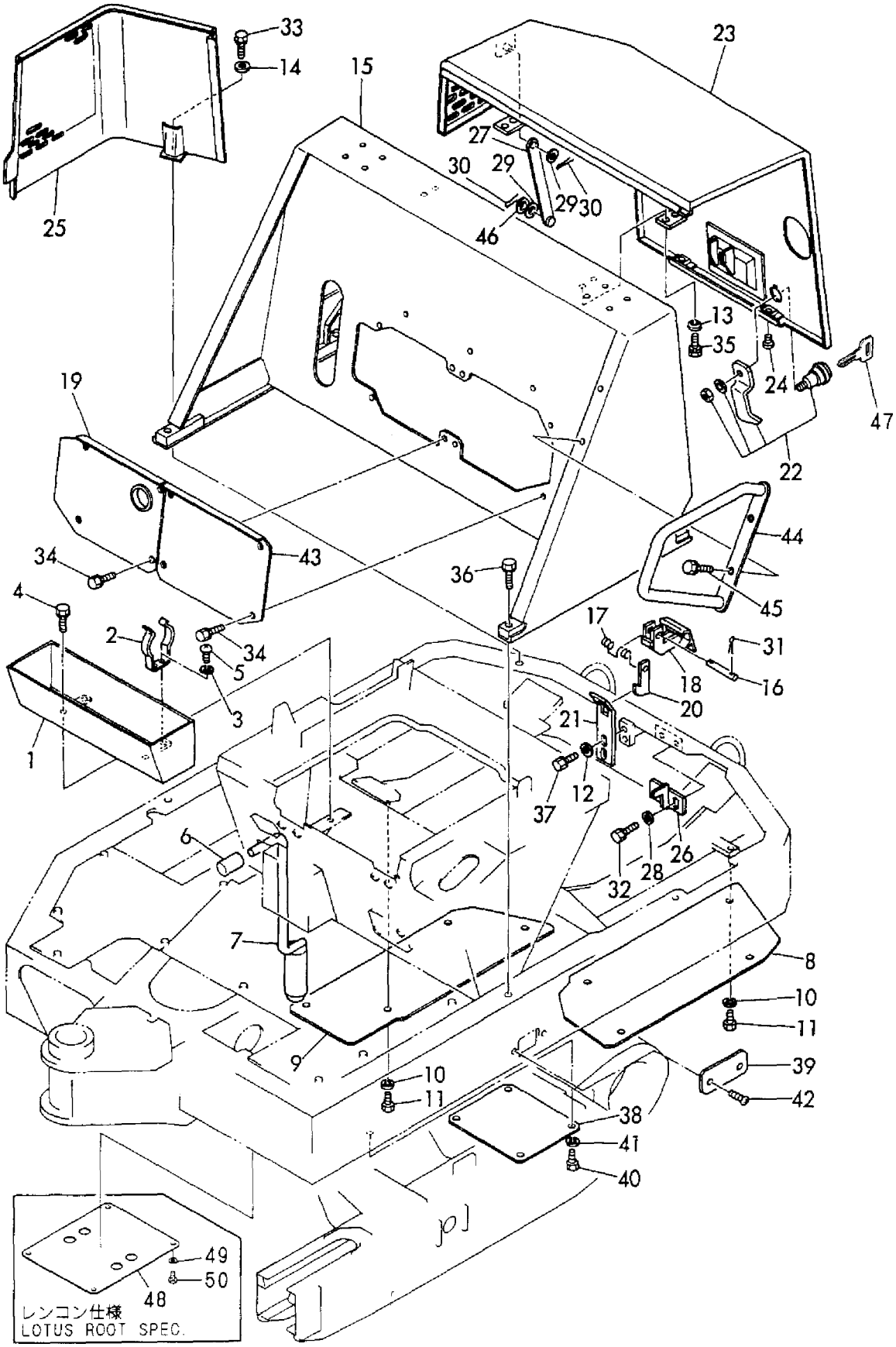

```
1,1,,194145-04810,,"WASHER 10",4,4,4,4,,,,,,,,,,,,
2,1,,172149-62100,,"STEP, CENTER",1,1,1,,,,,,,,,,,,,,
2-1,1,,172433-62100,,"STEP,CENTER",1,1,1,,,,N,,,M/#30629,,M/#30597,,M/#30597,,,,
2A,1,,172454-62100,,"STEP,CENTER",,,,1,,,,1,,,,,,,,,
3,1,,172149-62150,,"STEP, SIDE",1,1,1,,,,,,,,,,,,,,
3-1,1,,172433-62150,,"STEP,SIDE",1,1,1,1,,,N,,,M/#30629,,M/#30597,,M/#30597,,,,
4,1,,26013-100202,,"BOLT W/WASHER M10X20",10,10,10,10,,,,,,,,,,,,,
5,1,,194740-00160,,"WASHER 10, CONICAL",2,2,2,2,,,,,,,,,,,,,
6,1,,172116-46630,,"KNOB, LOCK LEVER",1,1,1,1,,,,,,,,,,,,,
7,1,,22157-100000,,"WASHER 10",1,1,1,1,,,,,,,,,,,,,
8,1,,172149-64201,,"MOUNT CMP",1,1,1,1,,,,,,,,,,,,,
9,1,,172156-64201,,SEAT,1,1,1,1,,,,,,,,,,,,,
10,1,,172149-64340,,"COVER, PEDAL",1,1,1,1,,,,,,,,,,,,,
11,1,,172141-64370,,"CUSHION, SEAT",2,2,2,2,,,,,,,,,,,,,
12,1,,172141-64370,,"CUSHION, SEAT",2,2,2,2,,,,,,,,,,,,,
13,1,,172149-64401,,"PLATE CMP ,SEAT",1,1,1,1,,,,,,,,,,,,,
15,1,,172156-64420,,PIN,1,1,1,1,,,,,,,,,,,,,
16,1,,172149-64450,,"LEVER, SEAT LOCK",1,1,1,1,,,,,,,,,,,,,
17,1,,172149-64470,,"SEAL, MOUNT",1,1,1,1,,,,,,,,,,,,,
18,1,,172149-64480,,"COLLAR 11X21",1,1,1,1,,,,,,,,,,,,,
19,1,,22137-080000,,"WASHER 8, POLISHED",4,4,4,4,,,,,,,,,,,,,
20,1,,22137-100000,,"WASHER 10,POLISHED",1,1,1,1,,,,,,,,,,,,,
21,1,,22190-080003,,"SEAL WASER  8",4,4,4,4,,,,,,,,,,,,,
22,1,,22217-080000,,"SPRING WASHER  8",4,4,4,4,,,,,,,,,,,,,
23,1,,22217-100000,,"SPRING WASHER 10",2,2,2,2,,,,,,,,,,,,,
24,1,,22372-080000,,"SNAP PIN (JASO 8)",2,2,2,2,,,,,,,,,,,,,
25,1,,26013-100202,,"BOLT W/WASHER M10X20",1,1,1,1,,,,,,,,,,,,,,
26,1,,26716-080002,,"NUT M 8",4,4,4,4,,,,,,,,,,,,,
27,1,,26716-100002,,"NUT 10",2,2,2,2,,,,,,,,,,,,,
28,1,,26716-100002,,"NUT 10",2,2,2,2,,,,,,,,,,,,,
```

Fig.26 シート＆ステップ SEAT & STEP

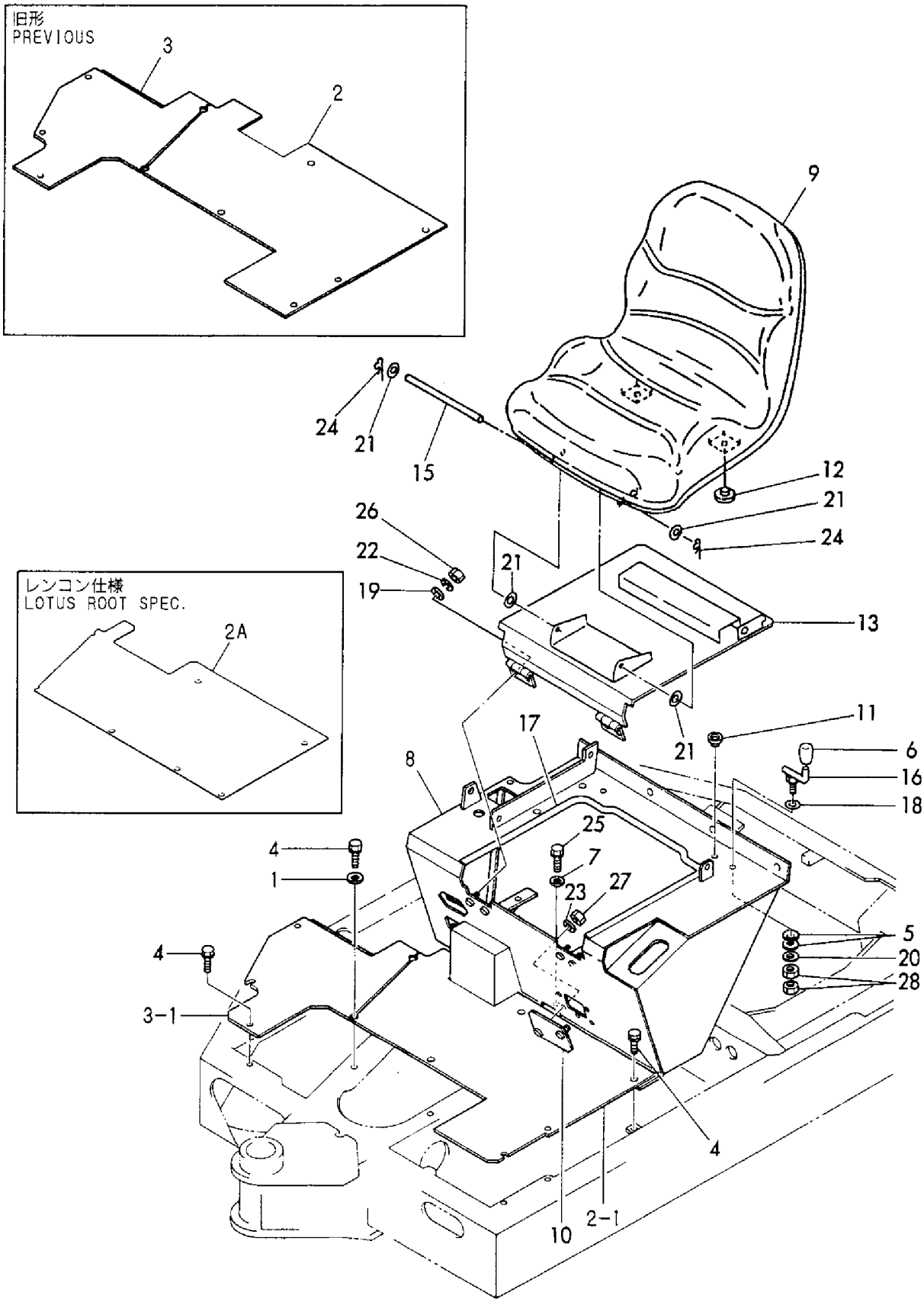

```
1,1,,772431-68100,,"CANOPY ASSY",1,1,,1,,,,,,,,,,,,,
1A,1,,772149-68110,,"CANOPY ASSY",,,1,,,,,,,,,,,,,,
2,2,,172149-68110-4,,"POLE(L),CANOPY",1,1,,1,,,,,,,,,,,,,
2A,2,,172149-68110-3,,"POLE(L) CANOPY",,,1,,,,,,,,,,,,,,
3,2,,172149-68120-4,,"POLE(R),CANOPY",1,1,,1,,,,,,,,,,,,,
3A,2,,172149-68120-3,,"POLE(R), CANOPY",,,1,,,,,,,,,,,,,,
4,2,,172429-68300,,"ROOF,CANOPY",1,1,,1,,,,,,,,,,,,,
4A,2,,172165-68301,,"ROOF, CANOPY",,,1,,,,,,,,,,,,,,
5,2,,26013-120302,,"BOLT W/WASHER M12X30",6,6,6,6,,,,,,,,,,,,,
6,2,,26013-120352,,"BOLT M12X 35",8,8,8,8,,,,,,,,,,,,,
7,1,,22137-100000,,"WASHER 10,POLISHED",6,6,6,6,,,,,,,,,,,,,
8,1,,22217-100000,,"SPRING WASHER 10",6,6,6,6,,,,,,,,,,,,,
9,1,,26013-100252,,"BOLT W/WASHER M10X25",4,4,4,4,,,,,,,,,,,,,
10,1,,172149-68300-4,,CANOPY(F),1,1,,1,,,,,,,,,,,,,
10A,1,,172149-68300-3,,"CANOPY(F)    (GREEN)",,,1,,,,,,,,,,,,,,
11,1,,172149-68351-4,,"COVER,FRONT",1,1,,,,,,,,,,,,,,,
11-1,1,,172149-68352,,"COVER, FRONT",1,1,,1,,,N,,,M/#30591,,M/#30533,,,,,,
11A,1,,172149-68351,,COVER,,,1,,,,,,,,,,,,,,
11A-1,1,,172149-68352-1,,COVER,,,1,,,,N,,,,,,,M/#30533,,,,
12,1,,26116-100162,,"BOLT M10X 16 PLATED",6,6,6,6,,,,,,,,,,,,,
```

Fig.27 キャノピ CANOPY

見出しNo．1は、見出しNo．2から
6を含みます。
1 inc．2 ～ 6

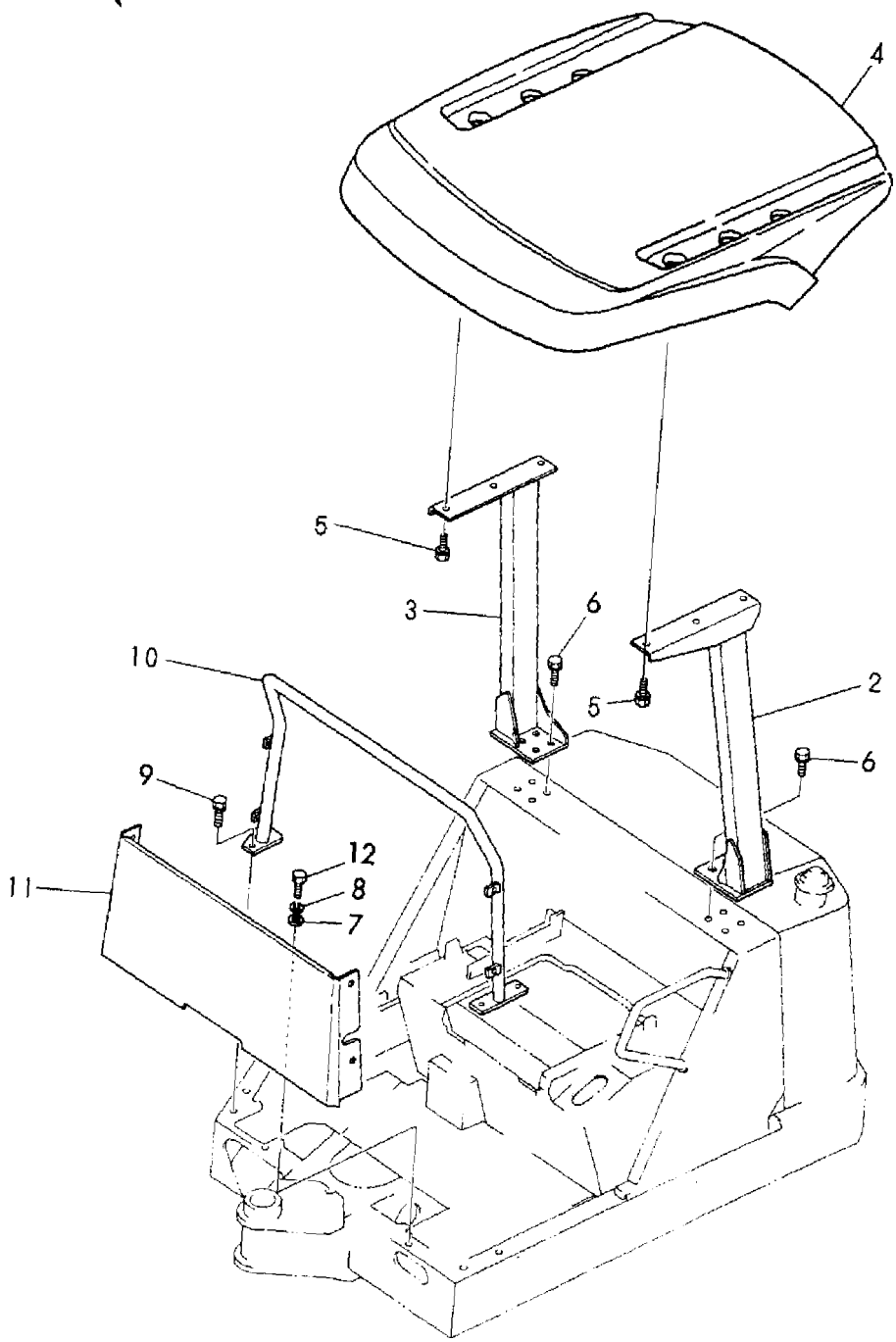

```
1,1,,172149-72102-4,,"CYLINDER, BOOM",1,1,,1,,,,,,,,,,,,,
1A,1,,172149-72102-1,,"CYLINDER, BOOM",,,1,,,,,,,,,,,,,,
2,2,,172149-72112-4,,"TUBE COMP.,BOOM",1,1,,1,,,,,,,,,,,,,
2A,2,,172149-72112-1,,"TUBE COMP.,BOOM",,,1,,,,,,,,,,,,,,
3,3,,172141-72561,,"BUSH 35 40 A, PIN",1,1,1,1,,,,,,,,,,,,,
4,3,,172171-81280,,"SEAL 35X45X4",2,2,2,2,,,,,,,,,,,,,
5,3,,23871-010000,,"PLUG PT1/8,SCREW",1,1,1,1,,,,,,,,,,,,,
6,2,,172149-72202,,"ROD COMP.,BOOM",1,1,1,1,,,,,,,,,,,,,
7,3,,172141-72561,,"BUSH 35 40 A, PIN",1,1,1,1,,,,,,,,,,,,,
8,3,,172171-81280,,"SEAL 35X45X4",2,2,2,2,,,,,,,,,,,,,
9,2,,172149-72241,,"HEAD 6035 COMPL.",1,1,1,1,,,,,,,,,,,,,
10,3,,933111-01600,,"BUSH 35 30, ROD",1,1,1,1,,,,,,,,,,,,,
11,2,,172137-72251,,SUPPORT,1,1,1,1,,,,,,,,,,,,,
12,2,,172137-72261,,"RING 41, CUSHION",1,1,1,1,,,,,,,,,,,,,
13,2,,172137-72272,,"COLLAR 41B, CUSHION",1,1,1,1,,,,,,,,,,,,,
14,2,,172171-72120,,PISTON,1,1,1,1,,,,,,,,,,,,,
15,2,,172149-99341,,"BOOMCYLINDER SET",1,1,1,1,,,,,,,,,,,,,
16,3,,172137-72463,,"SEAL SET, PISTON",1,1,1,1,,,,,,,,,,,,,
20,3,,172149-72011,,"SEAL SET, HEAD",1,1,1,1,,,,,,,,,,,,,
26,3,,172141-73090,,"RING 50, SPRING",1,1,1,1,,,,,,,,,,,,,
27,3,,933125-59600,,"WASHER 60 B, LOCK",1,1,1,1,,,,,,,,,,,,,
28,2,,172171-72130,,"U-NUT M24",1,1,1,1,,,,,,,,,,,,,
29,2,,24761-040000,,"NIPPLE B,GREASE",1,1,1,1,,,,,,,,,,,,,
30,1,,172149-72750,,SPACER,1,1,1,1,,,,,,,,,,,,,
31,1,,172162-61770,,"GUIDE,SLIDE",2,2,2,2,,,,,,,,,,,,,
32,1,,172149-72650-4,,"COVER, SLIDE",1,1,,1,,,,,,,,,,,,,
32A,1,,172149-72650-1,,"COVER, SLIDE",,,1,,,,,,,,,,,,,,
33,1,,22157-100000,,"WASHER 10",1,1,1,1,,,,,,,,,,,,,
34,1,,22217-100000,,"SPRING WASHER 10",1,1,1,1,,,,,,,,,,,,,
35,1,,26116-100162,,"BOLT M10X 16 PLATED",1,1,1,1,,,,,,,,,,,,,
36,1,,933168-14170,,"SPRING 16",2,2,2,2,,,,,,,,,,,,,
```

Fig.28 ブームシリンダ BOOM CYLINDER

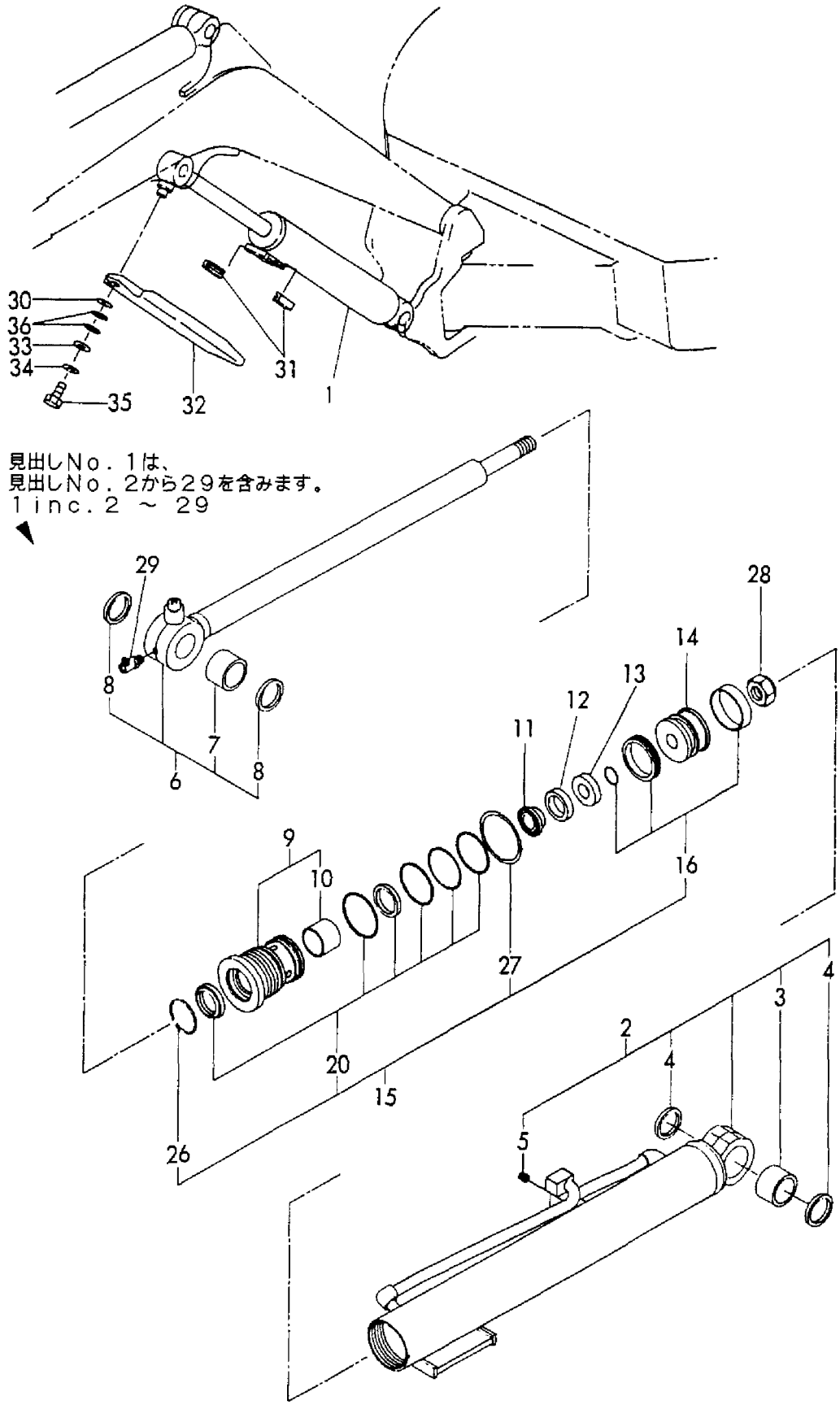

```
1,1,,172149-72352-4,,"CYLINDER COMP.,ARM",1,1,,1,,,,,,,,,,,,,
1A,1,,172149-72352-1,,"CYLINDER COMP.,ARM",,,1,,,,,,,,,,,,,,
2,2,,172149-72361-4,,"TUBE COMP.,ARM",1,1,,1,,,,,,,,,,,,,
2A,2,,172149-72361-1,,"TUBE COMP.,ARM",,,1,,,,,,,,,,,,,,
3,3,,172183-72290,,"SEAL 38X48X 4, DUST",2,2,2,2,,,,,,,,,,,,,
4,3,,172149-72440,,"BUSH A 30X30,PIN",1,1,1,1,,,,,,,,,,,,,
5,2,,172149-72382,,"ROD COMP.,ARM",1,1,1,1,,,,,,,,,,,,,
6,3,,172183-72290,,"SEAL 38X48X 4, DUST",2,2,2,2,,,,,,,,,,,,,
7,3,,172149-72440,,"BUSH A 30X30,PIN",1,1,1,1,,,,,,,,,,,,,
8,2,,172171-72120,,PISTON,1,1,1,1,,,,,,,,,,,,,
9,2,,172141-72540,,"HEAD 6035, CYLINDER",1,1,1,1,,,,,,,,,,,,,
10,3,,933111-01600,,"BUSH 35 30, ROD",1,1,1,1,,,,,,,,,,,,,
11,2,,172149-99380,,"CYLINDER KIT, BUCKET",1,1,1,1,,,,,,,,,,,,,
12,3,,172137-72452,,"SEAL SET 60A, PISTON",1,1,1,1,,,,,,,,,,,,,
15,3,,172141-71900,,"SEAL SET, HEAD",1,1,1,1,,,,,,,,,,,,,
20,3,,172141-73090,,"RING 50, SPRING",1,1,1,1,,,,,,,,,,,,,
21,3,,933125-59600,,"WASHER 60 B, LOCK",1,1,1,1,,,,,,,,,,,,,
22,2,,172171-72130,,"U-NUT M24",1,1,1,1,,,,,,,,,,,,,
23,2,,24761-040000,,"NIPPLE B,GREASE",2,2,2,2,,,,,,,,,,,,,
```

Fig.29 アームシリンダ ARM CYLINDER

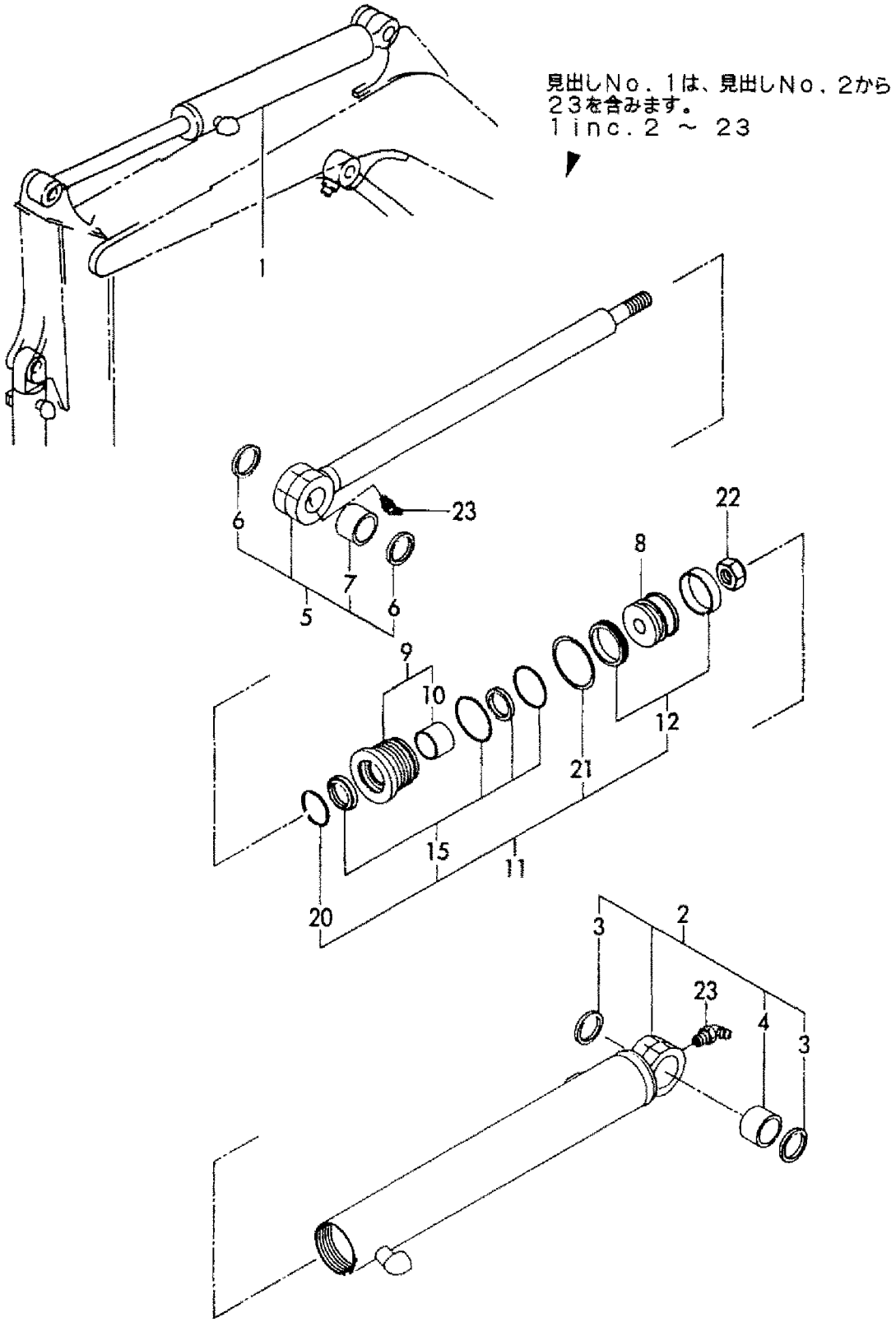

```
1,1,,933120-28403-4,,"CYLINDER CMP.,BUCKET",1,1,,1,,,,,,,,,,,,,
1A,1,,933120-28403-1,,"CYLINDER CMP.,BUCKET",,,1,,,,,,,,,,,,,,
2,2,,172171-72120,,PISTON,1,1,1,1,,,,,,,,,,,,,
3,2,,172141-72540,,"HEAD 6035, CYLINDER",1,1,1,1,,,,,,,,,,,,,
4,3,,933111-01600,,"BUSH 35 30, ROD",1,1,1,1,,,,,,,,,,,,,
5,2,,172149-99380,,"CYLINDER KIT, BUCKET",1,1,1,1,,,,,,,,,,,,,
6,3,,172137-72452,,"SEAL SET 60A, PISTON",1,1,1,1,,,,,,,,,,,,,
9,3,,172141-71900,,"SEAL SET, HEAD",1,1,1,1,,,,,,,,,,,,,
14,3,,172141-73090,,"RING 50, SPRING",1,1,1,1,,,,,,,,,,,,,
15,3,,933125-59600,,"WASHER 60 B, LOCK",1,1,1,1,,,,,,,,,,,,,
16,2,,172171-72130,,"U-NUT M24",1,1,1,1,,,,,,,,,,,,,
17,2,,24761-040000,,"NIPPLE B,GREASE",1,1,1,1,,,,,,,,,,,,,
18,2,,933121-28402-4,,"TUBE COMP.,BUCKET",1,1,,1,,,,,,,,,,,,,
18A,2,,933121-28402-1,,"TUBE, BUCKET",,,1,,,,,,,,,,,,,,
19,3,,172183-72290,,"SEAL 38X48X 4, DUST",2,2,2,2,,,,,,,,,,,,,
20,3,,172149-72440,,"BUSH A 30X30,PIN",1,1,1,1,,,,,,,,,,,,,
21,2,,933122-28302,,"ROD COMP.,BUCKET",1,1,1,1,,,,,,,,,,,,,
22,3,,172183-72290,,"SEAL 38X48X 4, DUST",2,2,2,2,,,,,,,,,,,,,
23,3,,172149-72680,,"BUSH B 30X30,PIN",1,1,1,1,,,,,,,,,,,,,
```

Fig.30 バケットシリンダ BUCKET CYLINDER

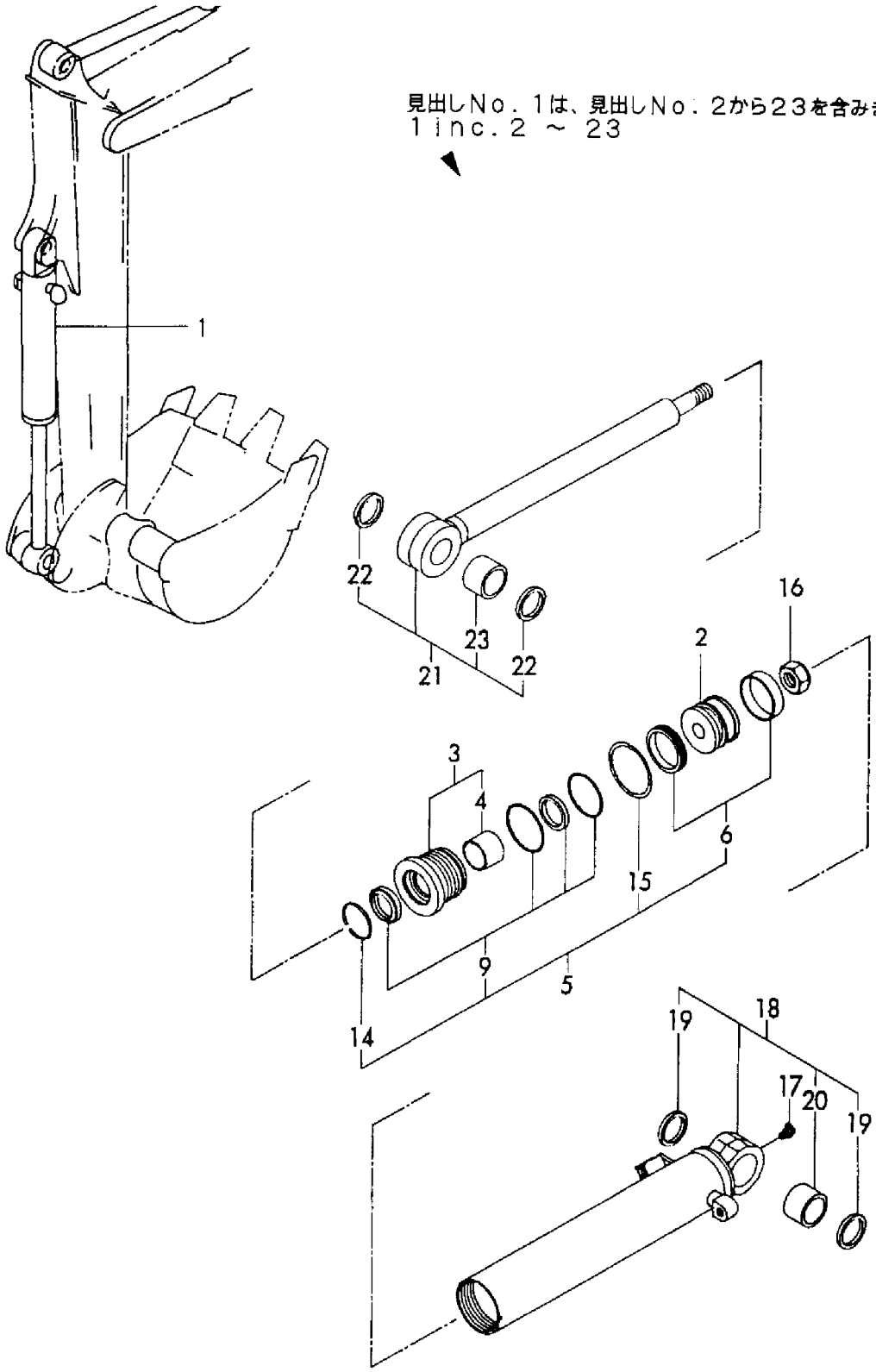

1,1,,172149-72451,,"CYLINDER ASSY, SWING",1,1,1,,,,,,,,,,,,,,
1-1,1,,172149-72452,,"CYLINDER ASSY,
SWING",1,1,1,1,,,N,,,M/#30590,,M/#30513,,M/#30513,,,,
1A,2,,172149-72900,,"SEAL SET,
CYLINDER",1,1,1,1,,,W,,,M/#30591,,M/#30515,,M/#30515,,,,
2,3,,172149-72021,,"SEAL SET, HEAD",1,1,1,1,,,,,,,,,,,,,
8,3,,172149-72000,,"SEAL SET, PISTON",1,1,1,1,,,,,,,,,,,,,
13,3,,172141-72420,,"WASHER 70, LOCK",1,1,1,1,,,,,,,,,,,,,
14,3,,933111-26600,,"RING 55, SPRING",1,1,1,1,,,,,,,,,,,,,
15,2,,22252-000561,,"CIRCLIP 56",1,1,1,1,,,,,,,,,,,,,
16,2,,172142-72810,,"CIRCLIP 22",1,1,1,1,,,,,,,,,,,,,
17,2,,172141-72250,,"U-NUT M27",1,1,1,1,,,,,,,,,,,,,
18,2,,172149-72461,,"TUBE ASSY, SWING",1,1,1,1,,,,,,,,,,,,,
19,3,,172168-72240,,"BUSH 38X50X40",1,1,1,1,,,,,,,,,,,,,
20,3,,172168-81270,,"SEAL,DUST 38X50X4",2,2,2,2,,,,,,,,,,,,,
21,2,,172149-72511,,"ROD ASSY, SWING",1,1,1,1,,,,,,,,,,,,,
22,3,,172168-72240,,"BUSH 38X50X40",1,1,1,1,,,,,,,,,,,,,
23,3,,172168-81270,,"SEAL,DUST 38X50X4",2,2,2,2,,,,,,,,,,,,,
24,2,,172149-72530,,GLAND,1,1,1,,,,,,,,,,,,,,
24-1,2,,172183-72660,,"PISTON B
70X27",1,1,1,1,,,S,,,M/#30590,,M/#30513,,M/#30513,,,,
25,2,,172137-72542,,"PISTON 70",1,1,1,,,,,,,,,,,,,,
25-1,2,,172141-73021,,"PISTON 70 27
A",1,1,1,1,,,S,,,M/#30590,,M/#30513,,M/#30513,,,,
26,2,,172149-72540,,"HEAD 7040",1,1,1,1,,,,,,,,,,,,,
27,3,,933135-14600,,"BUSH 40 30, ROD",1,1,1,1,,,,,,,,,,,,,
28,2,,172137-72700,,"RING 40A, CUSHION",1,1,1,1,,,,,,,,,,,,,
29,2,,172137-72710,,"COLLAR 40B, CUSHION",1,1,1,1,,,,,,,,,,,,,
30,2,,172137-72720,,"COLLAR 40A, CUSHION",1,1,1,1,,,,,,,,,,,,,
31,2,,172137-72730,,"RING 44B, CUSHION",1,1,1,1,,,,,,,,,,,,,
32,2,,172137-72740,,"CUSHION PLUNGER 44 A",1,1,1,1,,,,,,,,,,,,,,
33,2,,24761-020000,,"NIPPLE PT1/8,GREASE",1,1,1,1,,,,,,,,,,,,,
34,1,,172149-72570-4,,"COVER,SWING",1,1,,1,,,,,,,,,,,,,
34A,1,,172149-72570-3,,"COVER, SWING",,,1,,,,,,,,,,,,,,
35,1,,22157-100000,,"WASHER 10",1,1,1,1,,,,,,,,,,,,,
36,1,,22217-100000,,"SPRING WASHER 10",1,1,1,1,,,,,,,,,,,,,
37,1,,26116-100162,,"BOLT M10X 16 PLATED",1,1,1,1,,,,,,,,,,,,,
38,1,,933168-14170,,"SPRING 16",1,1,1,1,,,,,,,,,,,,,

Fig.31 スイングシリンダ SWING CYLINDER

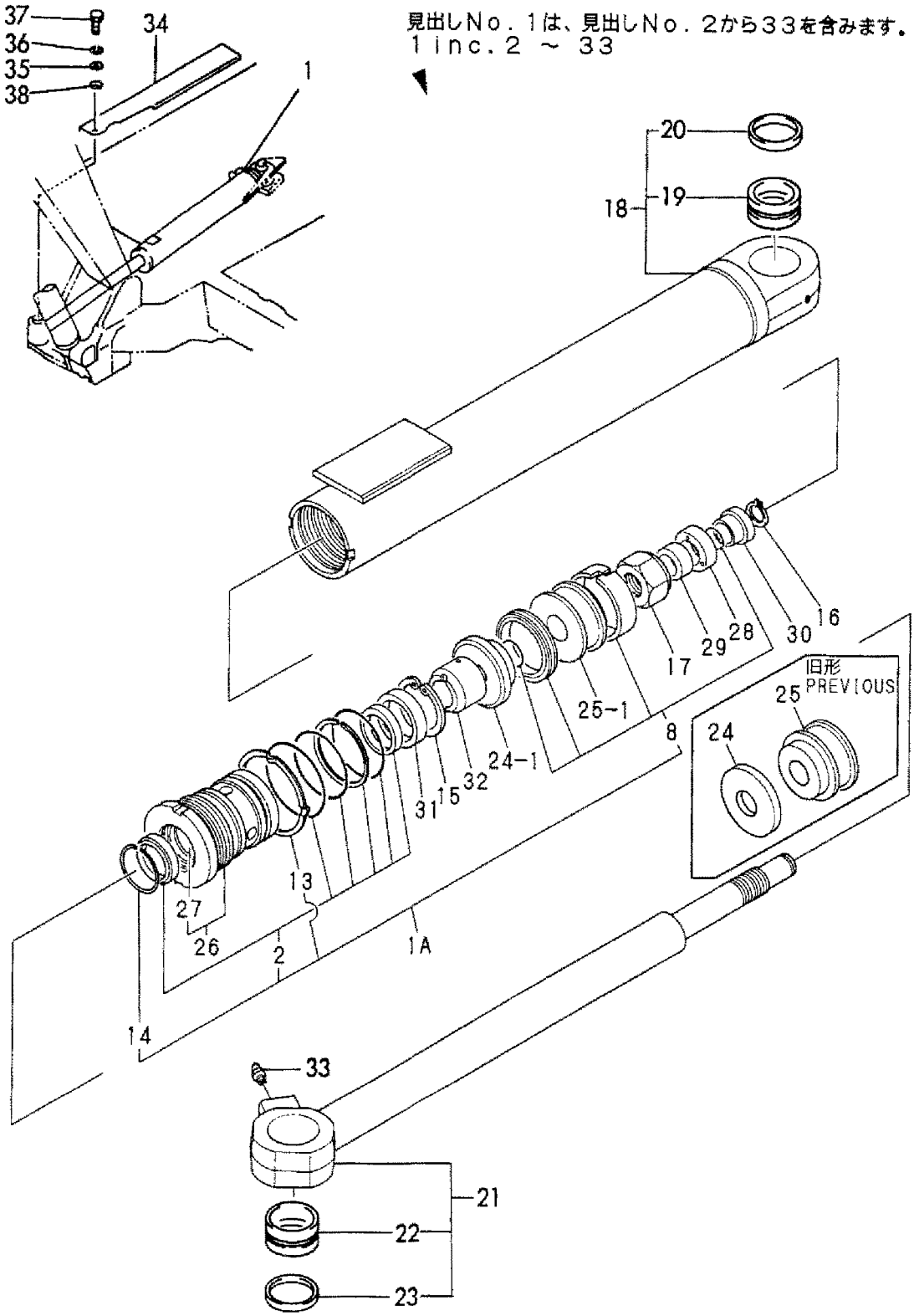

```
1,1,,933120-28504-1,,"CYLINDER COMP.,BLADE",1,1,1,,,,,,,,,,,,,,
2,2,,172171-72120,,PISTON,1,1,1,,,,,,,,,,,,,,
3,2,,172141-72540,,"HEAD 6035, CYLINDER",1,1,1,,,,,,,,,,,,,,
4,3,,933111-01600,,"BUSH 35 30, ROD",1,1,1,,,,,,,,,,,,,,
5,2,,172149-99380,,"CYLINDER KIT, BUCKET",1,1,1,,,,,,,,,,,,,,
6,3,,172137-72452,,"SEAL SET 60A, PISTON",1,1,1,,,,,,,,,,,,,,
9,3,,172141-71900,,"SEAL SET, HEAD",1,1,1,,,,,,,,,,,,,,
14,3,,172141-73090,,"RING 50, SPRING",1,1,1,,,,,,,,,,,,,,
15,3,,933125-59600,,"WASHER 60 B, LOCK",1,1,1,,,,,,,,,,,,,,
16,2,,172171-72130,,"U-NUT M24",1,1,1,,,,,,,,,,,,,,
17,2,,933121-28502-1,,"TUBE COMP.,BLADE",1,1,1,,,,,,,,,,,,,,
18,3,,172183-72290,,"SEAL 38X48X 4, DUST",2,2,2,,,,,,,,,,,,,,
19,3,,172149-72680,,"BUSH B 30X30,PIN",1,1,1,,,,,,,,,,,,,,
20,2,,23871-010000,,"PLUG PT1/8,SCREW",1,1,1,,,,,,,,,,,,,,
21,2,,933122-28403,,"ROD COMP.,BLADE",1,1,1,,,,,,,,,,,,,,
22,3,,172183-72290,,"SEAL 38X48X 4, DUST",2,2,2,,,,,,,,,,,,,,
23,3,,172149-72680,,"BUSH B 30X30,PIN",1,1,1,,,,,,,,,,,,,,
```

Fig.32 ブレードシリンダ BLADE CYLINDER

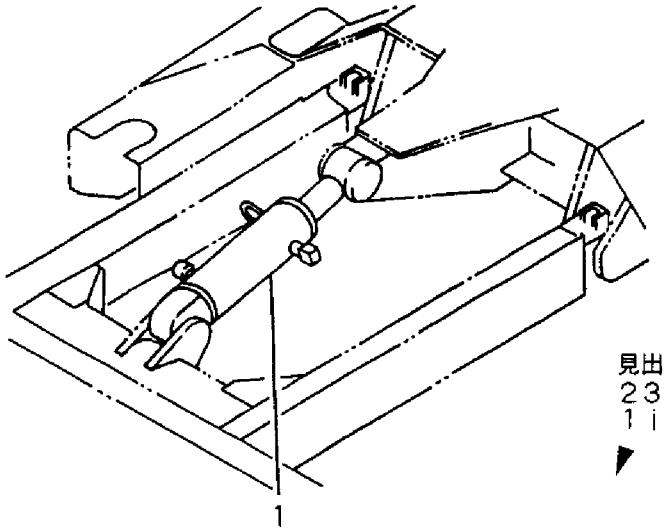

見出しNo．1は、見出しNo．2から23を含みます。
1 inc．2 ～ 23

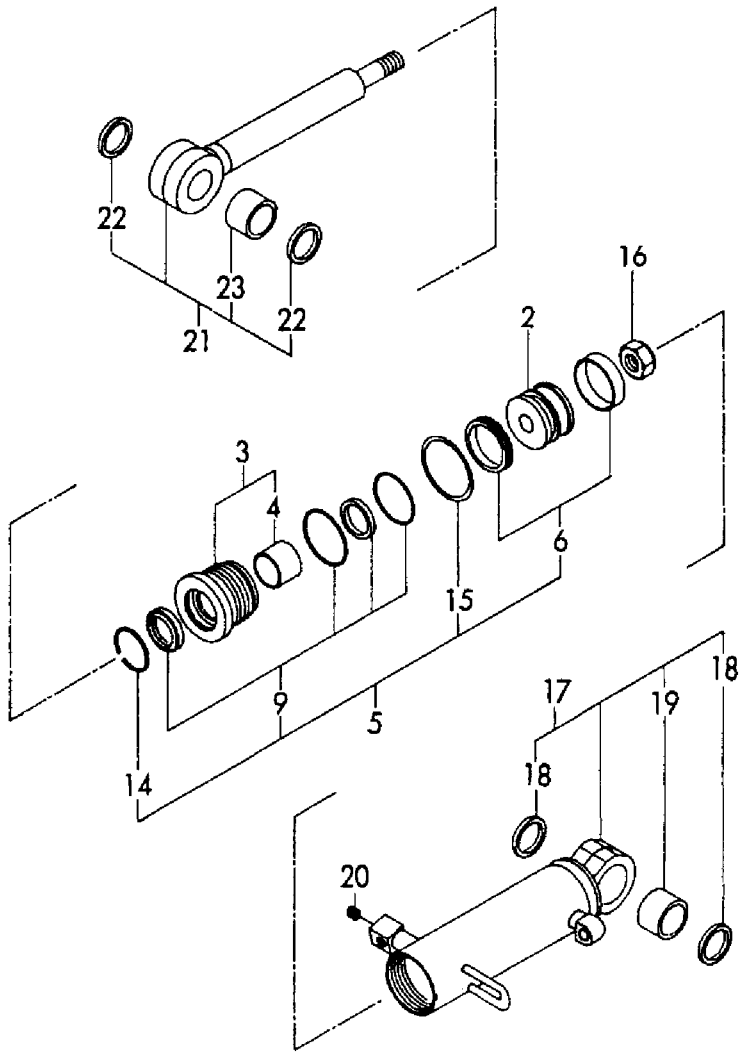

```
1,1,,172149-71110,,"MOUNT, PUMP",1,1,1,1,,,,,,,,,,,,,
2,1,,22137-100000,,"WASHER 10,POLISHED",2,2,2,2,,,,,,,,,,,,,,
3,1,,26013-100302,,"BOLT M10X 30",4,4,4,4,,,,,,,,,,,,,,
4,1,,26013-100352,,"BOLT M10X 35",2,2,2,2,,,,,,,,,,,,,,
5,1,,172137-71210,,"JOINT, PUMP",1,1,1,1,,,,,,,,,,,,,,
6,1,,172137-71220,,COUPLING,1,1,1,1,,,,,,,,,,,,,,
7,1,,22351-040008,,"SPRING PIN 4X 8",6,6,6,6,,,,,,,,,,,,,,
8,1,,26450-100352,,"BOLT M10X 35",6,6,6,6,,,,,,,,,,,,,,
9,1,,172122-71130,,"BOLT M10X 30",2,2,2,2,,,,,,,,,,,,,,
10,1,,172149-73110,,"PUMP ASSY, HYD. OIL",1,1,1,1,,,,,,,,,,,,,,,
11,2,,172149-73120,,"REAR KIT",1,1,1,1,,,,,,,,,,,,,,
12,2,,172137-73130,,"PUMP ASSY, CENTER",1,1,1,1,,,,,,,,,,,,,,,
13,2,,172149-73130,,"FRONT KIT",1,1,1,1,,,,,,,,,,,,,,
14,2,,172122-73140,,COVER,1,1,1,1,,,,,,,,,,,,,,
15,2,,172149-73140,,BOLT,4,4,4,4,,,,,,,,,,,,,,
16,2,,172122-73150,,"PLATE, CENTER",2,2,2,2,,,,,,,,,,,,,,
17,2,,172122-73170,,"COUPLING, SPLINE",2,2,2,2,,,,,,,,,,,,,,
18,2,,172137-73170,,"MOUNTING FLANGE",1,1,1,1,,,,,,,,,,,,,,
19,2,,172122-73200,,"SEAL SET",1,1,1,1,,,,,,,,,,,,,,
20,2,,22217-100000,,"SPRING WASHER 10",4,4,4,4,,,,,,,,,,,,,,
```

Fig.33 油圧ポンプ＆軸継手 HYD.OIL PUMP & JOINT

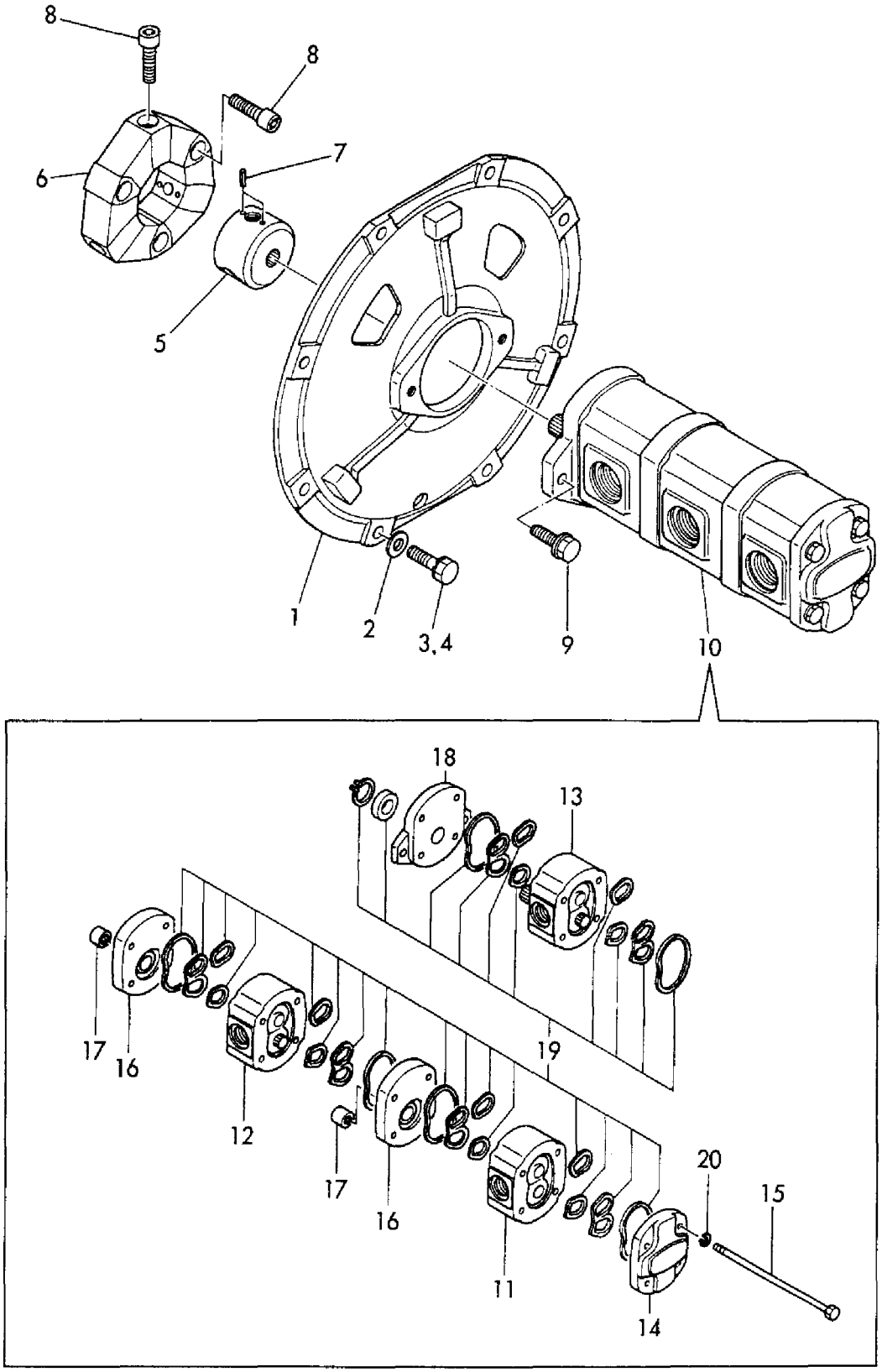

```
1,1,,172149-73310,,"MOTOR ASSY, TURNING",1,1,1,1,,,,,,,,,,,,,
2,2,,172149-73320,,"MOTOR ASSY, TURNING",1,1,1,1,,,,,,,,,,,,,
3,3,,172149-73440,,"PINION(SUB) ASSY",1,1,1,1,,,,,,,,,,,,,
4,4,,172149-73330,,"HOUSING, BEARING",1,1,1,1,,,,,,,,,,,,,
5,4,,172149-73340,,"SHAFT ASSY, PINION",1,1,1,1,,,,,,,,,,,,,
6,4,,172149-73350,,"SPACER, BEARING",1,1,1,1,,,,,,,,,,,,,
7,4,,172149-73460,,"SEAL KIT, PINION(SUB",1,1,1,1,,,,,,,,,,,,,,
8,4,,172141-77030,,"BEARING, ROLLER",1,1,1,1,,,,,,,,,,,,,
9,4,,172141-77040,,BEARING,1,1,1,1,,,,,,,,,,,,,
10,4,,172141-77050,,"RING, RETAINING",1,1,1,1,,,,,,,,,,,,,
11,4,,172141-77110,,BOLT,4,4,4,4,,,,,,,,,,,,,
12,4,,22217-120000,,"SPRING WASHER",4,4,4,4,,,,,,,,,,,,,
13,4,,22252-000900,,"CIRCLIP   90",1,1,1,1,,,,,,,,,,,,,
14,3,,172149-73450,,"MOTOR(SUB) ASSY",1,1,1,1,,,,,,,,,,,,,
15,4,,172137-70520,,PLUG,2,2,2,2,,,,,,,,,,,,,
16,4,,172137-70530,,BALL,2,2,2,2,,,,,,,,,,,,,
17,4,,172137-70600,,VALVE,1,1,1,1,,,,,,,,,,,,,
18,4,,172148-73360,,DRIVE,1,1,1,1,,,,,,,,,,,,,
19,4,,172149-73360,,ROLLER,1,1,1,1,,,,,,,,,,,,,
20,4,,172149-73380,,"HOUSING, VALVE",1,1,1,1,,,,,,,,,,,,,
21,4,,172149-73390,,PLUG,1,1,1,1,,,,,,,,,,,,,
22,4,,172149-73400,,BOLT,4,4,4,4,,,,,,,,,,,,,
23,4,,172149-73410,,FLANGEMOUTING,1,1,1,1,,,,,,,,,,,,,
24,4,,172149-73470,,"SEAL KIT, MOTOR(SUB",1,1,1,1,,,,,,,,,,,,,,
25,4,,172141-77160,,"PLATE, VALVE",1,1,1,1,,,,,,,,,,,,,
26,4,,172137-77190,,PLATE,1,1,1,1,,,,,,,,,,,,,
27,4,,172137-77200,,SPRING,2,2,2,2,,,,,,,,,,,,,
28,4,,172137-77220,,"TUBE, 3RD",1,1,1,1,,,,,,,,,,,,,
29,4,,172148-77260,,"DRIVE, VALVE",1,1,1,1,,,,,,,,,,,,,
30,2,,172149-73500,,"VALVE, BRAKE",1,1,1,1,,,,,,,,,,,,,
31,3,,172149-73620,,CONNECTOR,2,2,2,2,,,,,,,,,,,,,
32,3,,172149-73630,,BUSHING,2,2,2,2,,,,,,,,,,,,,
33,3,,172149-73650,,"SEAL KIT, BRAKE",1,1,1,1,,,,,,,,,,,,,
34,1,,26013-120402,,"BOLT M12X 40",4,4,4,4,,,,,,,,,,,,,
```

Fig.34 旋回モータ TURNING MOTOR

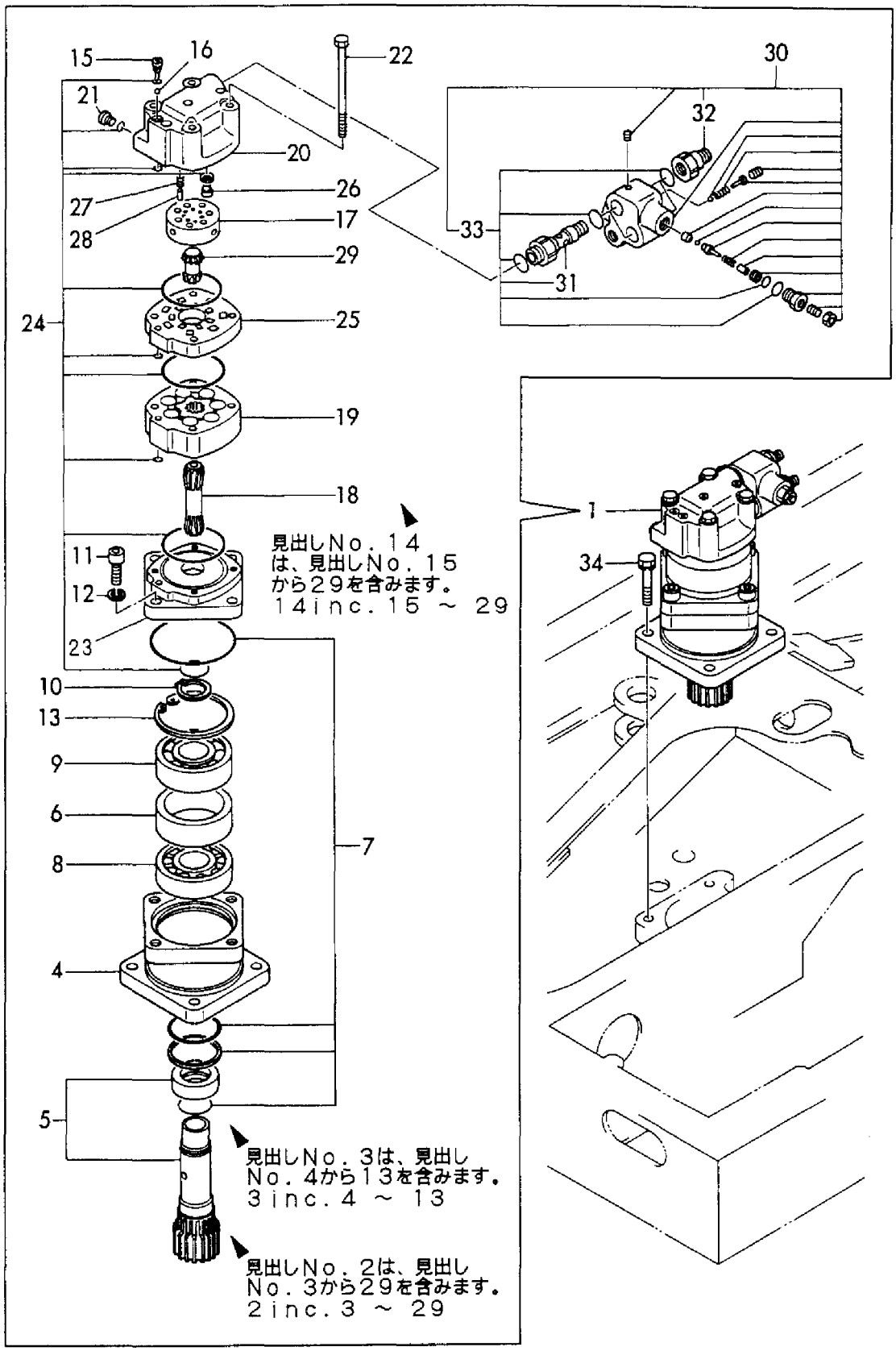

```
1,1,,172137-73351,,"MOTOR ASSY, DRIVE",2,2,2,,,,,,,,,,,,,
2,2,,172137-73361,,"MOTOR ASSY",2,2,2,,,,,,,,,,,,,
3,3,,172137-70631,,"REDUCTION GEAR ASSY",2,2,2,,,,,,,,,,,,,,
4,4,,172137-70461,,"SEAL KIT, REDUCTION",2,2,2,,,,,,,,,,,,,,
5,4,,172137-70471,,SPACER,2,2,2,,,,,,,,,,,,,
6,4,,172137-70651,,"GEAR, SUN",2,2,2,,,,,,,,,,,,,,
7,4,,172137-70661,,BUSH,2,2,2,,,,,,,,,,,,,
8,4,,172137-70681,,COVER,2,2,2,,,,,,,,,,,,,
9,4,,172137-70741,,HOUSING,2,2,2,,,,,,,,,,,,,,
10,4,,172137-70770,,"BEARING, DRIVE MOTOR",4,4,4,,,,,,,,,,,,,,
11,4,,172137-70781,,"SEAL W/PLATE KIT",2,2,2,,,,,,,,,,,,,,
12,4,,172137-70791,,PIN,2,2,2,,,,,,,,,,,,,
13,4,,172137-70811,,FLANGE,2,2,2,,,,,,,,,,,,,,
14,4,,172137-70820,,WASHER,2,2,2,,,,,,,,,,,,,,
15,4,,172137-70830,,WASHER,2,2,2,,,,,,,,,,,,,,
16,4,,172137-70840,,"CARRIER KIT",2,2,2,,,,,,,,,,,,,,
17,4,,22242-001100,,"CIRCLIP  110",2,2,2,,,,,,,,,,,,,,
18,4,,23871-030000,,"PLUG PT3/8,SCREW",4,4,4,,,,,,,,,,,,,,
19,4,,26450-060162,,"BOLT M 6X 16",18,18,18,,,,,,,,,,,,,,
20,4,,172137-70800,,"CIRCLIP  140",2,2,2,,,,,,,,,,,,,,
21,3,,172137-70641,,"MOTOR SUB ASSY",2,2,2,,,,,,,,,,,,,,
22,4,,172137-70451,,"SEAL KIT, MOTOR",2,2,2,,,,,,,,,,,,,,
23,4,,172137-70480,,BOLT,8,8,8,,,,,,,,,,,,,
24,4,,172137-70490,,PLUG,2,2,2,,,,,,,,,,,,,
25,4,,172137-70500,,PLUG,2,2,2,,,,,,,,,,,,,
26,4,,172137-70510,,"HOUSING, VALVE",2,2,2,,,,,,,,,,,,,
27,4,,172137-70520,,PLUG,4,4,4,,,,,,,,,,,,,
28,4,,172137-70530,,BALL,4,4,4,,,,,,,,,,,,,
29,4,,172137-70540,,"DRIVE, VALVE",2,2,2,,,,,,,,,,,,,
30,4,,172137-70551,,ROLLER,2,2,2,,,,,,,,,,,,,
31,4,,172137-70561,,DRIVE,2,2,2,,,,,,,,,,,,,
32,4,,172137-70570,,PIN,4,4,4,,,,,,,,,,,,,
33,4,,172137-70580,,SPRING,4,4,4,,,,,,,,,,,,,,
34,4,,172137-70590,,PLATE,2,2,2,,,,,,,,,,,,,,
35,4,,172137-70600,,VALVE,2,2,2,,,,,,,,,,,,,,
36,4,,172137-70610,,"PLATE, VALVE",2,2,2,,,,,,,,,,,,,,
37,4,,172137-70620,,"PLATE, SPACER",2,2,2,,,,,,,,,,,,,,
38,2,,172137-73370,,"VALVE,COUNTER BALAN.",2,2,2,,,,,,,,,,,,,,
39,3,,172137-70850,,"SEAL SET",2,2,2,,,,,,,,,,,,,
40,1,,26013-100252,,"BOLT W/WASHER M10X25",16,16,16,,,,,,,,,,,,,
```

Fig.35 走行モータ TRAVEL MOTOR

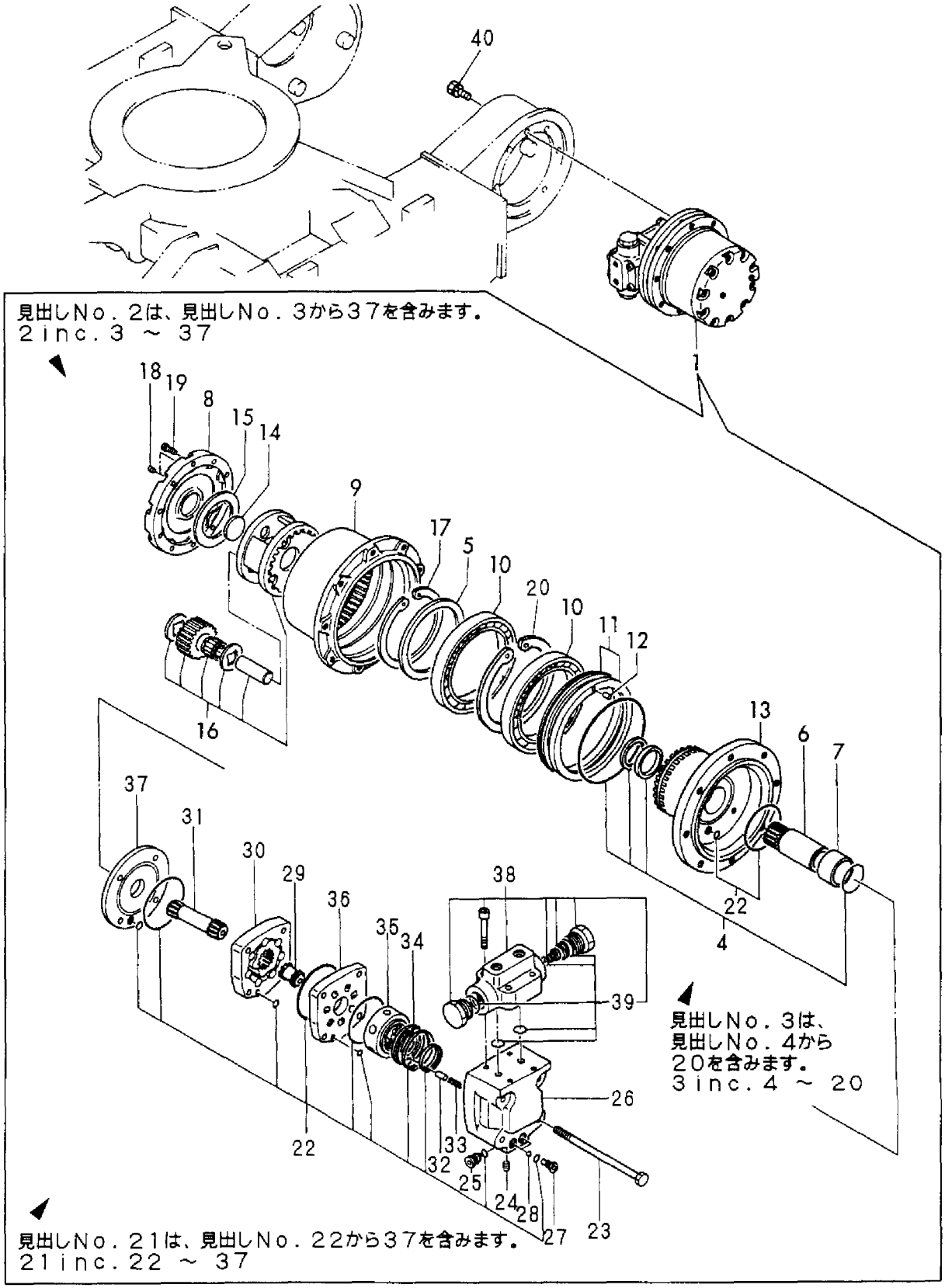

```
1,1,,172183-73300,,"MOTOR COMP.,TRAVEL",,,,2,,,,,,,,,,,,,
2,2,,172147-70220,,PLUG,,,,4,,,,,,,,,,,,,
3,2,,172148-70240,,ORIFICE,,,,4,,,,,,,,,,,,,
4,2,,172141-70450,,"SEAT, SPRING",,,,4,,,,,,,,,,,,,
5,2,,172141-70460,,SPRING,,,,4,,,,,,,,,,,,,
6,2,,172141-70470,,CAP,,,,4,,,,,,,,,,,,,
7,2,,172141-70480,,PIN,,,,2,,,,,,,,,,,,,
8,2,,172122-70650,,"PARALLEL PIN",,,,4,,,,,,,,,,,,,
9,2,,172168-71870,,BALL,,,,4,,,,,,,,,,,,,
10,2,,172168-71950,,SPRING,,,,4,,,,,,,,,,,,,
11,2,,172638-73330,,PLATE,,,,2,,,,,,,,,,,,,
12,2,,172183-73500,,"REDUCER,SPEED",,,,2,,,,,,,,,,,,,
35,3,,172183-73510,,"SEAL, FLOATING",,,,2,,,,,,,,,,,,,
36,3,,24315-001300,,"O-RING 1B P130.0",,,,2,,,,,,,,,,,,,
41,2,,172183-73670,,SHAFT,,,,2,,,,,,,,,,,,,
42,2,,172183-73680,,"PLATE,SWASH",,,,2,,,,,,,,,,,,,
43,2,,172183-73700,,"PISTON ASSY.",,,,4,,,,,,,,,,,,,
44,2,,172183-73760,,SPRING,,,,2,,,,,,,,,,,,,
45,2,,172183-73770,,PLUG,,,,6,,,,,,,,,,,,,
46,2,,172183-73780,,PLUG,,,,2,,,,,,,,,,,,,
47,2,,172183-73800,,"BLOCK ASSY.,RELIEF",,,,2,,,,,,,,,,,,,
49,3,,172183-73820,,"VALVE ASSY.,RELIEF",,,,4,,,,,,,,,,,,,
54,4,,172147-70580,,"RING P12 T2, BACK UP",,,,8,,,,,,,,,,,,,,
55,4,,172147-70600,,"RING P15,T3,BACKUP",,,,8,,,,,,,,,,,,,
56,4,,24315-000120,,"O-RING 1B P-12.0",,,,4,,,,,,,,,,,,,
57,4,,24315-000150,,"O-RING 1B P-15.0",,,,4,,,,,,,,,,,,,
58,4,,24315-000240,,"O-RING 1B P-24.0",,,,4,,,,,,,,,,,,,
61,3,,24315-000070,,"O-RING 1B P-7.0",,,,6,,,,,,,,,,,,,
62,3,,24315-000100,,"O-RING 1B P-10.0",,,,4,,,,,,,,,,,,,
63,2,,172183-73870,,PLUG,,,,4,,,,,,,,,,,,,
64,2,,172141-70370,,O-RING,,,,2,,,,,,,,,,,,,
65,2,,172638-73540,,"SEAL, OIL",,,,2,,,,,,,,,,,,,
66,2,,24315-000070,,"O-RING 1B P-7.0",,,,4,,,,,,,,,,,,,
67,2,,24315-000110,,"O-RING 1B P-11.0",,,,8,,,,,,,,,,,,,
68,2,,24315-000240,,"O-RING 1B P-24.0",,,,4,,,,,,,,,,,,,
69,2,,172183-73910,,"BLOCK KIT,CYLINDER",,,,2,,,,,,,,,,,,,
79,2,,172183-73920,,"PLATE KIT,BASE",,,,2,,,,,,,,,,,,,
86,4,,172141-70440,,O-RING,,,,4,,,,,,,,,,,,,
88,2,,172312-74790,,ORIFICE,,,,8,,,,,,,,,,,,,
89,2,,24101-060024,,"BALL BEARING",,,,2,,,,,,,,,,,,,
90,2,,24101-060040,,"BALL BEARING",,,,2,,,,,,,,,,,,,
91,2,,26450-080202,,"BOLT M 8X 20",,,,12,,,,,,,,,,,,,
92,1,,26013-100252,,"BOLT W/WASHER M10X25",,,,16,,,,,,,,,,,,,
93,1,,172183-73930,,"SEAL KIT, TRAV.MOTOR",,,,2,,,,1,,,,,,,,,
```

Fig.36 走行モータ（レンコン仕様） TRAVEL MOTOR (LOTUS ROOT SPEC.)

見出しNo．93は、見出しNo．35，36
，54~58，61~62，64~68，86を含みます。
93inc．35，36，54~58
，61~62，64~68，86

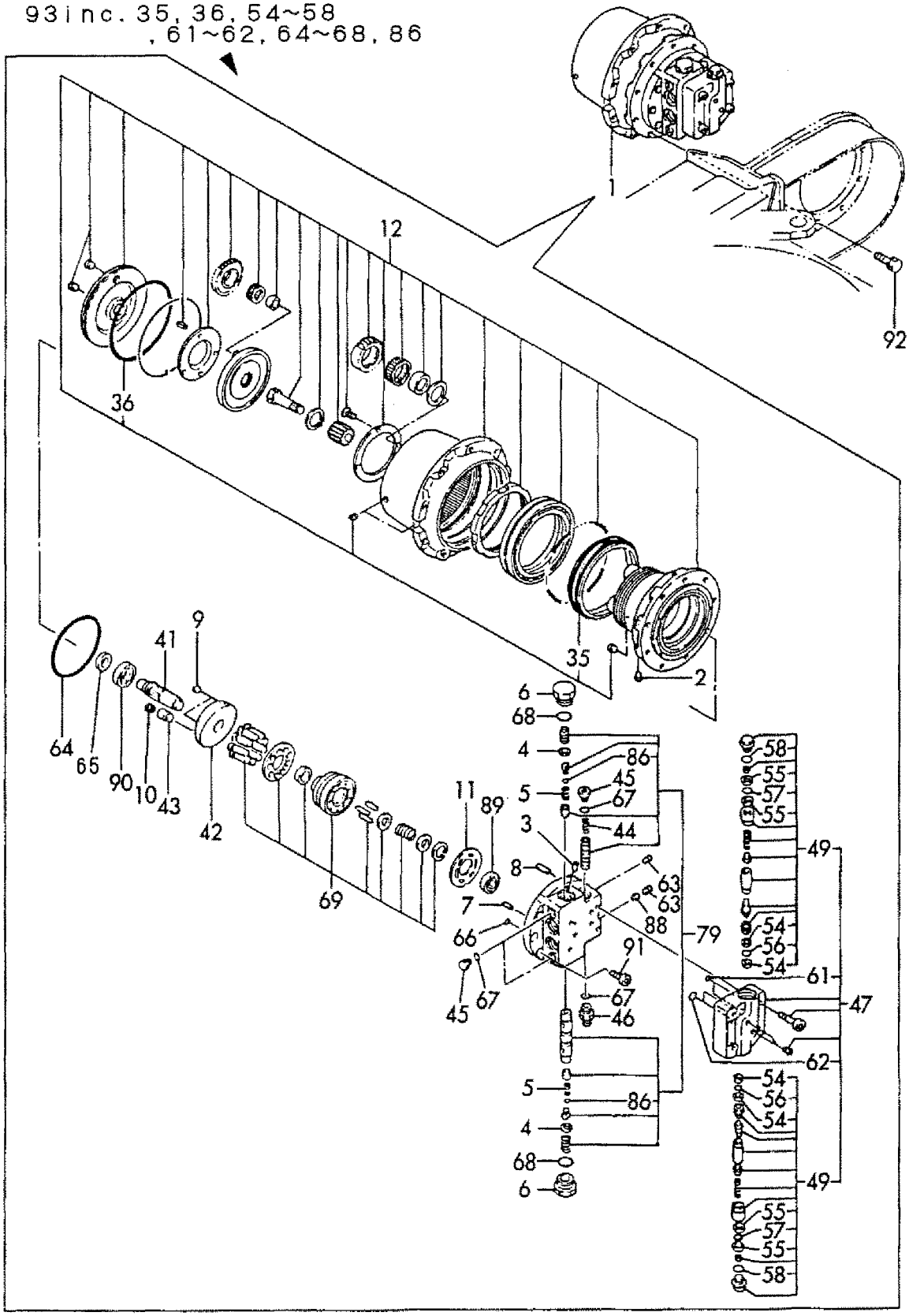

```
1,1,,172131-73800,,"SWIVEL JOINT ASSY",1,1,1,,,,,,,,,,,,,,
2,2,,194630-31910,,"LINER 22.5X40X2",1,1,1,,,,,,,,,,,,,,
3,2,,172142-73800,,"O-RING 55.76X5.7",8,8,8,,,,,,,,,,,,,,
4,2,,172131-73810,,"SHAFT,SWIVEL",1,1,1,,,,,,,,,,,,,,
5,2,,172137-73810,,"HUB, SWIVEL JOINT",1,1,1,,,,,,,,,,,,,,
6,2,,172131-73830,,"FLANGE,SWIVEL",1,1,1,,,,,,,,,,,,,,
7,2,,172137-73860,,"SPACER, SWIVEL",1,1,1,,,,,,,,,,,,,,
8,2,,22242-000451,,"CIRCLIP   45",1,1,1,,,,,,,,,,,,,,
9,2,,23871-020000,,"PLUG PT1/4,SCREW",6,6,6,,,,,,,,,,,,,,
10,2,,24311-000750,,"O-RING 1A P-75.0",1,1,1,,,,,,,,,,,,,,
11,2,,24321-000700,,"O-RING 1A G-70.0",1,1,1,,,,,,,,,,,,,,
12,2,,26013-100252,,"BOLT W/WASHER M10X25",3,3,3,,,,,,,,,,,,,,
13,1,,172137-76230,,BUSING,1,1,1,,,,,,,,,,,,,,
14,1,,26013-100252,,"BOLT W/WASHER M10X25",4,4,4,,,,,,,,,,,,,,
```

Fig.37 スイベルジョイント SWIVEL JOINT

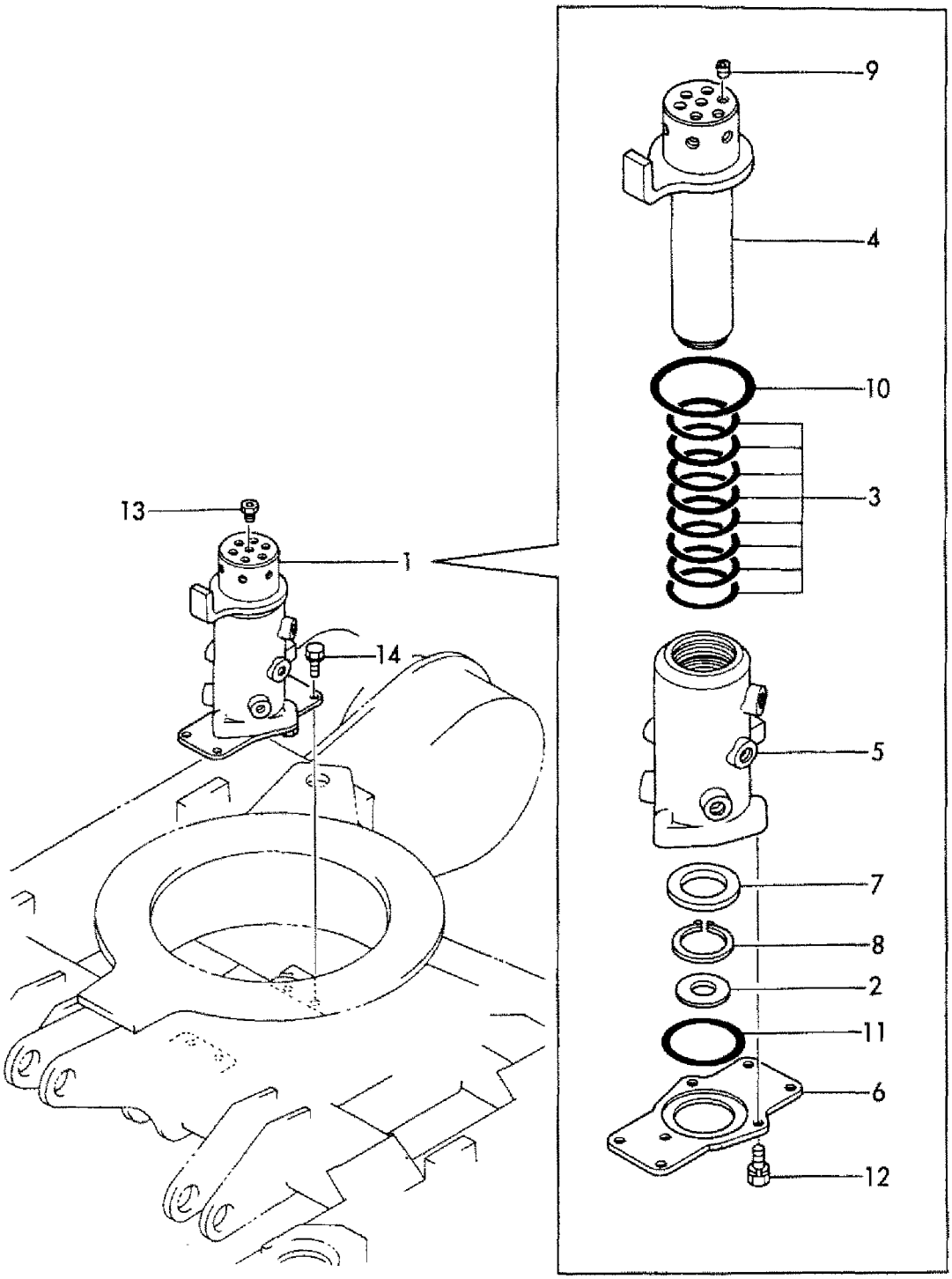

```
1,1,,172168-73800,,"JOINT COMP.,SWIVEL",,,,1,,,,,,,,,,,,,
2,2,,172148-73810,,"SHAFT, SWIVEL",,,,1,,,,,,,,,,,,,
3,2,,172148-73830,,"FLANGE, SWIVEL",,,,1,,,,,,,,,,,,,
4,2,,172148-73840,,"HUB, SWIVEL",,,,1,,,,,,,,,,,,,
5,2,,172137-73860,,"SPACER, SWIVEL",,,,1,,,,,,,,,,,,,
6,2,,22242-000451,,"CIRCLIP   45",,,,1,,,,,,,,,,,,,
7,2,,23871-020000,,"PLUG PT1/4,SCREW",,,,7,,,,,,,,,,,,,
8,2,,172168-73880,,"SEAL SET, SWIVEL",,,,1,,,,,,,,,,,,,
9,3,,172142-73800,,"O-RING 55.76X5.7",,,,1,,,,,,,,,,,,,
10,3,,172142-73800,,"O-RING 55.76X5.7",,,,7,,,,,,,,,,,,,
11,3,,172148-73870,,"LING EL, BUCK UP",,,,1,,,,,,,,,,,,,
12,3,,24311-000750,,"O-RING 1A P-75.0",,,,1,,,,,,,,,,,,,
13,3,,24321-000700,,"O-RING 1A G-70.0",,,,1,,,,,,,,,,,,,
14,2,,26013-100352,,"BOLT M10X 35",,,,3,,,,,,,,,,,,,
15,1,,26013-100302,,"BOLT M10X 30",,,,4,,,,,,,,,,,,,
```

Fig.38 スイベルジョイント（レンコン仕様）
SWIVEL JOINT (LOTUS ROOT SPEC.)

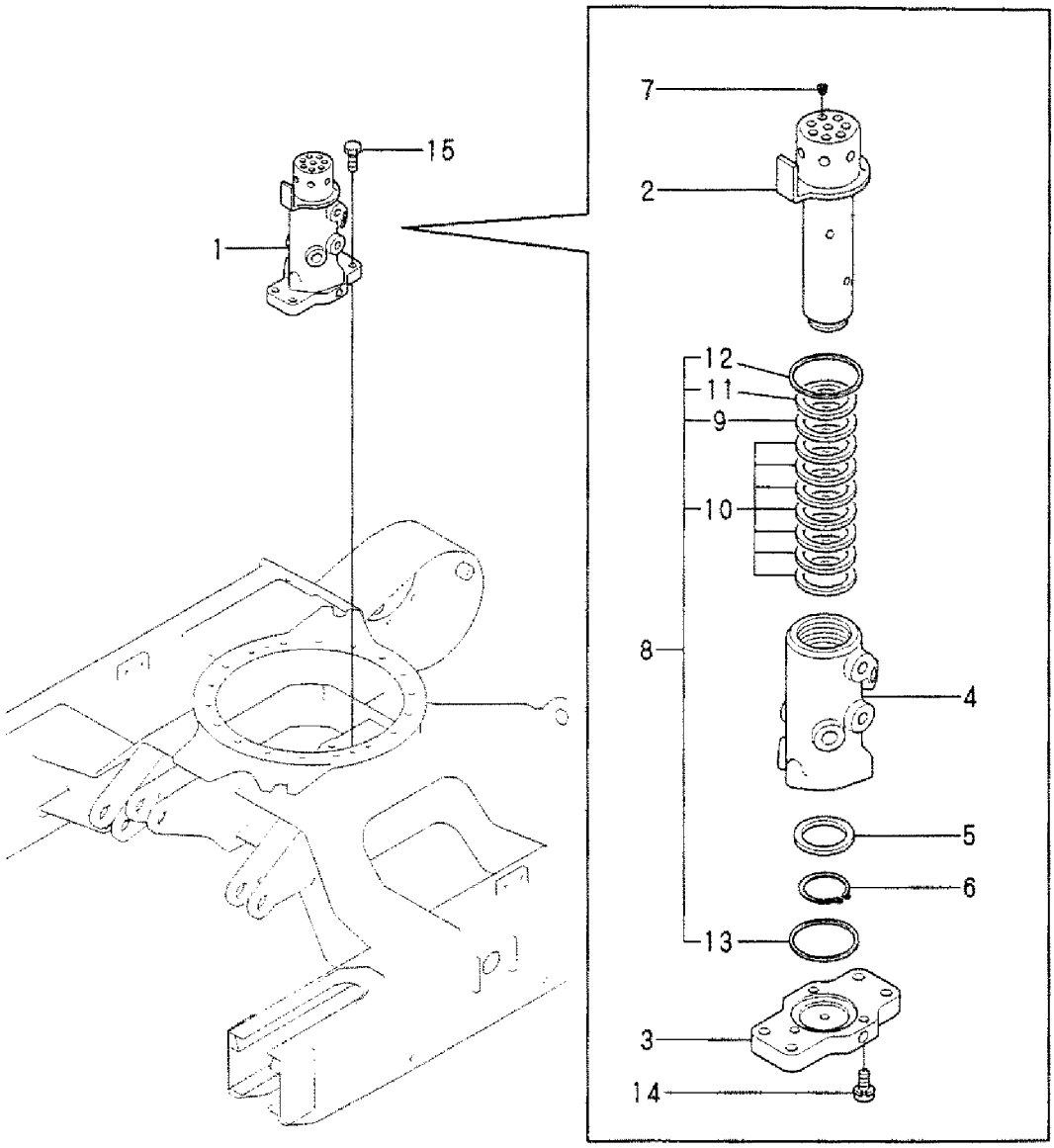

```
1,1,,172149-74100,,"VALVE ASSY, CONTROL",1,1,1,1,,,,1,,,,,,,,,,
2,2,,172149-74150,,"SECTION ASSY, DRIVE",2,2,2,2,,,,,,,,,,,,,,
4,3,,24325-000550,,"O-RING 1B G-55.0",2,2,2,2,,,,,,,,,,,,,,
5,3,,172137-74440,,"SEAL, OIL",4,4,4,4,,,,,,,,,,,,,,
6,3,,172137-74450,,"PLATE,SEAL",4,4,4,4,,,,,,,,,,,,,,
7,3,,172137-74460,,"SEAT, SPRING",4,4,4,4,,,,,,,,,,,,,,
8,3,,172137-74420,,"SPRING (A), RETURN",2,2,2,2,,,,,,,,,,,,,,
9,3,,172137-74470,,SPACER,2,2,2,2,,,,,,,,,,,,,,
10,3,,172137-74480,,"BOLT, SPOOL",2,2,2,2,,,,,,,,,,,,,,
11,3,,172137-74490,,CAP,2,2,2,2,,,,,,,,,,,,,,
12,3,,172137-74500,,"BOLT, PLATE",4,4,4,4,,,,,,,,,,,,,,
13,3,,172137-74510,,"BOLT, CAP",4,4,4,4,,,,,,,,,,,,,,
14,2,,172149-74360,,"SECTION ASY, TURNING",1,1,1,1,,,,,,,,,,,,,,,
16,3,,24325-000550,,"O-RING 1B G-55.0",1,1,1,1,,,,,,,,,,,,,,
17,3,,172137-74440,,"SEAL, OIL",2,2,2,2,,,,,,,,,,,,,,
18,3,,172137-74450,,"PLATE,SEAL",2,2,2,2,,,,,,,,,,,,,,
19,3,,172137-74460,,"SEAT, SPRING",2,2,2,2,,,,,,,,,,,,,,
20,3,,172137-74420,,"SPRING (A), RETURN",1,1,1,1,,,,,,,,,,,,,,
21,3,,172137-74470,,SPACER,1,1,1,1,,,,,,,,,,,,,,
22,3,,172137-74480,,"BOLT, SPOOL",1,1,1,1,,,,,,,,,,,,,,
23,3,,172137-74490,,CAP,1,1,1,1,,,,,,,,,,,,,,
24,3,,172137-74500,,"BOLT, PLATE",2,2,2,2,,,,,,,,,,,,,,
25,3,,172137-74510,,"BOLT, CAP",2,2,2,2,,,,,,,,,,,,,,
26,3,,172137-74520,,"VALVE, CHECK",1,1,1,1,,,,,,,,,,,,,,
27,3,,172137-74530,,"GUIDE, VALVE",1,1,1,1,,,,,,,,,,,,,,
28,3,,172137-74540,,"SPRING, VALVE",1,1,1,1,,,,,,,,,,,,,,
```

Fig.39 コントロールバルブ（走行，旋回） CONTROL VALVE (TRAVEL, TURNING)

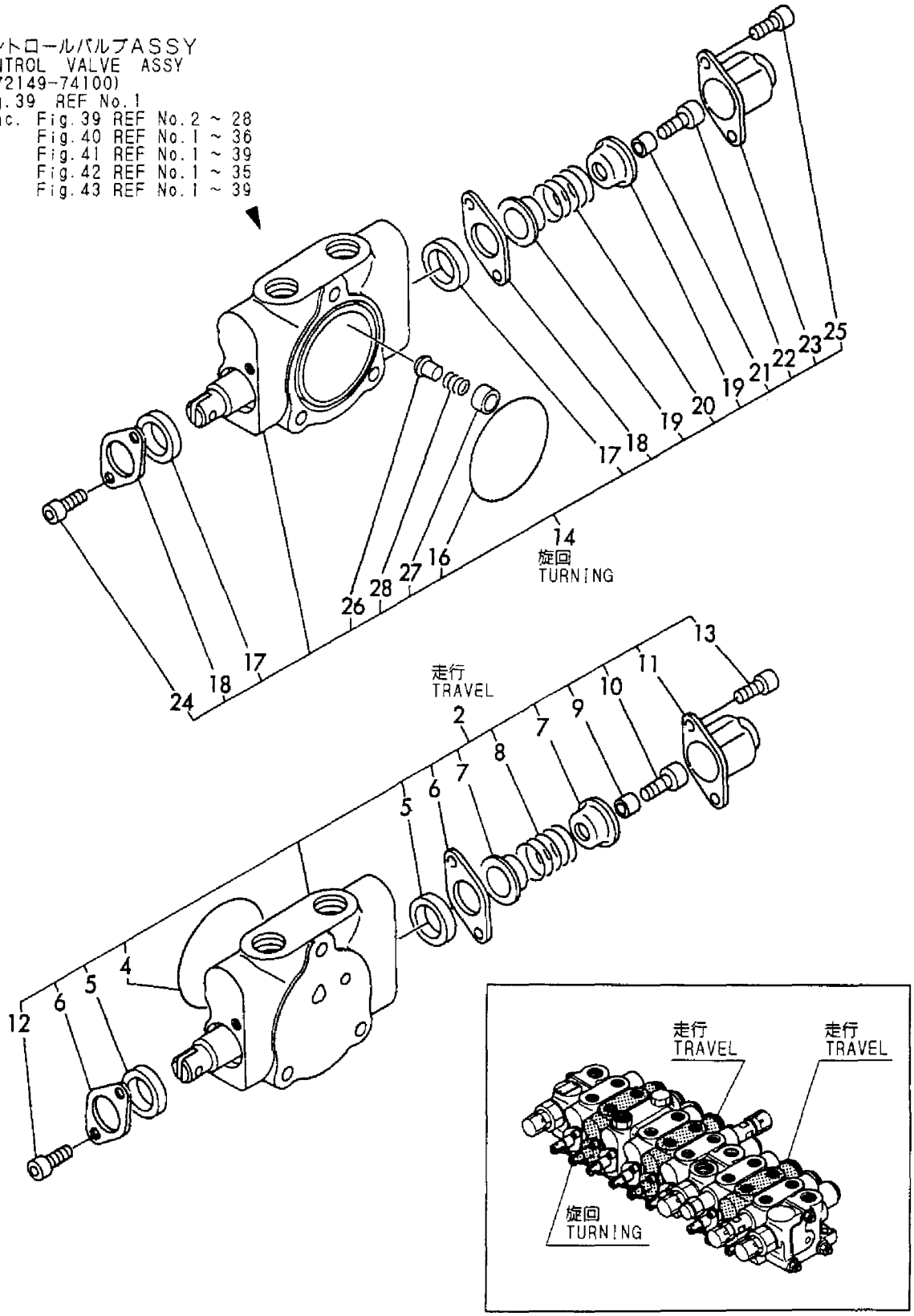

```
1,2,,172149-74130,,"SECTION ASSY, ARM",1,1,1,1,,,,,,,,,,,,,
3,3,,24325-000550,,"O-RING 1B G-55.0",1,1,1,1,,,,,,,,,,,,,
4,3,,172137-74440,,"SEAL, OIL",2,2,2,2,,,,,,,,,,,,,
5,3,,172137-74450,,"PLATE,SEAL",2,2,2,2,,,,,,,,,,,,,
6,3,,172137-74460,,"SEAT, SPRING",2,2,2,2,,,,,,,,,,,,,
7,3,,172137-74420,,"SPRING (A), RETURN",1,1,1,1,,,,,,,,,,,,,,
8,3,,172137-74470,,SPACER,1,1,1,1,,,,,,,,,,,,,
9,3,,172137-74480,,"BOLT, SPOOL",1,1,1,1,,,,,,,,,,,,,
10,3,,172137-74490,,CAP,1,1,1,1,,,,,,,,,,,,,
11,3,,172137-74500,,"BOLT, PLATE",2,2,2,2,,,,,,,,,,,,,
12,3,,172137-74510,,"BOLT, CAP",2,2,2,2,,,,,,,,,,,,,
13,3,,172137-74520,,"VALVE, CHECK",1,1,1,1,,,,,,,,,,,,,
14,3,,172137-74530,,"GUIDE, VALVE",1,1,1,1,,,,,,,,,,,,,
15,3,,172137-74540,,"SPRING, VALVE",1,1,1,1,,,,,,,,,,,,,
16,2,,172137-74600,,"VALVE ASSY,OVER ROAD",1,1,1,1,,,,,,,,,,,,,,
19,3,,24315-000150,,"O-RING 1B P-15.0",1,1,1,1,,,,,,,,,,,,,
20,3,,172137-74640,,"O-RING 1B S 12.5",1,1,1,1,,,,,,,,,,,,,
21,3,,24314-000160,,"O-RING 4C P-16.0",2,2,2,2,,,,,,,,,,,,,
22,2,,172149-74270,,"SECTION ASSY, BUCKET",1,1,1,1,,,,,,,,,,,,,,
24,3,,24325-000550,,"O-RING 1B G-55.0",1,1,1,1,,,,,,,,,,,,,
25,3,,172137-74440,,"SEAL, OIL",2,2,2,2,,,,,,,,,,,,,
26,3,,172137-74450,,"PLATE,SEAL",2,2,2,2,,,,,,,,,,,,,
27,3,,172137-74460,,"SEAT, SPRING",2,2,2,2,,,,,,,,,,,,,
28,3,,172137-74420,,"SPRING (A), RETURN",1,1,1,1,,,,,,,,,,,,,,
29,3,,172137-74470,,SPACER,1,1,1,1,,,,,,,,,,,,,
30,3,,172137-74480,,"BOLT, SPOOL",1,1,1,1,,,,,,,,,,,,,
31,3,,172137-74490,,CAP,1,1,1,1,,,,,,,,,,,,,
32,3,,172137-74500,,"BOLT, PLATE",2,2,2,2,,,,,,,,,,,,,
33,3,,172137-74510,,"BOLT, CAP",2,2,2,2,,,,,,,,,,,,,
34,3,,172137-74520,,"VALVE, CHECK",1,1,1,1,,,,,,,,,,,,,
35,3,,172137-74530,,"GUIDE, VALVE",1,1,1,1,,,,,,,,,,,,,
36,3,,172137-74540,,"SPRING, VALVE",1,1,1,1,,,,,,,,,,,,,
```

Fig.40 コントロールバルブ（アーム，バケット） CONTROL VALVE (ARM, BUCKET)

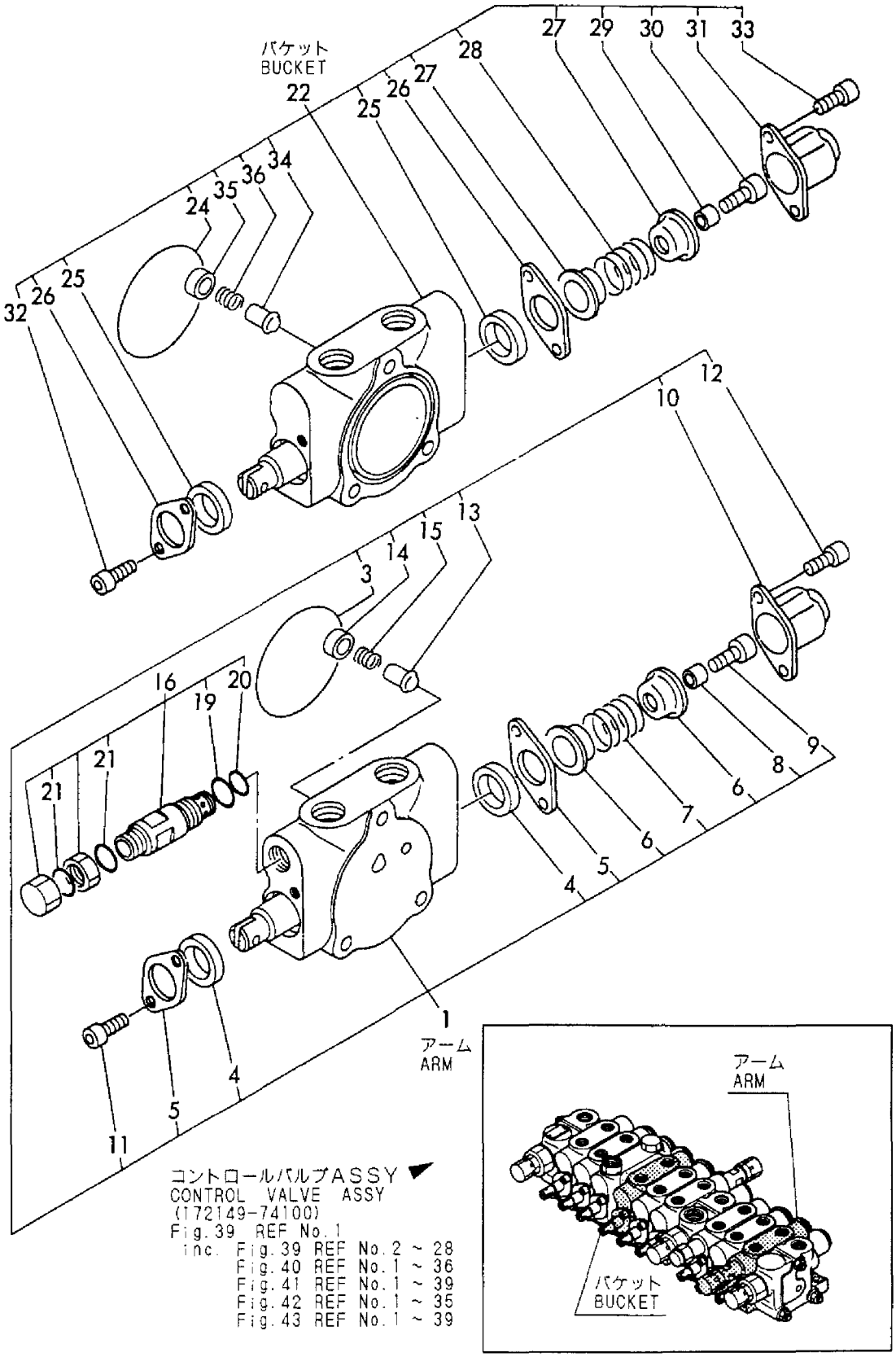

```
1,2,,172149-74200,,"SECTION ASSY, SEING",1,1,1,1,,,,,,,,,,,,,
3,3,,24325-000550,,"O-RING 1B G-55.0",1,1,1,1,,,,,,,,,,,,,
4,3,,172137-74440,,"SEAL, OIL",2,2,2,2,,,,,,,,,,,,,
5,3,,172137-74450,,"PLATE,SEAL",2,2,2,2,,,,,,,,,,,,,
6,3,,172137-74460,,"SEAT, SPRING",2,2,2,2,,,,,,,,,,,,,
7,3,,172137-74420,,"SPRING (A), RETURN",1,1,1,1,,,,,,,,,,,,,
8,3,,172137-74470,,SPACER,1,1,1,1,,,,,,,,,,,,,
9,3,,172137-74480,,"BOLT, SPOOL",1,1,1,1,,,,,,,,,,,,,
10,3,,172137-74490,,CAP,1,1,1,1,,,,,,,,,,,,,
11,3,,172137-74500,,"BOLT, PLATE",2,2,2,2,,,,,,,,,,,,,
12,3,,172137-74510,,"BOLT, CAP",2,2,2,2,,,,,,,,,,,,,
13,3,,172137-74520,,"VALVE, CHECK",1,1,1,1,,,,,,,,,,,,,
14,3,,172137-74530,,"GUIDE, VALVE",1,1,1,1,,,,,,,,,,,,,
15,3,,172137-74540,,"SPRING, VALVE",1,1,1,1,,,,,,,,,,,,,
16,2,,172137-74630,,"VALVE ASSY, SUCTION",1,1,1,1,,,,,,,,,,,,,
17,3,,24315-000150,,"O-RING 1B P-15.0",2,2,2,2,,,,,,,,,,,,,
18,3,,172137-74640,,"O-RING 1B S 12.5",1,1,1,1,,,,,,,,,,,,,
19,2,,172149-74250,,"SECTION ASSY, BOOM",1,1,1,1,,,,,,,,,,,,,
21,3,,24325-000550,,"O-RING 1B G-55.0",1,1,1,1,,,,,,,,,,,,,
22,3,,172137-74440,,"SEAL, OIL",2,2,2,2,,,,,,,,,,,,,
23,3,,172137-74450,,"PLATE,SEAL",2,2,2,2,,,,,,,,,,,,,
24,3,,172137-74460,,"SEAT, SPRING",2,2,2,2,,,,,,,,,,,,,
25,3,,172137-74420,,"SPRING (A), RETURN",1,1,1,1,,,,,,,,,,,,,
26,3,,172137-74470,,SPACER,1,1,1,1,,,,,,,,,,,,,
27,3,,172137-74480,,"BOLT, SPOOL",1,1,1,1,,,,,,,,,,,,,
28,3,,172137-74490,,CAP,1,1,1,1,,,,,,,,,,,,,
29,3,,172137-74500,,"BOLT, PLATE",2,2,2,2,,,,,,,,,,,,,
30,3,,172137-74510,,"BOLT, CAP",2,2,2,2,,,,,,,,,,,,,
31,3,,172137-74520,,"VALVE, CHECK",1,1,1,1,,,,,,,,,,,,,
32,3,,172137-74530,,"GUIDE, VALVE",1,1,1,1,,,,,,,,,,,,,
33,3,,172137-74540,,"SPRING, VALVE",1,1,1,1,,,,,,,,,,,,,
34,2,,172137-74600,,"VALVE ASSY,OVER ROAD",1,1,1,1,,,,,,,,,,,,,
37,3,,24315-000150,,"O-RING 1B P-15.0",1,1,1,1,,,,,,,,,,,,,
38,3,,172137-74640,,"O-RING 1B S 12.5",1,1,1,1,,,,,,,,,,,,,
39,3,,24314-000160,,"O-RING 4C P-16.0",2,2,2,2,,,,,,,,,,,,,
```

Fig.41 コントロールバルブ（スイング，ブーム） CONTROL VALVE (SWING, BOOM)

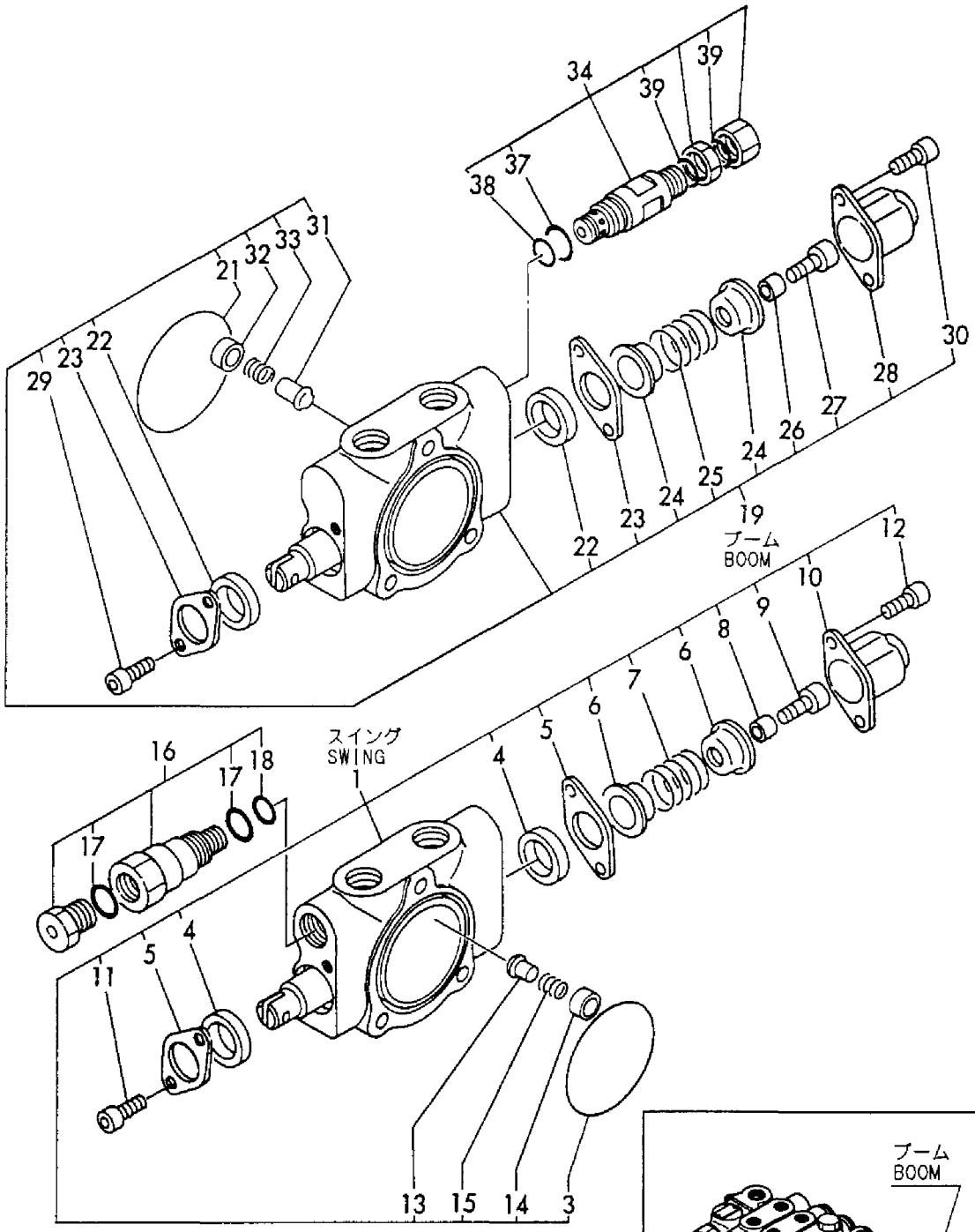

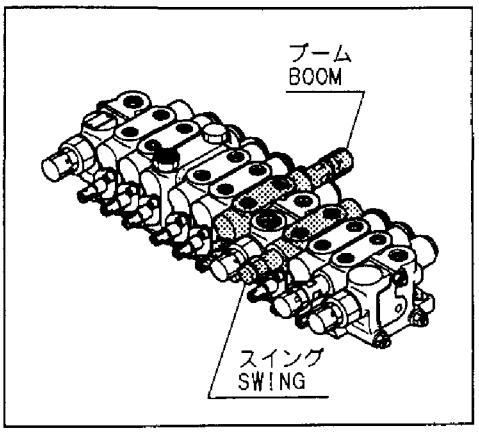

コントロールバルブASSY
CONTROL VALVE ASSY
(172149-74100)
Fig.39 REF No.1
inc. Fig.39 REF No.2 ~ 28
Fig.40 REF No.1 ~ 36
Fig.41 REF No.1 ~ 39
Fig.42 REF No.1 ~ 35
Fig.43 REF No.1 ~ 39

```
1,2,,172149-74380,,"SECTION ASSY, BLADE",1,1,1,1,,,,,,,,,,,,,
3,3,,24325-000550,,"O-RING 1B G-55.0",1,1,1,1,,,,,,,,,,,,,
4,3,,172137-74440,,"SEAL, OIL",2,2,2,2,,,,,,,,,,,,,
5,3,,172137-74450,,"PLATE,SEAL",2,2,2,2,,,,,,,,,,,,,
6,3,,172137-74460,,"SEAT, SPRING",2,2,2,2,,,,,,,,,,,,,
7,3,,172137-74420,,"SPRING (A), RETURN",1,1,1,1,,,,,,,,,,,,,
8,3,,172137-74470,,SPACER,1,1,1,1,,,,,,,,,,,,,
9,3,,172137-74480,,"BOLT, SPOOL",1,1,1,1,,,,,,,,,,,,,
10,3,,172137-74490,,CAP,1,1,1,1,,,,,,,,,,,,,
11,3,,172137-74500,,"BOLT, PLATE",2,2,2,2,,,,,,,,,,,,,
12,3,,172137-74510,,"BOLT, CAP",2,2,2,2,,,,,,,,,,,,,
13,3,,172137-74520,,"VALVE, CHECK",1,1,1,1,,,,,,,,,,,,,
14,3,,172137-74530,,"GUIDE, VALVE",1,1,1,1,,,,,,,,,,,,,
15,3,,172137-74540,,"SPRING, VALVE",1,1,1,1,,,,,,,,,,,,,
16,2,,172149-74320,,"SECTION ASSY, P.T.O",1,1,1,1,,,,,,,,,,,,,
18,3,,24325-000550,,"O-RING 1B G-55.0",1,1,1,1,,,,,,,,,,,,,
19,3,,172137-74440,,"SEAL, OIL",2,2,2,2,,,,,,,,,,,,,
20,3,,172137-74450,,"PLATE,SEAL",2,2,2,2,,,,,,,,,,,,,
21,3,,172137-74460,,"SEAT, SPRING",2,2,2,2,,,,,,,,,,,,,
22,3,,172137-74420,,"SPRING (A), RETURN",1,1,1,1,,,,,,,,,,,,,
23,3,,172137-74470,,SPACER,1,1,1,1,,,,,,,,,,,,,
24,3,,172137-74480,,"BOLT, SPOOL",1,1,1,1,,,,,,,,,,,,,
25,3,,172137-74490,,CAP,1,1,1,1,,,,,,,,,,,,,
26,3,,172137-74500,,"BOLT, PLATE",2,2,2,2,,,,,,,,,,,,,
27,3,,172137-74510,,"BOLT, CAP",2,2,2,2,,,,,,,,,,,,,
28,3,,172137-74520,,"VALVE, CHECK",1,1,1,1,,,,,,,,,,,,,
29,3,,172131-74060,,"GUIDE,CHECK VALVE",1,1,1,1,,,,,,,,,,,,,
30,3,,172137-74540,,"SPRING, VALVE",1,1,1,1,,,,,,,,,,,,,
31,3,,172131-74080,,"O-RING 1B S9",1,1,1,1,,,,,,,,,,,,,
32,3,,172149-74340,,PLUG,1,1,1,1,,,,,,,,,,,,,
33,3,,24315-000070,,"O-RING 1B P-7.0",1,1,1,1,,,,,,,,,,,,,
34,3,,172137-74270,,PLUG,2,2,2,2,,,,,,,,,,,,,
35,3,,24315-000140,,"O-RING 1B P-14.0",2,2,2,2,,,,,,,,,,,,,
```

Fig.42 コントロールバルブ（ブレード，PTO） CONTROL VALVE (BLADE, P.T.O.)

コントロールバルブASSY
CONTROL VALVE ASSY
(172149-74100)
Fig.39 REF No.1
inc. Fig.39 REF No.2 ~ 28
Fig.40 REF No.1 ~ 36
Fig.41 REF No.1 ~ 39
Fig.42 REF No.1 ~ 35
Fig.43 REF No.1 ~ 39

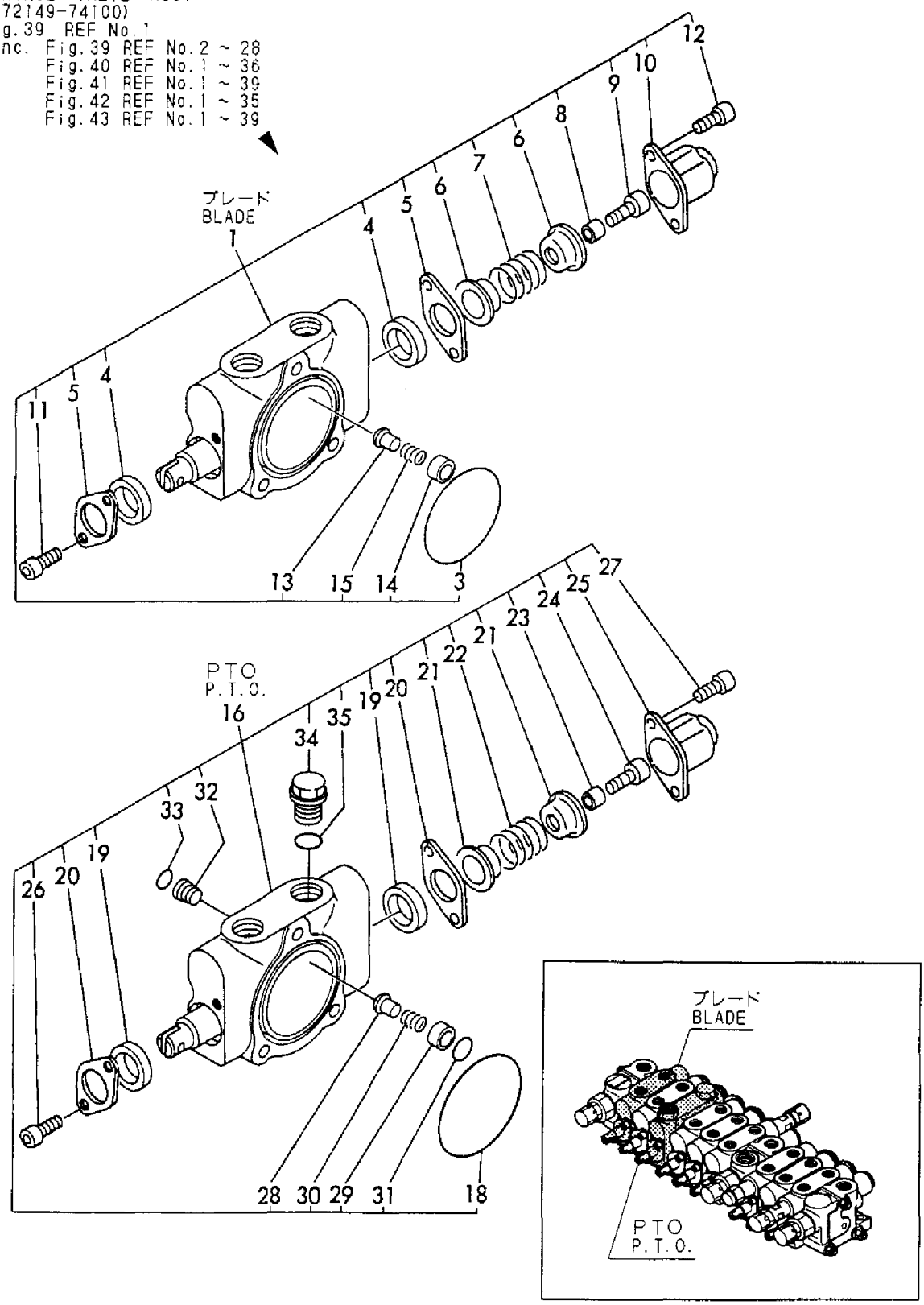

```
1,2,,172149-74110,,"SECTION ASSY, P1",1,1,1,1,,,,,,,,,,,,,
3,3,,24325-000550,,"O-RING 1B G-55.0",1,1,1,1,,,,,,,,,,,,,
4,3,,23871-020000,,"PLUG PT1/4,SCREW",1,1,1,1,,,,,,,,,,,,,
5,2,,172149-74440,,"VALVE, RELIEF",1,1,1,1,,,,,,,,,,,,,
6,3,,172131-74340,,"VALVE,RELIEF",1,1,1,1,,,,,,,,,,,,,
7,3,,172137-74580,,"O-RING 15",1,1,1,1,,,,,,,,,,,,,
8,3,,24315-000220,,"O-RING 1B P-22.0",1,1,1,1,,,,,,,,,,,,,
9,3,,24315-000100,,"O-RING 1B P-10.0",1,1,1,1,,,,,,,,,,,,,
10,3,,172131-74040,,"NUT M14X1",1,1,1,1,,,,,,,,,,,,,
11,3,,172131-74050,,"CAP NUT M16X1",1,1,1,1,,,,,,,,,,,,,
12,3,,24314-000160,,"O-RING 4C P-16.0",2,2,2,2,,,,,,,,,,,,,
13,2,,172149-74220,,"SECTION ASSY, P2",1,1,1,1,,,,,,,,,,,,,
15,3,,24325-000550,,"O-RING 1B G-55.0",2,2,2,2,,,,,,,,,,,,,
16,3,,23871-020000,,"PLUG PT1/4,SCREW",1,1,1,1,,,,,,,,,,,,,
17,2,,172149-74440,,"VALVE, RELIEF",1,1,1,1,,,,,,,,,,,,,
18,3,,172131-74340,,"VALVE,RELIEF",1,1,1,1,,,,,,,,,,,,,
19,3,,172137-74580,,"O-RING 15",1,1,1,1,,,,,,,,,,,,,
20,3,,24315-000220,,"O-RING 1B P-22.0",1,1,1,1,,,,,,,,,,,,,
21,3,,24315-000100,,"O-RING 1B P-10.0",1,1,1,1,,,,,,,,,,,,,
22,3,,172131-74040,,"NUT M14X1",1,1,1,1,,,,,,,,,,,,,
23,3,,172131-74050,,"CAP NUT M16X1",1,1,1,1,,,,,,,,,,,,,
24,3,,24314-000160,,"O-RING 4C P-16.0",2,2,2,2,,,,,,,,,,,,,
25,2,,172149-74410,,"SECTION ASSY, P3",1,1,1,1,,,,,,,,,,,,,
27,3,,24325-000550,,"O-RING 1B G-55.0",1,1,1,1,,,,,,,,,,,,,
28,2,,172149-74480,,"VALVE, RELIEF",1,1,1,1,,,,,,,,,,,,,
29,3,,172131-74340,,"VALVE,RELIEF",1,1,1,1,,,,,,,,,,,,,
30,3,,172137-74580,,"O-RING 15",1,1,1,1,,,,,,,,,,,,,
31,3,,24315-000220,,"O-RING 1B P-22.0",1,1,1,1,,,,,,,,,,,,,
32,3,,24315-000100,,"O-RING 1B P-10.0",1,1,1,1,,,,,,,,,,,,,
33,3,,172131-74040,,"NUT M14X1",1,1,1,1,,,,,,,,,,,,,
34,3,,172131-74050,,"CAP NUT M16X1",1,1,1,1,,,,,,,,,,,,,
35,3,,172131-74020,,O-RING,2,2,2,2,,,,,,,,,,,,,
36,2,,172149-74170,,PLATE,1,1,1,1,,,,,,,,,,,,,
37,2,,172149-74300,,PLATE,1,1,1,1,,,,,,,,,,,,,
38,2,,172149-74460,,TIE-ROD,3,3,3,3,,,,,,,,,,,,,
39,2,,26716-080002,,"NUT M 8",6,6,6,6,,,,,,,,,,,,,
40,1,,26013-080202,,"BOLT W/WASHER M8X20",1,1,1,1,,,,,,,,,,,,,
41,1,,26013-080252,,"BOLT M 8X 25",2,2,2,2,,,,,,,,,,,,,
```

Fig.43 コントロールバルブ (P1, P2, P3)
CONTROL VALVE (P1, P2, P3)

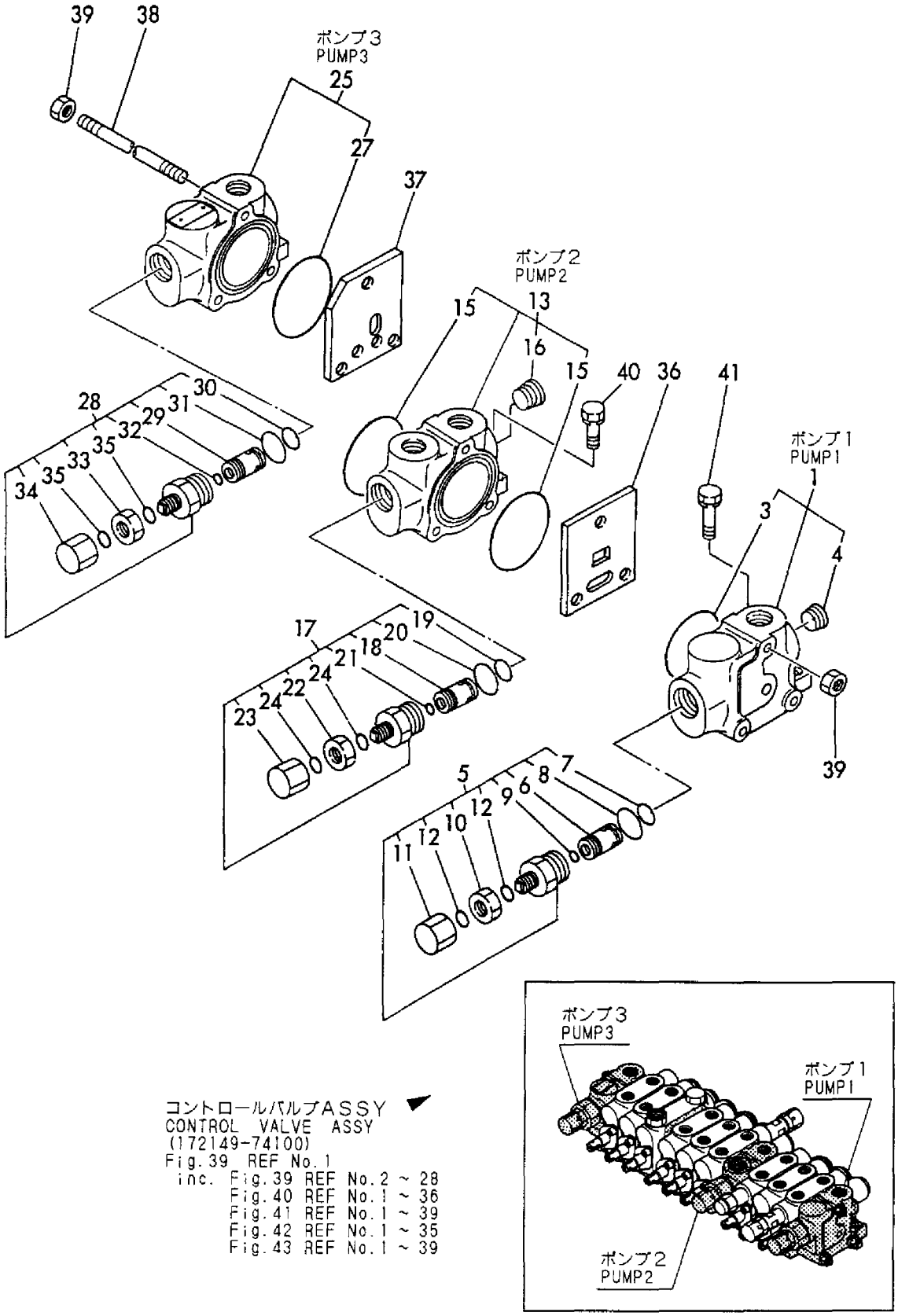

コントロールバルブASSY ◤
CONTROL VALVE ASSY
(172149-74100)
Fig.39 REF No.1
inc. Fig.39 REF No.2 ~ 28
Fig.40 REF No.1 ~ 36
Fig.41 REF No.1 ~ 39
Fig.42 REF No.1 ~ 35
Fig.43 REF No.1 ~ 39

```
1,1,,172186-74140,,VALVE,,,,1,,,,,,,,,,,,,,
3,2,,172186-74610,,SOLENOID,,,,1,,,,,,,,,,,,,,
4,2,,172186-74620,,O-RING,,,,1,,,,,,,,,,,,,,
5,2,,172186-74630,,O-RING,,,,1,,,,,,,,,,,,,,
6,2,,172186-74640,,SPRING,,,,1,,,,,,,,,,,,,,
7,2,,172186-74650,,"SPOOL KIT",,,,1,,,,,,,,,,,,,,
8,2,,172162-74860,,BOLT,,,,2,,,,,,,,,,,,,,
9,2,,24311-000180,,"O-RING 1A P-18.0",,,,1,,,,,,,,,,,,,,
10,2,,172179-73540,,O-RING,,,,1,,,,,,,,,,,,,,
12,1,,22217-080000,,"SPRING WASHER  8",,,,2,,,,,,,,,,,,,,
13,1,,26116-080752,,"BOLT M 8X 75 PLATED",,,,2,,,,,,,,,,,,,,
```

Fig.44 ローハイバルブ LOW-HIGH VALVE

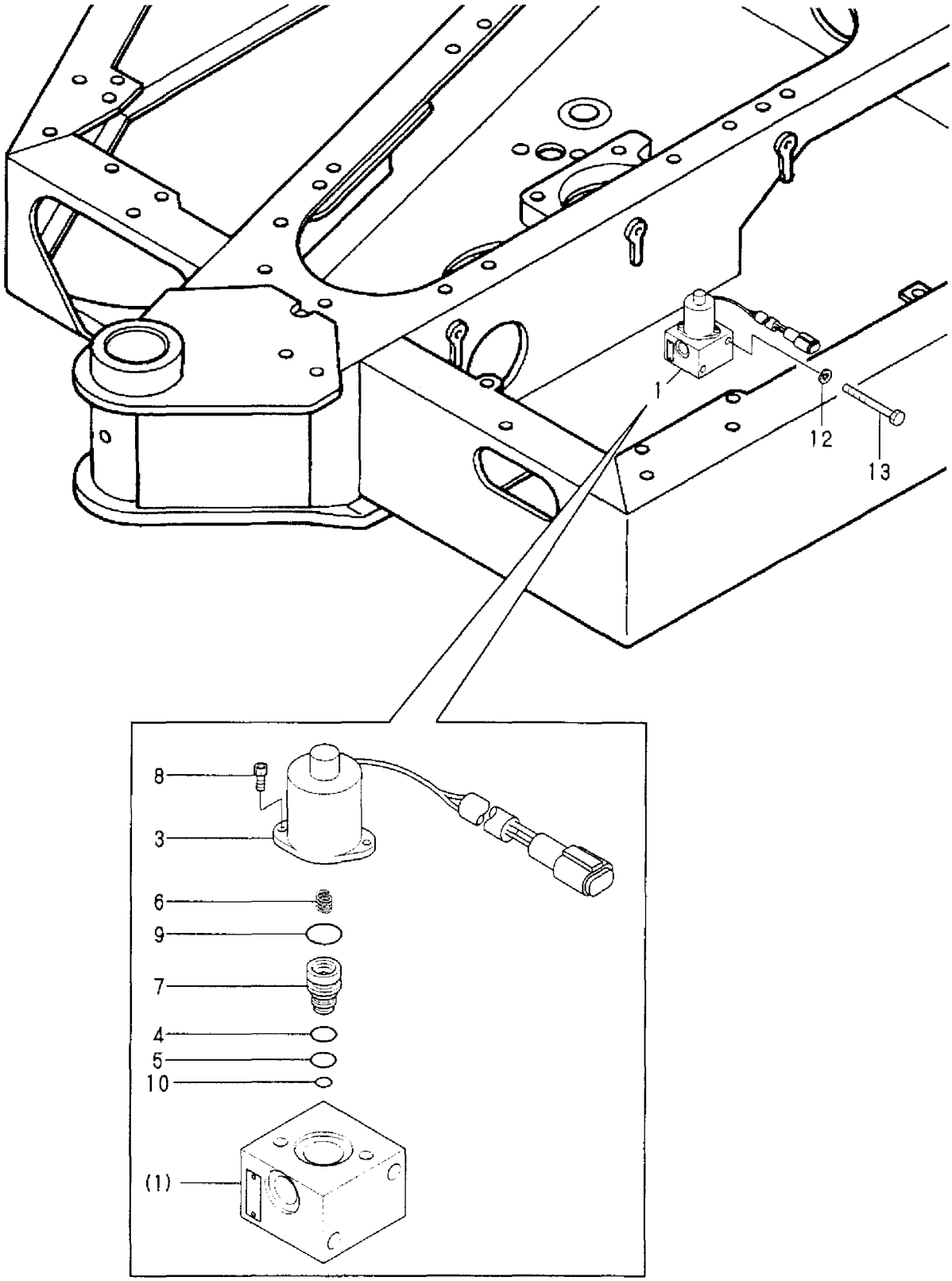

```
1,1,,772149-75100-4,,"TANK,HYD.OIL",1,1,,1,,,,,,,,,,,,,
1A,1,,772149-75100-2,,"TANK ASSY,HYD.OIL",,,1,,,,,,,,,,,,,,
2,2,,172137-73700,,"FILTER, SUCTION",1,1,1,1,,,,,,,,,,,,,
3,2,,172141-73710,,"ROD, STRAINER",1,1,1,1,,,,,,,,,,,,,
4,2,,172141-73750,,"FILTER ASSY, RETURN",1,1,1,1,,,,,,,,,,,,,,
5,3,,172141-73760,,ELEMENT,1,1,1,1,,,,,,,,,,,,,
6,3,,172141-73770,,"VALVE ASSY, BYPASS",1,1,1,1,,,,,,,,,,,,,
7,2,,172112-75780,,"SPRING, STRAINER",1,1,1,1,,,,,,,,,,,,,
8,2,,26716-100002,,"NUT 10",1,1,1,1,,,,,,,,,,,,,
9,2,,933152-02710,,"SPRING, SIDE CLUTCH",1,1,1,1,,,,,,,,,,,,,
11,2,,172141-75400-4,,"COVER,EXIT",1,1,,1,,,,,,,,,,,,,
11A,2,,172141-75400-2,,"COVER, EXIT  (YE",,,1,,,,,,,,,,,,,,
12,2,,172141-75430-4,,"COVER,INTAKE",1,1,,1,,,,,,,,,,,,,
12A,2,,172141-75430-2,,"COVER,INTAKE (YELLOW",,,1,,,,,,,,,,,,,,
13,2,,172122-75600,,"GAUGE, OIL LEVEL",1,1,1,1,,,,,,,,,,,,,
14,3,,172122-75620,,BOLT,2,2,2,2,,,,,,,,,,,,,
15,3,,172122-75630,,GASKET,4,4,4,4,,,,,,,,,,,,,
16,2,,172116-75850-5,,"PLUG,OIL FEED",1,1,,1,,,,,,,,,,,,,
16A,2,,172116-75850,,"PLUG, OIL FEED",,,1,,,,,,,,,,,,,,
17,2,,24341-000300,,"O-RING 1A S-30.0",1,1,1,1,,,,,,,,,,,,,
18,2,,22417-200160,,"COTTER PIN
2.0X16",1,1,1,,,,Z,,,M/#30579,,M/#30506,,M/#30506,,,,
19,2,,24311-000380,,"O-RING 1A P-38.0",1,1,1,1,,,,,,,,,,,,,
20,2,,24321-001050,,"O-RING 1A G-105.0",2,2,2,2,,,,,,,,,,,,,
21,2,,26013-080202,,"BOLT W/WASHER M8X20",6,6,6,6,,,,,,,,,,,,,
22,2,,933171-23042,,MAGNET,1,1,1,,,,Z,,,M/#30579,,M/#30506,,M/#30506,,,,
23,2,,933171-23050,,"PLUG 1/4",1,1,1,1,,,,,,,,,,,,,
24,2,,172183-75750,,"PLUG 24, DRAIN",1,1,1,,,,,,,,,,,,,,
24-1,2,,172187-75500,,"PLUG 24",1,1,1,1,,,N,,,M/#30579,,M/#30506,,M/#30506,,,,
25,1,,26013-120302,,"BOLT W/WASHER M12X30",3,3,3,3,,,,,,,,,,,,,
26,1,,933152-03700,,"WASHER, SIDE CLUTCH",3,3,3,3,,,,,,,,,,,,,
27,1,,933171-17770,,"SHIM SET",1,1,1,1,,,,,,,,,,,,,
```

Fig.45 作動油タンク HYD.OIL TANK

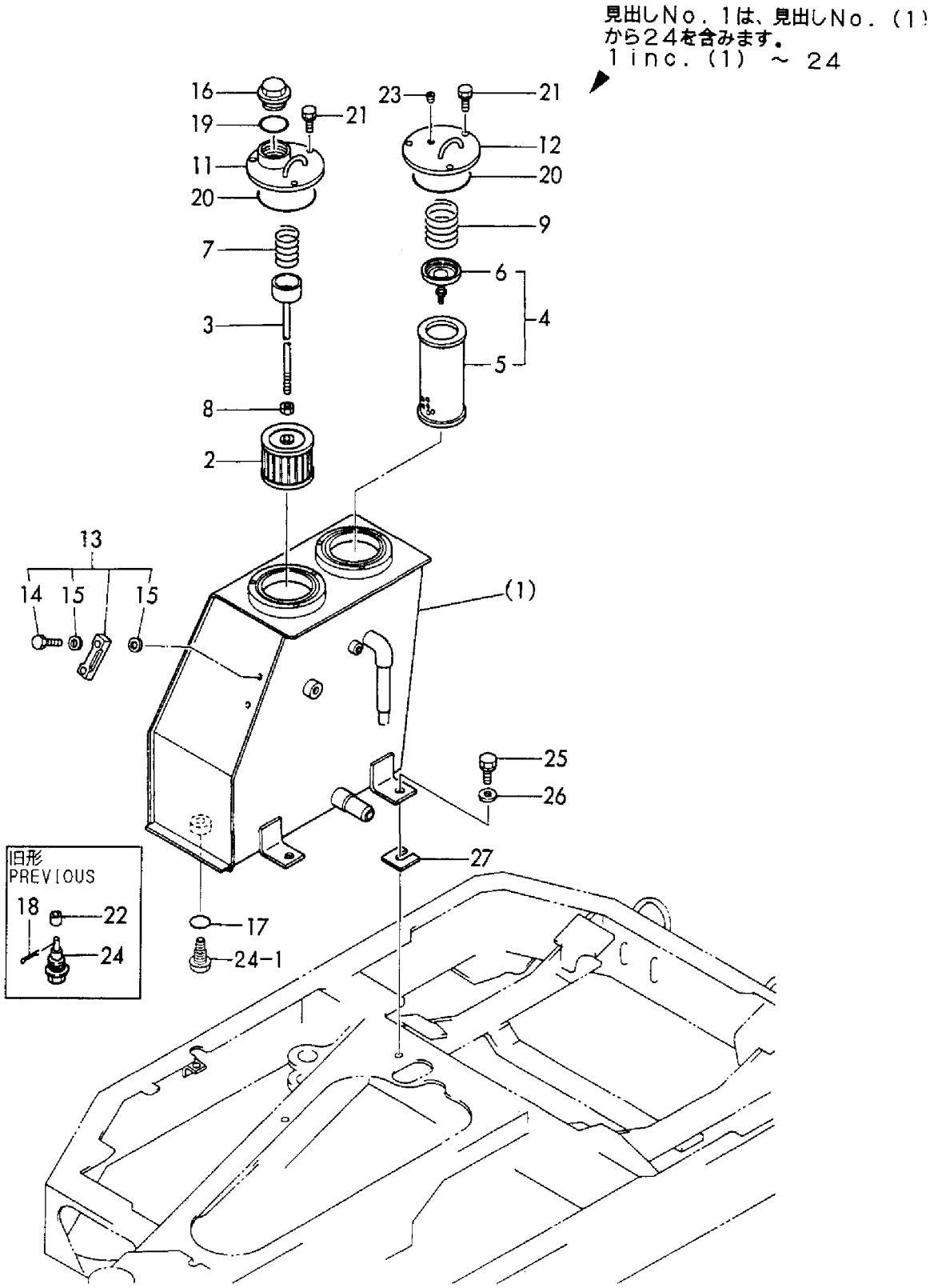

```
1,1,,172112-77660,,"L-JOINT 1/8",2,2,2,2,,,,,,,,,,,,,
2,1,,172141-77800,,"JOINT, GREASE",4,4,4,4,,,,,,,,,,,,,
3,1,,172137-78520,,"PIPE P202FF095",1,1,1,1,,,,,,,,,,,,,
4,1,,172149-77811,,HOSE,2,2,2,2,,,,,,,,,,,,,
5,1,,172312-77820,,"FITTING, GREASE",1,1,1,1,,,,,,,,,,,,,
6,1,,23871-010000,,"PLUG PT1/8,SCREW",1,1,1,1,,,,,,,,,,,,,
7,1,,24761-020000,,"NIPPLE PT1/8,GREASE",3,3,3,3,,,,,,,,,,,,,,
```

Fig.46 グリーシング GREASING

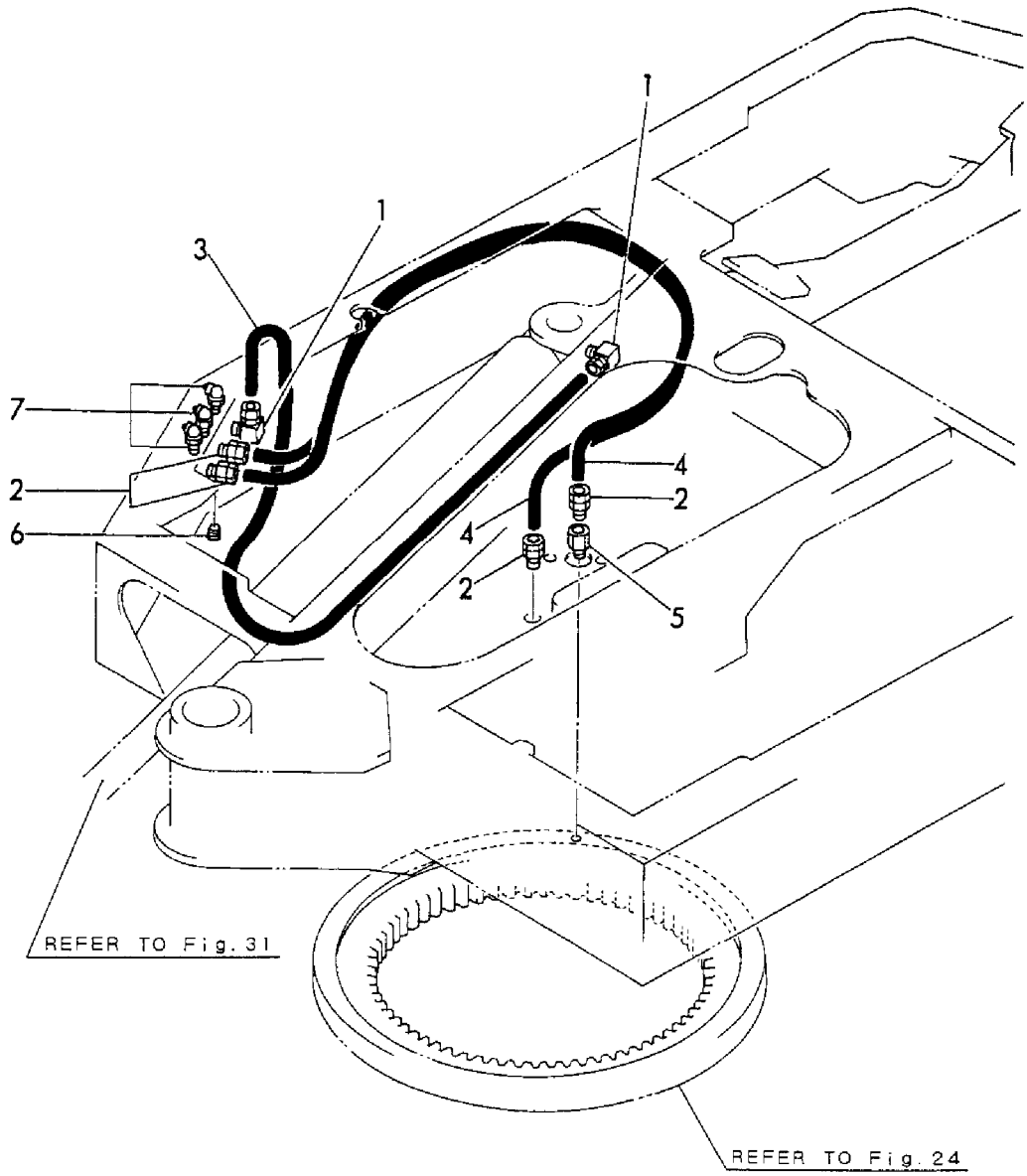

```
1,1,,172149-76151,,JOINT,3,3,3,,,,,,,,,,,,,
2,1,,172149-76300,,ELBOW,2,2,2,,,,,,,,,,,,,
3,1,,933152-07400,,"O-RING (A)",3,3,3,,,,,,,,,,,,,
4,1,,933160-03530,,"PORT, PUMP EXH.",3,3,3,,,,,,,,,,,,,
5,1,,933160-03570,,"O-RING (B)",3,3,3,,,,,,,,,,,,,
6,1,,172149-76400,,"TUBE, SUCTION",1,1,1,,,,,,,,,,,,,
7,1,,22137-100000,,"WASHER 10,POLISHED",2,2,2,,,,,,,,,,,,,
8,1,,26013-100202,,"BOLT W/WASHER M10X20",2,2,2,,,,,,,,,,,,,,
9,1,,172149-78100,,HOSE,1,1,1,,,,,,,,,,,,,
10,1,,172149-78110,,HOSE,3,3,3,,,,,,,,,,,,,
11,1,,23000-035000,,"CLAMP 35",12,12,12,,,,,,,,,,,,,
12,1,,23000-048000,,"CLAMP 48",4,4,4,,,,,,,,,,,,,
13,1,,933171-15680,,"GROMMET 40X13",3,3,3,,,,,,,,,,,,,
14,1,,172149-78150,,HOSE,1,1,1,,,,,,,,,,,,,
15,1,,172149-78160,,HOSE,1,1,1,,,,,,,,,,,,,
16,1,,172149-78170,,HOSE,1,1,1,,,,,,,,,,,,,
17,1,,172142-76180,,JOINT,1,1,1,,,,,,,,,,,,,
18,2,,24315-000140,,"O-RING 1B P-14.0",1,1,1,,,,,,,,,,,,,
```

Fig.47 油圧配管（タンク～バルブ） HYD. OIL PIPING (TANK~VALVE)

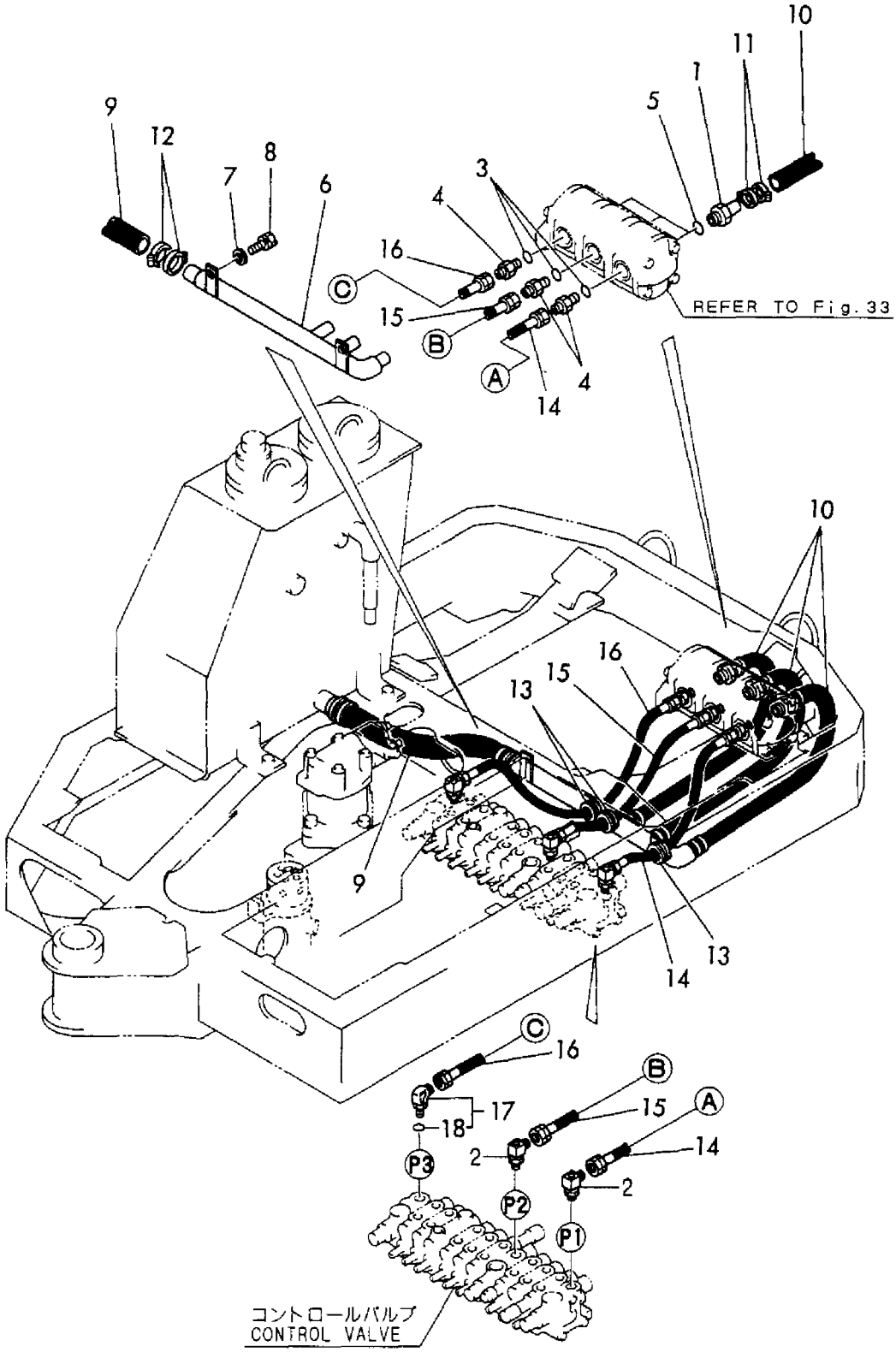

```
1,1,,172149-76151,,JOINT,,,,3,,,,,,,,,,,,,,
2,1,,172149-76300,,ELBOW,,,,2,,,,,,,,,,,,,,
3,1,,933152-07400,,"O-RING (A)",,,,3,,,,,,,,,,,,,,
4,1,,933160-03530,,"PORT, PUMP EXH.",,,,3,,,,,,,,,,,,,,
5,1,,933160-03570,,"O-RING (B)",,,,3,,,,,,,,,,,,,,
6,1,,172149-76400,,"TUBE, SUCTION",,,,1,,,,,,,,,,,,,,
7,1,,22137-100000,,"WASHER 10,POLISHED",,,,2,,,,,,,,,,,,,,
8,1,,26013-100202,,"BOLT W/WASHER M10X20",,,,2,,,,,,,,,,,,,,,
9,1,,172149-78100,,HOSE,,,,1,,,,,,,,,,,,,,
10,1,,172149-78110,,HOSE,,,,3,,,,,,,,,,,,,,
11,1,,23000-035000,,"CLAMP 35",,,,12,,,,,,,,,,,,,,
12,1,,23000-048000,,"CLAMP 48",,,,4,,,,,,,,,,,,,,
13,1,,933171-15680,,"GROMMET 40X13",,,,3,,,,,,,,,,,,,,
14,1,,172149-78150,,HOSE,,,,1,,,,,,,,,,,,,,
15,1,,172149-78160,,HOSE,,,,1,,,,,,,,,,,,,,
16,1,,172454-78150,,HOSE,,,,1,,,,,,,,,,,,,,
17,1,,172142-76180,,JOINT,,,,1,,,,,,,,,,,,,,
18,2,,24315-000140,,"O-RING 1B P-14.0",,,,1,,,,,,,,,,,,,,
19,1,,172183-74110,,"VALVE COMP.,CHECK",,,,1,,,,,,,,,,,,,,
20,1,,172454-74150,,BRACKET,,,,1,,,,,,,,,,,,,,
21,1,,26013-100252,,"BOLT W/WASHER M10X25",,,,2,,,,,,,,,,,,,,,
22,1,,172165-76550,,CONNECTOR,,,,1,,,,,,,,,,,,,,
23,2,,24315-000110,,"O-RING 1B P-11.0",,,,1,,,,,,,,,,,,,,
24,1,,23393-030000,,"JOINT 90RGI 3/8",,,,1,,,,,,,,,,,,,,
25,1,,23395-030000,,"JOINT RRN3/8",,,,1,,,,,,,,,,,,,,
26,1,,172454-78160,,HOSE,,,,1,,,,,,,,,,,,,,
27,1,,23393-030000,,"JOINT 90RGI 3/8",,,,1,,,,,,,,,,,,,,
```

Fig.48 油圧配管（タンク～バルブ）（レンコン仕様）
HYD.OIL PIPING(TANK~VALVE) (LOTUS ROOT SPEC.)

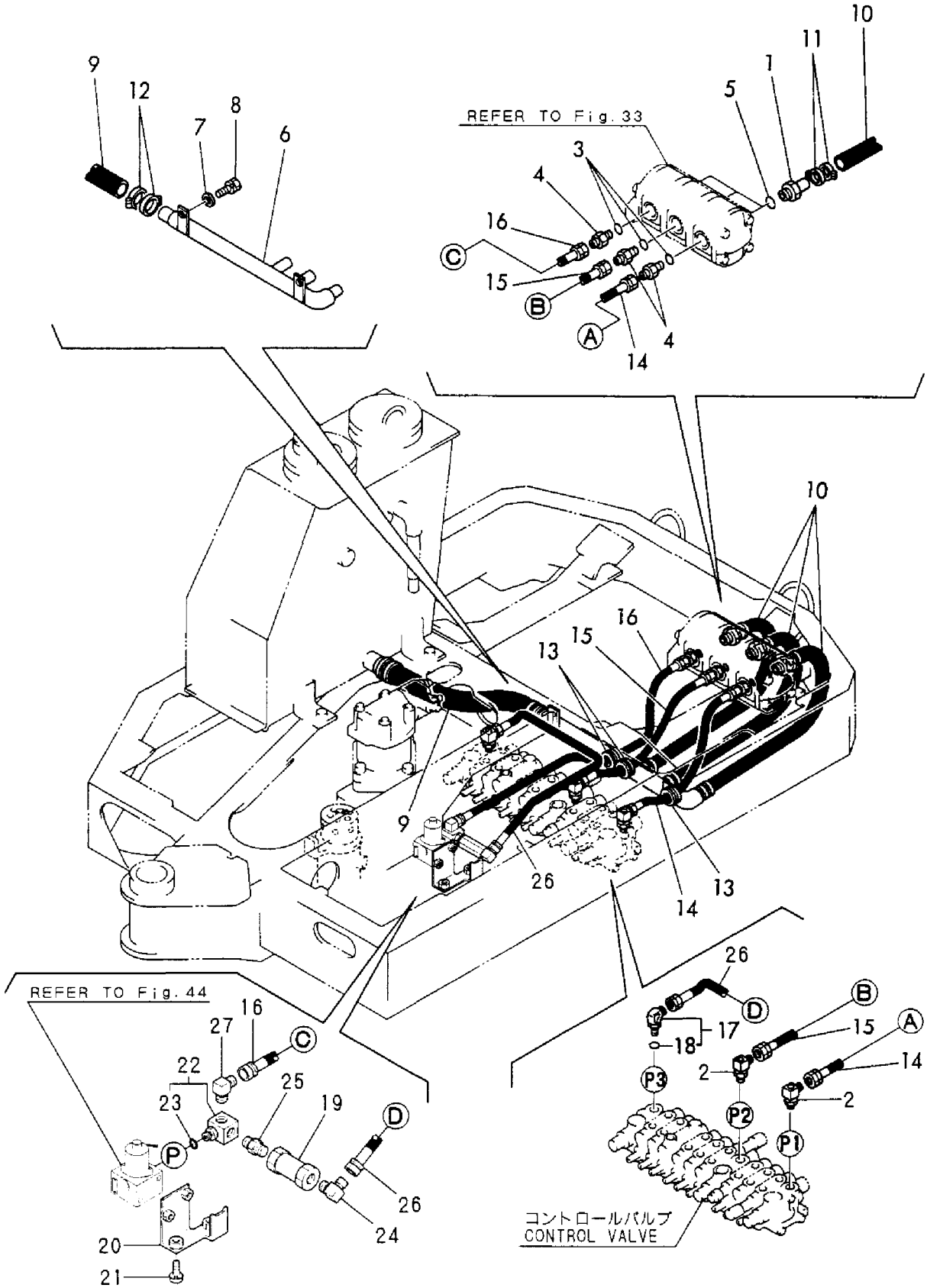

```
1,1,,23393-020000,,"JOINT 90RGI1/4",7,7,7,,,,,,,,,,,,,,
2,1,,172149-76250,,"CONNECTER, GAUGE",1,1,1,,,,,,,,,,,,,,
3,1,,172112-77660,,"L-JOINT 1/8",3,3,3,,,,,,,,,,,,,,
4,1,,26013-100202,,"BOLT W/WASHER M10X20",2,2,2,,,,,,,,,,,,,,,
5,1,,172149-78020,,BUSH,1,1,1,,,,,,,,,,,,,,
6,1,,172149-78781,,GROMET,2,2,2,,,,,,,,,,,,,,
7,1,,172149-78790,,BUSH,1,1,1,,,,,,,,,,,,,,
8,1,,172149-78210,,HOSE,1,1,1,,,,,,,,,,,,,,
9,1,,172149-78220,,HOSE,1,1,1,,,,,,,,,,,,,,
10,1,,172149-78230,,HOSE,1,1,1,,,,,,,,,,,,,,
11,1,,172149-78240,,HOSE,1,1,1,,,,,,,,,,,,,,
12,1,,172149-78270,,HOSE,2,2,2,,,,,,,,,,,,,,
13,1,,172149-78290,,HOSE,2,2,2,,,,,,,,,,,,,,
14,1,,172149-78300,,HOSE,2,2,2,,,,,,,,,,,,,,
15,1,,172149-78501,,HOSE,1,1,1,,,,,,,,,,,,,,
16,1,,172149-78511,,HOSE,1,1,1,,,,,,,,,,,,,,
17,1,,172149-78520,,HOSE,1,1,1,,,,,,,,,,,,,,
18,1,,23871-030000,,"PLUG PT3/8,SCREW",3,3,3,,,,,,,,,,,,,,
19,1,,24315-000110,,"O-RING 1B P-11.0",8,8,8,,,,,,,,,,,,,,
20,1,,172123-76120,,"CONNECTOR PF1/4",2,2,2,,,,,,,,,,,,,,
21,1,,24315-000110,,"O-RING 1B P-11.0",2,2,2,,,,,,,,,,,,,,
22,1,,23394-020000,,"JOINT 45RGI1/4",1,1,1,,,,,,,,,,,,,,
23,1,,172149-78361,,COVER,1,1,1,,,,,,,,,,,,,,
24,1,,933152-09280,,"BAND 170",2,2,2,,,,,,,,,,,,,,
25,1,,172171-14300,,W-CLAMP,1,1,1,,,,,,,,,,,,,,
26,1,,172149-78350,,"COVER, HOSE",2,2,2,,,,,,,,,,,,,,
```

Fig.49 油圧配管（バルブ～スイベル～モータ）
HYD.OIL PIPING(VALVE~SWIVEL~MOTOR)

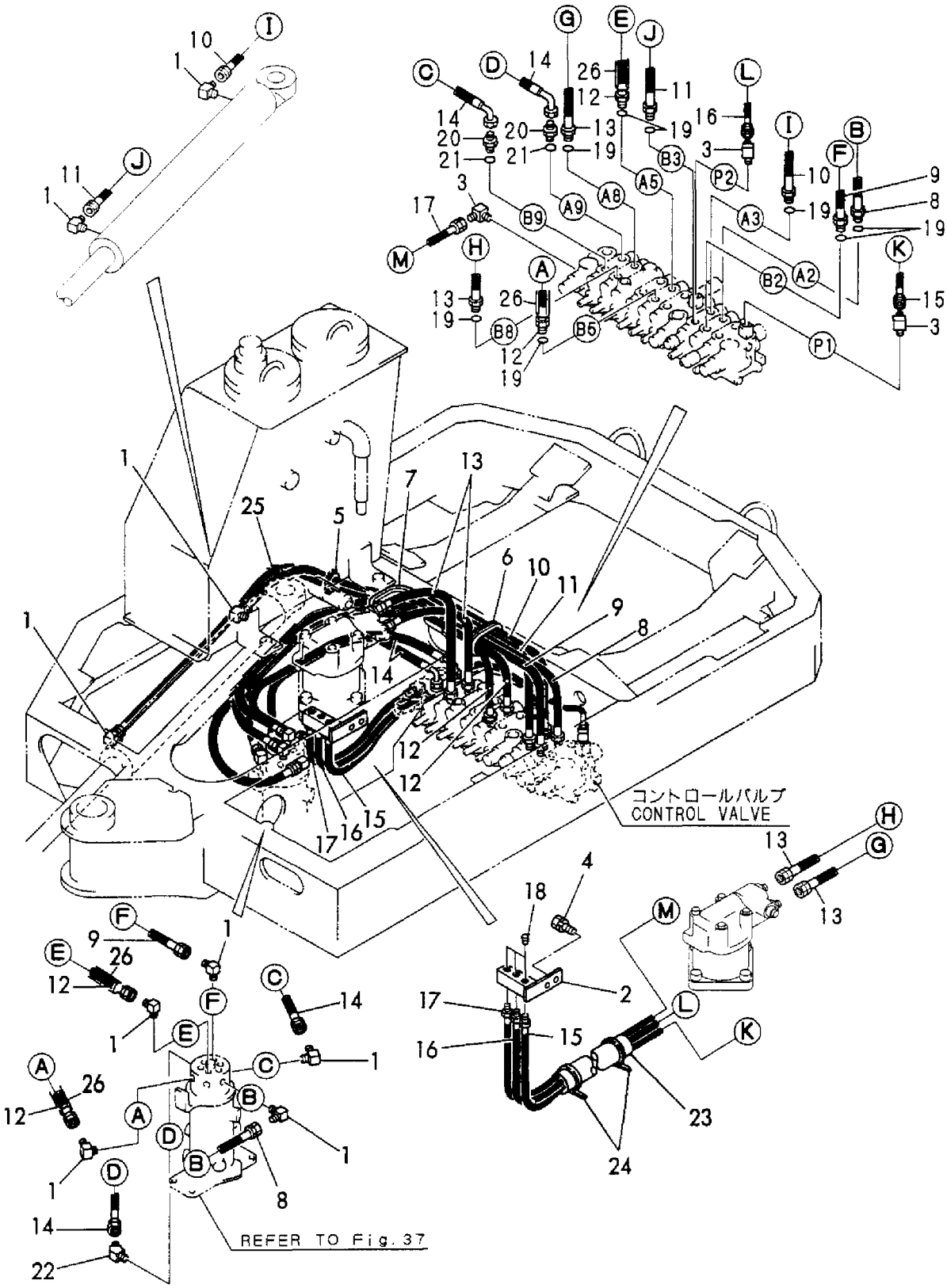

```
1,1,,23393-020000,,"JOINT 90RGI1/4",,,,4,,,,,,,,,,,,,
2,1,,172149-76250,,"CONNECTER, GAUGE",,,,1,,,,,,,,,,,,,
3,1,,172112-77660,,"L-JOINT 1/8",,,,3,,,,,,,,,,,,,
4,1,,26013-100202,,"BOLT W/WASHER M10X20",,,,2,,,,,,,,,,,,,,
5,1,,172149-78020,,BUSH,,,,1,,,,,,,,,,,,,
6,1,,172149-78781,,GROMET,,,,2,,,,,,,,,,,,,
7,1,,172149-78790,,BUSH,,,,1,,,,,,,,,,,,,
8,1,,172173-76120,,CONNECTOR,,,,4,,,,,,,,,,,,,
9,2,,24315-000110,,"O-RING 1B P-11.0",,,,4,,,,,,,,,,,,,
10,1,,172149-78230,,HOSE,,,,1,,,,,,,,,,,,,
11,1,,172149-78240,,HOSE,,,,1,,,,,,,,,,,,,
12,1,,172454-78100,,HOSE,,,,1,,,,,,,,,,,,,
13,1,,172149-78290,,HOSE,,,,2,,,,,,,,,,,,,
14,1,,172149-78300,,HOSE,,,,1,,,,,,,,,,,,,
15,1,,172149-78501,,HOSE,,,,1,,,,,,,,,,,,,
16,1,,172149-78511,,HOSE,,,,1,,,,,,,,,,,,,
17,1,,172149-78520,,HOSE,,,,1,,,,,,,,,,,,,
18,1,,23871-030000,,"PLUG PT3/8,SCREW",,,,3,,,,,,,,,,,,,
19,1,,24315-000110,,"O-RING 1B P-11.0",,,,4,,,,,,,,,,,,,
20,1,,172123-76120,,"CONNECTOR PF1/4",,,,2,,,,,,,,,,,,,
21,1,,24315-000110,,"O-RING 1B P-11.0",,,,2,,,,,,,,,,,,,
22,1,,23394-020000,,"JOINT 45RGI1/4",,,,1,,,,,,,,,,,,,
23,1,,172149-78361,,COVER,,,,1,,,,,,,,,,,,,
24,1,,933152-09280,,"BAND 170",,,,2,,,,,,,,,,,,,
25,1,,172171-14300,,W-CLAMP,,,,1,,,,,,,,,,,,,
26,1,,172149-78350,,"COVER, HOSE",,,,2,,,,,,,,,,,,,
27,1,,172141-76180,,CONNECTOR,,,,1,,,,,,,,,,,,,
28,2,,24315-000110,,"O-RING 1B P-11.0",,,,1,,,,,,,,,,,,,
29,1,,172454-78100,,HOSE,,,,1,,,,,,,,,,,,,
30,1,,172454-78120,,HOSE,,,,1,,,,,,,,,,,,,
31,1,,172454-78130,,HOSE,,,,1,,,,,,,,,,,,,
32,1,,172454-78170,,HOSE,,,,1,,,,,,,,,,,,,
33,1,,172454-78210,,HOSE,,,,1,,,,,,,,,,,,,
34,1,,23393-030000,,"JOINT 90RGI 3/8",,,,4,,,,,,,,,,,,,
```

Fig.50 油圧配管（バルブ～スイベル～モータ）（レンコン仕様）
HYD.OIL PIPING(VALVE~SWIVEL~MOTOR) (LOTUS ROOT SPEC.)

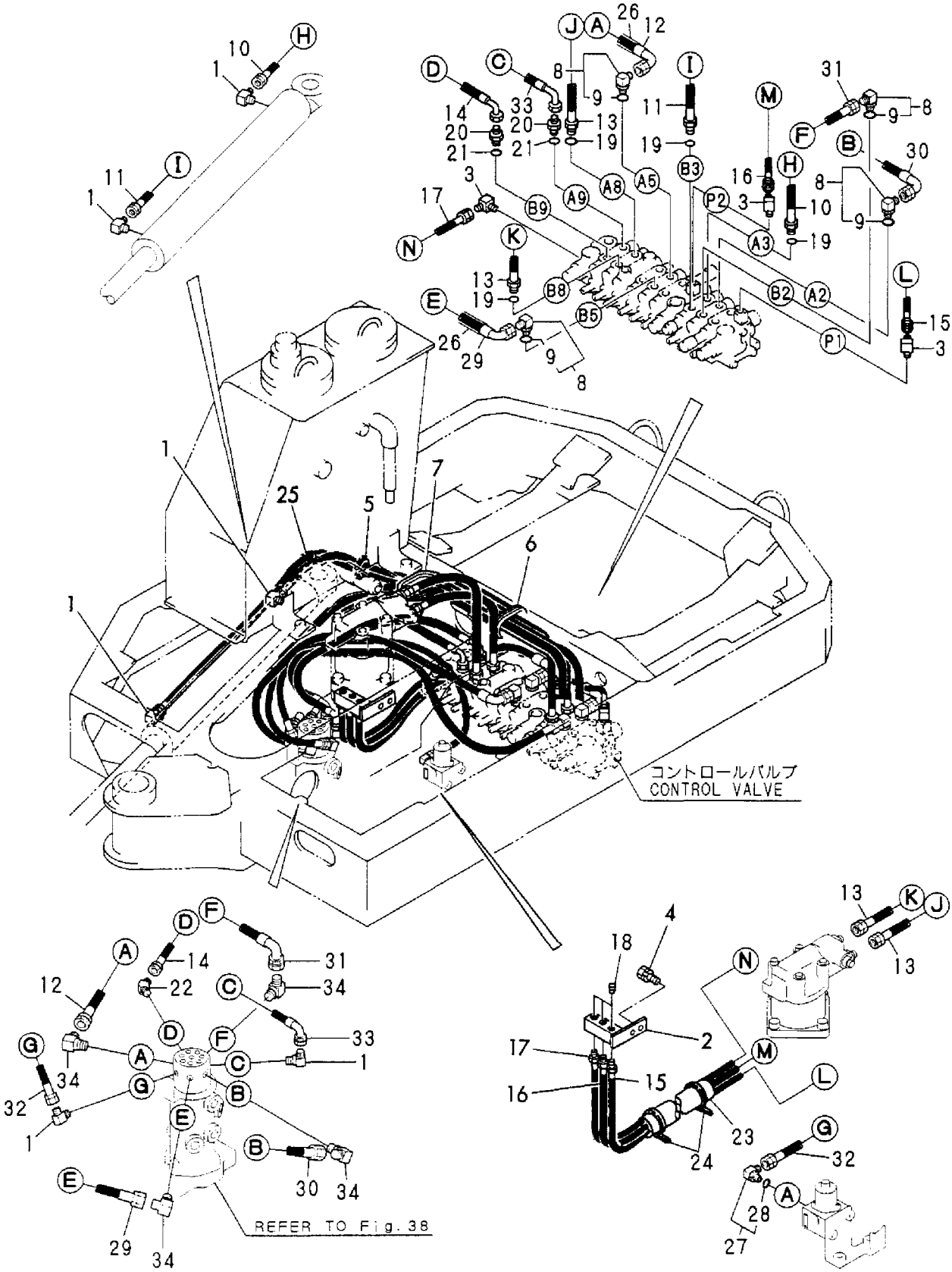

```
1,1,,172149-76120,,ELBOW,1,1,1,,,,,,,,,,,,,,
2,2,,24311-000180,,"O-RING 1A P-18.0",1,1,1,,,,,,,,,,,,,,
3,1,,172141-76180,,CONNECTOR,1,1,1,,,,,,,,,,,,,,
4,2,,24315-000110,,"O-RING 1B P-11.0",1,1,1,,,,,,,,,,,,,,
5,1,,172141-76200,,CONNECTOR,1,1,1,,,,,,,,,,,,,,
6,2,,24315-000110,,"O-RING 1B P-11.0",1,1,1,,,,,,,,,,,,,,
7,1,,172141-77800,,"JOINT, GREASE",2,2,2,,,,,,,,,,,,,,
8,1,,172142-77810,,HOSE,1,1,1,,,,,,,,,,,,,,
9,1,,172149-78120,,HOSE,1,1,1,,,,,,,,,,,,,,
10,1,,172149-78130,,HOSE,1,1,1,,,,,,,,,,,,,,
11,1,,172141-78500,,HOSE,1,1,1,,,,,,,,,,,,,,
13,2,,172141-78900,,"TUBE, SPIRAL",1,1,1,,,,,,,,,,,,,,
14,1,,23393-030000,,"JOINT 90RGI 3/8",1,1,1,,,,,,,,,,,,,,
15,1,,23000-048000,,"CLAMP 48",1,1,1,,,,,,,,,,,,,,
16,1,,172149-78400,,"TUBE, COIL",1,1,1,,,,,,,,,,,,,,
17,1,,172112-77480,,"ELBOW 1/8, STREET",1,1,1,,,,,,,,,,,,,,,
```

Fig.51 油圧配管（リターン） HYD.OIL PIPING (RETURN)

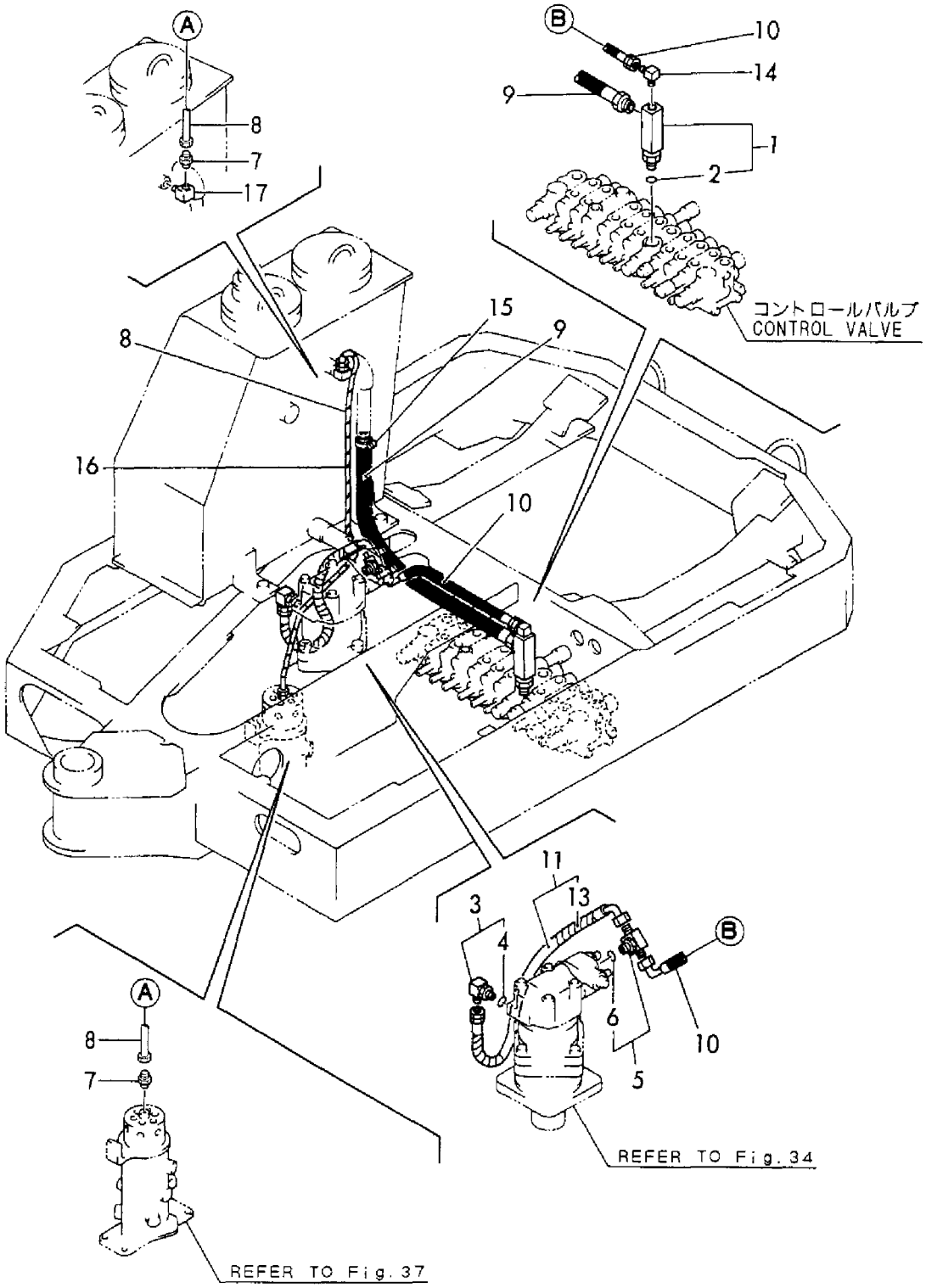

```
1,1,,172454-76100,,ELBOW,,,,1,,,,,,,,,,,,,,
2,2,,24311-000180,,"O-RING 1A P-18.0",,,,1,,,,,,,,,,,,,,
3,1,,172141-76180,,CONNECTOR,,,,1,,,,,,,,,,,,,,
4,2,,24315-000110,,"O-RING 1B P-11.0",,,,1,,,,,,,,,,,,,,
5,1,,172141-76200,,CONNECTOR,,,,1,,,,,,,,,,,,,,
6,2,,24315-000110,,"O-RING 1B P-11.0",,,,1,,,,,,,,,,,,,,
7,1,,172141-77800,,"JOINT, GREASE",,,,2,,,,,,,,,,,,,,
8,1,,172142-77810,,HOSE,,,,1,,,,,,,,,,,,,,
9,1,,172149-78120,,HOSE,,,,1,,,,,,,,,,,,,,
10,1,,172149-78130,,HOSE,,,,1,,,,,,,,,,,,,,
11,1,,172141-78500,,HOSE,,,,1,,,,,,,,,,,,,,
13,2,,172141-78900,,"TUBE, SPIRAL",,,,1,,,,,,,,,,,,,,
14,1,,23393-030000,,"JOINT 90RGI 3/8",,,,1,,,,,,,,,,,,,,
15,1,,23000-048000,,"CLAMP 48",,,,1,,,,,,,,,,,,,,
16,1,,172149-78400,,"TUBE, COIL",,,,1,,,,,,,,,,,,,,
17,1,,172112-77480,,"ELBOW 1/8, STREET",,,,1,,,,,,,,,,,,,,,
18,1,,172141-76180,,CONNECTOR,,,,1,,,,,,,,,,,,,,
19,2,,24315-000110,,"O-RING 1B P-11.0",,,,1,,,,,,,,,,,,,,,
20,1,,172454-78140,,HOSE,,,,1,,,,,,,,,,,,,,
```

Fig.52 油圧配管（リターン）（レンコン仕様）
HYD.OIL PIPING(RETURN) (LOTUS ROOT SPEC.)

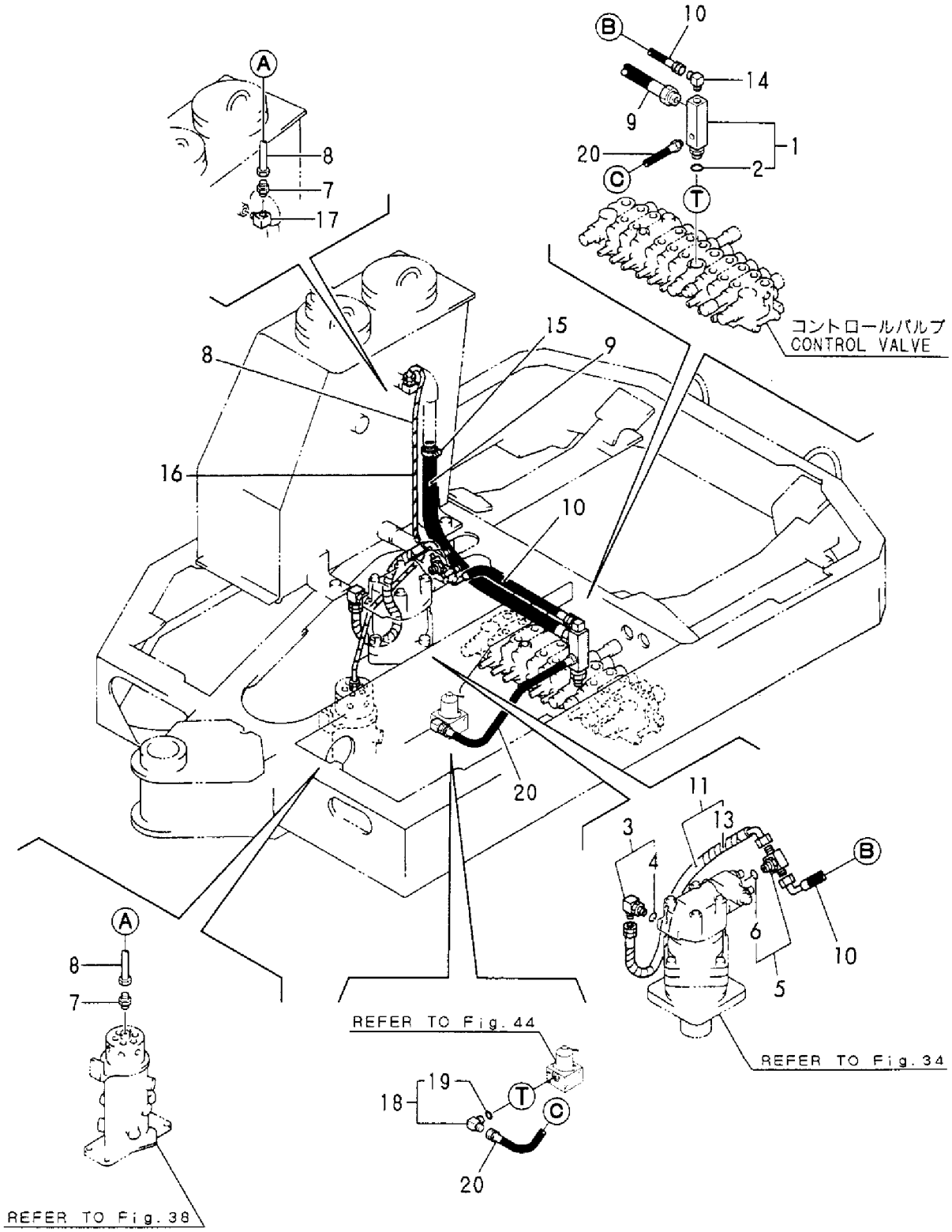

```
1,1,,172123-76120,,"CONNECTOR PF1/4",4,4,4,,,,,,,,,,,,,,
2,1,,23394-020000,,"JOINT 45RGI1/4",2,2,2,,,,,,,,,,,,,,
3,1,,23394-020000,,"JOINT 45RGI1/4",4,4,4,,,,,,,,,,,,,,
4,1,,24315-000110,,"O-RING 1B P-11.0",4,4,4,,,,,,,,,,,,,,,
5,1,,172149-78331,,HOSE,1,1,1,,,,,,,,,,,,,,
6,1,,172149-78340,,HOSE,1,1,1,,,,,,,,,,,,,,
7,1,,172149-78310,,HOSE,2,2,2,,,,,,,,,,,,,,
8,1,,172149-78320,,HOSE,2,2,2,,,,,,,,,,,,,,
9,1,,23391-020000,,"JOINT RGI1/4",2,2,2,,,,,,,,,,,,,,,
```

Fig.53 油圧配管（走行） HYD.OIL PIPING(TRAVEL)

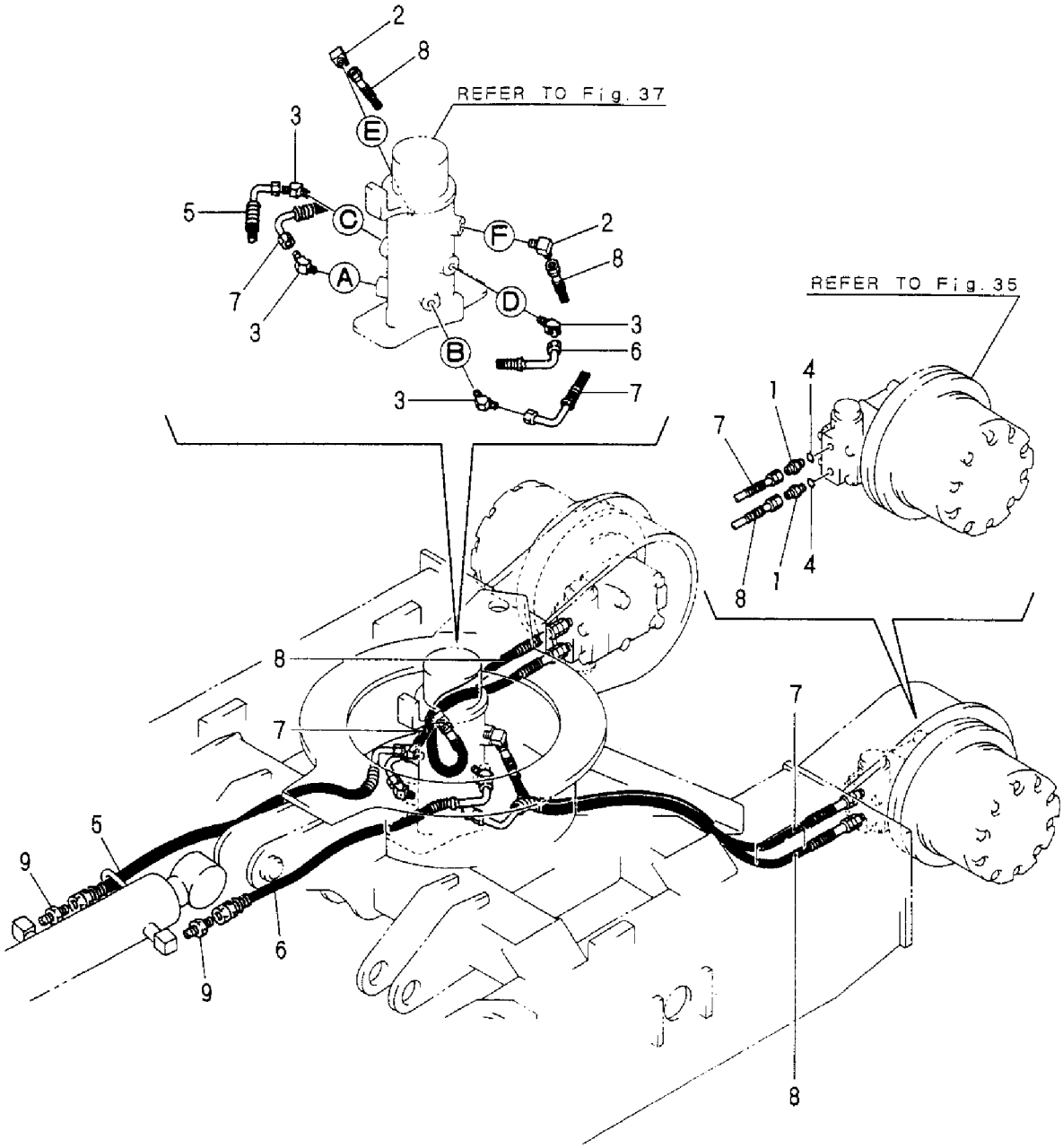

```
1,1,,172123-76120,,"CONNECTOR PF1/4",,,,2,,,,,,,,,,,,,
2,1,,23394-020000,,"JOINT 45RGI1/4",,,,2,,,,,,,,,,,,,
3,1,,172730-75140,,ADAPTOR,,,,4,,,,,,,,,,,,,
4,1,,24315-000110,,"O-RING 1B P-11.0",,,,2,,,,,,,,,,,,,,
5,1,,23393-020000,,"JOINT 90RGI1/4",,,,2,,,,,,,,,,,,,
6,1,,23393-020000,,"JOINT 90RGI1/4",,,,2,,,,,,,,,,,,,
7,1,,23393-030000,,"JOINT 90RGI 3/8",,,,2,,,,,,,,,,,,,
8,1,,23393-030000,,"JOINT 90RGI 3/8",,,,2,,,,,,,,,,,,,
9,1,,24315-000140,,"O-RING 1B P-14.0",,,,4,,,,,,,,,,,,,,
10,1,,1E3030-78370,,CAP,,,,2,,,,,,,,,,,,,
11,1,,172454-78190,,HOSE,,,,2,,,,,,,,,,,,,
12,1,,172454-78220,,HOSE,,,,2,,,,,,,,,,,,,
13,1,,172423-78450,,"HOSE P206BB078W",,,,2,,,,,,,,,,,,,
14,1,,172183-78650,,"HOSE P206BB073W",,,,2,,,,,,,,,,,,,
15,1,,172183-78730,,"HOSE P204BB077W",,,,2,,,,,,,,,,,,,
```

Fig.54 油圧配管（走行）（レンコン仕様）
HYD. OIL PIPING (TRAVEL) (LOTUS ROOT SPEC.)

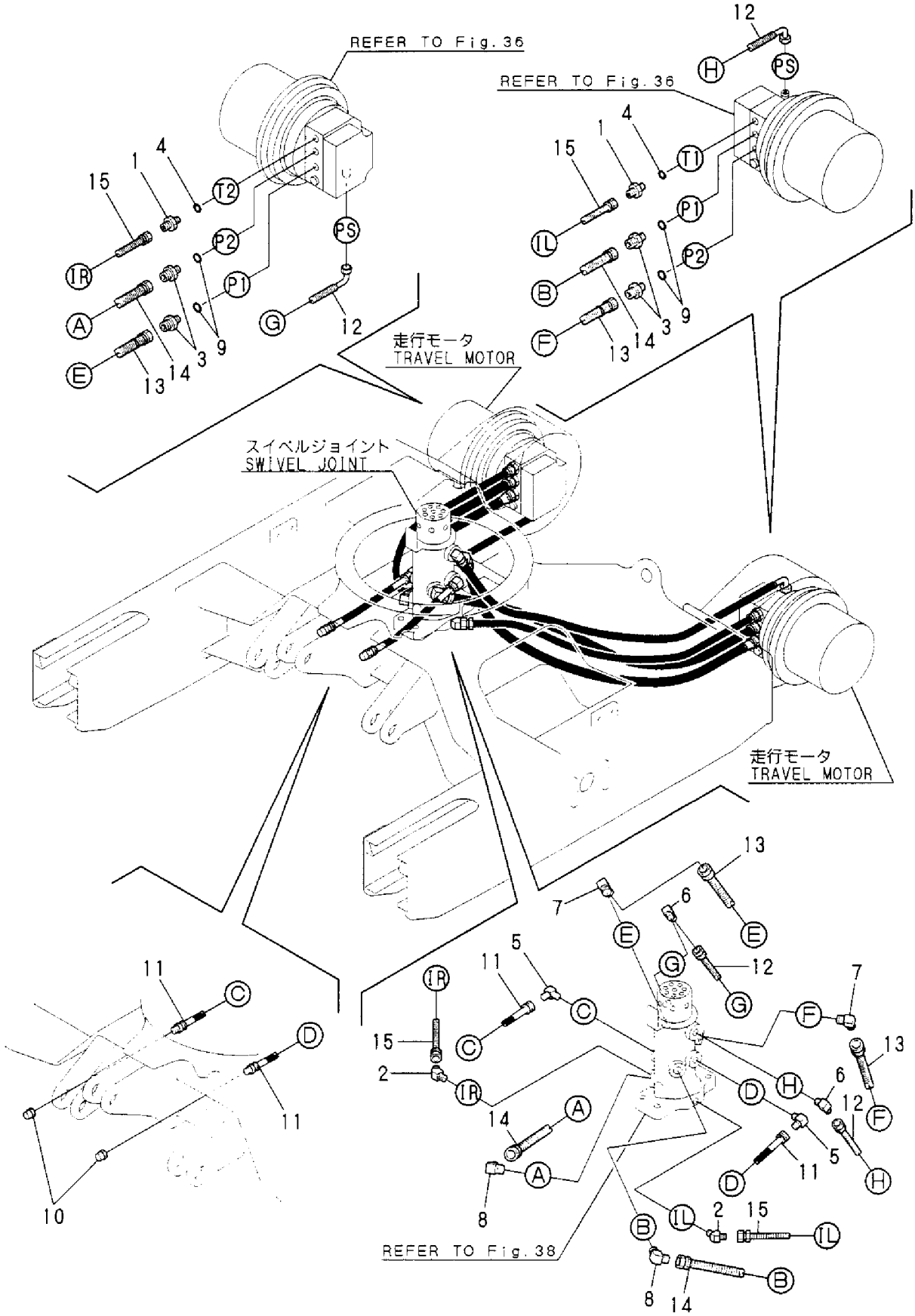

```
1,1,,172123-76120,,"CONNECTOR PF1/4",2,2,2,2,,,,,,,,,,,,
2,1,,24315-000110,,"O-RING 1B P-11.0",6,6,6,6,,,,,,,,,,,,
3,1,,172110-76170-4,,PLATE,4,4,,4,,,,,,,,,,,,
3A,1,,172110-76170-1,,PLATE,,,4,,,,,,,,,,,,,
4,1,,172149-76450-4,,"TUBE(L),ARM",1,1,,1,,,,,,,,,,,,
4A,1,,172149-76450-1,,"TUBE(L),ARM",,,1,,,,,,,,,,,,,
5,1,,172149-76471-4,,"TUBE(R),ARM",1,1,,1,,,,,,,,,,,,
5A,1,,172149-76471-1,,"TUBE(R),AR",,,1,,,,,,,,,,,,,
6,1,,172149-76490-4,,"TUBE(L),BUCKET",1,1,,1,,,,,,,,,,,,
6A,1,,172149-76490-1,,"TUBE(L),BUCKET",,,1,,,,,,,,,,,,,
7,1,,172149-76520-4,,"TUBE(R),BUCKET",1,1,,1,,,,,,,,,,,,
7A,1,,172149-76520-1,,"TUBE(R), BUCKET",,,1,,,,,,,,,,,,,
8,1,,172137-76580,,"COLLER 9X11",4,4,4,4,,,,,,,,,,,,
9,1,,172149-76580,,"JOINT, BOOM",1,1,1,1,,,,,,,,,,,,
10,1,,26013-080162,,"BOLT W/WASHER M8X16",3,3,3,3,,,,,,,,,,,,
11,1,,26013-080252,,"BOLT M 8X 25",4,4,4,4,,,,,,,,,,,,
12,1,,26013-100202,,"BOLT W/WASHER M10X20",2,2,2,2,,,,,,,,,,,,
13,1,,172137-78340,,HOSE,2,2,2,2,,,,,,,,,,,,
14,1,,172137-78350,,HOSE,2,,,,,,,,,,,,,,,,
15,1,,172149-78600,,CLAMP,1,1,1,1,,,,,,,,,,,,
16,1,,172149-78620-4,,"PLATE,CLAMP",1,1,,1,,,,,,,,,,,,
16A,1,,172149-78620-1,,"PLATE,CLAMP",,,1,,,,,,,,,,,,,
17,1,,172149-78650-4,,"SUPPORT,HOSE",1,1,1,1,,,,,,,,,,,,
17A,1,,172149-78650-1,,"SUPPORT,HOSE",,,1,,,,,,,,,,,,,
18,1,,172149-78760,,GROMMET,1,1,1,1,,,,,,,,,,,,
19,1,,23271-020501,,HOSE,1,1,1,1,,,,,,,,,,,,
20,1,,23271-020571,,HOSE,1,1,1,1,,,,,,,,,,,,
21,1,,26013-100202,,"BOLT W/WASHER M10X20",4,4,4,4,,,,,,,,,,,,
22,1,,172149-78190,,HOSE,1,1,1,1,,,,,,,,,,,,
23,1,,172149-78200,,HOSE,1,1,1,1,,,,,,,,,,,,
24,1,,172149-78250,,HOSE,1,1,1,1,,,,,,,,,,,,
25,1,,172149-78260,,HOSE,1,1,1,1,,,,,,,,,,,,
26,1,,172149-78280,,HOSE,1,1,1,1,,,,,,,,,,,,
27,1,,172149-78820,,"CLAMP, HOSE",1,1,1,1,,,,,,,,,,,,
28,1,,172150-78150,,HOSE,,2,2,,,,,,,,,,,,,
29,1,,172149-78871,,CLAMP,2,2,2,2,,,,,,,,,,,,
30,1,,26013-100202,,"BOLT W/WASHER M10X20",2,2,2,2,,,,,,,,,,,,
31,1,,172149-78180,,HOSE,1,1,1,1,,,,,,,,,,,,
32,1,,23871-010000,,"PLUG PT1/8,SCREW",1,1,1,1,,,,,,,,,,,,
33,1,,172149-78350,,"COVER, HOSE",2,2,2,2,,,,,,,,,,,,
34,1,,172454-78180,,HOSE,,,,2,,,,1,,,,,,,,,
```

Fig.55 油圧配管（ブーム） HYD. OIL PIPING (BOOM)

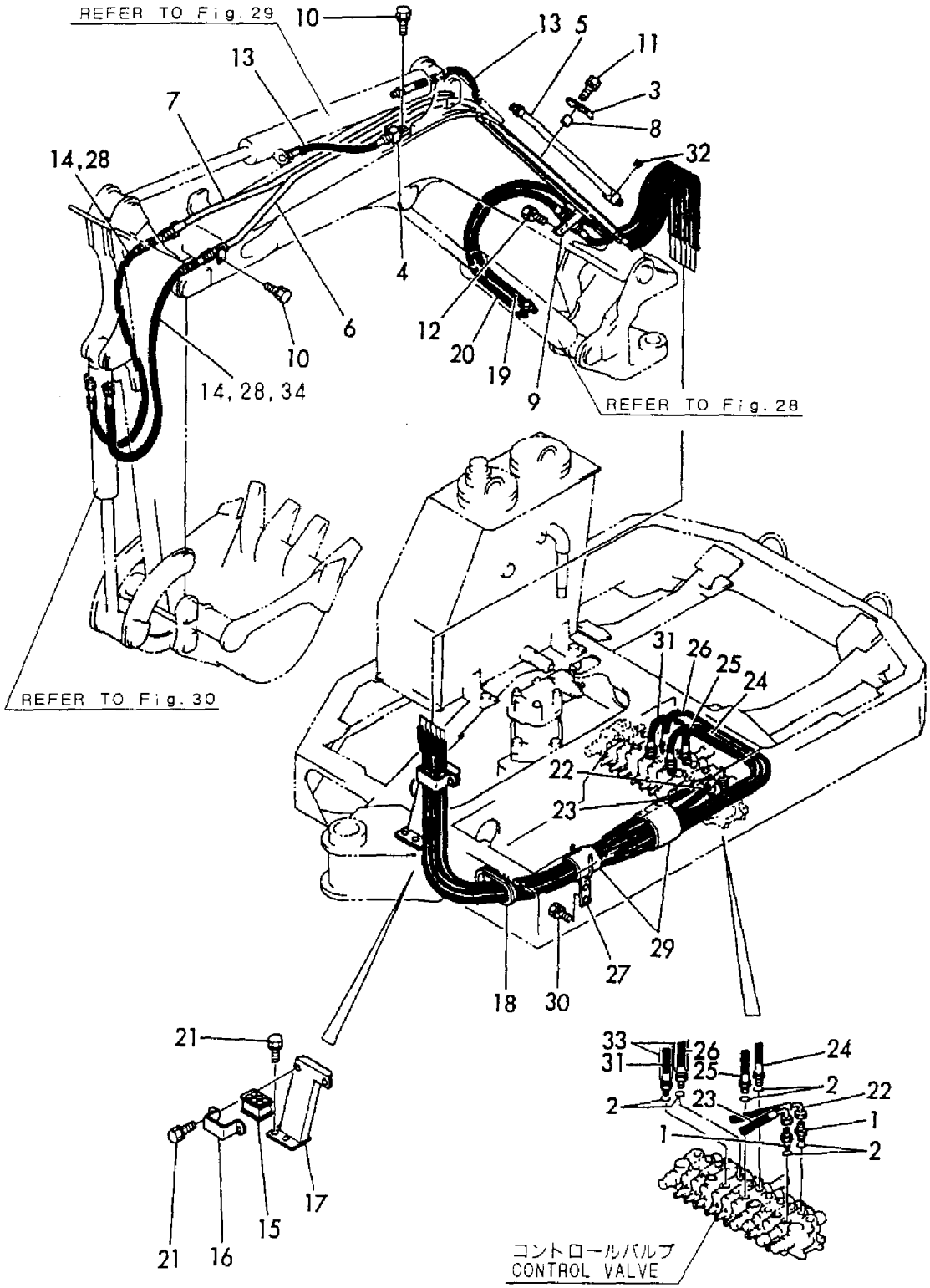

1,1,,772149-46100,,"3RD VALVE ASSY",1,1,1,,,,,,,,,,,,,
2,2,,172149-41860,,"PIN, BLADE",2,2,2,,,,,,,,,,,,,
3,2,,172149-42750,,"SUPPORT, PEDAL",1,1,1,,,,,,,,,,,,,
4,2,,172149-42800,,"PEDAL, 3RD",1,1,1,,,,,,,,,,,,,
5,3,,172141-41360,,"BUSH 1415",2,2,2,,,,,,,,,,,,,
7,2,,172149-42850,,"LINK, 3RD",1,1,1,,,,,,,,,,,,,
8,3,,172141-41360,,"BUSH 1415",2,2,2,,,,,,,,,,,,,
10,2,,172149-42890,,"LEVER, LOCK",1,1,1,,,,,,,,,,,,,
11,2,,172149-42900,,COLLAR,1,1,1,,,,,,,,,,,,,
12,2,,172149-42720,,"ROD COMP.,3RD",1,1,1,,,,,,,,,,,,,
15,2,,172146-45691,,"ROD(C), SPOOL",1,1,1,,,,,,,,,,,,,
16,2,,172122-46571,,"ROD-END 8",1,1,1,,,,,,,,,,,,,
17,2,,172122-46590,,"ELBALL 8",2,2,2,,,,,,,,,,,,,
18,2,,1C6281-52310,,"PIN 6,COME-OFF SNAP",1,1,1,,,,,,,,,,,,,
19,2,,22217-100000,,"SPRING WASHER 10",1,1,1,,,,,,,,,,,,,
20,2,,26013-100202,,"BOLT W/WASHER M10X20",4,4,4,,,,,,,,,,,,,
21,2,,26116-080302,,"BOLT 8X30",1,1,1,,,,,,,,,,,,,
22,2,,26116-100252,,"BOLT M10X 25 PLATED",1,1,1,,,,,,,,,,,,,
23,2,,26116-100352,,"BOLT 10X35",1,1,1,,,,,,,,,,,,,
24,2,,26051-080002,,"NUT M 8",2,2,2,,,,,,,,,,,,,
25,2,,26051-080002,,"NUT M 8",4,4,4,,,,,,,,,,,,,
26,2,,26716-100002,,"NUT 10",1,1,1,,,,,,,,,,,,,
27,2,,933110-54100,,"PIN 4.75X14",1,1,1,,,,,,,,,,,,,
28,2,,172131-03421,,"LABEL, 3RD VALVE",1,1,1,,,,,,,,,,,,,
29,2,,26013-100202,,"BOLT W/WASHER M10X20",2,2,2,,,,,,,,,,,,,
30,2,,24311-000210,,"O-RING 1A P-21.0",4,4,4,,,,,,,,,,,,,
31,2,,23871-040000,,"PLUG PT1/2,SCREW",2,2,2,,,,,,,,,,,,,
32,2,,23871-030000,,"PLUG PT3/8,SCREW",2,2,2,,,,,,,,,,,,,
33,2,,172730-75140,,ADAPTOR,1,1,1,,,,,,,,,,,,,
34,2,,24311-000140,,"O-RING 1A P-14.0",1,1,1,,,,,,,,,,,,,
35,2,,172149-76200,,CONNECTER,1,1,1,,,,,,,,,,,,,
36,2,,172149-76701-4,,CONNECTOR,1,1,,,,,,,,,,,,,,,
36A,2,,172149-76701,,CONNECTOR,,,1,,,,,,,,,,,,,
37,2,,23391-040000,,"JOINT RGI 1/2",1,1,1,,,,,,,,,,,,,
38,2,,933152-24410,,"CONNECTOR (A)",1,1,1,,,,,,,,,,,,,
39,2,,26013-100252,,"BOLT W/WASHER M10X25",2,2,2,,,,,,,,,,,,,
40,2,,172146-78380,,HOSE,1,1,1,,,,,,,,,,,,,
41,2,,172149-78461,,HOSE,1,1,1,,,,,,,,,,,,,
42,2,,172149-78900,,"CLAMP, HOSE(3RD)",1,1,1,,,,,,,,,,,,,
43,2,,172149-78920,,HOSE,1,1,1,,,,,,,,,,,,,
44,2,,22137-080000,,"WASHER 8, POLISHED",1,1,1,,,,,,,,,,,,,
45,2,,22137-080000,,"WASHER 8, POLISHED",2,2,2,,,,,,,,,,,,,
46,2,,26716-100002,,"NUT 10",1,1,1,,,,,,,,,,,,,
47,2,,172149-03451,,LABEL,1,1,1,,,,,,,,,,,,,

Fig.56 油圧配管（PTOバルブ～ブームブラケット）
HYD. OIL PIPING (P. T. O. VALVE~BOOM BRACKET)

見出しNo．1は、見出しNo．2から47を含みます。
1 inc. 2 ～ 47

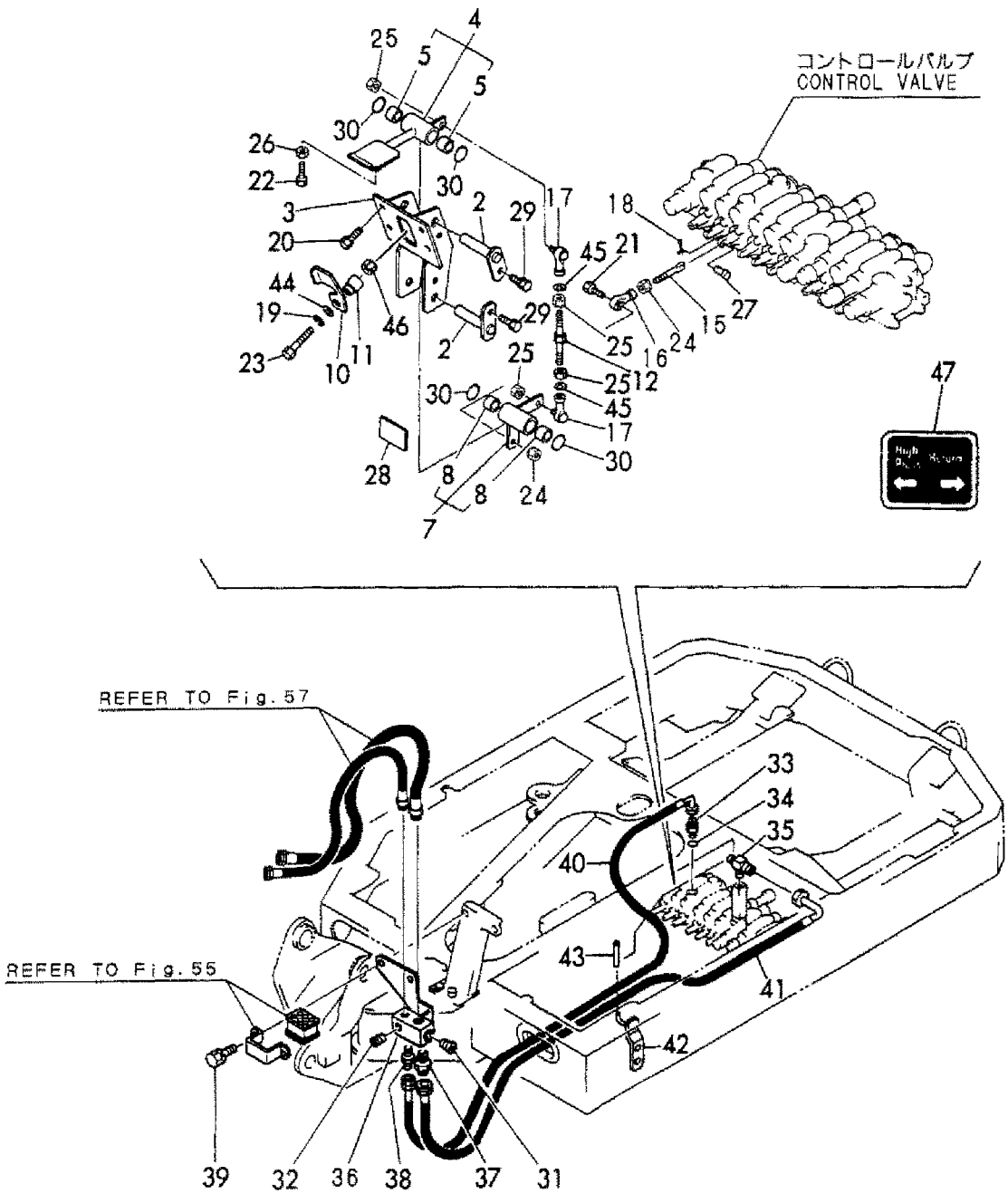

```
1,1,,772149-76411-4,,"PTO VALVE PIPING",1,1,,,,,,,,,,,,,,,
1A,1,,772149-76411-1,,"PTO VALVE PIPING",,,1,,,,,,,,,,,,,,,
2,2,,172112-76300-4,,"RETAINER A,BOOM PIPE",1,1,,,,,,,,,,,,,,,,,
2A,2,,172112-76300-3,,"RETAINER A,BOOM PIPE",,,1,,,,,,,,,,,,,,,,,
3,2,,172149-76541-4,,"HOSE,P.T.O. P",1,1,,,,,,,,,,,,,,,,,
3A,2,,172149-76541-1,,"HOSE, 3RD P",,,1,,,,,,,,,,,,,,,,,
4,2,,172149-76561-4,,"HOSE,P.T.O. T",1,1,,,,,,,,,,,,,,,,,
4A,2,,172149-76561-1,,"HOSE, 3RD T",,,1,,,,,,,,,,,,,,,,,
5,2,,23871-030000,,"PLUG PT3/8,SCREW",1,1,1,,,,,,,,,,,,,,,,,
6,2,,23871-040000,,"PLUG PT1/2,SCREW",1,1,1,,,,,,,,,,,,,,,,,
7,2,,26116-100552,,"BOLT M10X 55 PLATED",1,1,1,,,,,,,,,,,,,,,,,
8,2,,172142-76950-4,,"CLAMP 1/2 (GREEN:97)",3,3,,,,,,,,,,,,,,,,,,
8A,2,,172142-76950,,"CLAMP 1/2",,,3,,,,,,,,,,,,,,,,,
9,2,,172149-78470,,HOSE,1,1,1,,,,,,,,,,,,,,,,,
10,2,,172149-78480,,HOSE,1,1,1,,,,,,,,,,,,,,,,,
11,2,,26013-120402,,"BOLT M12X 40",1,1,1,,,,,,,,,,,,,,,,,
12,2,,22217-100000,,"SPRING WASHER 10",1,1,1,,,,,,,,,,,,,,,,,
13,2,,172183-76260,,SPACER,1,1,,,,,,,,,,,,,,,,,
13A,2,,172183-76260-1,,SPACER,,,1,,,,,,,,,,,,,,,,,
14,2,,172183-76250,,PLATE,2,2,,,,,,,,,,,,,,,,,
14A,2,,172183-76250-1,,PLATE,,,2,,,,,,,,,,,,,,,,,
15,2,,26013-120502,,"BOLT M12X 50",2,2,2,,,,,,,,,,,,,,,,,
```

Fig.57 油圧配管（PTOブームエンド） HYD.OIL PIPING(P.T.O.BOOM END)

見出しNo．1は、見出しNo．2から15を含みます。
1inc.2 ～ 15

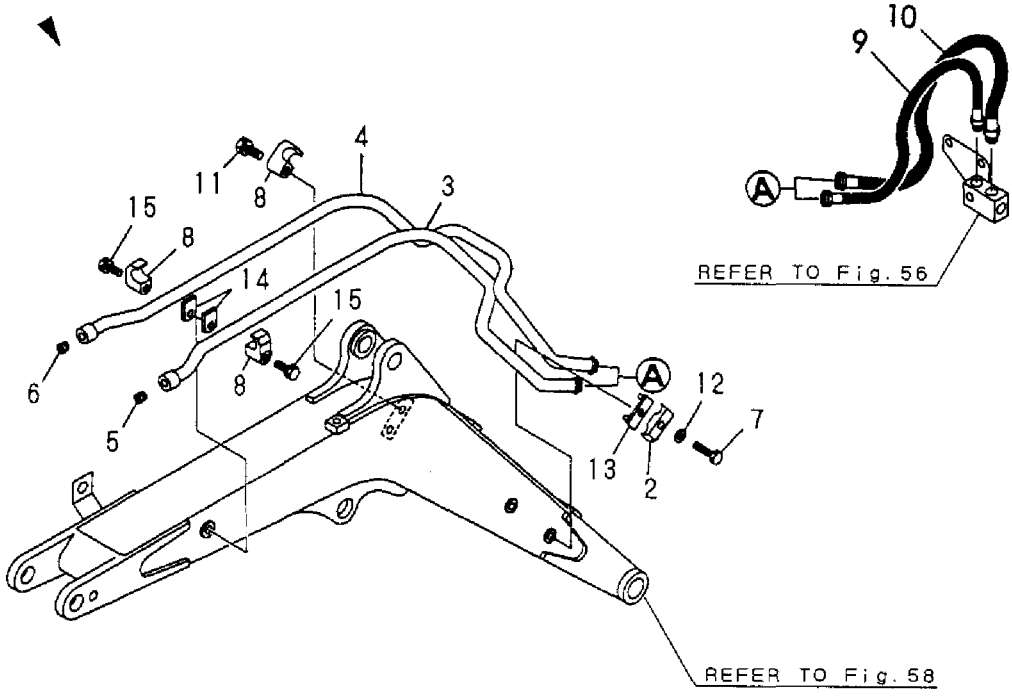

```
1,1,,172010-01640,,SPACER,1,1,1,1,,,,,,,,,,,,,
2,1,,172010-01640,,SPACER,2,2,2,2,,,,,,,,,,,,,
3,1,,172183-81100,,"BOOM W/BUSH",1,1,,1,,,,,,,,,,,,,
3A,1,,172183-81100-1,,"BOOM W/BUSH",,,1,,,,,,,,,,,,,,
4,2,,172171-81280,,"SEAL 35X45X4",2,2,2,2,,,,,,,,,,,,,
5,2,,172141-82270,,"BUSH 35 45",2,2,2,2,,,,,,,,,,,,,
6,1,,172149-81301-4,,"PIN 35X114 ASSY",1,1,,1,,,,,,,,,,,,,
6A,1,,172149-81301-1,,"PIN 35X114 COMPL",,,1,,,,,,,,,,,,,,
7,1,,172149-81321-4,,"PIN 30X148 ASSY",1,1,,1,,,,,,,,,,,,,
7A,1,,172149-81321-1,,"PIN 30X148 COMPL.",,,1,,,,,,,,,,,,,,
8,1,,172137-81361-4,,"PIN 30X114 ASSY",1,1,,1,,,,,,,,,,,,,
8A,1,,172137-81361-1,,PIN,,,1,,,,,,,,,,,,,,
9,1,,172141-84601,,"SHIM 35",1,1,1,1,,,,,,,,,,,,,
10,1,,22157-100000,,"WASHER 10",1,1,1,1,,,,,,,,,,,,,
11,1,,22157-100000,,"WASHER 10",2,2,2,2,,,,,,,,,,,,,
12,1,,24761-020000,,"NIPPLE PT1/8,GREASE",1,1,1,1,,,,,,,,,,,,,
13,1,,26013-100252,,"BOLT W/WASHER M10X25",1,1,1,1,,,,,,,,,,,,,
14,1,,26013-100302,,"BOLT M10X 30",2,2,2,2,,,,,,,,,,,,,
15,1,,933160-06711,,"SHIM 30, PIN ADJUST",2,2,2,2,,,,,,,,,,,,,
16,1,,172010-01640,,SPACER,2,2,2,2,,,,,,,,,,,,,
17,1,,172149-83101-4,,"BRACKET,BOOM",1,1,,1,,,,,,,,,,,,,
17A,1,,172149-83101-1,,"BRACKET, BOOM",,,1,,,,,,,,,,,,,,
18,1,,172149-83110,,PIN,1,1,1,1,,,,,,,,,,,,,
19,1,,172149-83131-4,,"PIN 35X213 ASSY",1,1,,1,,,,,,,,,,,,,
19A,1,,172149-83131-1,,"PIN 35X213 COMPL.",,,1,,,,,,,,,,,,,,
20,1,,172149-83151-4,,"PIN 35X114B ASSY",1,1,,1,,,,,,,,,,,,,
20A,1,,172149-83151-1,,PIN,,,1,,,,,,,,,,,,,,
21,1,,172149-83170,,PIN,1,1,1,1,,,,,,,,,,,,,
22,1,,172149-83180,,PIN,1,1,1,1,,,,,,,,,,,,,
23,1,,172149-83190,,"PLATE, LOCK",1,1,1,1,,,,,,,,,,,,,
24,1,,172117-83970-2,,"PLATE(C),LOCK",2,2,,2,,,,,,,,,,,,,
24A,1,,172117-83970-5,,PLATE,,,2,,,,,,,,,,,,,,
25,1,,172141-84601,,"SHIM 35",2,2,2,2,,,,,,,,,,,,,
26,1,,22157-100000,,"WASHER 10",2,2,2,2,,,,,,,,,,,,,
27,1,,26013-100252,,"BOLT W/WASHER M10X25",6,6,6,6,,,,,,,,,,,,,
28,1,,26013-100252,,"BOLT W/WASHER M10X25",2,2,2,2,,,,,,,,,,,,,
29,1,,933171-29751,,"SHIM SET,38X(0.8,1.2",2,2,2,2,,,,,,,,,,,,,
30,1,,24761-040000,,"NIPPLE B,GREASE",1,1,1,1,,,,,,,,,,,,,
31,1,,172183-81160,,"TREE CLIP",2,2,2,2,,,,,,,,,,,,,
32,1,,172183-81170,,"TREE CLIP",3,3,3,3,,,,,,,,,,,,,
33,1,,172173-81720,,SHIM,1,1,1,1,,,,,,,,,,,,,
34,1,,172173-81730,,SHIM,1,1,1,1,,,,,,,,,,,,,
```

Fig.58 ブーム&ブームブラケット BOOM & BOOM BRACKET

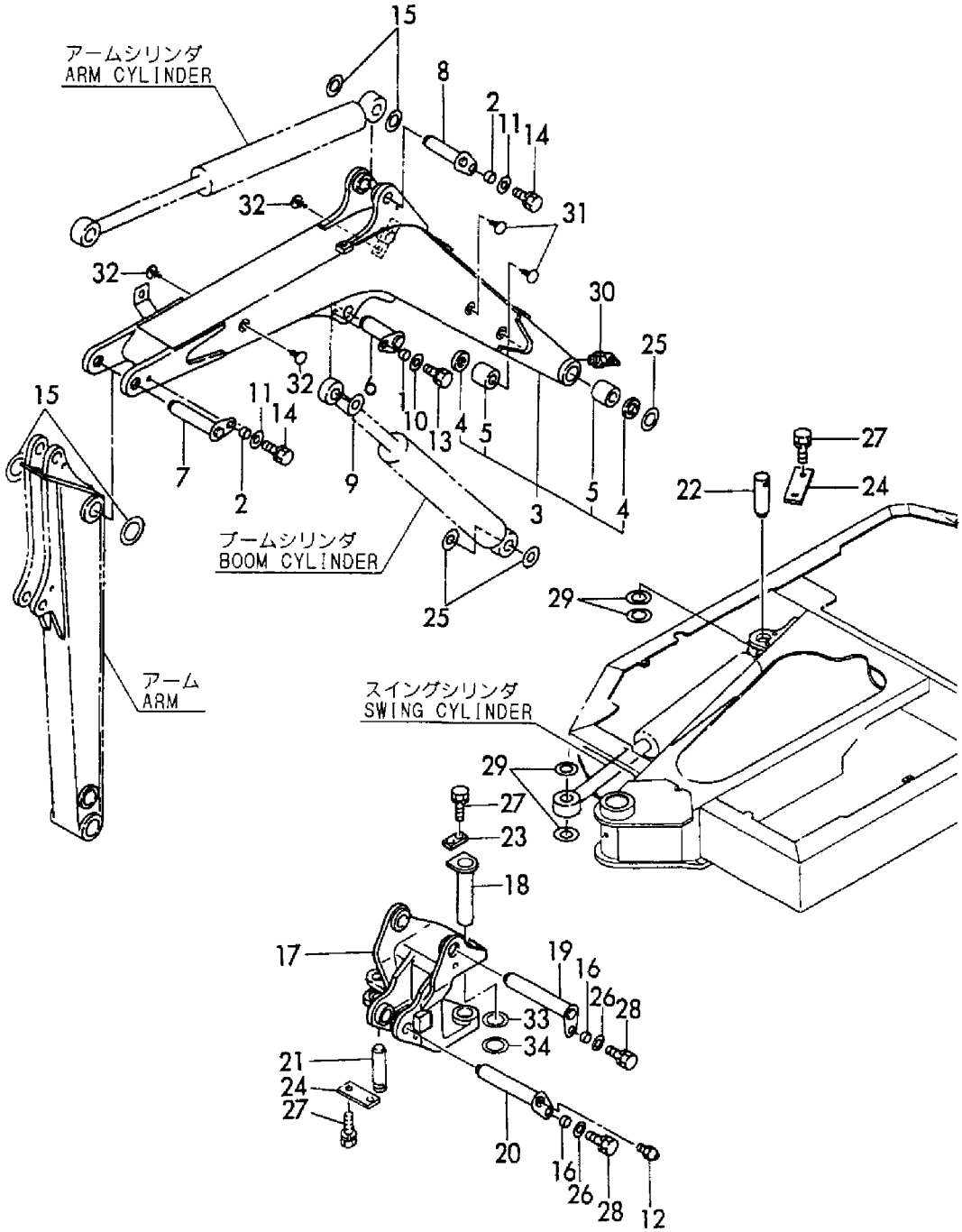

```
1,1,,172010-01640,,SPACER,2,2,2,,,,,,,,,,,,,
2,1,,172138-82102-4,,ARM,1,,,,,,,,,,,,,,,,
3,2,,172183-72290,,"SEAL 38X48X 4, DUST",6,,,,,,,,,,,,,,,,
4,2,,172137-81300,,"BUSH 30X45, PIN",6,,,,,,,,,,,,,,,,
5,1,,172183-82101,,"ARM 950 ASSY",,1,,,,,,,,,,,,,,,
5A,1,,172183-82101-1,,"ARM 950 ASSY",,,1,,,,,,,,,,,,,,
6,2,,172183-72290,,"SEAL 38X48X 4, DUST",,6,6,,,,,,,,,,,,,,
7,2,,172137-81300,,"BUSH 30X45, PIN",,6,6,,,,,,,,,,,,,,
8,1,,172137-94251-4,,"PIN 30X76A",2,2,,,,,,,,,,,,,,,
8A,1,,172137-94251-1,,"PIN 30X76",,,2,,,,,,,,,,,,,,,
9,1,,22157-100000,,"WASHER 10",2,2,2,,,,,,,,,,,,,,
10,1,,24761-040000,,"NIPPLE B,GREASE",1,1,1,,,,,,,,,,,,,
11,1,,26013-100252,,"BOLT W/WASHER M10X25",,2,2,,,,,,,,,,,,,,
12,1,,26013-100302,,"BOLT M10X 30",2,,,,,,,,,,,,,,,,
13,1,,933160-06711,,"SHIM 30, PIN ADJUST",2,2,2,,,,,,,,,,,,,,
14,1,,172149-99470-4,,"KIT,ARM PIN",2,2,,,,,,,,,,,,,,,
14A,1,,172149-99470-1,,"KIT, ARM PIN",,,2,,,,,,,,,,,,,,,
15,2,,172137-81380,,"NUT M16",2,2,2,,,,,,,,,,,,,,
16,2,,172149-83200-4,,"PIN 30X150 ASSY",2,2,,,,,,,,,,,,,,,
16A,2,,172149-83200-1,,"PIN 30X150 COMPL.",,,2,,,,,,,,,,,,,,
17,2,,24761-020000,,"NIPPLE PT1/8,GREASE",2,2,2,,,,,,,,,,,,,,
18,2,,933147-08501,,"WASHER 17X40X4.5",2,2,2,,,,,,,,,,,,,,
19,2,,933160-06711,,"SHIM 30, PIN ADJUST",2,2,2,,,,,,,,,,,,,,
20,1,,172137-84403-4,,"LINK,BUCKET",1,1,,,,,,,,,,,,,,,
20-1,1,,172137-84404-1,,"LINK,BUCKET",1,1,,,,N,,,M/#30591,,M/#30533,,,,,,
20A,1,,172137-84403-1,,"LINK COMP.,BUCKET",,,1,,,,,,,,,,,,,,
20A-1,1,,172137-84404-2,,"LINK,BUCKET",,,1,,,,N,,,,,,,M/#30533,,,,
21,2,,172183-72290,,"SEAL 38X48X 4, DUST",6,6,6,,,,,,,,,,,,,,
22,2,,172137-81300,,"BUSH 30X45, PIN",2,2,2,,,,,,,,,,,,,,
23,2,,172137-84451,,BUSH,2,2,2,,,,,,,,,,,,,,
24,1,,172137-84502-4,,"ARM(L), BUCKET",1,1,,,,,,,,,,,,,,,
24A,1,,172137-84502-1,,"ARM(L),BUCKET",,,1,,,,,,,,,,,,,,
25,1,,172137-84512-4,,"ARM(R), BUCKET",1,1,,,,,,,,,,,,,,,
25A,1,,172137-84512-1,,"ARM(R),BUCKET",,,1,,,,,,,,,,,,,,
26,1,,24761-020000,,"NIPPLE PT1/8,GREASE",2,2,2,,,,,,,,,,,,,,
27,1,,172183-81160,,"TREE CLIP",,4,4,,,,,,,,,,,,,,
28,1,,172150-03050,,LABEL,,1,,,,,,1,,,,,,,,,
29,1,,172431-03050,,LAVEL,1,,,,,,,1,,,,,,,,,
30,1,,172183-84450,,"LINK,BUCKET",1,1,,,,,,1,,,,,,,,,
31,2,,172183-72290,,"SEAL 38X48X 4, DUST",6,6,,,,,,1,,,,,,,,,
32,2,,172137-81300,,"BUSH 30X45, PIN",2,2,,,,,,1,,,,,,,,,
33,2,,172137-84451,,BUSH,2,2,,,,,,1,,,,,,,,,
```

Fig.59 アーム&バケットリンク ARM & BUCKET LINK

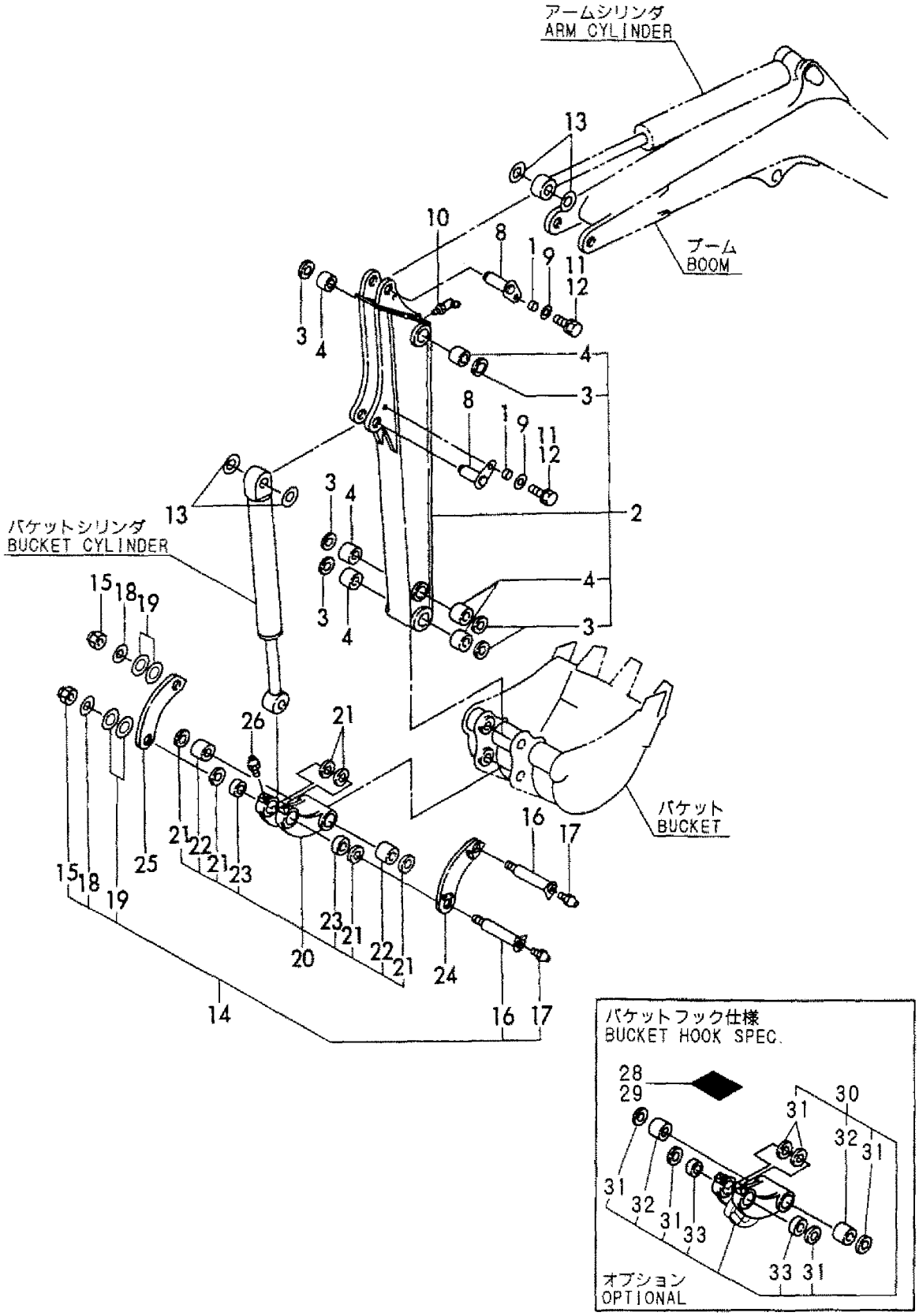

```
1,1,,172010-01640,,SPACER,,,,2,,,,,,,,,,,,,
2,1,,172454-81200,,ARM,,,,1,,,,,,,,,,,,,
3,2,,172183-72290,,"SEAL 38X48X 4, DUST",,,,6,,,,,,,,,,,,,
4,2,,172137-81300,,"BUSH 30X45, PIN",,,,6,,,,,,,,,,,,,
5,1,,172137-94251-4,,"PIN 30X76A",,,,2,,,,,,,,,,,,,
6,1,,22157-100000,,"WASHER 10",,,,2,,,,,,,,,,,,,
7,1,,24761-040000,,"NIPPLE B,GREASE",,,,1,,,,,,,,,,,,,
8,1,,26013-100252,,"BOLT W/WASHER M10X25",,,,2,,,,,,,,,,,,,
9,1,,933160-06711,,"SHIM 30, PIN ADJUST",,,,2,,,,,,,,,,,,,
10,1,,172149-99470-4,,"KIT,ARM PIN",,,,2,,,,,,,,,,,,,
11,2,,172137-81380,,"NUT M16",,,,2,,,,,,,,,,,,,
12,2,,172149-83200-4,,"PIN 30X150 ASSY",,,,2,,,,,,,,,,,,,
13,2,,24761-020000,,"NIPPLE PT1/8,GREASE",,,,2,,,,,,,,,,,,,
14,2,,933147-08501,,"WASHER 17X40X4.5",,,,2,,,,,,,,,,,,,
15,2,,933160-06711,,"SHIM 30, PIN ADJUST",,,,2,,,,,,,,,,,,,
16,1,,172137-84404-1,,"LINK,BUCKET",,,,1,,,,,,,,,,,,,
17,2,,172183-72290,,"SEAL 38X48X 4, DUST",,,,6,,,,,,,,,,,,,
18,2,,172137-81300,,"BUSH 30X45, PIN",,,,2,,,,,,,,,,,,,
19,2,,172137-84451,,BUSH,,,,2,,,,,,,,,,,,,
20,1,,172137-84502-4,,"ARM(L), BUCKET",,,,1,,,,,,,,,,,,,
21,1,,172137-84512-4,,"ARM(R), BUCKET",,,,1,,,,,,,,,,,,,
22,1,,24761-020000,,"NIPPLE PT1/8,GREASE",,,,2,,,,,,,,,,,,,
```

Fig.60 アーム&バケットリンク（レンコン仕様） ARM & BUCKET LINK (LOTUS ROOT SPEC.)

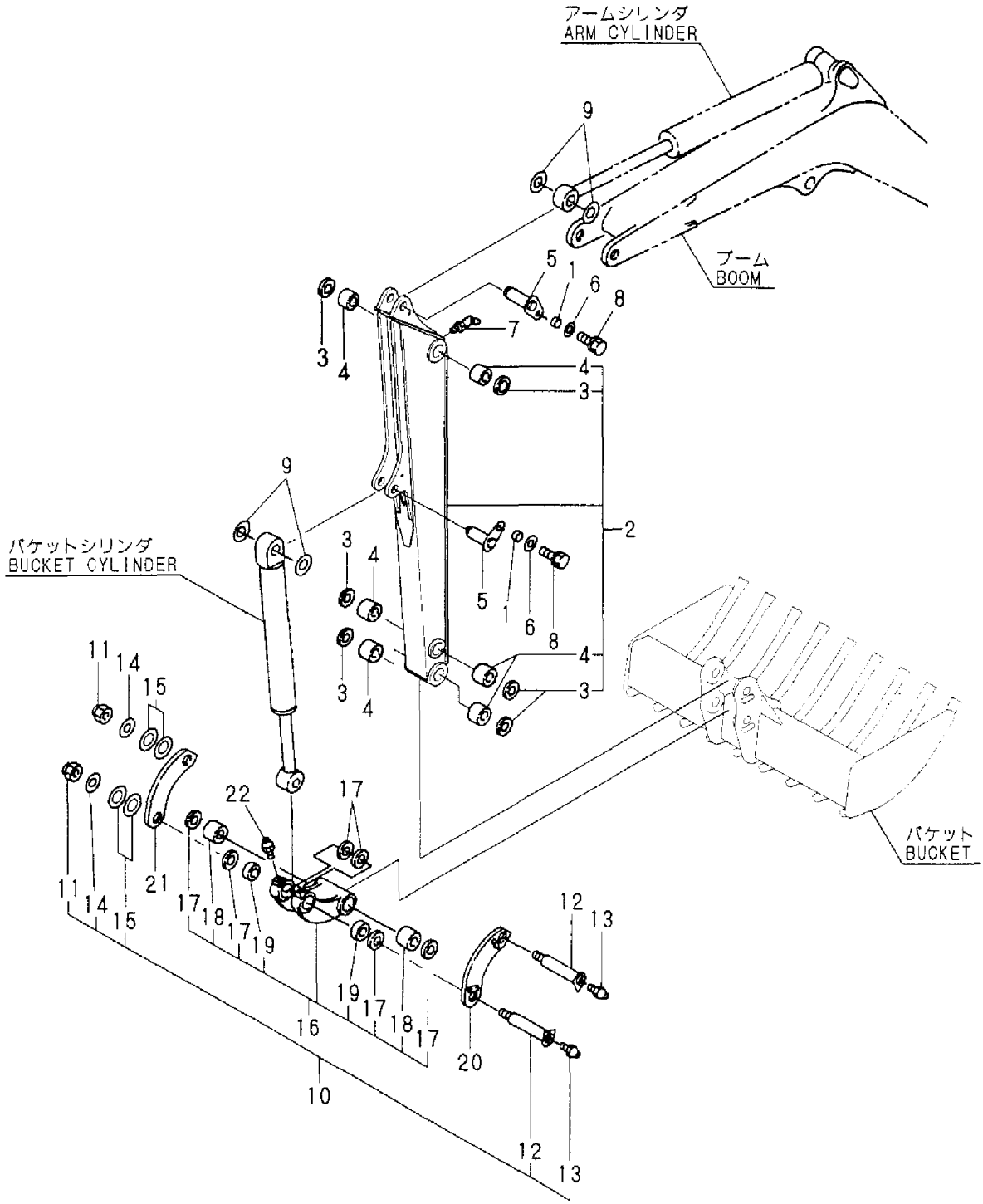

```
1,1,,172137-99451-4,,"BIN KIT,BUCKET",2,2,,,,,,,,,,,,,,,
1A,1,,172137-99451-2,,"BIN KIT,BUCKET",,,2,,,,,,,,,,,,,,
2,2,,172149-83220,,"COLLAR 30X42.7X22",2,2,2,,,,,,,,,,,,,,,
3,2,,172137-86251-4,,"PIN, BUCKET",2,2,,,,,,,,,,,,,,,
3A,2,,172137-86251-1,,"PIN,BUCKET",,,2,,,,,,,,,,,,,,
4,2,,24761-020000,,"NIPPLE PT1/8,GREASE",2,2,2,,,,,,,,,,,,,,,
5,2,,26116-100602,,"BOLT M10X 60 PLATED",2,2,2,,,,,,,,,,,,,,,
6,2,,26716-100002,,"NUT 10",4,4,4,,,,,,,,,,,,,,
7,2,,933160-06711,,"SHIM 30, PIN ADJUST",2,2,2,,,,,,,,,,,,,,,
8,1,,772137-86101-4,,"BUCKET 400 COMPL.",1,1,,,,,,1,,,,,,,,,
10,2,,172137-86240-4,,"TEETH,SIDE",2,2,,,,,,,,,,,,,,,
11,2,,772137-86751-4,,"TEETH ASSY",3,3,,,,,,,,,,,,,,,
12,3,,172137-86700,,"SHIM 2.3, TEETH",3,3,,,,,,,,,,,,,,,
13,3,,172137-86710,,"TEETH SHIM 17 SET",3,3,,,,,,,,,,,,,,,
14,3,,172137-86751-4,,"TEETH CMP",3,3,,,,,,,,,,,,,,,
15,4,,172141-86231-4,,TEETH,3,3,,,,,,,,,,,,,,,
16,4,,172137-86770,,BOLT,6,6,,,,,,,,,,,,,,,
17,4,,172137-86780-4,,"NUT          (GREEN)",6,6,,,,,,,,,,,,,,,
18,1,,772137-86301-4,,"BUCKET 450 COMPL.",1,1,,,,,,2,,,,,,,,,
20,2,,172137-86240-4,,"TEETH,SIDE",2,2,,,,,,,,,,,,,,,
21,2,,772137-86751-4,,"TEETH ASSY",4,4,,,,,,,,,,,,,,,
22,3,,172137-86700,,"SHIM 2.3, TEETH",4,4,,,,,,,,,,,,,,,
23,3,,172137-86710,,"TEETH SHIM 17 SET",4,4,,,,,,,,,,,,,,,
24,3,,172137-86751-4,,"TEETH CMP",4,4,,,,,,,,,,,,,,,
25,4,,172141-86231-4,,TEETH,4,4,,,,,,,,,,,,,,,
26,4,,172137-86770,,BOLT,8,8,,,,,,,,,,,,,,,
27,4,,172137-86780-4,,"NUT          (GREEN)",8,8,,,,,,,,,,,,,,,
```

Fig.61 バケット (400) (450)
BUCKET (400) (450)

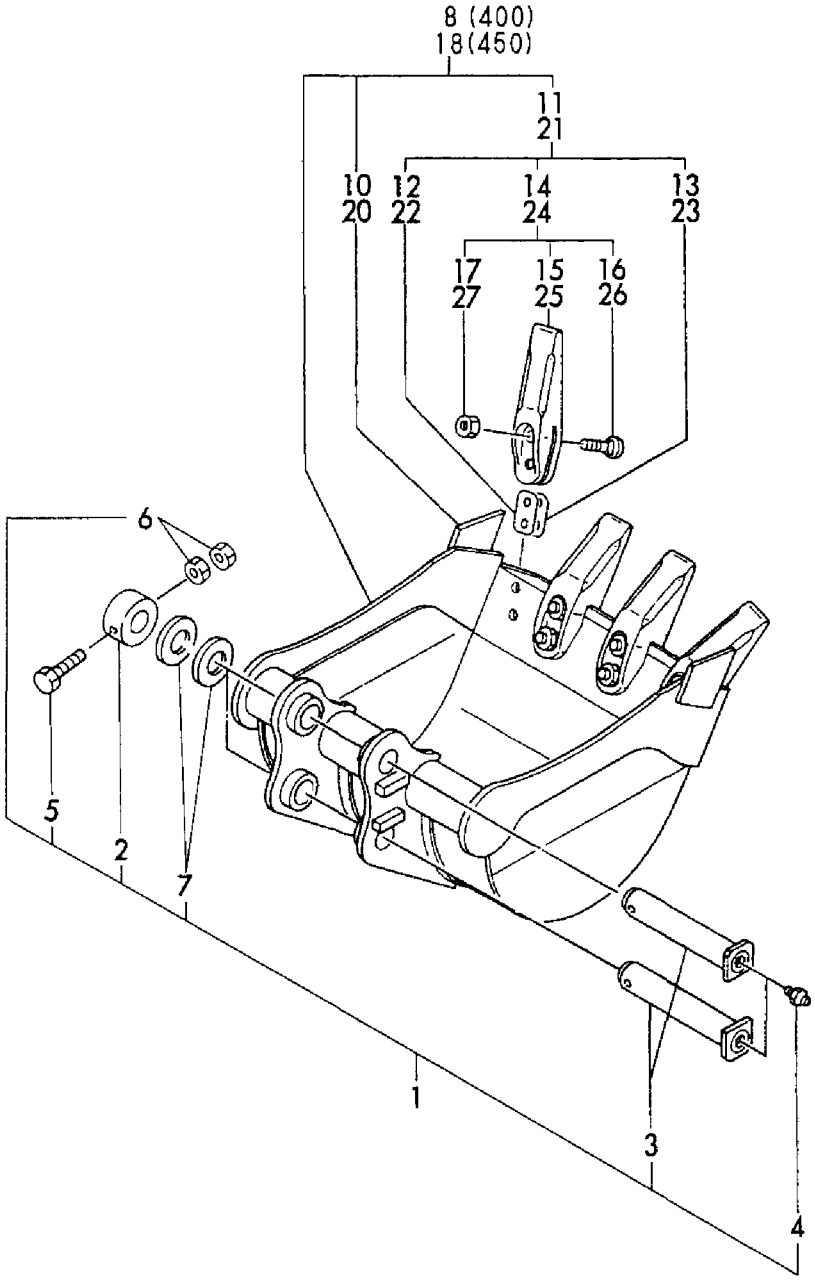

```
1,1,,172137-99451-4,,"BIN KIT,BUCKET",,,,2,,,,,,,,,,,,,
2,2,,172149-83220,,"COLLAR 30X42.7X22",,,,2,,,,,,,,,,,,,
3,2,,172137-86251-4,,"PIN, BUCKET",,,,2,,,,,,,,,,,,,
4,2,,24761-020000,,"NIPPLE PT1/8,GREASE",,,,2,,,,,,,,,,,,,,
5,2,,26116-100602,,"BOLT M10X 60 PLATED",,,,2,,,,,,,,,,,,,,
6,2,,26716-100002,,"NUT 10",,,,4,,,,,,,,,,,,,
7,2,,933160-06711,,"SHIM 30, PIN ADJUST",,,,2,,,,,,,,,,,,,,
8,1,,172454-86100,,BUCKET,,,,1,,,,,,,,,,,,,
```

Fig.62 バケット（900）（レンコン仕様）
BUCKET (900) (LOTUS ROOT SPEC.)

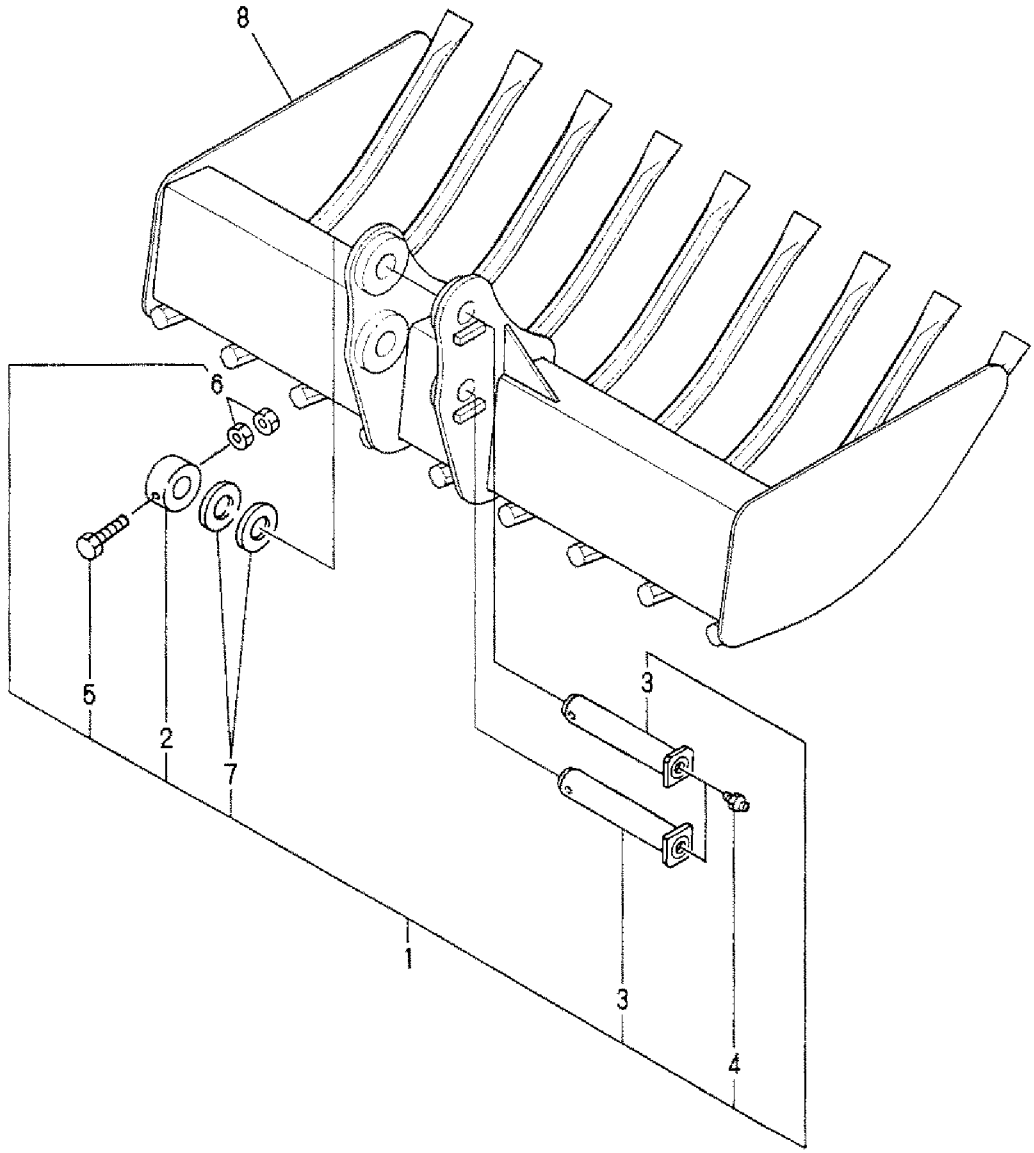

```
1,1,,172137-99451-4,,"BIN KIT,BUCKET",2,2,,,,,,,,,,,,,,,
2,2,,172149-83220,,"COLLAR 30X42.7X22",2,2,,,,,,,,,,,,,,,
3,2,,172137-86251-4,,"PIN, BUCKET",2,2,,,,,,,,,,,,,,,
4,2,,24761-020000,,"NIPPLE PT1/8,GREASE",2,2,,,,,,,,,,,,,,,
5,2,,26116-100602,,"BOLT M10X 60 PLATED",2,2,,,,,,,,,,,,,,,
6,2,,26716-100002,,"NUT 10",4,4,,,,,,,,,,,,,,,
7,2,,933160-06710,,"SHIM 30, PIN ADJUST",2,2,,,,,,,,,,,,,,,
8,1,,772137-86401-4,,"BUCKET 250 COMPL.",1,1,,,,,,,,,,,,,,,
10,2,,172137-86240-4,,"TEETH,SIDE",2,2,,,,,,,,,,,,,,,
11,2,,772137-86751-4,,"TEETH ASSY",2,2,,,,,,,,,,,,,,,
12,3,,172137-86700,,"SHIM 2.3, TEETH",2,2,,,,,,,,,,,,,,,
13,3,,172137-86710,,"TEETH SHIM 17 SET",2,2,,,,,,,,,,,,,,,
14,3,,172137-86751-4,,"TEETH CMP",2,2,,,,,,,,,,,,,,,
15,4,,172141-86231-4,,TEETH,2,2,,,,,,,,,,,,,,,
16,4,,172137-86770,,BOLT,4,4,,,,,,,,,,,,,,,
17,4,,172137-86780-4,,"NUT          (GREEN)",4,4,,,,,,,,,,,,,,,
18,1,,772137-86501-4,,"BUCKET(300) ASSY",1,1,,,,,,,,,,,,,,,
20,2,,172137-86240-4,,"TEETH,SIDE",2,2,,,,,,,,,,,,,,,
21,2,,772137-86751-4,,"TEETH ASSY",3,3,,,,,,,,,,,,,,,
22,3,,172137-86700,,"SHIM 2.3, TEETH",3,3,,,,,,,,,,,,,,,
23,3,,172137-86710,,"TEETH SHIM 17 SET",3,3,,,,,,,,,,,,,,,
24,3,,172137-86751-4,,"TEETH CMP",3,3,,,,,,,,,,,,,,,
25,4,,172141-86231-4,,TEETH,3,3,,,,,,,,,,,,,,,
26,4,,172137-86770,,BOLT,6,6,,,,,,,,,,,,,,,
27,4,,172137-86780,,NUT,6,6,,,,,,,,,,,,,,,
28,1,,772137-86601-4,,"BUCKET 350 COMPL.",1,1,,,,,,,,,,,,,,,
30,2,,172137-86240-4,,"TEETH,SIDE",2,2,,,,,,,,,,,,,,,
31,2,,772137-86751-4,,"TEETH ASSY",3,3,,,,,,,,,,,,,,,
32,3,,172137-86700,,"SHIM 2.3, TEETH",3,3,,,,,,,,,,,,,,,
33,3,,172137-86710,,"TEETH SHIM 17 SET",3,3,,,,,,,,,,,,,,,
34,3,,172137-86751-4,,"TEETH CMP",3,3,,,,,,,,,,,,,,,
35,4,,172141-86231-4,,TEETH,3,3,,,,,,,,,,,,,,,
36,4,,172137-86770,,BOLT,6,6,,,,,,,,,,,,,,,
37,4,,172137-86780-4,,"NUT          (GREEN)",6,6,,,,,,,,,,,,,,,
```

Fig.63 バケット250，300，350（アタッチメント） BUCKET250, 300, 350 (ATTACHMENT)

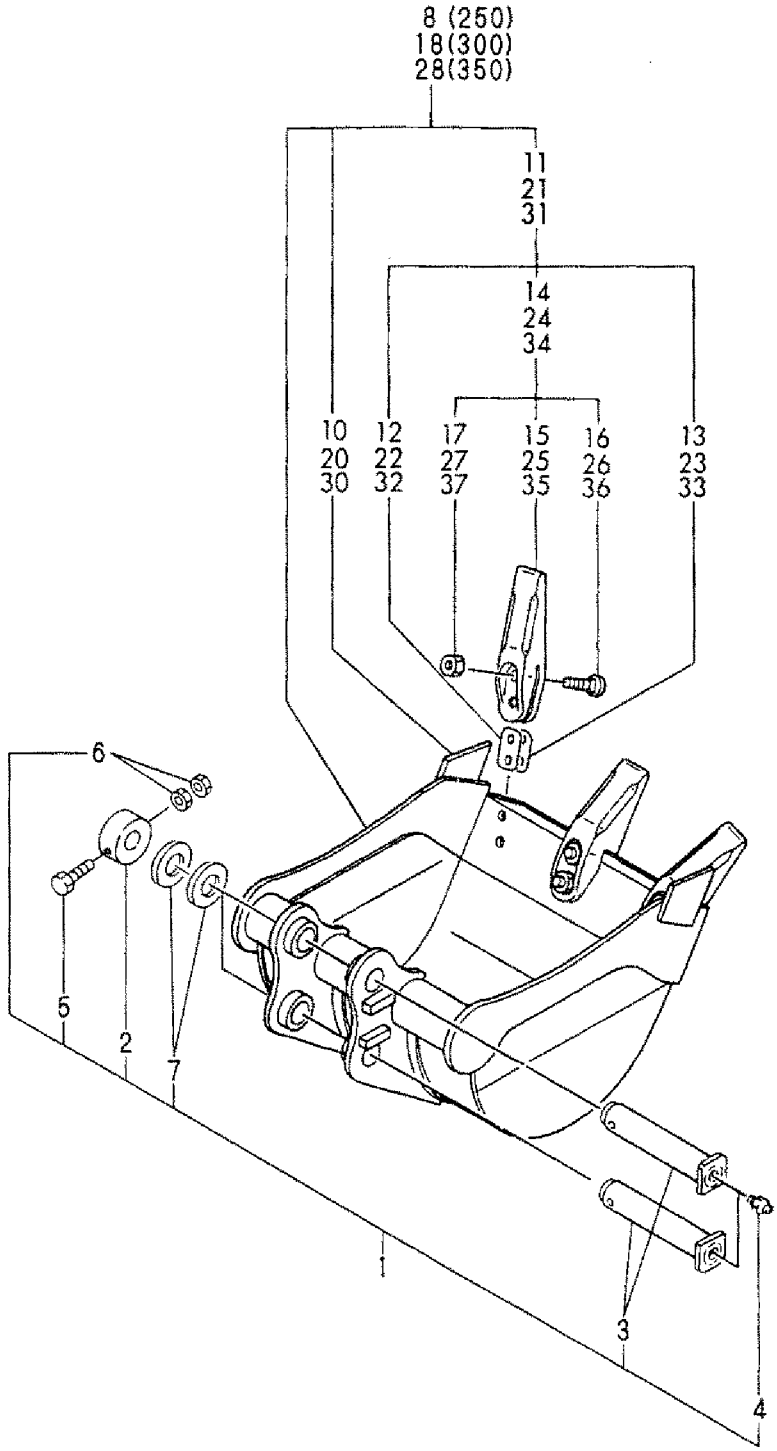

```
1,1,,172010-01640,,SPACER,4,4,4,,,,,,,,,,,,,
2,1,,172137-94101,,"BLADE ASSY",1,1,1,,,,,,,,,,,,,
3,2,,172183-72290,,"SEAL 38X48X 4, DUST",4,4,4,,,,,,,,,,,,,,
4,1,,172137-94251-3,,"PIN 30X76",2,2,2,,,,,,,,,,,,,
5,1,,172137-94271-2,,PIN,2,2,2,,,,,,,,,,,,,
6,1,,22157-100000,,"WASHER 10",4,4,4,,,,,,,,,,,,,
7,1,,24761-020000,,"NIPPLE PT1/8,GREASE",2,2,2,,,,,,,,,,,,,
8,1,,24761-040000,,"NIPPLE B,GREASE",2,2,2,,,,,,,,,,,,,
9,1,,26013-100302,,"BOLT M10X 30",4,4,4,,,,,,,,,,,,,
10,1,,933160-06711,,"SHIM 30, PIN ADJUST",4,4,4,,,,,,,,,,,,,,
```

Fig. 64 ブレード BLADE

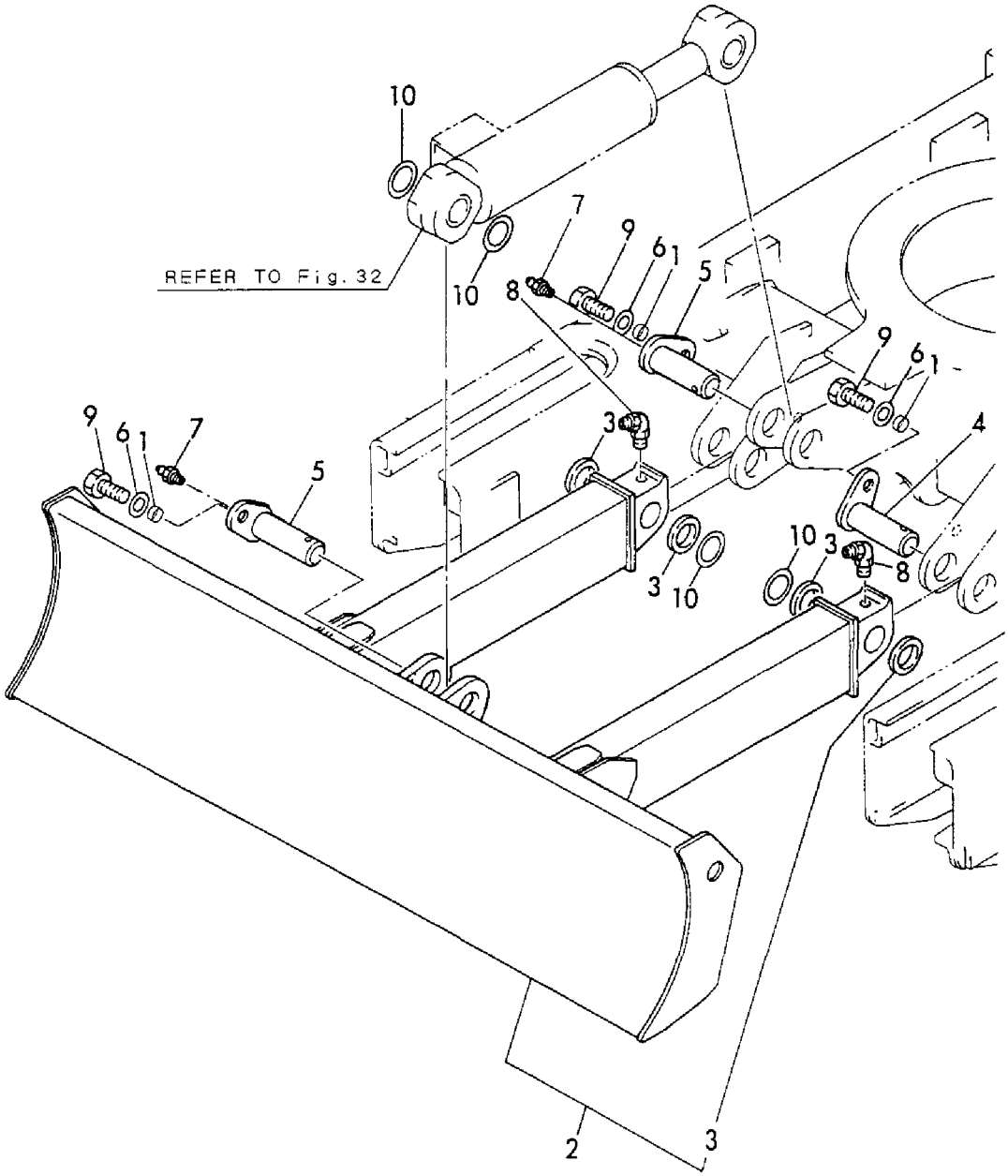

[Info]
PcNo=Y00K3442
PcName=B12/17-2B(JP,SA,EX)
JpnUse=1
JpnSec1=Œš‹@
JpnSec2=ƒoƒbƒNƒz[
JpnSec3=B
JpnPreface=1
EngUse=1
EngSec1=CONSTRUCTION
EngSec2=EXCAVATOR (B)
EngSec3=B
EngPreface=1

0,Y00K3442
1,001,,"VEHICLE B12/17-2B(JP,AS,EX)"
2,1,,LABEL(JP),"B12-2B(JP,EX","B17-2B(JP,EX",B17-2B(AS),B17-2B(ÚÝºÝ)
2,2,,"LABEL(LOTUS ROOT SPEC.)","B12-2B(JP,EX","B17-2B(JP,EX",B17-2B(AS),B17-2B(ÚÝºÝ)
2,3,,"LABEL(AS,EX)","B12-2B(JP,EX","B17-2B(JP,EX",B17-2B(AS),B17-2B(ÚÝºÝ)
2,4,,"SAFETY LABEL","B12-2B(JP,EX","B17-2B(JP,EX",B17-2B(AS),B17-2B(ÚÝºÝ)
2,5,,TOOL,"B12-2B(JP,EX","B17-2B(JP,EX",B17-2B(AS),B17-2B(ÚÝºÝ)
2,6,,"INLETHOUSE & EXHAUST PIPE","B12-2B(JP,EX","B17-2B(JP,EX",B17-2B(AS),B17-2B(ÚÝºÝ)
2,7,,ACCELERATOR,"B12-2B(JP,EX","B17-2B(JP,EX",B17-2B(AS),B17-2B(ÚÝºÝ)
2,8,,"ENGINE MOUNT & RADIATOR","B12-2B(JP,EX","B17-2B(JP,EX",B17-2B(AS),B17-2B(ÚÝºÝ)
2,9,,"FUEL TANK & FUEL PIPE","B12-2B(JP,EX","B17-2B(JP,EX",B17-2B(AS),B17-2B(ÚÝºÝ)
2,10,,BATTERY,"B12-2B(JP,EX","B17-2B(JP,EX",B17-2B(AS),B17-2B(ÚÝºÝ)
2,11,,"ELECTRIC PART","B12-2B(JP,EX","B17-2B(JP,EX",B17-2B(AS),B17-2B(ÚÝºÝ)
2,12,,"WORK LAMP","B12-2B(JP,EX","B17-2B(JP,EX",B17-2B(AS),B17-2B(ÚÝºÝ)
2,13,,"TRACK ROLLER","B12-2B(JP,EX","B17-2B(JP,EX",B17-2B(AS),B17-2B(ÚÝºÝ)
2,14,,"TRACK FRAME & IDLER","B12-2B(JP,EX","B17-2B(JP,EX",B17-2B(AS),B17-2B(ÚÝºÝ)
2,15,,"TRACK FRAME & IDLER(LOTUS ROOT","B12-2B(JP,EX","B17-2B(JP,EX",B17-2B(AS),B17-2B(ÚÝºÝ)
2,16,,CRAWLER,"B12-2B(JP,EX","B17-2B(JP,EX",B17-2B(AS),B17-2B(ÚÝºÝ)
2,17,,"LINK STAND","B12-2B(JP,EX","B17-2B(JP,EX",B17-2B(AS),B17-2B(ÚÝºÝ)
2,18,,"CONTROL EQUIPMENT(BOOM & BUCKE","B12-2B(JP,EX","B17-2B(JP,EX",B17-2B(AS),B17-2B(ÚÝºÝ)
2,19,,"CONTROL EQUIPMENT(ARM & TURNIG","B12-2B(JP,EX","B17-2B(JP,EX",B17-2B(AS),B17-2B(ÚÝºÝ)
2,20,,"CONTROL EQUIPMENT(TRAVEL & SWI","B12-2B(JP,EX","B17-2B(JP,EX",B17-2B(AS),B17-2B(ÚÝºÝ)
2,21,,"CONTROL EQUIPMENT(BLADE)","B12-2B(JP,EX","B17-2B(JP,EX",B17-2B(AS),B17-2B(ÚÝºÝ)
2,22,,"OPERATION LEVER STOPPER","B12-2B(JP,EX","B17-2B(JP,EX",B17-2B(AS),B17-2B(ÚÝºÝ)
2,23,,"TURNING FRAME","B12-2B(JP,EX","B17-2B(JP,EX",B17-2B(AS),B17-2B(ÚÝºÝ)
2,24,,"TURNING BEARING","B12-2B(JP,EX","B17-2B(JP,EX",B17-2B(AS),B17-2B(ÚÝºÝ)
2,25,,BONNET,"B12-2B(JP,EX","B17-2B(JP,EX",B17-2B(AS),B17-2B(ÚÝºÝ)
2,26,,"SEAT & STEP","B12-2B(JP,EX","B17-2B(JP,EX",B17-2B(AS),B17-2B(ÚÝºÝ)
2,27,,CANOPY,"B12-2B(JP,EX","B17-2B(JP,EX",B17-2B(AS),B17-2B(ÚÝºÝ)
2,28,,"BOOM CYLINDER","B12-2B(JP,EX","B17-2B(JP,EX",B17-2B(AS),B17-2B(ÚÝºÝ)
2,29,,"ARM CYLINDER","B12-2B(JP,EX","B17-2B(JP,EX",B17-2B(AS),B17-2B(ÚÝºÝ)
2,30,,"BUCKET CYLINDER","B12-2B(JP,EX","B17-2B(JP,EX",B17-2B(AS),B17-2B(ÚÝºÝ)
2,31,,"SWING CYLINDER","B12-2B(JP,EX","B17-2B(JP,EX",B17-2B(AS),B17-2B(ÚÝºÝ)
2,32,,"BLADE CYLINDER","B12-2B(JP,EX","B17-2B(JP,EX",B17-2B(AS),B17-2B(ÚÝºÝ)
2,33,,"HYD. OIL PUMP & JOINT","B12-2B(JP,EX","B17-2B(JP,EX",B17-2B(AS),B17-2B(ÚÝºÝ)
2,34,,"TURNING MOTOR","B12-2B(JP,EX","B17-2B(JP,EX",B17-2B(AS),B17-2B(ÚÝºÝ)
2,35,,"TRAVEL MOTOR","B12-2B(JP,EX","B17-2B(JP,EX",B17-2B(AS),B17-2B(ÚÝºÝ)
2,36,,"TRAVEL MOTOR(LOTUS ROOT SPEC.)","B12-2B(JP,EX","B17-2B(JP,EX",B17-2B(AS),B17-2B(ÚÝºÝ)
2,37,,"SWIVEL JOINT","B12-2B(JP,EX","B17-2B(JP,EX",B17-2B(AS),B17-2B(ÚÝºÝ)
2,38,,"SWIVEL JOINT(LOTUS ROOT","B12-2B(JP,EX","B17-2B(JP,EX",B17-2B(AS),B17-2B(ÚÝºÝ)
2,39,,"CONTROL VALVE(TRAVEL,TURNING)","B12-2B(JP,EX","B17-2B(JP,EX",B17-2B(AS),B17-2B(ÚÝºÝ)
2,40,,"CONTROL VALVE(ARM,BUCKET)","B12-2B(JP,EX","B17-2B(JP,EX",B17-2B(AS),B17-2B(ÚÝºÝ)
2,41,,"CONTROL VALVE(SWING,BOOM)","B12-2B(JP,EX","B17-2B(JP,EX",B17-2B(AS),B17-2B(ÚÝºÝ)
2,42,,"CONTROL VALVE(BLADE,P.T.O.)","B12-2B(JP,EX","B17-2B(JP,EX",B17-2B(AS),B17-2B(ÚÝºÝ)

2,43,,"CONTROL VALVE(P1,P2,P3)","B12-2B(JP,EX","B17-2B(JP,EX",B17-2B(AS),B17-2B(ÚÝºÝ)
2,44,,"LOW-HIGH VALVE","B12-2B(JP,EX","B17-2B(JP,EX",B17-2B(AS),B17-2B(ÚÝºÝ
2,45,,"HYD. OIL TANK","B12-2B(JP,EX","B17-2B(JP,EX",B17-2B(AS),B17-2B(ÚÝºÝ)
2,46,,GREASING,"B12-2B(JP,EX","B17-2B(JP,EX",B17-2B(AS),B17-2B(ÚÝºÝ)
2,47,,"HYD. OIL PIPING(TANK-VALVE)","B12-2B(JP,EX","B17-2B(JP,EX",B17-2B(AS),B17-2B(ÚÝºÝ)
2,48,,"HYD. OIL PIPING(TANK-VALVE)(LO","B12-2B(JP,EX","B17-2B(JP,EX",B17-2B(AS),B17-2B(ÚÝºÝ)
2,49,,"HYD. OIL PIPING(VALVE-SWIVEL-M","B12-2B(JP,EX","B17-2B(JP,EX",B17-2B(AS),B17-2B(ÚÝºÝ)
2,50,,"HYD. OIL PIPING(VALVE-SWIVEL-M","B12-2B(JP,EX","B17-2B(JP,EX",B17-2B(AS),B17-2B(ÚÝºÝ)
2,51,,"HYD. OIL PIPING(RETURN)","B12-2B(JP,EX","B17-2B(JP,EX",B17-2B(AS),B17-2B(ÚÝºÝ)
2,52,,"HYD. OIL PIPING(RETURN)(LOTUS","B12-2B(JP,EX","B17-2B(JP,EX",B17-2B(AS),B17-2B(ÚÝºÝ)
2,53,,"HYD. OIL PIPING(TRAVEL)","B12-2B(JP,EX","B17-2B(JP,EX",B17-2B(AS),B17-2B(ÚÝºÝ)
2,54,,"HYD. OIL PIPING(TRAVEL)(LOTUS","B12-2B(JP,EX","B17-2B(JP,EX",B17-2B(AS),B17-2B(ÚÝºÝ)
2,55,,"HYD.OIL PIPING(BOOM)","B12-2B(JP,EX","B17-2B(JP,EX",B17-2B(AS),B17-2B(ÚÝºÝ)
2,56,,"HYD.OIL PIPING(P.T.O.VALVE-BOO","B12-2B(JP,EX","B17-2B(JP,EX",B17-2B(AS),B17-2B(ÚÝºÝ)
2,57,,"HYD.OIL PIPING(P.T.O.BOOM END)","B12-2B(JP,EX","B17-2B(JP,EX",B17-2B(AS),B17-2B(ÚÝºÝ)
2,58,,"BOOM & BOOM BRACKET","B12-2B(JP,EX","B17-2B(JP,EX",B17-2B(AS),B17-2B(ÚÝºÝ)
2,59,,"ARM & BUCKET LINK","B12-2B(JP,EX","B17-2B(JP,EX",B17-2B(AS),B17-2B(ÚÝºÝ)
2,60,,"ARM & BUCKET LINK(LOTUS ROOT","B12-2B(JP,EX","B17-2B(JP,EX",B17-2B(AS),B17-2B(ÚÝºÝ)
2,61,,BUCKET(400)(450),"B12-2B(JP,EX","B17-2B(JP,EX",B17-2B(AS),B17-2B(ÚÝºÝ)
2,62,,"BUCKET(900)(LOTUS ROOT SPEC.)","B12-2B(JP,EX","B17-2B(JP,EX",B17-2B(AS),B17-2B(ÚÝºÝ)
2,63,,"BACKET250,300,350(ATTACHMENT)","B12-2B(JP,EX","B17-2B(JP,EX",B17-2B(AS),B17-2B(ÚÝºÝ)
2,64,,BLADE,"B12-2B(JP,EX","B17-2B(JP,EX",B17-2B(AS),B17-2B(ÚÝºÝ)