MANITOU NORTH AMERICA, INC.
6401 IMPERIAL DRIVE
Waco, TX 76712-6803

MT6034T
MT6034XT

PARTS MANUAL

For Parts Orders contact your Manitou North America Dealer or call:
Manitou North America, Parts Dept.
800-425-3727 or (254) 799-0232Parts Dept. Fax: (254) 867-6504
Email: parts.mna@manitou.com

CATALOG 805929
R11-05

Introduction

The Table of Contents pages list the page locations of various component groups on the machine.

When ordering service parts, specify the part number, full description, quantity required, and the unit model and serial number.

Model and serial numbers for this unit are stamped on a plate located inside the operator's station. The serial number is also stamped on the top front of the frame. The following reference shows the breakdown of the serial number:

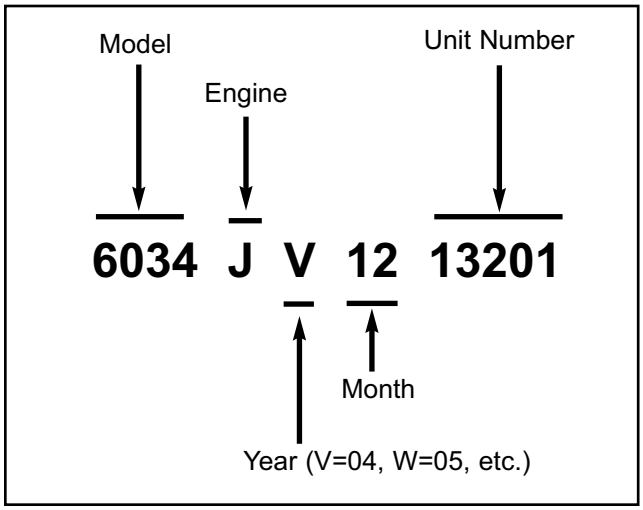

"Right" and "left" are determined from a position standing behind the unit and facing the direction of travel.

Manitou North America Inc., reserves the right to make changes or improvements in the design or construction of any part of the unit without incurring the obligation to install such changes on any unit previously delivered.

Grease fittings and common attaching hardware, such as cotter pins, set screws, woodruff keys, screws and nuts are included in the parts list, indented below the part they are associated with, but NOT illustrated, except where a particular routing or special fastening arrangement must be maintained. The hardware listed is for mounting purposes and is NOT included when the part is ordered for replacement.

Standard attaching hardware torque values are provided on the inside back cover. Unless otherwise specified, all capscrews are Grade 5, cadmium or zinc plated; hexagon nuts for Grade 5 capscrews or bolts are Grade A.

List of Abbreviations Used in this Manual

AN	Acorn Nut
AR	As Required
ASY	Assembly
BHB	Button Head Bolt
CB	Carriage Bolt
CN	Castellated Nut
CYL	Cylinder
CS	Capscrew (Hexagon Head)
DIA	Diameter
FHMS	Flat Head Machine
FLN	Flanged Flexlock Nut
FLS	Flanged Lock Screw
FT	Foot or Feet
GR	Grade
HLN	Hexlock Nut
HYD	Hydraulic
JN	Jam Nut
L	Lock (Washer)
LH	Left Hand
LT	Left
N	Nut (Plain Hex)
NA	Not Applicable
NIN	Nylon Insert Lock Nut
NPTF	National Pipe Threaded Fitting
NSS	Not Sold Separately
P	Plain (Washer)
PB	Plow Bolt
PHS	Pan Head Screw
RH	Right Hand
RHMS	Round Head Machine Screw
RHSMS	Round Head Sheet Metal Screw
RNF	Retained Nut Fastener
RT	Right
SHCS	Socket Head Caps crew
SHSS	Socket Head Set Screw
SFN	Serrated Flange Nut
SHSS	Square Head Set Screw
STS	Self-Thread Screw Hex. Washer Head
THMS	Truss-Head Machine Screw
TRS	Thread Roll Screw
W/	With
WN	Wing Nut

FILTER REFERENCE

TYPE	PART NUMBER
Engine Oil Filter	
Note c	808000
Engine Fuel Filter	
Note a	808002
Note b	808003
Engine Air Filter	see pg. 50
Transmission Oil Filter	808004
Hydraulic Oil Filter	808005

Notes:

a Used with 99 hp John Deere TIER II engine. (Units equipped with this engine use the manual accelerator pedal.)

b Used with 115 hp John Deere TIER II engine. (Units equipped with this engine use the electronic accelerator pedal.)

c Use Dust Seal P/N 808068 as needed.

TABLE OF STANDARD WASHERS, NUTS

Size & Description	Part No.	Size & Description	Part No.
#10-32 N	808544	7/16 L	808594
		7/16-14 NIN	808625
1/4 L	808589	7/16 P	809287
1/4-20 NIN	808661		
1/4 P	808588	1/2-13 NIN	808665
1/4-20 SFN	808545	1/2 P	808595
5/16 L	808591	5/8 L	808597
5/16-18 N	808603	5/8-11 N	809288
5/16-18 NIN	808662		
5/16 P	808590	3/4-10 N	809289
5/16-18 RNF	808671	3/4-10 NIN	808626
5/16-18 SFN	808555	3/4 P	808593
3/8-16 L	808593	1-8 JN	808592
3/8-16 N	809286		
3/8-16 NIN	808663		
3/8-16 P	808592		
3/8-16 SFN	808559		
3/8-16 WN	808670		

Table of Contents

Page

INTRODUCTION . . . . . Inside Front Cover
Table of Contents 1
Filters 4

DECALS
General Information 6
New Application 6
Decal Locations 7

CAB
Standard Cab and Covers 12
Front and Rear Window Group (Option) 14
Windshield Wiper / Top and Front (Option) 16
Top and Left Windows (Option) 18
Cab Door (Option) 20
Instrument Panel, Switches and Fuses 22
Heater (Option) 24
Steering column and Shifter Group 26
Seat 28
Brake and Accelerator Pedals 30
Cab Mounts 32

CHASSIS
Hydraulic Tank Group 34
Fuel Tank Group 36
Battery Group 38
Hoods and Covers 40
Front and Rear Lights 42

PERSONNEL WORK PLATFORM (PWP)
Boom Components 44
Chassis Components 45

ENGINE
External Engine Components Group 46
Radiator and Cooler Group 48
Engine Air Intake Group 50
Engine Exhaust Group 52

TRANSMISSION
External Transmission and Drive Shaft Group 54
Converter Housing Group 56
Case and Plate Group 58

(TRANSMISSION continued on next page)

Page

(TRANSMISSION Continued)
Torque Converter Group 60
Gear Group 62
Pump Drive Group 64
Charge Pump Group 65
Reverse Idler Group 66
Forward and Reverse Group 68
Third Shaft Group 70
First and Second Shaft Group 72
Output Shaft Group 74
Control Group 76
Drive Plate Group 78
Modulation Valve Group 79

AXLES
External Components Group 80
Steering Cylinder and Tie Rods (Front Axle) 82
Steering Cylinder and Tie Rods (Rear Axle) 83
Differential Housing Group (Front Axle) 84
Differential Housing Group (Rear Axle) 85
Brake Group (Front Axle) 86
Brake Group (Rear Axle) 87

AXLE, FRONT
Outer End Group 88
Differential Group 90

AXLE, REAR
Outer End Group 92
Differential Group 94

BOOM
Outer Boom Section 96
Intermediate Boom Section 98
Inner Boom Section 100
Dynattach ® 102

HYDRAULIC SYSTEMS
Hydraulic Pump and Flow Divider 104
Steer Motor and Steer Select Valve 106
Brake Valve Group 108
Brake and Steering Lines Group 110
Main Valve Group 112
Main Valve / Hydraulic Controls (joysticks) 114
(HYDRAULIC SYSTEMS continued on next page)

Table of Contents

Page

(HYDRAULIC SYSTEMS continued)

Hydraulic Controls - Standard 116
Hydraulic Controls - Auxiliary Hydraulic Option 118
Hydraulic Controls - PWP Only 120
Hydraulic Controls - PWP and Auxiliary Hydraulic Option 122
Frame Level Group 124
Lift Cylinder Group 126
Tilt / Slave Cylinder Group 128
Boom Extend Cylinder Group 130
Auxilary Hydraulics Group 132

HYDRAULIC COMPONENTS

Hydraulic Pump 134
Flow Divider 135
Main Valve 136
PWP Valve 138
Steer Valve 139
Steer Motor 140
Brake Valve 141
Controller - Tilt / Frame Level 142
Controller - Lift / Extend 144
Controller - Auxiliary Hydraulics Option 146
Frame Level Cylinder 148
Lift Cylinder 150
Slave Cylinder 152
Tilt Cylinder 154
Boom Extend Cylinder 156
Fork Shift Carriage Cylinder 158
Rotate Carriage Cylinder 159

ATTACHMENTS

Standard Carriage Attachment Group 160
Fork Shift Carriage Attachment Group 162
Rotate Carriage Attachment Group 164
Boom Attachment Group 166
Bucket Attachment Group 168

NUMERICAL INDEX

Numerical Index List 170

Filters

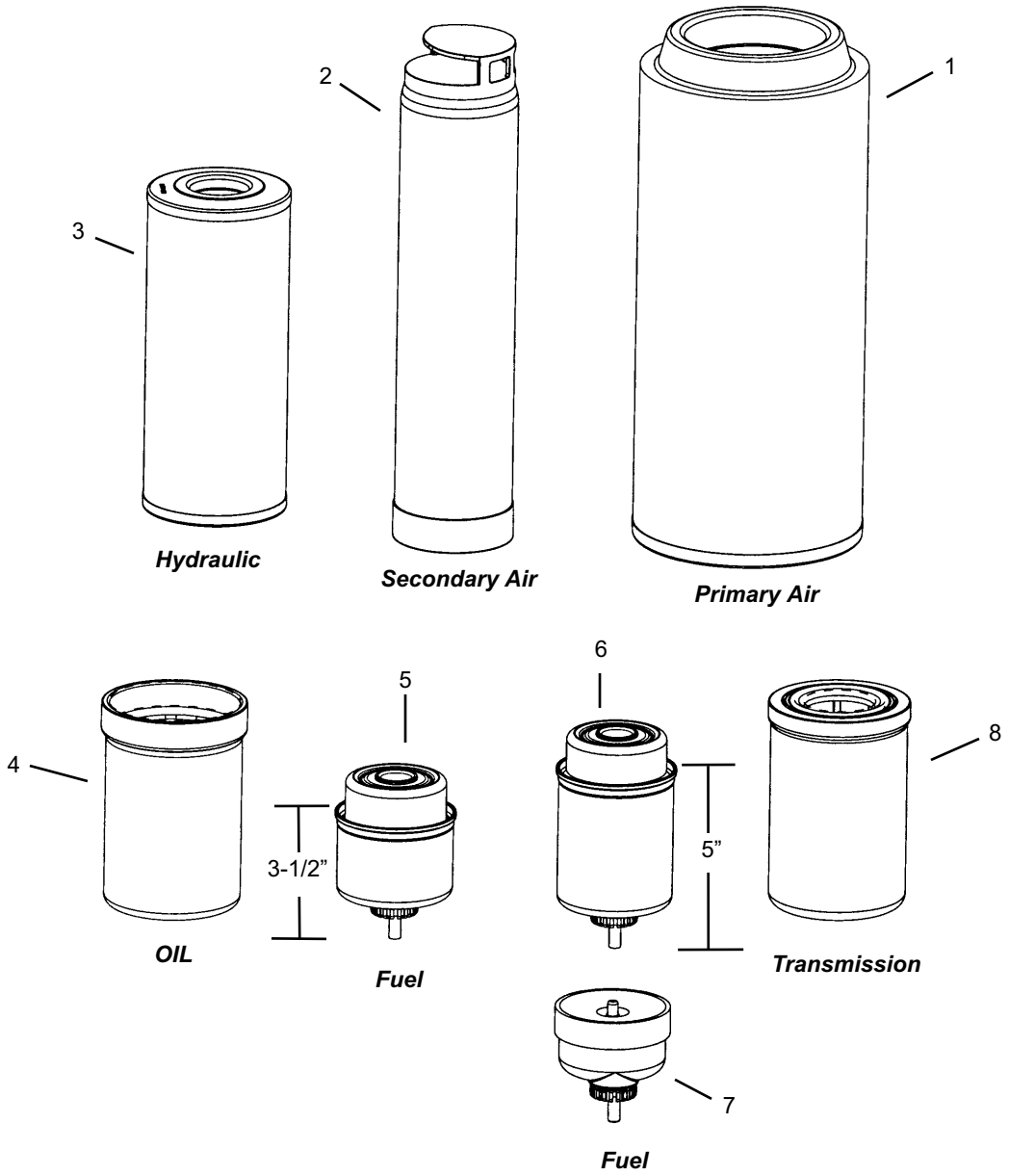
1
2
3
Hydraulic
Secondary Air
Primary Air
4
5
6
8
3-1/2”
5”
OIL
Fuel
Transmission
7
Fuel

Ref. No.	Part No.	Description	Qty. Req.
01	808066	PRIMARY AIR FILTER *(outer)*	1
02	808067	SECONDARY AIR FILTER *(inner)*	1
03	808005	HYDRAULIC FILTER	1
04[a]	808000	ENGINE OIL FILTER	1
05[b]	808002	FUEL FILTER	1
06[c]	808003	FUEL FILTER	1
07[d]	809377	SEDIMENT BOWL	1
08	808004	TRANSMISSION FILTER	1

a Use Dust Seal P/N 808068 as needed.

b Used with 99 hp John Deere TIER II engine. (Units equipped with this engine use the manual accelerator pedal.) This filter measures 3-1/2" high; as shown in the illustration.

c Used with 115 hp John Deere TIER II engine. (Units equipped with this engine use the electronic accelerator pedal.) This filter measures 5" high; as shown in the illustration.

d Replace as needed.

GENERAL INFORMATION

CAUTION

ALWAYS follow the safety precautions on decals. Replace decals if they are damaged, or if the unit is repainted. If repainting, be sure that all applicable decals are affixed in their proper locations.

Decal locations information is provided to assist in the proper selection and application of new decals, in the event original decals become damaged or the machine is repainted.

For correct replacement of decals, compare the location illustrations to your machine before starting to refinish the unit. Check off each required decal using the illustration reference number to find the part number, description and quantity in the list. Refer to the appropriate illustration for replacement locations.

NEW DECAL APPLICATION

Before applying the new decals, surfaces must be free from dirt, dust, grease and other foreign material. To apply a solid-formed decal, remove the smaller portion of the decal backing paper and apply this part of the exposed adhesive backing to the clean surface while maintaining proper position and alignment. Slowly peel off the other portion of the backing paper while applying hand pressure to smooth-out decal surface. To apply a die-cut decal, first remove the backing paper. Then, properly orient and position the decal onto the clean mounting surface. After the decal is firmly applied and smoothly pressed down, remove the front covering paper.

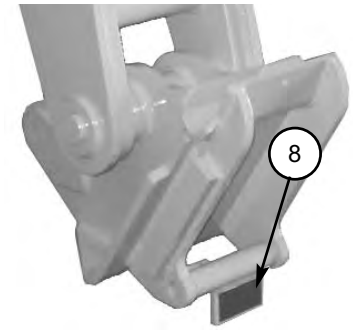

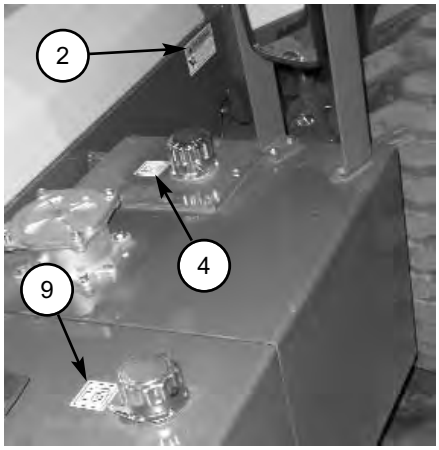

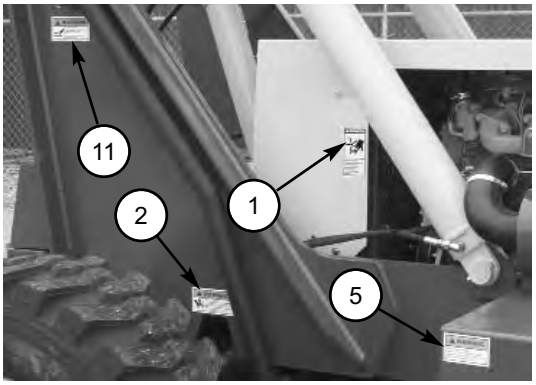

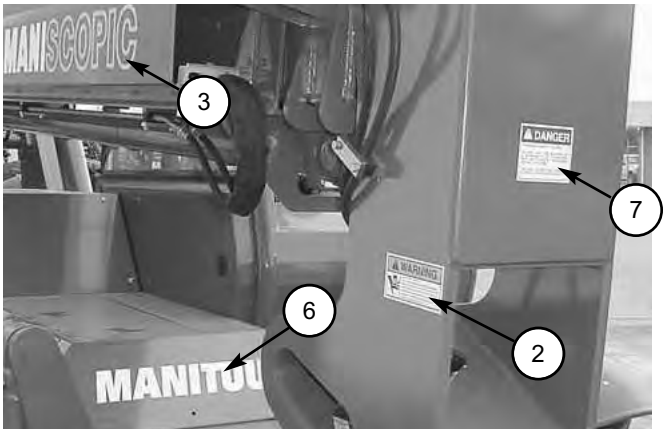

DECAL LOCATIONS - FRAME AND BOOM

Ref. No.	Part No.	Description	Qty. Req.
01	808036	DANGER-HANDS OUT	AR
02	808033	WARNING-PINCH POINT	AR
03	240794	MANISCOPIC	1
04	808057	HYDRAULIC OIL FILL	AR
05	808035	WARNING-NO RIDERS	AR
06	804768	MANITOU	3
07	808031	DANGER-PERSONNEL INJURY *(units without PWP)*	AR
08	808038	DYNATTACH UNLOCKED	AR
09	808058	DIESEL FUEL	AR
10	806320	MANITOU	1
11	809553	HOT SURFACE	AR

Decals

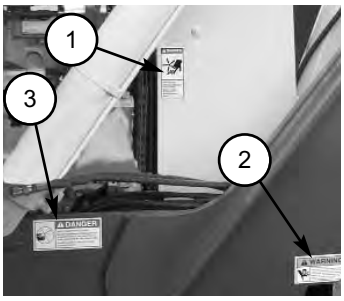
1
3
2
DANGER
WARNING

4
MANITOU

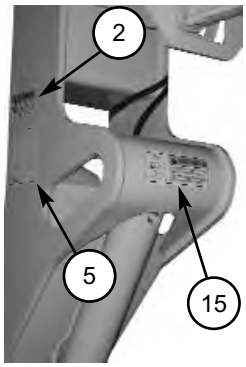
2
5
15

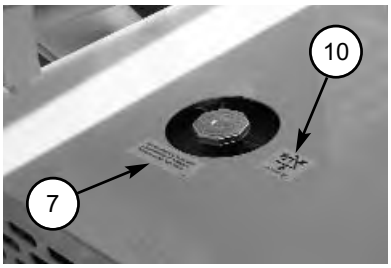
10
7

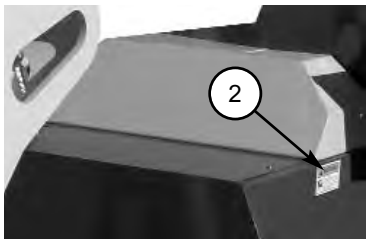
2

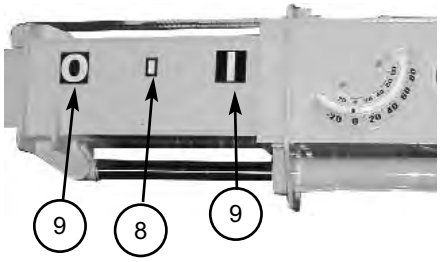
9
8
9

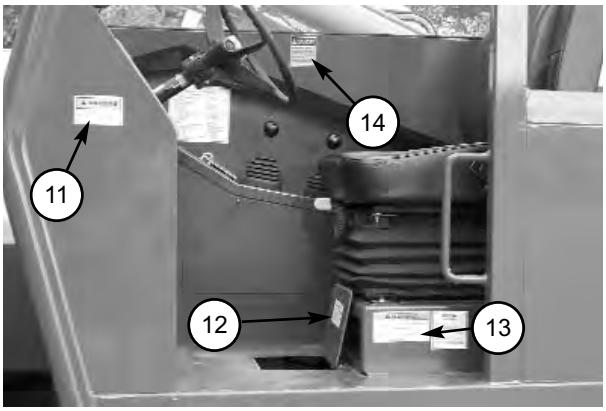
14
11
12
13

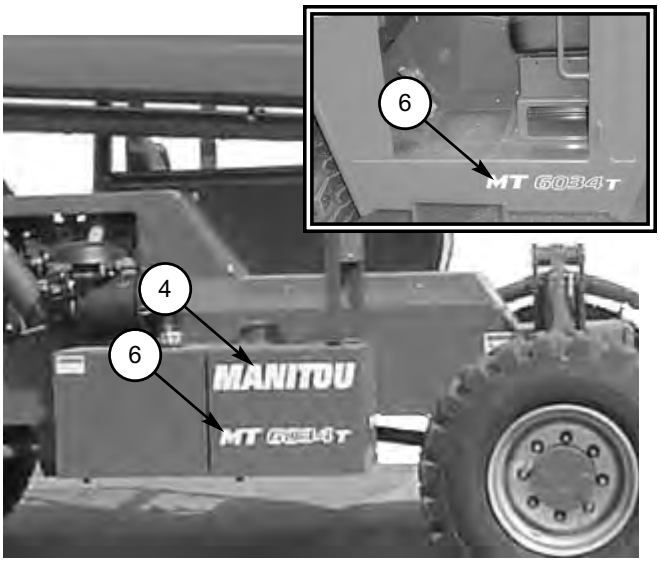
6
MT 6034T
4
6
MANITOU

DECAL LOCATIONS - FRAME AND BOOM

Ref. No.	Part No.	Description	Qty. Req.
01	808036	DANGER-HANDS OUT	AR
02	808033	WARNING-PINCH POINT	AR
03	808034	WARNING-JUMP START	AR
04	804768	MANITOU	3
05	808046	DYNATTACH DIAGRAM	AR
06	805812	MT6034T	2
	805813	MT6034XT	2
07	808047	ANTI-FREEZE	AR
08	808048	HALF ZONE MARKER	5
09	809561	NO. “0” EXTENSION MARKER	1
	808049	NO. “1” EXTENSION MARKER	1
	808050	NO. “2” EXTENSION MARKER	1
	808051	NO. “3” EXTENSION MARKER	1
	808052	NO. “4” EXTENSION MARKER	1
	808053	NO. “5” EXTENSION MARKER	1
10	808054	COOLANT UNDER PRESSURE	1
11	808035	WARNING-NO RIDERS	AR
12	808055	BRAKE FLUID	AR
13	808032	OPERATOR MANUAL WARNING	1
14	808031	DANGER-PERSONNEL INJURY *(units without PWP)*	AR
15	809552	CARRY LOAD LOW	AR

Decals

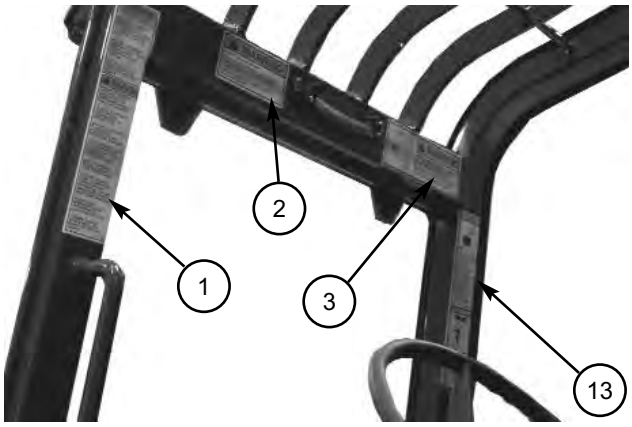

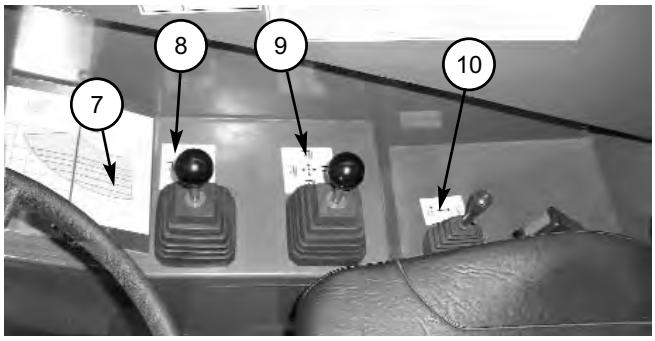

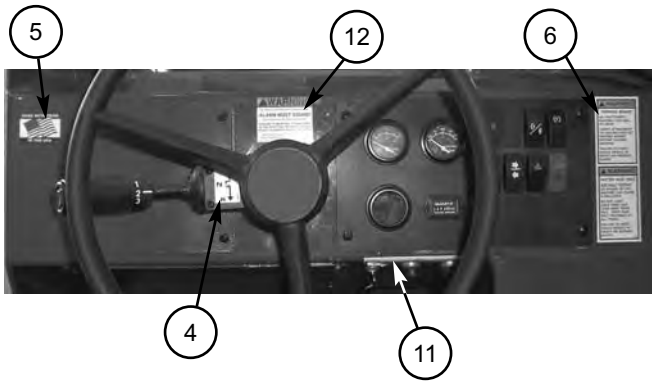

DECAL LOCATIONS - OPERATOR STATION

Ref. No.	Part No.	Description	Qty. Req.
01	808027	WARNING-TILT HAZZARD /GENERAL OPERATOR	1
02	808026	WARNING-MACHINE LEVEL	1
03	809552	WARNING-CARRY LOAD LOW	1
04	808059	F-N-R SHIFT	1
05	808060	MADE IN U.S.A.	1
06	808030	WARNING-PARK BRAKE /SEAT BELT	1
		-- LOAD CHARTS--	
07	809299	STANDARD CARRIAGE	1
	809301	ROTATING CARRIAGE	1
	809300	BUCKET LOAD CHART	1
	809302	TRUSS BOOM LOAD CHART	1
	809303	WINCH LOAD CHART	1
08	808061	ATTACHMENT TILT/FRAME LVL	1
09	808062	BOOM CONTROL	1
10	808064	AUX. HYD. CONTROL *(optional)*	1
11	808065	IGNITION/START/HORN	1
12	808028	WARNING-BACKUP ALARM	1
13	808029	DANGER-HIGH VOLTAGE /MOVING PARTS	1

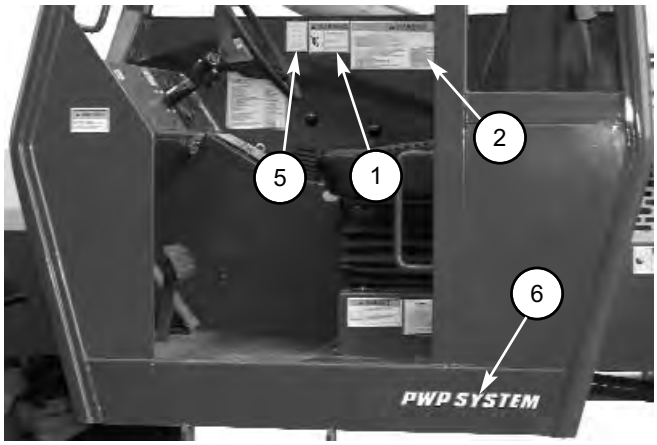

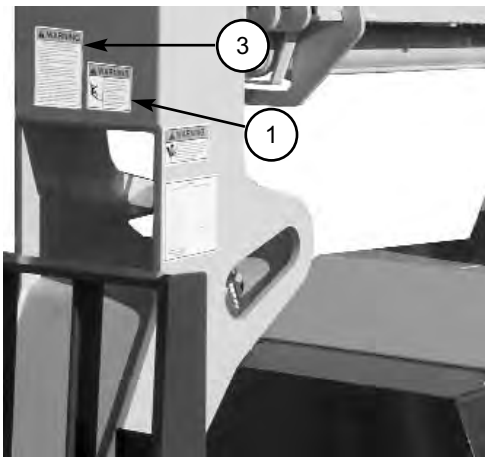

DECAL LOCATIONS - PWP EQUIPPED UNITS

Ref. No.	Part No.	Description	Qty. Req.
01	808039	WARNING-PERSONNEL LIFT	AR
02	808040	WARNING-WORK PLATFORM /RULES	AR
03	808041	PERSONNEL LIFT SAFETY /RULES	AR
04	809304	PWP LOAD CHART	AR
05	808042	PWP SWITCH	AR
06	808045	PWP SYSTEM	AR

Standard Cab and Covers

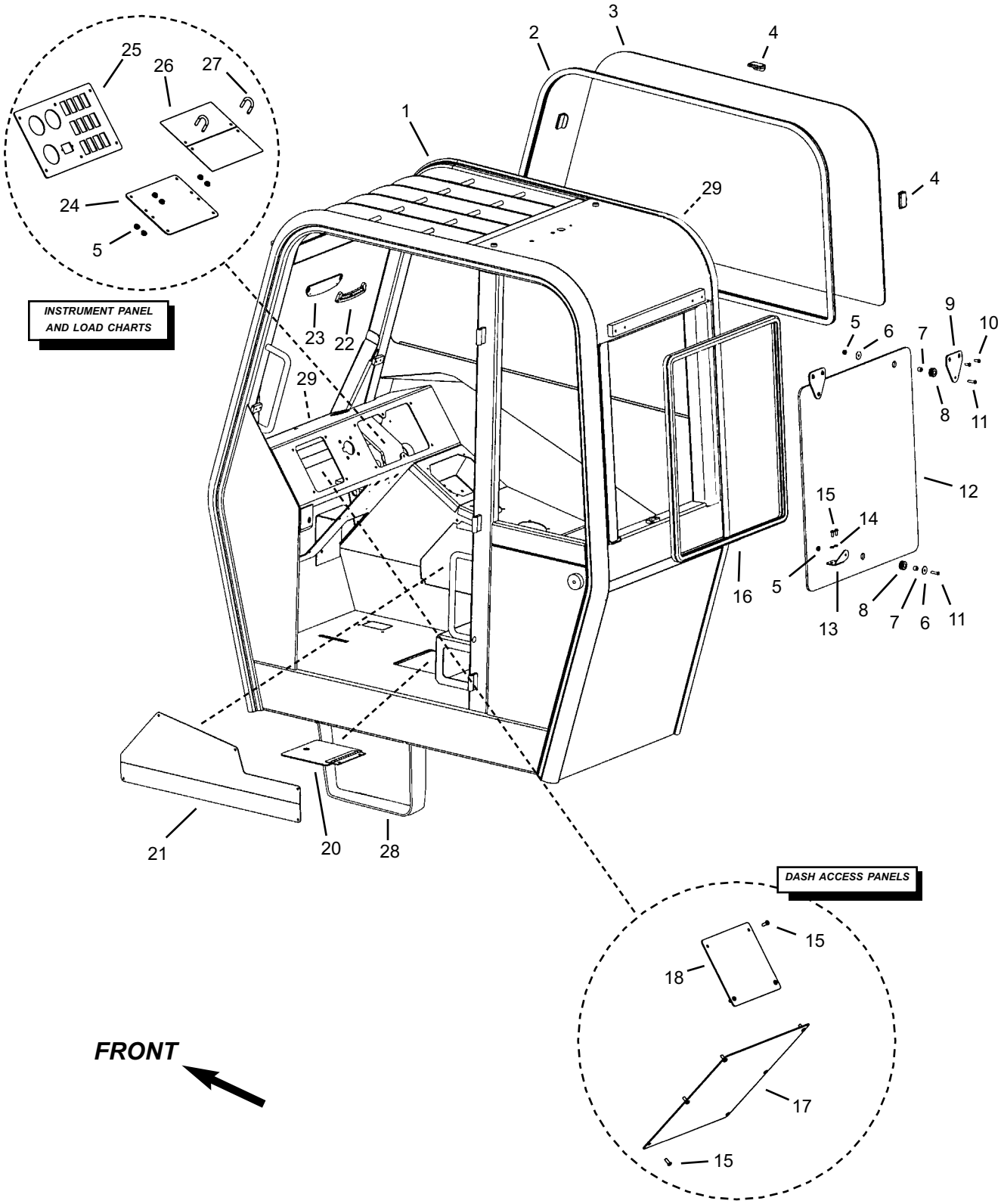

Standard Cab and Covers

Ref. No.	Part No.	Description	Qty. Req.
01	809328	CAB WELDMENT	1
02	809319	BULB SEAL, RIGHT WINDOW	1
03	809318	GLASS, RIGHT HAND	1
04	808493	CLIP, WINDOW	3
	808492	SCREW, FLANGE	6
05	808545	1/4”-20 WHIZ LOCK NUT	AR
06	808484	WASHER, FLAT (BLACK)	3
07	808482	BUSHING, NYLON	3
08	808483	GROMMET, 1/2”ID X 1/4”GROOVE	3
09	808306	MOUNT, REAR GLASS UPPER	2
10	808667	5/16”-18X3/4” BUTT. HD BOLT	4
11	808666	1/4”-20X1” BUTT. HD BOLT	3
12	809320	GLASS, REAR	1
13	808307	MOUNT, REAR GLASS LOWER	1
14	808589	1/4” LOCK WASHER	2
15	808600	1/4”-20X5/8” BUTT. HD BOLT	AR
16	809298	BULB SEAL, REAR WINDOW	1
17[a]	808258	PANEL, HEATER	1
18[a]	808257	PANEL, DASH COVER	1
19	NA		0
20	808261	WLDMNT, BRAKE CYL COVER	1
21	809312	COVER, HYD. CONTROLLERS	1
	808600	1/4”-20X5/8” BUTT0N HEAD	5
22	808802	INDICATOR/FRAME LEVEL	1
	809177	#8-32X1” SCREW	2
23	808862	PLATE, INCLMT MOUNT	1
	808667	5/16”-18X3/4” BUTT. HD BOLT	4
24	808245	COVER, FUSE PANEL	1
	808600	1/4”-20X5/8” BUTTN HD	4
25[b]	808308	PANEL, DASH	1
26[c]	808723	LOAD CHART PLATE	2
27	808734	1/4”-20 U-BOLT	1
28	NSS	ACCESS STEP	1
29	809333	GROMMET, 5/8” *(not shown)*	AR
		-- ITEMS NOT SHOWN--	
00	809821	HARNESS KIT, CANOPY	1
00[a]	808733	HOLE PLUG, 2-1/2” DIA *(defroster hole in dash)*	1
00	808672	TREAD STRIP, 6” WIDE (4 FT.)	1

a *Use when not equipped with a heater.*

b *Refer to Instrument Panel and Switches section on the next page for information regarding switches and gauges.*

c *Refer to Decal Section for Load Chart Decals.*

Front and Rear Window Group (Option)

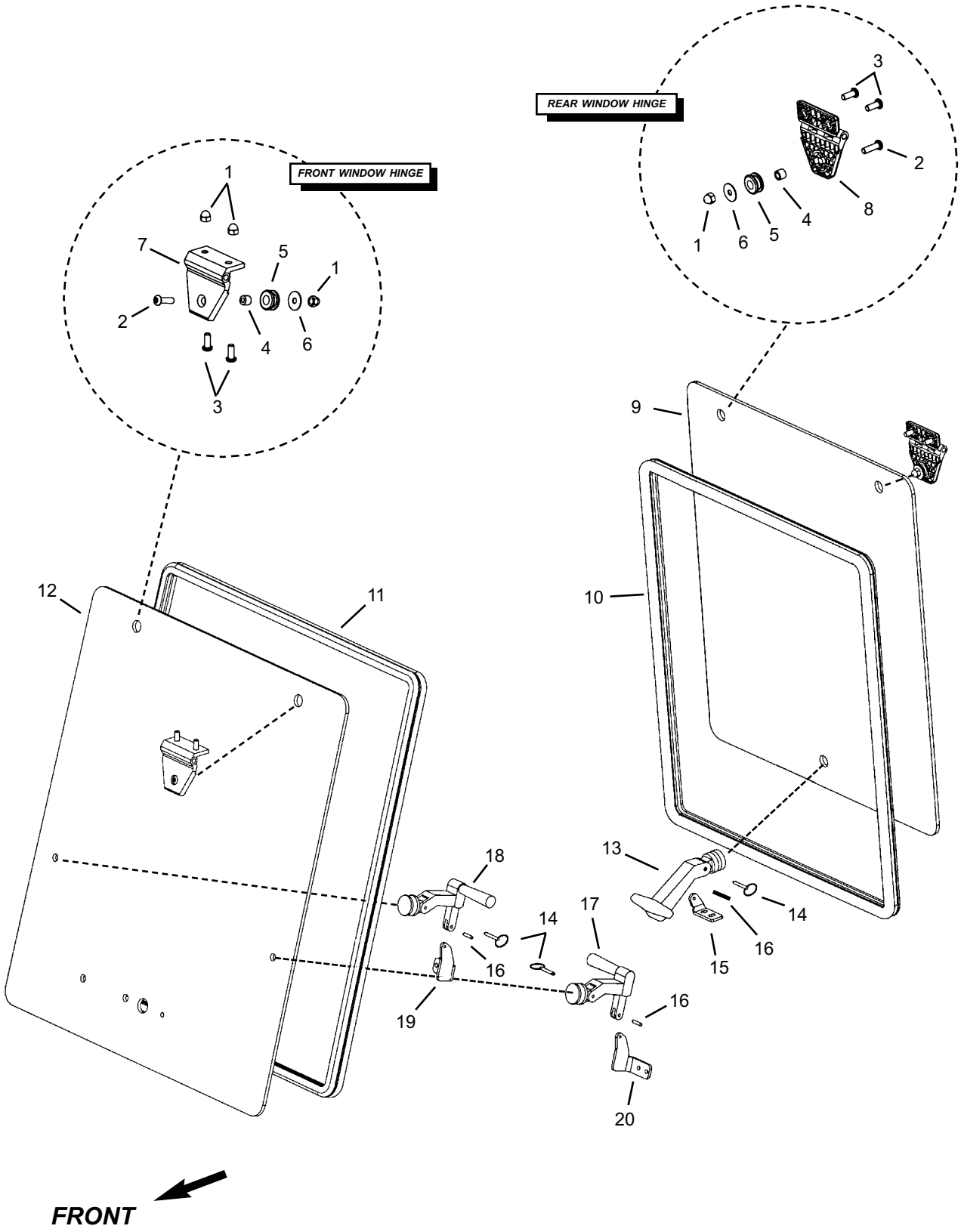

Front and Rear Window Group (Option)

Ref. No.	Part No.	Description	Qty. Req.
01	808490	5/16”-18 ACORN NUT	AR
02	808420	5/16”-18X1” BUTTN HD BOLT	4
03	808421	5/16”-18X3/4” BUTTN HD BOLT	8
04	808491	BUSHING, STEEL	4
05	808483	GROMMET, 1/2”IDX1/4”GROOVE	6
06	808422	5/16” FLAT WASHER (BLACK)	4
07	808495	HINGE, FRONT WINDOW	2
08	808485	HINGE, PLASTIC *(rear window)*	1
09	809320	GLASS, REAR	1
10	809321	BULB SEAL, REAR GLASS	1
11	809319	BULB SEAL, FRONT GLASS	1
12	809317	GLASS, FRONT	1
13	808095	HOLD OPEN, T-STYLE	1
14	808486	PIN, QUICK DETATCH	4
15[a]	808096	MOUNT, REAR WINDOW LATCH	1
16	808481	PIN, ROLL - 3/16”x1/2”	3
17	808488	HOLD OPEN, L-STYLE	1
18	808487	HOLD OPEN, L-STYLE	1
19[a]	809325	MOUNT, WIND. HOLD OPEN (RH)	1
20[a]	808255	MOUNT, WIND. HOLD OPEN (LH)	1

a *Use the parts listed below to fasten mount to frame:*

00	809180	1/4” FLAT WASHER	AR
00	809181	1/4” LOCK WASHER	AR
00	808600	1/4”-20X5/8” BUTTN HD BOLT	AR

Wiper (Option) / Front and Top Glass

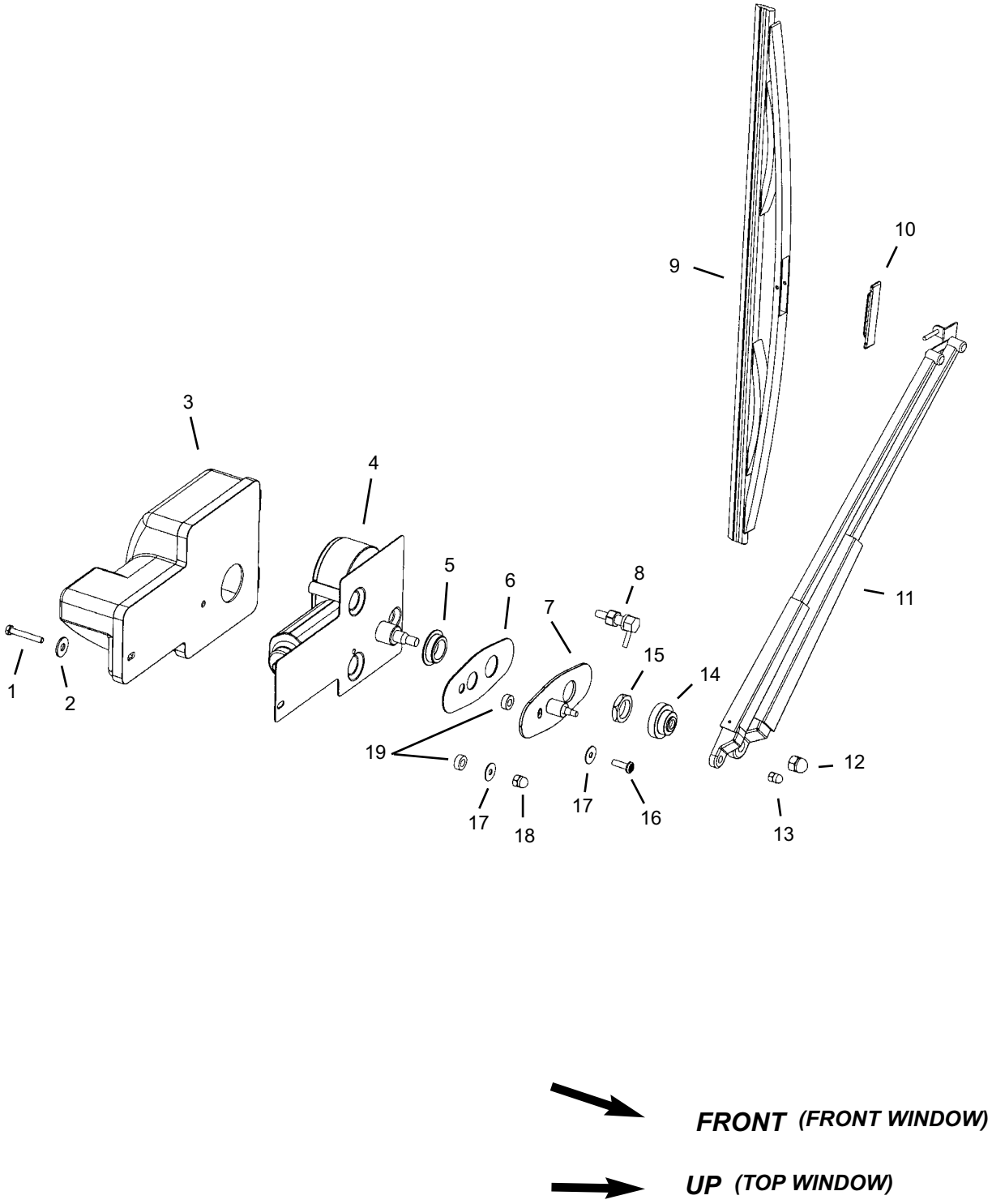

Wiper (Option) / Front and Top Glass

Ref. No.	Part No.	Description	Qty. Req.
		Note: unless otherwise indicated, the following parts are used on the top and front windows.	
01	808573	BOLT / 10-24x1.25 HEX GR5	1
02	808479	WASHER/BLK NYLON	1
03	808562	COVER WIPER MOTOR	1
04	808561	WIPER MOTOR / TRICO	1
05[c]	808570	TOWER SEAL / TRICO WIPER	1
06	808565	GASKET / PANTO ADAPTER	1
07	808574	PANTO ADAPTER PLATE	1
08	808494	ADAPTOR/WET ARM	1
09	808320	WIPER BLADE *(16")*	1
10	808569	ADAPTER / PIN LOCK	1
11		WIPER ARM	1
	808566	*Note a (15-12/")*	
	808319	*Note b (18-1/2")*	
12	808564	M8 / ACORN NUT	1
13	808568	M5 / ACORN NUT	1
14	808571	RAIN SHIELD	1
15	808563	M18 / NUT	1
16	808572	SCREW / M5 16mm	1
17	808093	WASHER, #10 WEATHERTITE	2
18	808480	NUT/ACORN #10-24 BLK	1
19[c]	808560	BUSHING / NYLON	2
20	808089	BOTTLE, DUAL -PUMP WASHER	1
		-- ITEMS NOT SHOWN --	
		(Windshield Wiper Harness)	
00	809331	HARNESS, TOP WIPER	1
00	809332	HARNESS, FRONT WIPER	1
		(Windshield Washer System)	
00	808321	HARNESS, WASHER BOTTLE	1
00	808347	TUBING, WASHER *(15-1/2')*	1

a *Used for front window*
b *Used for top window*
c *Not used on top window*

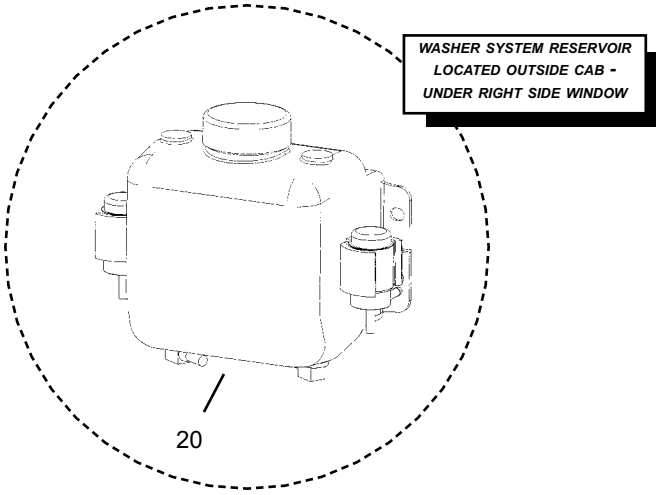

Top and Left Window (Option)

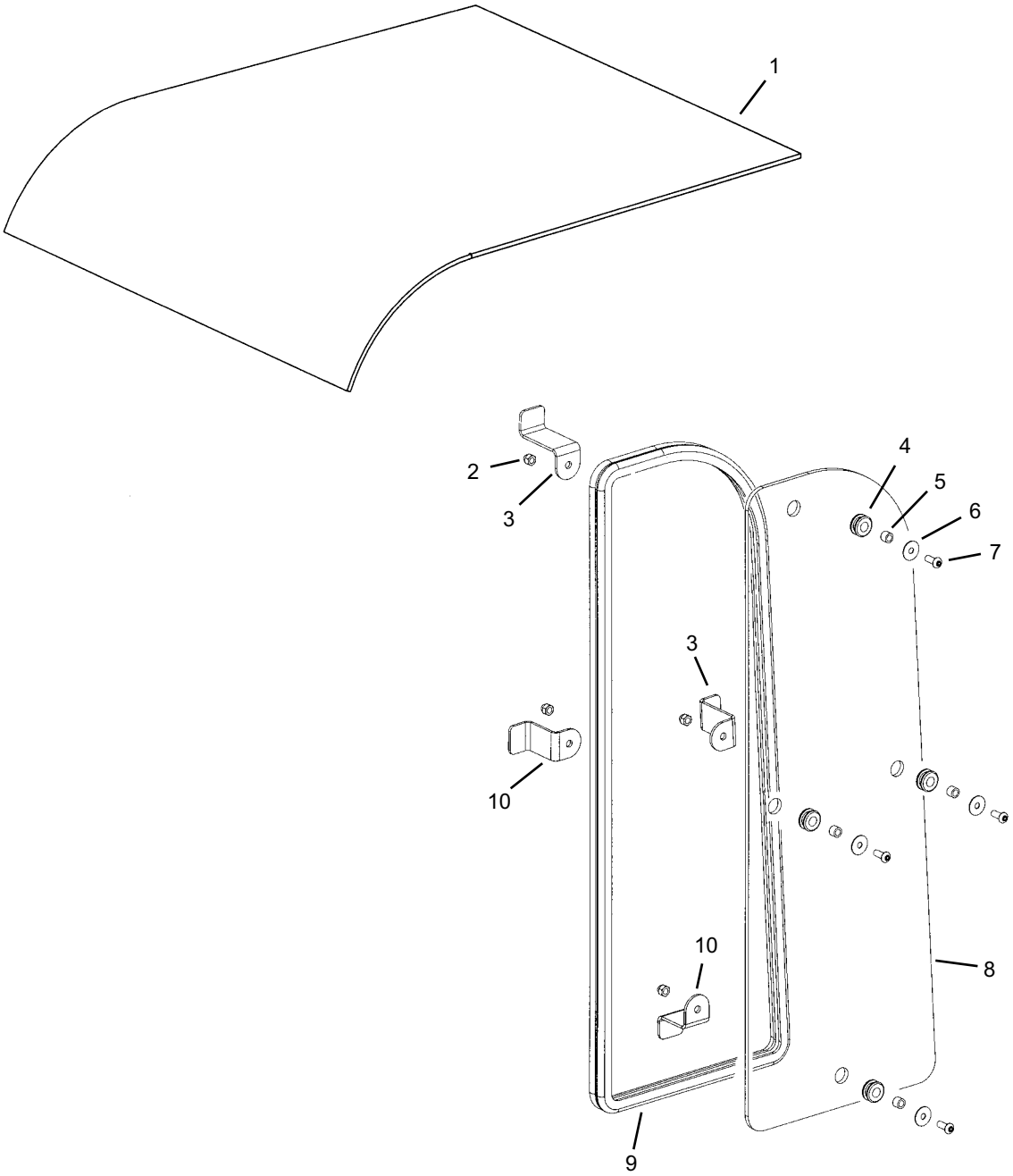

Top and Left Windows (Option)

Ref. No.	Part No.	Description	Qty. Req.
01[a]	809324	GLASS, TOP	1
02	808490	5/16”-18 ACORN NUT	AR
03	808252	WINDOW MOUNT	2
04	808483	GROMMET, 1/2”IDX1/4”GROOVE	4
05	808491	BUSHING, STEEL	4
06	808422	5/16” FLAT WASHER (BLACK)	4
07	808420	5/16”-18X1” BUTTN HD BOLT	4
08	809323	GLASS, LEFT REAR	1
09	809322	BULB SEAL, LEFT GLASS	1
10	808253	WINDOW MOUNT	2

a *Use P/N 808934 Adhesive Kit to attach top glass to cab.*

Cab Door (Option)

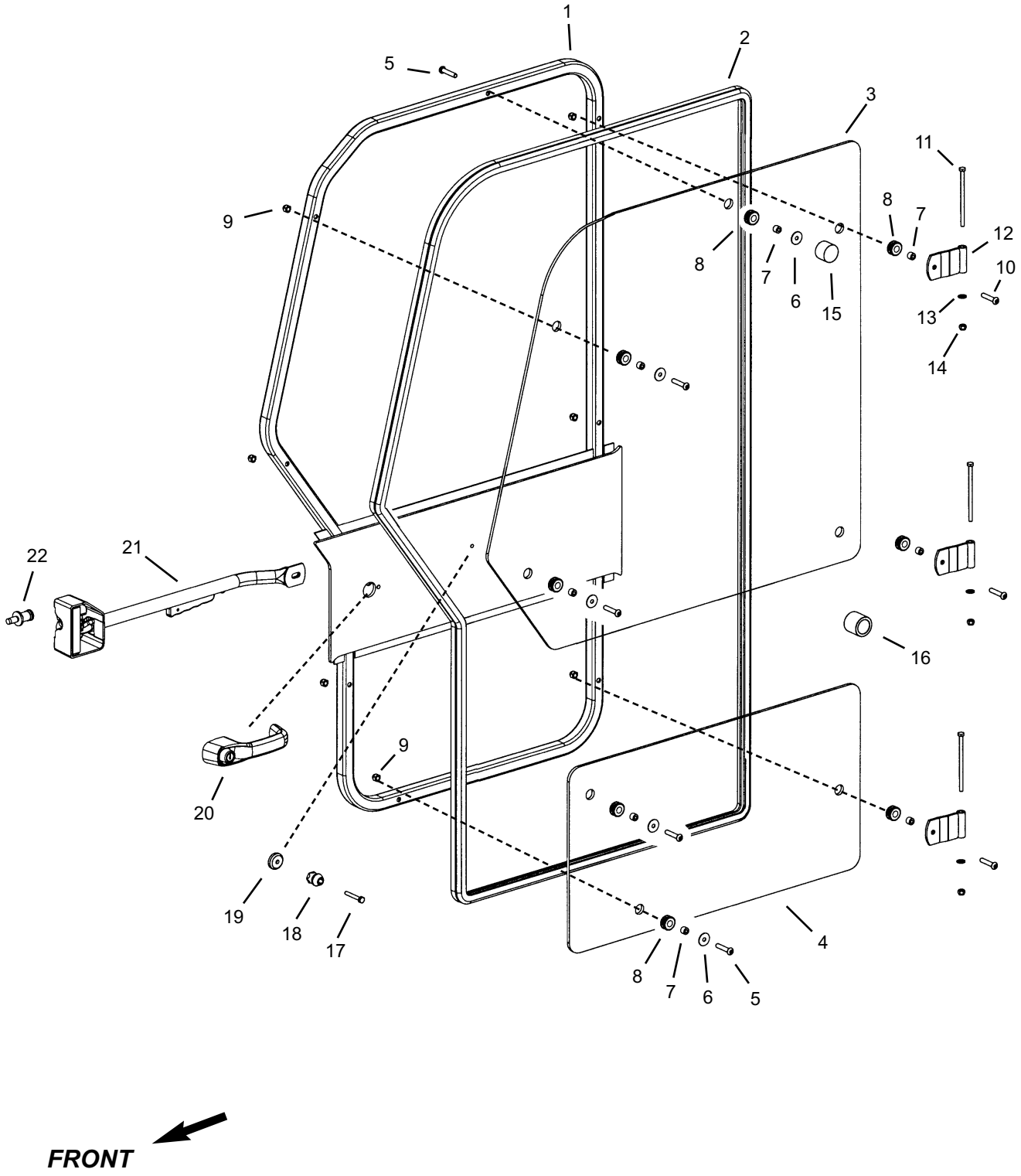

Cab Door (Option)

Ref. No.	Part No.	Description	Qty. Req.
00	808348	CAB DOOR	1
		(includes items 1-10, 12 and 15)	
01	808303	WELDMENT, CAB DOOR FRAME	1
02	808246	BULB SEAL, DOOR FRAME	1
03	808238	GLASS, UPPER DOOR	1
04	808239	GLASS, LOWER DOOR	1
05	808419	5/16”-18X1-3/4” BUTTN HD BOLT	5
06	808422	5/16” FLAT WASHER (BLACK)	5
07	808491	BUSHING, STEEL	8
08	808483	GROMMET, 1/2”IDX1/4”GROOVE	8
09	808490	5/16”-18 ACCORN NUT (BLACK)	8
10	809383	5/16”-18X2” BUTTN HD BOLT	3
11	808417	1/4”-20X4-1/2” BOLT	3
12	808317	WELDMENT, DOOR HINGE	3
13	808145	HINGE BEARING *(washer)*	3
14	808662	5/16”-18 NYLON INSERT NUT	3
15	808323	BUMPER, DOOR	1
16	808489	HOLD OPEN/DOOR (SET)	1
		(includes item #18) [mounts to cab]	
17	808413	1/4”-20x1-1/2” BOLT	1
18	NSS	HOLD OPEN/DOOR STUD	1
		(included with item #16 as a set)	
19	808094	GLASS MOUNT	1
20	808327	HANDLE, EXT. DOOR LOCKING	1
	808097	KEY ONLY	1
21	808310	LATCH RELEASE, INTERIOR	1
	809185	1/4-20X1-1/4” FLAT HD SCREW	2
	808600	1/4-20X5/8” BUTTN HD BOLT	1
	809186	M6-1X12 8.8 BOLT	2
	808484	FLAT WASHER (BLACK)	1
	808661	1/4”-20 NYLON INSERT NUT	2
	808891	1/2” HOLE PLUG	2
22	808086	STRIKER	1
	809187	7/16” LOCK WASHER	1
	809188	7/16” FLAT WASHER	1
	809189	7/16”-14 NUT	1

Instrument Panel, Switches and Fuses

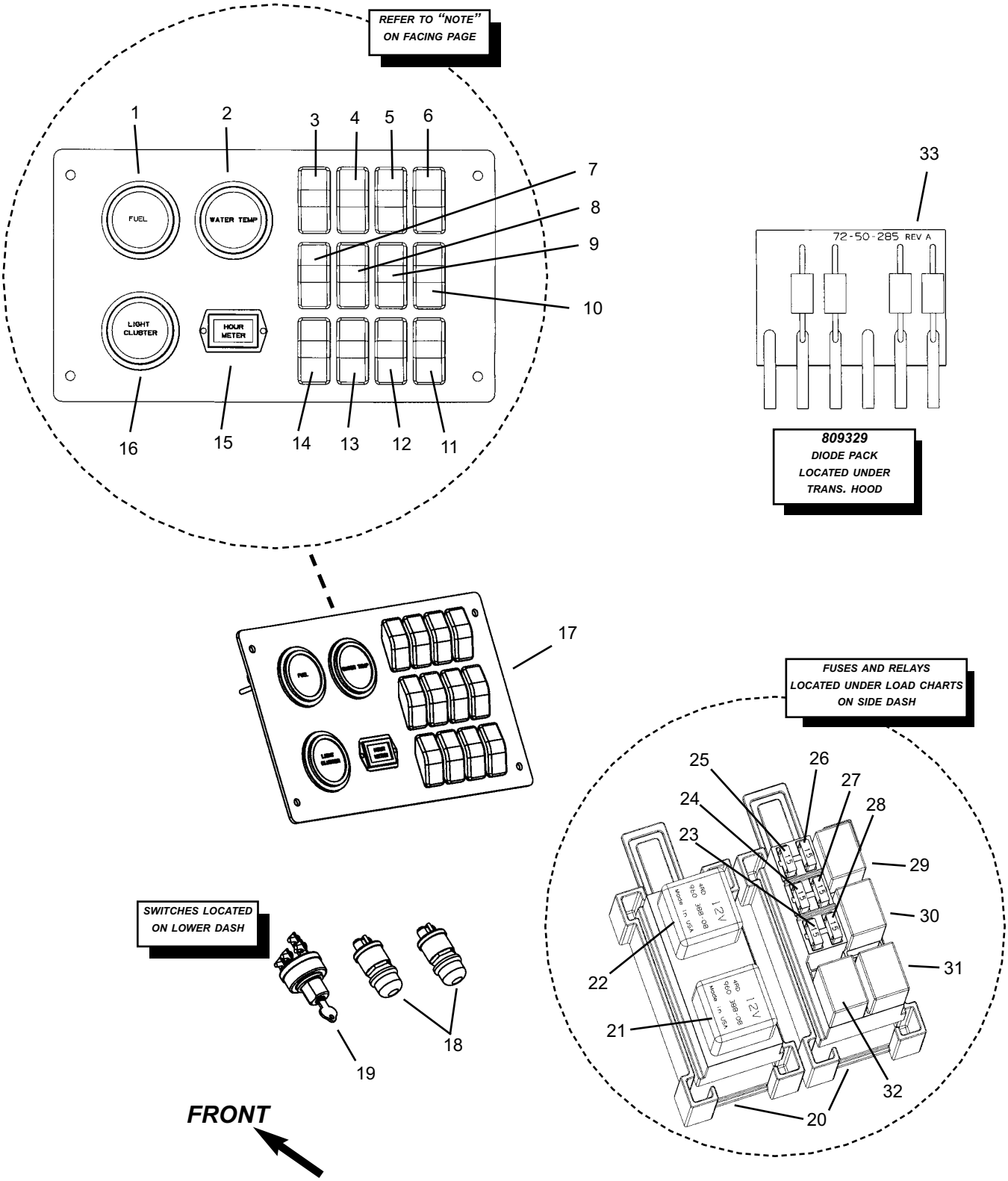

Instrument Panel, Switches and Fuses

Ref. No.	Part No.	Description	Qty. Req.
01[c]	808724	GAUGE, FUEL	1
02[c]	808809	GAUGE, WATER TEMP.	1
03	808922	SWITCH, STEER MODE.	1
04	808083	SWITCH, ENGINE FAULT.	1
05	808928	SWITCH, CLUTCH CUT OUT.	1
06	808921	SWITCH, PARK BRAKE	1
07	808926	SWITCH, LIGHTS	1
08	808927	SWITCH, TURN SIGNALS	1
09	808924	SWITCH, HAZARD LIGHTS	1
10	808938	SWITCH, PWP	1
11[a]	NA	OPTIONAL SWITCH	1
12	808925	SWITCH, ETHER	1
13	808923	SWITCH, WIPER/WASHER	1
14	808923	SWITCH, WIPER/WASHER	1
15	808069	GAUGE, HOUR METER	1
16	808721	GAUGE, LIGHT CLUSTER	1
17	808308	PANEL, DASH	1
		(does not include switches or gauges)	
18	808438	SWITCH, PUSH BUTTON.	2
19	808073	SWITCH, IGNITION w/KEY.	1
	808074	KEY ONLY	1
20[b]	809821	HARNESS KIT, CANOPY	1
21	808892	CHANGE OVER RELAY 20 AMP	1
22	808892	CHANGE OVER RELAY 20 AMP	1
23	808394	FUSE, MINI 15 AMP	1
24	809338	FUSE, MINI 25 AMP	1
25	809338	FUSE, MINI 25 AMP	1
26	809338	FUSE, MINI 25 AMP	1
27	808394	FUSE, MINI 15 AMP	1
28	808394	FUSE, MINI 15 AMP	1
29	808395	MICRO RELAY, 20 AMP	1
30	808395	MICRO RELAY, 20 AMP	1
31	808395	MICRO RELAY, 20 AMP	1
32	808395	MICRO RELAY, 20 AMP	1
33	809329	DIODE PACK, 4 DIODES	1
		(included with item 00 809346 wire harness below)	
		-- ITEMS NOT SHOWN --	
00	809346	WIRE HARNESS, FRAME	1
		(includes the following diode and fuse):	
	809329	DIODE PACK, 4 DIODES.	1
		(located under chassis cover just in front of transmission)	
	808500	60 AMP MAXI FUSE	1
		(located near engine starter)	
00	808707	GROUND STRAP	1

a *Use P/N 809694 Switch Hole Plug to cover hole when switches are not present.*

b *Not all connections or terminals are shown in this illustration. The fuse and relay blocks as shown are located under the load chart panel on the side dash.*

c *Back light kit #809341; for illuminating gauges.*

Note: *Switches shown in the llustration or listed on this page are for reference purposes only. Your machine might be configured differently or might not include all of the options shown.*

FUSE AND RELAY REFERENCE	
21	(Relay #2) - 20 AMP change-over relay - PARK BRAKE
22	(Relay #1) - 20 AMP change-over relay - IGNITION
23	(Fuse #2) - 15 AMP fuse - (IGNITION) - transmission, park brake, PWP, steer select, injector
24	(Fuse #4) - 25 AMP fuse - (IGNITION) - heater, gauges
25	(Fuse #6) - 25 AMP fuse - (IGNITION) - front wiper motor
26	(Fuse #5) - 25 AMP fuse - (IGNITION) - top wiper motor
27	(Fuse #3) - 15 AMP fuse - (IGNITION) - lights, ether, clutch cutout
28	(Fuse #1) - 15 AMP fuse - (BATTERY) - ignition switch, horn, brake lights, backup alarm
29	(Relay) - 20 AMP micro relay - top wiper
30	(Relay) - 20 AMP micro relay - lights
31	(Relay) - 20 AMP micro relay - bulb check
32	(Relay) - 20 AMP micro relay - front wiper

Heater (Option)

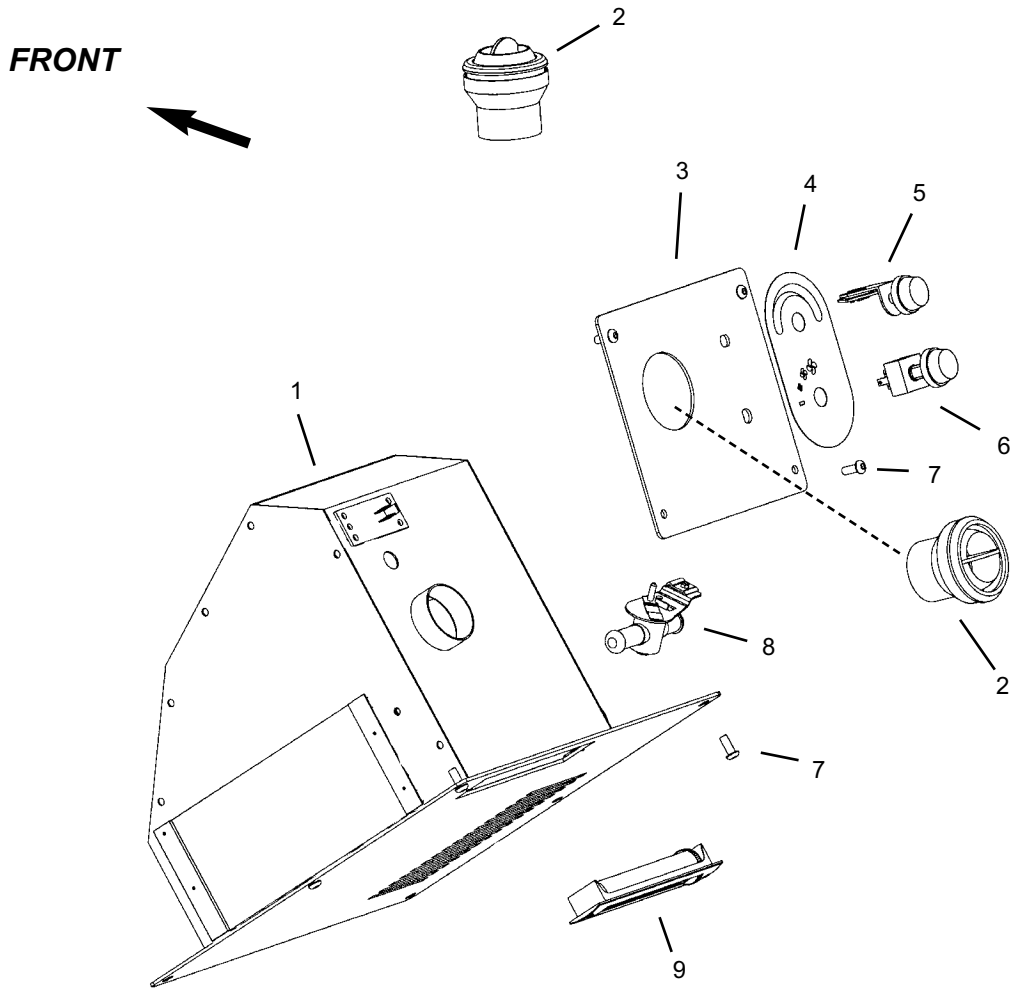

Heater (Option)

Ref. No.	Part No.	Description	Qty. Req.
01	808318	HEATER ASSEMBLY	1
		(Includes items 1-9)	
	808351	BLOWER MOTOR *(only)*	1
02	809542	GRILL, DEFROSTER	2
03	808324	INSTRUMENT PANEL	1
04	808325	DECAL, HEAT CONTROL	1
05	808352	CONTROL, TEMPERATURE	1
	809165	KNOB ONLY	AR
06	808411	SWITCH, VARIABLE SPEED	1
07	808600	1/4”-20X5/8” BUTTN HD BOLT	10
08	808496	VAVLE, WATER	1
09	808412	LOUVER	1
		-- ITEMS NOT SHOWN--	
00	NSS	5/8” HEATER HOSE *(10’)*	1
00	809403	HEATER HOSE CLAMP	AR

Steering Column and Shifter Group

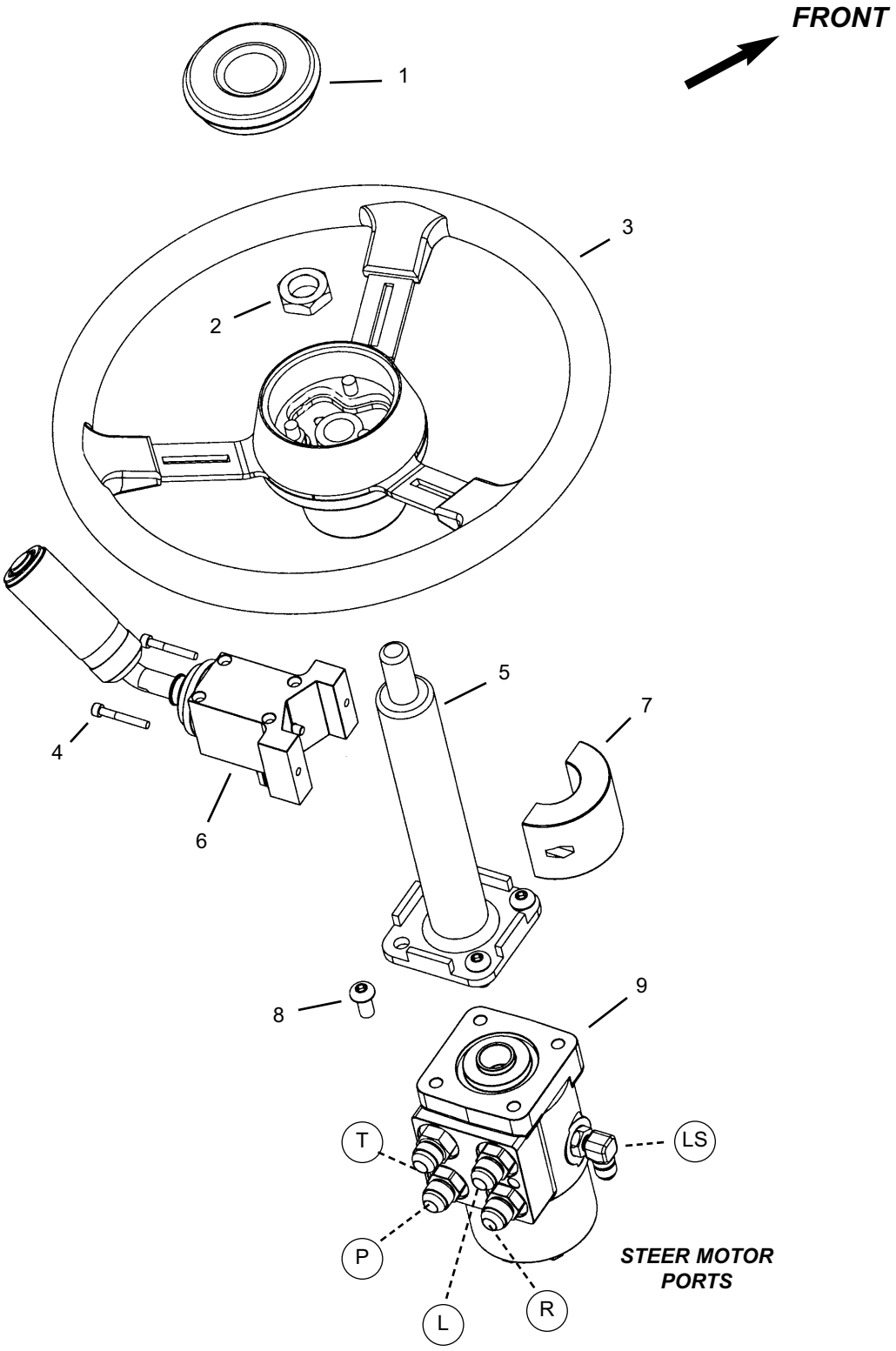

Steering Column and Shifter Group

Ref. No.	Part No.	Description	Qty. Req.
01	808435	CAP, STEERING WHEEL	1
02	808436	NUT, STEERING WHEEL	1
03	809615	STEERING WHEEL	1
04	808586	M5X.8X35mm HX SKTHD BOLT	2
05	808262	COLUMN, STEERING	1
06	808849	F-N-R/1-2-3 SHIFTER *(includes #7)*	1
	809130	BOOT	1
07	808833	CLAMP, SHIFTER*(included w/ #6)*	1
08	808668	3/8”-16X1-1/4” BUTTN HD BOLT	4
09	809292	MOTOR, STEER	1
		-- ITEMS NOT SHOWN--	
00	808234	WIRE HARNESS, FNR SHIFTER	1
00	808099	MODULE, F-N-R SHIFTER	1

Seat

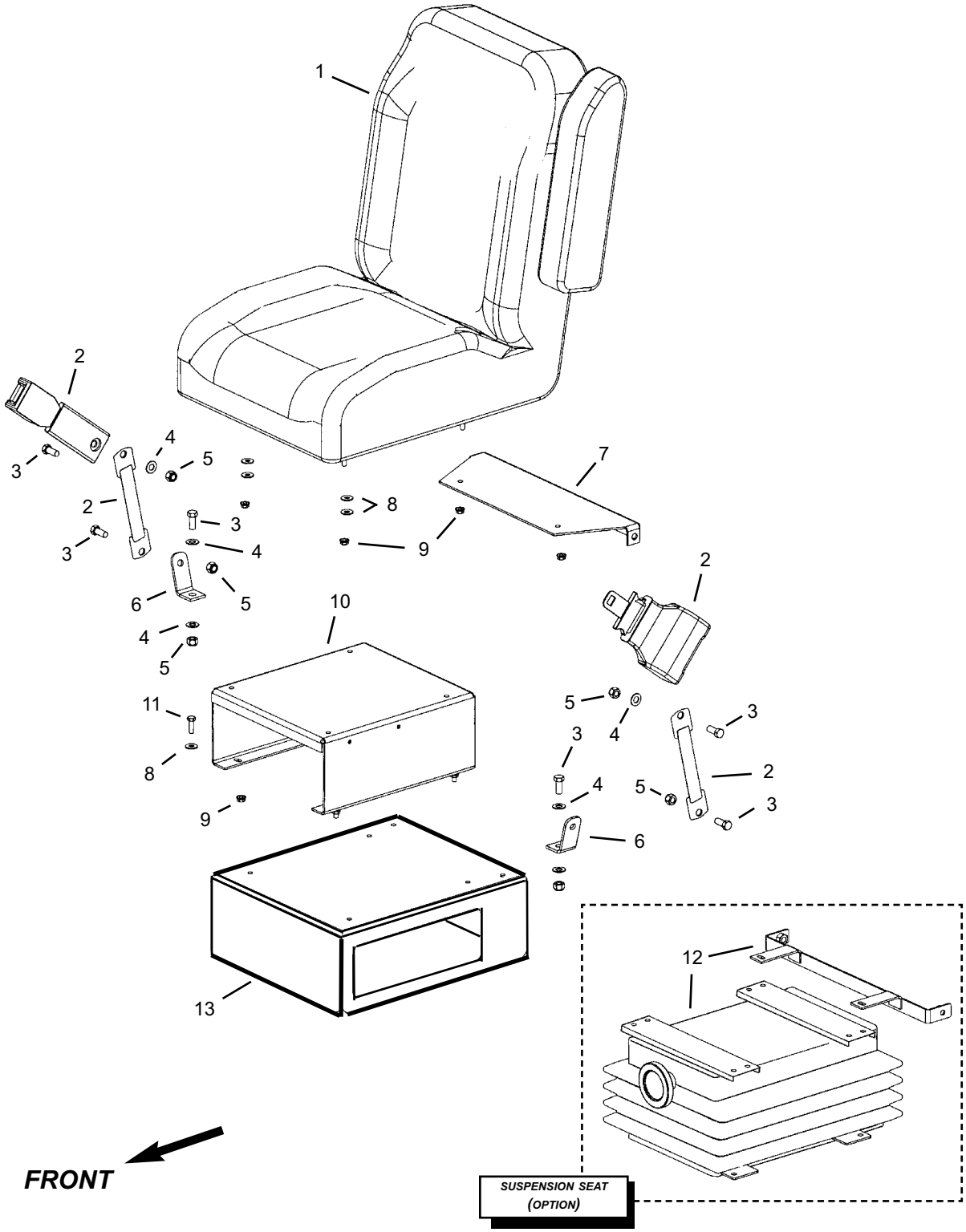
1
2
3
4
5
2
3
3
4
6
5
4
5
7
8
9
2
10
11
8
9
5
4
3
3
4
5
2
3
6
13
12
FRONT
SUSPENSION SEAT
(OPTION)

Seat

Ref. No.	Part No.	Description	Qty. Req.
01	808079	SEAT, OPERATOR'S	1
	809681	ARM REST *(only)*	1
02	808914	SEAT BELT *(includes tethers)*	1
03	808654	7/16"-20X1" BOLT	AR
04	808598	7/16" FLAT WASHER	AR
05	808625	7/16"-20 NYLON INSERT NUT	AR
06	808899	BRACKET, TETHER	2
07[a]	808898	MOUNT, SEAT BELT	1
08	808590	5/16" FLAT WASHER	AR
09	808555	5/6"-18 NYLON INSERT NUT	AR
10[a]	809195	SEAT RISER	1
11	808640	5/16"-18X1" BOLT	AR
12[b]	808835	BELLOWS, SUSPENSION SEAT *(includes seatbelt / tether bracket)*	1
13	809335	PEDESTAL / BOLT ON SEAT	1

a *Used for standard seat only. Not used with suspension seat option.*

b *Used for suspension seat option only.*

Brake and Accelerator Pedals

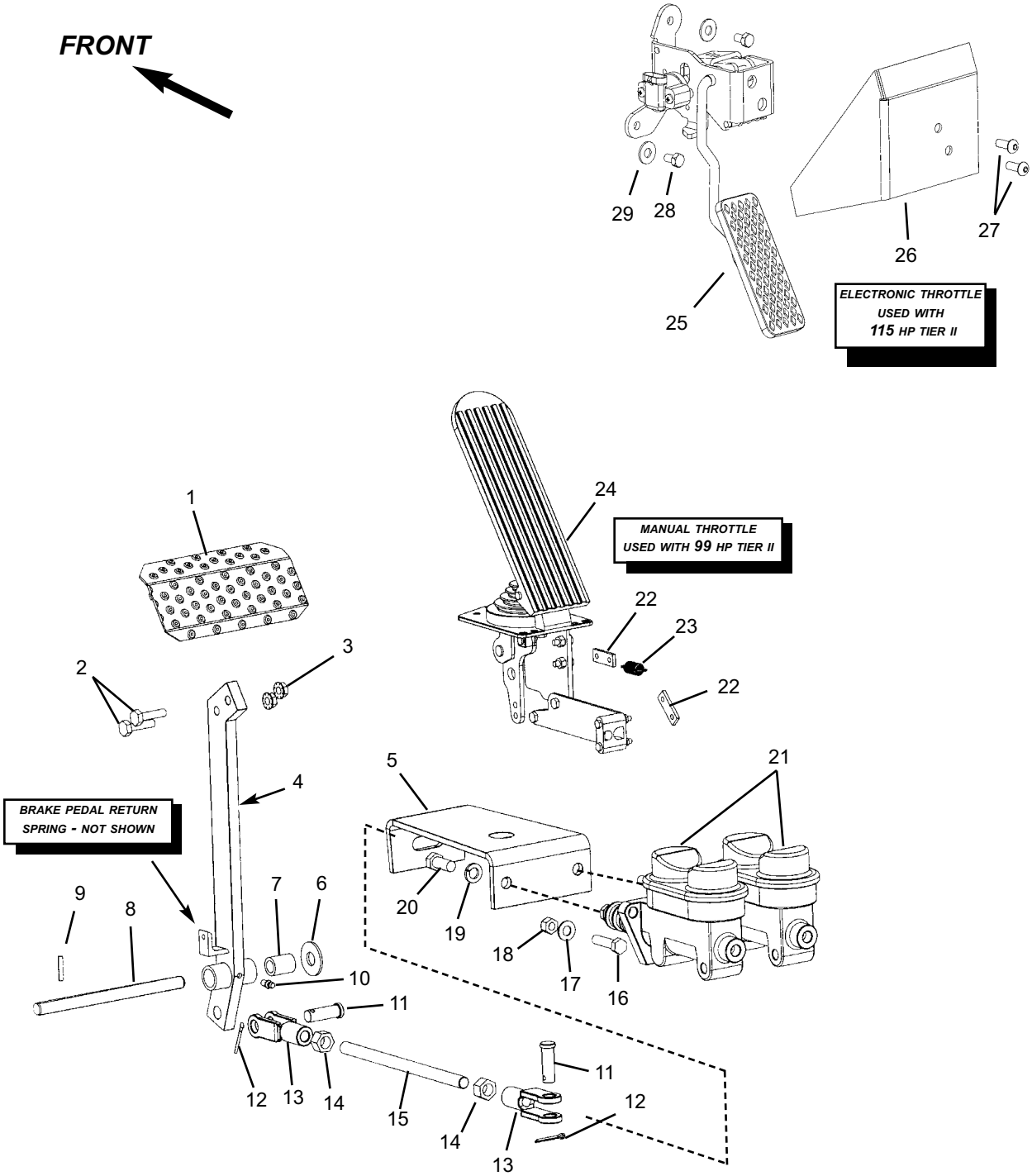

Brake and Accelerator Pedals

Ref. No.	Part No.	Description	Qty. Req.
01	808711	PAD, BRAKE PEDAL	1
02	808604	5/16”-18X1-1/4” BOLT	2
03	808555	5/16”-18 FLANGE NUT	2
04	808264	BRAKE LEVER ASSEMBLY *(includes item 7)*	1
05	808155	BRAKE LINKAGE, WLDMNT	1
06	808595	1/2” FLAT WASHER	1
07	808474	BRONZE BUSHING *(included with item 4)*	2
08	808154	PIN, BRAKE LEVER PIVOT	1
09	808632	ROLL PIN, .19X1	1
10	808424	ZERK, GREASE 1/4”-28	1
11	808466	PIN, CLEVIS 1/2”X27/64”	2
12	808630	1/8”X1” COTTER PIN	2
13	808675	YOKE, CLEVIS 1/2”-13	2
14	808575	1/2”-13 NUT	2
15	808156	ROD, BRAKE VALVE	1
16	808608	3/8”-16X1-1/2” BOLT	6
17	808592	3/8” FLAT WASHER	6
18	808663	3/8”-16 NYLON INSERT NUT	6
19	808594	7/16” LOCK WASHER	2
20	808654	7/16”-20X1” BOLT	2
21	808714	VALVE, BRAKE MASTER CYL.	2
22[a]	808722	BRACKET, THROTTLE RETRN	2
23[a]	808705	SPRING, CABLE TENSION	1
24[a]	808848	PEDAL, ACCELERATOR	1
	808666	1/4”-20X1” BUTTN HD BOLT	3
	808545	1/4”-20 FLANGE NUT	3
	809073	BOOT	1
25[b]	808084	THROTTLE PEDAL, ELECTRONIC	1
26[b]	808301	COVER, ELEC. THROTTLE	1
27[b]	808667	5/16”-18X3/4” BUTTN HD BOLT	2
	809684	5/16”-18 RETAIN/CLIP NUT	2
28[b]	808602	5/16”-18X3/4” BOLT	2
29[b]	808590	5/16” FLAT WASHER	2

-- ITEMS NOT SHOWN--

(Throttle)

00[a]	808717	THROTTLE CABLE	1
	808772	COUPLER *(John Deere)*	1
	808771	THROTTLE ROD *(John Deere)*	1

(Brake)

00	808674	RETURN SPRING *(Brake lever)* *(attaches to item 4)*	1

a *Used when equipped with a 99 hp TIER II engine.*
b *Used when equipped with a 115 hp TIER II engine.*

Cab Mounts

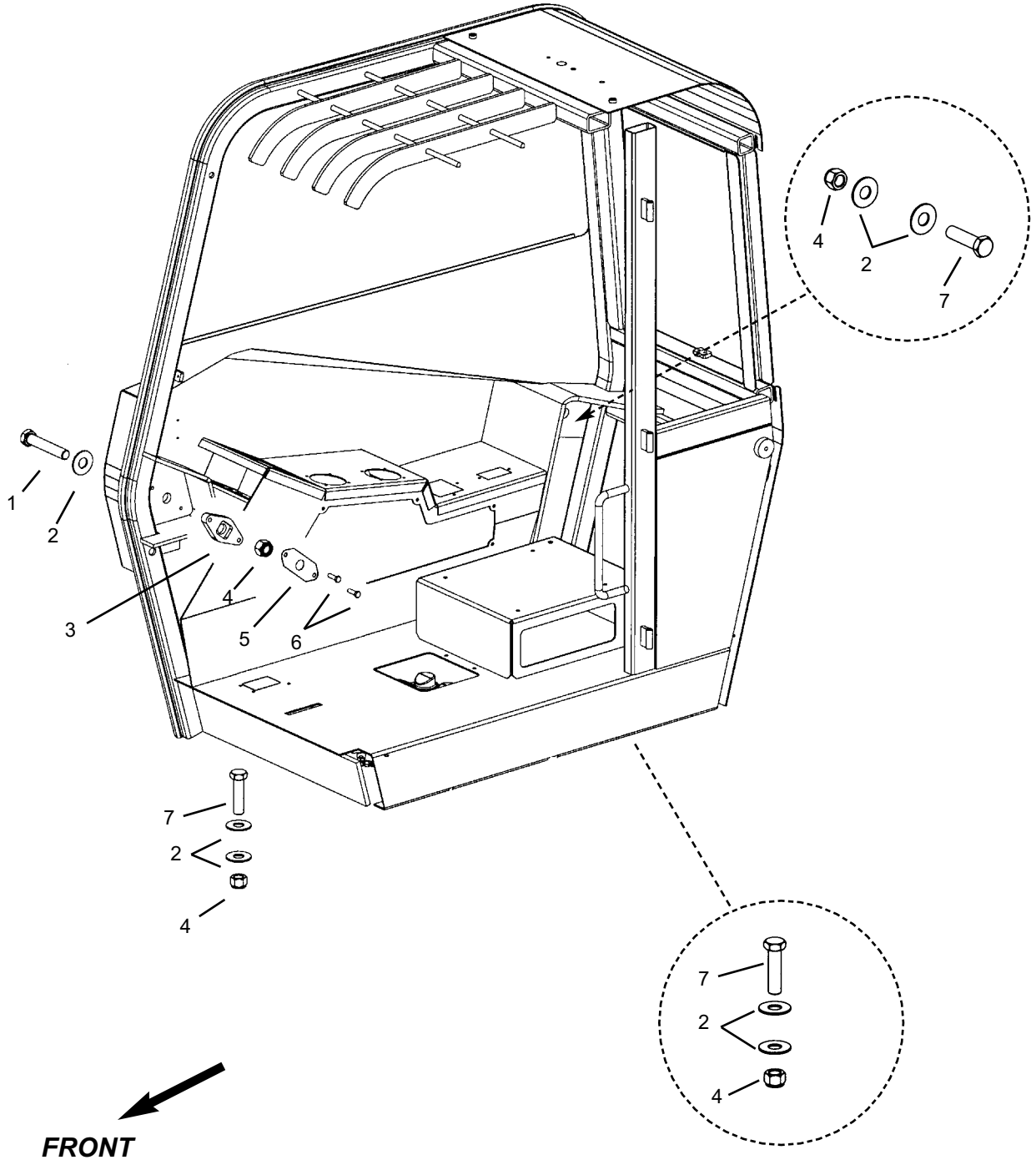

Cab Mounts

Ref. No.	Part No.	Description	Qty. Req.
01	809313	1”-8X3” GR8 BOLT	1
02	809315	1” SAE FLAT WASHER	7
03	808259	RETAINER, CANOPY NUT	1
04	809314	1”-8 CLASS C LOCK NUT	4
05	808092	WASHER, CANOPY NUT	1
06	808621	3/8”-16X1-1/4” BOLT	2
07	809313	1”-8X3” GR8 BOLT	3
		-- ITEMS NOT SHOWN--	
00	808733	HOLE PLUG, 2-1/2” DIA *(plugs hole in cab where side bolt attaches)*	1

Hydraulic Tank Group

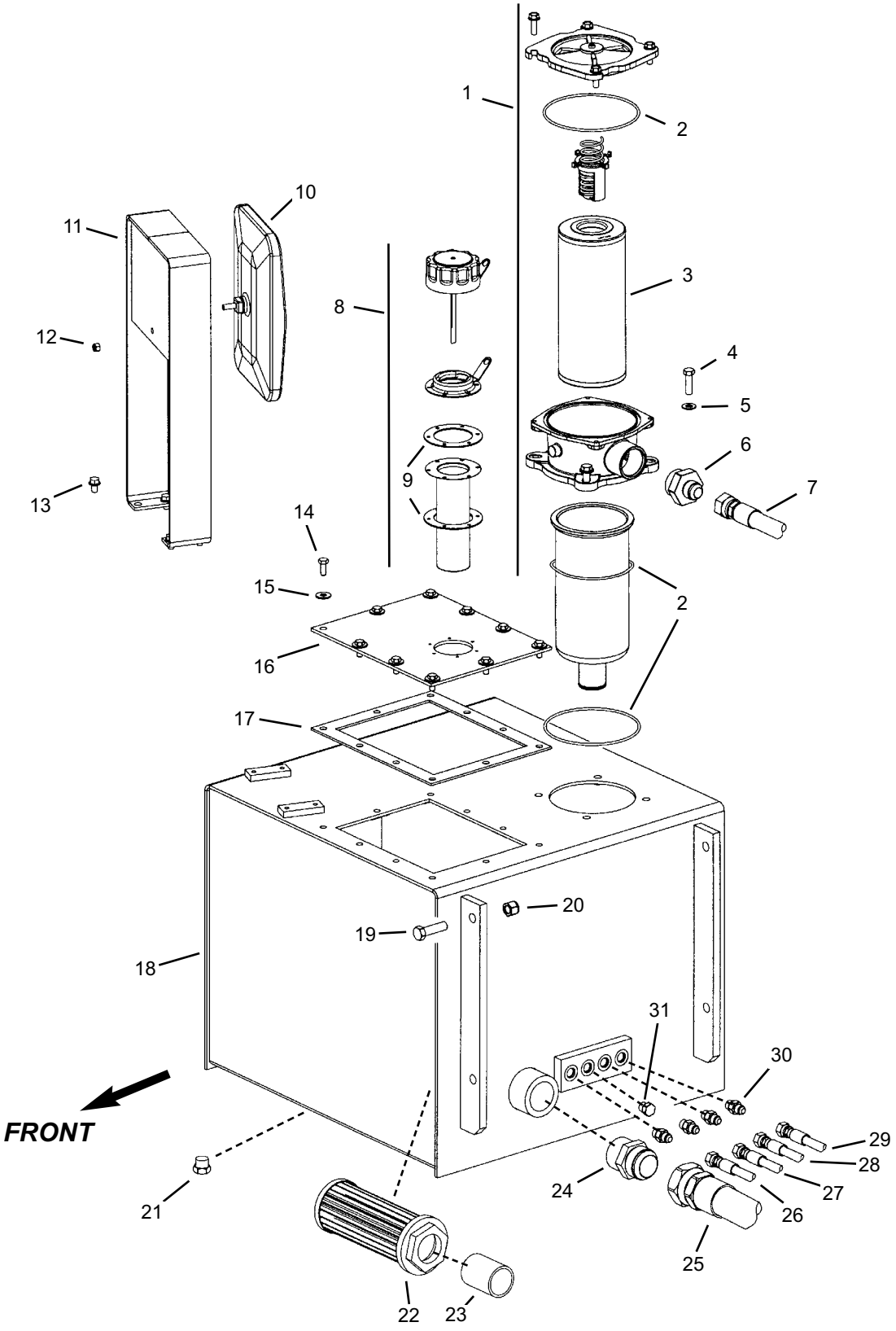

Hydraulic Tank Group

Ref. No.	Part No.	Description	Qty. Req.
01	808100	ASSEMBLY, IN-TANK FILTER. . . . . *(includes items 1-3)*	1
02	808340	SEAL KIT *(three o-rings)*	1
03	808005	HYDRAULIC FILTER ELEMENT. . .	1
04	808621	3/8”-16X1-1/14” BOLT	4
05	808592	3/8” FLAT WASHER	4
06	809385	ADAP, -20ORM -12JICM	1
07	809540	HOSE, -12 A12/DS12 114”	1
08	809527	CAP ASSEMBLY, HYDRAULIC . . . . *(includes item 9)*	1
09	809660	GASKET, FILLER NECK	2
10	808731	MIRROR, CONVEX 6-1/2”X10”. . . .	1
11	808736	BRACKET, MIRROR	1
12	808661	1/4”-20 NYLON INSERT NUT	1
13	808072	5/16”x1/2” LOCK BOLT	4
14	808603	5/16”-18x3/4” BOLT	10
15	808590	5/16” FLAT WASHER	10
16	808788	PLATE, HYDRAULIC TANK COVR.	1
17	808789	GASKET, RUBBER	1
18	809340	HYDRAULIC TANK WELDMENT . . *(includes items 22 and 23)*	1
19	808612	1/2”-13X1-3/4” BOLT	4
20	808665	1/2”-13 NYLON INSERT NUT	4
21	808462	PLUG, -8ORM SAE	1
22	808006	STRAINER, HYD. OIL.	1
23	809499	1-1/2” THREADED PIPE	1
24	809386	ADAP, -24NPTM -24JICM	1
25	808713	HOSE, -24 A24/A24 35”	1
26	809351	HOSE, -4 A6/DS6 60”	1
27[a]	809353	HOSE, -6 A6/DS6 52”	1
28	809600	HOSE, -6 A6/DS8 70”	1
29	809361	HOSE, -6 A6/DS6 52”	1
30	808443	ADAP, -6ORM -6JICM	AR
31[b]	809394	PLUG, -6ORM SAE	1

a *Used on unit equipped with PWP.*
b *Used when unit is not equipped with PWP.*

HOSE LOCATOR

07	HYDRAULIC FILTER	MAIN VALVE “OUT”
25	HYDRAULIC TANK	HYDRAULIC PUMP “IN”
26	HYDRAULIC TANK RETURN	JOYSTICK
27[a]	HYDRAULIC TANK RETURN	PWP VALVE “T”
28	HYDRAULIC TANK RETURN	STEER MOTOR “T”
29	HYDRAULIC TANK RETURN	FLOW DIVIDER “T”

Fuel Tank Group

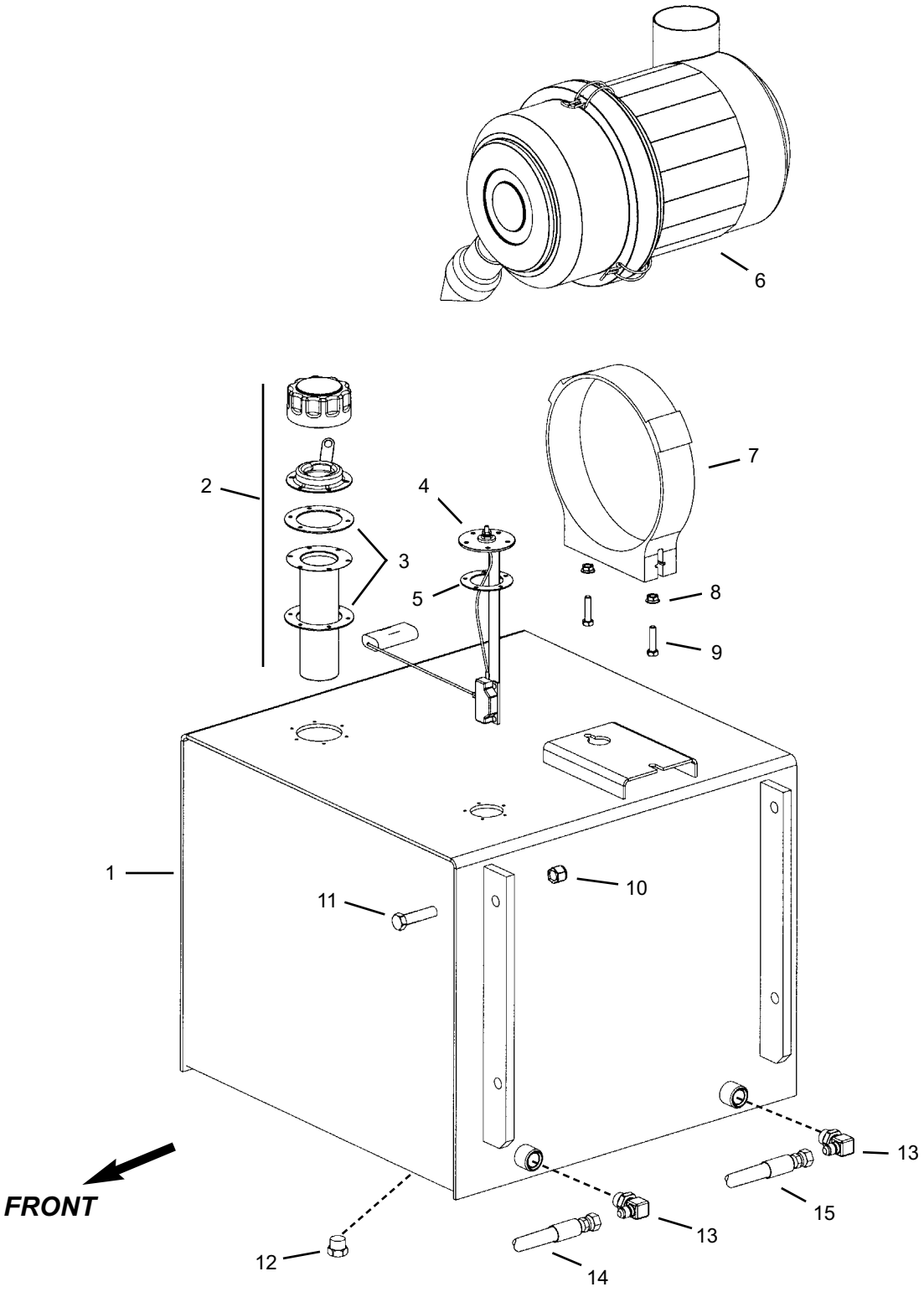

Fuel Tank Group

Ref. No.	Part No.	Description	Qty. Req.
01	809339	FUEL TANK WELDMENT	1
02	808732	CAP, FUEL ASSEMBLY *(includes item 3)*	1
03	809660	GASKET, FILLER NECK	2
04[a]	809503	SENDER, FUEL LEVEL	1
	809108	#10-32X1/2" RD MACH SCREW	5
05	808439	GASKET, FUEL SENDER	1
06[b]	809378	AIR CLEANER ASSEMBLY	1
07	809379	CLAMP, AIR CLEANER MOUNT	1
08	808555	5/16"-18 WHIZ LOCK NUT	2
09	808604	5/16"-18X1-1/25" BOLT	2
10	808665	1/2"-13 NYLON INSERT NUT	4
11	808612	1/2"-13X1-3/4" BOLT	4
12	808462	PLUG, -8ORM SAE	1
13	808457	ADAP, -8ORM -6JICM 90 DEG	2
14	809589	HOSE, -6 K6/XX 73" *(Fuel Supply)*	1
15	808298	HOSE, -4 K6/XX 73" *(Fuel Return)*	1

a *Includes gasket; item #5*

b *Refer to **Engine Air Intake Group** for individual air cleaner components.*

Battery Group

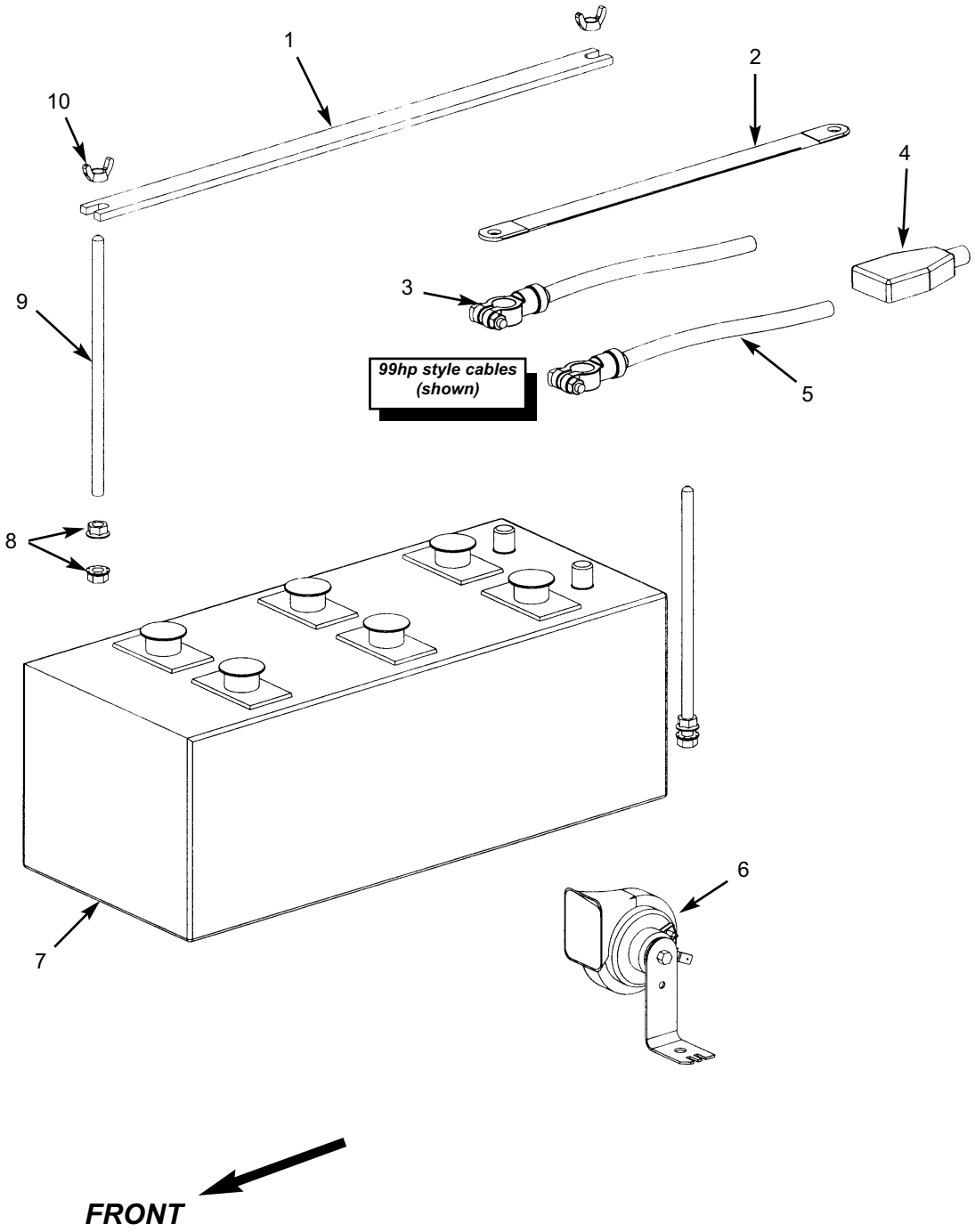

Battery Group

Ref. No.	Part No.	Description	Qty. Req.
01	809534	BAR, BATTERY HOLD DOWN	1
02	808707	GROUND STRAP, 14GA.X14”	1
03		CABLE, NEG. BATTERY	1
	808104	*Units w/ Electronic throttle pedal*	
	808706	*Units w/ Manual throttle pedal*	
04	809507	BOOT, RUBBER	1
05		CABLE, POS. BATTERY	1
	809293	*Units w/ Electronic throttle pedal*	
	809530	*Units w/ Manual throttle pedal*	
06	808437	HORN, 12V ELEC B2I	1
07	NSS	BATTERY, 4DLT TYPE	1
08	808559	3/8”-16 FLANGE NUT	4
09	808896	ROD, BATTERY HOLD DOWN	2
10	808670	3/8”-16 WING NUT	2
		-- ITEMS NOT SHOWN --	
		(Used on battery cables 808104 and 809293)	
00	809294	POWER PLUG (female end)	1
	809297	#8 DUETCH PIN	1
00	809295	POWER PLUG (male end)	1
	809296	#8 DUETCH SOCKET	1

Hoods and Covers

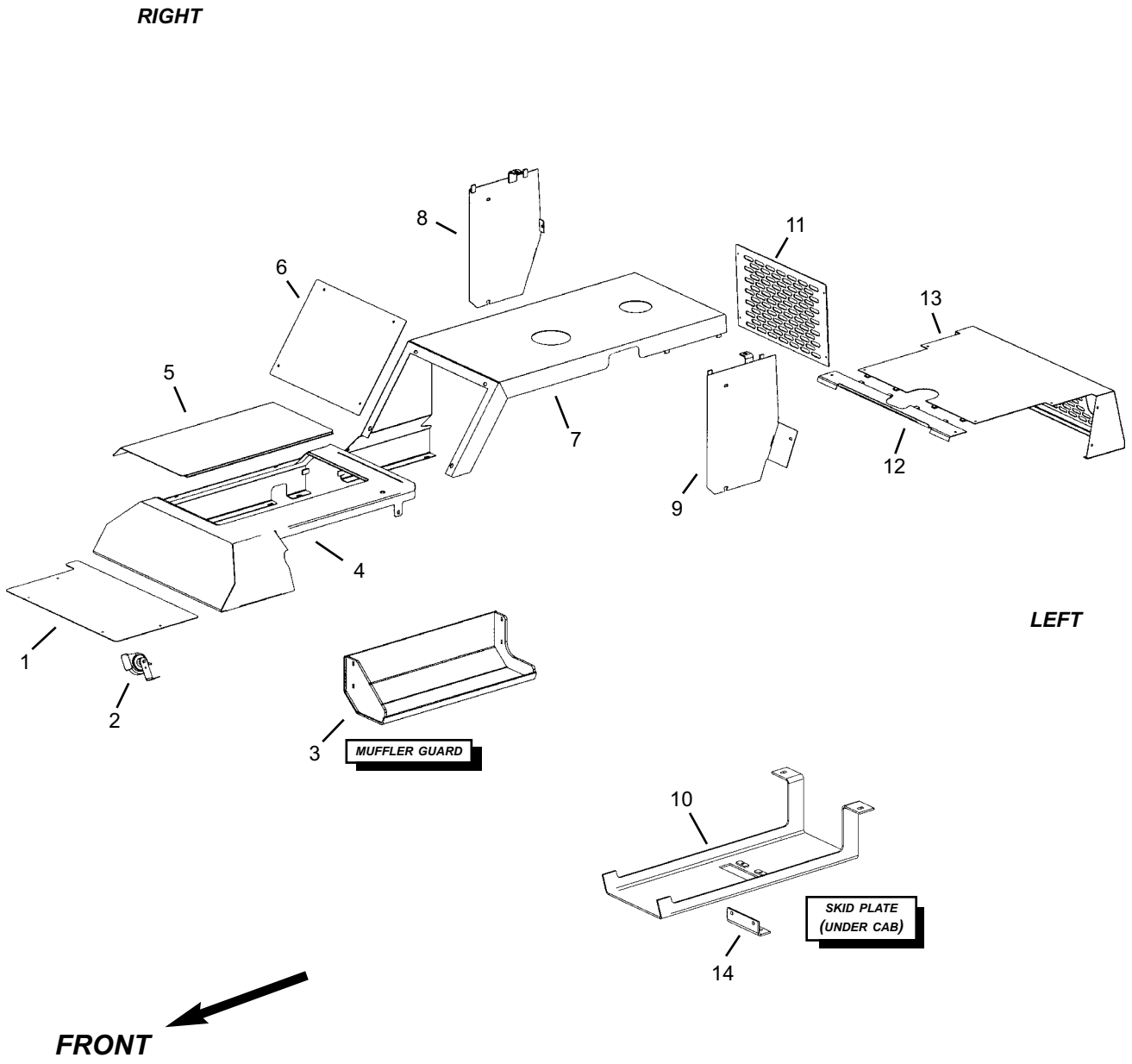

Hoods and Covers

Ref. No.	Part No.	Description	Qty. Req.
01	809609	FRONT COVER	1
	808667	5/16”-18X3/4” BOLT	4
	808671	FASTENER RETAINED NUT	4
02	808437	HORN, 12V	1
	808602	5/16”-18X1/2” BOLT	1
03	809563	MUFFLER GUARD	1
	809486	3/8”X1-1/4” BOLT	4
04	809347	HOOD/TRANS COVER	1
	808555	5/16”-18 WHIZ NUT	1
	808590	5/16” FLAT WASHER	5
	808603	5/16”-18X3/4” BOLT	6
	808671	FASTENER RETAINED NUT	5
05	809572	COVER, BATTERY ACCESS	1
06	809348	COVER, FUEL FILTER ACCESS	1
	808667	5/16”-18X3/4” BOLT	4
	808590	5/16” FLAT WASHER	4
07	809349	HOOD, ENGINE COVER	1
	808555	5/16”-18 WHIZ NUT	6
	808590	5/16” FLAT WASHER	6
	808603	5/16”-18X3/4” BOLT	4
	808671	FASTENER RETAINED NUT	2
	808640	5/16”-18x1” BOLT	2
08	809571	RADIATOR PANEL *(right)*	1
	808590	5/16” FLAT WASHER	2
	808603	5/16”-18X3/4” BOLT	2
	808671	FASTENER RETAINED NUT	1
09	809570	RADIATOR PANEL *(left)*	1
	808590	5/16” FLAT WASHER	2
	808603	5/16”-18X3/4” BOLT	2
	808671	FASTENER RETAINED NUT	1
10	809362	SKID PLATE	1
11	809568	GRILLE, RADIATOR	1
	809565	SCREW, CAPTIVE	4
	809566	RETAINER, SCREW	4
	809567	RECEPTACLE, SCREW	4
12	809569	REAR HOOD EXTENSION	1
	808590	5/16” FLAT WASHER	2
	808603	5/16”-18X3/4” BOLT	2
	808671	FASTENER RETAINED NUT	1
13	809336	REAR HOOD	1
	808590	5/16” FLAT WASHER	8
	808603	5/16”-18X3/4” BOLT	8
	808671	FASTENER RETAINED NUT	8
14	809363	BRACKET	1

Front and Rear Lights

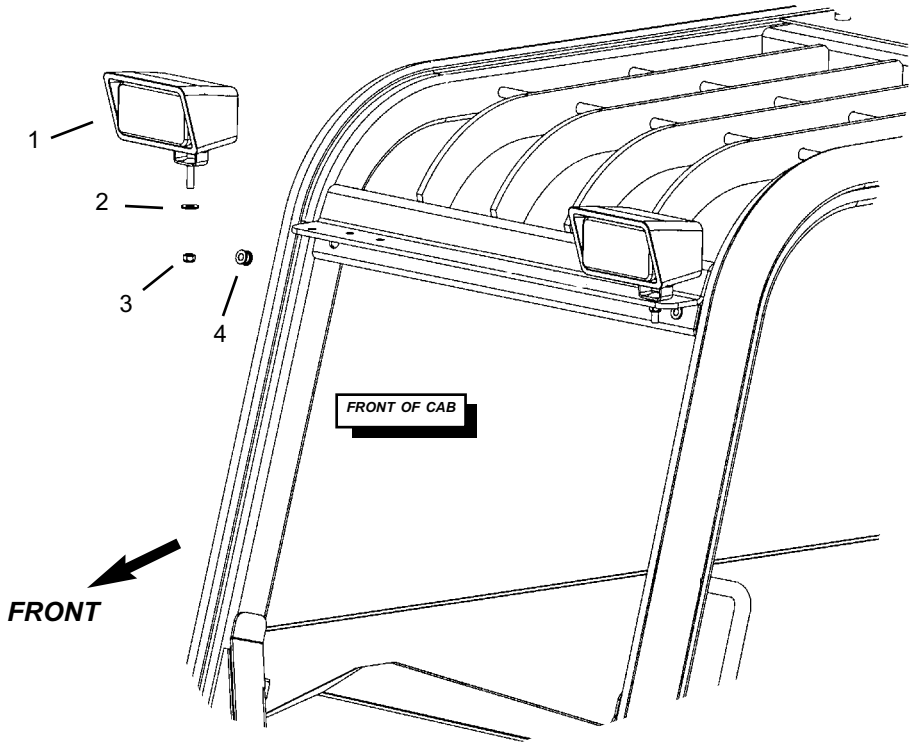

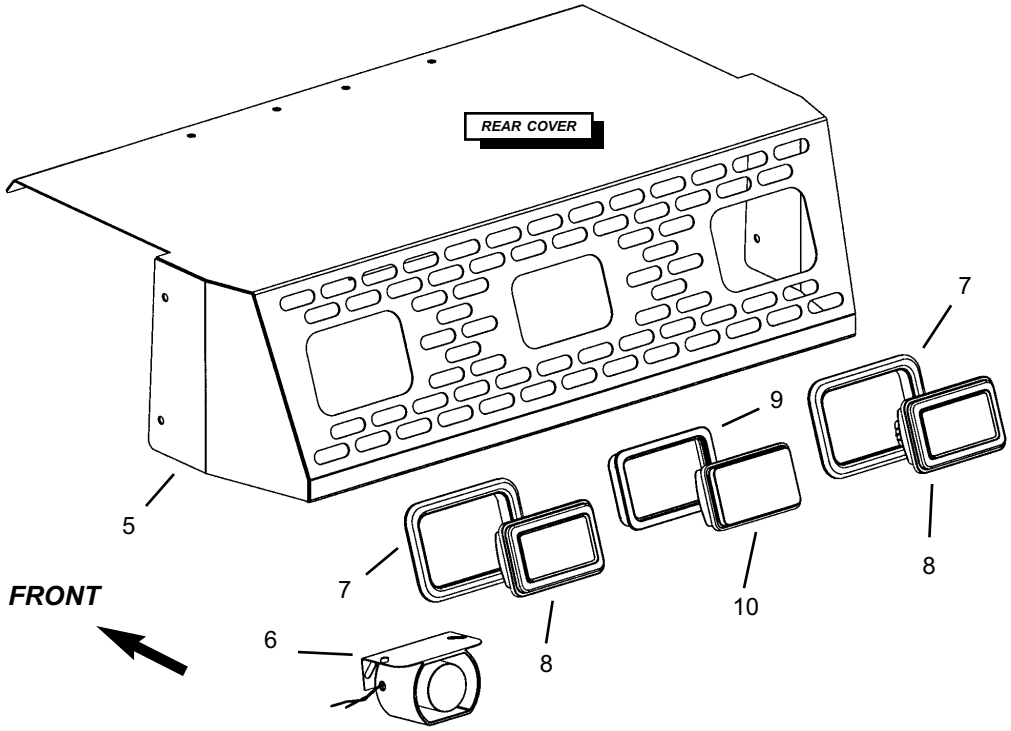

Front and Rear Lights

Ref. No.	Part No.	Description	Qty. Req.
01	808889	HEAD LIGHT	2
02	808592	3/8” FLAT WASHER	2
03	808663	3/8”-16 NYLON INSERT NUT	2
04	808341	GROMMET, 5/8”	2
05	809336	HOOD, REAR	1
06	808897	BACKUP ALARM	1
	808603	5/16-18X3/4” BOLT	2
	808555	5/16”-18 NUT	2
	808590	5/16” FLAT WASHER	2
07	808505	BEZEL, RUBBER *(included with item #04)*	2
08	808919	LIGHT, BRAKE/TURN *(includes item #03 bezel)*	2
09	808558	BEZEL, RUBBER *(included with item #06)*	1
10	808936	LIGHT, HALOGEN BACKUP *(includes item #05 bezel)*	1
	808078	JUMPER WIRE, BACKUP LIGHT	1
		-- ITEMS NOT SHOWN --	
00[a]	808232	WIRE HARNESS, REAR LIGHTS	1
00[b]	808166	HARNESS, LIGHT PACKAGE *(dash to rear lights - includes the following diodes:)*	1
	808396	DIODE PACK *(see below)*	1
	808577	DIODE PACK *(see below)*	1
	808576	CLEAR COVER, DIODE PACK	2

Ref. No.	Part No.	Description	Qty. Req.
00	808735	TURN SIGNAL FLASHER *(located under dash through joystick access cover)*	1
00	808901	HARNESS, HEAD LIGHT *(dash to head lights)*	2
00	809334	GROMMET 13/16” *(under dash for head light harness)*	2

a *Standard wire harness, used when not equipped with turn signals.*

b *Used with optional light package for units equipped with turn signals. Wire harness 808232 is not used when unit is equipped with turn signals.*

Note: Refer to the Outer Boom - Front Section for the work lights and wire harness associated with the boom.

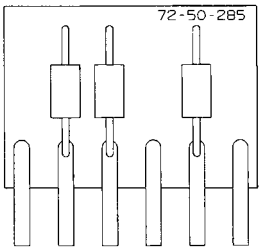

808396
DIODE PACK
LOCATED NEAR
REAR LIGHTS

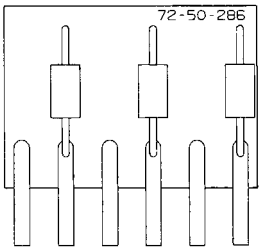

808577
DIODE PACK
LOCATED UNDER DASH
NEAR SWITCHES

Boom Components

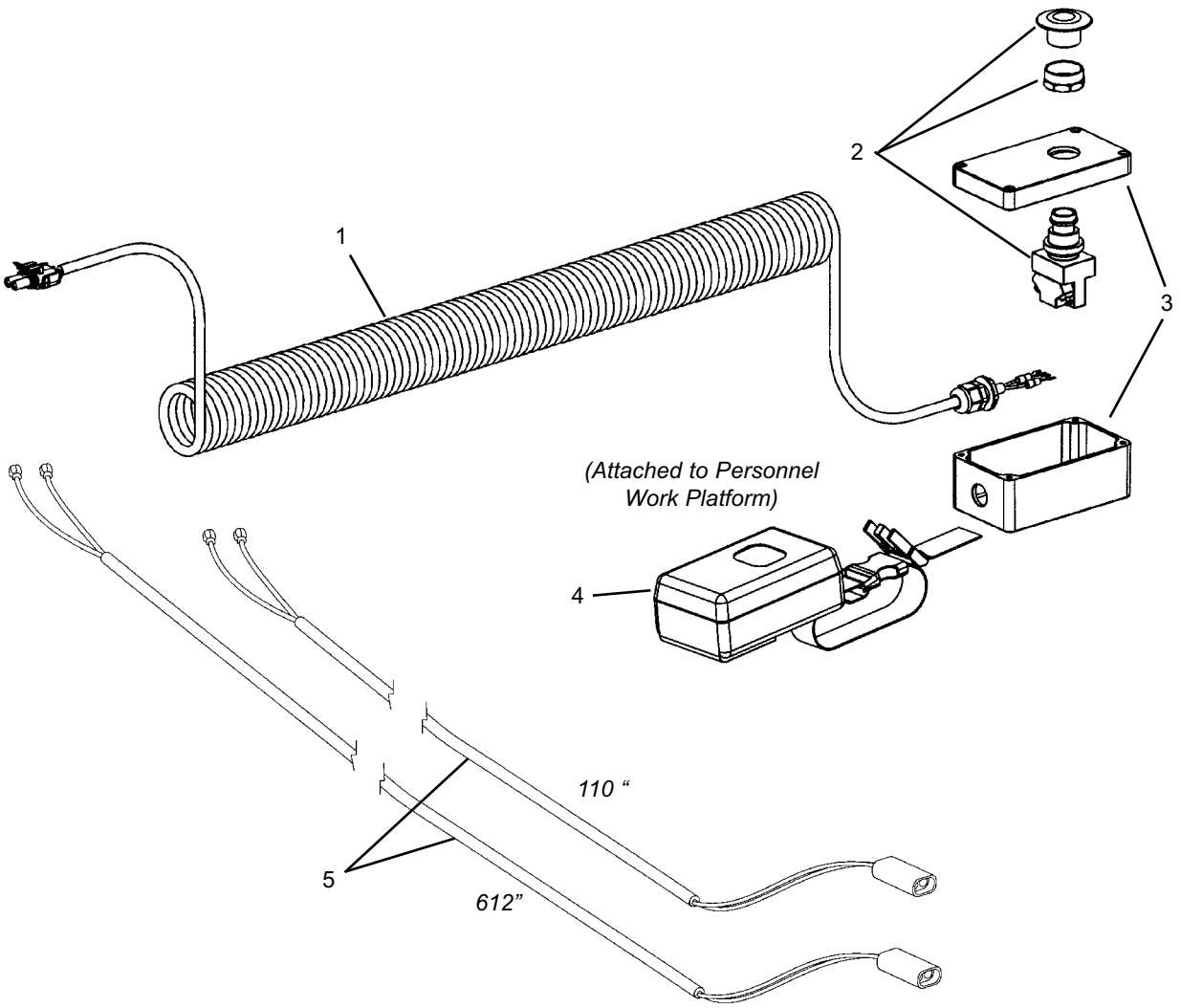

Ref. No.	Part No.	Description	Qty. Req.
00	808942	REMOTE SWITCH W/CABLE. . . . . *(Includes item 1-4)*	1
01	808131	CABLE ASSEMBLY.	1
02	808941	REMOTE STOP SWITCH	1
03	808940	REMOTE SWITCH ENCLOSURE. .	1
04	808944	REMOTE SWITCH POUCH	1
05	808943	REMOTE SWITCH HARNESS . . . . *(Consists of two cables)*	1

Chassis

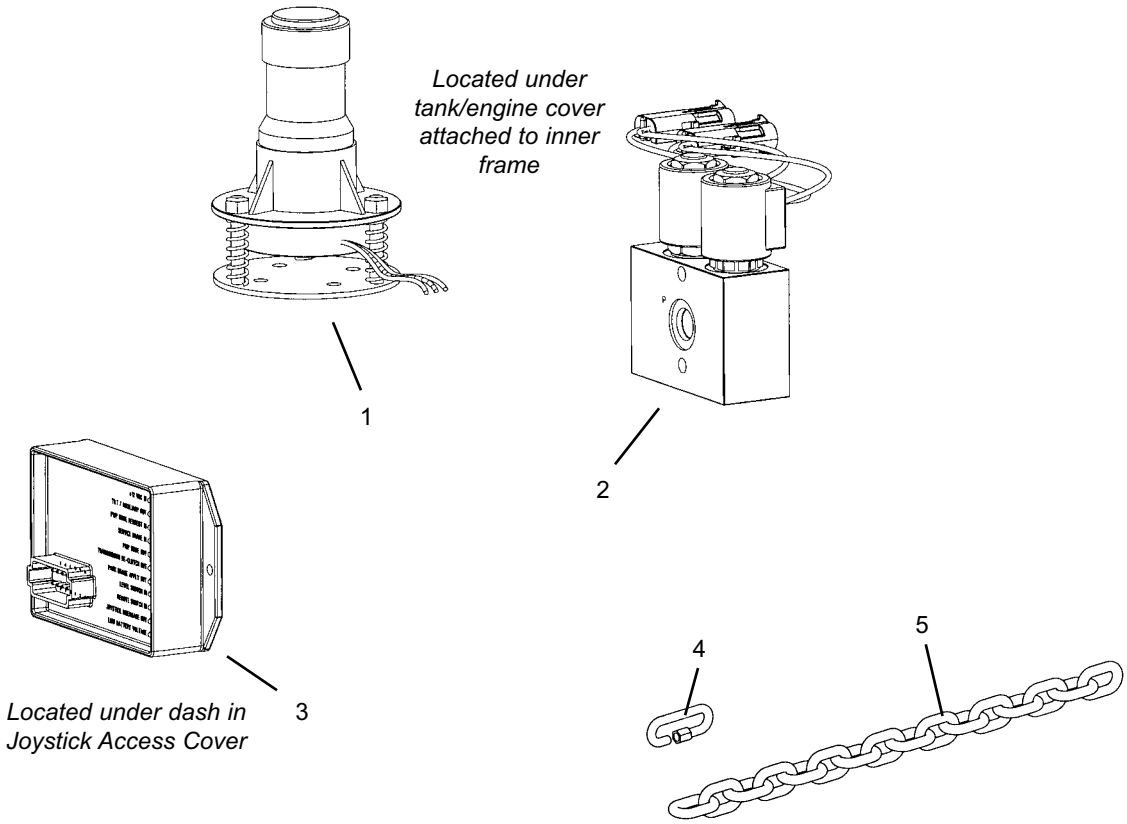

Chain and Shackle
(Used to secure Personnel Work Platform)

Ref. No.	Part No.	Description	Qty. Req.
01	808935	LEVEL SENSOR	1
02	808127	MANIFOLD, PWP JOYSTICK	1
03	808939	PWP CONTROL MODULE	1
04[a]	808946	5/16” CHAIN SHACKLE	1
05[a]	808945	5/16” CHAIN GR40 16 LINKS	1

Ref. No.	Part No.	Description	Qty. Req.
		-- ITEMS NOT SHOWN --	
00	808938	PWP SWITCH *(located on dash)*	1
00	808233	PWP WIRE HARNESS	1

a *Chain shackle and chain are used to secure the Personnel Work Platform.*

Engine - External Components

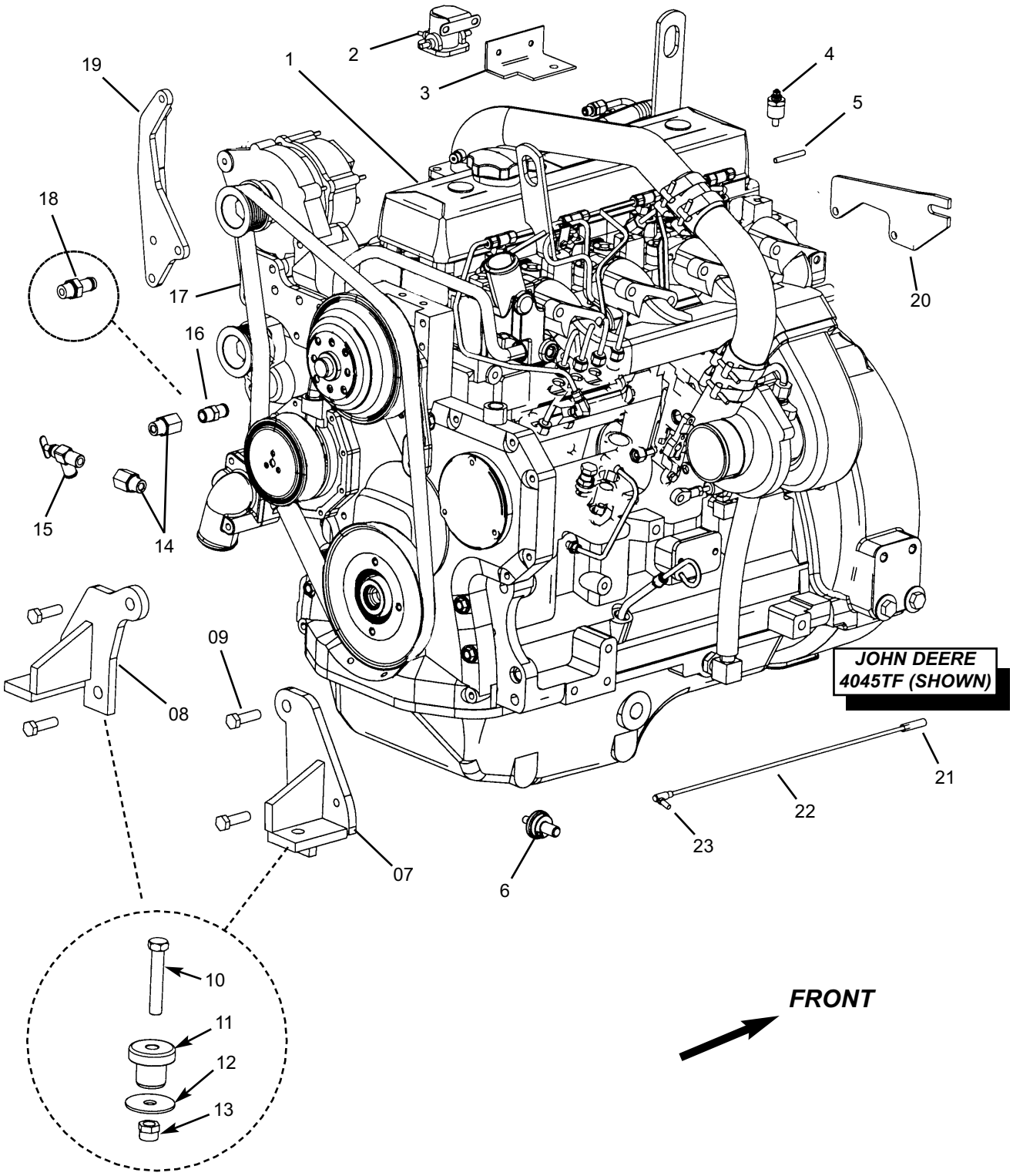

Engine - External Components

Ref. No.	Part No.	Description	Qty. Req.
01	NSS	ENGINE, JD 4045T	1
02	808434	RELAY, ENGINE STARTER	1
03	809586	MOUNT, RELAY	1
04	808758	SENDER, WATER TEMP	1
05	808861	FUEL LINE TUBE	1
06	808103	SENDER, OIL PRESSURE	1
07	809587	ENGINE MOUNT *(right)*	1
08	809614	ENGINE MOUNT *(left)*	1
09	808613	M16-2X35M BOLT GR8.8	4
10	808615	5/8”-11X3-1/2” BOLT	2
11	808744	MOUNT, VIBRATION ISOLATOR	2
12	808749	WASHER, ISOLATOR MOUNT	2
13	808664	5/8”-11 NYLON INSERT NUT	2
14	808872	ADAP, M18 -6NPTF STR	2
15	808844	SHUTOFF, MANUAL/WATER	1
16	808843	STEM, HOSE	1
17	808845	FAN BELT	1
18[c]	808465	ADAP, M18 10 BEAD STR	1
19	809588	BRACKET, ALTERNATOR	1
20[be]	808813	BRACKET, THROTTLE	1
21[b]	808772	COUPLER, ROD TO CABLE	1
	808544	#10-32 NUT	2
22[b]	808771	ROD, THROTTLE EXTEND	1
23[b]	808676	BALL JOINT #10-32	1
	808544	#10-32 NUT	1

Ref. No.	Part No.	Description	Qty. Req.
		-- ITEMS NOT SHOWN --	
00	808798	ENGINE BLOCK HEATER *(opt.)*	1
		(Throttle Cable)	
00[b]	808717	CABLE, THROTTLE	1
		(Electrical)	
00[a]	808098	HARNESS, TIER II	1
		(Ether - Optional)	
00	808322	HARNESS, ETHER KIT *(includes 21” BLU/WHT jumper wire)*	1
00[d]	808913	ETHER KIT *(optional) (includes: thermostat, atomizer, valve bracket, fitting, clamp and tubing. Does not include ether canister.)*	1
00	808925	SWITCH, ROCKER *(ether) (located in dash panel)*	1
		(Fuel Line)	
00	809551	HOSE END, -5 JICF	1
00	809589	HOSE, 3/8” X 73” *(supply)*	1
00	808298	HOSE, 1/4” X 73” *(return)*	1

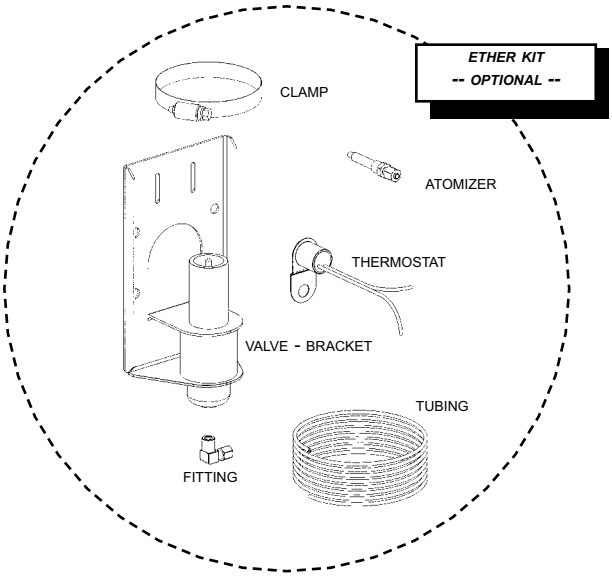

a *When equipped with a 115 HP Tier II engine. (equipped with an electronic throttle pedal)*

b *When equipped with a 99 HP Tier II engine. (equipped with a manual throttle pedal)*

c *Replaces item 16 and (1) of item 14.*

d *Thermostat is located on engine block, and switch is located on dash.*

e *Used with 99 hp TIER II engine with a manual throttle pedal. For 115 TIER II engine with electronic throttle pedal subsititue Harness mount bracket P/N 808144.*

Radiator and Cooler Group

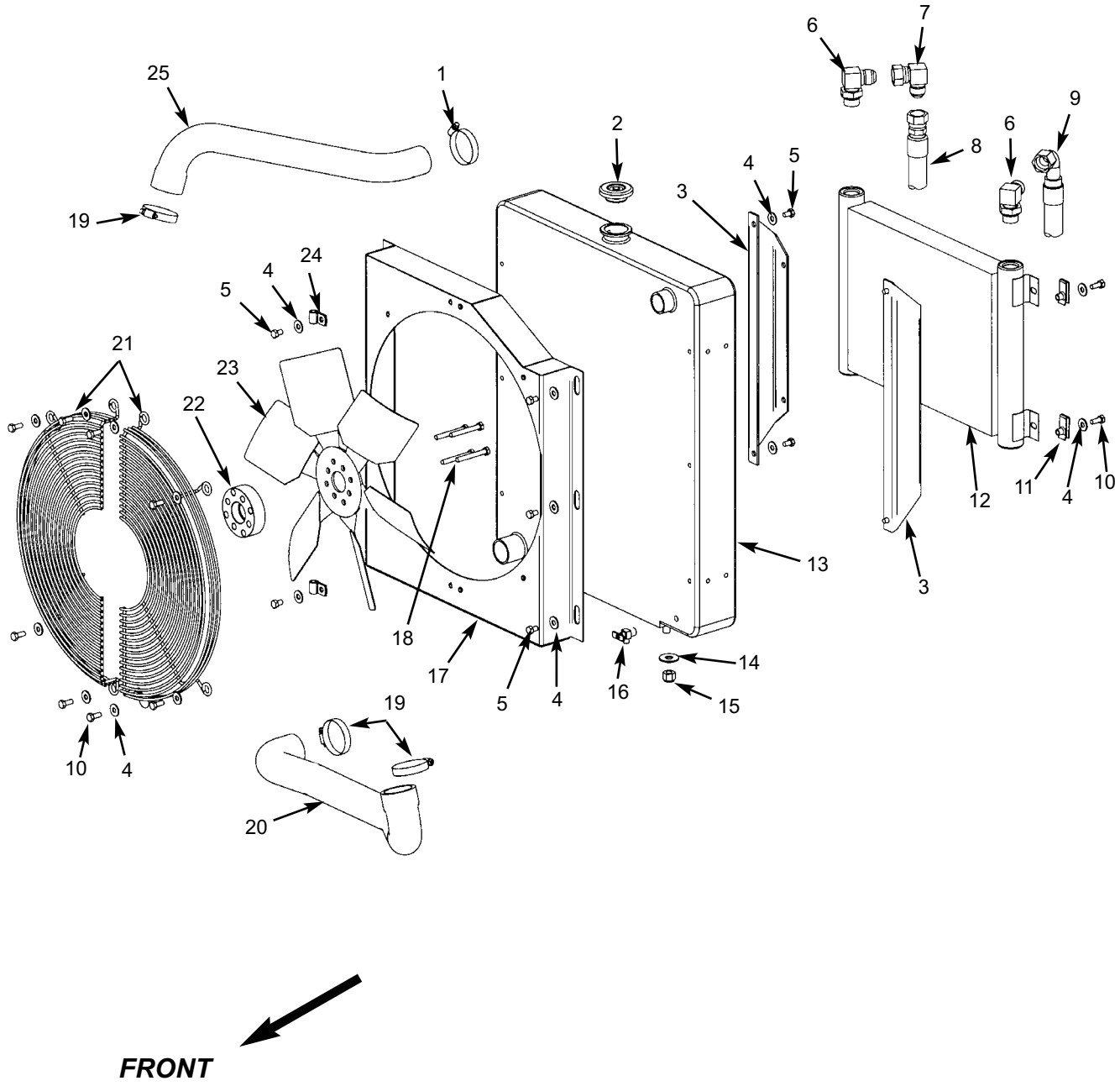

Radiator and Cooler Group

Ref. No.	Part No.	Description	Qty. Req.
01	808948	HOSE CLAMP	1
02	808106	RADIATOR CAP (10 LB.)	1
03	809536	COOLER MOUNT	2
04	808590	5/16” FLAT WASHER	AR
05	808602	5/16”-18X1/2” BOLT	AR
06	808453	ADAP, -12ORM -12JICM 90 DEG	2
07	808461	ADAP -12JICFS -12JICM 90 DEG	1
08	809540	HOSE -12 A12/DS12 114”	1
09	809539	HOSE -12 DS12/A12 82”	1
10	808603	5/16”-18X3/4” BOLT	AR
11	808671	5/16” NUT RETAINING CLIP	4
12	809554	COOLER/HEAT-EXCHANGER	1
13	808468	RADIATOR	1
14	808595	1/2” FLAT WASHER	2
15	808665	1/2”-13 NYLON INSERT NUT	2
16	808433	VALVE, DRAIN COCK	1
17	809559	SHROUD WELDMENT	1
18	809489	M8X1.25X45MM BOLT	4
19	808947	HOSE CLAMP	3
20	808841	LOWER RADIATOR HOSE	1
21		FAN GUARD *(HALF)*	2
	808726	*(STANDARD) (Shown)*	
	809562	*(WITH A/C)*	
22	808815	FAN SPACER 1”	1
23	808806	FAN, 18”	1
24	809396	VINYL CLAMP 3/8” HOSE	2
25	808838	UPPER RADIATOR HOSE	1

HOSE LOCATOR

07	TRANSMISSION *(top right side - near filter)*	TRANSMISSION COOLER “RIGHT SIDE”
09	TRANSMISSION *(left side - just under hyd. pump)*	TRANSMISSION COOLER “LEFT SIDE”

Engine Air Intake Group

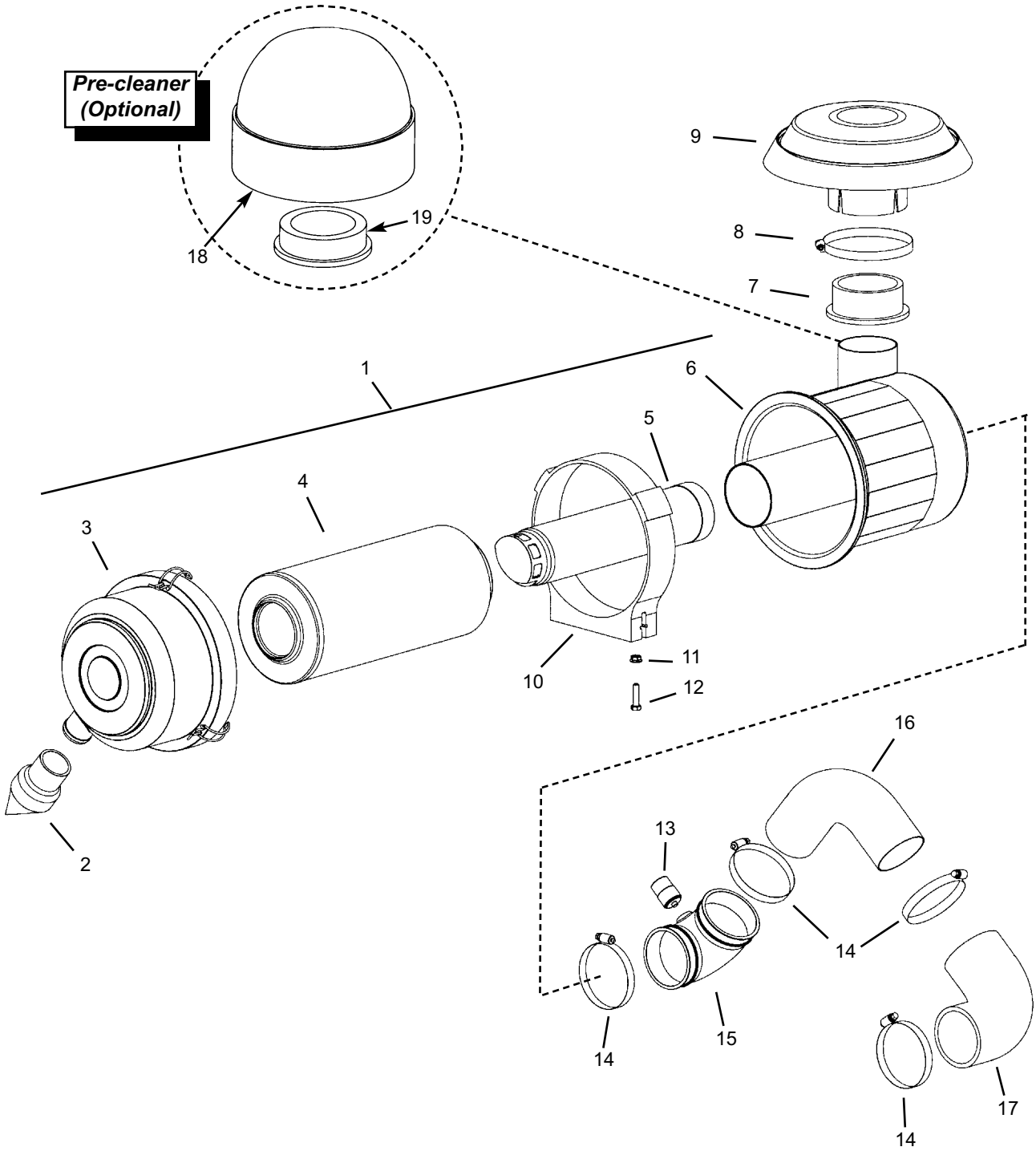

Engine Air Intake Group

Ref. No.	Part No.	Description	Qty. Req.
01	809378	AIR CLEANER ASSEMBLY *(Includes items 1-6, does not include item10)*	1
02	809381	EJECTOR/DUST	1
03	NSS	END CAP	1
04	808066	PRIMARY AIR FILTER	1
05	808067	SECONDARY AIR FILTER	1
06	NSS	HOUSING	1
07	809327	REDUCER, 3.84' TO 3.25"	1
08	808659	CLAMP, #72 SAE	1
09	808781	CAP, AIR INLET *(standard)*	1
10	809379	CLAMP, AIR CLEANER MOUNT	1
11	808555	5/16"-18 WHIZ LOCK NUT	2
12	808604	5/16"-18X1-1/25" BOLT	2
13	809382	GAUGE, AIR RESTRICTION	1
14	808655	CLAMP, #52 SAE	4
15	809380	ELBOW, RUBBER 90 DEG	1
16	809560	ELBOW, METAL 3" OD 90DEG	1
17	808427	ELBOW, RUBBER 3" ID 90 DEG	2
18	809308	PRE-CLEANER *(optional)*	1
19	809316	REDUCER, RUBBER 4"-3.25"	1

Engine Exhaust Group

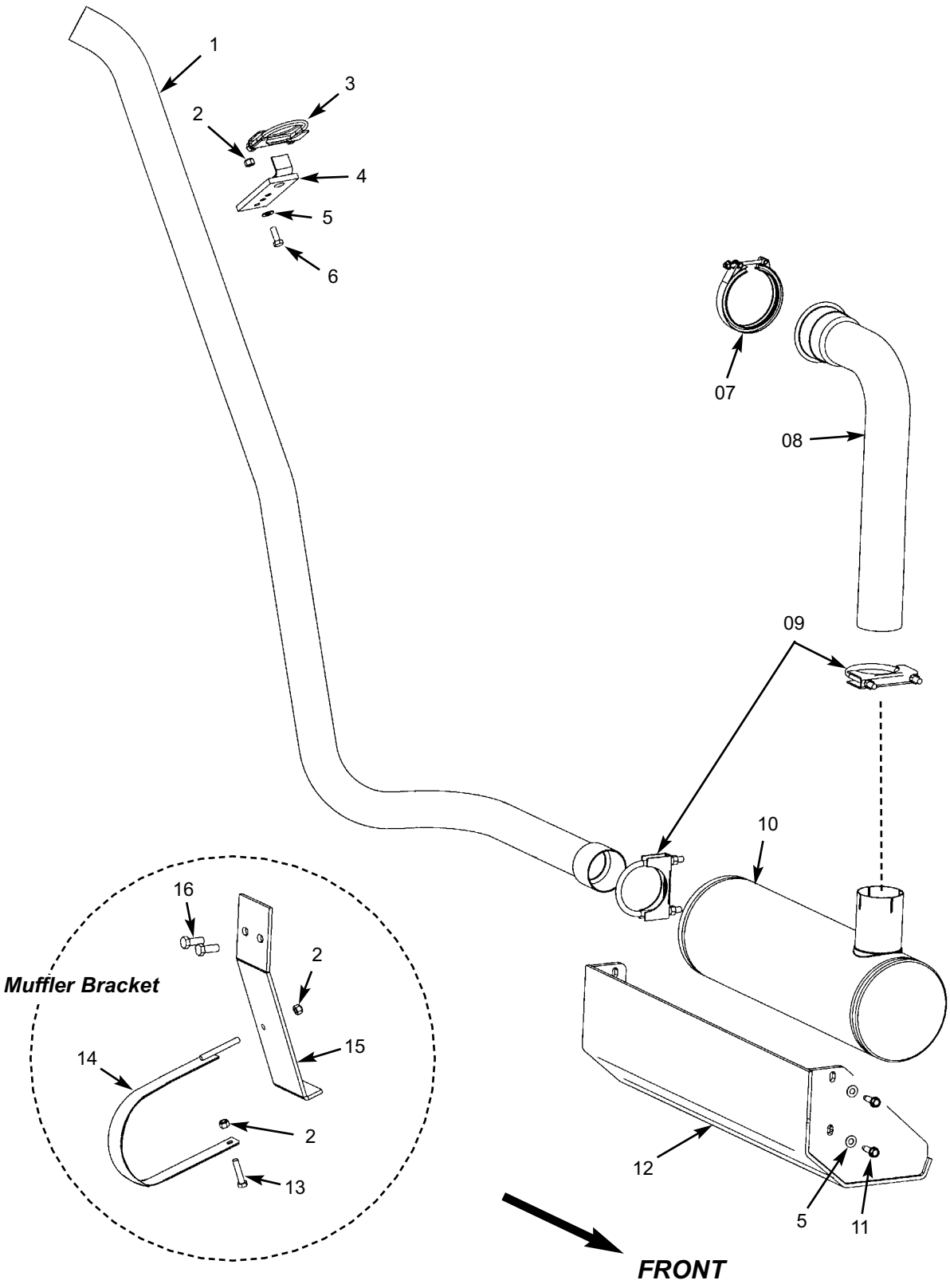

Engine Exhaust Group

Ref. No.	Part No.	Description	Qty. Req.
01	809309	TAILPIPE	1
02	808663	3/8”-16 NYLON INSERT NUT	AR
03	808428	MUFFLER CLAMP (2-1/2” CLAMP)	1
04	808777	TAILPIPE HANGER	1
05	808592	3/8” FLAT WASHER	AR
06	808617	3/8”-16X1” BOLT	AR
07	809131	TURBO CLAMP	1
08	808839	EXHAUST PIPE	1
09	808678	3” MUFFLER CLAMP	1
10	808778	MUFFLER	1
11	809486	3/8”-16X1-1/4” SELF TAP BOLT	4
12	809563	MUFFLER GUARD	1
13	808643	3/8”-16X1-3/4” BOLT	1
14	808684	MUFFLER STRAP	1
15	808765	MUFFLER BRACKET	1
16	809491	M12 1.75X30mm BOLT	2

External Components Group

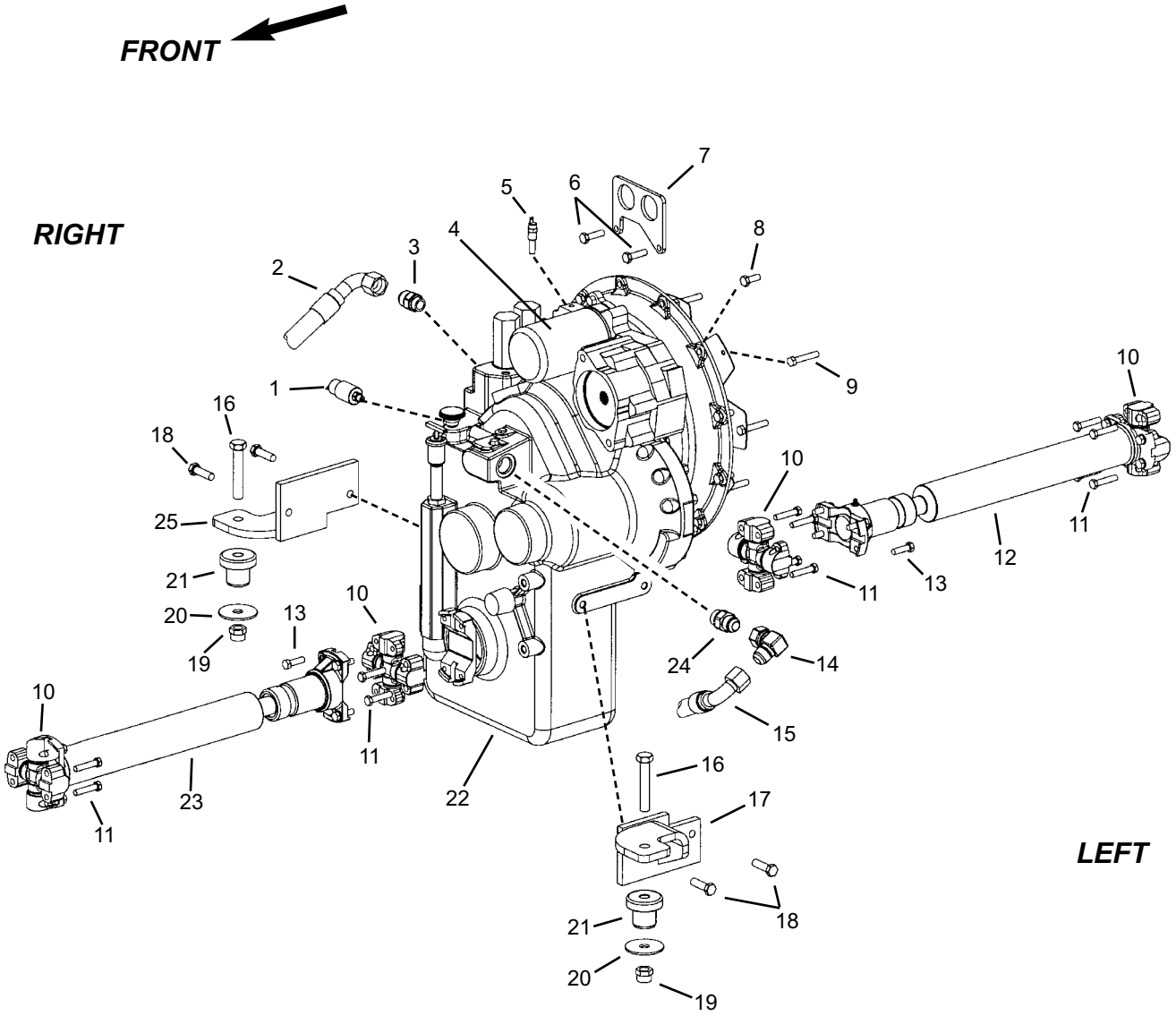

External Components Group

Ref. No.	Part No.	Description	Qty. Req.
01	808842	SWITCH, REVERSE PRESSURE	1
	808452	ADAP, -3ORM *(not shown)*	1
02	809540	HOSE, -12 DS12/A12 114”	1
03	808447	ADAP, -10ORM -12JICM STR	1
04	808004	FILTER, TRANSMISSION OIL	1
05	808828	SENDER, TEMP 250 DEGREE	1
06[d]	808636	M10X1.5X35mm	2
07[e]	808144	BRACKET, HARNESS MOUNT	1
08	808650	M10X1.5X25mm	10
09[c]	808641	3/8”-24X2” GRADE 8 BOLT	8
10	809107	UNIVERSAL JOINT *(includes bolts)*	4
11[a]	808623	3/8”-24X1-3/4” GR8 BOLT	16
12	809585	DRIVESHAFT, REAR	1
13[b]	809695	3/8”-24X1-1/4” GR 8 BOLT	8
	808593	3/8” LOCK WASHER	8
14	808461	ADAP, -12JICM -12JICFS 90 DEG	1
15	809539	HOSE, -12 DS12/A12 82”	1
16	808615	5/8”-11X3-1/2” BOLT	2
17	809582	TRANS MOUNT *(left)*	1
18	809490	M12X1.75X40mm BOLT	4
19	808664	5/8”-11 NYLON INSERT NUT	2
20	808749	WASHER, ISOLATOR MOUNT	2
21	808744	MOUNT, VIBRATION ISOLATOR	2
22	808235	TRANSMISSION, 1106 T12000	1
23	809584	DRIVESHAFT, FRONT	1
24	808442	ADAP, -12ORM -12JICM STR	1
25	809583	TRANS. MOUNT *(right)*	1

a *Used to fasten universal joint to transmission and to axle yokes.*
b *Used to fasten universal joint to driveshaft.*
c *Used to fasten flex plate to flywheel.*
d *Used to fasten wire harness bracket to transmission*
e *Used with 115 hp TIER II engine with electronic throttle pedal. For 99 hp TIER II engine with manual throttle pedal subsititue Throttle cable bracket P/N 808813.*

HOSE LOCATOR

02	TRANSMISSION *(top right side - near filter)*	TRANSMISSION COOLER “RIGHT SIDE”
15	TRANSMISSION *(left side - just under hyd. pump)*	TRANSMISSION COOLER “LEFT SIDE”

Converter Housing Group

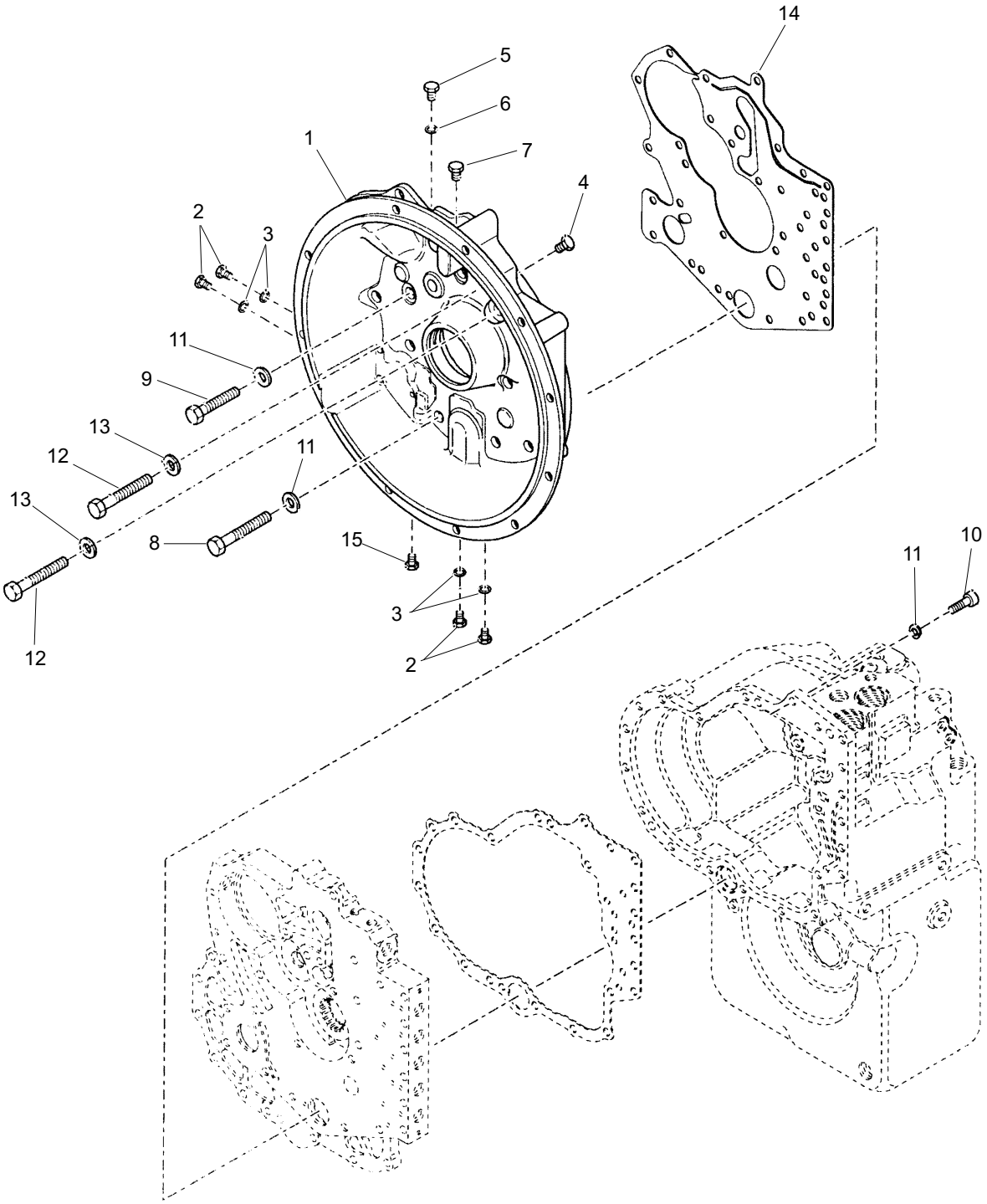

Converter Housing Group

Ref. No.	Part No.	Description	Qty. Req.
01	809120	HOUSING/CONVERTER	1
02	NSS	PLUG *(includes item 3)*	4
03	809118	O-Ring/Plug *(part of item 2)*	4
04	809673	PLUG	1
05	NSS	PLUG *(includes item 6)*	1
06	809118	O-Ring/Plug *(part of item 5)*	1
07	809115	PLUG	1
08	809119	SCREW	6
09	809676	SCREW	3
10	809677	SCREW	1
11	809096	WASHER/LOCK	10
12	809676	SCREW	13
13	809096	WASHER/LOCK	13
14	809078	GASKET/HSG. TO PLATE	1
15	809674	PLUG/TEMP PICKUP	1

Case and Plate Group

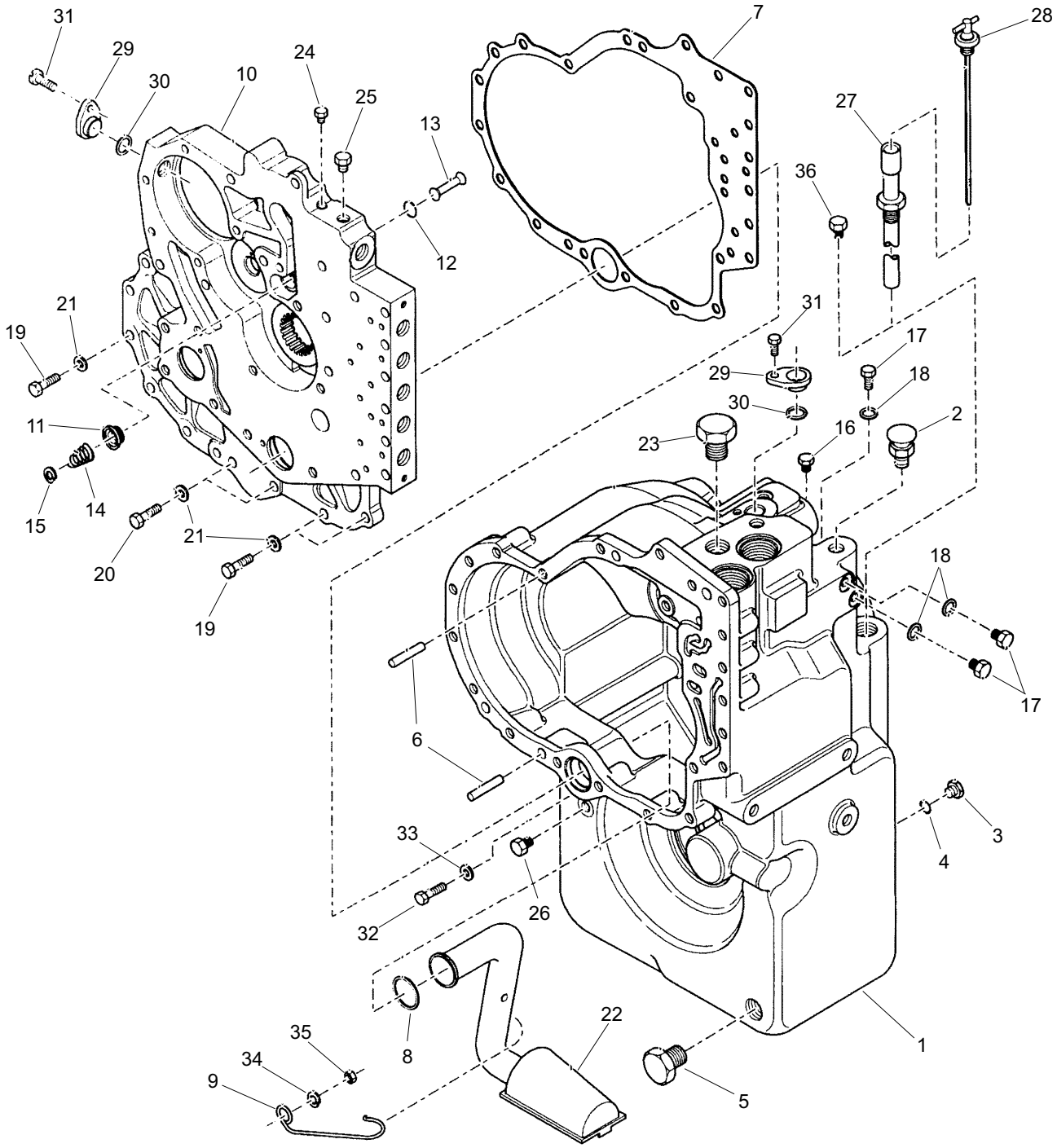

Case and Plate Group

Ref. No.	Part No.	Description	Qty. Req.
01	NSS	CASE-TRANSMISSION	1
02	808953	BREATHER/AIR	1
03	809675	PLUG	2
		(includes item 4)	
04	809095	O-RING/PLUG	2
		(part of item item 3)	
05	809114	PLUG/MAGNETIC DRAIN	1
06	809075	PIN/DOWEL PLATE TO CASE	2
07	809074	GASKET/PLATE TO CASE	1
08	808968	RING/TUBE SEAL	1
09	808966	CLIP/OIL TUBE RETAINER	1
10	808328	PLATE, SPACER	1
11	809077	SEAT/SAFETY VALVE	1
12	809076	SNAP RING	1
13	808992	POPPET/SAFETY VALVE	1
14	808988	SPRING	1
15	808987	WASHER/POPPET	1
16	809673	PLUG	1
17	NSS	PLUG	3
18	809118	O-RING/PLUG	3
19	809653	SCREW	7
20	809099	SCREW	2
21	809096	WASHER/LOCK	9
22	808967	ASSY/TUBE & SCREEN	1
23	809679	PLUG	1
24	809673	PLUG	1
25	809115	PLUG	1
26	809678	PLUG	1
27	809071	TUBE/TRANS DIPSTICK	1
28	809072	TRANS DIPSTICK TUBE	1
29	809121	PLUG	2
30	809125	O-RING	2
31	809122	SCREW	2
32	809119	SCREW	1
33	809123	WASHER/SEAL	1
34	809124	WASHER/SCREW	1
35	809680	NUT	1

Torque Converter Group

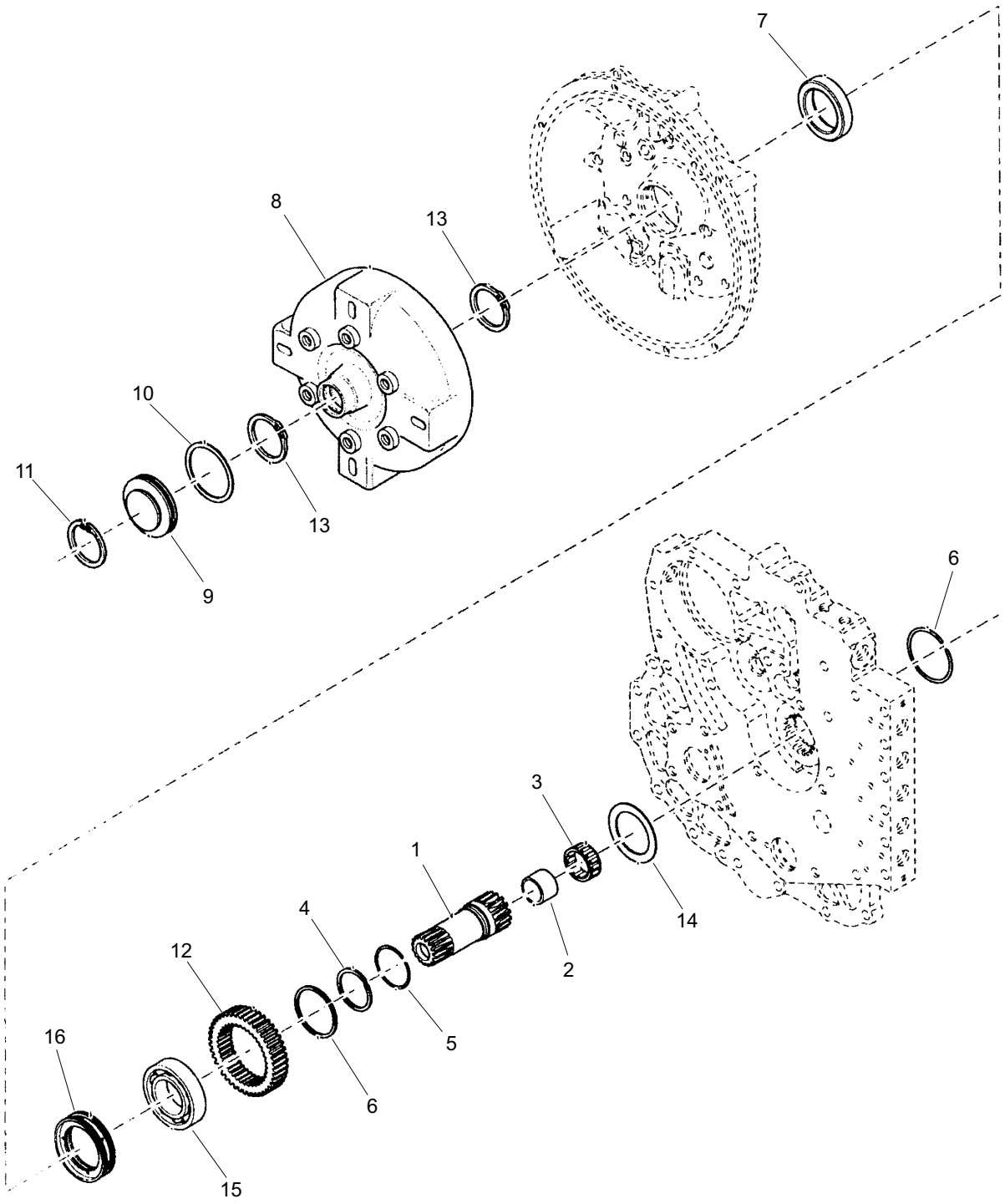

Torque Converter Group

Ref. No.	Part No.	Description	Qty. Req.	Ref. No.	Part No.	Description	Qty. Req.
01	808979	ASSY/STATOR SUPPORT	1	09	808969	PLUG/BORE	1
02	808980	BUSHING	1	10	808956	O-RING/BORE PLUG	1
03	808973	BEARING/FRONT	1	11	808957	RING/RET. BORE PLUG	1
04	808977	RING/PISTON	1	12	808975	IMPELLER/HUB GEAR	1
05	808978	EXPANDER/RING	1	13	808970	SNAP RING/IMPELLER HUB	2
06	808976	RING/SNAP	2	14	808981	WASHER/HUB GEAR	1
07	808971	SEAL/OIL CONV. HSG.	1	15	808974	BEARING/TORQUE CONVERTER.	1
08	809126	ASSY/TORQUE CONVERTER	1	16	808972	RING/OIL DISTRIBUTOR	1

Gear Group

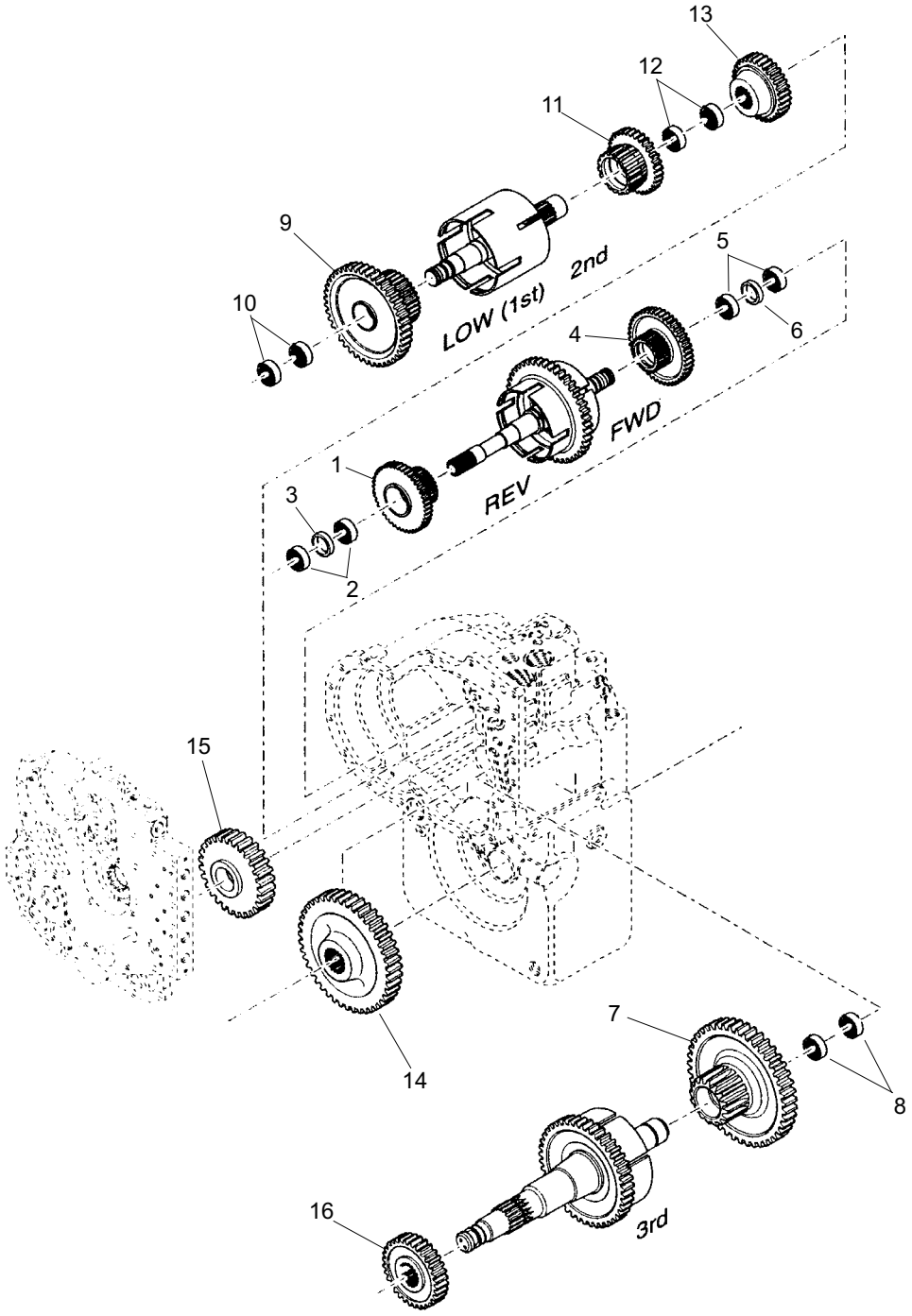

Gear Group

Ref. No.	Part No.	Description	Qty. Req.
01	NSS	ASSY/REV. GEAR & BEARING *(includes ittems 2 and 3)*	1
02	809014	BEARING/NEEDLE *(part of item 1)*	2
03	809015	SPACER/CLUTCH GEAR *(part of item 1)*	1
04	NSS	ASSY/FOR. GEAR & BEARING *(includes items 5 and 6)*	1
05	809014	BEARING/NEEDLE *(part of item 4)*	2
06	809015	SPACER/CLUTCH GEAR *(part of item 4)*	1
07	808508	ASY. 3RD CLUTCH GEAR *(includes item 8)*	1
08	808536	BEARING-3RD CLUTCH GEAR *(part of item 7)*	2
09	809094	1st CLUTCH GEAR/BRG. ASSY *(includes item 9)*	1
10	809014	BEARING/NEEDLE *(part of item 9)*	2
11	809025	2nd CLUTCH GEAR/BRG. ASSY *(includes item 12)*	1
12	809014	BEARING/NEEDLE *(part of item 11)*	2
13	809026	GEAR/THIRD DRIVEN - 18T	1
14	809031	GEAR/OUTPUT SHAFT - 40T	1
15	809651	GEAR/REVERSE IDLER - 28T	1
16	808510	GEAR/FIRST DRIVEN - 27T	1

Pump Drive Group

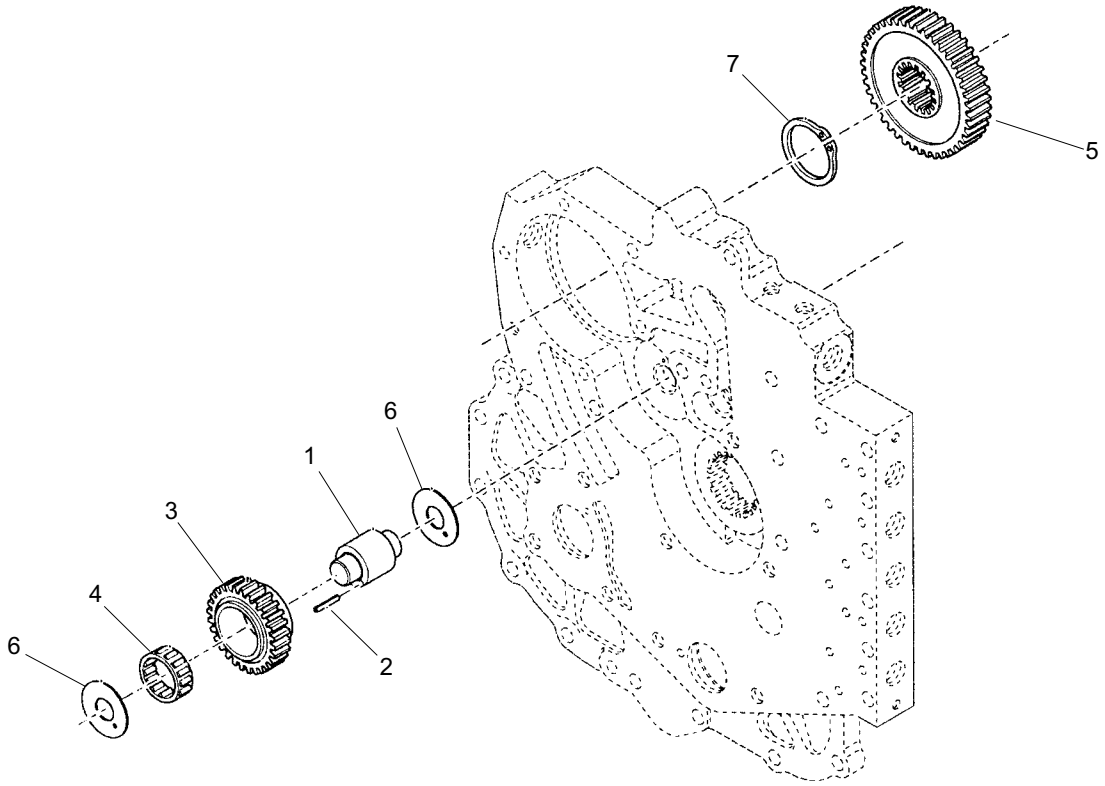

Ref. No.	Part No.	Description	Qty. Req.
01	809082	IDLER/SHAFT & PIN	1
		(includes item 2)	
02	809083	ROLL PIN	1
		(part of item1)	
03	809081	GEAR/IDLER,PUMP DRIVE	1
04	809080	BEARING/IDLER GEAR	1
05	808982	GEAR/DRIVE	1
06	809079	WASHER/THRUST	2
07	808983	RING/SNAP	1

Charge Pump Group

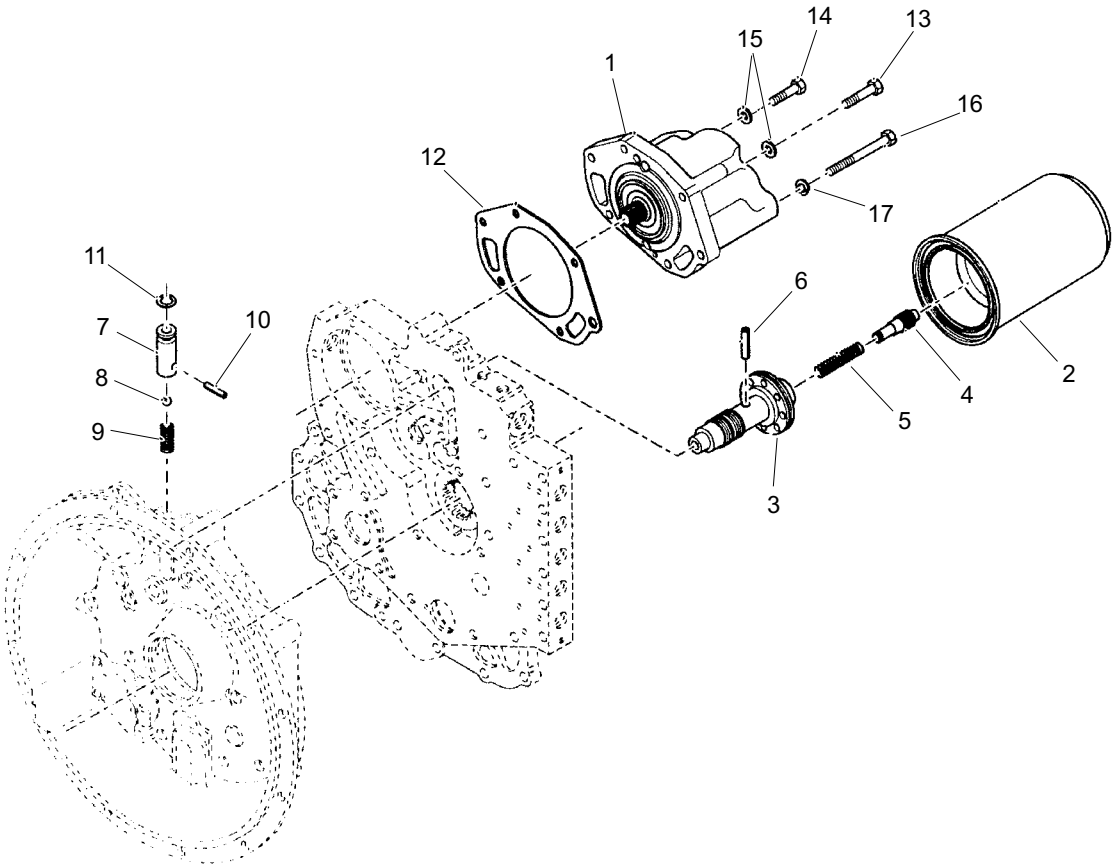

Ref. No.	Part No.	Description	Qty. Req.
01	808990	PUMP/T12000 CHARGE	1
02	808004	ASSY/ HYDRAULIC SPIN FILTER	1
03	809088	SLEEVE	1
04	809086	PISTON	1
05	809087	SPRING	1
06	808991	PIN/CLARK TRANS.	1
07	809085	ASSY/BALL CHECK VALVE *(includes items 8 thru 11)*	1
08	808985	BALL	1
09	808986	SPRING	1
10	808984	PIN	1
11	809084	O-RING	1
12	808989	GASKET/CHARGE PUMP	1
13	809656	SCREW	4
14	809655	SCREW	1
15	809654	WASHER/LOCK	5
16	809657	SCREW	1
17	809096	WASHER/LOCK	1

Reverse Idler Group

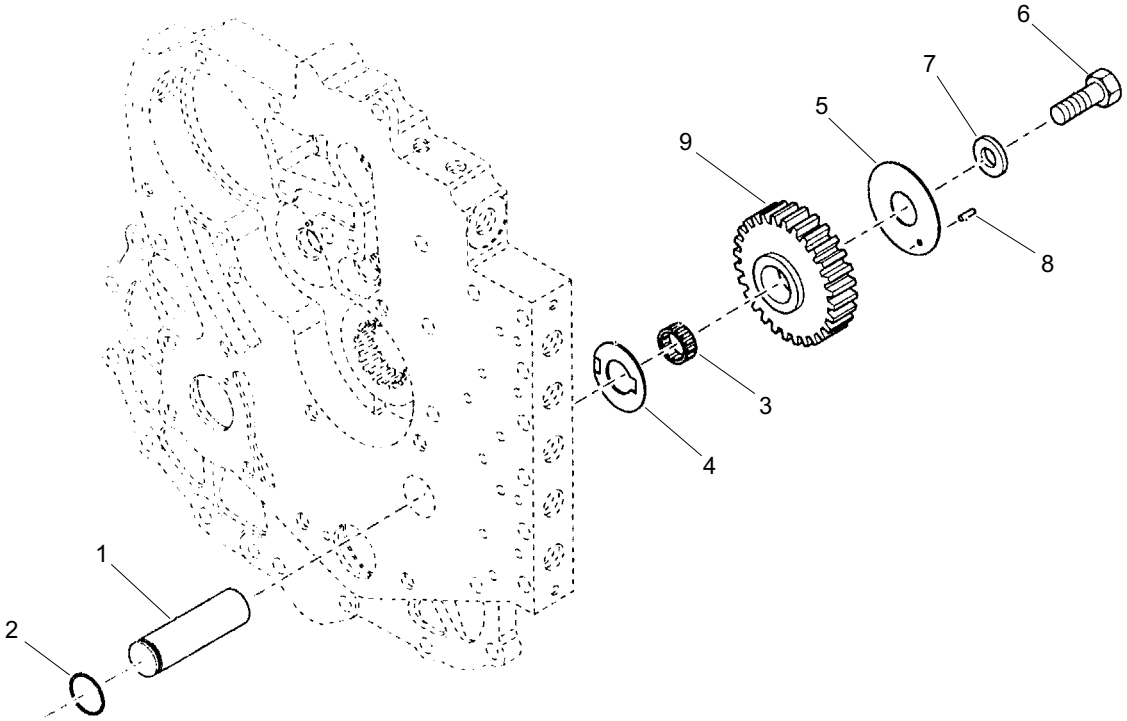

Reverse Idler Group

Ref. No.	Part No.	Description	Qty. Req.	Ref. No.	Part No.	Description	Qty. Req.
01	808994	SHAFT IDLER & PILOT	1	05	808997	END PLATE	1
02	808993	RING/SNAP	1	06	809658	CAPSCREW	1
03	808996	BEARING/REV IDLR GEAR	1	07	809659	WASHER	1
04	808995	WASHER/THRUST	1	08	808998	END PLATE	1

Forward and Reverse Group

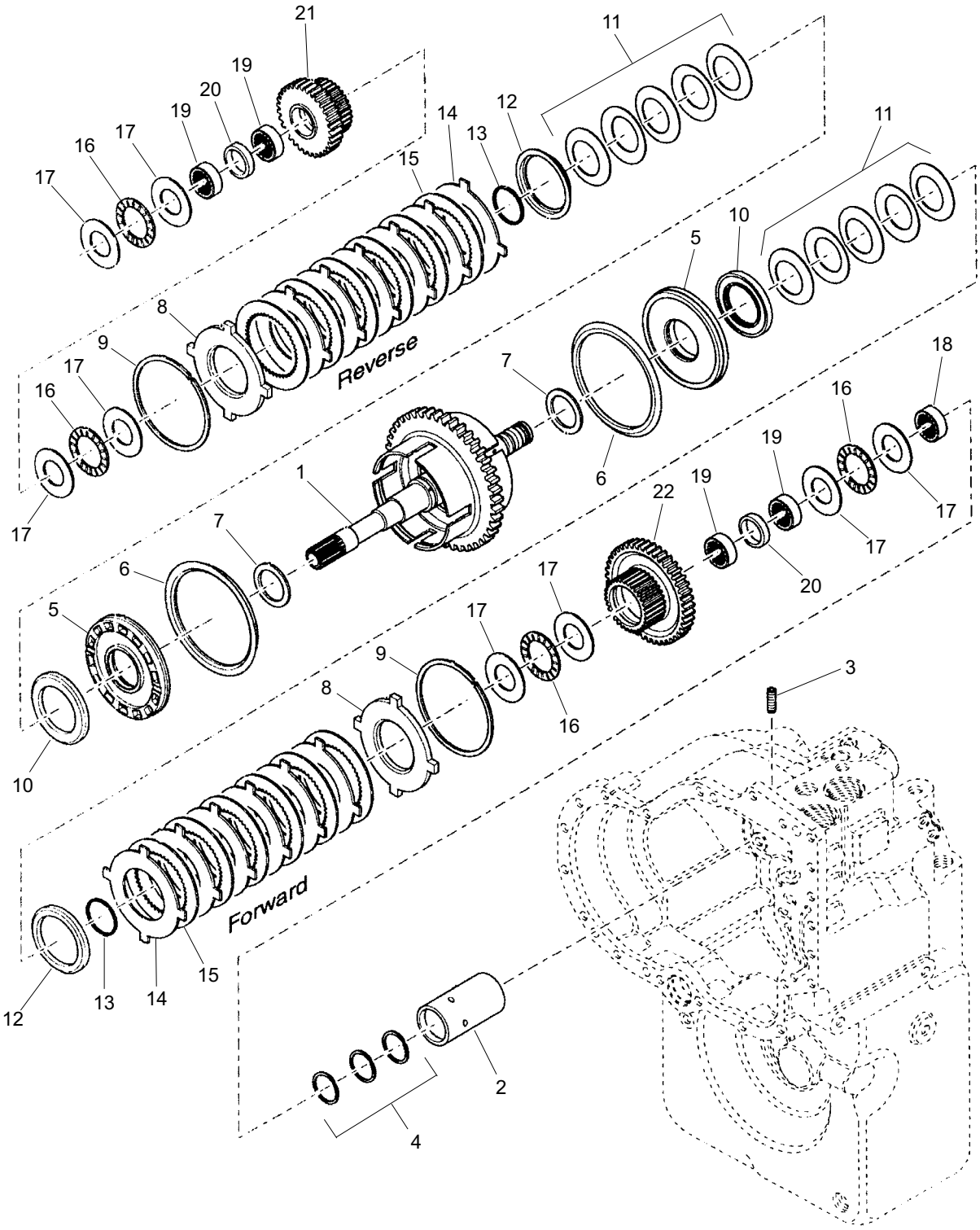

Forward and Reverse Group

Ref. No.	Part No.	Description	Qty. Req.
01	809010	ASY/TURB SHFT DRUM & PLUG	1
02	809013	SLEEVE/OIL DISTRIBUTOR	1
03	809621	SCREW	1
04	809012	RING/PISTON	3
05	809116	ASY/PISTON *(includes items 6 and 7)*	2
06	809008	SEAL/OUTER PISTON *(part of item 5)*	2
07	809009	SEAL/INNER PISTON *(part of item 5)*	2
08	809002	PLATE/END	2
09	809001	RING/SNAP	2
10	809007	PLATE/WEAR	2
11	809092	ASY/DISC SPRING Pkg 5	2
12	809006	RETAINER	2
13	809005	RETAINER/SNAP RING	2
14	809004	CLUTCH/OUTER FWD	12
15	809003	CLUTCH/INNER FWD	12
16	809000	BEARING	4
17	808999	WASHER/THRUST	8
18	809011	BEARING/REAR	1
19	809014	BEARING/CLUTCH GEAR	4
20	809015	SPACER/CLUTCH GEAR	2
21	809652	ASSY/REV. AND BRG. *(includes items 19 and 20)*	1
22	809622	ASSY/FOR. GEAR AND BRG. *(includes items 19 and 20)*	1

Third Shaft Group

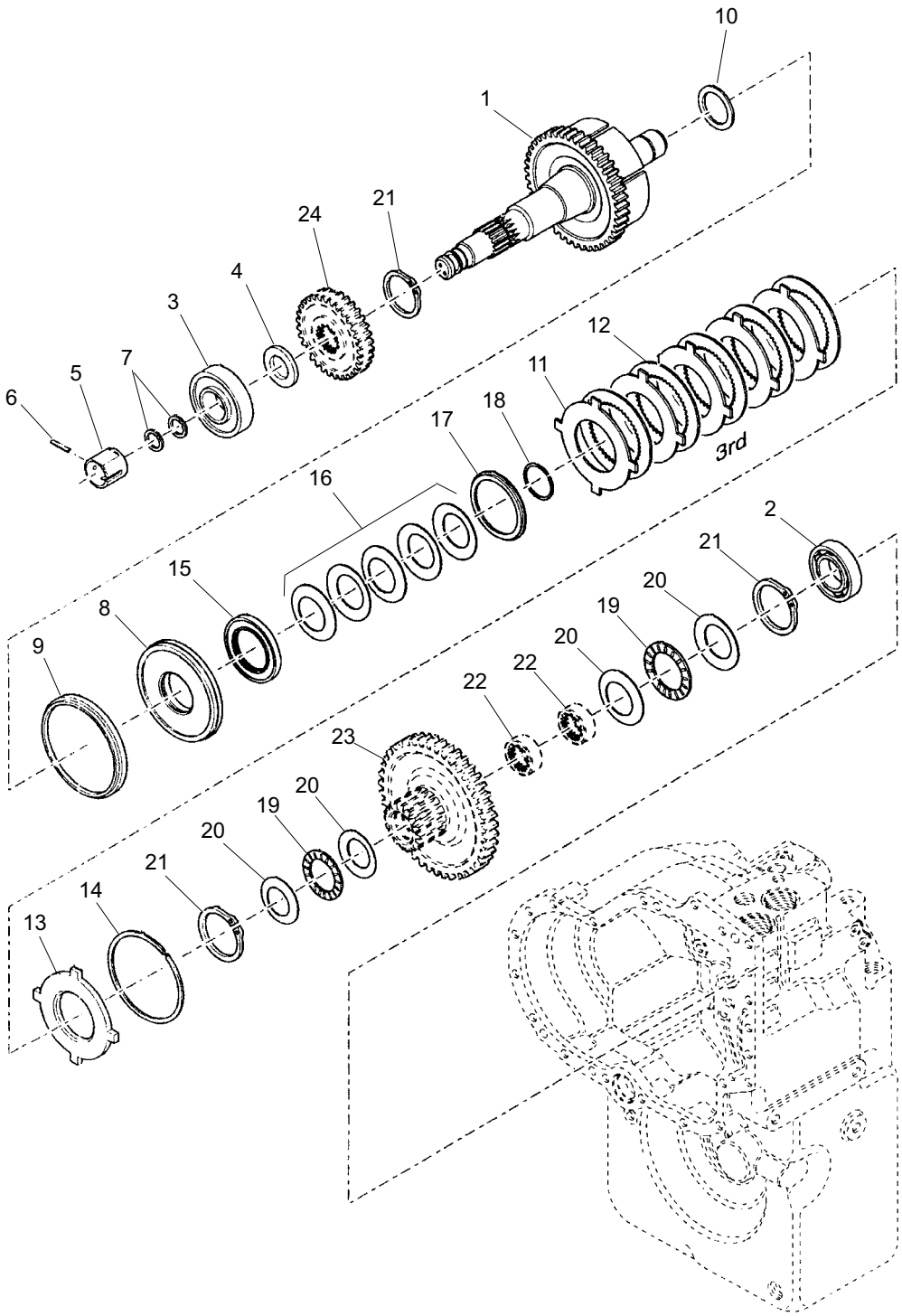

Third Shaft Group

Ref. No.	Part No.	Description	Qty. Req.
01	808511	ASY-3RD SHAFT, DRUM & PLUG	1
02	808512	BEARING-ROLLER	1
03	808503	ASSY/BEARING & SEAL	1
04	809410	WASHER-BEARING SUPPORT	1
05	809017	SLEEVE/OIL DISTRIBUTOR	1
06	809016	SCREW/SLEEVE LOCK	1
07	809012	RING/PISTON	2
08	809117	ASSY/CLTCH PISTON & BALL	1
09	809008	SEAL/OUTER PISTON	1
10	809009	SEAL/INNER PISTON	1
11	809004	CLUTCH/OUTER FWD	5
12	809003	CLUTCH/INNER FWD	5
13	809002	PLATE/END	1
14	809001	RING/SNAP	1
15	809007	RING/SNAP	1
16	809092	ASY/DISC SPRG PKG 5	1
17	809006	RETAINER	1
18	809005	RETAINER/SNAP RING	1
19	808513	BEARING-THRUST NEEDLE	2
20	808514	WASHER/CLTCH GEAR THRUST	4
21	809132	RING/SNAP	3
22	808509	BEARING-3RD CLUTCH GEAR	2
23	808508	ASY. 3RD CLUTCH GEAR	1
24	808509	GEAR-FIRST DRIVEN	1

First and Second Shaft Group

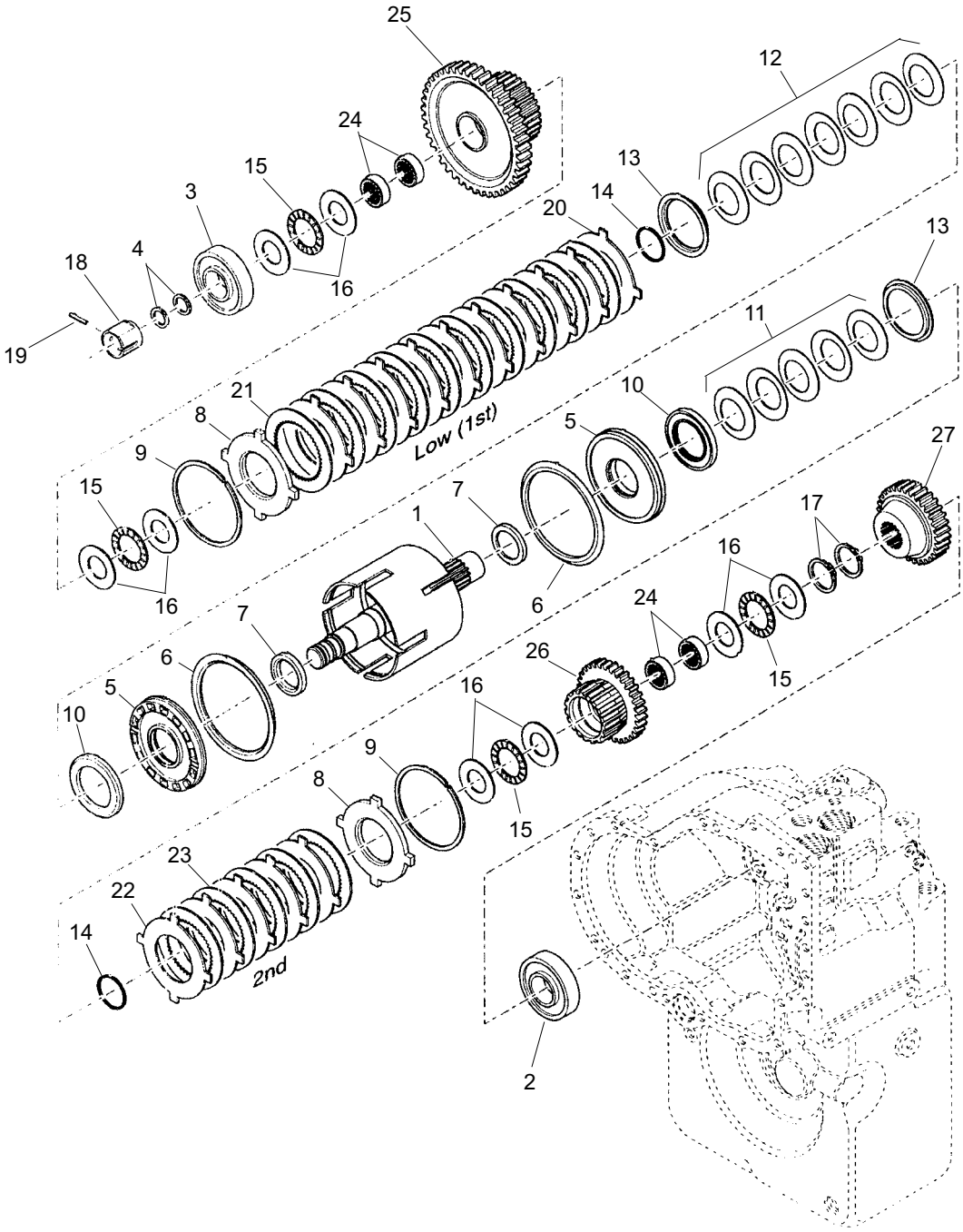

First and Second Shaft Group

Ref. No.	Part No.	Description	Qty. Req.
01	809023	ASY-1ST 2ND SHAFT	1
02	809024	BEARING/REAR	1
03	808503	ASSY/BEARING & SEAL	1
04	809012	RING/PISTON	2
05	809098	PISTON/CLUTCH & SEALS	2
06	809008	SEAL/OUTER PISTON	2
07	809009	SEAL/INNER PISTON	2
08	809002	PLATE/END	2
09	809001	RING/SNAP	2
10	809007	PLATE/WEAR	2
11	809092	ASSY/DISC SPRG PKG 5	1
12	809093	SPRING/DISC ASSY PKG (7)	1
13	809006	RETAINER	2
14	809005	RETAINER/SNAP RING	2
15	809000	BEARING	4
16	808999	WASHER/THRUST	8
17	809018	RING/SNAP	2
18	809022	SLEEVE/OIL DISTRIBUTOR	1
19	809016	SCREW/SLEEVE LOCK	1
20	809004	CLUTCH/OUTER FWD	10
21	809003	CLUTCH/INNER FWD	10
22	809004	CLUTCH/OUTER FWD	5
23	809003	CLUTCH/INNER FWD	5
24	809014	BEARING/CLUTCH GEAR	4
25	809094	1ST CLUTCH GEAR/BRG ASSY *(includes item 24)*	1
26	809025	2ND CLUTCH GEAR/BRG ASSY *(includes item 24)*	1
27	809026	GEAR/3RD DRIVEN	1

Output Shaft Group

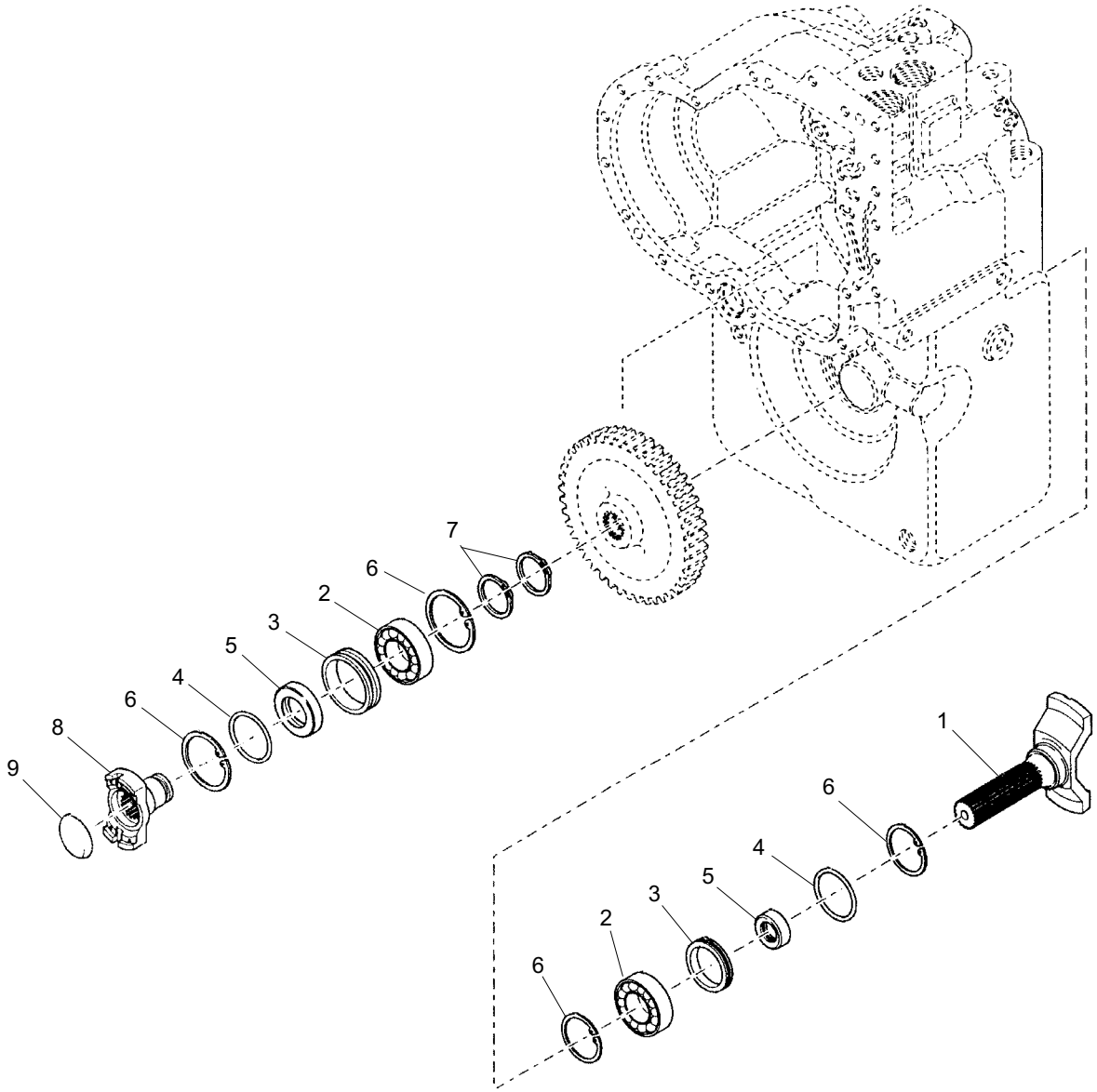

Output Shaft Group

Ref. No.	Part No.	Description	Qty. Req.
01	808504	SHAFT/OUTPUT	1
02	809030	BEARING/SHAFT	2
03	809029	SLEEVE/OIL SEAL	2
04	809021	O-RING/SLEEVE	2
05	808954	SEAL/OUTPUT SHAFT OIL	2
06	809019	RING/SNAP	4
07	809020	RING/SNAP	2
08	809028	FLANGE/OUTPUT & PLUG ASSY	1
09	809027	PLUG/FLANGE	1

Control Group

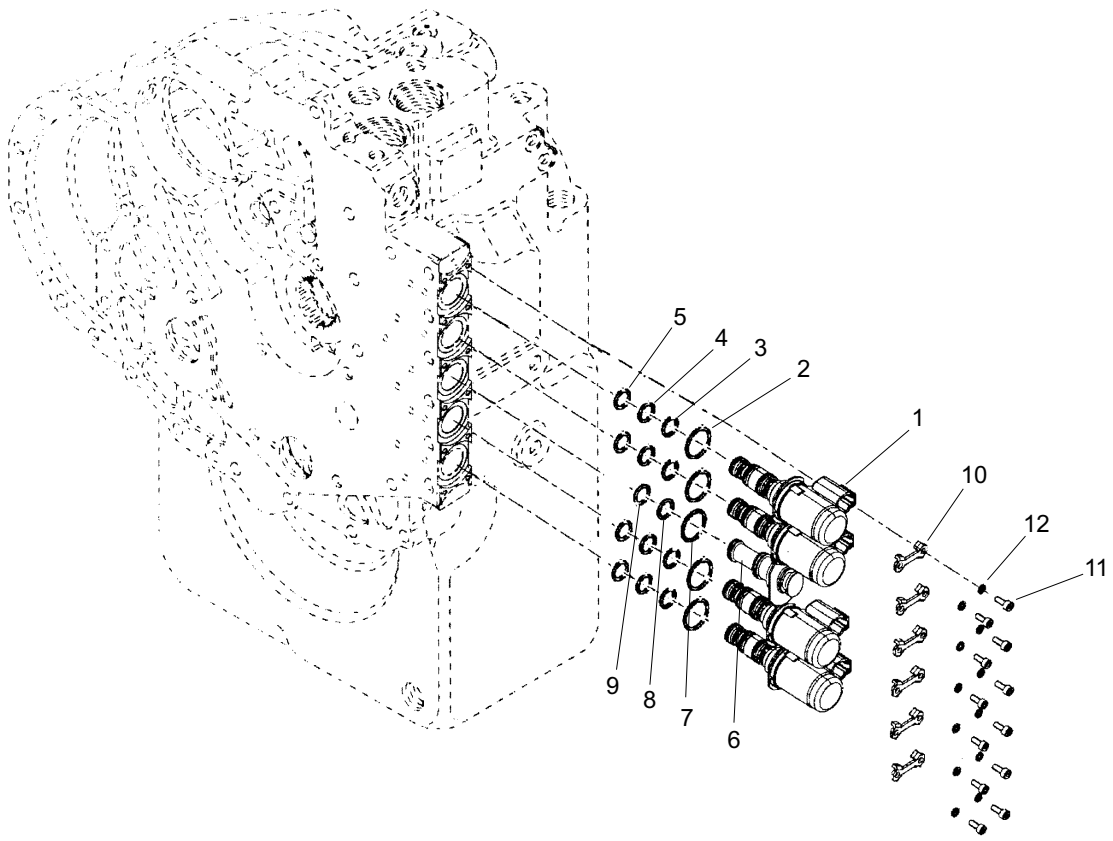

Control Group

Ref. No.	Part No.	Description	Qty. Req.
01	808329	SOLENOID, W / DEUTSCH CON. *(includes items 2 thru 5)*	4
02	808330	O-RING, 21.5 X 1.5MM *(included with item 1)*	4
03	808331	O-RING, 15.1 X 1.60MM *(included with item 1)*	4
04	808332	O-RING, 14.1 X 1.60MM *(included with item 1)*	4
05	808333	O-RING, 12.1 X 1.60MM *(included with item 1)*	4
06	808334	PLUG, SOLENOID BORE *(includes items 7, 8 and 9)*	1
07	808335	O-RING, 18.0 X 2.20MM *(included with item 6)*	1
08	808331	O-RING, 15.1 X 1.60MM *(included with item 6)*	1
09	808333	O-RING, 12.1 X 1.60MM *(included with item 6)*	1
10	808336	CLAMP, SOLENOID	6
11	808337	CAPSCREW	12
12	808338	WASHER, PLAIN	12

Drive Plate Group

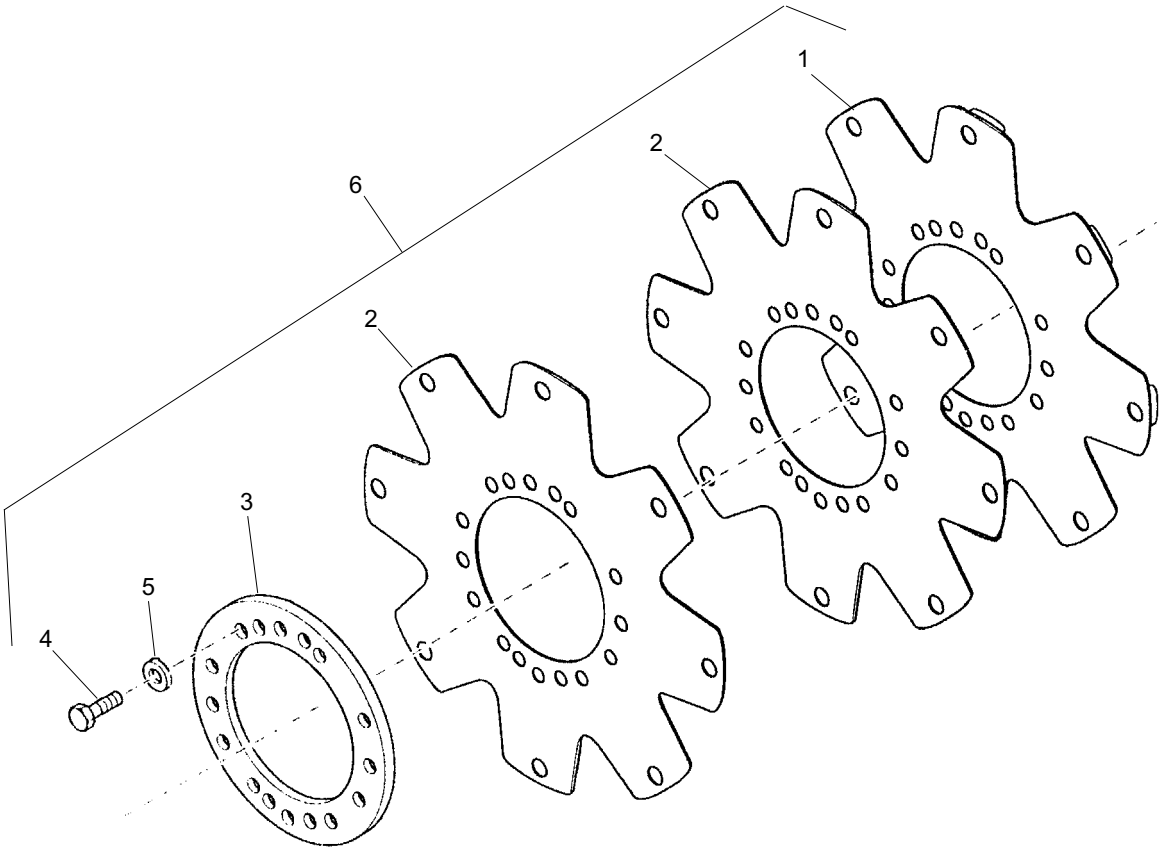

Ref. No.	Part No.	Description	Qty. Req.
01	NSS	ASSY/DRIVE PLATE	1
		(included in item 6)	
02	NSS	DRIVE PLATE	2
		(included in item 6)	
03	809044	RING/DRIVE PLATE BACKING	1
04	809133	SCREW/DRIVE PLATE MNTG	6
05	809097	LOCKWASHER/DRIVEPLATE	6
06	809045	KIT/DRIVE PLATE ASSY	1
		(includes items 1 thru 5)	

Modulation Valve Group

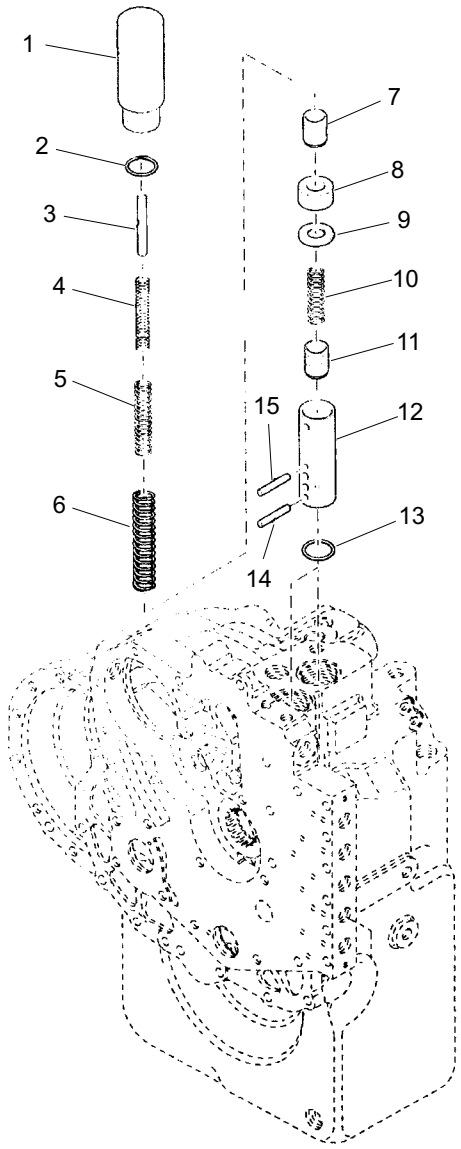

Ref. No.	Part No.	Description	Qty. Req.	Ref. No.	Part No.	Description	Qty. Req.
01	809032	HOUSING MODULATOR VALVE	1	09	809041	SPOOL ACCUMULATOR	1
02	809033	O-RING	1	10	809091	SPOOL	1
03	809035	SPRING INNER	1	11	809038	SPRING	1
04	809036	SPRING MIDDLE	1	12	809040	RETAINER	1
05	809042	SPRING OUTER	1	13	809039	SPACER	1
06	809037	SLEEVE-MODULATION VALVE	1	14	809089	PIN-UPPER	1
07	809043	O-RING	1	15	809090	PIN-LOWER	1
08	809034	PIN STOP	1				

External Components

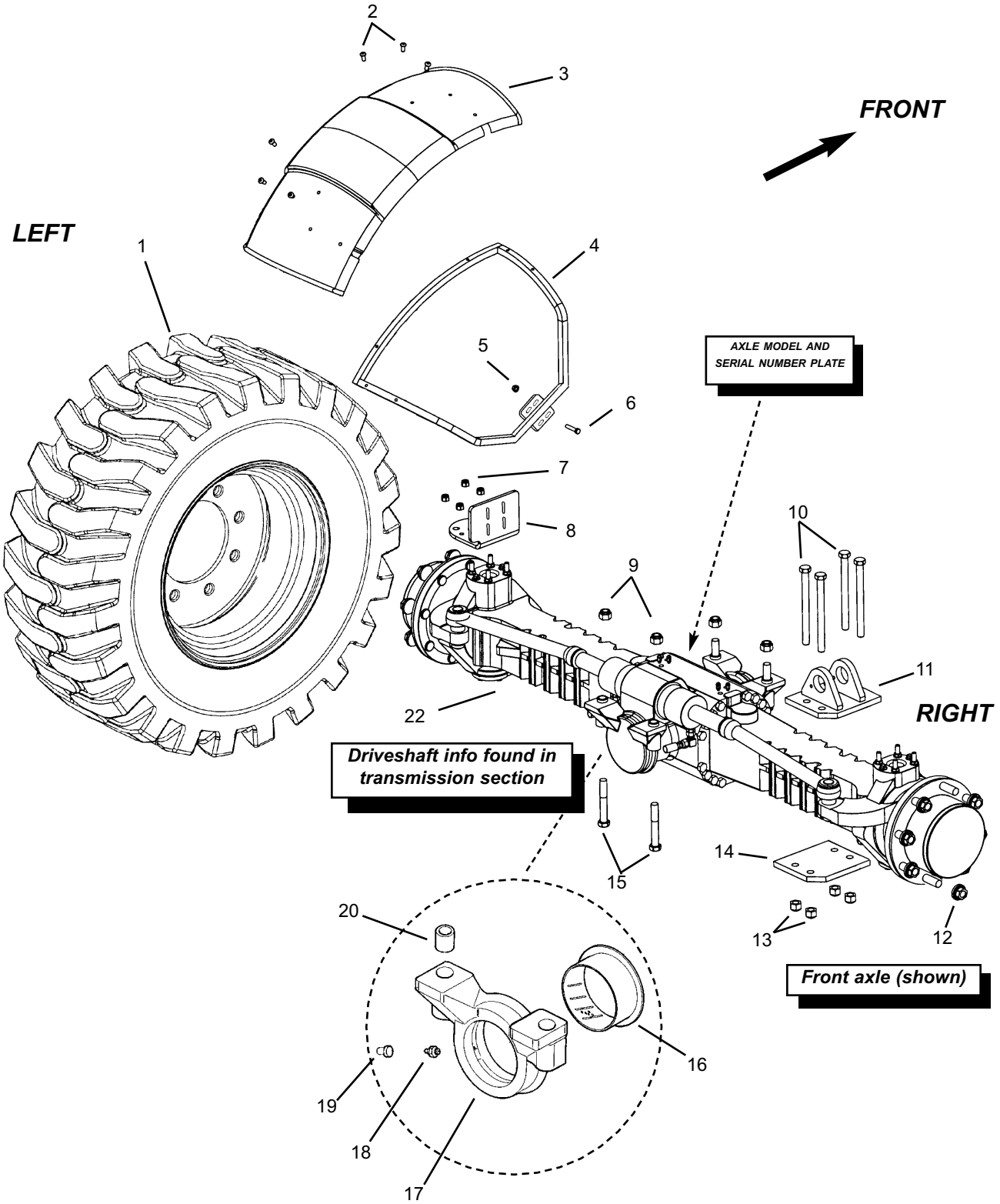

External Components

Ref. No.	Part No.	Description	Qty. Req.
01		TIRE AND WHEEL ASY	AR
	809528	VALVE STEM	1
	809393	TIRE, 15.00X19.5 12 PLY	1
	809610	WHEEL ONLY *(for tire 809393)*	1
	809556	TIRE, 405/70R 20XM27	1
	809613	WHEEL ONLY *(for tire 809556)*	1
	809557	TIRE, 9.00R 20XMINE D2	1
	809558	WHEEL ONLY *(for tire 809557)*	1
02[a]	808607	3/8”-16 BUTTON HD BOLT	6
03[a]	809164	FENDER	1
04[a]	809356	FENDER MOUNT (LF/RR)	1
05[a]	808559	3/8”-16 FLANGE LOCK NUT	4
06[a]	808617	3/8”-16X1” BOLT	4
07[a]	808180	NUT	4
08[a]	809350	FENDER MOUNT	1
09	808599	M20-2.5 CLASS 10 LOCK NUT	4
10	808634	3/4”-10X9” GR8 BOLT	8
11	809612	FRAME LEVEL MNT *(front axle)*	1
12	808876	M22-1.5 WHEEL NUT	AR
13	808583	3/4”-10 GR8 LOCK NUT	8
14	809611	PLATE, FRAME LEVEL	1
15	808418	M20-2.50X130 C10.9 BOLT	4
16	808553	THRUST BUSHING	2
17	808554	SUPPORT	2
18	809046	GREASE FITTING	2
19	808543	PLUG	2
20	808552	REDUCTION BUSING	4
21	NA		0
22[b]		AXLE ASSEMBLY, 212	
	809310	FRONT *(with internal park brake)*	1
	809608	REAR	1

a *Available only on the left side of the front axle.*
b *Does not include any other items shown in illustration.*

Steering Cylinder and Tie Rods (Front Axle)

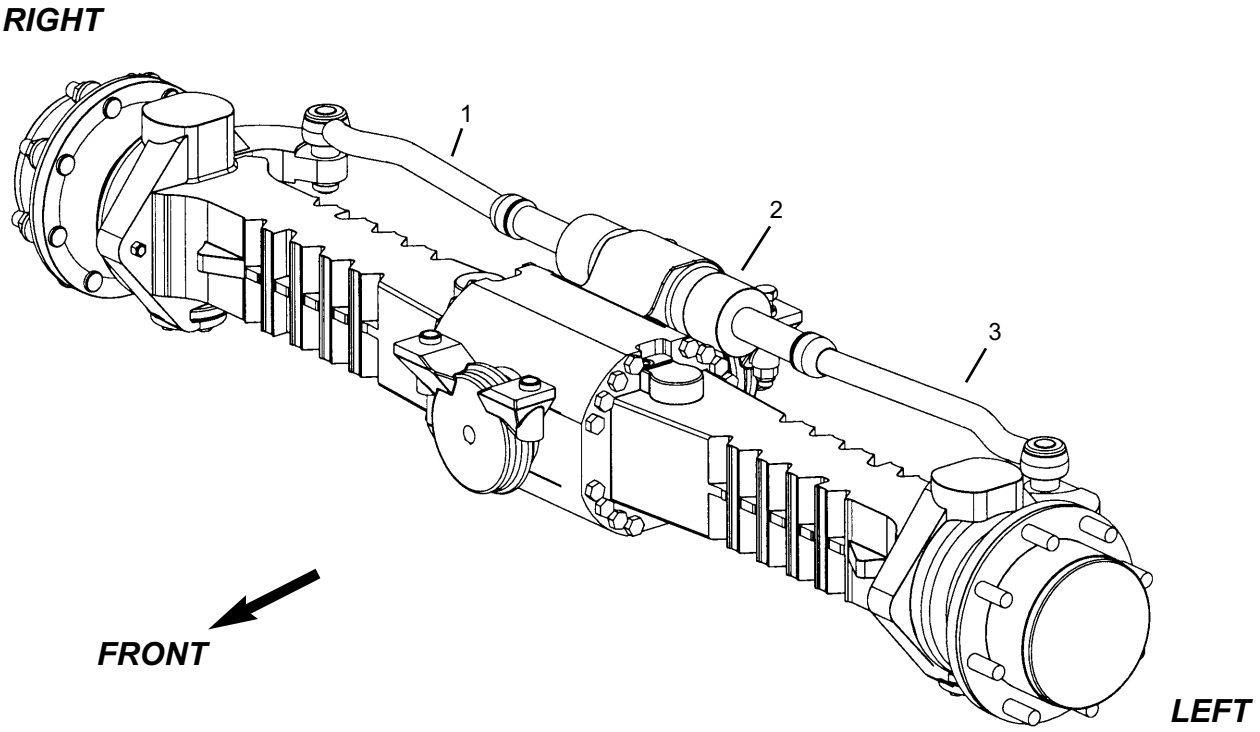

Ref. No.	Part No.	Description	Qty. Req.
01	809463	ARTICULATED TIE ROD *(Right [Front Axle], Left [Rear Axle])*	1
02	809461	STEER CYLINDER	1
	808551	STEER CYLINDER BOLT	4
	809469	SEAL KIT	1
03	809462	ARTICULATED TIE ROD *(Left [Front Axle], Right [Rear Axle])*	1

Steering Cylinder and Tie Rods (Rear Axle)

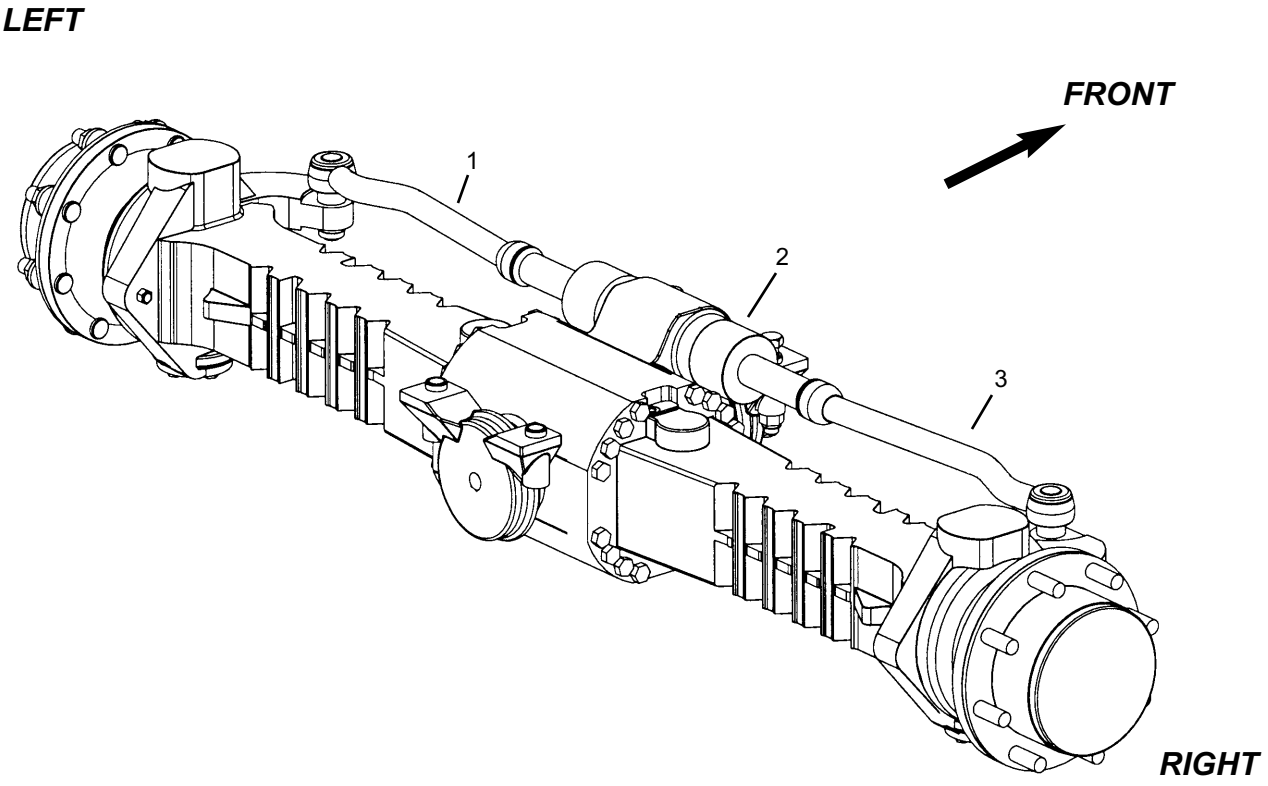

Ref. No.	Part No.	Description	Qty. Req.
01	809463	ARTICULATED TIE ROD *(Right [Front Axle], Left [Rear Axle])*	1
02	809461	STEER CYLINDER	1
	808551	STEER CYLINDER BOLT	4
	809469	SEAL KIT	1
03	809462	ARTICULATED TIE ROD *(Left [Front Axle], Right [Rear Axle])*	1

Differential Housing Group (Front Axle)

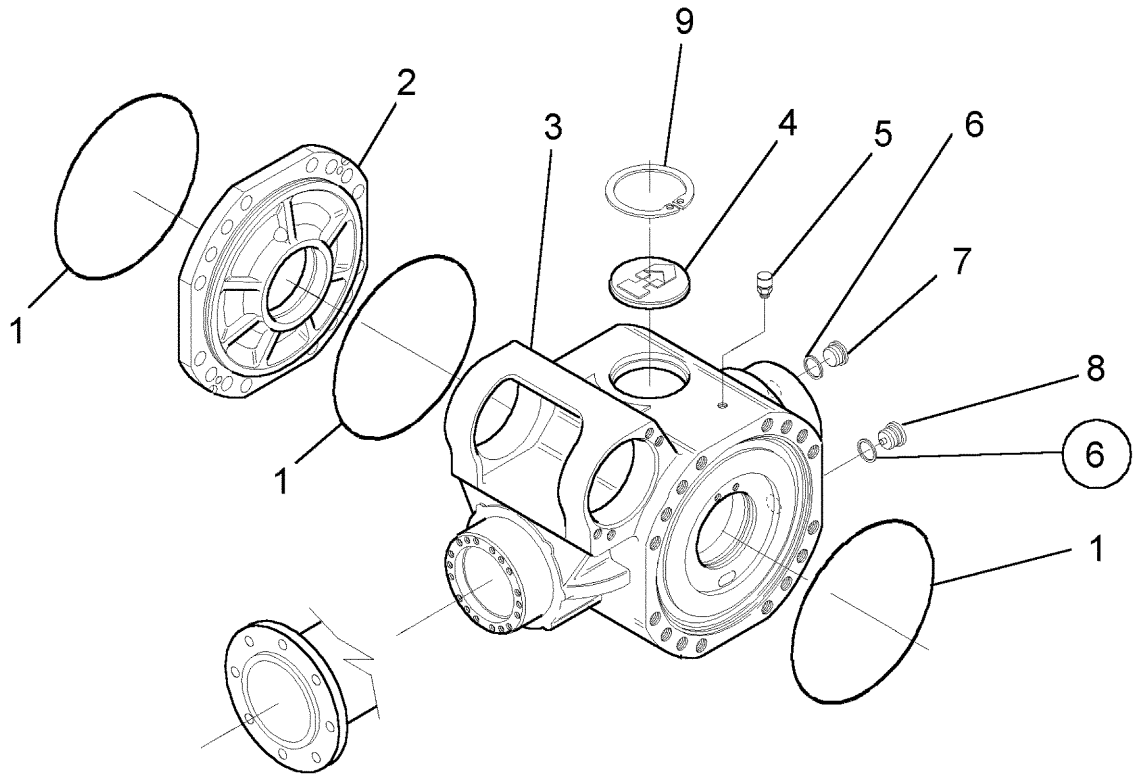

Ref. No.	Part No.	Description	Qty. Req.
01	809057	O-RING	3
02	808515	INTERMEDIATE COVER	1
03	808167	HOUSING	1
04	808168	COVER	1
05	808516	VENT	1
06	NA		0
07	808169	PLUG	1
08	808170	MAGNETIC PLUG	1
09	809050	CIRCLIP	1

Differential Housing Group (Rear Axle)

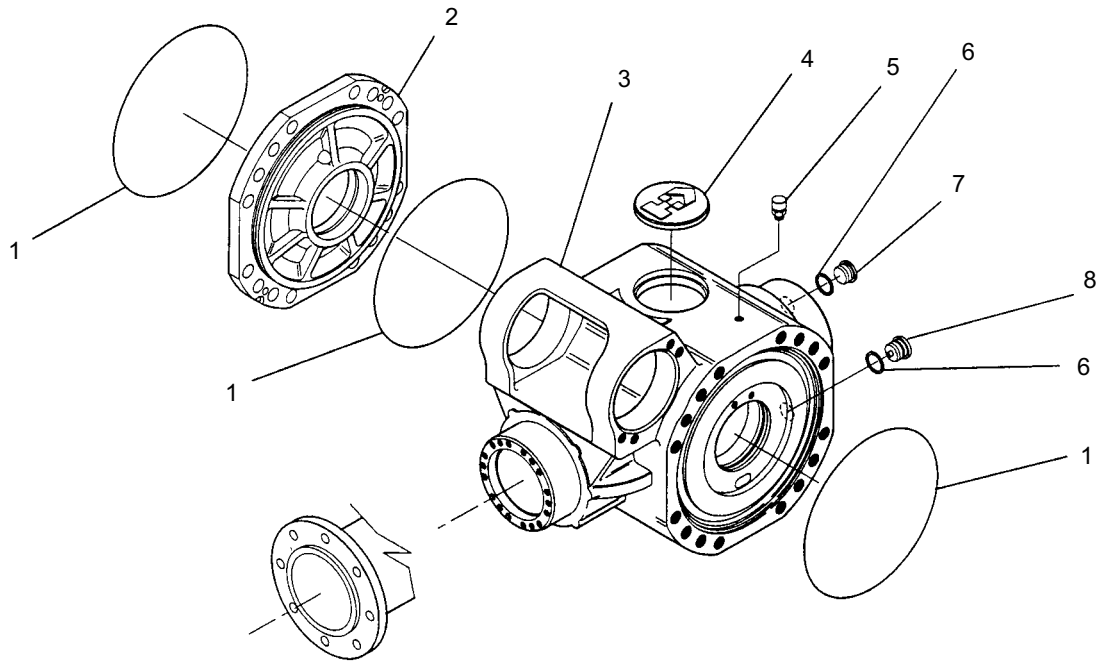

Ref. No.	Part No.	Description	Qty. Req.	Ref. No.	Part No.	Description	Qty. Req.
01	809057	O-RING	3	05	808516	VENT	1
02	808515	INTERMEDIATE COVER	1	06	809413	SEAL WASHER	2
03	809411	HOUSING	1	07	809623	PLUG	1
04	809412	COVER	1	08	809414	MAGNETIC PLUG	1

Brake Group (Front Axle)

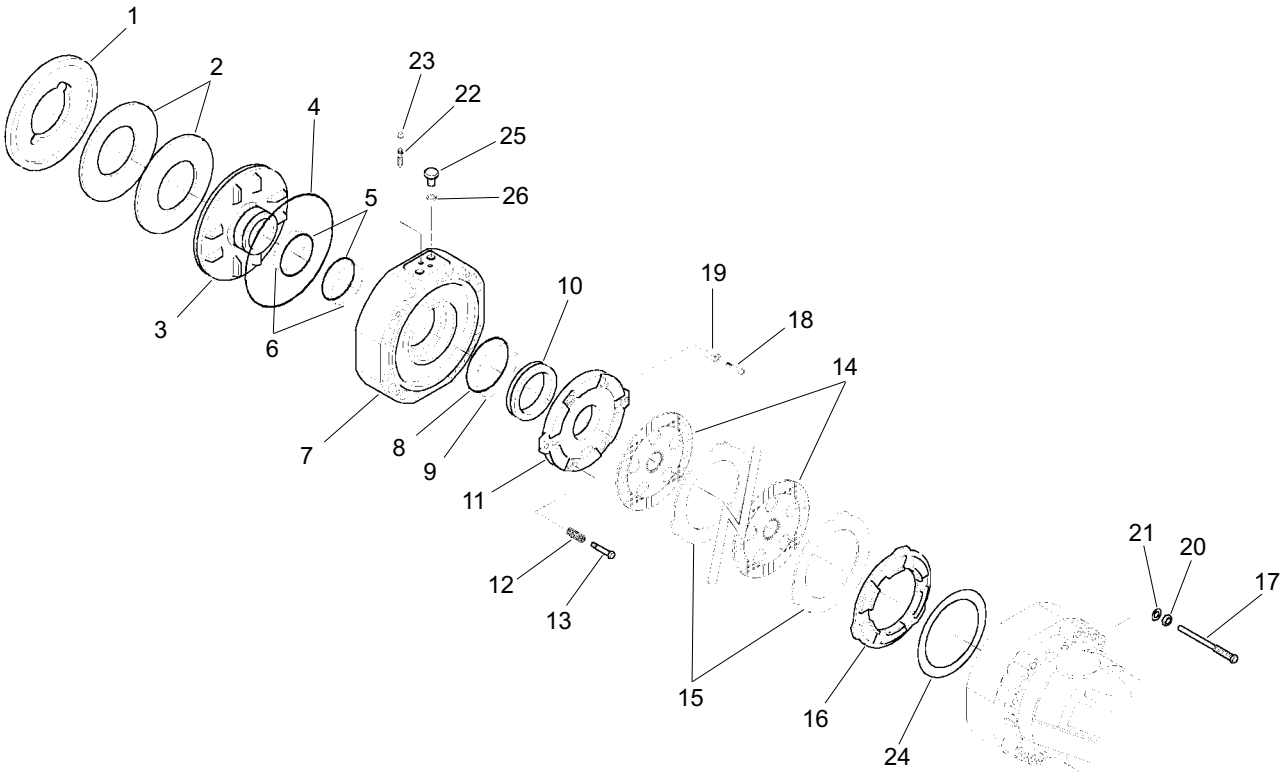

Ref. No.	Part No.	Description	Qty. Req.
01	808207	SPACER	2
02	808208	SPRING	4
03	808209	PISTON	2
04	808210	O-RING	2
05	808211	O-RING	4
06	808212	BACKUP RING	4
07	808213	COVER	2
08	809047	O-RING	2
09	808214	BACKUP RING	2
10	808215	PISTON	2
11	808216	INTERMEDIATE BRAKE DISC	2
12	808217	SPRING	6
13	808218	ADJUSTING BOLT	6
14	808549	BRAKE DISC	8
15	808550	INTERMEDIATE BRAKE DISC	8
16	809364	SPACER	2
17	809365	BOLT	4
18	809366	ADJUSTING BOLT	6
19	808222	SPRING	6
20	808223	NUT	4
21	808224	LOCK WASHER	4
22	809058	BLEEDING BOLT	4
23	808543	PLUG	4
24	808225	SHIM	2
	808226	SHIM	2
	808227	SHIM	2
25	808228	BOLT	4
26	808229	SEAL WASHER	4

Brake Group (Rear Axle)

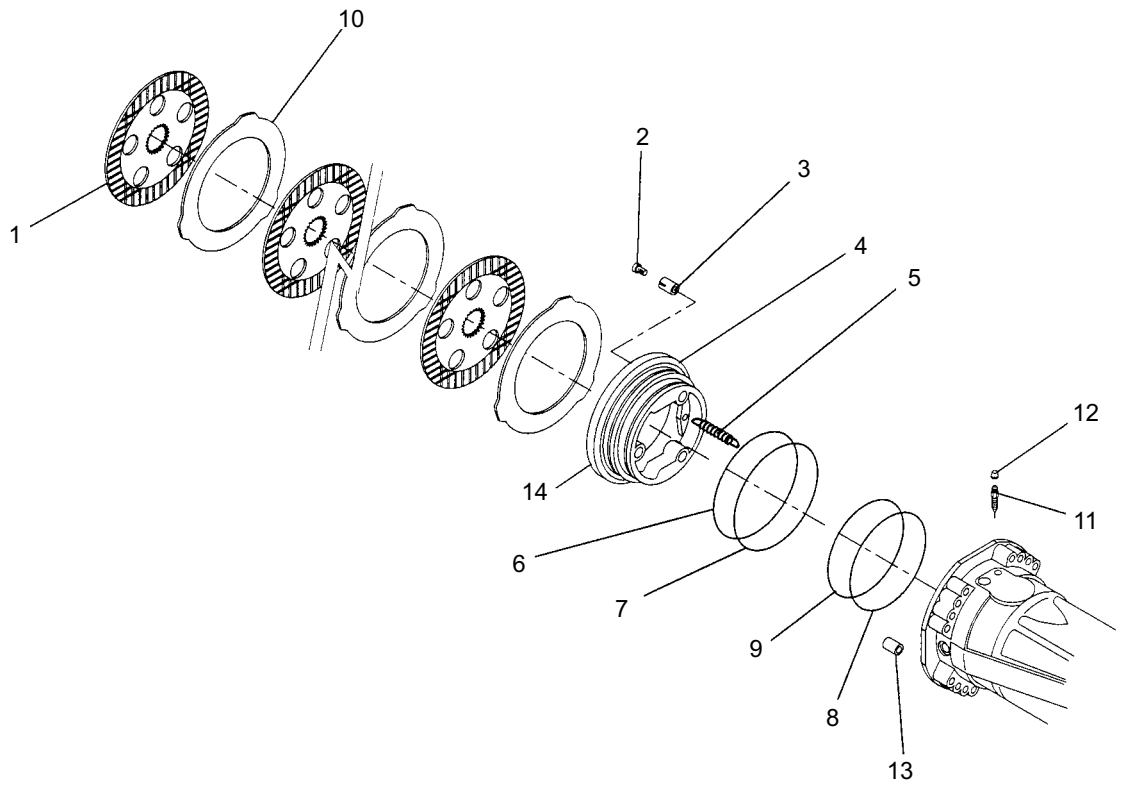

Ref. No.	Part No.	Description	Qty. Req.
01	808549	BRAKE DISC	6
02	809452	ADJUSTING BOLT	6
03	809453	SPRING	6
04	NSS	PISTON	2
05	809454	SPRING	6
06	809455	BACK-UP RING	2
07	809456	O-RING	2
08	809457	BACK-UP RING	2
09	809458	O-RING	2
10	808550	INTERMEDIATE BRAKE DISC	8
11	809058	BLEEDING BOLT	2
12	808543	PLUG	2
13	809459	DOWEL	2
14	809460	PISTON *(includes items 4-9)*	2

Outer End Group

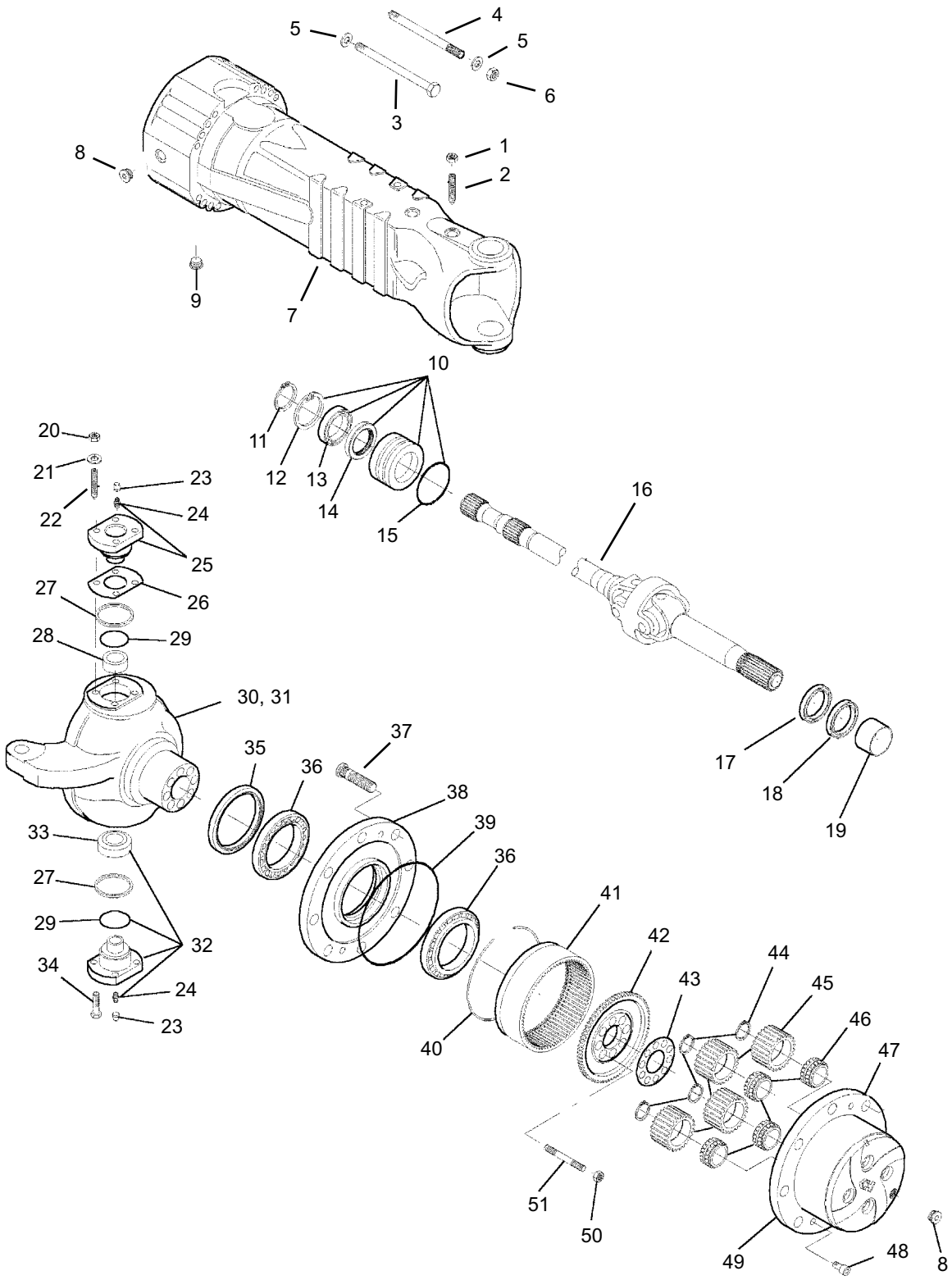

Outer End Group

Ref. No.	Part No.	Description	Qty. Req.
01	808538	NUT	2
02	809419	BOLT	2
03	809368	BOLT	24
04	808204	STUD	8
05	808539	WASHER	32
06	808205	NUT	8
07	809367	AXLE CASE	2
08	808169	PLUG	4
09	808170	MAGNET PLUG	2
10	808540	REDUCTION BUSHING *(set)*	2
11	809049	CIRCLIP	2
12	809050	CIRCLIP	2
13	809048	BALL BEARING	2
14	808541	SEAL	2
15	808542	O-RING	2
16	809369	JOINT	2
17	NSS	*(included as part of item 18)*	0
18	808188	SEAL/DUST EXCLUDER	2
19	809423	THRUST BUSHING	2
20	808180	NUT	5
21	808177	WASHER	8
22	808313	STUD	8
23	808543	PLUG	4
24	809046	GREASE FITTING	4
25	809371	PIVOT PIN	2
26	809448	SHIM	2
	809449	SHIM	2
	809450	SHIM	2
27	NSS	*(not used on this axle)*	0
28	809370	BUSHING	2
29	809429	SEAL	4
30	809431	STEERING CASE (LF AND RR) *(includes item 19)*	1
31	809434	STEERING CASE (RF and LR) *(includes item 19)*	1
32	809428	PIVOT PIN *(set)*	2
33	809430	BEARING	2
34	809425	BOLT	12
35	809435	SEAL	2
36	809436	BEARING	4
37	808192	WHEEL STUD	20
38	809438	WHEEL HUB	2
39	809057	O-RING	2
40	809445	CIRCLIP	2
41	809439	RING GEAR	2
42	809440	RING GEAR SUPPORT	2
43	809447	LOCKING PLATE	2
44	809441	CIRCLIP	8
45	809442	PLANET GEAR	8
46	809443	BEARING	8
47	809372	PLANET GEAR CARRIER	2
48	808546	COUNTERSUNK BOLT	4
49	809373	PLANET GEAR CARRIER *(includes items 41-48)*	2
50	808548	NUT	16
51	808547	STUD	16

Differential Group

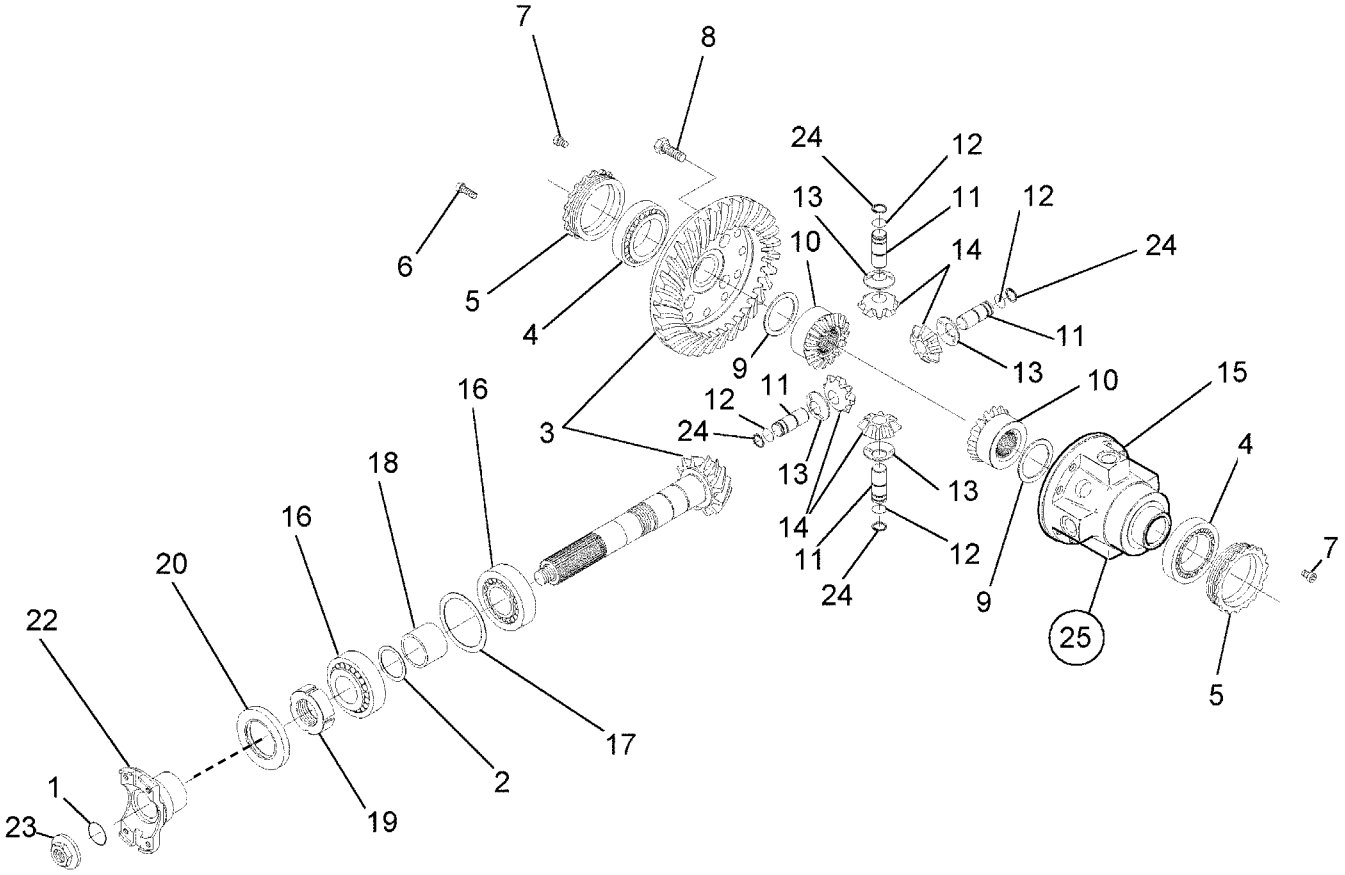

Differential Group

Ref. No.	Part No.	Description	Qty. Req.
01	808517	O-RING	1
02	808518	SHIM	1
	808519	SHIM	1
	808520	SHIM	1
	808521	SHIM	1
03	808521	BEVEL GEAR SET	1
04	809051	TAPER ROLLER BEARING	2
05	808522	RING NUT	2
06	808523	CYLINDER BOLT	4
07	808524	CYLINDER BOLT	2
08	808525	BOLT	12
09	808526	FRICTION WASHER	2
10	808527	DIFFERENTIAL SIDE GEAR	2
11	809374	PIN	4
12	808529	CIRCLIP	4
13	808530	FRICTION WASHER	4
14	808531	DIFFERENTIAL PINION	4
15	808532	DIFFERENTIAL CARRIER	1
16	809417	TAPER ROLLER BEARING	2
17	809055	SHIM	1
	809056	SHIM	1
	808533	SHIM	1
	808534	SHIM	1
18	808535	SPACER	1
19	809054	RING NUT	1
20	809053	SEAL	1
21	NA		0
22	808300	FLANGE	1
23	808536	NUT	1
24	808537	CIRCLIP	4

Outer End Group

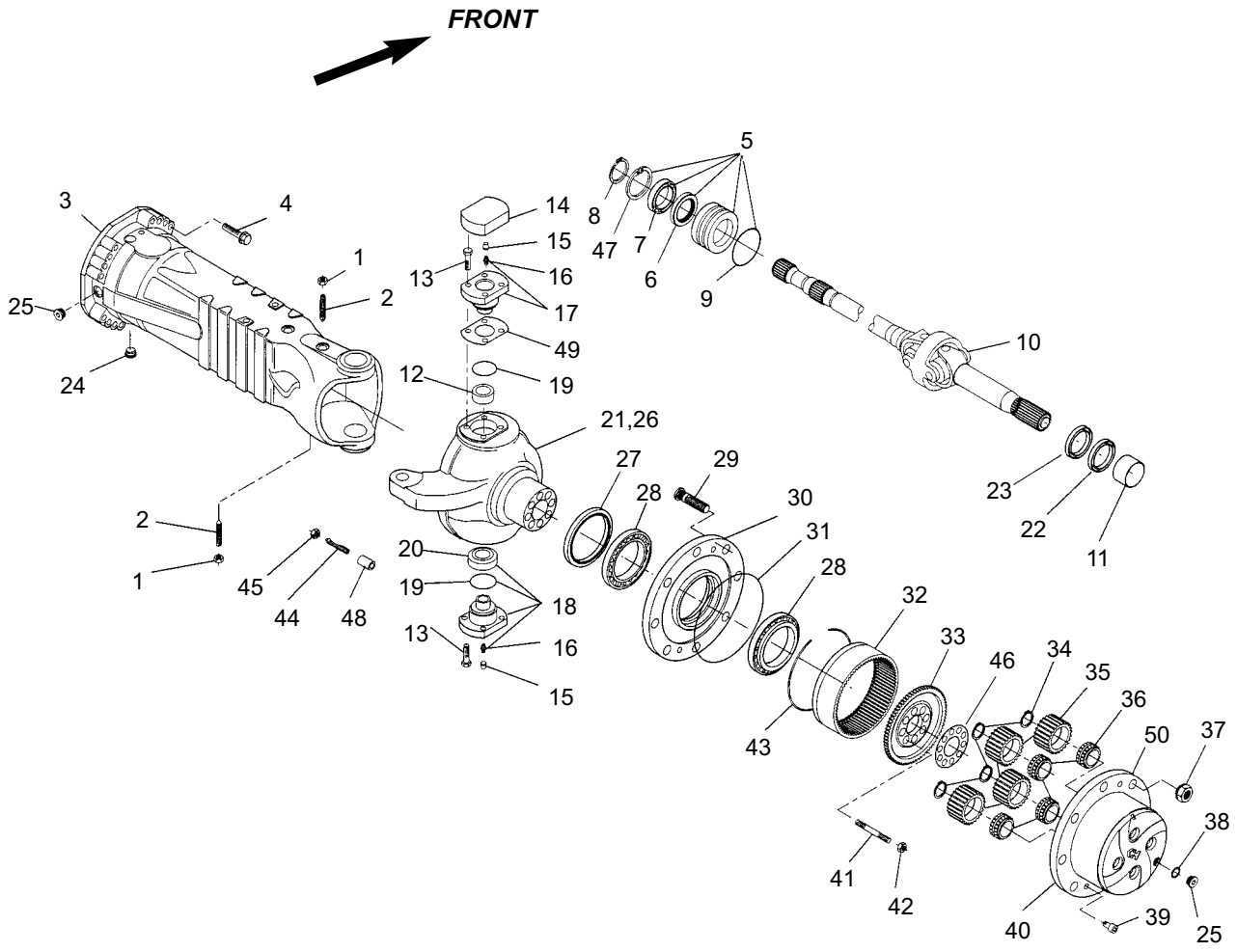

Outer End Group

Ref. No.	Part No.	Description	Qty. Req.
01	808538	NUT	2
02	809419	STEERING ADJUST BOLT	2
03	809420	AXLE CASE	2
04	809421	BOLT	32
05	808540	REDUCTION BUSHING *(includes items 6-9, and 47)*	2
06	808541	SEAL	2
07	809048	BALL BEARING	2
07	809049	CIRCLIP	2
09	808542	O-RING	2
10	809422	JOINT	2
11	809423	THRUST BUSHING *(included with items 21 and 26)*	2
12	809424	OUTER RACE	2
13	809425	BOLT	20
14	809426	COVER	2
15	808543	PLUG	4
16	809046	GREASE FITTING	2
17	809427	PIVOT PIN *(includes item 16)*	2
18	809428	PIVOT PIN *(includes items 16, 19 and 20)*	2
19	809429	SEAL	2
20	809430	ARTICULATION	2
21	809431	STEERING CASE - LF/RR *(includes item 11)*	1
22	809432	SEAL	2
23	809433	DUST EXCLUDER	2
24	809414	MAGNETIC PLUG	2
25	809623	PLUG	4
26	809434	STEERING CASE - RF/LR *(includes item 11)*	1
27	809435	SEAL	2
28	809436	BEARING	4
29	809437	WHEEL STUD	16
30	809438	WHEEL HUB	2
31	809057	O-RING	2
32	809439	RING GEAR	2
33	809440	RING GEAR SUPPORT	2
34	809441	CIRCLIP	8
35	809442	PLANET GEAR	8
36	809443	BEARING	8
37	808876	WHEEL NUT	16
38	809413	SEAL WASHER	6
39	808546	COUNTERSUNK BOLT	4
40	809444	PLANET GEAR CARRIER	2
41	808547	STUD	16
42	808548	NUT	16
43	809445	CIRCLIP	2
44	809464	ADJUSTING BOLT	4
45	809446	NUT	4
46	809447	LOCKING PLATE	2
47	809050	CIRCLIP	2
48	809465	SPACER	2
49	809448	SHIM - .15mm	2
	809449	SHIM - .20mm	2
	809450	SHIM - .50mm	2
50	809451	PLANET GEAR CARRIER *(includes items 32-36, 40-41)*	2

Differential Group

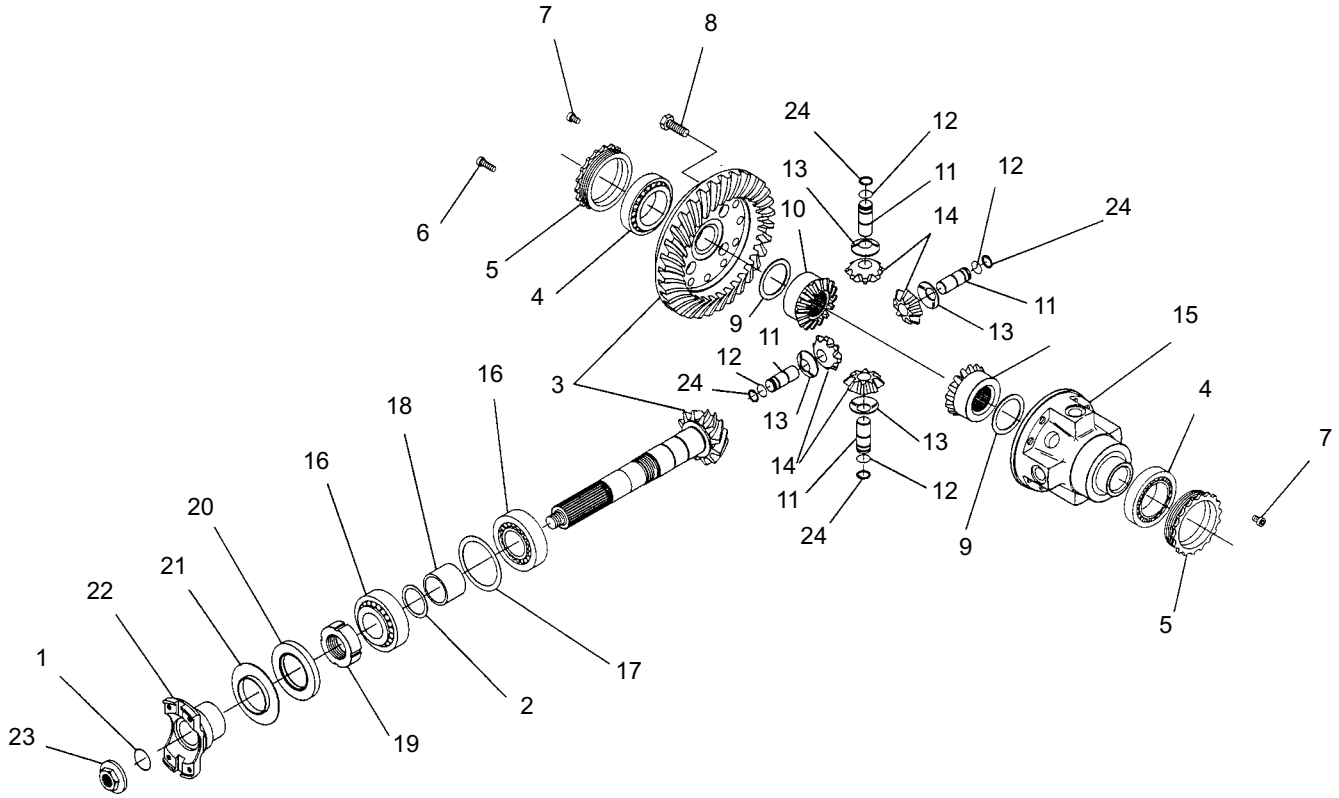

Differential Group

Ref. No.	Part No.	Description	Qty. Req.
01	808517	O-RING	1
02	809415	SHIM	1
	808518	SHIM	1
	808519	SHIM	1
	808520	SHIM	1
	808521	SHIM	1
03	808521	BEVEL GEAR SET	1
04	809051	TAPER ROLLER BEARING	2
05	808522	RING NUT	2
06	808523	CYLINDER BOLT	4
07	808524	CYLINDER BOLT	2
08	808525	BOLT	12
09	808526	FRICTION WASHER	2
10	808527	DIFFERENTIAL SIDE GEAR	2
11	808528	PIN	4
12	808529	CIRCLIP	4
13	808530	FRICTION WASHER	4
14	808531	DIFFERENTIAL PINION	4
15	808532	DIFFERENTIAL CARRIER	1
16	809467	TAPER ROLLER BEARING	2
17	809055	SHIM	1
	809056	SHIM	1
	808533	SHIM	1
	808534	SHIM	1
18	808535	SPACER	1
19	809054	RING NUT	1
20	809053	SEAL	1
21	809052	COVERPLATE	1
22	809418	FLANGE	1
23	808536	NUT	1
24	808537	CIRCLIP	4

Outer Boom Section

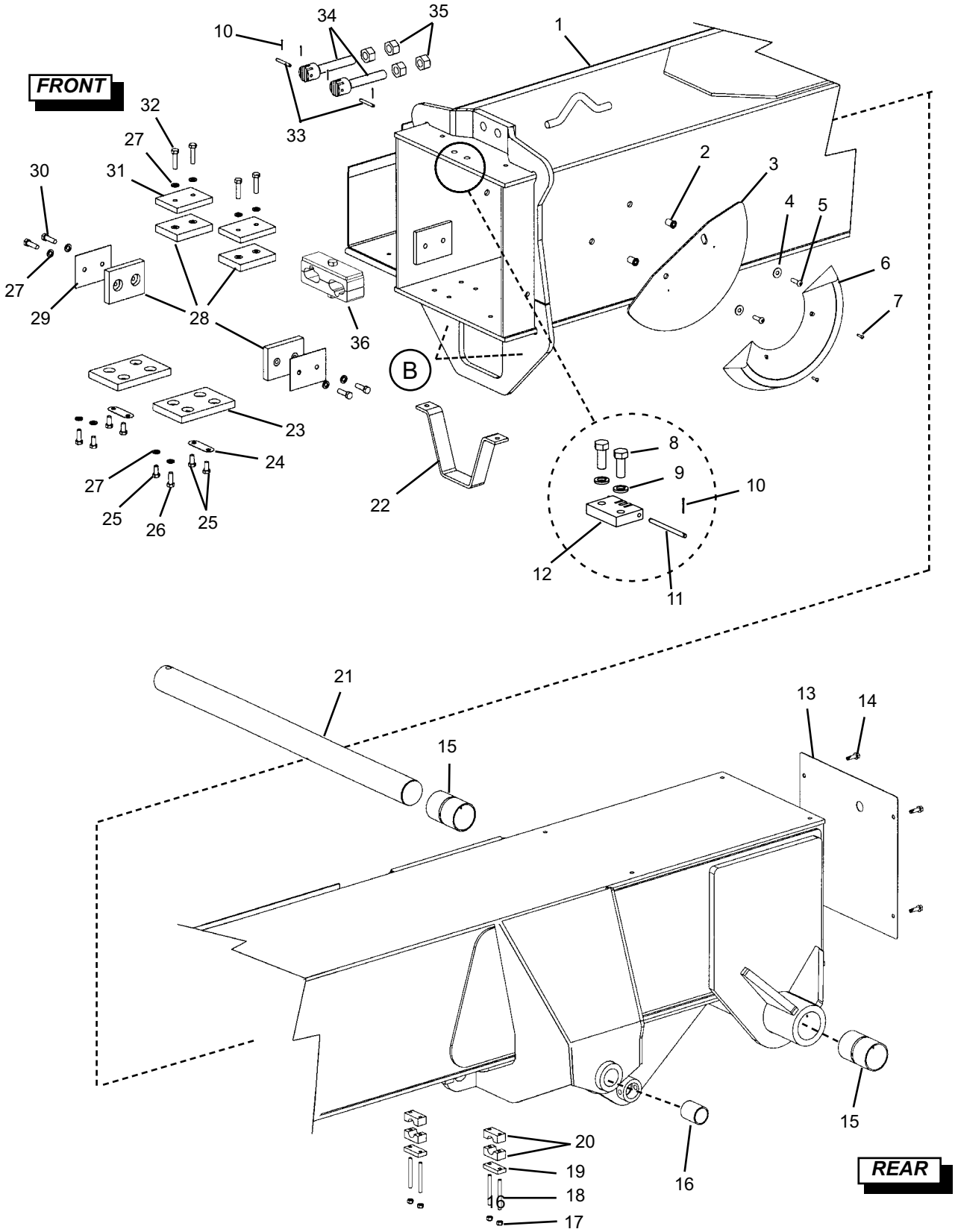

Outer Boom Section

Ref. No.	Part No.	Description	Qty. Req.
01	809575	OUTER SECT. WELDMENT	1
02	808902	5/16”-18 NUTSERT	2
03	808800	PLATE, BOOM ANGLE IND.	1
04	808590	5/16” FLAT WASHER	2
05	809496	5/16”-18X1” BTNHD BOLT	2
06	808799	INCLINOMETER-ANGLE IND.	1
07	809492	#8X5/8” RND HD MACH.SCREW	2
08	808619	1/2”-20X1-1/4” BOLT	2
09	808596	1/2” LOCK WASHER	2
10	809488	PIN, COTTER 1/16”X3/4”	6
11	809524	PIN, OUTER BOOM CLEVIS	1
12	809525	CLEVIS, OUTER BOOM	1
13	809516	REAR OUTER COVER	1
14	809484	5/16”-18X1” SELF TAP SCREW	4
15	809564	BUSHING 2.5IDX2.75ODX4”	2
16	809514	LIFT CYL. PIVOT BUSHING	2
17	808662	5/16”-18 NYLON INSERT NUT	4
18	809494	5/16”-18X3” STUD	4
19	809579	CUSHION TOP PLATE	2
20	809574	.88 HOSE CUSHION SINGLE	4
21	809515	PIN, PIVOT PIN	1
	809685	CAPSCREW 1/2-13X5	1
	808665	NYLON INSERT NUT 1/2-13	1
22	809544	EXT. CYL. BRACKET	1
	808617	3/8”-16X1” BOLT	2
	808593	3/8” LOCK WASHER	2
23	809501	SLIDE PAD 5/8”X4”X6”	2
24	808696	FLAT-BOLT LOCK	2
25	808606	3/8”-16X3/4” BOLT	6
26	808617	3/8”-16X1” BOLT	2
27	808593	3/8” LOCK WASHER	12
28	809502	SLIDE PAD 5/8”X3”X4”	4
29	808701	SHIM .06”X3”X4”	2
30	808621	3/8”-16X1-1/4” BOLT	4
31	808747	SHIM 1/2”X3”X4”	2
32	808608	3/8”-16X1-1/2” BOLT	4
33	809522	PIN, CLEVIS ADJUSTMENT	2
34[a]	809521	CLEVIS, CHAIN ADJUSTMENT	2
35	809468	3/4”-10 NUT	4
36	809359	ASY. BOOM HOSE CLAMP	1
37[b]	809360	BRACKET, LIGHT MOUNT	1
38[b]	808890	WORKLIGHT	2
39[b]	808592	3/8” FLAT WASHER	4
40[b]	808559	3/8”-16 WHIZ LOCK NUT	4
41[b]	808621	3/8”-16X1-1/4” BOLT	2

--- ITEMS NOT SHOWN ---

00[b]	808906	WIRE HARNESS, WORKLIGHT	1

a *Refer to Inner Boom Section for boom chains.*
b *When equipped with Optional Boom Work Lights. (Refer to illustration below.)*

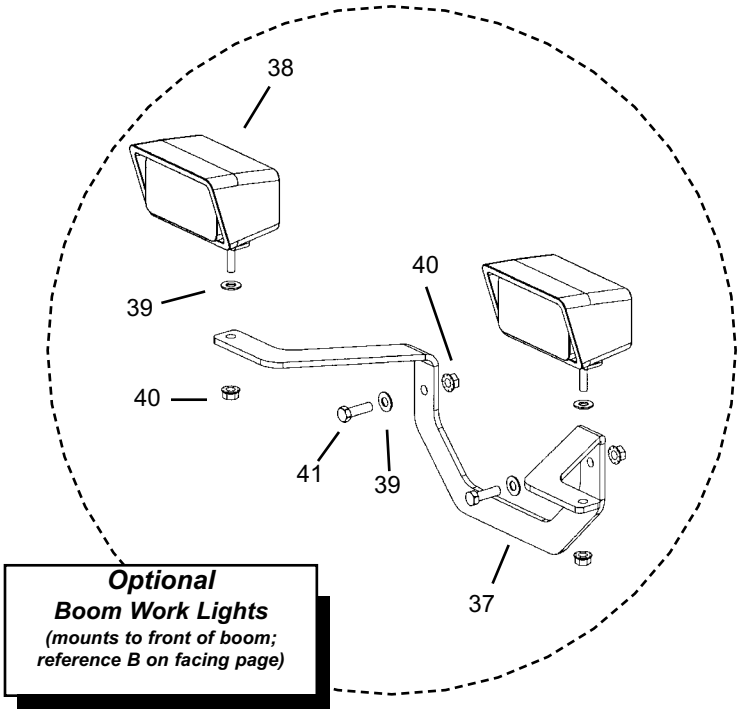

Intermediate Boom Section

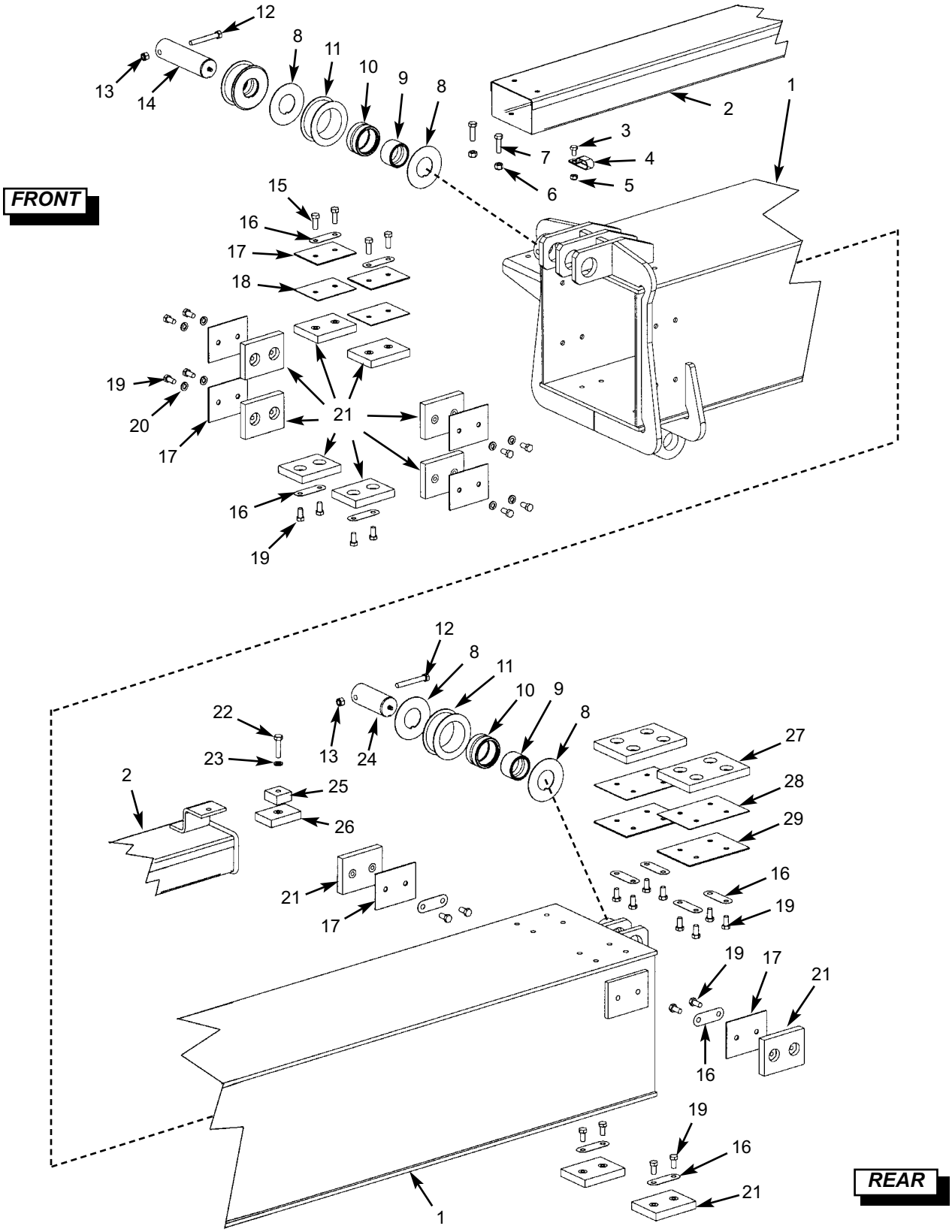

Intermediate Boom Section

Ref. No.	Part No.	Description	Qty. Req.
01	809595	INTERMEDIATE SECT WLDMNT	1
02	809509	TRAY, INTERMEDIATE	1
03	808602	5/16”-18X1/2” BOLT	1
04	809483	CLAMP, VINLYL .69 DBL	1
05	808662	5/16”X18 NYLON INSERT NUT	1
06	808663	3/8”-16 NYLON INSERT NUT	2
07	808668	3/8”-16X1-1/4” BOLT	2
08	809593	WASHER, CHAIN SHEAVE	6
09	809520	RING, BEARING-INNER	3
10	809519	BEARING, BOOM SHEAVE	3
11	809517	SHEAVE, CHAIN	3
12	808609	3/8”-16X2-3/4” BOLT	2
13	808663	3/8”-16 NYLON INSERT NUT	2
14	809591	PIN, FRONT SHEAVE	1
15	808617	3/8”-16X1” BOLT	4
16	808696	FLAT-BOLT LOCK	12
17	808702	SHIM, .105”X3”X4”	8
18	808701	SHIM, .06”X3”X4”	2
19	808606	3/8”-16X3/4” BOLT	28
20	808593	3/8” LOCK WASHER	8
21	809502	SLIDE PAD, 5/8”X3”X4”	12
22	808608	3/8”-16X1-1/2” BOLT	1
23	808593	3/8” LOCK WASHER	1
24	809592	PIN, REAR SHEAVE	1
25	809529	SPACER, TRAY BRACKET	1
26	809500	SLIDE PAD, 2”X3”	1
27	809501	SLIDE PAD, 5/8”X4”X6”	2
28	808700	SHIM, .06”X4”X6”	2
29	809504	SHIM, .105”X4”X6”	2

Note: Refer to Inner Boom Section for boom chains.

Inner Boom Section

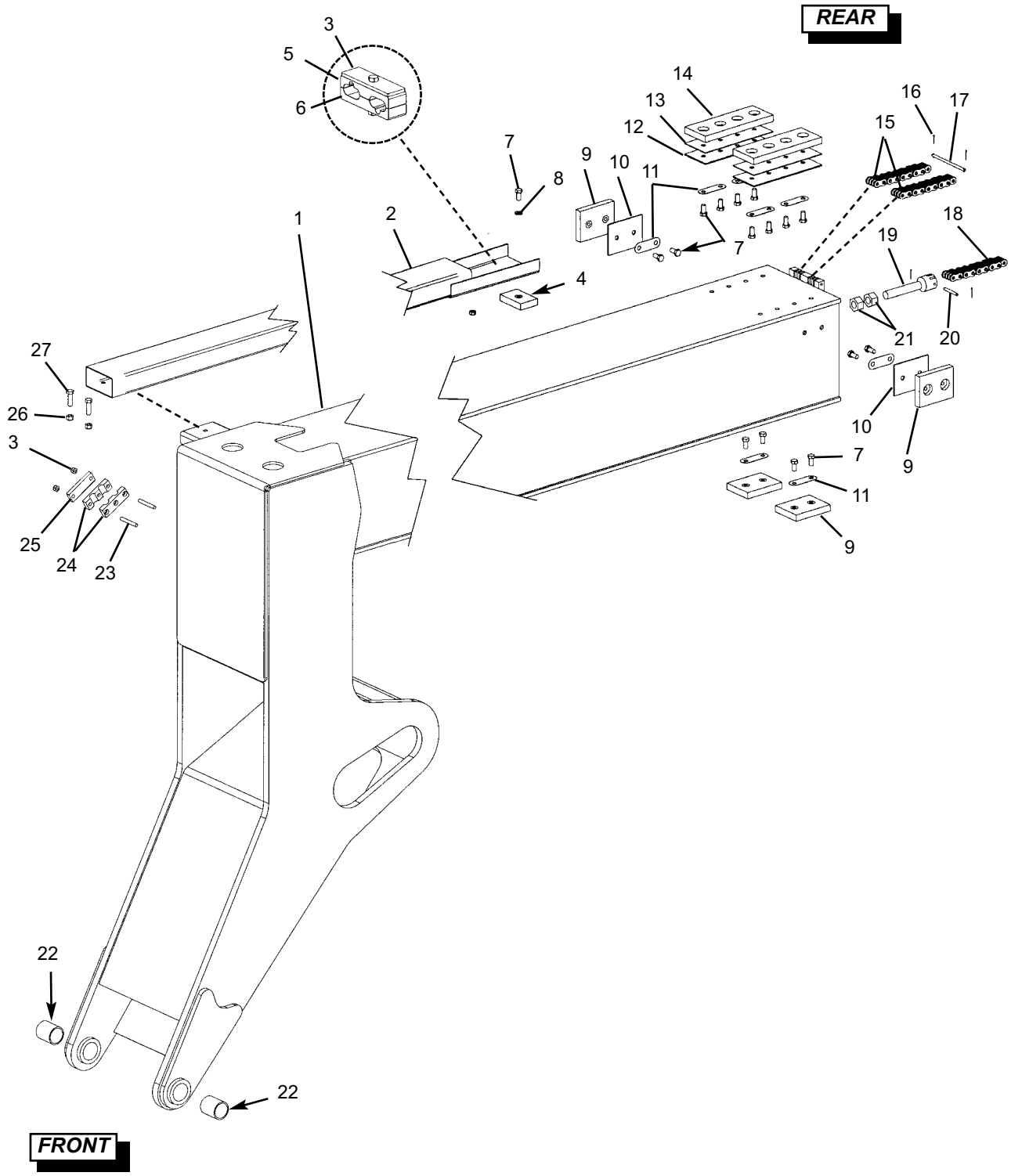

Inner Boom Section

Ref. No.	Part No.	Description	Qty. Req.
01	809596	INNER BOOM WELDMENT	1
02	809508	HOSE TRAY, INNER BOOM	1
03	809619	ASY. BOOM HOSE CLAMP	1
04	809500	SLIDE PAD 2”X3”	1
05	809357	CLAMP, BOOM HOSES	1
06	809358	CLAMP, BOOM W/INSERT	1
07	808606	3/8”-16X3/4” BOLT	17
08	808593	3/8” LOCK WASHER	1
09	809502	SLIDE PAD 5/8”X3”X4”	4
10	808702	SHIM .105”X3”X4”	2
11	808696	FLAT-BOLT LOCK	8
12	808819	SHIM .105”X3”X8”	2
13	808818	SHIM .06”X3”X8”	2
14	808817	SLIDE PAD 3”x8”	2
15[a]	809518	CHAIN, BOOM LEAF	2
16	809488	PIN, COTTER 1/16”X3/4”	4
17	809523	PIN, INNER BOOM CLEVIS	1
18[b]	809518	CHAIN, BOOM LEAF	1
19	809521	CLEVIS, CHAIN ADJUSTMENT	1
20	809522	PIN, CLEVIS ADJUSTMENT	1
21	809468	3/4”-10 NUT	2
22	809514	BUSHING	2
23	809493	5/16”-18X2-1/4” STUD	2
24	808728	CUSHION, HOSE-TWIN .68	2
25	808727	PLATE, TWIN CUSHION TOP	1
26	808663	3/8”-16 NYLON INSERT NUT	2
27	808668	3/8”-1-1/4” BOLT	2

a *Attaches from the rear of the inner boom to the chain adjustment clevis’ located on the front of the outer boom section. (Refer to Outer Boom Section, item #34, chain adjustment clevis.)*

b *Attaches from item #19 (chain adjustment clevis) to outer boom clevis. (Refer to Outer Boom Section, item #12, outer boom clevis.)*

Dynattach®

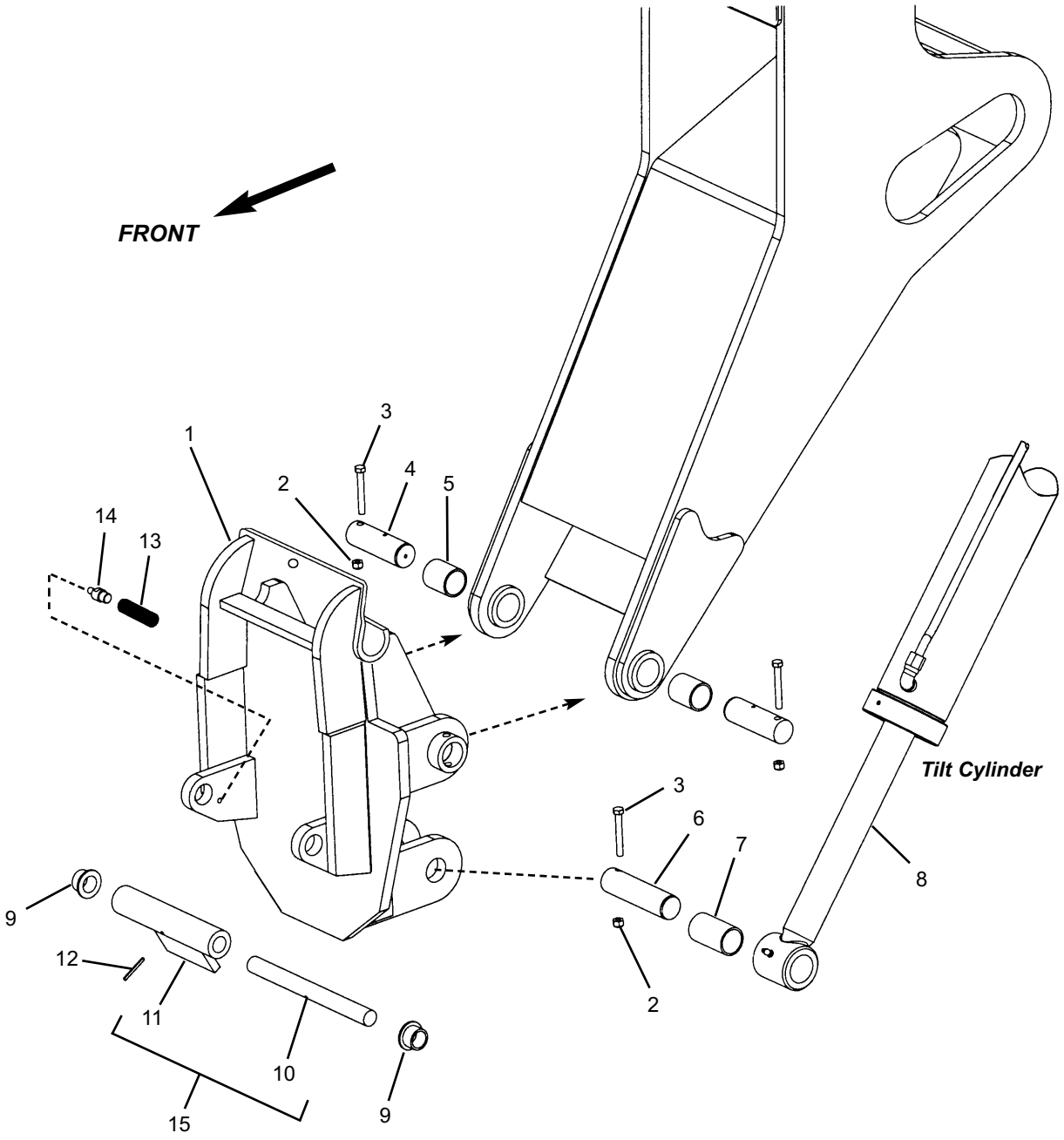

Dynattach®

Ref. No.	Part No.	Description	Qty. Req.
01	809337	DYANATTACH WELDMENT	1
02	808663	3/8”-16 NYLON INSERT NUT	3
03	808609	3/8”-16X2-3/4” BOLT	3
04	809533	PIN, TAPPED 1-1/2” DIA	2
05	809514	BUSHING	2
06	809531	PIN, TILT CYL.(ROD END)	1
07	808709	BUSHING, TILT CYL (ROD END)	1
08	809511	TILT CYLINDER	1
09	808811	BUSHING, LOCK PIN	2
10[a]	NSS	PIN, DYNATTACH LOCK	1
11[a]	NSS	DYNATTACH LOCK WLDMNT	1
12	808633	3/16”X1-3/4” ROLL PIN	1
13	808786	LOCK SPRING	1
14	808787	SPRING MOUNT	1
15	809546	LOCK AND PIN ASSEMBLY *(includes item 10-12)*	1
		-- ITEMS NOT SHOWN --	
00	808038	DECAL, DYNATTACH UNLOCKED *(adheres to item #11)*	1

a *Not sold seperately, order item #15*

Hydraulic Pump and Flow Divider

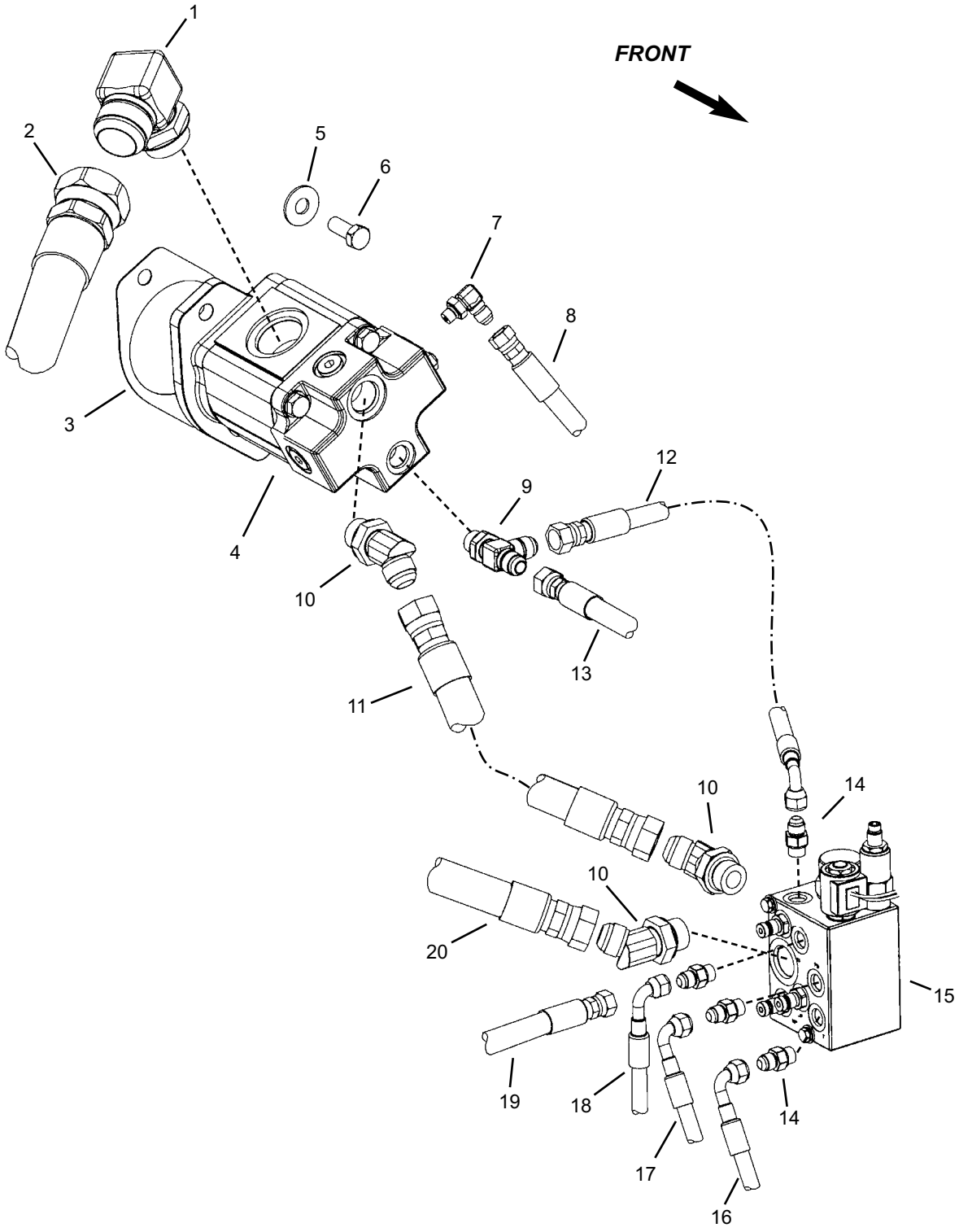

Hydraulic Pump and Flow Divider

Ref. No.	Part No.	Description	Qty. Req.
01	809390	ADAP, -20ORM -24JICM 90DEG	1
02	808713	HOSE, -24 A24/A24 35”	1
03	809395	GASKET, HYD PUMP	1
04[a]	809330	HYDRAULIC PUMP	1
05	809686	1/2” FLAT WASHER	2
06	809687	1/2”-13X1-1/4” BOLT	2
07	809506	ADAP, -4ORM -6JICM 90 DEG	1
08	809617	HOSE, -4 A6/A6 46”	1
09	808769	ADAP, -8 RUN TEE	1
10	809388	ADAP, -12ORM -12JICM 45 DEG	3
11	809599	HOSE, -12 A12/A12 17”	1
12	808275	HOSE, -6 A8/DS6 19”	1
13	809537	HOSE, -6 A8/DS8 40”	1
14	808443	ADAP, -6ORM -6JICM STR	AR
15	808126	FLOW DIVIDER	1
16	809361	HOSE, -6 A6/DS6 52”	1
17	809352	HOSE, -6 A6/A6 28”	1
18[b]	809353	HOSE, -4 A6/DS6 52”	1
19[c]	808715	HOSE, -4A6/A6 15”	1
20[a]	809540	HOSE, -12 A12/DS12 114”	1

a *Refer to hydraulic breakdown section for a break down of this component.*

b *Standard (not equipped with PWP).*

c *Option (when equipped with PWP).*

HOSE LOCATOR

02	HYDRAULIC PUMP	HYDRAULIC TANK
08	HYDRAULIC PUMP	STEER MOTOR PORT “LS”
11	HYDRAULIC PUMP	FLOW DIVIDER PORT “IN”
12	HYDRAULIC PUMT	FLOW DIVIDER PORT “S”
13	HYDRAULIC PUMP	STEER MOTOR PORT “P”
16	FLOW DIVIDER PORT “T”	HYDRAULIC TANK RETURN MANIFOLD
17	FLOW DIVIDER PORT “PB”	FRONT AXLE “PB” (LEFT SIDE)
18[b]	FLOW DIVIDER PORT “J”	JOYSTICKS
19[c]	FLOW DIVIDER PORT “J”	PWP PORT “P”
20	FLOW DIVIDER PORT “EF”	MAIN VALVE PORT (FRONT LEFT)

Steer Motor and Steer Select Valve

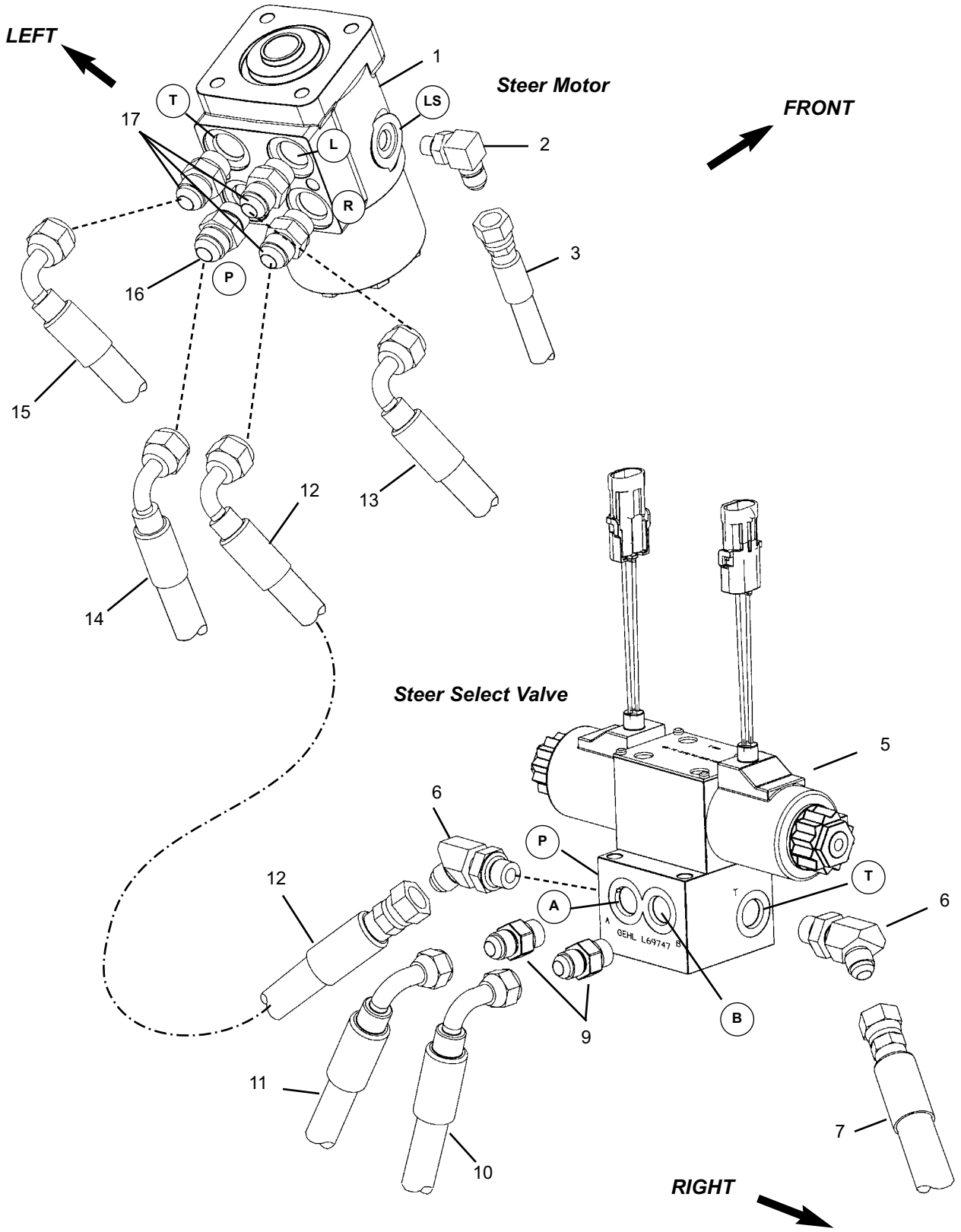

Steer Motor and Steer Select Valve

Ref. No.	Part No.	Description	Qty. Req.
01	809292	STEER MOTOR	1
02	809506	ADAP, -4ORM -6JICM 90 DEG	1
03	809616	HOSE, -4 A6/A6 46”	1
04	NA		0
05	808877	VALVE, STEER SELECT	1
	808627	1/4”-20X3” BOLT	2
	808661	1/4”-20 NYLON INSERT NUT	2
06	808456	ADAP, -6ORM -6JICM 45 DEG	2
07	809354	HOSE, -6 A8/A6 22”	1
08	NA		0
09	808443	ADAP, -6ORM -6JICM STR	2
10	808885	HOSE, -6 A8/DS6 100”	1
11	808885	HOSE, -6 A8/DS6 100”	1
12	808716	HOSE, -6 A6/DS8 52”	1
13	809538	HOSE, -6 A8/DS8 67”	1
14	809537	HOSE, -6 A8/DS8 40”	1
15	809600	HOSE, -6 A6/DS6 70”	1
16	808763	VALVE, CHECK, -8ORM	1
17	808445	ADAP, -8ORM -8JICM STR	3

HOSE LOCATOR

03	STEER MOTOR PORT “LS”	HYDRAULIC PUMP *(item #8 on previous page)*
07	STEER SELECT VALVE PORT “T”	STEER CYLINDER, FRONT AXLE RIGHT SIDE
10	STEER SELECT VALVE PORT “B”	STEER CYLINDER, REAR AXLE RIGHT SIDE
11	STEER SELECT VALVE PORT “A”	STEER CYLINDER, REAR AXLE LEFT SIDE
12	STEER MOTOR PORT “R”	STEER SELECT VALVE PORT “P”
13	STEER MOTOR PORT “L”	STEER CYLINDER, FRONT AXLE LEFT SIDE
14	STEER MOTOR PORT “P”	HYDRAULIC PUMP
15	STEER MOTOR PORT “T”	HYDRAULIC TANK RETURN MANIFOLD

Brake Valve Group

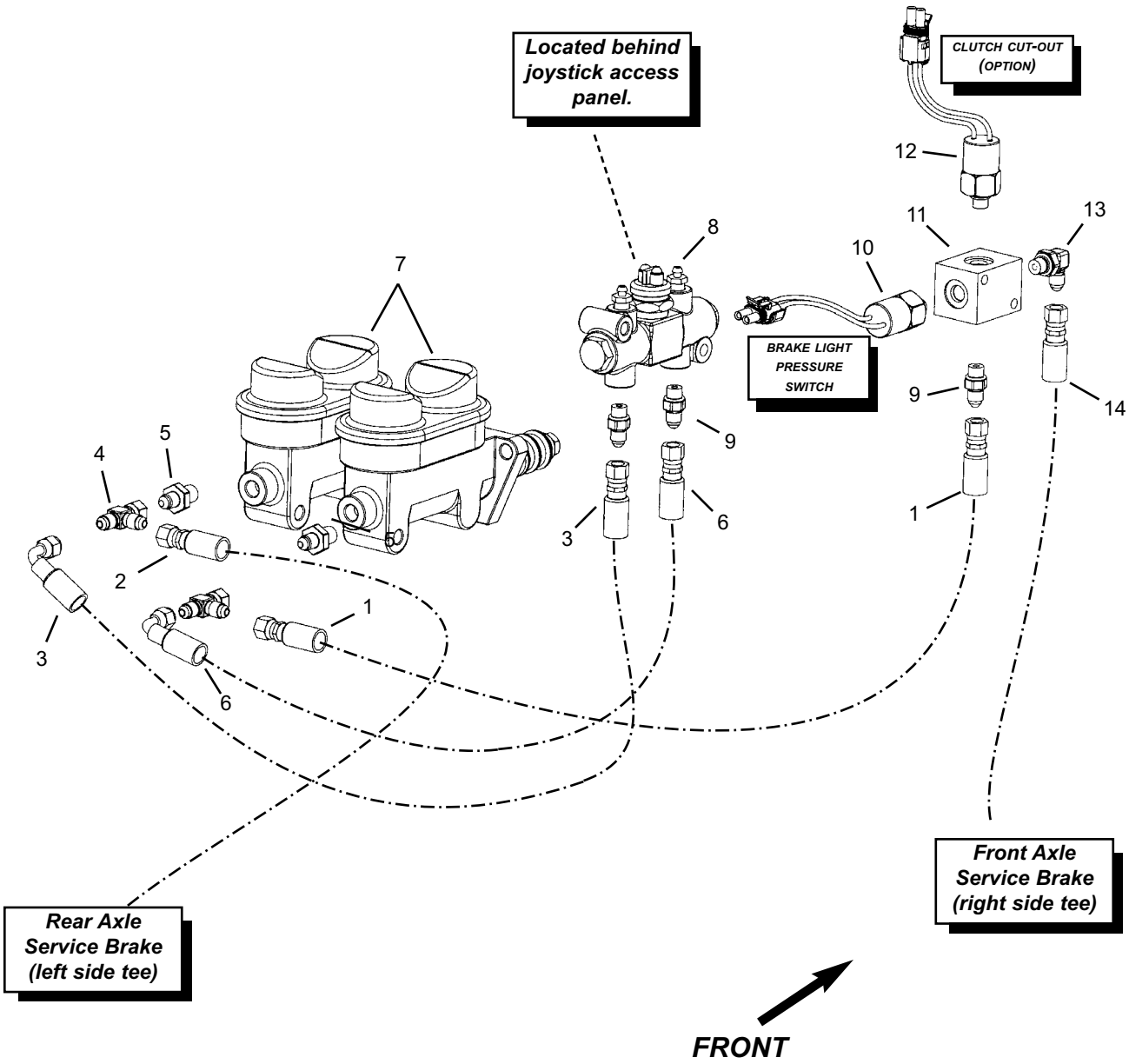

Brake Valve Group

Ref. No.	Part No.	Description	Qty. Req.
01	808276	HOSE, -4 A4/A4 52”	1
02	808279	HOSE, -4 A4/A6 90”	1
03	808725	HOSE, -4 A4/A4 45”	1
04	809392	ADAP, -4 SWIVEL TEE	2
05	808703	ADAP, HYDROMAX -4JICM STR	2
06	808725	HOSE, -4 A4/DM4 17”	1
07	808714	VALVE, MASTER CYLINDER	2
08	808719	SWITCH, DIFF. PRESSURE	1
09	808446	ADAP, -4ORM -4JICM STR	AR
10	808299	SWITCH, PRESSURE 150 PSI	1
11	808905	MANIFOLD, BRAKE LINE	1
12[a]	808299	SWITCH, PRESSURE 150 PSI	1
13	808656	ADAP, -40RM -4JICM 90 DEG	3
14	809355	HOSE, -4 A4/A6 40”	1
		-- ITEMS NOT SHOWN--	
00	808805	WIRE, 16ga. 6” *(ground wire for item #8)*	1
00[b]	808681	PLUG, -4ORM SAE	1

a *Used when unit is equipped with Clutch Cut-Out option.*

b *Used when unit is not equippped with Clutch Cut-Out option. Plug is used in place of pressure switch.*

Brake and Steering Lines Group

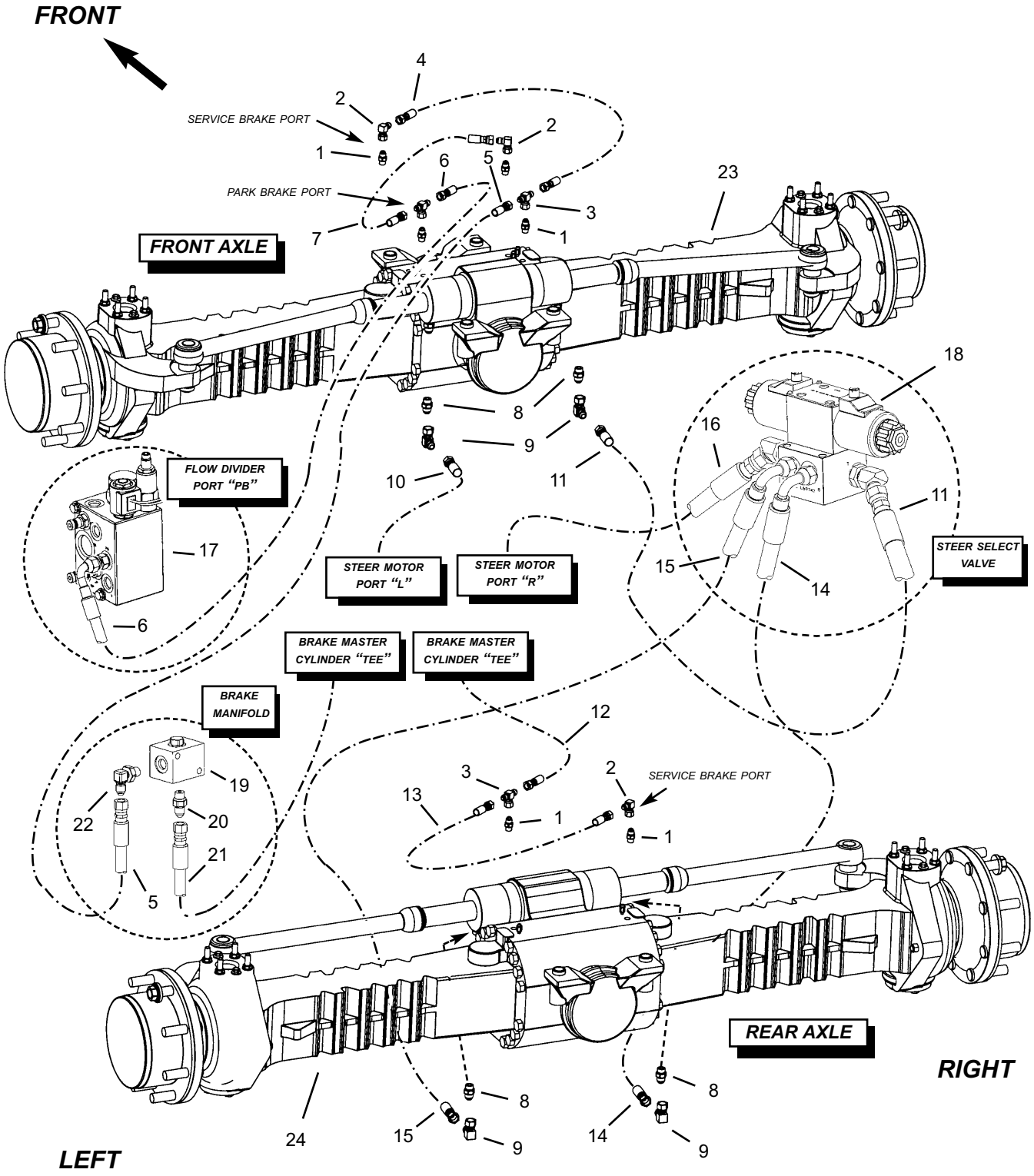

Brake and Steering Lines Group

Ref. No.	Part No.	Description	Qty. Req.
01	808804	ADAP, M14X1.5ORM -6JICM	6
02	808679	ADAP, -6JICFS -6JICM 90	3
03	809173	ADAP, -6 SWIVEL TEE	3
04	808884	HOSE, -4 A6/A6 25”	1
05	809355	HOSE, -4 A6/A4 40”	1
06	809352	HOSE, -6 A6/A6 28”	1
07	808884	HOSE, -4 A6/A6 25”	1
08	808076	ADAP, M18 ORM - 8JICM STR	4
09	808459	ADAP, -8JICFS -8JICM 90	4
10	809538	HOSE, -6 A8/DS8 67”	1
11	809354	HOSE, -6 A8/A6 22”	1
12	808279	HOSE, -4 A4/A6 90”	1
13	808884	HOSE, -4 A6/A6 25”	1
14	808885	HOSE, -6 A6/A8 100”	1
15	808885	HOSE, -6 A6/A8 100”	1
16	808716	HOSE, -6 A6/DS8 52”	1
17	808126	FLOW DIVIDER VALVE	1
18	808877	VALVE, STEER SELECT	1
19	808905	MANIFOLD, BRAKE LINE	1
20	808457	ADAP, -4ORM -4JJICM STR	AR
21	808276	HOSE, -4 A4/A4 52”	1
22	808656	ADAP, -40RM -4JICM 90 DEG	1
23	809310	AXLE, FRONT *(w/ int. park brake)*	1
24	809608	AXLE, REAR	1

Main Valve Group

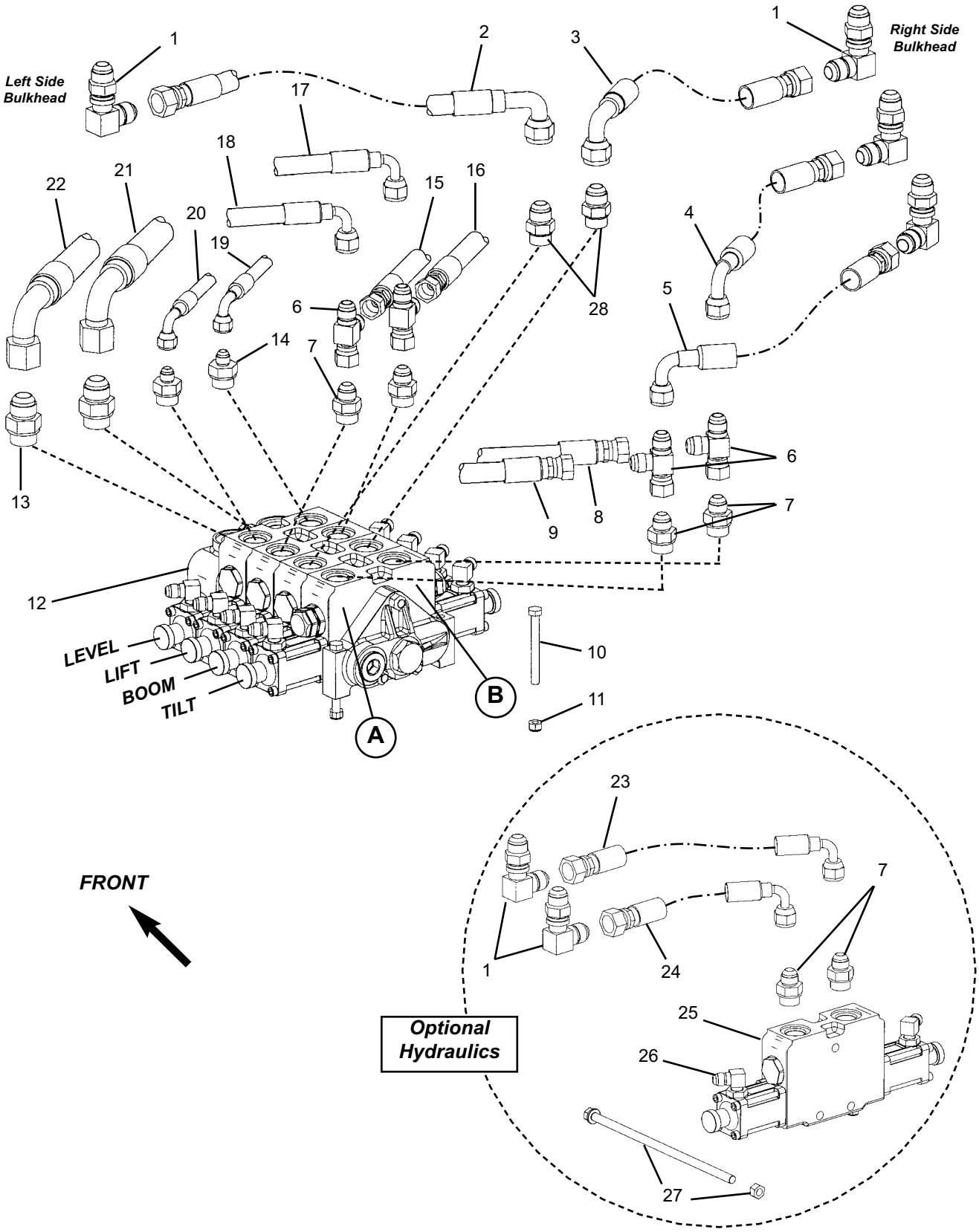

Main Valve Group

Ref. No.	Part No.	Description	Qty. Req.
01[a]	808441	ADAP, BLKHEAD 90 -10JICM	4
02	809604	HOSE, -8 A10/DS10 15”	1
03	809604	HOSE, -8 A10/DS10 15”	1
04	809606	HOSE, -8 A10/DS8 14”	1
05	809605	HOSE, -8 A10/DS8 17”	1
06	809391	ADAP, -8JICFS -8JICM RUN T	4
07[a]	808448	ADAP, -10ORM -8JICM	4
08	809607	HOSE, -6 A8/A8 26”	1
09	809541	HOSE, -6 A8/A8 48”	1
10	809495	5/16”-18X3” BOLT	3
11	808662	5/16”-18 NYLON INSERT NUT	3
12	809590	VALVE, MAIN CONTROL (V20)	1
13	808442	ADAP, -12ORM -12JICM STR	2
14	809497	ADAP, -10ORM -6JICM STR	2
15	809541	HOSE, -6 A8/A8 48”	1
16	809541	HOSE, -6 A8/A8 48”	1
17	808851	HOSE, -6 A8/DS8 54”	1
18	809601	HOSE, -6 A8/DS8 48”	1
19	809602	HOSE, -4 A6/DS6 136”	1
20	809602	HOSE, -4 A6/DS6 136”	1
21	809540	HOSE, -12 A12/DS12 114”	1
22	809540	HOSE, -12 A12/DS12 114”	1
23	809605	HOSE, -8 A10/DS8 17”	1
24	809606	HOSE, -8 A10/DS8 14”	1
25	809597	KIT, VALVE SECTION *(includes item #27)*	1
26	808455	ADAP, -6ORM -6JICM 90 DEG	10
27	NSS	BOLT KIT *(included with item #25)*	1
28	808449	ADAP, -10ORM -10JICM	2

a *Add (2) to quanity when unit is equipped with optional hydraulics*

HOSE LOCATOR

02	MAIN VALVE SECTION 3 PORT “A”	BULKHEAD FITTING TO (BOOM EXTEND)
03	MAIN VALVE SECTION 3 PORT “B”	BULKHEAD FITTING TO (BOOM RETRACT)
04	MAIN VALVE SECTION 4 PORT “B”	BULKHEAD FITTING TO (TILT CYL. RETRACT)
05	MAIN VALVE SECTION 4 PORT “A”	BULKHEAD FITTING TO (TILT CYL. EXTEND)
08	MAIN VALVE SECTION 4 PORT “B”	SLAVE CYLINDER (BOTTOM-RETRACT)
09	MAIN VALVE SECTION 4 PORT “A”	SLAVE CYLINDER (TOP-EXTEND)
15	MAIN VALVE SECTION 2 PORT “A”	LIFT CYLINDER (RIGHT) (OUTSIDE-EXTEND)
16	MAIN VALVE SECTION 2 PORT “B”	LIFT CYLINDER (RIGHT) (INSIDE-RETRACT)
17	MAIN VALVE SECTION 2 PORT “B”	LIFT CYLINDER (LEFT) (OUTSIDE-RETRACT)
18	MAIN VALVE SECTION 2 PORT “A”	LIFT CYLINDER (LEFT) (INSIDE-EXTEND)
19	MAIN VALVE SECTION 1 PORT “B”	LEVEL CYLINDER (OUTSIDE-RETRACT)
20	MAIN VALVE SECTION 1 PORT “A”	LEVEL CYLINDER (INSIDE-EXTEND)
21	MAIN VALVE “IN”	FLOW DIVIDER PORT “EF”
22	MAIN VALVE “OUT”	HYDRAULIC TANK (FILTER COVER FITTING)
23	OPTIONAL HYD. SECTION PORT “B”	BULKHEAD FITTING TO (OPTION - RETRACT)
24	OPTIONAL HYD. SECTION PORT “A”	BULKHEAD FITTING TO (OPTION - EXTEND)

Main Valve / Hydraulic Controls

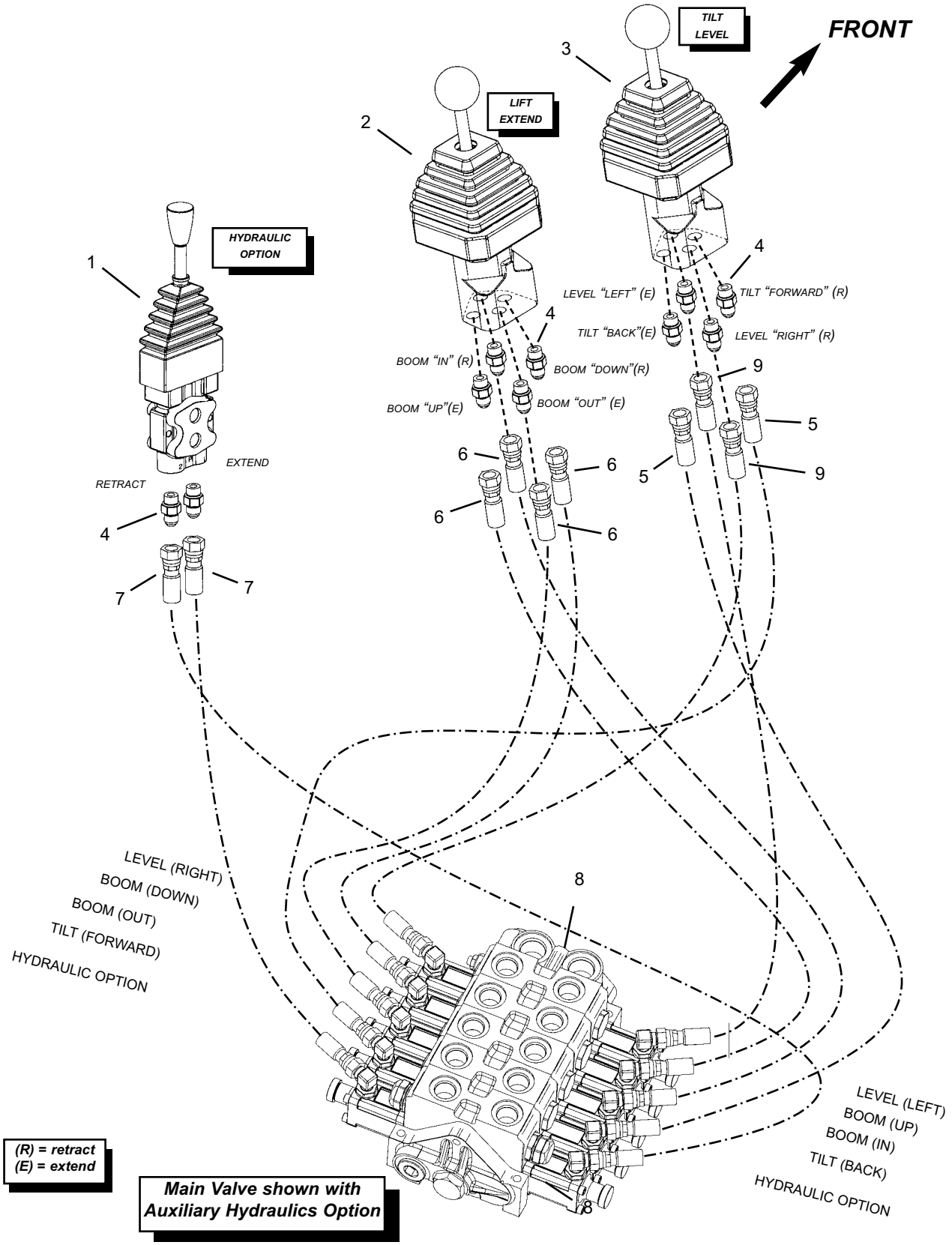

Main Valve shown with Auxiliary Hydraulics Option

Main Valve / Hydraulic Controls

Ref. No.	Part No.	Description	Qty. Req.
01	809344	CONTROLLER, AUX. HYD	1
02	809344	CONTROLLER, LIFT/EXTEND	1
03	809343	CONTROLLER, TILT/LEVEL	1
04	808443	ADAP, -6ORM -6JICM STR	AR
05	809603	HOSE, -4 A6/A6 108”	2
06	808852	HOSE, -4 A6/A6 96”	4
07	808852	HOSE, -4 A6/A6 96”	2
08[ab]	809590	MAIN VALVE	1
09	809550	HOSE, -4 A6/A6 102”	2

a *The illustration on the facing page shows the (optional) auxiliary hydraulic work section with the main valve. Refer to Main Valve Breakdown for more information.*

Hydraulic Controls - Standard

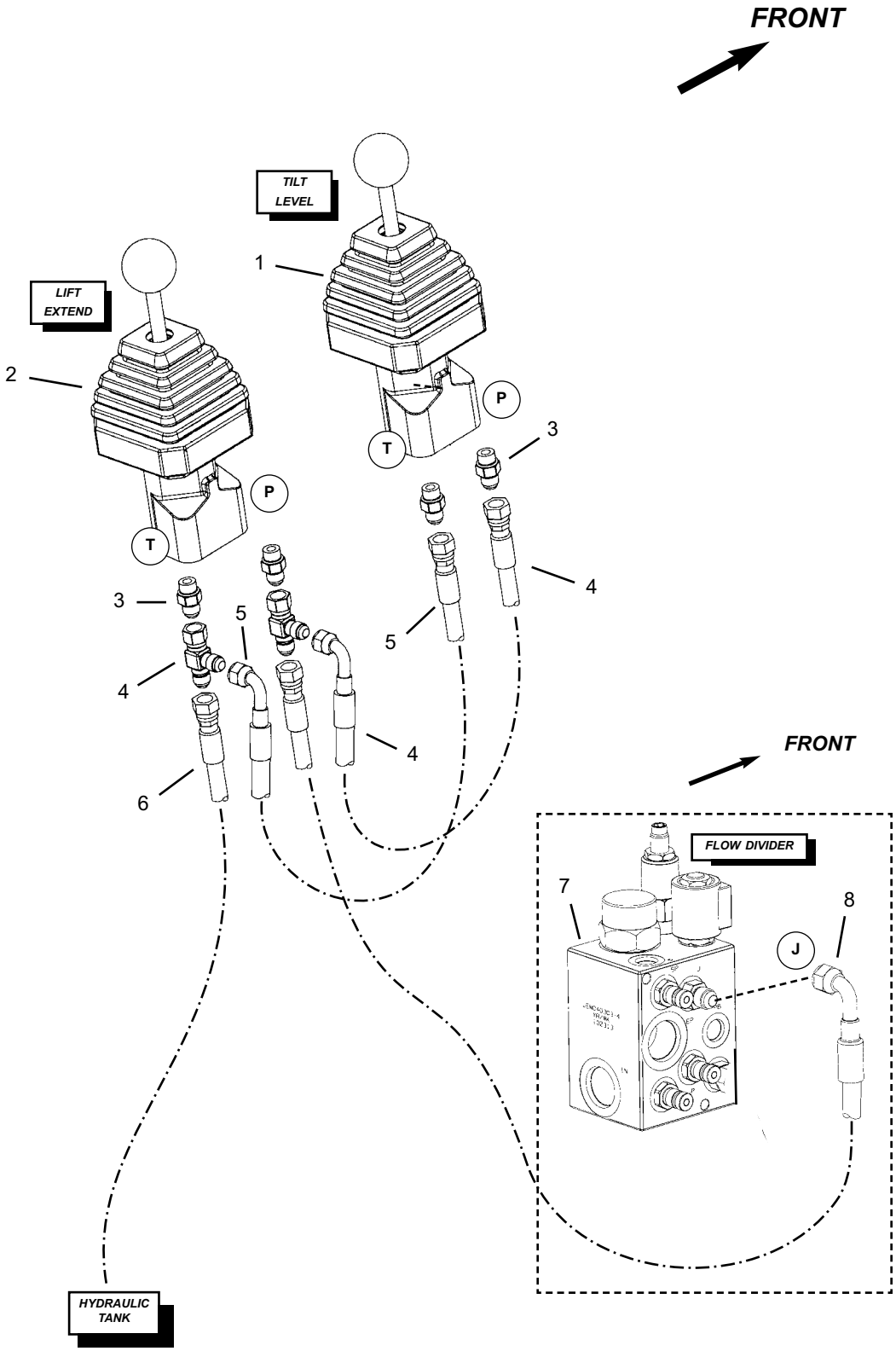

Hydraulic Controls - Standard

Ref. No.	Part No.	Description	Qty. Req.	Ref. No.	Part No.	Description	Qty. Req.
01	809343	CONTROLLER, TILT/LEVEL	1	05	808882	HOSE, -4 A6/DS6 17”	1
02	809344	CONTROLLER, LIFT/EXTEND	1	06	809351	HOSE, -4 A6/A6 60”	1
03	808443	ADAP, -6ORM -6JICM STR	4	07	808126	MANIFOLD, JOYSTICK RELIEF	1
04	808882	HOSE, -4 A6/DS6 17”	1	08	809353	HOSE, -4 A6/DS6 52”	1

Hydraulic Controls - Auxiliary Hydraulic Option

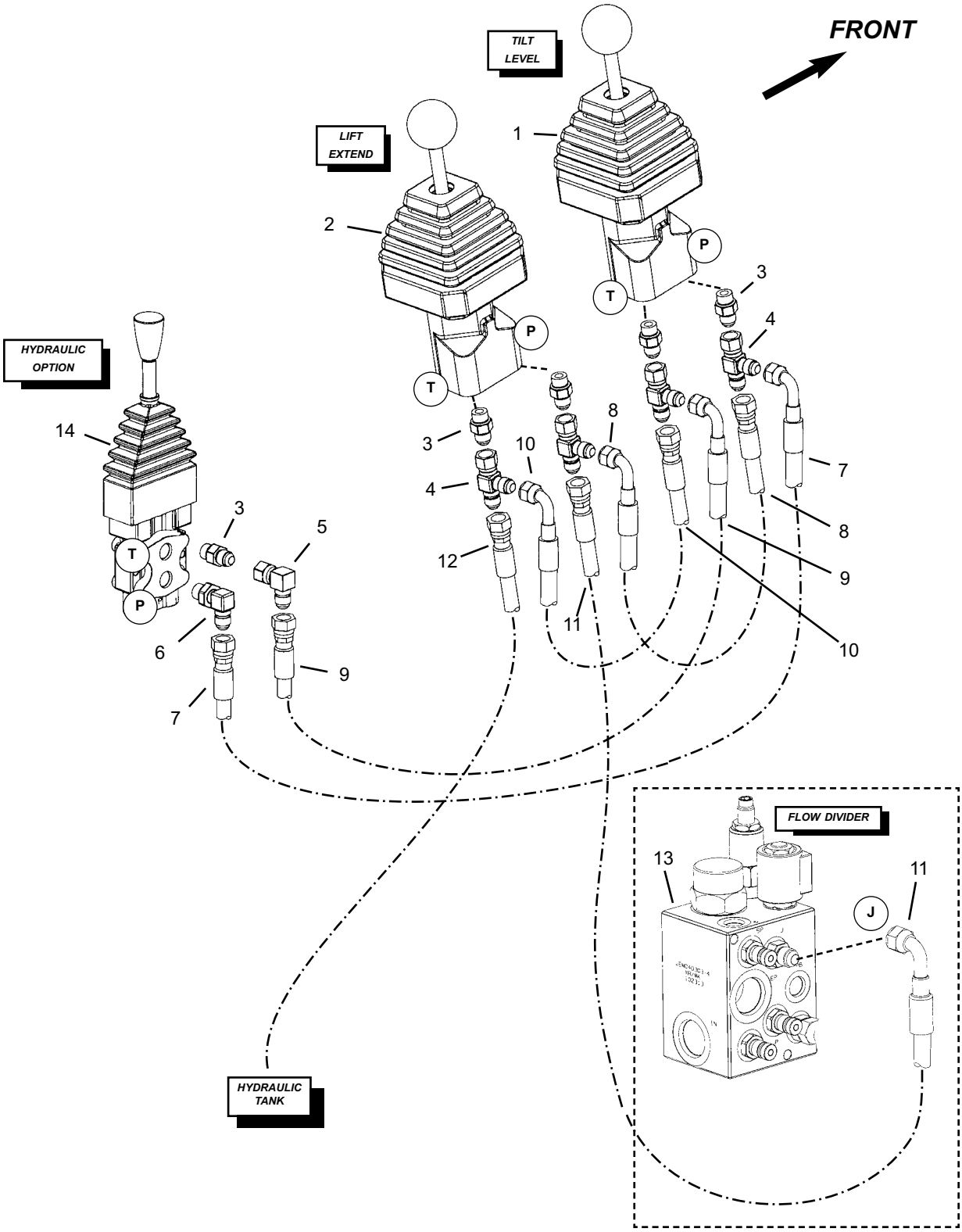

Hydraulic Controls - Auxiliary Hydraulic Option

Ref. No.	Part No.	Description	Qty. Req.
01	809343	CONTROLLER, TILT/LEVEL	1
02	809344	CONTROLLER, LIFT/EXTEND	1
03	808443	ADAP, -6ORM -6JICM STR	AR
04	808464	ADAP, -6 SWIVEL RUN TEE	AR
05	808679	ADAP, -6JICM -6JICFS 90 DEG	AR
06	808455	ADAP, -6ORM -6JICM 90 DEG	AR
07	808853	HOSE, -4 A6/DS6 20”	1
08	808882	HOSE, -4 A6/DS6 17”	1
09	808853	HOSE, -4 A6/DS6 20”	1
10	808882	HOSE, -4 A6/DS6 17”	1
11	809353	HOSE, -4 A6/DS6 52”	1
12	809351	HOSE, -4 A6/A6 60”	1
13	808126	MANIFOLD, JOYSTICK RELIEF	1
14	809344	CONTROLLER, AUX. HYD	1

Hydraulic Controls - PWP Only

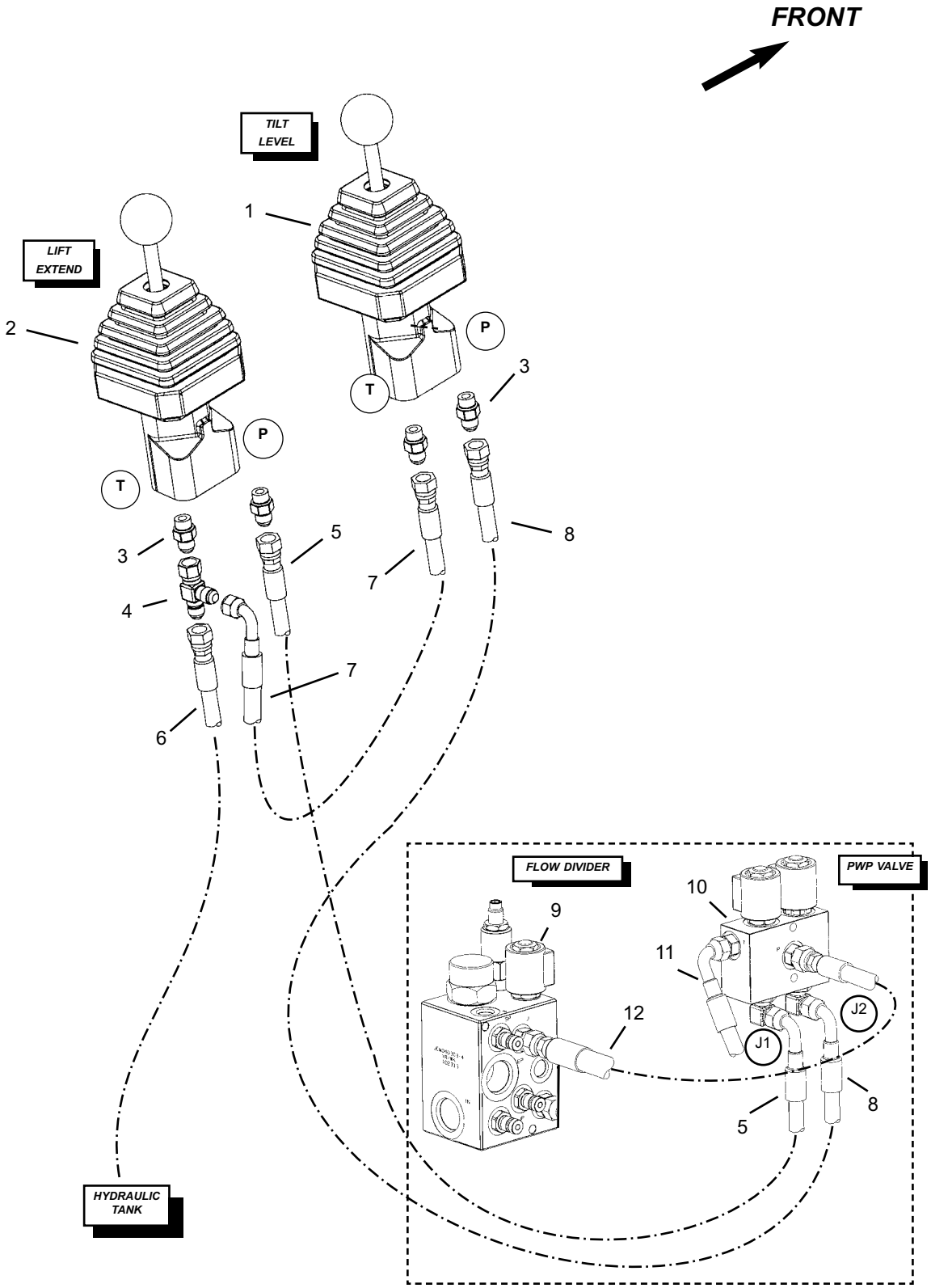

Hydraulic Controls - PWP Only

Ref. No.	Part No.	Description	Qty. Req.
01	809343	CONTROLLER, TILT/LEVEL	1
02	809344	CONTROLLER, LIFT/EXTEND	1
03	808443	ADAP, -6ORM -6JICM STR	AR
04	808464	ADAP, -6 SWIVEL RUN TEE	AR
05	809353	HOSE, -4 A6/DS6 52”	1
06	809351	HOSE, -4 A6/D6 60”	1
07	808882	HOSE, -4 A6/DS6 17”	1
08	809353	HOSE, -4 A6/DS6 52”	1
09	808126	MANIFOLD, JOYSTICK RELIEF	1
10	808127	MANIFOLD, PWP JOYSTICK	1
11	809353	HOSE, -4 A6/DS6 52” *(to hydraulic tank)*	1
12	808715	HOSE, -4 A6/DS6 15”	1

Hydraulic Controls - PWP and Aux. Hydraulic Option

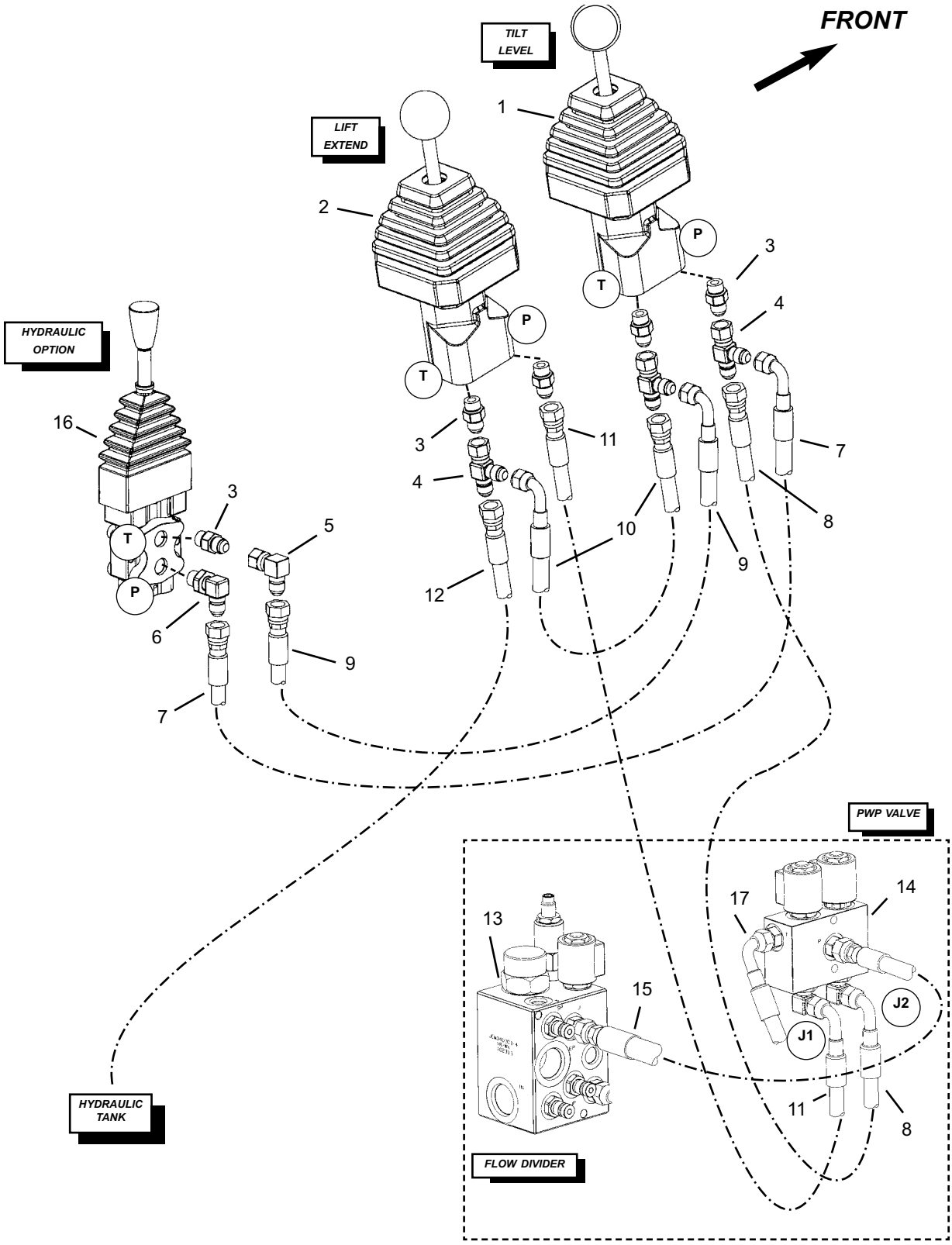

Hydraulic Controls - PWP and Aux. Hydraulic Option

Ref. No.	Part No.	Description	Qty. Req.
01	809343	CONTROLLER, TILT/LEVEL	1
02	809344	CONTROLLER, LIFT/EXTEND	1
03	808443	ADAP, -6ORM -6JICM STR	AR
04	808464	ADAP, -6 SWIVEL RUN TEE	AR
05	808679	ADAP, -6JICM -6JICFS 90 DEG	AR
06	808455	ADAP, -6ORM -6JICM 90 DEG	AR
07	808853	HOSE, -4 A6/DS6 20”	1
08	809353	HOSE, -4 A6/DS6 52”	1
09	808853	HOSE, -4 A6/DS6 20”	1
10	808882	HOSE, -4 A6/DS6 17”	1
11	809353	HOSE, -4 A6/DS6 52”	1
12	809351	HOSE, -4 A6/A6 60”	1
13	808126	MANIFOLD, JOYSTICK RELIEF	1
14	808127	MANIFOLD, PWP JOYSTICK	1
15	808715	HOSE, -4 A6/A6 15”	1
16	809344	CONTROLLER, AUX. HYD	1
17	809353	HOSE, -4 A6/DS6 52” *(to hydraulic tank)*	1

Frame Level Group

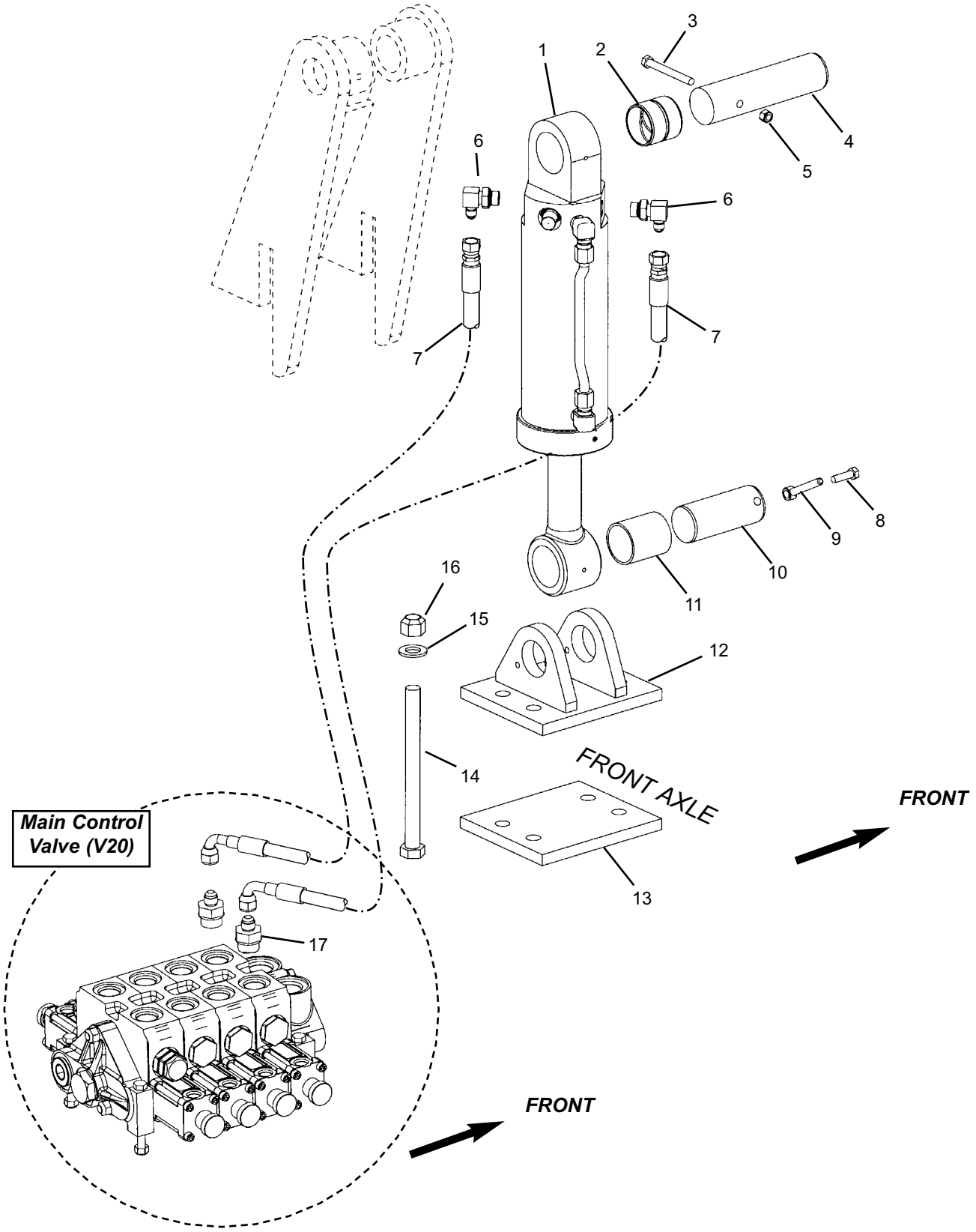

Frame Level Group

Ref. No.	Part No.	Description	Qty. Req.	Ref. No.	Part No.	Description	Qty. Req.
01	809513	LEVEL CYLINDER	1	10	808856	PIVOT PIN (ROD END)	1
02	808756	BRONZE BEARING	1	11	808708	BRONZE BEARING	1
03	808611	3/8”-16X3-1/2” BOLT	1	12	809612	FRAME LEVEL MOUNT	1
04	808712	PIN, CYLINDER (BASE END)	1	13	809611	PLATE, FRAME LEVEL	1
05	808663	3/8”-16 NYLON INSERT NUT	1	14	808634	3/4”-10X9” GR8 BOLT	4
06	809598	ADAP, W/ORIFICE -8ORM -6JICM	2	15	809481	3/4” FLAT WASHER	4
07	809602	HOSE, -4 A6/DS6 136”	2	16	808583	3/4”-10 STOVER NUT	4
08	808621	3/8”-16X1-1/4’ BOLT	1	17	809497	ADAP, -10ORM -6JICM	2
09	808855	LOCK, PIVOT PIN	1				

Lift Cylinder Group

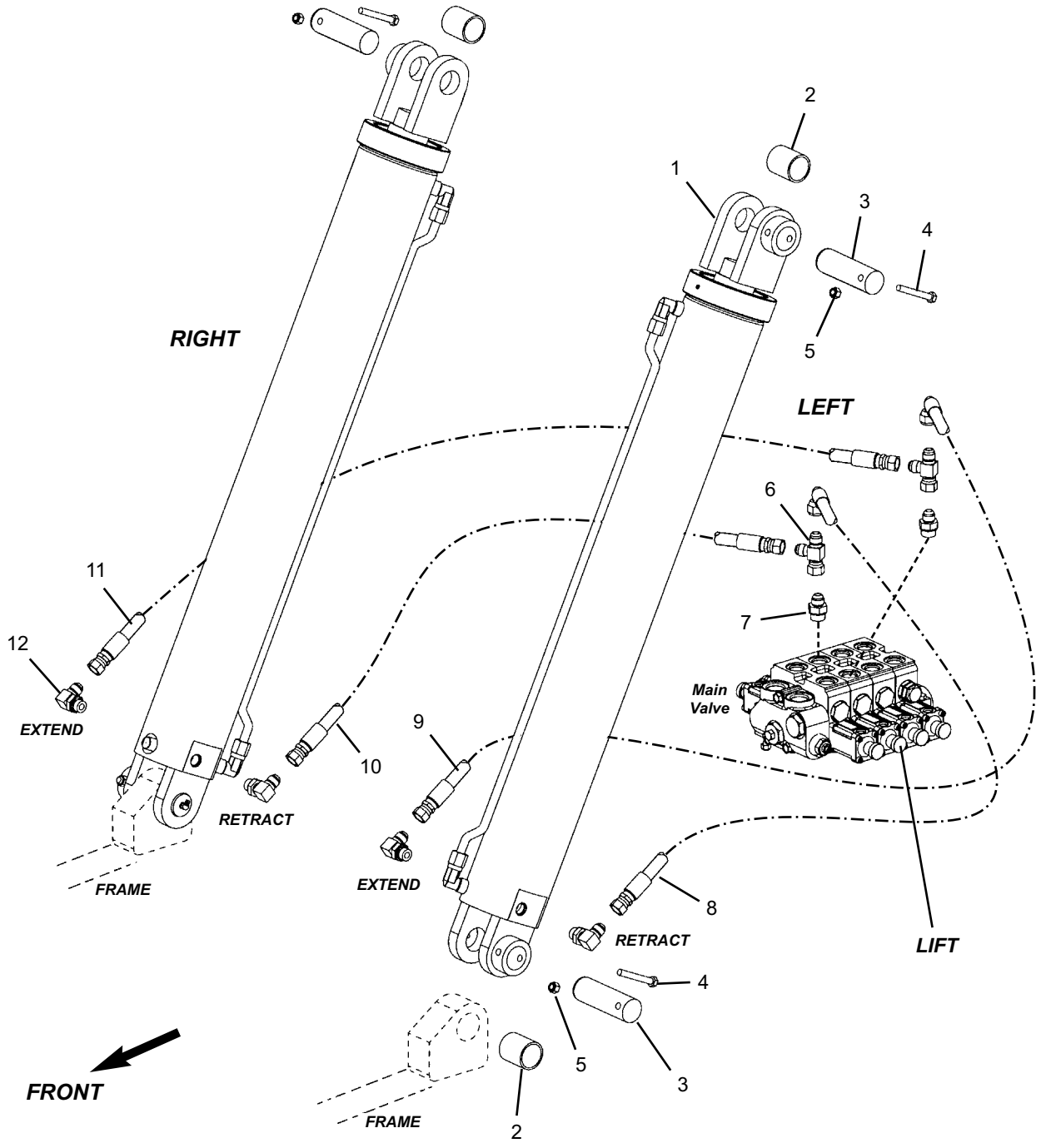

Lift Cylinder Group

Ref. No.	Part No.	Description	Qty. Req.	Ref. No.	Part No.	Description	Qty. Req.
01	809526	LIFT CYLINDER	2	07	808448	ADAP -10ORM -8JICM STR	2
02	809514	BRONZE BUSHING	4	08	808851	HOSE, -6 A8/DS8 54”	1
03	809533	PIN, LIFT CYLINDER	4	09	809601	HOSE, -6 A8/DS8 48”	1
04	808609	3/8”-16X2-3/4” BOLT	4	10	809541	HOSE, -6 A8/A8 48”	1
05	808663	3/8”-16 NYLON INSERT NUT	4	11	809541	HOSE, -6 A8/A8 48”	1
06	809391	ADAP -8JICFS -8JICM RUN TEE	2	12	808454	ADAP -8ORM -8JICM 90 DEG	4

Tilt / Slave Cylinder Group

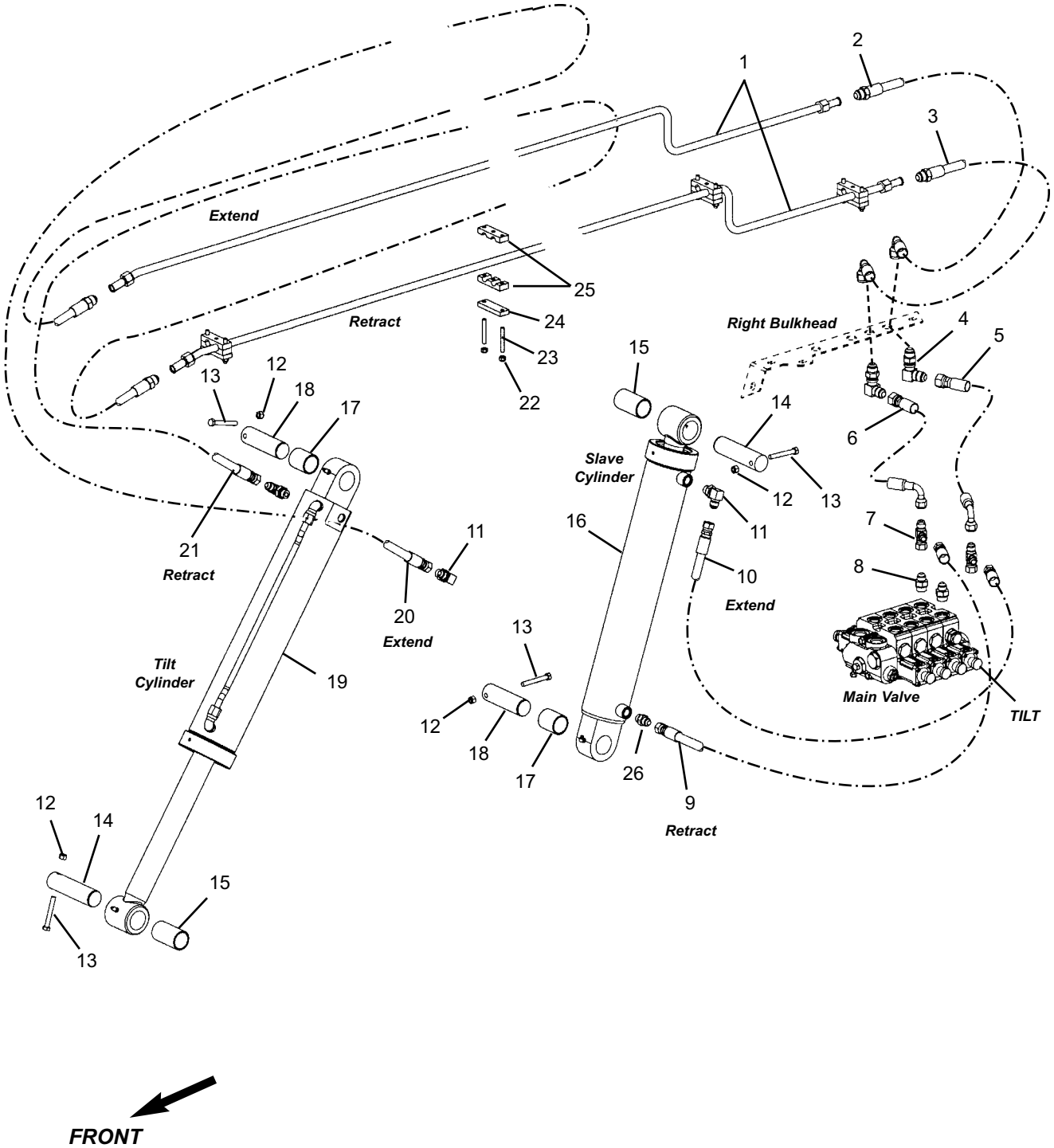

Tilt / Slave Cylinder Group

Ref. No.	Part No.	Description	Qty. Req.
01	809576	TUBE, TILT/AUX	2
02	809573	HOSE, -8 H10/DS10 54”	1
03	809573	HOSE, -8 H10/DS10 54”	1
04	808441	ADAP, -10JICM BLKHEAD 90DEG	2
05	809605	HOSE, -8 A10/DS8 17”	1
06	809606	HOSE, -8 A10/DS8 14”	1
07	809391	ADAP, -8JICFS -8JICM RUN TEE	2
08	808448	ADAP, -10ORM -8JICM	2
09	809607	HOSE, -6 A8/A8 26”	1
10	809541	HOSE -6 A8/A8 48”	1
11	808454	ADAP, -8ORM -8JICM 90 DEG	3
12	808663	3/8”-16 NYLON INSERT NUT	4
13	808609	3/8”-16X2-3/4” BOLT	4
14	809531	PIN, CYLINDER (ROD END)	2
15	808709	BUSHING (ROD END)	2
16	809512	CYLINDER, SLAVE	1
17	809514	BUSHING (BASE END)	2
18	809532	PIN, CYLINDER (BUTT END)	2
19	809511	CYLINDER, TILT	1
20[a]	809580	HOSE, -6 A8/H10 322”	1
21[a]	809580	HOSE, -6 A8/H10 322”	1
22	808662	5/16”-18 NYLON INSERT NUT	8
23	809493	5/16”-18X2-1/4” STUD	8
24	808727	PLATE, TWIN CUSHION	8
25	808832	5/8” DOUBLE TUBE CUSHION	16
26	809389	ADAP, -8ORM -8JICM 45 DEG	1

--- ITEMS NOT SHOWN ---

809483	VINYL CLAMP	2
808602	5/16”-18X1/2” BOLT	2
808662	5/16”-18 NYLON INSERT NUT	2

a *Used with protective fabric sleeve part number 808582.*

Boom Extend Cylinder Group

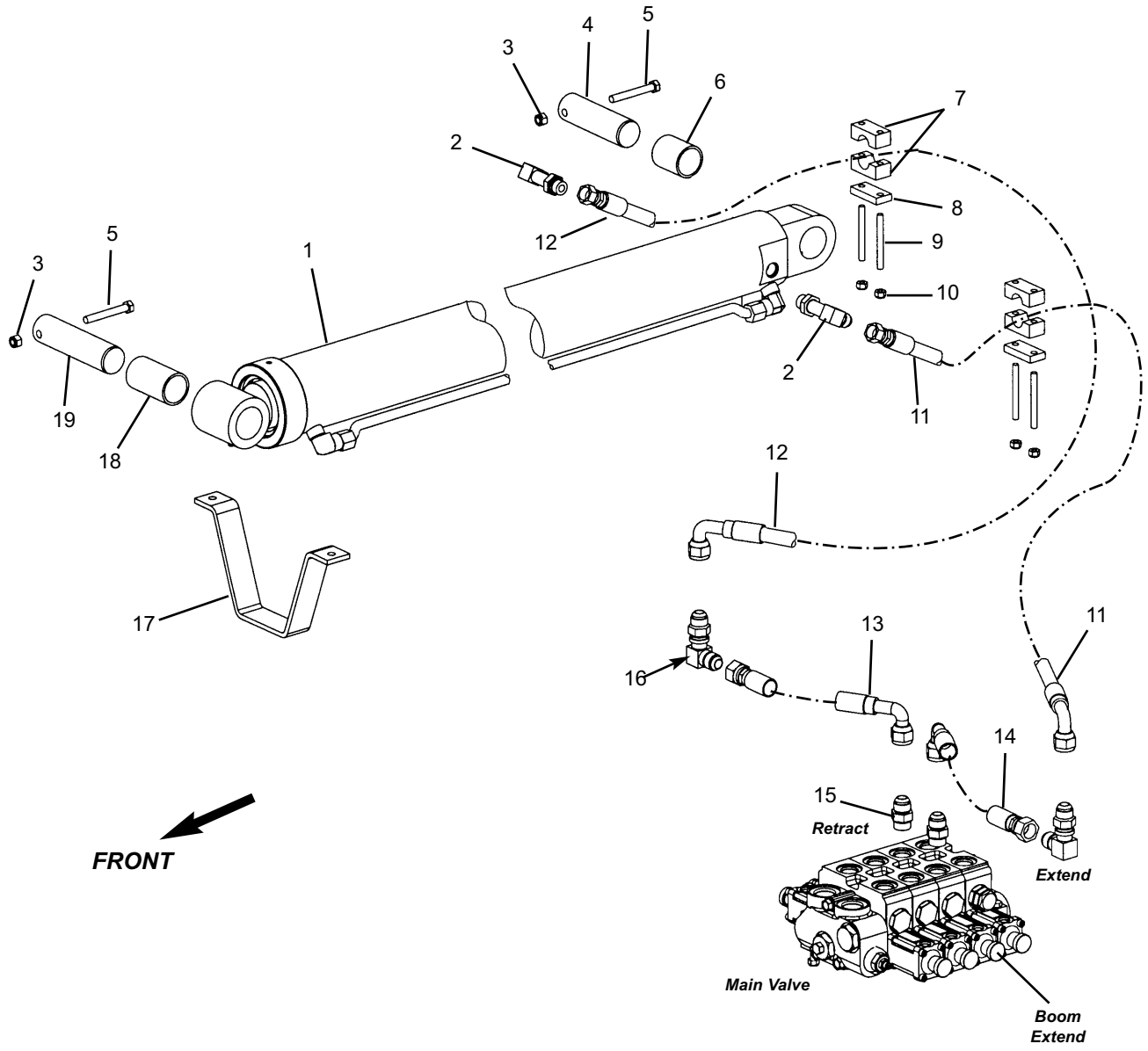

Boom Extend Cylinder Group

Ref. No.	Part No.	Description	Qty. Req.
01	809510	CYLINDER, EXTEND	1
02	809387	ADAP, -8ORM -8JICM 90 LONG	2
03	808663	3/8”-16 NYLON INSERT NUT	2
04	809532	PIN, CYLINDER (BUTT END)	1
05	808609	3/8”-16X2-3/4” BOLT	2
06	809514	BUSHING (BUTT END)	1
07	809574	7/8” HOSE CUSHION, SINGLE	4
08	809578	CUSHION TOP PLATE	2
09	809494	5/-16”-18X3” STUD	4
10	808662	5/16”-18 NYLON INSERT NUT	4
11	809577	HOSE, -8 A8/DS10 73”	1
12	809577	HOSE, -8 A8/DS10 73”	1
13	809604	HOSE, -8 A10/DS10 15”	1
14	809604	HOSE, -8 A10/DS10 15”	1
15	808449	ADAP, -10ORM -10JICM	2
16	808441	ADAP, -10JICM 90 BLKHEAD	2
17	809544	EXTEND CYL. BRACKET	1
	808617	3/8”-16X1” BOLT	2
	808593	3/8” LOCK WASHER	2
18	808709	BUSHING (ROD END)	1
19	809531	PIN, CYLINDER (ROD END)	1

Auxilary Hydraulics Group

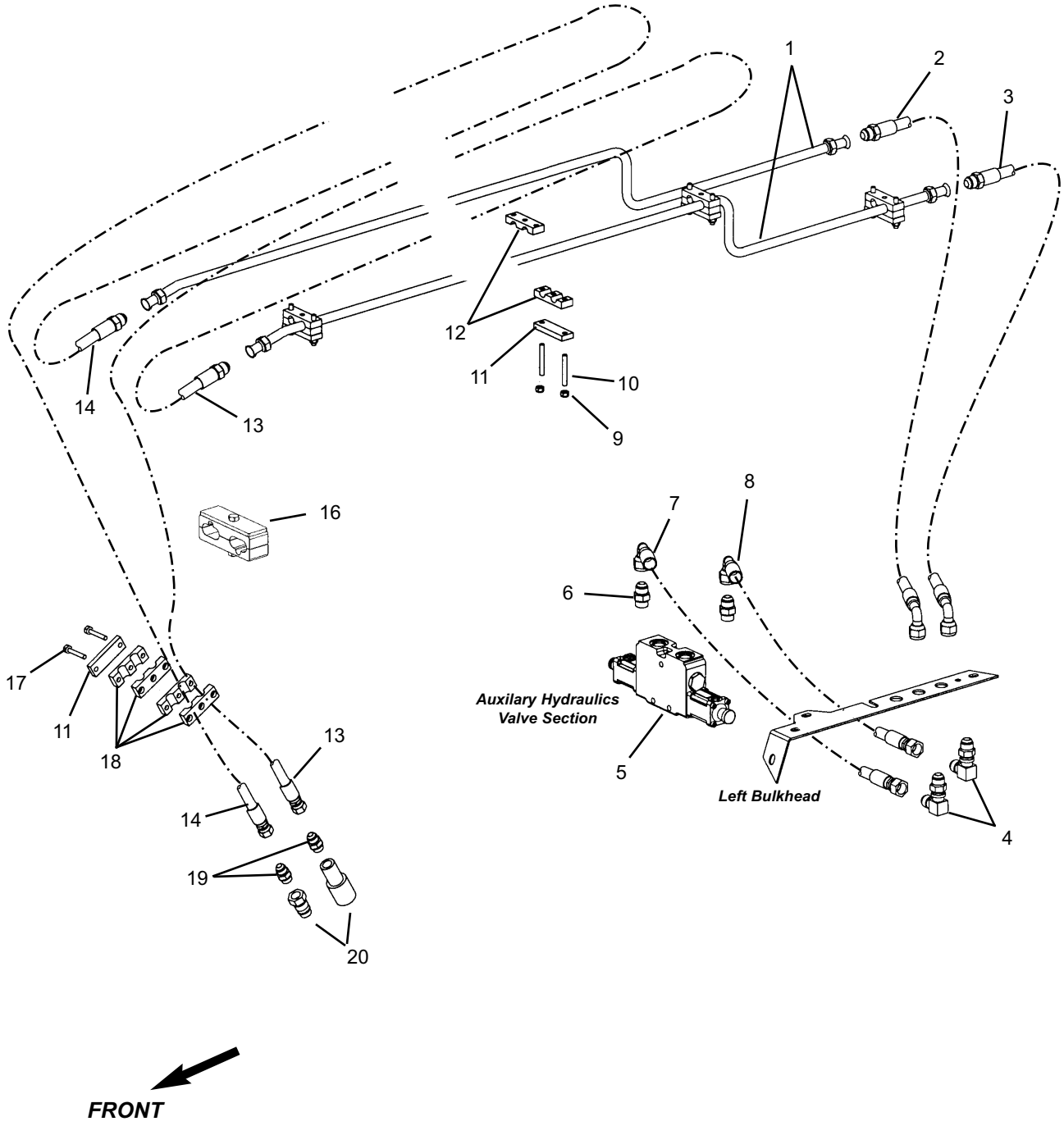

Auxilary Hydraulics Group

Ref. No.	Part No.	Description	Qty. Req.
01	809576	TUBE, TILT/AUX	2
02	809573	HOSE, -8 H10/DS10 54”	1
03	809573	HOSE, -8 H10/DS10 54”	1
04	808441	ADAP, -10JICM BLKHEAD 90DEG	2
05[a]	809597	KIT, VALVE SECTION	1
06	808448	ADAP, -10ORM -8JICM	2
07	809605	HOSE, -8 A10/DS8 17”	1
08	809606	HOSE, -8 A10/DS8 14”	1
09	808662	5/16”-18 NYLON INSERT NUT	10
10	809493	5/16”-18X2-1/4” STUD	8
11	808727	PLATE, TWIN CUSHION	8
12	808832	5/8” DOUBLE TUBE CUSHION	16
13[b]	809581	HOSE, -6 A8/H10 352”	1
14[b]	809581	HOSE, -6 A8/H10 352”	1
15	NA		0
16	809359	CLAMP ASY.	1
17	809688	5/16”-18X2-3/4” BOLT	2
	808591	5/16” LOCK WASHER	2
18	808728	11/16” DOUBLE TUBE CUSHI0N	4
19	808445	ADAP, -8ORM -8JICM STR.	2
20	808796	COUPLER SET	1

a *Kit includes a single V20 valve section and tie bolt kit for five section valve.*

b *Used with protective fabric sleeve part number 808582.*

Hydraulic Pump

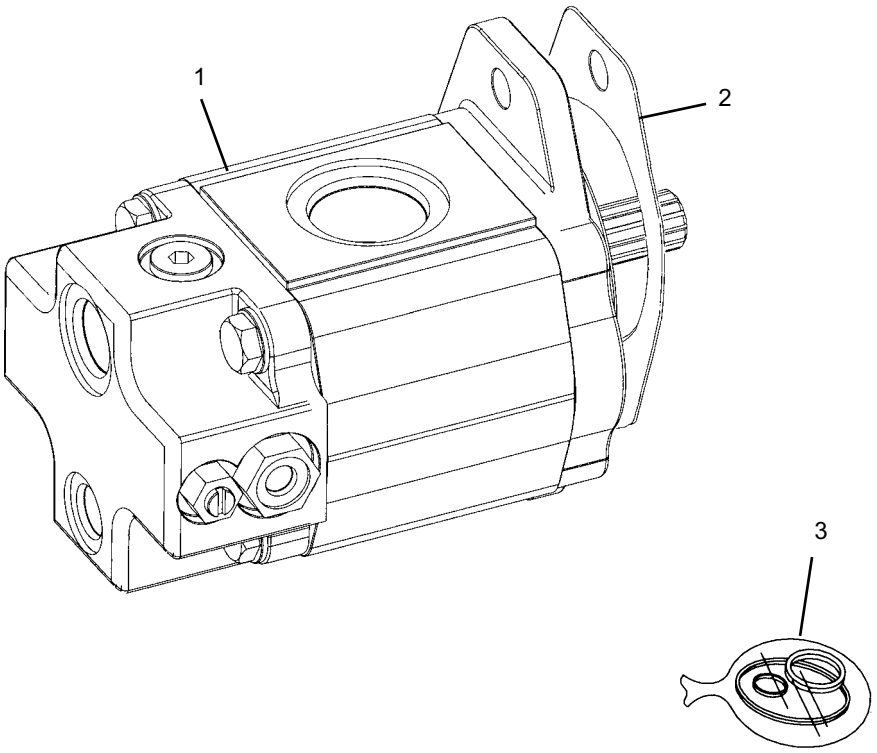

Ref. No.	Part No.	Description	Qty. Req.	Ref. No.	Part No.	Description	Qty. Req.
01	809330	HYDRAULIC PUMP	1	03	809408	SEAL KIT	1
02	809395	GASKET	1			(*Items included are not shown*)	

Flow Divider

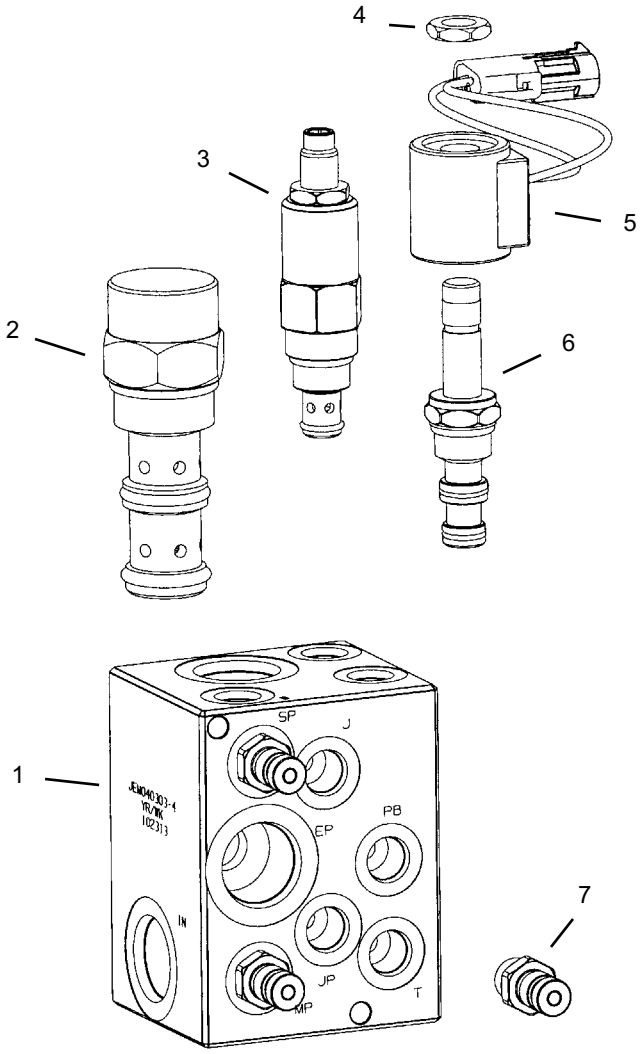

Ref. No.	Part No.	Description	Qty. Req.
01	808126	MANIFOLD, FLOW DIVIDER	1
		(includes items 1-7)	
02	808349	PILOTED SPOOL LOGIC ELEM.	1
03	809157	RELIEF VALVE	1
	809384	SEAL KIT	1
04	NSS	NUT, SOLENOID VALVE	1
		(included with item 5)	
05	809151	12 VDC WEATHER PACK COIL	1
		(includes item 4)	
06	809152	SOLENOID VALVE	1
	809153	SEAL KIT	1
07	809174	TEST PORT	3
	808704	CAP, DUST COVER *(not shown)*	3
		-- ITEMS NOT SHOWN --	
		(Mounting Hardware)	
00	809689	1/4”-20X3-1/2” BOLT	2
00	808589	1/4” LOCK WASHER	2
00	808588	1/4” FLAT WASHER	2

NOTE: Items included in seal kits are not shown.

Main Valve

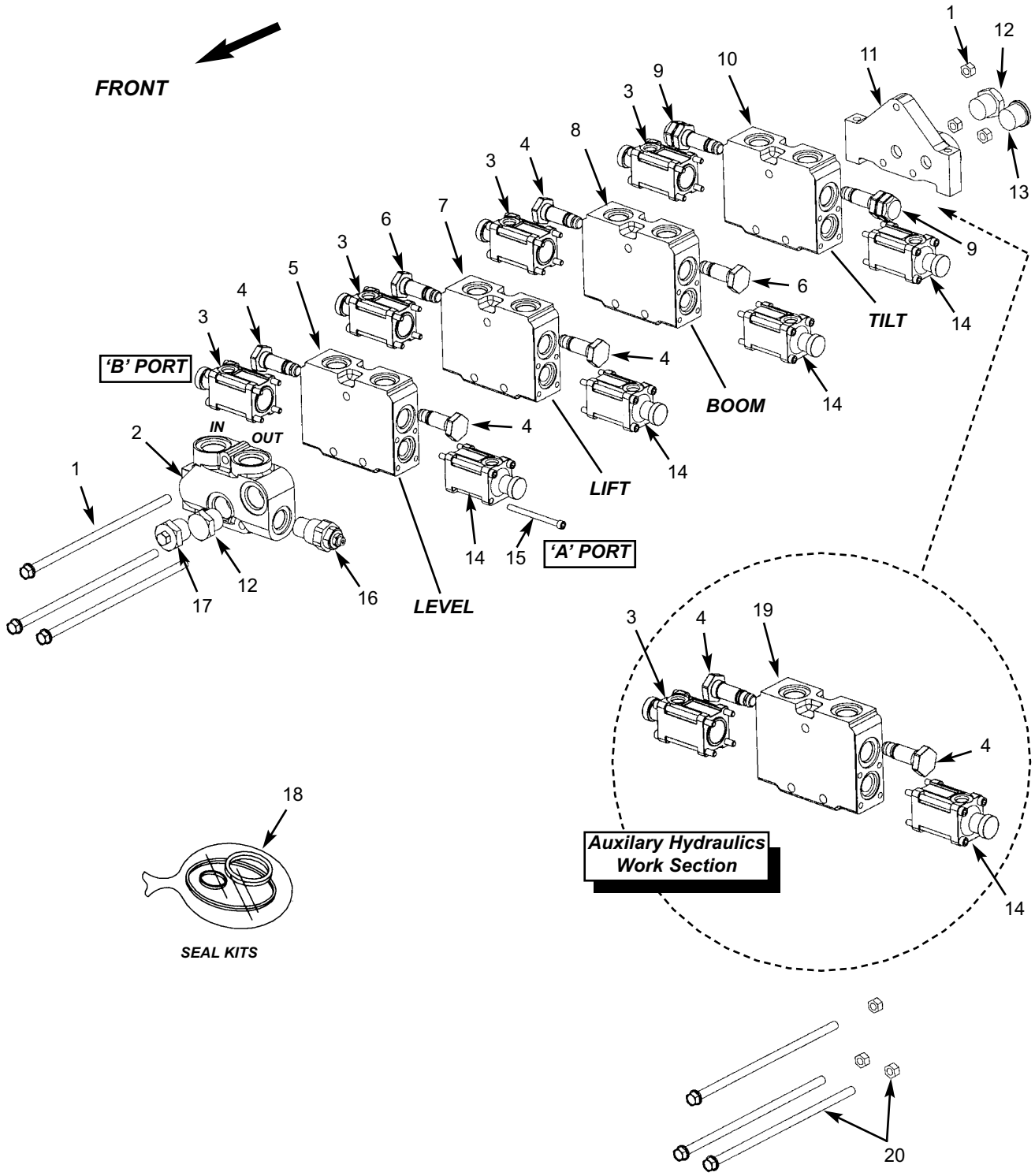
FRONT
'B' PORT
IN
OUT
LEVEL
LIFT
BOOM
TILT
'A' PORT
Auxilary Hydraulics Work Section
SEAL KITS
1
2
3
4
5
6
7
8
9
10
11
12
13
14
15
16
17
18
19
20

Main Valve

Ref. No.	Part No.	Description	Qty. Req.
00	809590	MAIN VALVE [V20] (*Complete*)	1
01	809644	STUD KIT (tie bolts and nuts)	1
02	809472	INLET COVER	1
03	809401	HRO ACUATOR “B” END	4
04	809400	NO RELIEF-NO ANTI-CAV.PLUG	4
	809399	SEAL KIT	1
05	809645	WORK SECTION 1 *(Level)* (*includes items 3, 4, 14 & 15*)	1
06	809470	NO RELIEF - ANTI-CAV PLUG	1
07	809471	WORK SECTION 2 *(Lift)* (*includes items 3, 4, 6, 14 & 15*)	1
08	809474	WORK SECTION 3 *(Boom Ext.)* (*includes items 3, 4, 6, 14 & 15*)	1
09	809646	RELIEF CARTRIDGE	2
	809647	SERVICE KIT *(less seals)*	2
	809648	SEAL KIT	2
10	809649	WORK SECTION 4 *(Tilt)* (*includes items 3, 9, 14 & 15*)	1
11	809473	OUTLET COVER	1
12	809475	PLUG SAE-12	
13	809477	PLUG SAE 12 (SOCKET HEAD)	1
14	809402	HRO ACUATOR “A” END	4
15	809479	SCREW	32
	809690	LOCK WASHER	32
16	809398	RELIEF CARTRIDGE (RP51-A)	1
	809620	RELIEF SEAL KIT	1
17	809476	PLUG WITH TEST PLUG	1
18		SEAL KITS FOR WORK SECTIONS	
	809397	SECTION SEAL KIT (*used with items 5-7 & 10*)	1ea
	809643	SPOOL SEAL KIT (*used with items 3 & 14*)	1ea
19	809645	WORK SECTION (*Aux. Hyd.*)	1
20	809478	STUD ASSEMBLY KIT (*Aux. Hyd.*) (*used with item 20*)	1
		-- ITEMS NOT SHOWN --	
00	809597	KIT, VALVE SECTION (AUX.) *(includes all items shown on facing page in the “Auxilary Hydraulics Work Section” group and item 20)*	1

PWP Valve

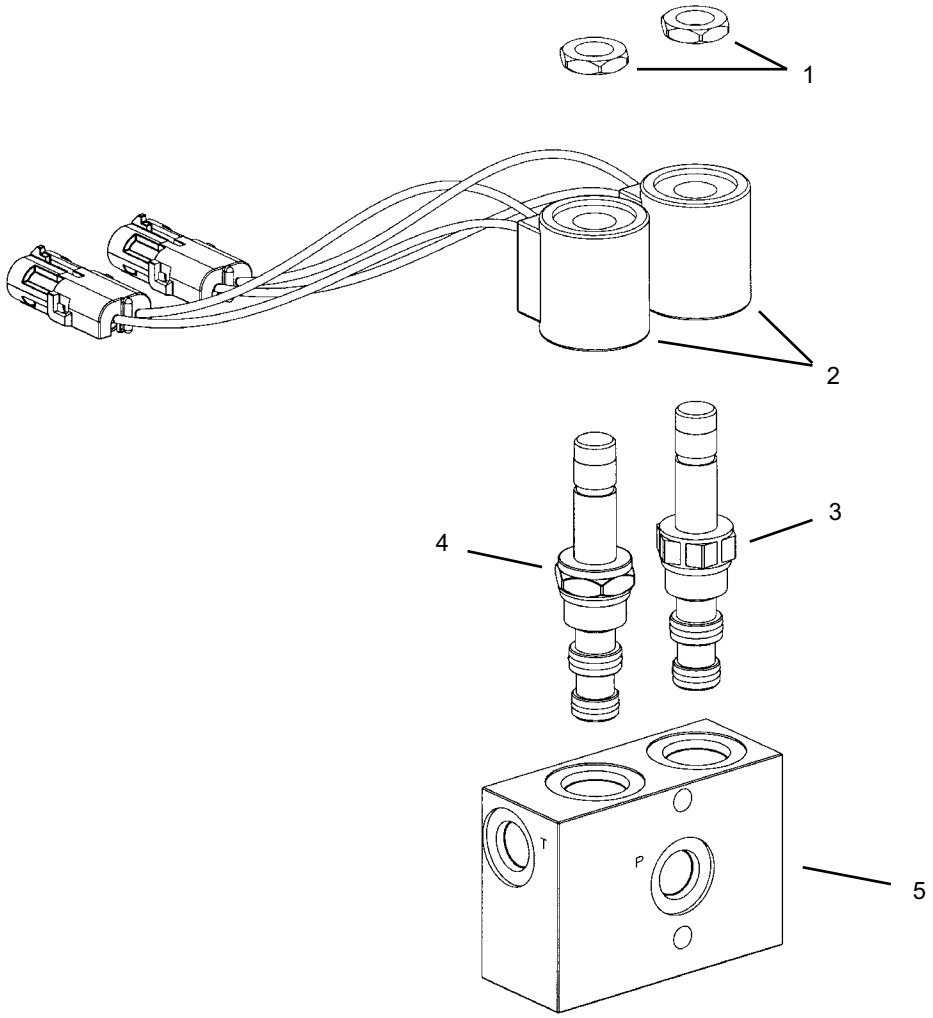

Ref. No.	Part No.	Description	Qty. Req.
00	808127	MANIFOLD, PWP JOYSTICK	1
		(Complete assembly)	
01	NSS	NUT, SOLENOID VALVE	2
		(included with item 3 and 4)	
02	809151	12 VDC WEATHER PACK COIL	2
03	809683	SOLENOID VALVE	1
	809153	SEAL KIT	1
		(*Items included are not shown*)	
04	809152	SOLENOID VALVE	1
	809153	SEAL KIT	1
		(*Items included are not shown*)	
05	NSS	MANIFOLD	1

Steer Valve

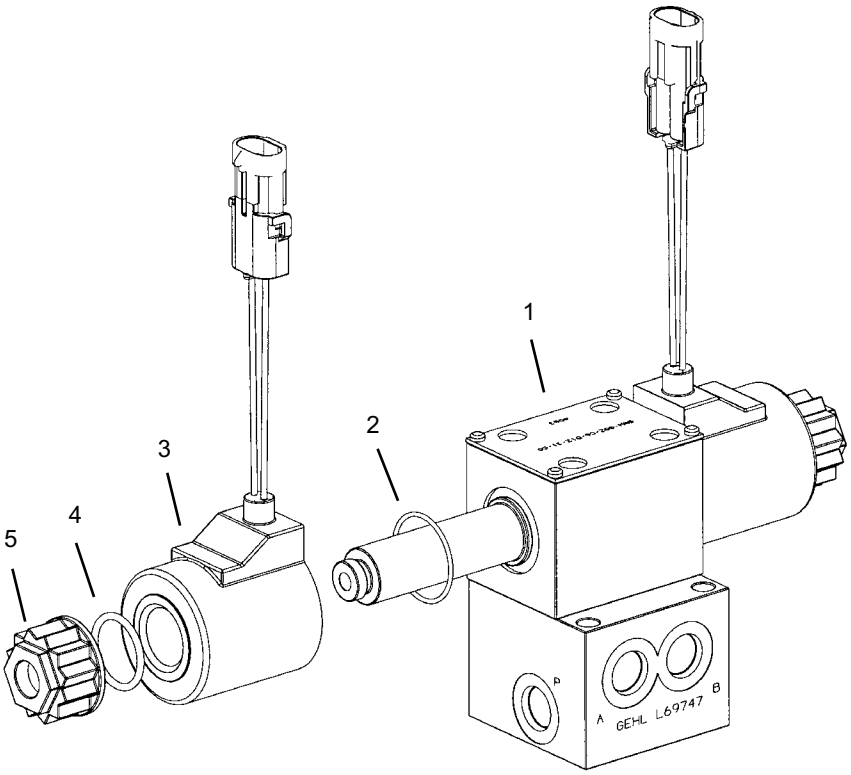

Ref. No.	Part No.	Description	Qty. Req.
01	808877	STEER SELECT VALVE . . . . . 1 *(Includes all items shown)*	
02	808398	ORING	2
03	808393	COIL 12VDC W/CONNECTOR . . . . 2 *(Includes item 5; nut)*	
04	808397	ORING	2
05	NSS	NUT . . . . . 2 *(Included with item 3)*	
		-- ITEMS NOT SHOWN --	
00	809594	WIRE HARNESS . . . . . 2 *(connects wire leads to frame wiring)*	

Steer Motor

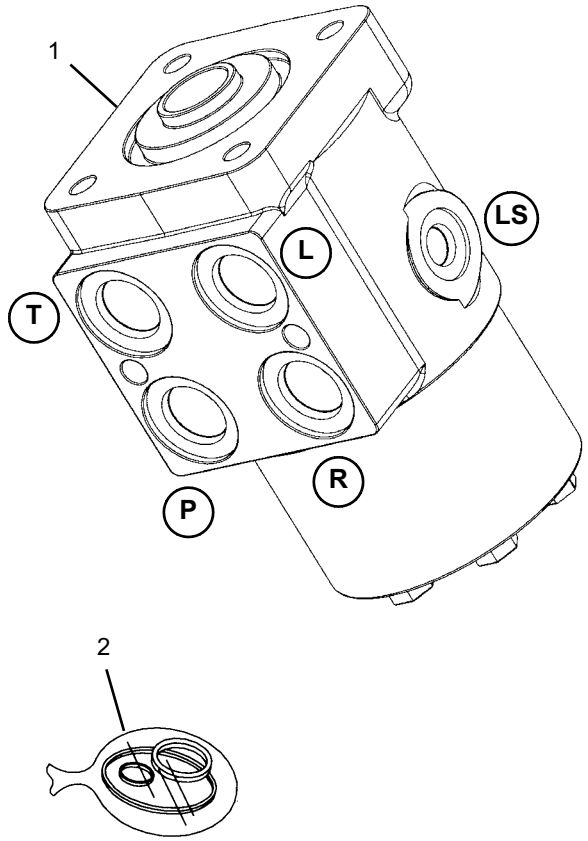

Ref. No.	Part No.	Description	Qty. Req.	Ref. No.	Part No.	Description	Qty. Req.
01	809292	STEERING CONTROL UNIT	1	02	809480	SEAL KIT . . . . . (*Items included are not shown*)	1

NOTE: Field service is limited to seals replacement.

Brake Valve

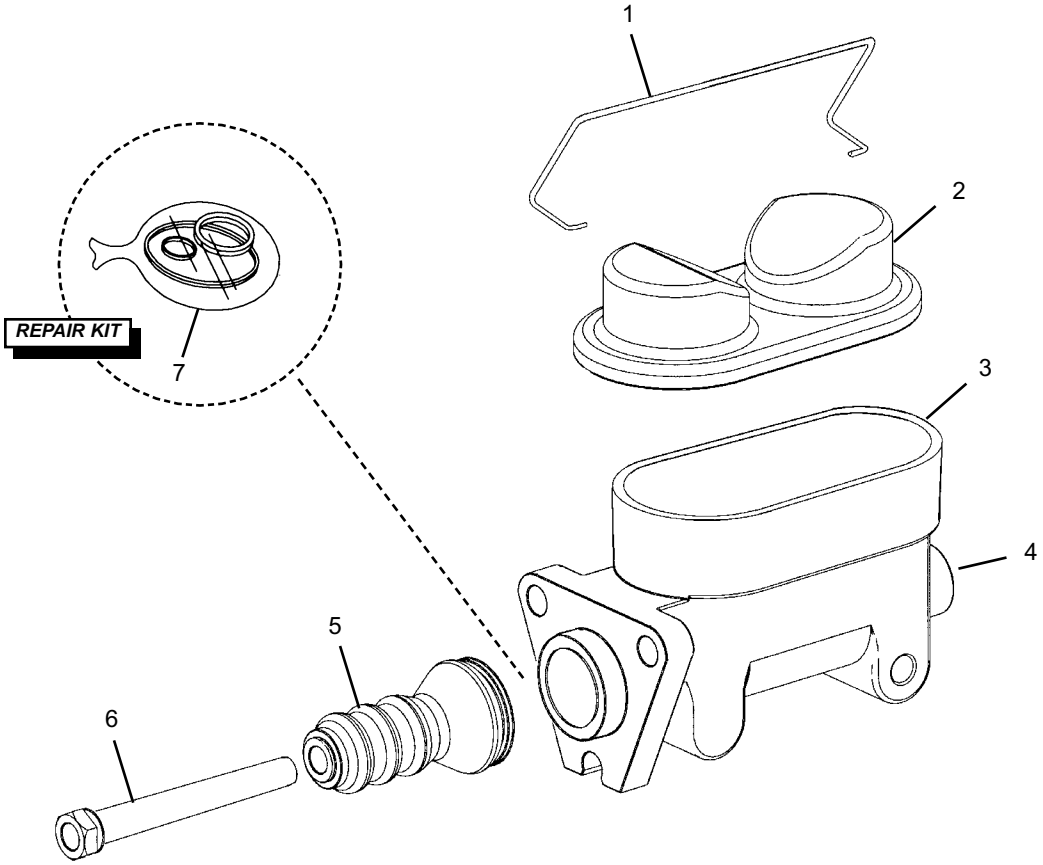

Ref. No.	Part No.	Description	Qty. Req.
00	808714	BRAKE VALVE ASY. (*Complete*). . . . *(Unit requires two brake valves)*	
01	809063	BAIL WIRE.	1
02	809638	COVER	1
	809064	DIAPHRAM GASKET	1
03	NSS	BODY	
04	NSS	TUBE SEAT (*not shown*).	1
05	809065	RUBBER BOOT	1
06	NSS	PUSH ROD	1
07[a]	809066	REPAIR KIT . . . . . (*Items included are not shown*)	1

a *Repair kit includes seals, cups, return spring, second arm piston, and snap ring. Piston is not included or sold seperately.*

Controller - Tilt / Frame Level

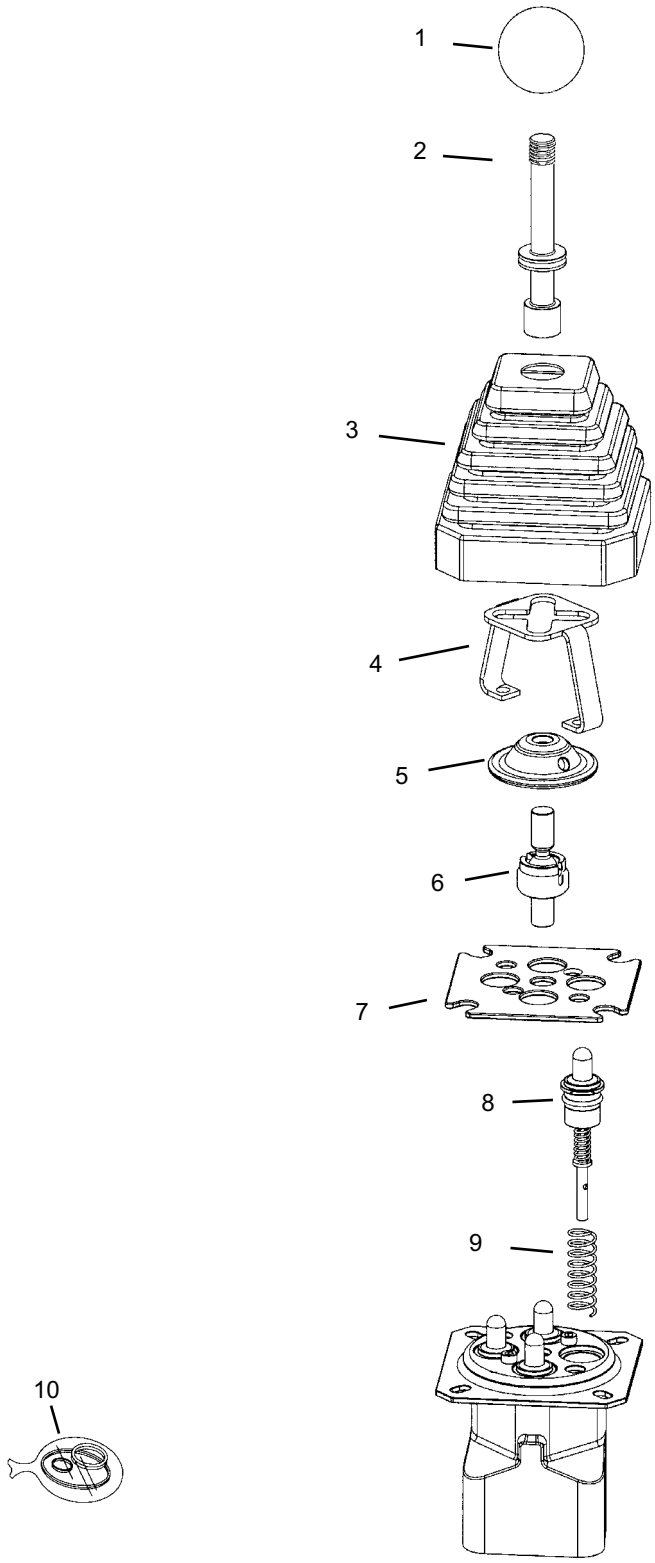

Controller - Tilt / Frame Level

Ref. No.	Part No.	Description	Qty. Req.
00	809343	HYD. CONTROLLER *(Complete)*	1
01	808406	KNOB	1
02	808399	LEVER ROD *(as shown)*	1
03	808400	BOOT	1
04	809311	LOCK GATE	1
05	808401	SELECTOR DISC	1
06	808402	PIVOT/ BALL JOINT	1
07	808403	PLATE / BOOT MOUNT	1
08	809375	METERING CURVE *(as shown)*	4
09	809376	RETURN SPRING	4
10[a]	808404	SEAL KIT	1

a *Items included in seal kit are not shown.*

Controller - Lift / Extend

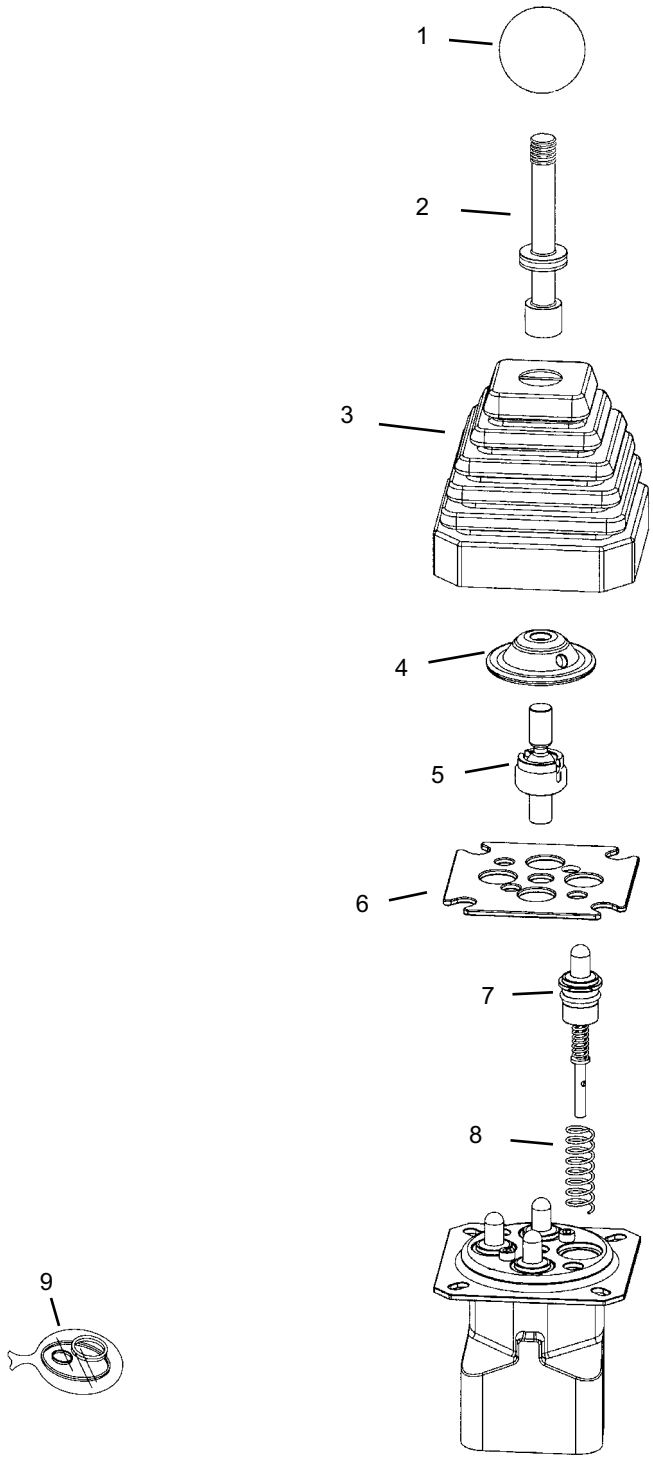

Controller - Lift / Extend

Ref. No.	Part No.	Description	Qty. Req.
00	809344	HYD. CONTROLLER *(Complete)*	1
01	808406	KNOB	1
02	808399	LEVER ROD *(as shown)*	1
03	808400	BOOT	1
04	808401	SELECTOR DISC	1
05	808402	PIVOT/ BALL JOINT	1
06	808403	PLATE /BOOT MOUNT	1
07	809375	METERING CURVE *(as shown)*	4
08	809376	RETURN SPRING	4
09[a]	808404	SEAL KIT	1

a *Items included in seal kit are not shown.*

Controller - Auxiliary Hydraulics (Option)

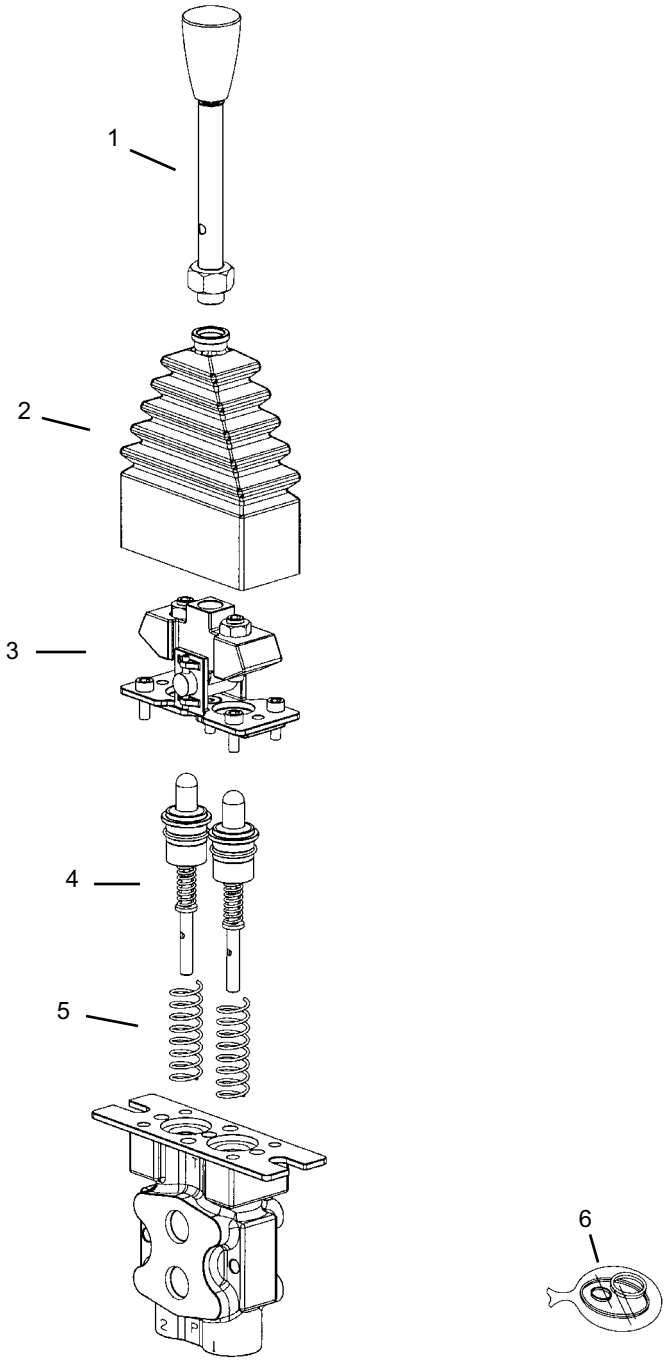

Controller - Auxiliary Hydraulics (Option)

Ref. No.	Part No.	Description	Qty. Req.
00	809344	COMPLETE VALVE ASY.	1
01	808384	LEVER ROD *(as shown)*	1
02	809326	BOOT *(included with item #3)*	1
03	808385	CONTROL KIT *(includes item #2 Boot)*	1
04	809375	METERING CURVE *(as shown)*	2
05	809376	RETURN SPRING	2
06[a]	808390	SEAL KIT	1

a *Items included in seal kit are not shown.*

Frame Level Cylinder

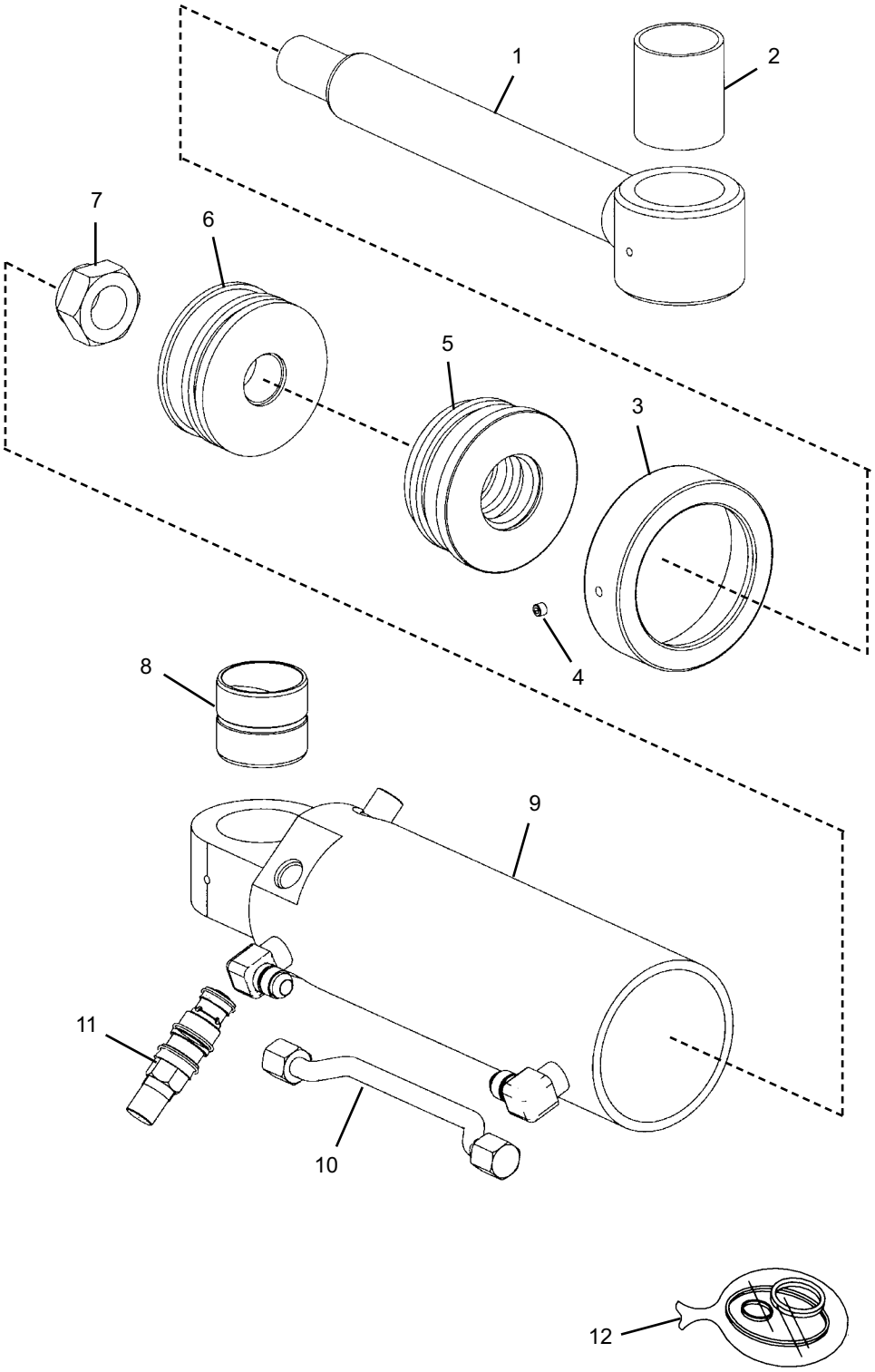

Frame Level Cylinder

Ref. No.	Part No.	Description	Qty. Req.
00	809513	FRAME LEVEL CYL. *(Complete)*	1
01	809059	ROD	1
02	808708	BUSHING	1
03	809067	HEAD GLAND CAP	1
04	809136	5/16”-18x1/4” SET SCREW	1
05	809061	HEAD GLAND	1
06	809068	PISTON	1
07	809128	1-1/4”-12 UNF LOCKNUT	1
08	808756	BUSHING 2.0X2.25X2.0”	1
09	NSS	TUBE WELDMENT	1
10	809062	OIL LINE TUBE ASSEMBLY	1
11	809618	COUNTER BALANCE VALVE	2
	808965	SEAL KIT (CBV)	1
12	809060	CYLINDER SEAL KIT	1
		(Items included are not shown)	

Lift Cylinder

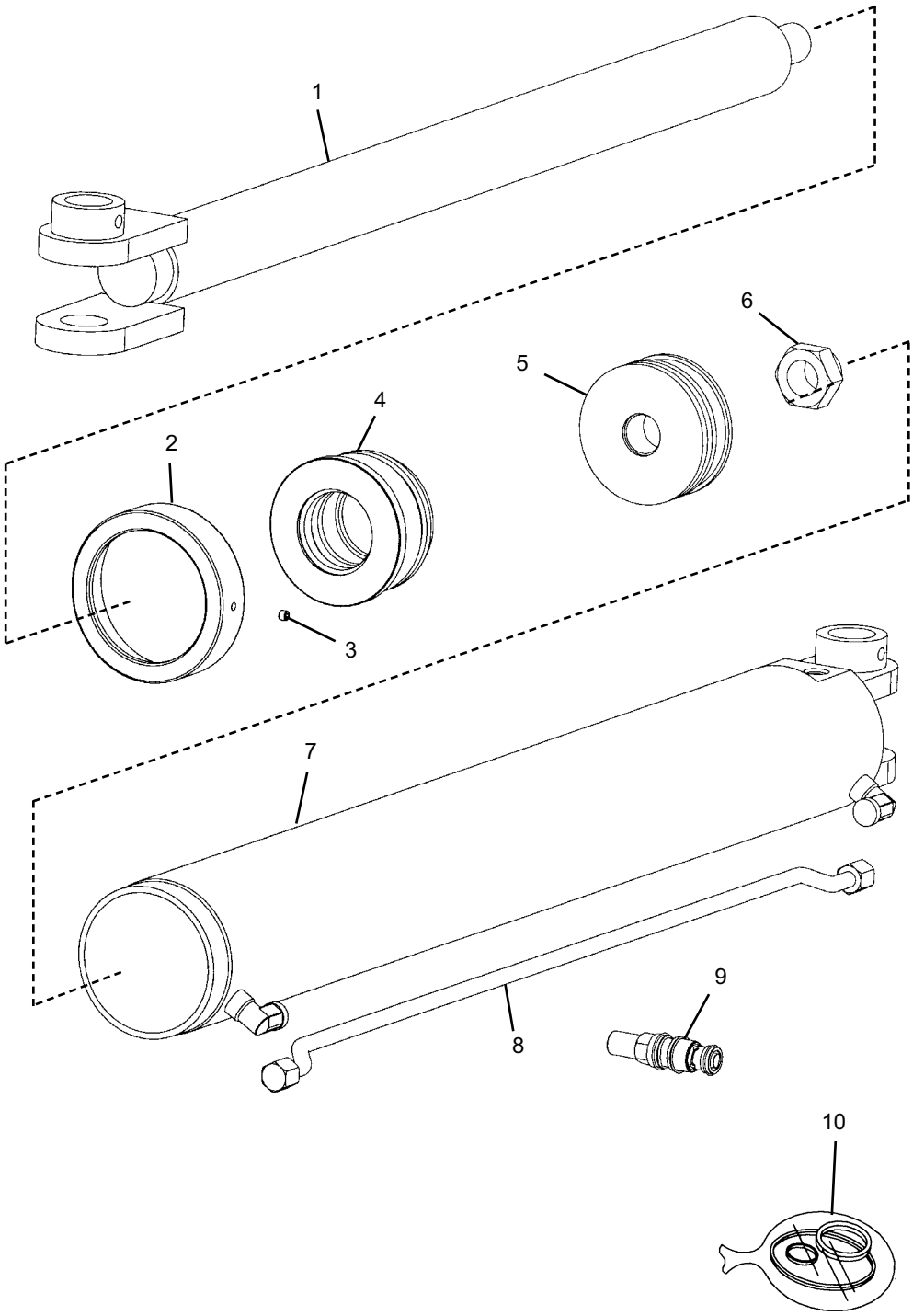

Lift Cylinder

Ref. No.	Part No.	Description	Qty. Req.
00	809526	LIFT CYLINDER *(Complete)*	2
		Note: Quantities shown are for one cylinder.	
01	809628	ROD WELDMENT	1
02	809630	HEAD GLAND CAP	1
03	809136	5/16”-18X1/4” SET SCREW	1
04	809632	HEAD GLAND	1
05	809633	PISTON	1
06	809128	1-1/4”-12 UNF LOCKNUT	1
07	NSS	TUBE WELDMENT	1
08	809629	OIL LINE TUBE ASSEMBLY *(includes nuts and ferrules)*	1
09	809549	COUNTER BALANCE VALVE	1
	808965	SEAL KIT (CBV)	1
10	809631	CYLINDER SEAL KIT *(Items included are not shown)*	1

Slave Cylinder

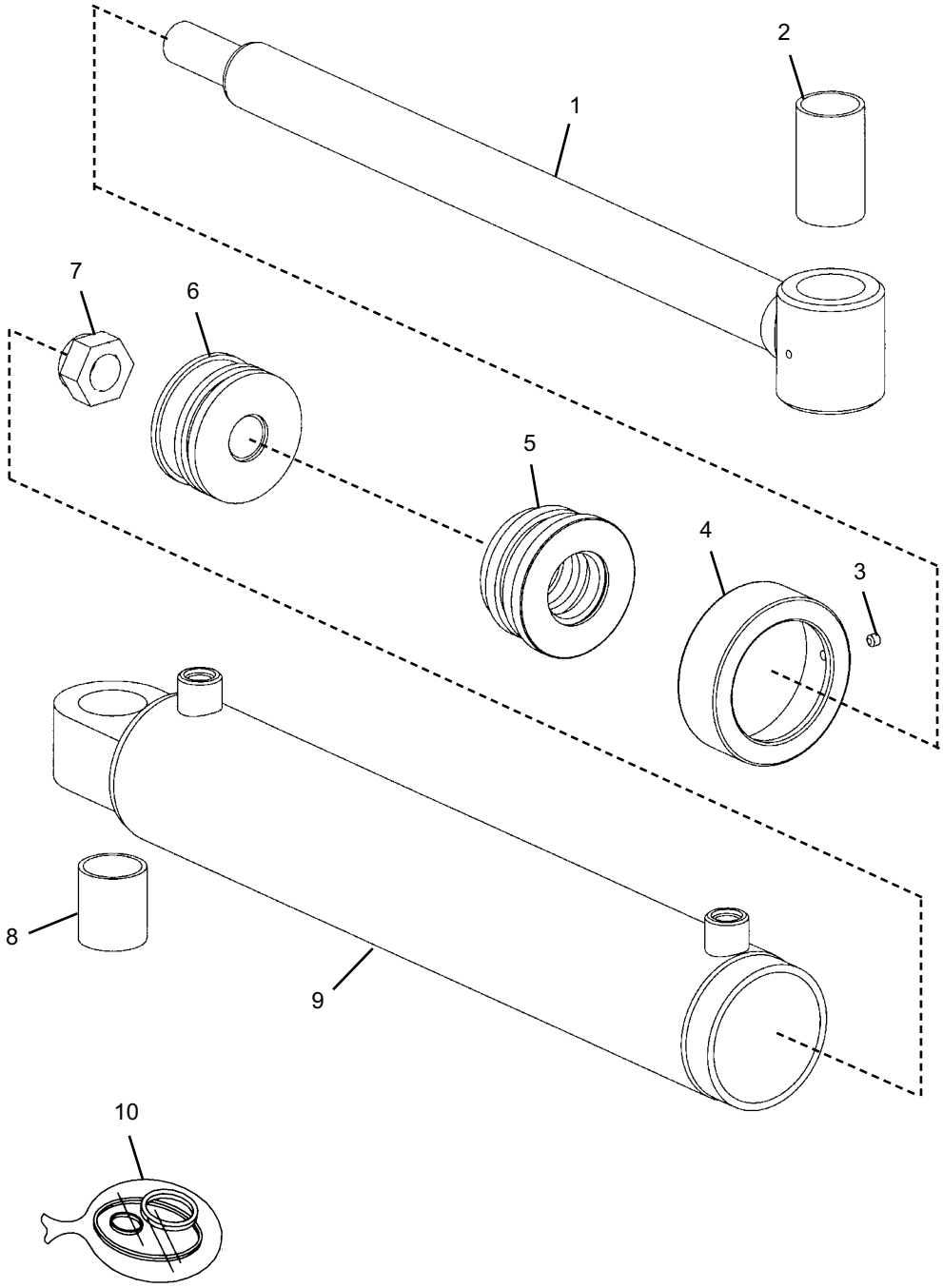

Slave Cylinder

Ref. No.	Part No.	Description	Qty. Req.
00	809512	SLAVE CYLINDER *(Complete)*	1
01	809634	ROD WELDMENT	1
02	808709	BUSHING	1
03	809136	5/16”-18X1/4” SET SCREW	1
04	809625	HEAD GLAND CAP	1
05	809636	HEAD GLAND	1
06	809637	PISTON	1
07	809466	1-1/8”-12 UN LOCKNUT	1
08	809514	BUSHING	1
09	NSS	TUBE WELDMENT	1
10	809635	CYLINDER SEAL KIT	1
		(Items included are not shown)	

Tilt Cylinder

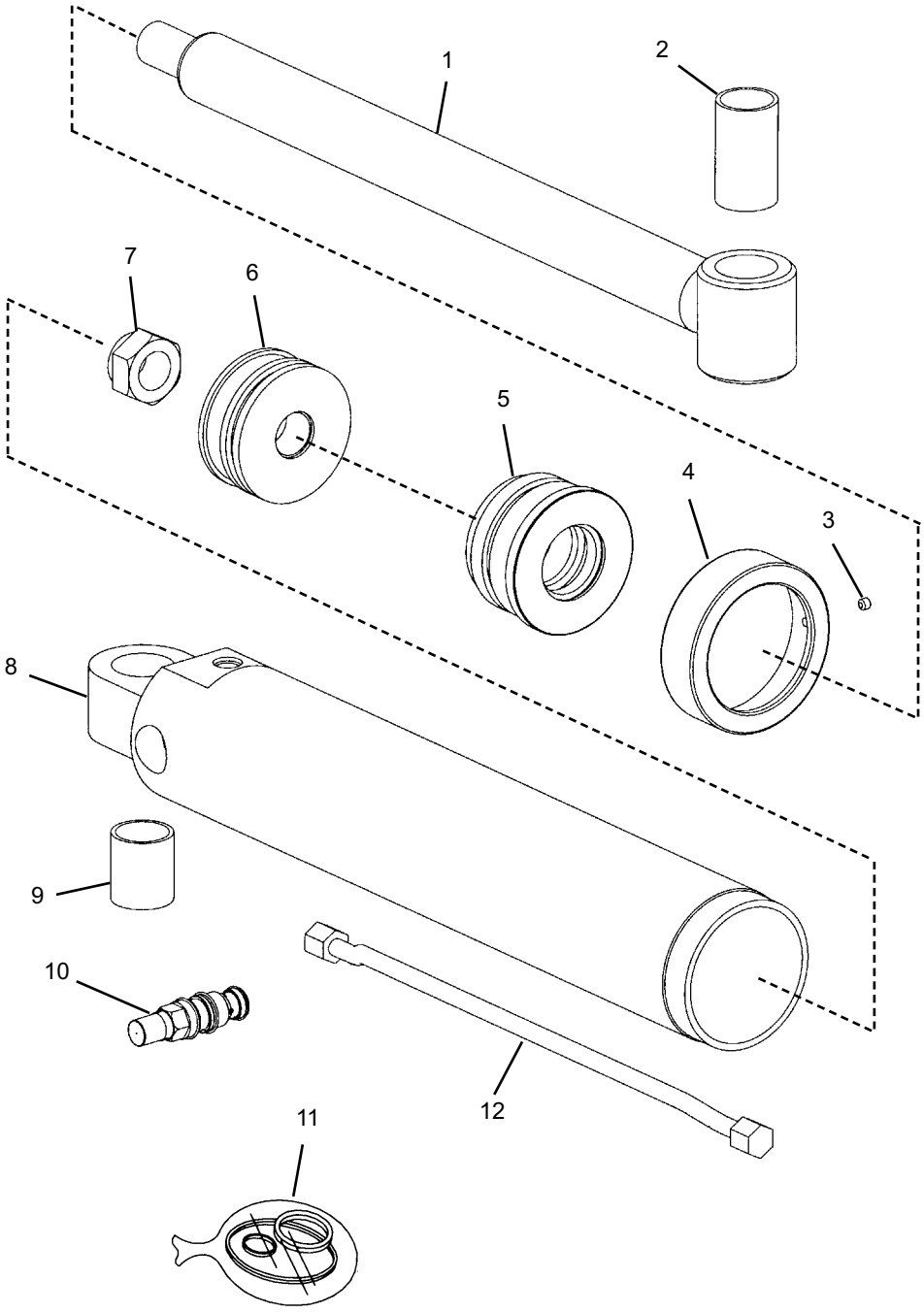

Tilt Cylinder

Ref. No.	Part No.	Description	Qty. Req.
00	809511	TILT CYLINDER *(Complete)*	1
01	809639	ROD WELDMENT	1
02	808709	BUSHING	1
03	809136	5/16”-18X1/4” SET SCREW	1
04	809067	HEAD GLAND CAP	1
05	809139	HEAD GLAND	1
06	809068	PISTON	1
07	809128	1-1/4”-12 UN LOCKNUT	1
08	NSS	TUBE WELDMENT	1
09	809514	BUSHING	1
10	809618	COUNTER BALANCE VALVE	1
	808965	SEAL KIT (CBV)	
11	809640	CYLINDER SEAL KIT	1
		(Items included are not shown)	
12	809641	HYDRAULIC LINE ASSY.	1

Boom Extend Cylinder

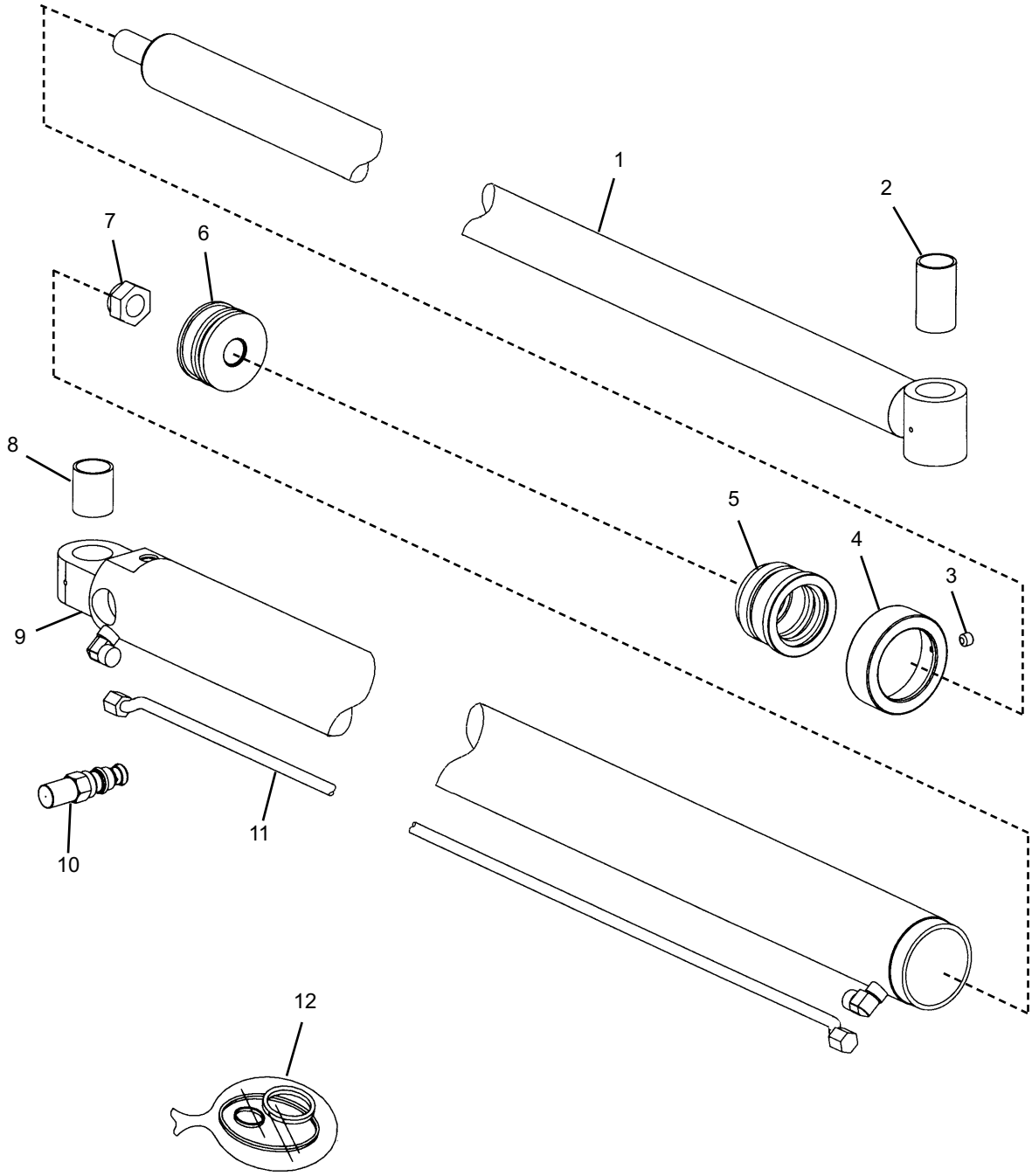

Boom Extend Cylinder

Ref. No.	Part No.	Description	Qty. Req.
00	809510	EXTEND CYLINDER *(Complete)*	1
01	809624	ROD WELDMENT	1
02	808709	BUSHING	1
03	809136	5/16”-18X1/4” SET SCREW	1
04	809625	HEAD GLAND CAP	1
05	809682	HEAD GLAND	1
06	809626	PISTON	1
07	809466	1-1/8”-12 UN LOCKNUT	1
08	809514	BUSHING	1
09	NSS	TUBE WELDMENT	1
10	808476	COUNTER BALANCE VALVE	1
	808955	SEAL KIT (CBV)	
11	809627	HYDRAULIC LINE ASSY.	1
12	809642	CYLINDER SEAL KIT	1
		(Items included are not shown)	

Fork Shift Cylinder

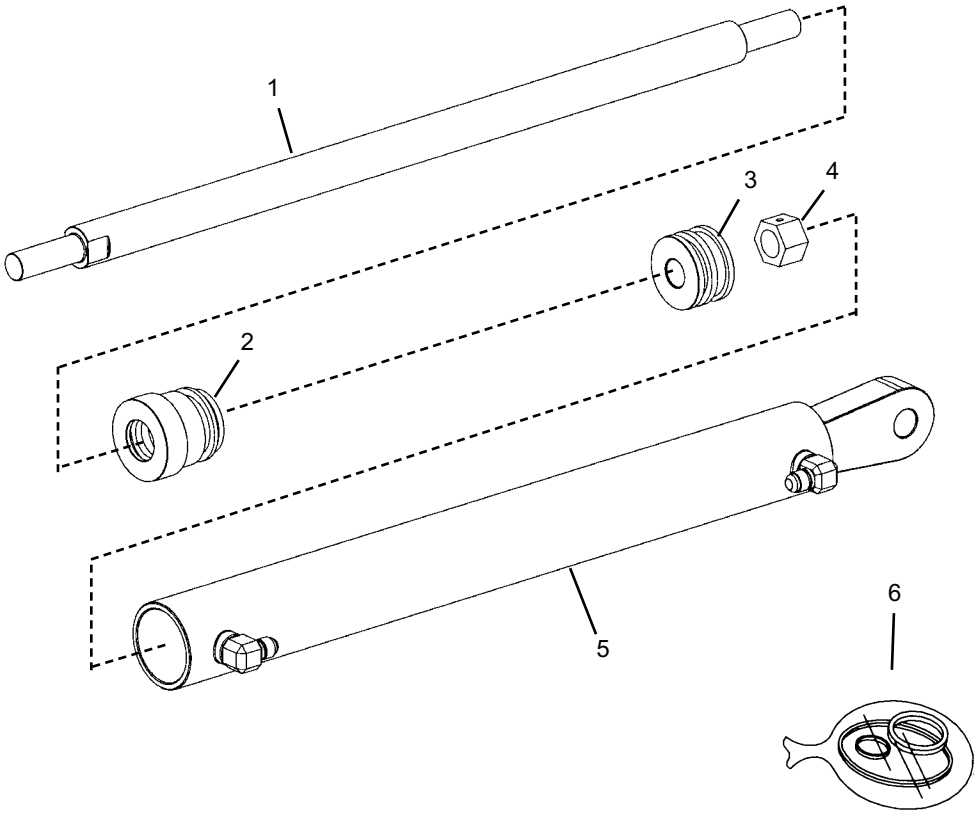

Ref. No.	Part No.	Description	Qty. Req.
00	808834	COMPLETE ASSEMBLY	
01	808581	ROD WELDMENT	1
02	808580	HEAD GLAND	1
03	808579	PISTON	1
04	809407	3/4”-16 UNF LOCKNUT	1
05	NSS	TUBE WELDMENT	1
06	808506	SEAL KIT	1
		(Items included are not shown)	

Rotate Carriage Cylinder

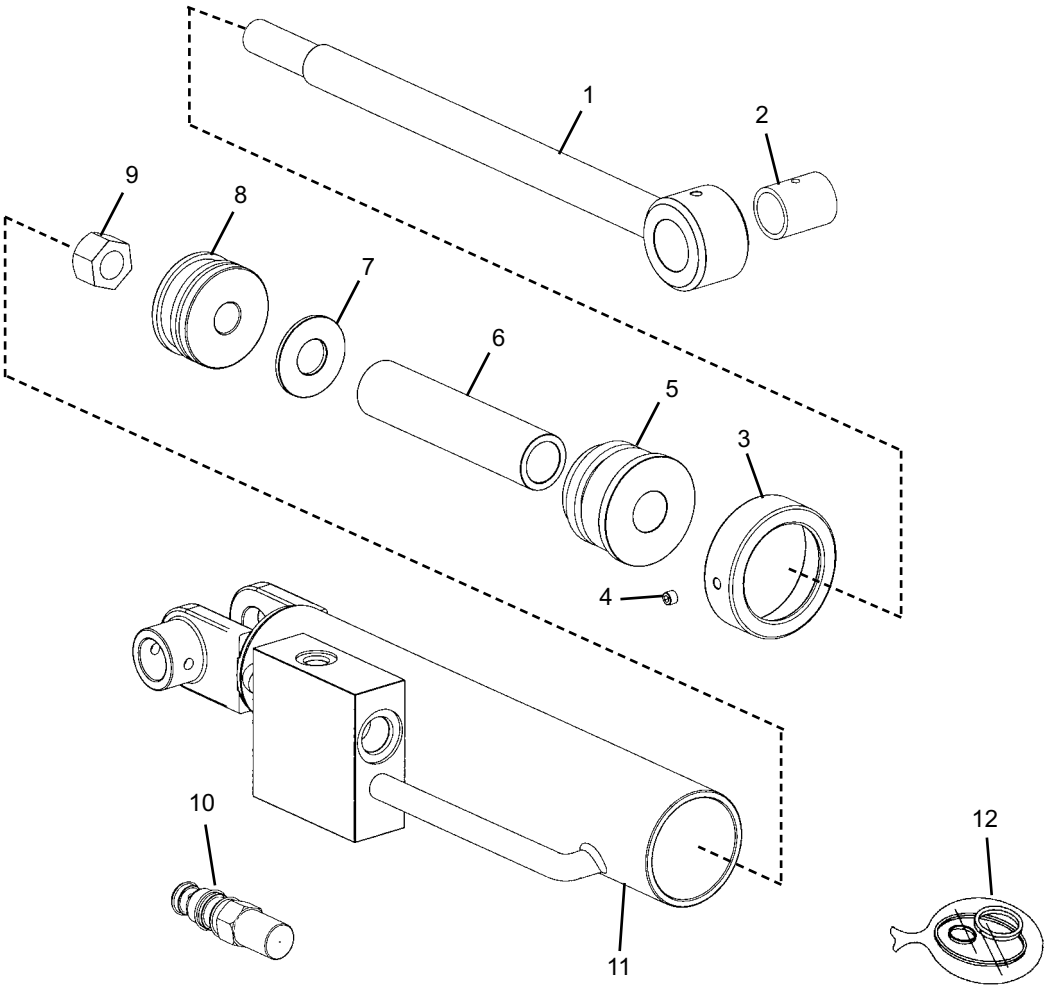

Ref. No.	Part No.	Description	Qty. Req.
00	809543	ROTATE CYLINDER *(Complete)*	1
01	809661	ROD WELDMENT	1
02	808720	BUSHING	1
03	809662	HEAD GLAND CAP	1
04	809136	5/16”-18X1/4” SET SCREW	1
05	809664	HEAD GLAND	1
06	809665	SPACER, ROD	1
07	809666	SUPPORT WASHER	1
06	809650	PISTON	1
09	809407	3/4”-16 UN LOCKNUT	1
10	809549	COUNTER BALANCE VALVE	1
	808965	SEAL KIT (CBV)	
11	NSS	TUBE WELDMENT	1
12	809663	CYLINDER SEAL KIT	1
		(Items included are not shown)	

Standard Carriage Attachment Group

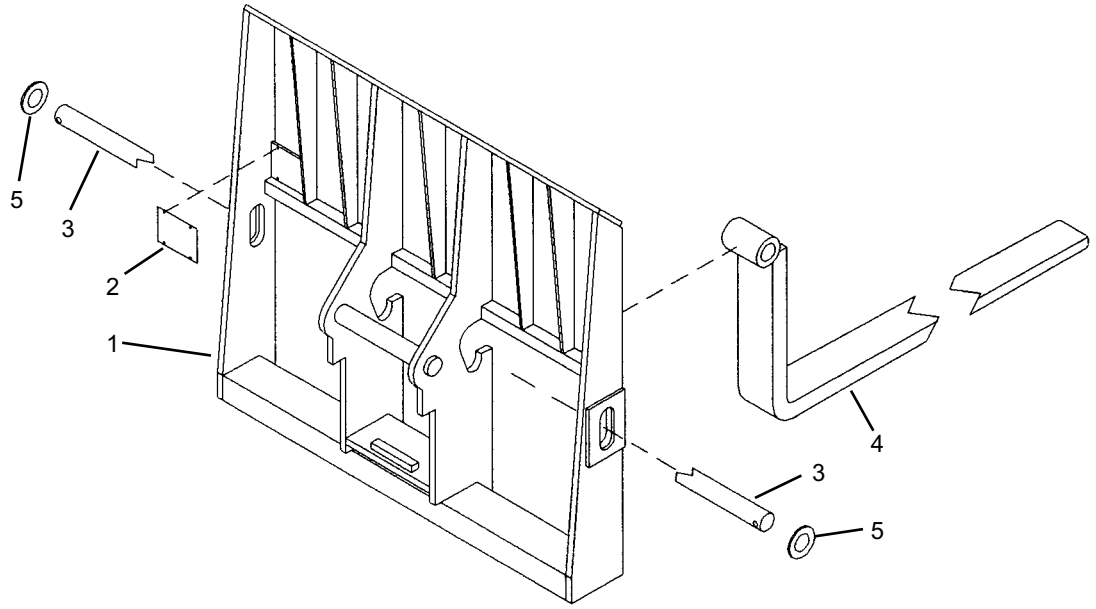

Standard Carriage Attachment Group

Ref. No.	Part No.	Description	Qty. Req.	Ref. No.	Part No.	Description	Qty. Req.
01	809667	STD. CARR. WELD. 48”	1				
	809668	STD. CARR. WELD. 66”	1				
02	NSS	CAPACITY PLATE	1				
03	809691	FORK SHAFT BAR 50-1/2 O.A.L.	1				
	809692	FORK SHAFT BAR 68-1/2 O.A.L.	1				
05	808431	RETAINER	2				
	808609	CAPSCREW 3/8-16X2-3/4	2				
	808663	NYLON INSERT NUT 3/8-16	2				

Fork Shift Carriage Attachment Group

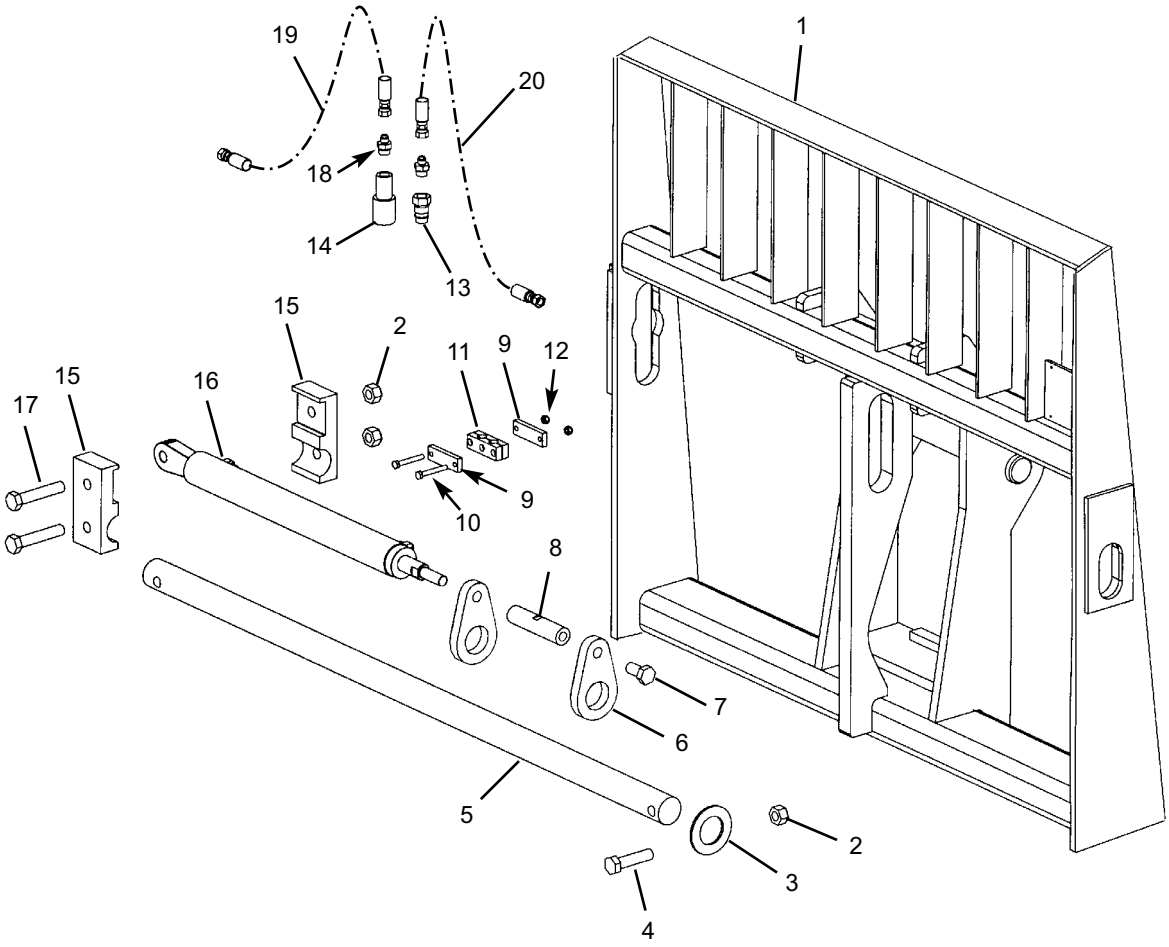

Fork Shift Carriage Attachment Group

Ref. No.	Part No.	Description	Qty. Req.
01	809405	FORK SHIFT CARRIAGE	1
02	808626	3/4”-10 NYLON INSERT NUT	3
03	808431	FORK SHAFT WASHER	1
04	808616	3/4”-10X3” BOLT	1
05	808822	FORK SHAFT, 50”	1
06	808824	FORK SLIDE PLATE	2
07	808646	3/4”-10X1-1/2” BOLT	1
08	*Note a*	FORK SLIDE COUPLER	1
09	808727	TWIN CUSHION TOP PLATE	2
10	809485	5/16”-18X2-1/4” BOLT	2
11	808728	TWIN HOSE CUSHION	1
12	808662	5/16”-18 NYLON INSERT NUT	2
13	*Note b*	COUPLER, MALE	1
14	*Note b*	COUPLER, FEMALE	1
15	809555	CYLINDER MOUNT	2
16	808834	FORK SHIFT CYLINDER	1
17	809487	3/4”-10X4” BOLT	2
18	808710	ADAP -8ORM -6JICM W/.06 ORF	2
19	809672	HOSE -6 A6/A6 59”	1
20	808826	HOSE -6 A6/A6 56”	1

a *For 4” wide forks use P/N 808823.*
For 5” wide forks use P/N 809276.

b *Sold as a set. Order part # 808796 Quick Couplers*

Rotate Carriage Attachment Group

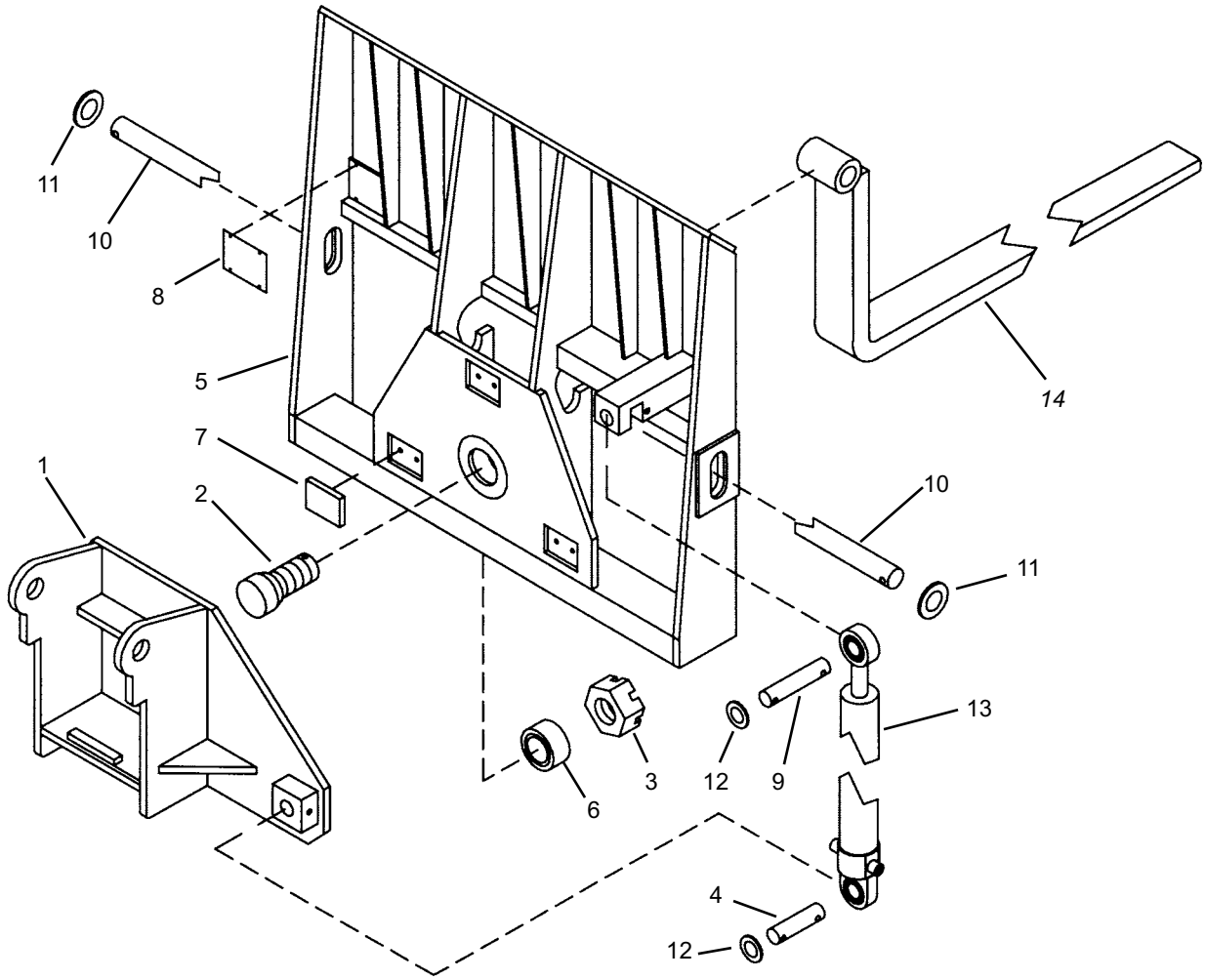

Rotate Carriage Attachment Group

Ref. No.	Part No.	Description	Qty. Req.
01	809545	ROTATE PLATE WELD *(Incl. 2)*	1
02	NSS	ROTATE PIN *(Welded To Item 1)*.	1
	808638	3/8”-16X4” BOLT	1
	808663	3/8”-16 NYLON INSERT NUT	1
03	809482	2”-12 CASTELLATED NUT	1
	808687	WASHER	1
04	809547	BUTT END PIVOT PIN	1
	808648	1/2”-13X4” BOLT	1
	808665	1/2”-13 NYLON INSERT NUT	1
	808609	3/8”-16X2-3/4” BOLT	1
	808663	3/8”-16 NYLON INSERT NUT	1
05	809670	ROT. CARR. WELD. 48” *(Incl.6,7)*.	1
	809669	ROT. CARR. WELD. 66” *(Incl.6,7)*.	1
06	808756	BUSHING	1
07	809502	SLIDE PAD 3”X4”	3
	808668	3/8”-16X1-1/4” BOLT”	6
08	NSS	CAPACITY PLATE	0
09	809548	ROD END PIVOT PIN	1
	809693	1/2”-13X3-1/2” BOLT	1
	808665	1/2”-13 NYLON INSERT NUT	1
	808609	3/8”-16X2-3/4” BOLT	1
	808663	3/8”-16 NYLON INSERT NUT	1
10	809691	FORK SHAFT BAR 50-1/2” LG.	1
	809692	FORK SHAFT BAR 68-1/2’ LG.	1
	808609	3/8”-16X2-3/4” BOLT	2
	808663	3/8”-16 NYLON INSERT NUT	2
11	808431	RETAINER	2
12	808688	SPACER	2
13	809543	ROTATE CYLINDER	1
		(Hoses and fittings are listed in the “Items Not Shown” section below.)	
		-- ITEMS NOT SHOWN --	
00	808660	ADAP, -6ORM -6JICM 90DEG	2
00	809535	HOSE, -6 A8/A6 20”	2
00	808710	ADAP, -8ORM -6JICM STR. *(with orifice)*	2
00	808796	QUICK COUPLER SET	1

Boom Attachment Group

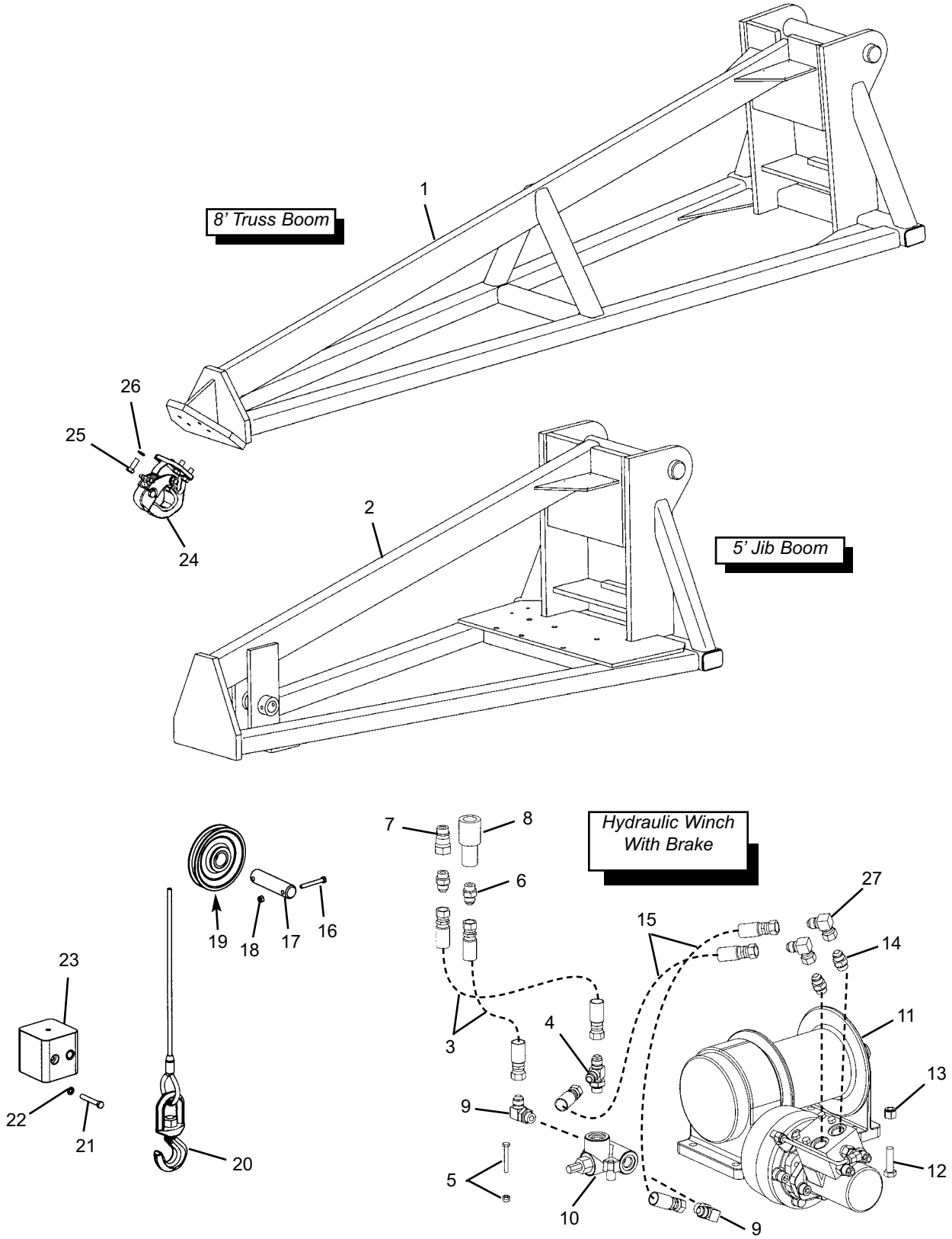

Boom Attachment Group

Ref. No.	Part No.	Description	Qty. Req.
01	809671	8' TRUSS BOOM WELDMENT	1
02	809404	5' JIB BOOM WELDMENT	1
03	808750	HOSE -8 A8/A8 53"	2
04	808769	ADAP -8ORM -8JICM RUN TEE	1
05	808644	1/4-20"X2" BOLT	2
	808661	1/4"-20 NYLON INSERT NUT	2
06	808445	ADAP -8ORM -8JICM STR	2
07[a]	NSS	COUPLER, MALE	1
08[a]	NSS	COUPLER, FEMALE	1
09	808454	ADAP -8ORM -8JICM 90 DEG	2
10	808951	RELIEF VALVE	1
11[b]	808081	HYDRAULIC WINCH	1
12	808612	1/2"-13X1-3/4" GR 8 BOLT	6
13	808665	1/2-13 NYLON INSERT NUT	6
14	808448	ADAP -10ORM -8JICM	2
15	808430	HOSE -6 A8/A8 18.5"	2
16	808639	5/16"X2-1/2" BOLT	2
17	808077	PIN, TRUSS WINCH	1
18	808662	5/16"-18 NYLON INSERT NUT	2
19	808797	WINCH SHEAVE	1
20[c]	808825	3/8"X60' WINCH CABLE *(Includes hook and swivel)*	1
21	808618	3/8"X2-1/2" BOLT	2
22	808593	3/8" LOCK WASHER	2
23	808677	WINCH BALL	1
24	809498	PINTLE HOOK	1
25	808619	1/2"-20X1-1/4" GR 8 BOLT	4
26	808596	1/2" LOCK WASHER	4
27[d]	808459	ADAP -8JICFS -8JICM 90	2
		-- ITEMS NOT SHOWN --	
00	809406	AUGER, ADAPTER PLATE	1

a *Sold as a set. Order part # 808796 Quick Couplers*

b *Used with 5' truss booms after attachment serial number 11182. The winch on 5' truss booms before attachment serial number 11183 have been discontinued, you must purchase a boom and a winch.*

c *Used with 5' truss booms with winch.*

d *Not used on some attachments.*

Bucket Attachment Group

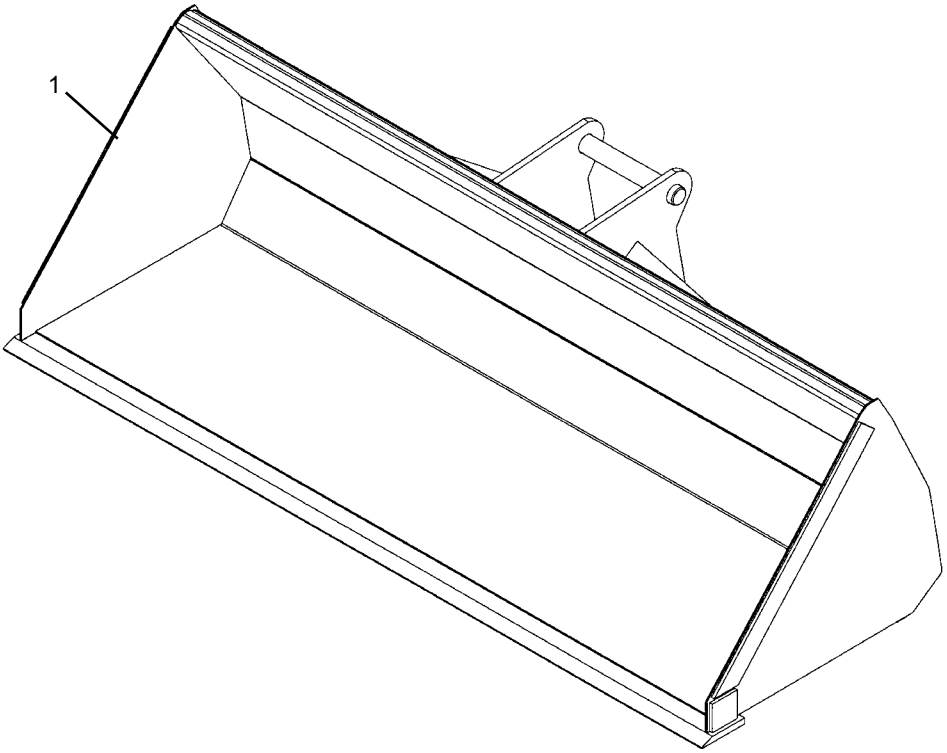

Ref. No.	Part No.	Description	Qty. Req.	Ref. No.	Part No.	Description	Qty. Req.
01	809409	1.3 CU. YD. BUCKET WELDMNT	1				
	808854	CUTTING EDGE 98” *(weld on)*	1				

Notes

Numerical Index

Part No.	Page No.	Ref. No.
808000	5	4
808002	5	5
808003	5	6
808004	5	8
808004	55	4
808004	65	2
808005	5	3
808005	35	3
808006	35	22
808026	10	2
808027	10	1
808028	10	12
808029	10	13
808030	10	6
808031	7	7
808031	9	14
808032	9	13
808033	7	2
808033	9	2
808034	9	3
808035	7	5
808035	9	11
808036	7	1
808036	9	1
808038	7	8
808038	103	0
808039	11	1
808040	11	2
808041	11	3
808042	11	5
808043	6	0
808045	11	6
808046	9	5
808047	9	7
808048	9	8
808049	9	9
808050	9	9
808051	9	9
808052	9	9
808053	9	9
808054	9	10
808055	9	12
808057	7	4
808058	7	9
808059	10	4
808060	10	5
808061	10	8
808062	10	9
808064	10	10
808065	10	11
808066	5	1
808066	51	4
808067	5	2
808067	51	5
808068	5	0
808069	23	15
808073	23	19
808074	23	19
808076	111	8
808077	167	17
808078	43	10
808079	29	1
808081	167	11
808083	23	4
808084	31	25
808086	21	22
808089	17	20
808092	33	5
808093	17	17
808094	21	19
808095	15	13
808096	15	15
808097	21	20
808098	47	0
808099	27	0
808100	35	1
808103	47	6
808104	39	3
808106	49	2
808126	105	15
808126	111	17
808126	117	7
808126	119	13
808126	121	9
808126	123	13
808126	135	1
808127	45	2
808127	121	10
808127	123	14
808127	138	0
808131	44	1
808144	55	7
808145	21	13
808154	31	8
808155	31	5
808156	31	15
808166	43	0
808167	84	3
808168	84	4
808169	84	7
808169	89	8
808170	84	8
808170	89	9
808177	89	21
808180	81	7
808180	89	20
808188	89	18
808192	89	37
808204	89	4
808205	89	6
808207	86	1
808208	86	2
808209	86	3
808210	86	4
808211	86	5
808212	86	6
808213	86	7
808214	86	9
808215	86	10
808216	86	11
808217	86	12
808218	86	13
808222	86	19
808223	86	20
808224	86	21
808225	86	24
808226	86	24
808227	86	24
808228	86	25
808229	86	26
808231	13	0
808231	23	20
808232	43	0
808233	45	0
808234	27	0
808235	55	22
808238	21	3
808239	21	4
808245	13	24
808246	21	2
808252	19	3
808253	19	10
808255	15	20
808257	13	18
808258	13	17
808259	33	3
808261	13	20
808262	27	5
808264	31	4
808275	105	12
808276	109	1
808276	111	21
808279	109	2
808279	111	12
808298	37	15
808298	47	0
808299	109	10
808299	109	12
808300	91	22
808301	31	26
808303	21	1
808306	13	9
808307	13	13
808308	13	25
808308	23	17
808309	33	7
808310	21	21
808313	89	22
808317	21	12
808318	25	1
808319	17	11
808320	17	9
808321	17	0
808322	47	0
808323	21	15
808324	25	3
808325	25	4
808327	21	20
808328	59	10
808329	77	1
808330	77	2
808331	77	3
808331	77	8
808332	77	4
808333	77	5
808333	77	9
808334	77	6
808335	77	7
808336	77	10
808337	77	11
808338	77	12
808340	35	2
808341	43	4
808347	17	0
808348	21	0
808349	135	2
808351	25	1
808352	25	5
808384	147	1
808385	147	3
808390	147	6
808393	139	3
808394	23	23
808394	23	27
808394	23	28
808395	23	29
808395	23	30
808395	23	31
808395	23	32
808396	43	0
808397	139	4
808398	139	2
808399	143	2
808399	145	2
808400	143	3
808400	145	3
808401	143	5
808401	145	4
808402	143	6
808402	145	5
808403	143	7
808403	145	6
808404	143	10
808404	145	9
808406	143	1
808406	145	1
808411	25	6
808412	25	9

Part No.	Page No.	Ref. No.
808418	81	15
808419	21	5
808420	15	2
808420	19	7
808421	15	3
808422	15	6
808422	19	6
808422	21	6
808424	31	10
808427	51	17
808428	53	3
808430	167	15
808431	161	5
808431	163	3
808431	165	11
808433	49	16
808434	47	2
808435	27	1
808436	27	2
808437	39	6
808437	41	2
808438	23	18
808439	37	5
808441	113	1
808441	129	4
808441	131	16
808441	133	4
808442	55	24
808442	113	13
808443	35	30
808443	105	14
808443	107	9
808443	115	4
808443	117	3
808443	119	3
808443	121	3
808443	123	3
808445	107	17
808445	133	19
808445	167	6
808446	109	9
808447	55	3
808448	113	7
808448	127	7
808448	129	8
808448	133	6
808448	167	14
808449	113	28
808449	131	15
808452	55	1
808453	49	6
808454	127	12
808454	129	11
808454	167	9
808455	113	26
808455	119	6
808455	123	6
808456	107	6
808457	37	13
808457	111	20
808459	111	9
808459	167	27
808461	49	7
808461	55	14
808462	35	21
808462	37	12
808464	119	4
808464	121	4
808464	123	4
808465	47	18
808466	31	11
808468	49	13
808474	31	7
808476	157	10
808479	17	2
808480	17	18
808481	15	16
808482	13	7
808483	13	8
808483	15	5
808483	19	4
808483	21	8
808484	13	6
808485	15	8
808486	15	14
808487	15	18
808488	15	17
808489	21	16
808490	15	1
808490	19	2
808490	21	9
808491	15	4
808491	19	5
808491	21	7
808493	13	4
808494	17	8
808495	15	7
808496	25	8
808500	23	0
808503	71	3
808503	73	3
808504	75	1
808505	43	7
808506	158	6
808508	63	7
808508	71	23
808509	71	22
808509	71	24
808510	63	16
808511	71	1
808512	71	2
808513	71	19
808514	71	20
808515	84	2
808515	85	2
808516	84	5
808516	85	5
808517	91	1
808517	95	1
808518	91	2
808518	95	2
808519	91	2
808519	95	2
808520	91	2
808520	95	2
808521	91	2
808521	95	2
808521	91	3
808521	95	3
808522	91	5
808522	95	5
808523	91	6
808523	95	6
808524	91	7
808524	95	7
808525	91	8
808525	95	8
808526	91	9
808526	95	9
808527	91	10
808527	95	10
808528	95	11
808529	91	12
808529	95	12
808530	91	13
808530	95	13
808531	91	14
808531	95	14
808532	91	15
808532	95	15
808533	91	17
808533	95	17
808534	91	17
808534	95	17
808535	91	18
808535	95	18
808536	63	8
808536	91	23
808536	95	23
808537	91	24
808537	95	24
808538	89	1
808538	93	1
808539	89	5
808540	89	10
808540	93	5
808541	89	14
808541	93	6
808542	89	15
808542	93	9
808543	81	19
808543	86	23
808543	87	12
808543	89	23
808543	93	15
808545	13	5
808546	89	48
808546	93	39
808547	89	51
808547	93	41
808548	89	50
808548	93	42
808549	86	14
808549	87	1
808550	86	15
808550	87	10
808551	82	2
808551	83	2
808552	81	20
808553	81	16
808554	81	17
808555	51	11
808558	43	9
808559	39	8
808559	81	5
808559	97	40
808560	17	19
808561	17	4
808562	17	3
808563	17	15
808564	17	12
808565	17	6
808566	17	11
808568	17	13
808569	17	10
808570	17	5
808571	17	14
808572	17	16
808573	17	1
808574	17	7
808576	43	0
808577	43	0
808579	158	3
808580	158	2
808581	158	1
808583	81	13
808583	125	16
808586	27	4
808590	49	4
808590	97	4
808592	43	2
808592	53	5
808592	97	39
808593	97	27
808593	99	20
808593	99	23
808593	101	8
808593	167	22

Part No.	Page No.	Ref. No.
808595	31	6
808595	49	14
808596	97	9
808596	167	26
808599	81	9
808600	25	7
808602	49	5
808602	99	3
808603	49	10
808604	51	12
808606	97	25
808606	99	19
808606	101	7
808607	81	2
808608	97	32
808608	99	22
808609	99	12
808609	127	4
808609	129	13
808609	131	5
808611	125	3
808612	167	12
808613	47	9
808615	47	10
808615	55	16
808616	163	4
808617	53	6
808617	81	6
808617	97	26
808617	99	15
808618	167	21
808619	97	8
808619	167	25
808621	97	30
808621	97	41
808621	125	8
808623	55	11
808626	163	2
808630	31	12
808632	31	9
808633	103	12
808634	81	10
808634	125	14
808636	55	6
808639	167	16
808643	53	13
808646	163	7
808650	55	8
808655	51	14
808656	109	13
808656	111	22
808659	51	8
808660	165	0
808662	97	17
808662	99	5
808662	113	11
808662	129	22
808662	131	10
808662	133	9
808662	163	12
808662	167	18
808663	43	3
808663	53	2
808663	99	6
808663	99	13
808663	101	26
808663	125	5
808663	127	5
808663	129	12
808663	131	3
808664	47	13
808664	55	19
808665	49	15
808665	167	13
808667	13	10
808668	27	8
808668	99	7
808668	101	27
808670	39	10
808671	41	8
808671	41	12
808671	49	11
808672	13	0
808674	31	0
808675	31	13
808676	47	23
808677	167	23
808678	53	9
808679	111	2
808679	119	5
808679	123	5
808681	109	0
808684	53	14
808688	165	12
808696	97	24
808696	99	16
808696	101	11
808700	99	28
808701	97	29
808701	99	18
808702	99	17
808702	101	10
808703	109	5
808704	135	7
808705	31	23
808706	39	3
808707	23	0
808707	39	2
808708	125	11
808708	149	2
808709	103	7
808709	129	15
808709	131	18
808709	153	2
808709	155	2
808709	157	2
808710	163	18
808710	165	0
808711	31	1
808712	125	4
808713	35	25
808713	105	2
808714	31	21
808714	109	7
808714	141	0
808715	105	19
808715	121	12
808715	123	15
808716	107	12
808716	111	16
808717	31	0
808717	47	0
808719	109	8
808720	159	2
808721	23	16
808722	31	22
808723	13	26
808724	23	1
808725	109	3
808725	109	6
808726	49	21
808727	101	25
808727	129	24
808727	133	11
808727	163	9
808728	101	24
808728	133	18
808728	163	11
808731	35	10
808732	37	2
808733	13	0
808733	33	0
808734	13	27
808735	43	0
808736	35	11
808744	47	11
808744	55	21
808747	97	31
808749	47	12
808749	55	20
808750	167	3
808756	125	2
808756	149	8
808756	165	6
808758	47	4
808763	107	16
808765	53	15
808769	105	9
808769	167	4
808771	31	0
808771	47	22
808772	31	0
808772	47	21
808777	53	4
808778	53	10
808781	51	9
808786	103	13
808787	103	14
808788	35	16
808789	35	17
808796	133	20
808796	165	0
808797	167	19
808798	47	0
808799	97	6
808800	97	3
808802	13	22
808804	111	1
808805	109	0
808806	49	23
808809	23	2
808811	103	9
808813	47	20
808815	49	22
808817	101	14
808818	101	13
808819	101	12
808822	163	5
808823	163	0
808824	163	6
808825	167	20
808826	163	20
808828	55	5
808832	129	25
808832	133	12
808833	27	7
808834	158	0
808834	163	16
808835	29	12
808838	49	25
808839	53	8
808841	49	20
808842	55	1
808843	47	16
808844	47	15
808845	47	17
808848	31	24
808849	27	6
808851	113	17
808851	127	8
808852	115	6
808852	115	7
808853	119	7
808853	119	9
808853	123	7
808853	123	9
808854	168	1
808855	125	9

Part No.	Page No.	Ref. No.
808856	125	10
808861	47	5
808862	13	23
808872	47	14
808876	81	12
808876	93	37
808877	107	5
808877	111	18
808877	139	1
808882	117	4
808882	117	5
808882	119	8
808882	119	10
808882	121	7
808882	123	10
808884	111	4
808884	111	7
808884	111	13
808885	107	10
808885	107	11
808885	111	14
808885	111	15
808889	43	1
808890	97	38
808891	21	0
808892	23	21
808892	23	22
808896	39	9
808897	43	6
808898	29	7
808899	29	6
808901	43	0
808902	97	2
808905	109	11
808905	111	19
808906	97	0
808913	47	0
808914	29	2
808919	43	8
808921	23	6
808922	23	3
808923	23	13
808923	23	14
808924	23	9
808925	23	12
808925	47	0
808926	23	7
808927	23	8
808928	23	5
808935	45	1
808936	43	10
808938	23	10
808938	45	0
808939	45	3
808940	44	3
808941	44	2
808942	44	0
808943	44	5
808944	44	4
808945	45	5
808946	45	4
808947	49	19
808948	49	1
808951	167	10
808953	59	2
808954	75	5
808955	157	10
808956	61	10
808957	61	11
808965	149	11
808965	151	9
808965	155	10
808965	159	10
808966	59	9
808967	59	22
808968	59	8
808969	61	9
808970	61	13
808971	61	7
808972	61	16
808973	61	3
808974	61	15
808975	61	12
808976	61	6
808977	61	4
808978	61	5
808979	61	1
808980	61	2
808981	61	14
808982	64	5
808983	64	7
808984	65	10
808985	65	8
808986	65	9
808987	59	15
808988	59	14
808989	65	12
808990	65	1
808991	65	6
808992	59	13
808993	67	2
808994	67	1
808995	67	4
808996	67	3
808997	67	5
808998	67	8
808999	69	17
808999	73	16
809000	69	16
809000	73	15
809001	69	9
809001	71	14
809001	73	9
809002	69	8
809002	71	13
809002	73	8
809003	69	15
809003	71	12
809003	73	21
809003	73	23
809004	69	14
809004	71	11
809004	73	20
809004	73	22
809005	69	13
809005	71	18
809005	73	14
809006	69	12
809006	71	17
809006	73	13
809007	69	10
809007	71	15
809007	73	10
809008	69	6
809008	71	9
809008	73	6
809009	69	7
809009	71	10
809009	73	7
809010	69	1
809011	69	18
809012	69	4
809012	71	7
809012	73	4
809013	69	2
809014	63	2
809014	63	5
809014	63	10
809014	63	12
809014	69	19
809014	73	24
809015	63	3
809015	63	6
809015	69	20
809016	71	6
809016	73	19
809017	71	5
809018	73	17
809019	75	6
809020	75	7
809021	75	4
809022	73	18
809023	73	1
809024	73	2
809025	63	11
809025	73	26
809026	63	13
809026	73	27
809027	75	9
809028	75	8
809029	75	3
809030	75	2
809031	63	14
809032	79	1
809033	79	2
809034	79	8
809035	79	3
809036	79	4
809037	79	6
809038	79	11
809039	79	13
809040	79	12
809041	79	9
809042	79	5
809043	79	7
809044	78	3
809045	78	6
809046	81	18
809046	89	24
809046	93	16
809047	86	8
809048	89	13
809048	93	7
809049	89	11
809049	93	7
809050	84	9
809050	89	12
809050	93	47
809051	91	4
809051	95	4
809052	95	21
809053	91	20
809053	95	20
809054	91	19
809054	95	19
809055	91	17
809055	95	17
809056	91	17
809056	95	17
809057	84	1
809057	85	1
809057	89	39
809057	93	31
809058	86	22
809058	87	11
809059	149	1
809060	149	12
809061	149	5
809062	149	10
809063	141	1
809064	141	2
809065	141	5
809066	141	7
809067	149	3
809067	155	4
809068	149	6
809068	155	6
809071	59	27

Numerical Index

Part No.	Page No.	Ref. No.
809072	59	28
809073	31	24
809074	59	7
809075	59	6
809076	59	12
809077	59	11
809078	57	14
809079	64	6
809080	64	4
809081	64	3
809082	64	1
809083	64	2
809084	65	11
809085	65	7
809086	65	4
809087	65	5
809088	65	3
809089	79	14
809090	79	15
809091	79	10
809092	69	11
809092	71	16
809092	73	11
809093	73	12
809094	63	9
809094	73	25
809095	59	4
809096	57	11
809096	57	13
809096	59	21
809096	65	17
809097	78	5
809098	73	5
809099	59	20
809107	55	10
809114	59	5
809115	57	7
809115	59	25
809116	69	5
809117	71	8
809118	57	3
809118	57	6
809118	59	18
809119	57	8
809119	59	32
809120	57	1
809121	59	29
809122	59	31
809123	59	33
809124	59	34
809125	59	30
809126	61	8
809128	149	7
809128	151	6
809128	155	7
809130	27	6
809131	53	7
809132	71	21
809133	78	4
809136	149	4
809136	151	3
809136	153	3
809136	155	3
809136	157	3
809136	159	4
809139	155	5
809151	135	5
809151	138	2
809152	135	6
809152	138	4
809153	135	6
809153	138	3
809153	138	4
809157	135	3
809164	81	3
809165	25	5
809173	111	3
809174	135	7
809195	29	10
809292	27	9
809292	107	1
809292	140	1
809293	39	5
809294	39	0
809295	39	0
809296	39	0
809297	39	0
809298	13	16
809308	51	18
809309	53	1
809310	81	22
809310	111	23
809311	143	4
809312	13	21
809313	33	1
809314	33	4
809315	33	2
809316	51	19
809317	15	12
809318	13	3
809319	13	2
809319	15	11
809320	13	12
809320	15	9
809321	15	10
809322	19	9
809323	19	8
809324	19	1
809325	15	19
809326	147	2
809327	51	7
809328	13	1
809329	23	0
809329	23	33
809330	105	4
809330	134	1
809331	17	0
809332	17	0
809333	13	29
809334	43	0
809335	29	13
809336	41	13
809336	43	5
809337	103	1
809338	23	24
809338	23	25
809338	23	26
809339	37	1
809340	35	18
809341	23	0
809342	9	16
809343	115	3
809343	117	1
809343	119	1
809343	121	1
809343	123	1
809343	143	0
809344	115	2
809344	117	2
809344	119	2
809344	121	2
809344	123	2
809344	145	0
809344	115	1
809344	119	14
809344	123	16
809344	147	0
809346	23	0
809347	41	4
809348	41	6
809349	41	7
809350	81	8
809351	35	26
809351	117	6
809351	119	12
809352	105	17
809352	111	6
809353	35	27
809353	105	18
809353	117	8
809353	119	11
809353	121	5
809353	121	6
809353	121	8
809353	121	11
809353	123	8
809353	123	11
809353	123	12
809353	123	17
809354	107	7
809354	111	11
809355	109	14
809355	111	5
809356	81	4
809357	101	5
809358	101	6
809359	97	36
809359	133	16
809360	97	37
809361	35	29
809361	105	16
809362	41	10
809363	41	14
809364	86	16
809365	86	17
809366	86	18
809367	89	7
809368	89	3
809369	89	16
809370	89	28
809371	89	25
809372	89	47
809373	89	49
809374	91	11
809375	143	8
809375	145	7
809375	147	4
809376	143	9
809376	145	8
809376	147	5
809377	5	7
809378	37	6
809378	51	1
809379	37	7
809379	51	10
809380	51	15
809381	51	2
809382	51	13
809383	21	10
809384	135	3
809385	35	6
809386	35	24
809387	131	2
809388	105	10
809389	129	26
809390	105	1
809391	113	6
809391	127	6
809391	129	7
809392	109	4
809393	81	1
809394	35	31
809395	105	3
809395	134	2
809396	49	24
809397	137	18
809398	137	16
809399	137	4

Part No.	Page No.	Ref. No.
809400	137	4
809401	137	3
809402	137	14
809403	25	0
809404	167	2
809405	163	1
809406	167	0
809407	158	4
809407	159	9
809408	134	3
809409	168	1
809410	71	4
809411	85	3
809412	85	4
809413	85	6
809413	93	38
809414	85	8
809414	93	24
809415	95	2
809417	91	16
809418	95	22
809419	89	2
809419	93	2
809420	93	3
809421	93	4
809422	93	10
809423	89	19
809423	93	11
809424	93	12
809425	89	34
809425	93	13
809426	93	14
809427	93	17
809428	89	32
809428	93	18
809429	89	29
809429	93	19
809430	89	33
809430	93	20
809431	89	30
809431	93	21
809432	93	22
809433	93	23
809434	89	31
809434	93	26
809435	89	35
809435	93	27
809436	89	36
809436	93	28
809437	93	29
809438	89	38
809438	93	30
809439	89	41
809439	93	32
809440	89	42
809440	93	33
809441	89	44
809441	93	34
809442	89	45
809442	93	35
809443	89	46
809443	93	36
809444	93	40
809445	89	40
809445	93	43
809446	93	45
809447	89	43
809447	93	46
809448	89	26
809448	93	49
809449	89	26
809449	93	49
809450	89	26
809450	93	49
809451	93	50
809452	87	2
809453	87	3
809454	87	5
809455	87	6
809456	87	7
809457	87	8
809458	87	9
809459	87	13
809460	87	14
809461	82	2
809461	83	2
809462	82	3
809462	83	3
809463	82	1
809463	83	1
809464	93	44
809465	93	48
809466	153	7
809466	157	7
809467	95	16
809468	97	35
809468	101	21
809469	82	2
809469	83	2
809470	137	6
809471	137	7
809472	137	2
809473	137	11
809474	137	8
809475	137	12
809476	137	17
809477	137	13
809478	137	20
809479	137	15
809480	140	2
809481	125	15
809482	165	3
809483	99	4
809484	97	14
809485	163	10
809486	53	11
809487	163	17
809488	97	10
809488	101	16
809489	49	18
809490	55	18
809491	53	16
809492	97	7
809493	101	23
809493	129	23
809493	133	10
809494	97	18
809494	131	9
809495	113	10
809496	97	5
809497	113	14
809497	125	17
809498	167	24
809499	35	23
809500	99	26
809500	101	4
809501	97	23
809501	99	27
809502	97	28
809502	99	21
809502	101	9
809502	165	7
809503	37	4
809504	99	29
809506	105	7
809506	107	2
809507	39	4
809508	101	2
809509	99	2
809510	131	1
809510	157	0
809511	103	8
809511	129	19
809511	155	0
809512	129	16
809512	153	0
809513	125	1
809513	149	0
809514	97	16
809514	101	22
809514	103	5
809514	127	2
809514	129	17
809514	131	6
809514	153	8
809514	155	9
809514	157	8
809515	97	21
809516	97	13
809517	99	11
809518	101	15
809518	101	18
809519	99	10
809520	99	9
809521	97	34
809521	101	19
809522	97	33
809522	101	20
809523	101	17
809524	97	11
809525	97	12
809526	127	1
809526	151	0
809527	35	8
809528	81	1
809529	99	25
809530	39	5
809531	103	6
809531	129	14
809531	131	19
809532	129	18
809532	131	4
809533	103	4
809533	127	3
809534	39	1
809535	165	0
809536	49	3
809537	105	13
809537	107	14
809538	107	13
809538	111	10
809539	49	9
809539	55	15
809540	35	7
809540	49	8
809540	55	2
809540	105	20
809540	113	21
809540	113	22
809541	113	9
809541	113	15
809541	113	16
809541	127	10
809541	127	11
809541	129	10
809542	25	2
809543	159	0
809543	165	13
809544	97	22
809544	131	17
809545	165	1
809546	103	15
809547	165	4
809548	165	9
809549	151	9
809549	159	10
809550	115	9
809551	47	0

Part No.	Page No.	Ref. No.
809552	9	15
809552	10	3
809553	7	11
809554	49	12
809555	163	15
809556	81	1
809557	81	1
809558	81	1
809559	49	17
809560	51	16
809561	9	9
809562	49	21
809563	41	3
809563	53	12
809564	97	15
809565	41	11
809566	41	11
809567	41	11
809568	41	11
809569	41	12
809570	41	9
809571	41	8
809572	41	5
809573	129	2
809573	129	3
809573	133	2
809573	133	3
809574	97	20
809574	131	7
809575	97	1
809576	129	1
809576	133	1
809577	131	11
809577	131	12
809578	131	8
809579	97	19
809580	129	20
809580	129	21
809581	133	13
809581	133	14
809582	55	17
809583	55	25
809584	55	23
809585	55	12
809586	47	3
809587	47	7
809588	47	19
809589	37	14
809589	47	0
809590	113	12
809590	115	8
809590	137	0
809591	99	14
809592	99	24
809593	99	8
809594	139	0
809595	99	1
809596	101	1
809597	113	25
809597	133	5
809597	137	0
809598	125	6
809599	105	11
809600	35	28
809600	107	15
809601	113	18
809601	127	9
809602	113	19
809602	113	20
809602	125	7
809603	115	5
809604	113	2
809604	113	3
809604	131	13
809604	131	14
809605	113	5
809605	113	23
809605	129	5
809605	133	7
809606	113	4
809606	113	24
809606	129	6
809606	133	8
809607	113	8
809607	129	9
809608	81	22
809608	111	24
809609	41	1
809610	81	1
809611	81	14
809611	125	13
809612	81	11
809612	125	12
809613	81	1
809614	47	8
809615	27	3
809616	107	3
809617	105	8
809618	149	11
809618	155	10
809619	101	3
809620	137	16
809621	69	3
809622	69	22
809623	85	7
809623	93	25
809624	157	1
809625	153	4
809625	157	4
809626	157	6
809627	157	11
809628	151	1
809629	151	8
809630	151	2
809631	151	10
809632	151	4
809633	151	5
809634	153	1
809635	153	10
809636	153	5
809637	153	6
809638	141	2
809639	155	1
809640	155	11
809641	155	12
809642	157	12
809643	137	18
809644	137	1
809645	137	5
809645	137	19
809646	137	9
809647	137	9
809648	137	9
809649	137	10
809650	159	6
809651	63	15
809652	69	21
809653	59	19
809654	65	15
809655	65	14
809656	65	13
809657	65	16
809658	67	6
809659	67	7
809660	35	9
809660	37	3
809661	159	1
809662	159	3
809663	159	12
809664	159	5
809665	159	6
809666	159	7
809667	161	1
809668	161	1
809669	165	5
809670	165	5
809671	167	1
809672	163	19
809673	57	4
809673	59	16
809673	59	24
809674	57	15
809675	59	3
809676	57	9
809676	57	12
809677	57	10
809678	59	26
809679	59	23
809680	59	35
809681	29	1
809682	157	5
809683	138	3

Torque Specifications

Use these torque values when tightening GEHL hardware (excluding: locknuts and self-tapping, thread-forming and metal screws) unless otherwise specified.

Unified National Thread	Grade 2		Grade 5		Grade 8	
	Dry	Lubed	Dry	Lubed	Dry	Lubed
8-32	19*	14*	30*	22*	41*	31*
8-36	20*	15*	31*	23*	43*	32*
10-24	27*	21*	43*	32*	60*	45*
10-32	31*	23*	49*	36*	68*	51*
1/4-20	66*	50*	9	75*	12	9
1/4-28	76*	56*	10	86*	14	10
5/16-18	11	9	17	13	25	18
5/16-24	12	9	19	14	25	20
3/8-16	20	15	30	23	45	35
3/8-24	23	17	35	25	50	35
7/16-14	32	24	50	35	70	55
7/16-20	36	27	55	40	80	60
1/2-13	35	35	75	55	110	80
1/2-20	40	40	90	65	120	90
9/16-12	55	55	110	80	150	110
9/16-18	60	60	120	90	170	130
5/8-11	75	75	150	110	220	170
5/8-18	85	85	180	130	240	180
3/4-10	130	130	260	200	380	280
3/4-16	150	150	300	220	420	320
7/8-9	125	125	430	320	600	460
7/8-14	140	140	470	360	660	500
1-8	190	190	640	480	900	680
1-14	210	210	710	530	1000	740

Metric Course Thread	Grade 8.8		Grade 10.9		Grade 12.9	
	Dry	Lubed	Dry	Lubed	Dry	Lubed
M6-1	8	6	11	7	13.5	10*
24M8-1.25	19	14	27	20	32.5	24*
M10-1.5	37.5	28	53	39	64	47
M12-1.75	65	48	91.5	67.5	111.5	82
M14-2	103.5	76.5	145.5	108	176.5	131
M16-2	158.5	117.5	223.5	165.5	271	200

* *All torque values are in lb-ft except those marked with an *, which are in lb-in.*
For metric torque value (Nm) muiltiply lb-ft x 1.355 or lb-in value x 0.113.