FIG.101 CRANKCASE ASSY

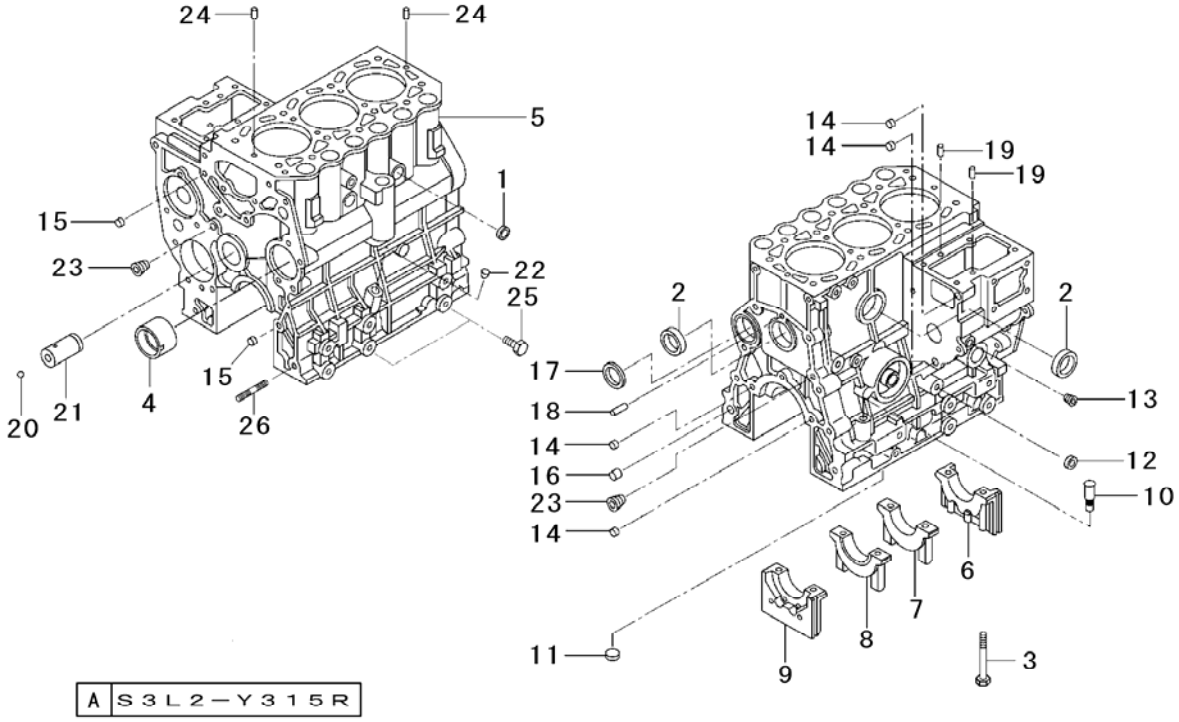

Key No.	Parts No.	Parts Name.	Q`ty A					R/P	Application	Description	Remarks
1～24	31B07-52030	BLOCK ASSY	1								
1～9	*	SUB ASSY,cylind	1								
1	04826-22000	CAP,sealing	2								
2	04826-23500	CAP,sealing	2								
3	31A07-00801	BOLT,bearing	8								
4	31A07-03100	BUSH,camshaft	1								
5	*	BLOCK,cylinder	1								
6～9	*	CAP SET,metal	1								
6	*	CAP,metal flont	1								
7	*	CAP,metal no.2	1								
8	*	CAP,metal no.3	1								
9	*	CAP,metal rear	1								
10	MM430613	GUIDE GAUGE	1								
11	MF665532	CAP,sealing(12)	1								
12	F5014-14000	CAP,sealing(14)	1								
13	MS661140	PLUG,taper	1								
14	MS471104	BUSHING,knock	4								
15	MS471105	BUSHING,knock	2								
16	MS471110	BUSHING,knock	1								
17	MS665511	PLUG,expansion	1								
18	MF472404	PIN,dowel	1								
19	MM409645	PIN,dowel	2								
20,21	31A23-00051	SHAFT ASSY,idle	1								
20	0800 0000 600	BALL,steel	1								
21	*	SHAFT,idler	1								
22	MD024256	PLUG,taper	1								
23	04827-90130	PLUG,taper	2								
24	F2846-05000	PIN,dowel	2								
25	F1035-12025	BOLT	4								
26	31A07-02500	STUD	2								

FIG.102 CRANKCASE

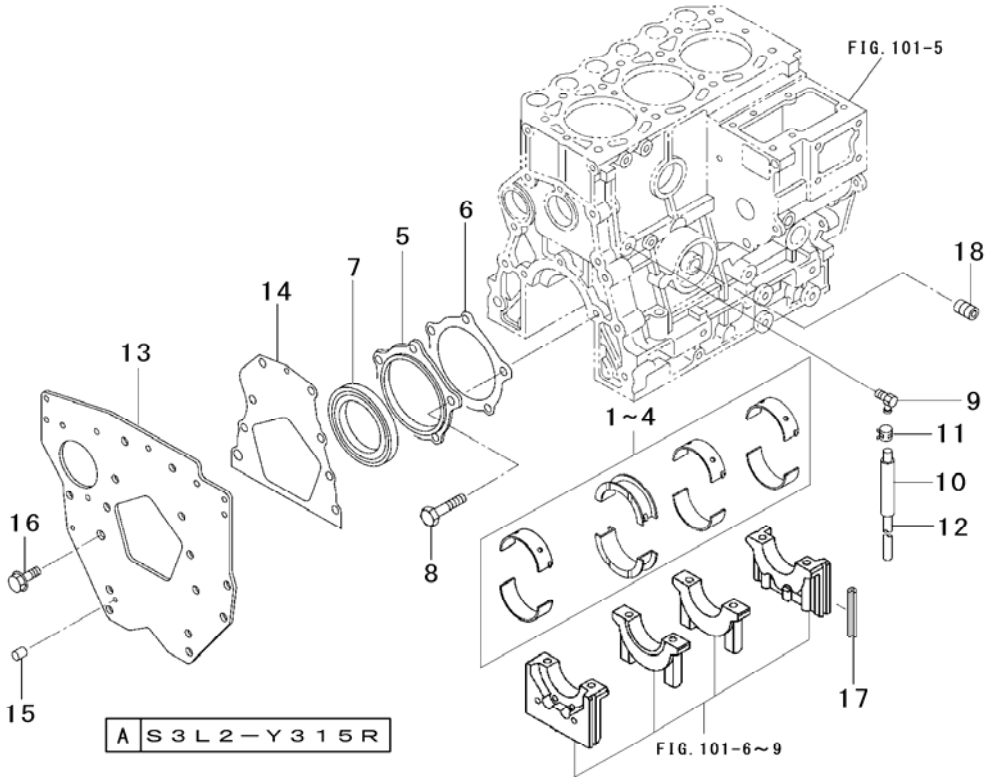

Key No.	Parts No.	Parts Name.	Q`ty					R/P	Application	Description	Remarks
			A								
1	31A09-01010	BEARING SET	1							S.T.D	
2	31A09-01020	BEARING SET	1							U.S 0.25	
3	31A09-01030	BEARING SET	1							U.S 0.50	
4	31A09-01040	BEARING SET	1							U.S 0.75	
5	31A07-11601	CASE,oil seal	1								
6	31A07-11701	GASKET,oil seal	1								
7	31A07-02300	SEAL,oil	1								
8	F1035-08020	BOLT	5								
9	31A46-02300	JOINT,drain	1								
10~12	*	HOSE ASSY,water	1								
10	MS602106	HOSE,fuel	1								
11	32C46-04100	CLAMP,hose	1								
12	MM43721501	HOSE,rubber	1								
13	31B07-04400	PLATE,rear	1								
14	31A07-02401	GASKET,rear	1								
15	MM408240	PIN,knock	1								
16	31A08-04102	BOLT,flange	6								
17	31A07-12200	SEAL,side	4								
18	30L07-00700	SHAFT	1								

FIG.103 OIL PAN & GEAR CASE

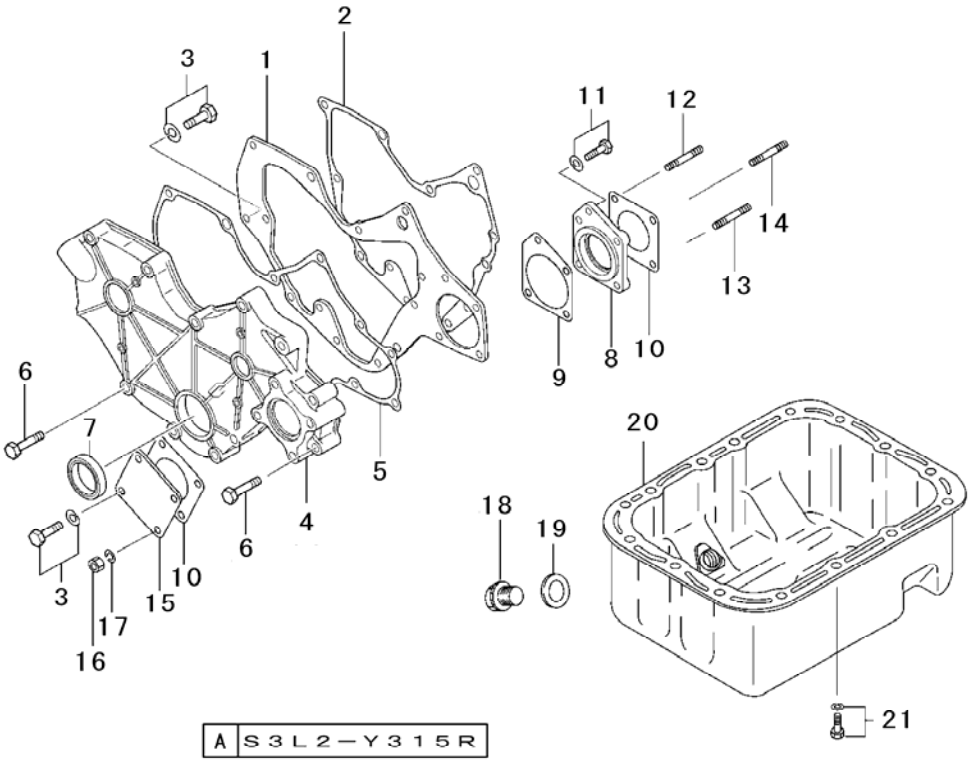

Key No.	Parts No.	Parts Name.	Q`ty A					R/P	Application	Description	Remarks
1	31A11-02100	PLATE,front	1								
2	31A07-11901	GASKET,plate	1								
3	MF240051	BOLT,w/washer	6								
4	31A11-00802	CASE,gear	1								
5	31A11-11101	GASKET,gear	1								
6	F1035-08045	BOLT	8								
7	MD008762	SEAL,oil	1								
8	31A11-05101	HOUSING,pump	1								
9	31A11-05201	GASKET,housing	1								
10	30A11-00101	GASKET,cover	2								
11	F1540108030	BOLT,w/washer	1							M8×30	
12	MS401426	STUD	3							M8×22	
13	MS401435	STUD	1							M8×45	
14	MS401327	STUD	1							M8×25	
15	MM398237	COVER,pump	1								
16	MF430005	NUT	3								
17	F2515-08000	WASHER,spring	3								
18～20	31B13-10021	PAN ASSY,oil	1								
18	MD050316	PLUG,drain	1								
19	MD050317	GASKET	1								
20	*	PAN,oil	1								
21	MF240051	BOLT,flange	15								

FIG.104 ROCKER COVER & CAMSHAFT

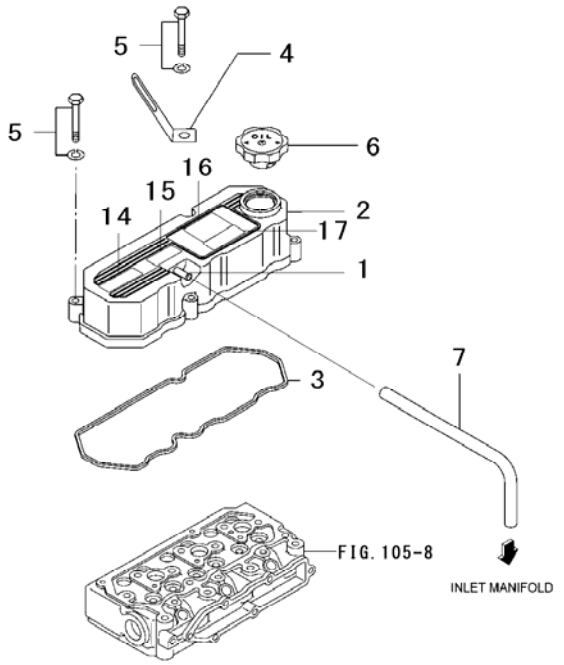

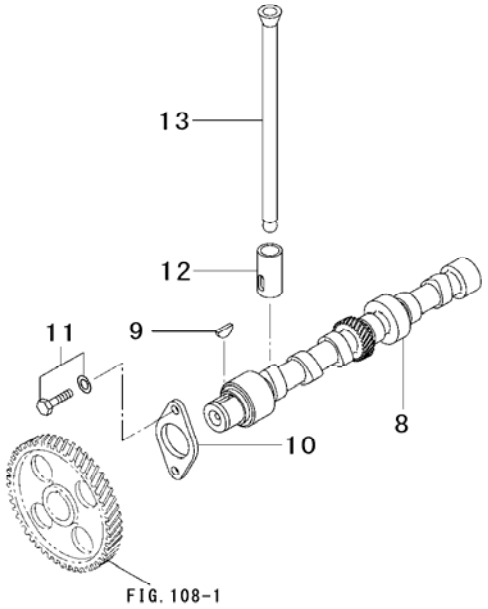

A	S3L2−Y315R

Key No.	Parts No.	Parts Name.	Q`ty					R/P	Application	Description	Remarks
			A								
1,2	31B04-03011	COVER ASSY,rock	1								
1	*	PIPE	1								
2	*	COVER,rocker	1								
3	31B04-13201	GASKET,cover	1								
4	MS470059	CLIP	1								
5	F1540108040	BOLT,w/washer	4							M8×40	
6	MD008784	CAP,oil	1								
7	MM400380	BREATHER,pipe	1								
8	31B05-00103	CAMSHAFT	1								
9	MF476215	KEY,woodruff	1								
10	30405-31403	PLATE,thrust	1								
11	MF240051	BOLT,w/washer	2								
12	31A05-00300	TAPPET	6								
13	31A05-01300	ROD,push	6								
14	*	LABEL,engine no	1								
15	31B06-07800	LABEL,model	1								
16	*	LABEL,epa	1								
17	*	LABEL,eu emi	1								

FIG.105 CYLINDER HEAD

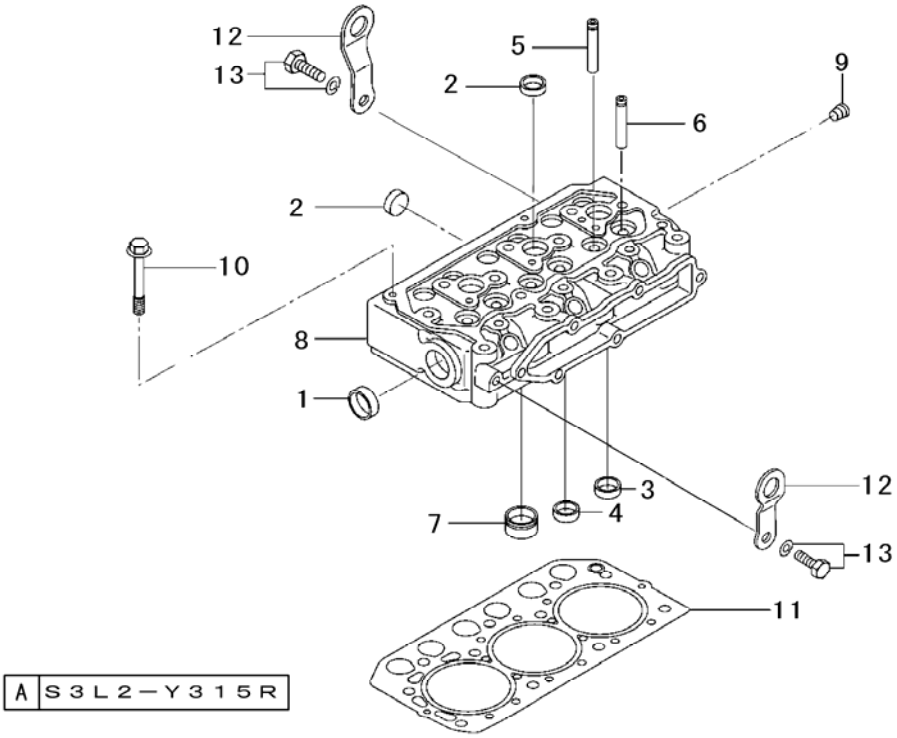

Key No.	Parts No.	Parts Name.	Q`ty					R/P	Application	Description	Remarks
			A								
1～9	31B01-13040	CYL.HEAD ASSY	1								
1～8	*	CYL,head assy	1								
1	F5014-35000	CAP,sealing	1								
2	F5014-25000	CAP,sealing	5								
3	31A01-01201	SEAT,valve in	3								
4	31A01-01301	SEAT,valve ex	3								
5	31A01-02500	GUIDE,valve	3								
6	31A01-02800	GUIDE,valve in	3								
7	31A03-13600	JET	3								
8	*	CYL.HEAD	1								
9	MS661140	PLUG,taper	1								
10	31A01-21100	BOLT,cyl head	11								
11	31B01-23200	GASKET,cyl head	1								
12	MM408470	HANGER,engine	2								
13	MF241280	BOLT,w/washer	2								

FIG.106 MAIN MOVING PARTS

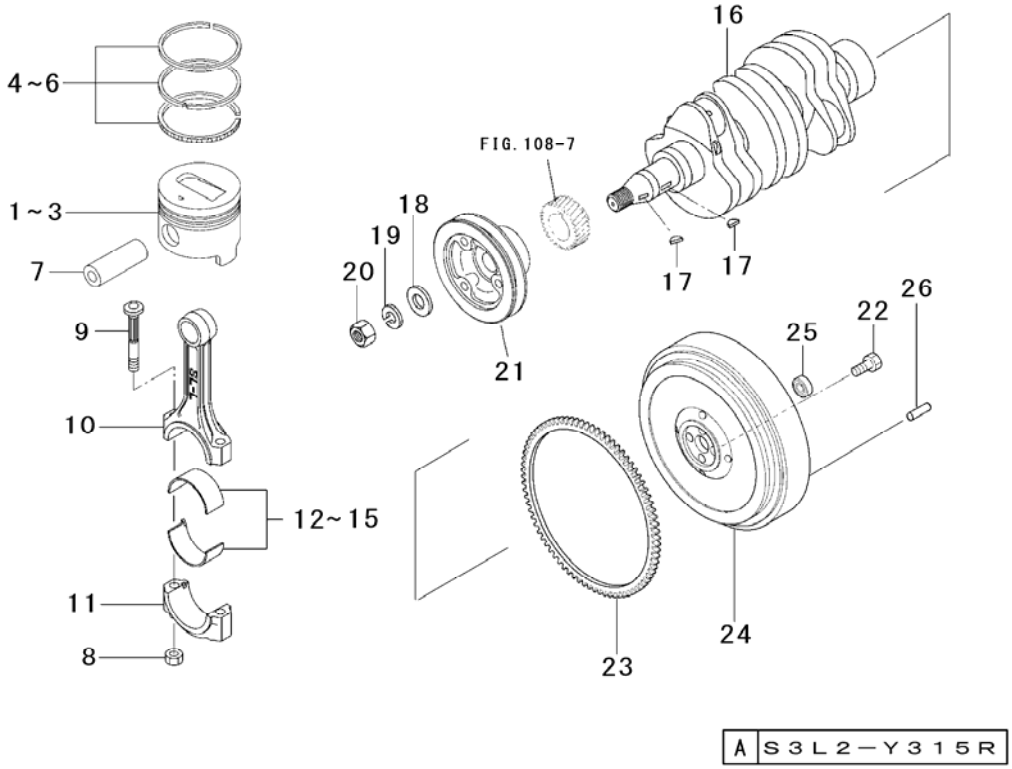

Key No.	Parts No.	Parts Name.	Q`ty A					R/P	Application	Description	Remarks
1	31A17-09101	PISTON	3							STD	
2	31A17-09201	PISTON	3							O.S 0.25	
3	31A17-09301	PISTON	3							O.S 0.50	
4	31A17-00010	RING SET,piston	3							STD	
5	31A17-00020	RING SET,piston	3							O.S 0.25	
6	31A17-00030	RING SET,piston	3							O.S 0.50	
7	31A17-10602	PIN,piston	3								
8~11	31B19-01023	CON-ROD ASSY	3								
8	MD006704	NUT	6								
9	MD021105	BOLT,connecting	6								
10	*	CON-ROD	3								
11	*	CAP,con-rod	3								
12	30A19-00040	BEAIRNG SET	3							STD	
13	30A19-10010	BEARING SET	3							U.S 0.25	
14	30A19-10020	BEARING SET	3							U.S 0.50	
15	30A19-10030	BEARING SET	3							U.S 0.75	
16	31B20-00204	CRANKSHAFT	1								
17	MF476215	KEY,woodruff	2								
18	F2500-18000	WASHER,plain	1								
19	F2515-18000	WASHER,spring	1								
20	F2305-18000	NUT	1								
21	31B20-02601	PULLEY,cranksha	1								
22	31A21-03800	BOLT,drive plat	4								
23,24	31B21-02070	FLYWHEEL ASSY	1								
23	MD040556	GEAR,ring	1								
24	*	FLYWHEEL	1								
25	0750 0560 024	BEARING,ball	1								
26	F2846-06000	PIN,dowel	2								

FIG.107 TIMING PARTS

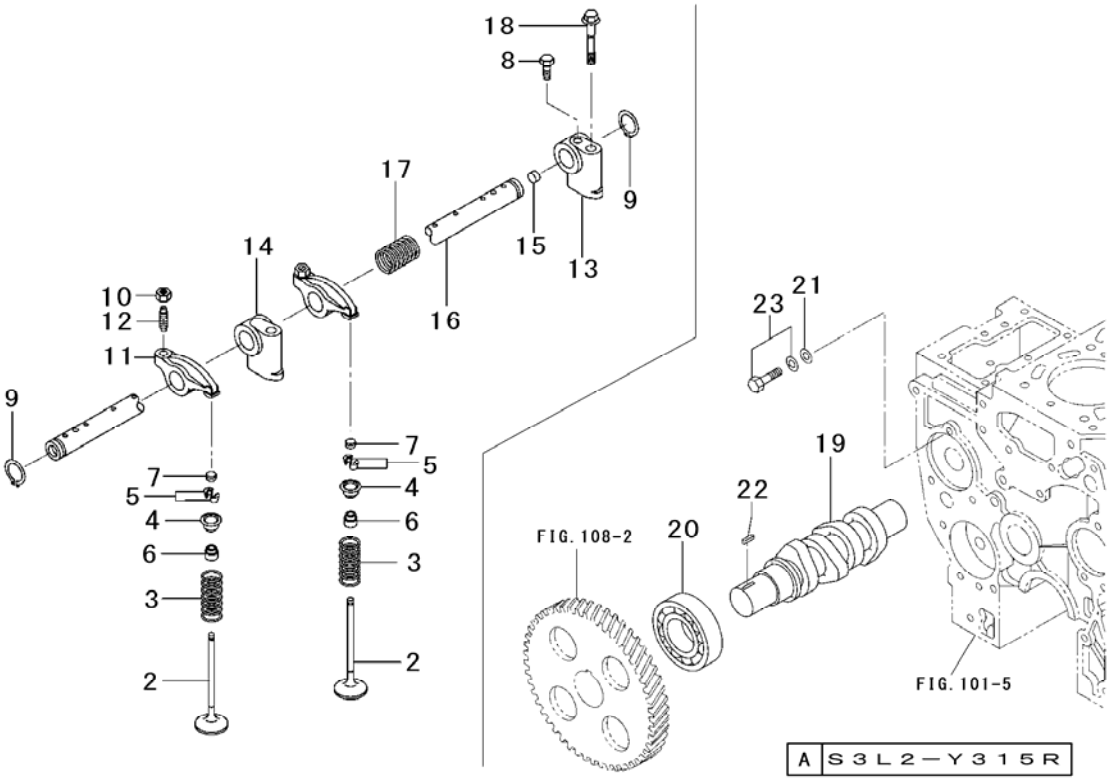

Key No.	Parts No.	Parts Name.	Q`ty A					R/P	Application	Description	Remarks
1	31A04-30100	VALVE,inlet	3								
2	31A04-20200	VALVE,exhaust	3								
3	31A04-01301	SPRING,valve	6								
4	MM43330601	RETAINER	6								
5	MD016483	VALVE,lock	12								
6	MD115472	SEAL,valve stem	6								
7	31A04-00700	CAP,valve	6								
8～18	31B04-00014	ROCKER & SHAFT	1								
8	F1035-05010	BOLT	1								
9	F3200-01900	C-RING	2								
10～12	31A04-11024	ROCKER ASSY	6								
10	F2325-08000	NUT,jam	6								
11	*	ROCKER ARM	6								
12	32A04-02401	SCREW,rocker	6								
13	31A04-34100	BRACKET,shaft	1								
14	31A04-34300	BRACKET,shaft	2								
15～16	31B04-01010	SHAFT ASSY	1								
15	MD021204	CAP,sealing	2								
16	*	SHAFT,rocker	1								
17	32C04-04501	SPRING,rocker	2								
18	32C04-06101	BOLT,bracket	3								
19	31B65-11300	SHAFT,fuel pump	1								
20	MD703856	BEARING	1								
21	MD001521	WASHER	1								
22	MF476018	KEY,sunk	1								
23	F1035-08016	BOLT,w/washer	1								

FIG.108 TIMING GEAR

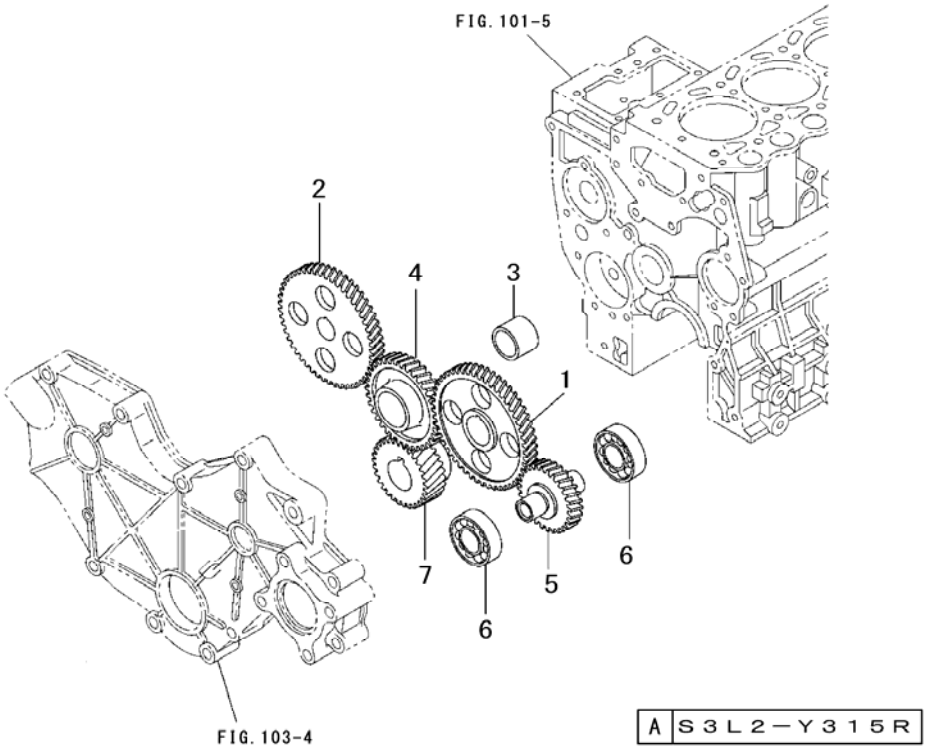

Key No.	Parts No.	Parts Name.	Q`ty A					R/P	Application	Description	Remarks
1	31A23-01402	GEAR,camshaft	1							Z=56	
2	31A23-00800	GEAR,inj pump	1							Z=56	
3,4	31A23-01023	GEAR ASSY,idler	1								
3	31A23-00600	BUSHING,idler	1								
4	*	GEAR,idler	1							Z=39	
5	31A23-01502	GEAR,oil pump	1							Z=28	
6	MD712517	BEARING,rear	2								
7	31A23-01302	GEAR,crank	1							Z=28	

FIG.109 FUEL SUPPLY PARTS

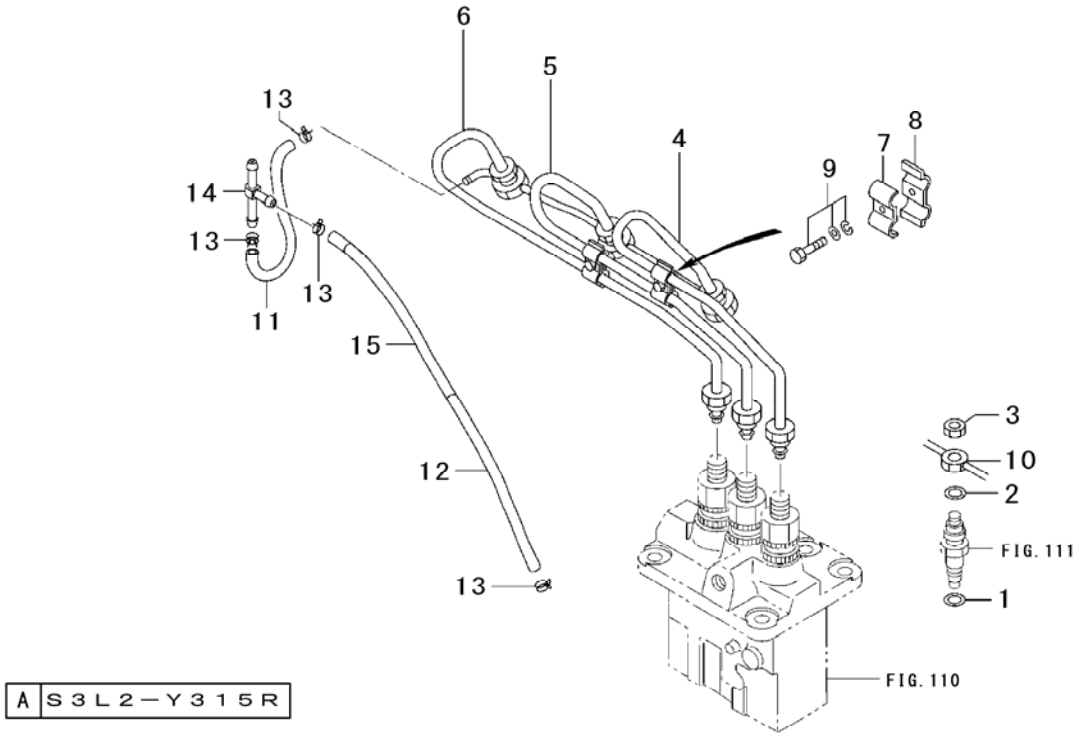

Key No.	Parts No.	Parts Name.	Q`ty A					R/P	Application	Description	Remarks
1	MD070717	GASKET,holder	3								
2	MD068355	GASKET	3								
3	MD068353	NUT	3								
4	31A61-07101	PIPE,inj no1	1								
5	31A61-07201	PIPE,inj no2	1								
6	31A61-07301	PIPE,inj no3	1								
7	MM430703	CLAMP (A)	2								
8	MM430614	CLAMP (B)	2								
9	F1805-06025	BOLT,w/washer	2								
10	31B61-02600	PIPE,fuel	1								
11~15	31B61-13100	HOSE ASSY AIR	1								
11	MM430131	HOSE,fuel	1								
12	MS604032	HOSE,fuel	1								
13	MS660169	CLIP	4								
14	31A61-01500	JOINT	1								
15	31A61-01200	HOSE,rubber	1								

FIG.109A FUEL SUPPLY PARTS

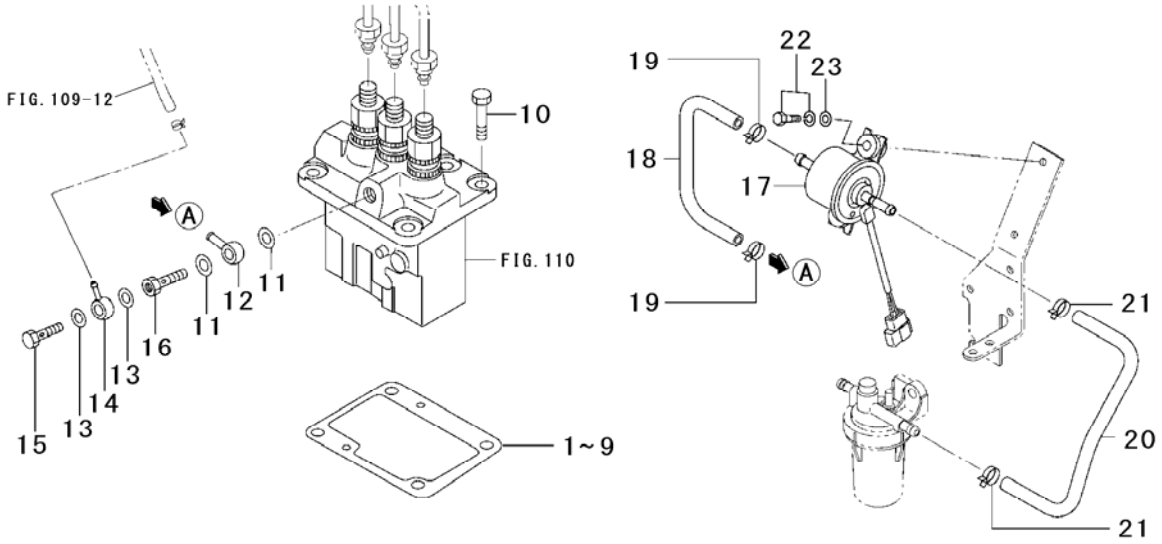

A	S3L2-Y315R

Key No.	Parts No.	Parts Name.	Q`ty A					R/P	Application	Description	Remarks
1	MM409040	SHIM	AR							t=0.2	
2	MM409041	SHIM	AR							t=0.3	
3	MM409042	SHIM	AR							t=0.4	
4	MM409043	SHIM	AR							t=0.5	
5	MM409044	SHIM	AR							t=0.6	
6	MM409045	SHIM	AR							t=0.7	
7	MM409046	SHIM	AR							t=0.8	
8	MM409047	SHIM	AR							t=0.9	
9	MM409048	SHIM	AR							t=1.0	
10	F1035-08020	BOLT	4								
11	MK66112000	WASHER,seal	2								
12	MM413206	COLLAR	1								
13	05946-01000	WASHER,seal	2								
14	31A65-00201	COLLAR	1								
15	31A65-00800	VALVE ASSY	1								
16	31B65-00200	SCREW,hollow	1								
17	31A60-00300	PUMP ASSY,fuel	1								
18,19	31B61-05300	HOSE ASSY,fuel	1								
18	31B61-05311	HOSE,fuel	1								
19	MS660167	CLIP,hose	2								
20,21	30A61-03800	HOSE ASSY,fuel	1								
20	MS603022	HOSE,fuel	1								
21	MS660164	CLIP,hose	2								
22	MF241229	BOLT,w/washer	2								
23	MD107589	WASHER	2								

FIG.110 FUEL INJECTION PUMP

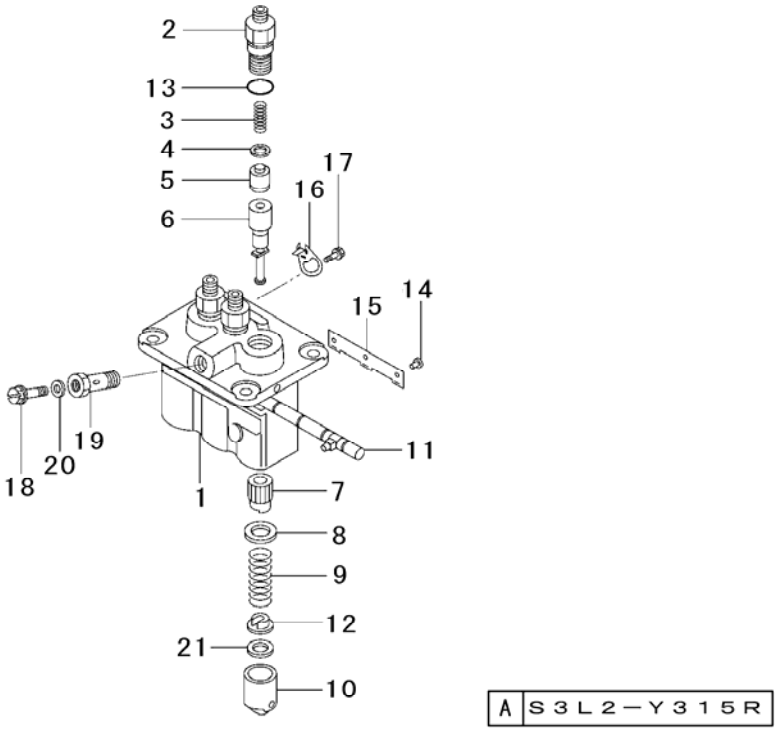

Key No.	Parts No.	Parts Name.	Q`ty A					R/P	Application	Description	Remarks
1～21	31B65-14090	PUMP ASSY,injec	1								
1	47X01-06100	HOUSING ASSY	1								
2	47X01-13200	HOLDER,delivery	3								
3	47X01-13300	SPRING,delivery	3								
4	09013-70130	GASKET,delivery	3								
5	47X01-07700	VALVE SUB ASSY	3								
6	47X01-07600	ELEMENT SUBASSY	3								
7	09016-10210	SLEEVE,control	3								
8	MM501098	SEAT,spring	3								
9	09016-40170	SPRING,plunger	3								
10	09017-00170	TAPPET SUB ASSY	3								
11	09021-00470	RACK ASSY,contr	1								
12	09030-10060	SEAT,spring	3								
13	47X01-22700	O-RING	3								
14	MM500370	PIN,tappet	3								
15	09046-70040	PLATE	1								
16	09006-80020	PLATE,adjusting	2								
17	MM514195	BOLT,head	2								
18	09024-40180	SCREW,air bleed	1								
19	09024-50210	SCREW,hollow	1								
20	MM500441	WASHER,plate	1								
21	09031-10110	SHIM	AR							t=0.20	
	09031-10160	SHIM	AR							t=0.25	
	09031-10120	SHIM	AR							t=0.30	
	MM500315	SHIM	AR							t=0.35	
	09031-10130	SHIM	AR							t=0.40	
	09031-10280	SHIM	AR							t=0.45	
	09031-10140	SHIM	AR							t=0.50	
	09031-10300	SHIM	AR							t=0.55	
	09031-10010	SHIM	AR							t=0.60	
	09031-10310	SHIM	AR							t=0.65	

FIG.111 NOZZLE & HOLDER

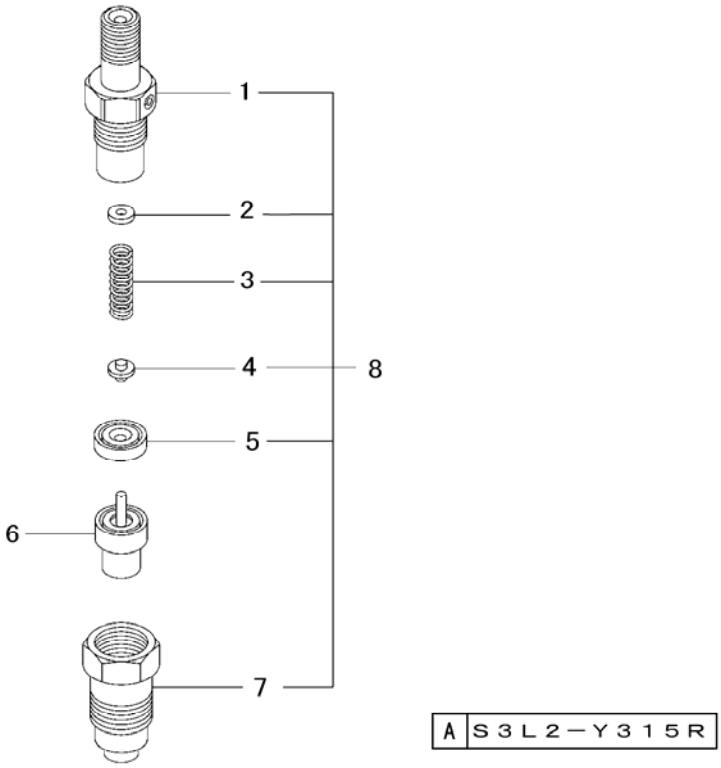

Key No.	Parts No.	Parts Name.	Q`ty					R/P	Application	Description	Remarks
			A								
1～8	MM43594101	NOZZLE & HOLDER	3								
1	09311-03840	BODY SUB ASSY	3								
2	MM501846	SHIM	AR							t=1.25	
	09317-51830	SHIM	AR							t=1.30	
	09317-51850	SHIM	AR							t=1.35	
	MD603493	SHIM	AR							t=1.40	
	09317-51890	SHIM	AR							t=1.45	
	MD603495	SHIM	AR							t=1.50	
	MD603496	SHIM	AR							t=1.55	
	09317-51950	SHIM	AR							t=1.60	
	09317-51970	SHIM	AR							t=1.65	
	09317-51990	SHIM	AR							t=1.70	
3	09312-70310	SPRING,pressure	3								
4	09312-10380	PIN,pressure	3								
5	09317-40070	PIECE,distance	3								
6	09340-05060	NOZZLE ASSY	3								
7	MM514380	NUT,retaining	3								
8	MM514045	HOLDER ASSY	3								Inc1～5&7

FIG.112 FUEL FILTER

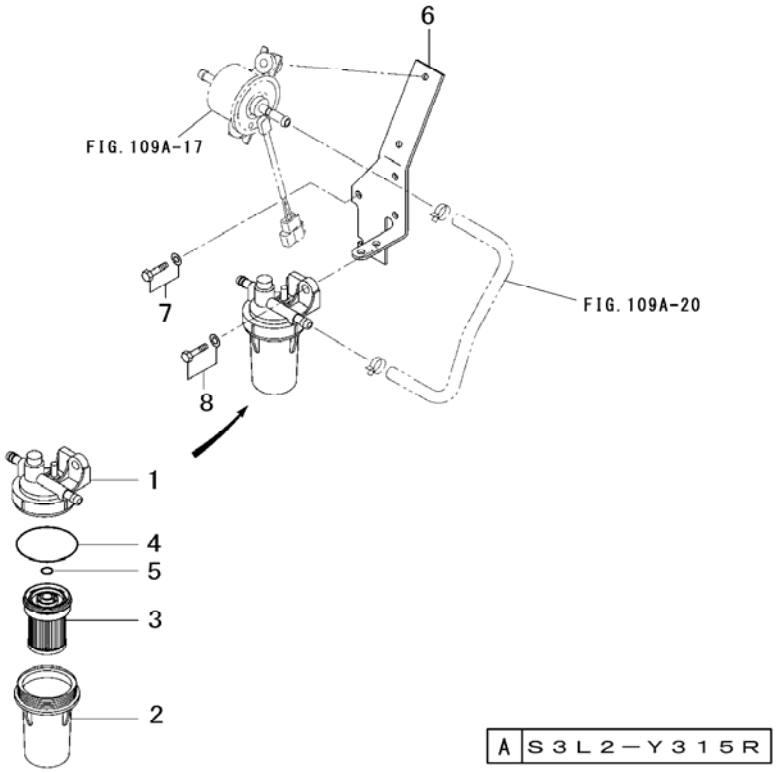

Key No.	Parts No.	Parts Name.	Q`ty A					R/P	Application	Description	Remarks
1～5	31A62-00300	FILTER ASSY	1								
1	31A62-00310	VODY SUB ASSY	1								
2	31A62-00312	CAP,filter	1								
3	31A62-00317	ELEMENT	1								
4	31A62-00318	O-RING	1								
5	31A62-00319	O-RING	1								
6	31B62-01200	BRACKET,filter	1								
7	F1035-06018	BOLT,w/washer	3								
8	MF241252	BOLT,w/washer	1								

FIG.113 GOVERNOR PARTS

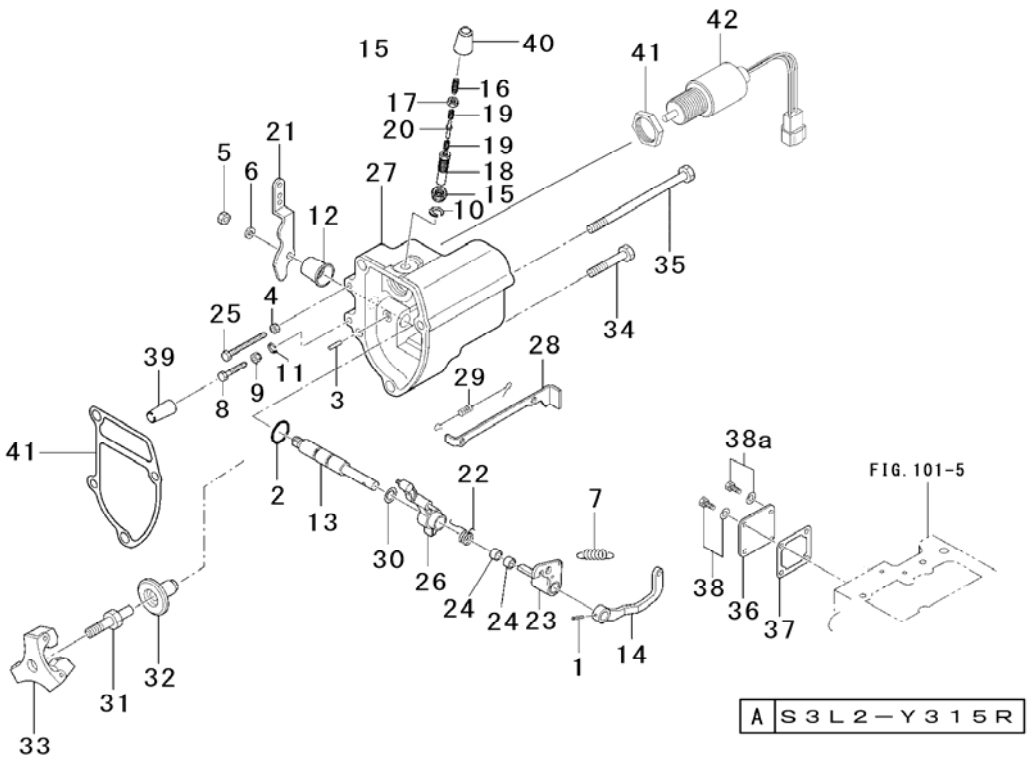

Key No.	Parts No.	Parts Name.	Q`ty					R/P	Application	Description	Remarks
			A								
1～30	31B63-33010	CASE ASSY,gover	1								
1	0550 0003 020	PIN,spring	1							φ3×20	
2	0830 0100 101	O-RING	1							φ10	
3	K8712630	PIN,grooved	1								
4	F2300-06000	NUT	1								
5	F2320-08000	NUT,jam	1								
6	F2515-08000	WASHER,spring	1								
7	MM433673	SPRING,governor	1								
8,9	30L63-00030	BOLT ASSY,speed	1								
8	30L63-02100	BOLT,high speed	1								
9	30L63-02300	NUT,high speed	1								
10	30L63-00700	C-RING	1								
11	30L63-12600	C-RING	1								
12	31A63-01800	COVER,gov shaft	1								
13	31A63-02600	SHAFT,governor	1								
14	31A63-02700	LEVER,spring	1								
15～20	31A64-01080	SPRING SET	1								
15	30L63-00600	NUT	1								
16	MD065628	SCREW,adjusting	1								
17	MD000961	NUT	1								
18	31A64-00200	CASE	1								
19	31A64-01800	SPRING	2								
20	MM434541	STOPPER,spring	1								
21	31A63-04700	LEVER,speed	1								
22	31A63-05300	SPRING,start	1								
23,24	31A63-01010	LEVER ASSY,tens	1								
23	*	LEVER,tension	1								
24	MM406420	BEARING,needle	2								
25	30L63-02200	BOLT,idle set	1								
26	31A63-15500	LEVER,governor	1								
27	31A63-32100	CASE,governor	1								
28	31B63-00400	TIE-ROD	1								
29	31B63-00500	SPRING,tie-rod	1								
30	31A63-15200	SHIM,shaft	1								
31	31A63-10300	SHAFT,sleeve	1								

FIG.113 GOVERNOR PARTS

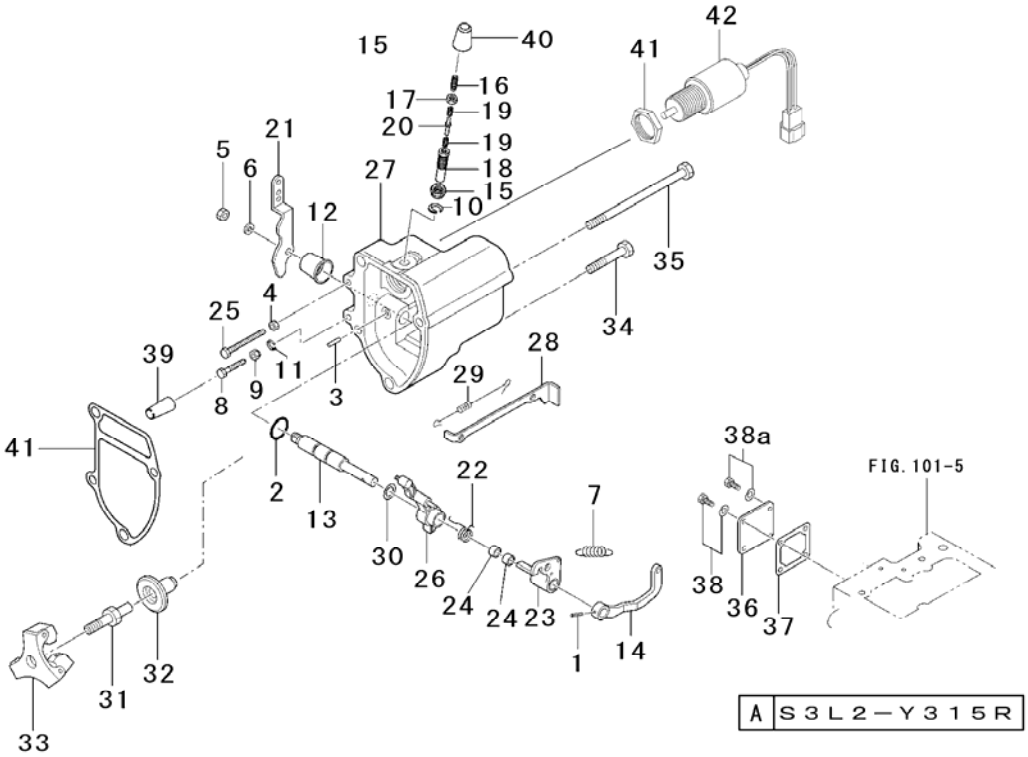

Key No.	Parts No.	Parts Name.	Q`ty A					R/P	Application	Description	Remarks
32	31A63-25101	SLEEVE,sliding	1								
33	31A63-11061	WEIGHT ASSY	1								
34	MF100064	BOLT	3								
35	31A63-02301	BOLT,gov case	1								
36	MM409150	COVER,tie rod	1								
37	30A63-00101	GASKET,cover	1								
38	MF241224	BOLT,w/washer	3								
38a	MF241224	BOLT,w/washer	1								
39	30L63-02400	COVER,highspeed	1								
40	31A64-00800	COVER,torq set	1								
41	31A63-12200	GASKET	1								
42,43	30A87-10043	SOLENOID & NUT	1								
42	MM40967101	NUT	1								
43	30A87-20403	SOLENOID ASSY	1								

FIG.114 LUBRICATING PARTS

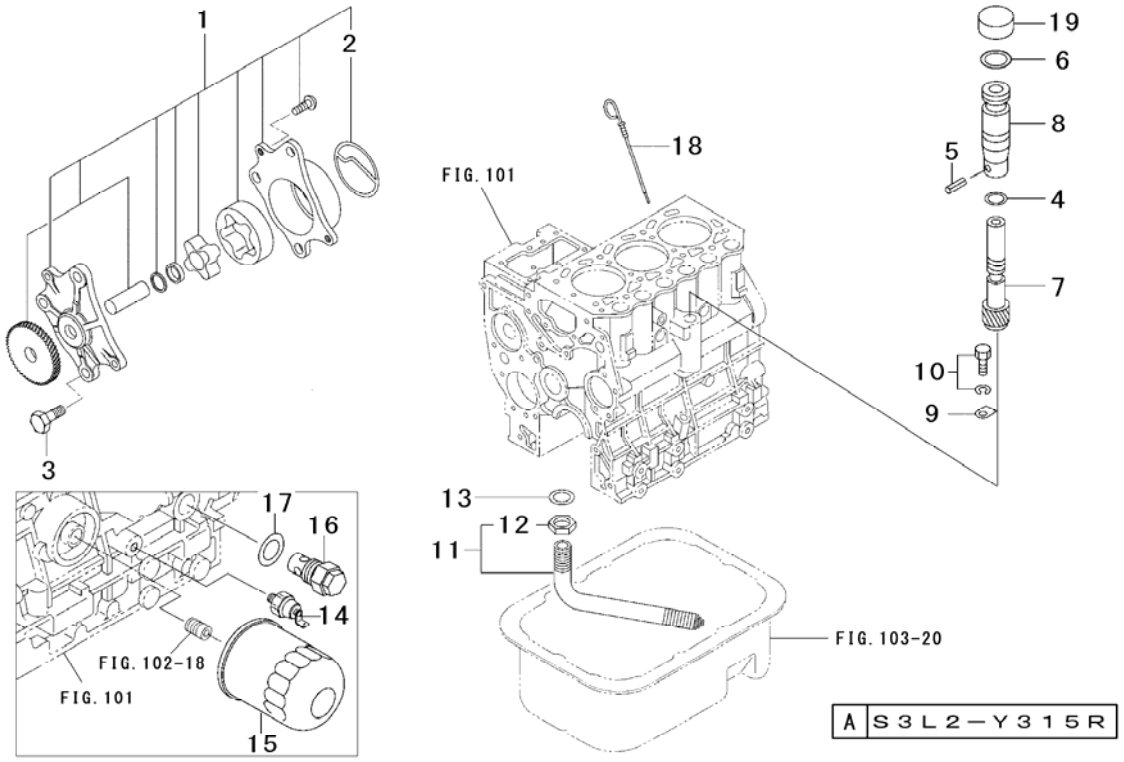

Key No.	Parts No.	Parts Name.	Q`ty A					R/P	Application	Description	Remarks
1	31A35-30010	PUMP ASSY,oil	1								Inc2
2	31A35-02300	PACKING,body	1								
3	F1025-08022	BOLT	3								
4～8	MM43059801	DRIVEN UNIT	1								
4	MD701788	O-RING	1								
5	F2850-03014	PIN,spring	1								
6	F3150-01800	O-RING	1								
7	*	GEAR,speed	1								
8	MM43041901	SLEEVE,speed	1								
9	MD701789	PLATE	1								
10	MF241223	BOLT,w/washer	1								
11	31A35-05041	STRAINER ASSY	1								Inc12
12	F2320-16000	NUT,jam	1								
13	MF660036	GASKET	1								
14	31A90-00300	SWITCH,oil	1								
15	31A40-02100	FILTER ASSY,oil	1								
16	32A36-05010	VALVE ASSY	1								
17	34340-00700	GASKET	1								
18	31B42-21700	GAUGE,oil level	1								
19	MM409980	PLUG,shipping	1								

FIG.115 COOLING PARTS

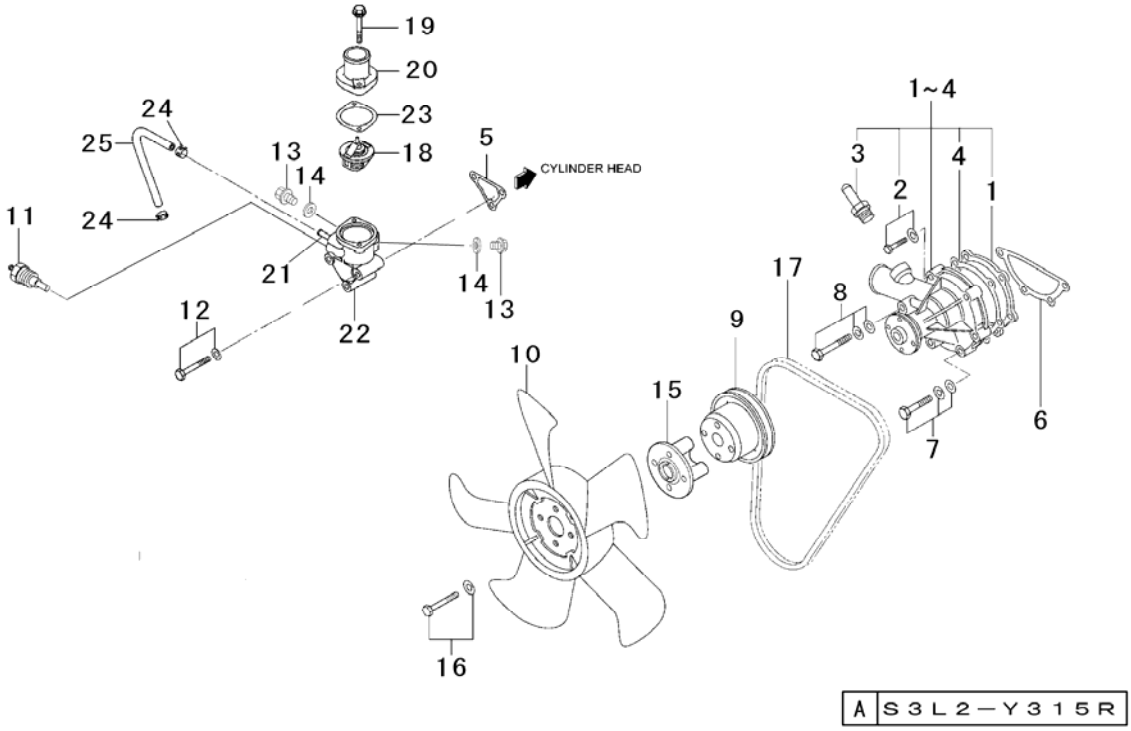

Key No.	Parts No.	Parts Name.	Q`ty A					R/P	Application	Description	Remarks
1～4	MM409303	PUMP ASSY,water	1								
1	MM409327	PLATE,pump	1								
2	MF240031	BOLT,w/washer	2								
3	MM409304	NIPPLE,hose	1								
4	MM409326	GASKET	1								
5	31A46-10101	GASKET,case	1								
6	30H45-00101	GASKET,pump	1								
7	MF244860	BOLT,w/washer	3								
8	MF244863	BOLT,w/washer	1								
9	31A45-20700	PULLEY	1								
10	MD009014	FAN,cooling	1								
11	MD001380	GAUGE UNIT	1								
12	MF241266	BOLT,w/washer	3								
13	MM316248	PULG,drain	2								
14	05946-01601	GASKET	2								
15	31A48-01100	SPACER,fan	1								
16	MF241242	BOLT,w/washer	4								
17	MD041704	V-BELT	1								
18～23	*	THERMOSTAT ASSY	1								
18	MD075460	THERMOSTAT	1								
19	MF140227	BOLT,flange	2								
20	MM40931302	COVER,thermosta	1								
21,22	31A46-00020	CASE ASSY,therm	1								
21	*	PIPE,thermostat	1								
22	*	CASE,thermostat	1								
23	31A46-11200	GASKET,thermo	1								
24,25	31A46-05010	HOSE ASSY,fuel	1								
24	F4300-02000	CLIP	2								
25	*	HOSE	1								

FIG.116 INLET & EXHAUST PARTS

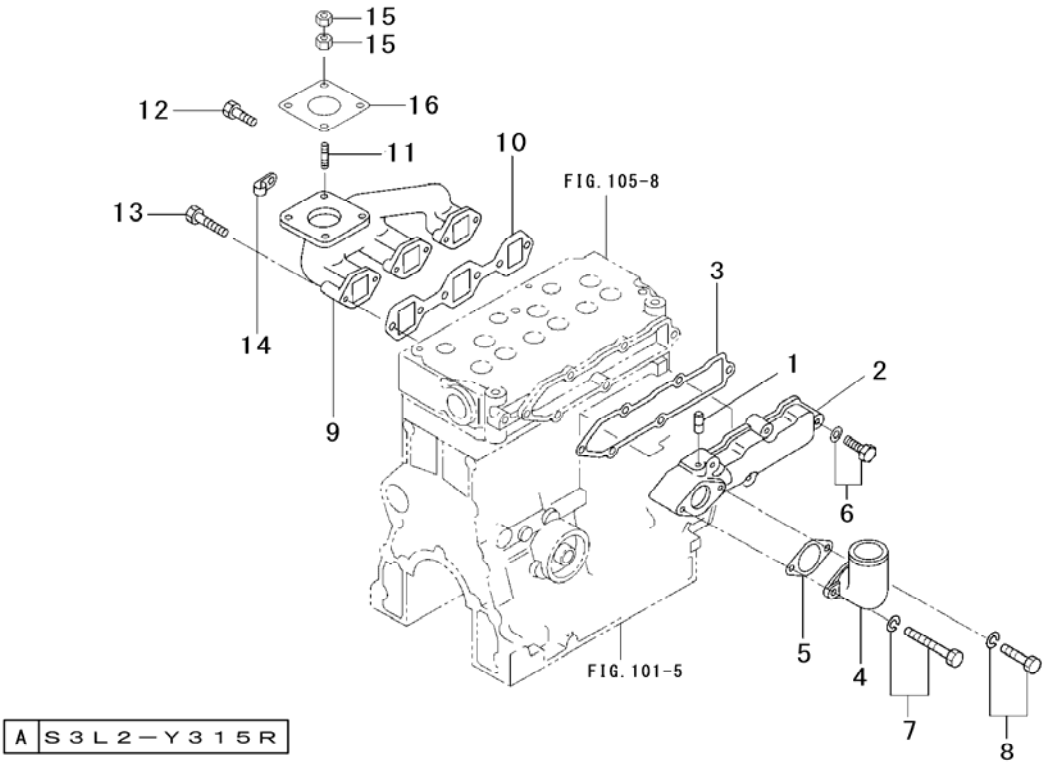

Key No.	Parts No.	Parts Name.	Q`ty A					R/P	Application	Description	Remarks
1,2	31B30-00040	COVER ASSY	1								
1	*	PIPE	1								
2	*	COVER,inlet	1								
3	31B30-00800	GASKET,cover	1								
4	31A30-00300	PIPE,inlet	1								
5	31A30-00801	GASKET,inlet	1								
6	MF241259	BOLT,w/washer	5								
7	MF241253	BOLT,w/washer	1								
8	MF241266	BOLT,w/washer	1								
9	31B32-00100	MANIFOLD,ehx up	1								
10	31B32-01200	GASKET	1								
11	F1435-08025	STUD	4								
12	F1035-08020	BOLT	4								
13	MF100026	BOLT	2								
14	31A32-02100	CLAMP	1								
15	MM436867	NUT	8								
16	30A30-00200	GASKET	1								

FIG.117 ELECTRIC PARTS

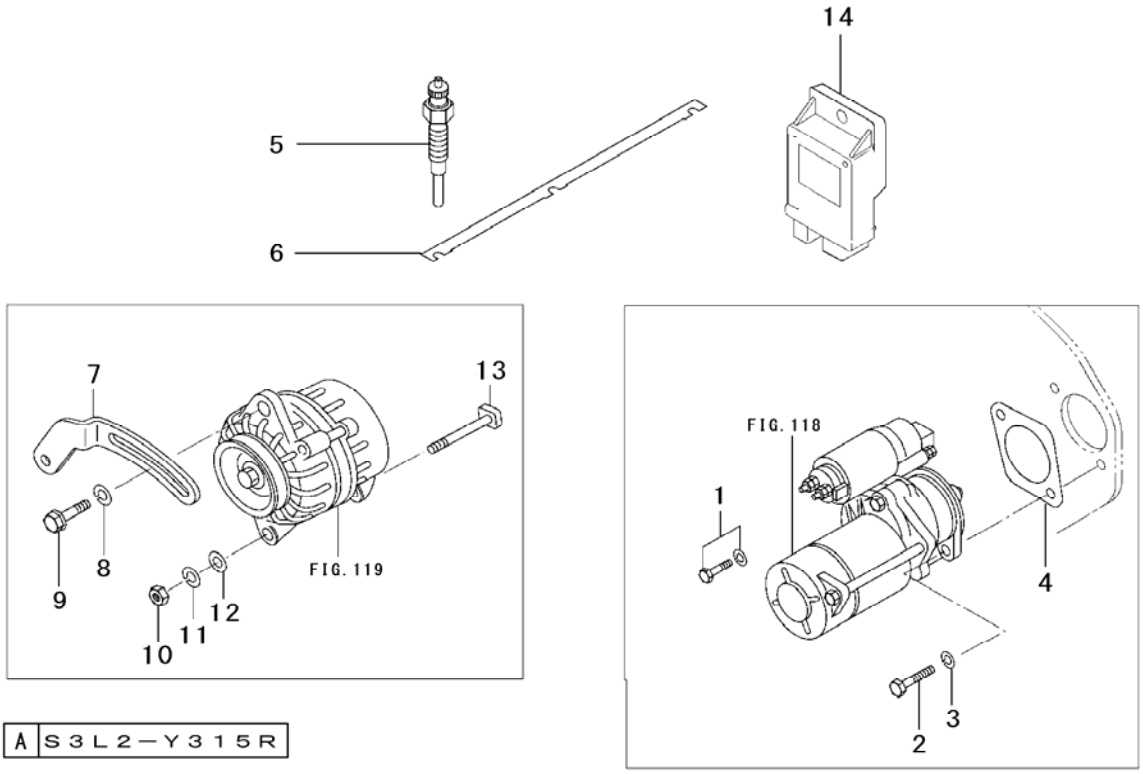

A	S3L2−Y315R

Key No.	Parts No.	Parts Name.	Q`ty					R/P	Application	Description	Remarks
			A								
1	MF241282	BOLT,w/washer	1								
2	MM409427	BOLT,starter	1								
3	F2515-10000	WASHER,spring	1								
4	30A66-00101	GASKET,starter	1								
5	32A66-03102	PLUG,glow	3								
6	31B66-04100	PLATE,connectio	1								
7	31A68-02100	PLATE,adjusting	1								
8	F2500-08000	WASHER	1								
9	MF140026	BOLT,flange	1								
10	F2300-10000	NUT	1								
11	F2515-10000	WASHER,spring	1								
12	F2500-10000	WASHER,plain	1								
13	31A68-20300	BOLT,alternator	1								
14	30H66-02300	CONTROLER,glow	1								

FIG.118 STARTER(12V-1.6kW)

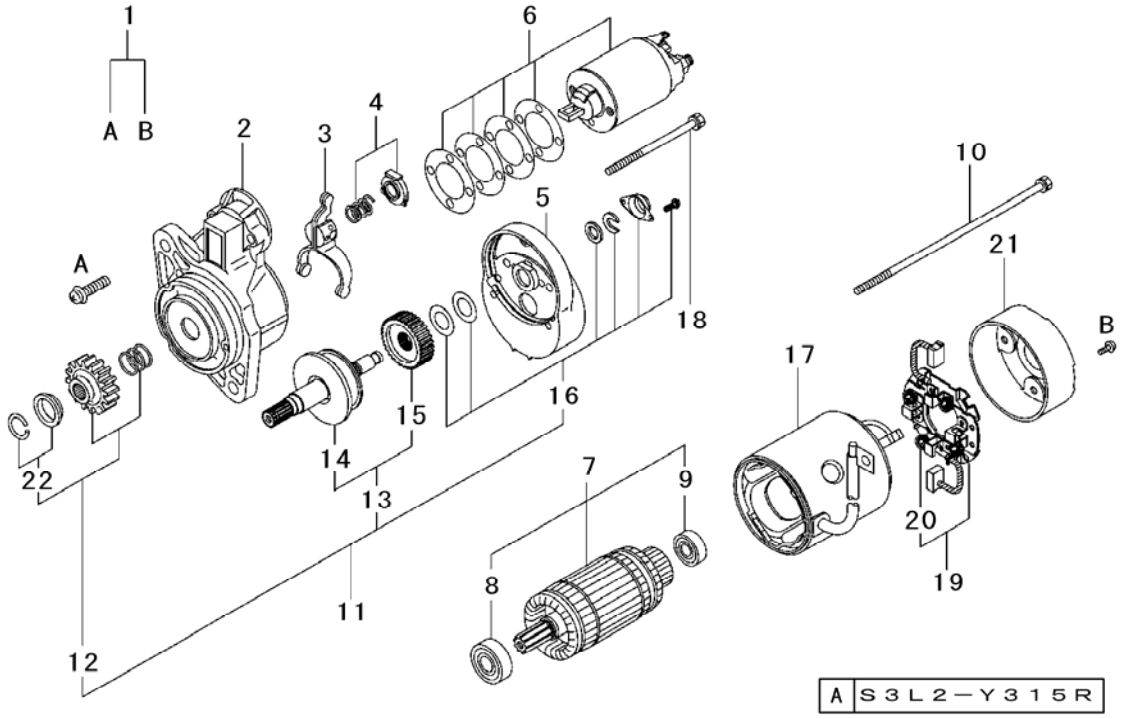

Key No.	Parts No.	Parts Name.	Q`ty A					R/P	Application	Description	Remarks
1～22	MM40941001	STARTER ASSY	1								
1	MD607432	SCREW SET	1								
2	MM502398	BRACKET ASSY	1								
3	MM502329	LEVER SET	1								
4	MM502330	SPRING SET	1								
5	MM502331	BRACKET ASSY	1								
6	M371X80171	SWITCH ASSY	1								
7	47X11-00700	ARMATURE SET	1								Inc8, 9
8	S930P12170	BEARING,front	1								
9	S930P12070	BEARING,rear	1								
10	MM502347	BOLT SET	2								
11	M357X81371	SHAFT ASSY	1								Inc12～16, 22
12	MM502396	PINION SET	1								Inc22
13	MD607539	GEAR SET	1								Inc14, 15
14	MD607540	SHAFT ASSY	1								
15	MM502341	GEAR	1								
16	MM502342	COVER SET	1								
17	M800X59471	YOKE ASSY	1								
18	MM502332	BOLT SET	1								
19	MD607420	HOLDER ASSY	1								Inc20
20	MD602210	SPRING,brush	4								
21	MM502346	BRACKET ASSY	1								
22	MD607416	STOPPER SET	1								

FIG.119 ALTERNATOR(12V-50A)

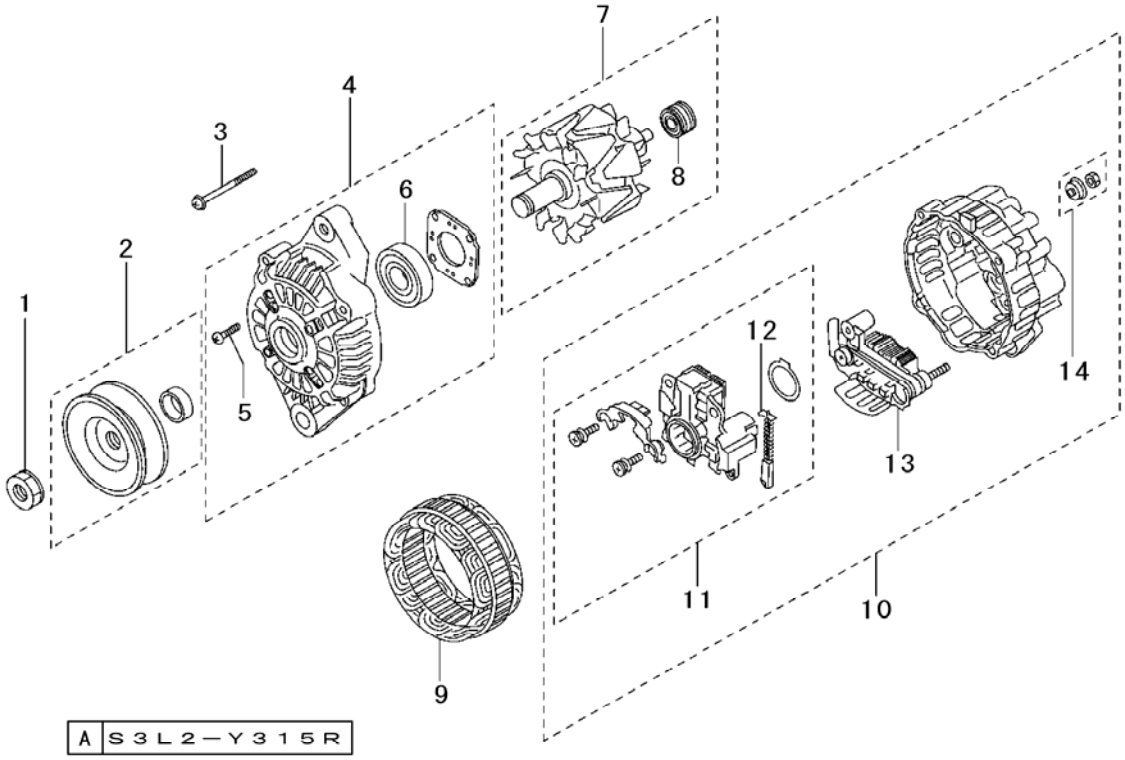

Key No.	Parts No.	Parts Name.	Q`ty					R/P	Application	Description	Remarks
			A								
1～14	31A68-00402	ALTERNATOR ASSY	1								
1	MD618927	NUT SET	1								
2	MM502578	PULLEY ASSY	1								
3	MD611556	BOLT SET	1								
4	47X11-02305	BRACKET ASSY	1								Inc5, 6
5	MM502568	SCREW SET	1								
6	A930X94570	BEARING,front	1								
7	47X11-02311	ROTOR ASSY	1								Inc8
8	MD611928	BEARING,rear	1								
9	47X11-02312	STATOR ASSY	1								
10	47X11-02313	BRACKET ASSY	1								Inc11～14
11	47X11-02304	REGULATOR SET	1								Inc12
12	A647X50170	BRUSH SET	2								
13	MM502574	RECTIFIER ASSY	1								
14	MM502575	NUT SET	1								

FIG.120 REPAIR GASKET KIT

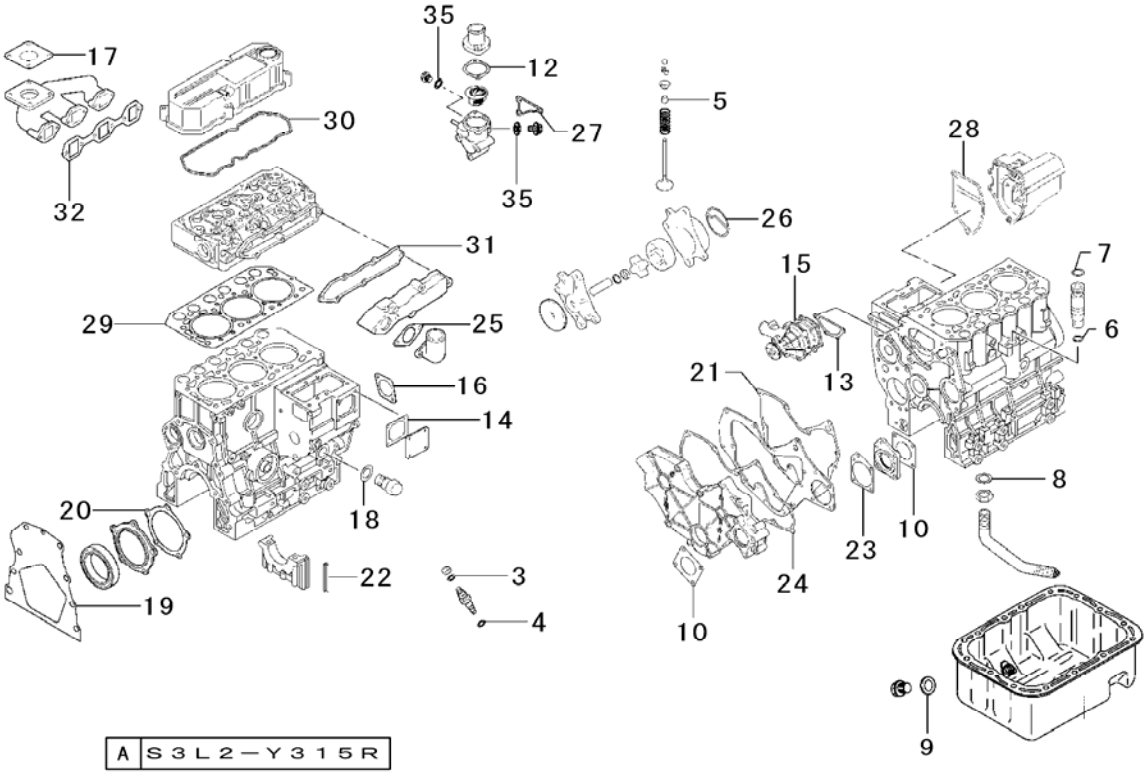

Key No.	Parts No.	Parts Name.	Q`ty A					R/P	Application	Description	Remarks
1～41	31B94-16010	GASKET KIT	1								
1	MD050317	GASKET,drain	2								Not Shown
2	F3150-00900	GASKET	1								Not Shown
3	MD068355	GASKET	3								
4	MD070717	GASKET	3								
5	MD115472	SEAL	6								
6	MD701788	O-RING	1								
7	F3150-01800	O-RING	1								
8	MF660036	GASKET	1								
9	F4202-14000	GASKET	2								Not Shown
10	30A11-00101	GASKET,cover	2								
11	31A46-01200	GASKET	2								Not Shown
12	31A46-11200	GASKET,thermo	1								
13	30H45-00101	GASKET,water	1								
14	30A63-00101	GASKET,cover	1								
15	MM409326	GASKET	1								
16	30A66-00101	GASKET,start	1								
17	30A30-00200	GASKET	1								
18	34340-00700	GASKET	1								
19	31A07-02401	GASKET,rear	1								
20	31A07-11701	GASKET,case	1								
21	31A07-11901	GASKET,plate	1								
22	31A07-12200	SEAL,side	4								
23	31A11-05201	GASKET,housing	1								
24	31A11-11101	GASKET,gear	1								
25	31A30-00801	GASKET,inlet	1								
26	31A35-02300	PACKING,body	1								
27	31A46-10101	GASKET,case	1								
28	31A63-12200	GASKET,case	1								
29	31B01-23200	GASKET,head	1								
30	31B04-13201	GASKET,rocker	1								
31	31B30-00800	GASKET,inlet	1								Not Shown
32	31B32-01200	GASKET,exh	1								
33	32A91-05100	GASKET,liquid	1								Not Shown
34	49168-15200	GASKET	3								Not Shown

FIG.120 REPAIR GASKET KIT

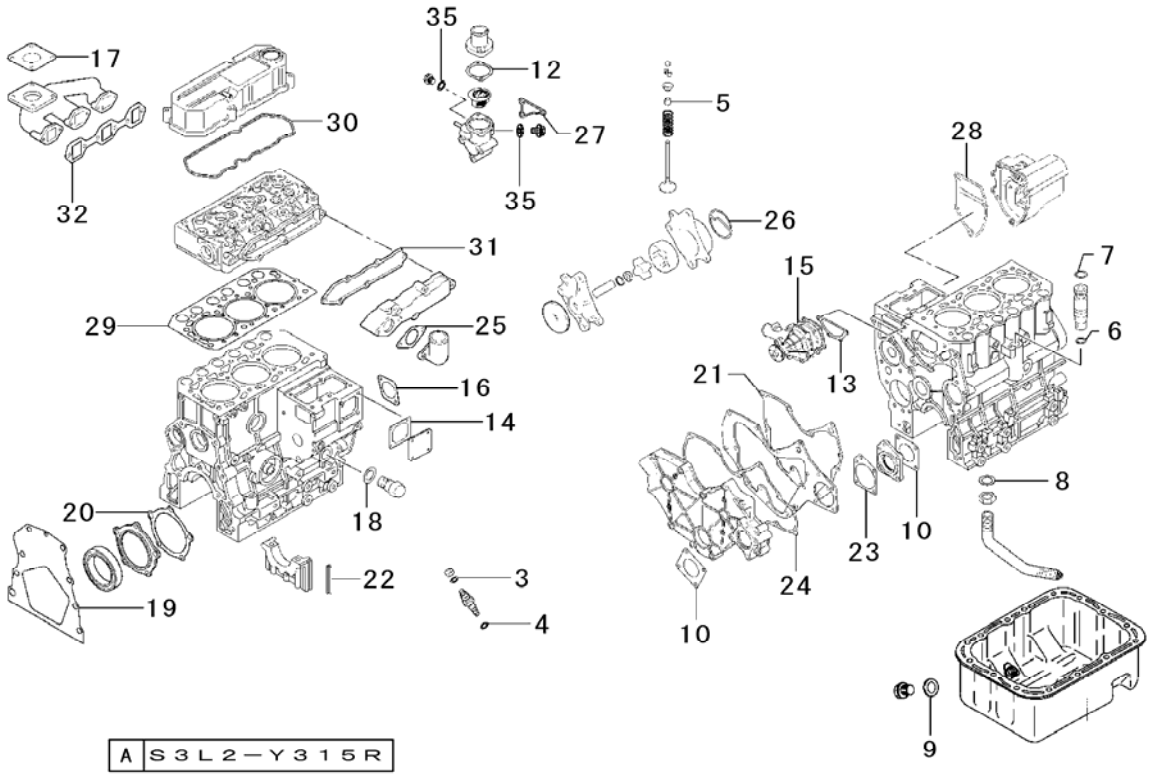

Key No.	Parts No.	Parts Name.	Q`ty A					R/P	Application	Description	Remarks
35	05946-01601	WASHER,seal	3								
36	32C39-00200	O-RING	1								Not Shown
37	31B30-00902	GASKET,inlet	1								Not Shown
38	MM435249	PROTECTOR,oil	1								Not Shown
39	F4202-14000	GASKET	2								Not Shown
40	0830 0200 600	O-RING	1								Not Shown
41	F4202-10000	GASKET	4								Not Shown

Parts No.	Page	Key No.
A647X50170	21	12
A930X94570	21	6
F1025-08022	16	3
F1035-05010	7	8
F1035-06018	13	7
F1035-08016	7	23
F1035-08020	2	8
	10	10
	18	12
F1035-08045	3	6
F1035-12025	1	25
F1435-08025	18	11
F1540108030	3	11
F1540108040	4	5
F1805-06025	9	9
F2300-06000	14	4
F2300-10000	19	10
F2305-18000	6	20
F2320-08000	14	5
F2320-16000	16	12
F2325-08000	7	10
F2500-08000	19	8
F2500-10000	19	12
F2500-18000	6	18
F2515-08000	3	17
	14	6
F2515-10000	19	3
	19	11
F2515-18000	6	19
F2846-05000	1	24
F2846-06000	6	26
F2850-03014	16	5
F3150-00900	22	2
F3150-01800	16	6
	22	7
F3200-01900	7	9
F4202-10000	23	41
F4202-14000	22	9
	23	39
F4300-02000	17	24
F5014-14000	1	12
F5014-25000	5	2
F5014-35000	5	1
K8712630	14	3
M357X81371	20	11
M371X80171	20	6
M800X59471	20	17
MD000961	14	17
MD001380	17	11
MD001521	7	21
MD006704	6	8
MD008762	3	7
MD008784	4	6
MD009014	17	10
MD016483	7	5
MD021105	6	9

Parts No.	Page	Key No.
MD021204	7	15
MD024256	1	22
MD040556	6	23
MD041704	17	17
MD050316	3	18
MD050317	3	19
	22	1
MD065628	14	16
MD068353	9	3
MD068355	9	2
	22	3
MD070717	9	1
	22	4
MD075460	17	18
MD107589	10	23
MD115472	7	6
	22	5
MD602210	20	20
MD603493	12	
MD603495	12	
MD603496	12	
MD607416	20	22
MD607420	20	19
MD607432	20	1
MD607539	20	13
MD607540	20	14
MD611556	21	3
MD611928	21	8
MD618927	21	1
MD701788	16	4
	22	6
MD701789	16	9
MD703856	7	20
MD712517	8	6
MF100026	18	13
MF100064	15	34
MF140026	19	9
MF140227	17	19
MF240031	17	2
MF240051	3	3
	3	21
	4	11
MF241223	16	10
MF241224	15	38
	15	38a
MF241229	10	22
MF241242	17	16
MF241252	13	8
MF241253	18	7
MF241259	18	6
MF241266	17	12
	18	8
MF241280	5	13
MF241282	19	1
MF244860	17	7
MF244863	17	8

Parts No.	Page	Key No.
MF430005	3	16
MF472404	1	18
MF476018	7	22
MF476215	4	9
	6	17
MF660036	16	13
	22	8
MF665532	1	11
MK66112000	10	11
MM316248	17	13
MM398237	3	15
MM400380	4	7
MM406420	14	24
MM408240	2	15
MM408470	5	12
MM409040	10	1
MM409041	10	2
MM409042	10	3
MM409043	10	4
MM409044	10	5
MM409045	10	6
MM409046	10	7
MM409047	10	8
MM409048	10	9
MM409150	15	36
MM409303	17	1～4
MM409304	17	3
MM40931302	17	20
MM409326	17	4
	22	15
MM409327	17	1
MM40941001	20	1～22
MM409427	19	2
MM409645	1	19
MM40967101	15	42
MM409980	16	19
MM413206	10	12
MM430131	9	11
MM43041901	16	8
MM43059801	16	4～8
MM430613	1	10
MM430614	9	8
MM430703	9	7
MM43330601	7	4
MM433673	14	7
MM434541	14	20
MM435249	23	38
MM43594101	12	1～8
MM436867	18	15
MM43721501	2	12
MM500315	11	
MM500370	11	14
MM500441	11	20
MM501098	11	8
MM501846	12	2
MM502329	20	3

Parts No.	Page	Key No.
MM502330	20	4
MM502331	20	5
MM502332	20	18
MM502341	20	15
MM502342	20	16
MM502346	20	21
MM502347	20	10
MM502396	20	12
MM502398	20	2
MM502568	21	5
MM502574	21	13
MM502575	21	14
MM502578	21	2
MM514045	12	8
MM514195	11	17
MM514380	12	7
MS401327	3	14
MS401426	3	12
MS401435	3	13
MS470059	4	4
MS471104	1	14
MS471105	1	15
MS471110	1	16
MS602106	2	10
MS603022	10	20
MS604032	9	12
MS660164	10	21
MS660167	10	19
MS660169	9	13
MS661140	1	13
	5	9
MS665511	1	17
S930P12070	20	9
S930P12170	20	8
04826-22000	1	1
04826-23500	1	2
04827-90130	1	23
0550 0003 020	14	1
05946-01000	10	13
05946-01601	17	14
	23	35
0750 0560 024	6	25
0800 0000 600	1	20
0830 0100 101	14	2
0830 0200 600	23	40
09006-80020	11	16
09013-70130	11	4
09016-10210	11	7
09016-40170	11	9
09017-00170	11	10
09021-00470	11	11
09024-40180	11	18
09024-50210	11	19
09030-10060	11	12
09031-10010	11	
09031-10110	11	21

Parts No.	Page	Key No.
09031-10120	11	
09031-10130	11	
09031-10140	11	
09031-10160	11	
09031-10280	11	
09031-10300	11	
09031-10310	11	
09046-70040	11	15
09311-03840	12	1
09312-10380	12	4
09312-70310	12	3
09317-40070	12	5
09317-51830	12	
09317-51850	12	
09317-51890	12	
09317-51950	12	
09317-51970	12	
09317-51990	12	
09340-05060	12	6
30405-31403	4	10
30A11-00101	3	10
	22	10
30A19-00040	6	12
30A19-10010	6	13
30A19-10020	6	14
30A19-10030	6	15
30A30-00200	18	16
	22	17
30A61-03800	10	20,21
30A63-00101	15	37
	22	14
30A66-00101	19	4
	22	16
30A87-10043	15	42,43
30A87-20403	15	43
30H45-00101	17	6
	22	13
30H66-02300	19	14
30L07-00700	2	18
30L63-00030	14	8,9
30L63-00600	14	15
30L63-00700	14	10
30L63-02100	14	8
30L63-02200	14	25
30L63-02300	14	9
30L63-02400	15	39
30L63-12600	14	11
31A01-01201	5	3
31A01-01301	5	4
31A01-02500	5	5
31A01-02800	5	6
31A01-21100	5	10
31A03-13600	5	7
31A04-00700	7	7
31A04-01301	7	3
31A04-11024	7	10～12

Parts No.	Page	Key No.
31A04-20200	7	2
31A04-30100	7	1
31A04-34100	7	13
31A04-34300	7	14
31A05-00300	4	12
31A05-01300	4	13
31A07-00801	1	3
31A07-02300	2	7
31A07-02401	2	14
	22	19
31A07-02500	1	26
31A07-03100	1	4
31A07-11601	2	5
31A07-11701	2	6
	22	20
31A07-11901	3	2
	22	21
31A07-12200	2	17
	22	22
31A08-04102	2	16
31A09-01010	2	1
31A09-01020	2	2
31A09-01030	2	3
31A09-01040	2	4
31A11-00802	3	4
31A11-02100	3	1
31A11-05101	3	8
31A11-05201	3	9
	22	23
31A11-11101	3	5
	22	24
31A17-00010	6	4
31A17-00020	6	5
31A17-00030	6	6
31A17-09101	6	1
31A17-09201	6	2
31A17-09301	6	3
31A17-10602	6	7
31A21-03800	6	22
31A23-00051	1	20,21
31A23-00600	8	3
31A23-00800	8	2
31A23-01023	8	3,4
31A23-01302	8	7
31A23-01402	8	1
31A23-01502	8	5
31A30-00300	18	4
31A30-00801	18	5
	22	25
31A32-02100	18	14
31A35-02300	16	2
	22	26
31A35-05041	16	11
31A35-30010	16	1
31A40-02100	16	15
31A45-20700	17	9

Parts No.	Page	Key No.
31A46-00020	17	21,22
31A46-01200	22	11
31A46-02300	2	9
31A46-05010	17	24,25
31A46-10101	17	5
	22	27
31A46-11200	17	23
	22	12
31A48-01100	17	15
31A60-00300	10	17
31A61-01200	9	15
31A61-01500	9	14
31A61-07101	9	4
31A61-07201	9	5
31A61-07301	9	6
31A62-00300	13	1～5
31A62-00310	13	1
31A62-00312	13	2
31A62-00317	13	3
31A62-00318	13	4
31A62-00319	13	5
31A63-01010	14	23,24
31A63-01800	14	12
31A63-02301	15	35
31A63-02600	14	13
31A63-02700	14	14
31A63-04700	14	21
31A63-05300	14	22
31A63-10300	14	31
31A63-11061	15	33
31A63-12200	15	41
	22	28
31A63-15200	14	30
31A63-15500	14	26
31A63-25101	15	32
31A63-32100	14	27
31A64-00200	14	18
31A64-00800	15	40
31A64-01080	14	15～20
31A64-01800	14	19
31A65-00201	10	14
31A65-00800	10	15
31A68-00402	21	1～14
31A68-02100	19	7
31A68-20300	19	13
31A90-00300	16	14
31B01-13040	5	1～9
31B01-23200	5	11
	22	29
31B04-00014	7	8～18
31B04-01010	7	15～16
31B04-03011	4	1,2
31B04-13201	4	3
	22	30
31B05-00103	4	8
31B06-07800	4	15

Parts No.	Page	Key No.
31B07-04400	2	13
31B07-52030	1	1～24
31B13-10021	3	18～20
31B19-01023	6	8～11
31B20-00204	6	16
31B20-02601	6	21
31B21-02070	6	23,24
31B30-00040	18	1,2
31B30-00800	18	3
	22	31
31B30-00902	23	37
31B32-00100	18	9
31B32-01200	18	10
	22	32
31B42-21700	16	18
31B61-02600	9	10
31B61-05300	10	18,19
31B61-05311	10	18
31B61-13100	9	11～15
31B62-01200	13	6
31B63-00400	14	28
31B63-00500	14	29
31B63-33010	14	1～30
31B65-00200	10	16
31B65-11300	7	19
31B65-14090	11	1～21
31B66-04100	19	6
31B94-16010	22	1～41
32A04-02401	7	12
32A36-05010	16	16
32A66-03102	19	5
32A91-05100	22	33
32C04-04501	7	17
32C04-06101	7	18
32C39-00200	23	36
32C46-04100	2	11
34340-00700	16	17
	22	18
47X01-06100	11	1
47X01-07600	11	6
47X01-07700	11	5
47X01-13200	11	2
47X01-13300	11	3
47X01-22700	11	13
47X11-00700	20	7
47X11-02304	21	11
47X11-02305	21	4
47X11-02311	21	7
47X11-02312	21	9
47X11-02313	21	10
49168-15200	22	34

FIG.201 FUEL LINE (1/2)

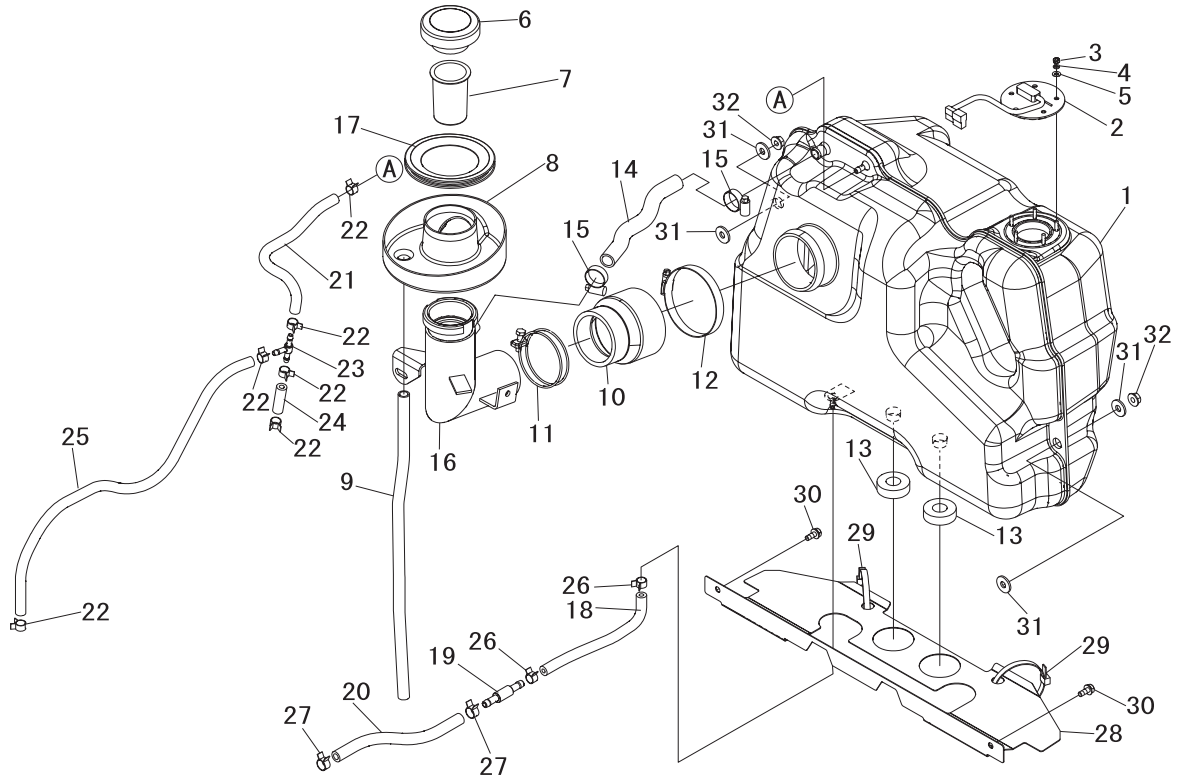

Key No.	Parts No.	Parts Name.	Q`ty ALL					R/P	Application	Description	Remarks
1～5	1956 0102 000	TANK FUEL ASSY	1								
1	1956 0103 000	TANK FUEL	1								
2	1044 0116 000	FUEL UNIT	1								
3	A300 0104 002	NUT	5							M4	
4	A360 0100 402	WASHER,spring	5							M4	
5	0350 0120 410	WASHER	5							M4	
6	1956 0101 000	CAP TANK	1								
7	0980 6000 001	FILTER	1								
8	1956 0108 000	TRAY FUEL	1								
9	0980 4100 502	PIPE,vinyl	1							φ10×500	
10	1956 0106 000	HOSE	1								
11	0050 1100 710	CLAMP,hose	1							φ71	
12	0050 5000 900	CLAMP HOSE	1								
13	1956 0124 000	RUBBER,cushion	2								
14	1956 0141 000	HOSE	1								
15	HA23 0108 000	CLIP,hose	2								
16	1957 0105 AG0	JOINT	1								
17	1956 0139 000	SEAL,fuel	1								
18	0981 0060 160	HOSE	1							φ6×160	
19	1044 0442 000	JOINT PIPE	1								
20	0981 0080 200	HOSE	1							φ8×200	
21	0981 0060 250	HOSE	1							φ6×250	
22	0050 3111 005	CLAMP,hose	6							φ11	
23	3694 0844 000	JOINT B	1								
24	0981 0060 040	HOSE	1							φ6×40	
25	0981 0060 500	HOSE	1							φ6×500	
26	0050 3111 005	CLAMP,hose	2							φ11	
27	0050 3113 007	CLAMP,hose	2							φ13	
28	1956 0133 003	PLATE	1								
29	0051 1070 070	BAND,wire	2								
30	H144 0106 016	BOLT,w/washer	2							M6×16	
31	0350 0150 822	WASHER	4							M8	
32	F301 0108 000	NUT,flange	2							M8	

FIG.202 FUEL LINE (2/2)

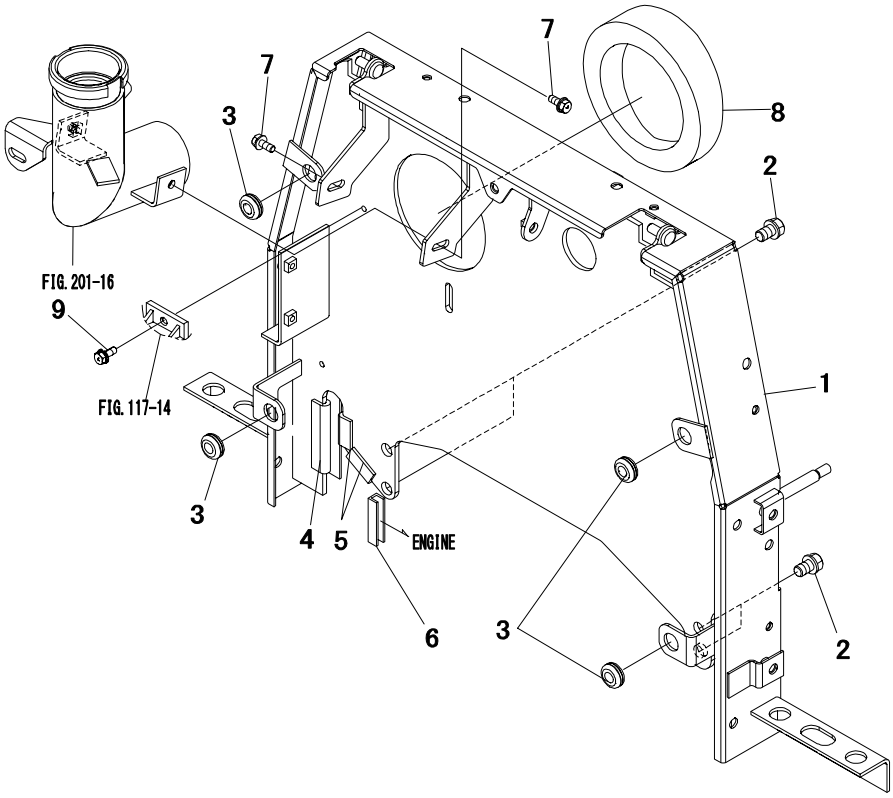

Key No.	Parts No.	Parts Name.	Q`ty ALL					R/P	Application	Description	Remarks
1	1945 0316 AG0	FRAME	1								
2	F154 0110 016	BOLT,w/washer	4							M10×16	
3	1035 6287 000	GROMMET	4								
4	3544 9448 000	RUBBER	1								
5	1025 3429 000	BAND,rubber	2								
6	1044 0135 000	RUBBER	1								
7	H144 0106 016	BOLT,w/washer	2							M6×16	
8	1956 0162 000	CUSHION	1								
9	H144 0106 016	BOLT,w/washer	1							M6×16	

FIG.203 MUFFLER

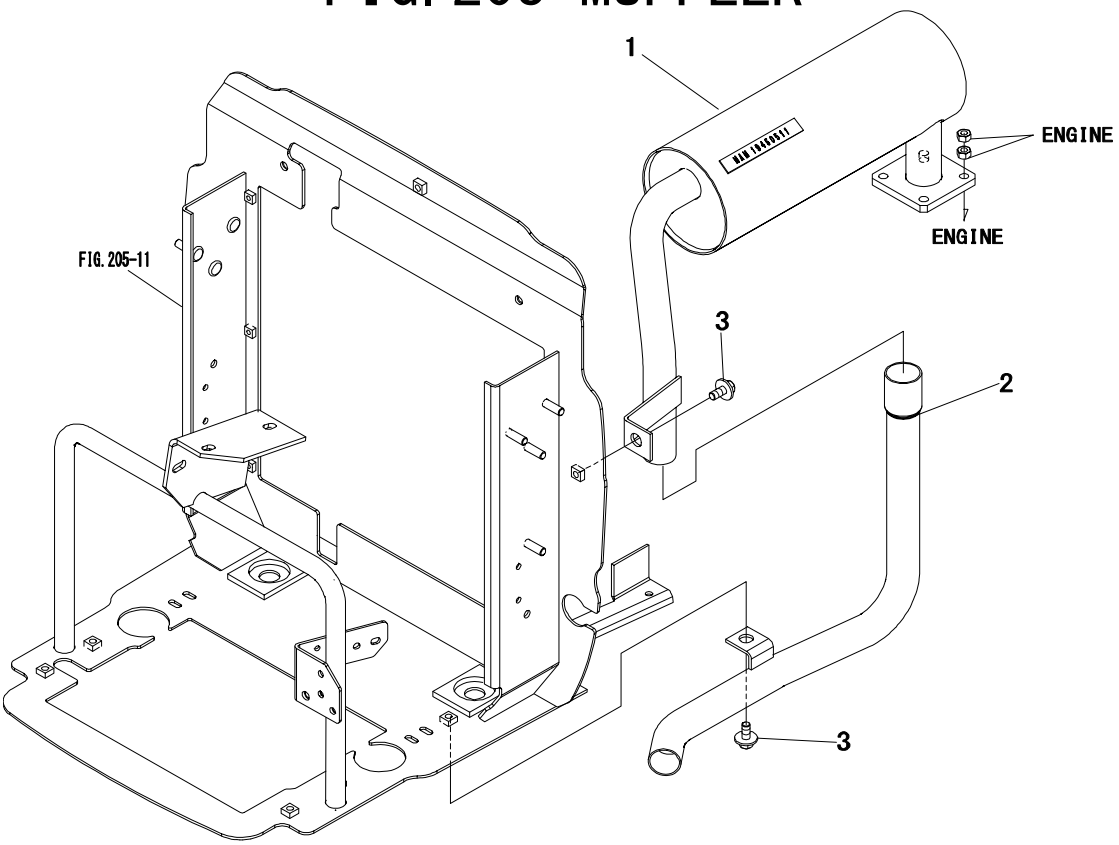

Key No.	Parts No.	Parts Name.	Q`ty					R/P	Application	Description	Remarks
			ALL								
1	1945 0511 0K0	MUFFLER	1								
2	1945 0521 0K0	PIPE,tail	1								
3	H184 0108 020	BOLT,w/washer	2							M8×20	

FIG.204 RADIATOR

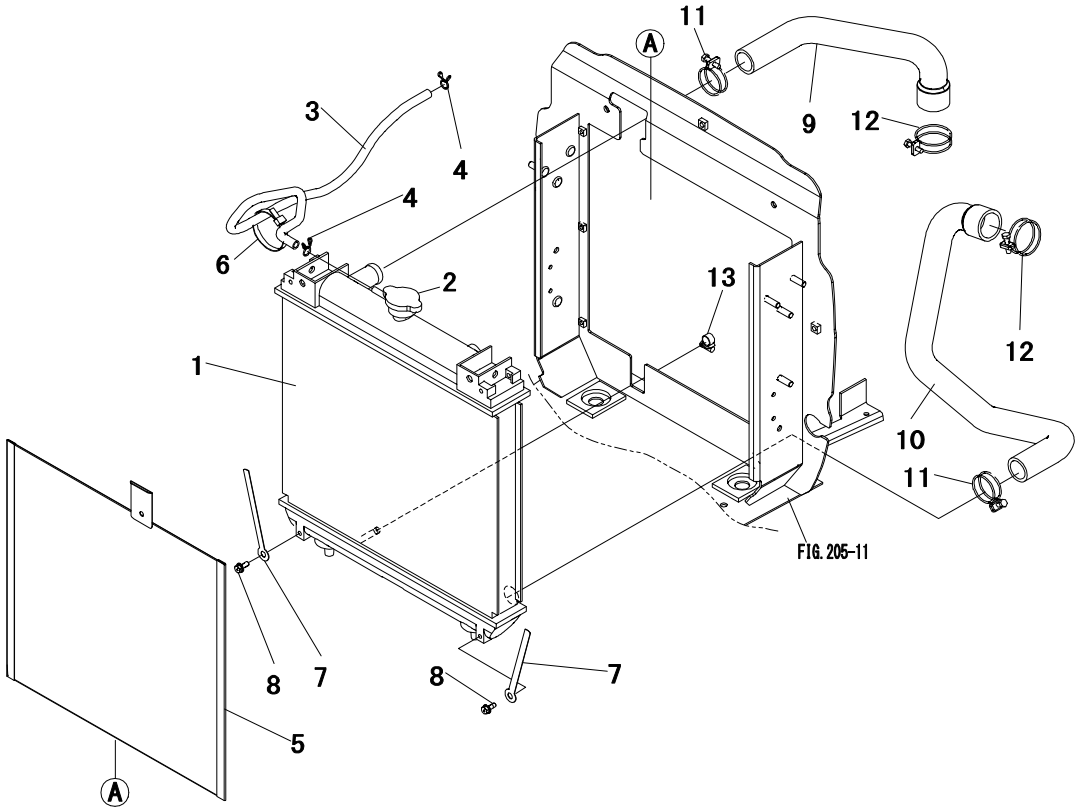

Key No.	Parts No.	Parts Name.	Q`ty ALL					R/P	Application	Description	Remarks
1～4	1941 0412 001	RADIATOR ASSY	1								
1	*	RADIATOR	1								
2	3523 0551 200	CAP	1								
3	3523 0551 400	HOSE	1								
4	68201-01814	CLIP	2								
5	1956 0414 AG0	NET RADIATOR	1								
6	0051 1070 070	BAND,wire	1								
7	1044 0435 000	CLAMP	2								
8	H144 0106 016	BOLT,w/washer	2							M6×16	
9	1945 0616 000	HOSE UPPER	1								
10	1945 0617 000	HOSE LOWER	1								
11	0050 1100 380	CLAMP,hose	2							φ38	
12	0050 1100 450	CLAMP,hose	2							φ45	
13	69501-06613	CLAMP	1								

FIG.205 RADIATOR

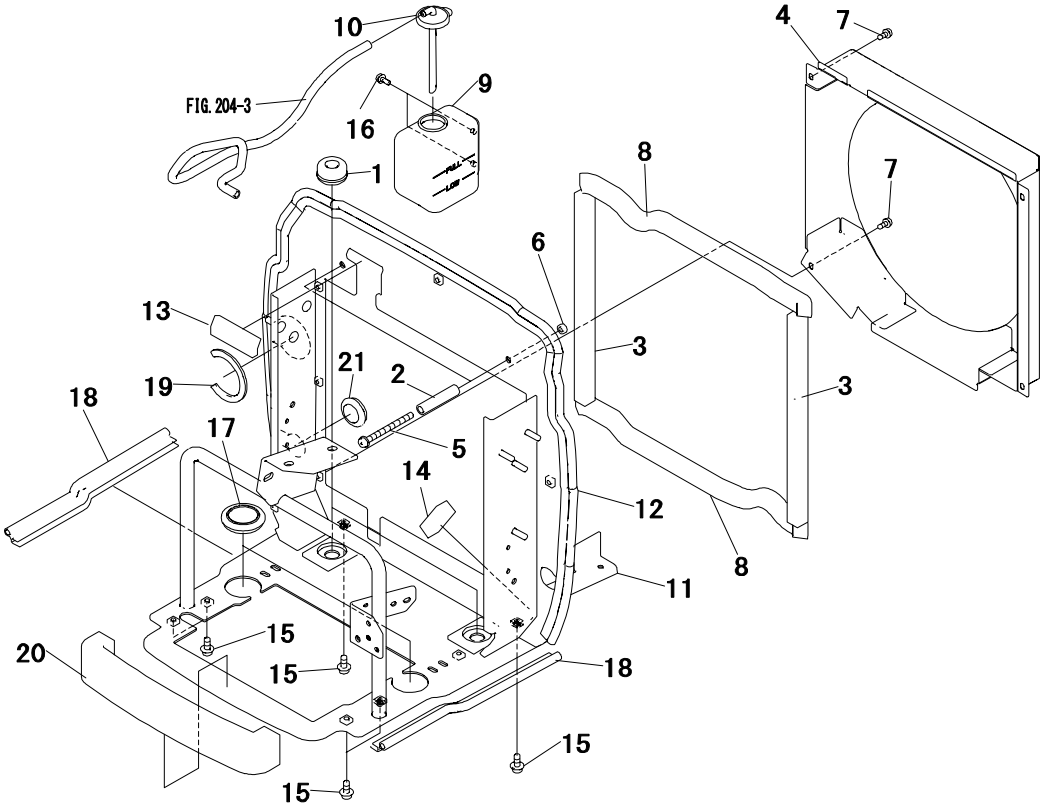

Key No.	Parts No.	Parts Name.	Q`ty ALL					R/P	Application	Description	Remarks
1	6043 2031 000	CUSHION	2								
2	1956 0422 000	SPACER	2								
3	1956 0424 000	CUSHION	2								
4	1945 0621 AG0	SHROUD FAN	1								
5	F050 0108 090	BOLT	2							M8×90	
6	A301 0108 002	NUT	2							M8	
7	H144 0106 016	BOLT,w/washer	4							M6×16	
8	1044 0424 000	CUSHION	2								
9,10	1908 0445 000	SUB TANK ASSY	1								
9	1908 0445 100	SUB TANK	1								
10	1908 0445 200	CAP ASSY	1								
11	1945 0615 AG0	BRACKET,radiato	1								
12	1944 0424 000	WEATHER STRIP	1								
13	1956 0442 000	CUSHION	1								
14	1041 0441 000	CUSHION	1								
15	H154 0108 020	BOLT,w/washer	6							M8×20	
16	H144 0106 016	BOLT,w/washer	2							M6×16	
17	6022 1831 000	GROMMET	2								
18	1051 0655 000	WEATHER STRIP	2								
19	1176 3543 000	RUBBER	1								
20	1041 2692 000	CUSHION	1								
21	6043 2036 000	GROMMET	1								

FIG.206 AIR CLEANER

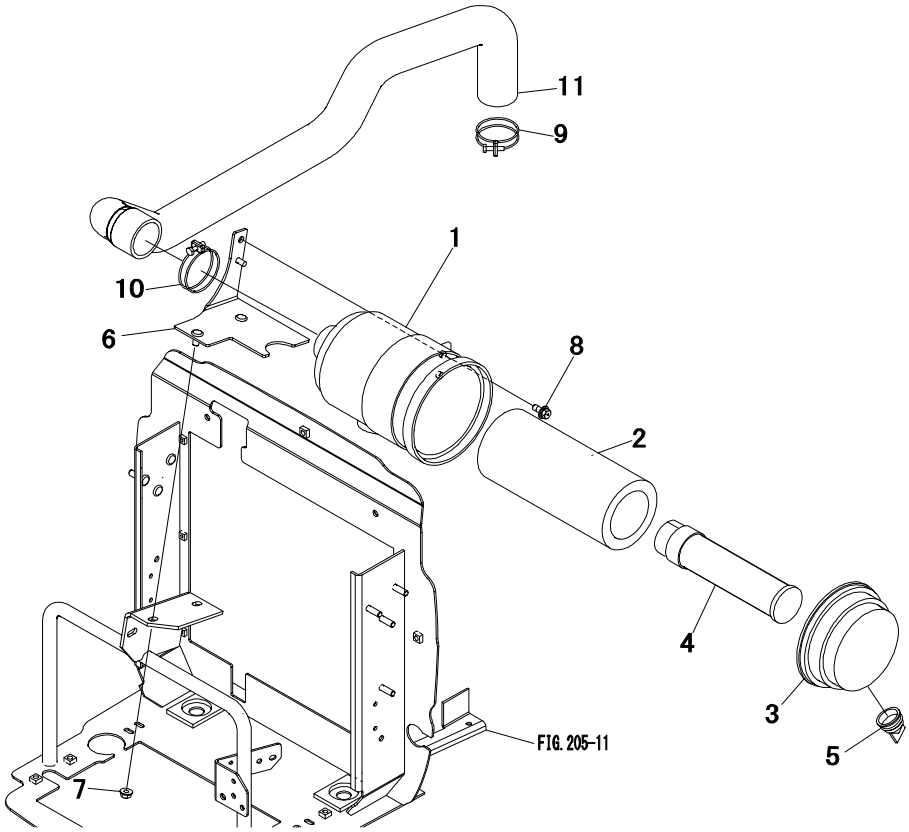

Key No.	Parts No.	Parts Name.	Q`ty					R/P	Application	Description	Remarks
			ALL								
1～5	1969 0531 000	AIR CLEANER ASS	1								
1	1040 0511 100	BODY ASSY	1								
2	1040 0511 200	ELEMENT ASSY	1								
3	1040 0511 300	COVER ASSY	1								
4	1969 0531 100	ELEMENT,inner	1								
5	3546 0501 400	VALVE,unloader	1								
6	1944 0516 000	BRACKET,air cle	1								
7	F301 0108 000	NUT,flange	2							M8	
8	H154 0108 020	BOLT,w/washer	1							M8×20	
9	0050 1100 560	CLAMP,hose	1							φ56	
10	0050 1100 630	CLAMP,hose	1							φ63	
11	1945 0421 000	HOSE AIR	1								

FIG.301 BONNET (1/3)

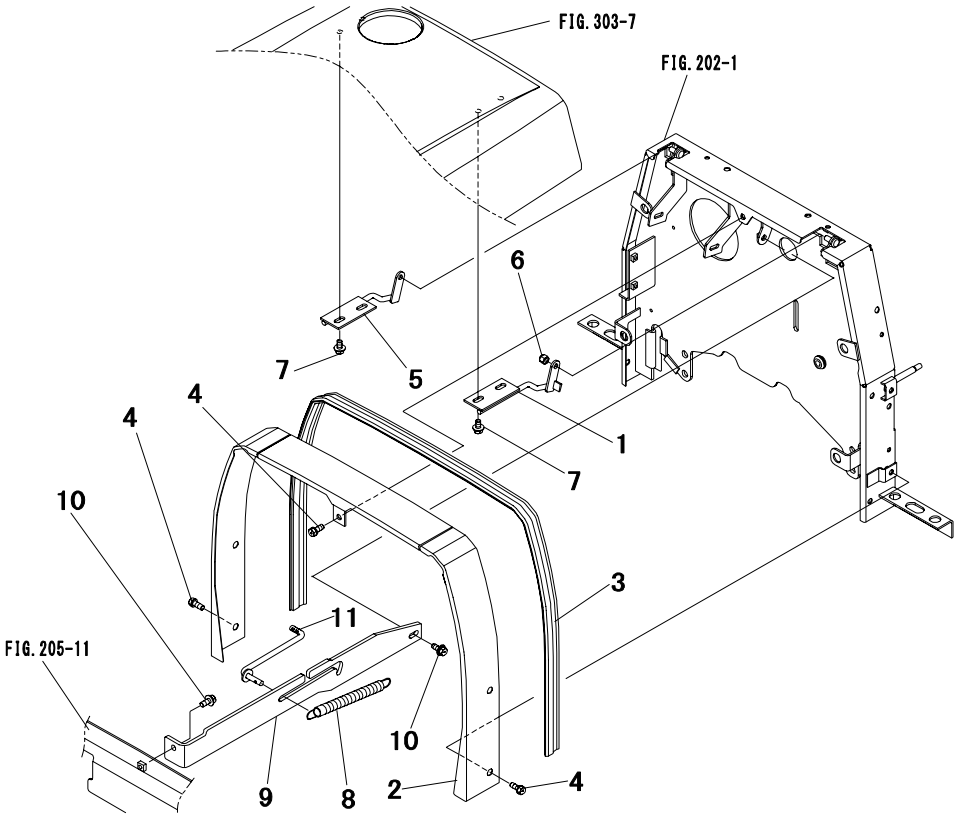

Key No.	Parts No.	Parts Name.	Q`ty ALL					R/P	Application	Description	Remarks
1	1944 2651 000	BRACKET LH	1								
2	1956 2671 AE0	COVER	1								
3	1956 2681 000	WEATHER STRIP	1								
4	F154 0108 020	BOLT,w/washer	5							M8×20	
5	1944 2652 000	BRACKET RH	1								
6	A381 0108 000	NUT	1							M8	
7	H154 0108 016	BOLT,w/washer	4							M8×16	
8	3520 7183 000	SPRING	1								
9	1051 1172 000	PLATE	1								
10	H154 0108 020	BOLT,w/washer	2							M8×20	
11	1051 1173 001	ROD	1								

FIG.302 BONNET (2/3)

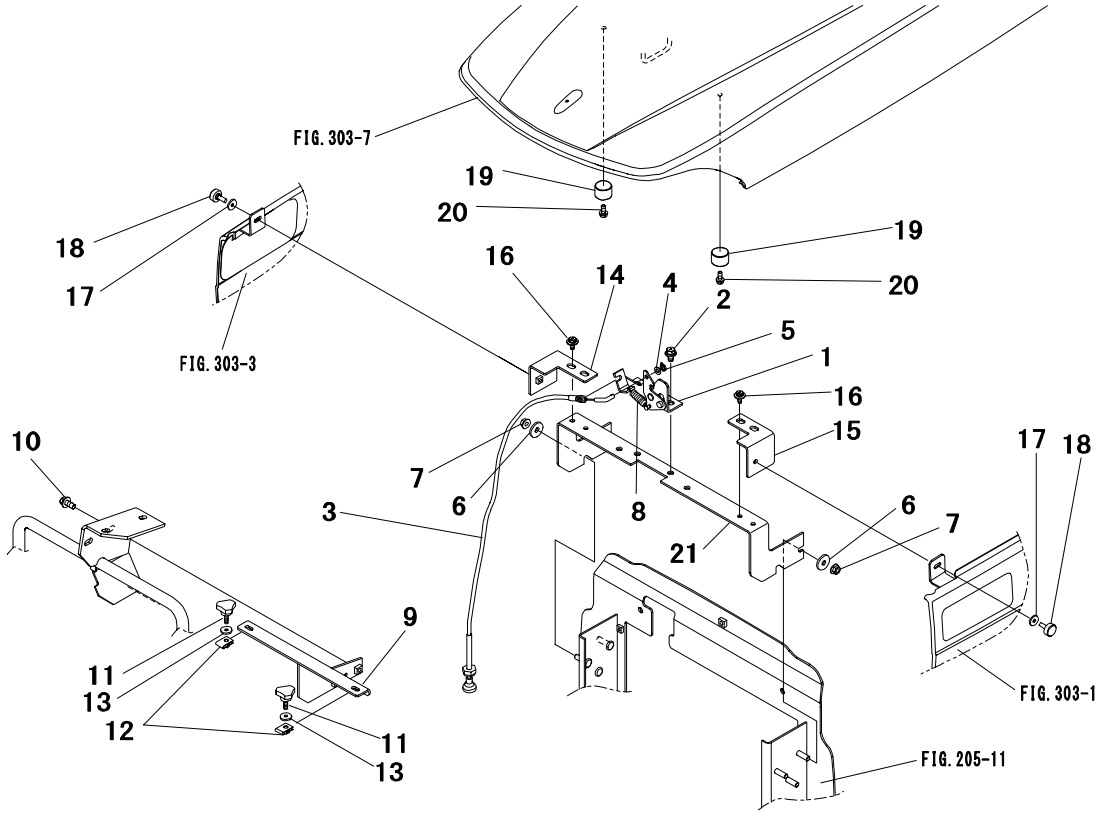

Key No.	Parts No.	Parts Name.	Q`ty ALL					R/P	Application	Description	Remarks
1	1040 2621 000	BRACKET	1								
2	H154 0108 016	BOLT,w/washer	2							M8×16	
3	1040 2623 001	WIRE	1								
4	0350 0130 613	WASHER	1							M6	
5	0520 0125 015	PIN,split	1							φ2.5×15	
6	0350 0160 826	WASHER	4							M8	
7	F301 0108 000	NUT,flange	4							M8	
8	1974 0722 000	SPRING	1								
9	1050 1182 AG0	STAY	1								
10	H154 0108 020	BOLT,w/washer	2							M8×20	
11	2708 3213 000	KNOB	2								
12	1044 6346 000	NUT,clip	2								
13	1447 0147 001	WASHER	2								
14	1944 2633 000	BRACKET RH	1								
15	1944 2632 000	BRACKET LH	1								
16	H194 0106 016	BOLT,w/washer	4							M6×16	
17	1447 0147 001	WASHER	2								
18	2716 2402 000	KNOB	2								
19	1040 2624 001	SPRING	2								
20	H144 0106 016	BOLT,w/washer	2							M6×16	
21	1944 2661 AG0	BRACKET	1								

FIG.303 BONNET (3/3)

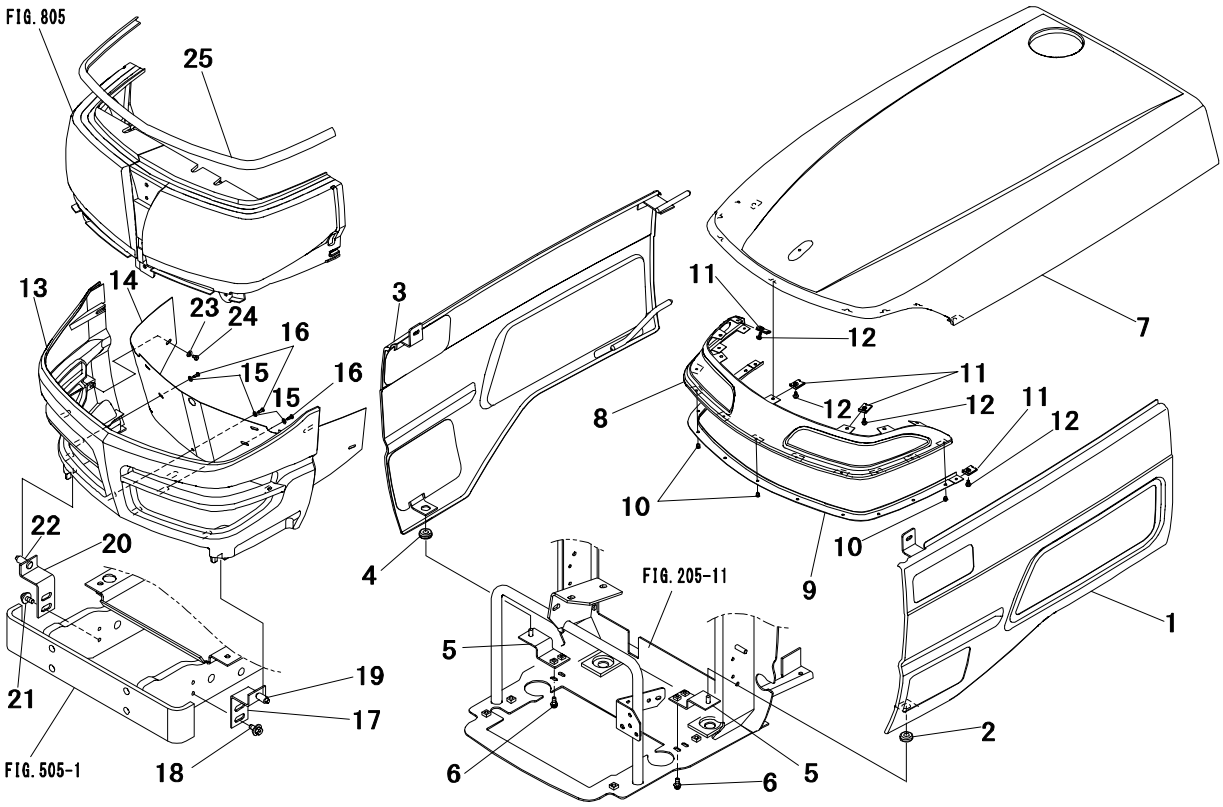

Key No.	Parts No.	Parts Name.	Q`ty ALL					R/P	Application	Description	Remarks
1	1944 2621 AE0	COVER LH,side	1								
2	1174 0217 001	GROMMET	1								
3	1944 2623 AE0	COVER RH,side	1								
4	1174 0217 001	GROMMET	1								
5	1944 2631 000	PLATE	2								
6	H144 0106 016	BOLT,w/washer	4							M6×16	
7	1051 1136 AE1	HOOD,bonnet	1								
8～10	1944 2645 AG0	SCREEN ASSY	1								
8	1944 2642 000	SCREEN	1								
9	1944 2643 000	PLATE	1								
10	0405 0004 008	RIVET BLIND	11								
11	1944 2644 000	NUT,clip	9								
12	H242 0104 010	SCREW,w/washer	9							M4×10	
13	1946 1176 000	GRILLE	1								
14	1040 5232 AG0	SCREEN,grille	1								
15	0350 0120 410	WASHER	8							M4	
16	0432 2104 012	SCREW,tapping	8							M4×12	
17	1945 1171 AG0	PLATE	1								
18	H184 0108 020	BOLT,w/washer	2							M8×20	
19	0980 4080 021	PIPE,vinyl	1							φ8×20	
20	1945 1171 AG0	PLATE	1								
21	H184 0108 020	BOLT,w/washer	2							M8×20	
22	0980 4080 021	PIPE,vinyl	1							φ8×20	
23	0350 0120 512	WASHER	2							M5	
24	0432 2105 008	SCREW,tapping	2							M5×8	
25	1040 5244 000	RUBBER	1								

FIG.304 FENDER & STEP

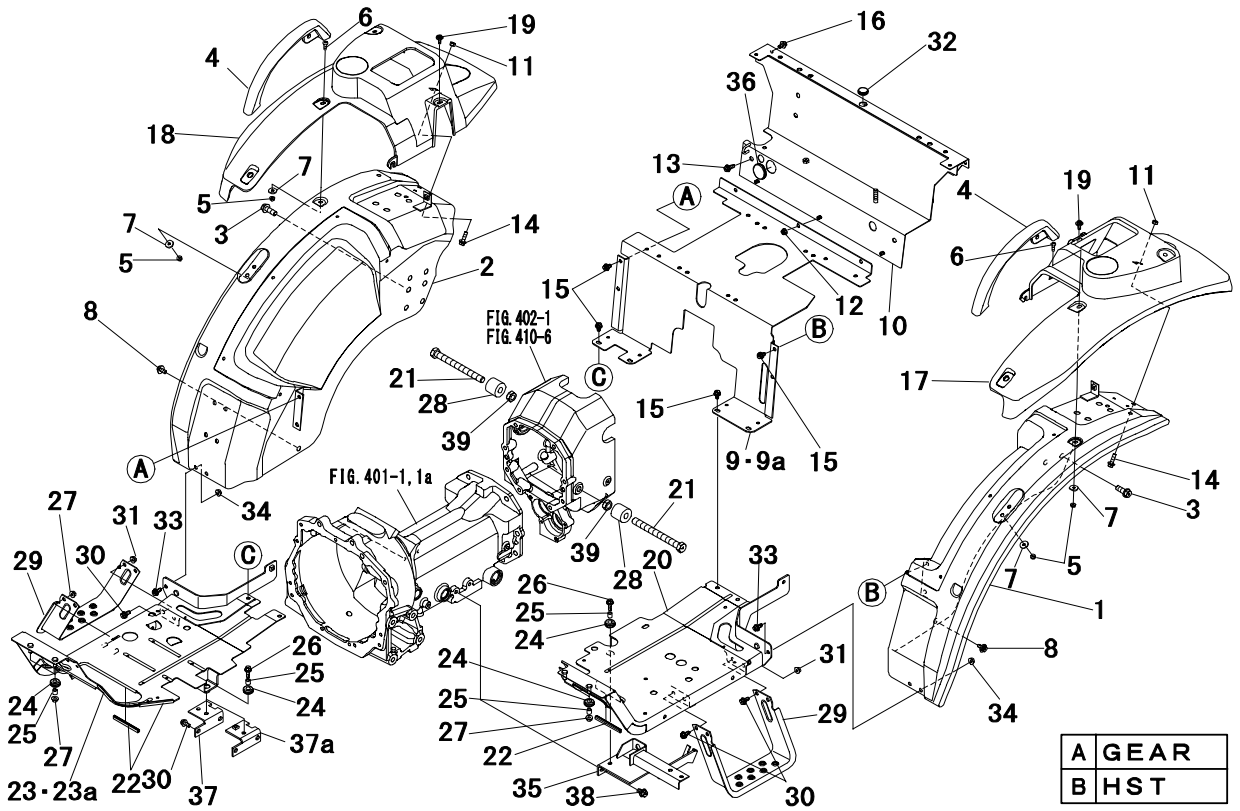

Key No.	Parts No.	Parts Name.	Q`ty A	Q`ty B				R/P	Application	Description	Remarks
1	1044 3502 AE0	FENDER LH	1	1							
2	1044 3504 AE0	FENDER RH	1	1							
3	F945 0112 035	BOLT	4	4						M12×35	
4	1038 3509 000	GRIP,assist	2	2							
5	F300 0106 001	NUT,flange	4	4						M6	
6	A252 0706 020	SCREW	2	2						M6×20	
7	0350 0150 622	WASHER	4	4						M6	
8	H184 0108 020	BOLT,w/washer	2	2						M8×20	
9	1945 6311 AE1	COVER,front	1	·							
9a	1945 6313 AE1	COVER,front	·	1							
10	1945 6315 AE0	COVER,rear	1	1							
11	A301 0108 002	NUT	2	2						M8	
12	F301 0108 000	NUT,flange	3	3						M8	
13	H154 0108 025	BOLT,w/washer	2	2						M8×25	
14	H154 0108 030	BOLT,w/washer	2	2						M8×30	
15	H154 0108 016	BOLT,w/washer	8	8						M8×16	
16	H154 0108 016	BOLT,w/washer	2	2						M8×16	
17	1945 6306 000	COVER LH,fender	1	1							
18	1945 6307 000	COVER RH,fender	1	1							
19	H194 0106 020	BOLT,w/washer	2	2						M6×20	
20	1945 6325 AE1	STEP LH	1	1							
21	1957 3541 000	BOLT	2	2							
22	1031 1826 000	RUBBER	3	3							
23	1945 6326 AE1	STEP RH	1	·							
23a	1945 6327 AE1	STEP RH	·	1							
24	1193 0439 000	GROMMET	6	6							
25	1038 2241 000	COLLAR	6	6							
26	H154 0108 025	BOLT,w/washer	2	2						M8×25	
27	F301 0108 000	NUT,flange	6	6						M8	
28	1044 3529 000	RUBBER	2	2							
29	1044 3531 AG0	STEP,sub	2	2							
30	H154 0108 020	BOLT,w/washer	8	8						M8×20	
31	F301 0108 000	NUT,flange	4	4						M8	
32	0040 1001 601	GROMMET	1	1						φ16	
33	H154 0108 020	BOLT,w/washer	2	2						M8×20	

FIG.304 FENDER & STEP

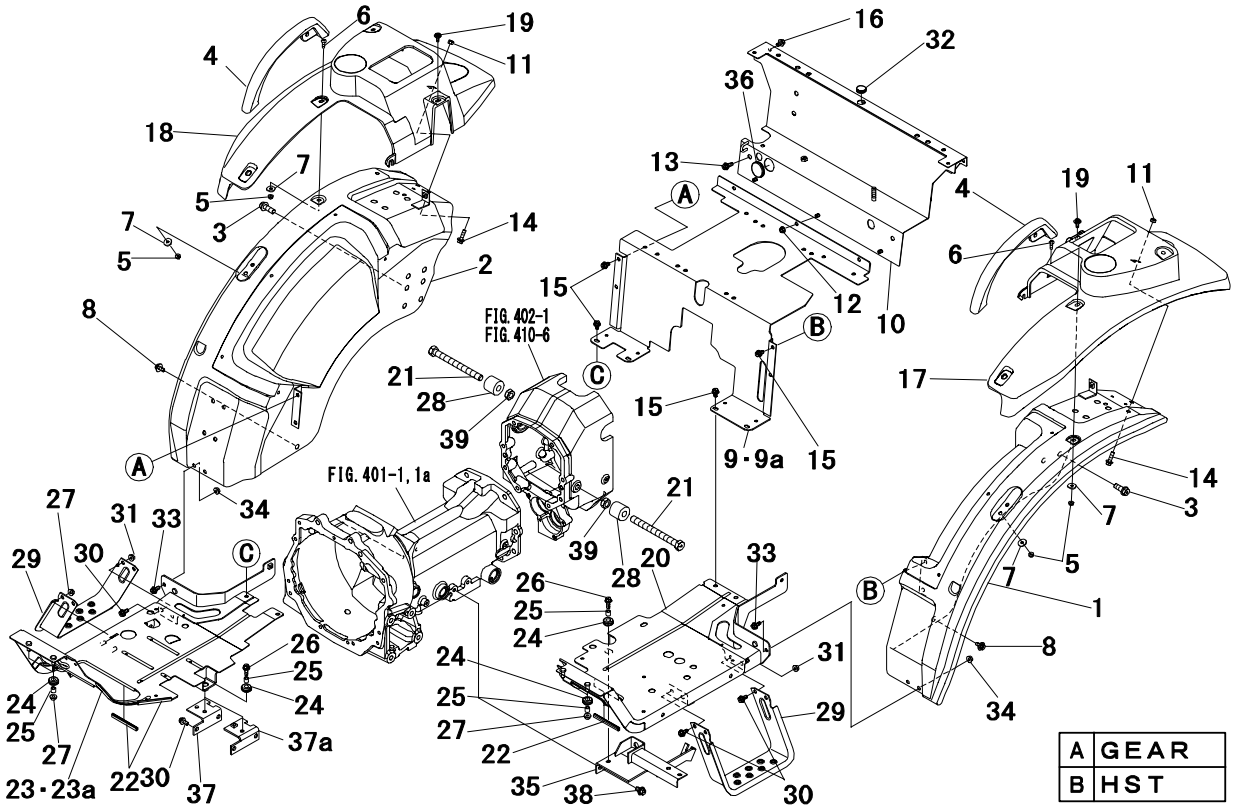

Key No.	Parts No.	Parts Name.	Q`ty A	Q`ty B				R/P	Application	Description	Remarks
34	F301 0108 000	NUT,flange	4	4						M8	
35	1945 6335 AG0	BRACKET LH,step	1	1							
36	0040 1003 001	GROMMET	1	1						φ30	
37	1044 3527 AG0	BRACKET RH,step	1	·							
37a	1957 3531 AG0	BRACKET RH,step	·	1							
38	H154 0110 020	BOLT,w/washer	2	2						M10×20	
39	A300 0116 003	NUT	2	2						M16	

FIG.305 COVER

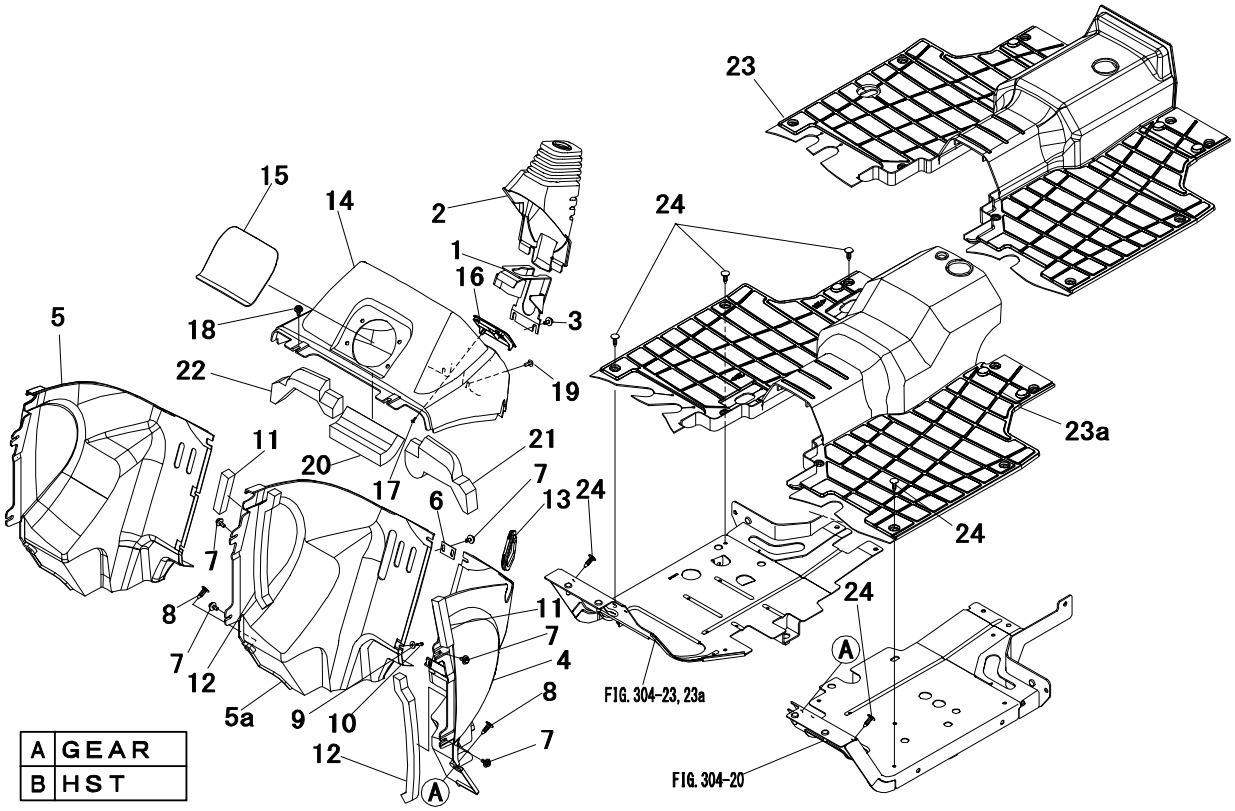

Key No.	Parts No.	Parts Name.	Q`ty					R/P	Application	Description	Remarks
			A	B							
1	1957 2259 000	BRACKET	1	1							
2	1957 2218 000	BOOTS,steering	1	1							
3	H194 0106 016	BOLT,w/washer	2	2						M6×16	
4	1957 2642 000	PANEL L.H,rear	1	1							
5	1044 2643 001	PANEL R.H,rear	1	·							
5a	1957 2643 000	PANEL R.H,rear	·	1							
6	1044 2646 000	PLATE	1	1							
7	H194 0106 016	BOLT,w/washer	6	6						M6×16	
8	1040 6313 000	CLIP	2	2							
9	1044 2675 000	WASHER	2	2							
10	3518 0844 000	SCREW	2	2							
11	3559 3838 600	SEAL	2	2							
12	1956 0424 000	CUSHION	2	2							
13	1957 1779 000	COVER	·	1							
14	1957 2942 000	PANEL	1	1							
15	1956 2833 000	COVER,panel	1	1							
16	1945 7211 000	COVER	1	1							
17	3515 0924 100	SCREW,tapping	2	2							
18	H194 0106 016	BOLT,w/washer	2	2						M6×16	
19	A252 0706 016	SCREW	2	2						M6×16	
20	1956 2656 001	CUSHION	1	1							
21	1956 2657 000	CUSHION LH	1	1							
22	1956 2658 000	CUSHION RH	1	1							
23	1957 3535 002	MAT,step	1	·							
23a	1957 3536 002	MAT,step	·	1							
24	1040 6313 000	CLIP	14	14							

FIG.306 SEAT

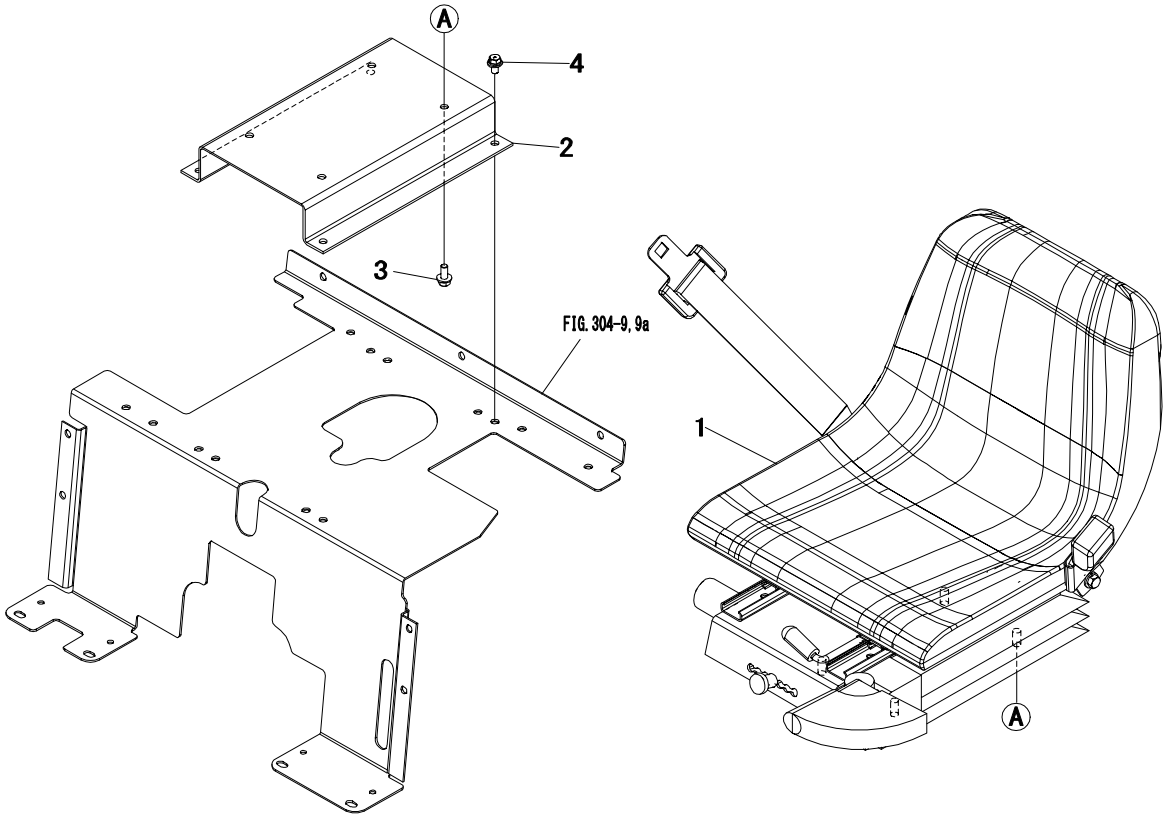

Key No.	Parts No.	Parts Name.	Q`ty					R/P	Application	Description	Remarks
			ALL								
1	1945 7101 000	SEAT ASSY	1								
2	1945 7151 AG0	PLATE	1								
3	H154 0108 020	BOLT,w/washer	4							M8×20	
4	H154 0108 016	BOLT,w/washer	4							M8×16	

FIG.307 SAFETY FRAME (REAR)

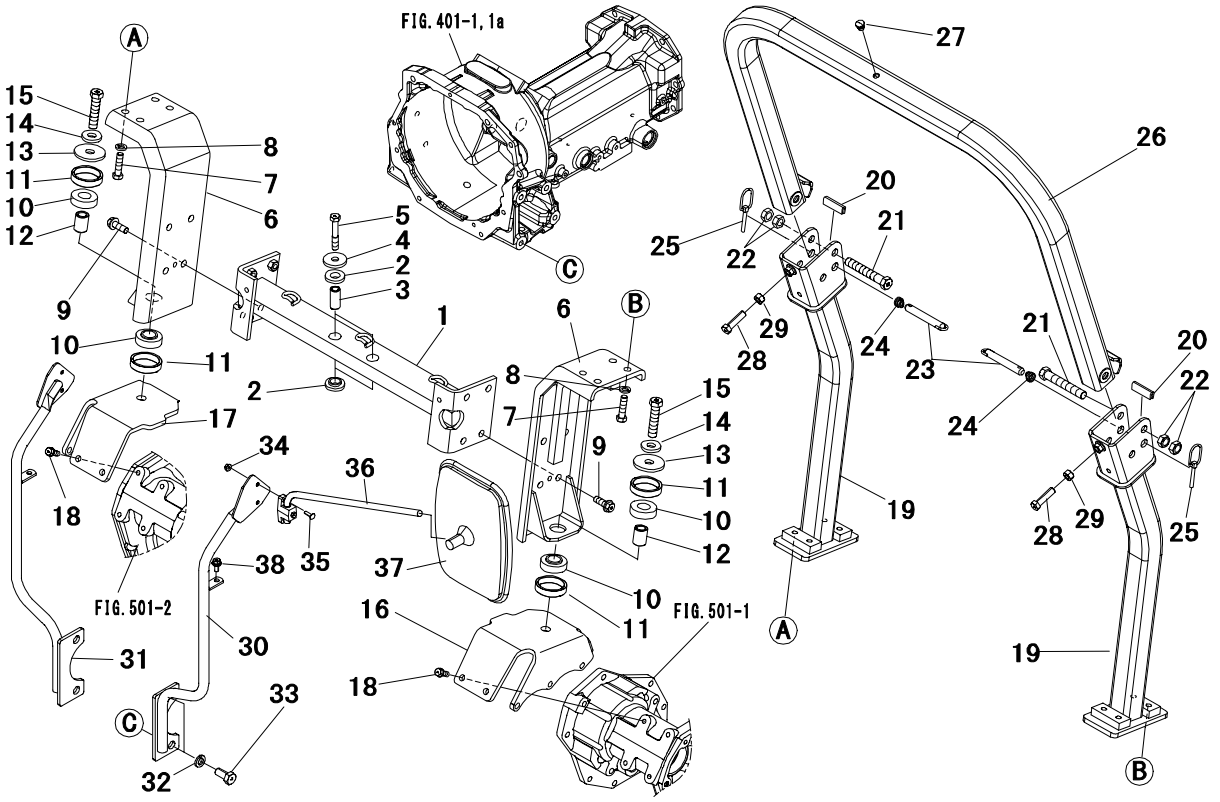

Key No.	Parts No.	Parts Name.	Q`ty ALL					R/P	Application	Description	Remarks
1	1945 6511 AG0	SUPPORT,bracket	1								
2	1038 3932 000	RUBBER CUSHION	4								
3	1957 3915 000	COLLAR	2								
4	3515 0657 200	WASHER	2								
5	A054 0112 070	BOLT 7T	2							M12×70	
6	1945 6513 AE0	FRAME	2								
7	A945 0112 045	BOLT 10.9	8							M12×45	
8	A360 0101 202	WASHER,spring	8							M12	
9	F945 0112 035	BOLT	4							M12×35	
10	1038 3946 000	RUBBER,cushion	4								
11	1038 3943 000	COLLAR	4								
12	1963 3915 000	COLLAR	2								
13	1038 3944 000	WASHER	2								
14	1044 3926 000	WASHER	2								
15	A945 0116 070	BOLT 10.9	2							M16×70	
16	1945 6517 AG0	BRACKET LH,rear	1								
17	1945 6518 AG0	BRACKET RH,rear	1								
18	F154 0110 025	BOLT,w/washer	4							M10×25	
19	1945 6531 AG0	BRACKET,rollbar	2								
20	3555 2625 000	BAND,rubber	2								
21	A945 0116 100	BOLT	2							M16×100	
22	A083 0116 001	NUT	4							M16	
23	1945 6525 000	PIN	2								
24	1035 3931 000	SPRING	2								
25	1904 3905 000	PIN,linch	2								
26	1945 6535 AG0	ROLLBAR	1								
27	1176 3534 001	PLUG,mat	1								
28	A050 0112 045	BOLT 7T	2							M12×45	
29	A301 0112 002	NUT	2							M12	
30	1945 6571 000	BRACKET,mirr lh	1								
31	1945 6576 000	BRACKET MIRR RH	1								
32	A360 0101 402	WASHER,spring	2							M14	
33	A040 0114 030	BOLT 7T	2							M14×30	
34	F300 0106 000	NUT,flange	2							M6	
35	A222 0106 020	SCREW	2							M6×20	

FIG.307 SAFETY FRAME (REAR)

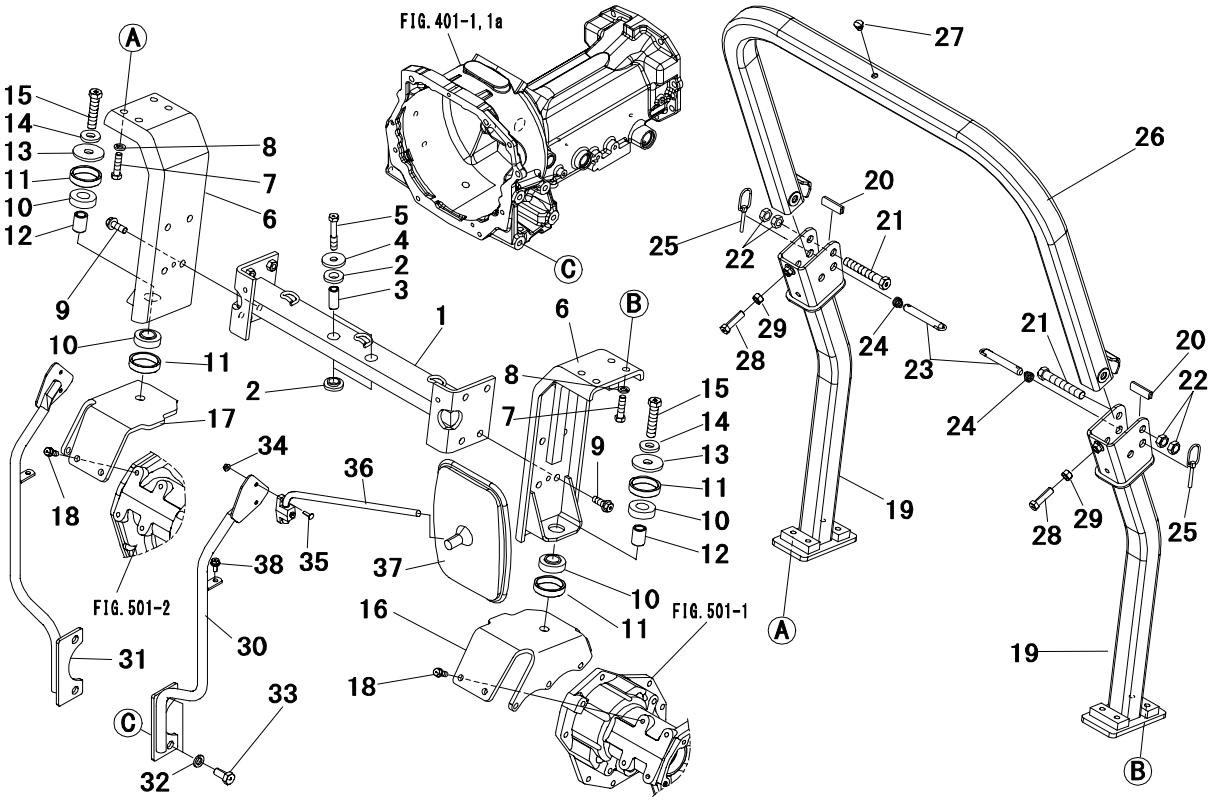

Key No.	Parts No.	Parts Name.	Q`ty ALL					R/P	Application	Description	Remarks
36	1215 0109 000	ARM MIRROR	1								
37	1215 0108 000	MIRROR	1								
38	H154 0108 020	BOLT,w/washer	1							M8×20	

FIG.308 SAFETY FRAME (FRONT 1)

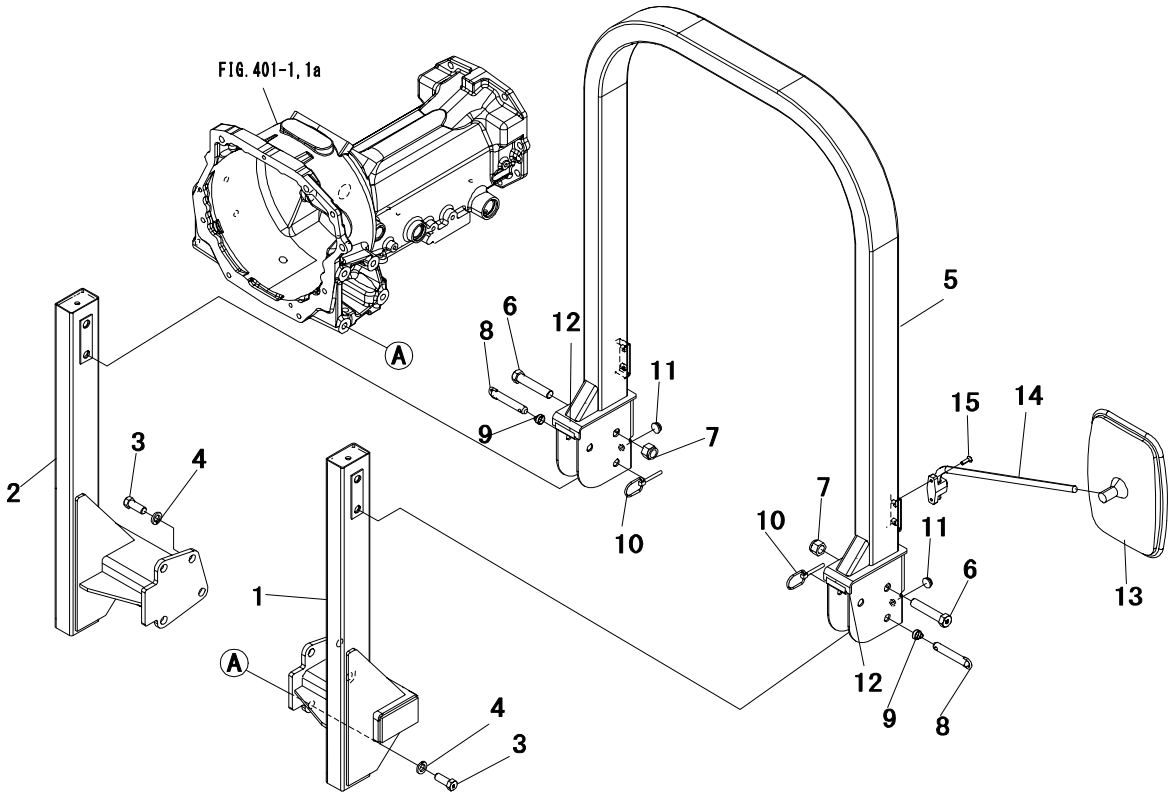

Key No.	Parts No.	Parts Name.	Q`ty					R/P	Application	Description	Remarks
			ALL								
1	1945 6551 AG0	BRACKET ROLL LH	1								
2	1945 6556 AG0	BRACKET ROLL RH	1								
3	A940 0114 035	BOLT 10.9	8							M14×35	
4	A360 0101 402	WASHER,spring	8							M14	
5	1945 6561 AG0	ROLLBAR	1								
6	A944 0116 080	BOLT 10.9	2							M16×80	
7	1044 3923 000	NUT,lock	2								
8	1942 3925 000	PIN	2								
9	1035 3931 000	SPRING	2								
10	1904 3905 000	PIN,linch	2								
11	1981 2822 000	PLUG	2								
12	3555 2625 000	BAND RUBBER	2								
13	1215 0108 000	MIRROR	1								
14	1215 0109 000	ARM MIRROR	1								
15	A222 0106 020	SCREW	2							M6×20	

FIG.309 SAFETY FRAME (FRONT 2)

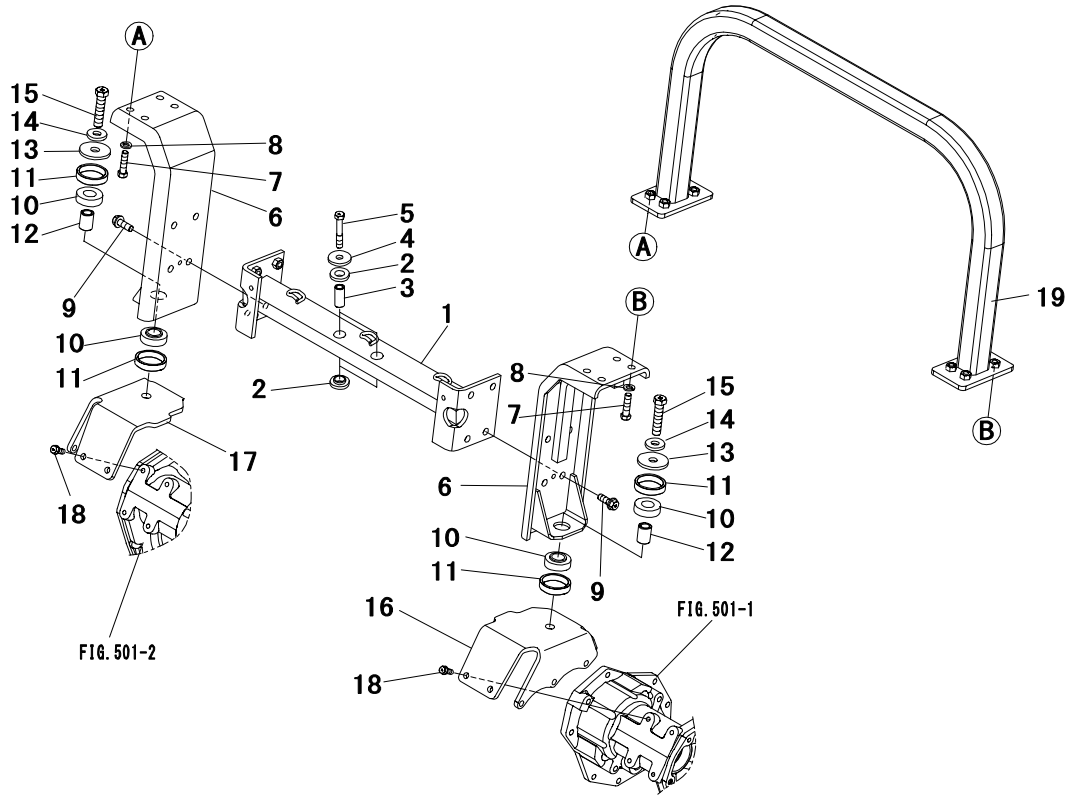

Key No.	Parts No.	Parts Name.	Q`ty ALL					R/P	Application	Description	Remarks
1	1945 6511 AG0	SUPPORT,bracket	1								
2	1038 3932 000	RUBBER,cushion	4								
3	1957 3915 000	COLLAR	2								
4	3515 0657 200	WASHER	2								
5	A054 0112 070	BOLT 7T	2							M12×70	
6	1945 6513 000	FRAME	2								
7	A945 0112 045	BOLT 10.9	8							M12×45	
8	A360 0101 202	WASHER,spring	8							M12	
9	F945 0112 035	BOLT	4							M12×35	
10	1038 3946 000	RUBBER,cushion	4								
11	1038 3943 000	COLLAR	4								
12	1963 3915 000	COLLAR	2								
13	1038 3944 000	WASHER	2								
14	1044 3926 000	WASHER	2								
15	A945 0116 070	BOLT 10.9	2							M16×70	
16	1945 6517 AG0	BRACKET LH,rear	1								
17	1945 6518 AG0	BRACKET RH,rear	1								
18	F154 0110 025	BOLT,w/washer	4							M10×25	
19	1945 6566 AG0	SAFETY SUPPORT	1								

FIG.310 SAFETY DEVICE

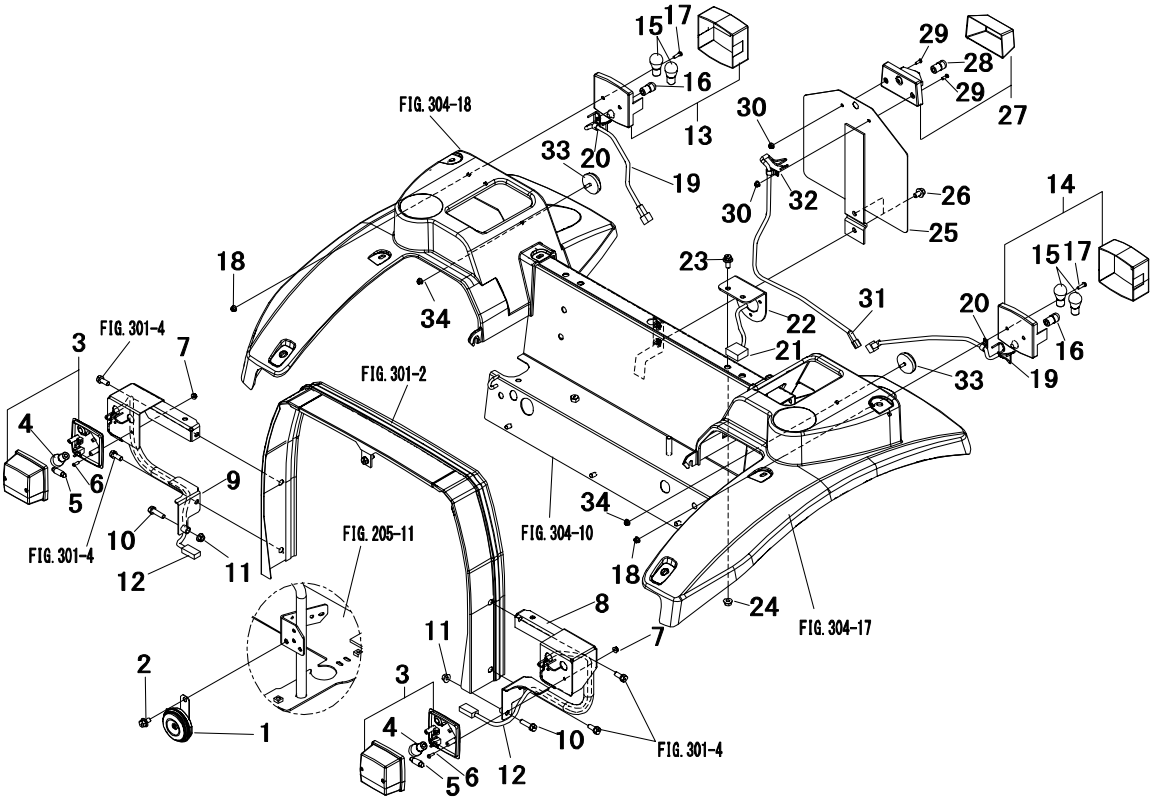

Key No.	Parts No.	Parts Name.	Q`ty ALL					R/P	Application	Description	Remarks
1,2	1945 3501 000	HORN ASSY	1								
1	1048 3502 000	HORN	1								
2	H154 0108 016	BOLT,w/washer	1							M8×16	
3～12	1945 3510 000	COMBI LAMP ASSY	1								
3	1215 0104 100	LAMP	2								
4	1215 0104 200	BULB	2							12V21W	
5	1215 0104 300	BULB	2							12V5W	
6	A242 0104 012	SCREW	4							M4×12	
7	F300 0104 000	NUT,flange	4							M4	
8	1945 3511 AG0	LAMP BRACKET LH	1								
9	1945 3512 AG0	LAMP BRACKET RH	1								
10	F154 0108 030	BOLT,w/washer	2							M8×30	
11	F301 0108 000	NUT,flange	2							M8	
12	1945 3513 000	LEAD WIRE F	2								
13～20	1945 3515 000	COMBI LAMP ASSY	1								
13	1215 0105 100	LAMP	1								
14	1215 0106 100	LAMP	1								
15	1215 0104 200	BULB	4							12V21W	
16	1215 0105 300	BULB	2							12V10W	
17	A242 0105 016	SCREW	4							M5×16	
18	F300 0105 000	NUT,flange	4							M5	
19	1945 3516 000	LEAD WIRE R	2								
20	1044 2993 000	CLIP	2								
21～24	1945 3520 000	7P ASSY	1								
21	1942 2919 000	HARNESS 7P	1								
22	1945 3522 AE0	PLATE 7P	1								
23	H154 0108 020	BOLT,w/washer	2							M8×20	
24	F301 0108 000	NUT,flange	2							M8	
25～32	1945 3525 000	REGIST ASSY	1								
25	1942 3421 AE0	PLATE,regist	1								
26	H154 0108 016	BOLT,w/washer	2							M8×16	
27	1215 0107 100	LAMP	1								
28	1215 0105 300	BLUB	1							12V10W	
29	A242 0104 012	SCREW	2							M4×12	
30	F300 0104 000	NUT,flange	2							M4	

FIG.310 SAFETY DEVICE

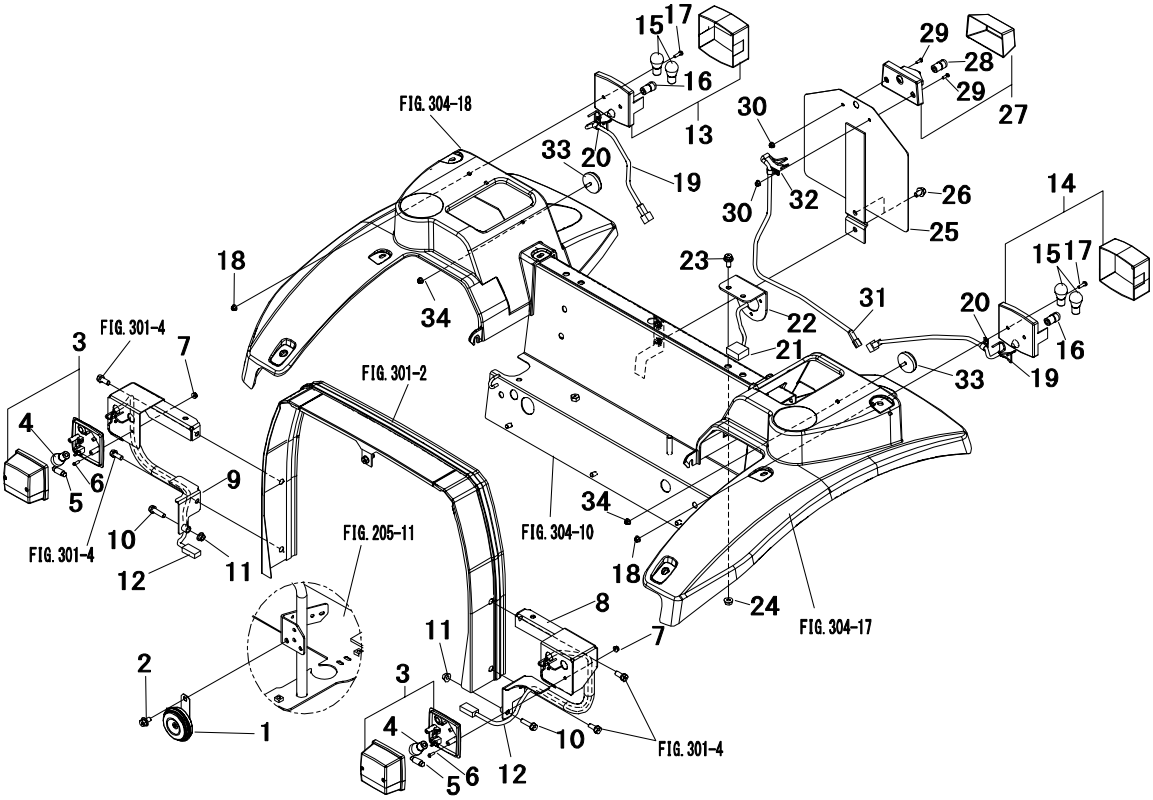

Key No.	Parts No.	Parts Name.	Q`ty					R/P	Application	Description	Remarks
			ALL								
31	1945 3526 000	LEAD WIRE	1								
32	1044 2993 000	CLIP	1								
33,34	1945 3505 000	REFLECTOR ASSY	1								
33	3700 0581 000	REFLECTOR	2								
34	F300 0105 000	NUT,flange	2							M5	

FIG.401 MAIN CLUTCH

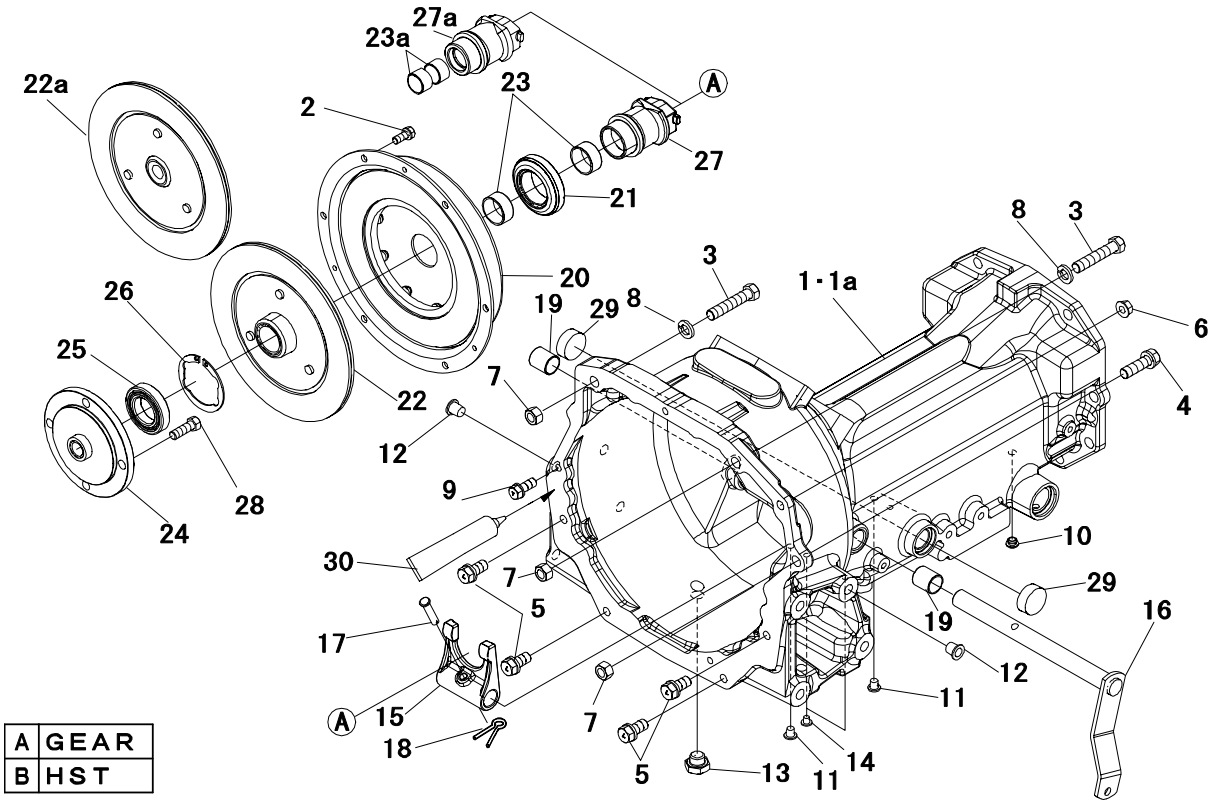

A	GEAR
B	HST

Key No.	Parts No.	Parts Name.	Q`ty					R/P	Application	Description	Remarks
			A	B							
1	1945 1321 AG0	HOUSING CLUTCH	1	・							
1a	1945 1322 AG0	HOUSING CLUTCH	・	1							
2	F154 0108 020	BOLT,w/washer	6	6						M8×20	
3	A055 0112 060	BOLT 7T	2	2						M12×60	
4	F155 0112 040	BOLT,w/washer	1	1						M12×40	
5	F154 0112 025	BOLT,w/washer	4	4						M12×25	
6	F303 0110 001	NUT,flange	1	1						M10	
7	A303 0112 002	NUT	3	3						M12	
8	A360 0101 202	WASHER,spring	2	2						M12	
9	F154 0110 025	BOLT,w/washer	1	1						M10×25	
10	2761 3733 000	CAP	1	1							
11	05534-10000	PLUG	2	2							
12	05534-14000	PLUG	8	8							
13	F5000-16000	PLUG	1	1							
14	05534-08000	PLUG	2	2							
15	1176 1014 001	LEVER,clutch	1	1							
16	1038 1011 AG0	SHAFT RELEASE	1	1							
17	F2855-08040	PIN,clevis	1	1						φ8×40	
18	0520 0120 020	PIN,split	1	1						φ2×20	
19	0796 1020 250	BUSHING	2	2							
20	1028 1111 000	COVER ASSY	1	1							
21	1176 1015 000	BEARING	1	1							
22	1957 1111 000	DISK,clutch	1	・							
22a	1964 1112 000	DISC,clutch	・	1							
23	1406 1178 000	BUSHING	2	・							
23a	0797 2022 150	BUSHING	・	2							
24	1945 1363 000	COUPLING	1	・							
25	1957 1051 000	BEARING	1	・							
26	0741 0005 801	C-RING	1	・						φ58	
27	1957 1011 000	HUB,release	1	・							
27a	1956 1011 000	HUB,release	・	1							
28	A050 0110 030	BOLT 7T	4	・						M10×30	
29	0834 0032 070	SEAL CAP	・	2							
30	TB1206D	GASKET	AR	AR							

FIG.402 TRANSMISSION (GEAR)(1/8)

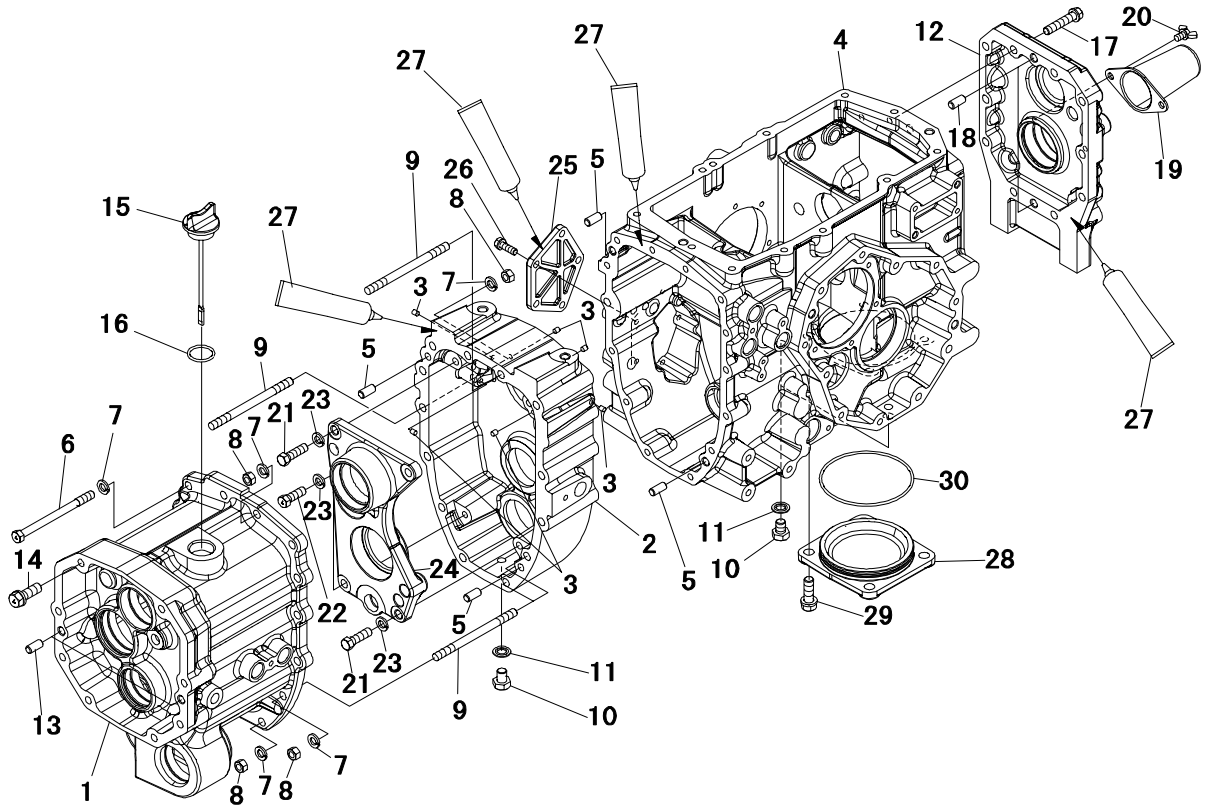

Key No.	Parts No.	Parts Name.	Q`ty ALL					R/P	Application	Description	Remarks
1	1945 1401 AG0	HOUSING,transmi	1								
2,3	1957 1210 000	HOLDER,bearing	1								
2	*	HOLDER BEARING	1								
3	*	PLUG	6								
4	1944 1203 AG2	HOUSING,diff	1								
5	0540 1010 020	PIN,dowel	4							φ10×20	
6	A054 0110 125	BOLT	10							M10×125	
7	A360 0101 002	WASHER,spring	14							M10	
8	A301 0110 002	NUT	4							M10	
9	1044 1595 000	STUD	4								
10	1025 0808 000	PLUG	3								
11	0833 1001 200	WASHER,seal	3							M12	
12	1957 1205 AG0	COVER PTO	1								
13	0540 1010 020	PIN,dowel	2							φ10×20	
14	F154 0112 035	BOLT,w/washer	8							M12×35	
15	1981 2472 002	PLUG,oiling	1								
16	0830 0100 280	O-RING	1							φ28	
17	F154 0110 050	BOLT,w/washer	10							M10×50	
18	0540 1010 020	PIN,dowel	2							φ10×20	
19	1031 1382 000	CAP P.T.O	1								
20	A140 0600 812	BOLT,wing	2							M8×12	
21	1040 1337 000	BOLT	2								
22	A050 0110 030	BOLT 7T	2							M10×30	
23	A360 0101 002	WASHER,spring	4							M10	
24	1957 1204 001	COVER	1								
25	1044 1207 AG0	COVER	1								
26	F154 0108 025	BOLT,w/washer	5							M8×25	
27	TB1206D	GASKET	AR								
28	1957 1602 AG0	COVER	1								
29	F154 0112 035	BOLT,w/washer	2							M12×35	
30	0830 0201 100	O-RING	1							φ110	

FIG.403 TRANSMISSION (GEAR) (2/8)

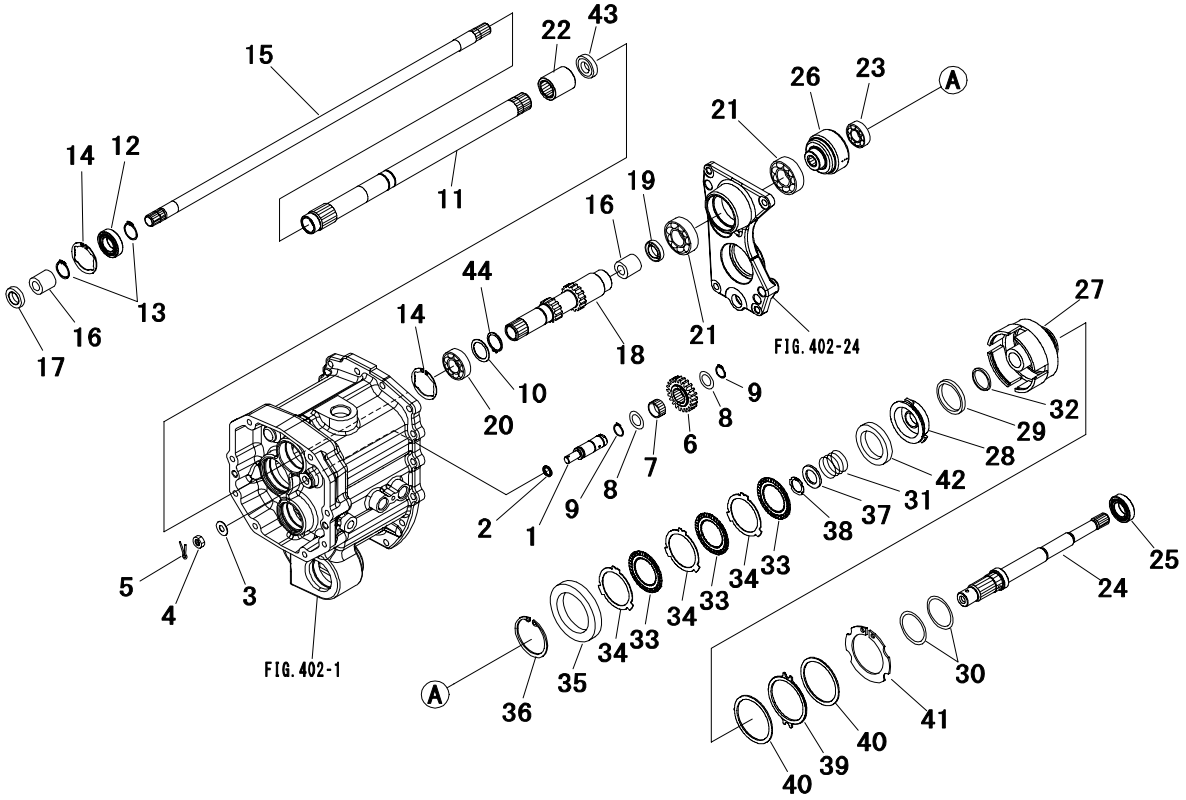

Key No.	Parts No.	Parts Name.	Q`ty ALL					R/P	Application	Description	Remarks
1	1044 1215 000	SHAFT,back idle	1								
2	0830 0100 160	O-RING	1							φ16	
3	0350 0151 226	WASHER	1							M12	
4	A310 0101 201	NUT	1								
5	0520 0125 020	PIN,split	1							φ2.5×20	
6	1044 1216 001	GEAR 22T	1							22T	
7	0780 2202 617	BEARING,needle	1								
8	1352 1406 000	LINER B,thrust	2								
9	0740 0002 000	C-RING	2							φ20	
10	3521 1303 200	LINER	1								
11	1957 1277 000	SHAFT,pipe	1								
12	0750 0560 064	BEARING,ball	1							6006DD	
13	0740 0003 000	C-RING	2							φ30	
14	0741 0005 501	C-RING	2							φ55	
15	1957 1278 000	SHAFT,drive	1								
16	0796 3020 200	BUSHING	2								
17	1963 1276 000	SEAL,oil	1								
18	1945 1481 000	SHAFT,shuttle	1								
19	0840 1020 307	SEAL,oil	1							TC20307	
20	0750 0060 060	BEARING,ball	1							6006	
21	0750 0060 070	BEARING,ball	2							6007	
22	1957 1279 000	BOSS,spline	1								
23	0750 0060 050	BEARING,ball	1							6005	
24	1957 1285 000	SHAFT	1								
25	0750 0560 054	BEARING,ball	1							6005DD	
26	1957 1283 000	BOSS,spline	1								
27～42	1957 1291 001	PTO CLUTCH ASSY	1								
27	1957 1291 111	CASE	1								
28	1957 1291 120	PISTON	1								
29	1961 1261 130	RING,seal	1								
30	1961 1261 140	RING,seal	2								
31	1961 1261 150	SPRING	1								
32	1961 1261 160	RING,seal	1								
33	1957 1291 170	PLATE,drive	3								
34	1961 1261 180	PLATE,disk	3								

FIG.403 TRANSMISSION (GEAR) (2/8)

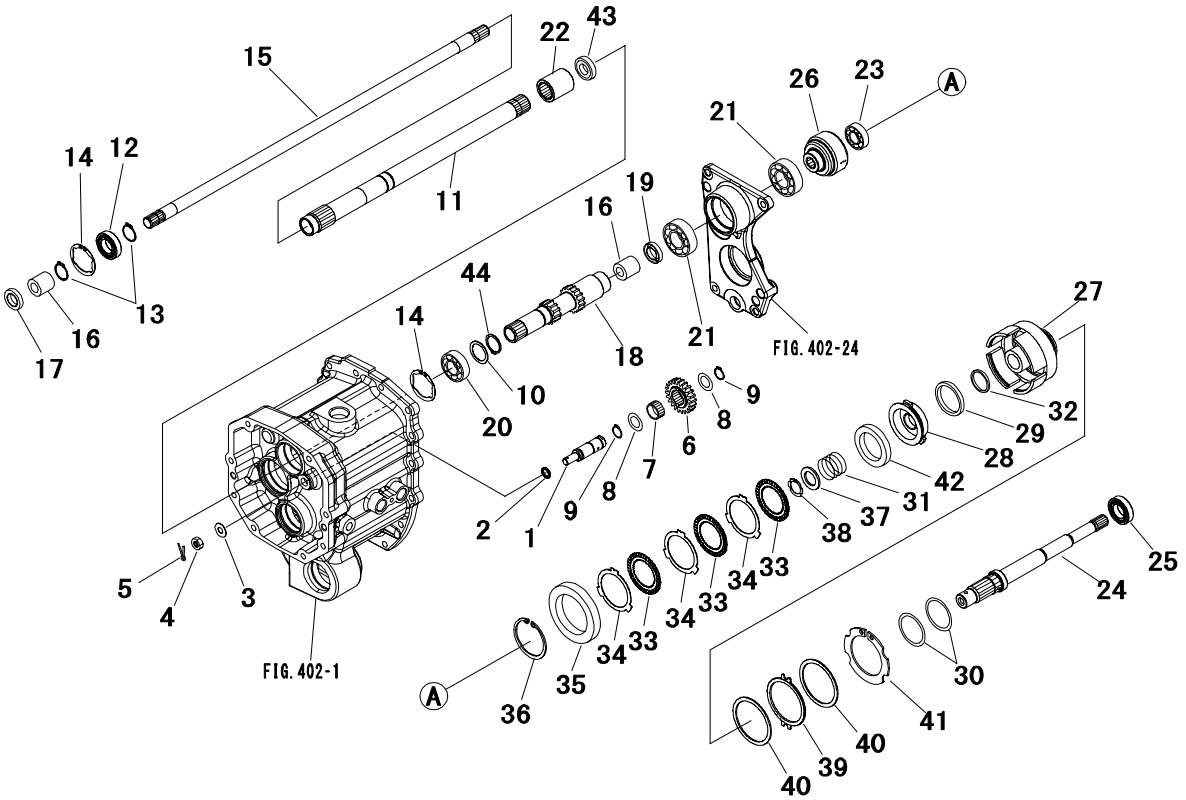

Key No.	Parts No.	Parts Name.	Q`ty ALL					R/P	Application	Description	Remarks
35	1957 1291 190	PLATE,back	1								
36	1957 1291 210	RING	1								
37	1961 1261 220	WASHER	1								
38	1961 1261 230	RING	1								
39	1961 1261 240	DISK,brake	1								
40	1957 1291 250	PLATE,brake	2								
41	1961 1261 260	RING	1								
42	1957 1291 270	WAVE SPRING	1								
43	1945 1491 000	SEAL,oil	1								
44	0740 0003 000	C-RING	1							φ30	

FIG.404 TRANSMISSION (GEAR) (3/8)

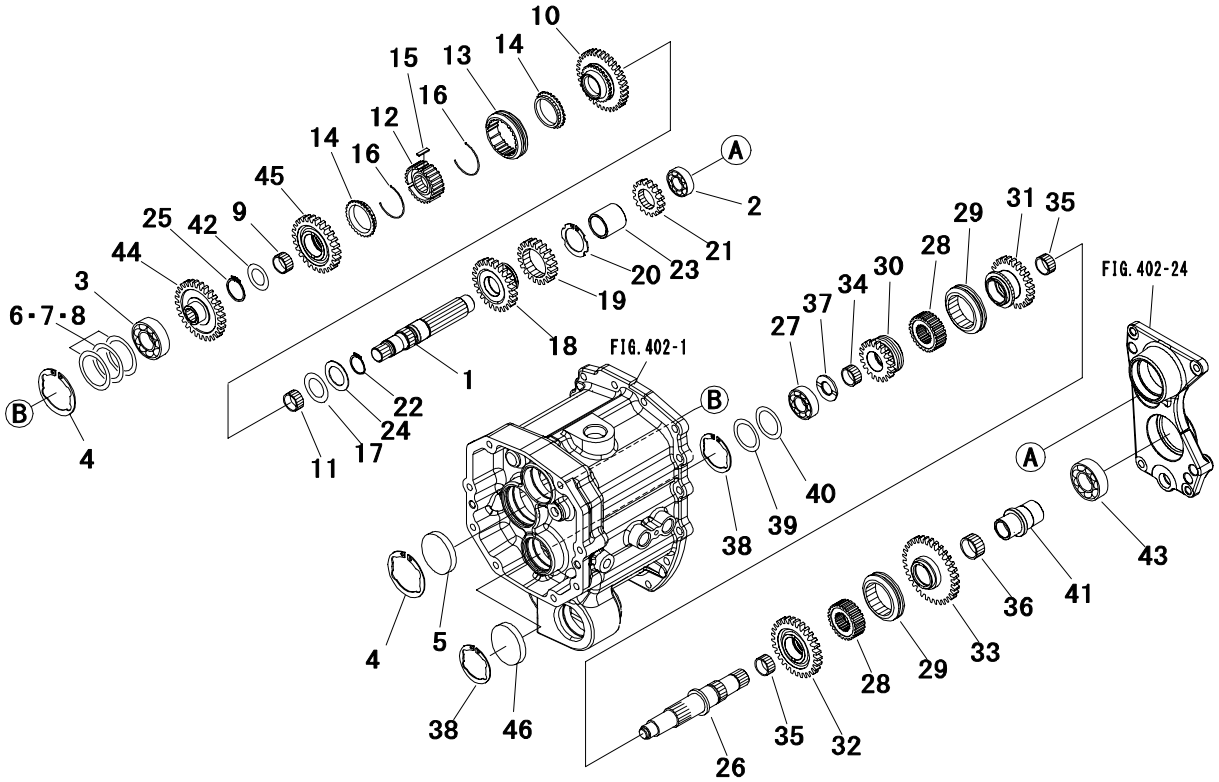

Key No.	Parts No.	Parts Name.	Q`ty ALL					R/P	Application	Description	Remarks
1	1945 1417 000	SHAFT	1								
2	0752 0662 050	BEARING,ball	1							6205RSH2	
3	0751 0662 060	BEARING	1								
4	0741 0006 201	C-RING	2							φ62	
5	0834 0062 100	CAP,seal	1							φ62	
6～8	1021 1318 000	LINER SET	AR								
6	0730 0006 202	LINER	AR							t=0.2	
7	0730 0006 206	LINER	AR							t=0.6	
8	0730 0006 210	LINER	AR							t=1.0	
9	0780 2253 117	BEARING,needle	1								
10	1945 1496 000	GEAR 34T	1							34T	
11	0780 2303 517	BEARING,needle	1								
12	1956 1208 000	HUB,synchronize	1								
13	1956 1209 000	SLEEVE,synchron	1								
14	1956 1215 000	RING,synchroniz	2								
15	1956 1216 000	KEY,synchronize	3								
16	1956 1217 000	SPRING,synchron	2								
17	1044 1235 000	LINER	AR							t=1.0	
18	1945 1428 000	GEAR 25T	1							25T	
19	1044 1229 000	GEAR 20T	1							20T	
20	0740 0004 501	C-RING	1							φ45	
21	1945 1427 000	GEAR 16T	1							16T	
22	0740 0003 000	C-RING	1							φ30	
23	1044 1239 000	COLLAR	1								
24	1051 1403 000	LINER	AR							t=1.2	
25	0740 0002 500	C-RING	1							φ25	
26	1044 1241 000	SHAFT,main	1								
27	0750 0063 040	BEARING,ball	1							6304	
28	1035 1289 001	HUB	2								
29	1044 1209 000	SLEEVE	2								
30	1044 1244 000	GEAR 19T	1							19T	
31	1945 1447 000	GEAR 24T	1							24T	
32	1945 1448 000	GEAR 29T	1							29T	
33	1945 1429 000	GEAR 33T	1							33T	
34	0780 2253 117	BEARING,needle	1								

FIG.404 TRANSMISSION (GEAR) (3/8)

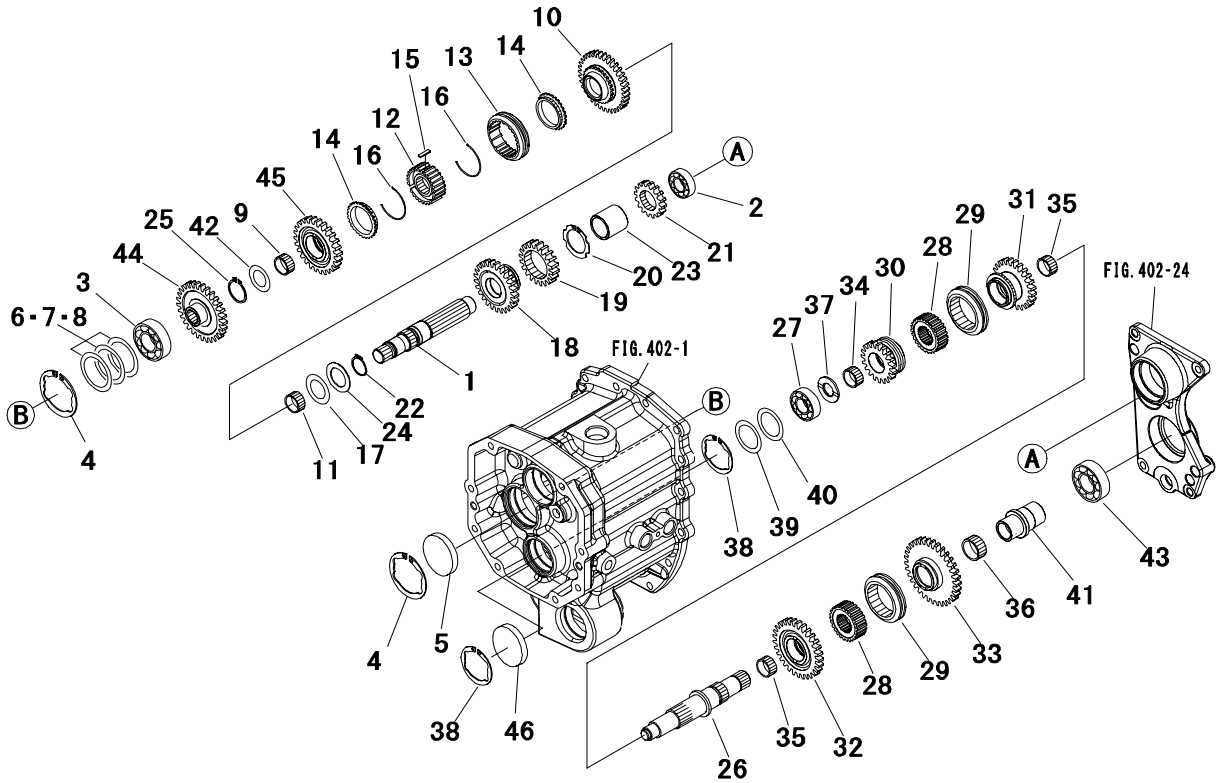

Key No.	Parts No.	Parts Name.	Q`ty ALL					R/P	Application	Description	Remarks
35	0780 2303 517	BEARING,needle	2								
36	0780 2323 920	BEARING,needle	1								
37	1174 1299 000	SPACER	1								
38	0741 0005 201	C-RING	1							φ52	
39,40	1907 1547 000	LINER SET	AR								
39	0730 0005 202	LINER	AR							t=0.2	
40	0730 0005 206	LINER	AR							t=0.6	
41	1945 1433 000	JOINT	1								
42	1135 1304 011	LINER,thrust	1								
43	0750 0062 070	BEARING,ball	1							6207	
44	1945 1432 000	GEAR 30T	1							30T	
45	1956 1297 000	GEAR 33T	1							33T	
46	0834 0052 100	CAP,seal	1							φ52	

FIG.405 TRANSMISSION (GEAR) (4/8)

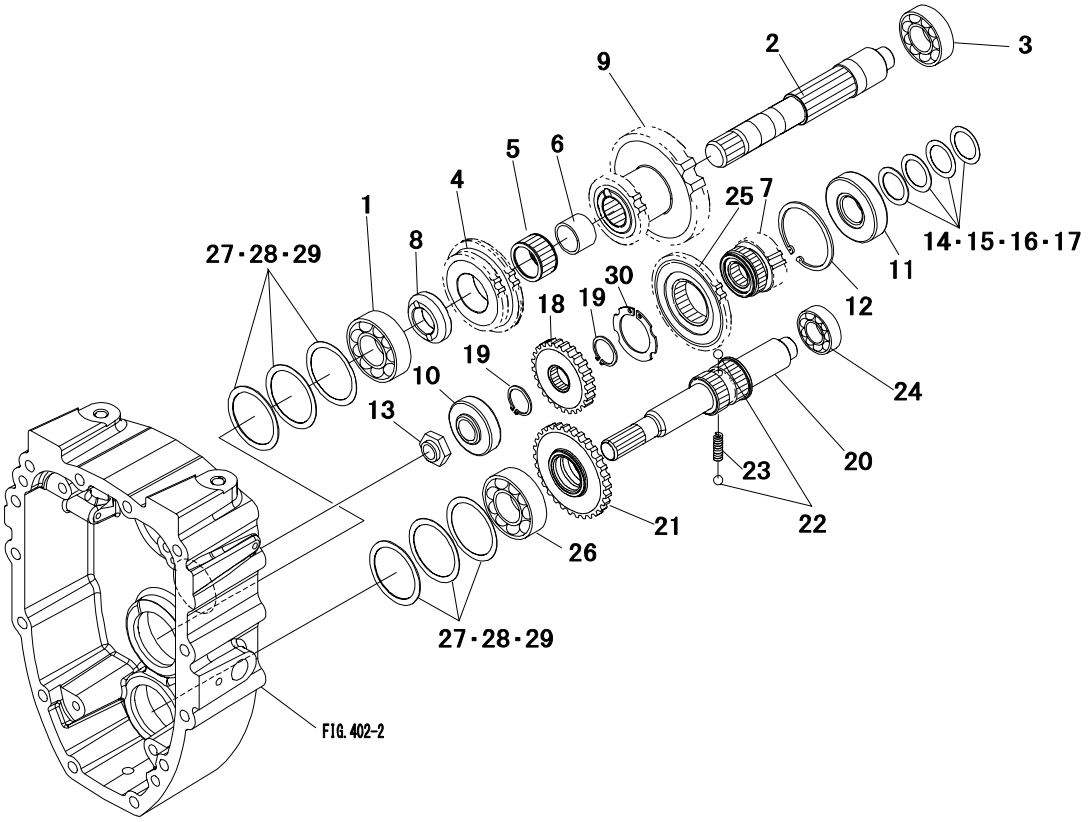

Key No.	Parts No.	Parts Name.	Q`ty ALL					R/P	Application	Description	Remarks
1	0750 0063 050	BEARING,ball	1							6305	
2	1957 1236 000	SHAFT,sub	1								
3	0750 0063 040	BEARING,ball	1							6304	
4	1957 1231 000	GEAR 28-33T	1							28-33T	
5	0780 2303 720	BEARING,needle	1								
6	1041 1291 000	COLLAR	1								
7	1957 1238 000	GEAR 14T	1							14T	
8	1044 1259 001	COLLAR	1								
9	1945 1437 000	GEAR 35-19T	1							35-19T	
10	0770 0030 304	BEARING,taper	1							30304	
11	0770 0130 305	BEARING,taper	1							30305	
12	0741 0006 200	C-RING	1							φ62	
13	1044 1226 001	NUT	1								
14～17	1021 2158 000	SHIM SET	AR								
14	0731 0002 501	LINER	AR							t=0.15	
15	0731 0002 502	LINER	AR							t=0.2	
16	0731 0002 504	LINER	AR							t=0.4	
17	0731 0002 508	LINER	AR							t=0.8	
18	1957 1242 000	GEAR 25T	1							25T	
19	0740 0002 500	C-RING	2							φ25	
20	1945 1472 000	SHAFT,4wd	1								
21	1957 1274 000	GEAR 35T	1							35T	
22	0800 0000 800	BALL	2							5/16″	
23	1035 1293 000	SPRING	1								
24	0750 0060 040	BEARING,ball	1							6004	
25	1957 1239 000	GEAR 28T	1							28T	
26	0750 0063 050	BEARING,ball	1							6305	
27～29	1021 1318 000	LINER SET	AR								
27	0730 0006 202	LINER	AR							t=0.2	
28	0730 0006 206	LINER	AR							t=0.6	
29	0730 0006 210	LINER	AR							t=1.0	
30	0740 0004 201	C-RING	1							φ42	

FIG.406 TRANSMISSION (GEAR) (5/8)

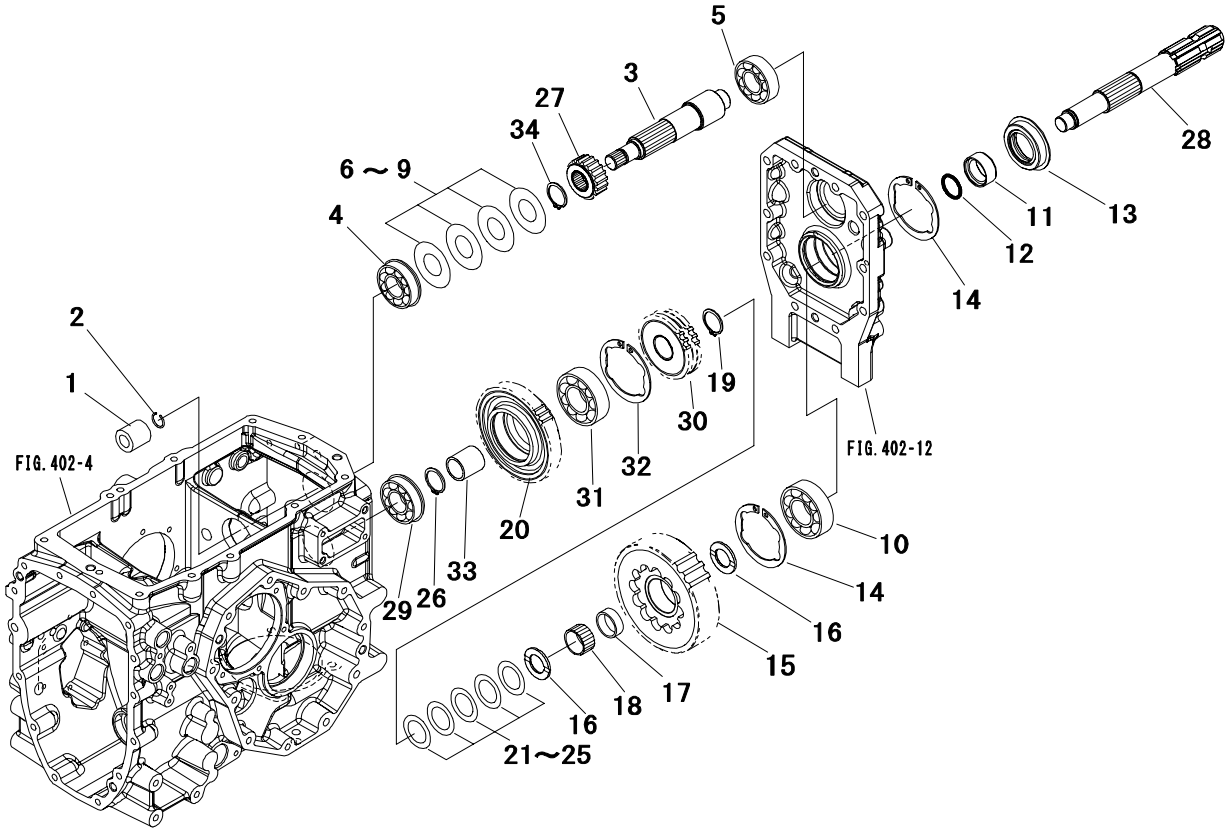

Key No.	Parts No.	Parts Name.	Q`ty ALL					R/P	Application	Description	Remarks
1	1957 1216 000	BOSS,spline	1								
2	1031 1363 001	RING	1								
3	1945 1465 000	SHAFT,pto drive	1								
4	0750 0063 045	BEARING,ball	1							6304	
5	0752 0663 050	BEARING,ball	1							6305	
6～9	1957 1261 000	LINER SET	AR								
6	0731 0002 001	LINER	AR							t=0.15	
7	0731 0002 002	LINER	AR							t=0.2	
8	0731 0002 004	LINER	AR							t=0.4	
9	0731 0002 010	LINER	AR							t=1.0	
10	0750 0062 060	BEARING,ball	1							6206	
11	1025 1405 000	BUSHING	1								
12	0830 0100 300	O-RING	1							φ30	
13	1021 1314 000	SEAL,oil	1								
14	0741 0006 201	C-RING	2							φ62	
15	1945 1467 000	GEAR 44T	1							44T	
16	1041 1237 000	LINER	2								
17	3559 6104 100	SLEEVE	1								
18	0780 2354 220	BEARING,needle	1								
19	0740 0003 000	C-RING	1							φ30	
20	1945 1469 000	GEAR 46T	1							46T	
21～25	1019 0625 000	LINER SET	AR								
21	0731 0003 001	LINER	AR							t=0.15	
22	0731 0003 002	LINER	AR							t=0.2	
23	0731 0003 004	LINER	AR							t=0.4	
24	0731 0003 008	LINER	AR							t=0.8	
25	0731 0003 010	LINER	AR							t=1.0	
26	0740 0002 500	C-RING	1							φ25	
27	1945 1466 000	GEAR 19T	1							19T	
28	1957 1254 000	SHAFT,pto	1								
29	0750 0063 045	BEARING,ball	1							6304	
30	1945 1468 000	GEAR 24T	1							24T	
31	0752 0663 050	BEARING,ball	1							6305	
32	0741 0006 201	C-RING	1							φ62	
33	1957 1253 000	COLLAR	1								

FIG.406 TRANSMISSION (GEAR) (5/8)

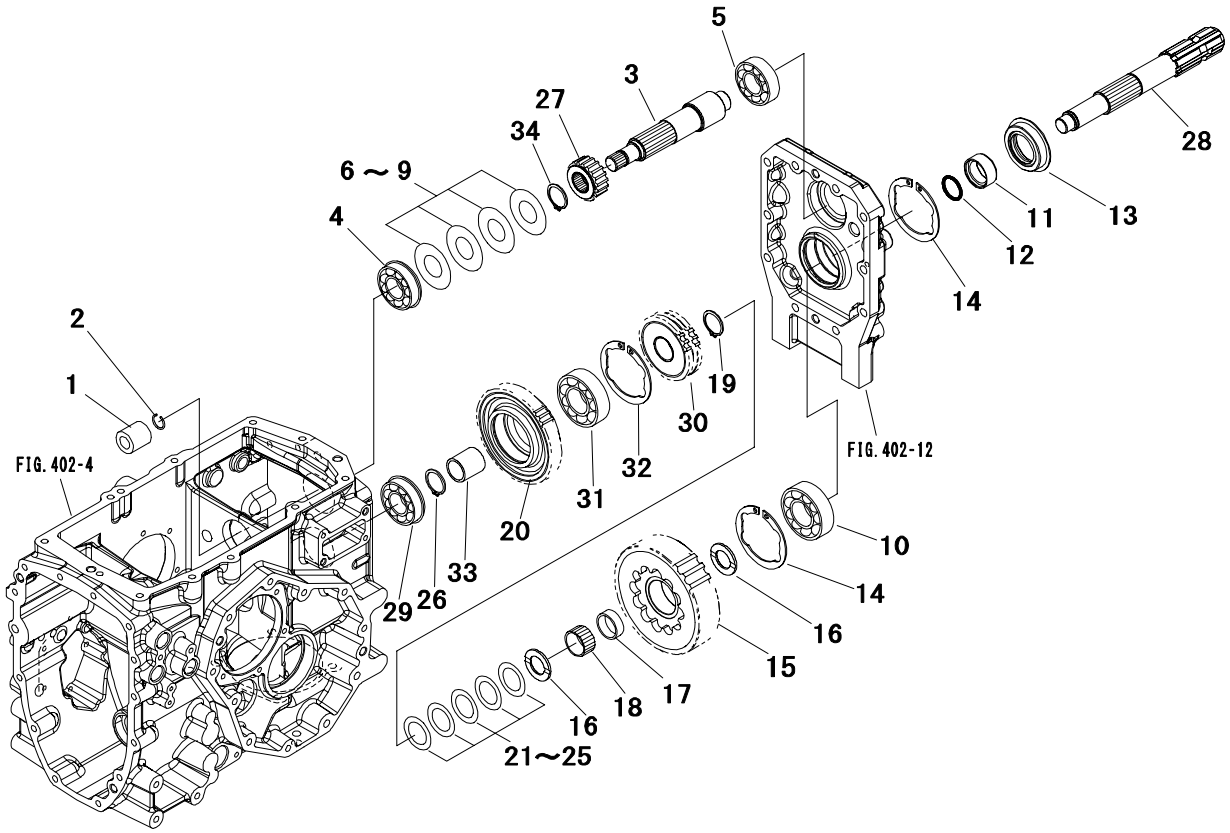

Key No.	Parts No.	Parts Name.	Q`ty ALL					R/P	Application	Description	Remarks
34	0740 0003 000	C-RING	1							φ30	

FIG.407 TRANSMISSION (GEAR) (6/8)

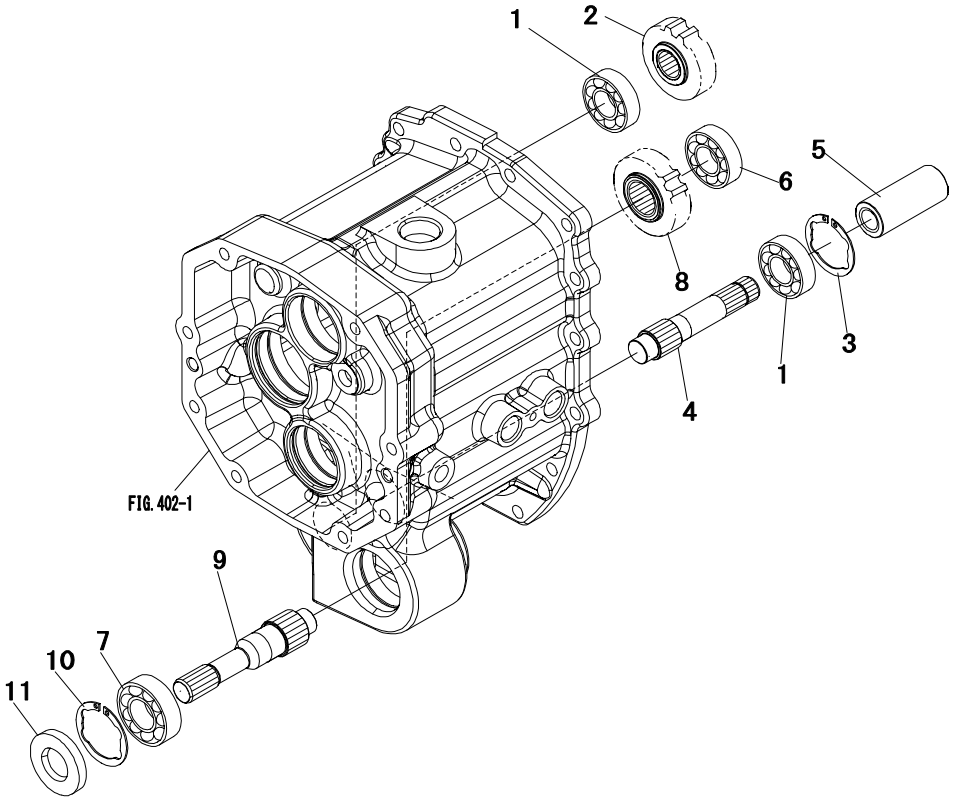

Key No.	Parts No.	Parts Name.	Q`ty					R/P	Application	Description	Remarks
			ALL								
1	0750 0062 040	BEARING,ball	2							6204	
2	1945 1451 000	GEAR 23T	1							23T	
3	0741 0004 701	C-RING	1							φ47	
4	1945 1454 000	SHAFT	1								
5	1044 1214 000	BOSS,spline	1								
6	0750 0062 040	BEARING,ball	1							6204	
7	0750 0062 050	BEARING,ball	1							6205	
8	1945 1452 000	GEAR 25T	1							25T	
9	1945 1453 000	SHAFT,4wd	1								
10	0741 0005 201	C-RING	1							φ52	
11	2682 1671 000	SEAL,oil	1								

FIG.408 TRANSMISSION (GEAR) (7/8)

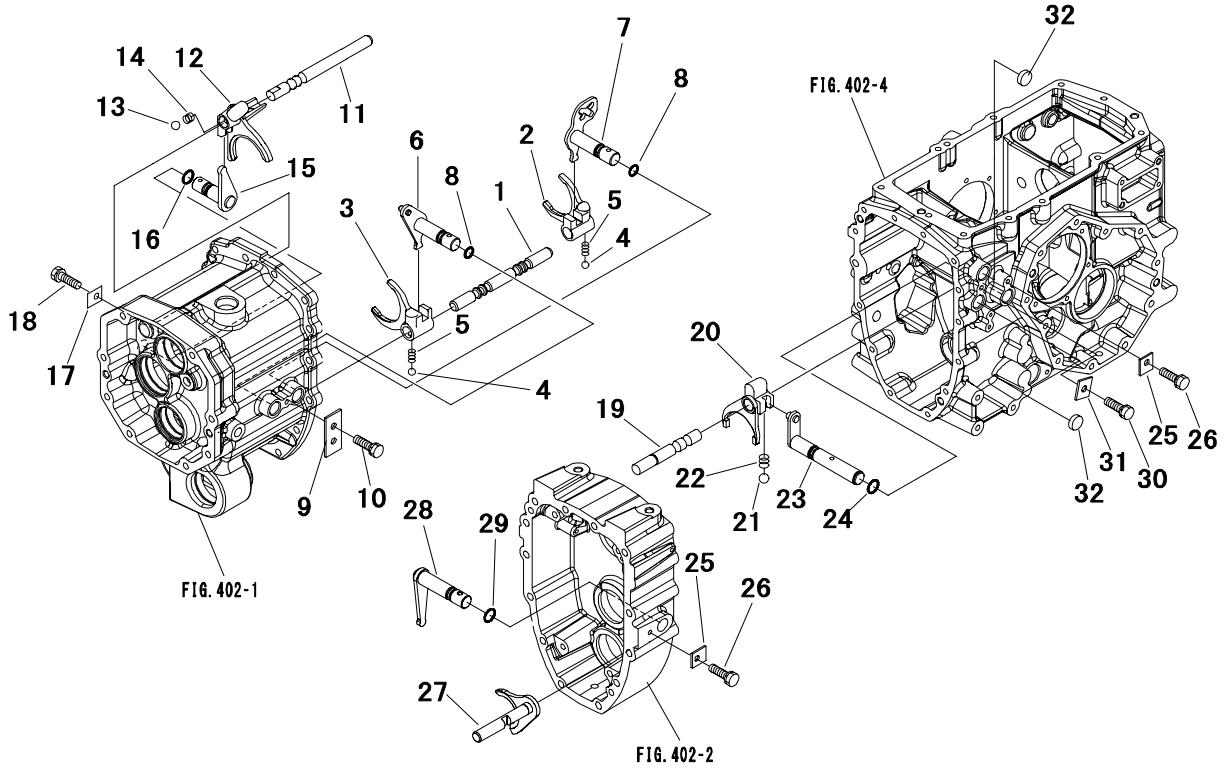

Key No.	Parts No.	Parts Name.	Q`ty ALL					R/P	Application	Description	Remarks
1	1044 1701 000	RAIL,main	1								
2	1044 1702 000	FORK 1-2,main	1								
3	1044 1703 000	FORK 3-4,main	1								
4	0800 0000 900	BALL	2							11/32″	
5	67428-01700	SPRING	2								
6	1044 1704 000	SHIFTER A,main	1								
7	1044 1705 000	SHIFTER B,main	1								
8	0830 0100 160	O-RING	2							φ16	
9	1958 1704 000	PLATE	1								
10	F154 0108 020	BOLT,w/washer	1							M8×20	
11	1957 1708 000	RAIL,shuttle	1								
12	1044 1709 000	FORK A,shuttle	1								
13	0800 0000 900	BALL	1							11/32″	
14	1030 1791 000	SPRING	1								
15	1044 1712 000	SHIFTER,shuttle	1								
16	0830 0100 160	O-RING	1							φ16	
17	1025 1304 000	PLATE	1								
18	F154 0108 020	BOLT,w/washer	1							M8×20	
19	1957 1716 000	RAIL,sub	1								
20	1044 1718 001	FORK,sub	1								
21	0800 0000 900	BALL	1							11/32″	
22	1037 1764 001	SPRING	1								
23	1957 1719 000	SHIFTER,sub	1								
24	0830 0100 160	O-RING	1							φ16	
25	1025 1304 000	PLATE	2								
26	F154 0108 020	BOLT,w/washer	2							M8×20	
27	1957 1721 000	FORK,4wd	1								
28	1957 1722 000	SHIFTER,4wd	1								
29	0830 0100 160	O-RING	1							φ16	
30	F154 0108 020	BOLT,w/washer	1							M8×20	
31	1025 1304 000	PLATE	1								
32	0834 0020 070	CAP,seal	2							φ20	

FIG.409 TRANSMISSION (GEAR) (8/8)

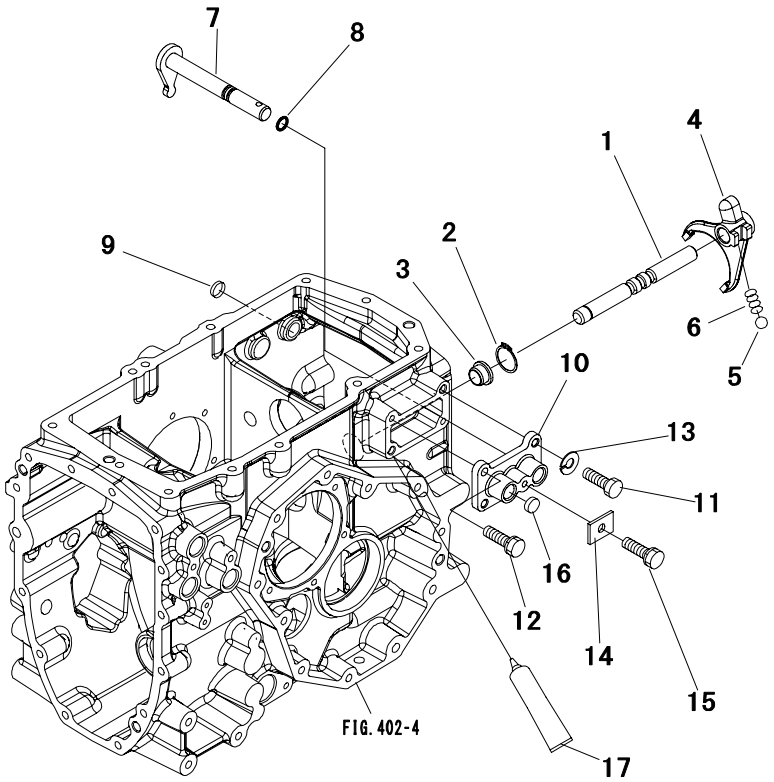

Key No.	Parts No.	Parts Name.	Q`ty ALL					R/P	Application	Description	Remarks
1	1945 1463 000	RAIL,pto	1								
2	0740 0001 600	C-RING	1							φ16	
3	1957 1732 000	SPACER	1								
4	1957 1733 000	FORK,rear pto	1								
5	0800 0000 900	BALL	1							11/32″	
6	1037 1764 001	SPRING	1								
7	1957 1652 000	SHIFTER,pto	1								
8	0830 1100 120	O-RING	1							φ12	
9	0834 0016 050	CAP,seal	1							φ16	
10	1957 1735 AG0	COVER	1								
11	3700 1063 000	BOLT,reamer	2								
12	F154 0108 025	BOLT,w/washer	2							M8×25	
13	A360 0100 802	WASHER,spring	2							M8	
14	1025 1109 001	PLATE	1								
15	F154 0108 016	BOLT,w/washer	1							M8×16	
16	0834 0016 050	CAP,seal	1							φ16	
17	TB1206D	GASKET	AR								

FIG.410 TRANSMISSION (HST) (1/7)

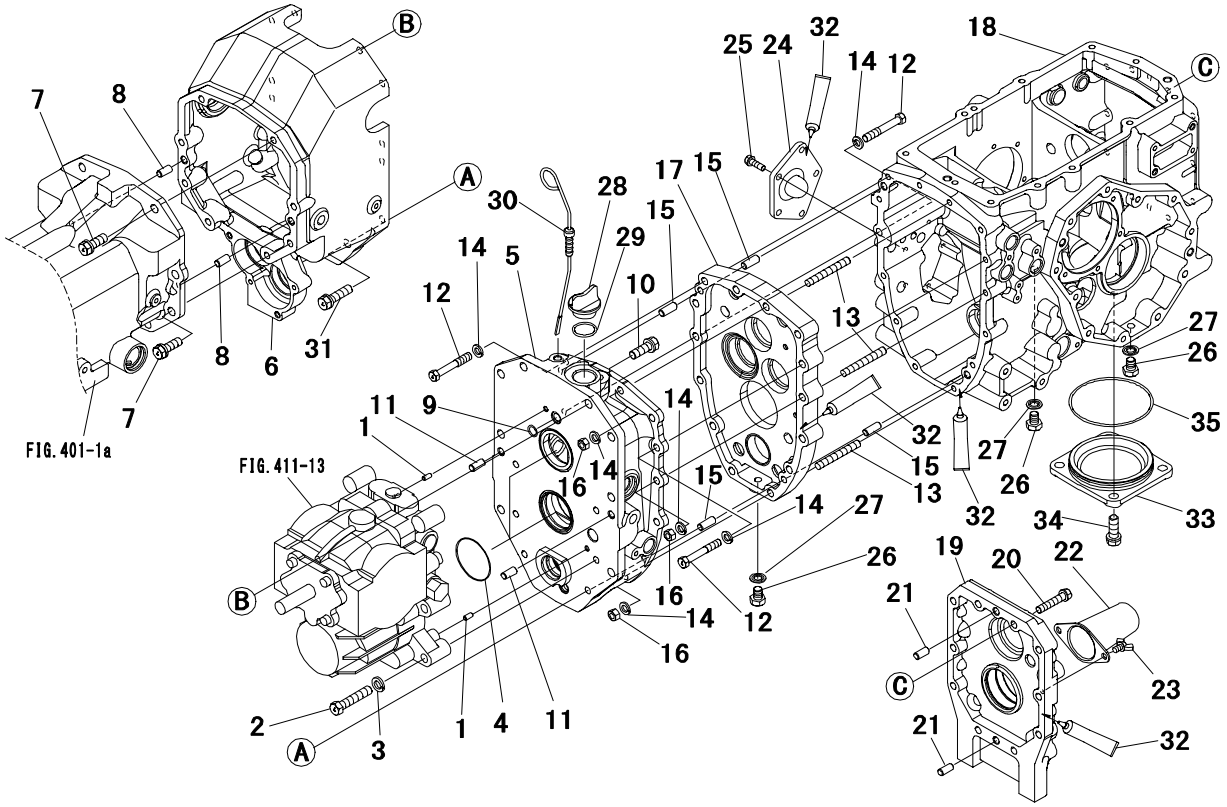

Key No.	Parts No.	Parts Name.	Q`ty ALL					R/P	Application	Description	Remarks
1	0540 1006 012	PIN,dowel	2							φ6×12	
2	A054 0112 060	BOLT 7T	4							M12×60	
3	A360 0101 202	WASHER,spring	4							M12	
4	0830 0500 630	O-RING	2							φ63	
5	1945 1702 AG0	CASE,center	1								
6	1945 1704 AG0	CASE,hst	1								
7	F154 0112 035	BOLT,w/washer	8							M12×35	
8	0540 1010 020	PIN,dowel	2							φ10×20	
9	0830 1100 140	O-RING	1							φ14	
10	F154 0112 035	BOLT,w/washer	8							M12×35	
11	0540 1010 020	PIN,dowel	2							φ10×20	
12	A054 0110 065	BOLT 7T	9							M10×65	
13	A063 0110 060	STUD	5								
14	A360 0101 002	WASHER,spring	14							M10	
15	0540 1010 025	PIN,dowel	4							φ10×25	
16	A301 0110 002	NUT	5							M10	
17	1957 1306 AG3	HOLDER,bearing	1								
18	1944 1203 AG2	HOUSING,diff	1								
19	1957 1205 AG0	COVER,pto	1								
20	F154 0110 050	BOLT,w/washer	10							M10×50	
21	0540 1010 020	PIN,dowel	2							φ10×20	
22	1031 1382 000	CAP,pto	1								
23	A140 0600 812	BOLT,wing	2							M8×12	
24	1957 1307 AG0	COVER	1								
25	F154 0108 025	BOLT,w/washer	5							M8×25	
26	1025 0808 000	PLUG	3								
27	0833 1001 200	WASHER,seal	3							M12	
28	67472-10601	PLUG,oil	1								
29	0830 0100 280	O-RING	1							φ28	
30	1957 1329 000	GAGE,oil	1								
31	F154 0112 045	BOLT,w/washer	3							M12×45	
32	TB1206D	GASKET	AR								
33	1957 1602 AG0	COVER	1								
34	F154 0112 035	BOLT,w/washer	2							M12×35	
35	0830 0201 100	O-RING	1							φ110	

FIG.411 TRANSMISSION (HST) (2/7)

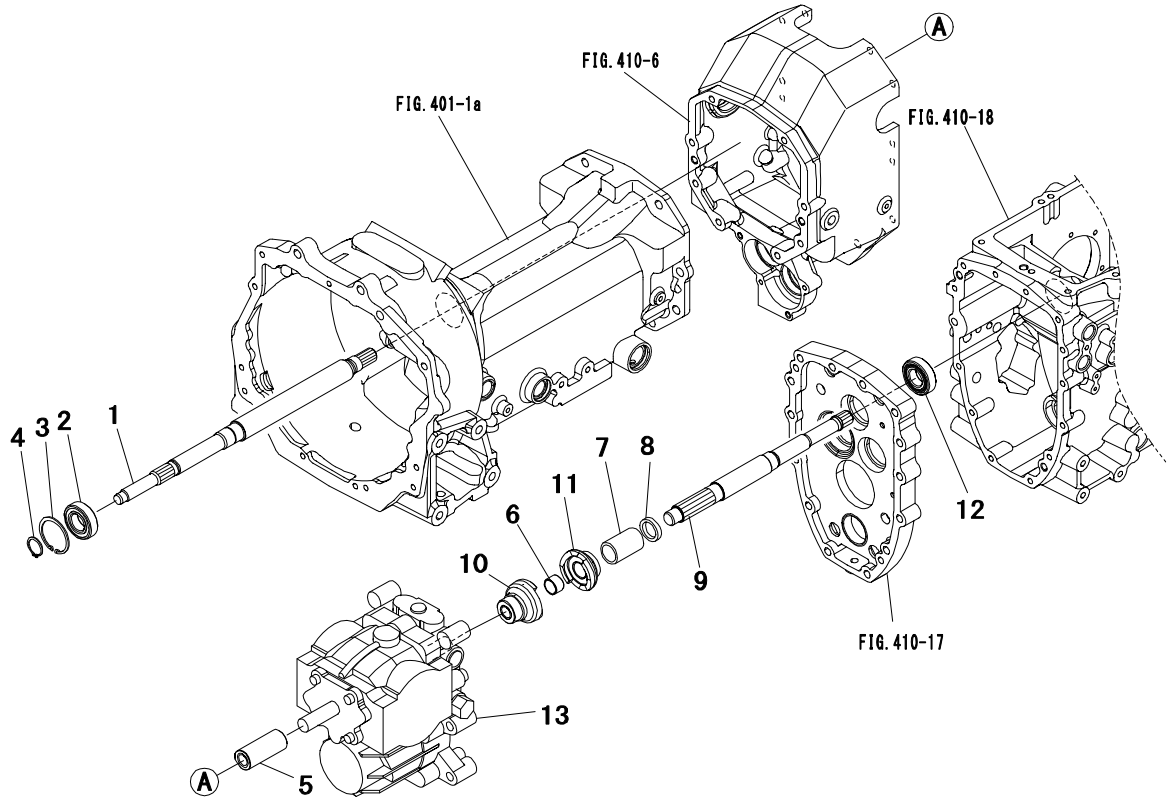

Key No.	Parts No.	Parts Name.	Q`ty ALL					R/P	Application	Description	Remarks
1	1957 1305 001	SHAFT	1								
2	0750 0562 054	BEARING,ball	1							6205DD	
3	0741 0005 200	C-RING	1							φ52	
4	0740 0002 500	C-RING	1							φ25	
5	1044 1214 000	BOSS,spline	1								
6	0797 2020 150	BUSHING	1								
7	1957 1351 000	SPRING	1								
8	1957 1315 000	COLLAR	1								
9	1957 1341 000	SHAFT	1								
10	1957 1371 000	CLUTCH A	1								
11	1983 1272 000	CLUTCH B	1								
12	0750 0062 050	BEARING,ball	1							6205	
13	1957 1301 000	HST UNIT	1								RefFIG417

FIG.412 TRANSMISSION (HST) (3/7)

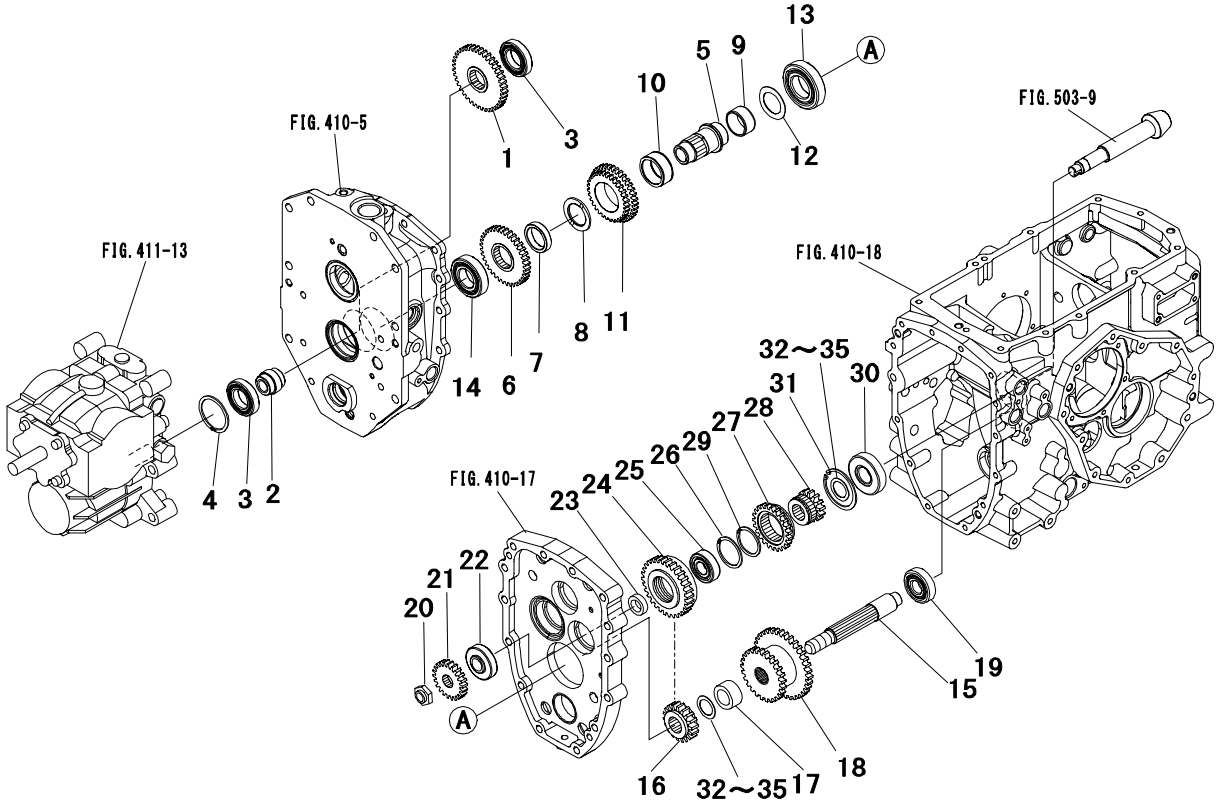

Key No.	Parts No.	Parts Name.	Q`ty ALL					R/P	Application	Description	Remarks
1	1957 1311 000	GEAR 40T	1							40T	
2	1957 1312 000	BOSS,spline	1								
3	0750 0060 060	BEARING,ball	2							6006	
4	0741 0005 501	C-RING	1							φ55	
5	1957 1317 000	SHAFT	1								
6	1957 1318 000	GEAR 36T	1							36T	
7	1957 1316 000	COLLAR	1								
8	1961 1314 000	LINER	1								
9	1041 1316 000	COLLAR	1								
10	0780 2404 820	BEARING,needle	1								
11	1945 1745 000	GEAR 31-35T	1							31-35T	
12	1039 1258 000	LINER	1								
13	0750 0062 070	BEARING,ball	1							6207	
14	0750 0062 060	BEARING,ball	1							6206	
15	1957 1321 000	SHAFT,sub	1								
16	1957 1322 000	GEAR 18T	1							18T	
17	1044 1298 001	COLLAR	1								
18	1945 1742 000	GEAR 25-35T	1							25-35T	
19	0750 0063 040	BEARING,ball	1							6304	
20	1044 1226 001	NUT	1								
21	1957 1331 000	GEAR 22T	1							22T	
22	0770 1130 304	BEARING,taper	1							30304	
23	1957 1334 000	COLLAR	1								
24	1957 1335 000	GEAR 30T	1							30T	
25	0752 0662 040	BEARING,ball	1							6204	
26	0741 0004 701	C-RING	1							φ47	
27	1957 1332 000	GEAR 23T	1							23T	
28	1957 1333 000	GEAR 14T	1							14T	
29	0740 0004 201	C-RING	1							φ42	
30	0770 0130 305	BEARING,taper	1							30305	
31	0741 0006 200	C-RING	1							φ62	
32～35	1021 2158 000	SHIM SET	AR								
32	0731 0002 501	LINER	AR							t=0.15	
33	0731 0002 502	LINER	AR							t=0.2	
34	0731 0002 504	LINER	AR							t=0.4	

FIG.412 TRANSMISSION (HST) (3/7)

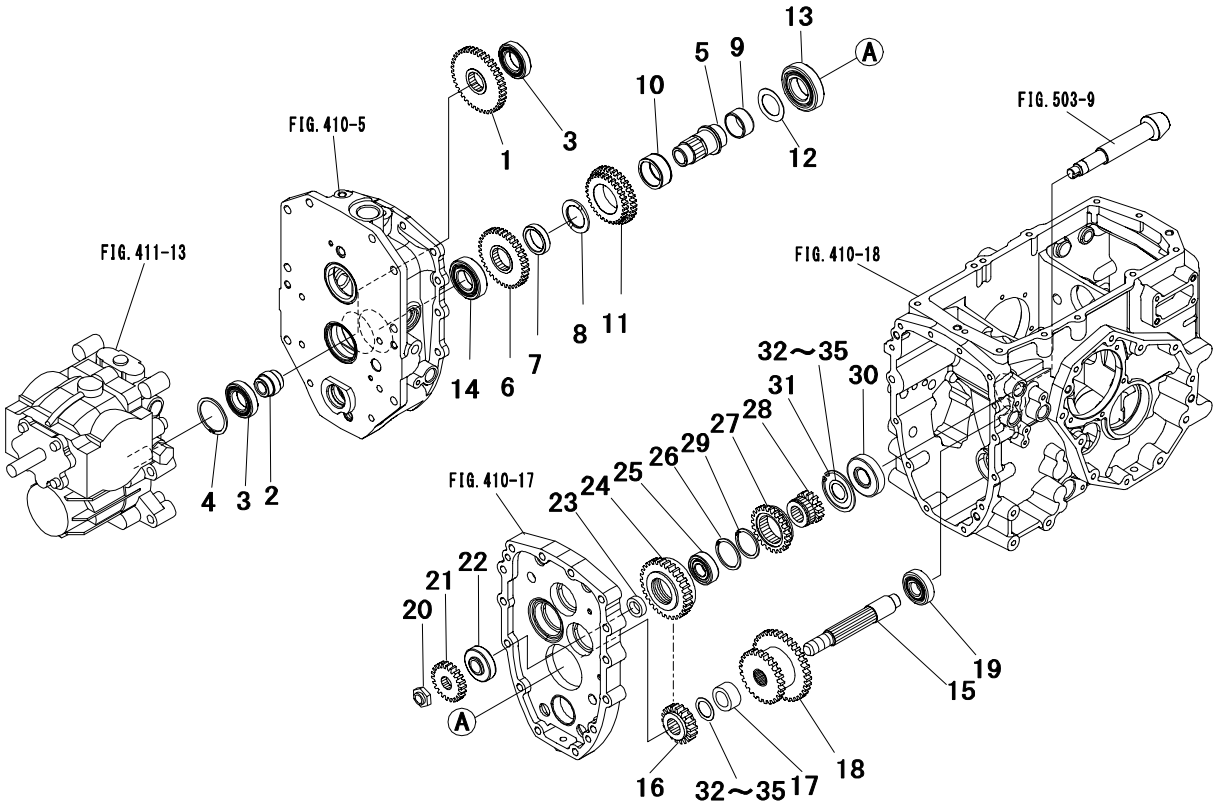

Key No.	Parts No.	Parts Name.	Q`ty					R/P	Application	Description	Remarks
			ALL								
35	0731 0002 508	LINER	AR							t=0.8	

FIG.413 TRANSMISSION (HST)(4/7)

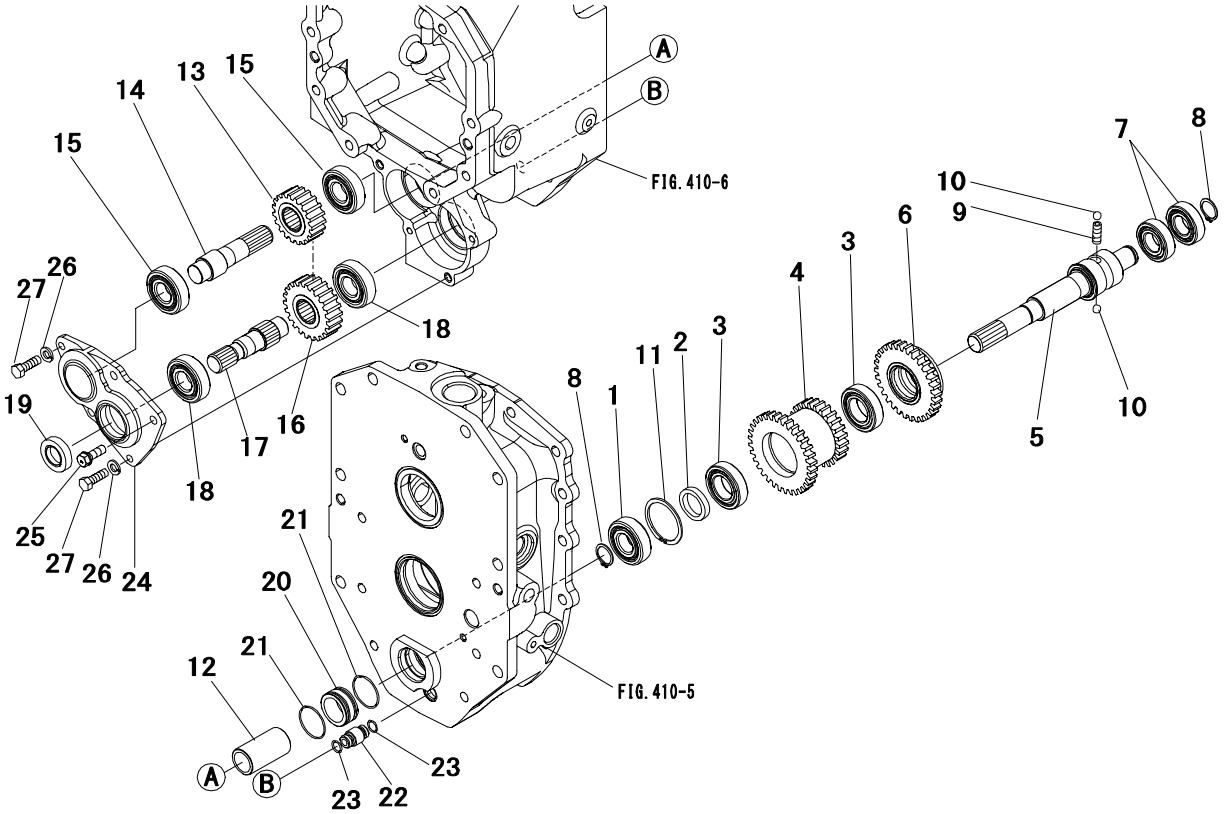

Key No.	Parts No.	Parts Name.	Q`ty ALL					R/P	Application	Description	Remarks
1	0750 0062 040	BEARING,ball	1							6204	
2	1957 1315 000	COLLAR	1								
3	0750 0060 050	BEARING,ball	2							6005	
4	1957 1314 000	GEAR 32-25T	1							32-25T	
5	1945 1725 000	SHAFT	1								
6	1945 1746 000	GEAR 30T	1							30T	
7	0750 0060 040	BEARING,ball	2							6004	
8	0740 0002 000	C-RING	2							φ20	
9	1035 1293 000	SPRING	1								
10	0800 0000 800	BALL	2							5/16″	
11	0741 0004 701	C-RING	1							φ47	
12	1023 1915 000	JOINT,front	1								
13	1945 1731 000	GEAR 19T	1							19T	
14	1945 1732 000	SHAFT	1								
15	0750 0062 040	BEARING,ball	2							6204	
16	1945 1735 000	GEAR 22T	1							22T	
17	1945 1736 000	SHAFT,4wd	1								
18	0750 0062 040	BEARING,ball	2							6204	
19	0840 1020 358	SEAL,oil	1							TC20358	
20	1945 1781 000	COLLAR	1								
21	0830 0500 320	O-RING	2							φ32	
22	1945 1771 000	JOINT	1								
23	0830 1100 100	O-RING	2							φ10	
24	1945 1705 AG0	COVER,4wd	1								
25	F154 0108 025	BOLT,w/washer	3							M8×25	
26	A360 0100 802	WASHER,spring	2							M8	
27	3700 1063 000	BOLT,reamer	2								

FIG.414 TRANSMISSION (HST)(5/7)

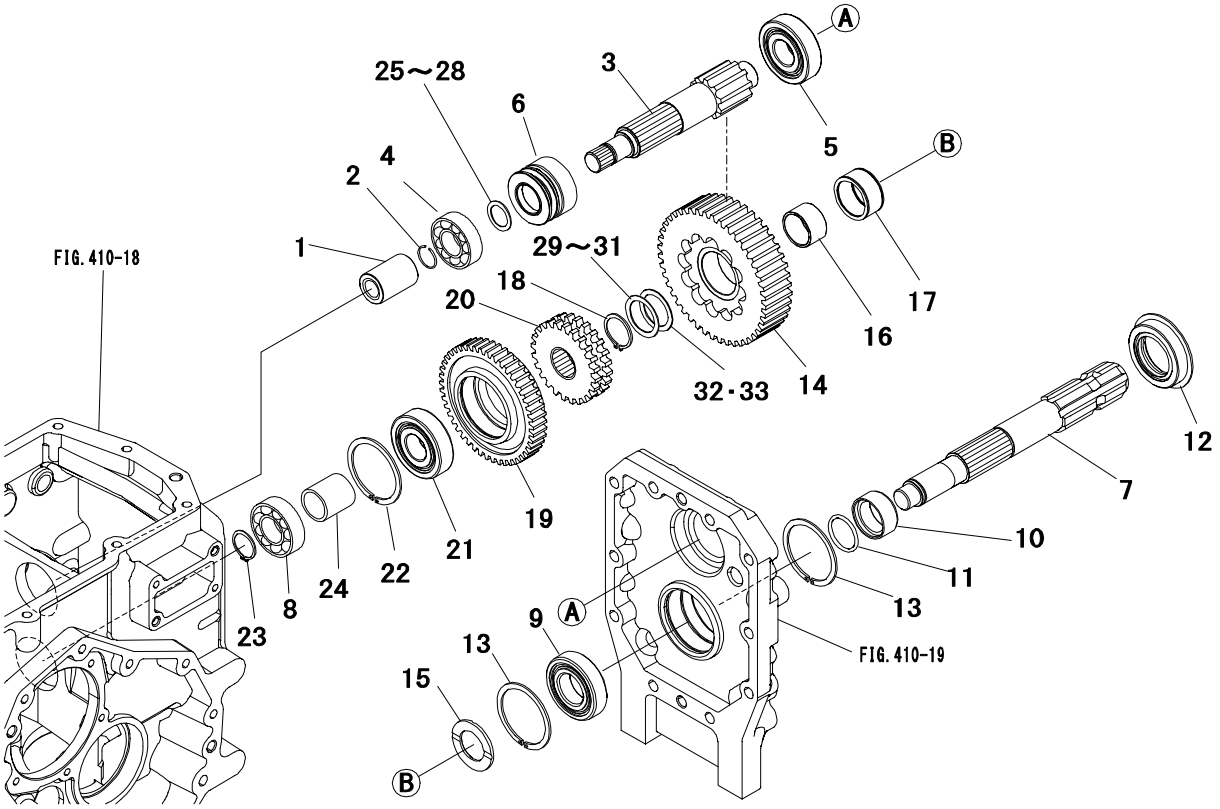

Key No.	Parts No.	Parts Name.	Q`ty ALL					R/P	Application	Description	Remarks
1	1957 1216 000	BOSS,spline	1								
2	1031 1363 001	RING	1								
3	1957 1247 000	SHAFT,pto drive	1								
4	0750 0063 045	BEARING,ball	1							6304	
5	0752 0663 050	BEARING,ball	1							6305	
6	1957 1248 000	GEAR 19T	1							19T	
7	1957 1254 000	SHAFT,pto	1								
8	0750 0063 045	BEARING,ball	1							6304	
9	0750 0062 060	BEARING,ball	1							6206	
10	1025 1405 000	BUSHING	1								
11	0830 0100 300	O-RING	1							φ30	
12	1021 1314 000	SEAL,oil	1								
13	0741 0006 201	C-RING	2							φ62	
14	1945 1467 000	GEAR 44T	1							44T	
15	1041 1237 000	LINER	1								
16	3559 6104 100	SLEEVE	1								
17	0780 2354 220	BEARING,needle	1								
18	0740 0003 000	C-RING	1							φ30	
19	1945 1769 000	GEAR 46T	1							46T	
20	1945 1468 000	GEAR 24T	1							24T	
21	0752 0663 050	BEARING,ball	1							6305	
22	0741 0006 201	C-RING	1							φ62	
23	0740 0002 500	C-RING	1							φ25	
24	1957 1253 000	COLLAR	1								
25～28	1957 1261 000	SHIM SET	AR								
25	0731 0002 001	LINER	AR							t=0.15	
26	0731 0002 002	LINER	AR							t=0.2	
27	0731 0002 004	LINER	AR							t=0.4	
28	0731 0002 010	LINER	AR							t=1.0	
29～31	1019 0625 000	SHIM SET	AR								
29	0731 0003 002	LINER	AR							t=0.2	
30	0731 0003 004	LINER	AR							t=0.4	
31	0731 0003 001	LINER	AR							t=0.15	
32	0731 0003 008	LINER	AR							t=0.8	
33	0731 0003 010	LINER	AR							t=1.0	

FIG.415 TRANSMISSION (HST)(6/7)

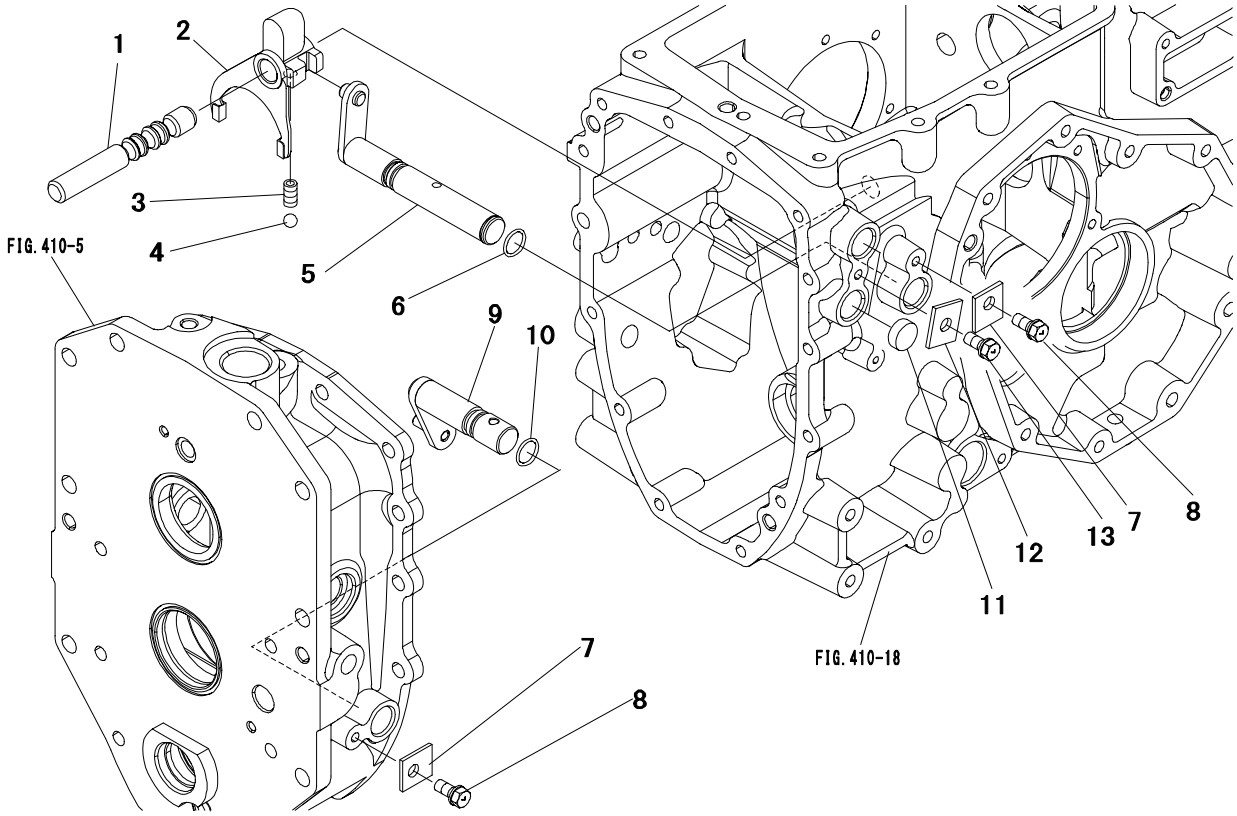

Key No.	Parts No.	Parts Name.	Q`ty ALL					R/P	Application	Description	Remarks
1	1957 1717 000	RAIL,sub	1								
2	1044 1718 001	FORK,sub	1								
3	0800 0000 900	BALL	1							11/32″	
4	1037 1764 001	SPRING	1								
5	1957 1719 000	SHIFTER,sub	1								
6	0830 0100 160	O-RING	1							φ16	
7	1025 1304 000	PLATE	2								
8	F154 0108 020	BOLT,w/washer	2							M8×20	
9	1957 1723 000	SHIFTER,4wd	1								
10	0830 0100 160	O-RING	1							φ16	
11	0834 0020 070	CAP,seal	2							φ20	
12	1025 1109 001	PLATE	1								
13	F154 0108 020	BOLT,w/washer	1							M8×20	

FIG.416 TRANSMISSION (HST)(7/7)

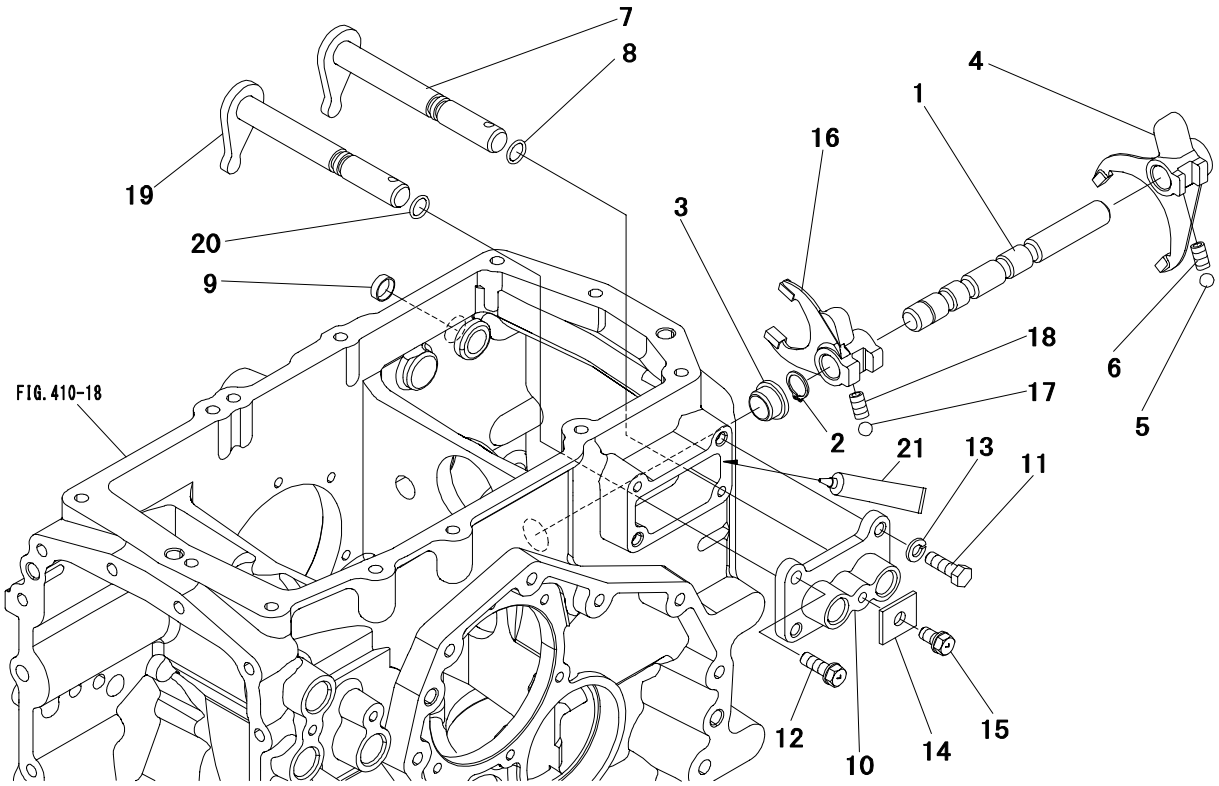

Key No.	Parts No.	Parts Name.	Q`ty ALL					R/P	Application	Description	Remarks
1	1957 1731 000	RAIL,pto	1								
2	0740 0001 600	C-RING	1							φ16	
3	1957 1732 000	SPACER	1								
4	1957 1733 000	FORK,rear pto	1								
5	0800 0000 900	BALL	1							11/32″	
6	1037 1764 001	SPRING	1								
7	1957 1652 000	SHIFTER,pto	1								
8	0830 1100 120	O-RING	1							φ12	
9	0834 0016 050	CAP,seal	1							φ16	
10	1957 1735 AG0	COVER	1								
11	3700 1063 000	BOLT,reamer	2								
12	F154 0108 025	BOLT,w/washer	2							M8×25	
13	A360 0100 802	WASHER,spring	2							M8	
14	1025 1109 001	PLATE	1								
15	F154 0108 016	BOLT,w/washer	1							M8×16	
16	1957 1651 000	FORK、MID PTO	1								
17	0800 0000 900	BALL	1							11/32″	
18	1037 1764 001	SPRING	1								
19	1957 1652 000	SHIFTER,pto	1								
20	0830 0100 120	O-RING	1							φ12	
21	TB1206D	GASKET	AR								

FIG.417 HST UNIT

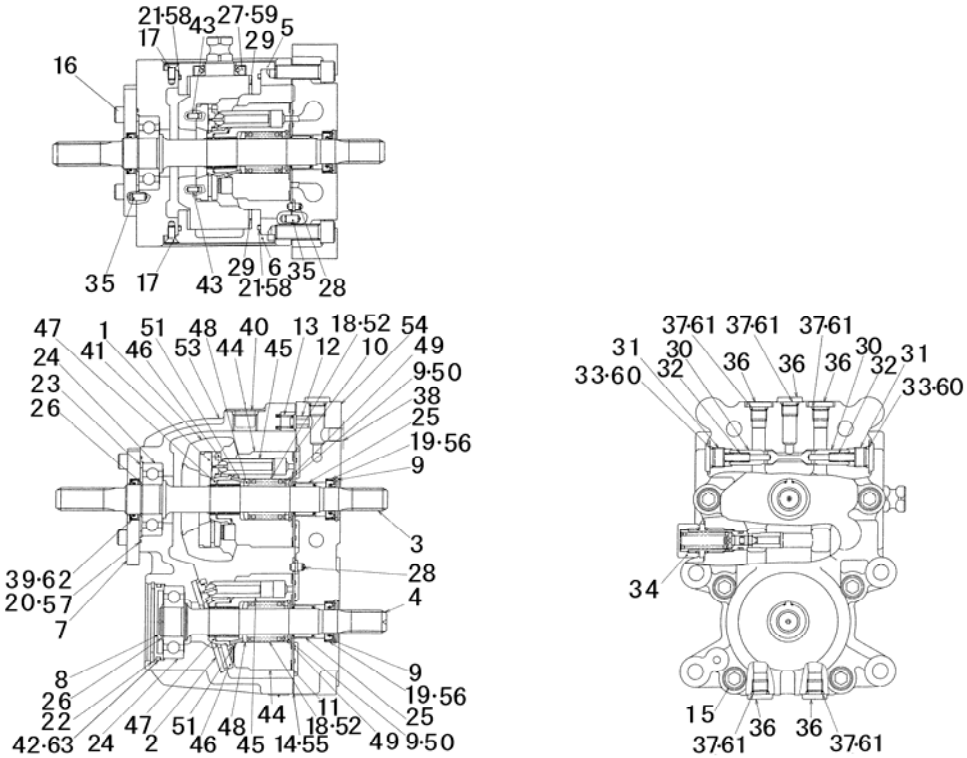

Key No.	Parts No.	Parts Name.	Q`ty					R/P	Application	Description	Remarks
			ALL								
1～54	1957 1301 000	HST UNIT	1								
1	1957 1301 150	SWASH PLATE	1								
2	1964 1301 170	PLATE,thrust	1								
3	1957 1301 170	SHAFT	1								
4	1957 1301 180	SHAFT	1								
5	1957 1301 190	COVER	1								
6	1957 1301 210	COVER	1								
7	1957 1301 220	COVER	1								
8	1957 1301 230	CAP	1								
9	0741 0003 500	C-RING	4							φ35	
10	1957 1301 240	PLATE,valve	1								
11	1957 1301 250	PLATE,valve	1								
12	1963 1301 470	VALVE	1								
13	1963 1301 430	SPRING	1								
14	1957 1301 280	GASKET	1								
15	1957 1301 290	BOLT	8								
16	A544 0708 020	BOLT	4							M8×20	
17	A222 0106 014	SCREW	6							M6×14	
18	1957 1301 320	SPRING	2								
19	1957 1301 330	OIL,seal	2								
20	1957 1301 340	O-RING	1								
21	0830 0200 650	O-RING	2							φ65	
22	0741 0006 500	C-RING	1							φ65	
23	1957 1301 350	COLLAR	1								
24	1957 1301 360	BEARING	2								
25	1957 1301 370	BEARING	2								
26	0740 0002 500	C-RING	2							φ25	
27	1957 1301 380	SEAL,oil	1								
28	1957 1301 390	PIN	2								
29	1957 1301 410	BUSHING	2								
30	1957 1301 420	POPET	2								
31	1957 1301 430	PLUG	2								
32	1957 1301 440	SPRING	2								
33	0830 1100 140	O-RING	2							φ14	
34	1957 1301 450	VALVE ASSY	1								

FIG.417 HST UNIT

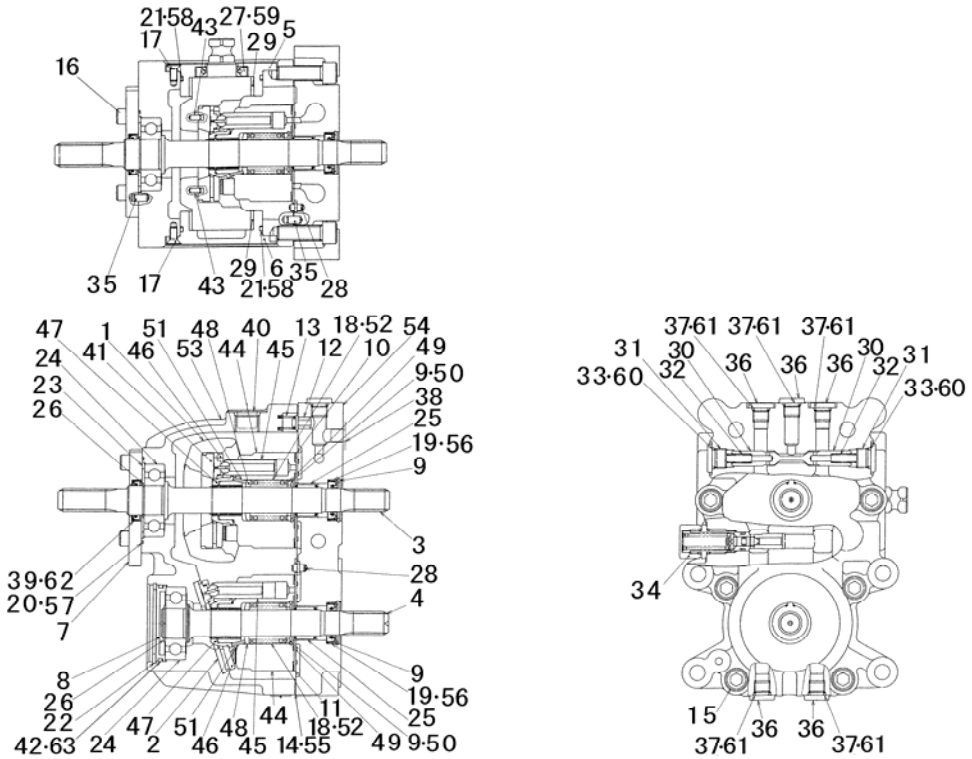

Key No.	Parts No.	Parts Name.	Q`ty ALL					R/P	Application	Description	Remarks
35	1957 1301 460	PIN	4								
36	1957 1301 470	PLUG	5								
37	0830 1100 110	O-RING	5							φ11	
38	1957 1301 480	PLUG	1								
39	1957 1301 490	SEAL,oil	1								
40	1957 1301 510	PLUG	1								
41	1957 1301 520	PLATE,thrust	1								
42	0830 0200 600	O-RING	1							φ60	
43	1957 1301 530	PIN	2								
44～52	1957 1301 560	CYL BLOCK ASSY	2								
44	*	CYLINDER BLOCK	2								
45	*	PISTON	18								
46	*	PLATE,retainer	2								
47	*	HOLDER,retainer	2								
48	*	HOLDER,spring	2								
49	*	HOLDER,spring	2								
50	*	C-RING	2								
51	*	PIN	2								
52	*	SPRING	2								
53	*	CASE	1								
54	*	BLOCK	1								
55～63	1957 1301 550	KIT,repair	1								
55	1957 1301 280	GASKET	1								
56	1957 1301 330	OIL,seal	2								
57	1957 1301 340	O-RING	1								
58	0830 0200 650	O-RING	2							φ65	
59	1957 1301 380	SEAL,oil	1								
60	0830 1100 140	O-RING	2							φ14	
61	0830 1100 110	O-RING	5							φ11	
62	1957 1301 490	SEAL,oil	1								
63	0830 0200 600	O-RING	1							φ60	

FIG.418 DIFF LOCK PEDAL(GEAR)

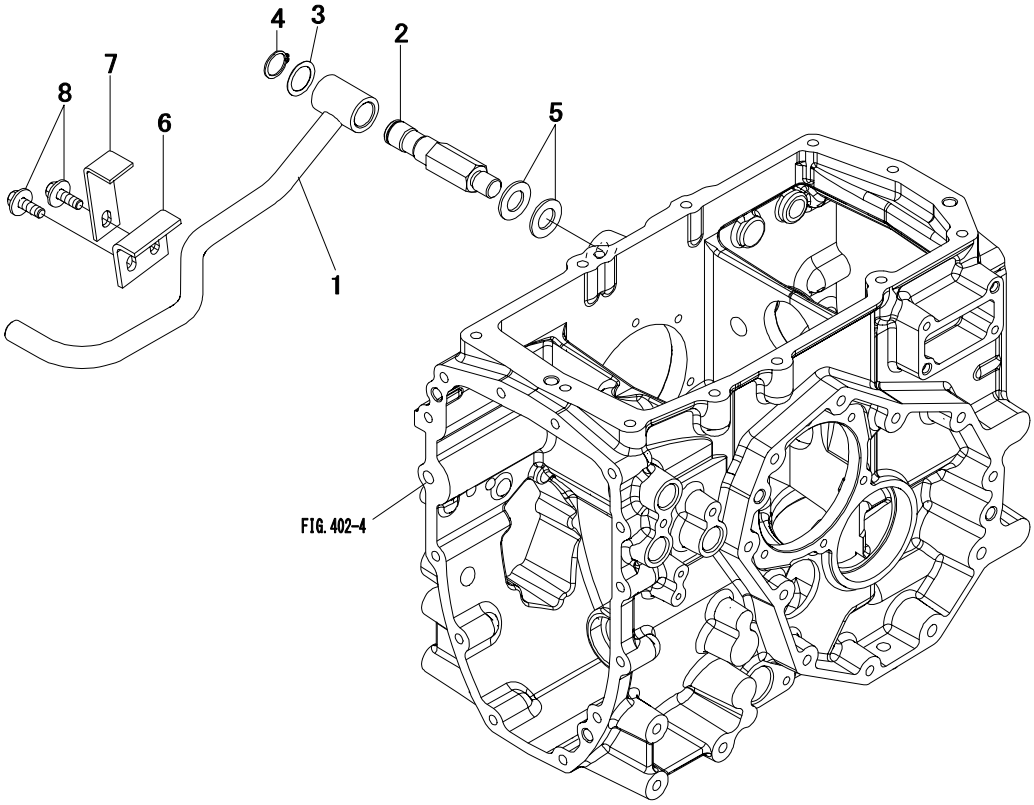

Key No.	Parts No.	Parts Name.	Q`ty					R/P	Application	Description	Remarks
			ALL								
1	1044 1427 AG0	PEDAL,diff lock	1								
2	1044 1429 000	SHAFT	1								
3	0731 0102 004	LINER	1							t=0.4	
4	0740 0102 000	C-RING	1							φ20	
5	0350 0151 632	WASHER	2							M16	
6	1044 1426 AG0	PLATE	1								
7	1044 1431 AG0	PLATE	1								
8	H184 0108 025	BOLT,w/washer	2							M8×25	

FIG.419 DIFF LOCK PEDAL(HST)

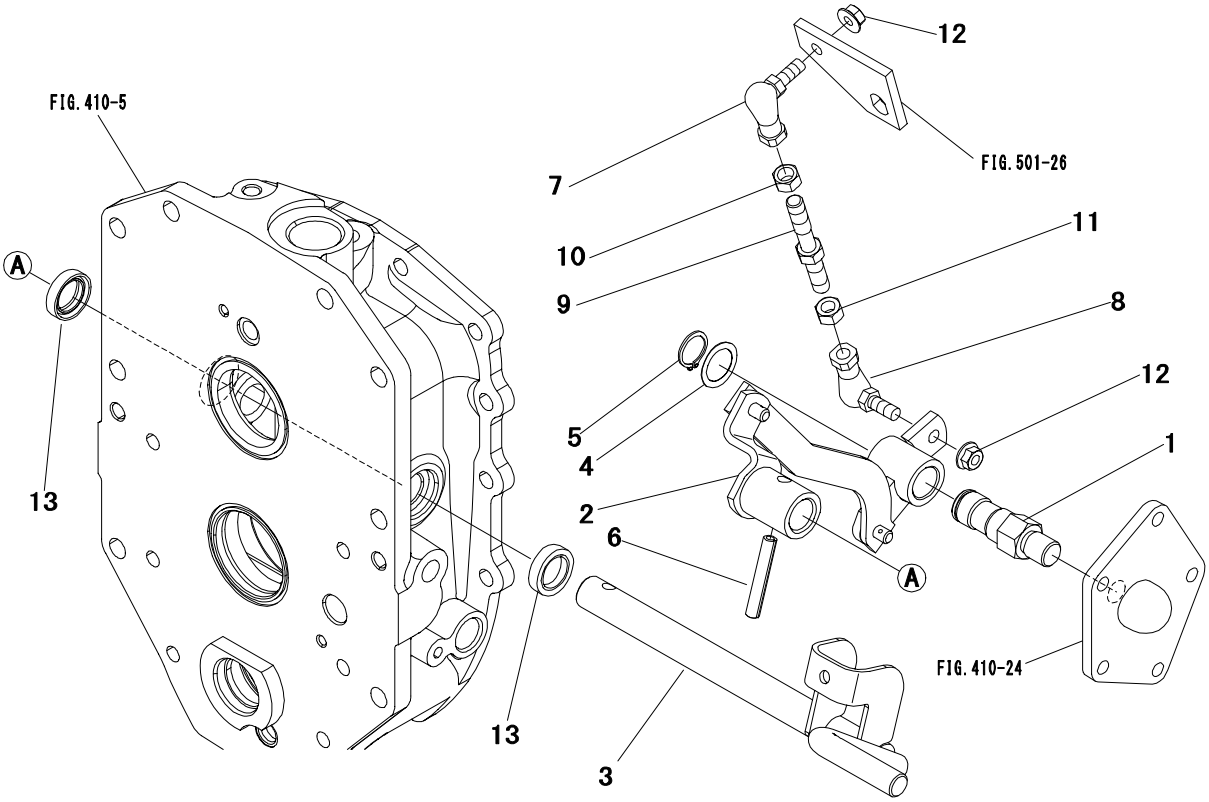

Key No.	Parts No.	Parts Name.	Q`ty					R/P	Application	Description	Remarks
			ALL								
1	1957 1429 000	SHAFT	1								
2	1945 8111 AG0	LINK ASSY	1								
3	1957 1432 AG0	PEDAL,difflock	1								
4	0731 0102 004	LINER	1							t=0.4	
5	0740 0002 000	C-RING	1							φ20	
6	0550 0008 050	PIN,spring	1							φ8×50	
7	1025 1135 000	JOINT,ball	1								
8	3704 1577 000	JOINT,ball	1								
9	1957 1436 000	ROD	1								
10	A303 2110 002	NUT	1							M10	
11	A303 0110 002	NUT	1							M10	
12	F301 0108 000	NUT,flange	2							M8	
13	0840 1020 307	SEAL,oil	2							TC20307	

FIG.501 REAR AXLE (1/3)

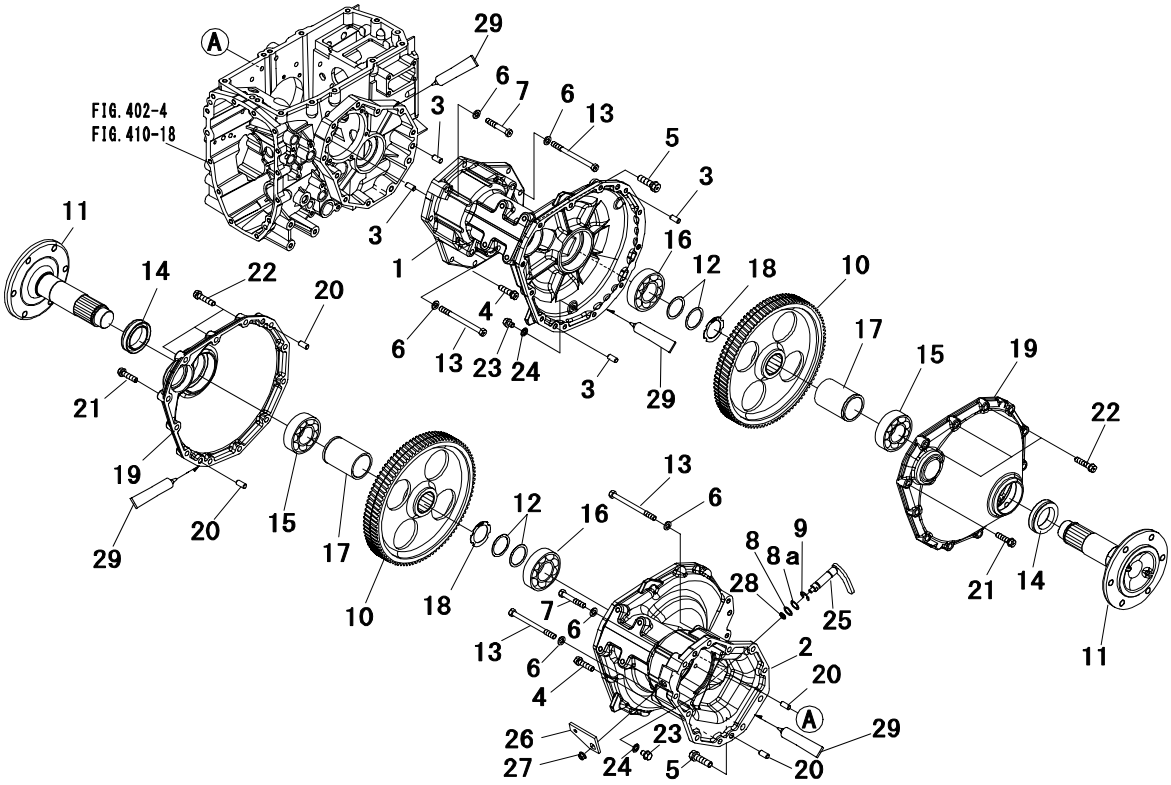

Key No.	Parts No.	Parts Name.	Q`ty ALL					R/P	Application	Description	Remarks
1	1944 1551 AG0	CASE L.H,axle	1								
2	1944 1552 AG0	CASE R.H,axle	1								
3	0540 1010 020	PIN,dowel	4							φ10×20	
4	F154 0110 040	BOLT,w/washer	12							M10×40	
5	F154 0112 045	BOLT,w/washer	4							M12×45	
6	A360 0101 002	WASHER,spring	6							M10	
7	A054 0110 060	BOLT 7T	2							M10×60	
8,8a	1019 1806 000	SHIM SET	AR								
8	0731 0001 504	LINER	AR							t=0.4	
8a	0731 0001 512	LINER	AR							t=1.2	
9	0742 0101 200	E-RING	1							φ12	
10	1944 1565 000	GEAR 95T	2							95T	
11	1956 1568 AG1	SHAFT,axle	2								
12	0730 0005 202	LINER	AR							t=0.2	
	0730 0005 206	LINER	AR							t=0.6	
13	A054 0110 120	BOLT 7T	4							M10×120	
14	1038 1515 000	SEAL,oil	2								
15	0750 0062 100	BEARING,ball	2							6210	
16	0750 0063 080	BEARING,ball	2							6308	
17	1956 1571 001	COLLAR	2								
18	0740 0004 801	C-RING	2							φ48	
19	1956 1554 AG0	COVER,axle	2								
20	0540 1010 020	PIN,dowel	4							φ10×20	
21	F154 0110 040	BOLT,w/washer	18							M10×40	
22	F154 0110 045	BOLT,w/washer	6							M10×45	
23	1022 1733 000	BOLT	2								
24	0833 1001 000	WASHER,seal	2							M10	
25	1044 1423 001	SHIFTER	1								
26	1044 1424 AG1	ARM,diff lock	1								
27	F301 0108 001	NUT,flange	1							M8	
28	0830 0100 110	O-RING	1							φ11	
29	TB1206D	GASKET	AR								

FIG.502 REAR AXLE (2/3)

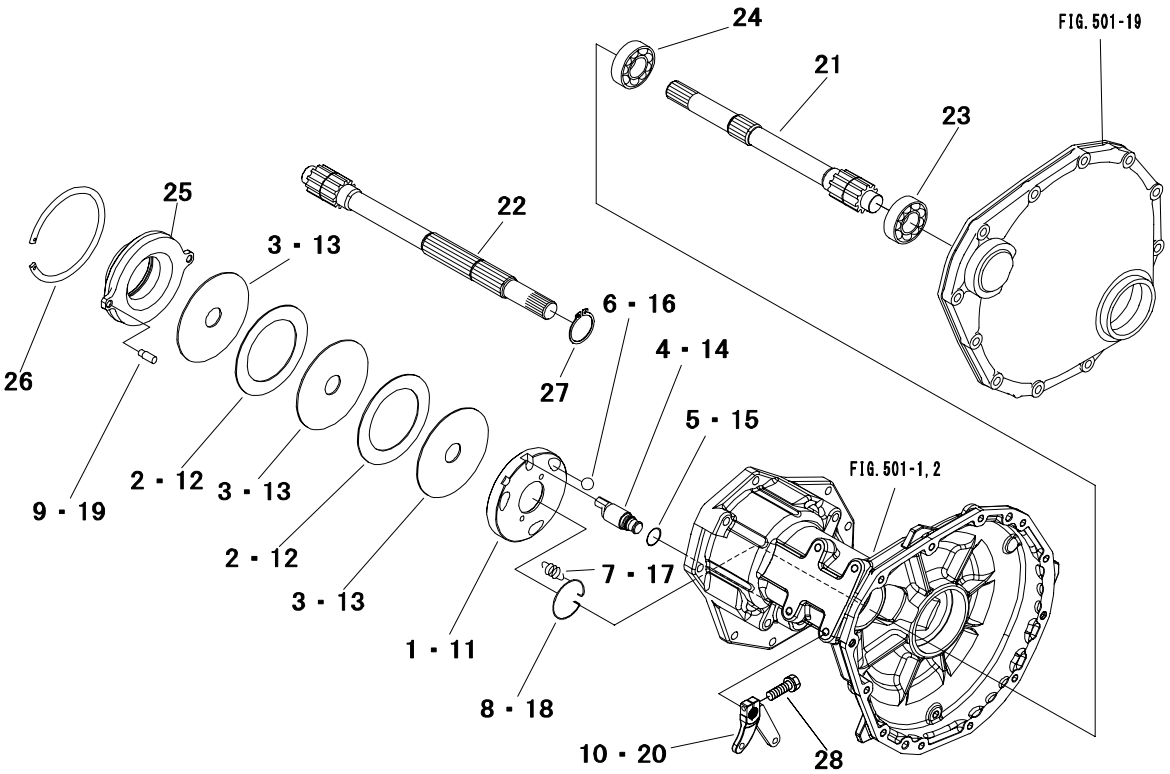

Key No.	Parts No.	Parts Name.	Q`ty ALL					R/P	Application	Description	Remarks
1～9	1944 1556 000	BRAKE ASSY LH	1								
1	1044 1556 100	PLATE LH,cam	1								
2	1044 1541 200	PLATE,mating	2								
3	1044 1541 300	DISK	3								
4	1044 1556 500	CAM,brake	1								
5	0830 0100 160	O-RING	1							φ16	
6	1044 1541 500	BALL,steel	3								
7	1032 1501 500	SPRING,return	2								
8	1044 1556 900	RING	1								
9	1044 1556 800	PIN	2								
10	1945 2709 AG0	ARM,brake	1								
11～19	1944 1557 000	BRAKE ASSY RH	1								
11	1044 1557 100	PLATE RH,cam	1								
12	1044 1541 200	PLATE,mating	2								
13	1044 1541 300	DISK	3								
14	1044 1556 500	CAM,brake	1								
15	0830 0100 160	O-RING	1							φ16	
16	1044 1541 500	BALL,steel	3								
17	1032 1501 500	SPRING,return	2								
18	1044 1556 900	RING	1								
19	1044 1556 800	PIN	2								
20	1945 2709 AG0	ARM,brake	1								
21	1957 1561 000	SHAFT LH,diff	1								
22	1957 1562 000	SHAFT RH,diff	1								
23	0752 0663 050	BEARING,ball	2							6305	
24	0752 0662 060	BEARING,ball	2							6206	
25	1044 1558 000	HOLDER	2								
26	1044 1517 000	RING	2								
27	0740 0003 000	C-RING	1							φ30	
28	F144 0106 025	BOLT,w/washer	2							M6×25	

FIG.503 REAR AXLE (3/3)

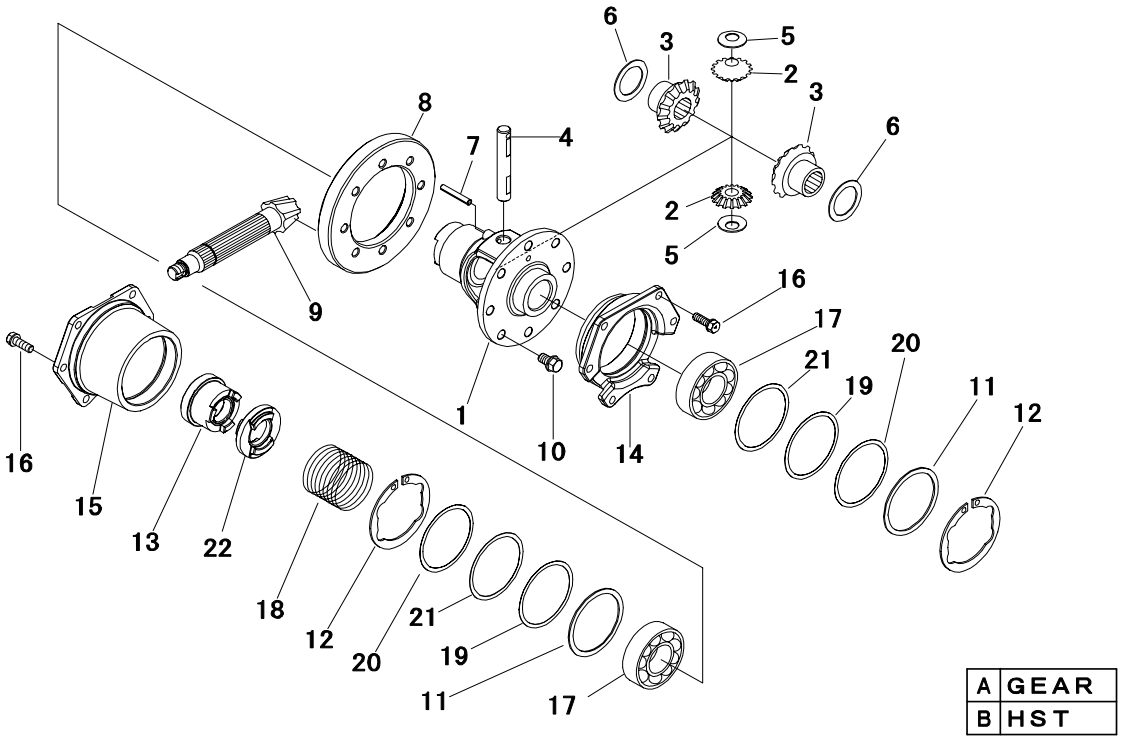

Key No.	Parts No.	Parts Name.	Q`ty A	Q`ty B				R/P	Application	Description	Remarks
1～10	1957 1401 000	DIFF CASE ASSY	1	·							
	1957 1411 000	DIFF CASE ASSY	·	1							
1	1044 1404 000	DIFF CASE	1	1							
2	1019 1412 000	PINION,mate	2	2							
3	1019 1413 000	GEAR,side	2	2							
4	1019 1414 000	SHAFT,pinion	1	1							
5	1019 1415 000	WASHER,thrust	2	2							
6	1019 1416 000	WASHER,thrust	2	2							
7	0550 0006 040	PIN,spring	1	1						φ6×40	
8,9	1957 1403 000	6-35 SET	1	·							
	1957 1413 000	6-35 SET	·	1							
8	*	GEAR,spairal	1	1							
9	*	PINION,spairal	1	1							
10	1218 6568 000	BOLT	8	8							
11	1025 1535 000	LINER	2	2							
12	0741 0008 001	C-RING	2	2						φ80	
13	1945 2729 000	SLEEVE	1	1							
14	1044 1416 000	HOLDER LH	1	1							
15	1044 1417 000	HOLDER RH	1	1							
16	F154 0108 025	BOLT,w/washer	12	12						M8×25	
17	0750 0060 100	BEARING,ball	2	2						6010	
18	1135 1416 000	SPRING	1	1							
19～21	1019 0623 000	SHIM SET	AR	AR							
19	1007 0618 200	LINER	AR	AR						t=0.4	
20	1007 0618 000	LINER	AR	AR						t=0.1	
21	1007 0618 100	LINER	AR	AR						t=0.2	
22	1945 2731 000	SPACER	1	1							

FIG.504 PTO SHAFT

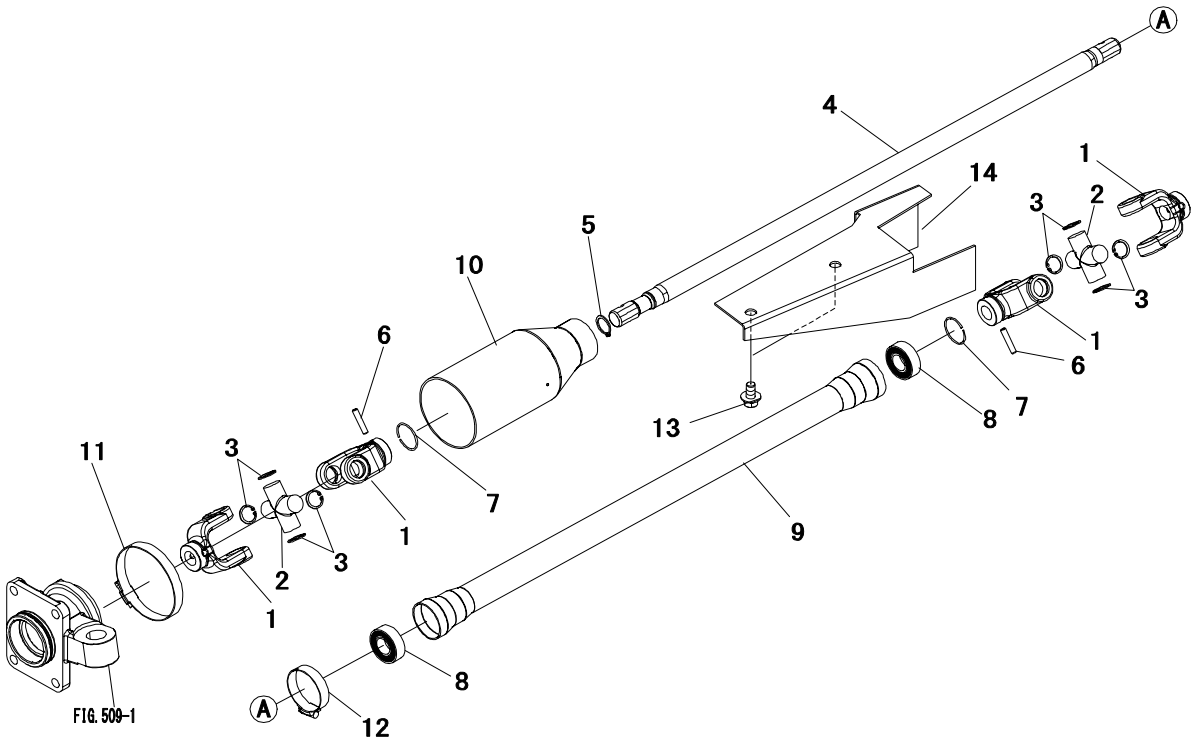

Key No.	Parts No.	Parts Name.	Q`ty ALL					R/P	Application	Description	Remarks
1～3	1007 0552 000	JOINT ASSY	2								
1	1007 0552 100	SPLINE YOKE	4								
2	1007 0552 200	JURNAL KIT	2								
3	0741 0002 000	RING,snap	8							φ20	
4	1945 2911 000	SHAFT	1								
5	0740 0002 000	C-RING	1							φ20	
6	0540 1006 028	PIN,dowel	3							φ6×28	
7	1007 0553 001	RING,snap	3								
8	0750 0560 044	BEARING,ball	2							6004DD	
9	1945 2951 AG0	COVER	1								
10	1945 2921 000	COVER	1								
11	0050 5000 900	CLAMP HOSE	1								
12	0050 5000 500	CLAMP,hose	1							φ50	
13	H154 0110 020	BOLT,w/washer	2							M10×20	
14	1945 2963 AG0	COVER	1								

FIG.505 CHASSIS BRACKET

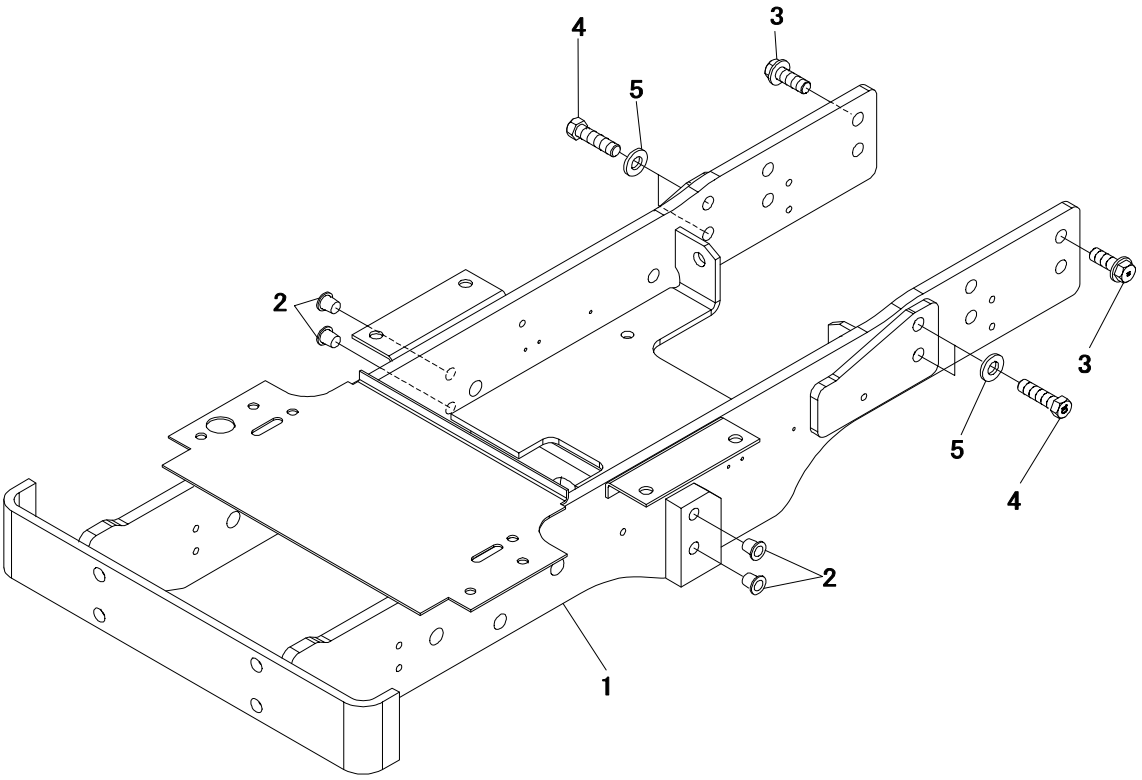

Key No.	Parts No.	Parts Name.	Q`ty					R/P	Application	Description	Remarks
			ALL								
1	1945 0911 AG0	BRACKET,front	1								
2	05534-14000	PLUG	4								
3	F945 0112 035	BOLT	8							M12×35	
4	A945 0112 045	BOLT 10.9	4							M12×45	
5	0355 0161 226	WASHER	4							M12	

FIG.506 FRONT AXLE (1/6)

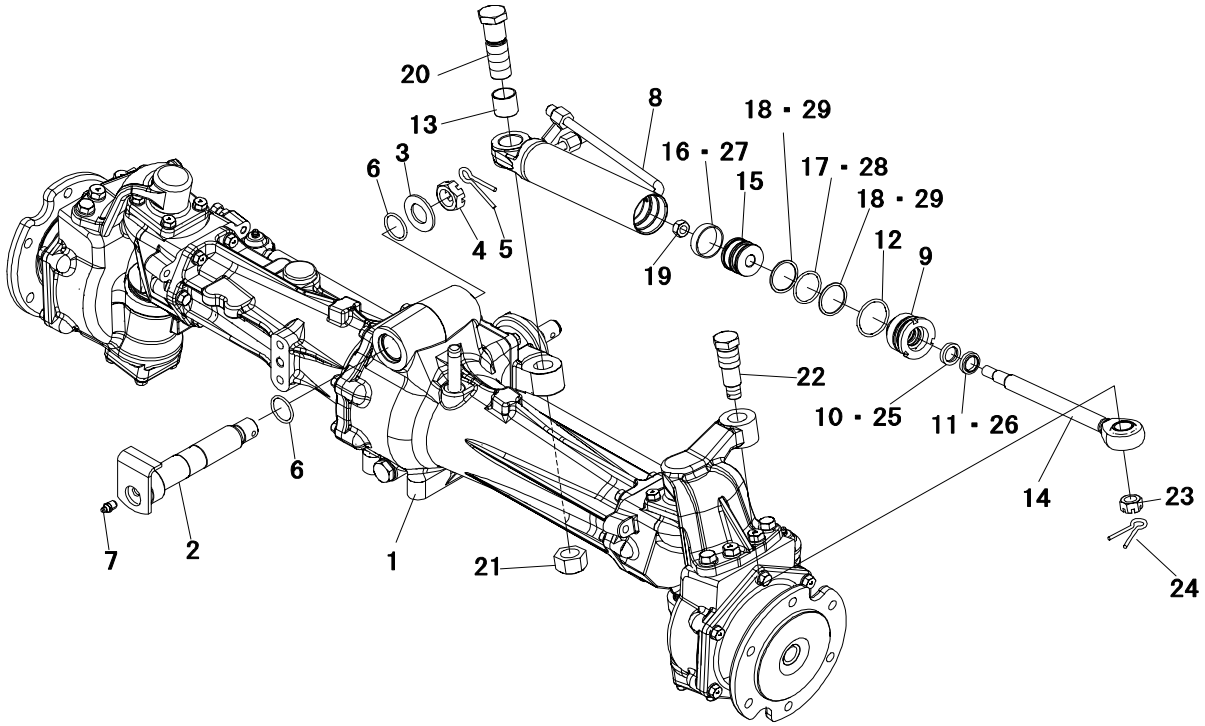

Key No.	Parts No.	Parts Name.	Q`ty ALL					R/P	Application	Description	Remarks
1	*	F/A ASSY	1								Inc507～511
2	1945 3165 AG0	PIN,center	1								
3	1135 2064 000	PLATE	1								
4	A313 0102 401	NUT,slotted	1							M24	
5	0520 0150 040	PIN,split	1							φ5×40	
6	0830 0100 290	O-RING	2							φ29	
7	A650 3100 300	NIPPLE,grease	1							PT=1/8	
8～19	1945 3171 AG0	CYLINDER ASSY	1								
8	*	TUBE ASSY	1								
9	1963 2211 AG0	CASE	1								
10	1963 2212 100	SEAL,rod	1								
11	1963 2212 200	SEAL,dust	1								
12	0830 1100 400	O-RING	1							φ40	
13	0796 3024 250	BUSHING	1								
14	*	ROD,cylinder	1								
15	1963 2208 000	PISTION	1								
16	1963 2209 100	WEAR RING	1								
17	0830 1100 340	O-RING	1							φ34	
18	0832 0100 340	RING,backup	2							φ34	
19	A353 0112 000	NUT,lock	1							M12	
20	1963 2225 000	BOLT	1								
21	A073 0124 001	NUT	1							M24	
22	1963 2267 000	BOLT	1								
23	A313 0101 601	NUT	1							M16	
24	0520 0140 032	PIN,split	1							φ4.0×32	
25,26	1963 2212 000	KIT SEAL B	1								
25	1963 2212 100	SEAL,rod	1								
26	1963 2212 200	SEAL,dust	1								
27～29	1963 2209 000	KIT SEAL A	1								
27	1963 2209 100	WEAR RING	1								
28	0830 1100 340	O-RING	1							φ34	
29	0832 0100 340	RING,backup	2							φ34	

FIG.507 FRONT AXLE (2/6)

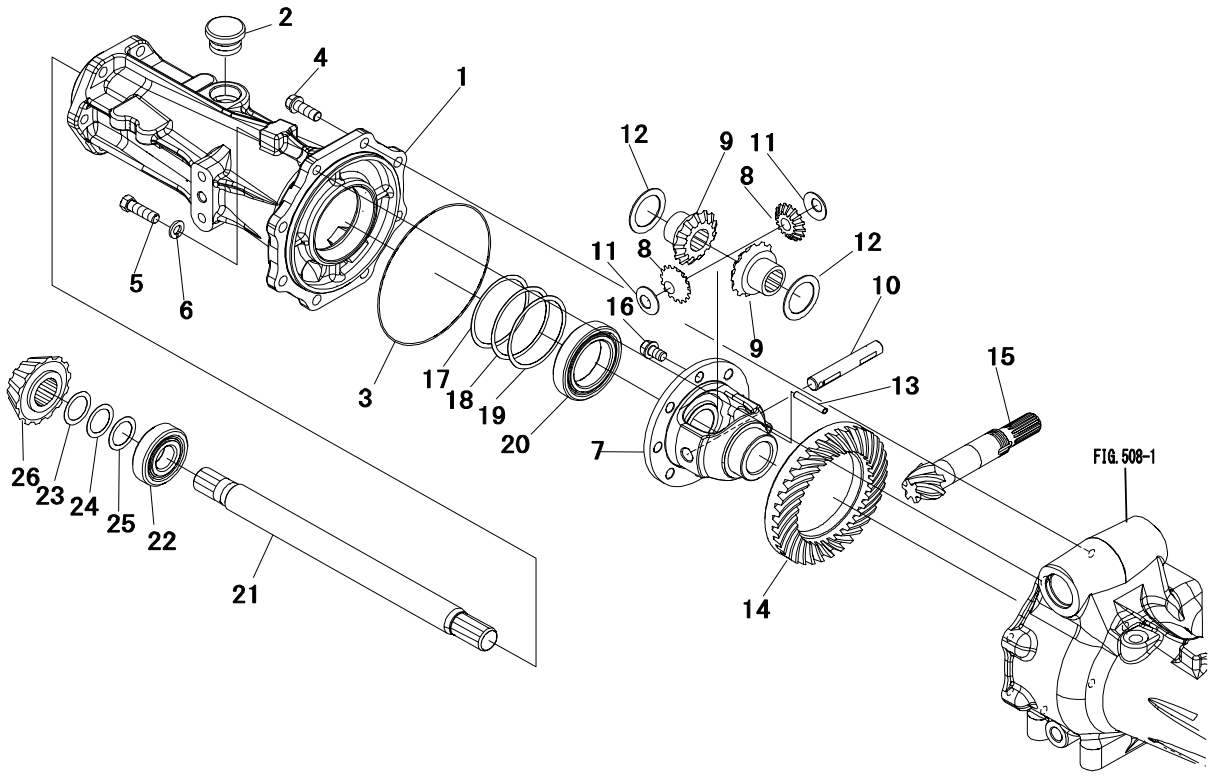

Key No.	Parts No.	Parts Name.	Q`ty ALL					R/P	Application	Description	Remarks
1	1030 2119 AG2	CASE B,center	1								
2	1191 1211 000	CAP,oil	1								
3	0830 0501 500	O-RING	1							φ150	
4	F155 0110 030	BOLT,w/washer	7							M10×30	
5	69542-64700	BOLT	1								
6	A360 0101 002	WASHER,spring	1							M10	
7～16	1964 2113 001	DIFF CASE ASSY	1								
7	1031 2121 000	CASE,diff	1								
8	1019 1412 000	PINION,mate	2								
9	1019 1413 000	GEAR,side	2								
10	1019 1414 000	SHAFT,pinion	1								
11	1019 1415 000	WASHER,thrust	2								
12	1019 1416 000	WASHER,thrust	2								
13	0550 0006 040	PIN,spring	1							φ6×40	
14,15	1964 2114 000	6-35 SET	1								
14	*	GEAR,ring	1								
15	*	SHAFT,pinion	1								
16	1218 6568 000	BOLT	8								
17～19	1019 0623 000	SHIM SET	1								
17	1007 0618 000	LINER	AR							t=0.1	
18	1007 0618 100	LINER	AR							t=0.2	
19	1007 0618 200	LINER	AR							t=0.4	
20	0750 0060 100	BEARING,ball	1							6010	
21	1030 2128 000	SHAFT,diff	1								
22	0750 0063 050	BEARING,ball	1							6305	
23～25	1019 0626 000	SHIM SET,pinion	1								
23	1135 3016 000	LINER	AR							t=0.1	
24	0731 0002 502	LINER	AR							t=0.2	
25	0731 0002 504	LINER	AR							t=0.4	
26	1945 3121 000	GEAR 14T	1							14T	

FIG.508 FRONT AXLE (3/6)

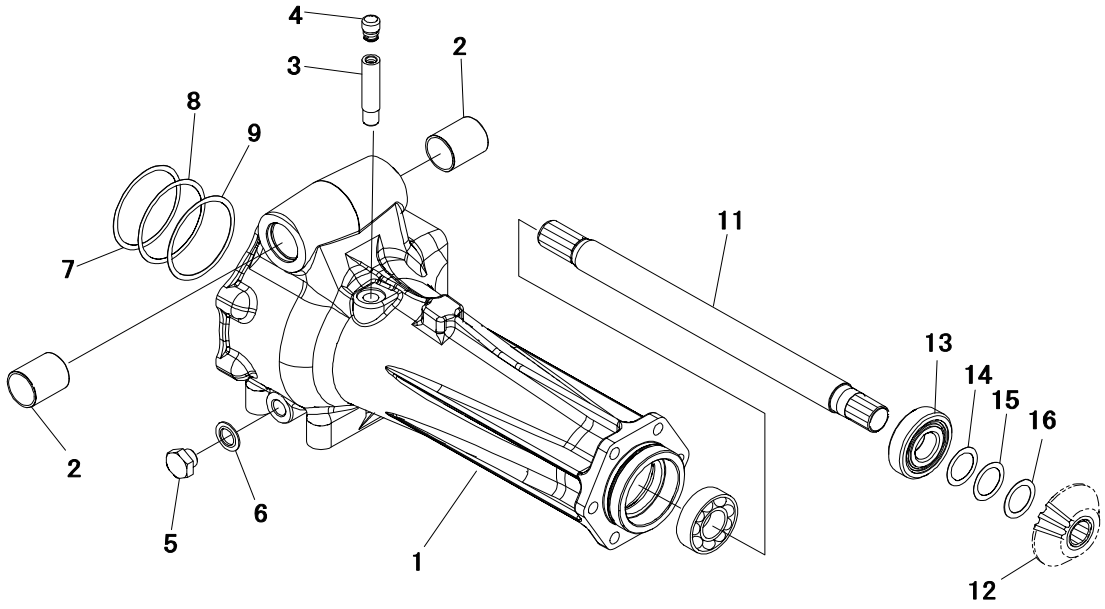

Key No.	Parts No.	Parts Name.	Q`ty					R/P	Application	Description	Remarks
			ALL								
1,2	1964 2111 002	HOUSING A ASSY	1								
1	1964 2112 AG2	HOUSING A,axle	1								
2	0796 1030 400	BUSHING	2								
3	1964 2117 AG0	PIPE	1								
4	1119 0621 000	PLUG,vent	1								
5	F5000-16000	PLUG	1								
6	0833 1001 600	WASHER,seal	1							M16	
7～9	1019 0623 000	SHIM SET	AR								
7	1007 0618 000	LINER	AR							t=0.1	
8	1007 0618 100	LINER	AR							t=0.2	
9	1007 0618 200	LINER	AR							t=0.4	
10	0750 0060 100	BEARING,ball	1							6010	
11	1030 2128 000	SHAFT,diff	1								
12	1945 3121 000	GEAR 14T	1							14T	
13	0750 0063 050	BEARING,ball	1							6305	
14～16	1019 0626 000	SHIM SET,pinion	AR								
14	1135 3016 000	LINER	AR							t=0.1	
15	0731 0002 502	LINER	AR							t=0.2	
16	0731 0002 504	LINER	AR							t=0.4	

FIG.509 FRONT AXLE (4/6)

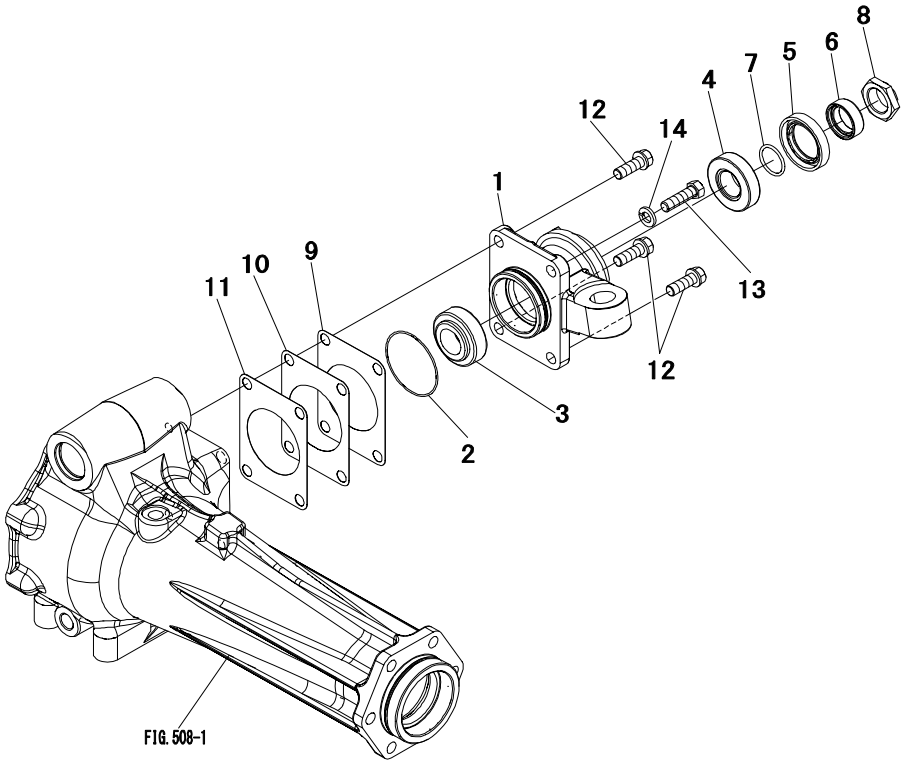

Key No.	Parts No.	Parts Name.	Q`ty					R/P	Application	Description	Remarks
			ALL								
1	1964 2116 AG0	CASE,pinion	1								
2	0830 0500 600	O-RING	1							φ60	
3	1021 2141 000	BEARING,roller	1								
4	0770 0130 205	BEARING,taper	1							30205	
5	0840 1035 529	SEAL,oil	1							TC35529	
6	1021 2171 000	BUSHING	1								
7	0830 0200 250	O-RING	1							φ25	
8	1030 2123 000	NUT	1							M25	
9～11	1964 2120 000	SHIM SET	AR								
9	1023 2136 001	SHIM	AR							t=0.1	
10	1023 2137 001	SHIM	AR							t=0.2	
11	1023 2138 001	SHIM	AR							t=0.4	
12	F155 0110 030	BOLT,w/washer	3							M10×30	
13	69542-64700	BOLT	1								
14	A360 0101 002	WASHER,spring	1							M10	

FIG.510 FRONT AXLE (5/6)

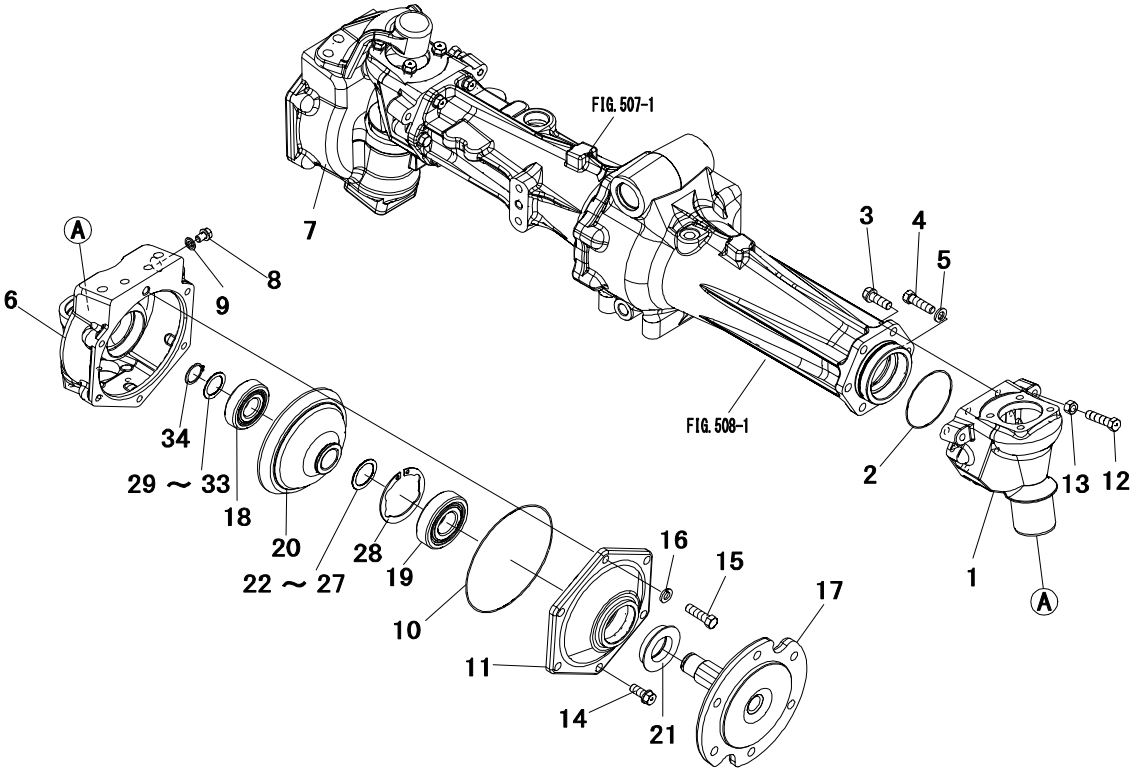

Key No.	Parts No.	Parts Name.	Q`ty ALL					R/P	Application	Description	Remarks
1	1030 2136 AG0	CASE,king pin	2								
2	0830 0500 750	O-RING	2							φ75	
3	F155 0110 030	BOLT,w/washer	10							M10×30	
4	69542-64700	BOLT	2								
5	A360 0101 002	WASHER,spring	2							M10	
6	1964 2121 AG0	CASE L.H,final	1								
7	1964 2122 AG0	CASE R.H,final	1								
8	2740 3214 200	PLUG	2								
9	0833 1000 800	WASHER,seal	2							M8	
10	0830 0501 450	O-RING	2							φ145	
11	1021 2119 AG0	COVER	2								
12	A052 0110 040	BOLT 7T	2							M10×40	
13	A303 0110 002	NUT	2							M10	
14	F155 0110 025	BOLT,w/washer	10							M10×25	
15	69542-64700	BOLT	2								
16	A360 0101 002	WASHER,spring	2							M10	
17	1040 2121 AG0	SHAFT	2								
18	0750 0063 050	BEARING,ball	2							6305	
19	0750 0063 060	BEARING,ball	2							6306	
20	1956 2143 000	GEAR 32T	2							32T	
21	0841 2355 212	SEAL,oil	1							TCFY35521	
22～26	1021 2159 000	SHIM SET	AR								
22	0731 0003 001	LINER	AR							t=0.15	
23	0731 0003 004	LINER	AR							t=0.4	
24	0731 0003 008	LINER	AR							t=0.8	
25	0731 0003 010	LINER	AR							t=1.0	
26	0731 0003 012	LINER	AR							t=1.2	
27	0731 0003 002	LINER	AR							t=0.2	
28	0741 0007 201	C-RING	2							φ72	
29～33	1021 2158 000	SHIM SET	AR								
29	1135 3016 000	LINER	AR							t=0.1	
30	0731 0002 504	LINER	AR							t=0.4	
31	0731 0002 508	LINER	AR							t=0.8	
32	0731 0002 510	LINER	AR							t=1.0	
33	0731 0002 512	LINER	AR							t=1.2	

FIG.510 FRONT AXLE (5/6)

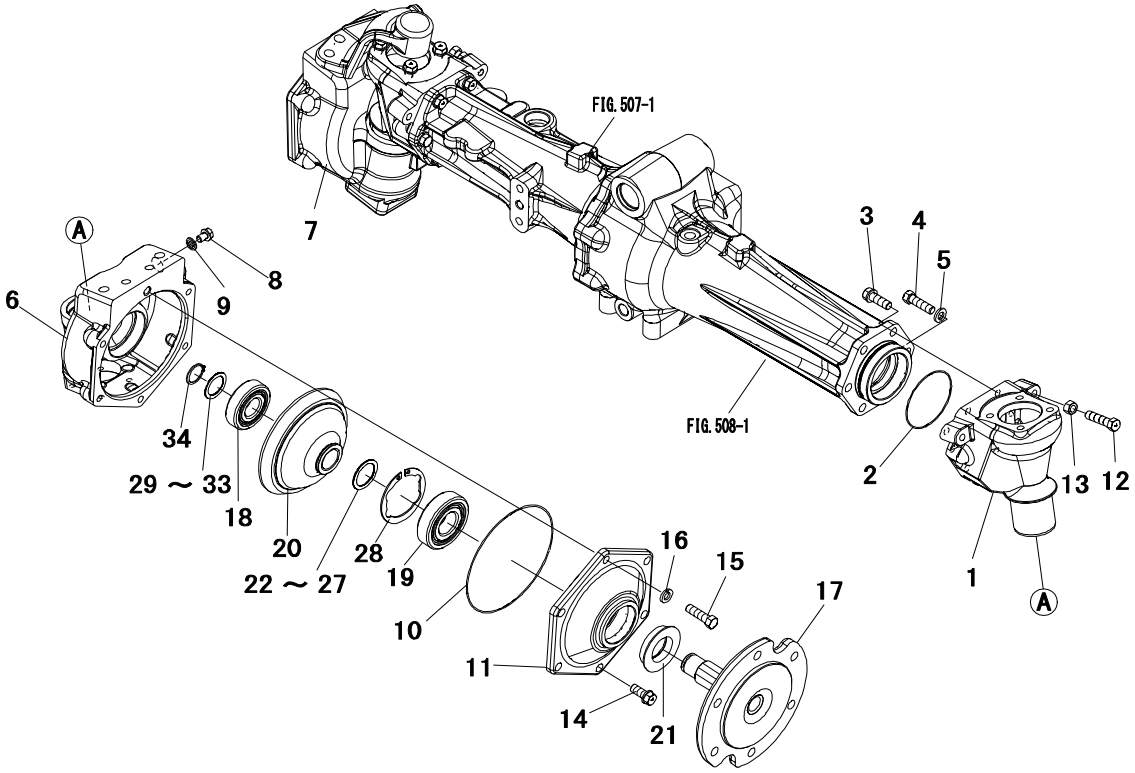

Key No.	Parts No.	Parts Name.	Q`ty					R/P	Application	Description	Remarks
			ALL								
34	0740 0002 500	C-RING	2							φ25	

FIG.511 FRONT AXLE (6/6)

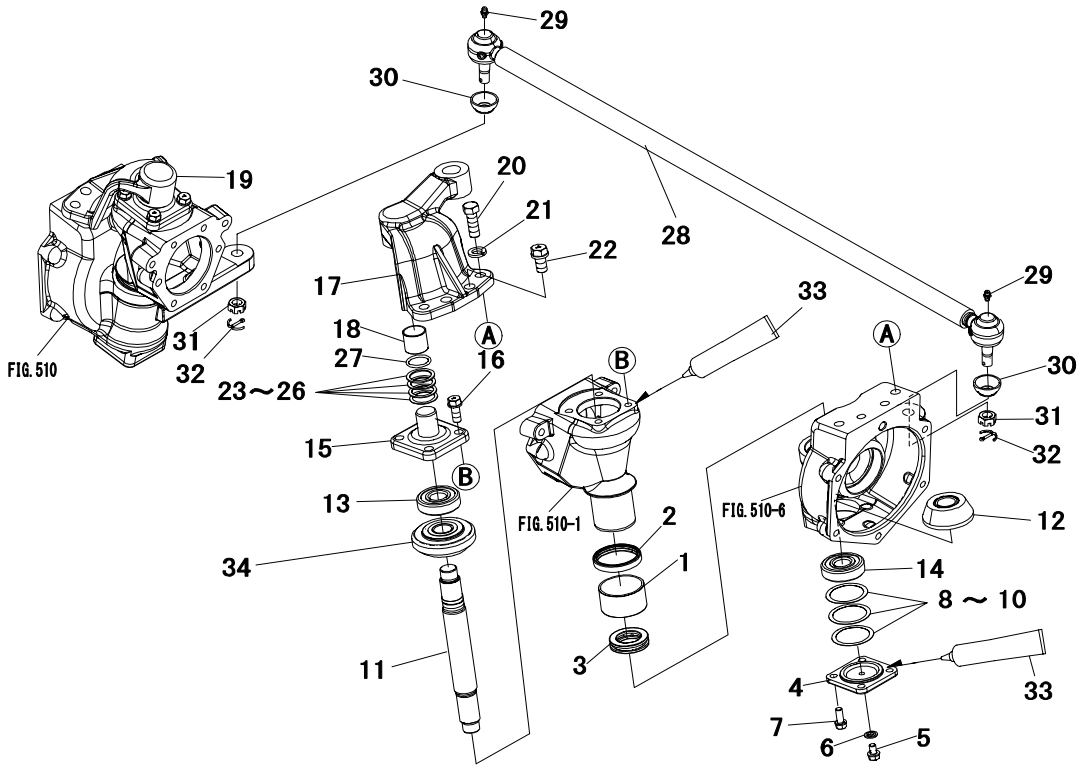

Key No.	Parts No.	Parts Name.	Q`ty ALL					R/P	Application	Description	Remarks
1	0796 1050 300	BUSHING	2								
2	69542-65100	SEAL,oil	2								
3	0760 0051 106	BEARING,thrust	2							51106	
4	1007 0638 AG1	COVER	2								
5	2740 3214 200	PLUG	2								
6	0833 1000 800	WASHER,seal	2							M8	
7	F154 0108 020	BOLT,w/washer	8							M8×20	
8～10	1963 2139 000	SHIM SET	AR								
8	0730 0005 201	LINER	AR							t=0.15	
9	0730 0005 202	LINER	AR							t=0.2	
10	0730 0005 203	LINER	AR							t=0.3	
11	1964 2124 001	SHAFT	2								
12	1956 2142 000	GEAR 12T	2							12T	
13	0750 0563 044	BEARING,ball	2							6304DD	
14	0750 0263 040	BEARING,ball	2							6304	
15	1021 2120 AG0	HOLDER	2								
16	F155 0110 025	BOLT,w/washer	8							M10×25	
17	1964 2126 AG0	KNUCKLE ARM LH	1								
18	0796 1025 250	BUSHING	2								
19	1964 2127 AG0	NUCKLE ARM RH	1								
20	69542-63301	BOLT	4								
21	A360 0101 202	WASHER,spring	4							M12	
22	F155 0112 025	BOLT,w/washer	4							M12×25	
23～26	1021 2157 000	SHIM SET	1								
23	1438 1319 300	LINER F,thrust	AR							t=1.4	
24	1438 1319 400	LINER G,thrust	AR							t=1.2	
25	1438 1319 500	LINER H,thrust	AR							t=1.0	
26	1438 1319 600	LINER J,thrust	AR							t=0.8	
27	0830 0100 240	O-RING	2							φ24	
28	1945 3151 AG0	TIE ROD	1								
29	A650 0100 600	NIPPLE,grease	2								
30	1030 2157 200	COVER,dust	2								
31	1030 2157 400	NUT	2								
32	1030 2157 500	PIN,split	2								
33	TB1206D	GASKET	AR								

FIG.511 FRONT AXLE (6/6)

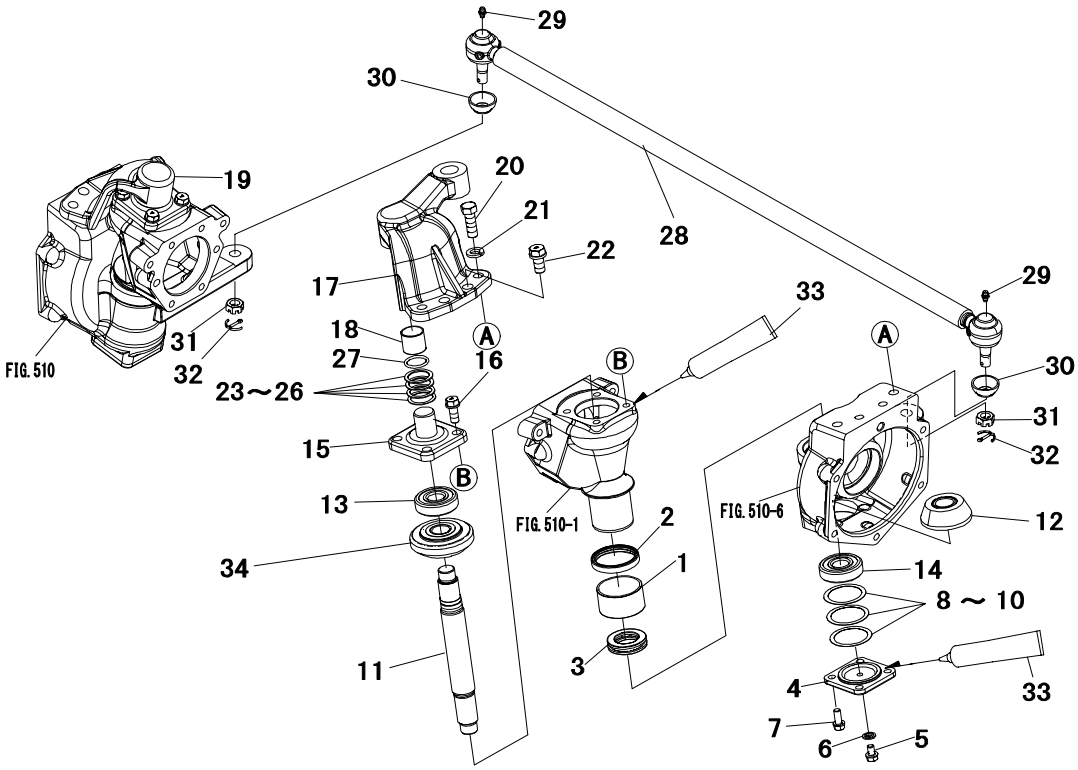

Key No.	Parts No.	Parts Name.	Q`ty					R/P	Application	Description	Remarks
			ALL								
34	1945 3122 000	GEAR 16T	1							16T	

FIG.512 WHEEL MOUNTING HARDWARE

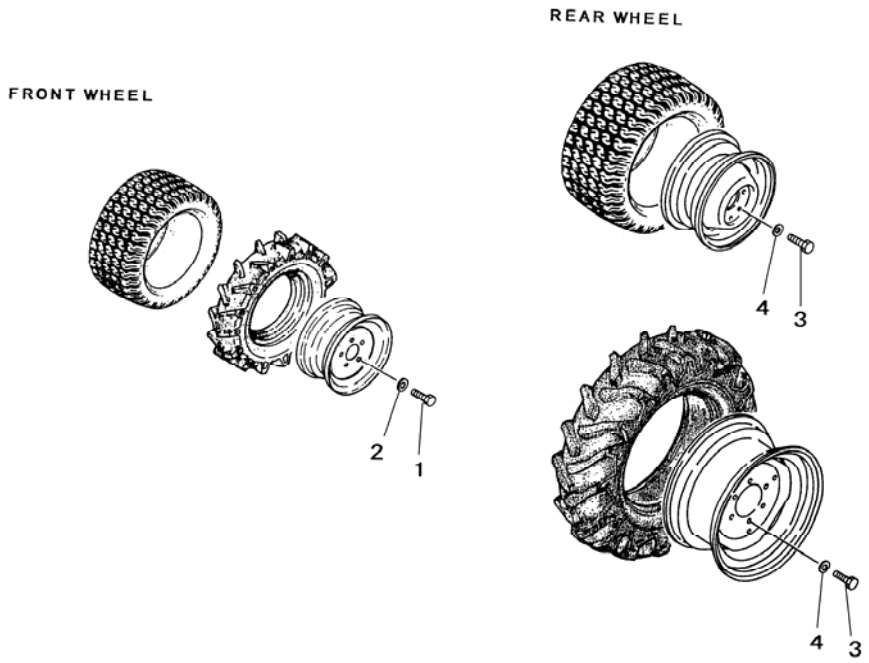

Key No.	Parts No.	Parts Name.	Q`ty					R/P	Application	Description	Remarks
			ALL								
1	A930 0114 025	BOLT	12							M14×25	For Front
2	0355 0161 428	WASHER	12							M14	For Front
3	A930 0114 030	BOLT	12							M14×30	For Rear
4	0355 0161 428	WASHER	12							M14	For Rear

FIG.513 FRONT TOW HOOK

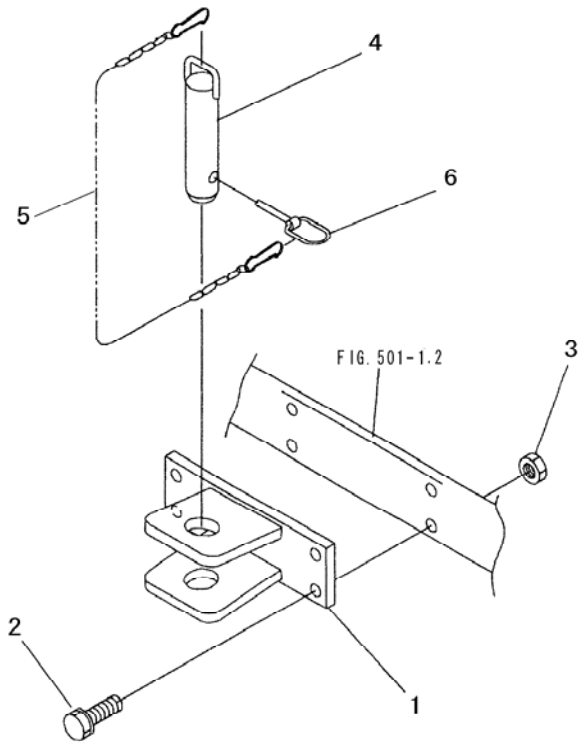

Key No.	Parts No.	Parts Name.	Q`ty					R/P	Application	Description	Remarks
			ALL								
1	1953 3151 AG0	TOW HOOK	1								
2	F154 0112 040	BOLT,w/washer	4							M12×40	
3	A301 0112 002	NUT	4							M12	
4	1965 3116 000	HITCH PIN	1								
5	1904 3911 000	CHAIN	1								
6	1032 3012 000	PIN,linch	1								

FIG. 601 ENGINE CONTROL

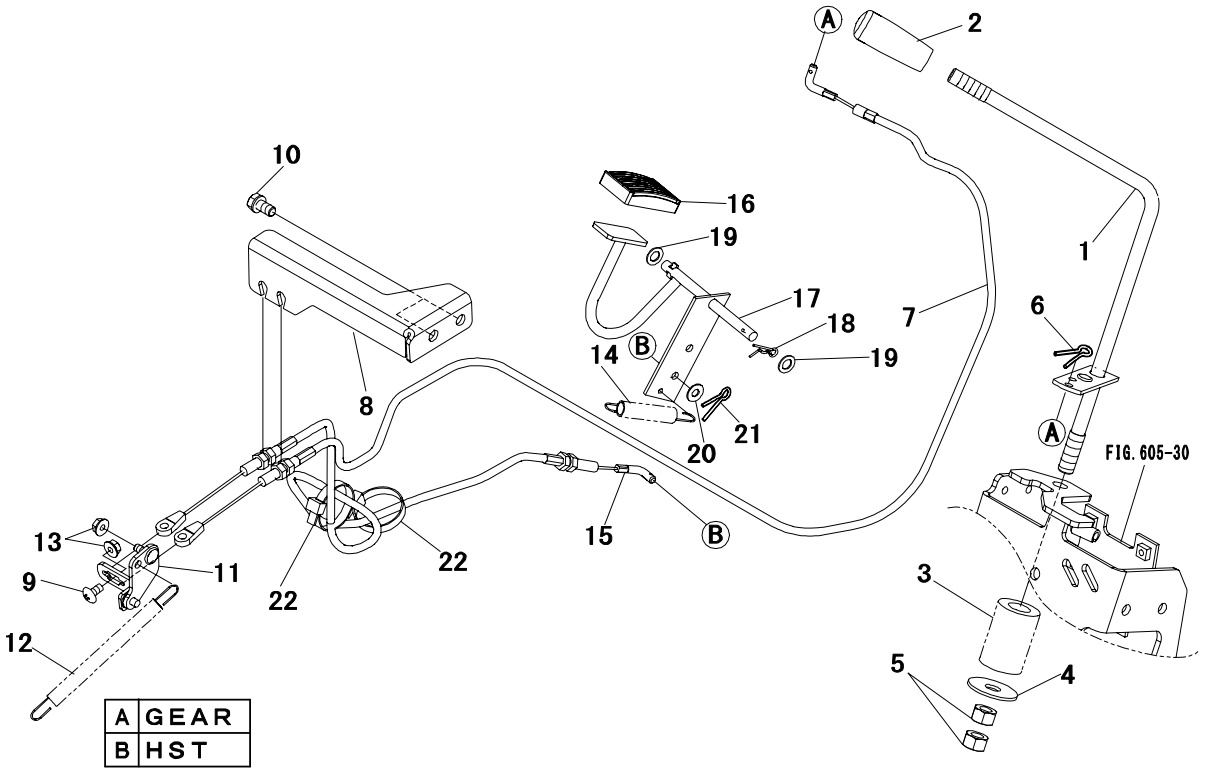

Key No.	Parts No.	Parts Name.	Q`ty A	Q`ty B				R/P	Application	Description	Remarks
1	1957 0201 AG1	LEVER,control	1	1							
2	0691 0012 258	GRIP	1	1							
3	6022 3314 000	SPRING	1	1							
4	2772 2323 000	WASHER	1	1							
5	A301 0112 002	NUT	2	2						M12	
6	0520 0125 015	PIN,split	1	1						φ2.5×15	
7	1945 7517 000	WIRE,accel	1	1							
8	1044 0219 AG0	BRACKET	1	1							
9	A252 0706 012	SCREW	1	1						M6×12	
10	F154 0108 016	BOLT,w/washer	2	2						M8×16	
11	1044 0238 000	PLATE	1	1							
12	3523 6834 000	SPRING	1	1							
13	F300 0106 000	NUT,flange	2	2						M6	
14	1019 0235 000	SPRING	1	·							
15	1945 7516 000	WIRE,footaccel	1	·							
16	1032 0228 000	COVER PEDAL	1	·							
17	1044 0215 001	PEDAL,accelerat	1	·							
18	0521 0108 000	PIN,snap	1	·						φ8	
19	0350 0130 815	WASHER	2	·						M8	
20	0350 0130 615	WASHER	1	·						M6	
21	0520 0125 012	PIN,split	1	·						φ2.5×12	
22	0051 1032 070	BAND,wire	2	·							

FIG. 602 CLUTCH PEDAL

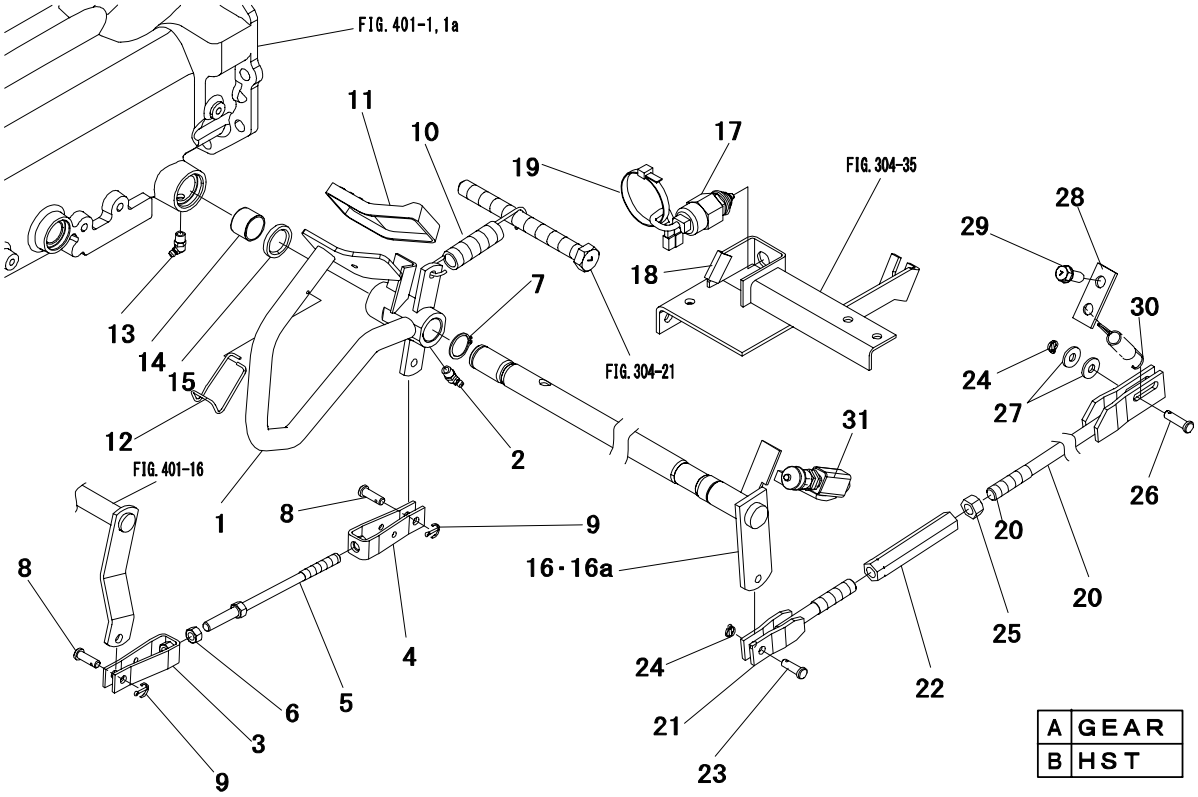

Key No.	Parts No.	Parts Name.	Q`ty					R/P	Application	Description	Remarks
			A	B							
1	1957 1811 AG0	PEDAL,clutch	1	1							
2	A651 3100 300	NIPPLE,grease	1	1							
3	1039 1823 000	JOINT	1	1							
4	1044 1814 000	JOINT	1	1							
5	1044 1813 000	ROD,clutch	1	1							
6	A301 0110 002	NUT	1	1						M10	
7	0740 0102 500	C-RING	1	1						φ25	
8	0562 1108 025	PIN,clevis	2	2						φ8×25	
9	0520 0125 020	PIN,split	2	2						φ2.5×20	
10	1044 1841 000	SPRING	1	1							
11	1193 1812 000	COVER,pedal	1	1							
12	1039 1815 001	HOOK	1	1							
13	A651 3100 300	NIPPLE,grease	1	1							
14	0797 2025 200	BUSHING	1	1							
15	0840 0025 355	OIL SEAL	1	1							
16	1945 7626 AG0	SHAFT,brake	1	・							
16a	1945 7625 AG0	SHAFT,brake	・	1							
17	1040 2821 000	SWITCH,safety	1	1							
18	1025 3429 000	BAND,rubber	1	1							
19	0051 1070 070	BAND,wire	1	1							
20	1945 7627 000	ROD,brake	1	1							
21	1944 1831 002	ROD,brake	1	1							
22	1944 1833 001	JOINT	1	1							
23	0562 1108 025	PIN,clevis	1	1						φ8×25	
24	0520 0125 015	PIN,split	2	2						φ2.5×15	
25	A301 0114 002	NUT	1	1						M14	
26	0562 1108 030	PIN,clevis	1	1						φ8×30	
27	0350 0150 822	WASHER	2	2						M8	
28	1945 7651 AG0	PLATE	1	1							
29	F154 0110 025	BOLT,w/washer	1	1						M10×25	
30	3200 2408 001	SPRING	1	1							
31	1040 2827 000	SWITCH	1	1							

FIG.603 BRAKE PEDAL (1/2)

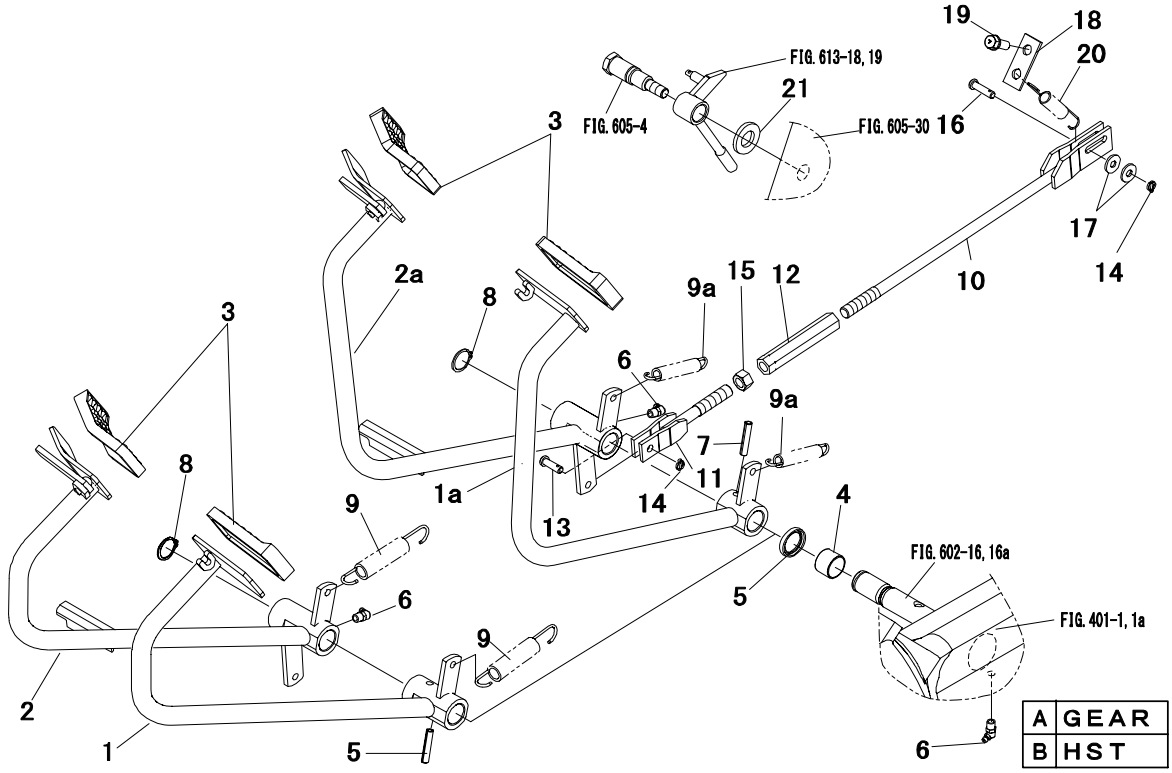

Key No.	Parts No.	Parts Name.	Q`ty					R/P	Application	Description	Remarks
			A	B							
1	1957 1813 AG0	PEDAL LH,brake	1	·							
1a	1957 1815 AG0	PEDAL LH,brake	·	1							
2	1944 1815 AG0	PEDAL RH,brake	1	·							
2a	1957 1821 AG0	PEDAL RH,brake	·	1							
3	1193 1812 000	COVER,pedal	2	2							
4	0797 2025 200	BUSHING	1	1							
5	0840 0025 355	OIL SEAL	1	1							
6	A651 3100 300	NIPPLE,grease	2	2							
7	0550 0008 040	PIN,spring	1	1						φ8×40	
8	0740 0102 500	C-RING	1	1						φ25	
9	1044 1841 000	SPRING	2	·							
9a	67200-06300	SPRING	·	2							
10	1945 7627 000	ROD,brake	1	1							
11	1944 1831 002	ROD,brake	1	1							
12	1944 1833 001	JOINT	1	1							
13	0562 1108 025	PIN,clevis	1	1						φ8×25	
14	0520 0125 016	PIN,split	2	2						φ2.5×15	
15	A301 0114 002	NUT	1	1						M14	
16	0562 1108 030	PIN,clevis	1	1						φ8×30	
17	0350 0150 822	WASHER	2	2						M8	
18	1945 7651 AG0	PLATE	1	1							
19	F154 0110 025	BOLT,w/washer	1	1						M10×25	
20	3200 2408 001	SPRING	1	1							
21	3572 8772 000	WASHER	·	1							

FIG.604 BRAKE PEDAL (2/2)

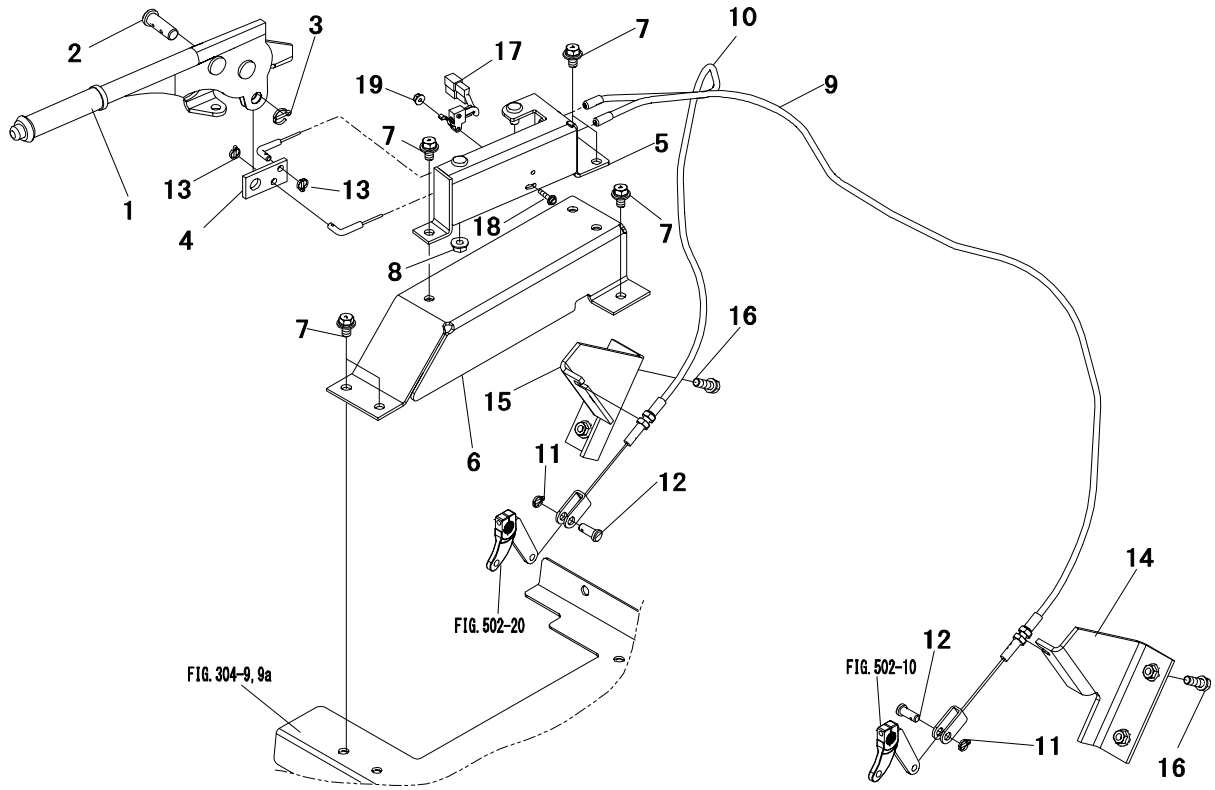

Key No.	Parts No.	Parts Name.	Q`ty ALL					R/P	Application	Description	Remarks
1	1953 1811 000	LEVER,parking	1								
2	1942 1842 000	PIN,clevis	1								
3	0520 0130 025	PIN,split	1							φ3.0×25	
4	1942 1841 000	PLATE	1								
5	1942 1851 AG0	BRACKET,lever	1								
6	1945 7671 AG0	BRACKET	1								
7	H154 0108 016	BOLT,w/washer	6							M8×16	
8	F301 0108 000	NUT,flange	2							M8	
9	1945 7631 000	BRAKE WIRE LH	1								
10	1945 7632 000	BRAKE WIRE RH	1								
11	0520 0125 015	PIN,split	2							φ2.5×15	
12	0562 0108 020	PIN,clevis	2							φ8×20	
13	0520 0125 015	PIN,split	2							φ2.5×15	
14	1945 7685 AG0	BRACKET WIRE LH	1								
15	1945 7686 AG0	BRACKET WIRE RH	1								
16	F154 0108 025	BOLT,w/washer	4							M8×25	
17	1953 2919 000	SWITCH	1								
18	H242 0104 020	SCREW,w/washer	1							M4×20	
19	F300 0104 000	NUT,flange	1							M4	

FIG.605 STEERING (1/2)

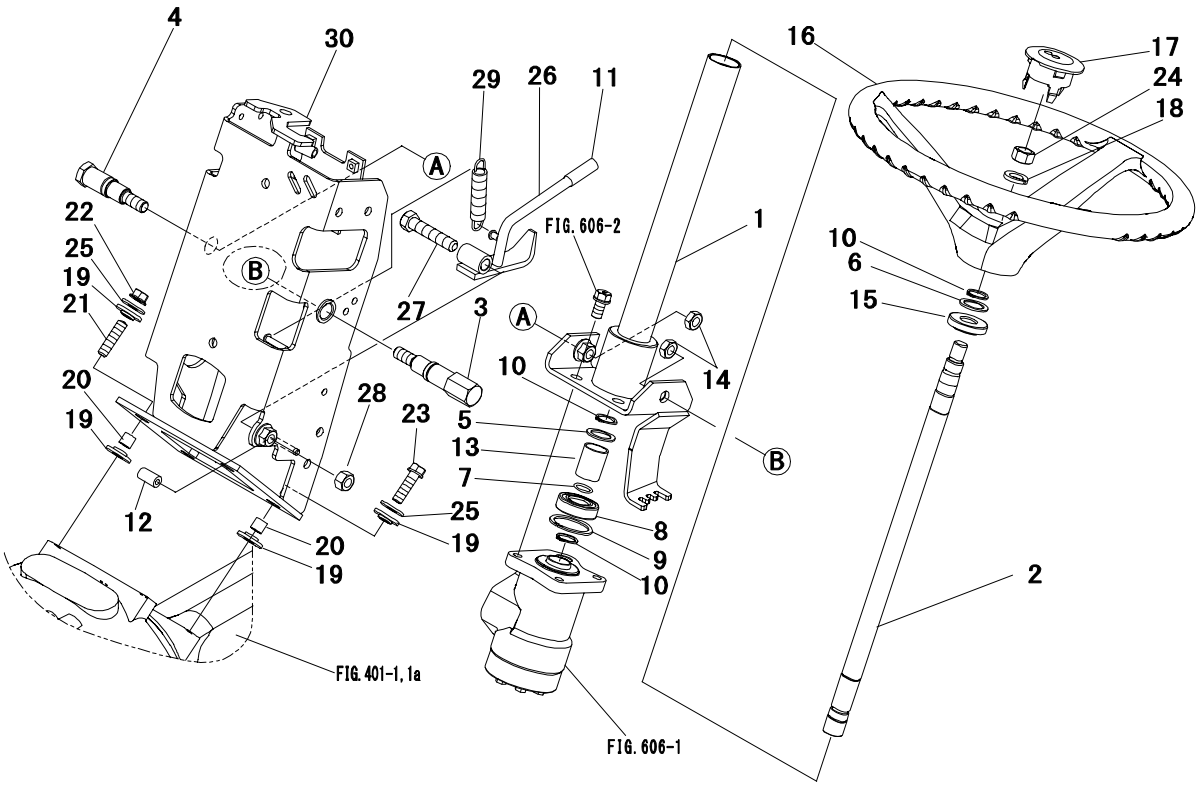

Key No.	Parts No.	Parts Name.	Q`ty ALL					R/P	Application	Description	Remarks
1	1957 2202 AG0	MAST,steering	1								
2	1958 2203 000	SHAFT,steering	1								
3	1957 2217 000	BOLT	1								
4	1957 2216 000	BOLT	1								
5	0731 0002 016	LINER	1							t=1.6	
6	0731 0102 016	LINER	1							t=1.6	
7	0830 0100 160	O-RING	1							φ16	
8	HA53 6004 000	BEARING	1								
9	0741 0004 201	C-RING	1							φ42	
10	0740 0001 900	C-RING	3							φ19	
11	1421 2284 000	GRIP	1								
12	3544 7219 102	CUSHION	1								
13	3951 0814 000	SPRING	1								
14	A301 0112 003	NUT	2							M12	
15	1044 2291 000	BUSHING,column	1								
16,17	1044 2205 000	WHEEL,steering	1								
16	*	WHEEL,steering	1								
17	1044 2207 000	CAP,center	1								
18	A360 0101 402	WASHER,spring	1							M14	
19	1036 6076 000	RUBBER	8								
20	1037 3021 000	COLLAR	4								
21	A062 0110 025	BOLT,stud	2							M10×25	
22	F301 0110 000	NUT,flange	2							M10	
23	F154 0110 035	BOLT,w/washer	2							M10×35	
24	A303 0114 002	NUT	1							M14	
25	0350 0151 026	WASHER	4							M10	
26	1957 2255 AG0	LEVER	1								
27	A050 0112 060	BOLT 7T	1							M12×60	
28	A301 0112 002	NUT	1							M12	
29	2772 2333 010	SPRING	1								
30	1945 8301 AG0	BRACKET,mast	1								

FIG.606 STEERING (2/2)

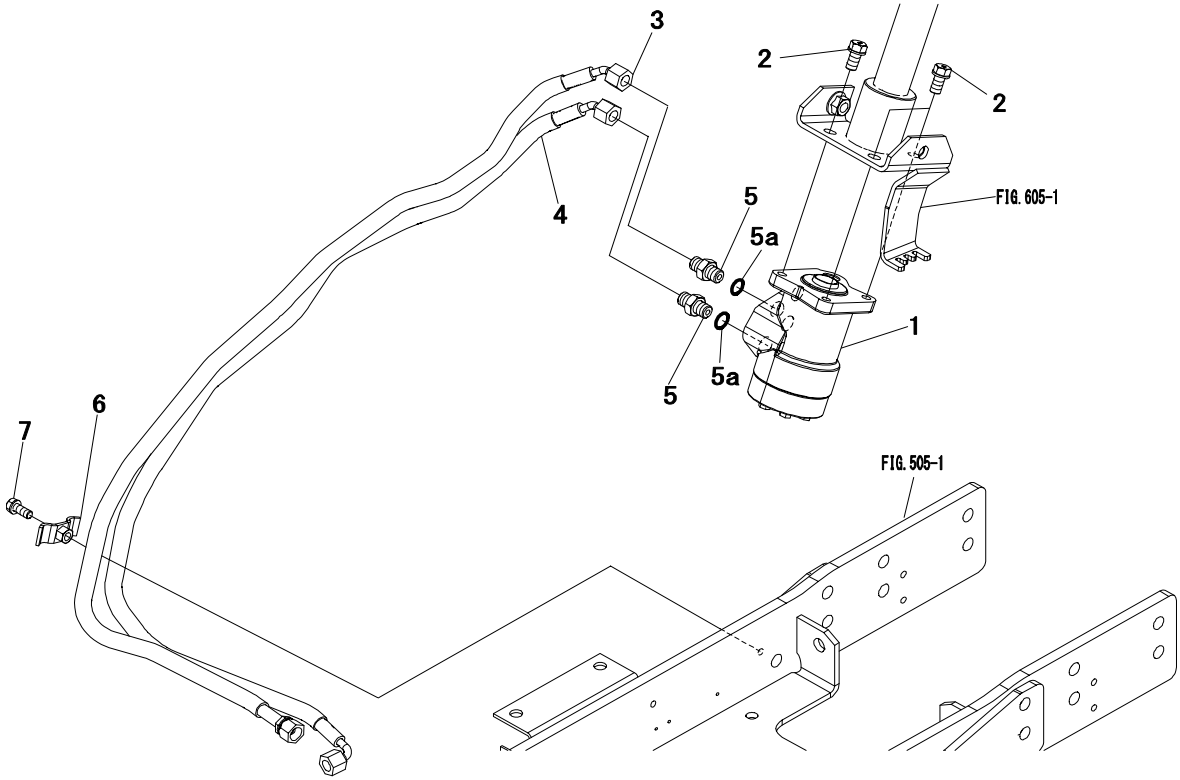

Key No.	Parts No.	Parts Name.	Q`ty					R/P	Application	Description	Remarks
			ALL								
1	1957 2231 000	STEERING UNIT	1								
2	F155 0110 020	BOLT,w/washer	3							M10×20	
3	1945 2341 000	HOSE L	1								
4	1945 2342 000	HOSE R	1								
5	0631 1113 130	ADAPTER	2								Inc5a
5a	0830 1100 110	O-RING	2							φ11	
6	1968 2223 000	CLAMP	1								
7	F154 0108 020	BOLT,w/washer	1							M8×20	

FIG.607 TRANSMISSION CONTROL(GEAR) (1/3)

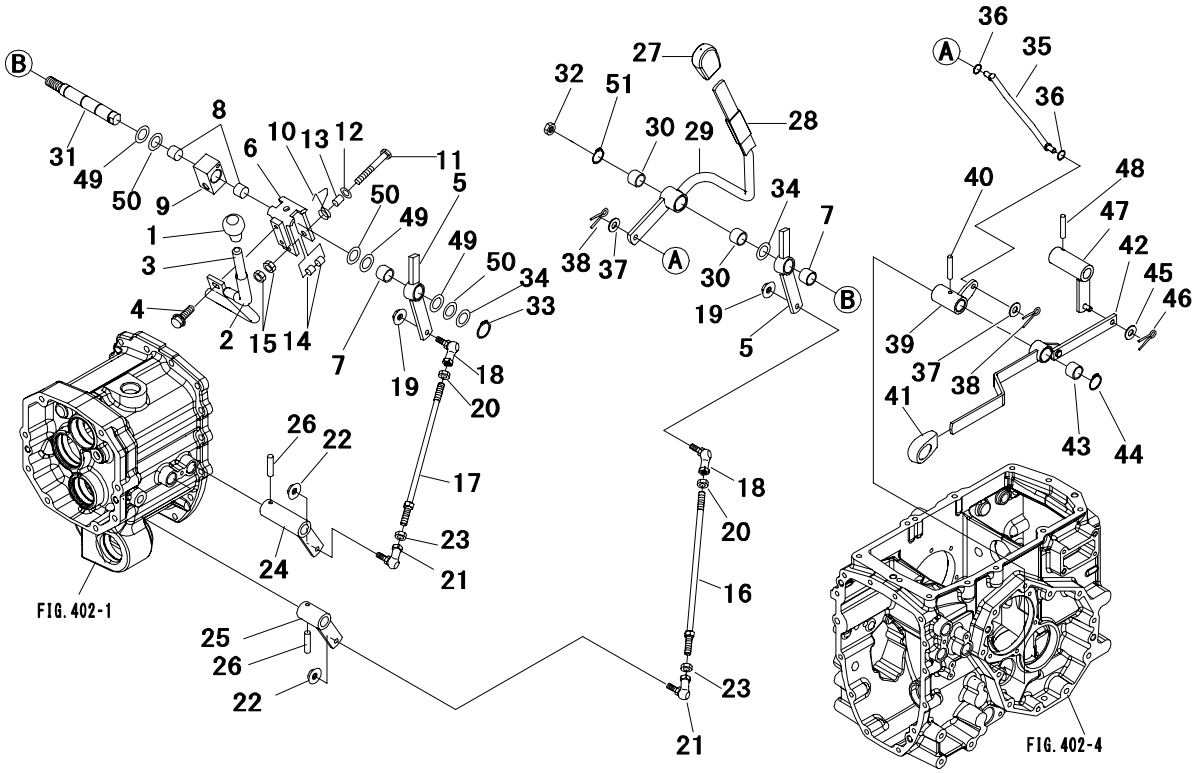

Key No.	Parts No.	Parts Name.	Q`ty ALL					R/P	Application	Description	Remarks
1	0693 0014 460	GRIP	1								
2	1035 1749 000	PIPE	1								
3	1944 1751 AG0	LEVER,main	1								
4	H154 0108 016	BOLT,w/washer	2							M8×16	
5	1044 1752 AG1	ARM,main	2								
6	1044 1753 AG0	CLANK	1								
7	0796 1020 150	BUSHING	2								
8	0796 1020 150	BUSHING	2								
9	1030 1724 AG0	BOSS	1								
10	1025 1127 004	SPRING	1								
11	A534 0110 080	BOLT 7T	1							M10×80	
12	0350 0141 022	WASHER	1							M10	
13	1025 1120 001	COLLAR	1								
14	0797 1010 150	BUSHING	2								
15	A301 0110 002	NUT	2							M10	
16	1957 1754 000	ROD,main(1-2)	1								
17	1957 1755 000	ROD,main(3-4)	1								
18	1025 1135 000	JOINT,ball	2								
19	F301 0108 000	NUT,flange	2							M8	
20	A303 2110 002	NUT	2							M10	
21	3704 1577 000	JOINT,ball	2								
22	F301 0108 000	NUT,flange	2							M8	
23	A303 0110 002	NUT	2							M10	
24	1044 1756 AG0	LINK,main(1-2)	1								
25	1044 1757 AG0	LINK,main(3-4)	1								
26	1038 1725 000	PIN,spring	2								
27	1039 2491 000	GRIP	1								
28	1044 2476 000	TUBE	1								
29	1945 7761 AG0	LEVER,sub	1								
30	0797 2020 100	BUSHING	2								
31	1044 1762 001	SHAFT,main.sub	1								
32	A301 0116 003	NUT	1							M16	
33	0740 0102 000	C-RING	1							φ20	
34	0731 0102 010	LINER	2							t=1.0	
35	1046 1763 000	ROD,sub	1								

FIG.607 TRANSMISSION CONTROL(GEAR) (1/3)

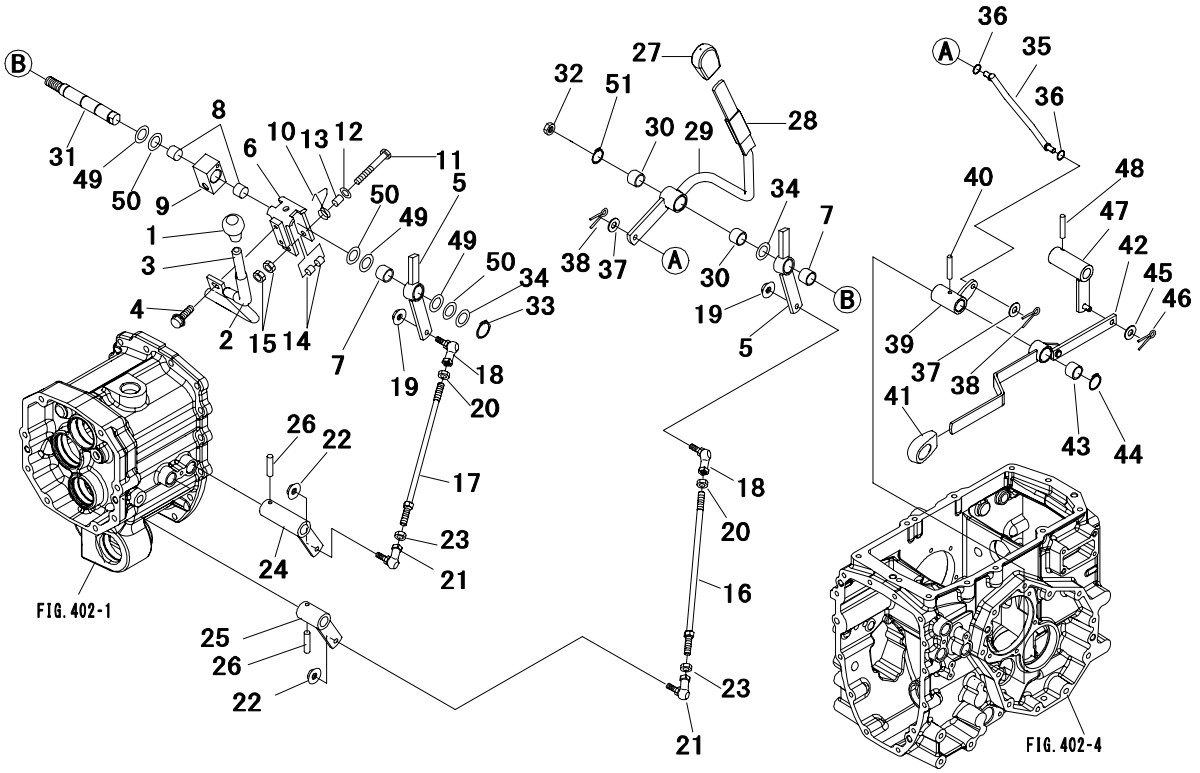

Key No.	Parts No.	Parts Name.	Q`ty ALL					R/P	Application	Description	Remarks
36	0830 0100 080	O-RING	2							φ8	
37	0350 0150 822	WASHER	2							M8	
38	0520 0125 020	PIN,split	2							φ2.5×20	
39	1957 1764 AG1	LINK,sub	1								
40	1038 1725 000	PIN,spring	1								
41	3577 3623 000	GRIP	1								
42	1957 1781 AG0	LEVER,4wd	1								
43	0796 1020 250	BUSHING	1								
44	0740 0102 000	C-RING	1							φ20	
45	0350 0140 818	WASHER	1							M8	
46	0520 0125 020	PIN,split	1							φ2.5×20	
47	1957 1782 AG0	LINK,4wd	1								
48	1038 1725 000	PIN,spring	1								
49	0731 0102 004	LINER	AR							t=0.4	
50	0731 0102 002	LINER	AR							t=0.2	
51	0740 0102 000	C-RING	1							φ20	

FIG.608 TRANSMISSION CONTROL(GEAR) (2/3)

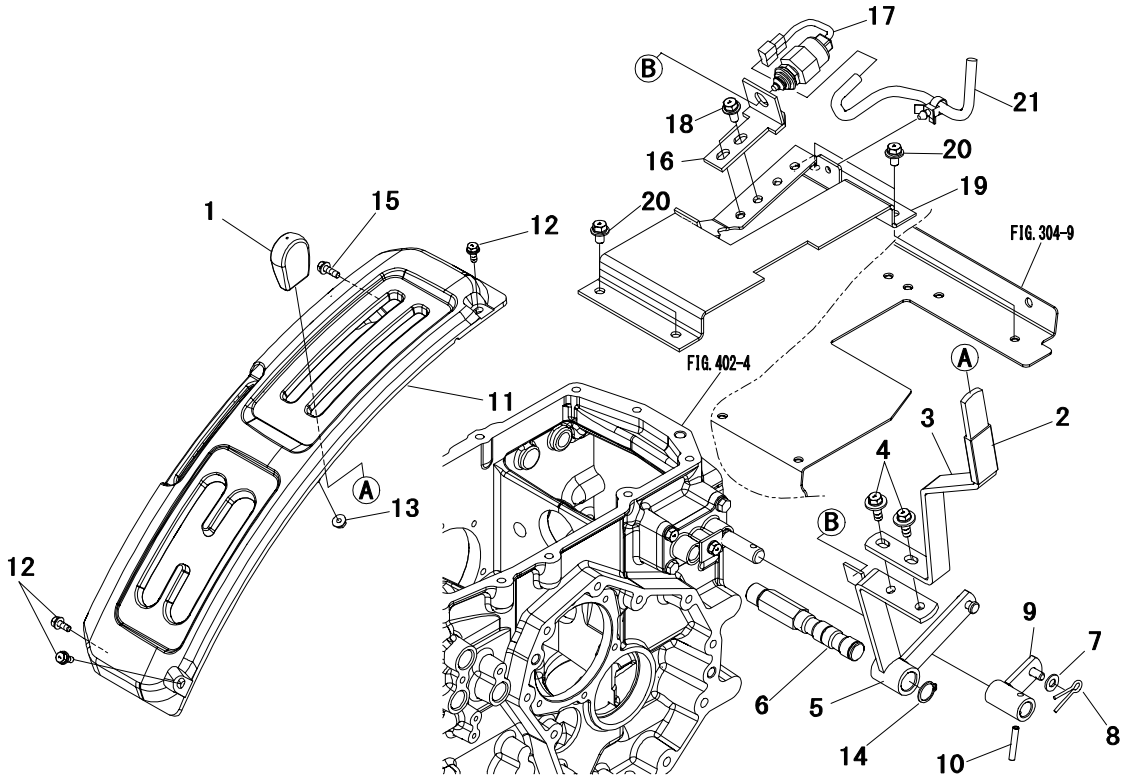

Key No.	Parts No.	Parts Name.	Q`ty ALL					R/P	Application	Description	Remarks
1	1044 1769 000	GRIP	1								
2	1044 1768 000	TUBE	1								
3	1945 7771 AG0	LEVER,rear pto	1								
4	H184 0108 025	BOLT,w/washer	2							M8×25	
5	1945 7775 AG0	ARM,rear pto	1								
6	1957 1773 000	SHAFT,pto	1								
7	0350 0140 818	WASHER	1							M8	
8	0520 0125 020	PIN,split	1							φ2.5×20	
9	1957 1774 AG0	LINK,rear pto	1								
10	1038 1725 000	PIN,spring	1								
11	1957 1793 000	LEVER GUIDE LH	1								
12	H144 0106 016	BOLT,w/washer	3							M6×16	
13	F300 0106 000	NUT,flange	1							M6	
14	0740 0102 000	C-RING	1							φ20	
15	H144 0106 020	BOLT,w/washer	1							M6×20	
16	1945 7791 AG0	BRACKET SW	1								
17	1040 2821 000	SWITCH,safety	1								
18	H154 0108 020	BOLT,w/washer	2							M8×20	
19	1945 7793 AG0	BRACKET	1								
20	H154 0108 016	BOLT,w/washer	4							M8×16	
21	1945 7796 000	LEAD WIRE	1								

FIG.609 TRANSMISSION CONTROL(GEAR) (3/3)

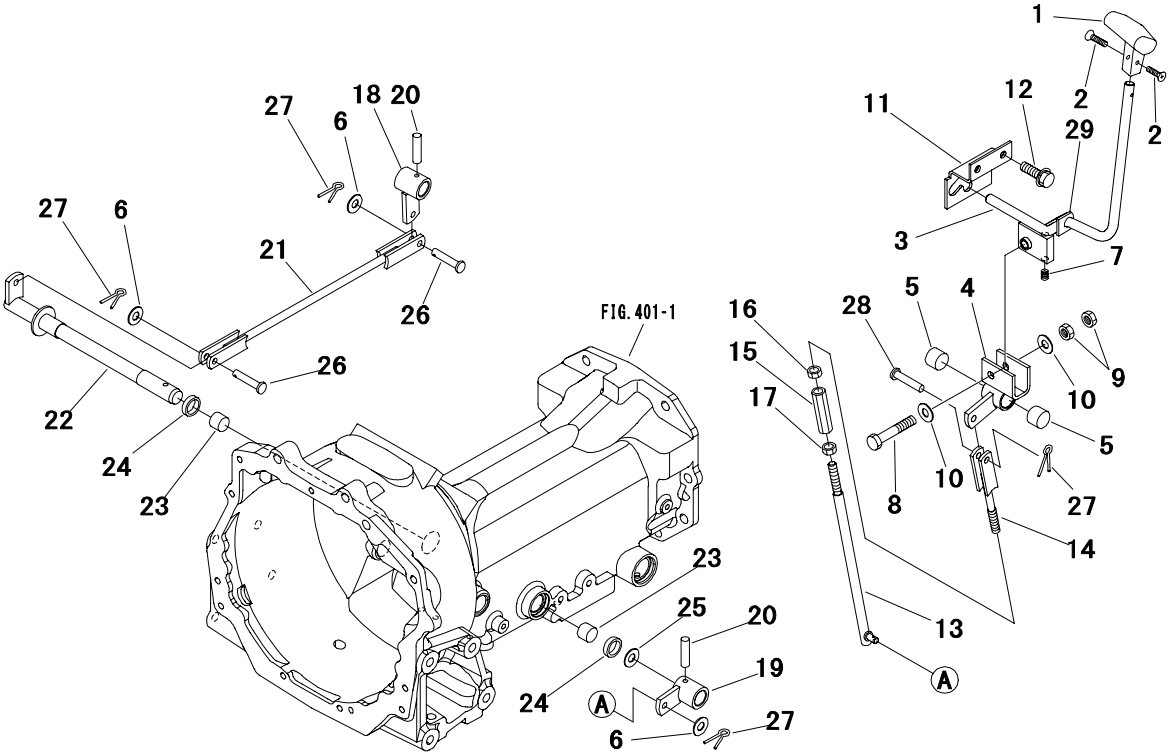

Key No.	Parts No.	Parts Name.	Q`ty ALL					R/P	Application	Description	Remarks
1	0697 0012 609	GRIP	1								
2	A222 0104 008	SCREW	2							M4×8	
3	1957 1792 AG0	LEVER,shuttle	1								
4	1957 1789 AG0	ARM,shuttle	1								
5	0797 2020 100	BUSHING	2								
6	0350 0150 822	WASHER	3							M8	
7	1031 1716 000	SPRING	1								
8	A534 0110 060	BOLT 7T	1							M10×60	
9	A301 0110 002	NUT	2							M10	
10	0350 0151 026	WASHER	2							M10	
11	1957 1799 AG0	PLATE,guide	1								
12	H154 0108 020	BOLT,w/washer	2							M8×20	
13	1044 1787 000	ROD F.R	1								
14	1044 1796 000	JOINT	1								
15	1040 1817 000	JOINT	1								
16	A301 0110 002	NUT	1							M10	
17	A301 2110 001	NUT	1							M10	
18	1044 1791 AG0	LINK F.R	1								
19	1044 1793 AG0	LINK,shuttle	1								
20	1038 1725 000	PIN,spring	2								
21	1044 1795 000	ROD F.R	1								
22	1044 1797 000	SHAFT F.R	1								
23	0796 1020 150	BUSHING	2								
24	0840 0020 325	SEAL,oil	2							VC20325	
25	0350 0162 040	WASHER	1							M20	
26	0562 0108 028	PIN,clevis	2							φ8×28	
27	0520 0125 020	PIN,split	4							φ2.5×20	
28	0562 0108 025	PIN,clevis	1							φ8×25	
29	1957 1795 000	RUBBER	1								

FIG.610 TRANSMISSION CONTROL(HST) (1/2)

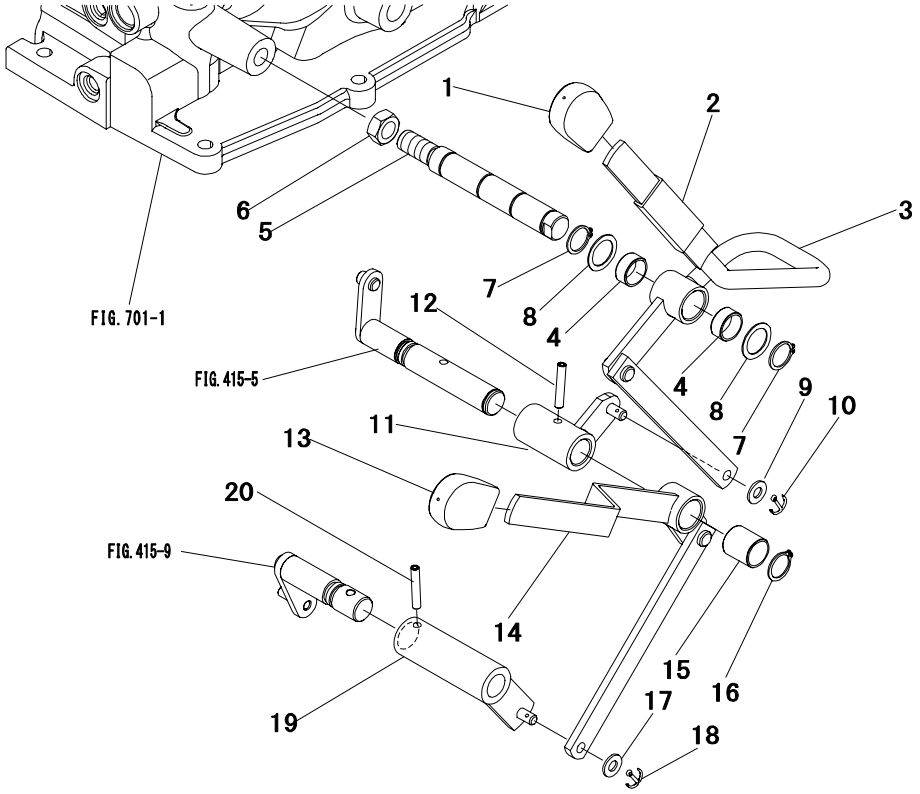

Key No.	Parts No.	Parts Name.	Q`ty ALL					R/P	Application	Description	Remarks
1	1039 2491 000	GRIP	1								
2	1045 1760 000	TUBE	1								
3	1945 7762 AG0	LEVER,sub	1								
4	0797 2020 100	BUSHING	2								
5	1044 1762 001	SHAFT,main.sub	1								
6	A301 0116 003	NUT	1							M16	
7	0740 0102 000	C-RING	2							φ20	
8	0731 0102 010	LINER	2							t=1.0	
9	0350 0140 818	WASHER	1							M8	
10	0520 0125 020	PIN,split	1							φ2.5×20	
11	1957 1765 AG1	LINK,sub	1								
12	1038 1725 000	PIN,spring	1								
13	3577 3623 000	GRIP	1								
14	1957 1784 AG0	LEVER,4wd	1								
15	0796 1020 250	BUSHING	1								
16	0740 0102 000	C-RING	1							φ20	
17	0350 0140 818	WASHER	1							M8	
18	0520 0125 020	PIN,split	1							φ2.5×20	
19	1957 1783 AG0	LINK,4wd	1								
20	1038 1725 000	PIN,spring	1								

FIG.611 TRANSMISSION CONTROL(HST) (2/2)

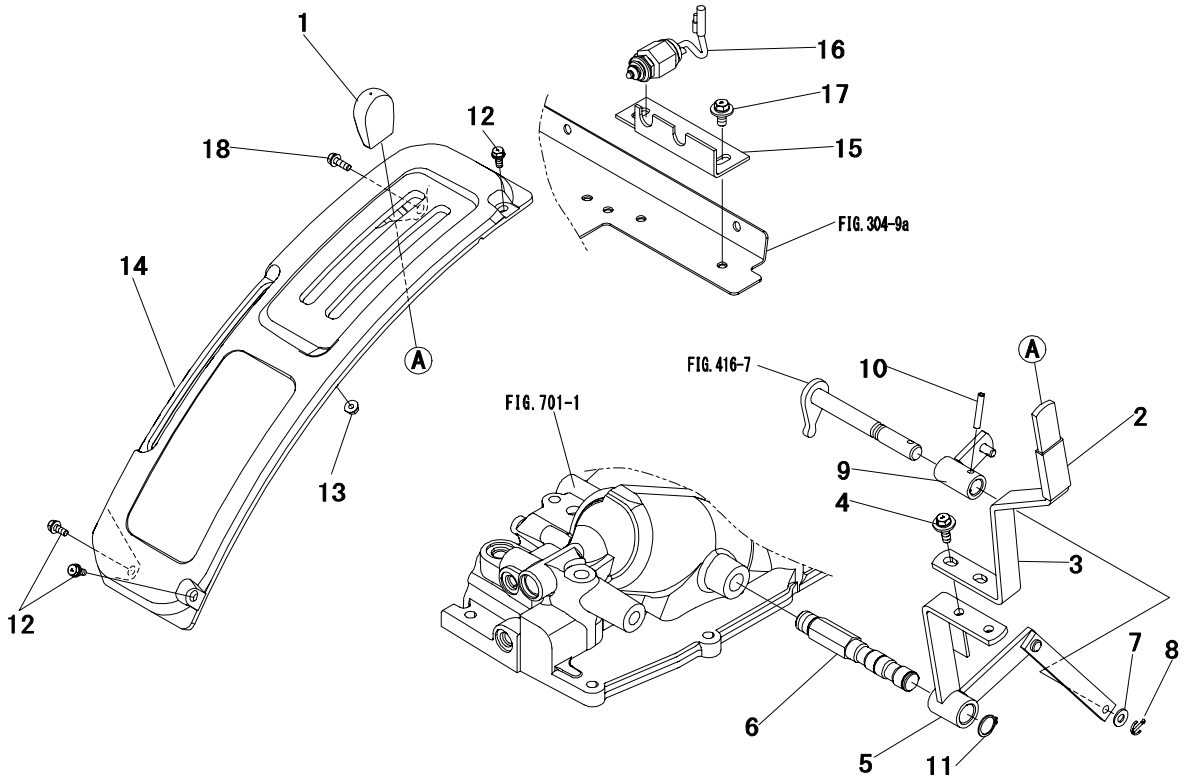

Key No.	Parts No.	Parts Name.	Q`ty ALL					R/P	Application	Description	Remarks
1	1044 1769 000	GRIP	1								
2	1044 1768 000	TUBE	1								
3	1945 7771 AG0	LEVER,rear pto	1								
4	H184 0108 025	BOLT,w/washer	2							M8×25	
5	1957 1772 AG1	ARM,rear pto	1								
6	1957 1773 000	SHAFT,pto	1								
7	0350 0140 818	WASHER	1							M8	
8	0520 0125 020	PIN,split	1							φ2.5×20	
9	1957 1774 AG0	LINK,rear pto	1								
10	1038 1725 000	PIN,spring	1								
11	0740 0102 000	C-RING	1							φ20	
12	H144 0106 016	BOLT,w/washer	3							M6×16	
13	F300 0106 000	NUT,flange	1							M6	
14	1957 1794 000	LEVER GUIDE LH	1								
15	1957 2913 AG0	PLATE	1								
16	1025 3505 001	SWITCH,safety	1								
17	H184 0108 020	BOLT,w/washer	2							M8×20	
18	H144 0106 020	BOLT,w/washer	1							M6×20	

FIG.612 HST CONTROL (1/2)

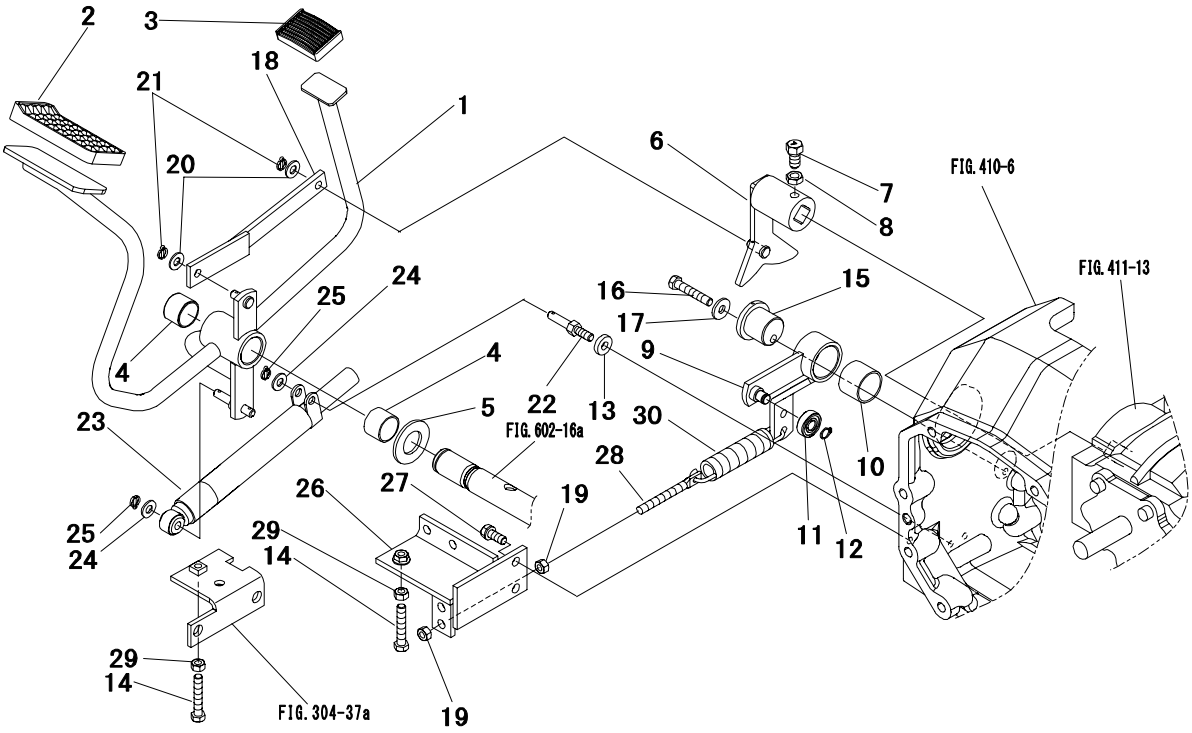

Key No.	Parts No.	Parts Name.	Q`ty ALL					R/P	Application	Description	Remarks
1	1957 2301 AG1	PEDAL,hst	1								
2	1193 1812 000	COVER,pedal	1								
3	1032 0228 000	COVER,pedal	1								
4	0796 1025 200	BUSHING	2								
5	3540 2291 000	PLATE	1								
6	1957 2302 AG0	ARM,trunnion	1								
7	1963 2304 000	BOLT SET	1								
8	A303 0110 003	NUT	1							M10	
9	1945 7903 000	ARM,neutral	1								
10	0796 3030 250	BUSHING	1								
11	0750 0560 004	BEARING,ball	1							6000DD	
12	0740 0101 000	C-RING	1							φ10	
13	2701 4273 000	WASHER	1								
14	A050 0108 045	BOLT 7T	2							M8×45	
15	1957 2304 000	SHAFT,holder	1								
16	A534 0108 045	BOLT 7T,reamer	1							M8×45	
17	0350 0150 822	WASHER	1							M8	
18	1957 2307 AG0	JOINT	1								
19	A301 0108 002	NUT	2							M8	
20	0350 0140 818	WASHER	2							M8	
21	0520 0125 015	PIN,split	2							φ2.5×15	
22	1957 2342 000	BOLT,set	1								
23	1957 2313 000	DAMPER	1								
24	0350 0140 818	WASHER	2							M8	
25	0520 0125 015	PIN,split	2							φ2.5×15	
26	1957 2312 AG1	BRACKET	1								
27	F154 0108 020	BOLT,w/washer	2							M8×20	
28	3574 7891 000	ADJUSTER	1								
29	A301 0108 002	NUT	2							M8	
30	1957 2316 000	SPRING	1								

FIG.613 HST CONTROL (2/2)

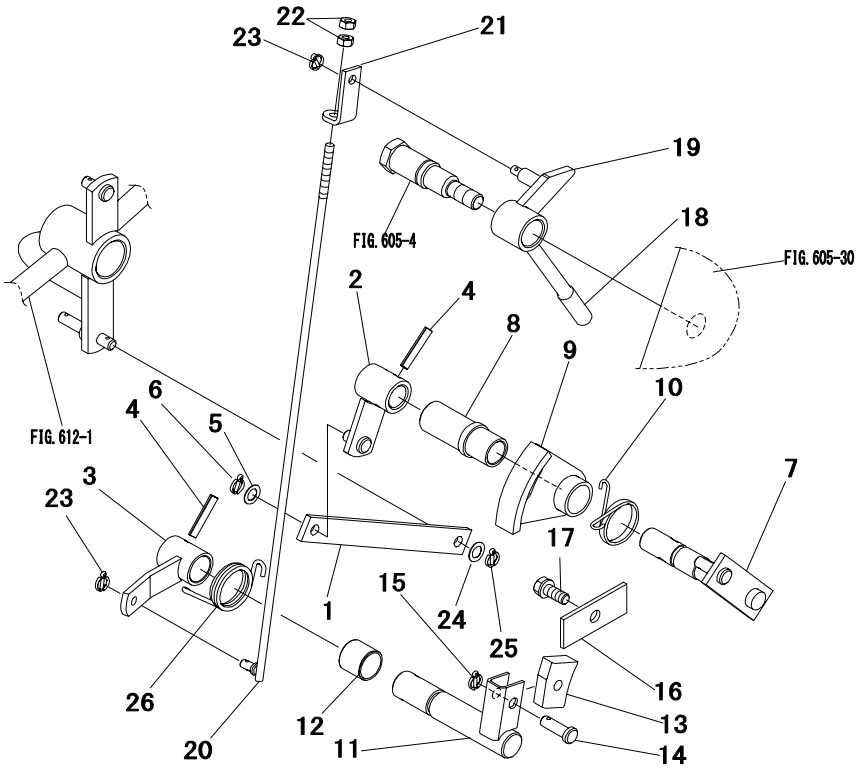

Key No.	Parts No.	Parts Name.	Q`ty ALL					R/P	Application	Description	Remarks
1	1957 2321 001	PLATE,speed con	1								
2	1957 2322 AG0	LINK,speed con	1								
3	1957 2323 AG0	ARM,speed con	1								
4	0550 0006 032	PIN,spring	2							φ6×32	
5	2761 3615 000	WASHER	1								
6	0520 0125 015	PIN,split	1							φ2.5×15	
7	1963 2311 000	SHAFT,pedal	1								
8	1963 2312 000	SHAFT	1								
9	1963 2313 000	ARM,lock	1								
10	1963 2317 000	SPRING	1								
11	1963 2334 000	ARM,brake	1								
12	0797 2020 200	BUSHING	1								
13	1963 2336 000	SHOE	1								
14	0562 0108 025	PIN,clevis	1							φ8×25	
15	0520 0125 015	PIN,split	1							φ2.5×15	
16	1957 2325 AG0	PLATE	1								
17	F154 0108 020	BOLT,w/washer	1							M8×20	
18	1421 2284 000	GRIP	1								
19	1957 2331 AG0	LEVER,speed con	1								
20	1957 2332 000	ROD,speed con	1								
21	1957 2335 000	PLATE	1								
22	A300 0106 002	NUT	2							M6	
23	0520 0125 015	PIN,split	2							φ2.5×15	
24	2761 3615 000	WASHER	1								
25	0520 0125 015	PIN,split	1							φ2.5×15	
26	1957 2345 000	SPRING	1								

FIG.701 HYDRAULIC LIFT(1/5)

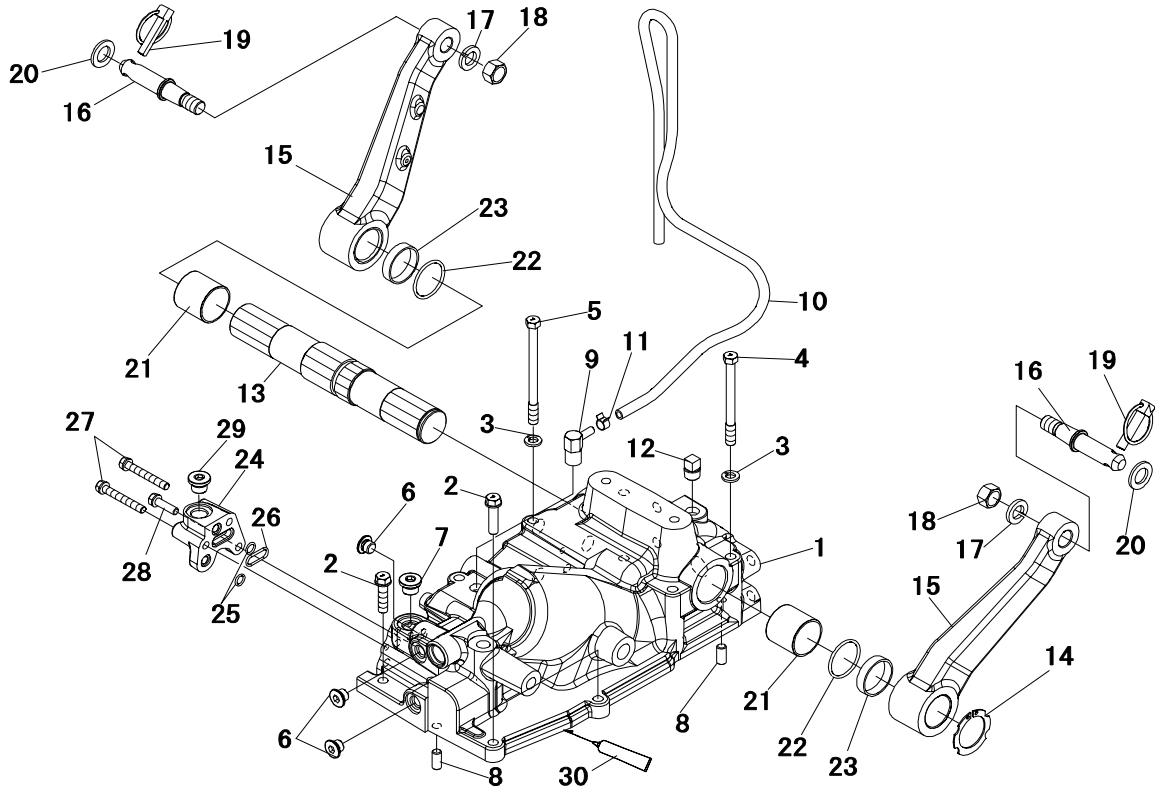

Key No.	Parts No.	Parts Name.	Q`ty ALL					R/P	Application	Description	Remarks
1	1957 2401 AG1	HOUSING,hydraul	1								
2	F154 0110 040	BOLT,w/washer	3							M10×40	
3	A360 0101 002	WASHER,spring	6							M10	
4	A054 0110 110	BOLT 7T	5							M10×110	
5	A054 0110 130	BOLT 7T	1							M10×130	
6	HA43 0102 000	PLUG	3								
7	HA43 0103 000	PLUG	1								
8	0540 1010 020	PIN,dowel	2							φ10×20	
9	1025 2425 000	BREATHER	1								
10	0980 4071 003	HOSE	1								
11	0050 4110 005	CLAMP,hose	1							φ10	
12	A600 0101 700	PLUG,taper	1							PT=3/8	
13	1956 2407 000	SHAFT,hydraulic	1								
14	0740 0004 001	C-RING	1							φ40	
15	1956 2408 AG0	ARM,lift	2								
16	1044 2409 000	PIN,lift arm	2								
17	A360 0101 602	WASHER,spring	2							M16	
18	A303 0116 002	NUT	2							M16	
19	1032 3012 000	PIN,linch	2								
20	1032 3016 000	WASHER	2								
21	0796 1040 400	BUSHING	2								
22	0830 0120 400	O-RING	2							φ40	
23	1021 2421 000	COLLAR	2								
24	1044 2457 AG0	BLOCK	1								
25	0830 1100 101	O-RING	2							φ10	
26	0830 1100 220	O-RING	1							φ22	
27	F154 0108 060	BOLT,w/washer	2							M8×60	
28	F154 0108 030	BOLT,w/washer	1							M8×30	
29	HA43 0103 000	PLUG	1								
30	TB1206D	GASKET	AR								

FIG.702 HYDRAULIC LIFT(2/5)

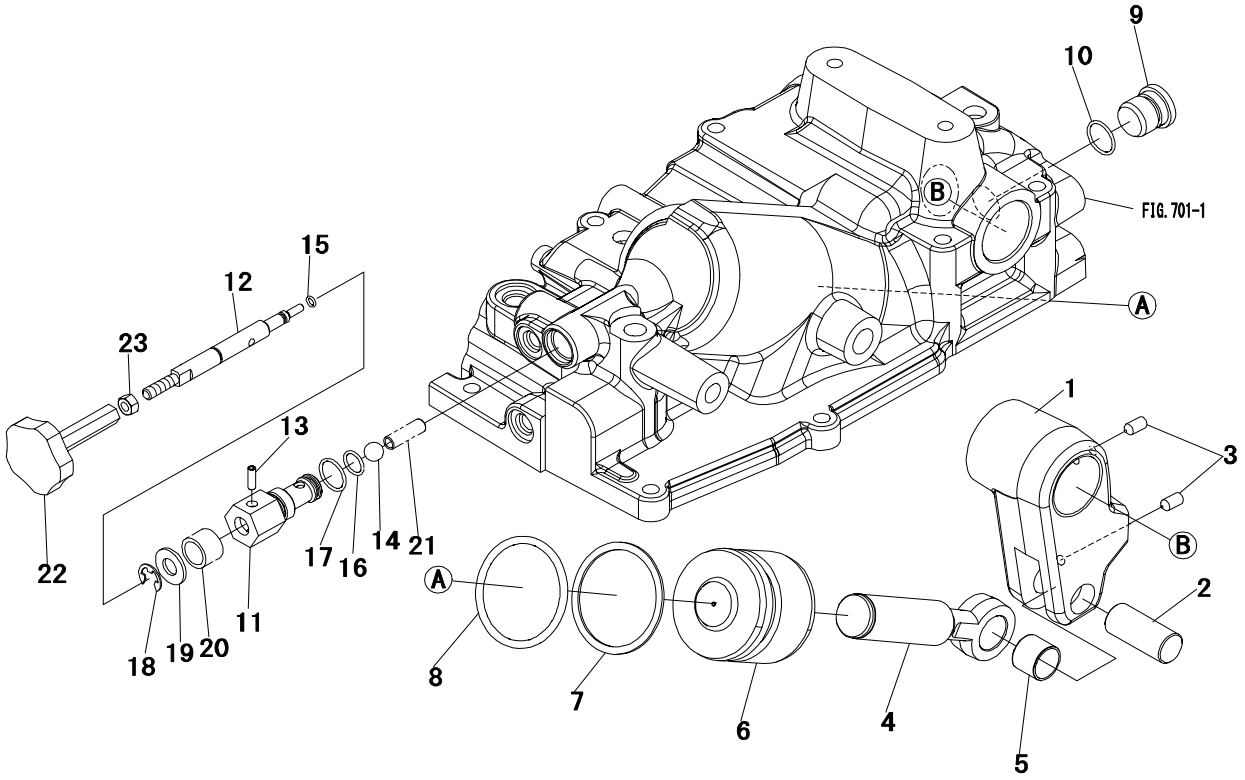

Key No.	Parts No.	Parts Name.	Q`ty ALL					R/P	Application	Description	Remarks
1	1956 2406 000	ARM,power	1								
2	1963 2418 000	PIN	1								
3	HA13 0401 000	SCREW	2								
4	1956 2405 000	ROD,piston	1								
5	0797 2022 200	BUSHING	1								
6	1956 2404 000	PISTON	1								
7	0832 0100 650	RING	1								
8	0830 0100 650	O-RING	1							φ65	
9	1041 2416 000	PIN	1								
10	0830 0100 210	O-RING	1							φ21	
11	1044 2413 000	SLEEVE	1								
12	1044 2411 000	SCREW	1								
13	0550 0005 016	PIN,spring	1							φ5×16	
14	0800 0001 200	BALL	1							1/2″	
15	0830 1100 050	O-RING	1							φ5	
16	0830 1100 140	O-RING	1							φ14	
17	0830 1100 200	O-RING	1							φ20	
18	0742 0101 000	E-RING	1							φ10	
19	0350 0151 226	WASHER	1							M12	
20	534A 1407 000	SPRING	1								
21	1961 1906 000	SPRING	1								
22	1032 2427 000	KNOB	1								
23	A301 0108 002	NUT	1							M8	

FIG.703 HYDRAULIC LIFT(3/5)

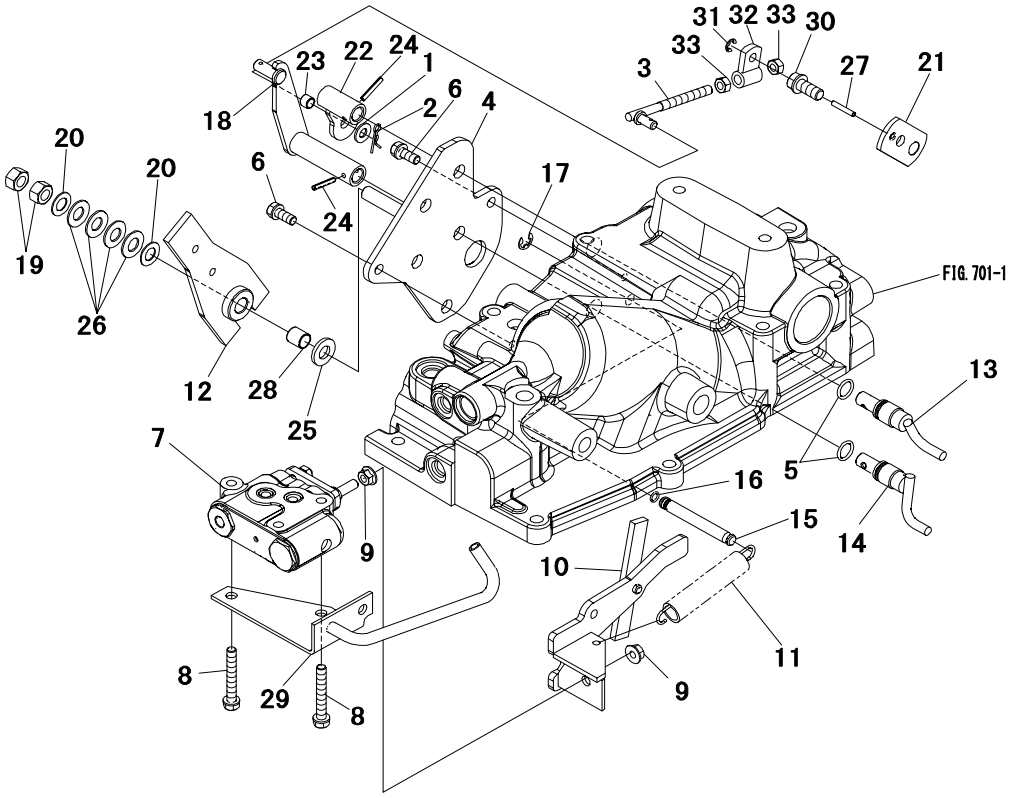

Key No.	Parts No.	Parts Name.	Q`ty ALL					R/P	Application	Description	Remarks
1	0350 0140 818	WASHER	1							M8	
2	0521 0108 000	PIN,snap	1							φ8	
3	1044 2427 000	ADJUSTER	1								
4	1957 2429 AG0	PLATE	1								
5	0830 0100 140	O-RING	2							φ14	
6	F154 0108 020	BOLT,w/washer	2							M8×20	
7	1943 2415 000	VALVE,control	1								RefFIG705
8	F154 0108 055	BOLT,w/washer	2							M8×55	
9	F301 0108 000	NUT,flange	2							M8	
10	1957 2431 000	LINK ASSY	1								
11	3501 1105 000	SPRING	1								
12	1044 2461 000	P/C ARM	1								
13	1044 2436 000	ARM,feed back	1								
14	1044 2438 000	P/C ARM	1								
15	1044 2441 000	PIN	1								
16	0830 0100 070	O-RING	1							φ7	
17	0742 0100 800	E-RING	1							φ8	
18	1957 2443 000	P/C LEVER	1								
19	A301 0112 002	NUT	2							M12	
20	3121 2559 000	LINER	2								
21	1044 2449 000	PLATE	1								
22	1044 2447 000	LINK,feed back	1								
23	0796 1008 080	BUSHING	1								
24	1038 2476 000	PIN,spring	2								
25	1904 1264 000	LINING,brake	1								
26	0356 0101 201	SPRING,conical	4								
27	1038 2476 000	PIN,spring	1								
28	0797 2012 150	BUSHING	1								
29	1044 2454 000	PIPE,lubricate	1								
30	F154 0110 025	BOLT,w/washer	1							M10×25	
31	0742 0100 600	E-RING	1							φ6	
32	1044 2426 000	JOINT	1								
33	A301 0108 002	NUT	2							M8	

FIG.704 HYDRAULIC LIFT(4/5)

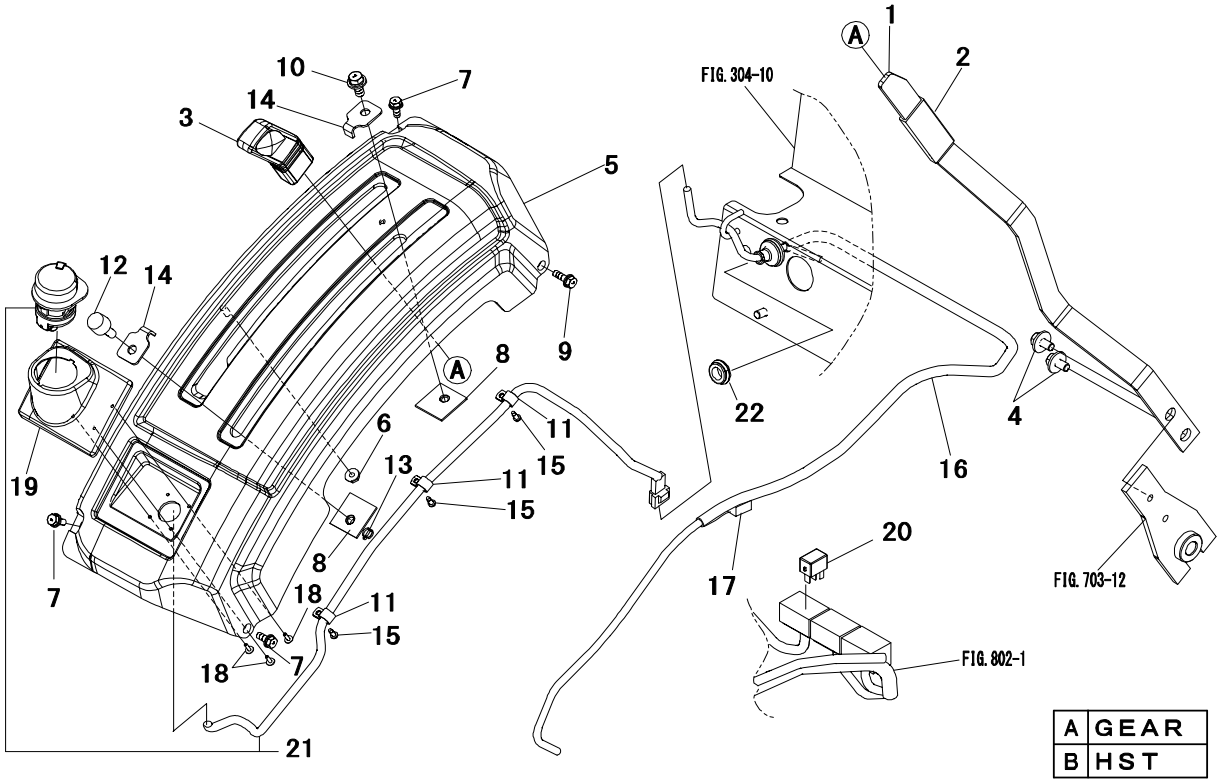

Key No.	Parts No.	Parts Name.	Q`ty A	Q`ty B				R/P	Application	Description	Remarks
1	1945 8221 AG0	LEVER,p/c	1	1							
2	1044 2475 000	TUBE	1	1							
3	1030 2444 000	GRIP	1	1							
4	H184 0108 016	BOLT,w/washer	2	2						M8×16	
5	1044 2489 002	LEVER GUIDE RH	1	1							
6	F300 0106 000	NUT,flange	1	1						M6	
7	H144 0106 016	BOLT,w/washer	3	3						M6×16	
8	1031 2476 000	PLATE,stopper	2	2							
9	H144 0106 020	BOLT,w/washer	1	1						M6×20	
10	H154 0108 020	BOLT,w/washer	1	1						M8×20	
11	1044 2993 000	CLIP	3	·							
12	1021 2438 000	GRIP	1	1							
13	0520 0120 012	PIN,split	1	1						φ2×12	
14	1040 2455 000	STOPPER	2	2							
15	0432 2104 010	SCREW,tapping	3	·						M4×10	
16,17	1945 8216 000	HARNESS IND	1	·							
16	*	HARNESS	1	·							
17	3577 0855 200	DIODE	1	·						1.5A	
18	3515 0924 100	SCREW,tapping	3	·							
19	1945 8212 000	COVER	1	·							
20	1957 2915 000	RELAY	1	·							
21	1945 8211 000	SWITCH IND	1	·							
22	1040 6715 000	GROMMET	·	1							

FIG.705 HYDRAULIC LIFT(5/5)

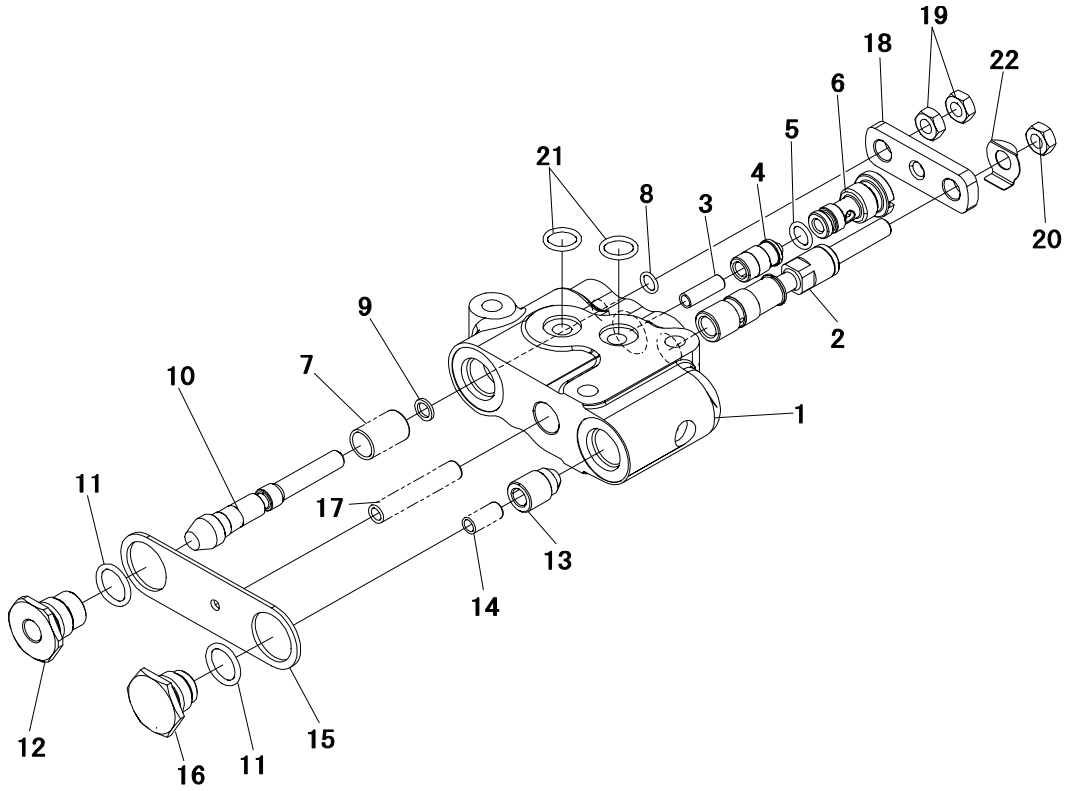

Key No.	Parts No.	Parts Name.	Q`ty					R/P	Application	Description	Remarks
			ALL								
1～22	1943 2415 000	VALVE,control	1								
1	*	BODY	1								
2	1943 2419 000	SPOOL	1								
3	1046 2421 000	SPRING	1								
4	1046 2422 000	POPPET	1								
5	0830 1100 090	O-RING	1							φ9	
6	1046 2423 000	VALVE SEAT	1								
7	1046 2424 000	SPRING	1								
8	0830 0100 070	O-RING	1							φ7	
9	0832 0100 070	RING	1								
10	1046 2427 000	POPPET	1								
11	0830 0100 150	O-RING	2							φ15	
12	1046 2428 000	PLUG,seat	1								
13	1046 2429 000	POPPET	1								
14	1046 2431 000	SPRING	1								
15	1046 2432 000	PLATE	1								
16	1046 2433 000	PLUG	1								
17	1046 2434 000	SPRING	1								
18	1046 2436 000	PLATE	1								
19	A301 0108 003	NUT	2							M8	
20	A301 0108 003	NUT	1							M8	
21	0830 1100 120	O-RING	2							φ12	
22	1046 2437 000	PLATE	1								

FIG.706 HYDRAULIC LINE(1/5)

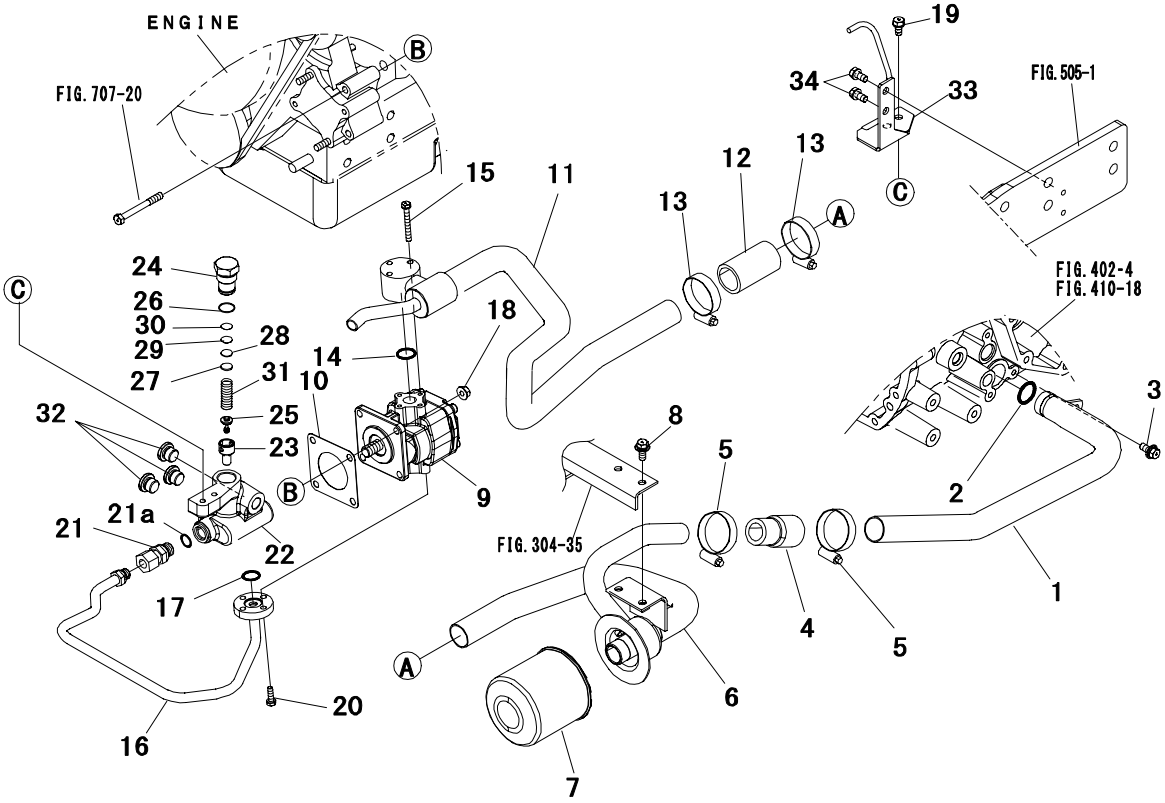

Key No.	Parts No.	Parts Name.	Q`ty ALL					R/P	Application	Description	Remarks
1	1958 2505 AG0	PIPE A,suction	1								
2	0830 0100 240	O-RING	1							φ24	
3	H154 0108 020	BOLT,w/washer	1							M8×20	
4	1994 2525 000	HOSE A	1								
5	HA23 0101 000	CLIP,hose	2								
6	1956 2506 AG1	PIPE B,suction	1								
7	1964 2509 000	FILTER	1								
8	H154 0108 020	BOLT,w/washer	2							M8×20	
9	1030 2501 002	PUMP,hydraulic	1								
10	67700-20101	PACKING	1								
11	1945 2107 AG1	PIPE C,suction	1								
12	1176 2527 000	HOSE	1								
13	HA23 0101 000	CLIP,hose	2								
14	0830 0100 200	O-RING	1							φ20	
15	F144 0106 050	BOLT,w/washer	3							M6×50	
16	1945 2181 AG0	PIPE A PRESSURE	1								
17	0830 1100 180	O-RING	1								
18	F301 0108 001	NUT,flange	4							M8	
19	F154 0108 016	BOLT,w/washer	2							M8×16	
20	F144 0106 020	BOLT,w/washer	4							M6×20	
21	0620 3115 170	NIPPLE	1								Inc21a
21a	0830 1100 140	O-RING	1							φ14	
22～32	1957 2585 AG0	BLOCK ASSY	1								
22	1957 2586 000	BLOCK	1								
23	1005 2405 191	HOUSING	1								
24	1005 2405 120	PLUG	1								
25	1005 2405 180	POPPET	1								
26	0830 0500 160	O-RING	1							φ16	
27	1005 2405 130	SHIM	AR							t=0.1	
28	1005 2405 140	SHIM	AR							t=0.3	
29	1005 2405 150	SHIM	AR							t=1.0	
30	1005 2405 160	SHIM	AR							t=2.0	
31	1005 2405 170	SPRING	1								
32	HA43 0103 000	PLUG	3								
33	1945 2156 AG0	BRACKET	1								

FIG.706 HYDRAULIC LINE(1/5)

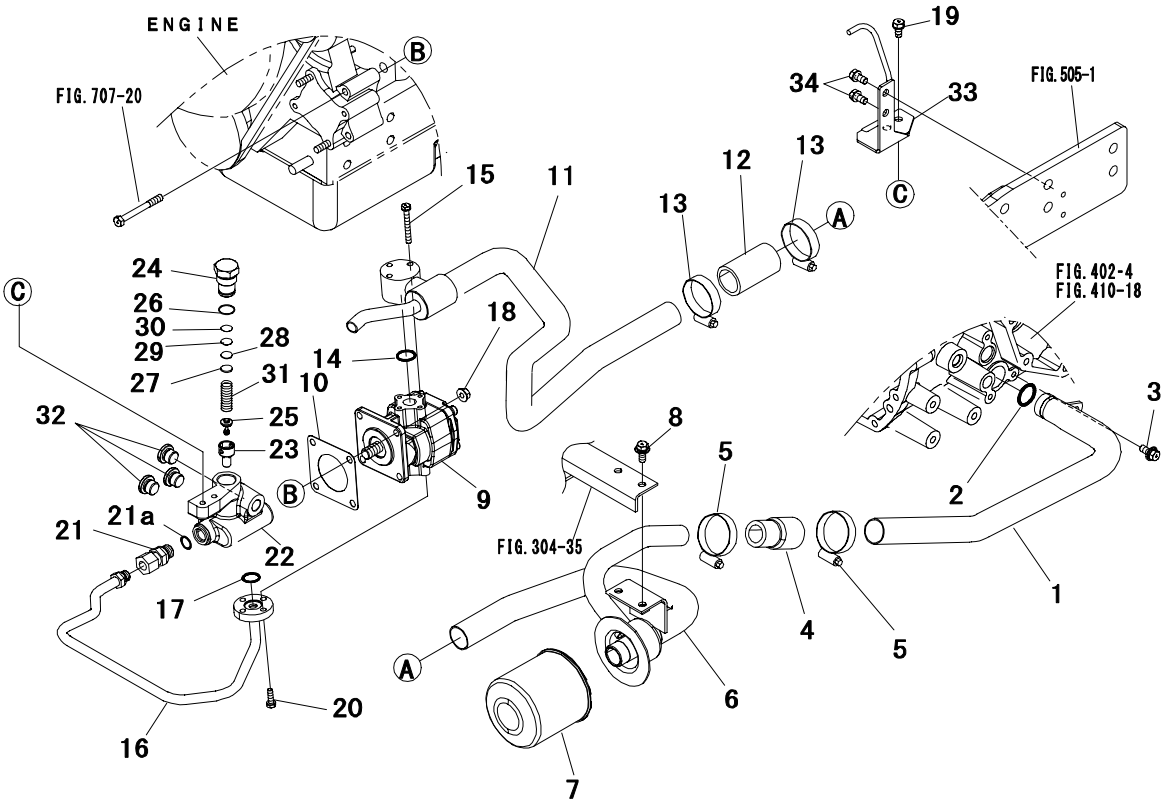

Key No.	Parts No.	Parts Name.	Q`ty					R/P	Application	Description	Remarks
			ALL								
34	F154 0108 016	BOLT,w/washer	2							M8×16	

FIG.707 HYDRAULIC LINE(2/5)

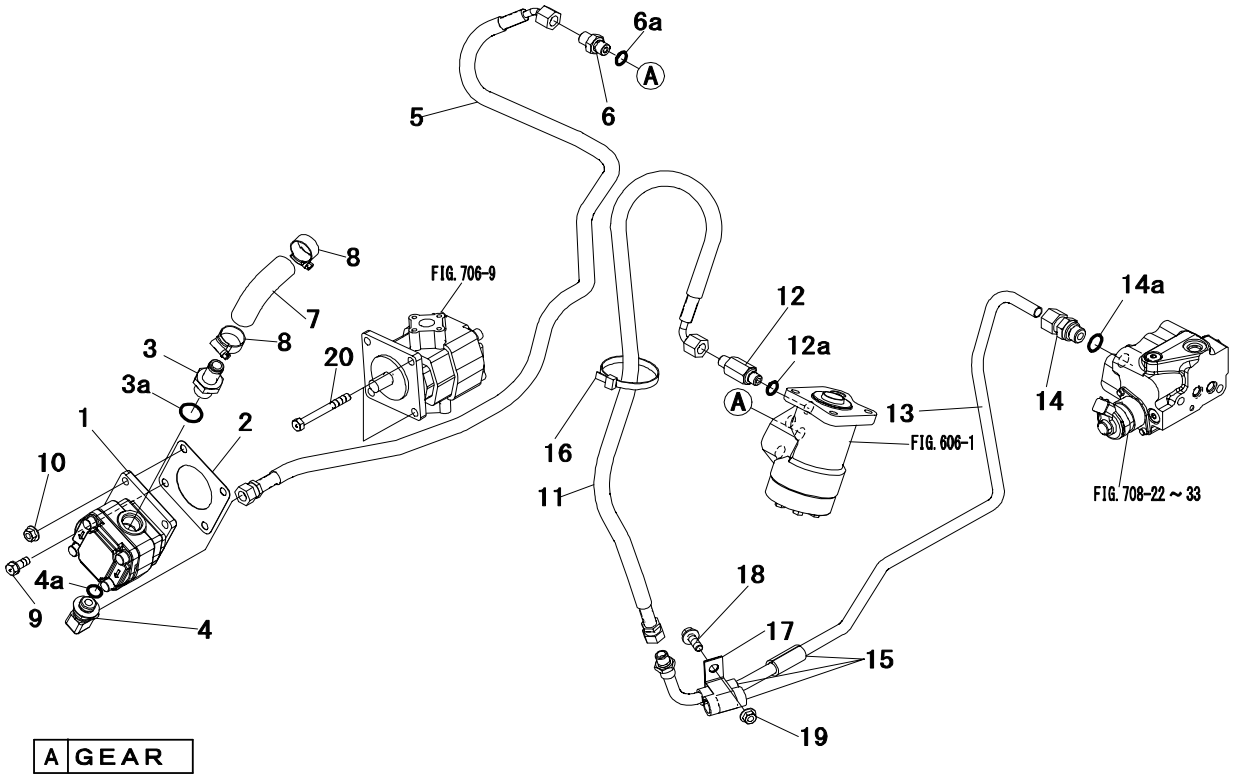

Key No.	Parts No.	Parts Name.	Q`ty A					R/P	Application	Description	Remarks
1	1030 2539 002	PUMP,hydraulic	1								
2	67700-20101	PACKING	1								
3	6000 1201 000	ADAPTER	1								Inc3a
3a	0830 1100 180	O-RING	1							φ18	
4	0631 3117 130	ELBOW 90	1								Inc4a
4a	0830 1100 140	O-RING	1							φ14	
5	1957 2565 000	HOSE A	1								
6	0631 1113 130	ADAPTER	1								Inc6a
6a	0830 1100 110	O-RING	1							φ11	
7	1044 2518 002	ELBOW	1								
8	0050 5000 280	CLAMP,hose	2							φ28	
9	F154 0108 020	BOLT,w/washer	1							M8×20	
10	F301 0108 001	NUT,flange	3							M8	
11	1957 2531 000	HOSE C	1								
12	6000 1125 000	ADAPTER	1								Inc12a
12a	0830 1100 110	O-RING	1							φ11	
13	1945 2184 AG0	PIPE B RETURN	1								
14	0620 3112 170	NIPPLE	1								Inc14a
14a	0830 1100 140	O-RING	1							φ14	
15	1180 2163 000	CUSHION	3								
16	0051 1070 070	BAND,wire	1								
17	1035 2535 000	CLAMP	1								
18	H154 0108 025	BOLT,w/washer	1							M8×25	
19	F301 0108 001	NUT,flange	1							M8	
20	A054 0108 070	BOLT 7T	2							M8×70	

FIG.708 HYDRAULIC LINE(3/5)

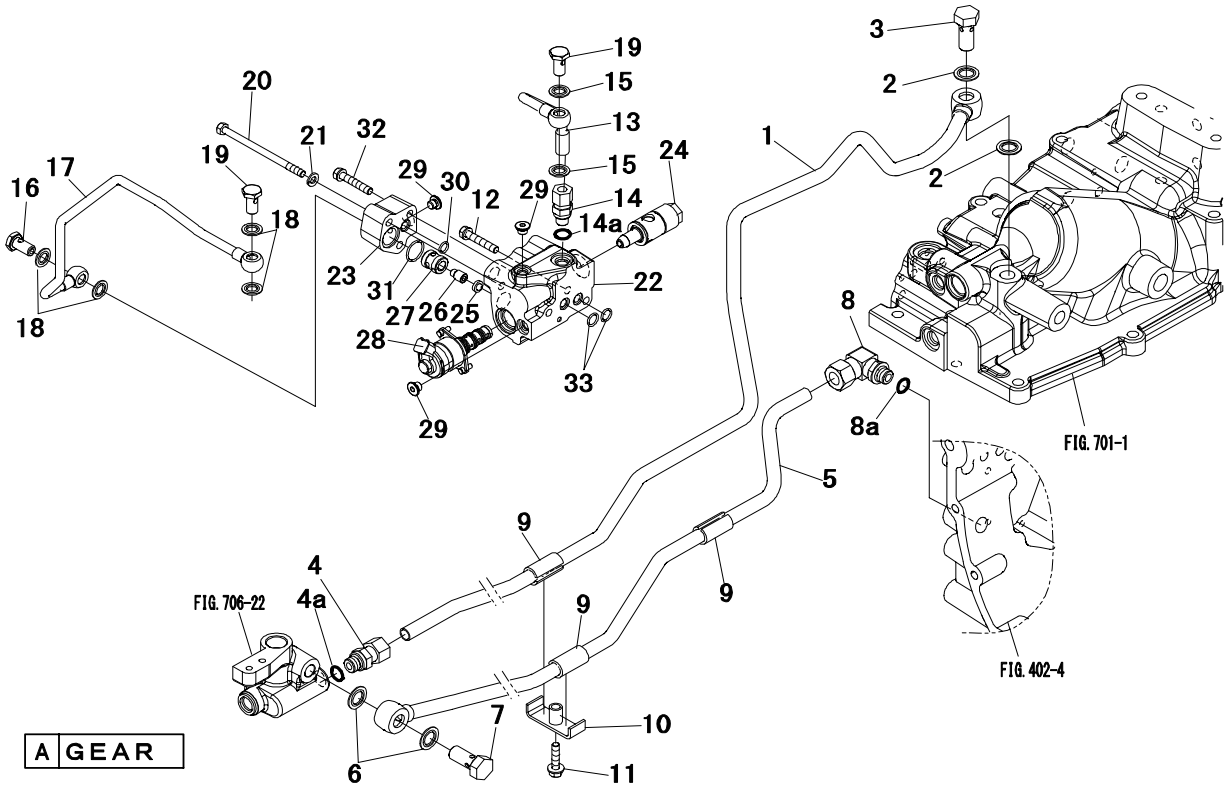

Key No.	Parts No.	Parts Name.	Q`ty A					R/P	Application	Description	Remarks
1	1945 2182 AG0	PIPE B PRESSURE	1								
2	0833 1001 600	WASHER,seal	2							M16	
3	1030 2534 000	BOLT,eye	1								
4	0620 3115 170	NIPPLE	1								Inc4a
4a	0830 1100 140	O-RING	1							φ14	
5	1945 2183 AG0	PIPE A RETURN	1								
6	0833 1001 600	WASHER,seal	2							M16	
7	1030 2534 000	BOLT,eye	1								
8	0620 5115 170	ELBOW	1								Inc8a
8a	0830 1100 140	O-RING	1							φ14	
9	1180 2163 000	CUSHION	3								
10	1957 2536 000	CLAMP	1								
11	H154 0108 035	BOLT,w/washer	1							M8×35	
12	F154 0108 045	BOLT,w/washer	1							M8×45	
13	1957 2598 AG0	PIPE IND,lublic	1								
14	0620 3110 130	NIPPLE	1								Inc14a
14a	0830 1100 110	O-RING	1							φ11	
15	0833 1001 200	WASHER,seal	2							M12	
16	1174 2443 001	BOLT EYE	1								
17	1957 2561 AG0	PIPE IND,pressu	1								
18	0833 1001 200	WASHER,seal	4							M12	
19	1174 2443 001	BOLT EYE	2								
20	A054 0108 120	BOLT	1							M8×120	
21	A360 0100 802	WASHER,spring	1							M8	
22～33	1945 2150 AG0	IND VALVE ASSY	1								
22	1957 2560 000	BLOCK ASSY	1								
23	1957 2552 000	COVER	1								
24	1957 2553 000	RELIEF VALVE AS	1								
25	1957 2554 000	FILTER	1								
26	1961 2534 000	POPPET	1								
27	1961 2536 000	SLEEVE	1								
28	1050 2158 000	VALVE	1								
29	HA43 0101 000	PLUG	3								
30	0830 1100 101	O-RING	1							φ10	
31	0830 1100 220	O-RING	1							φ22	

FIG.708 HYDRAULIC LINE(3/5)

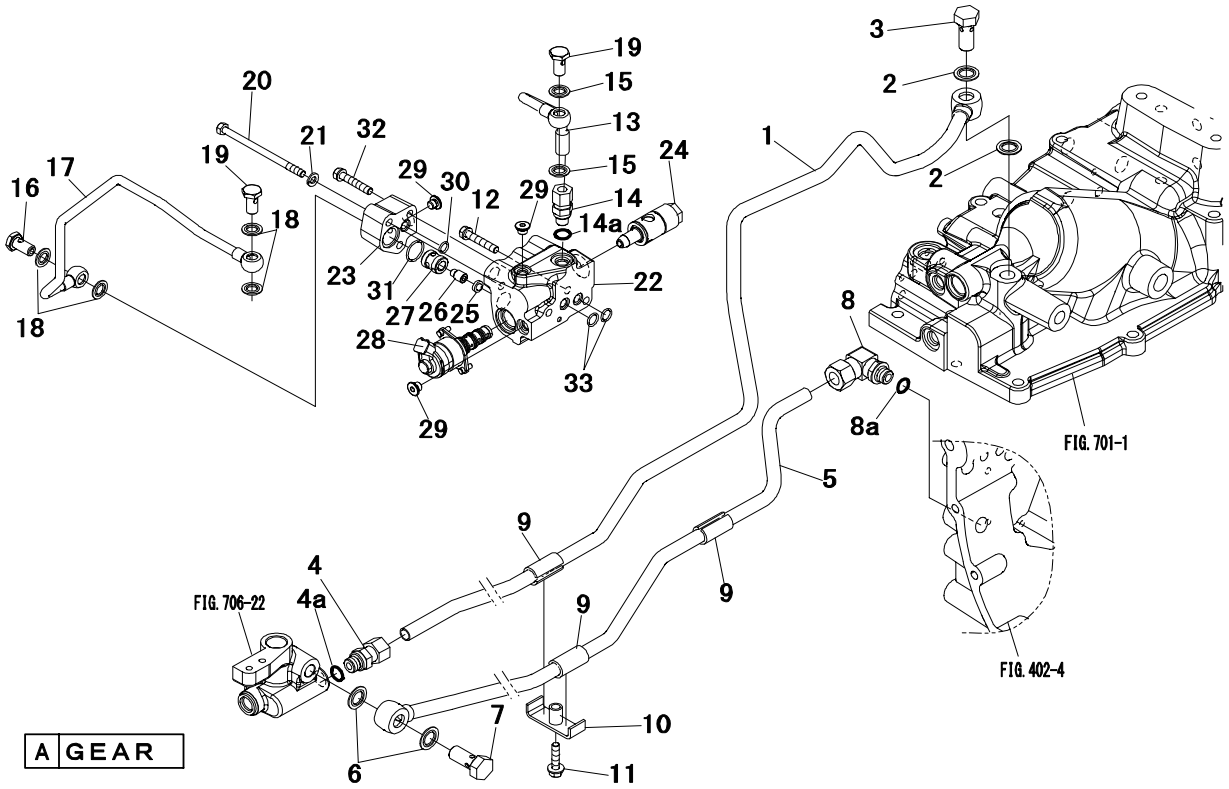

Key No.	Parts No.	Parts Name.	Q`ty A					R/P	Application	Description	Remarks
32	F154 0108 045	BOLT,w/washer	2							M8×45	
33	0830 1100 120	O-RING	2							φ12	

FIG.709 HYDRAULIC LINE(4/5)

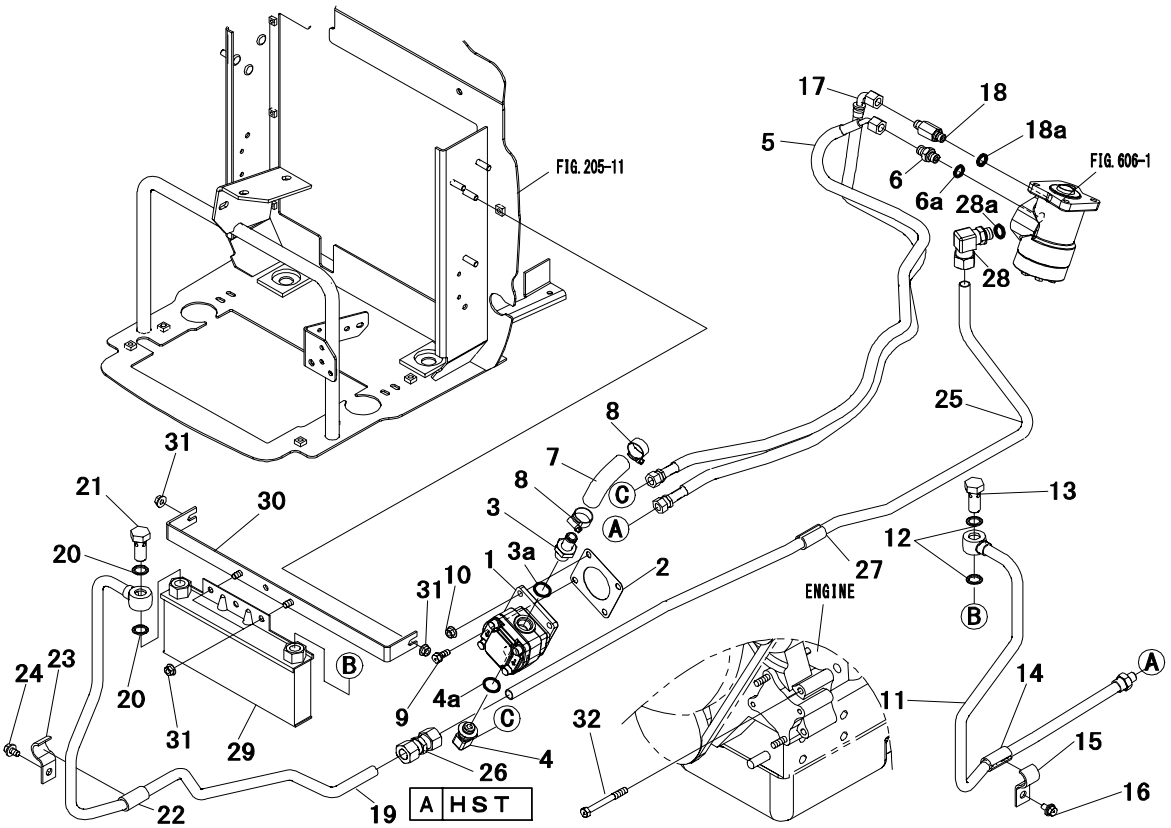

Key No.	Parts No.	Parts Name.	Q`ty A					R/P	Application	Description	Remarks
1	1030 2539 002	PUMP,hydraulic	1								
2	67700-20101	PACKING	1								
3	6000 1201 000	ADAPTER	1								Inc3a
3a	0830 1100 180	O-RING	1							φ18	
4	0631 3117 130	ELBOW 90	1								Inc4a
4a	0830 1100 140	O-RING	1							φ14	
5	1957 2565 000	HOSE A	1								
6	0631 1113 130	ADAPTER	1								Inc6a
6a	0830 1100 110	O-RING	1							φ11	
7	1044 2518 002	ELBOW	1								
8	0050 5000 280	CALMP,hose	2							φ28	
9	F154 0108 020	BOLT,w/asher	1							M8×20	
10	F301 0108 001	NUT,flange	3							M8	
11	1945 2131 AG0	PIPE A HST	1								
12	0833 1001 601	WASHER	2							M16	
13	1030 2534 000	BOLT,eye	1								
14	1180 2163 000	CUSHION	1								
15	1041 2532 000	CLAMP	1								
16	H154 0108 016	BOLT,w/washer	1							M8×16	
17	1957 2572 000	HOSE C	1								
18	6000 1125 000	ADAPTER	1								Inc18a
18a	0830 1100 110	O-RING	1							φ11	
19	1945 2186 AG0	PIPE B HST	1								
20	0833 1001 601	WASHER,seal	2							M16	
21	1030 2534 000	BOLT,eye	1								
22	1180 2163 000	CUSHION	1								
23	1041 2532 000	CLAMP	1								
24	H154 0108 016	BOLT,w/washer	1							M8×16	
25	1945 2185 AG0	PIPE C HST	1								
26	0620 1115 000	UNION	1								
27	1180 2163 000	CUSHION	1								
28	0620 5115 170	ELBOW	1								Inc28a
28a	0830 1100 140	O-RING	1							φ14	
29	1964 2552 000	OIL COLLER	1								
30	1957 2534 AG0	BRACKET	1								

FIG. 709 HYDRAULIC LINE(4/5)

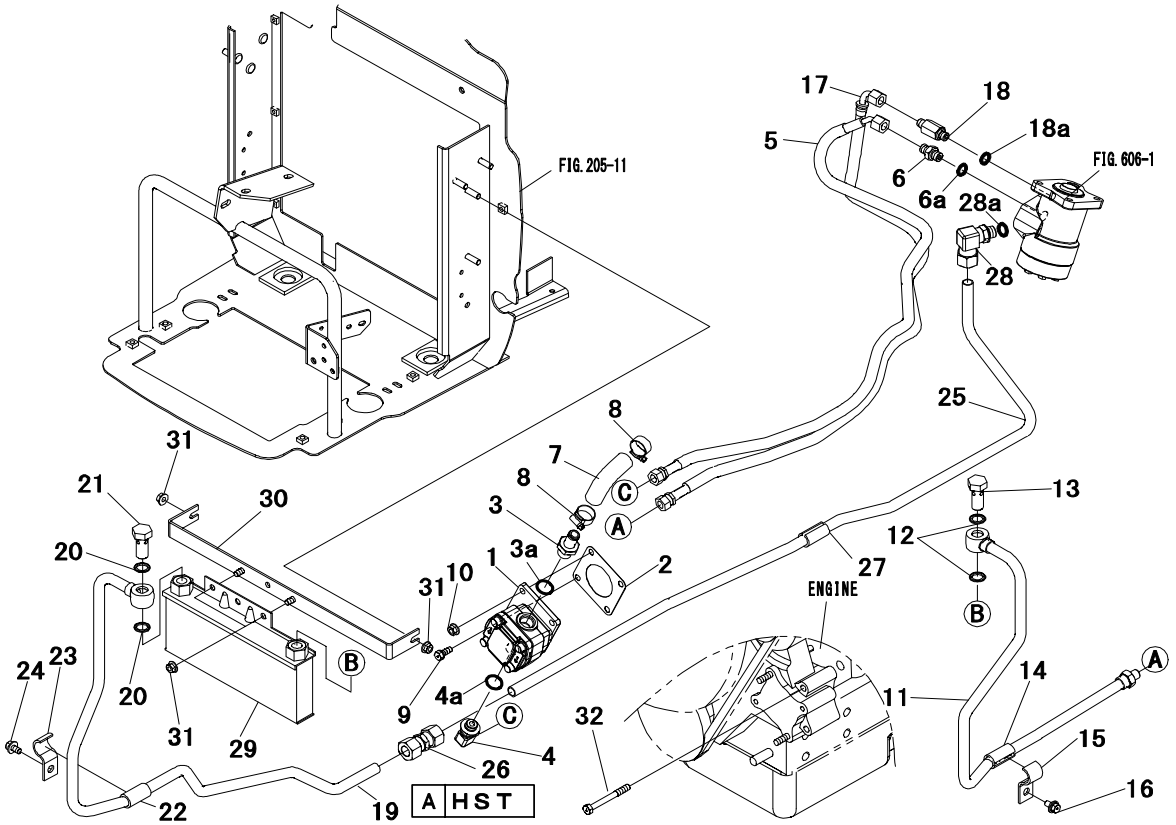

Key No.	Parts No.	Parts Name.	Q`ty A					R/P	Application	Description	Remarks
31	F301 0108 000	NUT,flange	4							M8	
32	A054 0108 070	BOLT 7T	2							M8 × 70	

FIG. 710 HYDRAULIC LINE(5/5)

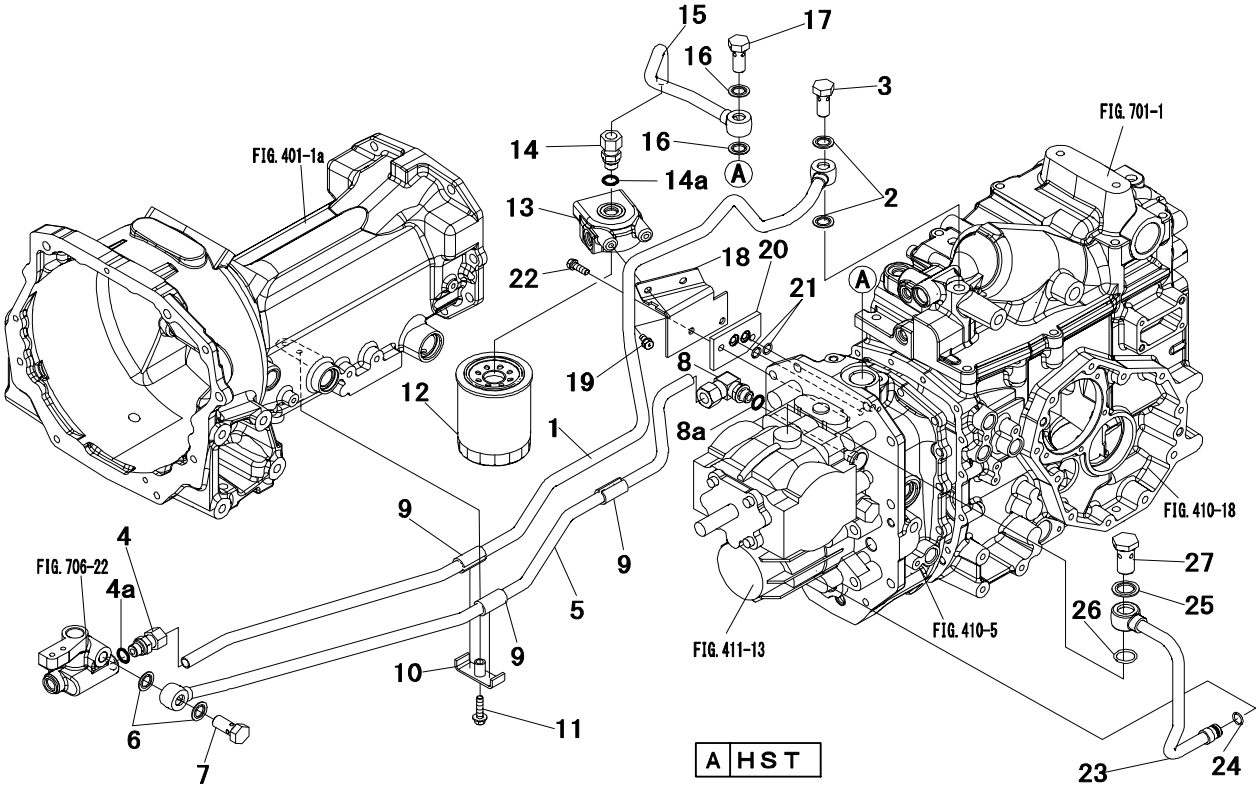

Key No.	Parts No.	Parts Name.	Q`ty A					R/P	Application	Description	Remarks
1	1945 2182 AG0	PIPE B PRESSURE	1								
2	0833 1001 600	WASHER,seal	2							M16	
3	1030 2534 000	BOLT,eye	1								
4	0620 3115 170	NIPPLE	1								Inc4a
4a	0830 1100 140	O-RING	1							φ14	
5	1945 2183 AG0	PIPE A RETURN	1								
6	0833 1001 600	WASHER,seal	2							M16	
7	1030 2534 000	BOLT,eye	1								
8	0620 5115 170	ELBOW	1								Inc8a
8a	0830 1100 140	O-RING	1							φ14	
9	1180 2163 000	CUSHION	3								
10	1957 2536 000	CLAMP	1								
11	H154 0108 035	BOLT,w/washer	1							M8×35	
12	1968 2581 000	FILTER OIL	1								
13	1963 2559 AG0	HEAD,filter	1								
14	0620 3115 170	NIPPLE	1								Inc14a
14a	0830 1100 140	O-RING	1							φ14	
15	1945 2188 AG0	PIPE D HST	1								
16	0833 1001 600	WASHER,seal	2							M16	
17	1030 2534 000	BOLT,eye	1								
18	1945 2166 AG0	PLATE	1								
19	F154 0108 016	BOLT,w/washer	2							M8×16	
20	1958 2551 AG0	PLATE	1								
21	0830 1100 120	O-RING	2							φ12	
22	F154 0108 025	BOLT,w/washer	2							M8×25	
23	1957 2541 AG0	PIPE,return hst	1								
24	0830 1100 140	O-RING	1							φ14	
25	0833 1002 200	WASHER,seal	1							M22	
26	0830 1100 240	O-RING	1							φ24	
27	1030 2541 000	BOLT,eye	1								

FIG.801 INDICATOR

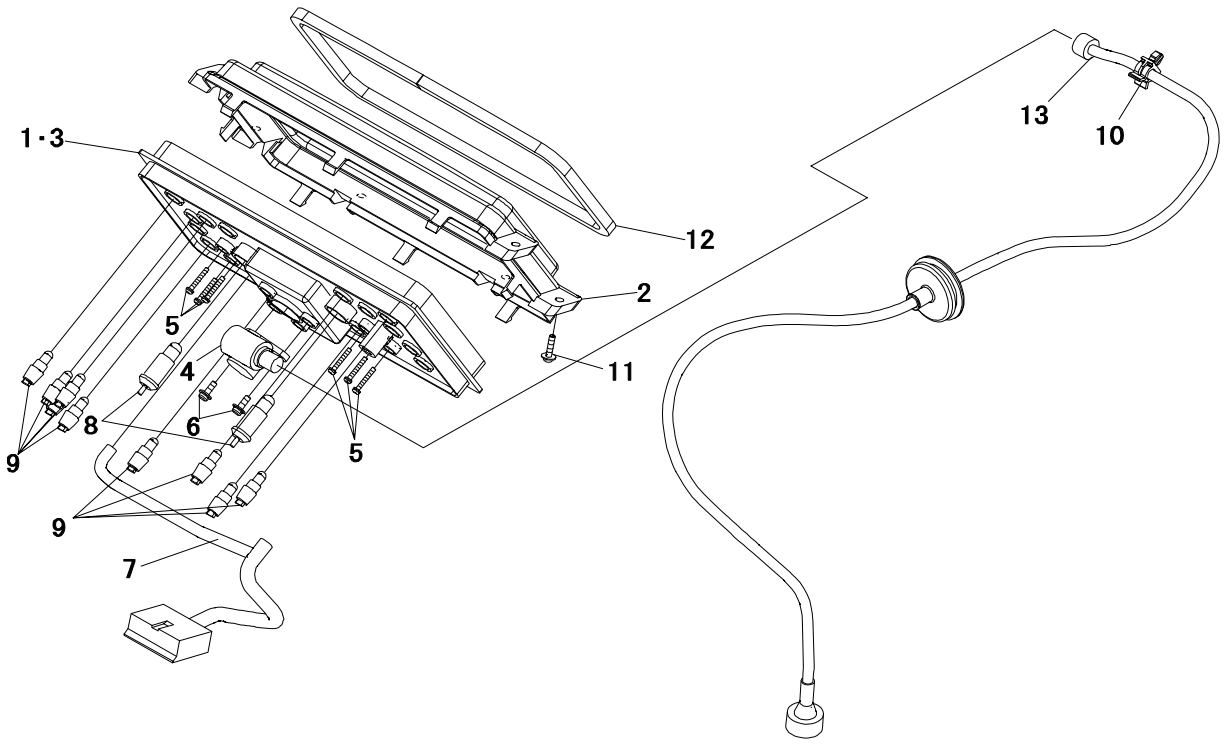

Key No.	Parts No.	Parts Name.	Q`ty					R/P	Application	Description	Remarks
			ALL								
1～9	1945 8602 000	METER ASSY	1								
1	1945 8602 100	CASE	1								
2	1046 2853 200	GLASS	1								
3	1945 8602 500	MONITOR ASSY	1								
4	1046 2853 600	ELBOW	1								
5	F242 0103 020	SCREW	6							M3×20	
6	H242 0104 012	SCREW,w/washer	2							M4×12	
7	*	HARNESS	1								
8	1046 2854 400	BULB	2							12V3.4W	
9	1046 2854 500	BULB	8							12V1.7W	
10	1046 2854 600	HOLDER	1								
11	1048 8638 000	SCREW	6								
12	1046 2859 000	SEAL	1								
13	1945 8606 000	CABLE FLEXIBLE	1								

FIG.802 ELECTRICAL SYSTEM 1

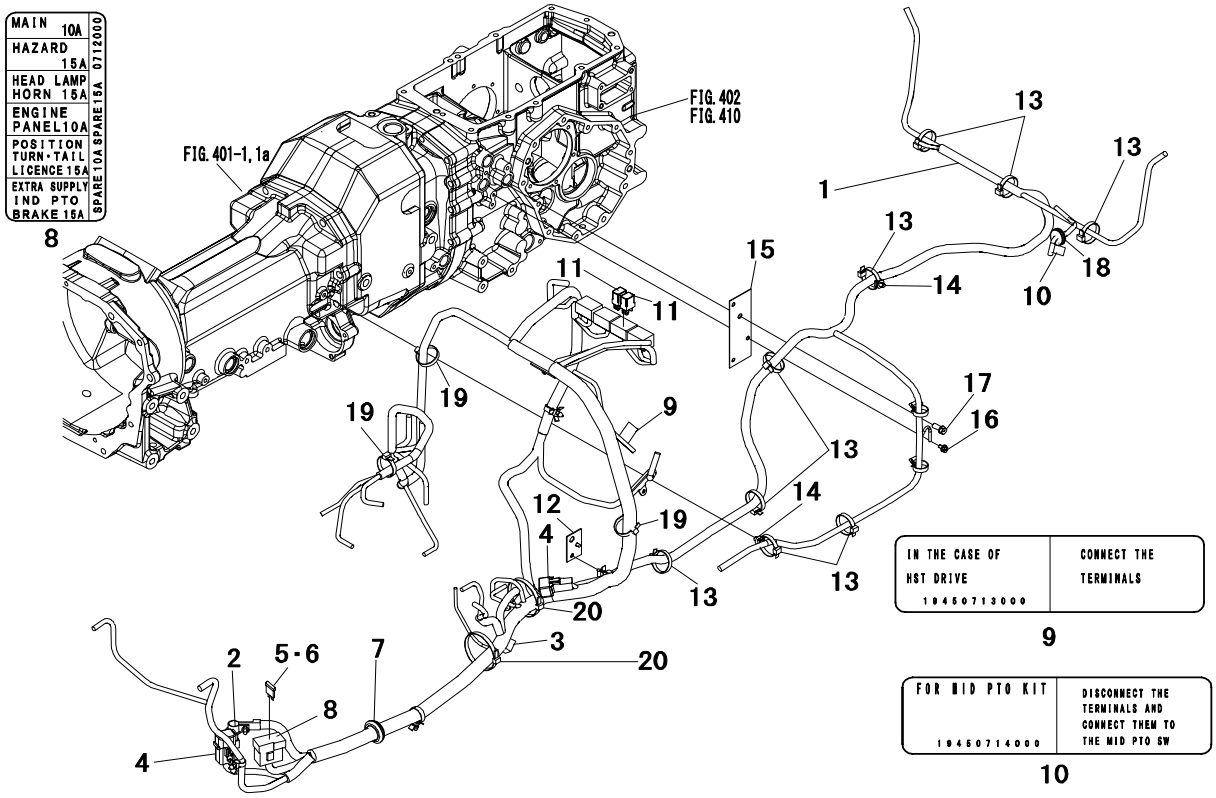

Key No.	Parts No.	Parts Name.	Q`ty ALL					R/P	Application	Description	Remarks
1～11	1945 0711 000	HARNESS M	1								
1	*	HARNESS	1								
2	1945 0711 200	PLUS CORD	1								
3	3577 0855 200	DIODE	1							1.5A	
4	1037 5581 200	FUSE	2							50A	
5	0980 1001 006	FUSE	3							10A	
6	0980 1001 506	FUSE	5							15A	
7	6043 2036 000	GROMMET	1								
8	1945 0712 000	LABEL FUSE	1								
9	1945 0713 000	LABEL	1								
10	1945 0714 000	LABEL	1								
11	1946 7462 000	RELAY	2								
12	1945 0721 000	BRACKET	1								
13	0051 1032 070	BAND,wire	9								
14	1048 3408 000	CLAMP	2								
15	1945 0722 000	PLATE	1								
16	H144 0106 012	BOLT,w/washer	1							M6×12	
17	F154 0108 020	BOLT,w/washer	1							M8×20	
18	0040 1002 001	GROMMET	1							φ20	
19	0051 1032 070	BAND,wire	3								
20	0051 1070 070	BAND,wire	2								

FIG.803 ELECTRICAL SYSTEM 2

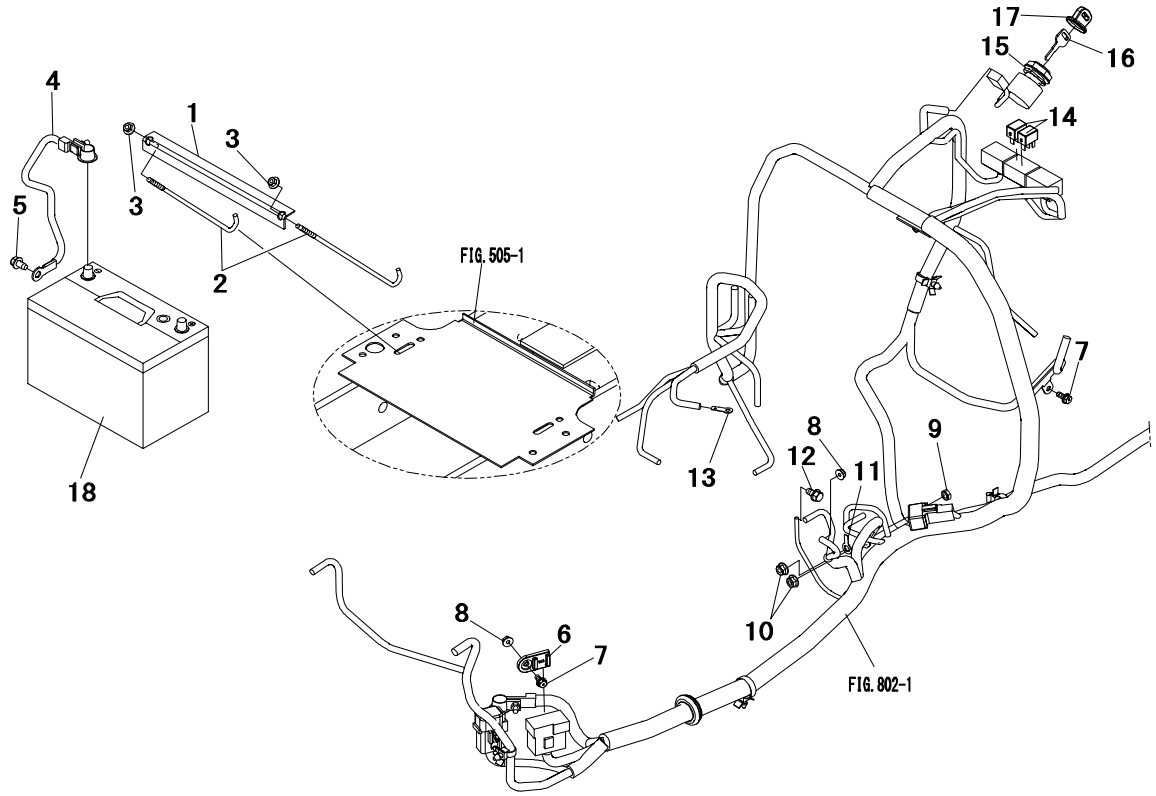

Key No.	Parts No.	Parts Name.	Q`ty					R/P	Application	Description	Remarks
			ALL								
1	3544 0895 AG0	BATTERY CLAMP	1								
2	2757 3640 001	BOLT	2								
3	F300 0106 011	NUT,flange	2							M6	
4	1174 2949 000	CABLE,battery	1								
5	HA12 1403 000	BOLT	1								
6	1945 0716 000	HOLDER	1								
7	H144 0106 016	BOLT,w/washer	2							M6×16	
8	F300 0106 000	NUT,flange	2							M6	
9	A301 0108 003	NUT	1							M8	
10	F301 0108 000	NUT,flange	2							M8	
11	1046 2806 000	TERMINAL	1								
12	HA12 1403 000	BOLT	1								
13	1942 2954 000	TERMINAL	1								
14	1957 2915 000	RELAY	2								
15,16	1957 2933 000	STARTER SW ASSY	1								
15	*	STARTER SW	1								
16	1957 2933 300	KEY ASSY	1								
17	1957 2933 500	CAP	1								
18	F985 255D 23R	BATTERY	1								

FIG.804 ELECTRICAL SYSTEM 3

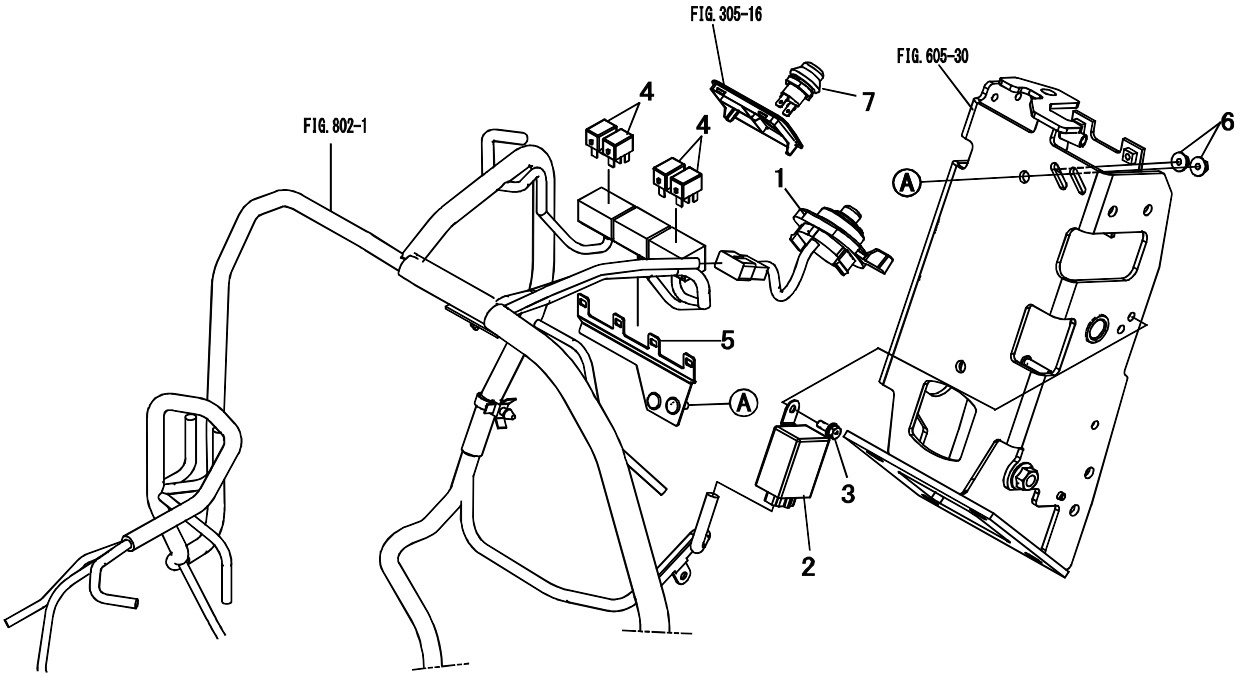

Key No.	Parts No.	Parts Name.	Q`ty ALL					R/P	Application	Description	Remarks
1	1945 8502 000	COMBINATION SW	1								
2	3586 0798 000	TURN UNIT	1								
3	H144 0106 016	BOLT,w/washer	1							M6×16	
4	1957 2915 000	RELAY	4								
5	1945 8512 000	BRACKET	1								
6	F300 0106 011	NUT,flange	2							M6	
7	1048 8521 000	SWITCH	1								

FIG.805 ELECTRICAL SYSTEM 4

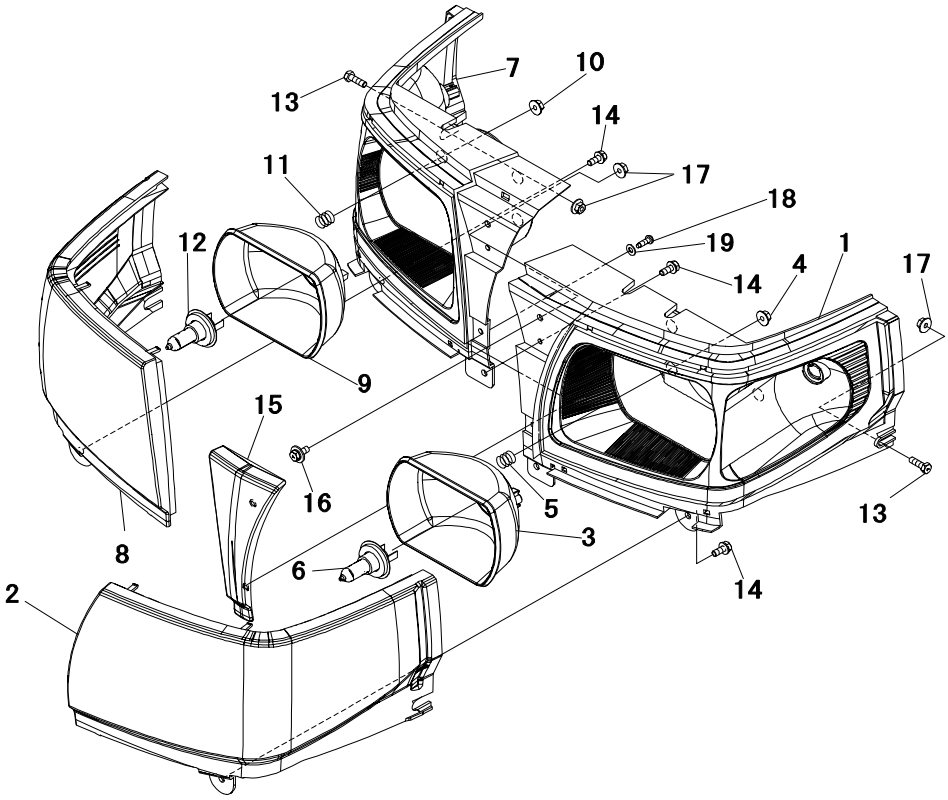

Key No.	Parts No.	Parts Name.	Q`ty					R/P	Application	Description	Remarks
			ALL								
1～6	1945 1181 000	HEAD LAMP LH	1								
1	1945 1181 100	REFLECTOR LH	1								
2	1945 1181 200	LENS LH	1								
3	1945 1181 300	REFLECTOR B	1								
4	F300 0105 000	NUT,flange	3							M5	
5	1019 2849 001	SPRING	3								
6	1040 5511 500	BULB	1							12V55/60W	
7～12	1945 1182 000	HEAD LAMP RH	1								
7	1945 1182 100	REFLECTOR RH	1								
8	1945 1182 200	LENS RH	1								
9	1945 1181 300	REFLECTOR B	1								
10	F300 0105 000	NUT,flange	3							M5	
11	1019 2849 001	SPRING	3								
12	1040 5511 500	BULB	1							12V55/60W	
13	A040 0106 020	BOLT 7T	2							M6×20	
14	H144 0106 016	BOLT,w/washer	3							M6×16	
15	1040 5236 000	COVER,center	1								
16	H194 0106 016	BOLT,w/washer	1							M6×16	
17	F300 0106 011	NUT,flange	3							M6	
18	0432 2105 016	SCREW,tapping	2							M5×16	
19	0350 0120 512	WASHER	2							M5	

FIG.901 3 POINT LINKAGE 1

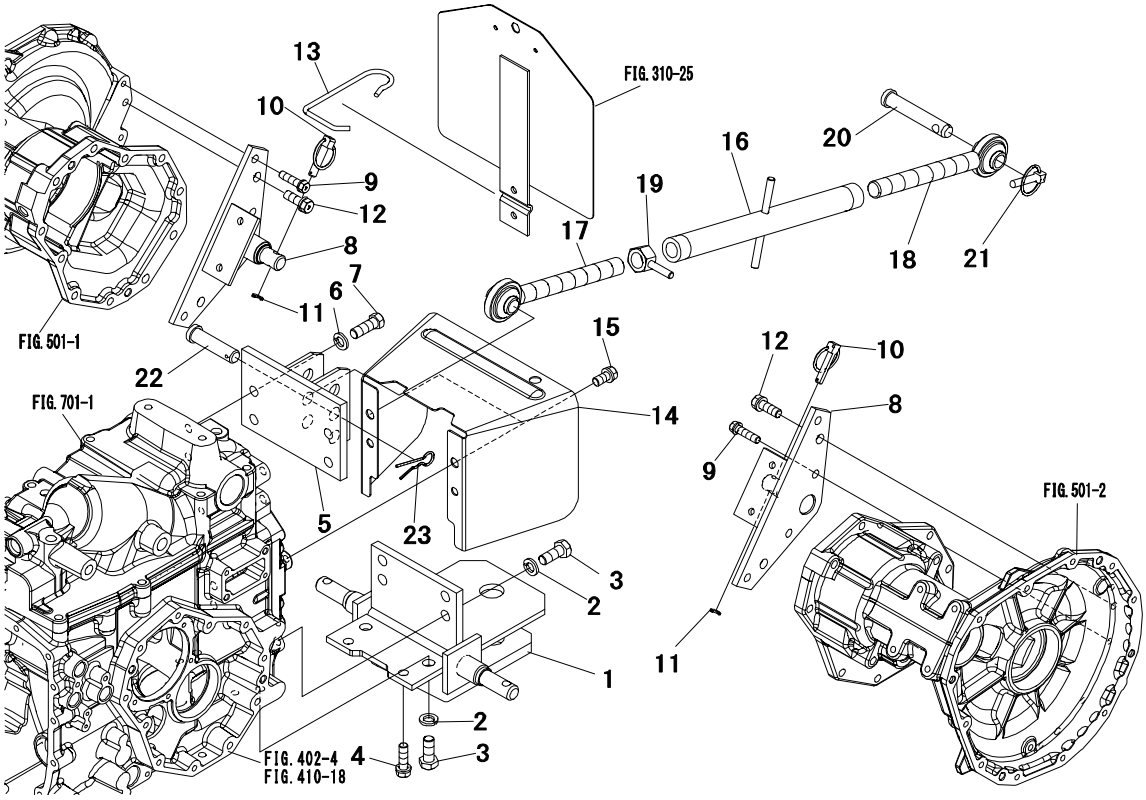

Key No.	Parts No.	Parts Name.	Q`ty ALL					R/P	Application	Description	Remarks
1	1945 4211 AG1	DRAWBAR	1								
2	A360 0101 402	WASHER,spring	6							M14	
3	A040 0114 035	BOLT 7T	6							M14×35	
4	F154 0112 040	BOLT,w/washer	2							M12×40	
5	1957 2414 AG0	BRACKET	1								
6	A360 0101 402	WASHER,spring	4							M14	
7	A940 0114 040	BOLT	4							M14×40	
8	1945 4276 AG0	BRACKET	2								
9	F154 0110 040	BOLT,w/washer	8							M10×40	
10	1037 3015 000	PIN,linch	2								
11	0520 0125 020	PIN,split	2							φ2.5×20	
12	F154 0112 035	BOLT,w/washer	4							M12×35	
13	1963 3031 000	HOOK,top link	1								
14	1963 3034 AG1	COVER,pto	1								
15	F154 0112 025	BOLT,w/washer	2							M12×25	
16～20	1964 3036 AG0	TOP LINK ASSY	1								
16	1964 3037 000	TURN BUCKLE	1								
17	1964 3038 000	ADJUSTER	1								
18	1964 3041 000	ADJUSTER	1								
19	1964 3039 000	NUT-LOCK	1								
20	1963 3037 000	PIN UPPER LINK	1								
21	1032 3012 000	PIN,linch	1								
22	1963 3038 000	PIN	1								
23	1963 3041 000	PIN,snap	1								

FIG.902 3 POINT LINKAGE 2

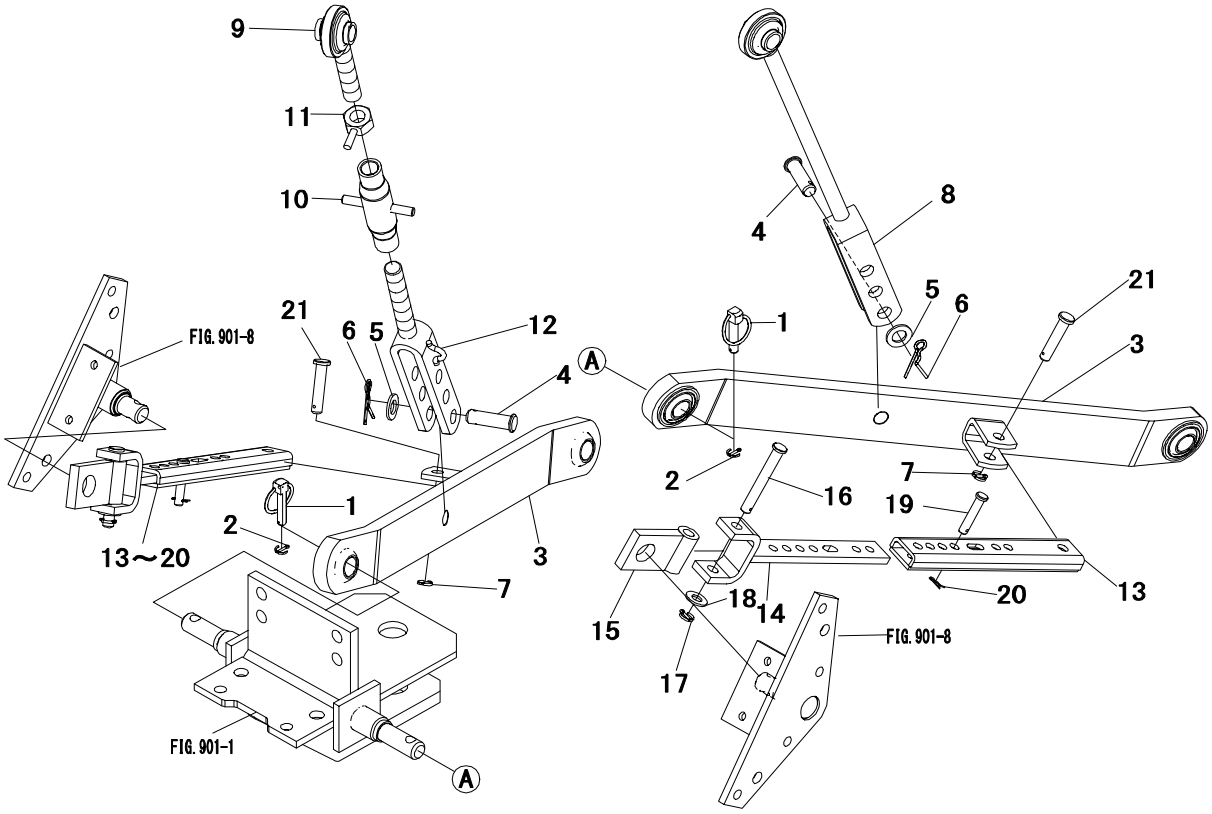

Key No.	Parts No.	Parts Name.	Q`ty ALL					R/P	Application	Description	Remarks
1	1037 3015 000	PIN,linch	2								
2	0520 0125 020	PIN,split	2							φ2.5×20	
3	1957 3016 AG0	LINK,lower	2								
4	1032 3018 001	PIN	2								
5	1032 3015 000	WASHER	2								
6	1032 3019 000	PIN,snap	2								
7	0520 0130 020	PIN,split	2							φ3×20	
8	1964 3007 AG0	ROD LH,lift	1								
9～12	1964 3011 AG0	ROD LIFT RH ASS	1								
9～11	1964 3020 000	ROD A SUB ASSY	1								
9	1964 3021 000	ROD A	1								
10	1964 3022 000	LIFT ROD,middle	1								
11	1964 3024 000	LOCK NUT	1								
12	1964 3014 000	ROD B	1								
13～20	1957 3020 002	STABILIZER ASSY	2								
13	*	STABILIZER,rear	2								
14	*	STABILIZER,fron	2								
15	*	JOINT	2								
16	0562 1112 090	PIN,clevis	2							φ12×90	
17	0520 0130 020	PIN,split	2							φ3×20	
18	0350 0151 226	WASHER	2							M12	
19	0562 1110 050	PIN,clevis	2							φ10×50	
20	0523 0110 000	PIN,snap	2							φ10	
21	0560 0112 050	PIN,wheel tube	2							φ12×50	

FIG.903 DRAWBAR

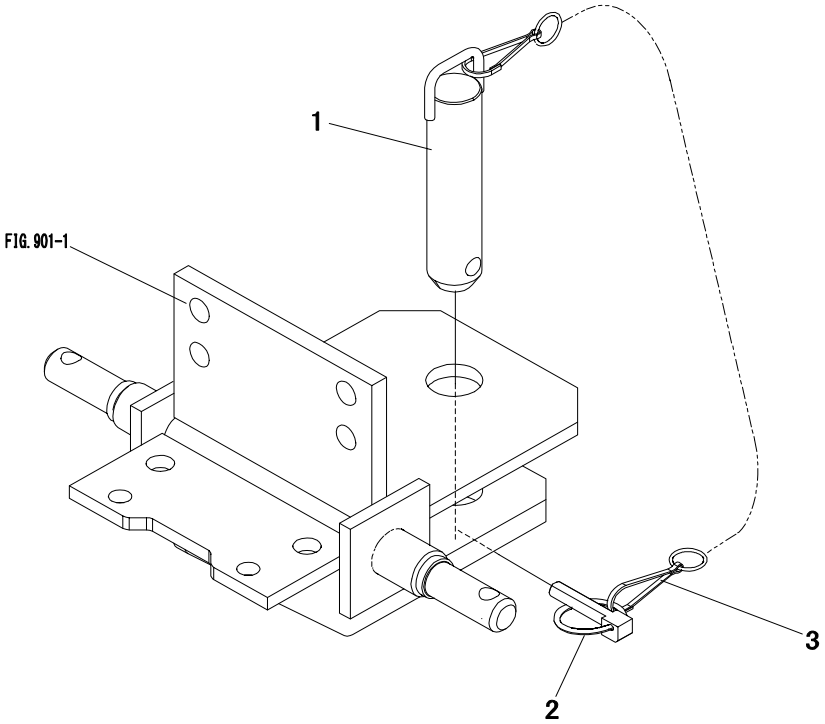

Key No.	Parts No.	Parts Name.	Q`ty					R/P	Application	Description	Remarks
			ALL								
1	1965 3116 000	HITCH PIN	1								
2	1032 3012 000	PIN,linch	1								
3	1904 3911 000	CHAIN	1								

FIG.904 MARK (1/2)

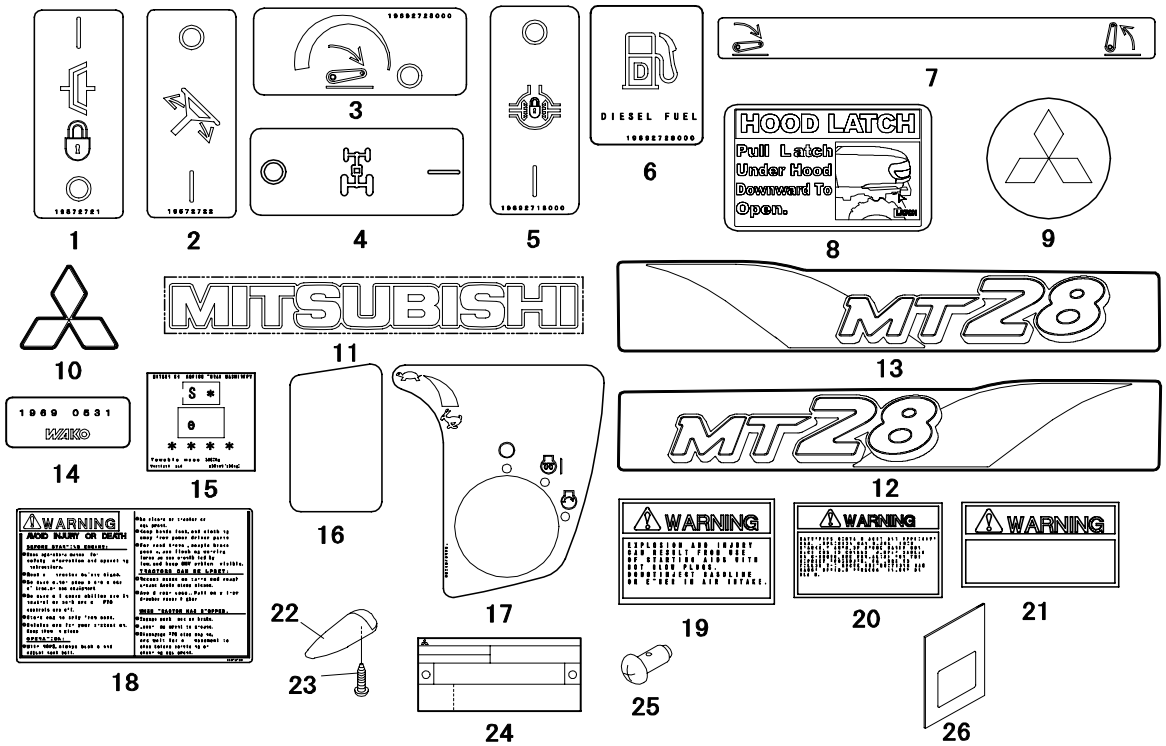

Key No.	Parts No.	Parts Name.	Q`ty ALL					R/P	Application	Description	Remarks
1	1957 2721 000	LABEL DECLUTCH	1								
2	1957 2722 000	LABEL TILT	1								
3	1969 2723 000	LABEL D.R.C	1								
4	1963 2731 000	LABEL,mfd	1								
5	1969 2718 000	LABEL DIFF LOCK	1								
6	1969 2728 000	MARK FUEL	1								
7	1957 2491 000	LABEL,lift	1								
8	1957 2736 000	LABEL,hood latc	1								
9	1044 2759 000	LABEL STEERING	1								
10	1048 8711 000	EMBLEM DIA	1								
11	2748 7014 000	MARK,name	2								
12	1945 8726 000	LABEL SIDE LH	1								
13	1945 8727 000	LABEL SIDE RH	1								
14	1945 8746 000	LABEL NUMBER AI	1								
15	1945 8751 000	LABEL DRAWBAR	1								
16	1945 8756 000	MARK	1								
17	1945 8761 000	LABEL R	1								
18	1957 2726 000	LABEL WARNING	1								
19	1904 2746 000	LABEL,warning	1								
20	1904 2759 000	LABEL,warning	1								
21	1904 2761 000	LABEL,warning	1								
22	1038 2767 000	MARK,center	1								
23	0432 2104 012	SCREW,tapping	1							M4×12	
24	*	PLATE NAME	1								
25	0480 0135 060	RIVET SCREW	2								
26	1945 9111 000	INSTRUCT BOOK	1								

FIG.905 MARK (2/2)

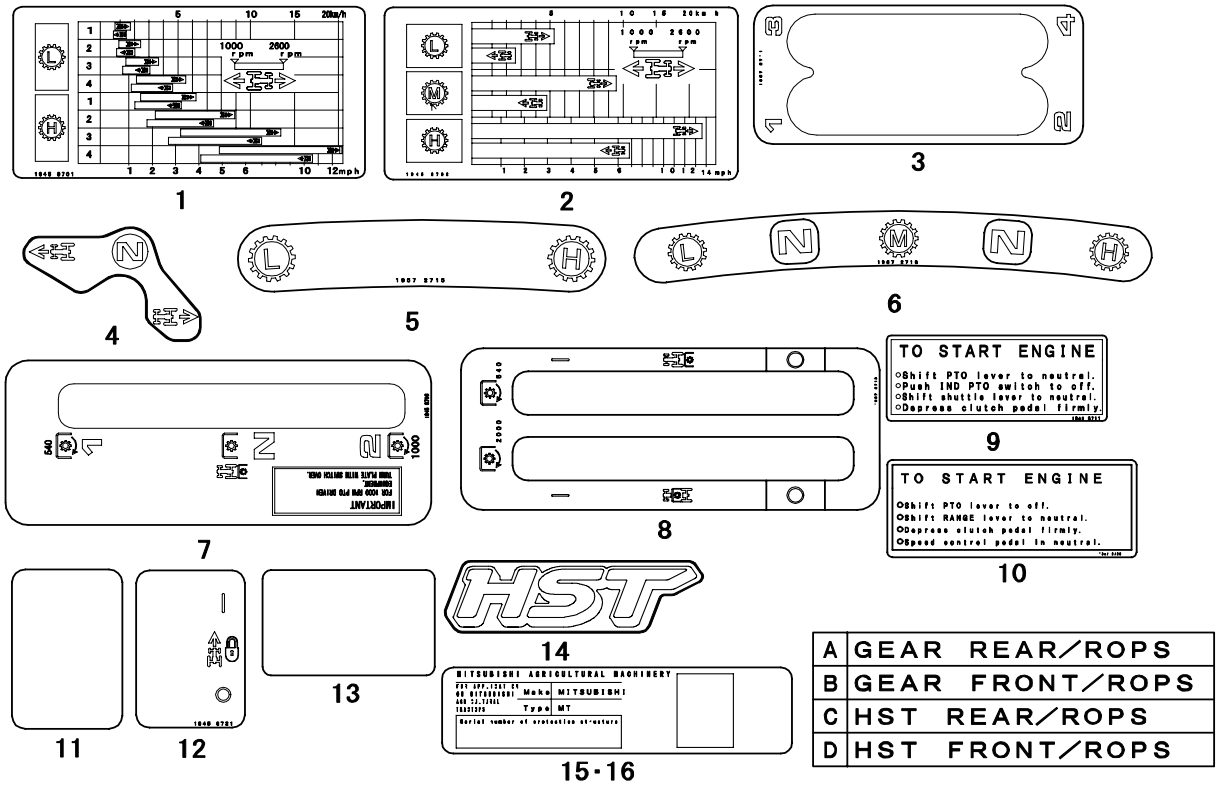

Key No.	Parts No.	Parts Name.	Q`ty					R/P	Application	Description	Remarks
			A	B	C	D					
1	1945 8701 000	LABEL SPEED G	1	1	・	・					
2	1945 8702 000	LABEL SPEED H	・	・	1	1					
3	1957 2711 000	LABEL MAIN	1	1	・	・					
4	1957 2712 000	LABEL SHUTTLE	1	1	・	・					
5	1957 2715 000	LABEL SUB G	1	1	・	・					
6	1957 2716 000	LABEL SUB H	・	・	1	1					
7	1945 8706 000	LABEL PTO	1	1	・	・					
8	1957 2719 000	LABEL PTO	・	・	1	1					
9	1945 8711 000	LABEL START G	1	1	・	・					
10	1957 2728 000	LABEL START H	・	・	1	1					
11	1945 8716 000	MARK	1	1	・	・					
12	1945 8721 000	LABEL SPEED CON	・	・	1	1					
13	1044 2923 000	MARK	・	・	1	1					
14	1953 2735 001	LABEL,hst	・	・	2	2					
15	1945 8736 000	LABEL ROPS	1	・	1	・					
16	1945 8741 000	LABEL ROPS	・	1	・	1					

FIG.A01 MID PTO KIT

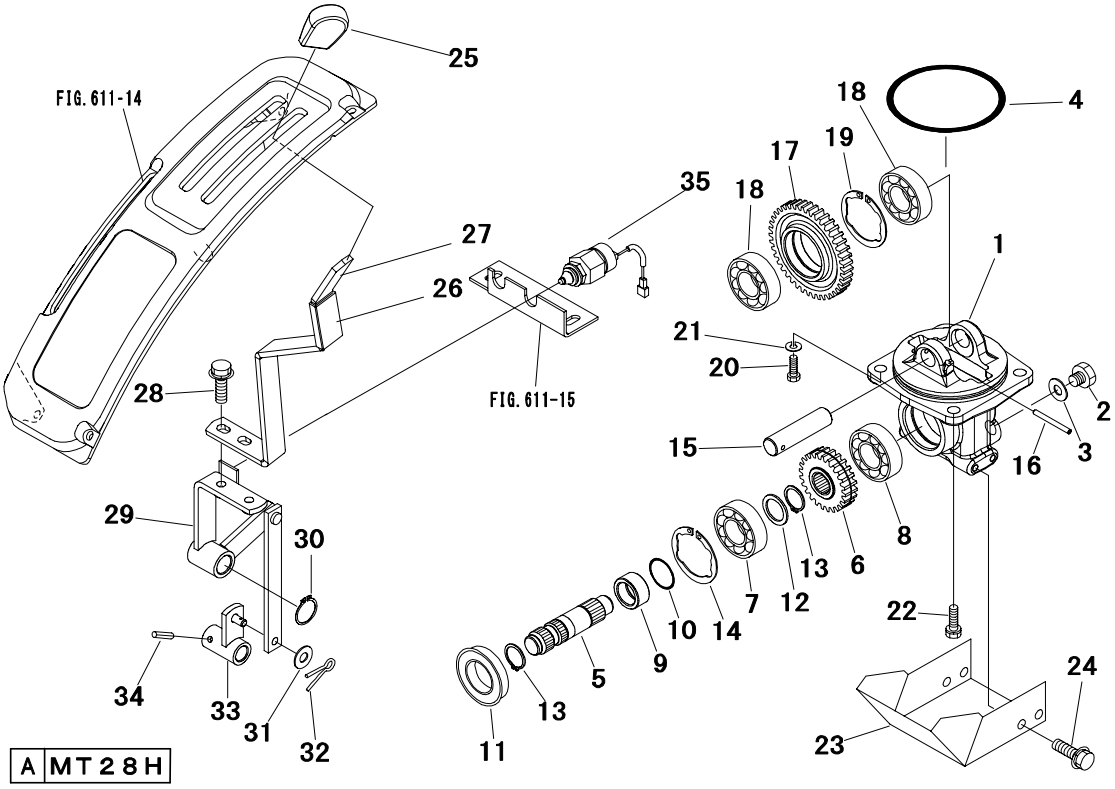

Key No.	Parts No.	Parts Name.	Q`ty A					R/P	Application	Description	Remarks
1～19	1218 1241 AG0	MID PTO ASSY	1								
1	1218 1242 000	CASE,mid pto	1								
2	1025 0808 000	PLUG	1								
3	0833 1001 200	WASHER,seal	1							M12	
4	0830 0201 100	O-RING	1							φ110	
5	1218 1243 000	SHAFT	1								
6	1218 1244 000	GEAR 24T	1							24T	
7	0750 0062 050	BEARING,ball	1							6205	
8	0750 0063 040	BEARING,ball	1							6304	
9	1039 1285 000	BUSHING	1								
10	0830 0200 250	O-RING	1							φ25	
11	0841 2355 212	SEAL,oil	1								
12	1352 1608 000	RING	1								
13	0740 0002 500	C-RING	2							φ25	
14	0741 0005 201	C-RING	1							φ52	
15	1987 1852 000	SHAFT A	1								
16	0550 0005 050	PIN SPRING	1							φ5×50	
17	1218 1245 000	GEAR 41T	1							41T	
18	0750 0063 040	BEARING,ball	2							6304	
19	0741 0005 201	C-RING	1							φ52	
20	1980 3186 000	BOLT	1								
21	A360 0101 202	WASHER,spring	1							M12	
22	F154 0112 035	BOLT,w/washer	1							M12×35	
23	1963 1607 AG0	COVER	1								
24	H154 0108 016	BOLT,w/washer	4							M8×16	
25	1044 1769 000	GRIP	1								
26	1044 1768 000	TUBE	1								
27	1215 0805 AG0	LEVER,mid pto	1								
28	H184 0108 025	BOLT,w/washer	2							M8×25	
29	1218 1249 AG1	ARM,mid pto	1								
30	0740 0102 000	C-RING	1							φ20	
31	0350 0140 818	WASHER	1							M8	
32	0520 0125 020	PIN,split	1							φ2.5×20	
33	1218 1251 AG0	LINK,mid pto	1								
34	1038 1725 000	PIN,spring	1								

FIG.A01 MID PTO KIT

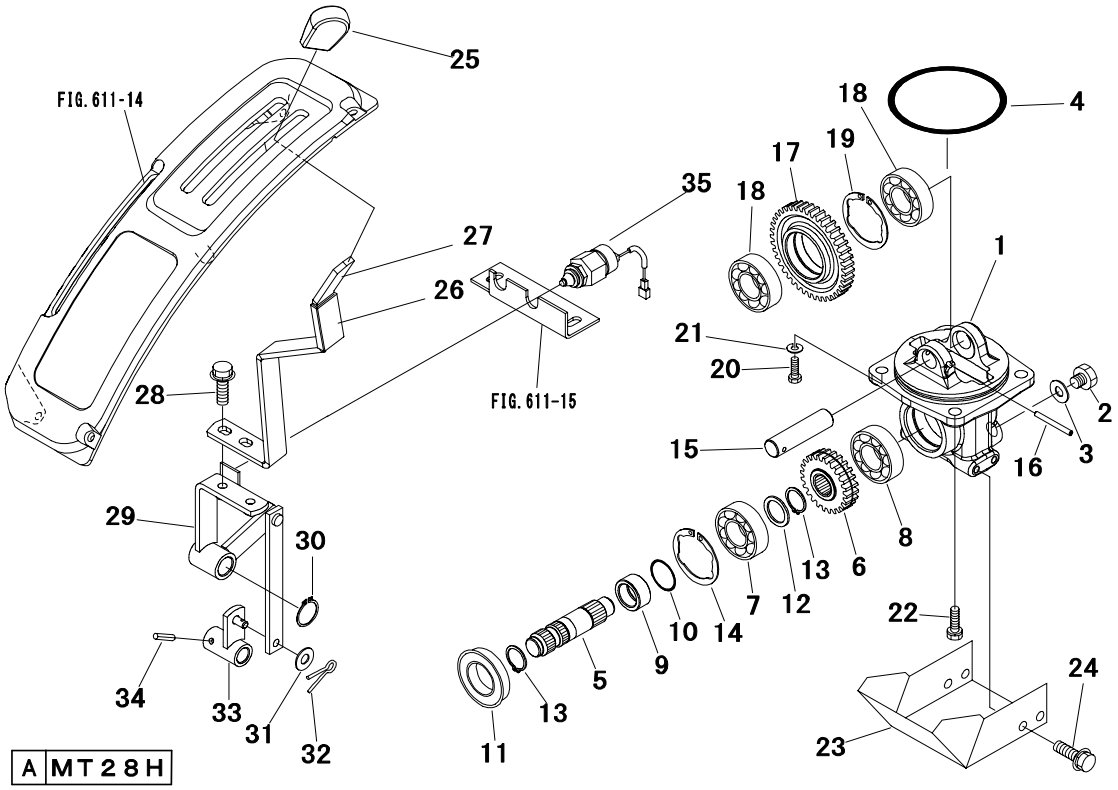

Key No.	Parts No.	Parts Name.	Q`ty A					R/P	Application	Description	Remarks
35	1025 3505 001	SWITCH,safety	1								

FIG.A02 SUB VALVE KIT

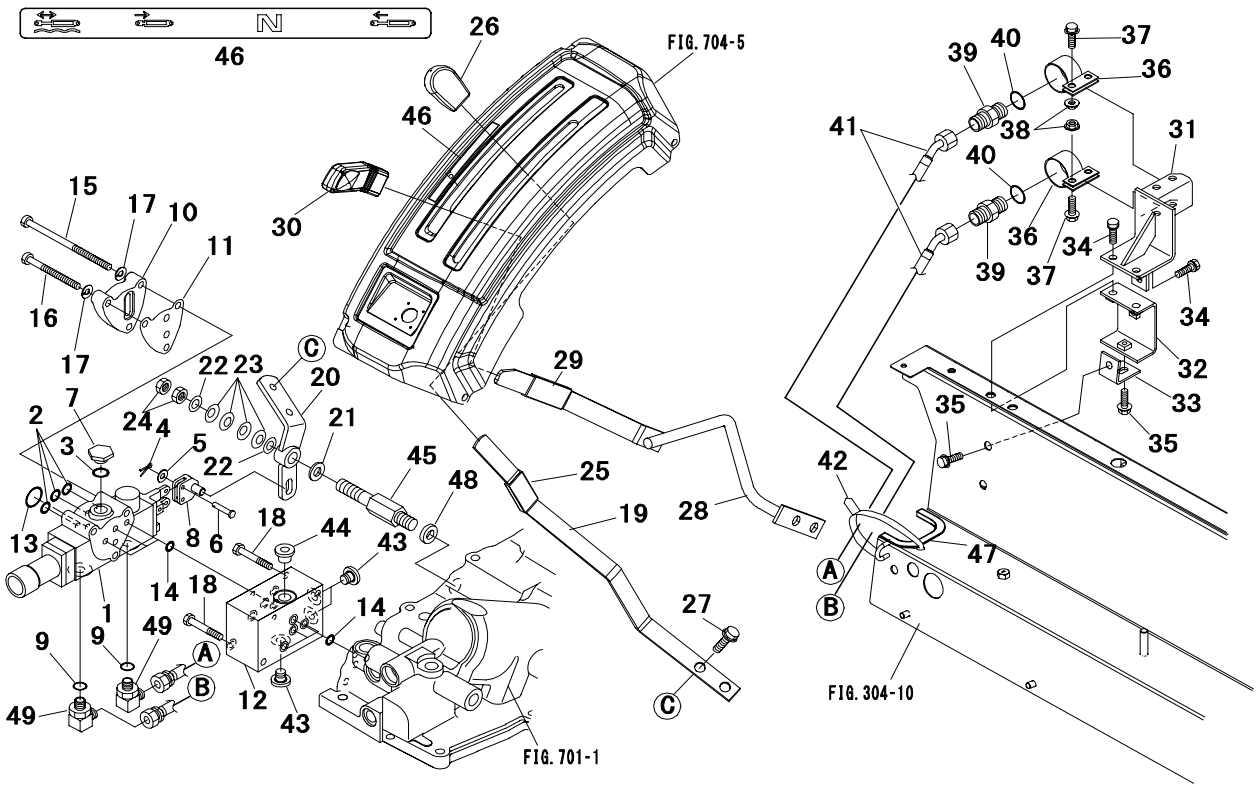

Key No.	Parts No.	Parts Name.	Q`ty ALL					R/P	Application	Description	Remarks
1～8	1218 5480 000	SUB VALVE ASSY	1								
1～7	1963 2482 AG0	SUB VALVE	1								
1	*	BODY	1								
2	0830 1100 120	O-RING	3							φ12	
3	0830 0100 160	O-RING	1							φ16	
4	0520 0112 008	PIN,split	3							φ1.2×8	
5	0350 0120 512	WASHER	3							M5	
6	1155 6501 270	PIN,clevis	3								
7	1155 6501 230	PLUG	1								
8	1964 2483 000	ARM	1								
9	0830 1100 140	O-RING	2							φ14	
10	1007 2448 AG0	CAP	1								
11	1007 2449 000	PLATE	1								
12	1218 5451 AG0	BLOCK	1								
13	0830 1100 250	O-RING	1							φ25	
14	0830 1100 101	O-RING	7							φ10	
15	A054 0108 140	BOLT	1							M8×140	
16	A054 0108 085	BOLT	2							M8×85	
17	A360 0100 802	WASHER,spring	3							M8	
18	A544 0708 060	BOLT	2							M8×60	
19	1215 0906 AG0	LEVER,aux	1								
20	1218 5453 000	ARM,aux	1								
21	2766 1205 000	COLLAR	1								
22	3630 1208 000	LINER	2								
23	0356 0001 601	SPRING CONICAL	4							M16	
24	A301 0116 002	NUT	2							M16	
25	1044 2476 000	TUBE	1								
26	1039 2491 000	GRIP	1								
27	H184 0108 025	BOLT,w/washer	2							M8×25	
28	1215 0901 AG0	LEVER P/C	1								
29	1044 2475 000	TUBE	1								
30	1030 2444 000	GRIP	1								
31	1218 5457 AG0	BRACKET	1								
32	1218 5458 000	BRACKET	1								
33	1218 5459 000	BRACKET	1								

FIG.A02 SUB VALVE KIT

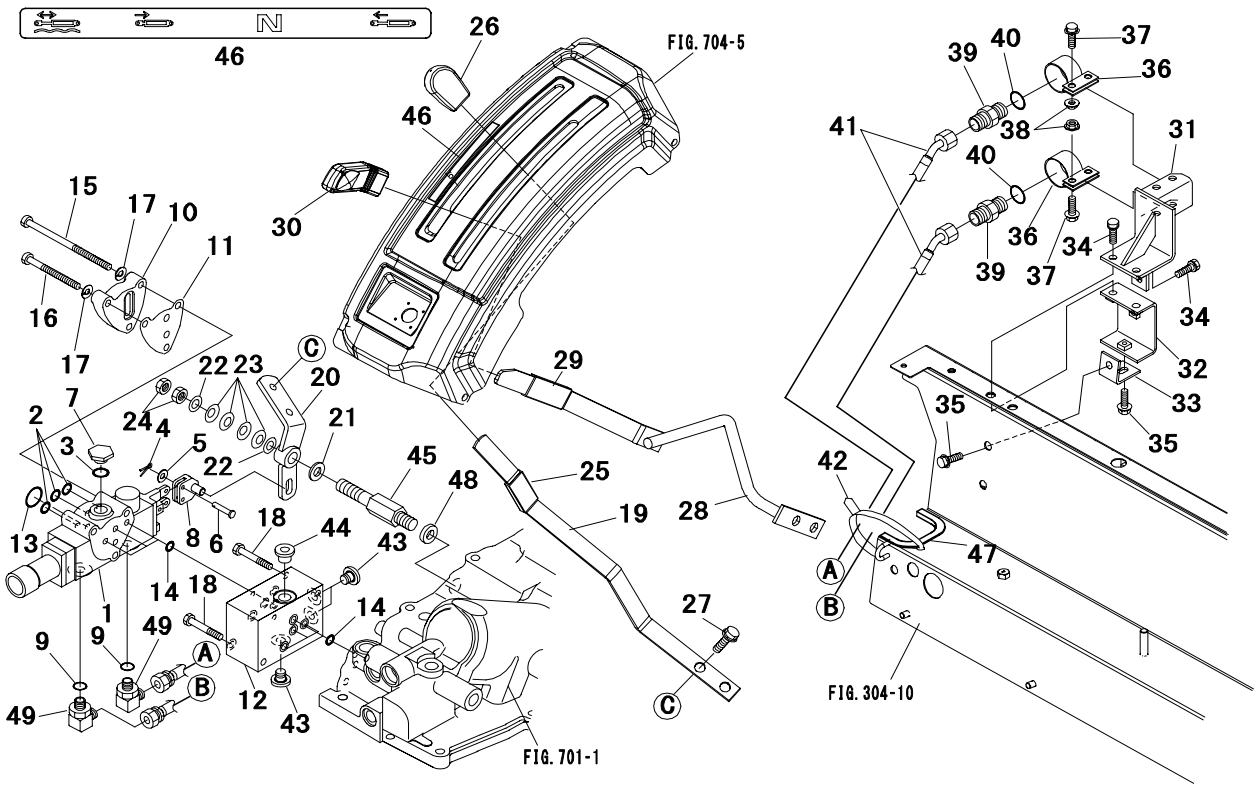

Key No.	Parts No.	Parts Name.	Q`ty ALL					R/P	Application	Description	Remarks
34	F154 0108 020	BOLT,w/washer	3							M8×20	
35	H184 0108 016	BOLT,w/washer	2							M8×16	
36	1218 5264 000	CLAMP,coupler	2								
37	H154 0108 020	BOLT,w/washer	4							M8×20	
38	F301 0108 000	NUT,flange	4							M8	
39	1218 5461 000	ADAPTER	2								Inc40
40	1780 5553 200	O-RING	2								
41	1218 5463 000	HOSE A	2								
42	0051 1070 070	BAND,wire	1								
43	HA43 0102 000	PLUG	3								
44	HA43 0103 000	PLUG	1								
45	1218 5471 000	SHAFT	1								
46	1218 5475 000	LABEL,aux valve	1								
47	3525 9242 800	SEAL A	1								
48	1980 3205 000	WASHER	1								
49	0631 3117 130	ELBOW 90	2								Inc9

FIG.A03 F & R WHEEL (1/3)

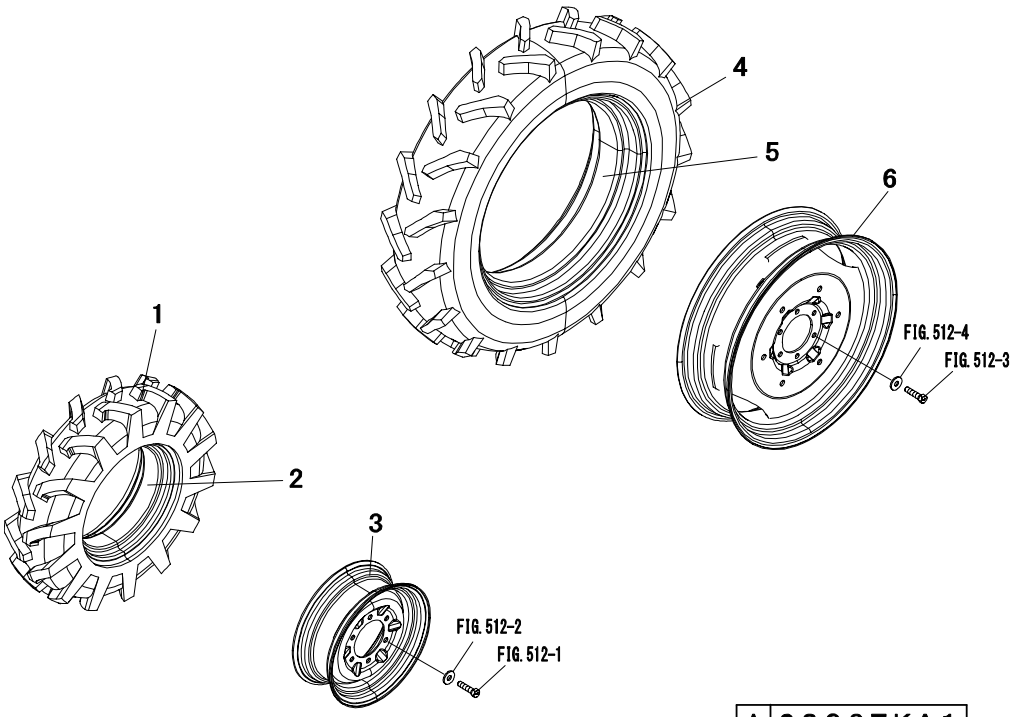

A 2836TKA1

Key No.	Parts No.	Parts Name.	Q`ty A					R/P	Application	Description	Remarks
		FRONT WHEEL									
1～3	1966 3203 000	FRONT WHEEL LH	1								
	1966 3204 000	FRONT WHEEL RH	1								
1,2	1174 3214 000	TIRE ASSY	2							7-14	
1	1174 3214 110	TIRE,front	2								
2	0890 0007 140	TUBE	2								
3	1983 3216 AG0	DISK WHEEL	2								
		REAR WHEEL									
4～6	1966 3303 000	REAR WHEEL LH	1								
	1966 3304 000	REAR WHEEL RH	1								
4,5	1966 3315 000	TIRE REAR	1							9.5-24	
4	1966 3315 110	TIRE	2								
5	0890 0095 241	TUBE	2								
6	1174 3311 AG0	DISK WHEEL	2								

FIG.A04 F & R WHEEL (2/3)

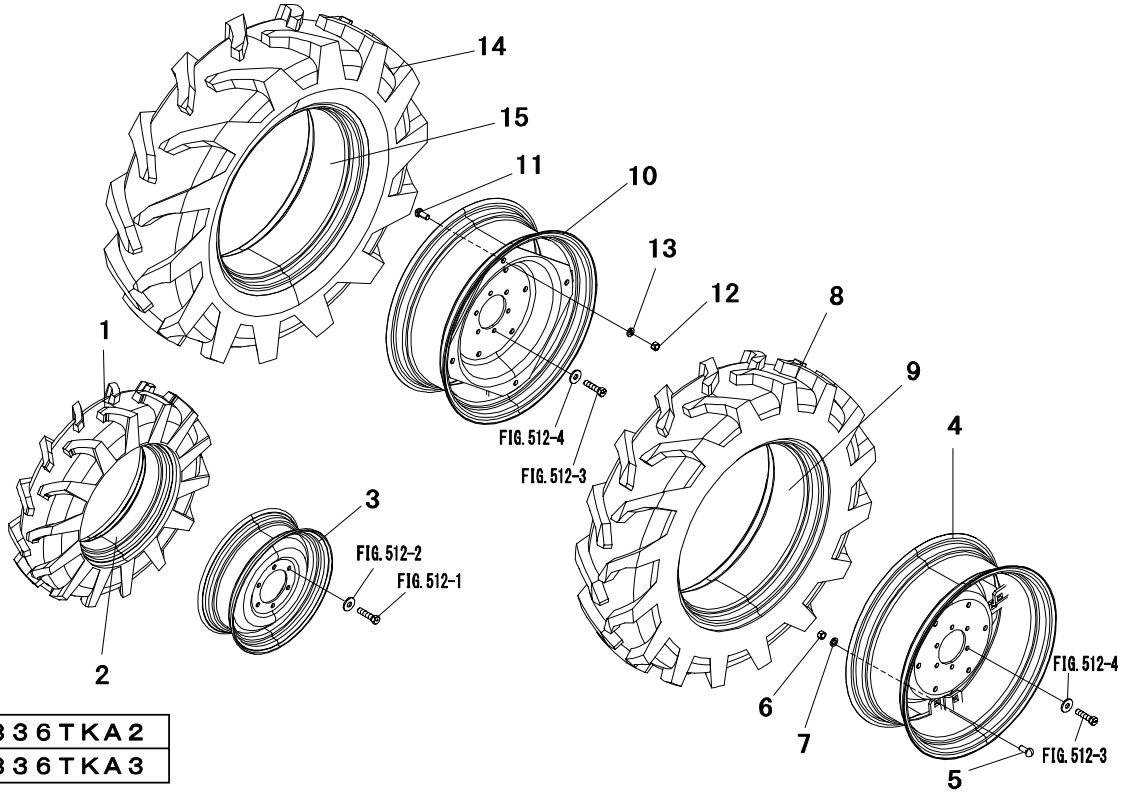

A	2836TKA2
B	2836TKA3

Key No.	Parts No.	Parts Name.	Q`ty					R/P	Application	Description	Remarks
			A	B							
		FRONT WHEEL									
1～3	1966 3275 000	FRONT WHEEL LH	1	1							
	1966 3276 000	FRONT WHEEL RH	1	1							
1,2	1966 3277 000	TIRE FRONT	2	2						7-16	
1	1966 3277 100	TIRE	2	2							
2	0890 0007 160	TUBE	2	2							
3	1030 3226 AG0	DISK WHEEL	2	2							
		REAR WHEEL									
4～9	1966 3341 000	REAR WHEEL LH	1	·							
	1966 3342 000	REAR WHEEL RH	1	·							
4～7	1994 3305 000	WHEEL ASSY	2	·							
4	1994 3316 AG1	DISK WHEEL	2	·							
5	1180 3063 000	BOLT	8	·							
6	A303 0116 002	NUT	8	·						M16	
7	A360 0101 602	WASHER,spring	8	·						M16	
8,9	1966 3343 000	TIRE REAR	2	·						11.2-24	
8	1966 3343 100	TIRE	2	·							
9	0890 0112 241	TUBE	2	·							
10～15	1966 3345 000	WHEEL ASSY LH	·	1							
	1966 3346 000	WHEEL ASSY RH	·	1							
10～13	1994 3305 000	WHEEL ASSY	·	2							
10	1994 3316 AG1	DISK WHEEL	·	2							
11	1180 3063 000	BOLT	·	8							
12	A303 0116 002	NUT	·	8						M16	
13	A360 0101 602	WASHER,spring	·	8						M16	
14,15	1966 3347 000	TIRE REAR	·	2						11.2-24	
14	1966 3347 100	TIRE	·	2							
15	0890 0124 241	TUBE	·	2							

FIG.A05 F & R WHEEL (3/3)

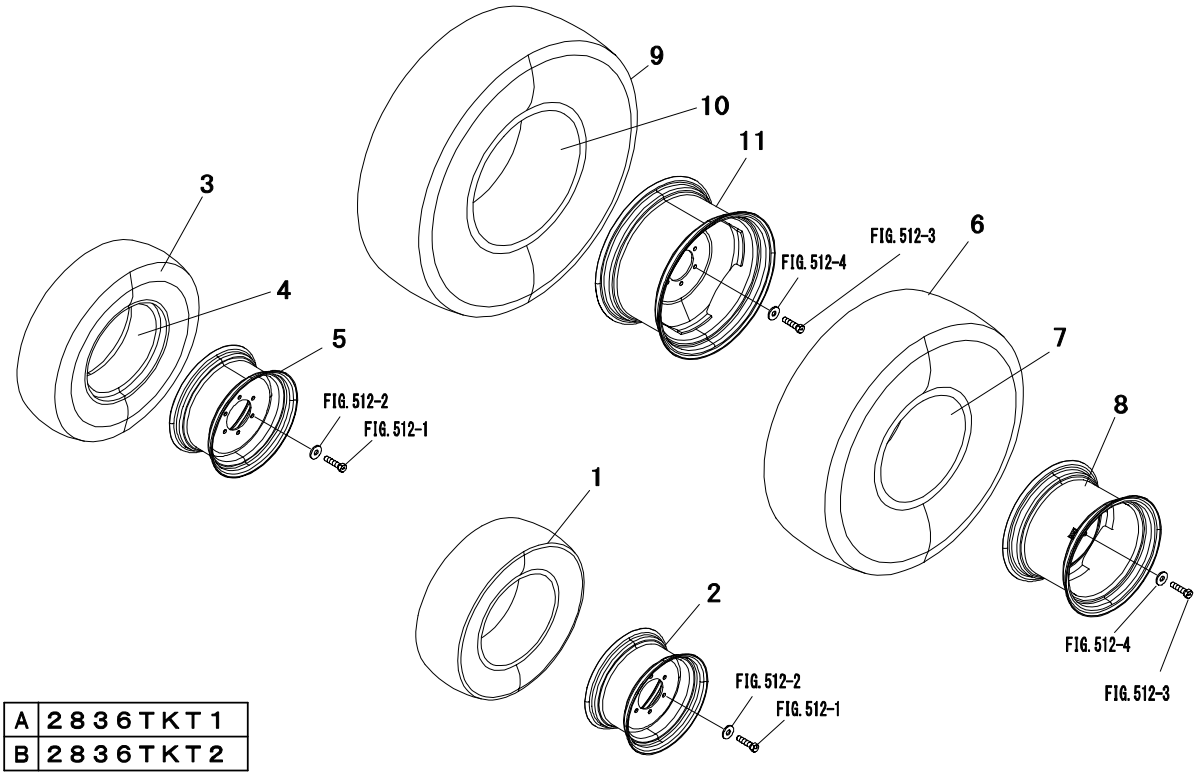

A	2836TKT1
B	2836TKT2

Key No.	Parts No.	Parts Name.	Q`ty					R/P	Application	Description	Remarks
			A	B							
		FRONT WHEEL									
1,2	1966 3261 000	FRONT WHEEL LH	1	·							
	1966 3262 000	FRONT WHEEL RH	1	·							
1	1025 3238 000	TIRE FRONT	2	·						25×8.5-14	Tubeless
2	1966 3258 AG0	DISK WHEEL	2	·							
3～5	1031 3241 000	FRONT WHEEL LH	·	1							
	1031 3242 000	FRONT WHEEL RH	·	1							
3,4	1908 3262 000	TIRE	·	2						212/80D15	
3	1908 3262 100	TIRE	·	2							
4	1908 3262 200	TUBE	·	2							
5	1031 3243 AG0	DISK,wheel	·	2							
		REAR WHEEL									
6～8	1215 0701 000	REAR WHEEL LH	1	·							
	1215 0702 000	REAR WHEEL RH	1	·							
6,7	1984 3333 000	TIRE,rear	2	·						13.6-16	
6	1984 3333 110	TIRE	2	·							
7	1984 3333 120	TUBE	2	·							
8	1215 0705 AG0	WHEEL	2	·							
9～11	1966 3307 000	REAR WHEEL LH	·	1							
	1966 3308 000	REAR WHEEL RH	·	1							
9,10	1906 3303 000	TIRE REAR	·	2						355/80D20	
9	1906 3303 110	TIRE	·	2							
10	1906 3303 120	TUBE	·	2							
11	1966 3333 AG0	DISK WHEEL	·	2							

Parts No.	Page	Key No.
A647X50170	21	12
A930X94570	21	6
F1025-08022	16	3
F1035-05010	7	8
F1035-06018	13	7
F1035-08016	7	23
F1035-08020	2	8
	10	10
	18	12
F1035-08045	3	6
F1035-12025	1	25
F1435-08025	18	11
F1540108030	3	11
F1540108040	4	5
F1805-06025	9	9
F2300-06000	14	4
F2300-10000	19	10
F2305-18000	6	20
F2320-08000	14	5
F2320-16000	16	12
F2325-08000	7	10
F2500-08000	19	8
F2500-10000	19	12
F2500-18000	6	18
F2515-08000	3	17
	14	6
F2515-10000	19	3
	19	11
F2515-18000	6	19
F2846-05000	1	24
F2846-06000	6	26
F2850-03014	16	5
F3150-00900	22	2
F3150-01800	16	6
	22	7
F3200-01900	7	9
F4202-10000	23	41
F4202-14000	22	9
	23	39
F4300-02000	17	24
F5014-14000	1	12
F5014-25000	5	2
F5014-35000	5	1
K8712630	14	3
M357X81371	20	11
M371X80171	20	6
M800X59471	20	17
MD000961	14	17
MD001380	17	11
MD001521	7	21
MD006704	6	8
MD008762	3	7
MD008784	4	6
MD009014	17	10
MD016483	7	5
MD021105	6	9

Parts No.	Page	Key No.
MD021204	7	15
MD024256	1	22
MD040556	6	23
MD041704	17	17
MD050316	3	18
MD050317	3	19
	22	1
MD065628	14	16
MD068353	9	3
MD068355	9	2
	22	3
MD070717	9	1
	22	4
MD075460	17	18
MD107589	10	23
MD115472	7	6
	22	5
MD602210	20	20
MD603493	12	
MD603495	12	
MD603496	12	
MD607416	20	22
MD607420	20	19
MD607432	20	1
MD607539	20	13
MD607540	20	14
MD611556	21	3
MD611928	21	8
MD618927	21	1
MD701788	16	4
	22	6
MD701789	16	9
MD703856	7	20
MD712517	8	6
MF100026	18	13
MF100064	15	34
MF140026	19	9
MF140227	17	19
MF240031	17	2
MF240051	3	3
	3	21
	4	11
MF241223	16	10
MF241224	15	38
	15	38a
MF241229	10	22
MF241242	17	16
MF241252	13	8
MF241253	18	7
MF241259	18	6
MF241266	17	12
	18	8
MF241280	5	13
MF241282	19	1
MF244860	17	7
MF244863	17	8

Parts No.	Page	Key No.
MF430005	3	16
MF472404	1	18
MF476018	7	22
MF476215	4	9
	6	17
MF660036	16	13
	22	8
MF665532	1	11
MK66112000	10	11
MM316248	17	13
MM398237	3	15
MM400380	4	7
MM406420	14	24
MM408240	2	15
MM408470	5	12
MM409040	10	1
MM409041	10	2
MM409042	10	3
MM409043	10	4
MM409044	10	5
MM409045	10	6
MM409046	10	7
MM409047	10	8
MM409048	10	9
MM409150	15	36
MM409303	17	1～4
MM409304	17	3
MM40931302	17	20
MM409326	17	4
	22	15
MM409327	17	1
MM40941001	20	1～22
MM409427	19	2
MM409645	1	19
MM40967101	15	42
MM409980	16	19
MM413206	10	12
MM430131	9	11
MM43041901	16	8
MM43059801	16	4～8
MM430613	1	10
MM430614	9	8
MM430703	9	7
MM43330601	7	4
MM433673	14	7
MM434541	14	20
MM435249	23	38
MM43594101	12	1～8
MM436867	18	15
MM43721501	2	12
MM500315	11	
MM500370	11	14
MM500441	11	20
MM501098	11	8
MM501846	12	2
MM502329	20	3

Parts No.	Page	Key No.
MM502330	20	4
MM502331	20	5
MM502332	20	18
MM502341	20	15
MM502342	20	16
MM502346	20	21
MM502347	20	10
MM502396	20	12
MM502398	20	2
MM502568	21	5
MM502574	21	13
MM502575	21	14
MM502578	21	2
MM514045	12	8
MM514195	11	17
MM514380	12	7
MS401327	3	14
MS401426	3	12
MS401435	3	13
MS470059	4	4
MS471104	1	14
MS471105	1	15
MS471110	1	16
MS602106	2	10
MS603022	10	20
MS604032	9	12
MS660164	10	21
MS660167	10	19
MS660169	9	13
MS661140	1	13
	5	9
MS665511	1	17
S930P12070	20	9
S930P12170	20	8
04826-22000	1	1
04826-23500	1	2
04827-90130	1	23
0550 0003 020	14	1
05946-01000	10	13
05946-01601	17	14
	23	35
0750 0560 024	6	25
0800 0000 600	1	20
0830 0100 101	14	2
0830 0200 600	23	40
09006-80020	11	16
09013-70130	11	4
09016-10210	11	7
09016-40170	11	9
09017-00170	11	10
09021-00470	11	11
09024-40180	11	18
09024-50210	11	19
09030-10060	11	12
09031-10010	11	
09031-10110	11	21

Parts No.	Page	Key No.
09031-10120	11	
09031-10130	11	
09031-10140	11	
09031-10160	11	
09031-10280	11	
09031-10300	11	
09031-10310	11	
09046-70040	11	15
09311-03840	12	1
09312-10380	12	4
09312-70310	12	3
09317-40070	12	5
09317-51830	12	
09317-51850	12	
09317-51890	12	
09317-51950	12	
09317-51970	12	
09317-51990	12	
09340-05060	12	6
30405-31403	4	10
30A11-00101	3	10
	22	10
30A19-00040	6	12
30A19-10010	6	13
30A19-10020	6	14
30A19-10030	6	15
30A30-00200	18	16
	22	17
30A61-03800	10	20,21
30A63-00101	15	37
	22	14
30A66-00101	19	4
	22	16
30A87-10043	15	42,43
30A87-20403	15	43
30H45-00101	17	6
	22	13
30H66-02300	19	14
30L07-00700	2	18
30L63-00030	14	8,9
30L63-00600	14	15
30L63-00700	14	10
30L63-02100	14	8
30L63-02200	14	25
30L63-02300	14	9
30L63-02400	15	39
30L63-12600	14	11
31A01-01201	5	3
31A01-01301	5	4
31A01-02500	5	5
31A01-02800	5	6
31A01-21100	5	10
31A03-13600	5	7
31A04-00700	7	7
31A04-01301	7	3
31A04-11024	7	10～12

Parts No.	Page	Key No.
31A04-20200	7	2
31A04-30100	7	1
31A04-34100	7	13
31A04-34300	7	14
31A05-00300	4	12
31A05-01300	4	13
31A07-00801	1	3
31A07-02300	2	7
31A07-02401	2	14
	22	19
31A07-02500	1	26
31A07-03100	1	4
31A07-11601	2	5
31A07-11701	2	6
	22	20
31A07-11901	3	2
	22	21
31A07-12200	2	17
	22	22
31A08-04102	2	16
31A09-01010	2	1
31A09-01020	2	2
31A09-01030	2	3
31A09-01040	2	4
31A11-00802	3	4
31A11-02100	3	1
31A11-05101	3	8
31A11-05201	3	9
	22	23
31A11-11101	3	5
	22	24
31A17-00010	6	4
31A17-00020	6	5
31A17-00030	6	6
31A17-09101	6	1
31A17-09201	6	2
31A17-09301	6	3
31A17-10602	6	7
31A21-03800	6	22
31A23-00051	1	20,21
31A23-00600	8	3
31A23-00800	8	2
31A23-01023	8	3,4
31A23-01302	8	7
31A23-01402	8	1
31A23-01502	8	5
31A30-00300	18	4
31A30-00801	18	5
	22	25
31A32-02100	18	14
31A35-02300	16	2
	22	26
31A35-05041	16	11
31A35-30010	16	1
31A40-02100	16	15
31A45-20700	17	9

Parts No.	Page	Key No.
31A46-00020	17	21,22
31A46-01200	22	11
31A46-02300	2	9
31A46-05010	17	24,25
31A46-10101	17	5
	22	27
31A46-11200	17	23
	22	12
31A48-01100	17	15
31A60-00300	10	17
31A61-01200	9	15
31A61-01500	9	14
31A61-07101	9	4
31A61-07201	9	5
31A61-07301	9	6
31A62-00300	13	1～5
31A62-00310	13	1
31A62-00312	13	2
31A62-00317	13	3
31A62-00318	13	4
31A62-00319	13	5
31A63-01010	14	23,24
31A63-01800	14	12
31A63-02301	15	35
31A63-02600	14	13
31A63-02700	14	14
31A63-04700	14	21
31A63-05300	14	22
31A63-10300	14	31
31A63-11061	15	33
31A63-12200	15	41
	22	28
31A63-15200	14	30
31A63-15500	14	26
31A63-25101	15	32
31A63-32100	14	27
31A64-00200	14	18
31A64-00800	15	40
31A64-01080	14	15～20
31A64-01800	14	19
31A65-00201	10	14
31A65-00800	10	15
31A68-00402	21	1～14
31A68-02100	19	7
31A68-20300	19	13
31A90-00300	16	14
31B01-13040	5	1～9
31B01-23200	5	11
	22	29
31B04-00014	7	8～18
31B04-01010	7	15～16
31B04-03011	4	1,2
31B04-13201	4	3
	22	30
31B05-00103	4	8
31B06-07800	4	15

Parts No.	Page	Key No.
31B07-04400	2	13
31B07-52030	1	1～24
31B13-10021	3	18～20
31B19-01023	6	8～11
31B20-00204	6	16
31B20-02601	6	21
31B21-02070	6	23,24
31B30-00040	18	1,2
31B30-00800	18	3
	22	31
31B30-00902	23	37
31B32-00100	18	9
31B32-01200	18	10
	22	32
31B42-21700	16	18
31B61-02600	9	10
31B61-05300	10	18,19
31B61-05311	10	18
31B61-13100	9	11～15
31B62-01200	13	6
31B63-00400	14	28
31B63-00500	14	29
31B63-33010	14	1～30
31B65-00200	10	16
31B65-11300	7	19
31B65-14090	11	1～21
31B66-04100	19	6
31B94-16010	22	1～41
32A04-02401	7	12
32A36-05010	16	16
32A66-03102	19	5
32A91-05100	22	33
32C04-04501	7	17
32C04-06101	7	18
32C39-00200	23	36
32C46-04100	2	11
34340-00700	16	17
	22	18
47X01-06100	11	1
47X01-07600	11	6
47X01-07700	11	5
47X01-13200	11	2
47X01-13300	11	3
47X01-22700	11	13
47X11-00700	20	7
47X11-02304	21	11
47X11-02305	21	4
47X11-02311	21	7
47X11-02312	21	9
47X11-02313	21	10
49168-15200	22	34