FIG.101 CRANK CASE

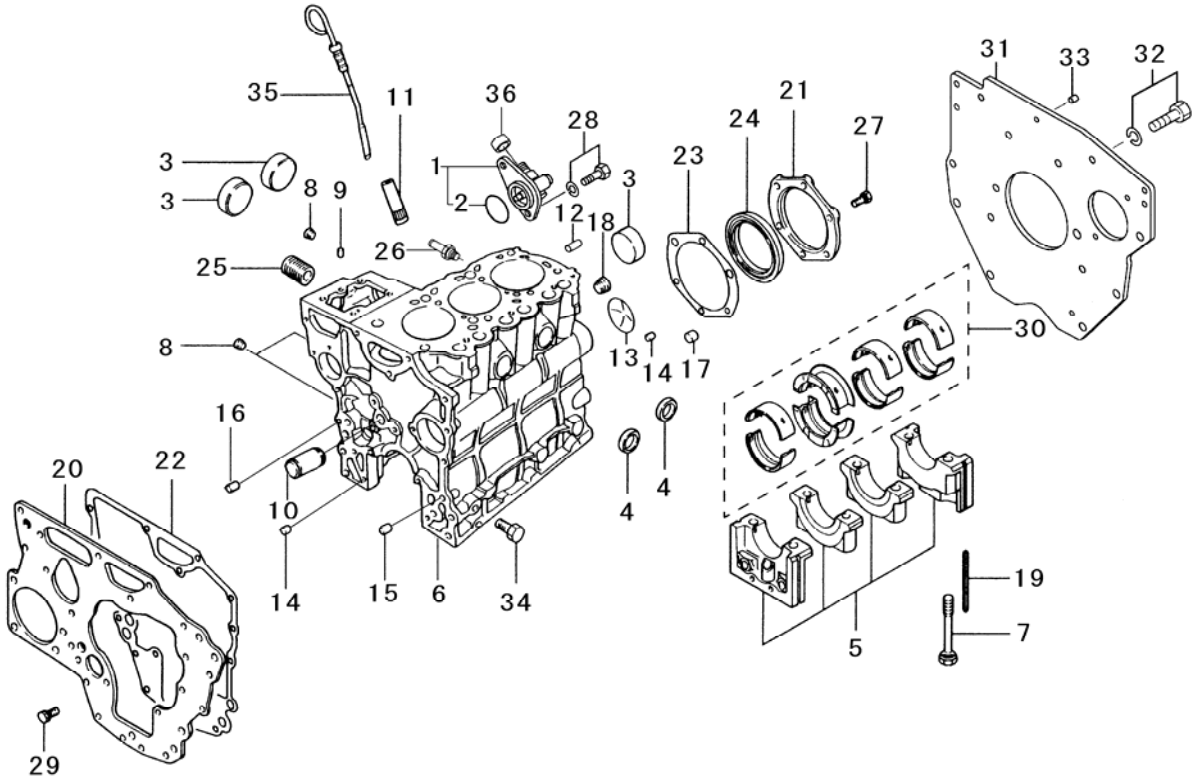

Key No.	Parts No.	Parts Name.	Q`ty ALL					R/P	Application	Description	Remarks
1	MM433891	DRIVEN UNIT	1								Inc2
2	MM433993	O-RING	1								
3～7	MM43265005	BLOCK SUB ASSY	1								
3	04826-24000	CAP,sealing	3								
4	F5014-25000	CAP,sealing	2								
5	*	CAP ASSY	1								
6	*	BLOCK,cylinder	1								
7	30L07-01100	BOLT,bearing	8								
8	30L07-01800	PLUG,taper	3								
9	MM409645	PIN,dowel	2								
10	MM433115	SHAFT,idler	1								
11	MM430613	GUIDE,oil level	1								
12	MF472404	PIN.DOWEL	1								
13	F5010-35000	PLUG,expansion	1								
14	MS471101	BUSHING,knock	2								
15	MS471102	BUSHING,knock	1								
16	MS471105	BUSHING,knock	2								
17	MS471107	BUSHING,knock	3								
18	MS661141	PLUG,taper	1								
19	MM432214	SEAL,side	4								
20	30L07-01300	PLATE,front	1								
21	MM432065	CASE,oil seal	1								
22	30L07-05300	GASKET,front	1								
23	30L07-05201	GASKET,case	1								
24	MD016317	SEAL,oil	1								
25	30L07-00700	SHAFT,filter	1								
26	31A46-12201	JOINT,drain	1								
27	F1035-06018	BOLT	6								
28	MF240051	BOLT,w/washer	2								
29	MF241224	BOLT,w/washer	7								
30	MM438799	METAL SET	1							STD	
	MM438800	METAL SET	1							U.S 0.25	
	MM438801	METAL SET	1							U.S 0.50	
31	30L12-01300	PLATE,rear	1								
32	MF241282	BOLT,w/washer	6								

FIG.101 CRANK CASE

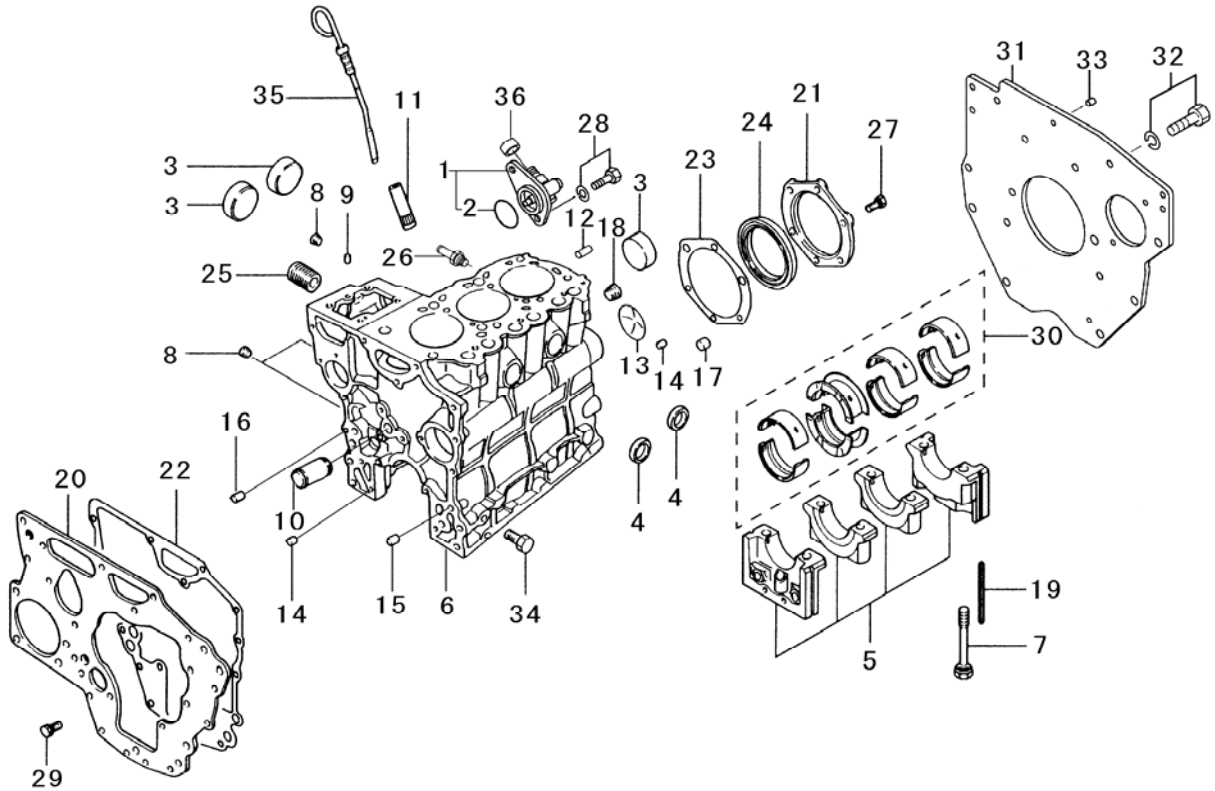

Key No.	Parts No.	Parts Name.	Q`ty ALL					R/P	Application	Description	Remarks
33	30A07-00701	PIN,dowel	1								
34	F1035-10020	BOLT	4								
35	30L42-03100	GAUGE,oil level	1								
36	*	PLUG,shipping	1								Not Serviceble

FIG.102 OIL PAN & GEAR CASE

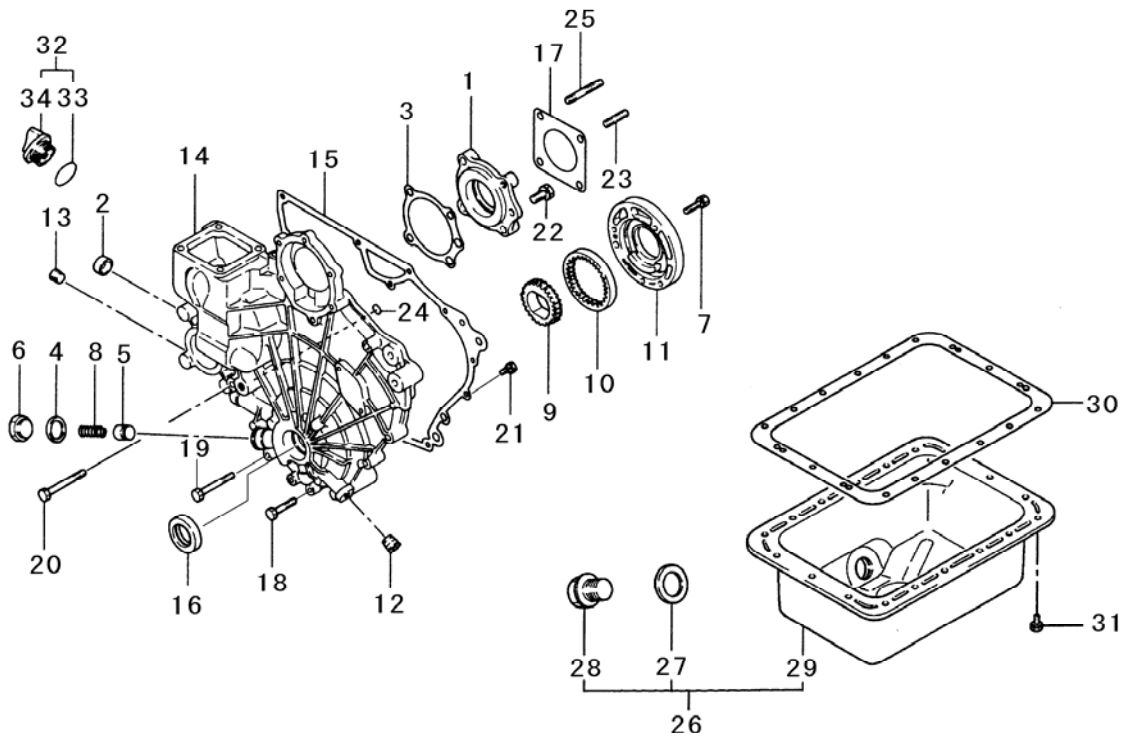

Key No.	Parts No.	Parts Name.	Q`ty ALL					R/P	Application	Description	Remarks
1	MM43206601	HOUSING	1								
2	MM432235	CAP,sealing	1								
3	30L11-01201	GASKET,housing	1								
4～14	30L11-00033	CASE ASSY,gear	1								
4	MD000312	GASKET	1								
5	MD001402	PLUNGER	1								
6	MD001404	PLUG	1								
7	MF241231	BOLT,w/washer	3								
8	MM433353	SPRING	1								
9	MM433793	GEAR	1							Z=24	
10	MM433794	GEAR	1							Z=29	
11	MM434466	HOUSING	1								
12	MS661141	PLUG,taper	1								
13	MS661140	PLUG,taper	1								
14	*	CASE,gear	1								Not Serviceble
15	30L11-05101	GASKET,gear	1								
16	MD008883	SEAL,oil	1								
17	30A11-00100	GASKET,cover	1								
18	F1035-06035	BOLT	3								
19	F1035-06055	BOLT	4								
20	F1035-06065	BOLT	1								
21	MF241224	BOLT,w/washer	4								
22	MF241255	BOLT,w/washer	1								
23	MS401426	STUD	1								
24	0830 0100 110	O-RING	2							φ11	
25	F1450-08045	STUD	3								
26	MM434428	PAN ASSY,oil	1								Inc27～29
27	MD000312	GASKET	1								
28	MD000318	PLUG	1								
29	*	PAN SUB ASSY	1								Not Serviceble
30	30L13-05200	GASKET,oil pan	1								
31	MF241223	BOLT,w/washer	18								
32	30H42-04020	CAP ASSY	1								Inc33&34
33	F3153-03000	O-RING	1								
34	*	CAP,oil filler	1								Not Serviceble

FIG.103 CYLINDER HEAD

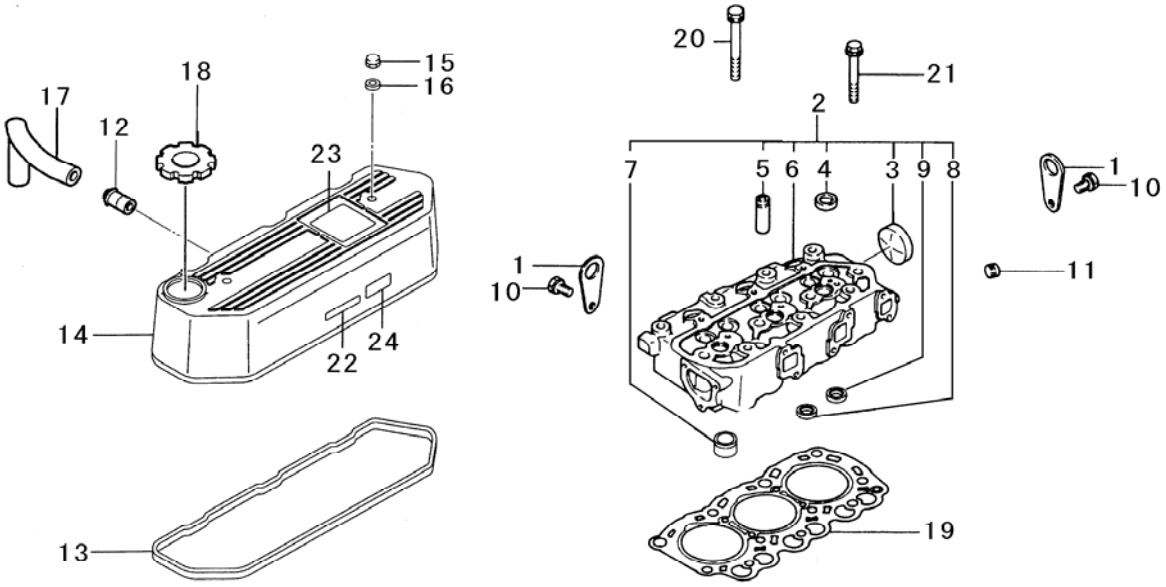

Key No.	Parts No.	Parts Name.	Q`ty ALL					R/P	Application	Description	Remarks
1	MM432239	HANGER,engine	2								
2	30L01-21090	HEAD ASSY	1								Inc3～9
3	04826-24000	CAP,sealing	1								
4	F5014-20000	CAP,sealing	3								
5	MM332813	GUIDE VALVE	6								
6	*	CYLINDER HEAD	1								Not Serviceble
7	*	MOUTH PIECE	3								Not Serviceble
8	MM433300	RING,valve in	3								
9	MM433301	RING,valve ex	3								
10	MF240051	BOLT,w/washer	2								
11	MS661140	PLUG,taper	1								
12～14	30L04-02011	COVER ASSY	1								
12	*	PIPE	1								Not Serviceble
13	MM433133	GASKET	1								
14	*	COVRE,rocker	1								Not Serviceble
15	F2460-06000	NUT,cap	2								
16	F2500-06000	WASHER,plain	2								
17	MM433709	HOSE,breather	1								
18	31A42-01300	CAP,filler	1								
19	30L01-01102	GASKET,cyl.head	1								
20	MM43212501	BOLT,cyl.head	8								
21	MD020566	BOLT,flange	3								
22	*	LABEL,engine	1								Not Serviceble
23	*	LABEL,epa	1								Not Serviceble
24	30L06-00900	LABEL,model	1								

FIG.104 MAIN MOVING PARTS

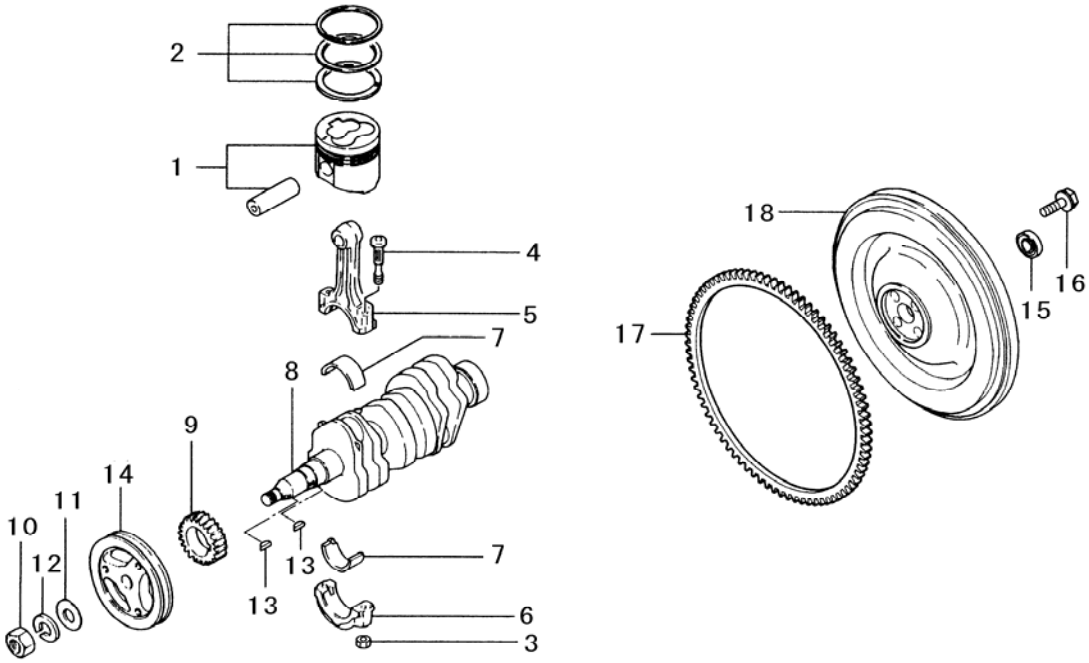

Key No.	Parts No.	Parts Name.	Q`ty					R/P	Application	Description	Remarks
			ALL								
1	30L17-10010	PISTON & PINSET	3							STD	
	30L17-10020	PISTON & PINSET	3							O.S 0.25	
	30L17-10030	PISTON & PINSET	3							O.S 0.50	
2	MM433152	RING SET,piston	3							STD	
	MM435677	RING SET,piston	3							O.S 0.25	
	MM435678	RING SET,piston	3							O.S 0.50	
3～6	30L19-00031	ROD ASSY,connec	3								
3	MD000704	NUT	6								
4	MD000705	BOLT,connecting	6								
5	*	ROD,connecting	3								Not Serviceble
6	*	CAP,connecting	3								Not Serviceble
7	30L19-02010	METAL SET	3							STD	
	30L19-02020	METAL SET	3							U.S 0.25	
	30L19-02030	METAL SET	3							U.S 0.50	
8	30L20-00501	CRANKSHAFT	1								
9	MM432887	GEAR,crankshaft	1							Z=26	
10	F2325-16000	NUT,jam	1								
11	0350 0151 632	WASHER,plain	1							M16	
12	A360 0101 602	WASHER,spring	1							M16	
13	MF476214	KEY,woodruff	2								
14	30L20-00800	PULLEY,crank	1								
15	MD016653	BEARING,ball	1								
16	30L21-03500	BOLT,flywheel	4								
17,18	30L21-03030	FLYWHEEL ASSY	1								
17	MD030629	GEAR,ring	1								
18	*	FLYWHEEL	1								Not Serviceble

FIG.105 TIMING PARTS

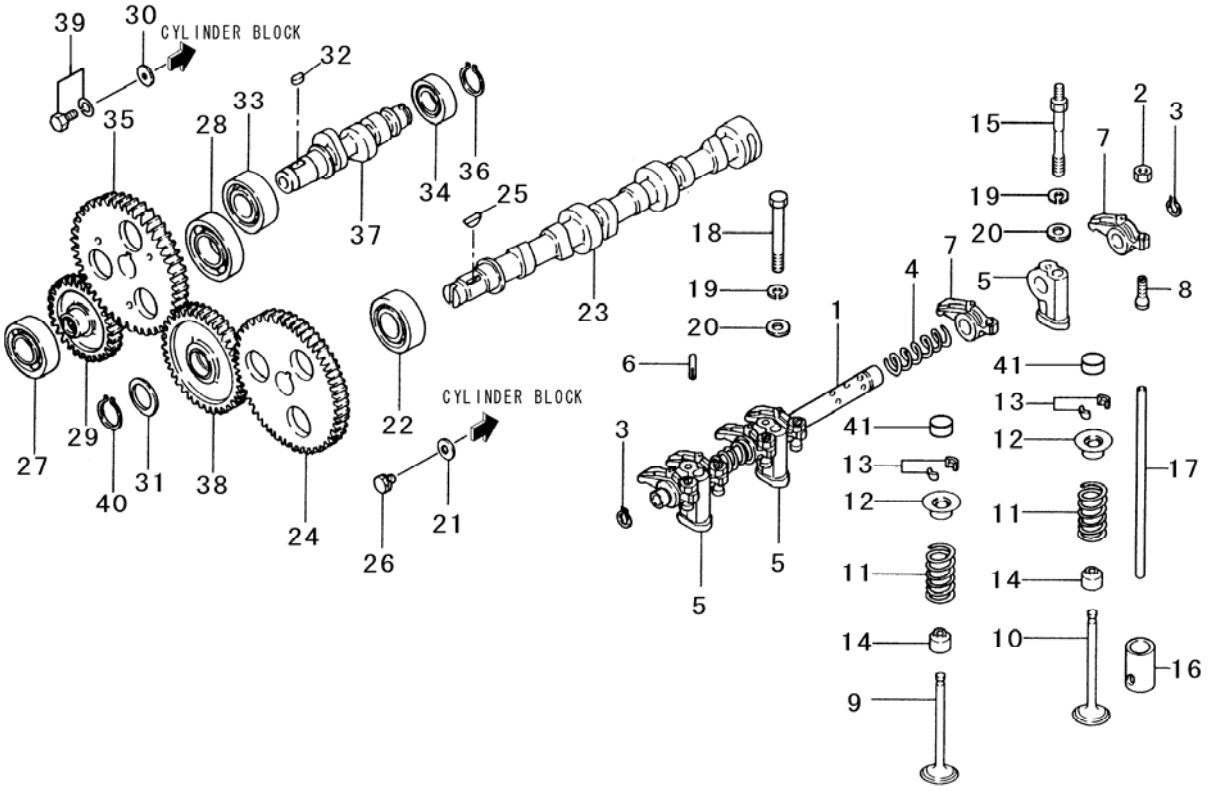

Key No.	Parts No.	Parts Name.	Q`ty ALL					R/P	Application	Description	Remarks
1	30L04-00071	SHAFT ASSY	1								
2	F2305-06000	NUT,jam	6								
3	0740 0001 200	RING,snap	2								
4	MM318768	SPRING,shaft	2								
5	MM318772	STAY,rocker	3								
6	MM432145	PIN,grooved	1								
7	30L05-01100	ARM,rocker	6								
8	MM433312	SCREW,adjusting	6								
9	30L06-01100	VALVE,intake	3								
10	30L06-01200	VALVE,exhaust	3								
11	MM432668	SPRING,valve	6								
12	MM43330601	RETAINER	6								
13	MD016483	VALVE,lock	12								
14	MD115472	SEAL	6								
15	30L05-03700	BOLT,stay	2								
16	MM434222	TAPPET	6								
17	MM433307	ROD,push	6								
18	F1035-08060	BOLT	1								
19	A360 0100 802	WASHER,spring	3							M8	
20	MS450035	WASHER,plain	3								
21	MM432306	WASHER	1								
22	MM432105	BEARING,ball	1								
23	MM43319702	CAMSHAFT	1								
24	MM432890	GEAR,camshaft	1							Z=52	
25	MF476214	KEY,woodruff	1								
26	MF241223	BOLT,w/washer	1								
27	MM432105	BEARING,ball	1								
28	0750 0060 050	BEARING,ball	1							6005	
29	MM432893	GEAR	1							Z=30	
30	MM432306	WASHER	1								
31	MM432567	PLATE,distance	1								
32	MF476018	KEY,sunk	1								
33	MM432105	BEARING,ball	1								
34	MM432106	BEARING,ball	1								
35	MM433127	GEAR,pump	1							Z=52	

FIG.105 TIMING PARTS

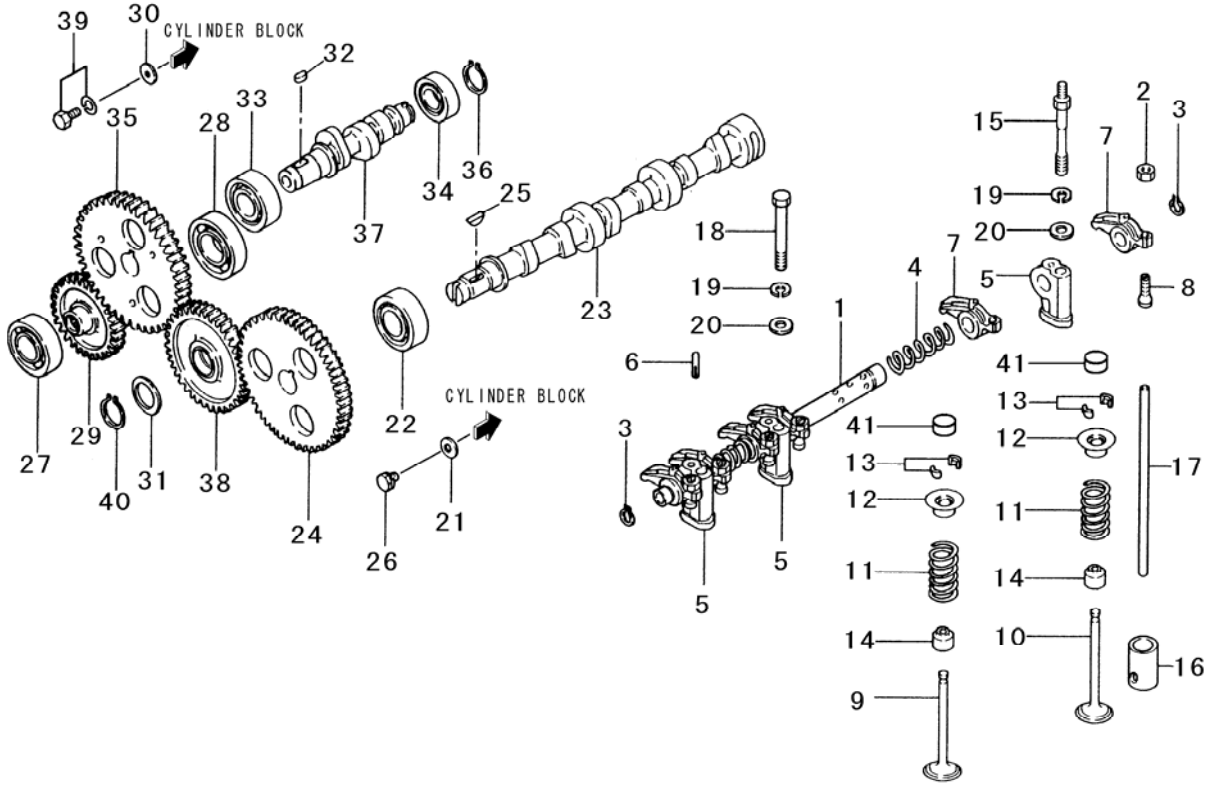

Key No.	Parts No.	Parts Name.	Q`ty					R/P	Application	Description	Remarks
			ALL	B							
36	0740 0001 600	RING,snap	1							φ16	
37	MM435144	SHAFT,pump	1								
38	MM433236	GEAR ASSY,idler	1							Z=40	
39	MF241223	BOLT,w/washer	1								
40	MF522011	RING,snap	1								
41	31A04-00700	CAP,valve	6								

FIG.106 FUEL SUPPLY PARTS

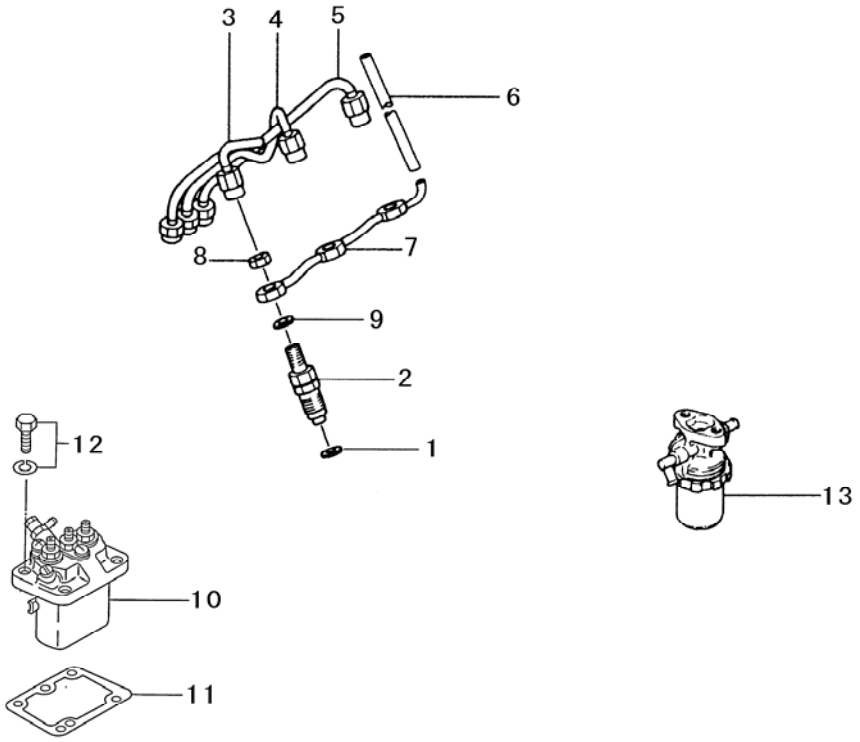

Key No.	Parts No.	Parts Name.	Q`ty					R/P	Application	Description	Remarks
			ALL								DENSO No
1	MD070717	GASKET,holder	3								
2	31A61-01010	NOZZLE & HOLDER	3								093500-6620
											Ref108
3	30L61-07400	PIPE INJ,no.1	1								
4	30L61-07500	PIPE INJ,no.2	1								
5	30L61-07600	PIPE INJ,no.3	1								
6	MM413119	PIPE,rubber	1								
7	MM432249	PIPE,fuel retur	1								
8	MD068353	NUT	3								
9	MD068355	GASKET	3								
10	30L65-05101	PUMP ASSY	1								Ref107
11	MM432219	SHIM	AR							t=0.2	
	MM432220	SHIM	AR							t=0.3	
	MM433164	SHIM	AR							t=0.4	
	MM432222	SHIM	AR							t=0.5	
	MM433165	SHIM	AR							t=0.6	
	MM433166	SHIM	AR							t=0.7	
	MM433167	SHIM	AR							t=0.8	
	MM433168	SHIM	AR							t=0.9	
	MM433169	SHIM	AR							t=1.0	
12	MF241228	BOLT,w/washer	4								
13	MM434476	FILTER ASSY	1								Ref109

FIG.107 FUEL INJECTION PUMP

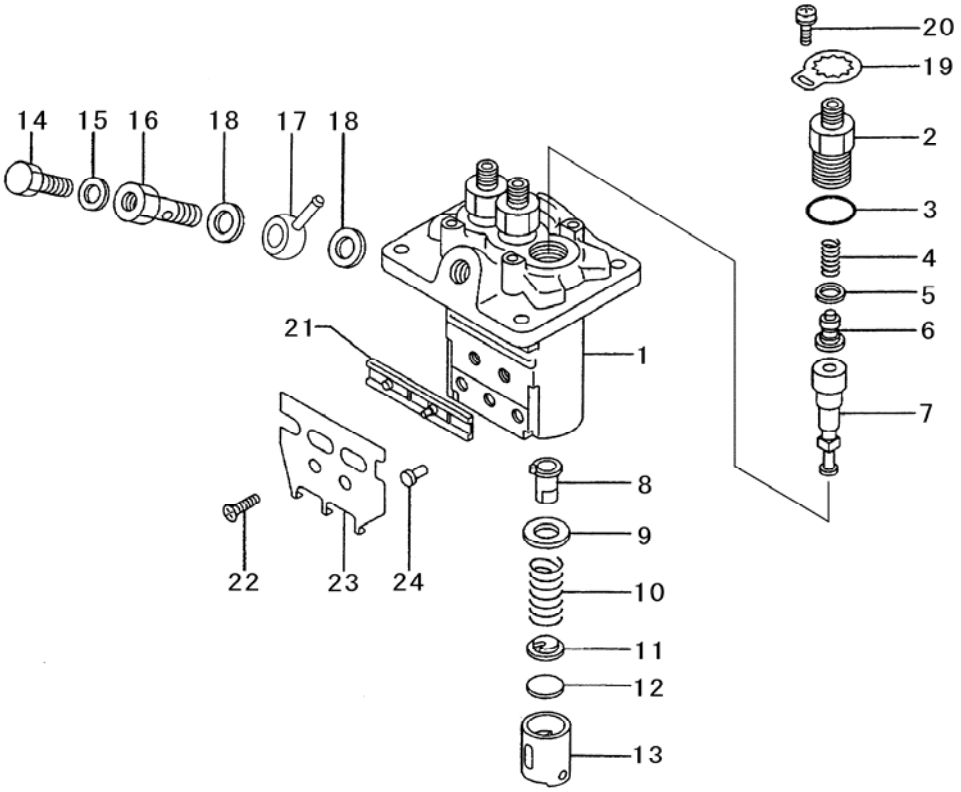

Key No.	Parts No.	Parts Name.	Q`ty					R/P	Application	Description	Remarks
			ALL								
1～24	30L65-05101	PUMP ASSY	1								
1	MM501917	HOUSINGSUB ASSY	1								
2	47X01-19800	HOLDER,delivery	3								
3	47X01-22600	O-RING	3								
4	09013-60530	SPRING,delivery	3								
5	09013-70130	GASKET,delivery	3								
6	MM514371	VALVE SUB ASSY	3								
7	47X01-23700	ELEMENTSUB ASSY	3								
8	MM501999	SLEEVE SUB ASSY	3								
9	09016-30140	SEAT,spring	3								
10	MM501926	SPRING,plunger	3								
11	09016-50170	SEAT,spring	3								
12	MM501939	PLATE,shim	AR							t=1.85	
	09031-10330	PLATE,shim	AR							t=1.90	
	09031-10340	PLATE,shim	AR							t=1.95	
	09031-10350	PLATE,shim	AR							t=2.00	
	09031-10360	PLATE,shim	AR							t=2.05	
	09031-10370	PLATE,shim	AR							t=2.10	
	MM501945	PLATE,shim	AR							t=2.15	
	09031-10390	PLATE,shim	AR							t=2.20	
	09031-10400	PLATE,shim	AR							t=2.25	
	09031-10410	PLATE,shim	AR							t=2.30	
	09031-10420	PLATE,shim	AR							t=2.35	
	MM501950	PLATE,shim	AR							t=2.40	
	09031-10440	PLATE,shim	AR							t=2.45	
	09031-10450	PLATE,shim	AR							t=2.50	
13	09017-00220	TAPPET SUB ASSY	3								
14	MM501930	SCREW,bleeder	1								
15	09024-80010	WASHER,screw	1								
16	09024-50310	SCREW,hollow	1								
17	09221-70470	NIPPLE,swivel	1								
18	09025-10010	WASHER,drain	2								
19	09023-00070	PLATE,lock	3								
20	94900-75390	SCREW,w/washer	3								
21	09021-00560	RACK ASSY	1								

FIG.107 FUEL INJECTION PUMP

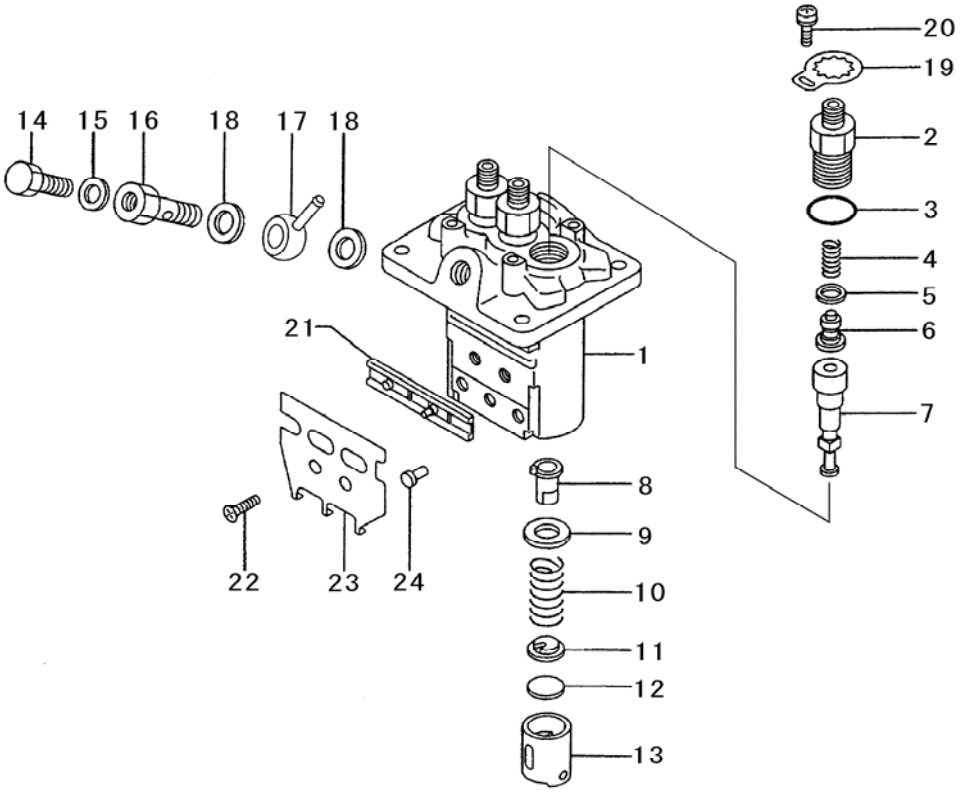

Key No.	Parts No.	Parts Name.	Q`ty ALL					R/P	Application	Description	Remarks
22	MM501935	SCREW	2								
23	09069-11020	BRACKET,stop	1								
24	09018-30090	PIN,tappet	3								

FIG.108 NOZZLE & NOZZLE HOLD

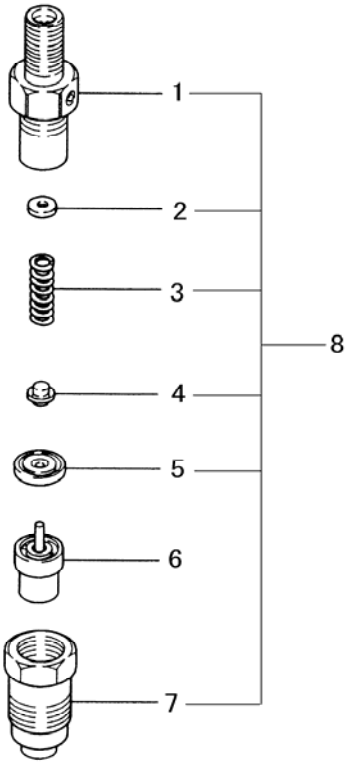

Key No.	Parts No.	Parts Name.	Q`ty					R/P	Application	Description	Remarks
			ALL								DENSO No
1～8	31A61-01010	NOZZLE & HOLDER	3								093500-6620
1	*	BODY SUB ASSY	3								Not Serviceble
2	09317-51810	WASHER	AR							t=1.25	
	09317-51830	WASHER	AR							t=1.3	
	09317-51850	WASHER	AR							t=1.35	
	MD603493	WASHER	AR							t=1.4	
	MD603494	WASHER	AR							t=1.45	
	MD603495	WASHER	AR							t=1.5	
	MD603496	WASHER	AR							t=1.55	
	09317-51950	WASHER	AR							t=1.6	
	09317-51970	WASHER	AR							t=1.65	
	09317-51990	WASHER	AR							t=1.7	
3	09312-70360	SPRING,pressure	3								
4	MM501838	PIN,pressure	3								
5	09317-40070	PIECE,distance	3								
6	47X01-09500	NOZZLE ASSY	3								
7	MM514380	NUT,retaining	3								
8	47X01-09600	NOZZLE ASSY	1								Inc1～5＆7

FIG.109 FUEL FILTER

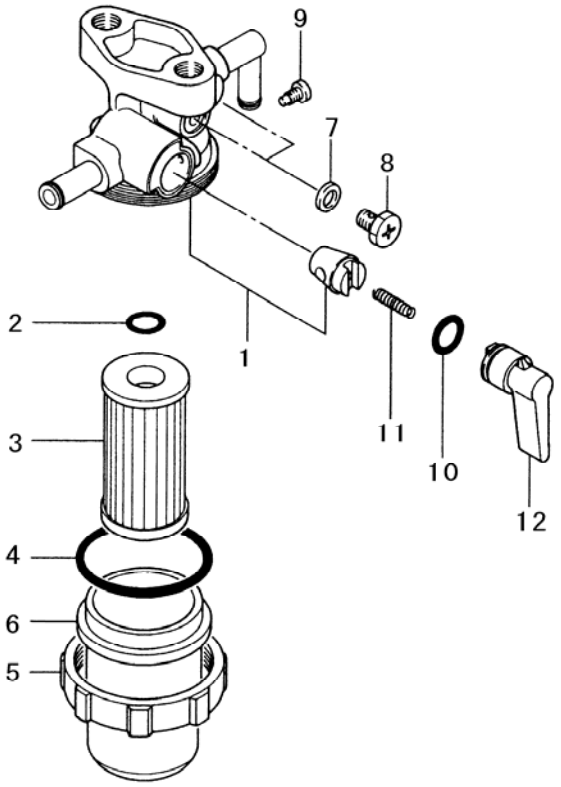

Key No.	Parts No.	Parts Name.	Q`ty					R/P	Application	Description	Remarks
			ALL								
1～12	MM434476	FILTER ASSY	1								
1	MM434484	BODY SUB ASSY	1								
2	F3151-01000	O-RING	1								
3	MM404879	ELEMENT	1								
4	MM404878	O-RING	1								
5	MM404877	NUT,ring	1								
6	MM400889	CUP,filter	1								
7	MM404884	PACKING	2								
8	MM404880	SCREW	2								
9	MM404875	SCREW	1								
10	F3151-01010	O-RING	1								
11	MM404873	SPRING,valve	1								
12	MM404871	LEVER	1								

FIG.110 GOVERNOR

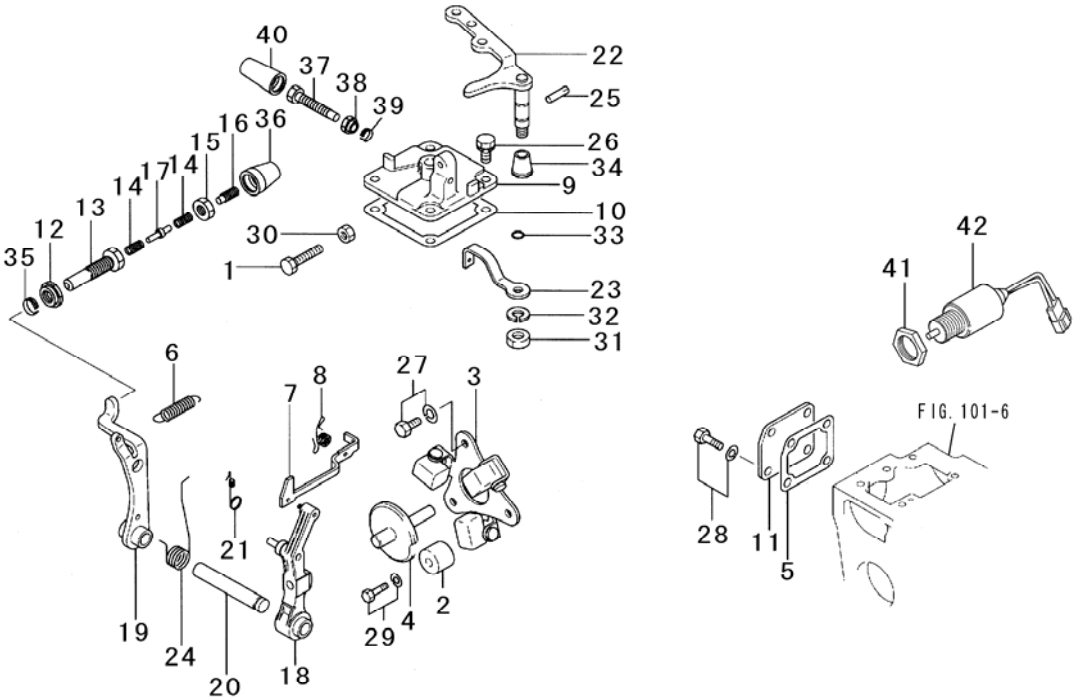

Key No.	Parts No.	Parts Name.	Q`ty ALL					R/P	Application	Description	Remarks
1	MM401080	BOLT,high speed	1								
2	MM403988	STOPPER	1								
3	30L63-00050	WEIGHT ASSY,gov	1								
4	MM43074001	SHAFT ASSY	1								
5	30L63-05201	GASKET,tie rod	1								
6	MM434585	SPRING,gov	1								
7	30L63-06100	ROD,tie	1								
8	30L63-23700	SPRING,tie rod	1								
9	30L63-01500	COVER,gov	1								
10	30L63-05101	GASKET,gov	1								
11	MM433627	COVER,tie rod	1								
12～17	*	SPRING SET	1								Not Serviceble
12	30L63-00600	NUT,torque set	1								
13	31A64-00200	CASE,torque spg	1								
14	31A64-01800	SPRING,torque	2								
15	MD000961	NUT	1								
16	MD065628	SCREW,adjust	1								
17	MM434541	STOPPER,spring	1								
18	MM434830	LEVER ASSY,gov	1								
19	MM434832	LEVER ASSY	1								
20	MM434872	SHAFT,gov	1								
21	MM43519801	SPRING,tie rod	1								
22	MM435889	LEVER ASSY	1								
23	MM437431	LEVER,gov	1								
24	MM437660	SPRING,start	1								
25	MM409239	PIN,grooved	2								
26	F1035-06012	BOLT	4								
27	MF241222	BOLT,w/washer	2								
28	MF241224	BOLT,w/washer	4								
29	MF241229	BOLT,w/washer	1								
30	A300 0106 002	NUT	2							M6	
31	A301 0108 003	NUT,jam	1							M8	
32	A360 0100 802	WASHER,spring	1							M8	
33	0830 0100 070	O-RING	1							φ7	
34	MM438721	COVER,gov shaft	1								

FIG.110 GOVERNOR

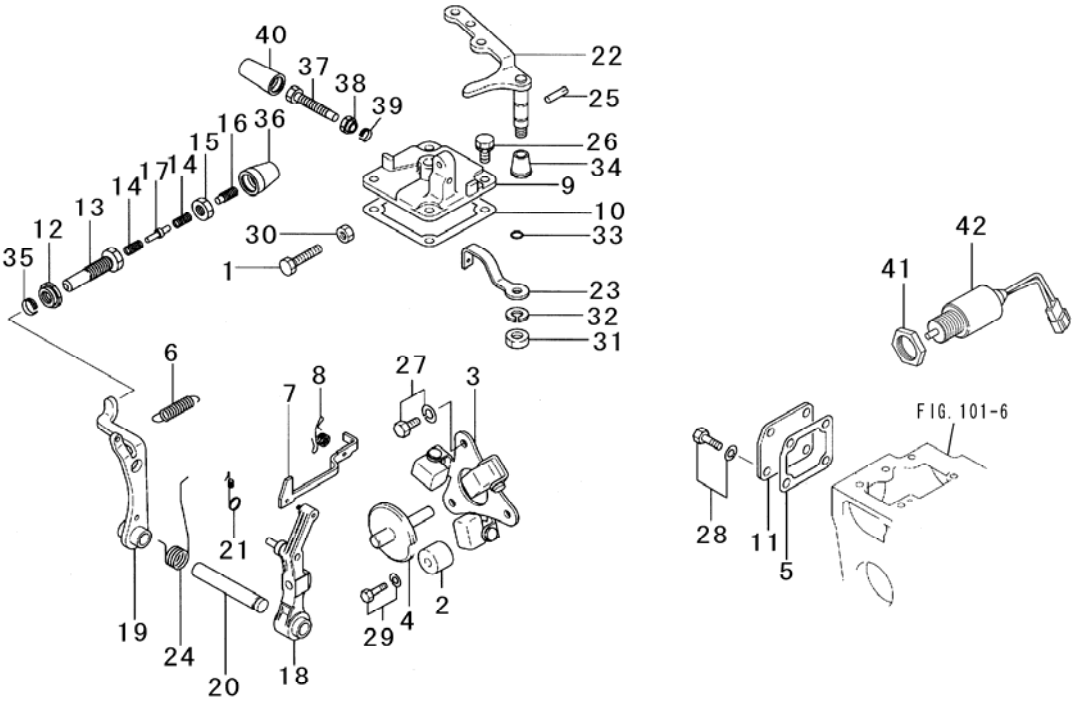

Key No.	Parts No.	Parts Name.	Q`ty ALL					R/P	Application	Description	Remarks
35	30L63-00700	C-RING	1								
36	31A64-00800	COVER,torque	1								
37,38	30L63-00040	BOLT ASSY	1								
37	30L63-02200	BOLT,high speed	1								
38	30L63-02300	NUT,high speed	1								
39	30L63-02600	C-RING	1								
40	30L63-02400	COVER,speed	1								
41,42	30A87-10042	SOLENOID & NUT	1								
41	MM409671	NUT	1								
42	30A87-20402	SOLENOID ASSY	1								

FIG.111 LUBRICATING PARTS

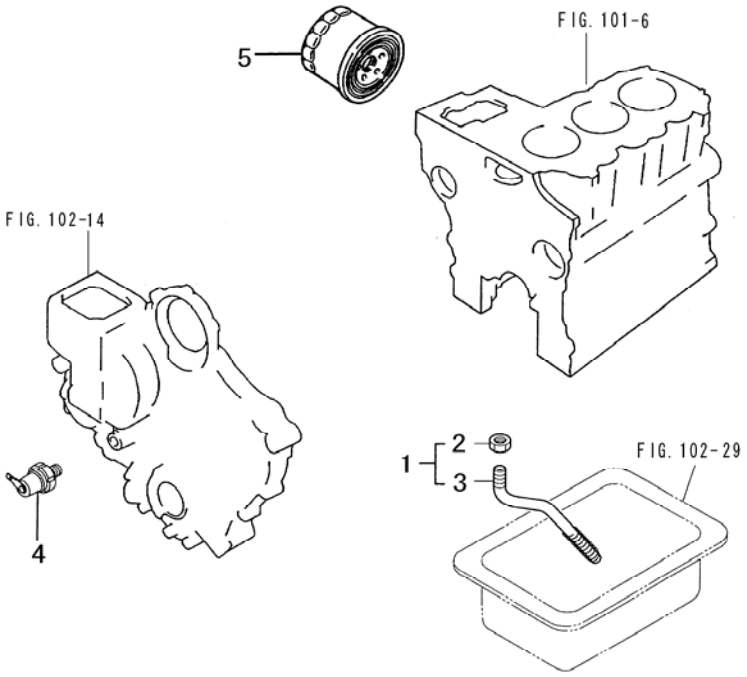

Key No.	Parts No.	Parts Name.	Q`ty					R/P	Application	Description	Remarks
			ALL								
1	MM434431	SCREEN ASSY,oil	1								Inc2 &3
2	A3040114003	NUT,jam	1								
3	*	SCREEN,oil	1								Not Serviceble
4	31A90-00601	SWITCH ASSY,oil	1								
5	31A40-02100	FILTER ASSY,oil	1								

FIG.112 COOLING PARTS

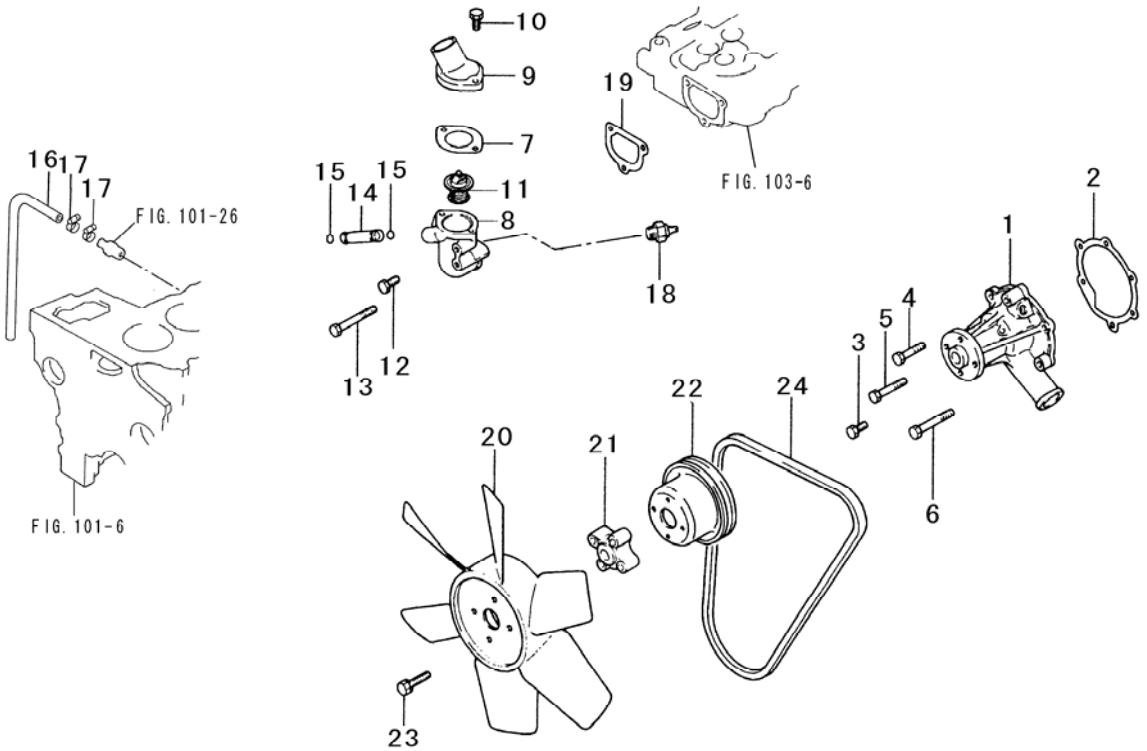

Key No.	Parts No.	Parts Name.	Q`ty ALL					R/P	Application	Description	Remarks
1	MM43317001	PUMP ASSY,water	1								
2	30L45-05101	GASKET,pump	1								
3	F1035-06018	BOLT	2								
4	F1035-06035	BOLT	1								
5	F1035-06045	BOLT	1								
6	F1035-06055	BOLT	2								
7～11	*	THERMOSTAT AY	1								Not Serviceble
7	MM43213503	GASKET,thermo	1								
8	30L46-04600	CASE,thermo	1								
9	30L46-02600	FITTING	1								
10	F1035-06018	BOLT	2								
11	MM43354801	THERMOSTAT	1								
12	F1035-06018	BOLT	2								
13	F1035-06060	BOLT	1								
14	MM432083	PIPE,bypass	1								
15	0830 0100 090	O-RING	2							φ9	
16,17	*	HOSE ASSY,fuel	1								Not Serviceble
16	MS602091	HOSE,water	1								
17	32C46-04100	CLIP	2								
18	MD001380	GAGE UNIT	1								
19	30L46-05100	GASKET,thermo	1								
20	MM409350	FAN,cooling	1								
21	MM434493	SPACER,fan	1								
22	MM405460	PULLEY PUMP	1								
23	MF241229	BOLT,w/washer	4								
24	MD079696	V-BELT	1								

FIG.113 INTAKE & EXHAUST PARTS

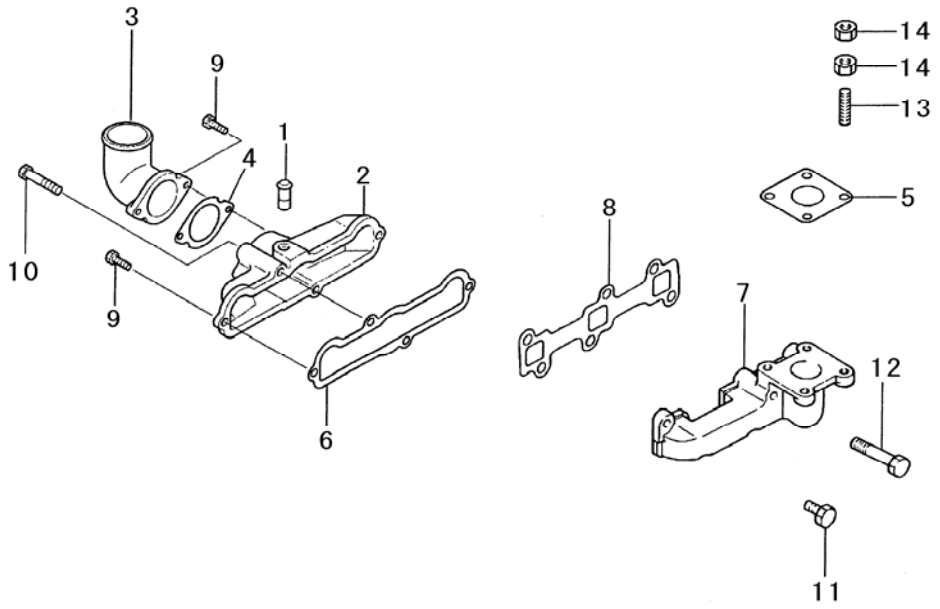

Key No.	Parts No.	Parts Name.	Q`ty ALL					R/P	Application	Description	Remarks
1～3	30L30-01011	COVER ASSY	1								
1,2	30L30-04011	COVER SUB ASSY	1								
1	*	PIPE	1								Not Serviceble
2	*	COVER	1								Not Serviceble
3	30L30-04200	PIPE,intake	1								
4	30L30-04300	GASKET,intake	1								
5	30A30-00100	GASKET	1								
6	30L30-05201	GASKET,manifold	1								
7	MM43275601	MANIFOLD ASSY	1								
8	MM43212901	GASKET,exhaust	1								
9	F1035-06018	BOLT	4								
10	F1035-06045	BOLT	2								
11	F1035-08025	BOLT	4								
12	F1035-08055	BOLT	2								
13	F1450-08018	STUD	4								
14	MM436867	NUT	8								

FIG.114 ELECTRIC PARTS

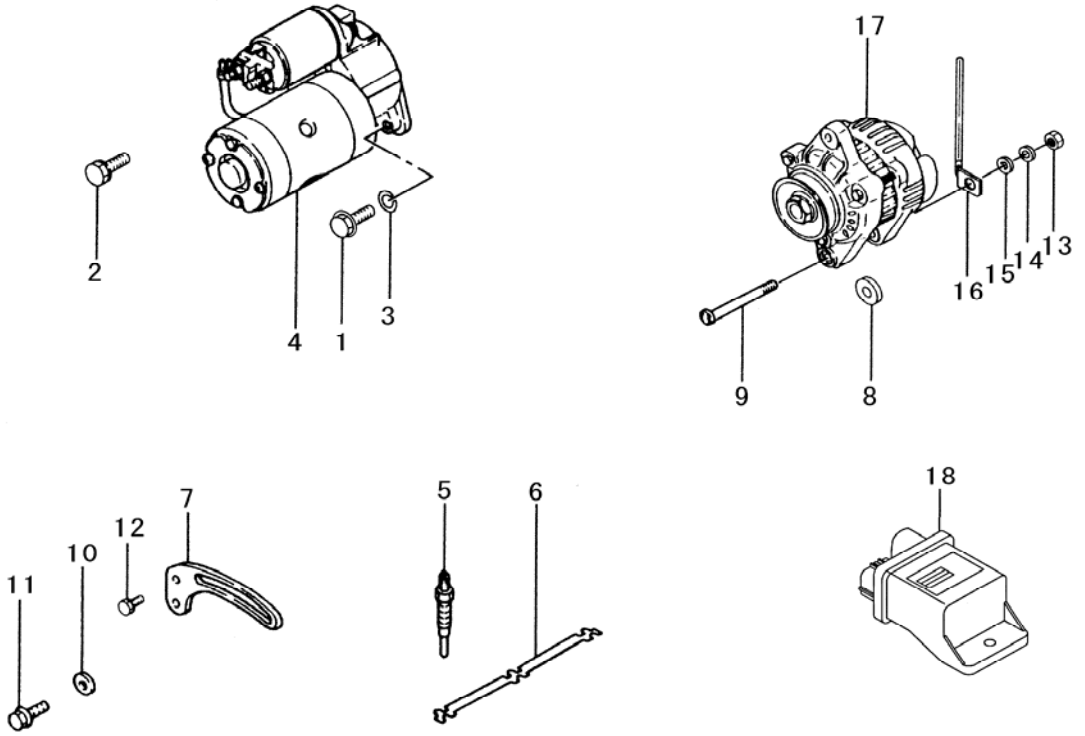

Key No.	Parts No.	Parts Name.	Q`ty ALL					R/P	Application	Description	Remarks
											MEC No
1	H155 0110 025	BOLT,w/washer	1							M10×25	
2	MF241282	BOLT,w/washer	1								
3	0350 0151 026	WASHER,spring	1							M10	
4	31B66-00101	STARTER ASSY	1								Ref115
5	MM43214801	PLUG,glow	3								
6	MM433309	PLATE,glow plug	1								
7	MM433651	BRACE,generator	1								
8	91520-00700	WASHER	1								
9	MD102429	BOLT	1								
10	F2500-08000	WASHER	1								
11	MF140026	BOLT,flange	1								
12	MF241224	BOLT,w/washer	1								
13	MF430005	NUT	1								
14	A360 0100 802	WASHER,spring	1							M8	
15	MS450035	WASHER,plain	1								
16	MS470059	CLIP	1								
17	30A68-00801	ALTERNATOR AY	1								A007TA0171B
											Ref116
18	30H66-02300	CONTROLER,glow	1								

FIG.115 STARTER

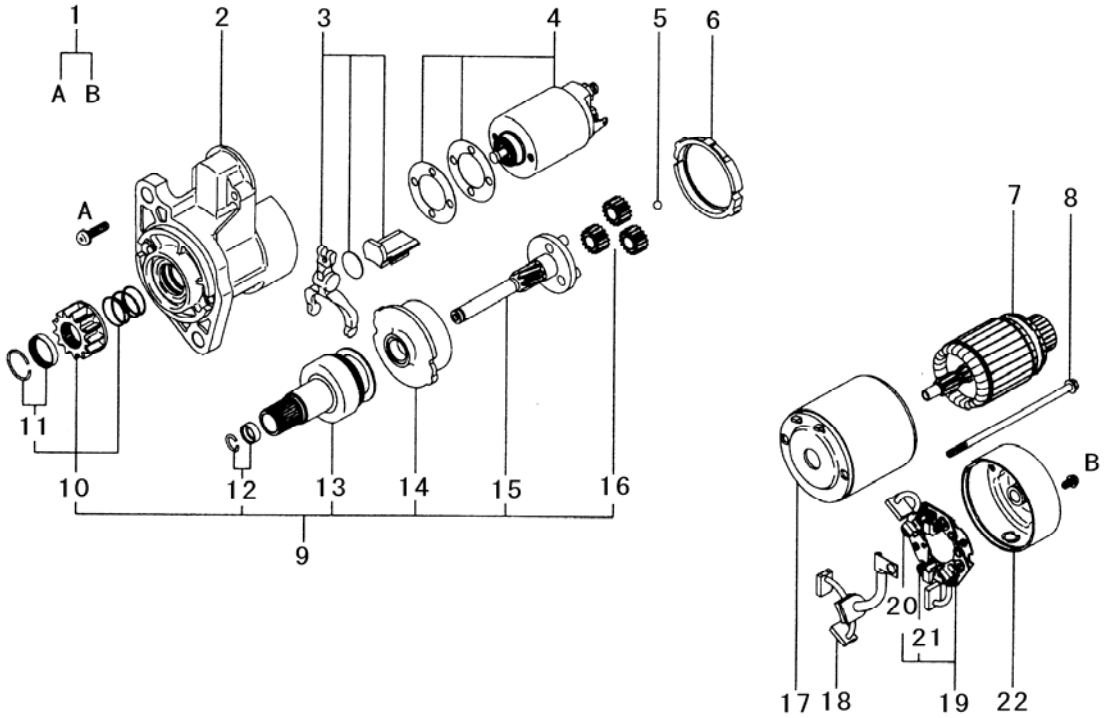

Key No.	Parts No.	Parts Name.	Q`ty ALL					R/P	Application	Description	Remarks
1～22	31B66-00101	STARTER ASSY	1								
1	MD607887	SCREW SET	1								
2	47X11-02247	BRACKET ASSY	1								
3	47X11-02235	LEVER SET	1								
4	M371X71973	SWITCH ASSY	1								
5	MD611214	BALL	1								
6	M578X31771	PACKING	1								
7	M106X59371	ARMATURE SET	1								
8	M981X73275	BOLT	1								
9	47X11-02227	SHAFT ASSY,clut	1								Inc10～16
10	47X11-02232	PINION SET	1								Inc11
11	M385X06171	STOPPER SET	1								
12	47X11-02234	STOPPER SET	1								
13	47X11-02231	CLUTCH,over run	1								
14	M135X03071	GEAR ASSY,inter	1								
15	M357X67671	SHAFT ASSY,gear	1								
16	M230X00471	GEAR ASSY	3								
17	47X11-02321	YOKE ASSY	1								
18	M647X00571	BRUSH ASSY	1								
19	M649X01271	HOLDER ASSY,bru	1								Inc20&21
20	M391X03271	SPRING,brush	2								
21	M371X03371	SPRING,brush	2								
22	47X11-02248	BRACKET ASSY	1								

FIG.116 ALTERNATOR

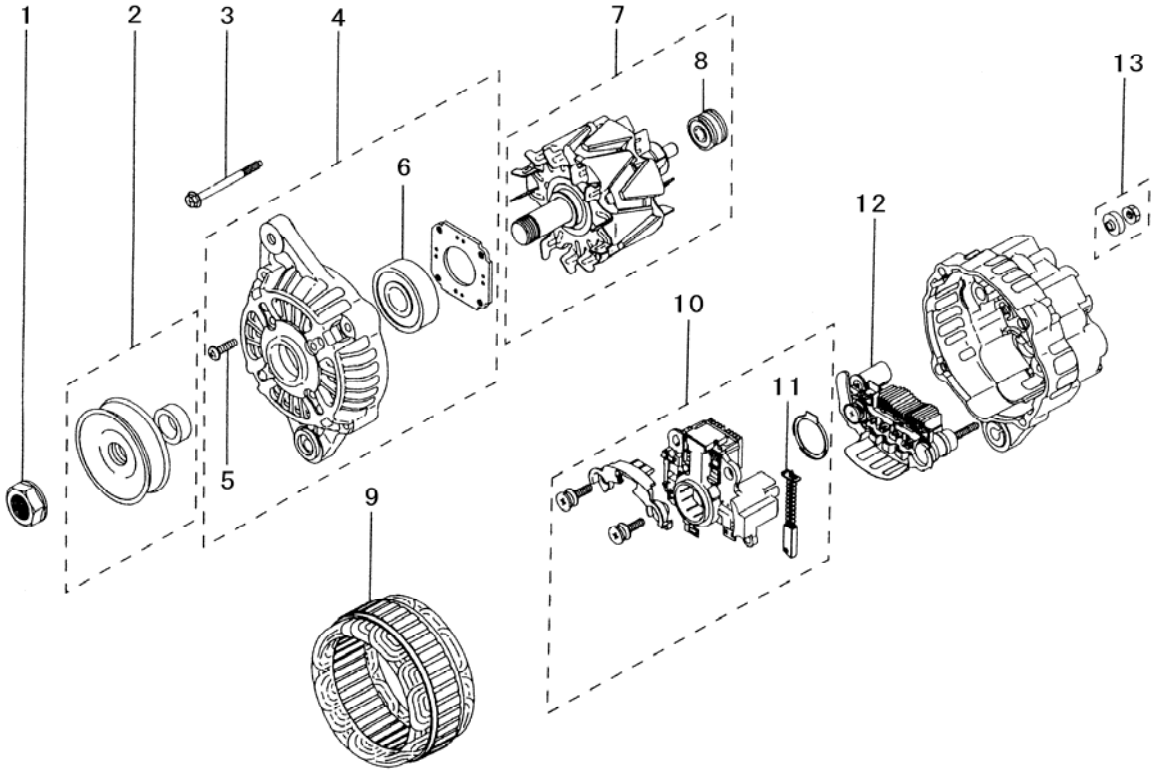

Key No.	Parts No.	Parts Name.	Q`ty ALL					R/P	Application	Description	Remarks
											MEC No
1～13	30A68-00801	ALTERNATOR AY	1								A007TA0171B
1	MD618927	NUT	1								
2	MM502578	PULLEY ASSY	1								
3	MD611556	BOLT SET	1								
4	47X11-02295	BRACKET ASSY	1								Inc5＆6
5	MM502568	SCREW,set	1								
6	A930X94570	BEARING,front	1								
7	47X11-02301	ROTOR ASSY	1								Inc8
8	MD611928	BEARING,rear	1								
9	MM502591	STATOR ASSY	1								
10～13	MM502598	BRACKET ASSY	1								
10	47X11-02304	REGULATOR SET	1								Inc11
11	A647X50170	BRUSH SET	2								
12	MM502599	RECTIFIER ASSY	1								
13	A529X05571	NUT SET	1								

FIG.117 REPAIR GASKET KIT

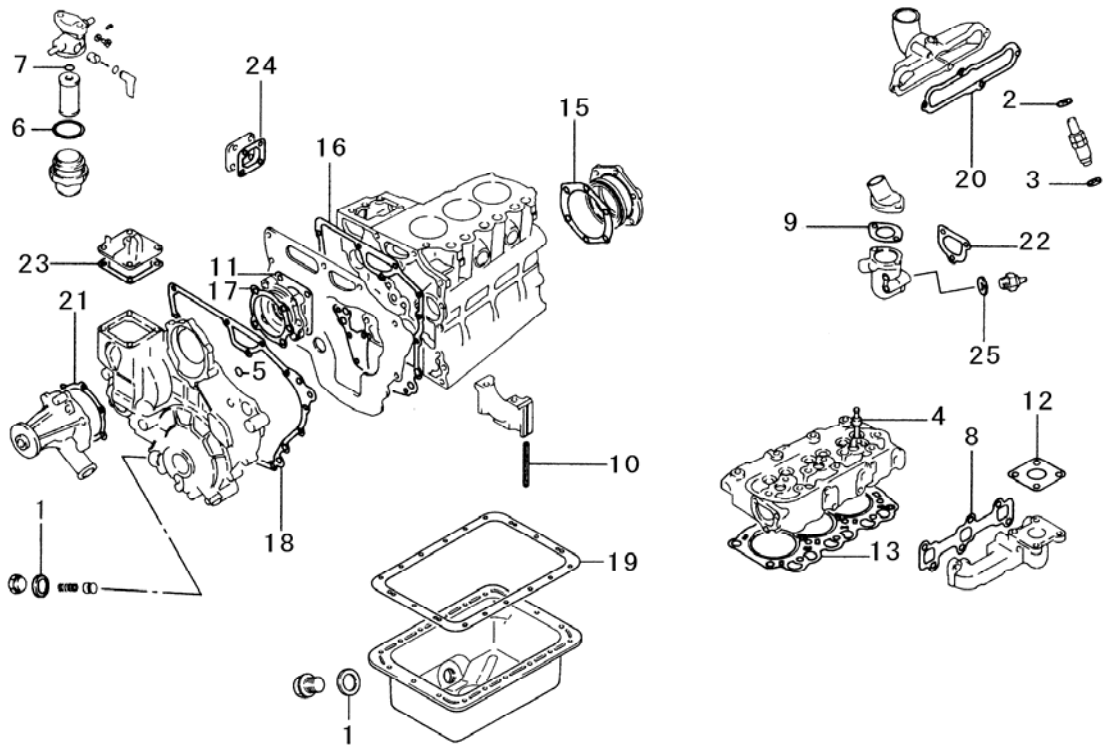

Key No.	Parts No.	Parts Name.	Q`ty ALL					R/P	Application	Description	Remarks
1～25	30L94-06032	GASKET KIT	1								
1	MD000312	GASKET	2								
2	MD068355	GASKET,return	3								
3	MD070717	GASCKET,holder	3								
4	MD115472	SEAL,valve stem	6								
5	0830 0100 110	O-RING	2							φ11	
6	MM404878	O-RING	1								
7	F3151-01000	O-RING	1								
8	MM43212901	GASKET,exh	1								
9	MM43213503	GASKET,thermo	1								
10	MM432214	SEAL,side	4								
11	30A11-00100	GASKET,cover	1								
12	30A30-00100	GASKET	1								
13	30L01-01102	GASKET,cylinder	1								
14	30L07-05101	GASKET	1								NOT SHOWN
15	30L07-05201	GASKET,case	1								
16	30L07-05300	GASKET,plate	1								
17	30L11-01201	GASKET,housing	1								
18	30L11-05101	GASKET,gear	1								
19	30L13-05200	GASKET,oil pan	1								
20	30L30-05201	GASKET,manifold	1								
21	30L45-05101	GASKET,water	1								
22	30L46-05100	GASKET,thermo	1								
23	30L63-05101	GASKET	1								
24	30L63-05201	GASKET,cover	1								
25	30636-25901	GASKET	1								

Parts No.	Page	Key No.
A300 0106 002	13	30
A301 0108 003	13	31
A3040114003	15	2
A360 0100 802	6	19
	13	32
	18	14
A360 0101 602	5	12
A529X05571	20	13
A647X50170	20	11
A930X94570	20	6
F1035-06012	13	26
F1035-06018	1	27
	16	3
	16	10
	16	12
	17	9
F1035-06035	3	18
	16	4
F1035-06045	16	5
	17	10
F1035-06055	3	19
	16	6
F1035-06060	16	13
F1035-06065	3	20
F1035-08025	17	11
F1035-08055	17	12
F1035-08060	6	18
F1035-10020	2	34
F1450-08018	17	13
F1450-08045	3	25
F2305-06000	6	2
F2325-16000	5	10
F2460-06000	4	15
F2500-06000	4	16
F2500-08000	18	10
F3151-01000	12	2
	21	7
F3151-01010	12	10
F3153-03000	3	33
F5010-35000	1	13
F5014-20000	4	4
F5014-25000	1	4
H155 0110 025	18	1
M106X59371	19	7
M135X03071	19	14
M230X00471	19	16
M357X67671	19	15
M371X03371	19	21
M371X71973	19	4
M385X06171	19	11
M391X03271	19	20
M578X31771	19	6
M647X00571	19	18
M649X01271	19	19
M981X73275	19	8
MD000312	3	4

Parts No.	Page	Key No.
	3	27
	21	1
MD000318	3	28
MD000704	5	3
MD000705	5	4
MD000961	13	15
MD001380	16	18
MD001402	3	5
MD001404	3	6
MD008883	3	16
MD016317	1	24
MD016483	6	13
MD016653	5	15
MD020566	4	21
MD030629	5	17
MD065628	13	16
MD068353	8	8
MD068355	8	9
	21	2
MD070717	8	1
	21	3
MD079696	16	24
MD102429	18	9
MD115472	6	14
	21	4
MD603493	11	2
MD603494	11	2
MD603495	11	2
MD603496	11	2
MD607887	19	1
MD611214	19	5
MD611556	20	3
MD611928	20	8
MD618927	20	1
MF140026	18	11
MF240051	1	28
	4	10
MF241222	13	27
MF241223	3	31
	6	26
	7	39
MF241224	1	29
	3	21
	13	28
	18	12
MF241228	8	12
MF241229	13	29
	16	23
MF241231	3	7
MF241255	3	22
MF241282	1	32
	18	2
MF430005	18	13
MF472404	1	12
MF476018	6	32
MF476214	5	13

Parts No.	Page	Key No.
	6	25
MF522011	7	40
MM318768	6	4
MM318772	6	5
MM332813	4	5
MM400889	12	6
MM401080	13	1
MM403988	13	2
MM404871	12	12
MM404873	12	11
MM404875	12	9
MM404877	12	5
MM404878	12	4
	21	6
MM404879	12	3
MM404880	12	8
MM404884	12	7
MM405460	16	22
MM409239	13	25
MM409350	16	20
MM409645	1	9
MM409671	14	41
MM413119	8	6
MM430613	1	11
MM43074001	13	4
MM432065	1	21
MM43206601	3	1
MM432083	16	14
MM432105	6	22
	6	27
	6	33
MM432106	6	34
MM43212501	4	20
MM43212901	17	8
	21	8
MM43213503	16	7
	21	9
MM432145	6	6
MM43214801	18	5
MM432214	1	19
	21	10
MM432219	8	11
MM432220	8	11
MM432222	8	11
MM432235	3	2
MM432239	4	1
MM432249	8	7
MM432306	6	21
	6	30
MM432567	6	31
MM43265005	1	3～7
MM432668	6	11
MM43275601	17	7
MM432887	5	9
MM432890	6	24
MM432893	6	29

Parts No.	Page	Key No.
MM433115	1	10
MM433127	6	35
MM433133	4	13
MM433152	5	2
MM433164	8	11
MM433165	8	11
MM433166	8	11
MM433167	8	11
MM433168	8	11
MM433169	8	11
MM43317001	16	1
MM43319702	6	23
MM433236	7	38
MM433300	4	8
MM433301	4	9
MM43330601	6	12
MM433307	6	17
MM433309	18	6
MM433312	6	8
MM433353	3	8
MM43354801	16	11
MM433627	13	11
MM433651	18	7
MM433709	4	17
MM433793	3	9
MM433794	3	10
MM433891	1	1
MM433993	1	2
MM434222	6	16
MM434428	3	26
MM434431	15	1
MM434466	3	11
MM434476	8	13
	12	1～12
MM434484	12	1
MM434493	16	21
MM434541	13	17
MM434585	13	6
MM434830	13	18
MM434832	13	19
MM434872	13	20
MM435144	7	37
MM43519801	13	21
MM435677	5	2
MM435678	5	2
MM435889	13	22
MM436867	17	14
MM437431	13	23
MM437660	13	24
MM438721	13	34
MM438799	1	30
MM438800	1	30
MM438801	1	30
MM501838	11	4
MM501917	9	1
MM501926	9	10

Parts No.	Page	Key No.
MM501930	9	14
MM501935	10	22
MM501939	9	12
MM501945	9	12
MM501950	9	12
MM501999	9	8
MM502568	20	5
MM502578	20	2
MM502591	20	9
MM502598	20	10～13
MM502599	20	12
MM514371	9	6
MM514380	11	7
MS401426	3	23
MS450035	6	20
	18	15
MS470059	18	16
MS471101	1	14
MS471102	1	15
MS471105	1	16
MS471107	1	17
MS602091	16	16
MS661140	3	13
	4	11
MS661141	1	18
	3	12
0350 0151 026	18	3
0350 0151 632	5	11
04826-24000	1	3
	4	3
0740 0001 200	6	3
0740 0001 600	7	36
0750 0060 050	6	28
0830 0100 070	13	33
0830 0100 090	16	15
0830 0100 110	3	24
	21	5
09013-60530	9	4
09013-70130	9	5
09016-30140	9	9
09016-50170	9	11
09017-00220	9	13
09018-30090	10	24
09021-00560	9	21
09023-00070	9	19
09024-50310	9	16
09024-80010	9	15
09025-10010	9	18
09031-10330	9	12
09031-10340	9	12
09031-10350	9	12
09031-10360	9	12
09031-10370	9	12
09031-10390	9	12
09031-10400	9	12
09031-10410	9	12

Parts No.	Page	Key No.
09031-10420	9	12
09031-10440	9	12
09031-10450	9	12
09069-11020	10	23
09221-70470	9	17
09312-70360	11	3
09317-40070	11	5
09317-51810	11	2
09317-51830	11	2
09317-51850	11	2
09317-51950	11	2
09317-51970	11	2
09317-51990	11	2
30636-25901	21	25
30A07-00701	2	33
30A11-00100	3	17
	21	11
30A30-00100	17	5
	21	12
30A68-00801	18	17
	20	1～13
30A87-10042	14	41,42
30A87-20402	14	42
30H42-04020	3	32
30H66-02300	18	18
30L01-01102	4	19
	21	13
30L01-21090	4	2
30L04-00071	6	1
30L04-02011	4	12～14
30L05-01100	6	7
30L05-03700	6	15
30L06-00900	4	24
30L06-01100	6	9
30L06-01200	6	10
30L07-00700	1	25
30L07-01100	1	7
30L07-01300	1	20
30L07-01800	1	8
30L07-05101	21	14
30L07-05201	1	23
	21	15
30L07-05300	1	22
	21	16
30L11-00033	3	4～14
30L11-01201	3	3
	21	17
30L11-05101	3	15
	21	18
30L12-01300	1	31
30L13-05200	3	30
	21	19
30L17-10010	5	1
30L17-10020	5	1
30L17-10030	5	1
30L19-00031	5	3～6

Parts No.	Page	Key No.
30L19-02010	5	7
30L19-02020	5	7
30L19-02030	5	7
30L20-00501	5	8
30L20-00800	5	14
30L21-03030	5	17,18
30L21-03500	5	16
30L30-01011	17	1～3
30L30-04011	17	1,2
30L30-04200	17	3
30L30-04300	17	4
30L30-05201	17	6
	21	20
30L42-03100	2	35
30L45-05101	16	2
	21	21
30L46-02600	16	9
30L46-04600	16	8
30L46-05100	16	19
	21	22
30L61-07400	8	3
30L61-07500	8	4
30L61-07600	8	5
30L63-00040	14	37,38
30L63-00050	13	3
30L63-00600	13	12
30L63-00700	14	35
30L63-01500	13	9
30L63-02200	14	37
30L63-02300	14	38
30L63-02400	14	40
30L63-02600	14	39
30L63-05101	13	10
	21	23
30L63-05201	13	5
	21	24
30L63-06100	13	7
30L63-23700	13	8
30L65-05101	8	10
	9	1～24
30L94-06032	21	1～25
31A04-00700	7	41
31A40-02100	15	5
31A42-01300	4	18
31A46-12201	1	26
31A61-01010	8	2
	11	1～8
31A64-00200	13	13
31A64-00800	14	36
31A64-01800	13	14
31A90-00601	15	4
31B66-00101	18	4
	19	1～22
32C46-04100	16	17
47X01-09500	11	6
47X01-09600	11	8

Parts No.	Page	Key No.
47X01-19800	9	2
47X01-22600	9	3
47X01-23700	9	7
47X11-02227	19	9
47X11-02231	19	13
47X11-02232	19	10
47X11-02234	19	12
47X11-02235	19	3
47X11-02247	19	2
47X11-02248	19	22
47X11-02295	20	4
47X11-02301	20	7
47X11-02304	20	10
47X11-02321	19	17
91520-00700	18	8
94900-75390	9	20

FIG.201 MUFFLER

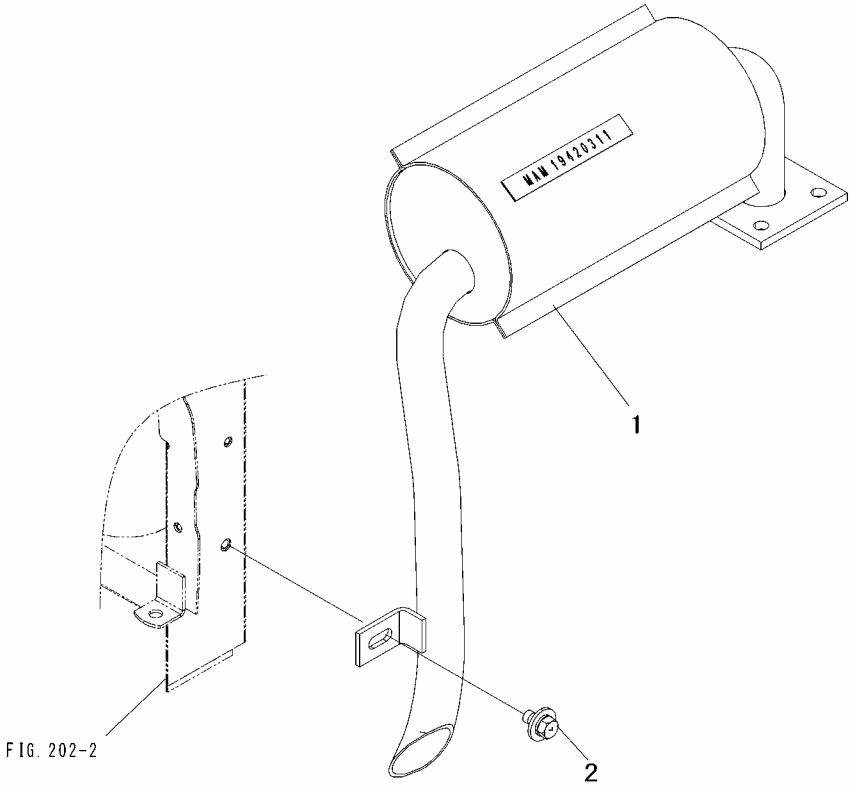

Key No.	Parts No.	Parts Name.	Q`ty					R/P	Application	Description	Remarks
			ALL								
1	1942 0311 0K0	MUFFLER	1								
2	H184 0108 016	BOLT,w/washer	1							M8×16	

FIG.202 RADIATOR

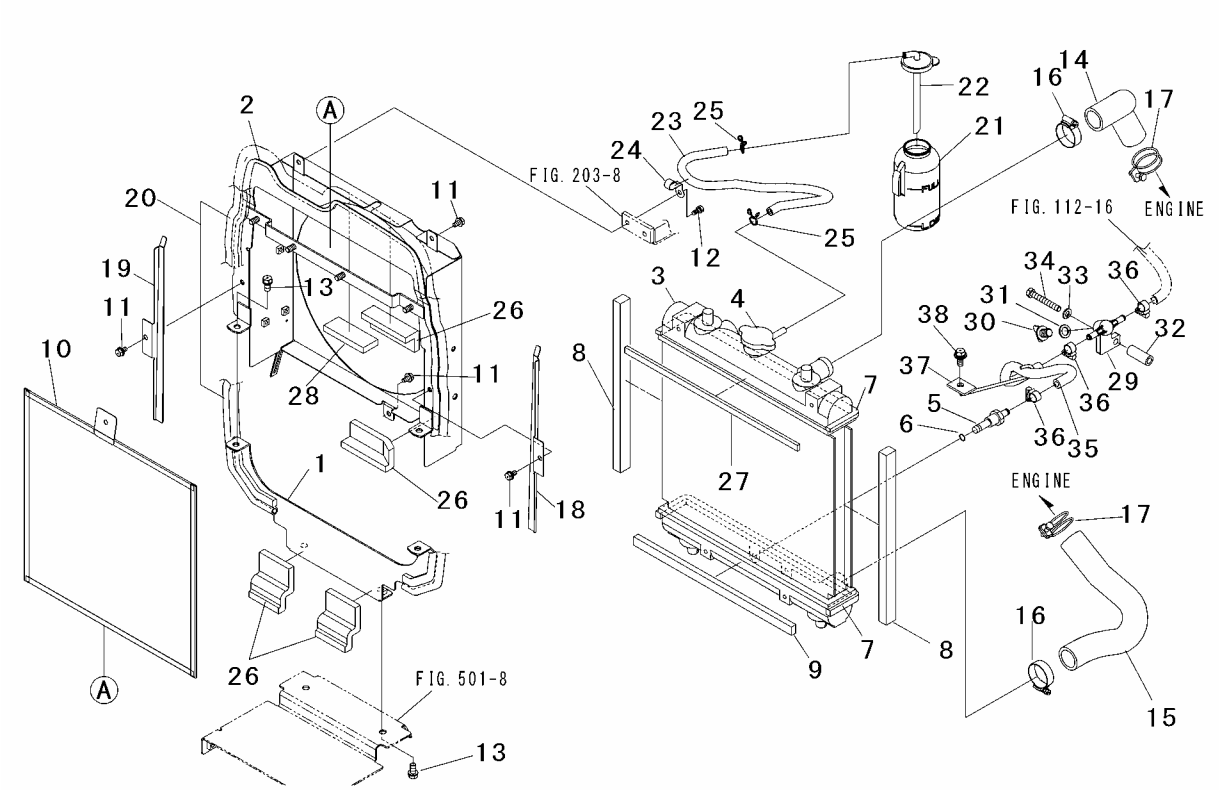

Key No.	Parts No.	Parts Name.	Q`ty ALL					R/P	Application	Description	Remarks
1	1045 0441 AG0	PLATE	1								
2	1959 0451 AG1	SHROUD,fan	1								
3	1959 0411 000	RADIATOR	1								Inc4～6
4	1039 0411 200	CAP	1								
5	1039 0411 300	PLUG,drain	1								
6	0830 0100 070	O-RING	1							φ7	
7	1045 0455 000	CUSHION	2								
8	1045 0456 000	CUSHION	2								
9	1039 0444 000	CUSHION	1								
10	1045 0418 AG0	NET,radiator	1								
11	H144 0106 012	BOLT,w/washer	4							M6×12	
12	F144 0106 016	BOLT,w/washer	1							M6×16	
13	F154 0108 016	BOLT,w/washer	4							M8×16	
14	1959 0415 000	HOSE,upper	1								
15	1959 0416 001	HOSE,lower	1								
16	0050 5000 380	CLAMP,hose	2							φ38	
17	0050 1100 380	CLAMP,hose	2							φ38	
18	1039 0441 AG0	PLATE LH	1								
19	1039 0442 AG0	PLATE RH	1								
20	1039 0443 000	SEAL	1								
21	1039 0438 000	TANK,sub	1								
22	1908 0445 200	CAP ASSY	1								
23	1039 0411 101	HOSE,rubber	1								
24	0050 2108 063	CLAMP	1							L=80	
25	68201-01814	CLIP	2								
26	1045 0451 000	CUSHION	4								
27	1045 0454 000	CUSHION	1								
28	1045 0457 000	CUSHION	1								
29～31	1046 0440 000	JOINT ASSY	1								
29	1046 0441 000	JOINT,water	1								
30,31	1046 0442 000	WATER COCK AY	1								
30	1046 0443 000	COCK,water	1								
31	67401-00114	GASCKET	1								
32	1031 2577 000	COLLAR	1								
33	A360 0100 802	WASHER,spring	1							M8	

FIG.202 RADIATOR

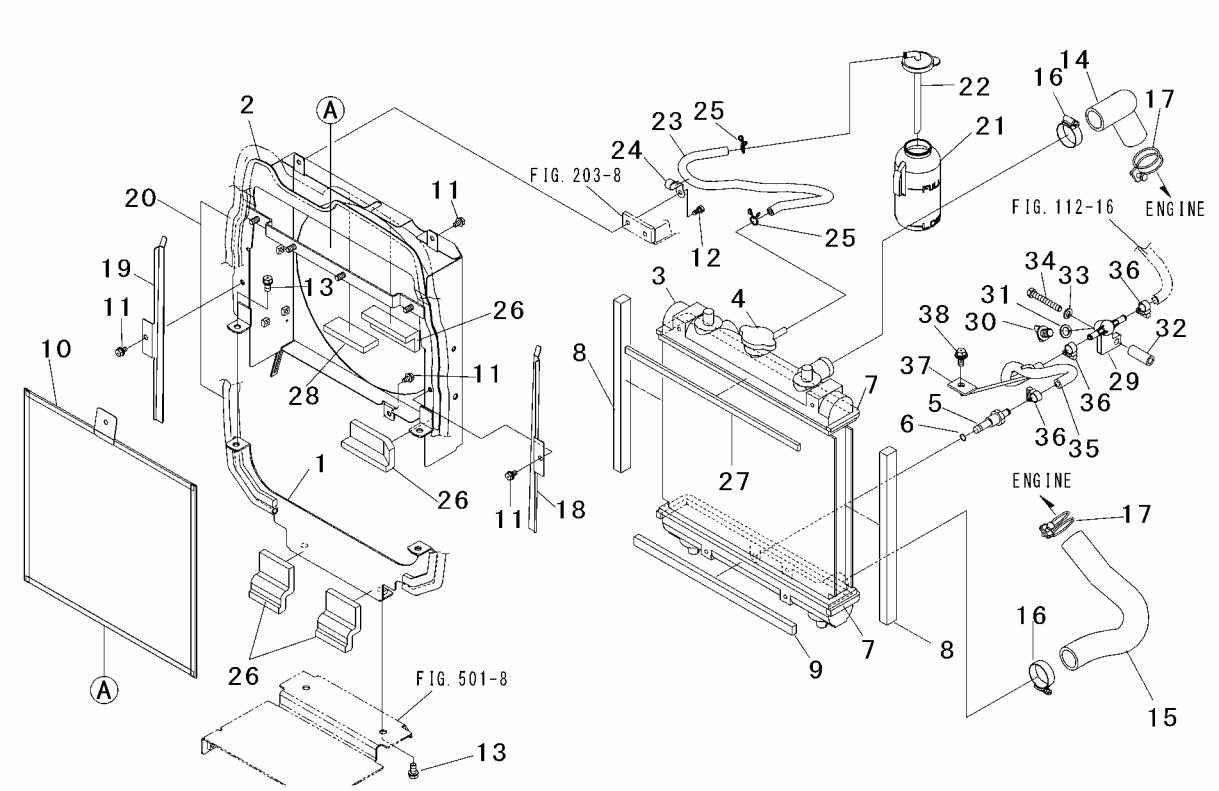

Key No.	Parts No.	Parts Name.	Q`ty ALL					R/P	Application	Description	Remarks
34	A054 0108 055	BOLT 7T	1							M8×55	
35	0981 0080 315	HOSE	1							φ8×310	
36	69501-06613	CLAMP	3								
37	1959 0441 000	CLAMP	1								
38	H154 0108 020	BOLT,w/washer	1							M8×20	

FIG.203 AIR CLEANER

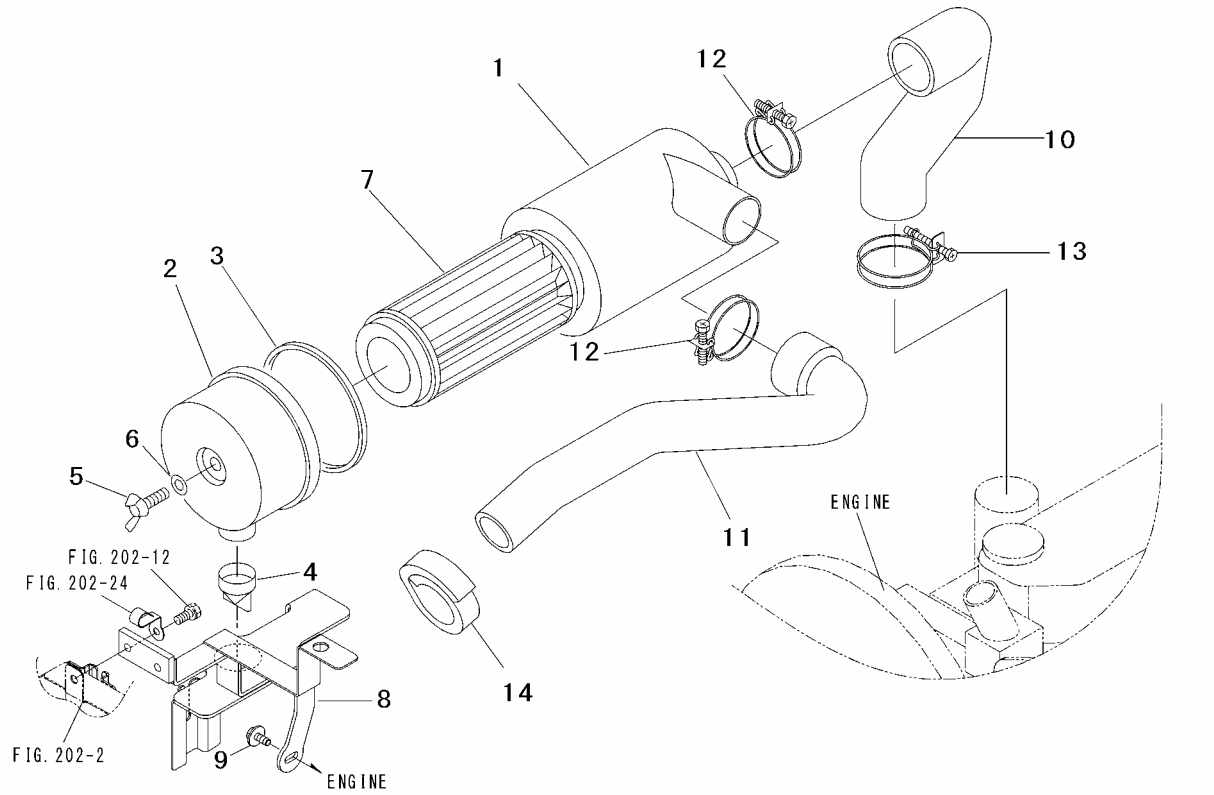

Key No.	Parts No.	Parts Name.	Q`ty					R/P	Application	Description	Remarks
			ALL								
1～7	3556 0501 000	AIR CLEANER	1								
1	3546 0501 100	CASE	1								
2	3546 0501 200	CAP,air cleaner	1								
3	3546 0501 300	GASKET	1								
4	3546 0501 400	VALVE,unloader	1								
5	3546 0501 500	BOLT	1								
6	3546 0501 600	WASHER	1								
7	3546 0501 800	ELEMENT	1								
8	1959 0521 AG0	BRACKET	1								
9	H194 0106 016	BOLT,w/washer	1							M6×16	
10	1044 0521 001	HOSE	1								
11	1959 0518 000	HOSE	1								
12	0050 1100 560	CLAMP,hose	2							φ56	
13	0050 1100 560	CLAMP,hose	1							φ56	
14	1045 0453 000	CUSHION	1								

FIG.204 FUEL LINE

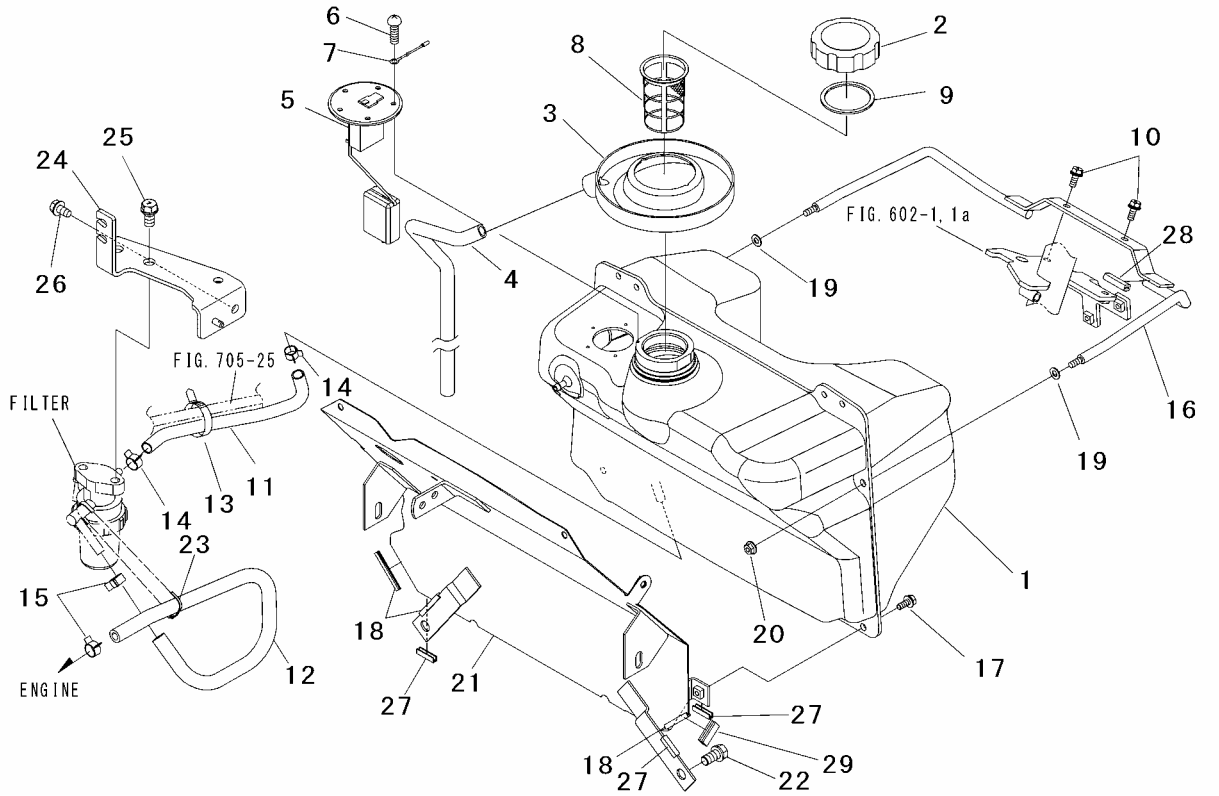

Key No.	Parts No.	Parts Name.	Q`ty ALL					R/P	Application	Description	Remarks
1～7	1039 0103 001	TANK ASSY	1								
1	1039 0105 000	TANK,fuel	1								
2	0980 5000 000	CAP,tank	1								
3	1039 0107 001	TRAY,fuel	1								
4	0980 4100 802	PIPE,vinyl	1							φ10×800	
5	1039 0106 000	FUEL UNIT	1								
6	2668 0407 000	SCREW	5								
7	1007 2824 000	WIRE A,lead	1								
8	0980 6000 001	FILTER	1								
9	0980 6100 001	PACKING	1								
10	H144 0106 016	BOLT,w/washer	2							M6×16	
11	0981 2070 250	HOSE	1								
12	0981 2080 400	HOSE	1								
13	0051 1070 070	BAND,wire	1								
14	0050 4112 005	CLAMP,hose	2							φ12	
15	0050 3113 007	CLIP,hose	2							φ13	
16	1959 0116AG0	BRACKET	1								
17	H144 0106 016	BOLT,w/washer	2							M6×16	
18	3583 6187 000	RUBBER	3								
19	0350 0130 613	WASHER	2							M6	
20	F300 0106 000	NUT,flange	2							M6	
21	1959 0127 AG0	BRACKET	1								
22	F154 0110 020	BOLT,w/washer	2							M10×20	
23	0051 1032 070	BAND,wire	1								
24	1045 0124 000	BRACKET	1								
25	F155 0110 020	BOLT,w/washer	2							M10×20	
26	HA12 1403 000	BOLT	1								
27	1957 0208 000	RUBBER	3								
28	3540 4766 000	CUSHION	1								
29	3540 4766 000	CUSHION	1					E	18G:0018～		
									18H:0017～		

FIG.301 BONNET (1/2)

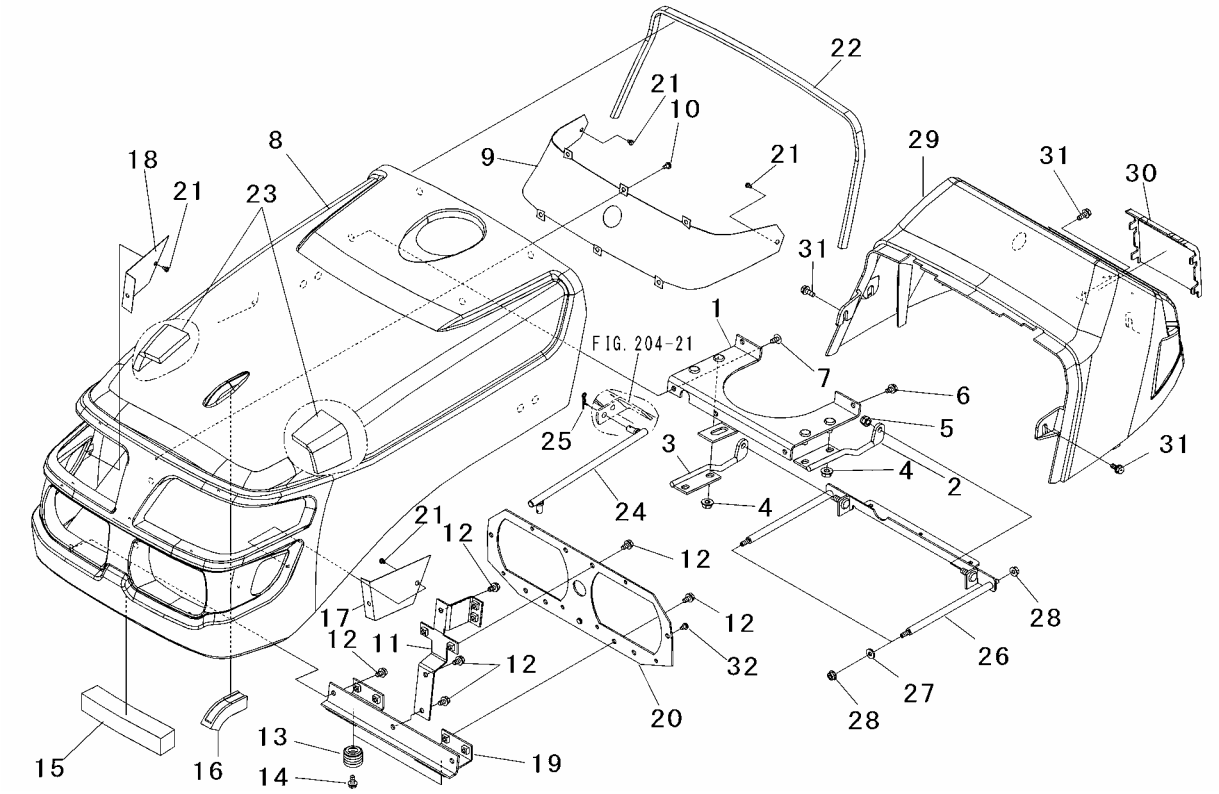

Key No.	Parts No.	Parts Name.	Q`ty ALL					R/P	Application	Description	Remarks
1	1039 2629 AG0	PLATE	1								
2	1959 2631 000	BRACKET LH	1								
3	1959 2632 000	BRACKET RH	1								
4	F301 0108 000	NUT,flange	4							M8	
5	A381 0108 000	NUT	1							M8	
6	H144 0106 012	BOLT,w/washer	2							M6×12	
7	A252 0706 012	SCREW	2							M6×12	
8	1942 2611 000	BONNET,hood	1								
9	1942 2641 AG0	SCREEN	1								
10	0432 2104 006	SCREW,tapping	6							M4×6	
11	1942 2651 AG0	BRACKET,upper	1								
12	H144 0106 012	BOLT,w/washer	11							M6×12	
13	1040 2624 001	SPRING	2								
14	F050 0106 012	BOLT,flange	2							M6×12	
15	1039 2666 000	CUSHION	1								
16	1039 2668 000	SEAL	1								
17	1942 2642 AG0	SCREEN LH,under	1								
18	1942 2643 AG0	SCREEN RH,under	1								
19	1942 2652 AG0	BRACKET,under	1								
20	1942 2653 AG0	STAY,light	1								
21	0432 2104 006	SCREW,tapping	4							M4×6	
22	1045 2608 001	RUBBER	1								
23	1045 0451 000	CUSHION	2								
24	1039 2633 000	ROD	1								
25	0521 0108 000	PIN,snap	1							φ8	
26	1045 2617 AG0	BRACKET	1								
27	3120 1709 000	WASHER	2								
28	F300 0106 000	NUT,flange	4							M6	
29	1045 2606 000	PANEL	1								
30	1045 2607 000	COVER,column	1								
31	H144 0106 016	BOLT,w/washer	4							M6×16	
32	0432 2104 006	SCREW,tapping	2							M4×6	

FIG.302 BONNET (2/2)

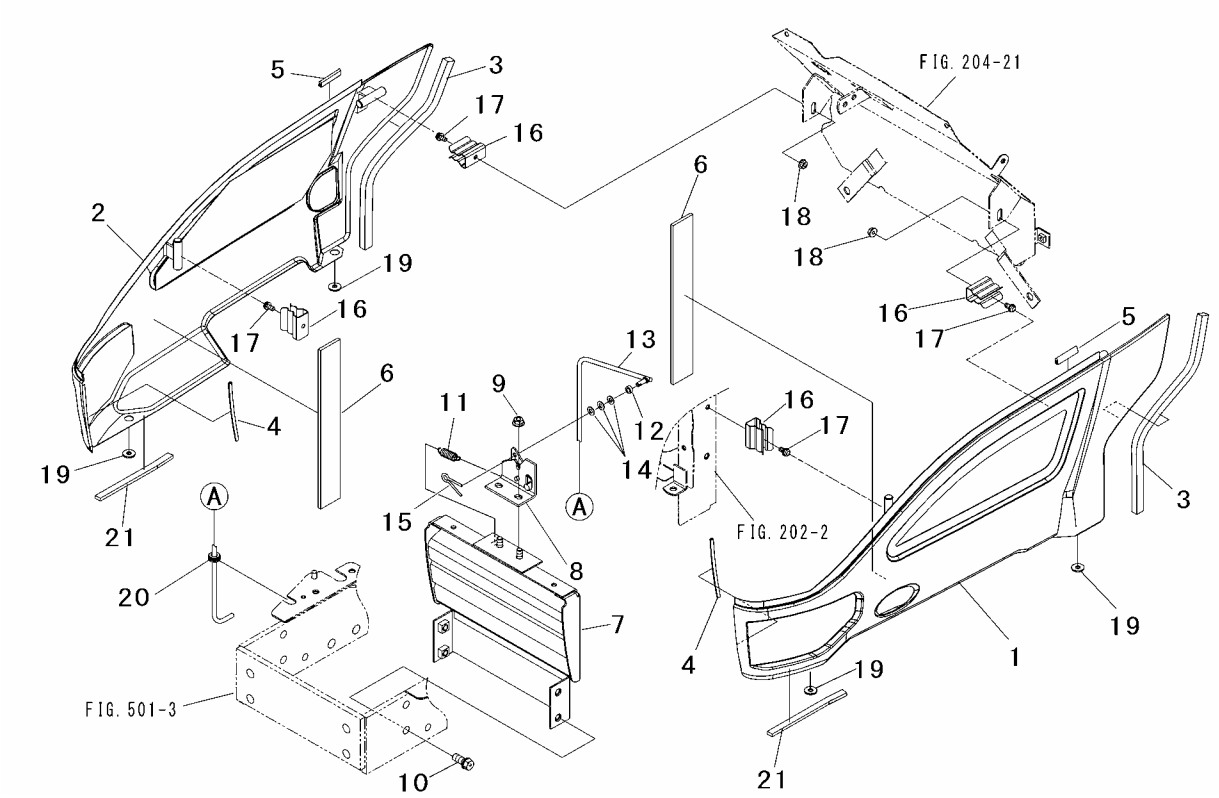

Key No.	Parts No.	Parts Name.	Q`ty ALL					R/P	Application	Description	Remarks
1	1039 2624 BR0	COVER L.H,side	1								
2	1039 2625 BR0	COVER R.H,side	1								
3	1039 2661 000	CUSHION	2								
4	1039 2636 000	RUBBER	2								
5	2794 3212 001	RUBBER	2								
6	1045 0452 000	CUSHION	2								
7	1942 2628 000	STAY,bonnet	1								
8	1038 2636 001	BRACKET	1								
9	F301 0108 000	NUT,flange	2							M8	
10	F154 0110 025	BOLT,w/washer	4							M10×25	
11	1974 0722 000	SPRING	1								
12	2793 5289 000	COLLAR	1								
13	1959 2638 000	LEVER	1								
14	0350 0130 613	WASHER	3							M6	
15	0520 0125 015	PIN,split	1							φ2.5×15	
16	1025 3320 000	SPRING	4								
17	F242 0106 012	SCREW,w/washer	4							M6×12	
18	F300 0106 000	NUT,flange	2							M6	
19	3565 3977 000	WASHER	4								
20	0040 1000 900	GROMMET	1							φ9	
21	1959 2627 000	CUSHION	2								

FIG.303 SEAT

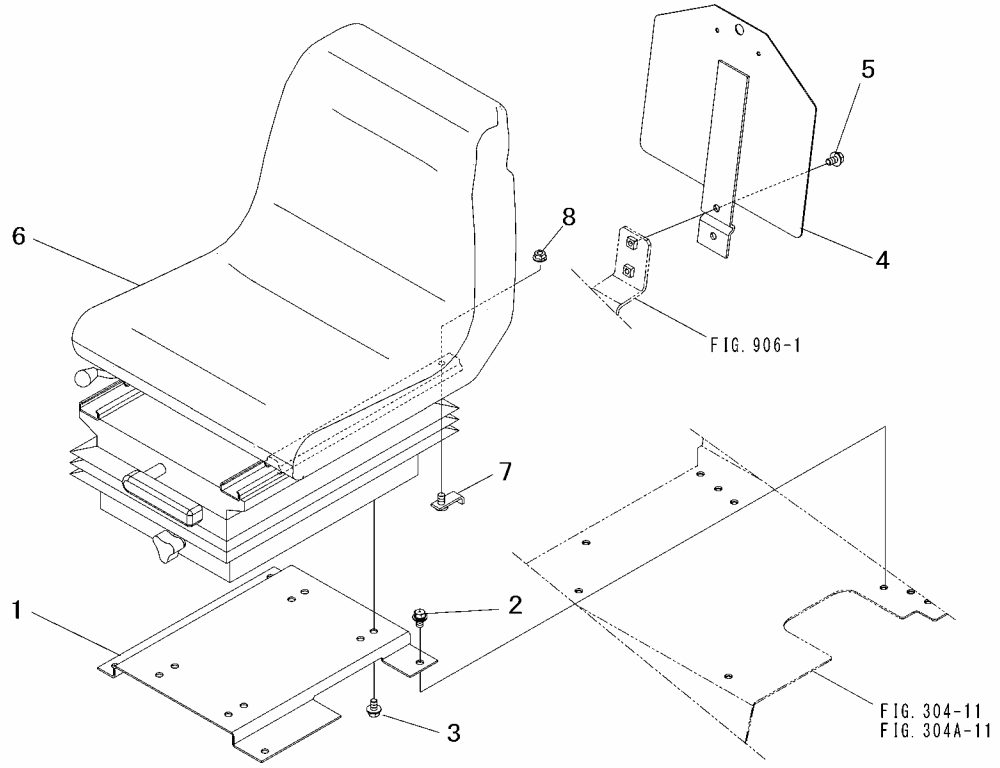

Key No.	Parts No.	Parts Name.	Q`ty					R/P	Application	Description	Remarks
			ALL								
1	1942 3411 AG0	PLATE	1								
2	H154 0108 016	BOLT,w/washer	4							M8×16	
3	H154 0108 020	BOLT,w/washer	4							M8×20	
4	1942 3421 AG0	PLATE,regist	1								
5	H154 0108 016	BOLT,w/washer	2							M8×16	
6	1942 3431 000	SEAT ASSY	1								
7	1942 3451 000	PLATE,stopper	1								
8	F301 0108 001	NUT,flange	1							M8	

FIG.304 FENDER & STEP

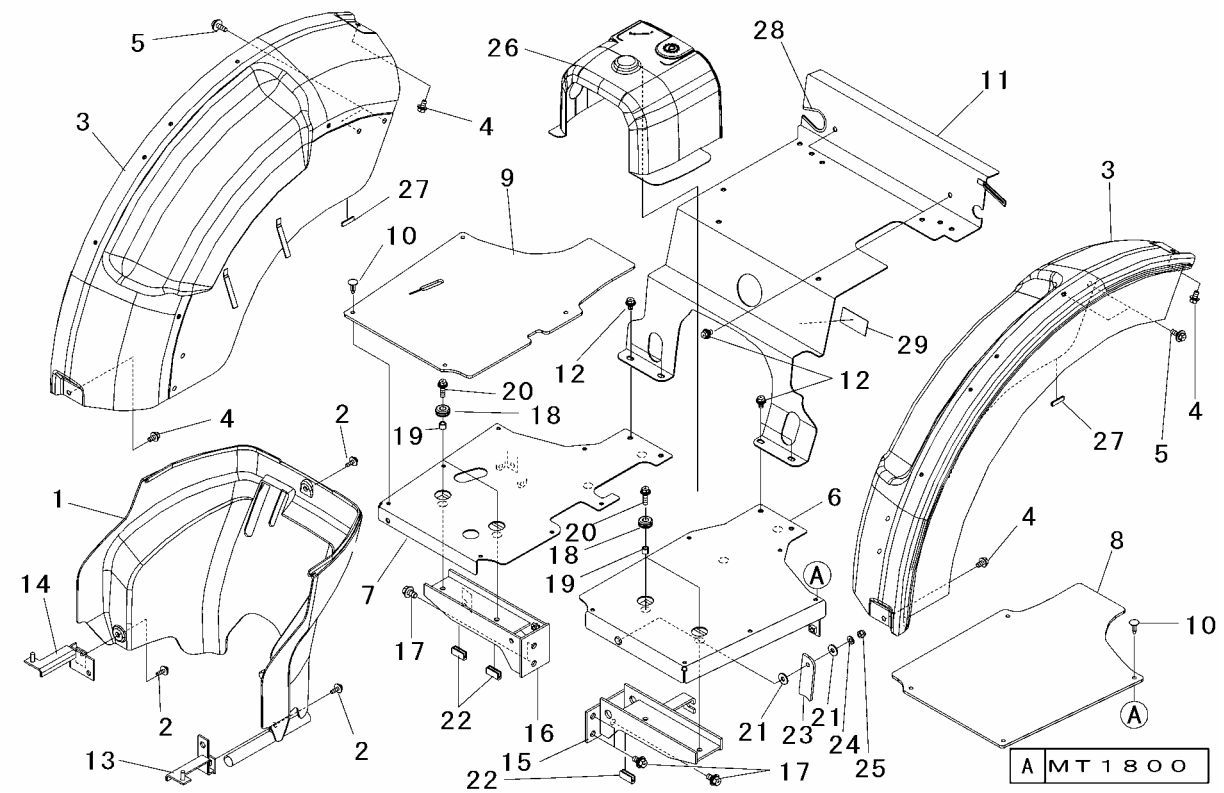

Key No.	Parts No.	Parts Name.	Q`ty A					R/P	Application	Description	Remarks
1	1959 3502 000	COVER,panel rea	1								
2	H194 0106 020	BOLT,w/washer	3							M6×20	
3	1045 3505 AE0	FENDER	2								
4	H154 0108 016	BOLT,w/washer	4							M8×16	
5	H184 0108 025	BOLT,w/washer	4							M8×25	
6	1942 3521 AE0	STEP LH	1								
7	1942 3523 AE0	STEP RH	1								
8	1942 3511 000	MAT LH,step	1								
9	1942 3512 000	MAT RH,step	1								
10	1040 6313 000	CLIP	8								
11	1942 3518 AG0	COVER,center	1								
12	H154 0108 016	BOLT,w/washer	6							M8×16	
13	1959 3528 AG1	BRACKET L,cover	1								
14	1959 3529 AG1	BRACKET R,cover	1								
15	1942 3531 AG0	BRACKET LH,step	1								
16	1942 3533 AG0	BRACKET RH,step	1								
17	H154 0110 020	BOLT,w/washer	5							M10×20	
18	1193 0439 000	GROMMET	4								
19	67700-26000	COLLAR	4								
20	H154 0108 030	BOLT,w/washer	4							M8×30	
21	0350 0150 822	WASHER	2							M8	
22	1025 3429 000	BAND,rubber	3								
23	1959 3534 001	PLATE	1								
24	A360 0100 802	WASHER,spring	1							M8	
25	A381 0108 000	NUT	1							M8	
26	1959 3515 000	COVER	1								
27	3523 4732 000	RUBBER	2								
28	3525 9242 800	SEAL A	1								
29	1039 2517 000	PLATE	1								

FIG.304A FENDER & STEP

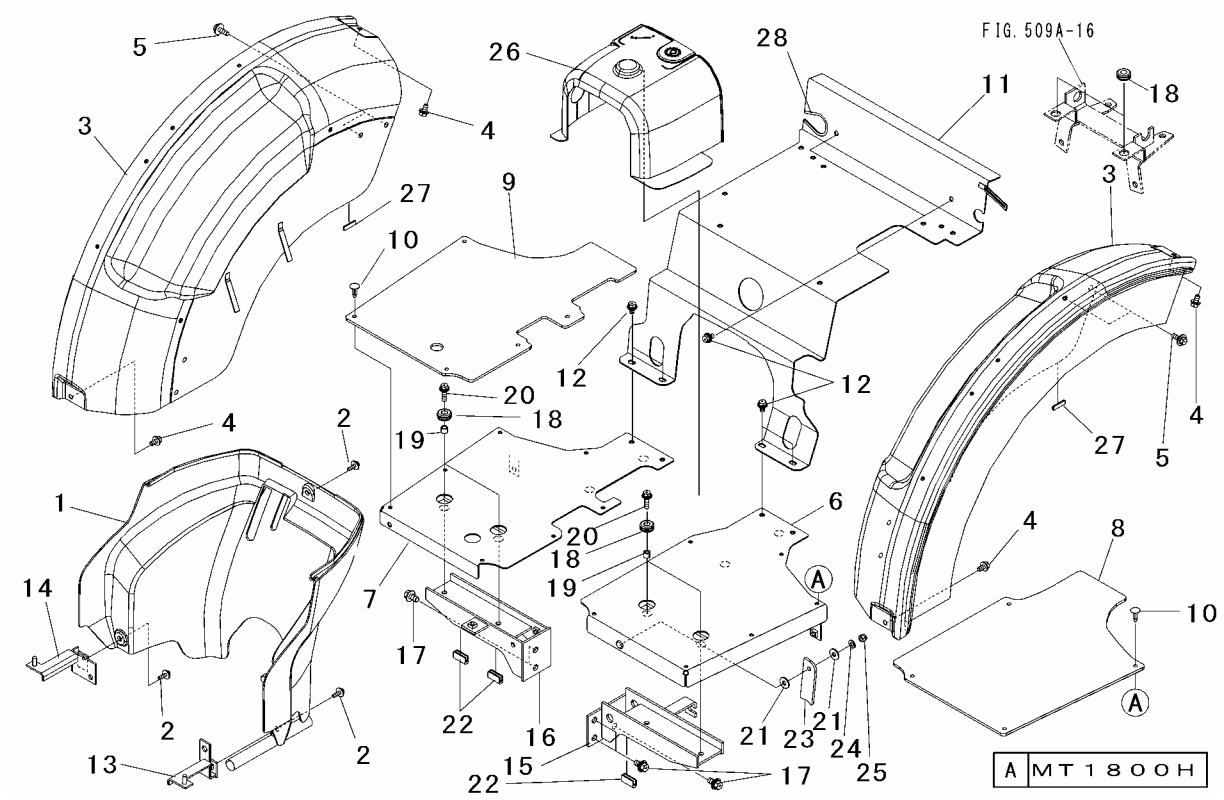

Key No.	Parts No.	Parts Name.	Q`ty A					R/P	Application	Description	Remarks
1	1959 3502 000	COVER,panel rea	1								
2	H194 0106 020	BOLT,w/washer	3							M6×20	
3	1045 3505 AE0	FENDER	2								
4	H154 0108 016	BOLT,w/washer	4							M8×16	
5	H184 0108 025	BOLT,w/washer	4							M8×25	
6	1942 3521 AE0	STEP LH	1								
7	1959 3523 AE1	STEP RH	1								
8	1942 3511 000	MAT LH,step	1								
9	1959 3512 000	MAT RH,step	1								
10	1040 6313 000	CLIP	9								
11	1942 3518 AG0	COVER,center	1								
12	H154 0108 016	BOLT,w/washer	6							M8×16	
13	1959 3528 AG1	BRACKET L,cover	1								
14	1959 3529 AG1	BRACKET R,cover	1								
15	1942 3531 AG0	BRACKET LH,step	1								
16	1942 3532 AG0	BRACKET RH,step	1								
17	H154 0110 020	BOLT,w/washer	5							M10×20	
18	1193 0439 000	GROMMET	6								
19	67700-26000	COLLAR	4								
20	H154 0108 030	BOLT,w/washer	4							M8×30	
21	0350 0150 822	WASHER	2							M8	
22	1025 3429 000	BAND,rubber	3								
23	1959 3534 001	PLATE	1								
24	A360 0100 802	WASHER,spring	1							M8	
25	A381 0108 000	NUT	1							M8	
26	1959 3515 000	COVER	1								
27	3523 4732 000	RUBBER	2								
28	3525 9242 800	SEAL A	1								

FIG.401 CLUTCH HOUSING

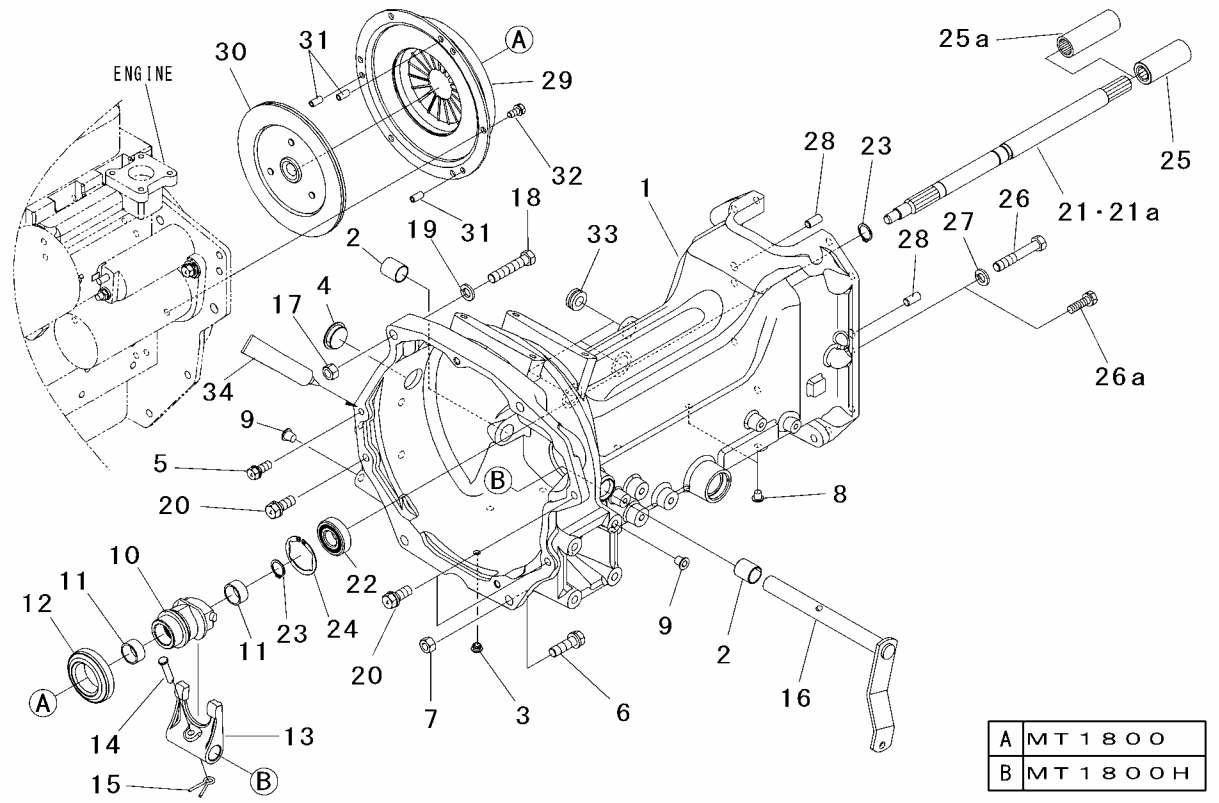

Key No.	Parts No.	Parts Name.	Q`ty A	Q`ty B				R/P	Application	Description	Remarks
1	1959 1001 AG2	HOUSING,clutch	1	1							
2	0796 1020 250	BUSHING	2	2							
3	2761 3733 000	CAP	1	1							
4	3518 1125 000	CAP,seal	1	1							
5	F154 0110 030	BOLT,w/washer	1	1						M10×30	
6	F155 0112 040	BOLT,w/washer	2	2						M12×40	
7	A303 0112 002	NUT	2	2						M12	
8	05534-10000	PLUG	8	8							
9	05534-12000	PLUG	8	8							
10	1959 1021 000	HUB,release	1	1							
11	0797 2020 150	BUSHING	2	2							
12	1176 1015 000	BEARING	1	1							
13	1176 1014 001	LEVER,clutch	1	1							
14	F2855-08040	PIN,clevis	1	1						φ8×40	
15	0520 0120 020	PIN,split	1	1						φ2×20	
16	1959 1011 AG0	SHAFT,release	1	1							
17	A303 0112 002	NUT	2	2						M12	
18	A055 0112 070	BOLT 7T	2	2						M12×70	
19	A360 0101 202	WASHER,spring	2	2						M12	
20	F154 0112 030	BOLT,w/washer	3	3						M12×30	
21	1959 1031 000	SHAFT,drive	1	・							
21a	1942 1035 000	SHAFT,drive	・	1							
22	0750 0562 044	BEARING,ball	1	1						6204DD	
23	0740 0002 000	C-RING	2	2						φ20	
24	0741 0004 701	C-RING	1	1						φ47	
25	1044 1214 000	BOSS,spline	1	・							
25a	1029 1943 000	JOINT	・	1							
26	A054 0112 070	BOLT 7T	・	10						M12×70	
26a	F154 0112 035	BOLT,w/washer	10	・						M12×35	
27	A360 0101 202	WASHER,spring	・	10						M12	
28	0540 1010 020	PIN,dowel	2	2						φ10×20	
29	1039 1111 000	CLUTCH COVER	1	1							
30	1039 1112 000	CLUTCH DISK	1	1							
31	0550 0008 016	PIN,spring	3	3						φ8×16	
32	F154 0108 016	BOLT,w/washer	6	6						M8×16	

FIG.401 CLUTCH HOUSING

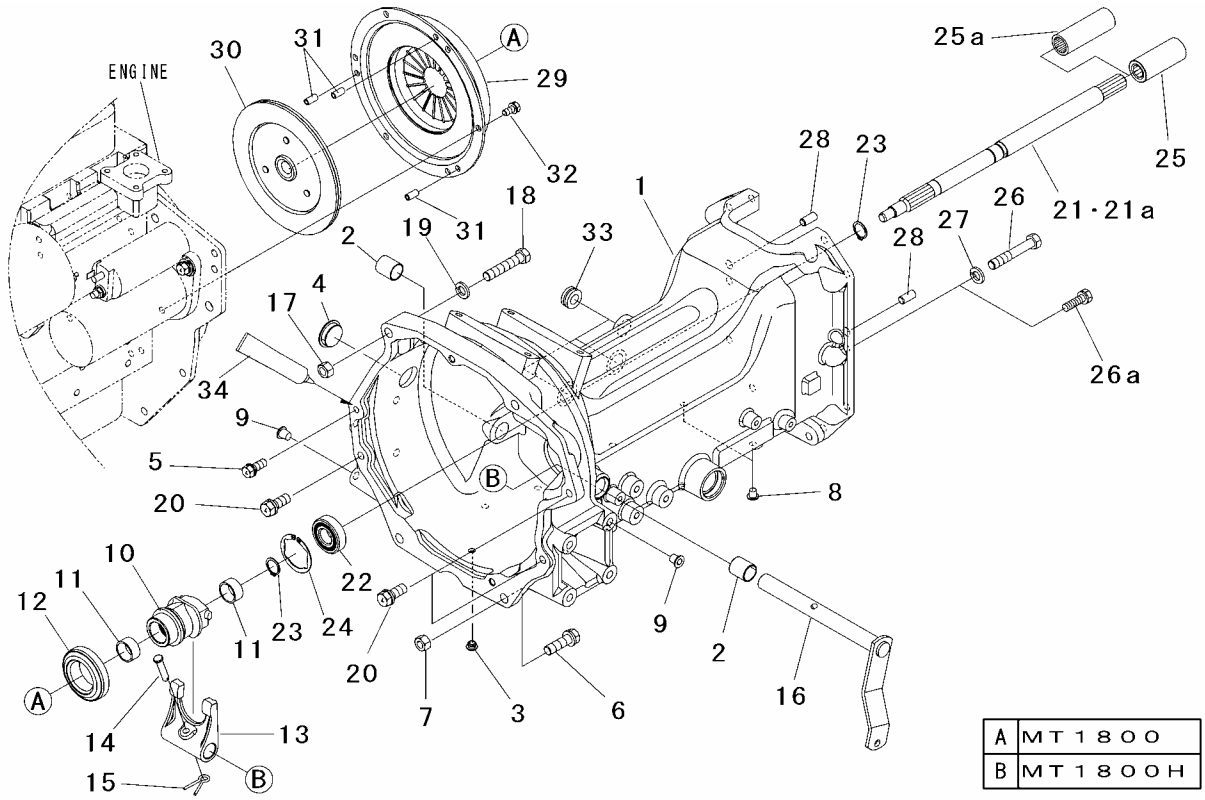

Key No.	Parts No.	Parts Name.	Q`ty A	Q`ty B				R/P	Application	Description	Remarks
33	1942 1031 000	GROMMET	3	·							
34	TB1206D	GASKET	AR	AR							

FIG.402 TRANSMISSION (1/8)(GEAR)

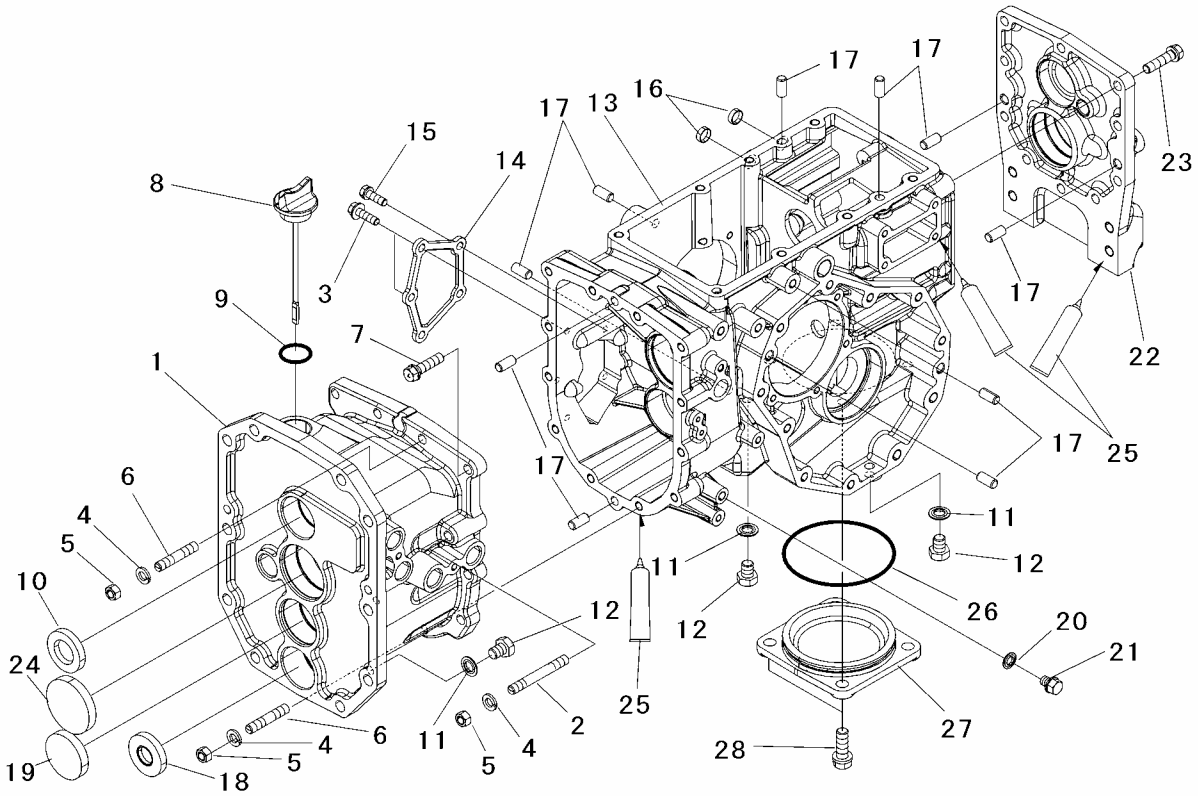

Key No.	Parts No.	Parts Name.	Q`ty ALL					R/P	Application	Description	Remarks
1	1942 1202 AG1	CASE,center	1								
2	A063 0110 060	STUD	1								
3	H154 0108 030	BOLT,w/washer	2							M8×30	
4	A360 0101 002	WASHER,spring	5							M10	
5	A301 0110 002	NUT	5							M10	
6	A063 0110 035	STUD	4								
7	F154 0110 040	BOLT,w/washer	7							M10×40	
8	1981 2472 002	PLUG,oiling	1								
9	0830 0100 280	O-RING	1							φ28	
10	0840 1025 478	SEAL,oil	1							TC25478	
11	0833 1001 200	WASHER,seal	3							M12	
12	1025 0808 000	PLUG	3								
13	1959 1303 AG1	HOUSING,diff	1								
14	1959 1307 AG0	COVER	1								
15	F154 0108 025	BOLT,w/washer	3							M8×25	
16	0834 0016 050	CAP,seal	2							φ16	
17	0540 1010 020	PIN,dowel	10							φ10×20	
18	2757 1411 000	SEAL,oil	1							TC20428	
19	0834 0052 100	CAP,seal	1							φ52	
20	0833 1001 000	WASHER,seal	1							M10	
21	1022 1733 000	BOLT	1								
22	1959 1304 AG0	COVER,pto	1								
23	F154 0110 040	BOLT,w/washer	10							M10×40	
24	0834 0062 100	CAP,seal	1							φ62	
25	TB1206D	GASKET	AR								
26	0830 0201 100	O-RING	1							φ110	
27	1957 1602 AG0	COVER	1								
28	F154 0112 035	BOLT,w/washer	2							M12×35	

FIG.403 TRANSMISSION (2/8)(GEAR)

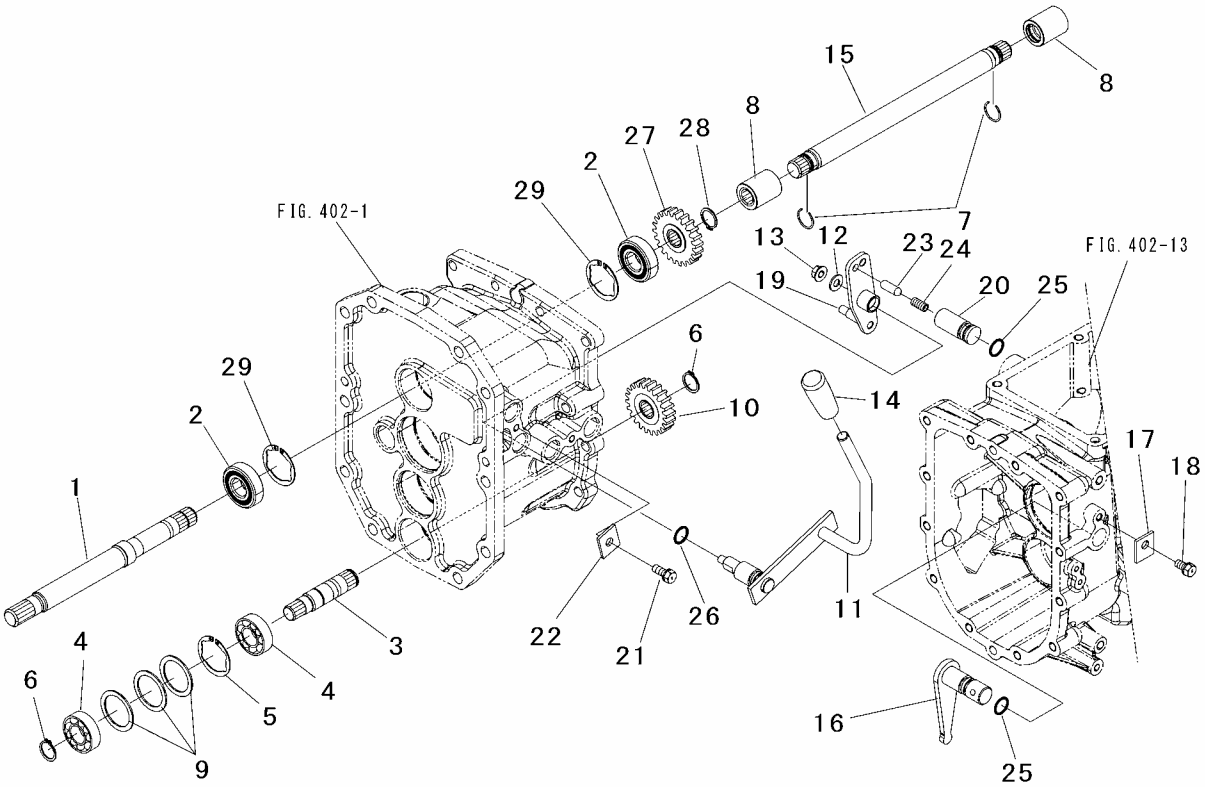

Key No.	Parts No.	Parts Name.	Q`ty ALL					R/P	Application	Description	Remarks
1	1942 1218 000	SHAFT,drive	1								
2	0750 0562 044	BEARING,ball	2							6204DD	
3	1942 1245 000	SHAFT	1								
4	0752 0662 040	BEARING,ball	2							6204	
5	0741 0004 701	C-RING	1							φ47	
6	0740 0002 000	C-RING	2							φ20	
7	1031 1363 001	RING	2								
8	1044 1278 000	BOSS,spline	2								
9	0730 0004 716	LINER	3							t=1.6	
10	1942 1243 000	GEAR 22T	1							22T	
11	1942 1262 AG0	LEVER,4wd	1								
12	0350 0140 818	WASHER	1							M8	
13	F301 0108 000	NUT,flange	1							M8	
14	0691 0012 258	GRIP	1								
15	1942 1248 000	SHAFT	1								
16	1045 1238 000	SHIFTER	1								
17	1025 1304 000	PLATE	1								
18	F154 0108 016	BOLT,w/washer	1							M8×16	
19	1942 1261 000	SHIFTER,4wd	1								
20	1044 1726 000	HOLDER,spring	1								
21	F154 0108 020	BOLT,w/washer	1							M8×20	
22	1025 1109 001	PLATE	1								
23	1174 1737 000	PIN	1								
24	1030 1791 000	SPRING	1								
25	0830 0100 160	O-RING	2							φ16	
26	0830 0100 160	O-RING	1							φ16	
27	1942 1219 000	GEAR 22T	1							22T	
28	0740 0002 000	C-RING	1							φ20	
29	0741 0004 701	C-RING	2							φ47	

FIG.404 TRANSMISSION (3/8)(GEAR)

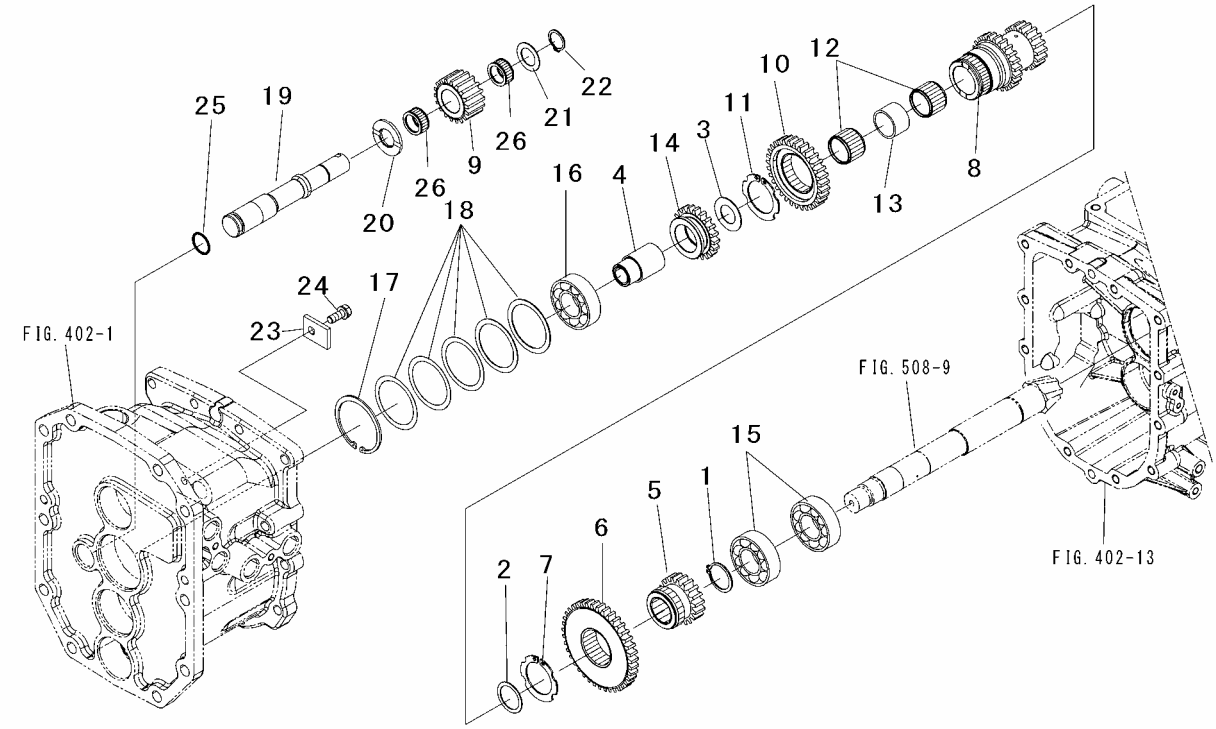

Key No.	Parts No.	Parts Name.	Q`ty ALL					R/P	Application	Description	Remarks
1	0740 0003 000	C-RING	1							φ30	
2	1045 1217 000	LINER	1								
3	1406 1166 000	LINER	1								
4	1942 1244 000	BOSS	1								
5	1942 1231 000	GEAR 19T	1							19T	
6	1942 1233 000	GEAR 39T	1							39T	
7	0740 0004 201	C-RING	1							φ42	
8	1942 1221 000	GEAR 18-23T	1							18-23T	
9	1045 1249 000	GEAR 18T	1							18T	
10	1942 1224 000	GEAR 31T	1							31T	
11	0740 0004 501	C-RING	1							φ45	
12	1039 1214 000	BEARING	2								
13	1942 1226 000	COLLAR	1								
14	1942 1241 000	GEAR 21T	1							21T	
15	0750 0062 060	BEARING,ball	2							6206	
16	0750 0063 050	BEARING,ball	1							6305	
17	0741 0006 200	C-RING	1							φ62	
18	0730 0006 201	LINER	AR							t=0.15	
	0730 0006 202	LINER	AR							t=0.2	
	0730 0006 204	LINER	AR							t=0.4	
	0730 0006 208	LINER	AR							t=0.8	
	0730 0006 210	LINER	AR							t=1.0	
19	1942 1225 000	SHAFT,idle	1								
20	1174 1299 000	SPACER	1								
21	1352 1406 000	LINER B,thrust	1								
22	0740 0002 000	C-RING	1							φ20	
23	1031 1328 000	PLATE	1								
24	F154 0108 020	BOLT,w/washer	1							M8×20	
25	0830 0100 210	O-RING	1							φ21	
26	0780 2202 612	BEARING,needle	2								

FIG.405 TRANSMISSION (4/8)(GEAR)

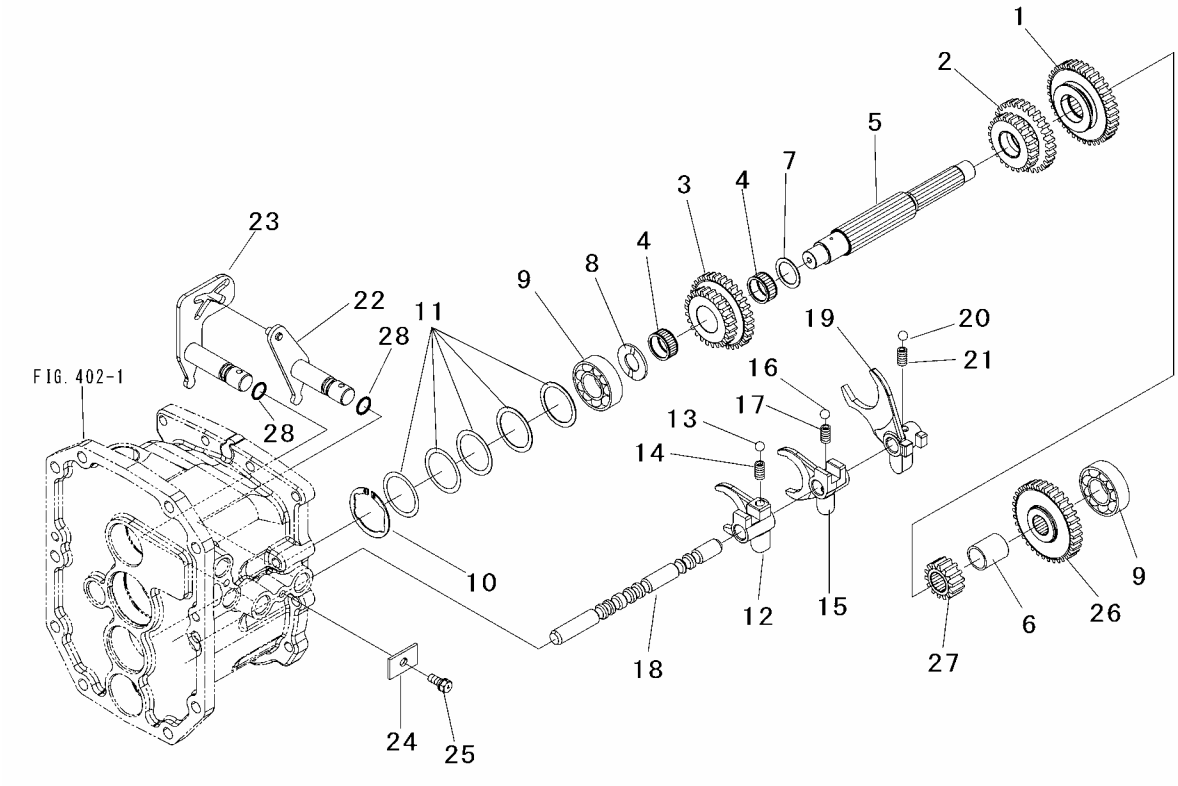

Key No.	Parts No.	Parts Name.	Q`ty ALL					R/P	Application	Description	Remarks
1	1045 1242 000	GEAR 36T	1							36T	
2	1045 1256 000	GEAR 23-30T	1							23-30T	
3	1942 1242 000	GEAR 24-31T	1							24-31T	
4	0780 2253 013	BEARIGN,needle	2								
5	1942 1235 000	SHAFT	1								
6	1959 1321 000	COLLAR	1								
7	3518 1102 001	LINER	1								
8	1174 1299 000	SPACER	1								
9	0750 0063 040	BEARING,ball	2							6304	
10	0741 0005 201	C-RING	1							φ52	
11	0730 0005 201	LINER	AR							t=0.15	
	0730 0005 202	LINER	AR							t=0.2	
	0730 0005 204	LINER	AR							t=0.4	
	0730 0005 208	LINER	AR							t=0.8	
	0730 0005 210	LINER	AR							t=1.0	
12	1045 1232 000	FORK,main 2-3	1								
13	0800 0001 000	BALL	1							3/8″	
14	1025 1305 000	SPRING	1								
15	1045 1233 000	FORK,main 1-r	1								
16	0800 0001 000	BALL	1							3/8″	
17	1025 1305 000	SPRING	1								
18	1942 1251 000	RAIL MAIN	1								
19	1045 1237 002	FORK,sub	1								
20	0800 0001 000	BALL	1							3/8″	
21	1025 1305 000	SPRING	1								
22	1045 1235 000	SHIFTER A,main	1								
23	1942 1252 000	SHIFTER B,main	1								
24	1045 1215 000	PLATE	1								
25	F154 0108 020	BOLT,w/washer	1							M8×20	
26	1942 1232 000	GEAR 34T	1							34T	
27	1942 1234 000	GEAR 14T	1							14T	
28	0830 0100 160	O-RING	2							φ16	

FIG.406 TRANSMISSION (5/8)(HST)

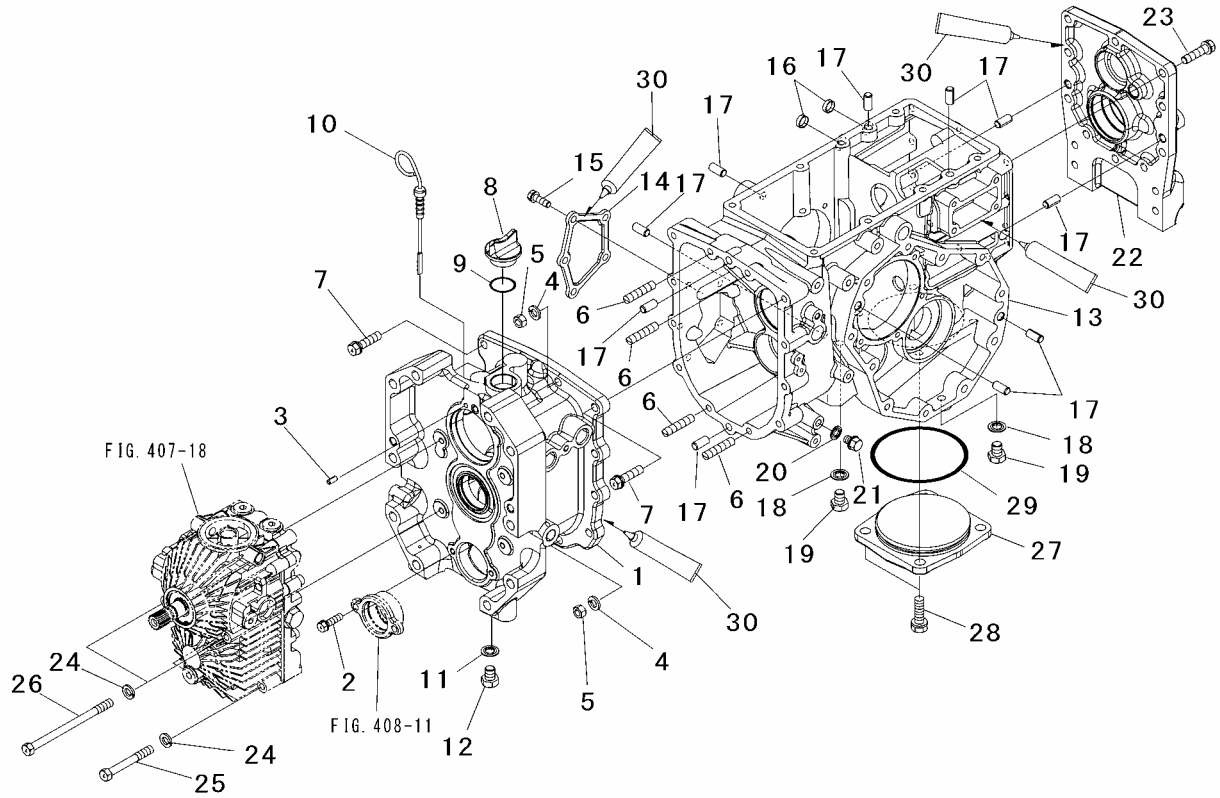

Key No.	Parts No.	Parts Name.	Q`ty ALL					R/P	Application	Description	Remarks
1	1942 1302 AG0	CASE,center	1					D	18H:～0016		
	1942 1302 AG1	CASE,center	1						18H:0017～		
2	F154 0108 025	BOLT,w/washer	2							M8×25	
3	0540 1006 012	PIN,dowel	1							φ6×12	
4	A360 0101 002	WASHER,spring	4							M10	
5	A301 0110 002	NUT	4							M10	
6	A063 0110 035	STUD	4							M10×35	
7	F154 0110 040	BOLT,w/washer	8							M10×40	
8	67472-10601	PLUG,oil	1								
9	0830 0100 280	O-RING	1							φ28	
10	1959 1381 000	GAGE,oil	1								
11	0833 1001 200	WASHER,seal	1							M12	
12	1025 0808 000	PLUG	1								
13	1959 1303 AG1	HOUSING,diff	1								
14	1959 1307 AG0	COVER	1								
15	F154 0108 025	BOLT,w/washer	5							M8×25	
16	0834 0016 050	CAP,seal	2							φ16	
17	0540 1010 020	PIN,dowel	10							φ10×20	
18	0833 1001 200	WASHER,seal	2							M12	
19	1025 0808 000	PLUG	2								
20	0833 1001 000	WASHER,seal	1							M10	
21	1022 1733 000	BOLT	1								
22	1959 1304 AG0	COVER,pto	1								
23	F154 0110 040	BOLT,w/washer	10							M10×40	
24	A360 0100 802	WASHER,spring	4							M8	
25	A054 0108 075	BOLT 7T	2							M8×75	
26	A054 0108 140	BOLT 7T	2							M8×140	
27	1957 1602 AG0	COVER	1								
28	F154 0112 035	BOLT,w/washer	2							M12×35	
29	0830 0201 100	O-RING	1							φ110	
30	TB1206D	GASKET	AR								

FIG.407 TRANSMISSION (6/8)(HST)

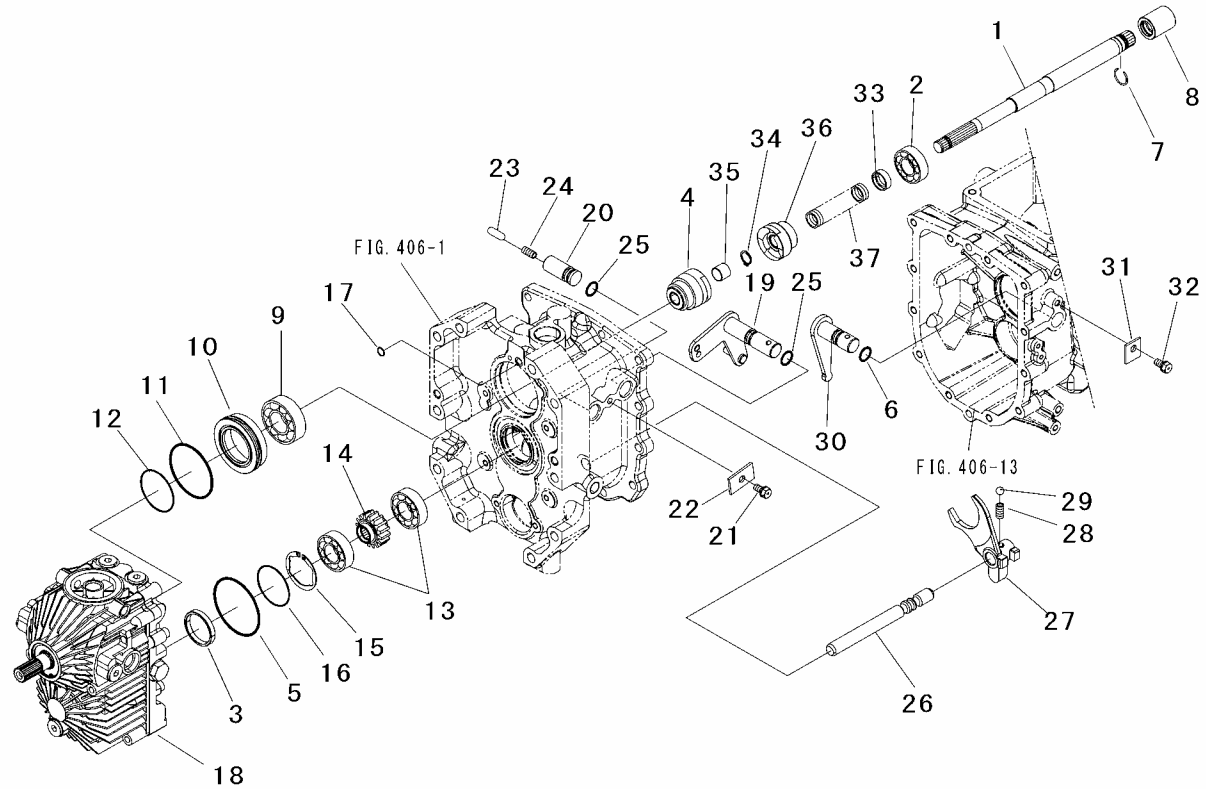

Key No.	Parts No.	Parts Name.	Q`ty ALL					R/P	Application	Description	Remarks
1	1942 1351 000	SHAFT	1								
2	0750 0062 040	BEARING,ball	1							6204	
3	1942 1395 000	COLLAR	1								
4	1942 1341 000	CLUTCH A	1								
5	0830 0200 750	O-RING	1							φ75	
6	0830 0100 160	O-RING	1							φ16	
7	1031 1363 001	RING	1								
8	1044 1278 000	BOSS,spline	1								
9	0750 0060 060	BEARING,ball	1							6006	
10	1942 1306 000	HOLDER	1								
11	0830 0200 700	O-RING	1							φ70	
12	0830 0500 550	O-RING	1							φ55	
13	0750 0060 050	BEARING,ball	2							6005	
14	1942 1313 000	GEAR16T	1							16T	
15	0741 0004 701	C-RING	1							φ47	
16	0830 0500 530	O-RING	1							φ53	
17	0830 0500 100	O-RING	1					D	18H:～0016	φ10	
	0830 0100 090	O-RING	1						18H:0017～	φ9	
18	1942 1301 000	HST UNIT	1								
19	1959 1345 000	SHIFTER,4wd	1								
20	1044 1726 000	HOLDER,spring	1								
21	F154 0108 016	BOLT,w/washer	1							M8×16	
22	1045 1215 000	PLATE	1								
23	1174 1737 000	PIN	1								
24	1030 1791 000	SPRING	1								
25	0830 0100 160	O-RING	2							φ16	
26	1959 1336 000	RAIL,sub	1								
27	1045 1237 002	FORK,sub	1								
28	1025 1305 000	SPRING	1								
29	0800 0001 000	BALL	1							3/8″	
30	1959 1338 000	SHIFTER	1								
31	1025 1304 000	PLATE	1								
32	F154 0108 016	BOLT,w/washer	1							M8×16	
33	1963 1261 000	COLLAR	1								
34	0740 0001 600	C-RING	1							φ16	

FIG.407 TRANSMISSION (6/8)(HST)

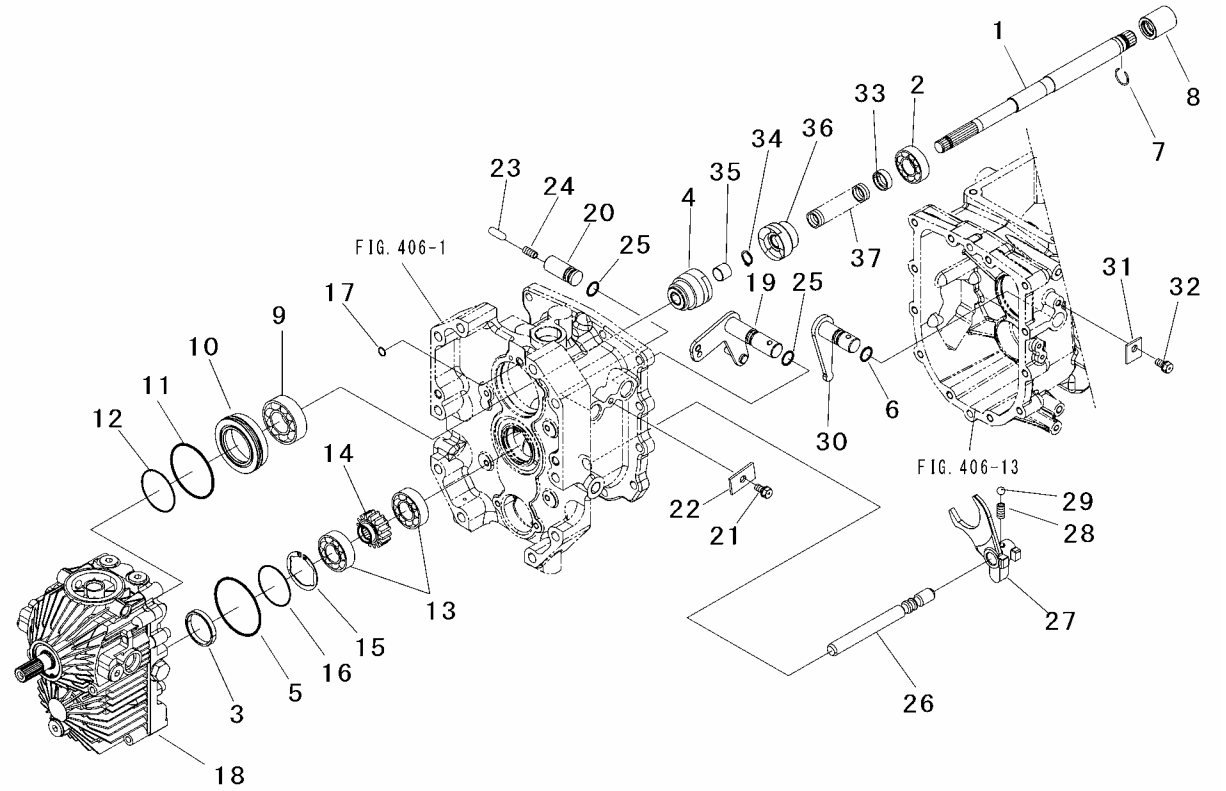

Key No.	Parts No.	Parts Name.	Q`ty ALL					R/P	Application	Description	Remarks
35	0796 1016 150	BUSHING	1								
36	1963 1342 000	CLUTCH B	1								
37	1981 1605 000	SPRING	1								

FIG.408 TRANSMISSION (7/8)(HST)

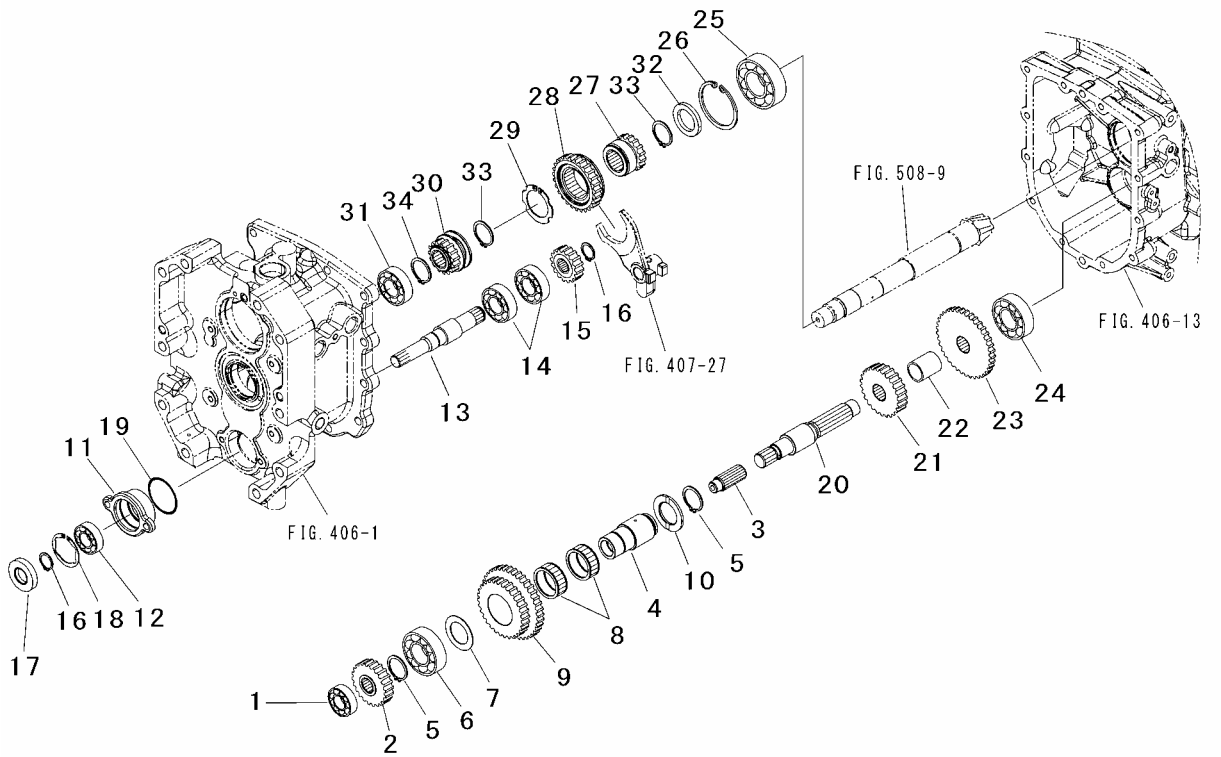

Key No.	Parts No.	Parts Name.	Q`ty ALL					R/P	Application	Description	Remarks
1	0750 0063 020	BEARING,ball	1							6302	
2	1959 1314 000	GEAR 22T	1							22T	
3	1959 1315 000	SHAFT	1								
4	1959 1316 000	BOSS	1								
5	0740 0003 000	C-RING	2							φ30	
6	0750 0062 060	BEARING,ball	1							6206	
7	1044 1235 000	LINER	1								
8	0780 2354 216	BEARING,needle	2								
9	1959 1337 000	GEAR 30-38T	1							30-38T	
10	1041 1237 000	LINER	1								
11	1959 1342 000	HOLDER	1								
12	0750 0060 040	BEARING,ball	1							6004	
13	1959 1341 000	SHAFT,4wd	1								
14	0750 0062 040	BEARING,ball	2							6204	
15	1959 1339 000	GEAR 16T	1							16T	
16	0740 0002 000	C-RING	2							φ20	
17	0840 1020 428	SEAL,oil	1							TC20428	
18	0741 0004 201	C-RING	1							φ42	
19	0830 0500 500	O-RING	1							φ50	
20	1959 1317 000	SHAFT,sub	1								
21	1959 1318 000	GEAR 25T	1							25T	
22	1959 1321 000	COLLAR	1								
23	1959 1319 000	GEAR 37T	1							37T	
24	0750 0063 040	BEARING,ball	1							6304	
25	3574 1264 000	BEARING	1								
26	0741 0006 200	C-RING	1							φ62	
27	1959 1332 000	GEAR 16T	1							16T	
28	1959 1331 000	GEAR 27T	1							27T	
29	0740 0004 201	C-RING	1							φ42	
30	1959 1335 000	GEAR 15T	1							15T	
31	0750 0062 040	BEARING,ball	1							6204	
32	1959 1333 000	COLLAR	1								
33	0740 0003 000	C-RING	2							φ30	
34	0740 0002 500	C-RING	1							φ25	

FIG.409 TRANSMISSION (8/8)

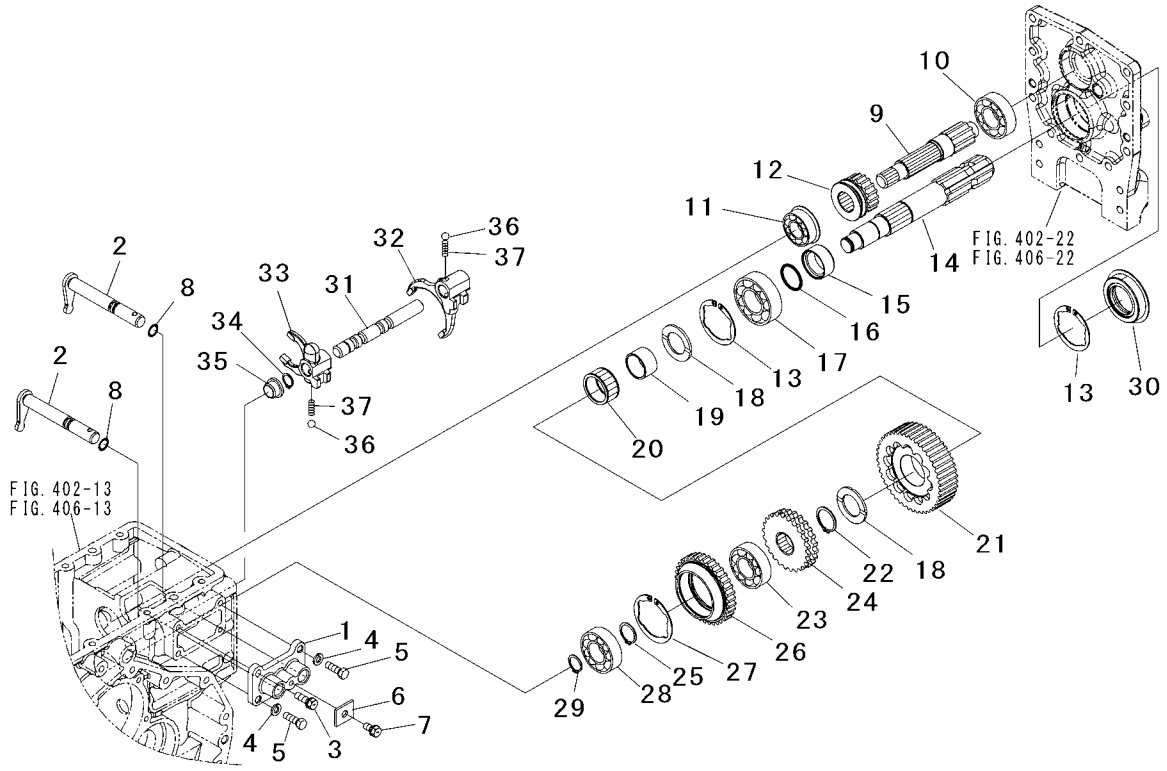

Key No.	Parts No.	Parts Name.	Q`ty ALL					R/P	Application	Description	Remarks
1	1957 1735 AG0	COVER	1								
2	1959 1375 000	SHIFTER,pto	2								
3	F154 0108 025	BOLT,w/washer	2							M8×25	
4	A360 0100 802	WASHER,spring	2							M8	
5	3700 1063 000	BOLT,reamer	2								
6	1025 1109 001	PLATE	1								
7	F154 0108 016	BOLT,w/washer	1							M8×16	
8	0830 1100 120	O-RING	2							φ12	
9	1959 1353 000	SHAFT,pto drive	1								
10	0752 0663 040	BEARING,ball	1							6304RSH2	
11	1045 1286 000	BEARING	1								
12	1959 1355 000	GEAR 18T	1							18T	
13	0741 0006 201	C-RING	2							φ62	
14	1959 1361 000	SHAFT,pto	1								
15	1025 1405 000	BUSHING	1								
16	0830 0100 300	O-RING	1							φ30	
17	0750 0062 060	BEARING,ball	1							6206	
18	1041 1237 000	LINER	2								
19	3559 6104 100	SLEEVE	1								
20	0780 2354 220	BEARING,needle	1								
21	1959 1363 000	GEAR 44T	1							44T	
22	0740 0003 000	C-RING	1							φ30	
23	0750 0063 050	BEARING,ball	1							6305	
24	1959 1365 000	GEAR 24T	1							24T	
25	0740 0002 500	C-RING	1							φ25	
26	1959 1367 000	GEAR 35T	1							35T	
27	0741 0006 201	C-RING	1							φ62	
28	0752 0662 040	BEARING,ball	1							6204	
29	0740 0002 000	C-RING	1							φ20	
30	1021 1314 000	SEAL,oil	1								
31	1959 1373 000	RAIL,pto	1								
32	1959 1371 000	FORK,rear pto	1								
33	1959 1372 000	FORK,mid pto	1								
34	0740 0001 600	C-RING	1							φ16	
35	1957 1732 000	SPACER	1								

FIG.409 TRANSMISSION (8/8)

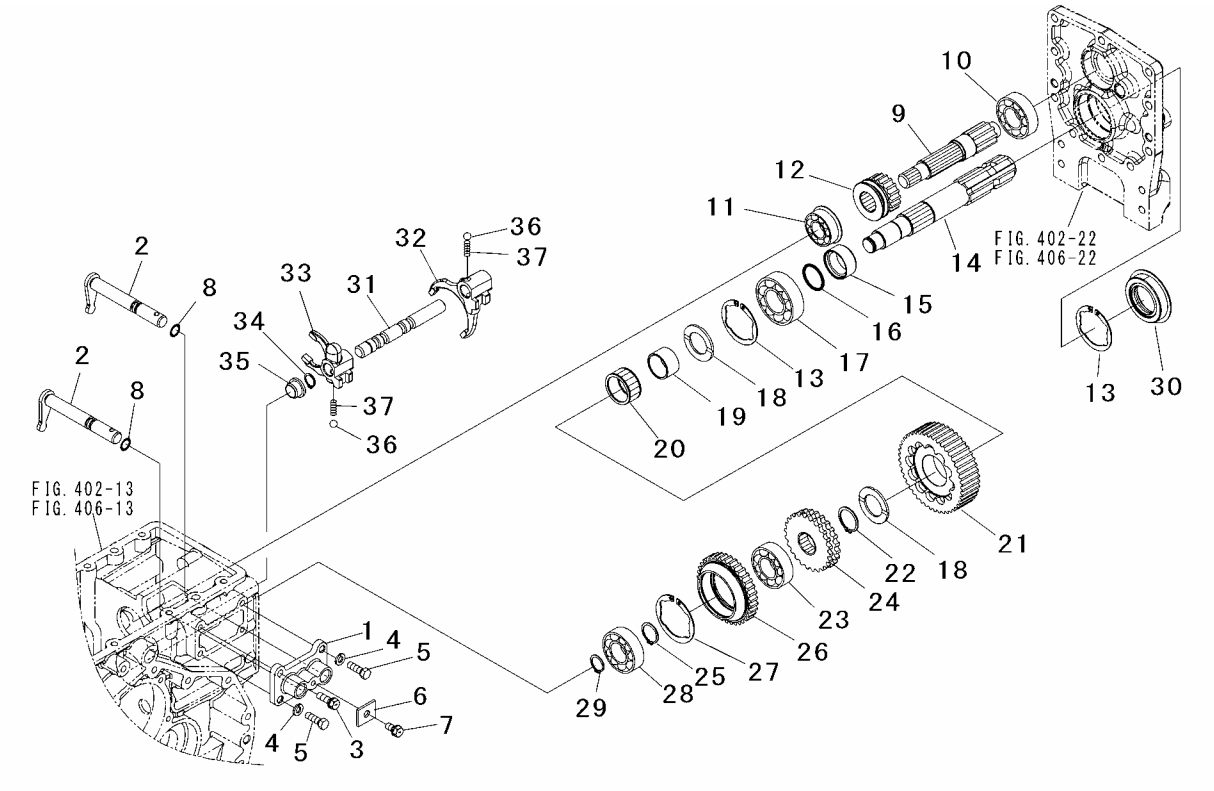

Key No.	Parts No.	Parts Name.	Q`ty ALL					R/P	Application	Description	Remarks
36	0800 0000 900	BALL	2							11/32″	
37	1037 1764 001	SPRING	2								

FIG.501 FRONT AXLE (1/7)

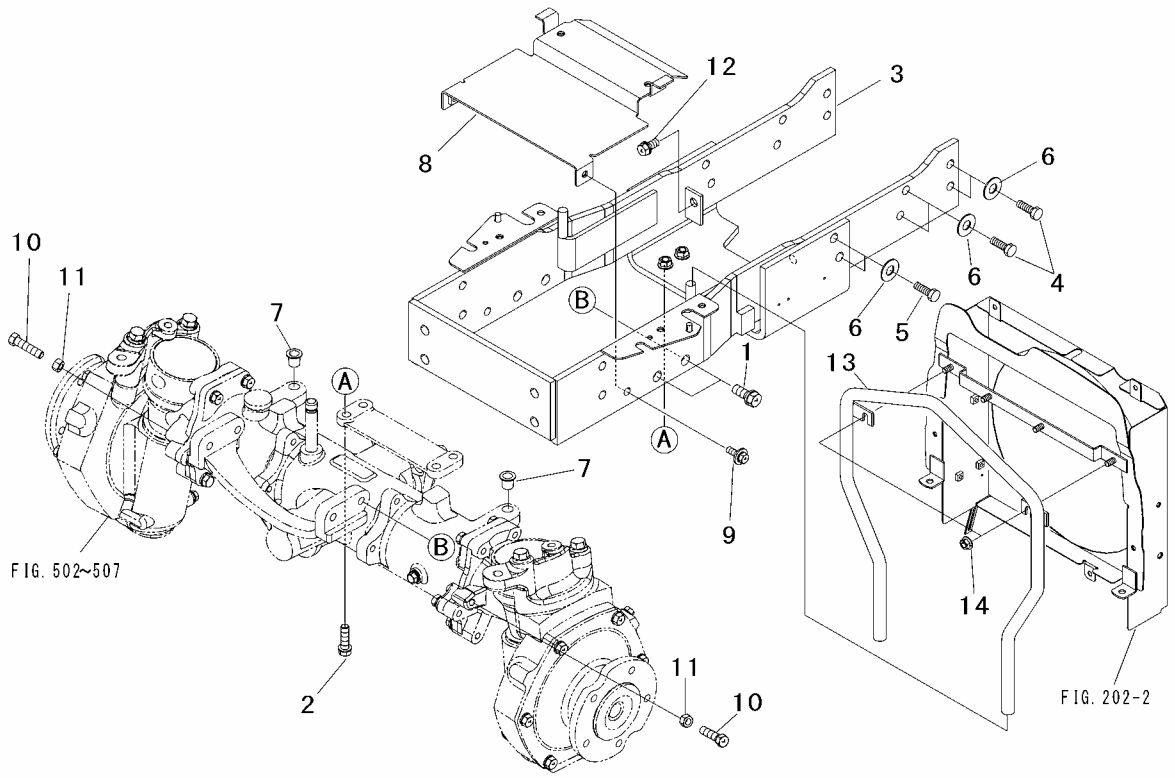

Key No.	Parts No.	Parts Name.	Q`ty ALL					R/P	Application	Description	Remarks
1	F154 0112 030	BOLT,w/washer	4							M12×30	
2	F154 0110 035	BOLT,w/washer	4							M10×35	
3	1959 2101 AG2	FRAME	1								
4	A942 0110 030	BOLT 10.9T	8							M10×30	
5	A942 0110 035	BOLT 10.9T	4							M10×35	
6	0355 0161 021	WASHER	12							M10	
7	05534-16000	CAP,rubber	2								
8	1959 2113 AG1	BRACKET,battery	1								
9	H184 0108 025	BOLT,w/washer	2							M8×25	
10	A050 0110 040	BOLT 7T	2							M10×40	
11	A301 0110 002	NUT	2							M10	
12	F155 0110 020	BOLT,w/washer	2							M10×20	
13	1942 2112 ZB0	FRAME,front	1								
14	F301 0108 000	NUT,flange	2							M8	

FIG.502 FRONT AXLE (2/7)

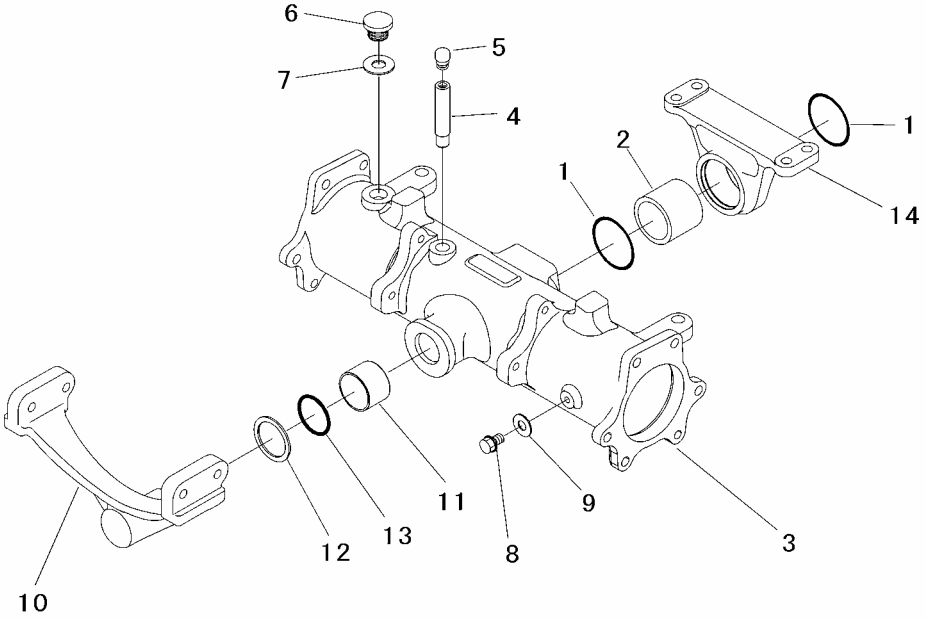

Key No.	Parts No.	Parts Name.	Q`ty ALL					R/P	Application	Description	Remarks
1	0830 0100 500	O-RING	2							φ50	
2	0796 1050 300	BUSHING	1								
3	1044 2101 AG0	HOUSING,axle a	1								
4	1025 2178 001	PIPE	1								
5	1119 0621 000	PLUG,vent	1								
6	2740 3214 100	PLUG,oiling	1								
7	SH51 3880 000	PACKING	1								
8	2740 3214 200	PLUG	1								
9	0833 1000 800	WASHER,seal	1							M8	
10	1044 2142 AG1	HOLDER,front	1								
11	0796 1030 300	BUSHING	1								
12	3700 1127 000	LINER	1								
13	0830 0100 300	O-RING	1							φ30	
14	1044 2141 AG1	BRACKET,rear	1								

FIG.503 FRONT AXLE (3/7)

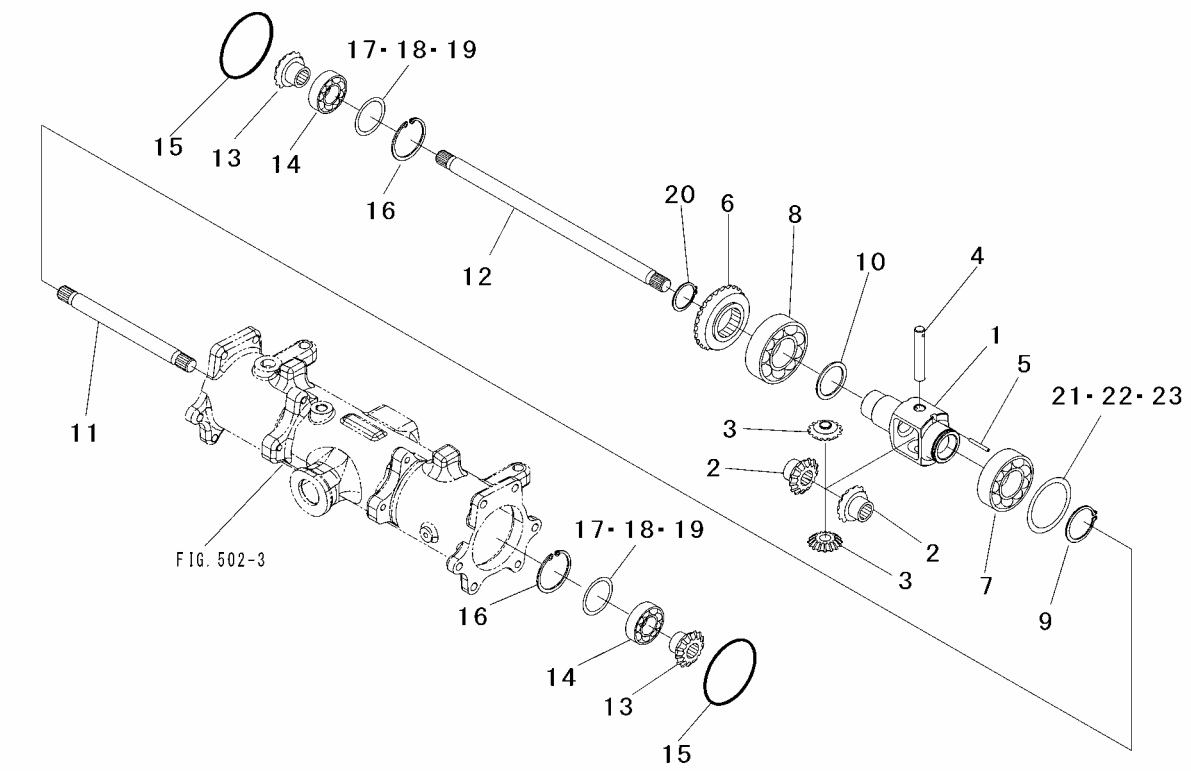

Key No.	Parts No.	Parts Name.	Q`ty ALL					R/P	Application	Description	Remarks
1～5	1044 2110 000	DIFF CASE ASSY	1								
1	1044 2111 000	DIFF CASE	1								
2	1044 2112 000	GEAR 16T	2							16T	
3	1044 2113 000	PINION 15T	2							15T	
4	1044 2114 000	PIN	1								
5	0550 0004 032	PIN,spring	1							φ4×32	
6	1044 2121 000	GEAR 25T	1							25T	
7	0750 0060 090	BEARING,ball	1							6009	
8	0750 0062 080	BEARING,ball	1							6208	
9	0740 0004 500	C-RING	1							φ45	
10	1445 1324 000	WASHER	1								
11	1044 2124 000	SHAFT LH	1								
12	1044 2125 000	SHAFT RH	1								
13	1044 2128 000	PINION 11T	2							11T	
14	0750 0062 050	BEARING,ball	2							6205	
15	0830 0200 850	O-RING	2							φ85	
16	0741 0005 200	C-RING	2							φ52	
17	0730 0005 201	LINER	AR							t=0.15	
18	0730 0005 203	LINER	AR							t=0.3	
19	0730 0005 205	LINER	AR							t=0.5	
20	0740 0103 500	C-RING	1							φ35	
21	1176 1336 000	SHIM	AR							t=0.15	
22	1176 1337 000	SHIM	AR							t=0.5	
23	1044 2138 000	SHIM	AR							t=0.3	

FIG.504 FRONT AXLE (4/7)

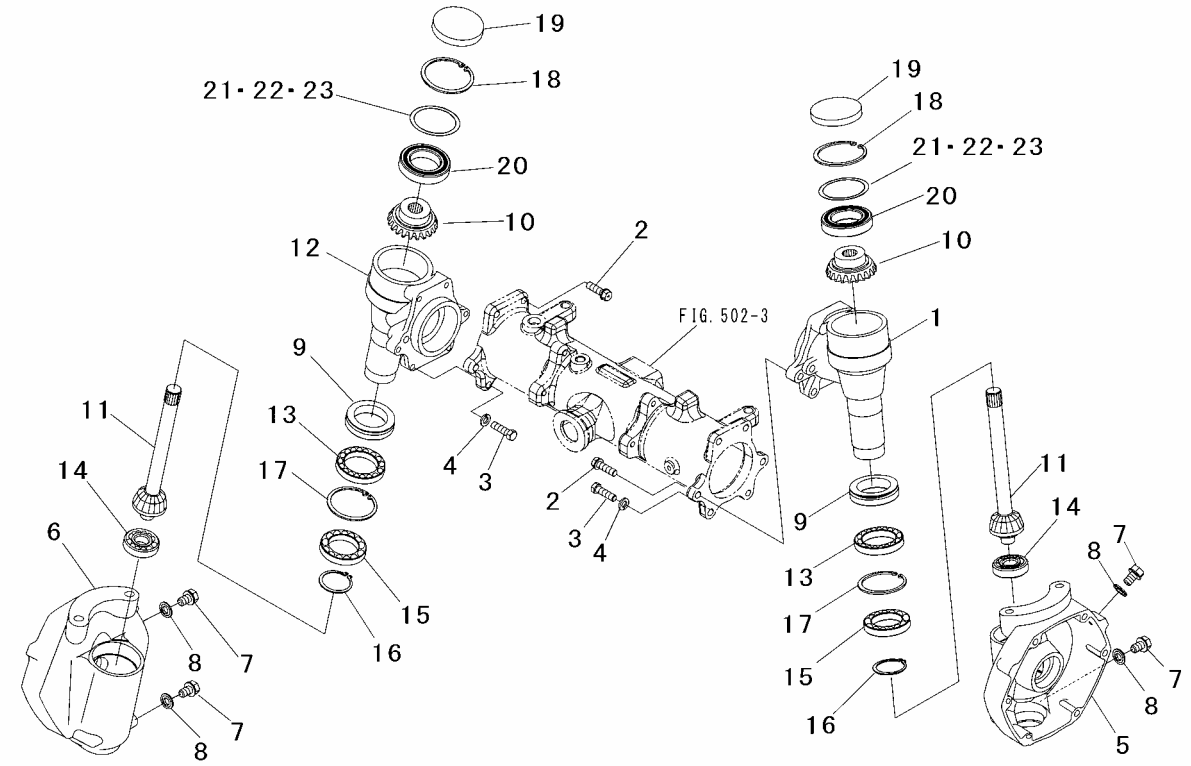

Key No.	Parts No.	Parts Name.	Q`ty ALL					R/P	Application	Description	Remarks
1	1044 2151 AG2	CASE LH,king p	1								
2	F154 0110 035	BOLT,w/washer	10							M10×35	
3	1040 1337 000	BOLT	2								
4	A360 0101 002	WASHER,spring	2							M10	
5	1044 2161 AG0	CASE LH,final	1								
6	1044 2162 AG0	CASE RH,final	1								
7	2740 3214 200	PLUG	4								
8	0833 1000 800	WASHER,seal	4							M8	
9	1038 1515 000	SEAL,oil	2								
10	1044 2171 000	GEAR 21T	2							21T	
11	1044 2172 000	PINION 9T	2							9T	
12	1044 2153 AG2	CASE RH,king p	1								
13	1044 2174 000	BEARING	2								
14	0750 0063 040	BEARING,ball	2							6304	
15	1044 2173 000	BEARING	2								
16	0740 0004 500	C-RING	2							φ45	
17	0741 0006 800	C-RING	2							φ68	
18	0741 0007 500	C-RING	2							φ75	
19	0834 0080 100	CAP,seal	2							φ80	
20	0750 0560 094	BEARING,ball	2							6009DD	
21	1176 1336 000	SHIM	AR							t=0.15	
22	1176 1337 000	SHIM	AR							t=0.5	
23	1044 2138 000	SHIM	AR							t=0.3	

FIG.505 FRONT AXLE (5/7)

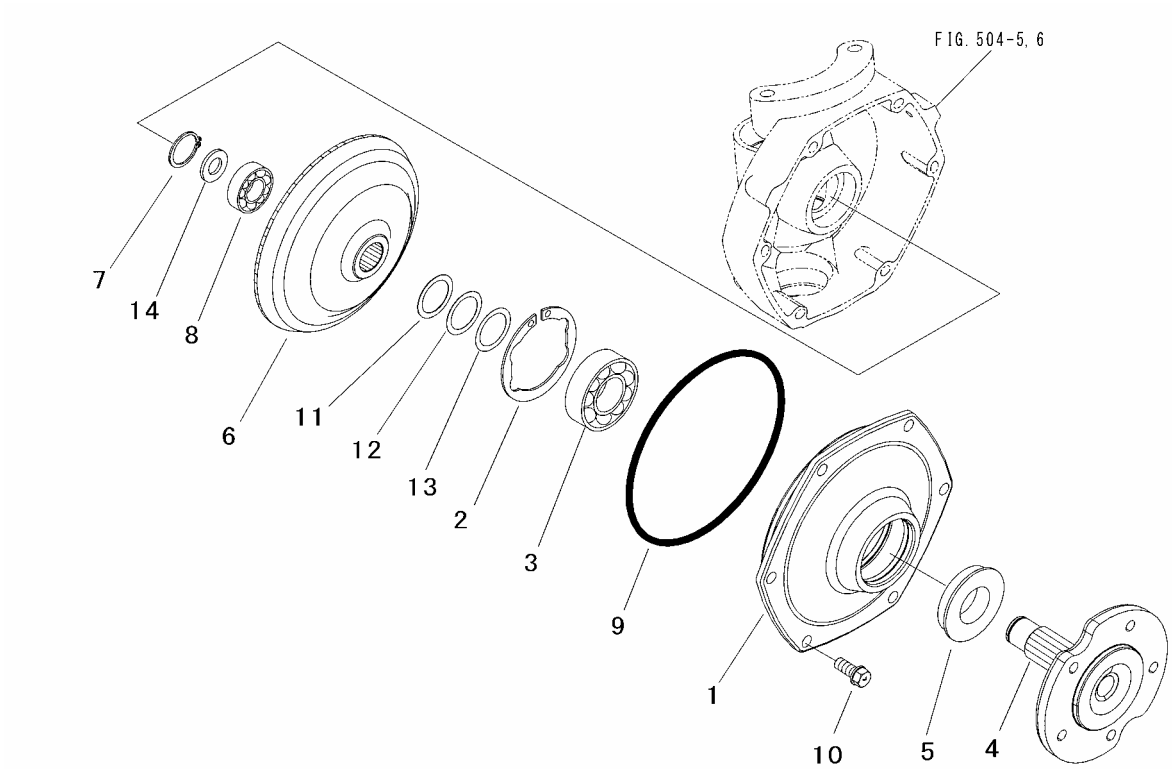

Key No.	Parts No.	Parts Name.	Q`ty					R/P	Application	Description	Remarks
			ALL								
1	1044 2181 AG0	COVER	2								
2	0741 0007 201	C-RING	2							φ72	
3	0750 0063 060	BEARING,ball	2							6306	
4	1958 2151 AG0	SHAFT,wheel	2								
5	3515 2261 001	SEAL,oil	2								
6	1044 2183 000	GEAR41T,bevel	2							41T	
7	0740 0002 500	C-RING	2							φ25	
8	0750 0062 050	BEARING,ball	2							6205	
9	0830 0201 750	O-RING	2							φ175	
10	F154 0110 025	BOLT,w/washer	12							M10×25	
11	0731 0003 001	LINER	AR							t=0.15	
12	0731 0003 003	LINER	AR							t=0.3	
13	0731 0003 005	LINER	AR							t=0.5	
14	1044 2184 000	SPACER	2								

FIG.506 FRONT AXLE (6/7)

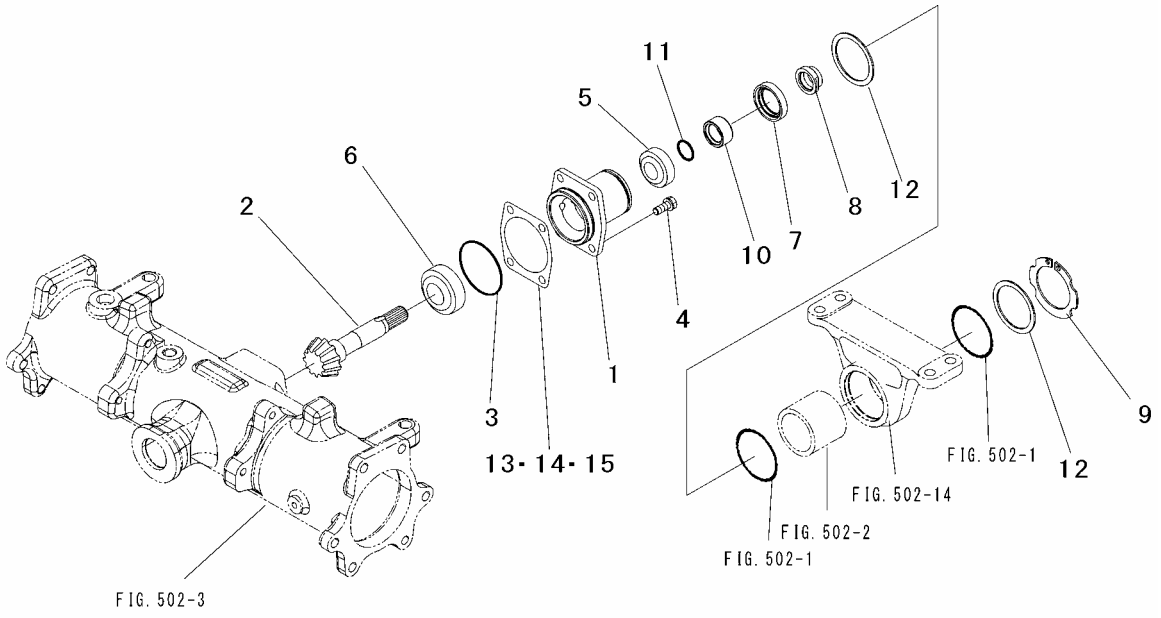

Key No.	Parts No.	Parts Name.	Q`ty					R/P	Application	Description	Remarks
			ALL								
1	1044 2131 AG0	HOLDER	1								
2	1044 2132 000	PINION 11T	1							11T	
3	0830 0500 600	O-RING	1							φ60	
4	F154 0108 020	BOLT,w/washer	4							M8×20	
5	0770 0232 004	BEARING,taper	1							32004	
6	1021 2141 000	BEARING,roller	1								
7	0840 1030 428	SEAL,oil	1							TC30428	
8	1983 1276 002	NUT	1								
9	0740 0005 001	C-RING	1							φ50	
10	1025 2119 000	BUSHING	1								
11	0830 0100 200	O-RING	1							φ20	
12	0730 0006 216	LINER	2							t=1.6	
13	1025 2126 000	SHIM	AR							t=0.1	
14	1025 2127 000	SHIM	AR							t=0.2	
15	1025 2128 000	SHIM	AR							t=0.4	

FIG.507 FRONT AXLE (7/7)

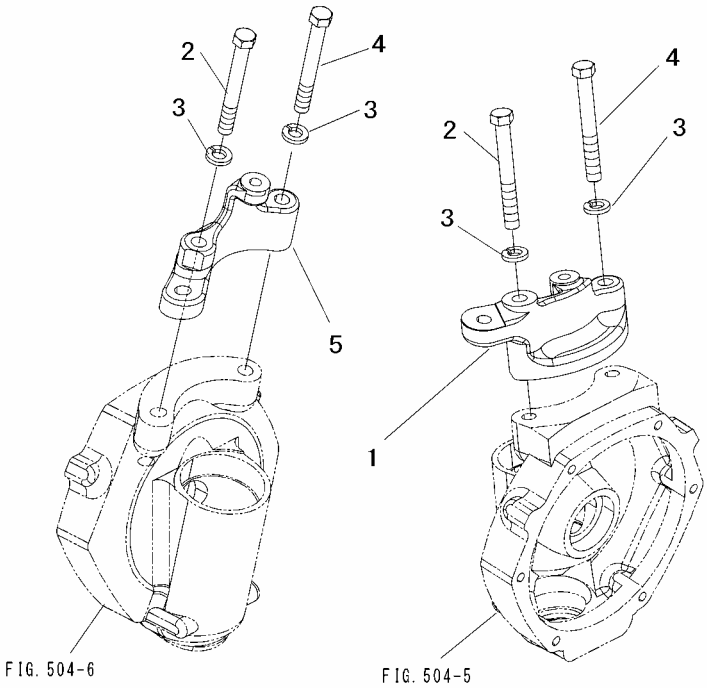

Key No.	Parts No.	Parts Name.	Q`ty					R/P	Application	Description	Remarks
			ALL								
1	1958 2191 AG0	KNUCKLE ARM LH	1								
2	1044 2196 000	BOLT A	2								
3	A360 0101 203	WASHER,spring	4							M12	
4	1044 2197 000	BOLT B	2								
5	1046 2192 AG0	KNUCKLE ARM RH	1								

FIG.508 FINAL DRIVE (1/2)

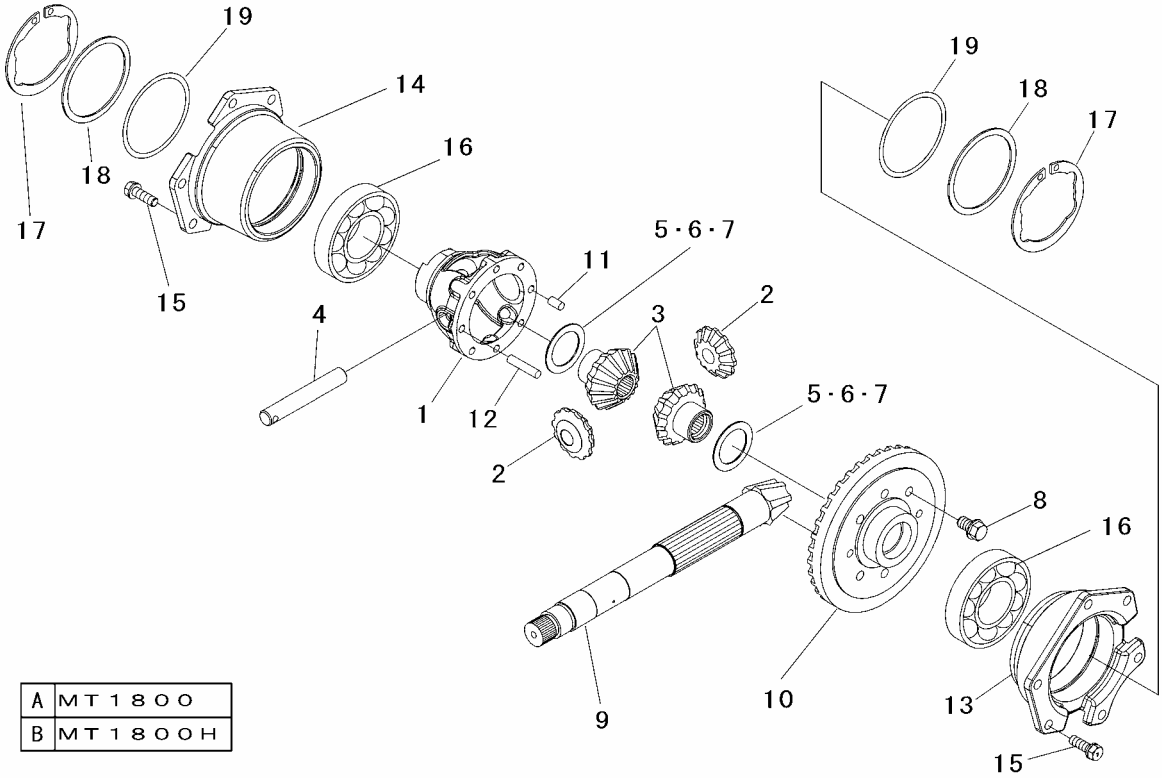

Key No.	Parts No.	Parts Name.	Q`ty A	Q`ty B				R/P	Application	Description	Remarks
1～12	1959 1401 002	DIFF CASE ASSY	・	1							
	1942 1401 000	DIFF CASE ASSY	1	・							
1	1045 1405 001	CASE,diff	1	1							
2	1045 1412 000	PINION MATE	2	2							
3	1045 1413 000	GEAR,side	2	2							
4	1045 1414 000	SHAFT,pinion	1	1							
5	1045 1415 100	SHIM 0.8	AR	AR							
6	1045 1415 200	SHIM 1.0	AR	AR							
7	1045 1415 300	SHIM 1.2	AR	AR							
8	1045 1409 000	BOLT	6	6							
9,10	1959 1404 001	GEAR,pinion set	・	1							
	1942 1404 000	GEAR,pinion set	1	・							
9	*	PINION,spairal	1	1							Not Serviceable
10	*	GEAR,spairal	1	1							Not Serviceable
11	1045 1407 000	PIN	1	1							
12	1045 1408 000	PIN	1	1							
13	1045 1416 000	HOLDER LH	1	1							
14	1045 1417 000	HOLDER RH	1	1							
15	F154 0108 025	BOLT,w/washer	12	12						M8×25	
16	0750 0060 100	BEARING,ball	2	2						6010	
17	0741 0008 001	C-RING	2	2						φ80	
18	1025 1535 000	LINER	2	2							
19	1007 0618 000	LINER	AR	AR						t=0.1	
	1007 0618 100	LINER	AR	AR						t=0.2	
	1007 0618 200	LINER	AR	AR						t=0.4	

FIG.509 FINAL DRIVE (2/2)

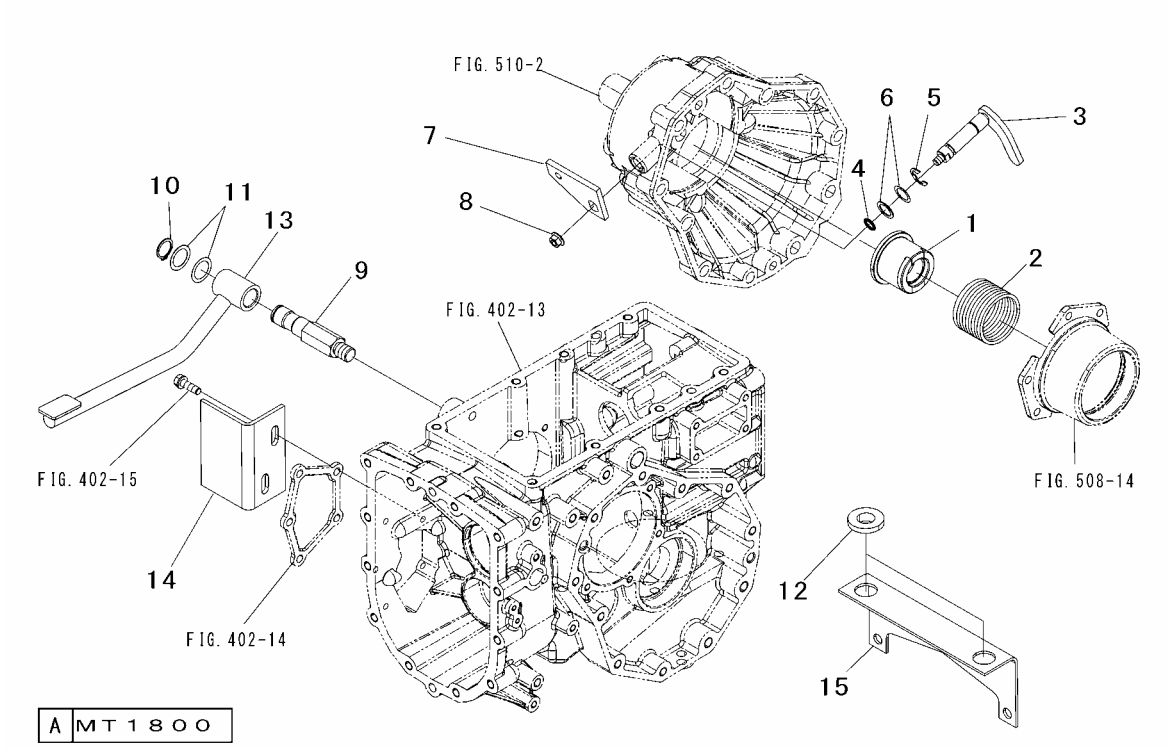

Key No.	Parts No.	Parts Name.	Q`ty A					R/P	Application	Description	Remarks
1	1045 1452 000	SLEEVE	1								
2	1135 1416 000	SPRING	1								
3	1044 1423 001	SHIFTER	1								
4	0830 0100 110	O-RING	1							φ11	
5	0742 0001 200	E-RING	1							φ12	
6	0731 0001 504	LINER	AR							t=0.4	
	0731 0001 512	LINER	AR							t=1.2	
7	1044 1424 AG1	ARM,diff lock	1								
8	F301 0108 001	NUT,flange	1							M8	
9	1044 1429 000	SHAFT	1								
10	0740 0102 000	C-RING	1							φ20	
11	0731 0102 004	LINER	AR							t=0.4	
	0731 0102 002	LINER	AR							t=0.2	
12	1038 3932 000	RUBBER CUSHION	2								
13	1942 1451 AG0	PEDAL,diff lock	1								
14	1942 1455 AG0	PLATE	1								
15	1942 1453 AG0	PLATE	1								

FIG.509A FINAL DRIVE (2/2)

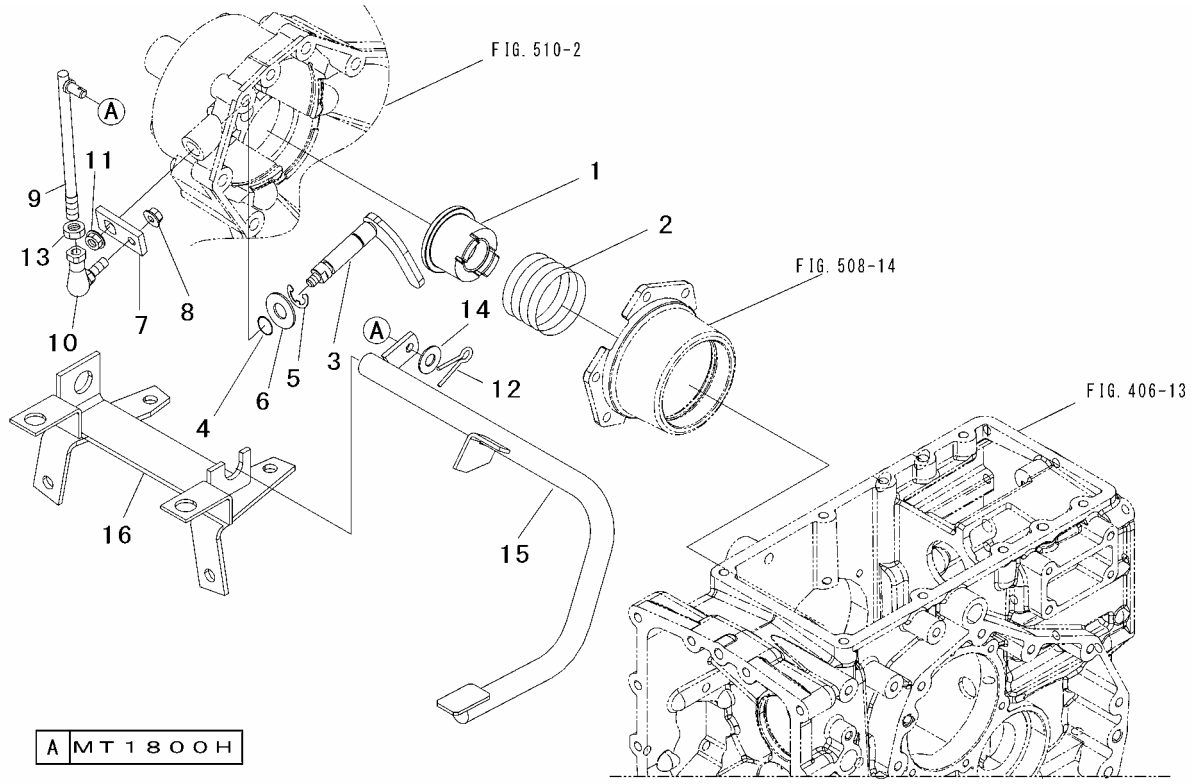

Key No.	Parts No.	Parts Name.	Q`ty A					R/P	Application	Description	Remarks
1	1045 1452 000	SLEEVE	1								
2	1135 1416 000	SPRING	1								
3	1044 1423 001	SHIFTER	1								
4	0830 0100 110	O-RING	1							φ11	
5	0742 0001 200	E-RING	1							φ12	
6	0731 0001 504	LINER	AR							t=0.4	
	0731 0001 512	LINER	AR							t=1.2	
7	1959 1459 AG0	ARM,diff lock	1								
8	F301 0108 001	NUT,flange	1							M8	
9	1959 1461 000	ROD	1								
10	3704 1577 000	JOINT,ball	1								
11	F301 0108 000	NUT,flange	1							M8	
12	0520 0125 020	PIN,split	1							φ2.5×20	
13	A303 0110 002	NUT	1							M10	
14	0350 0150 822	WASHER	1							M8	
15	1959 1451 AG1	PEDAL,diff lock	1								
16	1959 1453 AG0	BRACKET,diff lo	1								

FIG.510 REAR AXLE

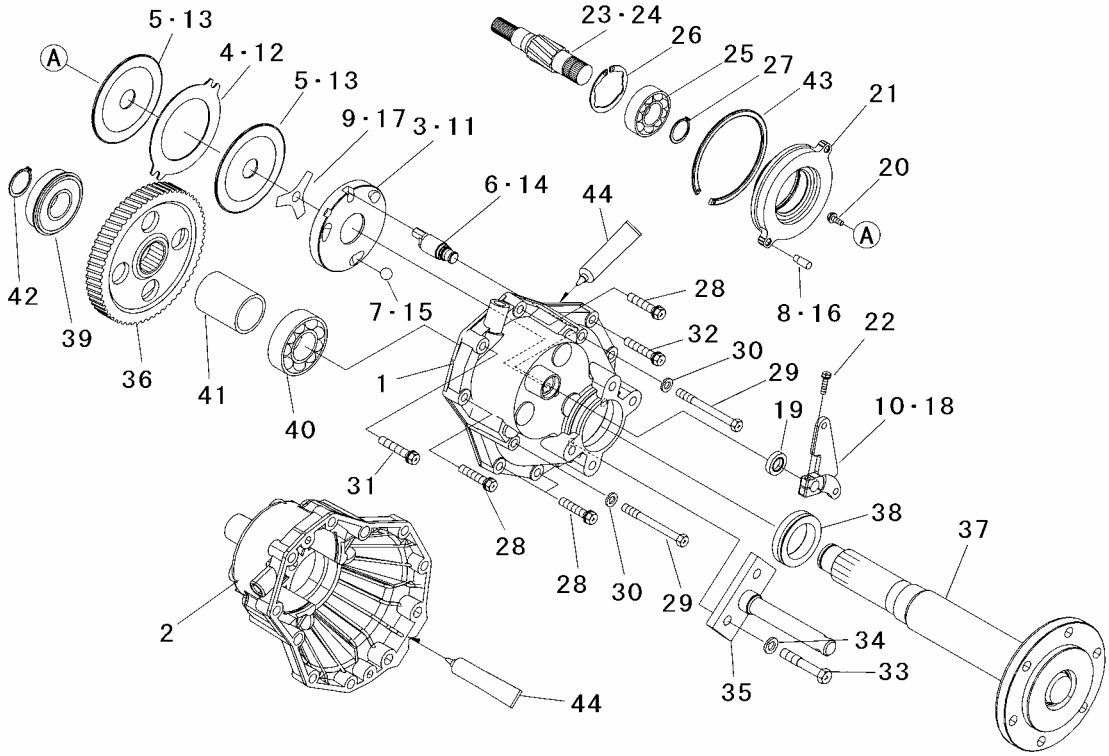

Key No.	Parts No.	Parts Name.	Q`ty ALL					R/P	Application	Description	Remarks
1	1044 1501 AG0	CASE L.H,axle	1								
2	1044 1502 AG0	CASE R.H,axle	1								
3～9	1942 1504 000	BRAKE LH,assy	1								
3	*	PLATE LH,cam	1								Not Serviceable
4	*	PLATE,mating	1								Not Serviceable
5	*	DISK	2								Not Serviceable
6	*	CAM,brake	1								Not Serviceable
7	*	BALL,steel	3								Not Serviceable
8	*	PIN	2								Not Serviceable
9	*	SPRING	1								Not Serviceable
10	1942 1561 AG0	ARM,brake	1								
11～17	1942 1505 000	BRAKE ASSY RH	1								
11	*	PLATE RH,cam	1								Not Serviceable
12	*	PLATE,mating	1								Not Serviceable
13	*	DISK	2								Not Serviceable
14	*	CAM,brake	1								Not Serviceable
15	*	BALL,steel	3								Not Serviceable
16	*	PIN	2								Not Serviceable
17	*	SPRING	1								Not Serviceable
18	1942 1561 AG0	ARM,brake	1								
19	0840 1017 307	SEAL,oil	2							TC17307	
20	F050 0106 016	BOLT,flange	2							M6×16	
21	1045 1515 000	HOLDER	2								
22	F144 0106 025	BOLT,w/washer	2							M6×25	
23	1045 1506 000	SHAFT L.H,diff	1								
24	1045 1507 000	SHAFT R.H,diff	1								
25	0750 0063 060	BEARING,ball	2							6306	
26	0741 0007 201	C-RING	2							φ72	
27	0740 0003 000	C-RING	2							φ30	
28	F154 0110 050	BOLT,w/washer	8							M10×50	
29	A054 0110 100	BOLT 7T	4							M10×100	
30	A360 0101 002	WASHER,spring	4							M10	
31	F154 0110 055	BOLT,w/washer	2							M10×55	
32	F174 0110 055	BOLT,w/washer	4							M10×55	
33	A054 0112 070	BOLT 7T	4							M12×70	

FIG.510 REAR AXLE

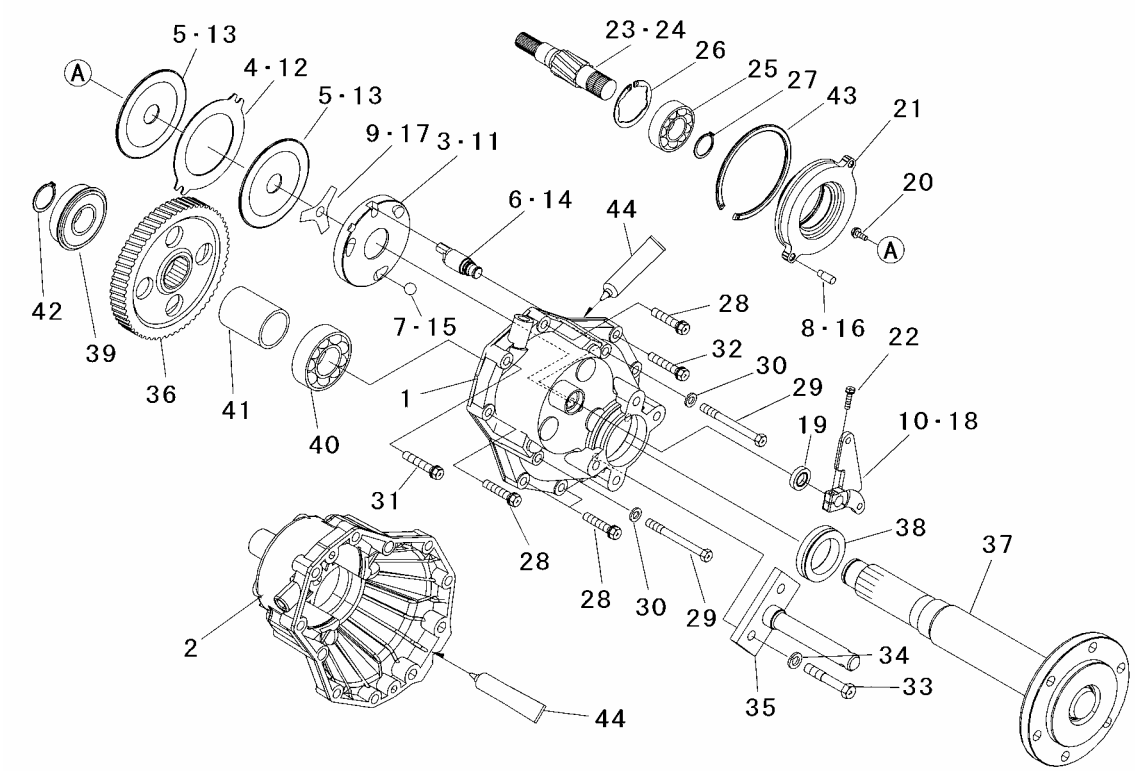

Key No.	Parts No.	Parts Name.	Q`ty					R/P	Application	Description	Remarks
			ALL								
34	A360 0101 202	WASHER,spring	4							M12	
35	1958 1526 AG0	BRACKET	2								
36	1044 1511 000	GEAR 59T	2							59T	
37	1958 1521 AG0	SHAFT,axle	2								
38	1038 1515 000	SEAL,oil	2								
39	0750 0063 075	BEARING,ball	2							6307NR	
40	0750 0062 090	BEARING,ball	2							6209	
41	1044 1513 000	COLLAR	2								
42	0740 0103 500	C-RING	2							φ35	
43	1044 1517 000	RING	2								
44	TB1206D	GASKET	AR								

FIG.511 WHEEL (ACCESSORY)

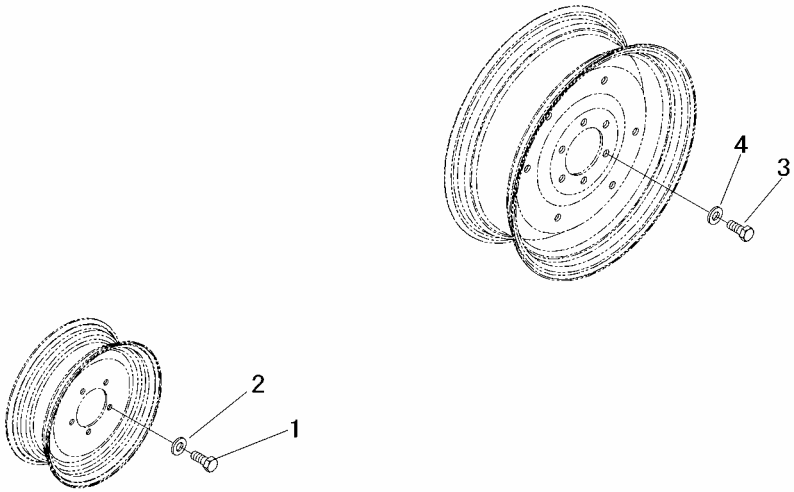

Key No.	Parts No.	Parts Name.	Q`ty					R/P	Application	Description	Remarks
			ALL								
1	A040 0112 030	BOLT 7T	10							M12×30	For Front
2	0355 0161 226	WASHER	10							M12	For Front
3	A050 0114 035	BOLT 7T	12							M14×35	For Rear
4	0355 0161 428	WASHER	12							M14	For Rear

FIG.512 FRONT TOW HOOK

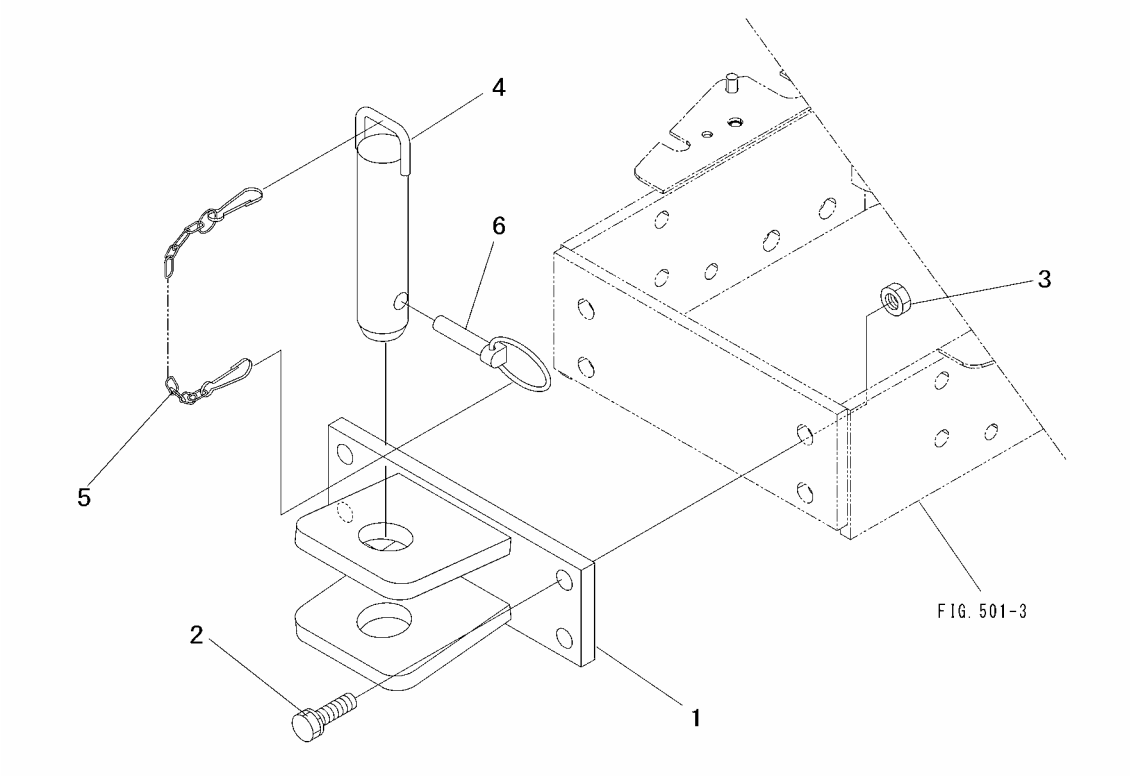

Key No.	Parts No.	Parts Name.	Q`ty					R/P	Application	Description	Remarks
			ALL								
1	1953 3151 AG0	TOW HOOK	1								
2	F154 0112 040	BOLT,w/washer	4							M12×40	
3	A301 0112 002	NUT	4							M12	
4	1965 3116 000	HITCH PIN	1								
5	1904 3911 000	CHAIN	1								
6	1037 3015 000	PIN,linch	1								

FIG. 601 ENGINE CONTROL

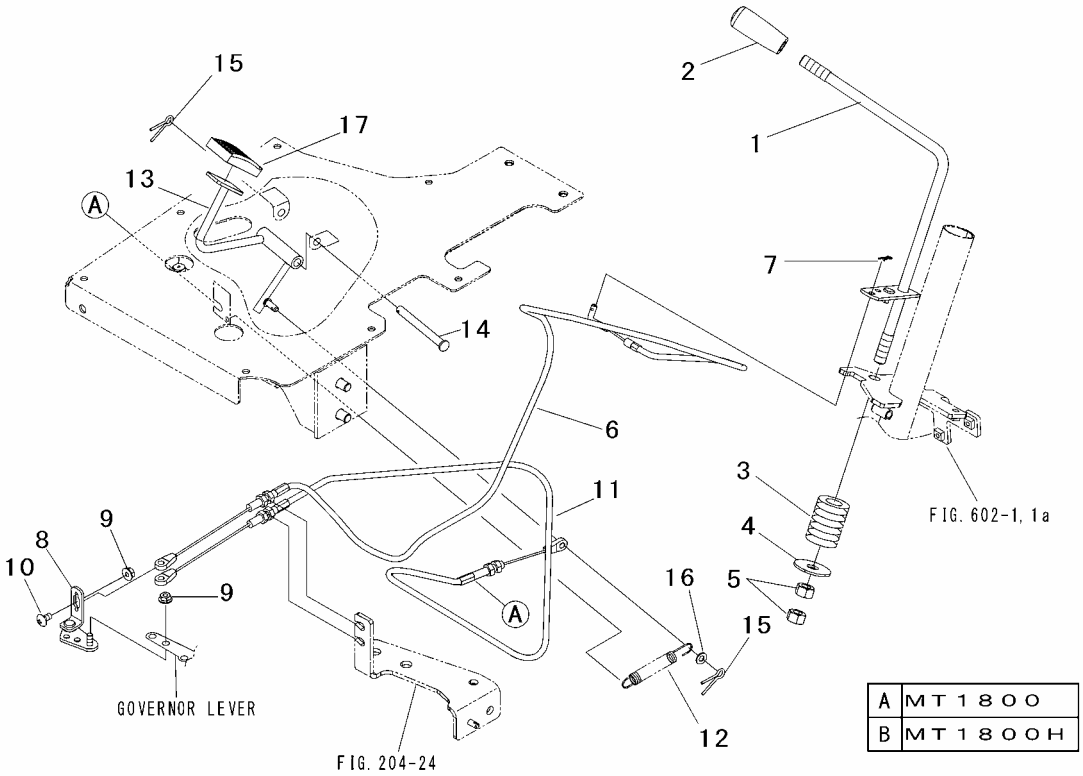

Key No.	Parts No.	Parts Name.	Q`ty A	Q`ty B				R/P	Application	Description	Remarks
1	1957 0201 AG1	LEVER,control	1	1							
2	0691 0012 258	GRIP	1	1							
3	6022 3314 000	SPRING	1	1							
4	2772 2323 000	WASHER	1	1							
5	A301 0112 002	NUT	2	2						M12	
6	1045 0217 000	WIRE,accelerate	1	1							
7	0521 0106 000	PIN,snap	1	1						φ6	
8	1045 0238 000	PLATE	1	1							
9	F300 0106 000	NUT,flange	2	2						M6	
10	A252 0706 012	SCREW	1	1						M6×12	
11	1942 0216 000	WIRE,accelerate	1	·							
12	1022 0218 000	SPRING	1	·							
13	1963 0221 000	PEDAL,accel	1	·							
14	2790 4116 000	PIN	1	·							
15	0520 0125 015	PIN,split	2	·						φ2.5×15	
16	0350 0130 613	WASHER	1	·						M6	
17	1032 0228 000	COVER PEDAL	1	·							

FIG.602 STEERING (1/2)

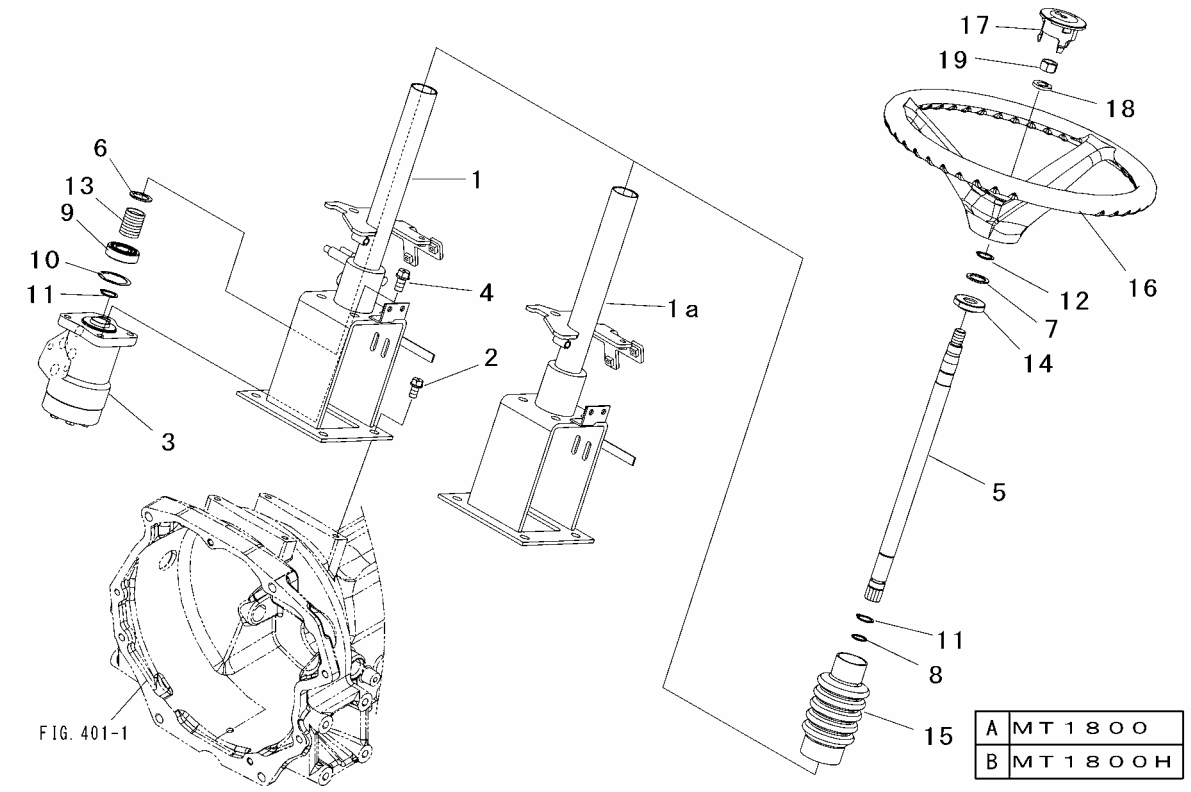

Key No.	Parts No.	Parts Name.	Q`ty A	Q`ty B				R/P	Application	Description	Remarks
1	1959 2202 AG2	MAST,steering	·	1							
1a	1942 2202 AG0	MAST,steering	1	·							
2	F154 0110 020	BOLT,w/washer	4	4						M10×20	
3	1958 2231 000	STEERING UNIT	1	1							
4	F155 0110 020	BOLT,w/washer	3	3						M10×20	
5	1959 2203 000	SHAFT,steering	1	1							
6	0731 0102 016	LINER	1	1						t=1.6	
7	0731 0102 016	LINER	1	1						t=1.6	
8	0830 0100 160	O-RING	1	1						φ16	
9	HA53 6004 000	BEARING,ball	1	1							
10	0741 0004 201	C-RING	1	1						φ42	
11	0740 0001 900	C-RING	2	2						φ19	
12	0740 0001 900	C-RING	1	1						φ19	
13	3951 0814 000	SPRING	1	1							
14	1044 2291 000	BUSHING,column	1	1							
15	3556 4065 001	BOOTS	1	1							
16,17	1044 2205 000	WHEEL,steering	1	1							
16	*	*	1	1							Not Serviceable
17	1044 2207 000	CAP,center	1	1							
18	A360 0101 402	WASHER,spring	1	1						M14	
19	A303 0114 002	NUT	1	1						M14	

FIG.603 STEERING (2/2)

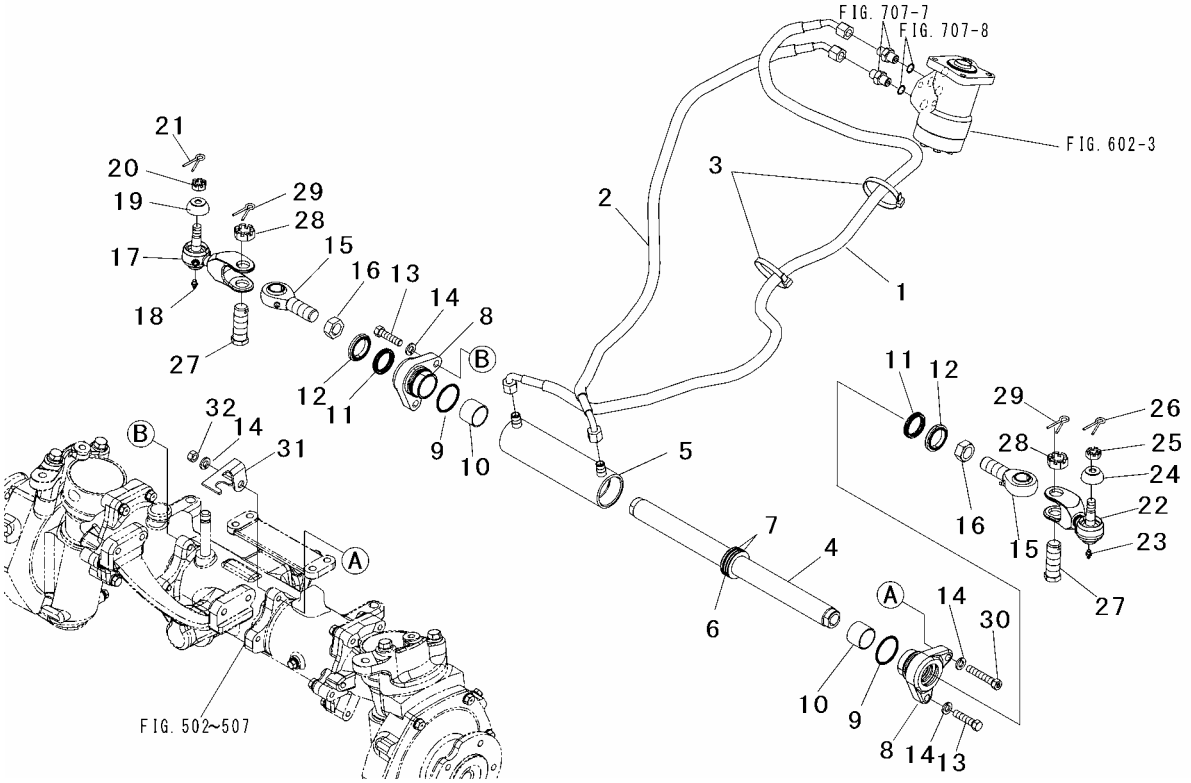

Key No.	Parts No.	Parts Name.	Q`ty ALL					R/P	Application	Description	Remarks
1	1959 2241 000	HOSE L	1								
2	1959 2242 001	HOSE R	1								
3	0051 1070 070	BAND,wire	2								
4～12	1044 2210 AG0	CYLINDER ASSY	1								
4	1044 2213 000	ROD,cylinder	1								
5	1044 2253 AG0	TUBE CYLINDER	1								
6	0830 1100 390	O-RING	1							φ39	
7	0832 0100 390	RING,backup	2							φ39	
8	1044 2274 AG0	CASE,packing	2								
9	0830 1100 400	O-RING	2							φ40	
10	0796 3030 250	BUSHING	2								
11	1030 2276 000	PACKING U	2								
12	1038 2217 000	SEAL,dust	2								
13	A954 0110 040	BOLT	3							M10×40	
14	A360 0101 002	WASHER,spring	5							M10	
15	1031 2212 000	ROD END	2								
16	A073 0120 003	NUT	2							M20	
17	1044 2278 AG0	ROD A	1								Inc18～21
18	A650 0100 600	NIPPLE,grease	1								
19	1030 2157 200	COVER,dust	1								
20	1030 2157 400	NUT	1								
21	1030 2157 500	PIN,split	1								
22	1044 2279 AG0	ROD B	1								Inc23～26
23	A650 0100 600	NIPPLE,grease	1								
24	1030 2157 200	COVER,dust	1								
25	1030 2157 400	NUT	1								
26	1030 2157 500	PIN,split	1								
27	1031 2217 000	BOLT	2								
28	A313 0102 001	NUT	2							M20	
29	0520 0140 036	PIN,split	2							φ4.0×36	
30	A930 0110 055	BOLT	1							M10×55	
31	1044 2261 AG0	PLATE	1								
32	A301 0110 002	NUT	1							M10	

FIG.604 TRANSMISSION CONTROL(1/4)(GEAR)

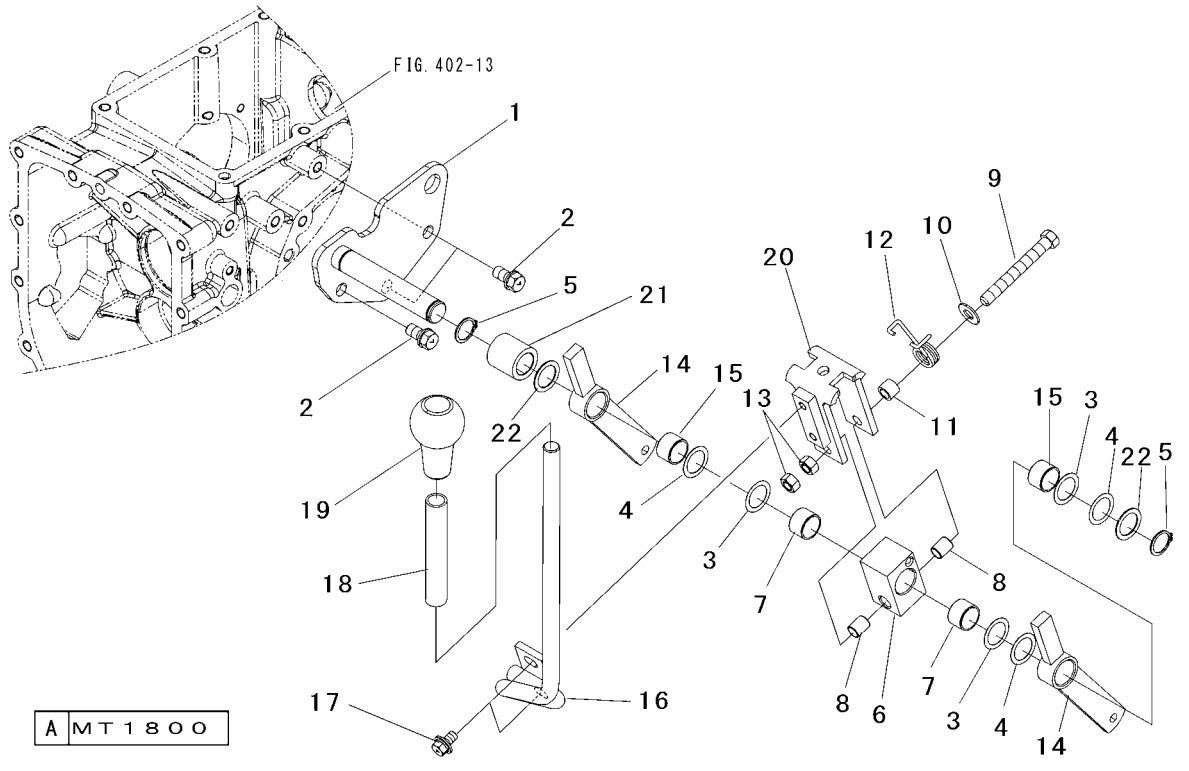

Key No.	Parts No.	Parts Name.	Q`ty A					R/P	Application	Description	Remarks
1	1942 1792 AG1	BRACKET	1								
2	F154 0110 020	BOLT,w/washer	3							M10×20	
3	0731 0102 002	LINER	AR							t=0.2	
4	0731 0102 004	LINER	AR							t=0.4	
5	0740 0102 000	C-RING	2							φ20	
6	1030 1724 000	BOSS	1								
7	0796 1020 150	BUSHING	2								
8	0797 1010 150	BUSHING	2								
9	A534 0110 080	BOLT 7T	1							M10×80	
10	0350 0141 022	WASHER	1							M10	
11	1025 1120 001	COLLAR	1								
12	1025 1127 004	SPRING	1								
13	A301 0110 002	NUT	2							M10	
14	1045 1752 AG2	ARM,main	2								
15	0796 1020 150	BUSHING	2								
16	1942 1751 AG0	LEVER,main	1								
17	H154 0108 016	BOLT,w/washer	2							M8×16	
18	1035 1749 000	PIPE	1								
19	0693 0014 460	GRIP	1								
20	1045 1753 AG0	CLANK	1								
21	1218 1223 000	PIPE	1								
22	0731 0102 010	LINER	2							t=1.0	

FIG.605 TRANSMISSION CONTROL(2/4)(GEAR)

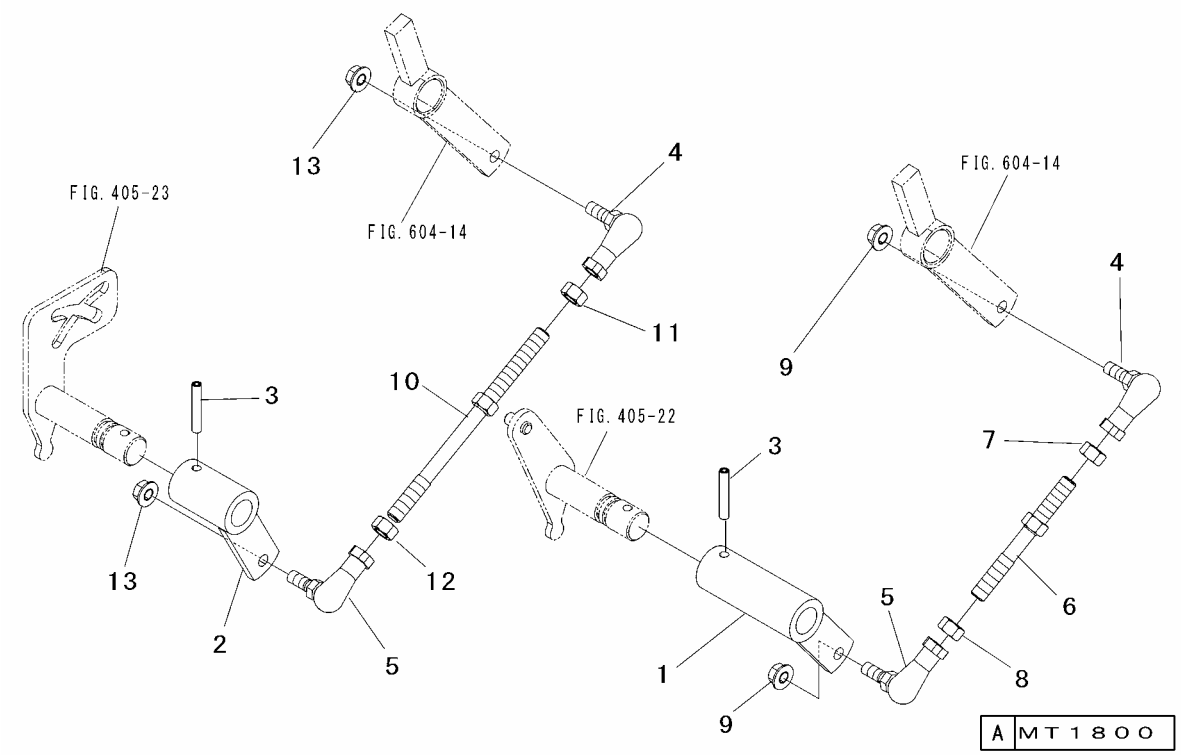

Key No.	Parts No.	Parts Name.	Q`ty A					R/P	Application	Description	Remarks
1	1045 1756 AG1	LINK (1-R),main	1								
2	1045 1757 AG1	LINK (2-3),main	1								
3	1038 1725 000	PIN,spring	2								
4	1025 1135 000	JOINT,ball	2								
5	3704 1577 000	JOINT,ball	2								
6	1045 1754 000	ROD (1-R),main	1								
7	A303 2110 002	NUT	1							M10	
8	A303 0110 002	NUT	1							M10	
9	F301 0108 000	NUT,flange	2							M8	
10	1045 1755 000	ROD (2-3),main	1								
11	A303 2110 002	NUT	1							M10	
12	A303 0110 002	NUT	1							M10	
13	F301 0108 000	NUT,flange	2							M8	

FIG.606 TRANSMISSION CONTROL(3/4)(GEAR)

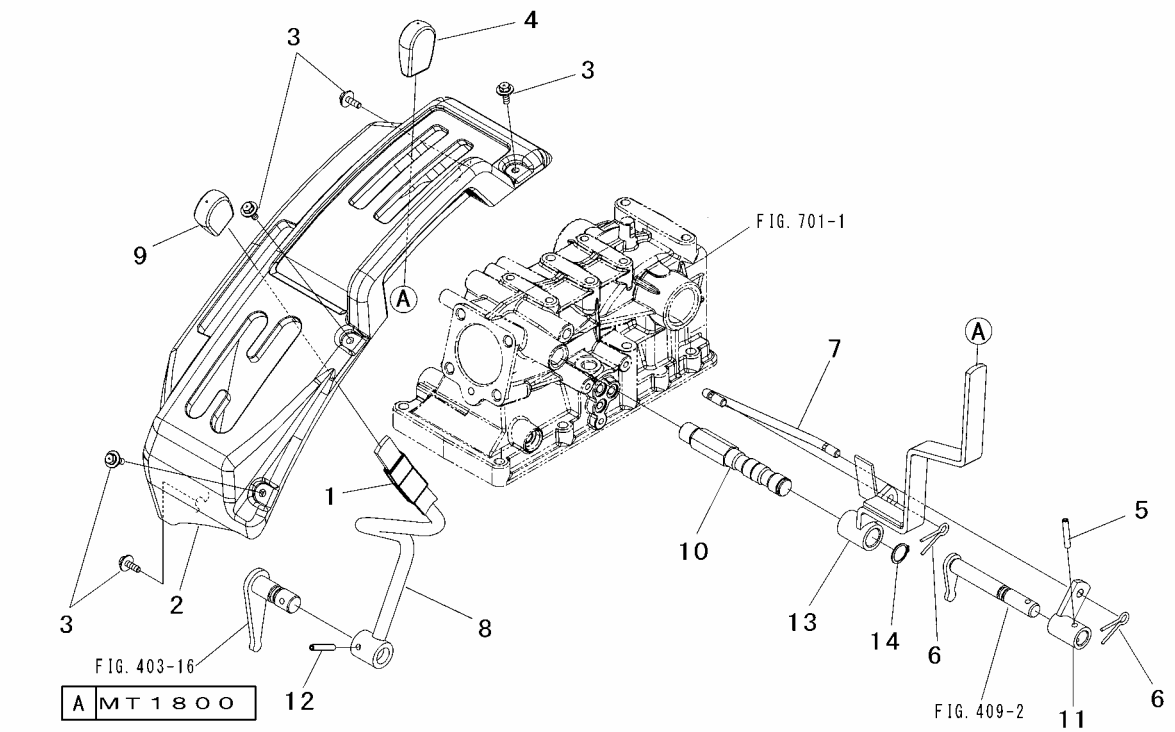

Key No.	Parts No.	Parts Name.	Q`ty A					R/P	Application	Description	Remarks
1	1045 1760 000	TUBE	1								
2	1958 1787 000	LEVER LH,guide	1								
3	H194 0106 016	BOLT,w/washer	5							M6×16	
4	1044 1769 000	GRIP	1								
5	1038 1725 000	PIN,spring	1								
6	0520 0125 020	PIN,split	2							φ2.5×20	
7	1959 1771 000	ROD,rear pto	1								
8	1942 1711 AG1	LEVER,sub	1								
9	1039 2491 000	GRIP	1								
10	1957 1773 000	SHAFT,pto	1								
11	1959 1778 AG0	LINK,rear pto	1								
12	1038 1725 000	PIN,spring	1								
13	1959 1772 AG0	LEVER,rear pto	1								
14	0740 0102 000	C-RING	1							φ20	

FIG.607 TRANSMISSION CONTROL (4/4)(HST)

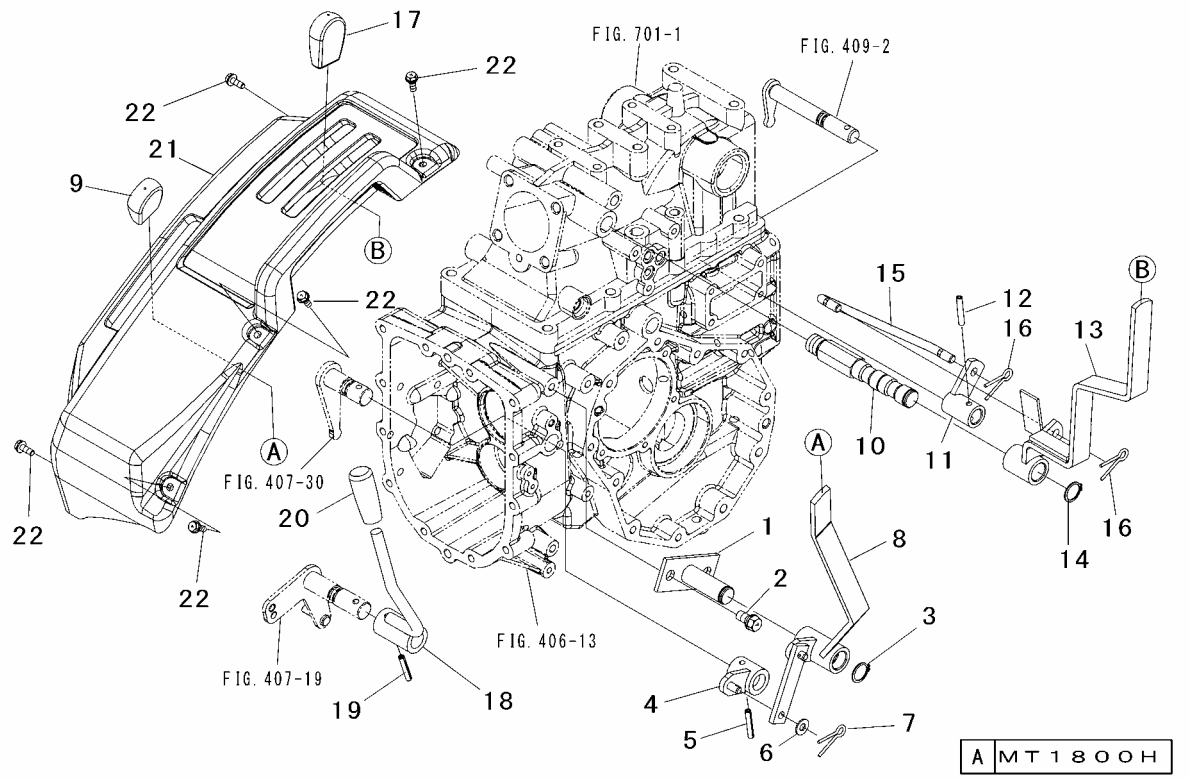

Key No.	Parts No.	Parts Name.	Q`ty A					R/P	Application	Description	Remarks
1	1959 1791 AG0	BRACKET,sub	1								
2	F154 0110 020	BOLT,w/washer	2							M10×20	
3	0740 0102 000	C-RING	1							φ20	
4	1959 1764 AG0	LINK,sub	1								
5	1038 1725 000	PIN,spring	1								
6	0350 0140 818	WASHER	1							M8	
7	0520 0125 020	PIN,split	1							φ2.5×20	
8	1959 1761 AG0	LEVER,sub	1								
9	1039 2491 000	GRIP	1								
10	1957 1773 000	SHAFT,pto	1								
11	1959 1778 AG0	LINK,rear pto	1								
12	1038 1725 000	PIN,spring	1								
13	1959 1772 AG0	LEVER,rear pto	1								
14	0740 0102 000	C-RING	1							φ20	
15	1959 1771 000	ROD,rear pto	1								
16	0520 0125 020	PIN,split	2							φ2.5×20	
17	1044 1769 000	GRIP	1								
18	1959 1781 AG0	LEVER,4wd	1								
19	1038 1725 000	PIN,spring	1								
20	0691 0012 258	GRIP	1								
21	1958 1788 000	LEVER GUIDE LH	1								
22	H194 0106 020	BOLT,w/washer	5							M6×20	

FIG.608 C/B CONTROL (1/2)

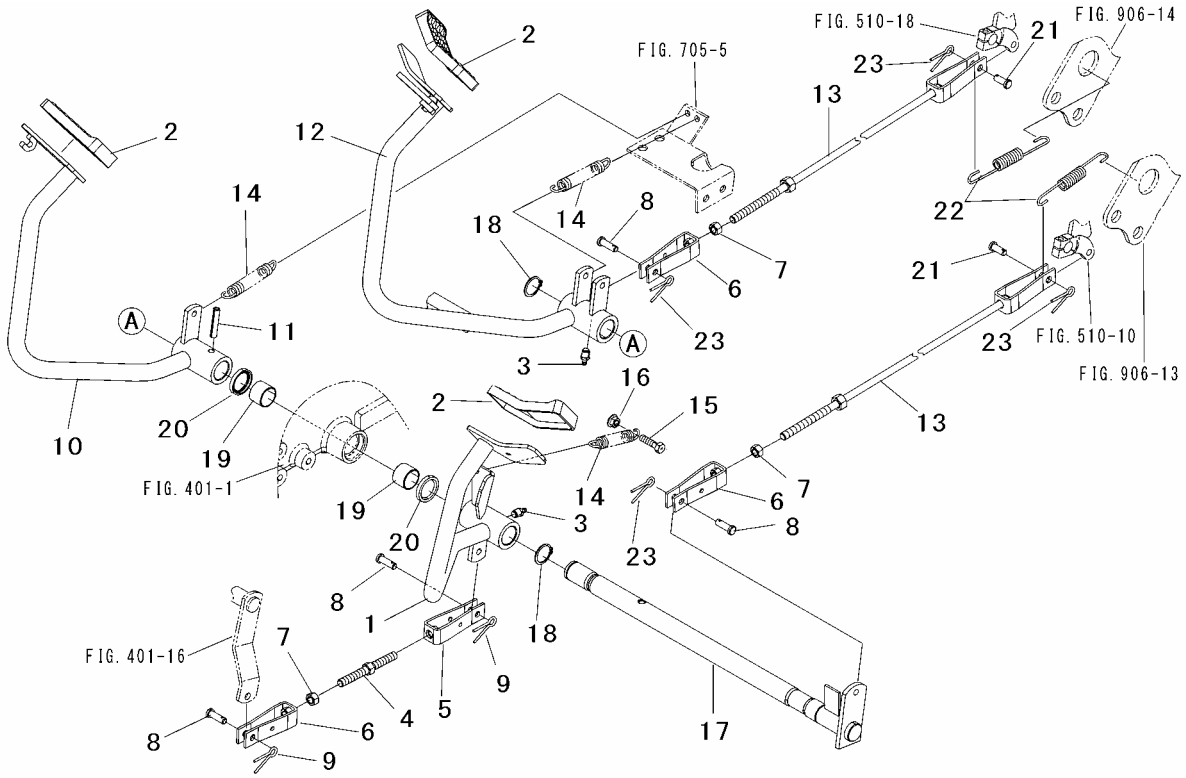

Key No.	Parts No.	Parts Name.	Q`ty ALL					R/P	Application	Description	Remarks
1	1959 1811 AG0	PEDAL,clutch	1								
2	1193 1812 000	COVER,pedal	3								
3	A650 3100 300	NIPPLE,grease	2							PT=1/8	
4	1959 1813 000	ROD,clutch	1								
5	1044 1814 000	JOINT	1								
6	1039 1823 000	JOINT	3								
7	A301 0110 002	NUT	3							M10	
8	0562 1108 025	PIN,clevis	4							φ8×25	
9	0520 0125 015	PIN,split	2							φ2.5×15	
10	1959 1815 AG0	PEDAL LH,brake	1								
11	0550 0008 040	PIN,spring	1							φ8×40	
12	1959 1819 AG0	PEDAL RH,brake	1								
13	1942 1829 000	ROD,brake	2								
14	67200-06300	SPRING	3								
15	A050 0108 030	BOLT 7T	1							M8×30	
16	F301 0108 000	NUT,flange	1							M8	
17	1942 1839 AG0	SHAFT,brake	1								
18	0740 0002 500	C-RING	2							φ25	
19	0797 2025 200	BUSHING	2								
20	0840 0025 355	OIL SEAL	2								
21	1045 1831 000	PIN,clevis	2								
22	2689 5072 000	SPRING	2								
23	0520 0125 020	PIN,split	4							φ2.5×20	

FIG.609 C/B CONTROL (2/2)

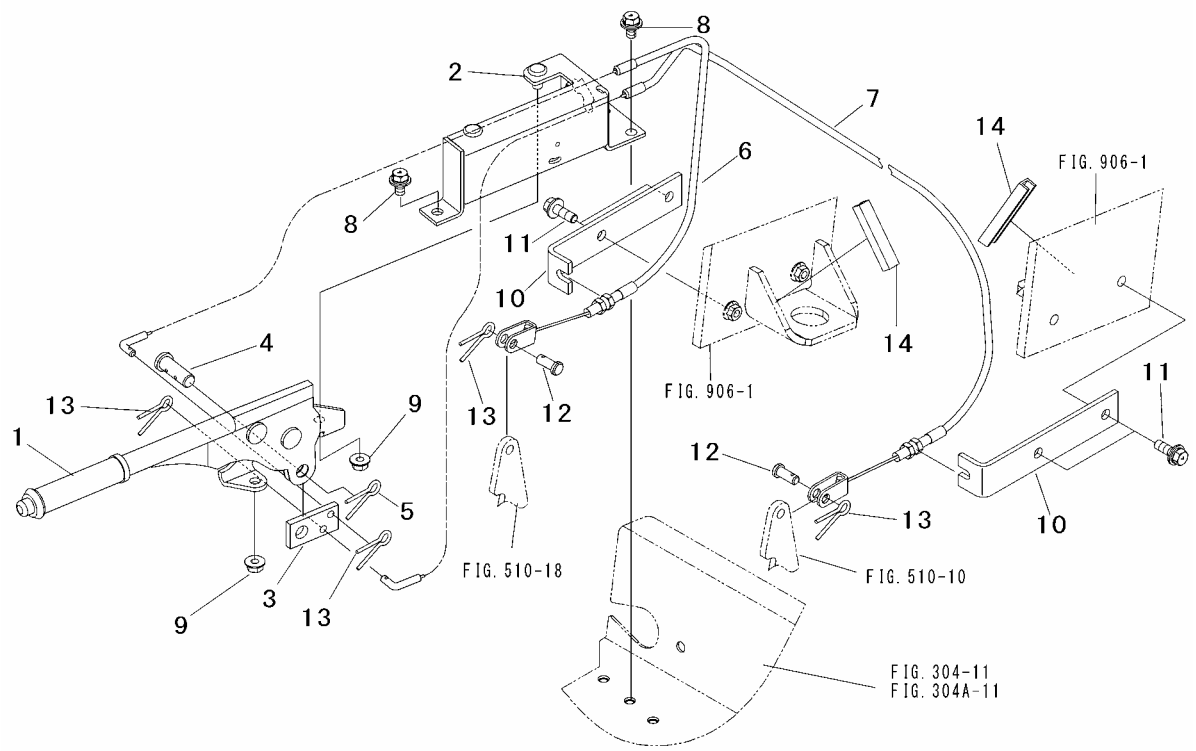

Key No.	Parts No.	Parts Name.	Q`ty ALL					R/P	Application	Description	Remarks
1	1953 1811 000	LEVER,parking	1								
2	1942 1851 AG0	BRACKET,lever	1								
3	1942 1841 000	PLATE	1								
4	1942 1842 000	PIN,clevis	1								
5	0520 0130 025	PIN,split	1							φ3×25	
6	1942 1831 000	WIRE RH,brake	1								
7	1942 1832 000	WIRE LH,brake	1								
8	H154 0108 016	BOLT,w/washer	3							M8×16	
9	F301 0108 000	NUT,flange	2							M8	
10	1942 1845 AG0	PLATE	2								
11	H154 0108 025	BOLT,w/washer	4							M8×25	
12	0562 0108 020	PIN,clevis	2							φ8×20	
13	0520 0125 015	PIN,split	4							φ2.5×15	
14	1040 6335 000	RUBBER	2								

FIG.610 MFD PTO

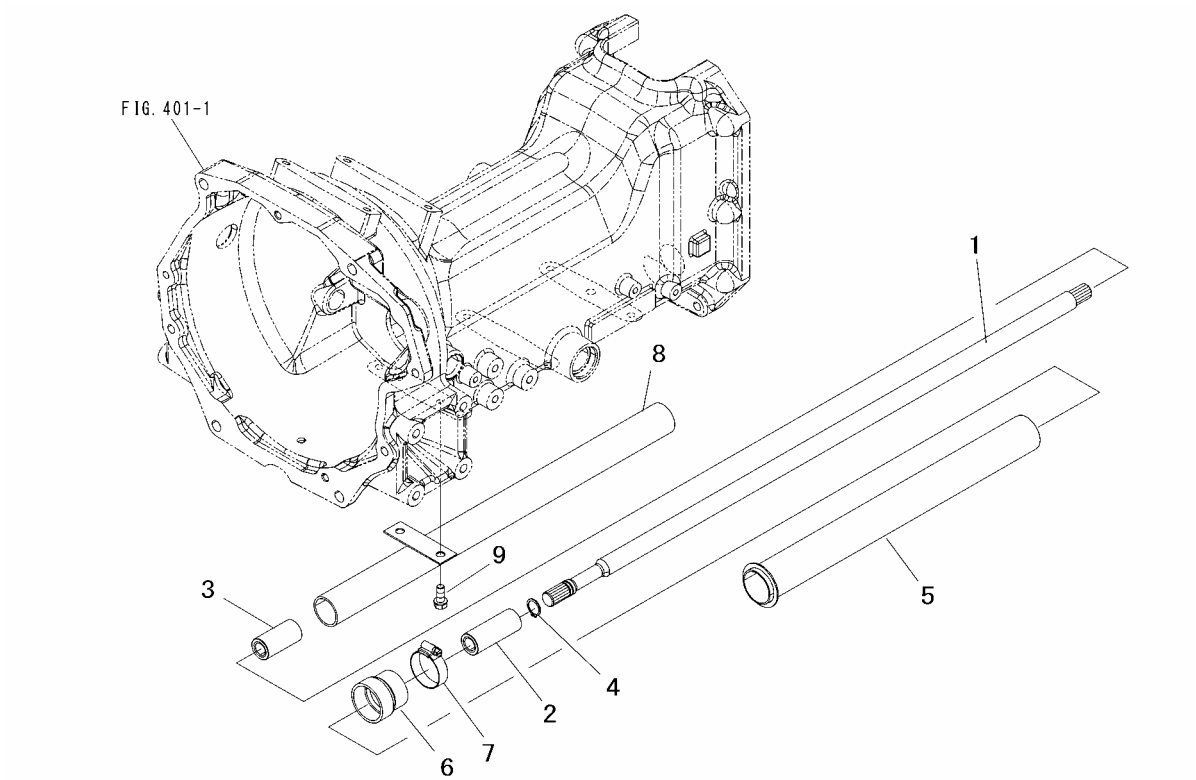

Key No.	Parts No.	Parts Name.	Q`ty					R/P	Application	Description	Remarks
			ALL								
1	1959 1901 000	SHAFT,propeller	1								
2	1026 1912 000	JOINT	1								
3	1025 1922 000	COLLAR	1								
4	0740 0001 700	C-RING	1							φ17	
5	1959 1903 AG0	COVER B,shaft	1								
6	1956 1906 000	PIPE	1								
7	0050 1100 430	CLAMP,hose	1							φ43	
8	1959 1904 AG0	COVER A,shaft	1								
9	H154 0108 016	BOLT,w/washer	2							M8×16	

FIG.611 HST CONTROL (1/2)

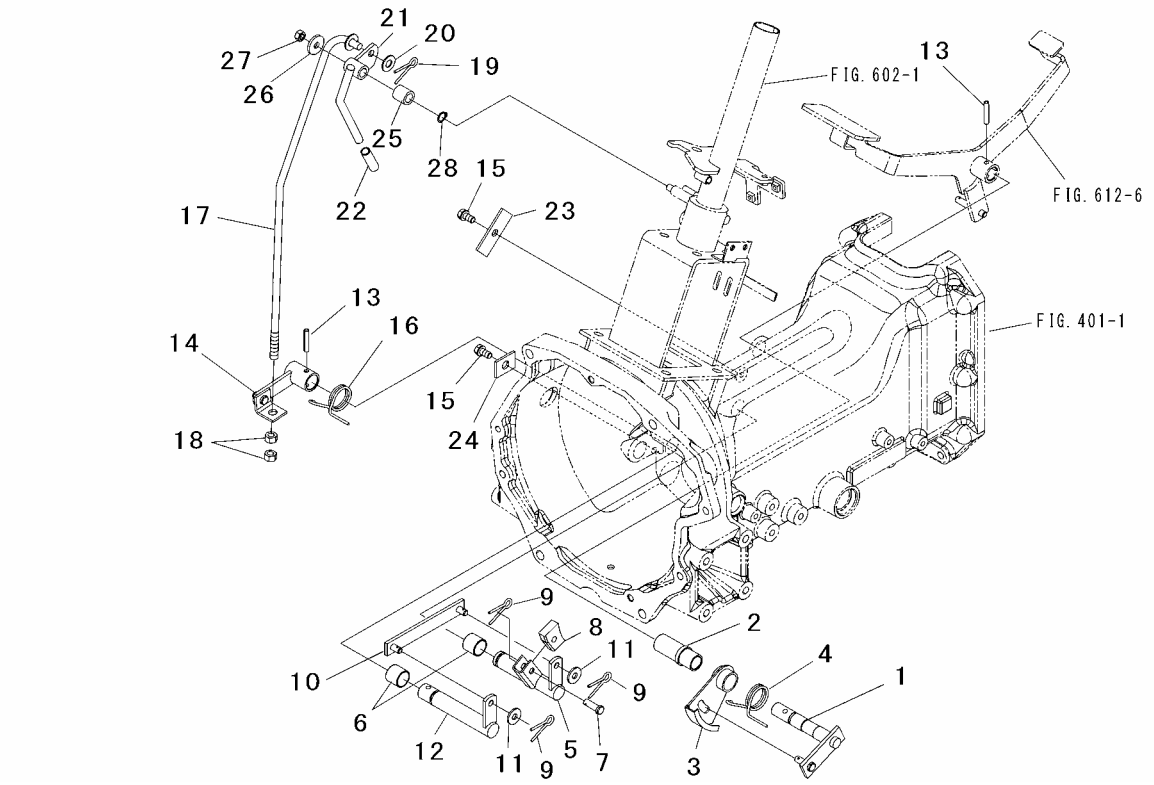

Key No.	Parts No.	Parts Name.	Q`ty ALL					R/P	Application	Description	Remarks
1	1963 2311 000	SHAFT,pedal	1								
2	1963 2312 000	SHAFT	1								
3	1963 2313 000	ARM,lock	1								
4	1963 2317 000	SPRING	1								
5	1959 2334 000	ARM A,brake	1								
6	0797 2020 200	BUSHING	2								
7	0562 0108 025	PIN,clevis	1							φ8×25	
8	1963 2336 000	SHOE	1								
9	0520 0125 015	PIN,split	3							φ2.5×15	
10	1959 2337 000	PLATE,speed con	1								
11	0350 0150 822	WASHER	2							M8	
12	1959 2335 000	ARM B,brake	1								
13	0550 0006 032	PIN,spring	2							φ6×32	
14	1959 2322 AG0	ARM,speed con	1								
15	F154 0108 016	BOLT,w/washer	2							M8×16	
16	1963 2339 000	SPRING	1								
17	1959 2353 001	ROD,speed con	1								
18	A300 0110 002	NUT	2							M10	
19	0520 0125 020	PIN,split	1							φ2.5×20	
20	0350 0141 022	WASHER	1							M10	
21	1959 2347 AG0	LEVER,speed con	1								
22	1421 2284 000	GRIP	1								
23	1957 2325 AG0	PLATE	1								
24	1044 1736 000	PLATE	1								
25	1956 1827 000	COLLAR	1								
26	0350 0160 826	WASHER	1							M8	
27	A301 0108 002	NUT	1							M8	
28	0740 0001 200	C-RING	1							φ12	

FIG.612 HST CONTROL (2/2)

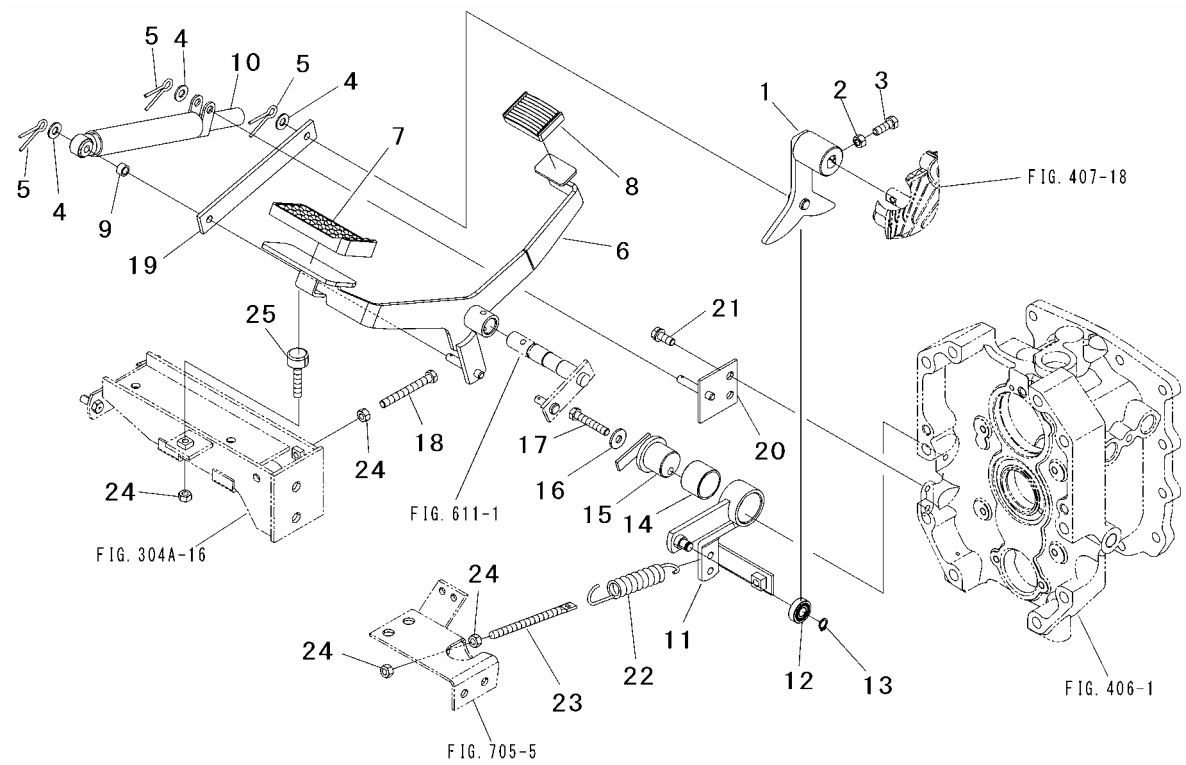

Key No.	Parts No.	Parts Name.	Q`ty ALL					R/P	Application	Description	Remarks
1	1942 2302 AG1	ARM,trunnion	1								
2	A301 0108 002	NUT	1							M8	
3	3578 6235 000	BOLT	1								
4	0350 0140 818	WASHER	3							M8	
5	0520 0125 020	PIN,split	3							φ2.5×20	
6	1959 2301 AG0	PEDAL,hst	1								
7	1193 1812 000	COVER,pedal	1								
8	1032 0228 000	COVER,pedal	1							M5	
9	SA98 2981 AG0	SPACER	1								
10	1957 2313 000	DUMPER	1								
11	1959 2303 000	ARM,neutral	1								
12	0750 0560 004	BEARING,ball	1							6000DD	
13	0740 0001 000	C-RING	1							φ10	
14	0796 3030 250	BUSHING	1								
15	1959 2304 000	SHAFT,holder	1								
16	0350 0150 822	WASHER	1							M8	
17	A534 0108 045	BOLT 7T,reamer	1							M8×45	
18	A050 0108 070	BOLT 7T	1							M8×70	
19	1959 2310 000	PLATE	1								
20	1942 2312 000	BRACKET	1								
21	F154 0108 020	BOLT,w/washer	2							M8×20	
22	1044 1841 000	SPRING	1								
23	3555 9013 000	ADJUSTER	1								
24	A301 0108 002	NUT	4							M8	
25	2786 2476 001	RUBBER STOPPER	1								

FIG.701 HYDRAULIC LIFT(1/4)

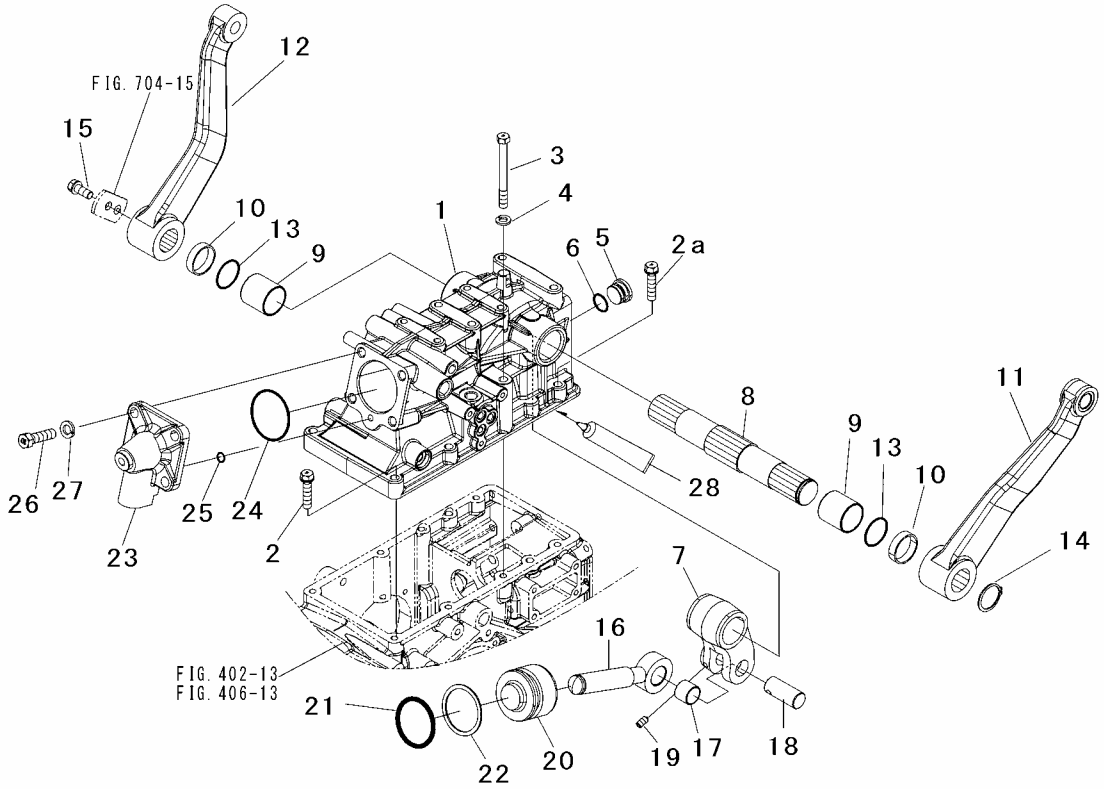

Key No.	Parts No.	Parts Name.	Q`ty ALL					R/P	Application	Description	Remarks
1	1963 2401 AG1	CASE,hydraulic	1								
2	F154 0110 045	BOLT,w/washer	5							M10×45	
2a	F154 0110 050	BOLT,w/washer	2							M10×50	
3	A054 0110 100	BOLT 7T	1							M10×100	
4	A360 0101 002	WASHER,spring	1							M10	
5	1007 2441 000	PLUG	1								
6	0830 0100 210	O-RING	1							φ21	
7	1963 2407 000	ARM,power	1								
8	1963 2409 000	SHAFT,hydraulic	1								
9	1963 2411 000	BUSHING	2								
10	1963 2412 000	COLLAR	2								
11	1963 2413 AG1	ARM L,lift	1								
12	1963 2414 AG1	ARM R,lift	1								
13	0830 0120 350	O-RING	2							φ35	
14	0740 0003 400	C-RING	1							φ34	
15	F155 0110 025	BOLT,w/washer	1							M10×25	
16	1174 2416 002	ROD,piston	1								
17	0797 2022 200	BUSHING	1								
18	1963 2418 000	PIN	1								
19	HA13 0401 000	SCREW	1								
20	1963 2419 000	PISTON	1								
21	0830 0100 550	O-RING	1							φ55	
22	0832 0100 550	RING,backup	1							φ55	
23	1959 2421 AG0	HEAD,cylinder	1								
24	0830 1200 600	O-RING	1							φ60	
25	0830 1100 100	O-RING	1							φ10	
26	A945 0112 045	BOLT 10.9	4							M12×45	
27	A360 0101 202	WASHER,spring	4							M12	
28	TB1206D	GASKET	AR								

FIG.702 HYDRAULIC LIFT(2/4)

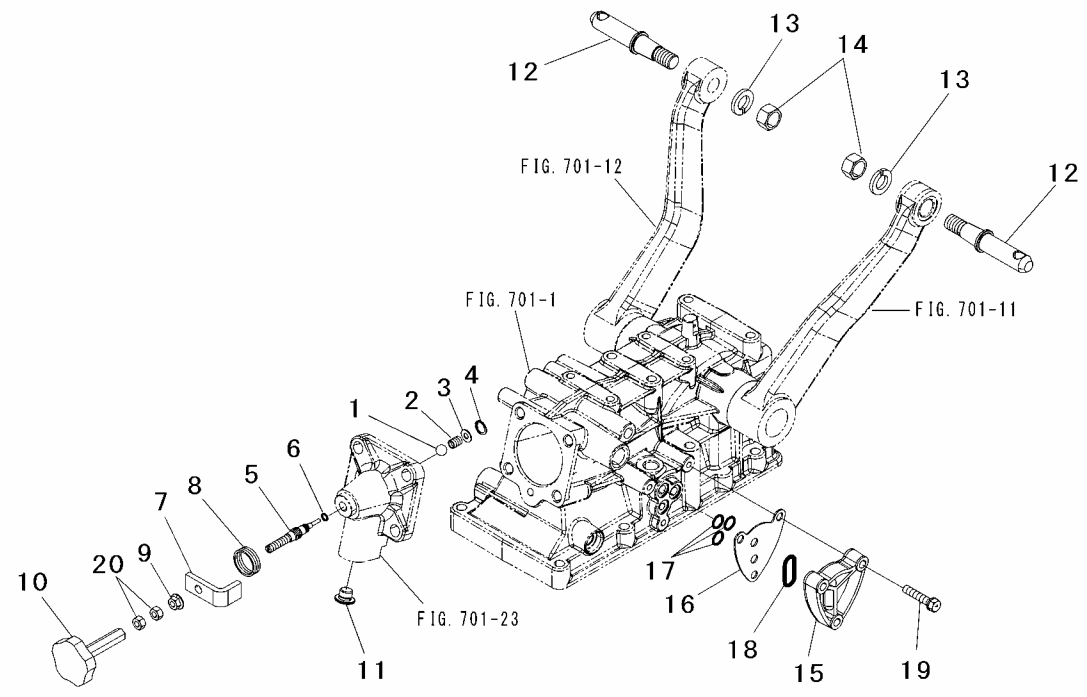

Key No.	Parts No.	Parts Name.	Q`ty ALL					R/P	Application	Description	Remarks
1	0800 0001 100	BALL	1							7/16″	
2	1150 1707 000	SPRING	1								
3	1982 2413 000	WASHER	1								
4	0741 0001 500	C-RING	1							φ15	
5	1908 2411 000	SCREW,pilot	1								
6	0830 1100 060	O-RING	1							φ6	
7	1963 2423 AG0	LEVER,stopper	1								
8	1025 2447 000	SPRING	1								
9	F301 0108 001	NUT,flange	1							M8	
10	1032 2427 000	KNOB	1								
11	HA43 0102 000	PLUG	1								
12	1044 2409 000	PIN,lift arm	2								
13	A360 0101 602	WASHER,spring	2							M16	
14	A303 0116 002	NUT	2							M16	
15	1007 2448 AG0	CAP	1								
16	1007 2449 AG0	PLATE	1								
17	0830 1100 120	O-RING	3							φ12	
18	0830 1100 250	O-RING	1							φ25	
19	F154 0108 040	BOLT,w/washer	3							M8×40	
20	A301 0108 002	NUT	2							M8	

FIG.703 HYDRAULIC LIFT(3/4)

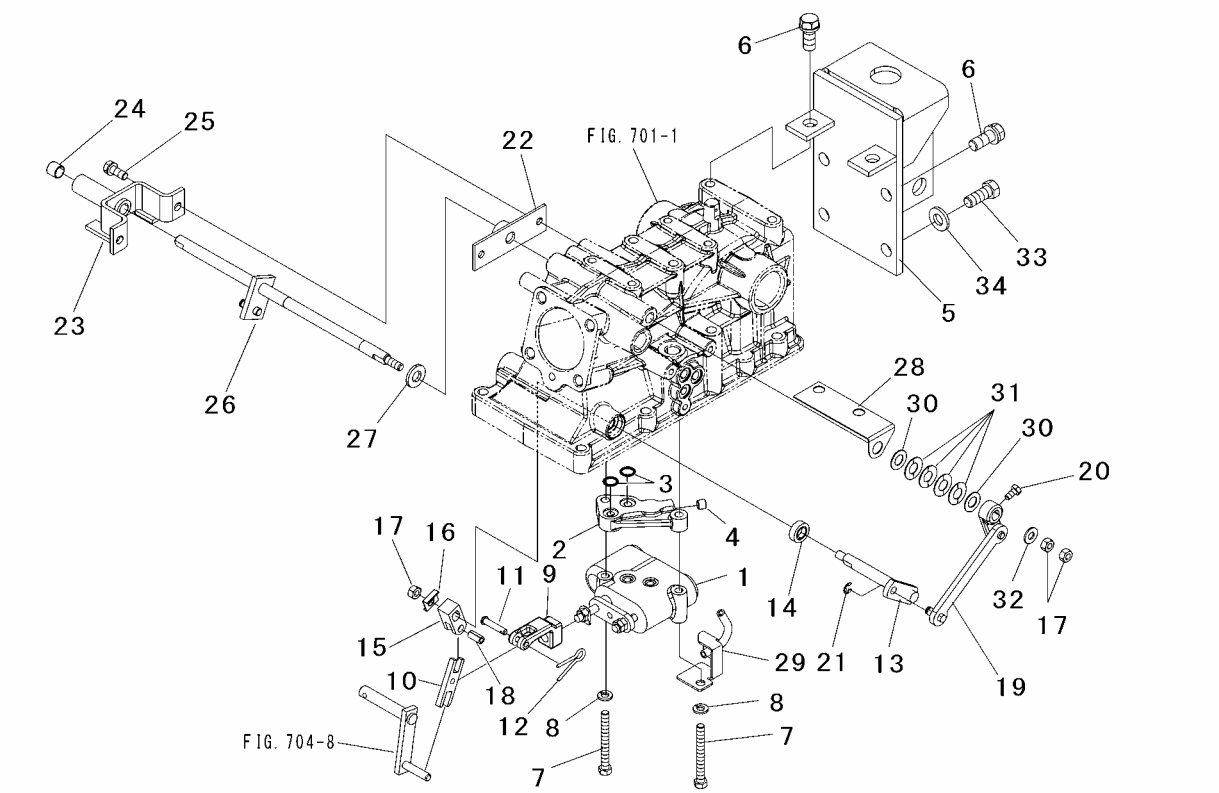

Key No.	Parts No.	Parts Name.	Q`ty					R/P	Application	Description	Remarks
			ALL								
1	1035 2405 000	VALVE,control	1								
2	1003 2421 000	SPACER	1								
3	0830 1100 120	O-RING	2							φ12	
4	A601 0A01 000	PLUG	1								
5	1959 2418 AG1	BRACKET	1								
6	F174 0112 030	BOLT,w/washer	4							M12×30	
7	A050 0108 070	BOLT 7T	2							M8×70	
8	A360 0100 802	WASHER,spring	2							M8	
9	1003 2418 001	JOINT	1								
10	1003 2419 001	LINK,valve	1								
11	0562 1106 030	PIN,clevis	1							φ6×30	
12	0520 0125 015	PIN,split	1							φ2.5×15	
13	1003 2414 000	SHAFT,link	1								
14	0840 1012 227	SEAL,oil	1							TC12227	
15	1003 2415 000	SHIFTER,valve	1								
16	1135 2426 000	PLATE	1								
17	A301 0108 002	NUT	3							M8	
18	0550 0008 016	PIN,spring	1							φ8×16	
19	1964 2453 AG0	LEVER ASSY	1								
20	A040 0106 012	BOLT 7T	1							M6×12	
21	0742 0100 600	E-RING	1							φ6	
22	1964 2456 000	PLATE	1								
23	1964 2457 000	BRACKET	1								
24	0796 1012 120	BUSHING	1								
25	F154 0108 020	BOLT,w/washer	2							M8×20	
26	1965 2458 AG0	SHAFT	1								
27	1904 1264 000	LINING,brake	1								
28	1003 2425 AG0	PLATE	1								
29	1959 2411 000	PIPE	1								
30	3121 2559 000	LINER	2								
31	0356 0101 201	SPRING,conical	4								
32	0350 0140 818	WASHER	1							M8	
33	A940 0112 030	BOLT 10.9	2							M12×30	
34	0355 0161 226	WASHER	2							M12	

FIG.704 HYDRAULIC LIFT(4/4)

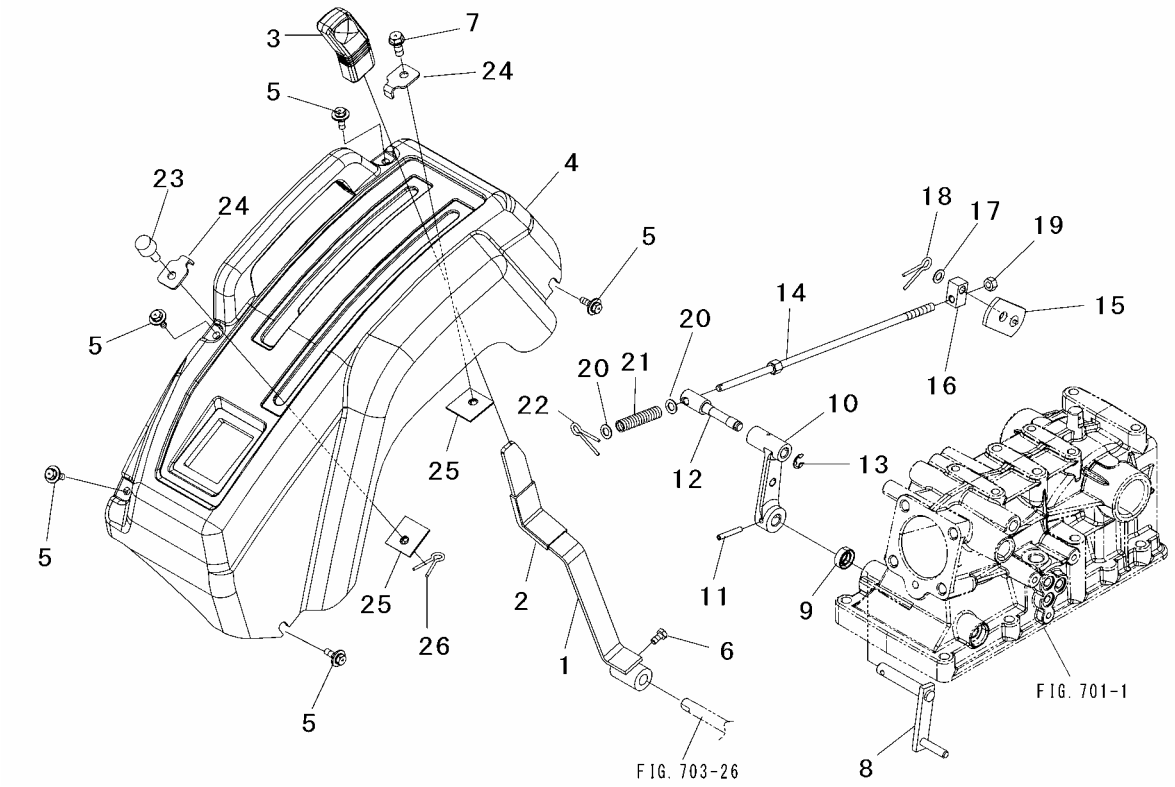

Key No.	Parts No.	Parts Name.	Q`ty ALL					R/P	Application	Description	Remarks
1	1959 2461 AG0	LEVER P/C	1								
2	1044 2476 000	TUBE	1								
3	1030 2444 000	GRIP	1								
4	1045 2489 000	LEVER GUIDE RH	1								
5	H194 0106 016	BOLT,w/washer	5							M6×16	
6	A040 0106 012	BOLT 7T	1							M6×12	
7	F050 0108 020	BOLT,flange	1							M8×20	
8	1003 2413 000	SHIFTER	1								
9	0840 1012 227	SEAL,oil	1							TC12227	
10	1003 2409 AG0	ARM,feedback	1								
11	0550 0005 032	PIN,spring	1							φ5×32	
12	1021 2428 AG0	PIN,joint	1								
13	0742 0100 800	E-RING	1							φ8	
14	1003 2408 000	FEEDBACK LINK	1								
15	1003 2406 AG0	PLATE	1								
16	1003 2407 AG0	JOINT	1								
17	0350 0130 815	WASHER	1							M8	
18	0520 0125 015	PIN,split	1							φ2.5×15	
19	A301 0108 002	NUT	1							M8	
20	0350 0130 815	WASHER	2							M8	
21	1003 2412 000	SPRING	1								
22	0520 0125 015	PIN,split	1							φ2.5×15	
23	1021 2438 000	GRIP	1								
24	1040 2455 000	STOPPER	2								
25	1031 2476 000	PLATE,stopper	2								
26	0520 0120 012	PIN,split	1							φ2×12	

FIG.705 HYDRAULIC LINE(1/3)

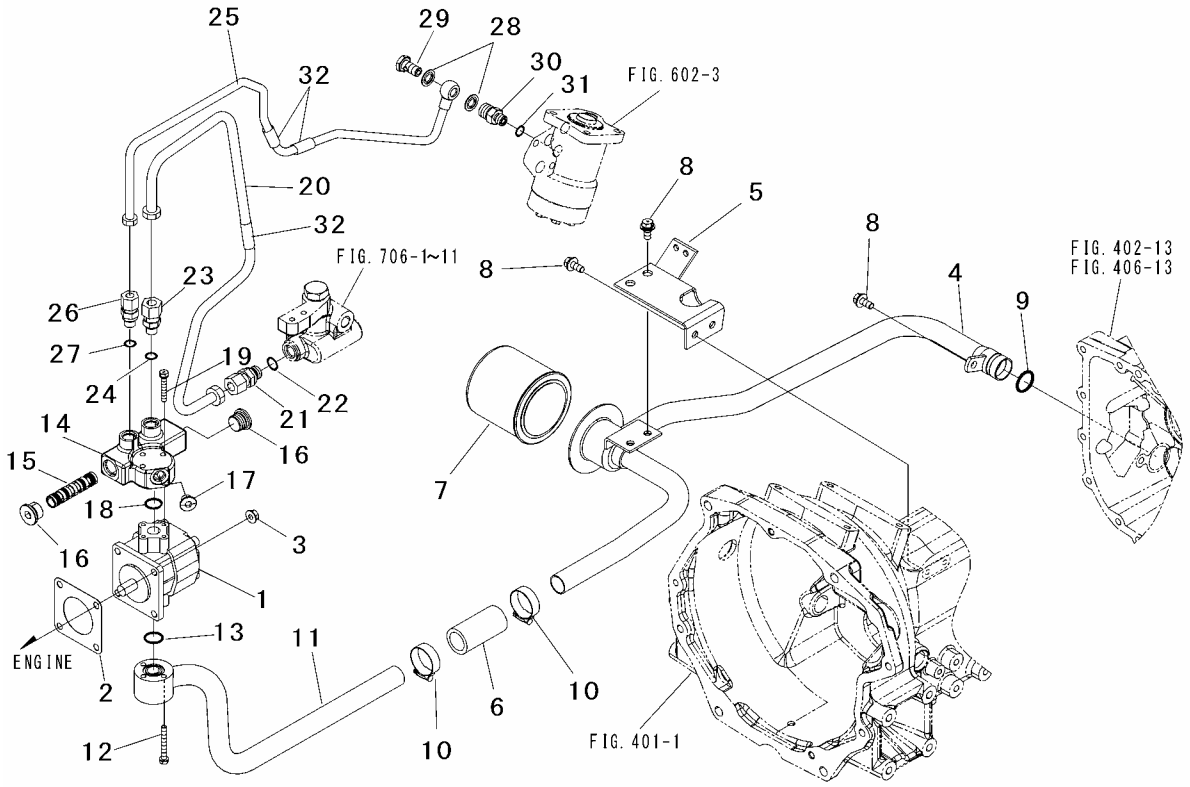

Key No.	Parts No.	Parts Name.	Q`ty ALL					R/P	Application	Description	Remarks
1	1030 2501 002	PUMP,hydraulic	1								
2	67700-20101	PACKING	1								
3	F301 0108 001	NUT,flange	4							M8	
4	1959 2564 AG0	BASE,filter	1								
5	1959 2568 AG0	BRACKET	1								
6	68275-02800	HOSE	1								
7	1038 2585 000	FILTER	1								
8	H154 0108 020	BOLT,w/washer	5							M8×20	
9	0830 0100 240	O-RING	1							φ24	
10	0050 5000 380	CLAMP,hose	2							φ38	
11	1959 2566 AG0	PIPE C, suction	1								
12	F144 0106 050	BOLT,w/washer	3							M6×50	
13	0830 0100 180	O-RING	1							φ18	
14~17	1045 2548 000	VALVE ASSY	1								
14	1039 2551 000	BODY	1								
15	1041 2558 000	SPOOL	1								
16	1039 2562 000	PLUG	2								
17	HA43 0102 000	PLUG	1								
18	0830 1100 180	O-RING	1							φ18	
19	F144 0106 040	BOLT,w/washer	3							M6×40	
20	1959 2511 AG1	PIPE A,pressure	1								
21	0620 3112 170	NIPPLE	1								Inc22
22	0830 1100 140	O-RING	1							φ14	
23	3544 1838 000	NIPPLE	1								Inc24
24	0830 1100 110	O-RING	1							φ11	
25	1959 2512 AG0	PIPE P/S ASSY	1								
26	0620 3110 130	NIPPLE	1								Inc27
27	0830 1100 110	O-RING	1							φ11	
28	0833 1001 200	WASHER,seal	2							M12	
29	1174 2443 001	BOLT,eye	1								
30	1039 2555 000	JOINT	1								Inc31
31	0830 1100 110	O-RING	1							φ11	
32	1135 2474 000	PIPE	3								

FIG.706 HYDRAULIC LINE(2/3)

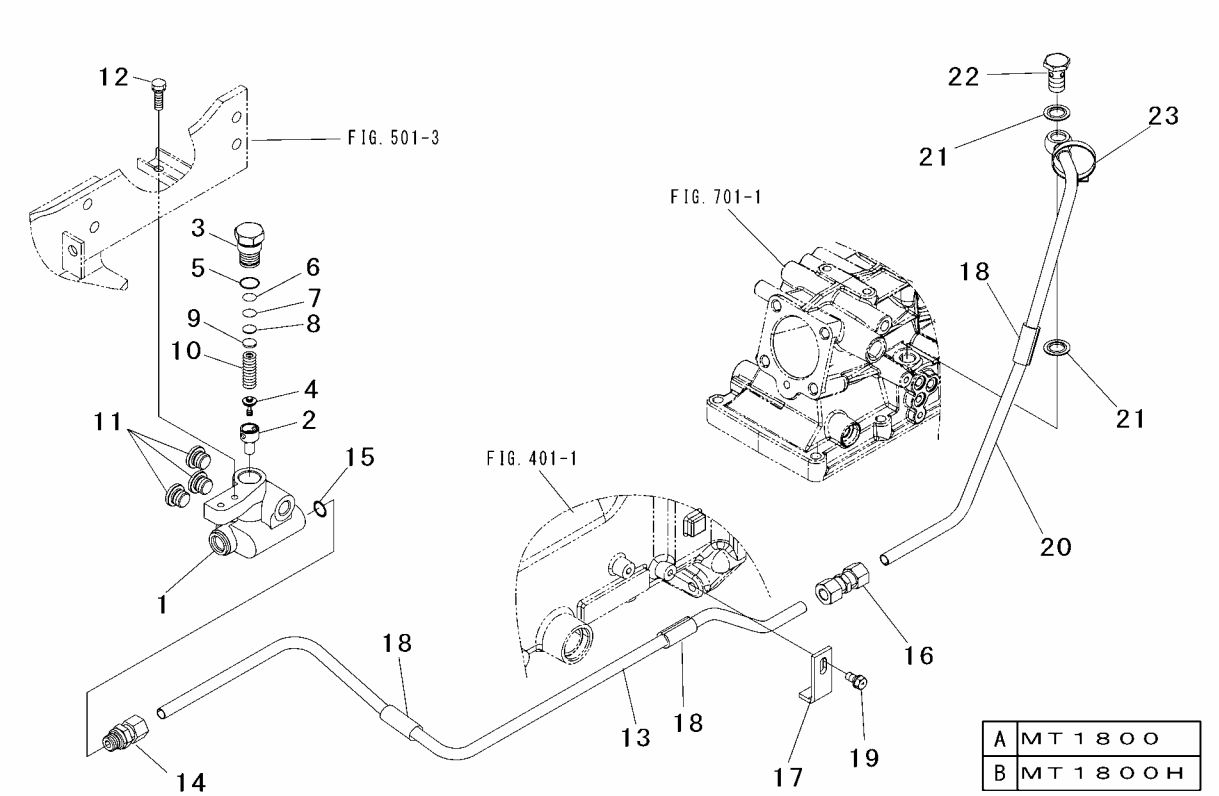

Key No.	Parts No.	Parts Name.	Q`ty A	Q`ty B				R/P	Application	Description	Remarks
1～11	1958 2585 AG0	BLOCK ASSY	1	1							
1	1957 2586 000	BLOCK	1	1							
2	1005 2405 191	HOUSING	1	1							
3	1005 2405 120	PLUG	1	1							
4	1005 2405 180	POPPET	1	1							
5	0830 0500 160	O-RING	1	1						φ16	
6	1005 2405 130	SHIM	AR	AR						t=0.1	
7	1005 2405 140	SHIM	AR	AR						t=0.3	
8	1005 2405 150	SHIM	AR	AR						t=1.0	
9	1005 2405 160	SHIM	AR	AR						t=2.0	
10	1005 2405 170	SPRING	1	1							
11	HA43 0103 000	PLUG	3	3							
12	F154 0108 016	BOLT,w/washer	1	1						M8×16	
13	1959 2513 AG0	PIPE B ASSY	1	1							
14	0620 3112 170	JOINT	1	1							Inc15
15	0830 1100 140	O-RING	1	1						φ14	
16	0620 1112 000	UNION	1	1							
17	1957 2542 000	PLATE	1	1							
18	1135 2474 000	PIPE	3	3							
19	H154 0108 020	BOLT,w/washer	1	1						M8×20	
20	1942 2514 AG0	PIPE D ASSY	1	1							
21	0833 1001 600	WASHER,seal	2	2						M16	
22	1981 2453 000	BOLT,eye	1	1							
23	0051 1032 070	BAND,wire	·	1							

FIG.707 HYDRAULIC LINE(3/3)

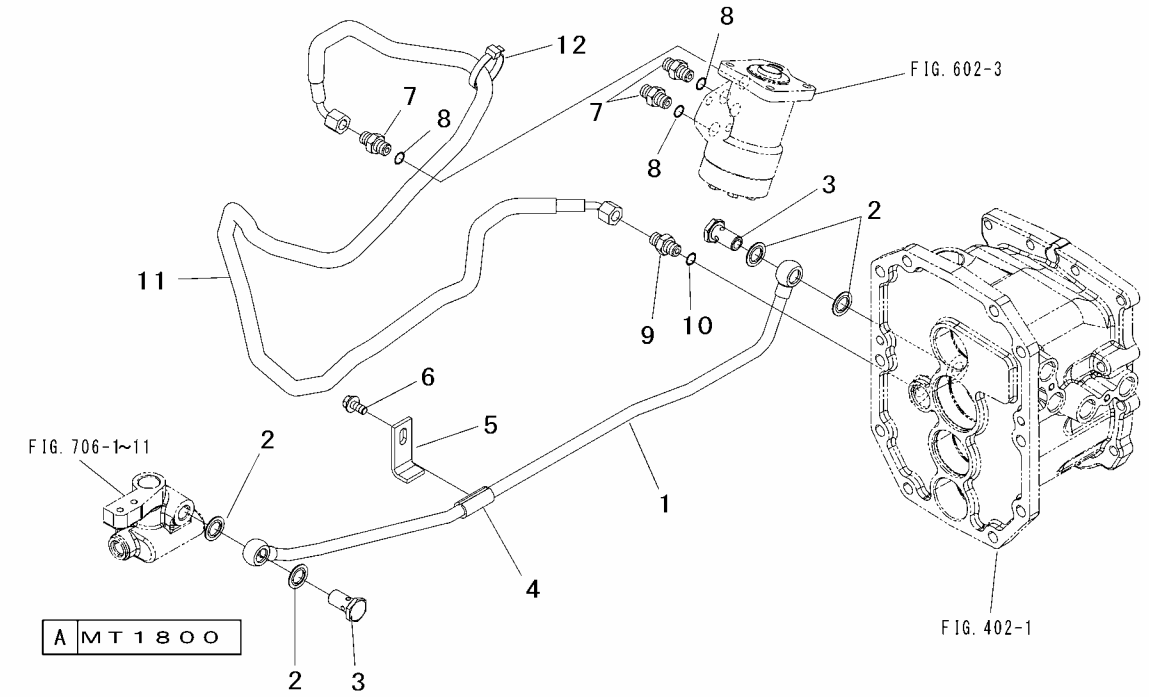

Key No.	Parts No.	Parts Name.	Q`ty A					R/P	Application	Description	Remarks
1	1942 2577 000	PIPE A,assy	1								
2	0833 1001 600	WASHER,seal	4							M16	
3	1981 2453 000	BOLT,eye	2								
4	1135 2474 000	PIPE	1								
5	1957 2542 000	PLATE	1								
6	H154 0108 020	BOLT,w/washer	1							M8×20	
7	0631 1113 130	ADAPTER	3								Inc8
8	0830 1100 110	O-RING	3							φ11	
9	0631 1113 130	ADAPTER	1								Inc10
10	0830 1100 110	O-RING	1							φ11	
11	1045 2579 000	HOSE	1								
12	0051 1032 070	BAND,wire	1								

FIG.707A HYDRAULIC LINE(3/3)

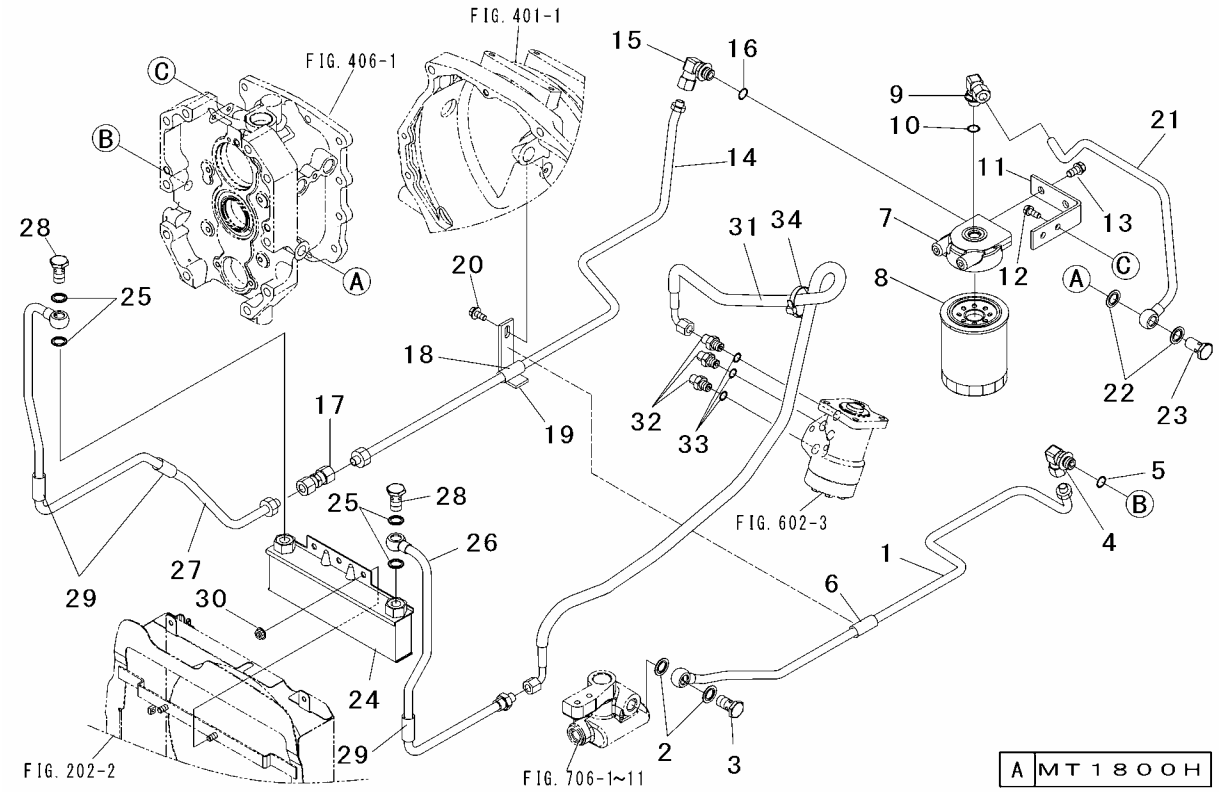

Key No.	Parts No.	Parts Name.	Q`ty A					R/P	Application	Description	Remarks
1	1959 2515 AG1	PIPE A ASSY	1								
2	0833 1001 600	WASHER,seal	2							M16	
3	1981 2453 000	BOLT,eye	1								
4	0620 5112 170	ELBOW	1								Inc5
5	0830 1100 140	O-RING	1							φ14	
6	1135 2474 000	PIPE	1								
7	1963 2559 AG0	FILTER HEAD	1								
8	1968 2581 000	FILTER,oil	1								
9	0620 5112 170	ELBOW	1								Inc10
10	0830 1100 140	O-RING	1							φ14	
11	1959 2559 AG0	PLATE	1								
12	F154 0108 020	BOLT,w/washer	2							M8×20	
13	F155 0110 020	BOLT,w/washer	2							M10×20	
14	1959 2516 AG1	PIPE C ASSY	1								
15	0620 5112 170	ELBOW	1								Inc16
16	0830 1100 140	O-RING	1							φ14	
17	0620 1112 000	UNION	1								
18	1135 2474 000	PIPE	1								
19	1957 2533 000	PLATE	1								
20	H154 0108 020	BOLT,w/washer	1							M8×20	
21	1942 2517 AG0	PIPE D ASSY	1								
22	0833 1001 600	WASHER,seal	2							M16	
23	1981 2453 000	BOLT,eye	1								
24	1963 2556 000	COOLER,oil	1								
25	0833 1001 601	WASHER,seal	4							M16	
26	1959 2532 AG0	PIPE A,hst	1								
27	1959 2518 AG1	PIPE B ASSY	1								
28	1981 2453 000	BOLT,eye	2								
29	1135 2474 000	PIPE	3								
30	F301 0108 001	NUT,flange	2							M8	
31	1956 2296 000	HOSE R	1								
32	0631 1113 130	ADAPTER	3								Inc33
33	0830 1100 110	O-RING	3							φ11	
34	0051 1032 070	BAND,wire	1								

FIG.801 METER PANEL

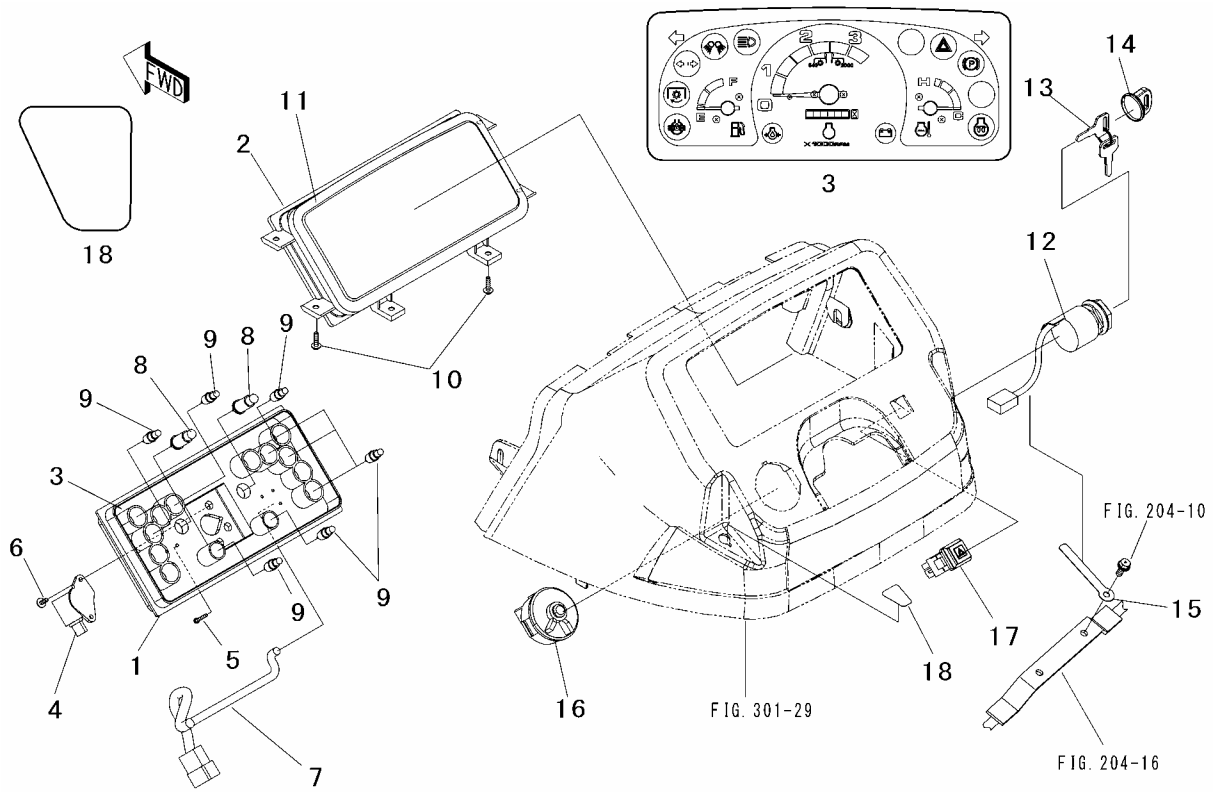

Key No.	Parts No.	Parts Name.	Q`ty ALL					R/P	Application	Description	Remarks
1～9	1942 2932 000	METER ASSY	1								
1	*	CASE	1								Not Serviceable
2	1046 2853 200	GLASS	1								
3	*	MONITOR ASSY	1								Not Serviceable
4	*	ELBOW	1								Not Serviceable
5	*	SCREW	6								Not Serviceable
6	H242 0104 012	SCREW,w/washer	2							M4×12	
7	*	HARNESS	1								Not Serviceable
8	1046 2854 400	BULB	2							12V3.4W	
9	1046 2854 500	BULB	9							12V1.7W	
10	1048 8638 000	SCREW	6								
11	3583 3032 000	SEAL	1								
12,13	1957 2933 000	STARTER SW AY	1								
12	*	STARTER SW	1								Not Serviceable
13	1957 2933 200	KEY	1								
14	1957 2933 500	CAP	1								
15	0050 2108 063	CLAMP	1							L=80	
16	1040 5556 000	SWITCH,combinat	1								
17	1957 2946 000	SWITCH,hazard	1								
18	1045 2841 000	MARK	1								

FIG.802 ELECTRICAL SYSTEM(1/3)

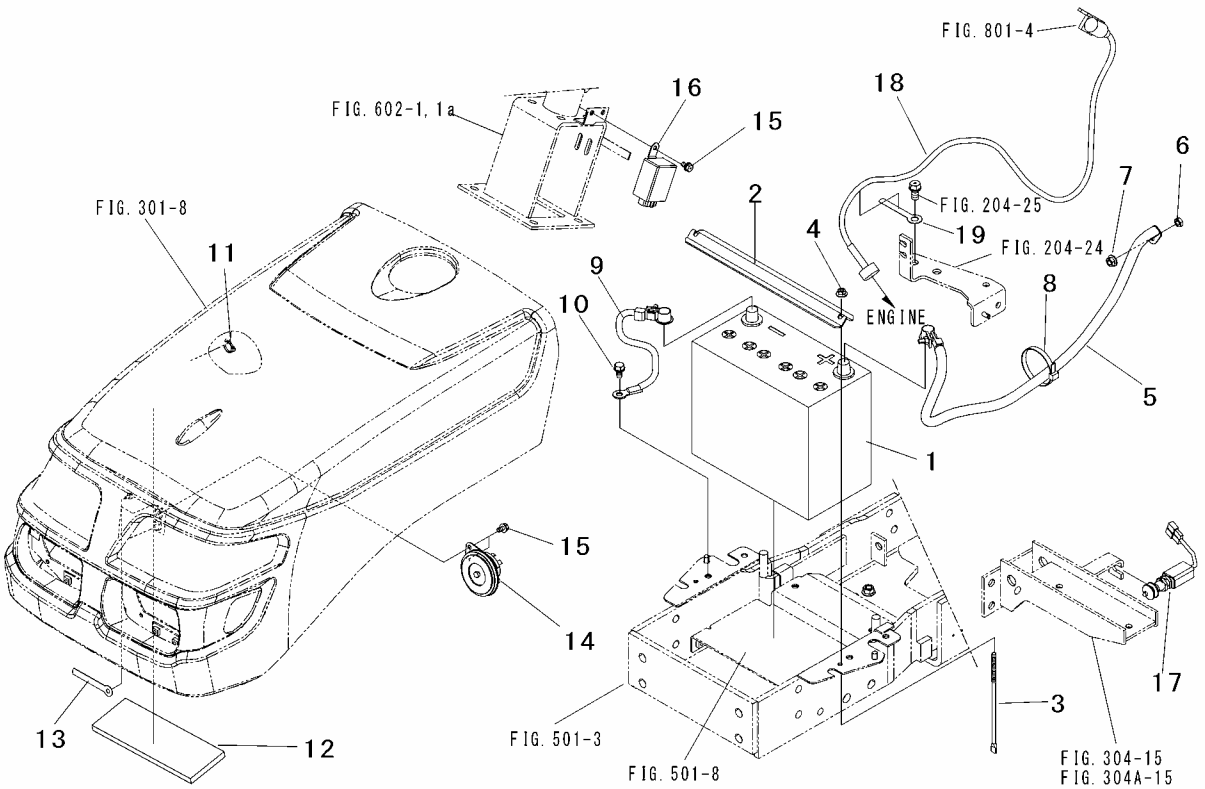

Key No.	Parts No.	Parts Name.	Q`ty ALL					R/P	Application	Description	Remarks
1	F985 255B 24R	BATTERY	1								
2	1942 2902 ZB0	PLATE	1								
3	1959 2904 000	ROD	2								
4	F300 0106 011	NUT,flange	2							M6	
5	1959 2902 000	CORD,plus	1								
6	A301 0108 003	NUT	1							M8	
7	F301 0108 000	NUT,flange	1							M8	
8	0051 1070 070	BAND,wire	1								
9	1040 5503 000	CORD,minus	1								
10	HA12 1403 000	BOLT	1								
11	0051 1022 030	BAND,wire	1								
12	1039 2809 001	SEAL	1								
13	0050 2108 063	CLAMP	1							L=80	
14	3583 3683 000	HORN	1								
15	H144 0106 012	BOLT,w/washer	3							M6×12	
16	3586 0798 000	TURN UNIT	1								
17	1040 2827 000	SWITCH	1								
18	1039 2818 000	CABLE,flexible	1								
19	0050 2108 103	CLAMP	1							L=80	

FIG.803 ELECTRICAL SYSTEM(2/3)

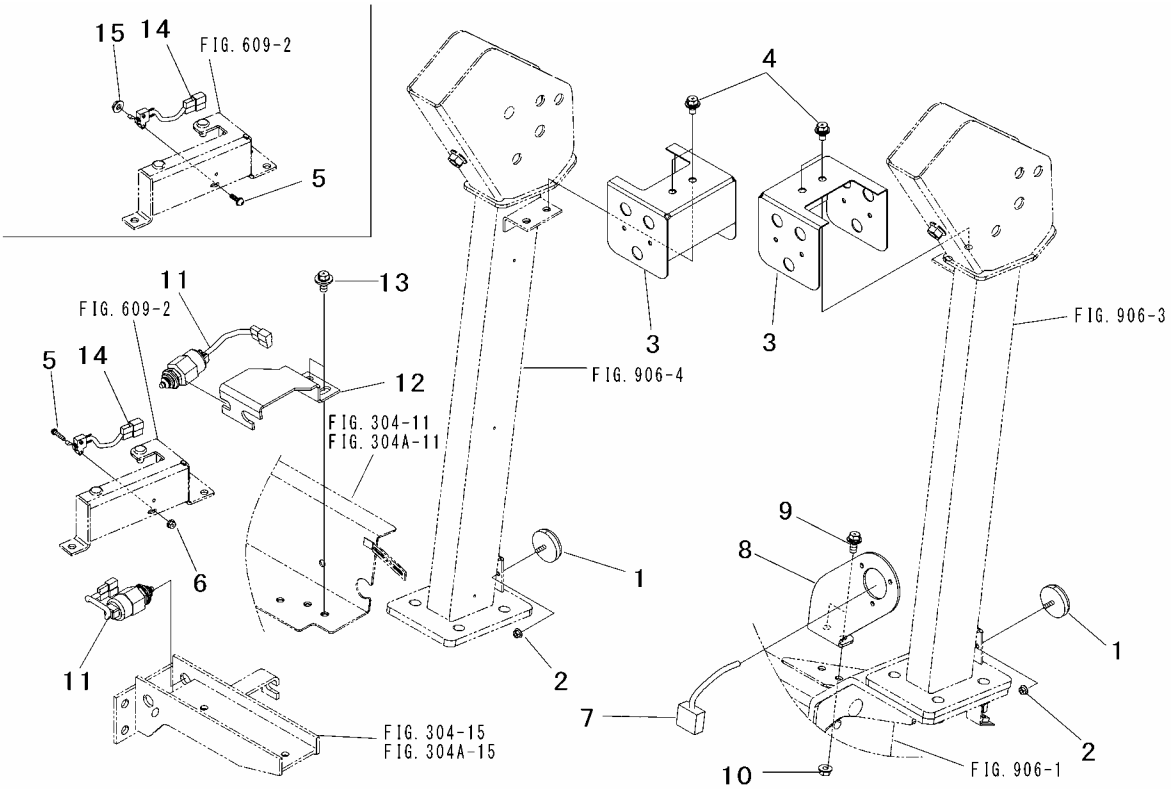

Key No.	Parts No.	Parts Name.	Q`ty ALL					R/P	Application	Description	Remarks
1	3700 0581 000	REFLECTOR	2								
2	F300 0105 000	NUT,flange	2							M5	
3	1942 2915 AG0	BRACKET	2								
4	H154 0108 016	BOLT,w/washer	4							M8×16	
5	○	SCREW,w/washer	1					A		M4×20	F242 0104 020
	H242 0104 020	SCREW,w/washer	1							M4×20	
6	F300 0104 000	NUT,flange	1					F	18G:～0017	M4	
									18H:～0016		
7	1942 2919 000	HARNESS 7P	1								
8	1942 2921 AG0	PLATE 7P	1								
9	H154 0108 020	BOLT,w/washer	2							M8×20	
10	F301 0108 000	NUT,flange	2							M8	
11	1040 2821 000	SWITCH,safety	2								
12	1942 2923 AG0	BRACKET,switch	1								
13	H184 0108 016	BOLT,w/washer	2							M8×16	
14	1953 2919 000	SWITCH	1								
15	F300 0104 000	NUT,flange	1					E	18G:0018～	M4	
									18H:0017～		

FIG.804 ELECTRICAL SYSTEM(3/3)

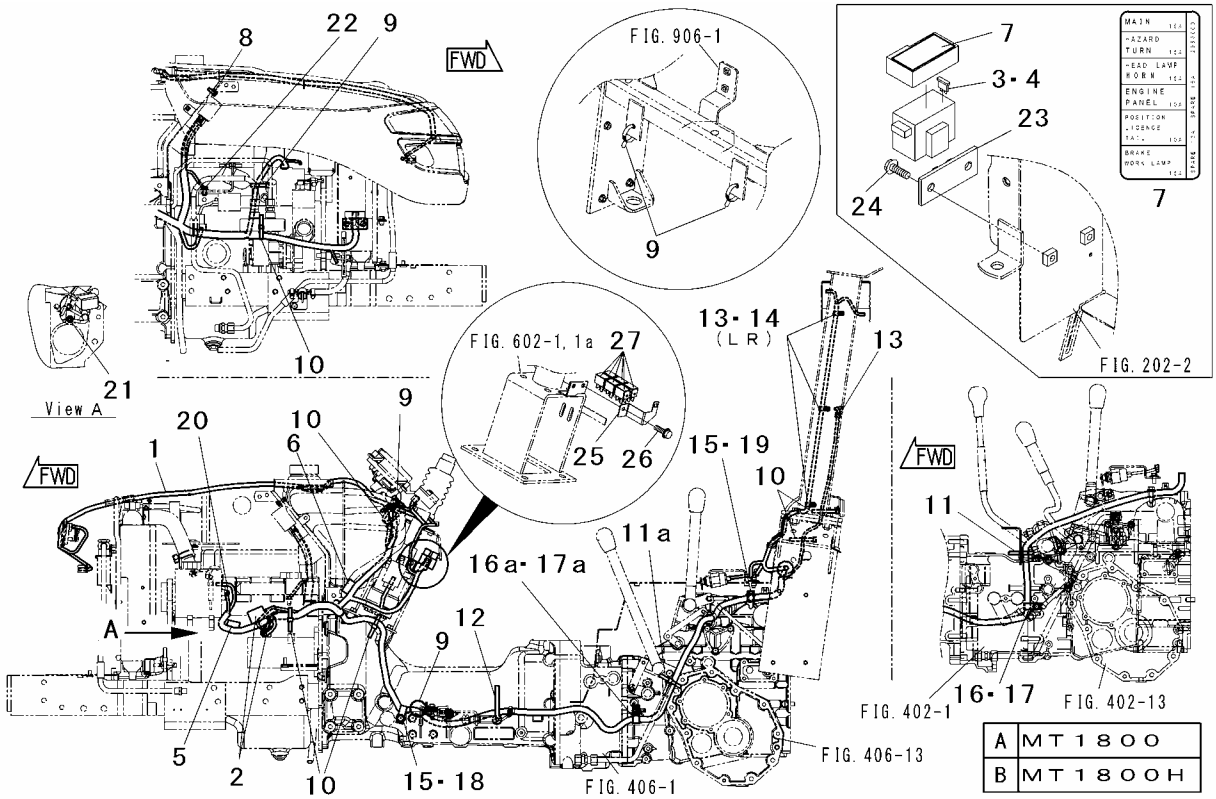

Key No.	Parts No.	Parts Name.	Q`ty A	Q`ty B				R/P	Application	Description	Remarks
1～7	1942 2952 000	HARNESS M	1	1							
1	*	HARNESS	1	1							
2	1037 5581 200	FUSE	2	2						50A	
3	0980 1001 006	FUSE	3	3						10A	
4	0980 1001 506	FUSE	5	5						15A	
5	3577 0855 200	DIODE	1	1						1.5A	
6	1040 2911 200	DIODE	1	1						1.5A	
7	1942 2953 000	LABEL,fuse	1	1							
8	H144 0106 020	BOLT,w/washer	1	1						M6×20	
9	0051 1032 070	BAND,wire	5	5							
10	0051 1070 070	BAND,wire	6	6							
11	0051 1070 070	BAND,wire	1	・							
11a	0051 1070 070	BAND,wire	・	1							
12	0050 2110 083	CLAMP	1	1						L=95	
13	1044 2993 000	CLIP	7	7							
14	1048 8638 000	SCREW	6	6							
15	0050 2116 105	CLAMP	2	2							
16	H194 0106 012	BOLT,w/washer	1	・						M6×12	
16a	H194 0106 012	BOLT,w/washer	・	1						M6×12	
17	0050 2116 105	CLAMP	1	・							
17a	0050 2116 105	CLAMP	・	1							
18	H154 0108 016	BOLT,w/washer	1	1						M8×16	
19	H155 0110 020	BOLT,w/washer	1	1						M10×20	
20	F300 0105 000	NUT,flange	1	1						M5	
21	F301 0108 000	NUT,flange	1	1						M8	
22	HA12 1403 000	BOLT	1	1							
23	1044 2812 000	HOLDER,fuse	1	1							
24	F050 0106 012	BOLT,flange	2	2						M6×12	
25	1942 2959 000	PLATE	1	1							
26	H144 0106 016	BOLT,w/washer	1	1						M6×16	
27	1957 2915 000	RELAY	6	6							

FIG.901 MARK (1/3)

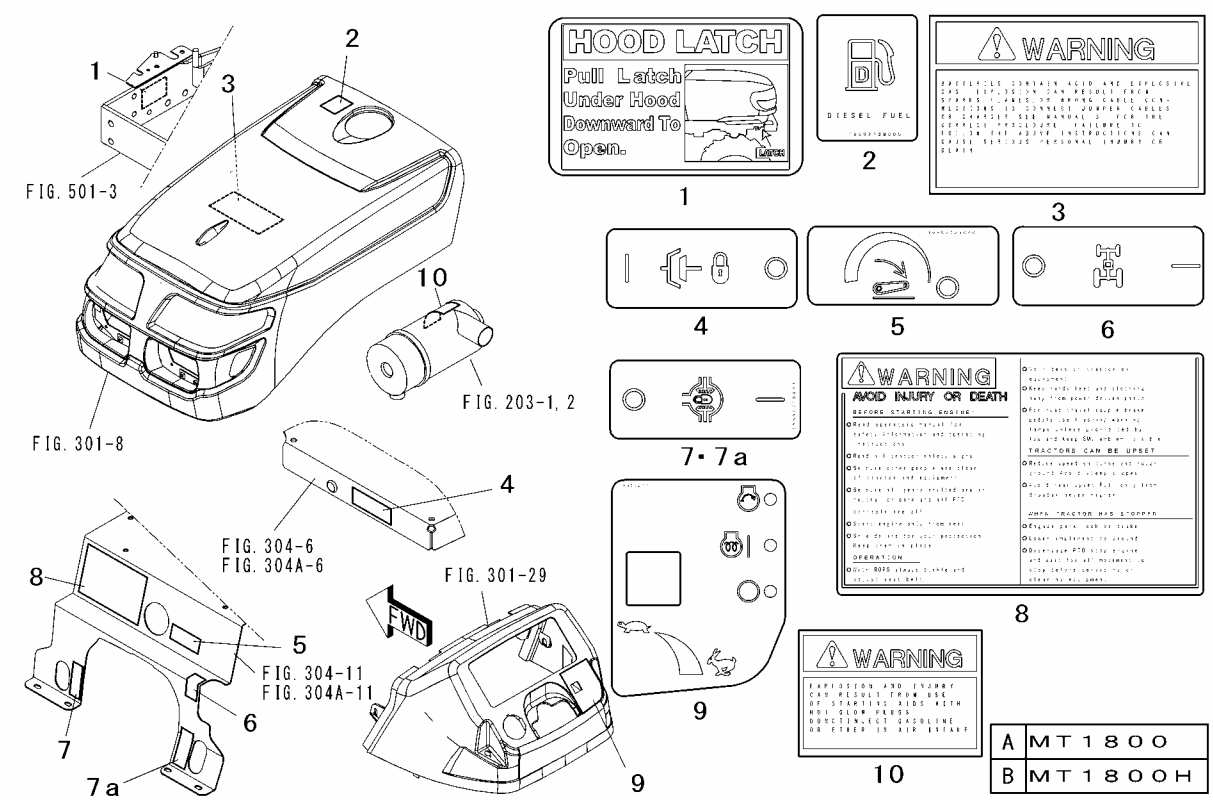

Key No.	Parts No.	Parts Name.	Q`ty A	Q`ty B				R/P	Application	Description	Remarks
1	1957 2736 000	LABEL,hood	1	1							
2	1969 2728 000	MARK,fuel	1	1							
3	1904 2759 000	LABEL,warning	1	1							
4	1963 2721 000	LABEL,declutch	1	1							
5	1969 2723 000	LABEL D.R	1	1							
6	1963 2731 000	LABEL,mfd	1	1							
7	1969 2718 000	LABEL,diff lock	1	・							
7a	1963 2718 000	LABEL,mfd	・	1							
8	1957 2726 000	LABEL,warning	1	1							
9	1959 2770 000	LABEL,main	1	1							
10	1904 2746 000	LABEL,warning	1	1							

FIG.902 MARK (2/3)

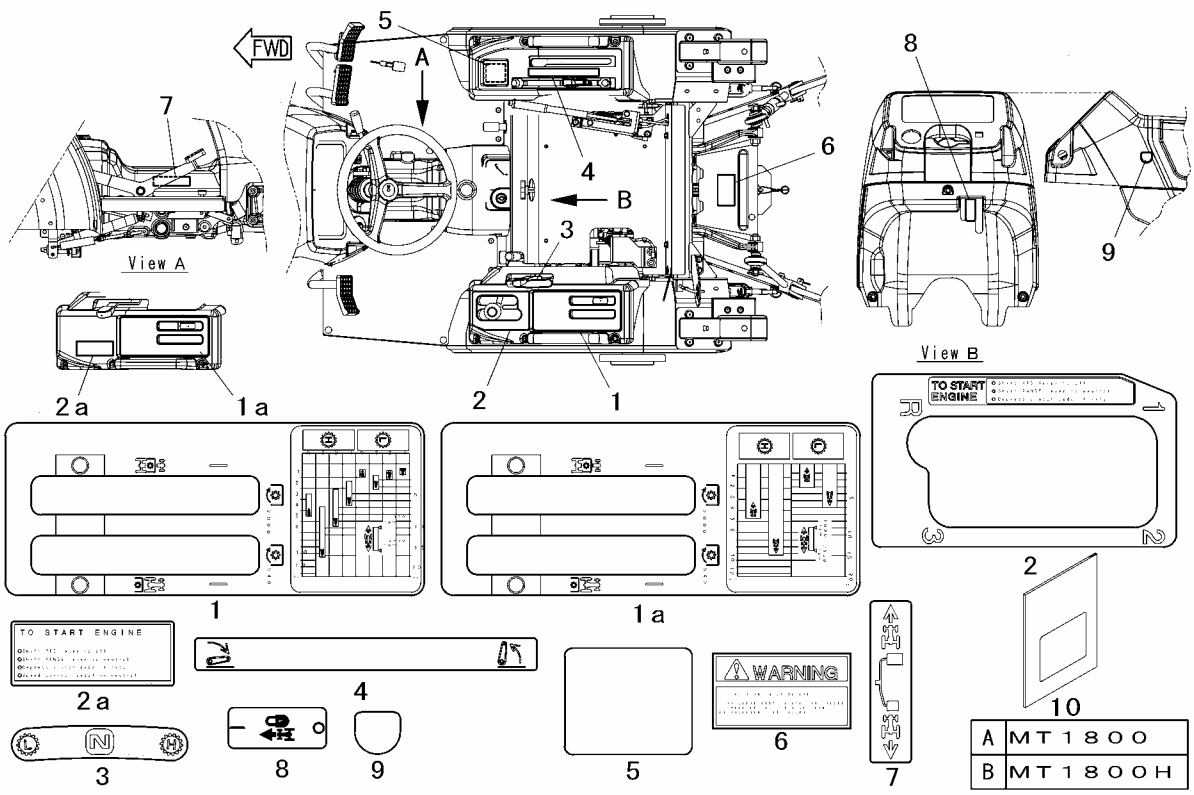

Key No.	Parts No.	Parts Name.	Q`ty A	Q`ty B				R/P	Application	Description	Remarks
1	1942 2701 000	LABEL G,speed	1	·							
1a	1958 2702 000	LABEL H,speed	·	1							
2	1942 2711 000	LABEL,main	1	·							
2a	1957 2728 000	LABEL H,start	·	1							
3	1958 2716 000	LABEL H,sub	1	1							
4	1957 2491 000	LABEL,lift	1	1							
5	1045 2873 000	LABEL,pac	1	1							
6	1904 2761 000	LABEL,warining	1	1							
7	1959 2731 000	LABEL,hst	·	1							
8	1963 2732 000	LABEL,cont	·	1							
9	1959 2722 000	MARK,cap	1	1							
10	1942 3711 000	INSTRUCT BOOK	1	1							

FIG.903 MARK (3/3)

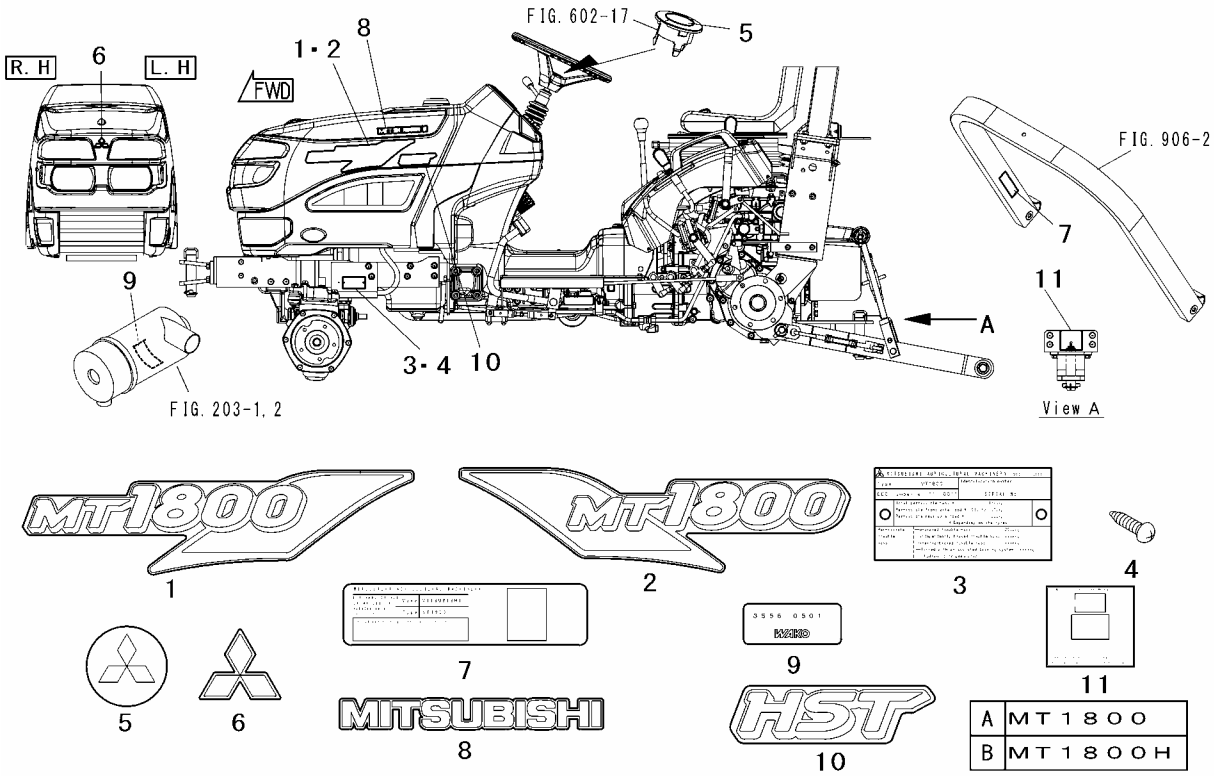

Key No.	Parts No.	Parts Name.	Q`ty A	Q`ty B				R/P	Application	Description	Remarks
1	1942 2751 000	LABEL LH,model	1	1							
2	1942 2752 000	LABEL RH,model	1	1							
3	*	PLATE NAME	1	1							
4	0480 0135 060	SCREW	2	2							
5	1044 2759 000	LABEL,steering	1	1							
6	1039 2785 000	MARK 3-DIA	1	1							
7	1942 2768 000	LABEL,rops	1	1							
8	1039 2786 000	LABEL,mitsubish	2	2							
9	1942 2771 000	LABEL,number	1	1							
10	1953 2735 000	LABEL,hst	・	2							
11	1942 2772 000	LABEL,drawbar	1	1							

FIG.904 3 POINT LINKAGE

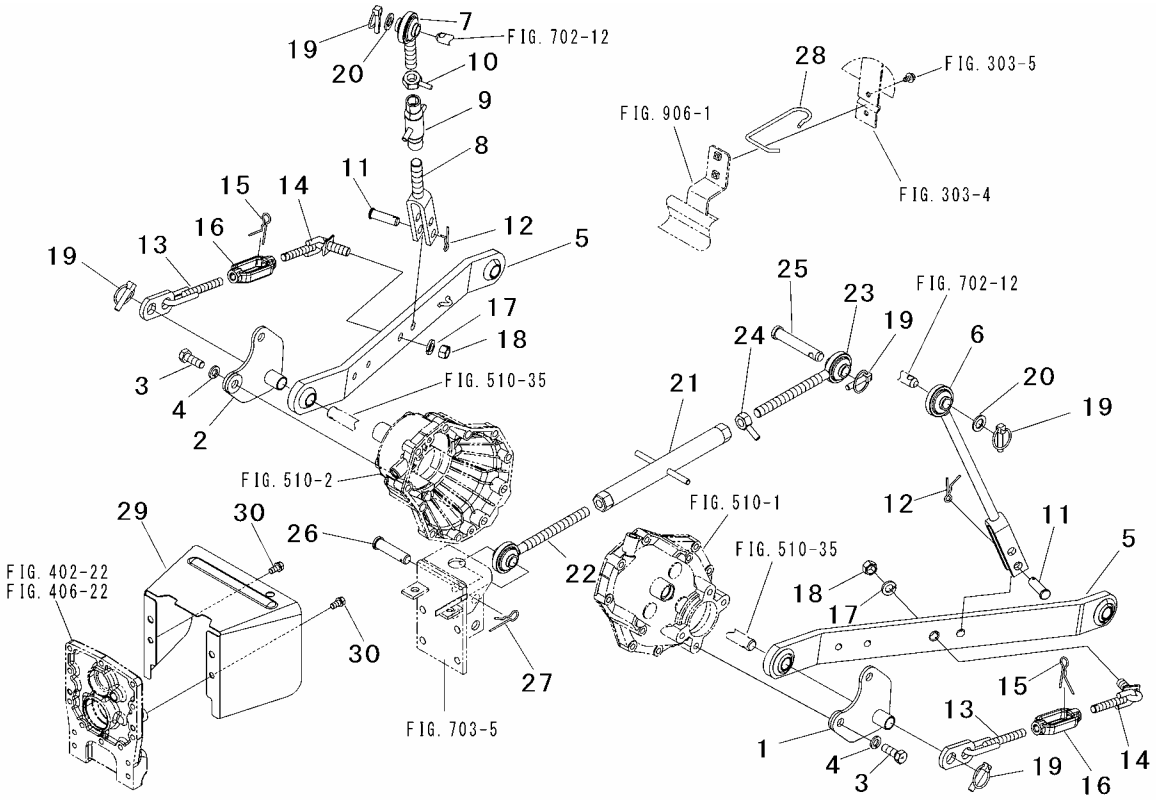

Key No.	Parts No.	Parts Name.	Q`ty ALL					R/P	Application	Description	Remarks
1	1958 3031 AG0	BRACKET LH	1								
2	1958 3032 AG0	BRACKET RH	1								
3	A940 0114 040	BOLT 10.9T	2							M14×40	
4	A360 0101 402	WASHER,spring	2							M14	
5	1963 3006 AG0	LINK,lower	2								
6	1963 3007 AG0	ROD LH,lift	1								
7～10	1963 3011 AG0	ROD ASSY,lift	1								
7	1963 3012 AG0	ROD A	1								
8	1963 3014 AG0	ROD B	1								
9	1032 3025 AG0	ROD MIDDLE,lift	1								
10	1032 3024 000	NUT,lock	1								
11	1032 3018 001	PIN	2								
12	1032 3019 000	PIN,snap	2								
13～16	1044 3040 000	CHECK CHAIN AY	2								
13	1044 3041 000	CHECK CHAIN 1	2								
14	1044 3042 000	CHAIN,r	2								
15	1038 3035 000	PIN,snap	2								
16	1038 3032 000	TURN BUCKLE	2								
17	A360 0101 602	WASHER,spring	2							M16	
18	A303 0116 002	NUT	2							M16	
19	1037 3015 000	PIN,linch	5								
20	1032 3016 000	WASHER	2								
21～24	1963 3026 AG0	LINK ASSY,top	1								
21	1963 3027 AG0	TURN BUCKLE	1								
22	1963 3036 AG0	ADJUSTER	1								
23	1963 3028 AG0	ADJUSTER	1								
24	1963 3029 000	NUT	1								
25	1963 3037 000	PIN,upper link	1								
26	1963 3038 000	PIN	1								
27	1963 3041 000	PIN,snap	1								
28	1963 3031 000	HOOK,top link	1								
29	1963 3034 AG1	COVER,pto	1								
30	F154 0110 020	BOLT,w/washer	2							M10×20	

FIG.905 DRAWBAR

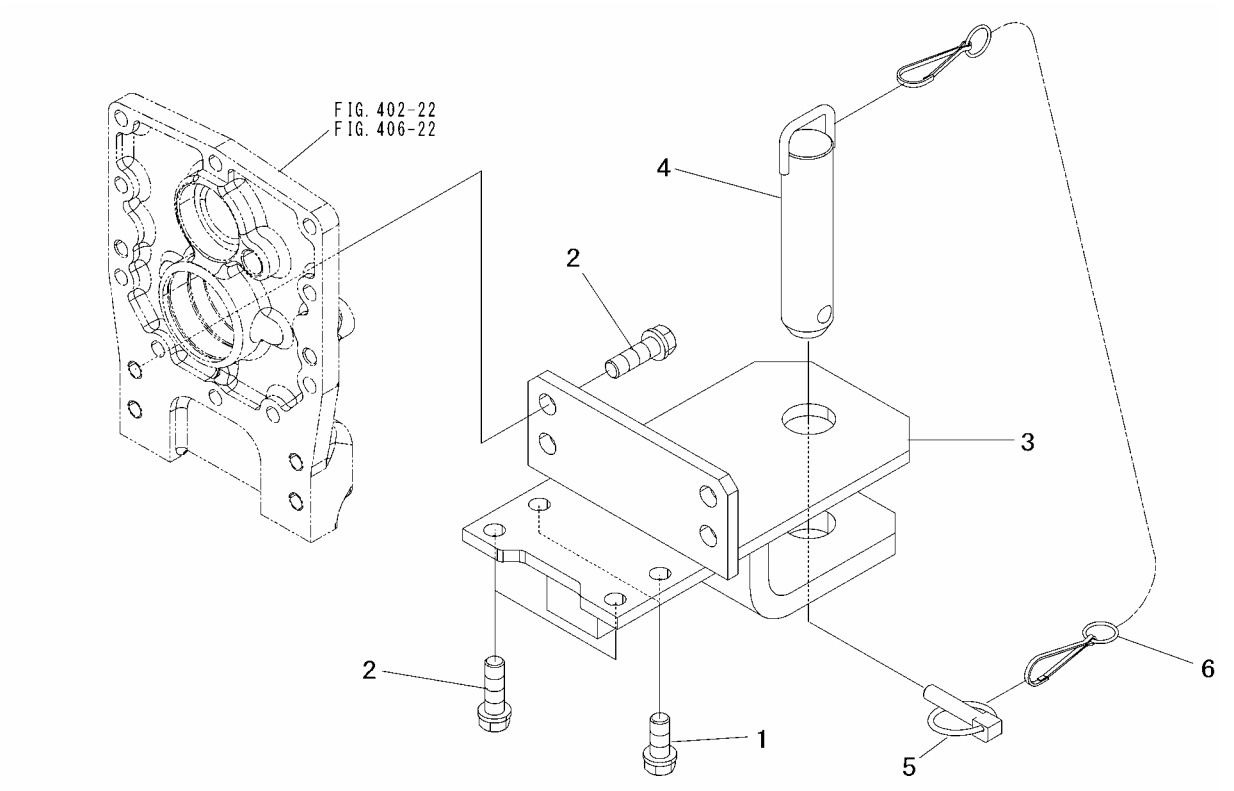

Key No.	Parts No.	Parts Name.	Q`ty					R/P	Application	Description	Remarks
			ALL								
1	F154 0112 030	BOLT,w/washer	2							M12×30	
2	F154 0112 040	BOLT,w/washer	6							M12×40	
3	1942 3111 AG0	DRAWBAR	1								
4	1965 3116 000	HITCH PIN	1								
5	1037 3015 000	PIN,linch	1								
6	1904 3911 000	CHAIN	1								

FIG.906 ROPS

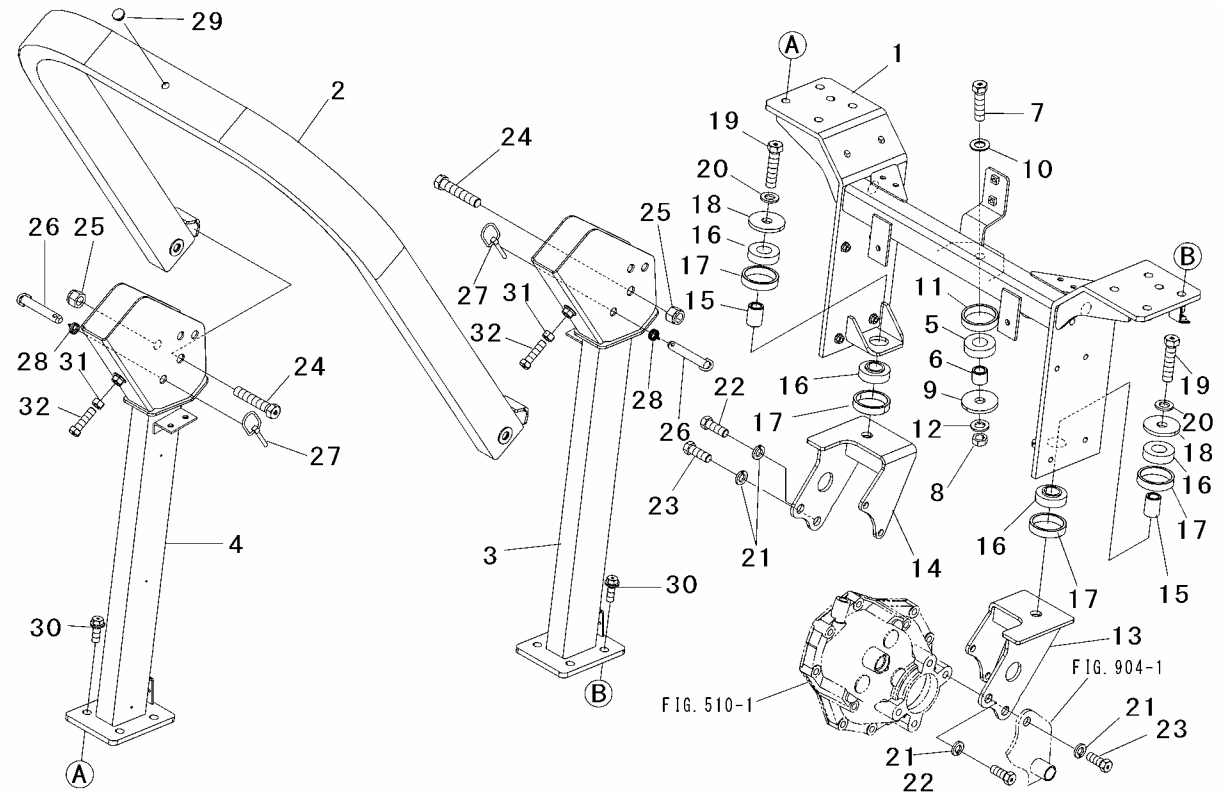

Key No.	Parts No.	Parts Name.	Q`ty ALL					R/P	Application	Description	Remarks
1	1942 3911 AG0	FRAME	1								
2	1942 3921 AG0	ROLLBAR	1								
3	1942 3922 AG0	BRACKET,rollbar	1								
4	1942 3923 AG0	BRACKET,rollbar	1								
5	1038 3946 000	RUBBER,cushion	1								
6	1959 3919 000	COLLAR	1								
7	A945 0116 060	BOLT 10.9	1							M16×60	
8	A083 0116 001	NUT	1							M16	
9	1038 3944 000	WASHER	1								
10	0350 0151 632	WASHER	1							M16	
11	1038 3943 000	COLLAR	1								
12	0355 0161 630	WASHER	1							M16	
13	1958 3915 AG0	BRACKET LH,rear	1								
14	1958 3916 AG0	BRACKET RH,rear	1								
15	1963 3915 000	COLLAR	2								
16	1038 3946 000	RUBBER,cushion	4								
17	1038 3943 000	COLLAR	4								
18	1038 3944 000	WASHER	2								
19	A945 0116 070	BOLT 10.9	2							M16×70	
20	0355 0161 630	WASHER	2							M16	
21	A360 0101 402	WASHER,spring	4							M14	
22	A940 0114 035	BOLT 10.9	2							M14×35	
23	A940 0114 040	BOLT	2							M14×40	
24	A944 0116 080	BOLT	2							M16×80	
25	1044 3923 000	NUT,lock	2								
26	1942 3925 000	PIN	2								
27	1904 3905 000	PIN,linch	2								
28	1035 3931 000	SPRING	2								
29	1981 2822 000	PLUG	1								
30	F945 0112 035	BOLT	8							M12×35	
31	A301 0112 002	NUT	2							M12	
32	A050 0112 045	BOLT 7T	2							M12×45	

Parts No.	Page	Key No.
A040 0106 012	72	20
	73	6
A040 0112 030	56	1
A050 0108 030	65	15
A050 0108 070	69	18
	72	7
A050 0110 040	44	10
A050 0112 045	87	32
A050 0114 035	56	3
A054 0108 055	24	34
A054 0108 075	38	25
A054 0108 140	38	26
A054 0110 100	54	29
	70	3
A054 0112 070	32	26
	54	33
A055 0112 070	32	18
A063 0110 035	34	6
	38	6
A063 0110 060	34	2
A073 0120 003	60	16
A083 0116 001	87	8
A252 0706 012	27	7
	58	10
A300 0110 002	68	18
A301 0108 002	68	27
	69	2
	69	24
	71	20
	72	17
	73	19
A301 0108 003	79	6
A301 0110 002	34	5
	38	5
	44	11
	60	32
	61	13
	65	7
A301 0112 002	57	3
	58	5
	87	31
A303 0110 002	53	13
	62	8
	62	12
A303 0112 002	32	7
	32	17
A303 0114 002	59	19
A303 0116 002	71	14
	85	18
A303 2110 002	62	7
	62	11
A313 0102 001	60	28
A360 0100 802	23	33
	30	24
	31	24
	38	24

Parts No.	Page	Key No.
	42	4
	72	8
A360 0101 002	34	4
	38	4
	47	4
	54	30
	60	14
	70	4
A360 0101 202	32	19
	32	27
	55	34
	70	27
A360 0101 203	50	3
A360 0101 402	59	18
	85	4
	87	21
A360 0101 602	71	13
	85	17
A381 0108 000	27	5
	30	25
	31	25
A534 0108 045	69	17
A534 0110 080	61	9
A601 0A01 000	72	4
A650 0100 600	60	18
	60	23
A650 3100 300	65	3
A930 0110 055	60	30
A940 0112 030	72	33
A940 0114 035	87	22
A940 0114 040	85	3
	87	23
A942 0110 030	44	4
A942 0110 035	44	5
A944 0116 080	87	24
A945 0112 045	70	26
A945 0116 060	87	7
A945 0116 070	87	19
A954 0110 040	60	13
F050 0106 012	27	14
	81	24
F050 0106 016	54	20
F050 0108 020	73	7
F144 0106 016	23	12
F144 0106 025	54	22
F144 0106 040	74	19
F144 0106 050	74	12
F154 0108 016	23	13
	32	32
	35	18
	39	21
	39	32
	42	7
	68	15
	75	12
F154 0108 020	35	21

Parts No.	Page	Key No.
	36	24
	37	25
	49	4
	69	21
	72	25
	77	12
F154 0108 025	34	15
	38	2
	38	15
	42	3
	51	15
F154 0108 040	71	19
F154 0110 020	26	22
	59	2
	61	2
	64	2
	85	30
F154 0110 025	28	10
	48	10
F154 0110 030	32	5
F154 0110 035	44	2
	47	2
F154 0110 040	34	7
	34	23
	38	7
	38	23
F154 0110 045	70	2
F154 0110 050	54	28
	70	2a
F154 0110 055	54	31
F154 0112 030	32	20
	44	1
	86	1
F154 0112 035	32	26a
	34	28
	38	28
F154 0112 040	57	2
	86	2
F155 0110 020	26	25
	44	12
	59	4
	77	13
F155 0110 025	70	15
F155 0112 040	32	6
F174 0110 055	54	32
F174 0112 030	72	6
F242 0106 012	28	17
F2855-08040	32	14
F300 0104 000	80	6
	80	15
F300 0105 000	80	2
	81	20
F300 0106 000	26	20
	27	28
	28	18
	58	9

Parts No.	Page	Key No.
F300 0106 011	79	4
F301 0108 000	27	4
	28	9
	35	13
	44	14
	53	11
	62	9
	62	13
	65	16
	66	9
	79	7
	80	10
	81	21
F301 0108 001	29	8
	52	8
	53	8
	71	9
	74	3
	77	30
F945 0112 035	87	30
F985 255B 24R	79	1
H144 0106 012	23	11
	27	6
	27	12
	79	15
H144 0106 016	26	10
	26	17
	27	31
	81	26
H144 0106 020	81	8
H154 0108 016	29	2
	29	5
	30	4
	30	12
	31	4
	31	12
	61	17
	66	8
	67	9
	80	4
	81	18
H154 0108 020	24	38
	29	3
	74	8
	75	19
	76	6
	77	20
	80	9
H154 0108 025	66	11
H154 0108 030	30	20
	31	20
	34	3
H154 0110 020	30	17
	31	17
H155 0110 020	81	19
H184 0108 016	22	2

Parts No.	Page	Key No.
	80	13
H184 0108 025	30	5
	31	5
	44	9
H194 0106 012	81	16
	81	16a
H194 0106 016	25	9
	63	3
	73	5
H194 0106 020	30	2
	31	2
	64	22
H242 0104 012	78	6
H242 0104 020	80	5
HA12 1403 000	26	26
	79	10
	81	22
HA13 0401 000	70	19
HA43 0102 000	71	11
	74	17
HA43 0103 000	75	11
HA53 6004 000	59	9
SA98 2981 AG0	69	9
SH51 3880 000	45	7
TB1206D	33	34
	34	25
	38	30
	55	44
	70	28
0040 1000 900	28	20
0050 1100 380	23	17
0050 1100 430	67	7
0050 1100 560	25	12
	25	13
0050 2108 063	23	24
	78	15
	79	13
0050 2108 103	79	19
0050 2110 083	81	12
0050 2116 105	81	15
	81	17
	81	17a
0050 3113 007	26	15
0050 4112 005	26	14
0050 5000 380	23	16
	74	10
0051 1022 030	79	11
0051 1032 070	26	23
	75	23
	76	12
	77	34
	81	9
0051 1070 070	26	13
	60	3
	79	8
	81	10

Parts No.	Page	Key No.
	81	11
	81	11a
0350 0130 613	26	19
	28	14
	58	16
0350 0130 815	73	17
	73	20
0350 0140 818	35	12
	64	6
	69	4
	72	32
0350 0141 022	61	10
	68	20
0350 0150 822	30	21
	31	21
	53	14
	68	11
	69	16
0350 0151 632	87	10
0350 0160 826	68	26
0355 0161 021	44	6
0355 0161 226	56	2
	72	34
0355 0161 428	56	4
0355 0161 630	87	12
	87	20
0356 0101 201	72	31
0432 2104 006	27	10
	27	21
	27	32
0480 0135 060	84	4
0520 0120 012	73	26
0520 0120 020	32	15
0520 0125 015	28	15
	58	15
	65	9
	66	13
	68	9
	72	12
	73	18
	73	22
0520 0125 020	53	12
	63	6
	64	7
	64	16
	65	23
	68	19
	69	5
0520 0130 025	66	5
0520 0140 036	60	29
0521 0106 000	58	7
0521 0108 000	27	25
0540 1006 012	38	3
0540 1010 020	32	28
	34	17
	38	17

Parts No.	Page	Key No.
0550 0004 032	46	5
0550 0005 032	73	11
0550 0006 032	68	13
0550 0008 016	32	31
	72	18
0550 0008 040	65	11
05534-10000	32	8
05534-12000	32	9
05534-16000	44	7
0562 0108 020	66	12
0562 0108 025	68	7
0562 1106 030	72	11
0562 1108 025	65	8
0620 1112 000	75	16
	77	17
0620 3110 130	74	26
0620 3112 170	74	21
	75	14
0620 5112 170	77	4
	77	9
	77	15
0631 1113 130	76	7
	76	9
	77	32
0691 0012 258	35	14
	58	2
	64	20
0693 0014 460	61	19
0730 0004 716	35	9
0730 0005 201	37	11
	46	17
0730 0005 202	37	11
0730 0005 203	46	18
0730 0005 204	37	11
0730 0005 205	46	19
0730 0005 208	37	11
0730 0005 210	37	11
0730 0006 201	36	18
0730 0006 202	36	
0730 0006 204	36	
0730 0006 208	36	
0730 0006 210	36	
0730 0006 216	49	12
0731 0001 504	52	6
	53	6
0731 0001 512	52	6
	53	6
0731 0003 001	48	11
0731 0003 003	48	12
0731 0003 005	48	13
0731 0102 002	52	11
	61	3
0731 0102 004	52	11
	61	4
0731 0102 010	61	22
0731 0102 016	59	6

Parts No.	Page	Key No.
	59	7
0740 0001 000	69	13
0740 0001 200	68	28
0740 0001 600	39	34
	42	34
0740 0001 700	67	4
0740 0001 900	59	11
	59	12
0740 0002 000	32	23
	35	6
	35	28
	36	22
	41	16
	42	29
0740 0002 500	41	34
	42	25
	48	7
	65	18
0740 0003 000	36	1
	41	5
	41	33
	42	22
	54	27
0740 0003 400	70	14
0740 0004 201	36	7
	41	29
0740 0004 500	46	9
	47	16
0740 0004 501	36	11
0740 0005 001	49	9
0740 0102 000	52	10
	61	5
	63	14
	64	3
	64	14
0740 0103 500	46	20
	55	42
0741 0001 500	71	4
0741 0004 201	41	18
	59	10
0741 0004 701	32	24
	35	5
	35	29
	39	15
0741 0005 200	46	16
0741 0005 201	37	10
0741 0006 200	36	17
	41	26
0741 0006 201	42	13
	42	27
0741 0006 800	47	17
0741 0007 201	48	2
	54	26
0741 0007 500	47	18
0741 0008 001	51	17
0742 0001 200	52	5

Parts No.	Page	Key No.
	53	5
0742 0100 600	72	21
0742 0100 800	73	13
0750 0060 040	41	12
0750 0060 050	39	13
0750 0060 060	39	9
0750 0060 090	46	7
0750 0060 100	51	16
0750 0062 040	39	2
	41	14
	41	31
0750 0062 050	46	14
	48	8
0750 0062 060	36	15
	41	6
	42	17
0750 0062 080	46	8
0750 0062 090	55	40
0750 0063 020	41	1
0750 0063 040	37	9
	41	24
	47	14
0750 0063 050	36	16
	42	23
0750 0063 060	48	3
	54	25
0750 0063 075	55	39
0750 0560 004	69	12
0750 0560 094	47	20
0750 0562 044	32	22
	35	2
0752 0662 040	35	4
	42	28
0752 0663 040	42	10
0770 0232 004	49	5
0780 2202 612	36	26
0780 2253 013	37	4
0780 2354 216	41	8
0780 2354 220	42	20
0796 1012 120	72	24
0796 1016 150	40	35
0796 1020 150	61	7
	61	15
0796 1020 250	32	2
0796 1030 300	45	11
0796 1050 300	45	2
0796 3030 250	60	10
	69	14
0797 1010 150	61	8
0797 2020 150	32	11
0797 2020 200	68	6
0797 2022 200	70	17
0797 2025 200	65	19
0800 0000 900	43	36
0800 0001 000	37	13
	37	16

Parts No.	Page	Key No.
	37	20
	39	29
0800 0001 100	71	1
0830 0100 070	23	6
0830 0100 090	39	
0830 0100 110	52	4
	53	4
0830 0100 160	35	25
	35	26
	37	28
	39	6
	39	25
	59	8
0830 0100 180	74	13
0830 0100 200	49	11
0830 0100 210	36	25
	70	6
0830 0100 240	74	9
0830 0100 280	34	9
	38	9
0830 0100 300	42	16
	45	13
0830 0100 500	45	1
0830 0100 550	70	21
0830 0120 350	70	13
0830 0200 700	39	11
0830 0200 750	39	5
0830 0200 850	46	15
0830 0201 100	34	26
	38	29
0830 0201 750	48	9
0830 0500 100	39	17
0830 0500 160	75	5
0830 0500 500	41	19
0830 0500 530	39	16
0830 0500 550	39	12
0830 0500 600	49	3
0830 1100 060	71	6
0830 1100 100	70	25
0830 1100 110	74	24
	74	27
	74	31
	76	8
	76	10
	77	33
0830 1100 120	42	8
	71	17
	72	3
0830 1100 140	74	22
	75	15
	77	5
	77	10
	77	16
0830 1100 180	74	18
0830 1100 250	71	18
0830 1100 390	60	6

Parts No.	Page	Key No.
0830 1100 400	60	9
0830 1200 600	70	24
0832 0100 390	60	7
0832 0100 550	70	22
0833 1000 800	45	9
	47	8
0833 1001 000	34	20
	38	20
0833 1001 200	34	11
	38	11
	38	18
	74	28
0833 1001 600	75	21
	76	2
	77	2
	77	22
0833 1001 601	77	25
0834 0016 050	34	16
	38	16
0834 0052 100	34	19
0834 0062 100	34	24
0834 0080 100	47	19
0840 0025 355	65	20
0840 1012 227	72	14
	73	9
0840 1017 307	54	19
0840 1020 428	41	17
0840 1025 478	34	10
0840 1030 428	49	7
0980 1001 006	81	3
0980 1001 506	81	4
0980 4100 802	26	4
0980 5000 000	26	2
0980 6000 001	26	8
0980 6100 001	26	9
0981 0080 315	24	35
0981 2070 250	26	11
0981 2080 400	26	12
1003 2406 AG0	73	15
1003 2407 AG0	73	16
1003 2408 000	73	14
1003 2409 AG0	73	10
1003 2412 000	73	21
1003 2413 000	73	8
1003 2414 000	72	13
1003 2415 000	72	15
1003 2418 001	72	9
1003 2419 001	72	10
1003 2421 000	72	2
1003 2425 AG0	72	28
1005 2405 120	75	3
1005 2405 130	75	6
1005 2405 140	75	7
1005 2405 150	75	8
1005 2405 160	75	9
1005 2405 170	75	10

Parts No.	Page	Key No.
1005 2405 180	75	4
1005 2405 191	75	2
1007 0618 000	51	19
1007 0618 100	51	19
1007 0618 200	51	19
1007 2441 000	70	5
1007 2448 AG0	71	15
1007 2449 AG0	71	16
1007 2824 000	26	7
1021 1314 000	42	30
1021 2141 000	49	6
1021 2428 AG0	73	12
1021 2438 000	73	23
1022 0218 000	58	12
1022 1733 000	34	21
	38	21
1025 0808 000	34	12
	38	12
	38	19
1025 1109 001	35	22
	42	6
1025 1120 001	61	11
1025 1127 004	61	12
1025 1135 000	62	4
1025 1304 000	35	17
	39	31
1025 1305 000	37	14
	37	17
	37	21
	39	28
1025 1405 000	42	15
1025 1535 000	51	18
1025 1922 000	67	3
1025 2119 000	49	10
1025 2126 000	49	13
1025 2127 000	49	14
1025 2128 000	49	15
1025 2178 001	45	4
1025 2447 000	71	8
1025 3320 000	28	16
1025 3429 000	30	22
	31	22
1026 1912 000	67	2
1029 1943 000	32	25a
1030 1724 000	61	6
1030 1791 000	35	24
	39	24
1030 2157 200	60	19
	60	24
1030 2157 400	60	20
	60	25
1030 2157 500	60	21
	60	26
1030 2276 000	60	11
1030 2444 000	73	3
1030 2501 002	74	1

Parts No.	Page	Key No.
1031 1328 000	36	23
1031 1363 001	35	7
	39	7
1031 2212 000	60	15
1031 2217 000	60	27
1031 2476 000	73	25
1031 2577 000	23	32
1032 0228 000	58	17
	69	8
1032 2427 000	71	10
1032 3016 000	85	20
1032 3018 001	85	11
1032 3019 000	85	12
1032 3024 000	85	10
1032 3025 AG0	85	9
1035 1749 000	61	18
1035 2405 000	72	1
1035 3931 000	87	28
1037 1764 001	43	37
1037 3015 000	57	6
	85	19
	86	5
1037 5581 200	81	2
1038 1515 000	47	9
	55	38
1038 1725 000	62	3
	63	5
	63	12
	64	5
	64	12
	64	19
1038 2217 000	60	12
1038 2585 000	74	7
1038 2636 001	28	8
1038 3032 000	85	16
1038 3035 000	85	15
1038 3932 000	52	12
1038 3943 000	87	11
	87	17
1038 3944 000	87	9
	87	18
1038 3946 000	87	5
	87	16
1039 0103 001	26	1～7
1039 0105 000	26	1
1039 0106 000	26	5
1039 0107 001	26	3
1039 0411 101	23	23
1039 0411 200	23	4
1039 0411 300	23	5
1039 0438 000	23	21
1039 0441 AG0	23	18
1039 0442 AG0	23	19
1039 0443 000	23	20
1039 0444 000	23	9
1039 1111 000	32	29

Parts No.	Page	Key No.
1039 1112 000	32	30
1039 1214 000	36	12
1039 1823 000	65	6
1039 2491 000	63	9
	64	9
1039 2517 000	30	29
1039 2551 000	74	14
1039 2555 000	74	30
1039 2562 000	74	16
1039 2624 BR0	28	1
1039 2625 BR0	28	2
1039 2629 AG0	27	1
1039 2633 000	27	24
1039 2636 000	28	4
1039 2661 000	28	3
1039 2666 000	27	15
1039 2668 000	27	16
1039 2785 000	84	6
1039 2786 000	84	8
1039 2809 001	79	12
1039 2818 000	79	18
1040 1337 000	47	3
1040 2455 000	73	24
1040 2624 001	27	13
1040 2821 000	80	11
1040 2827 000	79	17
1040 2911 200	81	6
1040 5503 000	79	9
1040 5556 000	78	16
1040 6313 000	30	10
	31	10
1040 6335 000	66	14
1041 1237 000	41	10
	42	18
1041 2558 000	74	15
1044 0521 001	25	10
1044 1214 000	32	25
1044 1235 000	41	7
1044 1278 000	35	8
	39	8
1044 1423 001	52	3
	53	3
1044 1424 AG1	52	7
1044 1429 000	52	9
1044 1501 AG0	54	1
1044 1502 AG0	54	2
1044 1511 000	55	36
1044 1513 000	55	41
1044 1517 000	55	43
1044 1726 000	35	20
	39	20
1044 1736 000	68	24
1044 1769 000	63	4
	64	17
1044 1814 000	65	5
1044 1841 000	69	22

Parts No.	Page	Key No.
1044 2101 AG0	45	3
1044 2111 000	46	1
1044 2112 000	46	2
1044 2113 000	46	3
1044 2114 000	46	4
1044 2121 000	46	6
1044 2124 000	46	11
1044 2125 000	46	12
1044 2128 000	46	13
1044 2131 AG0	49	1
1044 2132 000	49	2
1044 2138 000	46	23
	47	23
1044 2141 AG1	45	14
1044 2142 AG1	45	10
1044 2151 AG2	47	1
1044 2153 AG2	47	12
1044 2161 AG0	47	5
1044 2162 AG0	47	6
1044 2171 000	47	10
1044 2172 000	47	11
1044 2173 000	47	15
1044 2174 000	47	13
1044 2181 AG0	48	1
1044 2183 000	48	6
1044 2184 000	48	14
1044 2196 000	50	2
1044 2197 000	50	4
1044 2205 000	59	16,17
1044 2207 000	59	17
1044 2210 AG0	60	4～12
1044 2213 000	60	4
1044 2253 AG0	60	5
1044 2261 AG0	60	31
1044 2274 AG0	60	8
1044 2278 AG0	60	17
1044 2279 AG0	60	22
1044 2291 000	59	14
1044 2409 000	71	12
1044 2476 000	73	2
1044 2759 000	84	5
1044 2812 000	81	23
1044 2993 000	81	13
1044 3040 000	85	13～16
1044 3041 000	85	13
1044 3042 000	85	14
1044 3923 000	87	25
1045 0124 000	26	24
1045 0217 000	58	6
1045 0238 000	58	8
1045 0418 AG0	23	10
1045 0441 AG0	23	1
1045 0451 000	23	26
	27	23
1045 0452 000	28	6
1045 0453 000	25	14

Parts No.	Page	Key No.
1045 0454 000	23	27
1045 0455 000	23	7
1045 0456 000	23	8
1045 0457 000	23	28
1045 1215 000	37	24
	39	22
1045 1217 000	36	2
1045 1232 000	37	12
1045 1233 000	37	15
1045 1235 000	37	22
1045 1237 002	37	19
	39	27
1045 1238 000	35	16
1045 1242 000	37	1
1045 1249 000	36	9
1045 1256 000	37	2
1045 1286 000	42	11
1045 1405 001	51	1
1045 1407 000	51	11
1045 1408 000	51	12
1045 1409 000	51	8
1045 1412 000	51	2
1045 1413 000	51	3
1045 1414 000	51	4
1045 1415 100	51	5
1045 1415 200	51	6
1045 1415 300	51	7
1045 1416 000	51	13
1045 1417 000	51	14
1045 1452 000	52	1
	53	1
1045 1506 000	54	23
1045 1507 000	54	24
1045 1515 000	54	21
1045 1752 AG2	61	14
1045 1753 AG0	61	20
1045 1754 000	62	6
1045 1755 000	62	10
1045 1756 AG1	62	1
1045 1757 AG1	62	2
1045 1760 000	63	1
1045 1831 000	65	21
1045 2489 000	73	4
1045 2548 000	74	14～17
1045 2579 000	76	11
1045 2606 000	27	29
1045 2607 000	27	30
1045 2608 001	27	22
1045 2617 AG0	27	26
1045 2841 000	78	18
1045 2873 000	83	5
1045 3505 AE0	30	3
	31	3
1046 0440 000	23	29～31
1046 0441 000	23	29
1046 0442 000	23	30,31

Parts No.	Page	Key No.
1046 0443 000	23	30
1046 2192 AG0	50	5
1046 2853 200	78	2
1046 2854 400	78	8
1046 2854 500	78	9
1048 8638 000	78	10
	81	14
1119 0621 000	45	5
1135 1416 000	52	2
	53	2
1135 2426 000	72	16
1135 2474 000	74	32
	75	18
	76	4
	77	6
	77	18
	77	29
1150 1707 000	71	2
1174 1299 000	36	20
	37	8
1174 1737 000	35	23
	39	23
1174 2416 002	70	16
1174 2443 001	74	29
1176 1014 001	32	13
1176 1015 000	32	12
1176 1336 000	46	21
	47	21
1176 1337 000	46	22
	47	22
1193 0439 000	30	18
	31	18
1193 1812 000	65	2
	69	7
1218 1223 000	61	21
1352 1406 000	36	21
1406 1166 000	36	3
1421 2284 000	68	22
1445 1324 000	46	10
1904 1264 000	72	27
1904 2746 000	82	10
1904 2759 000	82	3
1904 2761 000	83	6
1904 3905 000	87	27
1904 3911 000	57	5
	86	6
1908 0445 200	23	22
1908 2411 000	71	5
1942 0216 000	58	11
1942 0311 0K0	22	1
1942 1031 000	33	33
1942 1035 000	32	21a
1942 1202 AG1	34	1
1942 1218 000	35	1
1942 1219 000	35	27
1942 1221 000	36	8

Parts No.	Page	Key No.
1942 1224 000	36	10
1942 1225 000	36	19
1942 1226 000	36	13
1942 1231 000	36	5
1942 1232 000	37	26
1942 1233 000	36	6
1942 1234 000	37	27
1942 1235 000	37	5
1942 1241 000	36	14
1942 1242 000	37	3
1942 1243 000	35	10
1942 1244 000	36	4
1942 1245 000	35	3
1942 1248 000	35	15
1942 1251 000	37	18
1942 1252 000	37	23
1942 1261 000	35	19
1942 1262 AG0	35	11
1942 1301 000	39	18
1942 1302 AG0	38	1
1942 1302 AG1	38	1
1942 1306 000	39	10
1942 1313 000	39	14
1942 1341 000	39	4
1942 1351 000	39	1
1942 1395 000	39	3
1942 1401 000	51	1～12
1942 1404 000	51	9,10
1942 1451 AG0	52	13
1942 1453 AG0	52	15
1942 1455 AG0	52	14
1942 1504 000	54	3～9
1942 1505 000	54	11～17
1942 1561 AG0	54	10
	54	18
1942 1711 AG1	63	8
1942 1751 AG0	61	16
1942 1792 AG1	61	1
1942 1829 000	65	13
1942 1831 000	66	6
1942 1832 000	66	7
1942 1839 AG0	65	17
1942 1841 000	66	3
1942 1842 000	66	4
1942 1845 AG0	66	10
1942 1851 AG0	66	2
1942 2112 ZB0	44	13
1942 2202 AG0	59	1a
1942 2302 AG1	69	1
1942 2312 000	69	20
1942 2514 AG0	75	20
1942 2517 AG0	77	21
1942 2577 000	76	1
1942 2611 000	27	8
1942 2628 000	28	7
1942 2641 AG0	27	9

Parts No.	Page	Key No.
1942 2642 AG0	27	17
1942 2643 AG0	27	18
1942 2651 AG0	27	11
1942 2652 AG0	27	19
1942 2653 AG0	27	20
1942 2701 000	83	1
1942 2711 000	83	2
1942 2751 000	84	1
1942 2752 000	84	2
1942 2768 000	84	7
1942 2771 000	84	9
1942 2772 000	84	11
1942 2902 ZB0	79	2
1942 2915 AG0	80	3
1942 2919 000	80	7
1942 2921 AG0	80	8
1942 2923 AG0	80	12
1942 2932 000	78	1～9
1942 2952 000	81	1～7
1942 2953 000	81	7
1942 2959 000	81	25
1942 3111 AG0	86	3
1942 3411 AG0	29	1
1942 3421 AG0	29	4
1942 3431 000	29	6
1942 3451 000	29	7
1942 3511 000	30	8
	31	8
1942 3512 000	30	9
1942 3518 AG0	30	11
	31	11
1942 3521 AE0	30	6
	31	6
1942 3523 AE0	30	7
1942 3531 AG0	30	15
	31	15
1942 3532 AG0	31	16
1942 3533 AG0	30	16
1942 3711 000	83	10
1942 3911 AG0	87	1
1942 3921 AG0	87	2
1942 3922 AG0	87	3
1942 3923 AG0	87	4
1942 3925 000	87	26
1953 1811 000	66	1
1953 2735 000	84	10
1953 2919 000	80	14
1953 3151 AG0	57	1
1956 1827 000	68	25
1956 1906 000	67	6
1956 2296 000	77	31
1957 0201 AG1	58	1
1957 0208 000	26	27
1957 1602 AG0	34	27
	38	27
1957 1732 000	42	35

Parts No.	Page	Key No.
1957 1735 AG0	42	1
1957 1773 000	63	10
	64	10
1957 2313 000	69	10
1957 2325 AG0	68	23
1957 2491 000	83	4
1957 2533 000	77	19
1957 2542 000	75	17
	76	5
1957 2586 000	75	1
1957 2726 000	82	8
1957 2728 000	83	2a
1957 2736 000	82	1
1957 2915 000	81	27
1957 2933 000	78	12,13
1957 2933 200	78	13
1957 2933 500	78	14
1957 2946 000	78	17
1958 1521 AG0	55	37
1958 1526 AG0	55	35
1958 1787 000	63	2
1958 1788 000	64	21
1958 2151 AG0	48	4
1958 2191 AG0	50	1
1958 2231 000	59	3
1958 2585 AG0	75	1～11
1958 2702 000	83	1a
1958 2716 000	83	3
1958 3031 AG0	85	1
1958 3032 AG0	85	2
1958 3915 AG0	87	13
1958 3916 AG0	87	14
1959 0116AG0	26	16
1959 0127 AG0	26	21
1959 0411 000	23	3
1959 0415 000	23	14
1959 0416 001	23	15
1959 0441 000	24	37
1959 0451 AG1	23	2
1959 0518 000	25	11
1959 0521 AG0	25	8
1959 1001 AG2	32	1
1959 1011 AG0	32	16
1959 1021 000	32	10
1959 1031 000	32	21
1959 1303 AG1	34	13
	38	13
1959 1304 AG0	34	22
	38	22
1959 1307 AG0	34	14
	38	14
1959 1314 000	41	2
1959 1315 000	41	3
1959 1316 000	41	4
1959 1317 000	41	20
1959 1318 000	41	21

Parts No.	Page	Key No.
1959 1319 000	41	23
1959 1321 000	37	6
	41	22
1959 1331 000	41	28
1959 1332 000	41	27
1959 1333 000	41	32
1959 1335 000	41	30
1959 1336 000	39	26
1959 1337 000	41	9
1959 1338 000	39	30
1959 1339 000	41	15
1959 1341 000	41	13
1959 1342 000	41	11
1959 1345 000	39	19
1959 1353 000	42	9
1959 1355 000	42	12
1959 1361 000	42	14
1959 1363 000	42	21
1959 1365 000	42	24
1959 1367 000	42	26
1959 1371 000	42	32
1959 1372 000	42	33
1959 1373 000	42	31
1959 1375 000	42	2
1959 1381 000	38	10
1959 1401 002	51	1～12
1959 1404 001	51	9,10
1959 1451 AG1	53	15
1959 1453 AG0	53	16
1959 1459 AG0	53	7
1959 1461 000	53	9
1959 1761 AG0	64	8
1959 1764 AG0	64	4
1959 1771 000	63	7
	64	15
1959 1772 AG0	63	13
	64	13
1959 1778 AG0	63	11
	64	11
1959 1781 AG0	64	18
1959 1791 AG0	64	1
1959 1811 AG0	65	1
1959 1813 000	65	4
1959 1815 AG0	65	10
1959 1819 AG0	65	12
1959 1901 000	67	1
1959 1903 AG0	67	5
1959 1904 AG0	67	8
1959 2101 AG2	44	3
1959 2113 AG1	44	8
1959 2202 AG2	59	1
1959 2203 000	59	5
1959 2241 000	60	1
1959 2242 001	60	2
1959 2301 AG0	69	6
1959 2303 000	69	11

Parts No.	Page	Key No.
1959 2304 000	69	15
1959 2310 000	69	19
1959 2322 AG0	68	14
1959 2334 000	68	5
1959 2335 000	68	12
1959 2337 000	68	10
1959 2347 AG0	68	21
1959 2353 001	68	17
1959 2411 000	72	29
1959 2418 AG1	72	5
1959 2421 AG0	70	23
1959 2461 AG0	73	1
1959 2511 AG1	74	20
1959 2512 AG0	74	25
1959 2513 AG0	75	13
1959 2515 AG1	77	1
1959 2516 AG1	77	14
1959 2518 AG1	77	27
1959 2532 AG0	77	26
1959 2559 AG0	77	11
1959 2564 AG0	74	4
1959 2566 AG0	74	11
1959 2568 AG0	74	5
1959 2627 000	28	21
1959 2631 000	27	2
1959 2632 000	27	3
1959 2638 000	28	13
1959 2722 000	83	9
1959 2731 000	83	7
1959 2770 000	82	9
1959 2902 000	79	5
1959 2904 000	79	3
1959 3502 000	30	1
	31	1
1959 3512 000	31	9
1959 3515 000	30	26
	31	26
1959 3523 AE1	31	7
1959 3528 AG1	30	13
	31	13
1959 3529 AG1	30	14
	31	14
1959 3534 001	30	23
	31	23
1959 3919 000	87	6
1963 0221 000	58	13
1963 1261 000	39	33
1963 1342 000	40	36
1963 2311 000	68	1
1963 2312 000	68	2
1963 2313 000	68	3
1963 2317 000	68	4
1963 2336 000	68	8
1963 2339 000	68	16
1963 2401 AG1	70	1
1963 2407 000	70	7

Parts No.	Page	Key No.
1963 2409 000	70	8
1963 2411 000	70	9
1963 2412 000	70	10
1963 2413 AG1	70	11
1963 2414 AG1	70	12
1963 2418 000	70	18
1963 2419 000	70	20
1963 2423 AG0	71	7
1963 2556 000	77	24
1963 2559 AG0	77	7
1963 2718 000	82	7a
1963 2721 000	82	4
1963 2731 000	82	6
1963 2732 000	83	8
1963 3006 AG0	85	5
1963 3007 AG0	85	6
1963 3011 AG0	85	7～10
1963 3012 AG0	85	7
1963 3014 AG0	85	8
1963 3026 AG0	85	21～24
1963 3027 AG0	85	21
1963 3028 AG0	85	23
1963 3029 000	85	24
1963 3031 000	85	28
1963 3034 AG1	85	29
1963 3036 AG0	85	22
1963 3037 000	85	25
1963 3038 000	85	26
1963 3041 000	85	27
1963 3915 000	87	15
1964 2453 AG0	72	19
1964 2456 000	72	22
1964 2457 000	72	23
1965 2458 AG0	72	26
1965 3116 000	57	4
	86	4
1968 2581 000	77	8
1969 2718 000	82	7
1969 2723 000	82	5
1969 2728 000	82	2
1974 0722 000	28	11
1981 1605 000	40	37
1981 2453 000	75	22
	76	3
	77	3
	77	23
	77	28
1981 2472 002	34	8
1981 2822 000	87	29
1982 2413 000	71	3
1983 1276 002	49	8
2668 0407 000	26	6
2689 5072 000	65	22
2740 3214 100	45	6
2740 3214 200	45	8
	47	7

Parts No.	Page	Key No.
2757 1411 000	34	18
2761 3733 000	32	3
2772 2323 000	58	4
2786 2476 001	69	25
2790 4116 000	58	14
2793 5289 000	28	12
2794 3212 001	28	5
3120 1709 000	27	27
3121 2559 000	72	30
3515 2261 001	48	5
3518 1102 001	37	7
3518 1125 000	32	4
3523 4732 000	30	27
	31	27
3525 9242 800	30	28
	31	28
3540 4766 000	26	28
	26	29
3544 1838 000	74	23
3546 0501 100	25	1
3546 0501 200	25	2
3546 0501 300	25	3
3546 0501 400	25	4
3546 0501 500	25	5
3546 0501 600	25	6
3546 0501 800	25	7
3555 9013 000	69	23
3556 0501 000	25	1～7
3556 4065 001	59	15
3559 6104 100	42	19
3565 3977 000	28	19
3574 1264 000	41	25
3577 0855 200	81	5
3578 6235 000	69	3
3583 3032 000	78	11
3583 3683 000	79	14
3583 6187 000	26	18
3586 0798 000	79	16
3700 0581 000	80	1
3700 1063 000	42	5
3700 1127 000	45	12
3704 1577 000	53	10
	62	5
3951 0814 000	59	13
6022 3314 000	58	3
67200-06300	65	14
67401-00114	23	31
67472-10601	38	8
67700-20101	74	2
67700-26000	30	19
	31	19
68201-01814	23	25
68275-02800	74	6
69501-06613	24	36