PREFACE

1. This parts catalog covers the parts of **YANMAR CRAWLER BACKHOE** model YB451(-2) and YB501(-2).
   Besides the domestic edition (Pub.No.000Y00K2091), the overseas edition (Pub.No.000Y00S2181) is also covered.
   This parts catalog is the revised edition which is supplemented with design change.

2. This parts catalog covers the parts of the machine as shown below.

Model	Machine No. (M/#)	
	Domestic M/#	Overseas M/#
YB451, YB501	00501～	00501～
Model-changed machine(March, 1986)	10501～	50001～
YB451-2, YB501-2	20501～	60501～

〔History〕

1st. edition Issued : Nov., 1984 Pub.No. 000Y00K2090(Domestic edition)
Issued : Nov., 1984 Pub.No. 000Y00S2180(Overseas edition)
2nd. edition Issued : Nov., 1987 Pub.No. 000Y00K2091(Domestic edition)
Issued : Mar., 1988 Pub.No. 000Y00S2181(Overseas edition)
3rd. edition Issued : Nov., 1991 Pub.No. 000Y00K2094(Domestic and Overseas edition)

※ Please discard the old parts catalog.(1st edition and 2nd edition)

3. Paint Color

Old

Paint Color	Munsel No.	Paint Code (18ℓ)	Spray
YANMAR New Light Yellow	10YR6.5/8	933110-91602	981101-06041
YANMAR Cream	2.5Y9/1	933110-91803	981101-06340
YANMAR New Dark Olieve	5GY1/1	933110-91702	981101-05941

New (from October, 1987)

Paint Color	Munsel No.	Paint Code (18ℓ)	Spray
YANMAR New Light Yellow	10YR6.5/8	933110-91602	981101-06041
YANMAR Cream White	5.0Y9/1	981101-09614	981101-10140
YANMAR Dark Olieve Ⅱ	7.5GY1/1	981101-09515	981101-10141

4. As this parts catalog covers the specifications of several countries, the Fig. No. for the applicable countries is shown in the following way.

a) When the applicable figure varies according to the appropriate country(s).

Example 1 :

Country	NW	FA	JP
Fig. No.	18	19	—

← Abbreviation of the country concerned
NW : Norway
FA : France
JP : Japan

↑ Fig. number on the page on which the country concerned is shown

In case of Example 1 above, NW(Norway) is shown in Fig. 18 and FA(France) in Fig. 19. JP(Japan) is not applicable.

b) When only one figure is available to be applied to one or more countries.

Example 2 :

Country	NW	FA	JP
Application	—	○	—

← Abbreviation of the country concerned

← The country concerned is indicated by a circle (○).

In case of Example 2 FA(France) is the applicable country.

(Note)

When the figure or specification is common to all destinations, no indication is given.

SPECIFICATIONS

Name			YANMAR CRAWLER BACHOE							
Model			YB451 (-2)-P	YB451 (-2)-C	YB451 UZ(-2)-P	YB451 UL(-2)-C	YB501 (-2)-P	YB501 (-2)-C	YB501 UZ(-2)-P	YB501 UL(-2)-C
Engine	Model		4TN78TL-D(R)BVM							
	Type		Vertical 4-cylinder water-cooled turbo diesel							
Dimensions	Transport length	mm	5360		5415		5460		5515	
	Transport width	mm	1840	1855	1840	1855	1840	1855	1840	1855
	Transport height	mm	2465	2455	2470	2455	2465	2455	2470	2455
Std. bucket capacity		m³	0.13(old 0.22)				0.14(old 0.24)			
Std. bucket width(Outside)		mm	600				650			
Max. digging depth		mm	3500				3700			
Max. cutting height		mm	4570		5650	4570	4640		5790	4640
Max. dump height		mm	3170		4060	3170	3250		4200	3250
Max. reach at ground level		mm	5400		5450		5560		5610	
Min. swing radius		mm	2570		1960	2625	2570		2030	2625
Boom swing angle		degree	Left&Right 60		Left50・Right90		Left&Right 60		Left50・Right90	
Max. digging force(Std. bucket)		kgf	3150							
Travel speed		km/h	3.6・1.9							
Gradability		degree	30							
Average ground pressure		kgf/cm²	0.251 [0.228]	0.264 [0.240]	0.251 [0.228]	0.264 [0.240]	0.284 [0.258]	0.295 [0.270]	0.284 [0.258]	0.295 [0.270]
Track shoe width(Std.)		mm	380							
Blade	Width×height	mm	1840×350							
	Capacity	m³	0.22							
Machine mass		kg	3800 [3700]	4000 [3900]	3800 [3700]	4000 [3900]	4300 [4200]	4500 [4400]	4300 [4200]	4500 [4400]

[ ] shows to the specification of rubber crowler.

各部の名称
PARTS NAME

COUNTRY	J	P	N	W	S	W	W	G	F	A	D	M	N	L
APPLI-CATION	—		○		○		○		○		○		○	

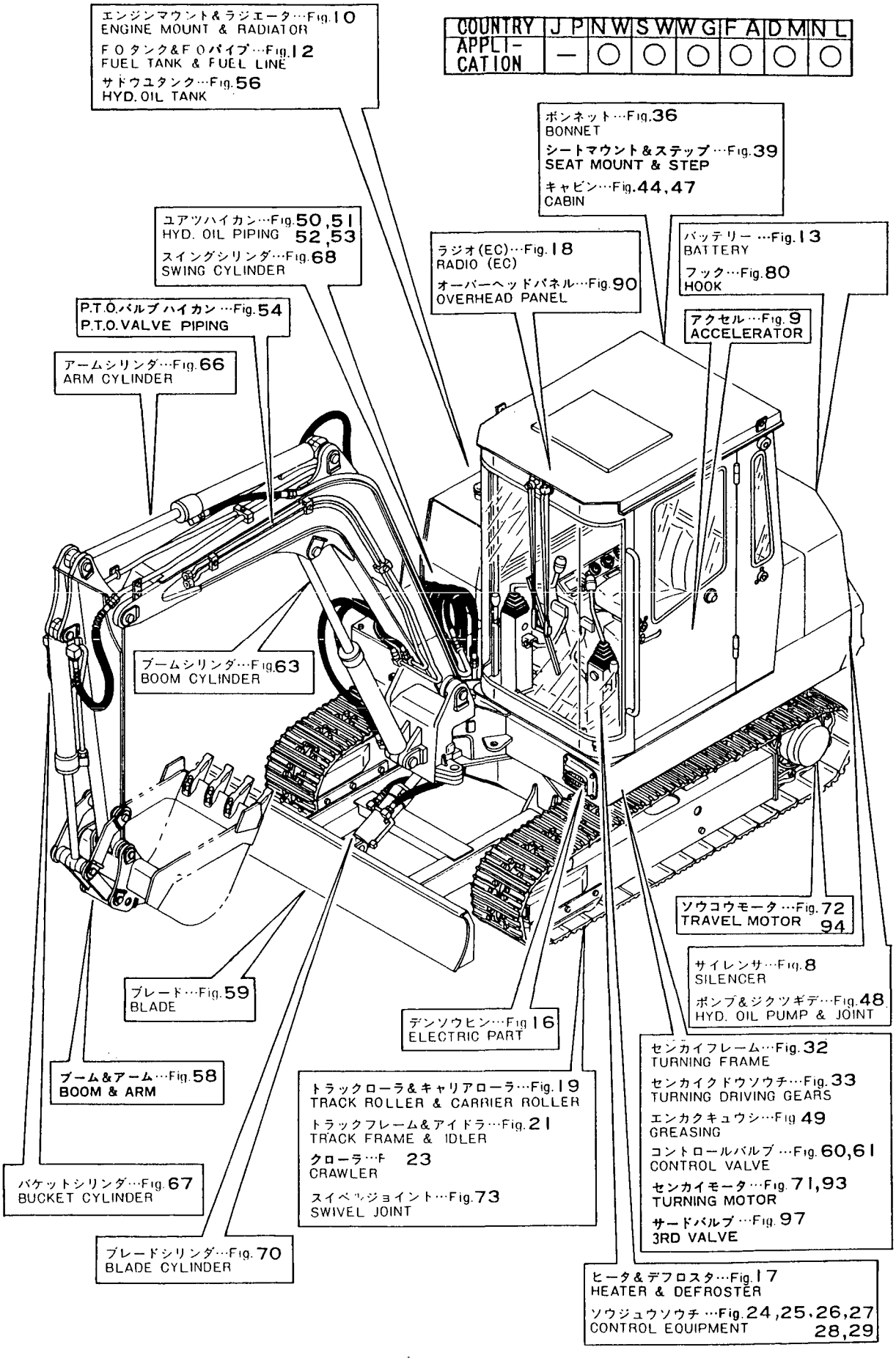

各部の名称
PARTS NAME

COUNTRY	JP	NW	SW	WG	FA	DM	NL
APPLI-CATION	○	—	—	—	—	—	—

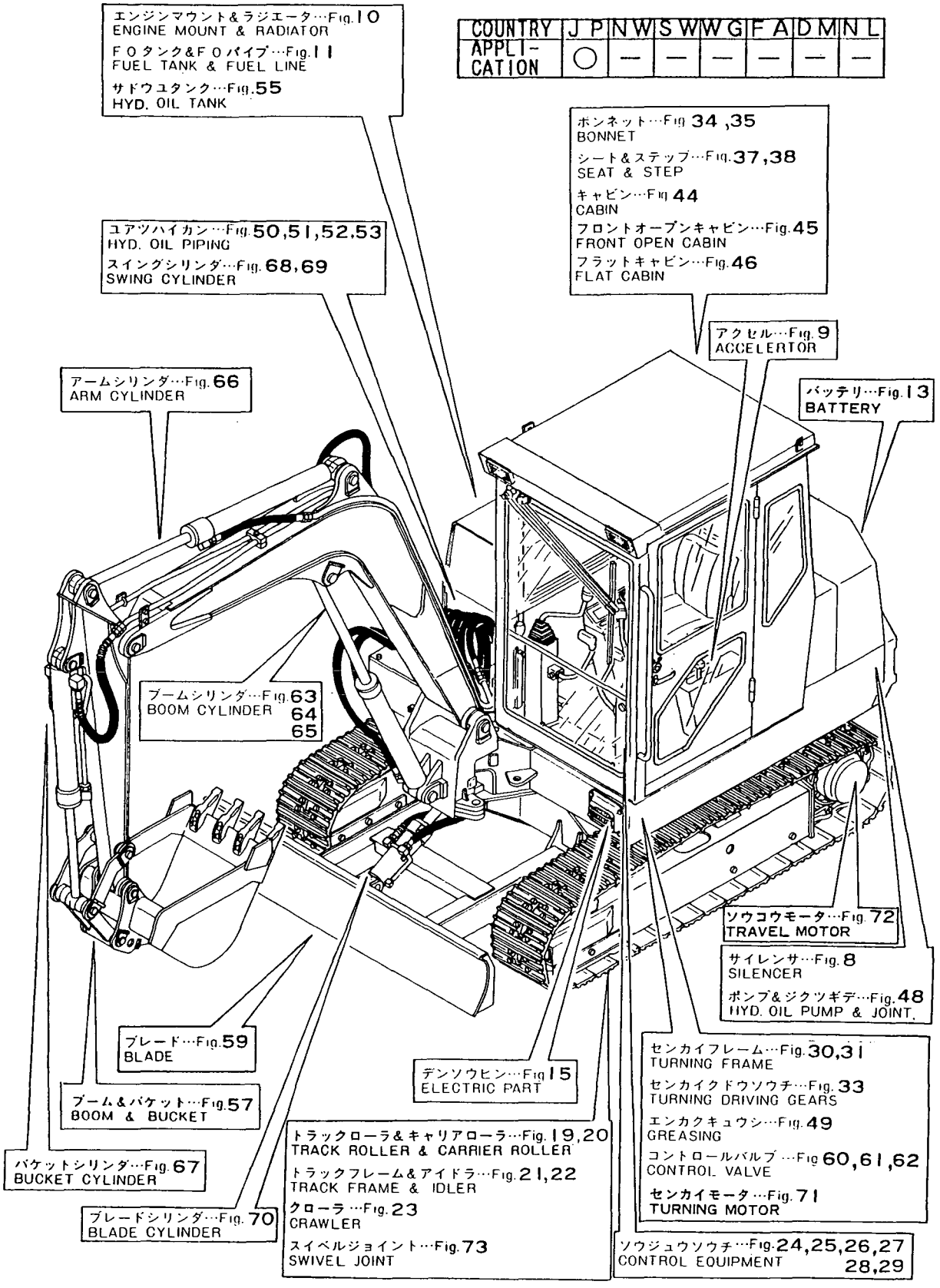

配線図
WIRING DIAGRAM

COUNTRY	J	P	N	W	S	W	W	G	F	A	D	M	N	L
APPLI-CATION	○	—	—	—	—	—	—	—	—	—	—	—	—	—

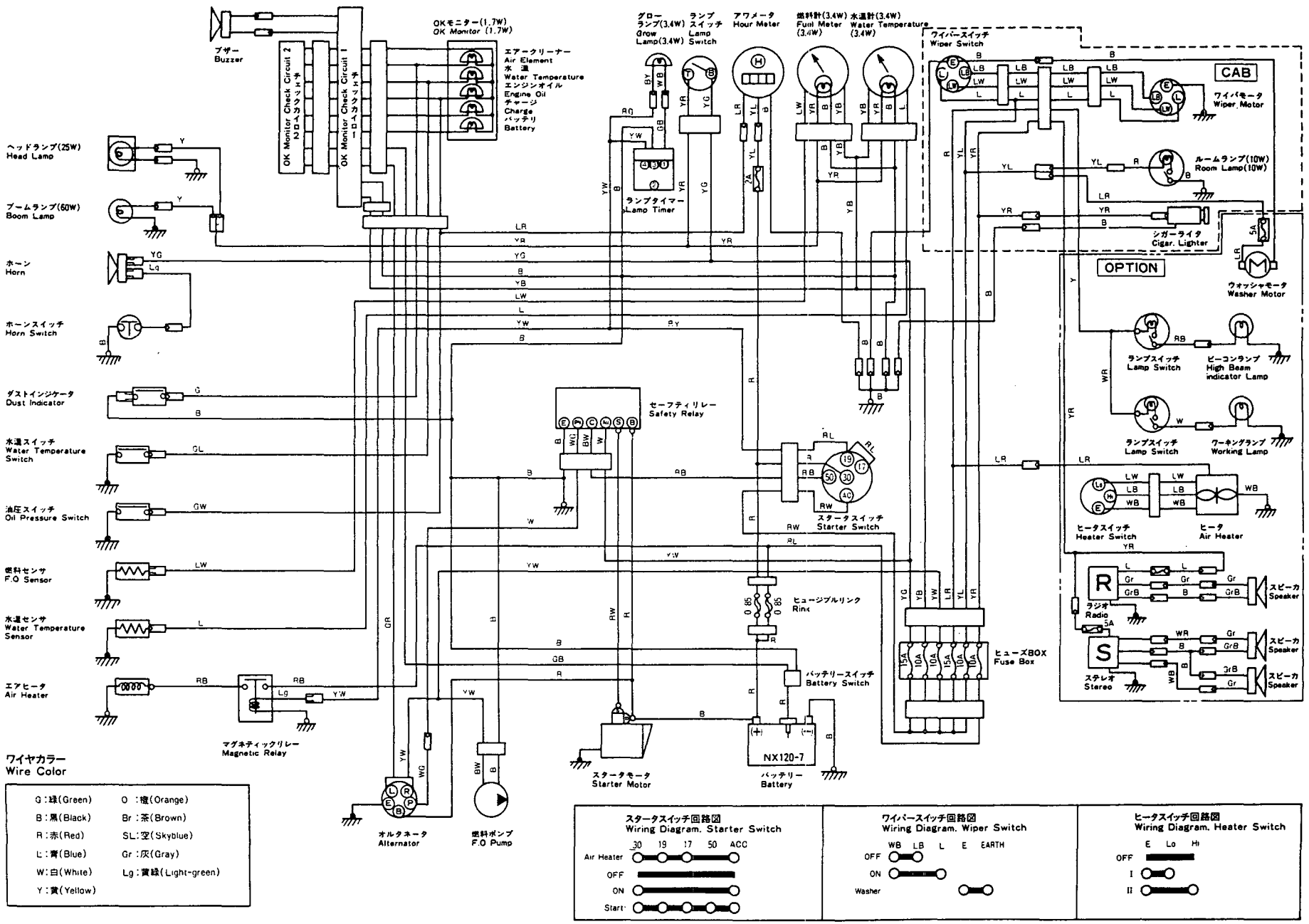

ワイヤカラー
Wire Color

G：緑(Green)	O：橙(Orange)
B：黒(Black)	Br：茶(Brown)
R：赤(Red)	SL：空(Skyblue)
L：青(Blue)	Gr：灰(Gray)
W：白(White)	Lg：黄緑(Light-green)
Y：黄(Yellow)	

スタータスイッチ回路図
Wiring Diagram. Starter Switch

	30	19	17	50	ACC
Air Heater	●	●	●	●	●
OFF					
ON	●	●	●	●	●
Start	●	●	●	●	●

ワイパースイッチ回路図
Wiring Diagram. Wiper Switch

	WB	LB	L	E	EARTH
OFF	●	●			
ON	●	●	●	●	●
Washer				●	●

ヒータスイッチ回路図
Wiring Diagram. Heater Switch

	E	Lo	Hi
OFF	●	●	●
I	●	●	
II	●	●	●

配線図
WIRING DIAGRAM

COUNTRY	J	P	N	W	S	W	W	G	F	A	D	M	N	L
APPLI-CATION	—	○	—	—	—	—	—	—	—	—	—	—	—	—

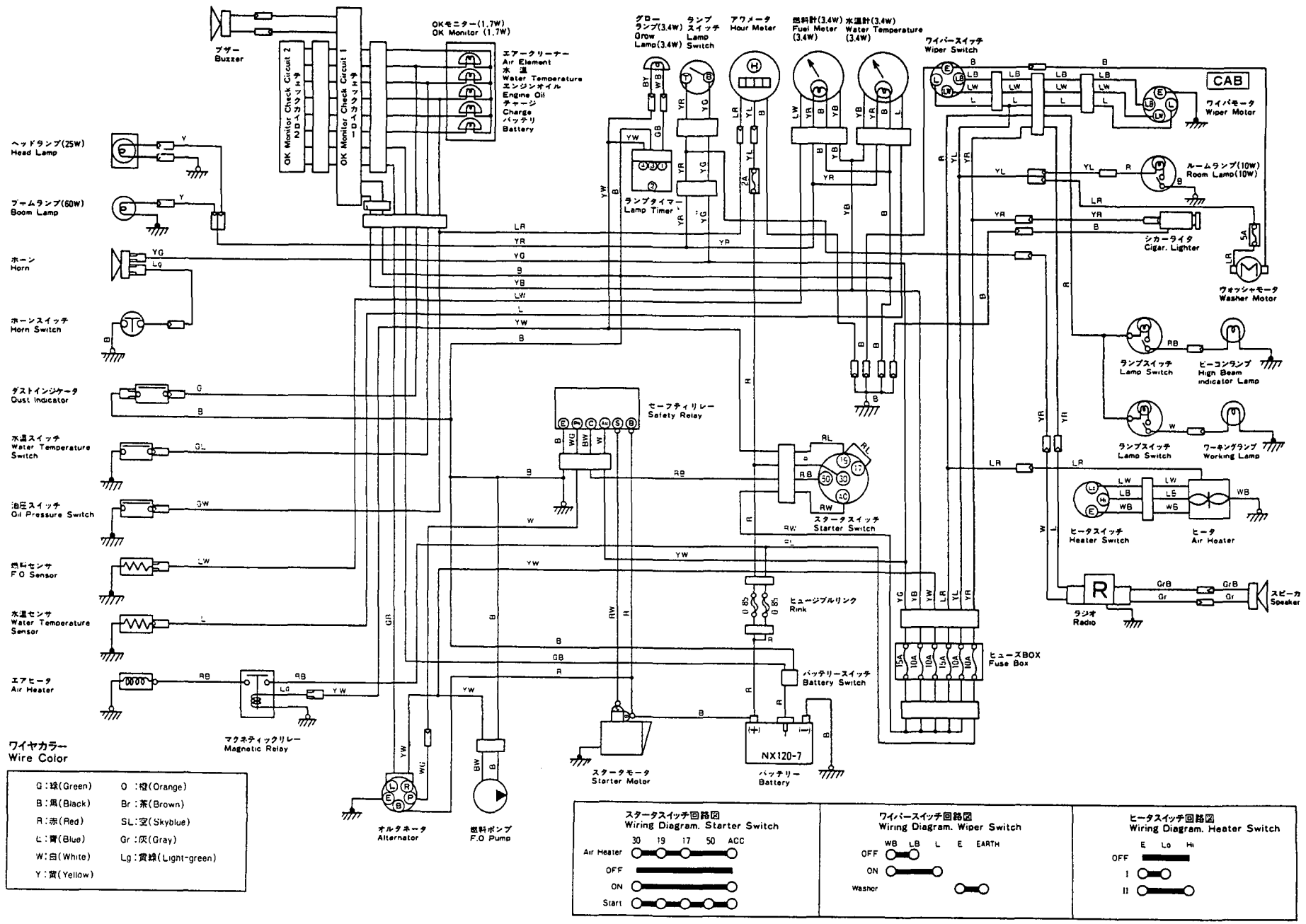

配線図 WIRING DIAGRAM

COUNTRY	J	P	N	W	S	W	W	G	F	A	D	M	N	L
APPLI-CATION	—	—		○		○		○		○		○		○

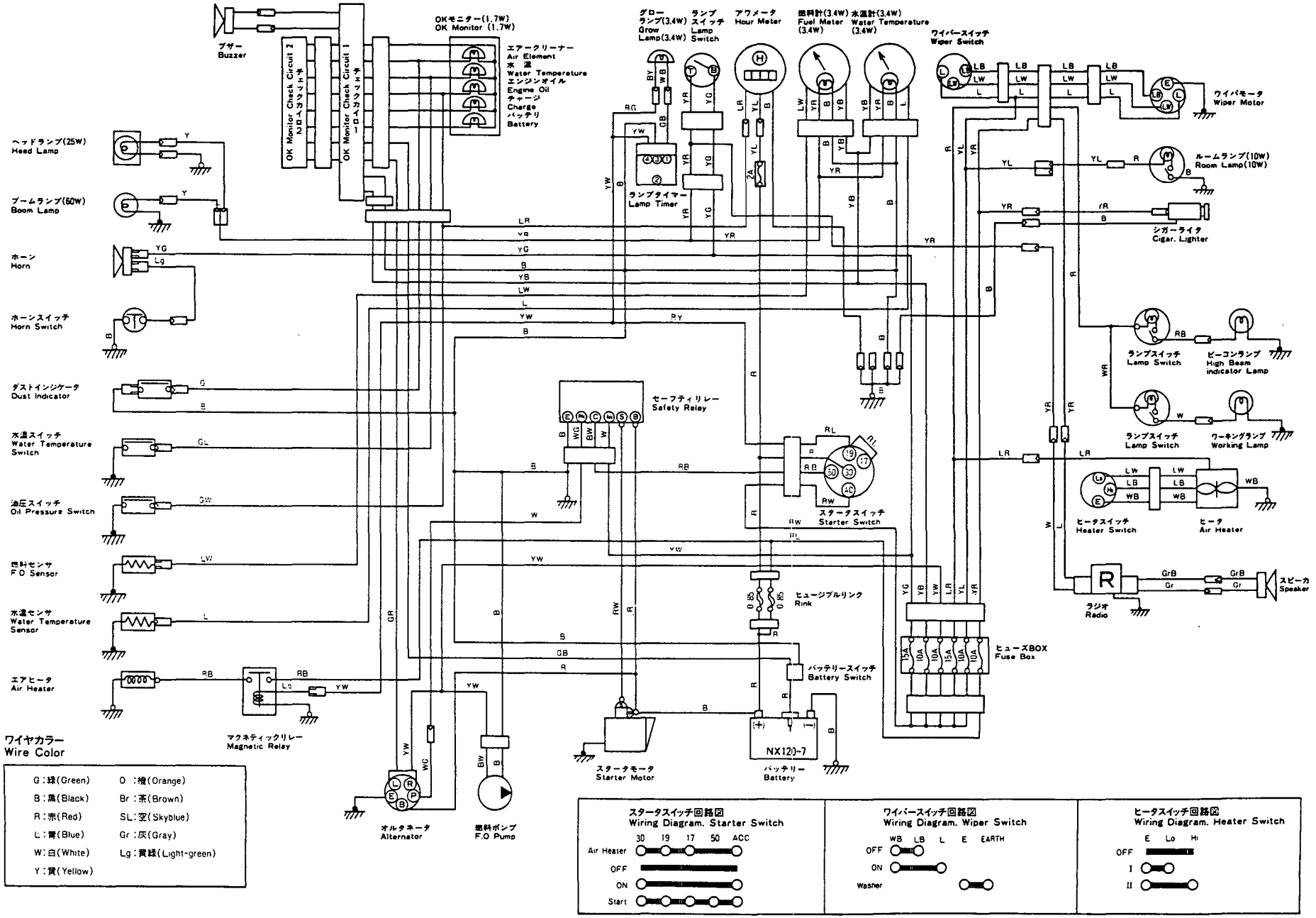

```
3,1,,772124-03110,,"LABEL SET",1,,,,,,,,,,,,,,,,
3-1,1,,772124-03111,,"LABEL SET",1,,,,,,S,,,M20501,,,,,,,,
4,1,,772125-03110,,"LABEL SET",,,,1,,,,,,,,,,,,,
4-1,1,,772125-03111,,"LABEL SET",,,,1,,,S,,,,,,,,,M20501,,
5,2,,172124-03110,,"LABEL, SPECIFICATION",1,,,,,,,,,,,,,,,,,
5-1,2,,172124-03111,,"LABEL, SPECIFICATION",1,,,,,,S,,,M20501,,,,,,,,
6,2,,172125-03110,,"LABEL, SPECIFICATION",,,,1,,,,,,,,,,,,,
6-1,2,,172125-03111,,"LABEL, SPECIFICATION",,,,1,,,S,,,,,,,,,M20501,,
7,2,,172122-03120,,"LABEL, GREASE",1,,,1,,,,,,,,,,,,,
8,2,,172124-03120,,LABEL,1,,,1,,,,,,,,,,,,,
9,2,,172125-03120,,"LABEL,MODEL",,,,2,,,,,,,,,,,,,
10,2,,172122-03140,,"LABEL, GREASE",1,,,1,,,,,,,,,,,,,
10-1,2,,172122-03141,,"LABEL, GREASE",1,,,1,,,N,,,*1985.12,,,,,,*1985.12,,
11,2,,172124-03140,,"LABEL,MODEL",2,,,,,,,,,,,,,,,,,
12,2,,172124-03150,,"LABEL, STRIPE (A)",1,,,1,,,,,,,,,,,,,
13,2,,172124-03160,,"LABEL, STRIPE (B)",1,,,1,,,,,,,,,,,,,
14,2,,172124-03180,,"LABEL, STRIPE (D)",1,,,1,,,,,,,,,,,,,
15,2,,172124-03190,,"LABEL, STRIPE (E)",1,,,1,,,,,,,,,,,,,
16,2,,172124-03200,,"LABEL, STRIPE (F)",1,,,1,,,,,,,,,,,,,
17,2,,172124-03210,,"LABEL, STRIPE (G)",1,,,1,,,,,,,,,,,,,
18,2,,172124-03220,,"LABEL, STRIPE (H)",1,,,1,,,,,,,,,,,,,
19,2,,172124-03230,,"LABEL,YANMAR 1000",1,,,,,,,,,,,,,,,,,
19-1,2,,172312-03281,,"LABEL, BUMPER",1,,,,,,R,,,*1987.10,,,,,,,,
20,2,,933112-23600,,"LABEL(A),OPERATION",1,,,1,,,,,,,,,,,,,
21,2,,172122-03350,,"LABEL, STRIPE (LF4)",1,,,1,,,,,,,,,,,,,
21-1,2,,172122-03351,,"LABEL, STRIPE (LF4)",1,,,1,,,N,,,*1987.11,,,,,,*1987.11,,
22,2,,172122-03380,,"LABEL, STRIPE (LF1)",1,,,1,,,,,,,,,,,,,
23,2,,172122-03410,,"LABEL, STRIPE (RF1)",1,,,1,,,,,,,,,,,,,
24,2,,121470-44540,,"LABEL, SUB-TANK",1,,,1,,,,,,,,,,,,,
25,2,,933112-45000,,"LABEL, DANGER",1,,,1,,,,,,,,,,,,,
26,2,,933112-47500,,LABEL,1,,,1,,,,,,,,,,,,,
27,2,,933112-50200,,LABEL,1,,,1,,,,,,,,,,,,,
28,2,,933112-52000,,"LABEL, FUEL",1,,,1,,,,,,,,,,,,,
28-1,2,,933112-52400,,"LABEL, FUEL",1,,,1,,,R,,,*1988.04,,,,,,*1988.04,,
29,2,,933112-91400,,"LABEL, YANMAR",2,,,2,,,,,,,,,,,,,
29-1,2,,172124-03310,,"LABEL, YANMAR (L)",1,,,1,,,S,,,*1987.10,,,,,,*1987.10,,
29A,1,,172124-03320,,"LABEL, YANMAR (R)",1,,,1,,,W,,,*1987.10,,,,,,*1987.10,,
30,2,,933112-94100,,"LABEL, TURBO",1,,,1,,,,,,,,,,,,,
31,2,,933112-94200,,"LABEL, TURBO",1,,,1,,,,,,,,,,,,,
32,2,,933112-92200,,"LABEL, SSS MARK",2,,,2,,,Z,,,M10501,,,,,,M10501,,
33,2,,172122-03250,,"LABEL, NO.1 MARK",1,,,1,,,W,,,M10501,,,,,,M10501,,
33-1,2,,172122-03250,,"LABEL, NO.1 MARK",1,,,1,,,Z,,,*1986.05,,,,,,*1986.05,,
34,2,,172122-03260,,"LABEL, NO.1 MARK",1,,,1,,,W,,,M10501,,,,,,M10501,,
34-1,2,,172122-03260,,"LABEL, NO.1 MARK",2,,,2,,,K,,,*1986.05,,,,,,*1986.05,,
34-2,2,,172122-03260,,"LABEL, NO.1 MARK",1,,,1,,,K,,,M20501,,,,,,M20501,,
35,2,,172124-03270,,"LABEL, SEAL (B)",1,,,1,,,W,,,M20501,,,,,,M20501,,
35-1,2,,172124-03271,,"LABEL,SEAL B",1,,,1,,,S,,,*1989.01,,,,,,*1989.01,,
36,2,,172137-03290,,"LABEL, NO.1 MARK",1,,,1,,,W,,,M20501,,,,,,M20501,,
39,1,,772132-03110,,"LABEL SET",1,,,,,,,,,,,,,,,,,
39-1,1,,772132-03111,,"LABEL SET",1,,,,,,S,,,M20501,,,,,,,,
40,1,,772133-03110,,"LABEL SET",,,,1,,,,,,,,,,,,,
40-1,1,,772133-03111,,"LABEL SET",,,,1,,,S,,,,,,,,,M20501,,
41,2,,172132-03100,,"LABEL, SPECIFICATION",1,,,,,,,,,,,,,,,,,
41-1,2,,172132-03101,,"LABEL, SPECIFICATION",1,,,,,,S,,,M20501,,,,,,,,
42,2,,172133-03100,,"LABEL, SPECIFICATION",,,,1,,,,,,,,,,,,,
42-1,2,,172133-03101,,"LABEL, SPECIFICATION",,,,1,,,S,,,,,,,,,M20501,,
43,2,,172122-03120,,"LABEL, GREASE",1,,,1,,,,,,,,,,,,,
44,2,,172124-03120,,LABEL,1,,,1,,,,,,,,,,,,,
45,2,,172133-03110,,"LABEL,MODEL YB501U",,,,2,,,,,,,,,,,,,
46,2,,172122-03141,,"LABEL, GREASE",1,,,1,,,,,,,,,,,,,
47,2,,172132-03110,,"LABEL,MODEL YB451U",2,,,,,,,,,,,,,,,,,
48,2,,172124-03150,,"LABEL, STRIPE (A)",1,,,1,,,,,,,,,,,,,
49,2,,172124-03160,,"LABEL, STRIPE (B)",1,,,1,,,,,,,,,,,,,
```

```
50,2,,172124-03180,,"LABEL, STRIPE (D)",1,,,1,,,,,,,,,,,,,
51,2,,172124-03190,,"LABEL, STRIPE (E)",1,,,1,,,,,,,,,,,,,
52,2,,172124-03200,,"LABEL, STRIPE (F)",1,,,1,,,,,,,,,,,,,
53,2,,172124-03210,,"LABEL, STRIPE (G)",1,,,1,,,,,,,,,,,,,
54,2,,172124-03220,,"LABEL, STRIPE (H)",1,,,1,,,,,,,,,,,,,
55,2,,172124-03230,,"LABEL,YANMAR 1000",1,,,,,,,,,,,,,,,,,
55-1,2,,172312-03281,,"LABEL, BUMPER",1,,,,,,R,,,*1987.10,,,,,,,,
56,2,,933112-23600,,"LABEL(A),OPERATION",1,,,1,,,,,,,,,,,,,
57,2,,172122-03350,,"LABEL, STRIPE (LF4)",1,,,1,,,,,,,,,,,,,
57-1,2,,172122-03351,,"LABEL, STRIPE (LF4)",1,,,1,,,N,,,*1987.11,,,,,,*1987.11,,
58,2,,172122-03380,,"LABEL, STRIPE (LF1)",1,,,1,,,,,,,,,,,,,
59,2,,172122-03410,,"LABEL, STRIPE (RF1)",1,,,1,,,,,,,,,,,,,
60,2,,121470-44540,,"LABEL, SUB-TANK",1,,,1,,,,,,,,,,,,,
61,2,,933112-45000,,"LABEL, DANGER",1,,,1,,,,,,,,,,,,,
62,2,,933112-47500,,LABEL,1,,,1,,,,,,,,,,,,,
63,2,,933112-50200,,LABEL,1,,,1,,,,,,,,,,,,,
64,2,,933112-52000,,"LABEL, FUEL",1,,,1,,,,,,,,,,,,,
64-1,2,,933112-52400,,"LABEL, FUEL",1,,,1,,,R,,,*1988.04,,,,,,*1988.04,,
65,2,,933112-91400,,"LABEL, YANMAR",2,,,2,,,,,,,,,,,,,
65-1,2,,172124-03310,,"LABEL, YANMAR (L)",1,,,1,,,S,,,*1987.10,,,,,,*1987.10,,
65A,2,,172124-03320,,"LABEL, YANMAR (R)",1,,,1,,,W,,,*1987.10,,,,,,*1987.10,,
66,2,,933112-94100,,"LABEL, TURBO",1,,,1,,,,,,,,,,,,,
67,2,,933112-94200,,"LABEL, TURBO",1,,,1,,,,,,,,,,,,,
68,2,,172122-03250,,"LABEL, NO.1 MARK",1,,,1,,,Z,,,M00824,,,,,,*1986.05,,
69,2,,172122-03260,,"LABEL, NO.1 MARK",1,,,1,,,,,,,,,,,,,
69-1,2,,172122-03260,,"LABEL, NO.1 MARK",2,,,2,,,K,,,M10501,,,,,,M10501,,
69-2,2,,172122-03260,,"LABEL, NO.1 MARK",1,,,1,,,K,,,M20501,,,,,,M20501,,
70,2,,172124-03270,,"LABEL, SEAL (B)",1,,,1,,,W,,,M20501,,,,,,M20501,,
70-1,2,,172124-03271,,"LABEL,SEAL B",1,,,1,,,S,,,*1989.01,,,,,,*1989.01,,
71,2,,172137-03290,,"LABEL, NO.1 MARK",1,,,1,,,W,,,M20501,,,,,,M20501,,
72,1,,172122-03240,,"LABEL, R EXPRESSION",1,,,1,,,Z,,,M20648,,,,,,M20527,,
73,1,,172513-03350,,"LABEL, ""YANMAR""",1,,,1,,,,,,,,,,,,,
73-1,1,,933112-91901,,"LABEL, YANMAR",1,,,1,,,N,,,M20501,,,,,,M20501,,
74,1,,933112-91700,,"LABEL, Z MARK",2,,,2,,,,,,,,,,,,,
75,1,,933112-23400,,"LABEL(B),OPERATION",,,1,,,1,,,,,,,,,,,
76,1,,933112-23500,,"LABEL(C),OPERATION",,,1,,,1,,,,,,,,,,,
77,1,,933112-23700,,"LABEL(D),OPERATION",,,1,,,1,,,,,,,,,,,
```

SPEC. CODE
D72124-03110 D72125-03140
D72125-03110 D72122-03150
D72132-03120 D72122-03160
D72133-03120 D72122-03170
D72122-03140 D72132-03220
D72124-03140 D72133-03220

Fig. 1 メイバン(キャノピ) LABEL (CANOPY SPEC.)

COUNTRY	J P	N W	S W	W G	F A	D M	N L
Fig. No.	1	—	—	—	—	—	—

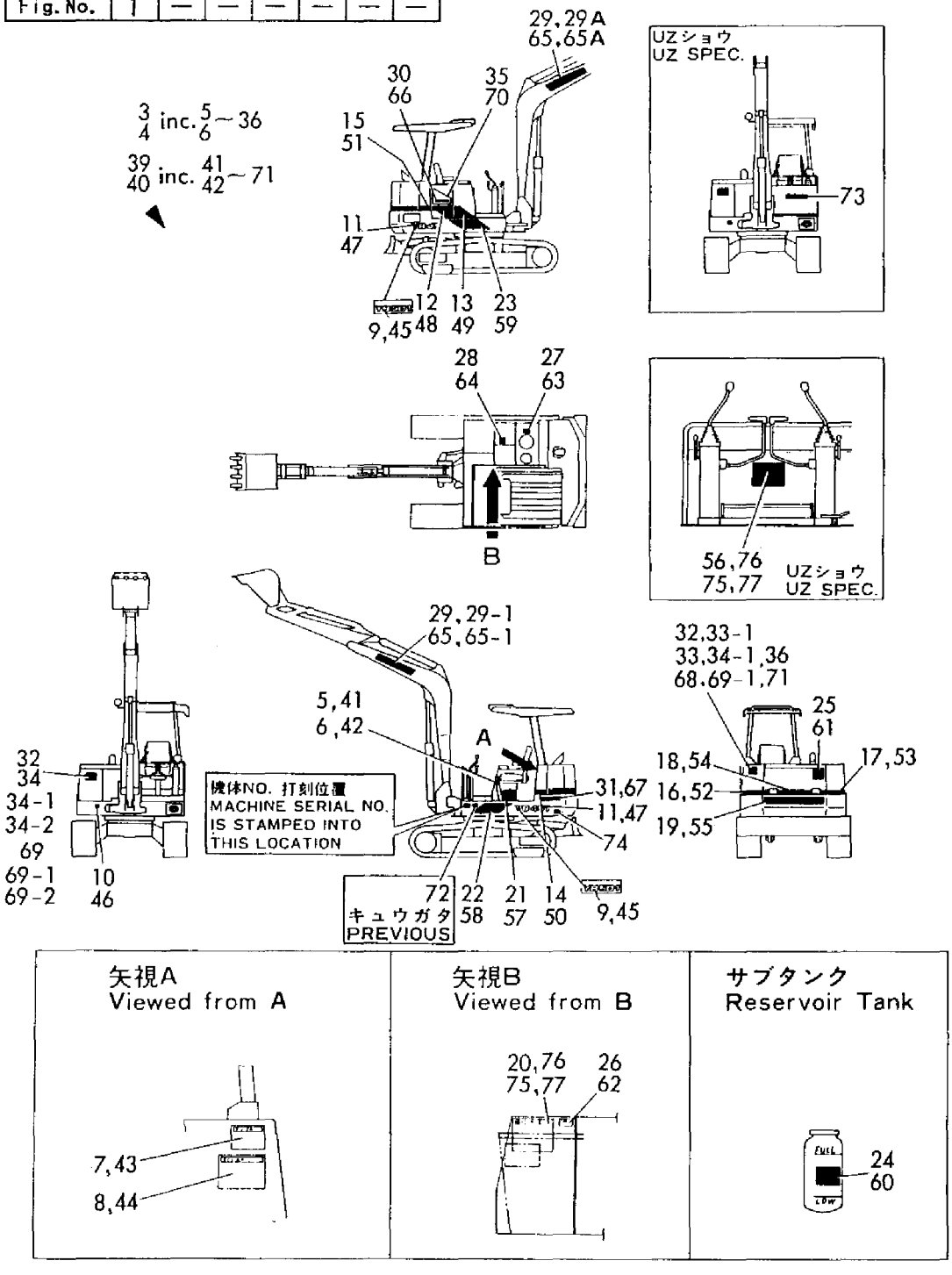

```
3,1,,772124-03100,,"LABEL SET",,1,,,,,,,,,,,,,,,
3-1,1,,772124-03101,,"LABEL SET",,1,,,,,S,,,,,M20501,,,,,,
4,1,,772125-03100,,"LABEL SET",,,,,1,,,,,,,,,,,,
4-1,1,,772125-03101,,"LABEL SET",,,,,1,,S,,,,,,,,,,,M20501
5,2,,172124-03110,,"LABEL, SPECIFICATION",,1,,,,,,,,,,,,,,,,
5-1,2,,172124-03111,,"LABEL, SPECIFICATION",,1,,,,,S,,,,,M20501,,,,,,
6,2,,172125-03110,,"LABEL, SPECIFICATION",,,,,1,,,,,,,,,,,,
6-1,2,,172125-03111,,"LABEL, SPECIFICATION",,,,,1,,S,,,,,,,,,,,M20501
7,2,,172122-03120,,"LABEL, GREASE",,1,,,1,,,,,,,,,,,,
8,2,,172124-03120,,LABEL,,1,,,1,,,,,,,,,,,,
9,2,,172125-03120,,"LABEL,MODEL",,,,,2,,,,,,,,,,,,
10,2,,172122-03140,,"LABEL, GREASE",,1,,,1,,,,,,,,,,,,
10-1,2,,172122-03141,,"LABEL, GREASE",,1,,,1,,N,,,,,*1985.12,,,,,,*1985.12
11,2,,172124-03140,,"LABEL,MODEL",,2,,,,,,,,,,,,,,,
12,2,,172124-03150,,"LABEL, STRIPE (A)",,1,,,1,,,,,,,,,,,,
13,2,,172124-03160,,"LABEL, STRIPE (B)",,1,,,1,,,,,,,,,,,,
14,2,,172124-03170,,"LABEL, STRIPE (C)",,1,,,1,,,,,,,,,,,,
14-1,2,,172124-03300,,"LABEL, STRIPE (C)",,1,,,1,,S,,,,,M20501,,,,,,M20501
14-2,2,,172124-03301,,"LABEL,STRIPE C",,1,,,1,,S,,,,,*1989.01,,,,,,*1989.01
15,2,,172124-03180,,"LABEL, STRIPE (D)",,1,,,1,,,,,,,,,,,,
16,2,,172124-03190,,"LABEL, STRIPE (E)",,1,,,1,,,,,,,,,,,,
17,2,,172124-03200,,"LABEL, STRIPE (F)",,1,,,1,,,,,,,,,,,,
18,2,,172124-03210,,"LABEL, STRIPE (G)",,1,,,1,,,,,,,,,,,,
19,2,,172124-03220,,"LABEL, STRIPE (H)",,1,,,1,,,,,,,,,,,,
20,2,,172124-03230,,"LABEL,YANMAR 1000",,1,,,,,,,,,,,,,,,
20-1,2,,172312-03281,,"LABEL, BUMPER",,1,,,,,R,,,,,*1987.10,,,,,,
21,2,,933112-23600,,"LABEL(A),OPERATION",,1,,,1,,,,,,,,,,,,
22,2,,172122-03360,,"LABEL, STRIPE (LF2)",,1,,,1,,,,,,,,,,,,
22-1,2,,172135-03200,,"LABEL, STRIPE (LF2)",,1,,,1,,S,,,,,M20501,,,,,,M20501
22-2,2,,172135-03201,,"LABEL, STRIPE (LF2)",,1,,,1,,S,,,,,*1989.01,,,,,,*1989.01
23,2,,172122-03380,,"LABEL, STRIPE (LF1)",,1,,,1,,,,,,,,,,,,
24,2,,172122-03410,,"LABEL, STRIPE (RF1)",,1,,,1,,,,,,,,,,,,
25,2,,121470-44540,,"LABEL, SUB-TANK",,1,,,1,,,,,,,,,,,,
26,2,,933112-45000,,"LABEL, DANGER",,1,,,1,,,,,,,,,,,,
27,2,,933112-47500,,LABEL,,1,,,1,,,,,,,,,,,,
28,2,,933112-50200,,LABEL,,1,,,1,,,,,,,,,,,,
29,2,,933112-52000,,"LABEL, FUEL",,1,,,1,,,,,,,,,,,,
29-1,2,,933112-52400,,"LABEL, FUEL",,1,,,1,,R,,,,,*1988.04,,,,,,*1988.04
30,2,,933112-91400,,"LABEL, YANMAR",,2,,,2,,,,,,,,,,,,
30-1,2,,172124-03310,,"LABEL, YANMAR (L)",,1,,,1,,S,,,,,*1987.10,,,,,,*1987.10
30A,2,,172124-03320,,"LABEL, YANMAR (R)",,1,,,1,,W,,,,,*1987.10,,,,,,*1987.10
31,2,,933112-94100,,"LABEL, TURBO",,1,,,1,,,,,,,,,,,,
32,2,,933112-94200,,"LABEL, TURBO",,1,,,1,,,,,,,,,,,,
33,2,,933112-94300,,"LABEL, SALOON",,1,,,1,,Z,,,,,M20501,,,,,,M20501
34,2,,933112-92200,,"LABEL, SSS MARK",,2,,,2,,Z,,,,,M10501,,,,,,M10501
35,2,,172122-03250,,"LABEL, NO.1 MARK",,1,,,1,,W,,,,,M10501,,,,,,M10501
35-1,2,,172122-03250,,"LABEL, NO.1 MARK",,1,,,1,,Z,,,,,*1986.05,,,,,,*1986.05
36,2,,172122-03260,,"LABEL, NO.1 MARK",,1,,,1,,W,,,,,M10501,,,,,,M10501
36-1,2,,172122-03260,,"LABEL, NO.1 MARK",,2,,,2,,K,,,,,*1986.05,,,,,,*1986.05
36-2,2,,172122-03260,,"LABEL, NO.1 MARK",,1,,,1,,K,,,,,M20501,,,,,,M20501
37,2,,172135-03220,,"LABEL, CAB.DOOR",,1,,,1,,W,,,,,M20501,,,,,,M20501
38,2,,172124-03270,,"LABEL, SEAL (B)",,1,,,1,,W,,,,,M20501,,,,,,M20501
38-1,2,,172124-03271,,"LABEL,SEAL B",,1,,,1,,S,,,,,*1989.01,,,,,,*1989.01
39,2,,172137-03290,,"LABEL, NO.1 MARK",,1,,,1,,W,,,,,M20501,,,,,,M20501
42,1,,772132-03100,,"LABEL SET",,1,,,,,,,,,,,,,,,
42-1,1,,772132-03101,,"LABEL SET",,1,,,,,S,,,,,M20501,,,,,,
43,1,,772133-03100,,"LABEL SET",,,,,1,,,,,,,,,,,,
43-1,1,,772133-03101,,"LABEL SET",,,,,1,,S,,,,,,,,,,,M20501
44,2,,172132-03100,,"LABEL, SPECIFICATION",,1,,,,,,,,,,,,,,,
44-1,2,,172132-03101,,"LABEL, SPECIFICATION",,1,,,,,S,,,,,M20501,,,,,,
45,2,,172133-03100,,"LABEL, SPECIFICATION",,,,,1,,,,,,,,,,,,
45-1,2,,172133-03101,,"LABEL, SPECIFICATION",,,,,1,,S,,,,,,,,,,,M20501
46,2,,172122-03120,,"LABEL, GREASE",,1,,,1,,,,,,,,,,,,
```

```
47,2,,172124-03120,,LABEL,,1,,,1,,,,,,,,,,,,
48,2,,172133-03110,,"LABEL,MODEL YB501U",,,,,2,,,,,,,,,,,,
49,2,,172122-03141,,"LABEL, GREASE",,1,,,1,,,,,,,,,,,,
50,2,,172132-03110,,"LABEL,MODEL YB451U",,2,,,,,,,,,,,,,,,,
51,2,,172124-03150,,"LABEL, STRIPE (A)",,1,,,1,,,,,,,,,,,,
52,2,,172124-03160,,"LABEL, STRIPE (B)",,1,,,1,,,,,,,,,,,,
53,2,,172124-03170,,"LABEL, STRIPE (C)",,1,,,1,,,,,,,,,,,,
53-1,2,,172124-03300,,"LABEL, STRIPE (C)",,1,,,1,,S,,,,,M20501,,,,,,M20501
53-2,2,,172124-03301,,"LABEL,STRIPE C",,1,,,1,,S,,,,,*1989.01,,,,,,*1989.01
54,2,,172124-03180,,"LABEL, STRIPE (D)",,1,,,1,,,,,,,,,,,,
55,2,,172124-03190,,"LABEL, STRIPE (E)",,1,,,1,,,,,,,,,,,,
56,2,,172124-03200,,"LABEL, STRIPE (F)",,1,,,1,,,,,,,,,,,,
57,2,,172124-03210,,"LABEL, STRIPE (G)",,1,,,1,,,,,,,,,,,,
58,2,,172124-03220,,"LABEL, STRIPE (H)",,1,,,1,,,,,,,,,,,,
59,2,,172124-03230,,"LABEL,YANMAR 1000",,1,,,,,,,,,,,,,,,,
59-1,2,,172312-03281,,"LABEL, BUMPER",,1,,,,,R,,,,,*1987.10,,,,,,
60,2,,933112-23600,,"LABEL(A),OPERATION",,1,,,1,,,,,,,,,,,,
61,2,,172122-03360,,"LABEL, STRIPE (LF2)",,1,,,1,,,,,,,,,,,,
61-1,2,,172135-03200,,"LABEL, STRIPE (LF2)",,1,,,1,,S,,,,,M20501,,,,,,M20501
61-2,2,,172135-03201,,"LABEL, STRIPE (LF2)",,1,,,1,,S,,,,,*1989.01,,,,,,*1989.01
62,2,,172122-03380,,"LABEL, STRIPE (LF1)",,1,,,1,,,,,,,,,,,,
63,2,,172122-03410,,"LABEL, STRIPE (RF1)",,1,,,1,,,,,,,,,,,,
64,2,,121470-44540,,"LABEL, SUB-TANK",,1,,,1,,,,,,,,,,,,
65,2,,933112-45000,,"LABEL, DANGER",,1,,,1,,,,,,,,,,,,
66,2,,933112-47500,,LABEL,,1,,,1,,,,,,,,,,,,
67,2,,933112-50200,,LABEL,,1,,,1,,,,,,,,,,,,
68,2,,933112-52000,,"LABEL, FUEL",,1,,,1,,,,,,,,,,,,
68-1,2,,933112-52400,,"LABEL, FUEL",,1,,,1,,R,,,,,*1988.04,,,,,,*1988.04
69,2,,933112-91400,,"LABEL, YANMAR",,2,,,2,,,,,,,,,,,,
69-1,2,,172124-03310,,"LABEL, YANMAR (L)",,1,,,1,,S,,,,,*1987.10,,,,,,*1987.10
69A,2,,172124-03320,,"LABEL, YANMAR (R)",,1,,,1,,W,,,,,*1987.10,,,,,,*1987.10
70,2,,933112-94100,,"LABEL, TURBO",,1,,,1,,,,,,,,,,,,
71,2,,933112-94200,,"LABEL, TURBO",,1,,,1,,,,,,,,,,,,
72,2,,933112-94300,,"LABEL, SALOON",,1,,,1,,Z,,,,,M20501,,,,,,M20501
73,2,,172122-03250,,"LABEL, NO.1 MARK",,1,,,1,,Z,,,,,M00824,,,,,,*1986.05
74,2,,172122-03260,,"LABEL, NO.1 MARK",,1,,,1,,,,,,,,,,,,
74-1,2,,172122-03260,,"LABEL, NO.1 MARK",,2,,,2,,K,,,,,M00824,,,,,,*1986.05
74-2,2,,172122-03260,,"LABEL, NO.1 MARK",,1,,,1,,K,,,,,M20501,,,,,,M20501
75,2,,172135-03220,,"LABEL, CAB.DOOR",,1,,,1,,W,,,,,M20501,,,,,,M20501
76,2,,172124-03270,,"LABEL, SEAL (B)",,1,,,1,,W,,,,,M20501,,,,,,M20501
76-1,2,,172124-03271,,"LABEL,SEAL B",,1,,,1,,S,,,,,*1989.01,,,,,,*1989.01
77,2,,172137-03290,,"LABEL, NO.1 MARK",,1,,,1,,W,,,,,M20501,,,,,,M20501
78,1,,172122-03240,,"LABEL, R EXPRESSION",,1,,,1,,Z,,,,,M20648,,,,,,M20527
79,1,,933112-23400,,"LABEL(B),OPERATION",,,1,,,1,,,,,,,,,,,,
80,1,,933112-23500,,"LABEL(C),OPERATION",,,1,,,1,,,,,,,,,,,,
81,1,,933112-23700,,"LABEL(D),OPERATION",,,1,,,1,,,,,,,,,,,,
```

SPEC. CODE
D72124-03100 D72122-03140
D72125-03100 D72122-03150
D72132-03100 D72122-03160
D72133-03100 D72122-03170
D72124-03130 D72132-03200
D72125-03130 D72133-03200

Fig. 2 メイバン(キャビン) LABEL (CABIN SPEC.)

COUNTRY	J P	N W	S W	W G	F A	D M	N L
Fig. No.	2	4	3	5	4	5	5

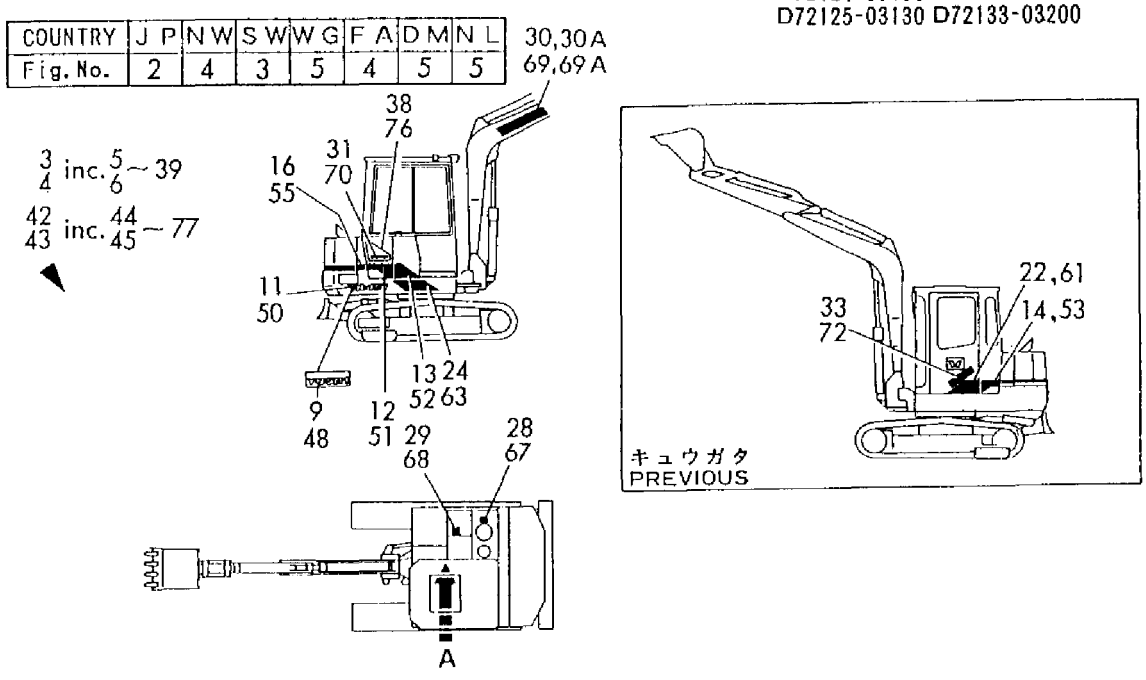

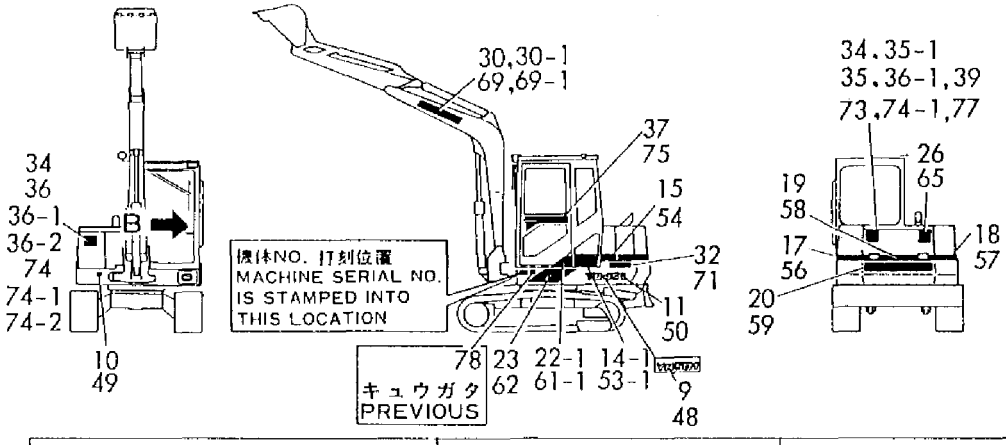

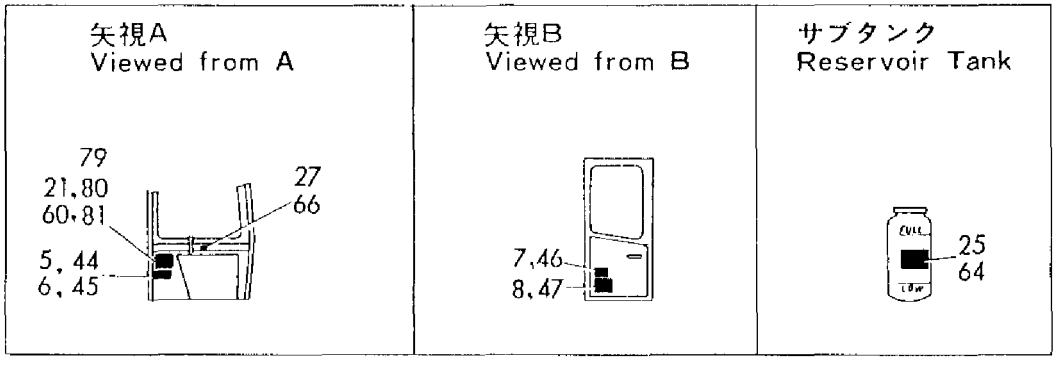

```
3,1,,772124-03700,,"LABEL SET",,,1,,,,,,,,,,,,,,
3-1,1,,772124-03701,,"LABEL SET",,,1,,,,S,,,,,,,*1986.06,,,,
4,1,,772125-03700,,"LABEL SET",,,,,1,1,,,,,,,,,,,
4-1,1,,772125-03701,,"LABEL SET",,,,,1,1,S,,,,,,,,,,,M50017,,M50017
5,2,,172124-03140,,"LABEL,MODEL",,,2,,,,,,,,,,,,,
6,2,,172125-03120,,"LABEL,MODEL",,,,,2,2,,,,,,,,,,,
7,2,,172124-03150,,"LABEL, STRIPE (A)",,,1,,1,1,,,,,,,,,,,
8,2,,172124-03160,,"LABEL, STRIPE (B)",,,1,,1,1,,,,,,,,,,,
9,2,,172124-03170,,"LABEL, STRIPE (C)",,,1,,1,1,,,,,,,,,,,
10,2,,172124-03180,,"LABEL, STRIPE (D)",,,1,,1,1,,,,,,,,,,,
11,2,,172124-03190,,"LABEL, STRIPE (E)",,,1,,1,1,,,,,,,,,,,
12,2,,172124-03200,,"LABEL, STRIPE (F)",,,1,,1,1,,,,,,,,,,,
13,2,,172124-03210,,"LABEL, STRIPE (G)",,,1,,1,1,,,,,,,,,,,
14,2,,172124-03220,,"LABEL, STRIPE (H)",,,1,,1,1,,,,,,,,,,,
15,2,,172122-03360,,"LABEL, STRIPE (LF2)",,,1,,1,1,,,,,,,,,,,
16,2,,172122-03380,,"LABEL, STRIPE (LF1)",,,1,,1,1,,,,,,,,,,,
17,2,,172122-03410,,"LABEL, STRIPE (RF1)",,,1,,1,1,,,,,,,,,,,
18,2,,172124-03410,,"LABEL, SPECIFICATION",,,1,,1,1,,,,,,,,,,,
19,2,,172125-03410,,"LABEL, SPECIFICATION",,,,,1,1,,,,,,,,,,,
19-1,2,,172125-03810,,"LABEL, SPECIFICATION",,,,,1,1,S,,,,,,,,,,,M50017,,M50017
20,2,,172124-03420,,"LABEL, OIL/WATER",,,1,,1,1,,,,,,,,,,,
20-1,2,,172125-03820,,"LABEL, OIL/WATER",,,,,1,1,S,,,,,,,,,,,M50017,,M50017
21,2,,172116-03670,,"LABEL, START CAUTION",,,1,,1,1,,,,,,,,,,,
21-1,2,,933112-47800,,"LABEL, RESTARTING",,,,,1,1,S,,,,,,,,,,,M50017,,M50017
22,2,,172122-03730,,"LABEL, GREASE SUPPLY",,,1,,1,1,,,,,,,,,,,
22-1,2,,172122-03960,,"LABEL,WATER/OIL FEED",,,,,1,1,S,,,,,,,,,,,M50017,,M50017
23,2,,172122-03740,,"LABEL, GREASE",,,1,,1,1,,,,,,,,,,,
23-1,2,,172138-03750,,"LABEL, GREASE",,,,,1,1,S,,,,,,,,,,,M50017,,M50017
24,2,,124764-44810,,"LABEL, SUB-TANK",,,1,,1,1,,,,,,,,,,,
24-1,2,,933112-55700,,"LABEL, SUB-TANK",,,,,1,1,S,,,,,,,,,,,M50017,,M50017
25,2,,22857-300050,,"SCREW 3X 5",,,4,,4,4,,,,,,,,,,,
26,2,,933112-45100,,"LABEL, CAUTION",,,1,,1,1,,,,,,,,,,,
26-1,2,,933112-45300,,"LABEL, DANGER (A)",,,,,1,1,S,,,,,,,,,,,M50017,,M50017
27,2,,933112-50300,,"LABEL, OIL FEED",,,1,,1,1,,,,,,,,,,,
27-1,2,,933112-50700,,"LABEL, OIL FEED",,,,,1,1,S,,,,,,,,,,,M50017,,M50017
28,2,,933112-52100,,"LABEL, FUEL",,,1,,1,1,,,,,,,,,,,
28-1,2,,933112-52500,,"LABEL, FUEL",,,,,1,1,S,,,,,,,,,,,M50017,,M50017
29,2,,933112-91400,,"LABEL, YANMAR",,,2,,2,2,,,,,,,,,,,
29-1,2,,172124-03310,,"LABEL, YANMAR
(L)",,,1,,1,1,S,,,,,,,M60501,,,,M60501,,M60501
30,2,,933112-92200,,"LABEL, SSS MARK",,,2,,2,2,Z,,,,,,,M50001,,,,M50001,,M50001
31,2,,933112-94100,,"LABEL, TURBO",,,1,,1,1,,,,,,,,,,,
32,2,,933112-94200,,"LABEL, TURBO",,,1,,1,1,,,,,,,,,,,
33,2,,933112-94300,,"LABEL, SALOON",,,1,,1,1,,,,,,,,,,,
34,2,,124064-44920,,"LABEL, RADIATOR",,,1,,1,1,,,,,,,,,,,
34-1,2,,933112-55800,,"LABEL, RADIATER",,,,,1,1,S,,,,,,,,,,,M50017,,M50017
35,2,,124764-44920,,"LABEL, ANTI-FREEZING",,,1,,1,1,,,,,,,,,,,
35-1,2,,933112-55900,,"LABEL, ANTI-FREEZING",,,,,1,1,S,,,,,,,,,,,M50017,,M50017
36,2,,933112-54001,,"LABEL, AIR CLEANER",,,1,,1,1,,,,,,,,,,,
36-1,2,,933112-54300,,"LABEL, AIR CLEANER",,,,,1,1,S,,,,,,,,,,,M50017,,M50017
37,2,,172122-03250,,"LABEL, NO.1 MARK",,,1,,1,1,W,,,,,,,M50001,,,,M50001,,M50001
37-1,2,,172122-03250,,"LABEL, NO.1
MARK",,,1,,1,1,Z,,,,,,,*1986.06,,,,*1986.06,,*1986.06
38,2,,172122-03260,,"LABEL, NO.1 MARK",,,1,,1,1,W,,,,,,,M50001,,,,M50001,,M50001
38-1,2,,172122-03260,,"LABEL, NO.1
MARK",,,2,,2,2,K,,,,,,,*1986.06,,,,*1986.06,,*1986.06
39,2,,172124-03230,,"LABEL,YANMAR 1000",,,1,,,,,,,,,,,,,
39-1,2,,172312-03281,,"LABEL, BUMPER",,,1,,,,R,,,,,,,*1987.10,,,,
40,2,,172124-03260,,"LABEL, SEAL(A)",,,1,,1,1,W,,,,,,,M60501,,,,M60501,,M60501
40-1,2,,172124-03261,,"LABEL,SEAL
A",,,,,1,1,S,,,,,,,*1989.01,,,,*1989.01,,*1989.01
41,2,,172124-03270,,"LABEL, SEAL (B)",,,1,,1,1,W,,,,,,,M60501,,,,M60501,,M60501
```

```
41-1,2,,172124-03271,,"LABEL,SEAL
B",,,1,,1,1,S,,,,,,*1989.01,,,,*1989.01,,*1989.01
42,2,,172122-03610,,"LABEL, SEAL(A)",,,1,,1,1,W,,,,,,,M60501,,,,M60501,,M60501
42-1,2,,172122-03611,,"LABEL,SEAL
A",,,1,,1,1,S,,,,,,*1989.01,,,,*1989.01,,*1989.01
43,2,,933112-45400,,"LABEL, DANGER (B)",,,,,1,1,W,,,,,,,,,,,M50017,,M50017
44,2,,172124-03320,,"LABEL, YANMAR
(R)",,,1,,1,1,W,,,,,,,*1987.09,,,,*1987.09,,*1987.09
45,2,,933112-23600,,"LABEL(A),OPERATION",,,,,1,,,,,,,,,,,,
46,1,,933112-23400,,"LABEL(B),OPERATION",,,1,,,1,,,,,,,,,,,,
47,1,,933112-23500,,"LABEL(C),OPERATION",,,1,,,1,,,,,,,,,,,,
48,1,,933112-23700,,"LABEL(D),OPERATION",,,1,,,1,,,,,,,,,,,,
```

SPEC. CODE
D72122-03140
D72122-03150
D72122-03160
D72122-03170
D72124-03700
D72125-03701

Fig. 3 メイバン(キャビン) LABEL (CABIN SPEC.)

COUNTRY	JP	NW	SW	WG	FA	DM	NL
Fig. No.	2	4	3	5	4	5	5

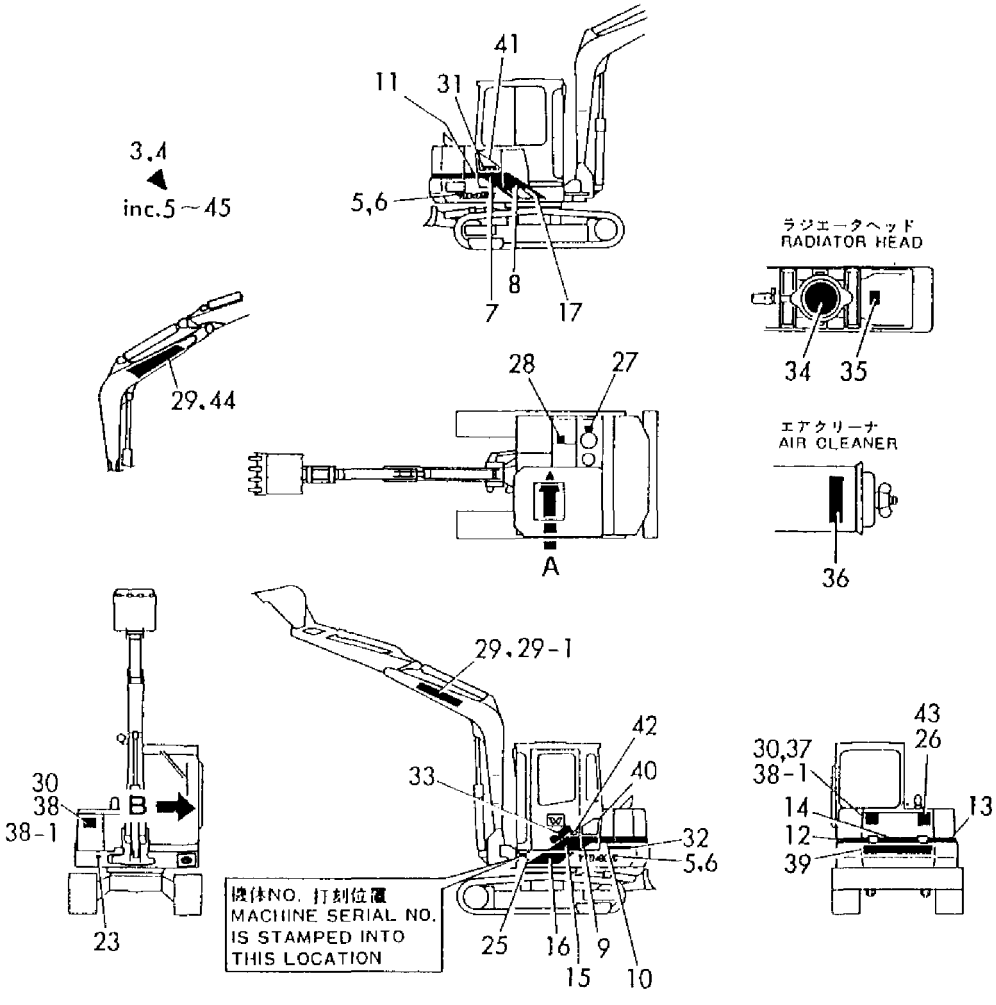

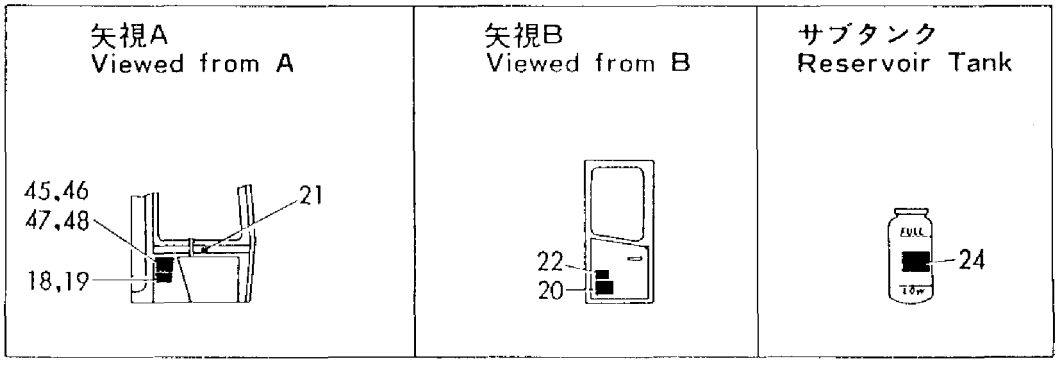

```
3,1,,772124-03720,,"LABEL SET",,1,,,,,,,,,,,,,,,
4,1,,772125-03720,,"LABEL SET",,,,,1,,,,,,,,,,,,
4-1,1,,772125-03721,,"LABEL SET",,,,,1,,S,,,,,,,,,,,M50017
5,2,,172124-03140,,"LABEL,MODEL",,2,,,,,,,,,,,,,,,
6,2,,172125-03120,,"LABEL,MODEL",,,,,2,,,,,,,,,,,,
7,2,,172124-03150,,"LABEL, STRIPE (A)",,1,,,1,,,,,,,,,,,,
8,2,,172124-03160,,"LABEL, STRIPE (B)",,1,,,1,,,,,,,,,,,,
9,2,,172124-03170,,"LABEL, STRIPE (C)",,1,,,1,,,,,,,,,,,,
10,2,,172124-03180,,"LABEL, STRIPE (D)",,1,,,1,,,,,,,,,,,,
11,2,,172124-03190,,"LABEL, STRIPE (E)",,1,,,1,,,,,,,,,,,,
12,2,,172124-03200,,"LABEL, STRIPE (F)",,1,,,1,,,,,,,,,,,,
13,2,,172124-03210,,"LABEL, STRIPE (G)",,1,,,1,,,,,,,,,,,,
14,2,,172124-03220,,"LABEL, STRIPE (H)",,1,,,1,,,,,,,,,,,,
15,2,,172122-03360,,"LABEL, STRIPE (LF2)",,1,,,1,,,,,,,,,,,,
16,2,,172122-03380,,"LABEL, STRIPE (LF1)",,1,,,1,,,,,,,,,,,,
17,2,,172122-03410,,"LABEL, STRIPE (RF1)",,1,,,1,,,,,,,,,,,,
18,2,,172124-03700,,"LABEL, SPECIFICATION",,1,,,,,,,,,,,,,,,
19,2,,172125-03460,,"LABEL, SPECIFICATION",,,,,1,,,,,,,,,,,,
19-1,2,,172125-03810,,"LABEL, SPECIFICATION",,,,,1,,S,,,,,,,,,,,M50017
20,2,,172124-03420,,"LABEL, OIL/WATER",,1,,,,,,,,,,,,,,,
21,2,,172124-03450,,"LABEL, OIL & WATER",,,,,1,,,,,,,,,,,,
21-1,2,,172125-03820,,"LABEL, OIL/WATER",,,,,1,,S,,,,,,,,,,,MXXXXX
22,2,,172116-03670,,"LABEL, START CAUTION",,1,,,,,,,,,,,,,,,
23,2,,933112-47600,,"LABEL, START CAUTION",,,,,1,,,,,,,,,,,,
23-1,2,,933112-47800,,"LABEL, RESTARTING",,,,,1,,S,,,,,,,,,,,M50017
24,2,,172122-03730,,"LABEL, GREASE SUPPLY",,1,,,,,,,,,,,,,,,
25,2,,172122-03800,,"LABEL, GREASE SUPPLY",,,,,1,,,,,,,,,,,,
26,2,,172122-03740,,"LABEL, GREASE",,1,,,,,,,,,,,,,,,
27,2,,172122-03790,,"LABEL, GREASE",,,,,1,,,,,,,,,,,,
27-1,2,,172138-03750,,"LABEL, GREASE",,,,,1,,S,,,,,,,,,,,M50017
28,2,,124764-44810,,"LABEL, SUB-TANK",,1,,,,,,,,,,,,,,,
29,2,,933112-55100,,"LABEL, UB-TANK",,,,,1,,,,,,,,,,,,
29-1,2,,933112-55700,,"LABEL, SUB-TANK",,,,,1,,S,,,,,,,,,,,M50017
30,2,,22857-300050,,"SCREW 3X 5",,4,,,4,,,,,,,,,,,,
31,2,,933112-45100,,"LABEL, CAUTION",,1,,,,,,,,,,,,,,,
32,2,,933112-45300,,"LABEL, DANGER (A)",,,,,1,,,,,,,,,,,,
33,2,,933112-45400,,"LABEL, DANGER (B)",,,,,1,,,,,,,,,,,,
34,2,,933112-50300,,"LABEL, OIL FEED",,1,,,,,,,,,,,,,,,
35,2,,933112-50400,,"LABEL, OIL FEED",,,,,1,,,,,,,,,,,,
35-1,2,,933112-50700,,"LABEL, OIL FEED",,,,,1,,S,,,,,,,,,,,M50017
36,2,,933112-52100,,"LABEL, FUEL",,1,,,,,,,,,,,,,,,
37,2,,933112-52200,,"LABEL, FUEL",,,,,1,,,,,,,,,,,,
37-1,2,,933112-52500,,"LABEL, FUEL",,,,,1,,S,,,,,,,,,,,M50017
38,2,,933112-91400,,"LABEL, YANMAR",,2,,,2,,,,,,,,,,,,
38-1,2,,172124-03310,,"LABEL, YANMAR (L)",,1,,,1,,S,,,,,*1987.09,,,,,,*1987.09
39,2,,933112-94100,,"LABEL, TURBO",,1,,,1,,,,,,,,,,,,
40,2,,933112-94200,,"LABEL, TURBO",,1,,,1,,,,,,,,,,,,
41,2,,933112-94300,,"LABEL, SALOON",,1,,,1,,,,,,,,,,,,
42,2,,172124-03230,,"LABEL,YANMAR 1000",,1,,,,,,,,,,,,,,,
42-1,2,,172312-03281,,"LABEL, BUMPER",,1,,,,,S,,,,,*1987.09,,,,,,
43,2,,172122-03250,,"LABEL, NO.1 MARK",,1,,,1,,Z,,,,,*1986.06,,,,,,*1986.06
44,2,,172122-03260,,"LABEL, NO.1 MARK",,1,,,1,,,,,,,,,,,,
44-1,2,,172122-03260,,"LABEL, NO.1 MARK",,2,,,2,,K,,,,,*1986.06,,,,,,*1986.06
45,2,,124064-44920,,"LABEL, RADIATOR",,1,,,,,,,,,,,,,,,
46,2,,933112-55200,,"LABEL, RADIATOR",,,,,1,,,,,,,,,,,,
46-1,2,,933112-55800,,"LABEL, RADIATER",,,,,1,,S,,,,,,,,,,,M50017
47,2,,124764-44920,,"LABEL, ANTI-FREEZING",,1,,,,,,,,,,,,,,,
48,2,,933112-55300,,"LABEL, ANTI-FREEZING",,,,,1,,,,,,,,,,,,
48-1,2,,933112-55900,,"LABEL, ANTI-FREEZING",,,,,1,,S,,,,,,,,,,,M50017
49,2,,933112-54001,,"LABEL, AIR CLEANER",,1,,,,,,,,,,,,,,,
50,2,,933112-54010,,"LABEL, AIR CLEANER",,,,,1,,,,,,,,,,,,
50-1,2,,933112-54300,,"LABEL, AIR CLEANER",,,,,1,,S,,,,,,,,,,,M50017
51,2,,933112-45500,,"LABEL, CAUTION",,,,,2,,,,,,,,,,,,
```

```
52,2,,933112-23600,,"LABEL(A),OPERATION",,1,,,1,,,,,,,,,,,,
53,2,,172124-03260,,"LABEL, SEAL(A)",,1,,,1,,W,,,,,M60501,,,,,,M60501
53-1,2,,172124-03261,,"LABEL,SEAL A",,1,,,1,,S,,,,,*1989.01,,,,,,*1989.01
54,2,,172124-03270,,"LABEL, SEAL (B)",,1,,,1,,W,,,,,M60501,,,,,,M60501
54-1,2,,172124-03271,,"LABEL,SEAL B",,1,,,1,,S,,,,,*1989.01,,,,,,*1989.01
55,2,,172122-03610,,"LABEL, SEAL(A)",,1,,,1,,W,,,,,M60501,,,,,,M60501
55-1,2,,172122-03611,,"LABEL,SEAL A",,1,,,1,,S,,,,,*1989.01,,,,,,*1989.01
56,2,,172124-03320,,"LABEL, YANMAR (R)",,1,,,1,,W,,,,,*1987.09,,,,,,*1987.09
57,1,,933112-23400,,"LABEL(B),OPERATION",,,1,,,1,,,,,,,,,,,
58,1,,933112-23500,,"LABEL(C),OPERATION",,,1,,,1,,,,,,,,,,,
59,1,,933112-23700,,"LABEL(D),OPERATION",,,1,,,1,,,,,,,,,,,
60,1,,194340-65580,,LABEL,,,,,1,,,,,,,,,,,,
61,1,,22857-300050,,"SCREW 3X 5",,,,,1,,,,,,,,,,,,
```

SPEC. CODE
D72122-03140
D72122-03150
D72122-03160
D72122-03170
D72124-03720
D72125-03721

Fig. 4 メイバン（キャビン） LABEL (CABIN SPEC.)

COUNTRY	J P	N W	S W	W G	F A	D M	N L
Fig. No.	2	4	3	5	4	5	5

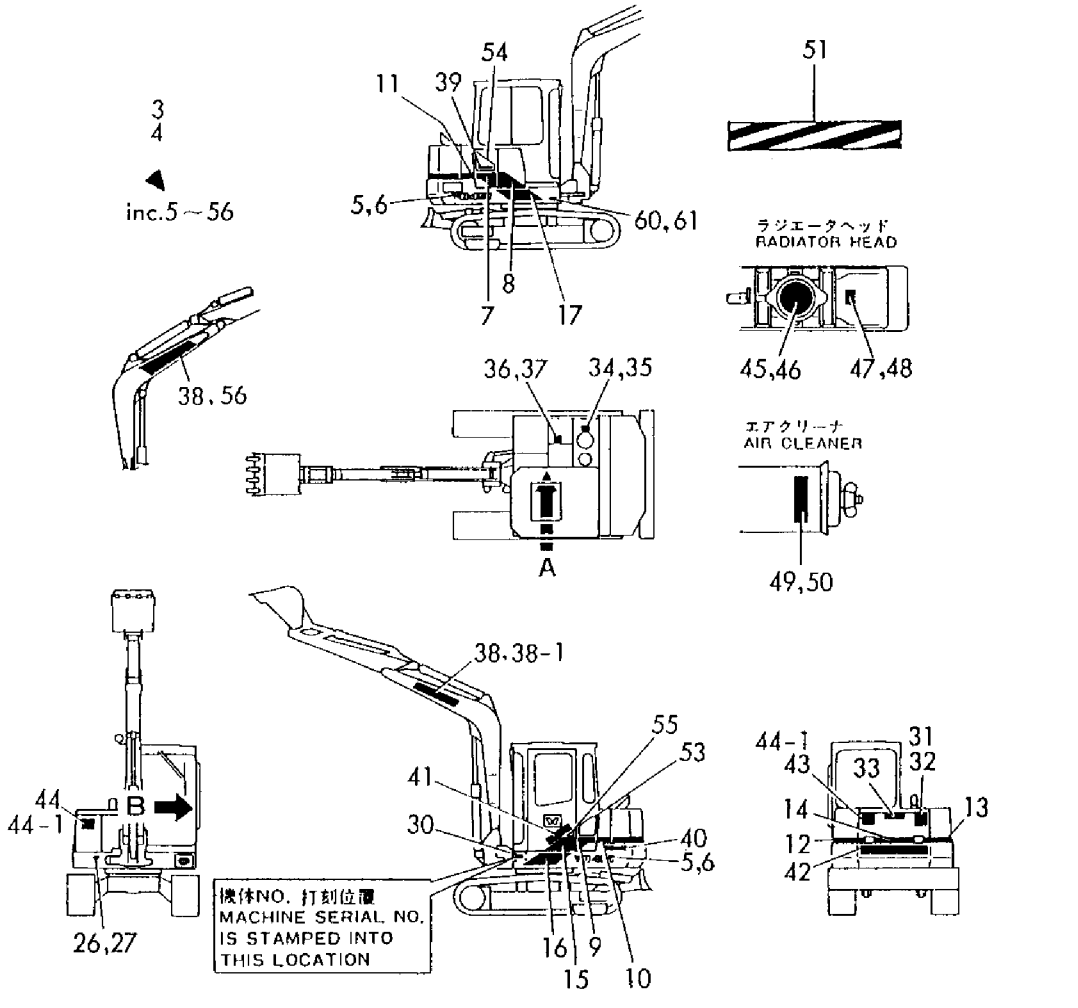

矢視A Viewed from A	矢視B Viewed from B	サブタンク Reservoir Tank
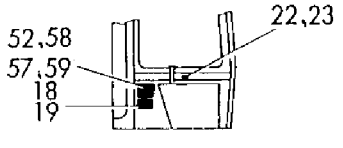	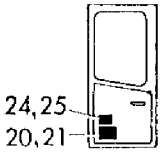	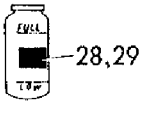

```
2,1,,772125-03730,,"LABEL SET",,,,,1,,,,,,,,,,,,
2-1,1,,772125-03731,,"LABEL SET",,,,,1,,S,,,,,,,,,,,M50017
3,2,,172125-03120,,"LABEL,MODEL",,,,,2,,,,,,,,,,,,
4,2,,172124-03150,,"LABEL, STRIPE (A)",,,,,1,,,,,,,,,,,,
5,2,,172124-03160,,"LABEL, STRIPE (B)",,,,,1,,,,,,,,,,,,
6,2,,172124-03170,,"LABEL, STRIPE (C)",,,,,1,,,,,,,,,,,,
7,2,,172124-03180,,"LABEL, STRIPE (D)",,,,,1,,,,,,,,,,,,
8,2,,172124-03190,,"LABEL, STRIPE (E)",,,,,1,,,,,,,,,,,,
9,2,,172124-03200,,"LABEL, STRIPE (F)",,,,,1,,,,,,,,,,,,
10,2,,172124-03210,,"LABEL, STRIPE (G)",,,,,1,,,,,,,,,,,,
11,2,,172124-03220,,"LABEL, STRIPE (H)",,,,,1,,,,,,,,,,,,
12,2,,172122-03360,,"LABEL, STRIPE (LF2)",,,,,1,,,,,,,,,,,,
13,2,,172122-03380,,"LABEL, STRIPE (LF1)",,,,,1,,,,,,,,,,,,
14,2,,172122-03410,,"LABEL, STRIPE (RF1)",,,,,1,,,,,,,,,,,,
15,2,,172125-03710,,"LABEL, SPECIFICATION",,,,,1,,,,,,,,,,,,
15-1,2,,172125-03810,,"LABEL, SPECIFICATION",,,,,1,,S,,,,,,,,,,,M50017
16,2,,172125-03720,,"LABEL, OIL & WATER",,,,,1,,,,,,,,,,,,
16-1,2,,172125-03820,,"LABEL, OIL/WATER",,,,,1,,S,,,,,,,,,,,M50017
17,2,,172122-03890,,"LABEL, GREASE SUPPLY",,,,,1,,,,,,,,,,,,
17-1,2,,172122-03970,,"LABEL, GREASE SUPPLY",,,,,1,,S,,,,,,,,,,,M50017
18,2,,172122-03850,,"LABEL, GREASE",,,,,1,,,,,,,,,,,,
18-1,2,,172138-03750,,"LABEL, GREASE",,,,,1,,S,,,,,,,,,,,M50017
19,2,,933112-55400,,"LABEL, SUB-TANK",,,,,1,,,,,,,,,,,,
19-1,2,,933112-55700,,"LABEL, SUB-TANK",,,,,1,,S,,,,,,,,,,,M50017
20,2,,22857-300050,,"SCREW 3X 5",,,,,4,,,,,,,,,,,,
21,2,,933112-50500,,"LABEL, OIL FEED",,,,,1,,,,,,,,,,,,
21-1,2,,933112-50700,,"LABEL, OIL FEED",,,,,1,,S,,,,,,,,,,,M50017
22,2,,933112-52300,,"LABEL, FUEL",,,,,1,,,,,,,,,,,,
22-1,2,,933112-52500,,"LABEL, FUEL",,,,,1,,S,,,,,,,,,,,M50017
23,2,,933112-91400,,"LABEL, YANMAR",,,,,2,,,,,,,,,,,,
23-1,2,,172124-03310,,"LABEL, YANMAR (L)",,,,,1,,S,,,,,,,,,,,*1987.09
24,2,,933112-94100,,"LABEL, TURBO",,,,,1,,,,,,,,,,,,
25,2,,933112-94200,,"LABEL, TURBO",,,,,1,,,,,,,,,,,,
26,2,,933112-94300,,"LABEL, SALOON",,,,,1,,,,,,,,,,,,
27,2,,172122-03250,,"LABEL, NO.1 MARK",,,,,1,,Z,,,,,,,,,,,*1986.06
28,2,,172122-03260,,"LABEL, NO.1 MARK",,,,,1,,,,,,,,,,,,
28-1,2,,172122-03260,,"LABEL, NO.1 MARK",,,,,2,,K,,,,,,,,,,,*1986.06
29,2,,172122-69890,,"LABEL, SAFETY DRIVE",,,,,1,,,,,,,,,,,,
30,2,,933112-45300,,"LABEL, DANGER (A)",,,,,1,,,,,,,,,,,,
31,2,,933112-45400,,"LABEL, DANGER (B)",,,,,1,,,,,,,,,,,,
32,2,,933112-45500,,"LABEL, CAUTION",,,,,2,,,,,,,,,,,,
33,2,,933112-47700,,"LABEL, RESTARTING",,,,,1,,,,,,,,,,,,
33-1,2,,933112-47800,,"LABEL, RESTARTING",,,,,1,,S,,,,,,,,,,,M50017
34,2,,933112-54020,,"LABEL, AIR CLEANER",,,,,1,,,,,,,,,,,,
34-1,2,,933112-54300,,"LABEL, AIR CLEANER",,,,,1,,S,,,,,,,,,,,M50017
35,2,,933112-55500,,"LABEL, ANTI-FREEZE",,,,,1,,,,,,,,,,,,
35-1,2,,933112-55900,,"LABEL, ANTI-FREEZING",,,,,1,,S,,,,,,,,,,,M50017
36,2,,933112-55600,,"LABEL, RADIATOR",,,,,1,,,,,,,,,,,,
36-1,2,,933112-55800,,"LABEL, RADIATER",,,,,1,,S,,,,,,,,,,,M50017
37,2,,172124-03260,,"LABEL, SEAL(A)",,,,,1,,W,,,,,,,,,,,M60501
37-1,2,,172124-03261,,"LABEL,SEAL A",,,,,1,,S,,,,,,,,,,,*1989.01
38,2,,172124-03270,,"LABEL, SEAL (B)",,,,,1,,W,,,,,,,,,,,M60501
38-1,2,,172124-03271,,"LABEL,SEAL B",,,,,1,,S,,,,,,,,,,,*1989.01
39,2,,172122-03610,,"LABEL, SEAL(A)",,,,,1,,W,,,,,,,,,,,M60501
39-1,2,,172122-03611,,"LABEL,SEAL A",,,,,1,,S,,,,,,,,,,,*1989.01
40,2,,172124-03320,,"LABEL, YANMAR (R)",,,,,1,,W,,,,,,,,,,,*1987.09
41,2,,933112-23600,,"LABEL(A),OPERATION",,,,,1,,,,,,,,,,,,
```

Fig. 5 メイバン(キャビン) LABEL (CABIN SPEC.)

SPEC. CODE
D72122-03150
D72125-03731

COUNTRY	JP	NW	SW	WG	FA	DM	NL
Fig. No.	2	4	3	5	4	5	5

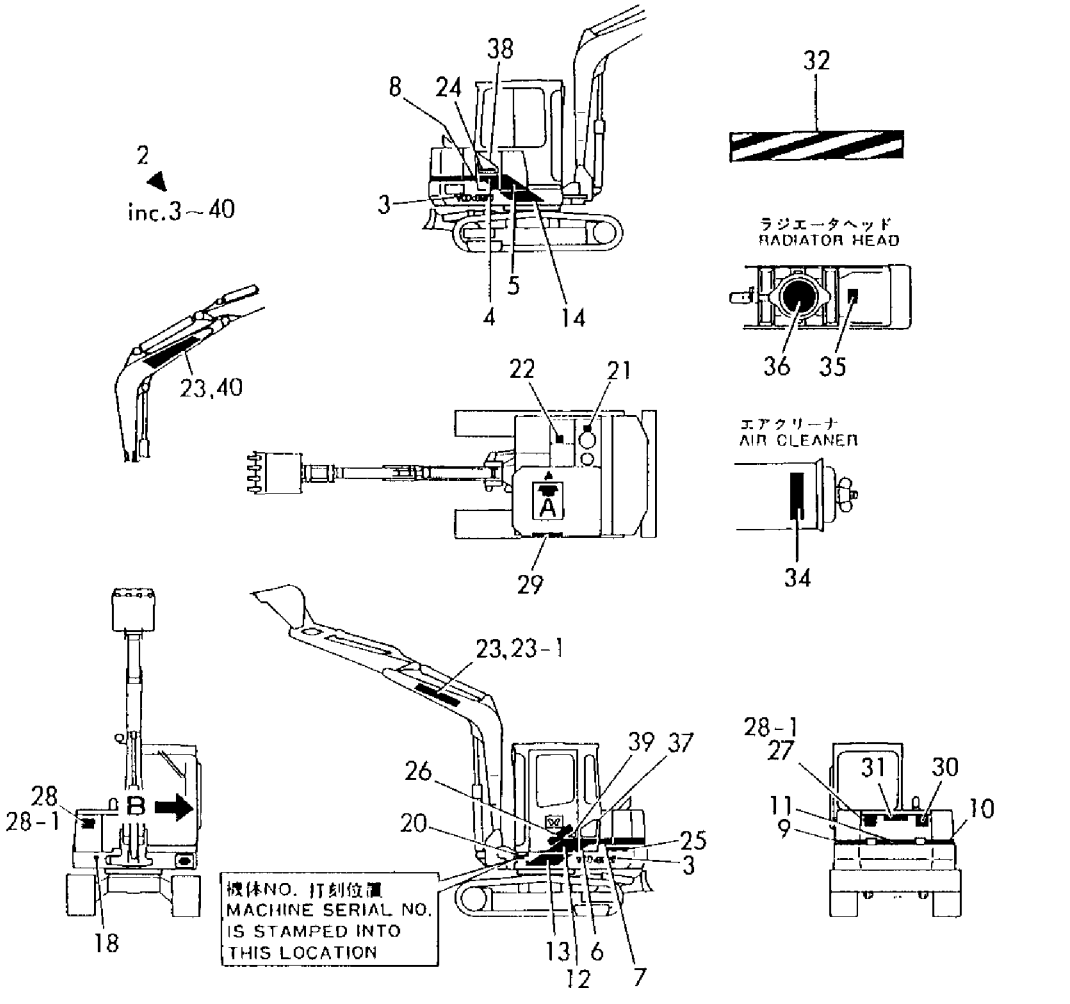

矢視A Viewed from A	矢視B Viewed from B	サブタンク Reservoir Tank
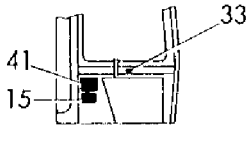	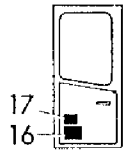	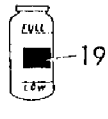

```
1,1,,772124-05100,,"TOOL ASSY",1,1,,1,1,,,,,,,,,,,,
2,2,,172112-38111,,"PIN, COTTER",4,4,,4,4,,,,,,,,,,,,
2-1,2,,172112-38111,,"PIN,
COTTER",2,2,,2,2,,K,,,M00501,,M00501,,,,M00501,,M00501
3,2,,104200-92350,,"DRIVER, SCREW",1,1,,1,1,,,,,,,,,,,,
4,2,,22417-800630,,"COTTER PIN 8.0X63",4,4,,4,4,,,,,,,,,,,,,
5,2,,28110-080100,,"WRENCH  8X10",1,1,,1,1,,,,,,,,,,,,,
6,2,,28110-120140,,"WRENCH 12X14",1,1,,1,1,,,,,,,,,,,,,
7,2,,28110-170190,,"WRENCH 17X19",1,1,,1,1,,,,,,,,,,,,,
8,2,,28110-220240,,"WRENCH 22X24",1,1,,1,1,,,,,,,,,,,,,
9,2,,28110-270300,,"WRENCH 27X30",1,1,,1,1,,,,,,,,,,,,,
10,2,,28110-320360,,"WRENCH 32X36",1,1,,1,1,,,,,,,,,,,,,
11,2,,28150-025000,,"BAR WRENCH  2.5",1,1,,1,1,,,,,,,,,,,,,
12,2,,28150-080000,,"BAR WRENCH  8",1,1,,1,1,,,,,,,,,,,,,
13,2,,28150-140000,,"BAR WRENCH 14",1,1,,1,1,,,,,,,,,,,,,
14,2,,28210-000140,,"FEEDER, OIL",1,1,,1,1,,Z,,,M00501,,M00501,,,,M00501,,M00501
15,2,,28227-271400,,"BOX WRENCH 27X140",1,1,,1,1,,,,,,,,,,,,,
16,2,,933110-09700,,"HOSE, GREASE",1,1,,1,1,,,,,,,,,,,,,
17,2,,933110-09800,,"GUN 800, GREASE",1,1,,1,1,,,,,,,,,,,,,
18,2,,933110-90600,,"WRENCH 24, SOCKET",1,1,,1,1,,,,,,,,,,,,,
19,2,,933171-00470,,"PLIER (200)",1,1,,1,1,,,,,,,,,,,,,
20,2,,933110-04600,,FUSE,1,1,,1,1,,Z,,,M00501,,M00501,,,,M00501,,M00501
21,2,,171301-92750,,"WRENCH, L.O.
FILTER",1,1,,1,1,,W,,,*1986.02,,*1986.02,,,,*1986.02,,*1986.02
22,2,,172122-
05100,,NOZZLE,1,1,,1,1,,W,,,*1988.02,,*1988.02,,,,*1988.02,,*1988.02
23,2,,28230-120250,,"TURNING
HANDLE",1,1,,1,1,,W,,,*1987.10,,*1987.10,,,,*1987.10,,*1987.10
```

Fig. 6 コウグ TOOL

SPEC. CODE
D72124-05100

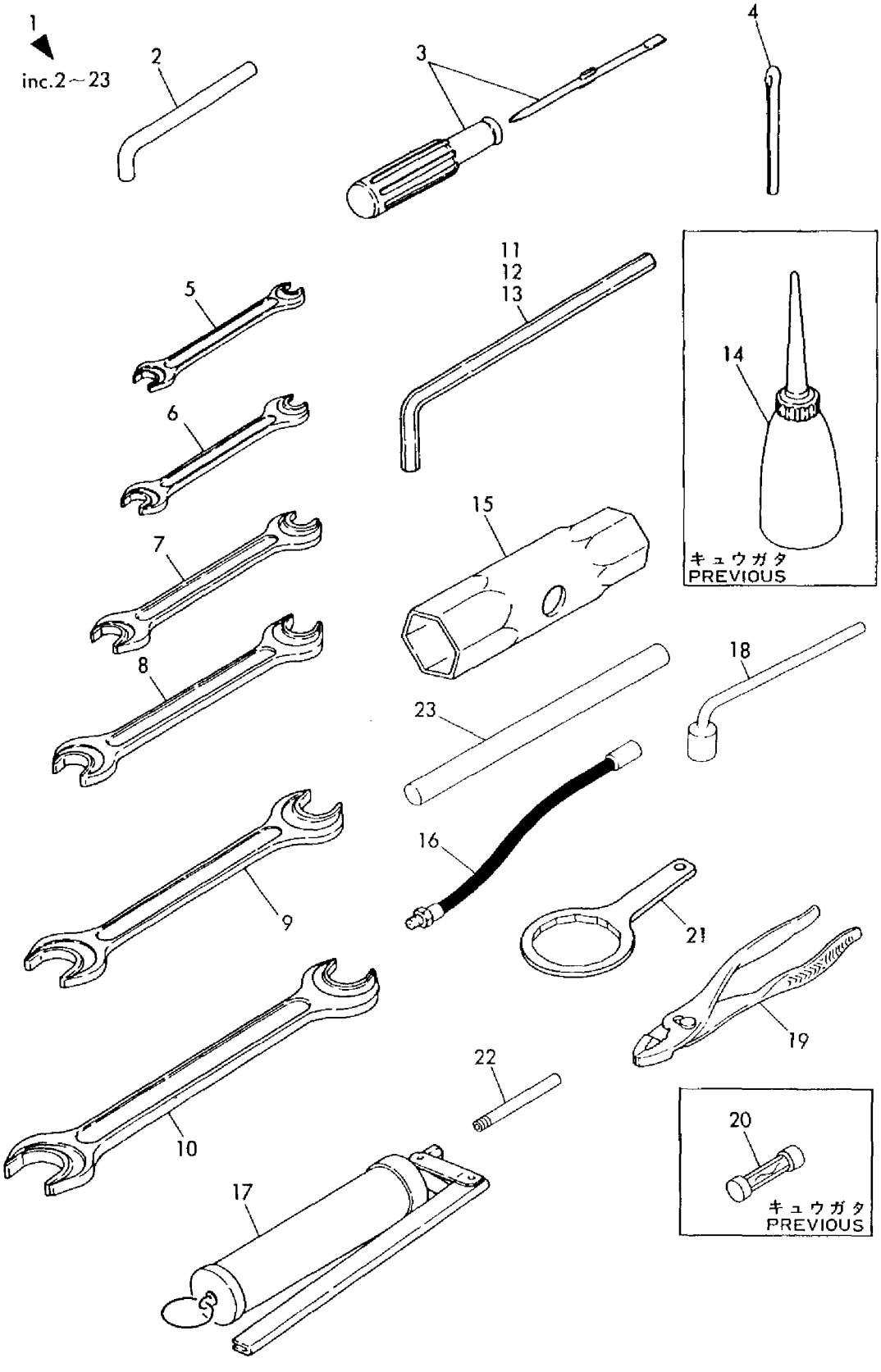

```
1,1,,172312-06700,,"STAY(L),BACK MIRROR",,,,,1,,,,,,,,,,,,
2,1,,172312-06720,,"STAY(R),BACK MIRROR",,,,,1,,,,,,,,,,,,
3,1,,172312-06740,,"MIRROR, REAR VIEW",,,,,2,,,,,,,,,,,,
4,1,,26013-100162,,"BOLT M10X 16",,,,,4,,,,,,,,,,,,
```

Fig. 7 バックミラー REAR VIEW MIRROR

SPEC. CODE
D72312-06700

COUNTRY	J P	N W	S W	W G	F A	D M	N L
Fig. No.	—	—	—	7	—	7	7

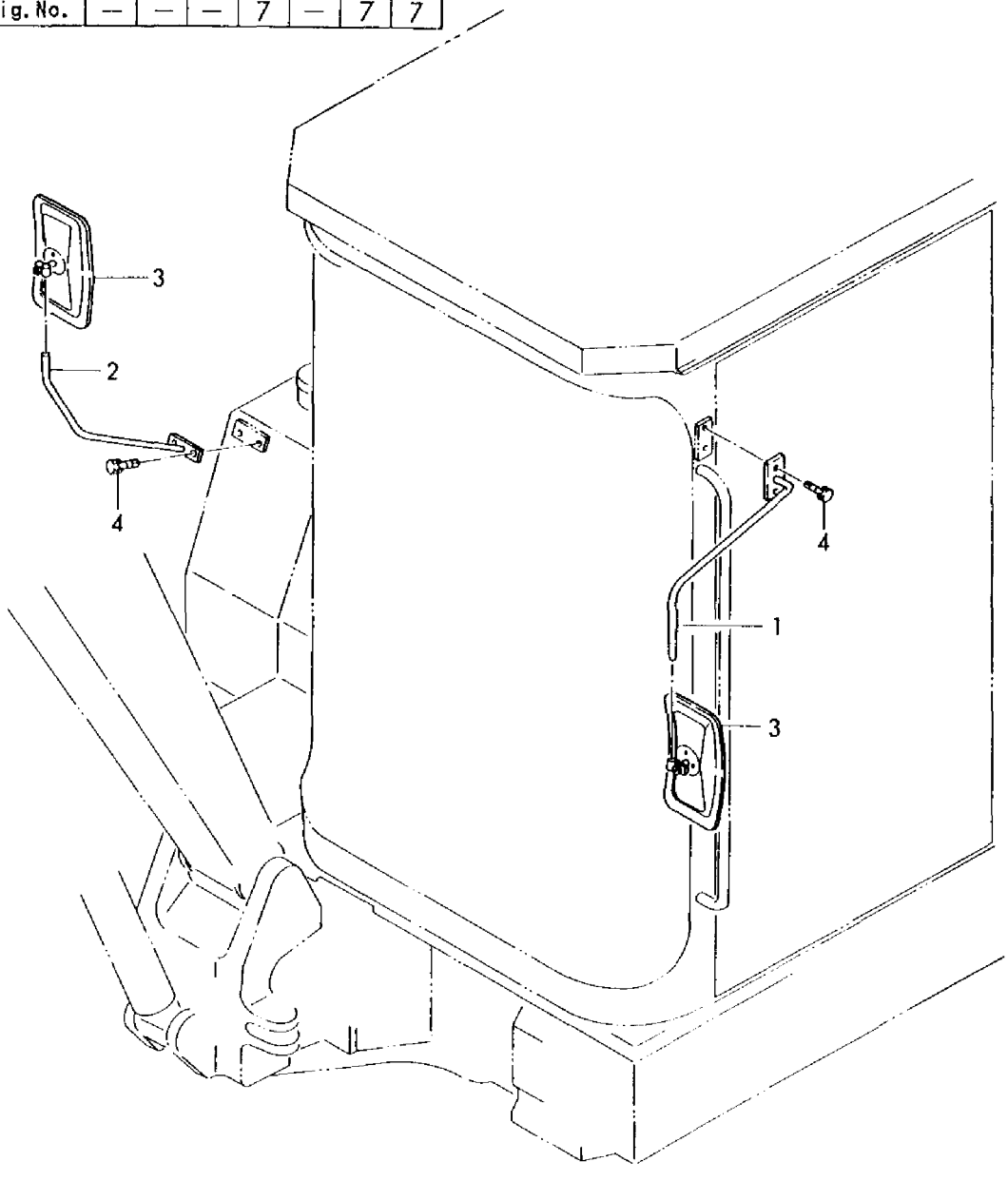

```
1,1,,129403-13500,,SILENCER,1,1,,1,1,,,,,,,,,,,,
2,1,,129403-13540,,"SUPPORT, SILENCER",1,1,,1,1,,,,,,,,,,,,
3,1,,129403-18090,,GASKET,1,1,,1,1,,,,,,,,,,,,
4,1,,26013-080162,,"BOLT W/WASHER M8X16",2,2,,2,2,,,,,,,,,,,,
5,1,,26013-080202,,"BOLT W/WASHER M8X20",2,2,,2,2,,,,,,,,,,,,
6,1,,26013-080202,,"BOLT W/WASHER M8X20",4,4,,4,4,,,,,,,,,,,,
7,1,,172124-11500,,"HOSE, AIR CLEANER",1,1,,1,1,,,,,,,,,,,,
8,1,,23000-070000,,"CLAMP 70",2,2,,2,2,,,,,,,,,,,,
```

SPEC. CODE
D72124-11300
D72124-11500

Fig. 8 サイレンサ SILENCER

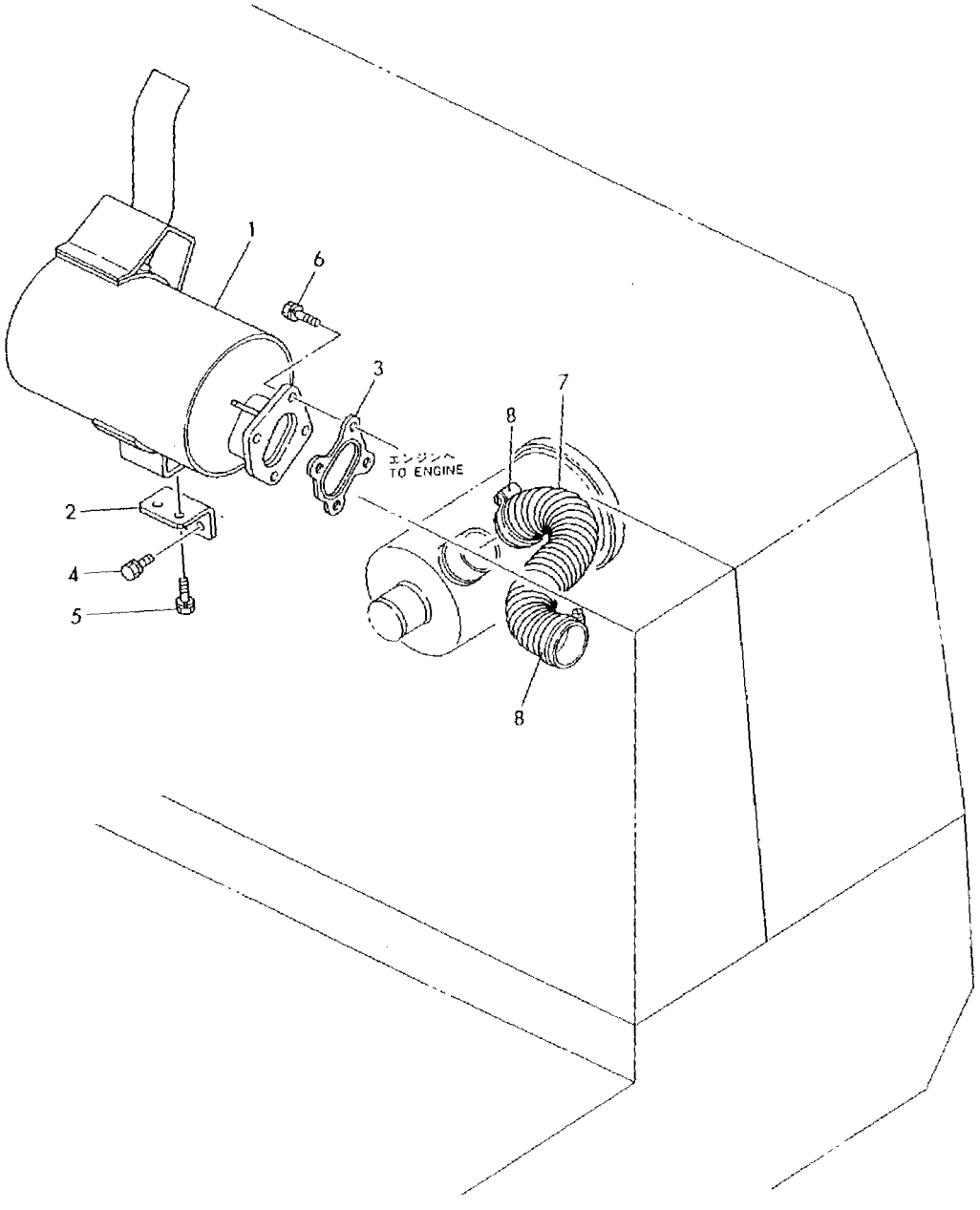

1,1,,172124-12100,,"LEVER ASSY,THROTTLE",1,1,,1,1,,,,,,,,,,,,
2,2,,933171-23680,,"BUSH 14X15",2,2,,2,2,,,,,,,,,,,,
3,1,,172124-12120,,"SUPPORT (A), CABLE",1,1,,1,1,,,,,,,,,,,,
4,1,,172124-12140,,"SUPPORT (B), CABLE",1,1,,1,1,,,,,,,,,,,,
5,1,,172124-12150,,"CABLE, THROTTLE",1,1,,1,1,,,,,,,,,,,,
6,1,,172122-12170,,BOLT,1,1,,1,1,,,,,,,,,,,,
7,1,,172112-12530,,"JOINT, CABLE",1,1,,1,1,,,,,,,,,,,,
8,1,,1E6140-16160,,"WASHER 10.5X23X3.2",1,1,,1,1,,,,,,,,,,,,
8-1,1,,194145-04810,,"WASHER
10",1,1,,1,1,,N,,,*1988.11,,*1988.11,,,,*1988.11,,*1988.11
9,1,,172730-33190,,"SPRING, SIDE CLUTCH",1,1,,1,1,,,,,,,,,,,,
10,1,,172116-45940,,"KNOB (C), LEVER",1,1,,1,1,,,,,,,,,,,,
10-1,1,,172122-46630,,"KNOB(D),
LEVER",1,1,,1,1,,R,1,,M20501,,M20501,,,,M20501,,M20501
11,1,,1A1040-56900,,"PIN 6X 17",1,1,,1,1,,,,,,,,,,,,
12,1,,22137-120000,,"WASHER 12,POLISHED",2,2,,2,2,,,,,,,,,,,,
13,1,,22417-200160,,"COTTER PIN 2.0X16",1,1,,1,1,,,,,,,,,,,,
14,1,,22417-320250,,"COTTER PIN 3.2X25",1,1,,1,1,,,,,,,,,,,,
15,1,,26013-080162,,"BOLT W/WASHER M8X16",2,2,,2,2,,,,,,,,,,,,
16,1,,26013-080202,,"BOLT W/WASHER M8X20",2,2,,2,2,,,,,,,,,,,,
17,1,,26756-100002,,"LOCK NUT M10 PLATED",2,2,,2,2,,,,,,,,,,,,
18,1,,933166-16110,,"GROMMET 30X9.5",1,1,,1,1,,,,,,,,,,,,
19,1,,933110-25700,,"CASTLE NUT M12",1,1,,1,1,,,,,,,,,,,,
19-1,1,,1A1040-16270,,"NUT M12,
CASTLE",1,1,,1,1,,R,,,*1986.02,,*1986.02,,,,*1986.02,,*1986.02
20,1,,933170-01490,,"SPRING 12",2,2,,2,2,,,,,,,,,,,,
21,1,,172112-12520,,"PIVOT, ACCEL",1,1,,1,1,,,,,,,,,,,,
22,1,,22272-000070,,"CIRCLIP E- 7",1,1,,1,1,,,,,,,,,,,,
23,1,,26716-050002,,"NUT M 5",1,1,,1,1,,,,,,,,,,,,
24,1,,22217-050000,,"SPRING WASHER 5",1,1,,1,1,,,,,,,,,,,,
25,1,,933168-28480,,"WASHER
20X9X3.2",2,2,,2,2,,W,1,,M20501,,M20501,,,,M20501,,M20501

Fig. 9 アクセル ACCELERATOR

SPEC. CODE
D72124-12100

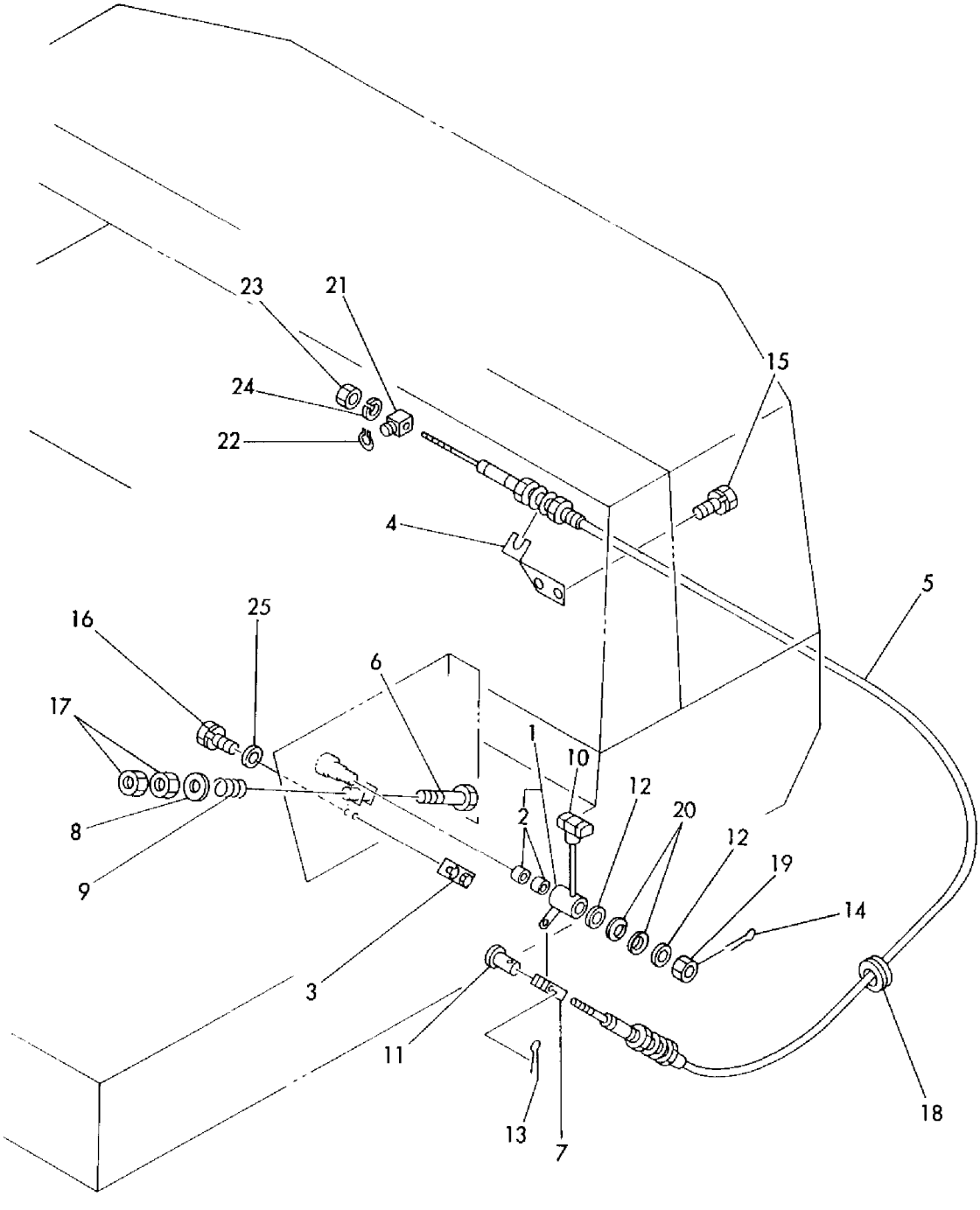

1,1,,172124-13100,,"SUPPORT (A), ENGINE",2,2,,2,2,,,,,,,,,,,,
2,1,,172124-13130,,"SUPPORT (B), ENGINE",2,2,,2,2,,,,,,,,,,,,
3,1,,172124-13150,,"BRACKET,ENG. ASSY",1,1,,1,1,,,,,,,,,,,,
4,1,,172124-13210,,"BRACKET,ENG(L)",1,1,,1,1,,,,,,,,,,,,
5,1,,172124-13220,,"BRACKET,ENG(R)ASSY",1,1,,1,1,,,,,,,,,,,,
6,1,,172124-13230,,"STOPPER, ENGINE",3,3,,3,3,,,,,,,,,,,,
7,1,,172116-13260,,"ABSORBER, SHOCK",4,4,,4,4,,,,,,,,,,,,
8,1,,22217-120000,,"WASHER 12,SPRING",8,8,,8,8,,,,,,,,,,,,
9,1,,26013-100252,,"BOLT W/WASHER M10X25",14,14,,14,14,,,,,,,,,,,,
10,1,,26013-120252,,"BOLT M12X 25",16,16,,16,16,,,,,,,,,,,,
11,1,,26716-120002,,"NUT M12",8,8,,8,8,,,,,,,,,,,,
12,1,,933152-03700,,"WASHER, SIDE CLUTCH",4,4,,4,4,,,,,,,,,,,,
12-1,1,,172147-13150,,"WASHER 32X
12.5",4,4,,4,4,,N,,,*1988.09,,*1988.09,,,,*1988.09,,*1988.09
13,1,,172124-13300,,"MOUNT(L),RADIATOR",1,1,,1,1,,,,,,,,,,,,
14,1,,172122-13310,,"MOUNT, RADIATOR",4,4,,4,4,,,,,,,,,,,,
14-1,1,,172124-13500,,"MOUNT,
RADIATOR",4,4,,4,4,,N,,,M00776,,M00776,,,,M00656,,M00656
15,1,,172124-13310,,"MOUNT(R),RADIATOR",1,1,,1,1,,,,,,,,,,,,
16,1,,172124-13400,,"HOSE(A), DRAIN",1,1,,1,1,,,,,,,,,,,,
17,1,,172124-13410,,"HOSE(B), DRAIN",1,1,,1,1,,,,,,,,,,,,
18,1,,172124-13420,,"SHIM
(T=0.8)",2,2,,2,2,,Z,,,M00501,,M00501,,,,M00501,,M00501
19,1,,172124-13430,,"SHIM
(T=1.2)",2,2,,2,2,,Z,,,M00501,,M00501,,,,M00501,,M00501
20,1,,172124-13440,,COCK,1,1,,1,1,,,,,,,,,,,,
21,1,,172124-13450,,PLUG,1,1,,1,1,,,,,,,,,,,,
22,1,,172124-13460,,"TUBE (A), COIL",1,1,,1,1,,,,,,,,,,,,
23,1,,172124-13470,,"TUBE (B), COIL",1,1,,1,1,,,,,,,,,,,,
24,1,,129403-44500,,RADIATOR,1,1,,1,1,,,,,,,,,,,,
24-1,1,,129403-44501,,"RADIATOR
ASSY",1,1,,1,1,,R,,,*1986.04,,*1986.04,,,,*1986.04,,*1986.04
24-2,1,,129403-
44502,,RADIATOR,1,1,,1,1,,R,,,*1986.05,,*1986.05,,,,*1986.05,,*1986.05
25,2,,124450-44590,,"CAP, RADIATOR",1,1,,1,1,,,,,,,,,,,,
26,2,,121250-44590,,CLAMP,2,2,,2,2,,,,,,,,,,,,
27,2,,129403-44610,,SHROUD,1,1,,1,1,,,,,,,,,,,,
29,2,,124722-49150,,"HOSE(A), WATER DRAIN",1,1,,1,1,,,,,,,,,,,,
30,2,,26014-060122,,"BOLT M 6X 12",4,4,,4,4,,,,,,,,,,,,
31,2,,119631-44800,,"LABEL, RADIATOR",1,1,,1,1,,,,,,,,,,,,
32,1,,171064-44510,,"SUB-TANK ASSY",1,1,,1,1,,,,,,,,,,,,
33,2,,171064-44530,,"CAP, SUB-TANK",1,1,,1,1,,,,,,,,,,,,
33-1,2,,121450-44531,,CAP,1,1,,1,1,,S,,,*1988.07,,*1988.07,,,,*1988.07,,*1988.07
34,2,,23065-070225,,"PIPE 7X 225",1,1,,1,1,,,,,,,,,,,,
35,2,,124450-44560,,CLAMP,1,1,,1,1,,,,,,,,,,,,
37,2,,121470-
44570,,SPACER,1,1,,1,1,,Z,,,*1988.07,,*1988.07,,,,*1988.07,,*1988.07
38,2,,121470-44580,,GASKET,1,1,,1,1,,,,,,,,,,,,
38-1,2,,121470-
44581,,GASKET,1,1,,1,1,,S,,,*1988.07,,*1988.07,,,,*1988.07,,*1988.07
39,1,,124450-44550,,"CLAMP, SUB-TANK",1,1,,1,1,,,,,,,,,,,,
40,1,,129403-44590,,"NET, WIRE",1,1,,1,1,,Z,,,M00501,,M00501,,,,M00501,,M00501
41,1,,121256-44600,,"BRACKET, SUB-TANK",1,1,,1,1,,,,,,,,,,,,
42,1,,129403-49010,,"PIPE (A), C.WATER",1,1,,1,1,,,,,,,,,,,,
43,1,,129403-49020,,"PIPE (B), C.WATER",1,1,,1,1,,,,,,,,,,,,
44,1,,121267-49500,,"CLAMP 38",4,4,,4,4,,,,,,,,,,,,
44-1,1,,23010-038000,,"CLAMP
38",4,4,,4,4,,R,,,*1989.01,,*1989.01,,,,*1989.01,,*1989.01
45,1,,124766-59050,,"CLAMP 12",4,4,,4,4,,,,,,,,,,,,
46,1,,22217-080000,,"SPRING WASHER 8",8,8,,8,8,,,,,,,,,,,,
47,1,,24311-000160,,"O-RING 1A P-16.0",1,1,,1,1,,,,,,,,,,,,
48,1,,26013-080162,,"BOLT W/WASHER M8X16",2,2,,2,2,,,,,,,,,,,,
49,1,,26013-100252,,"BOLT W/WASHER M10X25",4,4,,4,4,,,,,,,,,,,,

50,1,,26716-080002,,"NUT M 8",8,8,,8,8,,,,,,,,,,,,
51,1,,172124-62800,,"RUBBER, PLATE (A)",1,1,,1,1,,,,,,,,,,,,
52,2,,172124-62810,,"PLATE (A)",1,1,,1,1,,,,,,,,,,,,
53,2,,172124-62830,,"RUBBER (A)",1,1,,1,1,,,,,,,,,,,,
54,2,,172124-62840,,"RUBBER (B)",1,1,,1,1,,,,,,,,,,,,
55,1,,172124-62850,,"RUBBER, PLATE (B)",1,1,,1,1,,,,,,,,,,,,
55-1,1,,172124-62851,,"RUBBER
PLATE(B)ASSY",1,1,,1,1,,S,1,,M/#00794,,M/#00794,,,,M/#00670,,M/#00670
56,2,,172124-62861,,"PLATE (B)",1,1,,1,1,,,,,,,,,,,,
57,2,,172124-62890,,"RUBBER (C)",1,1,,1,1,,,,,,,,,,,,
58,2,,172124-62901,,"RUBBER
PLATE",1,1,,1,1,,,1,,M/#00794,,M/#00794,,,,M/#00670,,M/#00670
59,1,,172124-62910,,"RUBBER, PLATE (C)",1,1,,1,1,,,,,,,,,,,,
60,2,,172124-62920,,"PLATE (C)",1,1,,1,1,,,,,,,,,,,,
61,2,,172124-62940,,"RUBBER (E)",1,1,,1,1,,,,,,,,,,,,
62,2,,172124-62950,,"RUBBER (F)",1,1,,1,1,,,,,,,,,,,,
63,2,,172124-62960,,"RUBBER (G)",1,1,,1,1,,,,,,,,,,,,
64,1,,172124-62970,,"RUBBER (H),RADIATOR",2,2,,2,2,,,,,,,,,,,,
65,1,,172124-62980,,"RUBBER (I),RADIATOR",1,1,,1,1,,,,,,,,,,,,
66,1,,22117-080000,,"WASHER 8",3,3,,3,3,,,,,,,,,,,,
67,1,,22117-080000,,"WASHER 8",3,3,,3,3,,,,,,,,,,,,
68,1,,22117-080000,,"WASHER 8",2,2,,2,2,,,,,,,,,,,,
69,1,,26013-080162,,"BOLT W/WASHER M8X16",5,5,,5,5,,,,,,,,,,,,
70,1,,26013-080202,,"BOLT W/WASHER M8X20",3,3,,3,3,,,,,,,,,,,,
71,1,,26013-080202,,"BOLT W/WASHER M8X20",3,3,,3,3,,,,,,,,,,,,
72,1,,26013-080202,,"BOLT W/WASHER M8X20",2,2,,2,2,,,,,,,,,,,,
73,1,,26013-080202,,"BOLT W/WASHER M8X20",5,5,,5,5,,,,,,,,,,,,
74,1,,933152-02900,,WASHER,10,10,,10,10,,,,,,,,,,,,
75,1,,26013-080162,,"BOLT W/WASHER M8X16",2,2,,2,2,,,,,,,,,,,,
76,1,,933169-15241,,"STAPLE P-
20",1,1,,1,1,,Z,2,,M20501,,M20501,,,,M20501,,M20501
77,1,,22157-100000,,"WASHER 10",4,4,,4,4,,W,2,,M20501,,M20501,,,,M20501,,M20501

SPEC. CODE
D72124-13100
D72124-13300
D72124-62801

Fig. 10 エンジンマウント＆ラジエータ ENGINE MOUNT & RADIATOR

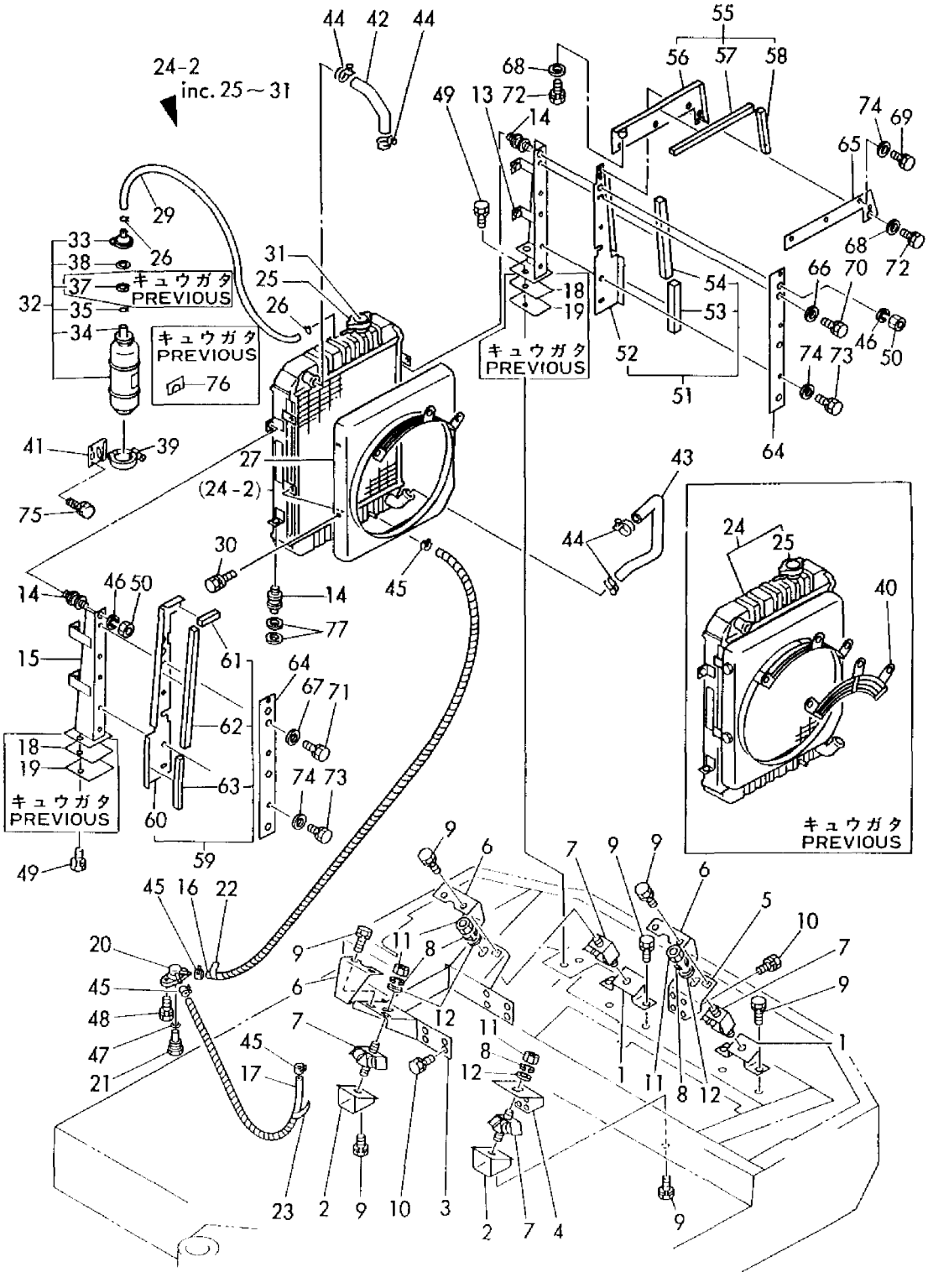

1,1,,772124-14100,,"TANK ASSY, FUEL OIL",1,1,,1,1,,,,,,,,,,,,
1-1,2,,772124-14101,,"TANK ASSY, FUEL
OIL",1,1,,1,1,,R,,,M20501,,M20501,,,,M20501,,M20501
2,2,,104200-11920,,COCK,1,1,,1,1,,,,,,,,,,,,
4,2,,105430-55041,,"CAP, FUEL TANK",1,1,,1,1,,,,,,,,,,,,
4-1,2,,172122-14300,,"CAP, FUEL
TANK",1,1,,1,1,,S,,,M20501,,M20501,,,,M20501,,M20501
4A,3,,105430-
55070,,GASKET,1,1,,1,1,,W,,,*1989.11,,*1989.11,,,,*1989.11,,*1989.11
5,2,,101504-55101,,"STRAINER,FUEL INLET",1,1,,1,1,,,,,,,,,,,,
6,2,,172124-14230,,"COVER,FO CAP",1,1,,1,1,,W,,,M00502,,M00502,,,,M00502,,M00502
6-1,2,,172124-14230,,"COVER,FO
CAP",1,1,,1,1,,Z,,,M20501,,M20501,,,,M20501,,M20501
7,2,,172124-14250,,"SPRING,CATCH",1,1,,1,1,,W,,,M00502,,M00502,,,,M00502,,M00502
7-1,2,,172124-
14250,,"SPRING,CATCH",1,1,,1,1,,Z,,,M20501,,M20501,,,,M20501,,M20501
8,2,,26013-080122,,"BOLT M 8X 12",2,2,,2,2,,W,,,M00502,,M00502,,,,M00502,,M00502
8-1,2,,26013-080122,,"BOLT M 8X
12",2,2,,2,2,,Z,,,M20501,,M20501,,,,M20501,,M20501
9,2,,26027-050102,,"SCREW W/WASHER
M5X10",2,2,,2,2,,W,,,M00502,,M00502,,,,M00502,,M00502
9-1,2,,26027-050102,,"SCREW W/WASHER
M5X10",2,2,,2,2,,Z,,,M20501,,M20501,,,,M20501,,M20501
10,2,,26717-050002,,"NUT M 5",2,2,,2,2,,W,,,M00502,,M00502,,,,M00502,,M00502
10-1,2,,26717-050002,,"NUT M 5",2,2,,2,2,,Z,,,M20501,,M20501,,,,M20501,,M20501
11,1,,22217-140000,,"SPRING WASHER 14",4,4,,4,4,,,,,,,,,,,,
12,1,,26116-140302,,"BOLT M14X 30 PLATED",4,4,,4,4,,,,,,,,,,,,
13,1,,172124-14600,,"HOSE L=1950, FUEL",1,1,,1,1,,,,,,,,,,,,
14,1,,172124-14610,,"HOSE L=200, FUEL",1,1,,1,1,,,,,,,,,,,,
15,1,,172116-14620,,"PIPE (B), FUEL",1,1,,1,1,,,,,,,,,,,,
15-1,1,,172124-14650,,"HOSE L=1100,
FUEL",1,1,,1,1,,N,,,M00823,,M00823,,,,M00670,,M00670
16,1,,172124-14620,,"HOSE L=300, FUEL",1,1,,1,1,,,,,,,,,,,,
17,1,,172124-14630,,"HOSE L=3300, FUEL",1,1,,1,1,,,,,,,,,,,,
18,1,,129100-55600,,"STRAINER, FUEL",1,1,,1,1,,,,,,,,,,,,
19,2,,104200-55321,,"VALVE, TAPER",1,1,,1,1,,,,,,,,,,,,
20,2,,104200-55330,,"SPRING, TAPER VALVE",1,1,,1,1,,,,,,,,,,,,
21,2,,104200-55750,,"SCREW M 4",1,1,,1,1,,,,,,,,,,,,
22,2,,24311-240100,,"O-RING 1A P-10A",1,1,,1,1,,,,,,,,,,,,
23,2,,129100-55670,,LEVER,1,1,,1,1,,,,,,,,,,,,
24,2,,129100-55680,,"CUP, STRAINER",1,1,,1,1,,,,,,,,,,,,
26,2,,129100-55690,,"RING, RETAINING",1,1,,1,1,,,,,,,,,,,,
27,2,,24321-000650,,"O-RING 1A G-65.0",1,1,,1,1,,,,,,,,,,,,
28,2,,129100-55650,,"ELEMENT, FUEL",1,1,,1,1,,,,,,,,,,,,
29,2,,129100-55700,,SPRING,1,1,,1,1,,,,,,,,,,,,
30,2,,24311-000160,,"O-RING 1A P-16.0",1,1,,1,1,,,,,,,,,,,,
31,1,,129335-55700,,"SEPARATOR, WATER",1,1,,1,1,,,,,,,,,,,,
32,2,,104200-55321,,"VALVE, TAPER",1,1,,1,1,,,,,,,,,,,,
33,2,,104200-55330,,"SPRING, TAPER VALVE",1,1,,1,1,,,,,,,,,,,,
34,2,,104200-55341,,"HANDLE, COCK",1,1,,1,1,,,,,,,,,,,,
35,2,,124064-55510,,"BOWL, FUEL STRAINER",1,1,,1,1,,,,,,,,,,,,
36,2,,102103-55520,,O-RING,1,1,,1,1,,,,,,,,,,,,
37,2,,110250-55610,,"RING, RETAINING",1,1,,1,1,,,,,,,,,,,,
38,2,,121257-55720,,"SPRING, SCREEN",1,1,,1,1,,,,,,,,,,,,
39,2,,121257-55731,,FLOAT,1,1,,1,1,,,,,,,,,,,,
41,2,,101720-55750,,"PLUG 6",2,2,,2,2,,,,,,,,,,,,
42,2,,104200-55750,,"SCREW M 4",1,1,,1,1,,,,,,,,,,,,
43,2,,171081-55910,,SCREEN,1,1,,1,1,,,,,,,,,,,,
44,2,,23418-060000,,"GASKET 6, NYLON",2,2,,2,2,,,,,,,,,,,,
45,2,,24311-240100,,"O-RING 1A P-10A",1,1,,1,1,,,,,,,,,,,,
46,1,,124766-59050,,"CLAMP 12",10,10,,10,10,,,,,,,,,,,,
47,1,,22137-080000,,"WASHER 8,
POLISHED",2,2,,2,2,,Z,,,M20501,,M20501,,,,M20501,,M20501

48,1,,22217-080000,,"SPRING WASHER 8",2,2,,2,2,,,,,,,,,,,,
49,1,,26116-080702,,"BOLT M 8X 70 PLATED",2,2,,2,2,,,,,,,,,,,,,
50,1,,29311-325000,,"GROMMET 32X5.0",2,2,,2,2,,,,,,,,,,,,,
51,1,,933169-23070,,"SPACER (1.6)",4,4,,4,4,,,,,,,,,,,,,
52,1,,933169-23080,,"SPACER (3.2)",4,4,,4,4,,,,,,,,,,,,,
53,1,,22137-140000,,"WASHER 14,POLISHED",4,4,,4,4,,,,,,,,,,,,,
54,1,,172124-17100,,"GAUGE UNIT, FUEL",1,1,,1,1,,,,,,,,,,,,,
55,1,,22190-050000,,"SEAL WASHER 5(BOLT)",5,5,,5,5,,,,,,,,,,,,,,
56,1,,26557-050122,,"SCREW M 5X 12",5,5,,5,5,,,,,,,,,,,,,
57,1,,129322-77400,,"FEED PUMP",1,1,,1,1,,,,,,,,,,,,,
57-1,1,,129322-77401,,"FEED PUMP",1,1,,1,1,,N,,,M20887,,M20887,,,,M20551,,M20551
58,1,,26013-060162,,"BOLT M 6X 16",2,2,,2,2,,,,,,,,,,,,,
59,1,,172116-14680,,"HOSE, VENT",1,1,,1,1,,,,,,,,,,,,,
59-1,1,,172124-14640,,"HOSE L=750,
FUEL",1,1,,1,1,,N,,,M00502,,M00502,,,,M00502,,M00502

Fig. 11 FOタンク&FOパイプ FUEL TANK & FUEL LINE

SPEC. CODE
D72124-14100
D72124-14601

COUNTRY	JP	NW	SW	WG	FA	DM	NL
Fig. No.	11	12	12	12	12	12	12

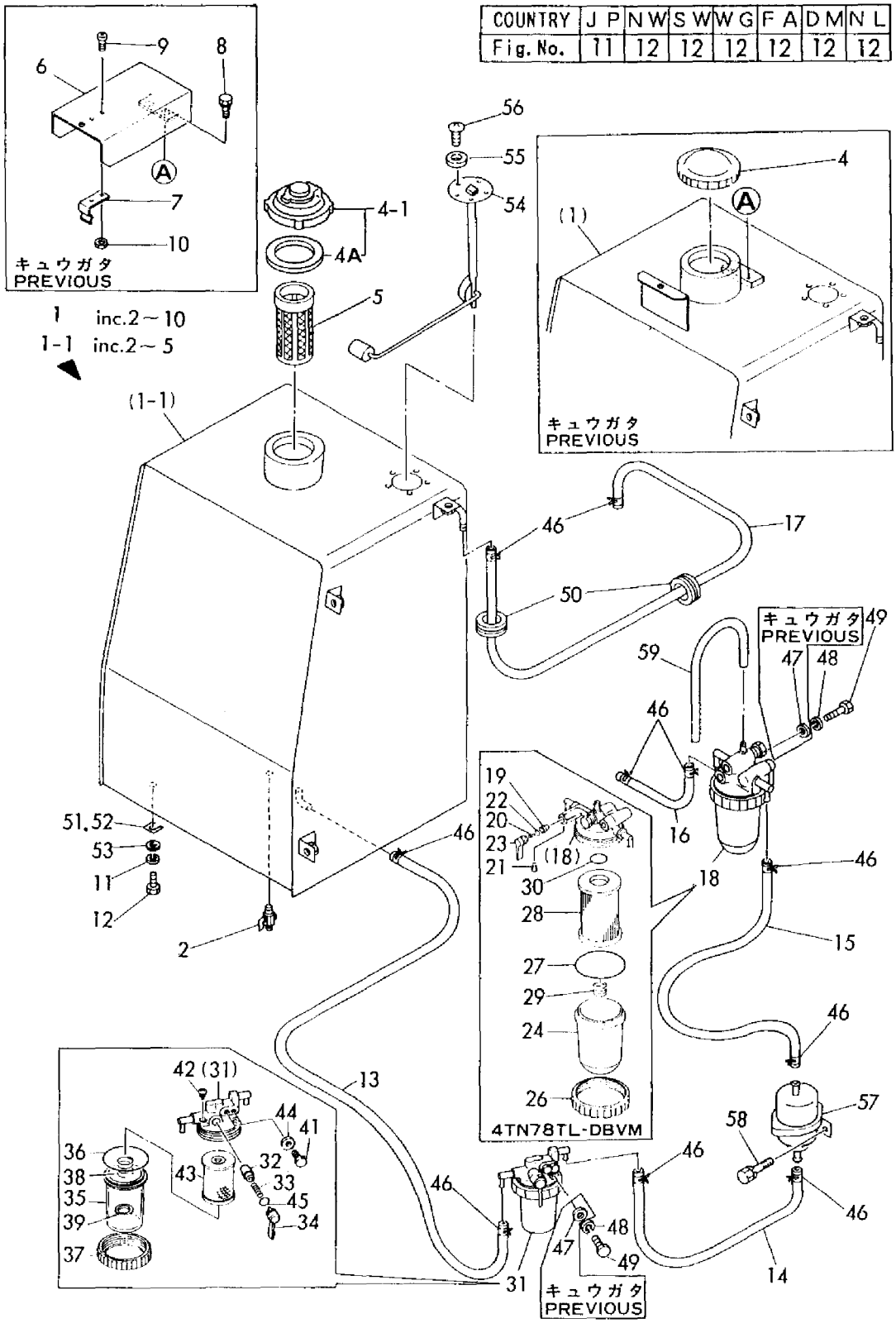

4TN78TL-RBVMのF.O.フィルタはエンジン部(SECT. 002) FIG.23参照
4TN78TL-RBVM : ASSEMBLED PARTS OF OIL FILTER=ENGINE (SECT. 002)
REFER TO FIG.23

```
1A,1,,772124-14100,,"TANK ASSY, FUEL OIL",,1,,,1,,,,,,,,,,,,
1A-1,1,,772124-14101,,"TANK ASSY, FUEL OIL",,1,,,1,,R,,,,,M60501,,,,,,M60501
1B,1,,772125-14100,,"TANK ASSY, FUEL OIL",,1,,,1,,,,,,,,,,,,
1B-1,1,,772125-14101,,"TANK ASSY, FUEL OIL",,1,,,1,,R,,,,,,,,,,,M60501
2,2,,104200-11920,,COCK,,1,,,1,,,,,,,,,,,,
4,2,,172124-14230,,"COVER,FO CAP",,1,,,1,,Z,,,,,M60501,,,,,,M60501
5,2,,172124-14250,,"SPRING,CATCH",,1,,,1,,Z,,,,,M60501,,,,,,M60501
6,2,,105430-55041,,"CAP, FUEL TANK",,1,,,1,,,,,,,,,,,,
6-1,2,,172122-14300,,"CAP, FUEL TANK",,1,,,1,,S,,,,,M60501,,,,,,M60501
6A,3,,105430-55070,,GASKET,,1,,,1,,W,,,,,*1989.11,,,,,,*1989.11
7,2,,101504-55101,,"STRAINER,FUEL INLET",,1,,,1,,,,,,,,,,,,
8,2,,26013-080122,,"BOLT M 8X 12",,2,,,2,,Z,,,,,M60501,,,,,,M60501
9,2,,26027-050102,,"SCREW W/WASHER M5X10",,2,,,2,,Z,,,,,M60501,,,,,,M60501
10,2,,26717-050002,,"NUT M 5",,2,,,2,,Z,,,,,M60501,,,,,,M60501
11,1,,22137-140000,,"WASHER 14,POLISHED",,4,,,4,,,,,,,,,,,,
12,1,,22217-140000,,"SPRING WASHER 14",,4,,,4,,,,,,,,,,,,
13,1,,26116-140302,,"BOLT M14X 30 PLATED",,4,,,4,,,,,,,,,,,,
14,1,,933169-23070,,"SPACER (1.6)",,4,,,4,,,,,,,,,,,,
15,1,,933169-23080,,"SPACER (3.2)",,4,,,4,,,,,,,,,,,,
16,1,,172124-14600,,"HOSE L=1950, FUEL",,1,,,1,,,,,,,,,,,,
17,1,,172124-14610,,"HOSE L=200, FUEL",,1,,,1,,,,,,,,,,,,
18,1,,172116-14620,,"PIPE (B), FUEL",,1,,,1,,,,,,,,,,,,
18-1,1,,172124-14650,,"HOSE L=1100, FUEL",,1,,,1,,N,,,,,M50011,,,,,,M50011
19,1,,172124-14620,,"HOSE L=300, FUEL",,1,,,1,,,,,,,,,,,,
20,1,,172124-14630,,"HOSE L=3300, FUEL",,1,,,1,,,,,,,,,,,,
21,1,,129100-55600,,"STRAINER, FUEL",,1,,,1,,,,,,,,,,,,
22,2,,104200-55321,,"VALVE, TAPER",,1,,,1,,,,,,,,,,,,
23,2,,104200-55330,,"SPRING, TAPER VALVE",,1,,,1,,,,,,,,,,,,
24,2,,104200-55750,,"SCREW M 4",,1,,,1,,,,,,,,,,,,
25,2,,24311-240100,,"O-RING 1A P-10A",,1,,,1,,,,,,,,,,,,
26,2,,129100-55670,,LEVER,,1,,,1,,,,,,,,,,,,
27,2,,129100-55680,,"CUP, STRAINER",,1,,,1,,,,,,,,,,,,
29,2,,129100-55690,,"RING, RETAINING",,1,,,1,,,,,,,,,,,,
30,2,,24321-000650,,"O-RING 1A G-65.0",,1,,,1,,,,,,,,,,,,
31,2,,129100-55650,,"ELEMENT, FUEL",,1,,,1,,,,,,,,,,,,
32,2,,129100-55700,,SPRING,,1,,,1,,,,,,,,,,,,
33,2,,24311-000160,,"O-RING 1A P-16.0",,1,,,1,,,,,,,,,,,,
34,1,,129335-55700,,"SEPARATOR, WATER",,1,,,1,,,,,,,,,,,,
35,2,,104200-55321,,"VALVE, TAPER",,1,,,1,,,,,,,,,,,,
36,2,,104200-55330,,"SPRING, TAPER VALVE",,1,,,1,,,,,,,,,,,,
37,2,,104200-55341,,"HANDLE, COCK",,1,,,1,,,,,,,,,,,,
38,2,,124064-55510,,"BOWL, FUEL STRAINER",,1,,,1,,,,,,,,,,,,
39,2,,102103-55520,,O-RING,,1,,,1,,,,,,,,,,,,
40,2,,110250-55610,,"RING, RETAINING",,1,,,1,,,,,,,,,,,,
41,2,,121257-55720,,"SPRING, SCREEN",,1,,,1,,,,,,,,,,,,
42,2,,121257-55731,,FLOAT,,1,,,1,,,,,,,,,,,,
44,2,,101720-55750,,"PLUG 6",,2,,,2,,,,,,,,,,,,
45,2,,104200-55750,,"SCREW M 4",,1,,,1,,,,,,,,,,,,
46,2,,171081-55910,,SCREEN,,1,,,1,,,,,,,,,,,,
47,2,,23418-060000,,"GASKET 6, NYLON",,2,,,2,,,,,,,,,,,,
48,2,,24311-240100,,"O-RING 1A P-10A",,1,,,1,,,,,,,,,,,,
49,1,,124766-59050,,"CLAMP 12",,10,,,10,,,,,,,,,,,,
50,1,,22137-080000,,"WASHER 8, POLISHED",,2,,,2,,Z,,,,,M60501,,,,,,M60501
51,1,,22217-080000,,"SPRING WASHER  8",,2,,,2,,,,,,,,,,,,
52,1,,26116-080702,,"BOLT M 8X 70 PLATED",,2,,,2,,,,,,,,,,,,
53,1,,29311-325000,,"GROMMET 32X5.0",,2,,,2,,,,,,,,,,,,
54,1,,172124-17100,,"GAUGE UNIT, FUEL",,1,,,1,,,,,,,,,,,,
55,1,,22190-050000,,"SEAL WASHER  5(BOLT)",,5,,,5,,,,,,,,,,,,
56,1,,26557-050122,,"SCREW M 5X 12",,5,,,5,,,,,,,,,,,,
57,1,,129322-77400,,"FEED PUMP",,1,,,1,,,,,,,,,,,,
57-1,1,,129322-77401,,"FEED PUMP",,1,,,1,,N,,,,,M60536,,,,,,M60536
58,1,,26013-060162,,"BOLT M 6X 16",,2,,,2,,,,,,,,,,,,
59,1,,172116-14680,,"HOSE, VENT",,,,,1,,,,,,,,,,,,
```

59-1,1,,172124-14640,,"HOSE L=750, FUEL",,1,,,1,,N,,,,,M00502,,,,,,M00502

SPEC. CODE
D72125-14100
D72124-14110
D72124-14601

Fig. 12 FOタンク&FOパイプ FUEL TANK & FUEL LINE

COUNTRY	J P	N W	S W	W G	F A	D M	N L
Fig. No.	11	12	12	12	12	12	12

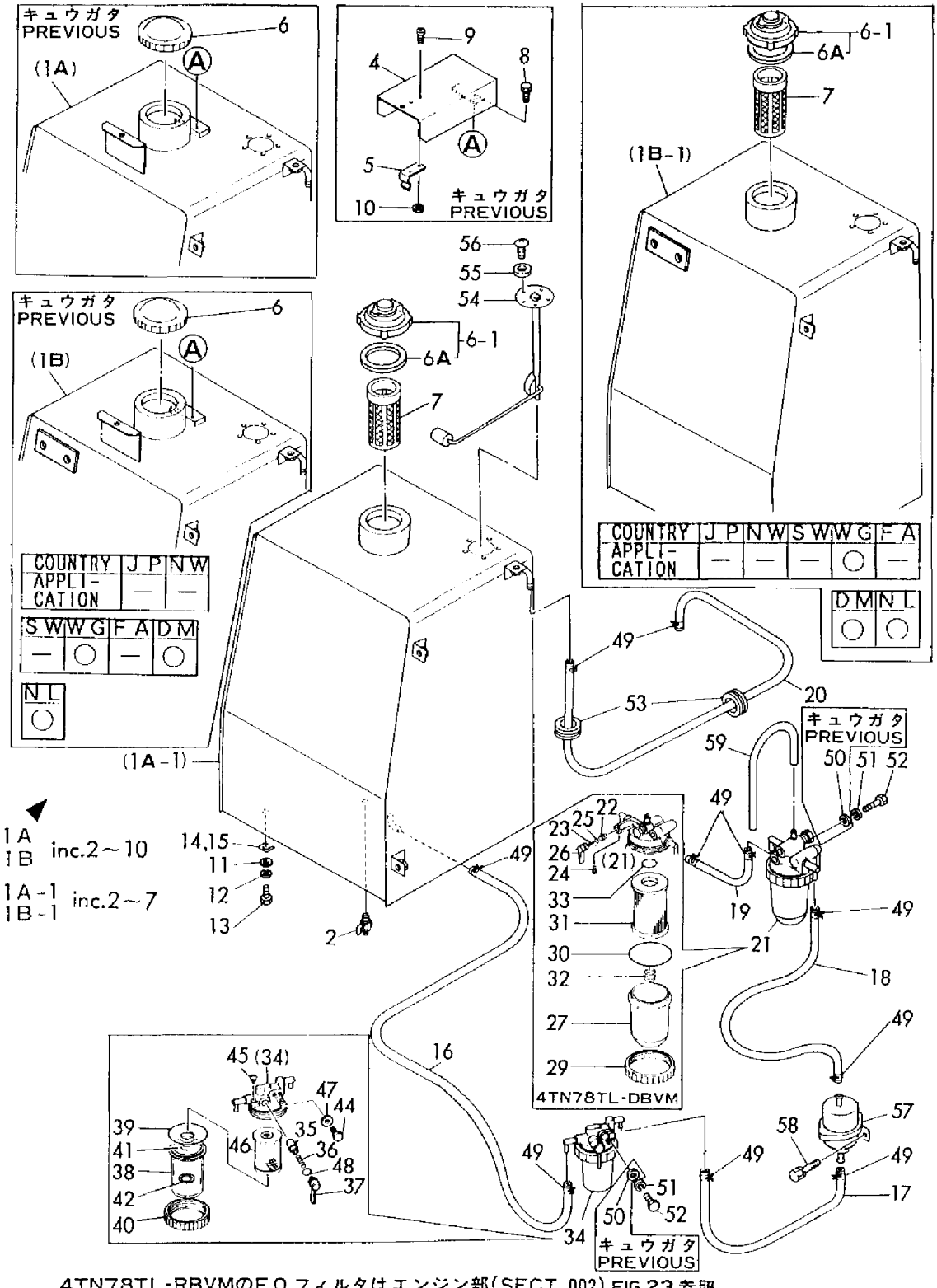

COUNTRY	J P	N W
APPLI-CATION	—	—

S W	W G	F A	D M
—	○	—	○

N L
○

COUNTRY	J P	N W	S W	W G	F A
APPLI-CATION	—	—	—	○	—

D M	N L
○	○

4TN78TL-RBVMのF.O.フィルタはエンジン部(SECT. 002) FIG.23参照
4TN78TL-RBVM : ASSEMBLED PARTS OF OIL FILTER=ENGINE (SECT. 002)
REFER TO FIG.23

```
1,1,,172124-16100,,"CORD (+), BATTERY",1,1,,1,1,,,,,,,,,,,,
2,1,,172312-16100,,"CORD (-), BATTERY",1,1,,1,1,,,,,,,,,,,,
3,1,,124550-77030,,"COVER, TERMINAL",1,1,,1,1,,,,,,,,,,,,
4,1,,22217-100000,,"SPRING WASHER 10",1,1,,1,1,,,,,,,,,,,,
5,1,,26716-100002,,"NUT M10",1,1,,1,1,,,,,,,,,,,,
6,1,,933113-01200,,"BATTERY (NX120-7)",1,1,,1,1,,,,,,,,,,,,
6-1,1,,933113-01201,,"BATTERY (NX120-
7)",1,1,,1,1,,S,,,M00701,,M00701,,,,M00632,,M00632
6-2,1,,172116-16100,,BATTERY,1,1,,1,1,,S,,,M10501,,M10501,,,,M10501,,M10501
6-3,1,,933113-01201,,"BATTERY (NX120-
7)",1,1,,1,1,,S,,,*1986.07,,*1986.07,,,,*1986.07,,*1986.07
7,2,,933113-01400,,SENSOR,1,1,,1,1,,,,,,,,,,,,
7-1,2,,933113-01600,,"SENSER,
BATTERY",1,1,,1,1,,F,1,,M00701,,M00701,,,,M00632,,M00632
8,2,,933113-01000,,"CAP (BATTERY",5,5,,5,5,,,,,,,,,,,,
9,1,,172116-16310,,"RETAINER, BATTERY",1,1,,1,1,,,,,,,,,,,,
10,1,,22157-080000,,"WASHER  8",2,2,,2,2,,,,,,,,,,,,
11,1,,26716-080002,,"NUT M 8",4,4,,4,4,,,,,,,,,,,,
12,1,,933171-15600,,"RUBBER,BATTERY MOUNT",1,1,,1,1,,,,,,,,,,,,
13,1,,933171-15710,,"ROD(B), BATTERY FIX",2,2,,2,2,,,,,,,,,,,,
```

Fig. 13 バッテリ BATTERY

SPEC. CODE
D72124-16100
D72116-16300

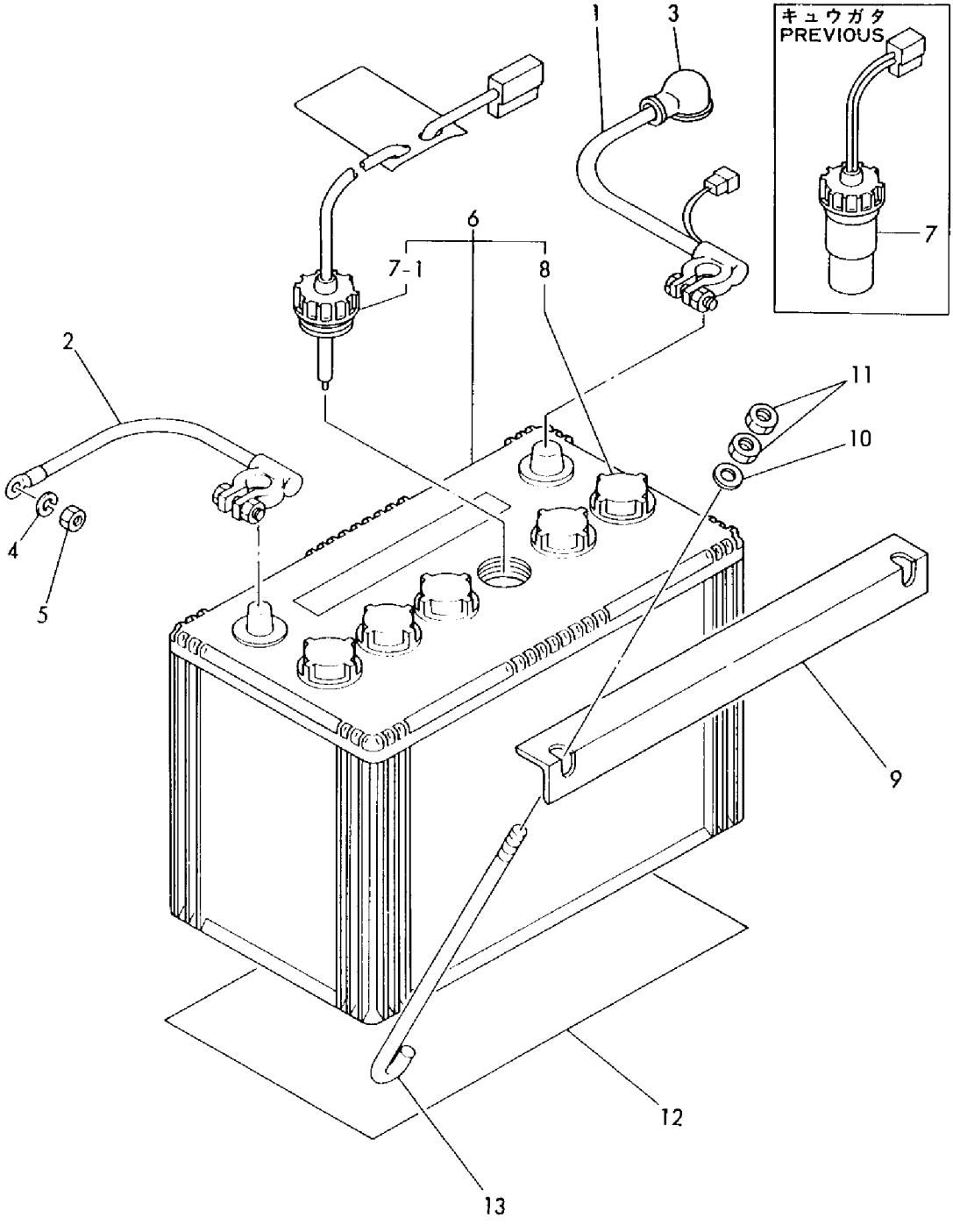

```
1,1,,172124-16500,,"HARNESS (A), WIRE",1,,,1,,,,,,,,,,,,,
1-1,1,,172124-16501,,"HARNESS (A), WIRE",1,,,1,,,N,,,*1986.06,,,,,,*1986.06,,
1-2,1,,172124-16502,,"HARNESS (A), WIRE",1,,,1,,,N,,,M20519,,,,,,M20502,,
2,1,,172116-16510,,"WIRE HARNESS(B",1,,,1,,,,,,,,,,,,,
3,1,,172124-16510,,"HARNESS (B), WIRE",1,,,1,,,,,,,,,,,,,
4,1,,172124-16520,,"HARNESS (C), WIRE",1,,,1,,,,,,,,,,,,,
5,1,,172124-16530,,"LEAD WIRE",1,,,1,,,,,,,,,,,,,
6,1,,172116-16560,,"LEAD WIRE(B",1,,,1,,,,,,,,,,,,,
7,1,,172124-16560,,"LEAD WIRE",1,,,1,,,,,,,,,,,,,
8,1,,172122-16570,,"LINK, FUSIBLE",1,,,1,,,,,,,,,,,,,
9,1,,172122-16580,,"HARNESS (D), WIRE",1,,,1,,,,,,,,,,,,,
10,1,,172122-16600,,W-CLAMP,4,,,4,,,,,,,,,,,,,
11,1,,172122-16660,,"LEAD WIRE",1,,,1,,,,,,,,,,,,,
12,1,,172112-69790,,"PLUG 32X2",1,,,1,,,,,,,,,,,,,
13,1,,124550-77020,,"COVER, TERMINAL",1,,,1,,,,,,,,,,,,,
14,1,,124756-77040,,"COVER, TERMINAL",1,,,1,,,,,,,,,,,,,
15,1,,1E6102-84970,,"BAND 140,WIRE LOCK",2,,,2,,,Z,,,M00501,,,,,,M00501,,
16,1,,26013-100202,,"BOLT W/WASHER M10X20",1,,,1,,,,,,,,,,,,,
17,1,,26013-120202,,"BOLT W/WASHER M12X20",1,,,1,,,,,,,,,,,,,
18,1,,29321-255050,,"GROMMET, RUBBER",1,,,1,,,,,,,,,,,,,
19,1,,933171-15801,,"WIRE, EARTH",1,,,1,,,,,,,,,,,,,
20,1,,172511-17210,,"LAMP, GLOW",1,,,1,,,,,,,,,,,,,
21,2,,172734-17430,,"BULB 12V 13.4W",1,,,1,,,,,,,,,,,,,
22,1,,172116-17250,,"COVER, HEAD LIGHT",1,,,1,,,,,,,,,,,,,
23,1,,172734-17300,,"FUSE BOX",1,,,1,,,,,,,,,,,,,
24,2,,194145-52830,,"FUSE 10A",5,,,5,,,,,,,,,,,,,
24-1,2,,29411-100000,,"FUSE
(10A),CARTRIDGE",5,,,5,,,R,,,*1987.05,,,,,,*1987.05,,
25,2,,194145-52840,,"FUSE 15A",3,,,3,,,,,,,,,,,,,
25-1,2,,29411-150000,,"FUSE
(15A),CARTRIDGE",3,,,3,,,R,,,*1987.05,,,,,,*1987.05,,
26,2,,172734-17310,,COVER,1,,,1,,,,,,,,,,,,,
27,1,,172116-17361,,"METER, FUEL LEVEL",1,,,1,,,,,,,,,,,,,
28,2,,933113-10110,,"BULB 12V 3.4W",1,,,1,,,,,,,,,,,,,
29,1,,172730-53610,,"LAMP, HEAD",1,,,1,,,,,,,,,,,,,
30,2,,194262-53080,,"BULB 12V-25W",1,,,1,,,,,,,,,,,,,
31,1,,171051-77100,,"RELAY, SAFETY",1,,,1,,,,,,,,,,,,,
32,1,,22117-100000,,"WASHER 10",2,,,2,,,,,,,,,,,,,
33,1,,124970-77920,,"TIMER, GLOW PLUG",1,,,1,,,,,,,,,,,,,
34,1,,22137-060000,,"WASHER 6, POLISHED",2,,,2,,,,,,,,,,,,,
35,1,,933113-15900,,"COVER, SWITCH TERMI.",1,,,1,,,,,,,,,,,,,
36,1,,22137-100000,,"WASHER 10,POLISHED",2,,,2,,,,,,,,,,,,,
37,1,,26013-060122,,"BOLT M 6X 12",2,,,2,,,,,,,,,,,,,
38,1,,172116-17460,,"STAY, WORK LAMP",1,,,1,,,,,,,,,,,,,
39,1,,26013-100162,,"BOLT M10X 16",2,,,2,,,,,,,,,,,,,
40,1,,26013-100202,,"BOLT W/WASHER M10X20",4,,,4,,,,,,,,,,,,,
41,1,,26013-100202,,"BOLT W/WASHER M10X20",2,,,2,,,,,,,,,,,,,
42,1,,26022-060122,,"SCREW M 6X 12",2,,,2,,,,,,,,,,,,,
43,1,,26022-060162,,"SCREW M 6X 16",2,,,2,,,,,,,,,,,,,
44,1,,26022-060202,,"SCREW M 6X 20",1,,,1,,,,,,,,,,,,,
45,1,,26033-030122,,"SCREW M 3X12",2,,,2,,,,,,,,,,,,,
46,1,,26347-030002,,"U-NUT M 3",2,,,2,,,,,,,,,,,,,
47,1,,26716-100002,,"NUT M10",1,,,1,,,,,,,,,,,,,
48,1,,933110-00100,,"SWITCH ASSY, STARTER",1,,,1,,,,,,,,,,,,,
50,2,,933110-00301,,"KEY ASSY",1,,,1,,,,,,,,,,,,,
51,1,,933110-05300,,HORN,1,,,1,,,,,,,,,,,,,
52,1,,933113-03000,,"SWITCH, LIGHTING",1,,,1,,,,,,,,,,,,,
53,1,,933113-05000,,"BOX ASSY, PILOT",1,,,1,,,,,,,,,,,,,
53-1,1,,933113-05001,,"BOX ASSY, PILOT",1,,,1,,,N,,,M00896,,,,,,M00896,,
55,2,,933113-05120,,"BULB 12V 1.7W",5,,,5,,,,,,,,,,,,,
56,1,,933113-10100,,"METER, TEMPERATURE",1,,,1,,,,,,,,,,,,,
56-1,1,,172734-17220,,"THERMOMETER ASSY",1,,,1,,,N,,,M10501,,,,,,M10501,,
57,2,,933113-10110,,"BULB 12V 3.4W",1,,,1,,,,,,,,,,,,,
```

```
58,1,,933113-10300,,"HOURMETER ASSY.",1,,,1,,,,,,,,,,,,,,
59,1,,933113-15400,,CONTROLLER,1,,,1,,,,,,,,,,,,,,
59-1,1,,933113-15401,,CONTROLLER,1,,,1,,,F,1,,M00701,,,,,,M00632,,
60,1,,172116-17430,,"LAMP, WORK",1,,,1,,,,,,,,,,,,,,
60-1,1,,172116-17431,,"LAMP, WORK",1,,,1,,,N,,,M00677,,,,,,M00631,,
61,2,,172116-17440,,"BULB 12V 60W",1,,,1,,,,,,,,,,,,,,
61-1,2,,172116-17441,,"BULB 14V 60W",1,,,1,,,N,,,M00677,,,,,,M00631,,
62,1,,172132-16530,,"WIRE, BOOM LIGHT",1,,,1,,,,2,,,,,,,,,,
```

SPEC. CODE
D72124-16510
D72132-16510
D72124-17110
D72116-17410

Fig. 14 デンソウヒン(キャノピ) ELECTRIC PART (CANOPY SPEC.)

COUNTRY	J P	N W	S W	W G	F A	D M	N L
Fig. No.	14	—	—	—	—	—	—

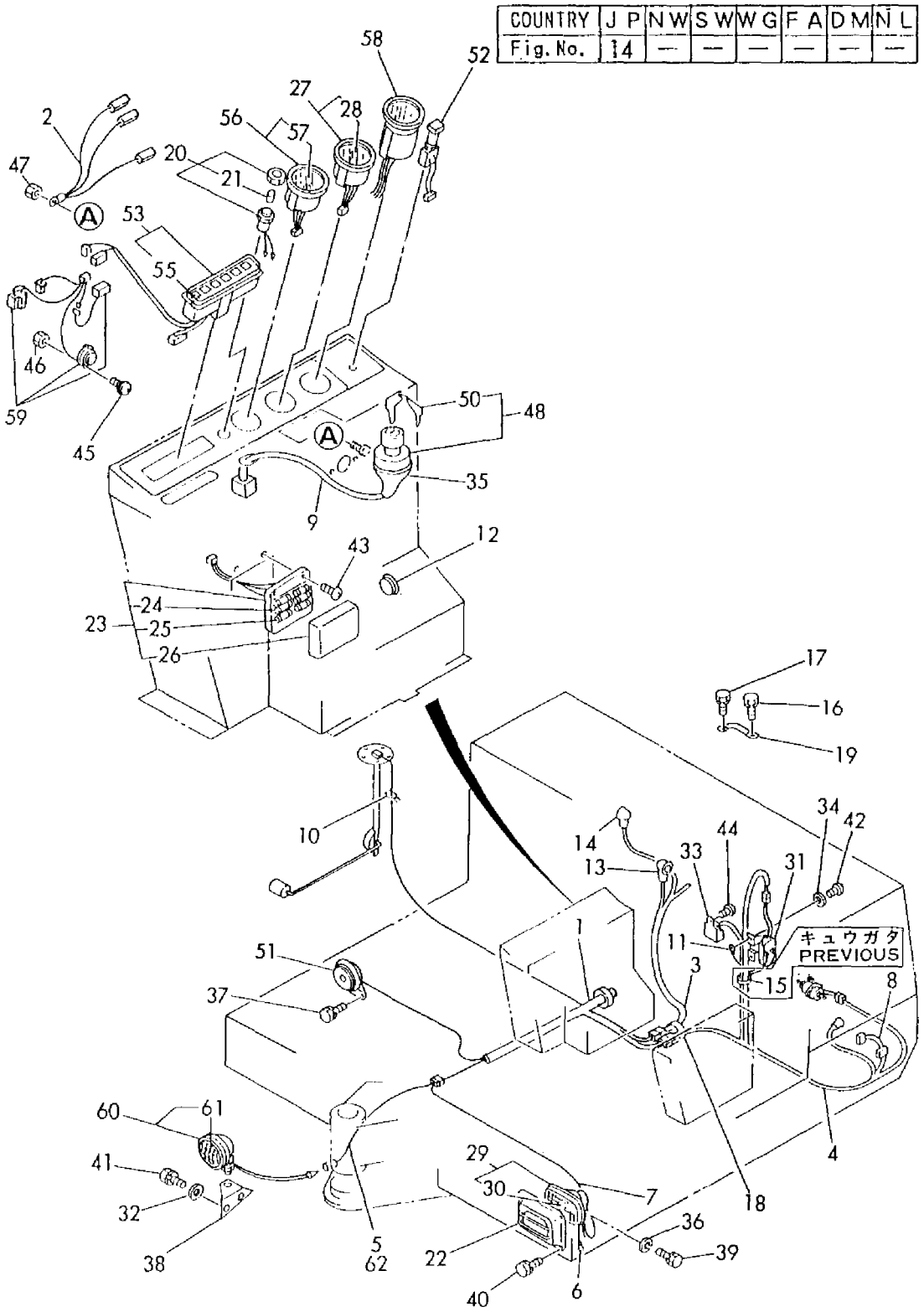

```
1,1,,172124-16500,,"HARNESS (A), WIRE",,1,,,1,,,,,,,,,,,,
1-1,1,,172124-16501,,"HARNESS (A), WIRE",,1,,,1,,N,,,,,*1986.06,,,,,,*1986.06
1-2,1,,172124-16502,,"HARNESS (A), WIRE",,1,,,1,,N,,,,,M20519,,,,,,M20502
2,1,,172116-16510,,"WIRE HARNESS(B",,1,,,1,,,,,,,,,,,,
3,1,,172124-16510,,"HARNESS (B), WIRE",,1,,,1,,,,,,,,,,,,
4,1,,172124-16520,,"HARNESS (C), WIRE",,1,,,1,,,,,,,,,,,,
5,1,,172122-16530,,"LEAD WIRE",,1,,,1,,Z,,,,,M20519,,,,,,M20519
6,1,,172124-16530,,"LEAD WIRE",,1,,,1,,,,,,,,,,,,
7,1,,172122-16540,,"LEAD WIRE",,1,,,1,,,,,,,,,,,,
8,1,,172116-16560,,"LEAD WIRE(B",,1,,,1,,,,,,,,,,,,
9,1,,172124-16560,,"LEAD WIRE",,1,,,1,,,,,,,,,,,,
10,1,,172122-16570,,"LINK, FUSIBLE",,1,,,1,,,,,,,,,,,,
11,1,,172122-16580,,"HARNESS (D), WIRE",,1,,,1,,,,,,,,,,,,
12,1,,172122-16590,,"BAND 200F",,18,,,18,,,,,,,,,,,,
12-1,1,,172122-16590,,"BAND 200F",,12,,,12,,K,,,,,M00501,,,,,,M00501
13,1,,172122-16600,,W-CLAMP,,4,,,4,,,,,,,,,,,,
14,1,,172122-16620,,"LEAD WIRE",,1,,,1,,,,,,,,,,,,
14-1,1,,172135-16550,,"WIRE HARNESS",,1,,,1,,S,,,,,M20519,,,,,,M20502
15,1,,172122-16660,,"LEAD WIRE",,1,,,1,,,,,,,,,,,,
16,1,,124550-77020,,"COVER, TERMINAL",,1,,,1,,,,,,,,,,,,
17,1,,124756-77040,,"COVER, TERMINAL",,1,,,1,,,,,,,,,,,,
18,1,,1E6102-84970,,"BAND 140,WIRE LOCK",,2,,,2,,Z,,,,,M00501,,,,,,M00501
19,1,,22137-040000,,"WASHER 4, POLISHED",,18,,,18,,Z,,,,,M00501,,,,,,M00501
20,1,,22857-400120,,"SCREW 4X12",,18,,,18,,,,,,,,,,,,
20-1,1,,22857-400120,,"SCREW 4X12",,12,,,12,,K,,,,,M00501,,,,,,M00501
21,1,,26013-100202,,"BOLT W/WASHER M10X20",,1,,,1,,,,,,,,,,,,
22,1,,26013-120202,,"BOLT W/WASHER M12X20",,1,,,1,,,,,,,,,,,,
23,1,,29321-255050,,"GROMMET, RUBBER",,1,,,1,,,,,,,,,,,,
24,1,,933171-15680,,"GROMMET 40X13",,1,,,1,,,,,,,,,,,,
25,1,,933171-15801,,"WIRE, EARTH",,1,,,1,,,,,,,,,,,,
26,1,,26716-100002,,"NUT M10",,1,,,1,,,,,,,,,,,,
27,1,,172112-17051,,"LAMP ASSY, ROOM",,1,,,1,,,,,,,,,,,,
27-1,1,,933113-05150,,"LAMP, ROOM",,1,,,1,,S,,,,,M20519,,,,,,M20502
28,2,,172112-17060,,"BULB 12V 10W",,1,,,1,,,,,,,,,,,,
28-1,2,,933113-05160,,"BULB (12V5W)",,1,,,1,,S,,,,,M20519,,,,,,M20502
29,1,,172734-17070,,"BLADE 450, WIPER",,1,,,1,,,,,,,,,,,,
30,1,,172511-17210,,"LAMP, GLOW",,1,,,1,,,,,,,,,,,,
31,2,,172734-17430,,"BULB 12V 13.4W",,1,,,1,,,,,,,,,,,,
32,1,,172116-17250,,"COVER, HEAD LIGHT",,1,,,1,,,,,,,,,,,,
33,1,,172734-17300,,"FUSE BOX",,1,,,1,,,,,,,,,,,,
34,2,,194145-52830,,"FUSE 10A",,5,,,5,,,,,,,,,,,,
34-1,2,,29411-100000,,"FUSE
(10A),CARTRIDGE",,5,,,5,,R,,,,,*1987.05,,,,,,*1987.05
35,2,,194145-52840,,"FUSE 15A",,3,,,3,,,,,,,,,,,,
35-1,2,,29411-150000,,"FUSE
(15A),CARTRIDGE",,3,,,3,,R,,,,,*1987.05,,,,,,*1987.05
36,2,,172734-17310,,COVER,,1,,,1,,,,,,,,,,,,
37,1,,172116-17361,,"METER, FUEL LEVEL",,1,,,1,,,,,,,,,,,,
38,2,,933113-10110,,"BULB 12V 3.4W",,1,,,1,,,,,,,,,,,,
39,1,,172730-53610,,"LAMP, HEAD",,1,,,1,,,,,,,,,,,,
40,2,,194262-53080,,"BULB 12V-25W",,1,,,1,,,,,,,,,,,,
41,1,,171051-77100,,"RELAY, SAFETY",,1,,,1,,,,,,,,,,,,
42,1,,933113-15900,,"COVER, SWITCH TERMI.",,1,,,1,,,,,,,,,,,,
43,1,,124970-77920,,"TIMER, GLOW PLUG",,1,,,1,,,,,,,,,,,,
44,1,,22137-060000,,"WASHER 6, POLISHED",,2,,,2,,,,,,,,,,,,
45,1,,172116-17460,,"STAY, WORK LAMP",,1,,,1,,,,,,,,,,,,
46,1,,22137-100000,,"WASHER 10,POLISHED",,2,,,2,,,,,,,,,,,,
47,1,,26013-060122,,"BOLT M 6X 12",,2,,,2,,,,,,,,,,,,
48,1,,26013-060162,,"BOLT M 6X 16",,3,,,3,,,,,,,,,,,,
48-1,1,,26013-060122,,"BOLT M 6X 12",,3,,,3,,S,,,,,M20519,,,,,,M20519
49,1,,22117-100000,,"WASHER 10",,2,,,2,,,,,,,,,,,,
50,1,,26013-100162,,"BOLT M10X 16",,2,,,2,,,,,,,,,,,,
51,1,,26013-100202,,"BOLT W/WASHER M10X20",,4,,,4,,,,,,,,,,,,
```

52,1,,26022-050122,,"SCREW M 5X 12",,2,,,2,,,,,,,,,,,,
52-1,1,,22857-400100,,"SCREW 4X10",,2,,,2,,S,,,,,M20519,,,,,,M20502
53,1,,26013-100202,,"BOLT W/WASHER M10X20",,2,,,2,,,,,,,,,,,,
54,1,,26022-060122,,"SCREW M 6X 12",,2,,,2,,,,,,,,,,,,
55,1,,26022-060162,,"SCREW M 6X 16",,2,,,2,,,,,,,,,,,,
56,1,,26022-060162,,"SCREW M 6X 16",,1,,,1,,,,,,,,,,,,
57,1,,26022-060202,,"SCREW M 6X 20",,1,,,1,,,,,,,,,,,,
58,1,,26033-030122,,"SCREW M 3X12",,2,,,2,,,,,,,,,,,,
59,1,,26347-030002,,"U-NUT M 3",,2,,,2,,,,,,,,,,,,
60,1,,933110-00100,,"SWITCH ASSY, STARTER",,1,,,1,,,,,,,,,,,,
62,2,,933110-00301,,"KEY ASSY",,1,,,1,,,,,,,,,,,,
63,1,,933110-05300,,HORN,,1,,,1,,,,,,,,,,,,
64,1,,933113-03000,,"SWITCH, LIGHTING",,1,,,1,,,,,,,,,,,,
65,1,,933113-03100,,"SWITCH, WIPER",,1,,,1,,,,,,,,,,,,
66,1,,933113-05000,,"BOX ASSY, PILOT",,1,,,1,,,,,,,,,,,,
66-1,1,,933113-05001,,"BOX ASSY, PILOT",,1,,,1,,N,,,,,M00896,,,,,,M00896
68,2,,933113-05120,,"BULB 12V 1.7W",,5,,,5,,,,,,,,,,,,
69,1,,933113-10100,,"METER, TEMPERATURE",,1,,,1,,,,,,,,,,,,
69-1,1,,172734-17220,,"THERMOMETER ASSY",,1,,,1,,N,,,,,M10501,,,,,,M10501
70,2,,933113-10110,,"BULB 12V 3.4W",,1,,,1,,,,,,,,,,,,
71,1,,933113-10300,,"HOURMETER ASSY.",,1,,,1,,,,,,,,,,,,
72,1,,933113-15000,,"CIGAR LIGHTER ASSY",,1,,,1,,,,,,,,,,,,
73,1,,933113-15200,,"MOTOR 520, WIPER",,1,,,1,,,,,,,,,,,,
73-1,1,,933113-16200,,"MOTER 520 A, WIPER",,1,,,1,,S,,,,,M20519,,,,,,M20502
74,1,,933113-15300,,"ARM 500, WIPER",,1,,,1,,,,,,,,,,,,
74-1,1,,172135-16540,,"ARM 550, WIPER",,1,,,1,,S,,,,,M20519,,,,,,M20502
75,1,,933113-15400,,CONTROLLER,,1,,,1,,,,,,,,,,,,
75-1,1,,933113-15401,,CONTROLLER,,1,,,1,,F,1,,,,M00701,,,,,,M00632
76,1,,172116-17430,,"LAMP, WORK",,1,,,1,,,,,,,,,,,,
76-1,1,,172116-17431,,"LAMP, WORK",,1,,,1,,N,,,,,M00677,,,,,,M00631
77,2,,172116-17440,,"BULB 12V 60W",,1,,,1,,,,,,,,,,,,
77-1,2,,172116-17441,,"BULB 14V 60W",,1,,,1,,N,,,,,M00677,,,,,,M00631
78,1,,172132-16530,,"WIRE, BOOM LIGHT",,1,,,1,,,2,,,,,,,,,
79,1,,933113-05220,,"LAMP, HEAD",,2,,,2,,W,,,,,M20519,,,,,,M20502
80,2,,933113-05230,,"BULB (12V20W)",,2,,,2,,W,,,,,M20519,,,,,,M20502
81,1,,26013-080162,,"BOLT W/WASHER M8X16",,2,,,2,,W,,,,,M20519,,,,,,M20502
82,1,,172137-16000,,WIRE,,1,,,1,,W,,,,,M20519,,,,,,M20502
83,1,,172116-16560,,"LEAD WIRE(B",,1,,,1,,W,,,,,M20519,,,,,,M20502

SPEC. CODE
D72132-16500
D72124-16530
D72135-17130
D72124-17140
D72116-17410

Fig. 15 デンソウヒン(キャビン) ELECTRIC PART (CABIN SPEC.)

COUNTRY	J P	N W	S W	W G	F A	D M	N L
Fig. No.	15	16	16	16	16	16	16

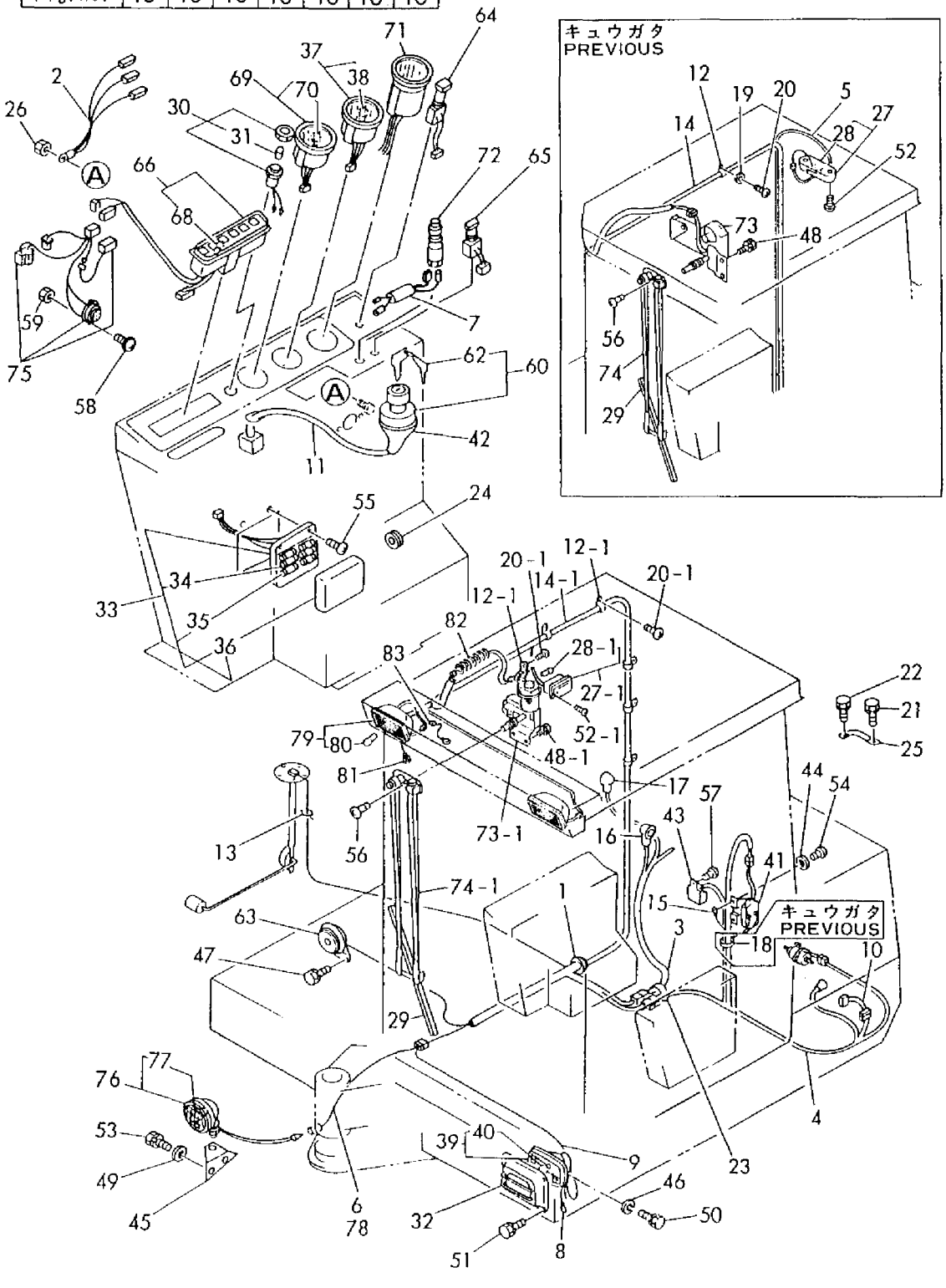

```
1,1,,172124-16500,,"HARNESS (A), WIRE",,1,,,1,,,,,,,,,,,,
1-1,1,,172124-16501,,"HARNESS (A), WIRE",,1,,,1,,N,,,,,*1986.06,,,,,,*1986.06
1-2,1,,172124-16502,,"HARNESS (A), WIRE",,1,,,1,,N,,,,,*1987.04,,,,,,*1987.04
2,1,,172116-16510,,"WIRE HARNESS(B",,1,,,1,,,,,,,,,,,,
3,1,,172124-16510,,"HARNESS (B), WIRE",,1,,,1,,,,,,,,,,,,
4,1,,172122-16520,,"HARNESS (D), WIRE",,,,,1,,,,,,,,,,,,
4-1,1,,172122-16521,,"HARNESS (D), WIRE",,1,,,1,,S,,,,,,,,,,,*1984.09
5,1,,172124-16520,,"HARNESS (C), WIRE",,1,,,1,,,,,,,,,,,,
6,1,,172122-16530,,"LEAD WIRE",,1,,,1,,,,,,,,,,,,
7,1,,172124-16530,,"LEAD WIRE",,1,,,1,,,,,,,,,,,,
8,1,,172122-16540,,"LEAD WIRE",,1,,,1,,,,,,,,,,,,
9,1,,172116-16560,,"LEAD WIRE(B",,1,,,1,,,,,,,,,,,,
10,1,,172124-16560,,"LEAD WIRE",,1,,,1,,,,,,,,,,,,
11,1,,172122-16570,,"LINK, FUSIBLE",,1,,,1,,,,,,,,,,,,
12,1,,172122-16580,,"HARNESS (D), WIRE",,1,,,1,,,,,,,,,,,,
13,1,,172122-16590,,"BAND 200F",,12,,,12,,,,,,,,,,,,
14,1,,172122-16600,,W-CLAMP,,4,,,4,,,,,,,,,,,,
15,1,,172122-16660,,"LEAD WIRE",,1,,,1,,,,,,,,,,,,
16,1,,124550-77020,,"COVER, TERMINAL",,1,,,1,,,,,,,,,,,,
17,1,,124756-77040,,"COVER, TERMINAL",,1,,,1,,,,,,,,,,,,
18,1,,1E6102-84970,,"BAND 140,WIRE LOCK",,,,,2,,Z,,,,,,,,,,,MXXXXX
19,1,,22137-040000,,"WASHER 4, POLISHED",,,,,12,,Z,,,,,,,,,,,MXXXXX
20,1,,22857-400120,,"SCREW 4X12",,12,,,12,,,,,,,,,,,,
21,1,,26013-100202,,"BOLT W/WASHER M10X20",,1,,,1,,,,,,,,,,,,
22,1,,26013-120202,,"BOLT W/WASHER M12X20",,1,,,1,,,,,,,,,,,,
23,1,,26716-100002,,"NUT M10",,1,,,1,,,,,,,,,,,,
24,1,,29321-255050,,"GROMMET, RUBBER",,1,,,1,,,,,,,,,,,,
25,1,,933171-15680,,"GROMMET 40X13",,1,,,1,,,,,,,,,,,,
26,1,,933171-15801,,"WIRE, EARTH",,1,,,1,,,,,,,,,,,,
27,1,,172112-17051,,"LAMP ASSY, ROOM",,1,,,1,,,,,,,,,,,,
28,2,,172112-17060,,"BULB 12V 10W",,1,,,1,,,,,,,,,,,,
29,1,,172734-17070,,"BLADE 450, WIPER",,1,,,1,,,,,,,,,,,,
30,1,,172511-17210,,"LAMP, GLOW",,1,,,1,,,,,,,,,,,,
31,2,,172734-17430,,"BULB 12V 13.4W",,1,,,1,,,,,,,,,,,,
32,1,,172116-17250,,"COVER, HEAD LIGHT",,1,,,1,,,,,,,,,,,,
33,1,,172734-17300,,"FUSE BOX",,1,,,1,,,,,,,,,,,,
34,2,,172734-17310,,COVER,,1,,,1,,,,,,,,,,,,
35,2,,194145-52830,,"FUSE 10A",,5,,,5,,,,,,,,,,,,
35-1,2,,29411-100000,,"FUSE
(10A),CARTRIDGE",,5,,,5,,R,,,,,*1987.05,,,,,,*1987.05
36,2,,194145-52840,,"FUSE 15A",,3,,,3,,,,,,,,,,,,
36-1,2,,29411-150000,,"FUSE
(15A),CARTRIDGE",,3,,,3,,R,,,,,*1987.05,,,,,,*1987.05
37,1,,172116-17361,,"METER, FUEL LEVEL",,1,,,1,,,,,,,,,,,,
38,2,,933113-10110,,"BULB 12V 3.4W",,1,,,1,,,,,,,,,,,,
39,1,,172730-53610,,"LAMP, HEAD",,1,,,1,,,,,,,,,,,,
40,2,,194262-53080,,"BULB 12V-25W",,1,,,1,,,,,,,,,,,,
41,1,,171051-77100,,"RELAY, SAFETY",,1,,,1,,,,,,,,,,,,
42,1,,22137-060000,,"WASHER 6, POLISHED",,2,,,2,,,,,,,,,,,,
43,1,,124970-77920,,"TIMER, GLOW PLUG",,1,,,1,,,,,,,,,,,,
44,1,,22137-100000,,"WASHER 10,POLISHED",,2,,,2,,,,,,,,,,,,
45,1,,172119-16520,,"LEAD WIRE (B)",,2,,,,,,,,,,,,,,,,
46,1,,26013-060122,,"BOLT M 6X 12",,,,,2,,,,,,,,,,,,
47,1,,26013-060122,,"BOLT M 6X 12",,3,,,3,,,,,,,,,,,,
48,1,,172119-17120,,HORN,,1,,,,,,,,,,,,,,,,
49,1,,26013-100162,,"BOLT M10X 16",,2,,,2,,,,,,,,,,,,
50,1,,26013-100202,,"BOLT W/WASHER M10X20",,4,,,4,,,,,,,,,,,,
51,1,,26022-050122,,"SCREW M 5X 12",,2,,,2,,,,,,,,,,,,
52,1,,26022-060162,,"SCREW M 6X 16",,2,,,2,,,,,,,,,,,,
53,1,,26022-060162,,"SCREW M 6X 16",,1,,,1,,,,,,,,,,,,
54,1,,26022-060202,,"SCREW M 6X 20",,1,,,1,,,,,,,,,,,,
55,1,,26022-060122,,"SCREW M 6X 12",,2,,,2,,,,,,,,,,,,
56,1,,26033-030122,,"SCREW M 3X12",,2,,,2,,,,,,,,,,,,
```

```
57,1,,26347-030002,,"U-NUT M 3",,2,,,2,,,,,,,,,,,
58,1,,22137-100000,,"WASHER 10,POLISHED",,1,,,,,,,,,,,,,,,
59,1,,933110-00100,,"SWITCH ASSY, STARTER",,1,,,1,,,,,,,,,,,,
61,2,,933110-00301,,"KEY ASSY",,1,,,1,,,,,,,,,,,,
62,1,,933110-05300,,HORN,,,,,1,,,,,,,,,,,,
63,1,,933113-03000,,"SWITCH, LIGHTING",,1,,,1,,,,,,,,,,,,
64,1,,933113-03100,,"SWITCH, WIPER",,,,,1,,,,,,,,,,,,
65,1,,933113-05000,,"BOX ASSY, PILOT",,1,,,1,,,,,,,,,,,,
65-1,1,,933113-05001,,"BOX ASSY, PILOT",,1,,,1,,N,,,,,*1986.11,,,,,,*1986.11
66,2,,933113-05120,,"BULB 12V 1.7W",,5,,,5,,,,,,,,,,,,
68,1,,933113-10100,,"METER, TEMPERATURE",,1,,,1,,,,,,,,,,,,
68-1,1,,172734-17220,,"THERMOMETER ASSY",,1,,,1,,S,,,,,M50001,,,,,,M50001
69,2,,933113-10110,,"BULB 12V 3.4W",,1,,,1,,,,,,,,,,,,
70,1,,933113-15000,,"CIGAR LIGHTER ASSY",,1,,,1,,,,,,,,,,,,
71,1,,933113-15200,,"MOTOR 520, WIPER",,1,,,1,,,,,,,,,,,,
72,1,,933113-15300,,"ARM 500, WIPER",,1,,,1,,,,,,,,,,,,
73,1,,933113-15400,,CONTROLLER,,1,,,1,,,,,,,,,,,,
73-1,1,,933113-15401,,CONTROLLER,,,,,1,,F,1,,,,,,,,,,M00632
74,1,,933113-15900,,"COVER, SWITCH TERMI.",,1,,,1,,,,,,,,,,,,
75,1,,933113-10300,,"HOURMETER ASSY.",,1,,,1,,,,,,,,,,,,
76,1,,172116-17430,,"LAMP, WORK",,,,,1,,,,,,,,,,,,
76-1,1,,172116-17431,,"LAMP, WORK",,1,,,1,,N,,,,,,,,,,,*1985.06
77,2,,172116-17440,,"BULB 12V 60W",,,,,1,,,,,,,,,,,,
77-1,2,,172116-17441,,"BULB 14V 60W",,1,,,1,,N,,,,,,,,,,,*1985.06
78,1,,22117-100000,,"WASHER 10",,2,,,2,,,,,,,,,,,,
79,1,,26013-100202,,"BOLT W/WASHER M10X20",,2,,,2,,,,,,,,,,,,
80,1,,172116-17460,,"STAY, WORK LAMP",,1,,,1,,,,,,,,,,,,
81,1,,22217-100000,,"SPRING WASHER 10",,1,,,,,,,,,,,,,,,
82,1,,26116-100302,,"BOLT M10X 30 PLATED",,1,,,,,,,,,,,,,,,
83,1,,26716-100002,,"NUT M10",,1,,,,,,,,,,,,,,,
84,1,,172122-16630,,"LEAD WIRE",,1,,,,,,,,,,,,,,,
85,1,,22137-050000,,"WASHER 5, POLISHED",,2,,,,,,,,,,,,,,,
86,1,,22857-500120,,"SCREW 5X12",,2,,,,,,,,,,,,,,,
87,1,,933113-03300,,"SWITCH, WIPER",,1,,,,,,,,,,,,,,,
88,1,,933113-15600,,"WINDOW WASHER",,1,,,,,,,,,,,,,,,
89,2,,933113-15800,,"NOZZLE, WASHER",,1,,,,,,,,,,,,,,,
90,1,,172124-16590,,"LEAD WIRE, LAMP",,1,,,,,,,,,,,,,,,
91,1,,172124-16600,,"LEAD WIRE",,1,,,,,,,,,,,,,,,
92,1,,172119-17130,,SWITCH,,1,,,,,,,,,,,,,,,
93,1,,172119-17140,,SWITCH,,1,,,,,,,,,,,,,,,
94,1,,933168-56000,,"GROMMET 17X19",,2,,,,,,,,,,,,,,,
```

SPEC. CODE
D72124-16520
D72124-17100
D72122-17130
D72124-17130
D72122-17140
D72124-17170
D72116-17410

Fig. 16 デンソウヒン(キャビン) ELECTRIC PART (CABIN SPEC.)

COUNTRY	JP	NW	SW	WG	FA	DM	NL
Fig. No.	15	16	16	16	16	16	16

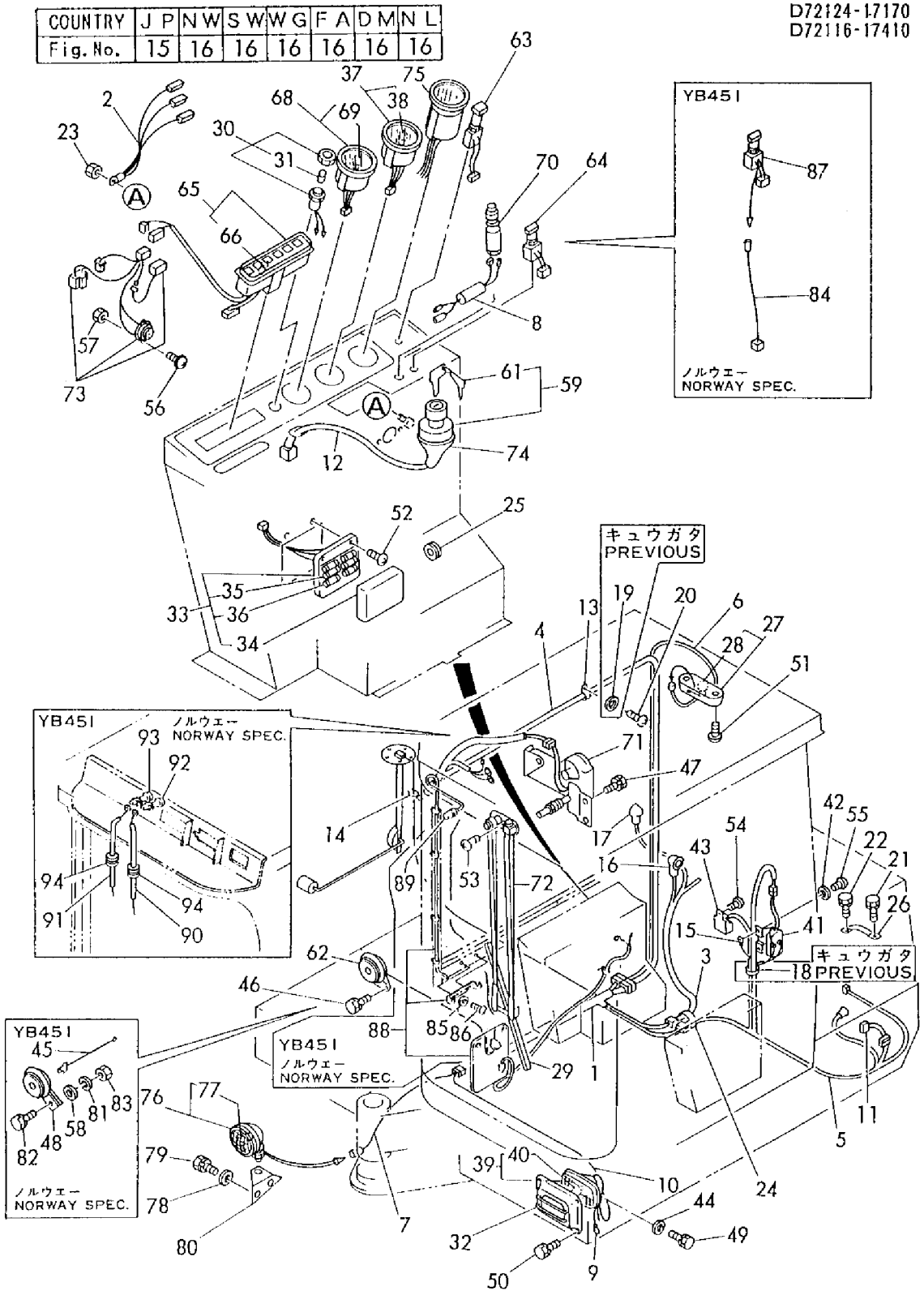

```
1,1,,772124-17600,,"HEATER ASSY",,,,1,,,,,,,,,,,
2,2,,172124-17600,,"HOSE ASSY,CORRUGAT",,,,2,,,,,,,,,,,
3,2,,172124-17630,,"VALVE, MINIATURE",,,,1,,,,,,,,,,,
4,2,,104511-49060,,CONNECTOR,,,,2,,,,,,,,,,,
4-1,2,,172124-17640,,"JOINT 3/8",,,,2,,N,,,,,,,,,,*1985.12
5,2,,22137-100000,,"WASHER 10,POLISHED",,,,3,,,,,,,,,,,
6,2,,23000-022000,,"CLAMP 22",,,,4,,,,,,,,,,,
7,2,,26013-100202,,"BOLT W/WASHER M10X20",,,,3,,,,,,,,,,,
8,2,,29321-405120,,"GROMMET 40X5.0",,,,1,,,,,,,,,,,
9,2,,933113-03200,,"SWITCH, HEATER",,,,1,,,,,,,,,,,
10,2,,933113-15700,,"HEATER ASSY",,,,1,,,,,,,,,,,
11,2,,933152-09280,,"BAND 170",,,,1,,,,,,,,,,,
12,1,,772124-17700,,"DEFROSTER ASSY",,,,1,,,,,,,,,,,
13,2,,172122-16590,,"BAND 200F",,,,2,,,,,,,,,,,
14,2,,172122-17700,,"STAY, NOZZLE",,,,2,,,,,,,,,,,
14-1,2,,172122-17701,,"STAY, NOZZLE",,,,2,,N,,,,,,,,,,*1988.04
15,2,,172124-17700,,"HOSE(L), DEFROSTER",,,,1,,,,,,,,,,,
16,2,,172120-17710,,"NOZZLE, DEFROSTER",,,,2,,,,,,,,,,,
17,2,,172124-17740,,"HOSE(R), DEFROSTER",,,,1,,,,,,,,,,,
18,2,,22137-100000,,"WASHER 10,POLISHED",,,,4,,,,,,,,,,,
19,2,,22857-400120,,"SCREW 4X12",,,,2,,,,,,,,,,,
20,2,,26013-100252,,"BOLT W/WASHER M10X25",,,,4,,,,,,,,,,,
21,1,,772124-17610,,"PIPING,HEATER",,1,,,,,,1,,,,,,,,,
22,2,,172124-16580,,"WIRE,HEATER LEAD",,1,,,,,,,,,,,,,,,
23,2,,172312-17610,,"HOSE ASSY, HEATER",,2,,,,,,,,,,,,,,,
24,2,,172124-17630,,"VALVE, MINIATURE",,1,,,,,,,,,,,,,,,
25,2,,172124-17640,,"JOINT 3/8",,2,,,,,,,,,,,,,,,
26,2,,933113-15700,,"HEATER ASSY",,1,,,,,,,,,,,,,,,
27,2,,23000-022000,,"CLAMP 22",,2,,,,,,,,,,,,,,,
28,2,,29321-405120,,"GROMMET 40X5.0",,1,,,,,,,,,,,,,,,
29,2,,933113-03200,,"SWITCH, HEATER",,1,,,,,,,,,,,,,,,
30,2,,933152-09280,,"BAND 170",,2,,,,,,,,,,,,,,,
31,2,,22137-100000,,"WASHER 10,POLISHED",,3,,,,,,,,,,,,,,,
32,2,,26013-100202,,"BOLT W/WASHER M10X20",,3,,,,,,,,,,,,,,,
```

SPEC. CODE
D72124-17600
D72124-17610
D72124-17700

Fig. 17 ヒータ＆デフロスタ HEATER & DEFROSTER

COUNTRY	J P	N W	S W	W G	F A	D M	N L
Fig. No.	84	17	17	17	17	17	17

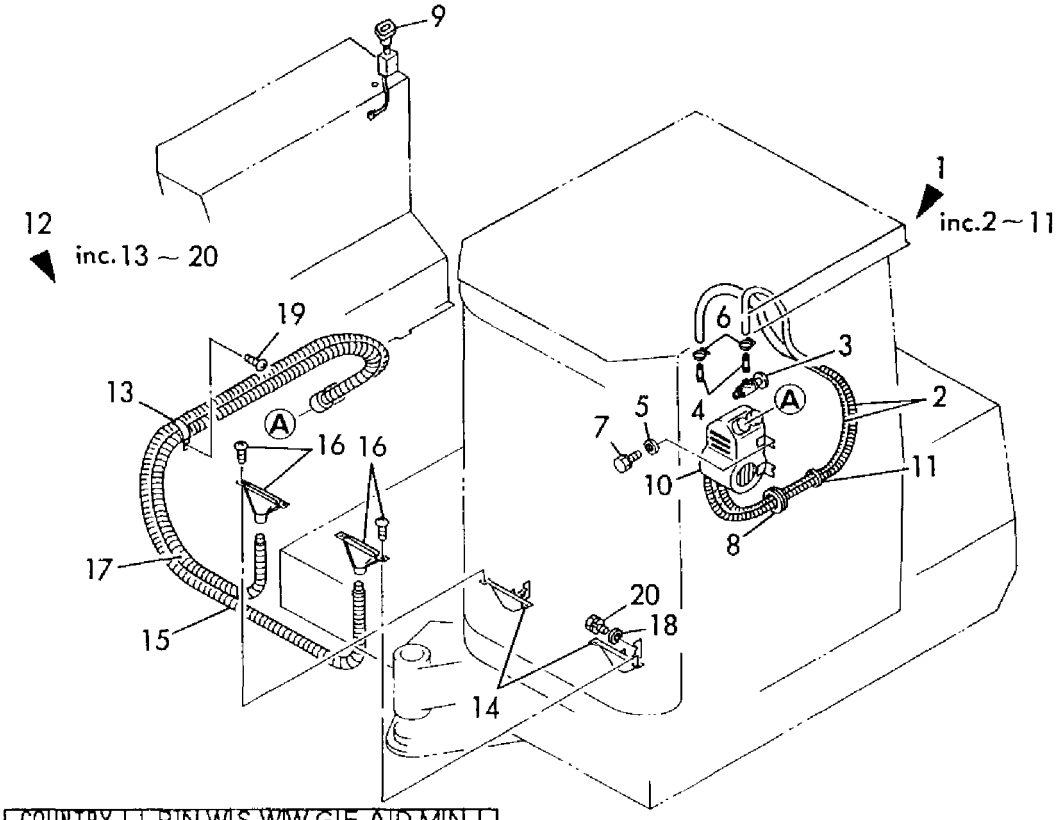

COUNTRY	J P	N W	S W	W G	F A	D M	N L
APPLI-CATION	—	—	○	○	○	○	○

COUNTRY	J P	N W	S W	W G	F A	D M	N L
APPLI-CATION	—	○	—	—	—	—	—

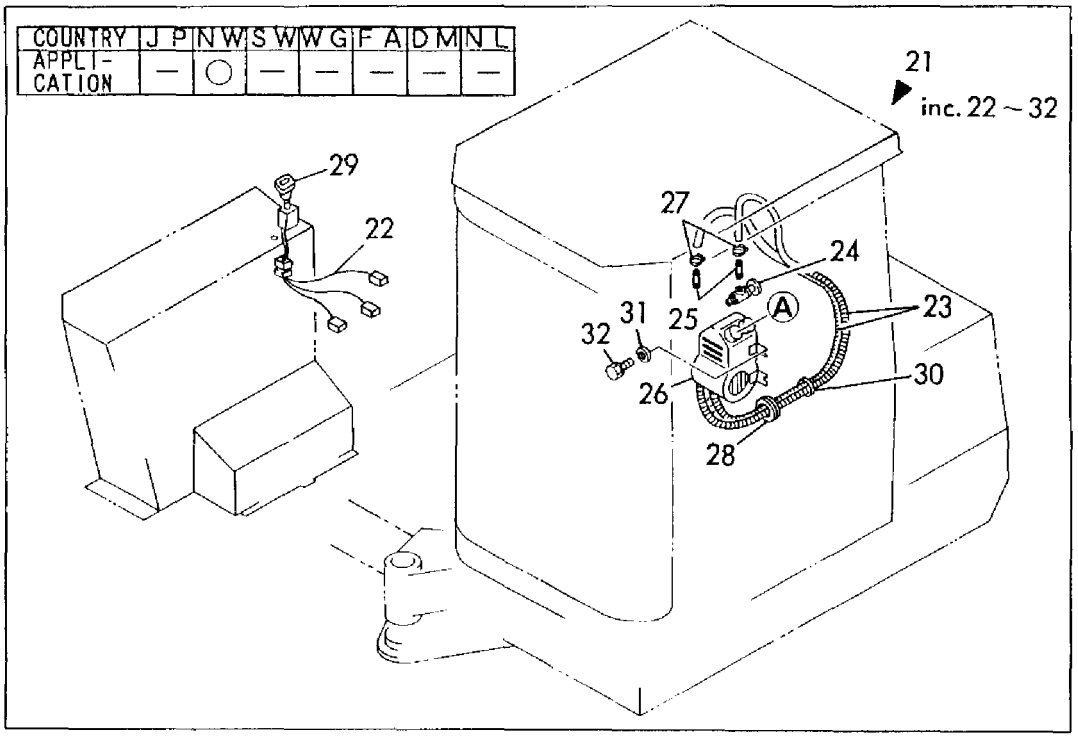

```
1,1,,772124-17820,,"RADIO ASSY",,1,,,1,,,,,,,,,,,,
1-1,1,,772124-17821,,"RADIO ASSY",,1,,,1,,S,,,,,*1987.02,,,,,,M50038
2,2,,172124-16540,,"LEAD WIRE",,1,,,1,,,,,,,,,,,,
3,2,,172119-16570,,"LEAD WIRE",,1,,,1,,,,,,,,,,,,
4,2,,172119-16590,,"LEAD WIRE",,1,,,1,,,,,,,,,,,,
5,2,,172122-16590,,"BAND 200F",,5,,,5,,,,,,,,,,,,
6,2,,172122-16680,,CONNECTOR,,1,,,1,,,,,,,,,,,,
7,2,,172122-16690,,"LEAD WIRE",,1,,,1,,,,,,,,,,,,
8,2,,172119-17150,,"AM-FM RADIO 5PB",,1,,,1,,,,,,,,,,,,
9,2,,172112-17170,,"SPEAKER (SPA-457)",,1,,,1,,,,,,,,,,,,
9-1,2,,172112-17171,,"SPEAKER (SPA-413)",,1,,,1,,S,,,,,*1987.02,,,,,,M50038
10,2,,172112-17190,,"ANTENNA (NCP-314)",,1,,,1,,,,,,,,,,,,
11,2,,172124-17810,,"STAY, SPEAKER",,2,,,2,,,,,,,,,,,,
11-1,2,,172124-17811,,"STAY, SPEAKER",,1,,,1,,S,,,,,*1987.02,,,,,,M50038
11-2,2,,172124-17812,,"STAY, SPEAKER",,1,,,1,,S,,,,,*1987.05,,,,,,*1987.05
12,2,,172122-18230,,"PANEL, RADIO",,1,,,1,,,,,,,,,,,,
13,2,,22857-400120,,"SCREW 4X12",,5,,,5,,,,,,,,,,,,
14,2,,22857-400120,,"SCREW 4X12",,4,,,4,,,,,,,,,,,,
14-1,2,,22857-400120,,"SCREW 4X12",,3,,,3,,K,,,,,*1987.02,,,,,,M50038
15,2,,26013-060162,,"BOLT M 6X 16",,2,,,2,,,,,,,,,,,,
15-1,2,,26557-040122,,"SCREW M 4X 12,PAN HD",,2,,,2,,S,,,,,*1987.02,,,,,,M50038
16,2,,933168-56000,,"GROMMET 17X19",,1,,,1,,,,,,,,,,,,
17,2,,22857-500120,,"SCREW 5X12",,2,,,2,,,,,,,,,,,,
18,2,,933168-56000,,"GROMMET 17X19",,1,,,1,,W,,,,,*1987.02,,,,,,M50038
```

Fig. 18 ラジオ(EC) RADIO (EC)

SPEC. CODE
D72124-17820

COUNTRY	J P	N W	S W	W G	F A	D M	N L
Fig. No.	—	18	18	18	18	18	18

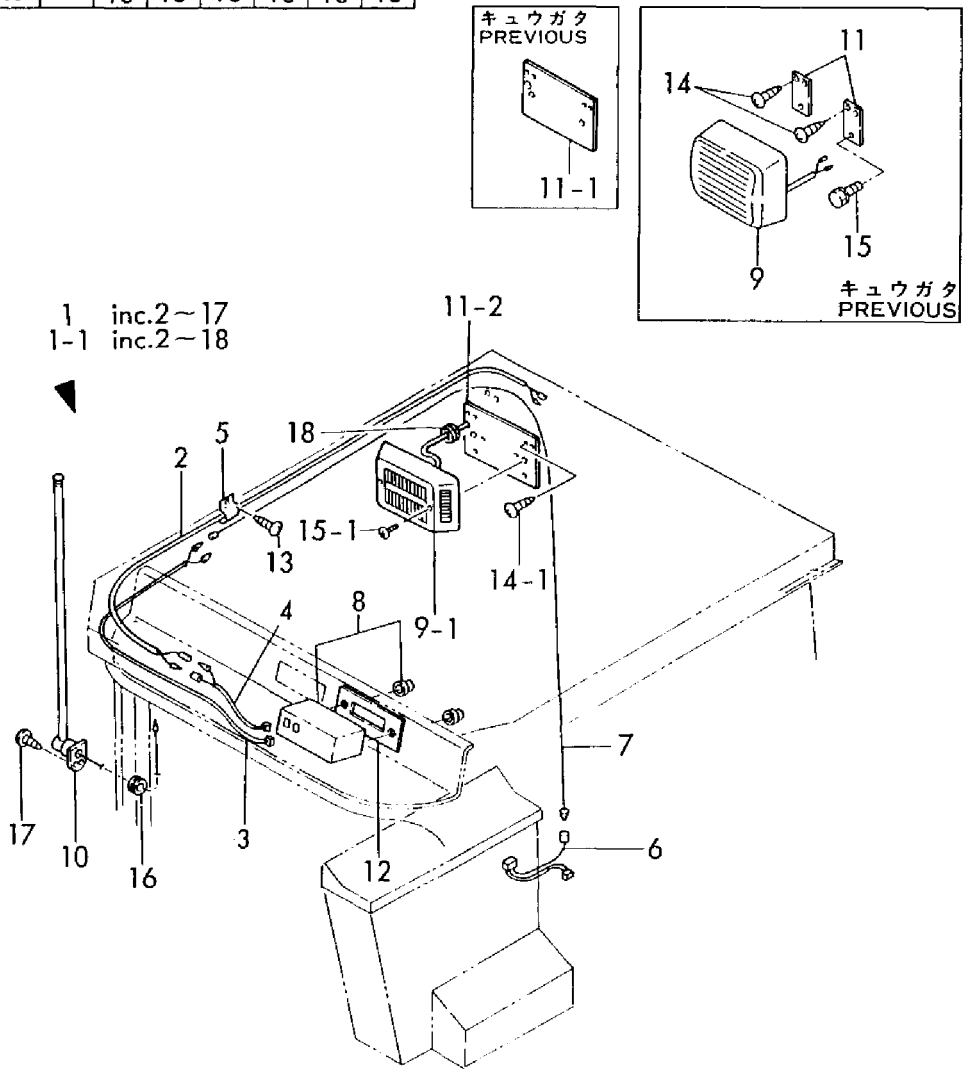

```
1,1,,172119-35010,,SPROCKET,2,2,,2,2,,,,,,,,,,,,
2,1,,22217-140000,,"SPRING WASHER 14",18,18,,18,18,,,,,,,,,,,,
3,1,,26116-140352,,"BOLT M14X 35 PLATED",18,18,,18,18,,,,,,,,,,,,,
4,1,,772124-37300,,"ROLLER ASSY, TRUCK",8,8,,8,8,,,,,,,,,,,,
5,2,,172124-37300,,"ROLLER ASSY, TRUCK",8,8,,8,8,,,,,,,,,,,,
6,3,,172124-37310,,"BUSH, ROLLER",16,16,,16,16,,,,,,,,,,,,
7,2,,172124-37320,,"SHAFT, ROLLER",8,8,,8,8,,,,,,,,,,,,
8,2,,172124-37350,,"COVER (B)",8,8,,8,8,,,,,,,,,,,,
9,2,,22242-000300,,"CIRCLIP   30",8,8,,8,8,,,,,,,,,,,,
10,2,,24321-000350,,"O-RING 1A G-35.0",8,8,,8,8,,,,,,,,,,,,
11,2,,933112-00400,,"SEAL 64 78 25",16,16,,16,16,,,,,,,,,,,,
12,2,,933171-13691,,"PLUG PT1/8",8,8,,8,8,,,,,,,,,,,,
13,1,,172113-36050,,"BOLT, ROLLER ADJUST",6,6,,6,6,,,,,,,,,,,,
14,1,,172116-37350,,"BOLT, ROLLER ADJUST",2,2,,2,2,,,,,,,,,,,,
15,1,,22217-160000,,"SPRING WASHER 16",8,8,,8,8,,,,,,,,,,,,
16,1,,26658-160002,,"CAP NUT M16",8,8,,8,8,,,,,,,,,,,,
16-1,1,,26657-160002,,"CAP NUT
M16",8,8,,8,8,,R,,,*1986.07,,*1986.07,,,,*1986.07,,*1986.07
17,1,,772124-37500,,"ROLLER ASSY, CARIA",2,2,,2,2,,,,,,,,,,,,
19,2,,172124-37510,,"SHAFT, ROLLER",2,2,,2,2,,,,,,,,,,,,
20,2,,172124-37520,,"COVER, SEAL",2,2,,2,2,,,,,,,,,,,,
21,2,,172124-37530,,COVER,2,2,,2,2,,,,,,,,,,,,
22,2,,172124-37540,,"O-RING P52",2,2,,2,2,,,,,,,,,,,,
23,2,,22242-000300,,"CIRCLIP   30",4,4,,4,4,,,,,,,,,,,,
24,2,,22252-000620,,"CIRCLIP 62(H)",4,4,,4,4,,,,,,,,,,,,
25,2,,22252-000750,,"CIRCLIP   75",2,2,,2,2,,,,,,,,,,,,
26,2,,24101-062064,,"BALL BEARING",4,4,,4,4,,,,,,,,,,,,
27,2,,933171-13691,,"PLUG PT1/8",2,2,,2,2,,,,,,,,,,,,
28,2,,933171-13820,,"SEAL WSF30X62X20",2,2,,2,2,,,,,,,,,,,,
29,1,,26116-120652,,"BOLT M12X 65 PLATED",2,2,,2,2,,,,,,,,,,,,
30,1,,22217-120000,,"WASHER 12,SPRING",2,2,,2,2,,,,,,,,,,,,
31,1,,26716-120002,,"NUT M12",2,2,,2,2,,,,,,,,,,,,
32,1,,22217-140000,,"SPRING WASHER 14",18,18,,18,18,,,,,,,,,,,,
33,1,,26116-140352,,"BOLT M14X 35 PLATED",18,18,,18,18,,,,,,,,,,,,,
```

Fig. 19 トラックローラ&キャリアローラ TRACK ROLLER & CARRIER ROLLER

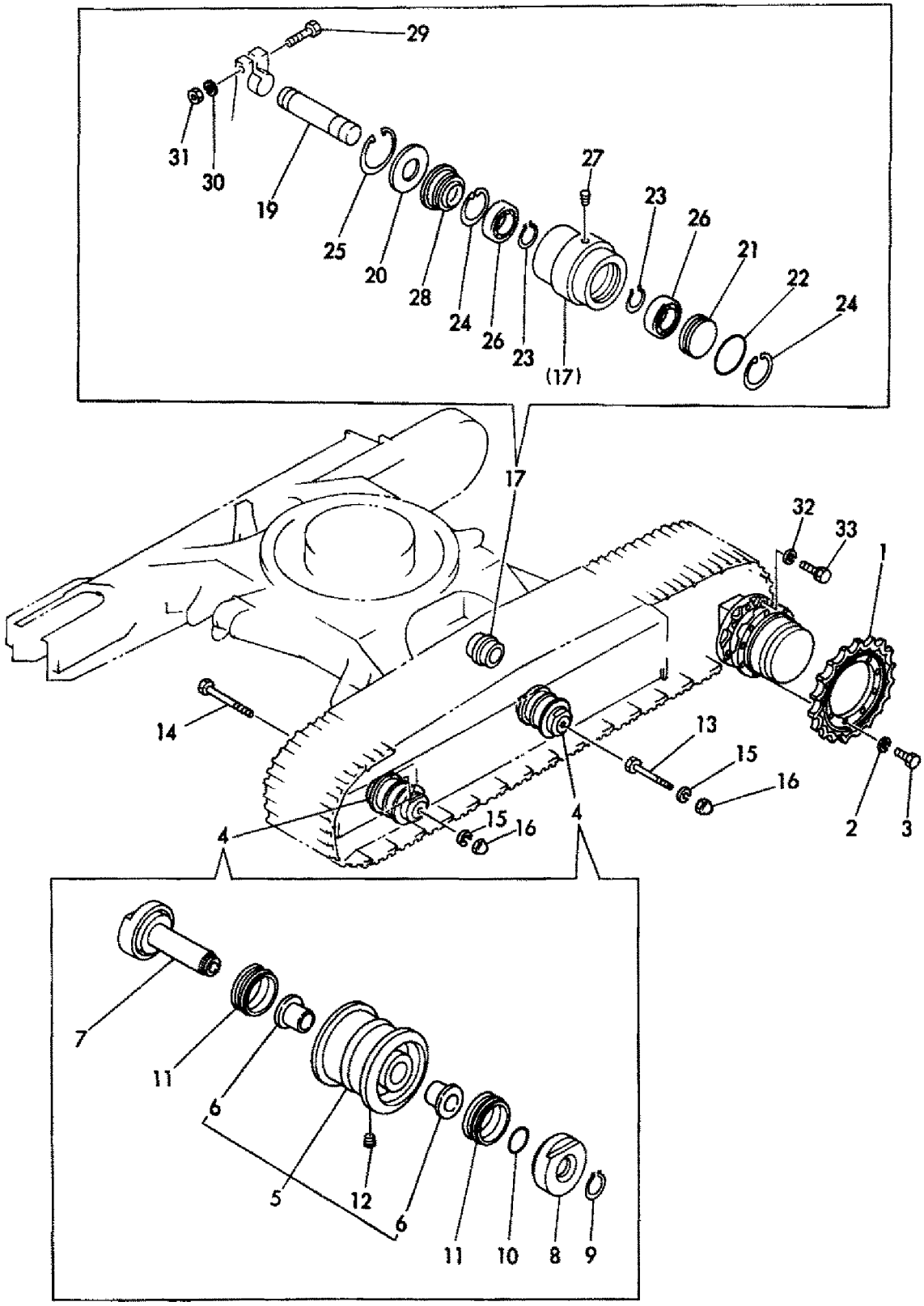

```
1,1,,172124-29100,,SPROCKET,2,2,,2,2,,,,,,,,,,,,
2,1,,22217-140000,,"SPRING WASHER 14",18,18,,18,18,,,,,,,,,,,,
3,1,,26116-140352,,"BOLT M14X 35 PLATED",18,18,,18,18,,,,,,,,,,,,,
4,1,,772124-37320,,"ROLLER ASSY, TRUCK",8,8,,8,8,,,,,,,,,,,,
5,2,,172124-37400,,"ROLLER ASSY, TRUCK",8,8,,8,8,,,,,,,,,,,,
6,3,,172124-37310,,"BUSH, ROLLER",16,16,,16,16,,,,,,,,,,,,
7,2,,172124-37320,,"SHAFT, ROLLER",8,8,,8,8,,,,,,,,,,,,
8,2,,172124-37350,,"COVER (B)",8,8,,8,8,,,,,,,,,,,,
9,2,,22242-000300,,"CIRCLIP   30",8,8,,8,8,,,,,,,,,,,,
10,2,,24321-000350,,"O-RING 1A G-35.0",8,8,,8,8,,,,,,,,,,,,
11,2,,933112-00400,,"SEAL 64 78 25",16,16,,16,16,,,,,,,,,,,,
12,2,,933171-13691,,"PLUG PT1/8",8,8,,8,8,,,,,,,,,,,,
13,1,,772124-37330,,"ROLLER ASSY, TRUCK",2,2,,2,2,,,,,,,,,,,,
14,2,,172124-37420,,"ROLLER ASSY, TRUCK",2,2,,2,2,,,,,,,,,,,,
15,3,,172124-37310,,"BUSH, ROLLER",4,4,,4,4,,,,,,,,,,,,
16,2,,172124-37320,,"SHAFT, ROLLER",2,2,,2,2,,,,,,,,,,,,
17,2,,172124-37350,,"COVER (B)",2,2,,2,2,,,,,,,,,,,,
18,2,,22242-000300,,"CIRCLIP   30",2,2,,2,2,,,,,,,,,,,,
19,2,,24321-000350,,"O-RING 1A G-35.0",2,2,,2,2,,,,,,,,,,,,
20,2,,933112-00400,,"SEAL 64 78 25",4,4,,4,4,,,,,,,,,,,,
21,2,,933171-13691,,"PLUG PT1/8",2,2,,2,2,,,,,,,,,,,,
22,1,,172113-36050,,"BOLT, ROLLER ADJUST",10,10,,10,10,,,,,,,,,,,,,
23,1,,22217-160000,,"SPRING WASHER 16",10,10,,10,10,,,,,,,,,,,,,
24,1,,26658-160002,,"CAP NUT M16",10,10,,10,10,,,,,,,,,,,,
24-1,1,,26657-160002,,"CAP NUT
M16",10,10,,10,10,,R,,,*1986.07,,*1986.07,,,,*1986.07,,*1986.07
25,1,,772124-37510,,"ROLLER ASSY, CARIA",2,2,,2,2,,,,,,,,,,,,
27,2,,172124-37510,,"SHAFT, ROLLER",2,2,,2,2,,,,,,,,,,,,
28,2,,172124-37520,,"COVER, SEAL",2,2,,2,2,,,,,,,,,,,,
29,2,,172124-37530,,COVER,2,2,,2,2,,,,,,,,,,,,
30,2,,172124-37540,,"O-RING P52",2,2,,2,2,,,,,,,,,,,,
31,2,,22242-000300,,"CIRCLIP   30",4,4,,4,4,,,,,,,,,,,,
32,2,,22252-000620,,"CIRCLIP 62(H)",4,4,,4,4,,,,,,,,,,,,
33,2,,22252-000750,,"CIRCLIP   75",2,2,,2,2,,,,,,,,,,,,
34,2,,24101-062064,,"BALL BEARING",4,4,,4,4,,,,,,,,,,,,
35,2,,933171-13691,,"PLUG PT1/8",2,2,,2,2,,,,,,,,,,,,
36,2,,933171-13820,,"SEAL WSF30X62X20",2,2,,2,2,,,,,,,,,,,,
37,1,,26116-120652,,"BOLT M12X 65 PLATED",2,2,,2,2,,,,,,,,,,,,
38,1,,22217-120000,,"WASHER 12,SPRING",2,2,,2,2,,,,,,,,,,,,
39,1,,26716-120002,,"NUT M12",2,2,,2,2,,,,,,,,,,,,
40,1,,22217-140000,,"SPRING WASHER 14",18,18,,18,18,,,,,,,,,,,,
41,1,,26116-140352,,"BOLT M14X 35 PLATED",18,18,,18,18,,,,,,,,,,,,
```

SPEC. CODE
D72124-29110
D72124-37320
D72124-37330
D72124-37510

Fig. 20 トラックローラ&キャリアローラ TRACK ROLLER & CARRIER ROLLER (ゴムクローラ) (CRAWLER, RUBBER)

COUNTRY	J P	N W	S W	W G	F A	D M	N L
Fig. No.	20	—	—	—	—	—	—

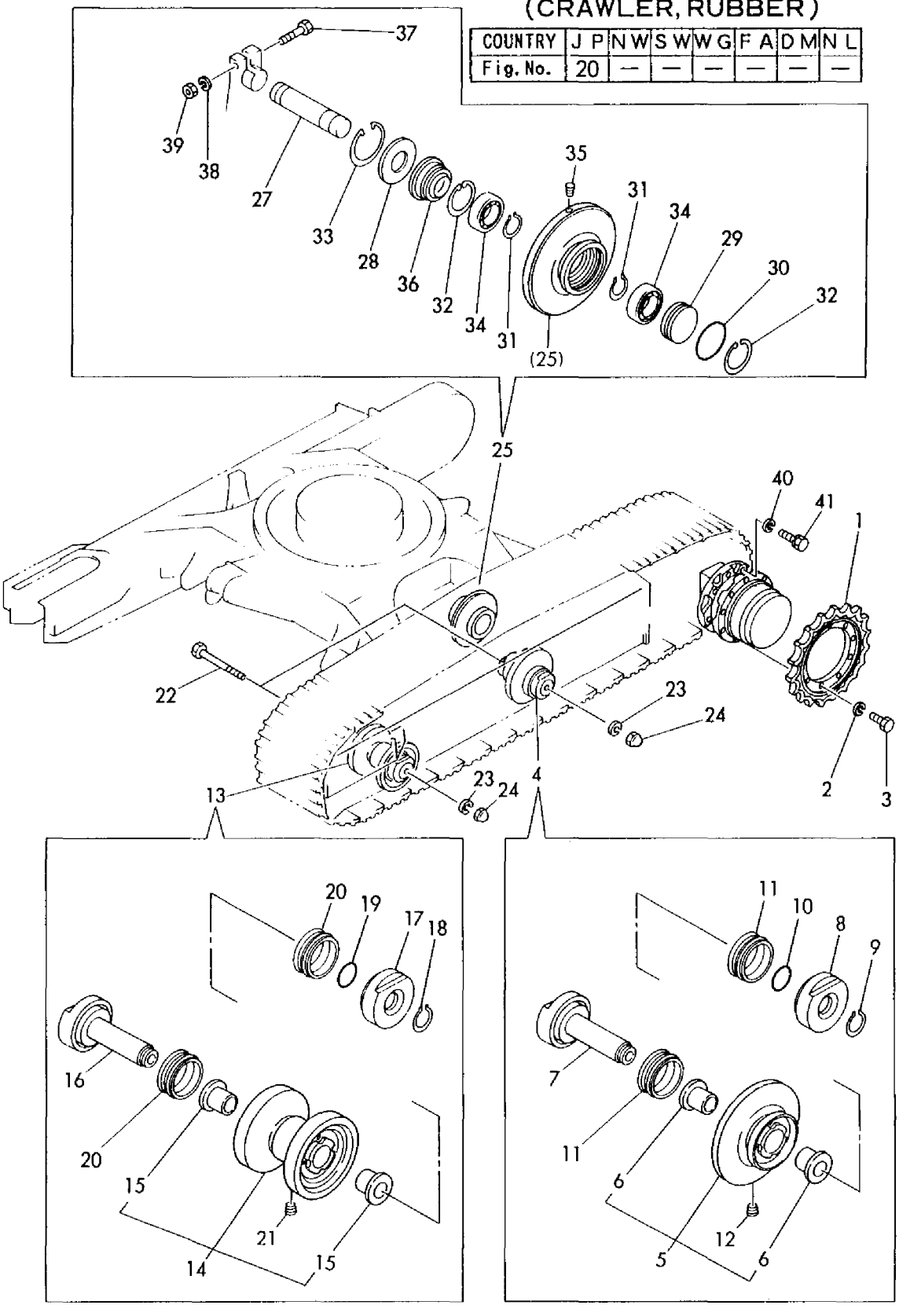

```
1,1,,772124-37100,,"IDLER ASSY",2,2,,2,2,,,,,,,,,,,,
2,2,,172124-37100,,"IDLER ASSY",2,2,,2,2,,,,,,,,,,,,
4,3,,172124-37120,,"BUSH 40",4,4,,4,4,,,,,,,,,,,,
5,2,,172124-37130,,"SHAFT, IDLER",2,2,,2,2,,,,,,,,,,,,
6,2,,172124-37140,,"COVER(A),IDLER SEAL",2,2,,2,2,,,,,,,,,,,,
7,2,,172124-37150,,"COVER(B),IDLER SEAL",2,2,,2,2,,,,,,,,,,,,
8,2,,22242-000350,,"CIRCLIP   35",2,2,,2,2,,,,,,,,,,,,
9,2,,24321-000350,,"O-RING 1A G-35.0",4,4,,4,4,,,,,,,,,,,,
10,2,,933112-00500,,"SEAL 66 86 28",4,4,,4,4,,,,,,,,,,,,
11,2,,933171-13691,,"PLUG PT1/8",2,2,,2,2,,,,,,,,,,,,
12,2,,172124-37160,,PIN,4,4,,4,4,,,,,,,,,,,,
12-1,2,,172124-37160,,PIN,2,2,,2,2,,K,,,*1988.08,,*1988.08,,,,*1988.08,,*1988.08
13,1,,172124-37700,,"SPRING, ADJUSTING",2,2,,2,2,,,,,,,,,,,,
14,1,,172122-37710,,"HOLDER, ADJUSTER",2,2,,2,2,,,,,,,,,,,,
15,1,,172122-37750,,"CYLINDER, ADJUSTER",2,2,,2,2,,,,,,,,,,,,
15-1,1,,172122-37751,,"ADJUST
CYLINDER",2,2,,2,2,,S,,,M00501,,M00501,,,,M00501,,M00501
16,2,,172122-37810,,PISTON,2,2,,2,2,,,,,,,,,,,,
17,2,,172122-37780,,"ADJUST TUBE",2,2,,2,2,,,,,,,,,,,,
17-1,2,,172122-37781,,"ADJUST
TUBE",2,2,,2,2,,S,,,M00501,,M00501,,,,M00501,,M00501
18,2,,172122-37820,,"ADJUST SEAL SET",2,2,,2,2,,,,,,,,,,,,
22,1,,172122-37840,,"VALVE ASSY, NIPPLE",2,2,,2,2,,,,,,,,,,,,
22-1,1,,172122-37841,,"VALVE ASSY,
NIPPLE",2,2,,2,2,,S,,,M00501,,M00501,,,,M00501,,M00501
22-2,1,,172122-37842,,"VALVE ASSY,
NIPPLE",2,2,,2,2,,N,,,M00672,,M00672,,,,M00618,,M00618
26,2,,24311-000180,,"O-RING 1A P-18.0",2,2,,2,2,,,,,,,,,,,,
26-1,2,,24315-000140,,"O-RING 1B P-
14.0",2,2,,2,2,,S,,,M00501,,M00501,,,,M00501,,M00501
26-2,2,,24315-000120,,"O-RING 1B P-
12.0",2,2,,2,2,,N,,,*1989.08,,*1989.08,,,,*1989.08,,*1989.08
27,2,,24761-020000,,"NIPPLE PT1/8,GREASE",2,2,,2,2,,,,,,,,,,,,
29,1,,26013-120402,,"BOLT M12X 40",8,8,,8,8,,,,,,,,,,,,
30,1,,172124-50100,,"FRAME ASSY, CRAWLER",1,1,,1,1,,,,,,,,,,,,
31,1,,172124-50800,,"GUARD, CRAWLER",4,4,,4,4,,,,,,,,,,,,
32,1,,22217-160000,,"SPRING WASHER 16",8,8,,8,8,,,,,,,,,,,,
33,1,,26116-160452,,"BOLT M16X 45 PLATED",8,8,,8,8,,,,,,,,,,,,
34,1,,172124-50810,,"GUARD (R), STONE",1,1,,1,1,,,,,,,,,,,,
35,1,,172124-50820,,"GUARD (L), STONE",1,1,,1,1,,,,,,,,,,,,
36,1,,22217-140000,,"SPRING WASHER 14",6,6,,6,6,,,,,,,,,,,,
37,1,,26116-140302,,"BOLT M14X 30 PLATED",6,6,,6,6,,,,,,,,,,,,
38,1,,26013-100202,,"BOLT W/WASHER M10X20",16,16,,16,16,,,,,,,,,,,,
39,1,,172124-50950,,"FRAME ASSY, TRACK",,1,,,,,,1,,,,,,,,,,
```

SPEC. CODE
D72124-37100
D72124-37700
D72124-50100
D72124-50120
D72124-50800
D72124-50810

Fig. 21 トラックフレーム&アイドラ TRACK FRAME & IDLER

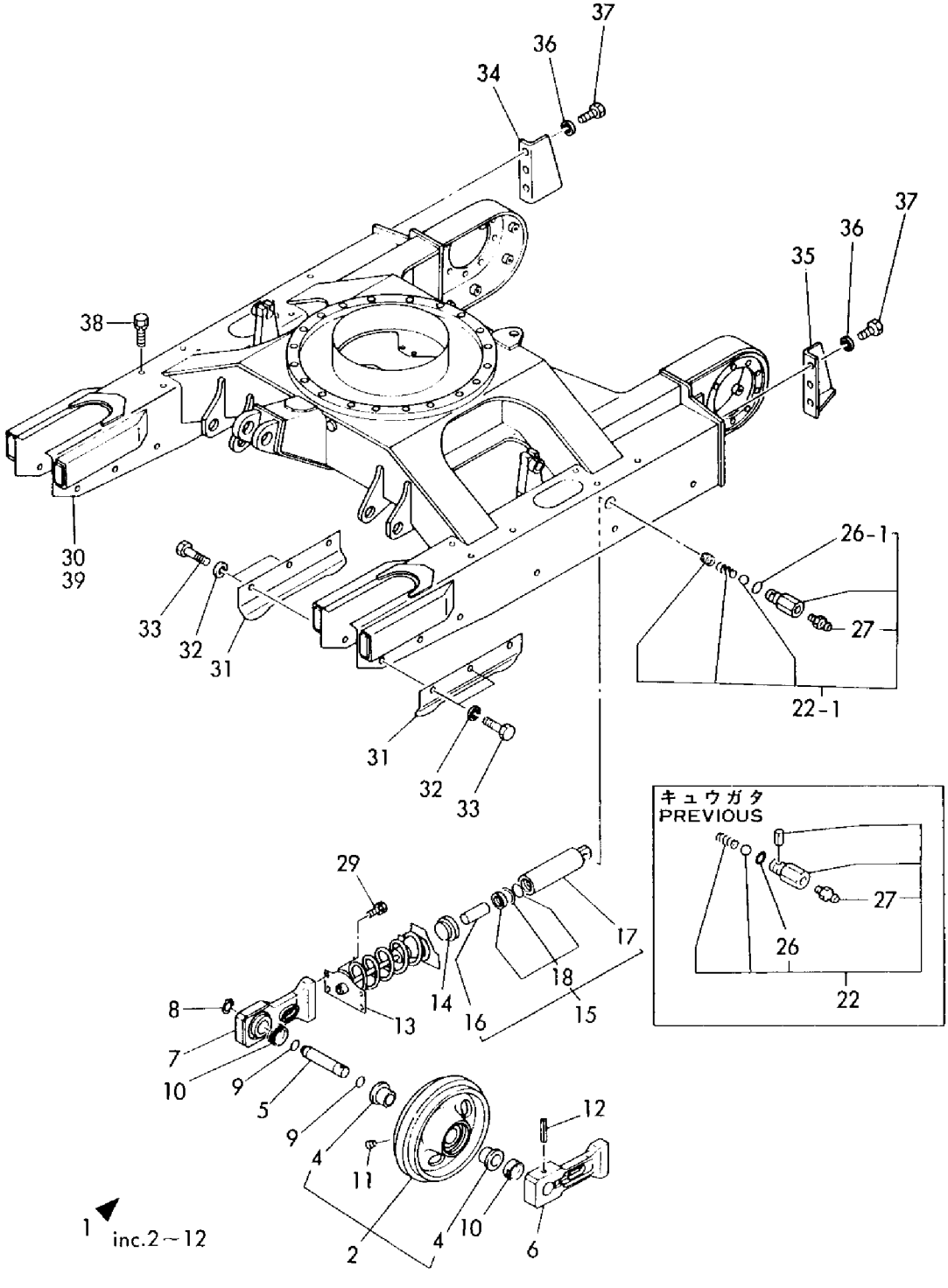

```
1,1,,772124-37110,,"IDLER ASSY",2,2,,2,2,,,,,,,,,,,,
2,2,,172124-37200,,"IDLER ASSY",2,2,,2,2,,,,,,,,,,,,
4,3,,172124-37120,,"BUSH 40",4,4,,4,4,,,,,,,,,,,,
5,2,,172124-37130,,"SHAFT, IDLER",2,2,,2,2,,,,,,,,,,,,
6,2,,172124-37140,,"COVER(A),IDLER SEAL",2,2,,2,2,,,,,,,,,,,,
7,2,,172124-37150,,"COVER(B),IDLER SEAL",2,2,,2,2,,,,,,,,,,,,
8,2,,22242-000350,,"CIRCLIP   35",2,2,,2,2,,,,,,,,,,,,
9,2,,24321-000350,,"O-RING 1A G-35.0",4,4,,4,4,,,,,,,,,,,,
10,2,,933112-00500,,"SEAL 66 86 28",4,4,,4,4,,,,,,,,,,,,
11,2,,933171-13691,,"PLUG PT1/8",2,2,,2,2,,,,,,,,,,,,
12,2,,172124-37160,,PIN,4,4,,4,4,,,,,,,,,,,,
13,1,,172124-37700,,"SPRING, ADJUSTING",2,2,,2,2,,,,,,,,,,,,
14,1,,172122-37710,,"HOLDER, ADJUSTER",2,2,,2,2,,,,,,,,,,,,
15,1,,172122-37751,,"ADJUST CYLINDER",2,2,,2,2,,,,,,,,,,,,
16,2,,172122-37781,,"ADJUST TUBE",2,2,,2,2,,,,,,,,,,,,
17,2,,172122-37810,,PISTON,2,2,,2,2,,,,,,,,,,,,
18,2,,172122-37820,,"ADJUST SEAL SET",2,2,,2,2,,,,,,,,,,,,
19,1,,172124-37780,,PLATE,4,4,,4,4,,,,,,,,,,,,
20,1,,172122-37842,,"VALVE ASSY, NIPPLE",2,2,,2,2,,,,,,,,,,,,
21,2,,24315-000140,,"O-RING 1B P-14.0",2,2,,2,2,,,,,,,,,,,,
21-1,2,,24315-000120,,"O-RING 1B P-
12.0",1,1,,1,1,,N,,,*1989.08,,*1989.08,,,,*1989.08,,*1989.08
22,2,,24761-020000,,"NIPPLE PT1/8,GREASE",2,2,,2,2,,,,,,,,,,,,
23,1,,22217-120000,,"WASHER 12,SPRING",8,8,,8,8,,,,,,,,,,,,
24,1,,26116-120602,,"BOLT M12X 60 PLATED",8,8,,8,8,,,,,,,,,,,,
25,1,,172124-50010,,"FRAME ASSY, TRACK",1,1,,1,1,,,,,,,,,,,,
```

SPEC. CODE
D72124-37110
D72124-37710
D72124-50110

Fig. 22 トラックフレーム&アイドラ TRACK FRAME & IDLER (ゴムクローラ) (CRAWLER, RUBBER)

COUNTRY	J P	N W	S W	W G	F A	D M	N L
Fig. No.	22	—	—	—	—	—	—

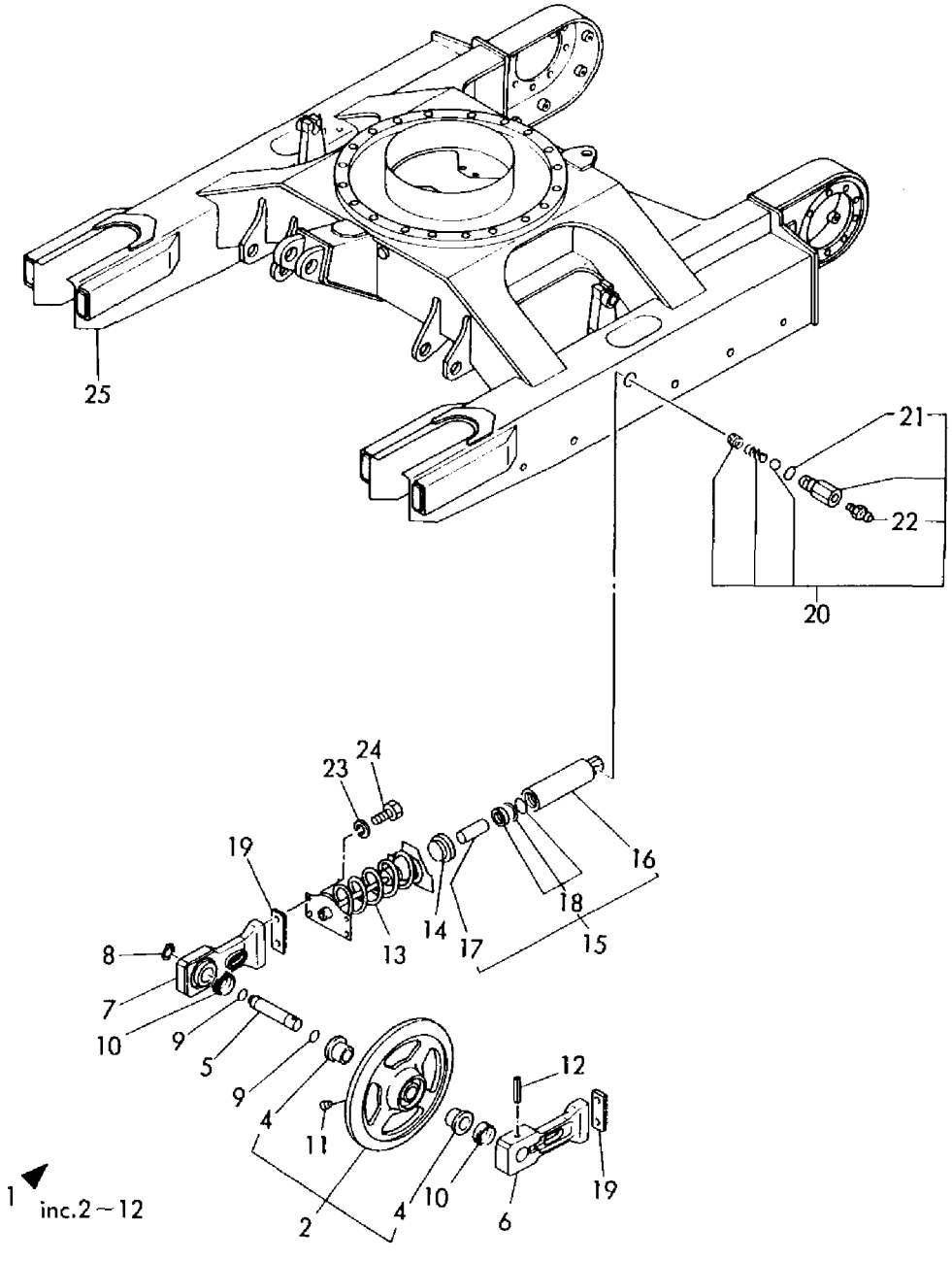

```
1,1,,772124-38100,,"CRAWLER ASSY, 380",2,2,,2,2,,,,,,,,,,,,
1-1,1,,772124-38101,,"CRAWLER ASSY,
380",2,2,,2,2,,N,,,*1985.09,,*1985.09,,,,*1985.09,,*1985.09
2,2,,172112-38103,,"PIN, MASTER",2,2,,2,2,,,,,,,,,,,,
2-1,2,,172124-38250,,"PIN,
MASTER",2,2,,2,2,,S,,,*1985.09,,*1985.09,,,,*1985.09,,*1985.09
3,2,,172112-38111,,"PIN, COTTER",2,2,,2,2,,,,,,,,,,,,
4,2,,172124-38100,,"CRAWLER ASSY, 380",2,2,,2,2,,,,,,,,,,,,
4-1,2,,172124-38101,,"CRAWLER ASSY,
380",2,2,,2,2,,S,,,*1985.09,,*1985.09,,,,*1985.09,,*1985.09
5,3,,172112-38130,,"BOLT, SHOE",296,296,,296,296,,,,,,,,,,,,
6,3,,172112-38140,,"NUT, SHOE",296,296,,296,296,,,,,,,,,,,,
7,3,,172112-38152,,"SHOW PLATE",74,74,,74,74,,,,,,,,,,,,
8,3,,172124-38010,,"LINK ASSY, TRACK",2,2,,2,2,,,M,,,,,,,,,
8-1,3,,172124-38110,,"LINK ASSY",2,2,,2,2,,,,,,,,,,,,
8-2,3,,172124-38111,,"LINK ASSY,
TRUCK",2,2,,2,2,,S,,,*1985.09,,*1985.09,,,,*1985.09,,*1985.09
9,4,,172112-38041,,"LINK (L), TRACK",72,72,,72,72,,,,,,,,,,,,
10,4,,172112-38051,,"LINK (R), TRACK",72,72,,72,72,,,,,,,,,,,,,
11,4,,172112-38081,,BUSH,74,74,,74,74,,,,,,,,,,,,
12,4,,172112-38091,,"PIN, TRACK",72,72,,72,72,,,,,,,,,,,,
13,4,,172124-38260,,"LINK (L), MASTER",2,2,,2,2,,,,,,,,,,,,
14,4,,172124-38270,,"LINK (R), MASTER",2,2,,2,2,,,,,,,,,,,,
15,1,,172112-38011,,"TRUCK, MASTER",2,2,,2,2,,,,,,,,,,,,
15-1,1,,172124-38140,,"MASTER
TRUCK",2,2,,2,2,,S,,,*1985.09,,*1985.09,,,,*1985.09,,*1985.09
16,2,,172112-38130,,"BOLT, SHOE",8,8,,8,8,,,,,,,,,,,,
17,2,,172112-38140,,"NUT, SHOE",8,8,,8,8,,,,,,,,,,,,
18,2,,172112-38152,,"SHOW PLATE",2,2,,2,2,,,,,,,,,,,,
19,2,,172112-38122,,"LINK, MASTER",2,2,,2,2,,,,,,,,,,,,
19-1,2,,172124-38300,,"LINK,
MASTER",2,2,,2,2,,S,,,*1985.09,,*1985.09,,,,*1985.09,,*1985.09
20,3,,172112-38081,,BUSH,2,2,,2,2,,,,,,,,,,,,
21,3,,172124-38260,,"LINK (L), MASTER",2,2,,2,2,,,,,,,,,,,,
22,3,,172124-38270,,"LINK (R), MASTER",2,2,,2,2,,,,,,,,,,,,
23,1,,172124-38600,,"CRAWLER ASSY, RUBBER",2,2,,2,2,,,,,,,,,,,,,
```

Fig. 23 クローラ CRAWLER

SPEC. CODE
D72124-38101
D72124-38600

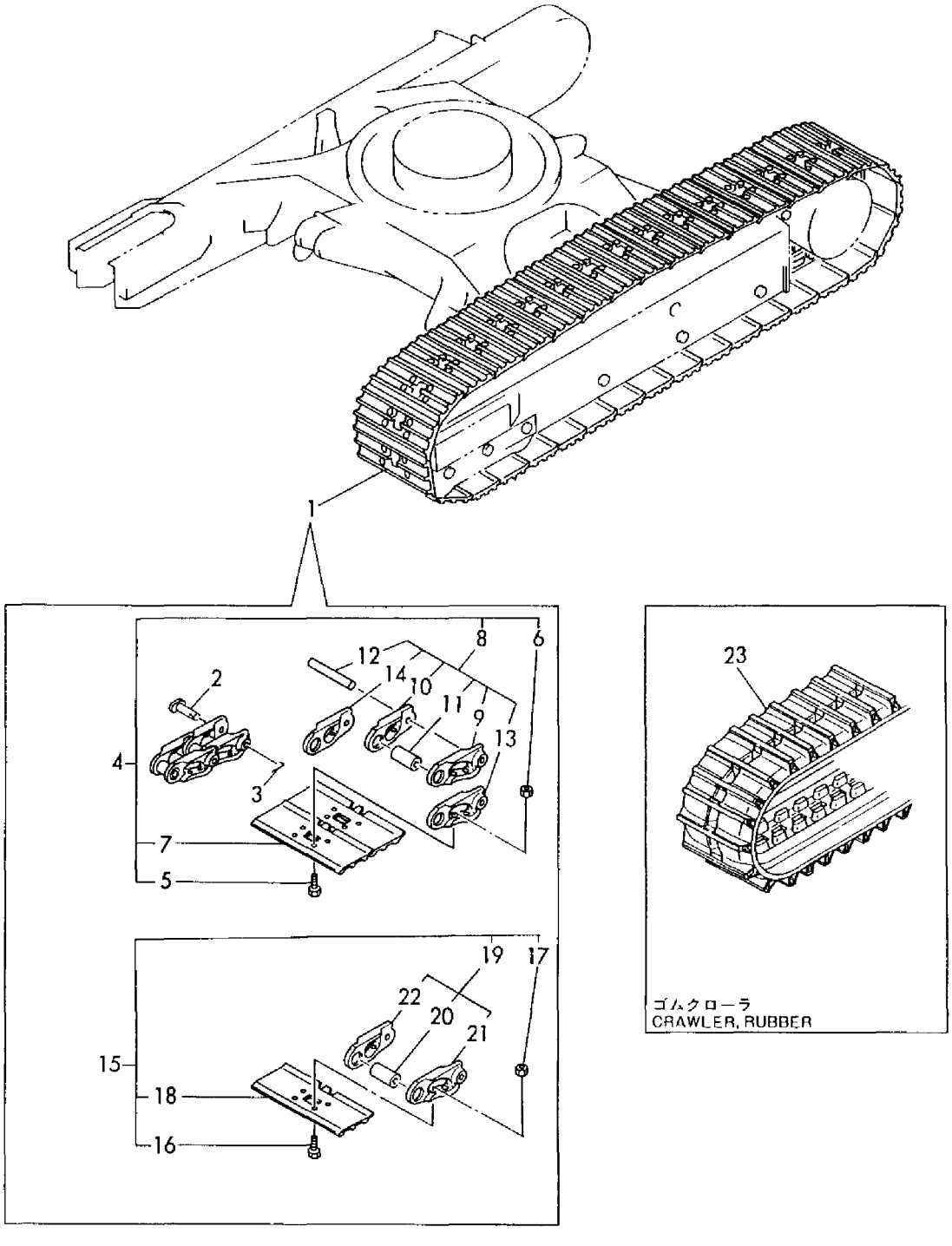

1,1,,172122-45101,,LEVER,2,2,,2,2,,,,,,,,,,,,
2,1,,172122-45170,,"LEVER ASSY, BLADE",1,1,,1,1,,,,,,,,,,,,
3,2,,933171-23680,,"BUSH 14X15",2,2,,2,2,,,,,,,,,,,,
4,1,,172122-45200,,"RUBBER BOOT, LEVER",2,2,,2,2,,,,,,,,,,,,
4-1,1,,172122-45201,,"RUBBER BOOT,
LEVER",2,2,,2,2,,N,,,M00573,,M00573,,,,M00563,,M00563
5,1,,172122-45210,,"BAND, BOOT",2,2,,2,2,,,,,,,,,,,,
6,1,,172116-45901,,"KNOB (A), CONTROL",1,1,,1,1,,,,,,,,,,,,
6-1,1,,172122-45850,,"GRIP (A),
LEVER",1,1,,1,1,,N,,,*1985.03,,*1985.03,,,,*1985.03,,*1985.03
6-2,1,,172122-45851,,"KNOB (A),
CONTROL",1,1,,1,1,,N,,,*1985.12,,*1985.12,,,,*1985.12,,*1985.12
7,1,,172116-45911,,"KNOB (B), CONTROL",1,1,,1,1,,,,,,,,,,,,
7-1,1,,172116-45912,,"KNOB (B),
CONTROL",1,1,,1,1,,N,,,*1985.12,,*1985.12,,,,*1985.12,,*1985.12
8,1,,172116-45920,,"KNOB (L), LEVER",1,1,,1,1,,,,,,,,,,,,
9,1,,172116-45930,,"KNOB (R), LEVER",1,1,,1,1,,,,,,,,,,,,
10,1,,172116-45940,,"KNOB (C), LEVER",1,1,,1,1,,,,,,,,,,,,
11,1,,172122-46600,,"LEVER(R), DRIVING",1,1,,1,1,,,,,,,,,,,,
12,1,,172122-46880,,"LEVER(L), DRIVING",1,1,,1,1,,,,,,,,,,,,
13,1,,22217-160000,,"SPRING WASHER 16",2,2,,2,2,,,,,,,,,,,,
14,1,,26557-050122,,"SCREW M 5X 12",2,2,,2,2,,,,,,,,,,,,
15,1,,26736-160002,,"NUT M16",2,2,,2,2,,,,,,,,,,,,
15-1,1,,26777-160002,,"LOCK NUT
M16",2,2,,2,2,,N,,,M00573,,M00573,,,,M00563,,M00563
16,1,,26756-050002,,"LOCK NUT M 5 PLATED",2,2,,2,2,,,,,,,,,,,,
17,1,,26756-100002,,"LOCK NUT M10 PLATED",2,2,,2,2,,,,,,,,,,,,
18,1,,26756-100002,,"LOCK NUT M10 PLATED",2,2,,2,2,,,,,,,,,,,,
19,1,,172112-41380,,"SHAFT, BLADE LEVER",1,1,,1,1,,,,,,,,,,,,
20,1,,172124-45500,,"PEDAL, SWING",1,1,,1,1,,,,,,,,,,,,
20-1,1,,172124-45501,,"PEDAL,
SWING",1,1,,1,1,,S,1,,M10501,,M10501,,,,M10501,,M10501
21,2,,933171-23680,,"BUSH 14X15",2,2,,2,2,,,,,,,,,,,,
22,1,,172122-45680,,"FULCRUM, PEDAL",1,1,,1,1,,,,,,,,,,,,
23,1,,22217-100000,,"SPRING WASHER 10",2,2,,2,2,,,,,,,,,,,,
24,1,,22417-400320,,"COTTER PIN 4.0X32",1,1,,1,1,,,,,,,,,,,,
25,1,,26116-100402,,"BOLT M10X 40 PLATED",1,1,,1,1,,,,,,,,,,,,
26,1,,26716-100002,,"NUT M10",2,2,,2,2,,,,,,,,,,,,
27,1,,172614-45170,,"SPRING 12",2,2,,2,2,,,,,,,,,,,,
28,1,,172122-46180,,"LEVER, LOCK",2,2,,2,2,,,,,,,,,,,,
29,1,,172122-46210,,"ARM, LOCK",2,2,,2,2,,,,,,,,,,,,
30,1,,172116-46630,,"KNOB, LOCK LEVER",2,2,,2,2,,,,,,,,,,,,
31,1,,194264-24190,,"PLUG, SCREW",2,2,,2,2,,Z,,,M00501,,M00501,,,,M00501,,M00501
32,1,,172124-45600,,"STAND, LEVER (L)",1,1,,1,1,,,,,,,,,,,,
33,2,,933171-23680,,"BUSH 14X15",2,2,,2,2,,,,,,,,,,,,
34,1,,172124-45620,,"STAND, LEVER (R)",1,1,,1,1,,,,,,,,,,,,
35,2,,933171-23680,,"BUSH 14X15",2,2,,2,2,,,,,,,,,,,,
36,1,,172124-45630,,"STAY, STAND",1,1,,1,1,,,,,,,,,,,,
37,1,,172124-45660,,"STAY, LINK",1,1,,1,1,,,,,,,,,,,,
38,1,,172122-45980,,"STAY, STOPPER",2,2,,2,2,,,,,,,,,,,,
39,1,,172112-69790,,"PLUG 32X2",1,1,,1,1,,,,,,,,,,,,
40,1,,26013-100162,,"BOLT M10X 16",3,3,,3,3,,,,,,,,,,,,
41,1,,26013-100202,,"BOLT W/WASHER M10X20",4,4,,4,4,,,,,,,,,,,,
42,1,,26013-100202,,"BOLT W/WASHER M10X20",4,4,,4,4,,,,,,,,,,,,
42-1,1,,26013-100302,,"BOLT M10X
30",4,4,,4,4,,S,,,M00501,,M00501,,,,M00501,,M00501
43,1,,26013-100202,,"BOLT W/WASHER M10X20",2,2,,2,2,,,,,,,,,,,,
44,1,,26756-050002,,"LOCK NUT M 5 PLATED",4,4,,4,4,,,,,,,,,,,,
45,1,,26756-050002,,"LOCK NUT M 5 PLATED",4,4,,4,4,,,,,,,,,,,,
46,1,,26979-050202,,"SCREW M 5X 20",4,4,,4,4,,,,,,,,,,,,
46-1,1,,172122-47500,,"SCREW M 5X
20",4,4,,4,4,,R,1,,M10501,,M10501,,,,M10501,,M10501
47,1,,26979-050202,,"SCREW M 5X 20",4,4,,4,4,,,,,,,,,,,,

47-1,1,,172122-47500,,"SCREW M 5X
20",4,4,,4,4,,R,1,,M10501,,M10501,,,,M10501,,M10501
48,1,,933168-56000,,"GROMMET
17X19",1,1,,1,1,,Z,,,M00501,,M00501,,,,M00501,,M00501
49,1,,22351-040036,,"SPRING PIN 4X36",2,2,,2,2,,,,,,,,,,,,,
50,1,,26716-100002,,"NUT M10",4,4,,4,4,,W,,,M00501,,M00501,,,,M00501,,M00501
51,1,,172122-45860,,"LEAD
WIRE(B),HORN",1,1,,1,1,,W,,,*1985.03,,*1985.03,,,,*1985.03,,*1985.03
52,1,,26116-100252,,"BOLT M10X 25 PLATED",1,1,,1,1,,,,,,,,,,,,,

SPEC. CODE
D72122-45100
D72124-45301
D72124-45400
D72122-45500
D72122-45520

Fig. 24 ソウジュウソウチ(レバー) CONTROL EQUIPMENT (LEVER)

(キュウガタ)
(PREVIOUS)

JAPAN, UP TO M/#20500
AMMANN, UP TO M/#60500

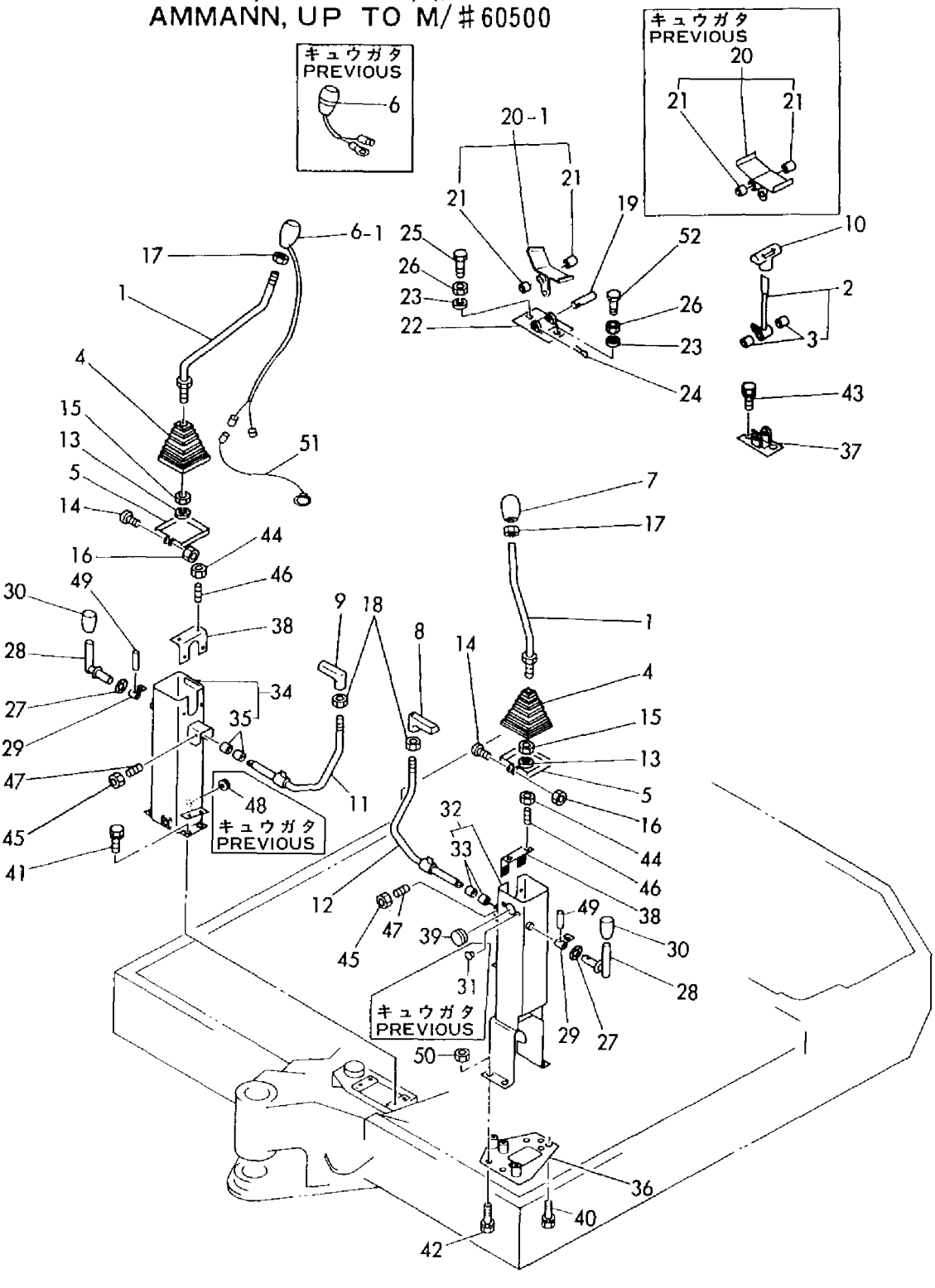

```
1,1,,172122-45101,,LEVER,2,2,,2,2,,,,,,,,,,,,
2,1,,172122-45170,,"LEVER ASSY, BLADE",1,1,,1,1,,,,,,,,,,,,
3,2,,933171-23680,,"BUSH 14X15",2,2,,2,2,,,,,,,,,,,,
4,1,,172122-45202,,"BOOT, LEVER",2,2,,2,2,,,,,,,,,,,,
5,1,,172312-46301,,KNOB(A),1,1,,1,1,,,,,,,,,,,,
6,1,,172312-46321,,KNOB(B),1,1,,1,1,,,,,,,,,,,,
7,1,,172122-45050,,"KNOB (L)",1,1,,1,1,,,,,,,,,,,,
8,1,,172122-45060,,"KNOB (R)",1,1,,1,1,,,,,,,,,,,,
9,1,,172116-45940,,"KNOB (C), LEVER",1,1,,1,1,,,,,,,,,,,,
10,1,,172122-46600,,"LEVER(R), DRIVING",1,1,,1,1,,,,,,,,,,,,
11,1,,172122-46880,,"LEVER(L), DRIVING",1,1,,1,1,,,,,,,,,,,,
12,1,,22217-160000,,"SPRING WASHER 16",2,2,,2,2,,,,,,,,,,,,
13,1,,26777-160002,,"LOCK NUT M16",2,2,,2,2,,,,,,,,,,,,
14,1,,26757-100002,,"LOCK NUT M10 PLATED",2,2,,2,2,,,,,,,,,,,,
15,1,,26757-100002,,"LOCK NUT M10 PLATED",2,2,,2,2,,,,,,,,,,,,
16,1,,172112-41380,,"SHAFT, BLADE LEVER",1,1,,1,1,,,,,,,,,,,,
17,1,,172124-45502,,"PEDAL, SWING",1,1,,1,1,,,,,,,,,,,,
18,2,,933171-23680,,"BUSH 14X15",2,2,,2,2,,,,,,,,,,,,
19,1,,172122-45681,,"FULCRUM, PEDAL",1,1,,1,1,,,,,,,,,,,,
20,1,,22217-100000,,"SPRING WASHER 10",2,2,,2,2,,,,,,,,,,,,
21,1,,22417-400400,,"COTTER PIN 4.0X40",1,1,,1,1,,,,,,,,,,,,
22,1,,26116-100604,,"BOLT M10X 60 PLATED",1,1,,1,1,,,,,,,,,,,,
23,1,,26716-100002,,"NUT M10",2,2,,2,2,,,,,,,,,,,,
24,1,,172614-45170,,"SPRING 12",2,2,,2,2,,,,,,,,,,,,
25,1,,172122-46180,,"LEVER, LOCK",2,2,,2,2,,,,,,,,,,,,
26,1,,172122-46210,,"ARM, LOCK",2,2,,2,2,,,,,,,,,,,,
27,1,,172116-46630,,"KNOB, LOCK LEVER",2,2,,2,2,,,,,,,,,,,,
28,1,,172124-45600,,"STAND, LEVER (L)",1,1,,1,1,,,,,,,,,,,,
29,2,,933171-23680,,"BUSH 14X15",2,2,,2,2,,,,,,,,,,,,
30,1,,172124-45620,,"STAND, LEVER (R)",1,1,,1,1,,,,,,,,,,,,
31,2,,933171-23680,,"BUSH 14X15",2,2,,2,2,,,,,,,,,,,,
32,1,,172124-45630,,"STAY, STAND",1,1,,1,1,,,,,,,,,,,,
33,1,,172124-45660,,"STAY, LINK",1,1,,1,1,,,,,,,,,,,,
34,1,,172122-45980,,"STAY, STOPPER",2,2,,2,2,,,,,,,,,,,,
35,1,,172112-69790,,"PLUG 32X2",1,1,,1,1,,,,,,,,,,,,
36,1,,26013-100162,,"BOLT M10X 16",3,3,,3,3,,,,,,,,,,,,
37,1,,26013-100202,,"BOLT W/WASHER M10X20",4,4,,4,4,,,,,,,,,,,,
38,1,,26013-100302,,"BOLT M10X 30",4,4,,4,4,,,,,,,,,,,,
39,1,,26013-100202,,"BOLT W/WASHER M10X20",2,2,,2,2,,,,,,,,,,,,
40,1,,194990-22120,,"NUT W/WASHER  5",4,4,,4,4,,,,,,,,,,,,
41,1,,194990-22120,,"NUT W/WASHER  5",4,4,,4,4,,,,,,,,,,,,
42,1,,26979-050202,,"SCREW M 5X 20",4,4,,4,4,,,,,,,,,,,,
43,1,,26979-050202,,"SCREW M 5X 20",4,4,,4,4,,,,,,,,,,,,
44,1,,22351-040036,,"SPRING PIN 4X36",2,2,,2,2,,,,,,,,,,,,
45,1,,26716-100002,,"NUT M10",4,4,,4,4,,,,,,,,,,,,
46,1,,172122-45860,,"LEAD WIRE(B),HORN",1,1,,1,1,,,,,,,,,,,,
47,1,,26116-100354,,"BOLT M10X 35 PLATED",1,1,,1,1,,,,,,,,,,,,
48,1,,24311-000210,,"O-RING 1A P-21.0",2,2,,2,2,,,,,,,,,,,,
49,1,,172125-45500,,"LEVER, LOCK",,,,,1,,,1,,,,,,,,,,
```

SPEC. CODE
D72122-45100
D72124-45301
D72124-45400
D72122-45500
D72122-45520

Fig. 25 ソウジュウソウチ(レバー) CONTROL EQUIPMENT (LEVER) (シンガタ) (NEW TYPE)

JAPAN, FROM TO M/#20501
AMMANN, FROM TO M/#60501

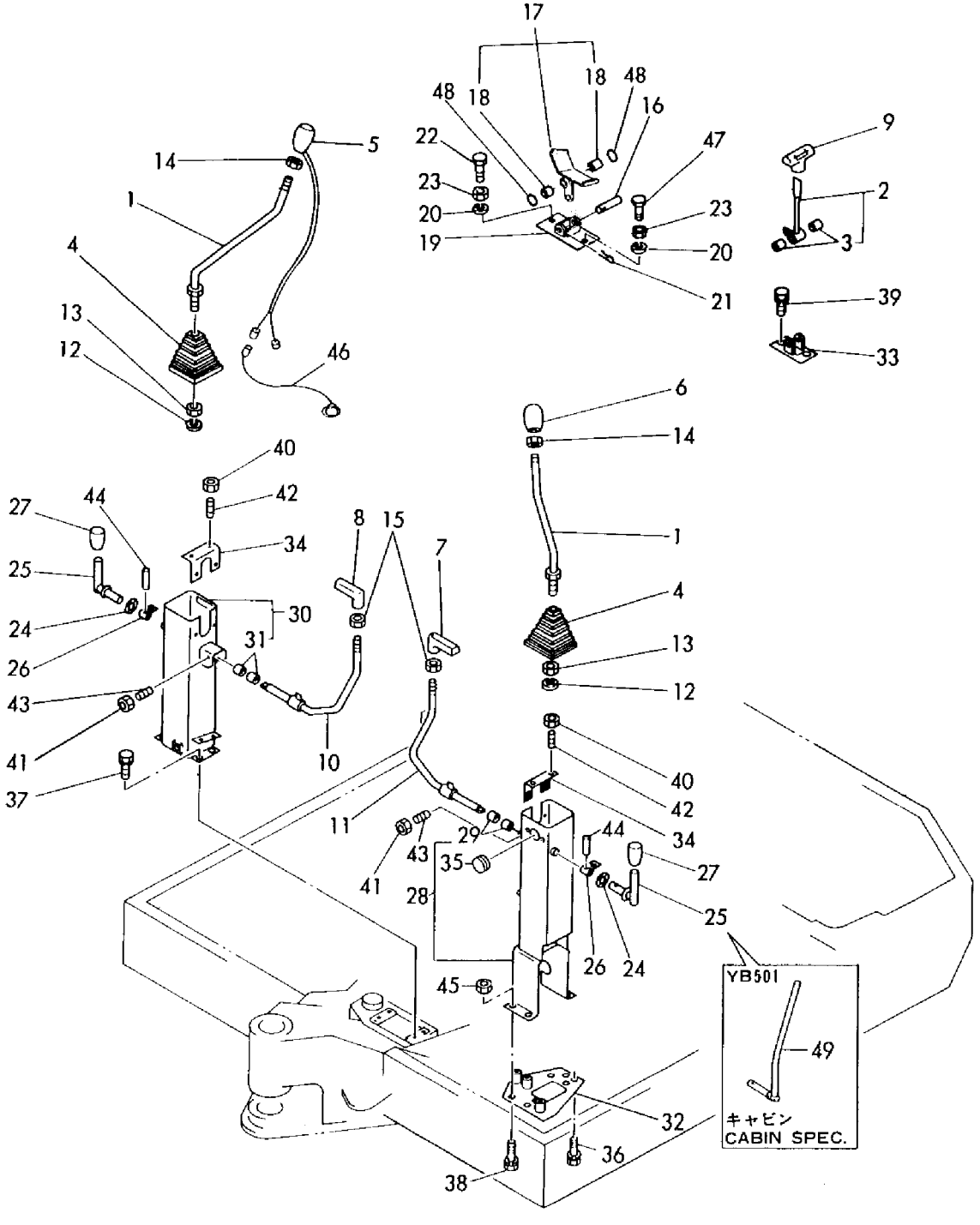

1,1,,172112-41380,,"SHAFT, BLADE LEVER",2,2,,2,2,,,,,,,,,,,,
2,1,,172124-45200,,"SHAFT 20X705",2,2,,2,2,,,,,,,,,,,,
3,1,,172124-45210,,"LINK (A)",1,1,,1,1,,,,,,,,,,,,
4,2,,172112-42730,,"BUSH 20X15",2,2,,2,2,,,,,,,,,,,,
5,1,,172124-45240,,"LINK (B)",1,1,,1,1,,,,,,,,,,,,
6,2,,172112-42730,,"BUSH 20X15",2,2,,2,2,,,,,,,,,,,,
7,1,,172122-45250,,"LINK (B)",2,2,,2,2,,,,,,,,,,,,
8,1,,172124-45530,,"LINK (H)",1,1,,1,1,,,,,,,,,,,,
9,2,,933171-23680,,"BUSH 14X15",2,2,,2,2,,,,,,,,,,,,
10,1,,172124-45270,,"LINK (D)",1,1,,1,1,,,,,,,,,,,,
11,1,,172122-45280,,"LINK (C)",3,3,,3,3,,,,,,,,,,,,
12,1,,172124-45280,,"LINK (E)",1,1,,1,1,,,,,,,,,,,,
13,2,,172112-42730,,"BUSH 20X15",2,2,,2,2,,,,,,,,,,,,
14,1,,172124-45300,,"LINK (F)",1,1,,1,1,,,,,,,,,,,,
15,2,,172112-42730,,"BUSH 20X15",2,2,,2,2,,,,,,,,,,,,
16,1,,172124-45330,,"LINK (A), SPOOL",6,6,,6,6,,,,,,,,,,,,
17,1,,172124-45441,,"LINK (D)ASSY, SPOOL",4,4,,4,4,,,,,,,,,,,,
18,1,,172124-45480,,"LINK (E), SPOOL",2,2,,2,2,,,,,,,,,,,,
18-1,1,,172124-45481,,"LINK (E)ASSY,
SPOOL",2,2,,2,2,,R,,,*1985.12,,*1985.12,,,,*1985.12,,*1985.12
19,1,,172124-45380,,"LINK (B), SPOOL",3,3,,3,3,,,,,,,,,,,,
20,1,,172124-45400,,"LINK (C), SPOOL",2,2,,2,2,,,,,,,,,,,,
21,1,,172124-45420,,"LINK (G)",1,1,,1,1,,,,,,,,,,,,
22,2,,933171-23680,,"BUSH 14X15",2,2,,2,2,,,,,,,,,,,,
23,1,,172122-45660,,"BRACKET (A), LINK",2,2,,2,2,,,,,,,,,,,,
24,1,,172122-45720,,"ROD-END 14",6,6,,6,6,,,,,,,,,,,,
25,1,,172122-45740,,"SHAFT (L), LINK",1,1,,1,1,,,,,,,,,,,,
25-1,1,,172122-45731,,"LINK
SHAFT(R)",1,1,,1,1,,R,,,*1984.10,,*1984.10,,,,"*1984,10",,*1984.10
26,1,,172122-45780,,"BOSS, SCREW",3,3,,3,3,,,,,,,,,,,,
27,1,,172122-46550,,"LINK (B), SPOOL",5,5,,5,5,,,,,,,,,,,,
28,1,,22137-140000,,"WASHER 14,POLISHED",6,6,,6,6,,,,,,,,,,,,
29,1,,22217-140000,,"SPRING WASHER 14",6,6,,6,6,,,,,,,,,,,,
30,1,,22217-140000,,"SPRING WASHER 14",3,3,,3,3,,,,,,,,,,,,
31,1,,22351-050032,,"SPRING PIN 5X32",8,8,,8,8,,,,,,,,,,,,
32,1,,22417-160160,,"COTTER PIN 1.6X16",11,11,,11,11,,,,,,,,,,,,
33,1,,22417-400400,,"COTTER PIN 4.0X40",2,2,,2,2,,,,,,,,,,,,
34,1,,26013-100202,,"BOLT W/WASHER M10X20",4,4,,4,4,,,,,,,,,,,,
35,1,,26116-140202,,"BOLT M14X 20 PLATED",3,3,,3,3,,,,,,,,,,,,
36,1,,26726-140002,,"NUT M14",6,6,,6,6,,,,,,,,,,,,
37,1,,26716-080002,,"NUT M 8",6,6,,6,6,,,,,,,,,,,,
38,1,,26716-100002,,"NUT M10",5,5,,5,5,,,,,,,,,,,,
39,1,,933110-54100,,"PIN 4.75X14",11,11,,11,11,,,,,,,,,,,,
40,1,,22117-080000,,"WASHER 8",2,2,,2,2,,,,,,,,,,,,
40-1,1,,22117-080000,,"WASHER 8",4,4,,4,4,,K,,,M00727,,M00727,,,,M00645,,M00645
41,1,,22417-200150,,"COTTER PIN 2.0X15",11,11,,11,11,,,,,,,,,,,,
42,1,,933171-21700,,"PIN (B), SPOOL LINK",11,11,,11,11,,,,,,,,,,,,
42-1,1,,933171-21700,,"PIN (B), SPOOL
LINK",9,9,,9,9,,K,,,M00727,,M00727,,,,M00645,,M00645
43,1,,172124-45430,,"LINK (I)",2,2,,2,2,,,,,,,,,,,,
44,1,,172112-41960,,"PIN 8X25.5",2,2,,2,2,,W,,,M00727,,M00727,,,,M00645,,M00645
45,1,,172122-45790,,SHIM,4,4,,4,4,,W,,,M00501,,M00501,,,,M00501,,M00501

Fig. 26 ソウジュウソウチ(リンク) CONTROL EQUIPMENT (LINK)

SPEC. CODE
D72124-45200
D72124-45600

(キュウガタ)
(PREVIOUS)

JAPAN, UP TO M/#20500
AMMANN, UP TO M/#60500

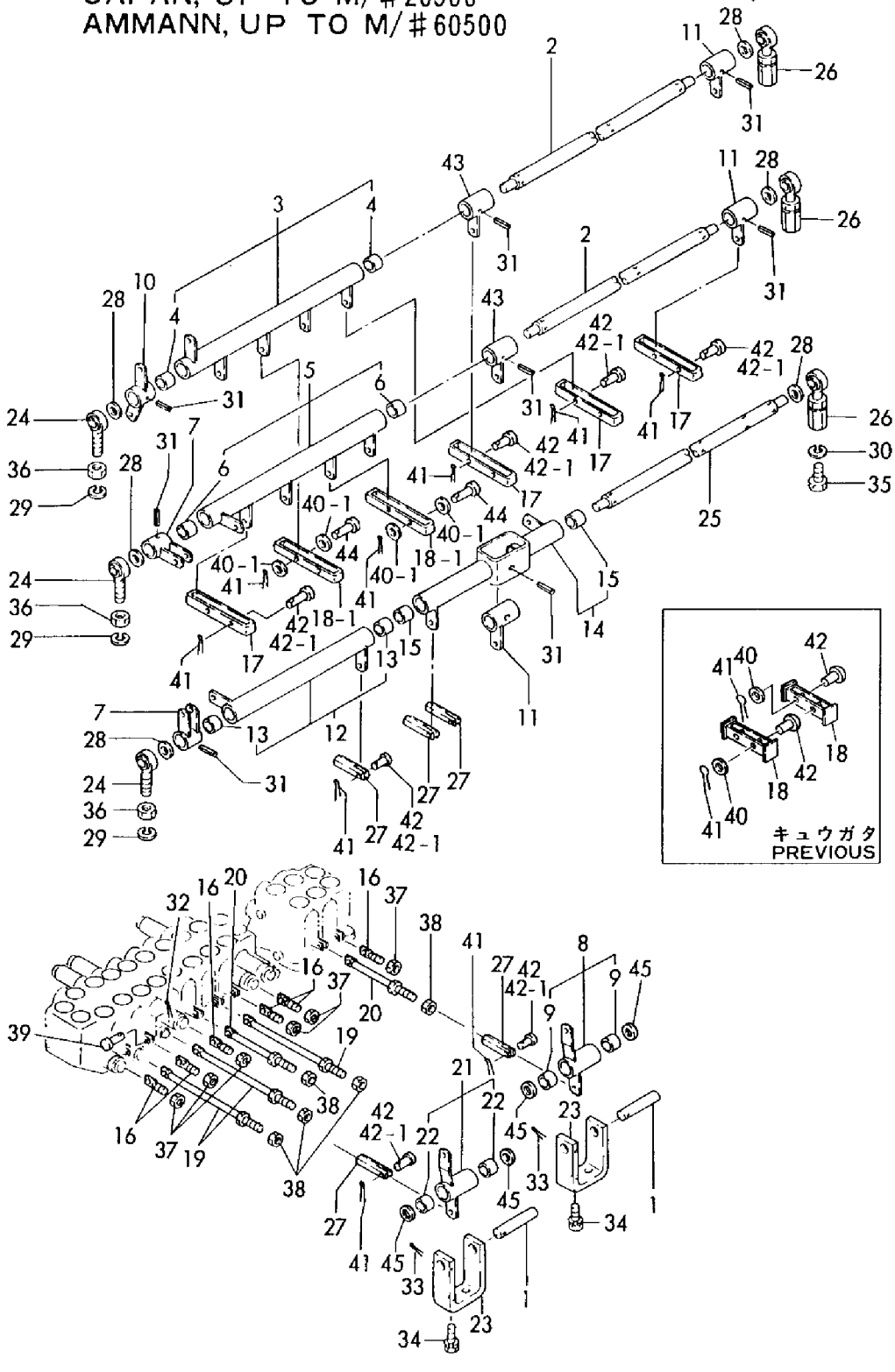

1,1,,172112-41380,,"SHAFT, BLADE LEVER",2,2,,2,2,,,,,,,,,,,,
2,1,,172124-45200,,"SHAFT 20X705",2,2,,2,2,,,,,,,,,,,,
3,1,,172124-45211,,"LINK (A)",1,1,,1,1,,,,,,,,,,,,
4,2,,172112-42730,,"BUSH 20X15",2,2,,2,2,,,,,,,,,,,,
5,1,,172124-45241,,"LINK (B)",1,1,,1,1,,,,,,,,,,,,
6,2,,172112-42730,,"BUSH 20X15",2,2,,2,2,,,,,,,,,,,,
7,1,,172122-45251,,"LINK (B)",1,1,,1,1,,,,,,,,,,,,
8,1,,172124-45531,,"LINK (H)",1,1,,1,1,,,,,,,,,,,,
9,2,,933171-23680,,"BUSH 14X15",2,2,,2,2,,,,,,,,,,,,
10,1,,172124-45271,,"LINK (D)",1,1,,1,1,,,,,,,,,,,,
11,1,,172122-45281,,"LINK (C)",1,1,,1,1,,,,,,,,,,,,
12,1,,172124-45281,,"LINK (E)",1,1,,1,1,,,,,,,,,,,,
13,2,,172112-42730,,"BUSH 20X15",2,2,,2,2,,,,,,,,,,,,
14,1,,172124-45301,,"LINK (F)",1,1,,1,1,,,,,,,,,,,,
15,2,,172112-42730,,"BUSH 20X15",2,2,,2,2,,,,,,,,,,,,
16,1,,172124-45331,,"LINK (A), SPOOL",4,4,,4,4,,,,,,,,,,,,
17,1,,172124-45481,,"LINK (E)ASSY, SPOOL",2,2,,2,2,,,,,,,,,,,,
18,1,,172124-45380,,"LINK (B), SPOOL",3,3,,3,3,,,,,,,,,,,,
19,1,,172124-45401,,"LINK (C)ASSY, SPOOL",1,1,,1,1,,,,,,,,,,,,
20,1,,172124-45421,,"LINK (G)",1,1,,1,1,,,,,,,,,,,,
21,2,,933171-23680,,"BUSH 14X15",2,2,,2,2,,,,,,,,,,,,
22,1,,172122-45660,,"BRACKET (A), LINK",2,2,,2,2,,,,,,,,,,,,
23,1,,172122-45720,,"ROD-END 14",6,6,,6,6,,,,,,,,,,,,
24,1,,172122-45731,,"LINK SHAFT(R)",1,1,,1,1,,,,,,,,,,,,
25,1,,172122-45780,,"BOSS, SCREW",3,3,,3,3,,,,,,,,,,,,
26,1,,172122-46550,,"LINK (B), SPOOL",3,3,,3,3,,,,,,,,,,,,
27,1,,22157-120000,,"WASHER 12",6,6,,6,6,,,,,,,,,,,,
28,1,,22217-140000,,"SPRING WASHER 14",6,6,,6,6,,,,,,,,,,,,
29,1,,22217-140000,,"SPRING WASHER 14",3,3,,3,3,,,,,,,,,,,,
30,1,,22351-050036,,"SPRING PIN 5X36",8,8,,8,8,,,,,,,,,,,,
31,1,,22417-160160,,"COTTER PIN 1.6X16",11,11,,11,11,,,,,,,,,,,,,
32,1,,22417-400400,,"COTTER PIN 4.0X40",2,2,,2,2,,,,,,,,,,,,
33,1,,26013-100202,,"BOLT W/WASHER M10X20",4,4,,4,4,,,,,,,,,,,,
34,1,,26116-140202,,"BOLT M14X 20 PLATED",3,3,,3,3,,,,,,,,,,,,
35,1,,26716-140002,,"NUT M14",6,6,,6,6,,,,,,,,,,,,
36,1,,26716-080002,,"NUT M 8",8,8,,8,8,,,,,,,,,,,,
37,1,,26716-100002,,"NUT M10",3,3,,3,3,,,,,,,,,,,,
38,1,,933110-54100,,"PIN 4.75X14",11,11,,11,11,,,,,,,,,,,,
39,1,,22117-080000,,"WASHER 8",4,4,,4,4,,,,,,,,,,,,
40,1,,22417-200150,,"COTTER PIN 2.0X15",5,5,,5,5,,,,,,,,,,,,
41,1,,933171-21700,,"PIN (B), SPOOL LINK",3,3,,3,3,,,,,,,,,,,,
42,1,,172124-45431,,"LINK (I)",2,2,,2,2,,,,,,,,,,,,
43,1,,172112-41960,,"PIN 8X25.5",2,2,,2,2,,,,,,,,,,,,
44,1,,172122-45790,,SHIM,4,4,,4,4,,,,,,,,,,,,
45,1,,172124-46300,,"LINK (B1) ASSY",1,1,,1,1,,,,,,,,,,,,
46,1,,172124-46200,,"O-RING 27X5.7",14,14,,14,14,,,,,,,,,,,,
47,1,,24761-020000,,"NIPPLE PT1/8,GREASE",2,2,,2,2,,,,,,,,,,,,
48,1,,24761-050000,,"NIPPLE C,GREASE",3,3,,3,3,,,,,,,,,,,,
49,1,,172124-46340,,"ROD (A), SPOOL",2,2,,2,2,,,,,,,,,,,,
50,1,,172112-41980,,"BEARING, ROD-END",6,6,,6,6,,,,,,,,,,,,
50-1,1,,172122-46590,,"ELBALL
8",6,6,,6,6,,R,,,*1987.05,,*1987.05,,,,*1987.05,,*1987.05
51,1,,26716-080002,,"NUT M 8",6,6,,6,6,,,,,,,,,,,,
52,1,,22217-080000,,"SPRING WASHER 8",6,6,,6,6,,,,,,,,,,,,
53,1,,172124-46380,,"ROD, SPOOL",1,1,,1,1,,,,,,,,,,,,

Fig. 27 ソウジュウソウチ(リンク) CONTROL EQUIPMENT (LINK) (シンガタ) (NEW TYPE)

SPEC. CODE
D72124-45201
D72124-45601

JAPAN, FROM TO M/#20501
AMMANN, FROM TO M/#60501

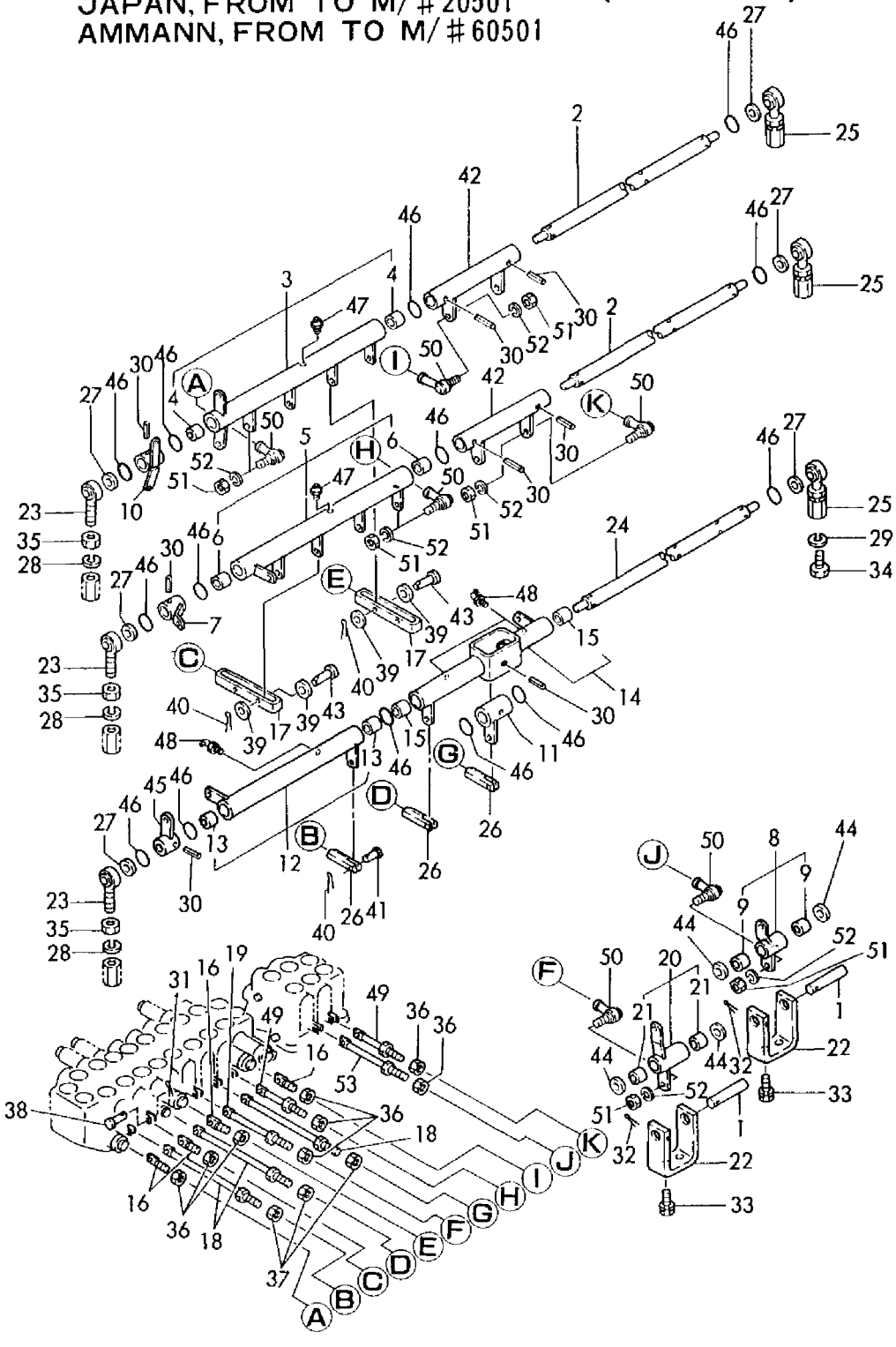

```
1,1,,172123-45201,,"LINK ASSY",1,1,,1,1,,,,,,,,,,,
2,1,,172122-45801,,"PEDAL,ACCELERATOR",1,1,,1,1,,,,,,,,,,,
3,1,,172122-45830,,"PAD, METAL",1,1,,1,1,,,,,,,,,,,
4,1,,22137-100000,,"WASHER 10,POLISHED",1,1,,1,1,,,,,,,,,,,
5,1,,26346-100002,,"U-NUT M10 PLATED",1,1,,1,1,,,,,,,,,,,
6,1,,172112-41380,,"SHAFT, BLADE LEVER",1,1,,1,1,,,,,,,,,,,
7,1,,172122-45340,,"LINK (E) W/BUSH",3,3,,3,3,,,,,,,,,,,
8,2,,933171-23680,,"BUSH 14X15",6,6,,6,6,,,,,,,,,,,
9,1,,172122-45510,,"LINK W/BUSH, BLADE",1,1,,1,1,,,,,,,,,,,
10,2,,933171-23680,,"BUSH 14X15",2,2,,2,2,,,,,,,,,,,
11,1,,172122-45540,,"BOSS W/BUSH, LINK",2,2,,2,2,,,,,,,,,,,
12,2,,172116-46960,,"BUSH 20X15",4,4,,4,4,,,,,,,,,,,
13,1,,172122-45591,,"LINK (L) W/BUSH",1,1,,1,1,,,,,,,,,,,
14,2,,933171-23680,,"BUSH 14X15",2,2,,2,2,,,,,,,,,,,
15,1,,172122-45611,,"LINK (R) W/BUSH",1,1,,1,1,,,,,,,,,,,
16,2,,933171-23680,,"BUSH 14X15",2,2,,2,2,,,,,,,,,,,
17,1,,172122-45640,,"LINK, WORK",2,2,,2,2,,,,,,,,,,,
18,1,,172122-45670,,"BRACKET (B), LINK",1,1,,1,1,,,,,,,,,,,
19,1,,172122-45700,,"ARM, DRIVING LINK",2,2,,2,2,,,,,,,,,,,
19-1,1,,172122-45701,,"ARM, DRIVING
LINK",2,2,,2,2,,N,,,M00501,,M00501,,,,M00501,,M00501
20,1,,172122-45760,,"SHAFT, LINK",1,1,,1,1,,,,,,,,,,,
21,1,,172122-45770,,"SHAFT, LINK",3,3,,3,3,,,,,,,,,,,
22,1,,22137-140000,,"WASHER 14,POLISHED",2,2,,2,2,,,,,,,,,,,
23,1,,22242-000200,,"CIRCLIP   20",2,2,,2,2,,,,,,,,,,,
24,1,,22417-400320,,"COTTER PIN 4.0X32",1,1,,1,1,,,,,,,,,,,
25,1,,22417-400320,,"COTTER PIN 4.0X32",1,1,,1,1,,,,,,,,,,,
26,1,,22417-400400,,"COTTER PIN 4.0X40",2,2,,2,2,,,,,,,,,,,
27,1,,22417-400400,,"COTTER PIN 4.0X40",1,1,,1,1,,,,,,,,,,,
28,1,,26013-100202,,"BOLT W/WASHER M10X20",4,4,,4,4,,,,,,,,,,,
29,1,,26013-100202,,"BOLT W/WASHER M10X20",2,2,,2,2,,,,,,,,,,,
30,1,,26756-050002,,"LOCK NUT M 5 PLATED",4,4,,4,4,,,,,,,,,,,
31,1,,26756-050002,,"LOCK NUT M 5 PLATED",2,2,,2,2,,,,,,,,,,,
32,1,,26979-050202,,"SCREW M 5X 20",4,4,,4,4,,,,,,,,,,,
32-1,1,,172122-47500,,"SCREW M 5X
20",4,4,,4,4,,R,1,,M10501,,M10501,,,,M10501,,M10501
33,1,,26979-050202,,"SCREW M 5X 20",2,2,,2,2,,,,,,,,,,,
33-1,1,,172122-47500,,"SCREW M 5X
20",2,2,,2,2,,R,1,,M10501,,M10501,,,,M10501,,M10501
34,1,,172730-11440,,"TURNBUCKLE 10",3,3,,3,3,,,,,,,,,,,
35,1,,194150-22480,,"NUT M10",3,3,,3,3,,,,,,,,,,,
36,1,,172112-41960,,"PIN 8X25.5",2,2,,2,2,,,,,,,,,,,
37,1,,172112-41980,,"BEARING, ROD-END",3,3,,3,3,,,,,,,,,,,
38,1,,172112-42130,,"ROD (A), ARM",1,1,,1,1,,,,,,,,,,,
39,1,,172124-45700,,"ROD (A)",1,1,,1,1,,,,,,,,,,,
40,1,,172124-45710,,"ROD (B)",2,2,,2,2,,,,,,,,,,,
41,1,,172124-45730,,"ROD (C)",1,1,,1,1,,,,,,,,,,,
42,1,,172124-45750,,"ROD (D)",1,1,,1,1,,,,,,,,,,,
43,1,,172124-45770,,"ROD (E)",1,1,,1,1,,,,,,,,,,,
44,1,,172122-46290,,ROD,3,3,,3,3,,,,,,,,,,,
45,1,,172122-46360,,ROD,1,1,,1,1,,,,,,,,,,,
46,1,,172122-46380,,ROD,1,1,,1,1,,,,,,,,,,,
47,1,,172122-46400,,ROD,2,2,,2,2,,,,,,,,,,,
48,1,,172122-46420,,ROD,2,2,,2,2,,,,,,,,,,,
49,1,,172122-46560,,"ROD-END 10",6,6,,6,6,,,,,,,,,,,
49-1,1,,172122-46560,,"ROD-END
10",5,5,,5,5,,K,,,M00677,,M00677,,,,M00631,,M00631
50,1,,172122-46570,,"ROD-END  8",2,2,,2,2,,,,,,,,,,,
51,1,,22117-080000,,"WASHER  8",2,2,,2,2,,,,,,,,,,,
52,1,,22217-080000,,"SPRING WASHER  8",3,3,,3,3,,,,,,,,,,,
53,1,,22217-100000,,"SPRING WASHER 10",6,6,,6,6,,,,,,,,,,,
54,1,,22417-200150,,"COTTER PIN 2.0X15",17,17,,17,17,,,,,,,,,,,
55,1,,26716-080002,,"NUT M 8",8,8,,8,8,,,,,,,,,,,
```

```
56,1,,26716-080002,,"NUT M 8",1,1,,1,1,,,,,,,,,,,,
57,1,,26716-100002,,"NUT M10",3,3,,3,3,,,,,,,,,,,,
58,1,,26776-100002,,"LOCK NUT M10 PLATED",12,12,,12,12,,,,,,,,,,,,
59,1,,933171-21700,,"PIN (B), SPOOL LINK",15,15,,15,15,,,,,,,,,,,,
60,1,,933171-21950,,"JOINT, ROD",1,1,,1,1,,,,,,,,,,,,
61,1,,172122-46580,,"ROD END 10",1,1,,1,1,,W,,,M00677,,M00677,,,,M00631,,M00631
```

SPEC. CODE
D72124-41100
D72124-45200
D72124-45600

Fig. 28 ソウジュウソウチ(ロッド)(キュウガタ) CONTROL EQUIPMENT(ROD) (PREVIOUS)

JAPAN, UP TO M/#20500
AMMANN, UP TO M/#60500

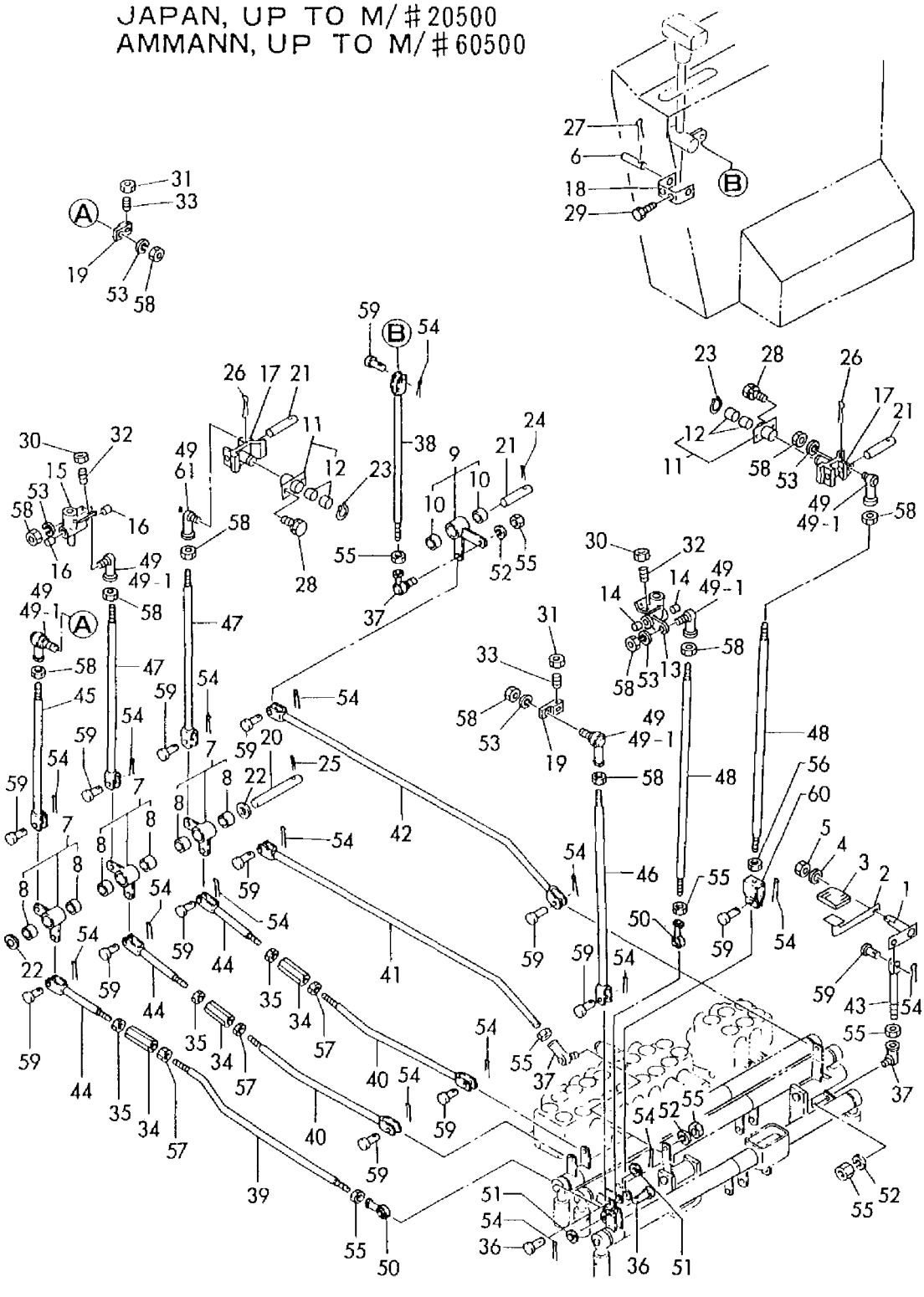

```
1,1,,172123-45201,,"LINK ASSY",1,1,,1,1,,,,,,,,,,,,
2,1,,172122-45801,,"PEDAL,ACCELERATOR",1,1,,1,1,,,,,,,,,,,,
3,1,,172122-45830,,"PAD, METAL",1,1,,1,1,,,,,,,,,,,,
4,1,,22137-100000,,"WASHER 10,POLISHED",1,1,,1,1,,,,,,,,,,,,
5,1,,26346-100002,,"U-NUT M10 PLATED",1,1,,1,1,,,,,,,,,,,,
6,1,,172112-41380,,"SHAFT, BLADE LEVER",1,1,,1,1,,,,,,,,,,,,
7,1,,172122-45351,,"LINK (E) W/BUSH",3,3,,3,3,,,,,,,,,,,,
8,2,,933171-23680,,"BUSH 14X15",6,6,,6,6,,,,,,,,,,,,
9,1,,172122-45510,,"LINK W/BUSH, BLADE",1,1,,1,1,,,,,,,,,,,,
10,2,,933171-23680,,"BUSH 14X15",2,2,,2,2,,,,,,,,,,,,
11,1,,172122-45541,,"BOSS W/BUSH, LINK",2,2,,2,2,,,,,,,,,,,,
12,2,,24162-172312,,"NEEDLE BEARING",4,4,,4,4,,,,,,,,,,,,
13,1,,172122-45592,,"LINK (L) W/BUSH",1,1,,1,1,,,,,,,,,,,,
14,2,,172124-46400,,"BUSH 14X15",2,2,,2,2,,,,,,,,,,,,
15,1,,172122-45612,,"LINK (R) W/BUSH",1,1,,1,1,,,,,,,,,,,,
16,2,,172124-46400,,"BUSH 14X15",2,2,,2,2,,,,,,,,,,,,
17,1,,172122-45641,,"LINK, WORK",2,2,,2,2,,,,,,,,,,,,
18,1,,172122-45670,,"BRACKET (B), LINK",1,1,,1,1,,,,,,,,,,,,
19,1,,172122-45701,,"ARM, DRIVING LINK",2,2,,2,2,,,,,,,,,,,,
20,1,,172122-45760,,"SHAFT, LINK",1,1,,1,1,,,,,,,,,,,,
21,1,,172122-45770,,"SHAFT, LINK",3,3,,3,3,,,,,,,,,,,,
22,1,,22137-140000,,"WASHER 14,POLISHED",2,2,,2,2,,,,,,,,,,,,
23,1,,22242-000170,,"CIRCLIP   17",2,2,,2,2,,,,,,,,,,,,
24,1,,22417-400320,,"COTTER PIN 4.0X32",1,1,,1,1,,,,,,,,,,,,
25,1,,22417-400320,,"COTTER PIN 4.0X32",1,1,,1,1,,,,,,,,,,,,
26,1,,22417-400400,,"COTTER PIN 4.0X40",2,2,,2,2,,,,,,,,,,,,
27,1,,22417-400400,,"COTTER PIN 4.0X40",1,1,,1,1,,,,,,,,,,,,
28,1,,26013-100202,,"BOLT W/WASHER M10X20",4,4,,4,4,,,,,,,,,,,,
29,1,,26013-100202,,"BOLT W/WASHER M10X20",2,2,,2,2,,,,,,,,,,,,
30,1,,194990-22120,,"NUT W/WASHER  5",4,4,,4,4,,,,,,,,,,,,
31,1,,194990-22120,,"NUT W/WASHER  5",2,2,,2,2,,,,,,,,,,,,
32,1,,26979-050202,,"SCREW M 5X 20",4,4,,4,4,,,,,,,,,,,,
33,1,,26979-050202,,"SCREW M 5X 20",2,2,,2,2,,,,,,,,,,,,
34,1,,172730-11440,,"TURNBUCKLE 10",3,3,,3,3,,,,,,,,,,,,
35,1,,194150-22480,,"NUT M10",3,3,,3,3,,,,,,,,,,,,
36,1,,172112-41980,,"BEARING, ROD-END",12,12,,12,12,,,,,,,,,,,,
37,1,,172112-42130,,"ROD (A), ARM",1,1,,1,1,,,,,,,,,,,,
38,1,,172124-45700,,"ROD (A)",1,1,,1,1,,,,,,,,,,,,
39,1,,172124-45721,,"ROD (B)",2,2,,2,2,,,,,,,,,,,,
40,1,,172124-45730,,"ROD (C)",1,1,,1,1,,,,,,,,,,,,
41,1,,172124-45750,,"ROD (D)",1,1,,1,1,,,,,,,,,,,,
42,1,,172124-45770,,"ROD (E)",1,1,,1,1,,,,,,,,,,,,
43,1,,172122-46301,,"ROD (H)",3,3,,3,3,,,,,,,,,,,,
44,1,,172122-46371,,"ROD (F)",1,1,,1,1,,,,,,,,,,,,
45,1,,172122-46391,,"ROD (G)",1,1,,1,1,,,,,,,,,,,,
46,1,,172122-46411,,"ROD (E)",2,2,,2,2,,,,,,,,,,,,
47,1,,172122-46420,,ROD,2,2,,2,2,,,,,,,,,,,,
48,1,,172122-46560,,"ROD-END 10",5,5,,5,5,,,,,,,,,,,,
49,1,,172112-41980,,"BEARING, ROD-END",2,2,,2,2,,,,,,,,,,,,
49-1,1,,172122-46590,,"ELBALL
8",2,2,,2,2,,R,,,*1987.05,,*1987.05,,,,*1987.05,,*1987.05
50,1,,22217-080000,,"SPRING WASHER  8",9,9,,9,9,,,,,,,,,,,,
51,1,,22217-100000,,"SPRING WASHER 10",6,6,,6,6,,,,,,,,,,,,
52,1,,22417-200150,,"COTTER PIN 2.0X15",5,5,,5,5,,,,,,,,,,,,
53,1,,26716-080002,,"NUT M 8",24,24,,24,24,,,,,,,,,,,,
54,1,,172122-47250,,"BALL 8, LINK",1,1,,1,1,,,,,,,,,,,,
55,1,,26716-100002,,"NUT M10",3,3,,3,3,,,,,,,,,,,,
56,1,,26776-100002,,"LOCK NUT M10 PLATED",12,12,,12,12,,,,,,,,,,,,
57,1,,933171-21700,,"PIN (B), SPOOL LINK",5,5,,5,5,,,,,,,,,,,,
58,1,,172122-46580,,"ROD END 10",1,1,,1,1,,,,,,,,,,,,
59,1,,194630-25250,,"LINER 17X30X1",2,2,,2,2,,,,,,,,,,,,
60,1,,172122-45330,,"O-RING 17",2,2,,2,2,,,,,,,,,,,,
```

Fig. 29 ソウジュウソウチ(ロッド)(シンガタ) CONTROL EQUIPMENT (ROD) (NEW TYPE)

SPEC. CODE
D72124-41100
D72124-45201
D72124-45601

JAPAN, FROM TO M/#20501
AMMANN, FROM TO M/#60501

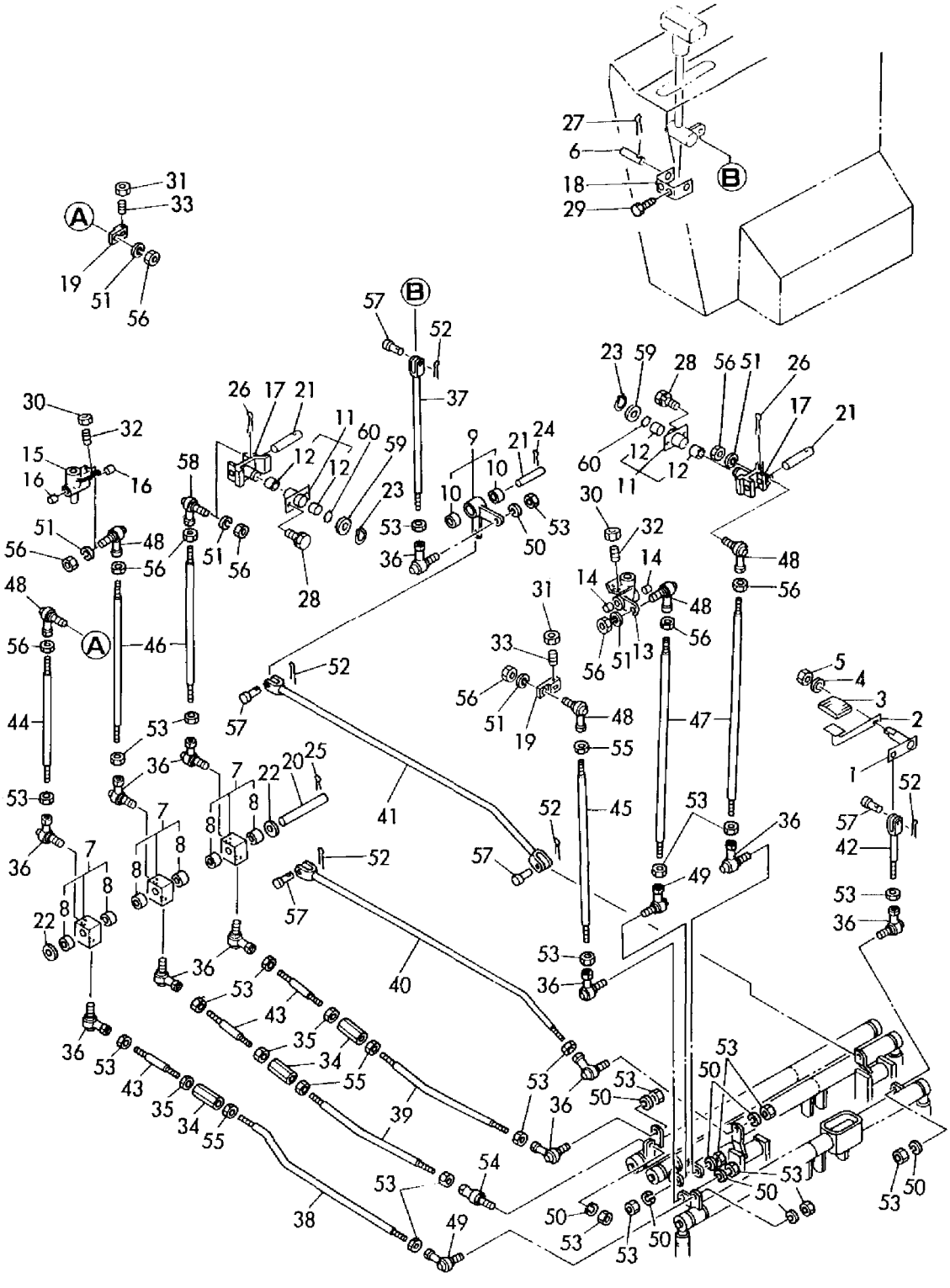

```
1,1,,172125-53300,,"WEIGHT, COUNTER",,,,1,1,,,,,,,,,,,,
2,1,,172125-53330,,"BOLT M20X50",,,,3,3,,,,,,,,,,,,
3,1,,22137-200000,,"WASHER 20,POLISHED",,,,3,3,,,,,,,,,,,,
4,1,,22217-200000,,"SPRING WASHER 20",,,,3,3,,,,,,,,,,,,
5,1,,172124-54010,,"FRAME ASSY, TURNING",1,1,,,,,,,,,,,,,,,,
5-1,1,,172124-54011,,"FRAME ASSY, TURNING",1,1,,,,,S,,,M20501,,M20501,,,,,,
5-2,1,,172124-54012,,"FRAME COMP.,TURNING",1,1,,,,,S,,,M20879,,M20879,,,,,,
6,1,,172125-54010,,"FRAME ASSY, TURNING",,,,1,1,,,,,,,,,,,,
6-1,1,,172125-54011,,"FRAME ASSY, TURNING",,,,1,1,,S,,,,,,,,,M20501,,M20501
6-2,1,,172125-54012,,"FRAME COMP.,TURNING",,,,1,1,,S,,,,,,,,,M20548,,M20548
7,1,,26116-200402,,"BOLT M20X40",,,,4,4,,,,,,,,,,,,
```

Fig. 30 センカイフレーム TURNING FRAME

SPEC. CODE
D72125-53300
D72124-54100
D72125-54100

COUNTRY	J P	N W	S W	W G	F A	D M	N L
Fig. No.	30	32	32	32	32	32	32

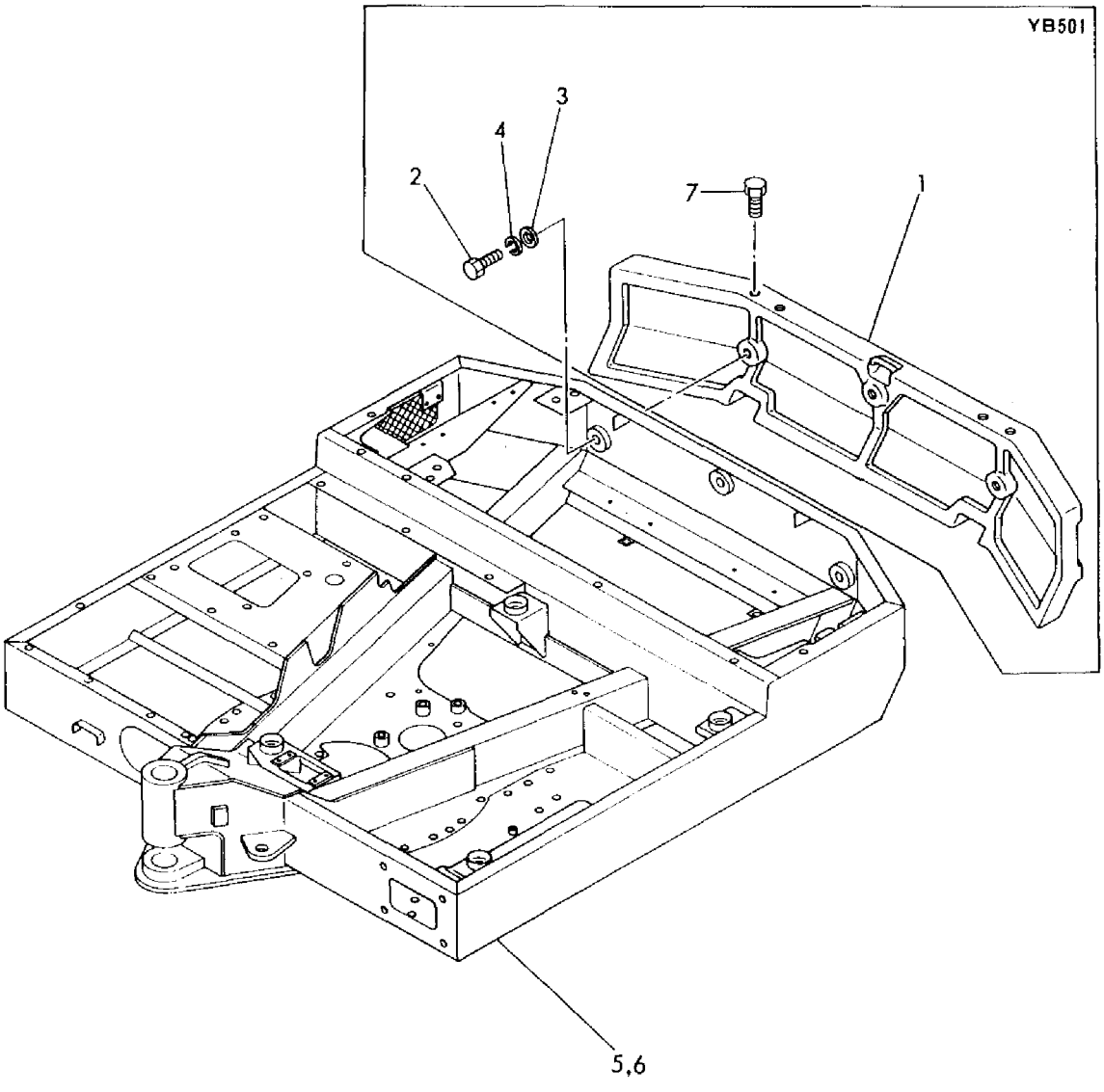

```
1,1,,172125-53300,,"WEIGHT, COUNTER",,,,1,1,,,,,,,,,,,,
2,1,,172125-53330,,"BOLT M20X50",,,,3,3,,,,,,,,,,,,
3,1,,22137-200000,,"WASHER 20,POLISHED",,,,3,3,,,,,,,,,,,,
4,1,,22217-200000,,"SPRING WASHER 20",,,,3,3,,,,,,,,,,,,
5,1,,172132-54010,,"FRAME ASSY, TURNING",1,1,,,,,,,,,,,,,,,,
5-1,1,,172132-54011,,"FRAME ASSY, TURNING",1,1,,,,,S,,,M20501,,M20501,,,,,,
5-2,1,,172132-54012,,"FRAME, TURNING",1,1,,,,,S,,,M20879,,M20879,,,,,,
6,1,,172133-54010,,"FRAME ASSY, TURNING",,,,1,1,,,,,,,,,,,,
6-1,1,,172133-54011,,"FRAME ASSY, TURNING",,,,1,1,,S,,,,,,,,,M20501,,M20501
6-2,1,,172133-54012,,"FRAME COMP.,TURNING",,,,1,1,,S,,,,,,,,,M20548,,M20548
7,1,,26116-200402,,"BOLT M20X40",,,,4,4,,,,,,,,,,,,
8,1,,172133-54102,,"FRAME COMP.,TURNING",,,,,,1,,,,,,,,,,,,
```

Fig. 31 センカイフレーム(U.UZ) TURNING FRAME (U. UZ)

SPEC. CODE
D72125-53300
D72132-54100
D72133-54100
D72133-54110

COUNTRY	J P	N W	S W	W G	F A	D M	N L
Fig. No.	31	—	—	—	—	—	—

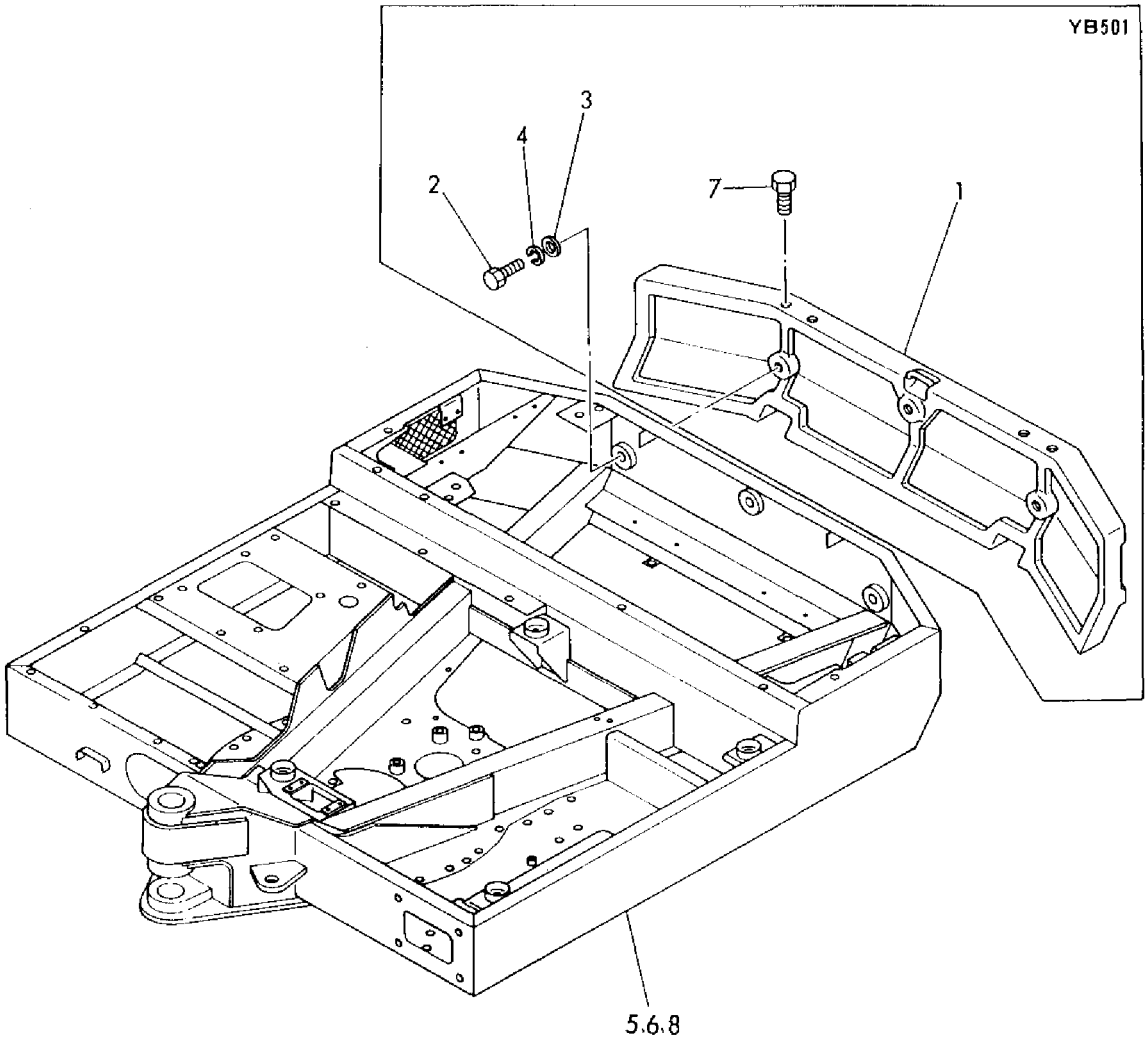

```
1,1,,172125-53300,,"WEIGHT, COUNTER",,,,,1,,,,,,,,,,,,
2,1,,172125-53330,,"BOLT M20X50",,,,,3,,,,,,,,,,,,
3,1,,22137-200000,,"WASHER 20,POLISHED",,,,,3,,,,,,,,,,,,
4,1,,22217-200000,,"SPRING WASHER 20",,,,,3,,,,,,,,,,,,
5,1,,172125-54100,,"FRAME ASSY, TURNING",,,,,1,,,,,,,,,,,,
5-1,1,,172125-54110,,"FRAME ASSY, TURNING",,,,,1,,S,,,,,,,,,,,M50001
5-2,1,,172125-54111,,"FRAME ASSY, TURNING",,,,,1,,S,,,,,,,,,,,M60501
5-3,1,,172125-54112,,"FRAME ASSY, TURNING",,,,,1,,S,,,,,,,,,,,M60531
6,1,,26116-200402,,"BOLT M20X40",,,,,4,,,,,,,,,,,,
7,1,,172124-54000,,"FRAME ASSY, TURNING",,1,,,,,,1,,,,,,,,,
7-1,1,,172124-54001,,"FRAME ASSY, TURNING",,1,,,,,S,1,,,,M60501,,,,,,
7-2,1,,172124-54002,,"FRAME COMP.,TURNING",,1,,,,,S,1,,,,M60531,,,,,,
```

Fig. 32 センカイフレーム(アンマン) TURNING FRAME (AMMANN SPEC.)

SPEC. CODE
D72125-53300
D72124-54110
D72125-54170

COUNTRY	JP	NW	SW	WG	FA	DM	NL
Fig. No.	30	32	32	32	32	32	32

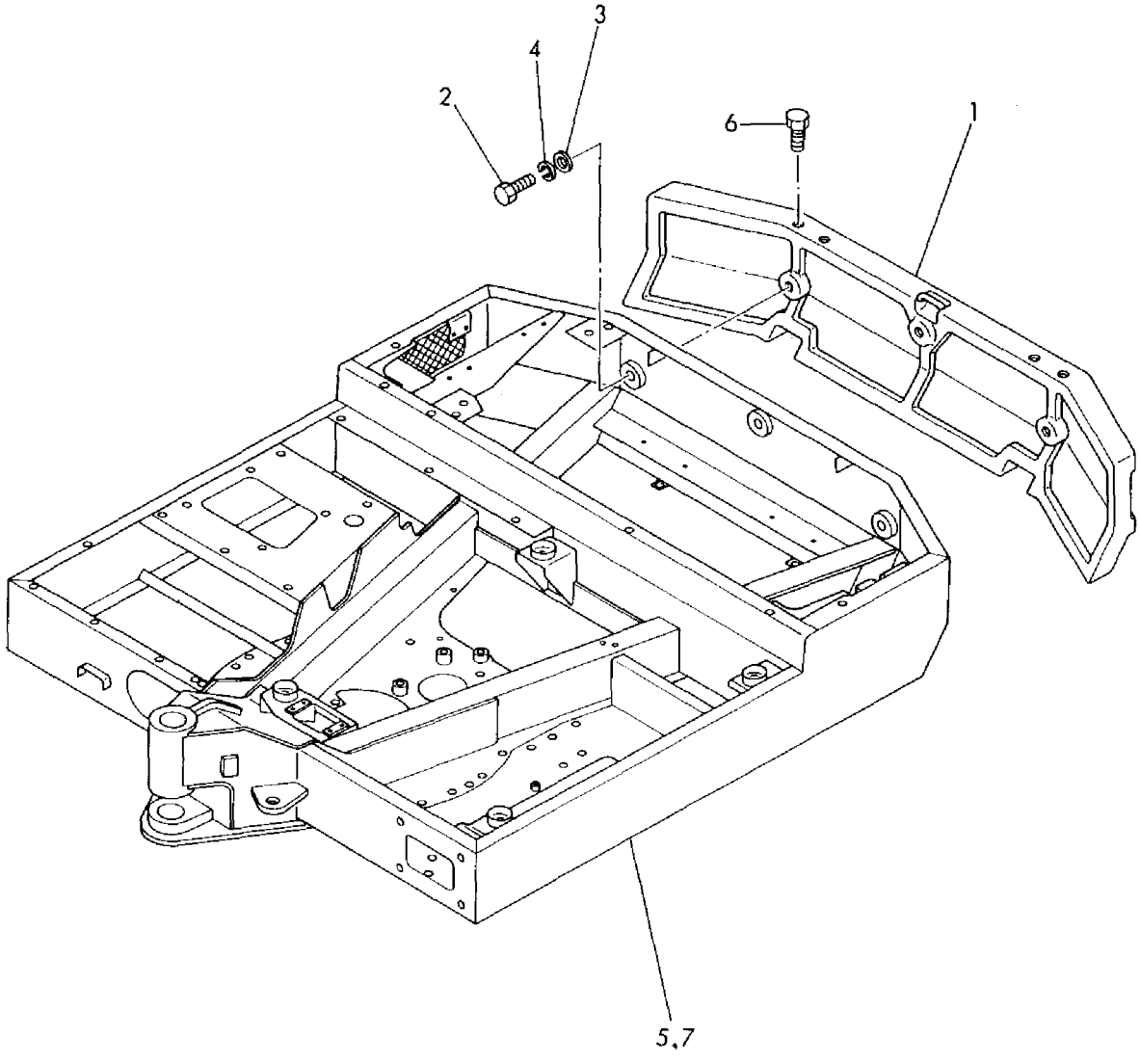

```
1,1,,172122-57100,,"HOUSING,REVOLVE GEAR",1,1,,1,1,,,,,,,,,,,,
2,1,,172122-57110,,"COVER,GEAR HOUSING",1,1,,1,1,,,,,,,,,,,,
3,1,,172122-57150,,"PIPE, GAUGE",1,1,,1,1,,,,,,,,,,,,
4,1,,172122-57200,,"GAUGE, OIL LEVEL",1,1,,1,1,,,,,,,,,,,,
4-1,1,,172122-57201,,"GAUGE, OIL
LEVEL",1,1,,1,1,,N,,,*1988.11,,*1988.11,,,,*1988.11,,*1988.11
5,1,,22217-140000,,"SPRING WASHER 14",5,5,,5,5,,,,,,,,,,,,
6,1,,23871-060000,,"PLUG PT3/4,SCREW",1,1,,1,1,,,,,,,,,,,,
7,1,,26013-120302,,"BOLT W/WASHER M12X30",5,5,,5,5,,,,,,,,,,,,
8,1,,26116-141102,,"BOLT M14X110 PLATED",5,5,,5,5,,,,,,,,,,,,
9,1,,933110-22800,,"PIN  8X10",2,2,,2,2,,,,,,,,,,,,
10,1,,172124-57300,,"PINION, REVOLVE",1,1,,1,1,,,,,,,,,,,,
11,1,,172122-57310,,"GEAR, PINION SHAFT",1,1,,1,1,,,,,,,,,,,,
12,1,,172124-57310,,BEARING,1,1,,1,1,,,,,,,,,,,,
13,1,,172124-57320,,COLLAR,1,1,,1,1,,,,,,,,,,,,
14,1,,172116-57350,,"COLLAR (B), PINION",1,1,,1,1,,,,,,,,,,,,
15,1,,172116-57361,,"COLLAR (C), PINION",1,1,,1,1,,,,,,,,,,,,
16,1,,22242-000450,,"CIRCLIP   45",1,1,,1,1,,,,,,,,,,,,
17,1,,933171-13410,,"SEAL TCX6 628012,OIL",1,1,,1,1,,,,,,,,,,,,
18,1,,172122-57400,,"GEAR, SECOND",1,1,,1,1,,,,,,,,,,,,
19,1,,24101-063074,,BEARING,2,2,,2,2,,,,,,,,,,,,
19-1,1,,172124-57340,,BEARING,2,2,,2,2,,N,,,M00665,,M00665,,,,M00597,,M00597
20,1,,194200-01150,,SPRING,1,1,,1,1,,,,,,,,,,,,
20-1,1,,194740-00160,,"WASHER 10,
CONICAL",1,1,,1,1,,R,,,*1987.03,,*1987.03,,,,*1987.03,,*1987.03
21,1,,195185-14890,,"BOLT M10X 26",1,1,,1,1,,,,,,,,,,,,
22,1,,172122-57500,,"GEAR,TURNING MOTOR",1,1,,1,1,,,,,,,,,,,,
23,1,,172122-57510,,"SPACER, MOTOR GEAR",1,1,,1,1,,,,,,,,,,,,
24,1,,172122-57520,,STOPPER,1,1,,1,1,,,,,,,,,,,,
25,1,,172112-57510,,"BOLT M16X 90",20,20,,20,20,,,,,,,,,,,,
26,1,,172124-57600,,"BEARING,REVOLVE",1,1,,1,1,,,,,,,,,,,,
27,2,,172124-57620,,"SEAL, UPPER",1,1,,1,1,,,,,,,,,,,,
28,2,,172124-57630,,"SEAL, LOWER",1,1,,1,1,,,,,,,,,,,,
29,1,,172124-57610,,"BOLT M16X80",20,20,,20,20,,,,,,,,,,,,
30,1,,172122-57620,,"PARALLEL PIN 13X36",4,4,,4,4,,,,,,,,,,,,
31,1,,172124-57330,,BEARING,1,1,,1,1,,,,,,,,,,,,
```

SPEC. CODE
D72122-57100
D72124-57300
D72122-57400
D72122-57500
D72124-57600

Fig. 33 センカイクドウソウチ TURNING DRIVING GEARS

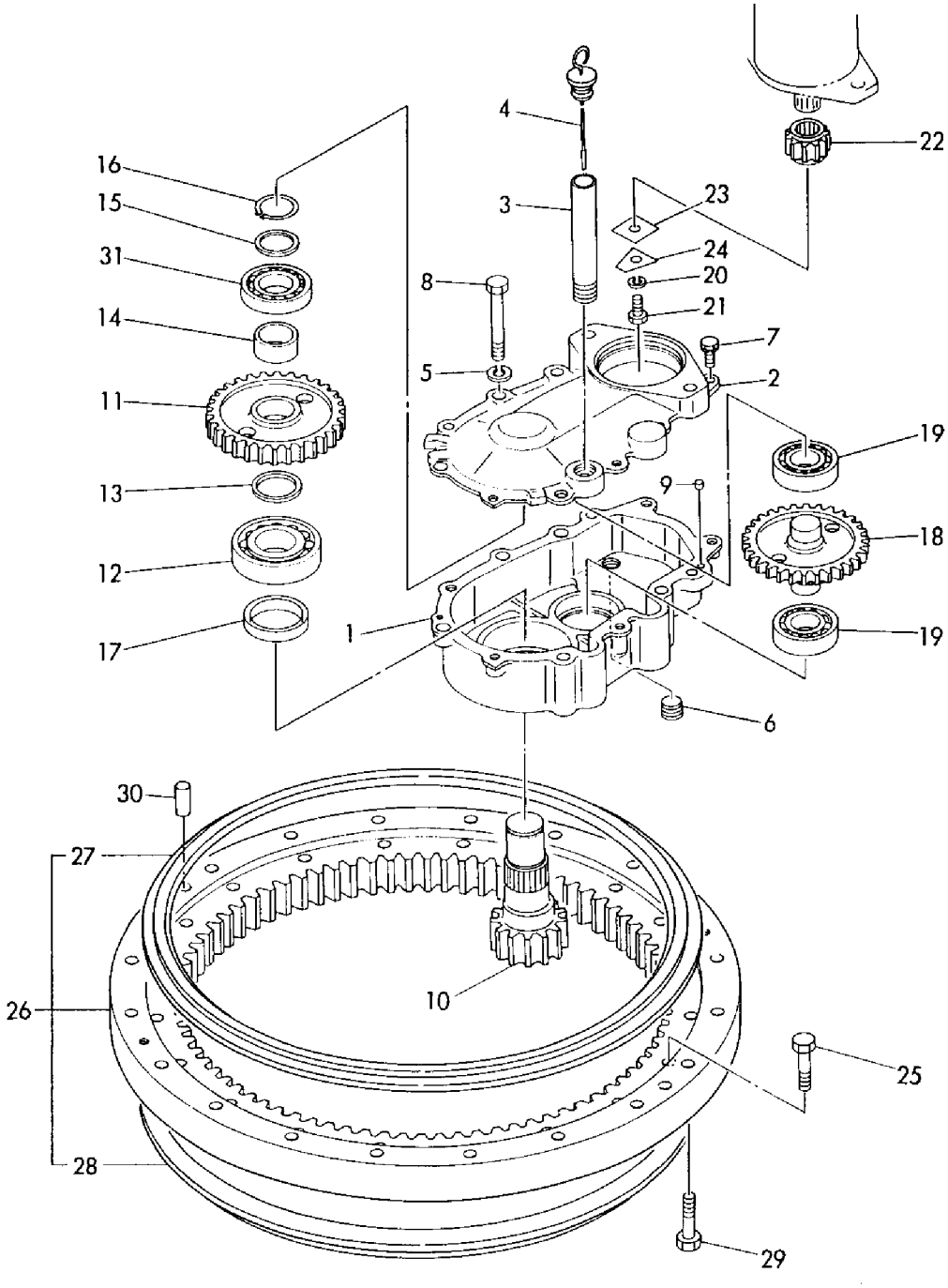

```
1,1,,172124-05300,,"COVER, TOOL",1,,,1,,,,,,,,,,,,,
1-1,1,,172124-05301,,"COVER, TOOL",1,,,1,,,S,,,M20501,,,,,,M20501,,
2,1,,172124-05330,,"CATCH, MAGNET",1,,,1,,,,,,,,,,,,,
3,1,,26013-100202,,"BOLT W/WASHER M10X20",4,,,4,,,,,,,,,,,,,
4,1,,26023-030082,,"SCREW M 3X  8",2,,,2,,,,,,,,,,,,,
5,1,,172124-58800,,"PIN, TURNING LOCK",1,,,1,,,,,,,,,,,,,
6,1,,172124-61100,,"COVER (A)ASSY",1,,,1,,,,,,,,,,,,,
6-1,1,,172124-61101,,"COVER (A)ASSY",1,,,1,,,S,,,M00704,,,,,,M00632,,
6-2,1,,172124-61102,,"COVER (A)ASSY",1,,,1,,,N,,,M21300,,,,,,M20589,,
7,1,,172124-61150,,"COVER (C)ASSY",1,,,1,,,,,,,,,,,,,
8,1,,172124-61260,,"COVER (D)",1,,,1,,,,,,,,,,,,,
8-1,1,,172124-61261,,"COVER (D)",1,,,1,,,S,,,M20501,,,,,,M20501,,
9,1,,172124-61200,,"COVER (E)",1,,,1,,,,,,,,,,,,,
10,1,,172124-61210,,"COVER (F)",1,,,1,,,,,,,,,,,,,
10-1,1,,172124-61211,,"COVER (F)",1,,,1,,,N,,,M21300,,,,,,M20589,,
11,1,,172124-61220,,"COVER (G)",1,,,1,,,,,,,,,,,,,
11-1,1,,172124-61221,,"COVER (G)",1,,,1,,,S,,,M00704,,,,,,M00632,,
11-2,1,,172124-61222,,"COVER (G)",1,,,1,,,N,,,M00704,,,,,,M00632,,
12,1,,172124-61230,,"COVER (H)",1,,,1,,,,,,,,,,,,,
12-1,1,,172124-61231,,"COVER (H)",1,,,1,,,N,,,M21300,,,,,,M20589,,
13,1,,172124-61240,,"COVER (I)",2,,,2,,,,,,,,,,,,,
14,1,,172124-61250,,"COVER (J)",1,,,1,,,,,,,,,,,,,
15,1,,26013-100202,,"BOLT W/WASHER M10X20",56,,,56,,,,,,,,,,,,,
16,1,,172122-17120,,"PANEL(L), INSTRUMENT",1,,,1,,,,,,,,,,,,,
16-1,1,,172122-17121,,"PANEL(L), INSTRUMENT",1,,,1,,,N,,,M00843,,,,,,*1986.09,,
16-2,1,,172122-17241,,"PANEL(L) ASSY",1,,,1,,,R,,,*1988.11,,,,,,*1988.11,,
17,2,,172122-17130,,"PANEL, INSTRUMENT",1,,,1,,,,,,,,,,,,,
17-1,2,,172122-17131,,"PANEL, INSTRUMENT",1,,,1,,,S,,,M00843,,,,,,*1986.09,,
18,2,,172122-17140,,COVER,1,,,1,,,,,,,,,,,,,
18-1,2,,172122-17141,,COVER,1,,,1,,,S,,,M00843,,,,,,*1986.09,,
18-2,2,,172122-17251,,COVER,1,,,1,,,N,,,*1988.11,,,,,,*1988.11,,
19,2,,172122-17150,,HINGE,2,,,2,,,,,,,,,,,,,
19-1,2,,172122-17151,,HINGE,2,,,2,,,S,,,M00843,,,,,,*1986.09,,
20,2,,172122-17160,,"ROD, STOPPER",1,,,1,,,,,,,,,,,,,
21,2,,22857-300050,,"SCREW 3X 5",8,,,8,,,,,,,,,,,,,
21-1,2,,22867-200080,,"SCREW 2X 8",12,,,12,,,S,,,M00843,,,,,,*1986.09,,
22,1,,172122-17180,,"PANEL, INSTRUMENT",1,,,1,,,,,,,,,,,,,
23,1,,172122-17190,,CLIP,2,,,2,,,,,,,,,,,,,
24,1,,172122-61300,,"PANEL (S), COVER",1,,,1,,,,,,,,,,,,,
25,1,,172122-61371,,"STAND (L), PANEL",1,,,1,,,,,,,,,,,,,
25-1,1,,172122-61372,,"STAND (L), PANEL",1,,,1,,,S,,,M10501,,,,,,M10501,,
26,1,,172122-61431,,"STAND (R), PANEL",1,,,1,,,,,,,,,,,,,
27,1,,172122-62851,,"PLATE,PANEL STAND",1,,,1,,,,,,,,,,,,,
28,1,,22137-040000,,"WASHER 4, POLISHED",3,,,3,,,,,,,,,,,,,
29,1,,26013-100202,,"BOLT W/WASHER M10X20",2,,,2,,,,,,,,,,,,,
30,1,,26013-100202,,"BOLT W/WASHER M10X20",4,,,4,,,,,,,,,,,,,
31,1,,26013-100202,,"BOLT W/WASHER M10X20",5,,,5,,,,,,,,,,,,,
32,1,,26013-100202,,"BOLT W/WASHER M10X20",3,,,3,,,,,,,,,,,,,
33,1,,26022-040122,,"SCREW M 4X 12",3,,,3,,,,,,,,,,,,,
34,1,,26557-060302,,"SCREW M 6X 30",3,,,3,,,,,,,,,,,,,
35,1,,933171-23680,,"BUSH 14X15",2,,,2,,,,,,,,,,,,,
36,1,,194145-61560,,"RUBBER, CUSHION",2,,,2,,,,,,,,,,,,,
36-1,1,,172137-65700,,"RUBBER, CUSHION",4,,,4,,,S,,,M/#00794,,,,,,M/#00670,,
37,1,,172124-65100,,"BONNET ASSY",1,,,1,,,,,,,,,,,,,
37-1,1,,172124-65101,,"BONNET ASSY",1,,,1,,,S,,,M/#00794,,,,,,M/#00670,,
38,1,,172734-65260,,"PIN, BONNET LEVER",2,,,2,,,,,,,,,,,,,
39,1,,172734-65270,,"SPRING, CATCH",2,,,2,,,,,,,,,,,,,
40,1,,172124-65450,,"LEVER, LOCK",2,,,2,,,,,,,,,,,,,
41,1,,172124-65480,,CATCHER,2,,,2,,,,,,,,,,,,,
42,1,,172124-65490,,"PLATE,CATCH",2,,,2,,,,,,,,,,,,,
43,1,,172112-65501,,"PIPE,EXH.EXTENSION",1,,,1,,,,,,,,,,,,,
44,1,,172124-65500,,"SHIM (T=0.8)",2,,,2,,,Z,,,M00501,,,,,,M00501,,
45,1,,172124-65510,,"SHIM (T=1.0)",2,,,2,,,Z,,,M00501,,,,,,M00501,,
```

46,1,,172124-65520,,"SHIM (T=1.6)",2,,,2,,,Z,,,M00501,,,,,,M00501,,
47,1,,172124-65530,,"SPRING, GAS",2,,,2,,,,,,,,,,,,,
48,1,,172122-65760,,"SHIM(A),BONNET COVER",4,,,4,,,,,,,,,,,,,
49,1,,172124-65800,,COVER(B)ASSY,1,,,1,,,,,,,,,,,,,
49-1,1,,172124-65801,,"COVER (B)ASSY",1,,,1,,,S,,,M/#00794,,,,,,M/#00670,,
49-2,1,,172124-65802,,"COVER B
COMP.,EVAPR.",1,,,1,,,N,,,*1988.04,,,,,,*1988.04,,
50,1,,22137-100000,,"WASHER 10,POLISHED",4,,,4,,,,,,,,,,,,,
51,1,,22417-200200,,"COTTER PIN 2.0X20",4,,,4,,,,,,,,,,,,,
52,1,,26013-060162,,"BOLT M 6X 16",8,,,8,,,,,,,,,,,,,
53,1,,26013-080202,,"BOLT W/WASHER M8X20",4,,,4,,,,,,,,,,,,,
54,1,,26013-100202,,"BOLT W/WASHER M10X20",4,,,4,,,,,,,,,,,,,
55,1,,26013-100252,,"BOLT W/WASHER M10X25",4,,,4,,,,,,,,,,,,,
56,1,,26013-100252,,"BOLT W/WASHER M10X25",6,,,6,,,,,,,,,,,,,
56-1,1,,26013-100302,,"BOLT M10X 30",6,,,6,,,N,,,*1987.03,,,,,,*1987.03,,
57,1,,22137-100000,,"WASHER 10,POLISHED",6,,,6,,,,,,,,,,,,,
57-1,1,,194145-04810,,"WASHER 10",6,,,6,,,N,,,*1987.03,,,,,,*1987.03,,
58,1,,22137-080000,,"WASHER 8, POLISHED",4,,,4,,,W,,,*1986.07,,,,,,*1986.07,,
59,1,,172132-61100,,"COVER (A)",,,1,,,1,,1,,,,,,,,,
60,1,,172132-61150,,"COVER (C)",,,1,,,1,,1,,,,,,,,,

SPEC. CODE
D72124-05300
D72124-58800
D72124-61111
D72132-61120
D72132-61130
D72124-63110
D72124-65111

Fig. 34 ボンネット(キャノピ) BONNET (CANOPY SPEC.)

COUNTRY	J P	N W	S W	W G	F A	D M	N L
Fig. No.	34	—	—	—	—	—	—

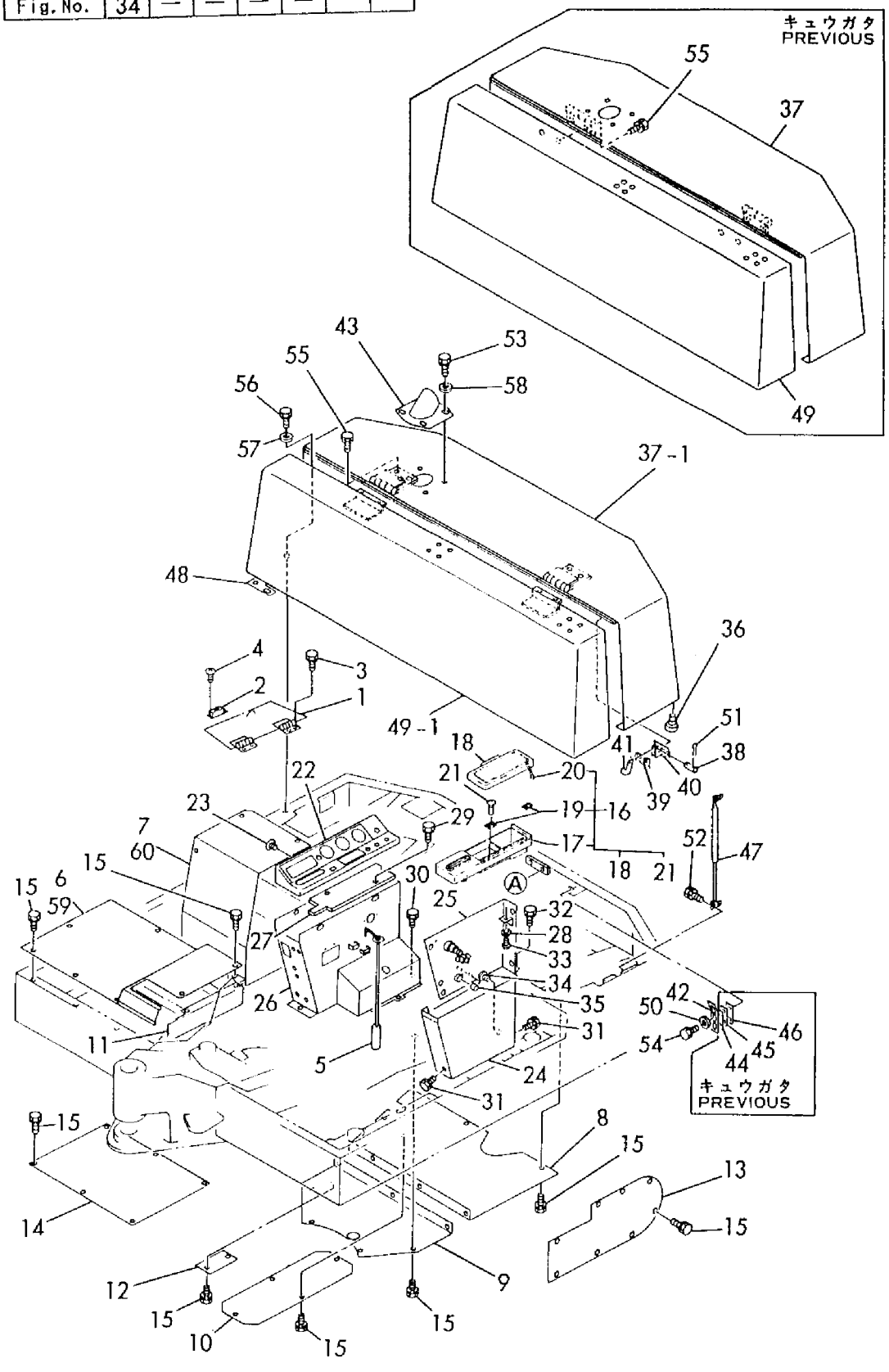

```
1,1,,172124-05300,,"COVER, TOOL",,1,,,1,,,,,,,,,,,,
1-1,1,,172124-05301,,"COVER, TOOL",,1,,,1,,S,,,,,M20501,,,,,,M20501
2,1,,172124-05330,,"CATCH, MAGNET",,1,,,1,,,,,,,,,,,,
3,1,,26013-100202,,"BOLT W/WASHER M10X20",,4,,,4,,,,,,,,,,,,
4,1,,26023-030082,,"SCREW M 3X  8",,2,,,2,,,,,,,,,,,,
5,1,,172124-58800,,"PIN, TURNING LOCK",,1,,,1,,,,,,,,,,,,
6,1,,172124-61100,,"COVER (A)ASSY",,1,,,1,,,,,,,,,,,,
6-1,1,,172124-61101,,"COVER (A)ASSY",,1,,,1,,S,,,,,M00677,,,,,,M00631
6-2,1,,172124-61102,,"COVER (A)ASSY",,1,,,1,,N,,,,,M21300,,,,,,M20589
7,1,,172124-61130,,"COVER (B)ASSY",,1,,,1,,,,,,,,,,,,
8,1,,172124-61260,,"COVER (D)",,1,,,1,,,,,,,,,,,,
8-1,1,,172124-61261,,"COVER (D)",,1,,,1,,S,,,,,M20501,,,,,,M20501
9,1,,172124-61200,,"COVER (E)",,1,,,1,,,,,,,,,,,,
10,1,,172124-61210,,"COVER (F)",,1,,,1,,,,,,,,,,,,
10-1,1,,172124-61211,,"COVER (F)",,1,,,1,,N,,,,,M21300,,,,,,M20589
11,1,,172124-61230,,"COVER (H)",,1,,,1,,,,,,,,,,,,
11-1,1,,172124-61231,,"COVER (H)",,1,,,1,,N,,,,,M21300,,,,,,M20589
12,1,,172124-61240,,"COVER (I)",,2,,,2,,,,,,,,,,,,
13,1,,172124-61250,,"COVER (J)",,1,,,1,,,,,,,,,,,,
14,1,,26013-100202,,"BOLT W/WASHER M10X20",,55,,,55,,,,,,,,,,,,
15,1,,172122-17110,,"PANEL, INSTRUMENT",,1,,,1,,,,,,,,,,,,
16,1,,172122-17120,,"PANEL(L), INSTRUMENT",,1,,,1,,,,,,,,,,,,
16-1,1,,172122-17121,,"PANEL(L), INSTRUMENT",,1,,,1,,N,,,,,M00843,,,,,,*1986.09
16-2,1,,172122-17241,,"PANEL(L) ASSY",,1,,,1,,R,,,,,*1988.11,,,,,,*1988.11
17,2,,172122-17130,,"PANEL, INSTRUMENT",,1,,,1,,,,,,,,,,,,
17-1,2,,172122-17131,,"PANEL, INSTRUMENT",,1,,,1,,S,,,,,M00843,,,,,,*1986.09
18,2,,172122-17140,,COVER,,1,,,1,,,,,,,,,,,,
18-1,2,,172122-17141,,COVER,,1,,,1,,S,,,,,M00843,,,,,,*1986.09
18-2,2,,172122-17251,,COVER,,1,,,1,,S,,,,,*1988.11,,,,,,*1988.11
19,2,,172122-17150,,HINGE,,2,,,2,,,,,,,,,,,,
19-1,2,,172122-17151,,HINGE,,2,,,2,,S,,,,,M00843,,,,,,*1986.09
20,2,,172122-17160,,"ROD, STOPPER",,1,,,1,,,,,,,,,,,,
21,2,,22857-300050,,"SCREW 3X 5",,8,,,8,,,,,,,,,,,,
21-1,2,,22867-200080,,"SCREW 2X 8",,12,,,12,,S,,,,,M00843,,,,,,*1986.09
22,1,,172122-17190,,CLIP,,2,,,2,,,,,,,,,,,,
23,1,,172122-61300,,"PANEL (S), COVER",,1,,,1,,,,,,,,,,,,
24,1,,172122-61371,,"STAND (L), PANEL",,1,,,1,,,,,,,,,,,,
24-1,1,,172122-61372,,"STAND (L), PANEL",,1,,,1,,S,,,,,M10501,,,,,,M10501
25,1,,172124-63100,,"STAND (R), PANEL",,1,,,1,,,,,,,,,,,,
26,1,,172122-62851,,"PLATE,PANEL STAND",,1,,,1,,,,,,,,,,,,
27,1,,22137-040000,,"WASHER 4, POLISHED",,3,,,3,,,,,,,,,,,,
28,1,,26013-100202,,"BOLT W/WASHER M10X20",,2,,,2,,,,,,,,,,,,
29,1,,26013-100202,,"BOLT W/WASHER M10X20",,4,,,4,,,,,,,,,,,,
30,1,,26013-100202,,"BOLT W/WASHER M10X20",,5,,,5,,,,,,,,,,,,
31,1,,26013-100202,,"BOLT W/WASHER M10X20",,3,,,3,,,,,,,,,,,,
32,1,,26022-040122,,"SCREW M 4X 12",,3,,,3,,,,,,,,,,,,
33,1,,26557-060302,,"SCREW M 6X 30",,3,,,3,,,,,,,,,,,,
34,1,,933113-15100,,ASHTRAY,,1,,,1,,,,,,,,,,,,
35,1,,933171-23680,,"BUSH 14X15",,2,,,2,,,,,,,,,,,,
36,1,,194145-61560,,"RUBBER, CUSHION",,2,,,2,,,,,,,,,,,,
36-1,1,,172137-65700,,"RUBBER, CUSHION",,4,,,4,,S,,,,,M/#00794,,,,,,M/#00670
37,1,,172124-65100,,"BONNET ASSY",,1,,,1,,,,,,,,,,,,
37-1,1,,172124-65101,,"BONNET ASSY",,1,,,1,,S,,,,,M/#00794,,,,,,M/#00670
38,1,,172734-65260,,"PIN, BONNET LEVER",,2,,,2,,,,,,,,,,,,
39,1,,172734-65270,,"SPRING, CATCH",,2,,,2,,,,,,,,,,,,
40,1,,172124-65450,,"LEVER, LOCK",,2,,,2,,,,,,,,,,,,
41,1,,172124-65480,,CATCHER,,2,,,2,,,,,,,,,,,,
42,1,,172124-65490,,"PLATE,CATCH",,2,,,2,,,,,,,,,,,,
43,1,,172112-65501,,"PIPE,EXH.EXTENSION",,1,,,1,,,,,,,,,,,,
44,1,,172124-65500,,"SHIM (T=0.8)",,2,,,2,,Z,,,,,M00501,,,,,,M00501
45,1,,172124-65510,,"SHIM (T=1.0)",,2,,,2,,Z,,,,,M00501,,,,,,M00501
46,1,,172124-65520,,"SHIM (T=1.6)",,2,,,2,,Z,,,,,M00501,,,,,,M00501
47,1,,172124-65530,,"SPRING, GAS",,2,,,2,,,,,,,,,,,,
```

```
48,1,,172124-65600,,COVER(A)ASSY,,1,,,1,,,,,,,,,,,,
48-1,1,,172124-65601,,COVER,,1,,,1,,S,,,,,M/#00794,,,,,,M/#00670
49,1,,172122-65760,,"SHIM(A),BONNET COVER",,4,,,4,,,,,,,,,,,,
50,1,,22137-100000,,"WASHER 10,POLISHED",,4,,,4,,,,,,,,,,,,
51,1,,22417-200200,,"COTTER PIN 2.0X20",,4,,,4,,,,,,,,,,,,
52,1,,26013-060162,,"BOLT M 6X 16",,8,,,8,,,,,,,,,,,,
53,1,,26013-080202,,"BOLT W/WASHER M8X20",,4,,,4,,,,,,,,,,,,
54,1,,26013-100202,,"BOLT W/WASHER M10X20",,4,,,4,,,,,,,,,,,,
55,1,,26013-100252,,"BOLT W/WASHER M10X25",,4,,,4,,,,,,,,,,,,
56,1,,26013-100252,,"BOLT W/WASHER M10X25",,6,,,6,,,,,,,,,,,,
56-1,1,,26013-100302,,"BOLT M10X 30",,6,,,6,,N,,,,,*1987.03,,,,,,*1987.03
57,1,,22137-100000,,"WASHER 10,POLISHED",,6,,,6,,,,,,,,,,,,
57-1,1,,194145-04810,,"WASHER 10",,6,,,6,,N,,,,,*1987.03,,,,,,*1987.03
58,1,,22137-080000,,"WASHER 8, POLISHED",,4,,,4,,W,,,,,*1986.07,,,,,,*1986.07
59,1,,172132-61100,,"COVER (A)",,,1,,,1,,1,,,,,,,,,
60,1,,172132-61130,,"COVER (B)",,,1,,,1,,1,,,,,,,,,
```

SPEC. CODE
D72124-05300
D72124-58800
D72124-61101
D72132-61110
D72124-63100
D72124-65101

Fig. 35 ボンネット(キャビン) BONNET (CABIN SPEC.)

COUNTRY	J P	N W	S W	W G	F A	D M	N L
Fig. No.	35	36	36	36	36	36	36

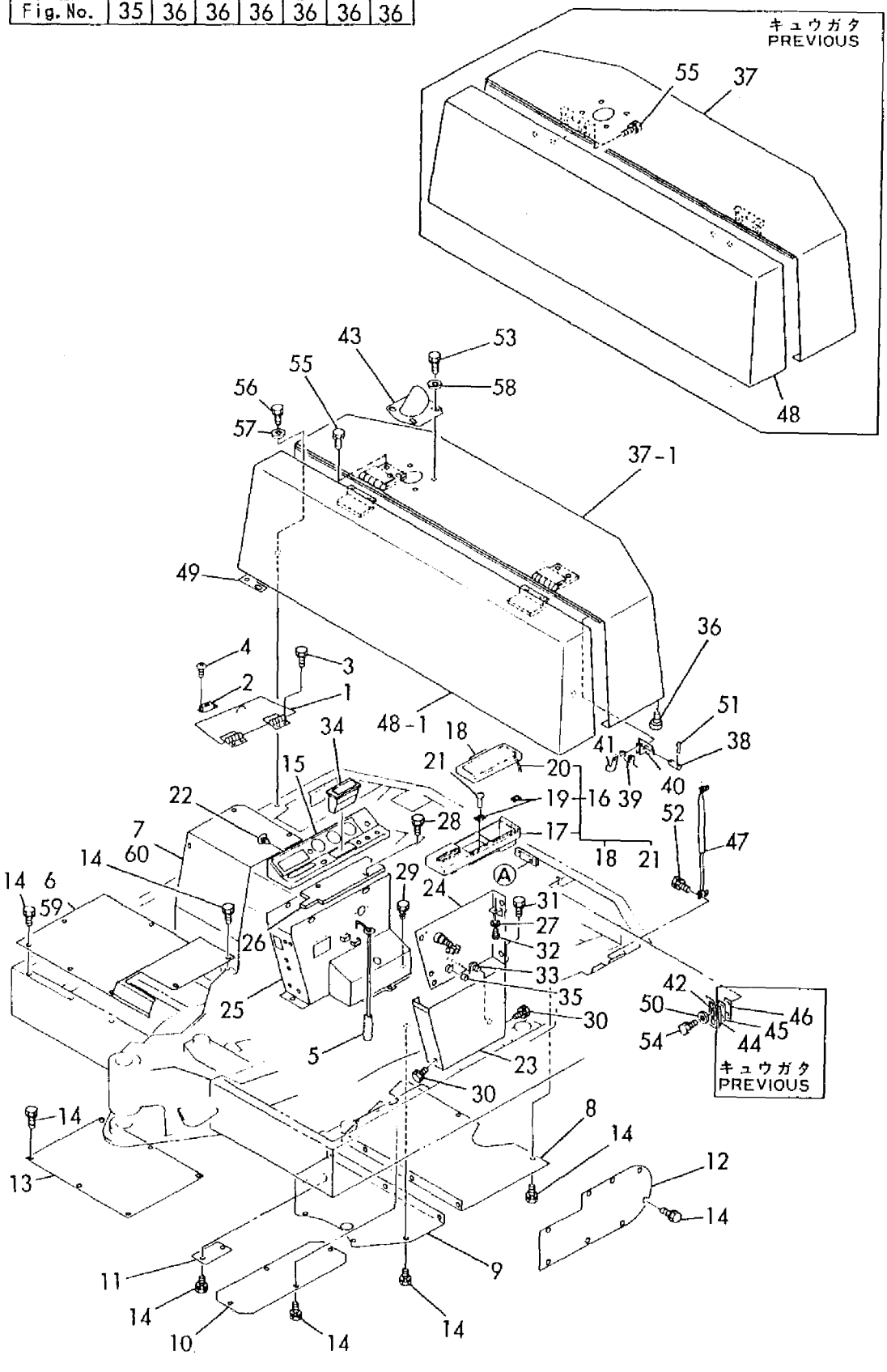

```
1,1,,172124-05300,,"COVER, TOOL",,1,,,1,,,,,,,,,,,,
1-1,1,,172124-05301,,"COVER, TOOL",,1,,,1,,S,,,,,M60501,,,,,,M60501
2,1,,172124-05330,,"CATCH, MAGNET",,1,,,1,,,,,,,,,,,,
3,1,,26013-100202,,"BOLT W/WASHER M10X20",,4,,,4,,,,,,,,,,,,
4,1,,26023-030082,,"SCREW M 3X  8",,2,,,2,,,,,,,,,,,,
5,1,,172124-58800,,"PIN, TURNING LOCK",,1,,,1,,,,,,,,,,,,
6,1,,172124-61100,,"COVER (A)ASSY",,1,,,,,,,,,,,,,,,,
6-1,1,,172124-61101,,"COVER (A)ASSY",,1,,,,,S,,,,,M01036,,,,,,
6-2,1,,172124-61102,,"COVER (A)ASSY",,1,,,,,N,,,,,M60557,,,,,,
7,1,,172125-61101,,"COVER (A)ASSY",,,,,1,,W,,,,,,,,,,,M00632
8,1,,172124-61130,,"COVER (B)ASSY",,1,,,1,,,,,,,,,,,,
9,1,,172124-61260,,"COVER (D)",,1,,,1,,,,,,,,,,,,
9-1,1,,172124-61261,,"COVER (D)",,1,,,1,,S,,,,,M60501,,,,,,M60501
10,1,,172124-61200,,"COVER (E)",,1,,,1,,,,,,,,,,,,
11,1,,172124-61210,,"COVER (F)",,1,,,1,,,,,,,,,,,,
11-1,1,,172124-61211,,"COVER (F)",,1,,,1,,N,,,,,M60557,,,,,,M60557
12,1,,172124-61230,,"COVER (H)",,1,,,1,,,,,,,,,,,,
12-1,1,,172124-61231,,"COVER (H)",,1,,,,,N,,,,,M60557,,,,,,
13,1,,172124-61240,,"COVER (I)",,2,,,2,,,,,,,,,,,,
14,1,,172124-61250,,"COVER (J)",,1,,,1,,,,,,,,,,,,
15,1,,26013-100202,,"BOLT W/WASHER M10X20",,55,,,55,,,,,,,,,,,,
16,1,,172122-17200,,"PANEL, INSTRUMENT",,,,,1,,,,,,,,,,,,
17,1,,172122-17110,,"PANEL, INSTRUMENT",,1,,,,,,,,,,,,,,,,
18,1,,172122-17120,,"PANEL(L), INSTRUMENT",,1,,,1,,,,,,,,,,,,
18-1,1,,172122-17121,,"PANEL(L), INSTRUMENT",,1,,,1,,N,,,,,M00843,,,,,,*1986.09
18-2,1,,172122-17241,,"PANEL(L) ASSY",,1,,,1,,R,,,,,*1989.01,,,,,,*1989.01
19,2,,172122-17130,,"PANEL, INSTRUMENT",,1,,,1,,,,,,,,,,,,
19-1,2,,172122-17131,,"PANEL, INSTRUMENT",,1,,,1,,S,,,,,M00843,,,,,,*1986.09
20,2,,172122-17140,,COVER,,1,,,1,,,,,,,,,,,,
20-1,2,,172122-17141,,COVER,,1,,,1,,S,,,,,M00843,,,,,,*1986.09
20-2,2,,172122-17251,,COVER,,1,,,1,,S,,,,,*1989.01,,,,,,*1989.01
21,2,,172122-17150,,HINGE,,2,,,2,,,,,,,,,,,,
21-1,2,,172122-17151,,HINGE,,2,,,2,,S,,,,,M00843,,,,,,*1986.09
22,2,,172122-17160,,"ROD, STOPPER",,1,,,1,,,,,,,,,,,,
23,2,,22857-300050,,"SCREW 3X 5",,8,,,8,,,,,,,,,,,,
23-1,2,,22867-200080,,"SCREW 2X 8",,12,,,12,,S,,,,,M00843,,,,,,*1986.09
24,1,,172122-17190,,CLIP,,2,,,2,,,,,,,,,,,,
25,1,,172122-61300,,"PANEL (S), COVER",,1,,,1,,,,,,,,,,,,
26,1,,172122-61371,,"STAND (L), PANEL",,1,,,1,,,,,,,,,,,,
26-1,1,,172122-61372,,"STAND (L), PANEL",,1,,,1,,S,,,,,M50001,,,,,,M50001
27,1,,172124-63100,,"STAND (R), PANEL",,1,,,1,,,,,,,,,,,,
28,1,,172122-62851,,"PLATE,PANEL STAND",,1,,,1,,,,,,,,,,,,
29,1,,22137-040000,,"WASHER 4, POLISHED",,3,,,3,,,,,,,,,,,,
30,1,,26013-100202,,"BOLT W/WASHER M10X20",,2,,,2,,,,,,,,,,,,
31,1,,26013-100202,,"BOLT W/WASHER M10X20",,4,,,4,,,,,,,,,,,,
32,1,,26013-100202,,"BOLT W/WASHER M10X20",,5,,,5,,,,,,,,,,,,
33,1,,26013-100202,,"BOLT W/WASHER M10X20",,3,,,3,,,,,,,,,,,,
34,1,,26022-040122,,"SCREW M 4X 12",,3,,,3,,,,,,,,,,,,
35,1,,26557-060302,,"SCREW M 6X 30",,3,,,3,,,,,,,,,,,,
36,1,,933113-15100,,ASHTRAY,,1,,,1,,,,,,,,,,,,
37,1,,933171-23680,,"BUSH 14X15",,2,,,2,,,,,,,,,,,,
38,1,,194145-61560,,"RUBBER, CUSHION",,2,,,2,,,,,,,,,,,,
38-1,1,,172137-65700,,"RUBBER, CUSHION",,4,,,4,,S,,,,,M/#50001,,,,,,M/#50001
39,1,,172124-65100,,"BONNET ASSY",,1,,,1,,,,,,,,,,,,
39-1,1,,172125-65101,,"EV BONNET",,1,,,1,,S,,,,,M/#50001,,,,,,M/#50001
39-2,1,,172125-65200,,BONNET,,1,,,1,,S,,,,,M60501,,,,,,M60501
40,1,,172734-65260,,"PIN, BONNET LEVER",,2,,,2,,,,,,,,,,,,
41,1,,172734-65270,,"SPRING, CATCH",,2,,,2,,,,,,,,,,,,
42,1,,172124-65450,,"LEVER, LOCK",,2,,,2,,,,,,,,,,,,
43,1,,172124-65480,,CATCHER,,2,,,2,,,,,,,,,,,,
44,1,,172124-65490,,"PLATE,CATCH",,2,,,2,,,,,,,,,,,,
45,1,,172112-65501,,"PIPE,EXH.EXTENSION",,1,,,1,,,,,,,,,,,,
46,1,,172124-65500,,"SHIM (T=0.8)",,2,,,2,,Z,,,,,M00501,,,,,,M00501
```

```
47,1,,172124-65510,,"SHIM (T=1.0)",,2,,,2,,Z,,,,,M00501,,,,,,M00501
48,1,,172124-65520,,"SHIM (T=1.6)",,2,,,2,,Z,,,,,M00501,,,,,,M00501
49,1,,172124-65530,,"SPRING, GAS",,2,,,2,,,,,,,,,,,,
50,1,,172124-65600,,COVER(A)ASSY,,1,,,1,,,,,,,,,,,,
50-1,1,,172124-65601,,COVER,,1,,,1,,S,,,,,M/#50001,,,,,,M/#50001
51,1,,172122-65760,,"SHIM(A),BONNET COVER",,4,,,4,,,,,,,,,,,,
52,1,,22137-100000,,"WASHER 10,POLISHED",,4,,,4,,,,,,,,,,,,
53,1,,22417-200200,,"COTTER PIN 2.0X20",,4,,,4,,,,,,,,,,,,
54,1,,26013-060162,,"BOLT M 6X 16",,8,,,8,,,,,,,,,,,,
55,1,,26013-080202,,"BOLT W/WASHER M8X20",,4,,,4,,,,,,,,,,,,
56,1,,26013-100202,,"BOLT W/WASHER M10X20",,4,,,4,,,,,,,,,,,,
57,1,,26013-100252,,"BOLT W/WASHER M10X25",,4,,,4,,,,,,,,,,,,
58,1,,26013-100252,,"BOLT W/WASHER M10X25",,4,,,4,,,,,,,,,,,,
58-1,1,,26013-100302,,"BOLT M10X 30",,6,,,6,,N,,,,,*1987.03,,,,,,*1987.03
59,1,,172122-65820,,"KEY PLATE ASSY",,1,,,1,,Z,,,,,M60501,,,,,,M60501
60,1,,22157-060000,,"WASHER  6",,2,,,2,,Z,,,,,M60501,,,,,,M60501
61,1,,22217-060000,,"SPRING WASHER  6",,2,,,2,,Z,,,,,M60501,,,,,,M60501
62,1,,26716-060002,,"NUT M6",,2,,,2,,Z,,,,,M60501,,,,,,M60501
63,1,,22137-100000,,"WASHER 10,POLISHED",,6,,,6,,,,,,,,,,,,
63-1,1,,194145-04810,,"WASHER 10",,6,,,6,,N,,,,,*1987.03,,,,,,*1987.03
64,1,,22137-080000,,"WASHER 8, POLISHED",,4,,,4,,W,,,,,*1986.07,,,,,,*1986.07
65,1,,172126-65500,,KEY,,1,,,1,,W,,,,,M60501,,,,,,M60501
66,2,,172126-65571,,"WASHER LOCK",,1,,,1,,W,,,,,*1990.04,,,,,,*1990.04
67,2,,26347-100002,,"U-NUT M10",,1,,,1,,W,,,,,*1990.04,,,,,,*1990.04
68,1,,26013-080202,,"BOLT W/WASHER M8X20",,2,,,2,,W,,,,,M60501,,,,,,M60501
69,1,,933152-02900,,WASHER,,2,,,2,,W,,,,,M60501,,,,,,M60501
70,1,,172126-65460,,HOOK,,1,,,1,,W,,,,,M60501,,,,,,M60501
```

SPEC. CODE
D72124-05300
D72124-58800
D72124-61101
D72124-63100
D72124-63120
D72125-65101
D72125-61121

Fig. 36 ボンネット(キャビン) BONNET (CABIN SPEC.)

COUNTRY	JP	NW	SW	WG	FA	DM	NL
Fig. No.	35	36	36	36	36	36	36

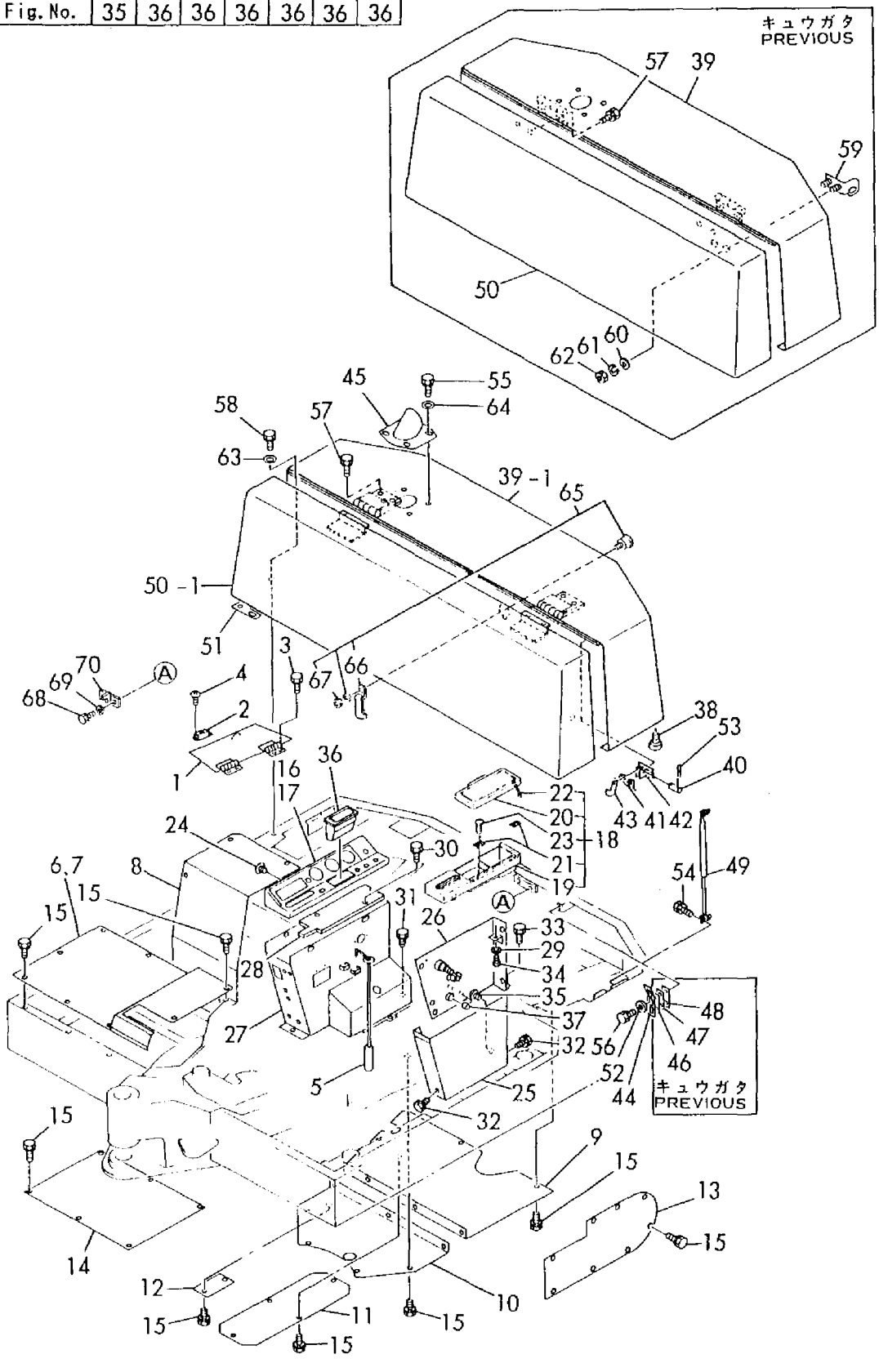

```
1,1,,172111-16890,,"GROMMET  9",1,,,1,,,,,,,,,,,,,
2,1,,172122-17190,,CLIP,11,,,11,,,Z,,,M00501,,,,,,M00501,,
3,1,,172614-45170,,"SPRING 12",1,,,1,,,,,,,,,,,,,
4,1,,172124-62500,,FLOOR,1,,,1,,,,,,,,,,,,,
5,1,,172124-62150,,"STEP ASSY, REAR",1,,,1,,,,,,,,,,,,,
5-1,1,,172124-62151,,"STEP ASSY, REAR",1,,,1,,,N,,,*1986.07,,,,,,*1986.07,,
6,1,,172122-62200,,"STEP (A), FRONT",1,,,1,,,,,,,,,,,,,
7,1,,172124-62200,,SPACER,4,,,4,,,,,,,,,,,,,
8,1,,172122-62250,,"STEP (B), FRONT",1,,,1,,,,,,,,,,,,,
9,1,,172122-62290,,"STEP (C), FRONT",1,,,1,,,,,,,,,,,,,
9-1,1,,172122-62291,,"STEP (C), FRONT",1,,,1,,,S,,,M00957,,,,,,M00690,,
10,1,,172124-62300,,"MAT, FLOOR",1,,,1,,,Z,,,M20501,,,,,,M20501,,
11,1,,172122-62330,,"STEP, CENTER",1,,,1,,,,,,,,,,,,,
11-1,1,,172124-62540,,"STEP, CENTER",1,,,1,,,N,,,M00795,,,,,,M00670,,
11-2,1,,172124-62570,,"STEP, CENTER",1,,,1,,,N,,,M20501,,,,,,M20501,,
12,1,,172122-62470,,"GUARD, PEDAL",1,,,1,,,,,,,,,,,,,
12-1,1,,172122-62471,,"GUARD, PEDAL",1,,,1,,,S,,,M10501,,,,,,M10501,,
13,1,,172112-69740,,"RUBBER, CUSHION",8,,,8,,,,,,,,,,,,,
14,1,,172112-69790,,"PLUG 32X2",1,,,1,,,Z,,,M00501,,,,,,M00501,,
15,1,,172112-69910,,"BOLT M16X105",4,,,4,,,,,,,,,,,,,
16,1,,22117-100000,,"WASHER 10",2,,,2,,,,,,,,,,,,,
17,1,,22217-100000,,"SPRING WASHER 10",1,,,1,,,,,,,,,,,,,
18,1,,22417-250200,,"COTTER PIN 2.5X20",1,,,1,,,,,,,,,,,,,
19,1,,22417-400250,,"COTTER PIN 4.0X25",4,,,4,,,,,,,,,,,,,
20,1,,26013-100202,,"BOLT W/WASHER M10X20",9,,,9,,,,,,,,,,,,,
21,1,,26013-100202,,"BOLT W/WASHER M10X20",4,,,4,,,,,,,,,,,,,
22,1,,26013-100202,,"BOLT W/WASHER M10X20",4,,,4,,,,,,,,,,,,,
23,1,,26013-100202,,"BOLT W/WASHER M10X20",2,,,2,,,,,,,,,,,,,
24,1,,26116-100502,,"BOLT M10X 50 PLATED",1,,,1,,,,,,,,,,,,,
25,1,,26712-100002,,"NUT M10",1,,,1,,,,,,,,,,,,,
26,1,,26837-160002,,"CASTLE NUT M16",4,,,4,,,,,,,,,,,,,
27,1,,933155-11490,,"WASHER 17X50, PIN",4,,,4,,,,,,,,,,,,,
28,1,,933171-18390,,"PIN, FOOT BAR",1,,,1,,,,,,,,,,,,,
29,1,,172124-62140,,"BAR, CROSS",1,,,1,,,,,,,,,,,,,
30,1,,172124-64240,,"SEAT, OPERATOR",1,,,1,,,,,,,,,,,,,
30-1,1,,172124-64241,,"SEAT (B), RECLINING",1,,,1,,,N,,,M20501,,,,,,M20501,,
30-2,1,,172124-64242,,"SEAT(B), RECLINING",1,,,1,,,N,,,*1989.03,,,,,,*1989.03,,
31,2,,172116-64130,,"ARM REST",1,,,1,,,W,,,*1988.03,,,,,,*1988.03,,
32,2,,172124-64360,,"SEAT BACK",1,,,1,,,W,,,*1988.03,,,,,,*1988.03,,
32-1,2,,172124-64361,,"BACK(C), SEAT",1,,,1,,,N,,,*1989.03,,,,,,*1989.03,,
33,2,,172124-64370,,"ADJUSTER, RECLINING",1,,,1,,,W,,,*1988.03,,,,,,*1988.03,,
34,2,,172124-64380,,"ADJUSTER, LOCK",1,,,1,,,W,,,*1988.03,,,,,,*1988.03,,
34-1,2,,172124-64381,,"ADJUSTER, LOCK",1,,,1,,,N,,,*1989.07,,,,,,*1989.07,,
35,2,,172124-64390,,"ADJUSTER, SEAT",1,,,1,,,W,,,*1988.03,,,,,,*1988.03,,
36,2,,172124-64400,,SPACER,1,,,1,,,W,,,*1988.03,,,,,,*1988.03,,
37,2,,172124-64410,,BOLT,1,,,1,,,W,,,*1988.03,,,,,,*1988.03,,
38,2,,172124-64420,,"CUSHION, SEAT",1,,,1,,,W,,,*1988.03,,,,,,*1988.03,,
38-1,2,,172124-64421,,"CUSHION, SEAT",1,,,1,,,N,,,*1989.03,,,,,,*1989.03,,
39,2,,172124-64430,,"SUPPORT, ARMREST",1,,,1,,,W,,,*1988.03,,,,,,*1988.03,,
40,2,,172124-64440,,"FRAME, ARMREST",1,,,1,,,W,,,*1988.03,,,,,,*1988.03,,
41,2,,172124-64450,,SPACER,1,,,1,,,W,,,*1988.03,,,,,,*1988.03,,
42,2,,22137-060000,,"WASHER 6, POLISHED",2,,,2,,,W,,,*1988.03,,,,,,*1988.03,,
43,2,,22137-080000,,"WASHER 8, POLISHED",1,,,1,,,W,,,*1988.03,,,,,,*1988.03,,
44,2,,22217-080000,,"SPRING WASHER  8",1,,,1,,,W,,,*1988.03,,,,,,*1988.03,,
45,2,,26013-080202,,"BOLT W/WASHER M8X20",6,,,6,,,W,,,*1988.03,,,,,,*1988.03,,
46,2,,26116-080302,,"BOLT M 8X 30 PLATED",1,,,1,,,W,,,*1988.03,,,,,,*1988.03,,
47,2,,26450-080162,,"BOLT M 8X 16",4,,,4,,,W,,,*1988.03,,,,,,*1988.03,,
48,2,,26712-060002,,"NUT M 6",2,,,2,,,W,,,*1988.03,,,,,,*1988.03,,
49,2,,26712-080002,,"NUT M 8",1,,,1,,,W,,,*1988.03,,,,,,*1988.03,,
50,1,,172124-64210,,"MOUNT, SEAT",1,,,1,,,,,,,,,,,,,
51,1,,22217-100000,,"SPRING WASHER 10",4,,,4,,,,,,,,,,,,,
52,1,,26013-100202,,"BOLT W/WASHER M10X20",4,,,4,,,,,,,,,,,,,
53,1,,26732-100002,,"NUT M10",4,,,4,,,,,,,,,,,,,
```

54,1,,933168-56000,,"GROMMET 17X19",1,,,1,,,W,,,*1986.07,,,,,,*1986.07,,
55,1,,22137-100000,,"WASHER 10,POLISHED",4,,,4,,,W,,,M21313,,,,,,M20596,,

SPEC. CODE
D72124-62111
D72124-64220

Fig. 37 シート＆ステップ(キャノピ) SEAT & STEP (CANOPY SPEC.)

COUNTRY	J P	N W	S W	W G	F A	D M	N L
Fig. No.	37	—	—	—	—	—	—

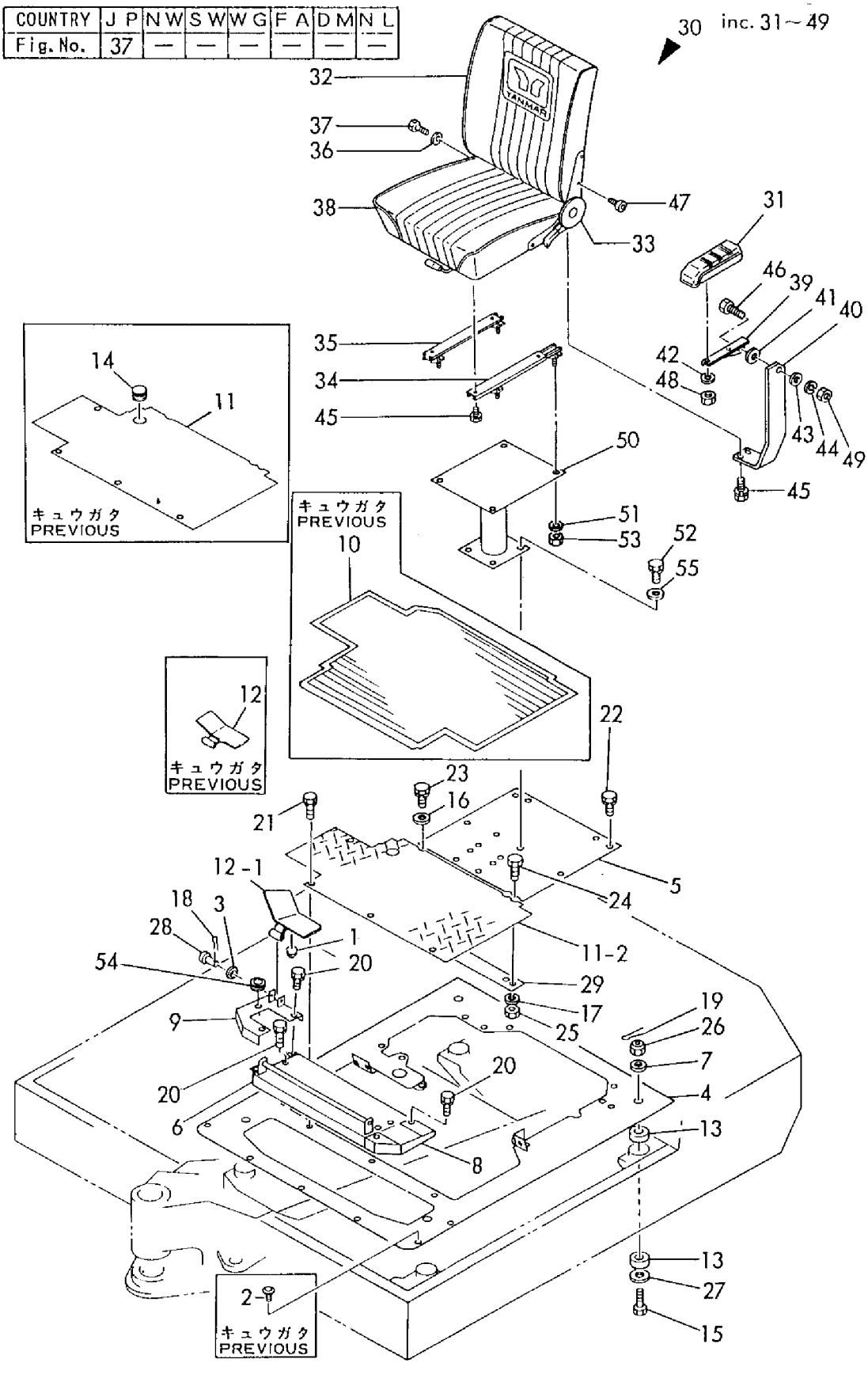

```
1,1,,172111-16890,,"GROMMET  9",,1,,,1,,,,,,,,,,,,
2,1,,172122-17190,,CLIP,,3,,,3,,Z,,,,,M00501,,,,,,M00501
3,1,,172614-45170,,"SPRING 12",,1,,,1,,,,,,,,,,,,
4,1,,172124-62100,,"FLOOR, FLOAT",,1,,,1,,,,,,,,,,,,
4-1,1,,172124-62101,,"FLOOR, FLOAT",,1,,,1,,N,,,,,M20501,,,,,,M20501
5,1,,172124-62150,,"STEP ASSY, REAR",,1,,,1,,,,,,,,,,,,
5-1,1,,172124-62151,,"STEP ASSY, REAR",,1,,,1,,N,,,,,*1986.07,,,,,,*1986.07
6,1,,172124-62190,,"MAT, FLOOR",,1,,,1,,,,,,,,,,,,
6-1,1,,172124-62191,,"MAT, FLOOR",,1,,,1,,N,,,,,*1986.04,,,,,,*1986.04
6-2,1,,172125-62190,,"MAT, FLOOR",,1,,,1,,S,,,,,M20501,,,,,,M20501
7,1,,172122-62200,,"STEP (A), FRONT",,1,,,1,,,,,,,,,,,,
8,1,,172124-62200,,SPACER,,4,,,4,,,,,,,,,,,,
9,1,,172122-62250,,"STEP (B), FRONT",,1,,,1,,,,,,,,,,,,
10,1,,172122-62290,,"STEP (C), FRONT",,1,,,1,,,,,,,,,,,,
10-1,1,,172122-62291,,"STEP (C), FRONT",,1,,,1,,S,,,,,M00957,,,,,,M00690
11,1,,172122-62330,,"STEP, CENTER",,1,,,1,,,,,,,,,,,,
11-1,1,,172124-62540,,"STEP, CENTER",,1,,,1,,N,,,,,M00795,,,,,,M00670
12,1,,172122-62470,,"GUARD, PEDAL",,1,,,1,,,,,,,,,,,,
12-1,1,,172122-62471,,"GUARD, PEDAL",,1,,,1,,S,,,,,M10501,,,,,,M10501
13,1,,172112-69740,,"RUBBER, CUSHION",,8,,,8,,,,,,,,,,,,
14,1,,172112-69790,,"PLUG 32X2",,1,,,1,,Z,,,,,M00501,,,,,,M00501
15,1,,172112-69910,,"BOLT M16X105",,4,,,4,,,,,,,,,,,,
16,1,,22117-100000,,"WASHER 10",,2,,,2,,,,,,,,,,,,
17,1,,22217-100000,,"SPRING WASHER 10",,1,,,1,,,,,,,,,,,,
18,1,,22417-250200,,"COTTER PIN 2.5X20",,1,,,1,,,,,,,,,,,,
19,1,,22417-400250,,"COTTER PIN 4.0X25",,4,,,4,,,,,,,,,,,,
20,1,,26013-100202,,"BOLT W/WASHER M10X20",,9,,,9,,,,,,,,,,,,
21,1,,26013-100202,,"BOLT W/WASHER M10X20",,4,,,4,,,,,,,,,,,,
22,1,,26013-100202,,"BOLT W/WASHER M10X20",,4,,,4,,,,,,,,,,,,
23,1,,26013-100202,,"BOLT W/WASHER M10X20",,2,,,2,,,,,,,,,,,,
24,1,,26116-100502,,"BOLT M10X 50 PLATED",,1,,,1,,,,,,,,,,,,
25,1,,26712-100002,,"NUT M10",,1,,,1,,,,,,,,,,,,
26,1,,26837-160002,,"CASTLE NUT M16",,4,,,4,,,,,,,,,,,,
27,1,,933155-11490,,"WASHER 17X50, PIN",,4,,,4,,,,,,,,,,,,
28,1,,933171-18390,,"PIN, FOOT BAR",,1,,,1,,,,,,,,,,,,
29,1,,172124-62140,,"BAR, CROSS",,1,,,1,,,,,,,,,,,,
30,1,,172124-64200,,"SEAT, OPERATOR",,1,,,1,,,,,,,,,,,,
30-1,1,,172124-64201,,"SEAT, OPERATOR",,1,,,1,,N,,,,,M00795,,,,,,M00670
31,2,,172124-64350,,"CUSHION, SEAT",,1,,,1,,W,,,,,*1988.03,,,,,,*1988.03
31-1,2,,172124-64351,,"CUSHION, SEAT",,1,,,1,,N,,,,,*1989.03,,,,,,*1989.03
32,2,,172124-64360,,"SEAT BACK",,1,,,1,,W,,,,,*1988.03,,,,,,*1988.03
32-1,2,,172124-64361,,"BACK(C), SEAT",,1,,,1,,N,,,,,*1989.03,,,,,,*1989.03
33,2,,172124-64370,,"ADJUSTER, RECLINING",,1,,,1,,W,,,,,*1988.03,,,,,,*1988.03
34,2,,172124-64380,,"ADJUSTER, LOCK",,1,,,1,,W,,,,,*1988.03,,,,,,*1988.03
34-1,2,,172124-64381,,"ADJUSTER, LOCK",,1,,,1,,N,,,,,*1989.07,,,,,,*1989.07
35,2,,172124-64390,,"ADJUSTER, SEAT",,1,,,1,,W,,,,,*1988.03,,,,,,*1988.03
36,2,,172124-64400,,SPACER,,1,,,1,,W,,,,,*1988.03,,,,,,*1988.03
37,2,,172124-64410,,BOLT,,1,,,1,,W,,,,,*1988.03,,,,,,*1988.03
38,2,,26013-080202,,"BOLT W/WASHER M8X20",,4,,,4,,W,,,,,*1988.03,,,,,,*1988.03
39,2,,26450-080162,,"BOLT M 8X 16",,4,,,4,,W,,,,,*1988.03,,,,,,*1988.03
40,1,,172124-64210,,"MOUNT, SEAT",,1,,,1,,,,,,,,,,,,
41,1,,22217-100000,,"SPRING WASHER 10",,4,,,4,,,,,,,,,,,,
42,1,,26013-100202,,"BOLT W/WASHER M10X20",,4,,,4,,,,,,,,,,,,
43,1,,26732-100002,,"NUT M10",,4,,,4,,,,,,,,,,,,
44,1,,933168-56000,,"GROMMET 17X19",,1,,,1,,W,,,,,*1986.07,,,,,,*1986.07
45,1,,22137-100000,,"WASHER 10,POLISHED",,4,,,4,,W,,,,,M21313,,,,,,M20596
```

Fig. 38 シート＆ステップ(キャビン) SEAT & STEP (CABIN SPEC.)

SPEC. CODE
D72124-62101
D72124-64200

COUNTRY	J P	N W	S W	W G	F A	D M	N L
Fig. No.	38	39	39	39	39	39	39

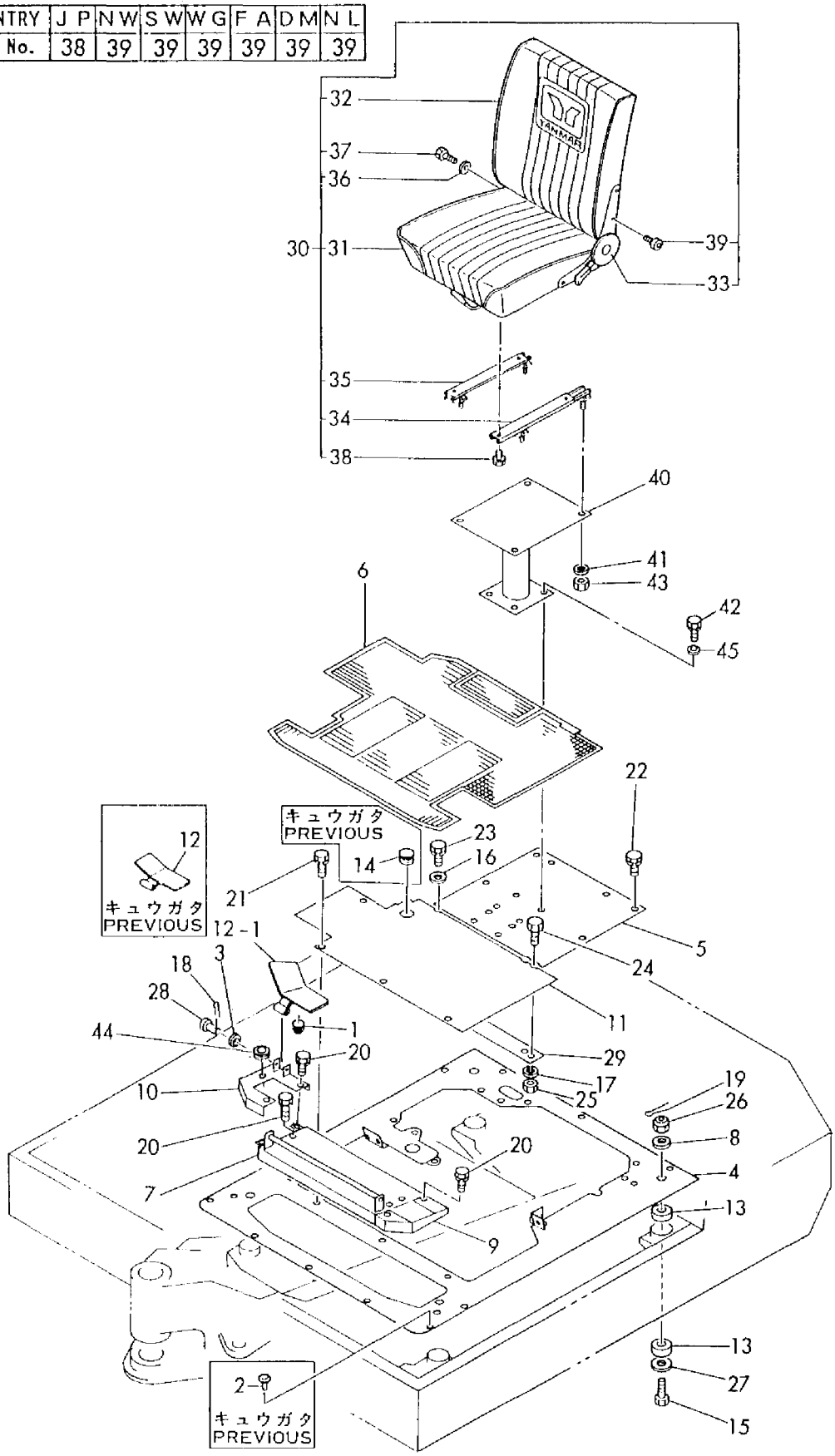

```
1,1,,172111-16890,,"GROMMET  9",,1,,,1,,,,,,,,,,,,
2,1,,172122-17190,,CLIP,,3,,,3,,Z,,,,,MXXXXX,,,,,,MXXXXX
3,1,,172614-45170,,"SPRING 12",,1,,,1,,,,,,,,,,,,
4,1,,172124-62100,,"FLOOR, FLOAT",,1,,,1,,,,,,,,,,,,
4-1,1,,172124-62101,,"FLOOR, FLOAT",,1,,,1,,N,,,,,M60501,,,,,,M60501
5,1,,172124-62150,,"STEP ASSY, REAR",,1,,,1,,,,,,,,,,,,
5-1,1,,172124-62151,,"STEP ASSY, REAR",,1,,,1,,N,,,,,*1986.07,,,,,,*1986.07
6,1,,172124-62190,,"MAT, FLOOR",,,,,1,,,,,,,,,,,,
6-1,1,,172122-62700,,"MAT, FLOOR",,,,,1,,N,,,,,,,,,,,*
6-2,1,,172122-62701,,"MAT, FLOOR",,,,,1,,R,,,,,,,,,,,*1986.04
6-3,1,,172124-62191,,"MAT, FLOOR",,,,,1,,S,,,,,,,,,,,*1988.07
7,1,,172122-62200,,"STEP (A), FRONT",,1,,,1,,,,,,,,,,,,
8,1,,172124-62200,,SPACER,,4,,,4,,,,,,,,,,,,
9,1,,172122-62250,,"STEP (B), FRONT",,1,,,1,,,,,,,,,,,,
10,1,,172122-62290,,"STEP (C), FRONT",,1,,,1,,,,,,,,,,,,
10-1,1,,172122-62291,,"STEP (C), FRONT",,1,,,1,,S,,,,,M60501,,,,,,M60501
11,1,,172122-62330,,"STEP, CENTER",,1,,,1,,,,,,,,,,,,
11-1,1,,172124-62540,,"STEP, CENTER",,1,,,1,,S,,,,,*1986.02,,,,,,*1986.02
12,1,,172122-62470,,"GUARD, PEDAL",,1,,,1,,,,,,,,,,,,
12-1,1,,172122-62471,,"GUARD, PEDAL",,1,,,1,,S,,,,,M50001,,,,,,M50001
13,1,,172112-69740,,"RUBBER, CUSHION",,8,,,8,,,,,,,,,,,,
14,1,,172112-69790,,"PLUG 32X2",,1,,,1,,Z,,,,,MXXXXX,,,,,,MXXXXX
15,1,,172112-69910,,"BOLT M16X105",,4,,,4,,,,,,,,,,,,
16,1,,22117-100000,,"WASHER 10",,2,,,2,,,,,,,,,,,,
17,1,,22217-100000,,"SPRING WASHER 10",,1,,,1,,,,,,,,,,,,
18,1,,22417-250200,,"COTTER PIN 2.5X20",,1,,,1,,,,,,,,,,,,
19,1,,22417-400250,,"COTTER PIN 4.0X25",,4,,,4,,,,,,,,,,,,
20,1,,26013-100202,,"BOLT W/WASHER M10X20",,9,,,9,,,,,,,,,,,,
21,1,,26013-100202,,"BOLT W/WASHER M10X20",,4,,,4,,,,,,,,,,,,
22,1,,26013-100202,,"BOLT W/WASHER M10X20",,4,,,4,,,,,,,,,,,,
23,1,,26013-100202,,"BOLT W/WASHER M10X20",,2,,,2,,,,,,,,,,,,
24,1,,26116-100502,,"BOLT M10X 50 PLATED",,1,,,1,,,,,,,,,,,,
25,1,,26712-100002,,"NUT M10",,1,,,1,,,,,,,,,,,,
26,1,,26837-160002,,"CASTLE NUT M16",,4,,,4,,,,,,,,,,,,
27,1,,933155-11490,,"WASHER 17X50, PIN",,4,,,4,,,,,,,,,,,,
28,1,,933171-18390,,"PIN, FOOT BAR",,1,,,1,,,,,,,,,,,,
29,1,,172124-62140,,"BAR, CROSS",,1,,,1,,,,,,,,,,,,
30,1,,172122-64370,,"MOUNT (B), SEAT",,,,,1,,,,,,,,,,,,
31,1,,172119-68600,,BUCK,,1,,,1,,,,,,,,,,,,
32,1,,22117-080000,,"WASHER  8",,2,,,2,,,,,,,,,,,,
32-1,1,,22117-080000,,"WASHER  8",,2,,,,,Z,,,,,*198.07,,,,,,
33,1,,26013-100252,,"BOLT W/WASHER M10X25",,4,,,4,,,,,,,,,,,,
34,1,,26116-080202,,"BOLT M 8X 20 PLATED",,2,,,2,,,,,,,,,,,,
35,1,,172124-64300,,"MOUNT ASSY, SEAT",,1,,,,,,,,,,,,,,,,
36,1,,933168-56000,,"GROMMET 17X19",,1,,,1,,W,,,,,*1986.07,,,,,,*1986.07
37,1,,933166-17730,,"WASHER 10.5X30",,,,,4,,W,,,,,,,,,,,M00501
```

Fig. 39 シートマウント＆ステップ(キャビン) SEAT MOUNT & STEP(CABIN SPEC.)

SPEC. CODE
D72124-62101
D72124-64250
D72124-64260

COUNTRY	J P	N W	S W	W G	F A	D M	N L
Fig. No.	38	39	39	39	39	39	39

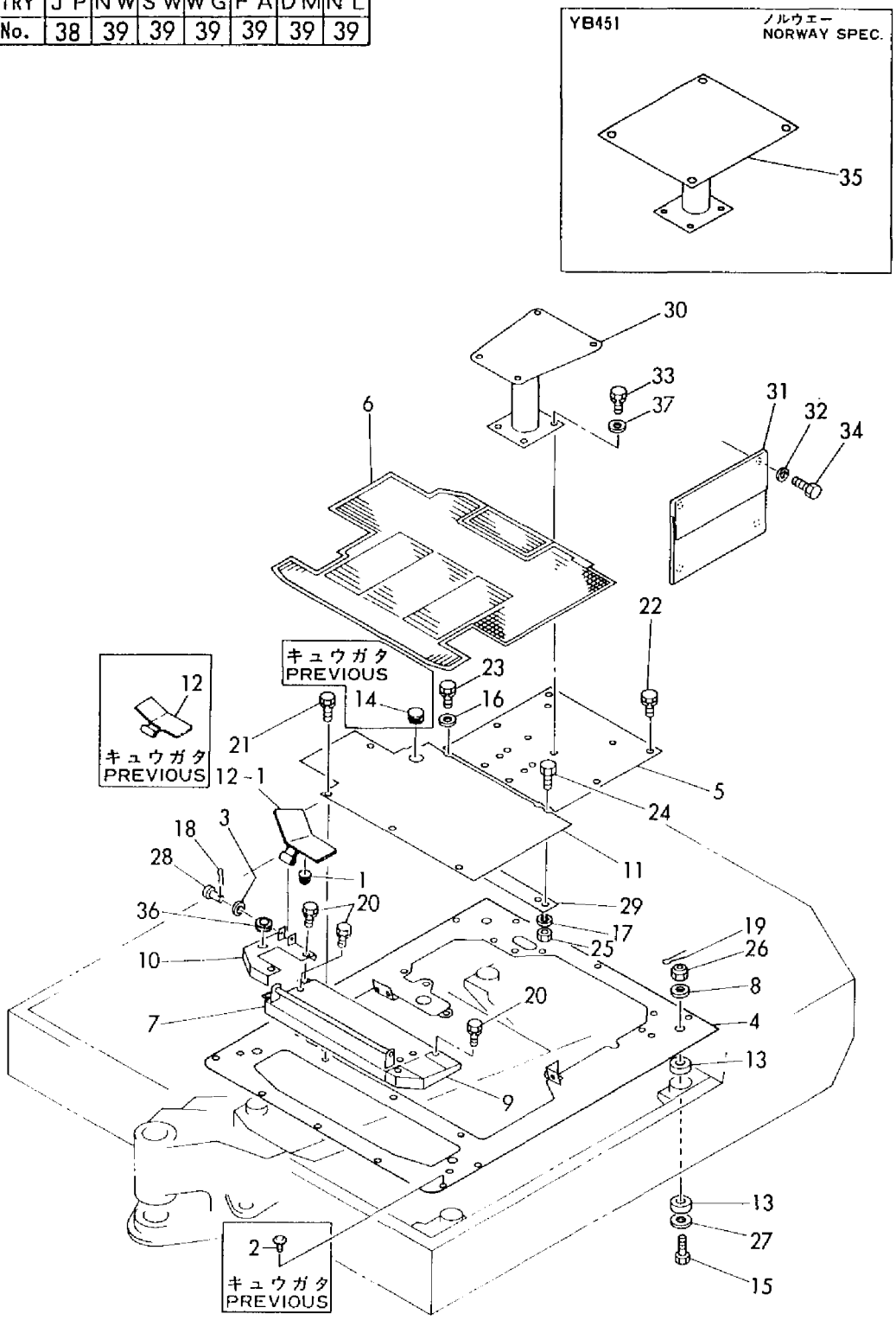

```
1,1,,772124-68100,,"CANOPY ASSY",1,,,1,,,,,,,,,,,,,
1-1,1,,772124-68101,,"CANOPY ASSY",1,,,1,,,S,,,M00607,,,,,,M00579,,
2,2,,772122-68100,,"CANOPY ASSY",1,,,1,,,,,,,,,,,,,
2-1,2,,772122-68101,,"CANOPY ASSY",1,,,1,,,S,,,M00607,,,,,,M00579,,
3,3,,172122-68100,,"PROP (L), CANOPY",1,,,1,,,,,,,,,,,,,
3-1,3,,172122-68101,,"COLUMN(L),CANOPY",1,,,1,,,S,,,M00607,,,,,,M00579,,
4,3,,172122-68150,,"PROP (R), CANOPY",1,,,1,,,,,,,,,,,,,
4-1,3,,172122-68151,,"PROP (R), CANOPY",1,,,1,,,S,,,M00607,,,,,,M00579,,
5,3,,172122-68200,,"HOOD ASSY",1,,,1,,,,,,,,,,,,,
5-1,3,,172122-68201,,"HOOD ASSY",1,,,1,,,S,,,M00607,,,,,,M00579,,
5-2,3,,172122-68202,,"HOOD ASSY",1,,,1,,,R,,,M00692,,,,,,M00631,,
5-3,3,,172122-68203,,"HOOD ASSY",1,,,1,,,N,,,*1986.03,,,,,,*1986.03,,
6,4,,172122-68210,,HOOD,1,,,1,,,,,,,,,,,,,
6-1,4,,172122-68211,,HOOD,1,,,1,,,S,,,M00692,,,,,,M00579,,
6-2,4,,172122-68212,,HOOD,1,,,1,,,N,,,*1986.03,,,,,,*1986.03,,
7,4,,172122-68220,,"ROPE (A)",1,,,1,,,,,,,,,,,,,
7-1,4,,172122-68221,,ROPE(A),1,,,1,,,S,,,M00607,,,,,,M00579,,
8,4,,172122-68230,,"ROPE (B)",2,,,2,,,,,,,,,,,,,
9,3,,172122-68300,,"ROOF ASSY, CANOPY",1,,,1,,,,,,,,,,,,,
9-1,3,,172122-68301,,"ROOF, CANOPY",1,,,1,,,S,,,M00607,,,,,,M00579,,
9-2,3,,172122-68302,,"ROOF ASSY, CANOPY",1,,,1,,,R,,,M00692,,,,,,M00631,,
10,3,,22137-120000,,"WASHER 12,POLISHED",12,,,12,,,,,,,,,,,,,
11,3,,26013-120252,,"BOLT M12X 25",6,,,6,,,,,,,,,,,,,
12,3,,26716-120002,,"NUT M12",6,,,6,,,,,,,,,,,,,
13,3,,26013-120302,,"BOLT W/WASHER M12X30",8,,,8,,,,,,,,,,,,,
14,2,,172124-65830,,"SUPPORT,FRONT COVER",1,,,1,,,,,,,,,,,,,
15,2,,22137-100000,,"WASHER 10,POLISHED",4,,,4,,,,,,,,,,,,,
16,2,,26013-100252,,"BOLT W/WASHER M10X25",4,,,4,,,,,,,,,,,,,
17,2,,26013-100252,,"BOLT W/WASHER M10X25",4,,,4,,,,,,,,,,,,,
18,2,,172122-68250,,"CANOPY (F)",1,,,1,,,,,,,,,,,,,
```

Fig. 40 キャノピ(キュウガタ) CANOPY (PREVIOUS)

SPEC. CODE
D72124-68100

COUNTRY	J P	N W	S W	W G	F A	D M	N L
Fig. No.	40	—	—	—	—	—	—

UP TO M/#20500

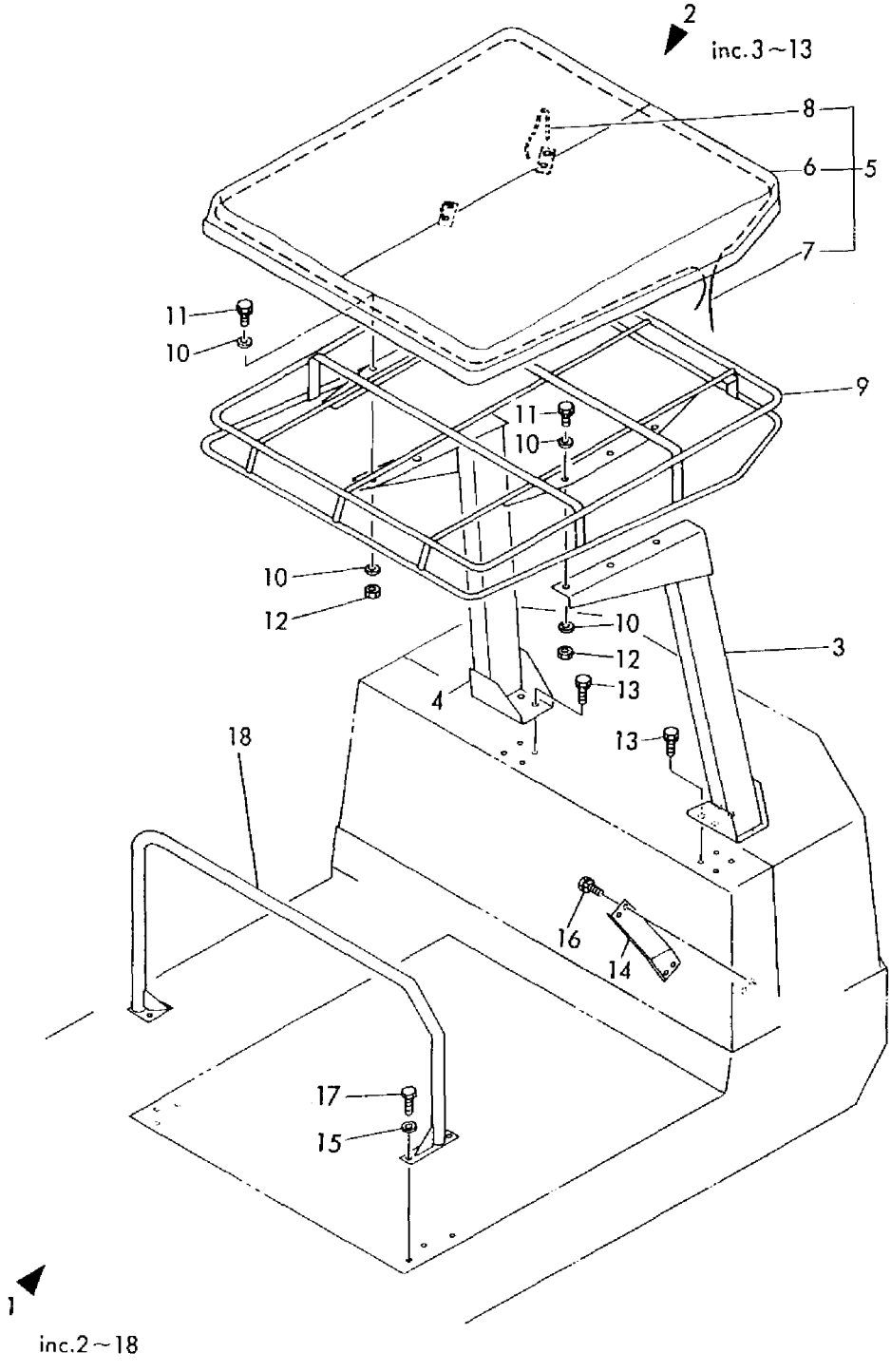

```
1,1,,772130-68101,,"CANOPY ASSY",1,,,1,,,,,,,,,,,,,
2,2,,172122-68102,,"COLUMN(L), CANOPY",1,,,1,,,,,,,,,,,,,
3,2,,172122-68152,,"COLUMN(R), CANOPY",1,,,1,,,,,,,,,,,,,
4,2,,172134-68200,,"ROOF, CANOPY",1,,,1,,,,,,,,,,,,,
5,2,,26013-120252,,"BOLT M12X 25",6,,,6,,,,,,,,,,,,,
6,2,,26013-120352,,"BOLT M12X 35",8,,,8,,,,,,,,,,,,,
7,1,,172122-68250,,"CANOPY (F)",1,,,1,,,,,,,,,,,,,
8,1,,172124-65830,,"SUPPORT,FRONT COVER",1,,,1,,,,,,,,,,,,,
9,1,,22137-100000,,"WASHER 10,POLISHED",4,,,4,,,,,,,,,,,,,
10,1,,26013-100252,,"BOLT W/WASHER M10X25",4,,,4,,,,,,,,,,,,,,
11,1,,26013-100252,,"BOLT W/WASHER M10X25",4,,,4,,,,,,,,,,,,,,
```

Fig. 41 キャノピ(シンガタ) CANOPY (NEW TYPE)

SPEC. CODE
D72124-68100

COUNTRY	J P	N W	S W	W G	F A	D M	N L
Fig. No.	41	—	—	—	—	—	—

FROM TO M/#20501

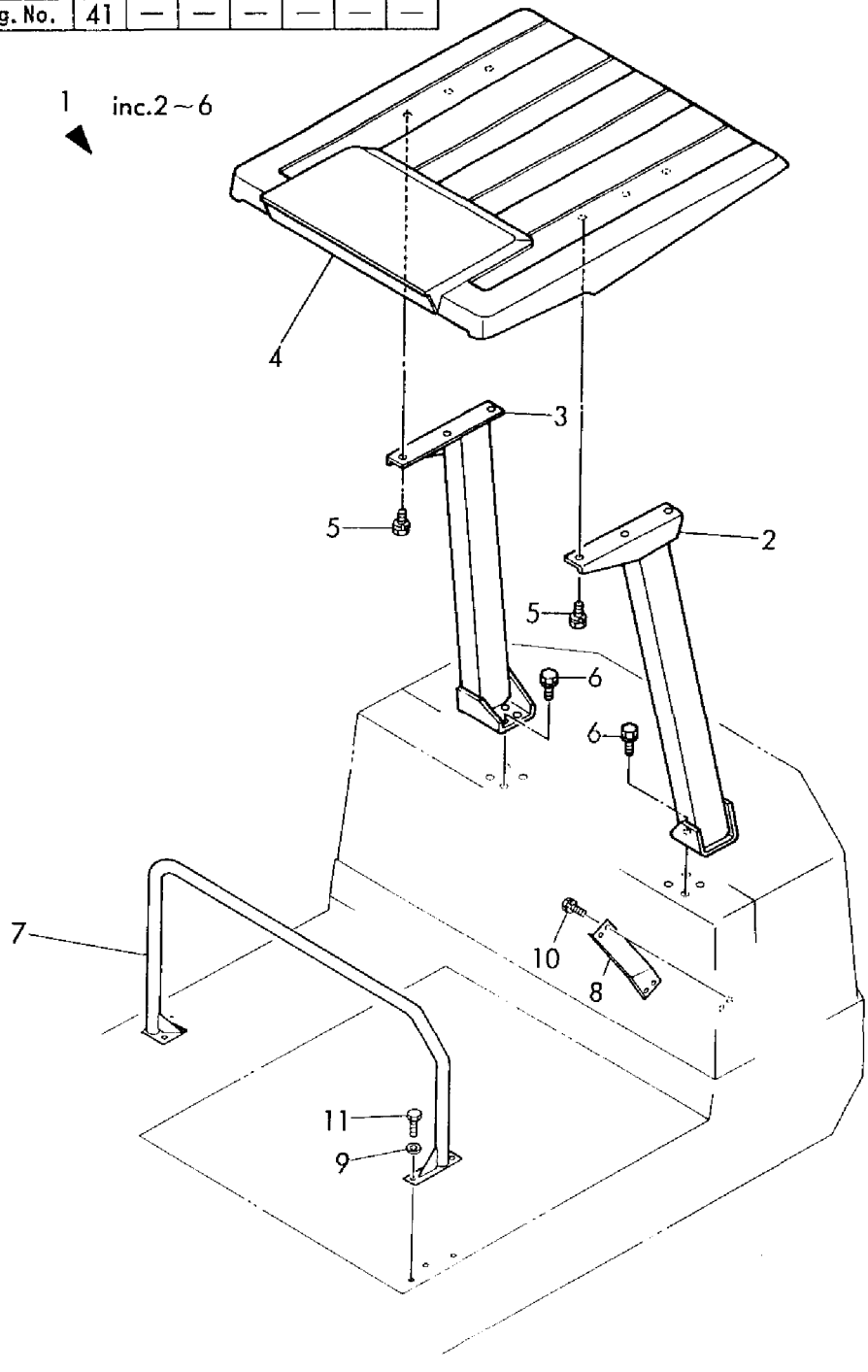

```
1,1,,772130-68100,,"CANOPY ASSY",1,,,1,,,,,,,,,,,,,
2,2,,772130-68110,,"CANOPY ASSY",1,,,1,,,,,,,,,,,,,
3,3,,172122-68101,,"COLUMN(L),CANOPY",1,,,1,,,,,,,,,,,,,
4,3,,172122-68151,,"PROP (R), CANOPY",1,,,1,,,,,,,,,,,,,
5,3,,172122-68202,,"HOOD ASSY",1,,,1,,,,,,,,,,,,,
5-1,3,,172122-68203,,"HOOD ASSY",1,,,1,,,N,,,*1986.03,,,,,,*1986.03,,
6,4,,172122-68211,,HOOD,1,,,1,,,,,,,,,,,,,
6-1,4,,172122-68212,,HOOD,1,,,1,,,N,,,*1986.03,,,,,,*1986.03,,
7,4,,172122-68221,,ROPE(A),1,,,1,,,,,,,,,,,,,
8,4,,172122-68230,,"ROPE (B)",2,,,2,,,,,,,,,,,,,
9,3,,172122-68302,,"ROOF ASSY, CANOPY",1,,,1,,,,,,,,,,,,,
10,3,,26716-120002,,"NUT M12",6,,,6,,,,,,,,,,,,,
11,3,,22217-120000,,"WASHER 12,SPRING",6,,,6,,,,,,,,,,,,,
12,3,,26013-120302,,"BOLT W/WASHER M12X30",8,,,8,,,,,,,,,,,,,
13,3,,26013-120252,,"BOLT M12X 25",6,,,6,,,,,,,,,,,,,
14,2,,22137-100000,,"WASHER 10,POLISHED",4,,,4,,,,,,,,,,,,,
15,2,,172135-68222,,"COVER, FRONT",1,,,1,,,,,,,,,,,,,
16,2,,26013-100252,,"BOLT W/WASHER M10X25",7,,,7,,,,,,,,,,,,,
17,2,,172135-68202,,"CANOPY (F)",1,,,1,,,,,,,,,,,,,
18,2,,26013-100202,,"BOLT W/WASHER M10X20",4,,,4,,,,,,,,,,,,,
19,2,,22137-100000,,"WASHER 10,POLISHED",7,,,7,,,,,,,,,,,,,
```

Fig. 42 キャノピ(UZ)(キュウガタ) CANOPY (UZ) (PREVIOUS)

SPEC. CODE D72130-68100

COUNTRY	J P	N W	S W	W G	F A	D M	N L
Fig. No.	42	—	—	—	—	—	—

UP TO M/#20500

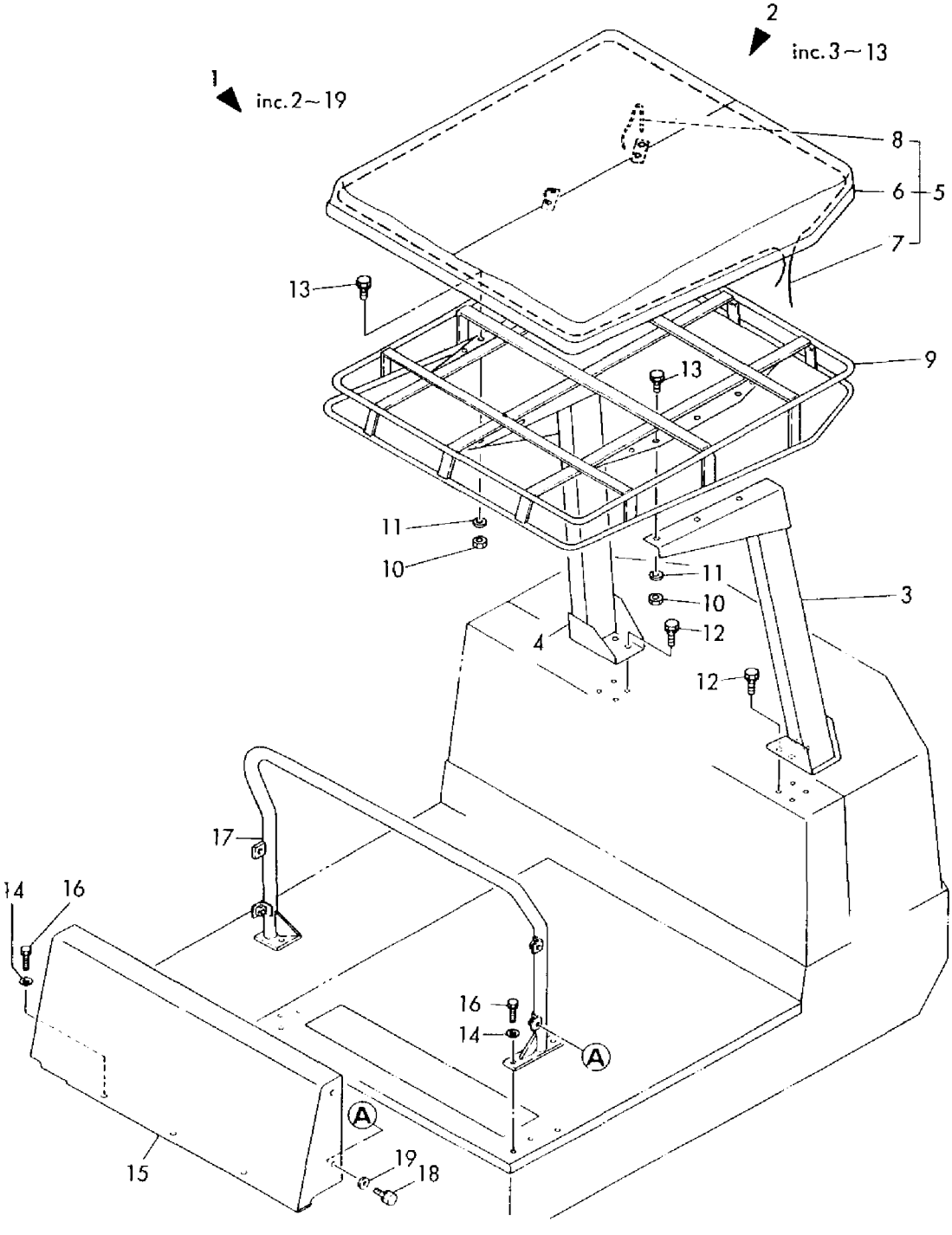

```
1,1,,772130-68101,,"CANOPY ASSY",1,,,1,,,,,,,,,,,,,
1-1,1,,772130-68102,,"CANOPY ASSY",1,,,1,,,N,,,*1987.09,,,,,,*1987.09,,
2,2,,172122-68102,,"COLUMN(L), CANOPY",1,,,1,,,,,,,,,,,,,
2-1,2,,172122-68103,,"COLUMN(L), CANOPY",1,,,1,,,N,,,*1987.09,,,,,,*1987.09,,
3,2,,172122-68152,,"COLUMN(R), CANOPY",1,,,1,,,,,,,,,,,,,
3-1,2,,172122-68153,,"COLUMN(R), CANOPY",1,,,1,,,N,,,*1987.09,,,,,,*1987.09,,
4,2,,172134-68200,,"ROOF, CANOPY",1,,,1,,,,,,,,,,,,,
5,2,,26013-120252,,"BOLT M12X 25",6,,,6,,,,,,,,,,,,,
6,2,,26013-120302,,"BOLT W/WASHER M12X30",8,,,8,,,,,,,,,,,,,
6-1,2,,26013-120352,,"BOLT M12X 35",8,,,8,,,N,,,*1988.04,,,,,,*1988.04,,
7,2,,194630-62360,,GROMMET,2,,,2,,,W,,,*1987.09,,,,,,*1987.09,,
8,1,,172135-68202,,"CANOPY (F)",1,,,1,,,,,,,,,,,,,
9,1,,172135-68222,,"COVER, FRONT",1,,,1,,,,,,,,,,,,,
10,1,,22137-100000,,"WASHER 10,POLISHED",7,,,7,,,,,,,,,,,,,
11,1,,22137-100000,,"WASHER 10,POLISHED",4,,,4,,,,,,,,,,,,,
12,1,,26013-100202,,"BOLT W/WASHER M10X20",4,,,4,,,,,,,,,,,,,,
13,1,,26013-100252,,"BOLT W/WASHER M10X25",7,,,7,,,,,,,,,,,,,,
```

Fig. 43 キャノピ(UZ)(シンガタ) CANOPY (UZ) (NEW TYPE)

SPEC. CODE
D72130-68100

FROM TO M/#20501

COUNTRY	JP	NW	SW	WG	FA	DM	NL
Fig. No.	43	—	—	—	—	—	—

1-1 inc. 2-1~7
1 inc. 2~6

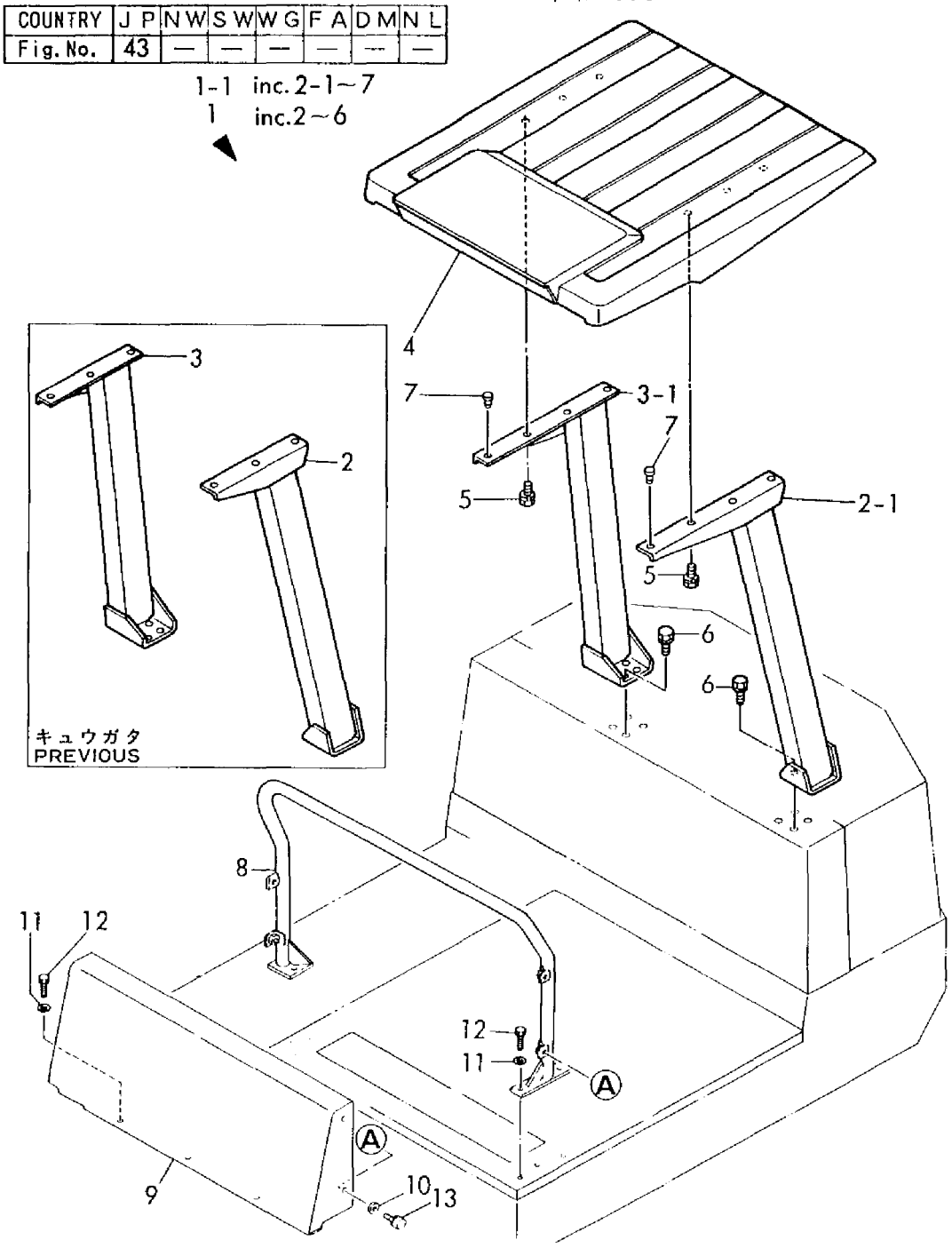

1A,1,,772124-68400,,"CABIN ASSY.",,,1,,1,1,,1,,,,,,,,,
1B,1,,772124-68430,,"CABIN ASSY.",,1,,,,,,2,,,,,,,,,
2,2,,194264-24190,,"PLUG, SCREW",,2,2,,2,2,,,,,,,,,,,
2-1,2,,194150-24270,,"SCREW CAP
13",,2,2,,2,2,R,,,,*1987.04,,*1987.04,,,,*1987.04,,*1987.04
3,2,,172730-27220,,"SPRING 2X12X25",,2,2,,2,2,,,,,,,,,,,
4,2,,172112-41960,,"PIN 8X25.5",,4,4,,4,4,,,,,,,,,,,
5A,2,,172124-68400,,CABIN,,,1,,1,1,,,,,,,,,,,
5B,2,,172124-68750,,CABIN,,1,,,,,,2,,,,,,,,,
6,2,,172124-68570,,"PANEL (A), ROOF",,1,1,,1,1,,,,,,,,,,,
7,2,,172124-68580,,"PANEL, REAR",,1,1,,1,1,,,,,,,,,,,
8,2,,172119-68590,,"RACK, HAT",,1,1,,1,1,,,,,,,,,,,
9,2,,172124-68590,,"PANEL, SIDE",,1,1,,1,1,,,,,,,,,,,
10,2,,172124-68600,,"GLASS, L SIDE",,1,1,,1,1,,,,,,,,,,,
11,2,,172124-68610,,"RUBBER,(L),SIDE GLAS",,1,1,,1,1,,,,,,,,,,,
12,2,,172122-69400,,"DOOR, ROOF",,1,1,,1,1,,,,,,,,,,,
13,2,,172122-69460,,"ARM, ROOF DOOR",,4,4,,4,4,,,,,,,,,,,
14,2,,172122-69500,,"GLASS, FRONT",,1,1,,1,1,,,,,,,,,,,
15,2,,172122-69520,,"PLATE, STOPPER",,4,4,,4,4,,,,,,,,,,,
16,2,,172122-69540,,"GLASS, REAR",,1,1,,1,4,,,,,,,,,,,
17,2,,172122-69560,,"WINDOW (R), SASH",,1,1,,1,1,,,,,,,,,,,
18,3,,172122-69350,,"LOCK, WINDOW",,2,2,,2,2,,,,,,,,,,,
19,3,,172122-69360,,"HOLDER(F), LOCK",,1,1,,1,1,,,,,,,,,,,
20,3,,172122-69370,,"HOLDER(R), LOCK",,1,1,,1,1,,,,,,,,,,,
21,3,,172122-69570,,"GLASS (F), RIGHT",,1,1,,1,1,,,,,,,,,,,
22,3,,172122-69580,,"GLASS (RE), RIGHT",,1,1,,1,1,,,,,,,,,,,
23,2,,172117-69600,,"RUBBER, CUSHION",,1,1,,1,1,,,,,,,,,,,
24,2,,172122-69600,,"SHAFT (B), ROOF DOOR",,2,2,,2,2,,,,,,,,,,,
25,2,,172122-69630,,RUBBER,,1,1,,1,1,,,,,,,,,,,
25-1,2,,172122-
69631,,RUBBER,,1,1,,1,1,N,,,,*1987.12,,*1987.12,,,,*1987.12,,*1987.12
26,2,,172122-69640,,RUBBER,,1,1,,1,1,,,,,,,,,,,
27,2,,172122-69650,,"SEAL, DOOR",,1,1,,1,1,,,,,,,,,,,
28,2,,172122-69660,,"RUBBER, ROOF PANEL",,1,1,,1,1,,,,,,,,,,,
29,2,,172122-69730,,RUBBER,,1,1,,1,1,,,,,,,,,,,
30,2,,172122-69840,,"PANEL (B), ROOF",,2,2,,2,2,,,,,,,,,,,
31,2,,172122-69850,,"PLATE (A), KEEP",,2,2,,2,2,,,,,,,,,,,
32,2,,172122-69860,,"PLATE (B), KEEP",,2,2,,2,2,,,,,,,,,,,
33,2,,172122-69870,,"PLATE (C), KEEP",,2,2,,2,2,,,,,,,,,,,
34,2,,22127-100000,,"WASHER 10",,11,11,,11,11,,,,,,,,,,,
35,2,,22417-200200,,"COTTER PIN 2.0X20",,8,8,,8,8,,,,,,,,,,,
36,2,,22857-400100,,"SCREW 4X10",,14,14,,14,14,,,,,,,,,,,
37,2,,26013-100202,,"BOLT W/WASHER M10X20",,11,11,,11,11,,,,,,,,,,,
38,2,,26013-100202,,"BOLT W/WASHER M10X20",,6,6,,6,6,,,,,,,,,,,
39,2,,26013-100202,,"BOLT W/WASHER M10X20",,8,8,,8,8,,,,,,,,,,,
40,2,,26022-060252,,"SCREW M 6X 25",,1,1,,1,1,,,,,,,,,,,
41,2,,26567-040102,,"SCREW M 4X 10",,4,4,,4,4,,,,,,,,,,,
42,2,,933110-53100,,"PIN 8X41.5",,4,4,,4,4,,,,,,,,,,,
43,2,,172111-16890,,"GROMMET 9",,1,1,,1,1,,,,,,,,,,,
44,2,,172122-69880,,"CLIP, TRIM",,18,18,,18,18,,,,,,,,,,,
45,2,,172122-69930,,"RUBBER,
CUSHION",,1,1,,1,1,W,,,,,*1985.03,,*1985.03,,,,*1985.03,,*1985.03
46,2,,172122-69940,,"RUBBER,
CUSHION",,1,1,,1,1,W,,,,,*1985.03,,*1985.03,,,,*1985.03,,*1985.03
47,1,,772122-69000,,"SIDE DOOR ASSY",,1,1,,1,1,,,,,,,,,,,
47-1,1,,772122-69001,,"SIDE DOOR
ASSY",,1,1,,1,1,S,,,,,M60501,,M20501,,,,M60501,,M20501
48,2,,172122-69100,,"DOOR ASSY, SIDE",,1,1,,1,1,,,,,,,,,,,
48-1,2,,172122-69040,,"DOOR ASSY,
SIDE",,1,1,,1,1,S,,,,,M60501,,M20501,,,,M60501,,M20501
49,3,,172122-69250,,HINGE,,2,2,,2,2,,,,,,,,,,,
50,4,,172122-69380,,HINGE,,2,2,,2,2,,,,,,,,,,,
51,4,,172122-69390,,HINGE,,2,2,,2,2,,,,,,,,,,,

52,2,,172112-69290,,"HANDLE, INNER",,1,1,,1,1,,,,,,,,,,,
53,2,,172112-69300,,"GROMMET 22X2",,1,1,,1,1,,,,,,,,,,,
54,2,,172122-69510,,"GLASS, SIDE DOOR",,1,1,,1,1,,,,,,,,,,,,
55,2,,172122-69610,,"OUTER HANDLE",,1,1,,1,1,,,,,,,,,,,,
56,2,,172122-69620,,"KNOB, DOOR",,1,1,,1,1,,,,,,,,,,,,
57,2,,172122-69670,,CHANNEL,,1,1,,1,1,,,,,,,,,,,,
58,2,,172122-69680,,REGULATOR,,1,1,,1,1,,,,,,,,,,,,
59,2,,172122-69690,,"HANDLE, REGULATOR",,1,1,,1,1,,,,,,,,,,,,
60,2,,172122-69700,,"PAD, DOOR GLASS",,1,1,,1,1,,,,,,,,,,,,
61,2,,172122-69710,,"CHANNEL, DOOR GLASS",,1,1,,1,1,,,,,,,,,,,,,
62,2,,172122-69720,,"LOCK(R), DOOR",,1,1,,1,1,,,,,,,,,,,,
62-1,2,,172125-68450,,"LOCK,
DOOR",,1,1,,1,1,S,,,,,M60501,,M20501,,,,M60501,,M20501
63,2,,172122-69750,,"CATCH, DOOR",,1,1,,1,1,,,,,,,,,,,,
64,3,,26557-050162,,"SCREW M 5X 16",,3,3,,3,3,,,,,,,,,,,,
65,3,,22217-050000,,"SPRING WASHER 5",,3,3,,3,3,,,,,,,,,,,,
66,3,,26716-050002,,"NUT M 5",,3,3,,3,3,,,,,,,,,,,,
67,3,,172122-69280,,"SPACER, CATCH-MALE",,1,1,,1,1,,,,,,,,,,,,
68,3,,172117-69640,,CATCH-FEMALE,,1,1,,1,1,,,,,,,,,,,,
69,3,,172117-69650,,GASKET,,1,1,,1,1,,,,,,,,,,,,
70,3,,172117-69660,,CUSHION,,1,1,,1,1,,,,,,,,,,,,
71,3,,172117-69690,,"CAP, KNOB",,1,1,,1,1,,,,,,,,,,,,
72,3,,172122-69760,,CATCH-MALE,,1,1,,1,1,,,,,,,,,,,,
73,2,,172122-69900,,"RUBBER, SIDE DOOR",,2,2,,2,2,,,,,,,,,,,,
74,2,,26022-060082,,"SCREW M 6X 8",,2,2,,2,2,,,,,,,,,,,,
75,2,,26022-060202,,"SCREW M 6X 20",,2,2,,2,2,,,,,,,,,,,,
76,2,,26022-060122,,"SCREW M 6X 12",,4,4,,4,4,,,,,,,,,,,,
77,2,,26022-060202,,"SCREW M 6X 20",,4,4,,4,4,,,,,,,,,,,,
78,2,,26557-040082,,"SCREW M 4X 8",,1,1,,1,1,,,,,,,,,,,,
79,2,,26557-050122,,"SCREW M 5X 12",,4,4,,4,4,,,,,,,,,,,,
80,2,,26577-050162,,"SCREW M 5X 16",,1,1,,1,1,,,,,,,,,,,,
81,2,,26577-050162,,"SCREW M 5X 16",,2,2,,2,2,,,,,,,,,,,,
82,2,,26022-050202,,"SCREW M 5X 20",,4,4,,4,4,,,,,,,,,,,,
83,2,,172122-69780,,"SHIM(A), DOOR CATCH",,1,1,,1,1,,,,,,,,,,,,
84,2,,172122-69790,,"SHIM(B), DOOR CATCH",,1,1,,1,1,,,,,,,,,,,,
85,2,,172124-68630,,"SEAL, CAB DOOR",,1,,,,,,2,,,,,,,,,,
86,2,,172122-69290,,"COVER, DOOR LATCH",,1,1,,1,1,,,,,,,,,,,,
87,2,,172122-69300,,"UNDAR COVER",,1,1,,1,1,,,,,,,,,,,,
88,2,,172122-69770,,"NUT, DOOR CATCH",,1,1,,1,1,,,,,,,,,,,,
89,2,,172122-69820,,"PANEL, SIDE DOOR",,1,1,,1,1,,,,,,,,,,,,
90,2,,172122-69880,,"CLIP, TRIM",,10,10,,10,10,,,,,,,,,,,,
91,2,,22137-050000,,"WASHER 5, POLISHED",,4,4,,4,4,,,,,,,,,,,,
92,2,,26557-050122,,"SCREW M 5X 12",,4,4,,4,4,,,,,,,,,,,,
93,1,,172112-69310,,KEY,,2,2,,2,2,,,,,,,,,,,,
94,1,,172122-69060,,"ROOF TRIM, FRONT",,,,,1,,W,1,,,,,,,,,,M00632
95,1,,172122-69070,,"ROOF TRIM, REAR",,,,,1,,W,1,,,,,,,,,,M00632
96,1,,933168-55770,,"BAND 146",,,,,1,,W,1,,,,,,,,,,M00632

SPEC. CODE
D72124-68400
D72122-68430
D72124-68430

Fig. 44 キャビン CABIN

COUNTRY	J P	N W	S W	W G	F A	D M	N L
Fig. No.	44	44	44	47	44	47	47

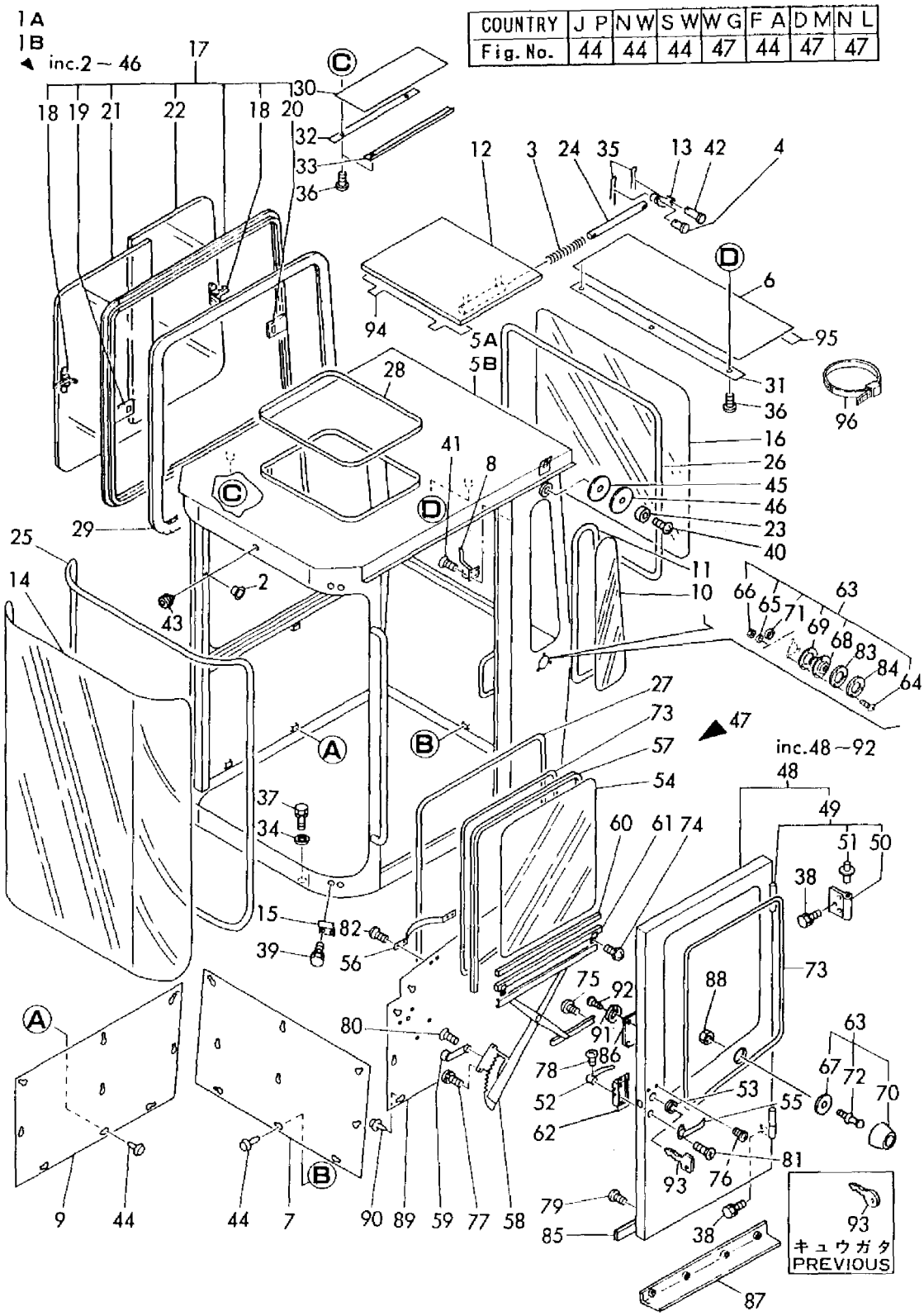

```
1,1,,772124-68700,,"CABIN ASSY, F-OPEN",,1,1,,1,1,,1,,,,,,,,,
2,2,,172730-27220,,"SPRING 2X12X25",,2,2,,2,2,,,,,,,,,,,
3,2,,172112-41960,,"PIN 8X25.5",,4,4,,4,4,,,,,,,,,,,
4,2,,172124-68700,,"CABIN,FRONT OPEN",,1,1,,1,1,,,,,,,,,,,
5,2,,172119-68590,,"RACK, HAT",,1,1,,1,1,,,,,,,,,,,
6,2,,22127-100000,,"WASHER 10",,11,11,,11,11,,,,,,,,,,,
7,2,,172122-69400,,"DOOR, ROOF",,1,1,,1,1,,,,,,,,,,,
8,2,,172122-69460,,"ARM, ROOF DOOR",,4,4,,4,4,,,,,,,,,,,
9,2,,26567-040102,,"SCREW M 4X 10",,4,4,,4,4,,,,,,,,,,,
10,2,,933110-53100,,"PIN 8X41.5",,4,4,,4,4,,,,,,,,,,,
11,2,,172122-69540,,"GLASS, REAR",,1,1,,1,1,,,,,,,,,,,
12,2,,172122-69560,,"WINDOW (R), SASH",,1,1,,1,1,,,,,,,,,,,
13,3,,172122-69570,,"GLASS (F), RIGHT",,1,1,,1,1,,,,,,,,,,,
14,3,,172122-69580,,"GLASS (RE), RIGHT",,1,1,,1,1,,,,,,,,,,,
15,3,,172122-69350,,"LOCK, WINDOW",,2,2,,2,2,,,,,,,,,,,
16,3,,172122-69360,,"HOLDER(F), LOCK",,1,1,,1,1,,,,,,,,,,,
17,3,,172122-69370,,"HOLDER(R), LOCK",,1,1,,1,1,,,,,,,,,,,
18,2,,172117-69600,,"RUBBER, CUSHION",,1,1,,1,1,,,,,,,,,,,
19,2,,172122-69600,,"SHAFT (B), ROOF DOOR",,2,2,,2,2,,,,,,,,,,,
20,2,,172111-16890,,"GROMMET  9",,1,1,,1,1,,,,,,,,,,,
21,2,,172122-69640,,RUBBER,,1,1,,1,1,,,,,,,,,,,
22,2,,172122-69650,,"SEAL, DOOR",,1,1,,1,1,,,,,,,,,,,
23,2,,172122-69660,,"RUBBER, ROOF PANEL",,1,1,,1,1,,,,,,,,,,,
24,2,,172122-69730,,RUBBER,,1,1,,1,1,,,,,,,,,,,
25,2,,172122-69930,,"RUBBER, CUSHION",,1,1,,1,1,,,,,,,,,,,
26,2,,172122-69940,,"RUBBER, CUSHION",,1,1,,1,1,,,,,,,,,,,
27,2,,172122-69880,,"CLIP, TRIM",,18,18,,18,18,,,,,,,,,,,
28,2,,172124-68590,,"PANEL, SIDE",,1,1,,1,1,,,,,,,,,,,
29,2,,172124-68580,,"PANEL, REAR",,1,1,,1,1,,,,,,,,,,,
30,2,,172124-68570,,"PANEL (A), ROOF",,1,1,,1,1,,,,,,,,,,,
31,2,,172122-69840,,"PANEL (B), ROOF",,2,2,,2,2,,,,,,,,,,,
32,2,,172122-69850,,"PLATE (A), KEEP",,2,2,,2,2,,,,,,,,,,,
33,2,,172122-69860,,"PLATE (B), KEEP",,2,2,,2,2,,,,,,,,,,,
34,2,,172122-69870,,"PLATE (C), KEEP",,2,2,,2,2,,,,,,,,,,,
35,2,,22417-200200,,"COTTER PIN 2.0X20",,8,8,,8,8,,,,,,,,,,,
36,2,,22857-400100,,"SCREW 4X10",,14,14,,14,14,,,,,,,,,,,
37,2,,26013-100202,,"BOLT W/WASHER M10X20",,11,11,,11,11,,,,,,,,,,,
38,2,,26013-100202,,"BOLT W/WASHER M10X20",,6,6,,6,6,,,,,,,,,,,
39,2,,194264-24190,,"PLUG, SCREW",,1,1,,1,1,,,,,,,,,,,
40,2,,26557-060252,,"SCREW M 6X 25",,1,1,,1,1,,,,,,,,,,,
41,2,,172122-67290,,"HOLDER, WIPER",,1,1,,1,1,,,,,,,,,,,
42,2,,172122-67350,,WINDOW(F),,1,1,,1,1,,,,,,,,,,,
43,3,,172122-67360,,"FRAME(F),WINDOW",,1,1,,1,1,,,,,,,,,,,
44,3,,172122-67370,,"FRONT GLASS(A)",,1,1,,1,1,,,,,,,,,,,
45,3,,172122-67380,,"FRONT GLASS(B)",,1,1,,1,1,,,,,,,,,,,
46,3,,172122-67390,,LOCK(L),,1,1,,1,1,,,,,,,,,,,
47,3,,172122-67400,,LOCK(R),,1,1,,1,1,,,,,,,,,,,
48,3,,172122-67410,,"BRACKET(L),LOCK",,1,1,,1,1,,,,,,,,,,,
49,3,,172122-67420,,"BRACKET(R),LOCK",,1,1,,1,1,,,,,,,,,,,
50,3,,172122-67430,,"PROTECTOR,DUST",,1,1,,1,1,,,,,,,,,,,
51,3,,172122-67440,,PLATE,,2,2,,2,2,,,,,,,,,,,
52,3,,172122-67450,,CLAMP(L),,2,2,,2,2,,,,,,,,,,,
53,3,,172122-67460,,CLAMP(R),,2,2,,2,2,,,,,,,,,,,
54,3,,172122-67470,,GASKET,,4,4,,4,4,,,,,,,,,,,
55,3,,172122-67480,,SPACER,,6,6,,6,6,,,,,,,,,,,
56,3,,172122-67530,,"SEAL,VINYL STRIP",,2,2,,2,2,,,,,,,,,,,
57,3,,172122-67540,,BRACKET,,8,8,,8,8,,,,,,,,,,,
58,3,,172122-67550,,"PAD,RUBBER",,1,1,,1,1,,,,,,,,,,,
59,3,,172122-67560,,"PAD,RUBBER",,1,1,,1,1,,,,,,,,,,,
60,3,,172122-67570,,GASKET,,6,6,,6,6,,,,,,,,,,,
61,3,,172122-67580,,SCREW,,1,1,,1,1,,,,,,,,,,,
62,3,,172122-67590,,SCREW,,1,1,,1,1,,,,,,,,,,,
63,3,,172122-67600,,SCREW,,1,1,,1,1,,,,,,,,,,,
```

64,3,,172122-67610,,SCREW,,1,1,,1,1,,,,,,,,,,,
65,3,,172122-67620,,SCREW,,1,1,,1,1,,,,,,,,,,,
66,3,,172122-67630,,"GASKET SET",,1,1,,1,1,,,,,,,,,,,
67,2,,172122-67500,,BALANCER(L),,1,1,,1,1,,,,,,,,,,,
68,2,,172122-67510,,BALANCER(R),,1,1,,1,1,,,,,,,,,,,
69,2,,172122-67650,,"NUT M14",,1,1,,1,1,,,,,,,,,,,
70,2,,22137-050000,,"WASHER 5,
POLISHED",,26,26,,26,26,Z,,,,,*1986.03,,*1986.03,,,,*1986.03,,*1986.03
71,2,,26716-050002,,"NUT M 5",,26,26,,26,26,,,,,,,,,,,
71-1,2,,194990-22120,,"NUT W/WASHER
5",,26,26,,26,26,R,,,,,*1986.03,,*1986.03,,,,*1986.03,,*1986.03
72,2,,26587-050162,,"SCREW M 5X 16",,26,26,,26,26,,,,,,,,,,,
73,2,,172124-68600,,"GLASS, L SIDE",,1,1,,1,1,,,,,,,,,,,
74,2,,172124-68610,,"RUBBER,(L),SIDE GLAS",,1,1,,1,1,,,,,,,,,,,
75,2,,26116-050162,,"BOLT M 5X 16 PLATED",,4,4,,4,4,,,,,,,,,,,
76,2,,22217-050000,,"SPRING WASHER 5",,4,4,,4,4,,,,,,,,,,,
77,2,,22137-060000,,"WASHER 6, POLISHED",,1,1,,1,1,,,,,,,,,,,
78,1,,772122-69000,,"SIDE DOOR ASSY",,1,1,,1,1,,,,,,,,,,,
79,2,,172122-69100,,"DOOR ASSY, SIDE",,1,1,,1,1,,,,,,,,,,,
80,3,,172122-69250,,HINGE,,2,2,,2,2,,,,,,,,,,,
81,4,,172122-69380,,HINGE,,2,2,,2,2,,,,,,,,,,,
82,4,,172122-69390,,HINGE,,2,2,,2,2,,,,,,,,,,,
83,2,,172112-69300,,"GROMMET 22X2",,1,1,,1,1,,,,,,,,,,,
84,2,,172122-69510,,"GLASS, SIDE DOOR",,1,1,,1,1,,,,,,,,,,,
85,2,,172122-69610,,"OUTER HANDLE",,1,1,,1,1,,,,,,,,,,,
86,2,,172122-69620,,"KNOB, DOOR",,1,1,,1,1,,,,,,,,,,,
87,2,,172122-69670,,CHANNEL,,1,1,,1,1,,,,,,,,,,,
88,2,,172122-69680,,REGULATOR,,1,1,,1,1,,,,,,,,,,,
89,2,,172122-69690,,"HANDLE, REGULATOR",,1,1,,1,1,,,,,,,,,,,
90,2,,172122-69700,,"PAD, DOOR GLASS",,1,1,,1,1,,,,,,,,,,,
91,2,,172122-69710,,"CHANNEL, DOOR GLASS",,1,1,,1,1,,,,,,,,,,,
92,2,,172122-69720,,"LOCK(R), DOOR",,1,1,,1,1,,,,,,,,,,,
93,2,,172122-69750,,"CATCH, DOOR",,1,1,,1,1,,,,,,,,,,,
94,3,,22217-050000,,"SPRING WASHER 5",,3,3,,3,3,,,,,,,,,,,
95,3,,26557-050162,,"SCREW M 5X 16",,3,3,,3,3,,,,,,,,,,,
96,3,,26717-050002,,"NUT M 5",,3,3,,3,3,,,,,,,,,,,
97,3,,172122-69280,,"SPACER, CATCH-MALE",,1,1,,1,1,,,,,,,,,,,
98,3,,172117-69640,,CATCH-FEMALE,,1,1,,1,1,,,,,,,,,,,
99,3,,172117-69650,,GASKET,,1,1,,1,1,,,,,,,,,,,
100,3,,172117-69660,,CUSHION,,1,1,,1,1,,,,,,,,,,,
101,3,,172117-69690,,"CAP, KNOB",,1,1,,1,1,,,,,,,,,,,
102,3,,172122-69760,,CATCH-MALE,,1,1,,1,1,,,,,,,,,,,
103,2,,26022-060082,,"SCREW M 6X 8",,2,2,,2,2,,,,,,,,,,,
104,2,,26022-060202,,"SCREW M 6X 20",,2,2,,2,2,,,,,,,,,,,
105,2,,26022-060122,,"SCREW M 6X 12",,4,4,,4,4,,,,,,,,,,,
106,2,,26022-060202,,"SCREW M 6X 20",,4,4,,4,4,,,,,,,,,,,
107,2,,26557-040082,,"SCREW M 4X 8",,1,1,,1,1,,,,,,,,,,,
108,2,,26557-050122,,"SCREW M 5X 12",,4,4,,4,4,,,,,,,,,,,
109,2,,26023-050122,,"SCREW M 5X 12",,4,4,,4,4,,,,,,,,,,,
110,2,,26577-050162,,"SCREW M 5X 16",,1,1,,1,1,,,,,,,,,,,
111,2,,26577-050162,,"SCREW M 5X 16",,2,2,,2,2,,,,,,,,,,,
112,2,,172122-69770,,"NUT, DOOR CATCH",,1,1,,1,1,,,,,,,,,,,
113,2,,26557-050202,,"SCREW M 5X 20",,4,4,,4,4,,,,,,,,,,,
114,2,,172122-69820,,"PANEL, SIDE DOOR",,1,1,,1,1,,,,,,,,,,,
115,2,,172122-69880,,"CLIP, TRIM",,10,10,,10,10,,,,,,,,,,,
116,2,,22217-050000,,"SPRING WASHER 5",,4,4,,4,4,,,,,,,,,,,
117,2,,172122-69900,,"RUBBER, SIDE DOOR",,2,2,,2,2,,,,,,,,,,,
118,2,,22137-050000,,"WASHER 5, POLISHED",,4,4,,4,4,,,,,,,,,,,
119,2,,172122-69300,,"UNDAR
COVER",,1,1,,1,1,W,,,,,*1986.02,,*1986.02,,,,*1986.02,,*1986.02
120,2,,172122-69290,,"COVER, DOOR LATCH",,1,1,,1,1,,,,,,,,,,,
121,2,,172112-69290,,"HANDLE, INNER",,1,1,,1,1,,,,,,,,,,,
122,2,,172122-69780,,"SHIM(A), DOOR CATCH",,1,1,,1,1,,,,,,,,,,,

123,2,,172122-69790,,"SHIM(B), DOOR CATCH",,1,1,,1,1,,,,,,,,,,,
124,2,,22217-050000,,"SPRING WASHER 5",,4,4,,4,4,,,,,,,,,,,
125,1,,172112-69310,,KEY,,2,2,,2,2,,,,,,,,,,,
126,1,,172122-69060,,"ROOF TRIM,
FRONT",,1,1,,1,1,W,,,,M00632,,M00632,,,,M00632,,M00632
127,1,,172122-69070,,"ROOF TRIM,
REAR",,1,1,,1,1,W,,,,M00632,,M00632,,,,M00632,,M00632
128,1,,933168-55770,,"BAND 146",,1,1,,1,1,W,,,,M00632,,M00632,,,,M00632,,M00632

Fig. 45 フロントオープンキャビン（キュウガタ） FRONT OPEN CABIN (PREVIOUS)

SPEC. CODE
D72124-68410

オプション → ヒョウジュンシヨウ
OPTIONAL → STANDARD SPEC.

YB451 FROM M/#00795 TO M/#20500
YB501 FROM M/#00670 TO M/#20500

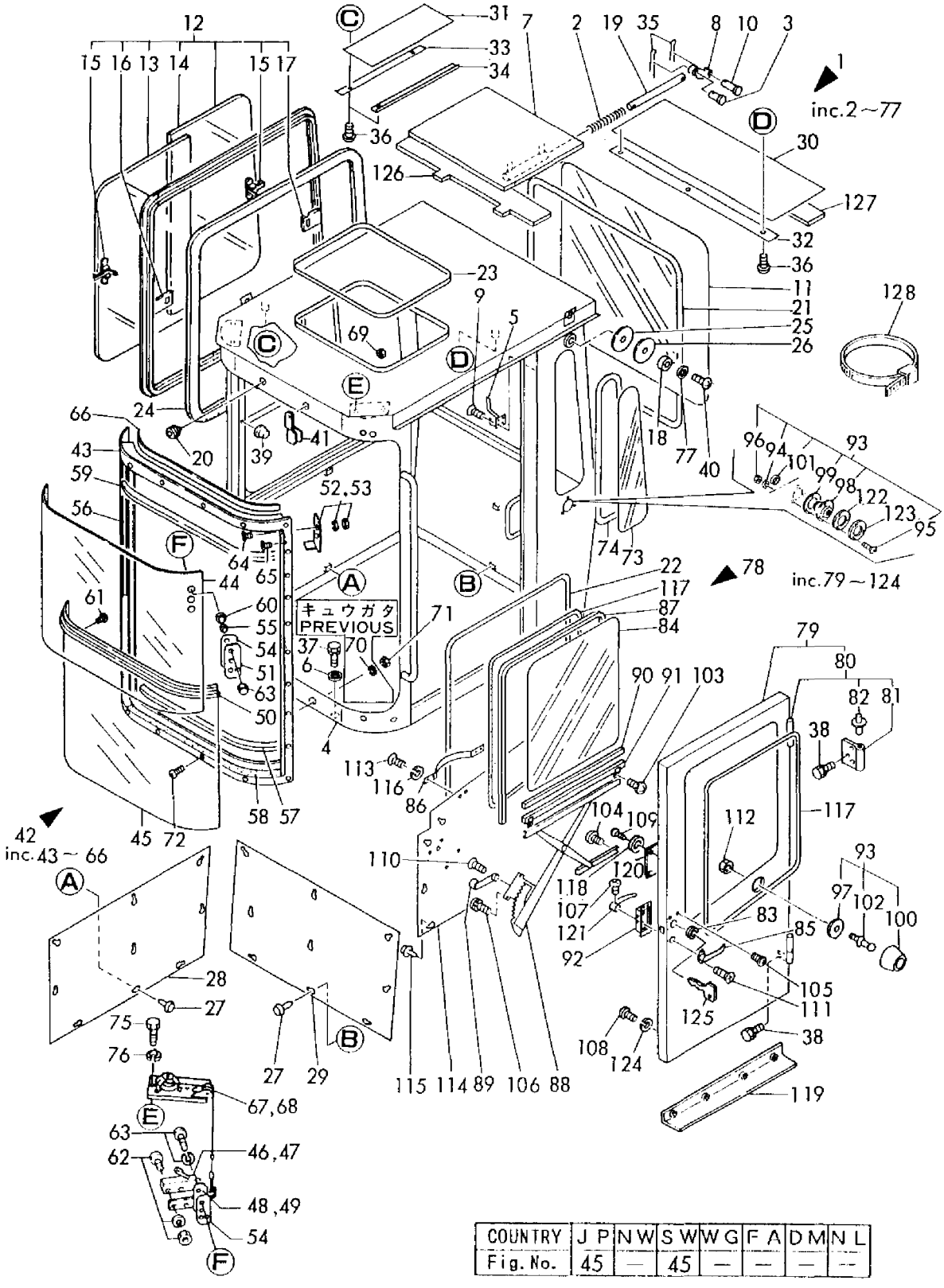

COUNTRY	J P	N W	S W	W G	F A	D M	N L
Fig. No.	45	—	45	—	—	—	—

```
1,1,,772124-68440,,"CABIN ASSY, FLAT",,1,,,1,,,,,,,,,,,,
2,2,,172111-16890,,"GROMMET  9",,1,,,1,,,,,,,,,,,,
3,2,,194150-24270,,"SCREW CAP 13",,1,,,1,,,,,,,,,,,,
4,2,,194630-28670,,"NUT M 5, PUSH",,4,,,4,,,,,,,,,,,,
5,2,,172137-46210,,SCREW,,18,,,18,,,,,,,,,,,,
6,2,,172137-46210,,SCREW,,7,,,7,,,,,,,,,,,,
7,2,,194555-65570,,"MARK (YANMAR)",,1,,,1,,,,,,,,,,,,
8,2,,172125-68550,,"CABIN ASSY",,1,,,1,,,,,,,,,,,,
9,2,,172119-68590,,"RACK, HAT",,1,,,1,,,,,,,,,,,,
10,2,,172135-68820,,"MOUNT, LOCK",,1,,,1,,,,,,,,,,,,
11,2,,172135-68830,,CUSHION,,2,,,2,,,,,,,,,,,,
12,2,,172125-68870,,"GLASS, SIDE",,1,,,1,,,,,,,,,,,,
13,2,,172125-68880,,"SEAL (C), SIDE",,1,,,1,,,,,,,,,,,,
14,2,,172125-68900,,"TRIM, SIDE",,1,,,1,,,,,,,,,,,,
15,2,,172125-68910,,"TRIM, REAR",,1,,,1,,,,,,,,,,,,
16,2,,172125-68920,,"TRIM, ROOF(B)",,1,,,1,,,,,,,,,,,,
17,2,,172137-68940,,PLATE,,1,,,1,,,,,,,,,,,,
18,2,,172135-69010,,"FRAME (L), GLASS",,1,,,1,,,,,,,,,,,,
19,2,,172135-69030,,"FRAME (R), GLASS",,1,,,1,,,,,,,,,,,,
20,2,,172135-69070,,"GASKET, FRAME (L)",,1,,,1,,,,,,,,,,,,
21,2,,172135-69080,,"GASKET, FRAME (R)",,1,,,1,,,,,,,,,,,,
22,2,,172135-69140,,"GLASS, FRONT",,1,,,1,,,,,,,,,,,,
23,2,,172135-69150,,"GLASS, FRONT LOWER",,1,,,1,,,,,,,,,,,,
24,2,,172135-69190,,"GLASS, REAR",,1,,,1,,,,,,,,,,,,
25,2,,172135-69200,,"SASH ASSY",,1,,,1,,,,,,,,,,,,
26,3,,172135-69210,,"GLASS, SASH (A)",,1,,,1,,,,,,,,,,,,
27,3,,172135-69220,,"GLASS, SASH (B)",,1,,,1,,,,,,,,,,,,
28,3,,172122-69350,,"LOCK, WINDOW",,2,,,2,,,,,,,,,,,,
29,3,,172122-69360,,"HOLDER(F), LOCK",,1,,,1,,,,,,,,,,,,
30,3,,172122-69370,,"HOLDER(R), LOCK",,1,,,1,,,,,,,,,,,,
31,2,,172137-69260,,BEARING,,4,,,4,,,,,,,,,,,,
31-1,2,,24104-062004,,"BALL BEARING",,4,,,4,,N,,,,,M21203,,,,,,M21203
32,2,,172137-69270,,"LATCH (L)",,1,,,1,,,,,,,,,,,,
33,2,,172135-69290,,"SEAL (D), REAR",,1,,,1,,,,,,,,,,,,
34,2,,172135-69300,,"RUBBER (A)",,2,,,2,,,,,,,,,,,,
35,2,,172135-69320,,"SUPPORT (A L)ASSY",,1,,,1,,,,,,,,,,,,
36,3,,172135-69340,,"SUPPORT (A L)",,1,,,1,,,,,,,,,,,,
37,3,,172135-69360,,RUBBER,,1,,,1,,,,,,,,,,,,
38,2,,172135-69330,,"SUPPORT (A R)ASSY",,1,,,1,,,,,,,,,,,,
39,3,,172135-69350,,"SUPPORT (A R)",,1,,,1,,,,,,,,,,,,
40,3,,172135-69360,,RUBBER,,1,,,1,,,,,,,,,,,,
41,2,,172135-69420,,"SEAL, FRONT GLASS",,1,,,1,,,,,,,,,,,,
42,2,,172135-69480,,"COVER, LIGHT",,1,,,1,,,,,,,,,,,,
43,2,,172135-69490,,MOUNT,,2,,,2,,,,,,,,,,,,
44,2,,172135-69520,,"TRIM, ROOF (A)",,1,,,1,,,,,,,,,,,,
45,2,,172137-69541,,"SHAFT, ROLLER",,4,,,4,,,,,,,,,,,,
46,2,,172137-69570,,LATCH(R),,1,,,1,,,,,,,,,,,,
47,2,,172117-69600,,"RUBBER, CUSHION",,1,,,1,,,,,,,,,,,,
48,2,,172137-69651,,"COLLAR, GLASS",,7,,,7,,,,,,,,,,,,
49,2,,172137-69840,,SCREW,,7,,,7,,,,,,,,,,,,
50,2,,172122-69940,,"RUBBER, CUSHION",,1,,,1,,,,,,,,,,,,
51,2,,22137-060000,,"WASHER 6, POLISHED",,1,,,1,,,,,,,,,,,,
52,2,,22137-060000,,"WASHER 6, POLISHED",,4,,,4,,,,,,,,,,,,
53,2,,22137-060000,,"WASHER 6, POLISHED",,4,,,4,,,,,,,,,,,,
54,2,,22137-080000,,"WASHER 8, POLISHED",,4,,,4,,,,,,,,,,,,
55,2,,22137-100000,,"WASHER 10,POLISHED",,10,,,10,,,,,,,,,,,,
56,2,,22157-080000,,"WASHER  8",,7,,,7,,,,,,,,,,,,
57,2,,26013-080202,,"BOLT W/WASHER M8X20",,4,,,4,,,,,,,,,,,,
58,2,,26013-100202,,"BOLT W/WASHER M10X20",,10,,,10,,,,,,,,,,,,
59,2,,26022-050122,,"SCREW M 5X 12",,12,,,12,,,,,,,,,,,,
60,2,,26022-060122,,"SCREW M 6X 12",,4,,,4,,,,,,,,,,,,
61,2,,26022-060122,,"SCREW M 6X 12",,4,,,4,,,,,,,,,,,,
62,2,,26557-060252,,"SCREW M 6X 25",,1,,,1,,,,,,,,,,,,
```

63,2,,26567-040102,,"SCREW M 4X 10",,4,,,4,,,,,,,,,,,,
64,2,,26756-140002,,"LOCK NUT M14 PLATED",,4,,,4,,,,,,,,,,,,
65,2,,933160-09220,,GROMMET,,4,,,4,,,,,,,,,,,,
66,2,,172135-69430,,"SEAL, DOOR",,1,,,1,,,,,,,,,,,,
66A,2,,172135-69700,,RUBBER(A),,2,,,2,,W,,,,M20876,,,,,,M20574
66B,2,,172135-69710,,RUBBER(B),,2,,,2,,W,,,,M20876,,,,,,M20574
67,1,,772135-68850,,"SIDE DOOR ASSY",,1,,,1,,,,,,,,,,,,
68,2,,172135-68850,,"DOOR ASSY, SIDE",,1,,,1,,,,,,,,,,,,
69,3,,172137-69410,,HINGE,,2,,,2,,,,,,,,,,,,
71,4,,172137-66650,,HINGE(B),,2,,,2,,,,,,,,,,,,
72,4,,172122-69390,,HINGE,,2,,,2,,,,,,,,,,,,
73,2,,172135-68950,,"COVER, LATCH",,1,,,1,,,,,,,,,,,,
74,2,,172135-69160,,"GLASS, SIDE DOOR(A)",,1,,,1,,,,,,,,,,,,
75,2,,172135-69170,,"GLASS, SIDE DOOR(B)",,1,,,1,,,,,,,,,,,,
76,2,,172137-69200,,"HANDLE, OUTER",,1,,,1,,,,,,,,,,,,
77,2,,172137-69210,,"HANDLE, INNER",,1,,,1,,,,,,,,,,,,
78,2,,172137-69220,,GROMMET,,1,,,1,,,,,,,,,,,,
79,2,,172135-69260,,"SEAL (A), DOOR",,1,,,1,,,,,,,,,,,,
80,2,,172135-69270,,"SEAL (B), DOOR",,1,,,1,,,,,,,,,,,,
81,2,,172122-69620,,"KNOB, DOOR",,1,,,1,,,,,,,,,,,,
82,2,,172117-69630,,"CATCH ASSY, DOOR",,1,,,1,,,,,,,,,,,,
83,3,,172117-69640,,CATCH-FEMALE,,1,,,1,,,,,,,,,,,,
84,3,,172117-69650,,GASKET,,1,,,1,,,,,,,,,,,,
85,3,,172117-69660,,CUSHION,,1,,,1,,,,,,,,,,,,
86,3,,172117-69670,,CATCH-MALE,,1,,,1,,,,,,,,,,,,
87,3,,172117-69680,,WASHER,,1,,,1,,,,,,,,,,,,
88,3,,172117-69690,,"CAP, KNOB",,1,,,1,,,,,,,,,,,,
89,3,,22217-050000,,"SPRING WASHER 5",,3,,,3,,,,,,,,,,,,
90,3,,22217-080000,,"SPRING WASHER 8",,1,,,1,,,,,,,,,,,,
91,3,,26557-050162,,"SCREW M 5X 16",,3,,,3,,,,,,,,,,,,
92,3,,26716-050002,,"NUT M 5",,3,,,3,,,,,,,,,,,,
93,3,,26716-080002,,"NUT M 8",,1,,,1,,,,,,,,,,,,
94,2,,172112-69790,,"PLUG 32X2",,1,,,1,,,,,,,,,,,,
95,2,,22137-100000,,"WASHER 10,POLISHED",,4,,,4,,,,,,,,,,,,
96,2,,26013-100252,,"BOLT W/WASHER M10X25",,4,,,4,,,,,,,,,,,,
97,2,,26022-050202,,"SCREW M 5X 20",,4,,,4,,,,,,,,,,,,
98,2,,26022-060122,,"SCREW M 6X 12",,4,,,4,,,,,,,,,,,,
99,2,,26023-050122,,"SCREW M 5X 12",,5,,,5,,,,,,,,,,,,
100,2,,26577-050122,,"SCREW M 5X 12",,2,,,2,,,,,,,,,,,,
101,2,,172137-66230,,GROMMET,,1,,,1,,,,,,,,,,,,
102,2,,172137-66240,,"LOCK, DOOR",,1,,,1,,,,,,,,,,,,
103,2,,172122-69780,,"SHIM(A), DOOR CATCH",,1,,,1,,,,,,,,,,,,
104,2,,172122-69790,,"SHIM(B), DOOR CATCH",,1,,,1,,,,,,,,,,,,
105,1,,933110-00301,,"KEY ASSY",,1,,,1,,,,,,,,,,,,

Fig. 46 フラットキャビン(シンガタ) FLAT CABIN (NEW TYPE)

SPEC. CODE
D72124-68440

FROM TO M/#20501

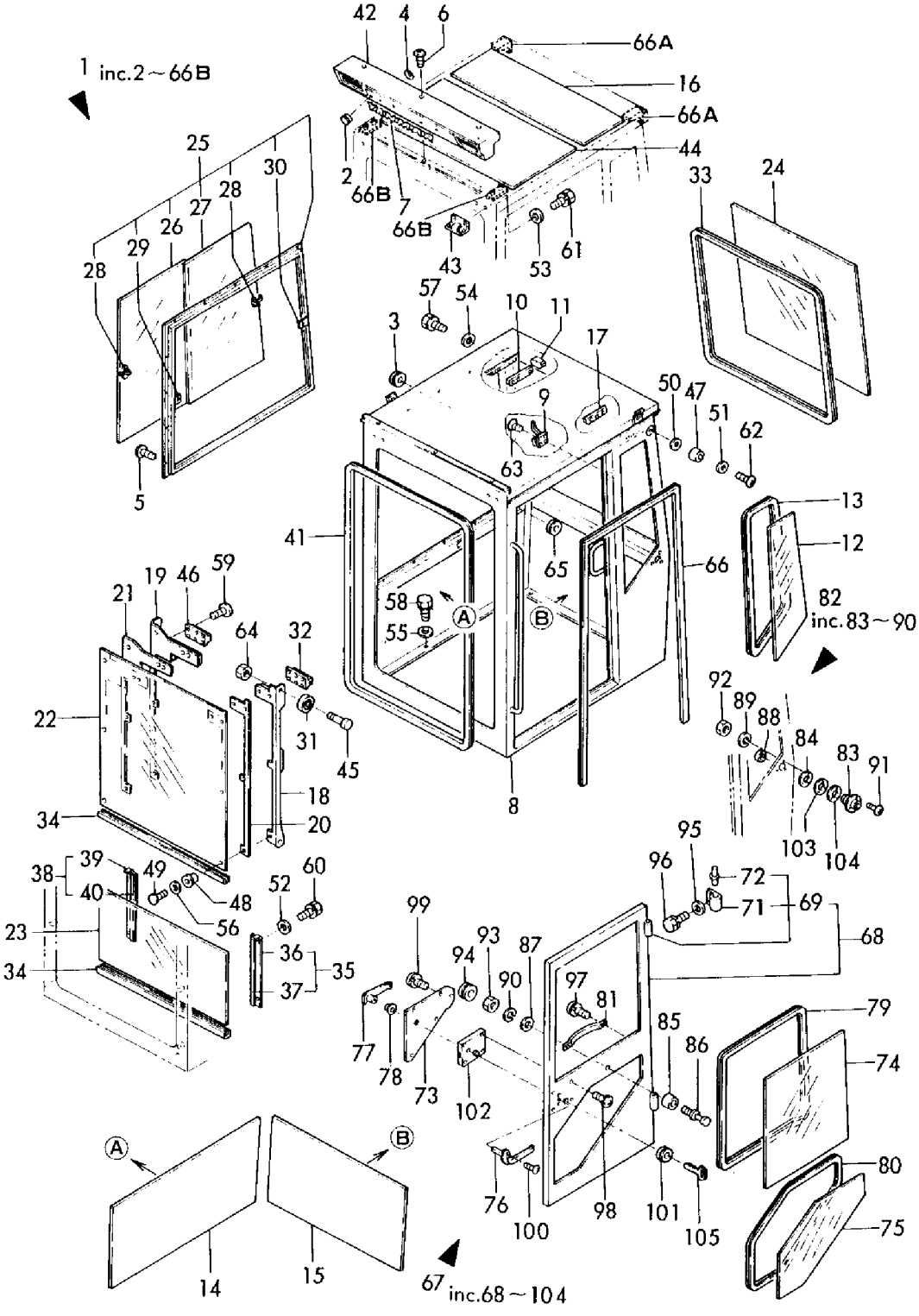

COUNTRY	J P	N W	S W	W G	F A	D M	N L
Fig. No.	46	—	—	—	—	—	—

```
1,1,,772125-68410,,"CABIN ASSY.",,,,,1,,,,,,,,,,,,
2,2,,194264-24190,,"PLUG, SCREW",,,,,2,,,,,,,,,,,,
2-1,2,,194150-24270,,"SCREW CAP 13",,,,,2,,R,,,,,,,,,,,*1987.04
3,2,,172730-27220,,"SPRING 2X12X25",,,,,2,,,,,,,,,,,,
4,2,,172112-41960,,"PIN 8X25.5",,,,,4,,,,,,,,,,,,
5,2,,172125-68500,,CABIN,,,,,1,,,,,,,,,,,,
6,2,,172124-68570,,"PANEL (A), ROOF",,,,,1,,,,,,,,,,,,
7,2,,172124-68580,,"PANEL, REAR",,,,,1,,,,,,,,,,,,
8,2,,172119-68590,,"RACK, HAT",,,,,1,,,,,,,,,,,,
9,2,,172124-68590,,"PANEL, SIDE",,,,,1,,,,,,,,,,,,
10,2,,172124-68600,,"GLASS, L SIDE",,,,,1,,,,,,,,,,,,
11,2,,172124-68610,,"RUBBER,(L),SIDE GLAS",,,,,1,,,,,,,,,,,,
12,2,,172122-69400,,"DOOR, ROOF",,,,,1,,,,,,,,,,,,
13,2,,172122-69460,,"ARM, ROOF DOOR",,,,,4,,,,,,,,,,,,
14,2,,172122-69500,,"GLASS, FRONT",,,,,1,,,,,,,,,,,,
15,2,,172122-69520,,"PLATE, STOPPER",,,,,4,,,,,,,,,,,,
16,2,,172122-69540,,"GLASS, REAR",,,,,1,,,,,,,,,,,,
17,2,,172122-69560,,"WINDOW (R), SASH",,,,,1,,,,,,,,,,,,
18,3,,172122-69350,,"LOCK, WINDOW",,,,,2,,,,,,,,,,,,
19,3,,172122-69360,,"HOLDER(F), LOCK",,,,,1,,,,,,,,,,,,
20,3,,172122-69370,,"HOLDER(R), LOCK",,,,,1,,,,,,,,,,,,
21,3,,172122-69570,,"GLASS (F), RIGHT",,,,,1,,,,,,,,,,,,
22,3,,172122-69580,,"GLASS (RE), RIGHT",,,,,1,,,,,,,,,,,,
23,2,,172117-69600,,"RUBBER, CUSHION",,,,,1,,,,,,,,,,,,
24,2,,172122-69600,,"SHAFT (B), ROOF DOOR",,,,,2,,,,,,,,,,,,
25,2,,172122-69631,,RUBBER,,,,,1,,,,,,,,,,,,
26,2,,172122-69640,,RUBBER,,,,,1,,,,,,,,,,,,
27,2,,172122-69650,,"SEAL, DOOR",,,,,1,,,,,,,,,,,,
28,2,,172122-69660,,"RUBBER, ROOF PANEL",,,,,1,,,,,,,,,,,,
29,2,,172122-69730,,RUBBER,,,,,1,,,,,,,,,,,,
30,2,,172122-69840,,"PANEL (B), ROOF",,,,,2,,,,,,,,,,,,
31,2,,172122-69850,,"PLATE (A), KEEP",,,,,2,,,,,,,,,,,,
32,2,,172122-69860,,"PLATE (B), KEEP",,,,,2,,,,,,,,,,,,
33,2,,172122-69870,,"PLATE (C), KEEP",,,,,2,,,,,,,,,,,,
34,2,,22127-100000,,"WASHER 10",,,,,11,,,,,,,,,,,,
35,2,,22417-200200,,"COTTER PIN 2.0X20",,,,,8,,,,,,,,,,,,
36,2,,22857-400100,,"SCREW 4X10",,,,,14,,,,,,,,,,,,
37,2,,26013-100202,,"BOLT W/WASHER M10X20",,,,,11,,,,,,,,,,,,
38,2,,26013-100202,,"BOLT W/WASHER M10X20",,,,,6,,,,,,,,,,,,
39,2,,26013-100202,,"BOLT W/WASHER M10X20",,,,,8,,,,,,,,,,,,
40,2,,26022-060252,,"SCREW M 6X 25",,,,,1,,,,,,,,,,,,
41,2,,26567-040102,,"SCREW M 4X 10",,,,,4,,,,,,,,,,,,
42,2,,933110-53100,,"PIN 8X41.5",,,,,4,,,,,,,,,,,,
43,2,,172111-16890,,"GROMMET  9",,,,,1,,,,,,,,,,,,
44,2,,172122-69880,,"CLIP, TRIM",,,,,18,,,,,,,,,,,,
45,2,,172122-69930,,"RUBBER, CUSHION",,,,,1,,,,,,,,,,,,
46,2,,172122-69940,,"RUBBER, CUSHION",,,,,1,,,,,,,,,,,,
47,1,,772122-69000,,"SIDE DOOR ASSY",,,,,1,,,,,,,,,,,,
47-1,1,,772122-69001,,"SIDE DOOR ASSY",,,,,1,,S,,,,,,,,,,,M60501
48,2,,172122-69100,,"DOOR ASSY, SIDE",,,,,1,,,,,,,,,,,,
48-1,2,,172122-69040,,"DOOR ASSY, SIDE",,,,,1,,S,,,,,,,,,,,M60501
49,3,,172122-69250,,HINGE,,,,,2,,,,,,,,,,,,
50,4,,172122-69380,,HINGE,,,,,2,,,,,,,,,,,,
51,4,,172122-69390,,HINGE,,,,,2,,,,,,,,,,,,
52,2,,172112-69290,,"HANDLE, INNER",,,,,1,,,,,,,,,,,,
53,2,,172112-69300,,"GROMMET 22X2",,,,,1,,,,,,,,,,,,
54,2,,172122-69510,,"GLASS, SIDE DOOR",,,,,1,,,,,,,,,,,,
55,2,,172122-69610,,"OUTER HANDLE",,,,,1,,,,,,,,,,,,
56,2,,172122-69620,,"KNOB, DOOR",,,,,1,,,,,,,,,,,,
57,2,,172122-69670,,CHANNEL,,,,,1,,,,,,,,,,,,
58,2,,172122-69680,,REGULATOR,,,,,1,,,,,,,,,,,,
59,2,,172122-69690,,"HANDLE, REGULATOR",,,,,1,,,,,,,,,,,,
60,2,,172122-69700,,"PAD, DOOR GLASS",,,,,1,,,,,,,,,,,,
```

```
61,2,,172122-69710,,"CHANNEL, DOOR GLASS",,,,,1,,,,,,,,,,,,
62,2,,172122-69720,,"LOCK(R), DOOR",,,,,1,,,,,,,,,,,,
62-1,2,,172125-68450,,"LOCK, DOOR",,,,,1,,S,,,,,,,,,,,M60501
63,2,,172122-69750,,"CATCH, DOOR",,,,,1,,,,,,,,,,,,
64,3,,26557-050162,,"SCREW M 5X 16",,,,,3,,,,,,,,,,,,
65,3,,22217-050000,,"SPRING WASHER  5",,,,,3,,,,,,,,,,,,
66,3,,26716-050002,,"NUT M 5",,,,,3,,,,,,,,,,,,
67,3,,172122-69280,,"SPACER, CATCH-MALE",,,,,1,,,,,,,,,,,,
68,3,,172117-69640,,CATCH-FEMALE,,,,,1,,,,,,,,,,,,
69,3,,172117-69650,,GASKET,,,,,1,,,,,,,,,,,,
70,3,,172117-69660,,CUSHION,,,,,1,,,,,,,,,,,,
71,3,,172117-69690,,"CAP, KNOB",,,,,1,,,,,,,,,,,,
72,3,,172122-69760,,CATCH-MALE,,,,,1,,,,,,,,,,,,
73,2,,172122-69900,,"RUBBER, SIDE DOOR",,,,,2,,,,,,,,,,,,
74,2,,26022-060082,,"SCREW M 6X  8",,,,,2,,,,,,,,,,,,
75,2,,26022-060202,,"SCREW M 6X 20",,,,,2,,,,,,,,,,,,
76,2,,26022-060122,,"SCREW M 6X 12",,,,,4,,,,,,,,,,,,
77,2,,26022-060202,,"SCREW M 6X 20",,,,,4,,,,,,,,,,,,
78,2,,26557-040082,,"SCREW M 4X  8",,,,,1,,,,,,,,,,,,
79,2,,26557-050122,,"SCREW M 5X 12",,,,,4,,,,,,,,,,,,
80,2,,26577-050162,,"SCREW M 5X 16",,,,,1,,,,,,,,,,,,
81,2,,26577-050162,,"SCREW M 5X 16",,,,,2,,,,,,,,,,,,
82,2,,26022-050202,,"SCREW M 5X 20",,,,,4,,,,,,,,,,,,
83,2,,172122-69780,,"SHIM(A), DOOR CATCH",,,,,1,,,,,,,,,,,,
84,2,,172122-69790,,"SHIM(B), DOOR CATCH",,,,,1,,,,,,,,,,,,
85,2,,26557-050122,,"SCREW M 5X 12",,,,,4,,,,,,,,,,,,
86,2,,172122-69290,,"COVER, DOOR LATCH",,,,,1,,,,,,,,,,,,
87,2,,172122-69300,,"UNDAR COVER",,,,,1,,,,,,,,,,,,
88,2,,172122-69770,,"NUT, DOOR CATCH",,,,,1,,,,,,,,,,,,
89,2,,172122-69820,,"PANEL, SIDE DOOR",,,,,1,,,,,,,,,,,,
90,2,,172122-69880,,"CLIP, TRIM",,,,,10,,,,,,,,,,,,
91,2,,22137-050000,,"WASHER 5, POLISHED",,,,,4,,,,,,,,,,,,
92,1,,172112-69310,,KEY,,,,,2,,,,,,,,,,,,
93,1,,172122-69060,,"ROOF TRIM, FRONT",,,,,1,,W,,,,,,,,,,,M00632
94,1,,172122-69070,,"ROOF TRIM, REAR",,,,,1,,W,,,,,,,,,,,M00632
95,1,,933168-55770,,"BAND 146",,,,,2,,W,,,,,,,,,,,M00632
```

Fig. 47 キャビン CABIN

SPEC. CODE
D72125-68410
D72122-68430

COUNTRY	J P	N W	S W	W G	F A	D M	N L
Fig. No.	44	44	44	47	44	47	47

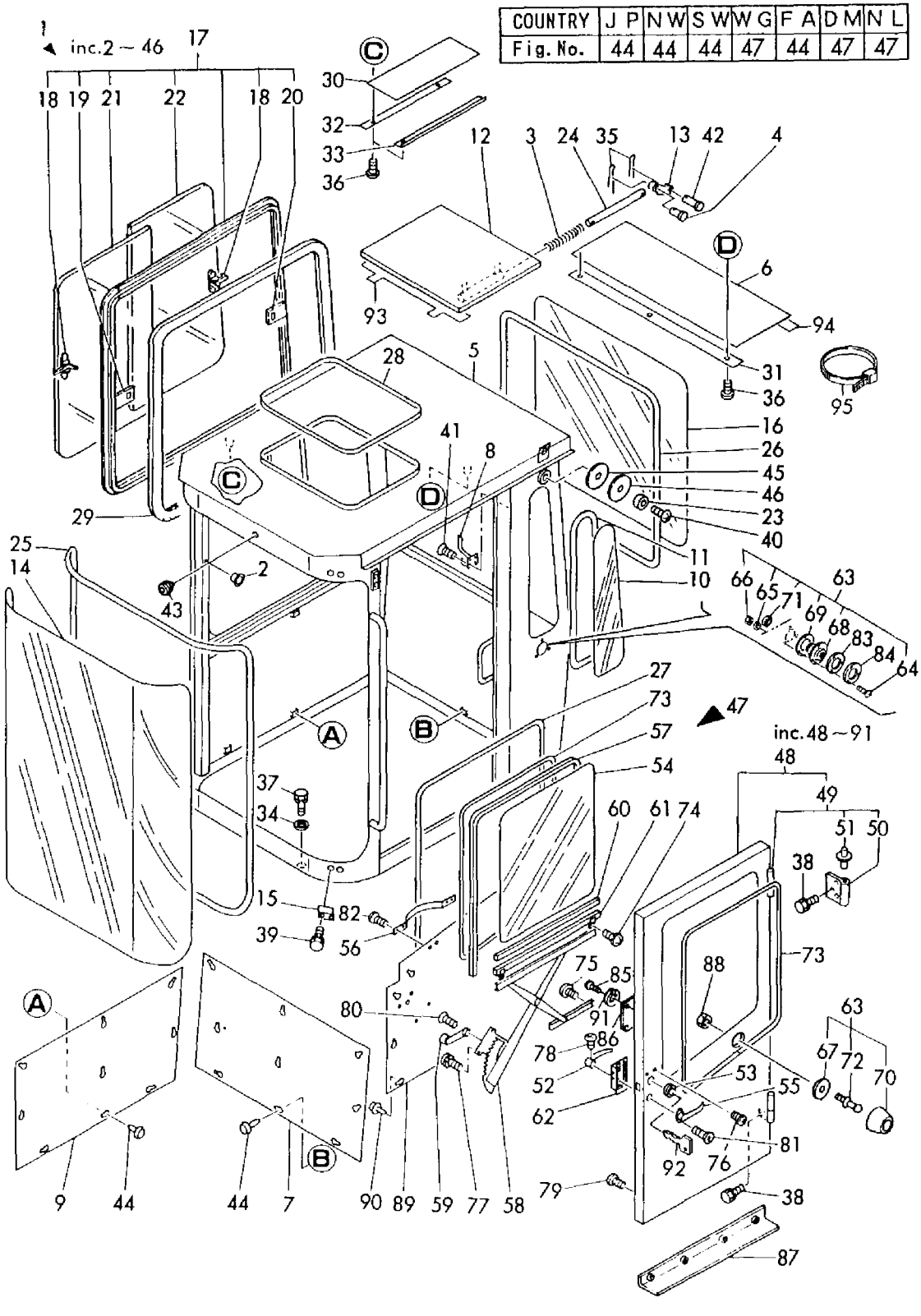

```
1,1,,172124-71100,,"COVER, FLYWHEEL",1,1,,1,1,,,,,,,,,,,,
2,1,,26013-100302,,"BOLT M10X 30",6,6,,6,6,,,,,,,,,,,,
2-1,1,,26013-100252,,"BOLT W/WASHER
M10X25",6,6,,6,6,,N,,,*1985.07,,*1985.07,,,,*1985.07,,*1985.07
3,1,,172112-71151,,"JOINT, PUMP SHAFT",1,1,,1,1,,,,,,,,,,,,
4,1,,22351-050010,,"SPRING PIN 5X10",6,6,,6,6,,,,,,,,,,,,
5,1,,22351-050020,,"SPRING PIN 5X20",3,3,,3,3,,,,,,,,,,,,
6,1,,26450-120402,,"BOLT M12X 40",6,6,,6,6,,,,,,,,,,,,
7,1,,933171-23101,,"COUPLING CF16",1,1,,1,1,,,,,,,,,,,,
8,1,,172124-73100,,"PUMP ASSY, GEAR",1,1,,1,1,,,,,,,,,,,,
9,2,,172124-73110,,"PUMP ASSY, FRONT",1,1,,1,1,,,,,,,,,,,,
10,2,,172124-73120,,"PUMP ASSY, CENTER",1,1,,1,1,,,,,,,,,,,,
11,2,,172124-73130,,"PUMP ASSY, REAR",1,1,,1,1,,,,,,,,,,,,
12,2,,172124-73140,,COVER,1,1,,1,1,,,,,,,,,,,,
13,2,,172124-73150,,"PLATE,CENTER",2,2,,2,2,,,,,,,,,,,,
14,2,,172124-73160,,"FLANGE, MOUNTING",1,1,,1,1,,,,,,,,,,,,
15,2,,172124-73170,,"COUPLING, SPLINE",2,2,,2,2,,,,,,,,,,,,
16,2,,172124-73180,,BOLT,8,8,,8,8,,,,,,,,,,,,
16-1,2,,172124-
73181,,BOLT,8,8,,8,8,,N,,,*1985.12,,*1985.12,,,,*1985.12,,*1985.12
17,2,,172124-73190,,WASHER,8,8,,8,8,,,,,,,,,,,,
17-1,2,,22217-100000,,"SPRING WASHER
10",8,8,,8,8,,N,,,*1986.02,,*1986.02,,,,*1986.02,,*1986.02
18,2,,172124-73200,,"SEAL SET",1,1,,1,1,,,,,,,,,,,,
19,1,,22217-120000,,"WASHER 12,SPRING",2,2,,2,2,,,,,,,,,,,,
20,1,,26116-120352,,"BOLT M12X 35 PLATED",2,2,,2,2,,,,,,,,,,,,
21,1,,22137-120000,,"WASHER 12,POLISHED",2,2,,2,2,,,,,,,,,,,,
```

Fig. 48 ポンプ＆ジクツギテ HYD. OIL PUMP & JOINT

SPEC. CODE
D72124-71100
D72124-71200
D72124-73100

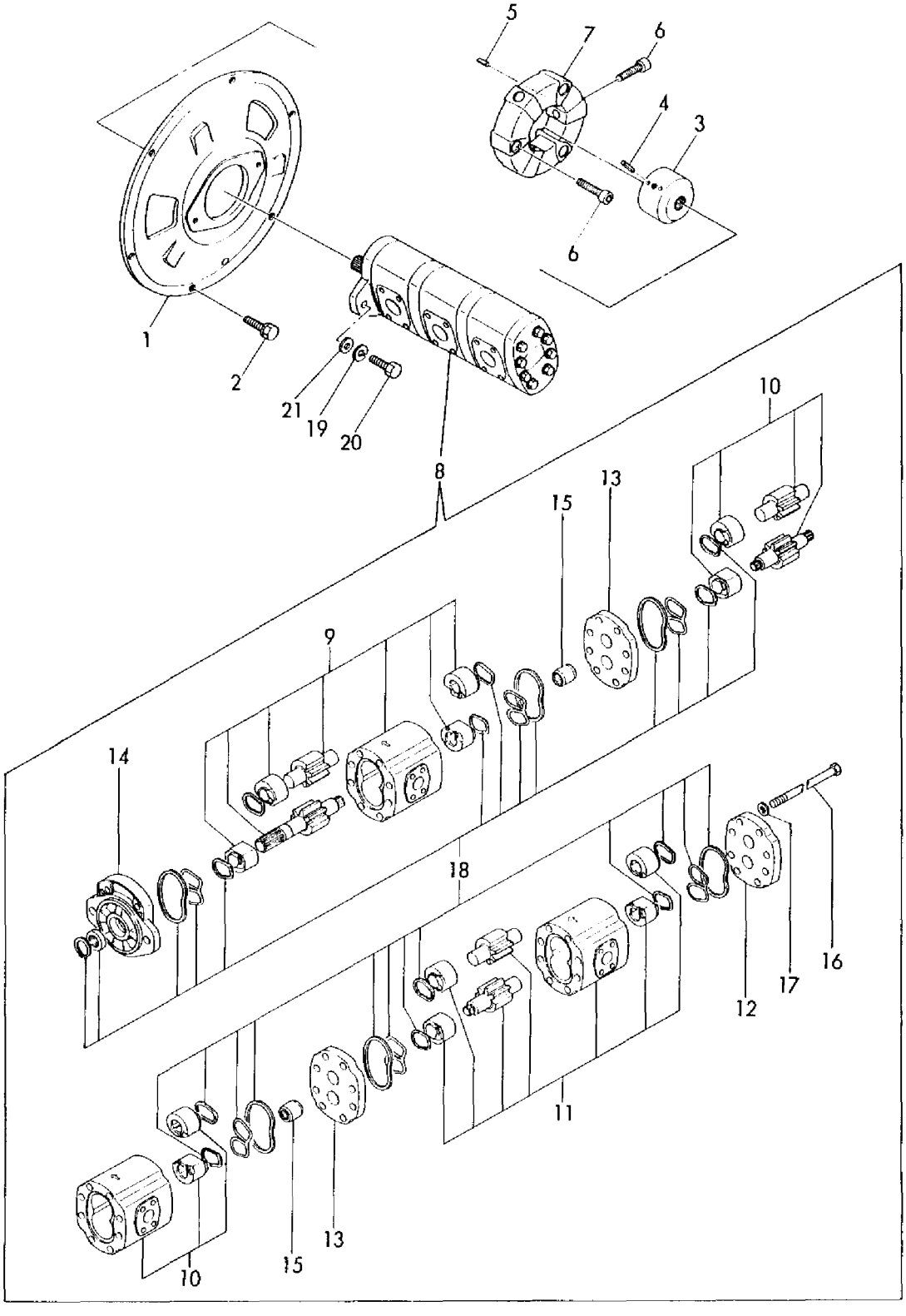

```
1,1,,172112-77580,,"JOINT 1/8",1,1,,1,1,,,,,,,,,,,,
2,1,,172112-77660,,"L-JOINT 1/8",2,2,,2,2,,,,,,,,,,,,
3,1,,172312-77820,,"FITTING, GREASE",1,1,,1,1,,,,,,,,,,,,
4,1,,172110-78241,,"HOSE, GREASE",1,1,,1,1,,,,,,,,,,,,
5,1,,172124-78370,,"PIPE P202AF045",1,1,,1,1,,,,,,,,,,,,
6,1,,172122-78400,,"HOSE K502 03",1,1,,1,1,,,,,,,,,,,,
7,1,,23871-010000,,"PLUG PT1/8,SCREW",1,1,,1,1,,,,,,,,,,,,
8,1,,24761-020000,,"NIPPLE PT1/8,GREASE",3,3,,3,3,,,,,,,,,,,,
```

Fig. 49 エンカクキュウシ GREASING

SPEC. CODE
D72124-77800

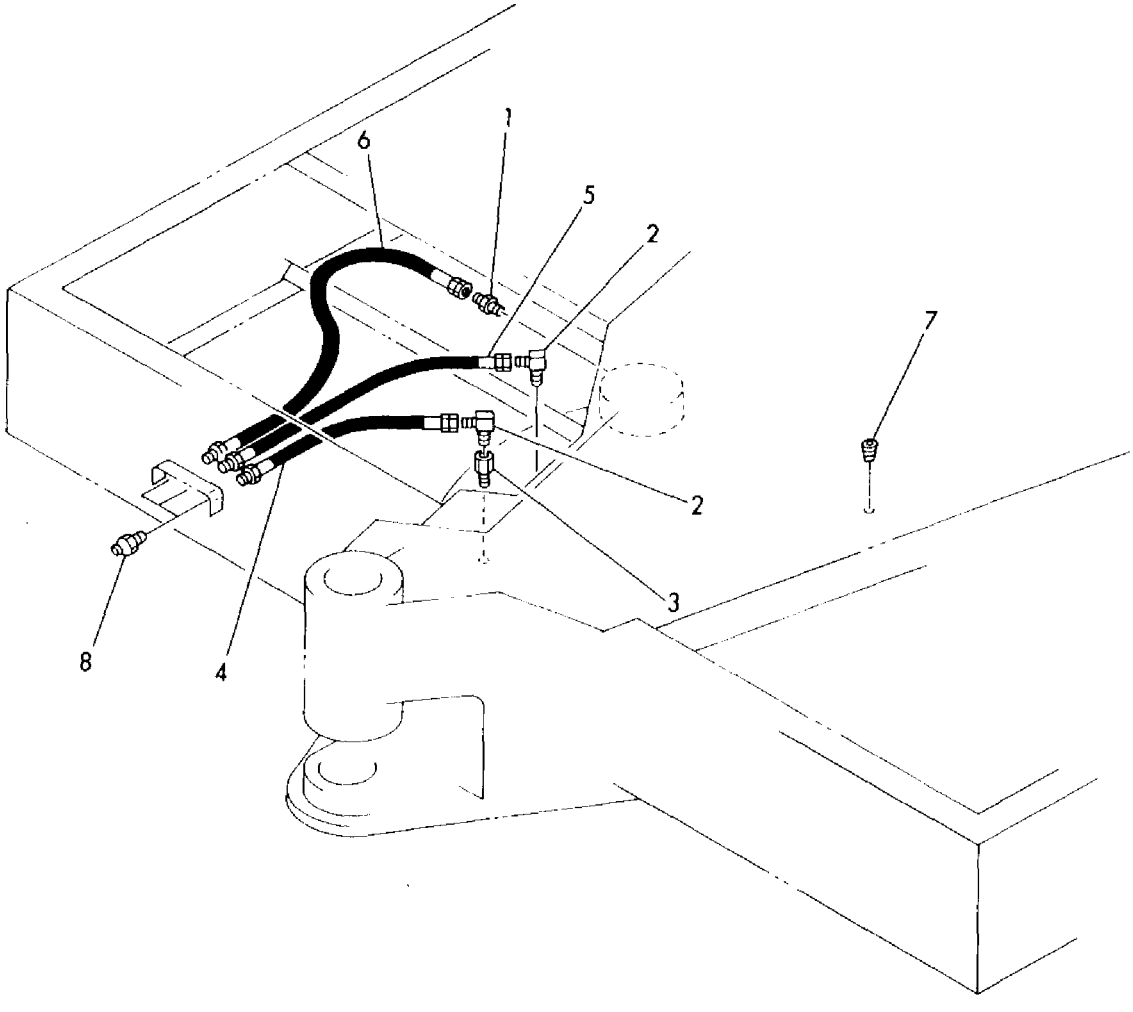

```
1,1,,22217-140000,,"SPRING WASHER 14",2,2,,2,2,,,,,,,,,,,
2,1,,24321-001100,,"O-RING 1A G-110.0",1,1,,1,1,,,,,,,,,,,
3,1,,26116-140702,,"BOLT M14X 70 PLATED",2,2,,2,2,,,,,,,,,,,,
4,1,,22217-100000,,"SPRING WASHER 10",7,7,,7,7,,,,,,,,,,,
5,1,,26013-100302,,"BOLT M10X 30",7,7,,7,7,,,,,,,,,,,
6,1,,26716-100002,,"NUT M10",7,7,,7,7,,,,,,,,,,,
7,1,,172010-11190,,CONNECTOR,2,2,,2,2,,,,,,,,,,,
8,1,,172124-76140,,"NIPPLE 3/4U-PF1/4",1,1,,1,1,,,,,,,,,,,
9,1,,172124-76150,,"NIPPLE 3/4U-PF1/4",1,1,,1,1,,,,,,,,,,,
10,1,,172124-76170,,"NIPPLE 3/4U-PF1/2",4,4,,4,4,,,,,,,,,,,,
11,1,,172110-76440,,ELBOW,2,2,,2,2,,,,,,,,,,,
12,1,,172112-77400,,CONNECTOR,2,2,,2,2,,,,,,,,,,,
13,1,,933152-22761,,"ELBOW (45ß)",1,1,,1,1,,,,,,,,,,,
14,1,,933152-22771,,"ELBOW (90ß)",2,2,,2,2,,,,,,,,,,,
15,1,,933152-24120,,"O-RING (B)",21,21,,21,21,,,,,,,,,,,
16,1,,933152-24410,,"CONNECTOR (A)",1,1,,1,1,,,,,,,,,,,
17,1,,933155-08481,,"CONNECTOR (A)",2,2,,2,2,,,,,,,,,,,
18,1,,933166-24120,,"CONNECTOR PF1/2-10",8,8,,8,8,,,,,,,,,,,
19,1,,933166-24130,,"CONNECTOR PF1/2-35",3,3,,3,3,,,,,,,,,,,
20,1,,933166-25350,,"ELBOW 1/2 (90ß)",4,4,,4,4,,,,,,,,,,,
21,1,,933166-25420,,ADAPTER,1,1,,1,1,,,,,,,,,,,
22,1,,933171-24520,,"CONNECTOR 3/8-78",2,2,,2,2,,,,,,,,,,,
23,1,,172124-76800,,"STAY, PIPE",1,1,,1,1,,,,,,,,,,,
23-1,1,,172124-76801,,"STAY,
PIPE",1,1,,1,1,,S,,,M00704,,M00704,,,,M00632,,M00632
24,1,,26013-100252,,"BOLT W/WASHER M10X25",2,2,,2,2,,,,,,,,,,,
25,1,,26013-100402,,"BOLT M10X 40",3,3,,3,3,,,,,,,,,,,
26,1,,933155-09670,,"CLAMP, PIPE",3,3,,3,3,,,,,,,,,,,
27,1,,172124-78140,,"PIPE P208BC053",2,2,,2,2,,,,,,,,,,,
28,1,,172124-78150,,"PIPE P208BC048S",2,2,,2,2,,,,,,,,,,,
29,1,,172124-78160,,"PIPE
P208BC120S",1,1,,1,1,,Z,,,*1985.05,,*1985.05,,,,*1985.05,,*1985.05
30,1,,172124-78170,,"PIPE P208BC113S",1,1,,1,1,,,,,,,,,,,
31,1,,172124-78180,,"PIPE P208BC065",1,1,,1,1,,,,,,,,,,,
32,1,,172124-78190,,"PIPE P206BC060S",1,1,,1,1,,,,,,,,,,,
33,1,,172124-78200,,"PIPE P206CD100S",1,1,,1,1,,,,,,,,,,,
34,1,,172124-78210,,"PIPE P208CC060S",1,1,,1,1,,,,,,,,,,,
35,1,,172124-78220,,"PIPE P208BC045",1,1,,1,1,,,,,,,,,,,
36,1,,172124-78230,,"PIPE P206BC054",1,1,,1,1,,,,,,,,,,,
37,1,,23271-020605,,"PIPE,HI-PRESS 02X60",1,1,,1,1,,,,,,,,,,,,
38,1,,172124-78330,,"HOSE G706BE042S",1,1,,1,1,,,,,,,,,,,
39,1,,172124-78340,,"HOSE G706BC070S",1,1,,1,1,,,,,,,,,,,
40,1,,23251-030654,,"PIPE 3X65",1,1,,1,1,,,,,,,,,,,
41,1,,23271-020555,,"PIPE,HI-PRESS 02X55",1,1,,1,1,,,,,,,,,,,,
42,1,,172124-78410,,"PIPE
P208AC120S",1,1,,1,1,,W,,,*1985.05,,*1985.05,,,,*1985.05,,*1985.05
43,1,,172124-76340,,"VALVE
3.5ASSY",1,1,,1,1,,W,,,*1985.05,,*1985.05,,,,*1985.05,,*1985.05
44,1,,23392-040000,,JOINT,1,1,,1,1,,W,,,*1985.05,,*1985.05,,,,*1985.05,,*1985.05
45,1,,172132-76340,,"VALVE 4.0 COMPL.",1,1,,1,1,,,1,,,,,,,,,
46,1,,23392-040000,,JOINT,1,1,,1,1,,,1,,,,,,,,,
47,1,,172132-78160,,"PIPE P208AC128S",1,1,,1,1,,,1,,,,,,,,,
48,1,,172132-78170,,"PIPE P208AC134S",1,1,,1,1,,,1,,,,,,,,,
49,1,,22217-140000,,"SPRING WASHER 14",,2,2,,,2,,2,,,,,,,,,
50,1,,24321-001100,,"O-RING 1A G-110.0",,1,1,,,1,,2,,,,,,,,,
51,1,,26116-140702,,"BOLT M14X 70 PLATED",,2,2,,,2,,2,,,,,,,,,
52,1,,172124-76900,,"PIPE, MOTOR",,2,2,,,2,,2,,,,,,,,,
53,1,,172124-78220,,"PIPE P208BC045",,2,2,,,2,,2,,,,,,,,,
```

SPEC. CODE D72125-76421
D72124-76100 D72124-76430
D72132-76100 D72132-78100
D72125-76110 D72124-78101
D72132-76400 D72132-78110
D72124-76401 D72124-78111
D72132-76410 D72125-78121

Fig. 50 ユアツハイカン HYD. OIL PIPING (バルブースイベルーモータ) (VALVE-SWIVEL-MOTOR)

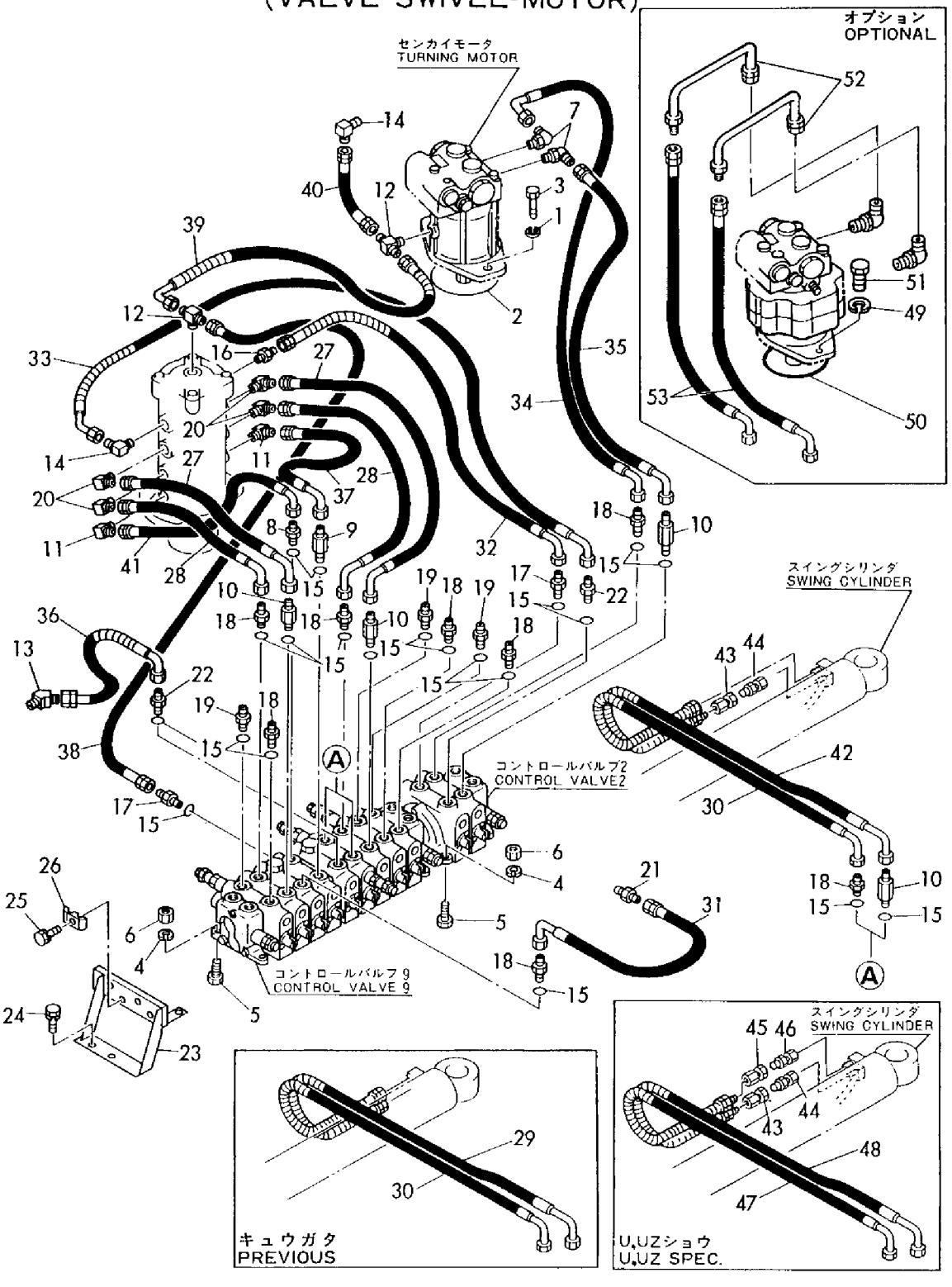

```
1-1,1,,172124-74800,,"COOLER ASSY, OIL",1,1,,1,1,,,1,,,,,,,,,
2,1,,26013-080202,,"BOLT W/WASHER M8X20",4,4,,4,4,,,,,,,,,,,,
3,1,,172124-76100,,"FLANGE,PUMP INLET",3,3,,3,3,,,,,,,,,,,,
4,1,,172124-76110,,"FLANGE,P OUT ASSY",3,3,,3,3,,,,,,,,,,,,
4-1,1,,172124-76111,,"FLANGE,PUMP
OUTLET",3,3,,3,3,,R,,,*1984.10,,*1984.10,,,,*1984.10,,*1984.10
5,1,,172112-77370,,"CONNECTOR 60",1,1,,1,1,,,,,,,,,,,,
6,1,,24311-000300,,"O-RING 1A P-30.0",3,3,,3,3,,,,,,,,,,,,
6-1,1,,24315-000300,,"O-RING 1B P-
30.0",3,3,,3,3,,N,,,*1984.11,,*1984.11,,,,*1984.11,,*1984.11
7,1,,24311-000350,,"O-RING 1A P-35.0",3,3,,3,3,,,,,,,,,,,,
7-1,1,,24315-000350,,"O-RING 1B P-
35.0",3,3,,3,3,,N,,,*1984.11,,*1984.11,,,,*1984.11,,*1984.11
8,1,,26013-100202,,"BOLT W/WASHER M10X20",24,24,,24,24,,,,,,,,,,,,
9,1,,933152-07274,,CONNECTOR,1,1,,1,1,,,,,,,,,,,,
10,1,,933152-07400,,"O-RING (A)",6,6,,6,6,,,,,,,,,,,,
10-1,1,,933152-07400,,"O-RING
(A)",5,5,,5,5,,K,,,*1984.10,,*1984.10,,,,*1984.10,,*1984.10
11,1,,933152-07410,,"RING (A), BUCK UP",2,2,,2,2,,,,,,,,,,,,
12,1,,933160-01510,,"NUT (A), CONNECTOR",2,2,,2,2,,,,,,,,,,,,
13,1,,933166-24090,,"CONNECTOR PF3/4-9.5",2,2,,2,2,,,,,,,,,,,,
13-1,1,,933166-24090,,"CONNECTOR PF3/4-
9.5",1,1,,1,1,,K,,,*1984.10,,*1984.10,,,,*1984.10,,*1984.10
14,1,,933166-25420,,ADAPTER,5,5,,5,5,,,,,,,,,,,,
15,1,,933171-24740,,"PLUG PT3/8",3,3,,3,3,,,,,,,,,,,,
16,1,,933171-24750,,"CONNECTOR 1/2",2,2,,2,2,,,,,,,,,,,,
17,1,,933171-24970,,ADAPTER,5,5,,5,5,,,,,,,,,,,,
17-1,1,,933171-
24970,,ADAPTER,4,4,,4,4,,K,,,*1984.10,,*1984.10,,,,*1984.10,,*1984.10
18,1,,172124-76400,,"PIPE, SUCTION",1,1,,1,1,,,,,,,,,,,,
19,1,,26013-100252,,"BOLT W/WASHER M10X25",2,2,,2,2,,,,,,,,,,,,
20,1,,29311-515000,,"GROMMET 51X5",8,8,,8,8,,,,,,,,,,,,
20-1,1,,29311-515000,,"GROMMET
51X5",7,7,,7,7,,K,,,*1986.01,,*1986.01,,,,*1986.01,,*1986.01
21,1,,172124-78110,,"HOSE G208CC150S",1,1,,1,1,,,,,,,,,,,,
22,1,,172124-78120,,"HOSE G208CC105S",1,1,,1,1,,,,,,,,,,,,
23,1,,172124-78130,,"HOSE G208CC097S",1,1,,1,1,,,,,,,,,,,,
24,1,,172124-78280,,"HOSE G712BC103S",1,1,,1,1,,,,,,,,,,,,
25,1,,172124-78290,,"HOSE
G712BC067",1,1,,1,1,,Z,,,*1984.10,,*1984.10,,,,*1984.10,,*1984.10
26,1,,172124-78300,,"HOSE G712CC140S",1,1,,1,1,,,,,,,,,,,,
27,1,,172124-78310,,"HOSE G712BC135S",1,1,,1,1,,,,,,,,,,,,
28,1,,172124-78350,,"HOSE 45X320",1,1,,1,1,,,,,,,,,,,,
29,1,,172124-78360,,"HOSE G716YY042",3,3,,3,3,,,,,,,,,,,,
30,1,,172112-78740,,"CLAMP (A), HOSE",1,1,,1,1,,,,,,,,,,,,
30-1,1,,172124-78740,,"CLAMP,
HOSE",1,1,,1,1,,S,,,*1986.04,,*1986.04,,,,*1986.04,,*1986.04
31,1,,23000-041000,,"CLAMP 41",6,6,,6,6,,,,,,,,,,,,
32,1,,23000-070000,,"CLAMP 70",2,2,,2,2,,,,,,,,,,,,
33,1,,22137-080000,,"WASHER 8,
POLISHED",4,4,,4,4,,W,,,*1986.07,,*1986.07,,,,*1986.07,,*1986.07
```

SPEC. CODE
D72124-74800
D72124-76100
D72132-76100
D72125-76110
D72132-76400
D72124-76401
D72132-76410
D72125-76421
D72124-76430
D72132-78100
D72124-78101
D72132-78110
D72124-78111
D72125-78121

Fig. 51 ユアツハイカン(タンクーバルブ) HYD. OIL PIPING (TANK-VALVE)

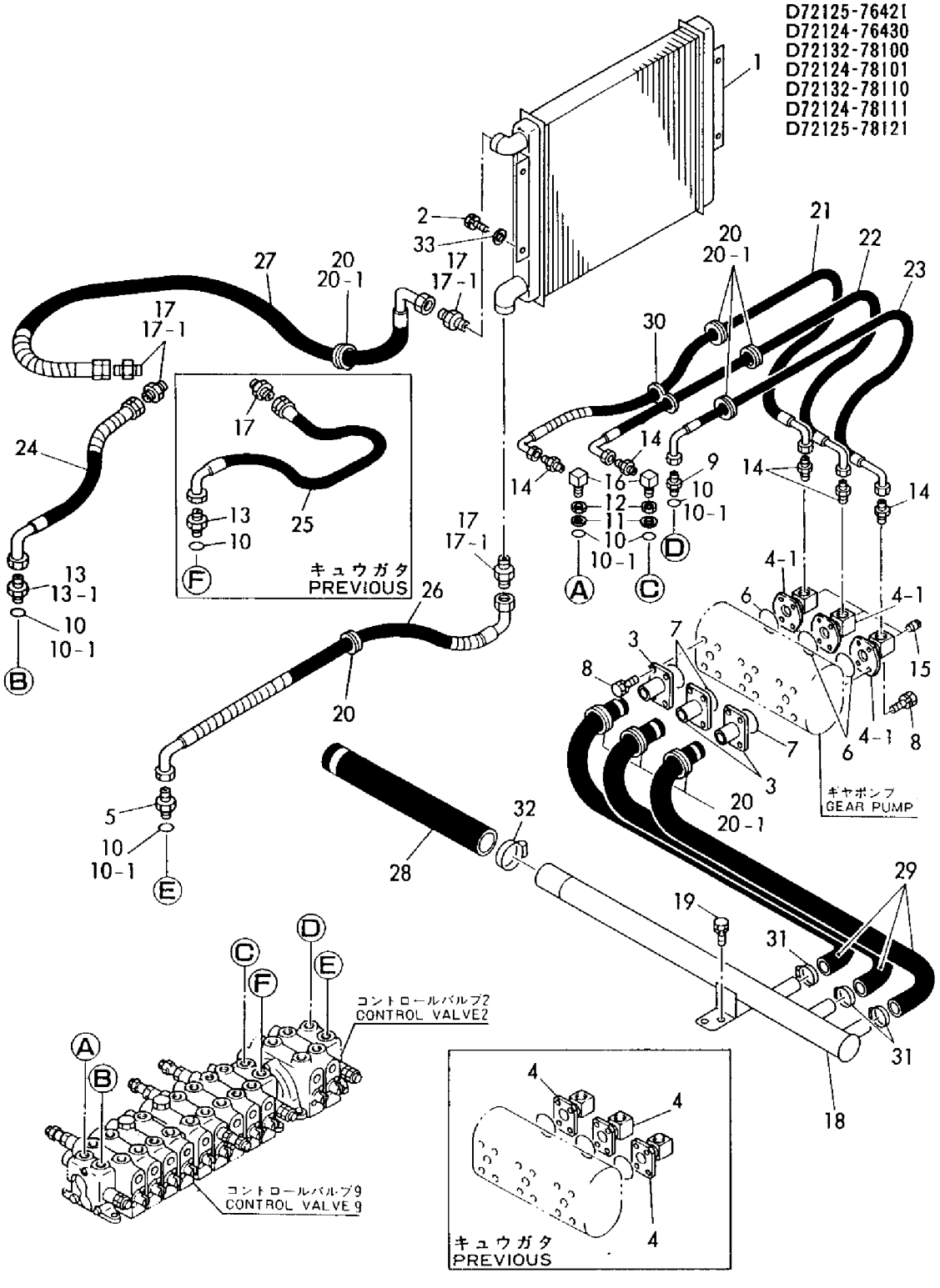

1,1,,172124-76160,,CONNECTOR,2,2,,2,2,,,,,,,,,,,,
1-1,1,,172730-
75140,,ADAPTOR,2,2,,2,2,,S,,,*1984.12,,*1984.12,,,,*1984.12,,*1984.12
2,1,,172122-76170,,"T-JOINT 1/4, DRAIN",1,1,,1,1,,,,,,,,,,,,
2-1,1,,172112-
77400,,CONNECTOR,1,1,,1,1,,S,,,*1984.12,,*1984.12,,,,*1984.12,,*1984.12
3,1,,172110-76470,,NIPPLE,2,2,,2,2,,,,,,,,,,,,
3-1,1,,23391-020000,,"JOINT
RGI1/4",2,2,,2,2,,R,,,*1988.02,,*1988.02,,,,*1988.02,,*1988.02
4,1,,172112-77360,,"CONNECTOR PF1/2PF1/2",4,4,,4,4,,,,,,,,,,,,
5,1,,24311-000140,,"O-RING 1A P-14.0",2,2,,2,2,,,,,,,,,,,,
5-1,1,,24315-000140,,"O-RING 1B P-
14.0",2,2,,2,2,,S,,,*1984.11,,*1984.11,,,,*1984.11,,*1984.11
6,1,,24311-000180,,"O-RING 1A P-18.0",6,6,,6,6,,,,,,,,,,,,
6-1,1,,24315-000180,,"O-RING 1B P-
18.0",4,4,,4,4,,S,,,*1984.11,,*1984.11,,,,*1984.11,,*1984.11
7,1,,933152-22771,,"ELBOW (90ß)",2,2,,2,2,,,,,,,,,,,,
8,1,,933166-25420,,ADAPTER,4,4,,4,4,,,,,,,,,,,,
9,1,,172124-76750,,"PIPE(A), BLADE",1,1,,1,1,,,,,,,,,,,,
10,1,,172124-76780,,"PIPE(B), BLADE",1,1,,1,1,,,,,,,,,,,,
11,1,,26013-100252,,"BOLT W/WASHER M10X25",2,2,,2,2,,,,,,,,,,,,
12,1,,172124-78240,,"PIPE P208BC140W",2,2,,2,2,,,,,,,,,,,,
13,1,,172124-78250,,"PIPE P208BB130W",2,2,,2,2,,,,,,,,,,,,
14,1,,172124-78260,,"PIPE P204BC150W",2,2,,2,2,,,,,,,,,,,,
15,1,,172124-78270,,"HOSE G106AB072W",2,2,,2,2,,,,,,,,,,,,
16,1,,172124-78320,,"HOSE G704BB140W",2,2,,2,2,,,,,,,,,,,,
16-1,1,,172124-78321,,"HOSE
G706BB140W",2,2,,2,2,,F,1,,*1984.12,,*1984.12,,,,*1984.12,,*1984.12

SPEC. CODE
D72124-76100
D72132-76100
D72125-76110
D72132-76400
D72124-76401
D72132-76410
D72125-76421
D72124-76430
D72132-78100
D72124-78101
D72132-78110
D72124-78111
D72125-78121

Fig. 52 ユアツハイカン(ソウコウ) HYD. OIL PIPING (TRAVEL)

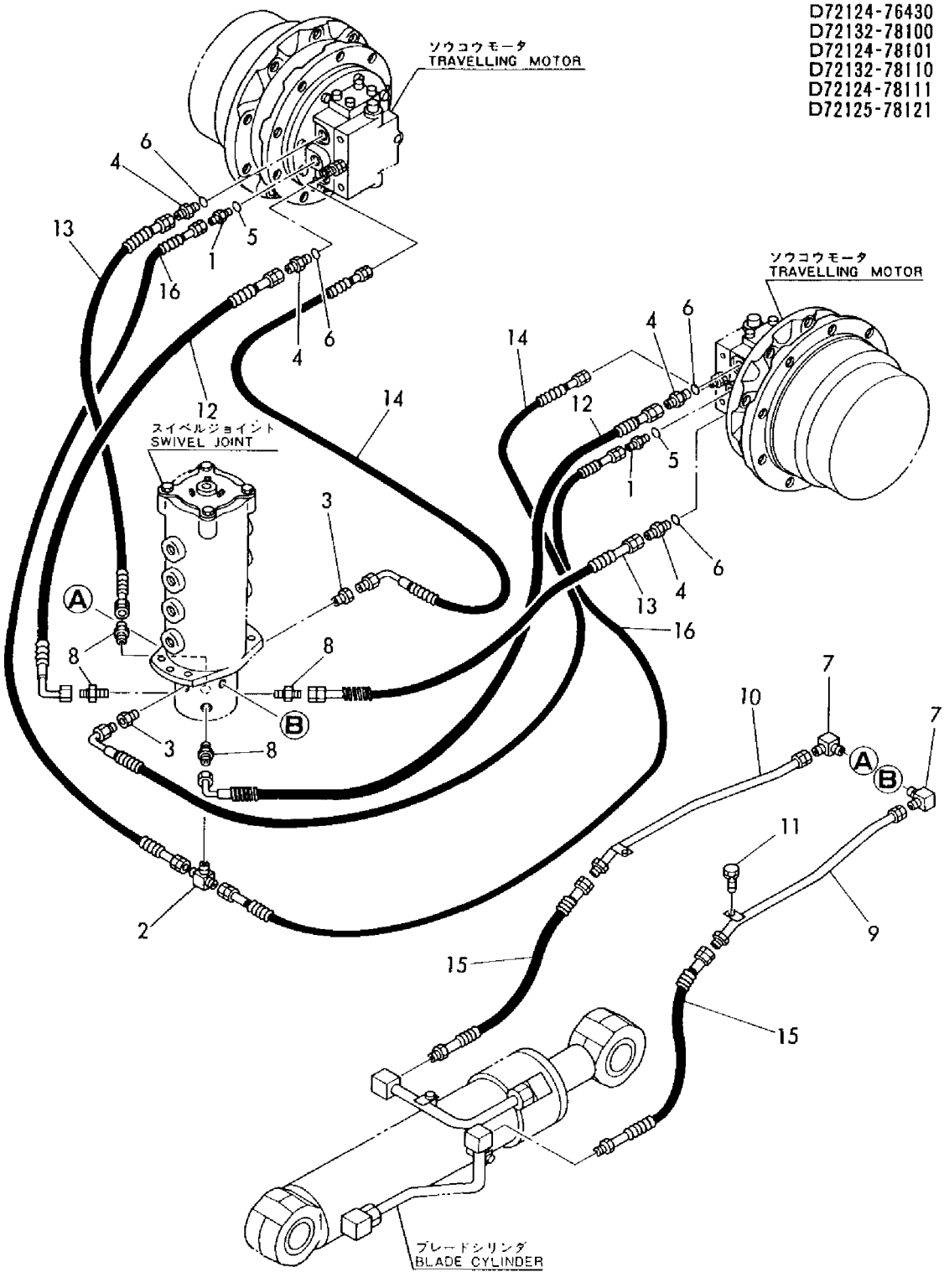

1,1,,172112-76300,,"RETAINER A,BOOM PIPE",4,4,,4,4,,,,,,,,,,,,
2,1,,172112-76321,,"RETAINER (YELLOW)",3,3,,3,3,,,,,,,,,,,,
3,1,,172124-76450,,"PIPE(A), BOOM",1,1,,1,1,,,,,,,,,,,,
3-1,1,,172124-76451,,"PIPE(A),
BOOM",1,1,,1,1,,S,,,M00704,,M00704,,,,M00632,,M00632
4,1,,172124-76500,,"PIPE(B), BOOM",1,1,,1,1,,,,,,,,,,,,
4-1,1,,172124-76501,,"PIPE(B),
BOOM",1,1,,1,1,,S,,,M00704,,M00704,,,,M00632,,M00632
5,1,,172124-76530,,"PIPE(C), BOOM",1,1,,1,1,,,,,,,,,,,,
6,1,,172124-76570,,"PIPE(A), ARM",1,1,,1,1,,,,,,,,,,,,
6-1,1,,172124-76571,,"PIPE(A),
ARM",1,1,,1,1,,S,,,M00704,,M00704,,,,M00632,,M00632
7,1,,172124-76590,,"PIPE(B), ARM",1,1,,1,1,,,,,,,,,,,,
7-1,1,,172124-76591,,"PIPE(B),
ARM",1,1,,1,1,,S,,,M00704,,M00704,,,,M00632,,M00632
8,1,,172124-76630,,"PIPE(C), ARM",1,1,,1,1,,,,,,,,,,,,
8-1,1,,172124-76631,,"PIPE(C),
ARM",1,1,,1,1,,S,,,M00704,,M00704,,,,M00632,,M00632
9,1,,172124-76650,,"PIPE(D), ARM",1,1,,1,1,,,,,,,,,,,,
9-1,1,,172124-76651,,"PIPE(D),
ARM",1,1,,1,1,,S,,,M00704,,M00704,,,,M00632,,M00632
10,1,,172124-76670,,"PIPE(A), BUCKET",1,1,,1,1,,,,,,,,,,,,
10-1,1,,172124-76671,,"PIPE(A),
BUCKET",1,1,,1,1,,S,,,M00704,,M00704,,,,M00632,,M00632
11,1,,172124-76690,,"PIPE(B), BUCKET",1,1,,1,1,,,,,,,,,,,,
11-1,1,,172124-76691,,"PIPE(B),
BUCKET",1,1,,1,1,,S,,,M00704,,M00704,,,,M00632,,M00632
12,1,,172124-76710,,"PIPE(C), BUCKET",1,1,,1,1,,,,,,,,,,,,
12-1,1,,172124-76711,,"PIPE(C),
BUCKET",1,1,,1,1,,S,,,M00704,,M00704,,,,M00632,,M00632
13,1,,172124-76730,,"PIPE(D), BUCKET",1,1,,1,1,,,,,,,,,,,,
13-1,1,,172124-76731,,"PIPE(D),
BUCKET",1,1,,1,1,,S,,,M00704,,M00704,,,,M00632,,M00632
14,1,,172112-81720,,"CUSION
RUBBER,PIPE",1,1,,1,1,,Z,,,M00501,,M00501,,,,M00501,,M00501
15,1,,22217-080000,,"SPRING WASHER 8",6,6,,6,6,,,,,,,,,,,,
16,1,,26013-100252,,"BOLT W/WASHER M10X25",2,2,,2,2,,,,,,,,,,,,
17,1,,26013-100404,,"NUT M16",4,4,,4,4,,,,,,,,,,,,
18,1,,26717-080002,,"NUT M 8",6,6,,6,6,,,,,,,,,,,,
19,1,,172124-78400,,"HOSE G208AB100W",2,2,,2,2,,,,,,,,,,,,
20,1,,172112-78710,,"CLAMP 75, HOSE",1,1,,1,1,,,,,,,,,,,,
21,1,,172112-78740,,"CLAMP (A), HOSE",1,1,,1,1,,,,,,,,,,,,
22,1,,172112-78750,,"CLAMP (B), HOSE",1,1,,1,1,,,,,,,,,,,,
23,1,,23202-040701,,"PIPE, HICH-PRESS.",2,2,,2,2,,,,,,,,,,,,
24,1,,23202-041001,,"PIPE, HICH-PRESS.",2,2,,2,2,,,,,,,,,,,,
25,1,,23202-041501,,"PIPE, HIGH-PRESS.",6,6,,6,6,,,,,,,,,,,,
25-1,1,,23202-041401,,"HOSE,HI-PRESS
4X1400",6,6,,6,6,,S,,,M00704,,M00704,,,,M00632,,M00632
26,1,,172112-76300,,"RETAINER A,BOOM PIPE",6,6,,6,6,,,1,,,,,,,,,
27,1,,172132-76630,,"PIPE (C), ARM",1,1,,1,1,,,1,,,,,,,,,
28,1,,172132-76650,,"PIPE (D), ARM",1,1,,1,1,,,1,,,,,,,,,
29,1,,172132-76710,,"PIPE (C), BUCKET",1,1,,1,1,,,1,,,,,,,,,
30,1,,172132-76730,,"PIPE (D), BUCKET",1,1,,1,1,,,1,,,,,,,,,
31,1,,172132-76900,,"PIPE, BOOM",1,1,,1,1,,,1,,,,,,,,,
32,1,,172132-76920,,"PIPE, BOOM",1,1,,1,1,,,1,,,,,,,,,
33,1,,172112-81720,,"CUSION RUBBER,PIPE",1,1,,1,1,,,1,,,,,,,,,
34,1,,26013-100402,,"BOLT M10X 40",6,6,,6,6,,,1,,,,,,,,,
35,1,,172132-78100,,"HOSE G208AB115",6,6,,6,6,,,1,,,,,,,,,
36,1,,23202-040801,,"PIPE 04X80",2,2,,2,2,,,1,,,,,,,,,
37,1,,172132-76380,,"PIPE (A), BUCKET",,1,,,1,,W,2,,,,M20519,,,,,,M20502
38,1,,172132-76400,,"PIPE (C), BOOM",,1,,,1,,W,2,,,,M20519,,,,,,M20502
39,1,,172132-76420,,"PIPE (D), BOOM",,1,,,1,,W,2,,,,M20519,,,,,,M20502
40,1,,172132-76450,,SPACER,,1,,,1,,W,2,,,,M20519,,,,,,M20502

```
41,1,,172132-76480,,"PIPE (A), BOOM",,1,,,1,,W,2,,,,M20519,,,,,,M20502
42,1,,172132-76500,,"PIPE (B), BOOM",,1,,,1,,W,2,,,,M20519,,,,,,M20502
43,1,,172132-76520,,"PIPE (A). ARM",,1,,,1,,W,2,,,,M20519,,,,,,M20502
44,1,,172132-76540,,"PIPE (B), ARM",,1,,,1,,W,2,,,,M20519,,,,,,M20502
45,1,,172132-76600,,"PIPE (B), BUCKET",,1,,,1,,W,2,,,,M20519,,,,,,M20502
46,1,,22137-100000,,"WASHER 10,POLISHED",,1,,,1,,W,2,,,,M20519,,,,,,M20502
47,1,,26116-100802,,"BOLT M10X 80 PLATED",,1,,,1,,W,2,,,,M20519,,,,,,M20502
```

SPEC. CODE
D72132-76400
D72124-76401
D72132-76410
D72125-76421
D72124-76430
D72132-78100
D72124-78101
D72132-78110
D72124-78111
D72125-78121

Fig. 53 ユアツハイカン(サギョウキブ) HYD. OIL PIPING (WORK EQUIPMNT)

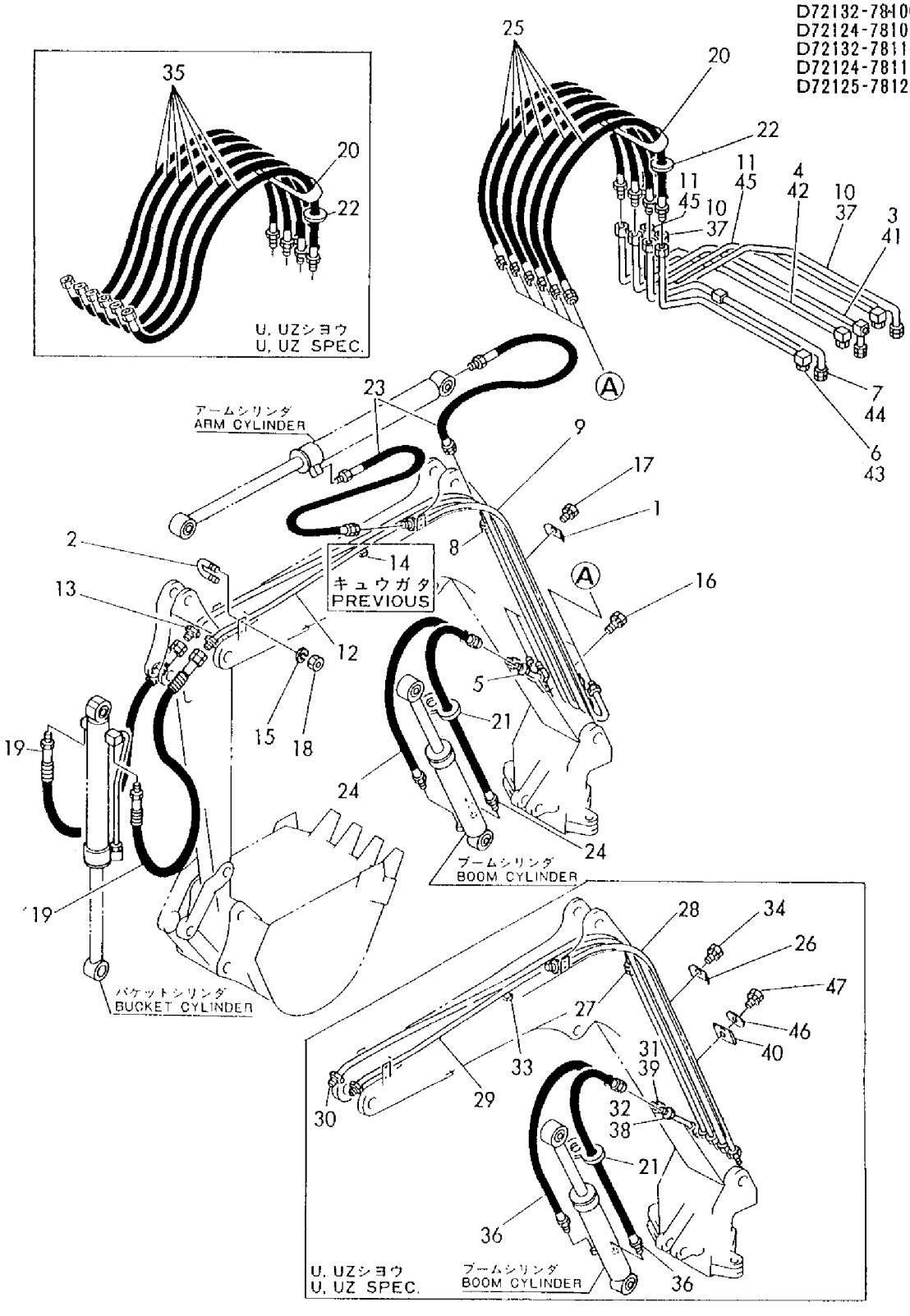

```
1,1,,772124-76100,,"VALVE ASSY, THIRD",,,,,1,,,,,,,,,,,,
1-1,1,,772124-76101,,"VALVE ASSY, THIRD",,,,,1,,S,,,,,,,,,,,M00632
1-2,1,,772124-76102,,"VALV ASSY, 3RD",,,,,1,,S,,,,,,,,,,,*1987.04
2,2,,172122-12100,,"LEVER ASSY, ACCEL",,,,,1,,,,,,,,,,,,
2-1,2,,172122-12140,,"LEVER ASSY,3RD VALVE",,,,,1,,N,,,,,,,,,,,*1986.03
3,3,,933171-23680,,"BUSH 14X15",,,,,2,,,,,,,,,,,,
4,2,,172122-41380,,"SHAFT, FULCRUM",,,,,1,,,,,,,,,,,,
4-1,2,,172112-41380,,"SHAFT, BLADE LEVER",,,,,1,,N,,,,,,,,,,,M00501
5,2,,172122-45670,,"BRACKET (B), LINK",,,,,1,,,,,,,,,,,,
6,2,,172116-45940,,"KNOB (C), LEVER",,,,,1,,,,,,,,,,,,
7,2,,172124-46100,,"MOUNT, 3RD VALVE",,,,,1,,,,,,,,,,,,
8,2,,172124-46120,,"LINK, SPOOL",,,,,1,,,,,,,,,,,,
9,2,,172124-46130,,"CABLE, PUSH-PULL",,,,,1,,,,,,,,,,,,
10,2,,172122-47300,,"BRACKET, LEVER",,,,,1,,,,,,,,,,,,
11,2,,22417-160160,,"COTTER PIN 1.6X16",,,,,1,,,,,,,,,,,,
12,2,,22417-400400,,"COTTER PIN 4.0X40",,,,,1,,,,,,,,,,,,
13,2,,26013-100202,,"BOLT W/WASHER M10X20",,,,,2,,,,,,,,,,,,
14,2,,26013-100202,,"BOLT W/WASHER M10X20",,,,,2,,,,,,,,,,,,
15,2,,26013-100202,,"BOLT W/WASHER M10X20",,,,,4,,,,,,,,,,,,
16,2,,26756-050002,,"LOCK NUT M 5 PLATED",,,,,1,,,,,,,,,,,,
17,2,,933110-54100,,"PIN 4.75X14",,,,,1,,,,,,,,,,,,
18,2,,22217-100000,,"SPRING WASHER 10",,,,,2,,,,,,,,,,,,
19,2,,26116-100602,,"BOLT M10X 60 PLATED",,,,,2,,,,,,,,,,,,
20,2,,172124-76920,,"PIPE(A), THIRD",,,,,1,,,,,,,,,,,,
20-1,2,,172124-76921,,"PIPE (A), THIRD",,,,,1,,S,,,,,,,,,,,M00632
21,2,,172125-76940,,"PIPE(B), THIRD",,,,,1,,,,,,,,,,,,
21-1,2,,172125-76941,,"PIPE (B), THIRD",,,,,1,,S,,,,,,,,,,,M00632
22,2,,172125-76960,,"PIPE(C), THIRD",,,,,1,,,,,,,,,,,,
23,2,,172125-76980,,"PIPE(D), THIRD",,,,,1,,,,,,,,,,,,
24,2,,172112-77260,,"CONNECTOR PF1/2L-42",,,,,1,,,,,,,,,,,,
25,2,,172124-78500,,"PIPE P208AB048",,,,,1,,,,,,,,,,,,
25-1,2,,172125-78500,,"PIPE P208AB041",,,,,1,,R,,,,,,,,,,,MXXXXX
26,2,,172124-78510,,"PIPE P208BC046",,,,,1,,,,,,,,,,,,
26-1,2,,172125-78510,,"PIPE P208BC054",,,,,1,,R,,,,,,,,,,,MXXXXX
27,2,,26013-100402,,"BOLT M10X 40",,,,,1,,,,,,,,,,,,
28,2,,933152-24120,,"O-RING (B)",,,,,2,,,,,,,,,,,,
29,2,,933152-24130,,"RING (B), BUCK UP",,,,,1,,,,,,,,,,,,
30,2,,933152-24140,,"NUT (B), CONNECTOR",,,,,1,,,,,,,,,,,,
31,2,,933155-09670,,"CLAMP, PIPE",,,,,1,,,,,,,,,,,,
32,2,,933166-24120,,"CONNECTOR PF1/2-10",,,,,1,,,,,,,,,,,,
33,2,,933166-25350,,"ELBOW 1/2 (90ß)",,,,,2,,,,,,,,,,,,
34,2,,933166-25420,,ADAPTER,,,,,2,,,,,,,,,,,,
35,2,,172125-76900,,CLAMP,,,,,4,,,,,,,,,,,,
36,2,,172125-76910,,"SPACER, CLAMP",,,,,4,,,,,,,,,,,,
37,2,,172125-78530,,"PIPE, RETURN",,,,,1,,,,,,,,,,,,
37-1,2,,172125-78531,,"PIPE, RETURN",,,,,1,,S,,,,,,,,,,,M00632
38,2,,22217-120000,,"WASHER 12,SPRING",,,,,4,,,,,,,,,,,,
39,2,,23871-040000,,"PLUG PT1/2,SCREW",,,,,1,,,,,,,,,,,,
40,2,,23871-100000,,"PLUG PT1",,,,,1,,,,,,,,,,,,
41,2,,26116-120652,,"BOLT M12X 65 PLATED",,,,,4,,,,,,,,,,,,
42,2,,172125-76800,,"STAY, PIPE",,,,,1,,,,,,,,,,,,
42-1,2,,172125-76801,,"STAY, PIPE",,,,,1,,S,,,,,,,,,,,M00632
43,2,,23391-100000,,JOINT,,,,,1,,,,,,,,,,,,
44,2,,172124-78160,,"PIPE P208BC120S",,,,,1,,,,,,,,,,,,
45,2,,172124-78170,,"PIPE P208BC113S",,,,,1,,,,,,,,,,,,
46,2,,172125-78570,,"HOSE G208AB200",,,,,1,,,,,,,,,,,,
46-1,2,,172125-78571,,"HOSE G208AB190",,,,,1,,S,,,,,,,,,,,M00632
47,2,,172125-78580,,"HOSE G216AB200",,,,,1,,,,,,,,,,,,
47-1,2,,172125-78581,,"HOSE G216AB190",,,,,1,,S,,,,,,,,,,,M00632
48,2,,172112-78750,,"CLAMP (B), HOSE",,,,,3,,,,,,,,,,,,
49,2,,23251-100805,,"HOSE 10X800,MID-PRES",,,,,1,,,,,,,,,,,,
50,2,,933171-25102,,"CLAMP, HOSE",,,,,1,,,,,,,,,,,,
51,2,,172125-81110,,STAY,,,,,4,,,,,,,,,,,,
```

```
52,2,,26013-100202,,"BOLT W/WASHER M10X20",,,,,2,,,,,,,,,,,,
53,2,,172125-74700,,"CHANGING VALVE",,,,,1,,W,,,,,,,,,,,*1987.04
54,3,,172138-74390,,SPRING,,,,,1,,W,,,,,,,,,,,*1987.04
55,3,,172138-74400,,ROLLER,,,,,1,,W,,,,,,,,,,,*1987.04
56,3,,172125-74710,,BODY,,,,,1,,W,,,,,,,,,,,*1987.04
57,3,,172125-74720,,ROTOR,,,,,1,,W,,,,,,,,,,,*1987.04
58,3,,172122-74730,,LEVER,,,,,1,,W,,,,,,,,,,,*1987.04
59,3,,172122-74740,,"KNOB, LEVER",,,,,1,,W,,,,,,,,,,,*1987.04
59-1,3,,172122-74741,,"KNOB, LEVER",,,,,1,,N,,,,,,,,,,,*1991.03
60,3,,172125-74740,,"SEAL KIT",,,,,1,,W,,,,,,,,,,,*1987.04
61,4,,172125-74730,,"RING P36,BACK-UP",,,,,1,,W,,,,,,,,,,,*1987.04
62,4,,172122-74760,,"RING P30, BACK-UP",,,,,1,,W,,,,,,,,,,,*1987.04
63,4,,24315-000300,,"O-RING 1B P-30.0",,,,,1,,W,,,,,,,,,,,*1987.04
64,4,,24315-000360,,"O-RING 1B P 36",,,,,1,,W,,,,,,,,,,,*1987.04
65,3,,172122-74770,,"PLUG PT1/16",,,,,1,,W,,,,,,,,,,,*1987.04
66,3,,24341-000360,,"O-RING 1A S-36.0",,,,,1,,W,,,,,,,,,,,*1987.04
67,2,,172125-74750,,"90  CONNECTOR",,,,,1,,W,,,,,,,,,,,*1987.04
69,3,,24315-000290,,"O-RING 1B P-29.0",,,,,1,,W,,,,,,,,,,,*1987.04
70,2,,172125-74770,,CONNECTOR,,,,,2,,W,,,,,,,,,,,*1987.04
71,2,,23202-040654,,HOSE,,,,,1,,W,,,,,,,,,,,*1987.04
72,2,,23395-100000,,"JOINT RRN1",,,,,1,,W,,,,,,,,,,,*1987.04
73,1,,172125-81100,,"BOOM ASSY",,,,,1,,,,,,,,,,,,
74,2,,172112-81701,,"BUSH 50X80,BOOM",,,,,2,,,,,,,,,,,,
```

SPEC. CODE
D72124-46100
D72124-74700
D72125-76110
D72125-76421
D72125-76440
D72125-78121
D72125-81120

Fig. 54 P.T.O.バルブハイカン P.T.O. VALVE PIPING

COUNTRY	J P	N W	S W	W G	F A	D M	N L
Fig. No.	95	—	54	54	54	54	54

1 inc.2 — 52
1-2 inc.2 — 72

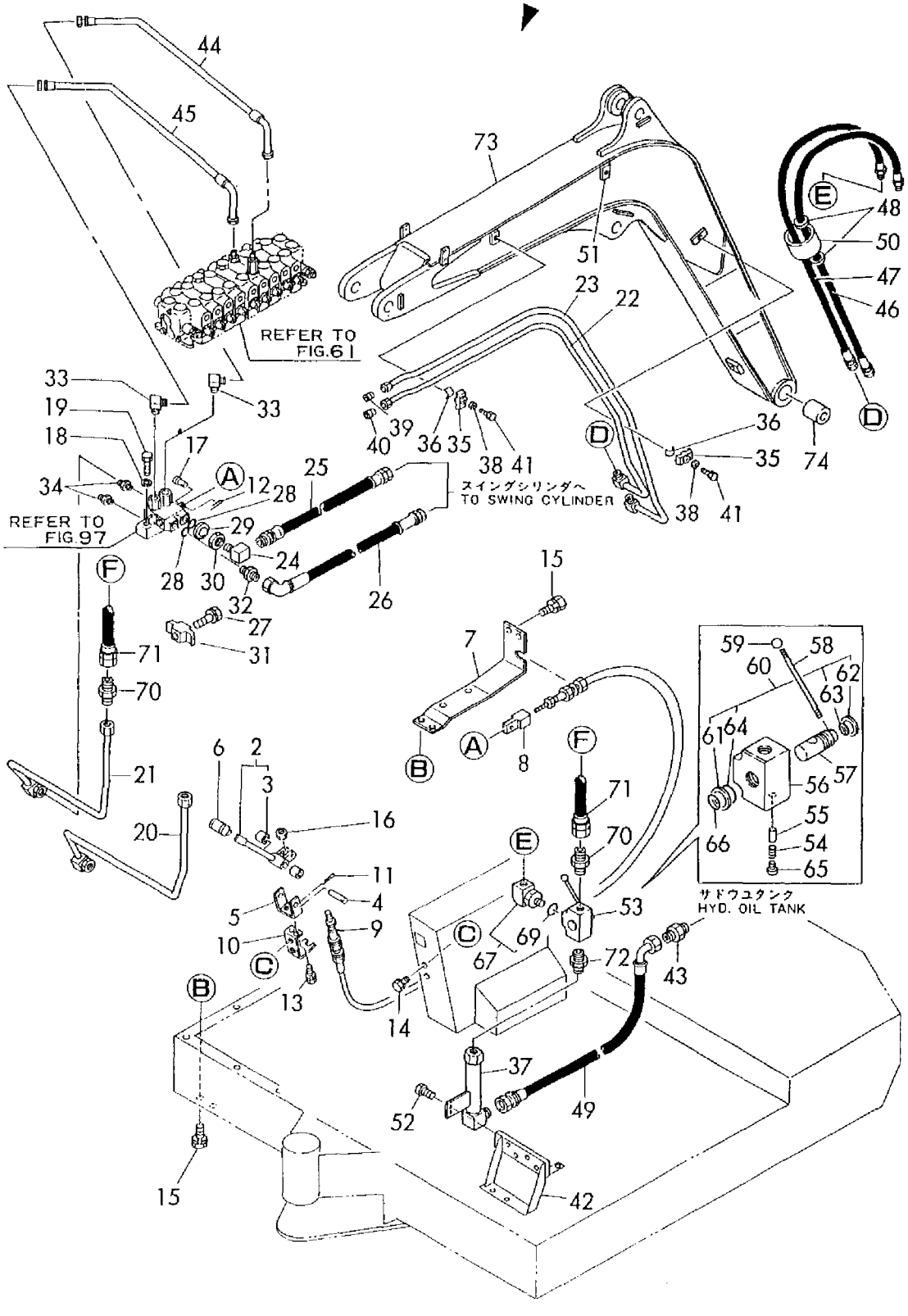

```
1,1,,772124-75100,,"RESERVIR ASSY",1,1,,1,1,,,,,,,,,,,,
2,2,,172124-73700,,"BAR,FILTER SUPPORT",1,1,,1,1,,,,,,,,,,,,
3,2,,172112-74801,,"STRAINER, SUCTION",1,1,,1,1,,,,,,,,,,,,
4,2,,172112-74901,,"ELEMENT W/VALVE",1,1,,1,1,,,,,,,,,,,,
5,3,,172112-74911,,ELEMENT,1,1,,1,1,,,,,,,,,,,,
6,3,,172112-74971,,"VALVE, BY-PASS",1,1,,1,1,,,,,,,,,,,,
7,2,,172112-75770,,"SPRING, STRAINER",1,1,,1,1,,,,,,,,,,,,
8,2,,172112-75780,,"SPRING, STRAINER",1,1,,1,1,,,,,,,,,,,,
9,2,,26716-100002,,"NUT M10",1,1,,1,1,,,,,,,,,,,,
11,2,,172312-75110,,"CAP, RESERVIOR(A)",1,1,,1,1,,,,,,,,,,,,
12,2,,172122-75330,,"COVER (B), RESERVOIR",1,1,,1,1,,,,,,,,,,,,
12-1,1,,172122-75331,,"COVER (B),
RESERVOIR",1,1,,1,1,,N,,,*1988.03,,*1988.03,,,,*1988.03,,*1988.03
13,2,,172110-75460,,"GAUGE, OIL LEVEL",1,1,,1,1,,,,,,,,,,,,
13-1,2,,172122-75600,,"GAUGE, OIL
LEVEL",1,1,,1,1,,R,,,M10501,,M10501,,,,M10501,,M10501
14,3,,172122-75620,,BOLT,2,2,,2,2,,,,,,,,,,,,
15,3,,172122-75630,,GASKET,4,4,,4,4,,,,,,,,,,,,
16,2,,22134-240000,,"WASHER 24",1,1,,1,1,,,,,,,,,,,,
17,2,,22417-200160,,"COTTER PIN 2.0X16",1,1,,1,1,,,,,,,,,,,,
18,2,,24321-001350,,"O-RING 1A G-135.0",1,1,,1,1,,,,,,,,,,,,
19,2,,24321-001900,,"O-RING 1A G-190.0",1,1,,1,1,,,,,,,,,,,,
20,2,,26013-100202,,"BOLT W/WASHER M10X20",8,8,,8,8,,,,,,,,,,,,
21,2,,933171-23042,,MAGNET,1,1,,1,1,,,,,,,,,,,,
22,2,,933171-23050,,"PLUG
1/4",1,1,,1,1,,Z,,,*1988.03,,*1988.03,,,,*1988.03,,*1988.03
23,2,,933171-23062,,"PLUG 24, DRAIN",1,1,,1,1,,,,,,,,,,,,
24,2,,172312-75130,,"BREATHER, AIR",1,1,,1,1,,,,,,,,,,,,
25,2,,24321-000650,,"O-RING 1A G-65.0",1,1,,1,1,,,,,,,,,,,,
26,2,,23871-060000,,"PLUG PT3/4,SCREW",1,1,,1,1,,,,,,,,,,,,
27,2,,23871-100000,,"PLUG PT1",1,1,,1,1,,,,,,,,,,,,
28,1,,26116-140302,,"BOLT M14X 30 PLATED",5,5,,5,5,,,,,,,,,,,,
29,1,,172117-53320,,"SPACER (M20)",2,2,,2,2,,,,,,,,,,,,
30,1,,22137-140000,,"WASHER 14,POLISHED",5,5,,5,5,,,,,,,,,,,,
31,1,,22217-140000,,"SPRING WASHER 14",5,5,,5,5,,,,,,,,,,,,
32,1,,172125-75100,,"COVER (A)",,,1,,,1,,,,,,,,,,,
33,1,,172116-75850,,"PLUG, OIL FEED",,,1,,,1,,,,,,,,,,,
34,1,,24311-000380,,"O-RING 1A P-38.0",,,1,,,1,,,,,,,,,,,
```

SPEC. CODE
D72124-73700
D72124-75100
D72125-75100

Fig. 55 サドウユタンク HYD. OIL TANK

COUNTRY	J P	N W	S W	W G	F A	D M	N L
Fig. No.	55	56	56	56	56	56	56

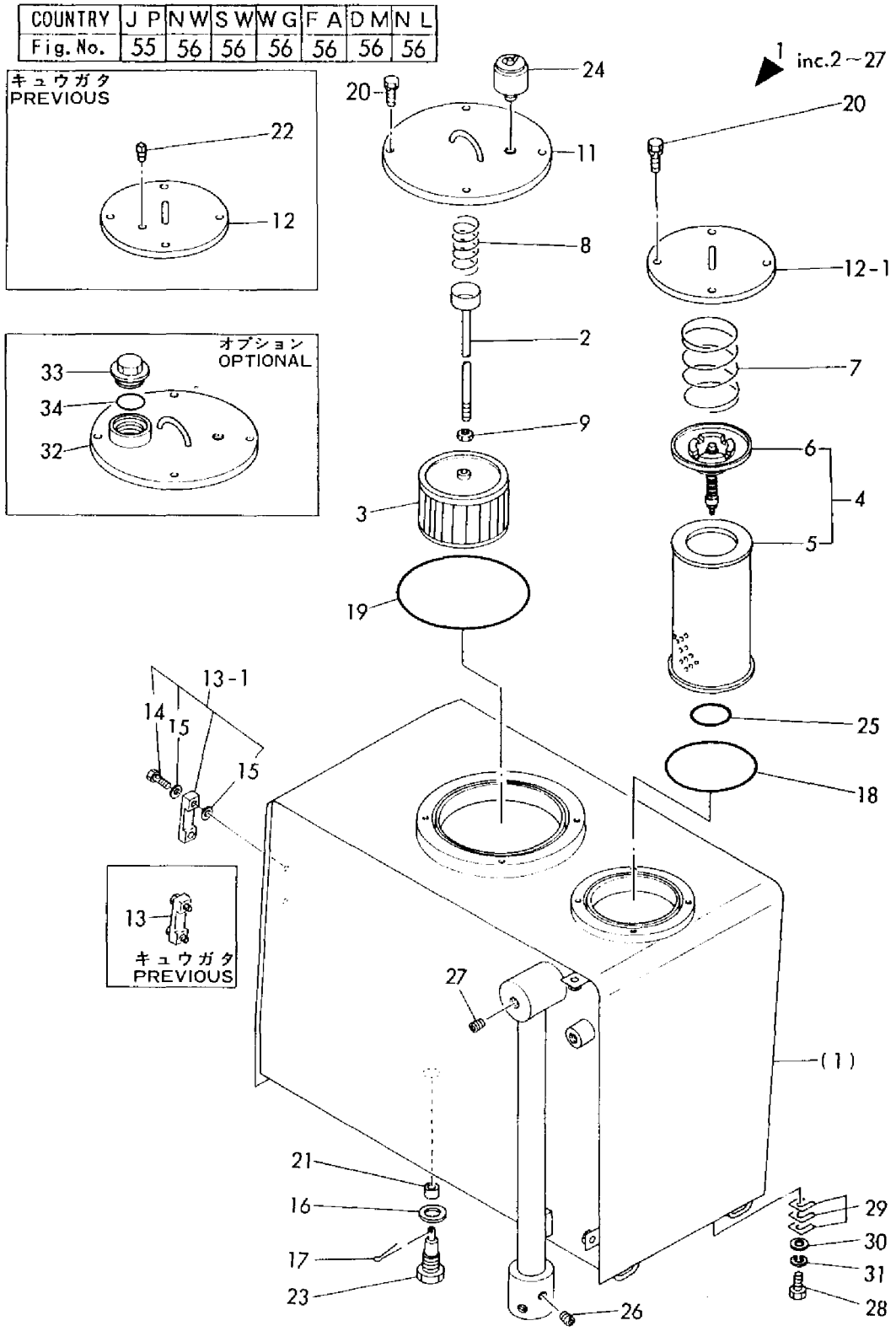

```
1,1,,772124-75100,,"RESERVIR ASSY",,1,,,,,,1,,,,,,,,,,
2,1,,772125-75100,,"RESERVOIR ASSY, HYD.",,,,,1,,,,,,,,,,,,
3,2,,172124-73700,,"BAR,FILTER SUPPORT",,1,,,1,,,,,,,,,,,,
4,2,,172112-74801,,"STRAINER, SUCTION",,1,,,1,,,,,,,,,,,,
5,2,,172112-74901,,"ELEMENT W/VALVE",,1,,,1,,,,,,,,,,,,
6,3,,172112-74911,,ELEMENT,,1,,,1,,,,,,,,,,,,
7,3,,172112-74971,,"VALVE, BY-PASS",,1,,,1,,,,,,,,,,,,
8,2,,172112-75770,,"SPRING, STRAINER",,1,,,1,,,,,,,,,,,,
9,2,,172112-75780,,"SPRING, STRAINER",,1,,,1,,,,,,,,,,,,
10,2,,24321-000650,,"O-RING 1A G-65.0",,1,,,1,,,,,,,,,,,,
11,2,,26716-100002,,"NUT M10",,1,,,1,,,,,,,,,,,,
13,2,,172125-75100,,"COVER (A)",,,,,1,,,,,,,,,,,,
14,2,,172312-75130,,"BREATHER, AIR",,1,,,1,,,,,,,,,,,,
15,2,,172122-75330,,"COVER (B), RESERVOIR",,1,,,1,,,,,,,,,,,,
15-1,2,,172122-75331,,"COVER (B),
RESERVOIR",,1,,,1,,N,,,,,*1988.05,,,,,,*1988.05
16,2,,172110-75460,,"GAUGE, OIL LEVEL",,1,,,1,,,,,,,,,,,,
16-1,2,,172122-75600,,"GAUGE, OIL LEVEL",,1,,,1,,R,,,,,M50001,,,,,,M50001
17,3,,172122-75620,,BOLT,,2,,,2,,,,,,,,,,,,
18,3,,172122-75630,,GASKET,,4,,,4,,,,,,,,,,,,
19,2,,172116-75850,,"PLUG, OIL FEED",,,,,1,,,,,,,,,,,,
20,2,,22134-240000,,"WASHER 24",,1,,,1,,,,,,,,,,,,
21,2,,22417-200160,,"COTTER PIN 2.0X16",,1,,,1,,,,,,,,,,,,
22,2,,23871-100000,,"PLUG PT1",,1,,,1,,,,,,,,,,,,
23,2,,24311-000380,,"O-RING 1A P-38.0",,,,,1,,,,,,,,,,,,
24,2,,24321-001350,,"O-RING 1A G-135.0",,1,,,1,,,,,,,,,,,,
25,2,,24321-001900,,"O-RING 1A G-190.0",,1,,,1,,,,,,,,,,,,
26,2,,26013-100202,,"BOLT W/WASHER M10X20",,8,,,8,,,,,,,,,,,,
27,2,,933171-23042,,MAGNET,,1,,,1,,,,,,,,,,,,
28,2,,933171-23050,,"PLUG 1/4",,1,,,1,,Z,,,,,*1988.05,,,,,,*1988.05
29,2,,933171-23062,,"PLUG 24, DRAIN",,1,,,1,,,,,,,,,,,,
30,2,,172312-75110,,"CAP, RESERVIOR(A)",,1,,,,,,,,,,,,,,,,
31,2,,23871-060000,,"PLUG PT3/4,SCREW",,1,,,1,,,,,,,,,,,,
32,1,,22137-140000,,"WASHER 14,POLISHED",,5,,,5,,,,,,,,,,,,
33,1,,22217-140000,,"SPRING WASHER 14",,5,,,5,,,,,,,,,,,,
34,1,,26116-140302,,"BOLT M14X 30 PLATED",,5,,,5,,,,,,,,,,,,
35,1,,172117-53320,,"SPACER (M20)",,2,,,2,,,,,,,,,,,,
```

SPEC. CODE
D72124-73700
D72124-75100
D72125-75100

Fig. 56 サドウユタンク HYD. OIL TANK

COUNTRY	JP	NW	SW	WG	FA	DM	NL
Fig. No.	55	56	56	56	56	56	56

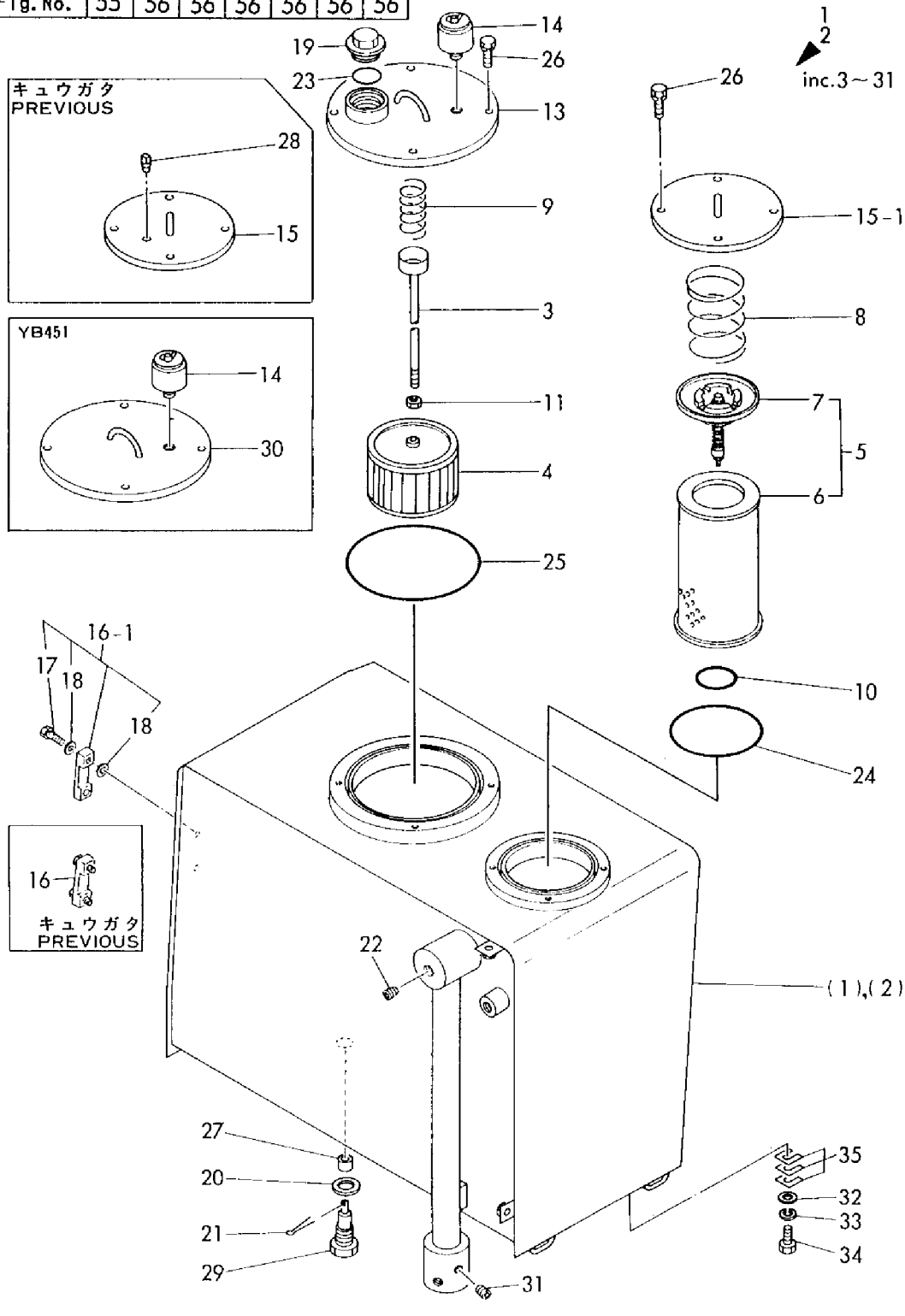

```
1,1,,172124-81010,,"BOOM ASSY",1,1,,1,1,,,,,,,,,,,
2,2,,172112-81701,,"BUSH 50X80,BOOM",2,2,,2,2,,,,,,,,,,,
3,1,,172124-81250,,"PIN (50-146)",1,1,,1,1,,,,,,,,,,,
4,1,,172124-81270,,"PIN (50-226)",1,1,,1,1,,,,,,,,,,,
5,1,,172112-81720,,"CUSION RUBBER,PIPE",1,1,,1,1,,,,,,,,,,,
6,1,,172124-81470,,"PIN (50-181)",1,1,,1,1,,,,,,,,,,,
7,1,,172112-87820,,"SHIM 50X1",2,2,,2,2,,,,,,,,,,,
8,1,,22417-800630,,"COTTER PIN 8.0X63",2,2,,2,2,,,,,,,,,,,
9,1,,24761-040000,,"NIPPLE B,GREASE",1,1,,1,1,,,,,,,,,,,
10,1,,172125-81200,,"ARM (1620) ASSY",,,,1,1,,,,,,,,,,,
10-1,1,,172125-81201,,"ARM (1620) ASSY",,,,1,1,,N,,,,,,,,,M20582,,M20582
10-2,1,,172125-81202,,"ARM (1620) ASSY",,,,1,1,,R,,,,,,,,,*1988.08,,*1988.08
11,2,,172112-83500,,"PIN BUSH 45X60",,,,4,4,,,,,,,,,,,
12,2,,172112-83530,,"SPACER 49.5X33",,,,2,2,,,,,,,,,,,
13,2,,172112-83600,,"BUSH, ARM",,,,2,2,,,,,,,,,,,
13-1,2,,172147-81450,,"BUSH 50X80",,,,2,2,,S,,,,,,,,,M20572,,M20572
14,1,,172124-81300,,"ARM (1420) ASSY",1,1,,,,,,,,,,,,,,,
14-1,1,,172124-81301,,ARM(1420)ASSY,1,1,,,,,N,,,M21143,,M21143,,,,,,
14-2,1,,172124-81302,,ARM(1420)ASSY,1,1,,,,,R,,,*1988.08,,*1988.08,,,,,,
15,2,,172112-83500,,"PIN BUSH 45X60",4,4,,,,,,,,,,,,,,,
16,2,,172112-83530,,"SPACER 49.5X33",2,2,,,,,,,,,,,,,,,
17,2,,172112-83600,,"BUSH, ARM",2,2,,,,,,,,,,,,,,,
17-1,2,,172147-81450,,"BUSH 50X80",2,2,,,,,S,,,M21196,,M21196,,,,,,
18,1,,172124-81420,,"PIN (50-119)",1,1,,1,1,,,,,,,,,,,
19,1,,172124-81440,,"PIN 45-109, BOOM",1,1,,1,1,,,,,,,,,,,
20,1,,172112-87750,,"SEAL #DKIY 45X55X4",4,4,,4,4,,,,,,,,,,,
21,1,,172112-87820,,"SHIM 50X1",1,1,,1,1,,,,,,,,,,,
22,1,,172112-87840,,"SHIM 45X1",1,1,,1,1,,,,,,,,,,,
23,1,,22417-800630,,"COTTER PIN 8.0X63",2,2,,2,2,,,,,,,,,,,
24,1,,24761-040000,,"NIPPLE B,GREASE",1,1,,1,1,,,,,,,,,,,
25,1,,172124-81500,,"LINK, BUCKET",1,1,,1,1,,,,,,,,,,,
26,2,,172112-83500,,"PIN BUSH 45X60",2,2,,2,2,,,,,,,,,,,
27,2,,172112-86250,,"BUSH 45X39, PIN",2,2,,2,2,,,,,,,,,,,
28,1,,172124-81530,,"ARM (L), BUCKET",1,1,,1,1,,,,,,,,,,,
29,1,,172124-81540,,"ARM (R), BUCKET",1,1,,1,1,,,,,,,,,,,
30,1,,172112-87140,,"PIN, BUCKET ARM",1,1,,1,1,,,,,,,,,,,
31,1,,172112-87170,,"PIN, BUCKET ARM",1,1,,1,1,,,,,,,,,,,
32,1,,172112-87750,,"SEAL #DKIY 45X55X4",6,6,,6,6,,,,,,,,,,,
33,1,,24761-020000,,"NIPPLE PT1/8,GREASE",2,2,,2,2,,,,,,,,,,,
34,1,,24761-020000,,"NIPPLE PT1/8,GREASE",1,1,,1,1,,,,,,,,,,,
35,1,,933110-86600,,"NUT M24, NYLON",2,2,,2,2,,,,,,,,,,,
36,1,,933171-29760,,WASHER,2,2,,2,2,,,,,,,,,,,
37,1,,772125-81400,,"BUCKET 650 ASSY",,,1,1,1,,,,,,,,,,,
37-1,1,,772125-81401,,"BUCKET 650
ASSY",,,1,1,1,,S,,,,,,*1989.03,,*1989.03,,*1989.03
39,3,,172112-91180,,"SIDE CUTTER, BUCKET",,,2,2,2,,,,,,,,,,,
40,2,,772112-91300,,"TEETH ASSY",,,4,4,4,,,,,,,,,,,
40-1,2,,772112-91302,,"TEETH ASSY",,,4,4,4,,R,,,,,,,M21023,,M20570,,M20570
40-2,2,,772112-91303,,"TEETH
ASSY",,,4,4,4,,S,1,,,,,*1989.03,,*1989.03,,*1989.03
41,3,,172112-91301,,TEETH,,,4,4,4,,,,,,,,,,,
41-1,3,,172112-91302,,TEETH,,,4,4,4,,R,,,,,,,M21023,,M20570,,M20570
41-2,3,,172112-91303,,TEETH,,,4,4,4,,S,,,,,,,*1989.03,,*1989.03,,*1989.03
42,3,,22217-160000,,"SPRING WASHER
16",,,8,8,8,,Z,,,,,,,*1989.03,,*1989.03,,*1989.03
43,3,,26716-160002,,"NUT M16",,,8,8,8,,,,,,,,,,,
43-1,3,,172137-86780,,NUT,,,8,8,8,,S,,,,,,,*1989.03,,*1989.03,,*1989.03
44,3,,933110-82500,,"BOLT M16X45X18",,,4,4,4,,,,,,,,,,,
44-1,3,,172151-
81400,,BOLT,,,8,8,8,,S,,,*1989.03,,*1989.03,,*1989.03,,*1989.03,,*1989.03
45,3,,933110-82600,,"BOLT
M16X55X18",,,4,4,4,,Z,,,,,,,*1989.03,,*1989.03,,*1989.03
```

46,3,,172112-91310,,"SHIM T=0.5,
TEETH",,,4,4,4,,Z,2,,,,,,*1989.03,,*1989.03,,*1989.03
47,3,,172112-91320,,"SHIM T=1.0,
TEETH",,,4,4,4,,Z,2,,,,,,*1989.03,,*1989.03,,*1989.03
48,3,,172112-91340,,"SHIM T=0.3,
TEETH",,,4,4,4,,Z,2,,,,,,*1989.03,,*1989.03,,*1989.03
49,2,,172151-81410,,"SHIM SET,
TEETH",,,4,4,4,,W,,,,,,,*1989.03,,*1989.03,,*1989.03
50,4,,172151-81420,,"SHIM
0.3,TEETH",,,4,4,4,,W,2,,,,,,*1989.03,,*1989.03,,*1989.03
51,4,,172151-81430,,"SHIM
0.5,TEETH",,,4,4,4,,W,2,,,,,,*1989.03,,*1989.03,,*1989.03
52,4,,172151-81440,,"SHIM
1.0,TEETH",,,4,4,4,,W,2,,,,,,*1989.03,,*1989.03,,*1989.03
53,1,,172112-87101,,"PIN ASSY, BUCKET",2,2,2,2,2,2,,,,,,,,,,,
54,1,,172112-87840,,"SHIM 45X1",2,2,2,2,2,2,,,,,,,,,,,
54-1,1,,172124-81930,,"SHIM
45X0.8",2,2,2,2,2,2,N,,,M21143,,M21143,,M21143,,M20582,,M20582,,M20582
55,1,,22417-800630,,"COTTER PIN 8.0X63",2,2,2,2,2,2,,,,,,,,,,,
56,1,,24761-020000,,"NIPPLE PT1/8,GREASE",2,2,2,2,2,2,,,,,,,,,,,
57,1,,172124-81940,,"SHIM
45X1.2",2,2,2,2,2,2,W,,,M21143,,M21143,,M21143,,M20582,,M20582,,M20582
58,1,,172124-82300,,"BRACKET, BOOM",1,1,,1,1,,,,,,,,,,,
59,2,,172112-85601,,"BUSH 70X85",2,2,,2,2,,,,,,,,,,,
60,1,,172124-82320,,"PIN (50-369)",1,1,,1,1,,,,,,,,,,,
61,1,,172124-82340,,"PIN (50-152)",1,1,,1,1,,,,,,,,,,,
62,1,,172312-82340,,"PIN 40-123, BOOM",1,1,,1,1,,,,,,,,,,,
63,1,,172124-82360,,"PIN (70-422)",1,1,,1,1,,,,,,,,,,,
63-1,1,,172124-82361,,PIN,1,1,,1,1,,N,,,M20879,,M20879,,,,M20548,,M20548
64,1,,172124-82370,,"PIN (40-107)",1,1,,1,1,,,,,,,,,,,
65,1,,172117-83970,,"PLATE(C),LOCK(YELLOW",1,1,,1,1,,,,,,,,,,,
66,1,,172112-87370,,"PLATE (A), LOCK",1,1,,1,1,,,,,,,,,,,
66-1,1,,172112-87371,,"PLATE (A),
LOCK",1,1,,1,1,,S,,,M20879,,M20879,,,,M20548,,M20548
67,1,,172112-87800,,"SHIM 70X1",2,2,,2,2,,,,,,,,,,,
68,1,,172112-87810,,"SHIM 70X2",2,2,,2,2,,,,,,,,,,,
69,1,,172112-87820,,"SHIM 50X1",8,8,,8,8,,,,,,,,,,,
70,1,,172112-87830,,"SHIM 70X4",2,2,,2,2,,,,,,,,,,,
71,1,,172112-87850,,"SHIM 40X5",2,2,,2,2,,,,,,,,,,,
72,1,,172112-87860,,"SHIM 40X1",4,4,,4,4,,,,,,,,,,,
73,1,,22417-800630,,"COTTER PIN 8.0X63",3,3,,3,3,,,,,,,,,,,
74,1,,24761-040000,,"NIPPLE B,GREASE",2,2,,2,2,,,,,,,,,,,
75,1,,26013-100202,,"BOLT W/WASHER M10X20",2,2,,2,2,,,,,,,,,,,
76,1,,26013-120302,,"BOLT W/WASHER M12X30",2,2,,2,2,,,,,,,,,,,
76-1,1,,26116-160402,,"BOLT M16X 40
PLATED",2,2,,2,2,,S,,,M20879,,M20879,,,,M20548,,M20548
77,1,,172132-82300,,"BRACKET W/BUSH, BOOM",1,1,,1,1,,,3,,,,,,,,,
78,2,,172112-85601,,"BUSH 70X85",2,2,,2,2,,,3,,,,,,,,,
79,1,,24761-050000,,"NIPPLE C,GREASE",2,2,,2,2,,,3,,,,,,,,,
80,1,,172132-82340,,"PIN (40-115)",1,1,,1,1,,,3,,,,,,,,,
81,1,,172124-82900,,"LOCK ASSY, SWING",,,1,,,1,,,,,,,,,,,
81-1,1,,172124-82901,,"SWING LOCK ASSY",,,1,,,1,S,,,,,,,M00704,,,,,,M00632
82,1,,172117-83400,,"PIN, SWING LOCK",,,2,,,2,,,,,,,,,,,
83,1,,933164-27430,,"SNAP PIN",,,2,,,2,,,,,,,,,,,
84,1,,172125-81280,,"O-RING 81X8",2,2,,2,2,,W,,,M21143,,M21143,,,,M20582,,M20582
85,1,,22217-160000,,"SPRING WASHER
16",2,2,,2,2,,W,,,M20879,,M20879,,,,M20548,,M20548
86,1,,22242-000700,,"CIRCLIP
70",1,1,,1,1,,W,,,M20879,,M20879,,,,M20548,,M20548
87,1,,172112-87820,,"SHIM 50X1",1,1,,1,1,,,,,,,,,,,
88,1,,22417-800630,,"COTTER PIN 8.0X63",1,1,,1,1,,,,,,,,,,,
89,1,,772124-81600,,"BUCKET 600 ASSY",1,1,,,,1,,,,,,,,,,,

```
89-1,1,,772124-81601,,"BUCKET
ASSY,600",1,1,,,,1,S,,,*1989.03,,*1989.03,,,,,,,,*1989.03
91,3,,172112-91180,,"SIDE CUTTER, BUCKET",2,2,,,,2,,,,,,,,,,,,
92,2,,772112-91300,,"TEETH ASSY",4,4,,,,4,,,,,,,,,,,,
92-1,2,,772112-91302,,"TEETH ASSY",4,4,,,,4,R,,,M21023,,M21023,,,,,,,,M20570
92-2,2,,772112-91303,,"TEETH
ASSY",4,4,,,,4,S,4,,*1989.03,,*1989.03,,,,,,,,*1989.03
93,3,,172112-91301,,TEETH,4,4,,,,4,,,,,,,,,,,,
93-1,3,,172112-91302,,TEETH,4,4,,,,4,R,,,M21023,,M21023,,,,,,,,M20570
93-2,3,,172112-91303,,TEETH,4,4,,,,4,S,,,*1989.03,,*1989.03,,,,,,,,*1989.03
94,3,,22217-160000,,"SPRING WASHER
16",8,8,,,,8,Z,,,*1989.03,,*1989.03,,,,,,,,*1989.03
95,3,,26716-160002,,"NUT M16",8,8,,,,8,,,,,,,,,,,,
95-1,3,,172137-86780,,NUT,8,8,,,,8,S,,,*1989.03,,*1989.03,,,,,,,,*1989.03
96,3,,933110-82500,,"BOLT M16X45X18",4,4,,,,4,,,,,,,,,,,,
96-1,3,,172151-81400,,BOLT,8,8,,,,8,S,,,*1989.03,,*1989.03,,,,,,,,*1989.03
97,3,,933110-82600,,"BOLT
M16X55X18",4,4,,,,4,Z,,,*1989.03,,*1989.03,,,,,,,,*1989.03
98,3,,172112-91310,,"SHIM T=0.5,
TEETH",4,4,,,,4,Z,2,,*1989.03,,*1989.03,,,,,,,,*1989.03
99,3,,172112-91320,,"SHIM T=1.0,
TEETH",4,4,,,,4,Z,2,,*1989.03,,*1989.03,,,,,,,,*1989.03
100,3,,172112-91340,,"SHIM T=0.3,
TEETH",4,4,,,,4,Z,2,,*1989.03,,*1989.03,,,,,,,,*1989.03
101,3,,172151-81410,,"SHIM SET,
TEETH",4,4,,,,4,W,,,*1989.03,,*1989.03,,,,,,,,*1989.03
102,4,,172151-81420,,"SHIM
0.3,TEETH",4,4,,,,4,W,2,,*1989.03,,*1989.03,,,,,,,,*1989.03
103,4,,172151-81430,,"SHIM
0.5,TEETH",4,4,,,,4,W,2,,*1989.03,,*1989.03,,,,,,,,*1989.03
104,4,,172151-81440,,"SHIM
1.0,TEETH",4,4,,,,4,W,2,,*1989.03,,*1989.03,,,,,,,,*1989.03
105,1,,172132-81010,,"BOOM COMPL.",1,1,,1,1,,,3,,,,,,,,,,
106,2,,172112-81701,,"BUSH 50X80,BOOM",2,2,,2,2,,,3,,,,,,,,,,
```

SPEC. CODE
D72124-81100
D72132-81100
D72124-81110
D72124-81200
D72125-81200
D72124-81300
D72124-81400
D72125-81400
D72124-82300
D72132-82300
D72132-82310
D72124-82900

Fig. 57 ブーム＆バケット BOOM & BUCKET

COUNTRY	J P	N W	S W	W G	F A	D M	N L
Fig. No.	57	58	58	58	58	58	58

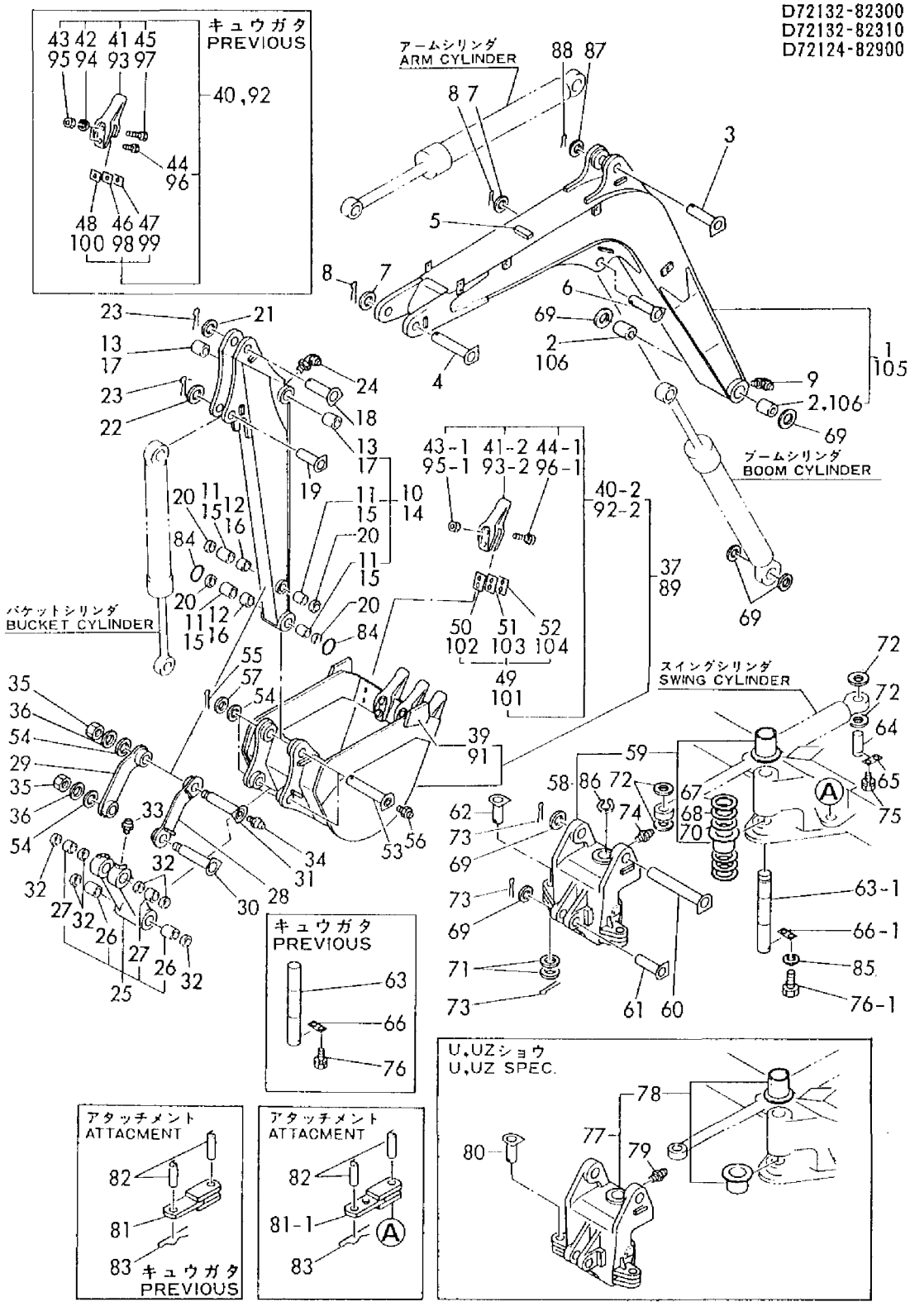

```
1,1,,172124-81010,,"BOOM ASSY",,1,,,,,,,,,,,,,,,
2,2,,172112-81701,,"BUSH 50X80,BOOM",,2,,,,,,,,,,,,,,,
3,1,,172125-81100,,"BOOM ASSY",,,,,1,,,,,,,,,,,,
4,2,,172112-81701,,"BUSH 50X80,BOOM",,,,,2,,,,,,,,,,,,
5,1,,172124-81270,,"PIN (50-226)",,1,,,1,,,,,,,,,,,,
6,1,,172112-81720,,"CUSION RUBBER,PIPE",,1,,,1,,,,,,,,,,,,
7,1,,172112-87330,,"PIN (C), BOOM",,1,,,1,,,,,,,,,,,,
7-1,1,,172124-81470,,"PIN (50-181)",,1,,,1,,N,,,,,*1984.09,,,,,,*1984.09
8,1,,172112-87820,,"SHIM 50X1",,2,,,2,,,,,,,,,,,,
9,1,,22417-800630,,"COTTER PIN 8.0X63",,2,,,2,,,,,,,,,,,,
10,1,,24761-040000,,"NIPPLE B,GREASE",,1,,,1,,,,,,,,,,,,
11,1,,172125-81200,,"ARM (1620) ASSY",,,,,1,,,,,,,,,,,,
11-1,1,,172125-81201,,"ARM (1620) ASSY",,,,,1,,N,,,,,,,,,,,M60557
11-2,1,,172125-81202,,"ARM (1620) ASSY",,,,,1,,R,,,,,,,,,,,*1988.10
12,2,,172112-83500,,"PIN BUSH 45X60",,,,,4,,,,,,,,,,,,
13,2,,172112-83530,,"SPACER 49.5X33",,,,,2,,,,,,,,,,,,
14,2,,172112-83600,,"BUSH, ARM",,,,,2,,,,,,,,,,,,
14-1,2,,172147-81450,,"BUSH 50X80",,,,,2,,S,,,,,,,,,,,M60557
15,1,,172124-81300,,"ARM (1420) ASSY",,1,,,,,,,,,,,,,,,
15-1,1,,172124-81301,,ARM(1420)ASSY,,1,,,,,N,,,,,M60557,,,,,,
15-2,1,,172124-81302,,ARM(1420)ASSY,,1,,,,,R,,,,,*1988.10,,,,,,
16,2,,172112-83500,,"PIN BUSH 45X60",,4,,,,,,,,,,,,,,,
17,2,,172112-83530,,"SPACER 49.5X33",,2,,,,,,,,,,,,,,,
18,2,,172112-83600,,"BUSH, ARM",,2,,,,,,,,,,,,,,,
18-1,2,,172147-81450,,"BUSH 50X80",,2,,,,,S,,,,,M60557,,,,,,
19,1,,172124-81420,,"PIN (50-119)",,1,,,1,,,,,,,,,,,,
20,1,,172124-81440,,"PIN 45-109, BOOM",,1,,,1,,,,,,,,,,,,
21,1,,172112-87750,,"SEAL #DKIY 45X55X4",,4,,,4,,,,,,,,,,,,
22,1,,172112-87820,,"SHIM 50X1",,1,,,1,,,,,,,,,,,,
23,1,,172112-87840,,"SHIM 45X1",,1,,,1,,,,,,,,,,,,
24,1,,22417-800630,,"COTTER PIN 8.0X63",,2,,,2,,,,,,,,,,,,
25,1,,24761-040000,,"NIPPLE B,GREASE",,1,,,1,,,,,,,,,,,,
26,1,,172124-81500,,"LINK, BUCKET",,1,,,1,,,,,,,,,,,,
27,2,,172112-83500,,"PIN BUSH 45X60",,2,,,2,,,,,,,,,,,,
28,2,,172112-86250,,"BUSH 45X39, PIN",,2,,,2,,,,,,,,,,,,
29,1,,172124-81530,,"ARM (L), BUCKET",,1,,,1,,,,,,,,,,,,
30,1,,172124-81540,,"ARM (R), BUCKET",,1,,,1,,,,,,,,,,,,
31,1,,172112-87140,,"PIN, BUCKET ARM",,1,,,1,,,,,,,,,,,,
32,1,,172112-87170,,"PIN, BUCKET ARM",,1,,,1,,,,,,,,,,,,
33,1,,172112-87750,,"SEAL #DKIY 45X55X4",,6,,,6,,,,,,,,,,,,
34,1,,24761-020000,,"NIPPLE PT1/8,GREASE",,2,,,2,,,,,,,,,,,,
35,1,,24761-020000,,"NIPPLE PT1/8,GREASE",,1,,,1,,,,,,,,,,,,
36,1,,933110-86600,,"NUT M24, NYLON",,2,,,2,,,,,,,,,,,,
37,1,,933171-29760,,WASHER,,2,,,2,,,,,,,,,,,,
38,1,,172112-87101,,"PIN ASSY, BUCKET",,2,,,2,,,,,,,,,,,,
39,1,,172112-87840,,"SHIM 45X1",,2,,,2,,,,,,,,,,,,
40,1,,22417-800630,,"COTTER PIN 8.0X63",,2,,,2,,,,,,,,,,,,
41,1,,24761-020000,,"NIPPLE PT1/8,GREASE",,2,,,2,,,,,,,,,,,,
42,1,,172124-82300,,"BRACKET, BOOM",,1,,,1,,,,,,,,,,,,
43,2,,172112-85601,,"BUSH 70X85",,2,,,2,,,,,,,,,,,,
44,1,,172124-82320,,"PIN (50-369)",,1,,,1,,,,,,,,,,,,
45,1,,172124-82340,,"PIN (50-152)",,1,,,1,,,,,,,,,,,,
46,1,,172312-82340,,"PIN 40-123, BOOM",,1,,,1,,,,,,,,,,,,
47,1,,172124-82360,,"PIN (70-422)",,1,,,1,,,,,,,,,,,,
47-1,1,,172124-82361,,PIN,,1,,,1,,N,,,,,M60531,,,,,,M60531
48,1,,172124-82370,,"PIN (40-107)",,1,,,1,,,,,,,,,,,,
49,1,,172117-83970,,"PLATE(C),LOCK(YELLOW",,1,,,1,,,,,,,,,,,,
50,1,,172112-87370,,"PLATE (A), LOCK",,1,,,1,,,,,,,,,,,,
50-1,1,,172112-87371,,"PLATE (A), LOCK",,1,,,1,,N,,,,,M60531,,,,,,M60531
51,1,,172112-87800,,"SHIM 70X1",,2,,,2,,,,,,,,,,,,
52,1,,172112-87810,,"SHIM 70X2",,2,,,2,,,,,,,,,,,,
53,1,,172112-87820,,"SHIM 50X1",,8,,,8,,,,,,,,,,,,
54,1,,172112-87830,,"SHIM 70X4",,2,,,2,,,,,,,,,,,,
```

55,1,,172112-87850,,"SHIM 40X5",,2,,,2,,,,,,,,,,,,
56,1,,172112-87860,,"SHIM 40X1",,4,,,4,,,,,,,,,,,,
57,1,,22417-800630,,"COTTER PIN 8.0X63",,3,,,3,,,,,,,,,,,,
58,1,,24761-040000,,"NIPPLE B,GREASE",,2,,,2,,,,,,,,,,,,
59,1,,26013-100202,,"BOLT W/WASHER M10X20",,2,,,2,,,,,,,,,,,,
60,1,,26013-120302,,"BOLT W/WASHER M12X30",,2,,,2,,,,,,,,,,,,
60-1,1,,26116-160402,,"BOLT M16X 40 PLATED",,2,,,2,,N,,,,,M60531,,,,,,M60531
61,1,,772124-05710,,"PIN ASSY, LIFT",,,,,1,,,,,,,,,,,,
62,2,,172124-81970,,"PIN 50-147, BOOM",,,,,1,,,,,,,,,,,,
63,2,,172124-81990,,COLLAR,,,,,1,,,,,,,,,,,,
64,2,,172112-87820,,"SHIM 50X1",,,,,1,,,,,,,,,,,,
65,2,,22242-000500,,"CIRCLIP   50",,,,,1,,,,,,,,,,,,
66,2,,933110-86600,,"NUT M24, NYLON",,,,,1,,,,,,,,,,,,
67,2,,933171-29760,,WASHER,,,,,1,,,,,,,,,,,,
68,1,,172124-81250,,"PIN (50-146)",,1,,,,,,,,,,,,,,,,
69,1,,172112-87820,,"SHIM 50X1",,1,,,,,,,,,,,,,,,,
70,1,,22417-800630,,"COTTER PIN 8.0X63",,1,,,,,,,,,,,,,,,,
71,1,,172124-82900,,"LOCK ASSY, SWING",,,,,1,,,,,,,,,,,,
71-1,1,,172124-82901,,"SWING LOCK ASSY",,1,,,1,,S,,,,,M00632,,,,,,M00632
72,1,,172117-83400,,"PIN, SWING LOCK",,2,,,2,,,,,,,,,,,,
73,1,,933164-27430,,"SNAP PIN",,2,,,2,,,,,,,,,,,,
74,1,,22217-160000,,"SPRING WASHER 16",,2,,,2,,W,,,,,M60531,,,,,,M60531
75,1,,22242-000700,,"CIRCLIP   70",,1,,,1,,W,,,,,M60531,,,,,,M60531
76,1,,172125-81280,,"O-RING 81X8",,2,,,2,,W,,,,,M60557,,,,,,M60557

SPEC. CODE
D72124-05710 D72125-81200
D72124-81100 D72124-81300
D72124-81110 D72125-81460
D72125-81120 D72124-82300
D72124-81200 D72124-82900

Fig. 58 ブーム&アーム BOOM & ARM

COUNTRY	J P	N W	S W	W G	F A	D M	N L
Fig. No.	57	58	58	58	58	58	58

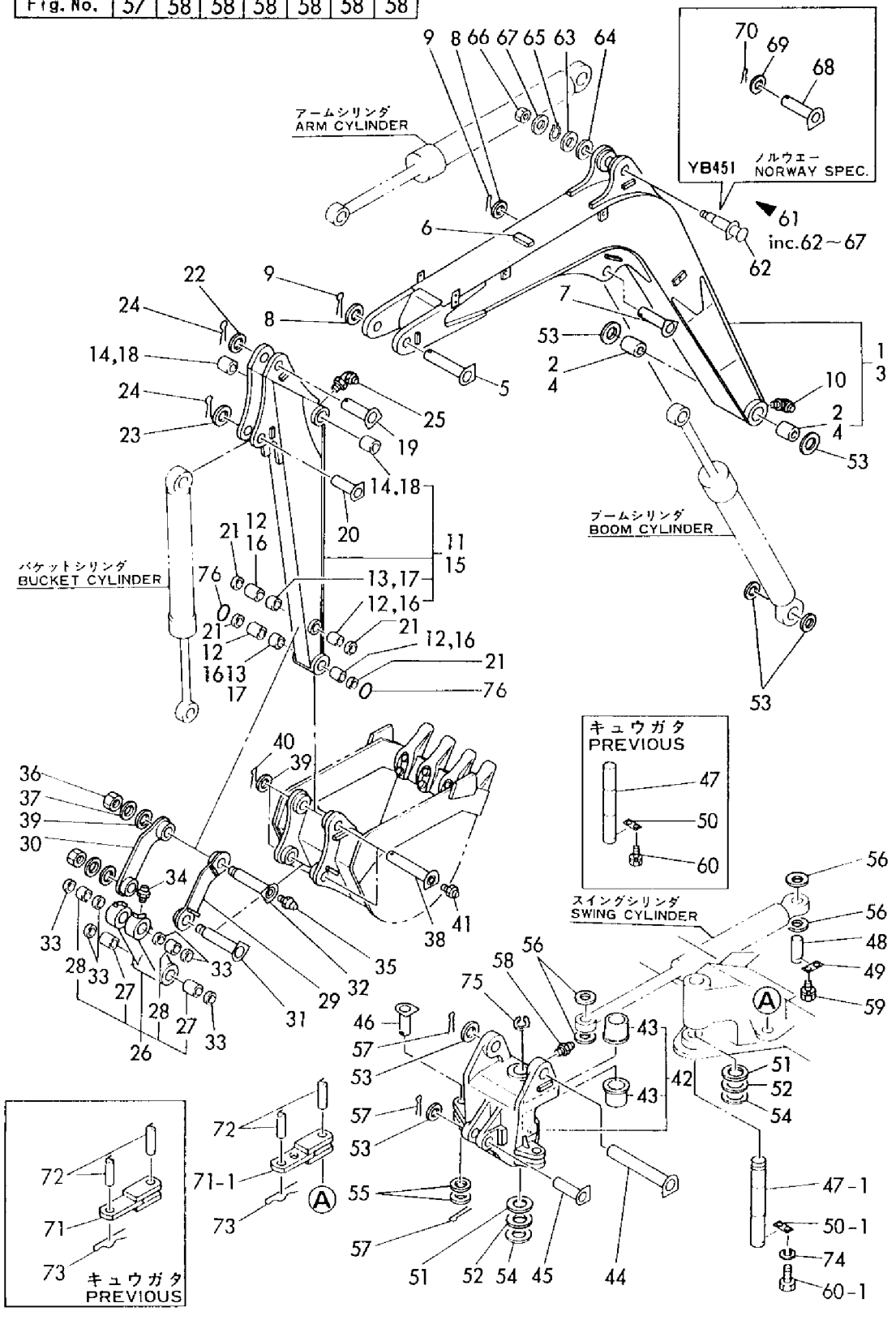

```
1,1,,172124-94100,,"BLADE ASSY",1,1,,1,1,,,,,,,,,,,,
2,2,,172112-88400,,"BUSH 45X40",4,4,,4,4,,,,,,,,,,,,
3,1,,172312-94260,,"PIN 45-119, BLADE",2,2,,2,2,,,,,,,,,,,,,
4,1,,172124-94300,,"PIN 45-157, BLADE",2,2,,2,2,,,,,,,,,,,,,
5,1,,172124-94310,,"PLATE, LOCK",2,2,,2,2,,,,,,,,,,,,,
6,1,,22417-800630,,"COTTER PIN 8.0X63",2,2,,2,2,,,,,,,,,,,,,
7,1,,24761-020000,,"NIPPLE PT1/8,GREASE",2,2,,2,2,,,,,,,,,,,,,,
8,1,,24761-040000,,"NIPPLE B,GREASE",2,2,,2,2,,,,,,,,,,,,,
9,1,,26013-100302,,"BOLT M10X 30",4,4,,4,4,,,,,,,,,,,,,
9-1,1,,26013-100252,,"BOLT W/WASHER
M10X25",4,4,,4,4,,R,,,*1988.12,,*1988.12,,,,*1988.12,,*1988.12
10,1,,172112-87840,,"SHIM 45X1",10,10,,10,10,,,,,,,,,,,,
11,1,,172124-94350,,"BLADE ASSY",,1,,,,,,1,,,,,,,,,
12,2,,172112-88400,,"BUSH 45X40",,4,,,,,,1,,,,,,,,,
13,1,,22417-800500,,"COTTER PIN 8.0X50",,2,,,,,,1,,,,,,,,,
```

Fig. 59 ブレード BLADE

SPEC. CODE
D72124-94100
D72124-94110

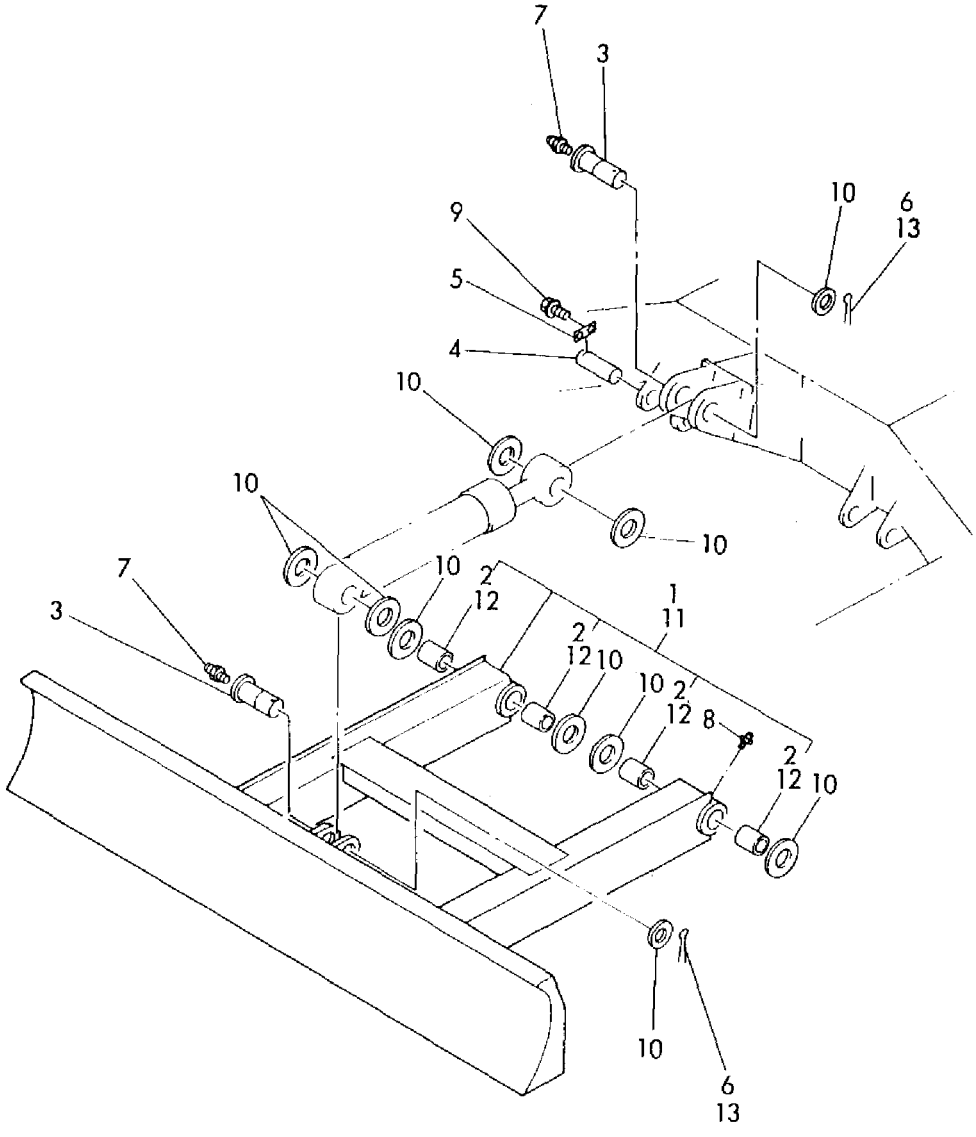

1,1,,172124-74110,,"VALVE 2 ASSY,CONTROL",1,1,,1,1,,,,,,,,,,,,
2,2,,172124-74300,,"OUTLET SECTION ASSY",1,1,,1,1,,,,,,,,,,,,
2-1,2,,933171-80420,,"SECTION,
OUTLET",1,1,,1,1,,S,,,*1986.02,,*1986.02,,,,*1986.02,,*1986.02
3,2,,172124-74280,,"SPOOL SECTION ASSY",1,1,,1,1,,,,,,,,,,,,
4,3,,172122-74130,,POPPET,1,1,,1,1,,,,,,,,,,,,
5,3,,172112-06330,,"SPRING,CONTROL VALVE",1,1,,1,1,,,,,,,,,,,,
5-1,3,,172113-
74190,,SPRING,1,1,,1,1,,S,,,*1985.02,,*1985.02,,,,*1985.02,,*1985.02
6,3,,933171-80590,,O-RING,1,1,,1,1,,,,,,,,,,,,
7,3,,933166-80550,,"SCREW, CAP",1,1,,1,1,,,,,,,,,,,,
8,3,,933171-80510,,"SEAT, SPRING",2,2,,2,2,,,,,,,,,,,,
9,3,,172122-74050,,SPRING,1,1,,1,1,,,,,,,,,,,,
9-1,3,,933171-
80540,,SPRING,1,1,,1,1,,S,,,*1985.02,,*1985.02,,,,*1985.02,,*1985.02
10,3,,933166-80530,,CAP,1,1,,1,1,,,,,,,,,,,,
11,3,,172116-74190,,"PLATE, SEAL",2,2,,2,2,,,,,,,,,,,,
12,3,,933166-80520,,WIPER,2,2,,2,2,,,,,,,,,,,,
13,3,,933171-80610,,O-RING,2,2,,2,2,,,,,,,,,,,,
14,3,,172116-74220,,SCREW,2,2,,2,2,,,,,,,,,,,,
15,3,,172116-74230,,"HEAD BOLT, SOCKET",2,2,,2,2,,,,,,,,,,,,
16,2,,172124-74290,,"SPOOL SECTION ASSY",1,1,,1,1,,,,,,,,,,,,
17,3,,933171-80590,,O-RING,1,1,,1,1,,,,,,,,,,,,
18,3,,933166-80550,,"SCREW, CAP",1,1,,1,1,,,,,,,,,,,,
19,3,,933171-80510,,"SEAT, SPRING",2,2,,2,2,,,,,,,,,,,,
20,3,,172122-74050,,SPRING,1,1,,1,1,,,,,,,,,,,,
20-1,3,,933171-
80540,,SPRING,1,1,,1,1,,S,,,*1985.02,,*1985.02,,,,*1985.02,,*1985.02
21,3,,933166-80530,,CAP,1,1,,1,1,,,,,,,,,,,,
22,3,,172116-74190,,"PLATE, SEAL",2,2,,2,2,,,,,,,,,,,,
23,3,,933166-80520,,WIPER,2,2,,2,2,,,,,,,,,,,,
24,3,,933171-80610,,O-RING,2,2,,2,2,,,,,,,,,,,,
25,3,,172116-74220,,SCREW,2,2,,2,2,,,,,,,,,,,,
26,3,,172116-74230,,"HEAD BOLT, SOCKET",2,2,,2,2,,,,,,,,,,,,
27,2,,172124-74070,,"SECTION ASSY, V",1,1,,1,1,,,,,,,,,,,,
28,3,,172124-74310,,"SECTION ASSY, INLET",1,1,,1,1,,,,,,,,,,,,
29,4,,933171-80590,,O-RING,1,1,,1,1,,,,,,,,,,,,
30,3,,172124-74160,,"VALVE ASSY, RELIEF",1,1,,1,1,,,,,,,,,,,,
30-1,3,,172124-74370,,"VALVE,
RELIEF",1,1,,1,1,,S,,,*1986.02,,*1986.02,,,,*1986.02,,*1986.02
31,4,,172116-74150,,O-RING,1,1,,1,1,,,,,,,,,,,,
32,3,,172124-74270,,"PLUG ASSY",1,1,,1,1,,,,,,,,,,,,
32-1,3,,172116-
74320,,PLUG,1,1,,1,1,,S,,,*1986.02,,*1986.02,,,,*1986.02,,*1986.02
33,3,,172116-74150,,O-RING,1,1,,1,1,,,,,,,,,,,,
34,2,,172124-74320,,TIE-ROD,2,2,,2,2,,,,,,,,,,,,
34-1,2,,172122-74230,,TIE-
ROD,2,2,,2,2,,R,,,*1986.02,,*1986.02,,,,*1986.02,,*1986.02
35,2,,172124-74330,,TIE-ROD,1,1,,1,1,,,,,,,,,,,,
36,2,,172124-74140,,NUT,2,2,,2,2,,,,,,,,,,,,
36-1,2,,26716-100002,,"NUT
M10",2,2,,2,2,,R,,,*1986.02,,*1986.02,,,,*1986.02,,*1986.02
37,2,,172124-74150,,NUT,4,4,,4,4,,,,,,,,,,,,
37-1,2,,26716-080002,,"NUT M
8",4,4,,4,4,,R,,,*1986.02,,*1986.02,,,,*1986.02,,*1986.02

Fig. 60 コントロールバルブ(ブレード) CONTROL VALVE (BLADE)

SPEC. CODE
D72124-74100

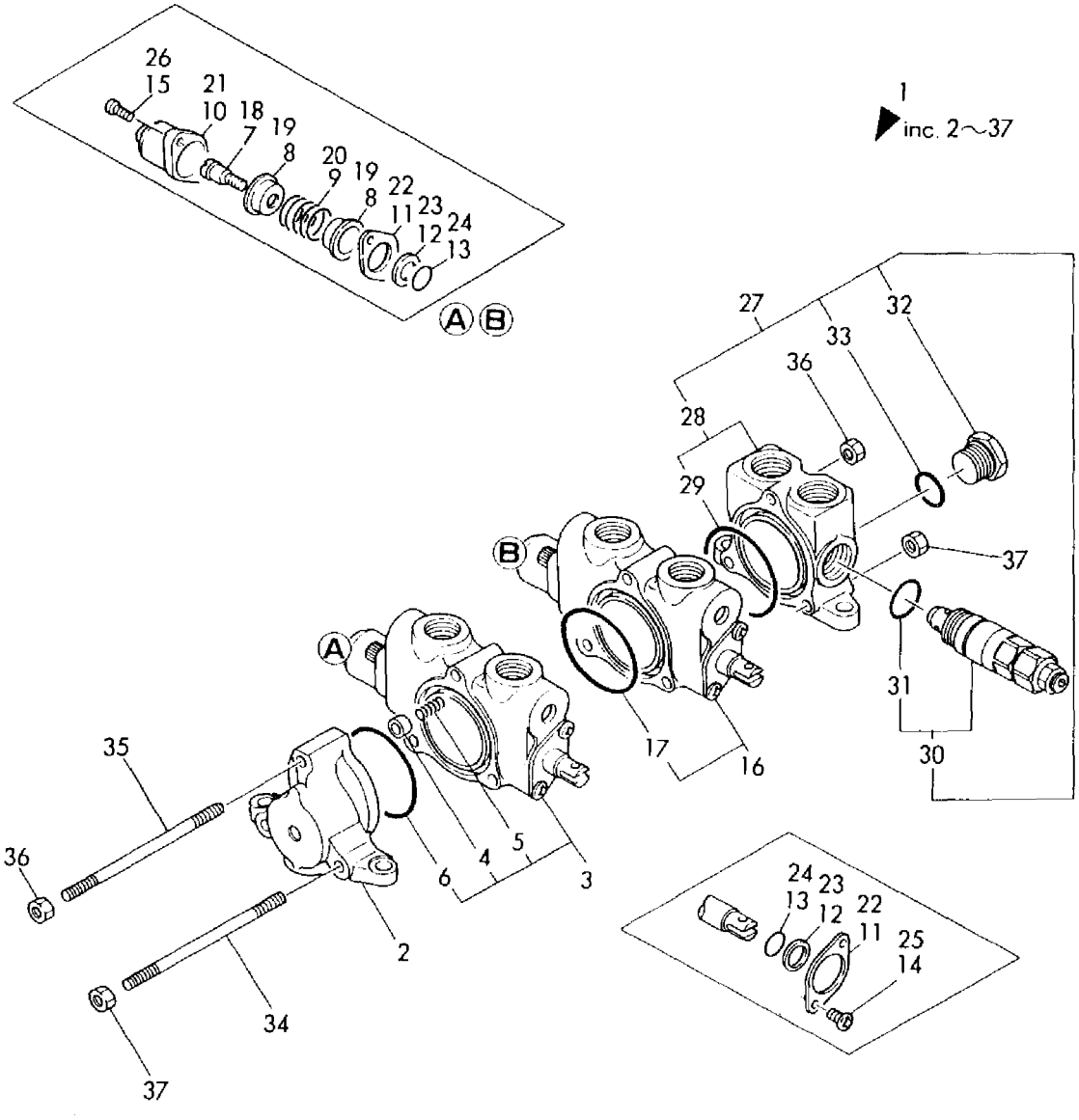

```
1,1,,172124-74100,,"VALVE 9 ASSY,CONTROL",1,1,,1,1,,,,,,,,,,,,
2,2,,172124-74060,,"SECTION ASSY, VALVE",1,1,,1,1,,,,,,,,,,,,
3,3,,172116-74160,,"SECTION, INLET",1,1,,1,1,,,,,,,,,,,,
3-1,3,,172122-74520,,"SECTION,
INLET",1,1,,1,1,,S,,,*1986.02,,*1986.02,,,,*1986.02,,*1986.02
4,4,,172122-74590,,"HOUSING, INLET",1,1,,1,1,,,,,,,,,,,,
5,4,,933171-80590,,O-RING,1,1,,1,1,,,,,,,,,,,,
6,3,,172124-74160,,"VALVE ASSY, RELIEF",1,1,,1,1,,,,,,,,,,,,
7,4,,172116-74150,,O-RING,1,1,,1,1,,,,,,,,,,,,
8,2,,172124-74050,,"SECTION ASSY, VALVE",1,1,,1,1,,,,,,,,,,,,
9,3,,172116-74130,,"VALVE (200KG/CM2)",2,2,,2,2,,,,,,,,,,,,
9-1,3,,172124-74360,,"VALVE,
RELIEF",2,2,,2,2,,S,,,*1986.02,,*1986.02,,,,*1986.02,,*1986.02
10,4,,172116-74150,,O-RING,2,2,,2,2,,,,,,,,,,,,
11,3,,172124-74170,,"SECTION ASSY, SPOOL",1,1,,1,1,,,,,,,,,,,,
12,4,,172122-74130,,POPPET,1,1,,1,1,,,,,,,,,,,,
13,4,,172117-06330,,SPRING,1,1,,1,1,,,,,,,,,,,,
13-1,4,,172113-
74190,,SPRING,1,1,,1,1,,S,,,*1985.02,,*1985.02,,,,*1985.02,,*1985.02
14,4,,933171-80590,,O-RING,1,1,,1,1,,,,,,,,,,,,
15,4,,172116-74190,,"PLATE, SEAL",2,2,,2,2,,,,,,,,,,,,
16,4,,933171-80610,,O-RING,2,2,,2,2,,,,,,,,,,,,
17,4,,933166-80520,,WIPER,2,2,,2,2,,,,,,,,,,,,
18,4,,933166-80530,,CAP,1,1,,1,1,,,,,,,,,,,,
19,4,,933171-80510,,"SEAT, SPRING",2,2,,2,2,,,,,,,,,,,,
20,4,,933166-80550,,"SCREW, CAP",1,1,,1,1,,,,,,,,,,,,
21,4,,172122-74050,,SPRING,1,1,,1,1,,,,,,,,,,,,
22,4,,172116-74220,,SCREW,2,2,,2,2,,,,,,,,,,,,
23,4,,172116-74230,,"HEAD BOLT, SOCKET",2,2,,2,2,,,,,,,,,,,,
24,4,,172124-74260,,WASHER,1,1,,1,1,,,,,,,,,,,,
25,2,,172124-74180,,"SECTION ASSY, SPOOL",1,1,,1,1,,,,,,,,,,,,
26,3,,933171-80590,,O-RING,1,1,,1,1,,,,,,,,,,,,
27,3,,172116-74190,,"PLATE, SEAL",2,2,,2,2,,,,,,,,,,,,
28,3,,933171-80610,,O-RING,2,2,,2,2,,,,,,,,,,,,
29,3,,933166-80520,,WIPER,2,2,,2,2,,,,,,,,,,,,
30,3,,933166-80530,,CAP,1,1,,1,1,,,,,,,,,,,,
31,3,,933171-80510,,"SEAT, SPRING",2,2,,2,2,,,,,,,,,,,,
32,3,,933166-80550,,"SCREW, CAP",1,1,,1,1,,,,,,,,,,,,
33,3,,172122-74050,,SPRING,1,1,,1,1,,,,,,,,,,,,
34,3,,172116-74220,,SCREW,2,2,,2,2,,,,,,,,,,,,
35,3,,172116-74230,,"HEAD BOLT, SOCKET",2,2,,2,2,,,,,,,,,,,,
36,2,,172124-74190,,"SECTION ASSY, SPOOL",1,1,,1,1,,,,,,,,,,,,
37,3,,172122-74130,,POPPET,1,1,,1,1,,,,,,,,,,,,
38,3,,172112-06330,,"SPRING,CONTROL VALVE",2,2,,2,2,,,,,,,,,,,,
38-1,3,,172113-
74190,,SPRING,1,1,,1,1,,S,,,*1985.02,,*1985.02,,,,*1985.02,,*1985.02
39,3,,933171-80590,,O-RING,1,1,,1,1,,,,,,,,,,,,
40,3,,172124-74250,,"PLUG ASSY",1,1,,1,1,,,,,,,,,,,,
40-1,3,,172112-
06480,,PLUG,1,1,,1,1,,S,,,*1986.02,,*1986.02,,,,*1986.02,,*1986.02
41,3,,172112-06490,,O-RING,1,1,,1,1,,,,,,,,,,,,
42,3,,172116-74190,,"PLATE, SEAL",2,2,,2,2,,,,,,,,,,,,
43,3,,172112-06370,,O-RING,2,2,,2,2,,,,,,,,,,,,
43-1,3,,933171-80610,,O-
RING,2,2,,2,2,,N,,,*1986.07,,*1986.07,,,,*1986.07,,*1986.07
44,3,,933166-80520,,WIPER,2,2,,2,2,,,,,,,,,,,,
45,3,,933166-80530,,CAP,1,1,,1,1,,,,,,,,,,,,
46,3,,933171-80510,,"SEAT, SPRING",2,2,,2,2,,,,,,,,,,,,
46-1,3,,933171-80510,,"SEAT,
SPRING",1,1,,1,1,,K,,,*1986.07,,*1986.07,,,,*1986.07,,*1986.07
47,3,,172116-74380,,"SCREW, CAP",1,1,,1,1,,,,,,,,,,,,
48,3,,172122-74050,,SPRING,1,1,,1,1,,,,,,,,,,,,
49,3,,172116-74220,,SCREW,2,2,,2,2,,,,,,,,,,,,
```

50,3,,172116-74230,,"HEAD BOLT, SOCKET",2,2,,2,2,,,,,,,,,,,,
51,3,,172116-74390,,SPACER,1,1,,1,1,,,,,,,,,,,,
52,2,,172122-74160,,"SECTION ASSY, SPOOL",1,1,,1,1,,,,,,,,,,,,,
53,3,,933171-80590,,O-RING,1,1,,1,1,,,,,,,,,,,,
54,3,,23871-030000,,"PLUG PT3/8,SCREW",1,1,,1,1,,,,,,,,,,,,
55,3,,172122-74190,,"HEAD, SPOOL",1,1,,1,1,,,,,,,,,,,,
56,3,,172116-74420,,PLUG,1,1,,1,1,,,,,,,,,,,,
57,3,,172116-74430,,O-RING,1,1,,1,1,,,,,,,,,,,,
58,3,,172116-74190,,"PLATE, SEAL",1,1,,1,1,,,,,,,,,,,,
59,3,,933171-80610,,O-RING,2,2,,2,2,,,,,,,,,,,,
60,3,,933166-80520,,WIPER,2,2,,2,2,,,,,,,,,,,,
61,3,,933166-80530,,CAP,1,1,,1,1,,,,,,,,,,,,
62,3,,933171-80510,,"SEAT, SPRING",2,2,,2,2,,,,,,,,,,,,
63,3,,172122-74040,,"SCREW, CAP",1,1,,1,1,,,,,,,,,,,,
64,3,,933171-80540,,SPRING,1,1,,1,1,,,,,,,,,,,,
65,3,,172116-74220,,SCREW,2,2,,2,2,,,,,,,,,,,,
66,3,,172116-74230,,"HEAD BOLT, SOCKET",2,2,,2,2,,,,,,,,,,,,
67,3,,172122-74270,,O-RING,2,2,,2,2,,,,,,,,,,,,
68,3,,172122-74120,,WASHER,1,1,,1,1,,,,,,,,,,,,
69,2,,172122-74070,,SPACER,1,1,,1,1,,,,,,,,,,,,
70,2,,172124-74200,,"SECTION ASSY, SPOOL",1,1,,1,1,,,,,,,,,,,,,
71,3,,172122-74130,,POPPET,1,1,,1,1,,,,,,,,,,,,
72,3,,172112-06330,,"SPRING,CONTROL VALVE",1,1,,1,1,,,,,,,,,,,,,
72-1,3,,172113-
74190,,SPRING,1,1,,1,1,,S,,,*1985.02,,*1985.02,,,,*1985.02,,*1985.02
73,3,,933171-80590,,O-RING,1,1,,1,1,,,,,,,,,,,,
74,3,,172112-06480,,PLUG,1,1,,1,1,,,,,,,,,,,,
75,3,,172112-06490,,O-RING,1,1,,1,1,,,,,,,,,,,,
76,3,,172116-74190,,"PLATE, SEAL",2,2,,2,2,,,,,,,,,,,,
77,3,,933171-80610,,O-RING,2,2,,2,2,,,,,,,,,,,,
78,3,,933166-80520,,WIPER,2,2,,2,2,,,,,,,,,,,,
79,3,,933166-80530,,CAP,1,1,,1,1,,,,,,,,,,,,
80,3,,933171-80510,,"SEAT, SPRING",1,1,,1,1,,,,,,,,,,,,
81,3,,172116-74380,,"SCREW, CAP",1,1,,1,1,,,,,,,,,,,,
82,3,,172122-74050,,SPRING,1,1,,1,1,,,,,,,,,,,,
83,3,,172116-74220,,SCREW,2,2,,2,2,,,,,,,,,,,,
84,3,,172116-74230,,"HEAD BOLT, SOCKET",2,2,,2,2,,,,,,,,,,,,
85,3,,172116-74390,,SPACER,1,1,,1,1,,,,,,,,,,,,
86,2,,172124-74040,,"SECTION ASSY, V",1,1,,1,1,,,,,,,,,,,,
87,3,,172116-74130,,"VALVE (200KG/CM2)",2,2,,2,2,,,,,,,,,,,,
87-1,3,,172124-75350,,"VALVE,
RELIEF",2,2,,2,2,,S,,,*1986.02,,*1986.02,,,,*1986.02,,*1986.02
88,4,,172116-74150,,O-RING,2,2,,2,2,,,,,,,,,,,,
89,4,,172124-74380,,"CAP NUT",2,2,,2,2,,,,,,,,,,,,
90,3,,172124-74210,,"SECTION ASSY, SPOOL",1,1,,1,1,,,,,,,,,,,,,
91,4,,172122-74130,,POPPET,1,1,,1,1,,,,,,,,,,,,
92,4,,172113-74190,,SPRING,1,1,,1,1,,,,,,,,,,,,
93,4,,933171-80590,,O-RING,1,1,,1,1,,,,,,,,,,,,
94,4,,172116-74190,,"PLATE, SEAL",2,2,,2,2,,,,,,,,,,,,
95,4,,933171-80610,,O-RING,2,2,,2,2,,,,,,,,,,,,
96,4,,933166-80520,,WIPER,2,2,,2,2,,,,,,,,,,,,
97,4,,933166-80530,,CAP,1,1,,1,1,,,,,,,,,,,,
98,4,,933171-80510,,"SEAT, SPRING",2,2,,2,2,,,,,,,,,,,,
99,4,,933166-80550,,"SCREW, CAP",1,1,,1,1,,,,,,,,,,,,
100,4,,933171-80540,,SPRING,1,1,,1,1,,,,,,,,,,,,
101,4,,172116-74220,,SCREW,2,2,,2,2,,,,,,,,,,,,
102,4,,172116-74230,,"HEAD BOLT, SOCKET",2,2,,2,2,,,,,,,,,,,,
103,2,,172124-74220,,"SECTION ASSY, SPOOL",1,1,,1,1,,,,,,,,,,,,,
104,3,,933171-80590,,O-RING,1,1,,1,1,,,,,,,,,,,,
105,3,,172116-74190,,"PLATE, SEAL",2,2,,2,2,,,,,,,,,,,,
106,3,,933171-80610,,O-RING,2,2,,2,2,,,,,,,,,,,,
107,3,,933166-80520,,WIPER,2,2,,2,2,,,,,,,,,,,,
108,3,,933166-80530,,CAP,1,1,,1,1,,,,,,,,,,,,

109,3,,933171-80510,,"SEAT, SPRING",2,2,,2,2,,,,,,,,,,,
110,3,,933166-80550,,"SCREW, CAP",1,1,,1,1,,,,,,,,,,,
111,3,,172122-74050,,SPRING,1,1,,1,1,,,,,,,,,,,
112,3,,172116-74220,,SCREW,2,2,,2,2,,,,,,,,,,,
113,3,,172116-74230,,"HEAD BOLT, SOCKET",2,2,,2,2,,,,,,,,,,,
114,2,,172124-74030,,"SECTION ASSY, V",1,1,,1,1,,,,,,,,,,,
115,3,,172116-74130,,"VALVE (200KG/CM2)",2,2,,2,2,,,,,,,,,,,
115-1,3,,172124-74360,,"VALVE,
RELIEF",2,2,,2,2,,S,,,*1986.02,,*1986.02,,,,*1986.02,,*1986.02
116,4,,172116-74150,,O-RING,2,2,,2,2,,,,,,,,,,,
117,3,,172124-74230,,"SECTION ASSY, SPOOL",1,1,,1,1,,,,,,,,,,,
118,4,,172122-74130,,POPPET,1,1,,1,1,,,,,,,,,,,
119,4,,172113-74190,,SPRING,1,1,,1,1,,,,,,,,,,,
120,4,,933171-80590,,O-RING,1,1,,1,1,,,,,,,,,,,
121,4,,172116-74190,,"PLATE, SEAL",2,2,,2,2,,,,,,,,,,,
122,4,,933171-80610,,O-RING,2,2,,2,2,,,,,,,,,,,
123,4,,933166-80520,,WIPER,2,2,,2,2,,,,,,,,,,,
124,4,,933166-80530,,CAP,1,1,,1,1,,,,,,,,,,,
125,4,,933171-80510,,"SEAT, SPRING",2,2,,2,2,,,,,,,,,,,
126,4,,933166-80550,,"SCREW, CAP",1,1,,1,1,,,,,,,,,,,
127,4,,933171-80540,,SPRING,1,1,,1,1,,,,,,,,,,,
128,4,,172116-74220,,SCREW,2,2,,2,2,,,,,,,,,,,
129,4,,172116-74230,,"HEAD BOLT, SOCKET",2,2,,2,2,,,,,,,,,,,
130,4,,172124-74260,,WASHER,1,1,,1,1,,,,,,,,,,,
131,2,,172124-74020,,"SECTION ASSY, V",1,1,,1,1,,,,,,,,,,,
132,3,,172116-74130,,"VALVE (200KG/CM2)",2,2,,2,2,,,,,,,,,,,
132-1,3,,172124-74360,,"VALVE,
RELIEF",1,1,,1,1,,S,,,*1986.02,,*1986.02,,,,*1986.02,,*1986.02
133,4,,172116-74150,,O-RING,2,2,,2,2,,,,,,,,,,,
134,3,,172124-74240,,"SPOOL SECTION ASSY",1,1,,1,1,,,,,,,,,,,
135,4,,172122-74130,,POPPET,1,1,,1,1,,,,,,,,,,,
136,4,,172112-06330,,"SPRING,CONTROL VALVE",1,1,,1,1,,,,,,,,,,,
136-1,4,,172113-
74190,,SPRING,1,1,,1,1,,S,,,*1985.02,,*1985.02,,,,*1985.02,,*1985.02
137,4,,933171-80590,,O-RING,1,1,,1,1,,,,,,,,,,,
138,4,,172116-74190,,"PLATE, SEAL",2,2,,2,2,,,,,,,,,,,
139,4,,933171-80610,,O-RING,2,2,,2,2,,,,,,,,,,,
140,4,,933166-80520,,WIPER,2,2,,2,2,,,,,,,,,,,
141,4,,933166-80530,,CAP,1,1,,1,1,,,,,,,,,,,
142,4,,933171-80510,,"SEAT, SPRING",2,2,,2,2,,,,,,,,,,,
143,4,,933166-80550,,"SCREW, CAP",1,1,,1,1,,,,,,,,,,,
144,4,,933171-80540,,SPRING,1,1,,1,1,,,,,,,,,,,
145,4,,172116-74220,,SCREW,2,2,,2,2,,,,,,,,,,,
146,4,,172116-74230,,"HEAD BOLT, SOCKET",2,2,,2,2,,,,,,,,,,,
147,4,,172124-74260,,WASHER,1,1,,1,1,,,,,,,,,,,
148,2,,172124-74010,,"SECTION ASSY, V",1,1,,1,1,,,,,,,,,,,
149,3,,172124-74160,,"VALVE ASSY, RELIEF",1,1,,1,1,,,,,,,,,,,
150,4,,172116-74150,,O-RING,1,1,,1,1,,,,,,,,,,,
151,3,,172116-74170,,"SECTION, INLET",1,1,,1,1,,,,,,,,,,,
151-1,3,,172122-74530,,"SECTION,
INLET",1,1,,1,1,,S,,,*1986.02,,*1986.02,,,,*1986.02,,*1986.02
152,4,,172122-74580,,"HOUSING, INLET",1,1,,1,1,,,,,,,,,,,
153,4,,933171-80590,,O-RING,1,1,,1,1,,,,,,,,,,,
154,3,,172116-74320,,PLUG,1,1,,1,1,,,,,,,,,,,
155,3,,172116-74150,,O-RING,1,1,,1,1,,,,,,,,,,,
156,2,,172124-74120,,TIE-ROD,1,1,,1,1,,,,,,,,,,,
157,2,,172124-74130,,TIE-ROD,2,2,,2,2,,,,,,,,,,,
158,2,,172124-74140,,NUT,2,2,,2,2,,,,,,,,,,,
158-1,2,,26716-100002,,"NUT
M10",2,2,,2,2,,R,,,*1986.02,,*1986.02,,,,*1986.02,,*1986.02
159,2,,172124-74150,,NUT,4,4,,4,4,,,,,,,,,,,
159-1,2,,26716-080002,,"NUT M
8",4,4,,4,4,,R,,,*1986.02,,*1986.02,,,,*1986.02,,*1986.02

Fig. 61 コントロールバルブ(メイン) CONTROL VALVE (MAIN)

SPEC. CODE
D72124-74100

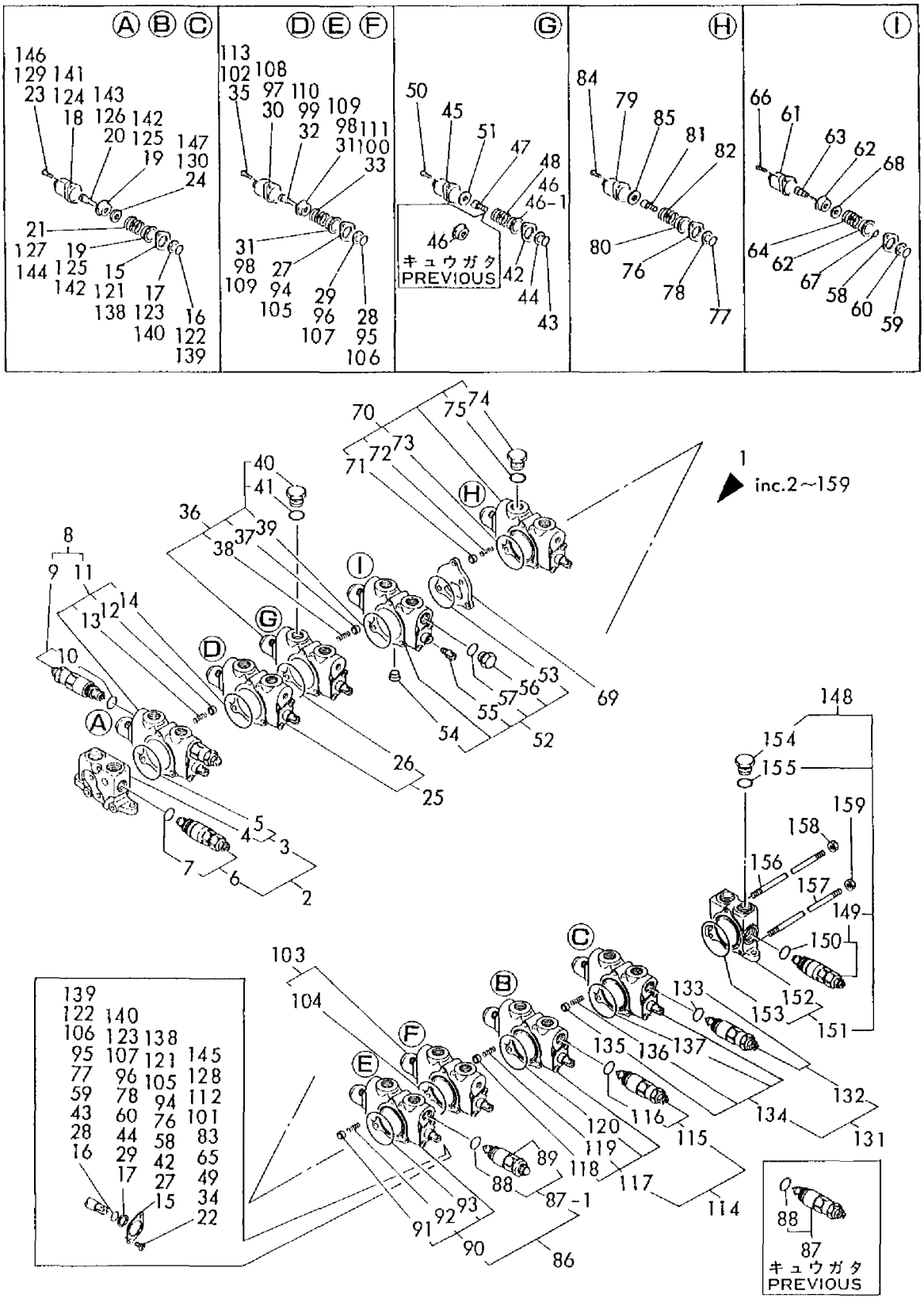

1,1,,172132-74100,,"VALVE 9 ASSY,CONTROL",1,1,,1,1,,,1,,,,,,,,,,
2,2,,172124-74060,,"SECTION ASSY, VALVE",1,1,,1,1,,,,,,,,,,,,
3,3,,172116-74160,,"SECTION, INLET",1,1,,1,1,,,,,,,,,,,,
3-1,3,,172122-74520,,"SECTION,
INLET",1,1,,1,1,,S,,,*1986.02,,*1986.02,,,,*1986.02,,*1986.02
4,4,,172122-74590,,"HOUSING, INLET",1,1,,1,1,,,,,,,,,,,,
5,4,,933171-80590,,O-RING,1,1,,1,1,,,,,,,,,,,,
6,3,,172124-74160,,"VALVE ASSY, RELIEF",1,1,,1,1,,,,,,,,,,,,
7,4,,172116-74150,,O-RING,1,1,,1,1,,,,,,,,,,,,
8,2,,172124-74050,,"SECTION ASSY, VALVE",1,1,,1,1,,,,,,,,,,,,
9,3,,172116-74130,,"VALVE (200KG/CM2)",2,2,,2,2,,,,,,,,,,,,
9-1,3,,172124-74360,,"VALVE,
RELIEF",2,2,,2,2,,S,,,*1986.02,,*1986.02,,,,*1986.02,,*1986.02
10,4,,172116-74150,,O-RING,2,2,,2,2,,,,,,,,,,,,
11,3,,172124-74170,,"SECTION ASSY, SPOOL",1,1,,1,1,,,,,,,,,,,,
12,4,,172122-74130,,POPPET,1,1,,1,1,,,,,,,,,,,,
13,4,,172113-74190,,SPRING,1,1,,1,1,,,,,,,,,,,,
14,4,,933171-80590,,O-RING,1,1,,1,1,,,,,,,,,,,,
15,4,,172116-74190,,"PLATE, SEAL",2,2,,2,2,,,,,,,,,,,,
16,4,,933171-80610,,O-RING,2,2,,2,2,,,,,,,,,,,,
17,4,,933166-80520,,WIPER,2,2,,2,2,,,,,,,,,,,,
18,4,,933166-80530,,CAP,1,1,,1,1,,,,,,,,,,,,
19,4,,933171-80510,,"SEAT, SPRING",2,2,,2,2,,,,,,,,,,,,
20,4,,933166-80550,,"SCREW, CAP",1,1,,1,1,,,,,,,,,,,,
21,4,,172122-74050,,SPRING,1,1,,1,1,,,,,,,,,,,,
22,4,,172116-74220,,SCREW,2,2,,2,2,,,,,,,,,,,,
23,4,,172116-74230,,"HEAD BOLT, SOCKET",2,2,,2,2,,,,,,,,,,,,
24,4,,172124-74260,,WASHER,1,1,,1,1,,,,,,,,,,,,
25,2,,172124-74180,,"SECTION ASSY, SPOOL",1,1,,1,1,,,,,,,,,,,,
26,3,,933171-80590,,O-RING,1,1,,1,1,,,,,,,,,,,,
27,3,,172116-74190,,"PLATE, SEAL",2,2,,2,2,,,,,,,,,,,,
28,3,,933171-80610,,O-RING,2,2,,2,2,,,,,,,,,,,,
29,3,,933166-80520,,WIPER,2,2,,2,2,,,,,,,,,,,,
30,3,,933166-80530,,CAP,1,1,,1,1,,,,,,,,,,,,
31,3,,933171-80510,,"SEAT, SPRING",2,2,,2,2,,,,,,,,,,,,
32,3,,933166-80550,,"SCREW, CAP",1,1,,1,1,,,,,,,,,,,,
33,3,,172122-74050,,SPRING,1,1,,1,1,,,,,,,,,,,,
34,3,,172116-74220,,SCREW,2,2,,2,2,,,,,,,,,,,,
35,3,,172116-74230,,"HEAD BOLT, SOCKET",2,2,,2,2,,,,,,,,,,,,
36,2,,172124-74190,,"SECTION ASSY, SPOOL",1,1,,1,1,,,,,,,,,,,,
37,3,,172122-74130,,POPPET,1,1,,1,1,,,,,,,,,,,,
38,3,,172113-74190,,SPRING,1,1,,1,1,,,,,,,,,,,,
39,3,,933171-80590,,O-RING,1,1,,1,1,,,,,,,,,,,,
40,3,,172124-74250,,"PLUG ASSY",1,1,,1,1,,,,,,,,,,,,
40-1,3,,172112-
06480,,PLUG,1,1,,1,1,,S,,,*1986.02,,*1986.02,,,,*1986.02,,*1986.02
41,3,,172112-06490,,O-RING,1,1,,1,1,,,,,,,,,,,,
42,3,,172116-74190,,"PLATE, SEAL",2,2,,2,2,,,,,,,,,,,,
43,3,,172112-06370,,O-RING,2,2,,2,2,,,,,,,,,,,,
43-1,3,,933171-80610,,O-
RING,2,2,,2,2,,N,,,*1986.07,,*1986.07,,,,*1986.07,,*1986.07
44,3,,933166-80520,,WIPER,2,2,,2,2,,,,,,,,,,,,
45,3,,933166-80530,,CAP,1,1,,1,1,,,,,,,,,,,,
46,3,,933171-80510,,"SEAT, SPRING",2,2,,2,2,,,,,,,,,,,,
46-1,3,,933171-80510,,"SEAT,
SPRING",1,1,,1,1,,K,,,*1986.07,,*1986.07,,,,*1986.07,,*1986.07
47,3,,172116-74380,,"SCREW, CAP",1,1,,1,1,,,,,,,,,,,,
48,3,,172122-74050,,SPRING,1,1,,1,1,,,,,,,,,,,,
49,3,,172116-74220,,SCREW,2,2,,2,2,,,,,,,,,,,,
50,3,,172116-74230,,"HEAD BOLT, SOCKET",2,2,,2,2,,,,,,,,,,,,
51,3,,172116-
74390,,SPACER,1,1,,1,1,,W,,,*1986.07,,*1986.07,,,,*1986.07,,*1986.07
52,2,,172122-74160,,"SECTION ASSY, SPOOL",1,1,,1,1,,,,,,,,,,,,

53,3,,933171-80590,,O-RING,1,1,,1,1,,,,,,,,,,,,
54,3,,23871-030000,,"PLUG PT3/8,SCREW",1,1,,1,1,,,,,,,,,,,,
55,3,,172122-74190,,"HEAD, SPOOL",1,1,,1,1,,,,,,,,,,,,
56,3,,172116-74420,,PLUG,1,1,,1,1,,,,,,,,,,,,
57,3,,172116-74430,,O-RING,1,1,,1,1,,,,,,,,,,,,
58,3,,172116-74190,,"PLATE, SEAL",1,1,,1,1,,,,,,,,,,,,
59,3,,933171-80610,,O-RING,2,2,,2,2,,,,,,,,,,,,
60,3,,933166-80520,,WIPER,2,2,,2,2,,,,,,,,,,,,
61,3,,933166-80530,,CAP,1,1,,1,1,,,,,,,,,,,,
62,3,,933171-80510,,"SEAT, SPRING",2,2,,2,2,,,,,,,,,,,,
63,3,,172122-74040,,"SCREW, CAP",1,1,,1,1,,,,,,,,,,,,
64,3,,933171-80540,,SPRING,1,1,,1,1,,,,,,,,,,,,
65,3,,172116-74220,,SCREW,2,2,,2,2,,,,,,,,,,,,
66,3,,172116-74230,,"HEAD BOLT, SOCKET",2,2,,2,2,,,,,,,,,,,,
67,3,,172122-74270,,O-RING,1,1,,1,1,,,,,,,,,,,,
68,3,,172122-74120,,WASHER,1,1,,1,1,,,,,,,,,,,,
69,2,,172122-74070,,SPACER,1,1,,1,1,,,,,,,,,,,,
70,2,,172124-74200,,"SECTION ASSY, SPOOL",1,1,,1,1,,,,,,,,,,,,
71,3,,172122-74130,,POPPET,1,1,,1,1,,,,,,,,,,,,
72,3,,172113-74190,,SPRING,1,1,,1,1,,,,,,,,,,,,
73,3,,933171-80590,,O-RING,1,1,,1,1,,,,,,,,,,,,
74,3,,172112-06480,,PLUG,1,1,,1,1,,,,,,,,,,,,
75,3,,172112-06490,,O-RING,1,1,,1,1,,,,,,,,,,,,
76,3,,172116-74190,,"PLATE, SEAL",2,2,,2,2,,,,,,,,,,,,
77,3,,933171-80610,,O-RING,2,2,,2,2,,,,,,,,,,,,
78,3,,933166-80520,,WIPER,2,2,,2,2,,,,,,,,,,,,
79,3,,933166-80530,,CAP,1,1,,1,1,,,,,,,,,,,,
80,3,,933171-80510,,"SEAT, SPRING",1,1,,1,1,,,,,,,,,,,,
81,3,,172116-74380,,"SCREW, CAP",1,1,,1,1,,,,,,,,,,,,
82,3,,172122-74050,,SPRING,1,1,,1,1,,,,,,,,,,,,
83,3,,172116-74220,,SCREW,2,2,,2,2,,,,,,,,,,,,
84,3,,172116-74230,,"HEAD BOLT, SOCKET",2,2,,2,2,,,,,,,,,,,,
85,3,,172116-74390,,SPACER,1,1,,1,1,,,,,,,,,,,,
86,2,,172124-74040,,"SECTION ASSY, V",1,1,,1,1,,,,,,,,,,,,
87,3,,172116-74130,,"VALVE (200KG/CM2)",2,2,,2,2,,,,,,,,,,,,
87-1,3,,172124-75350,,"VALVE,
RELIEF",2,2,,2,2,,S,,,*1986.02,,*1986.02,,,,*1986.02,,*1986.02
88,4,,172116-74150,,O-RING,2,2,,2,2,,,,,,,,,,,,
89,4,,172124-74380,,"CAP NUT",2,2,,2,2,,,,,,,,,,,,
90,3,,172124-74210,,"SECTION ASSY, SPOOL",1,1,,1,1,,,,,,,,,,,,
91,4,,172122-74130,,POPPET,1,1,,1,1,,,,,,,,,,,,
92,4,,172113-74190,,SPRING,1,1,,1,1,,,,,,,,,,,,
93,4,,933171-80590,,O-RING,1,1,,1,1,,,,,,,,,,,,
94,4,,172116-74190,,"PLATE, SEAL",2,2,,2,2,,,,,,,,,,,,
95,4,,933171-80610,,O-RING,2,2,,2,2,,,,,,,,,,,,
96,4,,933166-80520,,WIPER,2,2,,2,2,,,,,,,,,,,,
97,4,,933166-80530,,CAP,1,1,,1,1,,,,,,,,,,,,
98,4,,933171-80510,,"SEAT, SPRING",2,2,,2,2,,,,,,,,,,,,
99,4,,933166-80550,,"SCREW, CAP",1,1,,1,1,,,,,,,,,,,,
100,4,,933171-80540,,SPRING,1,1,,1,1,,,,,,,,,,,,
101,4,,172116-74220,,SCREW,2,2,,2,2,,,,,,,,,,,,
102,4,,172116-74230,,"HEAD BOLT, SOCKET",2,2,,2,2,,,,,,,,,,,,
103,2,,172124-74220,,"SECTION ASSY, SPOOL",1,1,,1,1,,,,,,,,,,,,
104,3,,933171-80590,,O-RING,1,1,,1,1,,,,,,,,,,,,
105,3,,172116-74190,,"PLATE, SEAL",2,2,,2,2,,,,,,,,,,,,
106,3,,933171-80610,,O-RING,2,2,,2,2,,,,,,,,,,,,
107,3,,933166-80520,,WIPER,2,2,,2,2,,,,,,,,,,,,
108,3,,933166-80530,,CAP,1,1,,1,1,,,,,,,,,,,,
109,3,,933171-80510,,"SEAT, SPRING",2,2,,2,2,,,,,,,,,,,,
110,3,,933166-80550,,"SCREW, CAP",1,1,,1,1,,,,,,,,,,,,
111,3,,172122-74050,,SPRING,1,1,,1,1,,,,,,,,,,,,
112,3,,172116-74220,,SCREW,2,2,,2,2,,,,,,,,,,,,
113,3,,172116-74230,,"HEAD BOLT, SOCKET",2,2,,2,2,,,,,,,,,,,,

114,2,,172132-74110,,"SECTION ASSY, VALVE",1,1,,1,1,,,,,,,,,,,,
115,3,,172132-74120,,"VALVE(230/43),RELIEF",2,2,,2,2,,,,,,,,,,,,,
116,4,,172116-74150,,O-RING,2,2,,2,2,,,,,,,,,,,,
117,3,,172124-74230,,"SECTION ASSY, SPOOL",1,1,,1,1,,,,,,,,,,,,,
118,4,,172122-74130,,POPPET,1,1,,1,1,,,,,,,,,,,,
119,4,,172113-74190,,SPRING,1,1,,1,1,,,,,,,,,,,,
120,4,,933171-80590,,O-RING,1,1,,1,1,,,,,,,,,,,,
121,4,,172116-74190,,"PLATE, SEAL",2,2,,2,2,,,,,,,,,,,,,
122,4,,933171-80610,,O-RING,2,2,,2,2,,,,,,,,,,,,
123,4,,933166-80520,,WIPER,2,2,,2,2,,,,,,,,,,,,
124,4,,933166-80530,,CAP,1,1,,1,1,,,,,,,,,,,,
125,4,,933171-80510,,"SEAT, SPRING",2,2,,2,2,,,,,,,,,,,,,
126,4,,933166-80550,,"SCREW, CAP",1,1,,1,1,,,,,,,,,,,,
127,4,,933171-80540,,SPRING,1,1,,1,1,,,,,,,,,,,,
128,4,,172116-74220,,SCREW,2,2,,2,2,,,,,,,,,,,,
129,4,,172116-74230,,"HEAD BOLT, SOCKET",2,2,,2,2,,,,,,,,,,,,,
130,4,,172124-74260,,WASHER,1,1,,1,1,,,,,,,,,,,,
131,2,,172124-74020,,"SECTION ASSY, V",1,1,,1,1,,,,,,,,,,,,
132,3,,172116-74130,,"VALVE (200KG/CM2)",1,1,,1,1,,,,,,,,,,,,,
132-1,3,,172124-74360,,"VALVE,
RELIEF",1,1,,1,1,,S,,,*1986.02,,*1986.02,,,,*1986.02,,*1986.02
133,4,,172116-74150,,O-RING,1,1,,1,1,,,,,,,,,,,,
134,3,,172124-74240,,"SPOOL SECTION ASSY",1,1,,1,1,,,,,,,,,,,,
135,4,,172122-74130,,POPPET,1,1,,1,1,,,,,,,,,,,,
136,4,,172113-74190,,SPRING,1,1,,1,1,,,,,,,,,,,,
137,4,,933171-80590,,O-RING,1,1,,1,1,,,,,,,,,,,,
138,4,,172116-74190,,"PLATE, SEAL",2,2,,2,2,,,,,,,,,,,,,
139,4,,933171-80610,,O-RING,2,2,,2,2,,,,,,,,,,,,
140,4,,933166-80520,,WIPER,2,2,,2,2,,,,,,,,,,,,
141,4,,933166-80530,,CAP,1,1,,1,1,,,,,,,,,,,,
142,4,,933171-80510,,"SEAT, SPRING",2,2,,2,2,,,,,,,,,,,,,
143,4,,933166-80550,,"SCREW, CAP",1,1,,1,1,,,,,,,,,,,,
144,4,,933171-80540,,SPRING,1,1,,1,1,,,,,,,,,,,,
145,4,,172116-74220,,SCREW,2,2,,2,2,,,,,,,,,,,,
146,4,,172116-74230,,"HEAD BOLT, SOCKET",2,2,,2,2,,,,,,,,,,,,,
147,4,,172124-74260,,WASHER,1,1,,1,1,,,,,,,,,,,,
148,2,,172124-74010,,"SECTION ASSY, V",1,1,,1,1,,,,,,,,,,,,
149,3,,172124-74160,,"VALVE ASSY, RELIEF",1,1,,1,1,,,,,,,,,,,,,
150,4,,172116-74150,,O-RING,1,1,,1,1,,,,,,,,,,,,
151,3,,172116-74170,,"SECTION, INLET",1,1,,1,1,,,,,,,,,,,,
151-1,3,,172122-74530,,"SECTION,
INLET",1,1,,1,1,,S,,,*1986.02,,*1986.02,,,,*1986.02,,*1986.02
152,4,,172122-74580,,"HOUSING, INLET",1,1,,1,1,,,,,,,,,,,,
153,4,,933171-80590,,O-RING,1,1,,1,1,,,,,,,,,,,,
154,3,,172116-74320,,PLUG,1,1,,1,1,,,,,,,,,,,,
155,3,,172116-74150,,O-RING,1,1,,1,1,,,,,,,,,,,,
156,2,,172124-74120,,TIE-ROD,1,1,,1,1,,,,,,,,,,,,
157,2,,172124-74130,,TIE-ROD,2,2,,2,2,,,,,,,,,,,,
158,2,,26716-100002,,"NUT M10",2,2,,2,2,,,,,,,,,,,,
159,2,,26716-080002,,"NUT M 8",4,4,,4,4,,,,,,,,,,,,

Fig. 62 コントロールバルブ(メイン)(U,UZ) CONTROL VALVE (MAIN)(U,UZ)

SPEC. CODE
D72132-74100

COUNTRY	J P	N W	S W	W G	F A	D M	N L
Fig. No.	62	—	—	—	—	—	—

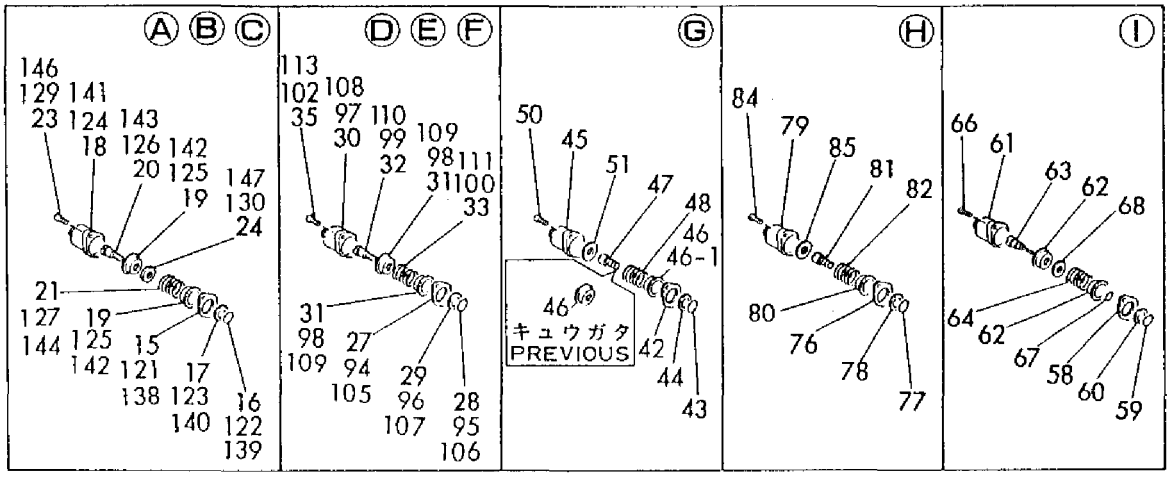

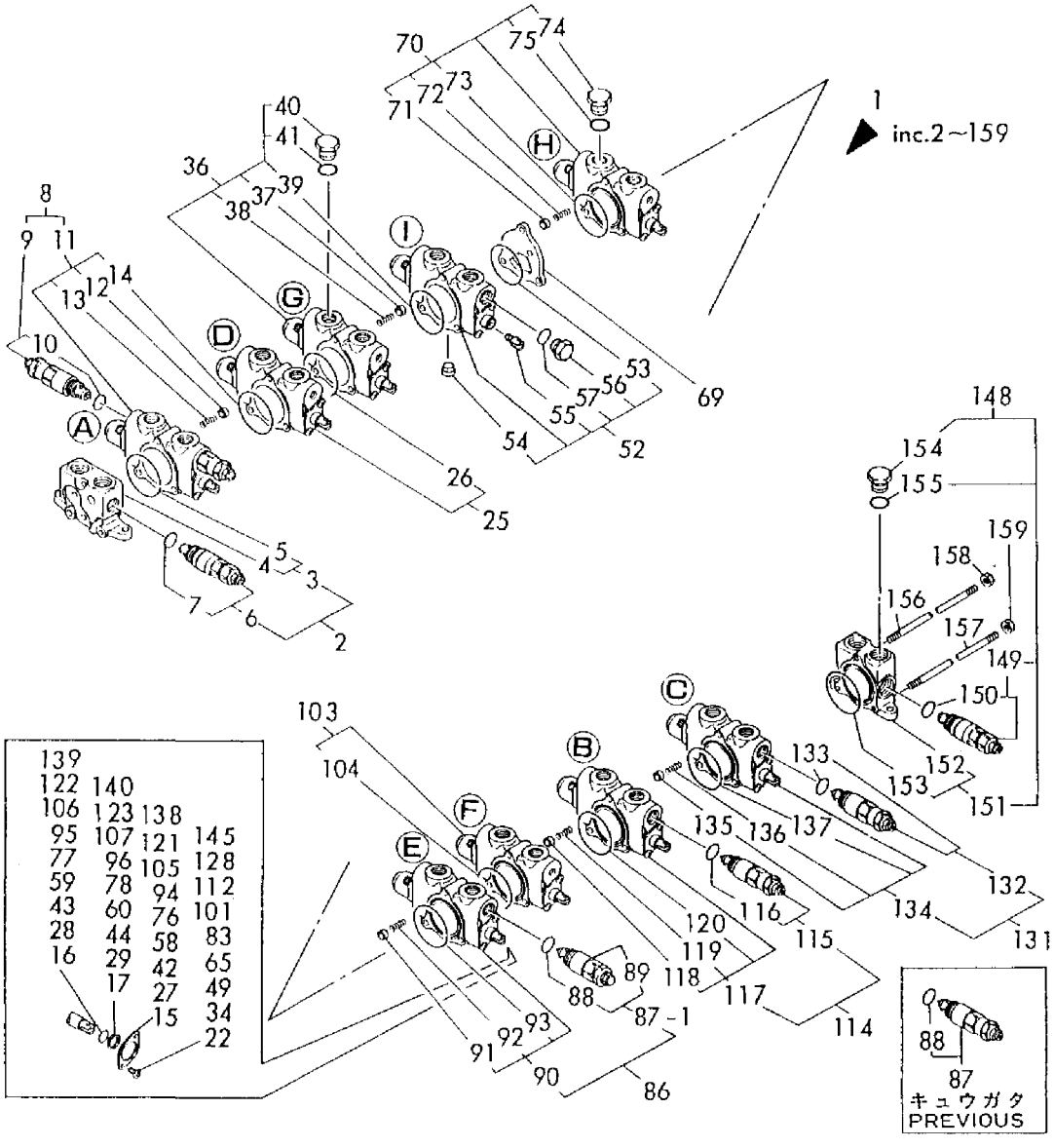

```
1,1,,933120-92100,,"CYLINDER ASSY,BOOM",1,1,,1,1,,,1,,,,,,,,,
1-1,1,,933120-92101,,"CYLINDER ASSY,
BOOM",1,1,,1,1,,R,2,,M20544,,M20544,,,,M20507,,M20507
2,2,,933138-40100,,"SEAL SET, HEAD",1,1,,1,1,,,,,,,,,,,,
8,3,,22417-500500,,"COTTER PIN 5.0X50",1,1,,1,1,,,,,,,,,,,,
8-1,3,,22417-600700,,"COTTER PIN
6.0X70",1,1,,1,1,,N,,,*XXXXXX,,*XXXXXX,,,,*XXXXXX,,*XXXXXX
8-2,3,,22417-600700,,"COTTER PIN
6.0X70",1,1,,1,1,,Z,,,*1990.07,,*1990.07,,,,*1990.07,,*1990.07
9,2,,933138-78000,,"SEAL SET, PISTON",1,1,,1,1,,,,,,,,,,,,
13,3,,22417-500500,,"COTTER PIN 5.0X50",1,1,,1,1,,,,,,,,,,,,
13-1,3,,22417-600700,,"COTTER PIN
6.0X70",1,1,,1,1,,N,,,*XXXXXX,,*XXXXXX,,,,*XXXXXX,,*XXXXXX
13-2,3,,22417-600700,,"COTTER PIN
6.0X70",1,1,,1,1,,Z,,,*1990.07,,*1990.07,,,,*1990.07,,*1990.07
14,2,,24761-020000,,"NIPPLE PT1/8,GREASE",2,2,,2,2,,,,,,,,,,,,
15,2,,933721-92100,,"TUBE ASSY, BOOM",1,1,,1,1,,,,,,,,,,,,
17,3,,933125-37600,,"BUSH 50 70, PIN",1,1,,1,1,,,,,,,,,,,,
18,2,,933722-67500,,"ROD ASSY, BOOM",1,1,,1,1,,,,,,,,,,,,
20,3,,933125-37600,,"BUSH 50 70, PIN",1,1,,1,1,,,,,,,,,,,,
21,2,,933124-06000,,"PISTON (100)",1,1,,1,1,,,,,,,,,,,,
22,2,,933124-95000,,"GLAND 100 6, GASKET",1,1,,1,1,,,,,,,,,,,,
23,2,,933124-95100,,"GLAND 100 12,GASKET",1,1,,1,1,,,,,,,,,,,,
23-1,2,,172124-72430,,"GLAND 100
12,GASKET",1,1,,1,1,,S,2,,M20529,,M20529,,,,M20506,,M20506
24,2,,933125-78000,,"WASHER (100)",1,1,,1,1,,,,,,,,,,,,
25,2,,933126-00500,,"RING 72, SPRING",1,1,,1,1,,,,,,,,,,,,
26,2,,933126-25200,,"CASTLE NUT M39",1,1,,1,1,,,,,,,,,,,,
26-1,2,,172151-72270,,"U-NUT
M39",1,1,,1,1,,S,,,*1990.07,,*1990.07,,,,*1990.07,,*1990.07
27,2,,933127-32000,,"PLUNGER 62, CUSHION",1,1,,1,1,,,,,,,,,,,,
27-1,2,,933127-32001,,"PLUNGER 62,
CUSHION",1,1,,1,1,,S,2,,M20544,,M20544,,,,M20507,,M20507
28,2,,933134-20200,,"HEAD 100 55",1,1,,1,1,,,,,,,,,,,,
28-1,2,,933134-20201,,"HEAD 100
55",1,1,,1,1,,S,2,,M20544,,M20544,,,,M20507,,M20507
30,3,,933135-20500,,"BUSH 55 40, ROD",1,1,,1,1,,,,,,,,,,,,
31,2,,172132-72700,,"RING 62,
CUSHION",1,1,,1,1,,W,2,,M20544,,M20544,,,,M20507,,M20507
32,2,,22252-000800,,"CIRCLIP
80",1,1,,1,1,,W,2,,M20544,,M20544,,,,M20507,,M20507
33,1,,933120-92102,,"CYLINDER ASSY,
BOOM",1,1,,1,1,,W,3,,*1991.05,,*1991.05,,,,*1991.05,,*1991.05
34,2,,172151-71810,,"SEAL SET,
HEAD",1,1,,1,1,,W,,,*1991.05,,*1991.05,,,,*1991.05,,*1991.05
41,2,,933138-78000,,"SEAL SET,
PISTON",1,1,,1,1,,W,,,*1991.05,,*1991.05,,,,*1991.05,,*1991.05
45,2,,24761-020000,,"NIPPLE
PT1/8,GREASE",2,2,,2,2,,W,,,*1991.05,,*1991.05,,,,*1991.05,,*1991.05
46,2,,933721-92101,,"TUBE W/BUSH,
BOOM",1,1,,1,1,,W,,,*1991.05,,*1991.05,,,,*1991.05,,*1991.05
48,3,,933125-37600,,"BUSH 50 70,
PIN",1,1,,1,1,,W,,,*1991.05,,*1991.05,,,,*1991.05,,*1991.05
49,2,,933722-67500,,"ROD ASSY,
BOOM",1,1,,1,1,,W,,,*1991.05,,*1991.05,,,,*1991.05,,*1991.05
51,3,,933125-37600,,"BUSH 50 70,
PIN",1,1,,1,1,,W,,,*1991.05,,*1991.05,,,,*1991.05,,*1991.05
52,2,,933124-06000,,"PISTON
(100)",1,1,,1,1,,W,,,*1991.05,,*1991.05,,,,*1991.05,,*1991.05
53,2,,933124-95000,,"GLAND 100 6,
GASKET",1,1,,1,1,,W,,,*1991.05,,*1991.05,,,,*1991.05,,*1991.05
54,2,,172124-72430,,"GLAND 100
12,GASKET",1,1,,1,1,,W,,,*1991.05,,*1991.05,,,,*1991.05,,*1991.05
```

55,2,,172151-72290,,"LOCK
WASHER",1,1,,1,1,,W,,,*1991.05,,*1991.05,,,,*1991.05,,*1991.05
56,2,,933126-00500,,"RING 72,
SPRING",1,1,,1,1,,W,,,*1991.05,,*1991.05,,,,*1991.05,,*1991.05
57,2,,172151-72270,,"U-NUT
M39",1,1,,1,1,,W,,,*1991.05,,*1991.05,,,,*1991.05,,*1991.05
58,2,,933127-32001,,"PLUNGER 62,
CUSHION",1,1,,1,1,,W,,,*1991.05,,*1991.05,,,,*1991.05,,*1991.05
59,2,,172151-72220,,"HEAD 100
55",1,1,,1,1,,W,,,*1991.05,,*1991.05,,,,*1991.05,,*1991.05
61,3,,172151-72240,,"BUSH 55 35,
ROD",1,1,,1,1,,W,,,*1991.05,,*1991.05,,,,*1991.05,,*1991.05
62,2,,172151-72330,,"CUSHION RING
62",1,1,,1,1,,W,,,*1991.05,,*1991.05,,,,*1991.05,,*1991.05
63,2,,22252-000800,,"CIRCLIP
80",1,1,,1,1,,W,,,*1991.05,,*1991.05,,,,*1991.05,,*1991.05

Fig. 63 ブームシリンダ BOOM CYLINDER

SPEC. CODE
D72124-72100

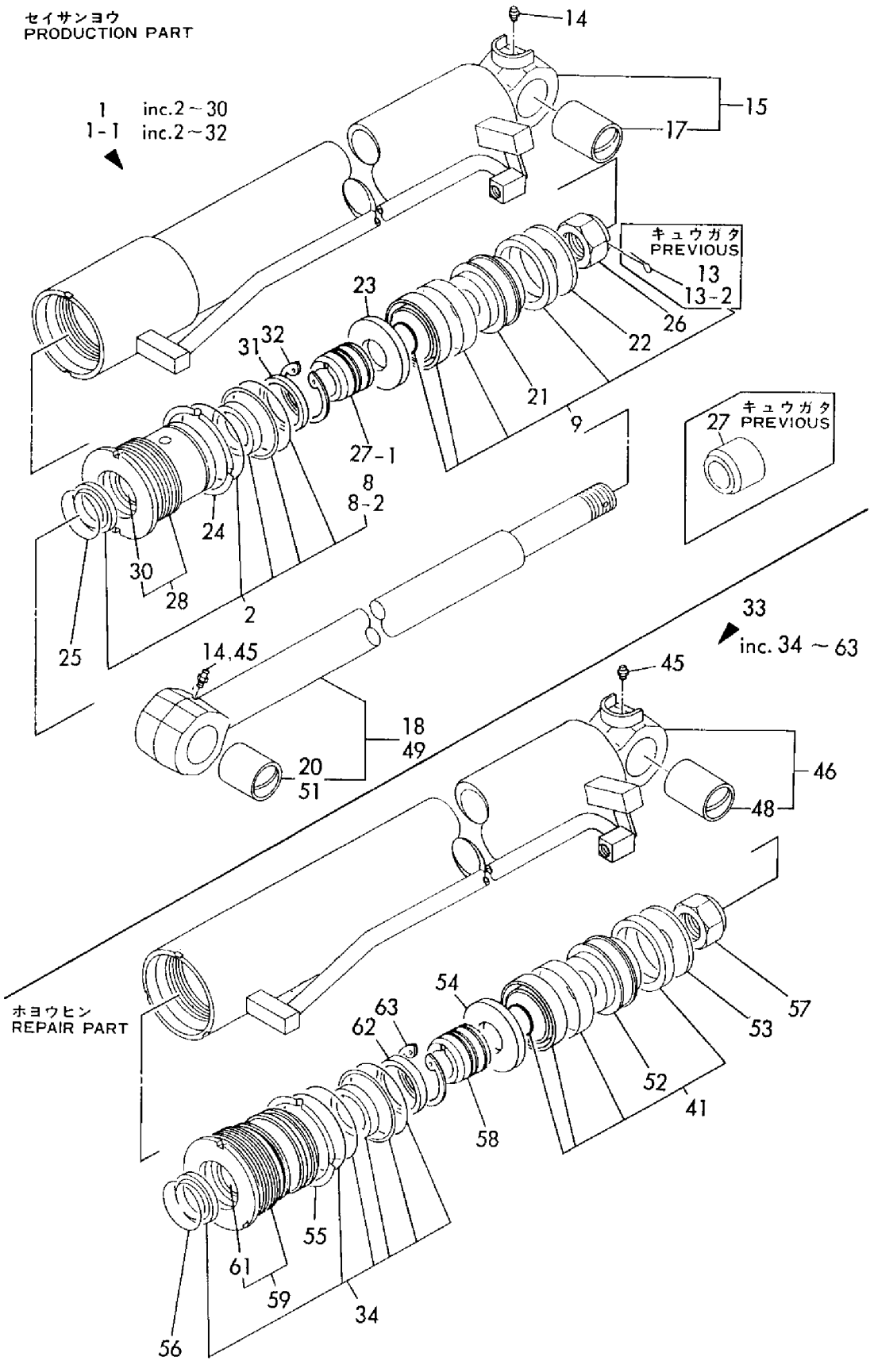

```
1,1,,933120-92200,,"CYLINDER ASSY,BOOM",,1,,,1,,,1,,,,,,,,,,
1-1,1,,933120-92201,,"CYLINDER ASSY, BOOM",,1,,,1,,R,1,,,,M/#20544,,,,,,M/#20507
2,2,,933138-40100,,"SEAL SET, HEAD",,1,,,1,,,,,,,,,,,,
8,3,,22417-600700,,"COTTER PIN 6.0X70",,1,,,1,,Z,,,,,*1990.07,,,,,,*1990.07
9,2,,933138-78000,,"SEAL SET, PISTON",,1,,,1,,,,,,,,,,,,
13,3,,22417-600700,,"COTTER PIN 6.0X70",,1,,,1,,Z,,,,,*1990.07,,,,,,*1990.07
14,2,,24761-020000,,"NIPPLE PT1/8,GREASE",,2,,,2,,,,,,,,,,,,
15,2,,933721-92200,,"TUBE ASSY, BOOM",,1,,,1,,,,,,,,,,,,
17,3,,933125-37600,,"BUSH 50 70, PIN",,1,,,1,,,,,,,,,,,,
18,2,,933722-68200,,"ROD ASSY, BOOM",,1,,,1,,,,,,,,,,,,
20,3,,933125-37600,,"BUSH 50 70, PIN",,1,,,1,,,,,,,,,,,,
21,2,,933124-06000,,"PISTON (100)",,1,,,1,,,,,,,,,,,,
22,2,,933124-95000,,"GLAND 100 6, GASKET",,1,,,1,,,,,,,,,,,,
23,2,,933124-95100,,"GLAND 100 12,GASKET",,1,,,1,,,,,,,,,,,,
23-1,2,,172124-72430,,"GLAND 100 12,GASKET",,1,,,1,,S,,,,,M20529,,,,,,M20506
24,2,,933125-78000,,"WASHER (100)",,1,,,1,,,,,,,,,,,,
25,2,,933126-00500,,"RING 72, SPRING",,1,,,1,,,,,,,,,,,,
26,2,,933126-25200,,"CASTLE NUT M39",,1,,,1,,,,,,,,,,,,
26-1,2,,172151-72270,,"U-NUT M39",,1,,,1,,S,,,,,*1990.07,,,,,,*1990.07
27,2,,933127-32000,,"PLUNGER 62, CUSHION",,1,,,1,,,,,,,,,,,,
27-1,2,,933127-32001,,"PLUNGER 62, CUSHION",,1,,,1,,S,,,,,M20544,,,,,,M20507
28,2,,933134-20200,,"HEAD 100 55",,1,,,1,,,,,,,,,,,,
28-1,2,,933134-20201,,"HEAD 100 55",,1,,,1,,S,,,,,M20544,,,,,,M20507
30,3,,933135-20500,,"BUSH 55 40, ROD",,1,,,1,,,,,,,,,,,,
31,2,,172132-72700,,"RING 62, CUSHION",,1,,,1,,W,,,,,M20544,,,,,,M20507
32,2,,22252-000800,,"CIRCLIP   80",,1,,,1,,W,,,,,M20544,,,,,,M20507
33,1,,933120-92202,,"CYLINDER ASSY, BOOM",,1,,,1,,W,2,,,,*1991.05,,,,,,*1991.05
34,2,,172151-71810,,"SEAL SET, HEAD",,1,,,1,,W,,,,,*1991.05,,,,,,*1991.05
41,2,,933138-78000,,"SEAL SET, PISTON",,1,,,1,,W,,,,,*1991.05,,,,,,*1991.05
45,2,,24761-020000,,"NIPPLE PT1/8,GREASE",,2,,,2,,W,,,,,*1991.05,,,,,,*1991.05
46,2,,933721-92201,,"TUBE W/BUSH, BOOM",,1,,,1,,W,,,,,*1991.05,,,,,,*1991.05
48,3,,933125-37600,,"BUSH 50 70, PIN",,1,,,1,,W,,,,,*1991.05,,,,,,*1991.05
49,2,,933722-68200,,"ROD ASSY, BOOM",,1,,,1,,W,,,,,*1991.05,,,,,,*1991.05
51,3,,933125-37600,,"BUSH 50 70, PIN",,1,,,1,,W,,,,,*1991.05,,,,,,*1991.05
52,2,,933124-06000,,"PISTON (100)",,1,,,1,,W,,,,,*1991.05,,,,,,*1991.05
53,2,,933124-95000,,"GLAND 100 6, GASKET",,1,,,1,,W,,,,,*1991.05,,,,,,*1991.05
54,2,,172124-72430,,"GLAND 100 12,GASKET",,1,,,1,,W,,,,,*1991.05,,,,,,*1991.05
55,2,,172151-72290,,"LOCK WASHER",,1,,,1,,W,,,,,*1991.05,,,,,,*1991.05
56,2,,933126-00500,,"RING 72, SPRING",,1,,,1,,W,,,,,*1991.05,,,,,,*1991.05
57,2,,172151-72270,,"U-NUT M39",,1,,,1,,W,,,,,*1991.05,,,,,,*1991.05
58,2,,933127-32001,,"PLUNGER 62, CUSHION",,1,,,1,,W,,,,,*1991.05,,,,,,*1991.05
59,2,,172151-72220,,"HEAD 100 55",,1,,,1,,W,,,,,*1991.05,,,,,,*1991.05
61,3,,172151-72240,,"BUSH 55 35, ROD",,1,,,1,,W,,,,,*1991.05,,,,,,*1991.05
62,2,,172151-72330,,"CUSHION RING 62",,1,,,1,,W,,,,,*1991.05,,,,,,*1991.05
63,2,,22252-000800,,"CIRCLIP   80",,1,,,1,,W,,,,,*1991.05,,,,,,*1991.05
```

Fig. 64 ブームシリンダ(U)(コクナイ) BOOM CYLINDER (U) (JAPAN SPEC.)

SPEC. CODE
D72132-72110

COUNTRY	J P	N W	S W	W G	F A	D M	N L
Fig. No.	64	—	—	—	—	—	—

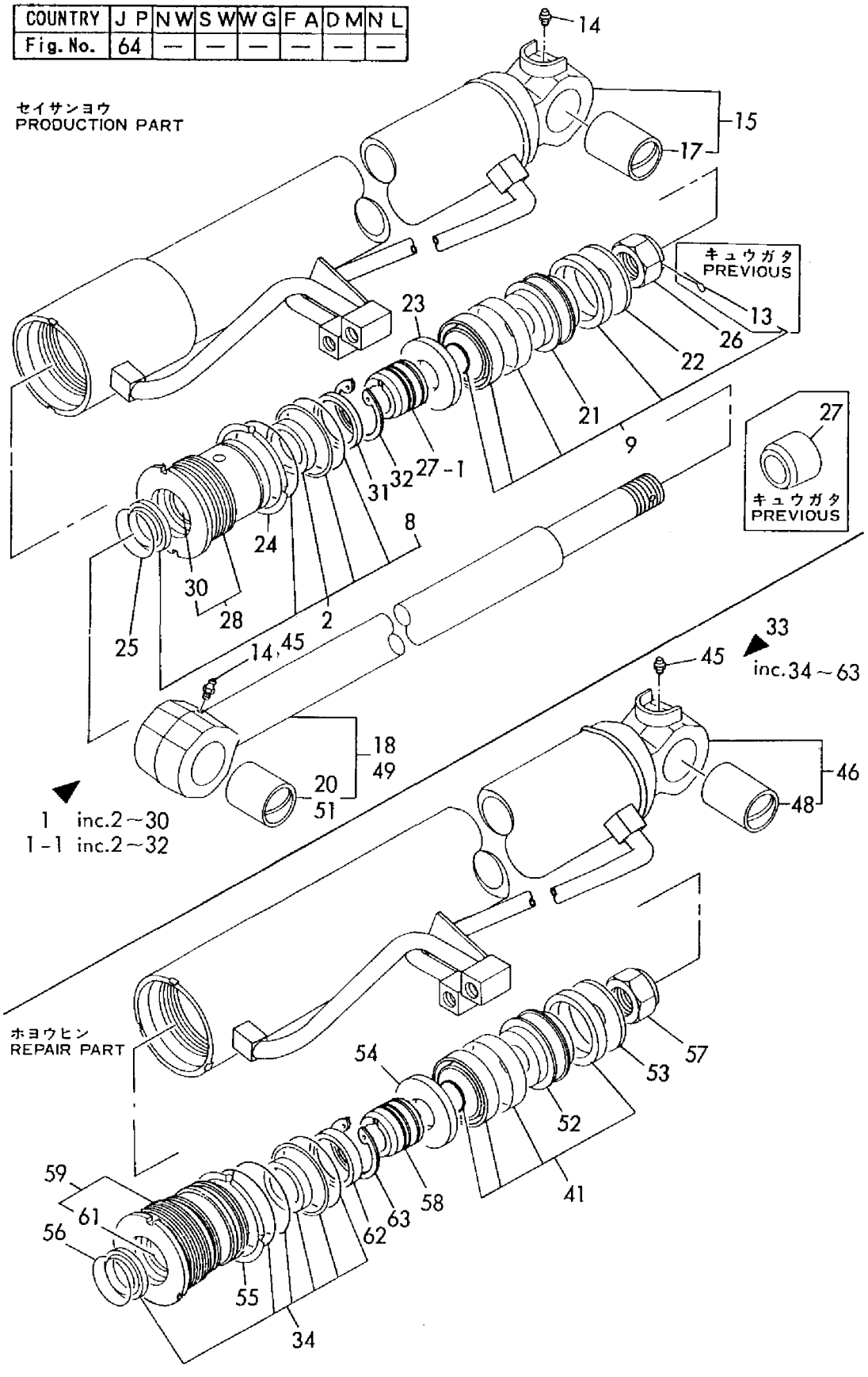

```
1,1,,933120-92300,,"CYLINDER ASSY,BOOM",1,,,1,,,,1,,,,,,,,,,
1-1,1,,933120-92301,,"CYLINDER ASSY, BOOM",1,,,1,,,R,1,,M20544,,,,,,M20507,,
2,2,,933138-40100,,"SEAL SET, HEAD",1,,,1,,,,,,,,,,,,,
8,3,,22417-600700,,"COTTER PIN 6.0X70",1,,,1,,,Z,,,*1990.07,,,,,,*1990.07,,
9,2,,933138-78000,,"SEAL SET, PISTON",1,,,1,,,,,,,,,,,,,
13,3,,22417-600700,,"COTTER PIN 6.0X70",1,,,1,,,Z,,,*1990.07,,,,,,*1990.07,,
14,2,,24761-020000,,"NIPPLE PT1/8,GREASE",2,,,2,,,,,,,,,,,,,
15,2,,933721-92300,,"TUBE ASSY, BOOM",1,,,1,,,,,,,,,,,,,
17,3,,933125-37600,,"BUSH 50 70, PIN",1,,,1,,,,,,,,,,,,,
18,2,,933722-68300,,"ROD ASSY, BOOM",1,,,1,,,,,,,,,,,,,
20,3,,933125-37600,,"BUSH 50 70, PIN",1,,,1,,,,,,,,,,,,,
21,2,,933124-06000,,"PISTON (100)",1,,,1,,,,,,,,,,,,,
22,2,,933124-95000,,"GLAND 100 6, GASKET",1,,,1,,,,,,,,,,,,,
23,2,,933124-95100,,"GLAND 100 12,GASKET",1,,,1,,,,,,,,,,,,,
23-1,2,,172124-72430,,"GLAND 100 12,GASKET",1,,,1,,,S,,,M20529,,,,,,M20506,,
24,2,,933125-78000,,"WASHER (100)",1,,,1,,,,,,,,,,,,,
25,2,,933126-00500,,"RING 72, SPRING",1,,,1,,,,,,,,,,,,,
26,2,,933126-25200,,"CASTLE NUT M39",1,,,1,,,,,,,,,,,,,
26-1,2,,172151-72270,,"U-NUT M39",1,,,1,,,S,,,*1990.07,,,,,,*1990.07,,
27,2,,933127-32000,,"PLUNGER 62, CUSHION",1,,,1,,,,,,,,,,,,,
27-1,2,,933127-32001,,"PLUNGER 62, CUSHION",1,,,1,,,S,,,M20544,,,,,,M20507,,
28,2,,933134-20200,,"HEAD 100 55",1,,,1,,,,,,,,,,,,,
28-1,2,,933134-20201,,"HEAD 100 55",1,,,1,,,S,,,M20544,,,,,,M20507,,
30,3,,933135-20500,,"BUSH 55 40, ROD",1,,,1,,,,,,,,,,,,,
31,2,,172132-72700,,"RING 62, CUSHION",1,,,1,,,W,,,M20544,,,,,,M20507,,
32,2,,22252-000800,,"CIRCLIP   80",1,,,1,,,W,,,M20544,,,,,,M20507,,
33,1,,172132-72560,,"COVER, SLIDE",1,,,1,,,,,,,,,,,,,
34,1,,172132-72590,,COVER,1,,,1,,,,,,,,,,,,,
35,1,,22157-100000,,"WASHER 10",1,,,1,,,,,,,,,,,,,
36,1,,26013-100202,,"BOLT W/WASHER M10X20",5,,,5,,,,,,,,,,,,,
37,1,,933120-92302,,"CYLINDER ASSY, BOOM",1,,,1,,,W,2,,*1991.05,,,,,,*1991.05,,
38,2,,172151-71810,,"SEAL SET, HEAD",1,,,1,,,W,,,*1991.05,,,,,,*1991.05,,
45,2,,933138-78000,,"SEAL SET, PISTON",1,,,1,,,W,,,*1991.05,,,,,,*1991.05,,
49,2,,24761-020000,,"NIPPLE PT1/8,GREASE",2,,,2,,,W,,,*1991.05,,,,,,*1991.05,,
50,2,,933721-92301,,"TUBE W/BUSH, BOOM",1,,,1,,,W,,,*1991.05,,,,,,*1991.05,,
52,3,,933125-37600,,"BUSH 50 70, PIN",1,,,1,,,W,,,*1991.05,,,,,,*1991.05,,
53,2,,933722-68300,,"ROD ASSY, BOOM",1,,,1,,,W,,,*1991.05,,,,,,*1991.05,,
55,3,,933125-37600,,"BUSH 50 70, PIN",1,,,1,,,W,,,*1991.05,,,,,,*1991.05,,
56,2,,933124-06000,,"PISTON (100)",1,,,1,,,W,,,*1991.05,,,,,,*1991.05,,
57,2,,933124-95000,,"GLAND 100 6, GASKET",1,,,1,,,W,,,*1991.05,,,,,,*1991.05,,
58,2,,172124-72430,,"GLAND 100 12,GASKET",1,,,1,,,W,,,*1991.05,,,,,,*1991.05,,
59,2,,172151-72290,,"LOCK WASHER",1,,,1,,,W,,,*1991.05,,,,,,*1991.05,,
60,2,,933126-00500,,"RING 72, SPRING",1,,,1,,,W,,,*1991.05,,,,,,*1991.05,,
61,2,,172151-72270,,"U-NUT M39",1,,,1,,,W,,,*1991.05,,,,,,*1991.05,,
62,2,,933127-32001,,"PLUNGER 62, CUSHION",1,,,1,,,W,,,*1991.05,,,,,,*1991.05,,
63,2,,172151-72220,,"HEAD 100 55",1,,,1,,,W,,,*1991.05,,,,,,*1991.05,,
65,3,,172151-72240,,"BUSH 55 35, ROD",1,,,1,,,W,,,*1991.05,,,,,,*1991.05,,
66,2,,172151-72330,,"CUSHION RING 62",1,,,1,,,W,,,*1991.05,,,,,,*1991.05,,
67,2,,22252-000800,,"CIRCLIP   80",1,,,1,,,W,,,*1991.05,,,,,,*1991.05,,
68,1,,172132-72560,,"COVER, SLIDE",1,,,1,,,W,,,*1991.05,,,,,,*1991.05,,
69,1,,172132-72590,,COVER,1,,,1,,,W,,,*1991.05,,,,,,*1991.05,,
70,1,,22157-100000,,"WASHER 10",1,,,1,,,W,,,*1991.05,,,,,,*1991.05,,
71,1,,26013-100202,,"BOLT W/WASHER M10X20",5,,,5,,,W,,,*1991.05,,,,,,*1991.05,,
```

Fig. 65 ブームシリンダ(UZ)(コクナイ) BOOM CYLINDER (UZ) (JAPAN SPEC.)

SPEC. CODE D72132-72110

COUNTRY	J P	N W	S W	W G	F A
Fig. No.	65	—	—	—	—

D M	N L
—	—

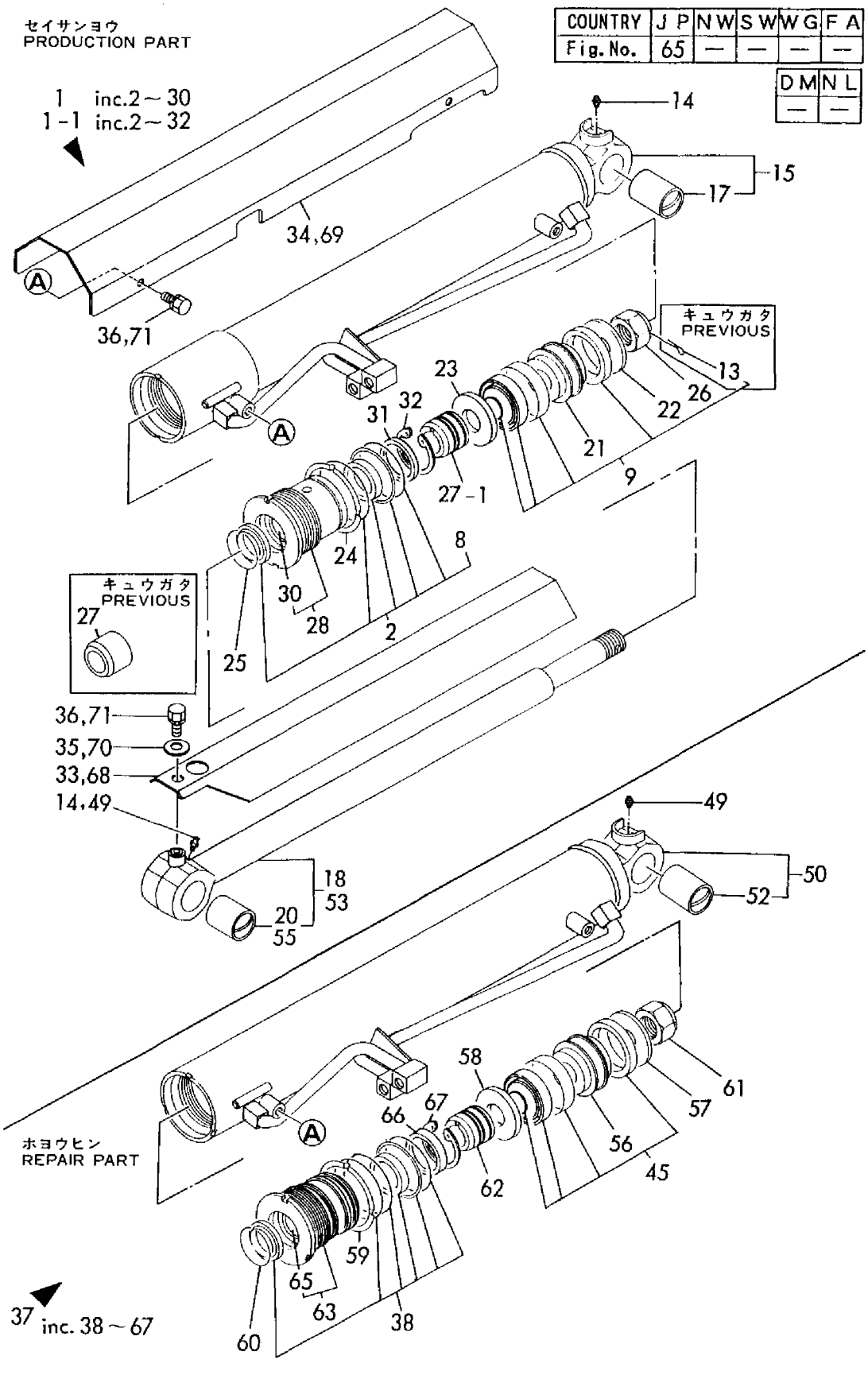

1,1,,933120-82500,,"CYLINDER ASSY,ARM",1,1,,1,1,,,1,,,,,,,,,,
2,2,,933138-40200,,"SEAL SET, HEAD",1,1,,1,1,,,,,,,,,,,,
6,3,,22417-500500,,"COTTER PIN
5.0X50",1,1,,1,1,,Z,,,*1990.07,,*1990.07,,,,*1990.07,,*1990.07
7,2,,933138-75300,,"SEAL SET, PISTON",1,1,,1,1,,,,,,,,,,,,
11,3,,22417-500500,,"COTTER PIN
5.0X50",1,1,,1,1,,Z,,,*1990.07,,*1990.07,,,,*1990.07,,*1990.07
12,2,,22252-000700,,"CIRCLIP 70",1,1,,1,1,,,,,,,,,,,,
13,2,,24761-050000,,"NIPPLE C,GREASE",2,2,,2,2,,,,,,,,,,,,
13-1,2,,24761-050000,,"NIPPLE
C,GREASE",1,1,,1,1,,K,2,,M20501,,M20501,,,,M20501,,M20501
14,2,,933721-82500,,"TUBE ASSY, ARM",1,1,,1,1,,,,,,,,,,,,
16,3,,933125-37500,,"BUSH 50 60 B, PIN",1,1,,1,1,,,,,,,,,,,,
17,2,,933722-67600,,"ROD ASSY, ARM",1,1,,1,1,,,,,,,,,,,,
19,3,,933125-37500,,"BUSH 50 60 B, PIN",1,1,,1,1,,,,,,,,,,,,
20,2,,933124-01101,,"PISTON 90",1,1,,1,1,,,,,,,,,,,,
21,2,,933124-30500,,"GLAND 71 55, GASKET",1,1,,1,1,,,,,,,,,,,,
22,2,,933124-89200,,"GLAND 90 6, GASKET",1,1,,1,1,,,,,,,,,,,,
23,2,,933124-89300,,"GLAND 90 12, GASKET",1,1,,1,1,,,,,,,,,,,,
24,2,,933125-75100,,"WASHER 90",1,1,,1,1,,,,,,,,,,,,
25,2,,933126-00500,,"RING 72, SPRING",1,1,,1,1,,,,,,,,,,,,
26,2,,933126-25200,,"CASTLE NUT M39",1,1,,1,1,,,,,,,,,,,,
26-1,2,,172151-72270,,"U-NUT
M39",1,1,,1,1,,S,,,*1990.07,,*1990.07,,,,*1990.07,,*1990.07
27,2,,933134-20001,,"HEAD 90 55",1,1,,1,1,,,,,,,,,,,,
29,3,,933135-20500,,"BUSH 55 40, ROD",1,1,,1,1,,,,,,,,,,,,
30,2,,24761-040000,,"NIPPLE
B,GREASE",1,1,,1,1,,W,2,,M20501,,M20501,,,,M20501,,M20501
31,1,,933120-82501,,"CYLINDER ASSY,
ARM",1,1,,1,1,,W,3,,*1991.05,,*1991.05,,,,*1991.05,,*1991.05
32,2,,933138-40201,,"SEAL SET
90X50,HEAD",1,1,,1,1,,W,,,*1991.05,,*1991.05,,,,*1991.05,,*1991.05
37,2,,933138-75300,,"SEAL SET,
PISTON",1,1,,1,1,,W,,,*1991.05,,*1991.05,,,,*1991.05,,*1991.05
41,2,,24761-050000,,"NIPPLE
C,GREASE",1,1,,1,1,,W,,,*1991.05,,*1991.05,,,,*1991.05,,*1991.05
42,2,,933721-82501,,"TUBE W/BUSH,
ARM",1,1,,1,1,,W,,,*1991.05,,*1991.05,,,,*1991.05,,*1991.05
44,3,,933125-37500,,"BUSH 50 60 B,
PIN",1,1,,1,1,,W,,,*1991.05,,*1991.05,,,,*1991.05,,*1991.05
45,2,,933722-67600,,"ROD ASSY,
ARM",1,1,,1,1,,W,,,*1991.05,,*1991.05,,,,*1991.05,,*1991.05
47,3,,933125-37500,,"BUSH 50 60 B,
PIN",1,1,,1,1,,W,,,*1991.05,,*1991.05,,,,*1991.05,,*1991.05
48,2,,933124-01101,,"PISTON
90",1,1,,1,1,,W,,,*1991.05,,*1991.05,,,,*1991.05,,*1991.05
49,2,,933124-89200,,"GLAND 90 6,
GASKET",1,1,,1,1,,W,,,*1991.05,,*1991.05,,,,*1991.05,,*1991.05
50,2,,933124-89300,,"GLAND 90 12,
GASKET",1,1,,1,1,,W,,,*1991.05,,*1991.05,,,,*1991.05,,*1991.05
51,2,,172151-72870,,"LOCK WASHER
90",1,1,,1,1,,W,,,*1991.05,,*1991.05,,,,*1991.05,,*1991.05
52,2,,933126-00500,,"RING 72,
SPRING",1,1,,1,1,,W,,,*1991.05,,*1991.05,,,,*1991.05,,*1991.05
53,2,,172151-72270,,"U-NUT
M39",1,1,,1,1,,W,,,*1991.05,,*1991.05,,,,*1991.05,,*1991.05
54,2,,172124-72200,,"HEAD 90 55
W/BUSH",1,1,,1,1,,W,,,*1991.05,,*1991.05,,,,*1991.05,,*1991.05
56,3,,172151-72240,,"BUSH 55 35,
ROD",1,1,,1,1,,W,,,*1991.05,,*1991.05,,,,*1991.05,,*1991.05
57,2,,24761-040000,,"NIPPLE
B,GREASE",1,1,,1,1,,W,,,*1991.05,,*1991.05,,,,*1991.05,,*1991.05

SPEC. CODE
D72124-72100
D72132-72100
D72132-72110

Fig. 66 アームシリンダ ARM CYLINDER

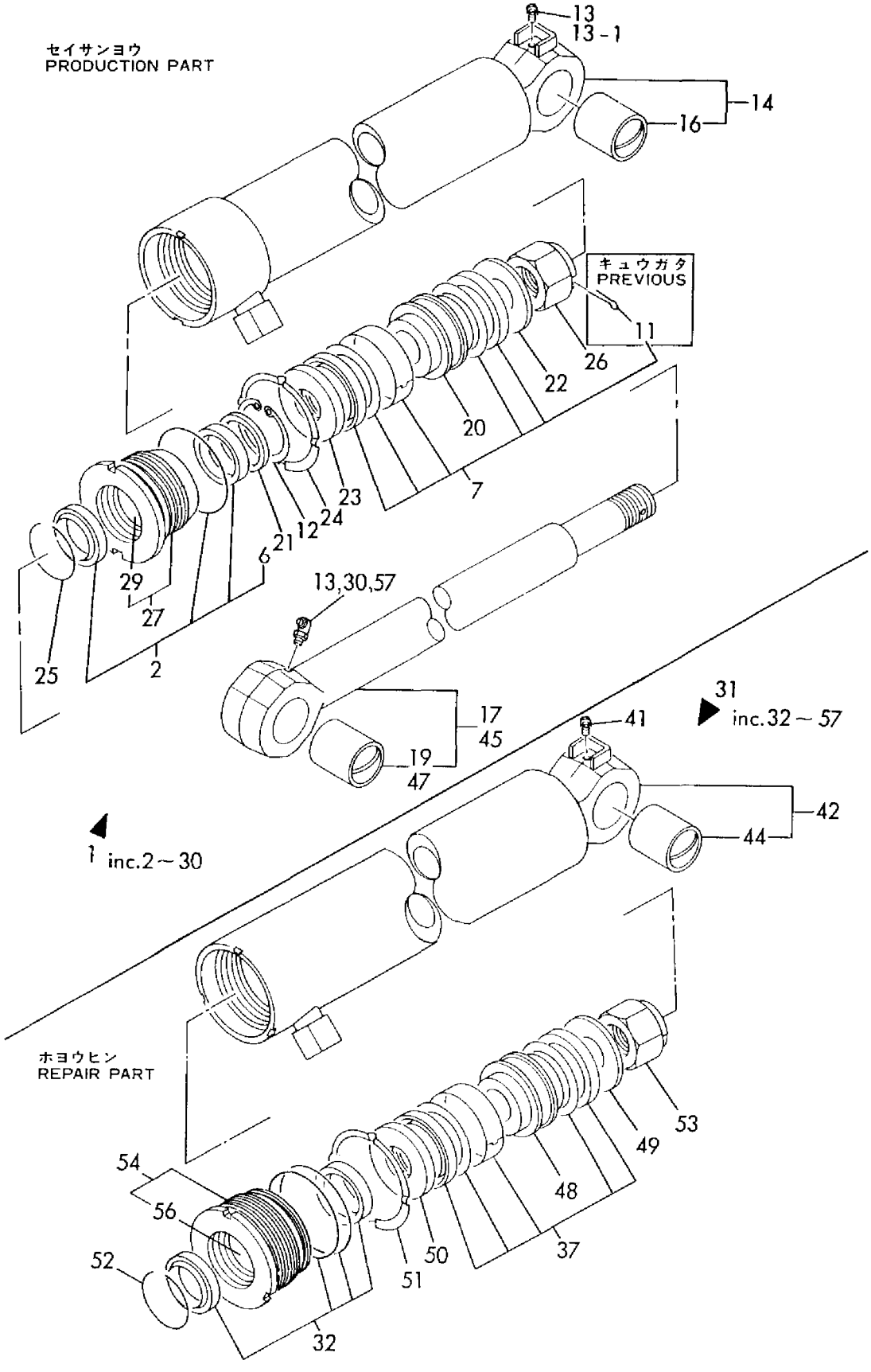

1,1,,933120-68000,,"CYLINDER ASSY,BUCKET",1,1,,1,1,,,1,,,,,,,,,,
2,2,,933138-40000,,"SEAL SET, HEAD",1,1,,1,1,,,,,,,,,,,,
6,3,,22417-500500,,"COTTER PIN
5.0X50",1,1,,1,1,,Z,,,*1990.07,,*1990.07,,,,*1990.07,,*1990.07
7,2,,933138-70500,,"SEAL SET, PISTON",1,1,,1,1,,,,,,,,,,,,
11,3,,22417-500500,,"COTTER PIN
5.0X50",1,1,,1,1,,Z,,,*1990.07,,*1990.07,,,,*1990.07,,*1990.07
12,2,,24761-020000,,"NIPPLE PT1/8,GREASE",1,1,,1,1,,,,,,,,,,,,
13,2,,24761-050000,,"NIPPLE C,GREASE",1,1,,1,1,,,,,,,,,,,,
14,2,,26013-120254,,"BOLT M12X 25",1,1,,1,1,,,,,,,,,,,,
15,2,,933111-05500,,"WASHER 90, LOCK",1,1,,1,1,,,,,,,,,,,,
16,2,,933111-17601,,"RING 80, BACK-UP",1,1,,1,1,,,,,,,,,,,,
17,2,,933111-17800,,"RING 80-12, BACK-UP",1,1,,1,1,,,,,,,,,,,,
18,2,,933721-68000,,"TUBE ASSY, BUCKET",1,1,,1,1,,,,,,,,,,,,
20,3,,933125-30000,,"BUSH 45 50",1,1,,1,1,,,,,,,,,,,,
21,2,,933131-80600,,"JOINT 21.7, COLLET",1,1,,1,1,,,,,,,,,,,,
22,3,,933131-80800,,NUT,1,1,,1,1,,,,,,,,,,,,
23,3,,933131-80900,,SLEEVE,1,1,,1,1,,,,,,,,,,,,
24,3,,933131-81000,,"O-RING 1B P22",1,1,,1,1,,,,,,,,,,,,
25,3,,933131-81100,,"RING, BUCK UP",1,1,,1,1,,,,,,,,,,,,
26,2,,933722-67700,,"ROD ASSY, BUCKET",1,1,,1,1,,,,,,,,,,,,
28,3,,933125-30000,,"BUSH 45 50",1,1,,1,1,,,,,,,,,,,,
29,2,,933123-93600,,"PISTON 80 C",1,1,,1,1,,,,,,,,,,,,
30,2,,933126-00500,,"RING 72, SPRING",1,1,,1,1,,,,,,,,,,,,
31,2,,933126-25100,,"CASTLE NUT M33",1,1,,1,1,,,,,,,,,,,,
31-1,2,,933111-20200,,"U-NUT
M33",1,1,,1,1,,S,,,*1990.07,,*1990.07,,,,*1990.07,,*1990.07
32,2,,933126-44500,,"SEAL VAY45X55X4,DUST",2,2,,2,2,,,,,,,,,,,,
33,2,,933134-20100,,"HEAD 80 55",1,1,,1,1,,,,,,,,,,,,
35,3,,933135-20500,,"BUSH 55 40, ROD",1,1,,1,1,,,,,,,,,,,,
36,2,,933137-40100,,"PIPE (R), BUCKET",1,1,,1,1,,,,,,,,,,,,
36-1,2,,933137-40101,,"PIPE (R),
BUCKET",1,1,,1,1,,S,,,*1987.09,,*1987.09,,,,*1987.09,,*1987.09
37,1,,933120-68001,,"CYLINDER
ASSY,BUCKET",1,1,,1,1,,W,2,,*1991.05,,*1991.05,,,,*1991.05,,*1991.05
38,2,,933138-40001,,"SEAL SET
80X50,HEAD",1,1,,1,1,,W,,,*1991.05,,*1991.05,,,,*1991.05,,*1991.05
43,2,,933138-70500,,"SEAL SET,
PISTON",1,1,,1,1,,W,,,*1991.05,,*1991.05,,,,*1991.05,,*1991.05
47,2,,24761-020000,,"NIPPLE
PT1/8,GREASE",1,1,,1,1,,W,,,*1991.05,,*1991.05,,,,*1991.05,,*1991.05
48,2,,24761-050000,,"NIPPLE
C,GREASE",1,1,,1,1,,W,,,*1991.05,,*1991.05,,,,*1991.05,,*1991.05
49,2,,26013-120254,,"BOLT M12X
25",1,1,,1,1,,W,,,*1991.05,,*1991.05,,,,*1991.05,,*1991.05
50,2,,172142-72260,,"WASHER 80
B",1,1,,1,1,,W,,,*1991.05,,*1991.05,,,,*1991.05,,*1991.05
51,2,,933111-17601,,"RING 80, BACK-
UP",1,1,,1,1,,W,,,*1991.05,,*1991.05,,,,*1991.05,,*1991.05
52,2,,933111-17800,,"RING 80-12, BACK-
UP",1,1,,1,1,,W,,,*1991.05,,*1991.05,,,,*1991.05,,*1991.05
53,2,,933721-68001,,"TUBE E/BUSH,
BUCKET",1,1,,1,1,,W,,,*1991.05,,*1991.05,,,,*1991.05,,*1991.05
55,3,,933125-30000,,"BUSH 45
50",1,1,,1,1,,W,,,*1991.05,,*1991.05,,,,*1991.05,,*1991.05
56,2,,933722-67700,,"ROD ASSY,
BUCKET",1,1,,1,1,,W,,,*1991.05,,*1991.05,,,,*1991.05,,*1991.05
58,3,,933125-30000,,"BUSH 45
50",1,1,,1,1,,W,,,*1991.05,,*1991.05,,,,*1991.05,,*1991.05
59,2,,933123-93600,,"PISTON 80
C",1,1,,1,1,,W,,,*1991.05,,*1991.05,,,,*1991.05,,*1991.05
60,2,,933126-00500,,"RING 72,
SPRING",1,1,,1,1,,W,,,*1991.05,,*1991.05,,,,*1991.05,,*1991.05

61,2,,933111-20200,,"U-NUT
M33",1,1,,1,1,,W,,,*1991.05,,*1991.05,,,,*1991.05,,*1991.05
62,2,,933126-44500,,"SEAL
VAY45X55X4,DUST",2,2,,2,2,,W,,,*1991.05,,*1991.05,,,,*1991.05,,*1991.05
63,2,,172124-72230,,"HEAD 95X55
COMPL.",1,1,,1,1,,W,,,*1991.05,,*1991.05,,,,*1991.05,,*1991.05
65,3,,172151-72240,,"BUSH 55 35,
ROD",1,1,,1,1,,W,,,*1991.05,,*1991.05,,,,*1991.05,,*1991.05
66,2,,933137-40102,,"PIPE (R),
BUCKET",1,1,,1,1,,W,,,*1991.05,,*1991.05,,,,*1991.05,,*1991.05

SPEC. CODE
D72124-72100
D72132-72100
D72132-72110

Fig. 67 バケットシリンダ BUCKET CYLINDER

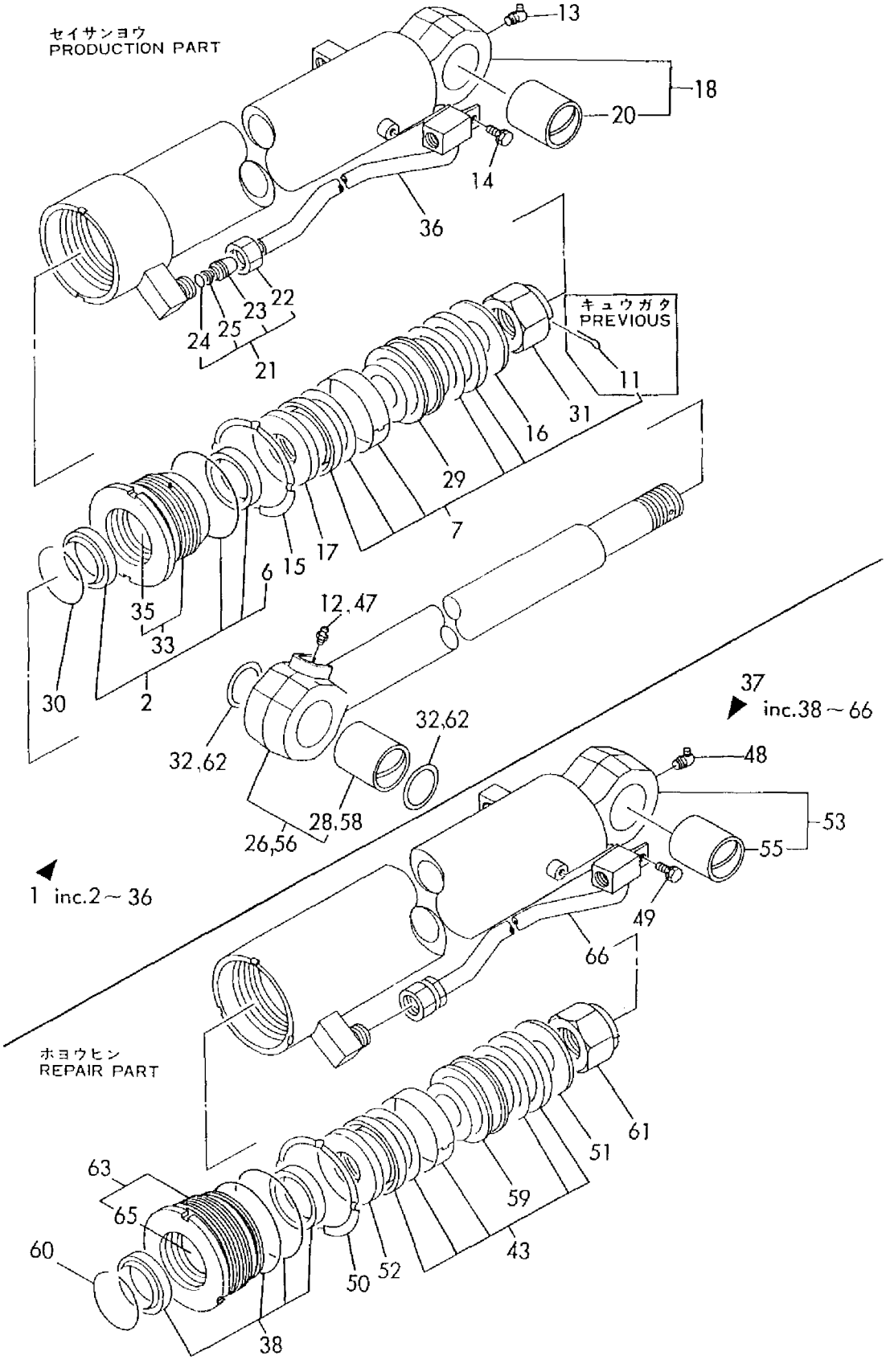

1,1,,933120-82600,,"CYLINDER ASSY, SWING",1,1,,1,1,,,1,,,,,,,,,,
2,2,,933138-34500,,"SEAL SET, HEAD",1,1,,1,1,,,,,,,,,,,,
6,3,,22417-500500,,"COTTER PIN
5.0X50",1,1,,1,1,,Z,,,*1990.07,,*1990.07,,,,*1990.07,,*1990.07
7,2,,933138-75400,,"SEAL SET, PISTON",1,1,,1,1,,,,,,,,,,,,
9,3,,22417-500500,,"COTTER PIN
5.0X50",1,1,,1,1,,Z,,,*1990.07,,*1990.07,,,,*1990.07,,*1990.07
10,2,,22252-000550,,"CIRCLIP 55",1,1,,1,1,,,,,,,,,,,,
11,2,,24761-020000,,"NIPPLE PT1/8,GREASE",1,1,,1,1,,,,,,,,,,,,
12,2,,933111-06000,,"GLAND 55 40, GASKET",1,1,,1,1,,,,,,,,,,,,
13,2,,933111-20400,,"CASTLE NUT M27",1,1,,1,1,,,,,,,,,,,,
13-1,2,,172141-72250,,"U-NUT
M27",1,1,,1,1,,S,,,*1990.07,,*1990.07,,,,*1990.07,,*1990.07
14,2,,933111-26600,,"RING 55, SPRING",1,1,,1,1,,,,,,,,,,,,
15,2,,933721-82600,,"TUBE ASSY, SWING",1,1,,1,1,,,,,,,,,,,,
17,3,,933125-22500,,"BUSH 40X50, PIN",1,1,,1,1,,,,,,,,,,,,
18,2,,933722-49200,,"ROD ASSY, SWING",1,1,,1,1,,,,,,,,,,,,
20,3,,933125-22500,,"BUSH 40X50, PIN",1,1,,1,1,,,,,,,,,,,,
21,2,,933124-01300,,"PISTON 90 (C)",1,1,,1,1,,,,,,,,,,,,
22,2,,933124-89400,,"GLAND 90 6 B,GASKET",1,1,,1,1,,,,,,,,,,,,
23,2,,933124-89500,,"GLAND 90 12 B,GASKET",1,1,,1,1,,,,,,,,,,,,
24,2,,933125-75100,,"WASHER 90",1,1,,1,1,,,,,,,,,,,,
25,2,,933134-08200,,"HEAD 90 40",1,1,,1,1,,,,,,,,,,,,
27,3,,933111-02000,,"BUSH 40 40, ROD",1,1,,1,1,,,,,,,,,,,,
28,1,,933120-82601,,"CYLINDER ASSY,
SWING",1,1,,1,1,,W,2,,*1991.05,,*1991.05,,,,*1991.05,,*1991.05
29,2,,933138-34501,,"SEAL SET
90X40,HEAD",1,1,,1,1,,W,,,*1991.05,,*1991.05,,,,*1991.05,,*1991.05
34,2,,24761-020000,,"NIPPLE
PT1/8,GREASE",1,1,,1,1,,W,,,*1991.05,,*1991.05,,,,*1991.05,,*1991.05
35,2,,172141-72250,,"U-NUT
M27",1,1,,1,1,,W,,,*1991.05,,*1991.05,,,,*1991.05,,*1991.05
36,2,,933111-26600,,"RING 55,
SPRING",1,1,,1,1,,W,,,*1991.05,,*1991.05,,,,*1991.05,,*1991.05
37,2,,933721-82601,,"TUBE W/BUSH,
SWING",1,1,,1,1,,W,,,*1991.05,,*1991.05,,,,*1991.05,,*1991.05
39,3,,933125-22500,,"BUSH 40X50,
PIN",1,1,,1,1,,W,,,*1991.05,,*1991.05,,,,*1991.05,,*1991.05
40,2,,933722-49200,,"ROD ASSY,
SWING",1,1,,1,1,,W,,,*1991.05,,*1991.05,,,,*1991.05,,*1991.05
42,3,,933125-22500,,"BUSH 40X50,
PIN",1,1,,1,1,,W,,,*1991.05,,*1991.05,,,,*1991.05,,*1991.05
43,2,,933124-01300,,"PISTON 90
(C)",1,1,,1,1,,W,,,*1991.05,,*1991.05,,,,*1991.05,,*1991.05
44,2,,933124-89400,,"GLAND 90 6
B,GASKET",1,1,,1,1,,W,,,*1991.05,,*1991.05,,,,*1991.05,,*1991.05
45,2,,933124-89500,,"GLAND 90 12
B,GASKET",1,1,,1,1,,W,,,*1991.05,,*1991.05,,,,*1991.05,,*1991.05
46,2,,172151-72870,,"LOCK WASHER
90",1,1,,1,1,,W,,,*1991.05,,*1991.05,,,,*1991.05,,*1991.05
47,2,,172124-72420,,"HEAD 90X40
COMPL.",1,1,,1,1,,W,,,*1991.05,,*1991.05,,,,*1991.05,,*1991.05
49,3,,933135-14600,,"BUSH 40 30,
ROD",1,1,,1,1,,W,,,*1991.05,,*1991.05,,,,*1991.05,,*1991.05
50,3,,933127-15100,,"PACKING 907012,
ODI",2,2,,2,2,,W,,,*1991.05,,*1991.05,,,,*1991.05,,*1991.05

Fig. 68 スイングシリンダ SWING CYLINDER

SPEC. CODE
D72124-72100

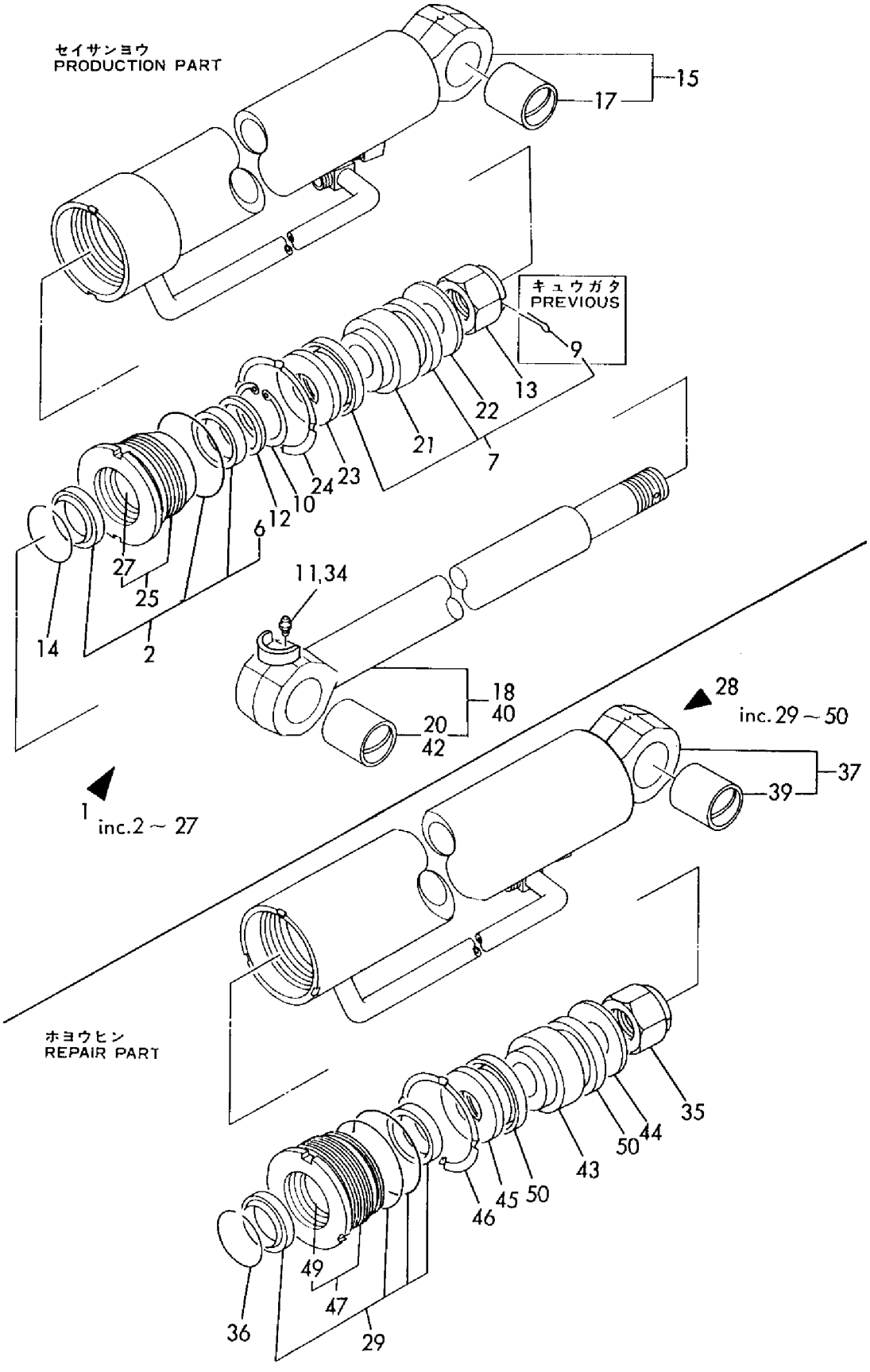

1,1,,933120-83400,,"CYLINDER ASSY, SWING",1,1,,1,1,,,1,,,,,,,,,,
1-1,1,,933120-83401,,"CYLINDER ASSY,
SWING",1,1,,1,1,,R,1,,M20501,,M20501,,,,M20501,,M20501
1-2,1,,933120-83402,,"CYLINDER ASSY,
SWING",1,1,,1,1,,R,1,,M20544,,M20544,,,,M20507,,M20507
2-1,2,,933138-40400,,"SEAL SET, HEAD",1,1,,1,1,,,2,,,,,,,,,,
8,3,,22417-500500,,"COTTER PIN
5.0X50",1,1,,1,1,,Z,,,*1990.07,,*1990.07,,,,*1990.07,,*1990.07
9-1,2,,933138-75600,,"SEAL SET, PISTON",1,1,,1,1,,,2,,,,,,,,,,
9-2,2,,172122-72150,,"SEAL SET, PISTON
90",1,1,,1,1,,S,,,M20501,,M20501,,,,M20501,,M20501
9-3,2,,772122-72150,,"SEAL SET, PISTON
90",1,1,,1,1,,S,,,M20559,,M20559,,,,M20559,,M20559
9-4,2,,172122-72151,,"SEAL SET, PISTON
90",1,1,,1,1,,S,,,*1987.08,,*1987.08,,,,*1987.08,,*1987.08
15,3,,22417-500500,,"COTTER PIN
5.0X50",1,1,,1,1,,Z,,,*1990.07,,*1990.07,,,,*1990.07,,*1990.07
16,2,,22242-000220,,"CIRCLIP 22",1,1,,1,1,,,,,,,,,,,,,,
16-1,2,,172142-72810,,"CIRCLIP
22",1,1,,1,1,,S,,,M20674,,M20674,,,,M20526,,M20526
17,2,,24761-050000,,"NIPPLE C,GREASE",1,1,,1,1,,,,,,,,,,,,,,
18,2,,933111-20400,,"CASTLE NUT M27",1,1,,1,1,,,,,,,,,,,,,,
18-1,2,,172141-72250,,"U-NUT
M27",1,1,,1,1,,S,,,*1990.07,,*1990.07,,,,*1990.07,,*1990.07
19,2,,933111-26600,,"RING 55, SPRING",1,1,,1,1,,,,,,,,,,,,,,
20,2,,933721-83400,,"TUBE ASSY, SWING",1,1,,1,1,,,,,,,,,,,,,,
20-1,2,,933721-83401,,"TUBE ASSY,
SWING",1,1,,1,1,,S,,,M20501,,M20501,,,,M20501,,M20501
22,3,,933125-22500,,"BUSH 40X50, PIN",1,1,,1,1,,,,,,,,,,,,,,
23,2,,933722-49900,,"ROD ASSY, SWING",1,1,,1,1,,,,,,,,,,,,,,
23-1,2,,933722-49901,,"ROD W/BUSH,
SWING",1,1,,1,1,,S,,,M20674,,M20674,,,,M20526,,M20526
25,3,,933125-22500,,"BUSH 40X50, PIN",1,1,,1,1,,,,,,,,,,,,,,
26,2,,933124-01500,,"PISTON 90 E",1,1,,1,1,,,,,,,,,,,,,,
26-1,2,,172122-72120,,"PISTON 90
I",1,1,,1,1,,S,,,M20501,,M20501,,,,M20501,,M20501
26-2,2,,172122-72121,,"PISTON 90
I",1,1,,1,1,,S,,,M20529,,M20529,,,,M20506,,M20506
26-3,2,,172122-72122,,"PISTON 90
(I)",1,1,,1,1,,S,,,M20573,,M20573,,,,M20512,,M20512
27,2,,933124-89400,,"GLAND 90 6
B,GASKET",2,2,,2,2,,Z,,,M20529,,M20529,,,,M20506,,M20506
28,2,,172122-72460,,"GLAND 90 5,
GASKET",1,1,,1,1,,W,,,M20529,,M20529,,,,M20506,,M20506
28-1,2,,172122-72461,,"GLAND 90 8
A,GASKET",1,1,,1,1,,S,,,M20573,,M20573,,,,M20512,,M20512
29,2,,933125-75100,,"WASHER 90",1,1,,1,1,,,,,,,,,,,,,,
30,2,,933134-08700,,"HEAD 9040 B W/BUSH",1,1,,1,1,,,,,,,,,,,,,,
30-1,2,,933134-08701,,"HEAD 9040 B
W/BUSH",1,1,,1,1,,S,,,M20529,,M20529,,,,M20529,,M20529
32,3,,933111-02000,,"BUSH 40 40, ROD",1,1,,1,1,,,,,,,,,,,,,,
33,2,,933127-20000,,"CUSHION PLUNGER 35 B",1,1,,1,1,,,,,,,,,,,,,,
33-1,2,,172137-72710,,"COLLAR 40B,
CUSHION",1,1,,1,1,,S,,,M20529,,M20529,,,,M20529,,M20529
34,2,,933127-23000,,"CUSHION PLUNGER 48 B",1,1,,1,1,,,,,,,,,,,,,,
34-1,2,,933127-23001,,"CUSHION PLUNGER 44
C",1,1,,1,1,,S,,,M20529,,M20529,,,,M20529,,M20529
35,2,,172137-72720,,"COLLAR 40A,
CUSHION",1,1,,1,1,,W,,,M20529,,M20529,,,,M20529,,M20529
36,2,,172137-72730,,"RING 44B,
CUSHION",1,1,,1,1,,W,,,M20529,,M20529,,,,M20529,,M20529
37,2,,172135-72800,,"RING 40 B,
CUSHION",1,1,,1,1,,W,,,M20529,,M20529,,,,M20529,,M20529

38,2,,22252-000561,,"CIRCLIP
56",1,1,,1,1,,W,,,M20529,,M20529,,,,M20529,,M20529
39,1,,172132-72510,,"STAY, CYL.COVER",1,1,,1,1,,,,,,,,,,,,
40,1,,172132-72521,,"COVER, SWING",1,1,,1,1,,,,,,,,,,,,
41,1,,22157-100000,,"WASHER 10",2,2,,2,2,,,,,,,,,,,,
42,1,,26013-080162,,"BOLT W/WASHER M8X16",2,2,,2,2,,,,,,,,,,,,
43,1,,26013-100202,,"BOLT W/WASHER M10X20",2,2,,2,2,,,,,,,,,,,,
44,1,,933120-83403,,"CYLINDER ASSY,
SWING",1,1,,1,1,,W,3,,*1991.05,,*1991.05,,,,*1991.05,,*1991.05
45,2,,172151-71860,,"SEAL SET,
HEAD",1,1,,1,1,,W,,,*1991.05,,*1991.05,,,,*1991.05,,*1991.05
52,2,,172122-72152,,"SEAL SET 90,
PISTON",1,1,,1,1,,W,,,*1991.05,,*1991.05,,,,*1991.05,,*1991.05
57,2,,172142-72810,,"CIRCLIP
22",1,1,,1,1,,W,,,*1991.05,,*1991.05,,,,*1991.05,,*1991.05
58,2,,24761-050000,,"NIPPLE
C,GREASE",1,1,,1,1,,W,,,*1991.05,,*1991.05,,,,*1991.05,,*1991.05
59,2,,172141-72250,,"U-NUT
M27",1,1,,1,1,,W,,,*1991.05,,*1991.05,,,,*1991.05,,*1991.05
60,2,,933111-26600,,"RING 55,
SPRING",1,1,,1,1,,W,,,*1991.05,,*1991.05,,,,*1991.05,,*1991.05
61,2,,933721-83402,,"TUBE W/BUSH,
SWING",1,1,,1,1,,W,,,*1991.05,,*1991.05,,,,*1991.05,,*1991.05
63,3,,933125-22500,,"BUSH 40X50,
PIN",1,1,,1,1,,W,,,*1991.05,,*1991.05,,,,*1991.05,,*1991.05
64,2,,933722-49901,,"ROD W/BUSH,
SWING",1,1,,1,1,,W,,,*1991.05,,*1991.05,,,,*1991.05,,*1991.05
66,3,,933125-22500,,"BUSH 40X50,
PIN",1,1,,1,1,,W,,,*1991.05,,*1991.05,,,,*1991.05,,*1991.05
67,2,,172122-72122,,"PISTON 90
(I)",1,1,,1,1,,W,,,*1991.05,,*1991.05,,,,*1991.05,,*1991.05
68,2,,172122-72461,,"GLAND 90 8
A,GASKET",1,1,,1,1,,W,,,*1991.05,,*1991.05,,,,*1991.05,,*1991.05
69,2,,172151-72870,,"LOCK WASHER
90",1,1,,1,1,,W,,,*1991.05,,*1991.05,,,,*1991.05,,*1991.05
70,2,,172151-72840,,"HEAD 90
50",1,1,,1,1,,W,,,*1991.05,,*1991.05,,,,*1991.05,,*1991.05
72,3,,933135-14600,,"BUSH 40 30,
ROD",1,1,,1,1,,W,,,*1991.05,,*1991.05,,,,*1991.05,,*1991.05
73,2,,172137-72710,,"COLLAR 40B,
CUSHION",1,1,,1,1,,W,,,*1991.05,,*1991.05,,,,*1991.05,,*1991.05
74,2,,933127-23001,,"CUSHION PLUNGER 44
C",1,1,,1,1,,W,,,*1991.05,,*1991.05,,,,*1991.05,,*1991.05
75,2,,172137-72720,,"COLLAR 40A,
CUSHION",1,1,,1,1,,W,,,*1991.05,,*1991.05,,,,*1991.05,,*1991.05
76,2,,172137-72730,,"RING 44B,
CUSHION",1,1,,1,1,,W,,,*1991.05,,*1991.05,,,,*1991.05,,*1991.05
77,2,,172135-72800,,"RING 40 B,
CUSHION",1,1,,1,1,,W,,,*1991.05,,*1991.05,,,,*1991.05,,*1991.05
78,2,,22252-000561,,"CIRCLIP
56",1,1,,1,1,,W,,,*1991.05,,*1991.05,,,,*1991.05,,*1991.05
79,1,,172132-72510,,"STAY,
CYL.COVER",1,1,,1,1,,W,,,*1991.05,,*1991.05,,,,*1991.05,,*1991.05
80,1,,172132-72521,,"COVER,
SWING",1,1,,1,1,,W,,,*1991.05,,*1991.05,,,,*1991.05,,*1991.05
81,1,,22157-100000,,"WASHER
10",2,2,,2,2,,W,,,*1991.05,,*1991.05,,,,*1991.05,,*1991.05
82,1,,26013-080162,,"BOLT W/WASHER
M8X16",2,2,,2,2,,W,,,*1991.05,,*1991.05,,,,*1991.05,,*1991.05
83,1,,26013-100202,,"BOLT W/WASHER
M10X20",2,2,,2,2,,W,,,*1991.05,,,,,,*1991.05,,*1991.05

Fig. 69 スイングシリンダ(U.UZ)(コクナイ) SWING CYLINDER (U. UZ) (JAPAN SPEC.)

SPEC. CODE
D72132-72100
D72132-72110

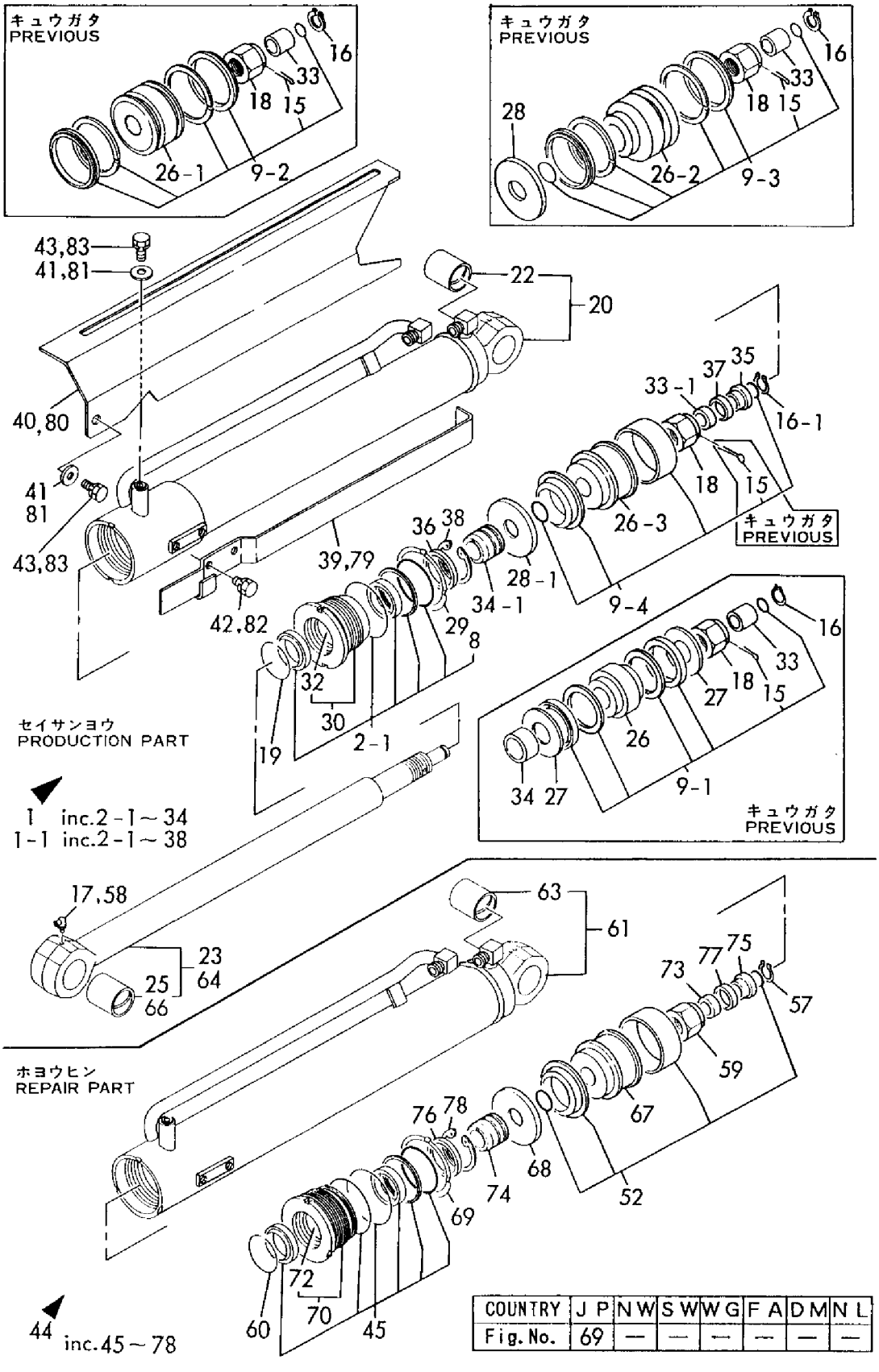

COUNTRY	JP	NW	SW	WG	FA	DM	NL
Fig. No.	69	—	—	—	—	—	—

1,1,,933120-82700,,"CYLINDER ASSY,BLADE",1,1,,1,1,,,1,,,,,,,,,,
2,2,,933138-40200,,"SEAL SET, HEAD",1,1,,1,1,,,,,,,,,,,,
6,3,,22417-500500,,"COTTER PIN
5.0X50",1,1,,1,1,,Z,,,*1990.07,,*1990.07,,,,*1990.07,,*1990.07
7,2,,933138-75300,,"SEAL SET, PISTON",1,1,,1,1,,,,,,,,,,,,
11,3,,22417-500500,,"COTTER PIN
5.0X50",1,1,,1,1,,Z,,,*1991.05,,*1991.05,,,,*1991.05,,*1991.05
12,2,,22252-000700,,"CIRCLIP 70",1,1,,1,1,,,,,,,,,,,,
13,2,,26013-100202,,"BOLT W/WASHER M10X20",2,2,,2,2,,,,,,,,,,,,
14,2,,933721-82700,,"TUBE ASSY, BLADE",1,1,,1,1,,,,,,,,,,,,
14-1,2,,933721-82701,,"TUBE ASSY,
BLADE",1,1,,1,1,,S,,,*1988.09,,*1988.09,,,,*1988.09,,*1988.09
16,3,,933125-30200,,"BUSH 45 60 B, PIN",1,1,,1,1,,,,,,,,,,,,
17,2,,933131-60700,,"JOINT 17.3, COLLET",2,2,,2,2,,,,,,,,,,,,
18,3,,933131-60900,,NUT,2,2,,2,2,,,,,,,,,,,,
19,3,,933131-61000,,SLEEVE,2,2,,2,2,,,,,,,,,,,,
20,3,,933131-61100,,O-RING,2,2,,2,2,,,,,,,,,,,,
21,3,,933131-61200,,"RING, BUCK UP",2,2,,2,2,,,,,,,,,,,,
22,3,,172116-76210,,"SPACER, COLLET",2,2,,2,2,,,,,,,,,,,,
23,2,,933722-67800,,"ROD ASSY, BLADE",1,1,,1,1,,,,,,,,,,,,
25,3,,933125-30200,,"BUSH 45 60 B, PIN",1,1,,1,1,,,,,,,,,,,,
26,2,,933124-01101,,"PISTON 90",1,1,,1,1,,,,,,,,,,,,
27,2,,933124-30500,,"GLAND 71 55, GASKET",1,1,,1,1,,,,,,,,,,,,
28,2,,933124-89200,,"GLAND 90 6, GASKET",1,1,,1,1,,,,,,,,,,,,
29,2,,933124-89300,,"GLAND 90 12, GASKET",1,1,,1,1,,,,,,,,,,,,
30,2,,933125-75100,,"WASHER 90",1,1,,1,1,,,,,,,,,,,,
31,2,,933126-00500,,"RING 72, SPRING",1,1,,1,1,,,,,,,,,,,,
32,2,,933126-25200,,"CASTLE NUT M39",1,1,,1,1,,,,,,,,,,,,
33,2,,933134-20001,,"HEAD 90 55",1,1,,1,1,,,,,,,,,,,,
35,3,,933135-20500,,"BUSH 55 40, ROD",1,1,,1,1,,,,,,,,,,,,
36,2,,933136-41100,,"PIPE (H), BLADE",1,1,,1,1,,,,,,,,,,,,
36-1,2,,933136-41102,,"PIPING H
COMP.,BLADE",1,1,,1,1,,S,,,*1988.09,,*1988.09,,,,*1988.09,,*1988.09
37,2,,933136-41200,,"PIPE (R), BLADE",1,1,,1,1,,,,,,,,,,,,
38,1,,933120-82701,,"CYLINDER ASSY,
BLADE",1,1,,1,1,,W,2,,*1991.05,,*1991.05,,,,*1991.05,,*1991.05
39,2,,933138-40201,,"SEAL SET
90X50,HEAD",1,1,,1,1,,W,,,*1991.05,,*1991.05,,,,*1991.05,,*1991.05
44,2,,933138-75300,,"SEAL SET,
PISTON",1,1,,1,1,,W,,,*1991.05,,*1991.05,,,,*1991.05,,*1991.05
48,2,,26013-100202,,"BOLT W/WASHER
M10X20",2,2,,2,2,,W,,,*1991.05,,*1991.05,,,,*1991.05,,*1991.05
49,2,,933721-82702,,"TUBE ASSY,
BLADE",1,1,,1,1,,W,,,*1991.05,,*1991.05,,,,*1991.05,,*1991.05
51,3,,933125-30200,,"BUSH 45 60 B,
PIN",1,1,,1,1,,W,,,*1991.05,,*1991.05,,,,*1991.05,,*1991.05
52,2,,933722-67800,,"ROD ASSY,
BLADE",1,1,,1,1,,W,,,*1991.05,,*1991.05,,,,*1991.05,,*1991.05
54,3,,933125-30200,,"BUSH 45 60 B,
PIN",1,1,,1,1,,W,,,*1991.05,,*1991.05,,,,*1991.05,,*1991.05
55,2,,933124-01101,,"PISTON
90",1,1,,1,1,,W,,,*1991.05,,*1991.05,,,,*1991.05,,*1991.05
56,2,,933124-89200,,"GLAND 90 6,
GASKET",1,1,,1,1,,W,,,*1991.05,,*1991.05,,,,*1991.05,,*1991.05
57,2,,933124-89300,,"GLAND 90 12,
GASKET",1,1,,1,1,,W,,,*1991.05,,*1991.05,,,,*1991.05,,*1991.05
58,2,,172151-72870,,"LOCK WASHER
90",1,1,,1,1,,W,,,*1991.05,,*1991.05,,,,*1991.05,,*1991.05
59,2,,933126-00500,,"RING 72,
SPRING",1,1,,1,1,,W,,,*1991.05,,*1991.05,,,,*1991.05,,*1991.05
60,2,,172151-72270,,"U-NUT
M39",1,1,,1,1,,W,,,*1991.05,,*1991.05,,,,*1991.05,,*1991.05

```
61,2,,172124-72200,,"HEAD 90 55
W/BUSH",1,1,,1,1,,W,,,*1991.05,,*1991.05,,,,*1991.05,,*1991.05
63,3,,172151-72240,,"BUSH 55 35,
ROD",1,1,,1,1,,W,,,*1991.05,,*1991.05,,,,*1991.05,,*1991.05
64,2,,933136-41103,,"PIPING H
COMP.,BLADE",1,1,,1,1,,W,,,*1991.05,,*1991.05,,,,*1991.05,,*1991.05
65,2,,933136-41202,,"PIPING R
COMP.,BLADE",1,1,,1,1,,W,,,*1991.05,,*1991.05,,,,*1991.05,,*1991.05
66,2,,22137-100000,,"WASHER
10,POLISHED",2,2,,2,2,,W,,,*1991.05,,*1991.05,,,,*1991.05,,*1991.05
```

Fig. 70 ブレードシリンダ BLADE CYLINDER

SPEC. CODE
D72124-72100
D72132-72100
D72132-72110

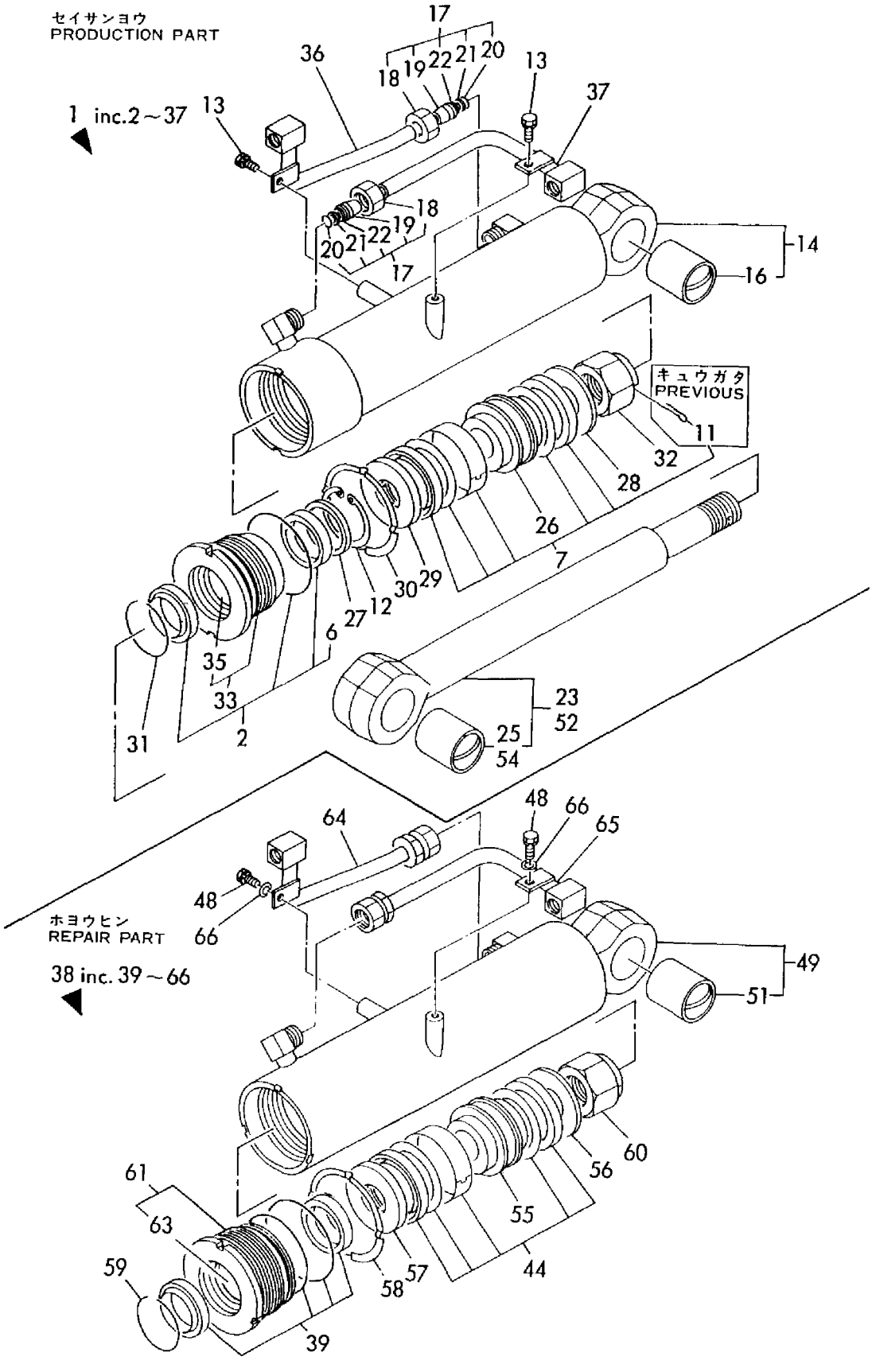

```
1,1,,172124-73300,,"MOTOR ASSY,TURNING",1,1,,1,1,,,,,,,,,,,,
2,2,,172124-70700,,"VALVE, BRAKE",1,1,,1,1,,,,,,,,,,,,
3,3,,172122-70460,,"SPRING SEAT",2,2,,2,2,,,,,,,,,,,,
4,3,,172122-70470,,SPRING,2,2,,2,2,,,,,,,,,,,,
5,3,,172122-70710,,SPRING,2,2,,2,2,,,,,,,,,,,,
6,3,,172124-70710,,"VALVE, RELEAF",2,2,,2,2,,,,,,,,,,,,
7,3,,172122-70720,,PLUG,2,2,,2,2,,,,,,,,,,,,
8,3,,172122-70740,,CAP,2,2,,2,2,,,,,,,,,,,,
9,3,,172122-70750,,"VALVE SEATSET",1,1,,1,1,,,,,,,,,,,,
10,2,,172112-74351,,"PISTON MOTOR",1,1,,1,1,,,,,,,,,,,,
11,3,,172122-70610,,"BOLT, SOCKET",3,3,,3,3,,,,,,,,,,,,
12,3,,172122-70620,,"SNAP RING",1,1,,1,1,,,,,,,,,,,,
13,3,,172122-70630,,"SNAP RING",1,1,,1,1,,,,,,,,,,,,
14,3,,172122-70640,,"SNAP RING",1,1,,1,1,,,,,,,,,,,,
15,3,,172122-70650,,"PARALLEL PIN",1,1,,1,1,,,,,,,,,,,,
16,3,,172122-70660,,SPRING,1,1,,1,1,,,,,,,,,,,,
17,3,,172122-70670,,WASHER,2,2,,2,2,,,,,,,,,,,,
18,3,,172122-70680,,"SEAL SET, MOTOR",1,1,,1,1,,,,,,,,,,,,
19,3,,23871-030000,,"PLUG PT3/8,SCREW",2,2,,2,2,,,,,,,,,,,,
```

Fig. 71 センカイモータ TURNING MOTOR

SPEC. CODE
D72124-73300

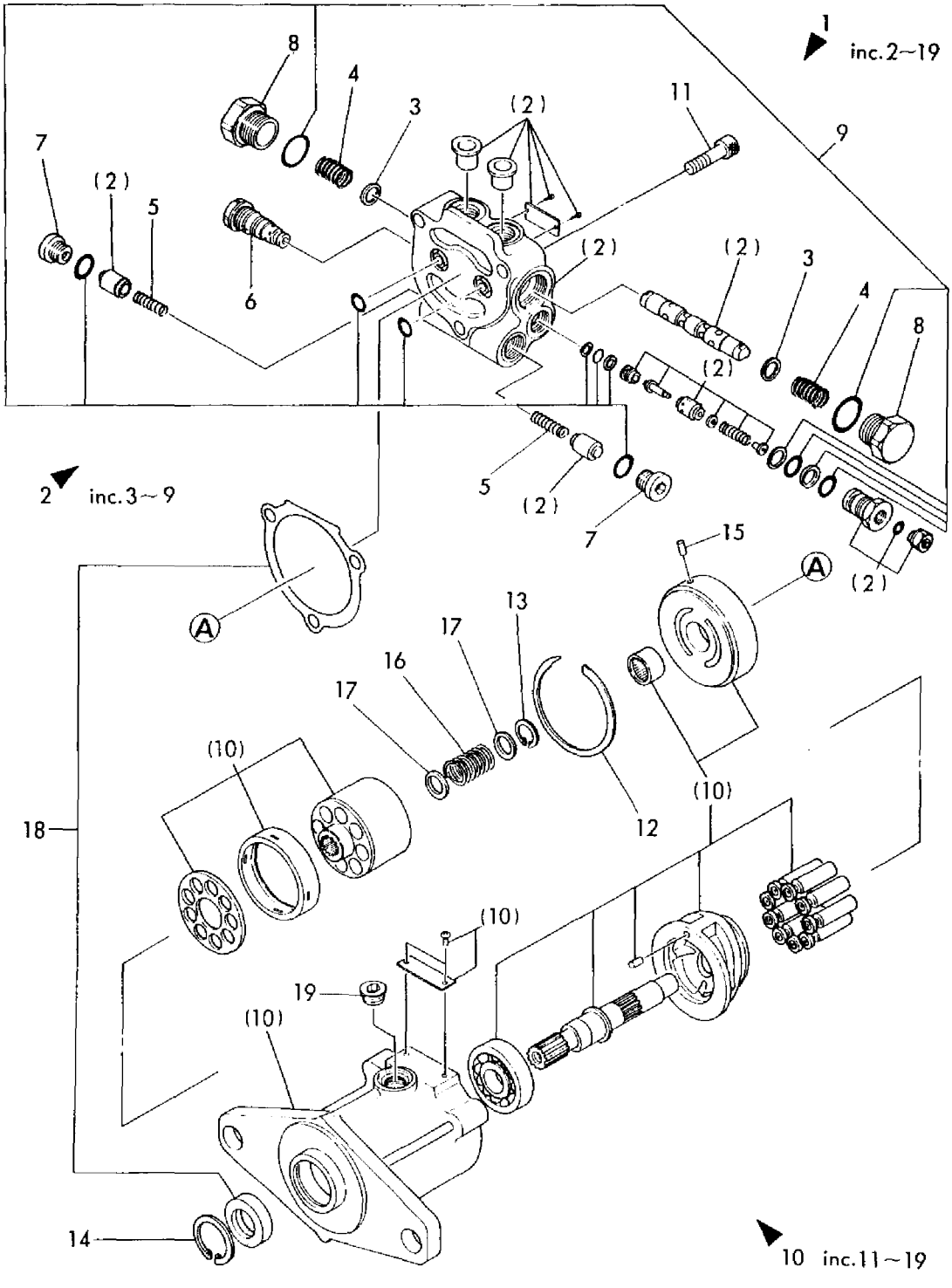

1,1,,172124-73310,,"MOTOR ASSY, DRIVING",2,2,,2,2,,,,,,,,,,,,
2,2,,172124-70010,,BEARING,2,2,,2,2,,,,,,,,,,,,
3,2,,172124-70020,,PIN,2,2,,2,2,,,,,,,,,,,,
4,2,,172124-70030,,BALL,198,198,,198,198,,,,,,,,,,,,
5,2,,172122-73430,,PLUG,2,2,,2,2,,,,,,,,,,,,
6,2,,172124-70050,,"RING NUT",2,2,,2,2,,,,,,,,,,,,
7,2,,172124-70060,,HOLDER,2,2,,2,2,,,,,,,,,,,,
8,2,,172124-70070,,"PLANETRY GEAR(A)",6,6,,6,6,,,,,,,,,,,,
9,2,,172124-70080,,SHAFT(A),6,6,,6,6,,,,,,,,,,,,
10,2,,172124-70090,,"GAUGE & ROLLER",6,6,,6,6,,,,,,,,,,,,
11,2,,172124-70100,,"SPRING PIN",6,6,,6,6,,,,,,,,,,,,
12,2,,172124-70110,,"GEAR, DRIVE",2,2,,2,2,,,,,,,,,,,,
13,2,,172124-70120,,BALL,2,2,,2,2,,,,,,,,,,,,
14,2,,172124-70130,,COLLAR,2,2,,2,2,,,,,,,,,,,,
15,2,,172124-70140,,"PLANETRY GEAR(B)",6,6,,6,6,,,,,,,,,,,,
16,2,,172124-70150,,COLLAR,6,6,,6,6,,,,,,,,,,,,
17,2,,172124-70160,,SHAFT(B),6,6,,6,6,,,,,,,,,,,,
18,2,,172124-70170,,"GAUGE & ROLLER",12,12,,12,12,,,,,,,,,,,,
19,2,,172124-70180,,COLLAR,12,12,,12,12,,,,,,,,,,,,
20,2,,172124-70190,,GEAR,2,2,,2,2,,,,,,,,,,,,
21,2,,172124-70200,,"SPRING PIN",6,6,,6,6,,,,,,,,,,,,
22,2,,172124-70210,,COLLAR,2,2,,2,2,,,1,,,,,,,,,
23,2,,172124-70220,,COLLAR,2,2,,2,2,,,1,,,,,,,,,
24,2,,172124-70230,,COLLAR,2,2,,2,2,,,1,,,,,,,,,
25,2,,172124-70240,,"SNAP RING",2,2,,2,2,,,,,,,,,,,,
26,2,,172124-70250,,COVER,2,2,,2,2,,,,,,,,,,,,
27,2,,172124-70260,,CABLE,2,2,,2,2,,,,,,,,,,,,
28,2,,172124-70270,,COLLAR,2,2,,2,2,,,,,,,,,,,,
29,2,,172124-70280,,COLLAR,6,6,,6,6,,,,,,,,,,,,
30,2,,172124-70290,,"SNAP RING",2,2,,2,2,,,,,,,,,,,,
31,2,,172124-70300,,PLATE,2,2,,2,2,,,,,,,,,,,,
33,2,,172122-70370,,"PLATE, RETAINER",2,2,,2,2,,,,,,,,,,,,
34,2,,172122-70360,,COLLAER,2,2,,2,2,,,,,,,,,,,,
36,2,,172123-70030,,"PLATE, VALVE",2,2,,2,2,,,,,,,,,,,,
37,2,,172122-70340,,PIN,6,6,,6,6,,,,,,,,,,,,
38,2,,172122-70300,,COLLAR,2,2,,2,2,,,,,,,,,,,,
39,2,,172122-70320,,COLLAR,2,2,,2,2,,,,,,,,,,,,
40,2,,172122-70310,,SPRING,2,2,,2,2,,,,,,,,,,,,
41,2,,172122-70250,,SHAFT,2,2,,2,2,,,,,,,,,,,,
42,2,,172122-70260,,BEARING,2,2,,2,2,,,,,,,,,,,,
43,2,,172122-70400,,BEARING,2,2,,2,2,,,,,,,,,,,,
44,2,,172123-70020,,BALL,4,4,,4,4,,,,,,,,,,,,
45,2,,172122-70350,,BALL,2,2,,2,2,,,,,,,,,,,,
46,2,,172122-70330,,"SNAP RING",2,2,,2,2,,,,,,,,,,,,
47,2,,172124-70310,,PLUNGER,2,2,,2,2,,,,,,,,,,,,
48,2,,172122-70520,,PLUG,4,4,,4,4,,,,,,,,,,,,
48-1,2,,172122-70430,,"VALVE,
CHECK",4,4,,4,4,,S,,,M00503,,M00503,,,,M00503,,M00503
49,2,,172122-70440,,SPRING,4,4,,4,4,,,,,,,,,,,,
50,2,,172124-70320,,PLUG,4,4,,4,4,,,,,,,,,,,,
51,2,,172124-70330,,"SPRING SEAT",4,4,,4,4,,,,,,,,,,,,
52,2,,172122-70470,,SPRING,4,4,,4,4,,,,,,,,,,,,
53,2,,172124-70350,,"PUSH ROD",4,4,,4,4,,,,,,,,,,,,
54,2,,172124-70360,,FLANGE,4,4,,4,4,,,,,,,,,,,,
55,2,,172124-70370,,BOLT,16,16,,16,16,,,,,,,,,,,,
56,2,,172124-70380,,ORIFICE,4,4,,4,4,,,,,,,,,,,,
57,2,,172122-70530,,PIN,2,2,,2,2,,,,,,,,,,,,
58,2,,172124-70390,,"BOLT, SOCKET",16,16,,16,16,,,,,,,,,,,,
58-1,2,,172124-70390,,"BOLT,
SOCKET",12,12,,12,12,,K,2,,M00812,,M00812,,,,M00681,,M00681
59,2,,172122-70410,,PIN,4,4,,4,4,,,,,,,,,,,,
60,2,,172124-70400,,PLUG,4,4,,4,4,,,,,,,,,,,,
60-1,2,,172122-73430,,PLUG,4,4,,4,4,,S,,,M00503,,M00503,,,,M00503,,M00503

61,2,,172124-70570,,VALVE,2,2,,2,2,,,,,,,,,,,,
62,3,,172124-70410,,"BODY, VALVE",2,2,,2,2,,,,,,,,,,,,
63,3,,172123-70090,,VALVE,4,4,,4,4,,,,,,,,,,,,
63-1,3,,172123-70091,,VALVE,4,4,,4,4,,S,,,M00503,,M00503,,,,M00503,,M00503
64,3,,172123-70010,,PLATE,4,4,,4,4,,,,,,,,,,,,
64-1,3,,172123-70101,,SPRING,4,4,,4,4,,S,,,M00503,,M00503,,,,M00503,,M00503
65,3,,172124-70420,,PLUG,4,4,,4,4,,,,,,,,,,,,
66,3,,172123-70121,,PLUG,2,2,,2,2,,,,,,,,,,,,
67,2,,172122-70540,,"BOLT, SOCKET",6,6,,6,6,,,,,,,,,,,,
67-1,2,,172124-70600,,"BOLT,
SOCKET",6,6,,6,6,,S,,,M00503,,M00503,,,,M00503,,M00503
68,2,,172124-70440,,"SEAL SET,DRIVE MOTOR",2,2,,2,2,,,,,,,,,,,,
69,2,,172124-70580,,"BOLT, SOCKET
HEAD",4,4,,4,4,,W,2,,M00812,,M00812,,,,M00681,,M00681
70,2,,172123-70130,,"PISTON
S/A",4,4,,4,4,,W,,,*1988.08,,*1988.08,,,,*1988.08,,*1988.08

Fig. 72 ソウコウモータ TRAVEL MOTOR

SPEC. CODE
D72124-73310

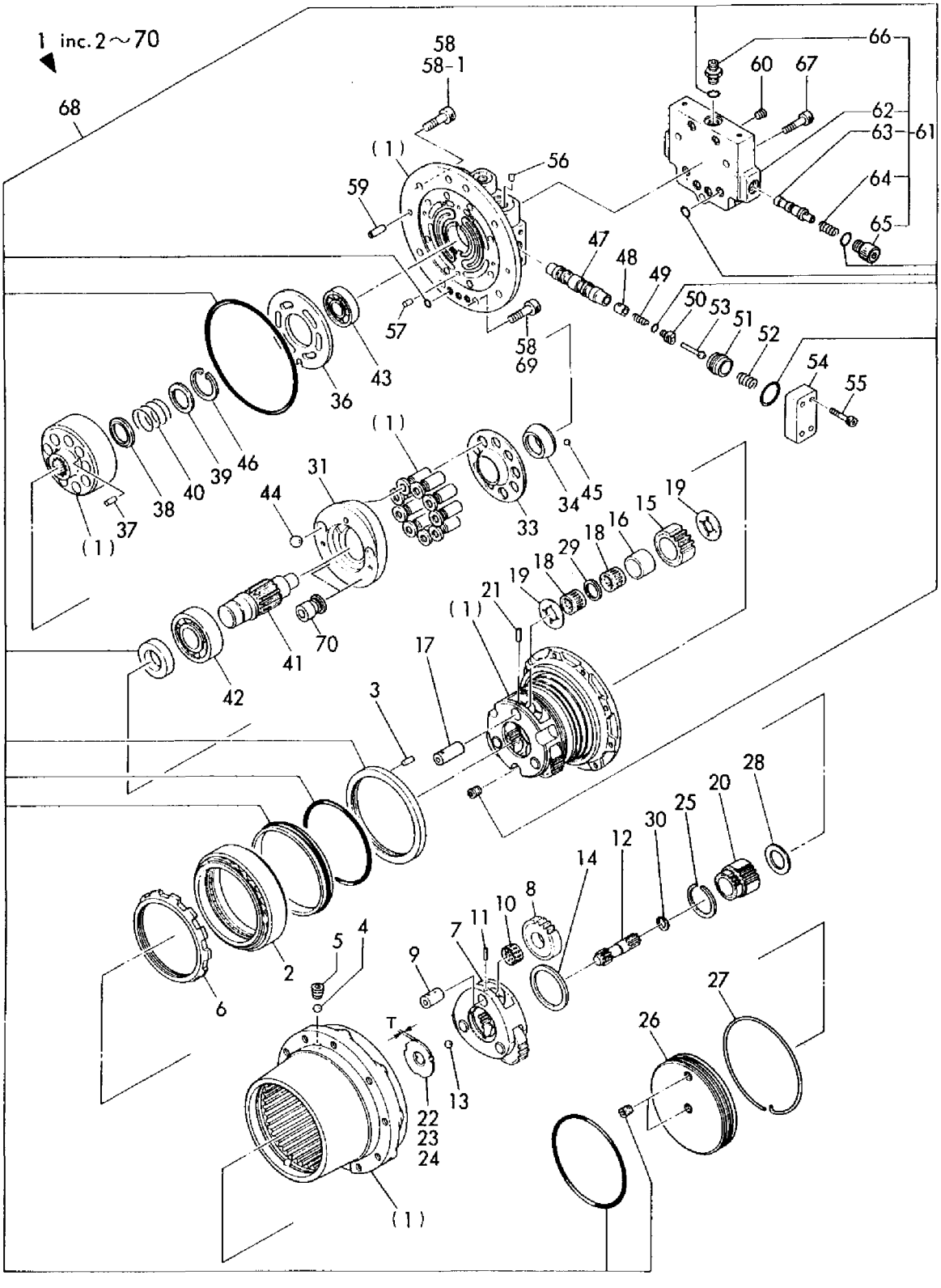

```
1,1,,172124-73800,,"JOINT ASSY, SWIVEL",1,1,,1,1,,,,,,,,,,,,
2,2,,172124-73810,,"SHAFT, SWIVEL",1,1,,1,1,,,,,,,,,,,,
3,2,,172124-73830,,"HUB, SWIVEL JOINT",1,1,,1,1,,,,,,,,,,,,
4,2,,172123-73850,,"COVER, SWIVEL END",1,1,,1,1,,,,,,,,,,,,
5,2,,172122-73860,,"SPACER, SWIVEL",1,1,,1,1,,,,,,,,,,,,
6,2,,172122-73870,,"THRUST WASHER",1,1,,1,1,,,,,,,,,,,,
7,2,,172123-73880,,"SEAL SET",1,1,,1,1,,,,,,,,,,,,
8,3,,172122-73890,,"SEAL, SWIVEL",9,9,,9,9,,,,,,,,,,,,
9,3,,24311-000800,,"O-RING 1A P-80.0",1,1,,1,1,,,,,,,,,,,,
10,3,,24311-001000,,"O-RING 1A P-100.0",1,1,,1,1,,,,,,,,,,,,
11,3,,24321-000950,,"O-RING 1A G-95.0",1,1,,1,1,,,,,,,,,,,,
12,2,,22242-000700,,"CIRCLIP   70",1,1,,1,1,,,,,,,,,,,,
13,2,,23871-020000,,"PLUG PT1/4,SCREW",4,4,,4,4,,,,,,,,,,,,
14,2,,23871-030000,,"PLUG PT3/8,SCREW",4,4,,4,4,,,,,,,,,,,,
15,2,,26013-100252,,"BOLT W/WASHER M10X25",4,4,,4,4,,,,,,,,,,,,,
16,1,,172122-73910,,"CIRCLIP, SWIVEL",1,1,,1,1,,,,,,,,,,,,
17,1,,22217-140000,,"SPRING WASHER 14",2,2,,2,2,,,,,,,,,,,,
18,1,,22312-080220,,"PARALLEL PIN 8X22",2,2,,2,2,,,,,,,,,,,,
19,1,,26013-120252,,"BOLT M12X 25",4,4,,4,4,,,,,,,,,,,,
20,1,,26116-140402,,"BOLT M14X 40 PLATED",2,2,,2,2,,,,,,,,,,,,
```

Fig. 73 スイベルジョイント SWIVEL JOINT

SPEC. CODE
D72124-73800

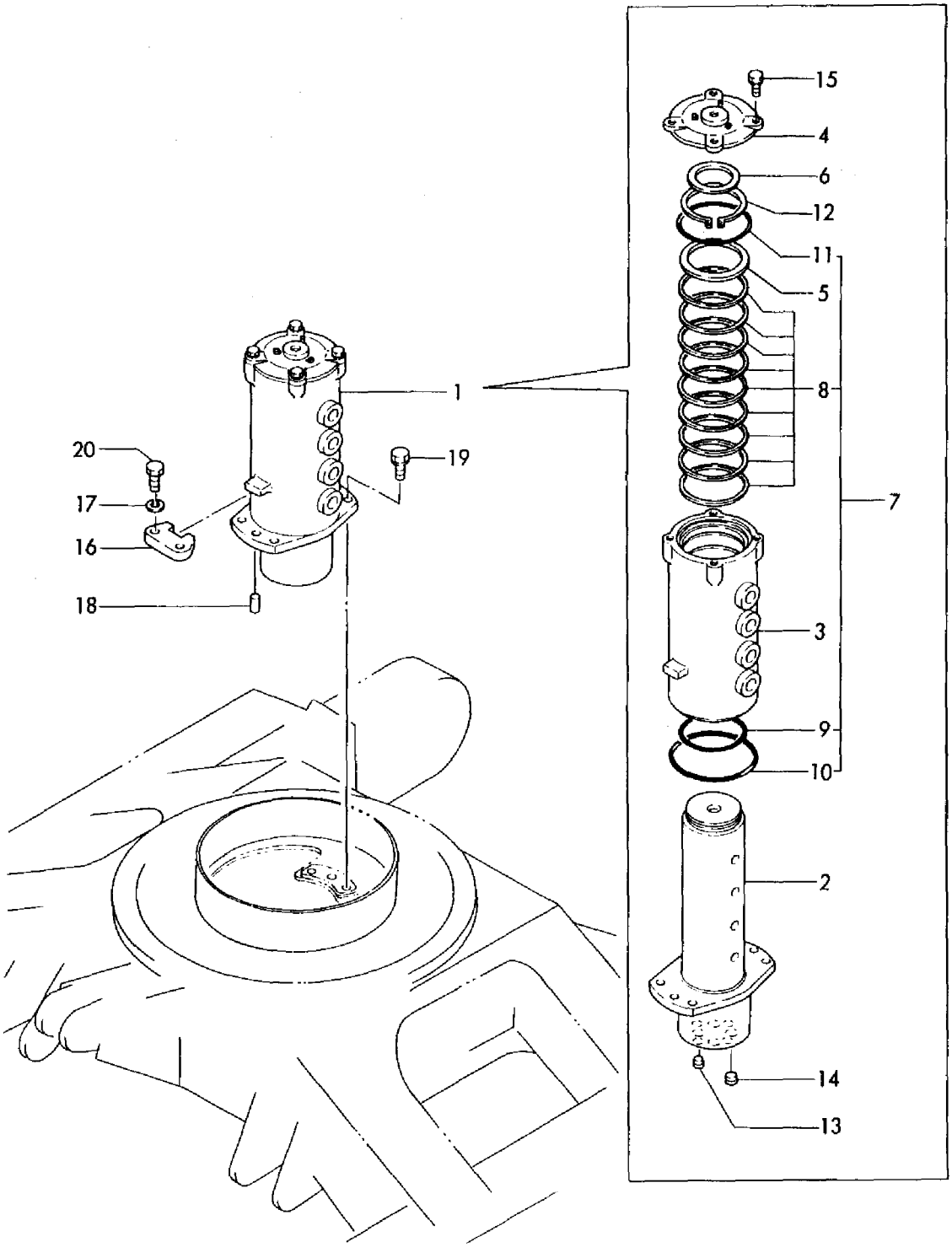

```
1,1,,772124-81750,,"BUCKET 400 ASSY",,,1,,,1,,,,,,,,,,,
1-1,1,,772124-81751,,"BUCKET ASSY (400)",,,1,,,1,S,,,,,,,*1989.03,,,,,,*1989.03
3,3,,172112-91180,,"SIDE CUTTER, BUCKET",,,2,,,2,,,,,,,,,,,
4,2,,772112-91300,,"TEETH ASSY",,,3,,,3,,,,,,,,,,,
4-1,2,,772112-91302,,"TEETH ASSY",,,3,,,3,R,,,,,,,*1988.07,,,,,,*1988.07
4-2,2,,772112-91303,,"TEETH ASSY",,,3,,,3,S,2,,,,,,*1989.03,,,,,,*1989.03
5,3,,172112-91301,,TEETH,,,3,,,3,,,,,,,,,,,
5-1,3,,172112-91302,,TEETH,,,3,,,3,R,,,,,,,*1988.07,,,,,,*1988.07
5-2,3,,172112-91303,,TEETH,,,3,,,3,S,,,,,,,*1989.03,,,,,,*1989.03
6,3,,22217-160000,,"SPRING WASHER 16",,,6,,,6,Z,,,,,,,*1989.03,,,,,,*1989.03
7,3,,26716-160002,,"NUT M16",,,6,,,6,,,,,,,,,,,
7-1,3,,172137-86780,,NUT,,,6,,,6,S,,,,,,,*1989.03,,,,,,*1989.03
8,3,,933110-82500,,"BOLT M16X45X18",,,3,,,3,,,,,,,,,,,
8-1,3,,172151-81400,,BOLT,,,6,,,6,S,,,,,,,*1989.03,,,,,,*1989.03
9,3,,933110-82600,,"BOLT M16X55X18",,,3,,,3,Z,,,,,,,*1989.03,,,,,,*1989.03
10,3,,172112-91310,,"SHIM T=0.5, TEETH",,,3,,,3,Z,1,,,,,,*1989.03,,,,,,*1989.03
11,3,,172112-91320,,"SHIM T=1.0, TEETH",,,3,,,3,Z,1,,,,,,*1989.03,,,,,,*1989.03
12,3,,172112-91340,,"SHIM T=0.3, TEETH",,,3,,,3,Z,1,,,,,,*1989.03,,,,,,*1989.03
13,3,,172151-81410,,"SHIM SET, TEETH",,,3,,,3,W,,,,,,,*1989.03,,,,,,*1989.03
14,4,,172151-81420,,"SHIM 0.3,TEETH",,,3,,,3,W,1,,,,,,*1989.03,,,,,,*1989.03
15,4,,172151-81430,,"SHIM 0.5,TEETH",,,3,,,3,W,1,,,,,,*1989.03,,,,,,*1989.03
16,4,,172151-81440,,"SHIM 1.0,TEETH",,,3,,,3,W,1,,,,,,*1989.03,,,,,,*1989.03
17,1,,172112-87101,,"PIN ASSY, BUCKET",,,2,,,2,,,,,,,,,,,
18,1,,172112-87840,,"SHIM 45X1",,,2,,,2,,,,,,,,,,,
18-1,1,,172124-81930,,"SHIM 45X0.8",,,2,,,2,N,,,,,,,*1988.04,,,,,,*1988.04
19,1,,22417-800630,,"COTTER PIN 8.0X63",,,2,,,2,,,,,,,,,,,
20,1,,24761-020000,,"NIPPLE PT1/8,GREASE",,,2,,,2,,,,,,,,,,,
21,1,,172124-81940,,"SHIM 45X1.2",,,2,,,2,W,,,,,,,*1988.04,,,,,,*1988.04
```

Fig. 74 バケット400(アタッチメント) BUCKET400(ATTACHMENT)

SPEC. CODE
D72124-81410

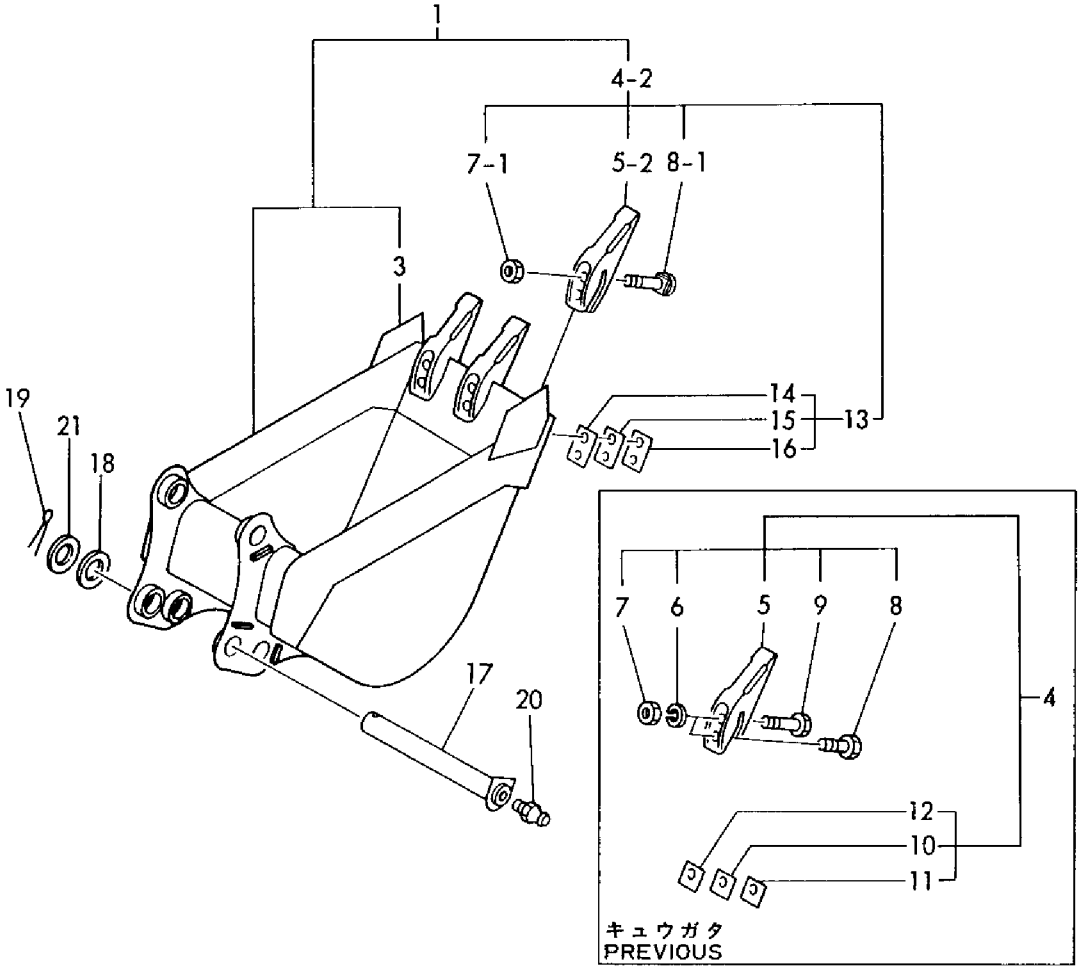

```
1,1,,772124-81840,,"BUCKET 550 ASSY",,,1,,,1,,,,,,,,,,,
1-1,1,,772124-81841,,"BUCKET 550 ASSY",,,1,,,1,S,,,,,,,*1989.03,,,,,,*1989.03
3,3,,172112-91180,,"SIDE CUTTER, BUCKET",,,2,,,2,,,,,,,,,,,
4,2,,772112-91300,,"TEETH ASSY",,,4,,,4,,,,,,,,,,,
4-1,2,,772112-91302,,"TEETH ASSY",,,4,,,4,R,,,,,,,*1988.07,,,,,,*1988.07
4-2,2,,772112-91303,,"TEETH ASSY",,,4,,,4,S,2,,,,,,*1989.03,,,,,,*1989.03
5,3,,172112-91301,,TEETH,,,4,,,4,,,,,,,,,,,
5-1,3,,172112-91302,,TEETH,,,4,,,4,R,,,,,,,*1988.07,,,,,,*1988.07
5-2,3,,172112-91303,,TEETH,,,4,,,4,S,,,,,,,*1989.03,,,,,,*1989.03
6,3,,22217-160000,,"SPRING WASHER 16",,,8,,,8,Z,,,,,,,*1989.03,,,,,,*1989.03
7,3,,26716-160002,,"NUT M16",,,8,,,8,,,,,,,,,,,
7-1,3,,172137-86780,,NUT,,,8,,,8,S,,,,,,,*1989.03,,,,,,*1989.03
8,3,,933110-82500,,"BOLT M16X45X18",,,4,,,4,,,,,,,,,,,
8-1,3,,172151-81400,,BOLT,,,8,,,8,S,,,,,,,*1989.03,,,,,,*1989.03
9,3,,933110-82600,,"BOLT M16X55X18",,,4,,,4,Z,,,,,,,*1989.03,,,,,,*1989.03
10,3,,172112-91310,,"SHIM T=0.5, TEETH",,,4,,,4,Z,1,,,,,,*1989.03,,,,,,*1989.03
11,3,,172112-91320,,"SHIM T=1.0, TEETH",,,4,,,4,Z,1,,,,,,*1989.03,,,,,,*1989.03
12,3,,172112-91340,,"SHIM T=0.3, TEETH",,,4,,,4,Z,1,,,,,,*1989.03,,,,,,*1989.03
13,3,,172151-81410,,"SHIM SET, TEETH",,,4,,,4,W,,,,,,,*1989.03,,,,,,*1989.03
14,4,,172151-81420,,"SHIM 0.3,TEETH",,,4,,,4,W,1,,,,,,*1989.03,,,,,,*1989.03
15,4,,172151-81430,,"SHIM 0.5,TEETH",,,4,,,4,W,1,,,,,,*1989.03,,,,,,*1989.03
16,4,,172151-81440,,"SHIM 1.0,TEETH",,,4,,,4,W,1,,,,,,*1989.03,,,,,,*1989.03
17,1,,172112-87101,,"PIN ASSY, BUCKET",,,2,,,2,,,,,,,,,,,
18,1,,172112-87840,,"SHIM 45X1",,,2,,,2,,,,,,,,,,,
18-1,1,,172124-81930,,"SHIM 45X0.8",,,2,,,2,N,,,,,,,*1988.04,,,,,,*1988.04
19,1,,22417-800630,,"COTTER PIN 8.0X63",,,2,,,2,,,,,,,,,,,
20,1,,24761-020000,,"NIPPLE PT1/8,GREASE",,,2,,,2,,,,,,,,,,,
21,1,,172124-81940,,"SHIM 45X1.2",,,2,,,2,W,,,,,,,*1988.04,,,,,,*1988.04
```

Fig. 75 バケット550(アタッチメント) BUCKET550(ATTACHMENT)

SPEC. CODE
D72124-81420

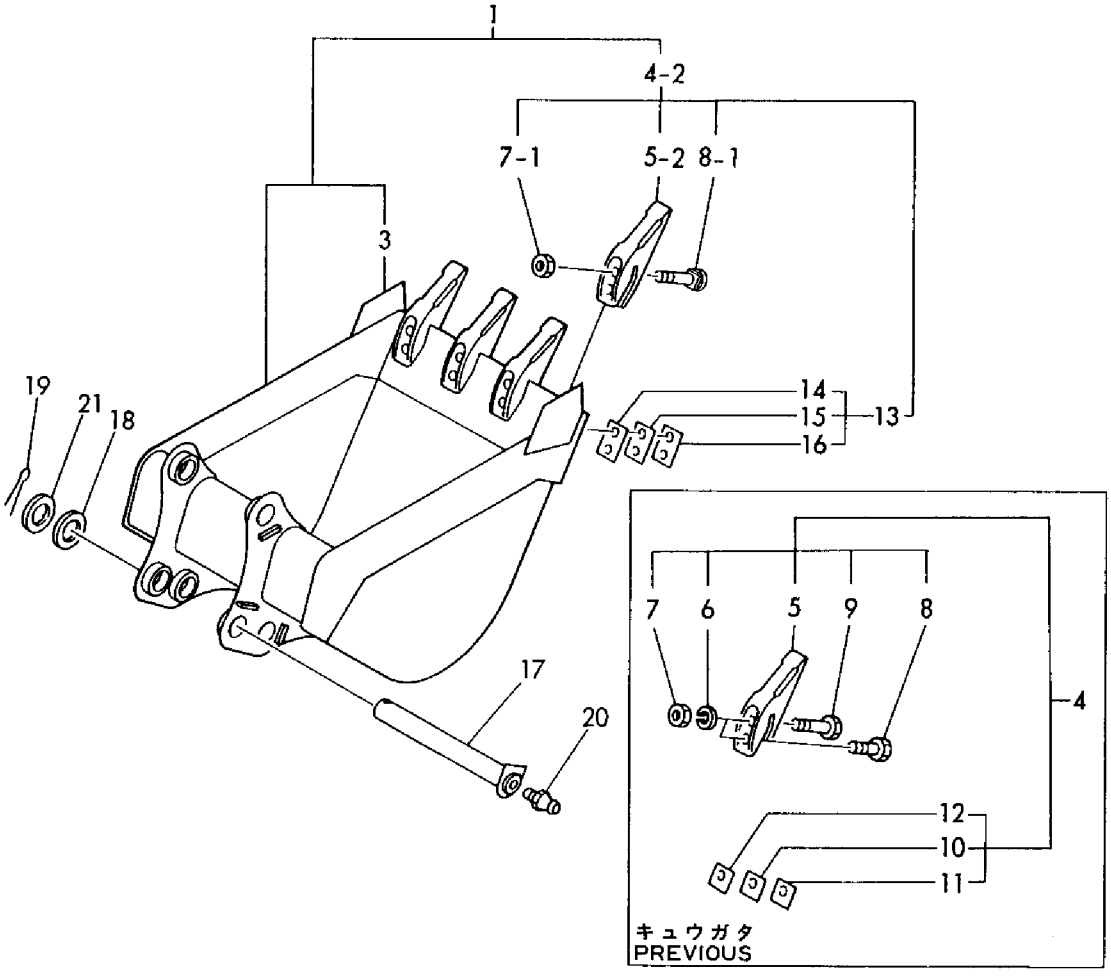

```
1,1,,772124-81870,,"BUCKET 600 ASSY",,,1,,,1,,,,,,,,,,,
1-1,1,,772124-81871,,"BUCKET 600 ASSY",,,1,,,1,S,,,,,,,*1989.03,,,,,,*1989.03
3,3,,172112-91180,,"SIDE CUTTER, BUCKET",,,2,,,2,,,,,,,,,,,
4,2,,772112-91300,,"TEETH ASSY",,,4,,,4,,,,,,,,,,,
4-1,2,,772112-91302,,"TEETH ASSY",,,4,,,4,R,,,,,,,*1988.07,,,,,,*1988.07
4-2,2,,772112-91303,,"TEETH ASSY",,,4,,,4,S,2,,,,,,*1989.03,,,,,,*1989.03
5,3,,172112-91301,,TEETH,,,4,,,4,,,,,,,,,,,
5-1,3,,172112-91302,,TEETH,,,4,,,4,R,,,,,,,*1988.07,,,,,,*1988.07
5-2,3,,172112-91303,,TEETH,,,4,,,4,S,,,,,,,*1989.03,,,,,,*1989.03
6,3,,22217-160000,,"SPRING WASHER 16",,,8,,,8,Z,,,,,,,*1989.03,,,,,,*1989.03
7,3,,26716-160002,,"NUT M16",,,8,,,8,,,,,,,,,,,
7-1,3,,172137-86780,,NUT,,,8,,,8,S,,,,,,,*1989.03,,,,,,*1989.03
8,3,,933110-82500,,"BOLT M16X45X18",,,4,,,4,,,,,,,,,,,
8-1,3,,172151-81400,,BOLT,,,8,,,8,S,,,,,,,*1989.03,,,,,,*1989.03
9,3,,933110-82600,,"BOLT M16X55X18",,,4,,,4,Z,,,,,,,*1989.03,,,,,,*1989.03
10,3,,172112-91310,,"SHIM T=0.5, TEETH",,,4,,,4,Z,1,,,,,,*1989.03,,,,,,*1989.03
11,3,,172112-91320,,"SHIM T=1.0, TEETH",,,4,,,4,Z,1,,,,,,*1989.03,,,,,,*1989.03
12,3,,172112-91340,,"SHIM T=0.3, TEETH",,,4,,,4,Z,1,,,,,,*1989.03,,,,,,*1989.03
13,3,,172151-81410,,"SHIM SET, TEETH",,,4,,,4,W,,,,,,,*1989.03,,,,,,*1989.03
14,4,,172151-81420,,"SHIM 0.3,TEETH",,,4,,,4,W,1,,,,,,*1989.03,,,,,,*1989.03
15,4,,172151-81430,,"SHIM 0.5,TEETH",,,4,,,4,W,1,,,,,,*1989.03,,,,,,*1989.03
16,4,,172151-81440,,"SHIM 1.0,TEETH",,,4,,,4,W,1,,,,,,*1989.03,,,,,,*1989.03
17,1,,172112-87101,,"PIN ASSY, BUCKET",,,2,,,2,,,,,,,,,,,
18,1,,172112-87840,,"SHIM 45X1",,,2,,,2,,,,,,,,,,,
18-1,1,,172124-81930,,"SHIM 45X0.8",,,2,,,2,N,,,,,,,*1988.04,,,,,,*1988.04
19,1,,22417-800630,,"COTTER PIN 8.0X63",,,2,,,2,,,,,,,,,,,
20,1,,24761-020000,,"NIPPLE PT1/8,GREASE",,,2,,,2,,,,,,,,,,,
21,1,,172124-81940,,"SHIM 45X1.2",,,2,,,2,W,,,,,,,*1988.04,,,,,,*1988.04
```

Fig. 76 バケット600(アタッチメント) BUCKET600(ATTACHMENT)

SPEC. CODE
D72124-81430

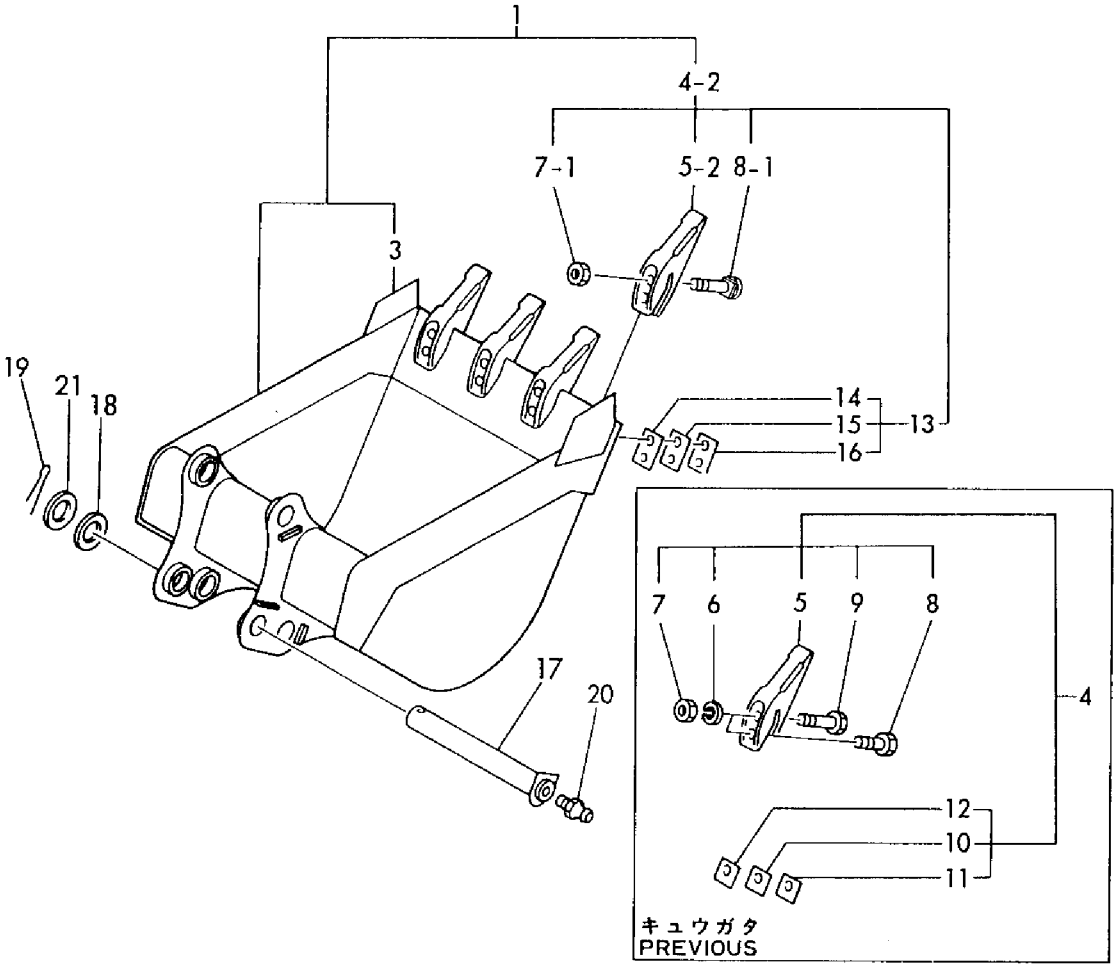

```
1,1,,772124-81880,,"BUCKET 650 ASSY",,,1,,,1,,,,,,,,,,,
1-1,1,,772124-81881,,"BUCKET 650 ASSY",,,1,,,1,S,,,,,,,*1989.03,,,,,,*1989.03
3,3,,172112-91180,,"SIDE CUTTER, BUCKET",,,2,,,2,,,,,,,,,,,
4,2,,772112-91300,,"TEETH ASSY",,,4,,,4,,,,,,,,,,,
4-1,2,,772112-91302,,"TEETH ASSY",,,4,,,4,R,,,,,,,*1988.07,,,,,,*1988.07
4-2,2,,772112-91303,,"TEETH ASSY",,,4,,,4,S,2,,,,,,*1989.03,,,,,,*1989.03
5,3,,172112-91301,,TEETH,,,4,,,4,,,,,,,,,,,
5-1,3,,172112-91302,,TEETH,,,4,,,4,R,,,,,,,*1988.07,,,,,,*1988.07
5-2,3,,172112-91303,,TEETH,,,4,,,4,S,,,,,,,*1989.03,,,,,,*1989.03
6,3,,22217-160000,,"SPRING WASHER 16",,,8,,,8,Z,,,,,,,*1989.03,,,,,,*1989.03
7,3,,26716-160002,,"NUT M16",,,8,,,8,,,,,,,,,,,
7-1,3,,172137-86780,,NUT,,,8,,,8,S,,,,,,,*1989.03,,,,,,*1989.03
8,3,,933110-82500,,"BOLT M16X45X18",,,4,,,4,,,,,,,,,,,
8-1,3,,172151-81400,,BOLT,,,8,,,8,S,,,,,,,*1989.03,,,,,,*1989.03
9,3,,933110-82600,,"BOLT M16X55X18",,,4,,,4,Z,,,,,,,*1989.03,,,,,,*1989.03
10,3,,172112-91310,,"SHIM T=0.5, TEETH",,,4,,,4,Z,1,,,,,,*1989.03,,,,,,*1989.03
11,3,,172112-91320,,"SHIM T=1.0, TEETH",,,4,,,4,Z,1,,,,,,*1989.03,,,,,,*1989.03
12,3,,172112-91340,,"SHIM T=0.3, TEETH",,,4,,,4,Z,1,,,,,,*1989.03,,,,,,*1989.03
13,3,,172151-81410,,"SHIM SET, TEETH",,,4,,,4,W,,,,,,,*1989.03,,,,,,*1989.03
14,4,,172151-81420,,"SHIM 0.3,TEETH",,,4,,,4,W,1,,,,,,*1989.03,,,,,,*1989.03
15,4,,172151-81430,,"SHIM 0.5,TEETH",,,4,,,4,W,1,,,,,,*1989.03,,,,,,*1989.03
16,4,,172151-81440,,"SHIM 1.0,TEETH",,,4,,,4,W,1,,,,,,*1989.03,,,,,,*1989.03
17,1,,172112-87101,,"PIN ASSY, BUCKET",,,2,,,2,,,,,,,,,,,
18,1,,172112-87840,,"SHIM 45X1",,,2,,,2,,,,,,,,,,,
18-1,1,,172124-81930,,"SHIM 45X0.8",,,2,,,2,N,,,,,,,*1988.04,,,,,,*1988.04
19,1,,22417-800630,,"COTTER PIN 8.0X63",,,2,,,2,,,,,,,,,,,
20,1,,24761-020000,,"NIPPLE PT1/8,GREASE",,,2,,,2,,,,,,,,,,,
21,1,,172124-81940,,"SHIM 45X1.2",,,2,,,2,W,,,,,,,*1988.04,,,,,,*1988.04
```

Fig. 77 バケット650(アタッチメント) BUCKET650(ATTACHMENT)

SPEC. CODE
D72124-81450

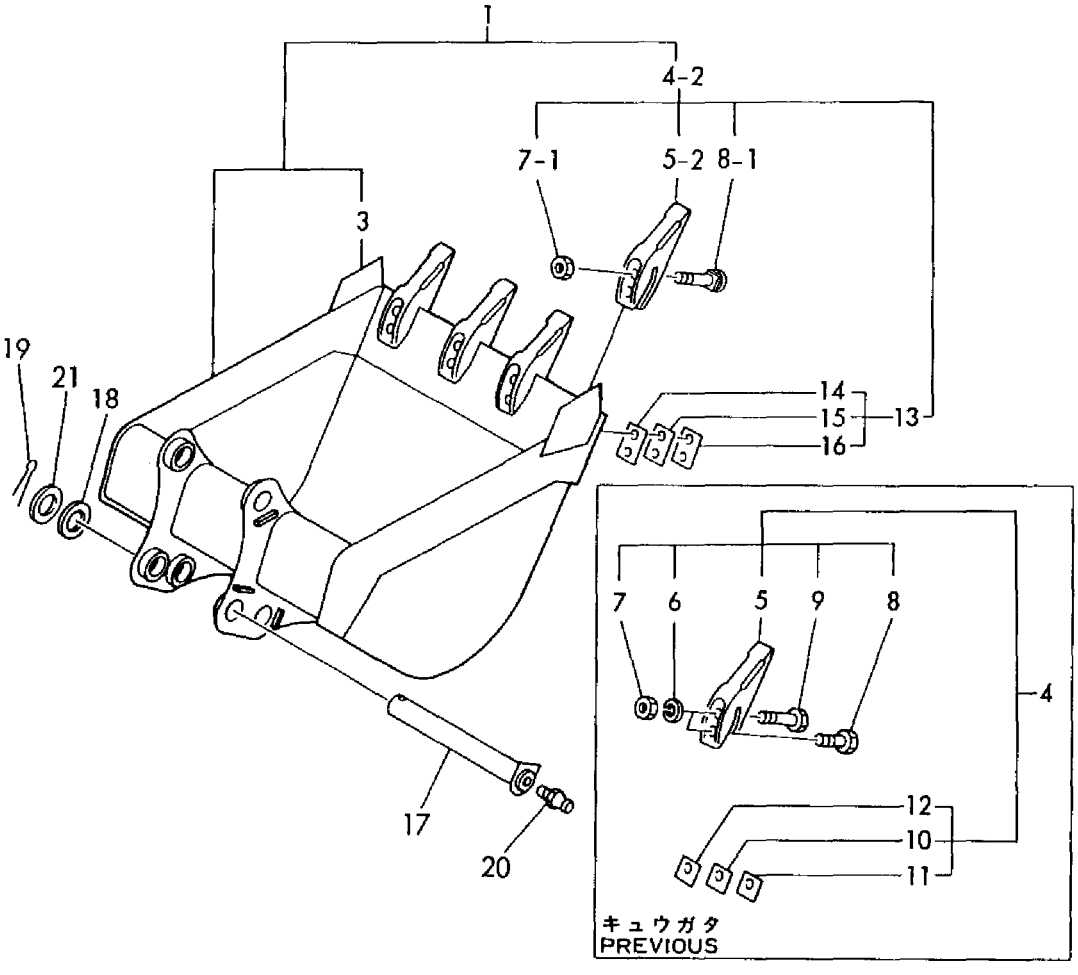

```
1,1,,772124-81900,,"BUCKET 700 ASSY",,,1,,,1,,,,,,,,,,,
1-1,1,,772124-81901,,"BUCKET 700 ASSY",,,1,,,1,S,,,,,,,*1989.03,,,,,,*1989.03
3,3,,172112-91180,,"SIDE CUTTER, BUCKET",,,2,,,2,,,,,,,,,,,
4,2,,772112-91300,,"TEETH ASSY",,,5,,,5,,,,,,,,,,,
4-1,2,,772112-91302,,"TEETH ASSY",,,5,,,5,R,,,,,,,*1988.07,,,,,,*1988.07
4-2,2,,772112-91303,,"TEETH ASSY",,,5,,,5,S,2,,,,,,*1989.03,,,,,,*1989.03
5,3,,172112-91301,,TEETH,,,5,,,5,,,,,,,,,,,
5-1,3,,172112-91302,,TEETH,,,5,,,5,R,,,,,,,*1988.07,,,,,,*1988.07
5-2,3,,172112-91303,,TEETH,,,5,,,5,S,,,,,,,*1989.03,,,,,,*1989.03
6,3,,22217-160000,,"SPRING WASHER 16",,,10,,,10,Z,,,,,,,*1989.03,,,,,,*1989.03
7,3,,26716-160002,,"NUT M16",,,10,,,10,,,,,,,,,,,
7-1,3,,172137-86780,,NUT,,,10,,,10,S,,,,,,,*1989.03,,,,,,*1989.03
8,3,,933110-82500,,"BOLT M16X45X18",,,5,,,5,,,,,,,,,,,
8-1,3,,172151-81400,,BOLT,,,10,,,10,S,,,,,,,*1989.03,,,,,,*1989.03
9,3,,933110-82600,,"BOLT M16X55X18",,,5,,,5,Z,,,,,,,*1989.03,,,,,,*1989.03
10,3,,172112-91310,,"SHIM T=0.5, TEETH",,,5,,,5,Z,1,,,,,,*1989.03,,,,,,*1989.03
11,3,,172112-91320,,"SHIM T=1.0, TEETH",,,5,,,5,Z,1,,,,,,*1989.03,,,,,,*1989.03
12,3,,172112-91340,,"SHIM T=0.3, TEETH",,,5,,,5,Z,1,,,,,,*1989.03,,,,,,*1989.03
13,3,,172151-81410,,"SHIM SET, TEETH",,,5,,,5,W,,,,,,,*1989.03,,,,,,*1989.03
14,4,,172151-81420,,"SHIM 0.3,TEETH",,,5,,,5,W,1,,,,,,*1989.03,,,,,,*1989.03
15,4,,172151-81430,,"SHIM 0.5,TEETH",,,5,,,5,W,1,,,,,,*1989.03,,,,,,*1989.03
16,4,,172151-81440,,"SHIM 1.0,TEETH",,,5,,,5,W,1,,,,,,*1989.03,,,,,,*1989.03
17,1,,172112-87101,,"PIN ASSY, BUCKET",,,2,,,2,,,,,,,,,,,
18,1,,172112-87840,,"SHIM 45X1",,,2,,,2,,,,,,,,,,,
18-1,1,,172124-81930,,"SHIM 45X0.8",,,2,,,2,N,,,,,,,*1988.04,,,,,,*1988.04
19,1,,22417-800630,,"COTTER PIN 8.0X63",,,2,,,2,,,,,,,,,,,
20,1,,24761-020000,,"NIPPLE PT1/8,GREASE",,,2,,,2,,,,,,,,,,,
21,1,,172124-81940,,"SHIM 45X1.2",,,2,,,2,W,,,,,,,*1988.04,,,,,,*1988.04
```

Fig. 78 バケット700(アタッチメント) BUCKET700(ATTACHMENT)

SPEC. CODE
D72124-81440

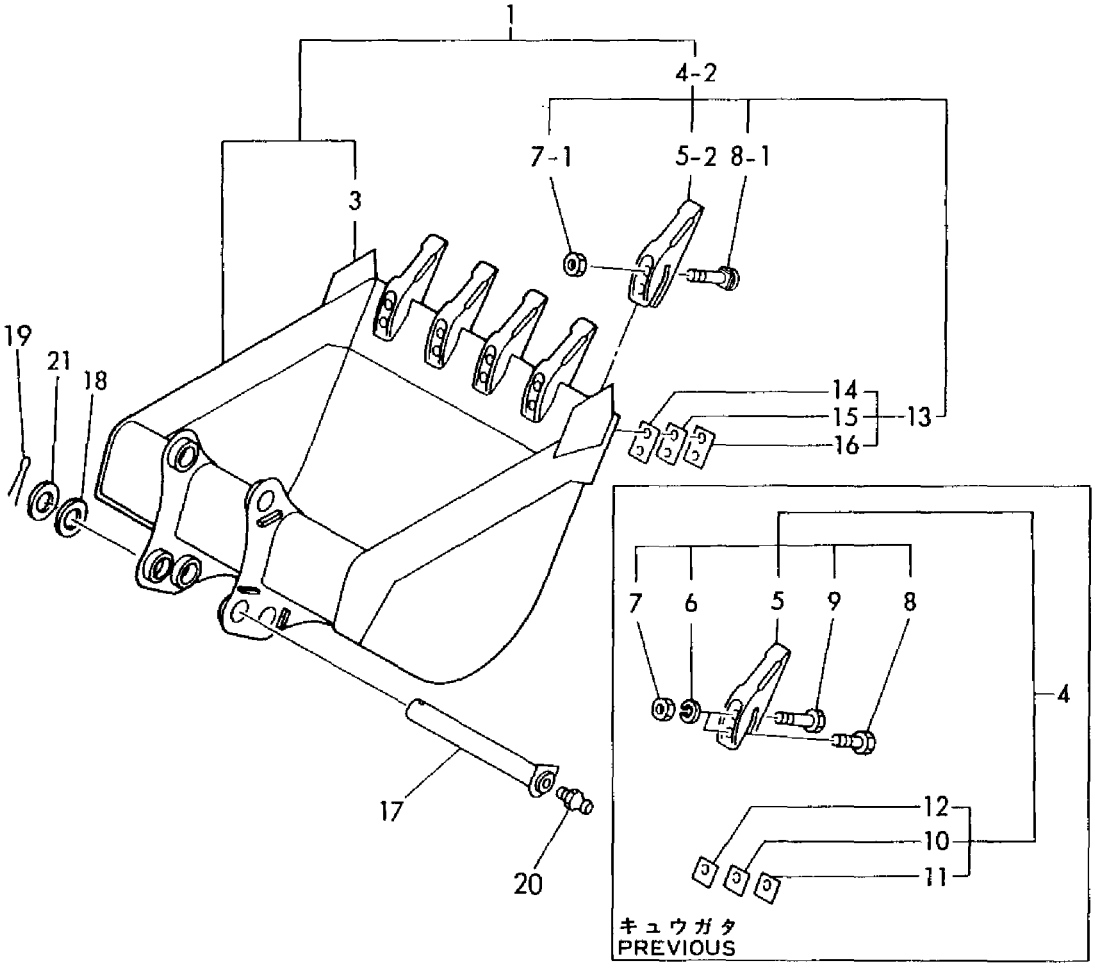

```
1,1,,772112-86700,,"BUCKET(330), EJECTOR",,,1,,,1,,,,,,,,,,,
1-1,1,,772112-86701,,"BUCKET(330),
EJECTOR",,,1,,,1,S,,,,,,*1989.03,,,,,,*1989.03
3,3,,172112-91180,,"SIDE CUTTER, BUCKET",,,2,,,2,,,,,,,,,,,
4,2,,772112-91300,,"TEETH ASSY",,,3,,,3,,,,,,,,,,,
4-1,2,,772112-91302,,"TEETH ASSY",,,3,,,3,R,,,,,,,*1988.07,,,,,,*1988.07
4-2,2,,772112-91303,,"TEETH ASSY",,,3,,,3,S,2,,,,,,*1989.03,,,,,,*1989.03
5,3,,172112-91301,,TEETH,,,3,,,3,,,,,,,,,,,
5-1,3,,172112-91302,,TEETH,,,3,,,3,R,,,,,,,*1988.07,,,,,,*1988.07
5-2,3,,172112-91303,,TEETH,,,3,,,3,S,,,,,,,*1989.03,,,,,,*1989.03
6,3,,22217-160000,,"SPRING WASHER 16",,,6,,,6,Z,,,,,,,*1989.03,,,,,,*1989.03
7,3,,26716-160002,,"NUT M16",,,6,,,6,,,,,,,,,,,
7-1,3,,172137-86780,,NUT,,,6,,,6,S,,,,,,,*1989.03,,,,,,*1989.03
8,3,,933110-82500,,"BOLT M16X45X18",,,3,,,3,,,,,,,,,,,
8-1,3,,172151-81400,,BOLT,,,6,,,6,S,,,,,,,*1989.03,,,,,,*1989.03
9,3,,933110-82600,,"BOLT M16X55X18",,,3,,,3,Z,,,,,,,*1989.03,,,,,,*1989.03
10,3,,172112-91310,,"SHIM T=0.5, TEETH",,,3,,,3,Z,1,,,,,,*1989.03,,,,,,*1989.03
11,3,,172112-91320,,"SHIM T=1.0, TEETH",,,3,,,3,Z,1,,,,,,*1989.03,,,,,,*1989.03
12,3,,172112-91340,,"SHIM T=0.3, TEETH",,,3,,,3,Z,1,,,,,,*1989.03,,,,,,*1989.03
13,3,,172151-81410,,"SHIM SET, TEETH",,,3,,,3,W,,,,,,,*1989.03,,,,,,*1989.03
14,4,,172151-81420,,"SHIM 0.3,TEETH",,,3,,,3,W,1,,,,,,*1989.03,,,,,,*1989.03
15,4,,172151-81430,,"SHIM 0.5,TEETH",,,3,,,3,W,1,,,,,,*1989.03,,,,,,*1989.03
16,4,,172151-81440,,"SHIM 1.0,TEETH",,,3,,,3,W,1,,,,,,*1989.03,,,,,,*1989.03
17,2,,172124-81560,,"PLATE, DISCHARGE",,,1,,,1,,,,,,,,,,,
18,3,,172112-86250,,"BUSH 45X39, PIN",,,2,,,2,,,,,,,,,,,
19,2,,24761-020000,,"NIPPLE PT1/8,GREASE",,,2,,,2,,,,,,,,,,,
20,1,,172112-87591,,"PIN, BLADE",,,2,,,2,,,,,,,,,,,
21,1,,172112-87840,,"SHIM 45X1",,,2,,,2,,,,,,,,,,,
22,1,,22417-800630,,"COTTER PIN 8.0X63",,,2,,,2,,,,,,,,,,,
23,1,,24761-020000,,"NIPPLE PT1/8,GREASE",,,4,,,4,,,,,,,,,,,
```

Fig. 79 バケット330(アタッチメント) BUCKET330(ATTACHMENT)

SPEC. CODE
D72124-81500

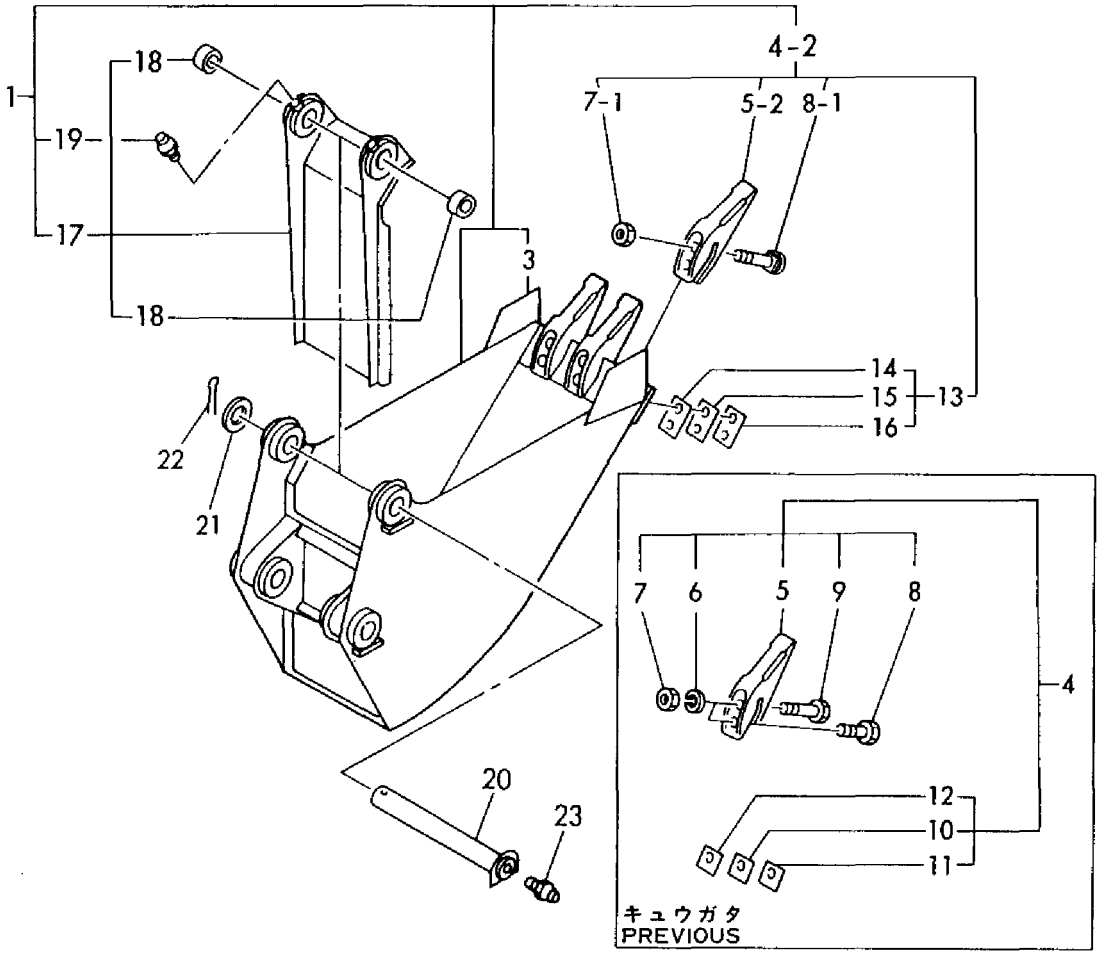

```
1,1,,172124-05700,,HOOK,,,2,,,,,,,,,,,,,,,
2,1,,172125-05700,,HOOK,,,,,2,2,,1,,,,,,,,,,
3,1,,22217-140000,,"SPRING WASHER 14",,,8,,,,,,,,,,,,,,,
4,1,,22217-200000,,"SPRING WASHER 20",,,,,4,4,,1,,,,,,,,,,
5,1,,26116-140352,,"BOLT M14X 35 PLATED",,,8,,,,,,,,,,,,,,,
6,1,,172125-53330,,"BOLT M20X50",,,,,4,4,,1,,,,,,,,,,
7,1,,26716-140002,,"NUT M14",,,8,,,,,,,,,,,,,,,
```

Fig. 80 フック(オプション) HOOK (OPTIONAL)

SPEC. CODE
D72124-05700
D72125-05700

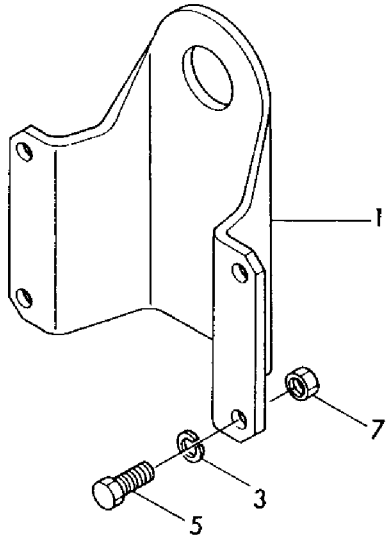

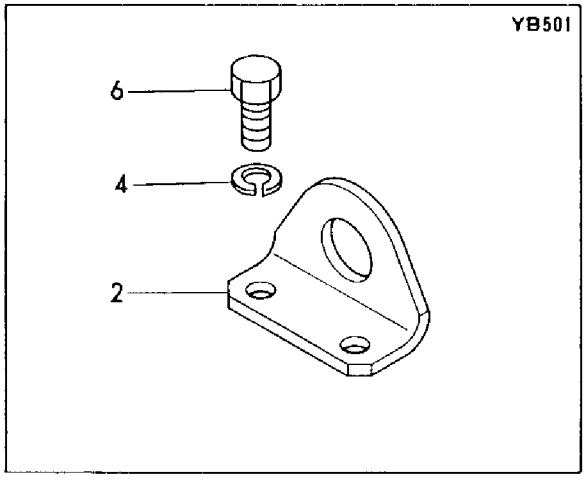

```
1,1,,772124-05710,,"PIN ASSY, LIFT",,,1,,,1,,,,,,,,,,,
2,2,,172124-81970,,"PIN 50-147, BOOM",,,1,,,1,,,,,,,,,,,,
3,2,,172124-81990,,COLLAR,,,1,,,1,,,,,,,,,,,
4,1,,22242-000500,,"CIRCLIP   50",,,1,,,1,,,,,,,,,,,
5,2,,933110-86600,,"NUT M24, NYLON",,,1,,,1,,,,,,,,,,,
6,2,,933171-29760,,WASHER,,,1,,,1,,,,,,,,,,,
7,2,,172112-87820,,"SHIM 50X1",,,1,,,1,,,,,,,,,,,
```

Fig. 81 リフトピン（オプション） LIFT PIN (OPTIONAL)

SPEC. CODE
D72124-05710

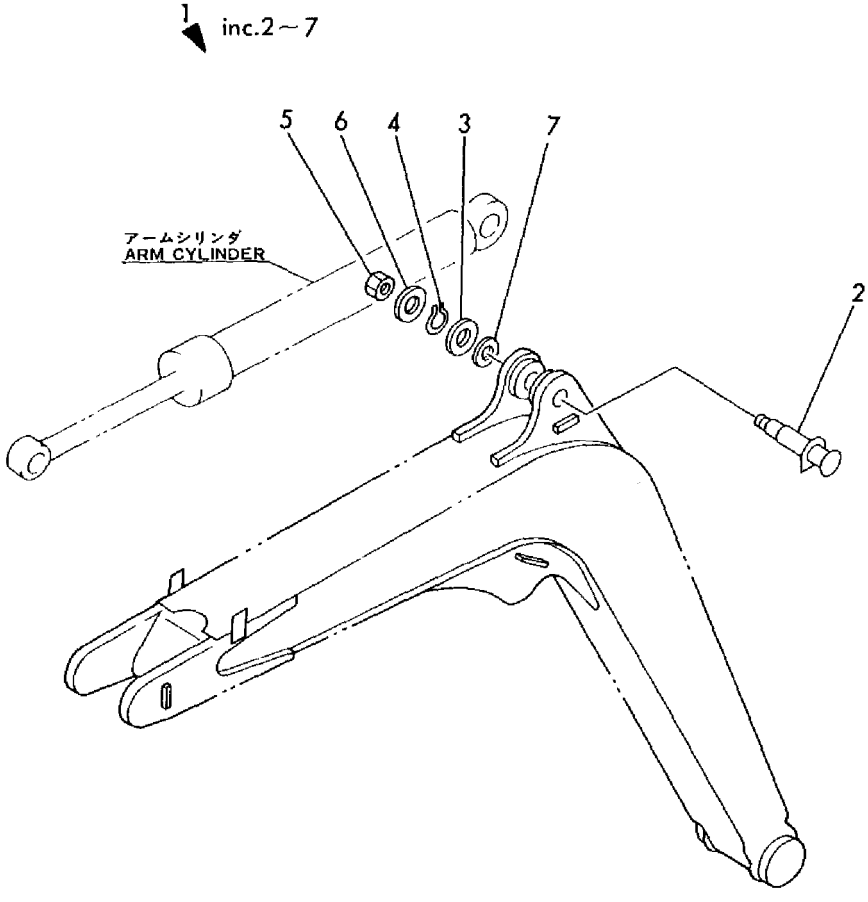

```
1,1,,772122-17140,,"WINDOW WASHER ASSY",,,1,,,1,,,,,,,,,,,
2,2,,172122-16630,,"LEAD WIRE",,,1,,,1,,,,,,,,,,,
3,2,,22137-050000,,"WASHER 5, POLISHED",,,2,,,2,,,,,,,,,,,
4,2,,22857-500120,,"SCREW 5X12",,,2,,,2,,,,,,,,,,,
5,2,,933113-03300,,"SWITCH, WIPER",,,1,,,1,,,,,,,,,,,
6,2,,933113-15600,,"WINDOW WASHER",,,1,,,1,,,,,,,,,,,
7,3,,933113-15800,,"NOZZLE, WASHER",,,1,,,1,,,,,,,,,,,
```

Fig. 82 ウインドウオッシャ(オプション) WIND WASHER(OPTIONAL)

SPEC. CODE
D72122-17140

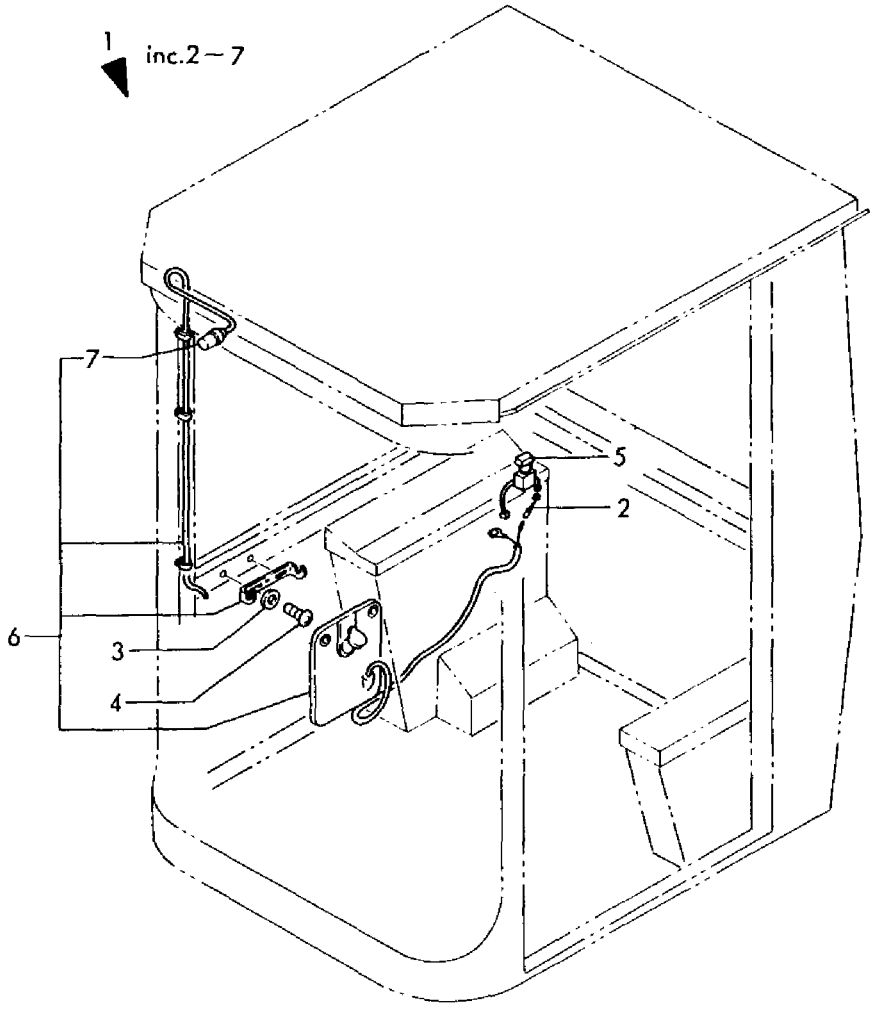

```
1,1,,172122-16520,,"HARNESS (D), WIRE",,,1,,,1,,1,,,,,,,,,,
1-1,1,,172122-16521,,"HARNESS (D), WIRE",,,1,,,1,S,1,,,,,,*1985.09,,,,,,*1985.09
2,1,,172119-17130,,SWITCH,,,1,,,1,,2,,,,,,,,,,
3,1,,172119-17140,,SWITCH,,,1,,,1,,2,,,,,,,,,,
4,1,,26577-040142,,"SCREW M 4 X 14",,,4,,,4,,2,,,,,,,,,,
5,1,,933113-10200,,"QUARTZ CLOCK",,,1,,,1,,2,,,,,,,,,,
```

SPEC. CODE
D72124-16520
D72122-17150
D72122-17160

Fig. 83 スイッチ & クォーツクロック(オプション) SWITCH & QUARTZ CLOCK (OPTIONAL)

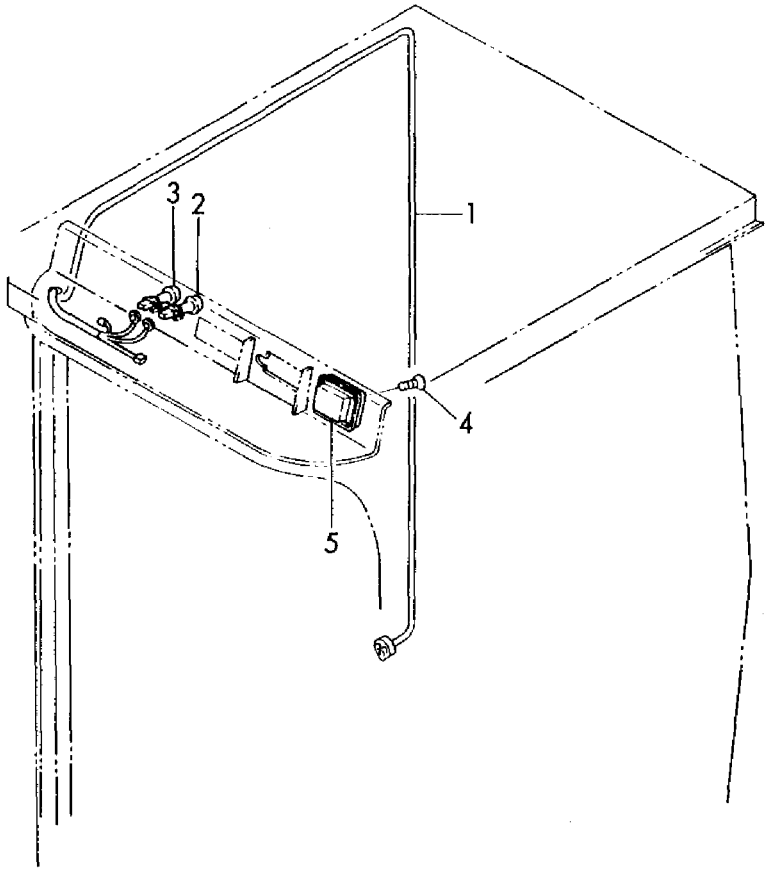

```
1,1,,772124-17600,,"HEATER ASSY",,,1,,,1,,,,,,,,,,,
2,2,,172124-17600,,"HOSE ASSY,CORRUGAT",,,2,,,2,,,,,,,,,,,
3,2,,172124-17630,,"VALVE, MINIATURE",,,1,,,1,,,,,,,,,,,
4,2,,104511-49060,,CONNECTOR,,,2,,,2,,,,,,,,,,,
4-1,2,,172124-17640,,"JOINT 3/8",,,2,,,2,N,,,,,,,*1985.12,,,,,,*1985.12
5,2,,22137-100000,,"WASHER 10,POLISHED",,,3,,,3,,,,,,,,,,,
6,2,,23000-022000,,"CLAMP 22",,,4,,,4,,,,,,,,,,,
7,2,,26013-100202,,"BOLT W/WASHER M10X20",,,3,,,3,,,,,,,,,,,
8,2,,29321-405120,,"GROMMET 40X5.0",,,1,,,1,,,,,,,,,,,
9,2,,933113-03200,,"SWITCH, HEATER",,,1,,,1,,,,,,,,,,,
10,2,,933113-15700,,"HEATER ASSY",,,1,,,1,,,,,,,,,,,
11,2,,933152-09280,,"BAND 170",,,3,,,3,,,,,,,,,,,
12A,1,,772124-17700,,"DEFROSTER ASSY",,,1,,,1,,1,,,,,,,,,
12B,1,,772124-17710,,"DEFROSTER ASSY",,,1,,,1,,2,,,,,,,,,
13,2,,172122-16590,,"BAND 200F",,,2,,,2,,,,,,,,,,,
14A,2,,172122-17700,,"STAY, NOZZLE",,,2,,,2,,1,,,,,,,,,
14A-1,2,,172122-17701,,"STAY, NOZZLE",,,2,,,2,N,1,,,,,,*1988.02,,,,,,*1988.02
14B,2,,172122-17700,,"STAY, NOZZLE",,,1,,,1,,2,,,,,,,,,
14B-1,2,,172122-17701,,"STAY, NOZZLE",,,1,,,1,N,2,,,,,,*1988.02,,,,,,*1988.02
15,2,,172124-17700,,"HOSE(L), DEFROSTER",,,1,,,1,,,,,,,,,,,
16,2,,172120-17710,,"NOZZLE, DEFROSTER",,,2,,,2,,,,,,,,,,,
17,2,,172124-17740,,"HOSE(R), DEFROSTER",,,1,,,1,,,,,,,,,,,
18,2,,22137-040000,,"WASHER 4, POLISHED",,,2,,,2,Z,,,,,,,*,,,,,,*
19,2,,22137-100000,,"WASHER 10,POLISHED",,,4,,,4,,,,,,,,,,,
20,2,,22857-400120,,"SCREW 4X12",,,2,,,2,,,,,,,,,,,
21,2,,26013-100252,,"BOLT W/WASHER M10X25",,,4,,,4,,,,,,,,,,,
22,2,,172122-17740,,"STAY (L), NOZZLE",,,1,,,1,,2,,,,,,,,,
23,1,,172122-17200,,"PANEL, INSTRUMENT",,,1,,,1,,,,,,,,,,,
```

Fig. 84 ヒータ＆デフロスタ(オプション) HEATER & DEFROSTER (OPTIONAL)

SPEC. CODE
D72124-17600
D72124-17710
D72124-63120

COUNTRY	J P	N W	S W	W G	F A	D M	N L
Fig. No.	84	17	17	17	17	17	17

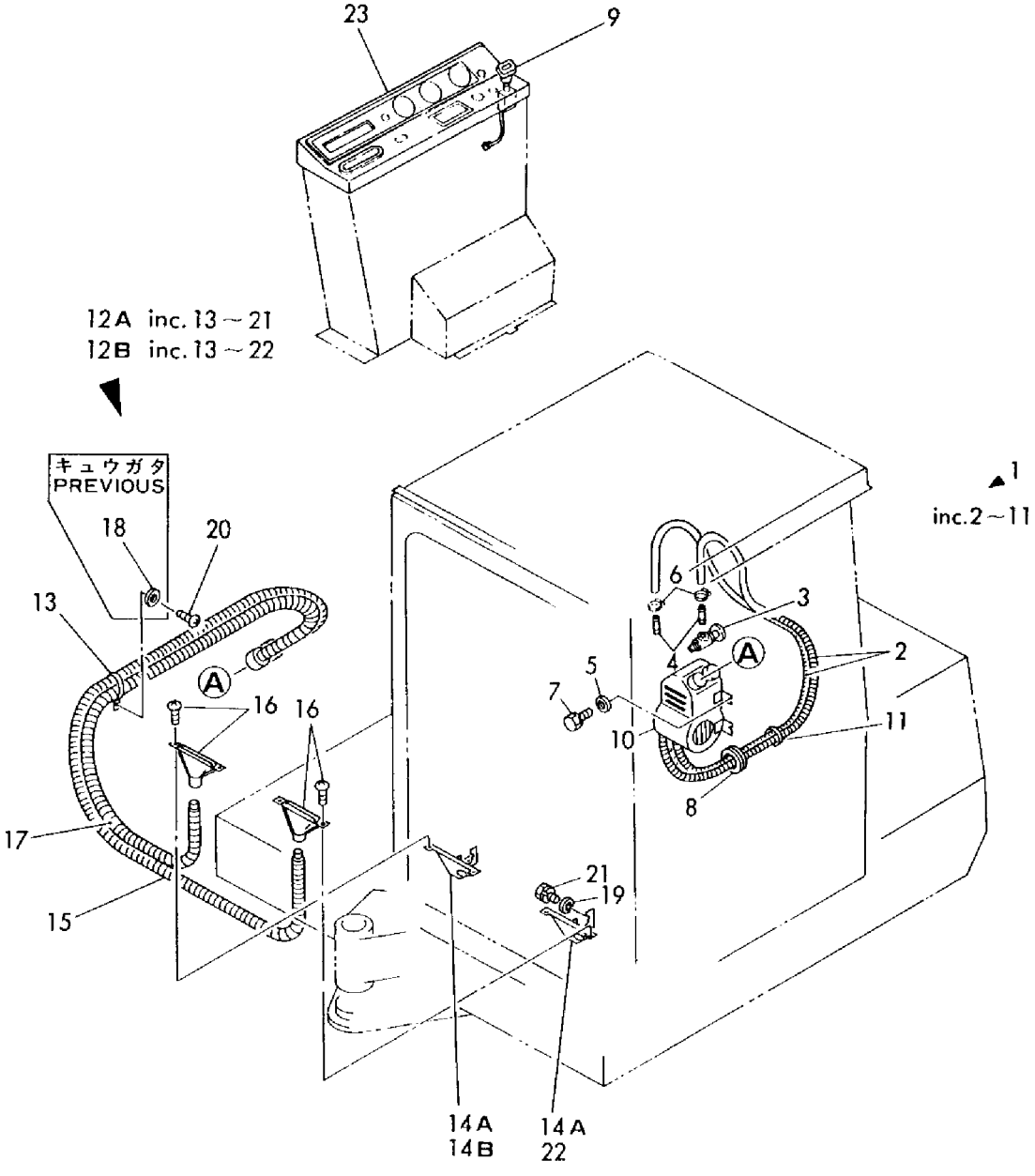

```
1,1,,772124-17720,,"DEFROSTER QCB ASSY.",,,1,,,1,W,1,,,,,,*1988.08,,,,,,*1988.08
2,2,,172120-17710,,"NOZZLE, DEFROSTER",,,2,,,2,W,,,,,,,*1988.08,,,,,,*1988.08
3,2,,172122-16590,,"BAND 200F",,,2,,,2,W,,,,,,,*1988.08,,,,,,*1988.08
4,2,,172122-17701,,"STAY, NOZZLE",,,1,,,1,W,,,,,,,*1988.08,,,,,,*1988.08
5,2,,172124-17700,,"HOSE(L), DEFROSTER",,,1,,,1,W,,,,,,,*1988.08,,,,,,*1988.08
6,2,,172124-17740,,"HOSE(R), DEFROSTER",,,1,,,1,W,,,,,,,*1988.08,,,,,,*1988.08
7,2,,172135-17700,,STAY,,,1,,,1,W,,,,,,,*1988.08,,,,,,*1988.08
8,2,,22857-400120,,"SCREW 4X12",,,2,,,2,W,,,,,,,*1988.08,,,,,,*1988.08
9,2,,26013-100252,,"BOLT W/WASHER M10X25",,,4,,,4,W,,,,,,,*1988.08,,,,,,*1988.08
10,2,,22137-100000,,"WASHER 10,POLISHED",,,4,,,4,W,,,,,,,*1988.08,,,,,,*1988.08
11,1,,772124-17730,,"DEFROSTER QCB
ASSY.",,,1,,,1,W,2,,,,,,*1988.08,,,,,,*1988.08
12,2,,172120-17710,,"NOZZLE, DEFROSTER",,,2,,,2,W,,,,,,,*1988.08,,,,,,*1988.08
13,2,,172122-16590,,"BAND 200F",,,2,,,2,W,,,,,,,*1988.08,,,,,,*1988.08
14,2,,172122-17701,,"STAY, NOZZLE",,,1,,,1,W,,,,,,,*1988.08,,,,,,*1988.08
15,2,,172124-17700,,"HOSE(L), DEFROSTER",,,1,,,1,W,,,,,,,*1988.08,,,,,,*1988.08
16,2,,172124-17740,,"HOSE(R), DEFROSTER",,,1,,,1,W,,,,,,,*1988.08,,,,,,*1988.08
17,2,,172135-17730,,"STAY COMP.,NOZZLE L",,,1,,,1,W,,,,,,,*1988.08,,,,,,*1988.08
18,2,,22857-400120,,"SCREW 4X12",,,2,,,2,W,,,,,,,*1988.08,,,,,,*1988.08
19,2,,26013-100252,,"BOLT W/WASHER
M10X25",,,4,,,4,W,,,,,,,*1988.08,,,,,,*1988.08
```

Fig.85 デフロスタB(クイックチェンジ)(オプション) DEFROSTER B (QUICK CHANGE) (OPTIONAL)

SPEC. CODE
D72124-17720
D72124-17730

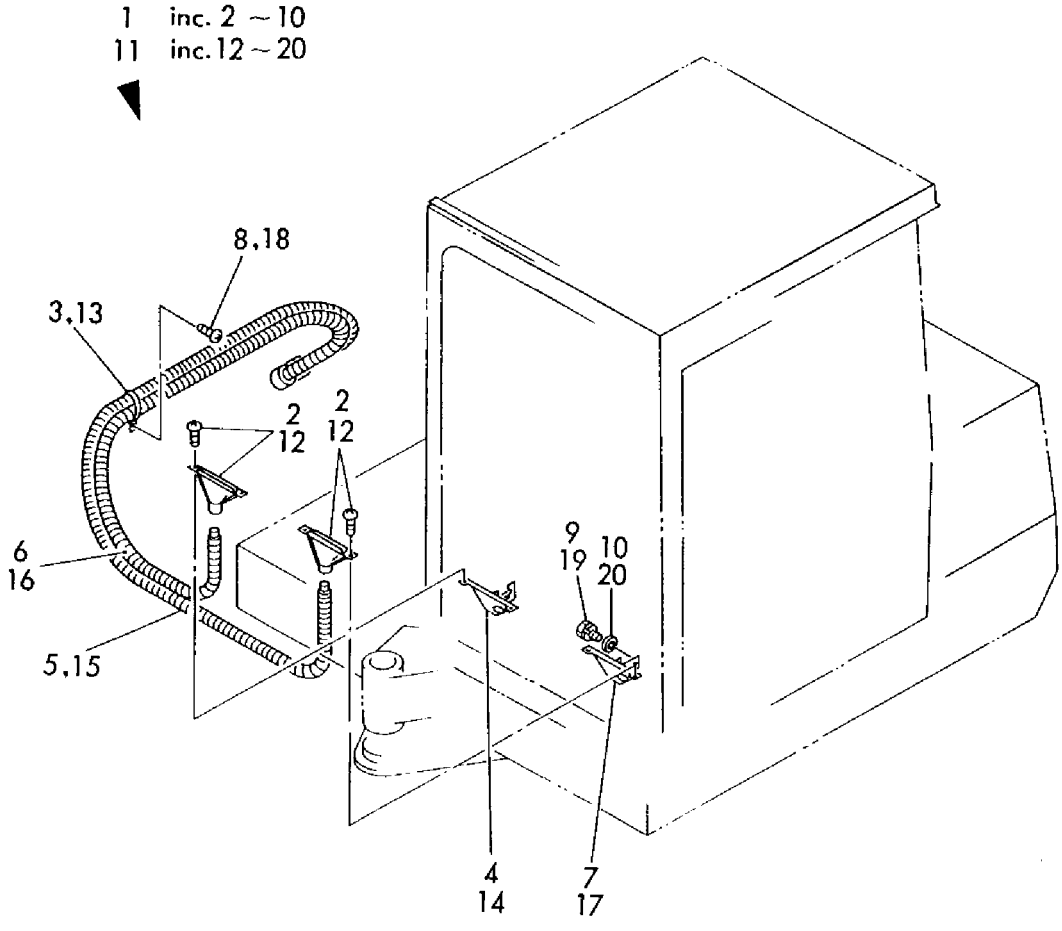

```
1,1,,772124-17800,,"RADIO ASSY",,,1,,,1,Z,,,,,,,M20519,,,,,,M20502
2,2,,172124-16540,,"LEAD WIRE",,,1,,,1,,,,,,,,,,,
3,2,,172122-16590,,"BAND 200F",,,5,,,5,,,,,,,,,,,
4,2,,172112-17150,,"RADIO (RA-155)",,,1,,,1,,,,,,,,,,,
5,2,,172112-17160,,"PANEL (PLA-03-100)",,,1,,,1,,,,,,,,,,,
6,2,,172112-17170,,"SPEAKER (SPA-457)",,,1,,,1,,,,,,,,,,,
7,2,,172112-17190,,"ANTENNA (NCP-314)",,,1,,,1,,,,,,,,,,,
8,2,,172124-17810,,"STAY, SPEAKER",,,2,,,2,,,,,,,,,,,
9,2,,172122-18190,,"PANEL, RADIO",,,1,,,1,,,,,,,,,,,
10,2,,22857-400120,,"SCREW 4X12",,,5,,,5,,,,,,,,,,,
11,2,,22857-400120,,"SCREW 4X12",,,4,,,4,,,,,,,,,,,
12,2,,26013-060162,,"BOLT M 6X 16",,,2,,,2,,,,,,,,,,,
13,2,,933168-56000,,"GROMMET 17X19",,,1,,,1,,,,,,,,,,,
13A,2,,22857-500120,,"SCREW 5X12",,,2,,,2,,,,,,,,,,,
14,1,,772132-17800,,"RADIO ASSY",,,1,,,1,W,,,,,,,M20519,,,,,,M20502
15,2,,172122-16590,,"BAND 200F",,,8,,,8,,,,,,,,,,,
16,2,,172135-17100,,"BRACKET (A)",,,1,,,1,,,,,,,,,,,
17,2,,172132-17140,,"BRACKET (B)",,,1,,,1,,,,,,,,,,,
18,2,,172112-17150,,"RADIO (RA-155)",,,1,,,1,,,,,,,,,,,
19,2,,172112-17160,,"PANEL (PLA-03-100)",,,1,,,1,,,,,,,,,,,
20,2,,172112-17171,,"SPEAKER (SPA-413)",,,1,,,1,,,,,,,,,,,
21,2,,172112-17190,,"ANTENNA (NCP-314)",,,1,,,1,,,,,,,,,,,
22,2,,172135-17200,,"LEAD WIRE, RADIO",,,1,,,1,,,,,,,,,,,
23,2,,172124-17812,,"STAY, SPEAKER",,,1,,,1,,,,,,,,,,,
24,2,,172112-69300,,"GROMMET 22X2",,,1,,,1,,,,,,,,,,,
25,2,,22857-400120,,"SCREW 4X12",,,8,,,8,,,,,,,,,,,
26,2,,22857-500120,,"SCREW 5X12",,,2,,,2,,,,,,,,,,,
27,2,,26023-060122,,"SCREW M 6X 12",,,5,,,5,,,,,,,,,,,
28,2,,26023-060122,,"SCREW M 6X 12",,,2,,,2,,,,,,,,,,,
29,2,,26557-040122,,"SCREW M 4X 12,PAN HD",,,2,,,2,,,,,,,,,,,
30,2,,933168-56000,,"GROMMET 17X19",,,2,,,2,,,,,,,,,,,
31,2,,172135-17210,,"LEAD WIRE, ANTENNA",,,1,,,1,W,,,,,,,M20876,,,,,,M20574
```

Fig. 86 ラジオ(オプション) RADIO (OPTIONAL)

SPEC. CODE
D72132-17800

キュウガタ
PREVIOUS

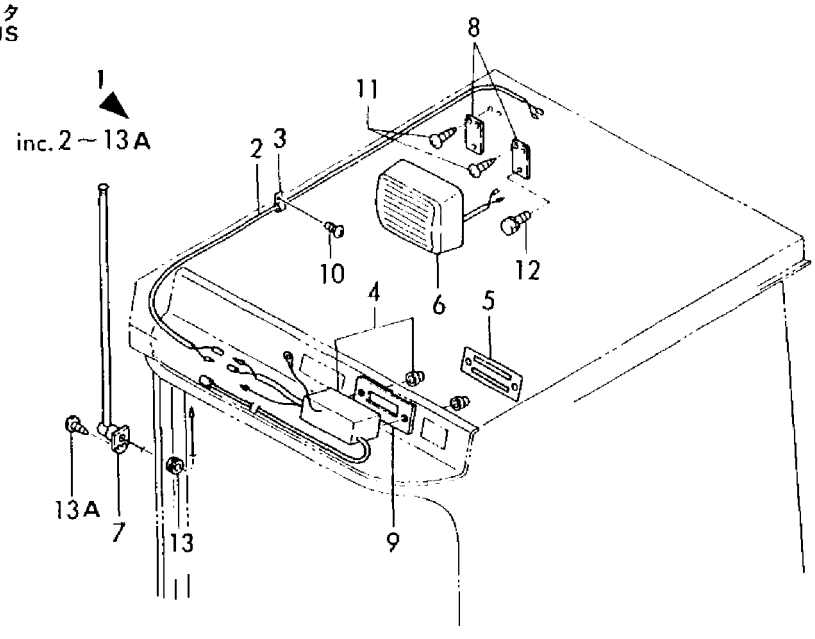

シンガタ
NEW TYPE

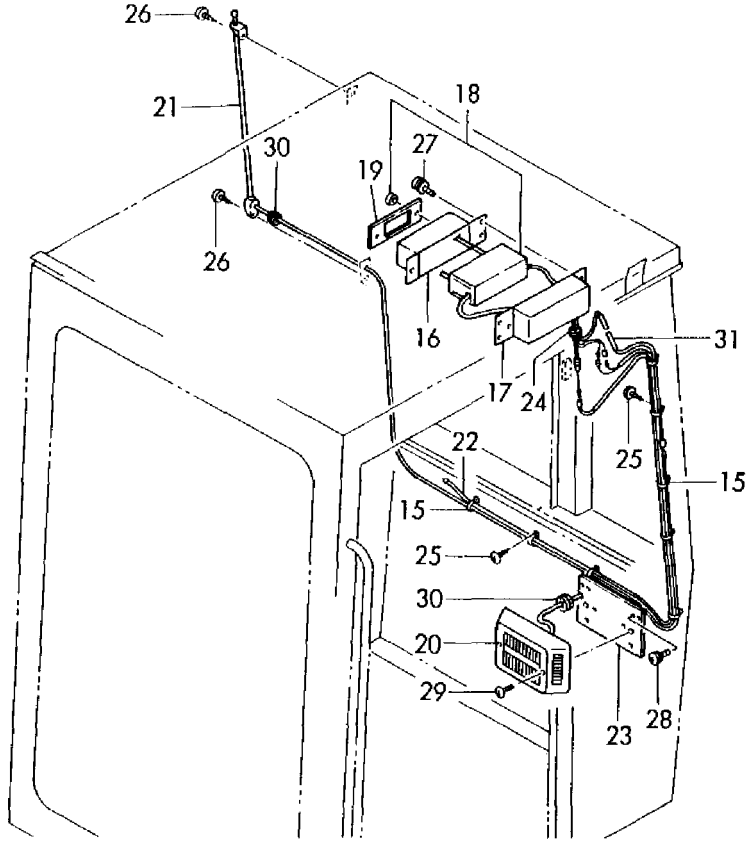

```
1,1,,772124-17810,,"STEREO ASSY,CASSETTE",,,1,,,1,,,,,,,,,,,
1-1,1,,772124-17811,,"STEREO
ASSY,CASSETTE",,,1,,,1,N,,,,,,,*1987.02,,,,,,*1987.02
2,2,,172124-16550,,"LEAD WIRE",,,1,,,1,,,,,,,,,,,
3,2,,172122-16590,,"BAND 200F",,,9,,,9,,,,,,,,,,,
4,2,,172112-17170,,"SPEAKER (SPA-457)",,,2,,,2,,,,,,,,,,,
4-1,2,,172112-17171,,"SPEAKER (SPA-413)",,,2,,,2,S,,,,,,,*1987.02,,,,,,*1987.02
5,2,,172112-17190,,"ANTENNA (NCP-314)",,,1,,,1,,,,,,,,,,,
6,2,,172124-17810,,"STAY, SPEAKER",,,4,,,4,,,,,,,,,,,
6-1,2,,172124-17811,,"STAY, SPEAKER",,,4,,,4,S,,,,,,,*1987.02,,,,,,*1987.02
6-2,2,,172124-17812,,"STAY, SPEAKER",,,2,,,2,N,,,,,,,M/#20519,,,,,,M/#20502
7,2,,22857-400120,,"SCREW 4X12",,,8,,,8,,,,,,,,,,,
7-1,2,,22857-400120,,"SCREW 4X12",,,6,,,6,K,,,,,,,*1987.02,,,,,,*1987.02
8,2,,22857-400120,,"SCREW 4X12",,,9,,,9,,,,,,,,,,,
9,2,,26013-060162,,"BOLT M 6X 16",,,4,,,4,,,,,,,,,,,
9-1,2,,26557-040122,,"SCREW M 4X 12,PAN
HD",,,4,,,4,S,,,,,,,*1987.02,,,,,,*1987.02
10,2,,933113-15500,,STELEO,,,1,,,1,,,,,,,,,,,
11,2,,933168-56000,,"GROMMET 17X19",,,1,,,1,,,,,,,,,,,
12,2,,22857-500120,,"SCREW 5X12",,,2,,,2,W,,,,,,,*1987.02,,,,,,*1987.02
13,2,,933168-56000,,"GROMMET 17X19",,,1,,,1,W,,,,,,,*1987.02,,,,,,*1987.02
```

Fig. 87 ステレオ(オプション) STEREO(OPTIONAL)

SPEC. CODE
D72124-17810

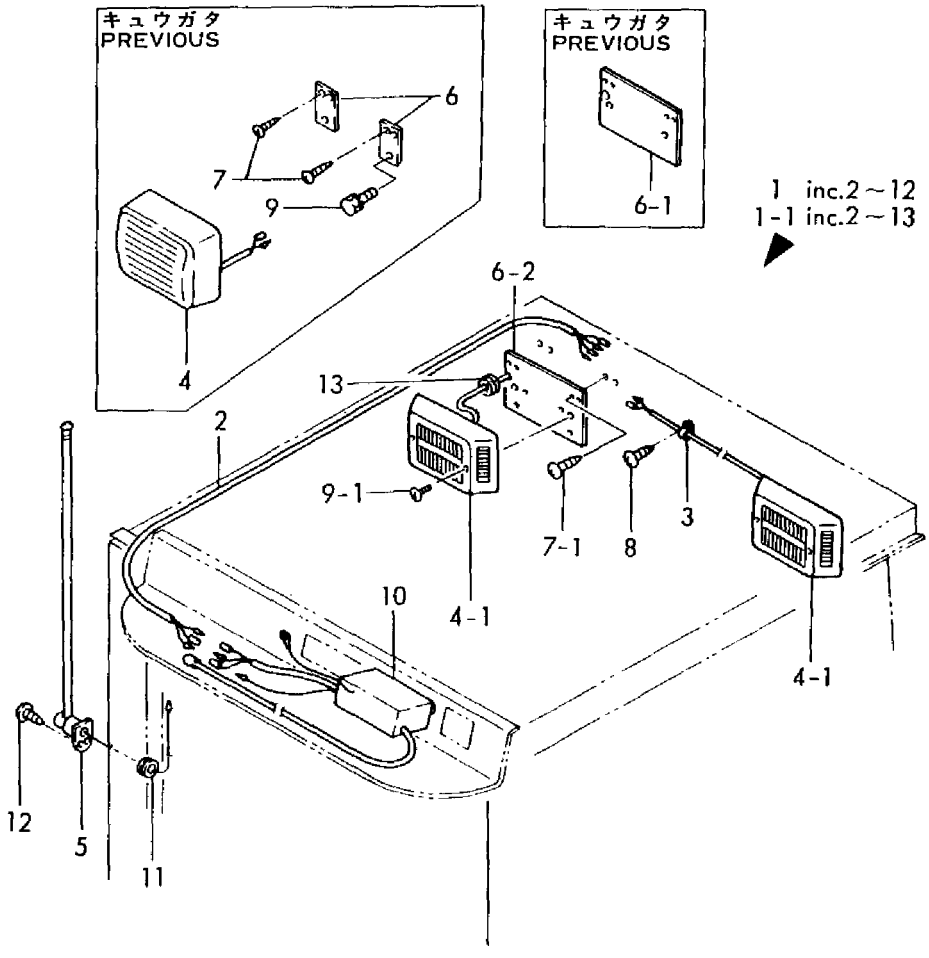

1,1,,772124-38150,,"CRAWLER ASSY, 500",,,2,,,2,,,,,,,,,,,
1-1,1,,772124-38111,,"CRAWLER ASSY, 500",,2,2,,,2,N,1,,,,,M00670,,,,,,M00670
2,2,,172112-38103,,"PIN, MASTER",,,2,,,2,,,,,,,,,,,
2-1,2,,172124-38250,,"PIN, MASTER",,2,2,,,2,S,,,,,,,M00670,,,,,,M00670
3,2,,172112-38111,,"PIN, COTTER",,2,2,,,2,,,,,,,,,,,
4,2,,172124-38150,,"CRAWLER ASSY, 500",,,2,,,2,,,,,,,,,,,
4-1,2,,172124-38151,,"CRAWLER ASSY, 500",,2,2,,,2,S,,,,,,,M00670,,,,,,M00670
5,3,,172112-38130,,"BOLT, SHOE",,296,296,,,296,,,,,,,,,,,
6,3,,172112-38140,,"NUT, SHOE",,296,296,,,296,,,,,,,,,,,
7,3,,172124-38160,,"SHOW PLATE",,74,74,,,74,,,,,,,,,,,
8,3,,772124-38010,,"LINK ASSY, TRACK",,,2,,,2,,,,,,,,,,,
8-1,3,,172124-38111,,"LINK ASSY, TRUCK",,2,2,,,2,S,,,,,,,M00670,,,,,,M00670
9,4,,172112-38041,,"LINK (L), TRACK",,72,72,,,72,,,,,,,,,,,
10,4,,172112-38051,,"LINK (R), TRACK",,72,72,,,72,,,,,,,,,,,
11,4,,172112-38081,,BUSH,,74,74,,,74,,,,,,,,,,,
12,4,,172112-38091,,"PIN, TRACK",,72,72,,,72,,,,,,,,,,,
13,4,,172124-38260,,"LINK (L), MASTER",,2,2,,,2,,,,,,,,,,,
14,4,,172124-38270,,"LINK (R), MASTER",,2,2,,,2,,,,,,,,,,,
15,1,,172124-38210,,"MASTER TRUCK",,,2,,,2,,,,,,,,,,,
15-1,1,,172124-38211,,"MASTER TRACK 500",,2,2,,,2,S,1,,,,,M00670,,,,,,M00670
16,2,,172112-38130,,"BOLT, SHOE",,2,2,,,2,,,,,,,,,,,
17,2,,172112-38140,,"NUT, SHOE",,8,8,,,8,,,,,,,,,,,
18,2,,172124-38160,,"SHOW PLATE",,8,8,,,8,,,,,,,,,,,
19,2,,172112-38122,,"LINK, MASTER",,,2,,,2,,,,,,,,,,,
19-1,2,,172124-38300,,"LINK, MASTER",,2,2,,,2,S,,,,,,,M00670,,,,,,M00670
20,3,,172112-38081,,BUSH,,2,2,,,2,,,,,,,,,,,
21,3,,172124-38260,,"LINK (L), MASTER",,2,2,,,2,,,,,,,,,,,
22,3,,172124-38270,,"LINK (R), MASTER",,2,2,,,2,,,,,,,,,,,
23,1,,772124-38400,,"CRAWLER ASSY, 400",,,2,,,2,,,,,,,,,,,
23-1,1,,772124-38401,,"CRAWLER ASSY, 400",,,2,,,2,N,,,,,,,M00670,,,,,,M00670
24,2,,172112-38103,,"PIN, MASTER",,,2,,,2,,,,,,,,,,,
24-1,2,,172124-38250,,"PIN, MASTER",,,2,,,2,S,,,,,,,M00670,,,,,,M00670
25,2,,172112-38111,,"PIN, COTTER",,,2,,,2,,,,,,,,,,,
26,2,,172124-38400,,"SHOE 400 ASSY, FLAT",,,2,,,2,,,,,,,,,,,
26-1,2,,172124-38401,,"SHOE 400 ASSY, FLAT",,,2,,,2,S,,,,,,,M00670,,,,,,M00670
27,3,,172112-38130,,"BOLT, SHOE",,,296,,,296,,,,,,,,,,,
28,3,,172112-38140,,"NUT, SHOE",,,296,,,296,,,,,,,,,,,
29,3,,172112-38651,,"CRAWLER, FLAT",,,74,,,74,,,,,,,,,,,
30,3,,772124-38010,,"LINK ASSY, TRACK",,,2,,,2,,,,,,,,,,,
30-1,3,,172124-38111,,"LINK ASSY, TRUCK",,,2,,,2,S,,,,,,,M00670,,,,,,M00670
31,4,,172112-38041,,"LINK (L), TRACK",,,72,,,72,,,,,,,,,,,
32,4,,172112-38051,,"LINK (R), TRACK",,,72,,,72,,,,,,,,,,,
33,4,,172112-38081,,BUSH,,,74,,,74,,,,,,,,,,,
34,4,,172112-38091,,"PIN, TRACK",,,72,,,72,,,,,,,,,,,
35,4,,172124-38260,,"LINK (L), MASTER",,,2,,,2,,,,,,,,,,,
36,4,,172124-38270,,"LINK (R), MASTER",,,2,,,2,,,,,,,,,,,
37,1,,172112-38613,,"FLAT SHOE, MASTER",,,2,,,2,,,,,,,,,,,
37-1,1,,172124-38420,,"FLAT SHOE, MASTER",,,2,,,2,S,,,,,,,M00670,,,,,,M00670
38,2,,172112-38130,,"BOLT, SHOE",,,8,,,8,,,,,,,,,,,
39,2,,172112-38140,,"NUT, SHOE",,,8,,,8,,,,,,,,,,,
40,2,,172112-38651,,"CRAWLER, FLAT",,,2,,,2,,,,,,,,,,,
41,2,,172112-38122,,"LINK, MASTER",,,2,,,2,,,,,,,,,,,
41-1,2,,172124-38300,,"LINK, MASTER",,,2,,,2,S,,,,,,,M00670,,,,,,M00670
42,3,,172112-38081,,BUSH,,,2,,,2,,,,,,,,,,,
43,3,,172124-38260,,"LINK (L), MASTER",,,2,,,2,,,,,,,,,,,
44,3,,172124-38270,,"LINK (R), MASTER",,,2,,,2,,,,,,,,,,,
45,1,,772124-38500,,"SHOE(460) ASSY",,,2,,,2,,,,,,,,,,,
45-1,1,,772124-38501,,"CRAWLER ASSY, 460",,,2,,,2,N,,,,,,,M00670,,,,,,M00670
46,2,,172112-38412,,"PLATE, TRUCK LINK",,,2,,,2,,,,,,,,,,,
46-1,2,,172124-38520,,"CRAWLER ASSY,MASTER",,,2,,,2,S,,,,,,,M00670,,,,,,M00670
47,2,,172124-38500,,"CRAWLER ASSY, 460",,,2,,,2,,,,,,,,,,,
47-1,2,,172124-38501,,"SHOE 460 ASSY",,,2,,,2,S,,,,,,,M00670,,,,,,M00670
48,3,,172124-38550,,"SHOE ASSY",,,72,,,72,,,,,,,,,,,

```
49,3,,772124-38010,,"LINK ASSY, TRACK",,,2,,,2,,,,,,,,,,,
49-1,3,,172124-38511,,"LINK ASSY, TRACK",,,2,,,2,S,,,,,,,M00670,,,,,,M00670
50,2,,172112-38111,,"PIN, COTTER",,,2,,,2,,,,,,,,,,,
51,2,,172112-38103,,"PIN, MASTER",,,2,,,2,,,,,,,,,,,
51-1,2,,172124-38250,,"PIN, MASTER",,,2,,,2,S,,,,,,,M00670,,,,,,M00670
52,1,,772124-38700,,"CRAWLER ASSY, 380G",,,2,,,2,,,,,,,,,,,
52-1,1,,772124-38701,,"CRAWLER ASSY, 380G",,,2,,2,2,S,2,,,,,,M00795,,,,,,M00670
53,2,,172112-38103,,"PIN, MASTER",,,2,,,2,,,,,,,,,,,
53-1,2,,172124-38250,,"PIN, MASTER",,,2,,2,2,S,,,,,,,M00670,,,,,,M00670
54,2,,172112-38111,,"PIN, COTTER",,,2,,2,2,,,,,,,,,,,
55,2,,172124-38700,,"SHOE 380G, TRACK",,,2,,,2,,,,,,,,,,,
55-1,2,,172124-38701,,"SHOE 380G, TRACK",,,2,,2,2,S,,,,,,,M00795,,,,,,M00670
56,3,,172112-38130,,"BOLT, SHOE",,,296,,296,296,,,,,,,,,,,
57,3,,172112-38140,,"NUT, SHOE",,,296,,296,296,,,,,,,,,,,
58,3,,172124-38710,,"SHOE PLATE (G)",,,74,,74,74,,,,,,,,,,,
59,3,,172124-38110,,"LINK ASSY",,,2,,,2,,,,,,,,,,,
59-1,3,,172124-38111,,"LINK ASSY, TRUCK",,,2,,2,2,S,,,,,,,M00795,,,,,,M00670
60,4,,172112-38041,,"LINK (L), TRACK",,,72,,72,72,,,,,,,,,,,
61,4,,172112-38051,,"LINK (R), TRACK",,,72,,72,72,,,,,,,,,,,
62,4,,172112-38081,,BUSH,,,74,,74,74,,,,,,,,,,,
63,4,,172112-38091,,"PIN, TRACK",,,72,,72,72,,,,,,,,,,,
64,4,,172124-38260,,"LINK (L), MASTER",,,2,,2,2,,,,,,,,,,,
65,4,,172124-38270,,"LINK (R), MASTER",,,2,,2,2,,,,,,,,,,,
66,1,,172112-38011,,"TRUCK, MASTER",,,2,,2,2,,2,,,,,,,,,
67,2,,172112-38130,,"BOLT, SHOE",,,8,,8,8,,,,,,,,,,,
68,2,,172112-38140,,"NUT, SHOE",,,8,,8,8,,,,,,,,,,,
69,2,,172124-38710,,"SHOE PLATE (G)",,,2,,2,2,,,,,,,,,,,
70,2,,172112-38122,,"LINK, MASTER",,,2,,2,2,,,,,,,,,,,
71,3,,172112-38081,,BUSH,,,2,,2,2,,,,,,,,,,,
72,3,,172124-38260,,"LINK (L), MASTER",,,2,,2,2,,,,,,,,,,,
73,3,,172124-38270,,"LINK (R), MASTER",,,2,,2,2,,,,,,,,,,,
74,1,,172124-38170,,"PLATE, SLIDE",,4,4,,,4,,3,,,,,,,,,
75,1,,26013-100252,,"BOLT W/WASHER M10X25",,16,16,,,16,,3,,,,,,,,,
```

SPEC. CODE
D72124-38111
D72124-38401
D72124-38501
D72124-38701

Fig. 88 クローラ(オプション) CRAWLER (OPTIONAL)

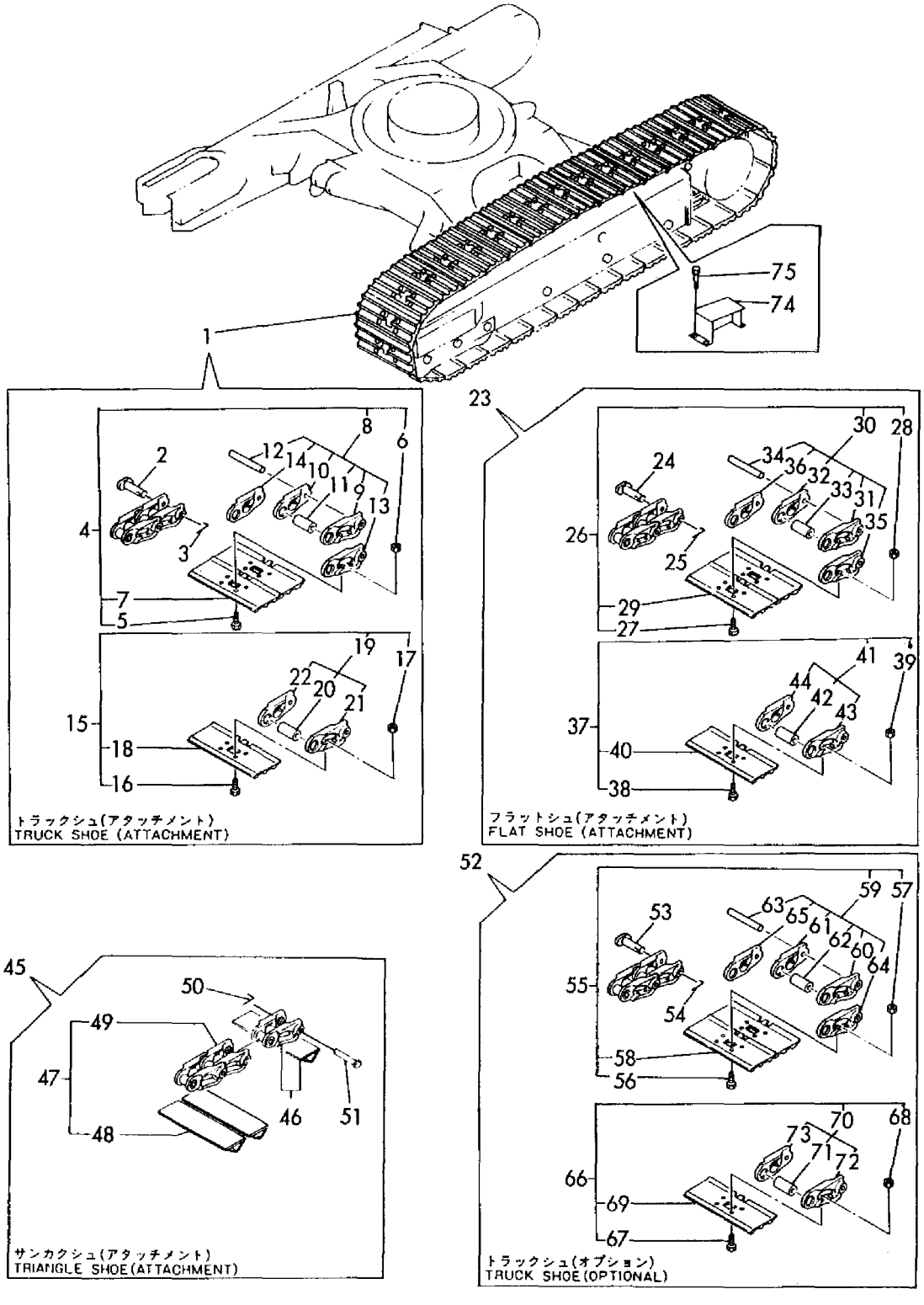

```
1,1,,772124-45110,,"LEVER ASSY,B QUICK",,,1,,,1,,,,,,,,,,,
1-1,1,,772124-45111,,"LEVER ASSY, B QUICK",,,1,,,1,S,1,,,,,,M20501,,,,,,M20501
2,2,,172122-03280,,"LABEL,OPERATION",,,1,,,1,,,,,,,,,,,
3,2,,172122-03290,,"LABEL,QUICK OPER.(A)",,,1,,,1,,,,,,,,,,,
4,2,,172122-03300,,"LABEL,QUICK OPER.(B)",,,1,,,1,,,,,,,,,,,
5,2,,172122-46801,,"LEVER (L)",,,1,,,1,,,,,,,,,,,
6,2,,172122-46831,,"JOINT, LEVER",,,1,,,1,,,,,,,,,,,
7,2,,172122-46861,,"NUT M24",,,1,,,1,,,,,,,,,,,
8,2,,172124-45900,,"STAND W/BUSH,LEVER L",,,1,,,1,,,,,,,,,,,
8-1,2,,172124-45901,,"STAND, LEVER (L)",,,1,,,1,N,1,,,,,,M20501,,,,,,M20501
9,3,,933171-23680,,"BUSH 14X15",,,2,,,2,,,,,,,,,,,
10,2,,172122-47180,,"PIPE, LINK",,,1,,,1,,,,,,,,,,,
11,2,,26013-100202,,"BOLT W/WASHER M10X20",,,2,,,2,,,,,,,,,,,
12,2,,172614-45170,,"SPRING 12",,,2,,,2,,,,,,,,,,,
13,2,,172122-46980,,"ARM, LOCK",,,1,,,1,,,,,,,,,,,
14,2,,22351-040020,,"SPRING PIN 4X20",,,1,,,1,,,,,,,,,,,
15,2,,172124-45100,,"LINK (H)",,,1,,,1,,,,,,,,,,,
15-1,2,,172124-45101,,"LINK H",,,1,,,1,S,,,,,,,M00957,,,,,,M00690
16,3,,172112-42730,,"BUSH 20X15",,,2,,,2,,,,,,,,,,,
17,2,,172122-46900,,"LINK (G)",,,1,,,1,,,,,,,,,,,
17-1,2,,172122-46901,,"LINK G",,,1,,,1,S,1,,,,,,M20501,,,,,,M20501
18,2,,172122-46920,,"BOSS W/BUSH, LINK",,,1,,,1,,,,,,,,,,,
18-1,2,,172122-46921,,"BOSS W/BUSH, LINK",,,1,,,1,S,1,,,,,,M20501,,,,,,M20501
19,3,,172116-46960,,"BUSH 20X15",,,2,,,2,,,,,,,,,,,
19-1,3,,24162-172312,,"NEEDLE BEARING",,,2,,,2,S,1,,,,,,M20501,,,,,,M20501
20,2,,22351-050032,,"SPRING PIN 5X32",,,1,,,1,,,,,,,,,,,
20-1,2,,22351-050036,,"SPRING PIN 5X36",,,1,,,1,N,,,,,,,M00957,,,,,,M00690
21,2,,26013-100202,,"BOLT W/WASHER M10X20",,,2,,,2,,,,,,,,,,,
22,2,,172122-47250,,"BALL 8, LINK",,,2,,,2,,,,,,,,,,,
23,2,,26716-080002,,"NUT M 8",,,2,,,2,,,,,,,,,,,
24,2,,22217-080000,,"SPRING WASHER  8",,,2,,,2,,,,,,,,,,,
25,2,,26013-100162,,"BOLT M10X 16",,,1,,,1,,,,,,,,,,,
```

SPEC. CODE
D72122-03180
D72122-45110
D72124-45211
D72124-45410
D72122-45510
D72124-45611

Fig. 89 Bタイプクイックレバー(オプション) B TYPE QUICK LEVER(OPTIONAL)

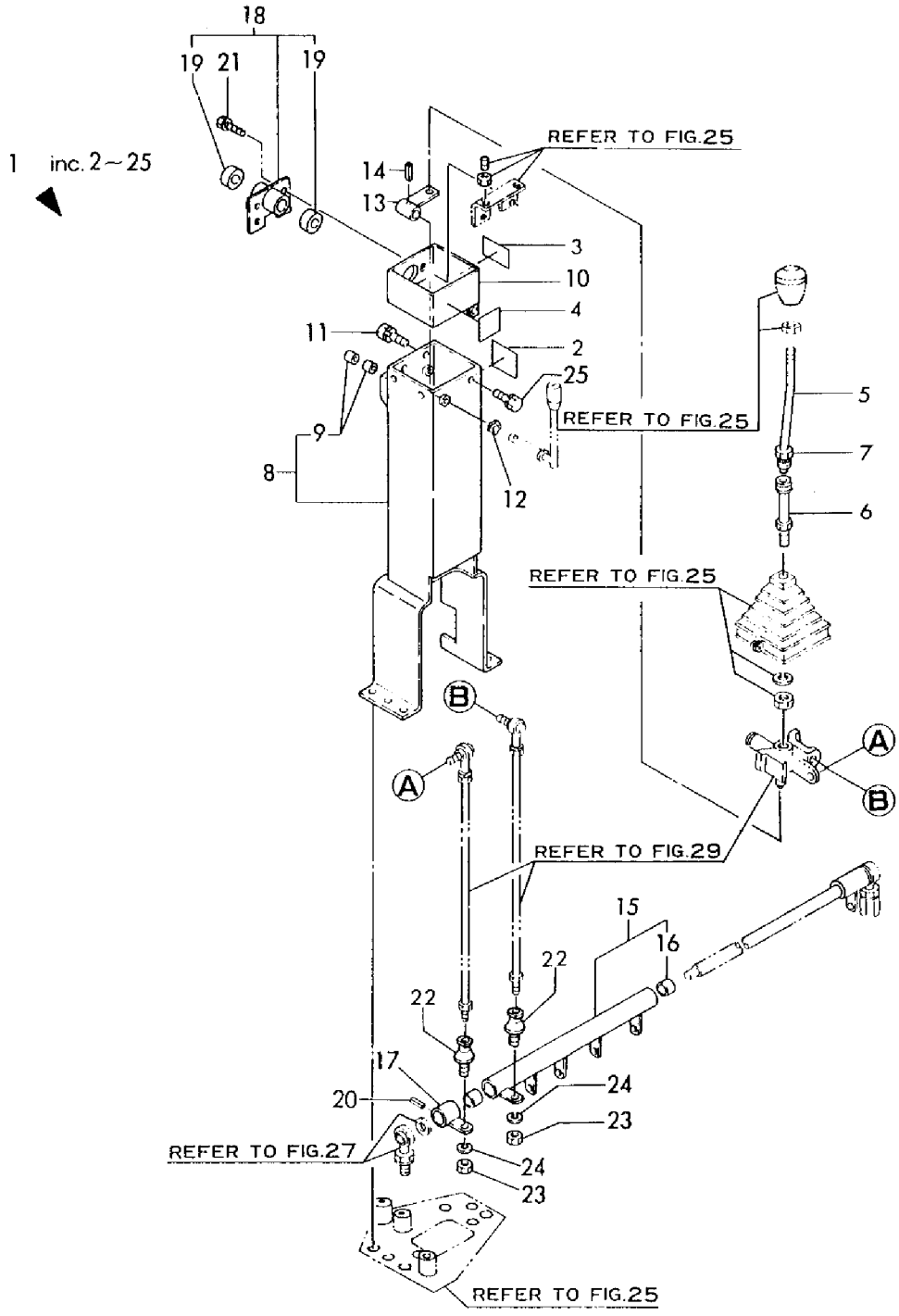

```
1,1,,772122-63130,,"PANEL ASSY,OVER HEAD",,,1,,1,1,,1,,,,,,,,,,
2,2,,172122-16710,,"BUSH 115",,,1,,1,1,,,,,,,,,,,,
3,2,,172111-16890,,"GROMMET  9",,,2,,2,2,,,,,,,,,,,,
4,2,,172122-18100,,"PANEL, OVER HEAD",,,1,,1,1,,,,,,,,,,,,
4-1,2,,172122-18101,,"PANEL, OVER
HEAD",,,1,,1,1,N,,,,,,,*1984.11,,,,*1984.11,,*1984.11
5,2,,172122-18200,,"COVER (A)",,,2,,2,2,,,,,,,,,,,,
6,2,,172122-18210,,"COVER (B)",,,1,,1,1,,,,,,,,,,,,
7,2,,22137-100000,,"WASHER 10,POLISHED",,,2,,2,2,,,,,,,,,,,,
8,2,,22217-040000,,"SPRING WASHER  4",,,8,,8,8,,,,,,,,,,,,
9,2,,26013-100402,,"BOLT M10X 40",,,2,,2,2,,,,,,,,,,,,
10,2,,26022-060122,,"SCREW M 6X 12",,,5,,5,5,,,,,,,,,,,,
11,2,,26557-040102,,"SCREW M 4X 10",,,12,,12,12,,,,,,,,,,,,
12,2,,26716-040002,,"NUT M 4",,,8,,8,8,,,,,,,,,,,,
13,2,,22137-060000,,"WASHER 6, POLISHED",,,5,,5,5,,,,,,,,,,,,
```

Fig. 90 オーバーヘッドパネル(オプション) OVERHEAD PANEL(OPTIONAL)

SPEC. CODE D72122-63130

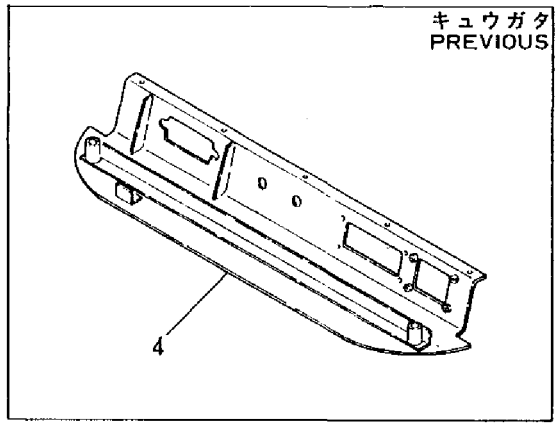

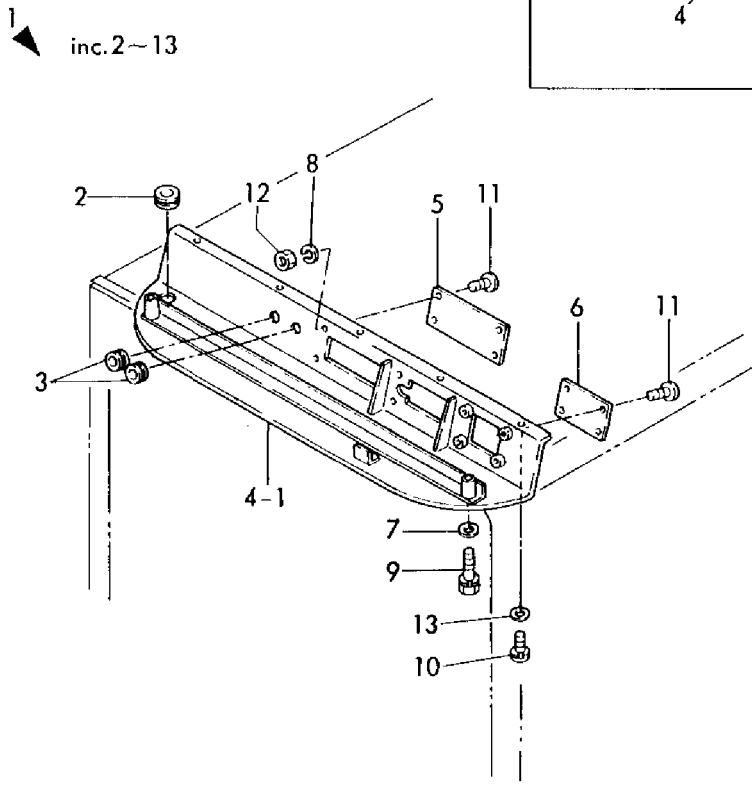

```
1,1,,172124-62400,,"STEP CENTER",,,1,,,1,,,,,,,,,,,
1-1,1,,172124-62401,,"EV CENTER STEP
ASSY",,,1,,,1,S,,,,,,,*1986.03,,,,,,*1986.03
2,1,,172124-62430,,"MAT (GR), FLOOR",,,1,,,1,,,,,,,,,,,
2-1,1,,172124-62431,,"FLOOR MAT(GR)",,,1,,,1,N,,,,,,,*1986.04,,,,,,*1986.04
3,1,,172122-64300,,"SEAT, OPERATOR",,,1,,,1,,,,,,,,,,,
4,1,,172312-64200,,"MOUNT (GR), SEAT",,,1,,,1,,,,,,,,,,,
5,1,,26013-080202,,"BOLT W/WASHER M8X20",,,6,,,6,,,,,,,,,,,
6,1,,26013-100252,,"BOLT W/WASHER M10X25",,,4,,,4,,,,,,,,,,,
```

Fig. 91 シート＆ステップ(1)(オプション) SEAT & STEP(1)(OPTIONAL)

SPEC. CODE
D72124-62121
D72124-64230

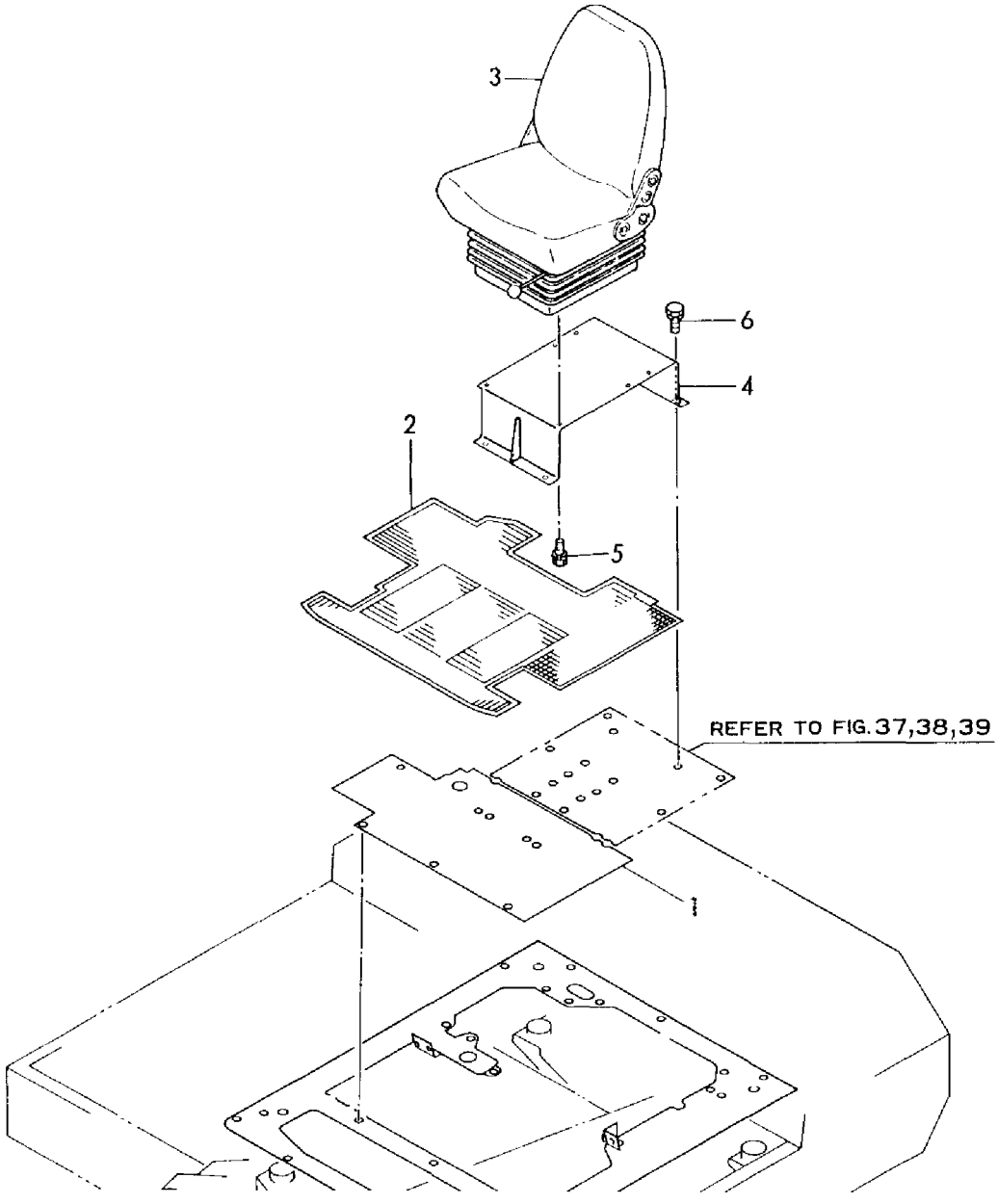

```
1,1,,172122-64200,,"SEAT, OPERATOR",,,1,,,1,,,,,,,,,,,
2,1,,172122-64210,,"MOUNT (A), SEAT",,,1,,,1,,,,,,,,,,,
3,1,,22217-100000,,"SPRING WASHER 10",,,4,,,4,,,,,,,,,,,
4,1,,26013-100202,,"BOLT W/WASHER M10X20",,,4,,,4,,,,,,,,,,,
5,1,,26736-100002,,"NUT M10",,,4,,,4,,,,,,,,,,,
6,1,,172124-62191,,"MAT, FLOOR",,,1,,,1,,,,,,,,,,,
```

Fig. 92 シート＆ステップ(2)(オプション) SEAT & STEP(2) (OPTIONAL)

SPEC. CODE
D72124-64210

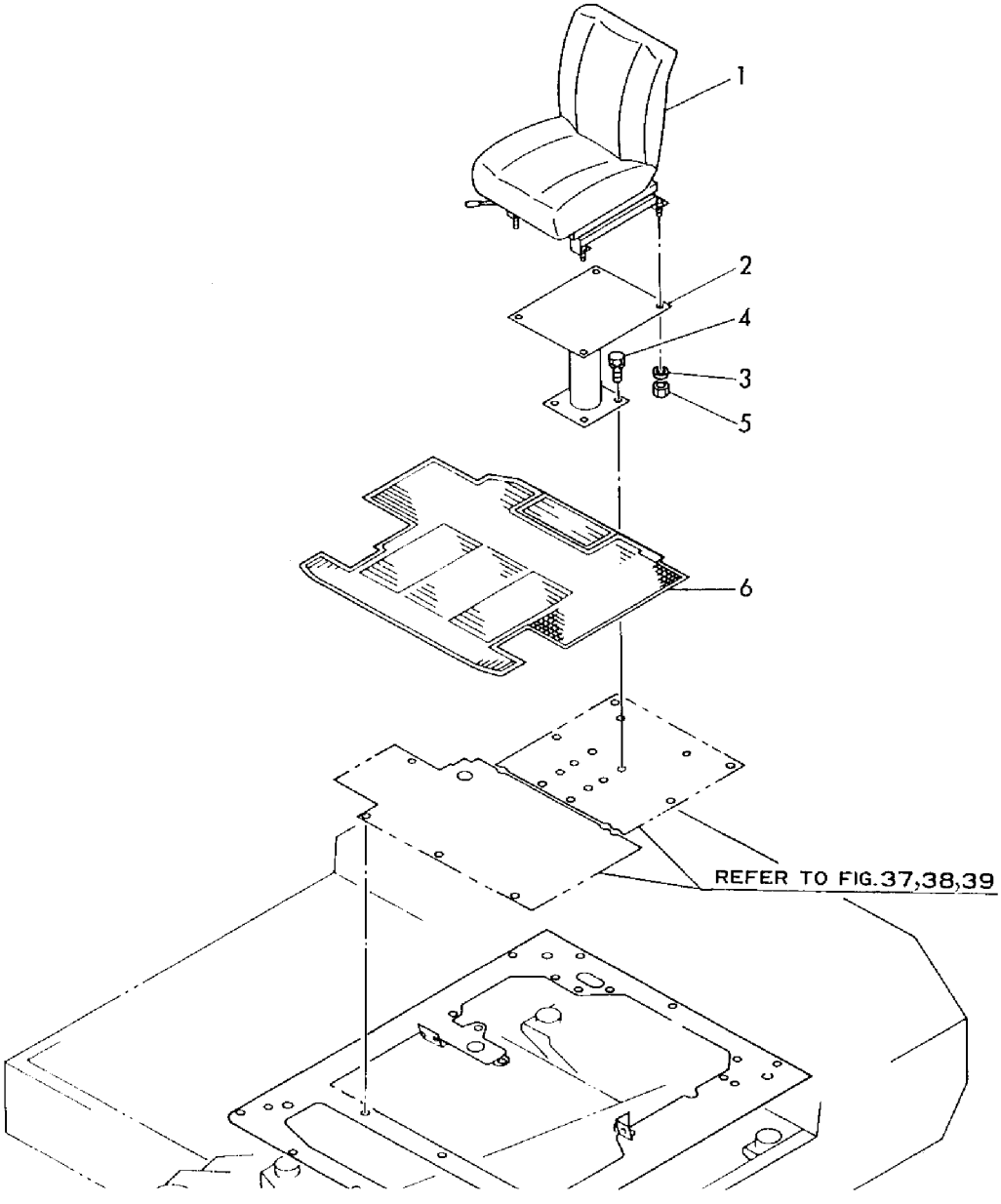

```
1,1,,172124-73400,,"MOTOR ASSY,TURNING",,1,1,,,1,,1,,,,,,,,,
2,2,,172124-73420,,"BRAKE VALVE",,1,1,,,1,,,,,,,,,,,
3,3,,172122-70460,,"SPRING SEAT",,2,2,,,2,,,,,,,,,,,
4,3,,172122-70470,,SPRING,,2,2,,,2,,,,,,,,,,,
5,3,,172122-70740,,CAP,,2,2,,,2,,,,,,,,,,,
6,3,,172124-73430,,"RELIEF VALVE",,2,2,,,2,,,,,,,,,,,
7,3,,172122-70720,,PLUG,,2,2,,,2,,,,,,,,,,,
8,3,,172122-70710,,SPRING,,2,2,,,2,,,,,,,,,,,
9,3,,172122-73500,,"SEAL SET",,1,1,,,1,,,,,,,,,,,
10,2,,172122-73390,,"PISTON MOTOR MSF-37N",,1,1,,,1,,,,,,,,,,,
11,3,,172122-70670,,WASHER,,2,2,,,2,,,,,,,,,,,
12,3,,172122-70660,,SPRING,,1,1,,,1,,,,,,,,,,,
13,3,,172122-70640,,"SNAP RING",,1,1,,,1,,,,,,,,,,,
14,3,,172122-70650,,"PARALLEL PIN",,2,2,,,2,,,,,,,,,,,
15,3,,172122-73470,,PIN,,1,1,,,1,,,,,,,,,,,
16,3,,172122-73460,,SPRING,,1,8,,,8,,,,,,,,,,,
17,3,,172122-73450,,PIN,,2,2,,,2,,,,,,,,,,,
18,3,,172122-70630,,"SNAP RING",,1,1,,,1,,,,,,,,,,,
19,3,,172122-73440,,BOLT,,,8,,,8,,,,,,,,,,,
20,3,,172122-73430,,PLUG,,1,1,,,1,,,,,,,,,,,
21,3,,23871-030000,,"PLUG PT3/8,SCREW",,1,1,,,1,,,,,,,,,,,
22,3,,172122-73410,,BOLT,,3,3,,,3,,,,,,,,,,,
23,3,,172122-73400,,"SEAL SET, MOTOR",,1,1,,,1,,,,,,,,,,,
24,2,,172122-73320,,"VALVE UNIT",,1,1,,,1,,,,,,,,,,,
25,3,,172122-73620,,PLUG,,1,1,,,1,,,,,,,,,,,
26,3,,172122-73610,,"GUIDE, SPRING",,3,3,,,3,,,,,,,,,,,
27,3,,172122-73600,,SPRING,,2,2,,,2,,,,,,,,,,,
28,3,,172122-73590,,"VALVE, CHECK",,2,2,,,2,,,,,,,,,,,
29,3,,172122-73580,,PISTON,,1,1,,,1,,,,,,,,,,,
30,3,,172122-73570,,SPRING,,1,1,,,1,,,,,,,,,,,
31,3,,172122-73560,,"SUB RELIEF ASSY",,2,2,,,2,,,,,,,,,,,
32,3,,172122-73550,,"SEAL SET, VALVE UNIT",,1,1,,,1,,,,,,,,,,,
```

Fig. 93 センカイモータ(メカブレーキ) TURNING MOTOR (MECHA, BRAKE) (オプション) (OPTIONAL)

SPEC. CODE D72124-73320

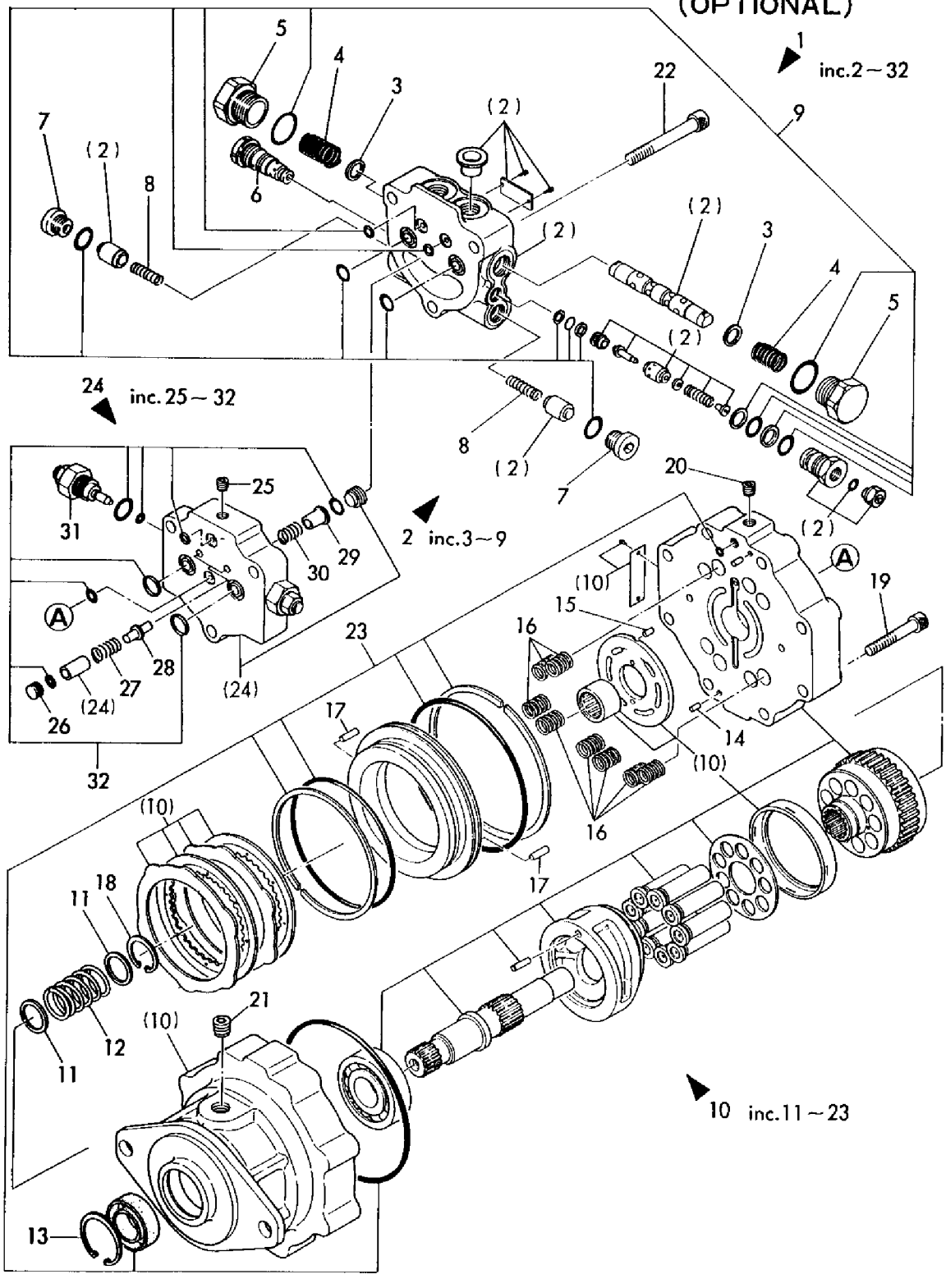

1,1,,172124-73410,,"MOTOR ASSY(MECHA.B)",,2,2,,,2,,1,,,,,,,,,
2,2,,172124-70010,,BEARING,,2,2,,,2,,,,,,,,,,,
3,2,,172124-70020,,PIN,,2,2,,,2,,,,,,,,,,,
4,2,,172124-70030,,BALL,,198,198,,,198,,,,,,,,,,,
5,2,,172122-73430,,PLUG,,2,2,,,2,,,,,,,,,,,
6,2,,172124-70050,,"RING NUT",,2,2,,,2,,,,,,,,,,,
7,2,,172124-70060,,HOLDER,,2,2,,,2,,,,,,,,,,,
8,2,,172124-70070,,"PLANETRY GEAR(A)",,6,6,,,6,,,,,,,,,,,
9,2,,172124-70080,,SHAFT(A),,6,6,,,6,,,,,,,,,,,
10,2,,172124-70090,,"GAUGE & ROLLER",,6,6,,,6,,,,,,,,,,,
11,2,,172124-70100,,"SPRING PIN",,6,6,,,6,,,,,,,,,,,
12,2,,172124-70110,,"GEAR, DRIVE",,2,2,,,2,,,,,,,,,,,
13,2,,172124-70120,,BALL,,2,2,,,2,,,,,,,,,,,
14,2,,172124-70130,,COLLAR,,2,2,,,2,,,,,,,,,,,
15,2,,172124-70140,,"PLANETRY GEAR(B)",,6,6,,,6,,,,,,,,,,,
16,2,,172124-70150,,COLLAR,,6,6,,,6,,,,,,,,,,,
17,2,,172124-70160,,SHAFT(B),,6,6,,,6,,,,,,,,,,,
18,2,,172124-70170,,"GAUGE & ROLLER",,12,12,,,12,,,,,,,,,,,
19,2,,172124-70180,,COLLAR,,12,12,,,12,,,,,,,,,,,
20,2,,172124-70190,,GEAR,,2,2,,,2,,,,,,,,,,,
21,2,,172124-70200,,"SPRING PIN",,6,6,,,6,,,,,,,,,,,
22,2,,172124-70210,,COLLAR,,2,2,,,2,,2,,,,,,,,,
23,2,,172124-70220,,COLLAR,,2,2,,,2,,2,,,,,,,,,
24,2,,172124-70230,,COLLAR,,2,2,,,2,,2,,,,,,,,,
25,2,,172124-70240,,"SNAP RING",,2,2,,,2,,,,,,,,,,,
26,2,,172124-70250,,COVER,,2,2,,,2,,,,,,,,,,,
27,2,,172124-70260,,CABLE,,2,2,,,2,,,,,,,,,,,
28,2,,172124-70270,,COLLAR,,2,2,,,2,,,,,,,,,,,
29,2,,172124-70280,,COLLAR,,6,6,,,6,,,,,,,,,,,
30,2,,172124-70290,,"SNAP RING",,2,2,,,2,,,,,,,,,,,
31,2,,172124-70300,,PLATE,,2,2,,,2,,,,,,,,,,,
33,2,,172122-70370,,"PLATE, RETAINER",,2,2,,,2,,,,,,,,,,,
34,2,,172122-70360,,COLLAER,,2,2,,,2,,,,,,,,,,,
36,2,,172123-70030,,"PLATE, VALVE",,2,2,,,2,,,,,,,,,,,
37,2,,172122-70340,,PIN,,6,6,,,6,,,,,,,,,,,
38,2,,172122-70300,,COLLAR,,2,2,,,2,,,,,,,,,,,
39,2,,172122-70320,,COLLAR,,2,2,,,2,,,,,,,,,,,
40,2,,172122-70310,,SPRING,,2,2,,,2,,,,,,,,,,,
41,2,,172122-70250,,SHAFT,,2,2,,,2,,,,,,,,,,,
42,2,,172122-70260,,BEARING,,2,2,,,2,,,,,,,,,,,
43,2,,172122-70400,,BEARING,,2,2,,,2,,,,,,,,,,,
44,2,,172123-70020,,BALL,,4,4,,,4,,,,,,,,,,,
45,2,,172122-70350,,BALL,,2,2,,,2,,,,,,,,,,,
46,2,,172122-70330,,"SNAP RING",,2,2,,,2,,,,,,,,,,,
47,2,,172124-70310,,PLUNGER,,2,2,,,2,,,,,,,,,,,
48,2,,172122-70520,,PLUG,,4,4,,,4,,,,,,,,,,,
48-1,2,,172122-70430,,"VALVE, CHECK",,4,4,,,4,S,,,,,M00503,,M00503,,,,,,M00503
49,2,,172122-70440,,SPRING,,4,4,,,4,,,,,,,,,,,
50,2,,172124-70320,,PLUG,,4,4,,,4,,,,,,,,,,,
51,2,,172124-70330,,"SPRING SEAT",,4,4,,,4,,,,,,,,,,,
52,2,,172122-70470,,SPRING,,4,4,,,4,,,,,,,,,,,
53,2,,172124-70350,,"PUSH ROD",,4,4,,,4,,,,,,,,,,,
54,2,,172124-70360,,FLANGE,,4,4,,,4,,,,,,,,,,,
55,2,,172124-70370,,BOLT,,16,16,,,16,,,,,,,,,,,
56,2,,172124-70380,,ORIFICE,,4,4,,,4,,,,,,,,,,,
57,2,,172122-70530,,PIN,,2,2,,,2,,,,,,,,,,,
58,2,,172124-70460,,VALVE,,2,2,,,2,,,,,,,,,,,
59,2,,172124-70470,,"SPRING SEAT",,4,4,,,4,,,,,,,,,,,
60,2,,172124-70480,,SPRING,,4,4,,,4,,,,,,,,,,,
61,2,,172124-70490,,PLUG,,4,4,,,4,,,,,,,,,,,
62,2,,172124-70390,,"BOLT, SOCKET",,16,16,,,16,,,,,,,,,,,
63,2,,172122-70410,,PIN,,4,4,,,4,,,,,,,,,,,
64,2,,172124-70400,,PLUG,,4,4,,,4,,,,,,,,,,,

```
64-1,2,,172122-73430,,PLUG,,4,4,,,4,R,,,,,*1986.03,,*1986.03,,,,,,*1986.03
65,2,,172124-70570,,VALVE,,2,2,,,2,,,,,,,,,,,,
66,3,,172123-70090,,VALVE,,4,4,,,4,,,,,,,,,,,,
66-1,3,,172123-70091,,VALVE,,4,4,,,4,N,,,,,M00503,,M00503,,,,,,M00503
67,3,,172124-70410,,"BODY, VALVE",,2,2,,,2,,,,,,,,,,,,
68,3,,172123-70010,,PLATE,,4,4,,,4,,,,,,,,,,,,
68-1,3,,172123-70101,,SPRING,,4,4,,,4,S,,,,,M00503,,M00503,,,,,,M00503
69,3,,172124-70420,,PLUG,,4,4,,,4,,,,,,,,,,,,
70,3,,172123-70121,,PLUG,,2,2,,,2,,,,,,,,,,,,
71,2,,172122-70540,,"BOLT, SOCKET",,6,6,,,6,,,,,,,,,,,,
71-1,2,,172124-70600,,"BOLT, SOCKET",,6,6,,,6,S,,,,,M00503,,M00503,,,,,,M00503
72,2,,172124-70500,,DISK,,2,2,,,2,,,,,,,,,,,,
73,2,,172124-70510,,"PISTON, BRAKE",,2,2,,,2,,,,,,,,,,,,
74,2,,172124-70520,,SPRING,,16,16,,,16,,,,,,,,,,,,
75,2,,172124-70530,,PIN,,4,4,,,4,,,,,,,,,,,,
76,2,,172124-70540,,"PLATE, FRICTION",,2,2,,,2,,,,,,,,,,,,
77,2,,172124-70550,,PIN,,4,4,,,4,,,,,,,,,,,,
78,2,,172124-70560,,"SEAL SET, DRIV.MOTOR",,2,2,,,2,,,,,,,,,,,,
79,2,,172123-70130,,"PISTON S/A",,4,4,,,4,W,,,,,*1988.08,,*1988.08,,,,,,*1988.08
```

Fig. 94 ソウコウモータ(メカブレーキ) TRAVEL MOTOR (MECHA, BRAKE) (オプション) (OPTIONAL)

SPEC. CODE
D72124-73330

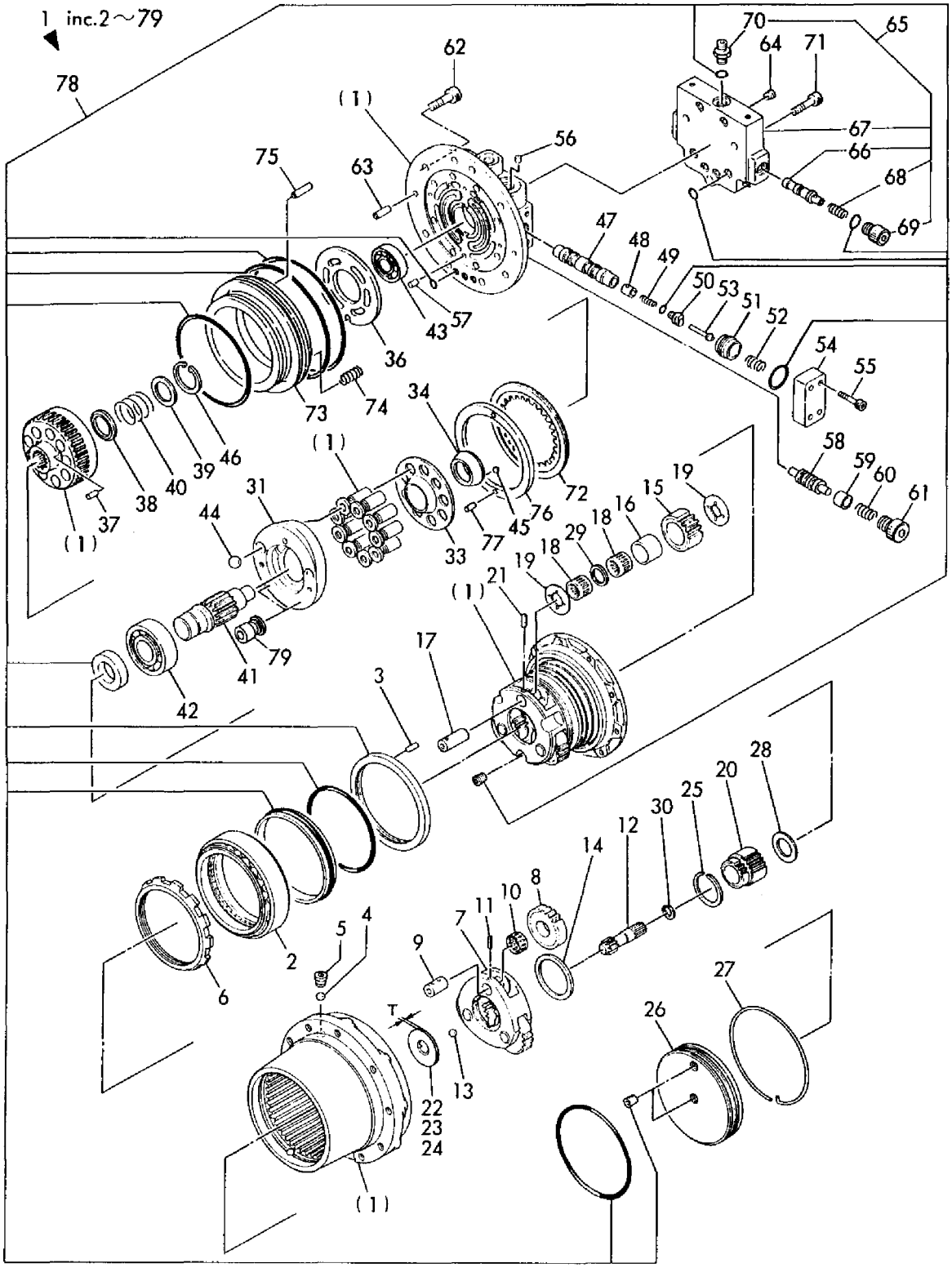

1,1,,772124-76100,,"VALVE ASSY, THIRD",,,1,,,1,,1,,,,,,,,,,
1-1,1,,772124-76101,,"VALVE ASSY, THIRD",,,1,,,1,S,1,,,,,,M00704,,,,,,M00632
2,2,,172122-12100,,"LEVER ASSY, ACCEL",,,1,,,1,,,,,,,,,,,
2-1,2,,172122-12140,,"LEVER ASSY,3RD
VALVE",,,1,,,1,N,,,,,,*1986.03,,,,,,"*1986,03"
3,3,,933171-23680,,"BUSH 14X15",,,2,,,2,,,,,,,,,,,
4,2,,172122-41380,,"SHAFT, FULCRUM",,,1,,,1,,,,,,,,,,,
4-1,2,,172112-41380,,"SHAFT, BLADE LEVER",,,1,,,1,N,,,,,,,M00501,,,,,,M00501
5,2,,172122-45670,,"BRACKET (B), LINK",,,1,,,1,,,,,,,,,,,
6,2,,172116-45940,,"KNOB (C), LEVER",,,1,,,1,,,,,,,,,,,
7,2,,172124-46100,,"MOUNT, 3RD VALVE",,,1,,,1,,,,,,,,,,,
8,2,,172124-46120,,"LINK, SPOOL",,,1,,,1,,,,,,,,,,,
9,2,,172124-46130,,"CABLE, PUSH-PULL",,,1,,,1,,,,,,,,,,,
10,2,,172122-47300,,"BRACKET, LEVER",,,1,,,1,,,,,,,,,,,
11,2,,22417-160160,,"COTTER PIN 1.6X16",,,1,,,1,,,,,,,,,,,
12,2,,22417-400400,,"COTTER PIN 4.0X40",,,1,,,1,,,,,,,,,,,
13,2,,26013-100202,,"BOLT W/WASHER M10X20",,,2,,,2,,,,,,,,,,,
14,2,,26013-100202,,"BOLT W/WASHER M10X20",,,2,,,2,,,,,,,,,,,
15,2,,26013-100202,,"BOLT W/WASHER M10X20",,,4,,,4,,,,,,,,,,,
16,2,,26756-050002,,"LOCK NUT M 5 PLATED",,,1,,,1,,,,,,,,,,,
17,2,,933110-54100,,"PIN 4.75X14",,,1,,,1,,,,,,,,,,,
18,2,,22217-100000,,"SPRING WASHER 10",,,2,,,2,,,,,,,,,,,
19,2,,26116-100602,,"BOLT M10X 60 PLATED",,,2,,,2,,,,,,,,,,,
20,2,,172124-76920,,"PIPE(A), THIRD",,,1,,,1,,,,,,,,,,,
20-1,2,,172124-76921,,"PIPE (A), THIRD",,,1,,,1,S,,,,,,,M00704,,,,,,M00632
21,2,,172125-76940,,"PIPE(B), THIRD",,,1,,,1,,,,,,,,,,,
21-1,2,,172125-76941,,"PIPE (B), THIRD",,,1,,,1,S,,,,,,,M00704,,,,,,M00632
22,2,,172125-76960,,"PIPE(C), THIRD",,,1,,,1,,,,,,,,,,,
23,2,,172125-76980,,"PIPE(D), THIRD",,,1,,,1,,,,,,,,,,,
24,2,,172112-77260,,"CONNECTOR PF1/2L-42",,,1,,,1,,,,,,,,,,,
25,2,,172124-78500,,"PIPE P208AB048",,,1,,,1,,,,,,,,,,,
25-1,2,,172125-78500,,"PIPE P208AB041",,,1,,,1,R,,,,,,,M00501,,,,,,M00501
26,2,,172124-78510,,"PIPE P208BC046",,,1,,,1,,,,,,,,,,,
26-1,2,,172125-78510,,"PIPE P208BC054",,,1,,,1,R,,,,,,,M00501,,,,,,M00501
27,2,,26013-100402,,"BOLT M10X 40",,,1,,,1,,,,,,,,,,,
28,2,,933152-24120,,"O-RING (B)",,,2,,,2,,,,,,,,,,,
29,2,,933152-24130,,"RING (B), BUCK UP",,,1,,,1,,,,,,,,,,,
30,2,,933152-24140,,"NUT (B), CONNECTOR",,,1,,,1,,,,,,,,,,,
31,2,,933155-09670,,"CLAMP, PIPE",,,1,,,1,,,,,,,,,,,
32,2,,933166-24120,,"CONNECTOR PF1/2-10",,,1,,,1,,,,,,,,,,,
33,2,,933166-25350,,"ELBOW 1/2 (90ß)",,,2,,,2,,,,,,,,,,,
34,2,,933166-25420,,ADAPTER,,,2,,,2,,,,,,,,,,,
35,2,,172125-76900,,CLAMP,,,4,,,4,,,,,,,,,,,
36,2,,172125-76910,,"SPACER, CLAMP",,,4,,,4,,,,,,,,,,,
37,2,,172125-78530,,"PIPE, RETURN",,,1,,,1,,,,,,,,,,,
37-1,2,,172125-78531,,"PIPE, RETURN",,,1,,,1,S,,,,,,,M00704,,,,,,M00632
38,2,,22217-120000,,"WASHER 12,SPRING",,,4,,,4,,,,,,,,,,,
39,2,,23871-040000,,"PLUG PT1/2,SCREW",,,1,,,1,,,,,,,,,,,
40,2,,23871-100000,,"PLUG PT1",,,1,,,1,,,,,,,,,,,
41,2,,26116-120652,,"BOLT M12X 65 PLATED",,,4,,,4,,,,,,,,,,,
42,2,,172125-76800,,"STAY, PIPE",,,1,,,1,,,,,,,,,,,
42-1,2,,172125-76801,,"STAY, PIPE",,,1,,,1,S,,,,,,,M00704,,,,,,M00632
43,2,,23391-100000,,JOINT,,,1,,,1,,,,,,,,,,,
44,2,,172124-78160,,"PIPE P208BC120S",,,1,,,1,,,,,,,,,,,
45,2,,172124-78170,,"PIPE P208BC113S",,,1,,,1,,,,,,,,,,,
46,2,,172125-78570,,"HOSE G208AB200",,,1,,,1,,,,,,,,,,,
46-1,2,,172125-78571,,"HOSE G208AB190",,,1,,,1,S,,,,,,,M00704,,,,,,M00632
47,2,,172125-78580,,"HOSE G216AB200",,,1,,,1,,,,,,,,,,,
47-1,2,,172125-78581,,"HOSE G216AB190",,,1,,,1,S,,,,,,,M00704,,,,,,M00632
48,2,,172112-78750,,"CLAMP (B), HOSE",,,3,,,3,,,,,,,,,,,
49,2,,23251-100805,,"HOSE 10X800,MID-PRES",,,1,,,1,,,,,,,,,,,
50,2,,933171-25102,,"CLAMP, HOSE",,,1,,,1,,,,,,,,,,,
51,2,,172125-81110,,STAY,,,4,,,4,,,,,,,,,,,

52,2,,26013-100202,,"BOLT W/WASHER M10X20",,,2,,,2,,,,,,,,,,,
53,1,,172125-81100,,"BOOM ASSY",,,1,,,1,,,,,,,,,,,
54,2,,172112-81701,,"BUSH 50X80,BOOM",,,2,,,2,,,,,,,,,,,

SPEC. CODE
D72124-46100
D72124-74700
D72125-76110
D72125-76421
D72125-78121
D72125-81120

Fig. 95 P.T.O. バルブハイカン(オプション) P.T.O. VALVE PIPING (OPTIONAL)

COUNTRY	JP	NW	SW	WG	FA	DM	NL
Fig. No.	95	—	54	54	54	54	54

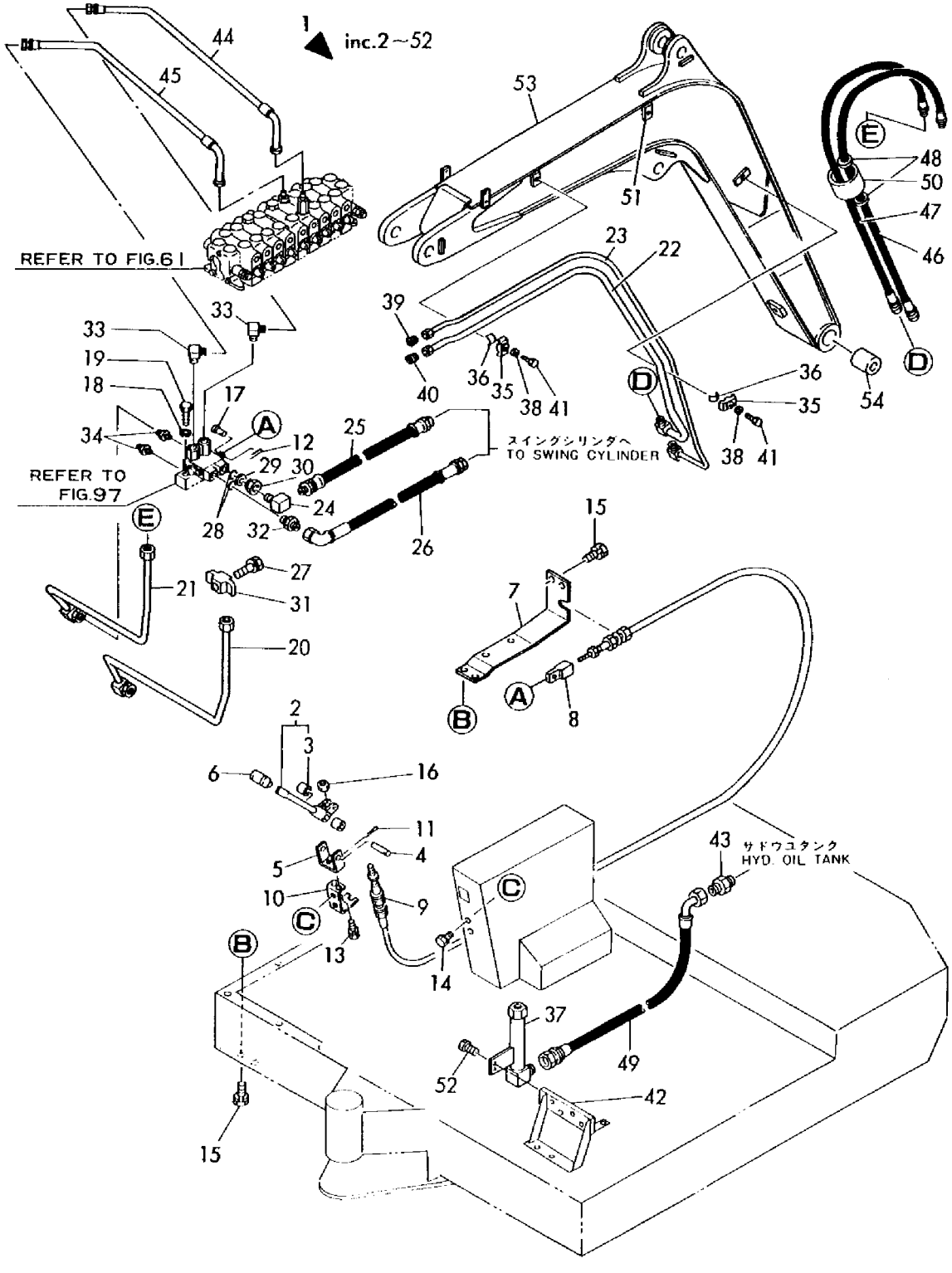

```
1,1,,772132-46100,,"VALVE ASSY, THIRD",,,1,,,1,,1,,,,,,,,,
2,2,,172122-12140,,"LEVER ASSY,3RD VALVE",,,1,,,1,,,,,,,,,,,
3,3,,933171-23680,,"BUSH 14X15",,,2,,,2,,,,,,,,,,,
4,2,,172112-12530,,"JOINT, CABLE",,,1,,,1,,,,,,,,,,,
5,2,,172112-41380,,"SHAFT, BLADE LEVER",,,1,,,1,,,,,,,,,,,
6,2,,172137-45641,,"ROD ASSY, SPOOL",,,1,,,1,,,,,,,,,,,
7,2,,172122-45670,,"BRACKET (B), LINK",,,1,,,1,,,,,,,,,,,
8,2,,172116-45940,,"KNOB (C), LEVER",,,1,,,1,,,,,,,,,,,
9,2,,172132-46130,,CABLE,,,1,,,1,,,,,,,,,,,
10,2,,172132-46230,,"SHAFT, SELECTOR LINK",,,1,,,1,,,,,,,,,,,
11,2,,172132-46300,,"MOUNT, 3RD VALVE",,,1,,,1,,,,,,,,,,,
12,2,,172132-46340,,"LINK, 3RD",,,1,,,1,,,,,,,,,,,
13,3,,933171-23680,,"BUSH 14X15",,,2,,,2,,,,,,,,,,,
14,2,,172137-46410,,"JOINT, LINK",,,1,,,1,,,,,,,,,,,
15,2,,172122-47300,,"BRACKET, LEVER",,,1,,,1,,,,,,,,,,,
16,2,,1C6281-52310,,"PIN 6,COME-OFF SNAP",,,1,,,1,,,,,,,,,,,
17,2,,1C6281-52320,,"PIN 8,COME-OFF SNAP",,,2,,,2,,,,,,,,,,,
18,2,,172112-77260,,"CONNECTOR PF1/2L-42",,,2,,,2,,,,,,,,,,,
19,2,,22137-120000,,"WASHER 12,POLISHED",,,3,,,3,,,,,,,,,,,
20,2,,22417-400400,,"COTTER PIN 4.0X40",,,2,,,2,,,,,,,,,,,
21,2,,26013-100202,,"BOLT W/WASHER M10X20",,,2,,,2,,,,,,,,,,,
22,2,,26013-100202,,"BOLT W/WASHER M10X20",,,2,,,2,,,,,,,,,,,
23,2,,26013-120302,,"BOLT W/WASHER M12X30",,,3,,,3,,,,,,,,,,,
24,2,,26716-050002,,"NUT M 5",,,1,,,1,,,,,,,,,,,
25,2,,26756-100002,,"LOCK NUT M10 PLATED",,,1,,,1,,,,,,,,,,,
26,2,,933110-54100,,"PIN 4.75X14",,,1,,,1,,,,,,,,,,,
27,2,,933171-21700,,"PIN (B), SPOOL LINK",,,1,,,1,,,,,,,,,,,
28,2,,22217-100000,,"SPRING WASHER 10",,,2,,,2,,,,,,,,,,,
29,2,,26116-100602,,"BOLT M10X 60 PLATED",,,2,,,2,,,,,,,,,,,
30,2,,23391-100000,,JOINT,,,1,,,1,,,,,,,,,,,
31,2,,933152-24120,,"O-RING (B)",,,2,,,2,,,,,,,,,,,
32,2,,933152-24130,,"RING (B), BUCK UP",,,2,,,2,,,,,,,,,,,
33,2,,933152-24140,,"NUT (B), CONNECTOR",,,2,,,2,,,,,,,,,,,
34,2,,933166-25350,,"ELBOW 1/2 (90ß)",,,3,,,3,,,,,,,,,,,
35,2,,933166-25420,,ADAPTER,,,3,,,3,,,,,,,,,,,
36,2,,172132-76580,,MOUNT,,,1,,,1,,,,,,,,,,,
37,2,,172132-76780,,"PIPIE (E), 3RD",,,1,,,1,,,,,,,,,,,
38,2,,172125-76801,,"STAY, PIPE",,,1,,,1,,,,,,,,,,,
39,2,,172132-76800,,"PIPE (A), RETURN",,,1,,,1,,,,,,,,,,,
40,2,,172132-76820,,"PIPE (B), RETURN",,,1,,,1,,,,,,,,,,,
41,2,,172132-76880,,"PIPE, 3RD",,,1,,,1,,,,,,,,,,,
42,2,,172125-76900,,CLAMP,,,4,,,4,,,,,,,,,,,
43,2,,172125-76910,,"SPACER, CLAMP",,,4,,,4,,,,,,,,,,,
44,2,,172132-76960,,"PIPE (F), 3RD",,,1,,,1,,,,,,,,,,,
45,2,,22137-120000,,"WASHER 12,POLISHED",,,1,,,1,,,,,,,,,,,
46,2,,22217-120000,,"WASHER 12,SPRING",,,4,,,4,,,,,,,,,,,
47,2,,23871-040000,,"PLUG PT1/2,SCREW",,,1,,,1,,,,,,,,,,,
48,2,,23871-100000,,"PLUG PT1",,,2,,,2,,,,,,,,,,,
49,2,,26013-100202,,"BOLT W/WASHER M10X20",,,2,,,2,,,,,,,,,,,
50,2,,26013-100452,,"BOLT M10X 45",,,1,,,1,,,,,,,,,,,
51,2,,26013-120202,,"BOLT W/WASHER M12X20",,,1,,,1,,,,,,,,,,,
52,2,,26013-120302,,"BOLT W/WASHER M12X30",,,1,,,1,,,,,,,,,,,
53,2,,26116-120652,,"BOLT M12X 65 PLATED",,,4,,,4,,,,,,,,,,,
54,2,,172132-78110,,BODY,,,2,,,2,,,,,,,,,,,
55,2,,172132-78120,,"COVER 1800, HOSE",,,1,,,1,,,,,,,,,,,
56,2,,172132-78220,,HOSE,,,1,,,1,,,,,,,,,,,
57,2,,172132-78260,,HOSE,,,1,,,1,,,,,,,,,,,
58,2,,172132-78270,,HOSE,,,2,,,2,,,,,,,,,,,
59,2,,172132-78280,,HOSE,,,2,,,2,,,,,,,,,,,
60,2,,172132-78290,,HOSE,,,1,,,1,,,,,,,,,,,
61,2,,172132-78300,,STAY,,,1,,,1,,,,,,,,,,,
62,2,,26013-100202,,"BOLT W/WASHER M10X20",,,1,,,1,,,,,,,,,,,
63,2,,26716-100002,,"NUT M10",,,1,,,1,,,,,,,,,,,
```

```
64,2,,172125-81110,,STAY,,,5,,,5,,,,,,,,,,,
65,1,,172132-81100,,"BOOM ASSY, 3RD",,,1,,,1,,,,,,,,,,,
66,2,,172112-81701,,"BUSH 50X80,BOOM",,,2,,,2,,,,,,,,,,,
```

SPEC. CODE
D72132-46100
D72124-74700
D72132-76110
D72132-76420
D72132-76430
D72132-78120
D72132-81120

Fig. 96 P.T.O. バルブハイカン(U,UZ)(オプション) P.T.O. VALVE PIPING(U,UZ)(OPTIONAL)

COUNTRY	J P	N W	S W	W G	F A	D M	N L
Fig. No.	96	—	—	—	—	—	—

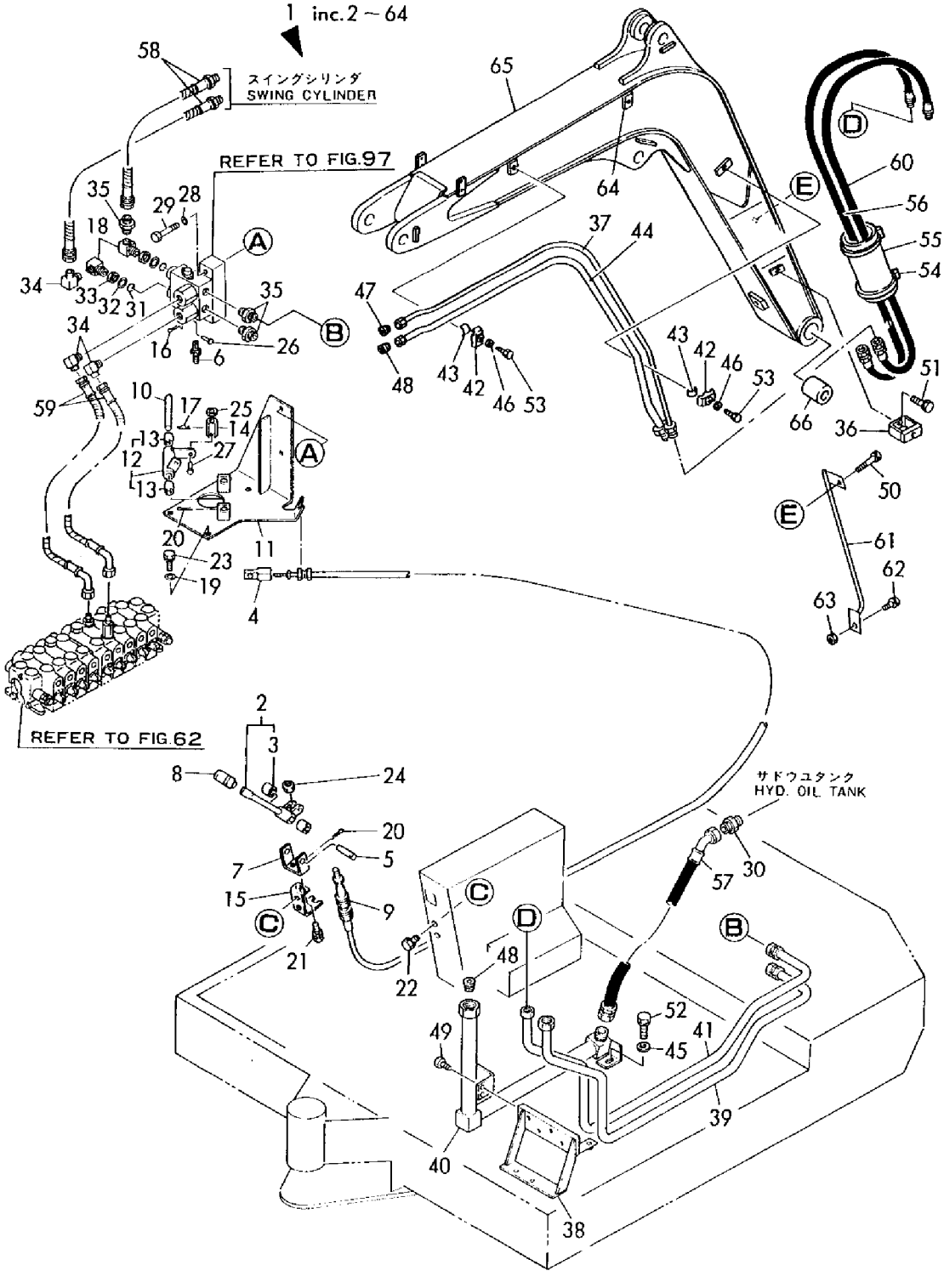

```
1,1,,172119-74100,,"VALVE, SELECTOR",,,1,,1,1,,1,,,,,,,,,
2,2,,172124-70840,,"VALVE (B), SELETOR",,,1,,1,1,,,,,,,,,,,
3,3,,172123-70290,,"PLUG PT1/16",,,1,,1,1,,,,,,,,,,,
4,3,,172123-70600,,O-RING,,,2,,2,2,,,,,,,,,,,
5,3,,172124-70720,,BODY,,,1,,1,1,,,,,,,,,,,
6,3,,172124-70730,,PLATE,,,1,,1,1,,,,,,,,,,,
7,3,,172124-70740,,CAP,,,1,,1,1,,,,,,,,,,,
8,3,,172124-70750,,WASHER,,,1,,1,1,,,,,,,,,,,
9,3,,172124-70760,,"RING, BACK-UP",,,2,,2,2,,,,,,,,,,,
10,3,,172124-70770,,BALL,,,1,,1,1,,,,,,,,,,,
11,3,,172124-70780,,SPRING,,,1,,1,1,,,,,,,,,,,
12,3,,172124-70790,,NUT,,,2,,2,2,,,,,,,,,,,
13,3,,172124-70800,,BOLT,,,2,,2,2,,,,,,,,,,,
14,3,,172124-70810,,SPOOL,,,1,,1,1,,,,,,,,,,,
15,3,,172124-70820,,PLATE,,,1,,1,1,,,,,,,,,,,
16,3,,172124-70830,,BOLT,,,4,,4,4,,,,,,,,,,,
17,3,,933152-07400,,"O-RING (A)",,,2,,2,2,,,,,,,,,,,
18,3,,22217-050000,,"SPRING WASHER  5",,,7,,7,7,,,,,,,,,,,
19,3,,23871-010000,,"PLUG PT1/8,SCREW",,,2,,2,2,,,,,,,,,,,
20,3,,24311-000140,,"O-RING 1A P-14.0",,,2,,2,2,,,,,,,,,,,
21,3,,24315-000250,,"O-RING 1B P-25.0",,,4,,4,4,,,,,,,,,,,
22,3,,26557-050122,,"SCREW M 5X 12",,,3,,3,3,,,,,,,,,,,
23,2,,172124-70850,,SUB-PLATE,,,1,,1,1,,,,,,,,,,,
```

Fig. 97 P.T.O.バルブ(オプション) P.T.O.VALVE(OPTIONAL)

SPEC. CODE
D72124-74700

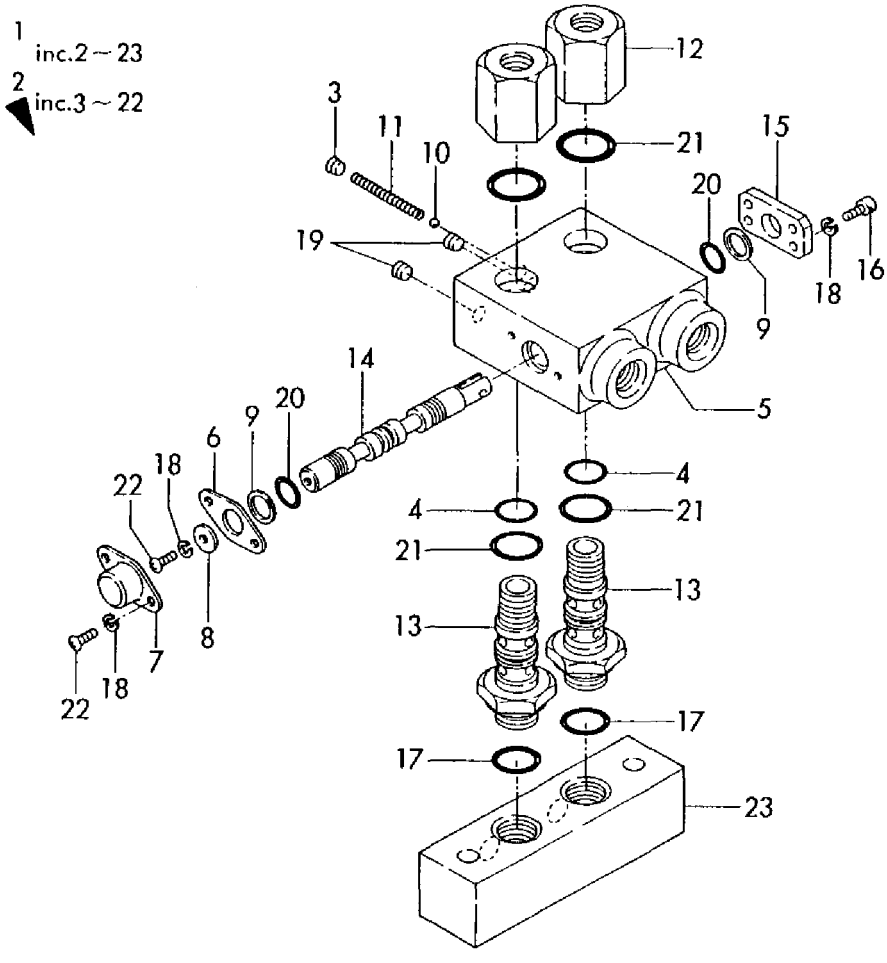

```
1,1,,772125-46200,,"STOPPER AS.,3RD VLV.",,,1,,,1,,,,,,,,,,,
2,2,,194740-00160,,"WASHER 10, CONICAL",,,1,,,1,,,,,,,,,,,
3,2,,172124-12200,,ACSEL,,,1,,,1,,,,,,,,,,,
4,3,,933171-23680,,"BUSH 14X15",,,2,,,2,,,,,,,,,,,
5,2,,172138-12250,,"STOPPER, ACCELERATOR",,,1,,,1,,,,,,,,,,,
6,2,,172138-12260,,PLATE,,,1,,,1,,,,,,,,,,,
7,2,,172122-12520,,"PIVOT,ACCELERATOR",,,1,,,1,,,,,,,,,,,
8,2,,172137-46800,,"PLATE, LOCK",,,1,,,1,,,,,,,,,,,
9,2,,172122-47800,,"BOLT STOPER",,,1,,,1,,,,,,,,,,,
10,2,,22137-060000,,"WASHER 6, POLISHED",,,2,,,2,,,,,,,,,,,
11,2,,22137-100000,,"WASHER 10,POLISHED",,,1,,,1,,,,,,,,,,,
12,2,,22217-060000,,"SPRING WASHER  6",,,2,,,2,,,,,,,,,,,
13,2,,26013-080162,,"BOLT W/WASHER M8X16",,,2,,,2,,,,,,,,,,,
14,2,,26557-060162,,"SCREW M 6X 16",,,2,,,2,,,,,,,,,,,
15,2,,26657-100002,,"CAP NUT M10",,,1,,,1,,,,,,,,,,,
16,2,,26716-100002,,"NUT M10",,,1,,,1,,,,,,,,,,,
17,2,,26756-100002,,"LOCK NUT M10 PLATED",,,1,,,1,,,,,,,,,,,
```

Fig. 98 バルブストッパ(オプション) VALVE STOPPER (OPTIONAL)

SPEC. CODE
D72125-46200

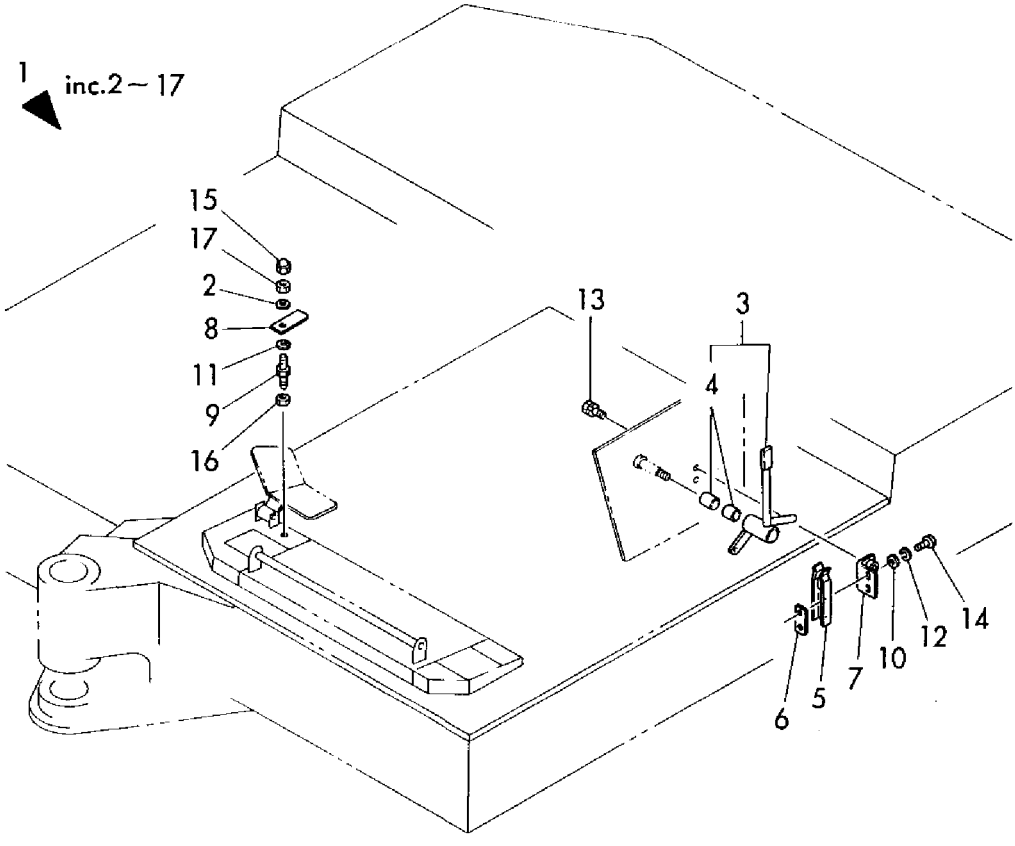

```
[Info]
PcNo=Y00K2094
PcName=YB451/YB501(B3631)
JpnUse=1
JpnSec1=Œš‹@
JpnSec2=ƒoƒbƒNƒz[
JpnSec3=YB
JpnPreface=1
EngUse=1
EngSec1=CONSTRUCTION
EngSec2=EXCAVATOR (YB)
EngSec3=YB
EngPreface=1
```