PREFACE

1. This parts catalog is the last edition of Yanmar crawler backhoe Model YB221U, YB221UZ, B22 & B22-1.

2. Part catalog history

	parts catalog No.	published	Remarks
1st edition	000Y00K2280	Jan., 1988	Disuse old edition
1st revised	000Y00K2281	Jul ., 1990	Disuse old edition
Last edition	000Y00K2282	Apr., 1996	

3. Model name

SECTION	Column	Model name	Remarks
I (Vehicle)	(A)	YB221U C (R)	cabin spec.
	(B)	YB221UZ P (R)	canopy spec.
	(C)	B22 (—1) C (R)	cabin spec.
	(D)	B22 (—1) P (R)	canopy spec.
II (Engine)	(A)	3TN75L-RB	

4. Your understanding is asking that this parts catalog is not a technical data manual setting forth as servicing procedures. This parts catalog is using simplified illustration.
Be sure to use Yanmar Genuine Parts in your maintenance servicing of Yanmar products.
Be careful not to use the simple parts available in the market ; otherwise their use in repairing causes such as an early breakage, for instance.

SPECIFICATIONS

Name			YANMAR CRAWLER BACKHOE	
Model			B22-P(R) YB221-UZP(R)	B22-C(R) YB221-UC(R)
Engine	Model		3TN75L-RB	
	Type		Vertical 3-cylinder water-cooled diesel	
Dimensions	Transport length	mm	4015	
	Transport width	mm	1360	1375
	Transport height	mm	2320	2390
Std. bucket capacity		m³	0.06	
Std. bucket width (Outside)		mm	450	
Max. digging depth		mm	2360 (2500 Blade)	
Max. cutting height		mm	4165	3720
Max. dump height		mm	2960	2570
Max. reach at ground level		mm	3990	
Min. turning radius		mm	1465 (Boom swing1080)	1705 (Boom swing1290)
Boom swing angle		degree	Left50/Right90	
Max. digging force (Std. bucket)		kgf	1700	
Travel speed		km/h	2.1	
Gradability		degree	30	
Average ground pressure		kgf/cm²	0.278 [0.263]	0.294 [0.278]
Track shoe width (Std.)		mm	270 [280]	
Blade	Width × height	mm	1360 × 300	
	Capacity	m³	0.123	
Machine mass		kg	2100	2220

[ ] shows to the specification of rubber crowler.

塗装色一覧
TABLE OF PAINTED COLOR

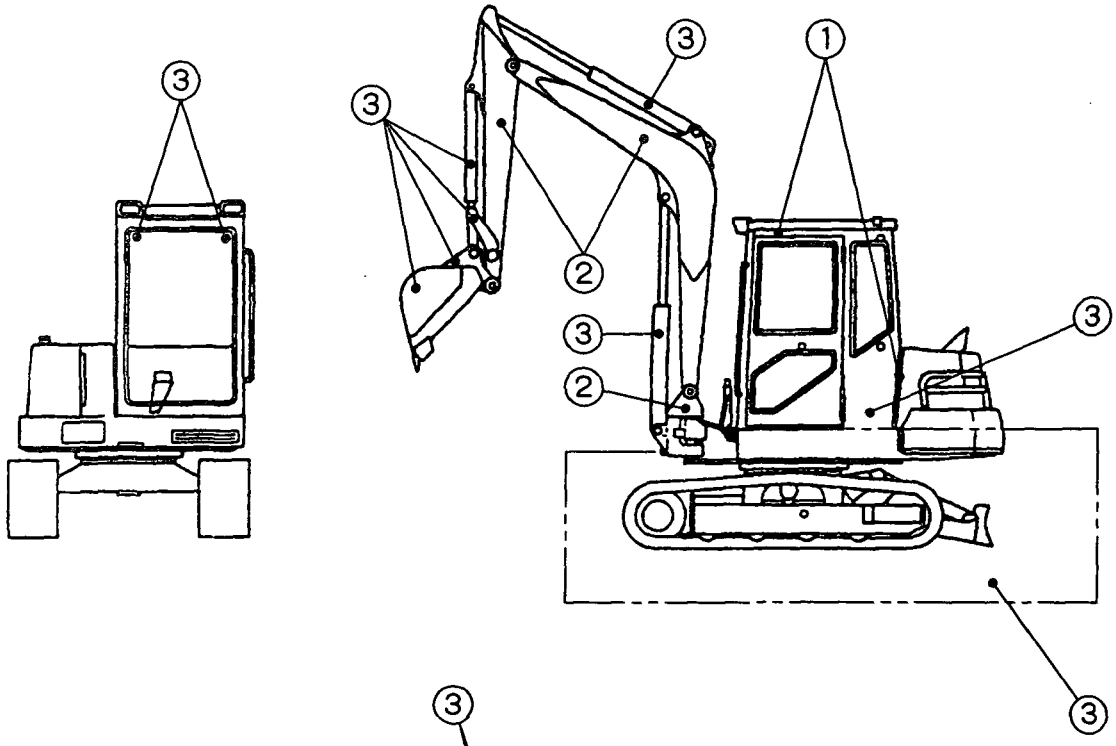

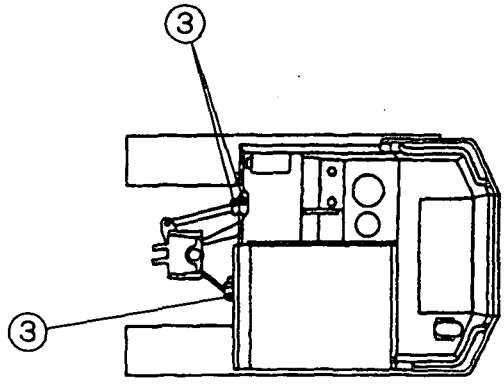

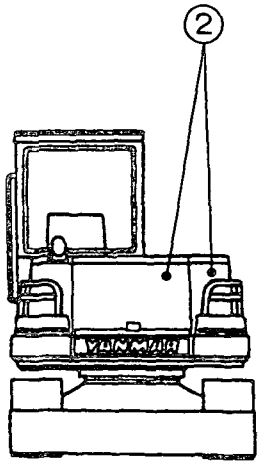

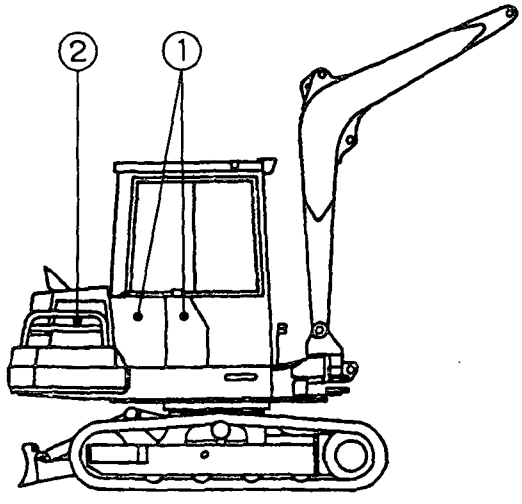

[本機塗装色]
[PAINTED COLOR LIST]

[旧形]
[PREVIOUS]

部所 PART	塗装色 PAINT COLOR	マンセル記号 MUNSEL No.	16ℓ缶 16ℓCAN	スプレー SPRAY
①	ヤンマークリームホワイト YANMAR CREAM WHITE	5.0Y9/1	981101-09614	981101-10140
②	ヤンマー新ライトイエロー YANMAR NEW LIGHT YELLOW	10YR6.5/8	933110-91602	981101-06041
③	ヤンマーダークオリーブII YANMAR DARK OLIEVE II	7.5GY1/1	981101-09515	981101-10141

[新形(1989年1月から)]
[NEW(January,1989)]

部所 PART	塗装色 PAINT COLOR	マンセル記号 MUNSEL No.	16ℓ缶 16ℓCAN	スプレー SPRAY
①	ヤンマークリームホワイト YANMAR CREAM WHITE	5.0Y9/1	981101-09614	981101-10140
②	ヤンマーサフランイエロー YANMAR SAFFRON YELLOW	1.0Y7.5/11	933110-91603	977620-30381
③	ヤンマーチャコールグレー YANMAR CHARCOAL GRAY	N2	981101-09516	977620-30371

絵目次（1）・・・・・・・・・・・・・・・・・・・・主要部品
PICTURESQUE INDEX (1)・・・・・・・・・MAIN PARTS

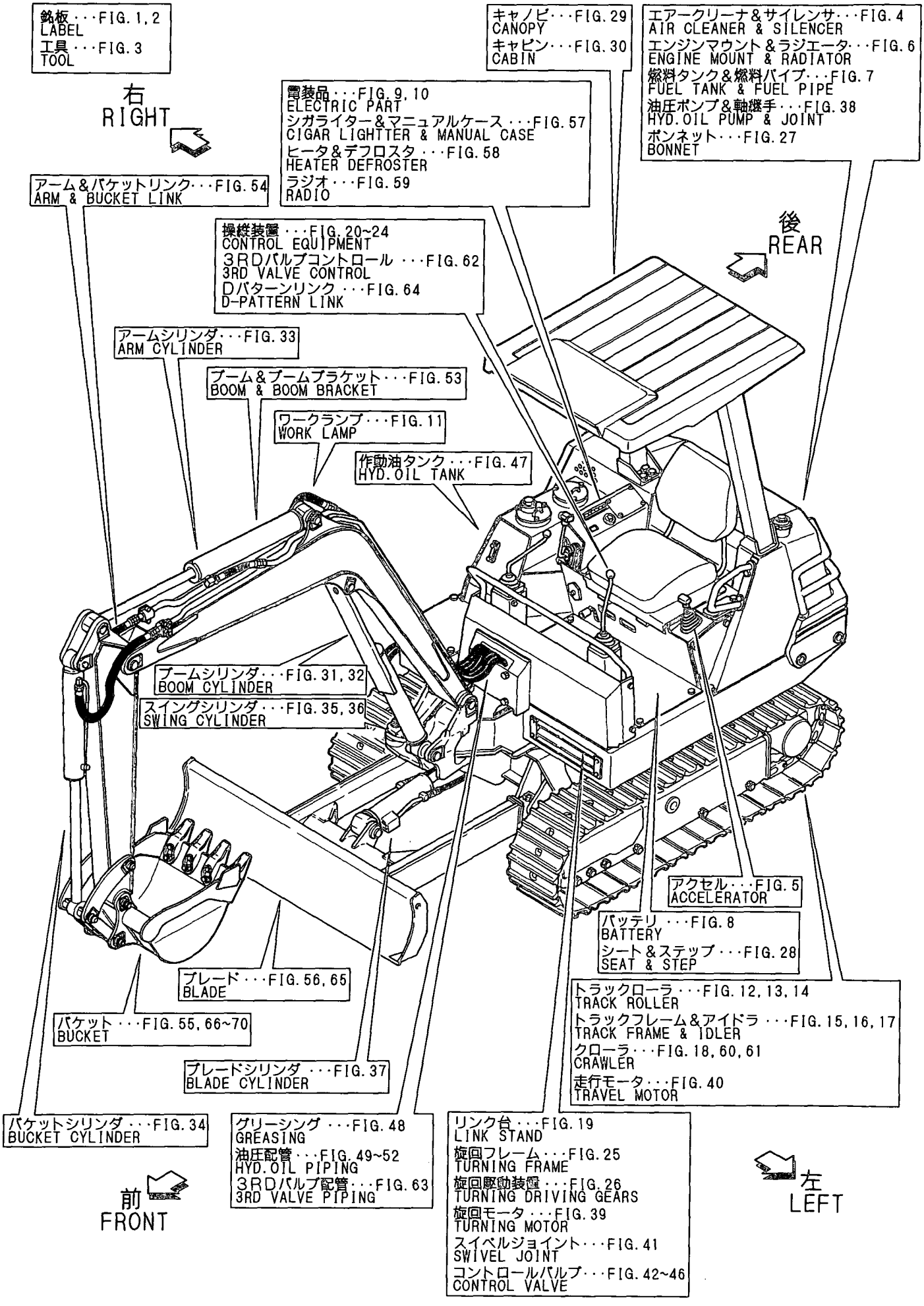

絵目次（2）・・・・・・・・・・・・・・・・・・・油圧関係
PICTURESQUE INDEX(2)・・・HYDRAULIC SECTION

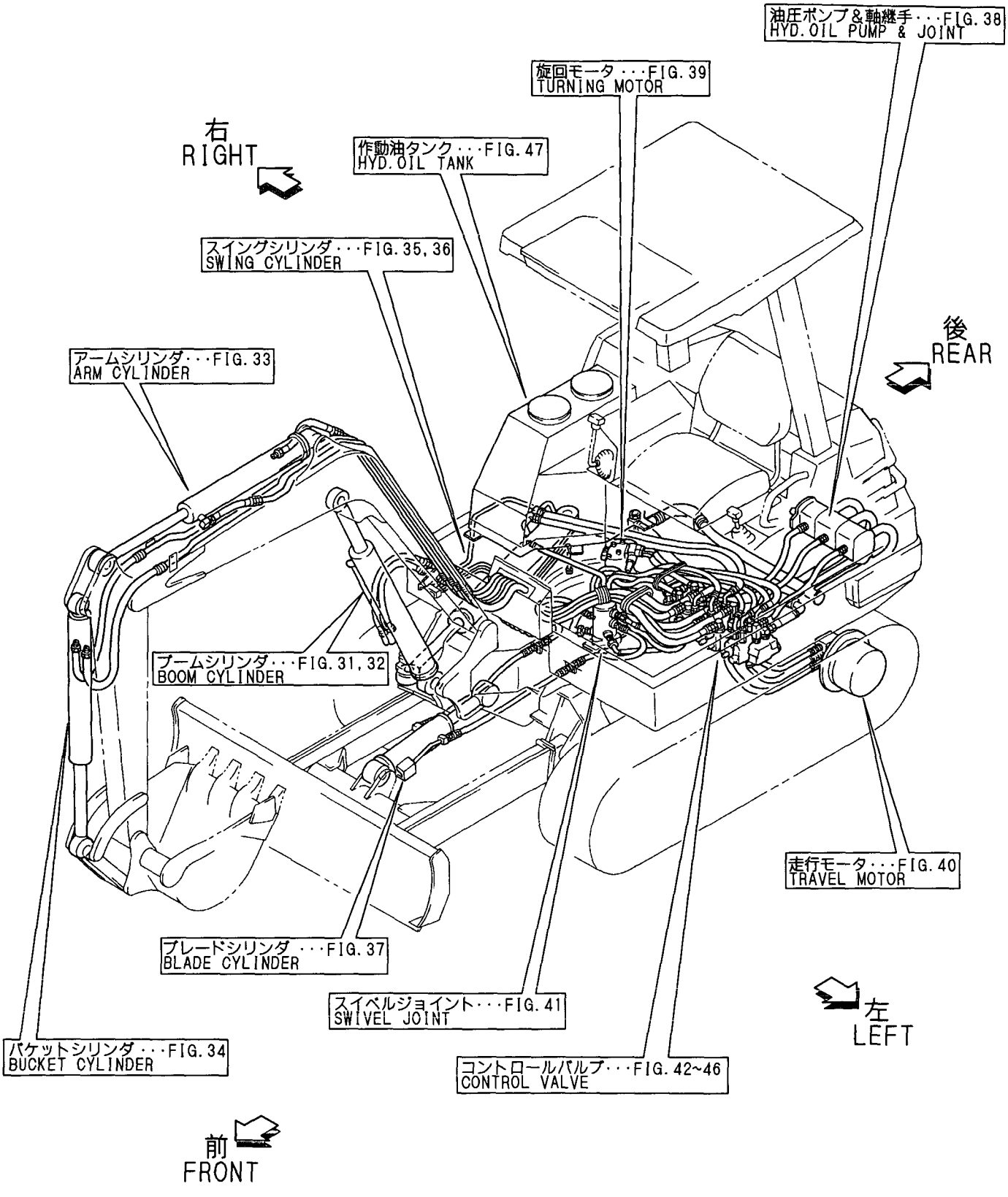

絵目次（3）・・・・・・・・・・・・・項目別
PICTURESQUE INDEX (3)・・・・・・FIGURE

Fig.1 銘板（キャノピ） LABEL (CANOPY)

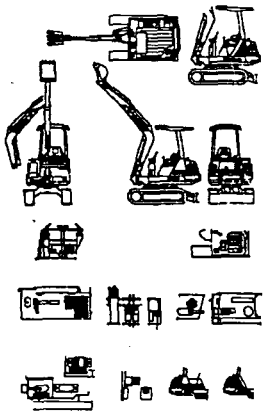

Fig.2 銘板（キャビン） LABEL (CABIN)

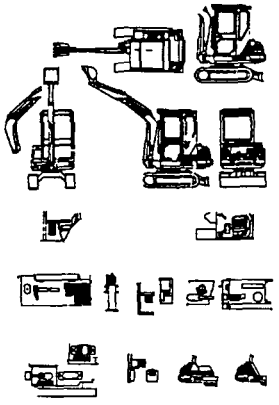

Fig.3 工具 TOOL

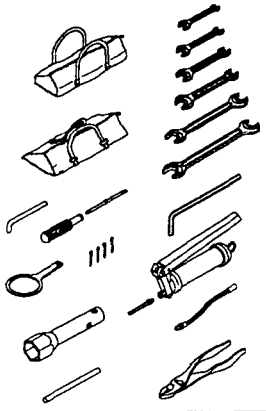

Fig.4 エアークリーナ＆サイレンサ AIR CLEANER & SILENCER

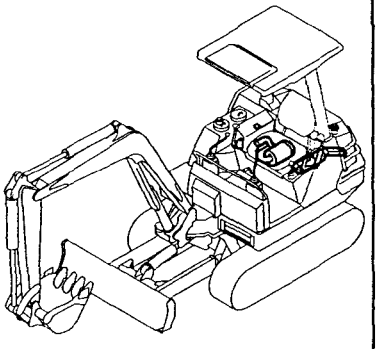

Fig.5 アクセル ACCELERATOR

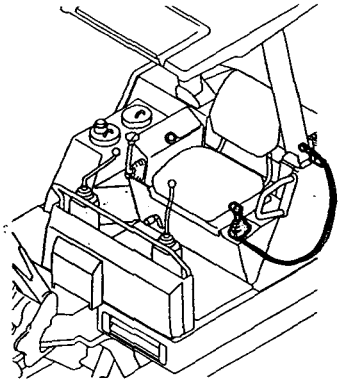

Fig.6 エンジンマウント＆ラジエータ ENGINE MOUNT & RADIATOR

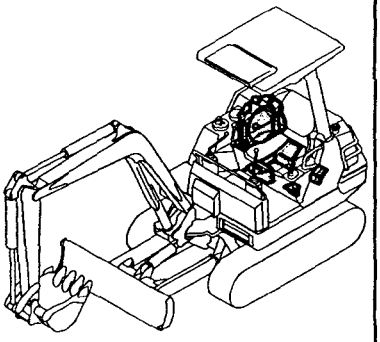

Fig.7 燃料タンク＆燃料パイプ FUEL TANK & FUEL PIPE

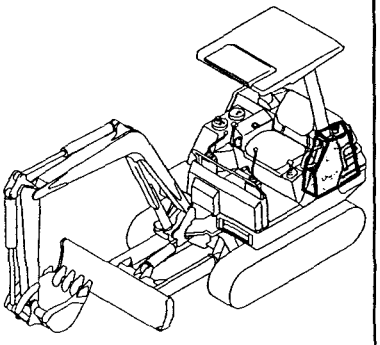

Fig.8 バッテリ BATTERY

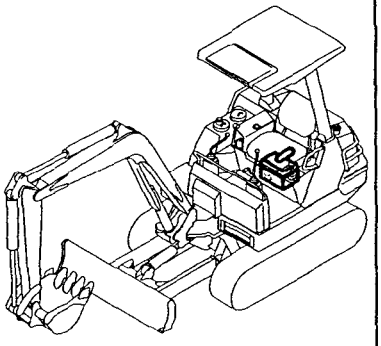

Fig.9 電装品（キャノピ） ELECTRIC PART (CANOPY)

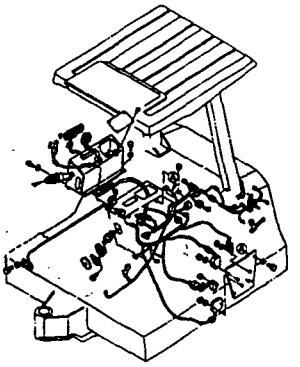

Fig.10 電装品（キャビン） ELECTRIC PART (CABIN)

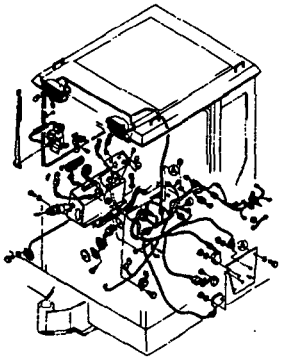

Fig.11 ワークランプ WORK LAMP

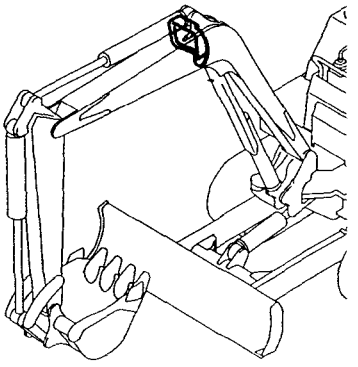

Fig.12 トラックローラ（旧形） TRACK ROLLER (PREVIOUS)

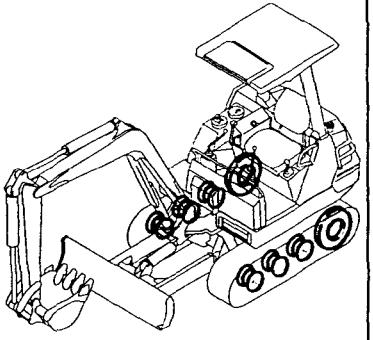

Fig.13 トラックローラ（R）（旧形）
TRACK ROLLER (R) (PREVIOUS)

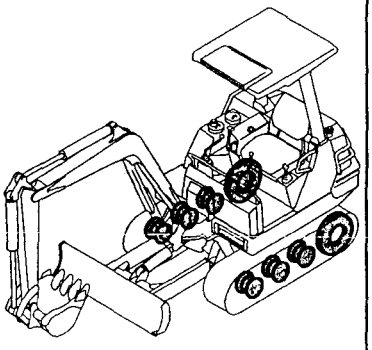

Fig.14 トラックローラ（新形）
TRACK ROLLER (NEW)

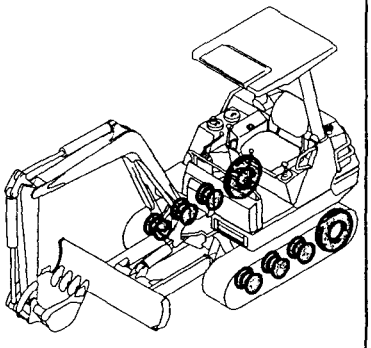

Fig.15 トラックフレーム＆アイドラ（旧形）
TRACK FRAME & IDLER (PREVIOUS)

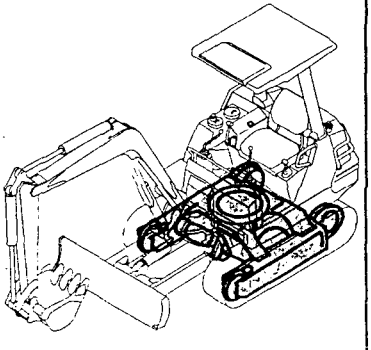

Fig.16 トラックフレーム＆アイドラ（R）（旧形）
TRACK FRAME & IDLER (R) (PREVIOUS)

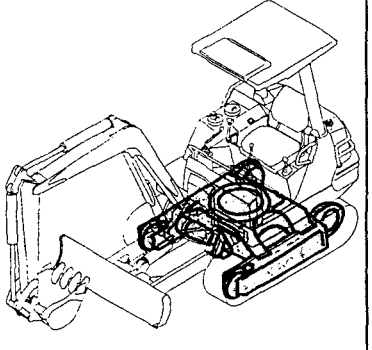

Fig.17 トラックフレーム＆アイドラ（新形）
TRACK FRAME & IDLER (NEW)

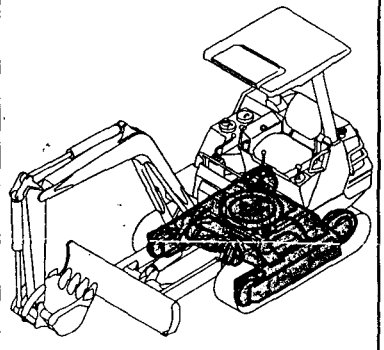

Fig.18 クローラ（270）
CRAWLER (270)

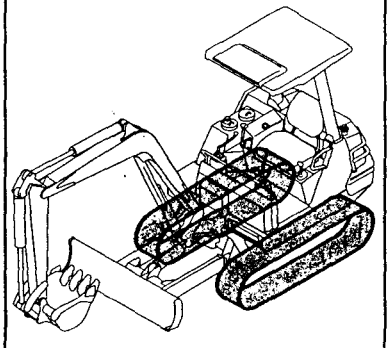

Fig.19 リンク台
LINK STAND

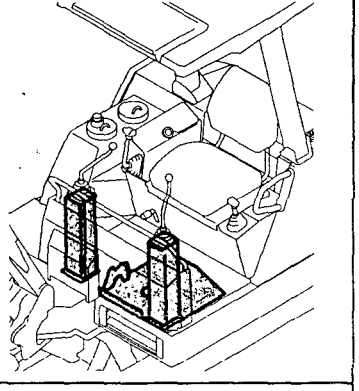

Fig.20 操縦装置（レバー）
CONTROL EQUIPMENT (LEVER)

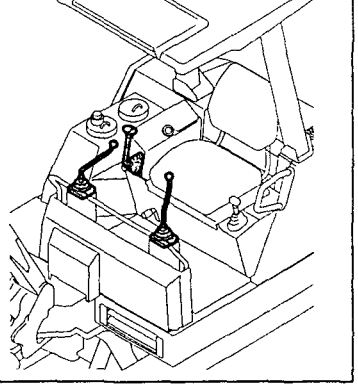

Fig.21 操縦装置（リンク）
CONTROL EQUIPMENT (LINK)

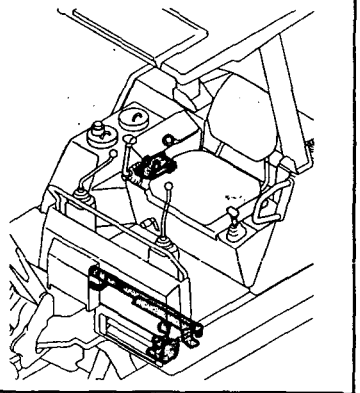

Fig.22 操縦装置（リンク）（マルチリンク仕様）
CONTROL EQUIPMENT (LINK) (MULTI LINK SPEC.)

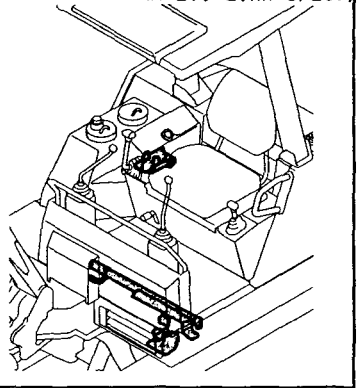

Fig.23 操縦装置（ロッド）
CONTROL EQUIPMENT (ROD)

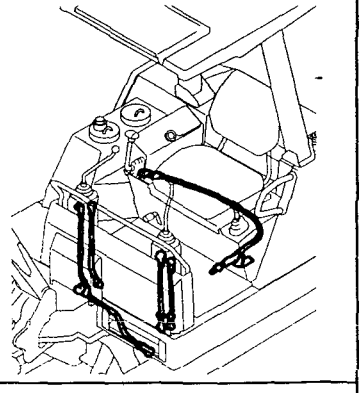

Fig.24 操縦装置（ロッド）（マルチリンク仕様）
CONTROL EQUIPMENT (ROD) (MULTI LINK SPEC.)

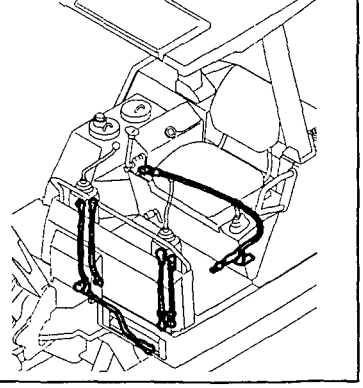

絵目次（3）・・・・・・・・・・・・・・項目別
PICTURESQUE INDEX (3) ・・・・・・FIGURE

Fig.25 旋回フレーム TURNING FRAME

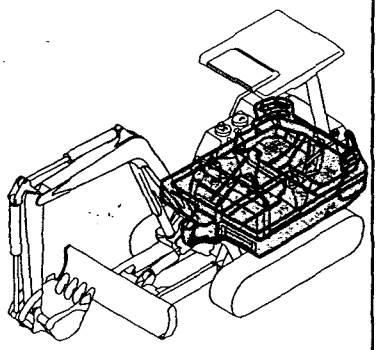

Fig.26 旋回駆動装置 TURNING DRIVING GEARS

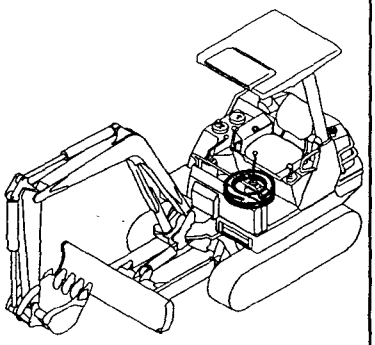

Fig.27 ボンネット BONNET

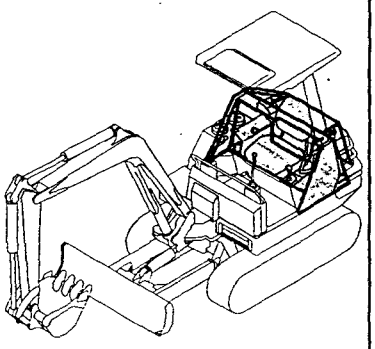

Fig.28 シート＆ステップ SEAT & STEP

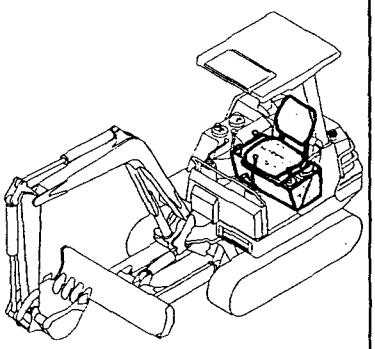

Fig.29 キャノピ CANOPY

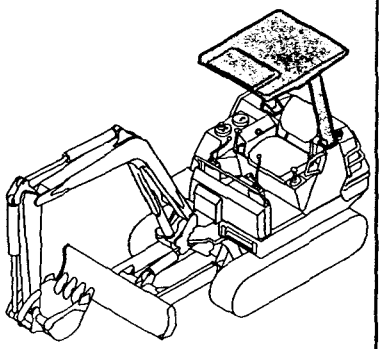

Fig.30 キャビン CABIN

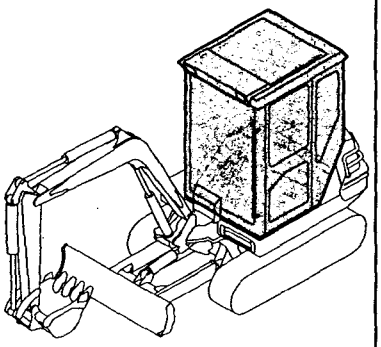

Fig.31 ブームシリンダ（キャビン） BOOM CYLINDER (CABIN)

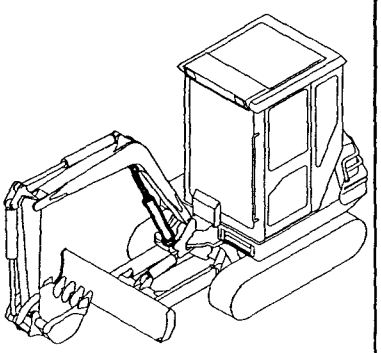

Fig.32 ブームシリンダ（キャノピ） BOOM CYLINDER (CANOPY)

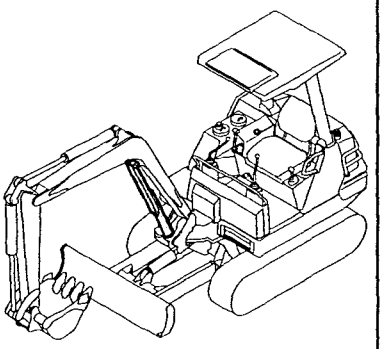

Fig.33 アームシリンダ ARM CYLINDER

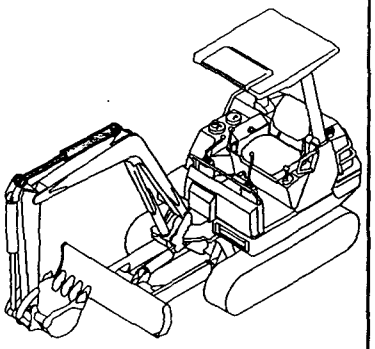

Fig.34 バケットシリンダ BUCKET CYLINDER

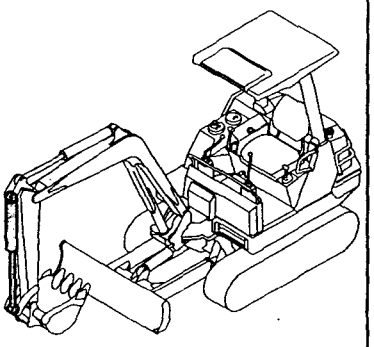

Fig.35 スイングシリンダ（キャビン） SWING CYLINDER (CABIN)

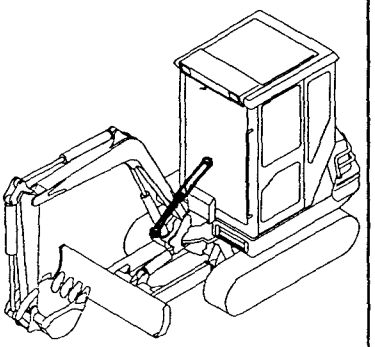

Fig.36 スイングシリンダ（キャノピ） SWING CYLINDER (CANOPY)

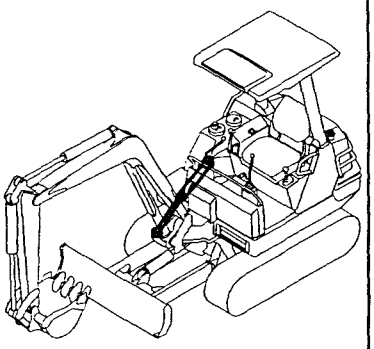

Fig.37 ブレードシリンダ BLADE CYLINDER

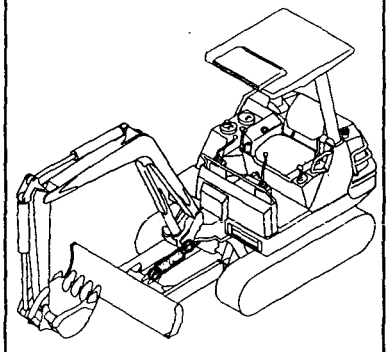

Fig.38 油圧ポンプ&軸継手 HYD.OIL PUMP & JOINT

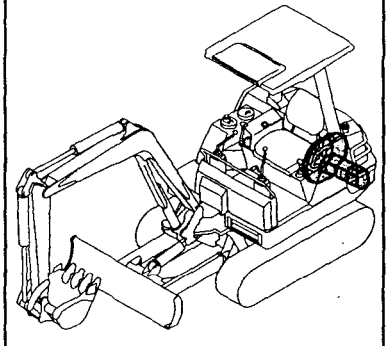

Fig.39 旋回モータ TURNING MOTOR

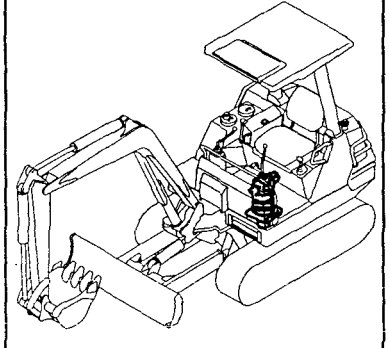

Fig.40 走行モータ TRAVEL MOTOR

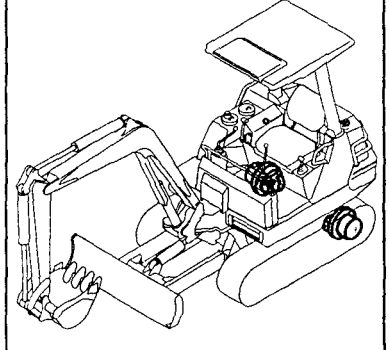

Fig.41 スイベルジョイント SWIVEL JOINT

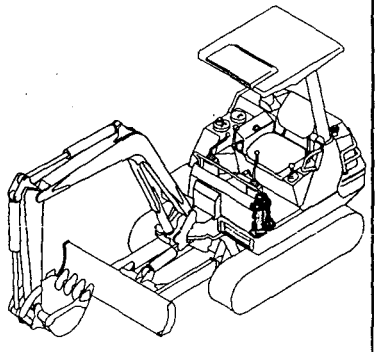

Fig.42 コントロールバルブ（走行&旋回） CONTROL VALVE (TRAVEL & TURNING)

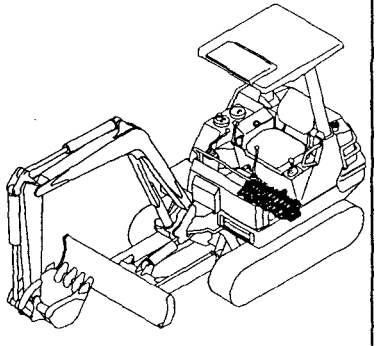

Fig.43 コントロールバルブ（アーム&バケット） CONTROL VALVE (ARM & BUCKET)

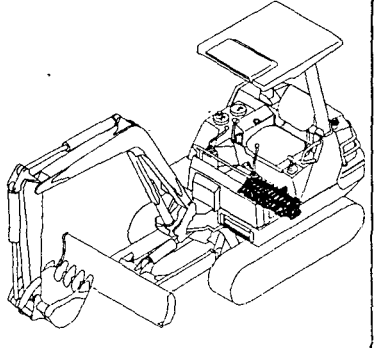

Fig.44 コントロールバルブ（スイング&ブーム） CONTROL VALVE (SWING & BOOM)

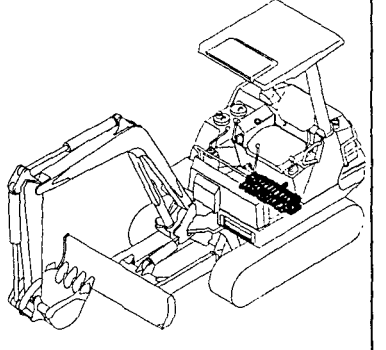

Fig.45 コントロールバルブ（ブレード） CONTROL VALVE (BLADE)

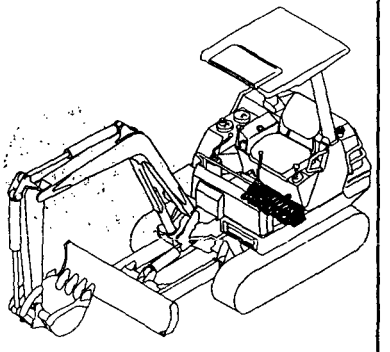

Fig.46 コントロールバルブ（P1, P2, P3） CONTROL VALVE (P1, P2, P3)

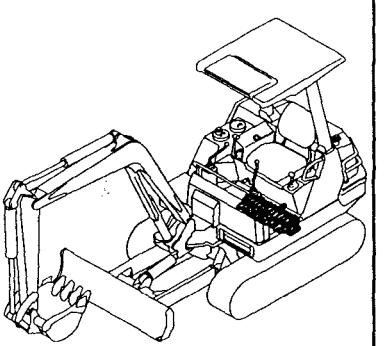

Fig.47 作動油タンク HYD.OIL TANK

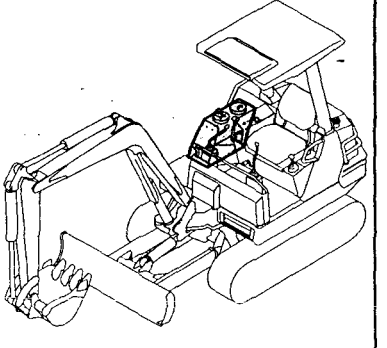

Fig.48 グリーシング GREASING

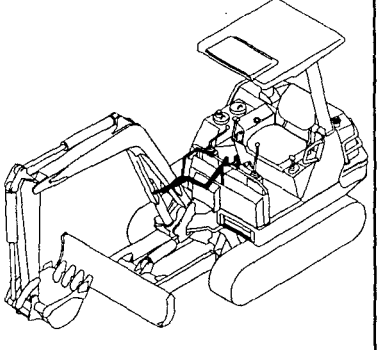

Fig.49 油圧配管（バルブ～スイベル～モータ）
HYD. OIL PIPING (VALVE ~ SWIVEL ~ MOTOR)

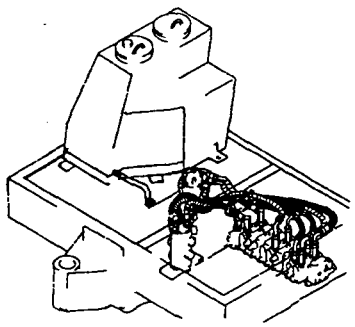

Fig.50 油圧配管（タンク～バルブ）
HYD. OIL PIPING (TANK ~ VALVE)

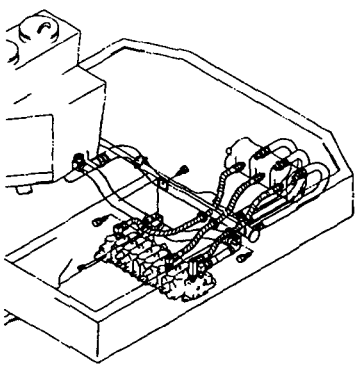

Fig.51 油圧配管（走行）
HYD. OIL PIPING (TRAVEL)

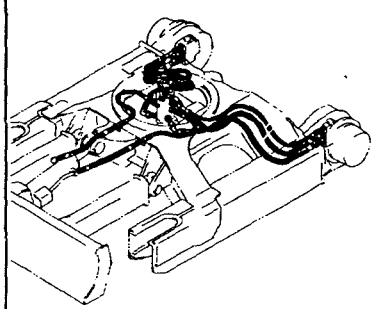

Fig.52 油圧配管（ブーム）
HYD. OIL PIPING (BOOM)

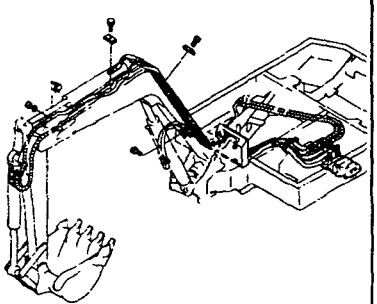

Fig.53 ブーム＆ブームブラケット
BOOM & BOOM BRACKET

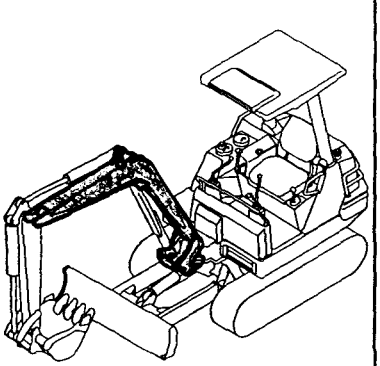

Fig.54 アーム＆バケットリンク
ARM & BUCKET LINK

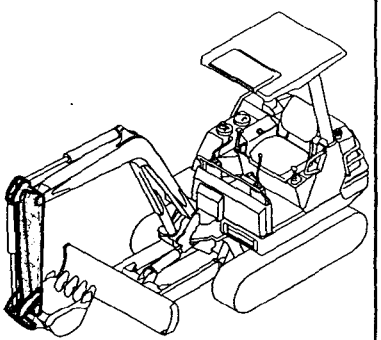

Fig.55 バケット
BUCKET

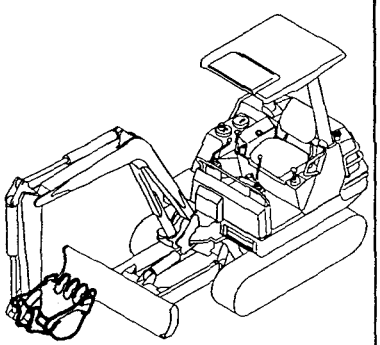

Fig.56 ブレード
BLADE

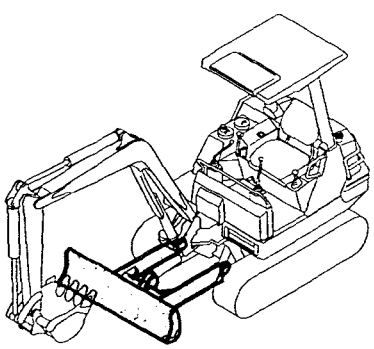

Fig.57 シガライター＆マニュアルケース（オプション）
CIGAR LIGHTTER & MANUAL CASE (OPTIONAL)

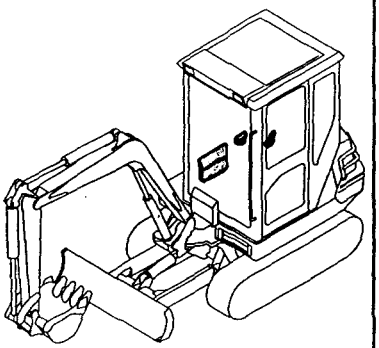

Fig.58 ヒータ＆デフロスタ
HEATER & DEFROSTER

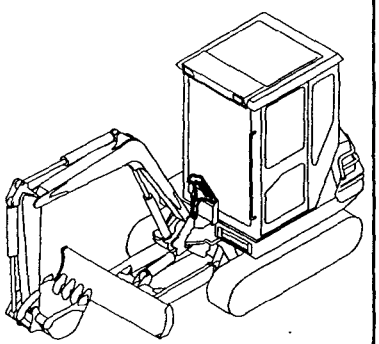

Fig.59 ラジオ（オプション）
RADIO (OPTIONAL)

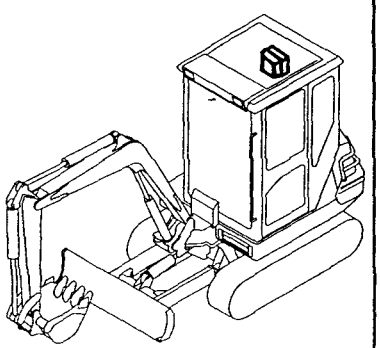

Fig.60 クローラ（320）（オプション）
CRAWLER (320) (OPTIONAL)

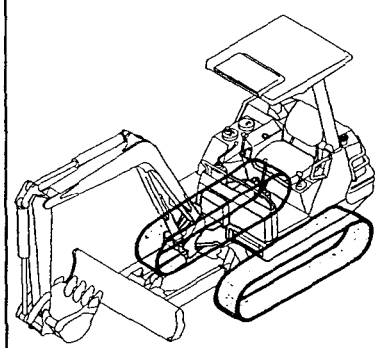

Fig.61 クローラ（350）（オプション）
CRAWLER (350) (OPTIONAL)

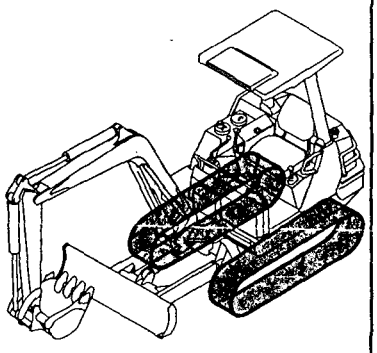

Fig.62 3RDバルブコントロール（オプション）
3RD VALVE CONTROL (OPTIONAL)

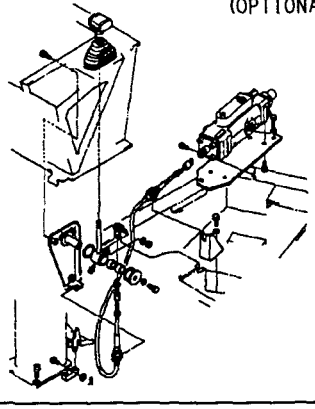

Fig.63 3RDバルブ配管（オプション）
3RD VALVE PIPING (OPTIONAL)

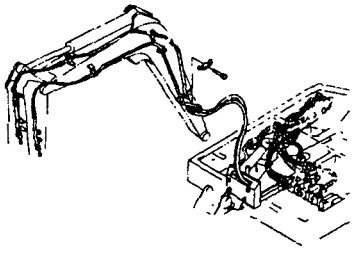

Fig.64 Dパターンリンク（オプション）
D－PATTERN LINK (OPTIONAL)

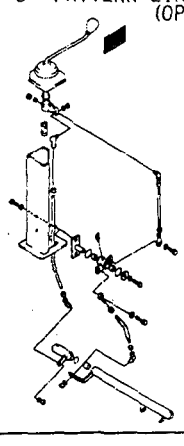

Fig.65 ブレード（アタッチメント）
BLADE (ATTACHMENT)

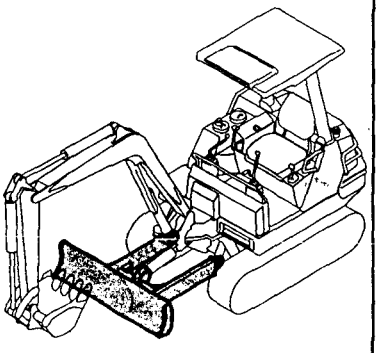

Fig.66 バケット（アタッチメント）
BUCKET (ATTACHMENT)

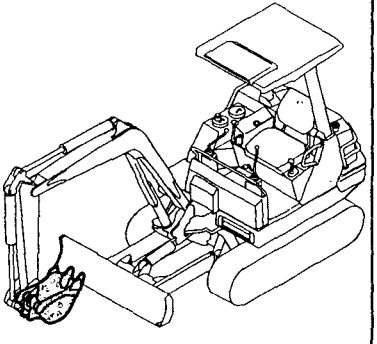

Fig.67 バケット（アタッチメント）
BUCKET (ATTACHMENT)

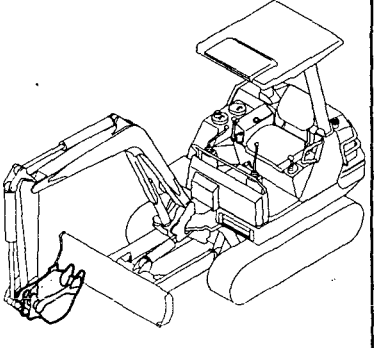

Fig.68 バケット（アタッチメント）
BUCKET (ATTACHMENT)

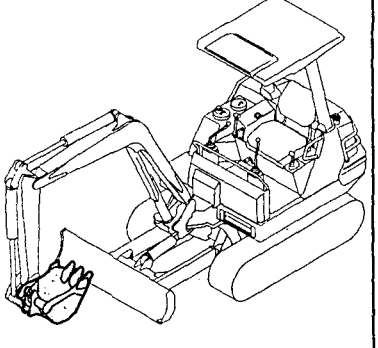

Fig.69 バケット（アタッチメント）
BUCKET (ATTACHMENT)

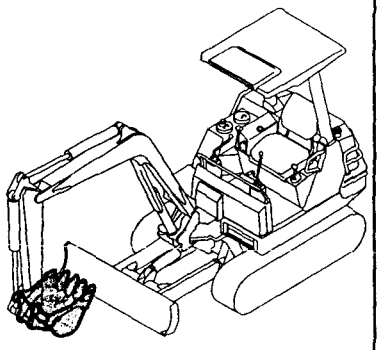

Fig.70 バケットSタイプ（アタッチメント）
BUCKET S－TYPE (ATTACHMENT)

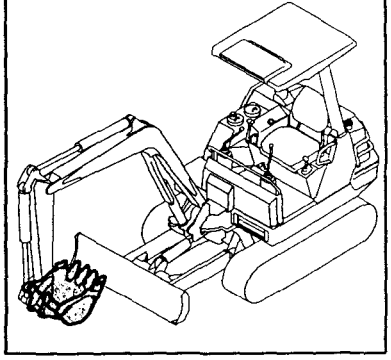

配線図 WIRING DIAGRAM

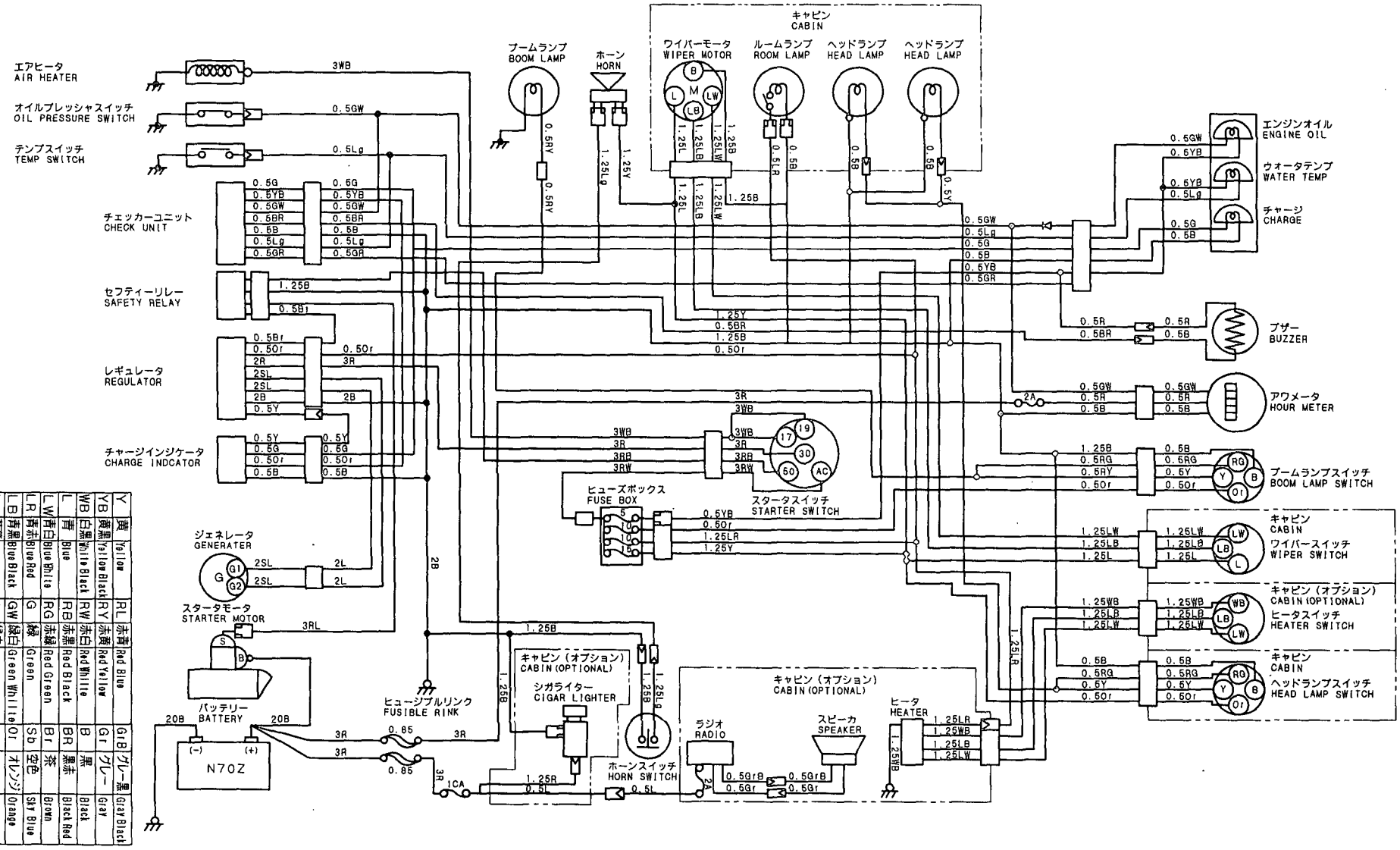

Y	黄	Yellow	RL	赤青	Red Blue	GrB	グレー黒	Gray Black
YB	黄黒	Yellow Black	RY	赤黄	Red Yellow	Gr	グレー	Gray
WB	白黒	White Black	RW	赤白	Red White	B	黒	Black
L	青	Blue	RB	赤黒	Red Black	BR	黒赤	Black Red
LW	青白	Blue White	RG	赤緑	Red Green	Br	茶	Brown
LR	青赤	Blue Red	G	緑	Green	Sb	空色	Sky Blue
LB	青黒	Blue Black	GW	緑白	Green White	Or	オレンジ	Orange
Lg	若草	Young Leaves	GR	緑赤	Green Red			
R	赤	Red	GB	緑黒	Green Black			

配線図
WIRING DIAGRAM

実施時期：1987.11～
EFFECTIVE DATE: Nov., 1987

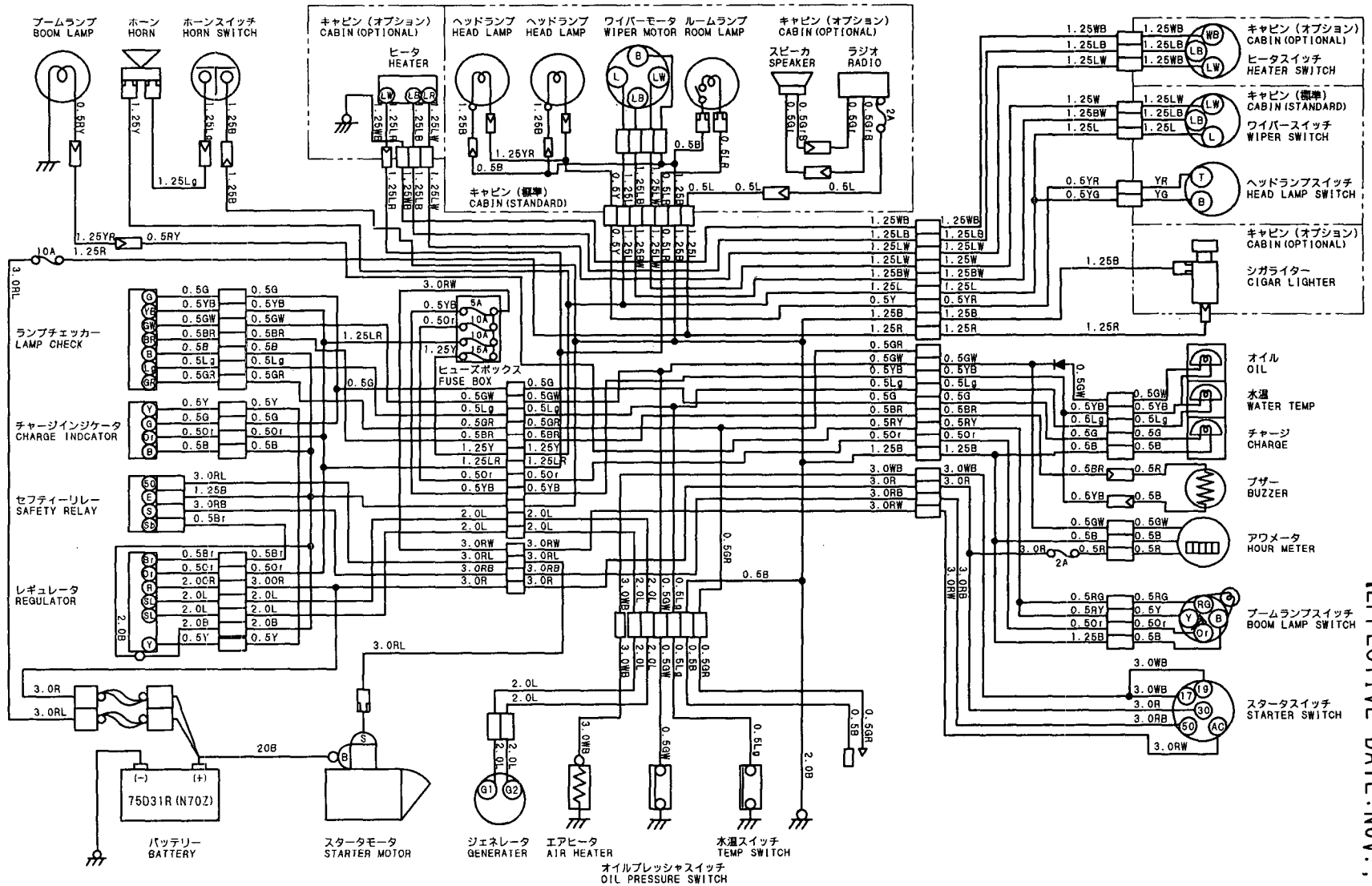

Y	黄	Yellow	LW	青白	Blue White	RW	赤白	Red White	GrB	グレー黒	Gray Black	Br	茶	Brown	Black Whlte	Black Red	Black	Gray	Orange
YB	黄黒	Yellow Black	LR	青赤	Blue Red	RB	赤黒	Red Black	Gr	グレー		B	黒						
YR	黄赤	Yellow Red	LB	青黒	Blue Black	RG	赤緑	Red Green	BR	黒赤		BW	黒白						
YG	黄緑	Yellow Green	Lg	若草	Young Leaves	G	緑	Green	BW	緑白	Green Whlte	Br	茶						
W	白	White	R	赤	Red	GW	緑白	Green Whlte	Or	オレンジ	Orange								
WB	白黒	White Black	RL	赤青	Red Blue	GR	緑赤	Green Red											
L	青	Blue	RY	赤黄	Red Yellow	GB	緑黒	Green Black											

```
3,1,,772141-03111,,"LABEL SET, CANOPY",,,,1,,,W,,,,,,,,,M10501,,
3-1,1,,772141-03112,,"LABEL SET, (B22-1 P)",,,,1,,,N,,,,,,,,,M20501,,
4,1,,772141-03110,,"LABEL SET, CANOPY",,1,,,,,,,,,,,,,,,,
5,2,,172141-03120,,"LABEL, SPECIFICATION",,1,,,,,,,,,,,,,,,,
6,2,,172141-03121,,"LABEL, SPACIFICATION",,,,1,,,W,,,,,,,,,M10501,,
6-1,2,,172141-03122,,"LABEL, SPECIFICATION",,,,1,,,S,,,,,,,,,M20501,,
7,2,,172141-03130,,"LABEL, GREASING",,1,,1,,,,,,,,,,,,,
8,2,,172122-03141,,"LABEL, GREASE",,1,,1,,,,,,,,,,,,,
9,2,,172141-03140,,"LABEL, OIL & WATER",,1,,1,,,,,,,,,,,,,
10,2,,172141-03170,,"LABEL, RESTART",,1,,1,,,,,,,,,,,,,
11,2,,172141-03181,,"LABEL, RESERVER(C)",,1,,1,,,,,,,,,,,,,
12,2,,172141-03190,,LABEL(D,,1,,1,,,,,,,,,,,,,
13,2,,172141-03200,,"LABEL,ENGINE ROOM(C)",,1,,,,,,,,,,,,,,,,
13-1,2,,172141-03201,,"LABEL,ENGINE ROOM(C)",,1,,,,,N,,,,,M00501,,,,,,
13-2,2,,172141-03220,,LABEL,,1,,1,,,N,,,,,M00839,,,,M00839,,
14,2,,172141-03230,,"LABEL, MODEL YB221U",,2,,,,,,,,,,,,,,,,
15,2,,172141-03231,,LABEL,,,,2,,,W,,,,,,,,,M10501,,
16,2,,172141-03240,,"LABEL, YANMAR",,1,,,,,,,,,,,,,,,,
17,2,,172148-03220,,LABEL,,,,1,,,W,,,,,,,,,M10501,,
18,2,,172141-03250,,"LABEL, OILING",,1,,1,,,,,,,,,,,,,
19,2,,172141-03270,,"LABEL, STRIPE(R)",,1,,,,,,,,,,,,,,,,
20,2,,172141-03271,,LABEL,,,,1,,,W,,,,,,,,,M10501,,
21,2,,172141-03280,,"LABEL, STRIPE(L)",,1,,,,,,,,,,,,,,,,
22,2,,172141-03281,,LABEL,,,,1,,,W,,,,,,,,,M10501,,
23,2,,172137-03290,,"LABEL, NO.1 MARK",,1,,1,,,,,,,,,,,,,
23-1,2,,172141-03620,,LABEL,,,,1,,,N,,,,,,,,,M20501,,
23-2,2,,172149-03271,,LABEL,,,,1,,,R,,,,,,,,,M20501,,
24,2,,172141-03290,,"LABEL, STRIPE(REAR)",,1,,,,,,,,,,,,,,,,
25,2,,172141-03291,,"LABEL, STRIPE(REAR)",,,,1,,,W,,,,,,,,,M10501,,
26,2,,172519-03290,,"LABEL, ENG.COVER",,1,,1,,,,,,,,,,,,,
27,2,,172141-03300,,"LABEL, YANMAR",,1,,,,,,,,,,,,,,,,
28,2,,172148-03230,,LABEL,,,,1,,,W,,,,,,,,,M10501,,
29,2,,172141-03310,,"LABEL,  Z MARK",,2,,,,,Z,,,,,M10501,,,,,,
30,2,,172141-03340,,"LABEL,ADJUST CRAWLER",,1,,,,,,,,,,,,,,,,
30-1,2,,172141-03341,,"LABEL,ADJUST CRAWLER",,1,,1,,,S,,,,,M01099,,,,M01099,,
30-2,2,,172165-03240,,LABEL,,,,1,,,N,,,,,,,,,M21607,,
31,2,,172141-03350,,"LABEL, QUICK(C)",,1,,1,,,,,,,,,,,,,
32,2,,172141-03360,,"LABEL, START SWITCH",,1,,1,,,,,,,,,,,,,
33,2,,172137-03730,,"LABEL, TURNING LOCK",,1,,,,,,,,,,,,,,,,
33-1,2,,172137-03300,,"LABEL, TURNING LOCK",,1,,1,,,N,,,,,M00501,,,,M00501,,
34,2,,172137-03780,,"LABEL, THROTTLE",,1,,1,,,,,,,,,,,,,
35,2,,121470-44540,,"LABEL, SUB-TANK",,1,,,,,Z,,,,,M00501,,,,,,
36,2,,933112-52000,,"LABEL, FUEL",,1,,,,,,,,,,,,,,,,
36-1,2,,933112-52400,,"LABEL, FUEL",,1,,1,,,R,,,,,M00501,,,,M00501,,
37,2,,933112-91901,,"LABEL, YANMAR",,1,,,,,,,,,,,,,,,,
38,2,,172148-03140,,"LABEL, STRIPE(F)",,,,1,,,W,,,,,,,,,M10501,,
39,2,,172141-03150,,"LABEL, OPERATION",,1,,1,,,,,,,,,,,,,
40,2,,172141-03370,,"LABEL, PROTECTOR",,2,,2,,,,,,,,,,,,,
41,2,,172141-03540,,LABEL,,,,1,,,W,,,,,,,,,M10501,,
42,2,,172141-03560,,LABEL,,,,1,,,W,,,,,,,,,M10501,,
43,2,,172141-03570,,LABEL,,,,1,,,W,,,,,,,,,M10501,,
44,2,,172141-03580,,LABEL,,,,1,,,W,,,,,,,,,M10501,,
45,2,,172141-03530,,LABEL,,,,1,,,W,,,,,,,,,M10501,,
45A,2,,172142-03300,,LABEL,,,,1,,,W,,,,,,,,,M20501,,
46,1,,172141-03160,,"LABEL, OPERATION(C)",,1,,1,,,,2,,,,,,,,,
47,1,,172141-03210,,"LABEL, SELECT",,1,,1,,,,2,,,,,,,,,
48,1,,172141-03330,,"LABEL, P.T.O.",,1,,1,,,,2,,,,,,,,,
49,1,,172148-03410,,LABEL,,,,1,,,W,1,,,,,,,,,*1989.09,,
50,1,,172141-03700,,"LABEL ASSY",,,,1,,,W,1,,,,,,,,,*1989.09,,
51,1,,172141-03710,,"LABEL, MULTI",,,,2,,,W,1,,,,,,,,,M20501,,
```

Fig. 1 銘板（キャノピ） LABEL (CANOPY)

見出しNo．3，3−1は、見出しNo．6から45Aを含みます。
3，3−1 inc．6 ～ 45A
見出しNo．4は、見出しNo．5から40を含みます。
4 inc．5 ～ 40

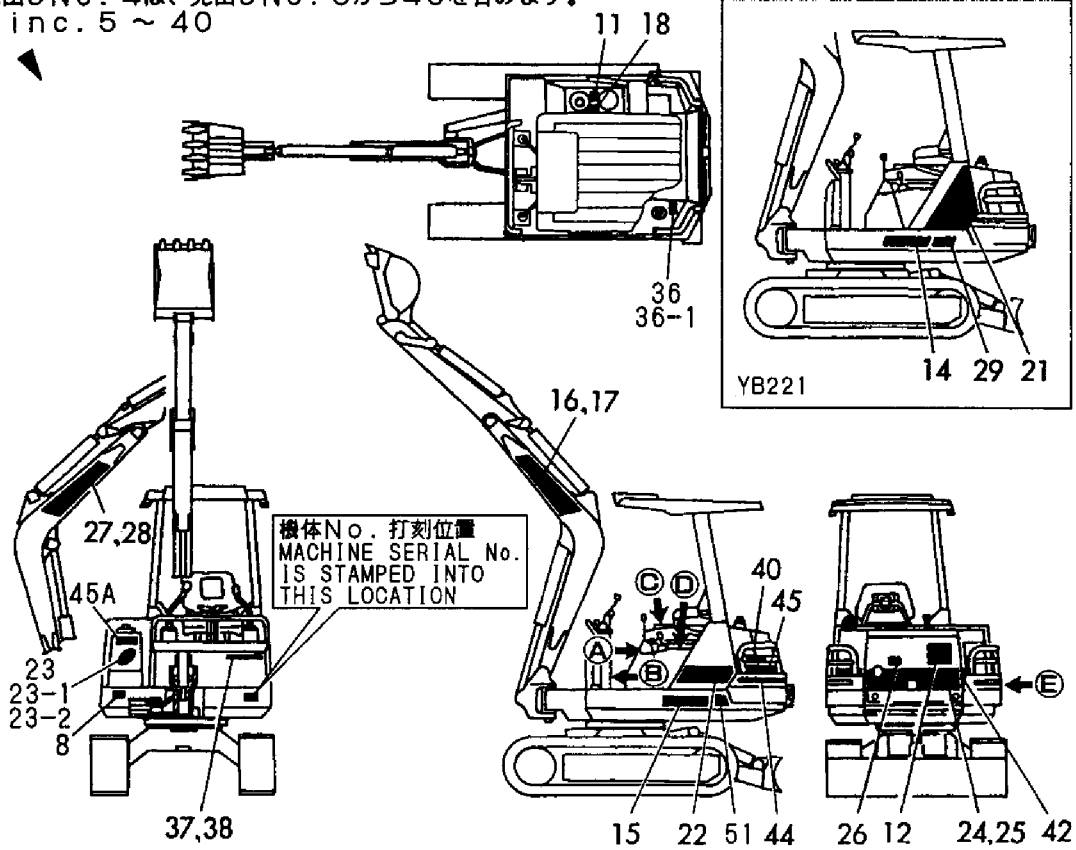

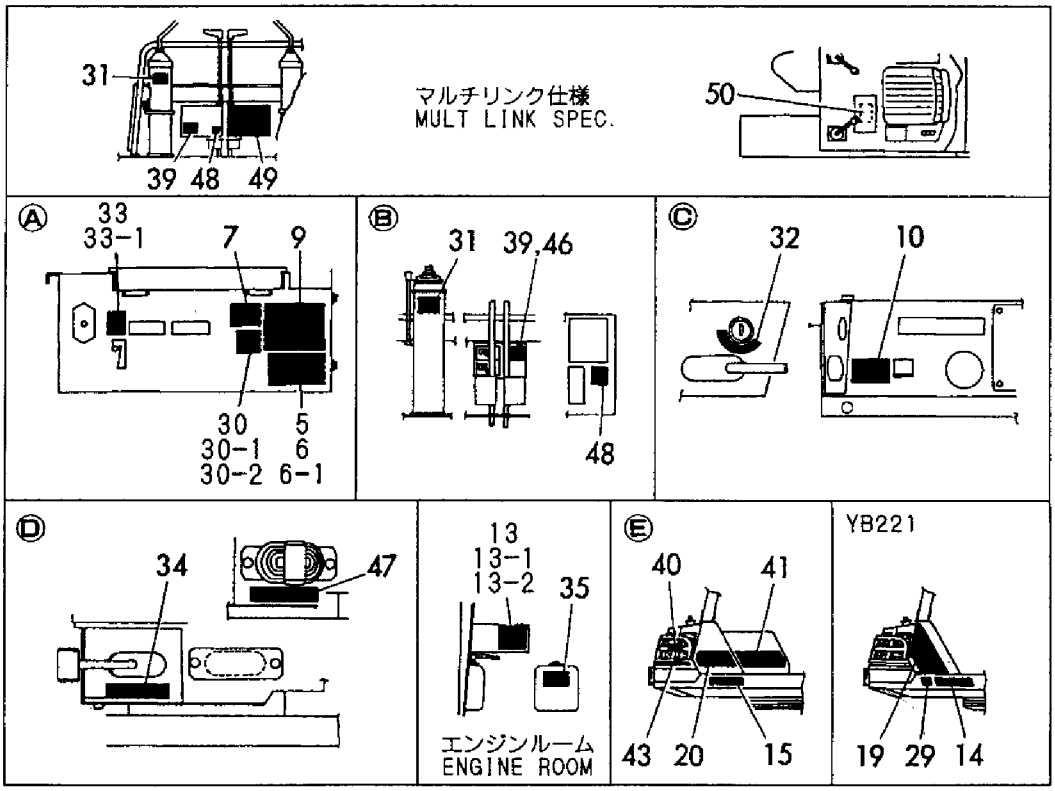

```
3,1,,772141-03101,,"LABEL SET, CABINE",,,1,,,,W,,,,,,,M10501,,,,
3-1,1,,772141-03102,,"LABEL SET, (B22-1 C)",,,1,,,,N,,,,,,,M20501,,,,
4,1,,772141-03100,,"LABEL SET, CABIN",1,,,,,,,,,,,,,,,,,
5,2,,172141-03120,,"LABEL, SPECIFICATION",1,,,,,,,,,,,,,,,,,
6,2,,172141-03121,,"LABEL, SPACIFICATION",,,1,,,,W,,,,,,,M10501,,,,
6-1,2,,172141-03122,,"LABEL, SPECIFICATION",,,1,,,,S,,,,,,,M20501,,,,
7,2,,172141-03130,,"LABEL, GREASING",1,,1,,,,,,,,,,,,,,
8,2,,172122-03141,,"LABEL, GREASE",1,,1,,,,,,,,,,,,,,
9,2,,172141-03140,,"LABEL, OIL & WATER",1,,1,,,,,,,,,,,,,,,
10,2,,172141-03170,,"LABEL, RESTART",1,,1,,,,,,,,,,,,,,
11,2,,172141-03181,,"LABEL, RESERVER(C)",1,,1,,,,,,,,,,,,,,,
12,2,,172141-03190,,LABEL(D,1,,1,,,,,,,,,,,,,,
13,2,,172141-03200,,"LABEL,ENGINE ROOM(C)",1,,,,,,,,,,,,,,,,,
13-1,2,,172141-03201,,"LABEL,ENGINE ROOM(C)",1,,,,,,N,,,M00501,,,,,,,,
13-2,2,,172141-03220,,LABEL,1,,1,,,,N,,,M00839,,,,M00839,,,,
14,2,,172141-03230,,"LABEL, MODEL YB221U",2,,,,,,,,,,,,,,,,,
15,2,,172141-03231,,LABEL,,,2,,,,W,,,,,,,M10501,,,,
16,2,,172141-03240,,"LABEL, YANMAR",1,,,,,,,,,,,,,,,,,
17,2,,172148-03220,,LABEL,,,1,,,,W,,,,,,,M10501,,,,
18,2,,172141-03250,,"LABEL, OILING",1,,1,,,,,,,,,,,,,,
19,2,,172141-03270,,"LABEL, STRIPE(R)",1,,,,,,,,,,,,,,,,,
20,2,,172141-03271,,LABEL,,,1,,,,W,,,,,,,M10501,,,,
21,2,,172141-03280,,"LABEL, STRIPE(L)",1,,,,,,,,,,,,,,,,,
22,2,,172141-03281,,LABEL,,,1,,,,W,,,,,,,M10501,,,,
23,2,,172137-03290,,"LABEL, NO.1 MARK",1,,1,,,,,,,,,,,,,,
23-1,2,,172141-03620,,LABEL,,,1,,,,N,,,,,,,M20501,,,,
23-2,2,,172149-03271,,LABEL,,,1,,,,R,,,,,,,M20501,,,,
24,2,,172141-03290,,"LABEL, STRIPE(REAR)",1,,,,,,,,,,,,,,,,,
25,2,,172141-03291,,"LABEL, STRIPE(REAR)",,,1,,,,W,,,,,,,M10501,,,,
26,2,,172519-03290,,"LABEL, ENG.COVER",1,,1,,,,,,,,,,,,,,
27,2,,172141-03300,,"LABEL, YANMAR",1,,,,,,,,,,,,,,,,,
28,2,,172148-03230,,LABEL,,,1,,,,W,,,,,,,M10501,,,,
29,2,,172141-03340,,"LABEL,ADJUST CRAWLER",1,,,,,,,,,,,,,,,,,
29-1,2,,172141-03341,,"LABEL,ADJUST
CRAWLER",1,,1,,,,S,,,*1988.10,,,,*1988.10,,,,
29-2,2,,172165-03240,,LABEL,,,1,,,,N,,,,,,,M21607,,,,
30,2,,172141-03350,,"LABEL, QUICK(C)",1,,1,,,,,,,,,,,,,,
31,2,,172141-03360,,"LABEL, START SWITCH",1,,1,,,,,,,,,,,,,,
32,2,,172137-03730,,"LABEL, TURNING LOCK",1,,,,,,,,,,,,,,,,,
32-1,2,,172137-03300,,"LABEL, TURNING LOCK",1,,1,,,,N,,,M00501,,,,,,,,
33,2,,172137-03780,,"LABEL, THROTTLE",1,,1,,,,,,,,,,,,,,
34,2,,121470-44540,,"LABEL, SUB-TANK",1,,,,,,Z,,,M00501,,,,,,,,
35,2,,933112-52000,,"LABEL, FUEL",1,,,,,,,,,,,,,,,,,
35-1,2,,933112-52400,,"LABEL, FUEL",1,,1,,,,R,,,M00501,,,,,,,,
36,2,,933112-91901,,"LABEL, YANMAR",1,,,,,,Z,,,M00501,,,,,,,,
37,2,,172141-03150,,"LABEL, OPERATION",1,,1,,,,,,,,,,,,,,
38,2,,172141-03370,,"LABEL, PROTECTOR",2,,2,,,,,,,,,,,,,,
39,2,,172141-03380,,LABEL,1,,1,,,,W,,,M00501,,,,,,,,
40,2,,172141-03540,,LABEL,,,1,,,,W,,,,,,,M10501,,,,
41,2,,172141-03560,,LABEL,,,1,,,,W,,,,,,,M10501,,,,
42,2,,172141-03570,,LABEL,,,1,,,,W,,,,,,,M10501,,,,
43,2,,172141-03580,,LABEL,,,1,,,,W,,,,,,,M10501,,,,
44,2,,172141-03590,,"LABEL, STRIPE(CA)",,,1,,,,W,,,,,,,M10501,,,,
45,2,,172141-03600,,"LABEL, STRIPE(CB)",,,1,,,,W,,,,,,,M10501,,,,
46,2,,172141-03530,,LABEL,,,1,,,,W,,,,,,,M10501,,,,
46A,2,,172142-03300,,LABEL,,,1,,,,W,,,,,,,M20501,,,,
47,1,,172141-03160,,"LABEL, OPERATION(C)",1,,1,,,,,2,,,,,,,,,
48,1,,172141-03210,,"LABEL, SELECT",1,,1,,,,,2,,,,,,,,,
49,1,,172141-03330,,"LABEL, P.T.O.",1,,1,,,,,2,,,,,,,,,
50,1,,172148-03410,,LABEL,,,1,,,,W,1,,,,,,*1989.09,,,,
51,1,,172141-03700,,"LABEL ASSY",,,1,,,,W,1,,,,,,*1989.09,,,,
52,1,,172141-03710,,"LABEL, MULTI",,,2,,,,W,1,,,,,,M20501,,,,
```

Fig. 2 銘板（キャビン） LABEL (CABIN)

見出しNo．3，3−1は、見出しNo．6から46Aを含みます。
3，3−1 inc．6 ～ 46A
見出しNo．4は、見出しNo．5から39を含みます。
4 inc．5 ～ 39

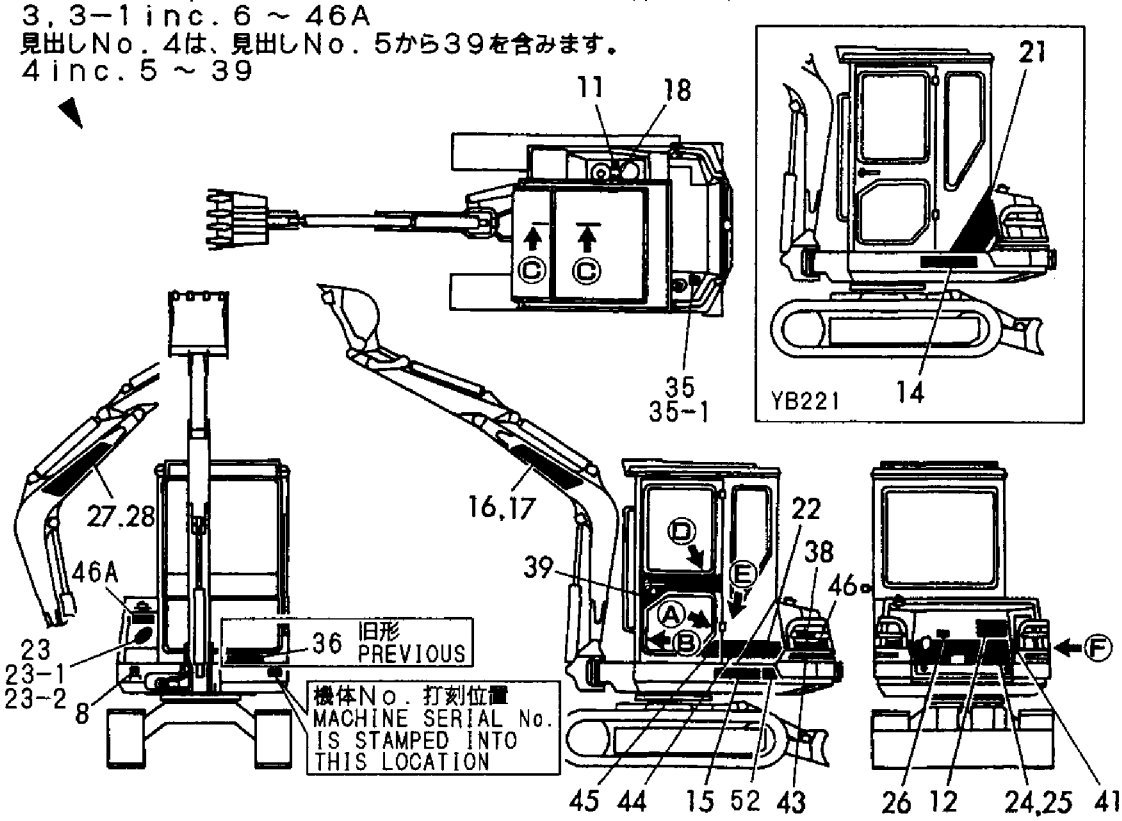

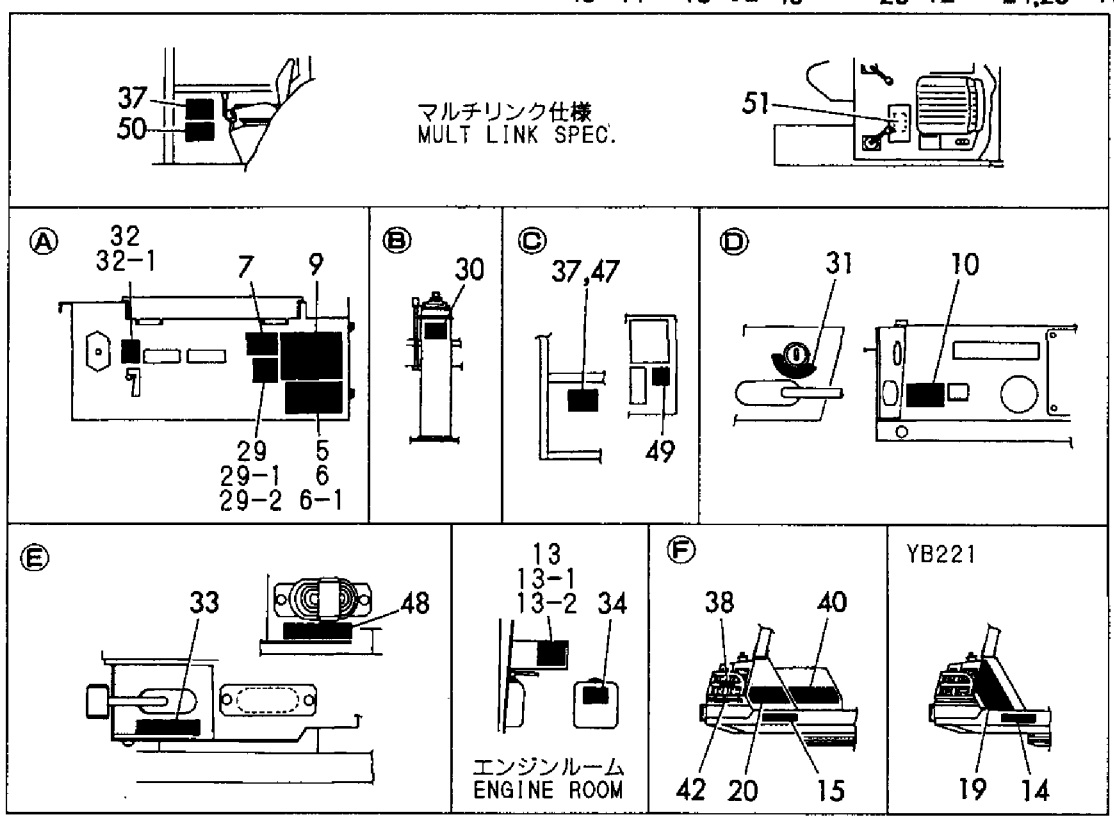

```
1,1,,772141-05100,,"TOOL SET",1,1,1,1,,,,,,,,,,,,,
2,2,,172122-05300,,"TOOL BAG",1,1,,,,,,,,,,,,,,,,
2-1,2,,933110-90000,,"BAG,
TOOL",1,1,1,1,,,N,,,*1987.12,,M00544,,*1987.12,,*1987.12,,
3,2,,172614-38300,,"PIN 5X45, LOCK",4,4,4,4,,,,,,,,,,,,,
4,2,,104200-92350,,"DRIVER, SCREW",1,1,1,1,,,,,,,,,,,,,
5,2,,171301-92750,,"WRENCH, L.O. FILTER",1,1,1,1,,,,,,,,,,,,,,
6,2,,22417-800500,,"COTTER PIN 8.0X50",4,4,4,4,,,,,,,,,,,,,
7,2,,28110-080100,,"WRENCH  8X10",1,1,1,1,,,,,,,,,,,,,
8,2,,28110-120140,,"WRENCH 12X14",1,1,1,1,,,,,,,,,,,,,
9,2,,28110-170190,,"WRENCH 17X19",1,1,1,1,,,,,,,,,,,,,
10,2,,28110-220240,,"WRENCH 22X24",1,1,1,1,,,,,,,,,,,,,
11,2,,28110-270300,,"WRENCH 27X30",1,1,1,1,,,,,,,,,,,,,
12,2,,28110-320360,,"WRENCH 32X36",1,1,1,1,,,,,,,,,,,,,
13,2,,28150-080000,,"BAR WRENCH  8",1,1,1,1,,,,,,,,,,,,,
14,2,,28150-140000,,"BAR WRENCH 14",1,1,,,,,Z,,,M00902,,M00902,,,,,,
15,2,,28227-271400,,"BOX WRENCH 27X140",1,1,1,1,,,,,,,,,,,,,
16,2,,28230-120250,,"TURNING HANDLE",1,1,1,1,,,,,,,,,,,,,
17,2,,933110-09700,,"HOSE, GREASE",1,1,1,1,,,,,,,,,,,,,
18,2,,933110-09800,,"GUN 800, GREASE",1,1,1,1,,,,,,,,,,,,,,
19,2,,933171-00470,,"PLIERS 200",1,1,1,1,,,,,,,,,,,,,
20,2,,172122-
05100,,NOZZLE,1,1,1,1,,,W,,,*1988.05,,*1988.05,,*1988.05,,*1988.05,,
```

Fig.3 工具 TOOL

見出しNo．1は、見出しNo．2から20を含みます。
1 inc．2 ～ 20

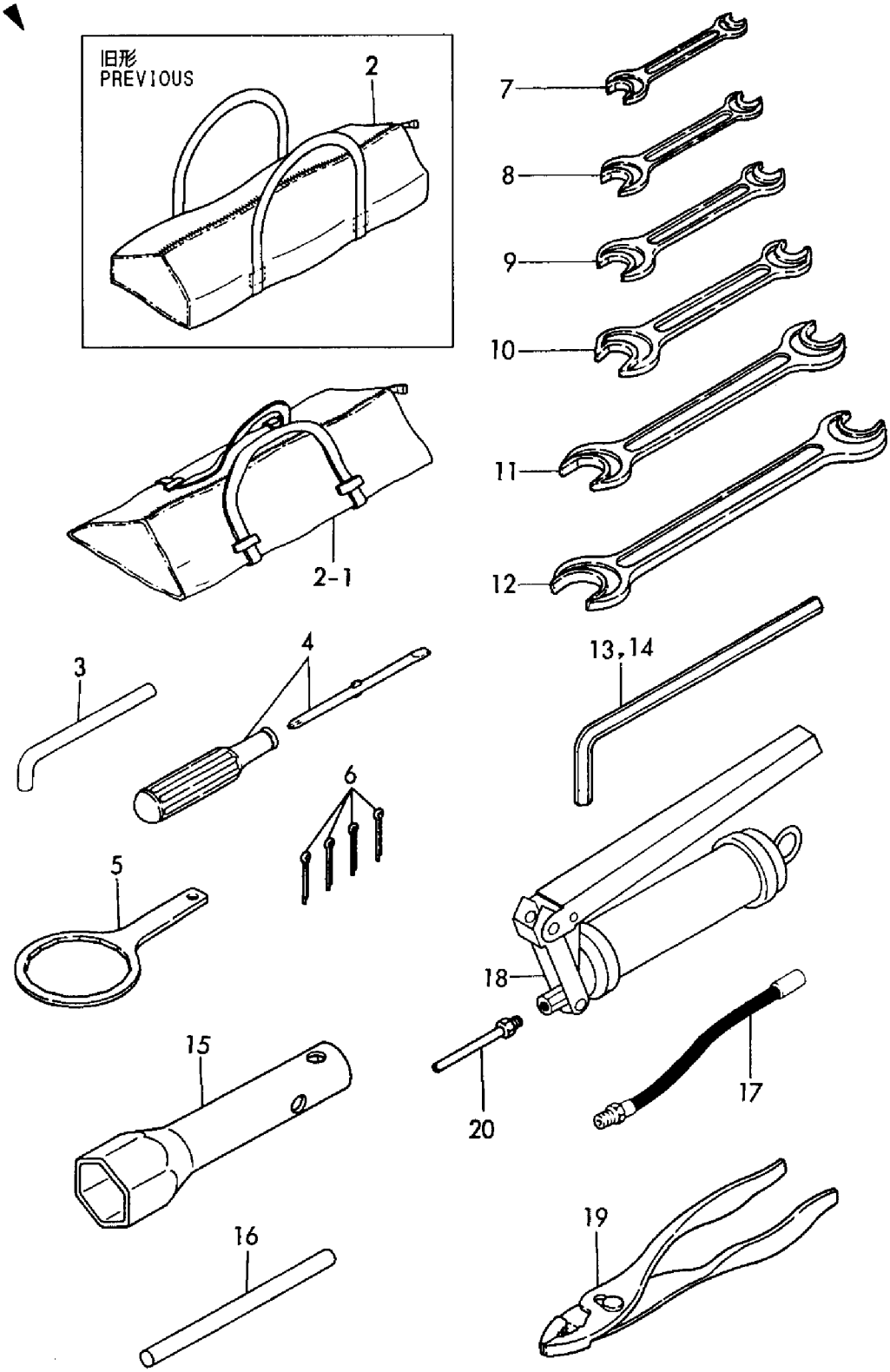

1,1,,172141-11300,,"PIPE, EXHAUST",1,1,1,1,,,,,,,,,,,,,
2,1,,172519-11350,,"BAND, SILENCER",1,1,1,1,,,,,,,,,,,,,
3,1,,172141-11400,,"SUPPORT, SILENCER",1,1,1,1,,,,,,,,,,,,,
4,1,,172141-11470,,"STAY, SILENCER",1,1,1,1,,,,,,,,,,,,,
5,1,,124701-11910,,"GASKET, SILENCER",1,1,1,1,,,,,,,,,,,,,
5-1,1,,124701-11911,,"GASKET, (NON-ASB.)",,,1,1,,,N,,,,,,,M11938,,M11938,,
6,1,,119831-13500,,SILENCER,1,1,1,1,,,,,,,,,,,,,
7,1,,124664-13580,,CLAMP,1,1,1,1,,,,,,,,,,,,,
7-1,1,,172168-11310,,CLAMP,,,1,1,,,N,,,,,,,M21607,,M21607,,
8,1,,172112-42090,,"WASHER, STOPPER",1,1,1,1,,,,,,,,,,,,,
9,1,,22137-080000,,"WASHER 8, POLISHED",4,4,4,4,,,,,,,,,,,,,
10,1,,22217-080000,,"SPRING WASHER 8",4,4,4,4,,,,,,,,,,,,,
11,1,,26013-080252,,"BOLT M 8X 25",4,4,4,4,,,,,,,,,,,,,
12,1,,26106-080552,,"BOLT M 8X 55 PLATED",1,1,1,1,,,,,,,,,,,,,
13,1,,26366-080002,,"NUT M 8",1,1,1,1,,,,,,,,,,,,,
14,1,,26717-080002,,"NUT 8",4,4,4,4,,,,,,,,,,,,,
15,1,,172141-11500,,"HOSE, SUCTION",1,1,1,1,,,,,,,,,,,,,
16,1,,119831-12500,,"CLEANER ASSY, AIR",1,1,1,1,,,,,,,,,,,,,
17,2,,121465-12700,,RETAINER,1,1,1,1,,,,,,,,,,,,,
18,2,,121465-12510,,"ELEMENT, AIR CLEANER",1,1,1,1,,,,,,,,,,,,,
19,2,,124064-12680,,"BOLT, WING",1,1,1,1,,,,,,,,,,,,,
20,2,,124064-12690,,WASHER,1,1,1,1,,,,,,,,,,,,,
21,1,,119831-12550,,"PIPE, SUCTION",1,1,1,1,,,,,,,,,,,,,
22,1,,119831-12560,,"SUPPORT,AIR CLEANER",1,1,1,1,,,,,,,,,,,,,
23,1,,23000-060000,,"CLAMP 60",4,4,4,4,,,,,,,,,,,,,
24,1,,26106-080162,,"BOLT M 8X 16 PLATED",3,3,3,3,,,,,,,,,,,,,
24-1,1,,26116-080162,,"BOLT M 8X 16 PLATED",,,3,3,,,R,,,,,,,M20501,,M20501,,
25,1,,26366-080002,,"NUT M 8",1,1,1,1,,,,,,,,,,,,,
25-1,1,,26366-080002,,"NUT M 8",,,1,1,,,Z,,,,,,,M20501,,M20501,,
26,1,,172141-11310,,COVER,1,1,1,1,,,W,,,M00747,,M00747,,M00747,,M00747,,
27,1,,22137-100000,,"WASHER
10,POLISHED",2,2,2,2,,,W,,,M00747,,M00747,,M00747,,M00747,,
28,1,,26013-100202,,"BOLT W/WASHER
M10X20",2,2,2,2,,,W,,,M00747,,M00747,,M00747,,M00747,,
29,1,,26716-080002,,"NUT M 8",1,1,1,1,,,W,,,M00637,,M00637,,M00637,,M00637,,
29-1,1,,26716-080002,,"NUT M 8",,,2,2,,,K,,,,,,,M20501,,M20501,,
30,1,,22217-080000,,"SPRING WASHER 8",,,3,3,,,W,,,,,,,M20501,,M20501,,
31,1,,26013-100302,,"BOLT M10X 30",1,1,1,1,,,W,,,"FROM 1ST",,"FROM 1ST",,"FROM
1ST",,"FROM 1ST",,

Fig. 4 エアークリーナ&サイレンサ AIR CLEANER & SILENCER

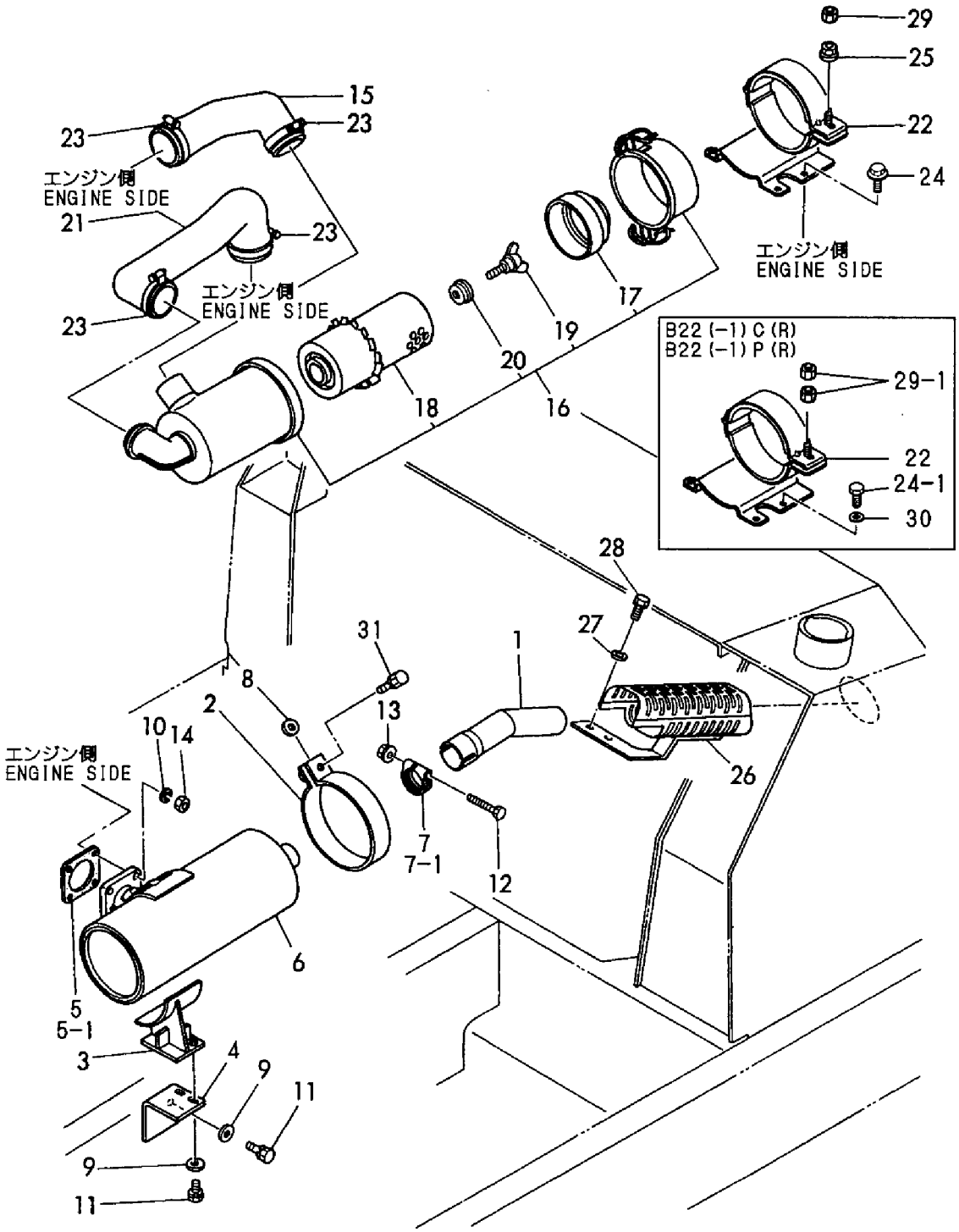

```
1,1,,172141-12100,,"LEVER W/BUSH, ACCEL",1,1,1,1,,,,,,,,,,,,,
2,2,,172141-12220,,"BUSH 30X10",2,2,2,2,,,,,,,,,,,,,
3,1,,172137-12110,,"CABLE, THROTTLE",1,1,1,1,,,,,,,,,,,,,
4,1,,172141-12160,,BRACKET,1,1,1,1,,,,,,,,,,,,,
5,1,,172141-12230,,SPRING,1,1,,,,,,,,,,,,,,,
5-1,1,,172141-12231,,SPRING,1,1,,,,,N,,,M00846,,M00846,,,,,,
5-2,1,,172141-12232,,SPRING,1,1,1,1,,,N,,,M00867,,M00867,,,,,,
6,1,,172141-12240,,SPRING,1,1,1,1,,,,,,,,,,,,,
7,1,,172141-12250,,PLATE,1,1,1,1,,,,,,,,,,,,,
8,1,,172141-12260,,PLATE,1,1,1,1,,,,,,,,,,,,,
9,1,,172137-12270,,"JOINT, CABLE",1,1,1,1,,,,,,,,,,,,,
10,1,,172141-12280,,"CLAMP, ACCEL WIRE",1,1,1,1,,,,,,,,,,,,,
11,1,,172141-41340,,BOOTS,1,1,1,1,,,,,,,,,,,,,
12,1,,172122-46630,,"KNOB(D), LEVER",1,1,1,1,,,,,,,,,,,,,
13,1,,1C6281-52310,,"PIN 6,COME-OFF SNAP",2,2,2,2,,,,,,,,,,,,,
14,1,,1A1040-56900,,"PIN  6X 17",2,2,2,2,,,,,,,,,,,,,
14-1,1,,1A1040-56900,,"PIN  6X 17",,,1,1,,,K,,,,,,,M21556,,M21556,,
15,1,,22137-060000,,"WASHER 6, POLISHED",1,1,1,1,,,,,,,,,,,,,
16,1,,24190-160001,,"BALL 1/2",1,1,1,1,,,,,,,,,,,,,
17,1,,26013-080162,,"BOLT W/WASHER M8X16",2,2,2,2,,,,,,,,,,,,,
18,1,,26013-100202,,"BOLT W/WASHER M10X20",2,2,,,,,,,,,,,,,,,
18-1,1,,26116-100202,,"BOLT M10X 20
PLATED",2,2,2,2,,,N,,,*1987.11,,*1987.11,,*1987.11,,*1987.11,,
19,1,,26013-100302,,"BOLT M10X 30",1,1,,,,,,,,,,,,,,,
19-1,1,,26116-100302,,"BOLT M10X 30
PLATED",1,1,1,1,,,N,,,*1987.11,,*1987.11,,*1987.11,,*1987.11,,
20,1,,933171-15680,,"GROMMET 40X13",1,1,1,1,,,,,,,,,,,,,
21,1,,933160-06870,,"SHIM 30X
T=1.6",1,1,1,1,,,W,,,M00846,,M00846,,M00846,,M00846,,
21-1,1,,933160-06870,,"SHIM 30X
T=1.6",1,1,1,1,,,Z,,,M00867,,M00867,,M00867,,M00867,,
22,1,,22217-100000,,"SPRING WASHER
10",2,2,2,2,,,W,,,*1987.11,,*1987.11,,*1987.11,,*1987.11,,
23,1,,22217-100000,,"SPRING WASHER
10",1,1,1,1,,,W,,,*1987.11,,*1987.11,,*1987.11,,*1987.11,,
24,1,,172113-12521,,"PIN, CABLE",,,1,1,,,W,,,,,,,M21556,,M21556,,
```

Fig. 5 アクセル ACCELERATOR

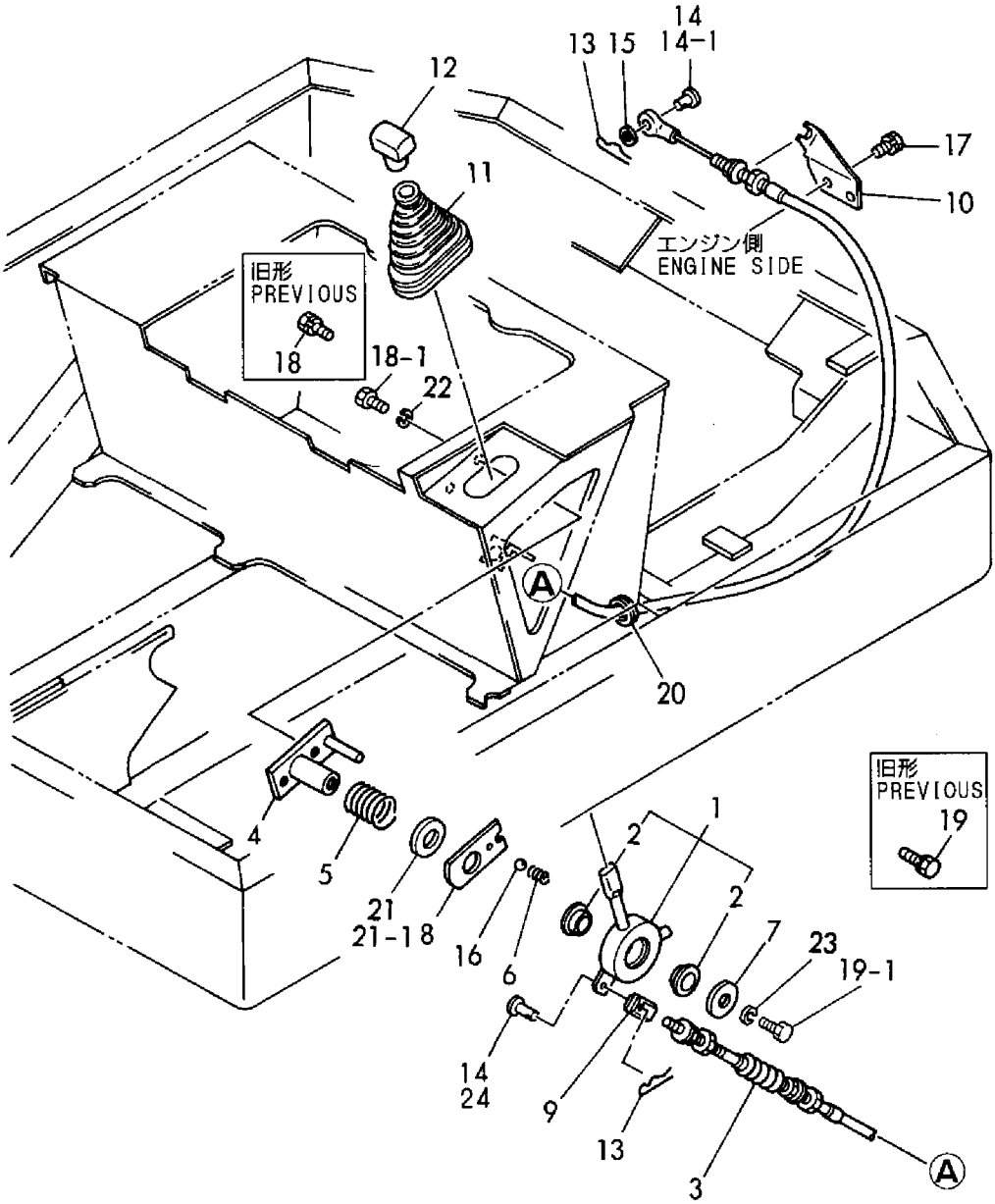

```
1,1,,196420-02310,,"ABSORBER, SHOCK",4,4,4,4,,,,,,,,,,,,
2,1,,172141-13010,,"STOPER, ENGINE",3,3,3,3,,,,,,,,,,,,
3,1,,172141-13030,,"BRACKET(L.R), ENGINE",1,1,1,1,,,,,,,,,,,,,
4,1,,172141-13271,,"BRACKET(L.F), ENGINE",1,1,1,1,,,,,,,,,,,,,
5,1,,172141-13100,,"BRACKET(R), ENGINE",1,1,1,1,,,,,,,,,,,,,
6,1,,22217-120000,,"WASHER 12,SPRING",8,8,8,8,,,,,,,,,,,,,
7,1,,26013-100252,,"BOLT W/WASHER M10X25",8,8,8,8,,,,,,,,,,,,,,
8,1,,26013-120252,,"BOLT M12X 25",8,8,8,8,,,,,,,,,,,,,
9,1,,26013-120302,,"BOLT W/WASHER M12X30",6,6,6,6,,,,,,,,,,,,,,
10,1,,26717-120002,,"NUT M12",8,8,8,8,,,,,,,,,,,,,
11,1,,172141-13300,,"MOUNT(F), RADIATOR",1,1,1,1,,,,,,,,,,,,,
12,1,,172141-13340,,"MOUNT(R), RADIATOR",1,1,1,1,,,,,,,,,,,,,
13,1,,172141-13410,,"BRACKET(F), RADIATOR",1,1,1,1,,,,,,,,,,,,,,
14,1,,172141-13420,,"BRACKET(R), RADIATOR",1,1,1,1,,,,,,,,,,,,,,
15,1,,172124-13500,,"MOUNT, RADIATOR",4,4,4,4,,,,,,,,,,,,,
16,1,,172141-13500,,"HOSE, SUB-TANK",1,1,1,1,,,,,,,,,,,,,
17,1,,172141-14610,,"HOSE, FUEL",1,1,,,,,,,,,,,,,,,,,
17-1,1,,172137-13430,,"PIPE (B),
DRAIN",1,1,1,1,,,N,,,M01055,,M01055,,M01055,,M01055,,
18,1,,172124-14650,,"HOSE L=1100, FUEL",1,1,1,1,,,,,,,,,,,,,
19,1,,119831-44500,,RADIATOR,1,1,1,1,,,,,,,,,,,,,
20,2,,124450-44590,,"CAP, RADIATOR",1,1,1,1,,,,,,,,,,,,,
21,1,,121468-44510,,"SUB-TANK ASSY",1,1,1,1,,,,,,,,,,,,,
22,2,,121470-44521,,"BODY,SUB-TANK",1,1,1,1,,,,,,,,,,,,,
23,2,,121450-44530,,"CAP, RESERVOIR TANK",1,1,,,,,,,,,,,,,,,,,
23-1,2,,121450-44531,,CAP,1,1,1,1,,,S,,,M00501,,M00501,,M00501,,M00501,,
24,2,,121468-44540,,"PLUG, SUB-TANK",1,1,1,1,,,,,,,,,,,,,
25,2,,124450-44560,,CLAMP,1,1,1,1,,,,,,,,,,,,,
26,2,,121470-44570,,SPACER,1,1,1,1,,,,,,,,,,,,,
27,2,,121470-44580,,GASKET,1,1,,,,,,,,,,,,,,,,,
27-1,2,,121470-44581,,GASKET,1,1,1,1,,,S,,,M00501,,M00501,,,,,,
28,2,,23065-070130,,"PIPE  7X 130",1,1,1,1,,,,,,,,,,,,,
29,1,,121470-44540,,"LABEL, SUB-TANK",1,1,1,1,,,,,,,,,,,,,
30,1,,119280-49010,,"PIPE  A",1,1,1,1,,,,,,,,,,,,,
31,1,,171301-49020,,"PIPE (B), C. WATER",1,1,1,1,,,,,,,,,,,,,
32,1,,172124-13440,,COCK,1,1,1,1,,,,,,,,,,,,,
32-1,1,,121450-49110,,"COCK ASSY, 3-WAY",,,1,1,,,R,,,,,,,M21430,,M21430,,
32B,2,,121250-49121,,PLUG,,,1,1,,,W,,,,,,,M21430,,M21430,,
32C,2,,24311-000160,,"O-RING 1A P-16.0",,,1,1,,,W,,,,,,,M21430,,M21430,,
33,1,,172124-13450,,PLUG,1,1,1,1,,,,,,,,,,,,,
33-1,1,,172124-13450,,PLUG,,,1,1,,,Z,,,,,,,M21430,,M21430,,
34,1,,22137-060000,,"WASHER 6, POLISHED",2,2,2,2,,,,,,,,,,,,,
35,1,,22137-080000,,"WASHER 8, POLISHED",4,4,4,4,,,,,,,,,,,,,
36,1,,22137-080000,,"WASHER 8, POLISHED",4,4,4,4,,,,,,,,,,,,,
37,1,,22137-080000,,"WASHER 8, POLISHED",4,4,4,4,,,,,,,,,,,,,
38,1,,22217-080000,,"SPRING WASHER  8",8,8,8,8,,,,,,,,,,,,,
39,1,,23010-038000,,"CLAMP 38",4,4,4,4,,,,,,,,,,,,,
40,1,,23080-012000,,"CLAMP 12",4,4,4,4,,,,,,,,,,,,,
41,1,,24311-000160,,"O-RING 1A P-16.0",1,1,1,1,,,,,,,,,,,,,
41-1,1,,24311-000160,,"O-RING 1A P-16.0",,,1,1,,,Z,,,,,,,M21430,,M21430,,
42,1,,26013-060162,,"BOLT M 6X 16",2,2,2,2,,,,,,,,,,,,,
43,1,,26013-080162,,"BOLT W/WASHER M8X16",2,2,2,2,,,,,,,,,,,,,
44,1,,26013-080202,,"BOLT W/WASHER M8X20",4,4,4,4,,,,,,,,,,,,,
45,1,,26013-080252,,"BOLT M 8X 25",4,4,4,4,,,,,,,,,,,,,
46,1,,26716-080002,,"NUT M 8",8,8,8,8,,,,,,,,,,,,,
47,1,,933152-09280,,"BAND 170",2,2,2,2,,,,,,,,,,,,,
```

Fig. 6 エンジンマウント＆ラジエータ ENGINE MOUNT & RADIATOR

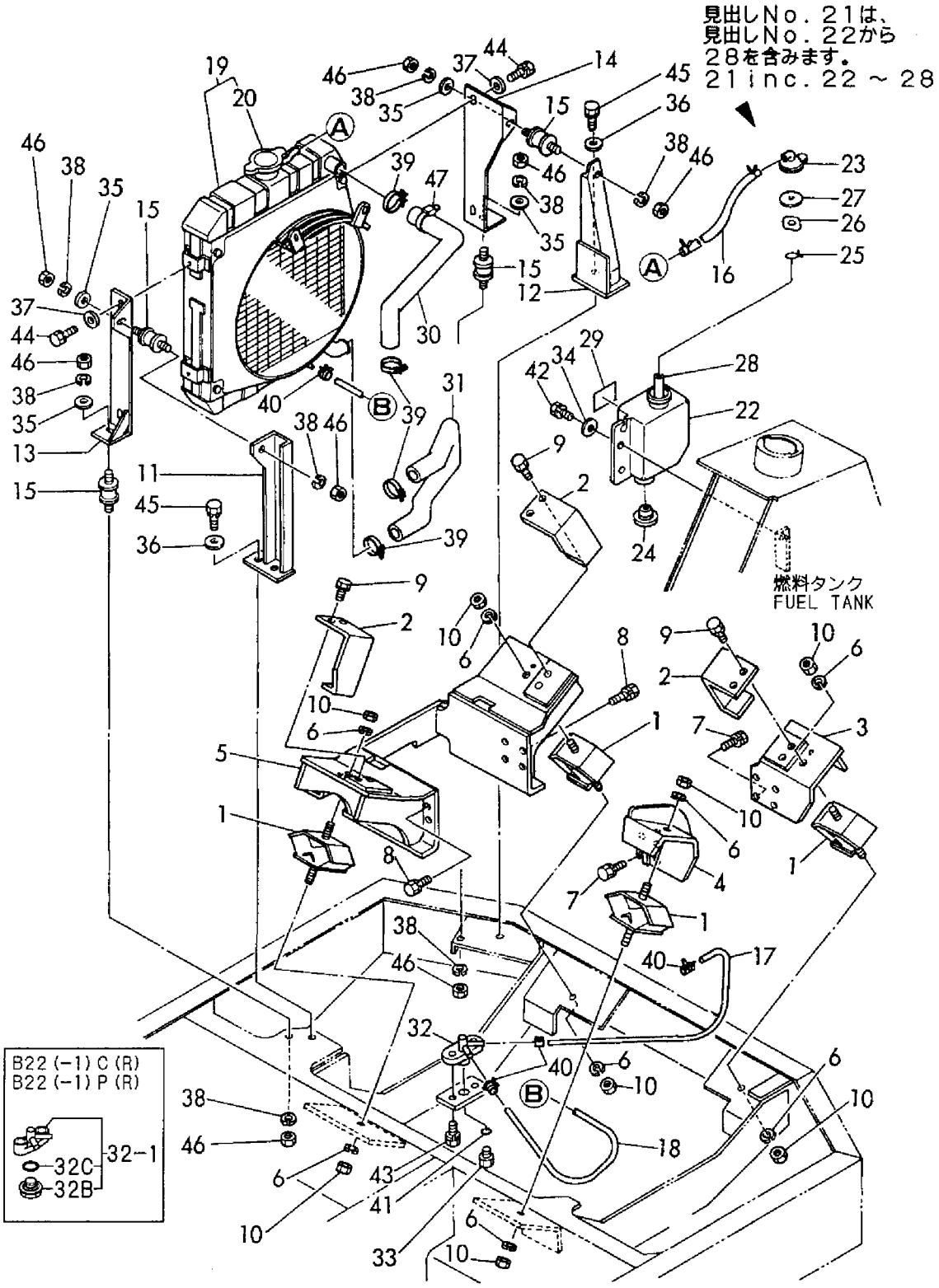

```
1,1,,772141-14100,,"TANK ASSY, FUEL",1,1,1,1,,,,,,,,,,,,,
2,2,,104200-11920,,COCK,1,1,1,1,,,,,,,,,,,,,
3,2,,172141-14250,,"GAUGE, FUEL",1,1,1,1,,,,,,,,,,,,,
4,2,,172141-14260,,FLOAT,1,1,1,1,,,,,,,,,,,,,
5,2,,172122-14300,,"CAP, FUEL TANK",1,1,1,1,,,,,,,,,,,,,
5A,3,,105430-55070,,GASKET,1,1,1,1,,,W,,,"FROM 1ST",,"FROM 1ST",,"FROM
1ST",,"FROM 1ST",,
6,2,,101504-55101,,"STRAINER,FUEL INLET",1,1,1,1,,,,,,,,,,,,,
7,2,,23010-014000,,"CLAMP 14",2,2,2,2,,,,,,,,,,,,,
8,1,,22137-120000,,"WASHER 12,POLISHED",3,3,3,3,,,,,,,,,,,,,
9,1,,23080-013000,,"CLAMP 13,HOSE",1,1,1,1,,,,,,,,,,,,,
10,1,,26013-120352,,"BOLT M12X 35",3,3,3,3,,,,,,,,,,,,,
11,1,,933169-22940,,"SPACER, RESERVOIR",1,1,1,1,,,,,,,,,,,,,
12,1,,172141-14610,,"HOSE, FUEL",1,1,,,,,,,,,,,,,,,
12-1,1,,172137-13430,,"PIPE (B), DRAIN",1,1,1,1,,,N,,,M01055,,M01055,,,,,,
13,1,,172116-14620,,"PIPE, FUEL",1,1,1,1,,,,,,,,,,,,,
14,1,,172141-14620,,"HOSE, FUEL",1,1,1,1,,,,,,,,,,,,,
15,1,,129335-55700,,"SEPARATOR, WATER",1,1,1,1,,,,,,,,,,,,,
16,2,,104200-55321,,"VALVE, TAPER",1,1,1,1,,,,,,,,,,,,,
17,2,,104200-55330,,"SPRING, TAPER VALVE",1,1,1,1,,,,,,,,,,,,,
18,2,,104200-55341,,"HANDLE, COCK",1,1,1,1,,,,,,,,,,,,,
19,2,,124064-55510,,"BOWL, FUEL STRAINER",1,1,1,1,,,,,,,,,,,,,
20,2,,102103-55520,,O-RING,1,1,1,1,,,,,,,,,,,,,
21,2,,110250-55610,,"RING, RETAINING",1,1,1,1,,,,,,,,,,,,,
22,2,,121257-55720,,"SPRING, SCREEN",1,1,1,1,,,,,,,,,,,,,
23,2,,121257-55731,,FLOAT,1,1,1,1,,,,,,,,,,,,,
24,2,,101720-55750,,"PLUG 6",2,2,2,2,,,,,,,,,,,,,
25,2,,104200-55750,,"SCREW M 4",1,1,1,1,,,,,,,,,,,,,
26,2,,171081-55910,,SCREEN,1,1,1,1,,,,,,,,,,,,,
27,2,,23418-060000,,"GASKET 6, NYLON",2,2,2,2,,,,,,,,,,,,,
28,2,,24311-240100,,"O-RING 1A P-10A",1,1,1,1,,,,,,,,,,,,,
29,1,,124766-59050,,"CLAMP 12",6,6,6,6,,,,,,,,,,,,,
30,1,,22137-080000,,"WASHER 8, POLISHED",1,1,1,1,,,,,,,,,,,,,
31,1,,26116-080652,,"BOLT M 8X 65 PLATED",1,1,1,1,,,,,,,,,,,,,
32,1,,172137-14280,,"GAUGE, FUEL OIL",1,1,1,1,,,,,,,,,,,,,
32-1,1,,23061-100230,,"PIPE 10X
230",1,1,1,1,,,N,,,*1988.06,,*1988.06,,*1988.06,,*1988.06,,
33,1,,172126-16540,,"CLAMP 10X70",2,2,2,2,,,W,,,"FROM 1ST",,"FROM 1ST",,"FROM
1ST",,"FROM 1ST",,
34,1,,933152-09280,,"BAND 170",1,1,1,1,,,W,,,"FROM 1ST",,"FROM 1ST",,"FROM
1ST",,"FROM 1ST",,
```

Fig. 7 燃料タンク＆燃料パイプ FUEL TANK & FUEL PIPE

見出しNo．1は、見出しNo．2から7を含みます。
1 inc．2 ～ 7

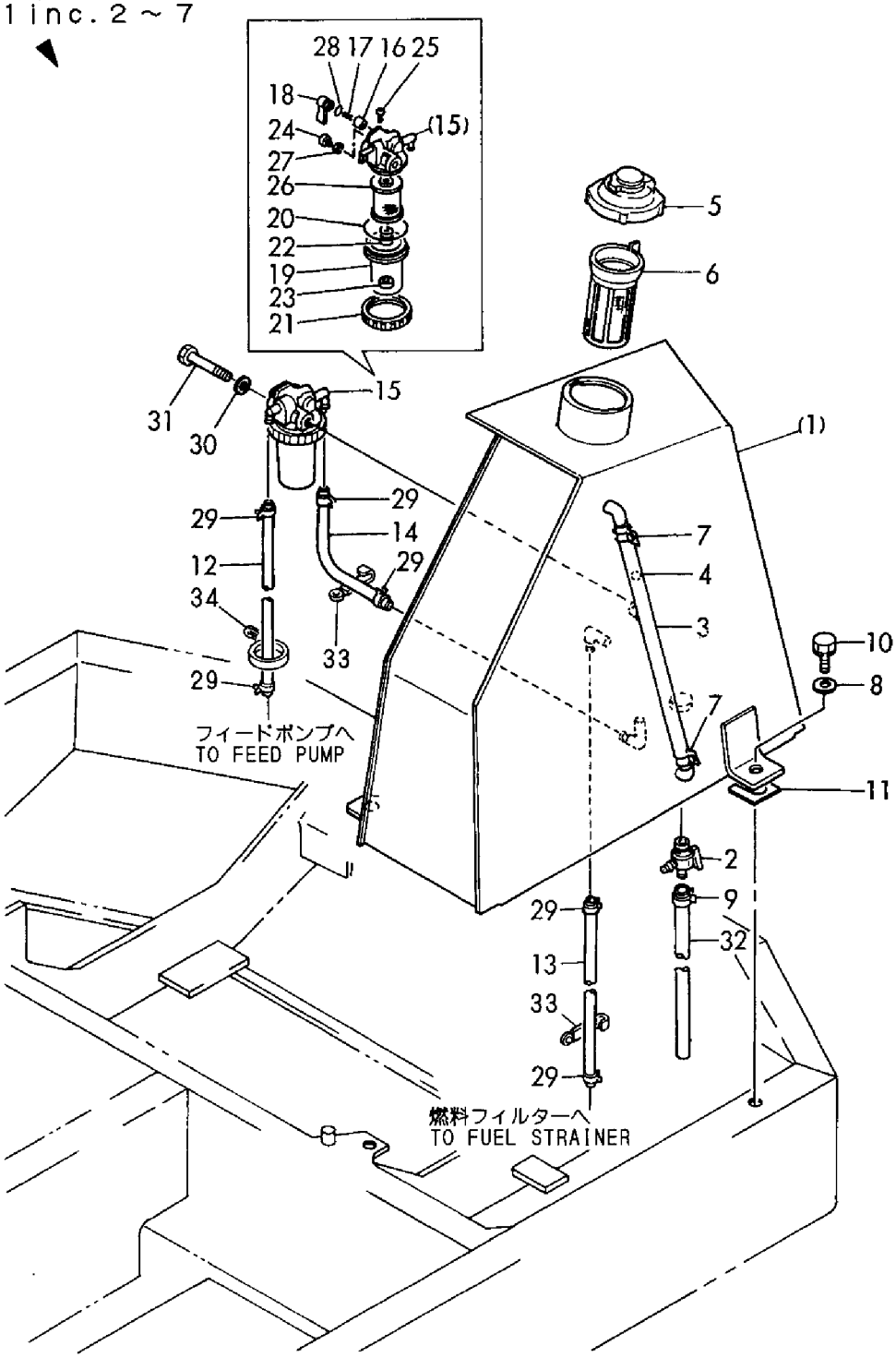

1,1,,172141-16140,,"HARNESS, BATTERY(-)",1,1,1,1,,,,,,,,,,,,,
2,1,,172141-16160,,"HARNESS, BATTERY(+)",1,1,1,1,,,,,,,,,,,,,
3,1,,124550-77030,,"COVER, TERMINAL",1,1,1,1,,,,,,,,,,,,,
4,1,,933113-01500,,"BATTERY (N70Z)",1,1,1,1,,,,,,,,,,,,,
5,1,,172310-16080,,"BOLT, BATTERY",2,2,2,2,,,,,,,,,,,,,
6,1,,172141-16110,,"CLAMP, BATTERY",1,1,1,1,,,,,,,,,,,,,
7,1,,172141-16130,,"COVER, BATTERY",1,1,1,1,,,,,,,,,,,,,
8,1,,22217-080000,,"SPRING WASHER 8",2,2,2,2,,,,,,,,,,,,,
9,1,,22137-100000,,"WASHER 10,POLISHED",,,1,1,,,W,,,,,,,M20501,,M20501,,
10,1,,22217-080000,,"SPRING WASHER 8",1,1,1,1,,,W,,,"FR0M 1ST",,"FROM
1ST",,"FROM 1ST",,"FROM 1ST",,
11,1,,26716-080002,,"NUT M 8",1,1,1,1,,,W,,,"FROM 1ST",,"FROM 1ST",,"FROM
1ST",,"FROM 1ST",,

Fig.8 バッテリ BATTERY

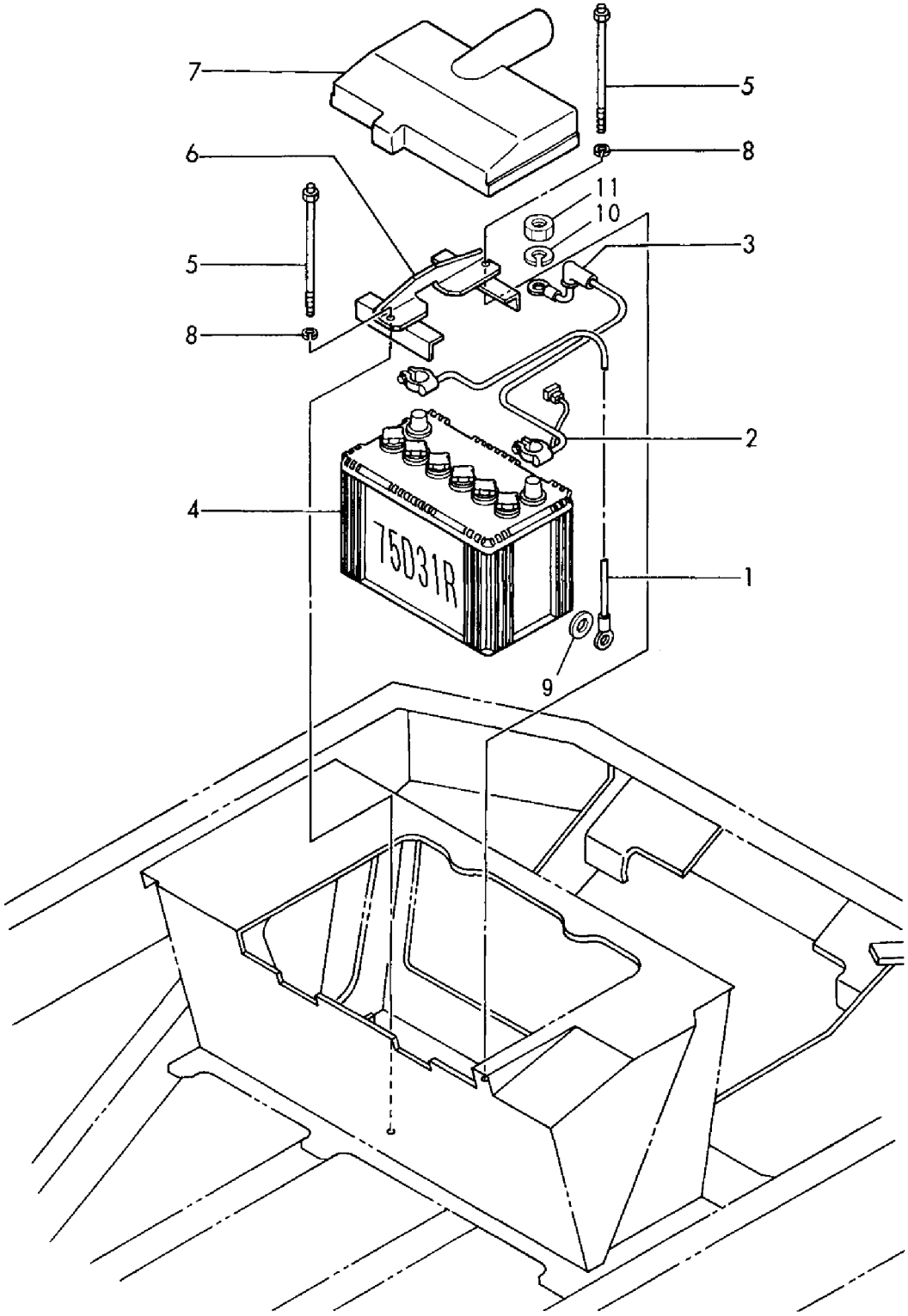

1,1,,172141-16510,,"HARNESS(A), WIRE",,1,,,,,,,,,,,,,,,
1-1,1,,172142-16500,,"HARNESS(A), WIRE",,1,,1,,,S,,,,,*1987.11,,,,*1987.11,,
2,1,,172141-16520,,"HARNESS(B), WIRE",,1,,,,,,,,,,,,,,,
2-1,1,,172141-16521,,"HARNESS(B), WIRE",,1,,1,,,S,,,,,*1987.11,,,,*1987.11,,
3,1,,172141-16540,,"HARNESS(D), WIRE",,1,,,,,,,,,,,,,,,
3-1,1,,172141-16541,,"HARNESS(D), WIRE",,1,,1,,,S,,,,,*1987.11,,,,*1987.11,,
4,1,,172141-16550,,"HARNESS(E), WIRE",,1,,1,,,,,,,,,,,,,
5,1,,172122-16570,,"LINK, FUSIBLE",,1,,1,,,,,,,,,,,,,
6,1,,933168-55770,,"BAND 146",,5,,5,,,,,,,,,,,,,
7,1,,933171-15801,,"WIRE, EARTH",,1,,1,,,,,,,,,,,,,
8,1,,172141-17110,,PLATE,,1,,1,,,,,,,,,,,,,
9,1,,172141-17140,,"UNIT, CHECKER",,1,,1,,,,,,,,,,,,,
9-1,1,,172141-17141,,"UNIT, CHECKER",,1,,1,,,N,,,,,M00764,,,,M00764,,
10,1,,172141-17150,,BUZZER,,1,,1,,,,,,,,,,,,,
11,1,,172141-17160,,"BOX, FUSE",,1,,1,,,,,,,,,,,,,
12,2,,29411-050000,,"FUSE (5A),CARTRIDGE",,1,,1,,,,,,,,,,,,,
13,2,,29411-100000,,"FUSE (10A),CARTRIDGE",,2,,2,,,,,,,,,,,,,
14,2,,29411-150000,,"FUSE (15A),CARTRIDGE",,2,,2,,,,,,,,,,,,,
15,1,,172141-17170,,"BOX, PILOT",,1,,,,,,,,,,,,,,,
15-1,1,,172141-17171,,"BOX, PILOT",,1,,1,,,N,,,,,M00964,,,,M00964,,
16,2,,933113-05120,,"BULB 12V 1.7W",,4,,,,,,,,,,,,,,,
16-1,2,,933113-05120,,"BULB 12V 1.7W",,3,,3,,,K,,,,,M00964,,,,M00964,,
17,1,,172141-17190,,"SWITCH, WORK LAMP",,1,,1,,,,,,,,,,,,,
18,2,,933113-05120,,"BULB 12V 1.7W",,1,,,,,,,,,,,,,,,
18-1,2,,172141-17230,,"BULB 24V- 6W",,1,,1,,,N,,,,,,,,,M11343,,
19,1,,172141-17220,,"METER, HOUR",,1,,,,,,,,,,,,,,,
19-1,1,,172147-17200,,"METER, HOUR",,1,,1,,,N,,,,,M01210,,,,M01210,,
20,2,,172147-17210,,"CASE, HOUR METER",,1,,1,,,W,,,,,M01210,,,,,,
21,2,,172147-17220,,"CAP, HOUR METER",,1,,1,,,W,,,,,M01210,,,,,,
22,2,,172147-17230,,NUT,,2,,2,,,W,,,,,M01210,,,,,,
23,2,,172147-17240,,SLEEVE,,2,,2,,,W,,,,,M01210,,,,,,
24,2,,172147-17250,,"WIRE,LEAD",,1,,1,,,W,,,,,M01210,,,,,,
25,2,,22217-050000,,"SPRING WASHER 5",,2,,2,,,W,,,,,M01210,,,,,,
26,1,,121522-77101,,RELAY,,1,,1,,,,,,,,,,,,,
27,1,,119640-77710,,"LIMITER,CURRENT",,1,,,,,,,,,,,,,,,
27-1,1,,119640-77711,,"LIMITER,CURRENT",,1,,1,,,N,,,,,*1988.02,,,,*1988.02,,
28,1,,121522-77721,,"INDICATOR, CHARGING",,1,,1,,,,,,,,,,,,,
29,1,,22217-060000,,"SPRING WASHER 6",,4,,4,,,,,,,,,,,,,
30,1,,26013-060122,,"BOLT M 6X 12",,2,,,,,,,,,,,,,,,
30-1,1,,26116-060122,,"BOLT M 6X 12",,2,,2,,,N,,,,,M00501,,,,M00501,,
31,1,,26013-100162,,"BOLT M10X 16",,4,,,,,,,,,,,,,,,
31-1,1,,26116-100162,,"BOLT M10X 16 PLATED",,4,,4,,,N,,,,,M00501,,,,,,
32,1,,26022-050162,,"SCREW M 5X 16",,2,,2,,,,,,,,,,,,,
33,1,,26022-060122,,"SCREW M 6X 12",,2,,2,,,,,,,,,,,,,
34,1,,26716-060002,,"NUT M 6",,4,,4,,,,,,,,,,,,,
35,1,,933110-00100,,"SWITCH ASSY, STARTER",,1,,1,,,,,,,,,,,,,
37,2,,933110-00301,,"KEY ASSY",,1,,1,,,,,,,,,,,,,
38,1,,933110-05300,,HORN,,1,,1,,,,,,,,,,,,,
39,1,,933113-15900,,"COVER, SWITCH TERMI.",,1,,1,,,,,,,,,,,,,
40,1,,172141-63100,,PANEL,,1,,1,,,,,,,,,,,,,
41,1,,172141-63140,,"COVER, IN-PANE",,1,,1,,,,,,,,,,,,,
42,1,,22857-400100,,"SCREW 4X10",,4,,4,,,,,,,,,,,,,
43,1,,26013-100202,,"BOLT W/WASHER M10X20",,4,,,,,,,,,,,,,,,
43-1,1,,26116-100202,,"BOLT M10X 20 PLATED",,4,,4,,,N,,,,,*1987.11,,,,,,
44,1,,172112-69790,,"PLUG 32X2",,1,,1,,,,,,,,,,,,,
45,1,,22217-060000,,"SPRING WASHER 6",,2,,2,,,W,,,,,*1987.11,,,,,,
46,1,,22217-100000,,"SPRING WASHER 10",,4,,4,,,W,,,,,*1987.11,,,,,,
47,1,,22217-100000,,"SPRING WASHER 10",,4,,4,,,W,,,,,*1987.11,,,,,,
48,1,,933168-55770,,"BAND 146",,4,,4,,,,,,,,,,,,,
49,1,,172126-16540,,"CLAMP 10X70",,2,,2,,,W,,,,,M00501,,,,,,
50,1,,26716-100002,,"NUT M10",,1,,1,,,W,,,,,M00501,,,,,,
51,1,,1E6102-84960,,"BAND 250,WIRE LOCK",,1,,1,,,W,,,,,"FROM 1ST",,,,"FROM
1ST",,

Fig. 9 電装品（キャノピ） ELECTRIC PART (CANOPY SPEC.)

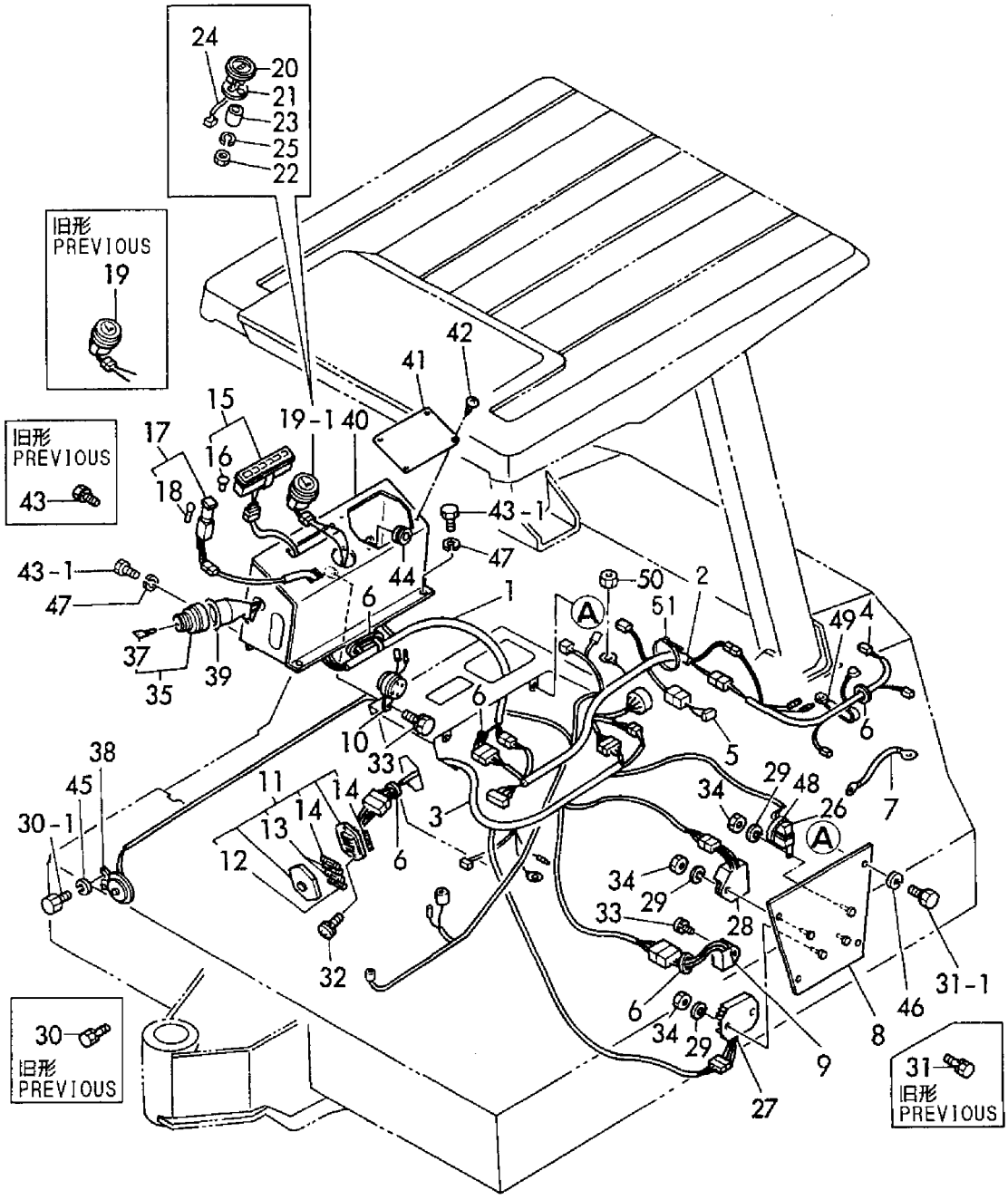

```
1,1,,172137-16000,,WIRE,1,,1,,,,,,,,,,,,,
2,1,,172142-16500,,"HARNESS(A), WIRE",1,,1,,,,,,,,,,,,,
3,1,,172141-16521,,"HARNESS(B), WIRE",1,,1,,,,,,,,,,,,,
4,1,,172141-16530,,"HARNESS(C), WIRE",1,,1,,,,,,,,,,,,,
5,1,,172141-16541,,"HARNESS(D), WIRE",1,,1,,,,,,,,,,,,,
6,1,,172142-16540,,"HARNESS(E), WIRE",1,,1,,,,,,,,,,,,,
7,1,,172122-16570,,"LINK, FUSIBLE",1,,1,,,,,,,,,,,,,
8,1,,194250-51660,,"BAND  250",1,,1,,,,,,,,,,,,,
9,1,,26013-100252,,"BOLT W/WASHER M10X25",1,,1,,,,,,,,,,,,,
10,1,,933168-55770,,"BAND 146",5,,5,,,,,,,,,,,,,
11,1,,933171-15801,,"WIRE, EARTH",1,,1,,,,,,,,,,,,,
12,1,,172141-17110,,PLATE,1,,1,,,,,,,,,,,,,
13,1,,172124-17140,,"UNIT, CHECKER",1,,,,,,,,,,,,,,,
13-1,1,,172141-17141,,"UNIT, CHECKER",1,,1,,,,N,,,M00764,,,,,,,
14,1,,172124-17150,,BUZZER,1,,,,,,,,,,,,,,,
14-1,1,,172141-17150,,BUZZER,1,,1,,,,N,,,M00764,,,,,,,
15,1,,172141-17160,,"BOX, FUSE",1,,1,,,,,,,,,,,,,
16,2,,29411-050000,,"FUSE ( 5A),CARTRIDGE",1,,1,,,,,,,,,,,,,
17,2,,29411-100000,,"FUSE (10A),CARTRIDGE",2,,2,,,,,,,,,,,,,
18,2,,29411-150000,,"FUSE (15A),CARTRIDGE",2,,2,,,,,,,,,,,,,
19,1,,172141-17170,,"BOX, PILOT",1,,,,,,,,,,,,,,,
19-1,1,,172141-17171,,"BOX, PILOT",1,,1,,,,N,,,M00964,,,,,,,
20,2,,933113-05120,,"BULB 12V 1.7W",4,,,,,,,,,,,,,,,
20-1,2,,933113-05120,,"BULB 12V 1.7W",3,,3,,,,K,,,M00964,,,,,,,
21,1,,933113-03000,,"SWITCH, LIGHTING",1,,1,,,,,,,,,,,,,
22,1,,172141-17190,,"SWITCH, WORK LAMP",1,,1,,,,,,,,,,,,,
23,2,,933113-05120,,"BULB 12V 1.7W",1,,,,,,,,,,,,,,,
23-1,2,,172141-17230,,"BULB 24V- 6W",1,,1,,,,N,,,M11343,,,,,,,
24,1,,172141-17220,,"METER, HOUR",1,,,,,,,,,,,,,,,
25,2,,172147-17210,,"CASE, HOUR METER",1,,1,,,,W,,,M01210,,,,,,,
26,2,,172147-17220,,"CAP, HOUR METER",1,,1,,,,W,,,M01210,,,,*1987.11,,,,
27,2,,172147-17230,,NUT,2,,2,,,,W,,,M01210,,,,*1987.11,,,,
28,2,,172147-17240,,SLEEVE,2,,2,,,,W,,,M01210,,,,,,,
29,2,,172147-17250,,"WIRE,LEAD",1,,1,,,,W,,,M01210,,,,*1987.11,,,,
30,2,,22217-050000,,"SPRING WASHER  5",2,,2,,,,W,,,M01210,,,,,,,
31,1,,121522-77101,,RELAY,1,,1,,,,,,,,,,,,,
32,1,,119640-77710,,"LIMITER,CURRENT",1,,,,,,,,,,,,,,,
32-1,1,,119640-77711,,"LIMITER,CURRENT",1,,1,,,,N,,,*1988.02,,,,,,,
33,1,,121522-77721,,"INDICATOR, CHARGING",1,,1,,,,,,,,,,,,,
34,1,,22217-060000,,"SPRING WASHER  6",4,,4,,,,,,,,,,,,,
35,1,,22857-400100,,"SCREW 4X10",2,,2,,,,,,,,,,,,,
36,1,,26013-060122,,"BOLT M 6X 12",2,,2,,,,,,,,,,,,,
37,1,,26013-080162,,"BOLT W/WASHER M8X16",2,,2,,,,,,,,,,,,,
38,1,,26013-100162,,"BOLT M10X 16",4,,4,,,,,,,,,,,,,
39,1,,26022-050162,,"SCREW M 5X 16",2,,2,,,,,,,,,,,,,
40,1,,26022-060122,,"SCREW M 6X 12",2,,2,,,,,,,,,,,,,
41,1,,26716-060002,,"NUT M 6",4,,4,,,,,,,,,,,,,
42,1,,933110-00100,,"SWITCH ASSY, STARTER",1,,1,,,,,,,,,,,,,
44,2,,933110-00301,,"KEY ASSY",1,,1,,,,,,,,,,,,,
45,1,,933110-05300,,HORN,1,,1,,,,,,,,,,,,,
46,1,,933113-05150,,"LAMP, ROOM",1,,1,,,,,,,,,,,,,
47,2,,933113-05160,,"BULB (12V5W)",1,,1,,,,,,,,,,,,,
48,1,,933113-05220,,"LAMP, HEAD",2,,2,,,,,,,,,,,,,
49,2,,933113-05230,,"BULB (12V20W)",2,,2,,,,,,,,,,,,,
50,1,,933113-15900,,"COVER, SWITCH TERMI.",1,,1,,,,,,,,,,,,,
51,1,,172734-17070,,"BLADE 450, WIPER",1,,1,,,,,,,,,,,,,
52,1,,172137-17100,,"ARM 450, WIPER",1,,1,,,,,,,,,,,,,
53,1,,26023-050122,,"SCREW M 5X 12",3,,3,,,,,,,,,,,,,
54,1,,933113-03100,,"SWITCH, WIPER",1,,1,,,,,,,,,,,,,
55,1,,933113-16200,,"MOTER 520 A, WIPER",1,,1,,,,,,,,,,,,,
56,1,,172111-16890,,"GROMMET  9",1,,1,,,,,,,,,,,,,
57,1,,172141-63100,,PANEL,1,,1,,,,,,,,,,,,,
58,1,,172141-63151,,"COVER, IN-PAME",1,,1,,,,,,,,,,,,,
```

```
59,1,,172312-17260,,"GROMMET 22X2.3",1,,1,,,,,,,,,,,,,,
60,1,,22857-400100,,"SCREW 4X10",4,,4,,,,,,,,,,,,,,
61,1,,26013-100202,,"BOLT W/WASHER M10X20",4,,,,,,,,,,,,,,,,,
61-1,1,,26116-100202,,"BOLT M10X 20 PLATED",4,,4,,,,N,,,*1987.11,,,,,,,,
62,1,,933171-15680,,"GROMMET 40X13",1,,1,,,,,,,,,,,,,,
63,1,,26716-100002,,"NUT M10",1,,1,,,,W,,,*1987.11,,,,,,,,
64,1,,26716-120002,,"NUT M12",1,,1,,,,W,,,*1987.11,,,,,,,,
65,1,,22217-100000,,"SPRING WASHER 10",4,,4,,,,W,,,*1987.11,,,,,,,,
66,1,,933168-55770,,"BAND 146",4,,4,,,,W,,,*1987.11,,,,,,,,
67,1,,172141-16550,,"HARNESS(E), WIRE",1,,1,,,,,,,,,,,,,,
68,1,,172126-16540,,"CLAMP 10X70",2,,2,,,,W,,,"FROM 1ST",,,,"FROM 1ST",,,,
69,1,,1E6102-84960,,"BAND 250,WIRE LOCK",1,,1,,,,W,,,"FROM 1ST",,,,"FROM
1ST",,,,
```

Fig. 10 電装品（キャビン） ELECTRIC PART (CABIN)

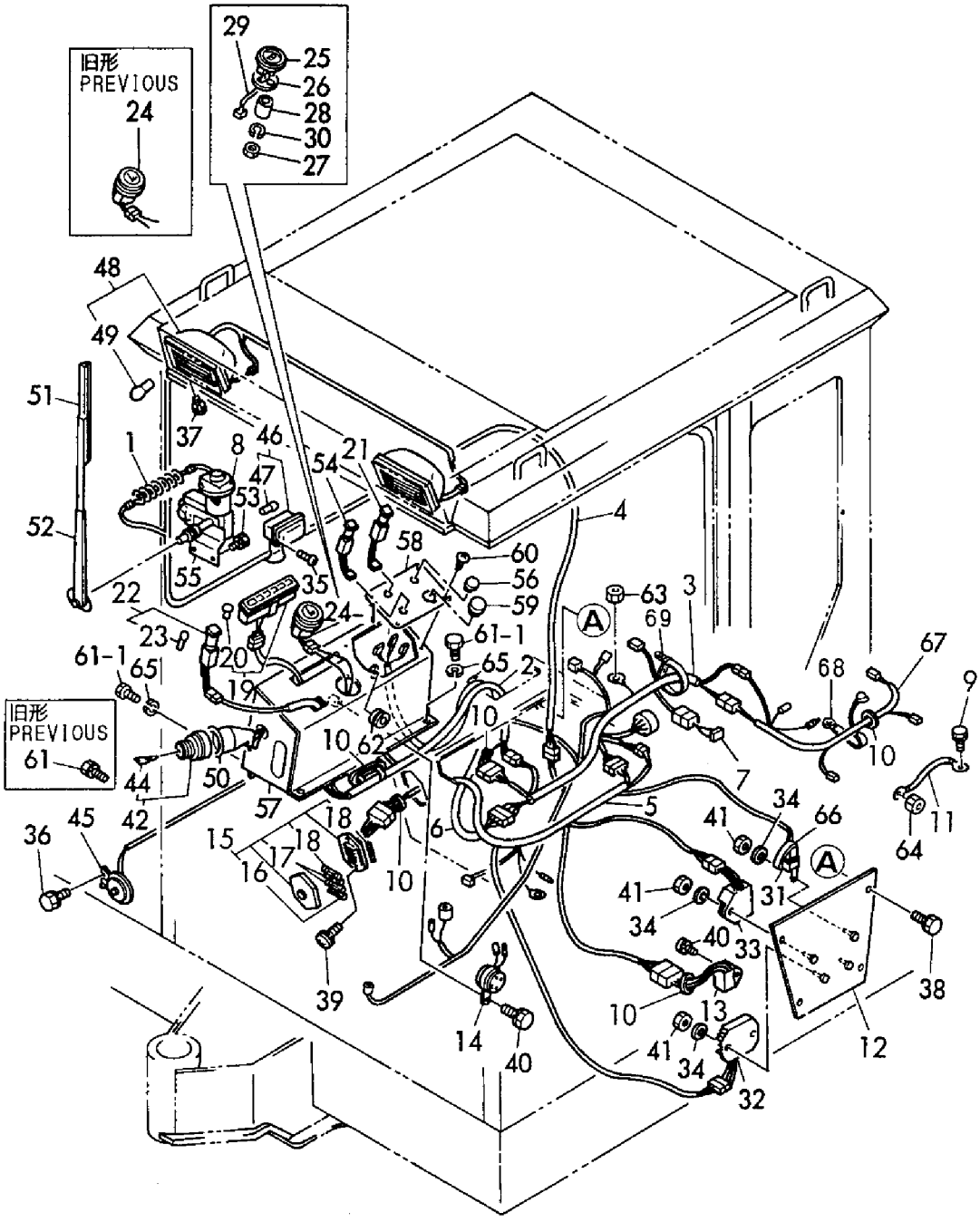

```
1,1,,172137-16560,,BAND,5,5,5,5,,,,,,,,,,,,,
2,1,,172141-16560,,"WIRE, LAMP",1,1,1,1,,,,,,,,,,,,,
2-1,1,,172141-16561,,"WIRE, LAMP",,,1,1,,,S,,,,,,,M21607,,M21607,,
3,1,,172141-17200,,"LAMP, WORK",1,1,1,1,,,,,,,,,,,,,
3-1,1,,172141-17201,,"LAMP, WORK",,,1,1,,,N,,,,,,,M21607,,M21607,,
4,2,,172141-17210,,"BULB 12V-60W",1,1,1,1,,,,,,,,,,,,,
4-1,2,,172141-17211,,"BULB 12V55W",,,1,1,,,S,,,,,,,M21607,,M21607,,
5,1,,172137-17400,,"STAY, BOOM LIGHT",1,1,1,1,,,,,,,,,,,,,
5-1,1,,172137-17401,,COVER,,,1,1,,,N,,,,,,,M20501,,M20501,,
6,1,,26013-120252,,"BOLT M12X 25",1,1,,,,,,,,,,,,,,,
6-1,1,,26116-120252,,"BOLT M12X 25
PLATED",1,1,1,1,,,N,,,*1987.11,,*1987.11,,,,,,
6-2,1,,26013-120302,,"BOLT W/WASHER M12X30",,,1,1,,,S,,,,,,,M20501,,M20501,,
6-3,1,,26013-120252,,"BOLT M12X 25",,,1,1,,,S,,,,,,,M21607,,M21607,,
7,1,,933168-56000,,"GROMMET 17X19",1,1,1,1,,,,,,,,,,,,,
8,1,,22217-120000,,"WASHER 12,SPRING",1,1,1,1,,,W,,,*1987.11,,*1987.11,,,,,,
8-1,1,,22217-120000,,"WASHER 12,SPRING",,,1,1,,,Z,,,,,,,M20501,,M20501,,
9,1,,933152-03700,,"WASHER, SIDE CLUTCH",,,1,1,,,W,,,,,,,M20501,,M20501,,
10,1,,22137-130000,,"WASHER 13",,,2,2,,,W,,,,,,,M21607,,M21607,,
```

Fig. 11 ワークランプ WORK LAMP

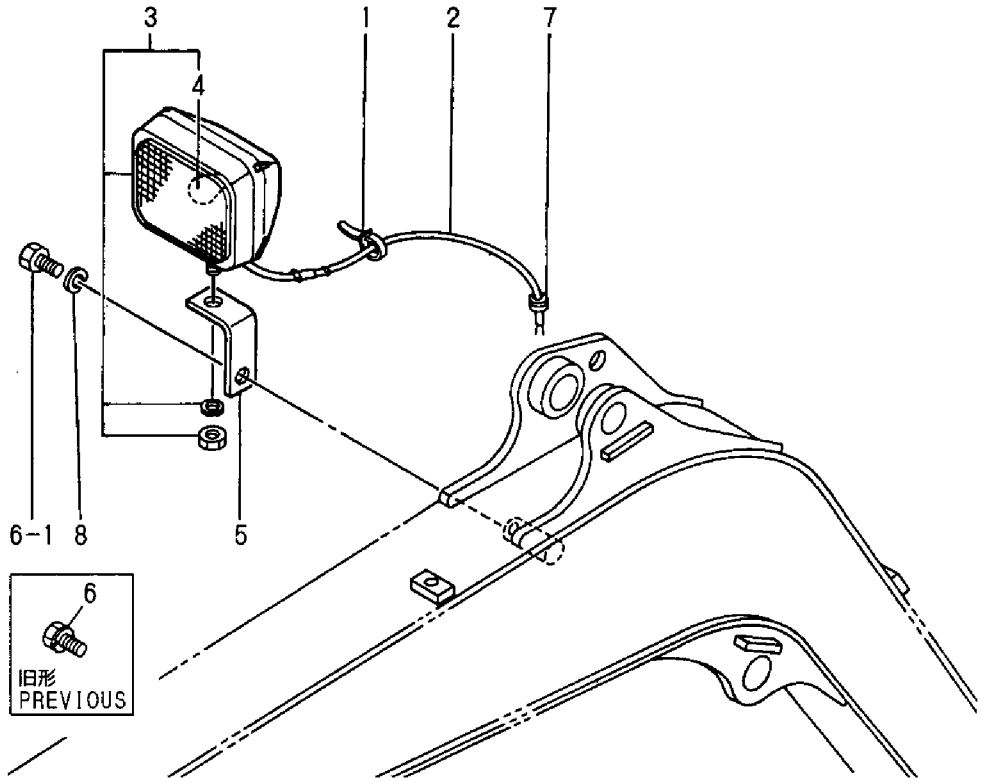

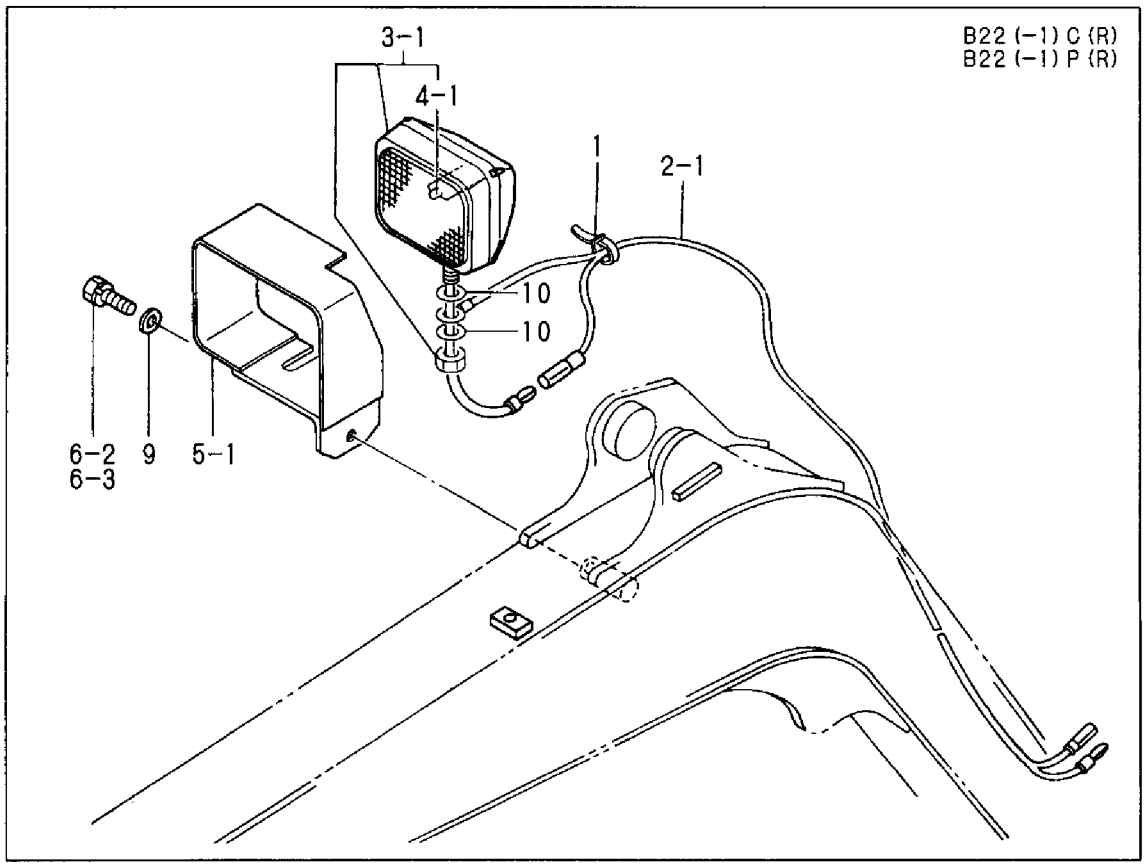

```
1,1,,172141-29110,,SPROCKET,2,2,,,,,,,,,,,,,,,
2,1,,26013-120302,,"BOLT W/WASHER M12X30",18,18,,,,,,,,,,,,,,,
3,1,,772141-37300,,"ROLLER ASSY, TRACK",6,6,,,,,,,,,,,,,,,
3-1,1,,772141-37301,,"ROLLER ASSY, TRACK",6,6,,,,,N,,,M00573,,M00573,,,,,,
4,2,,172141-37310,,"SHAFT, ROLLER",6,6,,,,,,,,,,,,,,,
4-1,2,,172141-37311,,"SHAFT, ROLLER",6,6,,,,,S,,,M00573,,M00573,,,,,,
5,2,,172141-37320,,"SPACER 75X2.6",12,12,,,,,,,,,,,,,,,
6,2,,1A1030-48250,,"SEAL QLF30621218,OIL",12,12,,,,,,,,,,,,,,,
7,2,,22252-000550,,"CIRCLIP   55",12,12,,,,,,,,,,,,,,,
8,2,,22252-000750,,"CIRCLIP   75",12,12,,,,,,,,,,,,,,,
9,2,,24101-060064,,"BALL BEARING",12,12,,,,,,,,,,,,,,,
9-1,2,,24101-060064,,"BALL BEARING",24,24,,,,,K,,,M00573,,M00573,,,,,,
10,1,,172113-36050,,"BOLT, ROLLER ADJUST",6,6,,,,,,,,,,,,,,,
11,1,,22217-160000,,"SPRING WASHER 16",6,6,,,,,,,,,,,,,,,
12,1,,26657-160002,,"CAP NUT M16",6,6,,,,,,,,,,,,,,,
```

Fig. 12 トラックローラ（旧形） TRACK ROLLER (PREVIOUS)

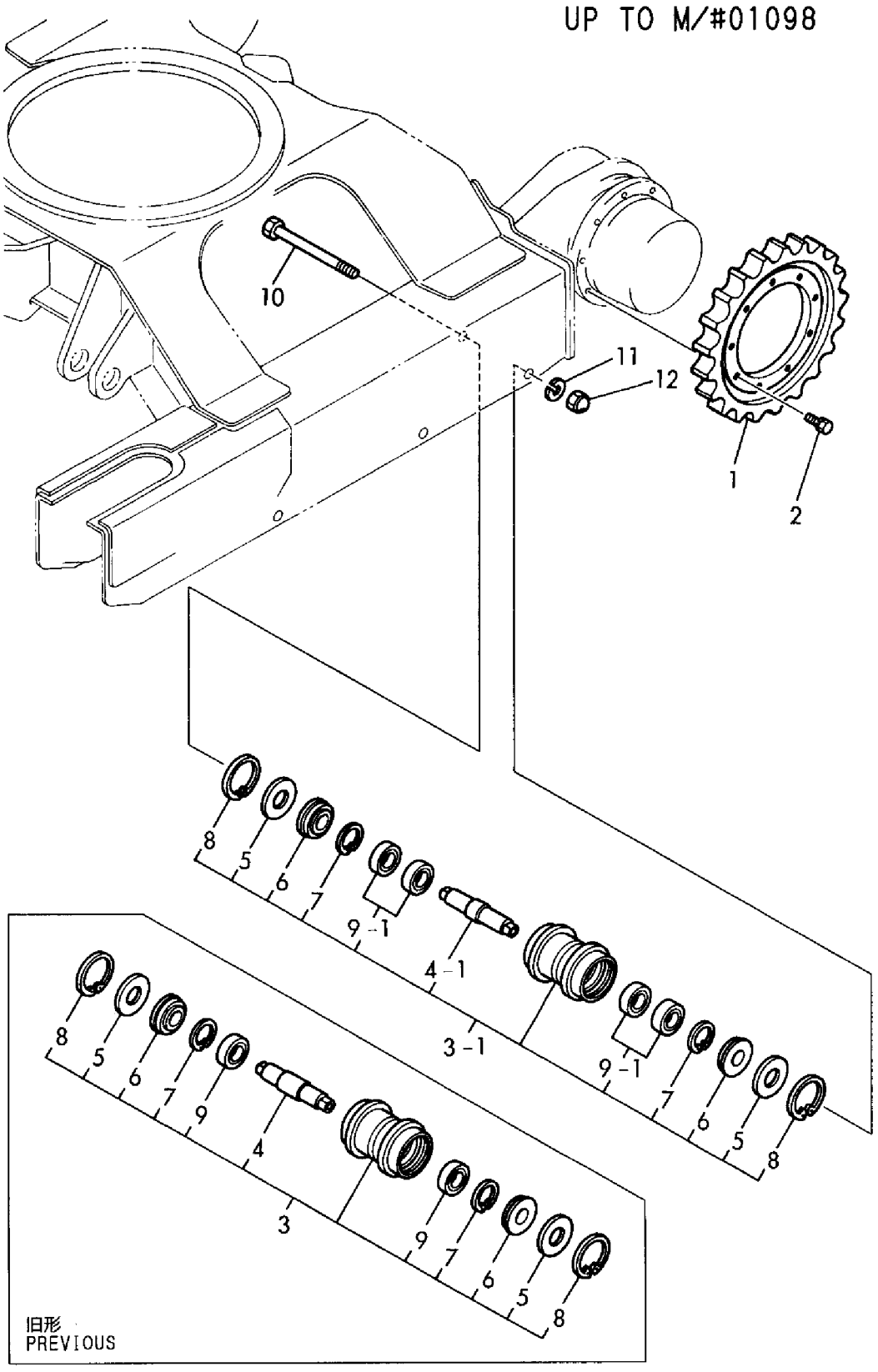

```
1,1,,172141-29210,,"SPROCKET R",2,2,,,,,,,,,,,,,,,
2,1,,26013-120302,,"BOLT W/WASHER M12X30",18,18,,,,,,,,,,,,,,,
3,1,,772141-37310,,"ROLLER(R)ASSY, TRACK",8,8,,,,,,,,,,,,,,,
3-1,1,,772141-37311,,"ROLLER(R)ASSY, TRACK",8,8,,,,,N,,,M00573,,M00573,,,,,,
4,2,,172141-37310,,"SHAFT, ROLLER",8,8,,,,,,,,,,,,,,,
4-1,2,,172141-37311,,"SHAFT, ROLLER",8,8,,,,,S,,,M00573,,M00573,,,,,,
5,2,,172141-37320,,"SPACER 75X2.6",16,16,,,,,,,,,,,,,,,
6,2,,1A1030-48250,,"SEAL QLF30621218,OIL",16,16,,,,,,,,,,,,,,,
7,2,,22252-000550,,"CIRCLIP   55",16,16,,,,,,,,,,,,,,,
8,2,,22252-000720,,"CIRCLIP   72",16,16,,,,,,,,,,,,,,,
9,2,,24101-060064,,"BALL BEARING",16,16,,,,,,,,,,,,,,,
9-1,2,,24101-060064,,"BALL BEARING",32,32,,,,,K,,,M00573,,M00573,,,,,,
10,1,,172113-36050,,"BOLT, ROLLER ADJUST",8,8,,,,,,,,,,,,,,,
11,1,,22217-160000,,"SPRING WASHER 16",8,8,,,,,,,,,,,,,,,
12,1,,26657-160002,,"CAP NUT M16",8,8,,,,,,,,,,,,,,,
```

Fig. 13 トラックローラ（R）（旧形）
TRACK ROLLER (R) (PREVIOUS)

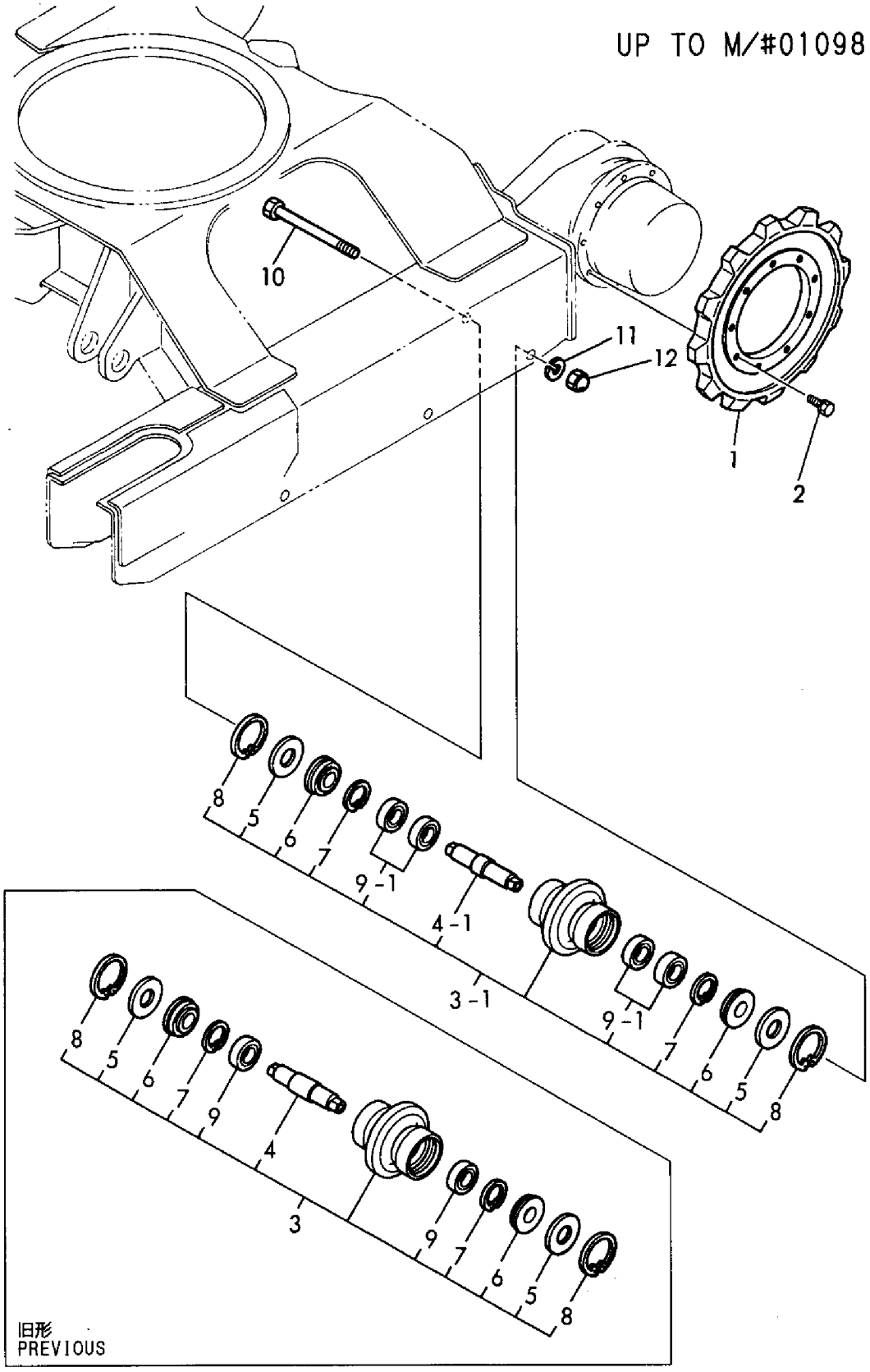

```
1,1,,172141-29110,,SPROCKET,2,2,2,2,,,,,,,,,,,,,
2,1,,26013-120302,,"BOLT W/WASHER M12X30",18,18,18,18,,,,,,,,,,,,,
3,1,,772142-37300,,"ROLLER ASSY, TRACK",8,8,8,8,,,,,,,,,,,,,
4,2,,172146-37310,,"SHAFT, ROLLER",6,6,6,6,,,,,,,,,,,,,
5,2,,172141-37320,,"SPACER 75X2.6",16,16,16,16,,,,M,,,,,,,,,
5-1,2,,172141-37320,,"SPACER 75X2.6",12,12,12,12,,,,,,,,,,,,,
6,2,,1A1030-48250,,"SEAL QLF30621218,OIL",16,16,16,16,,,,M,,,,,,,,,
6-1,2,,1A1030-48250,,"SEAL QLF30621218,OIL",12,12,12,12,,,,,,,,,,,,,
7,2,,22252-000620,,"CIRCLIP 62(H)",12,12,12,12,,,,,,,,,,,,,
8,2,,22252-000750,,"CIRCLIP   75",12,12,12,12,,,,,,,,,,,,,
9,2,,933111-73800,,BEARING,12,12,12,12,,,,,,,,,,,,,
10,1,,172113-36050,,"BOLT, ROLLER ADJUST",6,6,6,6,,,,,,,,,,,,,
11,1,,22217-160000,,"SPRING WASHER 16",6,6,6,6,,,,,,,,,,,,,
12,1,,26657-160002,,"CAP NUT M16",6,6,6,6,,,,,,,,,,,,,
```

Fig. 14 トラックローラ（新形） TRACK ROLLER (NEW)

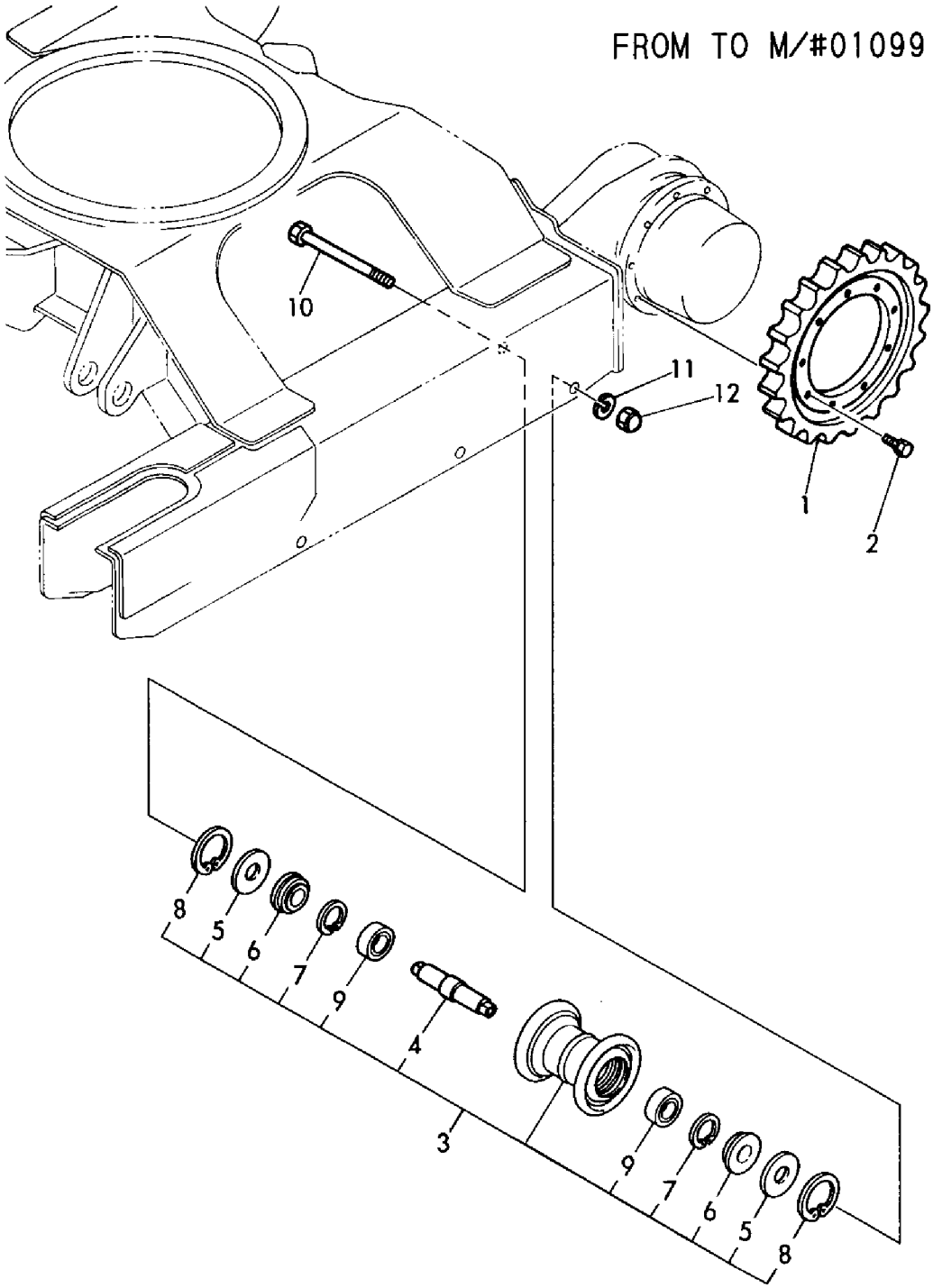

```
1,1,,772141-37100,,"IDLER 280 ASSY",2,2,,,,,,,,,,,,,,,
2,2,,172141-37110,,"FORK(L), IDLER",2,2,,,,,,,,,,,,,,,
3,2,,172141-37120,,"FORK(R), IDLER",2,2,,,,,,,,,,,,,,,
4,2,,172141-37130,,"SHAFT, IDLER",2,2,,,,,,,,,,,,,,,
5,2,,172141-37140,,"SEAL 357220",4,4,,,,,,,,,,,,,,,
6,2,,22242-000300,,"CIRCLIP   30",2,2,,,,,,,,,,,,,,,
7,2,,22252-000720,,"CIRCLIP   72",4,4,,,,,,,,,,,,,,,
8,2,,24101-062074,,"BALL BEARING",4,4,,,,,,,,,,,,,,,
9,1,,172141-37500,,PLATE,4,4,,,,,,,,,,,,,,,
10,1,,26013-100302,,"BOLT M10X 30",8,8,,,,,,,,,,,,,,,
11,1,,172141-37700,,"SPRING, CRAWLER",2,2,,,,,,,,,,,,,,,
12,1,,172141-37800,,"PISTON, ADJUST",2,2,,,,,,,,,,,,,,,
13,1,,172122-37842,,"VALVE ASSY, NIPPLE",2,2,,,,,,,,,,,,,,,
14,2,,24315-000140,,"O-RING 1B P-14.0",2,2,,,,,,,,,,,,,,,
15,2,,24761-020000,,"NIPPLE PT1/8,GREASE",2,2,,,,,,,,,,,,,,,
16,1,,172141-37850,,"RING G35, BACK UP",2,2,,,,,,,,,,,,,,,
17,1,,24325-000350,,"O-RING 1B G 35.0",2,2,,,,,,,,,,,,,,,
18,1,,26013-100402,,"BOLT M10X 40",8,8,,,,,,,,,,,,,,,
19,1,,933126-34300,,"SEAL 3547710",2,2,,,,,,,,,,,,,,,
20,1,,933171-13691,,"PLUG PT1/8",2,2,,,,,,,,,,,,,,,
21,1,,172141-50100,,"FRAME, LOWER",1,1,,,,,,,,,,,,,,,
22,1,,172141-50750,,"COVER, MOTOR",2,2,,,,,,,,,,,,,,,
23,1,,172141-50760,,"COVER, UNDER",1,1,,,,,,,,,,,,,,,
24,1,,172141-50890,,GROMMET,2,2,,,,,,,,,,,,,,,
25,1,,22217-120000,,"WASHER 12,SPRING",4,4,,,,,,,,,,,,,,,
26,1,,26116-100202,,"BOLT M10X 20 PLATED",6,6,,,,,,,,,,,,,,,
27,1,,26450-120252,,"BOLT M12X 25",4,4,,,,,,,,,,,,,,,
28,1,,172730-05250,,"WASHER 12",12,12,,,,,,,,,,,,,,,
29,1,,172141-50901,,"GUARD, SHOE",4,4,,,,,,,,,,,,,,,
30,1,,26013-120452,,"BOLT M12X 45",12,12,,,,,,,,,,,,,,,
31,1,,172122-50850,,"GUARD(L), SPROCKET",2,2,,,,,,1,,,,,,,,,
32,1,,172122-50860,,"GUARD(R), SPROCKET",2,2,,,,,,1,,,,,,,,,
33,1,,26013-120252,,"BOLT M12X 25",6,6,,,,,,1,,,,,,,,,
34,1,,22217-100000,,"SPRING WASHER 10",6,6,,,,,,,,,,,,,,,
```

Fig. 15 トラックフレーム&アイドラ（旧形） TRACK FRAME & IDLER (PREVIOUS)

UP TO M/#01098

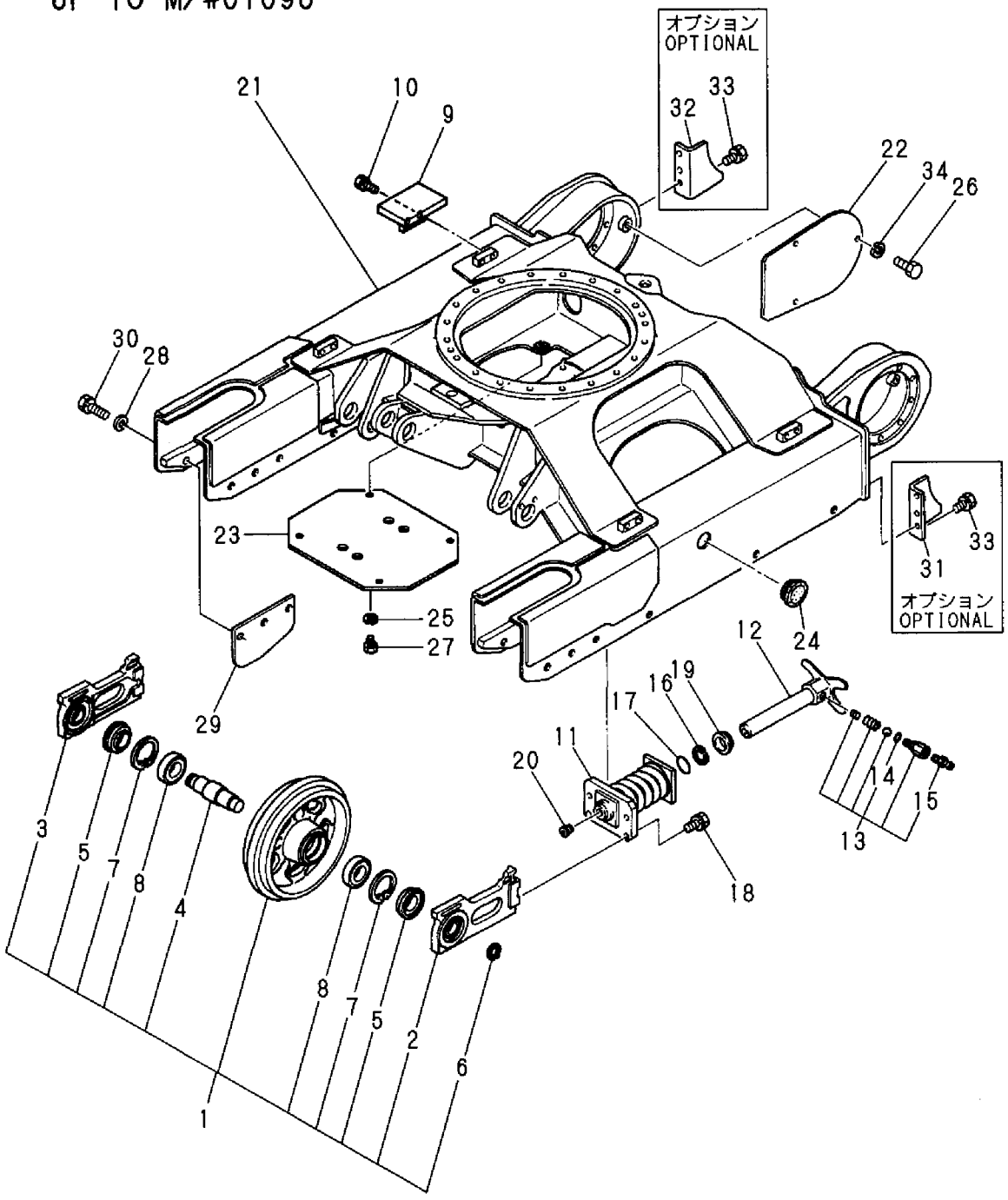

```
1,1,,772141-37110,,"IDLER 358 ASSY",2,2,,,,,,,,,,,,,,,
2,2,,172141-37110,,"FORK(L), IDLER",2,2,,,,,,,,,,,,,,,
3,2,,172141-37120,,"FORK(R), IDLER",2,2,,,,,,,,,,,,,,,
4,2,,172141-37130,,"SHAFT, IDLER",2,2,,,,,,,,,,,,,,,
5,2,,172141-37140,,"SEAL 357220",4,4,,,,,,,,,,,,,,,
6,2,,22242-000300,,"CIRCLIP   30",2,2,,,,,,,,,,,,,,,
7,2,,22252-000720,,"CIRCLIP   72",4,4,,,,,,,,,,,,,,,
8,2,,24101-062074,,"BALL BEARING",4,4,,,,,,,,,,,,,,,
9,1,,172141-37550,,PLATE(R),4,4,,,,,,,,,,,,,,,
10,1,,26013-100402,,"BOLT M10X 40",8,8,,,,,,,,,,,,,,,
11,1,,172141-37700,,"SPRING, CRAWLER",2,2,,,,,,,,,,,,,,,
12,1,,172141-37800,,"PISTON, ADJUST",2,2,,,,,,,,,,,,,,,
13,1,,172122-37842,,"VALVE ASSY, NIPPLE",2,2,,,,,,,,,,,,,,,
14,2,,24315-000140,,"O-RING 1B P-14.0",2,2,,,,,,,,,,,,,,,
15,2,,24761-020000,,"NIPPLE PT1/8,GREASE",2,2,,,,,,,,,,,,,,,
16,1,,172141-37850,,"RING G35, BACK UP",2,2,,,,,,,,,,,,,,,
17,1,,24325-000350,,"O-RING 1B G 35.0",2,2,,,,,,,,,,,,,,,
18,1,,26013-100402,,"BOLT M10X 40",8,8,,,,,,,,,,,,,,,
19,1,,933126-34300,,"SEAL 3547710",2,2,,,,,,,,,,,,,,,
20,1,,933171-13691,,"PLUG PT1/8",2,2,,,,,,,,,,,,,,,
21,1,,172141-50100,,"FRAME, LOWER",1,1,,,,,,,,,,,,,,,
22,1,,172141-50750,,"COVER, MOTOR",2,2,,,,,,,,,,,,,,,
23,1,,172141-50760,,"COVER, UNDER",1,1,,,,,,,,,,,,,,,
24,1,,172141-50890,,GROMMET,2,2,,,,,,,,,,,,,,,
25,1,,22217-120000,,"WASHER 12,SPRING",4,4,,,,,,,,,,,,,,,
26,1,,26116-100202,,"BOLT M10X 20 PLATED",6,6,,,,,,,,,,,,,,,
27,1,,26450-120252,,"BOLT M12X 25",4,4,,,,,,,,,,,,,,,
28,1,,22217-100000,,"SPRING WASHER 10",6,6,,,,,,,,,,,,,,,
```

Fig. 16 トラックフレーム&アイドラ (R) (旧形) TRACK FRAME & IDLER (R) (PREVIOUS)

UP TO M/#01098

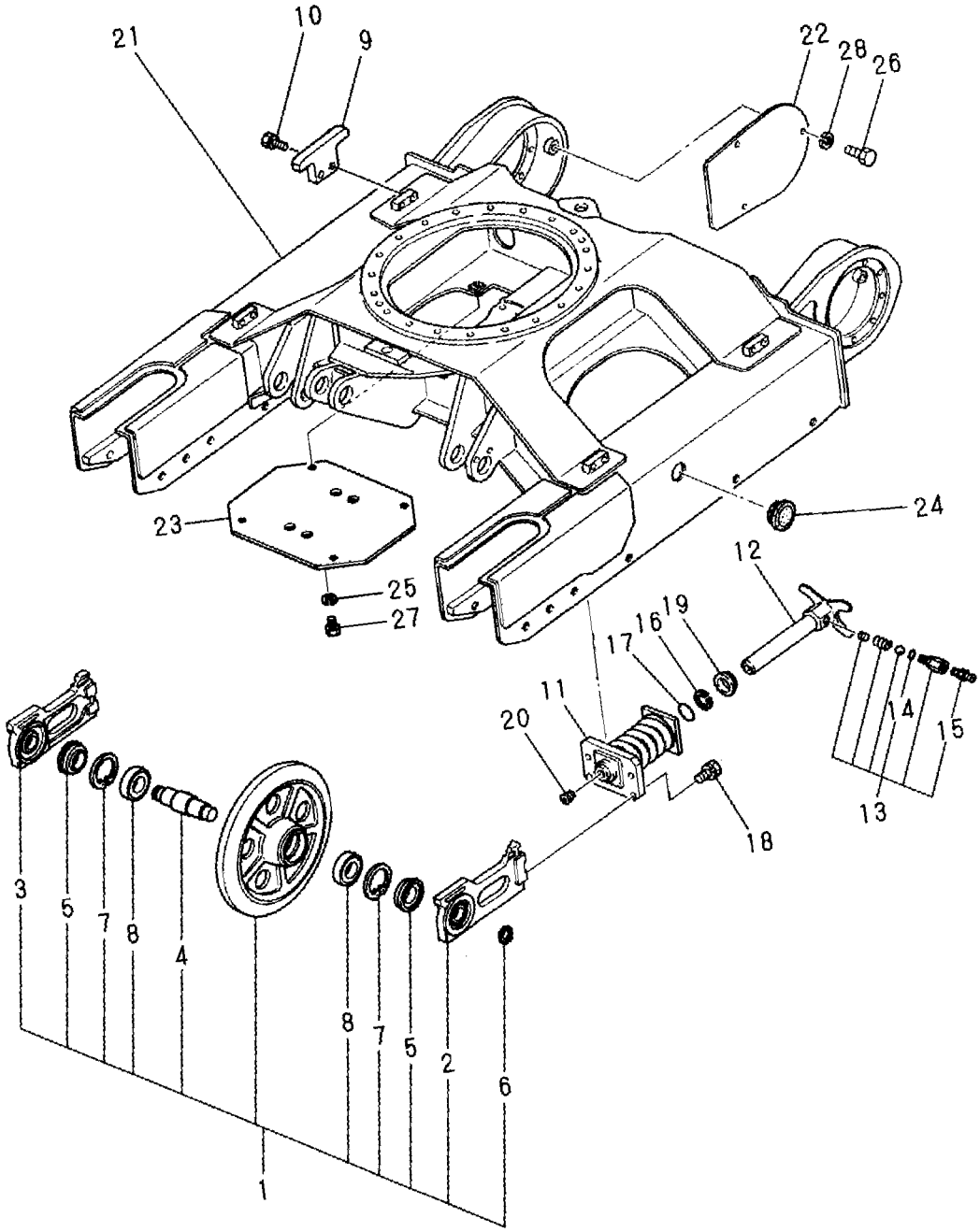

```
1,1,,772141-37110,,"IDLER 358 ASSY",2,2,2,2,,,,,,,,,,,,,
1-1,1,,772141-37111,,"IDLER 358 ASSY",,,2,2,,,R,,,,,,,M21607,,M21607,,
1A,2,,172146-37100,,"IDLER 280",2,2,2,2,,,,,,,,,,,,,
2,2,,172141-37110,,"FORK(L), IDLER",2,2,2,2,,,,,,,,,,,,,,
2-1,2,,172141-37111,,"FORK(L), IDLER",,,2,2,,,R,,,,,,,M21607,,M21607,,
3,2,,172141-37120,,"FORK(R), IDLER",2,2,2,2,,,,,,,,,,,,,,
3-1,2,,172141-37121,,"FORK(R), IDLER",,,2,2,,,R,,,,,,,M21607,,M21607,,
3A,2,,172141-99490,,"IDLER KIT, FRONT",2,2,2,2,,,,,,,,,,,,,
4,3,,172141-37130,,"SHAFT, IDLER",2,2,2,2,,,,,,,,,,,,,
5,3,,172141-37140,,"SEAL 357220",4,4,4,4,,,,,,,,,,,,,
6,3,,22242-000300,,"CIRCLIP   30",2,2,2,2,,,,,,,,,,,,,
7,3,,22252-000720,,"CIRCLIP   72",4,4,4,4,,,,,,,,,,,,,
8,3,,24101-062074,,"BALL BEARING",4,4,4,4,,,,,,,,,,,,,
9,1,,172141-37501,,PLATE,4,4,4,4,,,,,,,,,,,,,
10,1,,26013-100302,,"BOLT M10X 30",8,8,8,8,,,,,,,,,,,,,
11,1,,172146-37700,,SPRING,2,2,2,2,,,,,,,,,,,,,
12,1,,172141-37800,,"PISTON, ADJUST",2,2,2,2,,,,,,,,,,,,,
12-1,1,,172141-37801,,"PISTON, ADJUST",,,2,2,,,S,,,,,,,M11008,,M11008,,
13,1,,172122-37842,,"VALVE ASSY, NIPPLE",2,2,2,2,,,,,,,,,,,,,
13-1,1,,172122-37843,,"VALVE ASSY, NIPPLE",,,2,2,,,S,,,,,,,M11008,,M11008,,
14,2,,24315-000140,,"O-RING 1B P-14.0",2,2,2,2,,,,,,,,,,,,,
15,2,,24761-020000,,"NIPPLE PT1/8,GREASE",2,2,2,2,,,,,,,,,,,,,
16,1,,172141-37850,,"RING G35, BACK UP",2,2,2,2,,,,,,,,,,,,,
17,1,,24325-000350,,"O-RING 1B G 35.0",2,2,2,2,,,,,,,,,,,,,
18,1,,26013-100402,,"BOLT M10X 40",8,8,8,8,,,,,,,,,,,,,
19,1,,933126-34300,,"SEAL 3547710",2,2,2,2,,,,,,,,,,,,,
20,1,,933171-13691,,"PLUG PT1/8",2,2,2,2,,,,,,,,,,,,,
21,1,,172141-50101,,"FRAME ASSY, LOWER",1,1,1,1,,,,,,,,,,,,,
21-1,1,,172141-50102,,"FRAME ASSY, LOWER",,,1,1,,,S,,,,,,,M21607,,M21607,,
21-2,1,,172141-50103,,"FRAME ASSY, LOWER",,,1,1,,,N,,,,,,,M21607,,M21607,,
22,1,,172141-50750,,"COVER, MOTOR",2,2,2,2,,,,,,,,,,,,,
23,1,,172141-50761,,"COVER, UNDER",1,1,1,1,,,,,,,,,,,,,
24,1,,172141-50890,,GROMMET,2,2,2,2,,,,,,,,,,,,,
25,1,,22217-120000,,"WASHER 12,SPRING",4,4,4,4,,,,,,,,,,,,,
26,1,,26116-100202,,"BOLT M10X 20 PLATED",6,6,6,6,,,,,,,,,,,,,
27,1,,26116-120252,,"BOLT M12X 25 PLATED",4,4,4,4,,,,,,,,,,,,,
28,1,,172730-05250,,"WASHER 12",12,12,12,12,,,,,,,,,,,,,
29,1,,172141-50901,,"GUARD, SHOE",4,4,4,4,,,,,,,,,,,,,
30,1,,26013-120452,,"BOLT M12X 45",12,12,12,12,,,,,,,,,,,,,
31,1,,22217-100000,,"SPRING WASHER 10",6,6,6,6,,,,,,,,,,,,,
32,1,,772146-37100,,"IDLER 280 ASSY",2,2,2,2,,,,1,,,,,,,,,
32-1,1,,772146-37101,,IDLER,,,2,2,,,R,,,,,,,M21607,,M21607,,
32A,2,,172146-37100,,"IDLER 280",2,2,2,2,,,,1,,,,,,,,,
33,2,,172141-37110,,"FORK(L), IDLER",2,2,2,2,,,,1,,,,,,,,,
33-1,2,,172141-37111,,"FORK(L), IDLER",,,2,2,,,R,1,,,,,,M21607,,M21607,,
34,2,,172141-37120,,"FORK(R), IDLER",2,2,2,2,,,,1,,,,,,,,,
34-1,2,,172141-37121,,"FORK(R), IDLER",,,2,2,,,R,1,,,,,,M21607,,M21607,,
34A,2,,172141-99490,,"IDLER KIT, FRONT",2,2,2,2,,,,1,,,,,,,,,
35,3,,172141-37130,,"SHAFT, IDLER",2,2,2,2,,,,1,,,,,,,,,
36,3,,172141-37140,,"SEAL 357220",4,4,4,4,,,,1,,,,,,,,,
37,3,,22242-000300,,"CIRCLIP   30",2,2,2,2,,,,1,,,,,,,,,
38,3,,22252-000720,,"CIRCLIP   72",4,4,4,4,,,,1,,,,,,,,,
39,3,,24101-062074,,"BALL BEARING",4,4,4,4,,,,1,,,,,,,,,
40,1,,172122-50851,,"GUARD(L), SPROCKET",1,1,1,1,,,,2,,,,,,,,,
40-1,1,,172122-50852,,"GUARD(L), SPROCKET",,,1,1,,,Q,2,,,,,,M11599,,M11599,,
41,1,,172122-50861,,"GUARD(R), SPROCKET",1,1,1,1,,,,2,,,,,,,,,
41-1,1,,172122-50862,,"GUARD(R), SPROCKET",,,1,1,,,Q,2,,,,,,M11599,,M11599,,
42,1,,26013-120252,,"BOLT M12X 25",6,6,6,6,,,,2,,,,,,,,,
```

Fig. 17 トラックフレーム&アイドラ（新形） TRACK FRAME & IDLER (NEW)

FROM TO M/#01099

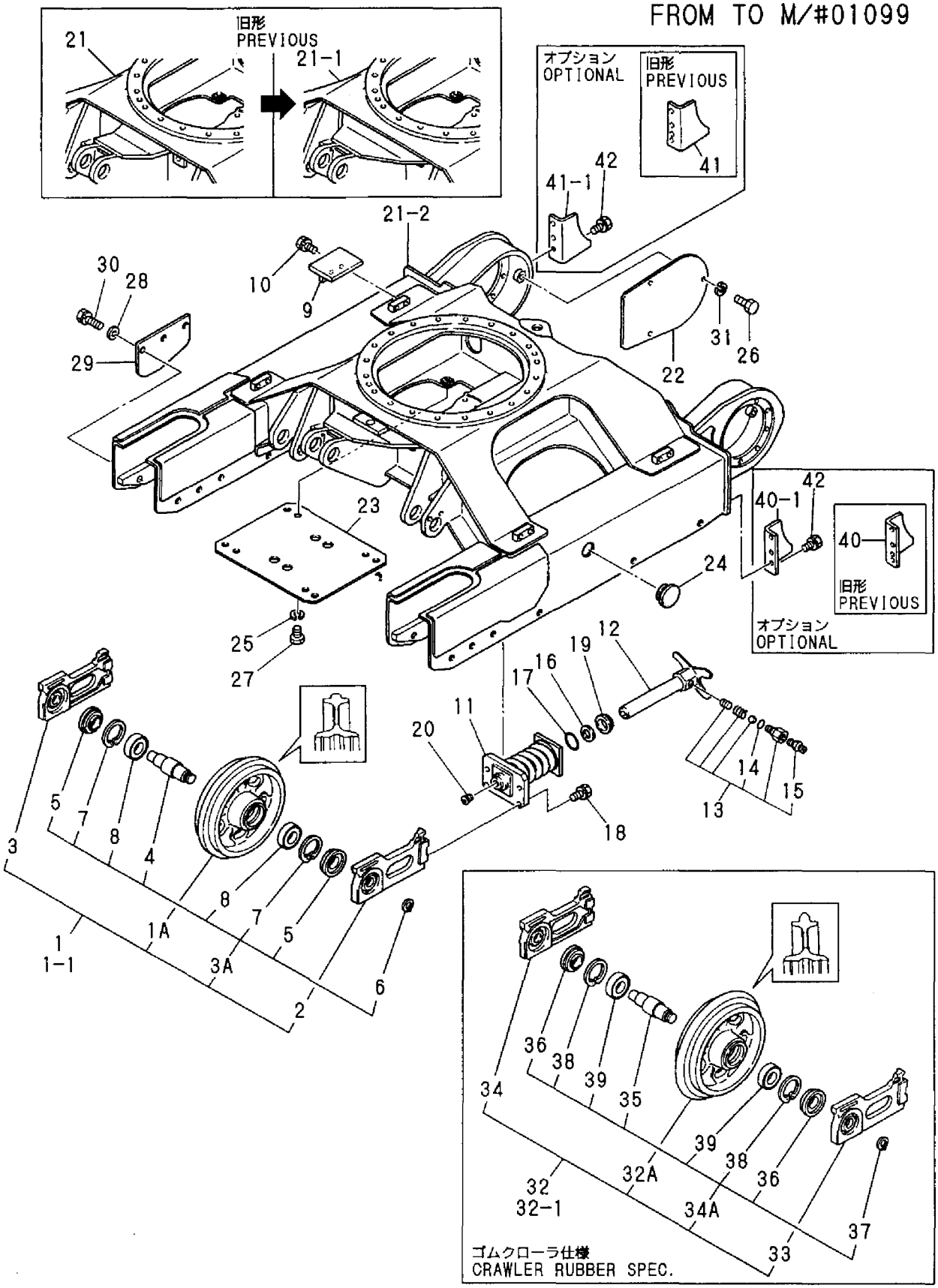

```
1,1,,172141-38100,,"CRAWLER 270 ASSY",2,2,2,2,,,,,,,,,,,,,
1-1,1,,172141-38101,,"CRAWLER 270 ASSY",,,2,2,,,N,,,,,,,M21607,,M21607,,
2,2,,172141-38150,,"LINK ASSY, CRAWLER",2,2,2,2,,,,,,,,,,,,,
3,3,,172141-38200,,BUSH,72,72,72,72,,,,,,,,,,,,,
4,3,,172141-38210,,"PIN, CRAWLER",70,70,70,70,,,,,,,,,,,,,
5,2,,172141-38230,,"SHOE 270, CRAWLER",72,72,72,72,,,,,,,,,,,,,
5-1,2,,172141-38231,,"SHOE 270,CRAWLER",,,72,72,,,N,,,,,,,M21607,,M21607,,
6,1,,172141-38220,,"PIN, MASTER",2,2,2,2,,,,,,,,,,,,,
7,1,,172614-38300,,"PIN 5X45, LOCK",2,2,2,2,,,,,,,,,,,,,
8,1,,172141-38240,,"TRACK 270, MASTER",2,2,2,2,,,,,,,,,,,,,
8-1,1,,172141-38241,,"TRACK 270, MASTER",,,2,2,,,N,,,,,,,M21607,,M21607,,
9,1,,172141-38600,,"CRAWLER 280, RUBBER",2,2,,,,,,,,,,,,,,,,
9-1,1,,172141-38610,,"CRAWLER, RUBBER",2,2,2,2,,,S,,,,,M/#01099,,,,,,
```

Fig. 18 クローラ (270) CRAWLER (270)

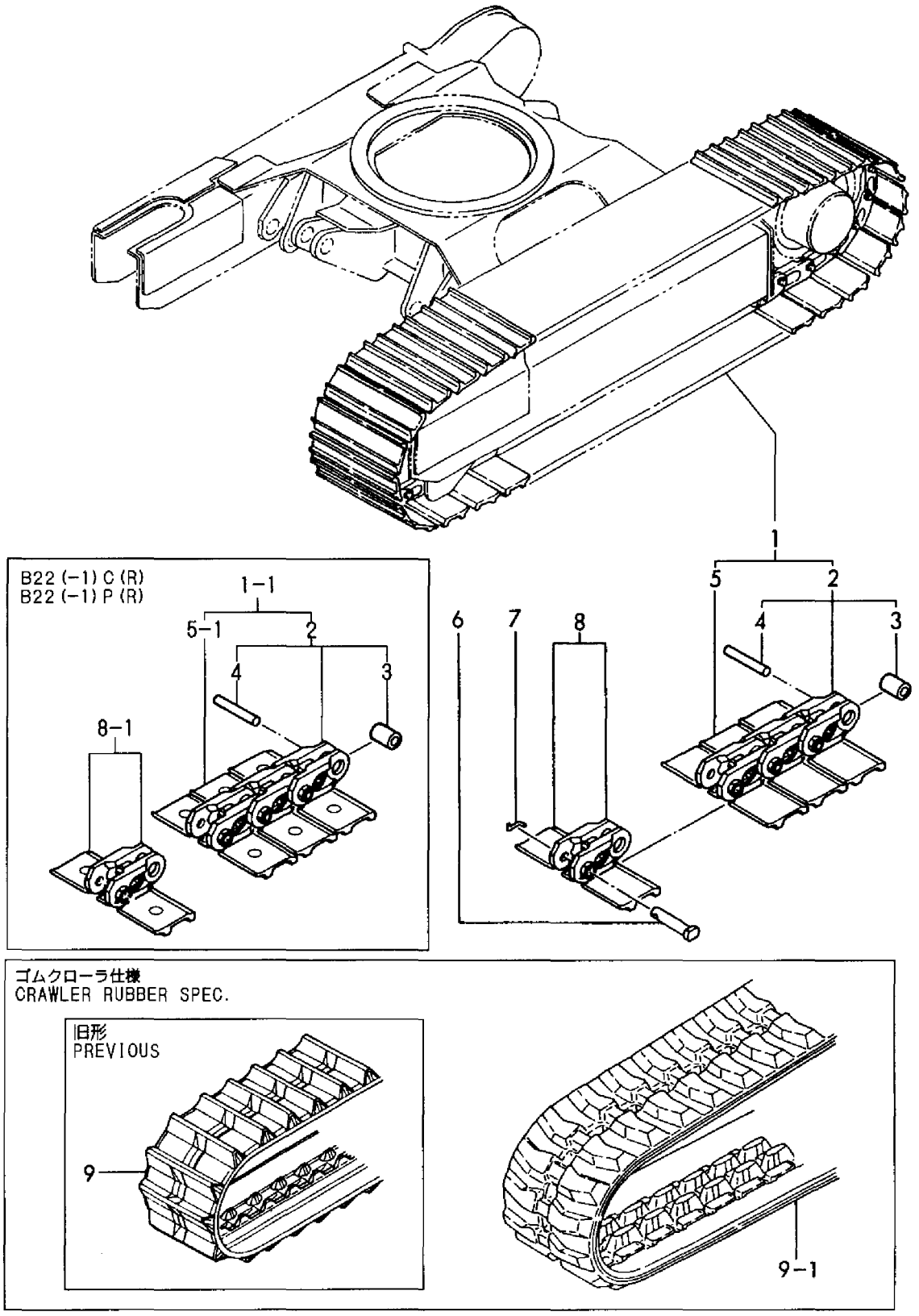

```
1,1,,172141-41370,,"BUSH 2015",2,2,2,2,,,,,,,,,,,,
2,1,,172141-42100,,"SUPPORT(L), LINK",1,1,,,,,,,,,,,,,,,
2-1,1,,172141-42101,,"SUPPORT(L), LINK",1,1,1,1,,,N,,,M01084,,M01084,,,,,,
3,1,,172141-42200,,"SUPPORT(R), LINK",1,1,,,,,,,,,,,,,,,
3-1,1,,172141-42201,,"SUPPORT(R), LINK",1,1,1,1,,,N,,,M01084,,M01084,,,,,,
4,1,,172141-42230,,"COVER(L), SUPPORT",1,1,,,,,,,,,,,,,,,
4-1,1,,172141-42231,,"COVER(L), SUPPORT",1,1,1,1,,,N,,,M01084,,M01084,,,,,,
5,1,,172141-42240,,"COVER(R), SUPPORT",1,1,,,,,,,,,,,,,,,
5-1,1,,172141-42241,,"COVER(R), SUPPORT",1,1,1,1,,,N,,,M01084,,M01084,,,,,,
6,1,,172141-42300,,"PLATE, LINK",1,1,1,1,,,,,,,,,,,,
7,1,,172141-42390,,"COVER, UNDER",2,2,,,,,,,,,,,,,,,
7-1,1,,172141-42390,,"COVER, UNDER",1,1,1,1,,,K,,,*1990.01,,*1990.01,,,,,,
8,1,,24761-050000,,"NIPPLE C,GREASE",1,1,1,1,,,,,,,,,,,,
9,1,,26013-100202,,"BOLT W/WASHER M10X20",6,6,6,6,,,,,,,,,,,,
10,1,,26013-100202,,"BOLT W/WASHER M10X20",8,8,,,,,,,,,,,,,,,
10-1,1,,26013-100202,,"BOLT W/WASHER
M10X20",4,4,4,4,,,K,,,*1990.01,,*1990.01,,,,,,
11,1,,26013-100202,,"BOLT W/WASHER M10X20",4,4,4,4,,,,,,,,,,,,
12,1,,26013-100202,,"BOLT W/WASHER M10X20",4,4,4,4,,,,,,,,,,,,
13,1,,26013-100202,,"BOLT W/WASHER M10X20",6,6,6,6,,,,,,,,,,,,
14,1,,26013-100202,,"BOLT W/WASHER M10X20",6,6,6,6,,,,,,,,,,,,
15,1,,26716-100002,,"NUT M10",4,4,,,,,Z,,,*1990.01,,*1990.01,,,,,,
16,1,,26013-100252,,"BOLT W/WASHER
M10X25",2,2,2,2,,,W,,,*1990.01,,*1990.01,,,,,,
17,1,,172141-43820,,"COVER(A), UNDER",1,1,1,1,,,W,,,*1990.01,,*1990.01,,,,,,
18,1,,172141-43800,,"PLATE ASSY, MULTI",,,1,1,,,,1,,,,,,,,,
```

Fig. 19 リンク台 LINK STAND

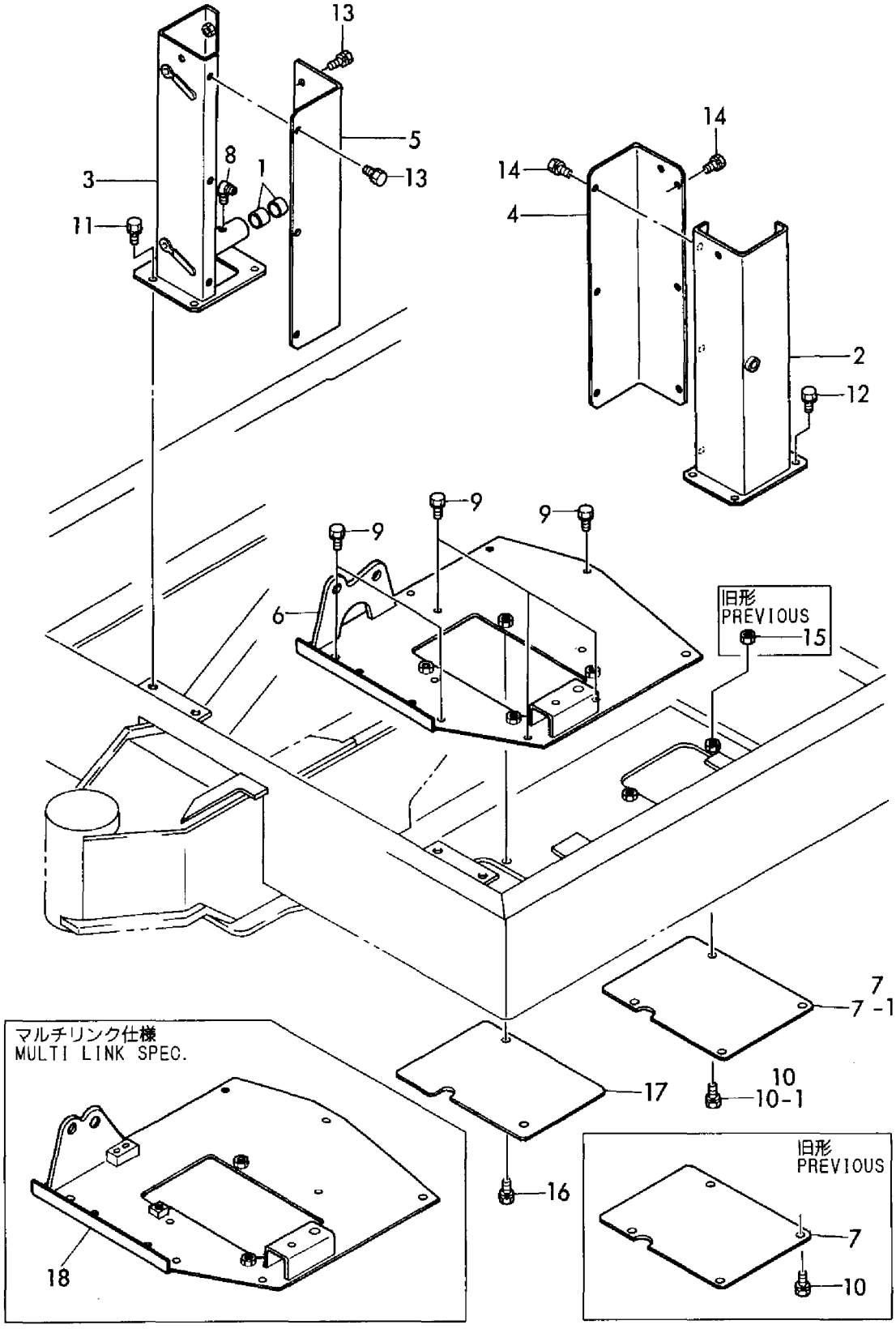

```
1,1,,172141-41100,,LEVER(L),1,1,1,1,,,,,,,,,,,,,
2,1,,172141-41110,,LEVER(R),1,1,1,1,,,,,,,,,,,,,
3,1,,172141-41150,,"LINK(L), LEVER",1,1,1,1,,,,,,,,,,,,,
4,1,,172141-41160,,JOINT,2,2,2,2,,,,,,,,,,,,,
5,1,,172141-41170,,"LEVER(L) W/BUSH",1,1,,,,,,,,,,,,,,,
5-1,1,,172141-41171,,"LEVER(L) W/BUSH",1,1,1,1,,,N,,,*1990.02,,*1990.02,,,,,,
6,2,,172141-41370,,"BUSH 2015",2,2,2,2,,,,,,,,,,,,,
7,1,,172141-41230,,"LEVER(R) W/BUSH",1,1,,,,,,,,,,,,,,,
7-1,1,,172141-41231,,"LEVER(R) W/BUSH",1,1,1,1,,,N,,,*1990.02,,*1990.02,,,,,,
8,2,,172141-41370,,"BUSH 2015",2,2,2,2,,,,,,,,,,,,,
9,1,,172141-41270,,"LEVER W/BUSH, BLADE",1,1,1,1,,,,,,,,,,,,,
9-1,1,,172141-41271,,"LEVER W/BUSH, BLADE",,,1,1,,,F,2,,,,,,M20501,,M20501,,
10,2,,172141-41360,,"BUSH 1415",2,2,2,2,,,,,,,,,,,,,
11,1,,172141-41330,,"BOOTS, LEVER (BLACK)",2,2,2,2,,,,,,,,,,,,,
11-1,1,,172141-41331,,"BOOTS, LEVER (GRAY)",,,2,2,,,S,,,,,,,M20501,,M20501,,
12,1,,172141-41340,,BOOTS,3,3,3,3,,,,,,,,,,,,,
13,1,,172141-41380,,NUT,1,1,1,1,,,,,,,,,,,,,
14,1,,172122-45050,,"KNOB (L)",1,1,1,1,,,,,,,,,,,,,
15,1,,172122-45060,,"KNOB (R)",1,1,1,1,,,,,,,,,,,,,
16,1,,172116-45940,,"KNOB (C), LEVER",1,1,1,1,,,,,,,,,,,,,
17,1,,172124-46200,,"O-RING 27X5.7",3,3,3,3,,,,,,,,,,,,,
18,1,,172312-46301,,KNOB(A),1,1,1,1,,,,,,,,,,,,,
19,1,,172312-46321,,KNOB(B),1,1,1,1,,,,,,,,,,,,,
20,1,,172730-62230,,RUBBER,1,1,,,,,,,,,,,,,,,
20-1,1,,172141-41310,,GROMMET,1,1,1,1,,,N,,,M00544,,,,,,,
20-2,1,,172141-41311,,GROMMET,,,1,1,,,S,,,,,,,M20501,,M20501,,
21,1,,22351-030010,,"SPRING PIN 3X10",1,1,1,1,,,,,,,,,,,,,
22,1,,24311-000140,,"O-RING 1A P-14.0",1,1,1,1,,,,,,,,,,,,,
23,1,,24311-000210,,"O-RING 1A P-21.0",2,2,2,2,,,,,,,,,,,,,
24,1,,24761-050000,,"NIPPLE C,GREASE",2,2,2,2,,,,,,,,,,,,,
25,1,,26064-080201,,"WING BOLT M 8X 20",1,1,,,,,,,,,,,,,,,
25-1,1,,26063-080201,,"BOLT M 8X 20",1,1,1,1,,,N,,,M00544,,M00544,,,,,,
26,1,,26716-100002,,"NUT M10",2,2,2,2,,,,,,,,,,,,,
27,1,,26757-100002,,"LOCK NUT M10",2,2,2,2,,,,,,,,,,,,,
28,1,,933168-55770,,"BAND 146",2,2,2,2,,,,,,,,,,,,,
29,1,,172111-16890,,"GROMMET  9",1,1,1,1,,,,,,,,,,,,,
30,1,,172141-41840,,"PEDAL(L), TRACK",1,1,1,1,,,,,,,,,,,,,
31,1,,172141-41850,,"PEDAL(R), TRACK",1,1,1,1,,,,,,,,,,,,,
32,1,,172141-41900,,"PEDAL, SWING",1,1,1,1,,,,,,,,,,,,,
33,1,,172141-41940,,"LOCK, SWING",1,1,1,1,,,,,,,,,,,,,
34,1,,22217-100000,,"SPRING WASHER 10",2,2,2,2,,,,,,,,,,,,,
35,1,,22417-250200,,"COTTER PIN 2.5X20",1,1,1,1,,,,,,,,,,,,,
36,1,,26013-060352,,"BOLT M 6X 35",4,4,4,4,,,,,,,,,,,,,
37,1,,26116-100404,,"BOLT M10X 40 PLATED",2,2,2,2,,,,,,,,,,,,,
38,1,,26716-100002,,"NUT M10",2,2,2,2,,,,,,,,,,,,,
39,1,,933171-18390,,"PIN, FOOT BAR",1,1,1,1,,,,,,,,,,,,,
40,1,,172141-42500,,"LEVER, LOCK",2,2,,,,,,,,,,,,,,,
40-1,1,,172141-42501,,"LEVER, LOCK",2,2,2,2,,,S,,,M00544,,,,,,,
41,1,,172141-42550,,"ARM, LOCK",2,2,,,,,,,,,,,,,,,
41-1,1,,172141-42551,,"ARM, LOCK",2,2,2,2,,,S,,,M00544,,,,,,,
42,1,,172141-42600,,"PIPE, LOCK",2,2,2,2,,,,,,,,,,,,,
43,1,,172141-42700,,"LINK, LOCK",4,4,4,4,,,,,,,,,,,,,
44,1,,172141-42750,,"BOLT, STOPPER",8,8,8,8,,,,,,,,,,,,,
45,1,,172116-46630,,"KNOB, LOCK LEVER",2,2,,,,Z,,,M00544,,,,,,,
46,1,,1C6281-52310,,"PIN 6,COME-OFF SNAP",4,4,4,4,,,,,,,,,,,,,
47,1,,22137-120000,,"WASHER 12,POLISHED",4,4,4,4,,,,,,,,,,,,,
48,1,,22217-100000,,"SPRING WASHER 10",4,4,4,4,,,,,,,,,,,,,
49,1,,26116-100504,,"BOLT M10X 50 PLATED",4,4,4,4,,,,,,,,,,,,,
50,1,,26716-080002,,"NUT M 8",8,8,8,8,,,,,,,,,,,,,
51,1,,26716-100002,,"NUT M10",4,4,4,4,,,,,,,,,,,,,
52,1,,26756-120002,,"LOCK NUT M12 PLATED",4,4,4,4,,,,,,,,,,,,,
53,1,,933110-54100,,"PIN 4.75X14",4,4,4,4,,,,,,,,,,,,,
54,1,,933170-01490,,"SPRING 12",4,4,4,4,,,,,,,,,,,,,
```

```
55,1,,172614-45170,,"SPRING 12",1,1,1,1,,,,,,,,,,,,,
56,1,,172141-43640,,"LEVER(L), MULTI",,,1,1,,,,1,,,,,,,,,,
56-1,1,,172141-43641,,"LEVER(L), MULTI",,,1,1,,,N,1,,,,,,M12357,,M12357,,
57,2,,172141-41370,,"BUSH 2015",,,2,2,,,,1,,,,,,,,,,
```

Fig. 20 操縦装置（レバー） CONTROL EQUIPMENT (LEVER)

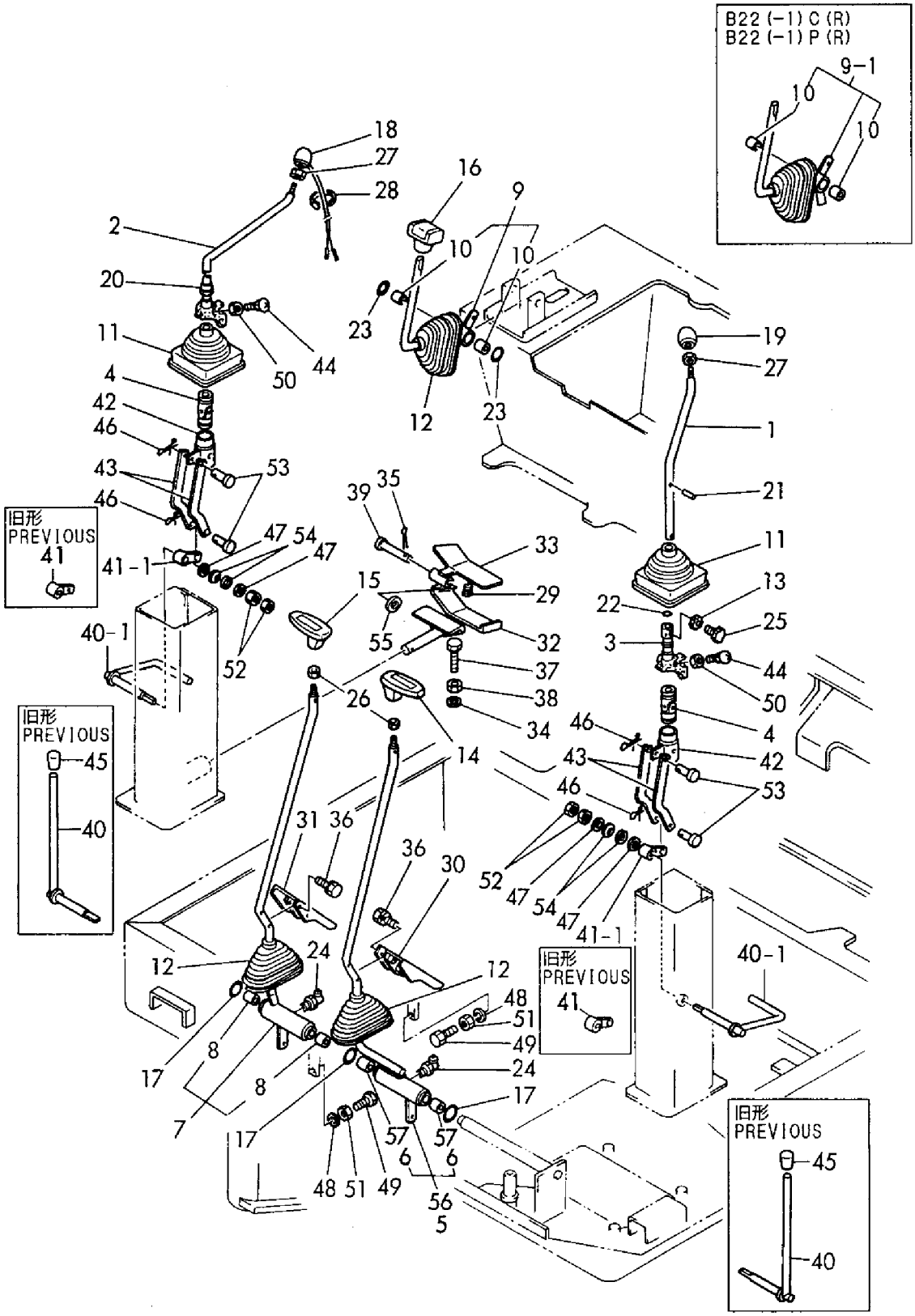

```
1,1,,172112-41380,,"SHAFT, BLADE LEVER",1,1,1,1,,,,,,,,,,,,,
2,1,,172141-41400,,"LINK W/BUSH, BOOM",1,1,1,1,,,,,,,,,,,,,
3,2,,172141-41370,,"BUSH 2015",2,2,2,2,,,,,,,,,,,,,
4,1,,172141-41460,,"LINK(A), BUCKET",1,1,1,1,,,,,,,,,,,,,
5,1,,172141-41490,,"LINK(B), BUCKET",1,1,1,1,,,,,,,,,,,,,
6,1,,172141-41510,,"LINK W/BUSH, ARM",1,1,1,1,,,,,,,,,,,,,
7,2,,172141-41370,,"BUSH 2015",2,2,2,2,,,,,,,,,,,,,
8,1,,172141-41570,,"LINK W/BUSH, TURNING",1,1,1,1,,,,,,,,,,,,,
9,2,,172141-41370,,"BUSH 2015",2,2,2,2,,,,,,,,,,,,,
10,1,,172141-41610,,"LINK W/BUSH, SWING",1,1,1,1,,,,,,,,,,,,,
11,2,,172141-41370,,"BUSH 2015",2,2,2,2,,,,,,,,,,,,,
12,1,,172141-41660,,BRACKET,1,1,1,1,,,,,,,,,,,,,
12-1,1,,172141-41661,,"BRACKET CMP",,,1,1,,,F,1,,,,,M20501,,M20501,,
13,1,,172141-41700,,"LINK, SWING",1,1,1,1,,,,,,,,,,,,,
14,1,,172141-41720,,SHAFT(A),1,1,1,1,,,,,,,,,,,,,
15,1,,172141-41760,,"SHAFT, TRACK",1,1,1,1,,,,,,,,,,,,,
16,1,,172141-41810,,"SHAFT, LINK",1,1,1,1,,,,,,,,,,,,,
17,1,,172122-45720,,"ROD-END 14",2,2,2,2,,,,,,,,,,,,,
18,1,,1A1040-45890,,"WASHER 10 36 4.5",1,1,1,1,,,,,,,,,,,,,
19,1,,172124-46200,,"O-RING 27X5.7",11,11,11,11,,,,,,,,,,,,,
20,1,,22157-120000,,"WASHER 12",2,2,2,2,,,,,,,,,,,,,
21,1,,22217-100000,,"SPRING WASHER 10",1,1,1,1,,,,,,,,,,,,,
22,1,,22217-140000,,"SPRING WASHER 14",2,2,2,2,,,,,,,,,,,,,
23,1,,22351-050036,,"SPRING PIN 5X36",3,3,3,3,,,,,,,,,,,,,
24,1,,22417-400400,,"COTTER PIN 4.0X40",1,1,1,1,,,,,,,,,,,,,
25,1,,24761-040000,,"NIPPLE B,GREASE",3,3,3,3,,,,,,,,,,,,,
26,1,,24761-050000,,"NIPPLE C,GREASE",1,1,1,1,,,,,,,,,,,,,
27,1,,26013-100202,,"BOLT W/WASHER M10X20",1,1,,,,,,,,,,,,,,,,
27-1,1,,26116-100202,,"BOLT M10X 20
PLATED",1,1,1,1,,,N,,,*1988.12,,*1988.12,,,,,
28,1,,26013-100202,,"BOLT W/WASHER M10X20",3,3,3,3,,,,,,,,,,,,,
29,1,,26013-100202,,"BOLT W/WASHER M10X20",1,1,1,1,,,,,,,,,,,,,
30,1,,26013-100252,,"BOLT W/WASHER M10X25",3,3,3,3,,,,,,,,,,,,,
31,1,,26116-100604,,"BOLT M10X 60 PLATED",1,1,1,1,,,,,,,,,,,,,
32,1,,26716-100002,,"NUT M10",1,1,1,1,,,,,,,,,,,,,
33,1,,26716-140002,,"NUT M14",2,2,2,2,,,,,,,,,,,,,
34,1,,22137-140000,,"WASHER 14,POLISHED",2,2,2,2,,,W,,,*1988.05,,*1988.05,,,,,
35,1,,26756-140002,,"LOCK NUT M14 PLATED",1,1,1,1,,,W,,,*1988.05,,*1988.05,,,,,
36,1,,194630-47340,,"SHIM 0.4",2,2,2,2,,,W,,,M00665,,M00665,,,,,
37,1,,22117-080000,,"WASHER  8",2,2,2,2,,,W,,,M00665,,M00665,,,,,
38,1,,194150-24270,,"SCREW CAP 13",2,2,2,2,,,W,,,*1988.09,,*1988.09,,,,,
39,1,,22217-100000,,"SPRING WASHER 10",1,1,1,1,,,W,,,*1988.09,,*1988.09,,,,,
40,1,,26116-100302,,"BOLT M10X 30 PLATED",,,1,1,,,W,,,,,,M20501,,M20501,,
41,1,,26716-100002,,"NUT M10",,,1,1,,,W,,,,,,M20501,,M20501,,
```

Fig. 21 操縦装置（リンク） CONTROL EQUIPMENT (LINK)

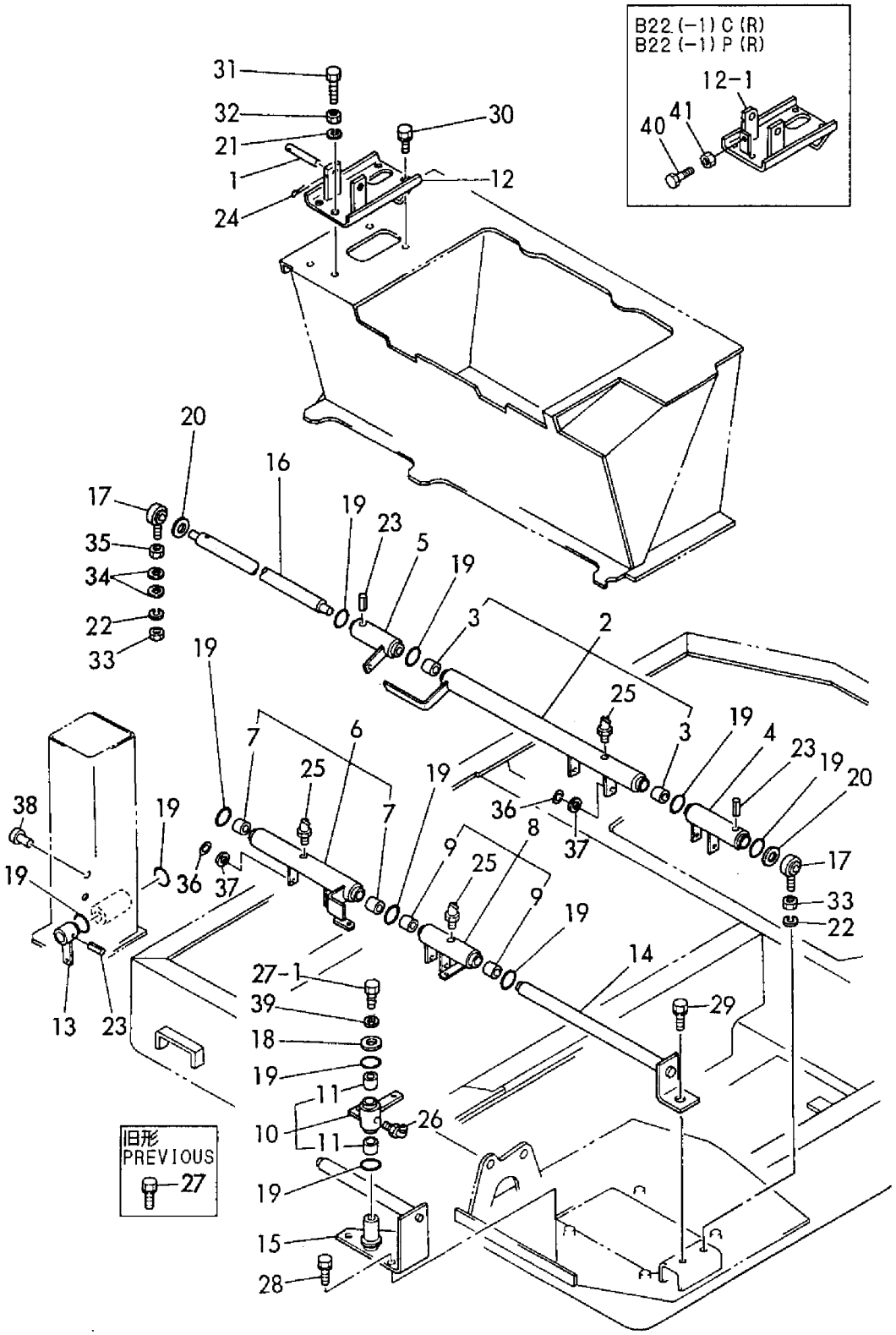

```
1,1,,194150-24270,,"SCREW CAP 13",,,2,2,,,,,,,,,,,,
2,1,,172112-41380,,"SHAFT, BLADE LEVER",,,1,1,,,,,,,,,,,,
3,1,,172141-41490,,"LINK(B), BUCKET",,,1,1,,,,,,,,,,,,
4,1,,172141-41660,,BRACKET,,,1,1,,,,,,,,,,,,
4-1,1,,172141-41661,,"BRACKET CMP",,,1,1,,,F,1,,,,,M20501,,M20501,,
5,1,,172141-41700,,"LINK, SWING",,,1,1,,,,,,,,,,,,
6,1,,172141-41810,,"SHAFT, LINK",,,1,1,,,,,,,,,,,,
7,1,,172141-43660,,"LINK(G), MULTI",,,1,1,,,,,,,,,,,,
8,2,,172141-41370,,"BUSH 2015",,,2,2,,,,,,,,,,,,
10,1,,172141-43690,,"LINK(H), MULTI",,,1,1,,,,,,,,,,,,
11,2,,172141-41370,,"BUSH 2015",,,2,2,,,,,,,,,,,,
13,1,,172141-43710,,"LINK ARM, MULTI",,,1,1,,,,,,,,,,,,
14,2,,172141-41370,,"BUSH 2015",,,2,2,,,,,,,,,,,,
16,1,,172141-43750,,"LINK BUCKET, MULTI",,,1,1,,,,,,,,,,,,
17,1,,172141-43770,,"LINK, BOOM",,,1,1,,,,,,,,,,,,
18,2,,172141-41370,,"BUSH 2015",,,2,2,,,,,,,,,,,,
20,1,,172142-45420,,"SHAFT, SWING",,,1,1,,,,,,,,,,,,
21,1,,172122-45720,,"ROD-END 14",,,2,2,,,,,,,,,,,,
22,1,,1A1040-45890,,"WASHER 10 36 4.5",,,1,1,,,,,,,,,,,,
23,1,,172148-46190,,"LINK(C),MULTI",,,1,1,,,,,,,,,,,,
24,2,,172141-41370,,"BUSH 2015",,,2,2,,,,,,,,,,,,
26,1,,172124-46200,,"O-RING 27X5.7",,,16,16,,,,,,,,,,,,
27,1,,172148-46230,,"SHAFT(A),MULTI",,,1,1,,,,,,,,,,,,
28,1,,172148-46270,,"SHAFT(B),MULTI",,,1,1,,,,,,,,,,,,
29,1,,172148-46360,,"LINK(D),MULTI",,,1,1,,,,,,,,,,,,
30,2,,172141-41370,,"BUSH 2015",,,2,2,,,,,,,,,,,,
32,1,,172148-46400,,"LINK, SWING",,,1,1,,,,,,,,,,,,
33,2,,172141-41370,,"BUSH 2015",,,2,2,,,,,,,,,,,,
35,1,,172148-46440,,"SHAFT(C),MULTI",,,1,1,,,,,,,,,,,,
36,1,,172148-46470,,"SHAFT(D),MULTI",,,1,1,,,,,,,,,,,,
37,1,,172148-46510,,"PLATE, SUPPORT",,,1,1,,,,,,,,,,,,
38,1,,172148-46520,,SPRING,,,5,5,,,,,,,,,,,,
39,1,,172148-46530,,"LINK, SPOOL A",,,3,3,,,,,,,,,,,,
40,1,,172148-46560,,"LINK, SPOOL B",,,1,1,,,,,,,,,,,,
41,1,,172148-46590,,"PIN CMP",,,4,4,,,,,,,,,,,,
42,1,,22137-040000,,"WASHER 4, POLISHED",,,10,10,,,,,,,,,,,,
43,1,,22137-140000,,"WASHER 14,POLISHED",,,2,2,,,,,,,,,,,,
44,1,,22157-120000,,"WASHER 12",,,2,2,,,,,,,,,,,,
45,1,,22217-040000,,"SPRING WASHER  4",,,10,10,,,,,,,,,,,,
46,1,,22217-100000,,"SPRING WASHER 10",,,1,1,,,,,,,,,,,,
47,1,,22217-100000,,"SPRING WASHER 10",,,1,1,,,,,,,,,,,,
48,1,,22217-140000,,"SPRING WASHER 14",,,2,2,,,,,,,,,,,,
49,1,,22351-050036,,"SPRING PIN 5X36",,,3,3,,,,,,,,,,,,
50,1,,22417-400400,,"COTTER PIN 4.0X40",,,1,1,,,,,,,,,,,,
51,1,,24761-020000,,"NIPPLE PT1/8,GREASE",,,3,3,,,,,,,,,,,,
52,1,,24761-040000,,"NIPPLE B,GREASE",,,2,2,,,,,,,,,,,,
53,1,,24761-050000,,"NIPPLE C,GREASE",,,2,2,,,,,,,,,,,,
54,1,,26013-100252,,"BOLT W/WASHER M10X25",,,2,2,,,,,,,,,,,,
55,1,,26013-100252,,"BOLT W/WASHER M10X25",,,1,1,,,,,,,,,,,,
56,1,,26013-100252,,"BOLT W/WASHER M10X25",,,3,3,,,,,,,,,,,,
57,1,,26013-100252,,"BOLT W/WASHER M10X25",,,2,2,,,,,,,,,,,,
58,1,,26013-100252,,"BOLT W/WASHER M10X25",,,1,1,,,,,,,,,,,,
59,1,,26013-100252,,"BOLT W/WASHER M10X25",,,1,1,,,,,,,,,,,,
60,1,,26013-100252,,"BOLT W/WASHER M10X25",,,2,2,,,,,,,,,,,,
61,1,,26116-100202,,"BOLT M10X 20 PLATED",,,1,1,,,,,,,,,,,,
62,1,,26116-100604,,"BOLT M10X 60 PLATED",,,1,1,,,,,,,,,,,,
63,1,,26557-040062,,"SCREW M 4X  6",,,10,10,,,,,,,,,,,,
64,1,,26716-100002,,"NUT M10",,,1,1,,,,,,,,,,,,
65,1,,26716-140002,,"NUT M14",,,2,2,,,,,,,,,,,,
66,1,,26756-140002,,"LOCK NUT M14 PLATED",,,1,1,,,,,,,,,,,,
67,1,,26116-100302,,"BOLT M10X 30 PLATED",,,1,1,,,W,,,,,,,M20501,,M20501,,
68,1,,26716-100002,,"NUT M10",,,1,1,,,W,,,,,,,M20501,,M20501,,
```

Fig. 22 操縦装置（リンク）（マルチリンク仕様）
CONTROL EQUIPMENT (LINK) (MULTI LINK SPEC.)

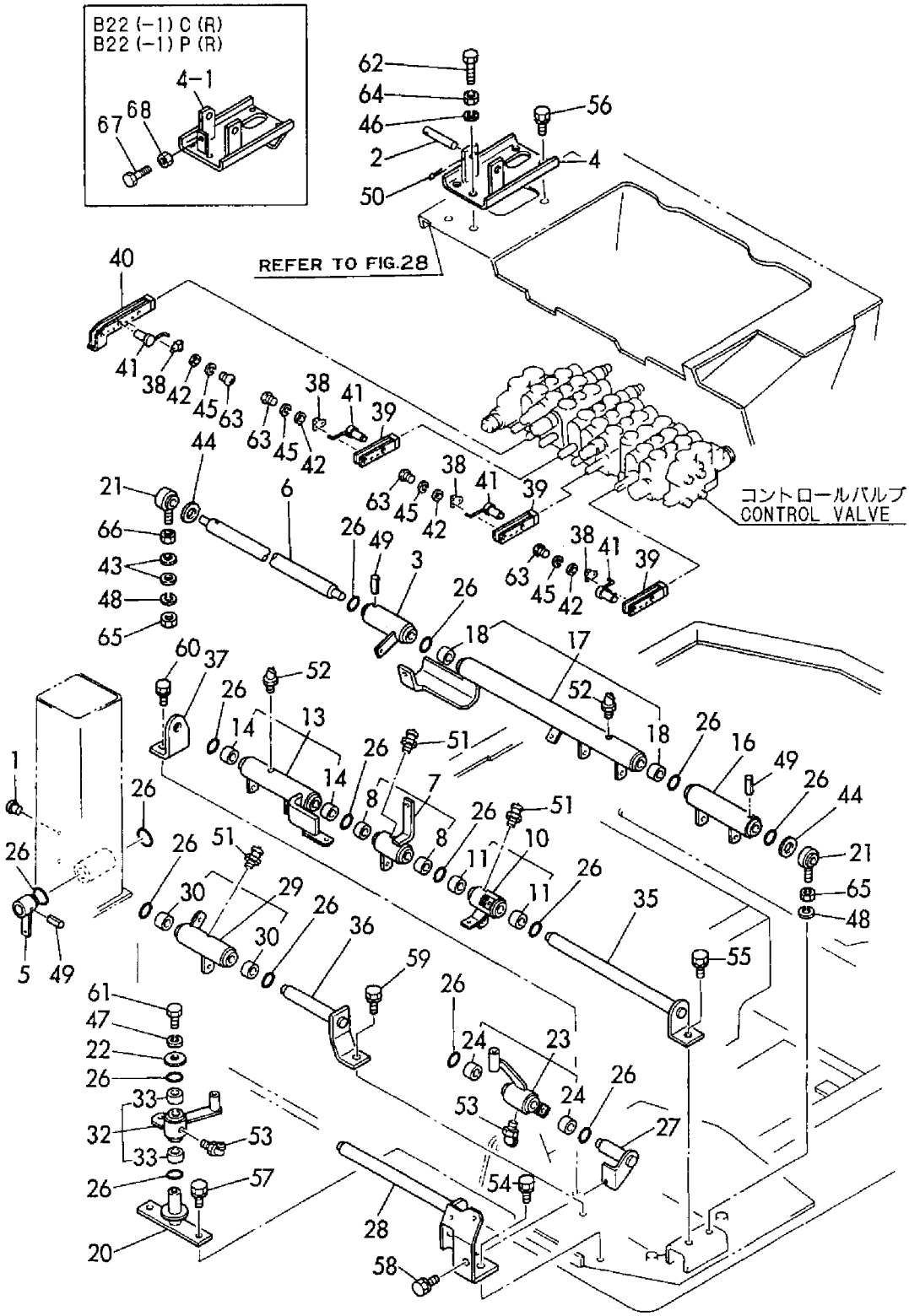

```
1,1,,172141-42820,,"ROD, LINK(L)",2,2,2,2,,,,,,,,,,,,
2,1,,172141-42830,,"ROD, LINK(R)",2,2,2,2,,,,,,,,,,,,
3,1,,172141-42840,,"ROD, SWING",1,1,,,,,,,,,,,,,,,,
3-1,1,,172141-42860,,"ROD, SWING",1,1,1,1,,,N,,,M00574,,,,,,,
4,1,,172141-42870,,"ROD(A), SPOOL",2,2,2,2,,,,,,,,,,,,
4-1,1,,172141-42780,,"ROD (A), SPOOL",,,2,2,,,N,,,,,,,M20985,,M20985,,
5,1,,172141-42880,,"ROD(B), SPOOL",2,2,2,2,,,,,,,,,,,,
6,1,,172141-42890,,"ROD(C), SPOOL",2,2,2,2,,,,,,,,,,,,
6-1,1,,172141-42790,,"ROD(C), SPOOL",,,2,2,,,N,,,,,,,M20985,,M20985,,
7,1,,172141-42900,,ROD(P),1,1,1,1,,,,,,,,,,,,
8,1,,172141-42910,,"ROD(D), SPOOL",1,1,1,1,,,,,,,,,,,,
8-1,1,,172141-42800,,"ROD(D), SPOOL",,,1,1,,,N,,,,,,,M20985,,M20985,,
9,1,,172141-42920,,"SUPPORT, CABLE",1,1,1,1,,,,,,,,,,,,
10,1,,172141-42950,,"CABLE, BLADE",1,1,1,1,,,,,,,,,,,,
11,1,,172141-42960,,"JOINT, CABLE",1,1,1,1,,,,,,,,,,,,
12,1,,172141-42970,,"PIN 6X15",8,8,8,8,,,,,,,,,,,,
13,1,,172122-46590,,"ELBALL 8",2,2,2,2,,,,,,,,,,,,
14,1,,172122-46590,,"ELBALL 8",2,2,2,2,,,,,,,,,,,,
15,1,,172122-46590,,"ELBALL 8",7,7,7,7,,,,,,,,,,,,
16,1,,172122-46590,,"ELBALL 8",1,1,1,1,,,,,,,,,,,,
17,1,,172122-46590,,"ELBALL 8",1,1,1,1,,,,,,,,,,,,
18,1,,172122-46590,,"ELBALL 8",1,1,1,1,,,,,,,,,,,,
19,1,,172122-46590,,"ELBALL 8",2,2,2,2,,,,,,,,,,,,
20,1,,172122-47250,,"BALL 8, LINK",2,2,2,2,,,,,,,,,,,,
21,1,,1C6281-52310,,"PIN 6,COME-OFF SNAP",8,8,8,8,,,,,,,,,,,,
22,1,,22217-080000,,"SPRING WASHER  8",16,16,16,16,,,,,,,,,,,,
22-1,1,,22217-080000,,"SPRING WASHER  8",,,16,16,,,Z,,,,,,,M20985,,M20985,,
23,1,,22217-080000,,"SPRING WASHER  8",2,2,2,2,,,,,,,,,,,,
23-1,1,,22217-080000,,"SPRING WASHER  8",,,2,2,,,Z,,,,,,,M20985,,M20985,,
24,1,,26013-100202,,"BOLT W/WASHER M10X20",2,2,2,2,,,,,,,,,,,,
25,1,,26716-080002,,"NUT M 8",30,30,30,30,,,,,,,,,,,,
25-1,1,,26051-080002,,"NUT M 8",,,30,30,,,N,,,,,,,M20985,,M20985,,
26,1,,26716-080002,,"NUT M 8",4,4,4,4,,,,,,,,,,,,
26-1,1,,26051-080002,,"NUT M 8",,,4,4,,,N,,,,,,,M20985,,M20985,,
27,1,,933168-28480,,"WASHER 20X9X3.2",1,1,1,1,,,,,,,,,,,,
28,1,,22137-080000,,"WASHER 8, POLISHED",,,16,16,,,W,,,,,,,M20985,,M20985,,
29,1,,22137-080000,,"WASHER 8, POLISHED",,,2,2,,,W,,,,,,,M20985,,M20985,,
```

Fig. 23 操縦装置（ロッド） CONTROL EQUIPMENT (ROD)

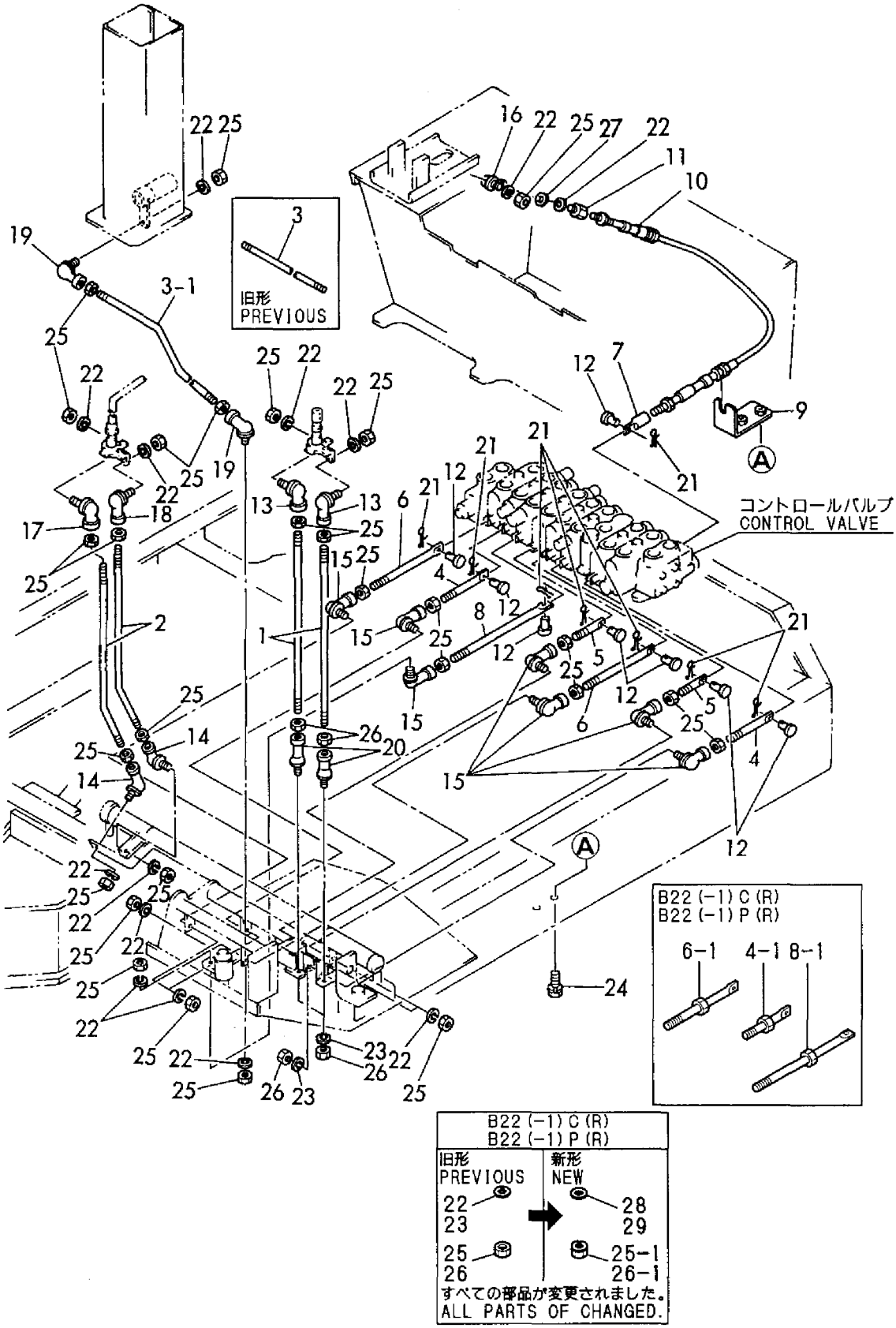

```
1,1,,172730-11440,,"TURNBUCKLE 10",,,2,2,,,,,,,,,,,,,
2,1,,194150-22480,,"NUT M10",,,2,2,,,,,,,,,,,,,
3,1,,172141-42820,,"ROD, LINK(L)",,,2,2,,,,,,,,,,,,,
4,1,,172141-42890,,"ROD(C), SPOOL",,,2,2,,,,,,,,,,,,,
4-1,1,,172141-42790,,"ROD(C), SPOOL",,,2,2,,,N,,,,,,,M20985,,M20985,,
5,1,,172141-42900,,ROD(P),,,1,1,,,,,,,,,,,,,
6,1,,172141-42910,,"ROD(D), SPOOL",,,1,1,,,,,,,,,,,,,
6-1,1,,172141-42800,,"ROD(D), SPOOL",,,1,1,,,N,,,,,,,M20985,,M20985,,
7,1,,172141-42920,,"SUPPORT, CABLE",,,1,1,,,,,,,,,,,,,
8,1,,172141-42950,,"CABLE, BLADE",,,1,1,,,,,,,,,,,,,
9,1,,172141-42960,,"JOINT, CABLE",,,1,1,,,,,,,,,,,,,
10,1,,172141-42970,,"PIN 6X15",,,8,8,,,,,,,,,,,,,
11,1,,172141-43830,,"ROD, SWING",,,1,1,,,,,,,,,,,,,
12,1,,172141-43840,,"ROD, SPOOL",,,4,4,,,,,,,,,,,,,
13,1,,172143-45670,,"ROD, END 8",,,2,2,,,,,,,,,,,,,
14,1,,172122-46570,,"ROD-END  8",,,2,2,,,,,,,,,,,,,
14-1,1,,172122-46571,,"ROD-END  8",,,2,2,,,N,,,,,,,M20985,,M20985,,
15,1,,172122-46590,,"ELBALL 8",,,2,2,,,,,,,,,,,,,
16,1,,172122-46590,,"ELBALL 8",,,2,2,,,,,,,,,,,,,
17,1,,172122-46590,,"ELBALL 8",,,3,3,,,,,,,,,,,,,
18,1,,172122-46590,,"ELBALL 8",,,1,1,,,,,,,,,,,,,
19,1,,172122-46590,,"ELBALL 8",,,1,1,,,,,,,,,,,,,
20,1,,172122-46590,,"ELBALL 8",,,1,1,,,,,,,,,,,,,
21,1,,172122-46590,,"ELBALL 8",,,1,1,,,,,,,,,,,,,
22,1,,172122-46590,,"ELBALL 8",,,1,1,,,,,,,,,,,,,
23,1,,172148-46700,,"ROD(A), LINK R",,,2,2,,,,,,,,,,,,,
24,1,,172148-46710,,"ROD(B), LINK R",,,2,2,,,,,,,,,,,,,
25,1,,172148-46730,,"BOLT M8",,,1,1,,,,,,,,,,,,,
26,1,,172122-47250,,"BALL 8, LINK",,,2,2,,,,,,,,,,,,,
27,1,,172122-47250,,"BALL 8, LINK",,,1,1,,,,,,,,,,,,,
28,1,,172122-47250,,"BALL 8, LINK",,,1,1,,,,,,,,,,,,,
29,1,,1C6281-52310,,"PIN 6,COME-OFF SNAP",,,8,8,,,,,,,,,,,,,
30,1,,22137-080000,,"WASHER 8, POLISHED",,,2,2,,,,,,,,,,,,,
31,1,,22137-080000,,"WASHER 8, POLISHED",,,2,2,,,,,,,,,,,,,
32,1,,22217-080000,,"SPRING WASHER  8",,,11,11,,,Z,,,,,,,M20985,,M20985,,
33,1,,22217-080000,,"SPRING WASHER  8",,,4,4,,,Z,,,,,,,M20985,,M20985,,
34,1,,26013-080252,,"BOLT M 8X 25",,,2,2,,,,,,,,,,,,,
35,1,,26013-080252,,"BOLT M 8X 25",,,2,2,,,,,,,,,,,,,
36,1,,26013-100202,,"BOLT W/WASHER M10X20",,,2,2,,,,,,,,,,,,,
37,1,,26716-080002,,"NUT M 8",,,21,21,,,,,,,,,,,,,
37-1,1,,26051-080002,,"NUT M 8",,,21,21,,,N,,,,,,,M20985,,M20985,,
38,1,,26716-080002,,"NUT M 8",,,8,8,,,,,,,,,,,,,
38-1,1,,26051-080002,,"NUT M 8",,,8,8,,,N,,,,,,,M20985,,M20985,,
39,1,,26716-080002,,"NUT M 8",,,2,2,,,,,,,,,,,,,
39-1,1,,26051-080002,,"NUT M 8",,,2,2,,,N,,,,,,,M20985,,M20985,,
40,1,,26716-080002,,"NUT M 8",,,4,4,,,,,,,,,,,,,
40-1,1,,26051-080002,,"NUT M 8",,,4,4,,,N,,,,,,,M20985,,M20985,,
41,1,,26716-100002,,"NUT M10",,,2,2,,,,,,,,,,,,,
42,1,,933168-28480,,"WASHER 20X9X3.2",,,1,1,,,,,,,,,,,,,
43,1,,22137-080000,,"WASHER 8, POLISHED",,,12,12,,,W,,,,,,,M20985,,M20985,,
44,1,,22137-080000,,"WASHER 8, POLISHED",,,4,4,,,W,,,,,,,M20985,,M20985,,
```

Fig. 24 操縦装置（ロッド）（マルチリンク仕様）
CONTROL EQUIPMENT (ROD) (MULTI LINK SPEC.)

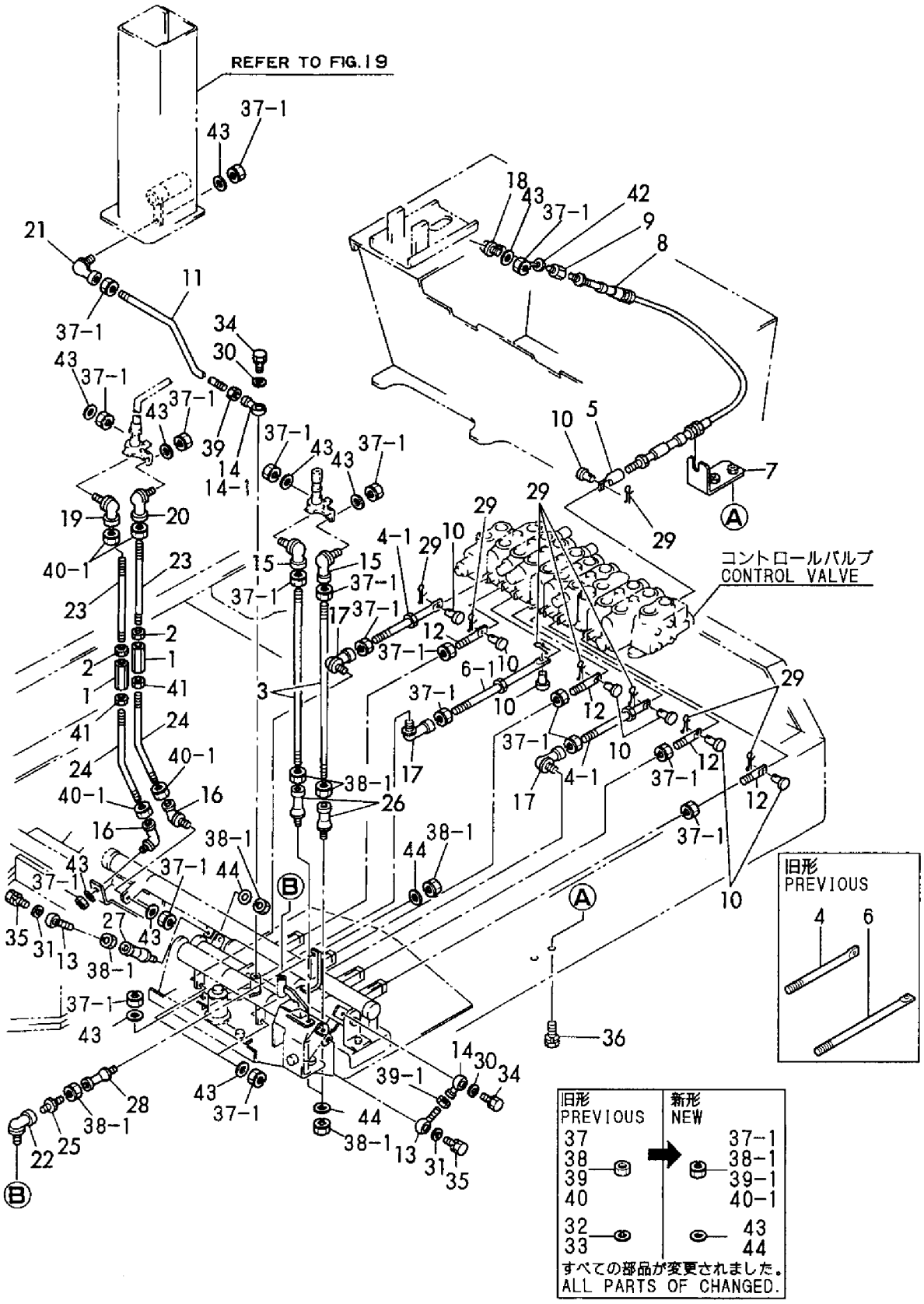

```
1,1,,172730-05250,,"WASHER 12",6,6,6,6,,,,,,,,,,,,
2,1,,172141-53200,,"PROTECTOR, REAR(L)",1,1,,,,,,,,,,,,,,,,
2-1,1,,172141-53201,,"PROTECTOR, REAR(L)",1,1,1,1,,,N,,,*1988.03,,,,,,,,
3,1,,172141-53250,,"PROTECTOR, REAR(R)",1,1,,,,,,,,,,,,,,,,
3-1,1,,172141-53251,,"PROTECTOR, REAR(R)",1,1,1,1,,,N,,,*1988.03,,,,,,,,
4,1,,172141-53350,,"GROMMET 26",6,6,6,6,,,,,,,,,,,,,,
5,1,,26013-120302,,"BOLT W/WASHER M12X30",6,6,6,6,,,,,,,,,,,,,,
6,1,,172730-05250,,"WASHER 12",3,3,3,3,,,,,,,,,,,,,,
7,1,,172141-53300,,"WEIGHT. COUNTER",1,1,1,1,,,,,,,,,,,,,,
8,1,,172141-53350,,"GROMMET 26",3,3,3,3,,,,,,,,,,,,,,
9,1,,26116-120602,,"BOLT M12X 60 PLATED",3,3,3,3,,,,,,,,,,,,,,
10,1,,172141-54100,,"FRAME, TURNING",1,1,1,1,,,,,,,,,,,,,,
11,1,,172141-54980,,"PLATE, BUSH",1,1,1,1,,,,,,,,,,,,,,
12,1,,172141-54990,,"BUSH 50",2,2,2,2,,,,,,,,,,,,,,
13,1,,26013-080202,,"BOLT W/WASHER M8X20",2,2,2,2,,,,,,,,,,,,,,
```

Fig. 25 旋回フレーム TURNING FRAME

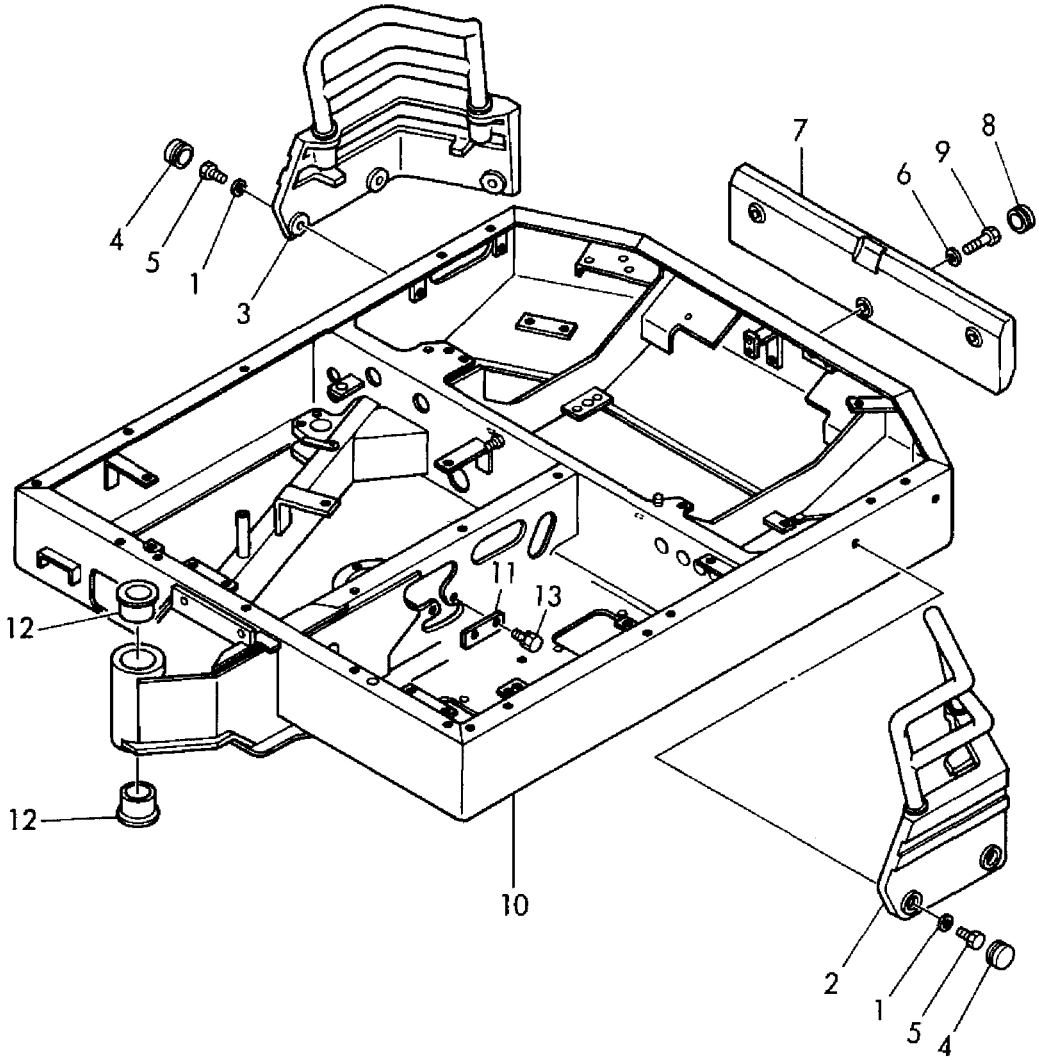

```
1,1,,172141-57600,,"BEARING, SWING",1,1,1,1,,,,,,,,,,,,,
1-1,1,,172141-57601,,"BEARING, SWING",,,1,1,,,R,,,,,,,M21607,,M21607,,
2,2,,172141-57610,,"SEAL KIT",1,1,1,1,,,,,,,,,,,,,
3,3,,172141-57620,,"SEAL, UPPER",1,1,1,1,,,,,,,,,,,,,
4,3,,172141-57630,,"SEAL,LOWER",1,1,1,1,,,,,,,,,,,,,
5,1,,22312-100280,,"PARALLEL PIN 10X28",4,4,,,,,,,,,,,,,,,,,
5-1,1,,194940-24350,,"PIN 10X28,STRAIGHT",4,4,4,4,,,N,,,M00501,,M00501,,,,,,
6,1,,26116-120552,,"BOLT M12X 55 PLATED",38,38,38,38,,,,,,,,,,,,,
6-1,1,,172141-57650,,"BOLT M12X 55 PLATED",,,38,38,,,R,,,,,,,M11821,,M11821,,
```

Fig. 26 旋回駆動装置 TURNING DRIVING GEARS

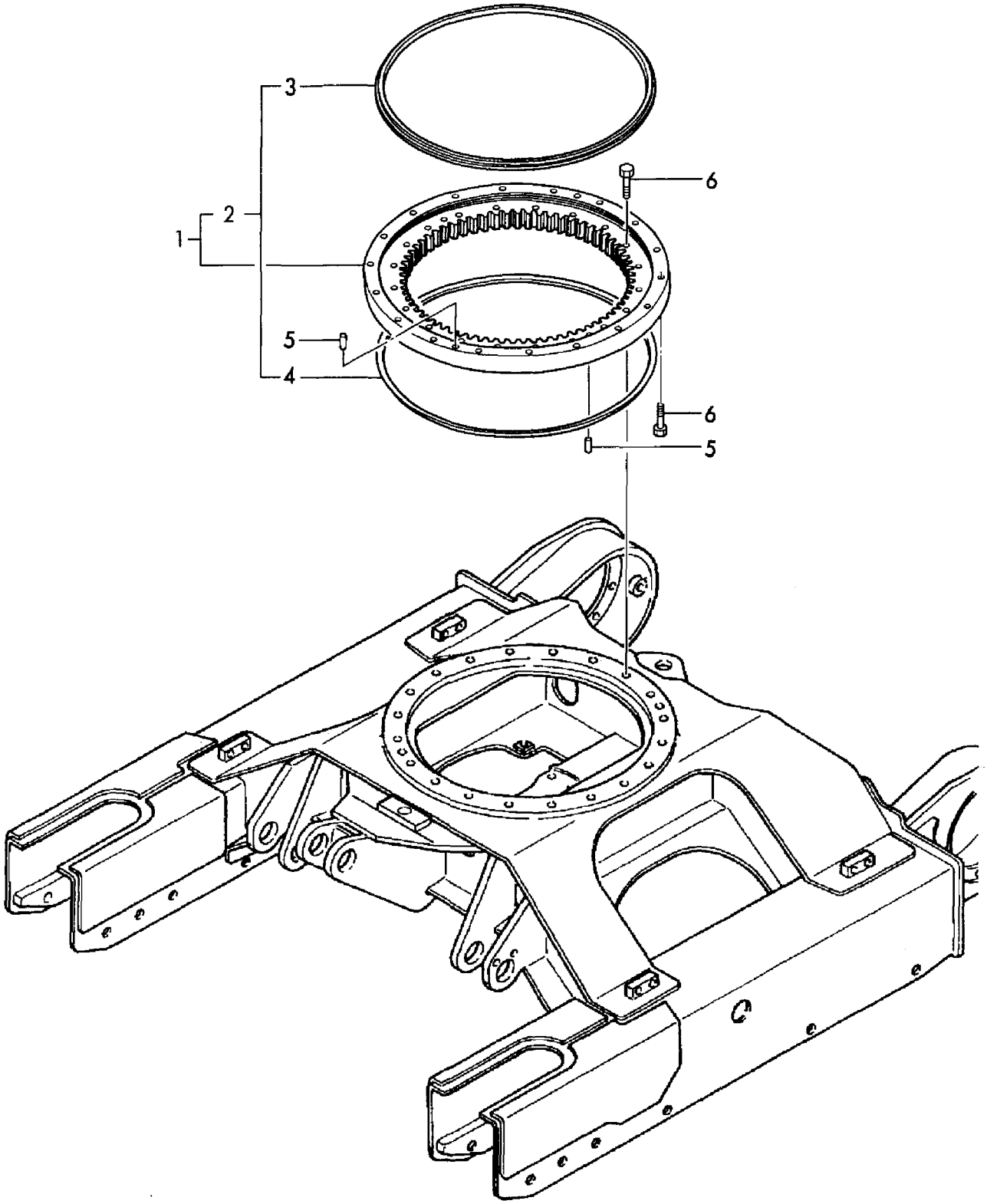

```
1,1,,172141-05300,,"BOX, TOOL",1,1,1,1,,,,,,,,,,,,
2,1,,22137-080000,,"WASHER 8, POLISHED",4,4,,,,,Z,,,M00501,,M00501,,,,,,
3,1,,26013-080202,,"BOLT W/WASHER M8X20",4,4,,,,,,,,,,,,,,,,
3-1,1,,26116-100202,,"BOLT M10X 20
PLATED",4,4,4,4,,,S,,,*1987.11,,*1987.11,,,,,,
4,1,,194150-01190,,"KNOB, THROTTLE LEVER",1,1,1,1,,,,,,,,,,,,,
4-1,1,,172116-46630,,"KNOB, LOCK LEVER",,,1,1,,,R,,,,,,,"FROM 1ST",,"FROM 1ST",,
5,1,,172141-58800,,"PIN, LOCK",1,1,1,1,,,,,,,,,,,,,
6,1,,172141-61100,,"COVER, SEAT MOUNT",1,1,1,1,,,,,,,,,,,,,
7,1,,172141-61110,,"COVER, DUCT",1,1,1,1,,,,,,,,,,,,,
7-1,1,,172141-61110,,"COVER, DUCT",1,,1,,,,Z,,,M10571,,,,,,,,
8,1,,172141-61120,,"COVER, 3RD",1,1,1,1,,,,,,,,,,,,,
9,1,,26013-080162,,"BOLT W/WASHER M8X16",3,3,,,,,,,,,,,,,,,,
9-1,1,,26116-080162,,"BOLT M 8X 16
PLATED",3,3,3,3,,,N,,,*1987.11,,*1987.11,,,,,,
10,1,,26013-080162,,"BOLT W/WASHER M8X16",3,3,,,,,,,,,,,,,,,,
10-1,1,,26116-080162,,"BOLT M 8X 16
PLATED",2,2,2,2,,,,,,*1987.11,,*1987.11,,,,,,
11,1,,26013-100202,,"BOLT W/WASHER M10X20",2,2,,,,,,,,,,,,,,,,
11-1,1,,26116-100202,,"BOLT M10X 20
PLATED",2,2,2,2,,,N,,,*1987.11,,*1987.11,,,,,,
12,1,,172141-62500,,"COVER, UNDER(L)",1,1,1,1,,,,,,,,,,,,,
13,1,,172141-62520,,"COVER, UNDER(R)",1,1,1,1,,,,,,,,,,,,,
13-1,1,,172141-62530,,"COVER, UNDER(R)",,,1,1,,,N,,,,,,,M10501,,M10501,,
14,1,,22137-100000,,"WASHER 10,POLISHED",10,10,10,10,,,,,,,,,,,,,
15,1,,26013-100202,,"BOLT W/WASHER M10X20",10,10,,,,,,,,,,,,,,,,
15-1,1,,26116-100202,,"BOLT M10X 20
PLATED",10,10,10,10,,,N,,,*1987.11,,*1987.11,,,,,,
16,1,,172141-65090,,COVER(R),1,1,1,1,,,,,,,,,,,,,
17,1,,172734-65260,,"PIN, BONNET LEVER",1,1,1,1,,,,,,,,,,,,,
18,1,,172734-65270,,"SPRING, CATCH",1,1,1,1,,,,,,,,,,,,,
19,1,,172141-65390,,COVER(C),1,1,1,1,,,,,,,,,,,,,
20,1,,172124-65450,,"LEVER, LOCK",1,1,1,1,,,,,,,,,,,,,
21,1,,172126-65460,,HOOK,1,1,1,1,,,,,,,,,,,,,
22,1,,172124-65480,,CATCHER,1,1,1,1,,,,,,,,,,,,,
23,1,,172124-65490,,"PLATE,CATCH",1,1,1,1,,,,,,,,,,,,,
24,1,,172126-65500,,KEY,1,1,1,1,,,,,,,,,,,,,
25,1,,172141-65640,,COVER(B),1,1,1,1,,,,,,,,,,,,,
26,1,,172142-65650,,"ROD, STOPPER",1,1,1,1,,,,,,,,,,,,,
27,1,,172137-65700,,"RUBBER, CUSHION",2,2,2,2,,,,,,,,,,,,,
28,1,,172141-65900,,PLATE,1,1,1,1,,,,,,,,,,,,,
29,2,,172141-65970,,"RUBBER, PLATE",1,1,1,1,,,,,,,,,,,,,
30,2,,172141-65980,,"PLATE, COVER(B)",1,1,1,1,,,,,,,,,,,,,
31,1,,22137-100000,,"WASHER 10,POLISHED",2,2,2,2,,,,,,,,,,,,,
32,1,,22137-100000,,"WASHER 10,POLISHED",4,4,4,4,,,,,,,,,,,,,
33,1,,22137-120000,,"WASHER 12,POLISHED",4,4,4,4,,,,,,,,,,,,,
34,1,,22417-200200,,"COTTER PIN 2.0X20",2,2,2,2,,,,,,,,,,,,,
35,1,,22417-320200,,"COTTER PIN 3.2X20",4,4,4,4,,,,,,,,,,,,,
36,1,,26013-080162,,"BOLT W/WASHER M8X16",2,2,2,2,,,,,,,,,,,,,
37,1,,26013-100162,,"BOLT M10X 16",4,4,4,4,,,,,,,,,,,,,
38,1,,26013-100252,,"BOLT W/WASHER M10X25",4,4,4,4,,,,,,,,,,,,,
39,1,,26013-100252,,"BOLT W/WASHER M10X25",2,2,2,2,,,,,,,,,,,,,
40,1,,26013-100252,,"BOLT W/WASHER M10X25",2,2,2,2,,,,,,,,,,,,,
41,1,,26013-120452,,"BOLT M12X 45",4,4,4,4,,,,,,,,,,,,,
42,1,,933152-02900,,WASHER,2,2,2,2,,,,,,,,,,,,,
43,1,,172738-61630,,"RUBBER 150",1,1,1,1,,,W,,,M00839,,M00839,,,,,,
44,1,,22217-100000,,"SPRING WASHER 10",4,4,4,4,,,W,,,*1987.11,,*1987.11,,,,,,
45,1,,22217-080000,,"SPRING WASHER  8",3,3,3,3,,,W,,,*1987.11,,*1987.11,,,,,,
46,1,,22217-080000,,"SPRING WASHER  8",2,2,2,2,,,W,,,*1987.11,,*1987.11,,,,,,
47,1,,22217-100000,,"SPRING WASHER 10",2,2,2,2,,,W,,,*1987.11,,*1987.11,,,,,,
48,1,,22217-100000,,"SPRING WASHER
10",10,10,10,10,,,W,,,*1987.11,,*1987.11,,,,,,
49,1,,22137-100000,,"WASHER 10,POLISHED",2,2,2,2,,,W,,,M00501,,M00501,,,,,,
```

Fig. 27 ボンネット BONNET

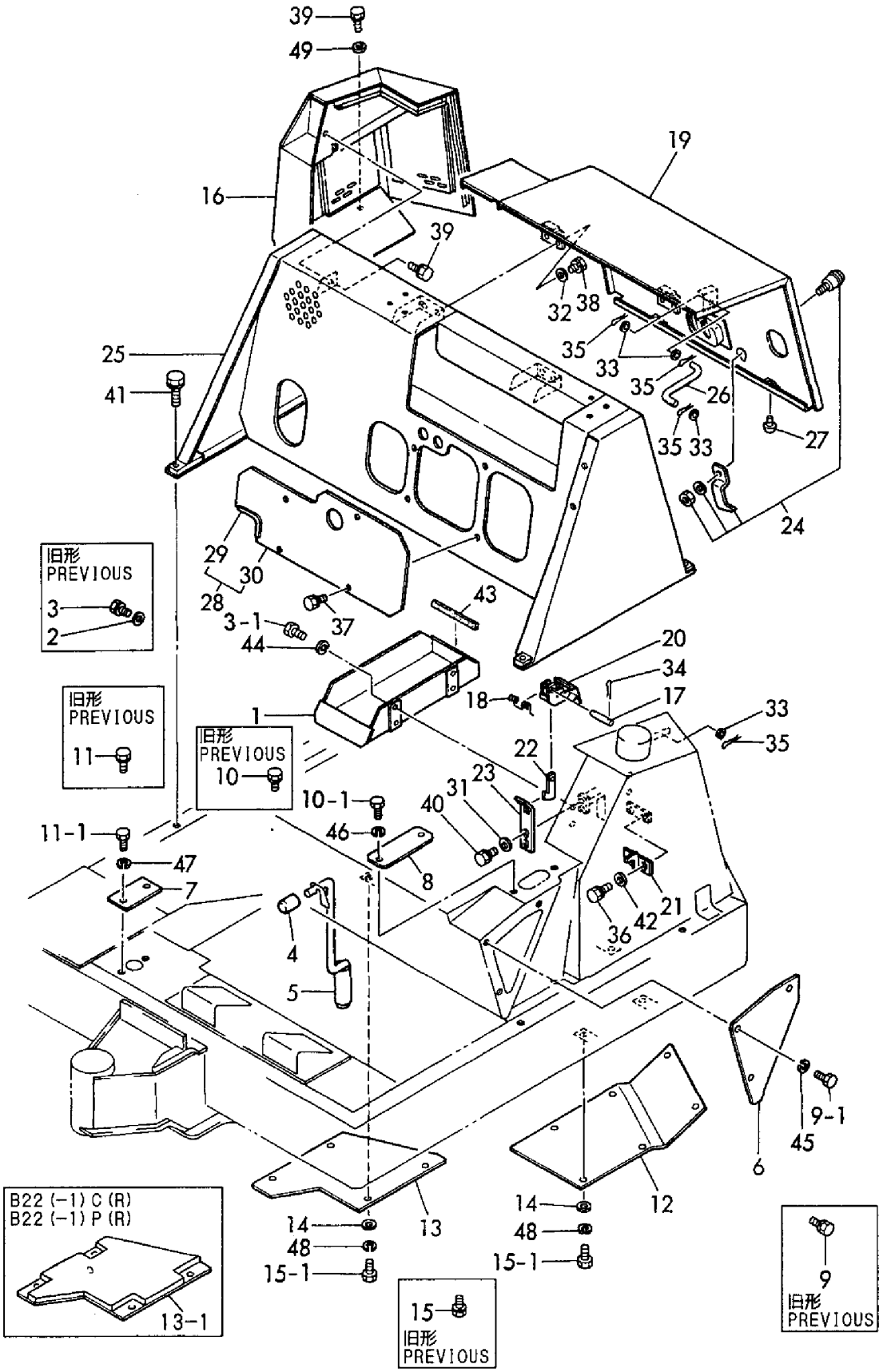

1,1,,172141-62100,,"STEP, FRONT",1,1,1,1,,,,,,,,,,,,,
2,1,,172141-62140,,"STEP(A), CENTER",1,1,1,1,,,,,,,,,,,,,
3,1,,172141-62170,,"STEP(B), CENTER",1,1,1,1,,,,,,,,,,,,,
4,1,,172141-62210,,"STEP, SIDE",1,1,1,1,,,,,,,,,,,,,
5,1,,172141-62250,,"BASE, SUPPORT",1,1,1,1,,,,,,,,,,,,,
6,1,,172141-78790,,RUMMER,1,1,1,1,,,,,,,,,,,,,
7,1,,26013-100202,,"BOLT W/WASHER M10X20",5,5,5,5,,,,,,,,,,,,,
8,1,,26013-100202,,"BOLT W/WASHER M10X20",7,7,7,7,,,,,,,,,,,,,
9,1,,26013-100202,,"BOLT W/WASHER M10X20",1,1,1,1,,,,,,,,,,,,,
10,1,,26013-100202,,"BOLT W/WASHER M10X20",4,4,4,4,,,,,,,,,,,,,
11,1,,26013-100202,,"BOLT W/WASHER M10X20",1,1,,,,,,,,,,,,,,,
11-1,1,,26116-100202,,"BOLT M10X 20
PLATED",1,1,1,1,,,N,,,*1987.11,,*1987.11,,,,,
12,1,,933160-09240,,"GROMMET 9X10.5",1,1,1,1,,,,,,,,,,,,,
14,1,,172116-64121,,"SEAT, OPERATOR",,1,,,,,,,,,,,,,,,
14-2,1,,172116-64101,,"SEAT ASSY",1,1,1,1,,,N,,,M10501,,M10501,,,,,
15,2,,172116-64130,,"ARM REST",1,1,,,,,,,,,,,,,,,
16,2,,172116-64140,,"SLIDER R",1,1,1,1,,,W,,,M00501,,M00501,,,,,
17,2,,172116-64180,,"BACK(A), SEAT",1,1,,,,,W,,,M00501,,M00501,,,,,
17-1,2,,172116-64181,,"BACK(A), SEAT",1,1,1,1,,,N,,,M10501,,M10501,,,,,
18,2,,172116-64190,,"SLIDER L",1,1,1,1,,,W,,,M00501,,M00501,,,,,
19,2,,172116-64210,,"CUSHION, SEAT B",1,1,,,,,W,,,M00501,,72122723,,,,,
19-1,2,,172116-64211,,"CUSHION, SEAT B",1,1,1,1,,,N,,,M10501,,M10501,,,,,
20,2,,26013-060162,,"BOLT M 6X 16",4,4,4,4,,,W,,,M00501,,M00501,,,,,
21,2,,26022-080162,,"SCREW M 8X 16",4,4,4,4,,,W,,,M00501,,M00501,,,,,
22,1,,172141-64200,,"MOUNT, SEAT",1,1,1,1,,,,,,,,,,,,,
23,1,,172141-64300,,"PLATE, SEAT",1,1,1,1,,,,,,,,,,,,,
24,1,,172141-64350,,"SEAL, MOUNT",1,1,1,1,,,,,,,,,,,,,
25,1,,172141-64370,,"CUSHION, SEAT",2,2,2,2,,,,,,,,,,,,,
26,1,,22137-080000,,"WASHER 8, POLISHED",4,4,4,4,,,,,,,,,,,,,
27,1,,22217-080000,,"SPRING WASHER 8",4,4,4,4,,,,,,,,,,,,,
28,1,,22217-080000,,"SPRING WASHER 8",4,4,4,4,,,,,,,,,,,,,
29,1,,26116-100202,,"BOLT M10X 20 PLATED",2,2,2,2,,,,,,,,,,,,,
30,1,,26717-080002,,"NUT 8",4,4,4,4,,,,,,,,,,,,,
31,1,,26717-080002,,"NUT 8",4,4,4,4,,,,,,,,,,,,,
32,1,,22217-100000,,"SPRING WASHER 10",2,2,2,2,,,,,,,,,,,,,
33,1,,172141-68200,,GRIP,,1,,1,,,W,,,,*1987.11,,,,,
34,1,,26013-100252,,"BOLT W/WASHER M10X25",,2,,2,,,W,,,,*1987.11,,,,,
35,1,,26064-080201,,"WING BOLT M 8X 20",1,1,1,1,,,W,,,M00565,,,,,,,
36,1,,1A1040-46460,,"WASHER 10X33X4.5",1,1,1,1,,,W,,,M00565,,,,,,,
37,1,,22137-100000,,"WASHER 10,POLISHED",1,1,1,1,,,W,,,*1988.02,,*1988.02,,,,,
38,1,,22217-100000,,"SPRING WASHER 10",1,1,1,1,,,W,,,*1987.11,,*1987.11,,,,,
39,1,,172141-64400,,"SPRING WASHER 8",1,,1,,,,,,,,,,,,,
40,1,,172148-62250,,"COVER, STEP",,,1,1,,,,1,,,,,,,,,
41,1,,172148-62270,,PIN,,,1,1,,,,1,,,,,,,,,
42,1,,172141-62280,,STEP,,,1,1,,,,1,,,,,,,,,
43,1,,172148-62300,,HANDLE,,,1,1,,,,1,,,,,,,,,
44,1,,1A1040-66000,,"SPRING,STICK LOCK",,,1,1,,,,1,,,,,,,,,
45,1,,22137-080000,,"WASHER 8, POLISHED",,,2,2,,,,1,,,,,,,,,
46,1,,22117-100000,,"WASHER 10",,,2,2,,,,1,,,,,,,,,
47,1,,22217-060000,,"SPRING WASHER 6",,,2,2,,,,1,,,,,,,,,
48,1,,22217-080000,,"SPRING WASHER 8",,,2,2,,,,1,,,,,,,,,
49,1,,22417-320200,,"COTTER PIN 3.2X20",,,2,2,,,,1,,,,,,,,,
50,1,,26013-080202,,"BOLT W/WASHER M8X20",,,2,2,,,,1,,,,,,,,,
51,1,,26557-060102,,"SCREW M 6X 10",,,2,2,,,,1,,,,,,,,,
52,1,,26657-060002,,"CAP NUT M 6",,,2,2,,,,1,,,,,,,,,
53,1,,26716-080002,,"NUT M 8",,,2,2,,,,1,,,,,,,,,
54,1,,26013-100202,,"BOLT W/WASHER M10X20",,,8,8,,,,1,,,,,,,,,

Fig. 28 シート＆ステップ SEAT & STEP

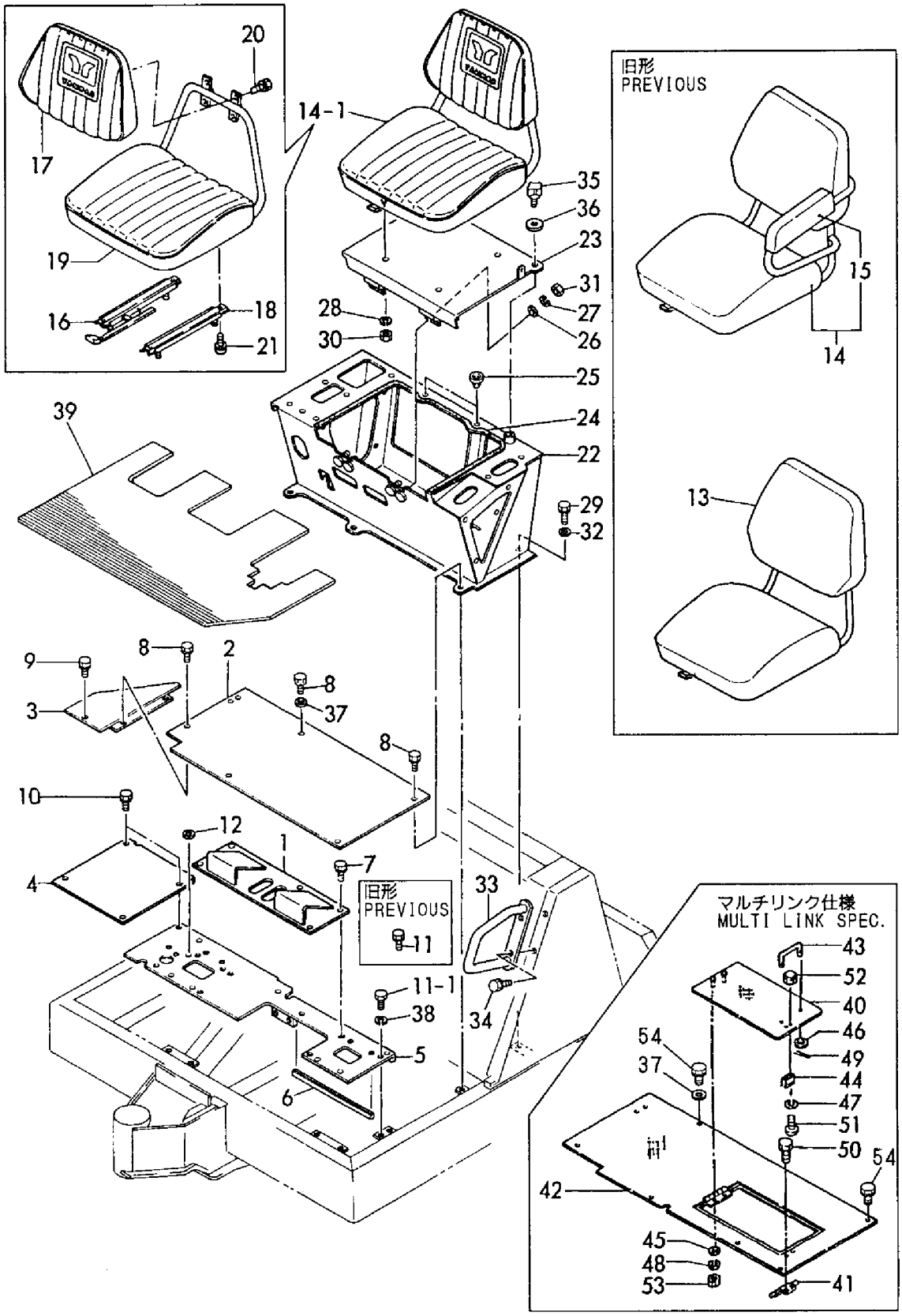

```
1,1,,772141-68100,,"CANOPY ASSY",,1,,1,,,,,,,,,,,,,
2,2,,172141-68110,,"COLUMN(R), CANOPY",,1,,1,,,,,,,,,,,,,
3,2,,172141-68120,,"COLUMN(L), CANOPY",,1,,1,,,,,,,,,,,,,
4,2,,172134-68200,,"ROOF, CANOPY",,1,,1,,,,,,,,,,,,,
4-1,2,,172141-68250,,"ROOF, CANOPY",,,,1,,,N,,,,,,,,,M20501,,
5,2,,26013-120252,,"BOLT M12X 25",,6,,6,,,,,,,,,,,,,
6,2,,26013-120302,,"BOLT W/WASHER M12X30",,7,,7,,,,,,,,,,,,,,
7,1,,172141-68310,,CANOPY(F),,1,,1,,,,,,,,,,,,,
8,1,,172141-68360,,"COVER, FRONT",,1,,1,,,,,,,,,,,,,
9,1,,26013-100202,,"BOLT W/WASHER M10X20",,6,,,,,,,,,,,,,,,
9-1,1,,26116-100202,,"BOLT M10X 20 PLATED",,6,,6,,,N,,,,,*1987.11,,,,,,
10,1,,26013-100252,,"BOLT W/WASHER M10X25",,4,,4,,,,,,,,,,,,,
11,1,,22217-100000,,"SPRING WASHER 10",,6,,6,,,W,,,,,*1987.11,,,,,,
12,1,,172141-68270,,"CLIP 8, TREE",,,,1,,,W,,,,,,,,,M21607,,
```

Fig. 29 キャノピ CANOPY

見出しNo．1は、見出しNo．2から6を含みます。
1 inc．2 ～ 6

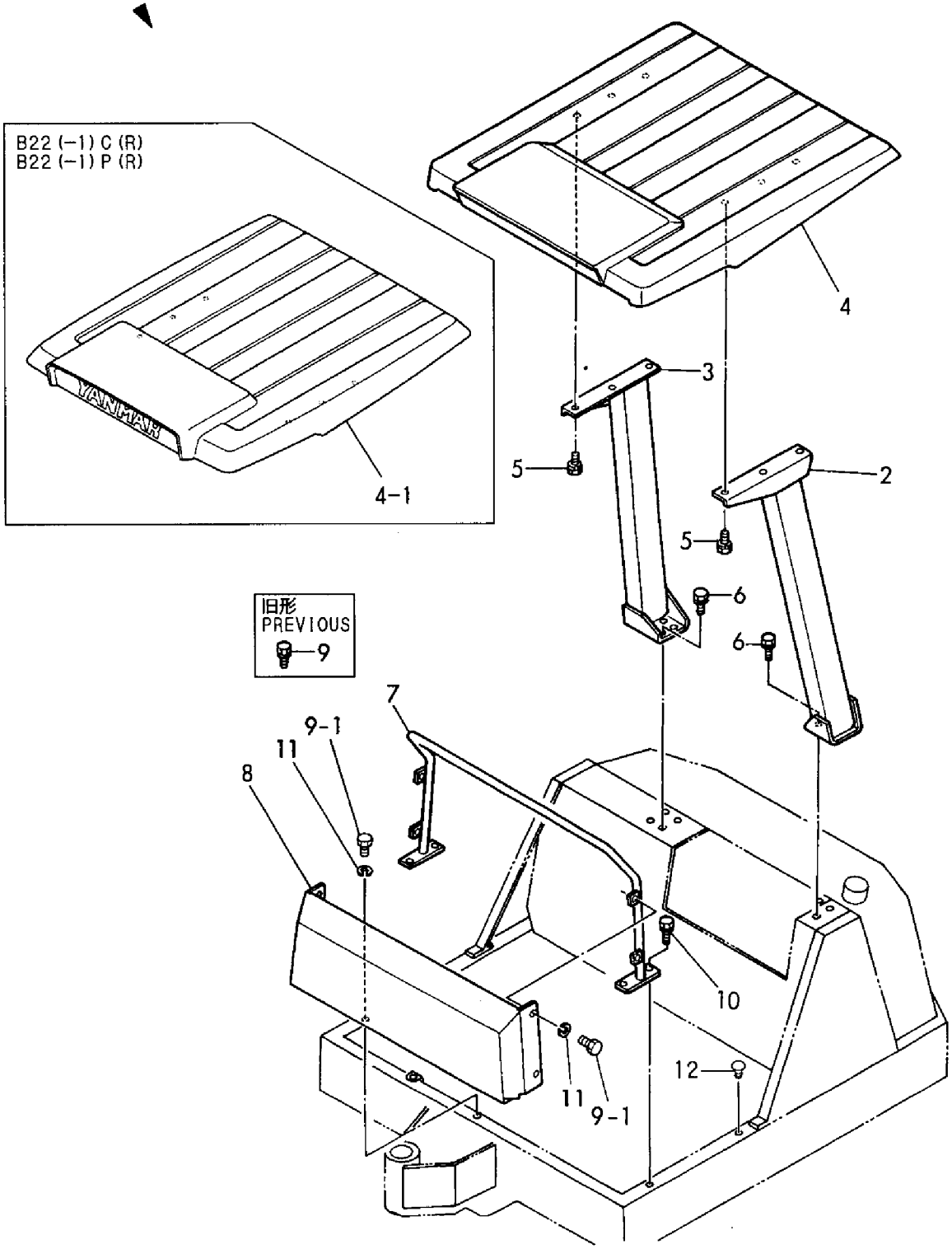

```
1,1,,772141-68400,,"CABIN ASSY",1,,,,,,,,,,,,,,,,
1-1,1,,772141-68401,,"CABIN ASSY",1,,1,,,,S,,,M11018,,,,,,,,
2,2,,194264-24190,,"PLUG, SCREW",1,,,,,,,,,,,,,,,,
2-1,2,,194150-24270,,"SCREW CAP 13",1,,1,,,,R,,,M00501,,,,,,,,
3,2,,194630-28670,,"NUT M 5, PUSH",4,,4,,,,,,,,,,,,,,
4,2,,172137-46210,,SCREW,18,,18,,,,,,,,,,,,,,
5,2,,194555-65570,,"MARK (YANMAR)",1,,1,,,,,,,,,,,,,,
5-1,2,,172141-68240,,"MARK, (YANMAR",,,1,,,,N,,,,,,,M20501,,,,
6,2,,172137-68120,,PIN,1,,1,,,,,,,,,,,,,,
7,2,,172141-68400,,CABIN,1,,,,,,,,,,,,,,,,
7-1,2,,172141-68401,,CABIN,1,,1,,,,S,,,M11018,,,,,,,,
8,2,,172119-68590,,"RACK, HAT",1,,1,,,,,,,,,,,,,,
9,2,,172141-68880,,RAIL,1,,,,,,,,,,,,,,,,
9-1,2,,172141-68881,,RAIL,1,,1,,,,S,,,M11018,,,,,,,,
10,2,,172141-68910,,"HOLDER(A), GLASS",2,,2,,,,,,,,,,,,,,
11,2,,172141-68920,,"PLATE, LOCK",2,,2,,,,,,,,,,,,,,
12,2,,172141-68930,,"COVER, LIGHT",1,,1,,,,,,,,,,,,,,
13,2,,172135-69190,,"GLASS, REAR",1,,1,,,,,,,,,,,,,,
14,2,,172141-69220,,"FRAME(L), GLASS",1,,1,,,,,,,,,,,,,,,
15,2,,172141-69240,,"FRAME(R), GLASS",1,,1,,,,,,,,,,,,,,,
16,2,,172137-69260,,BEARING,4,,,,,,,,,,,,,,,,
16-1,2,,24104-062004,,"BALL BEARING",4,,4,,,,N,,,M01113,,,,,,,,
17,2,,172137-69270,,"LATCH (L)",1,,1,,,,,,,,,,,,,,
18,2,,172135-69290,,"SEAL (D), REAR",1,,1,,,,,,,,,,,,,,
19,2,,172141-69300,,"GASKET, FRAME",2,,2,,,,,,,,,,,,,,
20,2,,172141-69310,,"TRIM, SIDE",1,,1,,,,,,,,,,,,,,
21,2,,172141-69320,,"TRIM, ROOM",1,,1,,,,,,,,,,,,,,
22,2,,172141-69350,,"GLASS, FRONT",1,,1,,,,,,,,,,,,,,
23,2,,172141-69360,,"GLASS, FRONT LOWER",1,,1,,,,,,,,,,,,,,
24,2,,172141-69370,,"GLASS, (L)SIDE",1,,1,,,,,,,,,,,,,,
25,2,,172141-69380,,"SEAL, (L)SIDE",1,,1,,,,,,,,,,,,,,
26,2,,172141-69450,,"CUSHION RUBBER",1,,1,,,,,,,,,,,,,,
27,2,,172141-69470,,PLATE,2,,2,,,,,,,,,,,,,,
28,2,,172141-69500,,"SEAL, FRONT GLASS",1,,1,,,,,,,,,,,,,,
29,2,,172141-69510,,"SEAL, SIDE",1,,1,,,,,,,,,,,,,,
30,2,,172141-69520,,"SEAL, RESERVER",1,,1,,,,,,,,,,,,,,
31,2,,172141-69530,,"WINDOW SASH",1,,1,,,,,,,,,,,,,,
32,3,,172122-69350,,"LOCK, WINDOW",2,,2,,,,W,,,M00501,,,,,,,,
33,3,,172122-69360,,"HOLDER(F), LOCK",1,,1,,,,W,,,M00501,,,,,,,,
34,3,,172122-69370,,"HOLDER(R), LOCK",1,,1,,,,W,,,M00501,,,,,,,,
35,3,,172141-69560,,GLASS,2,,2,,,,W,,,M00501,,,,,,,,
36,2,,172137-69541,,"SHAFT, ROLLER",4,,4,,,,,,,,,,,,,,
37,2,,172141-69540,,"CUSHION RUBBER",1,,1,,,,,,,,,,,,,,
38,2,,172141-69550,,RUBBER,1,,1,,,,,,,,,,,,,,
39,2,,172112-69570,,"BOSS, LOCK PLATE",1,,1,,,,,,,,,,,,,,
40,2,,172137-69570,,LATCH(R),1,,1,,,,,,,,,,,,,,
41,2,,172137-69651,,"COLLAR, GLASS",8,,8,,,,,,,,,,,,,,
42,2,,172137-69740,,RUBBER,1,,1,,,,,,,,,,,,,,
43,2,,172112-69750,,"RUBBER, STOPPER",1,,1,,,,,,,,,,,,,,
44,3,,22217-080000,,"SPRING WASHER  8",1,,1,,,,,,,,,,,,,,
45,3,,26716-080002,,"NUT M 8",1,,1,,,,,,,,,,,,,,
46,2,,172137-69840,,SCREW,8,,8,,,,,,,,,,,,,,
47,2,,22137-080000,,"WASHER 8, POLISHED",3,,3,,,,,,,,,,,,,,
48,2,,22137-080000,,"WASHER 8, POLISHED",4,,4,,,,,,,,,,,,,,
49,2,,22137-080000,,"WASHER 8, POLISHED",6,,6,,,,,,,,,,,,,,
50,2,,22137-100000,,"WASHER 10,POLISHED",4,,4,,,,,,,,,,,,,,
51,2,,22157-080000,,"WASHER  8",8,,8,,,,,,,,,,,,,,
52,2,,22217-100000,,"SPRING WASHER 10",1,,1,,,,,,,,,,,,,,
53,2,,26013-060162,,"BOLT M 6X 16",3,,3,,,,,,,,,,,,,,
54,2,,26013-080162,,"BOLT W/WASHER M8X16",1,,,,,,,,,,,,,,,,
54-1,2,,26013-080352,,"BOLT M 8X 35",2,,2,,,,N,,,M00941,,,,,,,,
55,2,,26013-080162,,"BOLT W/WASHER M8X16",4,,4,,,,,,,,,,,,,,
56,2,,26013-080162,,"BOLT W/WASHER M8X16",6,,6,,,,,,,,,,,,,,
```

57,2,,26013-080352,,"BOLT M 8X 35",1,,1,,,,,,,,,,,,,
58,2,,26013-100202,,"BOLT W/WASHER M10X20",4,,4,,,,,,,,,,,,,,
59,2,,26022-050122,,"SCREW M 5X 12",12,,12,,,,,,,,,,,,,,
60,2,,26033-080252,,"SCREW M 8X 25",1,,1,,,,,,,,,,,,,,
61,2,,26226-120502,,"STUD M12X 50 PLATED",4,,4,,,,,,,,,,,,,,
62,2,,26567-040102,,"SCREW M 4X 10",4,,4,,,,,,,,,,,,,,
63,2,,26657-120002,,"CAP NUT M12",4,,4,,,,,,,,,,,,,,
64,2,,26716-100002,,"NUT M10",1,,1,,,,,,,,,,,,,,
65,2,,26716-120002,,"NUT M12",4,,4,,,,,,,,,,,,,,
66,2,,26756-140002,,"LOCK NUT M14 PLATED",4,,4,,,,,,,,,,,,,,
67,2,,933171-15680,,"GROMMET 40X13",4,,,,,,,,,,,,,,,,
67-1,2,,933171-15680,,"GROMMET 40X13",2,,2,,,,K,,,M00641,,,,,,,,
68,2,,172137-69681,,"SEAL, DOOR",1,,1,,,,,,,,,,,,,,
69,2,,172135-69710,,RUBBER(B),4,,4,,,,W,,,M00941,,,,,,,,
70,2,,172141-69460,,SEAL,1,,1,,,,W,,,M01165,,,,,,,,
71,2,,172149-64480,,"COLLAR 11X21",2,,2,,,,W,,,*1989.07,,,,,,,,
72,1,,772141-69100,,"DOOR ASSY, SIDE",1,,1,,,,,,,,,,,,,,
73,2,,172141-69100,,"DOOR, SIDE",1,,1,,,,,,,,,,,,,,
74,3,,172137-69410,,HINGE,2,,2,,,,,,,,,,,,,,
76,4,,172137-66650,,HINGE(B),2,,2,,,,,,,,,,,,,,
77,4,,172122-69390,,HINGE,2,,2,,,,,,,,,,,,,,
78,2,,172137-66230,,GROMMET,1,,1,,,,,,,,,,,,,,
79,2,,172137-66240,,"LOCK, DOOR",1,,1,,,,,,,,,,,,,,
80,2,,172137-69200,,"HANDLE, OUTER",1,,1,,,,,,,,,,,,,,
81,2,,172141-69200,,"COVER, LATCH",1,,1,,,,,,,,,,,,,,
82,2,,172137-69210,,"HANDLE, INNER",1,,1,,,,,,,,,,,,,,
83,2,,172137-69220,,GROMMET,1,,1,,,,,,,,,,,,,,
84,2,,172141-69390,,"GLASS, SIDE DOOR(A)",1,,1,,,,,,,,,,,,,,
85,2,,172141-69400,,"SEAL, SIDE DOOR(A)",1,,1,,,,,,,,,,,,,,
86,2,,172141-69410,,"GLASS, SIDE DOOR(B)",1,,1,,,,,,,,,,,,,,
87,2,,172141-69420,,"SEAL, SIDE DOOR(B)",1,,1,,,,,,,,,,,,,,
88,2,,172122-69620,,"KNOB, DOOR",1,,1,,,,,,,,,,,,,,
89,2,,172117-69630,,"CATCH ASSY, DOOR",1,,1,,,,,,,,,,,,,,
90,3,,172117-69640,,CATCH-FEMALE,1,,1,,,,,,,,,,,,,,
91,3,,172117-69650,,GASKET,1,,1,,,,,,,,,,,,,,
92,3,,172117-69660,,CUSHION,1,,1,,,,,,,,,,,,,,
93,3,,172117-69670,,CATCH-MALE,1,,1,,,,,,,,,,,,,,
94,3,,172117-69680,,WASHER,1,,1,,,,,,,,,,,,,,
95,3,,172117-69690,,"CAP, KNOB",1,,1,,,,,,,,,,,,,,
96,3,,22217-050000,,"SPRING WASHER 5",3,,3,,,,,,,,,,,,,,
97,3,,22217-080000,,"SPRING WASHER 8",1,,1,,,,,,,,,,,,,,
98,3,,26557-050162,,"SCREW M 5X 16",3,,3,,,,,,,,,,,,,,
99,3,,26716-050002,,"NUT M 5",3,,3,,,,,,,,,,,,,,
100,3,,26716-080002,,"NUT M 8",1,,1,,,,,,,,,,,,,,
101,2,,172112-69790,,"PLUG 32X2",1,,1,,,,,,,,,,,,,,
102,2,,22137-100000,,"WASHER 10,POLISHED",4,,4,,,,,,,,,,,,,,
103,2,,26013-100202,,"BOLT W/WASHER M10X20",4,,4,,,,,,,,,,,,,,,
104,2,,26022-050202,,"SCREW M 5X 20",4,,4,,,,,,,,,,,,,,
105,2,,26022-060122,,"SCREW M 6X 12",4,,4,,,,,,,,,,,,,,
106,2,,26023-050122,,"SCREW M 5X 12",4,,4,,,,,,,,,,,,,,
107,2,,26577-050162,,"SCREW M 5X 16",2,,2,,,,,,,,,,,,,,
108,2,,933110-00301,,"KEY ASSY",1,,1,,,,,,,,,,,,,,

Fig.30 キャビン CABIN

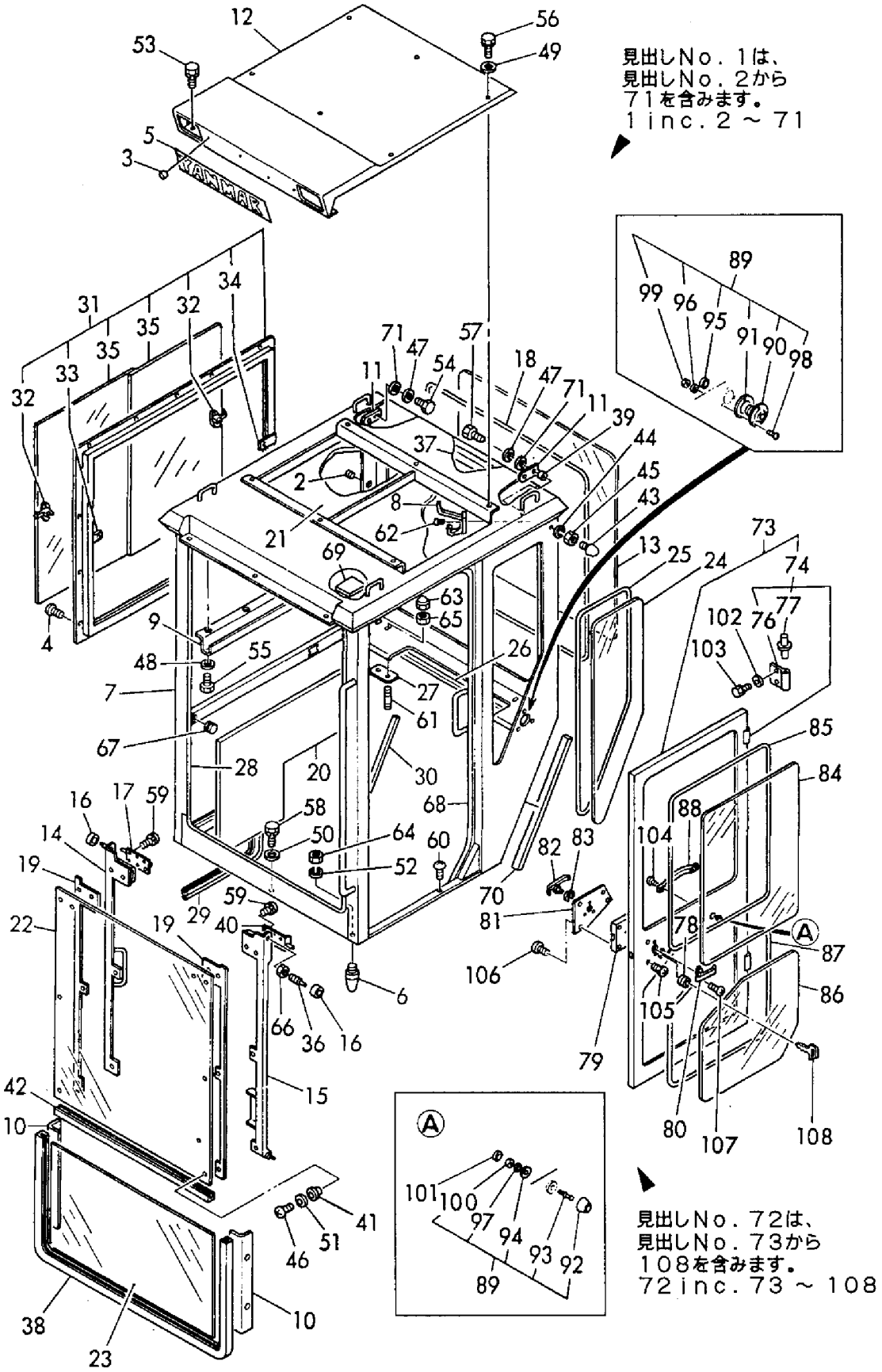

```
1,1,,172141-72010,,"CYLINDER ASSY, BOOM",1,,1,,,,,,,,,,,,,,
1-1,1,,172141-72011,,"CYLINDER ASSY, BOOM",,,1,,,,N,,,,,,,M21607,,,,
2,2,,172141-71750,,"TUBE W/BUSH, BOOM",1,,1,,,,,,,,,,,,,,
2-1,2,,172141-72021,,"TUBE 75 COMP",,,1,,,,N,,,,,,,M21607,,,,
4,3,,172141-72260,,"BUSH 38 50",1,,,,,,,,,,,,,,,,,
4-1,3,,933125-12701,,"BUSH 38 50A",1,,1,,,,R,,,*1989.04,,,,,,,
4-2,3,,172143-72330,,"BUSH, 38 50",1,,1,,,,N,,,M01490,,,,,,,
4-3,3,,172143-72331,,"BUSH 38 50",,,1,,,,S,,,,,,,M21607,,,,
4A,3,,172168-81270,,"SEAL,DUST 38X50X4",,,2,,,,W,,,,,,,M21607,,,,
5,2,,172141-71760,,"ROD W/BUSH, BOOM",1,,1,,,,,,,,,,,,,,
5-1,2,,172141-72111,,"ROD ASSY, BOOM",,,1,,,,N,,,,,,,M21607,,,,
7,3,,172141-72260,,"BUSH 38 50",1,,,,,,,,,,,,,,,,,
7-1,3,,933125-12701,,"BUSH 38 50A",1,,1,,,,R,,,*1989.04,,,,,,,
7-2,3,,172143-72330,,"BUSH, 38 50",1,,1,,,,N,,,M01490,,,,,,,
7-3,3,,172143-72331,,"BUSH 38 50",,,1,,,,S,,,,,,,M21607,,,,
7A,3,,172168-81270,,"SEAL,DUST 38X50X4",,,2,,,,W,,,,,,,M21607,,,,
8,2,,172141-72140,,"HEAD 75 40",1,,1,,,,,,,,,,,,,,
9,3,,933135-14600,,"BUSH 40 30, ROD",1,,1,,,,,,,,,,,,,,
10,2,,172141-71880,,"SEAL SET, HEAD",1,,1,,,,,,,,,,,,,,
16,2,,172141-72190,,"WASHER 75",1,,1,,,,,,,,,,,,,,
17,2,,172141-72220,,"PLUNGER 44C, CUSHION",1,,1,,,,,,,,,,,,,,
18,2,,172141-72250,,"U-NUT M27",1,,1,,,,,,,,,,,,,,
19,2,,172137-72730,,"RING 44B, CUSHION",1,,1,,,,,,,,,,,,,,
20,2,,172141-71910,,"SEAL SET, PISTON",1,,,,,,,,,,,,,,,,
20-1,2,,172141-71911,,"SEAL SET, PISTON",1,,1,,,,S,,,X,,,,,,,
24,2,,172141-73050,,"PISTON 75",1,,,,,,,,,,,,,,,,,
24-1,2,,172141-73051,,"PISTON 75 27 A",1,,1,,,,S,,,*1989.06,,,,,,,
25,2,,172141-73060,,"SPACER 75 8 A",1,,,,,,,,,,,,,,,,,
25-1,2,,172141-73061,,"PISTON 75 27 B",1,,1,,,,S,,,*1989.06,,,,,,,
26,2,,22252-000561,,"CIRCLIP   56",1,,1,,,,,,,,,,,,,,
27,2,,24761-020000,,"NIPPLE PT1/8,GREASE",2,,2,,,,,,,,,,,,,,
28,2,,933111-26600,,"RING 55, SPRING",1,,1,,,,,,,,,,,,,,
```

Fig.31 ブームシリンダ（キャビン） BOOM CYLINDER (CABIN)

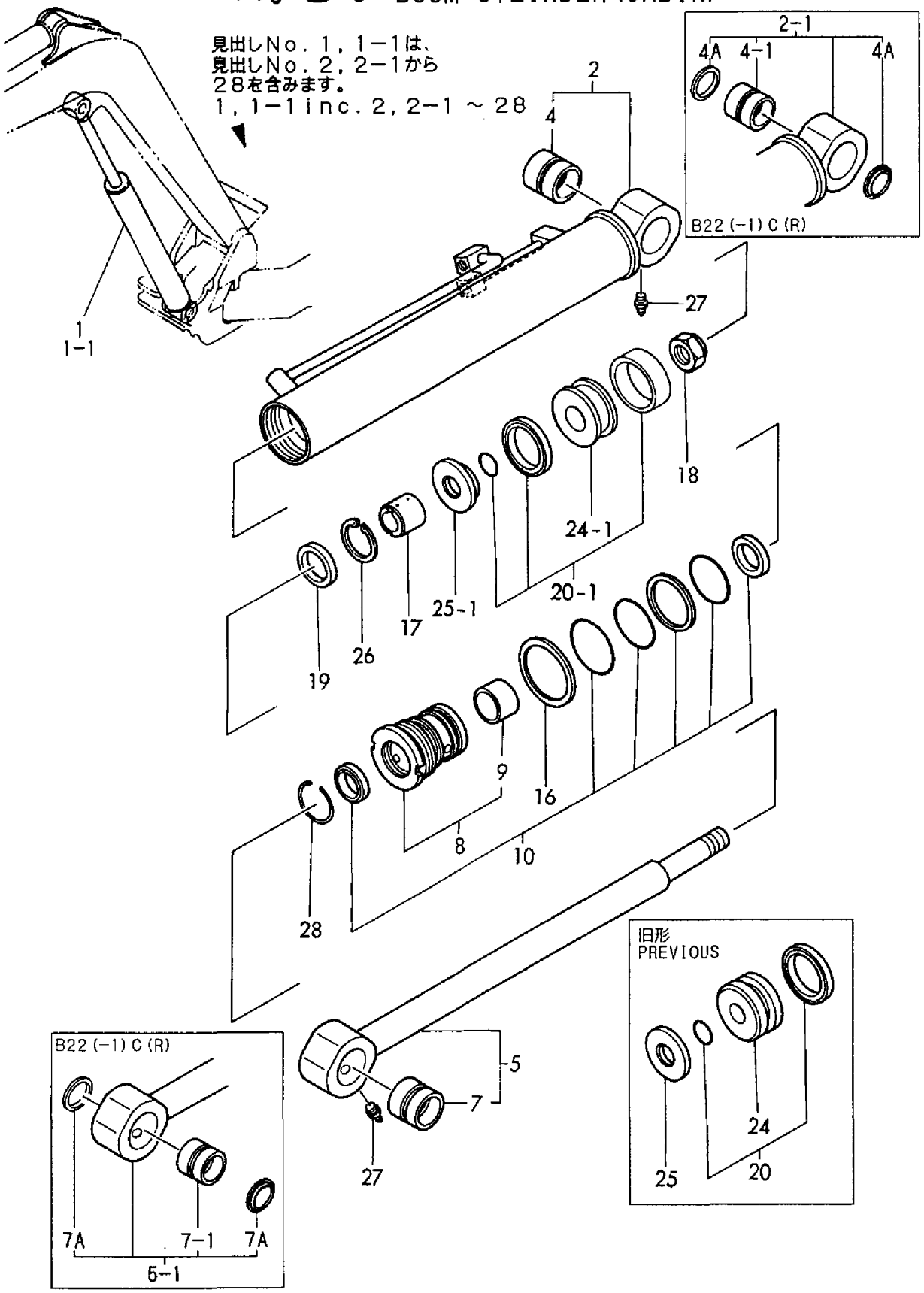

```
1,1,,172141-72270,,"CYLINDER ASSY,BOOM(Z",,1,,,,,,,,,,,,,,,,
1-1,1,,172141-72271,,"CYLINDER ASSY,BOOM(Z",,1,,,,,N,,,,,*1987.12,,,,,,
1-2,1,,172141-72272,,"CYLINDER ASSY,BOOM(Z",,1,,1,,,S,,,,,M10593,,,,,,
1-3,1,,172141-72273,,"CYLINDER ASSY,BOOM(Z",,,,1,,,S,,,,,,,,,M21607,,
2,2,,172141-72140,,"HEAD 75 40",,1,,1,,,,,,,,,,,,,
3,3,,933135-14600,,"BUSH 40 30, ROD",,1,,1,,,,,,,,,,,,,
4,2,,172141-71880,,"SEAL SET, HEAD",,1,,1,,,,,,,,,,,,,
10,2,,172141-72190,,"WASHER 75",,1,,1,,,,,,,,,,,,,
11,2,,172141-72220,,"PLUNGER 44C, CUSHION",,1,,1,,,,,,,,,,,,,
12,2,,172141-72250,,"U-NUT M27",,1,,1,,,,,,,,,,,,,
13,2,,172141-71770,,"TUBE(Z)W/BUSH, BOOM",,1,,,,,,,,,,,,,,,,
13-1,2,,172141-71771,,"TUBE(Z)W/BUSH, BOOM",,1,,1,,,N,,,,,*1987.12,,,,,,
13-2,2,,172141-72282,,"TUBE W/BUSH",,,,1,,,S,,,,,,,,,M21607,,
15,3,,172141-72260,,"BUSH 38 50",,1,,,,,,,,,,,,,,,,
15-1,3,,933125-12701,,"BUSH 38 50A",,1,,,,,R,,,,,*1989.04,,,,,,
15-2,3,,172143-72330,,"BUSH, 38 50",,1,,1,,,N,,,,,M01490,,,,,,
15-3,3,,172143-72331,,"BUSH 38 50",,,,1,,,S,,,,,,,,,M21607,,
15A,3,,172168-81270,,"SEAL,DUST 38X50X4",,,,2,,,W,,,,,,,,,M21607,,
16,2,,172141-71780,,"ROD W/BUSH, BOOM(Z)",,1,,1,,,,,,,,,,,,,
16-1,2,,172141-72322,,"ROD COMP",,,,1,,,N,,,,,,,,,M21607,,
18,3,,172141-72260,,"BUSH 38 50",,1,,,,,,,,,,,,,,,,
18-1,3,,933125-12701,,"BUSH 38 50A",,1,,1,,,R,,,,,*1989.04,,,,,,
18-2,3,,172143-72330,,"BUSH, 38 50",,1,,1,,,N,,,,,M01490,,,,,,
18-3,3,,172143-72331,,"BUSH 38 50",,,,1,,,S,,,,,,,,,M21607,,
18A,3,,172168-81270,,"SEAL,DUST 38X50X4",,,,2,,,W,,,,,,,,,M21607,,
19,2,,172137-72730,,"RING 44B, CUSHION",,1,,1,,,,,,,,,,,,,
20,2,,172141-71910,,"SEAL SET, PISTON",,1,,,,,,,,,,,,,,,,
20-1,2,,172141-71911,,"SEAL SET, PISTON",,1,,1,,,S,,,,,M10671,,,,,,
24,2,,172141-73050,,"PISTON 75",,1,,,,,,,,,,,,,,,,
24-1,2,,172141-73051,,"PISTON 75 27 A",,1,,1,,,S,,,,,M10671,,,,,,
25,2,,172141-73060,,"SPACER 75 8 A",,1,,,,,,,,,,,,,,,,
25-1,2,,172141-73061,,"PISTON 75 27 B",,1,,1,,,S,,,,,M10671,,,,,,
26,2,,22252-000561,,"CIRCLIP   56",,1,,1,,,,,,,,,,,,,
27,2,,24761-020000,,"NIPPLE PT1/8,GREASE",,2,,2,,,,,,,,,,,,,
28,2,,933111-26600,,"RING 55, SPRING",,1,,1,,,,,,,,,,,,,
29,1,,172141-72590,,"COVER, SLIDE",,1,,1,,,,,,,,,,,,,
29-1,1,,172141-72591,,"COVER, SLIDE",,,,1,,,R,,,,,,,,,M12464,,
29-2,1,,172141-72592,,"COVER, SLIDE",,,,1,,,S,,,,,,,,,M21607,,
30,1,,22157-100000,,"WASHER 10",,1,,,,,,,,,,,,,,,,
30-1,1,,933147-03400,,"WASHER, BRAKE ARM",,1,,1,,,N,,,,,M10571,,,,,,
31,1,,26013-100202,,"BOLT W/WASHER M10X20",,1,,,,,,,,,,,,,,,,
31-1,1,,26116-100202,,"BOLT M10X 20 PLATED",,1,,1,,,R,,,,,*1987.12,,,,,,
32,1,,22217-100000,,"SPRING WASHER 10",,1,,1,,,W,,,,,*1987.12,,,,,,
33,1,,933168-14170,,"SPRING 16",,2,,2,,,W,,,,,,,,,M10593,,
34,1,,172165-72420,,"GUIDE,SLIDE",,,,2,,,W,,,,,,,,,M21607,,
34-1,1,,172162-61770,,"GUIDE,SLIDE",,,,2,,,N,,,,,,,,,M21607,,
```

Fig. 32 ブームシリンダ（キャノピ） BOOM CYLINDER (CANOPY)

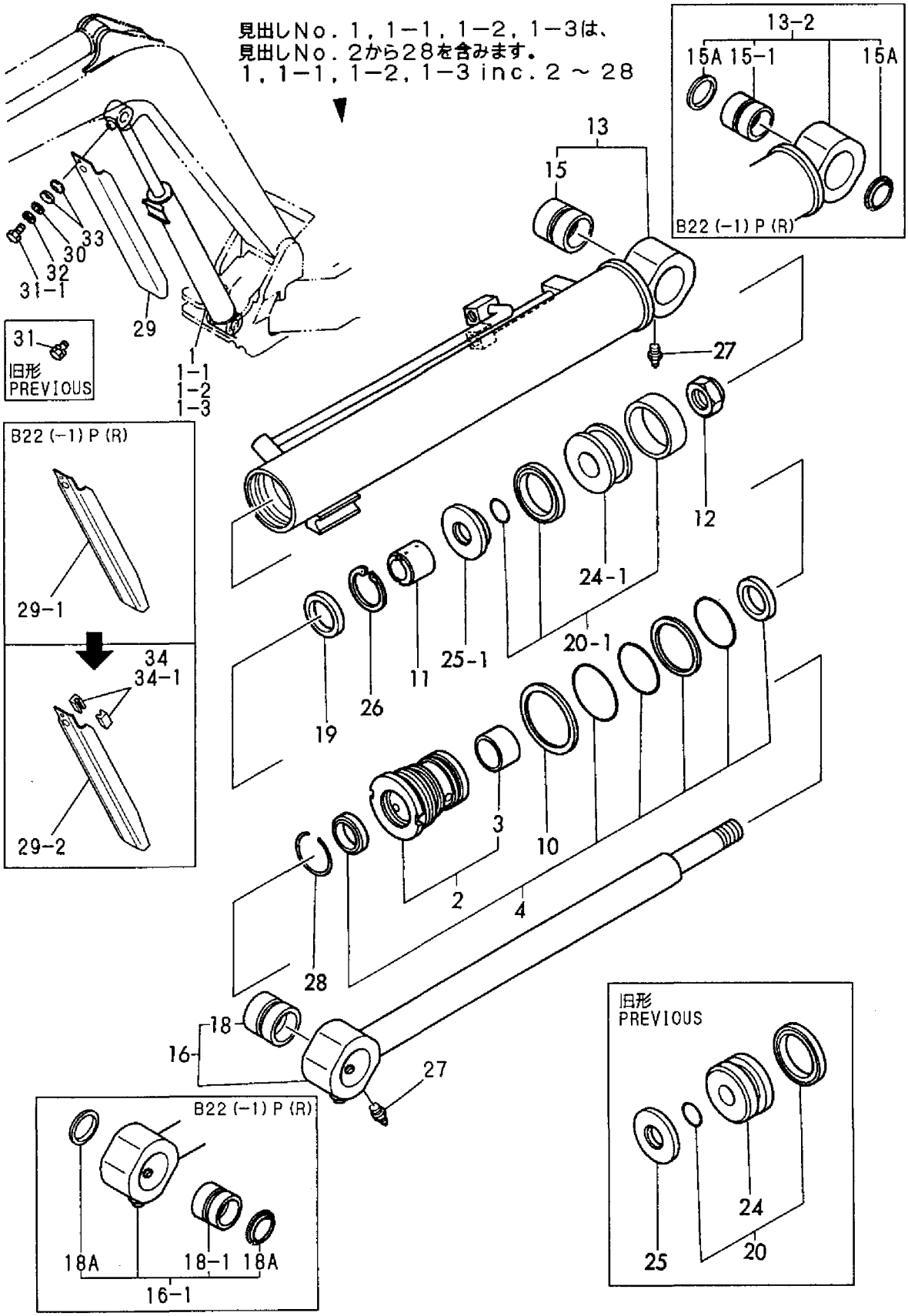

```
1,1,,172141-72350,,"CYLINDER ASSY, ARM",1,1,1,1,,,,,,,,,,,,,
1-1,1,,172141-72351,,"CYLINDER ASSY, ARM",,,1,1,,,N,,,,,,,M21607,,M21607,,
2,2,,172141-71890,,"SEAL SET, CYL.HEAD",1,1,1,1,,,,,,,,,,,,,
7,2,,172141-72190,,"WASHER 75",1,1,1,1,,,,,,,,,,,,,
8,2,,172141-72250,,"U-NUT M27",1,1,1,1,,,,,,,,,,,,,
9,2,,172141-71790,,"TUBE W/BUSH, ARM",1,1,1,1,,,,,,,,,,,,,
9-1,2,,172141-72361,,"TUBE W/BUSH",,,1,1,,,N,,,,,,,M21607,,M21607,,
11,3,,172141-72260,,"BUSH 38 50",1,1,,,,,,,,,,,,,,,
11-1,3,,933125-12701,,"BUSH 38 50A",1,1,1,1,,,R,,,,,*1989.04,,,,,,
11-2,3,,172171-72150,,"BUSH 38X50X40",,,1,1,,,S,,,,,,,M21607,,M21607,,
11A,3,,172168-81270,,"SEAL,DUST 38X50X4",,,2,2,,,W,,,,,,,M21607,,M21607,,
12,2,,172141-71800,,"ROD W/BUSH, ARM",1,1,1,1,,,,,,,,,,,,,
12-1,2,,172141-72381,,"ROD W/BUSH, ARM",,,1,1,,,N,,,,,,,M21607,,M21607,,
14,3,,172141-72260,,"BUSH 38 50",1,1,,,,,,,,,,,,,,,
14-1,3,,933125-12701,,"BUSH 38 50A",1,1,1,1,,,R,,,,,*1989.04,,,,,,
14-2,3,,172171-72150,,"BUSH 38X50X40",,,1,1,,,S,,,,,,,M21607,,M21607,,
14A,3,,172168-81270,,"SEAL,DUST 38X50X4",,,2,2,,,W,,,,,,,M21607,,M21607,,
15,2,,172141-72690,,"HEAD 75 40 W/BUSH",1,1,1,1,,,,,,,,,,,,,
16,3,,933135-14600,,"BUSH 40 30, ROD",1,1,1,1,,,,,,,,,,,,,
17,2,,172141-72990,,GASKET,1,1,,,,,Z,,,M10671,,,,,,,
18,2,,172141-73050,,"PISTON 75",1,1,,,,,,,,,,,,,,,
18-1,2,,172141-73051,,"PISTON 75 27 A",1,1,1,1,,,S,,,,,,,M10671,,M10671,,
18-2,2,,172175-72470,,"PISTON 75",,,1,1,,,S,,,,,,,M21607,,M21607,,
19,2,,172141-73070,,"SPACER 75 8 B",1,1,,,,,,,,,,,,,,,
19-1,2,,172141-73071,,"PISTON 75 27 C",1,1,1,1,,,R,,,,,,,,,M10671,,
19-2,2,,172141-73071,,"PISTON 75 27 C",,1,,1,,,Z,,,,,,,M21607,,M21607,,
20,2,,24761-040000,,"NIPPLE B,GREASE",2,2,2,2,,,,,,,,,,,,,
21,2,,933111-26600,,"RING 55, SPRING",1,1,1,1,,,,,,,,,,,,,
22,2,,172148-72930,,"SEAL SET, PISTON",1,1,1,1,,,W,,,,,M10671,,,,,,
```

Fig. 33 アームシリンダ ARM CYLINDER

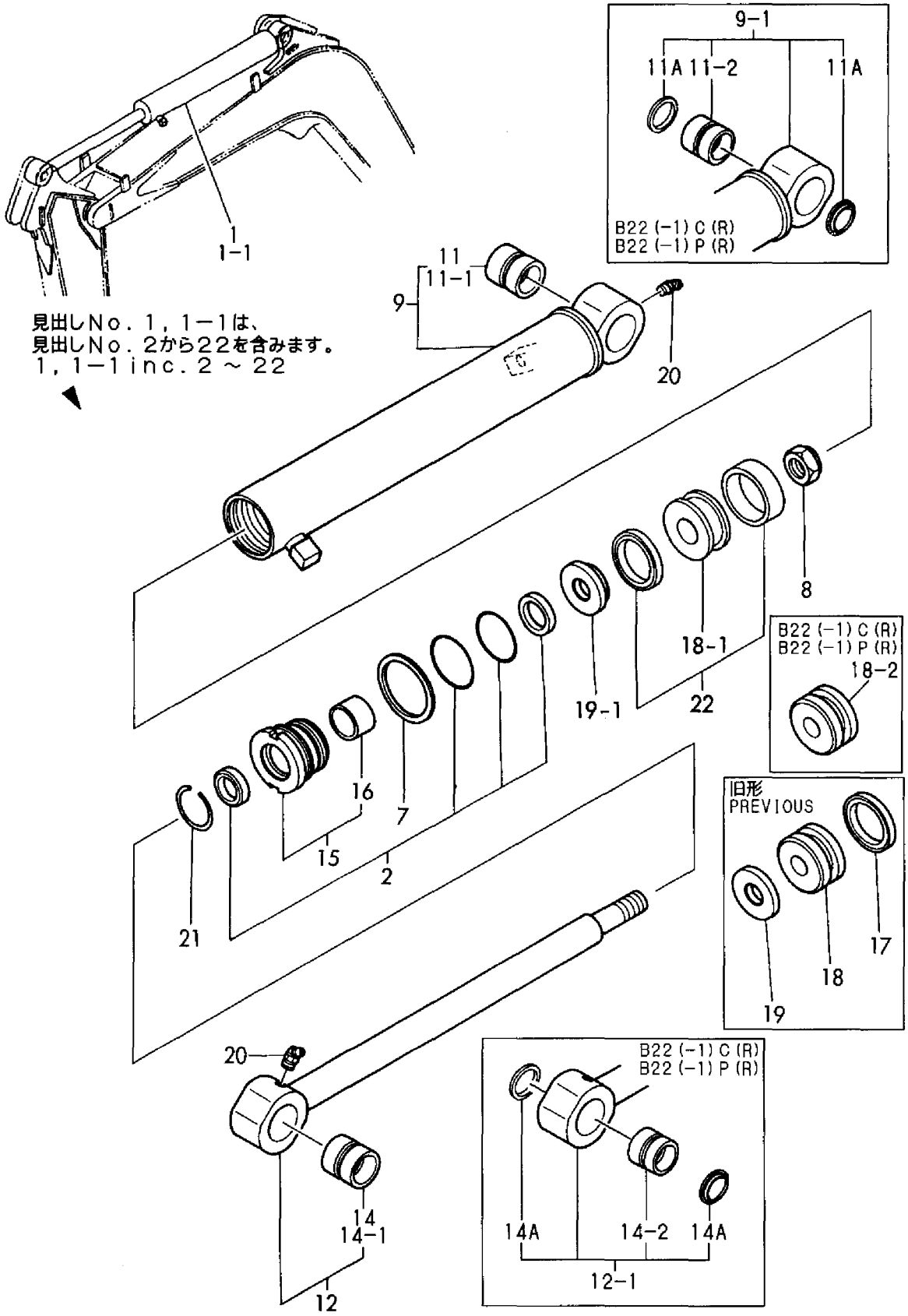

```
1,1,,172141-72450,,"CYLINDER ASSY,BUCKET",1,1,1,1,,,,,,,,,,,,,
1-1,1,,172141-72451,,"CYLINDER ASSY,BUCKET",,1,1,1,,,N,,,,,,,M21607,,M21607,,
2,2,,172141-71810,,"TUBE E/BUSH, BUCKET",1,1,1,1,,,,,,,,,,,,,
2-1,2,,172141-72461,,"TUBE ASSY, BUCKET",,,1,1,,,N,,,,,,,M21607,,M21607,,
4,3,,172141-72560,,"BUSH 35 40 A, PIN",1,1,1,1,,,,,,,,,,,,,
4-1,3,,172141-72561,,"BUSH 35 40 A, PIN",,,1,1,,,S,,,,,,,M21607,,M21607,,
4A,3,,172171-81280,,"SEAL 35X45X4",,,2,2,,,W,,,,,,,M21607,,M21607,,
5,2,,172141-71820,,"ROD W/BUSH, BUCKET",1,1,1,1,,,,,,,,,,,,,
5-1,2,,172141-72511,,"ROD, BUCKET",,,1,1,,,S,,,,,,,M21607,,M21607,,
7,3,,172141-72560,,"BUSH 35 40 A, PIN",1,1,1,1,,,,,,,,,,,,,
7-1,3,,172141-72561,,"BUSH 35 40 A, PIN",,,1,1,,,S,,,,,,,M21607,,M21607,,
7A,3,,172171-81280,,"SEAL 35X45X4",,,2,2,,,W,,,,,,,M21607,,M21607,,
8,2,,172141-72540,,"HEAD 6035, CYLINDER",1,1,1,1,,,,,,,,,,,,,
9,3,,933111-01600,,"BUSH 35 30, ROD",1,1,1,1,,,,,,,,,,,,,
10,2,,172141-72970,,"PACKING 60 46 8.4",1,1,,,,,Z,,,M10671,,M10671,,,,,,
11,2,,172141-73000,,"PISTON 60",1,1,,,,,,,,,,,,,,,,
11-1,2,,172137-72431,,"PISTON 60G",1,1,1,1,,,S,,,M10671,,,,,,,
11-2,2,,172171-72120,,PISTON,,,1,1,,,S,,,,,,,M21607,,M21607,,
12,2,,172141-73010,,"GLAND 60 14.5",1,1,,,,,Z,,,M10671,,M10671,,,,,,
13,2,,172141-71900,,"SEAL SET, HEAD",1,1,1,1,,,,,,,,,,,,,
18,2,,24761-040000,,"NIPPLE B,GREASE",1,1,1,1,,,,,,,,,,,,,
19,2,,172141-72580,,"NUT M20",1,1,1,1,,,,,,,,,,,,,
19-1,2,,172171-72130,,"U-NUT M24",,,1,1,,,S,,,,,,,M21607,,M21607,,
20,2,,933125-59600,,"WASHER 60 B, LOCK",1,1,1,1,,,,,,,,,,,,,
21,2,,172141-73090,,"RING 50, SPRING",1,1,1,1,,,,,,,,,,,,,
22-1,2,,172137-72452,,"SEAL SET 60A, PISTON",1,1,1,1,,,W,1,,,,M10671,,,,,,
```

Fig.34 バケットシリンダ BUCKET CYLINDER

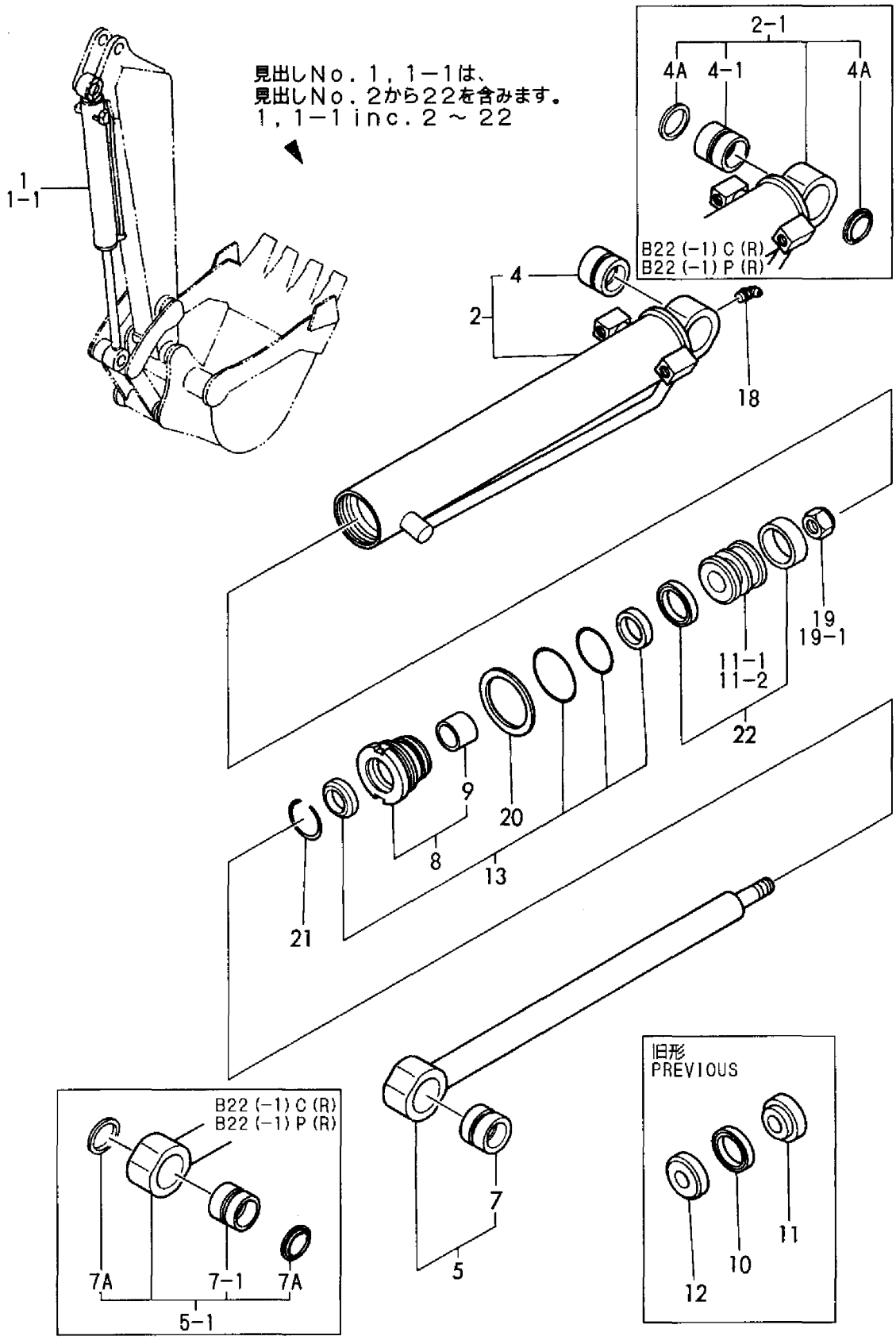

```
1,1,,172141-72750,,"CYLINDER ASSY, SWING",1,,1,,,,,,,,,,,,,,
2,2,,172141-71880,,"SEAL SET, HEAD",1,,1,,,,,,,,,,,,,
8,2,,172141-72250,,"U-NUT M27",1,,1,,,,,,,,,,,,,,
9,2,,172141-72190,,"WASHER 75",1,,1,,,,,,,,,,,,,,
10,2,,172137-72710,,"COLLAR 40B, CUSHION",1,,1,,,,,,,,,,,,,,
11,2,,172137-72720,,"COLLAR 40A, CUSHION",1,,1,,,,,,,,,,,,,,
12,2,,172137-72730,,"RING 44B, CUSHION",1,,1,,,,,,,,,,,,,,
13,2,,172141-71870,,"TUBE W/BUSH, SWING",1,,1,,,,,,,,,,,,,,
15,3,,172141-72260,,"BUSH 38 50",1,,,,,,,,,,,,,,,,,
15-1,3,,933125-12701,,"BUSH 38 50A",1,,1,,,,R,,,MXXX,,,,MXXX,,,,
16,2,,172141-71920,,"SEAL SET, PISTON",1,,,,,,,,,,,,,,,,,
16-1,2,,172141-71921,,"SEAL SET,PISTON",1,,1,,,,S,,,M10671,,,,,,,,
21,2,,172141-71860,,"ROD W/BUSH, SWING",1,,1,,,,,,,,,,,,,,
23,3,,172141-72260,,"BUSH 38 50",1,,,,,,,,,,,,,,,,,
23-1,3,,933125-12701,,"BUSH 38 50A",1,,1,,,,R,,,*1989.04,,,,,,,,
24,2,,172141-72140,,"HEAD 75 40",1,,1,,,,,,,,,,,,,,
25,3,,933135-14600,,"BUSH 40 30, ROD",1,,1,,,,,,,,,,,,,,
26,2,,172141-72930,,"PLUGER 44, CUSHION",1,,1,,,,,,,,,,,,,,
27,2,,172141-73050,,"PISTON 75",1,,,,,,,,,,,,,,,,,
27-1,2,,172141-73051,,"PISTON 75 27 A",1,,1,,,,S,,,M10671,,,,,,,,
28,2,,172141-73060,,"SPACER 75 8 A",1,,,,,,,,,,,,,,,,,
28-1,2,,172141-73061,,"PISTON 75 27 B",1,,1,,,,S,,,M10671,,,,,,,,
29,2,,172142-72810,,"CIRCLIP 22",1,,1,,,,,,,,,,,,,,
30,2,,22252-000561,,"CIRCLIP   56",1,,1,,,,,,,,,,,,,,
31,2,,24761-050000,,"NIPPLE C,GREASE",2,,2,,,,,,,,,,,,,,
32,2,,172137-72700,,"RING 40A, CUSHION",1,,1,,,,,,,,,,,,,,
33,2,,933111-26600,,"RING 55, SPRING",1,,1,,,,,,,,,,,,,,
```

Fig.35 スイングシリンダ（キャビン） SWING CYLINDER (CABIN)

見出しNo．1は、見出しNo．2から33を含みます。
1 inc. 2 ～ 33

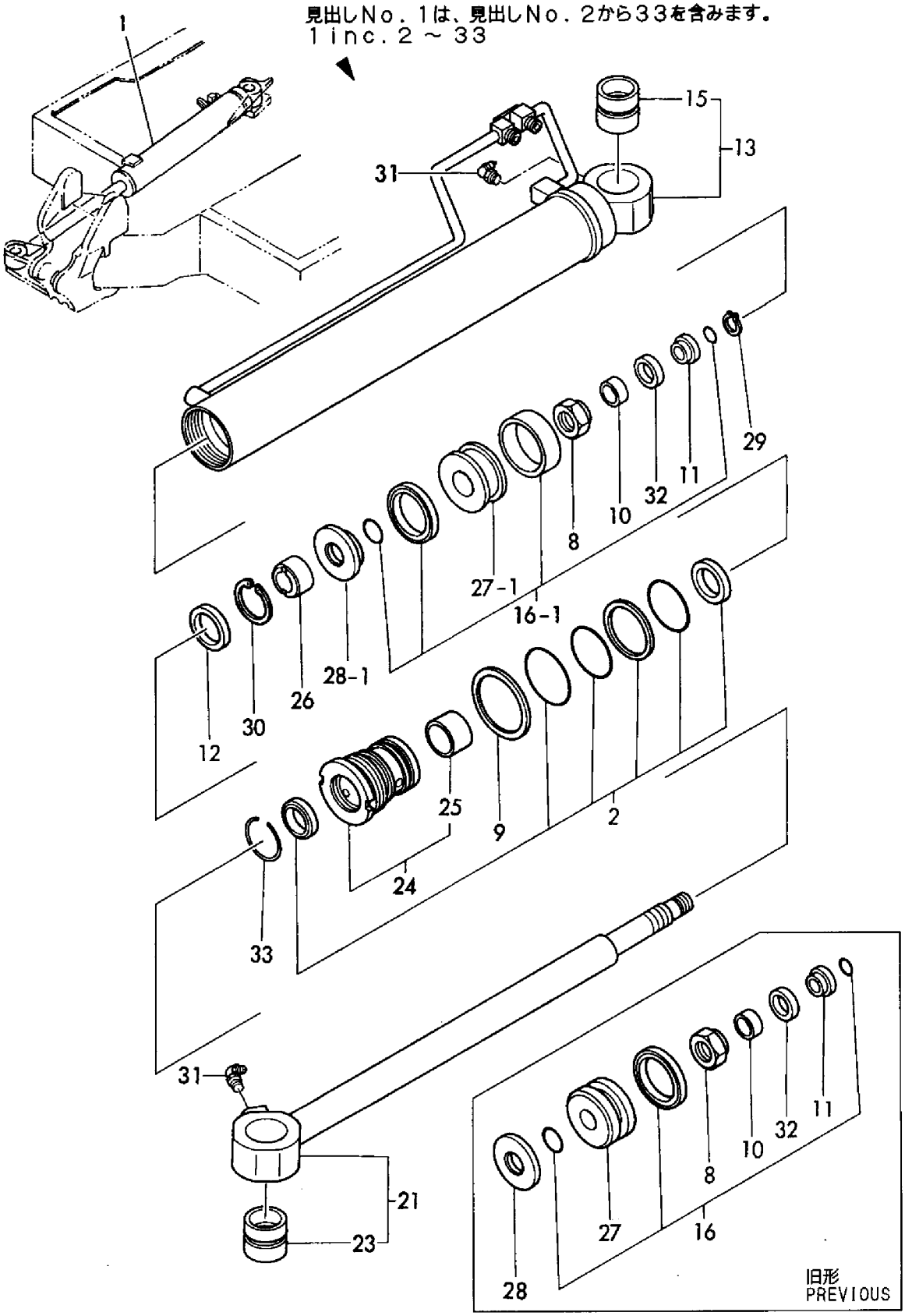

```
1,1,,172141-72730,,"CYL.ASSY(Z), SWING",,1,,1,,,,,,,,,,,,,
2,2,,172141-71880,,"SEAL SET, HEAD",,1,,1,,,,,,,,,,,,,
8,2,,172141-72250,,"U-NUT M27",,1,,1,,,,,,,,,,,,,
9,2,,172141-72420,,"WASHER 70, LOCK",,1,,,,,,,,,,,,,,,,,
9-1,2,,172141-72190,,"WASHER 75",,1,,1,,,S,,,,,M00501,,,,,,
10,2,,172137-72710,,"COLLAR 40B, CUSHION",,1,,1,,,,,,,,,,,,,
11,2,,172137-72720,,"COLLAR 40A, CUSHION",,1,,1,,,,,,,,,,,,,
12,2,,172137-72730,,"RING 44B, CUSHION",,1,,1,,,,,,,,,,,,,
13,2,,172141-71850,,"TUBE(Z) ASSY, SWING",,1,,1,,,,,,,,,,,,,
15,3,,172141-72260,,"BUSH 38 50",,1,,,,,,,,,,,,,,,,,
15-1,3,,933125-12701,,"BUSH 38 50A",,1,,1,,,R,,,,,M01490,,,,,,
16,2,,172141-71920,,"SEAL SET, PISTON",,1,,,,,,,,,,,,,,,,,
16-1,2,,172141-71921,,"SEAL SET,PISTON",,1,,1,,,S,,,,,M10671,,,,M10671,,
21,2,,172141-71860,,"ROD W/BUSH, SWING",,1,,1,,,,,,,,,,,,,
23,3,,172141-72260,,"BUSH 38 50",,1,,,,,,,,,,,,,,,,,
23-1,3,,933125-12701,,"BUSH 38 50A",,1,,1,,,R,,,,,*1989.04,,,,,,
24,2,,172141-72850,,"HEAD 7040, CYLINDER",,1,,,,,,,,,,,,,,,,,
24-1,2,,172141-72140,,"HEAD 75 40",,1,,1,,,S,,,,,M00501,,,,,,
25,3,,933135-14600,,"BUSH 40 30, ROD",,1,,1,,,,,,,,,,,,,
26,2,,933111-26600,,"RING 55, SPRING",,1,,1,,,,,,,,,,,,,
27,2,,172141-72920,,"RING 40, CUSHION",,1,,1,,,,,,,,,,,,,
28,2,,172141-72930,,"PLUGER 44, CUSHION",,1,,1,,,,,,,,,,,,,
29,2,,172141-73020,,"PISTON 70",,1,,,,,,,,,,,,,,,,,
29-1,2,,172141-73050,,"PISTON 75",,1,,1,,,S,,,,,M00501,,,,,,
29-2,2,,172141-73051,,"PISTON 75 27 A",,1,,1,,,S,,,,,M10671,,,,M10671,,
30,2,,172141-73030,,"SPACER 70 8 A",,1,,,,,,,,,,,,,,,,,
30-1,2,,172141-73060,,"SPACER 75 8 A",,1,,1,,,S,,,,,M00501,,,,,,
30-2,2,,172141-73061,,"PISTON 75 27 B",,1,,1,,,S,,,,,M10671,,,,,,
31,2,,22242-000220,,"CIRCLIP   22",,1,,1,,,,,,,,,,,,,
32,2,,22252-000561,,"CIRCLIP   56",,1,,1,,,,,,,,,,,,,
33,2,,24761-050000,,"NIPPLE C,GREASE",,2,,2,,,,,,,,,,,,,
34,1,,172141-72880,,"COVER, SWING",,1,,1,,,,,,,,,,,,,
35,1,,22157-100000,,"WASHER 10",,1,,,,,,,,,,,,,,,,,
35-1,1,,933147-03400,,"WASHER, BRAKE ARM",,1,,1,,,N,,,,,,,,,M10571,,
36,1,,26013-100162,,"BOLT M10X 16",,1,,,,,,,,,,,,,,,,,
36-1,1,,26116-100202,,"BOLT M10X 20 PLATED",,1,,1,,,N,,,,,MXXX,,,,MXXX,,
38,1,,933168-14170,,"SPRING 16",,2,,2,,,W,,,,,,,,,M10593,,
```

Fig.36 スイングシリンダ（キャノピ） SWING CYLINDER (CANOPY)

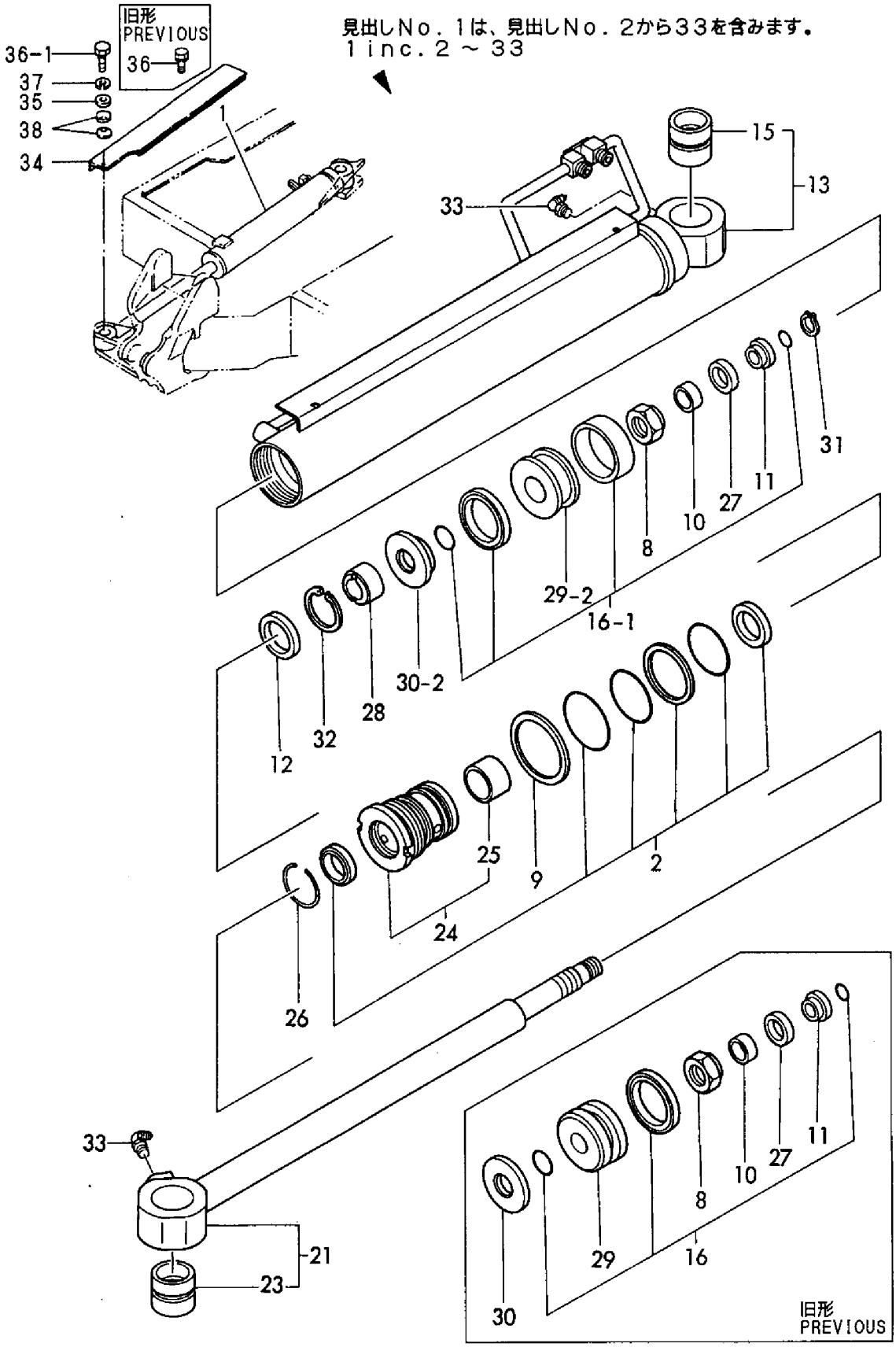

```
1,1,,172141-72600,,"CYLINDER ASSY, BLADE",1,1,1,1,,,,,,,,,,,,,
1-1,1,,172141-72601,,"CYLINDER ASSY, BLADE",,,1,1,,,N,,,,,,,M21607,,M21607,,
2,2,,172141-71890,,"SEAL SET, CYL.HEAD",1,1,1,1,,,,,,,,,,,,,
7,2,,172141-72190,,"WASHER 75",1,1,1,1,,,,,,,,,,,,,
8,2,,172141-72250,,"U-NUT M27",1,1,1,1,,,,,,,,,,,,,
9,2,,172141-71830,,"TUBE W/BUSH, BLADE",1,1,1,1,,,,,,,,,,,,,
9-1,2,,172141-72611,,"TUBE ASSY, BLADE",,,1,1,,,N,,,,,,,M21607,,M21607,,
11,3,,172141-72710,,"BUSH 38 50A",1,1,,,,,,,,,,,,,,,,,
11-1,3,,933125-12701,,"BUSH 38 50A",1,1,1,1,,,R,,,,,*1989.04,,,,,,
11-2,3,,172168-72240,,"BUSH 38X50X40",,,1,1,,,S,,,,,,,M21607,,M21607,,
11A,3,,172168-81270,,"SEAL,DUST 38X50X4",,,2,2,,,W,,,,,,,M21607,,M21607,,
12,2,,172141-71840,,"ROD W/BUSH, BLADE",1,1,1,1,,,,,,,,,,,,,
12-1,2,,172141-72671,,"ROD, BLADE",,,1,1,,,N,,,,,,,M21607,,M21607,,
14,3,,172141-72710,,"BUSH 38 50A",1,1,,,,,,,,,,,,,,,,,
14-1,3,,933125-12701,,"BUSH 38 50A",1,1,1,1,,,R,,,,,*1989.04,,,,,,
14-2,3,,172168-72240,,"BUSH 38X50X40",,,1,1,,,S,,,,,,,M21607,,M21607,,
14A,3,,172168-81270,,"SEAL,DUST 38X50X4",,,2,2,,,W,,,,,,,M21607,,M21607,,
15,2,,172141-72690,,"HEAD 75 40 W/BUSH",1,1,1,1,,,,,,,,,,,,,
16,3,,933135-14600,,"BUSH 40 30, ROD",1,1,1,1,,,,,,,,,,,,,
17,2,,172141-72990,,GASKET,1,1,,,,,Z,,,M10671,,M10671,,,,,,
18,2,,172141-73050,,"PISTON 75",1,1,,,,,,,,,,,,,,,,,
18-1,2,,172141-73051,,"PISTON 75 27 A",1,1,1,1,,,S,,,,,,,,,M10671,,
18-2,2,,172175-72470,,"PISTON 75",,,1,1,,,S,,,,,,,M21607,,M21607,,
19,2,,172141-73070,,"SPACER 75 8 B",1,1,,,,,,,,,,,,,,,,,
19-1,2,,172141-73071,,"PISTON 75 27 C",1,1,1,1,,,S,,,M10671,,,,,,,
19-2,2,,172141-73071,,"PISTON 75 27 C",,,1,1,,,Z,,,,,,,M21607,,M21607,,
20,2,,933111-26600,,"RING 55, SPRING",1,1,1,1,,,,,,,,,,,,,
21,2,,172148-72930,,"SEAL SET, PISTON",1,1,1,1,,,W,,,,,M10671,,,,,,
```

Fig.37 ブレードシリンダ BLADE CYLINDER

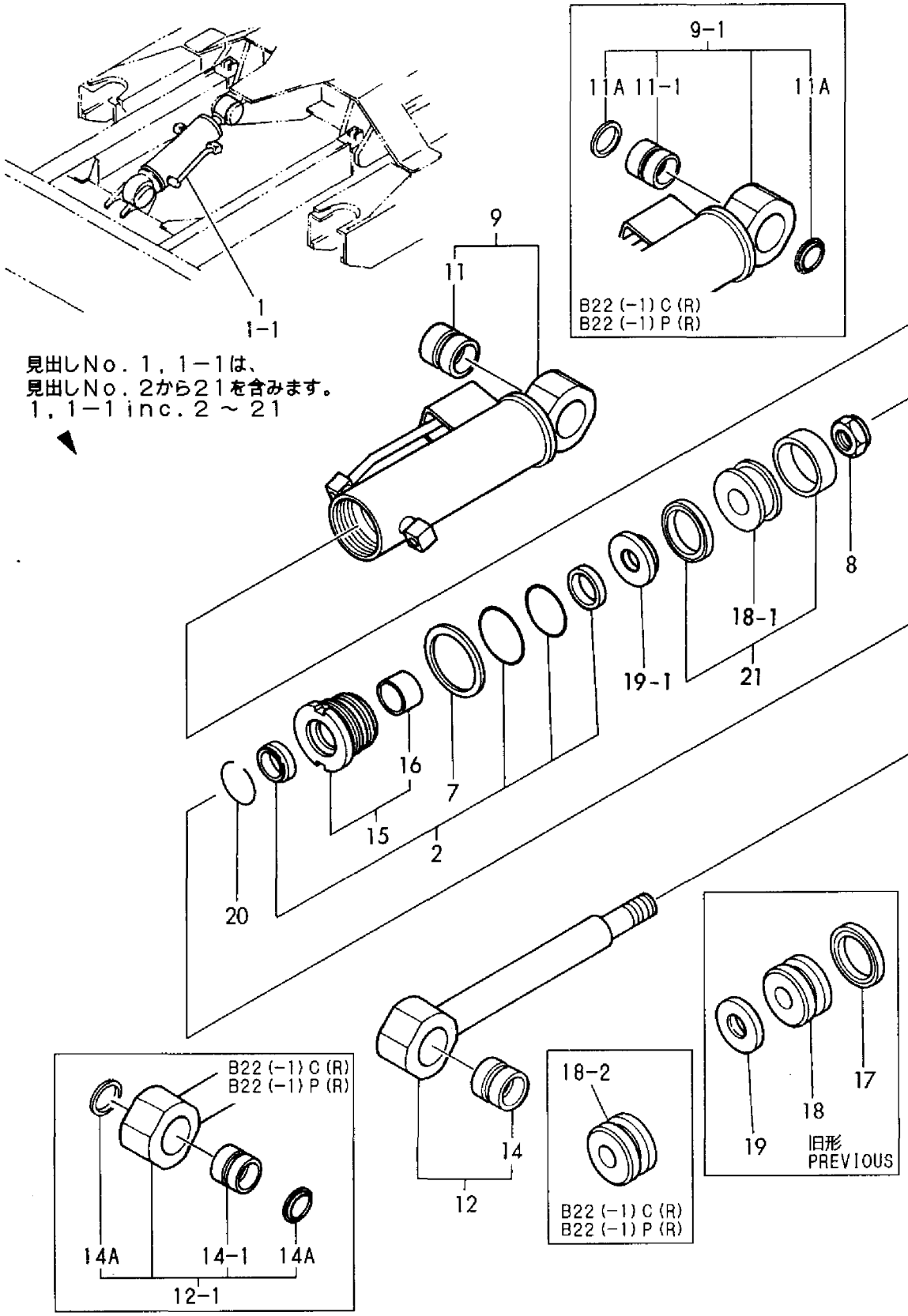

```
1,1,,172141-71100,,"COVER, FLYWHEEL",1,1,1,1,,,,,,,,,,,,,
2,1,,26013-100302,,"BOLT M10X 30",8,8,8,8,,,,,,,,,,,,,
3,1,,172141-71210,,"COUPLING, PUMP",1,1,1,1,,,,,,,,,,,,,
4,1,,22351-050010,,"SPRING PIN 5X10",6,6,6,6,,,,,,,,,,,,,
5,1,,26450-120402,,"BOLT M12X 40",6,6,6,6,,,,,,,,,,,,,
6,1,,933171-23101,,"COUPLING CF16",1,1,1,1,,,,,,,,,,,,,
7,1,,172141-73100,,"PUMP ASSY, HYD.OIL",1,1,1,1,,,,,,,,,,,,,
8,2,,172141-73110,,"PUMP, FRONT",1,1,1,1,,,,,,,,,,,,,
9,3,,172141-73190,,FRAME,1,1,1,1,,,,,,,,,,,,,
10,3,,172141-73220,,PLATE,3,3,3,3,,,,,,,,,,,,,
11,3,,172141-73230,,GUIDE,6,6,6,6,,,,,,,,,,,,,
12,3,,172141-73240,,"PIN, PARALLEL",10,10,10,10,,,,,,,,,,,,,
13,2,,172141-73120,,"PUMP, CENTER",1,1,1,1,,,,,,,,,,,,,
14,3,,172141-73220,,PLATE,3,3,3,3,,,,,,,,,,,,,
15,3,,172141-73230,,GUIDE,6,6,6,6,,,,,,,,,,,,,
16,2,,172141-73130,,"PUMP, REAR",1,1,1,1,,,,,,,,,,,,,
17,3,,172141-73220,,PLATE,3,3,3,3,,,,,,,,,,,,,
18,3,,172141-73230,,GUIDE,6,6,6,6,,,,,,,,,,,,,
19,2,,172141-73140,,"SEAL SET",1,1,1,1,,,,,,,,,,,,,
20,2,,172141-73150,,"COVER, REAR",1,1,1,1,,,,,,,,,,,,,
21,2,,172141-73160,,NUT,4,4,4,4,,,,,,,,,,,,,
22,2,,172141-73170,,STUD,4,4,4,4,,,,,,,,,,,,,
23,2,,172141-73180,,FRAME,2,2,2,2,,,,,,,,,,,,,
24,2,,172141-73200,,C0UPLING,2,2,2,2,,,,,,,,,,,,,
25,2,,172141-73210,,CIRCLIP,2,2,2,2,,,,,,,,,,,,,
26,1,,26013-120352,,"BOLT M12X 35",4,4,4,4,,,,,,,,,,,,,
26-1,1,,26013-120352,,"BOLT M12X 35",2,2,2,2,,,K,,,MXXX,,MXXX,,MXXX,,MXXX,,
```

Fig.38 油圧ポンプ＆軸継手 HYD.OIL PUMP & JOINT

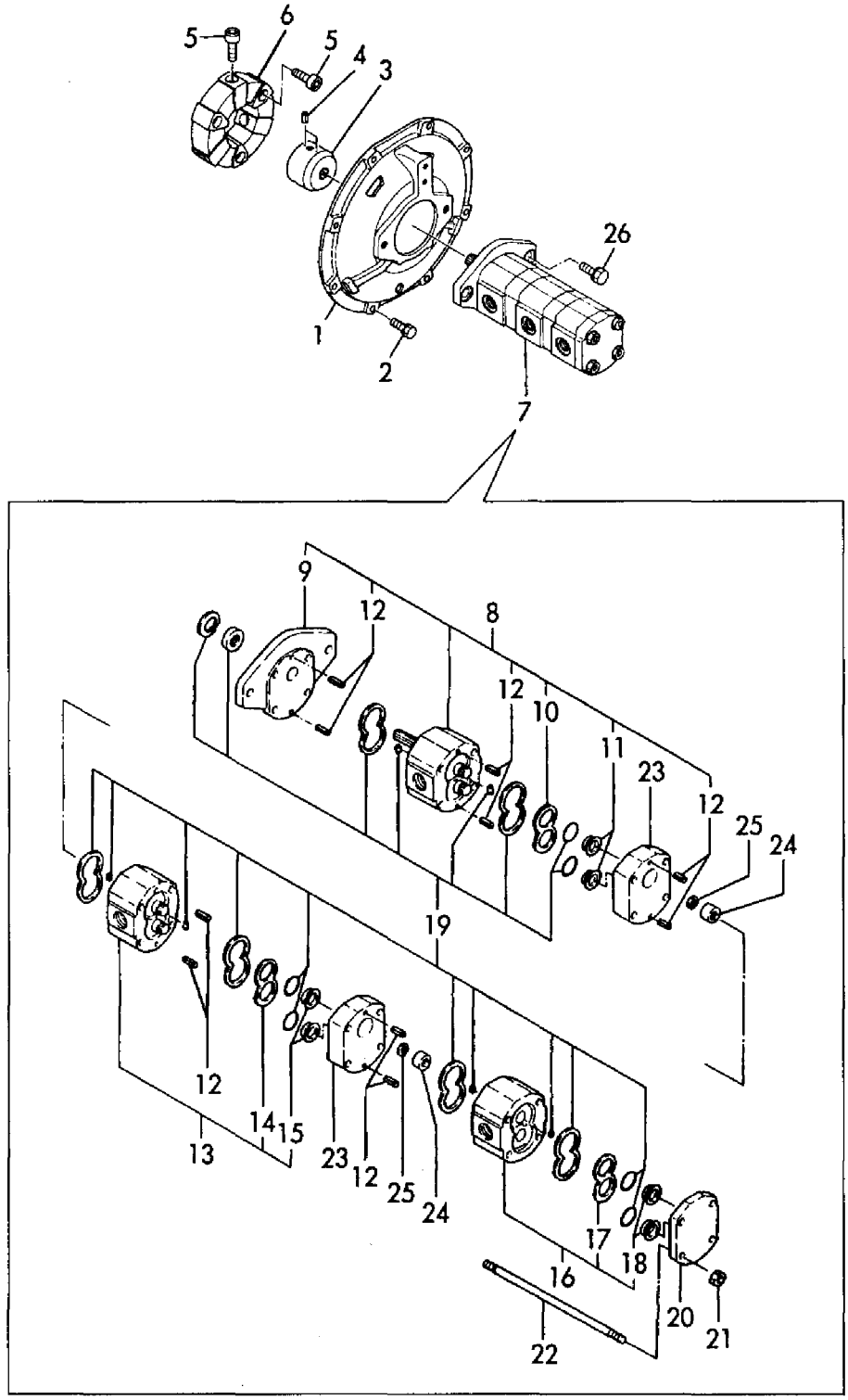

1,1,,172141-73300,,"MOTOR ASSY, TURNING",1,1,1,1,,,,,,,,,,,,,
2,2,,172141-77000,,"MOTOR, TURNING",1,1,1,1,,,,,,,,,,,,,
3,3,,172141-77410,,"GEAR ASSY, PINION",1,1,1,1,,,,,,,,,,,,,
4,4,,172141-77010,,"HOUSING, BEARING",1,1,1,1,,,,,,,,,,,,,
5,4,,172141-77030,,"BEARING, ROLLER",1,1,1,1,,,,,,,,,,,,,
6,4,,172141-77040,,BEARING,1,1,1,1,,,,,,,,,,,,,
7,4,,172141-77050,,"RING, RETAINING",1,1,1,1,,,,,,,,,,,,,
8,4,,172141-77060,,"SPACER, BEARING",1,1,1,1,,,,,,,,,,,,,
9,4,,172141-77070,,"SPACER, BEARING",1,1,1,1,,,,,,,,,,,,,
10,4,,172141-77110,,BOLT,4,4,4,4,,,,,,,,,,,,,
11,4,,172141-77460,,"GEAR SUB ASSY,PINION",1,1,1,1,,,,,,,,,,,,,
12,4,,172141-77430,,"SEAL SET, PINION",1,1,1,1,,,,,,,,,,,,,
13,3,,172141-77420,,MOTOR,1,1,1,1,,,,,,,,,,,,,
14,4,,172141-77120,,PISTON,1,1,1,1,,,,,,,,,,,,,
15,4,,172141-77130,,POPPET,2,2,2,2,,,,,,,,,,,,,
16,4,,172141-77140,,SLEEVE,2,2,2,2,,,,,,,,,,,,,
17,4,,172141-77160,,"PLATE, VALVE",1,1,1,1,,,,,,,,,,,,,
18,4,,172141-77180,,VALVE,1,1,1,1,,,,,,,,,,,,,
19,4,,172141-77190,,"PLATE, BALANCING",1,1,1,1,,,,,,,,,,,,,
20,4,,172141-77200,,SPRING,2,2,2,2,,,,,,,,,,,,,
21,4,,172141-77220,,PIN,2,2,2,2,,,,,,,,,,,,,
22,4,,172141-77240,,DRIVE,1,1,1,1,,,,,,,,,,,,,
23,4,,172141-77250,,ROLLER,1,1,1,1,,,,,,,,,,,,,
24,4,,172141-77260,,"VALVE DRIVE",1,1,1,1,,,,,,,,,,,,,
25,4,,172141-77270,,SPRING,2,2,2,2,,,,,,,,,,,,,
26,4,,172141-77280,,PLUG,2,2,2,2,,,,,,,,,,,,,
27,4,,172141-77310,,BOLT,4,4,4,4,,,,,,,,,,,,,
28,4,,172141-77340,,FLANGEMOUTING,1,1,1,1,,,,,,,,,,,,,
29,4,,172141-77380,,PLUG,2,2,2,2,,,,,,,,,,,,,
30,4,,172141-77390,,"HOUSING, VALVE",1,1,1,1,,,,,,,,,,,,,
31,4,,172141-77400,,"PLUG, BLIND",1,1,1,1,,,,,,,,,,,,,
32,4,,172141-77450,,"SPRING, ORIFICE",1,1,1,1,,,,,,,,,,,,,
33,4,,172141-77440,,"SEAL KIT, MOTOR",1,1,1,1,,,,,,,,,,,,,
34,2,,172141-77500,,"VALVE, BRAKE",1,1,1,1,,,,,,,,,,,,,
35,3,,172141-77510,,"BODY, VALVE",1,1,1,1,,,,,,,,,,,,,
36,3,,172141-77520,,FILTER,2,2,2,2,,,,,,,,,,,,,
37,3,,172141-77530,,"SEAT, VALVE",2,2,2,2,,,,,,,,,,,,,
38,3,,172141-77540,,"VALVE, NEEDLE",2,2,2,2,,,,,,,,,,,,,
39,3,,172141-77550,,"SEAT, SPRING",2,2,2,2,,,,,,,,,,,,,
40,3,,172141-77560,,"PUSH-ROD, SPRING",2,2,2,2,,,,,,,,,,,,,
41,3,,172141-77570,,"PLUG, ORIFICE",2,2,2,2,,,,,,,,,,,,,
42,3,,172141-77580,,GASKET,2,2,2,2,,,,,,,,,,,,,
43,3,,172141-77590,,"PLUG, CHECK",2,2,2,2,,,,,,,,,,,,,
44,3,,172141-77600,,SPRING,2,2,2,2,,,,,,,,,,,,,
45,3,,172141-77610,,SPRING,2,2,2,2,,,,,,,,,,,,,
46,3,,172141-77620,,"SCREW M 6X 18",2,2,2,2,,,,,,,,,,,,,
47,3,,172141-77650,,"VALVE FITTING",2,2,2,2,,,,,,,,,,,,,
48,3,,172141-77660,,ADAPTER,2,2,2,2,,,,,,,,,,,,,
49,3,,172141-77670,,"SEAL KIT,BRAKE VALVE",1,1,1,1,,,,,,,,,,,,,
50,3,,26756-060002,,"LOCK NUT M 6 PLATED",2,2,2,2,,,,,,,,,,,,,
51,3,,26657-060002,,"CAP NUT M 6",2,2,2,2,,,,,,,,,,,,,
52,3,,24190-140001,,"BALL 7/16, STEEL",2,2,2,2,,,,,,,,,,,,,
53,1,,26013-120402,,"BOLT M12X 40",4,4,4,4,,,,,,,,,,,,,

Fig. 39 旋回モータ TURNING MOTOR

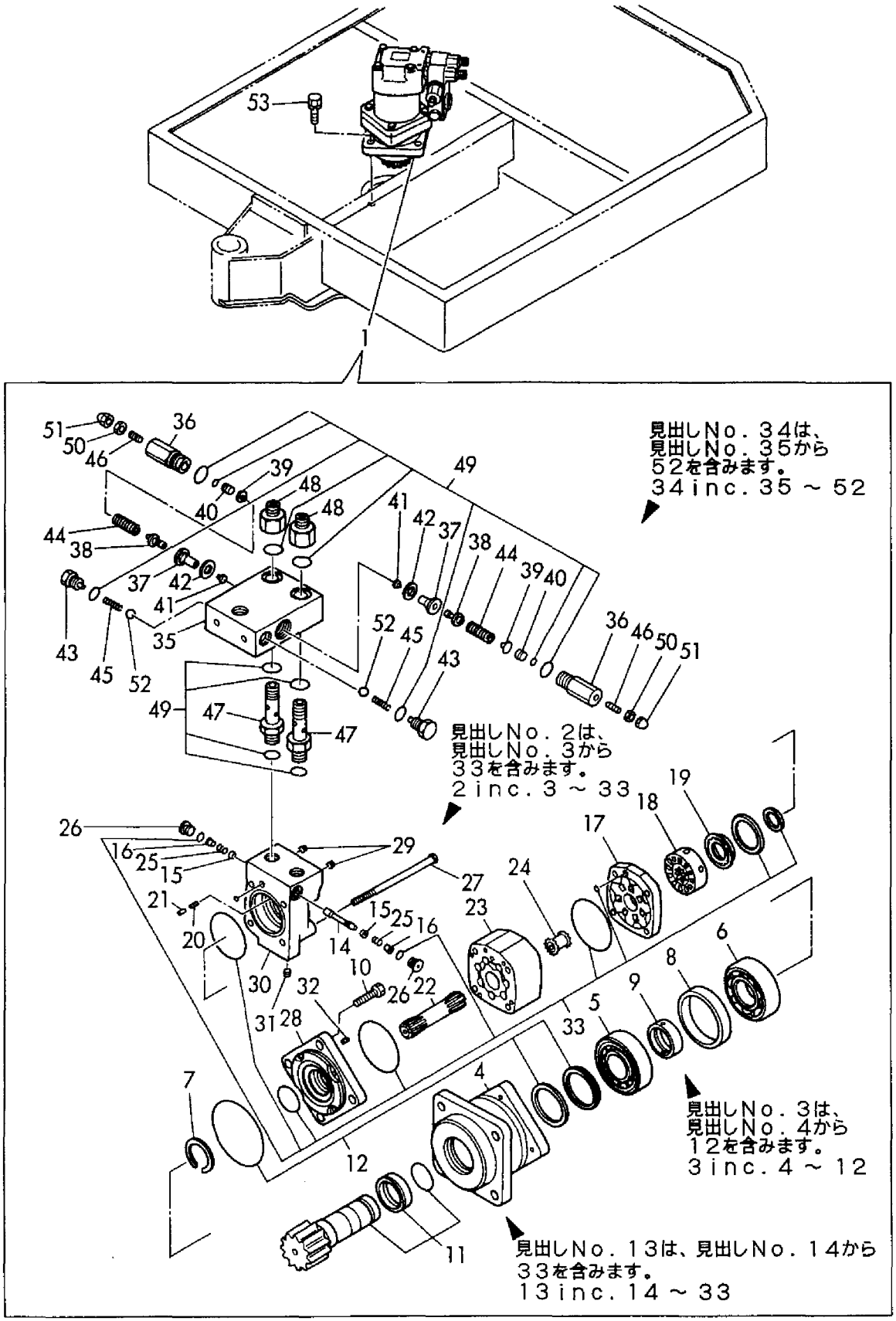

```
1,1,,172141-73350,,"MOTOR ASSY, DRIVE",2,2,2,2,,,,,,,,,,,,,
1-1,1,,172141-73351,,"MOTOR ASSY, DRIVE",,,2,2,,,N,,,,,,,M21607,,M21607,,
4,3,,172141-70020,,"SEAL, FLOATING",2,2,2,2,,,,,,,,,,,,,
5,3,,172141-70030,,"BEARING, ANGULAR",2,2,2,2,,,,,,,,,,,,,
6,3,,172141-70040,,"NUT, RING",2,2,2,2,,,,,,,,,,,,,
8,3,,172141-70060,,"GEAR(B), PLANETARY",8,8,8,8,,,,,,,,,,,,,
9,3,,172141-70070,,"CAGE & ROLLER",8,8,8,8,,,,,,,,,,,,,
10,3,,172141-70080,,COLLAR,8,8,8,8,,,,,,,,,,,,,
11,3,,172141-70090,,"WASHER, THRUST",8,8,8,8,,,,,,,,,,,,,
12,3,,172141-70100,,"PLATE, THRUST",2,2,2,2,,,,,,,,,,,,,
13,3,,172141-70110,,SCREW,8,8,8,8,,,,,,,,,,,,,
14,3,,172141-70120,,"GEAR, SUN",2,2,2,2,,,,,,,,,,,,,
15,3,,172141-70130,,HOLDER,2,2,2,2,,,,,,,,,,,,,
16,3,,172141-70140,,"GEAR(A), PLANETARY",6,6,6,6,,,,,,,,,,,,,
17,3,,172141-70150,,"CAGE & ROLLER",6,6,6,6,,,,,,,,,,,,,
18,3,,172141-70160,,"INNER LACE",6,6,6,6,,,,,,,,,,,,,
19,3,,172141-70170,,"GEAR, DRIVE",2,2,2,2,,,,,,,,,,,,,
20,3,,172141-70180,,"PLATE(T1.8), THRUST",2,2,2,2,,,,,,,,,,,,,
21,3,,172141-70190,,"PLATE(T2.3), THRUST",2,2,2,2,,,,,,,,,,,,,
22,3,,172141-70200,,"PLATE(T2.8), THRUST",2,2,2,2,,,,,,,,,,,,,
23,3,,172141-70210,,COVER,2,2,2,2,,,,,,,,,,,,,
24,3,,172141-70220,,O-RING,2,2,2,2,,,,,,,,,,,,,
25,3,,172141-70230,,WIRE,2,2,2,2,,,,,,,,,,,,,
26,3,,172122-73430,,PLUG,4,4,4,4,,,,,,,,,,,,,
27,3,,22242-000350,,"CIRCLIP   35",2,2,2,2,,,,,,,,,,,,,
28,3,,22351-050016,,"SPRING PIN 5X16",6,6,6,6,,,,,,,,,,,,,
29,3,,23871-020000,,"PLUG PT1/4,SCREW",4,4,4,4,,,,,,,,,,,,,
30,3,,23871-030000,,"PLUG PT3/8,SCREW",4,4,4,4,,,,,,,,,,,,,
31,3,,24190-050001,,"BALL 5/32",262,262,262,262,,,,,,,,,,,,,
32,2,,172141-70240,,SHAFT,2,2,2,2,,,,,,,,,,,,,
32-1,2,,172142-73591,,"SHAFT ASSY",,,2,2,,,R,,,,,,,M21607,,M21607,,
32A,3,,172171-70360,,SHAFT,,,2,2,,,W,,,,,,,M21607,,M21607,,
33,2,,172141-70250,,"SEAL, OIL",2,2,2,2,,,,,,,,,,,,,
33-1,2,,172141-70250,,"SEAL, OIL",,,2,2,,,Z,,,,,,,M21607,,M21607,,
33B,3,,172171-70370,,"SEAL, OIL",,,2,2,,,W,,,,,,,M21607,,M21607,,
34,2,,172141-70260,,PLATE,2,2,2,2,,,,,,,,,,,,,
35,2,,172141-70270,,PIN,2,2,2,2,,,,,,,,,,,,,
36,2,,172141-70540,,"CYLINDER BLOCK S/A",2,2,2,2,,,W,,,M00501,,,,,,,,
39,2,,172141-70290,,"HOLDER, SPRING",4,4,4,4,,,,,,,,,,,,,
40,2,,172141-70300,,SPRING,2,2,2,2,,,,,,,,,,,,,
41,2,,172141-70310,,"SNAP RING",2,2,2,2,,,,,,,,,,,,,
42,2,,172141-70320,,PIN,6,6,6,6,,,,,,,,,,,,,
43,2,,172141-70330,,"HOLDER, RETAINER",2,2,2,2,,,,,,,,,,,,,
44,2,,172141-70340,,"PLATE, RETAINER",2,2,2,2,,,,,,,,,,,,,
45,2,,172141-70360,,"PLATE, VALVE",2,2,2,2,,,,,,,,,,,,,
46,2,,172141-70370,,O-RING,2,2,2,2,,,,,,,,,,,,,
49,3,,172141-70400,,PLUNGER,2,2,2,2,,,,,,,,,,,,,
50,3,,172141-70410,,"VALVE, CHECK",4,4,4,4,,,,,,,,,,,,,
51,3,,172141-70420,,SPRING,4,4,4,4,,,,,,,,,,,,,
52,3,,172141-70430,,PLUG,4,4,4,4,,,,,,,,,,,,,
53,3,,172141-70440,,O-RING,4,4,4,4,,,,,,,,,,,,,
54,3,,172141-70450,,"SEAT, SPRING",4,4,4,4,,,,,,,,,,,,,
55,3,,172141-70460,,SPRING,4,4,4,4,,,,,,,,,,,,,
56,3,,172141-70470,,CAP,4,4,4,4,,,,,,,,,,,,,
57,3,,172141-70480,,PIN,2,2,2,2,,,,,,,,,,,,,
58,3,,24315-000300,,"O-RING 1B P-30.0",4,4,4,4,,,,,,,,,,,,,
59,2,,172141-70490,,PIN,4,4,4,4,,,,,,,,,,,,,
60,2,,23871-020000,,"PLUG PT1/4,SCREW",8,8,8,8,,,,,,,,,,,,,
61,2,,24101-060024,,"BALL BEARING",2,2,2,2,,,,,,,,,,,,,
62,2,,26450-080202,,"BOLT M 8X 20",12,12,12,12,,,,,,,,,,,,,
63,2,,24101-060040,,"BALL BEARING",2,2,2,2,,,,,,,,,,,,,
64,1,,26013-120302,,"BOLT W/WASHER M12X30",18,18,18,18,,,,,,,,,,,,,
```

Fig. 40 走行モータ TRAVEL MOTOR

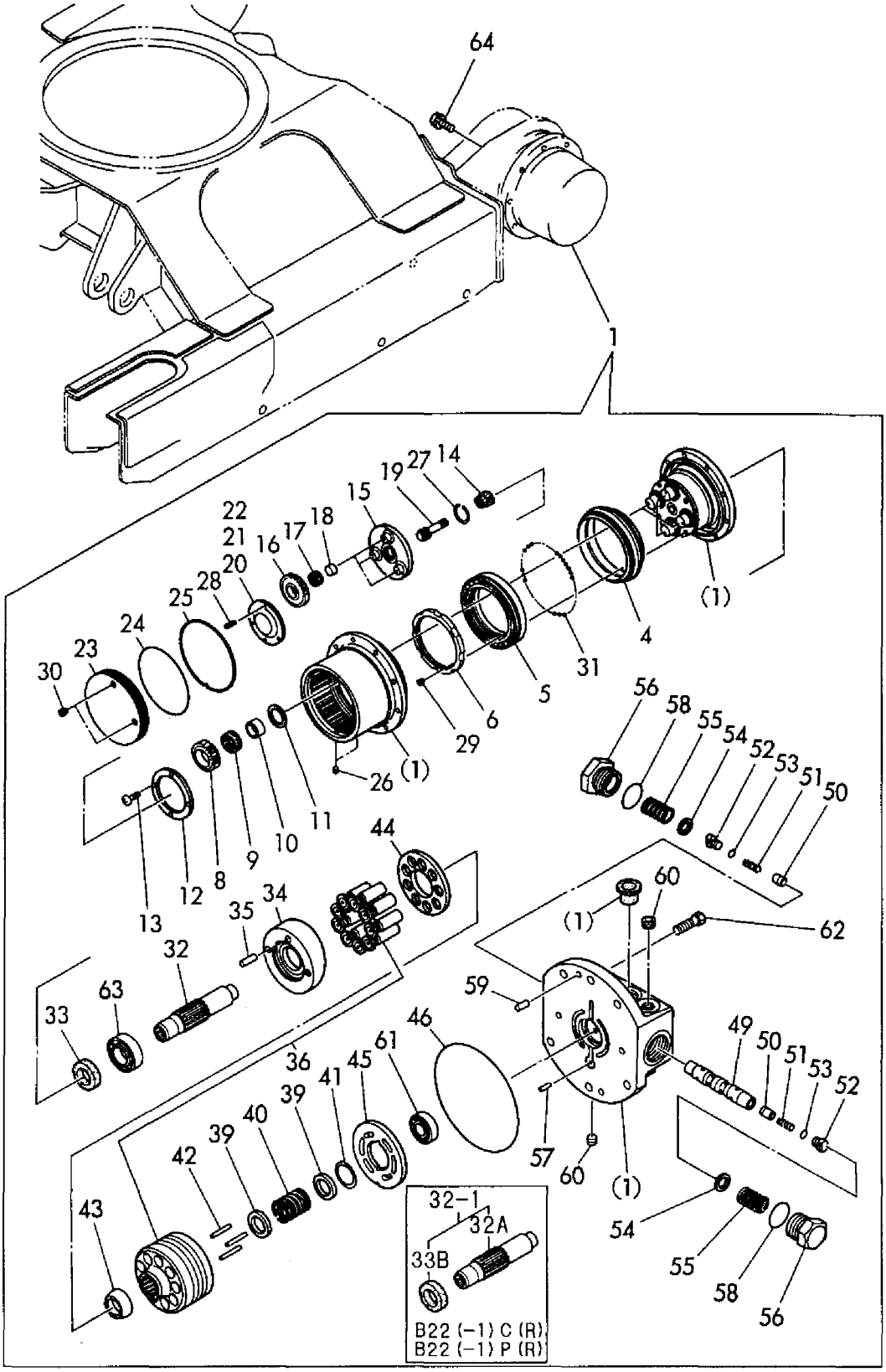

```
1,1,,172141-73800,,"JOINT, SWIVEL",1,1,1,1,,,,,,,,,,,,,
2,2,,194630-31910,,"LINER 22.5X40X2",1,1,1,1,,,,,,,,,,,,,
3,2,,172141-73810,,"SHAFT, SWIVEL",1,1,1,1,,,,,,,,,,,,,
4,2,,172131-73830,,"FLANGE,SWIVEL",1,1,1,1,,,,,,,,,,,,,
5,2,,172141-73830,,"HUB, SWIVEL",1,1,1,1,,,,,,,,,,,,,
6,2,,172137-73860,,"SPACER, SWIVEL",1,1,1,1,,,,,,,,,,,,,
7,2,,172141-73890,,"SEAL SET, SWIVEL",1,1,1,1,,,,,,,,,,,,,
8,3,,24311-000750,,"O-RING 1A P-75.0",1,1,1,1,,,,,,,,,,,,,
9,3,,24315-000560,,"O-RING 1B P 56.0",8,8,,,,,,,,,,,,,,,
9-1,3,,172142-73800,,"O-RING 55.76X5.7",8,8,8,8,,,R,,,M00902,,M00902,,,,,,
10,3,,24321-000700,,"O-RING 1A G-70.0",1,1,1,1,,,,,,,,,,,,,
11,2,,22242-000451,,"CIRCLIP   45",1,1,1,1,,,,,,,,,,,,,
12,2,,23871-020000,,"PLUG PT1/4,SCREW",6,6,6,6,,,,,,,,,,,,,
13,2,,26013-100252,,"BOLT W/WASHER M10X25",3,3,3,3,,,,,,,,,,,,,
14,1,,26013-100302,,"BOLT M10X 30",4,4,4,4,,,,,,,,,,,,,
```

Fig.41 スイベルジョイント SWIVEL JOINT

見出しNo．1は、見出しNo．2から13を含みます。
1inc．2 ～ 13

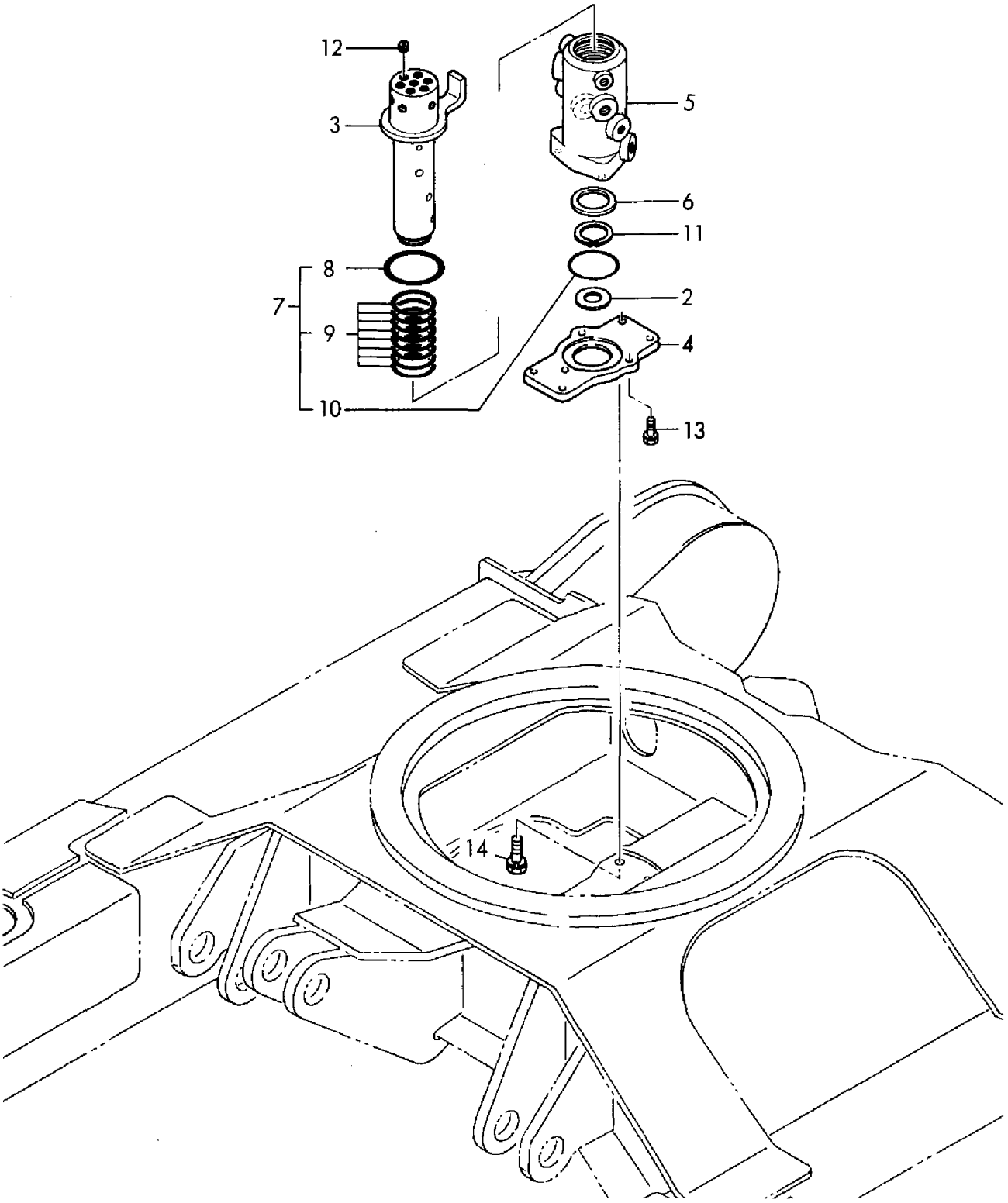

```
1,1,,172141-74100,,"VALVE ASSY, CONTROL",1,1,1,1,,,,1,,,,,,,,,
2,1,,172141-74110,,VALVE,1,1,1,1,,,W,2,,*1990.03,,*1990.03,,,,,,
3,2,,172141-74150,,"BODY ASSY",2,2,2,2,,,,,,,,,,,,,
6,3,,172141-74350,,COVER,2,2,2,2,,,,,,,,,,,,,
7,3,,172141-74360,,"SEAT, SPRING",2,2,2,2,,,,,,,,,,,,,
8,3,,172141-74370,,"SEAT, SPRING",4,4,4,4,,,,,,,,,,,,,
9,3,,172141-74380,,SPRING,2,2,2,2,,,,,,,,,,,,,
10,3,,172141-74390,,PLUG,2,2,2,2,,,,,,,,,,,,,
11,3,,172141-74400,,PLATE,4,4,4,4,,,,,,,,,,,,,
12,3,,172141-74410,,BOLT,4,4,4,4,,,,,,,,,,,,,
13,3,,172141-74420,,BOLT,4,4,4,4,,,,,,,,,,,,,
14,3,,172141-74430,,O-RING,2,2,2,2,,,,,,,,,,,,,
15,3,,172141-74440,,RING,2,2,2,2,,,,,,,,,,,,,
16,3,,172141-74450,,RING,2,2,2,2,,,,,,,,,,,,,
17,3,,172141-74460,,RING,2,2,2,2,,,,,,,,,,,,,
18,3,,172141-74470,,GASKET,4,4,4,4,,,,,,,,,,,,,
19,3,,172141-74480,,SHIM,8,8,8,8,,,,,,,,,,,,,
20,2,,172141-74210,,"BODY ASSY",1,1,1,1,,,,,,,,,,,,,
21,2,,172143-74350,,"BODY ASSY, VALVE",1,1,1,1,,,W,3,,*1990.03,,*1990.03,,,,,,
22,3,,172141-74350,,COVER,1,1,1,1,,,,,,,,,,,,,
23,3,,172141-74360,,"SEAT, SPRING",1,1,1,1,,,,,,,,,,,,,
24,3,,172141-74370,,"SEAT, SPRING",2,2,2,2,,,,,,,,,,,,,
25,3,,172141-74380,,SPRING,1,1,1,1,,,,,,,,,,,,,
26,3,,172141-74390,,PLUG,1,1,1,1,,,,,,,,,,,,,
27,3,,172141-74400,,PLATE,2,2,2,2,,,,,,,,,,,,,
28,3,,172141-74410,,BOLT,2,2,2,2,,,,,,,,,,,,,
29,3,,172141-74420,,BOLT,2,2,2,2,,,,,,,,,,,,,
30,3,,172141-74430,,O-RING,1,1,1,1,,,,,,,,,,,,,
31,3,,172141-74440,,RING,1,1,1,1,,,,,,,,,,,,,
32,3,,172141-74450,,RING,1,1,1,1,,,,,,,,,,,,,
33,3,,172141-74460,,RING,1,1,1,1,,,,,,,,,,,,,
34,3,,172141-74470,,GASKET,2,2,2,2,,,,,,,,,,,,,
35,3,,172141-74480,,SHIM,4,4,4,4,,,,,,,,,,,,,
36,3,,172141-74520,,SPRING,1,1,1,1,,,,,,,,,,,,,
37,3,,172141-74530,,PLANGER,1,1,1,1,,,,,,,,,,,,,
```

Fig. 42 コントロールバルブ（走行＆旋回） CONTROL VALVE (TRAVEL & TURNING)

コントロールバルブ ASSY
CONTROL VALVE ASSY
(172141-74100)
Fig. 42 Ref. No. 1
INC Fig. 42 Ref. No. 3～37
Fig. 43 Ref. No. 1～41
Fig. 44 Ref. No. 1～50
Fig. 45 Ref. No. 1～17
Fig. 46 Ref. No. 1～32

見出しNo．3は、見出しNo．6から19を含みます。
3 inc．6 ～ 19

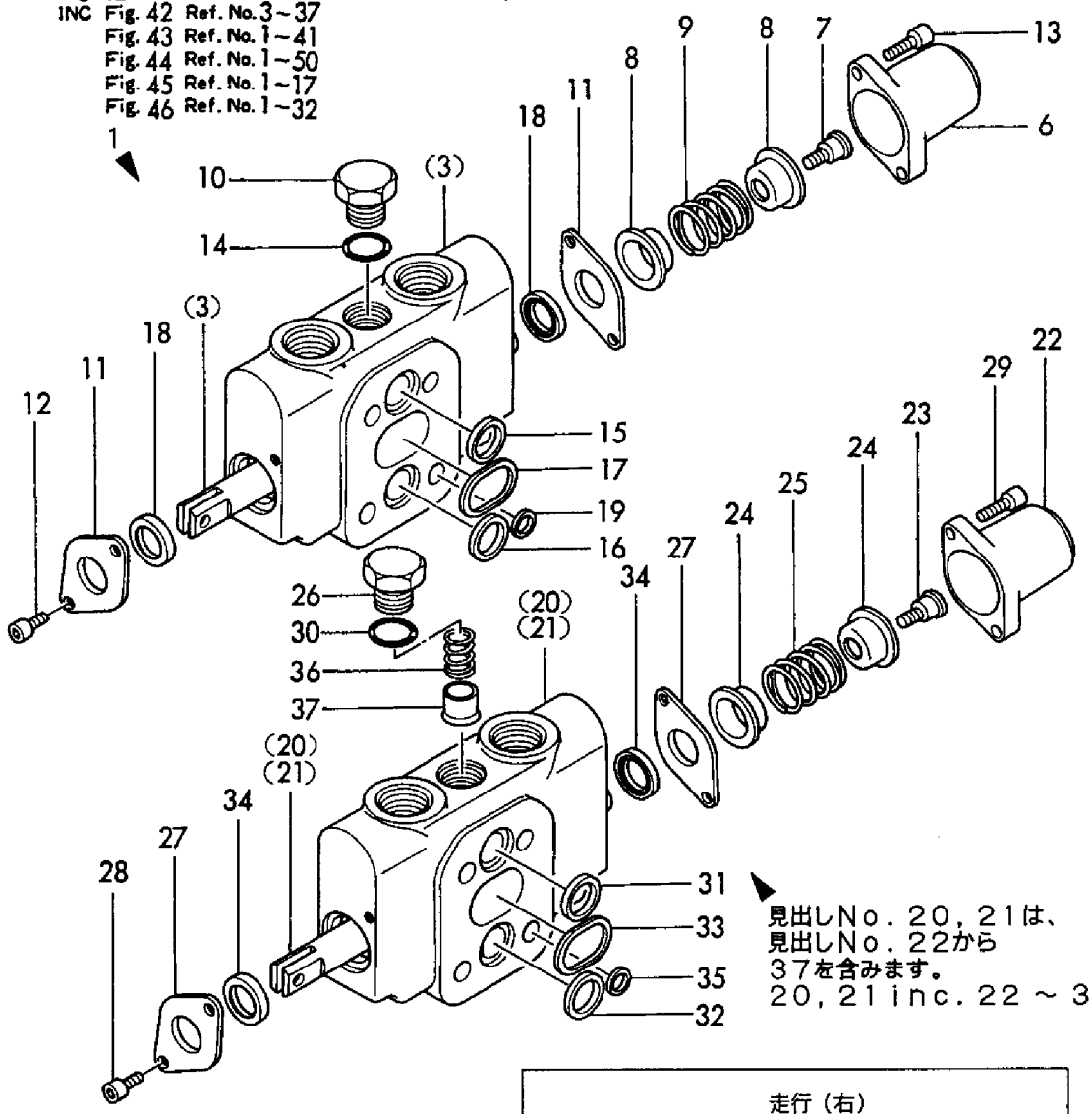

見出しNo．20，21は、
見出しNo．22から
37を含みます。
20，21 inc．22 ～ 37

コントロールバルブ ASSY
CONTROL VALVE ASSY
(172141-74110)
Fig. 42 Ref. No. 2
INC Fig. 42 Ref. No. 3～37
Fig. 43 Ref. No. 2～46
Fig. 44 Ref. No. 2～55
Fig. 45 Ref. No. 1～17
Fig. 46 Ref. No. 1～30

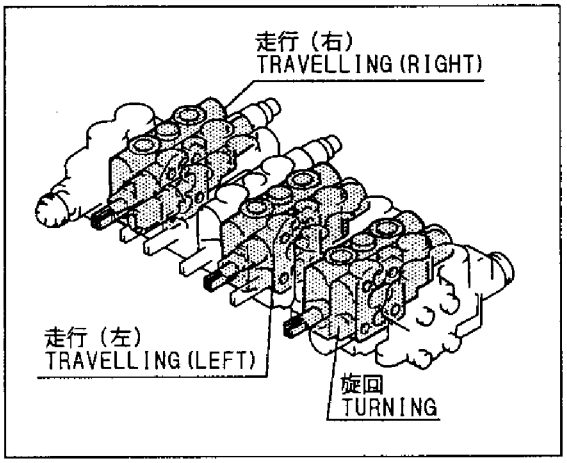

```
1,2,,172141-74160,,"BODY ASSY",1,1,1,1,,,,,,,,,,,,,
2,2,,172141-74010,,"BODY ARM, 3RD",1,1,1,1,,,W,1,,*1990.03,,*1990.03,,,,,,
3,3,,172141-74370,,"SEAT, SPRING",2,2,2,2,,,,,,,,,,,,,
4,3,,172141-74390,,PLUG,1,1,1,1,,,,,,,,,,,,,
5,3,,172141-74400,,PLATE,2,2,2,2,,,,,,,,,,,,,
6,3,,172141-74410,,BOLT,2,2,2,2,,,,,,,,,,,,,
7,3,,172141-74420,,BOLT,2,2,2,2,,,,,,,,,,,,,
8,3,,172141-74430,,O-RING,1,1,1,1,,,,,,,,,,,,,
9,3,,172141-74440,,RING,1,1,1,1,,,,,,,,,,,,,
10,3,,172141-74450,,RING,1,1,1,1,,,,,,,,,,,,,
11,3,,172141-74460,,RING,1,1,1,1,,,,,,,,,,,,,
12,3,,172141-74470,,GASKET,2,2,2,2,,,,,,,,,,,,,
13,3,,172141-74480,,SHIM,4,4,4,4,,,,,,,,,,,,,
14,3,,172141-74510,,SPRING,1,1,1,1,,,,,,,,,,,,,
14-1,3,,172141-74380,,SPRING,,,1,1,,,R,,,,,,,MXXX,,MXXX,,
15,3,,172141-74520,,SPRING,1,1,1,1,,,,,,,,,,,,,
16,3,,172141-74530,,PLANGER,1,1,1,1,,,,,,,,,,,,,
17,3,,172141-74540,,"VALVE 190/22, RELIEF",2,2,2,2,,,,,,,,,,,,,
20,3,,172141-74350,,COVER,1,1,1,1,,,,,,,,,,,,,
21,3,,172141-74360,,"SEAT, SPRING",1,1,1,1,,,,,,,,,,,,,
22,2,,172141-74200,,"BODY ASSY",1,1,1,1,,,,,,,,,,,,,
23,2,,172141-74040,,"BODY BUCKET, 3RD",1,1,1,1,,,W,1,,*1990.03,,*1990.03,,,,,,
24,3,,172141-74350,,COVER,1,1,1,1,,,,,,,,,,,,,
25,3,,172141-74360,,"SEAT, SPRING",1,1,1,1,,,,,,,,,,,,,
26,3,,172141-74370,,"SEAT, SPRING",2,2,2,2,,,,,,,,,,,,,
27,3,,172141-74380,,SPRING,1,1,1,1,,,,,,,,,,,,,
28,3,,172141-74390,,PLUG,1,1,1,1,,,,,,,,,,,,,
29,3,,172141-74400,,PLATE,2,2,2,2,,,,,,,,,,,,,
30,3,,172141-74410,,BOLT,2,2,2,2,,,,,,,,,,,,,
31,3,,172141-74420,,BOLT,2,2,2,2,,,,,,,,,,,,,
32,3,,172141-74430,,O-RING,1,1,1,1,,,,,,,,,,,,,
33,3,,172141-74440,,RING,1,1,1,1,,,,,,,,,,,,,
34,3,,172141-74450,,RING,1,1,1,1,,,,,,,,,,,,,
35,3,,172141-74460,,RING,1,1,1,1,,,,,,,,,,,,,
36,3,,172141-74470,,GASKET,2,2,2,2,,,,,,,,,,,,,
37,3,,172141-74480,,SHIM,4,4,4,4,,,,,,,,,,,,,
39,3,,172141-74520,,SPRING,1,1,1,1,,,,,,,,,,,,,
40,3,,172141-74530,,PLANGER,1,1,1,1,,,,,,,,,,,,,
41,3,,172141-74540,,"VALVE 190/22, RELIEF",1,1,1,1,,,,,,,,,,,,,
43,3,,172141-74570,,PLUG,1,1,1,1,,,W,1,,*1990.03,,*1990.03,,,,,,
44,3,,172141-74580,,O-RING,1,1,1,1,,,W,1,,*1990.03,,*1990.03,,,,,,
45,3,,172141-74590,,O-RING,1,1,1,1,,,W,1,,*1990.03,,*1990.03,,,,,,
46,3,,172141-74600,,"RING, BACK UP",1,1,1,1,,,W,1,,*1990.03,,*1990.03,,,,,,
```

Fig. 43 コントロールバルブ（アーム＆バケット） CONTROL VALVE (ARM & BUCKET)

見出しNo．1，2は、見出しNo．3から21を含みます。
1，2 inc．3 ～ 21

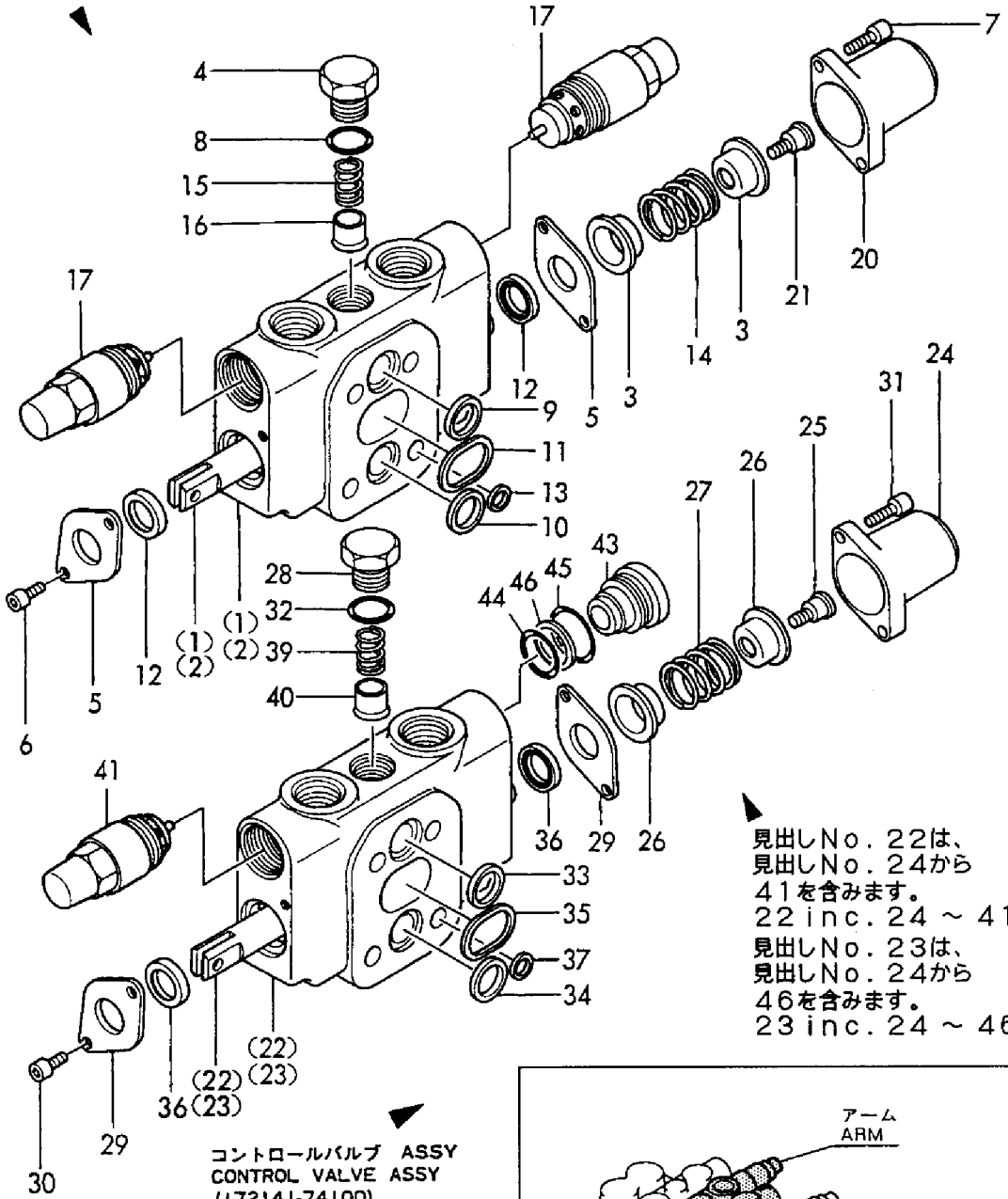

見出しNo．22は、
見出しNo．24から
41を含みます。
22 inc．24 ～ 41

見出しNo．23は、
見出しNo．24から
46を含みます。
23 inc．24 ～ 46

コントロールバルブ ASSY
CONTROL VALVE ASSY
(172141-74100)
Fig. 42 Ref. No. 1
INC Fig. 42 Ref. No. 3～37
Fig. 43 Ref. No. 1～41
Fig. 44 Ref. No. 1～50
Fig. 45 Ref. No. 1～17
Fig. 46 Ref. No. 1～32
(172141-74110)
Fig. 42 Ref. No. 2
INC Fig. 42 Ref. No. 3～37
Fig. 43 Ref. No. 2～46
Fig. 44 Ref. No. 2～55
Fig. 45 Ref. No. 1～17
Fig. 46 Ref. No. 1～30

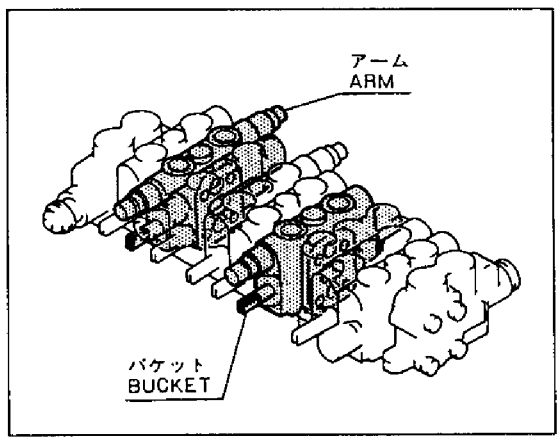

```
1,2,,172141-74170,,"BODY ASSY",1,1,1,1,,,,,,,,,,,,,
2,2,,172143-74180,,"BODY ASSY, VALVE",1,1,1,1,,,W,1,,*1990.03,,*1990.03,,,,,,
3,3,,172141-74350,,COVER,1,1,1,1,,,,,,,,,,,,,
4,3,,172141-74360,,"SEAT, SPRING",1,1,1,1,,,,,,,,,,,,,
5,3,,172141-74370,,"SEAT, SPRING",2,2,2,2,,,,,,,,,,,,,
6,3,,172141-74380,,SPRING,1,1,1,1,,,,,,,,,,,,,
7,3,,172141-74390,,PLUG,1,1,1,1,,,,,,,,,,,,,
8,3,,172141-74400,,PLATE,2,2,2,2,,,,,,,,,,,,,
9,3,,172141-74410,,BOLT,2,2,2,2,,,,,,,,,,,,,
10,3,,172141-74420,,BOLT,2,2,2,2,,,,,,,,,,,,,
11,3,,172141-74430,,O-RING,1,1,1,1,,,,,,,,,,,,,
12,3,,172141-74440,,RING,1,1,1,1,,,,,,,,,,,,,
13,3,,172141-74450,,RING,1,1,1,1,,,,,,,,,,,,,
14,3,,172141-74460,,RING,1,1,1,1,,,,,,,,,,,,,
15,3,,172141-74470,,GASKET,2,2,2,2,,,,,,,,,,,,,
16,3,,172141-74480,,SHIM,4,4,4,4,,,,,,,,,,,,,
17,3,,172141-74520,,SPRING,1,1,1,1,,,,,,,,,,,,,
18,3,,172141-74530,,PLANGER,1,1,1,1,,,,,,,,,,,,,
21,3,,172141-74570,,PLUG,1,1,1,1,,,,,,,,,,,,,
22,3,,172141-74580,,O-RING,1,1,1,1,,,,,,,,,,,,,
23,3,,172141-74590,,O-RING,1,1,1,1,,,,,,,,,,,,,
24,3,,172141-74600,,"RING, BACK UP",1,1,1,1,,,,,,,,,,,,,
25,3,,172141-74610,,BUSH,1,1,1,1,,,,,,,,,,,,,
26,3,,172141-74620,,"VALVE,ANTI-CAVITATI.",1,1,1,1,,,,,,,,,,,,,
27,3,,172143-74200,,PLUNGER,1,1,1,1,,,W,1,,*1989.08,,*1989.08,,,,,,
28,3,,172143-74210,,RETAINER,1,1,1,1,,,W,1,,*1989.08,,*1989.08,,,,,,
29,3,,172143-74220,,O-RING,1,1,1,1,,,W,1,,*1989.08,,*1989.08,,,,,,
30,3,,172142-74310,,NIPPLE,1,1,1,1,,,W,1,,*1989.08,,*1989.08,,,,,,
31,2,,172141-74180,,"BODY ASSY",1,1,1,1,,,,,,,,,,,,,
32,2,,172141-74030,,"BODY BOOM, 3RD",1,1,1,1,,,W,1,,*1990.03,,*1990.03,,,,,,
33,3,,172141-74350,,COVER,1,1,1,1,,,,,,,,,,,,,
34,3,,172141-74360,,"SEAT, SPRING",1,1,1,1,,,,,,,,,,,,,
35,3,,172141-74370,,"SEAT, SPRING",2,2,2,2,,,,,,,,,,,,,
36,3,,172141-74390,,PLUG,1,1,1,1,,,,,,,,,,,,,
37,3,,172141-74400,,PLATE,2,2,2,2,,,,,,,,,,,,,
38,3,,172141-74410,,BOLT,2,2,2,2,,,,,,,,,,,,,
39,3,,172141-74420,,BOLT,2,2,2,2,,,,,,,,,,,,,
40,3,,172141-74430,,O-RING,1,1,1,1,,,,,,,,,,,,,
41,3,,172141-74440,,RING,1,1,1,1,,,,,,,,,,,,,
42,3,,172141-74450,,RING,1,1,1,1,,,,,,,,,,,,,
43,3,,172141-74460,,RING,1,1,1,1,,,,,,,,,,,,,
44,3,,172141-74470,,GASKET,2,2,2,2,,,,,,,,,,,,,
45,3,,172141-74480,,SHIM,4,4,4,4,,,,,,,,,,,,,
47,3,,172141-74510,,SPRING,1,1,1,1,,,,,,,,,,,,,
47-1,3,,172141-74380,,SPRING,1,1,1,1,,,,,,,,,,,,,
48,3,,172141-74520,,SPRING,1,1,1,1,,,,,,,,,,,,,
49,3,,172141-74530,,PLANGER,1,1,1,1,,,,,,,,,,,,,
50,3,,172141-74540,,"VALVE 190/22, RELIEF",1,1,1,1,,,,,,,,,,,,,
52,3,,172141-74570,,PLUG,1,1,1,1,,,W,1,,*1990.03,,*1990.03,,,,,,
53,3,,172141-74580,,O-RING,1,1,1,1,,,W,1,,*1990.03,,*1990.03,,,,,,
54,3,,172141-74590,,O-RING,1,1,1,1,,,W,1,,*1990.03,,*1990.03,,,,,,
55,3,,172141-74600,,"RING, BACK UP",1,1,1,1,,,W,1,,*1990.03,,*1990.03,,,,,,
```

Fig. 44 コントロールバルブ（スイング＆ブーム） CONTROL VALVE (SWING & BOOM)

見出しNo．1は、見出しNo．3から26を含みます。
1inc．3 ～ 26
見出しNo．2は、見出しNo．3から30を含みます。
2inc．3 ～ 30

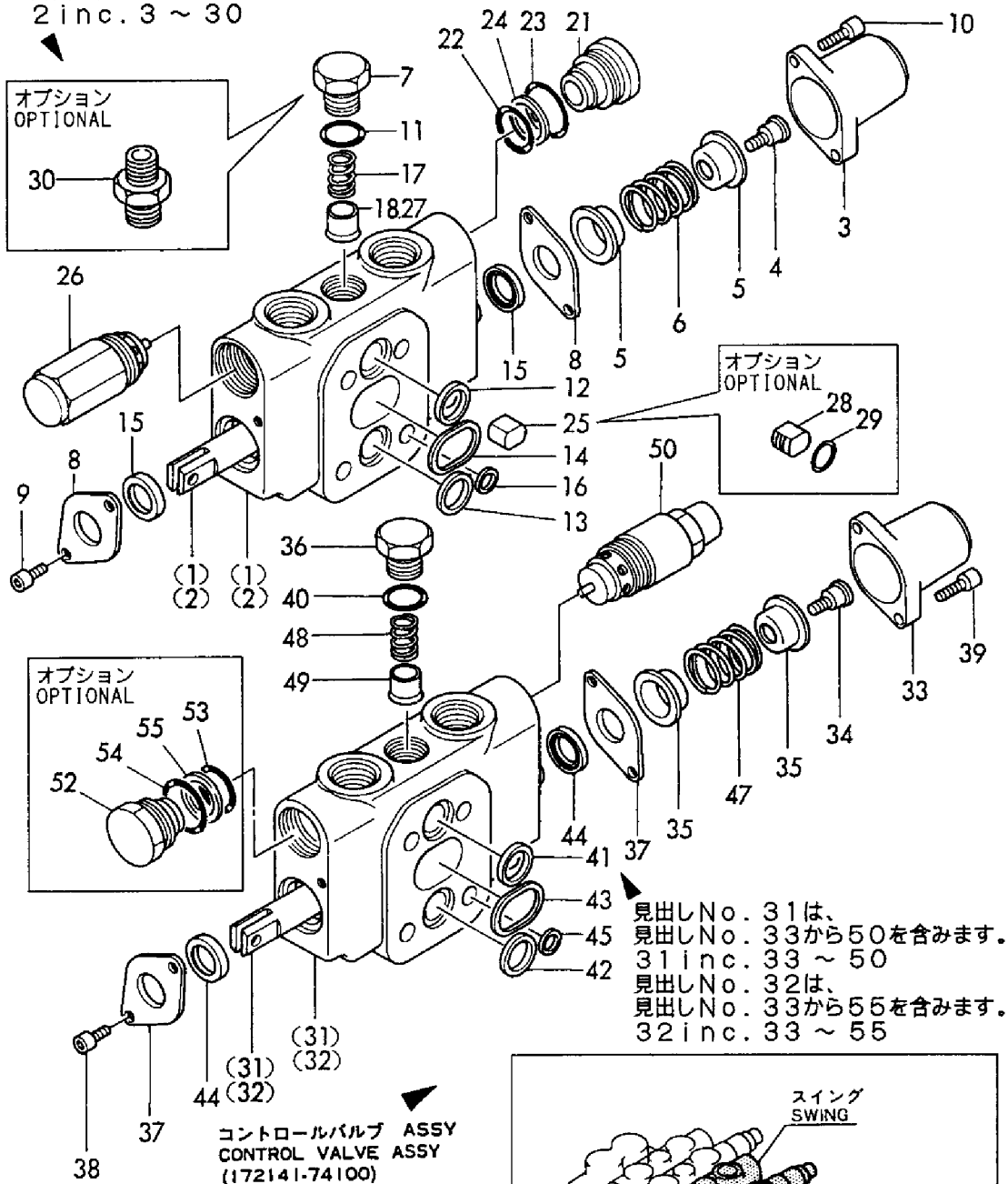

見出しNo．31は、
見出しNo．33から50を含みます。
31inc．33 ～ 50
見出しNo．32は、
見出しNo．33から55を含みます。
32inc．33 ～ 55

コントロールバルブ ASSY
CONTROL VALVE ASSY
(172141-74100)
Fig. 42 Ref. No. 1
INC Fig. 42 Ref. No. 3～37
Fig. 43 Ref. No. 1～41
Fig. 44 Ref. No. 1～50
Fig. 45 Ref. No. 1～17
Fig. 46 Ref. No. 1～32
(172141-74110)
Fig. 42 Ref. No. 2
INC Fig. 42 Ref. No. 3～37
Fig. 43 Ref. No. 2～46
Fig. 44 Ref. No. 2～55
Fig. 45 Ref. No. 1～17
Fig. 46 Ref. No. 1～30

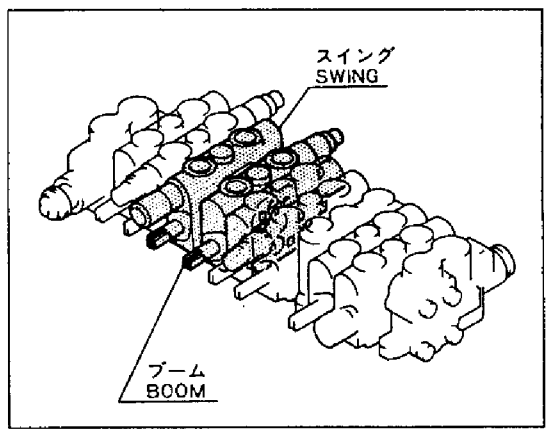

```
1,2,,172141-74220,,"BODY ASSY",1,1,1,1,,,,,,,,,,,,,
2,3,,172141-74350,,COVER,1,1,1,1,,,,,,,,,,,,,
3,3,,172141-74360,,"SEAT, SPRING",1,1,1,1,,,,,,,,,,,,,,
4,3,,172141-74370,,"SEAT, SPRING",2,2,2,2,,,,,,,,,,,,,,
5,3,,172141-74380,,SPRING,1,1,1,1,,,,,,,,,,,,,
6,3,,172141-74390,,PLUG,1,1,1,1,,,,,,,,,,,,,
7,3,,172141-74400,,PLATE,2,2,2,2,,,,,,,,,,,,,
8,3,,172141-74410,,BOLT,2,2,2,2,,,,,,,,,,,,,
9,3,,172141-74420,,BOLT,2,2,2,2,,,,,,,,,,,,,
10,3,,172141-74430,,O-RING,1,1,1,1,,,,,,,,,,,,,
11,3,,172141-74440,,RING,1,1,1,1,,,,,,,,,,,,,
12,3,,172141-74450,,RING,1,1,1,1,,,,,,,,,,,,,
14,3,,172141-74470,,GASKET,2,2,2,2,,,,,,,,,,,,,
15,3,,172141-74480,,SHIM,4,4,4,4,,,,,,,,,,,,,
16,3,,172141-74520,,SPRING,1,1,1,1,,,,,,,,,,,,,
17,3,,172141-74530,,PLANGER,1,1,1,1,,,,,,,,,,,,,
```

Fig. 45 コントロールバルブ（ブレード） CONTROL VALVE (BLADE)

見出しNo．1は、見出しNo．2から17を含みます。
1 inc．2 ～ 17

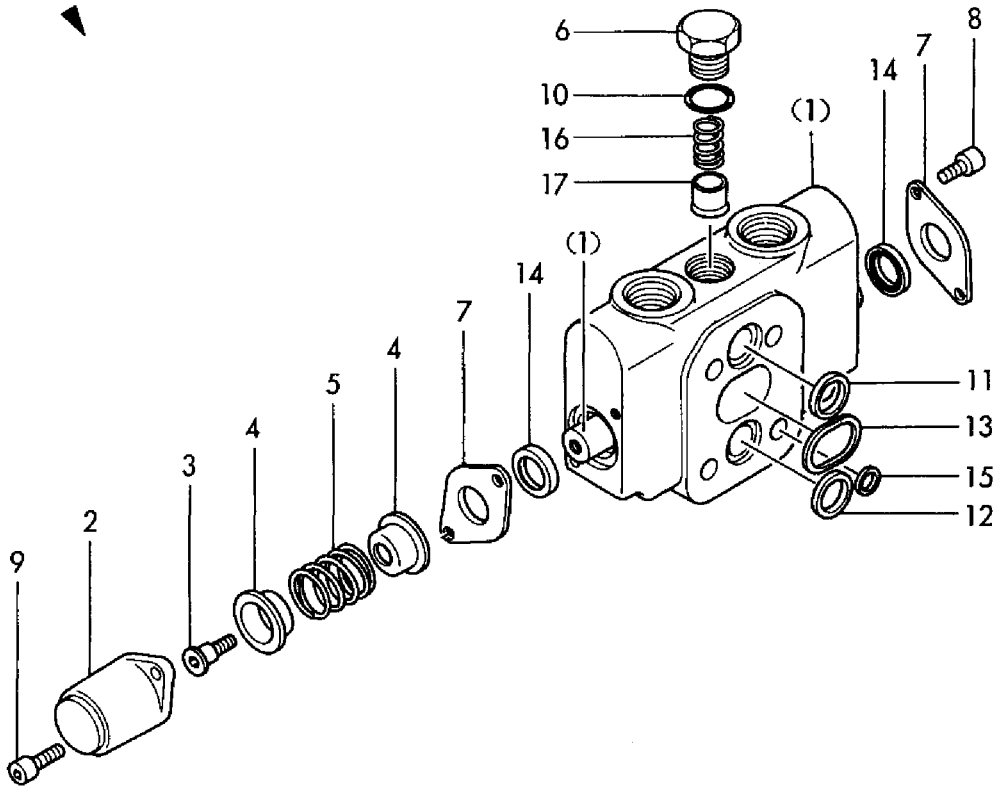

コントロールバルブ ASSY
CONTROL VALVE ASSY
(172141-74100)
Fig. 42 Ref. No. 1
INC Fig. 42 Ref. No. 3～37
Fig. 43 Ref. No. 1～41
Fig. 44 Ref. No. 1～50
Fig. 45 Ref. No. 1～17
Fig. 46 Ref. No. 1～32
(172141-74110)
Fig. 42 Ref. No. 2
INC Fig. 42 Ref. No. 3～37
Fig. 43 Ref. No. 2～46
Fig. 44 Ref. No. 2～55
Fig. 45 Ref. No. 1～17
Fig. 46 Ref. No. 1～30

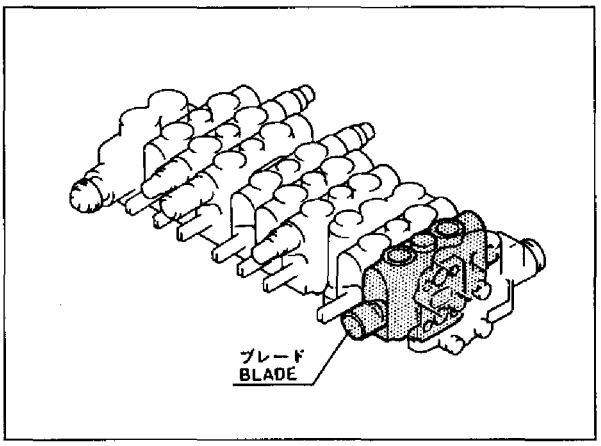

```
1,2,,172141-74230,,"COVER ASSY(PT)",1,1,1,1,,,,,,,,,,,,,
2,3,,172141-74440,,RING,1,1,1,1,,,,,,,,,,,,,
3,3,,172141-74450,,RING,1,1,1,1,,,,,,,,,,,,,
4,3,,172141-74460,,RING,1,1,1,1,,,,,,,,,,,,,
5,3,,172141-74480,,SHIM,4,4,4,4,,,,,,,,,,,,,
7,3,,172141-74690,,"VALVE 175/22, RELIEF",1,1,1,1,,,,,,,,,,,,,
8,3,,172141-74750,,PLUG,1,1,1,1,,,,,,,,,,,,,
9,2,,172141-74240,,"COVER ASSY(PT)",1,1,1,1,,,,,,,,,,,,,
10,3,,172141-74440,,RING,1,1,1,1,,,,,,,,,,,,,
11,3,,172141-74450,,RING,1,1,1,1,,,,,,,,,,,,,
12,3,,172141-74460,,RING,1,1,1,1,,,,,,,,,,,,,
13,3,,172141-74480,,SHIM,4,4,4,4,,,,,,,,,,,,,
15,3,,172141-74740,,"VALVE 160/22, RELIEF",1,1,1,1,,,,,,,,,,,,,
16,3,,172141-74750,,PLUG,1,1,1,1,,,,,,,,,,,,,
17,2,,172141-74260,,STUD,4,4,4,4,,,,,,,,,,,,,
18,2,,172141-74270,,"NUT, LOCK",8,8,8,8,,,,,,,,,,,,,
19,2,,172141-74280,,"SPRING WASHER",8,8,8,8,,,,,,,,,,,,,
20,2,,172141-74290,,PLATE,1,1,1,1,,,,,,,,,,,,,
21,2,,172141-74300,,"COVER ASSY(PL)",1,1,1,1,,,,,,,,,,,,,
22,2,,172143-74400,,"COVER ASSY(PL)",1,1,1,1,,,W,1,,*1990.03,,*1990.03,,,,,,
23,3,,172141-74440,,RING,1,1,1,1,,,,,,,,,,,,,
24,3,,172141-74450,,RING,1,1,1,1,,,,,,,,,,,,,
25,3,,172141-74460,,RING,1,1,1,1,,,,,,,,,,,,,
26,3,,172141-74480,,SHIM,4,4,4,4,,,,,,,,,,,,,
27,3,,172141-74690,,"VALVE 175/22, RELIEF",1,1,1,1,,,,,,,,,,,,,
28,3,,172141-74750,,PLUG,1,1,1,1,,,,,,,,,,,,,
28A,3,,172141-74750,,PLUG,2,2,2,2,,,W,1,,*1990.03,,*1990.03,,,,,,
30,3,,172141-74720,,PLUG,1,1,1,1,,,,,,,,,,,,,
31,2,,172141-74310,,PLUG,1,1,1,1,,,,2,,,,,,,,,
32,2,,172141-74320,,O-RING,1,1,1,1,,,,2,,,,,,,,,
33,1,,26013-100202,,"BOLT W/WASHER M10X20",2,2,2,2,,,,,,,,,,,,,
34,1,,26013-100302,,"BOLT M10X 30",1,1,1,1,,,,,,,,,,,,,
```

Fig. 46 コントロールバルブ（P1，P2，P3）
CONTROL VALVE (P1, P2, P3)

見出しNo．1は、見出しNo．2から8を含みます。
1 inc．2 ～ 8

見出しNo．21，22は、
見出しNo．23から30を含みます。
21，22 inc．23 ～ 30

見出しNo．9は、
見出しNo．10から16を含みます。
9 inc．10 ～ 16

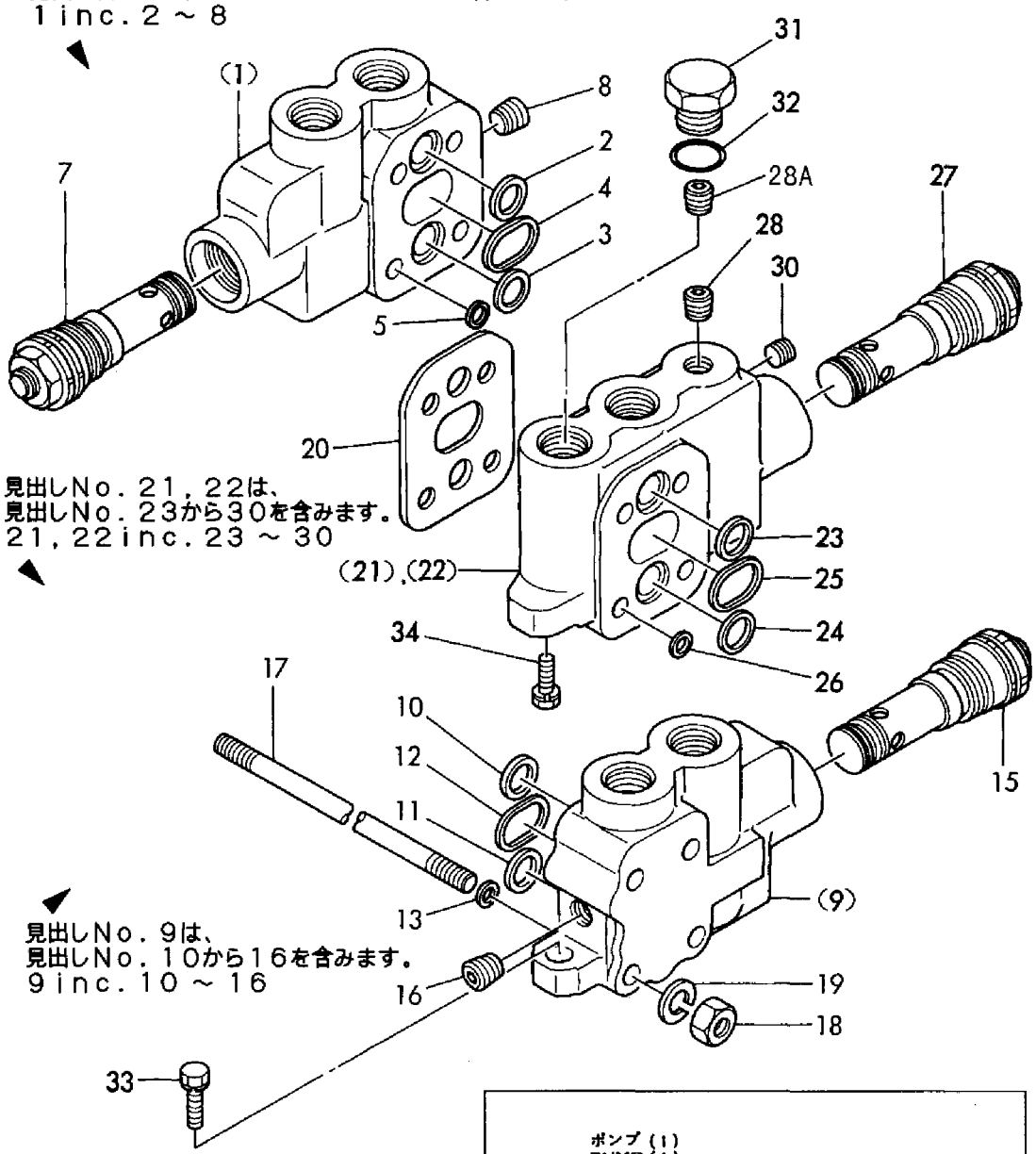

コントロールバルブ ASSY
CONTROL VALVE ASSY
(172141-74100)
Fig. 42 Ref. No. 1
INC Fig. 42 Ref. No. 3～37
Fig. 43 Ref. No. 1～41
Fig. 44 Ref. No. 1～50
Fig. 45 Ref. No. 1～17
Fig. 46 Ref. No. 1～32

(172141-74110)
Fig. 42 Ref. No. 2
INC Fig. 42 Ref. No. 3～37
Fig. 43 Ref. No. 2～46
Fig. 44 Ref. No. 2～55
Fig. 45 Ref. No. 1～17
Fig. 46 Ref. No. 1～30

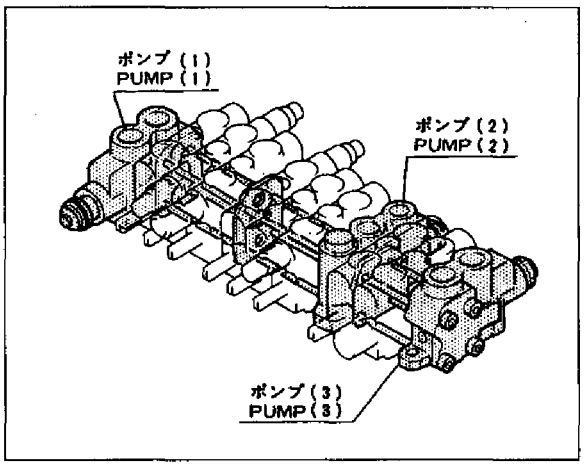

```
1,1,,772141-75100,,"RESERVER ASSY",1,1,1,1,,,,,,,,,,,,,
2,2,,172137-73700,,"FILTER, SUCTION",1,1,1,1,,,,,,,,,,,,,
3,2,,172141-73710,,"ROD, STRAINER",1,1,1,1,,,,,,,,,,,,,
4,2,,172141-73750,,"FILTER ASSY, RETURN",1,1,1,1,,,,,,,,,,,,,,
5,3,,172141-73760,,ELEMENT,1,1,1,1,,,,,,,,,,,,,
6,3,,172141-73770,,"VALVE ASSY, BYPASS",1,1,1,1,,,,,,,,,,,,,
7,2,,172112-75780,,"SPRING, STRAINER",1,1,1,1,,,,,,,,,,,,,
8,2,,26716-100002,,"NUT M10",1,1,1,1,,,,,,,,,,,,,
9,2,,933152-02710,,"SPRING, SIDE CLUTCH",1,1,1,1,,,,,,,,,,,,,
10,2,,172141-75400,,"COVER, EXIT",1,1,1,1,,,,,,,,,,,,,
11,2,,172141-75430,,"COVER, INTAKE",1,1,1,1,,,,,,,,,,,,,
12,2,,172122-75600,,"GAUGE, OIL LEVEL",1,1,1,1,,,,,,,,,,,,,
13,3,,172122-75620,,BOLT,2,2,2,2,,,,,,,,,,,,,
14,3,,172122-75630,,GASKET,4,4,4,4,,,,,,,,,,,,,
15,2,,172116-75850,,"PLUG, OIL FEED",1,1,1,1,,,,,,,,,,,,,
16,2,,22134-240000,,"WASHER 24",1,1,1,1,,,,,,,,,,,,,
17,2,,22417-200160,,"COTTER PIN 2.0X16",1,1,1,1,,,,,,,,,,,,,
18,2,,24311-000380,,"O-RING 1A P-38.0",1,1,1,1,,,,,,,,,,,,,
19,2,,24321-001050,,"O-RING 1A G-105.0",2,2,2,2,,,,,,,,,,,,,
20,2,,26013-080202,,"BOLT W/WASHER M8X20",6,6,6,6,,,,,,,,,,,,,,
21,2,,933171-23042,,MAGNET,1,1,1,1,,,,,,,,,,,,,
22,2,,933171-23050,,"PLUG 1/4",1,1,,,,,Z,,,M00838,,M00838,,,,,,
23,2,,933171-23062,,"PLUG 24, DRAIN",1,1,1,1,,,,,,,,,,,,,
24,1,,26013-120302,,"BOLT W/WASHER M12X30",4,4,4,4,,,,,,,,,,,,,,
25,1,,933152-03700,,"WASHER, SIDE CLUTCH",4,4,4,4,,,,,,,,,,,,,
26,1,,933169-22940,,"SPACER, RESERVOIR",1,1,1,1,,,,,,,,,,,,,
```

Fig.47 作動油タンク HYD.OIL TANK

見出しNo．1は、見出しNo．2から23を含みます。
1inc．2～23

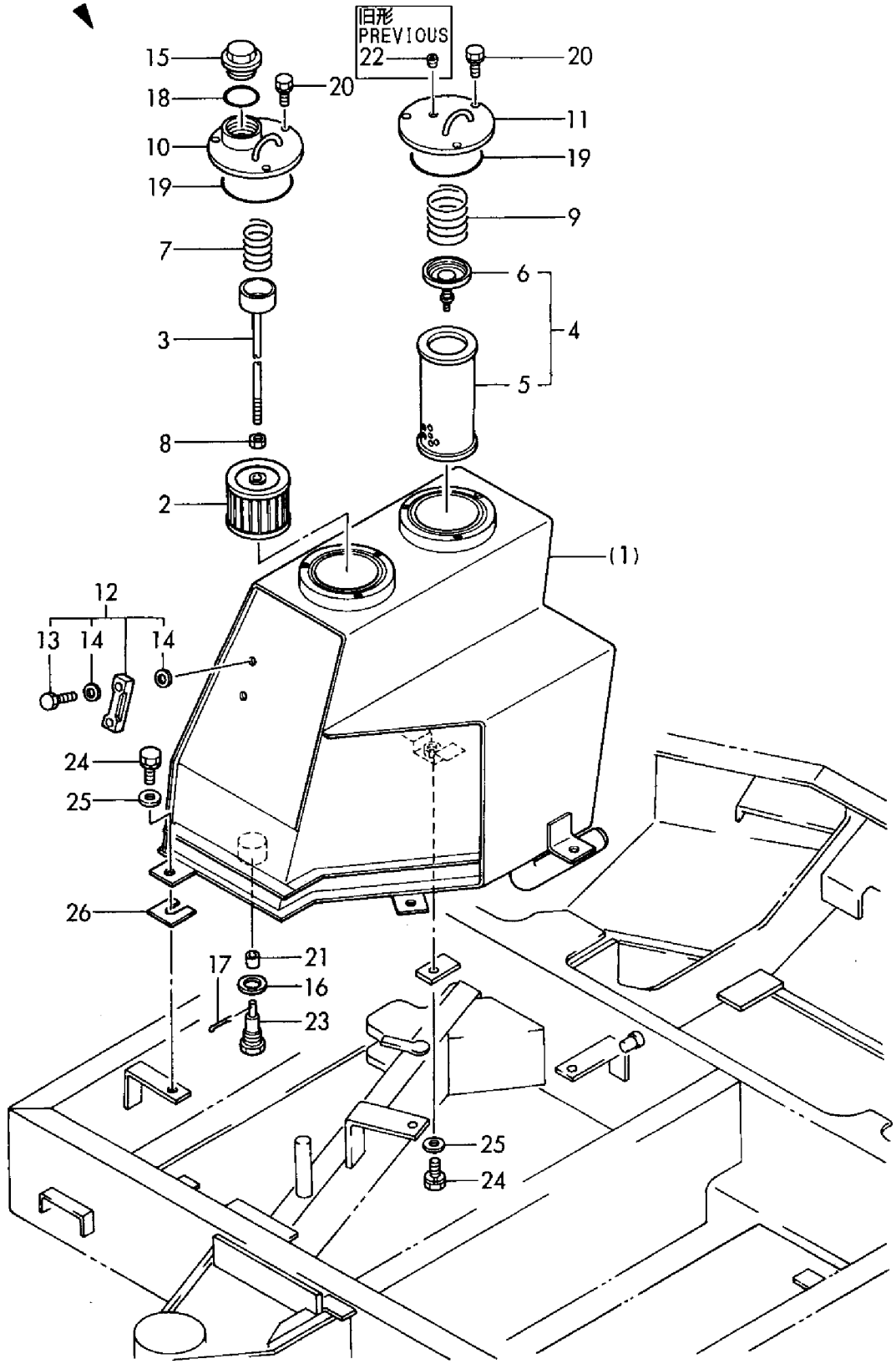

```
1,1,,172112-77580,,"JOINT 1/8",2,2,2,2,,,,,,,,,,,,,
2,1,,172141-77800,,"JOINT, GREASE",4,4,4,4,,,,,,,,,,,,,
3,1,,172141-77810,,"HOSE, GREASE",2,2,,,,,,,,,,,,,,,,
3-1,1,,172141-77811,,"HOSE, GREASE",2,2,2,2,,,N,,,M10918,,M10918,,,,,,
4,1,,172312-77820,,"FITTING, GREASE",1,1,1,1,,,,,,,,,,,,,
5,1,,172135-78110,,HOSE,1,1,1,1,,,,,,,,,,,,,
6,1,,24761-020000,,"NIPPLE PT1/8,GREASE",3,3,3,3,,,,,,,,,,,,,
```

Fig. 48 グリーシング GREASING

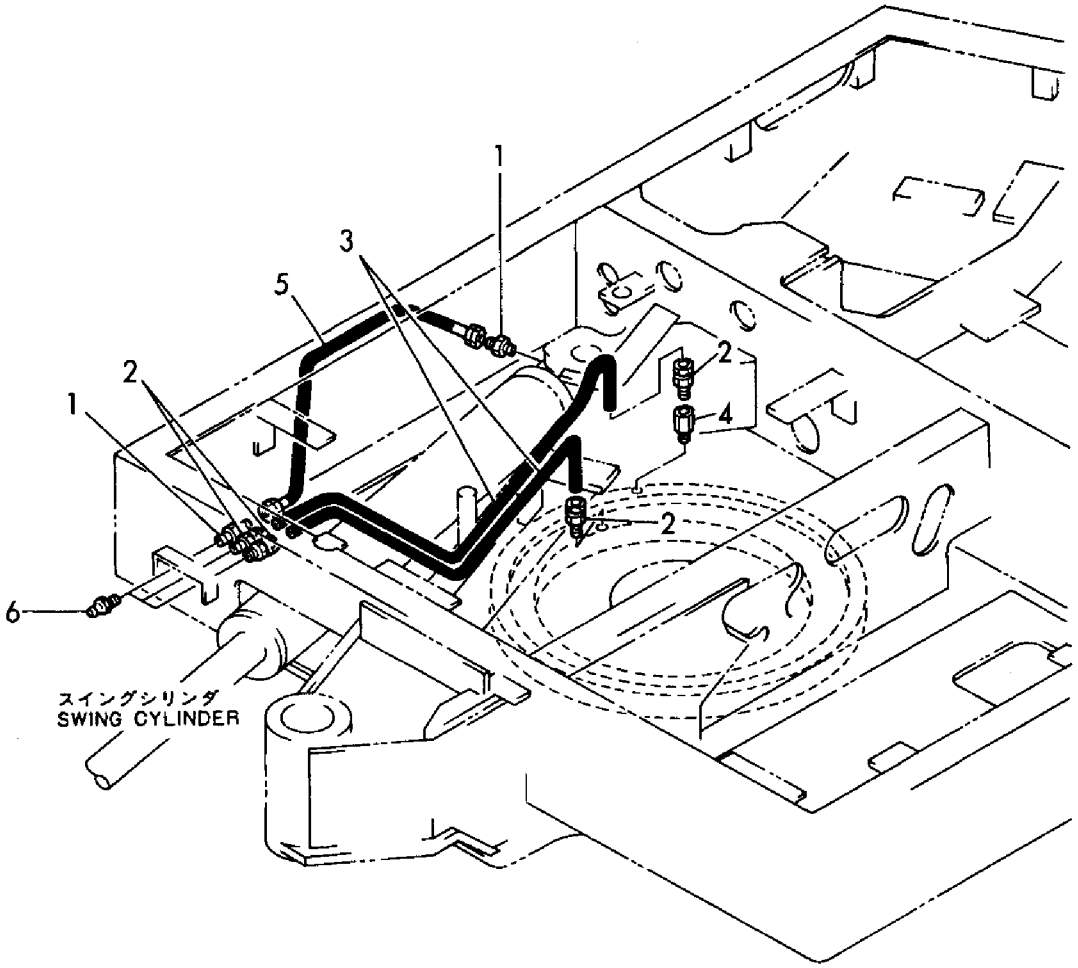

```
1,1,,172124-76150,,"NIPPLE 3/4U-PF1/4",2,2,2,2,,,,,,,,,,,,,
2,1,,172110-76440,,ELBOW,1,1,,,,,,,,,,,,,,,
2-1,1,,23393-020000,,"JOINT 90RGI1/4",1,1,1,1,,,R,,,M00501,,,,,,,,
3,1,,172141-76200,,CONNECTOR,1,1,1,1,,,,,,,,,,,,,
4,2,,24315-000110,,"O-RING 1B P-11.0",1,1,1,1,,,,,,,,,,,,,
5,1,,172141-76220,,NIPPLE,2,2,2,2,,,,,,,,,,,,,
6,1,,172110-76440,,ELBOW,2,2,,,,,,,,,,,,,,,
6-1,1,,23393-020000,,"JOINT 90RGI1/4",2,2,2,2,,,R,,,,,M00501,,,,,,
7,1,,933152-22771,,"ELBOW (90ß)",4,4,,,,,,,,,,,,,,,
7-1,1,,23393-030000,,"JOINT 90RGI 3/8",4,4,4,4,,,R,,,M00501,,M00501,,,,,,
8,1,,933152-24120,,"O-RING (B)",2,2,2,2,,,,,,,,,,,,,
9,1,,933152-24120,,"O-RING (B)",2,2,2,2,,,,,,,,,,,,,
10,1,,933152-24120,,"O-RING (B)",2,2,2,2,,,,,,,,,,,,,
11,1,,933152-24410,,"CONNECTOR (A)",1,1,1,1,,,,,,,,,,,,,
12,1,,933155-08481,,"CONNECTOR (A)",2,2,2,2,,,,,,,,,,,,,
13,1,,933169-24091,,CONNECTOR,2,2,2,2,,,,,,,,,,,,,
14,2,,933152-24120,,"O-RING (B)",2,2,2,2,,,,,,,,,,,,,
15,1,,933169-24281,,CONNECTOR,1,1,1,1,,,,,,,,,,,,,
16,2,,933152-07400,,"O-RING (A)",1,1,1,1,,,,,,,,,,,,,
17,1,,933171-24520,,"CONNECTOR 3/8-78",2,2,2,2,,,,,,,,,,,,,
18,1,,172141-78040,,"BUSH 10140",1,1,1,1,,,,,,,,,,,,,
19,1,,172141-78110,,HOSE,1,1,1,1,,,,,,,,,,,,,
20,1,,172141-78190,,HOSE,1,1,1,1,,,,,,,,,,,,,
21,1,,172141-78260,,HOSE,2,2,2,2,,,,,,,,,,,,,
22,1,,172141-78330,,HOSE,1,1,1,1,,,,,,,,,,,,,
23,2,,172141-78820,,"TUBE, SPIRAL",1,1,1,1,,,,,,,,,,,,,
24,1,,172141-78340,,HOSE,2,2,2,2,,,,,,,,,,,,,
25,1,,172141-78350,,HOSE,1,1,1,1,,,,,,,,,,,,,
26,2,,172141-78840,,"TUBE, SPIRAL",1,1,1,1,,,,,,,,,,,,,
27,1,,172141-78360,,HOSE,1,1,1,1,,,,,,,,,,,,,
28,1,,172141-78500,,HOSE,1,1,1,1,,,,,,,,,,,,,
29,2,,172141-78900,,"TUBE, SPIRAL",1,1,1,1,,,,,,,,,,,,,
30,1,,172141-78530,,HOSE,1,1,1,1,,,,,,,,,,,,,
30-1,1,,172141-78531,,HOSE,,,1,1,,,N,,,,,,,M20848,,M20848,,
31,1,,23010-014000,,"CLAMP 14",2,2,2,2,,,,,,,,,,,,,
31-1,1,,23000-013000,,"CLAMP 13",,,2,2,,,N,,,,,,,M20848,,M20848,,
32,1,,172141-78030,,"BUSH 10265",1,1,1,1,,,,,,,,,,,,,
```

Fig.49 油圧配管（バルブ～スイベル～モータ） HYD.OIL PIPING(VALVE ~ SWIVEL ~ MOTOR)

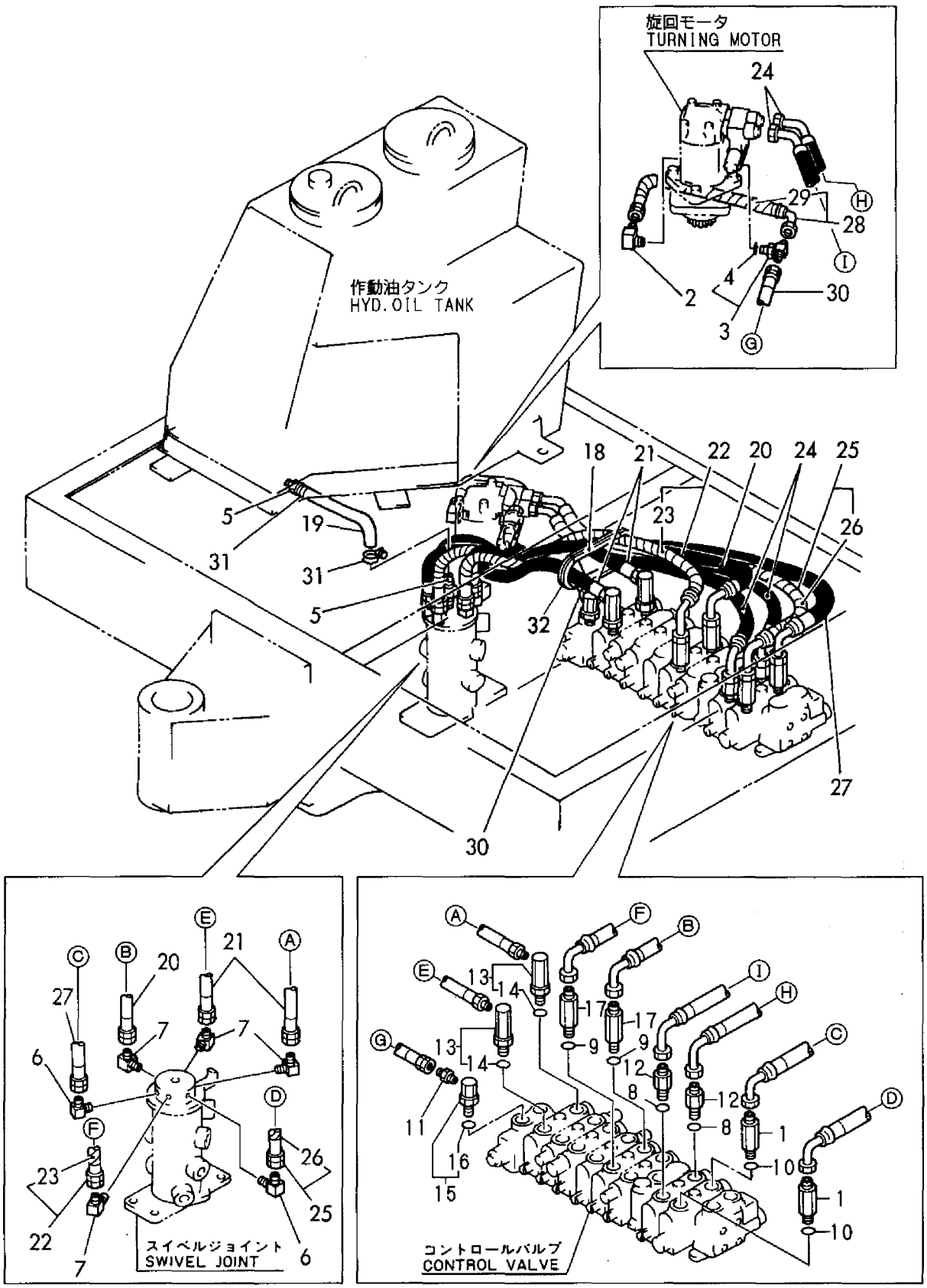

```
1,1,,172730-75140,,ADAPTOR,3,3,3,3,,,,,,,,,,,,,
2,1,,172142-76100,,CONNECTOR,3,3,3,3,,,,,,,,,,,,,
3,1,,172141-76110,,CONNECTOR,2,2,2,2,,,,,,,,,,,,,
4,2,,933152-07400,,"O-RING (A)",2,2,2,2,,,,,,,,,,,,,
5,1,,172141-76130,,CONNECTOR,1,1,1,1,,,,,,,,,,,,,
6,2,,933152-07400,,"O-RING (A)",1,1,1,1,,,,,,,,,,,,,
7,1,,172141-76260,,"CONNECTOR 12-14",1,1,1,1,,,,,,,,,,,,,
8,2,,933160-03570,,"O-RING (B)",1,1,1,1,,,,,,,,,,,,,
9,1,,23871-020000,,"PLUG PT1/4,SCREW",3,3,3,3,,,,,,,,,,,,,
10,1,,24315-000140,,"O-RING 1B P-14.0",3,3,3,3,,,,,,,,,,,,,
11,1,,24315-000240,,"O-RING 1B P-24.0",3,3,3,3,,,,,,,,,,,,,
12,1,,933152-24410,,"CONNECTOR (A)",1,1,1,1,,,,,,,,,,,,,
13,1,,172141-76400,,"PIPE, INTAKE",1,1,1,1,,,,,,,,,,,,,
14,1,,172141-76440,,"JOINT, RETURN(A)",1,1,1,1,,,,,,,,,,,,,
15,1,,172141-76470,,"JOINT, RETURN(B)",1,1,1,1,,,,,,,,,,,,,
16,1,,172141-76490,,"JOINT, RETURN(C)",1,1,1,1,,,,,,,,,,,,,
17,1,,23871-060000,,"PLUG PT3/4,SCREW",1,1,1,1,,,,,,,,,,,,,
18,1,,172141-78090,,"HOSE(B), INTAKE",3,3,3,3,,,,,,,,,,,,,
19,1,,172141-78100,,"HOSE(A), INTAKE",1,1,1,1,,,,,,,,,,,,,
20,1,,172141-78120,,HOSE,1,1,1,1,,,,,,,,,,,,,
21,1,,172141-78131,,"HOSE(A), RETURN",1,1,1,1,,,,,,,,,,,,,
22,1,,172141-78200,,HOSE,1,1,1,1,,,,,,,,,,,,,
23,2,,172141-78220,,"TUBE, SPIRAL",1,1,1,1,,,,,,,,,,,,,
24,1,,172141-78230,,HOSE,2,2,2,2,,,,,,,,,,,,,
25,2,,172141-78250,,"TUBE, SPIRAL",2,2,2,2,,,,,,,,,,,,,
26,1,,172141-78510,,HOSE,1,1,1,1,,,,,,,,,,,,,
27,1,,23000-035000,,"CLAMP 35",13,13,,,,,,,,,,,,,,,
27-1,1,,23000-041000,,"CLAMP 41",13,13,13,13,,,R,,,M00501,,M00501,,,,,,
28,1,,23000-048000,,"CLAMP 48",10,10,10,10,,,,,,,,,,,,,
29,1,,26013-100202,,"BOLT W/WASHER M10X20",4,4,4,4,,,,,,,,,,,,,
30,1,,933171-15680,,"GROMMET 40X13",3,3,3,3,,,,,,,,,,,,,
```

Fig.50 油圧配管（タンク～バルブ） HYD.OIL PIPING(TANK~VALVE)

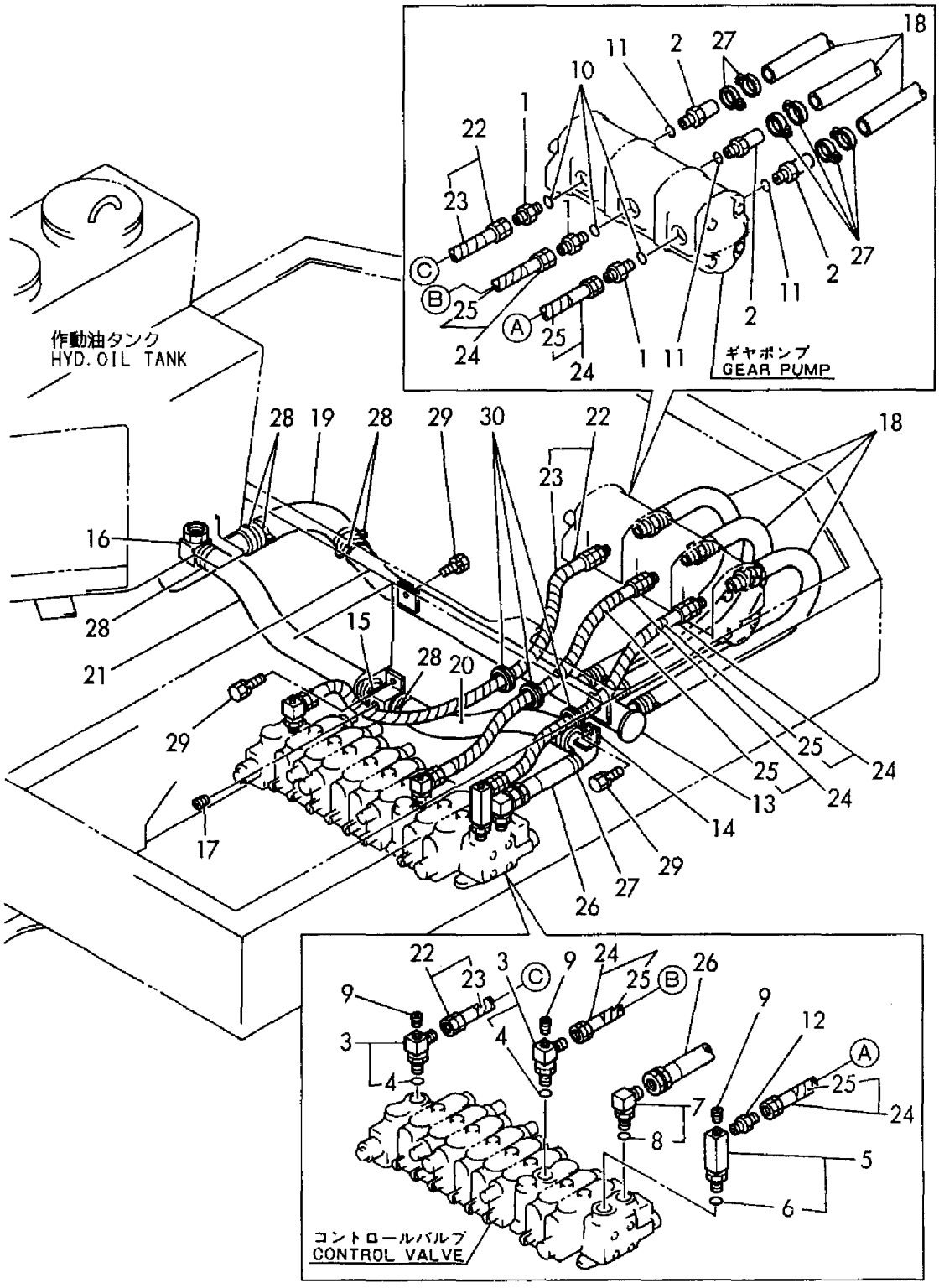

```
1,1,,172730-75140,,ADAPTOR,4,4,4,4,,,,,,,,,,,,,
2,1,,172141-76230,,JOINT,2,2,2,2,,,,,,,,,,,,,
3,1,,172110-76470,,NIPPLE,4,4,,,,,,,,,,,,,,,,
3-1,1,,23391-020000,,"JOINT RGI1/4",4,4,4,4,,,R,,,*1988.01,,*1988.01,,,,,,
4,1,,172110-76470,,NIPPLE,2,2,,,,,,,,,,,,,,,,
4-1,1,,23391-020000,,"JOINT RGI1/4",2,2,2,2,,,R,,,*1988.01,,*1988.01,,,,,,
5,1,,24315-000140,,"O-RING 1B P-14.0",4,4,4,4,,,,,,,,,,,,,
6,1,,933152-22761,,"ELBOW (45ß)",2,2,,,,,,,,,,,,,,,,
6-1,1,,23394-030000,,"JOINT 45RGI 3/8",2,2,2,2,,,R,,,M00501,,M00501,,,,,,
7,1,,933152-24410,,"CONNECTOR (A)",2,2,2,2,,,,,,,,,,,,,
8,1,,172141-78450,,HOSE,2,2,2,2,,,,,,,,,,,,,
9,1,,172141-78460,,HOSE,2,2,2,2,,,,,,,,,,,,,
10,1,,172141-78470,,HOSE,2,2,2,2,,,,,,,,,,,,,
11,1,,172141-78480,,HOSE,2,2,2,2,,,,,,,,,,,,,
12,1,,172141-78490,,HOSE,2,2,2,2,,,,,,,,,,,,,
```

Fig.51 油圧配管（走行） HYD.OIL PIPING(TRAVEL)

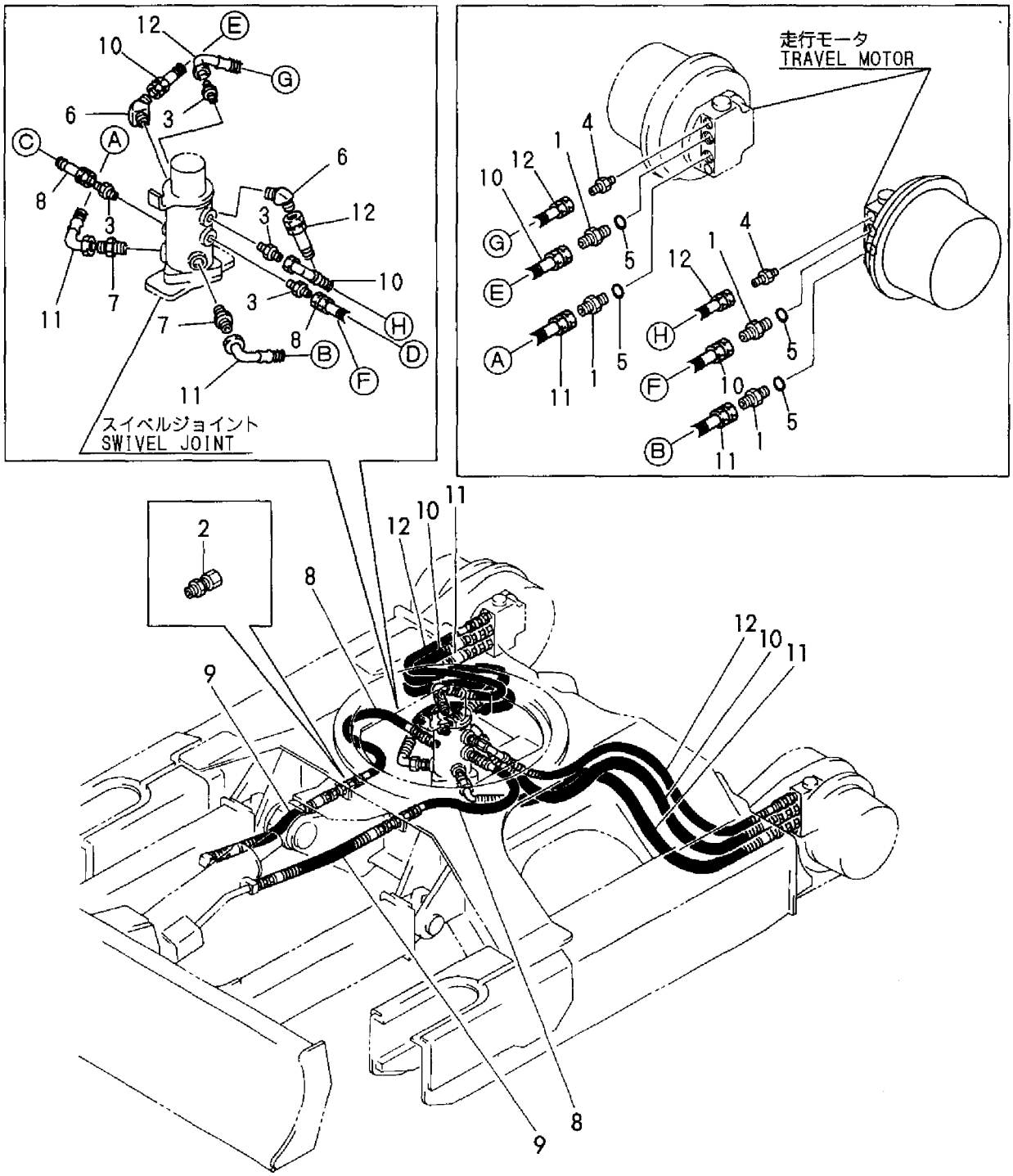

```
1,1,,172312-76190,,"NIPPLE 3/8X1/4",1,1,1,1,,,,,,,,,,,,,
2,1,,172312-76220,,"CONNECTOR 1/4-3/4UN",1,1,1,1,,,,,,,,,,,,,
3,1,,933152-24062,,"CONNECTOR (C)",4,4,4,4,,,,,,,,,,,,,
4,2,,933152-24120,,"O-RING (B)",4,4,4,4,,,,,,,,,,,,,
5,1,,933152-24120,,"O-RING (B)",1,1,1,1,,,,,,,,,,,,,
6,1,,933152-24410,,"CONNECTOR (A)",6,6,6,6,,,,,,,,,,,,,
7,1,,933169-24091,,CONNECTOR,3,3,3,3,,,,,,,,,,,,,
8,2,,933152-24120,,"O-RING (B)",3,3,3,3,,,,,,,,,,,,,
9,1,,172141-76500,,"JOINT, BOOM",1,1,,,,,,,,,,,,,,,,,
9-1,1,,172141-76501,,"JOINT, BOOM",1,1,1,1,,,N,,,*1988.03,,*1988.03,,,,,,
10,1,,172141-76530,,"PIPE, ARM(L)",1,1,1,1,,,,,,,,,,,,,
11,1,,172141-76570,,"PIPE, ARM(R)",1,1,1,1,,,,,,,,,,,,,
12,1,,172141-76600,,"PIPE, BUCKET(L)",1,1,1,1,,,,,,,,,,,,,
13,1,,172141-76630,,"PIPE, BUCKET(R)",1,1,1,1,,,,,,,,,,,,,
14,1,,172141-76670,,"CLAMP, PIPE(A)",5,5,5,5,,,,,,,,,,,,,
15,1,,172141-76680,,"CLAMP, PIPE(B)",2,2,2,2,,,,,,,,,,,,,
16,1,,22217-080000,,"SPRING WASHER  8",2,2,2,2,,,,,,,,,,,,,
17,1,,26013-100202,,"BOLT W/WASHER M10X20",2,2,2,2,,,,,,,,,,,,,,
18,1,,26013-100352,,"BOLT M10X 35",5,5,5,5,,,,,,,,,,,,,
19,1,,26717-080002,,"NUT 8",2,2,2,2,,,,,,,,,,,,,
20,1,,194250-51660,,"BAND  250",1,1,1,1,,,,,,,,,,,,,
21,1,,172141-78030,,"BUSH 10265",1,1,1,1,,,,,,,,,,,,,
22,1,,172141-78050,,"CLAMP, HOSE",1,1,1,1,,,,,,,,,,,,,
23,1,,172141-78270,,HOSE,1,1,1,1,,,,,,,,,,,,,
24,2,,172141-78290,,"TUBE, SPIRAL",1,1,1,1,,,,,,,,,,,,,
25,1,,172141-78300,,HOSE,1,1,1,1,,,,,,,,,,,,,
26,2,,172141-78320,,"TUBE, SPIRAL",1,1,1,1,,,,,,,,,,,,,
27,1,,172141-78370,,HOSE,2,2,2,2,,,,,,,,,,,,,
28,1,,172141-78380,,HOSE,2,2,2,2,,,,,,,,,,,,,
29,1,,172141-78390,,HOSE,2,2,2,2,,,,,,,,,,,,,
30,1,,172141-78400,,HOSE,1,1,1,1,,,,,,,,,,,,,
31,1,,172141-78410,,HOSE,1,1,1,1,,,,,,,,,,,,,
32,1,,172141-78420,,HOSE,1,1,1,1,,,,,,,,,,,,,
33,1,,172141-78430,,HOSE,1,1,1,1,,,,,,,,,,,,,
34,1,,172141-78440,,HOSE,2,2,2,2,,,,,,,,,,,,,
35,1,,172141-78600,,"SUPPORT, HOSE",1,1,1,1,,,,,,,,,,,,,
36,1,,172141-78620,,"COVER, HOSE",1,1,1,1,,,,,,,,,,,,,
37,1,,172141-78640,,"STAY, CLAMP",1,1,1,1,,,,,,,,,,,,,
38,1,,172141-78680,,RUBBER,1,1,1,1,,,,,,,,,,,,,
39,1,,172141-78690,,RUBBER,1,1,1,1,,,,,,,,,,,,,
40,1,,26013-060162,,"BOLT M 6X 16",2,2,,,,,,,,,,,,,,,
40-1,1,,26116-060162,,"BOLT M 6X 16
PLATED",2,2,2,2,,,N,,,*1987.11,,*1987.11,,,,,,
41,1,,26013-100202,,"BOLT W/WASHER M10X20",4,4,,,,,,,,,,,,,,,
41-1,1,,26116-100202,,"BOLT M10X 20
PLATED",4,4,4,4,,,N,,,*1987.11,,*1987.11,,,,,,
42,1,,29321-405065,,"GROMMET 40X5.0",1,1,1,1,,,,,,,,,,,,,
43,1,,22217-060000,,"SPRING WASHER  6",2,2,2,2,,,W,,,*1987.11,,*1987.11,,,,,,
44,1,,22217-100000,,"SPRING WASHER 10",4,4,4,4,,,W,,,*1987.11,,*1987.11,,,,,,
45,1,,933168-56000,,"GROMMET 17X19",1,1,1,1,,,,,,,,,,,,,
```

Fig. 52 油圧配管（作業部） HYD. OIL PIPING (EQUIPMENT)

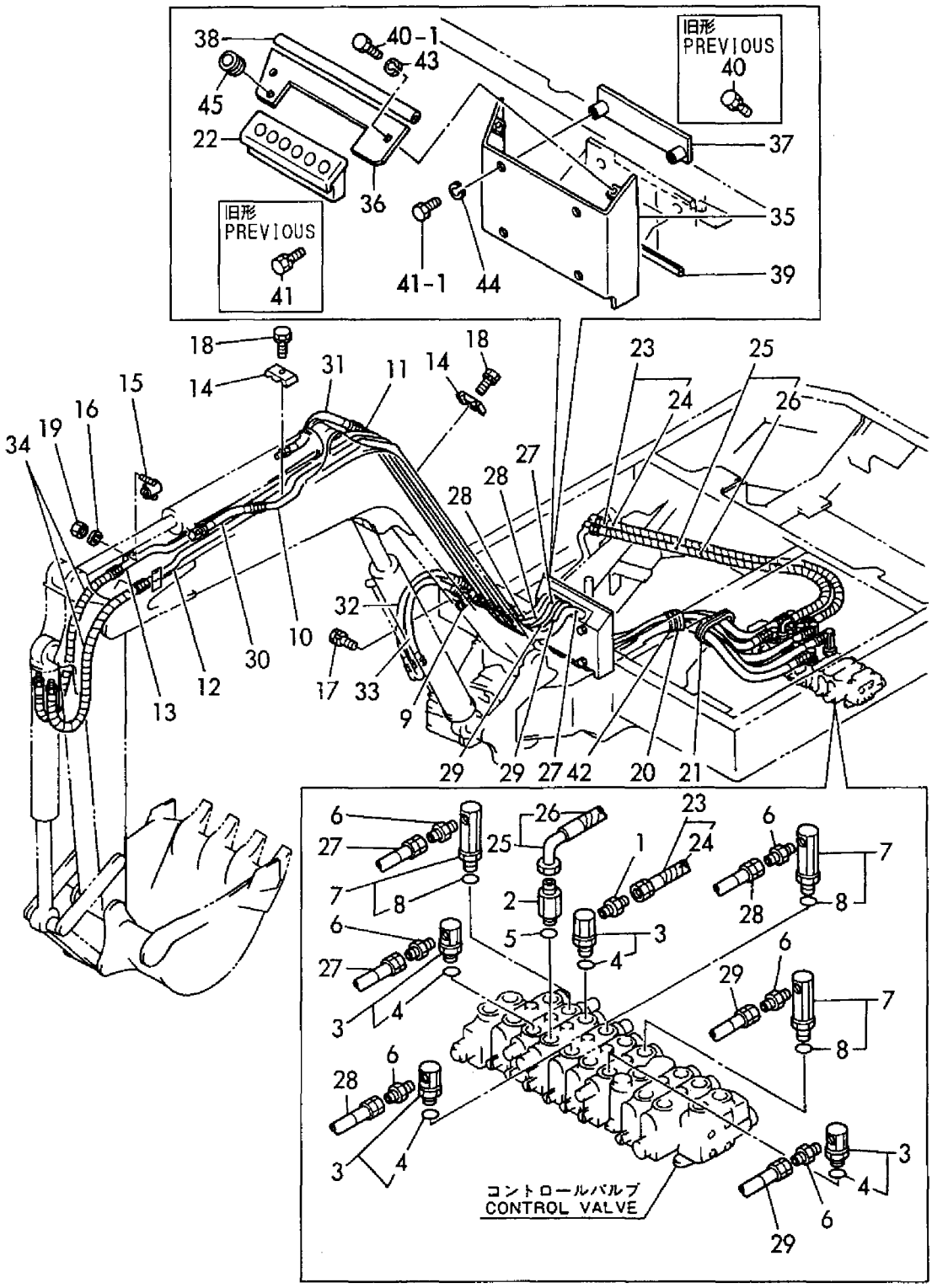

```
1,1,,172141-81100,,"BOOM ASSY",1,1,1,1,,,,,,,,,,,,
2,2,,172141-81360,,"BUSH 38-55, PIN",2,2,,,,,,,,,,,,,,,
2-1,2,,172116-82400,,"PIN BUSH 38X55",2,2,2,2,,,R,,,*1989.04,,,,,,,,
3,1,,172141-81400,,"PIN 38-160",1,1,1,1,,,,,,,,,,,,,
4,1,,172141-81420,,"PIN 38-115",2,2,2,2,,,,,,,,,,,,,
5,1,,22417-800500,,"COTTER PIN 8.0X50",3,3,3,3,,,,,,,,,,,,,
6,1,,24761-040000,,"NIPPLE B,GREASE",1,1,1,1,,,,,,,,,,,,,
7,1,,933171-29750,,"SHIM SET, PIN 38",4,4,4,4,,,,,,,,,,,,,
8,1,,172141-81400,,"PIN 38-160",1,1,1,1,,,,,,,,,,,,,
9,1,,172141-83301,,"BRACKET, BOOM",1,1,1,1,,,,,,,,,,,,,
9-1,1,,172141-83290,,BRACKET,,,1,1,,,N,,,,,,,M21607,,M21607,,
9A,2,,172141-83330,,"BUSH 50X45",,,2,2,,,W,,,,,,,M21607,,M21607,,
10,1,,172141-83321,,"PIN 50-303",1,1,,,,,,,,,,,,,,,
10-1,1,,172141-83322,,"PIN 50-303",1,1,1,1,,,N,,,M00501,,M00501,,,,,,
11,1,,172141-83340,,"PIN 38-223",1,1,1,1,,,,,,,,,,,,,
12,1,,172141-83370,,"PIN 38-97",1,1,,,,,,,,,,,,,,,
12-1,1,,172141-83371,,"PIN 38-97",1,1,1,1,,,S,,,*1989.08,,*1989.08,,,,,,
13,1,,172141-83390,,"PLATE, PIN LOCK",1,1,1,1,,,,,,,,,,,,,
14,1,,172141-94260,,"PIN 38-130",1,1,1,1,,,,,,,,,,,,,
15,1,,22242-000500,,"CIRCLIP   50",1,1,1,1,,,,,,,,,,,,,
16,1,,22417-800500,,"COTTER PIN 8.0X50",3,3,3,3,,,,,,,,,,,,,
17,1,,24761-040000,,"NIPPLE B,GREASE",1,1,1,1,,,,,,,,,,,,,
18,1,,26013-100252,,"BOLT W/WASHER M10X25",2,2,2,2,,,,,,,,,,,,,
19,1,,26013-160402,,"BOLT M16X 40",2,2,,,,,,,,,,,,,,,
19-1,1,,26116-160402,,"BOLT M16X 40 PLATED",2,2,2,2,,,S,,,M00531,,M00531,,,,,,
20,1,,933171-29750,,"SHIM SET, PIN 38",4,4,4,4,,,,,,,,,,,,,
21,1,,172141-83410,,PLATE,1,1,,,,,,,,,,,,,,,
21-1,1,,172141-83400,,PLATE,1,1,1,1,,,S,,,M00531,,,,,,,
22,1,,22217-160000,,"SPRING WASHER 16",2,2,2,2,,,W,,,*1988.03,,*1988.03,,,,,,
23,1,,172141-81500,,"BOOM W/BUSH, 3RD",1,1,1,1,,,Z,,,*1990.01,,*1990.01,,,,,,
24,2,,172141-81360,,"BUSH 38-55, PIN",2,2,2,2,,,Z,,,*1990.01,,*1990.01,,,,,,
25,1,,172141-81550,,"BOOM ASSY, 3RD",1,1,1,1,,,W,,,*1990.01,,*1990.01,,,,,,
27,3,,172116-82400,,"PIN BUSH 38X55",2,2,2,2,,,W,,,*1990.01,,*1990.01,,,,,,
```

Fig.53 ブーム&ブームブラケット BOOM & BOOM BRACKET

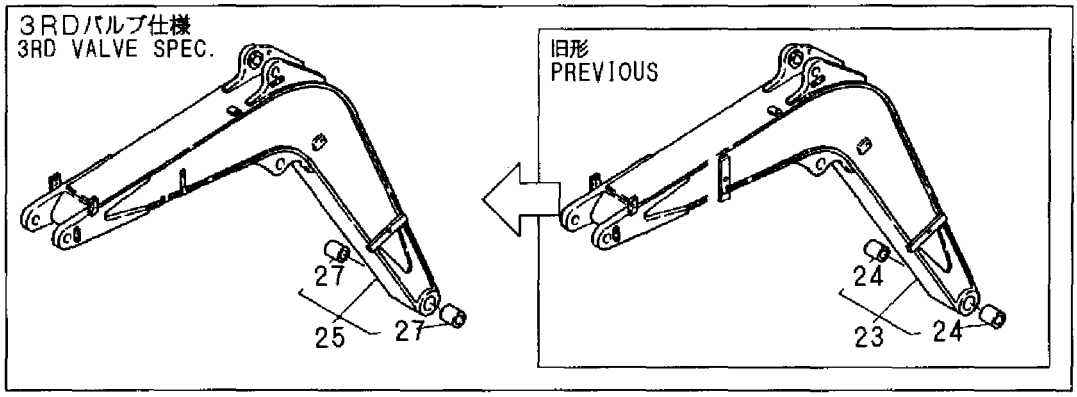

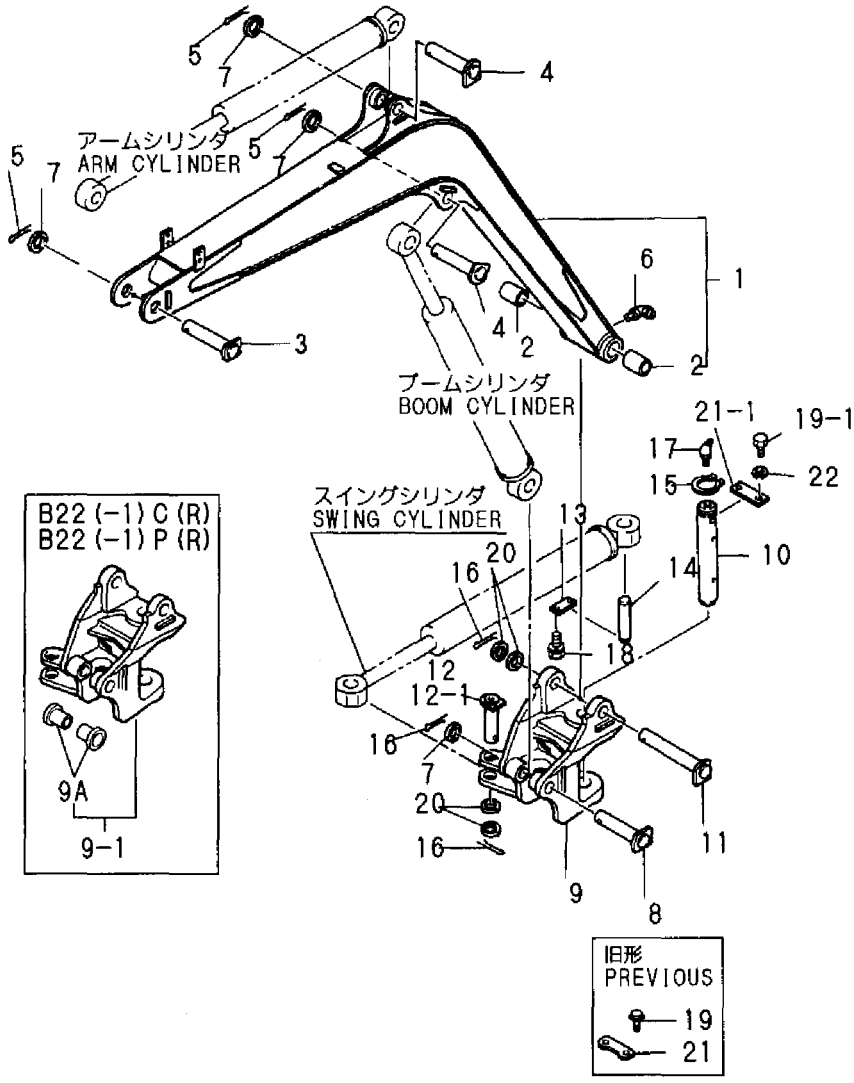

```
1,1,,172141-82100,,"ARM ASSY(1080)",1,1,1,1,,,,,,,,,,,,,
1-1,1,,172141-82101,,"ARM ASSY(1080)",,,1,1,,,N,,,,,,,M20501,,M20501,,
1-2,1,,172141-82102,,"ARM ASSY(1080)",,,1,1,,,N,,,,,,,M21607,,M21607,,
1-3,1,,172141-82103,,"ARM ASSY(1080)",1,1,1,1,,,S,,,,,,,M21607,,M21607,,
2,2,,172141-82270,,"BUSH 35 45",4,4,4,4,,,,,,,,,,,,,
2-1,2,,172141-82270,,"BUSH 35 45",,,2,2,,,K,,,,,,,M21607,,M21607,,
3,2,,172141-82280,,"BUSH 38 45, PIN",2,2,2,2,,,,,,,,,,,,,
4,2,,172171-81261,,"BUSH 35X50",,,2,2,,,W,,,,,,,M21607,,M21607,,
5,2,,172171-81280,,"SEAL 35X45X4",,,4,4,,,W,,,,,,,M21607,,M21607,,
6,2,,172122-82290,,"SEAL, DUST",,,2,2,,,W,,,,,,,M21607,,M21607,,
6-1,2,,172168-81400,,"SEAL,DUST 38X48X4",,,2,2,,,R,,,,,,,M21607,,M21607,,
7,1,,172141-82300,,"PIN 38-86",1,1,1,1,,,,,,,,,,,,,
7-1,1,,172141-82301,,"PIN 35-92",,,1,1,,,S,,,,,,,M21607,,M21607,,
8,1,,172141-82330,,"PIN 38-86",1,1,1,1,,,,,,,,,,,,,
8-1,1,,172122-82302,,"PIN ASSY, ARM",,,1,1,,,S,,,,,,,M21607,,M21607,,
9,1,,172141-84600,,"SHIM 35",2,2,2,2,,,,,,,,,,,,,
10,1,,22417-800500,,"COTTER PIN 8.0X50",2,2,,,,,,,,,,,,,,,
10-1,1,,22417-800500,,"COTTER PIN 8.0X50",1,1,1,1,,,K,,,M00519,,M00519,,,,,,
10-2,1,,22417-800500,,"COTTER PIN 8.0X50",,,1,1,,,Z,,,,,,,M21607,,M21607,,
11,1,,24761-040000,,"NIPPLE B,GREASE",1,1,1,1,,,,,,,,,,,,,
12,1,,933171-29750,,"SHIM SET, PIN 38",1,1,1,1,,,,,,,,,,,,,
13,1,,172141-84400,,"LINK W/BUSH, BUCKET",1,1,1,1,,,,,,,,,,,,,,
13-1,1,,172141-84401,,"LINK W/BUSH, BUCKET",,,1,1,,,N,,,,,,,M21607,,M21607,,
14,2,,172141-82270,,"BUSH 35 45",2,2,2,2,,,,,,,,,,,,,
15,2,,172141-72560,,"BUSH 35 40 A, PIN",2,2,2,2,,,,,,,,,,,,,,
15-1,2,,172141-72561,,"BUSH 35 40 A, PIN",,,2,2,,,S,,,,,,,M21607,,M21607,,
16,2,,172171-81280,,"SEAL 35X45X4",,,6,6,,,W,,,,,,,M21607,,M21607,,
17,1,,172141-84500,,"ARM(L), BUCKET",1,1,1,1,,,,,,,,,,,,,
18,1,,172141-84510,,"ARM(R), BUCKET",1,1,1,1,,,,,,,,,,,,,
19,1,,172141-99470,,"KIT, ARM PIN",2,2,2,2,,,,,,,,,,,,,
20,2,,172141-84550,,"PIN 35-152",2,2,2,2,,,,,,,,,,,,,
21,2,,24761-020000,,"NIPPLE PT1/8,GREASE",2,2,2,2,,,,,,,,,,,,,,
22,2,,933110-86600,,"NUT M24, NYLON",2,2,2,2,,,,,,,,,,,,,,
23,2,,933171-29760,,WASHER,2,2,2,2,,,,,,,,,,,,,
24,2,,172141-84600,,"SHIM 35",2,2,2,2,,,,,,,,,,,,,,
24-1,2,,172141-84601,,"SHIM 35",,,2,2,,,N,,,,,,,M21607,,M21607,,
25,1,,24761-020000,,"NIPPLE PT1/8,GREASE",2,2,2,2,,,,,,,,,,,,,,
26,1,,22417-800450,,"COTTER PIN 8.0X45",1,1,1,1,,,W,,,M00519,,M00519,,,,,,
26-1,1,,22417-800450,,"COTTER PIN 8.0X45",,,1,1,,,Z,,,,,,,M21607,,M21607,,
27,1,,172171-81270,,O-RING,,,2,2,,,W,,,,,,,M21607,,M21607,,
28,1,,172010-01640,,SPACER,,,1,1,,,W,,,,,,,M21607,,M21607,,
29,1,,172164-81670,,SPACER,,,1,1,,,W,,,,,,,M21607,,M21607,,
30,1,,22157-100000,,"WASHER 10",,,1,1,,,W,,,,,,,M21607,,M21607,,
31,1,,22157-120000,,"WASHER 12",,,1,1,,,W,,,,,,,M21607,,M21607,,
32,1,,26013-100252,,"BOLT W/WASHER M10X25",,,1,1,,,W,,,,,,,M21607,,M21607,,
33,1,,26013-120302,,"BOLT W/WASHER M12X30",,,1,1,,,W,,,,,,,M21607,,M21607,,
34,1,,172141-82400,,"ARM ASSY, 3RD",1,1,1,1,,,W,,,*1990.01,,*1990.01,,,,,,
34-1,1,,172141-82401,,"ARM ASSY, 3RD",,,1,1,,,N,,,,,,,M20501,,M20501,,
34-2,1,,172141-82402,,"ARM ASSY, 3RD",,,1,1,,,N,,,,,,,M21607,,M21607,,
34-3,1,,172141-82403,,"ARM ASSY, 3RD",1,1,1,1,,,S,,,,,,,M21607,,M21607,,
36,3,,172141-82270,,"BUSH 35 45",4,4,4,4,,,W,,,*1990.01,,*1990.01,,,,,,
36-1,3,,172141-82270,,"BUSH 35 45",,,2,2,,,K,,,,,,,M21607,,M21607,,
37,3,,172141-82280,,"BUSH 38 45, PIN",2,2,2,2,,,W,,,*1990.01,,*1990.01,,,,,,
38,3,,172171-81261,,"BUSH 35X50",,,2,2,,,W,,,,,,,M21607,,M21607,,
39,3,,172171-81280,,"SEAL 35X45X4",,,4,4,,,W,,,,,,,M21607,,M21607,,
40,3,,172122-82290,,"SEAL, DUST",,,2,2,,,W,,,,,,,M21607,,M21607,,
40-1,3,,172168-81400,,"SEAL,DUST 38X48X4",,,2,2,,,R,,,,,,,M21607,,M21607,,
```

Fig.54 アーム&バケットリンク ARM & BUCKET LINK

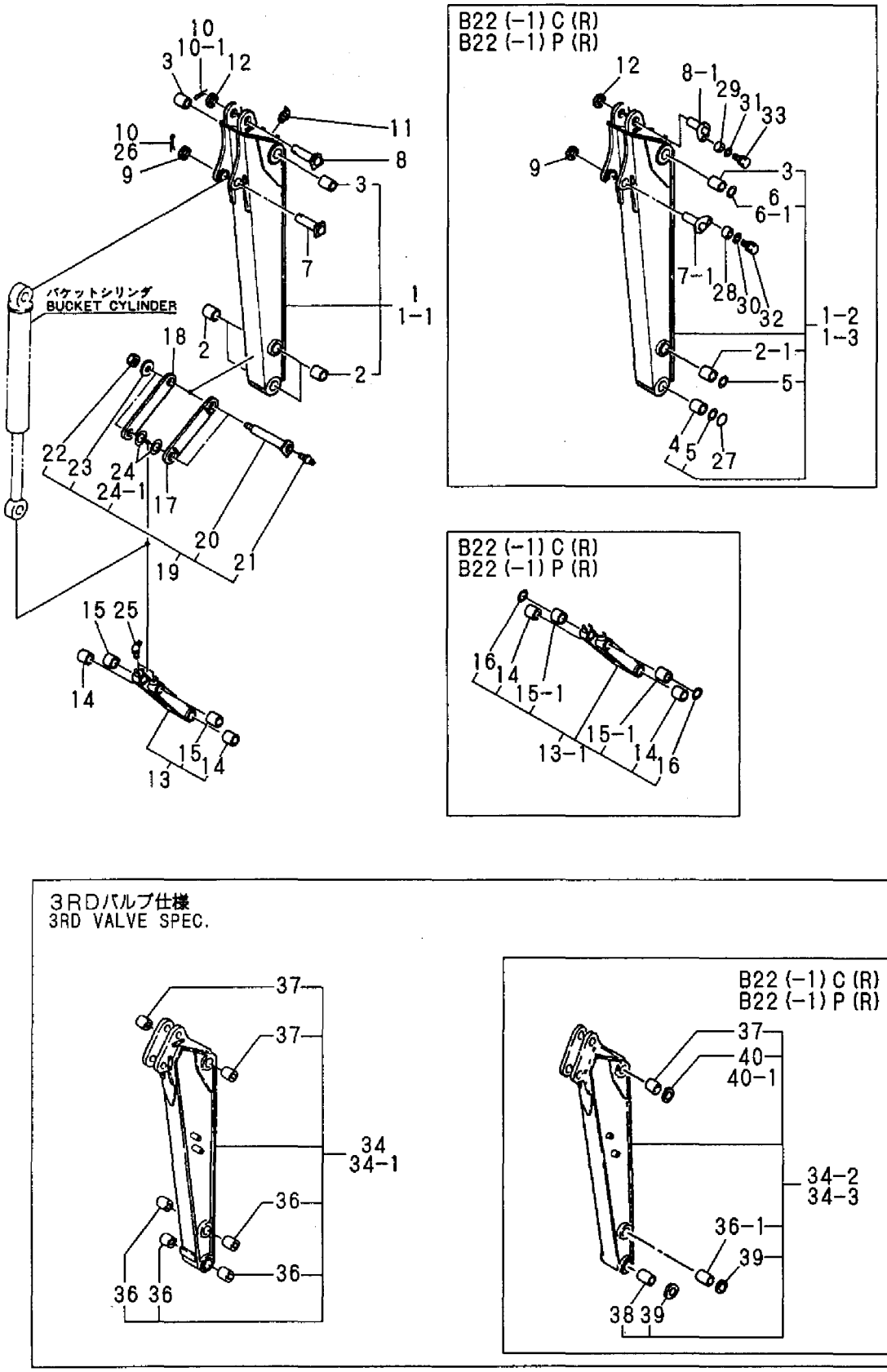

```
1,1,,772141-81400,,"BUCKET 450",1,1,,,,,,,,,,,,,,,
1-1,1,,772141-81401,,"BUCKET 450",1,1,1,1,,,F,1,,M00872,,,,,,,,
1-2,1,,772141-81402,,"BUCKET 450",,,1,1,,,N,,,,,,,M21607,,M21607,,
3,3,,172116-86240,,"SIDE CUTTER, BUCKET",2,2,2,2,,,,,,,,,,,,,
3-1,3,,172116-86240,,"SIDE CUTTER, BUCKET",,,2,2,,,Z,,,,,,,M21607,,M21607,,
4,2,,772141-86230,,"TEETH ASSY",4,4,,,,,,,,,,,,,,,,
4-1,2,,772141-86231,,"TEETH ASSY",4,4,4,4,,,R,,,*1988.05,,,,,,,,
5,3,,172141-86230,,TEETH,4,4,,,,,,,,,,,,,,,,
5-1,3,,172141-86231,,TEETH,4,4,4,4,,,R,,,*1988.05,,*1988.05,,,,,,
6,3,,172137-86710,,"TEETH SHIM 17 SET",4,4,4,4,,,,,,,,,,,,,
7,3,,172137-86770,,BOLT,8,8,8,8,,,,,,,,,,,,,
8,3,,172137-86780,,NUT,8,8,8,8,,,,,,,,,,,,,
9,2,,172142-86150,,"CUTTER (L), SIDE",,,1,1,,,W,,,,,,,M21607,,M21607,,
10,2,,172142-86160,,"CUTTER (R), SIDE",,,1,1,,,W,,,,,,,M21607,,M21607,,
11,2,,172142-86280,,"BOLT M14X 40",,,6,6,,,W,,,,,,,M21607,,M21607,,
12,2,,172142-86290,,"NUT 14",,,6,6,,,W,,,,,,,M21607,,M21607,,
13,2,,22217-140000,,"SPRING WASHER 14",,,6,6,,,W,,,,,,,M21607,,M21607,,
14,1,,172141-99460,,"PIN KIT, BUCKET",2,2,2,2,,,,,,,,,,,,,
14-1,1,,172173-99460,,"PIN KIT, BUCKET",,,2,2,,,N,,,,,,,M21607,,M21607,,
15,2,,172141-86250,,"PIN 35-156",2,2,,,,,,,,,,,,,,,,
15-1,2,,172141-86251,,"PIN  35-188 CMP",2,2,2,2,,,S,,,M00872,,M00872,,,,,,
15-2,2,,172141-86252,,"PIN 35-195",,,2,2,,,S,,,,,,,M21607,,M21607,,
16,2,,22417-800500,,"COTTER PIN 8.0X50",2,2,2,2,,,,,,,,,,,,,
16-1,2,,22417-800500,,"COTTER PIN 8.0X50",,,2,2,,,Z,,,,,,,M21607,,M21607,,
17,2,,24761-020000,,"NIPPLE PT1/8,GREASE",2,2,2,2,,,,,,,,,,,,,
18,2,,172141-84600,,"SHIM 35",2,2,2,2,,,,,,,,,,,,,
18-1,2,,172141-84601,,"SHIM 35",,,2,2,,,N,,,,,,,M21607,,M21607,,
19,2,,172171-81500,,COLLAR,,,2,2,,,W,,,,,,,M21607,,M21607,,
20,2,,26116-100702,,"BOLT M10X 70 PLATED",,,2,2,,,W,,,,,,,M21607,,M21607,,
20-1,1,,26116-100652,,"BOLT M10X 65 PLATED",,,2,2,,,N,,,,,,,M21607,,M21607,,
21,1,,26716-100002,,"NUT M10",,,4,4,,,W,,,,,,,M21607,,M21607,,
```

Fig. 55 バケット BUCKET

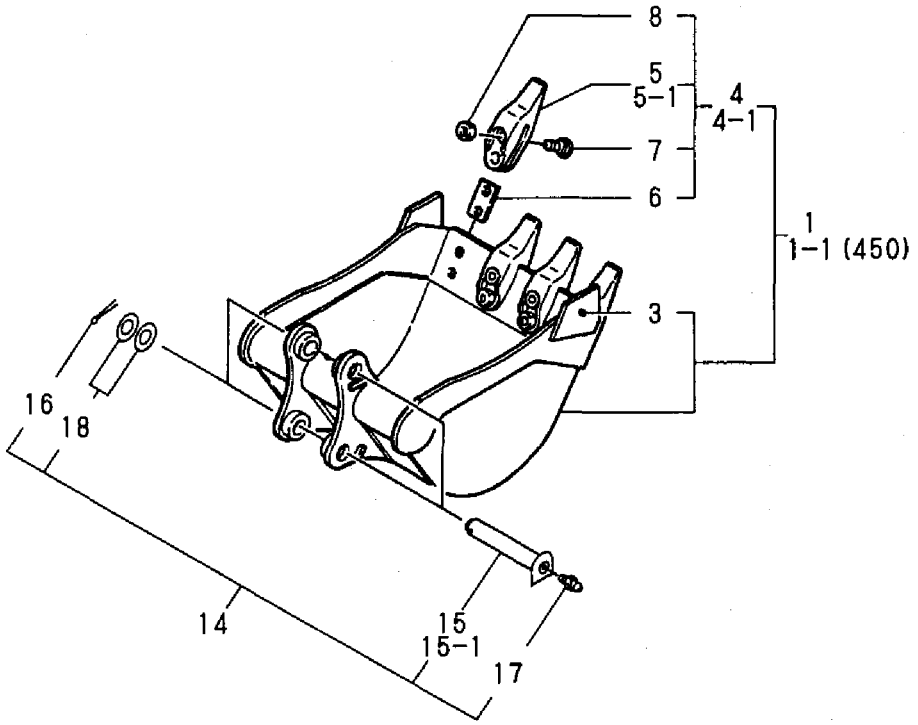

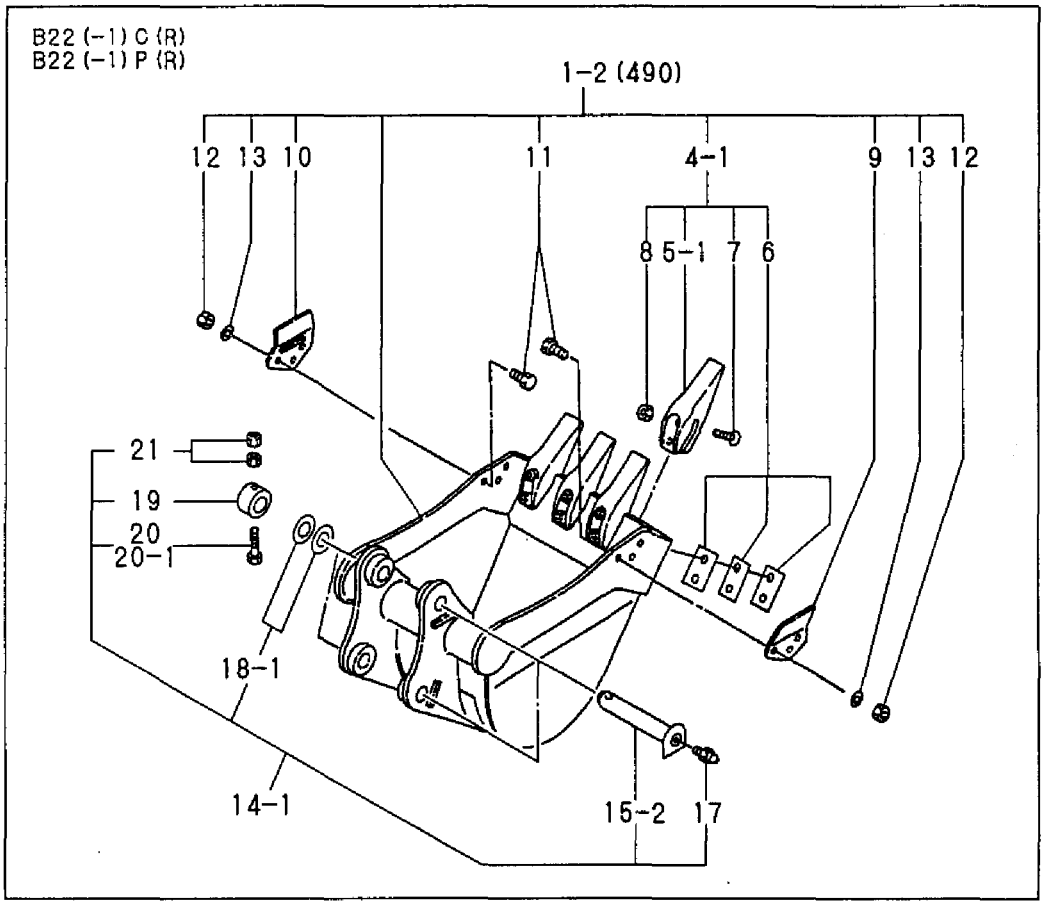

```
1,1,,172141-94100,,"BLADE ASSY, 850",1,1,1,1,,,,,,,,,,,,,
1-1,1,,172141-94101,,"BLADE ASSY, 850",,,1,1,,,N,,,,,,,M20501,,M20501,,
1-2,1,,172141-94102,,"BLADE ASSY, 850",,,1,1,,,N,,,,,,,M21607,,M21607,,
1-3,1,,172141-94103,,"BLADE 850 COMPL.",,,1,1,,,S,,,,,,,M21607,,M21607,,
1A,2,,172168-81270,,"SEAL,DUST 38X50X4",,,4,4,,,W,,,,,,,M21607,,M21607,,
2,1,,172141-94260,,"PIN 38-130",2,2,2,2,,,,,,,,,,,,,
3,1,,172141-94270,,"PIN 38-90",2,2,2,2,,,,,,,,,,,,,
3-1,1,,172141-94271,,"PIN 38-94",,,2,2,,,S,,,,,,,M21607,,M21607,,
4,1,,172124-94310,,"PLATE, LOCK",2,2,2,2,,,,,,,,,,,,,
5,1,,22417-800560,,"COTTER PIN 8.0X 56",2,2,2,2,,,,,,,,,,,,,
5-1,1,,22417-800560,,"COTTER PIN 8.0X 56",,,2,2,,,Z,,,,,,,M21607,,M21607,,
6,1,,24761-020000,,"NIPPLE PT1/8,GREASE",2,2,2,2,,,,,,,,,,,,,
7,1,,24761-040000,,"NIPPLE B,GREASE",2,2,2,2,,,,,,,,,,,,,
8,1,,26013-100252,,"BOLT W/WASHER M10X25",4,4,4,4,,,,,,,,,,,,,
9,1,,933171-29750,,"SHIM SET, PIN 38",1,1,1,1,,,,,,,,,,,,,
10,1,,172164-81670,,SPACER,,,2,2,,,W,,,,,,,M21607,,M21607,,
11,1,,22157-120000,,"WASHER 12",,,2,2,,,W,,,,,,,M21607,,M21607,,
12,1,,26013-120302,,"BOLT W/WASHER M12X30",,,2,2,,,W,,,,,,,M21607,,M21607,,
```

Fig. 56 ブレード (850) BLADE (850)

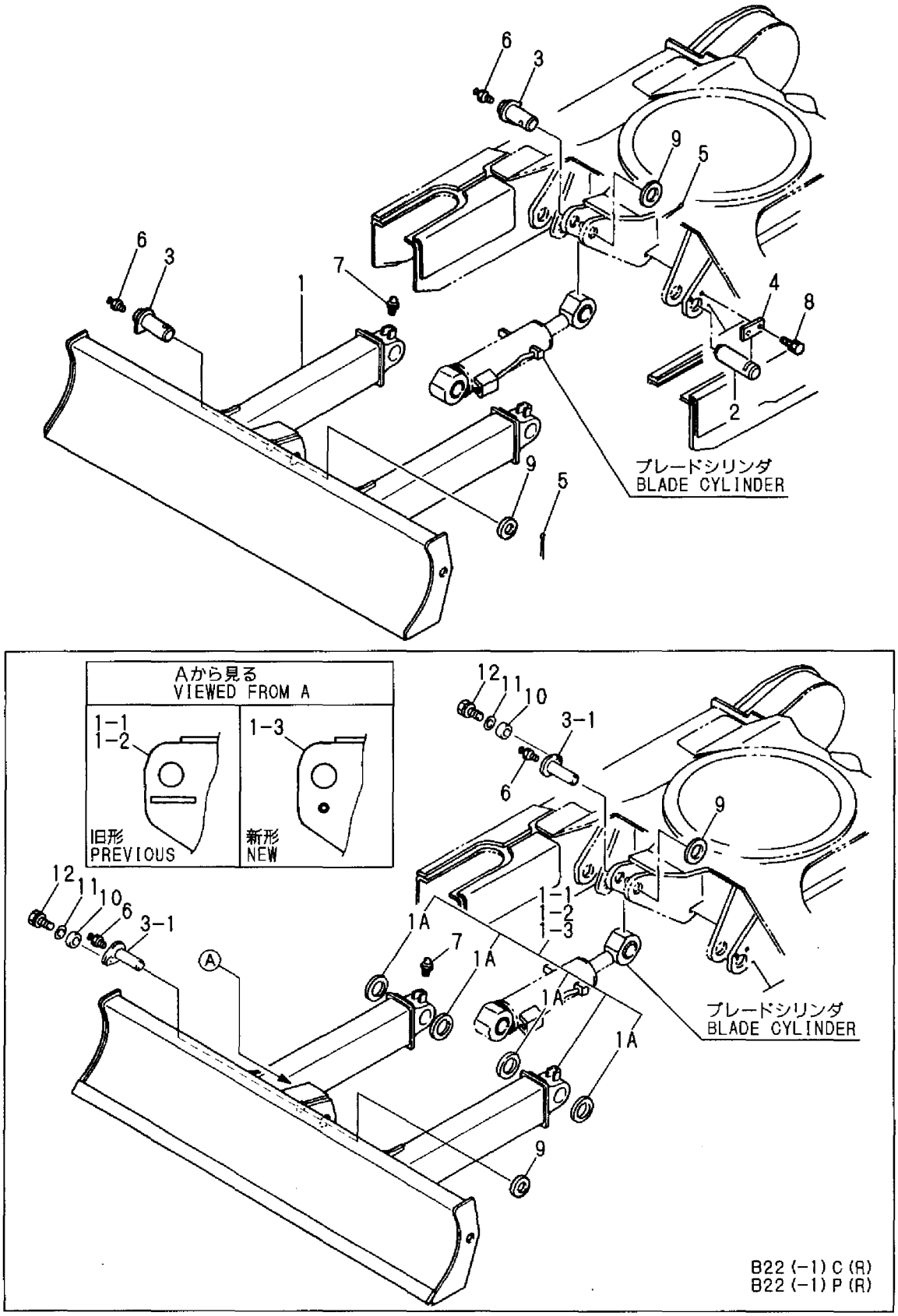

```
1,1,,172312-17250,,ASHTRAY,1,,1,,,,,,,,,,,,,,
2,1,,22867-400100,,"SCREW 4X10",3,,3,,,,,,,,,,,,,,
3,1,,933113-15000,,"CIGAR LIGHTER ASSY",1,,1,,,,,,,,,,,,,,
4,1,,172119-68600,,BUCK,1,,1,,,,W,,,M00501,,,,,,,,
5,1,,172141-07100,,SUPPORT,1,,1,,,,W,,,M00501,,,,,,,,
6,1,,22117-080000,,"WASHER  8",2,,2,,,,W,,,M00501,,,,,,,,
7,1,,26116-080162,,"BOLT M 8X 16 PLATED",2,,2,,,,W,,,M00501,,,,,,,,
8,1,,22857-400120,,"SCREW 4X12",2,,2,,,,W,,,"FROM 1ST",,,,"FROM 1ST",,,,
```

Fig.57 シガライター&マニュアルケース（オプション）
CIGAR LIGHTTER & MANUAL CASE (OPTIONAL)

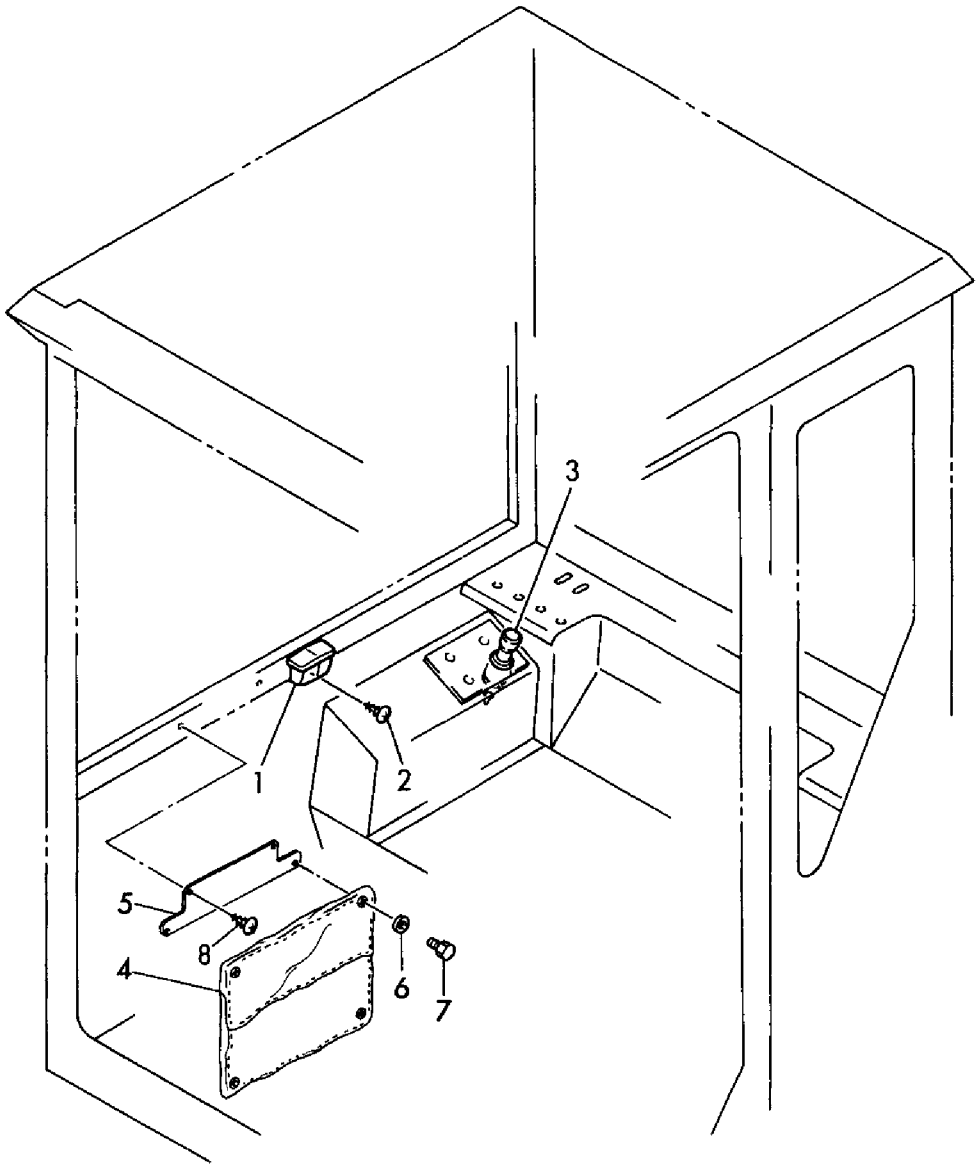

```
1,1,,772141-17600,,"HEATER ASSY",1,,1,,,,,,,,,,,,,,
2,2,,172141-13450,,"PIPE(A,E), C.WATER",1,,1,,,,Z,,,*1988.02,,,,,,,
3,2,,172141-13460,,"PIPE(A,R), C.WATER",1,,1,,,,Z,,,*1988.02,,,,,,,
4,2,,172141-13470,,"PIPE(B,E), C.WATER",1,,1,,,,Z,,,M10571,,,,,,,
5,2,,172141-13480,,"PIPE(B,R), C.WATER",1,,1,,,,Z,,,M10571,,,,,,,
6,2,,172141-13490,,JOINT,2,,2,,,,,,,,,,,,,,
6-1,2,,172141-13490,,JOINT,1,,1,,,,K,,,*1988.02,,,,,,,
6-2,2,,172141-13490,,JOINT,1,,1,,,,Z,,,M10571,,,,,,,
7,2,,172141-17600,,"ELBOW 90ß",1,,1,,,,Z,,,M10571,,,,,,,
8,2,,172124-17630,,"VALVE, MINIATURE",1,,1,,,,Z,,,M10571,,,,,,,
9,2,,172124-17640,,"JOINT 3/8",2,,2,,,,Z,,,M10571,,,,,,,
10,2,,172141-17640,,"COVER, PIPE",1,,1,,,,Z,,,M10571,,,,,,,
11,2,,172141-17680,,"HOSE ASSY, HEATER",1,,1,,,,Z,,,M10571,,,,,,,
12,3,,172141-17690,,"HOSE, HEATER",1,,1,,,,Z,,,M10571,,,,,,,
13,3,,172141-17700,,"TUBE, CORRUGAT",1,,1,,,,Z,,,M10571,,,,,,,
14,2,,172141-17710,,"HOSE ASSY, HEATER",1,,1,,,,Z,,,M10571,,,,,,,
15,3,,172141-17720,,"HOSE, HEATER",1,,1,,,,Z,,,M10571,,,,,,,
16,3,,172141-17730,,"TUBE, CORRUGAT",1,,1,,,,Z,,,M10571,,,,,,,
17,2,,172122-17730,,"COVER, DEFROSTER",1,,1,,,,Z,,,M10571,,,,,,,
18,2,,172124-17740,,"HOSE(R), DEFROSTER",1,,1,,,,,,,,,,,,,,
18-1,2,,172141-17750,,"TUBE, AIR",1,,1,,,,N,,,*1988.03,,,,,,,
18-2,2,,172141-17750,,"TUBE, AIR",1,,1,,,,Z,,,M10571,,,,,,,
19,2,,22137-100000,,"WASHER 10,POLISHED",3,,3,,,,Z,,,M10571,,,,,,,
20,2,,23000-022000,,"CLAMP 22",4,,4,,,,Z,,,M10571,,,,,,,
21,2,,26013-100202,,"BOLT W/WASHER M10X20",3,,3,,,,Z,,,M10571,,,,,,,
22,2,,26013-100202,,"BOLT W/WASHER M10X20",2,,2,,,,,,,,,,,,,,
22-1,2,,26116-100202,,"BOLT M10X 20 PLATED",2,,2,,,,S,,,M10571,,,,,,,
22-2,2,,26116-100202,,"BOLT M10X 20 PLATED",2,,2,,,,Z,,,*1988.03,,,,,,,
23,2,,26716-100002,,"NUT M10",3,,3,,,,Z,,,M10571,,,,,,,
24,2,,933113-03200,,"SWITCH, HEATER",1,,1,,,,Z,,,M10571,,,,,,,
25,2,,933113-15700,,"HEATER ASSY",1,,1,,,,Z,,,M10571,,,,,,,
26,2,,933152-09280,,"BAND 170",4,,4,,,,,,,,,,,,,,
26-1,2,,933152-09280,,"BAND 170",2,,2,,,,K,,,*1988.03,,,,,,,
26-2,2,,933152-09280,,"BAND 170",2,,2,,,,Z,,,M10571,,,,,,,
27,2,,933171-15680,,"GROMMET 40X13",3,,3,,,,Z,,,M10571,,,,,,,
28,2,,172141-16570,,"WIRE, JOINT",1,,1,,,,W,,,*1988.02,,,,,,,
28-1,2,,172141-16570,,"WIRE, JOINT",1,,1,,,,Z,,,M10571,,,,,,,
29,2,,172137-17630,,"JOINT, HEATER",1,,1,,,,W,,,*1988.02,,,,,,,
29-1,2,,172137-17630,,"JOINT, HEATER",1,,1,,,,Z,,,M10571,,,,,,,
30,2,,194250-51660,,"BAND  250",2,,2,,,,W,,,*1988.03,,,,,,,
30-1,2,,194250-51660,,"BAND  250",2,,2,,,,Z,,,M10571,,,,,,,
31,2,,22217-100000,,"SPRING WASHER 10",2,,2,,,,W,,,*1988.03,,,,,,,
31-1,2,,22217-100000,,"SPRING WASHER 10",2,,2,,,,Z,,,M10571,,,,,,,
32,2,,23010-038000,,"CLAMP 38",2,,2,,,,W,,,*1988.02,,,,,,,
32-1,2,,23010-038000,,"CLAMP 38",2,,2,,,,Z,,,M10571,,,,,,,
33,2,,933166-24240,,"ELBOW, SWIVEL JOINT",1,,1,,,,W,,,*1988.03,,,,,,,
33-1,2,,933166-24240,,"ELBOW, SWIVEL JOINT",1,,1,,,,Z,,,M10571,,,,,,,
34,1,,772141-17700,,"DEFROSTER ASSY",1,,1,,,,W,,,*1988.03,,,,,,,
35,2,,172120-17710,,"NOZZLE, DEFROSTER",1,,1,,,,W,,,*1988.03,,,,,,,
36,2,,172141-17770,,"STAY, NOZZLE",1,,1,,,,W,,,*1988.03,,,,,,,
37,2,,172141-17780,,"TUBE, AIR",1,,1,,,,W,,,*1988.03,,,,,,,
38,2,,26557-050102,,"SCREW M 5X 10",2,,2,,,,W,,,*1988.03,,,,,,,
39,2,,933152-09280,,"BAND 170",2,,2,,,,W,,,*1988.03,,,,,,,
40,2,,26116-080162,,"BOLT M 8X 16 PLATED",1,,1,,,,W,,,*1988.03,,,,,,,
41,2,,22217-080000,,"SPRING WASHER  8",1,,1,,,,W,,,*1988.03,,,,,,,
42,1,,172122-17730,,"COVER, DEFROSTER",1,,1,,,,W,,,M10571,,,,,,,
43,1,,172124-17630,,"VALVE, MINIATURE",1,,1,,,,W,,,M10571,,,,,,,
44,1,,172124-17640,,"JOINT 3/8",2,,2,,,,W,,,M10571,,,,,,,
45,1,,172137-17630,,"JOINT, HEATER",1,,1,,,,W,,,M10571,,,,,,,
46,1,,172141-13470,,"PIPE(B,E), C.WATER",1,,1,,,,W,,,M10571,,,,,,,
47,1,,172141-13480,,"PIPE(B,R), C.WATER",1,,1,,,,W,,,M10571,,,,,,,
48,1,,172141-13490,,JOINT,1,,1,,,,W,,,M10571,,,,,,,
49,1,,172141-16570,,"WIRE, JOINT",1,,1,,,,W,,,M10571,,,,,,,
```

```
50,1,,172141-17600,,"ELBOW 90ß",1,,1,,,,W,,,M10571,,,,,,,,
51,1,,172141-17640,,"COVER, PIPE",1,,1,,,,W,,,M10571,,,,,,,,
52,1,,172141-17680,,"HOSE ASSY, HEATER",2,,2,,,,W,,,M10571,,,,,,,,
53,2,,172141-17690,,"HOSE, HEATER",2,,2,,,,W,,,M10571,,,,,,,,
54,2,,172141-17700,,"TUBE, CORRUGAT",2,,2,,,,W,,,M10571,,,,,,,,
55,1,,194250-51660,,"BAND  250",2,,2,,,,W,,,M10571,,,,,,,,
56,1,,22137-100000,,"WASHER 10,POLISHED",3,,3,,,,W,,,M10571,,,,,,,,
57,1,,22217-100000,,"SPRING WASHER 10",2,,2,,,,W,,,M10571,,,,,,,,
58,1,,23000-022000,,"CLAMP 22",4,,4,,,,W,,,M10571,,,,,,,,
59,1,,23010-038000,,"CLAMP 38",2,,2,,,,W,,,M10571,,,,,,,,
60,1,,26013-100202,,"BOLT W/WASHER M10X20",3,,3,,,,W,,,M10571,,,,,,,,
61,1,,26116-100202,,"BOLT M10X 20 PLATED",2,,2,,,,W,,,M10571,,,,,,,,
62,1,,26716-100002,,"NUT M10",3,,3,,,,W,,,M10571,,,,,,,,
63,1,,933113-03200,,"SWITCH, HEATER",1,,1,,,,W,,,M10571,,,,,,,,
64,1,,933113-15700,,"HEATER ASSY",1,,1,,,,W,,,M10571,,,,,,,,
65,1,,933152-09280,,"BAND 170",2,,2,,,,W,,,M10571,,,,,,,,
66,1,,933166-24240,,"ELBOW, SWIVEL JOINT",1,,1,,,,W,,,M10571,,,,,,,,
67,1,,933171-15680,,"GROMMET 40X13",3,,3,,,,W,,,M10571,,,,,,,,
68,1,,172141-17750,,"TUBE, AIR",1,,1,,,,W,,,M10571,,,,,,,,
```

Fig.58 ヒータ&デフロスタ HEATER & DEFROSTER

見出しNo．1は、見出しNo．2から33を含みます。
1 inc．2～33
見出しNo．34は、見出しNo．35から41を含みます。
34 inc．35～41

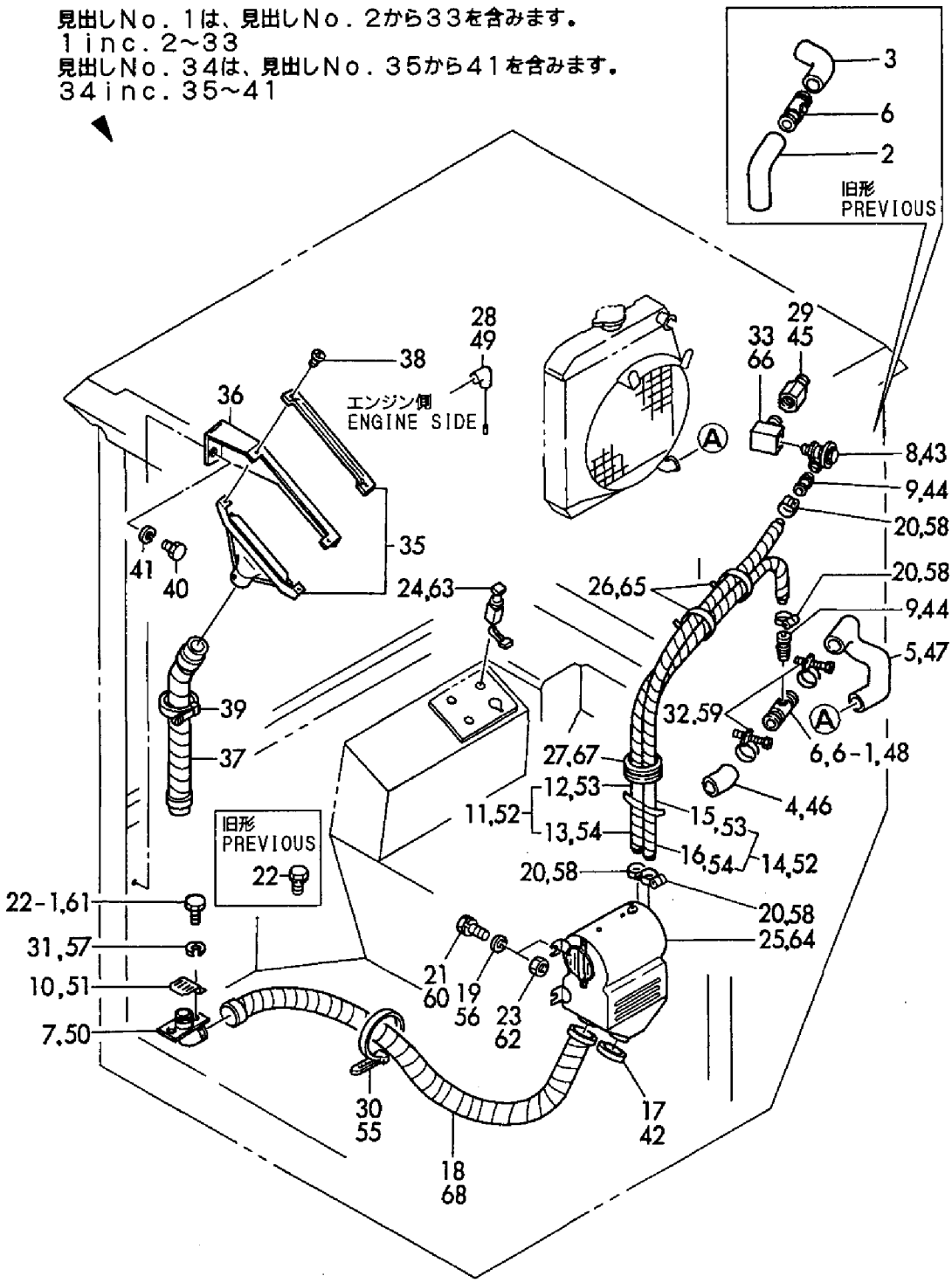

```
1,1,,772141-17810,,"RADIO ASSY",1,,1,,,,,,,,,,,,,
2,2,,172112-17150,,"RADIO (RA-155)",1,,1,,,,,,,,,,,,,
3,2,,172112-17160,,"PANEL (PLA-03-100)",1,,1,,,,,,,,,,,,,,
4,2,,172112-17171,,"SPEAKER (SPA-413)",1,,1,,,,,,,,,,,,,,
5,2,,172112-17190,,"ANTENNA (NCP-314)",1,,1,,,,,,,,,,,,,,
6,2,,172141-17810,,"CASE, RADIO",1,,1,,,,,,,,,,,,,,
6-1,2,,172141-17811,,"CASE, RADIO",1,,1,,,,S,,,M00501,,,,,,,
7,2,,172141-17820,,"STAY, SPEAKER",1,,1,,,,Z,,,M00501,,,,,,,
8,2,,172122-18190,,"PANEL, RADIO",1,,1,,,,,,,,,,,,,,
9,2,,22857-500120,,"SCREW 5X12",4,,4,,,,,,,,,,,,,,
9-1,2,,22857-500120,,"SCREW 5X12",2,,2,,,,K,,,M00501,,,,,,,
10,2,,26013-080162,,"BOLT W/WASHER M8X16",4,,4,,,,,,,,,,,,,,
10-1,2,,26013-080162,,"BOLT W/WASHER M8X16",1,,1,,,,K,,,M00501,,,,,,,
11,2,,26557-040122,,"SCREW M 4X 12,PAN HD",2,,2,,,,,,,,,,,,,,
12,2,,933168-56000,,"GROMMET 17X19",2,,2,,,,,,,,,,,,,,
13,2,,22857-500120,,"SCREW 5X12",2,,2,,,,,,,,,,,,,,
14,2,,172141-16600,,"HARNESS,RADIO",1,,1,,,,W,,,M12032,,,,M12032,,,,
15,2,,933168-55770,,"BAND 146",1,,1,,,,W,,,M12032,,,,M12032,,,,
```

Fig.59 ラジオ（オプション） RADIO (OPTIONAL)

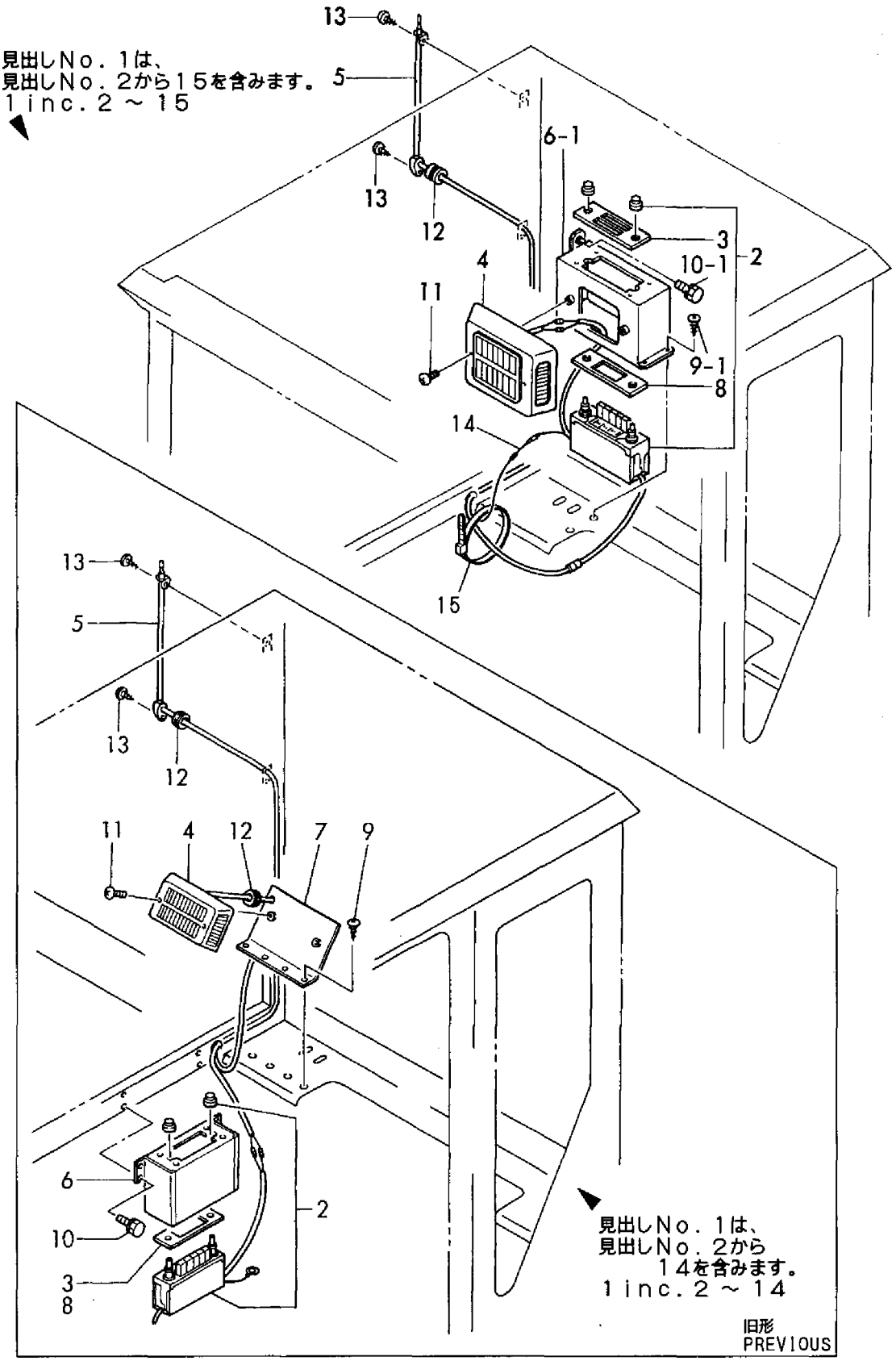

```
1,1,,172141-38110,,"CRAWLER 320 ASSY",2,2,2,2,,,,,,,,,,,,,
1-1,1,,172141-38111,,"CRAWLER 320 ASSY",,,2,2,,,N,,,,,,,M21607,,M21607,,
2,2,,172141-38150,,"LINK ASSY, CRAWLER",2,2,2,2,,,,,,,,,,,,,
3,3,,172141-38200,,BUSH,72,72,72,72,,,,,,,,,,,,,
4,3,,172141-38210,,"PIN, CRAWLER",70,70,70,70,,,,,,,,,,,,,
5,2,,172122-38661,,"PLATE 320G, SHOE",72,72,72,72,,,,,,,,,,,,,
5-1,2,,172072-13791,,"PLATE,SHOE",,,72,72,,,N,,,,,,,M21607,,M21607,,
6,1,,172141-38220,,"PIN, MASTER",2,2,2,2,,,,,,,,,,,,,
7,1,,172614-38300,,"PIN 5X45, LOCK",2,2,2,2,,,,,,,,,,,,,
8,1,,172141-38250,,"TRACK 320, MASTER",2,2,2,2,,,,,,,,,,,,,
8-1,1,,172141-38251,,"TRACK, MASTER ASSY",,,2,2,,,N,,,,,,,M21607,,M21607,,
```

Fig. 60 クローラ（320）（オプション） CRAWLER (320) (OPTIONAL)

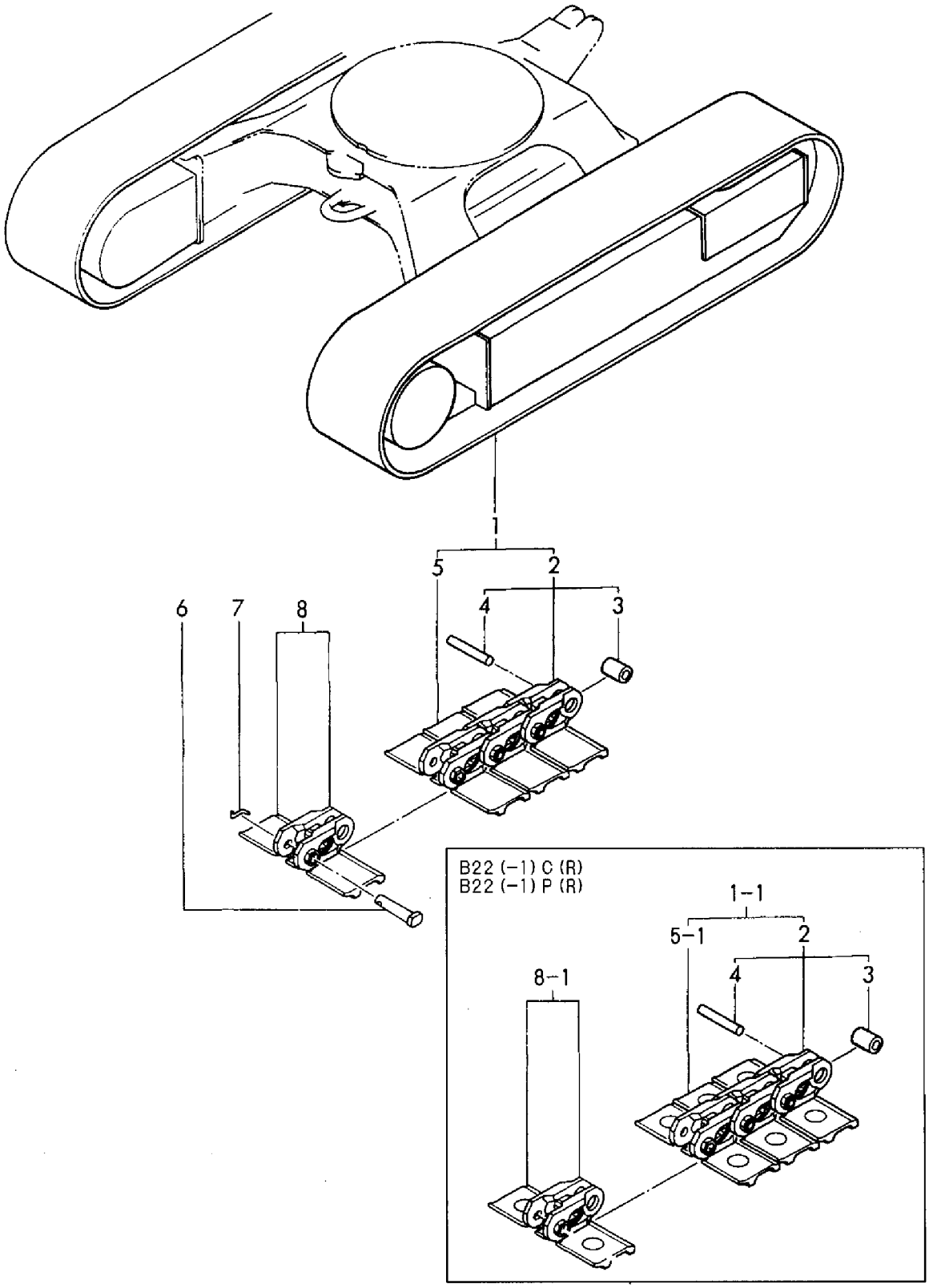

```
1,1,,172141-38120,,"CRAWLER 350,TRIANGLE",2,2,2,2,,,,,,,,,,,,,
1-1,1,,172141-38120,,"CRAWLER 350,TRIANGLE",4,4,4,4,,,K,,,M00501,,M00501,,,,,,
1-2,1,,172141-38121,,"CRAWLER
350,TRIANGLE",4,4,4,4,,,N,,,M00501,,M00501,,M00501,,M00501,,
2,2,,172141-38150,,"LINK ASSY, CRAWLER",2,2,2,2,,,,,,,,,,,,,
2-1,2,,172141-38130,,"LINK ASSY, CRAWLER",4,4,4,4,,,R,,,M00501,,M00501,,,,,,
3,3,,172141-38200,,BUSH,72,72,72,72,,,,,,,,,,,,,
4,3,,172141-38210,,"PIN, CRAWLER",70,70,70,70,,,,,,,,,,,,,
4-1,3,,172141-38210,,"PIN, CRAWLER",68,68,68,68,,,K,,,M00501,,M00501,,,,,,
5,2,,172614-38550,,"SHOE, TRIANGLE",72,72,72,72,,,,,,,,,,,,,
6,1,,172141-38220,,"PIN, MASTER",2,2,2,2,,,,,,,,,,,,,
6-1,1,,172141-38220,,"PIN, MASTER",4,4,4,4,,,K,,,M00501,,M00501,,,,,,
7,1,,172614-38300,,"PIN 5X45, LOCK",2,2,2,2,,,,,,,,,,,,,
7-1,1,,172614-38300,,"PIN 5X45, LOCK",4,4,4,4,,,K,,,M00501,,M00501,,,,,,
8,1,,172141-38260,,"TRACK 350, MASTER",2,2,2,2,,,,,,,,,,,,,
8-1,1,,172141-38260,,"TRACK 350, MASTER",4,4,4,4,,,K,,,M00501,,M00501,,,,,,
9,1,,172141-37500,,PLATE,4,4,4,4,,,W,,,M/#01099,,M/#01099,,,,,,
10,1,,26013-100302,,"BOLT M10X 30",8,8,8,8,,,W,,,M/#01099,,M/#01099,,,,,,
```

Fig.61 クローラ(350)(オプション) CRAWLER(350)(OPTIONAL)

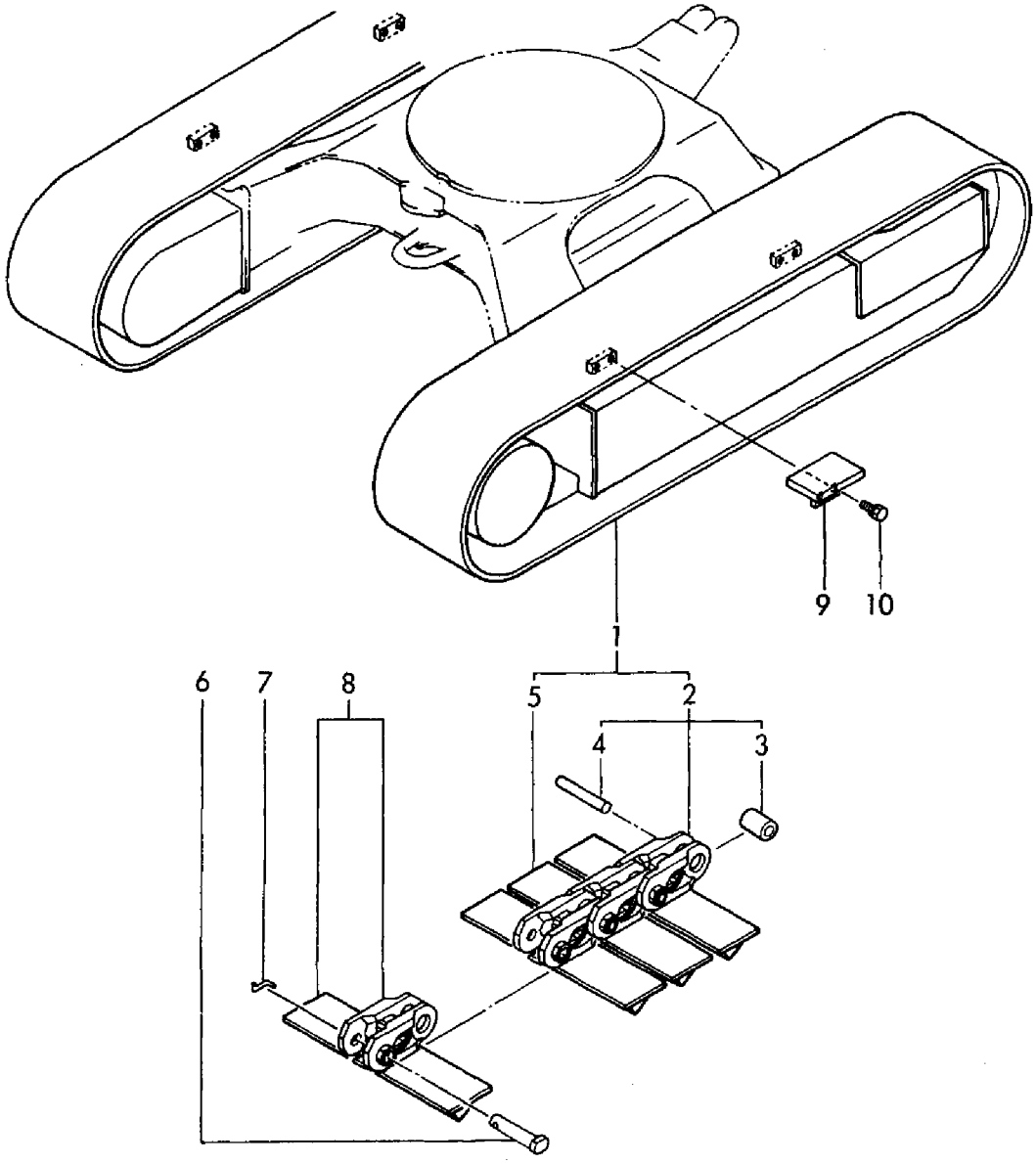

```
1,1,,772141-76110,,"VALVE ASSY, 3RD",1,1,1,1,,,,1,,,,,,,,,,
1-1,1,,772141-76111,,"VALVE ASSY, 3RD",1,1,1,1,,,S,1,,*1990.01,,*1990.01,,,,,,
2,2,,172141-41340,,BOOTS,1,1,1,1,,,,,,,,,,,,,
3,2,,172112-41960,,"PIN 8X25.5",1,1,1,1,,,,,,,,,,,,,
4,2,,172141-42960,,"JOINT, CABLE",1,1,1,1,,,,,,,,,,,,,
5,2,,172141-43100,,"LEVER W/BUSH",1,1,1,1,,,,,,,,,,,,,
6,3,,172141-41370,,"BUSH 2015",2,2,2,2,,,,,,,,,,,,,
7,2,,172141-43120,,SHAFT,1,1,1,1,,,,,,,,,,,,,
8,2,,172141-43150,,"HOOK, PEDAL",1,1,1,1,,,,,,,,,,,,,
9,2,,172141-43160,,"BLACK, PEDAL LOCK",1,1,1,1,,,,,,,,,,,,,
10,2,,172141-43180,,CABLE,1,1,1,1,,,,,,,,,,,,,
11,2,,172141-43200,,"BRACKET, CABLE",1,1,1,1,,,,,,,,,,,,,
12,2,,172141-43210,,BRACKET,1,1,1,1,,,,,,,,,,,,,
13,2,,1A1040-45890,,"WASHER 10 36 4.5",1,1,1,1,,,,,,,,,,,,,
14,2,,172116-45940,,"KNOB (C), LEVER",1,1,1,1,,,,,,,,,,,,,
15,2,,172124-46200,,"O-RING 27X5.7",2,2,2,2,,,,,,,,,,,,,
16,2,,172122-46590,,"ELBALL 8",1,1,1,1,,,,,,,,,,,,,
17,2,,172116-46910,,"JOINT, SPOOL",1,1,1,1,,,,,,,,,,,,,
18,2,,1C6281-52310,,"PIN 6,COME-OFF SNAP",1,1,1,1,,,,,,,,,,,,,
19,2,,1C6281-52310,,"PIN 6,COME-OFF SNAP",1,1,1,1,,,,,,,,,,,,,
20,2,,22137-080000,,"WASHER 8, POLISHED",1,1,1,1,,,,,,,,,,,,,
21,2,,22217-080000,,"SPRING WASHER  8",2,2,2,2,,,,,,,,,,,,,
22,2,,24761-020000,,"NIPPLE PT1/8,GREASE",1,1,1,1,,,,,,,,,,,,,
23,2,,26013-100202,,"BOLT W/WASHER M10X20",4,4,4,4,,,,,,,,,,,,,
23-1,2,,26116-100202,,"BOLT M10X 20
PLATED",4,4,4,4,,,N,,,*1987.11,,*1987.11,,,,,,
24,2,,26013-100202,,"BOLT W/WASHER M10X20",1,1,1,1,,,,,,,,,,,,,
24-1,2,,26116-100202,,"BOLT M10X 20
PLATED",2,2,2,2,,,N,,,*1987.11,,*1987.11,,,,,,
25,2,,26013-100202,,"BOLT W/WASHER M10X20",3,3,3,3,,,,,,,,,,,,,
26,2,,26013-100402,,"BOLT M10X 40",1,1,1,1,,,,,,,,,,,,,
26-1,2,,26013-100502,,"BOLT M10X 50",1,1,1,1,,,N,,,M1989.01,,M1989.01,,,,,,
27,2,,26716-080002,,"NUT M 8",1,1,1,1,,,,,,,,,,,,,
28,2,,933110-54100,,"PIN 4.75X14",1,1,1,1,,,,,,,,,,,,,
29,2,,172141-74700,,"VALVE ASSY, SELECTOR",1,1,1,1,,,,,,,,,,,,,
30,3,,172141-74790,,"PLATE, ADAPTER",1,1,1,1,,,,,,,,,,,,,
31,3,,172141-74820,,PLATE,1,1,1,1,,,,,,,,,,,,,
32,3,,172141-74830,,COVER,1,1,1,1,,,,,,,,,,,,,
33,3,,172141-74840,,SPRING,1,1,1,1,,,,,,,,,,,,,
34,3,,172141-74850,,"RETAINER, BALL",1,1,1,1,,,,,,,,,,,,,
35,3,,172141-74860,,"SLEEVE, DETENT",1,1,1,1,,,,,,,,,,,,,
36,3,,172141-74870,,"SEAL KIT",1,1,1,1,,,,,,,,,,,,,
37,3,,172141-74890,,WASHER,1,1,1,1,,,,,,,,,,,,,
38,3,,172141-74900,,GUIDE,1,1,1,1,,,,,,,,,,,,,
39,3,,172141-74910,,SPACER,1,1,1,1,,,,,,,,,,,,,
40,3,,172141-74920,,"VALVE, RELIEF",1,1,1,1,,,,,,,,,,,,,
41,3,,172141-74930,,STUD,2,2,2,2,,,,,,,,,,,,,
42,3,,172141-74950,,"PLUG 1/16",3,3,3,3,,,,,,,,,,,,,
43,3,,26450-060162,,"BOLT M 6X 16",1,1,1,1,,,,,,,,,,,,,
44,3,,26450-060202,,"BOLT M 6X 20",7,7,7,7,,,,,,,,,,,,,
45,3,,26557-080502,,"SCREW M 8X 50",1,1,1,1,,,,,,,,,,,,,
46,3,,24190-050002,,"BALL 5/32",2,2,2,2,,,,,,,,,,,,,
47,2,,22217-100000,,"SPRING WASHER 10",1,1,1,1,,,W,,,*1987.11,,*1987.11,,,,,,
48,2,,22217-100000,,"SPRING WASHER 10",2,2,2,2,,,W,,,*1987.11,,*1987.11,,,,,,
49,2,,22217-100000,,"SPRING WASHER 10",3,3,3,3,,,W,,,*1987.11,,*1987.11,,,,,,
50,2,,26013-080202,,"BOLT W/WASHER M8X20",4,4,4,4,,,,,,,,,,,,,
51,2,,172110-51850,,SPACER,1,1,1,1,,,W,,,M1989.01,,M1989.01,,,,,,
```

Fig. 62 3RDバルブコントロール（オプション） 3RD VALVE CONTROL (OPTIONAL)

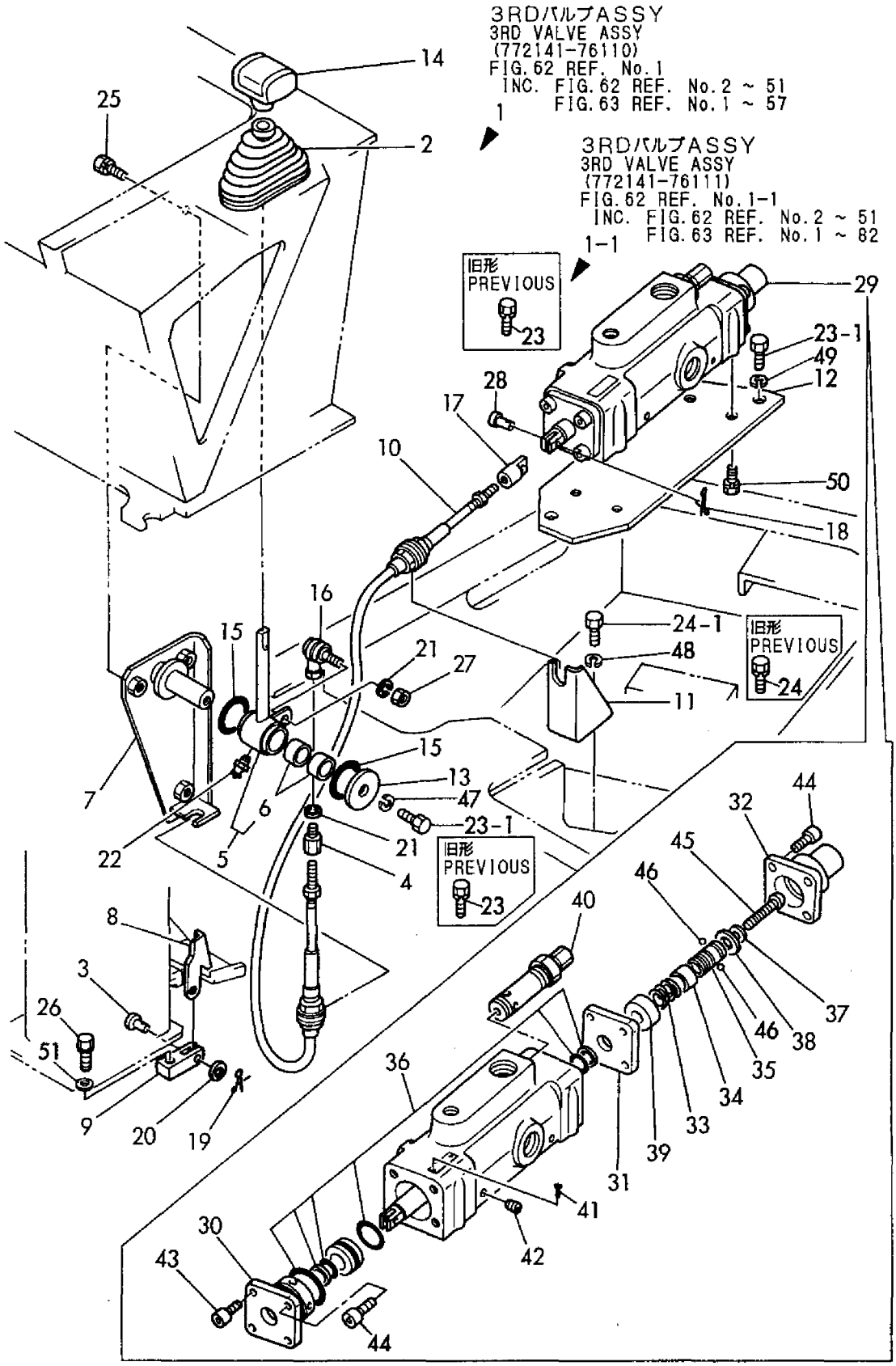

```
1,2,,172141-76090,,"CONNECTOR 3/4L",2,2,2,2,,,,,,,,,,,,
2,3,,24315-000240,,"O-RING 1B P-24.0",2,2,2,2,,,,,,,,,,,,
3,2,,172124-76160,,CONNECTOR,2,2,2,2,,,,,,,,,,,,
4,2,,933166-25360,,"ELBOW 3/4 (90ß)",1,1,1,1,,,,,,,,,,,,
5,2,,172141-76880,,"CONNECTOR 3/8L",2,2,2,2,,,,,,,,,,,,
6,3,,24315-000140,,"O-RING 1B P-14.0",2,2,2,2,,,,,,,,,,,,
7,2,,172141-76900,,"CONNECTOR 1/2L",2,2,2,2,,,,,,,,,,,,
8,3,,24315-000180,,"O-RING 1B P-18.0",2,2,2,2,,,,,,,,,,,,
9,2,,172141-76920,,"CONNECTOR 3/8-1/4L",1,1,1,1,,,,,,,,,,,,
10,3,,24315-000140,,"O-RING 1B P-14.0",1,1,1,1,,,,,,,,,,,,
11,2,,172141-76940,,"ADAPTOR 1/2-3/8",1,1,1,1,,,Z,,,M00615,,M00615,,,,,,
12,2,,172141-76950,,JOINT,1,1,1,1,,,,,,,,,,,,
13,2,,24315-000140,,"O-RING 1B P-14.0",2,2,2,2,,,,,,,,,,,,
14,2,,26013-100202,,"BOLT W/WASHER M10X20",1,1,1,1,,,,,,,,,,,,
15,2,,172141-76750,,"PIPE, 3RD V.(P)",1,1,1,1,,,Z,,,*1990.01,,*1990.01,,,,,,
16,2,,172141-76800,,"PIPE, 3RD V.(T)",1,1,1,1,,,Z,,,*1990.01,,*1990.01,,,,,,
17,2,,172141-76850,,"SPACER, CLAMP",3,3,3,3,,,Z,,,*1990.01,,*1990.01,,,,,,
18,2,,172125-76900,,CLAMP,3,3,3,3,,,Z,,,*1990.01,,*1990.01,,,,,,
19,2,,26013-120502,,"BOLT M12X 50",3,3,3,3,,,Z,,,*1990.01,,*1990.01,,,,,,
20,2,,172141-78060,,CLAMP,1,1,1,1,,,,,,,,,,,,
21,2,,172141-78720,,SUPPORT,1,1,1,1,,,,,,,,,,,,
22,2,,172141-78750,,COVER,1,1,1,1,,,,,,,,,,,,
23,2,,172141-78760,,STAY,1,1,1,1,,,,,,,,,,,,
24,2,,172141-78790,,RUMMER,1,1,1,1,,,,,,,,,,,,
25,2,,172141-79100,,HOSE,1,1,1,1,,,,,,,,,,,,
26,3,,172141-79120,,"TUBE, SPIRAL",1,1,1,1,,,,,,,,,,,,
27,2,,172141-79130,,HOSE,1,1,1,1,,,,,,,,,,,,
28,3,,172141-79150,,"TUBE, SPIRAL",1,1,1,1,,,,,,,,,,,,
29,2,,172141-79160,,HOSE,1,1,1,1,,,,,,,,,,,,
30,3,,172141-79180,,"TUBE, SPIRAL",1,1,1,1,,,,,,,,,,,,
31,2,,172141-79190,,HOSE,1,1,1,1,,,,,,,,,,,,
32,3,,172141-79210,,"TUBE, SPIRAL",1,1,1,1,,,,,,,,,,,,
33,2,,172141-79220,,HOSE,1,1,1,1,,,,,,,,,,,,
34,3,,172141-79240,,"TUBE, SPIRAL",1,1,1,1,,,,,,,,,,,,
35,2,,172141-79250,,HOSE,1,1,1,1,,,,,,,,,,,,
36,3,,172141-79270,,"TUBE, SPIRAL",1,1,1,1,,,,,,,,,,,,
37,2,,172141-79280,,HOSE,1,1,1,1,,,,,,,,,,,,
38,3,,172141-79300,,"TUBE, SPIRAL",1,1,1,1,,,,,,,,,,,,
39,2,,172141-79310,,HOSE,1,1,1,1,,,,,,,,,,,,
40,3,,172141-79330,,"TUBE, SPIRAL",1,1,1,1,,,,,,,,,,,,
41,2,,172141-79340,,HOSE,1,1,1,1,,,,,,,,,,,,
42,3,,172141-79360,,"TUBE, SPIRAL",1,1,1,1,,,,,,,,,,,,
43,2,,172141-79370,,HOSE,1,1,1,1,,,,,,,,,,,,
44,2,,172141-79380,,HOSE,1,1,1,1,,,,,,,,,,,,
45,2,,933152-24410,,"CONNECTOR (A)",2,2,2,2,,,,,,,,,,,,
46,2,,23871-040000,,"PLUG PT1/2,SCREW",1,1,1,1,,,Z,,,*1990.01,,*1990.01,,,,,,
47,2,,23871-060000,,"PLUG PT3/4,SCREW",1,1,1,1,,,Z,,,*1990.01,,*1990.01,,,,,,
48,2,,172142-74310,,NIPPLE,1,1,1,1,,,,,,,,,,,,
49,2,,172141-74430,,O-RING,1,1,1,1,,,,,,,,,,,,
50,2,,933160-03530,,"PORT, PUMP EXH.",1,1,1,1,,,,,,,,,,,,
51,2,,933152-07400,,"O-RING (A)",1,1,1,1,,,,,,,,,,,,
52,2,,172141-74750,,PLUG,1,1,1,1,,,,,,,,,,,,
53,2,,172141-81510,,"STAY(A), 3RD PIPE",1,1,1,1,,,Z,,,*1990.01,,*1990.01,,,,,,
54,2,,172141-81520,,"STAY(B), 3RD PIPE",1,1,1,1,,,Z,,,*1990.01,,*1990.01,,,,,,
55,2,,172141-81530,,"STAY(C), 3RD PIPE",1,1,1,1,,,Z,,,*1990.01,,*1990.01,,,,,,
56,2,,172732-76160,,ELBOW,1,1,1,1,,,W,,,M00615,,M00615,,,,,,
57,2,,172141-76990,,"BUSH 38-55, PIN",1,1,1,1,,,W,,,M00615,,M00615,,,,,,
58,2,,172142-77100,,"VALVE, STOP",2,2,2,2,,,W,,,*1990.01,,*1990.01,,,,,,
58-1,2,,172142-77101,,"STOP VALVE",,,2,2,,,R,,,,,,,M21607,,M21607,,
59,3,,172142-77110,,"BODY, VALVE",2,2,2,2,,,W,,,*1990.01,,*1990.01,,,,,,
59-1,3,,172142-77110,,"BODY, VALVE",,,2,2,,,Z,,,,,,,M21607,,M21607,,
60,3,,172142-77120,,"RING, BACK UP",2,2,2,2,,,W,,,*1990.01,,*1990.01,,,,,,
60-1,3,,172142-77120,,"RING, BACK UP",,,2,2,,,Z,,,,,,,M21607,,M21607,,
```

61,3,,172142-77130,,VALVE,2,2,2,2,,,W,,,*1990.01,,*1990.01,,,,,,
61-1,3,,172142-77130,,VALVE,,,2,2,,,Z,,,,,,,M21607,,M21607,,
62,3,,172142-77140,,"RING, BACK UP",2,2,2,2,,,W,,,*1990.01,,*1990.01,,,,,,
62-1,3,,172142-77140,,"RING, BACK UP",,,2,2,,,Z,,,,,,,M21607,,M21607,,
63,3,,22242-000200,,"CIRCLIP 20",2,2,2,2,,,W,,,*1990.01,,*1990.01,,,,,,
64,3,,22351-040010,,"SPRING PIN 4X10",2,2,2,2,,,W,,,*1990.01,,*1990.01,,,,,,
64-1,3,,22351-040010,,"SPRING PIN 4X10",,,2,2,,,Z,,,,,,,M21607,,M21607,,
65,3,,24315-000160,,"O-RING 1B P-16.0",4,4,4,4,,,W,,,*1990.01,,*1990.01,,,,,,
65-1,3,,24315-000160,,"O-RING 1B P-16.0",,,4,4,,,Z,,,,,,,M21607,,M21607,,
66,3,,24315-000200,,"O-RING 1B P-20.0",2,2,2,2,,,W,,,*1990.02,,*1990.02,,,,,,
66-1,3,,24315-000200,,"O-RING 1B P-20.0",,,2,2,,,Z,,,,,,,M21607,,M21607,,
66A,3,,172142-77150,,"SEAL SET",,,2,2,,,W,,,,,,,M21607,,M21607,,
67,2,,23871-040000,,"PLUG PT1/2,SCREW",2,2,2,2,,,W,,,*1990.01,,*1990.01,,,,,,
68,2,,172141-76280,,"TUBE (A), 3RD",1,1,1,1,,,W,,,*1990.01,,*1990.01,,,,,,
69,2,,172112-76300,,"RETAINER A,BOOM
PIPE",1,1,1,1,,,W,,,*1990.01,,*1990.01,,,,,,
70,2,,172141-76300,,"TUBE (B), 3RD",1,1,1,1,,,W,,,*1990.01,,*1990.01,,,,,,
71,2,,172142-76800,,"PIPE(C), 3RD",1,1,1,1,,,W,,,*1990.01,,*1990.01,,,,,,
72,2,,172142-76850,,"PIPE(D), 3RD",1,1,1,1,,,W,,,*1990.01,,*1990.01,,,,,,
73,2,,172142-76950,,"CLAMP 1/2",4,4,4,4,,,W,,,*1990.01,,*1990.01,,,,,,
74,2,,26013-100452,,"BOLT M10X 45",1,1,1,1,,,W,,,*1990.01,,*1990.01,,,,,,
75,2,,26013-120302,,"BOLT W/WASHER
M12X30",4,4,4,4,,,W,,,*1990.01,,*1990.01,,,,,,
76,2,,26013-120452,,"BOLT M12X 45",4,4,4,4,,,W,,,*1990.01,,*1990.01,,,,,,
77,2,,172142-78860,,HOSE,1,1,1,1,,,W,,,*1990.01,,*1990.01,,,,,,
78,2,,172142-78870,,HOSE,1,1,1,1,,,W,,,*1990.01,,*1990.01,,,,,,
79,2,,172141-81560,,"STAY C(M12,3RD
VALVE",2,2,2,2,,,W,,,*1990.01,,*1990.01,,,,,,
80,2,,172141-81570,,"STAY(M10, 3RD VALVE",1,1,1,1,,,W,,,*1990.01,,*1990.01,,,,,,
81,2,,172142-81720,,"STAY ASSY",2,2,2,2,,,W,,,*1990.01,,*1990.01,,,,,,
82,2,,172142-81740,,"SEAT, SCREW",4,4,4,4,,,W,,,*1990.01,,*1990.01,,,,,,

Fig.63 3RDバルブ配管（オプション）
3RD VALVE PIPING (OPTIONAL)

3RDバルブASSY
3RD VALVE ASSY
(772141-76110)
FIG.62 REF. No.1
INC. FIG.62 REF. No.2 ~ 51
FIG.63 REF. No.1 ~ 57

3RDバルブASSY
3RD VALVE ASSY
(772141-76111)
FIG.62 REF. No.1-1
INC. FIG.62 REF. No.2 ~ 51
FIG.63 REF. No.1 ~ 82

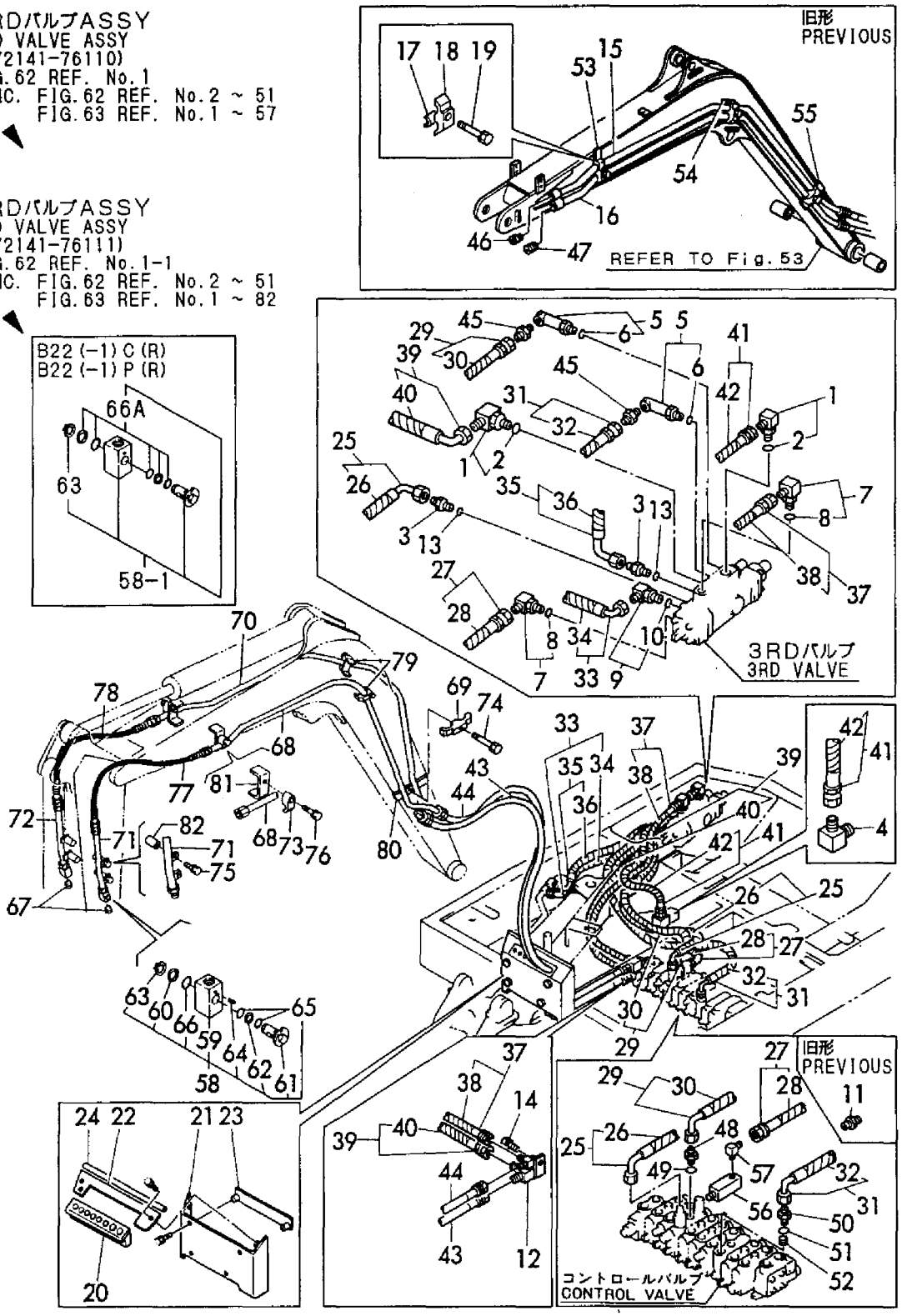

```
1,1,,772141-45210,,"LINK ASSY",1,1,1,1,,,W,,,M00632,,M00632,,,,,,
1-1,1,,772141-45211,,"LINK ASSY",,,1,1,,,N,,,,,,,M20985,,M20985,,
2,2,,172122-46570,,"ROD-END  8",2,2,2,2,,,W,,,M00632,,M00632,,,,,,
2-1,2,,172122-46571,,"ROD-END  8",,,2,2,,,N,,,,,,,M12595,,M12595,,
3,2,,172141-43250,,"LINK ASSY(D)",1,1,1,1,,,W,,,M00632,,M00632,,,,,,
3-1,2,,172142-45800,,LINK,1,1,1,1,,,S,,,*1988.09,,*1988.09,,,,,,
4,3,,172141-41370,,"BUSH 2015",1,1,1,1,,,W,,,M00632,,M00632,,,,,,
4-1,3,,172141-41370,,"BUSH 2015",2,2,2,2,,,K,,,*1988.09,,*1988.09,,,,,,
5,2,,172141-43280,,SHAFT(D),1,1,1,1,,,W,,,M00632,,M00632,,,,,,
5-1,2,,172142-45840,,"SHIFT, D-PATTERN",1,1,1,1,,,S,,,*1988.09,,*1988.09,,,,,,
6,2,,172141-43300,,ROD(D1),1,1,1,1,,,W,,,M00632,,M00632,,,,,,
6-1,2,,172142-45870,,ROD,1,1,1,1,,,S,,,*1988.09,,*1988.09,,,,,,
7,2,,172141-43310,,ROD(D2),1,1,1,1,,,W,,,M00632,,M00632,,,,,,
8,2,,22137-080000,,"WASHER 8, POLISHED",2,2,2,2,,,W,,,M00632,,M00632,,,,,,
9,2,,22137-120000,,"WASHER 12,POLISHED",1,1,1,1,,,W,,,M00632,,M00632,,,,,,
9-1,2,,22137-120000,,"WASHER 12,POLISHED",1,1,1,1,,,Z,,,*1988.09,,*1988.09,,,,,,
10,2,,26013-080452,,"BOLT M 8X 45",2,2,2,2,,,W,,,M00632,,M00632,,,,,,
10-1,2,,26013-080452,,"BOLT M 8X 45",2,2,2,2,,,Z,,,*1988.09,,*1988.09,,,,,,
11,2,,26013-120302,,"BOLT W/WASHER M12X30",2,2,2,2,,,W,,,M00632,,M00632,,,,,,
11-1,2,,26013-120302,,"BOLT W/WASHER
M12X30",2,2,2,2,,,Z,,,*1988.09,,*1988.09,,,,,,
12,2,,26716-080002,,"NUT M 8",2,2,2,2,,,W,,,M00632,,M00632,,,,,,
12-1,2,,26051-080002,,"NUT M 8",,,2,2,,,N,,,,,,,M20985,,M20985,,
13,2,,933152-03700,,"WASHER, SIDE CLUTCH",1,1,1,1,,,W,,,M00632,,M00632,,,,,,
13-1,2,,933152-03700,,"WASHER, SIDE
CLUTCH",1,1,1,1,,,Z,,,*1988.09,,*1988.09,,,,,,
14,2,,172141-03390,,LABEL,1,1,1,1,,,W,,,M00501,,M00501,,,,,,
15,2,,1A1040-45890,,"WASHER 10 36 4.5",1,1,1,1,,,W,,,*1988.09,,*1988.09,,,,,,
16,2,,172124-46200,,"O-RING 27X5.7",2,2,2,2,,,W,,,*1988.09,,*1988.09,,,,,,
17,2,,172734-41300,,"BALL, LINK",1,1,1,1,,,W,,,*1988.09,,*1988.09,,,,,,
18,2,,194200-37780,,"LS-NUT 8",1,1,1,1,,,W,,,*1988.09,,*1988.09,,,,,,
19,2,,22217-100000,,"SPRING WASHER 10",3,3,3,3,,,W,,,*1988.09,,*1988.09,,,,,,
20,2,,24761-040000,,"NIPPLE B,GREASE",1,1,1,1,,,W,,,*1988.09,,*1988.09,,,,,,
21,2,,26013-080302,,"BOLT M 8X 30",1,1,1,1,,,W,,,*1988.09,,*1988.09,,,,,,
22,2,,26013-080402,,"BOLT M 8X 40",1,1,1,1,,,W,,,*1988.09,,*1988.09,,,,,,
23,2,,26116-100202,,"BOLT M10X 20 PLATED",3,3,3,3,,,W,,,*1988.09,,*1988.09,,,,,,
24,1,,22137-080000,,"WASHER 8, POLISHED",,,2,2,,,W,,,,,,,M20985,,M20985,,
```

Fig.64 Dパターンリンク（オプション） D-PATTERN LINK (OPTIONAL)

見出しNo．1は、見出しNo．2から23を含みます。
1 inc．2～23

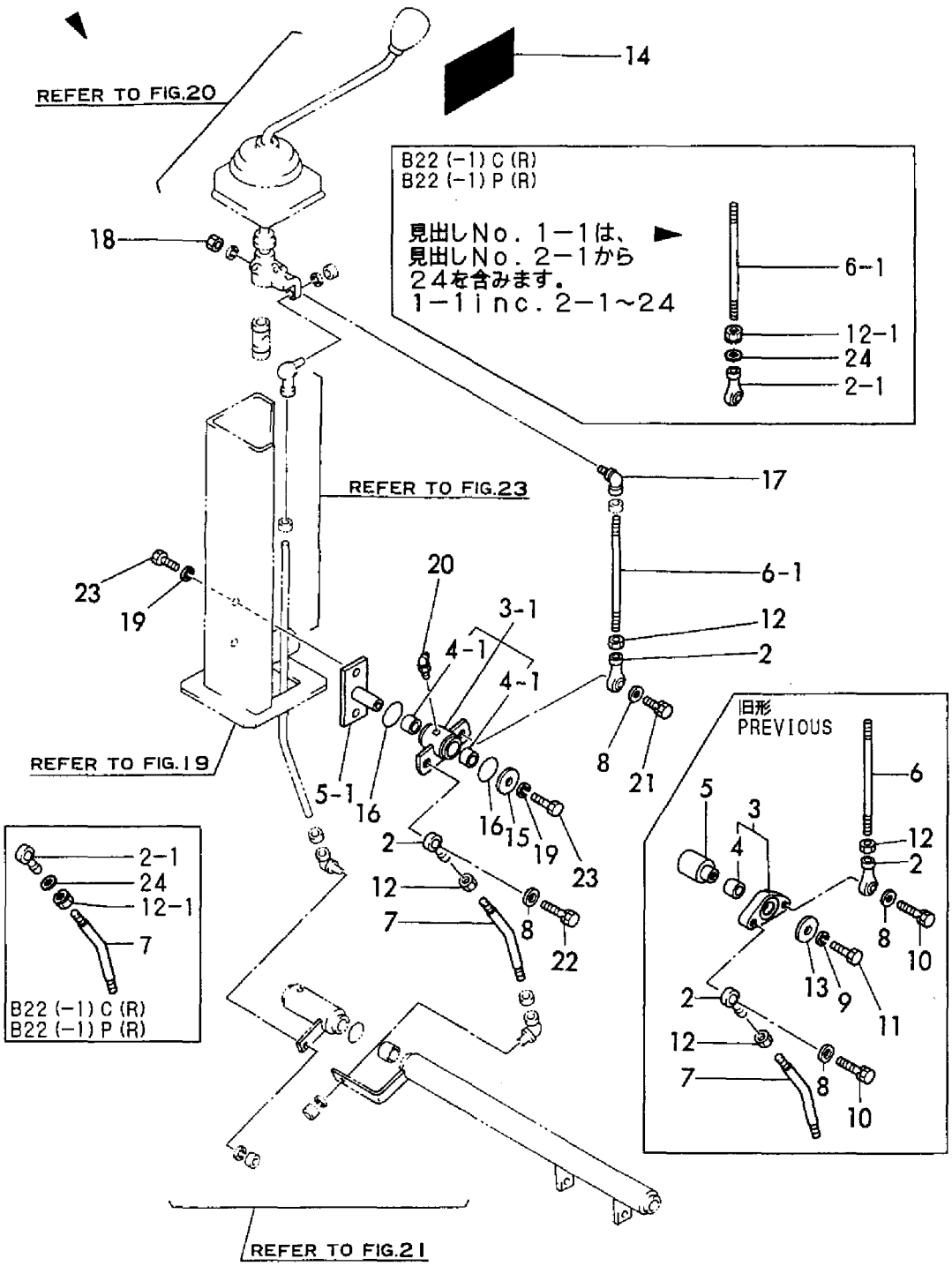

```
1,1,,772141-94110,,"BLADE ASSY, 1120",1,1,1,1,,,W,,,*1988.03,,*1988.03,,,,,,
1-1,1,,772141-94111,,"BLADE ASSY (1150)",,,1,1,,,N,,,,,,,M21607,,M21607,,
1-2,1,,772141-94112,,"BLADE ASSY (1150)",,,1,1,,,N,,,,,,,M21607,,M21607,,
2,2,,172141-94340,,BLADE,1,1,1,1,,,W,,,*1988.03,,*1988.03,,,,,,
2-1,2,,172141-94341,,"BLADE ASSY (1150)",,,1,1,,,N,,,,,,,M21607,,M21607,,
2-2,2,,172141-94342,,"BLADE ASSY (1150)",,,1,1,,,S,,,,,,,M21607,,M21607,,
2A,3,,172168-81270,,"SEAL,DUST 38X50X4",,,4,4,,,W,,,,,,,M21607,,M21607,,
3,2,,172141-94260,,"PIN 38-130",2,2,2,2,,,W,,,*1988.03,,*1988.03,,,,,,
4,2,,172141-94270,,"PIN 38-90",2,2,2,2,,,W,,,*1988.03,,*1988.03,,,,,,
4-1,2,,172141-94271,,"PIN 38-94",,,1,1,,,S,,,,,,,M21607,,M21607,,
5,2,,172124-94310,,"PLATE, LOCK",2,2,2,2,,,W,,,*1988.03,,*1988.03,,,,,,
6,2,,22417-800560,,"COTTER PIN 8.0X 56",2,2,2,2,,,W,,,*1988.03,,*1988.03,,,,,,
6-1,2,,22417-800560,,"COTTER PIN 8.0X 56",,,2,2,,,Z,,,,,,,M21607,,M21607,,
7,2,,24761-020000,,"NIPPLE PT1/8,GREASE",2,2,2,2,,,W,,,*1988.03,,*1988.03,,,,,,
8,2,,24761-040000,,"NIPPLE B,GREASE",2,2,2,2,,,W,,,*1988.03,,*1988.03,,,,,,
9,2,,26013-100252,,"BOLT W/WASHER M10X25",4,4,4,4,,,W,,,*1988.03,,*1988.03,,,,,,
10,2,,933171-29750,,"SHIM SET, PIN 38",2,2,2,2,,,W,,,*1988.03,,*1988.03,,,,,,
11,1,,172164-81670,,SPACER,,,2,2,,,W,,,,,,,M21607,,M21607,,
12,1,,22157-120000,,"WASHER 12",,,2,2,,,W,,,,,,,M21607,,M21607,,
13,1,,26013-120302,,"BOLT W/WASHER M12X30",,,2,2,,,W,,,,,,,M21607,,M21607,,
```

Fig. 65 ブレード（850）（アタッチメント）
BLADE (850) (ATTACHMENT)

見出しNo．1は、
見出しNo．2から10を含みます。
1 inc．2～10

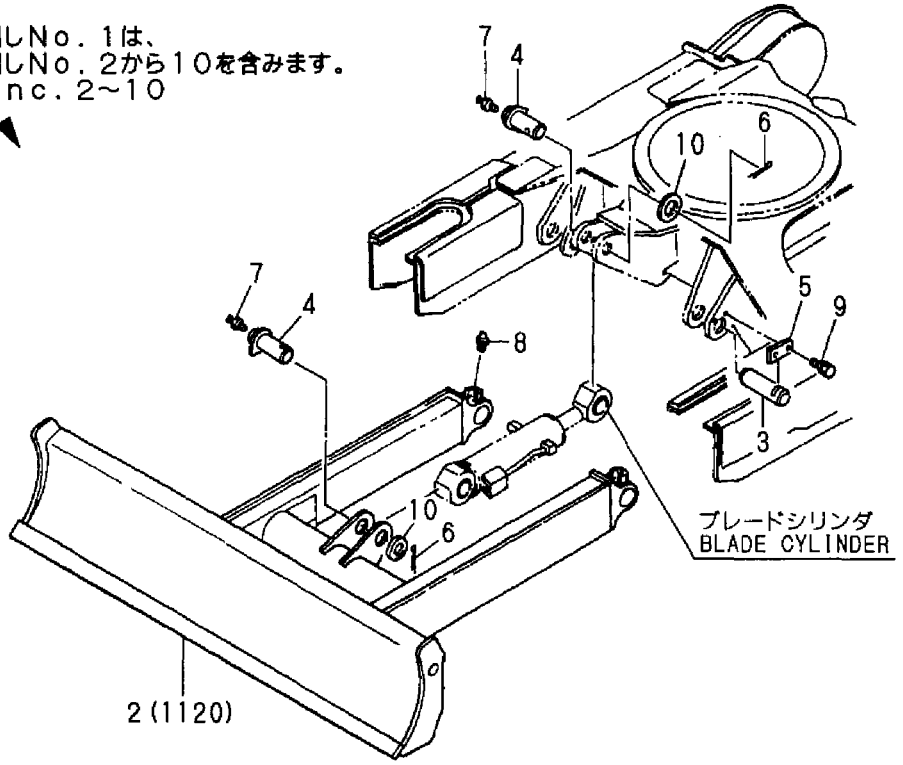

見出しNo．1−1，1−2は、
見出しNo．2−1，2−2から13を含みます。
1−1，1−2 inc．2−1，2−2～13

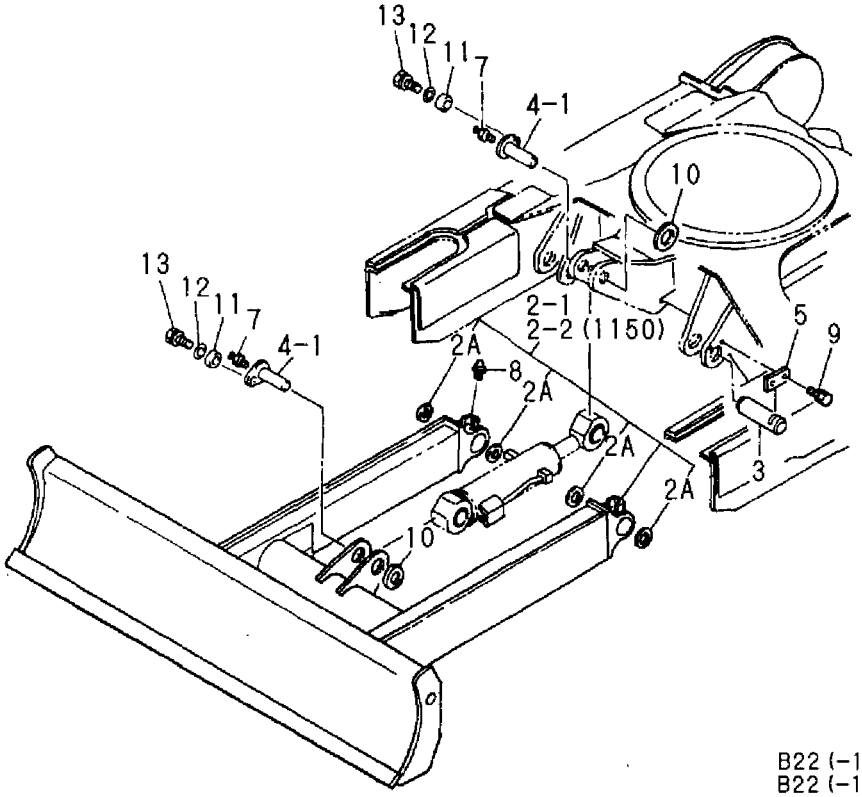

B22 (−1) C (R)
B22 (−1) P (R)

```
1,1,,772141-81410,,"BUCKET ASSY(250)",1,1,1,1,,,,,,,,,,,,,
1-1,1,,772141-81411,,"BUCKET ASSY(250)",1,1,1,1,,,F,1,,M00872,,M00872,,,,,,
1-2,1,,772141-82412,,"BUCKET ASSY(290)",,,1,1,,,N,,,,,,,M21607,,M21607,,
3,3,,172116-86240,,"SIDE CUTTER, BUCKET",2,2,2,2,,,,,,,,,,,,,
3-1,3,,172116-86240,,"SIDE CUTTER, BUCKET",,,2,2,,,Z,,,,,,,M21607,,M21607,,
4,2,,772141-86230,,"TEETH ASSY",2,2,2,2,,,,,,,,,,,,,
4-1,2,,772141-86231,,"TEETH ASSY",2,2,2,2,,,R,,,*1988.05,,*1988.05,,,,,,
5,3,,172141-86230,,TEETH,2,2,2,2,,,,,,,,,,,,,
5-1,3,,172141-86231,,TEETH,2,2,2,2,,,R,,,*1988.05,,*1988.05,,,,,,
6,3,,172137-86710,,"TEETH SHIM 17 SET",2,2,2,2,,,,,,,,,,,,,
7,3,,172137-86770,,BOLT,4,4,4,4,,,,,,,,,,,,,
8,3,,172137-86780,,NUT,4,4,4,4,,,,,,,,,,,,,
9,2,,172142-86150,,"CUTTER (L), SIDE",,,1,1,,,W,,,,,,,M21607,,M21607,,
10,2,,172142-86160,,"CUTTER (R), SIDE",,,1,1,,,W,,,,,,,M21607,,M21607,,
11,2,,172142-86280,,"BOLT M14X 40",,,6,6,,,W,,,,,,,M21607,,M21607,,
12,2,,172142-86290,,"NUT 14",,,6,6,,,W,,,,,,,M21607,,M21607,,
13,2,,22217-140000,,"SPRING WASHER 14",,,6,6,,,W,,,,,,,M21607,,M21607,,
14,1,,172141-99460,,"PIN KIT, BUCKET",2,2,2,2,,,,,,,,,,,,,
14-1,1,,172173-99460,,"PIN KIT, BUCKET",,,2,2,,,N,,,,,,,M21607,,M21607,,
15,2,,172141-86250,,"PIN 35-156",2,2,2,2,,,,,,,,,,,,,
15-1,2,,172141-86251,,"PIN  35-188 CMP",2,2,2,2,,,S,,,MM/#00872,,MM/#00872,,,,,,
15-2,2,,172141-86252,,"PIN 35-195",,,2,2,,,S,,,,,,,M21607,,M21607,,
16,2,,22417-800500,,"COTTER PIN 8.0X50",2,2,2,2,,,,,,,,,,,,,
16-1,2,,22417-800450,,"COTTER PIN 8.0X45",2,2,2,2,,,N,,,M00519,,M00519,,,,,,
16-2,2,,22417-800450,,"COTTER PIN 8.0X45",,,2,2,,,Z,,,,,,,M21607,,M21607,,
17,2,,24761-020000,,"NIPPLE PT1/8,GREASE",2,2,2,2,,,,,,,,,,,,,
18,2,,172141-84600,,"SHIM 35",2,2,2,2,,,,,,,,,,,,,
18-1,2,,172141-84601,,"SHIM 35",,,2,2,,,N,,,,,,,M21607,,M21607,,
19,1,,172171-81500,,COLLAR,,,2,2,,,W,,,,,,,M21607,,M21607,,
20,1,,26116-100702,,"BOLT M10X 70 PLATED",,,2,2,,,W,,,,,,,M21607,,M21607,,
20-1,1,,26116-100652,,"BOLT M10X 65 PLATED",,,2,2,,,N,,,,,,,M21607,,M21607,,
21,1,,26716-100002,,"NUT M10",,,4,4,,,W,,,,,,,M21607,,M21607,,
```

Fig. 66 バケット（アタッチメント） BUCKET (ATTACHMENT)

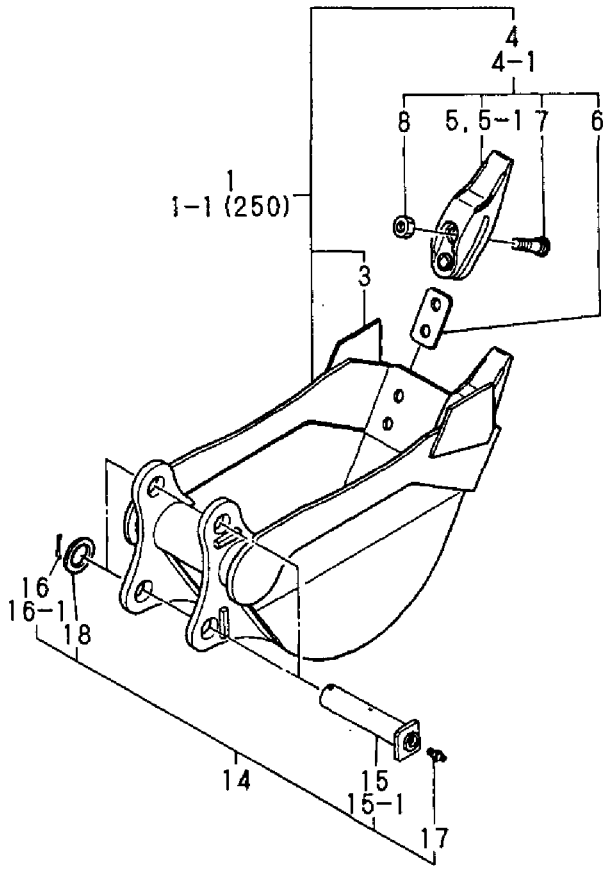

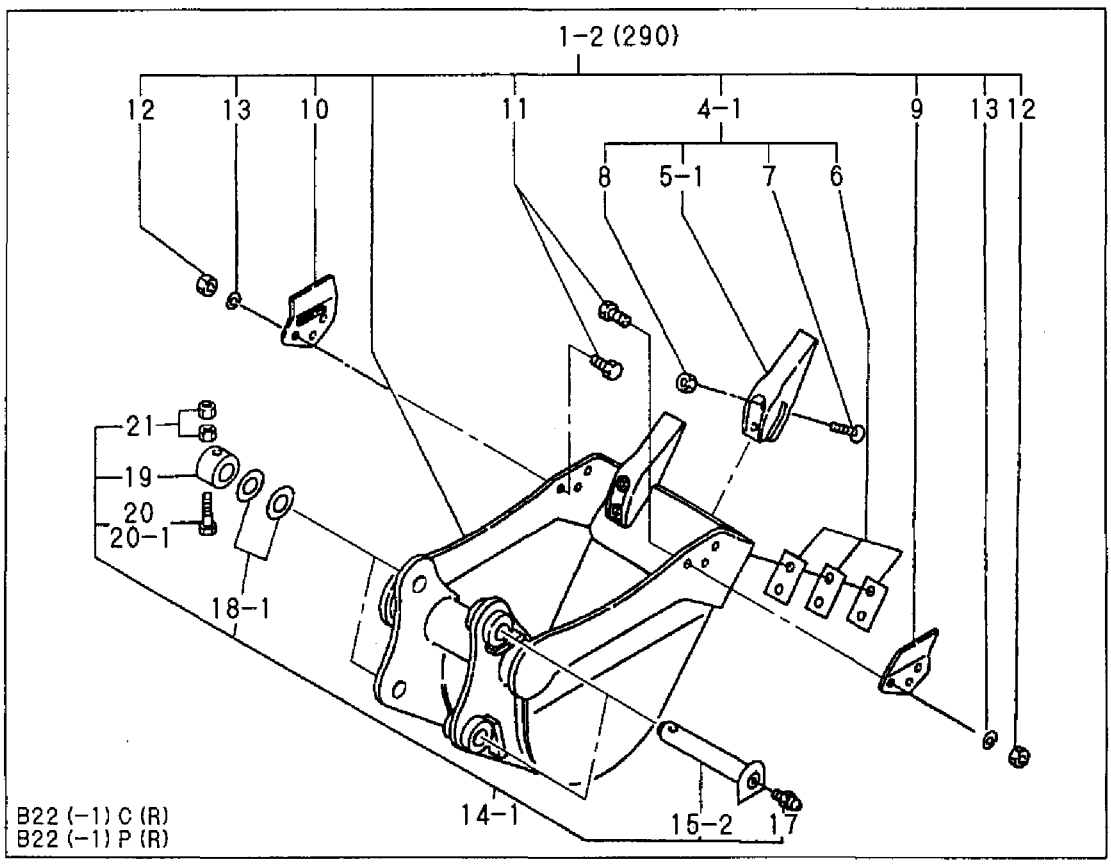

```
1,1,,772141-81440,,"BUCKET ASSY(250)",1,1,1,1,,,,,,,,,,,,,
1-1,1,,772141-81441,,"BUCKET
ASSY(300",1,1,1,1,,,F,1,,M00872,,M00872,,M00872,,M00872,,
1-2,1,,772141-81442,,"BUCKET ASSY(340)",,,1,1,,,N,,,,,,,M21607,,M21607,,
3,3,,172116-86240,,"SIDE CUTTER, BUCKET",2,2,2,2,,,,,,,,,,,,,
3-1,3,,172116-86240,,"SIDE CUTTER, BUCKET",,,2,2,,,Z,,,,,,,M21607,,M21607,,
4,2,,772141-86230,,"TEETH ASSY",2,2,2,2,,,,,,,,,,,,,
4-1,2,,772141-86231,,"TEETH ASSY",2,2,2,2,,,R,,,*1988.07,,*1988.07,,,,,,
5,3,,172141-86230,,TEETH,2,2,2,2,,,W,,,M00501,,M00501,,,,,,
5-1,3,,172141-86231,,TEETH,2,2,2,2,,,N,,,*1988.07,,*1988.07,,,,,,
6,3,,172137-86710,,"TEETH SHIM 17 SET",2,2,2,2,,,W,,,M00501,,M00501,,,,,,
7,3,,172137-86770,,BOLT,4,4,4,4,,,,,,,,,,,,,
8,3,,172137-86780,,NUT,4,4,4,4,,,,,,,,,,,,,
9,2,,172142-86150,,"CUTTER (L), SIDE",,,1,1,,,W,,,,,,,M21607,,M21607,,
10,2,,172142-86160,,"CUTTER (R), SIDE",,,1,1,,,W,,,,,,,M21607,,M21607,,
11,2,,172142-86280,,"BOLT M14X 40",,,6,6,,,W,,,,,,,M21607,,M21607,,
12,2,,172142-86290,,"NUT 14",,,6,6,,,W,,,,,,,M21607,,M21607,,
13,2,,22217-140000,,"SPRING WASHER 14",,,6,6,,,W,,,,,,,M21607,,M21607,,
14,1,,172141-99460,,"PIN KIT, BUCKET",2,2,2,2,,,,,,,,,,,,,
14-1,1,,172173-99460,,"PIN KIT, BUCKET",,,2,2,,,N,,,,,,,M21607,,M21607,,
15,2,,172141-86250,,"PIN 35-156",2,2,2,2,,,,,,,,,,,,,
15-1,2,,172141-86251,,"PIN  35-188 CMP",2,2,2,2,,,S,,,M00872,,M00872,,,,,,
15-2,2,,172141-86252,,"PIN 35-195",,,2,2,,,S,,,,,,,M21607,,M21607,,
16,2,,22417-800450,,"COTTER PIN 8.0X45",2,2,2,2,,,,,,,,,,,,,
16-1,2,,22417-800450,,"COTTER PIN 8.0X45",,,2,2,,,Z,,,,,,,M21607,,M21607,,
17,2,,24761-020000,,"NIPPLE PT1/8,GREASE",2,2,2,2,,,,,,M00501,,M00501,,,,,,
18,2,,172141-84600,,"SHIM 35",2,2,2,2,,,,,,,,,,,,,
18-1,2,,172141-84601,,"SHIM 35",,,2,2,,,N,,,,,,,M21607,,M21607,,
19,2,,172171-81500,,COLLAR,,,2,2,,,W,,,,,,,M21607,,M21607,,
20,2,,26116-100702,,"BOLT M10X 70 PLATED",,,2,2,,,W,,,,,,,M21607,,M21607,,
20-1,2,,26116-100652,,"BOLT M10X 65 PLATED",,,2,2,,,N,,,,,,,M21607,,M21607,,
21,2,,26716-100002,,"NUT M10",,,4,4,,,W,,,,,,,M21607,,M21607,,
```

Fig. 67 バケット（アタッチメント） BUCKET (ATTACHMENT)

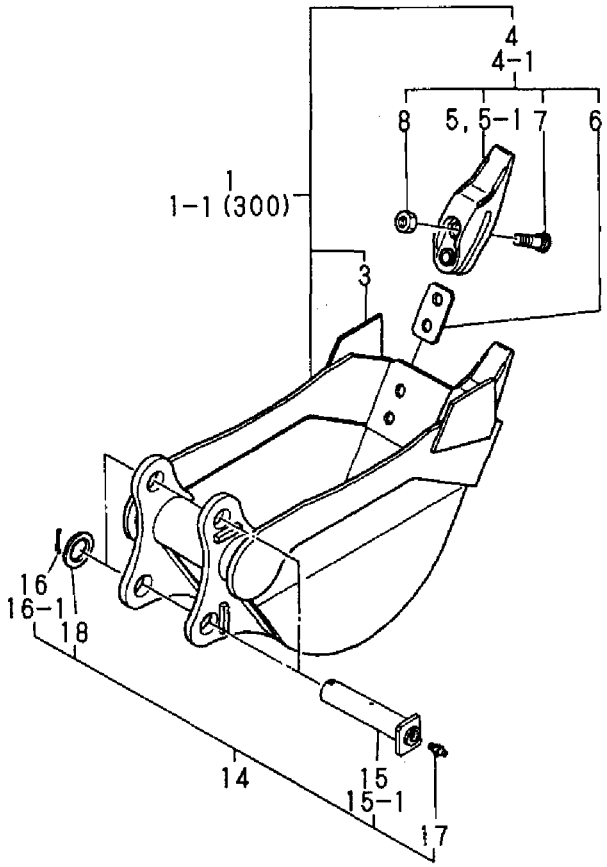

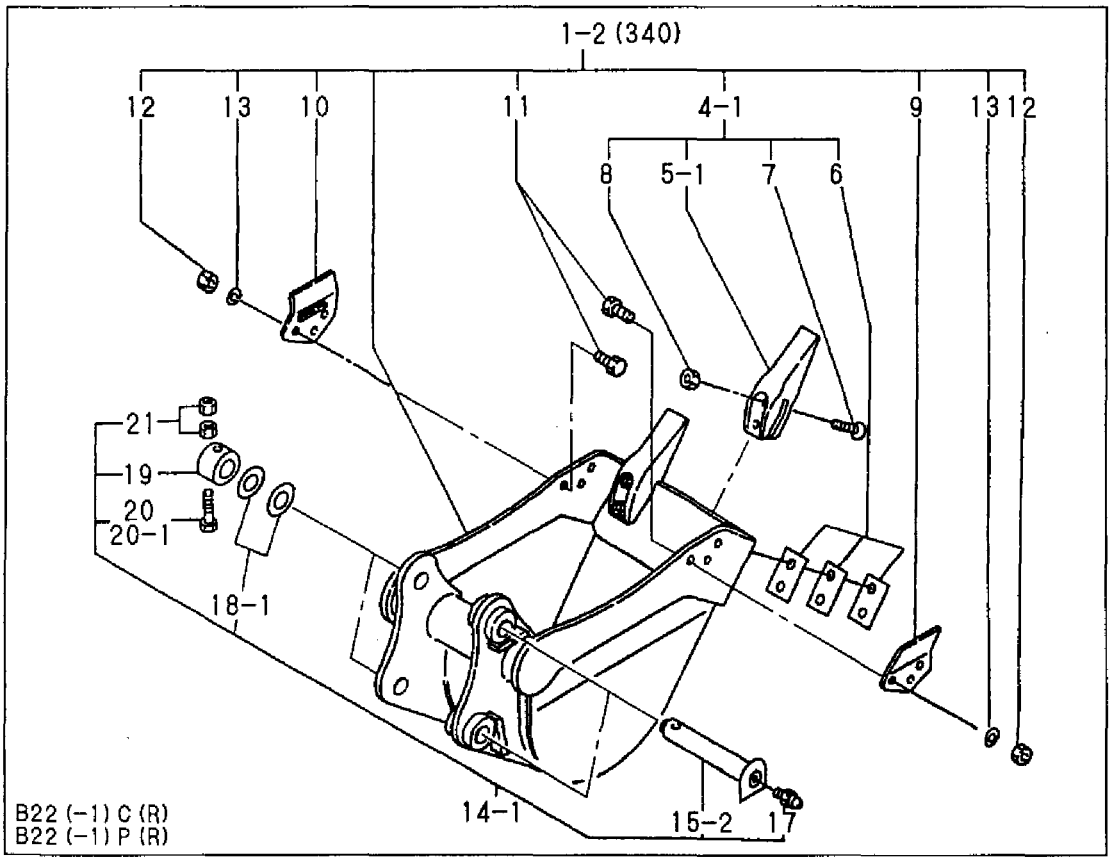

```
1,1,,772141-81420,,"BUCKET ASSY(350)",1,1,1,1,,,,,,,,,,,,,
1-1,1,,772141-81421,,"BUCKET
ASSY(350)",1,1,1,1,,,F,1,,MM/#00872,,MM/#00872,,,,,,
1-2,1,,772141-81422,,"BUCKET ASSY(390)",,,1,1,,,N,,,,,,,M21607,,M21607,,
3,3,,172116-86240,,"SIDE CUTTER, BUCKET",2,2,2,2,,,,,,,,,,,,,
3-1,3,,172116-86240,,"SIDE CUTTER, BUCKET",,,2,2,,,Z,,,,,,,M21607,,M21607,,
4,2,,772141-86230,,"TEETH ASSY",3,3,3,3,,,,,,,,,,,,,
4-1,2,,772141-86231,,"TEETH ASSY",3,3,3,3,,,R,,,*1988.05,,*1988.05,,,,,,
5,3,,172141-86230,,TEETH,3,3,3,3,,,,,,,,,,,,,
5-1,3,,172141-86231,,TEETH,3,3,3,3,,,R,,,*1988.05,,*1988.05,,,,,,
6,3,,172137-86710,,"TEETH SHIM 17 SET",3,3,3,3,,,,,,,,,,,,,
7,3,,172137-86770,,BOLT,6,6,6,6,,,,,,,,,,,,,
8,3,,172137-86780,,NUT,6,6,6,6,,,,,,,,,,,,,
9,2,,172142-86150,,"CUTTER (L), SIDE",,,1,1,,,W,,,,,,,M21607,,M21607,,
10,2,,172142-86160,,"CUTTER (R), SIDE",,,1,1,,,W,,,,,,,M21607,,M21607,,
11,2,,172142-86280,,"BOLT M14X 40",,,6,6,,,W,,,,,,,M21607,,M21607,,
12,2,,172142-86290,,"NUT 14",,,6,6,,,W,,,,,,,M21607,,M21607,,
13,2,,22217-140000,,"SPRING WASHER 14",,,6,6,,,W,,,,,,,M21607,,M21607,,
14,1,,172141-99460,,"PIN KIT, BUCKET",2,2,2,2,,,,,,,,,,,,,
14-1,1,,172173-99460,,"PIN KIT, BUCKET",,,2,2,,,N,,,,,,,M21607,,M21607,,
15,2,,172141-86250,,"PIN 35-156",2,2,2,2,,,,,,,,,,,,,
15-1,2,,172141-86251,,"PIN  35-188 CMP",2,2,2,2,,,S,,,MM/#00872,,MM/#00872,,,,,,
15-2,2,,172141-86252,,"PIN 35-195",,,2,2,,,S,,,,,,,M21607,,M21607,,
16,2,,22417-800500,,"COTTER PIN 8.0X50",2,2,2,2,,,,,,,,,,,,,
16-1,2,,22417-800450,,"COTTER PIN 8.0X45",2,2,2,2,,,N,,,M00519,,M00519,,,,,,
16-2,2,,22417-800450,,"COTTER PIN 8.0X45",,,2,2,,,Z,,,,,,,M21607,,M21607,,
17,2,,24761-020000,,"NIPPLE PT1/8,GREASE",2,2,2,2,,,,,,,,,,,,,
18,2,,172141-84600,,"SHIM 35",2,2,2,2,,,,,,,,,,,,,
18-1,2,,172141-84601,,"SHIM 35",,,2,2,,,N,,,,,,,M21607,,M21607,,
19,2,,172171-81500,,COLLAR,,,2,2,,,W,,,,,,,M21607,,M21607,,
20,2,,26116-100702,,"BOLT M10X 70 PLATED",,,2,2,,,W,,,,,,,M21607,,M21607,,
20-1,2,,26116-100652,,"BOLT M10X 65 PLATED",,,2,2,,,N,,,,,,,M21607,,M21607,,
21,2,,26716-100002,,"NUT M10",,,4,4,,,W,,,,,,,M21607,,M21607,,
```

Fig. 68 バケット（アタッチメント） BUCKET (ATTACHMENT)

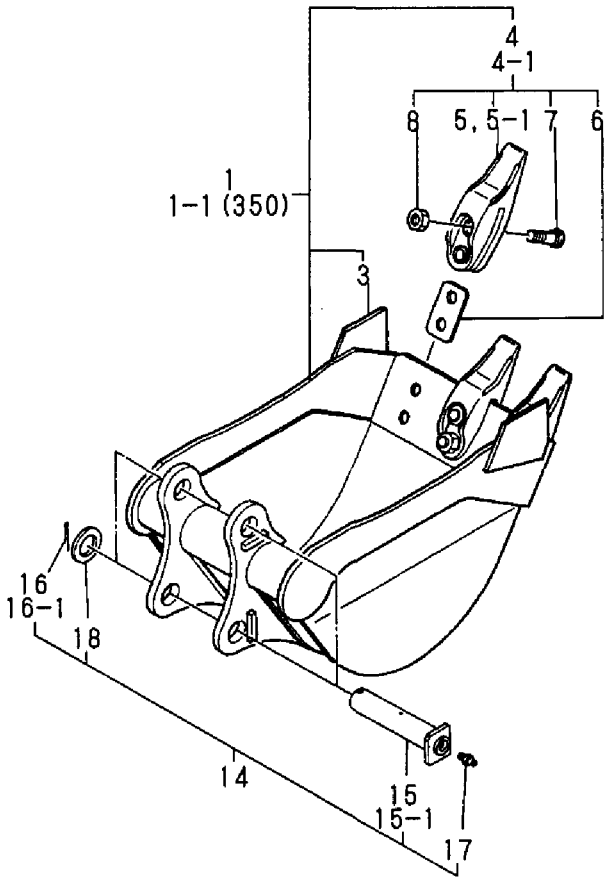

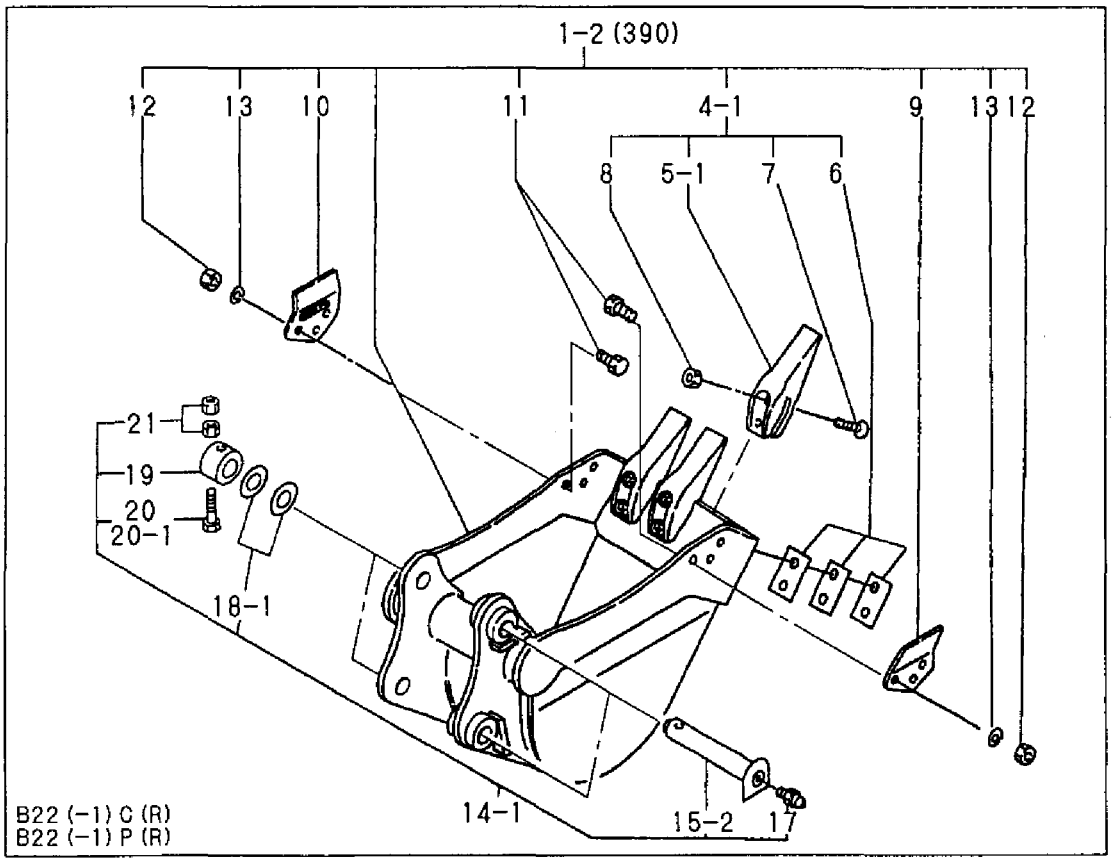

```
1,1,,772141-81430,,"BUCKET ASSY,(500)",1,1,1,1,,,,,,,,,,,,,
1-1,1,,772141-81431,,"BUCKET ASSY,(500)",1,1,1,1,,,F,1,,M00872,,M00872,,,,,,
1-2,1,,772141-81432,,"BUCKET ASSY(540)",,,1,1,,,N,,,,,,,M21607,,M21607,,
3,3,,172116-86240,,"SIDE CUTTER, BUCKET",2,2,2,2,,,,,,,,,,,,,
3-1,3,,172116-86240,,"SIDE CUTTER, BUCKET",,,2,2,,,Z,,,,,,,M21607,,M21607,,
4,2,,772141-86230,,"TEETH ASSY",4,4,4,4,,,,,,,,,,,,,
4-1,2,,772141-86231,,"TEETH ASSY",4,4,4,4,,,R,,,*1988.05,,*1988.05,,,,,,
5,3,,172141-86230,,TEETH,4,4,4,4,,,,,,,,,,,,,
5-1,3,,172141-86231,,TEETH,4,4,4,4,,,R,,,*1988.05,,*1988.05,,,,,,
6,3,,172137-86710,,"TEETH SHIM 17 SET",4,4,4,4,,,,,,,,,,,,,
7,3,,172137-86770,,BOLT,8,8,8,8,,,,,,,,,,,,,
8,3,,172137-86780,,NUT,8,8,8,8,,,,,,,,,,,,,
9,2,,172142-86150,,"CUTTER (L), SIDE",,,1,1,,,W,,,,,,,M21607,,M21607,,
10,2,,172142-86160,,"CUTTER (R), SIDE",,,1,1,,,W,,,,,,,M21607,,M21607,,
11,2,,172142-86280,,"BOLT M14X 40",,,6,6,,,W,,,,,,,M21607,,M21607,,
12,2,,172142-86290,,"NUT 14",,,6,6,,,W,,,,,,,M21607,,M21607,,
13,2,,22217-140000,,"SPRING WASHER 14",,,6,6,,,W,,,,,,,M21607,,M21607,,
14,1,,172141-99460,,"PIN KIT, BUCKET",2,2,2,2,,,,,,,,,,,,,
14-1,1,,172173-99460,,"PIN KIT, BUCKET",,,2,2,,,W,,,,,,,M21607,,M21607,,
15,2,,172141-86250,,"PIN 35-156",2,2,2,2,,,,,,,,,,,,,
15-1,2,,172141-86251,,"PIN  35-188 CMP",2,2,2,2,,,S,,,MM/#00872,,MM/#00872,,,,,,
15-2,2,,172141-86252,,"PIN 35-195",,,2,2,,,S,,,,,,,M21607,,M21607,,
16,1,,22417-800500,,"COTTER PIN 8.0X50",2,2,2,2,,,,,,,,,,,,,
16-1,1,,22417-800450,,"COTTER PIN 8.0X45",2,2,2,2,,,N,,,M00519,,M00519,,,,,,
16-2,1,,22417-800450,,"COTTER PIN 8.0X45",,,2,2,,,Z,,,,,,,M21607,,M21607,,
17,1,,24761-020000,,"NIPPLE PT1/8,GREASE",2,2,2,2,,,,,,,,,,,,,
18,2,,172141-84600,,"SHIM 35",2,2,2,2,,,,,,,,,,,,,
18-1,2,,172141-84601,,"SHIM 35",,,2,2,,,N,,,,,,,M21607,,M21607,,
19,2,,172171-81500,,COLLAR,,,2,2,,,W,,,,,,,M21607,,M21607,,
20,2,,26116-100702,,"BOLT M10X 70 PLATED",,,2,2,,,W,,,,,,,M21607,,M21607,,
20-1,2,,26116-100652,,"BOLT M10X 65 PLATED",,,2,2,,,N,,,,,,,M21607,,M21607,,
21,2,,26716-100002,,"NUT M10",,,4,4,,,W,,,,,,,M21607,,M21607,,
```

Fig. 69 バケット（アタッチメント） BUCKET (ATTACHMENT)

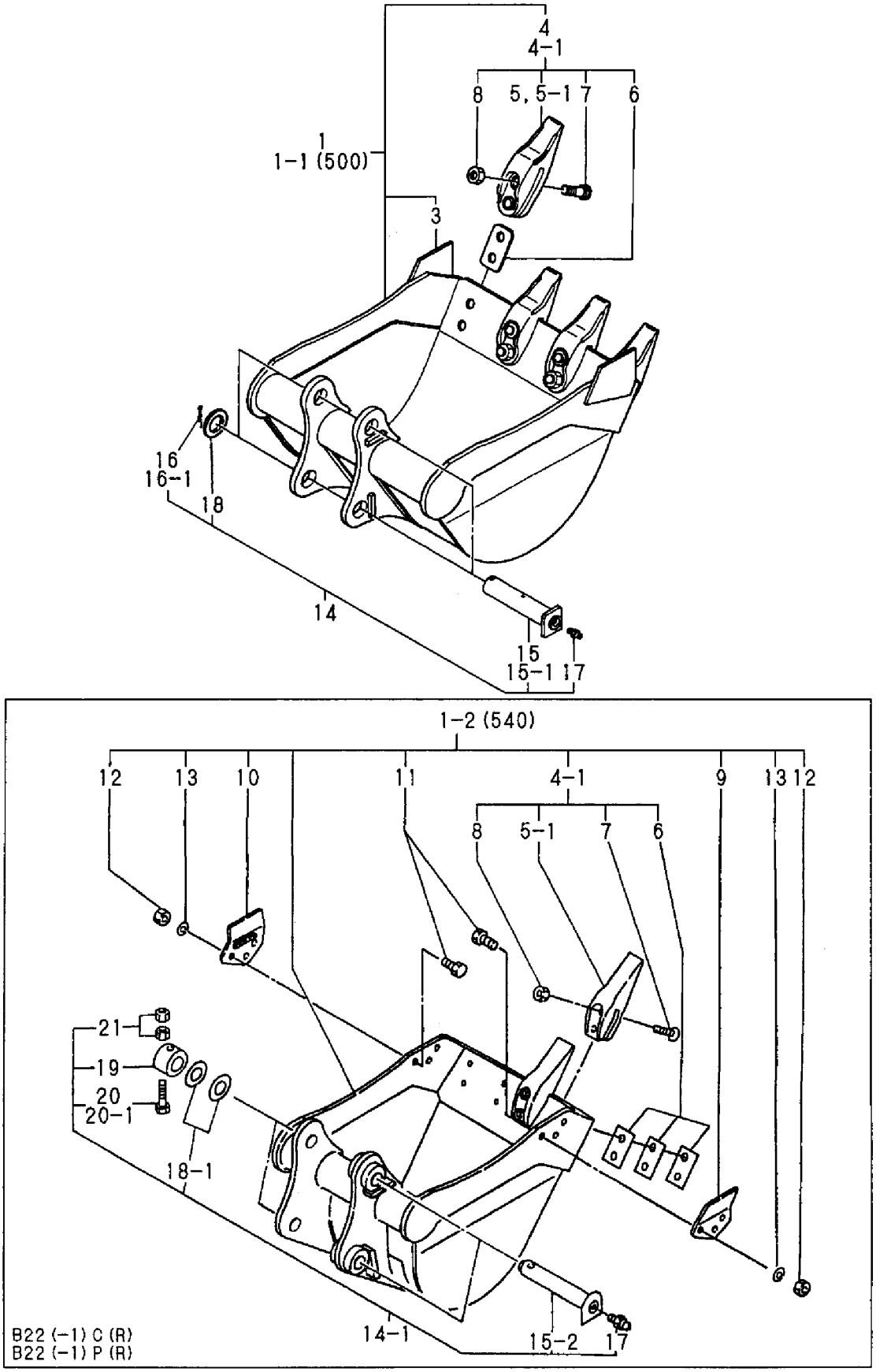

```
1,1,,172173-99460,,"PIN KIT, BUCKET",2,2,,,,,,,,,,,,,,
2,2,,172141-86252,,"PIN 35-195",2,2,,,,,,,,,,,,,,
3,2,,26116-100652,,"BOLT M10X 65 PLATED",2,2,,,,,,,,,,,,,,,
4,2,,24761-020000,,"NIPPLE PT1/8,GREASE",2,2,,,,,,,,,,,,,,,
5,2,,172141-84601,,"SHIM 35",2,2,,,,,,,,,,,,,,
8,2,,26716-100002,,"NUT M10",4,4,,,,,,,,,,,,,,
9,2,,172171-81500,,COLLAR,2,2,,,,,,,,,,,,,,
10,1,,172141-87200,,"BUCKET ASSY(290S)",1,1,,,,,,,,,,,,,,,
11,2,,172141-87210,,"BUCKET ASSY(290S)",1,1,,,,,,,,,,,,,,,
12,2,,172142-86150,,"CUTTER (L), SIDE",1,1,,,,,,,,,,,,,,,
13,2,,172142-86160,,"CUTTER (R), SIDE",1,1,,,,,,,,,,,,,,,
14,2,,172142-86280,,"BOLT M14X 40",6,6,,,,,,,,,,,,,,
15,2,,172142-86290,,"NUT 14",6,6,,,,,,,,,,,,,,
16,2,,22217-140000,,"SPRING WASHER 14",6,6,,,,,,,,,,,,,,,
17,2,,772173-86140,,"TEETH ASSY",2,2,,,,,,,,,,,,,,
18,3,,172173-86220,,POINT,2,2,,,,,,,,,,,,,,
19,3,,172173-86230,,"PIN ASSY, LOCK",2,2,,,,,,,,,,,,,,
20,4,,172173-86240,,PIN,2,2,,,,,,,,,,,,,,
21,4,,172173-86250,,PIN,2,2,,,,,,,,,,,,,,
22,3,,172173-86140,,"ADAPTER 16",2,2,,,,,,,,,,,,,,
23,1,,172141-87300,,"BUCKET ASSY(340S)",1,1,,,,,,,,,,,,,,,
24,2,,172141-87310,,"BUCKET ASSY(340S)",1,1,,,,,,,,,,,,,,,
25,2,,172142-86150,,"CUTTER (L), SIDE",1,1,,,,,,,,,,,,,,,
26,2,,172142-86160,,"CUTTER (R), SIDE",1,1,,,,,,,,,,,,,,,
27,2,,172142-86280,,"BOLT M14X 40",6,6,,,,,,,,,,,,,,
28,2,,172142-86290,,"NUT 14",6,6,,,,,,,,,,,,,,
29,2,,22217-140000,,"SPRING WASHER 14",6,6,,,,,,,,,,,,,,,
30,2,,772173-86140,,"TEETH ASSY",3,3,,,,,,,,,,,,,,
31,3,,172173-86220,,POINT,3,3,,,,,,,,,,,,,,
32,3,,172173-86230,,"PIN ASSY, LOCK",3,3,,,,,,,,,,,,,,
33,4,,172173-86240,,PIN,3,3,,,,,,,,,,,,,,
34,4,,172173-86250,,PIN,3,3,,,,,,,,,,,,,,
35,3,,172173-86210,,"ADAPTER 16",3,3,,,,,,,,,,,,,,
36,1,,172141-87400,,"BUCKET ASSY(390S)",1,1,,,,,,,,,,,,,,,
37,2,,172141-87410,,"BUCKET ASSY(390S)",1,1,,,,,,,,,,,,,,,
38,2,,172142-86150,,"CUTTER (L), SIDE",1,1,,,,,,,,,,,,,,,
39,2,,172142-86160,,"CUTTER (R), SIDE",1,1,,,,,,,,,,,,,,,
40,2,,172142-86280,,"BOLT M14X 40",6,6,,,,,,,,,,,,,,
41,2,,172142-86290,,"NUT 14",6,6,,,,,,,,,,,,,,
42,2,,22217-140000,,"SPRING WASHER 14",6,6,,,,,,,,,,,,,,,
43,2,,772173-86140,,"TEETH ASSY",3,3,,,,,,,,,,,,,,
44,3,,172173-86220,,POINT,3,3,,,,,,,,,,,,,,
45,3,,172173-86230,,"PIN ASSY, LOCK",3,3,,,,,,,,,,,,,,
46,4,,172173-86240,,PIN,3,3,,,,,,,,,,,,,,
47,4,,172173-86250,,PIN,3,3,,,,,,,,,,,,,,
48,3,,172173-86210,,"ADAPTER 16",3,3,,,,,,,,,,,,,,
49,1,,172141-87101,,"BUCKET ASSY 490S",1,1,,,,,,,,,,,,,,,
50,2,,172141-87111,,"BUCKET ASSY 490S",1,1,,,,,,,,,,,,,,,
51,2,,172142-86150,,"CUTTER (L), SIDE",1,1,,,,,,,,,,,,,,,
52,2,,172142-86160,,"CUTTER (R), SIDE",1,1,,,,,,,,,,,,,,,
53,2,,172142-86280,,"BOLT M14X 40",6,6,,,,,,,,,,,,,,
54,2,,172142-86290,,"NUT 14",6,6,,,,,,,,,,,,,,
55,2,,22217-140000,,"SPRING WASHER 14",6,6,,,,,,,,,,,,,,,
56,2,,772173-86140,,"TEETH ASSY",4,4,,,,,,,,,,,,,,
57,3,,172173-86220,,POINT,4,4,,,,,,,,,,,,,,
58,3,,172173-86230,,"PIN ASSY, LOCK",4,4,,,,,,,,,,,,,,
59,4,,172173-86240,,PIN,4,4,,,,,,,,,,,,,,
60,4,,172173-86250,,PIN,4,4,,,,,,,,,,,,,,
61,3,,172173-86210,,"ADAPTER 16",4,4,,,,,,,,,,,,,,
62,1,,172141-87500,,"BUCKET ASSY(540S)",1,1,,,,,,,,,,,,,,,
63,2,,172141-87510,,"BUCKET ASSY(640S)",1,1,,,,,,,,,,,,,,,
64,2,,172142-86150,,"CUTTER (L), SIDE",1,1,,,,,,,,,,,,,,,
65,2,,172142-86160,,"CUTTER (R), SIDE",1,1,,,,,,,,,,,,,,,
```

```
66,2,,172142-86280,,"BOLT M14X 40",6,6,,,,,,,,,,,,,,,
67,2,,172142-86290,,"NUT 14",6,6,,,,,,,,,,,,,,,
68,2,,22217-140000,,"SPRING WASHER 14",6,6,,,,,,,,,,,,,,,,,
69,2,,772173-86140,,"TEETH ASSY",4,4,,,,,,,,,,,,,,,
70,3,,172173-86220,,POINT,4,4,,,,,,,,,,,,,,,
71,3,,172173-86230,,"PIN ASSY, LOCK",4,4,,,,,,,,,,,,,,,,
72,4,,172173-86240,,PIN,4,4,,,,,,,,,,,,,,,
73,4,,172173-86250,,PIN,4,4,,,,,,,,,,,,,,,
74,3,,172173-86210,,"ADAPTER 16",4,4,,,,,,,,,,,,,,,,
```

Fig. 70 バケットSタイプ（アタッチメント） BUCKET S－TYPE (ATTACHMENT)

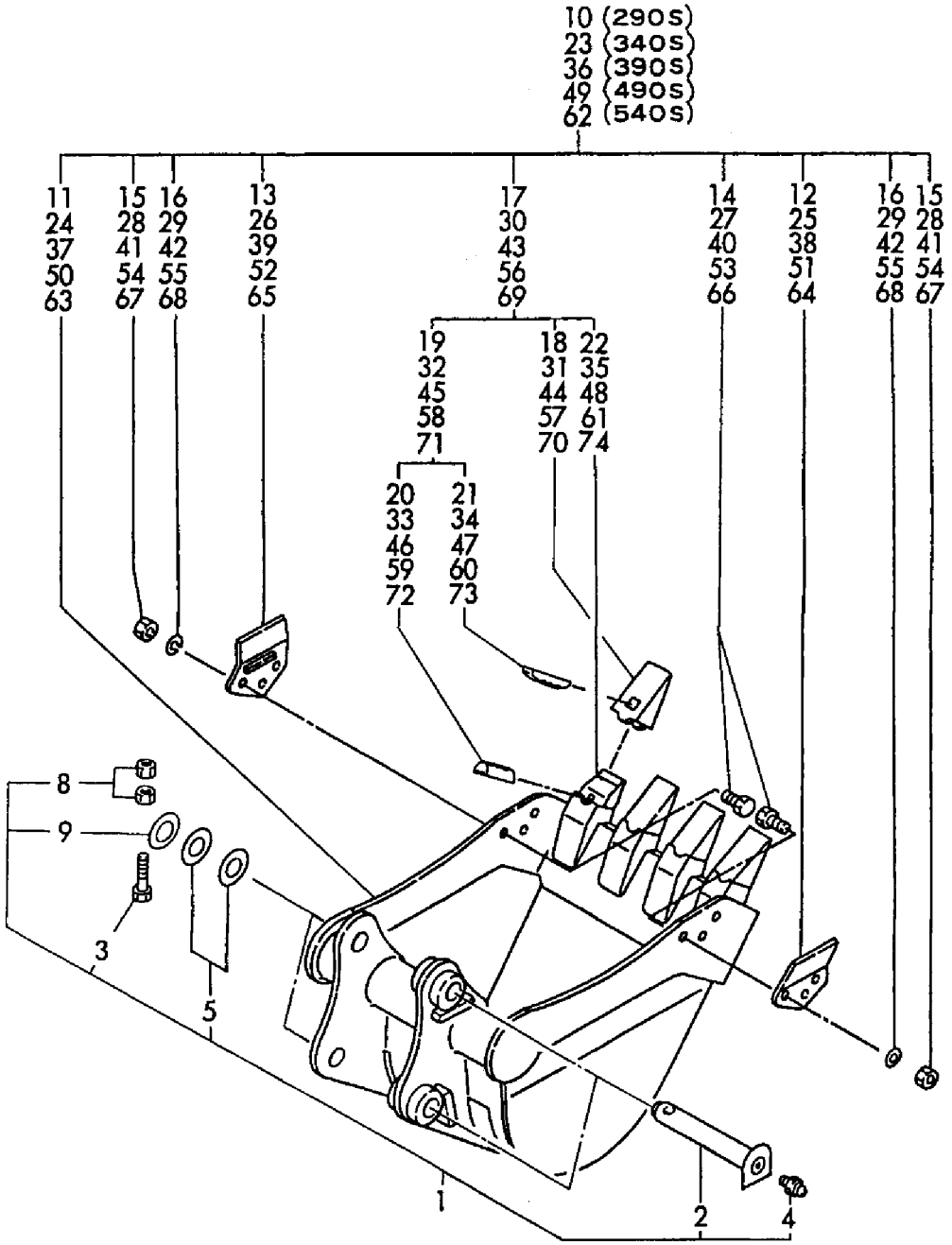

```
[Info]
PcNo=Y00K2282
PcName=B22(-1),YB221(B3612)
JpnUse=1
JpnSec1=Œš‹@
JpnSec2=ƒoƒbƒNƒz[
JpnSec3=YB
JpnPreface=1
EngUse=1
EngSec1=CONSTRUCTION
EngSec2=EXCAVATOR (YB)
EngSec3=YB
EngPreface=1
```