TB014

Book No.BC4Z004
Serial No.11400003-11401973
(2005.04)

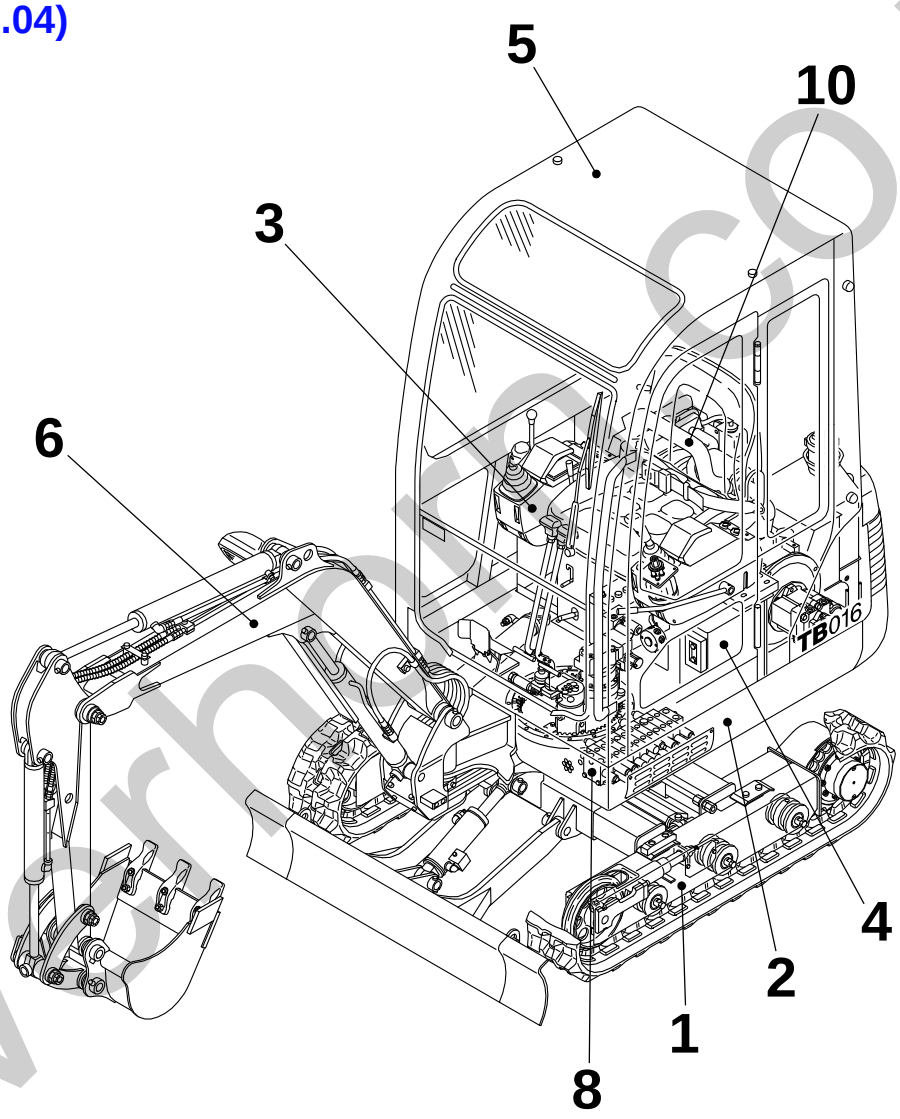

silverhand.co.uk
TAKEUCHI

silverhorn.co.uk

INDEX

Item	Part number	Description	Q'ty	Chan.	Serial No.	Serv.	Remarks
1		UNDERCARRIAGE					
2		TURNTABLE & CONTROL LEVER					
3		ENGINE & ELECTRICAL SYSTEM					
4		HYDRAULIC PIPNG & TANK					
5		COVER & CAB					
6		HOE ATTACHMENT					
7		DECAL & TOOL					
8		HYDRAULIC DEVICE					
10		ENGINE(3TNE68-NTB)					
		ENGINE(3TNE68-TB1,ETB1)					
		2005.02.14					
99		KITS, ATTACHMENTS AND QUICK REFERENCE					

silverhorn.co.uk

LOWER FRAME

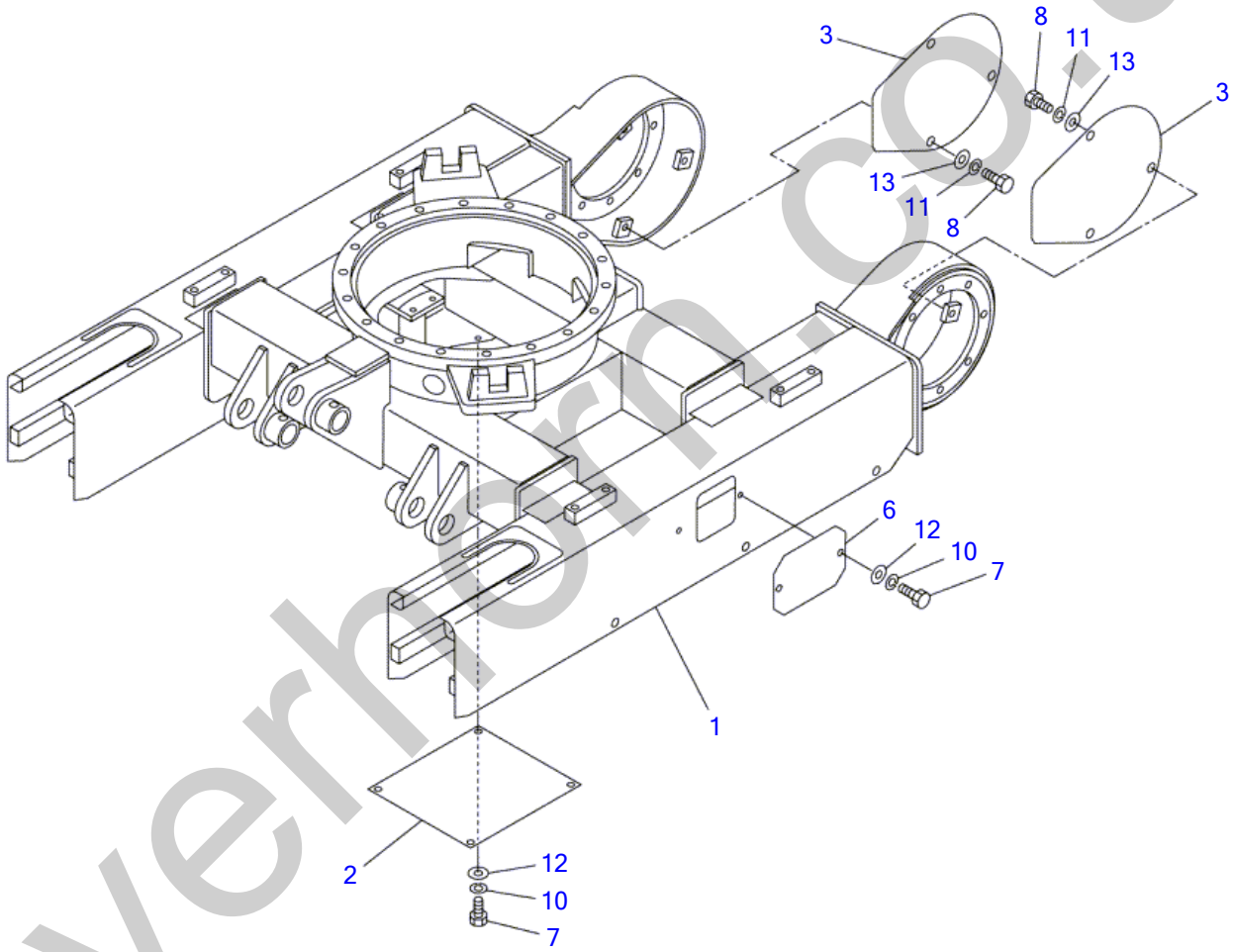

C4A011

S=1/10

silverhorn.co.uk

LOWER FRAME

Item	Part number	Description	Q'ty	Chan.	Serial No.	Serv.	Remarks
		FRAME ASSY, lower					X03310-30000-1
1	X **********	FRAME	1				
2	0331010400	PLATE	1				
3	0331021003	COVER	2				
6	0331018600	COVER	2				
7	1100040816	BOLT	8				
8	1100041020	BOLT	6				
10	1140020008	WASHER, spring	8				
11	1140020010	WASHER, spring	6				
12	1141110008	WASHER	8				
13	1141110010	WASHER	6				
	C4a012						

silverhorn.co.uk

SHOE SLIDE

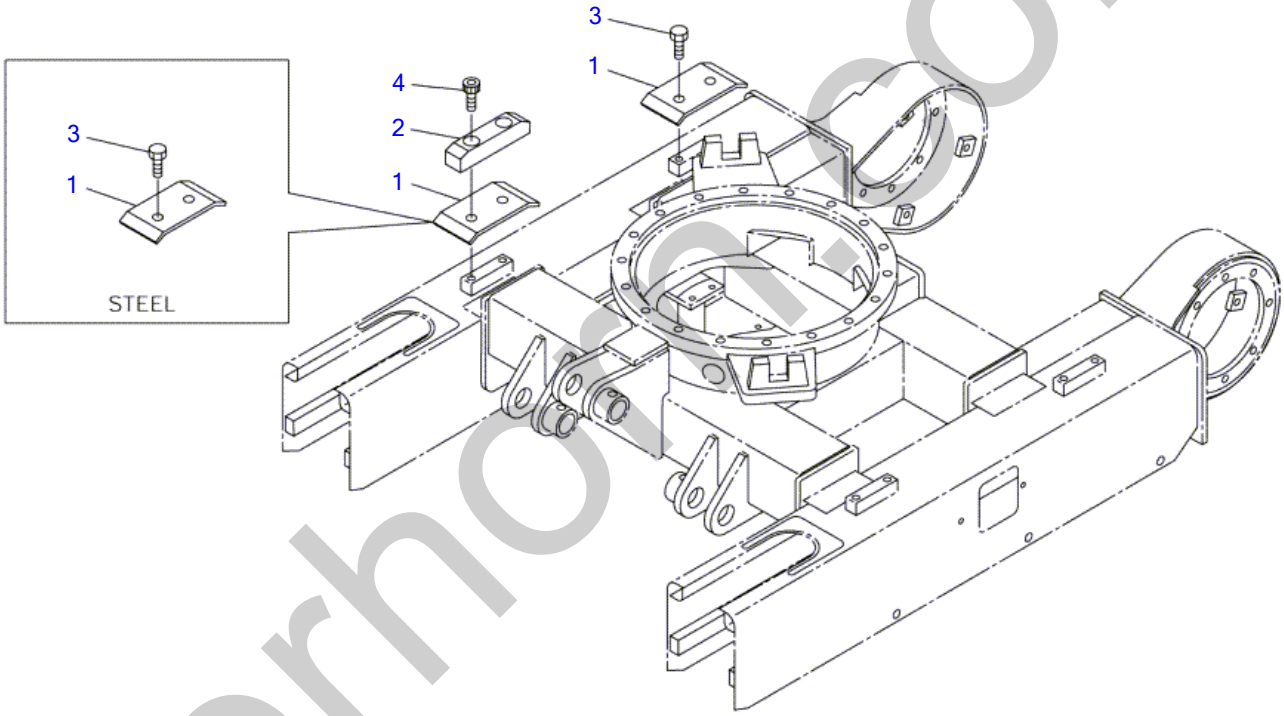

C4A200

S-1/10

silverhorn.co.uk

SHOE SLIDE

Item	Part number	Description	Q'ty	Chan.	Serial No.	Serv.	Remarks
		SHOE SLIDE ASSY (rubber)					X03312-02000-0
		SHOE SLIDE ASSY (steel)					X03312-02100-0
1	0421013800	SLIDE, shoe	4				
2	0331011200	GUIDE	2				rubber
3	1100041020	BOLT	4				rubber
	1100041020	BOLT	8				steel
4	1110041030	SCREW, cap	4				
	C4a200						

silverhorn.co.uk

CRAWLER BELT

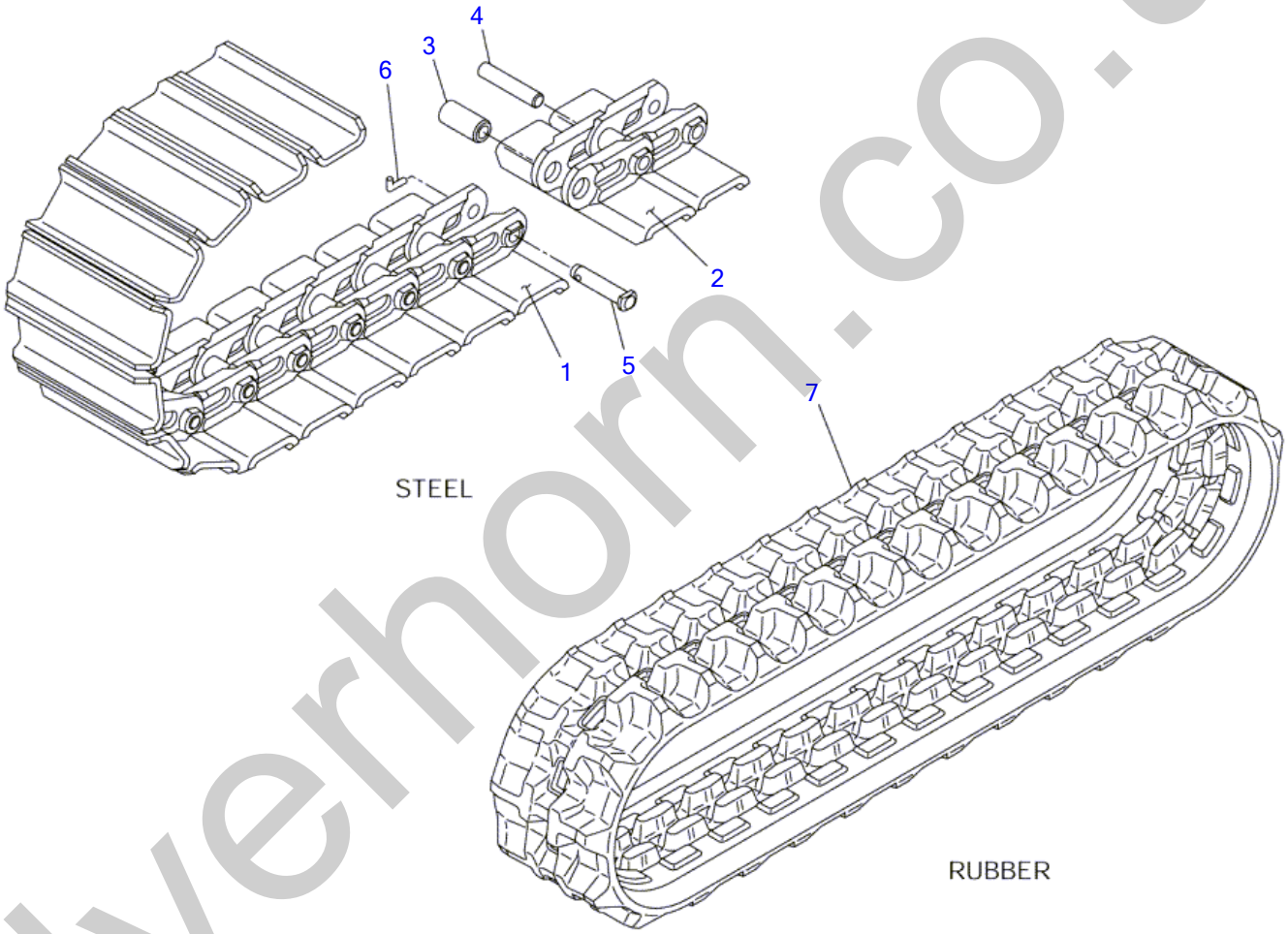

C4A030

S=1/8, 1/10

silverhorn.co.uk

CRAWLER BELT

Item	Part number	Description	Q'ty	Chan.	Serial No.	Serv.	Remarks
0	1914050300	BELT, steel crawler	2				X19140-50300-0
1	1914050214	・PLATE ASSY, master	1				
2	1914050213	・PLATE ASSY	31				
3	1914050005	・BUSHING	32				
4	1914050006	・PIN, track	31				
5	1914050007	・PIN, master	1				
6	1914050008	・PIN, coter	1				
7	1914049300	BELT, rubber crawler	2		11400003~11400328		
	1914049800	BELT, rubber crawler	2	(H)	11400329~11400424		short pitch
	1914080400	BELT, rubber crawler	2	(H)	11400425~		short pitch
	C4a031S						

silverhorn.co.uk

TRACK ROLLER

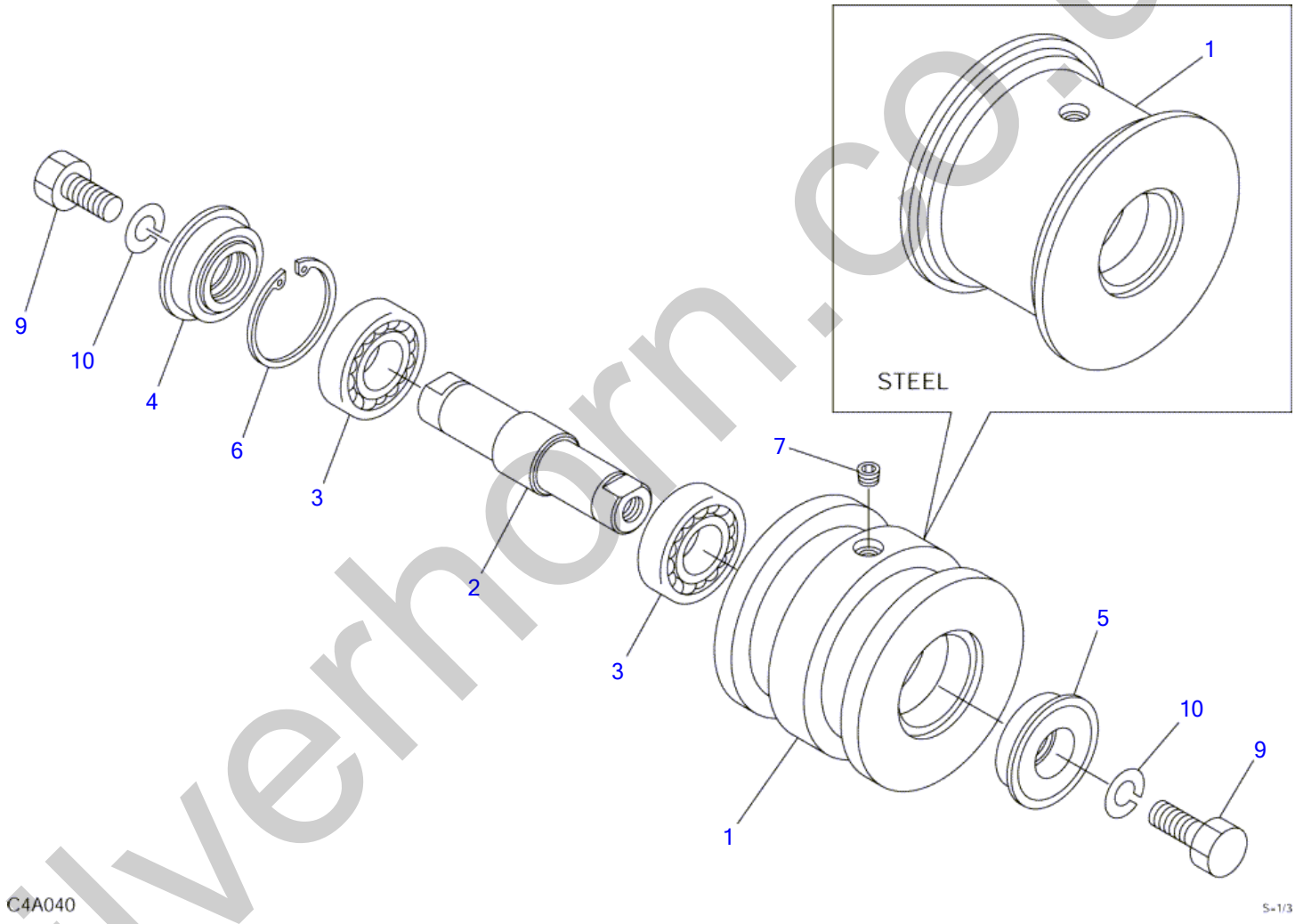

silverhorn.co.uk

TRACK ROLLER

Item	Part number	Description	Q'ty	Chan.	Serial No.	Serv.	Remarks
		ROLLER ASSY, track (rubber crawler)					X03313-06000-1
		ROLLER ASSY, track (steel crawler)					X03313-07000-1
0-1	0331306100	ROLLER SUB ASSY	6				rubber crawler
	0331307100	ROLLER SUB ASSY	6				steel crawler
1	0331306200	・SHELL	1				rubber crawler
	0331307200	・SHELL	1				steel crawler
2	0421301300	・SHAFT	1				
3	1300006205	・BEARING	2				
4	1431202552	・SEAL	1				
5	1431202547	・SEAL	1				
6	1221000052	・RING, snap	1				
7	1501810001	・PLUG	1				
9	1101041225	BOLT	12				
10	1140010012	WASHER, spring	12				
	C4a042						

silverhorn.co.uk

FRONT IDLER

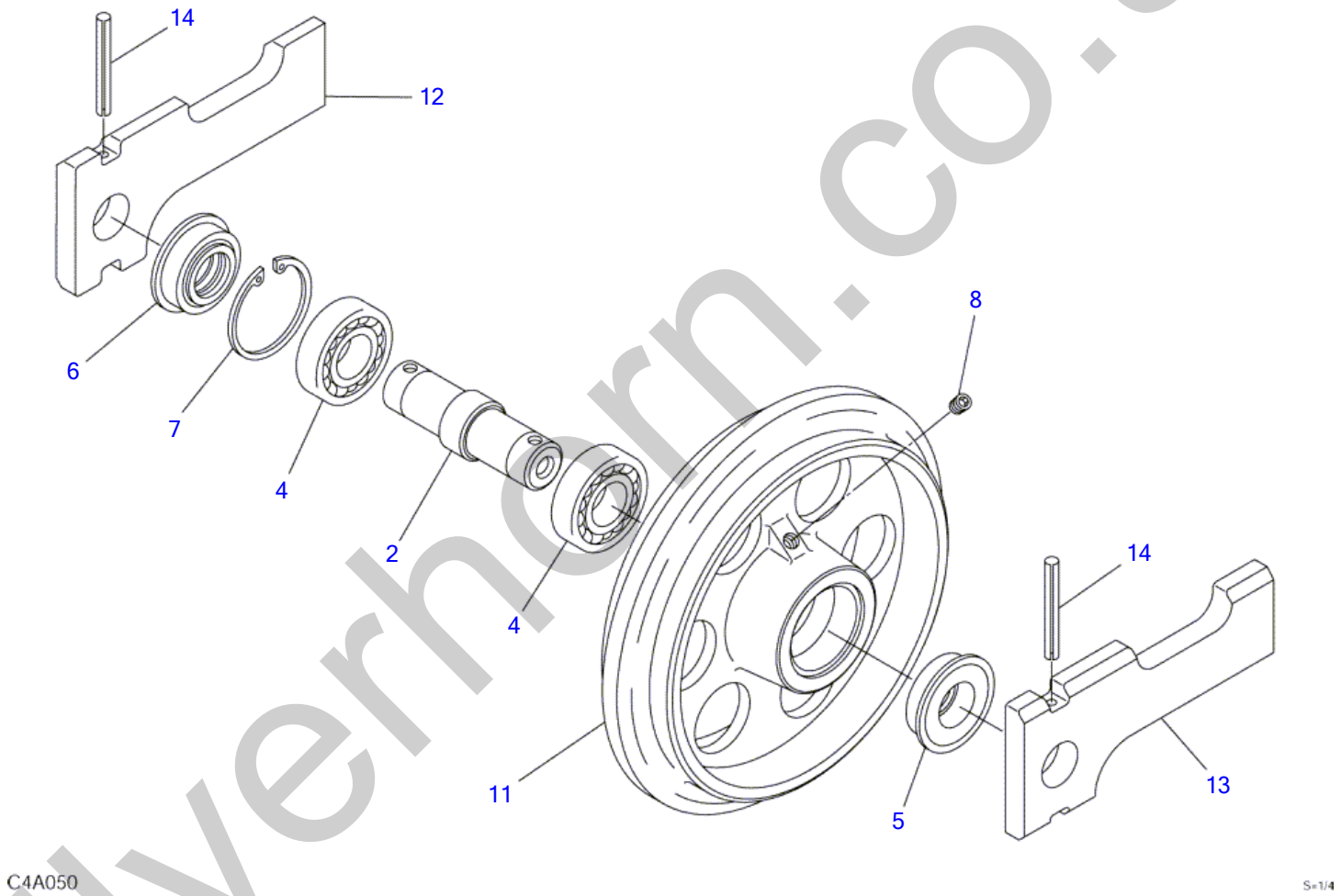

silverhorn.co.uk

FRONT IDLER

Item	Part number	Description	Q'ty	Chan.	Serial No.	Serv.	Remarks
		IDLER ASSY, front					X03314-04000-1
0-1	0421401200	IDLER SUB ASSY	2				
2	0421400200	・SHAFT	1				
4	1300006206	・BEARING	2				
5	1431203055	・SEAL	1				
6	1431203062	・SEAL	1				
7	1221000062	・RING, snap	1				
8	1501810001	・PLUG	1				
11	0421401100	・IDLER	1				
12	0331404600	YOKE (R.H.)	2				
13	0331404700	YOKE (L.H.)	2				
14	1213000670	PIN, spring	4				
	C4a052						

silverhorn.co.uk

TRACK ADJUSTER (11400003-11400782)

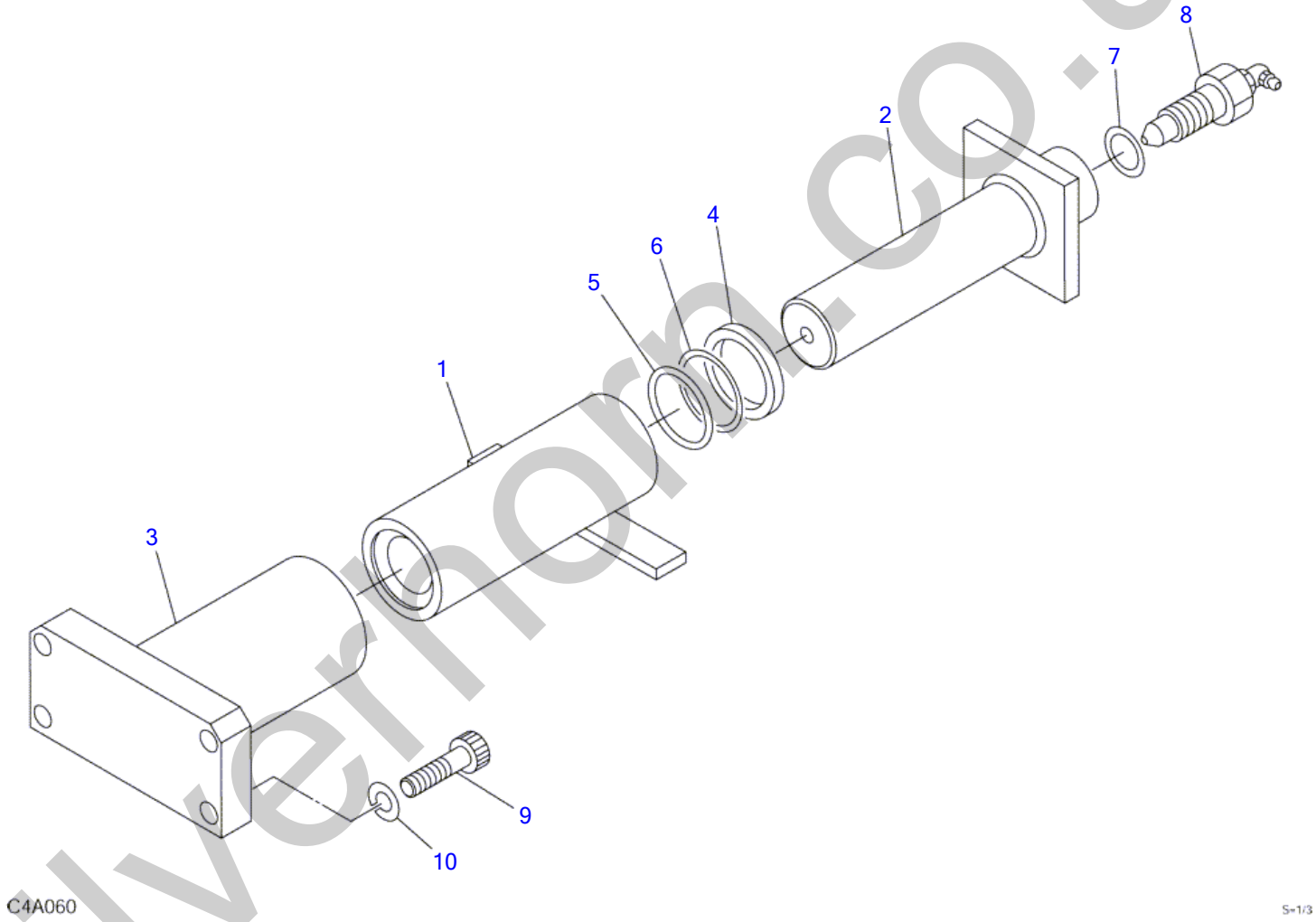

silverhorn.co.uk

TRACK ADJUSTER (11400003-11400782)

Item	Part number	Description	Q'ty	Chan.	Serial No.	Serv.	Remarks
0-1	0331506500	ADJUSTER ASSY, track	2				X03315-06500-1
1	0331506100	・CYLINDER, grease	1				
2	0331506200	・PISTON	1		11400003~11400010		
	0331506600	・PISTON	1	(H)	11400011~		
3	0331505300	・PLATE	1		11400003~11400010		
	0331506700	・PLATE	1	(H)	11400011~		
4	1400502033	・SEAL, oil	1				
5	1422010350	・O-RING	1				
6	1421020350	・RING, back-up	1				
7	1541201616	・WASHER	1				
8	1541301602	・VALVE ASSY, check	1				
9	1110041035	SCREW, cap	8				
10	1140420010	WASHER, spring	8				
	C4a062S						

silverhorn.co.uk

TRACK ADJUSTER (11400783-)

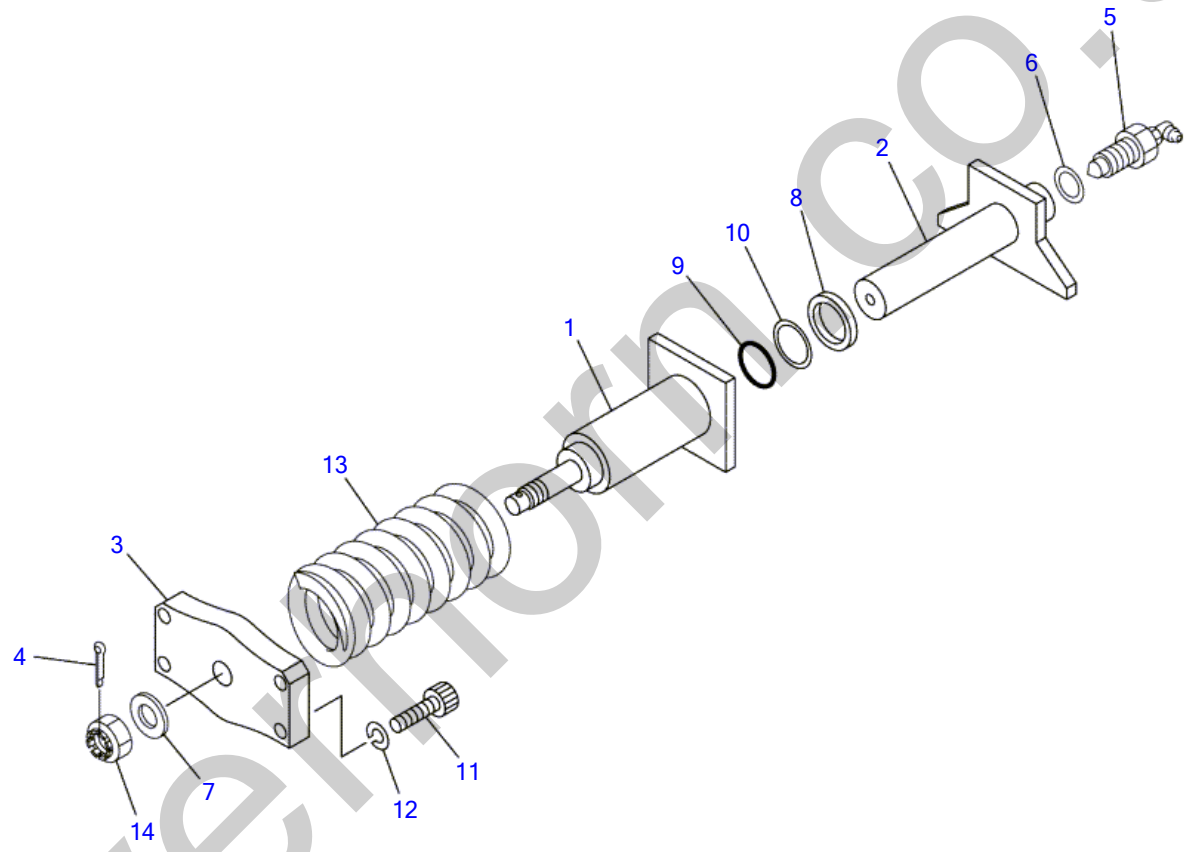

C4A150

S-1/5

silverthorn.co.uk

TRACK ADJUSTER (11400783-)

Item	Part number	Description	Q'ty	Chan.	Serial No.	Serv.	Remarks
0-1	0331508500	ADJUSTER ASSY, track (R)	1				X03315-08500-4
	0331508900	ADJUSTER ASSY, track (L)	1				X03315-08900-4
1	0331508600	・CYLINDER, grease	1				
2	0331508700	・PISTON	1				
3	0331508030	・PLATE	1				
4	1210010440	・PIN, split	1				
5	1541301602	・VALVE ASSY, check	1				
6	1541201616	・WASHER	1				
7	1141540016	・WASHER	1				
8	1400401654	・SEAL, oil	1				
9	1422010300	・O-RING	1				
10	1421020300	・RING, back-up	1				
11	1110041035	SCREW, cap	8				
12	1140420010	WASHER, spring	8				
13	0007000018	SPRING	2				
14	1132080016	NUT	2				
	C4a152						

silverhorn.co.uk

TRAVEL DEVICE (11400003-11400436)

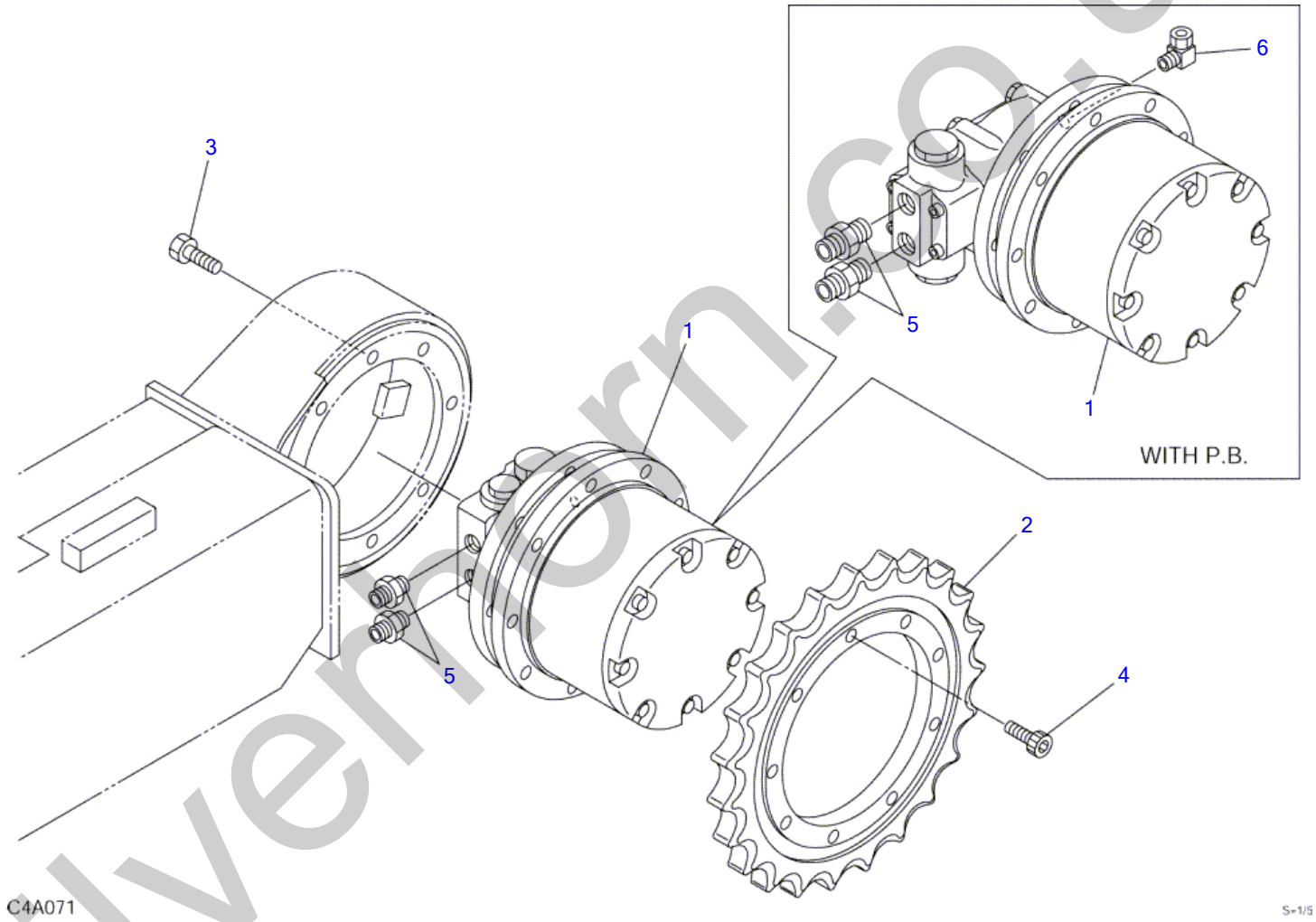

silvermorn.co.uk

TRAVEL DEVICE (11400003-11400436)

Item	Part number	Description	Q'ty	Chan.	Serial No.	Serv.	Remarks
		MOTOR ASSY, travel					X03316-16000-1
		MOTOR ASSY, travel (with P.B.)			11400263~11400436		X03316-18000-1
1	1903118000	MOTOR, travel	2				
	1903119800	MOTOR, travel	2		11400263~11400436		with P.B.
2	0331610100	SPROCKET	2				
3	1100241022	BOLT	16				
4	1110041025	SCREW, cap	18				
5	1515600200	ADAPTOR	4				
	1420010110	・O-RING	1			M	
	1515600576	ADAPTOR	4		11400263~11400436		with P.B.
	1420010140	・O-RING	1			M	
6	1532620802	ELBOW	2		11400263~11400436		with P.B.
	C4a071						

silverhorn.co.uk

TRAVEL DEVICE (11400437-)

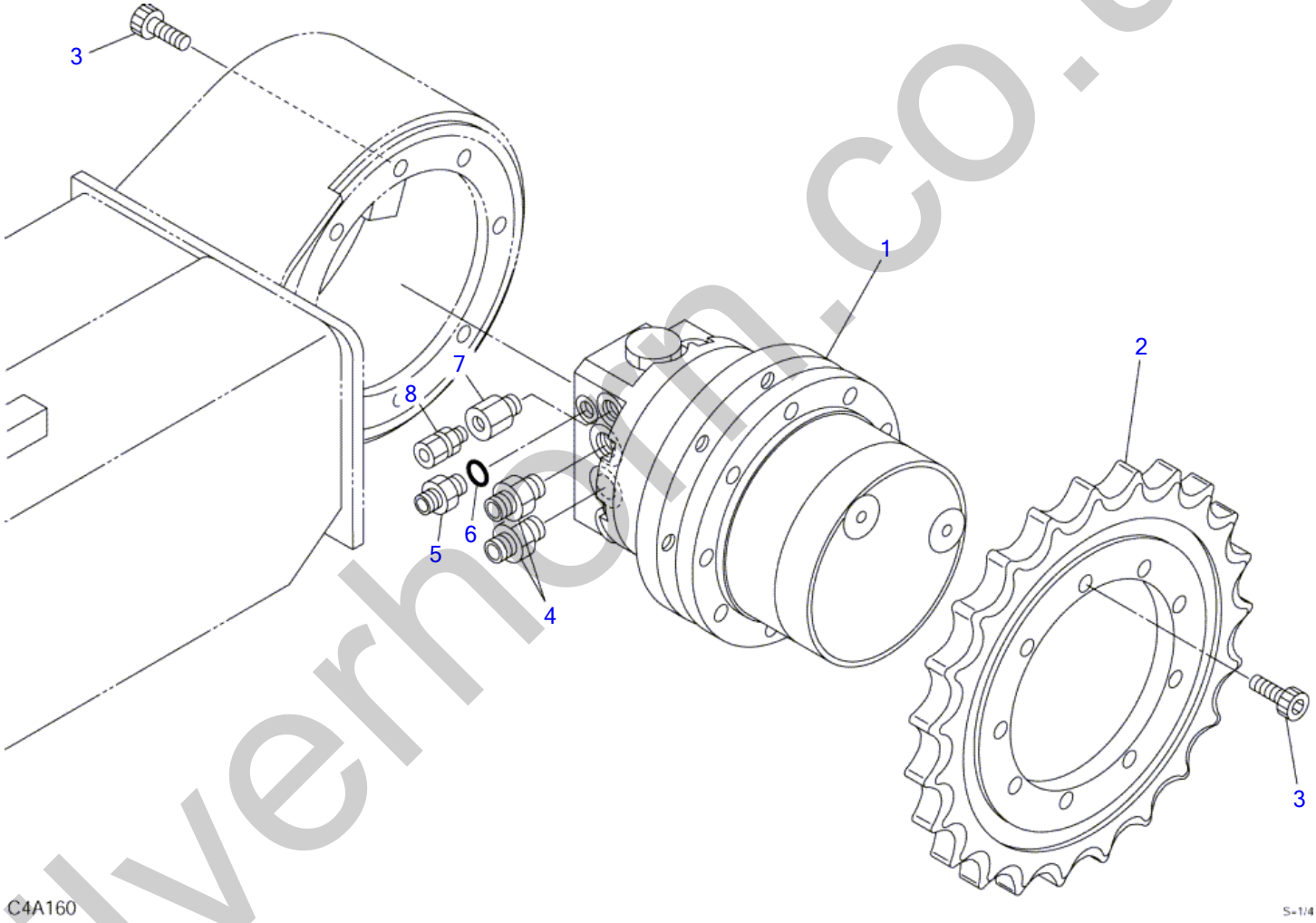

silverhorn.co.uk

TRAVEL DEVICE (11400437-)

Item	Part number	Description	Q'ty	Chan.	Serial No.	Serv.	Remarks
		MOTOR ASSY, travel					X03316-19000-0
1	1903121200	MOTOR, travel	2				
2	0421600100	SPROCKET	2				
3	1110041022	SCREW, cap	34				
4	1515600576	ADAPTOR	4				
	1420010140	・O-RING	1			M	
5	0007203059	NIPPLE	2				
6	1420010080	O-RING	2				
7	0007211014	BUSHING	2				
8	1532520801	CONNECTOR	2				
	C4a160S						

silverhorn.co.uk

SLEW BEARING

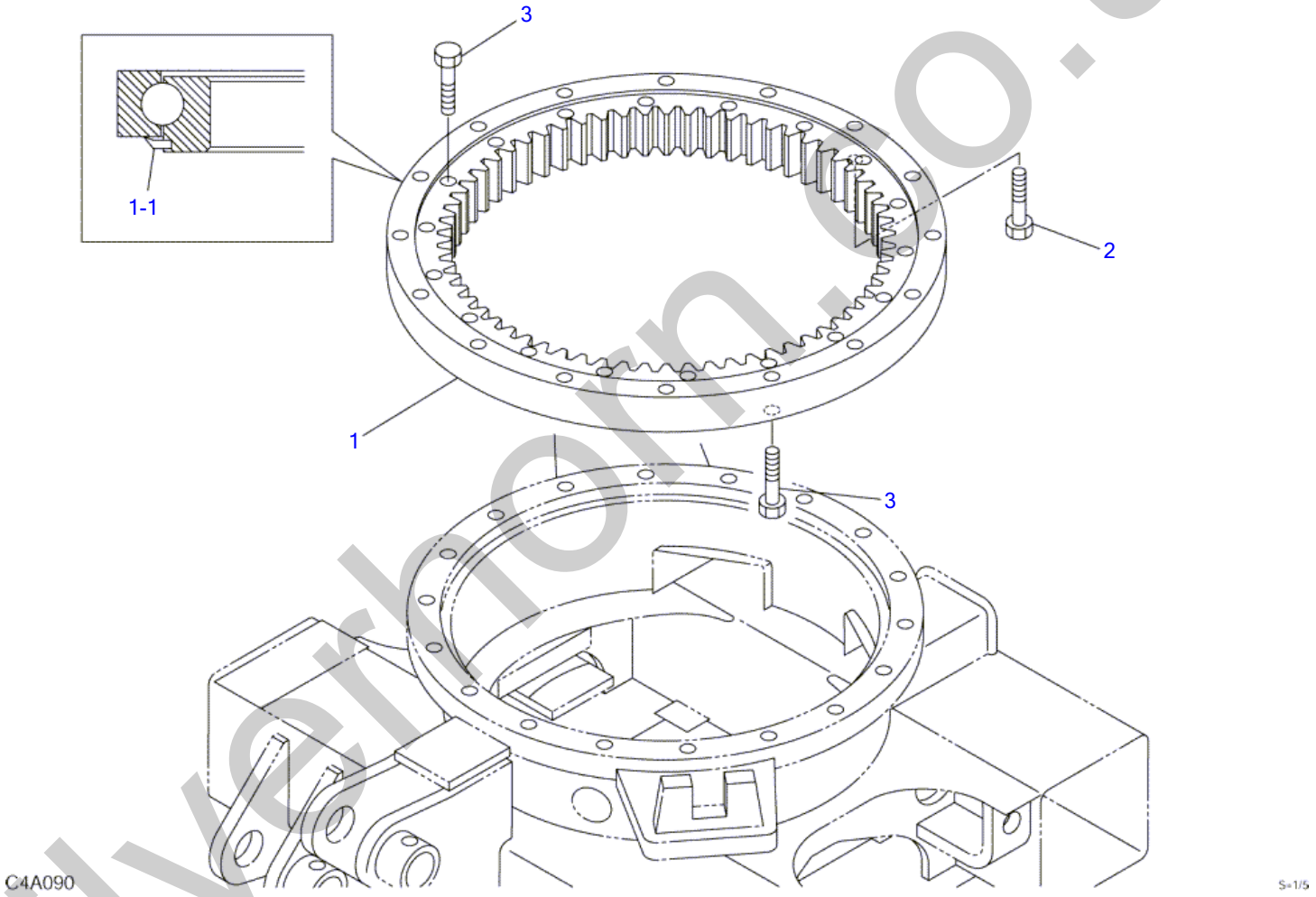

silverhorn.co.uk

SLEW BEARING

Item	Part number	Description	Q'ty	Chan.	Serial No.	Serv.	Remarks
		BEARING ASSY, slew					X03320-02000-1
1	**1913003950**	BEARING	1				
1-1	**1913003959**	・SEAL	1				
2	**0422001100**	BOLT	1				
3	**1106251250**	BOLT	33				
	C4a092						

silverhorn.co.uk

SWIVEL JOINT & ACCESSORIES (11400003-11400436)

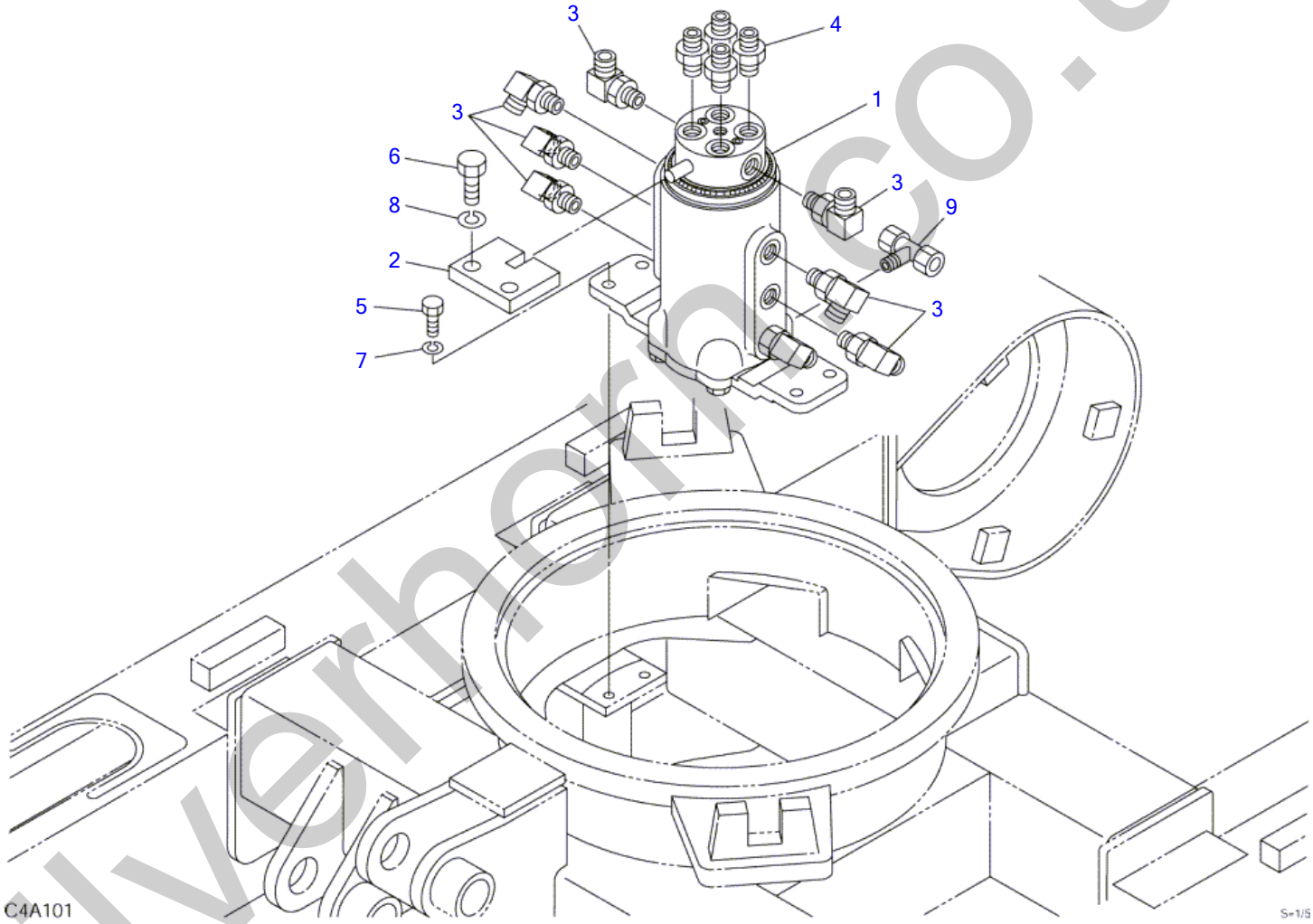

silverhorn.co.uk

SWIVEL JOINT & ACCESSORIES (11400003-11400436)

Item	Part number	Description	Q'ty	Chan.	Serial No.	Serv.	Remarks
		JOINT ASSY, swivel					X03321-13000-1
		JOINT ASSY, swivel (with P.B.)			11400263~11400436		X03321-17000-0
1	1904007900	JOINT, swivel	1				
2	0332113100	COLLAR	1				
3	1515012040	ELBOW	8				
	1420010110	・O-RING	1			M	
4	1515600200	ADAPTOR	4				
	1420010110	・O-RING	1			M	
5	1100040820	BOLT	4				
6	1101041235	BOLT	2				
7	1140020008	WASHER, spring	4				
8	1140020012	WASHER, spring	2				
9	1532720801	TEE	1				with P.B.
	C4a102						

silverhorn.co.uk

SWIVEL JOINT & ACCESSORIES (11400437-)

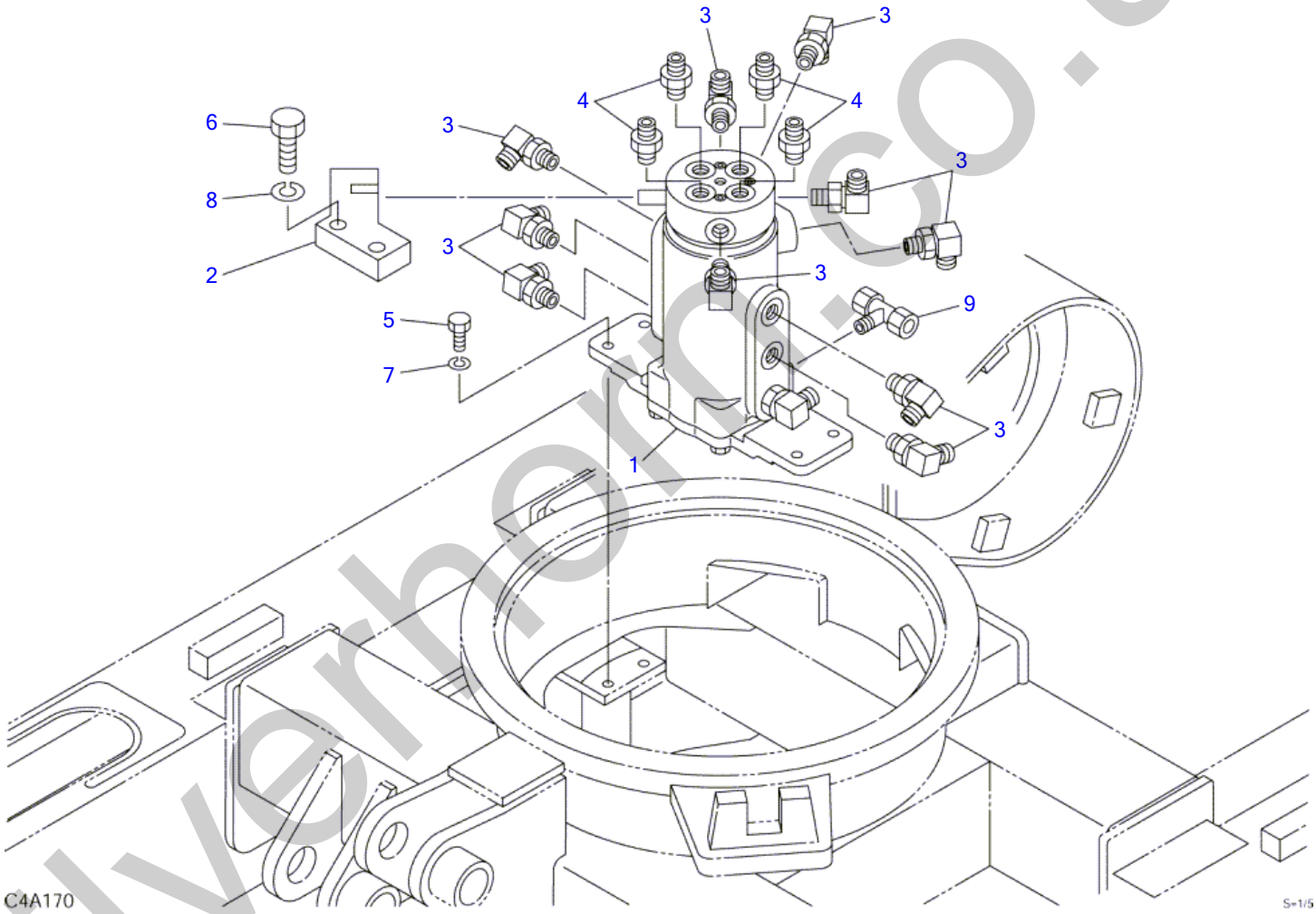

silverhorn.co.uk

SWIVEL JOINT & ACCESSORIES (11400437-)

Item	Part number	Description	Q'ty	Chan.	Serial No.	Serv.	Remarks
		JOINT ASSY, swivel					X03321-19000-1
1	1904008100	JOINT, swivel	1				
2	0332119100	COLLAR	1				
3	1515012040	ELBOW	11				
	1420010110	・O-RING	1			M	
4	1515600200	ADAPTOR	4				
	1420010110	・O-RING	1			M	
5	1100040820	BOLT	4				
6	1101041235	BOLT	2				
7	1140020008	WASHER, spring	4				
8	1140020012	WASHER, spring	2				
9	1532720801	TEE	1				
	C4a171						

silverhorn.co.uk

DOZER BLADE

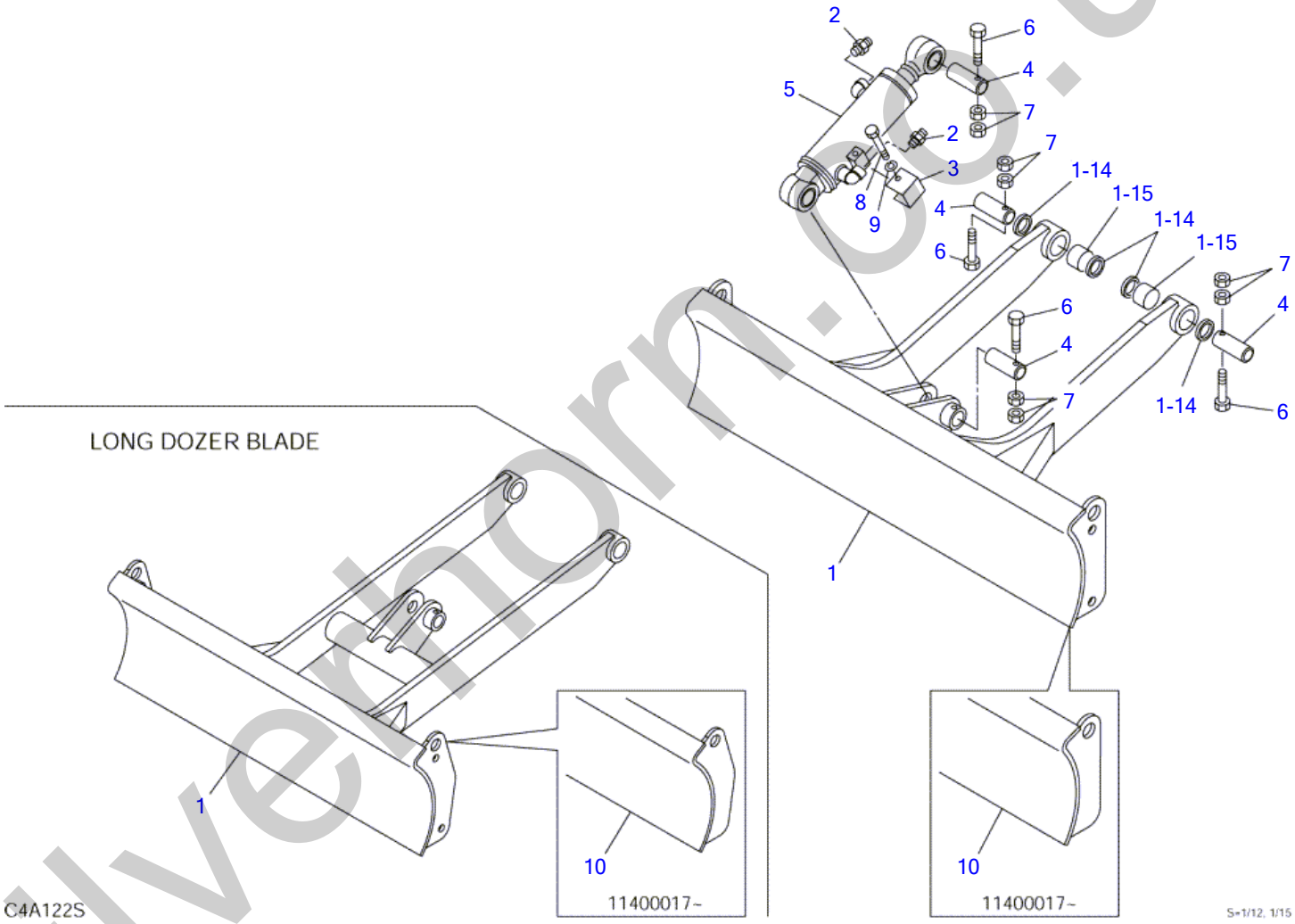

silvethorn.co.uk

DOZER BLADE

Item	Part number	Description	Q'ty	Chan.	Serial No.	Serv.	Remarks
		BLADE ASSY, dozer					X03363-36000-3
		BLADE ASSY, dozer (long)					X03363-38000-3
1	0336332100	BLADE, dozer	1		11400003~11400010		595mm long
	0336336100	BLADE, dozer	1	(H)	11400011~11400016		595mm long
	0336334100	BLADE, dozer (long)	1		11400003~11400010		950mm long
	0336338100	BLADE, dozer (long)	1	(H)	11400011~11400016		950mm long
1-14	1432200030	・SEAL, dust	4				
1-15	0426007300	・BUSHING	2				
2	1515600200	ADAPTOR	2				
	1420010110	・O-RING	1			M	
3	0426300400	COVER	1				
4	0011601100	PIN	4				
5	1900070300	CYLINDER, dozer blade	1				
	1900074900	CYLINDER, dozer blade (long)	1				
6	1103040860	BOLT	4				
7	1130240008	NUT	8				
8	1100040860	BOLT	1				
9	1140020008	WASHER, spring	1				
10	0336336300	BLADE, dozer	1		11400017~		595mm long
	0336338300	BLADE, dozer (long)	1		11400017~		950mm long
	C4a122S						

silverhorn.co.uk

PIPING; LOWER (11400003-11400436)

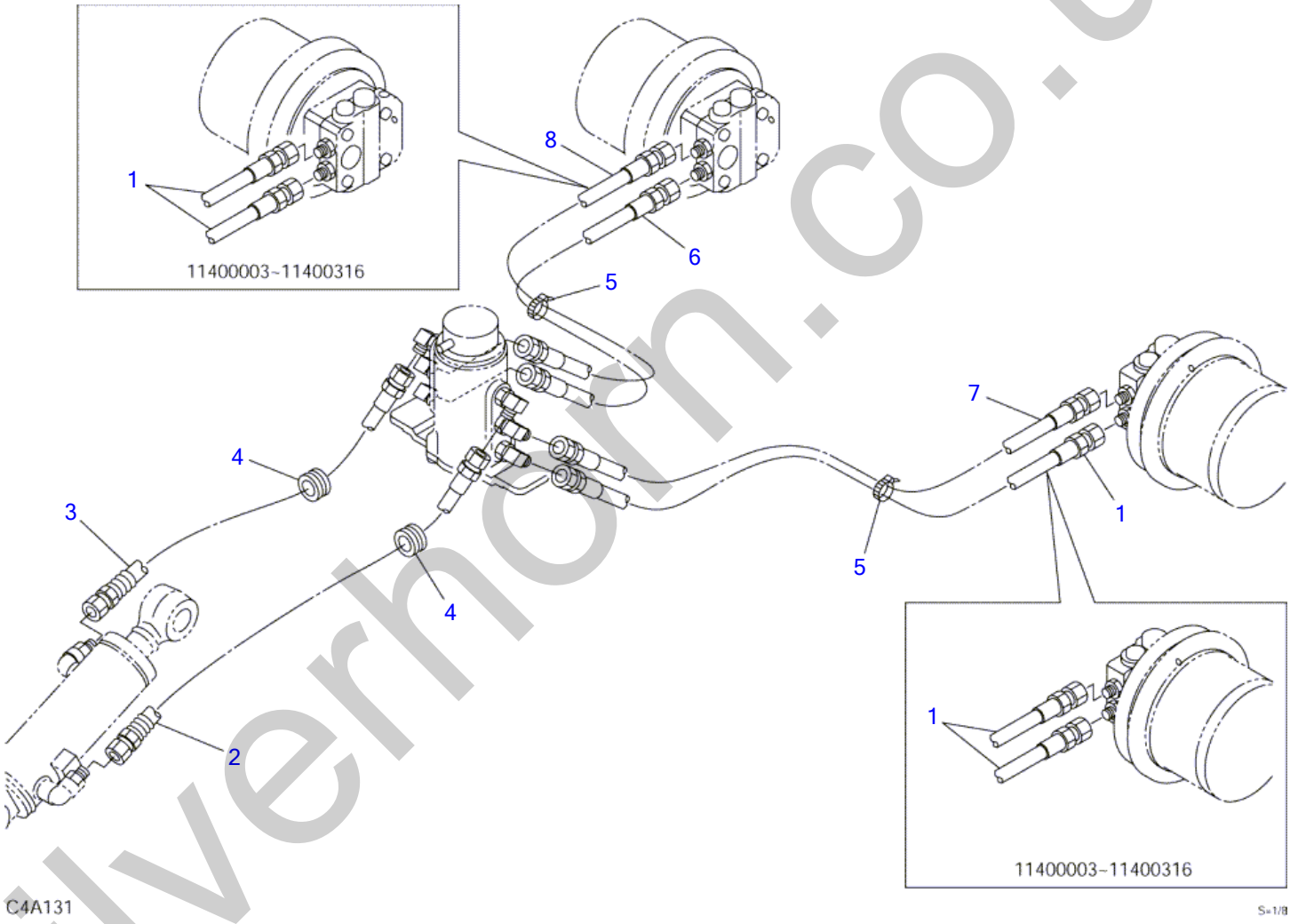

silverhorn.co.uk

PIPING; LOWER (11400003-11400436)

Item	Part number	Description	Q'ty	Chan.	Serial No.	Serv.	Remarks
		PIPING ASSY, lower					X03372-24000-0
1	**1801760070**	HOSE ASSY	4		11400003~11400316		
	0337224100	HOSE ASSY	1		11400317~		18015-60070
2	**1801660068**	HOSE ASSY	1		11400003~11400010		
	1801519002	HOSE ASSY	1		11400011~11400316		
	0337224200	HOSE ASSY	1		11400317~		18015-00067
3	**1801660050**	HOSE ASSY	1		11400003~11400010		
	1801519001	HOSE ASSY	1		11400011~11400316		
	0337224210	HOSE ASSY	1		11400317~		18015-00050
4	**0077200400**	GUARD	2				
5	**1652201005**	BAND	2				
6	**0337224110**	HOSE ASSY	1		11400317~		18015-60070
7	**0337224120**	HOSE ASSY	1		11400317~		18015-60070
8	**0337224130**	HOSE ASSY	1		11400317~		18015-60070
	C4a131						

silverhorn.co.uk

PIPING; LOWER (with P.B.; 11400263-11400436)

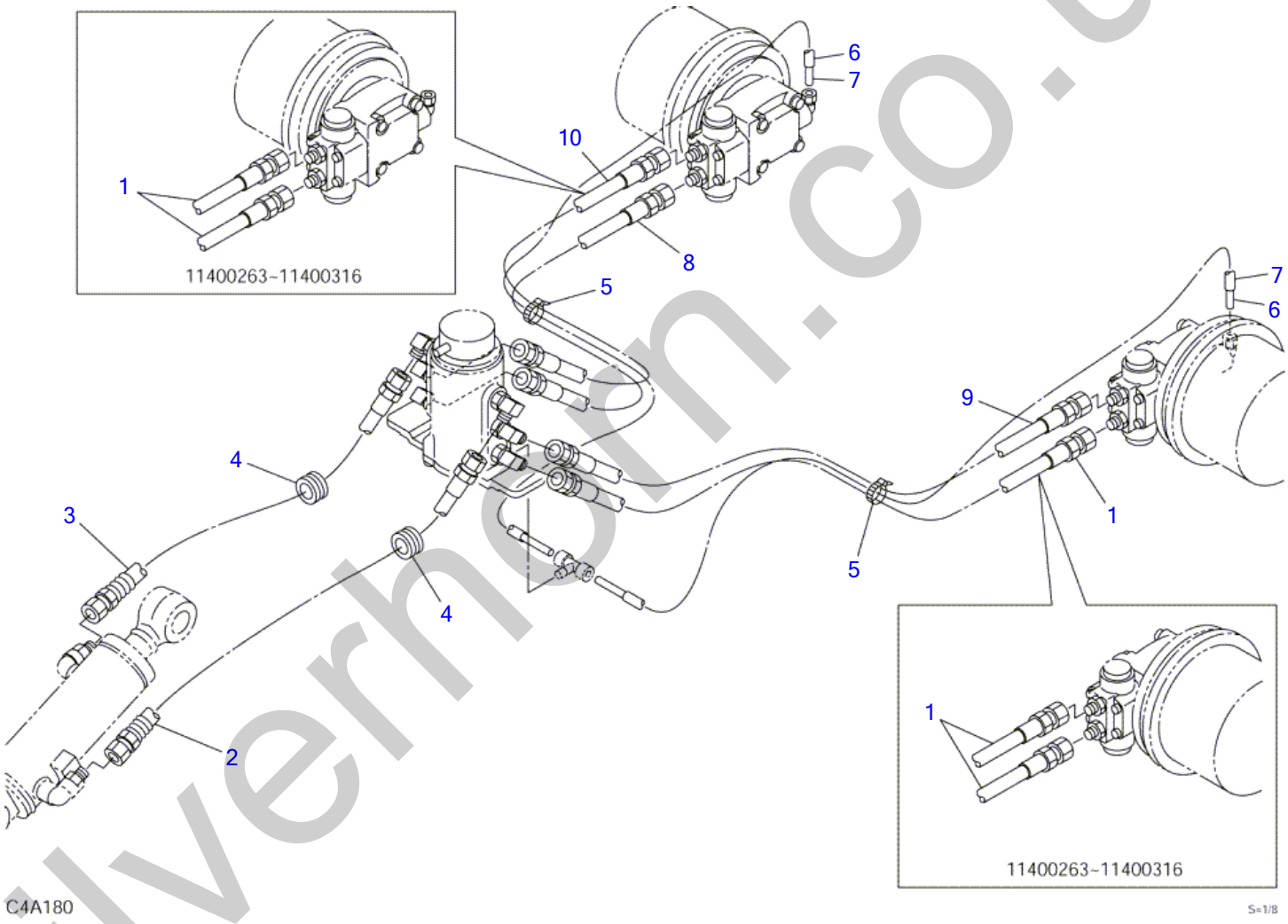

silverhorn.co.uk

PIPING; LOWER (with P.B.; 11400263-11400436)

Item	Part number	Description	Q'ty	Chan.	Serial No.	Serv.	Remarks
		PIPING ASSY, lower					X03372-25000-0
1	**1801760064**	HOSE ASSY	4		11400263~11400316		
	0337225100	HOSE ASSY	1		11400317~11400436		18015-60064
2	**1801519002**	HOSE ASSY	1		11400263~11400316		
	0337224200	HOSE ASSY	1		11400317~11400436		18015-00067
3	**1801519001**	HOSE ASSY	1		11400263~11400316		
	0337224210	HOSE ASSY	1		11400317~11400436		18015-00050
4	**0077200400**	GUARD	2				
5	**1652201005**	BAND	2				
6	**1532020890**	TUBE	2				sold by the meter
7	**1531010080**	PROTECTOR	2				sold by the meter
8	**0337225110**	HOSE ASSY	1		11400317~11400436		18015-60064
9	**0337225120**	HOSE ASSY	1		11400317~11400436		18015-60064
10	**0337225130**	HOSE ASSY	1		11400317~11400436		18015-60064
	C4a180						

silverhorn.co.uk

PIPING; LOWER (11400437-)

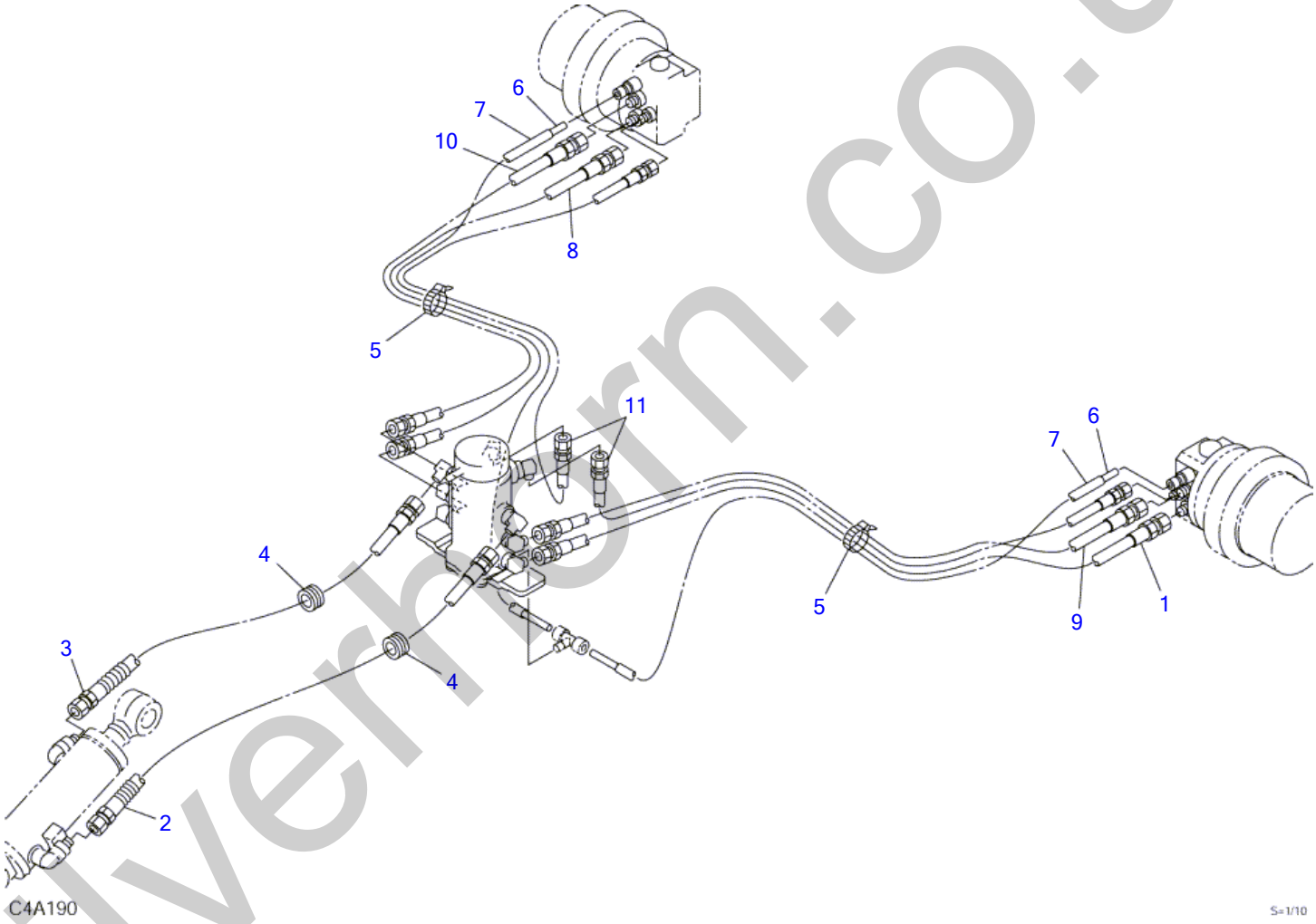

silverhorn.co.uk

PIPING; LOWER (11400437-)

Item	Part number	Description	Q'ty	Chan.	Serial No.	Serv.	Remarks
		PIPING ASSY, lower					X03372-27000-0
1	**0337227100**	HOSE ASSY	1				18015-60071
2	**0337224200**	HOSE ASSY	1				18015-00067
3	**0337224210**	HOSE ASSY	1				18015-00050
4	**0077200400**	GUARD	2				
5	**1652201005**	BAND	2				
6	**1532020865**	TUBE	2				sold by the meter
7	**1531010055**	PROTECTOR	2				sold by the meter
8	**0337227110**	HOSE ASSY	1				18015-60071
9	**0337227120**	HOSE ASSY	1				18015-60071
10	**0337227130**	HOSE ASSY	1				18015-60071
11	**0337227140**	HOSE ASSY	1				18015-02073
	C4a190						

silverhorn.co.uk

SLEWING DEVICE

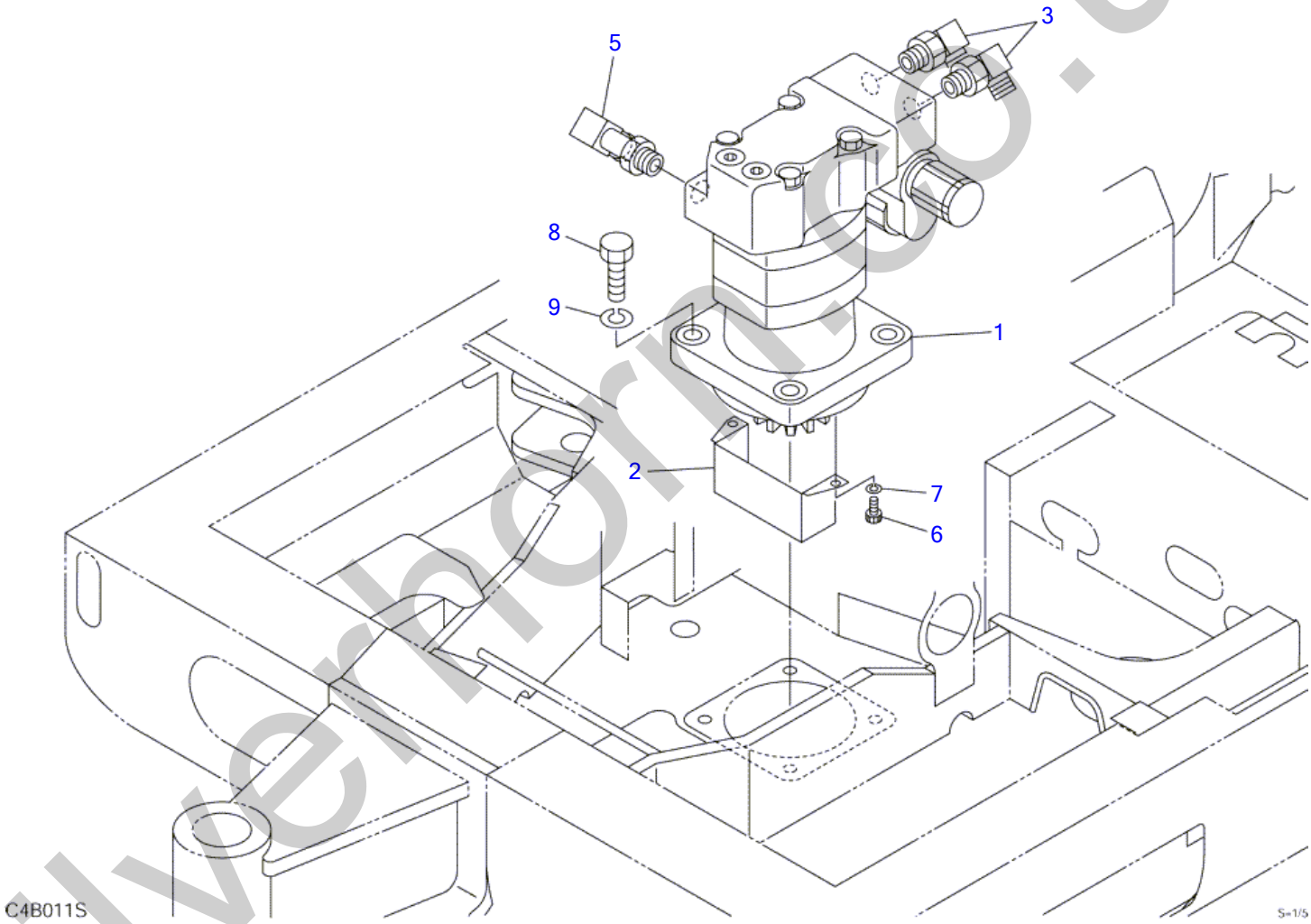

silverhorn.co.uk

SLEWING DEVICE

Item	Part number	Description	Q'ty	Chan.	Serial No.	Serv.	Remarks
		DEVICE ASSY, slewing					X03323-18000-1
1	1903117800	MOTOR, slew (without P.B.)	1				
2	0332314100	COVER	1				
3	1515010050	ELBOW	2				
	1420010140	・O-RING	1			M	
5	1513350003	ELBOW	1				
	1420010140	・O-RING	1			M	
6	1110040610	SCREW, cap	2				
7	1140420006	WASHER, spring	2				
8	1101041235	BOLT	4				
9	0003900036	WASHER	4				
	C4b012S						

silverhorn.co.uk

TURNTABLE

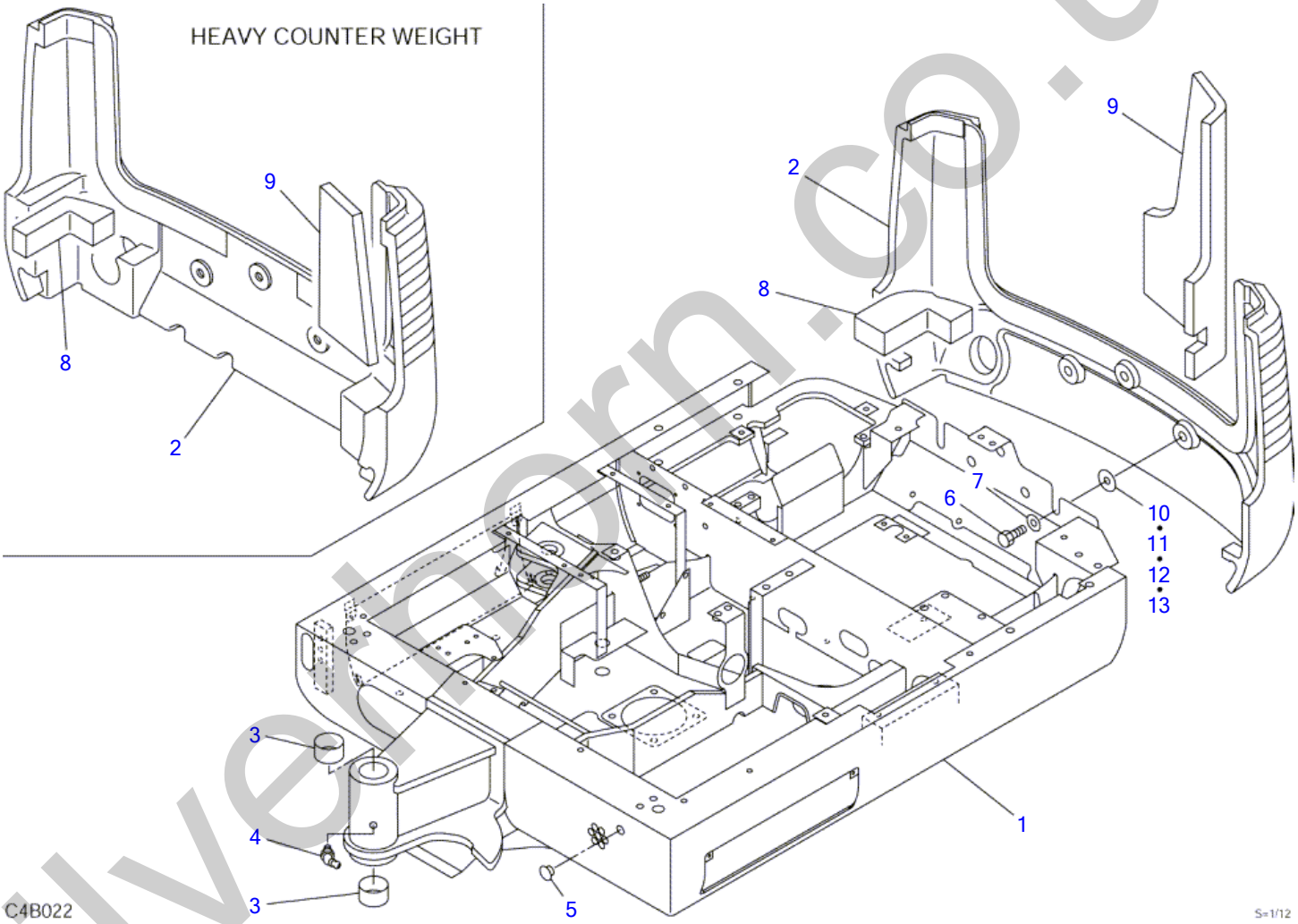

silvermorn.co.uk

TURNTABLE

Item	Part number	Description	Q'ty	Chan.	Serial No.	Serv.	Remarks
		TURNTABLE ASSY					X03330-21000-7
		TURNTABLE ASSY (hevy weight)					X03330-22000-6
1	X **********	TURNTABLE	1				
2	0333018500	COUNTERWEIGHT	1				(69kg)
	0333022500	COUNTERWEIGHT, heavy	1				(116kg)
3	0002400050	BUSHING	2				
4	1560001675	FITTING, grease	1				
5	1652533023	CAP	1				
6	1101051435	BOLT	3				
7	1141550014	WASHER	3				
8	0334019360	URETHANE	1				
	0333022200	URETHANE	1				hevy weight
9	0338230840	ABSORBENT, noise	1				
	0333022300	ABSORBENT, noise	1				hevy weight
10	0003600151	SHIM	AR				t=1.0mm
11	0003600152	SHIM	AR				t=2.3mm
12	0003600153	SHIM	AR				t=3.2mm
13	0003600175	SHIM	AR				t=0.5mm
	C4b023						

silverhorn.co.uk

BOOM SWING

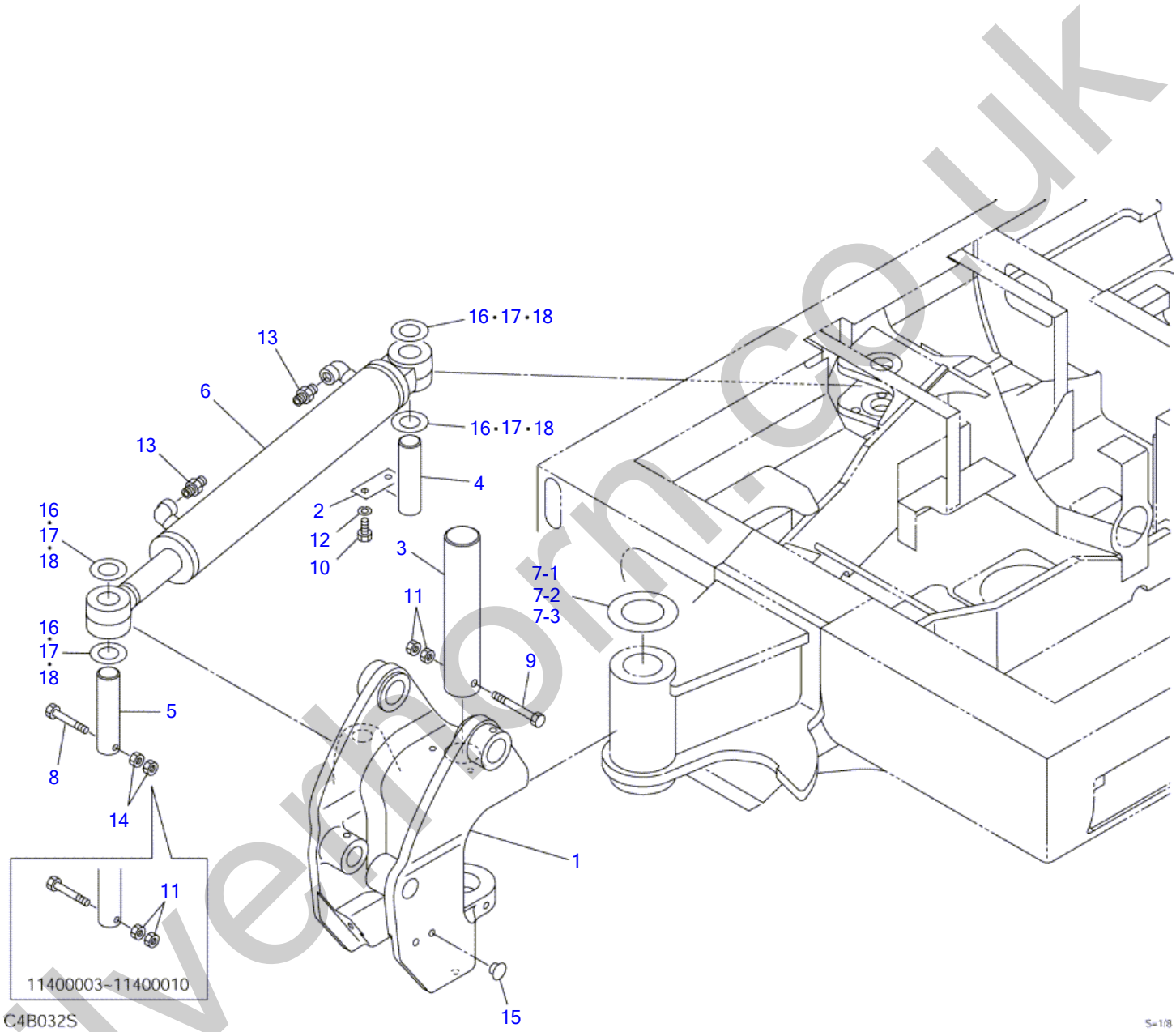

silverthorn.co.uk

BOOM SWING

Item	Part number	Description	Q'ty	Chan.	Serial No.	Serv.	Remarks
		SWING ASSY, boom					X03331-19000-3
1	0333118100	BACKET	1		11400003~11400010		
	0333119100	BACKET	1	(H)	11400011~		
2	0423103800	PLATE	1				
3	0011515004	PIN	1				
4	0011691002	PIN	1				
5	0001601130	PIN	1				
6	1900070500	CYLINDER, swing	1				
7	0333114500	WASHER	1				
7-1	0333114501	・WASHER t=4.5	AR				
7-2	0333114502	・WASHER t=5.0	AR				
7-3	0333114503	・WASHER t=5.5	AR				
8	1100040860	BOLT	1		11400003~11400010		
	1103040860	BOLT	1		11400011~		
9	1100140825	BOLT	1				
10	1101041220	BOLT	2				
11	1130040008	NUT	4		11400003~11400010		
	1130040008	NUT	2		11400011~		
12	1140020012	WASHER, spring	2				
13	1515600200	ADAPTOR	2				
	1420010110	・O-RING	1			M	
14	1130240008	NUT	2		11400011~		
15	1652062003	CAP	2				
16	0426109800	SHIM t=1.0	AR			M	
17	0003600045	SHIM t=0.5	AR				
18	0003600044	SHIM t=0.2	AR			M	
	C4b033S						

silverhorn.co.uk

SWING CYLINDER (for YBM)

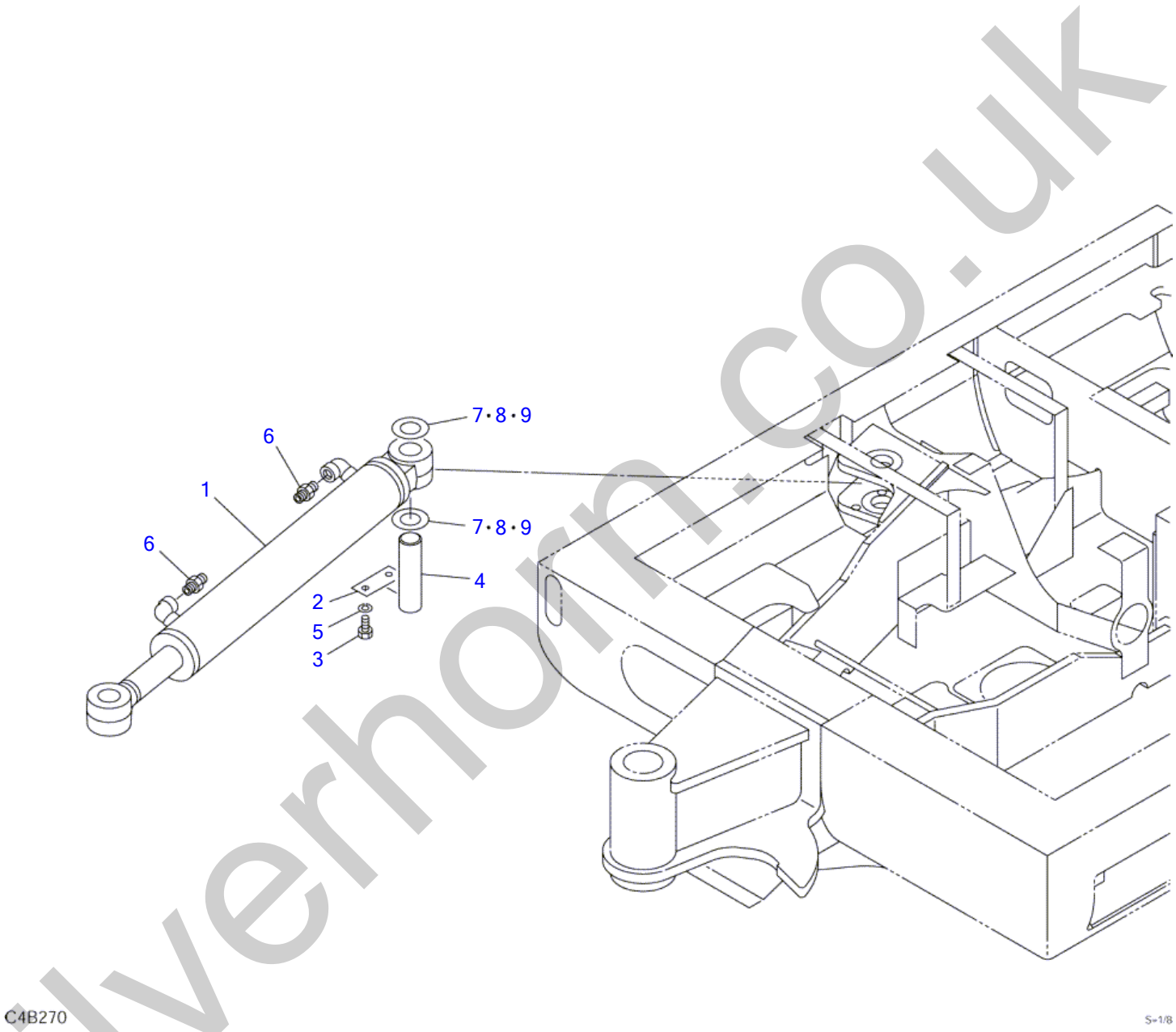

silverhorn.co.uk

SWING CYLINDER (for YBM)

Item	Part number	Description	Q'ty	Chan.	Serial No.	Serv.	Remarks
		SWING CYLINDER ASSY					X03331-19500-0
1	1900070500	CYLINDER, swing	1				
2	0423103800	PLATE	1				
3	1101041220	BOLT	2				
4	0011691002	PIN	1				
5	1140020012	WASHER, spring	2				
6	1515600200	ADAPTOR	2				
	1420010110	・O-RING	1			M	
7	0003600044	SHIM t=0.2	AR				
8	0003600045	SHIM t=0.5	AR				
9	0426109800	SHIM t=1.0	AR				
	C4b270						

silverhorn.co.uk

SWING STOPPER

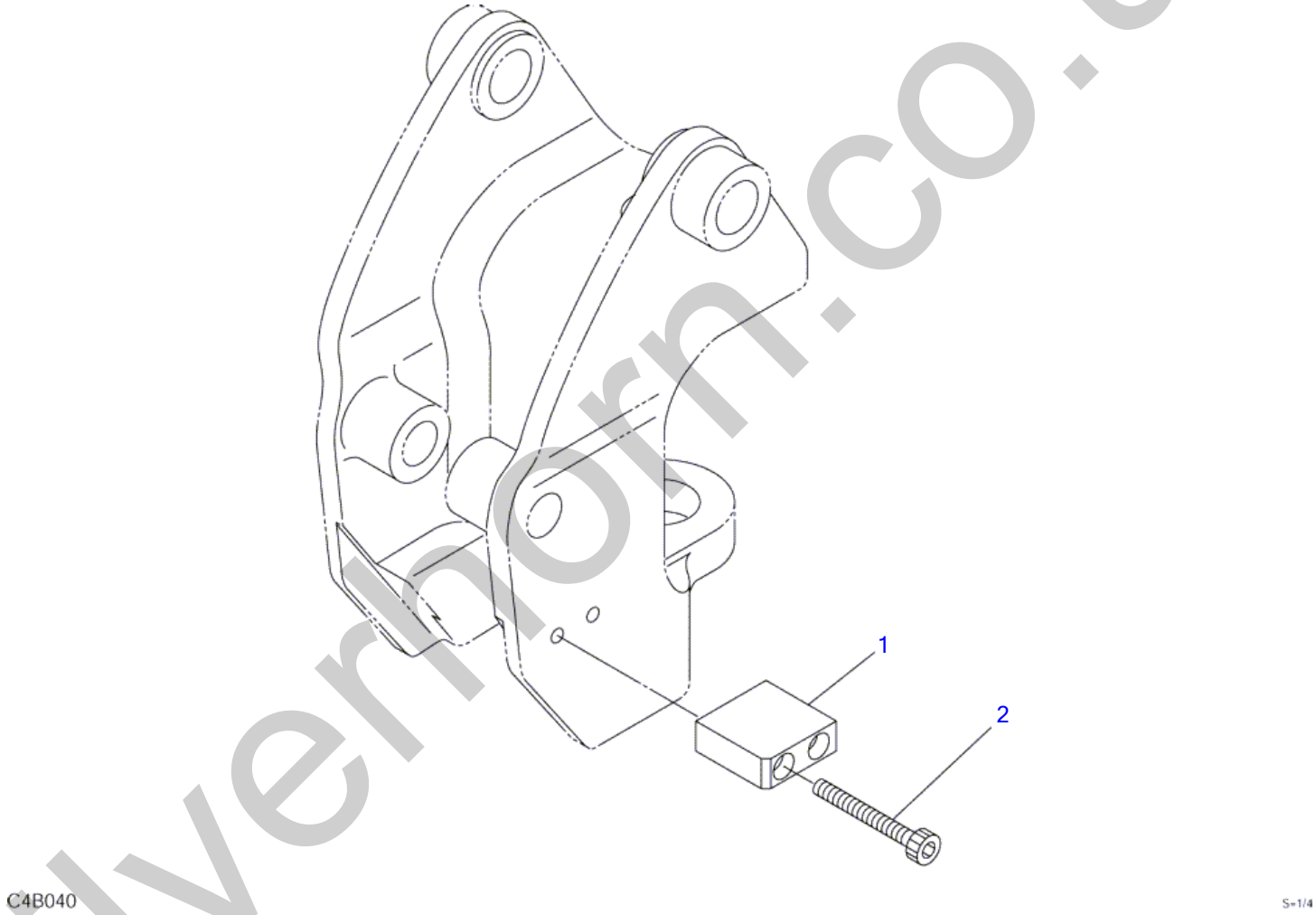

silverhorn.co.uk

SWING STOPPER

Item	Part number	Description	Q'ty	Chan.	Serial No.	Serv.	Remarks
		STOPPER ASSY, swing					X03339-03000-0
1	0333903100	PLATE	1				
2	1110041070	SCREW, cap	2				
	C4b041						

silverhorn.co.uk

SLEWING LOCK

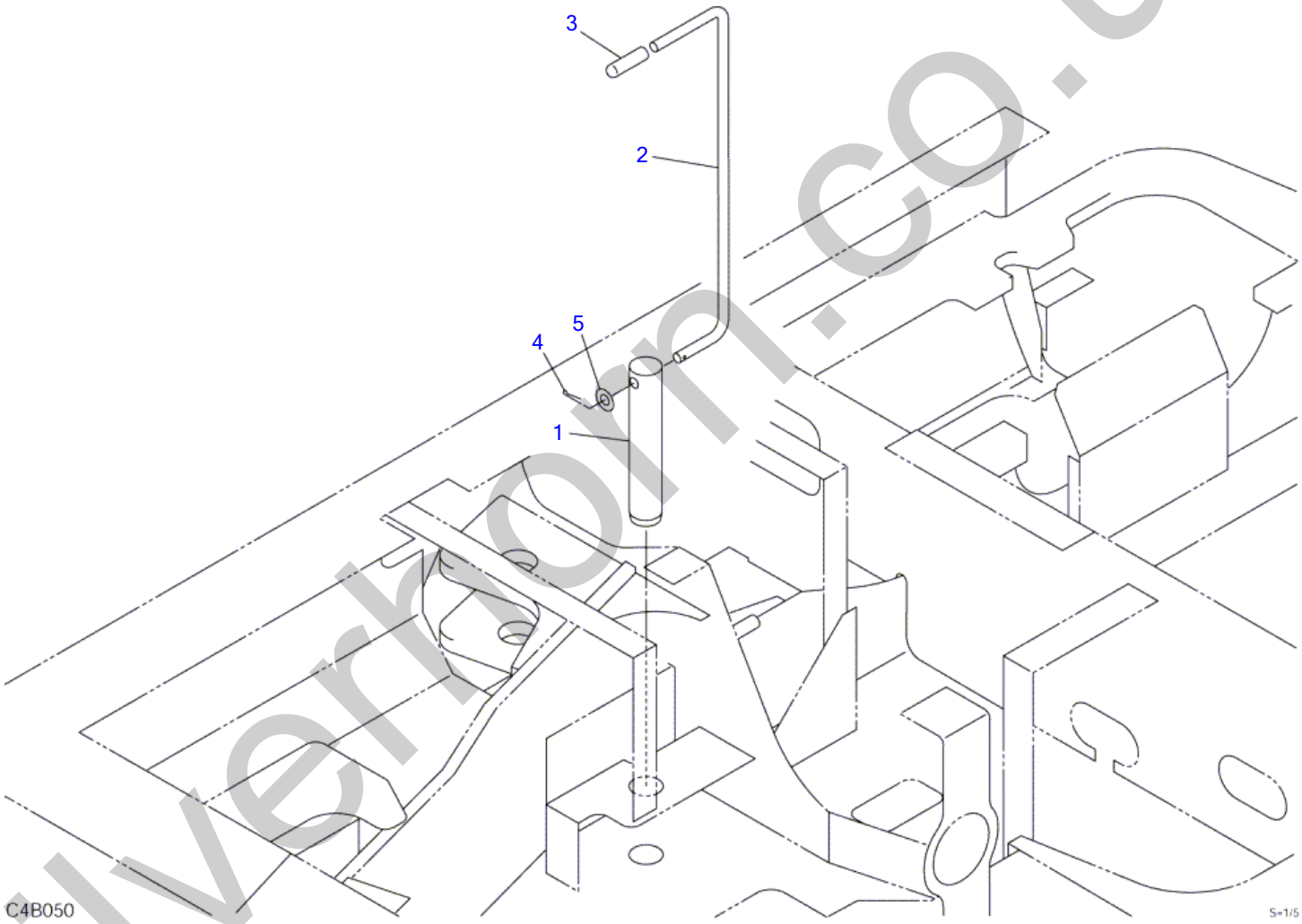

silverhorn.co.uk

SLEWING LOCK

Item	Part number	Description	Q'ty	Chan.	Serial No.	Serv.	Remarks
		PIN ASSY, swing lock					X03322-12000-1
1	0332212010	PIN	1				
2	0332212020	ROD	1				
3	0543208900	GRIP	1				
4	1210012516	PIN, split	1				
5	1141110008	WASHER	1				
	C4b052						

silverhorn.co.uk

TRAVEL LEVER

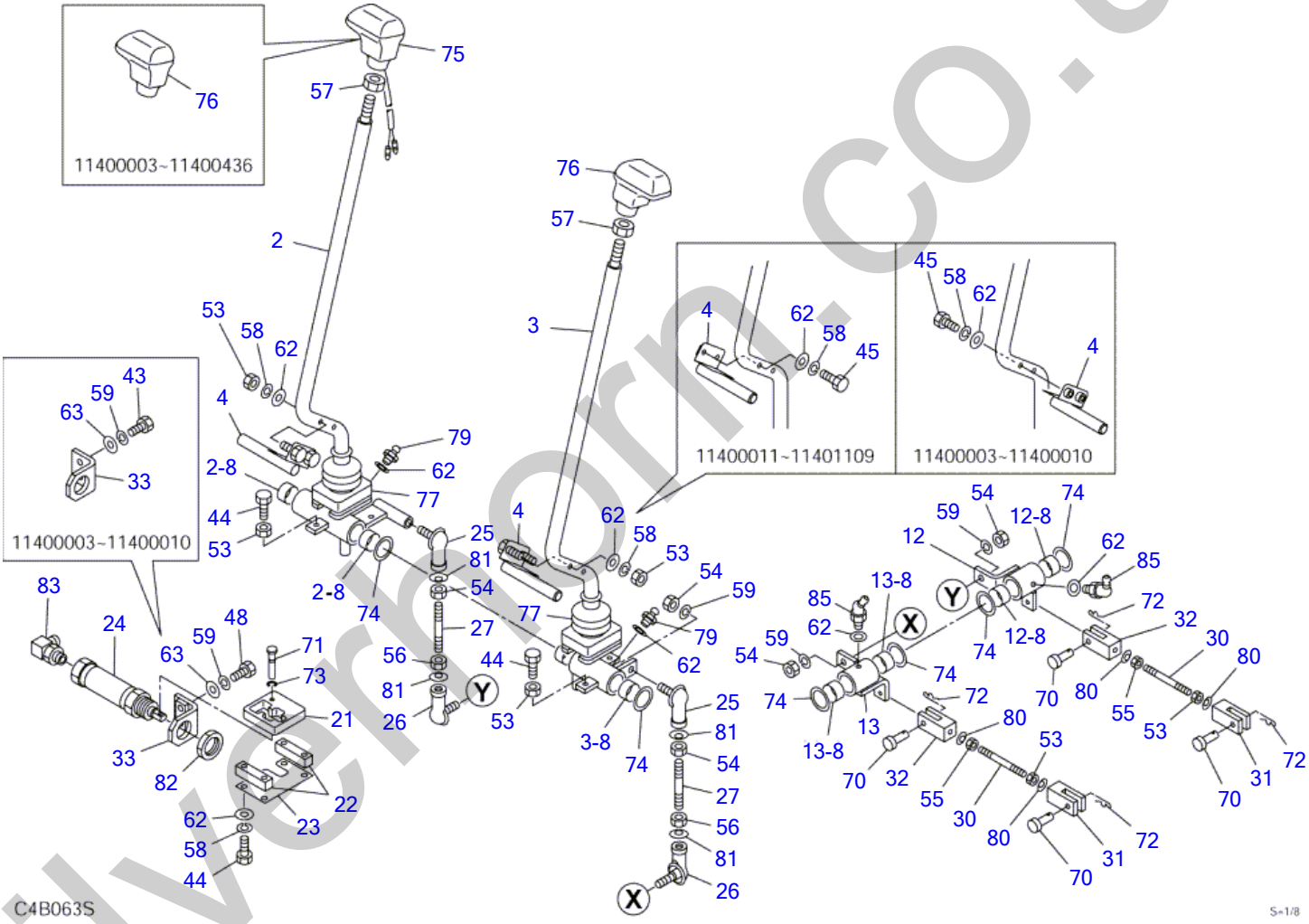

silverthorn.co.uk

TRAVEL LEVER

Item	Part number	Description	Q'ty	Chan.	Serial No.	Serv.	Remarks
		LEVER ASSY, control					X03332-44000-8
2	0333234150	LEVER (R.H.)	1		11400003~11400010		
	0333236150	LEVER (R.H.)	1		11400011~11400262		
	0333236500	LEVER (R.H.)	1		11400263~		
2-8	1333002015	・BUSHING	2				
3	0333234200	LEVER (L.H.)	1		11400003~11400010		
	0333236200	LEVER (L.H.)	1		11400011~		
3-8	1333002015	・BUSHING	2				
4	0333224250	LEVER	2		11400003~11400010		
	0333236250	LEVER	2		11400011~		
12	0333234330	LEVER (R.H.)	1				
12-8	1333002015	・BUSHING	2				
13	0333234350	LEVER (L.H.)	1				
13-8	1333002015	・BUSHING	2				
21	0333231460	PLATE	1		11400003~11400010		
	0333236320	PLATE	1		11400011~		
22	0333231470	BAR	2		11400003~11400010		
	0333236330	BAR	2		11400011~		
23	0333231480	PLATE	1				
24	1900074800	CYLINDER, lock	1				
25	1340010080	END, rod	2				
26	1340010085	END, rod	2				
27	0005008050	ROD	2				
30	0005006070	ROD	2				
31	0005500006	YOKE (R.H.)	2				
32	0005600003	YOKE (L.H.)	2				
33	0333234450	BRACKET	1		11400003~11400010		
	0333236340	BRACKET	1		11400011~		
43	1100040620	BOLT	2		11400003~11400010		
44	1100040625	BOLT	8				
45	1100040630	BOLT	4		11400003~11401109		
48	1100040825	BOLT	2		11400011~		
53	1130040006	NUT	10				
54	1130040008	NUT	5				
55	1131540006	NUT	2				
56	1131540008	NUT	2				
57	1131040012	NUT	2				
58	1140020006	WASHER, spring	10		11400003~11400010		
	1140020006	WASHER, spring	8		11400011~		
59	1140020008	WASHER, spring	3		11400003~11400010		
	1140020008	WASHER, spring	5		11400011~		
62	1141110006	WASHER	14		11400003~11400010		
	1141110006	WASHER	12		11400011~		
63	1141110008	WASHER	2		11400011~		
70	0004005117	PIN	4				
71	0333231500	PIN	2		11400003~11400010		
	0333236350	PIN	2		11400011~		
72	1214010005	PIN, snap	4				
73	1224010004	E-RING	1				
74	0093208300	WASHER	6				
75	1650203210	GRIP	1		11400437~		
76	1650202610	GRIP	2		11400003~11400436		
	1650202610	GRIP	1		11400437~		
77	0563217700	BOOT	2				
79	1560011006	FITTING, grease	2				
80	1225000006	WASHER	4				
81	1225000008	WASHER	4				
82	1130640024	NUT	1				
83	1515012040	ELBOW	1				
	1420010110	・O-RING	1			M	
85	1560012006	FITTING, grease	2				
	C4b063S						

silverhorn.co.uk

SWING PEDAL & AUXILIARY PEDAL

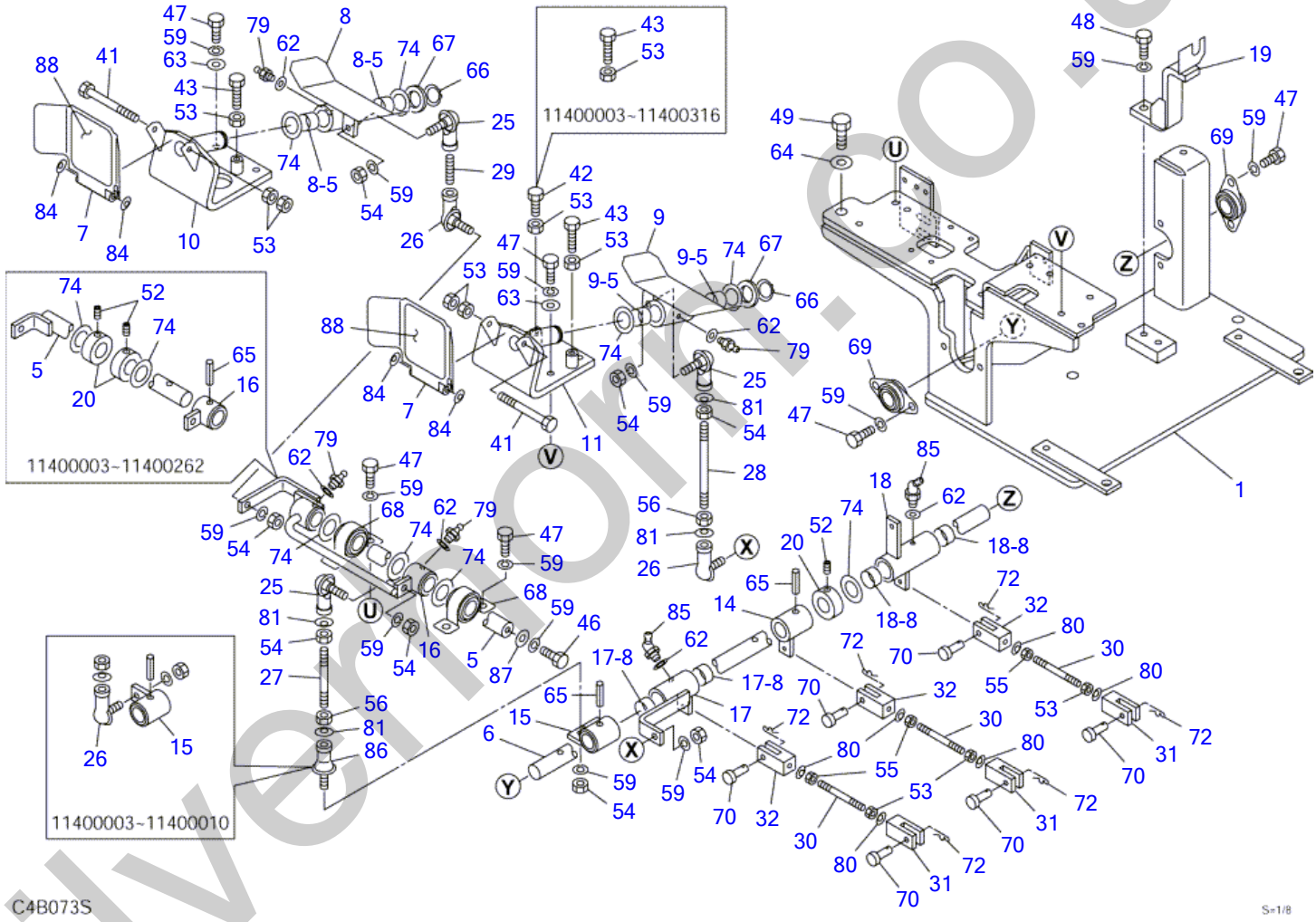

silvermorn.co.uk

SWING PEDAL & AUXILIARY PEDAL

Item	Part number	Description	Q'ty	Chan.	Serial No.	Serv.	Remarks
		LEVER ASSY, control					X03332-44000-8
1	0333234100	BRACKET	1		11400003~11400010		
	0333236100	BRACKET	1		11400011~11400262		
	0334242700	BRACKET	1		11400263~		
5	0333231250	SHAFT	1		11400003~11400010		
	0333236260	SHAFT	1		11400011~11400262		
	0333236650	SHAFT	1		11400263~		
6	0333234250	SHAFT	1				
7	0333234260	COVER	2				
8	0333234270	PEDAL	1				
8-5	1333002020	・BUSHING	2				
9	0333234290	PEDAL	1				
9-5	1333002020	・BUSHING	2				
10	0333231320	BRACKET (R.H.)	1		11400003~11400010		
	0333236270	BRACKET (R.H.)	1		11400011~		
11	0333231330	BRACKET (L.H.)	1		11400003~11400010		
	0333236280	BRACKET (L.H.)	1		11400011~		
14	0333231380	LEVER	1				
15	0333231390	LEVER	1		11400003~11400010		
	0333236290	LEVER	1		11400011~		
16	0333231400	LEVER	1		11400003~11400010		
	0333236300	LEVER	1		11400011~11400262		
	0333241200	LEVER	1		11400263~		
17	0333234400	LEVER	1				
17-8	1333002015	・BUSHING	2				
18	0333234420	LEVER	1				
18-8	1333002015	・BUSHING	2				
19	0333234440	BRACKET	1		11400003~11400010		
	0333236310	BRACKET	1		11400011~		
20	0163209400	STOPPER	3		11400003~11400010		
	0163209400	STOPPER	1		11400011~		
25	1340010080	END, rod	3				
26	1340010085	END, rod	3		11400003~11400010		
	1340010085	END, rod	2		11400011~		
27	0005008050	ROD	1				
28	0005008130	ROD	1				
29	1121040825	SET-SCREW	1				
30	0005006070	ROD	3				
31	0005500006	YOKE (R.H.)	3				
32	0005600003	YOKE (L.H.)	3				
41	1100040680	BOLT	2				
42	1100040635	BOLT	1		11400317~		
43	1100040620	BOLT	4		11400003~11400316		
	1100040620	BOLT	3		11400317~		
46	1100040816	BOLT	1		11400263~		
47	1100040820	BOLT	14				
48	1100040825	BOLT	2				
49	1100041025	BOLT	3				
52	1121040808	SET-SCREW	3		11400003~11400010		
	1121040808	SET-SCREW	1		11400011~		
53	1130040006	NUT	11				
54	1130040008	NUT	7				
55	1131540006	NUT	3				
56	1131540008	NUT	2				
59	1140020008	WASHER, spring	22		11400003~11400262		
	1140020008	WASHER, spring	23		11400263~		
62	1141110006	WASHER	4		11400003~11400262		
	1141110006	WASHER	6		11400263~		
63	1141110008	WASHER	6				
64	1141550010	WASHER	3				
65	1213000830	PIN, spring	3		11400003~11400262		
	1213000830	PIN, spring	2		11400263~		
66	1220000020	RING, snap	2				
67	0003600034	WASHER	2				
68	1332002022	MINI-PILLOW	2				
69	1332052022	MINI-PILLOW	2				
70	0004005117	PIN	6				
72	1214010005	PIN, snap	6				

silverthorn.co.uk

SWING PEDAL & AUXILIARY PEDAL

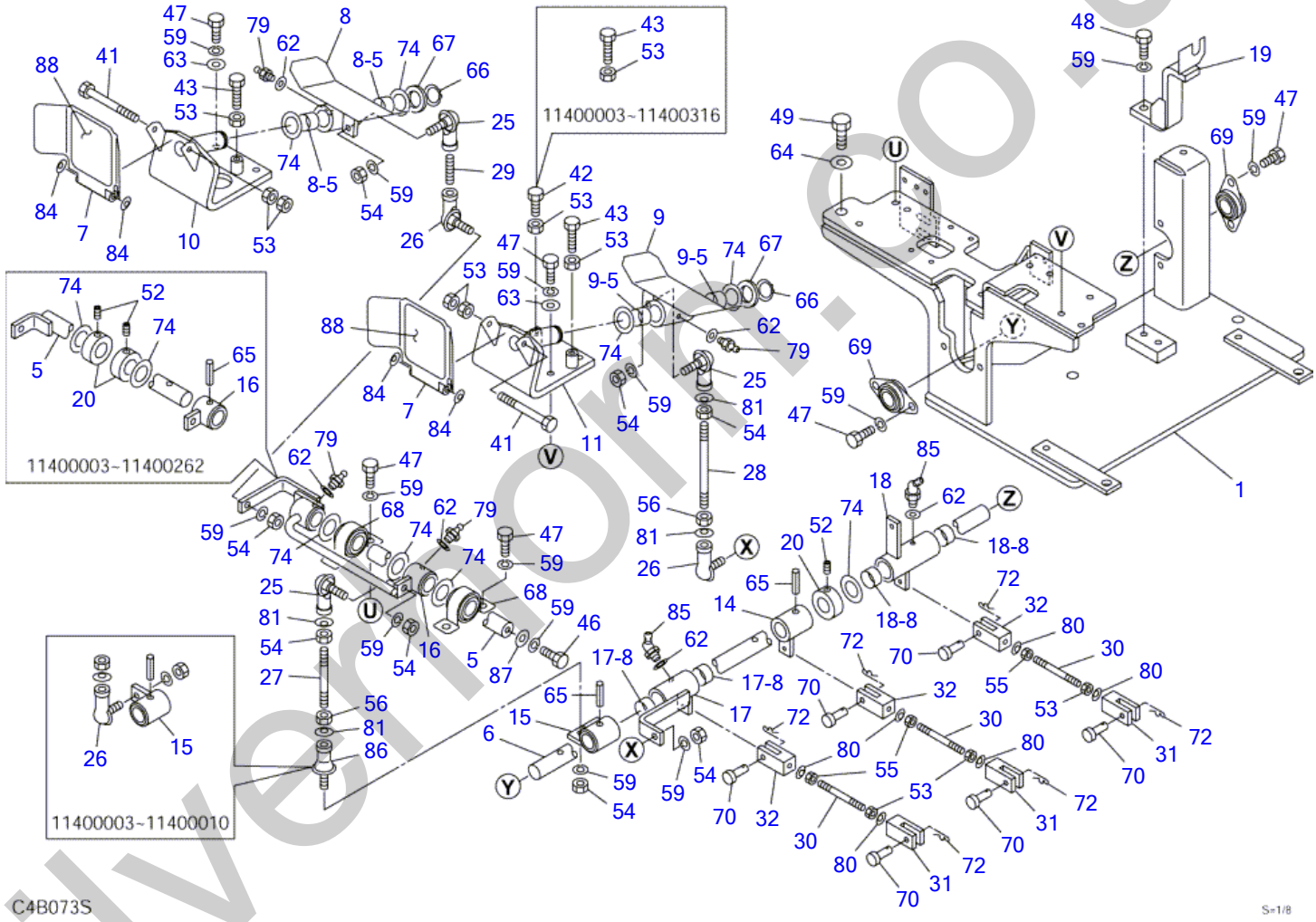

silvermorn.co.uk

SWING PEDAL & AUXILIARY PEDAL

Item	Part number	Description	Q'ty	Chan.	Serial No.	Serv.	Remarks
74	**0860322200**	WASHER	9		11400003~11400010		
74	**0860322200**	WASHER	5		11400011~11400262		
74	**0093208300**	WASHER	7		11400263~		
79	**1560011006**	FITTING, grease	3		11400003~11400262		
79	**1560011006**	FITTING, grease	4		11400263~		
80	**1225000006**	WASHER	6				
81	**1225000008**	WASHER	4				
84	**1225110006**	WASHER, conical	4				
85	**1560012006**	FITTING, grease	2				
86	**1340300080**	END, rod	1		11400011~		
87	**0003608252**	WASHER	1		11400263~		
88	**0333241250**	SEET	2		11400263~		
	C4b073S						

silverhorn.co.uk

DOZER BLADE LEVER

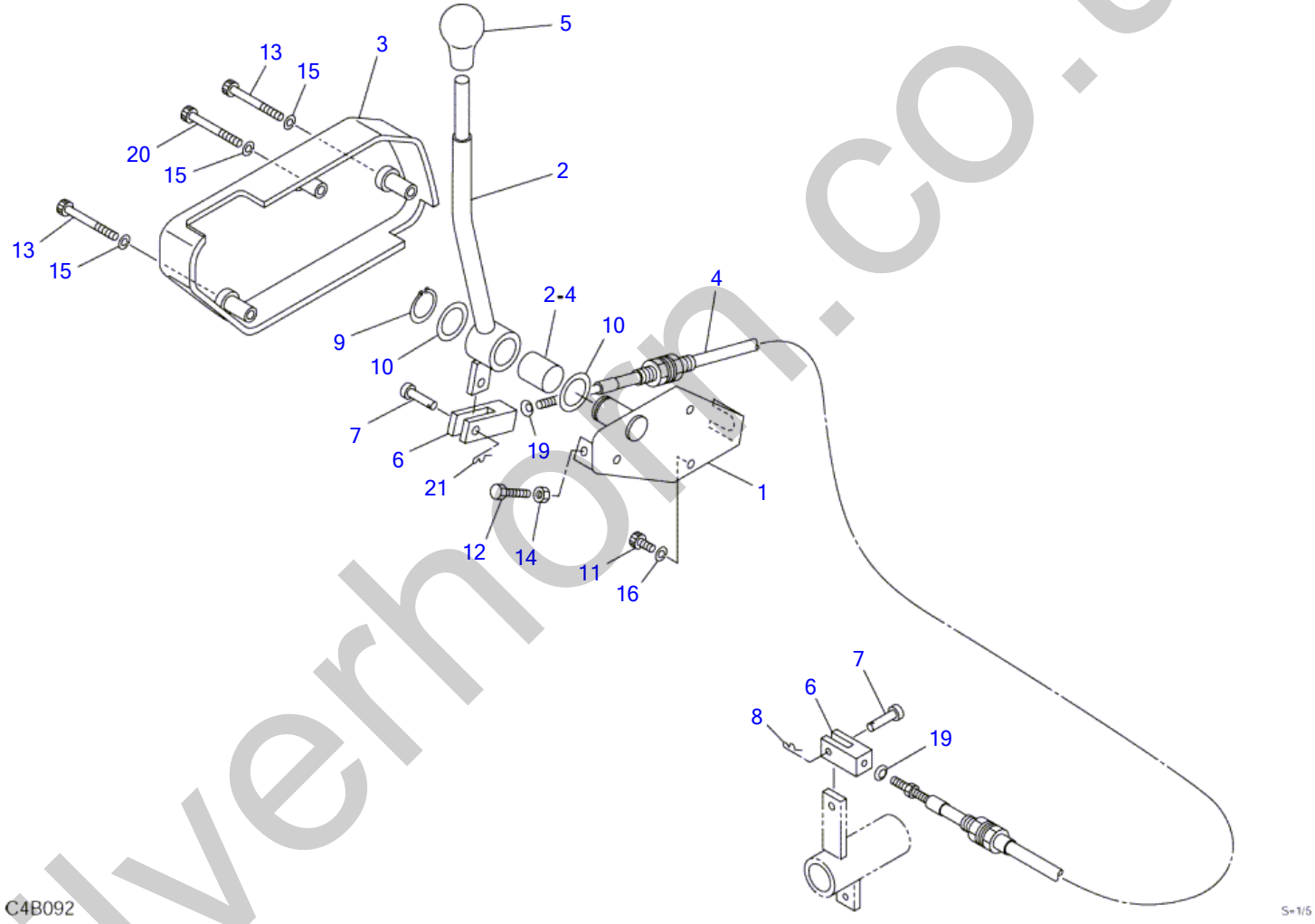

silverhorn.co.uk

DOZER BLADE LEVER

Item	Part number	Description	Q'ty	Chan.	Serial No.	Serv.	Remarks
		LEVER ASSY, dozer blade					X03333-04000-2
1	0333303100	BRACKET	1		11400003~11400010		
	0333304100	BRACKET	1		11400011~		
2	0333302200	LEVER	1				
2-4	1333002025	▪ BUSHING	1				
3	0333302350	COVER	1				
4	1630341190	CABLE, control	1				
5	1650153655	GRIP	1				
6	0005506024	YOKE	2				
7	0004006017	PIN	2				
8	1214000006	PIN, snap	1				
9	1220000020	RING, snap	1				
10	0093208300	WASHER	2				
11	1110040616	SCREW, cap	3				
12	1100040620	BOLT	2		11400003~11400010		
	1100040625	BOLT	2		11400011~		
13	1110040535	SCREW, cap	2				
14	1130040006	NUT	2				
15	1140010005	WASHER, spring	3				
16	1140020006	WASHER, spring	3				
19	1225000005	WASHER	2				
20	1110040540	SCREW, cap	2				
21	1214010006	PIN, snap	1				
	C4b092S						

silverhorn.co.uk

OPERATION LEVER & STAND; R.H. (canopy)

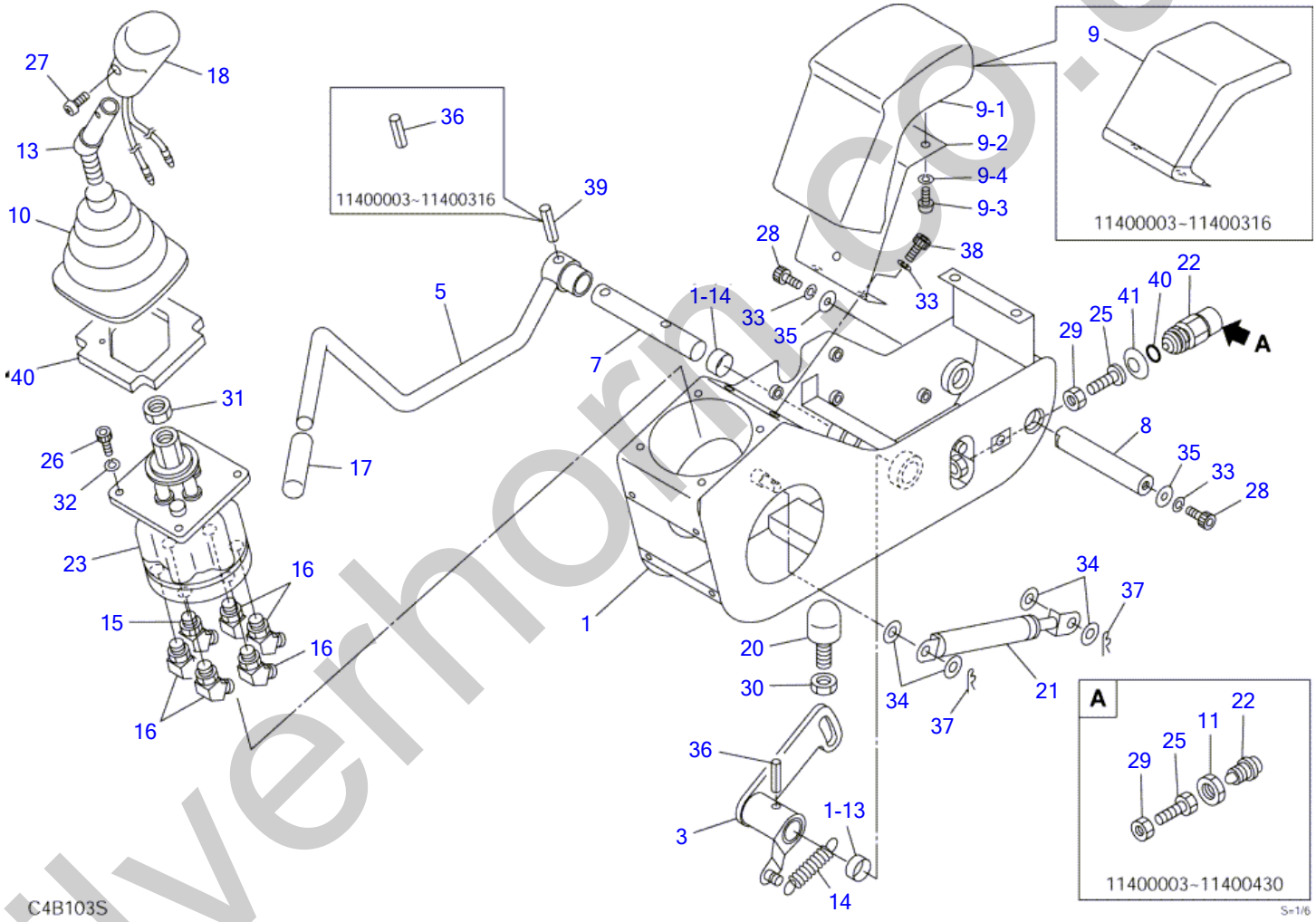

silverhorn.co.uk

OPERATION LEVER & STAND; R.H. (canopy)

Item	Part number	Description	Q'ty	Chan.	Serial No.	Serv.	Remarks
		VALVE ASSY					X03351-34000-2
1	0335128100	BOX, control (R.H.)	1		11400003~11400010		
	0335130100	BOX, control (R.H.)	1	(H)	11400011~11400460		
	0335130700	BOX, control (R.H.)	1		11400461~		
1-13	1333002010	・BUSHING	1				
1-14	1333002015	・BUSHING	1				
3	0335128300	PLATE (R.H.)	1		11400003~11400010		
	0335130300	PLATE (R.H.)	1		11400011~		
5	0335128500	LEVER (R.H.)	1		11400003~11400010		
	0335130500	LEVER (R.H.)	1	(H)	11400011~11400316		
	0375105300	LEVER (R.H.)	1	(H)	11400317~		
7	0335124700	SHAFT	1				
8	0335124750	SHAFT	1				
9	0375103010	REST, arm	1		11400003~11400010		
	0335130900	REST, arm	1	(H)(L)	11400011~11400316		
	0375105500	REST, arm	1	(H)	11400317~		
9-1	0375105510	・URETHANE	1		11400317~		
9-2	0375105520	・PLATE	1		11400317~		
9-3	1120530812	・SCREW	3		11400317~		
9-4	1140020008	・WASHER, spring	3		11400317~		
10	0335124900	BOOT	1				
11	0335120960	NUT	1		11400003~11400430		
13	0565102500	LEVER	1				
14	0425105100	SPRING	1				
15	1512370012	ADAPTOR	1				
	1420010110	・O-RING	1			M	
16	1515100110	ELBOW	5				
	1420010110	・O-RING	1			M	
17	1650202300	CAP	1				
18	1650203300	GRIP	1				
20	1651101224	STOPPER	1				
21	1653900036	SPRING, gas	1	(L)	11400003~11400670		
	1653900050	SPRING, gas	1	(H)	11400671~11401133		
	1653900057	SPRING, gas	1	(H)	11401134~		
22	1700000026	SWITCH, safety	1	(L)	11400003~11400430		
	1700000033	SWITCH, safety	1	(H)	11400431~		
23	1901730400	VALVE, pilot	1				
25	1100041030	BOLT	1	(L)	11400003~11400430		
	0335120970	BOLT	1	(H)	11400431~		
26	1110040616	SCREW, cap	4				
27	1120590416	SCREW	1				
28	1110040816	SCREW, cap	2				
29	1130040010	NUT	1				
30	1130040012	NUT	1				
31	1130040014	NUT	1				
32	1140020006	WASHER, spring	4				
33	1140020008	WASHER, spring	4				
34	1141110008	WASHER	4				
35	0003600011	WASHER	2				
36	1213000832	PIN, spring	2		11400003~11400316		
	1213000832	PIN, spring	1		11400317~		
37	1214000008	PIN, snap	2				
38	1110040820	SCREW, cap	2				
39	1213000836	PIN, spring	1		11400317~		
40	1420010140	O-RING	1		11400431~11400460		
	0375105610	SPONGE	1		11400954~		
41	1225121016	WASHER	1		11400431~11400460		
	C4b103S						

silvethorn.co.uk

OPERATION LEVER & STAND; R.H. (cab)

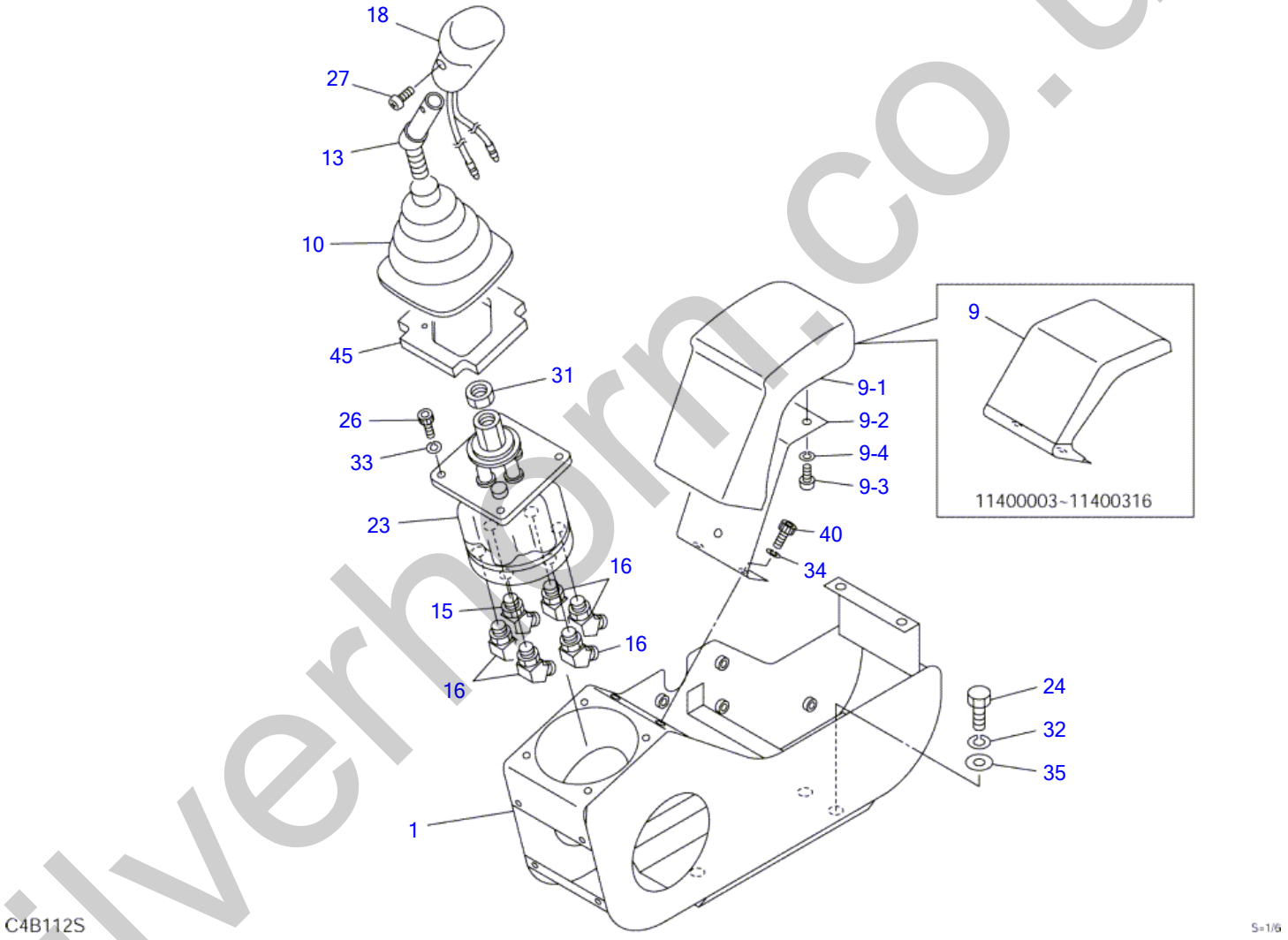

silverhorn.co.uk

OPERATION LEVER & STAND; R.H. (cab)

Item	Part number	Description	Q'ty	Chan.	Serial No.	Serv.	Remarks
		VALVE ASSY					X03351-35000-2
1	0375103050	BOX, control (R.H.)	1		11400003~11400010		
	0335131100	BOX, control (R.H.)	1		11400011~		
9	0375103010	REST, arm	1		11400003~11400010		
	0335130900	REST, arm	1	(H)(L)	11400011~11400316		
	0375105500	REST, arm	1	(H)	11400317~		
9-1	0375105510	・URETHANE	1		11400317~		
9-2	0375105520	・PLATE	1		11400317~		
9-3	1120530812	・SCREW	3		11400317~		
9-4	1140020008	・WASHER, spring	3		11400317~		
10	0335124900	BOOT	1				
13	0565102500	LEVER	1				
15	1512370012	ADAPTOR	1				
	1420010110	・O-RING	1			M	
16	1515100110	ELBOW	5				
	1420010110	・O-RING	1			M	
18	1650203300	GRIP	1				
23	1901730400	VALVE, pilot	1				
24	1100041020	BOLT	2		11400003~11400010		
	1100041020	BOLT	3		11400011~		
26	1110040616	SCREW, cap	4				
27	1120590416	SCREW	2				
31	1130040014	NUT	1				
32	1140020010	WASHER, spring	2		11400003~11400010		
	1140020010	WASHER, spring	3		11400011~		
33	1140020006	WASHER, spring	4				
34	1140090008	WASHER, spring	2				
35	1141110010	WASHER	2		11400003~11400010		
	1141110010	WASHER	3		11400011~		
40	1120590816	SCREW, cap	2		11400003~11400010		
	1110040820	SCREW, cap	2		11400011~		
45	0375105610	SPONGE	1		11400954~		
	C4b113S						

silverhorn.co.uk

OPERATION LEVER & STAND; L.H. (canopy)

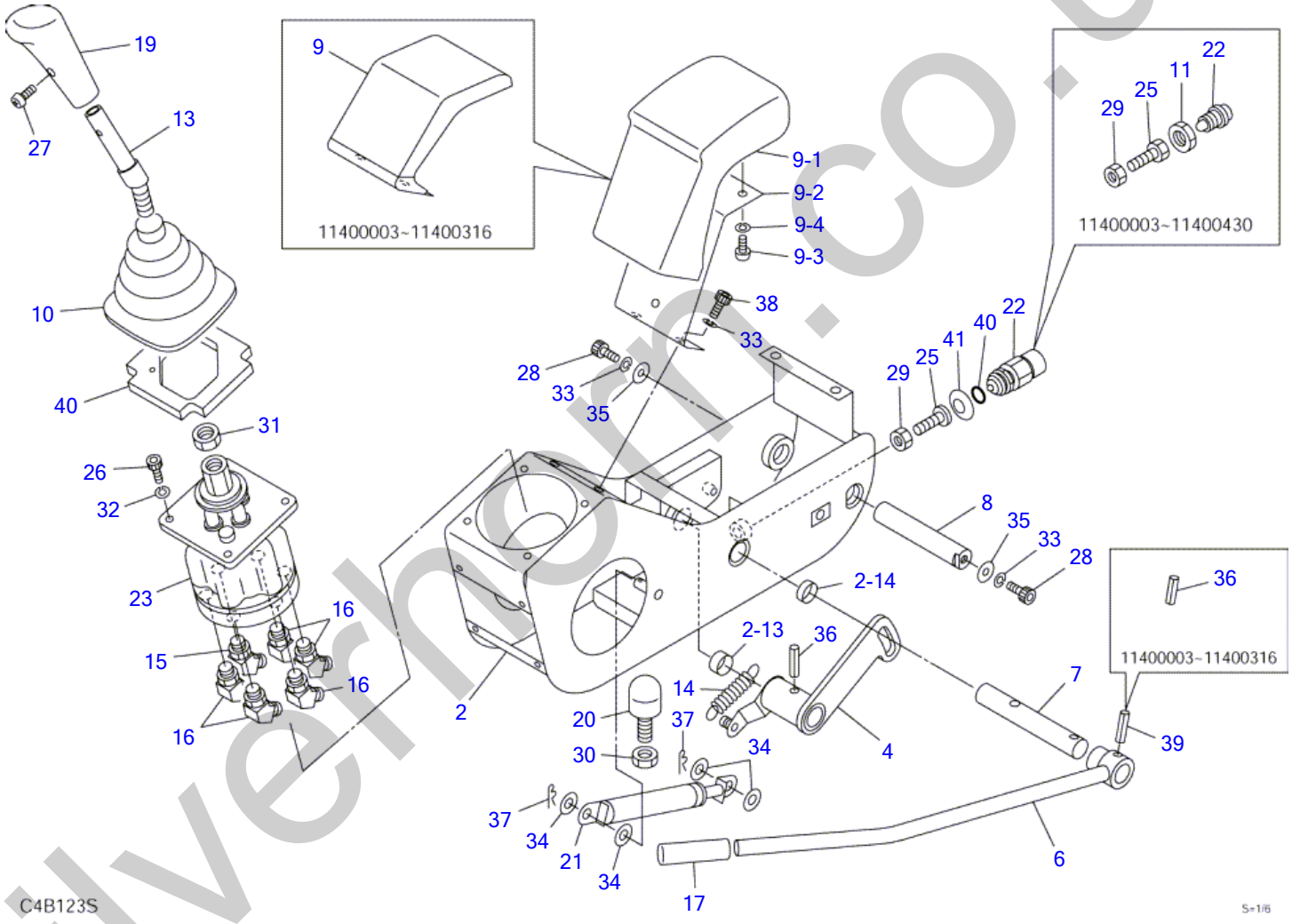

silvermoor.co.uk

OPERATION LEVER & STAND; L.H. (canopy)

Item	Part number	Description	Q'ty	Chan.	Serial No.	Serv.	Remarks
		VALVE ASSY					X03351-34000-2
2	0335128200	BOX, control (L.H.)	1		11400003~11400010		
	0335130200	BOX, control (L.H.)	1	(H)	11400011~11400460		
	0335130800	BOX, control (L.H.)	1		11400461~		
2-13	1333002010	・BUSHING	1				
2-14	1333002015	・BUSHING	1				
4	0335128400	PLATE (L.H.)	1		11400003~11400010		
	0335130400	PLATE (L.H.)	1		11400011~		
6	0335128600	LEVER (L.H.)	1		11400003~11400010		
	0335130600	LEVER (L.H.)	1	(H)	11400011~11400316		
	0375105400	LEVER (L.H.)	1	(H)	11400317~		
7	0335124700	SHAFT	1				
8	0335124750	SHAFT	1				
9	0375103010	REST, arm	1		11400003~11400010		
	0335130900	REST, arm	1	(H)(L)	11400011~11400316		
	0375105500	REST, arm	1	(H)	11400317~		
9-1	0375105510	・URETHANE	1		11400317~		
9-2	0375105520	・PLATE	1		11400317~		
9-3	1120530812	・SCREW	3		11400317~		
9-4	1140020008	・WASHER, spring	3		11400317~		
10	0335124900	BOOT	1				
11	0335120960	NUT	1		11400003~11400430		
13	0565102500	LEVER	1				
14	0425105100	SPRING	1				
15	1512370012	ADAPTOR	1				
	1420010110	・O-RING	1			M	
16	1515100110	ELBOW	5				
	1420010110	・O-RING	1			M	
17	1650202300	CAP	1				
19	1650203400	GRIP	1				
20	1651101224	STOPPER	1				
21	1653900036	SPRING, gas	1	(L)	11400003~11400670		
	1653900050	SPRING, gas	1	(H)	11400671~11401133		
	1653900057	SPRING, gas	1	(H)	11401134~		
22	1700000026	SWITCH, safety	1	(L)	11400003~11400430		
	1700000033	SWITCH, safety	1	(H)	11400431~		
23	1901730400	VALVE, pilot	1				
25	1100041030	BOLT	1	(L)	11400003~11400430		
	0335120970	BOLT	1	(H)	11400431~		
26	1110040616	SCREW, cap	4				
27	1120590416	SCREW	1				
28	1110040816	SCREW, cap	2				
29	1130040010	NUT	1				
30	1130040012	NUT	1				
31	1130040014	NUT	1				
32	1140020006	WASHER, spring	4				
33	1140020008	WASHER, spring	4				
34	1141110008	WASHER	4				
35	0003600011	WASHER	2				
36	1213000832	PIN, spring	2		11400003~11400316		
	1213000832	PIN, spring	1		11400317~		
37	1214000008	PIN, snap	2				
38	1110040820	SCREW, cap	2				
39	1213000836	PIN, spring	1		11400317~		
40	1420010140	O-RING	1		11400431~11400460		
	0375105610	SPONGE	1		11400954~		
41	1225121016	WASHER	1		11400431~11400460		
	C4b123S						

silvermorn.co.uk

OPERATION LEVER & STAND; L.H. (cab)

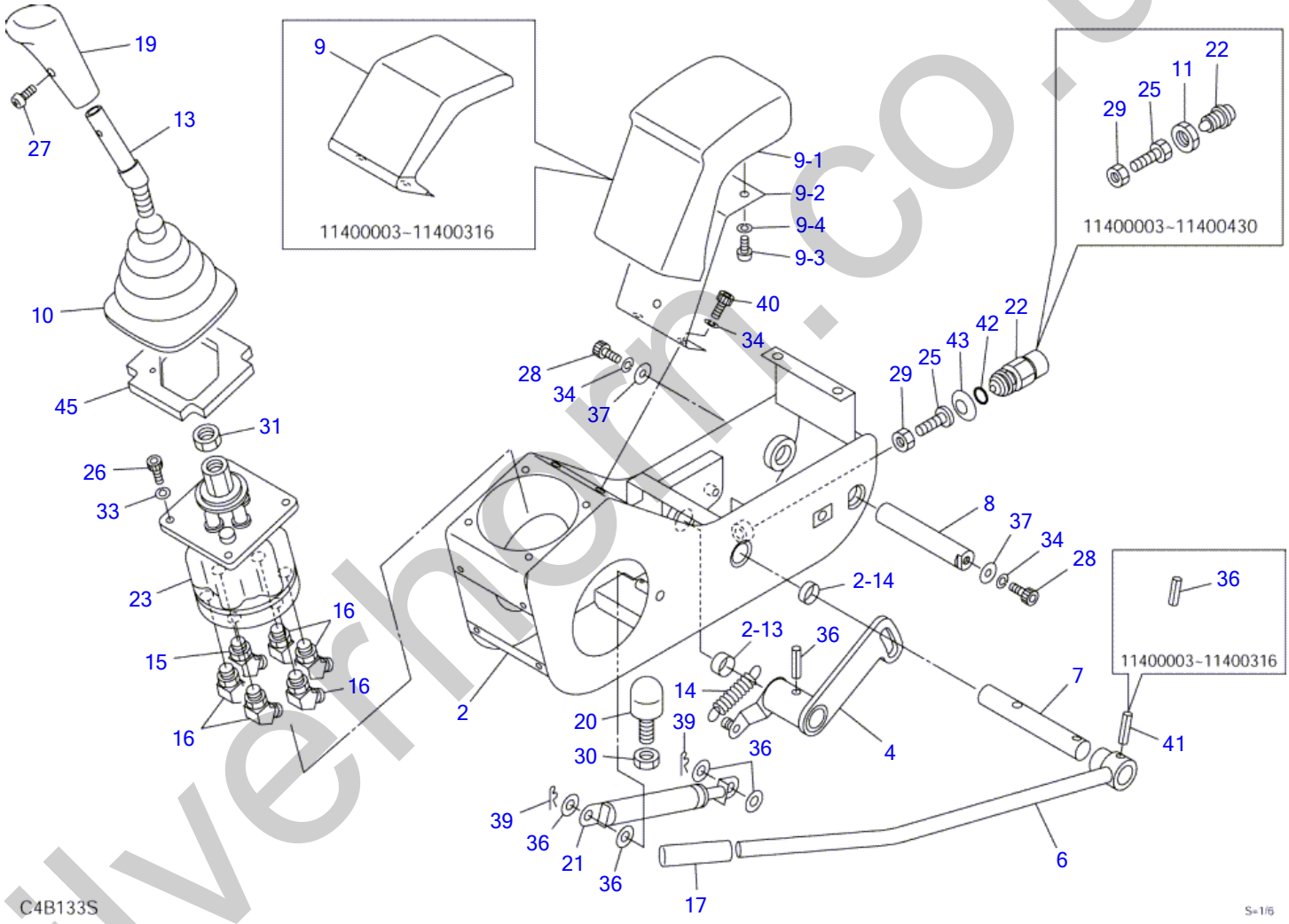

silverhorn.co.uk

OPERATION LEVER & STAND; L.H. (cab)

Item	Part number	Description	Q'ty	Chan.	Serial No.	Serv.	Remarks
		VALVE ASSY					X03351-35000-2
2	0335128200	BOX, control (L.H.)	1		11400003~11400010		
	0335130200	BOX, control (L.H.)	1	(H)	11400011~11400460		
	0335130800	BOX, control (L.H.)	1		11400461~		
2-13	1333002010	・BUSHING	1				
2-14	1333002015	・BUSHING	1				
4	0335128400	PLATE (L.H.)	1		11400003~11400010		
	0335130400	PLATE (L.H.)	1		11400011~		
6	0335128600	LEVER (L.H.)	1		11400003~11400010		
	0335130600	LEVER (L.H.)	1	(H)	11400011~11400316		
	0375105400	LEVER (L.H.)	1	(H)	11400317~		
7	0335124700	SHAFT	1				
8	0335124750	SHAFT	1				
9	0375103010	REST, arm	1		11400003~11400010		
	0335130900	REST, arm	1	(H)(L)	11400011~11400316		
	0375105500	REST, arm	1	(H)	11400317~		
9-1	0375105510	・URETHANE	1		11400317~		
9-2	0375105520	・PLATE	1		11400317~		
9-3	1120530812	・SCREW	3		11400317~		
9-4	1140020008	・WASHER, spring	3		11400317~		
10	0335124900	BOOT	1				
11	0335120960	NUT	1		11400003~11400430		
13	0565102500	LEVER	1				
14	0425105100	SPRING	1				
15	1512370012	ADAPTOR	1				
	1420010110	・O-RING	1			M	
16	1515100110	ELBOW	5				
	1420010110	・O-RING	1			M	
17	1650202300	CAP	1				
19	1650203400	GRIP	1				
20	1651101224	STOPPER	1				
21	1653900036	SPRING, gas	1	(L)	11400003~11400670		
	1653900050	SPRING, gas	1	(H)	11400671~11401133		
	1653900057	SPRING, gas	1	(H)	11401134~		
22	1700000026	SWITCH, safety	1	(L)	11400003~11400430		
	1700000033	SWITCH, safety	1	(H)	11400431~		
23	1901730400	VALVE, pilot	1				
25	1100041030	BOLT	1	(L)	11400003~11400430		
	0335120970	BOLT	1	(H)	11400431~		
26	1110040616	SCREW, cap	4				
27	1120590416	SCREW	1				
28	1110040816	SCREW, cap	2				
29	1130040010	NUT	1				
30	1130040012	NUT	1				
31	1130040014	NUT	1				
33	1140020006	WASHER, spring	4				
34	1140020008	WASHER, spring	4				
36	1141110008	WASHER	4				
37	0003600011	WASHER	2				
38	1213000832	PIN, spring	2		11400003~11400316		
	1213000832	PIN, spring	1		11400317~		
39	1214000008	PIN, snap	2				
40	1110040820	SCREW, cap	2				
41	1213000836	PIN, spring	1		11400317~		
42	1420010140	O-RING	1		11400431~11400460		
43	1225121016	WASHER	1		11400431~11400460		
45	0375105610	SPONGE	1		11400954~		
	C4b133S						

silvermorn.co.uk

PIPING; OPERATION LEVER (11400003-11400010)

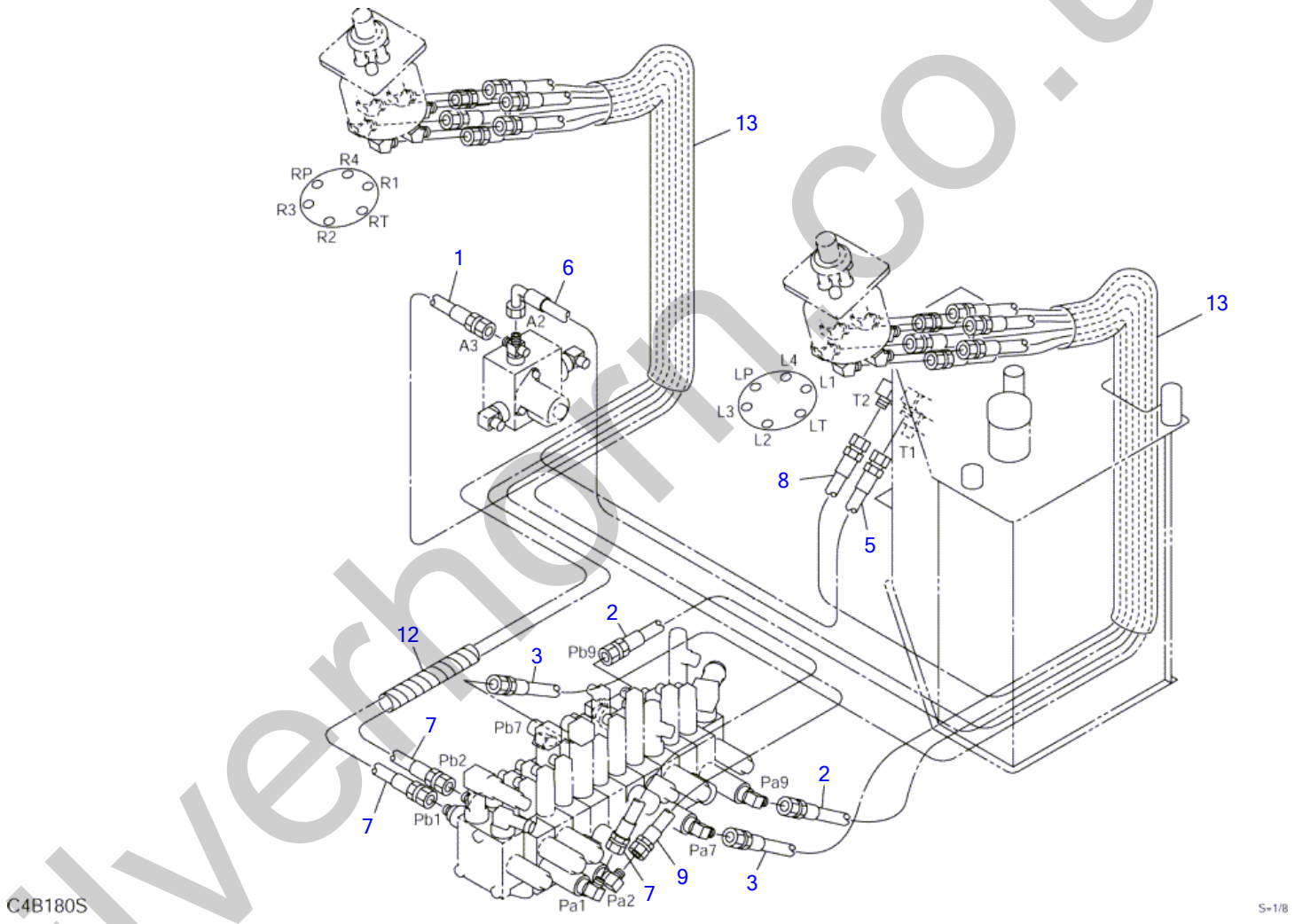

silverhorn.co.uk

PIPING; OPERATION LEVER (11400003-11400010)

Item	Part number	Description	Q'ty	Chan.	Serial No.	Serv.	Remarks
		PIPING ASSY					X03371-23000
1	**1934822110**	HOSE ASSY	1				
2	**1934722140**	HOSE ASSY	2				
3	**1934722145**	HOSE ASSY	2				
5	**1934822150**	HOSE ASSY	1				
6	**1934852180**	HOSE ASSY	1				
7	**1934722210**	HOSE ASSY	3				
8	**1934822175**	HOSE ASSY	1				
9	**1934722205**	HOSE ASSY	1				
12	**1532224015**	PROTECTOR	1				sold by the meter
13	**1531345087**	PROTECTOR	2				sold by the meter
	C4b181						

silverhorn.co.uk

PIPING; OPERATION LEVER (11400011-)

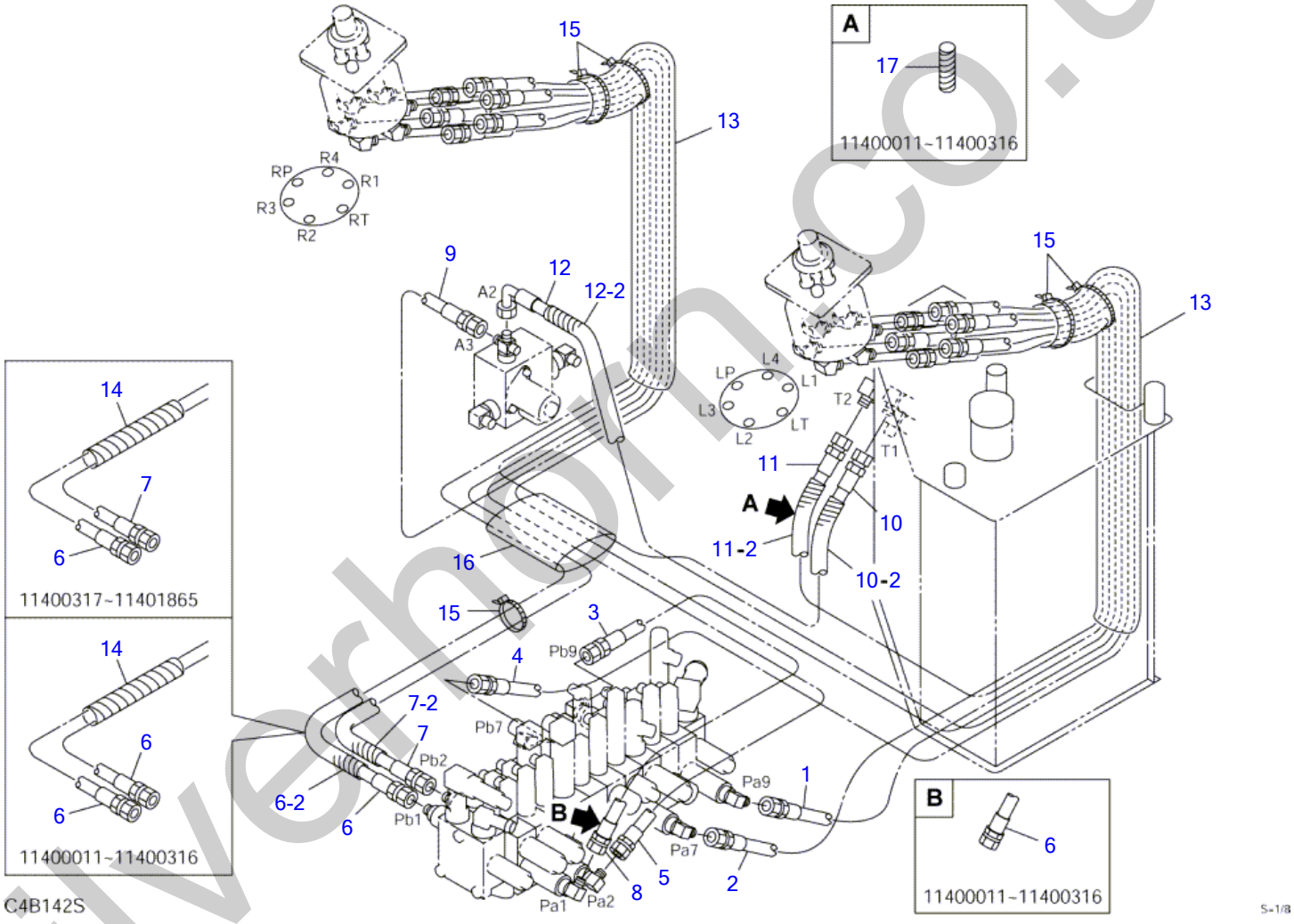

silverhorn.co.uk

PIPING; OPERATION LEVER (11400011-)

Item	Part number	Description	Q'ty	Chan.	Serial No.	Serv.	Remarks
		PIPING ASSY					X03371-31000-1
1	1934722134	HOSE ASSY	1		11400011~11400316		
	0337131100	HOSE ASSY	1	(H)	11400317~		19347-22134
2	1934722144	HOSE ASSY	1		11400011~11400316		
	0337131200	HOSE ASSY	1	(H)	11400317~		19347-22144
3	1934722146	HOSE ASSY	1		11400011~11400316		
	0337131110	HOSE ASSY	1	(H)	11400317~		19347-22146
4	1934722160	HOSE ASSY	1		11400011~11400316		
	0337131210	HOSE ASSY	1	(H)	11400317~		19347-22160
5	1934722205	HOSE ASSY	1		11400011~11400316		
	0337131120	HOSE ASSY	1	(H)	11400317~		19347-22205
6	1934722210	HOSE ASSY	3		11400011~11400316		
	0337131220	HOSE ASSY	1	(H)	11400317~		19347-22210
6-2	1532208055	・PROTECTOR	1		11401866~	M	sold by the meter
7	0337131130	HOSE ASSY	1		11400317~		19347-22210
7-2	1532208055	・PROTECTOR	1		11401866~	M	sold by the meter
8	0337131230	HOSE ASSY	1		11400317~		19347-22210
9	1934822110	HOSE ASSY	1		11400011~11400316		
	0337131140	HOSE ASSY	1	(H)	11400317~		19347-22110
10	1934822144	HOSE ASSY	1		11400011~11400316		
	0337131150	HOSE ASSY	1	(H)	11400317~		19348-22144
10-2	1532208015	・PROTECTOR	1		11400317~		sold by the meter
11	1934822185	HOSE ASSY	1		11400011~11400316		
	0337131160	HOSE ASSY	1	(H)	11400317~		19348-22185
11-2	1532208015	・PROTECTOR	1		11400317~		sold by the meter
12	1934852185	HOSE ASSY	1		11400011~11400316		
	0337131170	HOSE ASSY	1	(H)	11400317~		19348-52185
12-2	1532208025	・PROTECTOR	1		11400317~		sold by the meter
13	1531645087	PROTECTOR	2				sold by the meter
14	1532218015	PROTECTOR	1		11400011~11401865		sold by the meter
15	1652200007	BAND	5			M	
16	1531335025	PROTECTOR	1				sold by the meter
17	1532208006	PROTECTOR	1		11400011~11400316		sold by the meter
	C4b142S						

silverhorn.co.uk

PIPING; OPERATION LEVER (A-B pattern; 11400003-11400010)

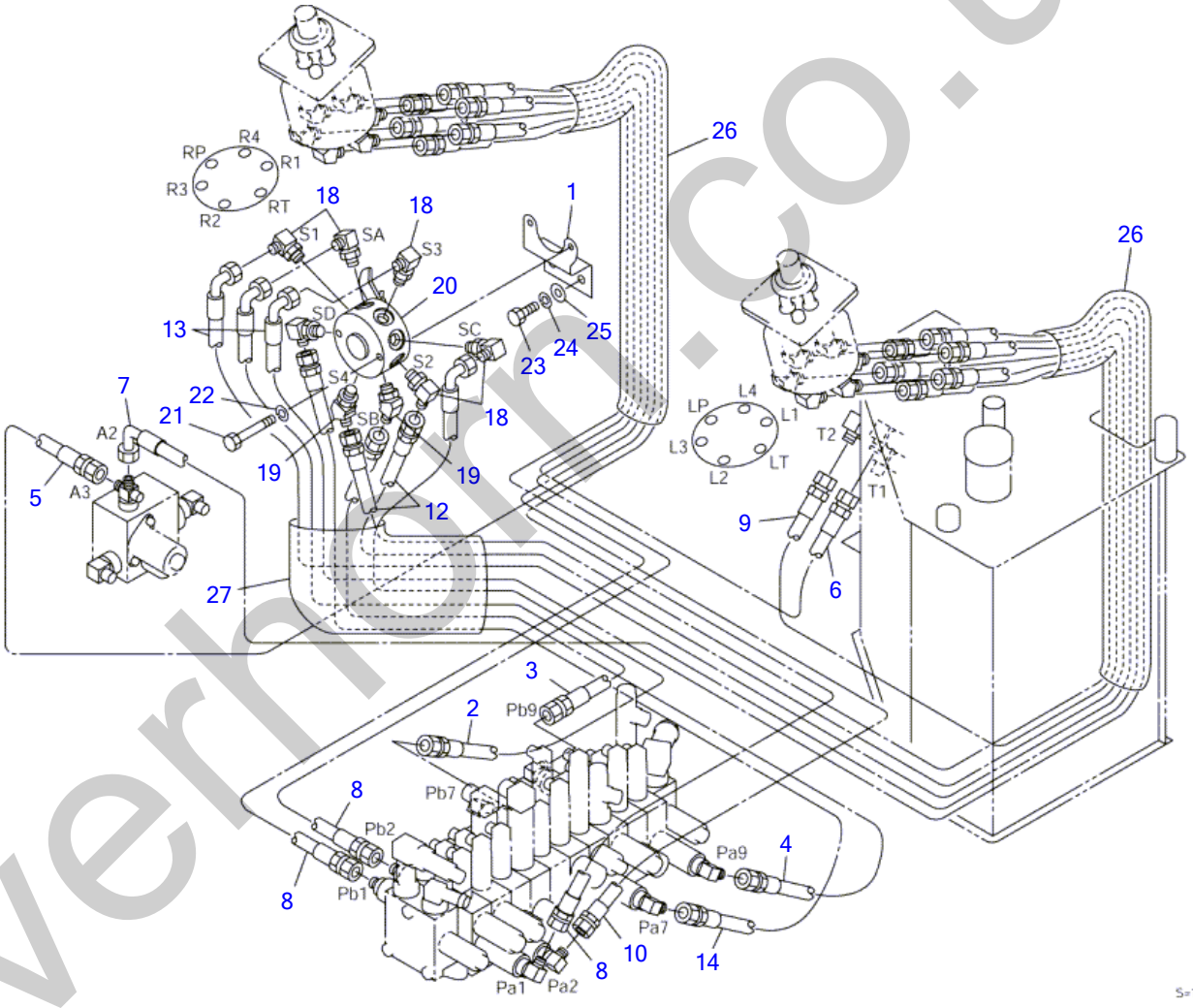

silverhorn.co.uk

PIPING; OPERATION LEVER (A-B pattern; 11400003-11400010)

Item	Part number	Description	Q'ty	Chan.	Serial No.	Serv.	Remarks
		PIPING ASSY (A-B)					X03371-24000
1	0337120010	BRACKET	1				
2	1934752064	HOSE ASSY	1				
3	1934752060	HOSE ASSY	1				
4	1934722074	HOSE ASSY	1				
5	1934822110	HOSE ASSY	1				
6	1934822150	HOSE ASSY	1				
7	1934852180	HOSE ASSY	1				
8	1934722210	HOSE ASSY	3				
9	1934822175	HOSE ASSY	1				
10	1934722205	HOSE ASSY	1				
12	1934722180	HOSE ASSY	2				
13	1934752180	HOSE ASSY	2				
14	1934722080	HOSE ASSY	1				
18	1515010040	ELBOW	6				
	1420010110	・O-RING	1			M	
19	1515100110	ELBOW	2				
	1420010110	・O-RING	1			M	
20	1901731400	VALVE, selector	1				
21	1100040650	BOLT	2				
22	1140020006	WASHER, spring	2				
23	1100040816	BOLT	2				
24	1140020008	WASHER, spring	2				
25	1141110008	WASHER	2				
26	1531345087	PROTECTOR	2				sold by the meter
27	1531345025	PROTECTOR	1				sold by the meter
	C4b191						

silverhorn.co.uk

PIPING; OPERATION LEVER (A-B pattern; 11400011-)

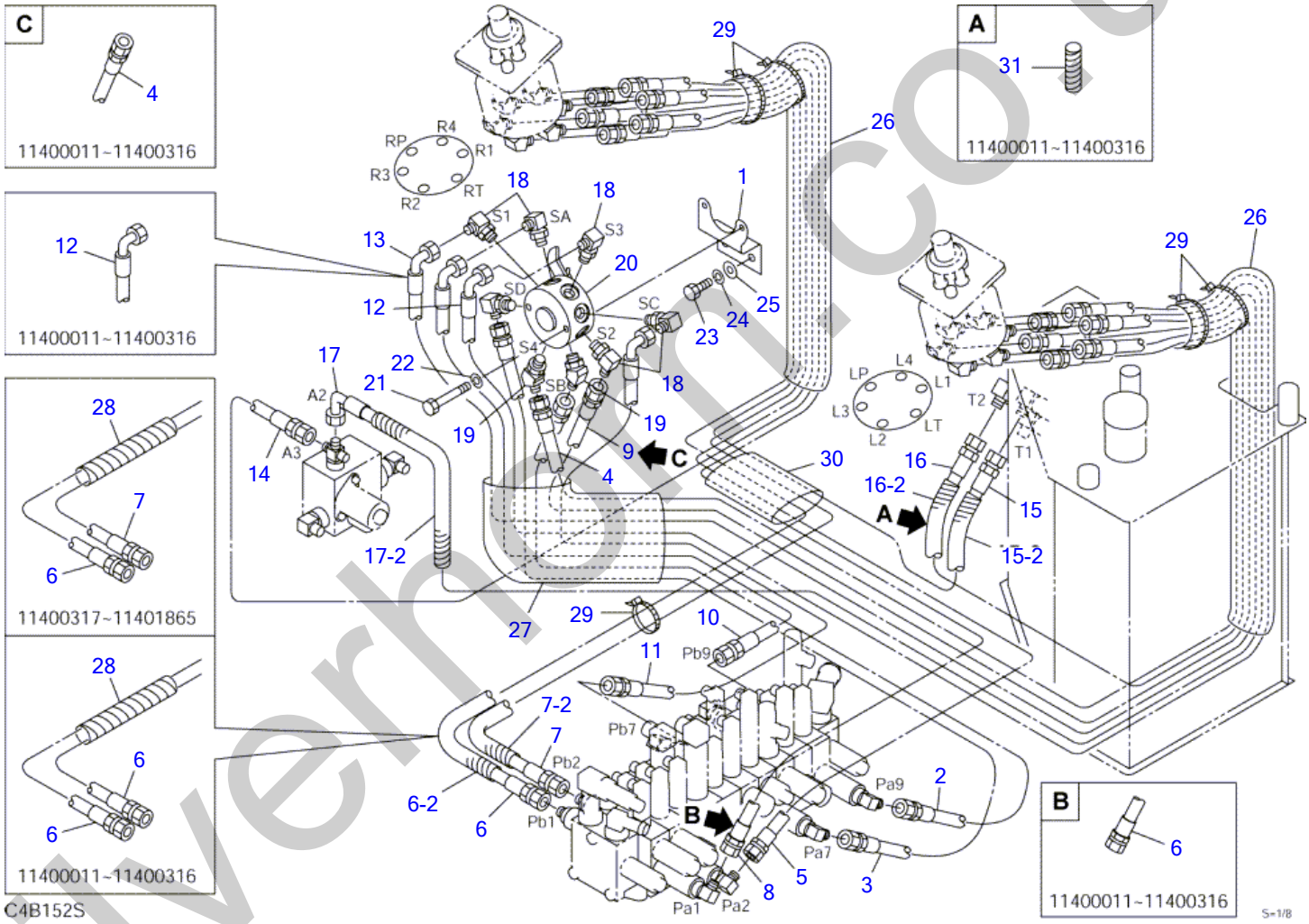

silvermoor.co.uk

PIPING; OPERATION LEVER (A-B pattern; 11400011-)

Item	Part number	Description	Q'ty	Chan.	Serial No.	Serv.	Remarks
		PIPING ASSY (A-B)					X03371-34000-2
1	0337120010	BRACKET	1				
2	1934722074	HOSE ASSY	1		11400011~11400316		
	0337134100	HOSE ASSY	1	(H)	11400317~		19347-22074
3	1934722080	HOSE ASSY	1		11400011~11400316		
	0337134110	HOSE ASSY	1	(H)	11400317~		19347-22080
4	1934722180	HOSE ASSY	2		11400011~11400316		
	0337133130	HOSE ASSY	1	(H)	11400317~		19347-22185
5	1934722205	HOSE ASSY	1		11400011~11400316		
	0337131120	HOSE ASSY	1	(H)	11400317~		19347-22205
6	1934722210	HOSE ASSY	3		11400011~11400316		
	0337131220	HOSE ASSY	1	(H)	11400317~		19347-22210
6-2	1532208055	・PROTECTOR	1		11401866~	M	sold by the meter
7	0337131130	HOSE ASSY	1		11400317~		19347-22210
7-2	1532208055	・PROTECTOR	1		11401866~	M	sold by the meter
8	0337131230	HOSE ASSY	1		11400317~		19347-22210
9	0337134120	HOSE ASSY	1		11400317~		19347-22180
10	1934752060	HOSE ASSY	1		11400011~11400316		
	0337134130	HOSE ASSY	1	(H)	11400317~		19347-52060
11	1934752064	HOSE ASSY	1		11400011~11400316		
	0337134140	HOSE ASSY	1	(H)	11400317~		19347-52064
12	1934752180	HOSE ASSY	2		11400011~11400316		
	0337133170	HOSE ASSY	1	(H)	11400317~		19347-52185
13	0337134150	HOSE ASSY	1		11400317~		19347-52100
14	1934822110	HOSE ASSY	1		11400011~11400316		
	0337131140	HOSE ASSY	1	(H)	11400317~		19348-22110
15	1934822144	HOSE ASSY	1		11400011~11400316		
	0337131150	HOSE ASSY	1	(H)	11400317~		19348-22144
15-2	1532208015	・PROTECTOR	1		11400317~		sold by the meter
16	1934822185	HOSE ASSY	1		11400011~11400316		
	0337131160	HOSE ASSY	1	(H)	11400317~		19348-22185
16-2	1532208015	・PROTECTOR	1		11400317~		sold by the meter
17	1934852185	HOSE ASSY	1		11400011~11400316		
	0337131170	HOSE ASSY	1	(H)	11400317~		19348-52185
17-2	1532208025	・PROTECTOR	1		11400317~		sold by the meter
18	1515012040	ELBOW	6				
	1420010110	・O-RING	1			M	
19	1515100110	ELBOW	2				
	1420010110	・O-RING	1			M	
20	1901731400	VALVE, selector	1				
21	1100040650	BOLT	2				
22	1140020006	WASHER, spring	2				
23	1100040816	BOLT	2				
24	1140020008	WASHER, spring	2				
25	1141110008	WASHER	2				
26	1531645087	PROTECTOR	2				sold by the meter
27	1531345025	PROTECTOR	1				sold by the meter
28	1532218015	PROTECTOR	1		11400011~11401865		sold by the meter
29	1652200007	BAND	5			M	
30	1531335025	PROTECTOR	1				sold by the meter
31	1532208006	PROTECTOR	1		11400011~11400316		sold by the meter
	C4b153S						

silverthorn.co.uk

PIPING; OPERATION LEVER (ISO-JCB pattern; 11400003-11400010)

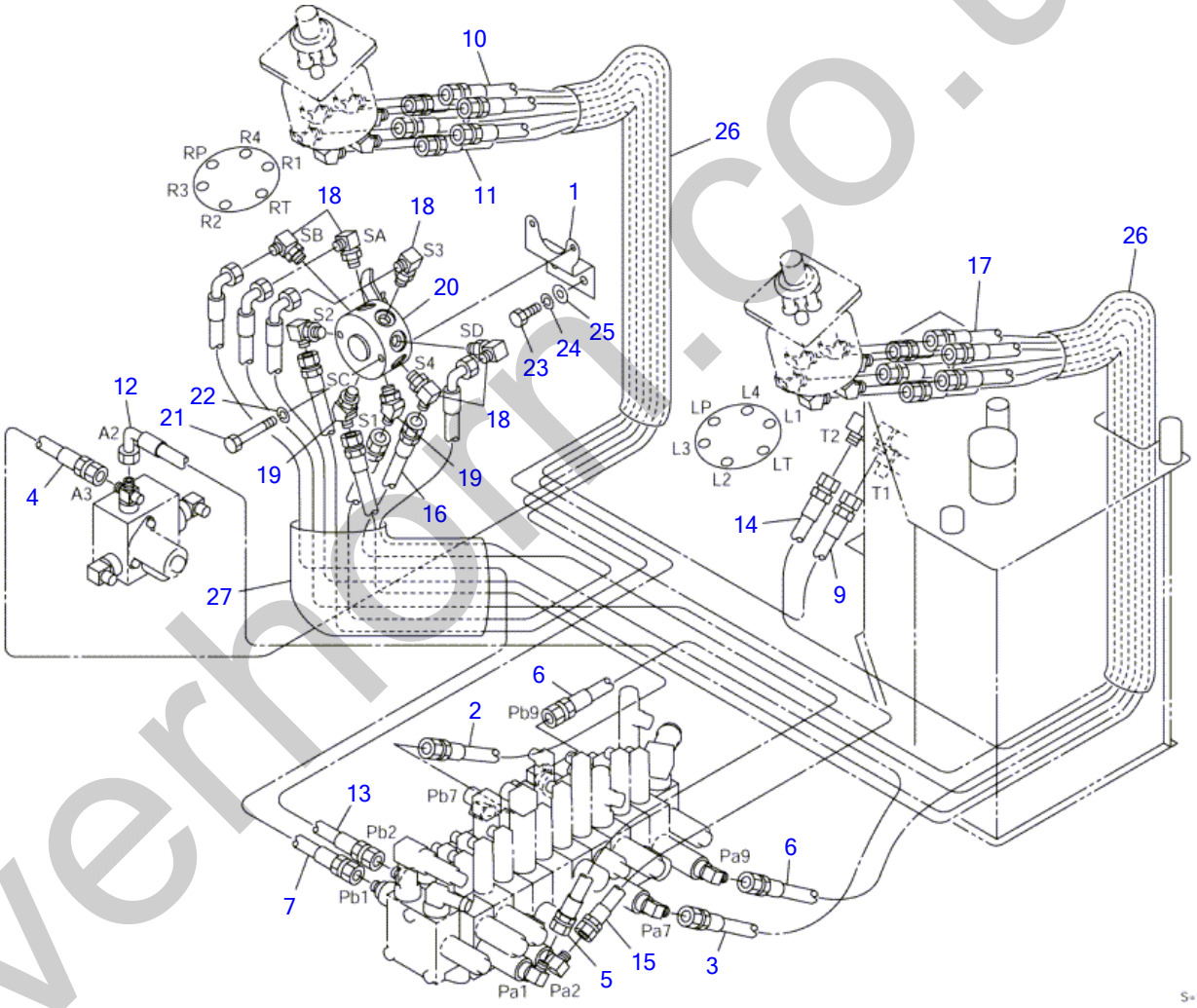

silverhorn.co.uk

PIPING; OPERATION LEVER (ISO-JCB pattern; 11400003-11400010)

Item	Part number	Description	Q'ty	Chan.	Serial No.	Serv.	Remarks
		PIPING ASSY (ISO-JCB)	1				X03371-25000
1	0337120010	BRACKET	1				
2	1934722058	HOSE ASSY	1				
3	1934752090	HOSE ASSY	1				
4	1934822110	HOSE ASSY	1				
5	1934752120	HOSE ASSY	1				
6	1934722140	HOSE ASSY	1				
7	1934752100	HOSE ASSY	1				
9	1934822150	HOSE ASSY	1				
10	1934722170	HOSE ASSY	1				
11	1934722175	HOSE ASSY	1				
12	1934852180	HOSE ASSY	1				
13	1934722210	HOSE ASSY	1				
14	1934822175	HOSE ASSY	1				
15	1934722205	HOSE ASSY	1				
16	1934722180	HOSE ASSY	1				
17	1934752180	HOSE ASSY	1				
18	1515010040	ELBOW	6				
	1420010110	・O-RING	1			M	
19	1515100110	ELBOW	2				
	1420010110	・O-RING	1			M	
20	1901730500	VALVE, selector	1				
21	1100040650	BOLT	2				
22	1140020006	WASHER, spring	2				
23	1100040816	BOLT	2				
24	1140020008	WASHER, spring	2				
25	1141110008	WASHER	2				
26	1531345087	PROTECTOR	2				sold by the meter
27	1531345025	PROTECTOR	1				sold by the meter
	C4b201						

silverhorn.co.uk

PIPING; OPERATION LEVER (ISO-JCB pattern; 11400011-)

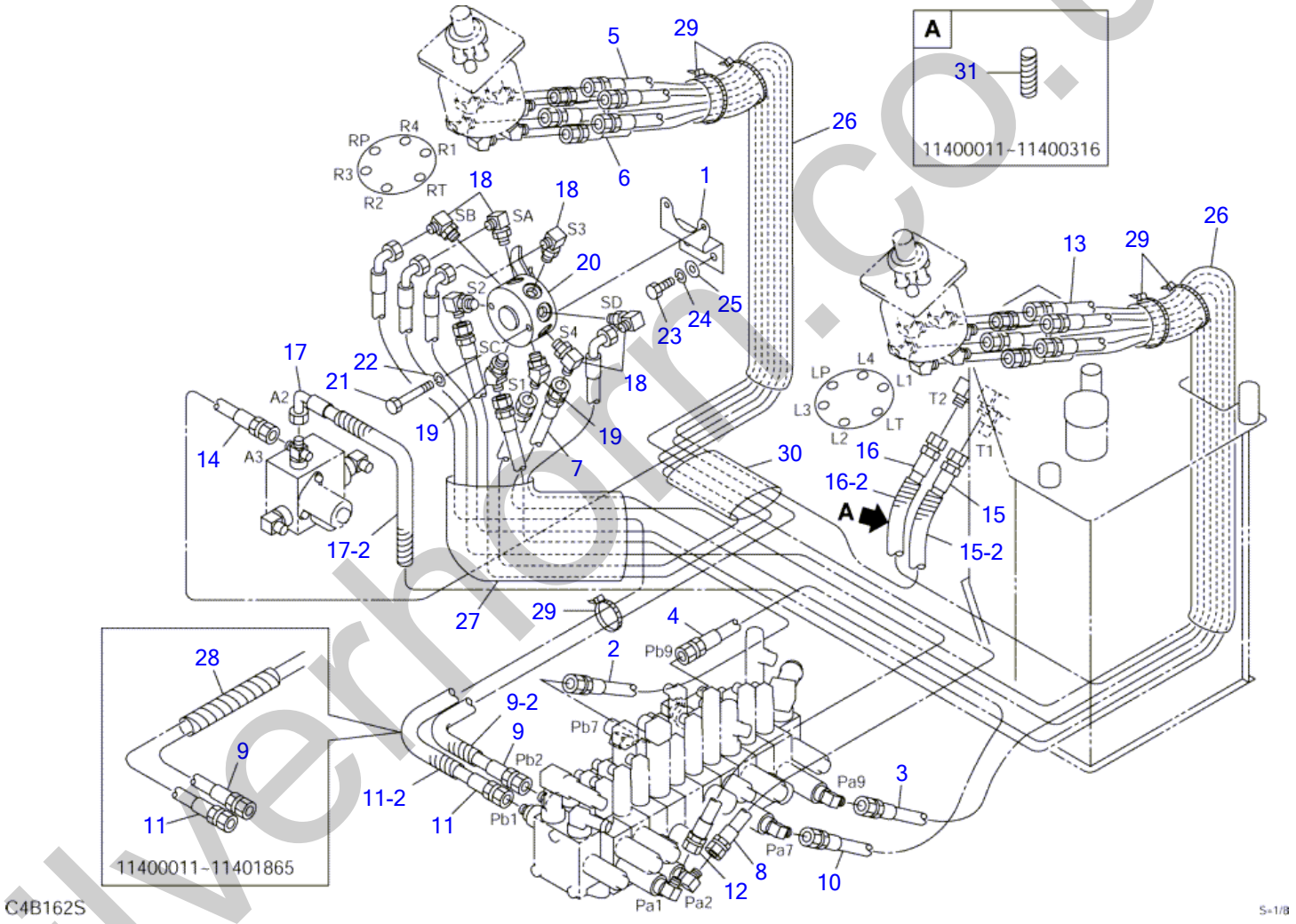

silverhorn.co.uk

PIPING; OPERATION LEVER (ISO-JCB pattern; 11400011-)

Item	Part number	Description	Q'ty	Chan.	Serial No.	Serv.	Remarks
		PIPING ASSY (ISO-JCB)	1				X03371-33000-2
1	0337120010	BRACKET	1				
2	1934722058	HOSE ASSY	1		11400011~11400316		
	0337133100	HOSE ASSY	1	(H)	11400317~		19347-22058
3	1934722134	HOSE ASSY	1		11400011~11400316		
	0337131100	HOSE ASSY	1	(H)	11400317~		19347-22134
4	1934722146	HOSE ASSY	1		11400011~11400316		
	0337131110	HOSE ASSY	1	(H)	11400317~		19347-22146
5	1934722155	HOSE ASSY	1		11400011~11400316		
	0337133110	HOSE ASSY	1	(H)	11400317~		19347-22155
6	1934722165	HOSE ASSY	1		11400011~11400316		
	0337133120	HOSE ASSY	1	(H)	11400317~		19347-22165
7	1934722180	HOSE ASSY	1		11400011~11400316		
	0337133130	HOSE ASSY	1	(H)	11400317~		19347-22210
8	1934722205	HOSE ASSY	1		11400011~11400316		
	0337131120	HOSE ASSY	1	(H)	11400317~		19347-22205
9	1934722210	HOSE ASSY	1		11400011~11400316		
	0337131130	HOSE ASSY	1	(H)	11400317~		19347-22210
9-2	1532208055	・PROTECTOR	1		11401866~	M	sold by the meter
10	1934752090	HOSE ASSY	1		11400011~11400316		
	0337133140	HOSE ASSY	1	(H)	11400317~		19347-52090
11	1934752100	HOSE ASSY	1		11400011~11400316		
	0337133150	HOSE ASSY	1	(H)	11400317~		19347-52100
11-2	1532208055	・PROTECTOR	1		11401866~	M	sold by the meter
12	1934752120	HOSE ASSY	1		11400011~11400316		
	0337133160	HOSE ASSY	1	(H)	11400317~		19347-52120
13	1934752180	HOSE ASSY	1		11400011~11400316		
	0337133170	HOSE ASSY	1	(H)	11400317~		19347-52185
14	1934822110	HOSE ASSY	1		11400011~11400316		
	0337131140	HOSE ASSY	1	(H)	11400317~		19348-22110
15	1934822144	HOSE ASSY	1		11400011~11400316		
	0337131150	HOSE ASSY	1	(H)	11400317~		19348-22144
15-2	1532208015	・PROTECTOR	1		11400317~		sold by the meter
16	1934822185	HOSE ASSY	1		11400011~11400316		
	0337131160	HOSE ASSY	1	(H)	11400317~		19348-22185
16-2	1532208015	・PROTECTOR	1		11400317~		sold by the meter
17	1934852185	HOSE ASSY	1		11400011~11400316		
	0337131170	HOSE ASSY	1	(H)	11400317~		19348-52185
17-2	1532208025	・PROTECTOR	1		11400317~		sold by the meter
18	1515012040	ELBOW	6				
	1420010110	・O-RING	1			M	
19	1515100110	ELBOW	2				
	1420010110	・O-RING	1			M	
20	1901730500	VALVE, selector	1				
21	1100040650	BOLT	2				
22	1140020006	WASHER, spring	2				
23	1100040816	BOLT	2				
24	1140020008	WASHER, spring	2				
25	1141110008	WASHER	2				
26	1531645087	PROTECTOR	2				sold by the meter
27	1531345025	PROTECTOR	1				sold by the meter
28	1532218015	PROTECTOR	1		11400011~11401865		sold by the meter
29	1652200007	BAND	5			M	
30	1531335025	PROTECTOR	1				sold by the meter
31	1532208006	PROTECTOR	1		11400011~11400316		sold by the meter
	C4b163S						

silverthorn.co.uk

PIPING; OPERATION LEVER (JCB pattern)

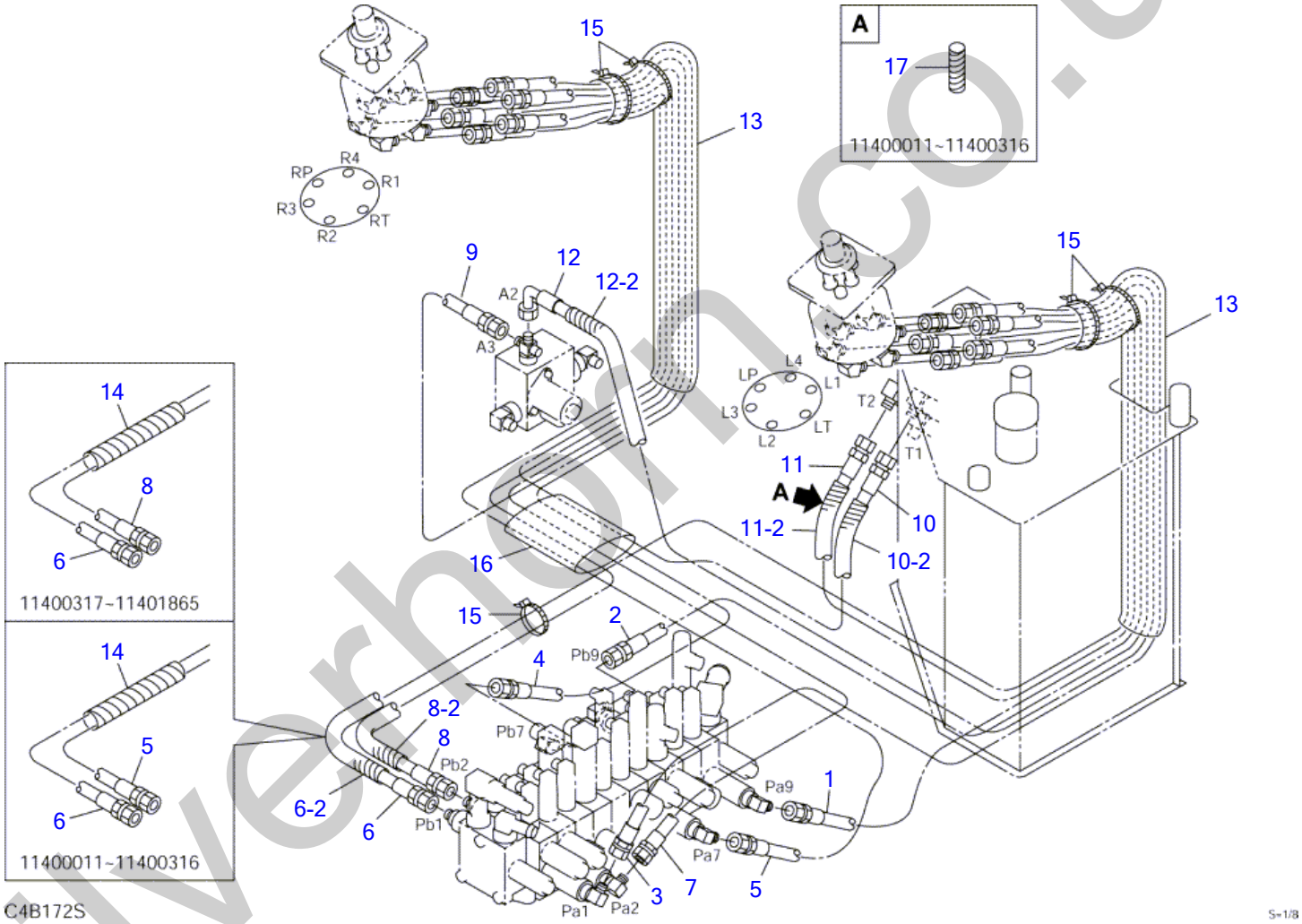

silverhorn.co.uk

PIPING; OPERATION LEVER (JCB pattern)

Item	Part number	Description	Q'ty	Chan.	Serial No.	Serv.	Remarks
		PIPING ASSY (JCB)	1				X03371-32000-1
1	1934722134	HOSE ASSY	1		11400003~11400316		
	0337131100	HOSE ASSY	1	(H)	11400317~		19347-22134
2	1934722146	HOSE ASSY	1		11400003~11400316		
	0337131110	HOSE ASSY	1	(H)	11400317~		19347-22146
3	1934722165	HOSE ASSY	1		11400003~11400316		
	0337132100	HOSE ASSY	1	(H)	11400317~		19347-22165
4	1934722175	HOSE ASSY	1		11400003~11400316		
	0337132110	HOSE ASSY	1	(H)	11400317~		19347-22175
5	1934722190	HOSE ASSY	2		11400003~11400316		
	0337132120	HOSE ASSY	1	(H)	11400317~		19347-22190
6	0337132130	HOSE ASSY	1		11400317~		19347-22210
6-2	1532208055	・PROTECTOR	1		11401866~	M	sold by the meter
7	1934722205	HOSE ASSY	1		11400003~11400316		
	0337131120	HOSE ASSY	1	(H)	11400317~		19347-22205
8	1934722210	HOSE ASSY	1		11400003~11400316		
	0337131130	HOSE ASSY	1	(H)	11400317~		19347-22210
8-2	1532208055	・PROTECTOR	1		11401866~	M	sold by the meter
9	1934822110	HOSE ASSY	1		11400003~11400316		
	0337131140	HOSE ASSY	1	(H)	11400317~		19348-22110
10	1934822144	HOSE ASSY	1		11400003~11400316		
	0337131150	HOSE ASSY	1	(H)	11400317~		19348-22144
10-2	1532208015	・PROTECTOR	1		11400317~		sold by the meter
11	1934822185	HOSE ASSY	1		11400003~11400316		
	0337131160	HOSE ASSY	1	(H)	11400317~		19348-22185
11-2	1532208015	・PROTECTOR	1		11400317~		sold by the meter
12	1934852185	HOSE ASSY	1		11400003~11400316		
	0337131170	HOSE ASSY	1	(H)	11400317~		19348-52185
12-2	1532208025	・PROTECTOR	1		11400317~		sold by the meter
13	1531645087	PROTECTOR	2				sold by the meter
14	1532218015	PROTECTOR	1		11400011~11401865		sold by the meter
15	1652200007	BAND	5			M	
16	1531335025	PROTECTOR	1				sold by the meter
17	1532208006	PROTECTOR	1		11400003~11400316		sold by the meter
	C4b172S						

silverhorn.co.uk

PIPING; OPERATION LEVER (for YBM)

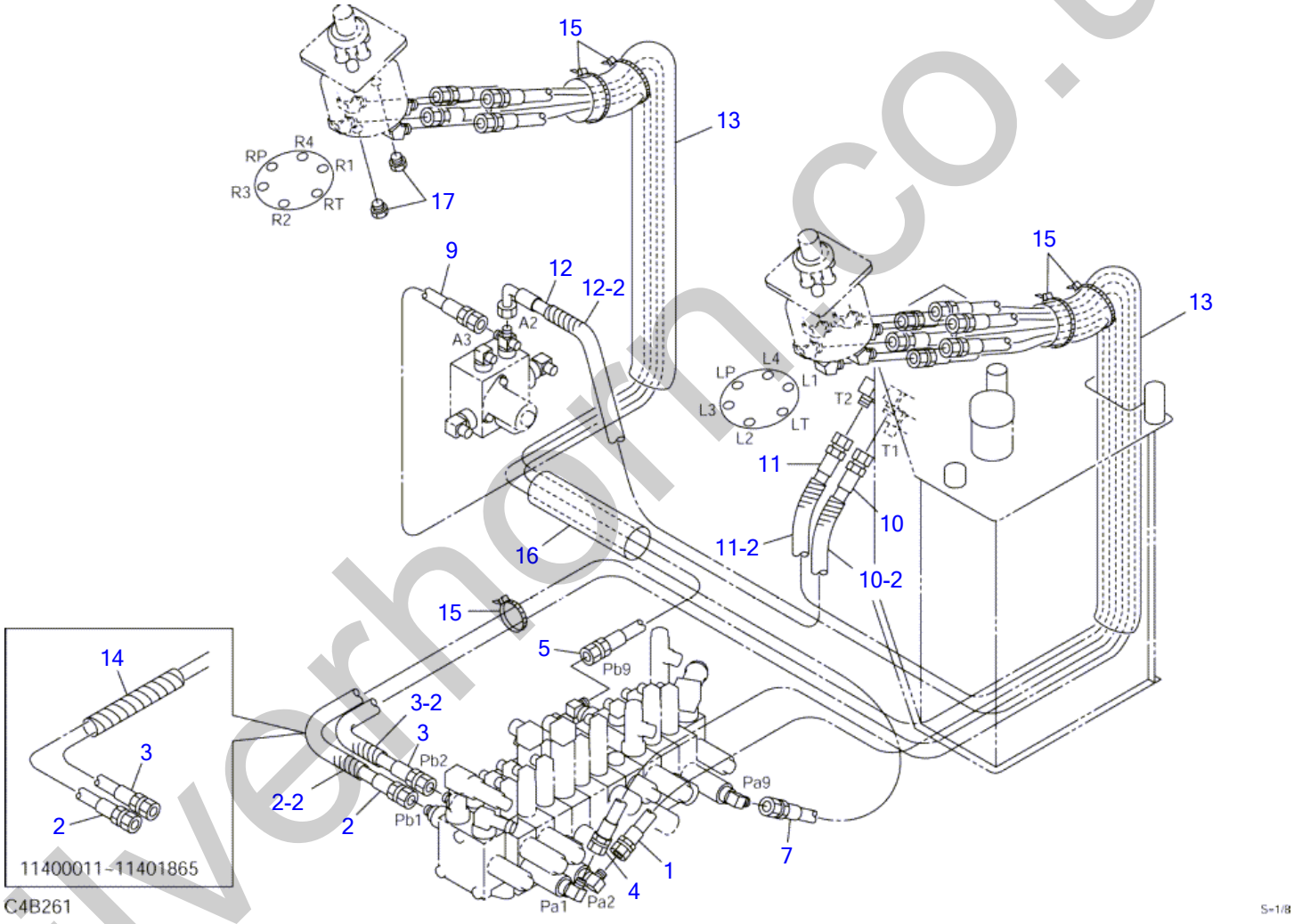

silverhorn.co.uk

PIPING; OPERATION LEVER (for YBM)

Item	Part number	Description	Q'ty	Chan.	Serial No.	Serv.	Remarks
		PIPING ASSY (for YBM)	1				X03371-41000-1
1	0337141010	HOSE ASSY	1				19347-22160
2	0337141020	HOSE ASSY	1				19347-22210
2-2	1532208055	・PROTECTOR	1		11401866~		sold by the meter
3	0337141030	HOSE ASSY	1				19347-22198
3-2	1532208055	・PROTECTOR	1		11401866~		sold by the meter
4	0337141040	HOSE ASSY	1				19347-22168
5	0337141050	HOSE ASSY	1				19347-22178
7	0337141070	HOSE ASSY	1				19347-22196
9	0337131140	HOSE ASSY	1				19348-22110
10	0337131150	HOSE ASSY	1				19348-22144
10-2	1532208015	・PROTECTOR	1				sold by the meter
11	0337131160	HOSE ASSY	1				19348-22185
11-2	1532208015	・PROTECTOR	1				sold by the meter
12	0337131170	HOSE ASSY	1				19348-52185
12-2	1532208025	・PROTECTOR	1				sold by the meter
13	1531645087	PROTECTOR	2				sold by the meter
14	1532218015	PROTECTOR	1		11400011~11401865		sold by the meter
15	1652200007	BAND	5			M	
16	1531335025	PROTECTOR	1				sold by the meter
17	1501750002	PLUG	2				
	1420010110	・O-RING	1			M	
	C4b261						

silverhorn.co.kr

ENGINE & ACCESSORIES (1/2) (11400003-11400010)

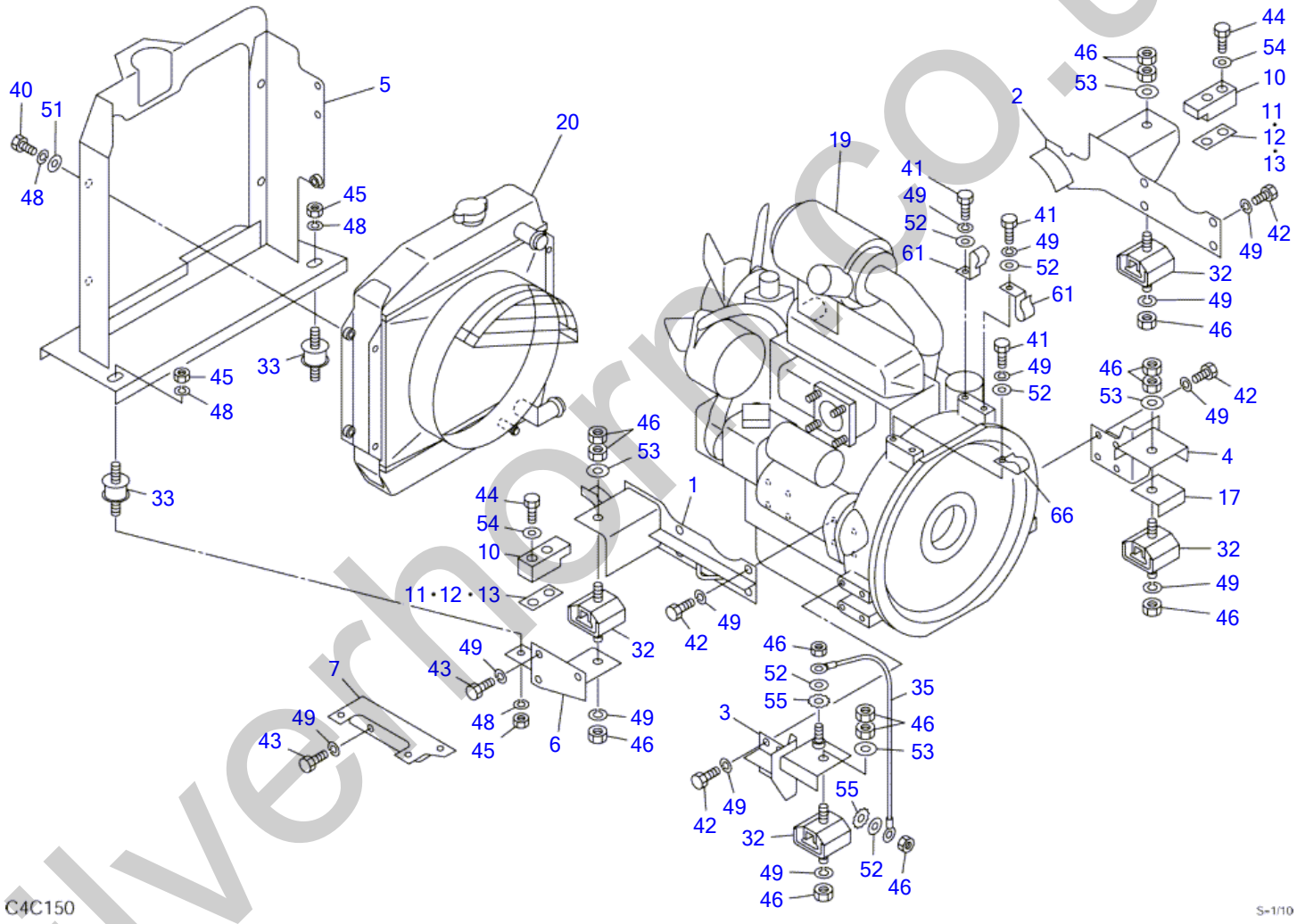

silverhorncs.uk

ENGINE & ACCESSORIES (1/2) (11400003-11400010)

Item	Part number	Description	Q'ty	Chan.	Serial No.	Serv.	Remarks
		ENGINE ASSY					X03340-17000
1	0334017100	FOOT, engine (F.L.)	1				
2	0334017200	FOOT, engine (F.R.)	1				
3	0334017300	FOOT, engine (R.L.)	1				
4	0334017400	FOOT, engine (R.R.)	1				
5	0334017500	BRACKET	1				
6	0334017600	MOUNT	1				
7	0334017700	BRACKET	1				
10	0424003600	STOPPER	2				
11	0424003610	SHIM t=1.6	AR				
12	0424003620	SHIM t=2.3	AR				
13	0424003630	SHIM t=0.8	AR				
17	0334017930	COVER	1				
19	1910127001	ENGINE	1				3TNE68-NTB
20	1910096002	RADIATOR	1				Y119632-44520
32	1651081361	RUBBER, cushion	4				
33	1651014003	RUBBER, cushion	3				
35	1702430280	CABLE, earth	1				
40	1100040825	BOLT	4				
41	1100041016	BOLT	3				
42	1100041020	BOLT	16				
43	1100041025	BOLT	5				
44	1101041240	BOLT	4				
45	1130040008	NUT	4				
46	1130040010	NUT	14				
48	1140020008	WASHER, spring	8				
49	1140020010	WASHER, spring	28				
51	1141110008	WASHER	4				
52	1141110010	WASHER	5				
53	1141550010	WASHER	4				
54	1141550012	WASHER	4				
55	1140330010	WASHER	2				
61	0007300036	CLAMP	2				
66	0007300035	CLAMP	1				
	C4c151						

silverhorn.co.uk

ENGINE & ACCESSORIES (2/2) (11400003-11400010)

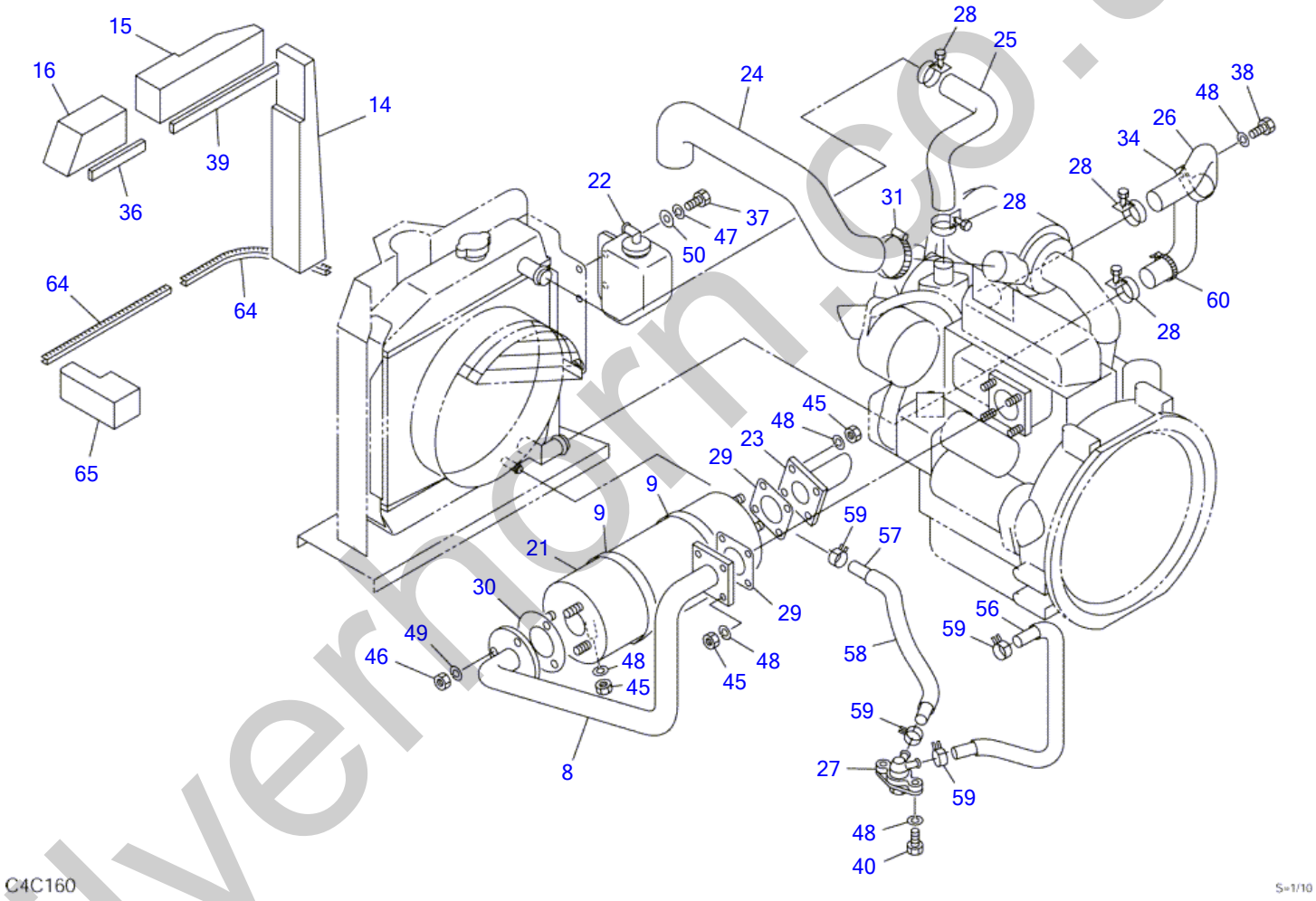

silverhorn.co.uk

ENGINE & ACCESSORIES (2/2) (11400003-11400010)

Item	Part number	Description	Q'ty	Chan.	Serv.	Remarks
		ENGINE ASSY				X03340-17000
8	0334017800	PIPE	1			
9	0064017000	BAND	2			
14	0334017900	URETHANE	1			
15	0334017910	URETHANE	1			
16	0334017920	URETHANE	1			
21	1910096005	SILENCER	1			Y119232-13500
22	1910056020	TANK	1			Y121468-44510
23	1910127024	PIPE, exhaust	1			Y119266-13580
24	1910116013	PIPE, air intake	1			Y119233-12210
25	1910056024	HOSE	1			Y119688-49010
26	1910065012	HOSE	1			Y119632-49020
27	1910065037	PLUG, drain	1			Y121450-49110
28	1910006013	BAND	4			Y23010-038000
29	1910051022	GASKET	2			Y124701-11911
30	1910006015	GASKET	1			Y103954-13200
31	1910116047	CLIP	1			Y23000-054000
34	0007300030	CLAMP	1			
36	1654331011	SPONGE	1			sold by the meter
37	1100040616	BOLT	2			
38	1100040816	BOLT	1			
39	1654331022	SPONGE	1			sold by the meter
40	1100040825	BOLT	2			
45	1130040008	NUT	10			
46	1130040010	NUT	3			
47	1140020006	WASHER, spring	2			
48	1140020008	WASHER, spring	15			
49	1140020010	WASHER, spring	3			
50	1141110006	WASHER	2			
56	1531407055	HOSE	1			sold by the meter
57	1531407050	TUBE	1			sold by the meter
58	1531115040	HOSE	1			sold by the meter
59	1533120011	BAND	4			
60	1652241300	BAND	1			
64	1654607028	SEAL	2			sold by the meter
65	0334017940	ABSORBENT, noise	1			
	C4c161					

silverhorn.co.uk

ENGINE & ACCESSORIES (1/2) (11400011-)

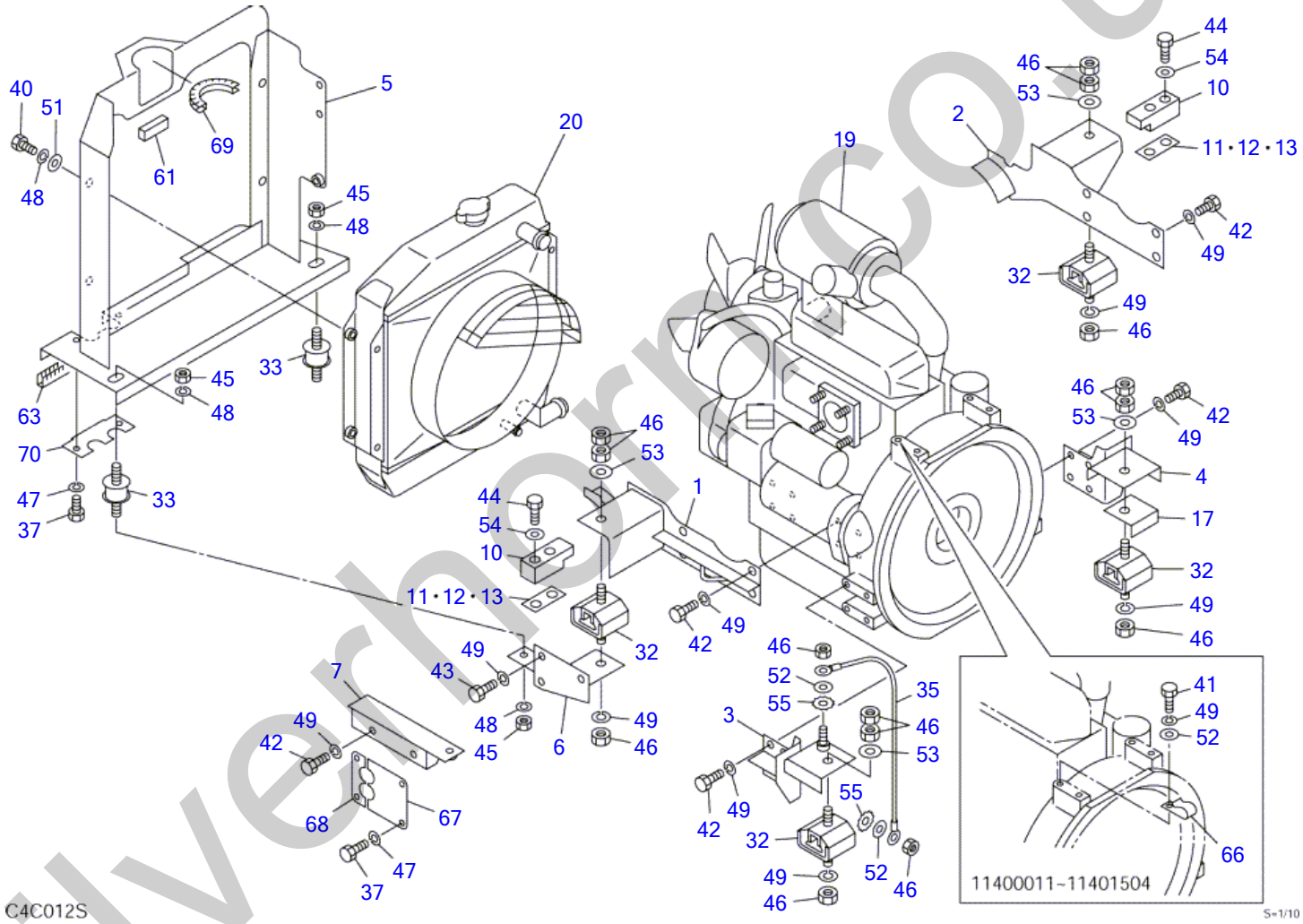

silverhorn.co.uk

ENGINE & ACCESSORIES (1/2) (11400011-)

Item	Part number	Description	Q'ty	Chan.	Serial No.	Serv.	Remarks
		ENGINE ASSY					X03340-20000-9
1	0334019400	FOOT, engine (F.L.)	1				
2	0334019500	FOOT, engine (F.R.)	1				
3	0334017300	FOOT, engine (R.L.)	1				
4	0334017400	FOOT, engine (R.R.)	1				
5	0334019100	BRACKET	1				
6	0334017600	MOUNT	1				
7	0334019200	BRACKET	1				
10	0424003600	STOPPER	2				
11	0424003610	SHIM	2				
12	0424003620	SHIM	2				
13	0424003630	SHIM	2				
17	0334017930	COVER	1				
19	1910127001	ENGINE	1		11400011~11400022		3TNE68-NTB
	1910133001	ENGINE	1		11400023~11400460		3TNE68-TB1
	1910149001	ENGINE	1	(H)	11400461~		3TNE68-ETB1
20	1910096002	RADIATOR	1				Y119632-44520
32	1651081361	RUBBER, cushion	4				
33	1651014003	RUBBER, cushion	3				
35	1702430280	CABLE, earth	1				
37	1100040616	BOLT	6				
40	1100040825	BOLT	4				
41	1100041016	BOLT	1		11400011~11401504		
42	1100041020	BOLT	18				
43	1100041025	BOLT	3				
44	1101041240	BOLT	4				
45	1130040008	NUT	4				
46	1130040010	NUT	14				
47	1140020006	WASHER, spring	6				
48	1140020008	WASHER, spring	8				
49	1140020010	WASHER, spring	25				
51	1141110008	WASHER	4				
52	1141110010	WASHER	2				
53	1141550010	WASHER	4				
54	1141550012	WASHER	4				
55	1140330010	WASHER	2				
61	1654307005	SPONGE	1				sold by the meter
63	1654607032	SEAL	1				sold by the meter
66	0007300035	CLAMP	1		11400011~11401504		
67	0334019340	PLATE	1				
68	0334019350	PLATE	1				
69	1653916008	TRIM	1				sold by the meter
70	0334019370	PLATE	1				
	C4c014S						

silverhorn.co.uk

ENGINE & ACCESSORIES (2/2) (11400011-)

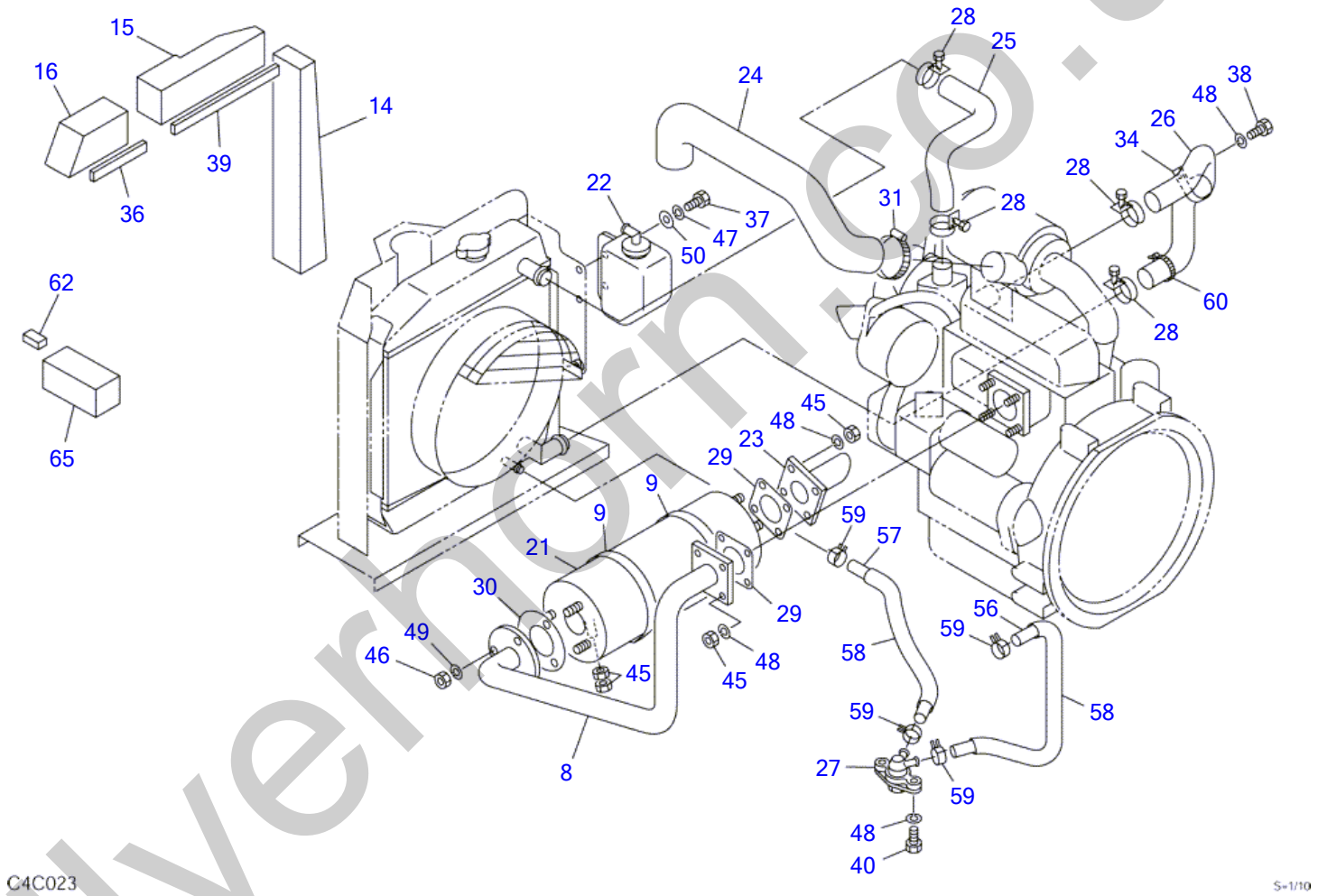

silverhorn.co.uk

ENGINE & ACCESSORIES (2/2) (11400011-)

Item	Part number	Description	Q'ty	Chan.	Serial No.	Serv.	Remarks
		ENGINE ASSY					X03340-20000-9
8	0334017800	PIPE	1				
9	0064017000	BAND	2				
14	0334019300	URETHANE	1				
15	0334019310	URETHANE	1				
16	0334019320	URETHANE	1				
21	1910096005	SILENCER	1				Y119232-13500
22	1910056020	TANK	1				Y121468-44510
23	1910127024	PIPE, exhaust	1		11400011~11400376		Y119266-13580
	0334020100	PIPE, exhaust	1	(H)	11400377~		
24	1910116013	PIPE, air intake	1				Y119233-12210
25	1910056024	HOSE	1		11400011~11400941		Y119688-49010
	1910137011	HOSE	1	(H)	11400942~		Y119233-49030
26	1910065012	HOSE	1				Y119632-49020
27	1910065037	PLUG, drain	1				Y121450-49110
28	1910006013	BAND	4				Y23010-038000
29	1910051022	GASKET	2				Y124701-11911
30	1910006015	GASKET	1				Y103954-13200
31	1910116047	CLIP	1				Y23000-054000
34	0007300030	CLAMP	1				
36	1654331011	SPONGE	1				sold by the meter
37	1100040616	BOLT	8				
38	1100040816	BOLT	1				
39	1654331022	SPONGE	1				sold by the meter
40	1100040825	BOLT	6				
45	1130040008	NUT	9				
46	1130040010	NUT	18				
47	1140020006	WASHER, spring	8				
48	1140020008	WASHER, spring	20				
49	1140020010	WASHER, spring	38				
50	1141110006	WASHER	2				
56	1530808035	HOSE	1			M	sold by the meter
57	1530808036	TUBE	1			M	sold by the meter
58	1531115027	PROTECTOR	2				sold by the meter
59	1533120512	BAND	4			M	
60	1652241300	BAND	1				
62	1654309003	SPONGE	1				sold by the meter
65	0334019330	URETHANE	1				
	C4c024S						

silverhorn.co.uk

AIR CLEANER (for double element)

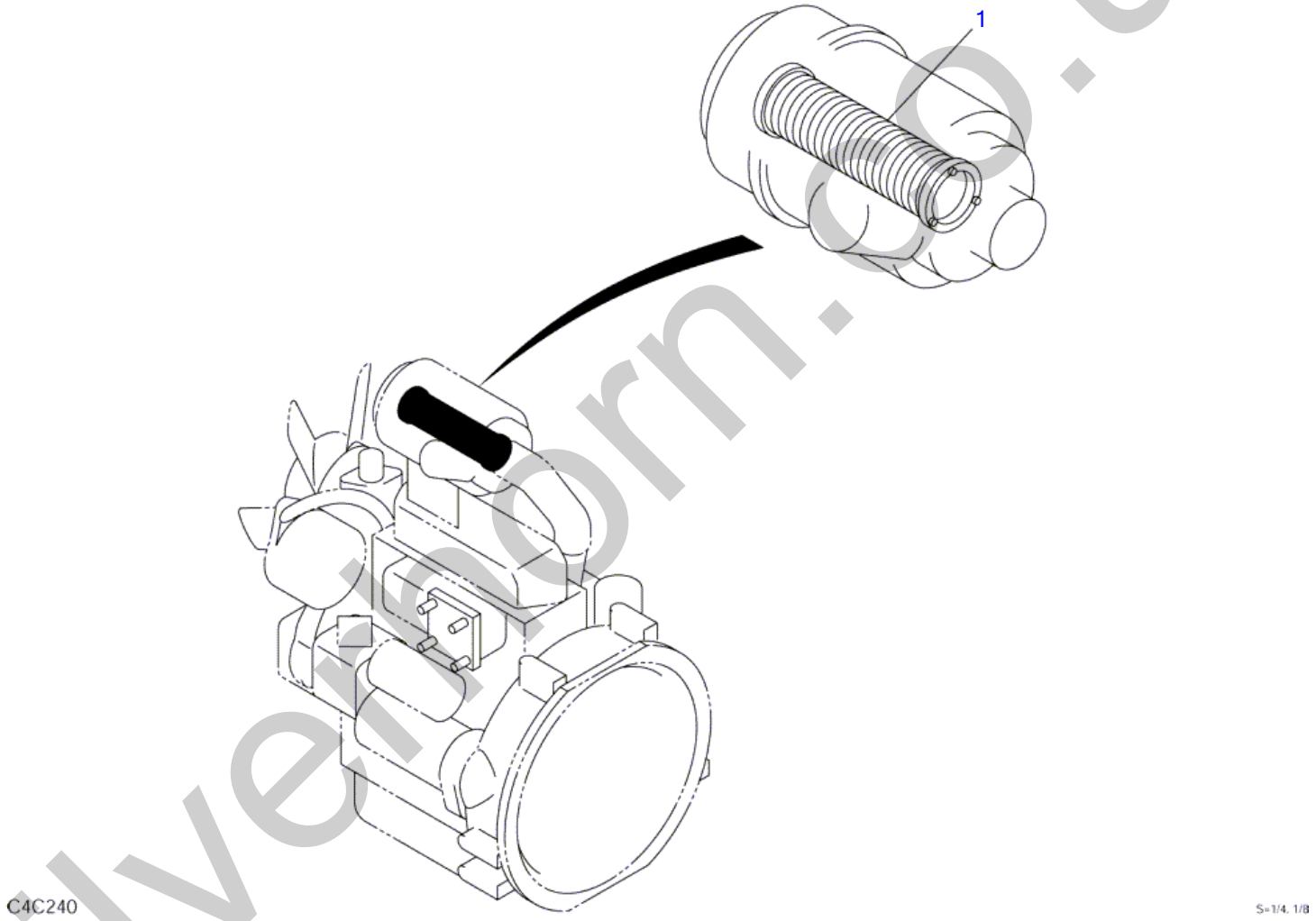

silvernorn.co.uk

AIR CLEANER (for double element)

Item	Part number	Description	Q'ty	Chan.	Serial No.	Serv.	Remarks
1	**1911101342 C4c240**	CLEANER ASSY, air ELEMENT	1				X03340-22000-0 ÄÞÅÙÄÞ¿Ý P53-5396

silverhorn.co.uk

DRAIN PLUG (for EU)

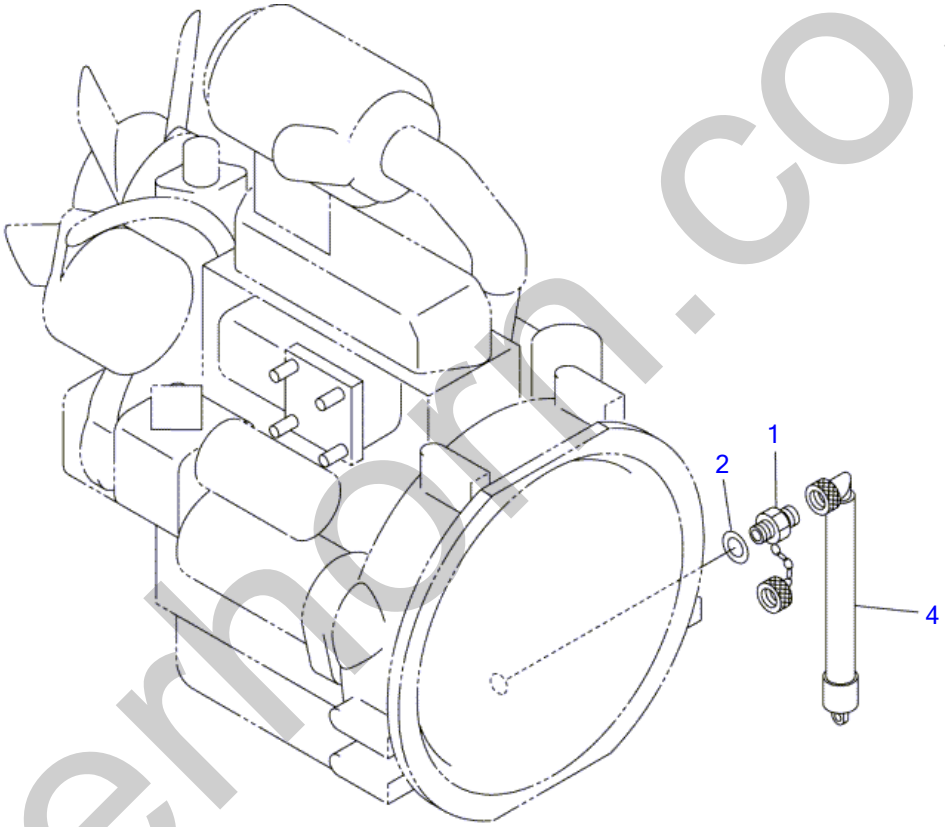

C4C030

S=1/6

silverhorn.co.uk

DRAIN PLUG (for EU)

Item	Part number	Description	Q'ty	Chan.	Serial No.	Serv.	Remarks
		PLUG ASSY, drain					X03240-16000-1
1	**1554502250**	PLUG	1		11400003~11400022		
	1554501650	PLUG	1		11400023~		
2	**1541400522**	WASHER	1		11400003~11400022		
	1541400516	WASHER	1		11400023~		
4	**1554512601**	TUBE	1		11400003~11400022		
	1554512201	TUBE	1		11400023~		
	C4c031S						

silverhorn.co.uk

CONTROL BOX; R.H.

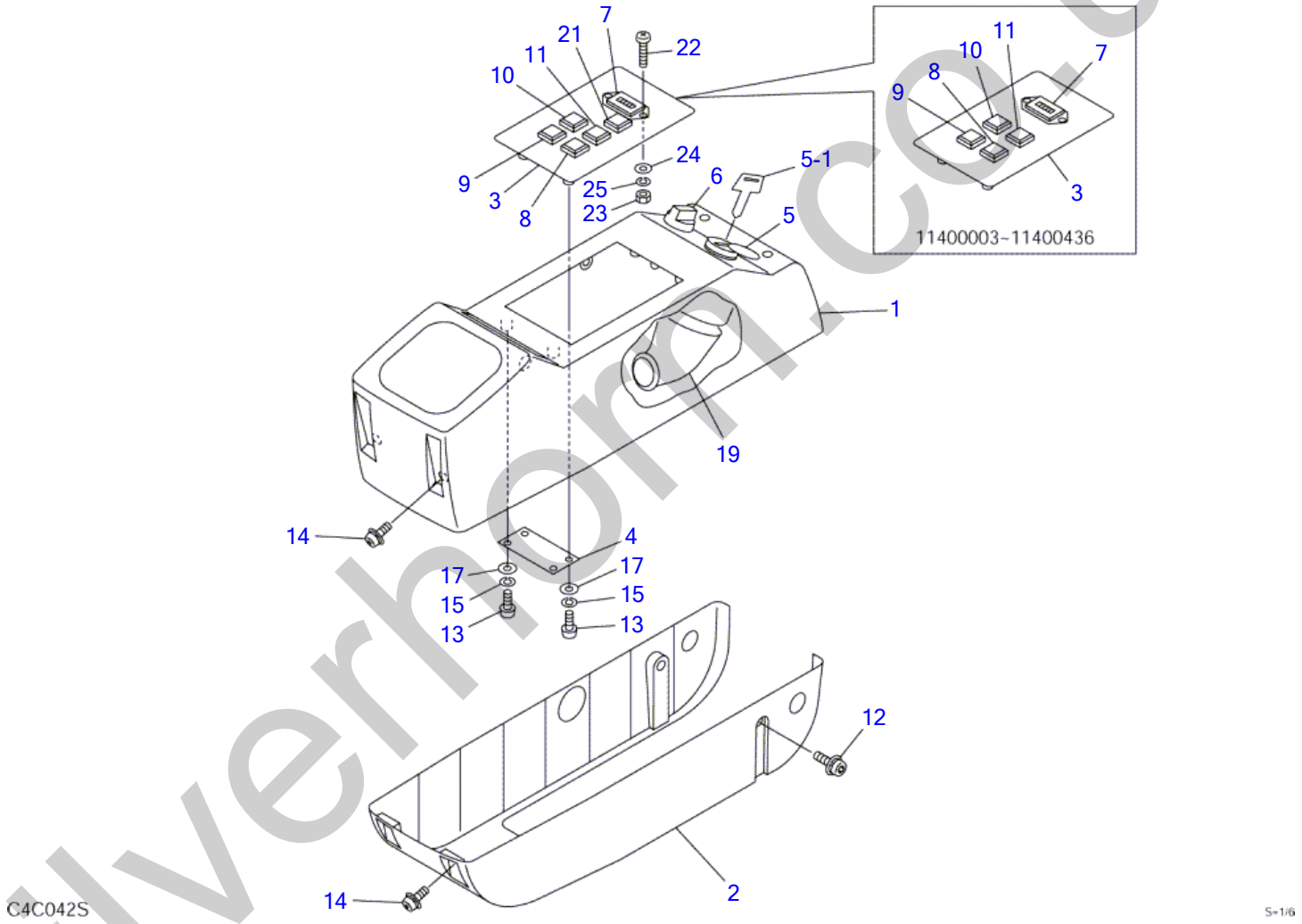

silverhorn.co.uk

CONTROL BOX; R.H.

Item	Part number	Description	Q'ty	Chan.	Serial No.	Serv.	Remarks
		BOX ASSY, control (R.H.)					X03343-30000-4
1	0334326150	COVER (R.H.)	1				
2	0334326250	COVER (R.H.)	1				
3	0334326600	PANEL	1		11400003~11400436		
	0334326610	PANEL	1		11400437~		
4	0334326700	STAY	2				
5	1700100023	SWITCH, starter	1	(L)	11400003~11401079		
	1700100052	SWITCH, starter	1	(H)	11401080~		
5-1	1700100019	KEY	1				
6	1700000010	SWITCH, lamp	1				
7	1730000500	METER, hour	1				
8	1700550002	LAMP, charge	1				
9	1700550003	LAMP, oil	1				
10	1700550020	LAMP, pilot	1				
11	1700550021	LAMP, pilot	1				
12	1110540614	SCREW, cap	2				
13	1120530410	SCREW	8				
14	1150410614	SCREW	6				
15	1140020004	WASHER, spring	8				
17	1141110004	WASHER	8				
19	0870431821	COVER	1				
21	1700550022	LAMP, pilot	1		11400437~		
22	1120530312	SCREW	2				
23	1130030003	NUT	2				
24	1141110003	WASHER	2				
25	1140020003	WASHER, spring	2				
	C4c043S						

silverhorn.co.uk

CONTROL BOX; L.H.

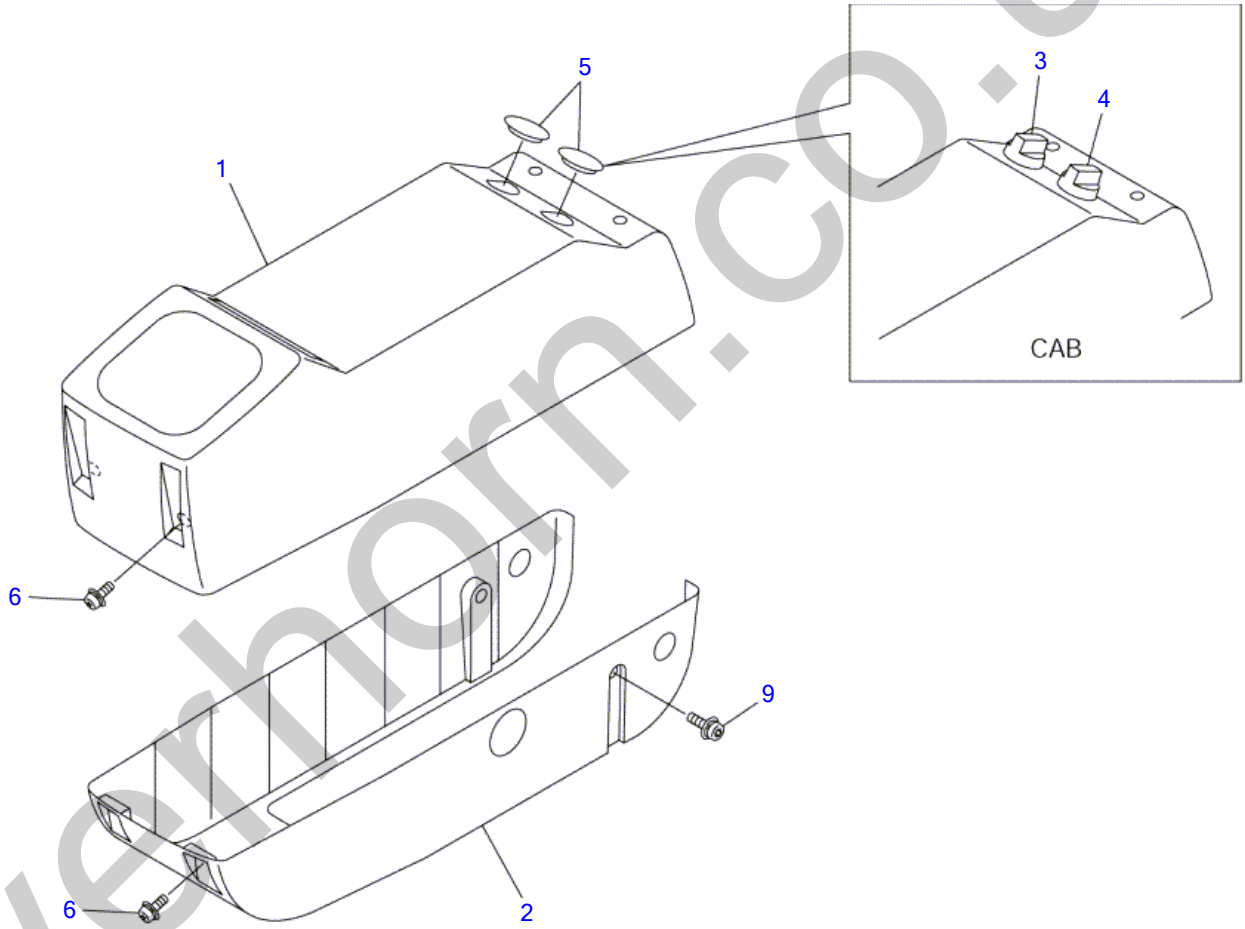

C4C052

S=1/6

silverhorn.co.uk

CONTROL BOX; L.H.

Item	Part number	Description	Q'ty	Chan.	Serial No.	Serv.	Remarks
		BOX ASSY, control (L.H.) (cab)					X03343-27000-4
		BOX ASSY, control (L.H.) (canopy)					X03343-27500-4
1	0334327150	COVER (L.H.)	1				
2	0334327250	COVER (L.H.)	1				
3	1704300007	SWITCH, wiper	1				cab
4	1700000011	SWITCH, heater	1				cab
5	1652533019	CAP	2				canopy
6	1150410614	SCREW	8				
9	1110540614	SCREW, cap	2				
	C4c052						

silverhorn.co.uk

ENGINE CONTROL (11400003-11400010)

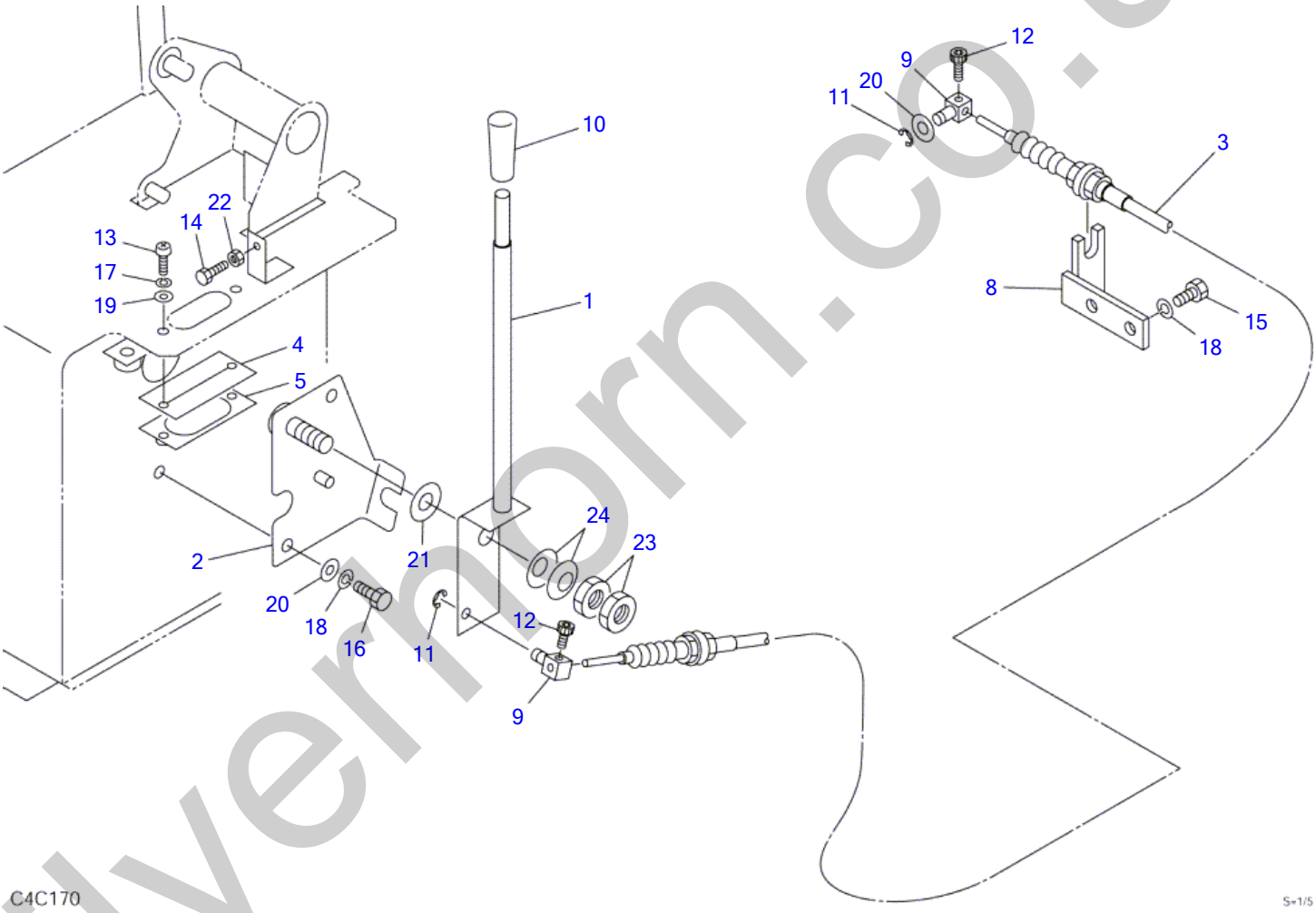

silvermorn.co.uk

ENGINE CONTROL (11400003-11400010)

Item	Part number	Description	Q'ty	Chan.	Serial No.	Serv.	Remarks
		CONTROL ASSY, engine					X03341-16000
1	0334116100	LEVER	1				
2	0334116200	BRACKET	1				
3	0334116300	WIRE	1				
4	0334116400	SEAL	1				
5	0334116500	COVER	1				
8	0334112300	BRACKET	1				
9	0007900016	PIN	2				
10	1650132050	GRIP	1				
11	1224010006	E-RING	2				
12	1110040510	SCREW, cap	2				
13	1120530514	SCREW	2				
14	1100240625	BOLT	1				
15	1100040816	BOLT	2				
16	1100040820	BOLT	2				
17	1140020005	WASHER, spring	2				
18	1140020008	WASHER	4				
19	1141110005	WASHER	2				
20	1141110008	WASHER	3				
21	1141540014	WASHER	1				
22	1130040006	NUT	1				
23	1130640014	NUT	2				
24	1225110014	WASHER, conical	2				
	C4c171						

silverhorn.co.uk

ENGINE CONTROL (11400011-11400016)

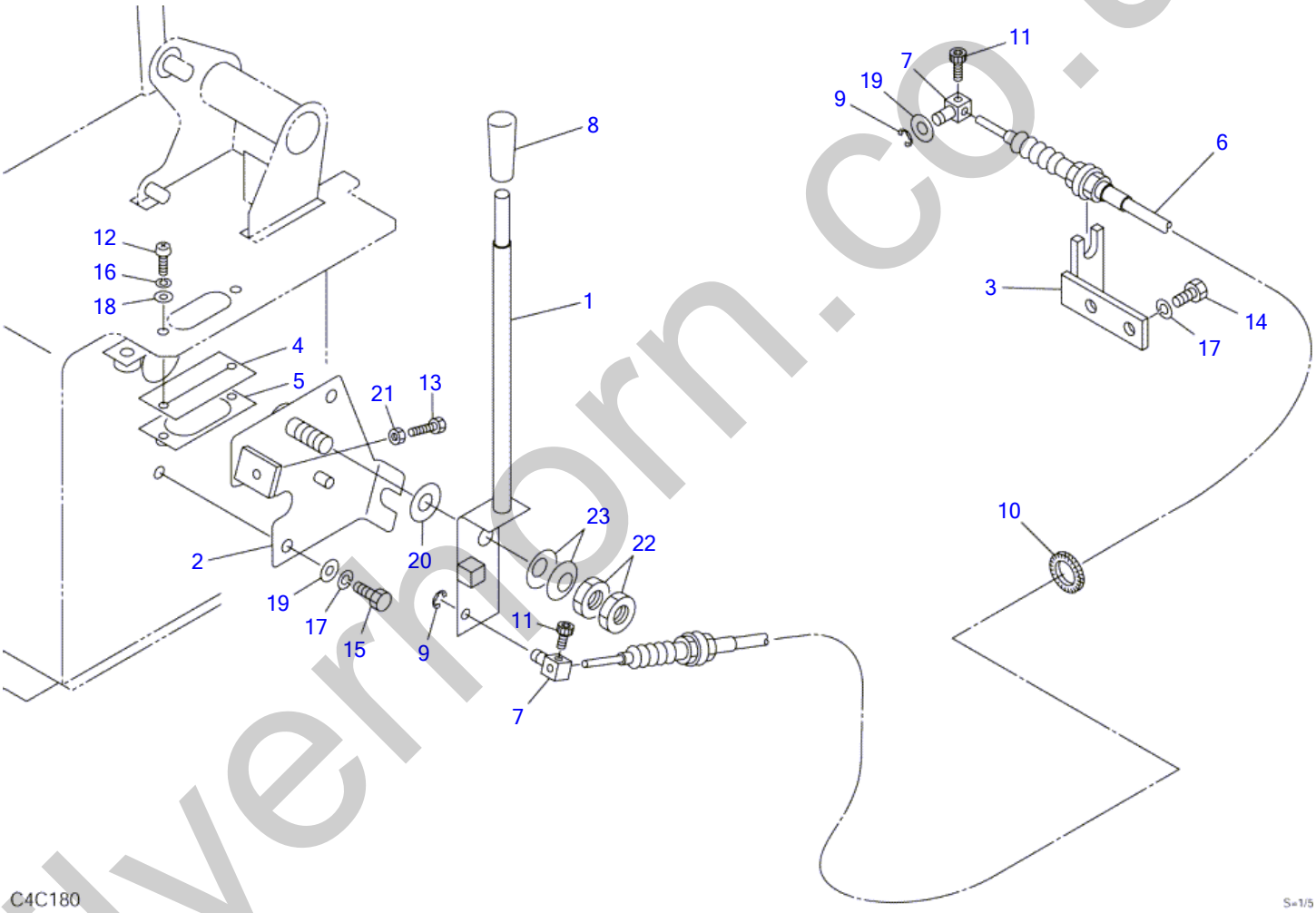

silverthorn.co.uk

ENGINE CONTROL (11400011-11400016)

Item	Part number	Description	Q'ty	Chan.	Serial No.	Serv.	Remarks
		CONTROL ASSY, engine	1				X03341-19000-0
1	0334119100	LEVER	1				
2	0334119200	BRACKET	1				
3	0334119300	BRACKET	1				
4	0334119400	RUBBER	1				
5	0334119500	COVER	1				
6	0334116300	WIRE	1				
7	0007900016	PIN	2				
8	1650132050	GRIP	1				
9	1224010006	E-RING	2				
10	1652606201	BUSHING	1				
11	1110040510	SCREW, cap	2				
12	1120530514	SCREW	2				
13	1100240640	BOLT	1				
14	1100040816	BOLT	2				
15	1100040820	BOLT	2				
16	1140020005	WASHER, spring	2				
17	1140020008	WASHER, spring	4				
18	1141110005	WASHER	2				
19	1141110008	WASHER	3				
20	1141540014	WASHER	1				
21	1130040006	NUT	1				
22	1130640014	NUT	2				
23	1225110014	WASHER, conical	2				
	C4c181						

silverhorn.co.uk

ENGINE CONTROL (11400017-)

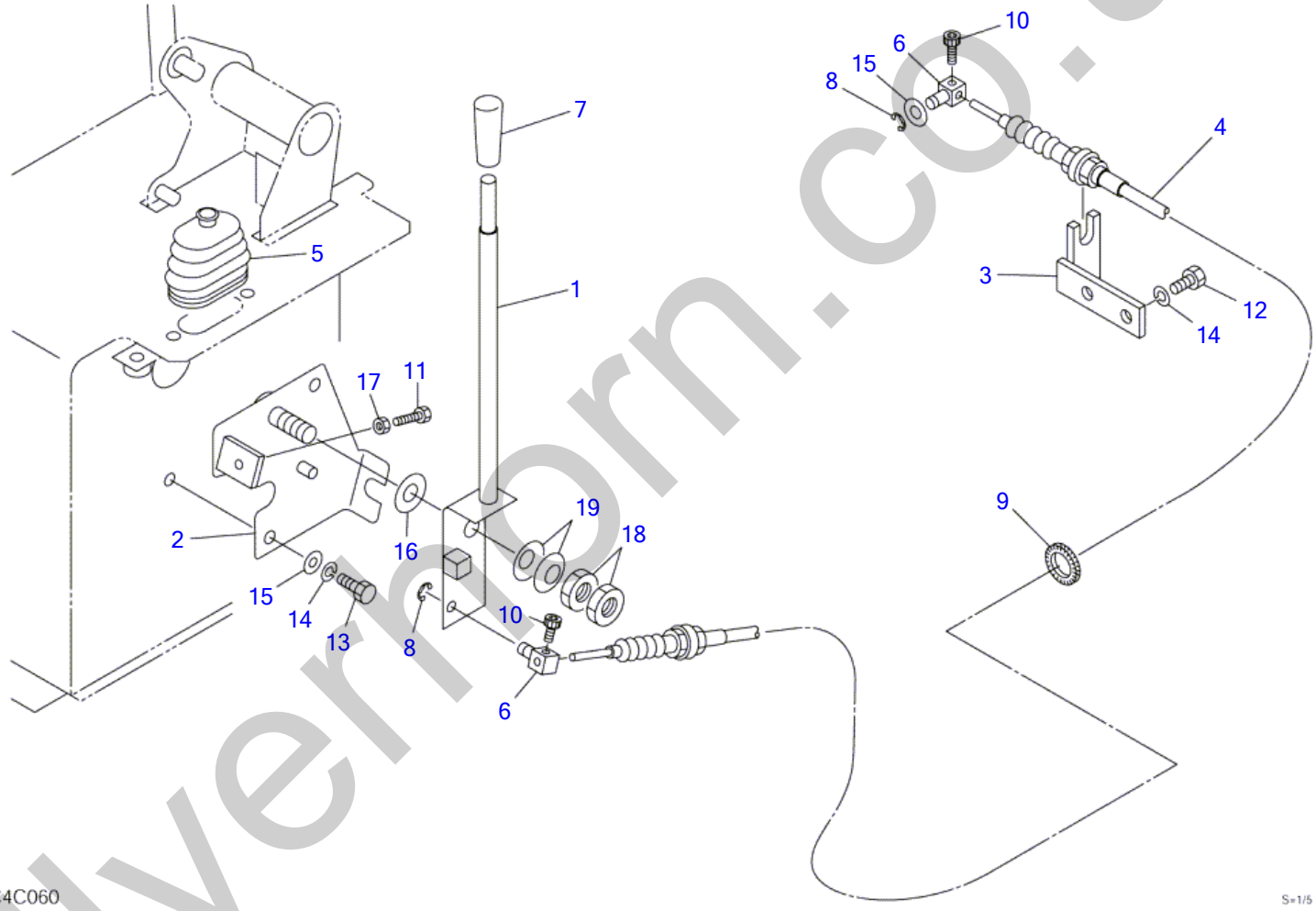

silverhorn.co.uk

ENGINE CONTROL (11400017-)

Item	Part number	Description	Q'ty	Chan.	Serial No.	Serv.	Remarks
		CONTROL ASSY, engine					X03341-20000-2
1	0334119100	LEVER	1				
2	0334119200	BRACKET	1				
3	0334119300	BRACKET	1				
4	0334116300	WIRE	1				
5	0334120100	BOOT	1				
6	0007900016	PIN	2	(L)	11400017~11401091		
	0007900020	PIN	2		11401092~		
7	1650132050	GRIP	1				
8	1224010006	E-RING	2				
9	1652606201	BUSHING	1				
10	1110040510	SCREW, cap	2				
11	1100240640	BOLT	1				
12	1100040816	BOLT	2				
13	1100040820	BOLT	2				
14	1140020008	WASHER, spring	4				
15	1141110008	WASHER	3				
16	1141540014	WASHER	1				
17	1130040006	NUT	1				
18	1130640014	NUT	2				
19	1225110014	WASHER, conical	2				
	C4c062S						

silverhorn.co.uk

ELECTRICAL (1/2) (11400003-11400010)

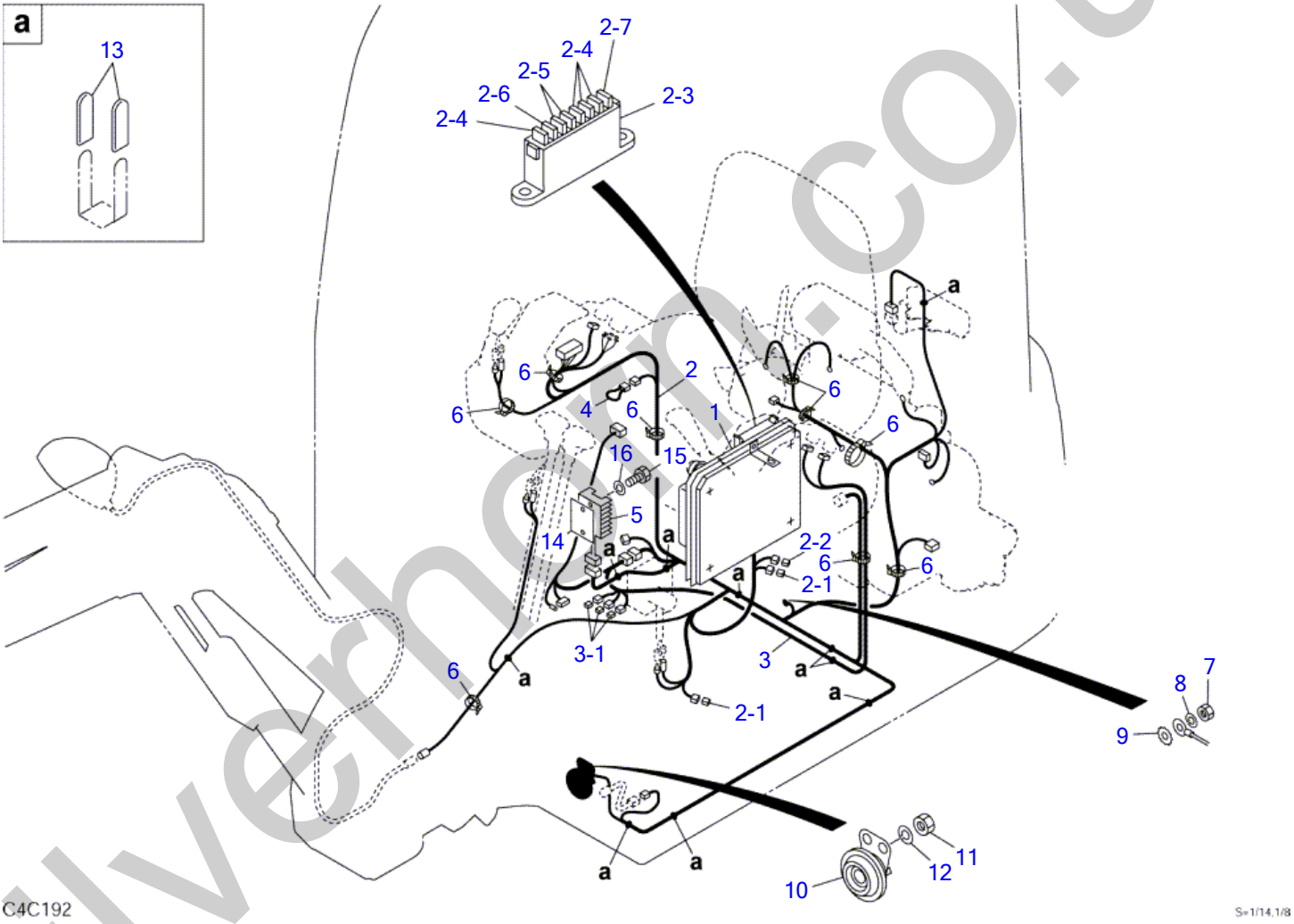

silverhorn.co.uk

ELECTRICAL (1/2) (11400003-11400010)

Item	Part number	Description	Q'ty	Chan.	Serial No.	Serv.	Remarks
		ELECTRICAL ASSY (canopy)					X03342-37000
		ELECTRICAL ASSY (cab)					X03342-38000
1	0334237100	UNIT, control	1				see page (2/2)
2	0334237200	HARNESS, wiring	1				
2-1	1730500008	・DIODE (3A, yellow)	2				
2-2	1730500017	・DIODE (1A, gray)	1				
2-3	1701203501	・BOX, fuse	1				
2-4	1701310010	・FUSE (10A)	4				
2-5	1701310015	・FUSE (15A)	2				
2-6	1701310025	・FUSE (25A)	1				
2-7	1701310030	・FUSE (30A)	1				
3	0334230300	HARNESS, wiring	1				cab
3-1	1730500008	・DIODE (3A, yellow)	3				cab
4	0334230400	CONNECTOR	1				cab
5	1910127104	LIMITER, current	1				Y119653-77710
6	1652231250	BAND	10				
7	1130040010	NUT	1				
8	1140020010	WASHER, spring	1				
9	1140330010	WASHER	1				
10	1703500612	HORN	1				
11	1130040008	NUT	1				
12	1140020008	WASHER, spring	1				
13	0872433150	CLAMP	16				
14	0334230150	SHEET	1				
15	1100040620	BOLT	2				
16	1140020006	WASHER, spring	2				
	C4c192						

silverhorn.co.uk

ELECTRICAL (2/2) (11400003-11400010)

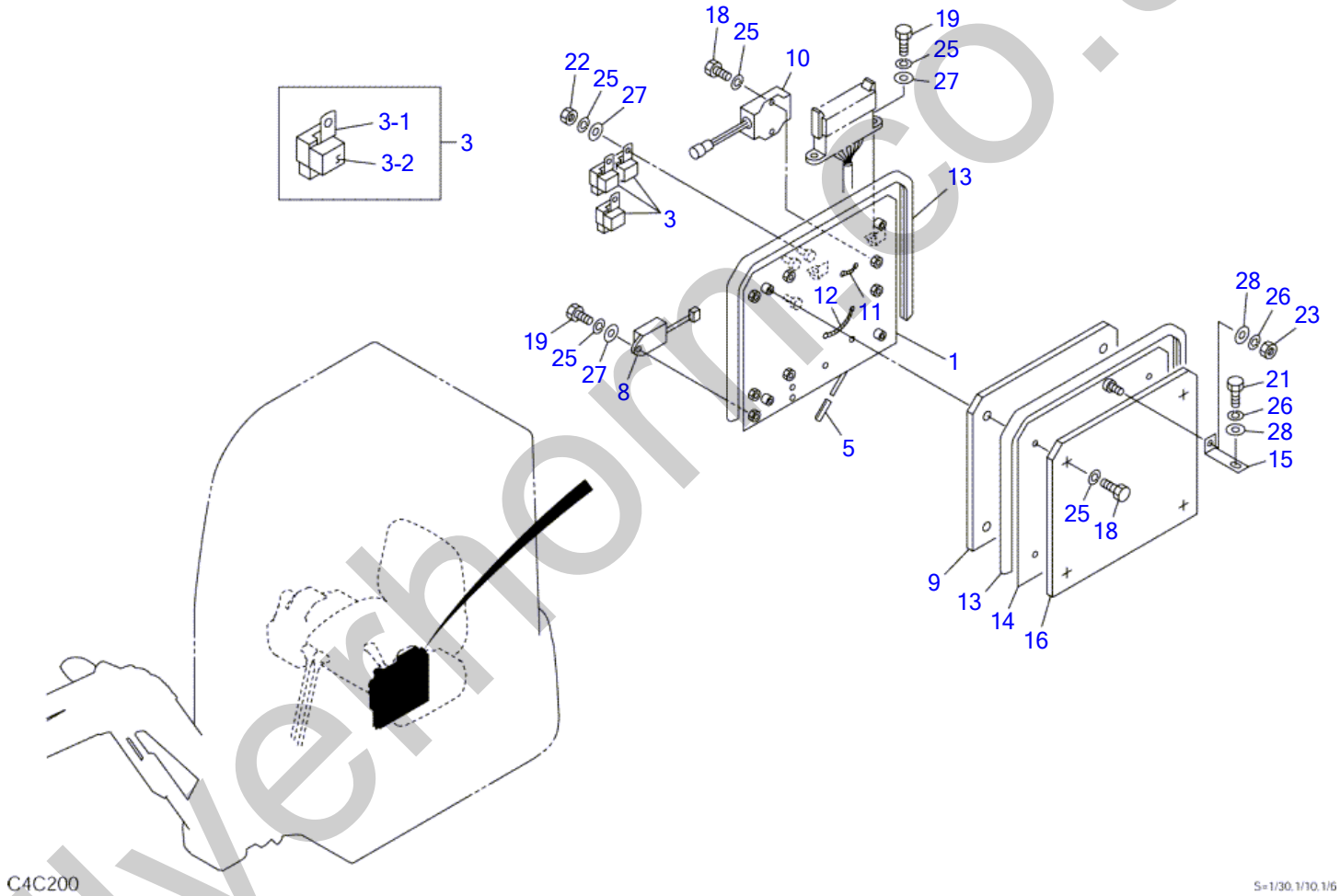

silverhorn.co.uk

ELECTRICAL (2/2) (11400003-11400010)

Item	Part number	Description	Q'ty	Chan.	Serial No.	Serv.	Remarks
0-1	0334237100	UNIT, control	1				
1	0334239110	・PLATE	1				
3	0334230130	・RELAY ASSY	3				
3-1	1711900042	・・RELAY	1				
3-2	1654302003	・・SPONGE	1				sold by the meter
5	0872433150	・CLAMP	2				
8	1910150118	・UNIT, timer	1				Y129211-77920
9	0334239120	・INSULATOR	1				
10	1910056107	・RESISTOR, grow	1				
11	1652231100	・BAND	1				
12	1652231250	・BAND	1				
13	1654613083	・PACKING	2				sold by the meter
14	0334239130	・PLATE	1				
15	0334230160	・BRACKET	1				
16	0334239140	・INSULATOR	1				
18	1100040610	・BOLT	6				
19	1100040616	・BOLT	3				
21	1100040816	・BOLT	1				
22	1130030006	・NUT	3				
23	1130030008	・NUT	1				
25	1140020006	・WASHER, spring	12				
26	1140020008	・WASHER, spring	2				
27	1141110006	・WASHER	6				
28	1141110008	・WASHER	2				
	C4c201						

silverhorn.co.uk

ELECTRICAL (1/2) (11400011-)

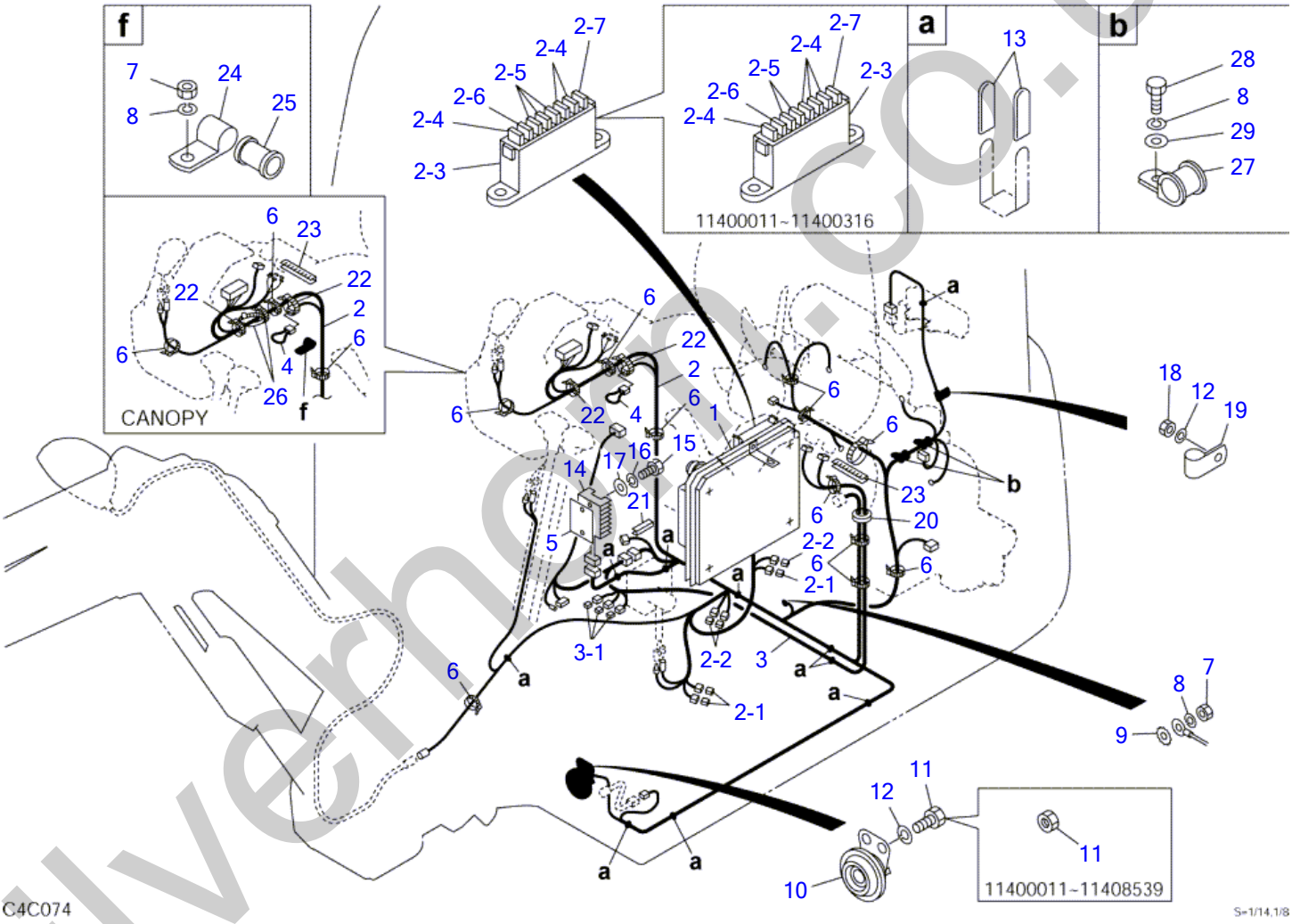

silverhorn.co.uk

ELECTRICAL (1/2) (11400011-)

Item	Part number	Description	Q'ty	Chan.	Serial No.	Serv.	Remarks
		ELECTRICAL ASSY (canopy)					X03342-64000-6
		ELECTRICAL ASSY (cab)					X03342-64500-6
1	0334241100	UNIT, control	1		11400011~11400436		see page (2/2)
	0334264100	UNIT, control	1		11400437~		see page (2/2)
2	0334241200	HARNESS, wiring	1		11400011~11400310		
	0334242100	HARNESS, wiring	1		11400311~11400436		
	0334264200	HARNESS, wiring	1		11400437~		
2-1	1730500008	・DIODE (3A, yellow)	2		11400011~11400436		
	1730500008	・DIODE (3A, yellow)	3		11400437~		
2-2	1730500017	・DIODE (1A, gray)	1		11400011~11400436		
	1730500017	・DIODE (1A, gray)	3		11400437~		
2-3	1701203501	・BOX, fuse	1				
2-4	1701310010	・FUSE (10A)	4		11400011~11400316		
	1701310010	・FUSE (10A)	3		11400317~		
2-5	1701310015	・FUSE (15A)	2		11400011~11400316		
	1701310015	・FUSE (15A)	3		11400317~		
2-6	1701310025	・FUSE (25A)	1				
2-7	1701310030	・FUSE (30A)	1				
3	0334230300	HARNESS, wiring	1		11400011~11400310		cab
	0334242200	HARNESS, wiring	1	(H)	11400311~		cab
3-1	1730500008	・DIODE (3A, yellow)	3				cab
4	0334230400	CONNECTOR	1				cab
5	0334243300	SHEET	1				
6	1652231250	BAND	14				
7	1130040010	NUT	1		11400011~11401055		cab
	1130040010	NUT	2		11401056~		canopy
8	1140020010	WASHER, spring	1		11400011~11401504		
	1140020010	WASHER, spring	3		11401505~		cab
	1140020010	WASHER, spring	4		11401505~		canopy
9	1140330010	WASHER	1				
10	1703500612	HORN	1				
11	1130040008	NUT	1		11400011~11408539		
	1100040816	BOLT	1		11408540~	M	
12	1140020008	WASHER, spring	1				
13	0872433150	CLAMP	16				
14	1910127104	LIMITER, current	1				Y119653-77710
15	1100040620	BOLT	2				
16	1140020006	WASHER, spring	2				
17	1141110006	WASHER	2				
18	1130040008	NUT	1				
19	0007300004	CLAMP	1				
20	0868423862	GROMMET	1				
21	1653916005	TRIM (canopy)	1				sold by the meter
22	1652201005	BAND	2				
23	1653917009	TRIM (canopy)	2				sold by the meter
	1653917009	TRIM (cab)	1				sold by the meter
24	0007300001	CLAMP	1		11401044~		canopy
25	0868423862	GROMMET	1		11401044~		canopy
26	1652241400	BAND	2		11401109~		canopy
27	1711900076	CLAMP	2		11401505~		
28	1100041016	BOLT	2		11401505~		
29	1141110010	WASHER	2		11401505~		
	C4c074						

silverthorn.co.uk

ELECTRICAL (2/2) (11400011-)

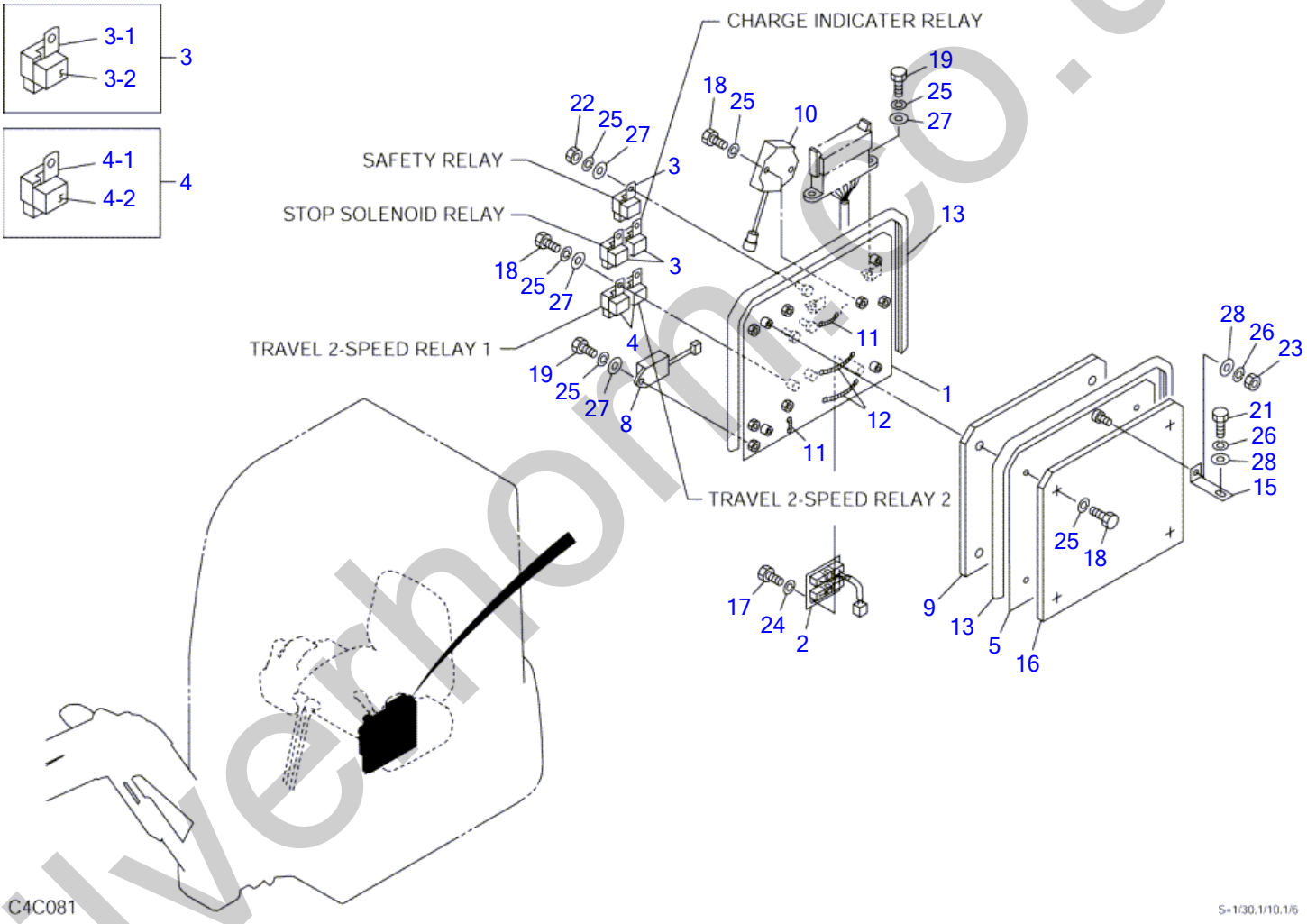

silverhome.co.uk

ELECTRICAL (2/2) (11400011-)

Item	Part number	Description	Q'ty	Chan.	Serial No.	Serv.	Remarks
0-1	0334241100	UNIT, control	1		11400011~11400436		
	0334264100	UNIT, control	1		11400437~		
1	0334243110	・PLATE	1				
2	0334230120	・RESISTOR	1		11400437~		
3	0334230130	・RELAY ASSY	3				
3-1	1711900042	・・RELAY	1				
3-2	1654302003	・・SPONGE	1				sold by the meter
4	0334230140	・RELAY ASSY	2		11400437~		
4-1	1711900042	・・RELAY	1		11400437~		
4-2	1654304003	・・SPONGE	1		11400437~		sold by the meter
5	0334243120	・PLATE	1		11400011~11400424		
	0334243130	・PLATE	1		11400425~		
8	1910150118	・UNIT, timer	1				Y129211-77920
9	0334239120	・INSULATOR	1				
10	1910056107	・RESISTOR, grow	1				Y129155-77810
11	1652231100	・BAND	2				
12	1652231250	・BAND	2				
13	1654613083	・PACKING	2				sold by the meter
15	0334230160	・BRACKET	1				
16	0334239140	・INSULATOR	1				
17	1100040510	・BOLT	2		11400437~		
18	1100040610	・BOLT	6		11400011~11400436		
	1100040610	・BOLT	8		11400437~		
19	1100040616	・BOLT	3				
21	1100040816	・BOLT	1				
22	1130030006	・NUT	3				
23	1130030008	・NUT	1				
24	1140020005	・WASHER, spring	2		11400437~		
25	1140020006	・WASHER, spring	12		11400011~11400436		
	1140020006	・WASHER, spring	14		11400437~		
26	1140020008	・WASHER, spring	2				
27	1141110006	・WASHER	6		11400011~11400436		
	1141110006	・WASHER	8		11400437~		
28	1141110008	・WASHER	2				
	C4c083						

silverhorn.co.uk

TRAVEL ALARM

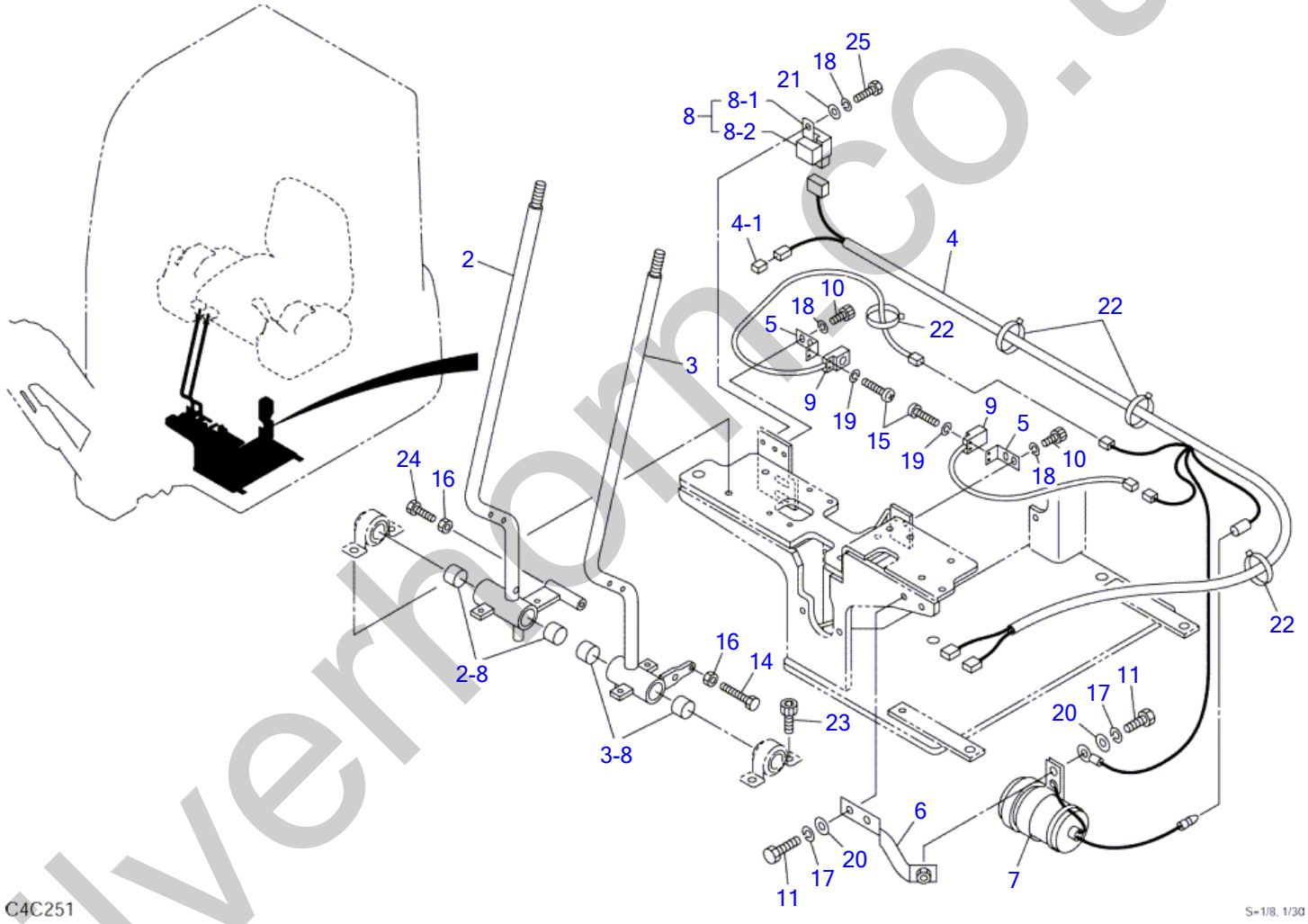

silverthorn.co.uk

TRAVEL ALARM

Item	Part number	Description	Q'ty	Chan.	Serial No.	Serv.	Remarks
		ALARM ASSY, travel					X03342-42500-5
2	0334242600	LEVER (R.H.)	1				
2-8	1333002015	・BUSHING	2				
3	0334242650	LEVER (L.H.)	1				
3-8	1333002015	・BUSHING	2				
4	0334242520	HARNESS, wiring	1				
4-1	1730500008	・DIODE (3A, yellow)	1				
5	0334242530	BRACKET	2				
6	0334233020	BRACKET	1				
7	0354211050	BUZZER	1				
8	0334242540	RELAY ASSY	1				
8-1	1711900042	・RELAY	1				
8-2	1654301003	・SPONGE	1				sold by the meter
9	1700009010	SWITCH	2				
10	1110040612	SCREW, cap	4				
11	1100040820	BOLT	3				
14	1100040625	BOLT	1				
15	1120530314	SCREW	4				
16	1130040006	NUT	2				
17	1140020008	WASHER, spring	3				
18	1140020006	WASHER, spring	5				
19	1140020003	WASHER, spring	4				
20	1141110008	WASHER	3				
21	1141110006	WASHER	5				
22	1652231250	BAND	4				
23	1110040820	SCREW, cap	1				
24	1100040620	BOLT	1				
25	1100040612	BOLT	1				
	C4c251S						

silverhorn.co.uk

GENERATOR (for 35A)

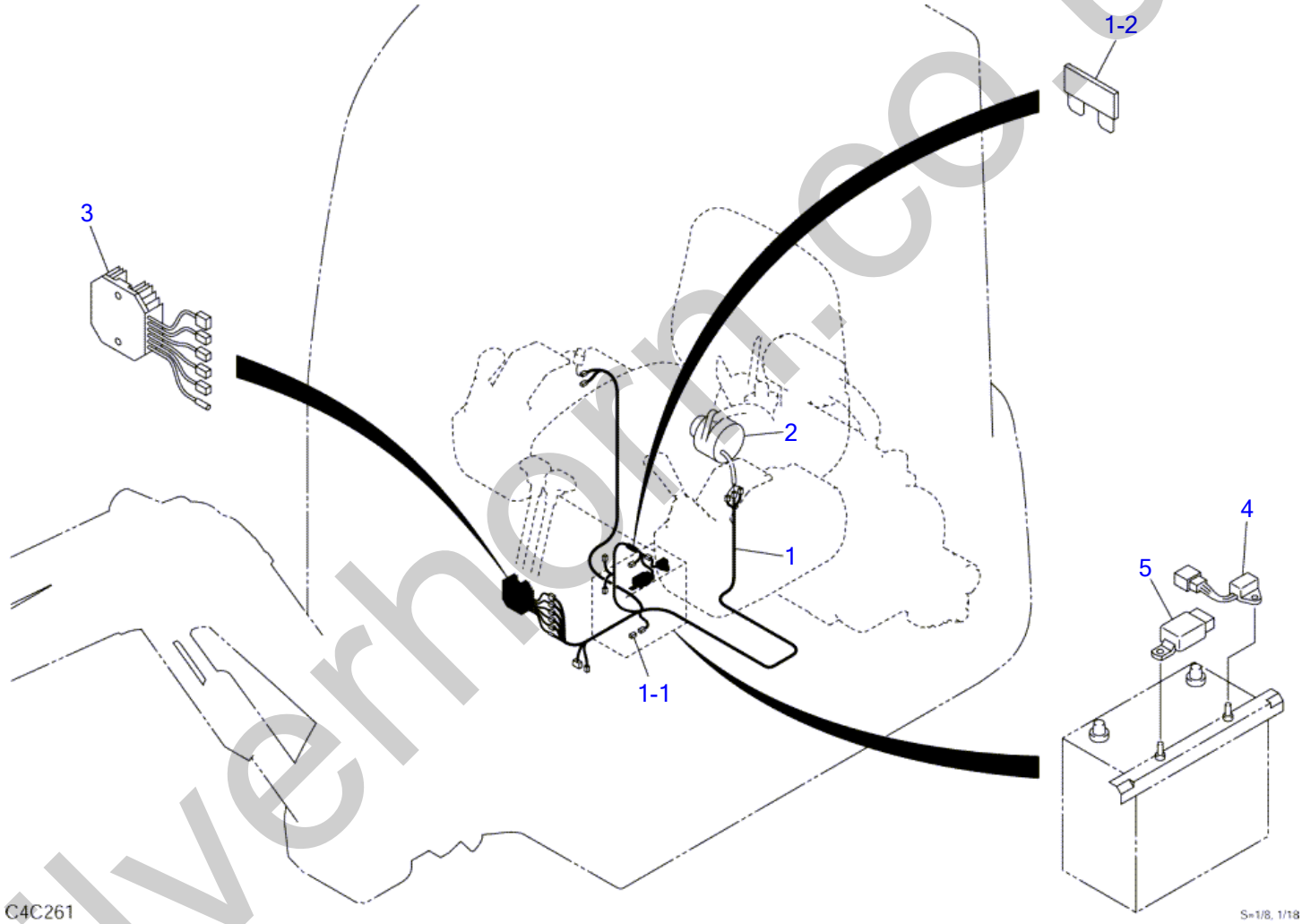

silverhorn.co.uk

GENERATOR (for 35A)

Item	Part number	Description	Q'ty	Chan.	Serial No.	Serv.	Remarks
		GENERATOR ASSY					X03342-51000-0
1	0334251100	HARNESS, wiring	1				
1-1	1730500008	・DIODE (3A, yellow)	1				
1-2	1701310015	・FUSE (15A)	1				
2	1910133123	GENERATOR (35A)	1				Y119000-77202
3	1910133104	LIMITER, current	1				Y119000-77711
4	1910011130	INDICATER, charge	1				
5	1711900042	RELAY	1				
	C4c262S						

silverhorn.co.uk

BATTERY

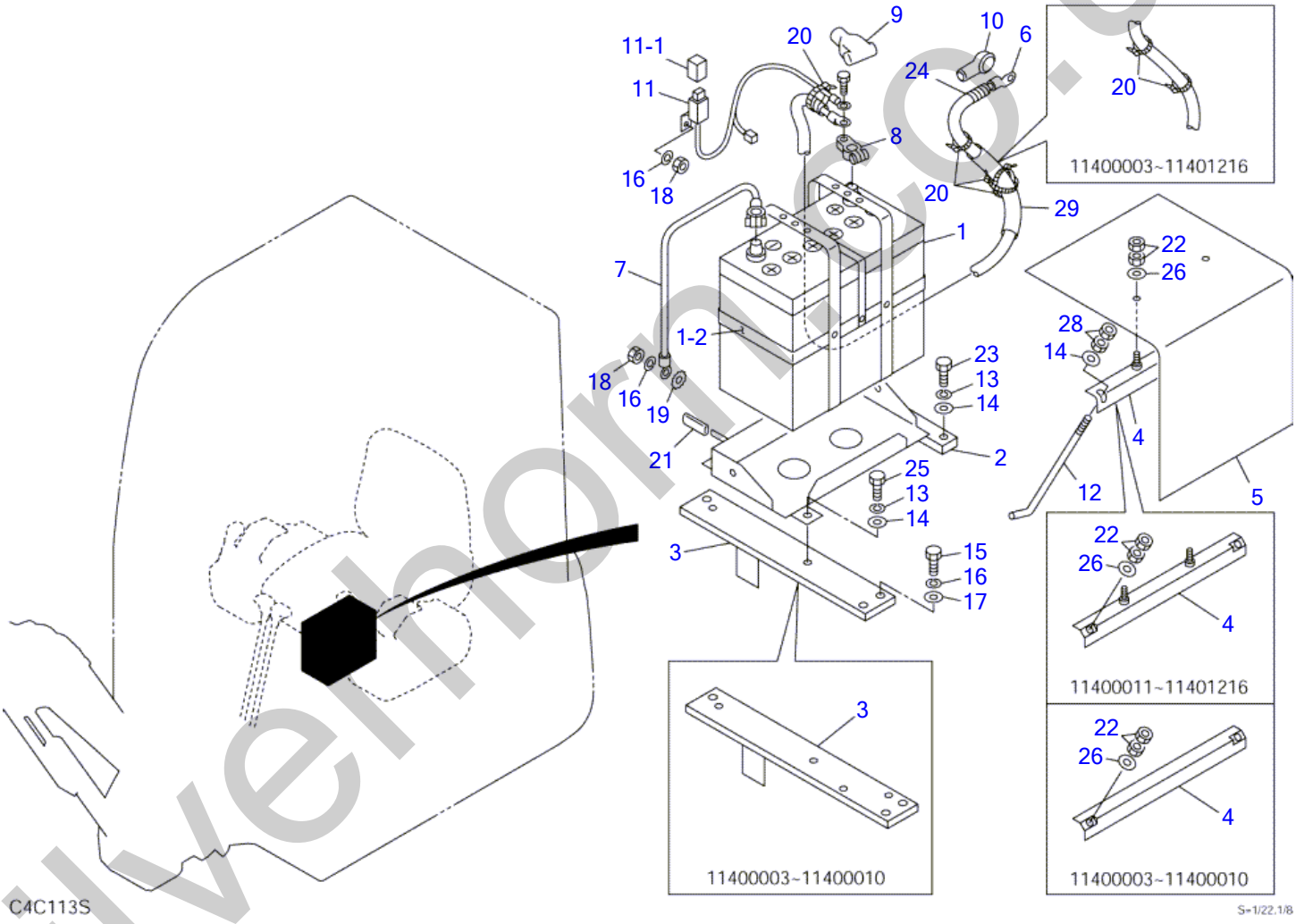

silverhorn.co.uk

BATTERY

Item	Part number	Description	Q'ty	Chan.	Serial No.	Serv.	Remarks
		BATTERY ASSY					X03344-20000-11
		BATTERY ASSY (for USA)					X03344-21000-11
1	0334420100	BATTERY (55B24R)	1				
	0334421100	BATTERY (55B24R-S)	1				for USA
1-2	1711900063	・BELT	1				
2	0334418010	BRACKET	1		11400003~11400010		
	0334420010	BRACKET	1	(H)	11400011~		
3	0334418020	BRACKET	1		11400003~11400010		
	0334420020	BRACKET	1	(H)	11400011~		
4	0424402100	ANGLE	1		11400003~11400010		
	0334420030	ANGLE	1		11400011~11401216		
	0334420060	ANGLE	1		11401217~		
5	0334420040	SHEET	1		11400011~		
6	1702522110	CABLE	1		11400003~11400010		
	1702522115	CABLE	1	(H)	11400011~		
	1702607110	CABLE	1		11400003~11400010		for USA
	1702607115	CABLE	1	(H)	11400011~		for USA
7	1702222038	CABLE, earth	1				
	1702622038	CABLE, earth	1				for USA
8	1702330040	TERMINAL	1				
	1702330000	TERMINAL	1				for USA
9	1702920001	COVER	1		11400003~11400010		
	1702920060	COVER	1		11400011~		
10	1910011119	CAP	1				Y124160-77020
11	0334418030	LINK, fusible	1		11400003~11400010		
	0334420050	LINK, fusible	1		11400011~		
	0334419010	LINK, fusible	1		11400003~11400010		for USA
	0334421010	LINK, fusible	1		11400011~		for USA
11-1	1701330045	・FUSE (45A)	1				
12	1702106224	BOLT	2		11400003~11400782		
	1702106215	BOLT	2		11400783~11401198		
	1702108220	BOLT	2		11401199~		
13	1140020008	WASHER, spring	4				
14	1141110008	WASHER	6				
15	1100241030	BOLT	3				
16	1140020010	WASHER, spring	5				
17	1141110010	WASHER	3				
18	1130040010	NUT	2				
19	1140330010	WASHER	1				
20	1652231140	BAND	4				
21	0872433150	TUBE	4				
22	1130040006	NUT	4				
23	1100240825	BOLT	2				
24	1703221300	PROTECTOR	1		11400003~11400010		sold by the meter
	1703221015	PROTECTOR	1		11400011~		sold by the meter
25	1100240816	BOLT	2				
26	1141110006	WASHER	2				
28	1130040008	NUT	4		11401217~		
29	1531115010	PROTECTOR	1		11401217~		sold by the meter
	C4c114S						

silvermorn.co.uk

BATTERY (with battery switch)

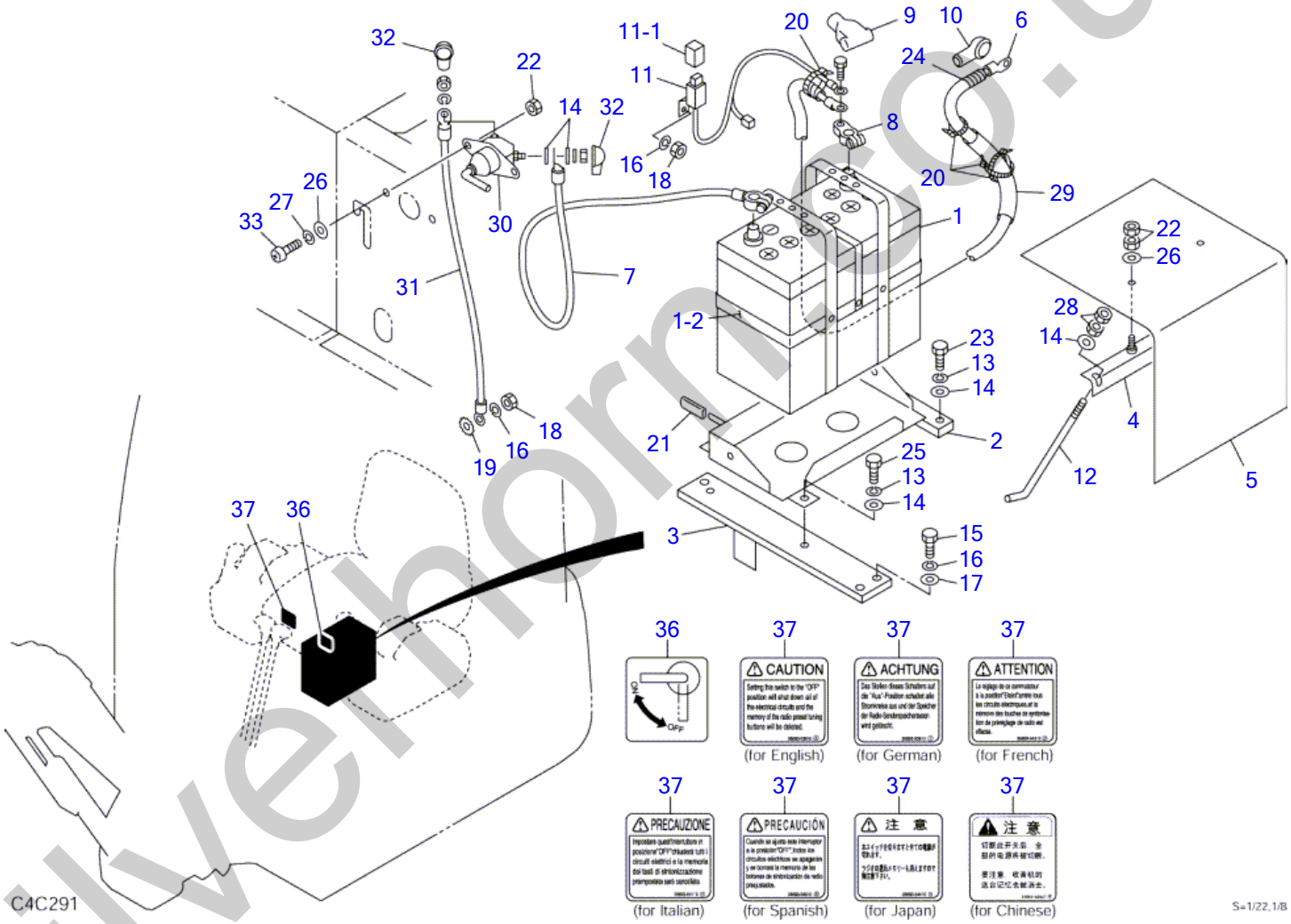

silverhorn.co.uk

BATTERY (with battery switch)

Item	Part number	Description	Q'ty	Chan.	Serial No.	Serv.	Remarks
		BATTERY ASSY (for English)					X03344-20200-11
		BATTERY ASSY (for German)					X03344-20300-11
		BATTERY ASSY (for French)					X03344-20400-11
		BATTERY ASSY (for Italian)					X03344-20500-11
		BATTERY ASSY (for Spanish)					X03344-20600-11
		BATTERY ASSY (for Japan)					X03344-20700-11
		BATTERY ASSY (for Chinese)					X03344-20800-11
		BATTERY ASSY (for USA)					X03344-21200-11
1	0334420100	BATTERY (55B24R)	1				
	0334421100	BATTERY (55B24R-S)	1				for USA
1-2	1711900063	・BELT	1				
2	0334420010	BRACKET	1				
3	0334420020	BRACKET	1				
4	0334420060	ANGLE	1				
5	0334420040	SHEET	1				
6	1702522115	CABLE	1				
	1702607115	CABLE	1				for USA
7	1702222038	CABLE, earth	1				
	1702622038	CABLE, earth	1				for USA
8	1702330040	TERMINAL	1				
	1702330000	TERMINAL	1				for USA
9	1702920060	COVER	1				
10	1910011119	CAP	1				Y124160-77020
11	0334420050	LINK, fusible	1				
	0334421010	LINK, fusible	1				for USA
11-1	1701330045	・FUSE (45A)	1				
12	1702108215	BOLT	2				
13	1140020008	WASHER, spring	4				
14	1141110008	WASHER	8				
15	1100241030	BOLT	3				
16	1140020010	WASHER, spring	5				
17	1141110010	WASHER	3				
18	1130040010	NUT	2				
19	1140330010	WASHER	1				
20	1652231140	BAND	4				
21	0872433150	TUBE	6				
22	1130040006	NUT	6				
23	1100240825	BOLT	2				
24	1703221015	PROTECTOR	1				sold by the meter
25	1100240816	BOLT	2				
26	1141110006	WASHER	4				
27	1140020006	WASHER, spring	2				
28	1130040008	NUT	4				
29	1531115010	PROTECTOR	1				sold by the meter
30	1700100051	SWITCH	1				
31	1702520045	CABLE, battery	1				
32	1702901281	CAP	2				
33	1120590616	SCREW	2				
36	0399351210	DECAL	1				
37	0569353810	DECAL (English)	1				
	0569353910	DECAL (German)	1				
	0569354010	DECAL (French)	1				
	0569354110	DECAL (Italian)	1				
	0569354310	DECAL (Spanish)	1				
	0569354410	DECAL (Japan)	1				
	0569355847	DECAL (Chinese)	1				
	C4c291						

silvermorn.co.uk

CAB LIGHT

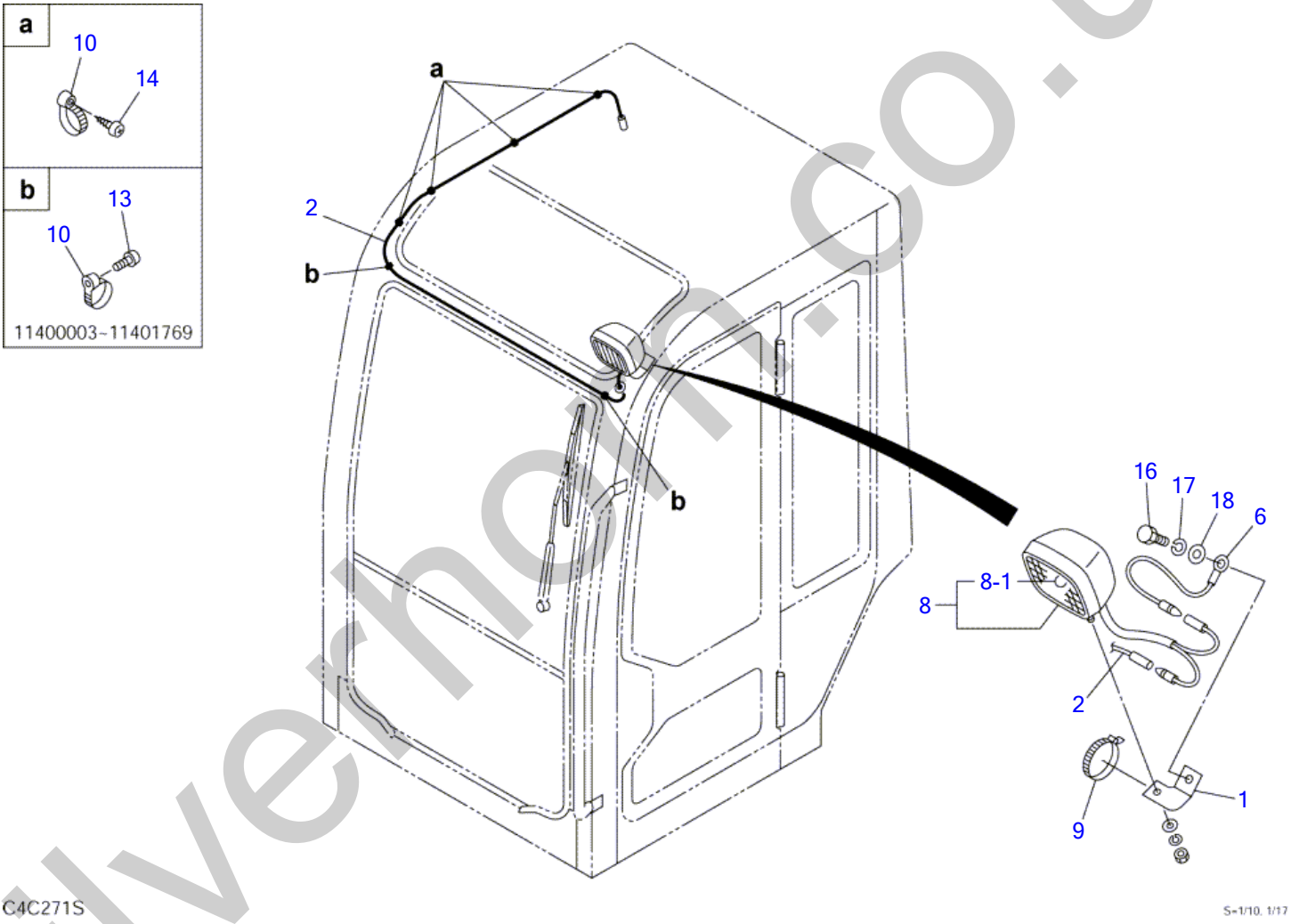

silverhorn.co.uk

CAB LIGHT

Item	Part number	Description	Q'ty	Chan.	Serial No.	Serv.	Remarks
		CAB LIGHT ASSY					X03342-41500-2
1	0334241510	BRACKET	1				
2	0334241520	HARNESS, wiring	1				
6	0336021400	HARNESS, wiring	1				
8	1703006000	LAMP ASSY	1				
8-1	1703005506	・BULB	1				
9	1652231250	BAND	1				
10	1652221050	BAND	4			M	
13	1120590512	SCREW	2		11400003~11401769	M	
14	1122400512	SCREW	4			M	
16	1100031025	BOLT	1				
17	1140020010	WASHER, spring	1				
18	1140330010	WASHER	1				
	C4c271S						

silverhorn.co.uk

CANOPY LIGHT

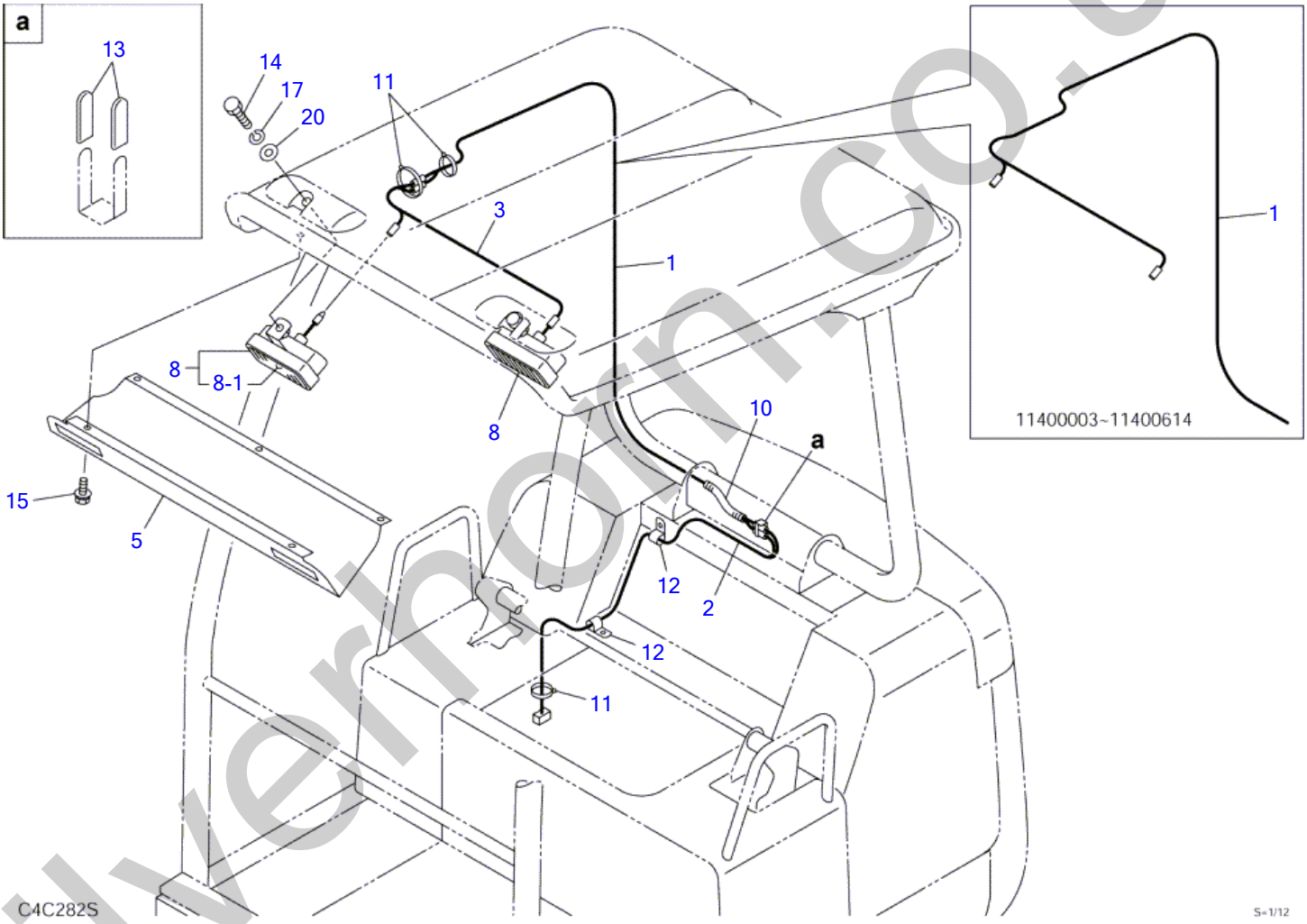

silverhorn.co.uk

CANOPY LIGHT

Item	Part number	Description	Q'ty	Chan.	Serial No.	Serv.	Remarks
		CANOPY LIGHT ASSY					X03342-41600-3
1	0334241610	HARNESS, wiring	1	A	11400003~11400614		
	0334241630	HARNESS, wiring	1	a(H)	11400615~		
2	0334241620	HARNESS, wiring	1				
3	0334241640	HARNESS, wiring	1	a(H)	11400615~		
5	0358402700	COVER	1				
8	1703001900	LAMP ASSY	2				
8-1	1703001901	・BULB	1				
10	1703210715	TUBE	1				sold by the meter
11	1652231250	BAND	3				
12	1652900006	CLAMP	2				
13	0872433150	TUBE	2				
14	1100040825	BOLT	2				
15	1150420516	SCREW	5				
17	1140020008	WASHER, spring	2				
20	1141110008	WASHER	2				
		<<NOTE>>					
		"A" is interchangeable with					
		SET "a".					
	C4c282S						

silverhorn.co.uk

RADIO (11400003-11400010)

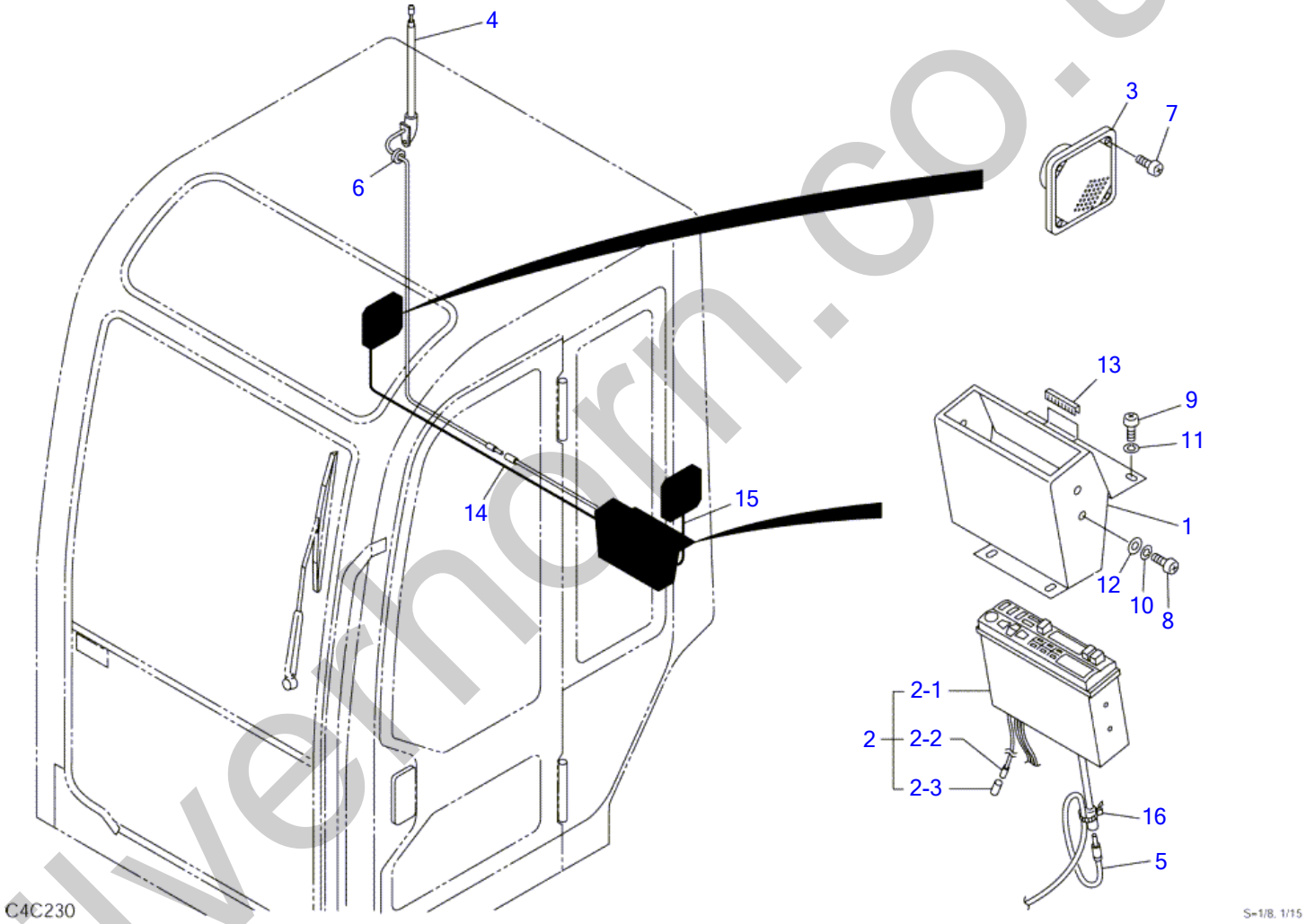

silvernorn.co.uk

RADIO (11400003-11400010)

Item	Part number	Description	Q'ty	Chan.	Serial No.	Serv.	Remarks
		RADIO ASSY (for EC)					X03347-04000
		RADIO ASSY (for USA)					X03347-05000
		RADIO ASSY (for JAPAN)					X03347-06000
1	0334704100	COVER	1				
2	0374700200	CASSETTE STEREO ASSY	1				for EC
	0374701200	CASSETTE STEREO ASSY	1				for USA
	0374702200	CASSETTE STEREO ASSY	1				for JAPAN
2-1	1705002900	・CASSETTE STEREO	1				for EC
	1705003000	・CASSETTE STEREO	1				for USA
	1705003100	・CASSETTE STEREO	1				for JAPAN
2-2	1702700002	・SOCKET	1				
2-3	1702700004	・SLEEVE	1				
3	1705003200	SPEAKER	2				
4	1705003400	ANTENNA	1				
5	1705001610	JUMPER	1				
6	1652053000	GROMMET	1				
7	1120590416	SCREW	8				
8	1120590516	SCREW	4				
9	1120590616	SCREW	4				
10	1140090005	WASHER, spring	4				
11	1140090006	WASHER, spring	4				
12	1141190005	WASHER	4				
13	1653917005	TRIM	1				sold by the meter
14	0334702018	HARNESS, wiring	1				
15	0334702019	HARNESS, wiring	1				
16	1652231100	BAND	1				
	C4c231						

silverhorn.co.uk

RADIO (11400011-)

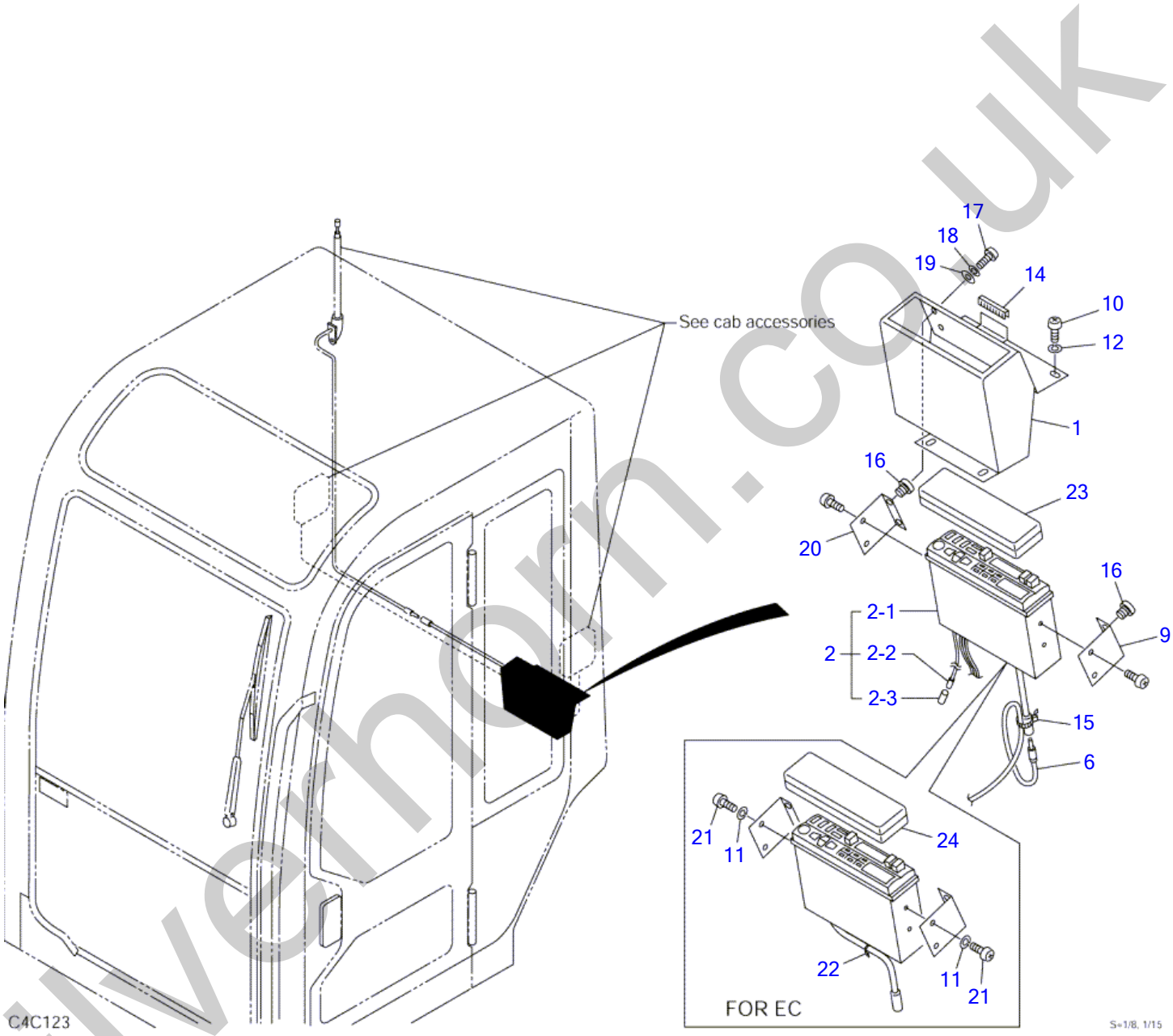

silverhorn.co.uk

RADIO (11400011-)

Item	Part number	Description	Q'ty	Chan.	Serial No.	Serv.	Remarks
		RADIO ASSY (for EC)					X03347-07000-7
		RADIO ASSY (for USA)					X03347-08000-7
		RADIO ASSY (for JAPAN)					X03347-09000-7
1	0334704500	COVER	1				
2	0334704800	CASSETTE STEREO ASSY	1				for EC
	0334704300	CASSETTE STEREO ASSY	1				for USA
	0334704400	CASSETTE STEREO ASSY	1				for JAPAN
2-1	1705004500	・CASSETTE STEREO	1				for EC
	1705003700	・CASSETTE STEREO	1				for USA
	1705003800	・CASSETTE STEREO	1				for JAPAN
2-2	1702700002	・SOCKET	1				
2-3	1702700004	・SLEEVE	1				
6	1705001610	JUMPER	1				
9	0334704600	BRACKET (L.H.)	1				
10	1120590616	SCREW	4				
11	1140090005	WASHER, spring	4				for EC
12	1140090006	WASHER, spring	4				
14	1653917005	TRIM	1				sold by the meter
15	1652231100	BAND	1				for JAPAN, USA
16	1652520005	RUBBER, cushion	4				
17	1120530520	SCREW	4				
18	1140020005	WASHER, spring	4				
19	1141110005	WASHER	4				
20	0334704700	BRACKET (R.H.)	1				
21	1120590510	SCREW	4				for EC
22	1652201003	BAND	1				for EC
23	1705003650	COVER	1				
24	1705004550	COVER	1				for EC
	C4c123						

silverhorn.co.uk

MAINTENANCE LIGHT SOCKET

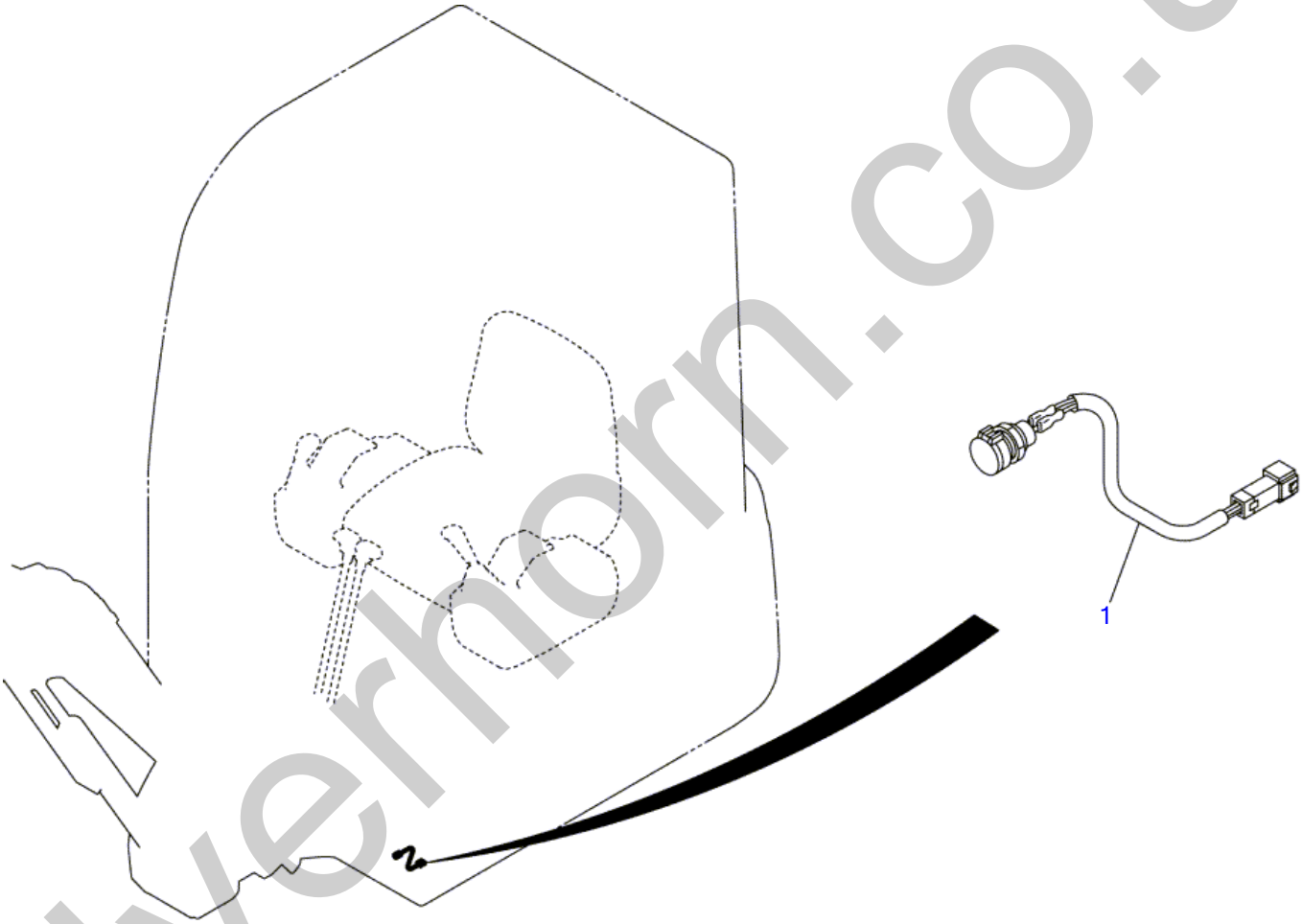

C4C130

S=1/18

silverhorn.co.uk

MAINTENANCE LIGHT SOCKET

Item	Part number	Description	Q'ty	Chan.	Serial No.	Serv.	Remarks
		SOCKET ASSY, maintenance light					X03942-03000-0
1	**0394203100**	SOCKET ASSY	1				
	C4c131						

silverhorn.co.uk

WINDOW WASHER

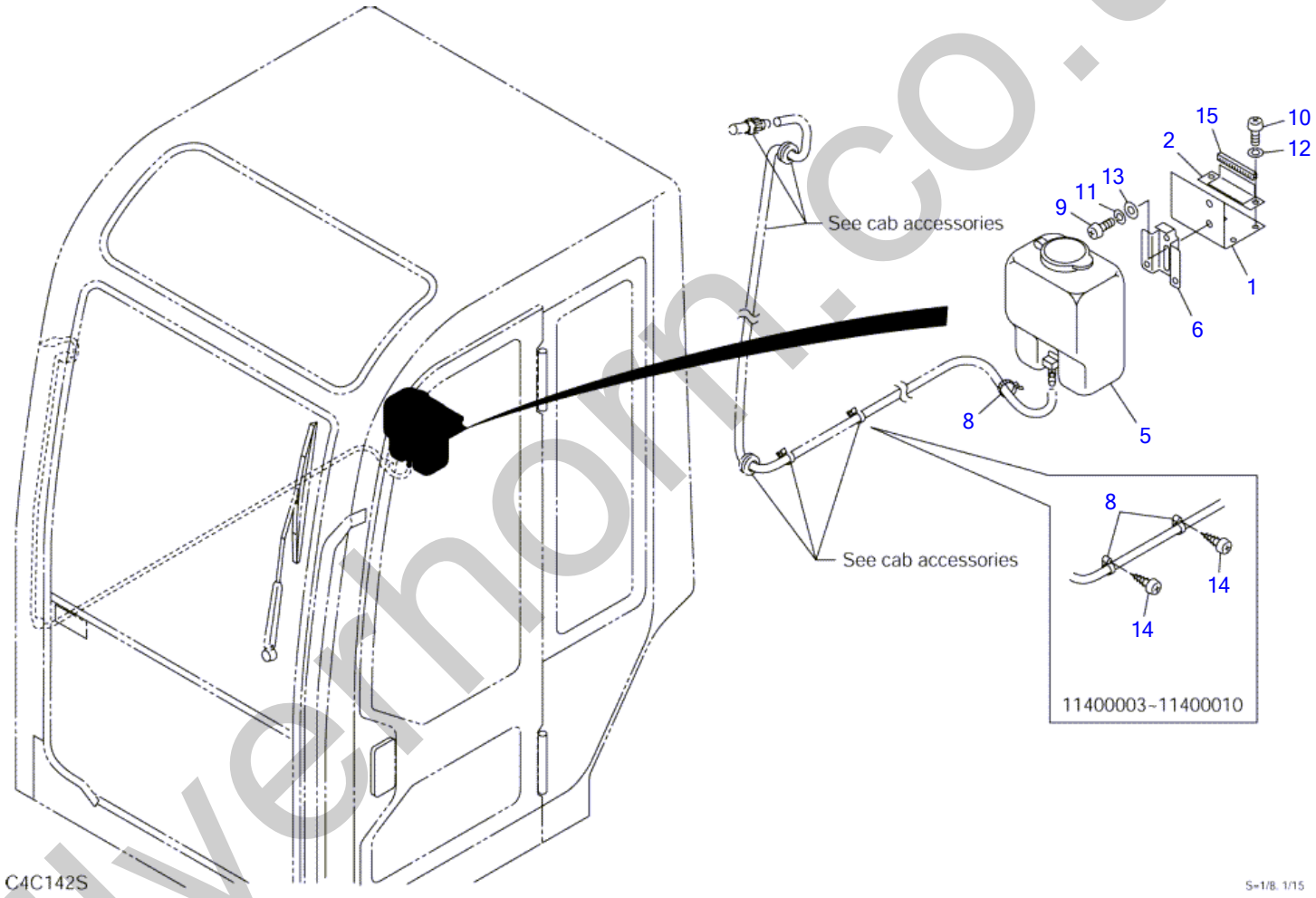

silverhorn.co.uk

WINDOW WASHER

Item	Part number	Description	Q'ty	Chan.	Serial No.	Serv.	Remarks
		WINDOW WASHER ASSY					X03389-16000-2
1	0378900100	PLATE	1		11400003~11400010		
	0338916100	PLATE	1	(H)	11400011~		
2	0338915200	PLATE	1				
5	1711910101	TANK	1				
6	1711910062	BRACKET	1				
8	1652221050	BAND	2		11400003~11400010		
	1652200004	BAND	1		11400011~		
9	1120530612	SCREW	2				
10	1120590616	SCREW	4				
11	1140020006	WASHER, spring	2				
12	1140090006	WASHER, spring	4				
13	1141110006	WASHER	2				
14	1122500412	SCREW	2		11400003~11400010		
15	1653917006	TRIM	1				sold by the meter
	C4c142S						

silverhorn.co.uk

GREASE PIPING

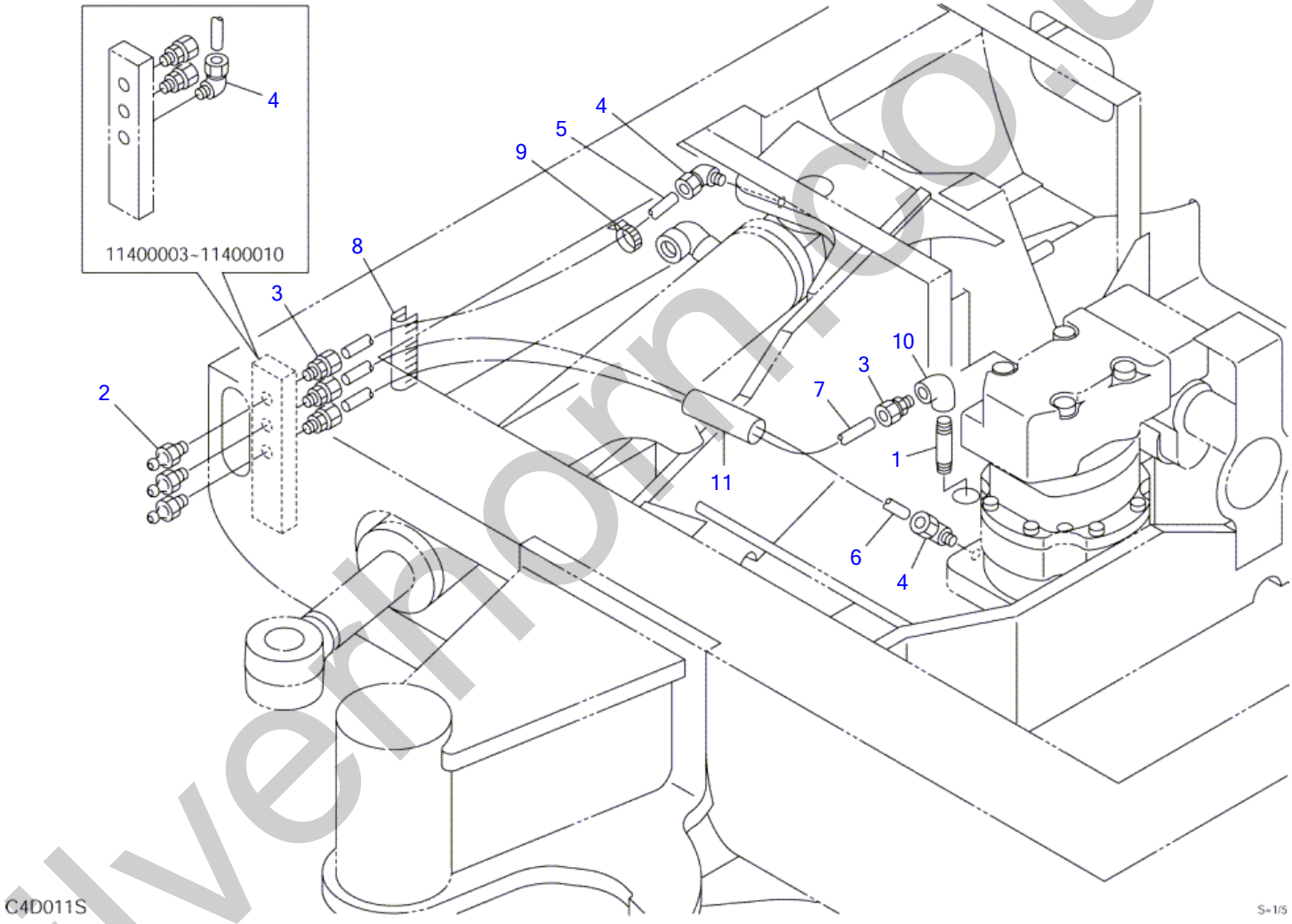

silvermoon.co.uk

GREASE PIPING

Item	Part number	Description	Q'ty	Chan.	Serial No.	Serv.	Remarks
		PIPING ASSY, grease					X03324-04000-1
1	0009101040	NIPPLE	1				
2	1560001000	FITTING, grease	3				
3	1532520601	CONNECTOR	3		11400003~11400010		
	1532520601	CONNECTOR	4		11400011~		
4	1532620601	ELBOW	3		11400003~11400010		
	1532620601	ELBOW	2		11400011~		
5	1532020660	TUBE	1		11400003~11400010		sold by the meter
	1532020655	TUBE	1		11400011~		sold by the meter
6	1532020665	TUBE	1		11400003~11400010		sold by the meter
	1532020670	TUBE	1		11400011~		sold by the meter
7	1532020668	TUBE	1				sold by the meter
8	1653916002	TRIM	1				sold by the meter
9	1652231100	BAND	1				
10	1508010001	ELBOW	1				
11	1531115006	HOSE	1		11400011~		sold by the meter
	C4d011S						

silverhorn.co.uk

VALVE & ACCESSORIES (for Japan)

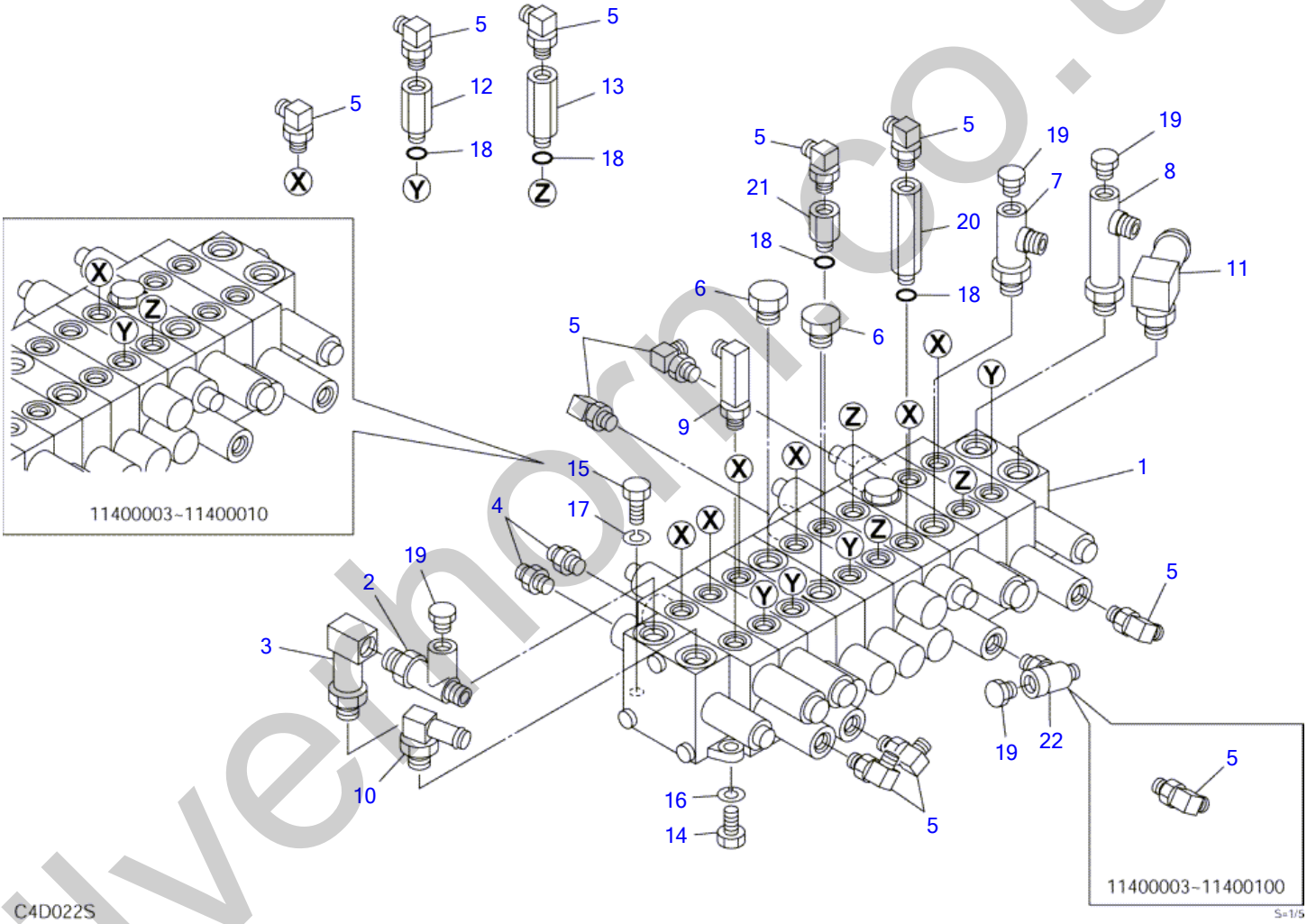

silverthorn.co.uk

VALVE & ACCESSORIES (for Japan)

Item	Part number	Description	Q'ty	Chan.	Serial No.	Serv.	Remarks
		VALVE ASSY, control					X03350-30000-4
1	1901036100	VALVE, control	1		11400003~11400430		
	1901037600	VALVE, control	1	(H)	11400431~11400460		
	1901038400	VALVE, control	1	(H)	11400461~		
2	1512340016	ELBOW	1				
	1420010140	・O-RING	1			M	
3	1513300018	ELBOW	1				
	1420010140	・O-RING	1			M	
4	1515600200	ADAPTOR	2				
	1420010110	・O-RING	1			M	
5	1515012040	ELBOW	21		11400003~11400100		
	1420010110	・O-RING	1			M	
	1515012040	ELBOW	20		11400101~		
	1420010110	・O-RING	1			M	
6	1501750003	PLUG	2				
	1420010140	・O-RING	1			M	
7	1512340009	ELBOW	1				
	1420010140	・O-RING	1			M	
8	1512340010	ELBOW	1				
	1420010140	・O-RING	1			M	
9	1515012510	ELBOW	1				
	1420010110	・O-RING	1			M	
10	1513350013	ELBOW	1				
	1420010180	・O-RING	1			M	
11	1513350006	ADAPTOR	1				
	1420010180	・O-RING	1			M	
12	0007213028	BUSHING	5		11400003~11400010		
	0007213028	BUSHING	4		11400011~		
13	0007213032	BUSHING	2		11400003~11400010		
	0007213032	BUSHING	3		11400011~		
14	1100041025	BOLT	2				
15	1100040825	BOLT	2				
16	1140020010	WASHER, spring	2				
17	1140020008	WASHER, spring	2				
18	1420010110	O-RING	7		11400003~11400010		
	1420010110	O-RING	9		11400011~		
19	1501750002	PLUG	3		11400003~11400100		
	1420010110	・O-RING	1			M	
	1501750002	PLUG	4		11400101~		
	1420010110	・O-RING	1			M	
20	0007213041	BUSHING	1		11400011~		
21	0007213042	BUSHING	1		11400011~		
22	1513390029	TEE	1		11400101~		
	1420010110	・O-RING	1			M	
	C4d022S						

silvermorn.co.uk

VALVE & ACCESSORIES

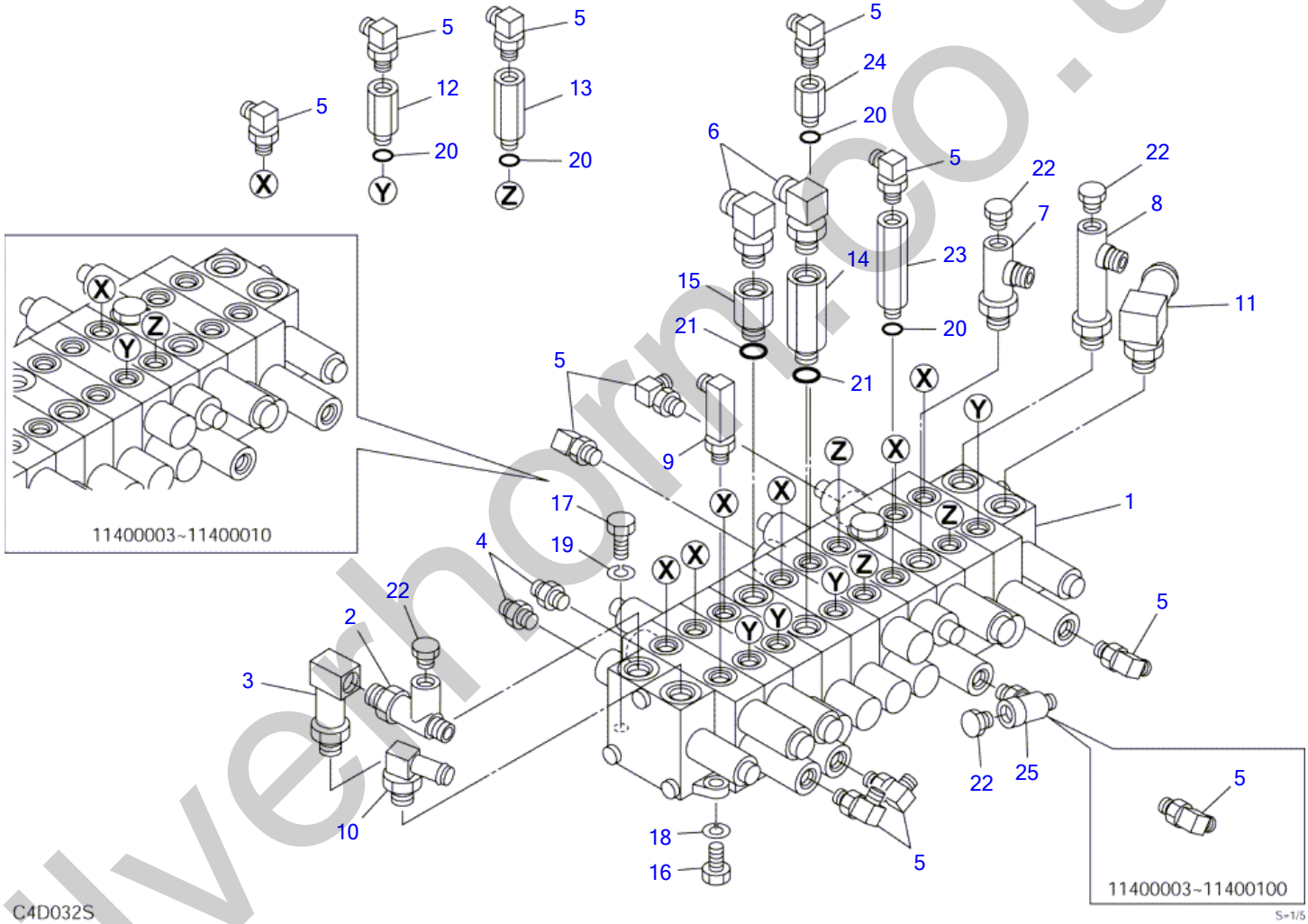

silverthorn.co.uk

VALVE & ACCESSORIES

Item	Part number	Description	Q'ty	Chan.	Serial No.	Serv.	Remarks
		VALVE ASSY, control					X03350-28000-4
1	1901036100	VALVE, control	1		11400003~11400430		
	1901037600	VALVE, control	1	(H)	11400431~11400460		
	1901038400	VALVE, control	1	(H)	11400461~		
2	1512340016	ELBOW	1				
	1420010140	・O-RING	1			M	
3	1513300018	ELBOW	1				
	1420010140	・O-RING	1			M	
4	1515600200	ADAPTOR	2				
	1420010110	・O-RING	1			M	
5	1515012040	ELBOW	21		11400003~11400100		
	1420010110	・O-RING	1			M	
	1515012040	ELBOW	20		11400101~		
	1420010110	・O-RING	1			M	
6	1515010131	ELBOW	2				
	1420010140	・O-RING	1			M	
7	1512340009	ELBOW	1				
	1420010140	・O-RING	1			M	
8	1512340010	ELBOW	1				
	1420010140	・O-RING	1			M	
9	1515012510	ELBOW	1				
	1420010110	・O-RING	1			M	
10	1513350013	ELBOW	1				
	1420010180	・O-RING	1			M	
11	1513350006	ADAPTOR	1				
	1420010180	・O-RING	1			M	
12	0007213028	BUSHING	5		11400003~11400010		
	0007213028	BUSHING	4		11400011~		
13	0007213032	BUSHING	2		11400003~11400010		
	0007213032	BUSHING	3		11400011~		
14	0007213014	BUSHING	1				
15	0007213023	CONNECTOR	1				
16	1100041025	BOLT	2				
17	1100040825	BOLT	2				
18	1140020010	WASHER, spring	2				
19	1140020008	WASHER, spring	2				
20	1420010110	O-RING	7		11400003~11400010		
	1420010110	O-RING	9		11400011~		
21	1420010140	O-RING	2				
22	1501750002	PLUG	3		11400003~11400100		
	1420010110	・O-RING	1			M	
	1501750002	PLUG	4		11400101~		
	1420010110	・O-RING	1			M	
23	0007213041	BUSHING	1		11400011~		
24	0007213042	BUSHING	1		11400011~		
25	1513390029	TEE	1		11400101~		
	1420010110	・O-RING	1			M	
	C4d032S						

silverthorn.co.uk

VALVE & ACCESSORIES (for YBM)

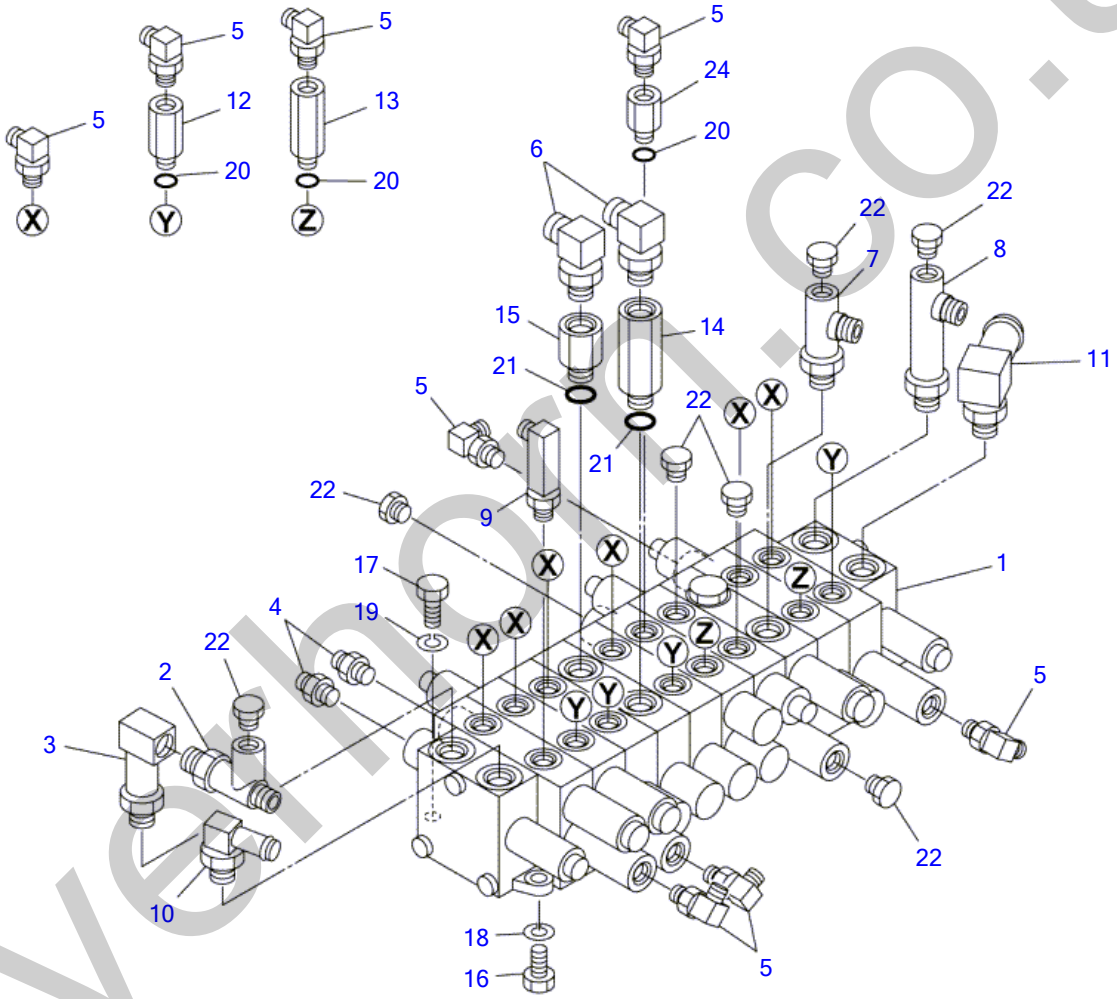

silverthorn.co.uk

VALVE & ACCESSORIES (for YBM)

Item	Part number	Description	Q'ty	Chan.	Serial No.	Serv.	Remarks
		VALVE ASSY, control	1				X03350-36000-1
1	1901038400	VALVE, control	1				
2	1512340016	ELBOW	1				
	1420010140	・O-RING	1			M	
3	1513300018	ELBOW	1				
	1420010140	・O-RING	1			M	
4	1515600200	ADAPTOR	2				
	1420010110	・O-RING	1			M	
5	1515012040	ELBOW	17				
	1420010110	・O-RING	1			M	
6	1515010131	ELBOW	2				
	1420010140	・O-RING	1			M	
7	1512340009	ELBOW	1				
	1420010140	・O-RING	1			M	
8	1512340010	ELBOW	1				
	1420010140	・O-RING	1			M	
9	1515012510	ELBOW	1				
	1420010110	・O-RING	1			M	
10	1513350013	ELBOW	1				
	1420010180	・O-RING	1			M	
11	1513350006	ADAPTOR	1				
	1420010180	・O-RING	1			M	
12	0007213028	BUSHING	4				
13	0007213032	BUSHING	2				
14	0007213014	BUSHING	1				
15	0007213023	ADAPTOR	1				
16	1100041025	BOLT	2				
17	1100040825	BOLT	2				
18	1140020010	WASHER, spring	2				
19	1140020008	WASHER, spring	2				
20	1420010110	O-RING	7				
21	1420010140	O-RING	2				
22	1501750002	PLUG	7				
	1420010110	・O-RING	1			M	
24	0007213042	BUSHING	1				
	C4d320						

silverhorn.co.uk

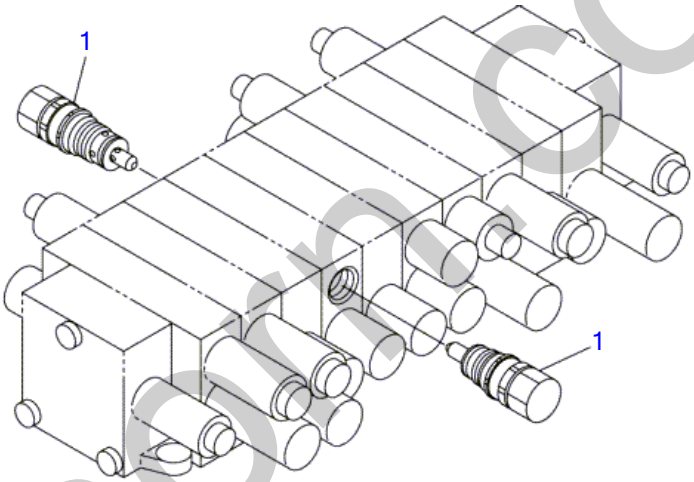

C4D240S

S-1/5

silverhorn.co.uk

OVER LOAD

Item	Part number	Description	Q'ty	Chan.	Serial No.	Serv.	Remarks
		VALVE ASSY, over load					X03350-28500-0
1	**1901732800**	VALVE, relief	2				
	C4d240S						

silverhorn.co.uk

SOLENOID VALVE (11400003-11400436)

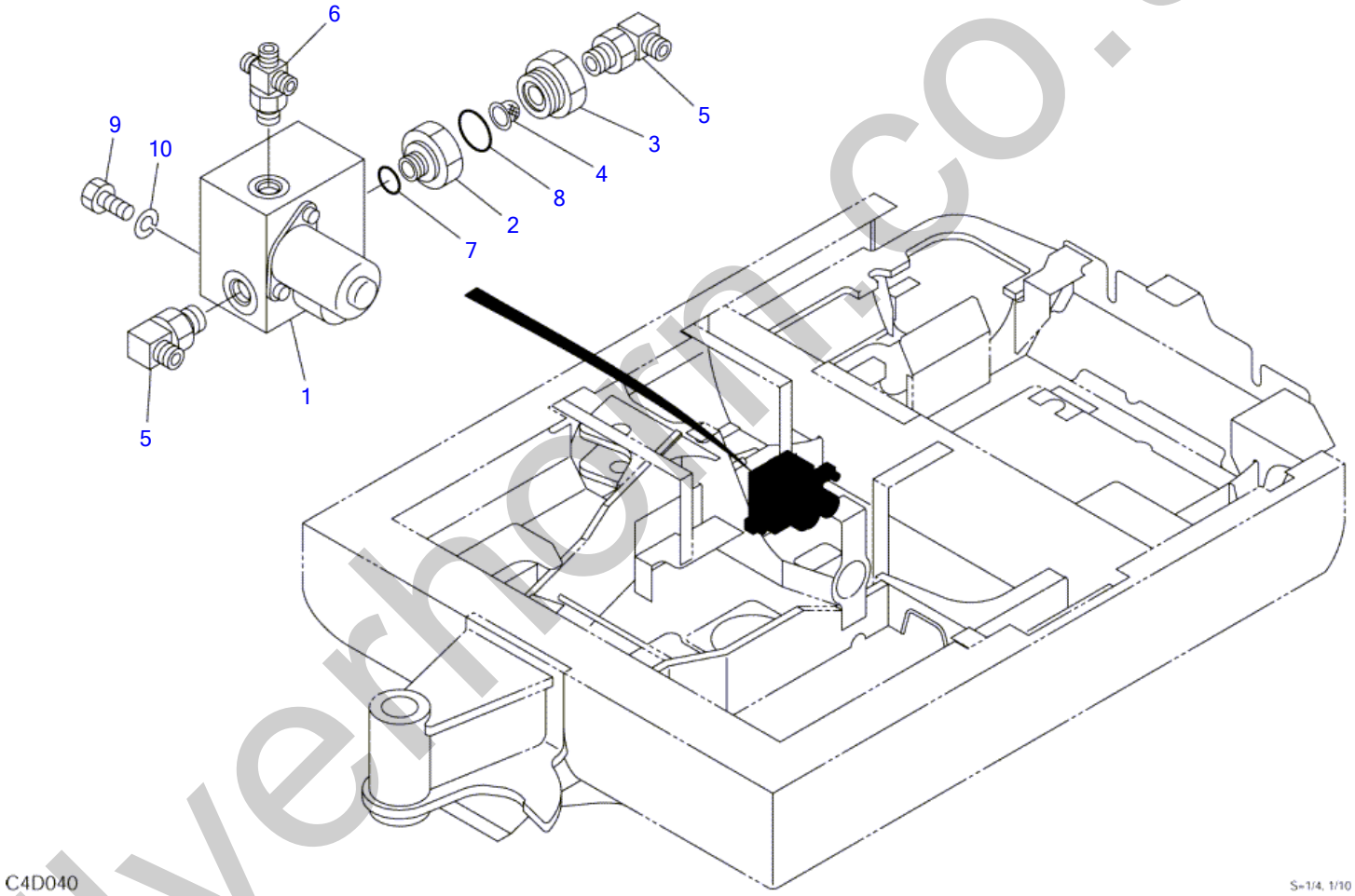

silverhorn.co.uk

SOLENOID VALVE (11400003-11400436)

Item	Part number	Description	Q'ty	Chan.	Serial No.	Serv.	Remarks
		VALVE ASSY, solenoid					X03355-02000-0
1	1901728700	VALVE, solenoid	1				
2	0425500100	ADAPTOR	1				
3	0425500200	ADAPTOR	1				
4	0425500300	FILTER	1				
5	1515010041	ELBOW	2				
	1420010140	・O-RING	1			M	
6	1513390027	NIPPLE	1				
	1420010110	・O-RING	1			M	
7	1420010140	O-RING	1				
8	1420010200	O-RING	1				
9	1100041016	BOLT	2		11400003~11400010		
	1101041020	BOLT	2		11400011~		
10	1140020010	WASHER, spring	2		11400011~		
	C4d041						

silverhorn.co.uk

SOLENOID VALVE (11400437-11400540)

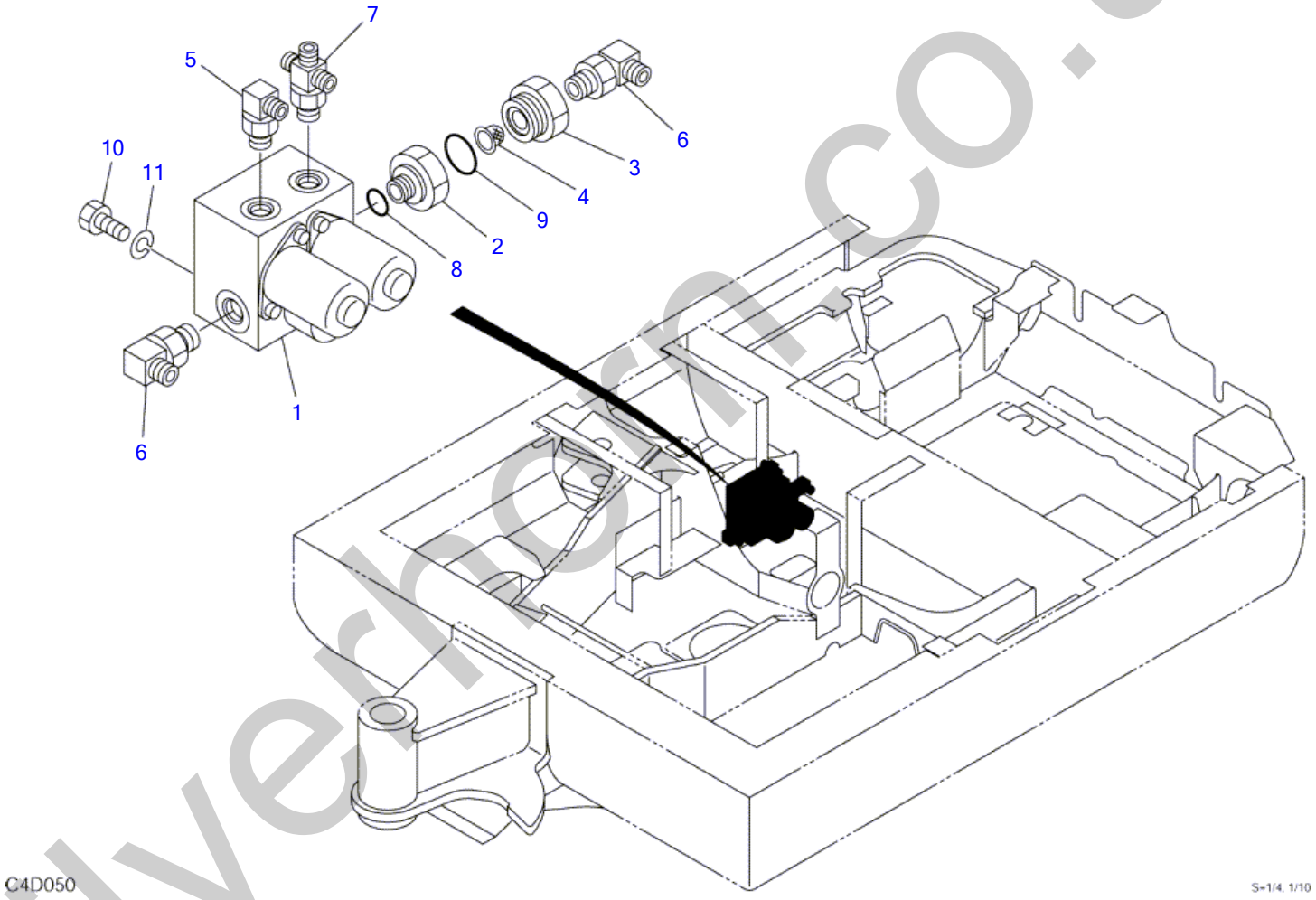

silverhorn.co.uk

SOLENOID VALVE (11400437-11400540)

Item	Part number	Description	Q'ty	Chan.	Serial No.	Serv.	Remarks
		VALVE ASSY, solenoid					X03355-01000-0
1	1901728800	VALVE, solenoid	1				
2	0425500100	ADAPTOR	1				
3	0425500200	ADAPTOR	1				
4	0425500300	FILTER	1				
5	1515010040	ELBOW	1				
	1420010110	・O-RING	1			M	
6	1515010041	ELBOW	2				
	1420010140	・O-RING	1			M	
7	1513390027	NIPPLE	1				
	1420010110	・O-RING	1			M	
8	1420010140	O-RING	1				
9	1420010200	O-RING	1				
10	1101041020	BOLT	2				
11	1140020010	WASHER, spring	2				
	C4d051S						

silverhorn.co.uk

SOLENOID VALVE (11400541)

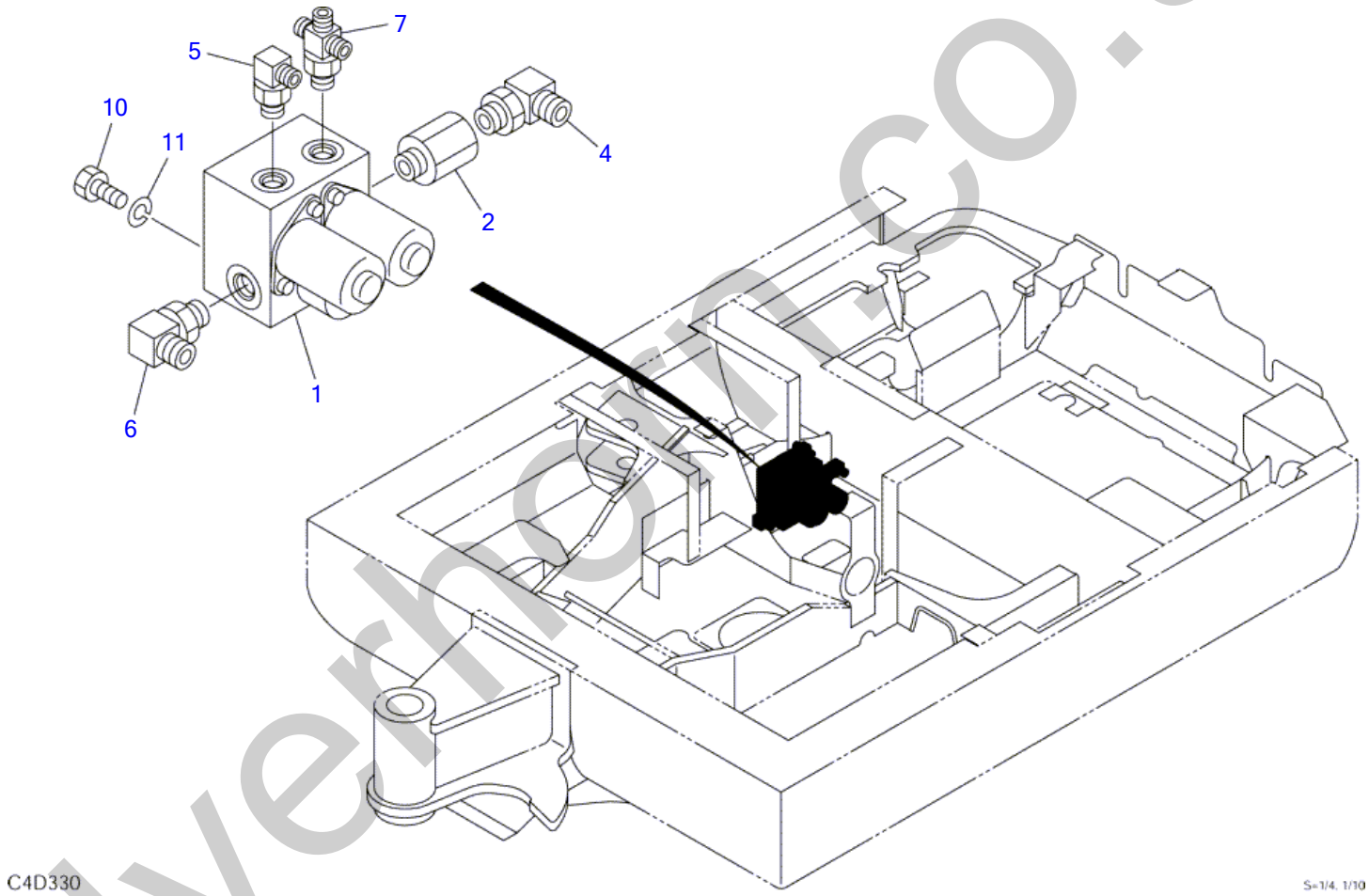

silverhorn.co.uk

SOLENOID VALVE (11400541)

Item	Part number	Description	Q'ty	Chan.	Serial No.	Serv.	Remarks
		VALVE ASSY, solenoid	1				X03355-03000-1
1	1901728800	VALVE, solenoid	1				
2	1513370047	ADAPTOR (with filter)	1				
	1420010140	・O-RING	1			M	
4	1515010051	ELBOW	1				
	1420010180	・O-RING	1			M	
5	1515012040	ELBOW	1				
	1420010110	・O-RING	1			M	
6	1515010041	ELBOW	1				
	1420010140	・O-RING	1			M	
7	1513390027	TEE	1				
	1420010110	・O-RING	1			M	
10	1101041020	BOLT	2				
11	1140020010	WASHER, spring	2				
	C4d330						

silverhorn.co.uk

PIPING; UPPER (1/3)

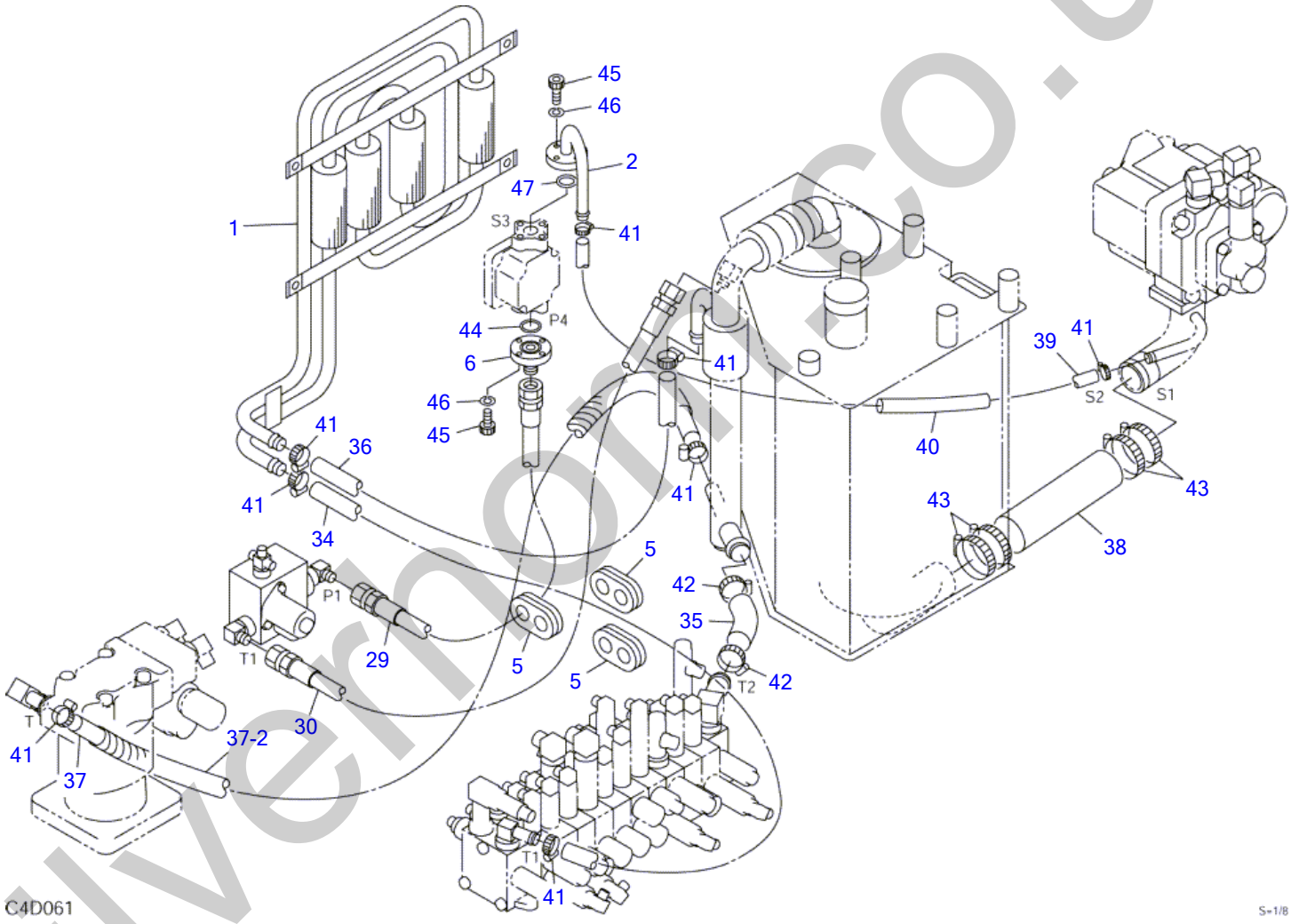

silvermoor.co.uk

PIPING; UPPER (1/3)

Item	Part number	Description	Q'ty	Chan.	Serial No.	Serv.	Remarks
		PIPING ASSY, upper					X03370-29000-5
		PIPING ASSY, upper (for YBM)					X03370-33000-4
1	0337019100	PIPE	1		11400003~11400010		
	0337024600	PIPE	1	(H)	11400011~		
2	0337019200	PIPE	1				
5	0337017300	GUARD	3				
6	0007200185	NIPPLE, flange	1				
29	0337027160	HOSE ASSY	1				18010-23042
30	0337027170	HOSE ASSY	1				18010-23042
34	1530516132	HOSE	1				sold by the meter
35	1530525017	HOSE	1				sold by the meter
36	1530516071	HOSE	1				sold by the meter
37	0337027300	HOSE (15305-16049)	1				sold by the meter
37-2	1532224045	▪ TUBE	1				sold by the meter
38	1530741035	HOSE	1				sold by the meter
39	1530512065	HOSE	1				sold by the meter
40	1531325022	PROTECTOR	1				sold by the meter
41	1533700025	BAND	8				
42	1533700041	BAND	2				
43	1533700060	BAND	4				
44	1420010200	O-RING	1				
45	1110040620	SCREW, cap	8				
46	1140420006	WASHER, spring	8				
47	1420010180	O-RING	1				
	C4d063						

silverhorn.co.uk

PIPING; UPPER (2/3) (11400003-11400010)

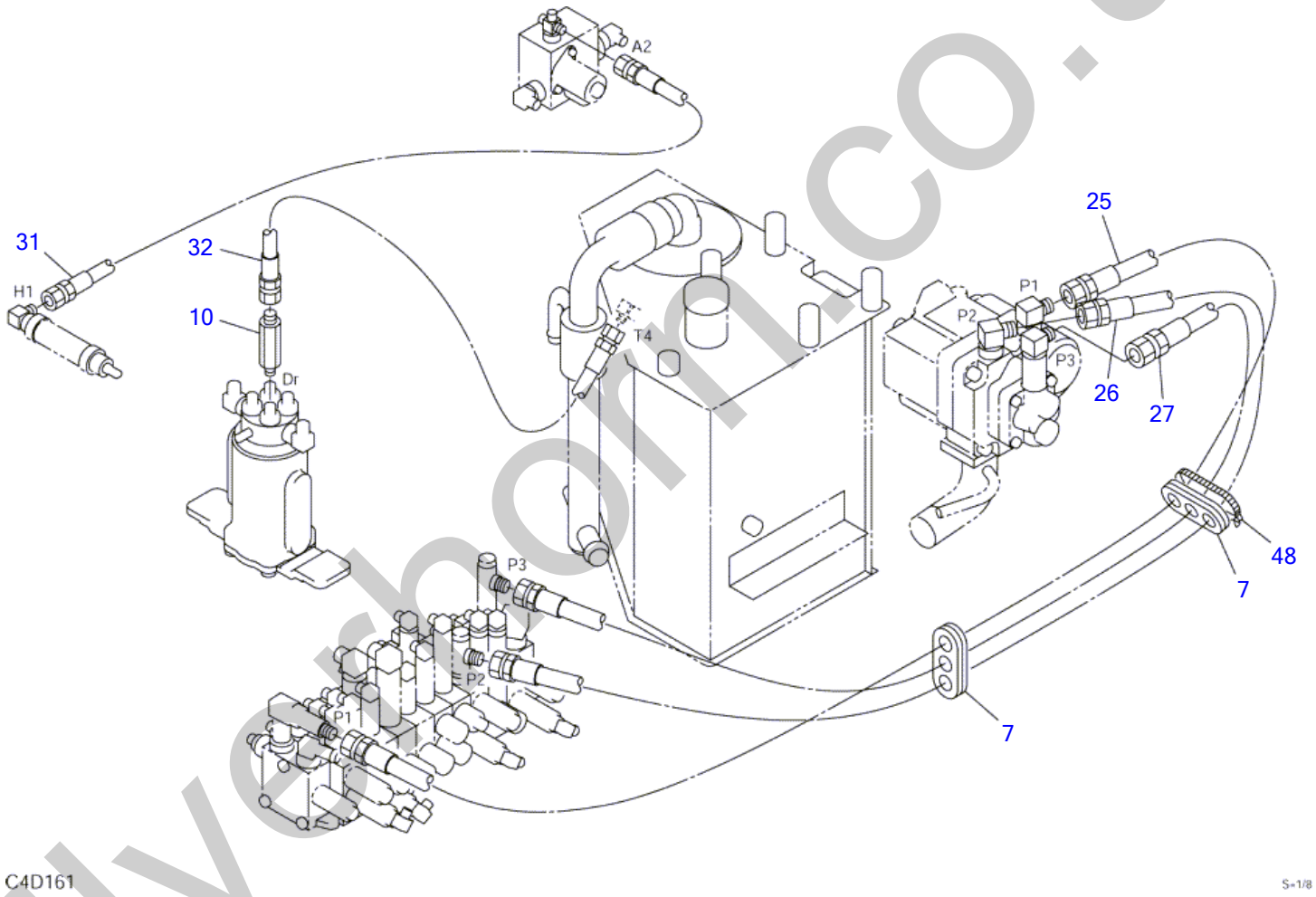

silverhorn.co.uk

PIPING; UPPER (2/3) (11400003-11400010)

Item	Part number	Description	Q'ty	Chan.	Serial No.	Serv.	Remarks
		PIPING ASSY, upper					X03370-22000
7	0097022400	GUARD	2				
10	0007200193	ADAPTOR	1				
25	1938209144	HOSE ASSY	1				
26	1938209118	HOSE ASSY	1				
27	1938209110	HOSE ASSY	1				
31	1801022056	HOSE	1				
32	1801022062	HOSE	1				
48	1652200005	BAND	1				
	C4d161						

silverhorn.co.uk

PIPING; UPPER (2/3) (11400011-11400436)

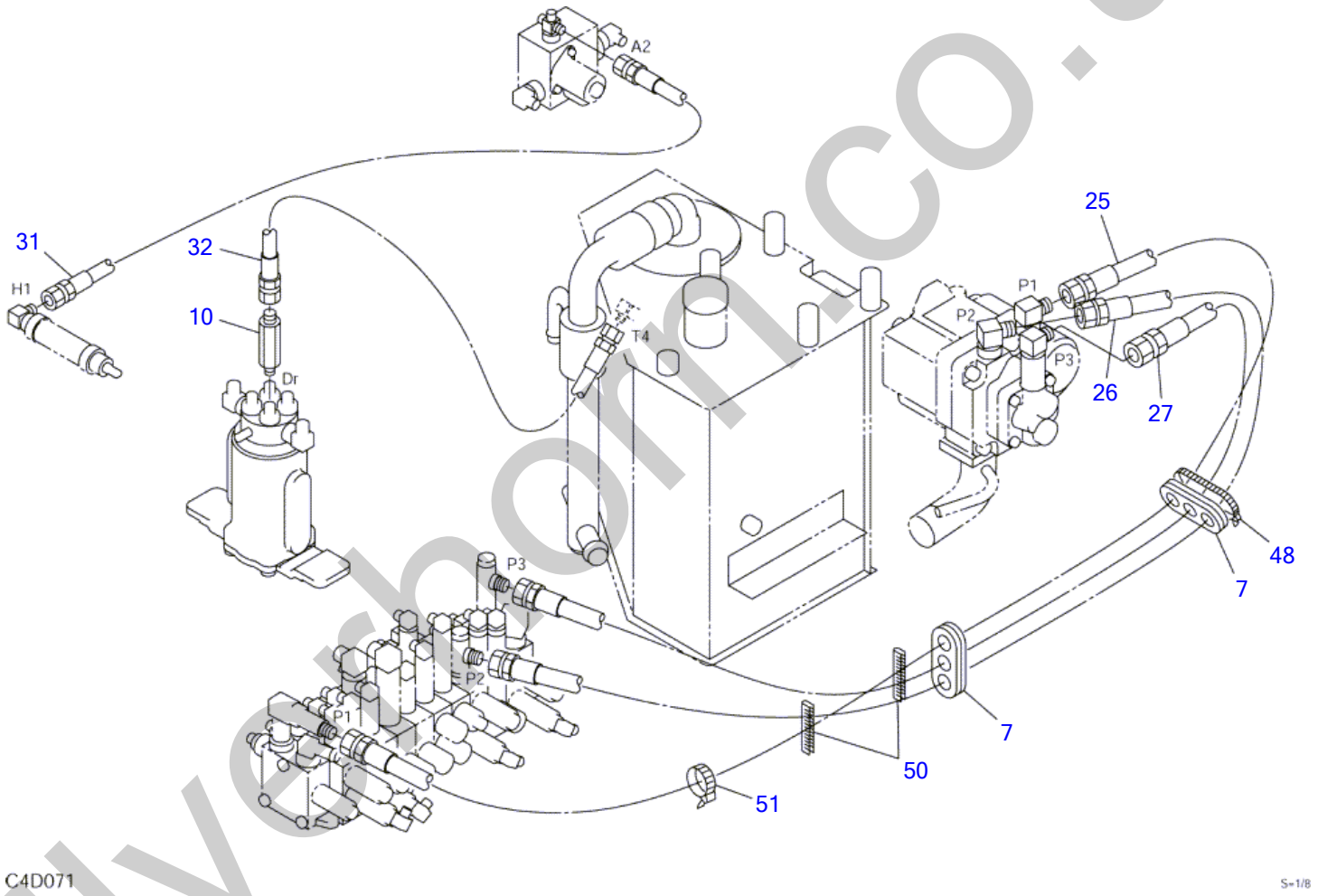

silverhorn.co.uk

PIPING; UPPER (2/3) (11400011-11400436)

Item	Part number	Description	Q'ty	Chan.	Serial No.	Serv.	Remarks
		PIPING ASSY, upper					X03370-27000-1
7	0097022400	GUARD	2				
10	0007203062	ADAPTOR	1				
25	0337027130	HOSE ASSY	1				18015-20144
26	0337027140	HOSE ASSY	1				18015-20118
27	0337027150	HOSE ASSY	1				18015-20110
31	0337027280	HOSE ASSY	1				18010-22063
32	0337027290	HOSE ASSY	1				18010-22070
48	1652200005	BAND	1				
50	1653916008	TRIM	2				sold by the meter
51	1652231250	BAND	1				
	C4d071						

silverhorn.co.uk

PIPING; UPPER (2/3) (11400437-)

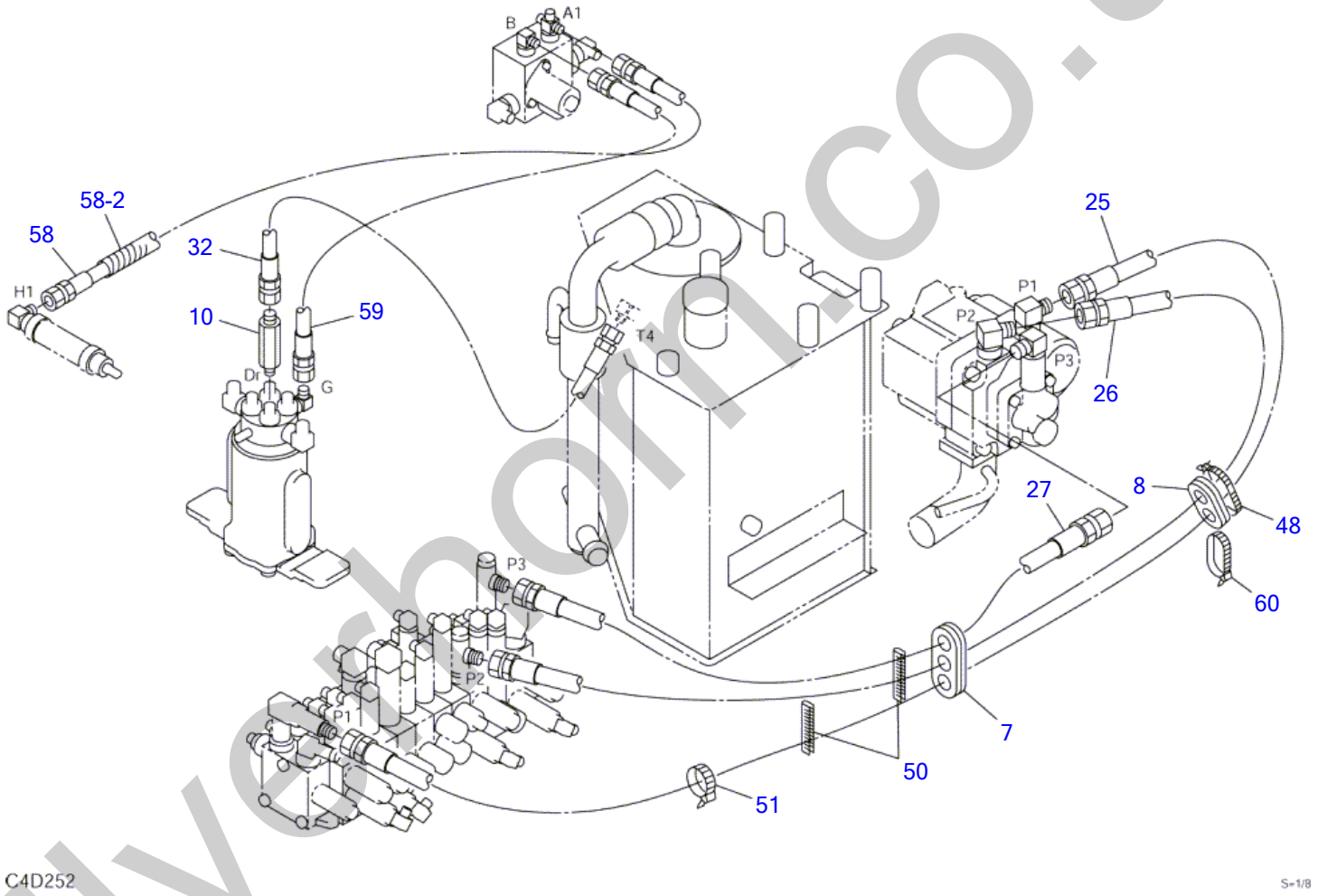

silverhorn.co.uk

PIPING; UPPER (2/3) (11400437-)

Item	Part number	Description	Q'ty	Chan.	Serial No.	Serv.	Remarks
		PIPING ASSY, upper					X03370-29000-5
		PIPING ASSY, upper (for YBM)					X03370-33000-4
7	0097022400	GUARD	1				
8	0097210300	GUARD	1				
10	0007203062	ADAPTOR	1				
25	0337027130	HOSE ASSY	1				18015-20144
26	0337027140	HOSE ASSY	1				18015-20118
27	0337032300	HOSE ASSY	1				18015-21082
32	0337027290	HOSE ASSY	1				18010-22070
48	1652261410	BAND	1				
50	1653916008	TRIM	2				sold by the meter
51	1652231250	BAND	1				
58	0337029160	HOSE ASSY	1				18010-22070
58-2	1532210056	▪ TUBE	1				sold by the meter
59	0337029170	HOSE ASSY	1				18010-22054
60	1652201007	BAND	1				
	C4d252						

silverhorn.co.uk

PIPING; UPPER (3/3) (11400003-11400010)

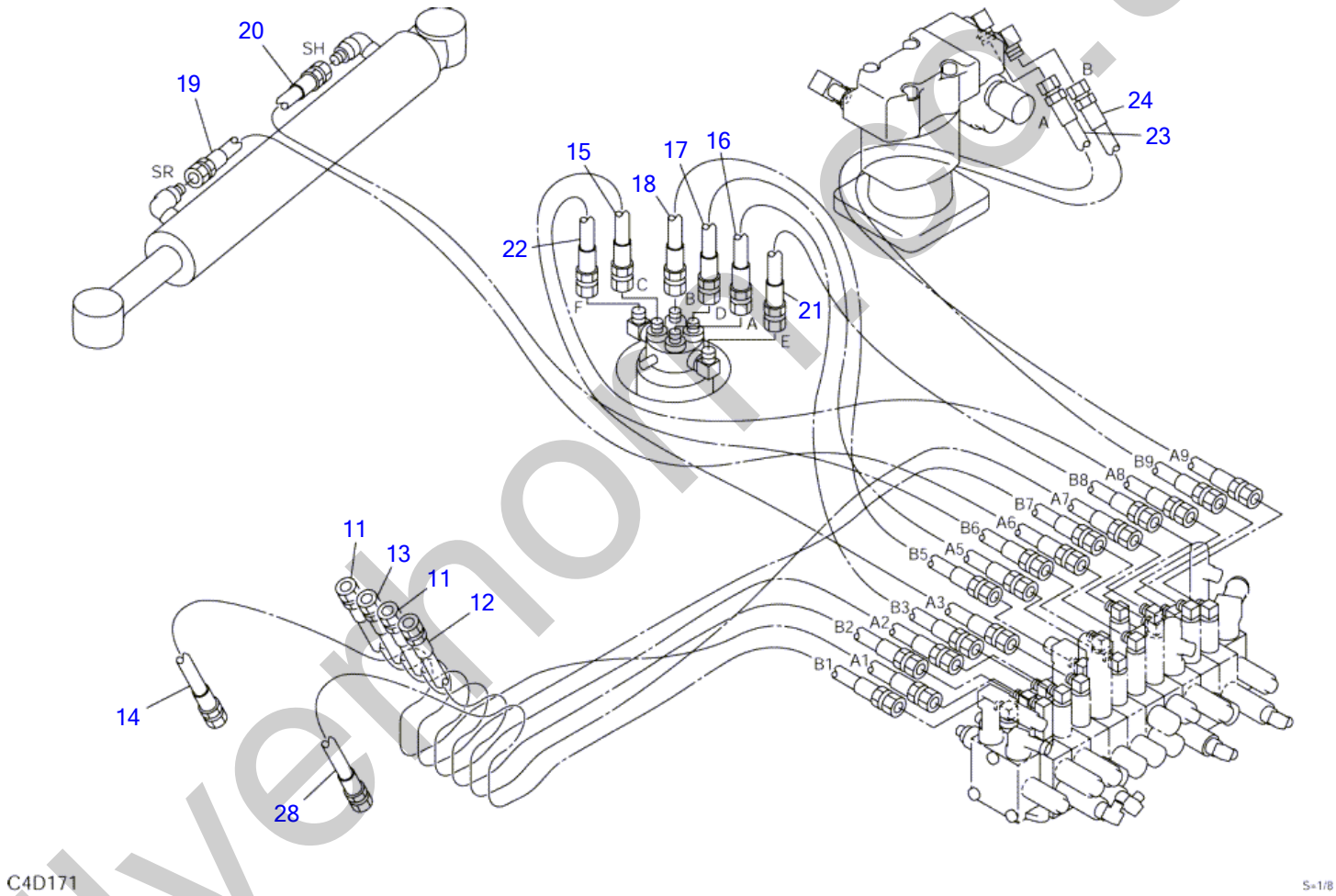

silverhoe.co.uk

PIPING; UPPER (3/3) (11400003-11400010)

Item	Part number	Description	Q'ty	Chan.	Serial No.	Serv.	Remarks
		PIPING ASSY, upper					X03370-22000
11	1801869001	HOSE ASSY	2				
12	1801869002	HOSE ASSY	1				
13	1801869003	HOSE ASSY	1				
14	1801869004	HOSE ASSY	1				
15	1801860046	HOSE ASSY	1				
16	1801860038	HOSE ASSY	1				
17	1801860044	HOSE ASSY	1				
18	1801860042	HOSE ASSY	1				
19	1801860084	HOSE ASSY	1				
20	1801860080	HOSE ASSY	1				
21	1801860056	HOSE ASSY	1				
22	1801860040	HOSE ASSY	1				
23	1938206074	HOSE ASSY	1				
24	1938206068	HOSE ASSY	1				
28	1801869005	HOSE ASSY	1				
	C4d171						

silverhorn.co.uk

PIPING; UPPER (3/3) (11400011-11400436)

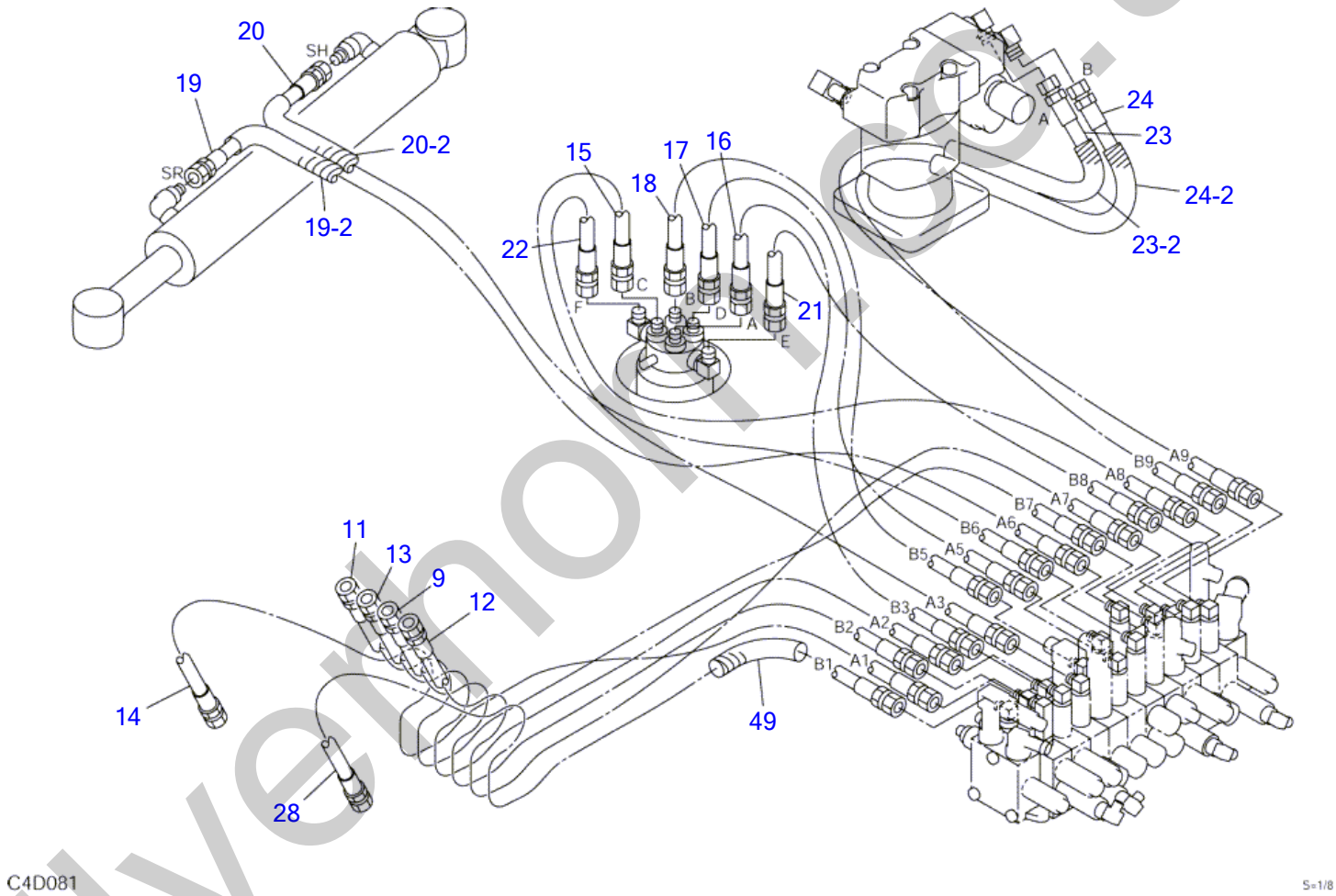

silverhoffice.co.uk

PIPING; UPPER (3/3) (11400011-11400436)

Item	Part number	Description	Q'ty	Chan.	Serial No.	Serv.	Remarks
		PIPING ASSY, upper					X03370-27000-1
9	0337027100	HOSE ASSY	1				18015-60180
11	0337024100	HOSE ASSY	1				18015-60180
12	0337024200	HOSE ASSY	1				18015-60185
13	0337024300	HOSE ASSY	1				18015-60190
14	0337024400	HOSE ASSY	1				18015-60235
15	0337027200	HOSE ASSY	1				18015-60046
16	0337027210	HOSE ASSY	1				18015-60038
17	0337027220	HOSE ASSY	1				18015-60044
18	0337027230	HOSE ASSY	1				18015-60040
19	0337027110	HOSE ASSY	1				18015-60084
19-2	1532215029	・TUBE	1				sold by the meter
20	0337027120	HOSE ASSY	1				18015-60080
20-2	1532215027	・TUBE	1				sold by the meter
21	0337027240	HOSE ASSY	1				18015-00034
22	0337027250	HOSE ASSY	1				18015-00050
23	0337027260	HOSE ASSY	1				18015-00074
23-2	1532215034	・TUBE	1				sold by the meter
24	0337027270	HOSE ASSY	1				18015-00068
24-2	1532215034	・TUBE	1				sold by the meter
28	0337024500	HOSE ASSY	1				18015-60225
49	1532215010	TUBE	1				sold by the meter
	C4d081						

silverhorn.co.uk

PIPING; UPPER (3/3) (11400437-)

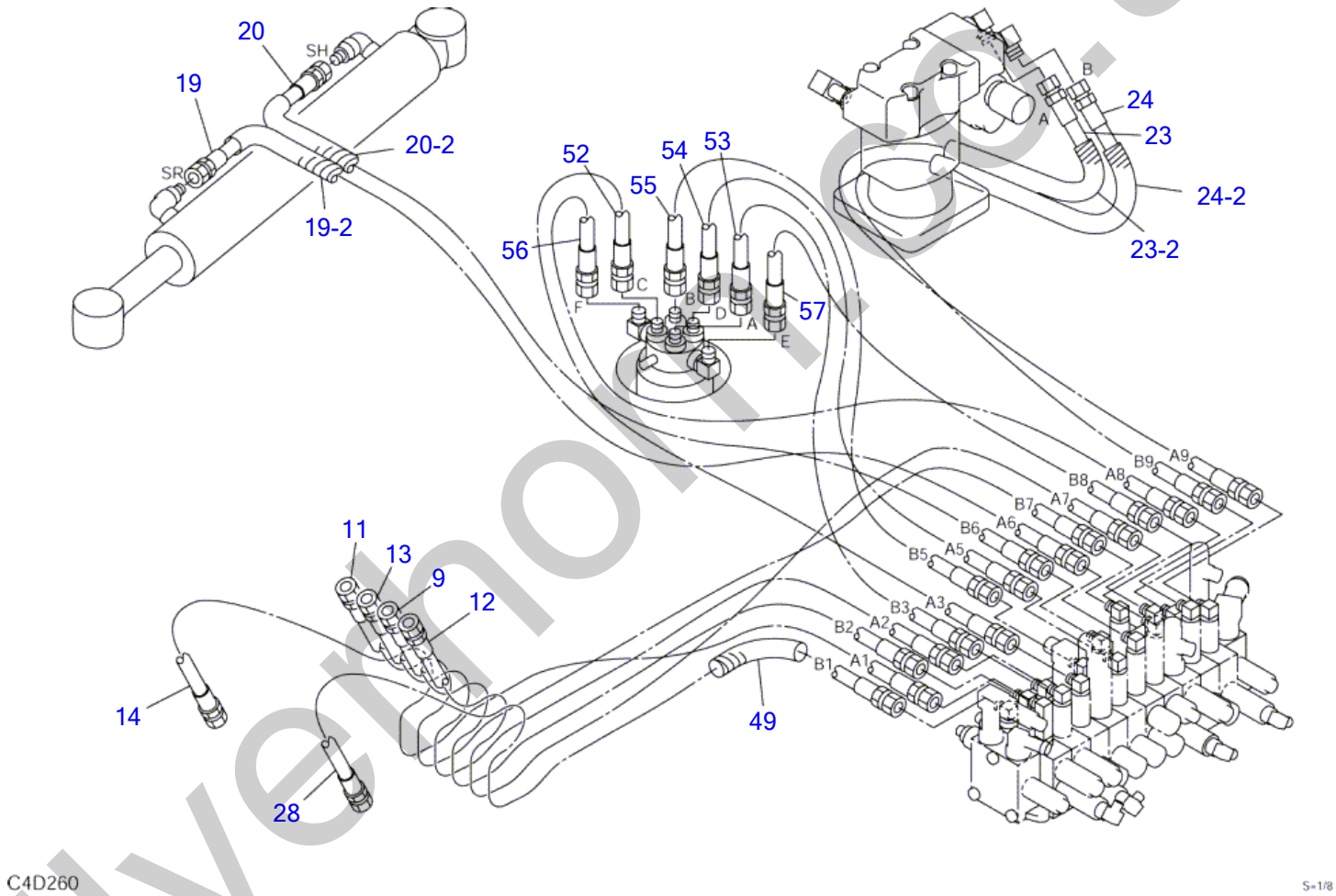

silverhoe.co.uk

PIPING; UPPER (3/3) (11400437-)

Item	Part number	Description	Q'ty	Chan.	Serial No.	Serv.	Remarks
		PIPING ASSY, upper					X03370-29000-5
9	0337029200	HOSE ASSY	1				18019-60180
11	0337029210	HOSE ASSY	1				18019-60180
12	0337029220	HOSE ASSY	1				18019-60185
13	0337029230	HOSE ASSY	1				18019-60190
14	0337029240	HOSE ASSY	1				18019-60235
19	0337027110	HOSE ASSY	1				18015-60084
19-2	1532215029	・TUBE	1				sold by the meter
20	0337027120	HOSE ASSY	1				18015-60080
20-2	1532215027	・TUBE	1				sold by the meter
23	0337027260	HOSE ASSY	1				18015-00074
23-2	1532215034	・TUBE	1				sold by the meter
24	0337027270	HOSE ASSY	1				18015-00068
24-2	1532215034	・TUBE	1				sold by the meter
28	0337029250	HOSE ASSY	1				18019-60225
49	1532215010	TUBE	1				sold by the meter
52	0337029100	HOSE ASSY	1				18015-60050
53	0337029110	HOSE ASSY	1				18015-60042
54	0337029120	HOSE ASSY	1				18015-60042
55	0337029130	HOSE ASSY	1				18015-60042
56	0337029140	HOSE ASSY	1				18015-00050
57	0337029150	HOSE ASSY	1				18015-00042
	C4d261						

silverhorn.co.uk

PIPING; UPPER (3/3) (for YBM)

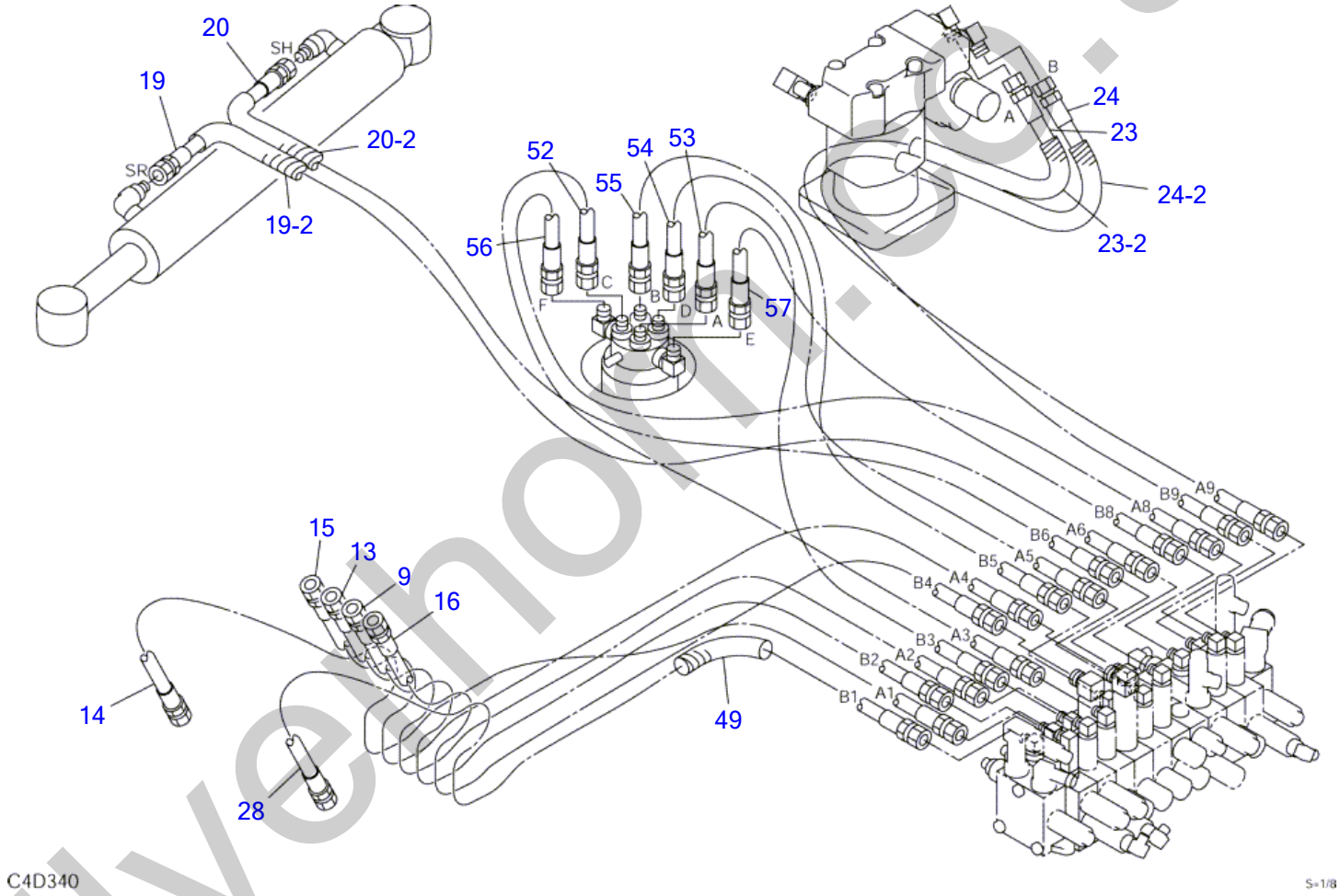

silvethorn.co.uk

PIPING; UPPER (3/3) (for YBM)

Item	Part number	Description	Q'ty	Chan.	Serial No.	Serv.	Remarks
		PIPING ASSY, upper (for YBM)					X03370-33000-4
9	0337029200	HOSE ASSY	1				18019-60180
13	0337029230	HOSE ASSY	1				18019-60190
14	0337029240	HOSE ASSY	1				18019-60235
15	0337330100	HOSE ASSY	1				18015-40185
16	0337330200	HOSE ASSY	1				18015-40200
19	0337027110	HOSE ASSY	1				18015-60084
19-2	1532215029	・TUBE	1				sold by the meter
20	0337027120	HOSE ASSY	1				18015-60080
20-2	1532215027	・TUBE	1				sold by the meter
23	0337027260	HOSE ASSY	1				18015-00074
23-2	1532215034	・TUBE	1				sold by the meter
24	0337027270	HOSE ASSY	1				18015-00068
24-2	1532215034	・TUBE	1				sold by the meter
28	0337029250	HOSE ASSY	1				18019-60225
49	1532215010	TUBE	1				sold by the meter
52	0337029100	HOSE ASSY	1				18015-60050
53	0337029110	HOSE ASSY	1				18015-60042
54	0337029120	HOSE ASSY	1				18015-60042
55	0337029130	HOSE ASSY	1				18015-60042
56	0337029140	HOSE ASSY	1				18015-00050
57	0337029150	HOSE ASSY	1				18015-00042
	C4d341						

silverhorn.co.uk

PUMP DRIVE

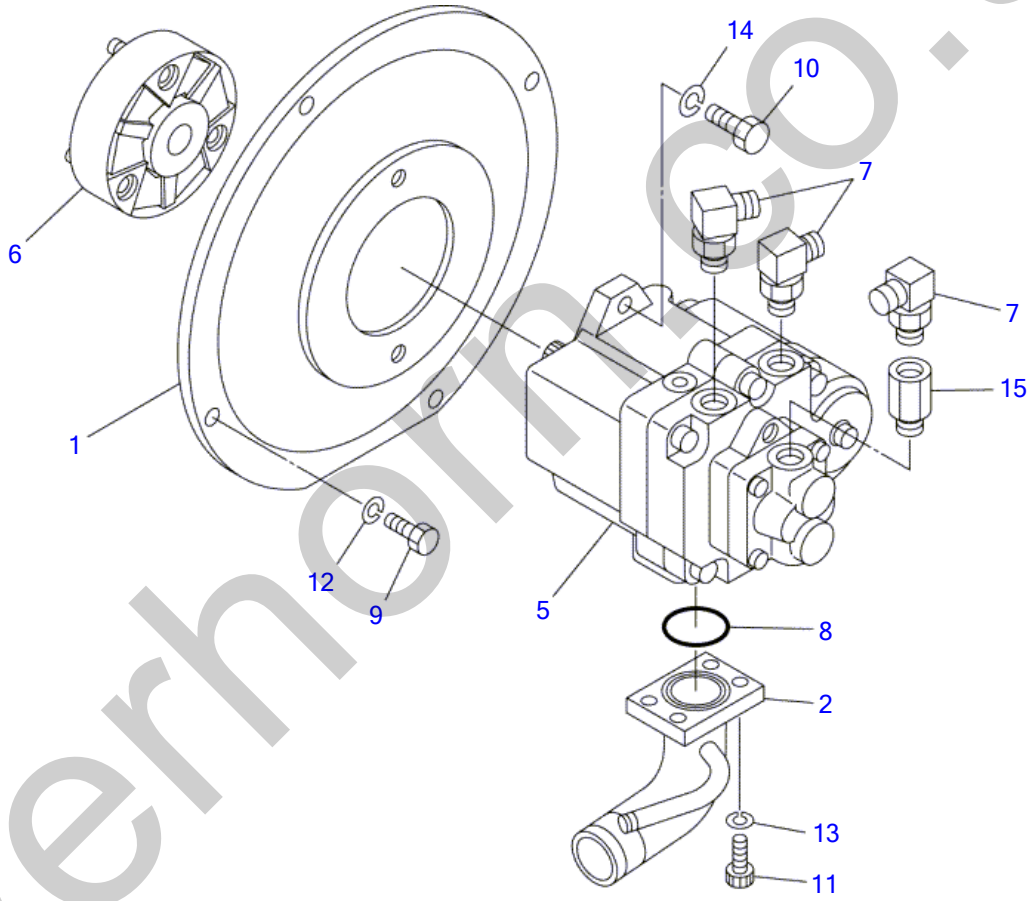

C4D121

S-1/5

silverhorm.co.uk

PUMP DRIVE

Item	Part number	Description	Q'ty	Chan.	Serial No.	Serv.	Remarks
		PUMP ASSY, drive					X03352-18000-3
1	0335213100	HOUSING	1				
2	0335215100	FLANGE	1		11400003~11400010		
	0335216100	FLANGE	1	(H)	11400011~		
5	1902014700	PUMP, hydraulic	1		11400003~11400490		
	1902018200	PUMP, hydraulic	1	(H)	11400491~		
6	1603100800	COUPLING	1				
7	1515010041	ELBOW	3				
	1420010140	▪ O-RING	1			M	
8	1420100400	O-RING	1				
9	1100041025	BOLT	4				
10	1101041230	BOLT	2				
11	1110041025	SCREW, cap	4				
12	1140020010	WASHER, spring	4				
13	1140420010	WASHER, spring	4				
14	1140020012	WASHER, spring	2				
15	0007213016	BUSHING	1				
	C4d122S						

silverhorn.co.uk

HYDRAULIC TANK

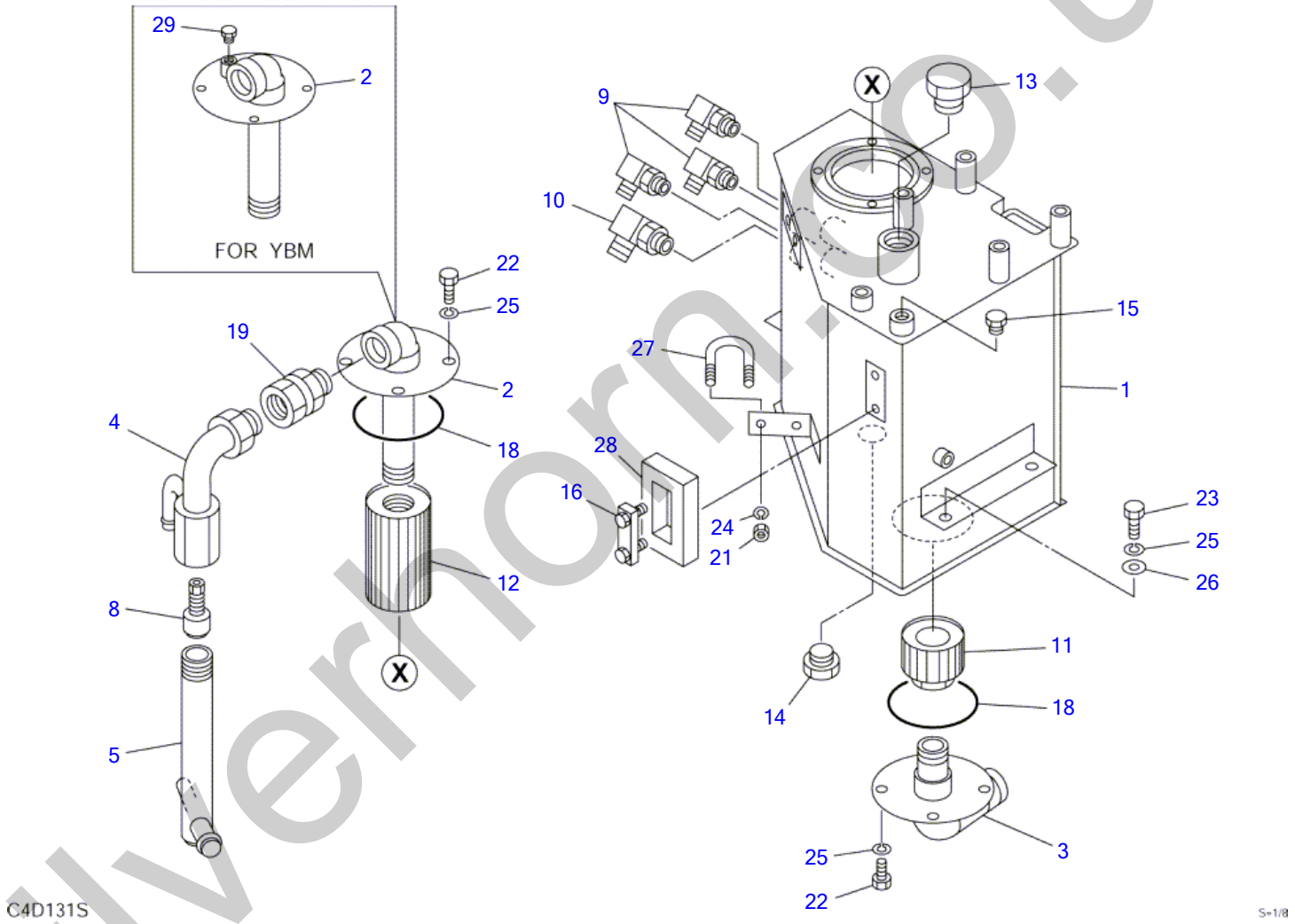

silverhorn.co.uk

HYDRAULIC TANK

Item	Part number	Description	Q'ty	Chan.	Serial No.	Serv.	Remarks
		TANK ASSY, hydraulic					X03380-22000-4
		TANK ASSY, hydraulic (for YBM)					X03380-27000-2
1	0338021100	TANK, hydraulic	1		11400003~11400010		
	0338022100	TANK, hydraulic	1	(H)	11400011~11400424		
	0338022400	TANK, hydraulic	1		11400425~		
2	0338019300	COVER	1		11400003~11400010		
	0338022200	COVER	1	(H)	11400011~		
	0338027100	COVER	1				for YBM
3	0338019200	PIPE	1				
4	0338019400	JOINT	1				
	0338027200	JOINT	1				for YBM
5	0338021500	JOINT	1		11400003~11400010		
	0338022300	JOINT	1	(H)	11400011~		
8	1540140815	VALVE, check	1				
9	1515012040	ELBOW	3				
	1420010110	・O-RING	1			M	
10	1515010041	ELBOW	1				
	1420010140	・O-RING	1			M	
11	1550010150	FILTER	1				
12	1551101300	FILTER	1				
13	1501750010	PLUG	1				
	1420010290	・O-RING	1			M	
14	1501750006	PLUG	1				
	1420010240	・O-RING	1			M	
15	1501750002	PLUG	1		11400741~		
	1420010110	・O-RING	1			M	
16	1553020655	GAUGE	1				
18	1420101050	O-RING	2				
19	1511420010	ADAPTOR	1				
21	1130040008	NUT	2				
22	1100041016	BOLT	8				
23	1100041025	BOLT	4				
24	1140020008	WASHER, spring	2				
25	1140020010	WASHER, spring	12				
26	1141550010	WASHER	4				
27	1533201010	U-BOLT	1				
28	0338021028	URETHANE	1				
29	1501710002	PLUG	1				for YBM
	C4d132S						

silverhorn.co.uk

FUEL TANK & FUEL PIPING (11400003-11400010)

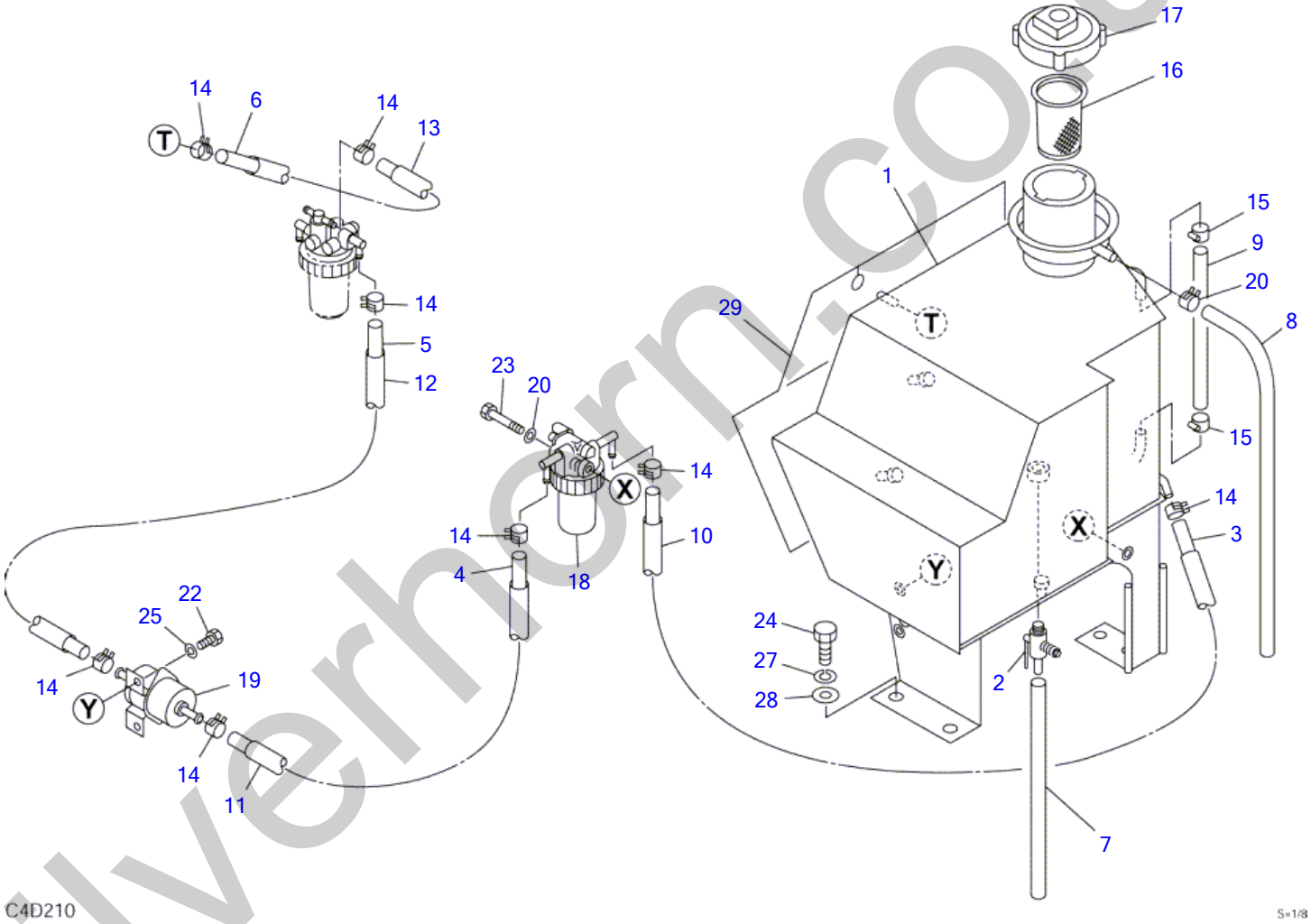

silverhorn.co.uk

FUEL TANK & FUEL PIPING (11400003-11400010)

Item	Part number	Description	Q'ty	Chan.	Serial No.	Serv.	Remarks
		TANK ASSY, fuel					X03381-19000
1	0338119100	TANK	1				
2	1522100014	VALVE, drain	1				
3	1531207035	HOSE	1				sold by the meter
4	1531207059	HOSE	1				sold by the meter
5	1531207050	HOSE	1				sold by the meter
6	1531207013	HOSE	1				sold by the meter
7	1531007031	HOSE	1				sold by the meter
8	1531010080	HOSE	1				sold by the meter
9	1531010021	HOSE	1				sold by the meter
10	1531115025	PROTECTOR	1				sold by the meter
11	1531115045	PROTECTOR	1				sold by the meter
12	1531115040	PROTECTOR	1				sold by the meter
13	1531115010	PROTECTOR	1				sold by the meter
14	1533120012	BAND	8				sold by the meter
15	1533700015	CLIP	2				
16	1552100320	STRAINER	1				
17	1552100500	CAP	1				
18	1910030033	SEPARATOR, water	1				Y129335-55700
19	1910047033	PUMP, feed	1				Y129322-77401
20	1533120015	BAND	1				
22	1100040612	BOLT	2				
23	1100040865	BOLT	1				
24	1100041025	BOLT	4				
25	1140020006	WASHER, spring	2				
27	1140020010	WASHER, spring	4				
28	1141110010	WASHER	4				
29	0339601300	INSULATOR	1				
	C4d211						

silverhorn.co.uk

FUEL TANK & FUEL PIPING (11400011-)

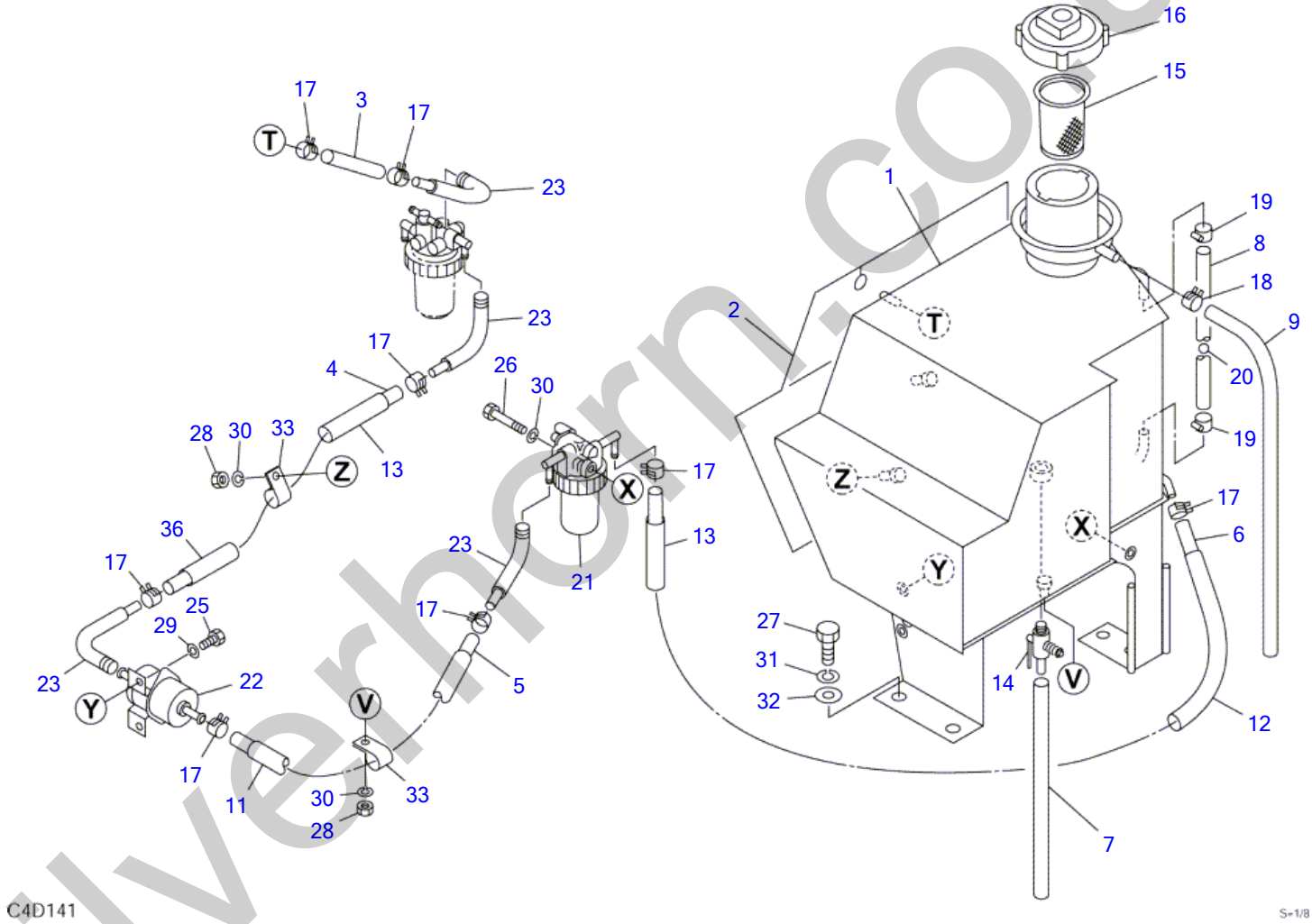

silverhorn.co.uk

FUEL TANK & FUEL PIPING (11400011-)

Item	Part number	Description	Q'ty	Chan.	Serial No.	Serv.	Remarks
		TANK ASSY, fuel					X03381-20000-4
1	0338121000	TANK	1				
2	0338121400	INSULATOR	1				
3	1531207011	HOSE	1				sold by the meter
4	1531207014	HOSE	1				sold by the meter
5	1531207021	HOSE	1				sold by the meter
6	1531207037	HOSE	1				sold by the meter
7	1531007035	HOSE	1				sold by the meter
8	1531010024	HOSE	1			M	sold by the meter
9	1531010080	HOSE	1				sold by the meter
11	1531115015	PROTECTOR	1				sold by the meter
12	1531115020	PROTECTOR	1				sold by the meter
13	1531115010	PROTECTOR	2				sold by the meter
14	1522100014	COCK	1				
15	1552100320	STRAINER	1				
16	1552100500	CAP	1				
17	1533120012	BAND	8				
18	1533120015	BAND	1				
19	1533700015	CLIP	2				
20	1553000001	FLOAT	1				
21	1910030033	SEPARATOR, water	1				Y129335-55700
22	1910047033	PUMP, feed	1				Y129322-77401
23	1910065047	HOSE, bend	4				Y119840-59601
25	1100040612	BOLT	2				
26	1100040865	BOLT	1				
27	1100041025	BOLT	3				
28	1130040008	NUT	2				
29	1140020006	WASHER, spring	2				
30	1140020008	WASHER, spring	3				
31	1140020010	WASHER, spring	3				
32	0003600003	WASHER	4				
33	0007300050	CLAMP	2				
36	1531115008	HOSE	1				sold by the meter
	C4d142						

silverhorn.co.uk

WATER SEPARATOR (for HE service)

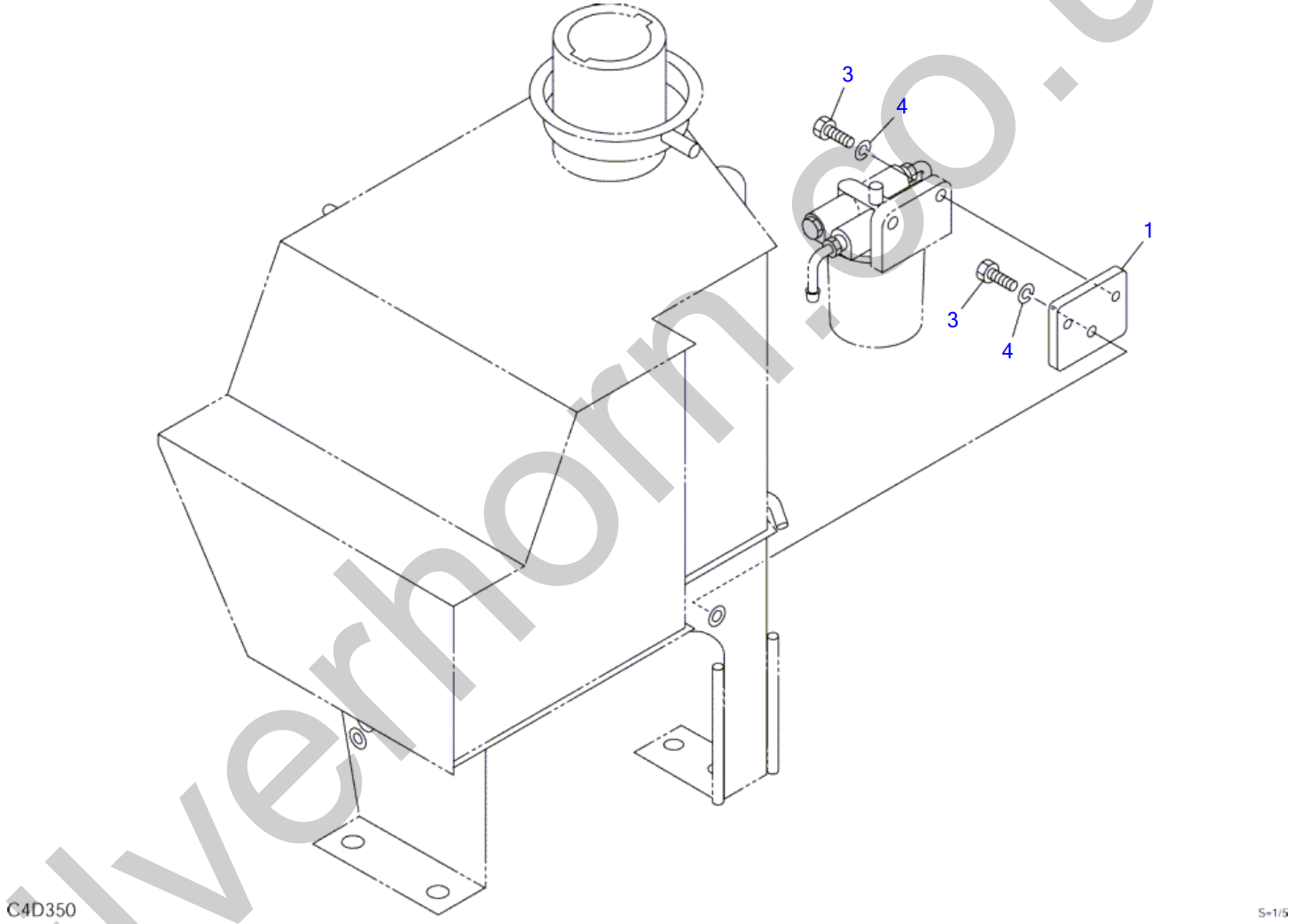

silverhorn.co.uk

WATER SEPARATOR (for HE service)

Item	Part number	Description	Q'ty	Chan.	Serial No.	Serv.	Remarks
		SEPARATOR ASSY, water					X03381-23000-1
1	**0338123001**	PLATE	1				
3	**1100240825**	BOLT	3				
4	**1140020008**	WASHER, spring	3				
	C4d350						

silverhorn.co.uk

COVER (1/4) (11400003-11400010)

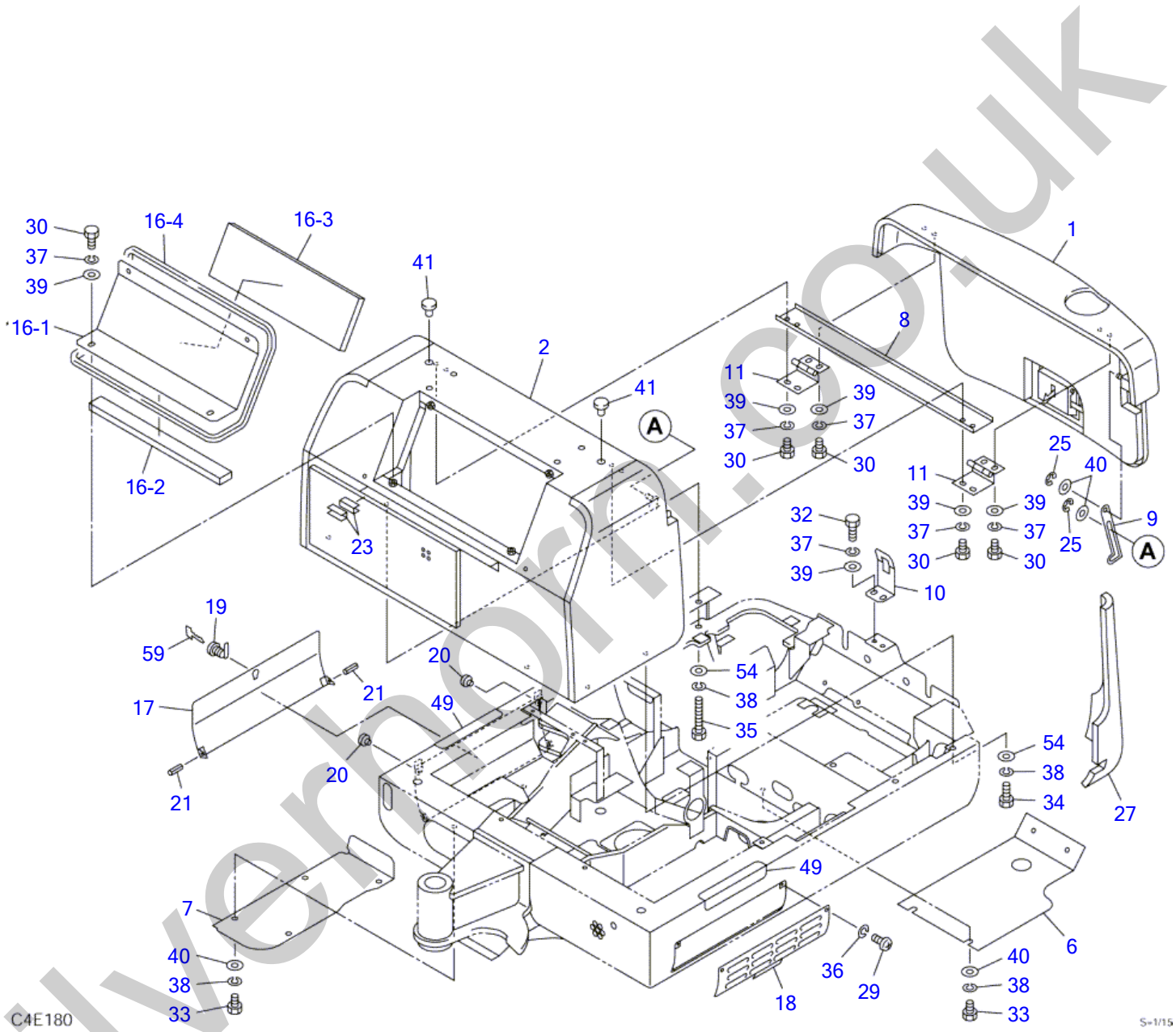

silverhorn.co.uk

COVER (1/4) (11400003-11400010)

Item	Part number	Description	Q'ty	Chan.	Serial No.	Serv.	Remarks
		COVER ASSY (canopy)					X03382-33000
		COVER ASSY (cab)					X03382-34000
1	0338233100	HOOD, engine	1				see page (3/4)
2	0338233200	COVER, engine	1				see page (4/4)
6	0338233700	COVER	1				
7	0338233710	COVER	1				
8	0338230720	GUTTER	1				
9	0338233730	STOPPER	1				
10	0338230740	HOOK	1				
11	0338230750	HINGE	2				
16	0338233790	COVER	1				
16-1	0338233791	・COVER	1				
16-2	0338230792	・ABSORBENT, noise	1				
16-3	0338230793	・ABSORBENT, noise	1				
16-4	1654605150	・SEAL	1				sold by the meter
17	0338230800	COVER (R.H.)	1				
18	0338230810	COVER (L.H.)	1				
19	1653601395	LOCK	1				
20	1652512200	RUBBER, cushion	2				
21	1213000420	PIN, spring	2				
23	1654613005	PACKING (sold by the meter)	2				sold by the meter
25	1224010009	E-RING	2				
27	0338230840	ABSORBENT, noise	1				
29	1120530612	SCREW	2				
30	1100040816	BOLT	12				
32	1100040825	BOLT	2				
33	1100041020	BOLT	8				
34	1100041035	BOLT	4				
35	1100141010	BOLT	2				
36	1140020006	WASHER, spring	2				
37	1140020008	WASHER, spring	14				
38	1140020010	WASHER, spring	14				
39	1141110008	WASHER	12				
40	1141110010	WASHER	10				
41	1652530001	PLUG	2				
49	0068228700	SHEET	2				
54	1141550010	WASHER	6				
59	1700100019	KEY	1				
	C4e181						

silverhorn.co.uk

COVER (2/4) (canopy; 11400003-11400010)

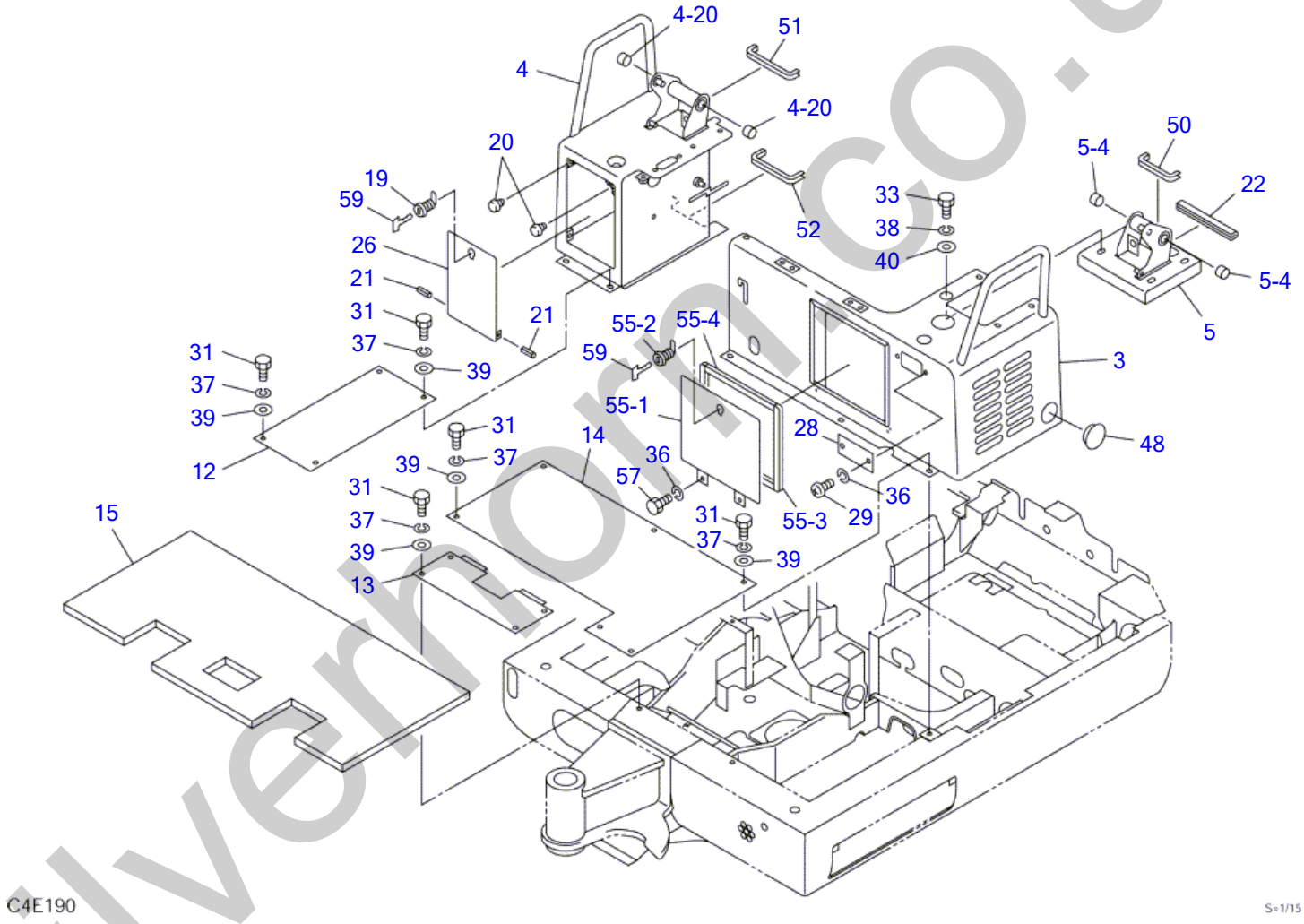

silvernorm.co.uk

COVER (2/4) (canopy; 11400003-11400010)

Item	Part number	Description	Q'ty	Chan.	Serial No.	Serv.	Remarks
		COVER ASSY (canopy)					X03382-33000
3	0338233450	COVER	1				
4	0338233500	COVER (R.H.)	1				
4-20	1333002015	・BUSHING	2				
5	0338233600	COVER (L.H.)	1				
5-4	1333002015	・BUSHING	2				
12	0338230760	PLATE	1				
13	0338230770	PLATE	1				
14	0338230830	PLATE	1				
15	0338231300	MAT, floor	1				
19	1653601395	LOCK	1				
20	1652512200	RUBBER, cushion	2				
21	1213000420	PIN, spring	2				
22	1654606017	SEAL	1				sold by the meter
26	0338230820	COVER	1				
28	0338230850	COVER	1				
29	1120530612	SCREW	2				
31	1100040820	BOLT	14				
33	1100041020	BOLT	14				
36	1140020006	WASHER, spring	4				
37	1140020008	WASHER, spring	14				
38	1140020010	WASHER, spring	4				
39	1141110008	WASHER	14				
40	1141110010	WASHER	4				
48	1652060051	BUSHING	1				
50	1653917010	TRIM	1				sold by the meter
51	1653917015	TRIM	1				sold by the meter
52	1653917017	TRIM	1				sold by the meter
55	0338233950	COVER	1				
55-1	0338230960	・COVER	1				
55-2	1653601395	・LOCK	1				
55-3	0338233953	・SPONGE	2				
55-4	0338233954	・SPONGE	2				
57	1100040612	BOLT	2				
59	1700100019	KEY	2				
	C4e193						

silverhorn.co.uk

COVER (2/4) (cab; 11400003-11400010)

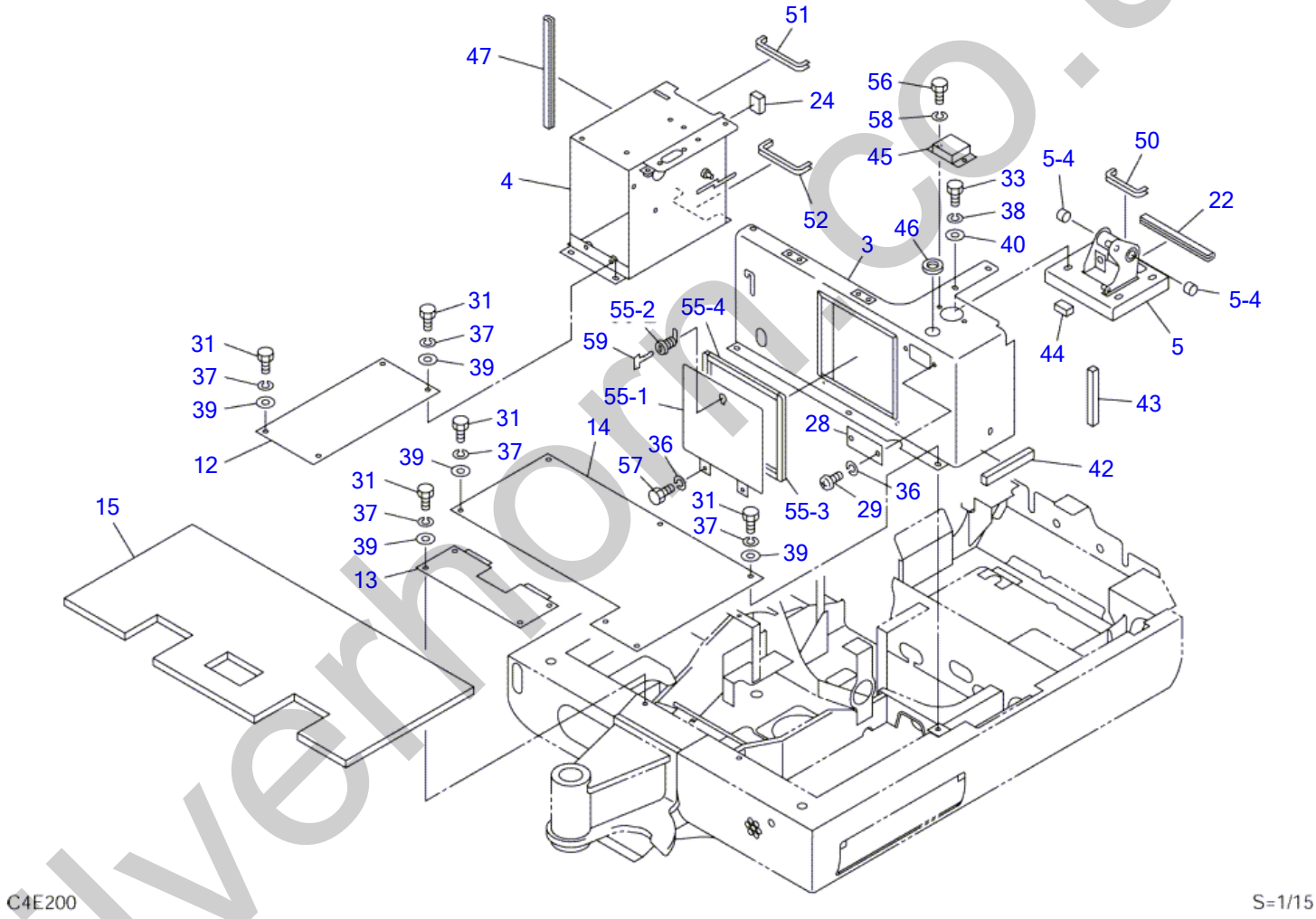

silvernorm.co.uk

COVER (2/4) (cab; 11400003-11400010)

Item	Part number	Description	Q'ty	Chan.	Serial No.	Serv.	Remarks
		COVER ASSY (cab)					X03382-34000
3	0338234150	COVER	1				
4	0338234200	COVER (R.H.)	1				
5	0338233600	COVER (L.H.)	1				
5-4	1333002015	・BUSHING	2				
12	0338230760	PLATE	1				
13	0338230770	PLATE	1				
14	0338230830	PLATE	1				
15	0338231300	MAT, floor	1				
22	1654606021	SEAL	1				sold by the meter
24	1654308004	SPONGE	1				sold by the meter
28	0338230850	COVER	1				
29	1120530612	SCREW	2				
31	1100040820	BOLT	14				
33	1100041020	BOLT	4				
36	1140020006	WASHER, spring	4				
37	1140020008	WASHER, spring	14				
38	1140020010	WASHER, spring	4				
39	1141110008	WASHER	14				
40	1141110010	WASHER	4				
42	1654304015	SPONGE	1				sold by the meter
43	1654306015	SPONGE	1				sold by the meter
44	1654304003	SPONGE	1				sold by the meter
45	0338233900	COVER	1				
46	1654613015	PACKING	1				sold by the meter
47	1654606030	SEAL	1				sold by the meter
50	1653917010	TRIM	1				sold by the meter
51	1653917015	TRIM	1				sold by the meter
52	1653917017	TRIM	1				sold by the meter
55	0338233950	COVER	1				
55-1	0338230960	・COVER	1				
55-2	1653601395	・LOCK	1				
55-3	0338233953	・SPONGE	2				
55-4	0338233954	・SPONGE	2				
56	1100040510	BOLT	2				
57	1100040612	BOLT	2				
58	1140020005	WASHER, spring	2				
59	1700100019	KEY	1				
	C4e203						

silverhorn.co.uk

COVER (1/4) (11400011-)

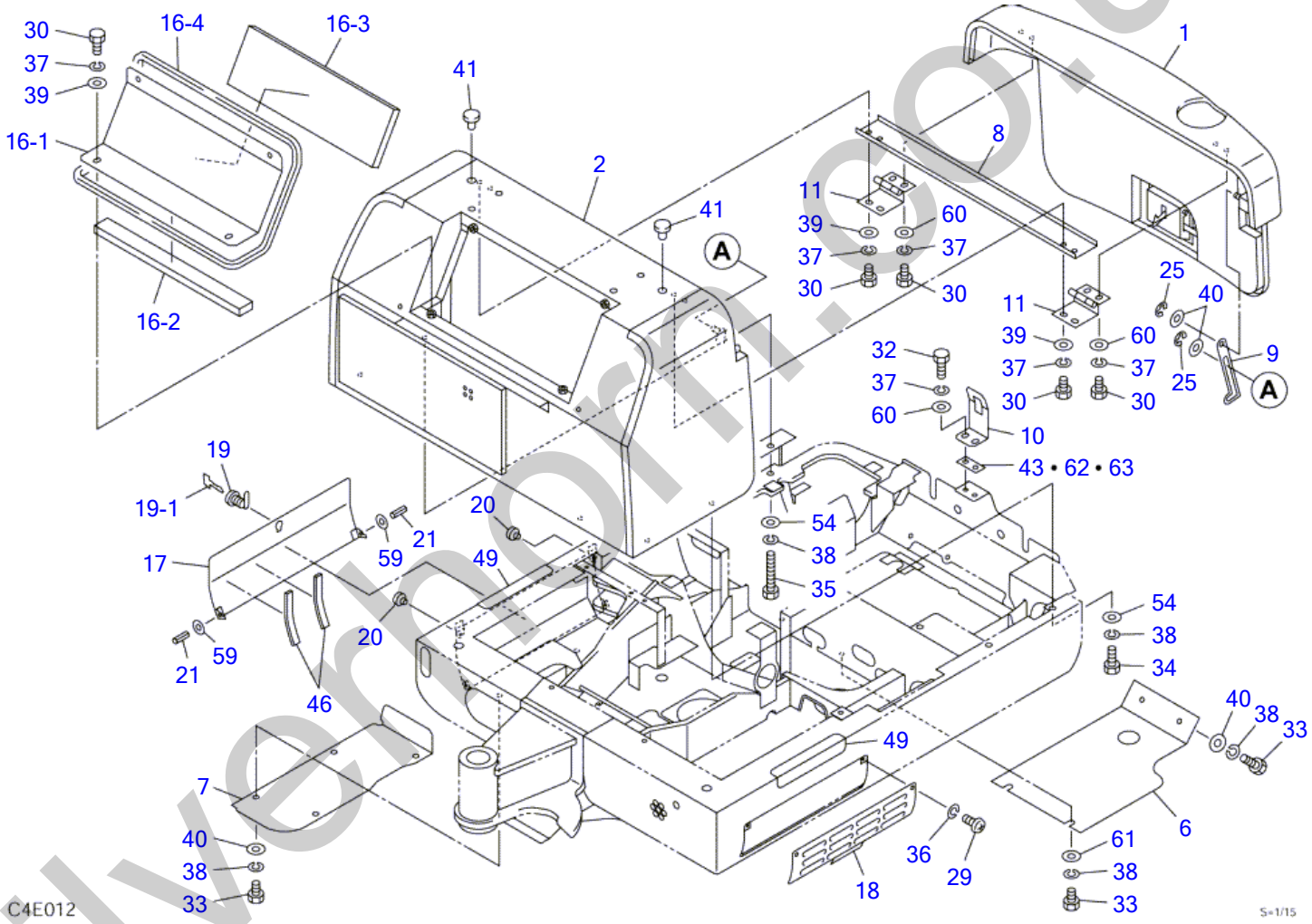

silverhorn.co.uk

COVER (1/4) (11400011-)

Item	Part number	Description	Q'ty	Chan.	Serial No.	Serv.	Remarks
		COVER ASSY (canopy)					X03382-39000-9
		COVER ASSY (cab)					X03382-40000-9
		COVER ASSY (canopy) (with battery switch)					X03382-40100-9
		COVER ASSY (cab) (with battery switch)					X03382-40200-9
1	0338235100	HOOD, engine	1				see page (3/4)
2	0338235200	COVER, engine	1		11400011~11400100		see page (4/4)
	0338239100	COVER, engine	1	(H)	11400101~		see page (4/4)
6	0338235700	COVER	1				
7	0338235710	COVER	1				
8	0338235720	GUTTER	1				
9	0338233730	STOPPER	1				
10	0338235740	HOOK	1				
11	0338230750	HINGE	2				
16	0338233790	COVER	1		11400011~11400100		
16-1	0338233791	・COVER	1		11400011~11400100		
16-2	0338230792	・ABSORBENT, noise	1		11400011~11400100		
16-3	0338230793	・ABSORBENT, noise	1		11400011~11400100		
16-4	1654605150	・SEAL	1		11400011~11400100		sold by the meter
17	0338235800	COVER (R.H.)	1				
18	0338235810	COVER (L.H.)	1				
19	1653601395	LOCK	1				canopy
19-1	1700100019	KEY	1				
20	1652515000	RUBBER, cushion	2				canopy
21	1213000420	PIN, spring	2				canopy
25	1224010009	E-RING	2				
29	1120530612	SCREW	2				
30	1100040816	BOLT	12		11400003~11400100		
	1100040816	BOLT	8		11400101~		
32	1100040825	BOLT	2				
33	1100041020	BOLT	8				
34	1100041035	BOLT	4				
35	1100141010	BOLT	2				
36	1140020006	WASHER, spring	2				
37	1140020008	WASHER, spring	14		11400003~11400100		
	1140020008	WASHER, spring	10		11400101~		
38	1140020010	WASHER, spring	14				
39	1141110008	WASHER	14		11400003~11400100		
	1141110008	WASHER	4		11400101~		
40	1141110010	WASHER	8				
41	1652530002	PLUG	2				canopy
43	0003900028	SPACER	1				
46	1654304010	SPONGE	2		11401109~		sold by the meter
49	0068228700	SHEET	2				canopy
54	0003600020	WASHER	6				
59	1141110004	WASHER	2				
60	0003608252	WASHER	6				
61	0003600003	WASHER	2				
62	0003900027	SHIM t=2.3	AR				
63	0003900028	SHIM t=4.5	AR				
	C4e012S						

silverform.co.uk

COVER (2/4) (canopy; 11400011-)

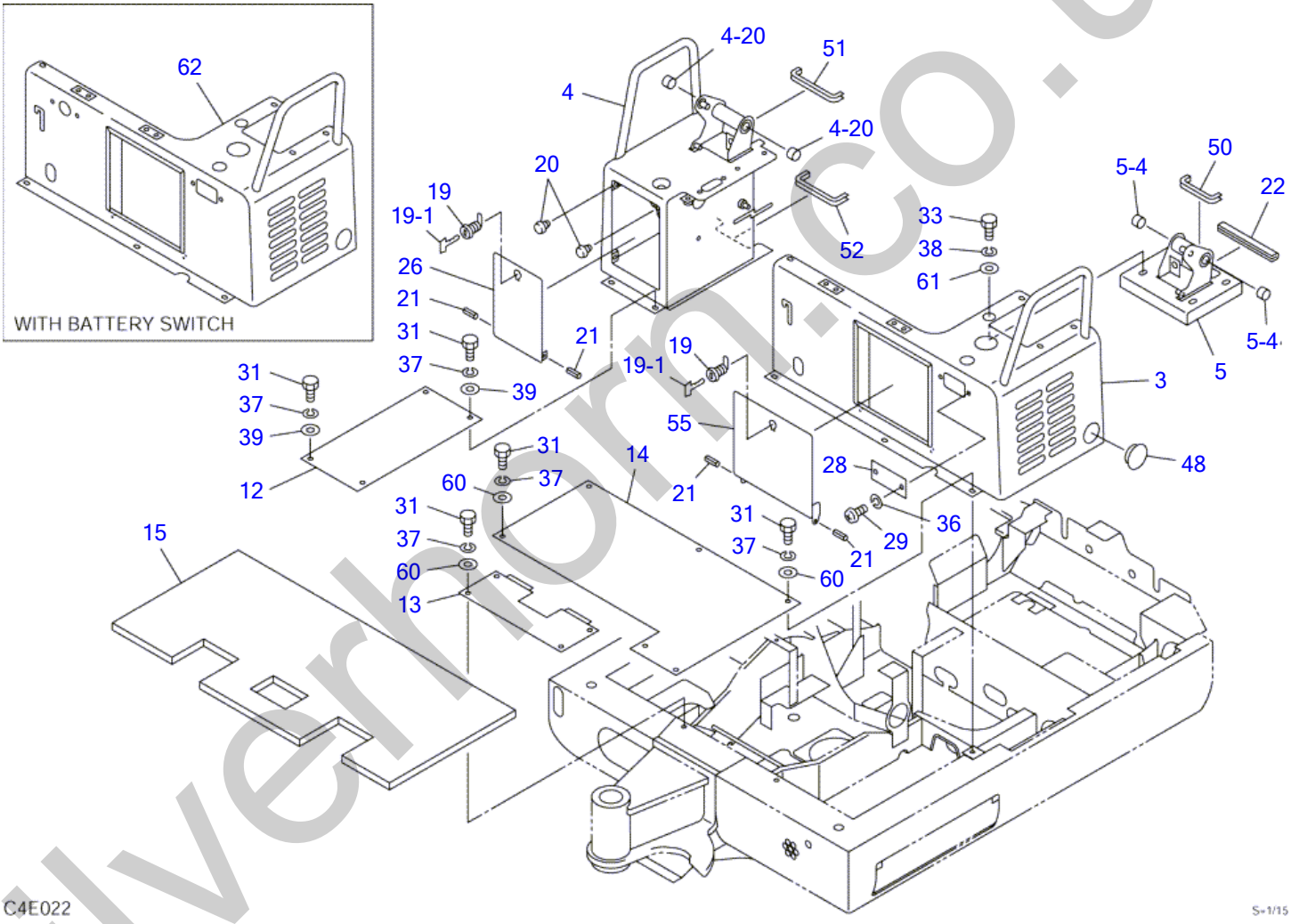

silverhorn.co.uk

COVER (2/4) (canopy; 11400011-)

Item	Part number	Description	Q'ty	Chan.	Serial No.	Serv.	Remarks
		COVER ASSY (canopy)					X03382-39000-9
		COVER ASSY (canopy) (with battery switch)					X03382-40100-9
3	0338235450	COVER	1				
4	0338235500	COVER (R.H.)	1		11400011~11400016		
	0338237100	COVER (R.H.)	1		11400017~11400460		
	0338239400	COVER (R.H.)	1		11400461~		
4-20	1333002015	・BUSHING	2				
5	0338235600	COVER (L.H.)	1		11400011~11400460		
	0338239500	COVER (L.H.)	1		11400461~		
5-4	1333002015	・BUSHING	2				
12	0338235760	PLATE	1				
13	0338235770	PLATE	1				
14	0338235830	PLATE	1				
15	0338239350	MAT, floor	1				
19	1653601395	LOCK	2				
19-1	1700100019	KEY	2				
20	1652515000	RUBBER, cushion	2				
21	1213000420	PIN, spring	4				
22	1654606017	SEAL	1				sold by the meter
26	0338230820	COVER	1				
28	0338230850	COVER	1				
29	1120530612	SCREW	2				
31	1100040820	BOLT	17				
33	1100041020	BOLT	4				
36	1140020006	WASHER, spring	2				
37	1140020008	WASHER, spring	16				
38	1140020010	WASHER, spring	4				
39	1141110008	WASHER	6				
48	1652060051	BUSHING	1				
50	1653917010	TRIM	1				sold by the meter
51	1653917015	TRIM	1				sold by the meter
52	1653917017	TRIM	1				sold by the meter
55	0338235950	COVER	1				
60	0003608252	WASHER	10		11401267~		
61	0003600003	WASHER	4				
62	0338240110	COVER	1				with battery switch
	C4e023S						

silverhorn.co.uk

COVER (2/4) (cab; 11400011-)

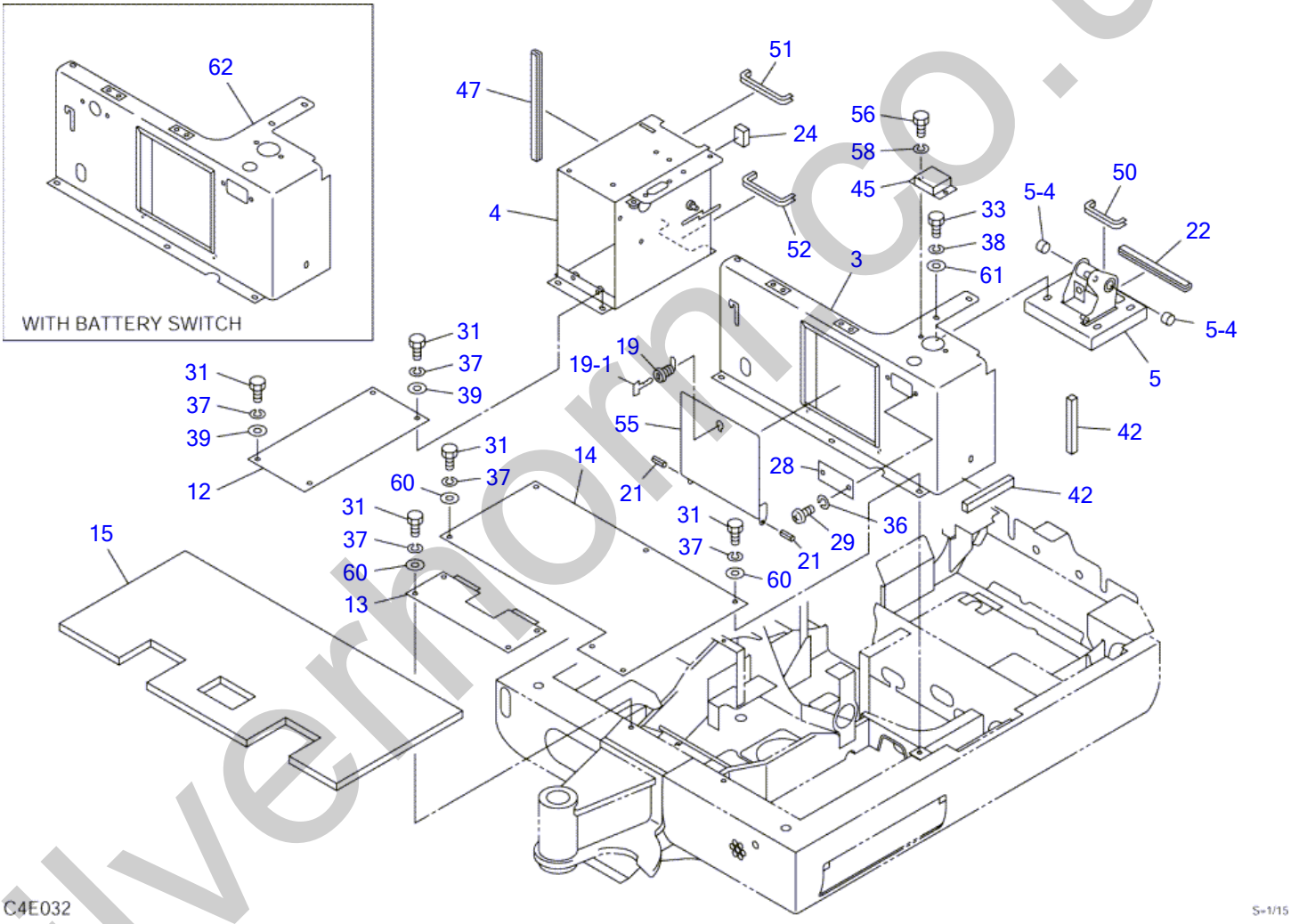

silverhorn.co.uk

COVER (2/4) (cab; 11400011-)

Item	Part number	Description	Q'ty	Chan.	Serial No.	Serv.	Remarks
		COVER ASSY (cab)					X03382-40000-9
		COVER ASSY (cab) (with battery switch)					X03382-40200-9
3	0338236150	COVER	1				
4	0338236200	COVER (R.H.)	1		11400011~11400016		
	0338238100	COVER (R.H.)	1		11400017~		
5	0338235600	COVER (L.H.)	1		11400011~11400460		
	0338239500	COVER (L.H.)	1		11400461~		
5-4	1333002015	・BUSHING	2				
12	0338235760	PLATE	1				
13	0338235770	PLATE	1				
14	0338235830	PLATE	1				
15	0338239300	MAT, floor	1				
19	1653601395	LOCK	1				
19-1	1700100019	KEY	1				
21	1213000420	PIN, spring	2				
22	1654606021	SEAL	1				sold by the meter
24	1654308004	SPONGE	1				sold by the meter
28	0338230850	COVER	1				
29	1120530612	SCREW	2				
31	1100040820	BOLT	17				
33	1100041020	BOLT	4				
36	1140020006	WASHER, spring	2				
37	1140020008	WASHER, spring	16				
38	1140020010	WASHER, spring	4				
39	1141110008	WASHER	6				
42	1654304015	SPONGE	2				sold by the meter
45	0338236900	COVER	1				
47	1654606030	SEAL	1				sold by the meter
50	1653917010	TRIM	1				sold by the meter
51	1653917015	TRIM	1				sold by the meter
52	1653917017	TRIM	1				sold by the meter
55	0338235950	COVER	1				
56	1100040510	BOLT	2				
58	1140020005	WASHER, spring	2				
60	0003608252	WASHER	10		11401267~		
61	0003600003	WASHER	4				
62	0338240210	COVER	1				with battery switch
	C4e033S						

silverhorn.co.uk

COVER (3/4) (engine hood)

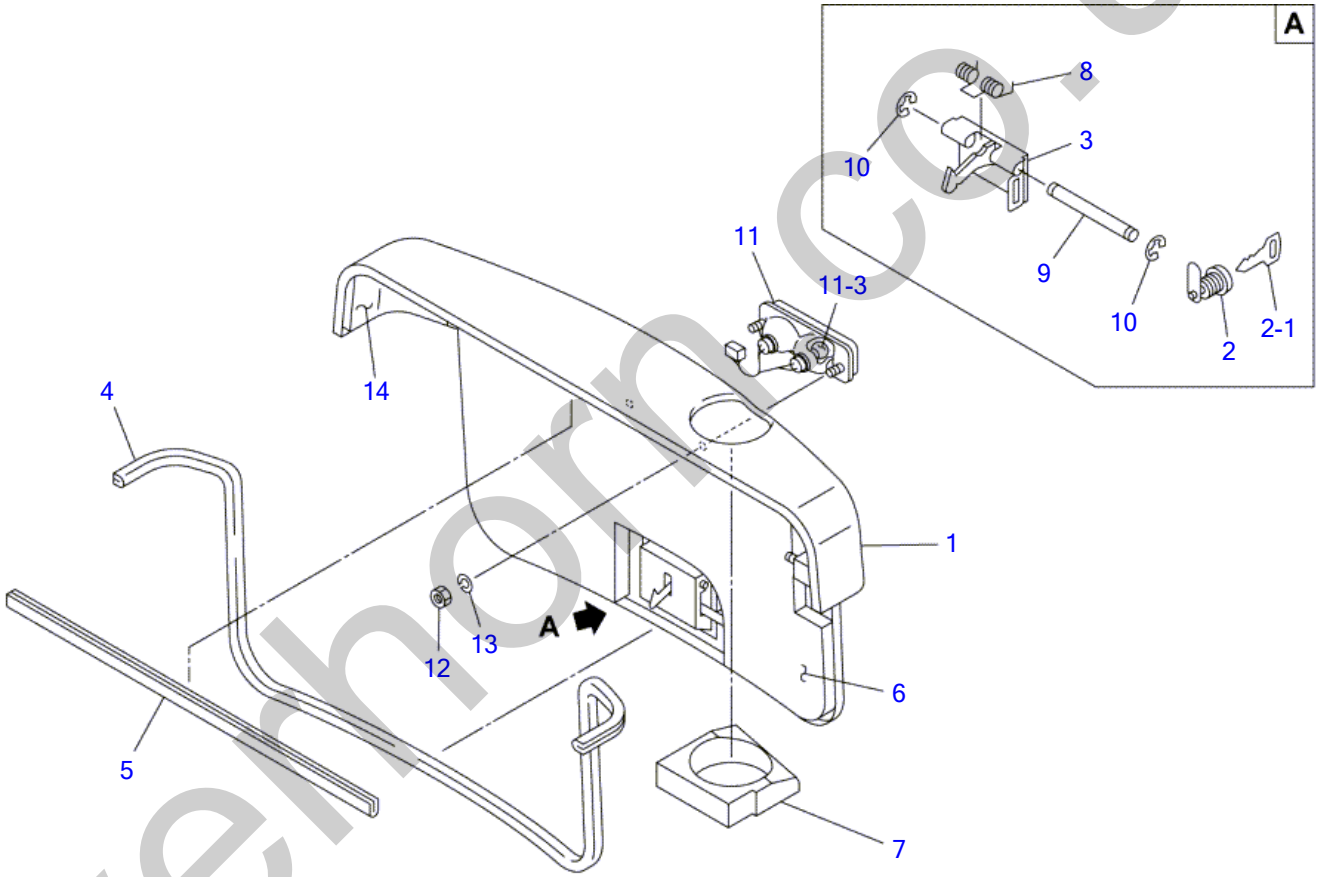

C4E041

S=1/8,1/10

silverhorn.co.uk

COVER (3/4) (engine hood)

Item	Part number	Description	Q'ty	Chan.	Serial No.	Serv.	Remarks
0-1	0338233100	HOOD ASSY, engine	1		11400003~11400010		
	0338235100	HOOD ASSY, engine	1		11400011~		
1	0338230130	・HOOD, engine	1		11400003~11400010		
	0338235130	・HOOD, engine	1		11400011~		
2	1653601395	・LOCK	1				
2-1	1700100019	・KEY	1				
3	0338230160	・LOCK	1		11400003~11400010		
	0338235180	・LOCK	1		11400011~		
4	1654606172	・SEAL	1				sold by the meter
5	1654605072	・SEAL	1				sold by the meter
6	0338233110	・ABSORBENT, noise	1		11400003~11400202		
	0338233111	・ABSORBENT, noise	1		11400203~		
7	0338233120	・SPONGE	1				
8	0007000095	・SPRING	1				
9	0004206111	・SHAFT	1				
10	1224010004	・E-RING	2				
11	1703002000	・LAMP, tail	1				
11-3	1703002003	・・BULB	2				
12	1130030004	・NUT	2				
13	1140020004	・WASHER, spring	2				
14	0338233112	・ABSORBENT, noise	1		11400203~		
	C4e042S						

silverhorn.co.uk

COVER (4/4) (engine cover)

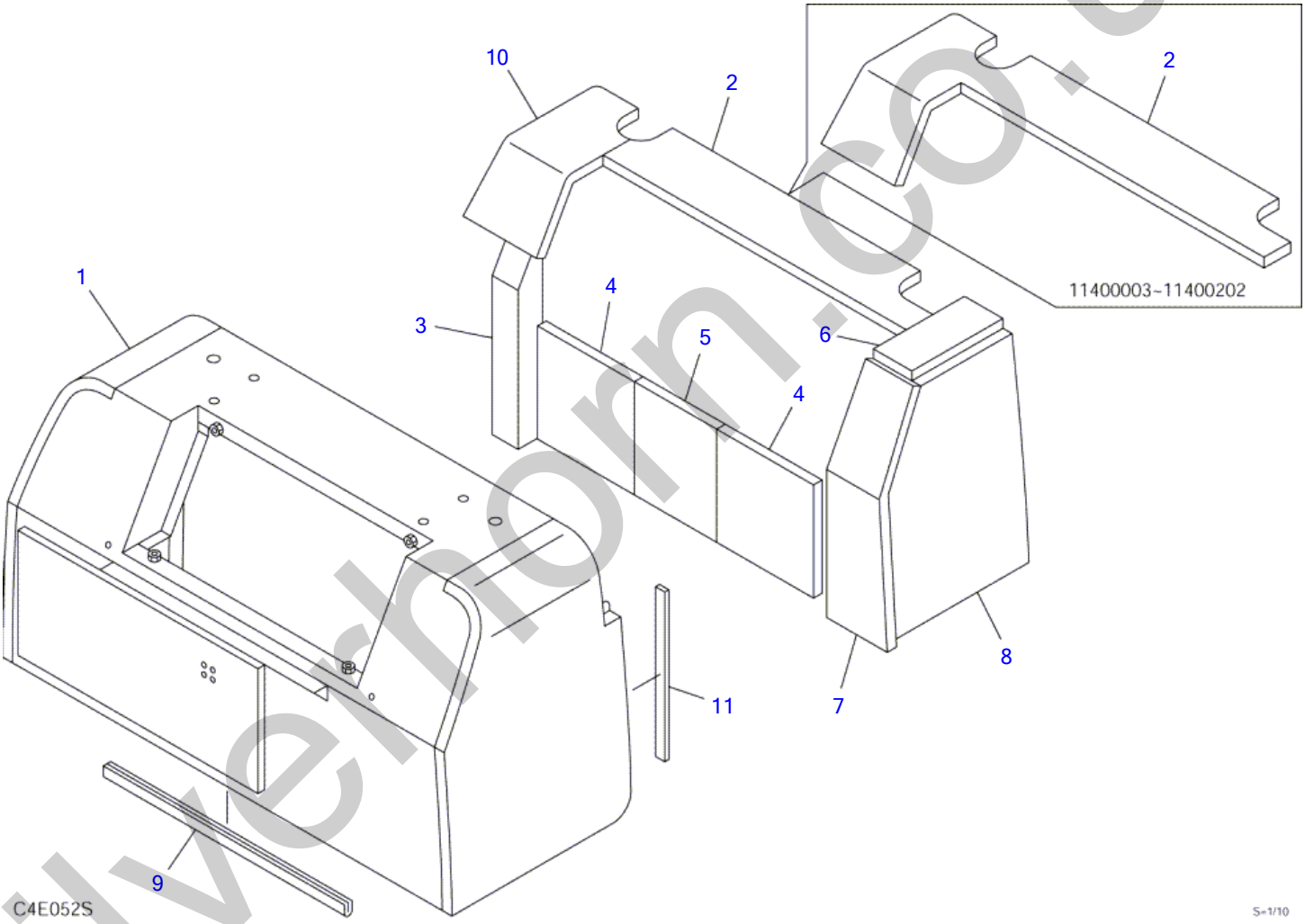

silverhorn.co.uk

COVER (4/4) (engine cover)

Item	Part number	Description	Q'ty	Chan.	Serial No.	Serv.	Remarks
0-2	0338233200	COVER ASSY, engine	1		11400003~11400010		
	0338235200	COVER ASSY, engine	1	(H)	11400011~11400100		
	0338239100	COVER ASSY, engine	1	(H)	11400101~		
1	0338233300	・COVER, engine	1		11400003~11400010		
	0338235300	・COVER, engine	1	(H)	11400011~11400100		
	0338239200	・COVER, engine	1	(H)	11400101~		
2	0338230220	・ABSORBENT, noise	1		11400003~11400010		
	0338235220	・ABSORBENT, noise	1		11400011~11400202		
	0338235221	・ABSORBENT, noise	1		11400203~		
3	0338230230	・SPONGE	1				
4	0338233240	・ABSORBENT, noise	2				
5	0338233250	・INSULATOR	1				
6	0338235260	・ABSORBENT, noise	1		11400011~		
7	0338230270	・ABSORBENT, noise	1				
8	0338230280	・ABSORBENT, noise	1				
9	1654606052	・SEAL	1				sold by the meter
10	0338235222	・ABSORBENT, noise	1		11400203~		
11	1654303032	・SPONGE	1				sold by the meter
	C4e053S						

silverhorn.co.uk

SEAT (1/2) (for Japan)

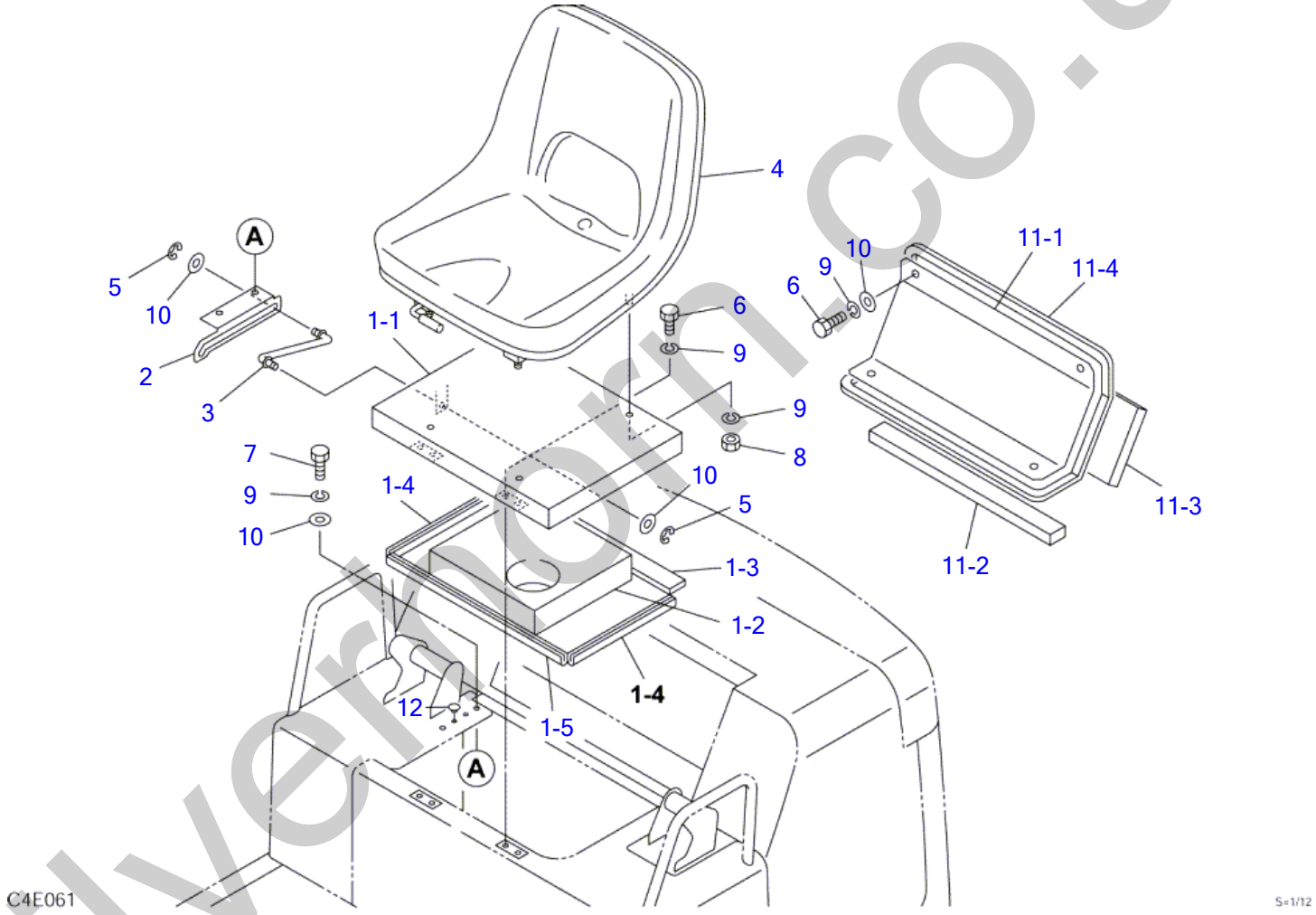

silvermorn.co.uk

SEAT (1/2) (for Japan)

Item	Part number	Description	Q'ty	Chan.	Serial No.	Serv.	Remarks
		SEAT ASSY					X03334-32000-1
1	0333420100	COVER ASSY	1		11400003~11400010		
	0333426100	COVER ASSY	1		11400011~11400016		
	0333428100	COVER ASSY	1		11400017~		
1-1	0333420110	・COVER	1		11400003~11400016		
	0333428110	・COVER	1		11400017~		
1-2	0333420120	・ABSORBENT, noise	1		11400003~11400010		
	0333426120	・ABSORBENT, noise	1		11400011~		
1-3	0333420130	・RUBBER	1		11400003~11400016		
	0333427120	・RUBBER	1		11400017~		
1-4	1654606025	・SEAL	2				sold by the meter
1-5	1654606045	・SEAL	1		11400003~11400016		sold by the meter
	1654606044	・SEAL	1		11400017~		sold by the meter
2	0333420200	BRACKET	1		11400003~11400010		
	0333425200	BRACKET	1		11400011~		
3	0333420300	ROD	1				
4	1914100061	SEAT ASSY	1				see page (2/2)
5	1224010006	E-RING	2				
6	1100040816	BOLT	4		11400003~11400100		
	1100040816	BOLT	8		11400101~		
7	1100040820	BOLT	2				
8	1130040008	NUT	4				
9	1140020008	WASHER, spring	10		11400003~11400100		
	1140020008	WASHER, spring	14		11400101~		
10	1141110008	WASHER	4		11400003~11400100		
	1141110008	WASHER	8		11400101~		
11	0333431100	COVER ASSY	1		11400101~		
11-1	0333431110	・COVER ASSY	1		11400101~		
11-2	0333431120	・ABSORBENT, noise	1		11400101~		
11-3	0338230793	・ABSORBENT, noise	1		11400101~		
11-4	1654605149	・SEAL	1		11400101~		sold by the meter
12	1652515000	CUSHING, rubber	2		11400101~		
	C4e062S						

silverhorn.co.uk

SEAT (2/2) (for Japan)

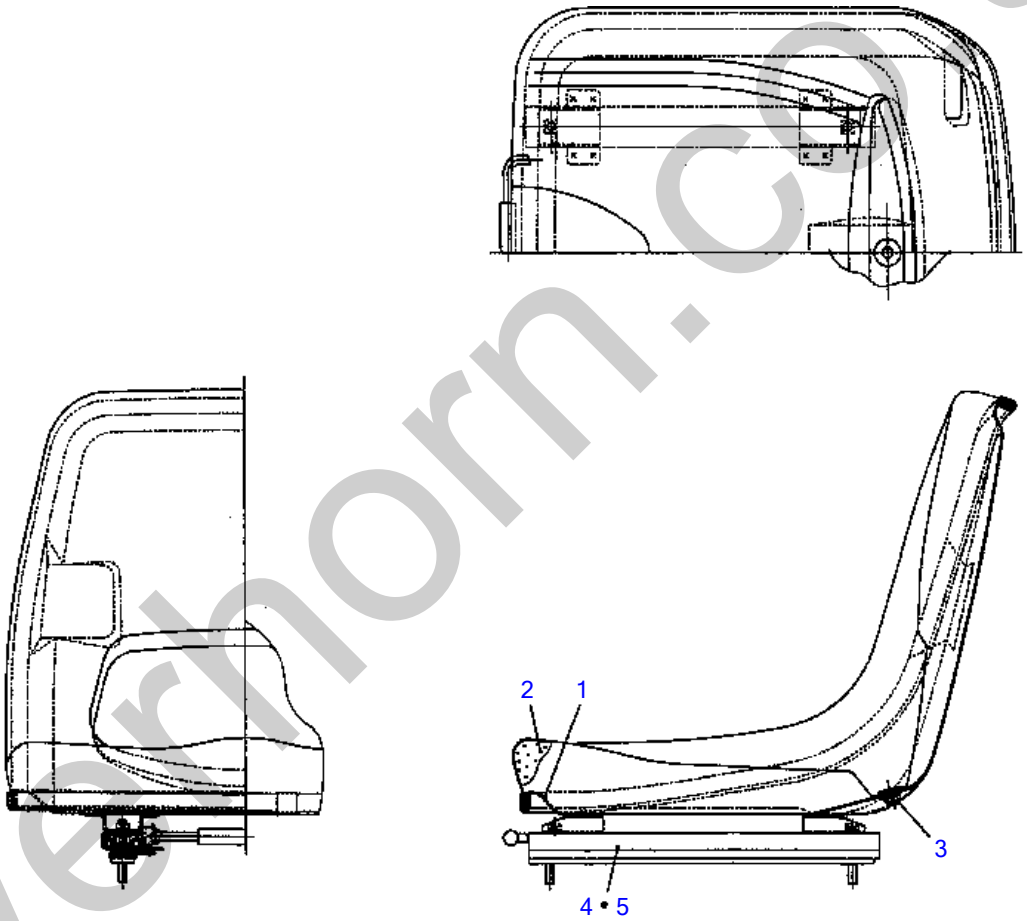

C4E280

silverhorn.co.uk

SEAT (2/2) (for Japan)

Item	Part number	Description	Q'ty	Chan.	Serial No.	Serv.	Remarks
0	1914100061	SEAT ASSY	1				X19141-00061-2
1	1914101061	・PLATE	1				
2	1914102061	・CUSHION	1				
3	1914105061	・GROMMET	1				
4	1914108061	・RAIL, slide (R.H.)	1				
5	1914109061	・RAIL, slide (L.H.)	1				
	C4e280						

silverhorn.co.uk

SEAT (1/2) (for Japan; 11400003-11400010)

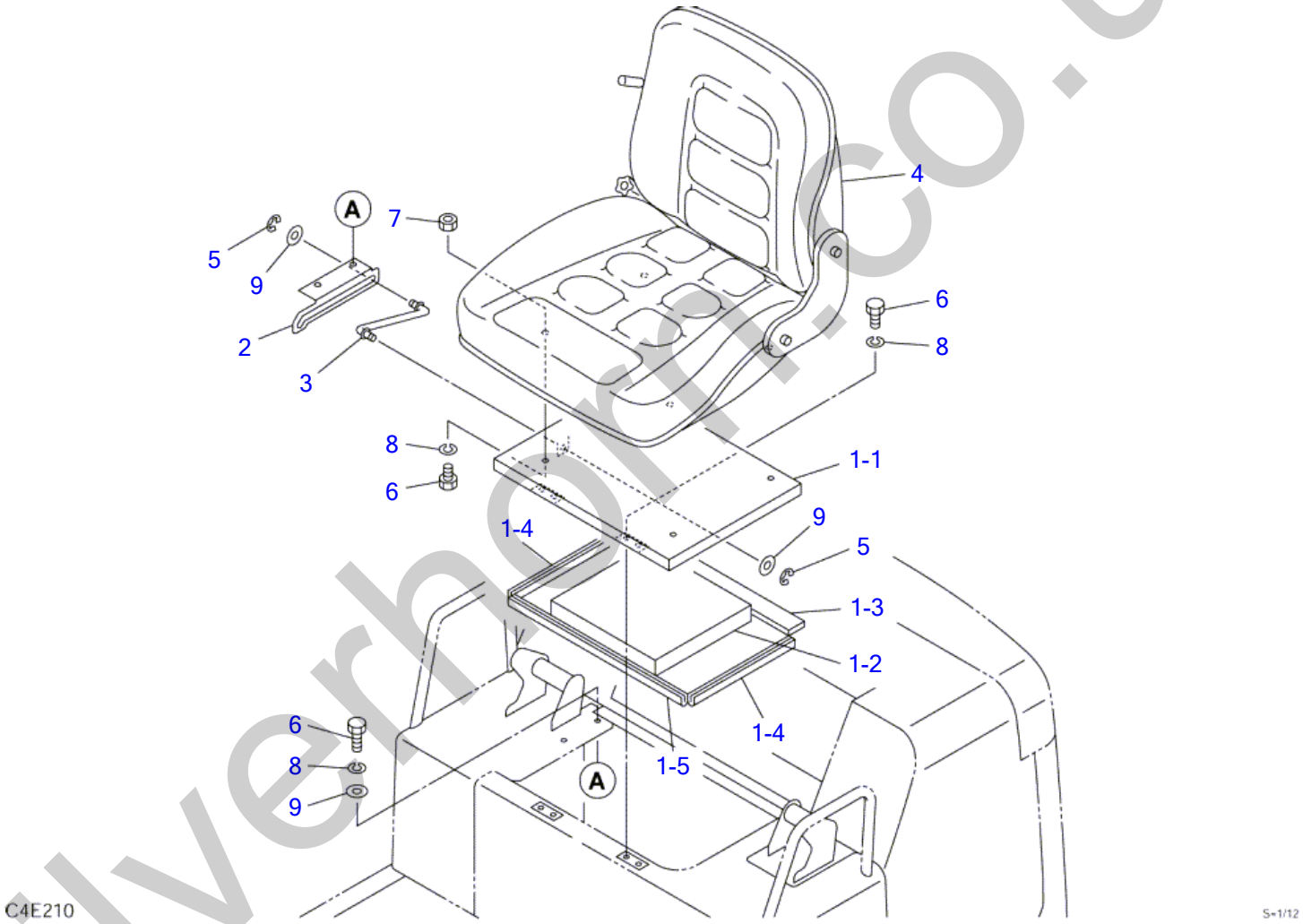

silverhorn.co.uk

SEAT (1/2) (for Japan; 11400003-11400010)

Item	Part number	Description	Q'ty	Chan.	Serial No.	Serv.	Remarks
		SEAT ASSY					X03334-23000
1	0333421100	COVER ASSY	1				
1-1	0333421110	・COVER	1				
1-2	0333421140	・ABSORBENT, noise	1				
1-3	0333420130	・RUBBER	1				
1-4	1654606025	・SEAL	2				sold by the meter
1-5	1654606045	・SEAL	1				sold by the meter
2	0333424200	BRACKET	1				
3	0333420300	ROD	1				
4	1914100063	SEAT ASSY	1				see page (2/2)
5	1224010006	E-RING	2				
6	1100040816	BOLT	10				
7	1130040008	NUT	4				
8	1140020008	WASHER, spring	10				
9	1141110008	WASHER	4				
	C4e212						

silverhorn.co.uk

SEAT (2/2) (for Japan; 11400011-)

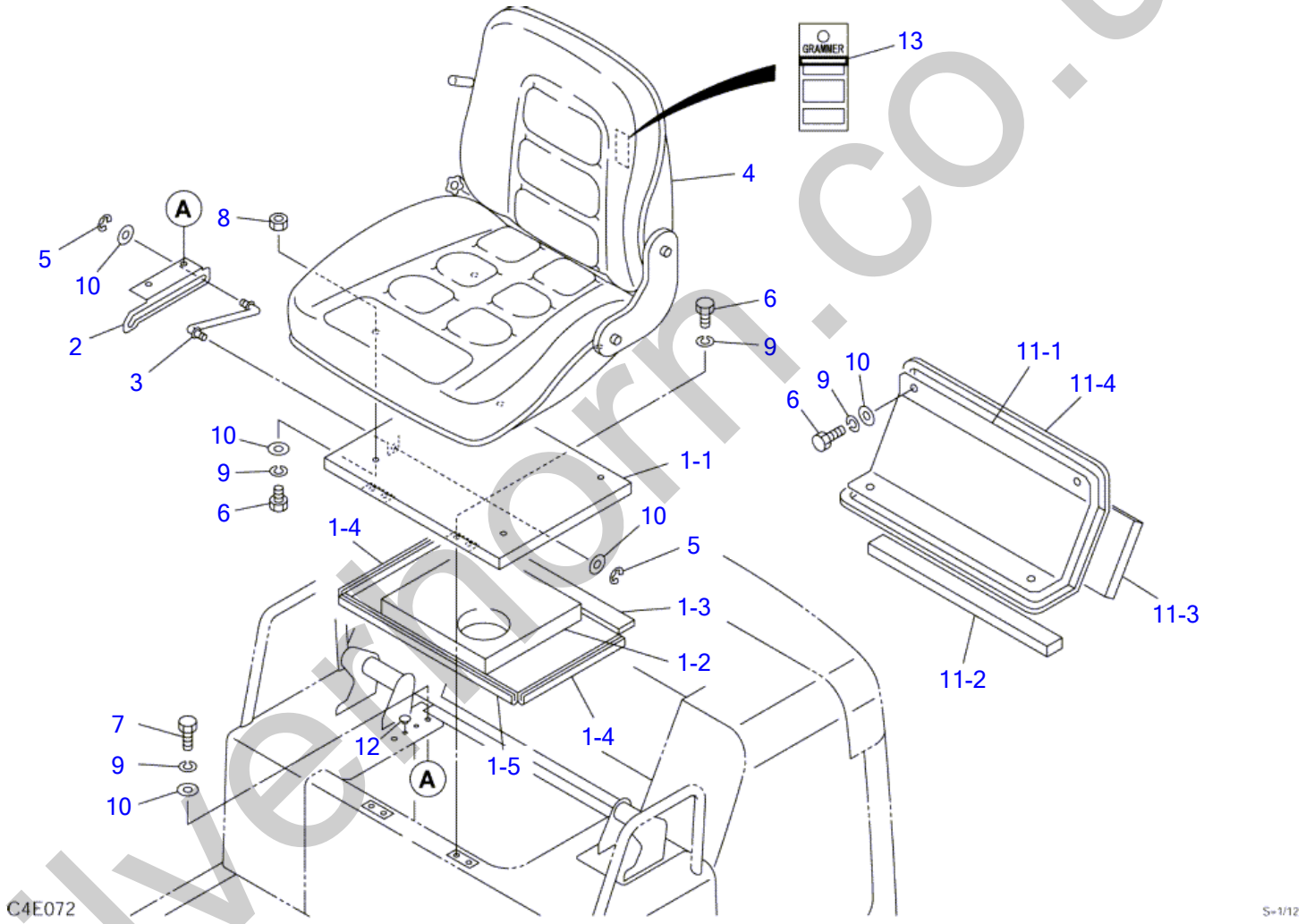

silvermorn.co.uk

SEAT (2/2) (for Japan; 11400011-)

Item	Part number	Description	Q'ty	Chan.	Serial No.	Serv.	Remarks
		SEAT ASSY (P.V.C.)					X03334-31000-3
		SEAT ASSY (fabric)					X03334-35000-3
1	0333425100	COVER ASSY	1		11400011~11400016		
	0333427100	COVER ASSY	1		11400017~		
1-1	0333421110	・COVER	1		11400011~11400016		
	0333427110	・COVER	1		11400017~		
1-2	0333425120	・ABSORBENT, noise	1				
1-3	0333420130	・RUBBER	1		11400011~11400016		
	0333427120	・RUBBER	1		11400017~		
1-4	1654606025	・SEAL	2				sold by the meter
1-5	1654606045	・SEAL	1		11400011~11400016		sold by the meter
	1654606044	・SEAL	1		11400017~		sold by the meter
2	0333425200	BRACKET	1				
3	0333420300	ROD	1				
4	1914100063	SEAT ASSY (P.V.C.)	1				see page (2/2)
	1914100059	SEAT ASSY (fabric)	1				see page (2/2)
5	1224010006	E-RING	2				
6	1100040816	BOLT	8		11400011~11400100		
	1100040816	BOLT	12		11400101~		
7	1100040820	BOLT	2				
8	1130040008	NUT	4				
9	1140020008	WASHER, spring	10		11400011~11400100		
	1140020008	WASHER, spring	14		11400101~		
10	1141110008	WASHER	4		11400011~11400100		
	1141110008	WASHER	12		11400101~		
11	0333431100	COVER ASSY	1		11400101~		
11-1	0333431110	・COVER ASSY	1		11400101~		
11-2	0333431120	・ABSORBENT, noise	1		11400101~		
11-3	0338230793	・ABSORBENT, noise	1		11400101~		
11-4	1654605149	・SEAL	1		11400101~		sold by the meter
12	1652515000	CUSHING, rubber	2		11400101~		
13	0339332300	DECAL	1		11400011~1140#		
	C4e073S						

silverhorn.co.uk

SEAT (2/2)

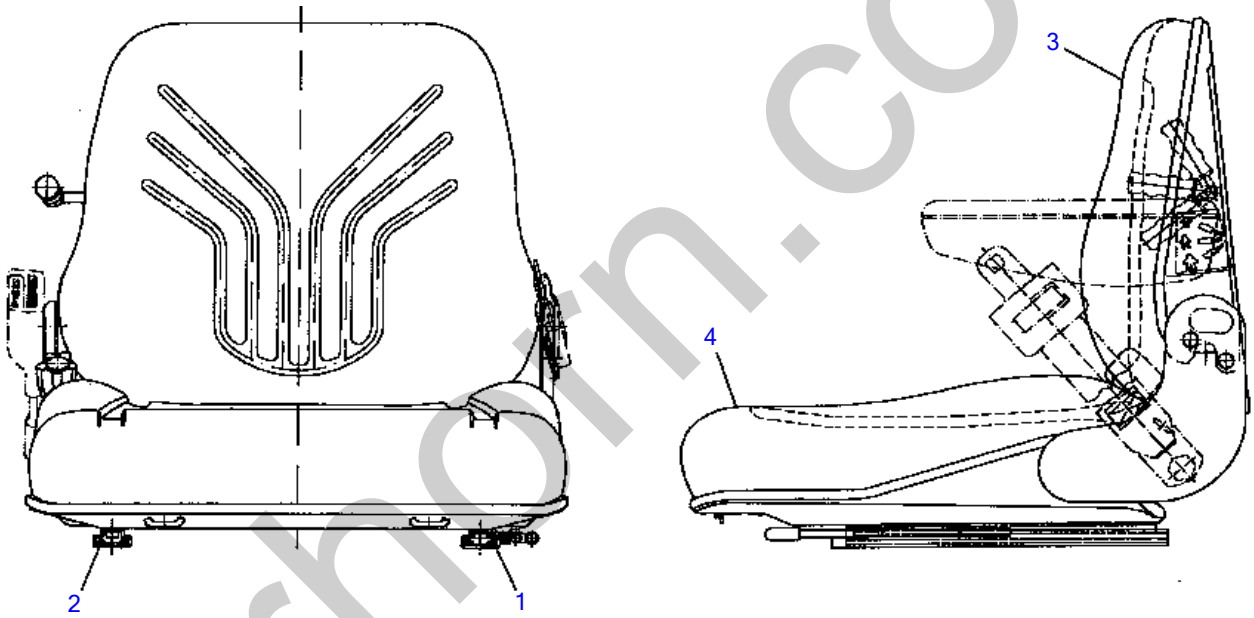

C4E290

silverhorn.co.uk

SEAT (2/2)

Item	Part number	Description	Q'ty	Chan.	Serial No.	Serv.	Remarks
0	1914100063	SEAT ASSY (P.V.C.)	1				X19141-00063-1
	1914100059	SEAT ASSY (fabric)	1				X19141-00059-1
1	1914103059	・RAIL, slide (L.H.)	1				
2	1914104059	・RAIL, slide (R.H.)	1				
3	1914110063	・CUSHION	1				P.V.C.
	1914110059	・CUSHION	1				fabric
4	1914111063	・CUSHION	1				P.V.C.
	1914111059	・CUSHION	1				fabric
	C4e290						

silverhorn.co.uk

SEAT (1/2) (hight back)

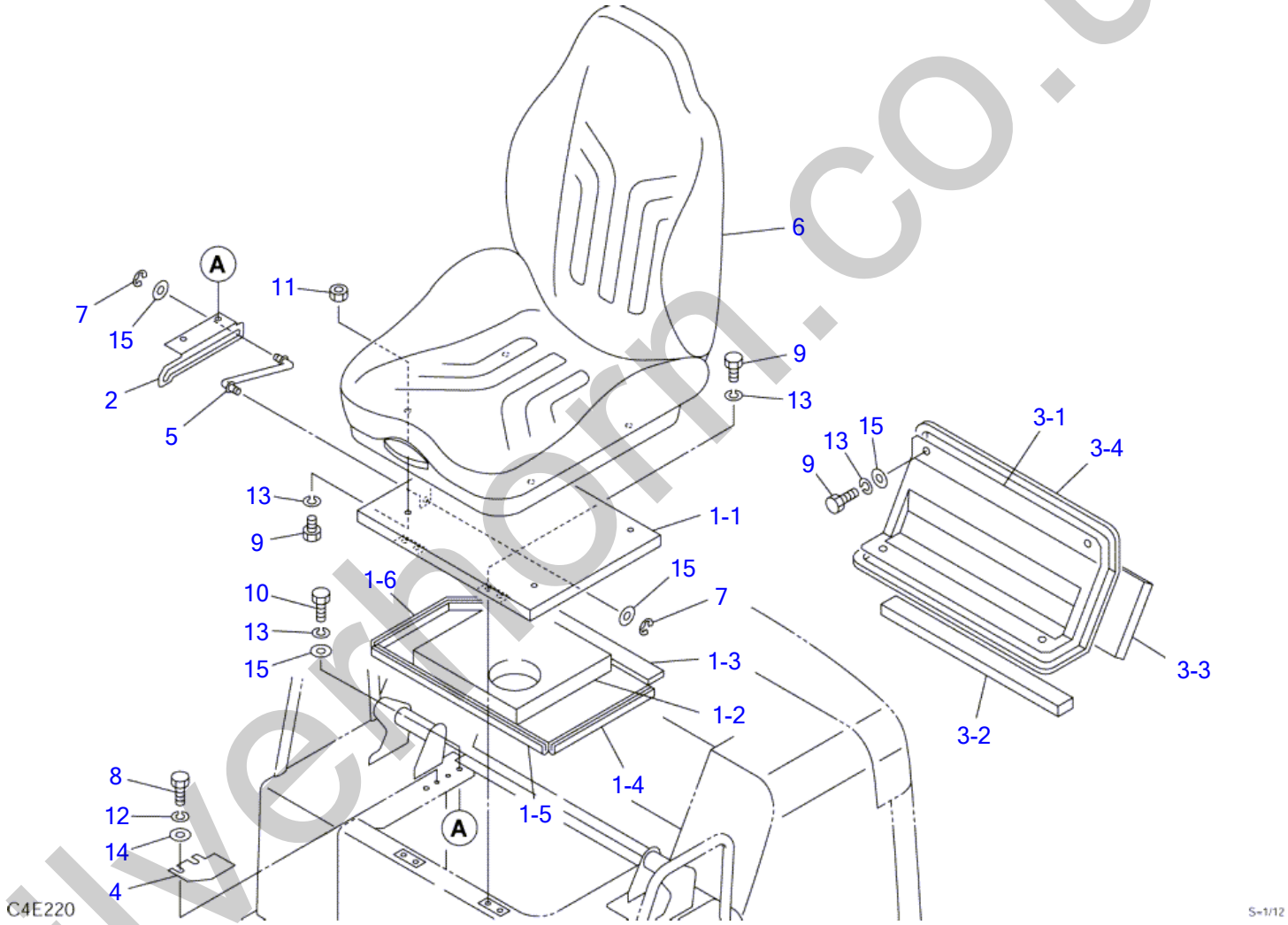

silverhorn.co.uk

SEAT (1/2) (hight back)

Item	Part number	Description	Q'ty	Chan.	Serial No.	Serv.	Remarks
		SEAT ASSY (fabric)	1				X03334-29000-0
		SEAT ASSY (PVC)	1				X03334-33000-0
1	0333429100	COVER ASSY	1				
1-1	0333429110	・COVER	1				
1-2	0333425120	・ABSORBENT, noise	1				
1-3	0333429120	・RUBBER	1				
1-4	1654606025	・SEAL	1				sold by the meter
1-5	1654606044	・SEAL	1				sold by the meter
1-6	1654606026	・SEAL	1				sold by the meter
2	0333425200	BRACKET	1				
3	0333429200	COVER ASSY	1				
3-1	0333429210	・COVER	1				
3-2	0333429250	・ABSORBENT, noise	1				
3-3	0333429260	・ABSORBENT, noise	1				
3-4	1654605149	・SEAL	1				sold by the meter
4	0333429130	PLATE	1				
5	0333420300	ROD	1				
6	1914100070	SEAT ASSY (fabric)	1				see page (2/2)
	1914100077	SEAT ASSY (P.V.C.)	1				see page (2/2)
7	1224010006	E-RING	2				
8	1100040616	BOLT	2				
9	1100040816	BOLT	12				
10	1100040820	BOLT	2				
11	1130040008	NUT	4				
12	1140020006	WASHER, spring	2				
13	1140020008	WASHER, spring	14				
14	1141110006	WASHER	2				
15	1141110008	WASHER	8				
	C4e222						

silverhorn.co.uk

SEAT (2/2) (hight back)

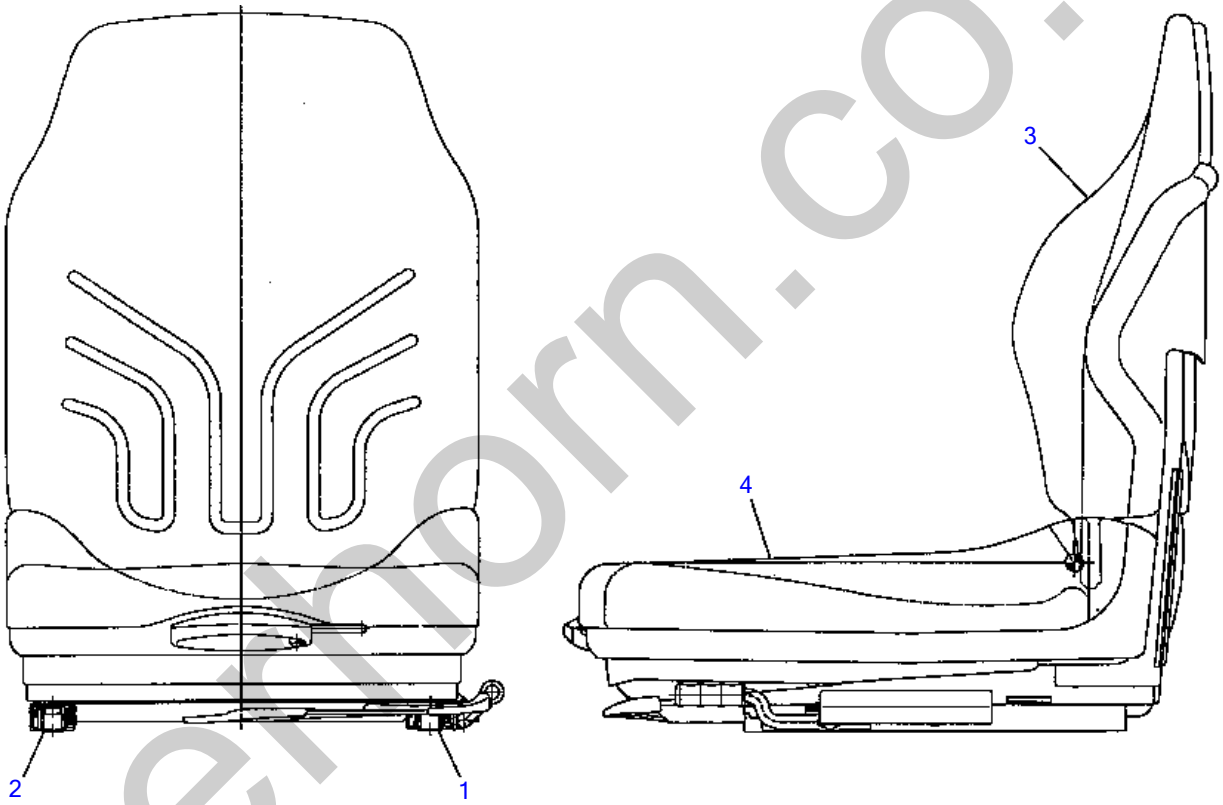

C4E300

silvermorn.co.uk

SEAT (2/2) (hight back)

Item	Part number	Description	Q'ty	Chan.	Serial No.	Serv.	Remarks
0	1914100070	SEAT ASSY (fabric)	1				X19141-00070
	1914100077	SEAT ASSY (P.V.C.)	1				X19141-00077
1	1914103070	・RAIL, slide (L.H.)	1				
2	1914104070	・RAIL, slide (R.H.)	1				
3	1914110070	・CUSHION	1				fabric
	1914110077	・CUSHION	1				P.V.C.
4	1914111070	・CUSHION	1				fabric
	1914111077	・CUSHION	1				P.V.C.
	C4e300						

silverhorn.co.uk

SEAT BELT (11400003-11400010)

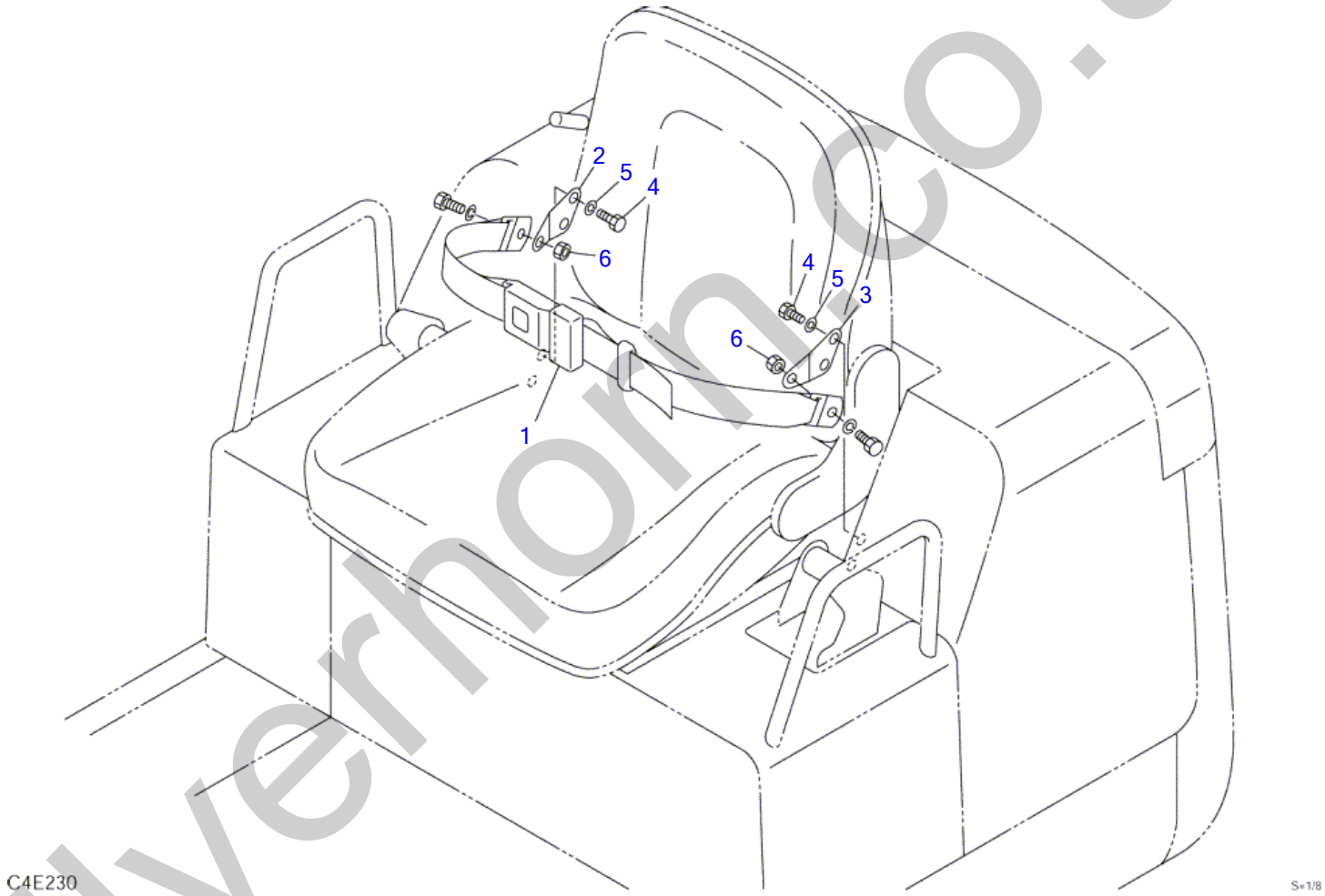

silverhorn.co.uk

SEAT BELT (11400003-11400010)

Item	Part number	Description	Q'ty	Chan.	Serial No.	Serv.	Remarks
		BELT ASSY, seat	1				X03334-18000
1	1914100048	BELT, seat	1				
2	0333418100	PLATE (R)	1				
3	0333418200	PLATE (L)	1				
4	1100041030	BOLT	4				
5	1140020010	WASHER, spring	4				
6	1132940719	NUT	2				
	C4e231						

silverhorn.co.uk

SEAT BELT (11400011-)

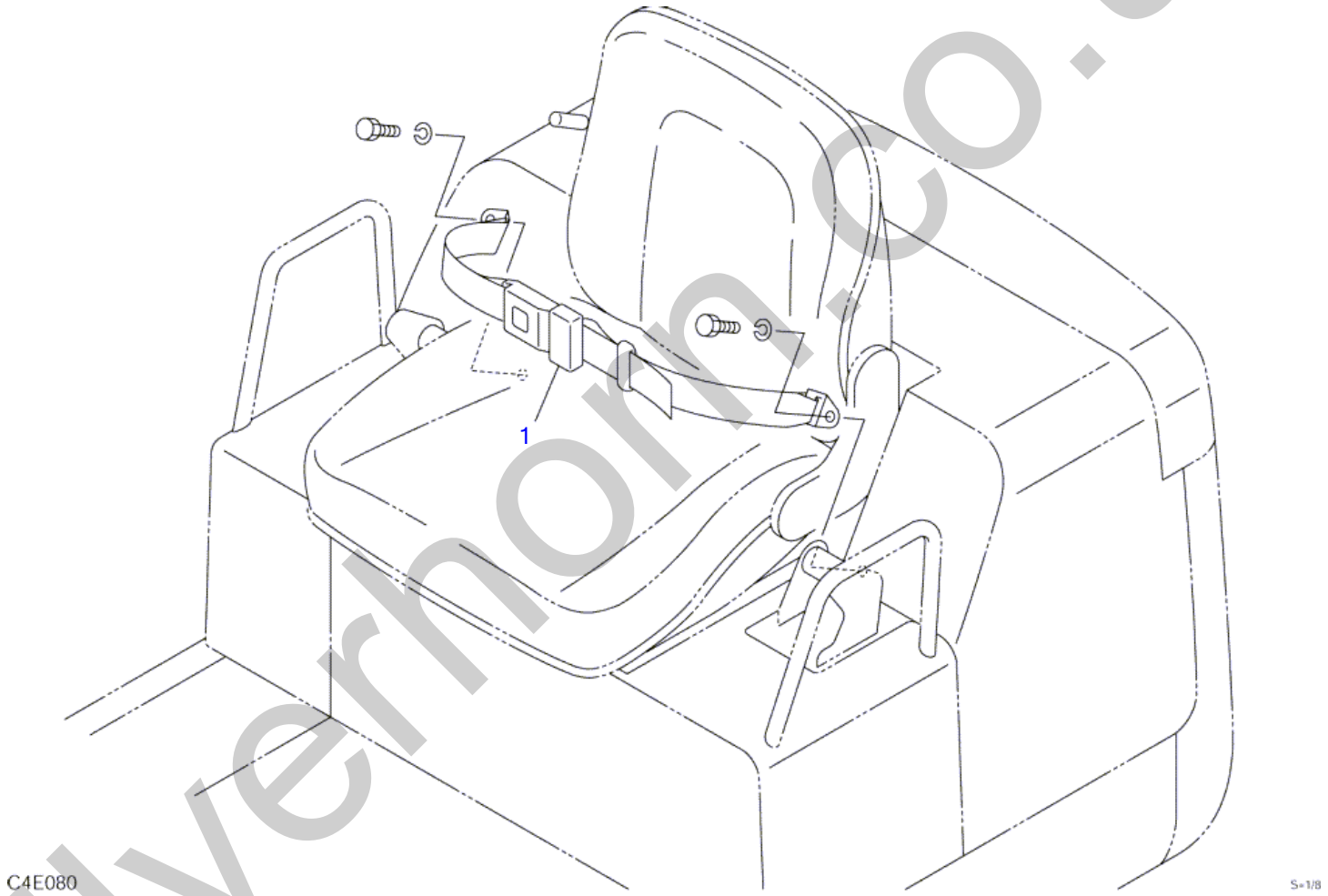

silverhorn.co.uk

SEAT BELT (11400011-)

Item	Part number	Description	Q'ty	Chan.	Serial No.	Serv.	Remarks
		BELT ASSY, seat	1				X03334-22000-1
1	1914100080	BELT, seat	1				
	C4e082						

silverhorn.co.uk

SEAT BELT (retractable)

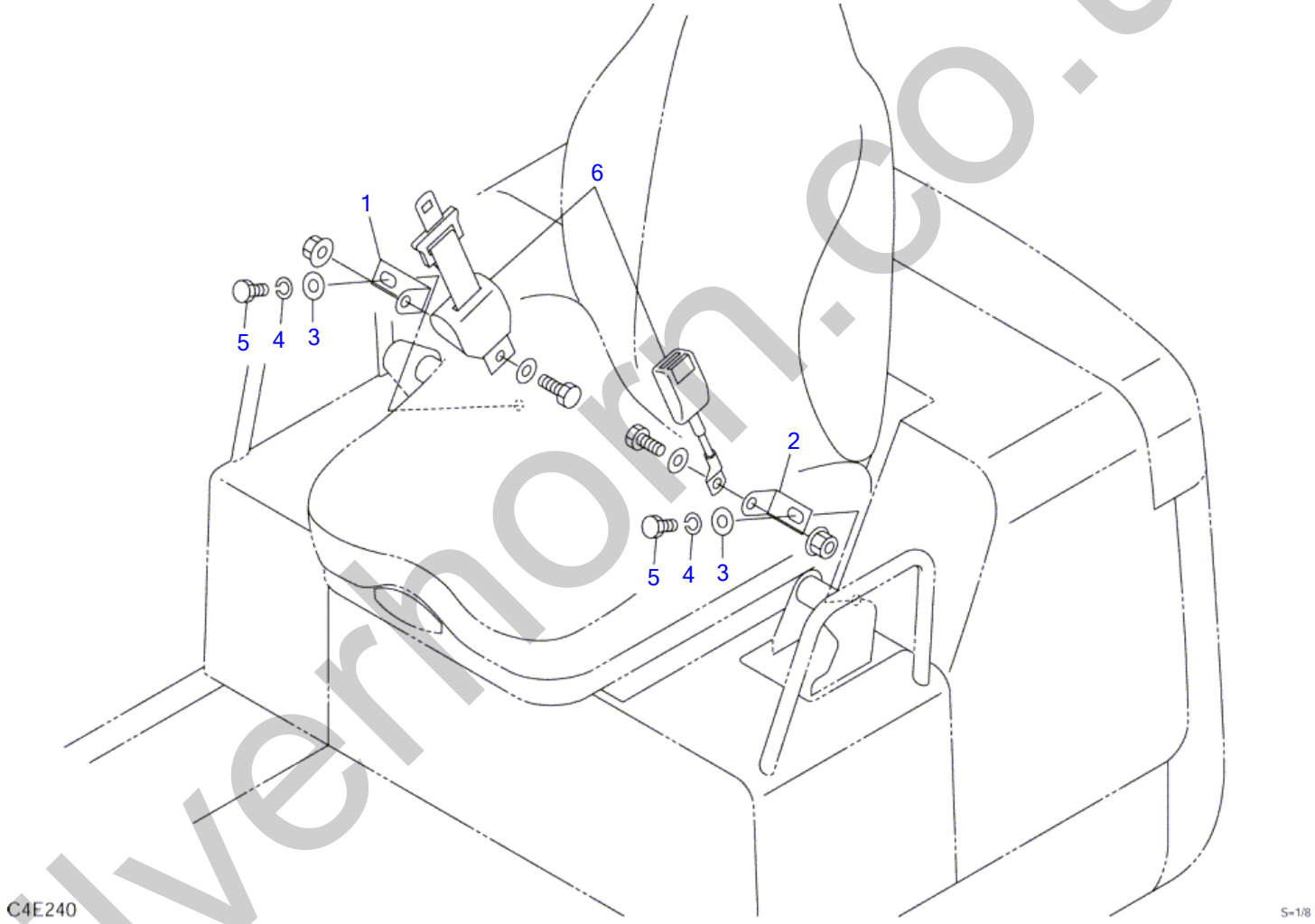

silverhorn.co.uk

SEAT BELT (retractable)

Item	Part number	Description	Q'ty	Chan.	Serial No.	Serv.	Remarks
		BELT ASSY, seat	1				X03334-30000-0
1	**0333430100**	BRACKET (R.H.)	1				
2	**0333430200**	BRACKET (L.H.)	1				
3	**0003600024**	WASHER	2				
4	**1140210007**	WASHER, spring	2				
5	**1111940725**	BOLT	2				
6	**1914100069**	BELT, seat	1				
	C4e241						

silverhorn.co.uk

CAB MOUNT (11400003-#)

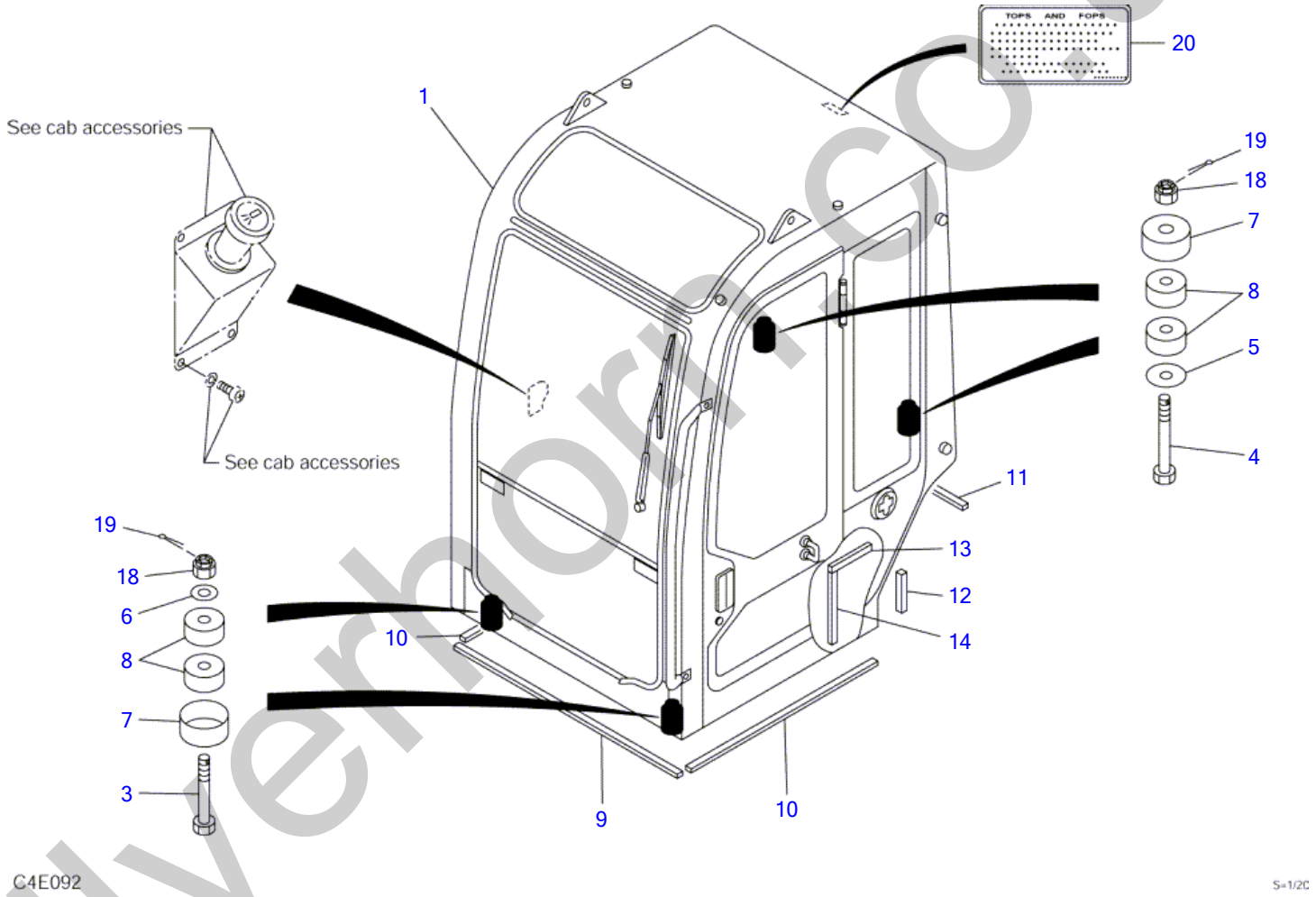

silverhorn.co.uk

CAB MOUNT (11400003-#)

Item	Part number	Description	Q'ty	Chan.	Serial No.	Serv.	Remarks
0	0338630000	CAB MOUNT	1		11400003~11400490		X03386-30000-2
	0338641000	CAB MOUNT	1		11400491~		X03386-41000-3
1	0338630200	・CAB	1		11400003~11400490		see page (1/4)
	0338641200	・CAB	1		11400491~11401265		see page (1/4)
	0338641800	・CAB	1		11401266~	M	see page (1/4)
3	0338624020	・BOLT	2				
4	0338624030	・BOLT	2				
5	0003000010	・COLLAR	2				
6	0003600129	・WASHER	2				
7	0278609000	・STOPPER	4				
8	1651005030	・RUBBER, cushion	8				
9	1654304097	・SPONGE	1				sold by the meter
10	1654304080	・SPONGE	2				sold by the meter
11	1654306085	・SPONGE	1				sold by the meter
12	1654306015	・SPONGE	1				sold by the meter
13	1654304017	・SPONGE	1				sold by the meter
14	1654304027	・SPONGE	1				sold by the meter
18	1132080016	・NUT	4				
19	1210010430	・PIN, split	4				
20	0339361100	・DECAL	1				
	C4e093S						

silverhorn.co.uk

CAB (1/4) (11400003-#)

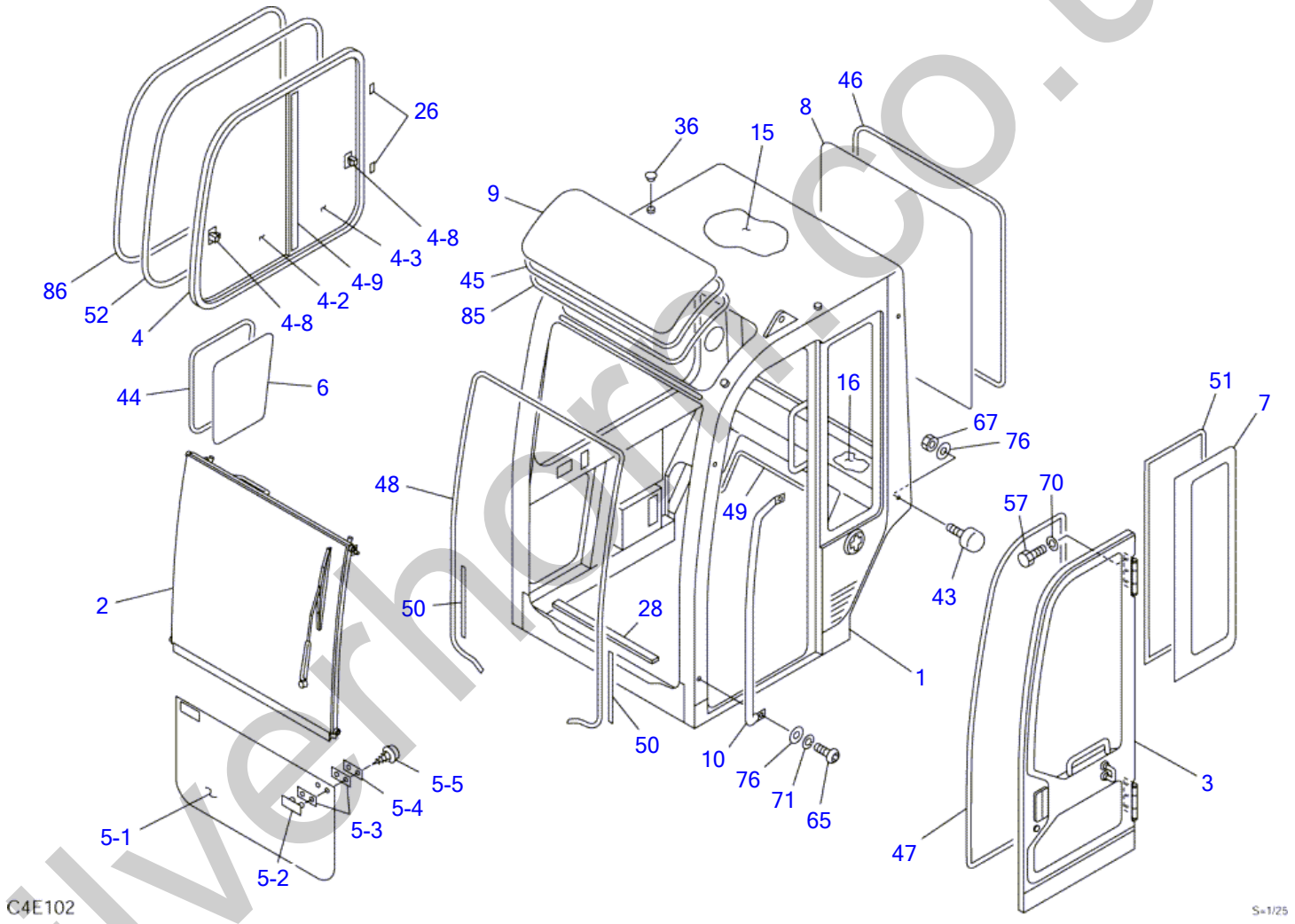

silverhorse.co.uk

CAB (1/4) (11400003-#)

Item	Part number	Description	Q'ty	Chan.	Serial No.	Serv.	Remarks
0	0338630200	CAB ASSY	1		11400003~11400490		X03386-30200
	0338641200	CAB ASSY	1		11400491~11401265		X03386-41200
	0338641800	CAB ASSY	1		11401266~	M	X03386-41800-2
1	X **********	・CAB	1				
2	0338630400	・SASH, front	1				see page (3/4)
3	0338630500	・DOOR	1				see page (4/4)
4	0338630600	・SASH ASSY	1				
4-2	0338630630	・・GLASS	1				
4-3	0338630640	・・GLASS	1				
4-8	0338630650	・・LOCK ASSY	2				
4-9	0338630006	・・STRIP, weather	1				
5	0338630700	・GLASS, front	1				
5-1	0338630710	・・GLASS	1				
5-2	1654010900	・・RETAINER	2				
5-3	1654011100	・・PACKING	4				
5-4	1654011000	・・PLATE	2				
5-5	1122410412	・・SCREW	4				
6	0338630800	・GLASS	1				
7	0338630810	・GLASS	1				
8	0338630820	・GLASS	1				
9	0568633200	・GLASS	1		11400003~11401265		
	0358605300	・GLASS	1		11401266~		
10	0338630840	・HANDLE	1				
15	0338630890	・ABSORBENT, noise	1				
16	0338630900	・ABSORBENT, noise	1				
26	0438601770	・SPACER	7				
28	0568634100	・SEAL	1				
36	1653303010	・CAP	3				
43	1651101042	・RUBBER	2				
44	1654262140	・H-RUBBER	1				sold by the meter
45	1654231225	・H-RUBBER	1		11400003~11401265		sold by the meter
	1654615216	・DAM	1		11401266~		sold by the meter
46	1654231336	・H-RUBBER	1				sold by the meter
47	1654605338	・SEAL	1				sold by the meter
48	1654605374	・RUBBER	1				sold by the meter
49	1654520168	・RUBBER	1				sold by the meter
50	1654605033	・RUBBER	2				sold by the meter
51	1654615220	・DAM	1				sold by the meter
52	1653930315	・TRIM	1				sold by the meter
57	1100090820	・BOLT	6				
65	1120800830	・SCREW	2				
67	1130090010	・NUT	2				
70	1140090008	・WASHER, spring	6				
71	1140090010	・WASHER, spring	2				
76	1141190010	・WASHER	4				
85	1653916222	・TRIM	1		11401266~		sold by the meter
86	1654620330	・SEAL	1		11400317~		sold by the meter
	C4e103S						

silverthorn.co.uk

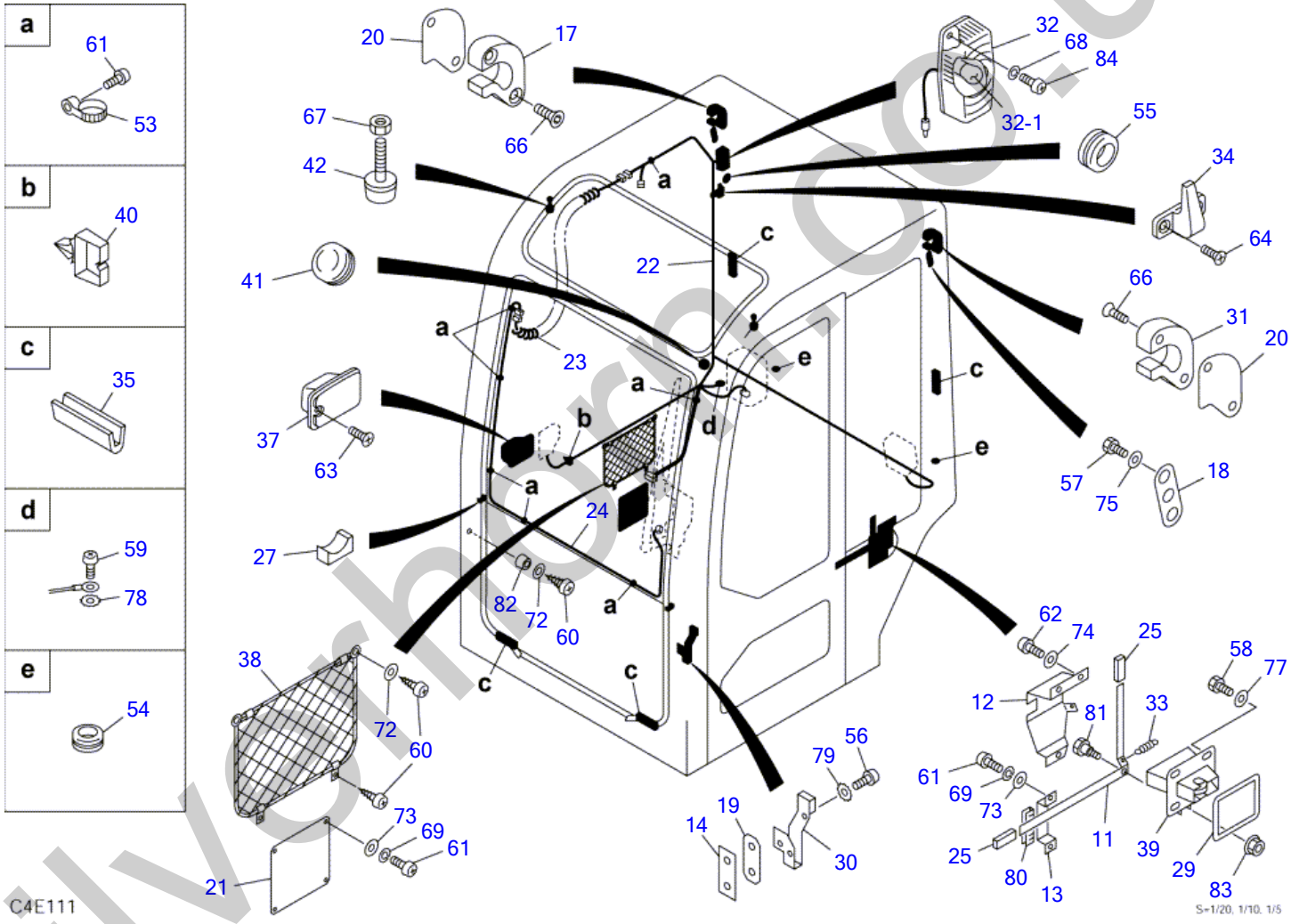

silverhorn.co.uk

CAB (2/4) (11400003-#)

Item	Part number	Description	Q'ty	Chan.	Serial No.	Serv.	Remarks
0	0338630200	CAB ASSY	1		11400003~11400490		X03386-30200
	0338641200	CAB ASSY	1		11400491~11401265		X03386-41200
	0338641800	CAB ASSY	1		11401266~	M	X03386-41800-2
11	0338630850	・PLATE	1				
12	0338630860	・PLATE	1				
13	0338630870	・PLATE	1				
14	0338630880	・PLATE	1				
17	0338630910	・STOPPER (R.H.)	1				
18	0338630920	・PLATE	2				
19	0338630930	・PACKING	1				
20	0338630940	・SHIM	2		11400317~		
21	0338630950	・COVER	1		11400317~11400976		
	0338630970	・COVER	1		11400977~		
22	0338631000	・HARNESS, wiring	1		11400003~11400310		
	0338631100	・HARNESS, wiring	1	(H)	11400311~		
23	0398802200	・HARNESS, wiring	1				
24	0338631010	・HARNESS, wiring	1				
25	0438601760	・COVER	2				
27	0568633300	・STOPPER	2				
29	0568634400	・SEAL	1				
30	0068620500	・STRIKER	1				
31	0338630960	・STOPPER (L.H.)	1				
32	1703001700	・LAMP, room	1				
32-1	1703001701	・・BULB	1				
33	0007000096	・SPRING	1				
34	1654004800	・HANGER	1				
35	1654004900	・STOPPER	4				
37	1654010500	・ASHTRAY	1				
38	1654010600	・POCKET	1				
39	1654010700	・LOCK	1				
40	1652341547	・CLAMP	1				
41	1652050900	・GROMMET	1				
42	1651101028	・STOPPER	2				
53	1652221050	・BAND	6				
54	1652060016	・GROMMET	2				
55	1652060031	・BUSHING	1				
56	0068621300	・SCREW	2				
57	1100090820	・BOLT	10				
58	1100040825	・BOLT	4				
59	1120590516	・SCREW	1				
60	1122410416	・SCREW	8				
61	1120590512	・SCREW	12				
62	1120590616	・SCREW	5				
63	1120630412	・SCREW	2				
64	1120790412	・SCREW	2				
66	1120890830	・SCREW	4				
67	1130090010	・NUT	4				
68	1140090004	・WASHER, spring	2				
69	1140090005	・WASHER, spring	6				
72	1141190004	・WASHER	6				
73	1141190005	・WASHER	6				
74	1140090006	・WASHER, spring	3				
75	1141190008	・WASHER	4				
77	1141550008	・WASHER	4				
78	1140330005	・WASHER	1				
79	1140330010	・WASHER	2				
80	1653916007	・TRIM	1				sold by the meter
81	1654010800	・PIN	1				
82	1652101811	・RUBBER	2				
83	1131242006	・NUT	1				
84	1120540408	・SCREW	2				
	C4e113S						

silverthorn.co.uk

CAB MOUNT (#-)

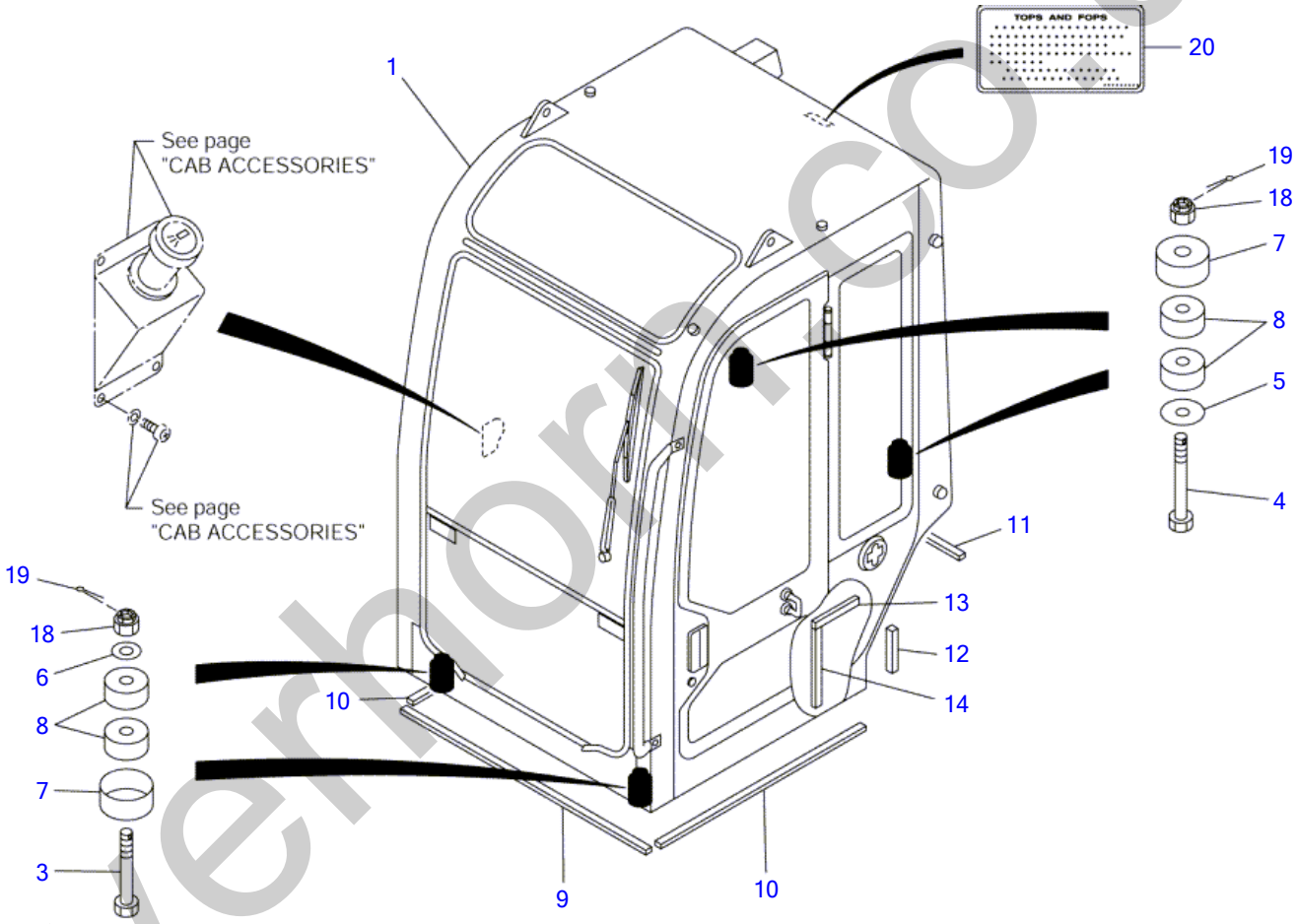

silverhorn.co.uk

CAB MOUNT (#-)

Item	Part number	Description	Q'ty	Chan.	Serial No.	Serv.	Remarks
0	0338642000	CAB MOUNT	1			A	X03386-42000-0
1	0338642500	・CAB	1			M	see page (1/4)
3	0338624020	・BOLT	2				
4	0338624030	・BOLT	2				
5	0003000010	・COLLAR	2				
6	0003600129	・WASHER	2				
7	0278609000	・STOPPER	4				
8	1651005030	・RUBBER, cushion	8				
9	1654304097	・SPONGE	1				sold by the meter
10	1654304080	・SPONGE	2				sold by the meter
11	1654306085	・SPONGE	1				sold by the meter
12	1654306015	・SPONGE	1				sold by the meter
13	1654304017	・SPONGE	1				sold by the meter
14	1654304027	・SPONGE	1				sold by the meter
18	1132080016	・NUT	4				
19	1210010430	・PIN, split	4				
20	0339361100	・DECAL	1				
	C4e310						

silverhorn.co.uk

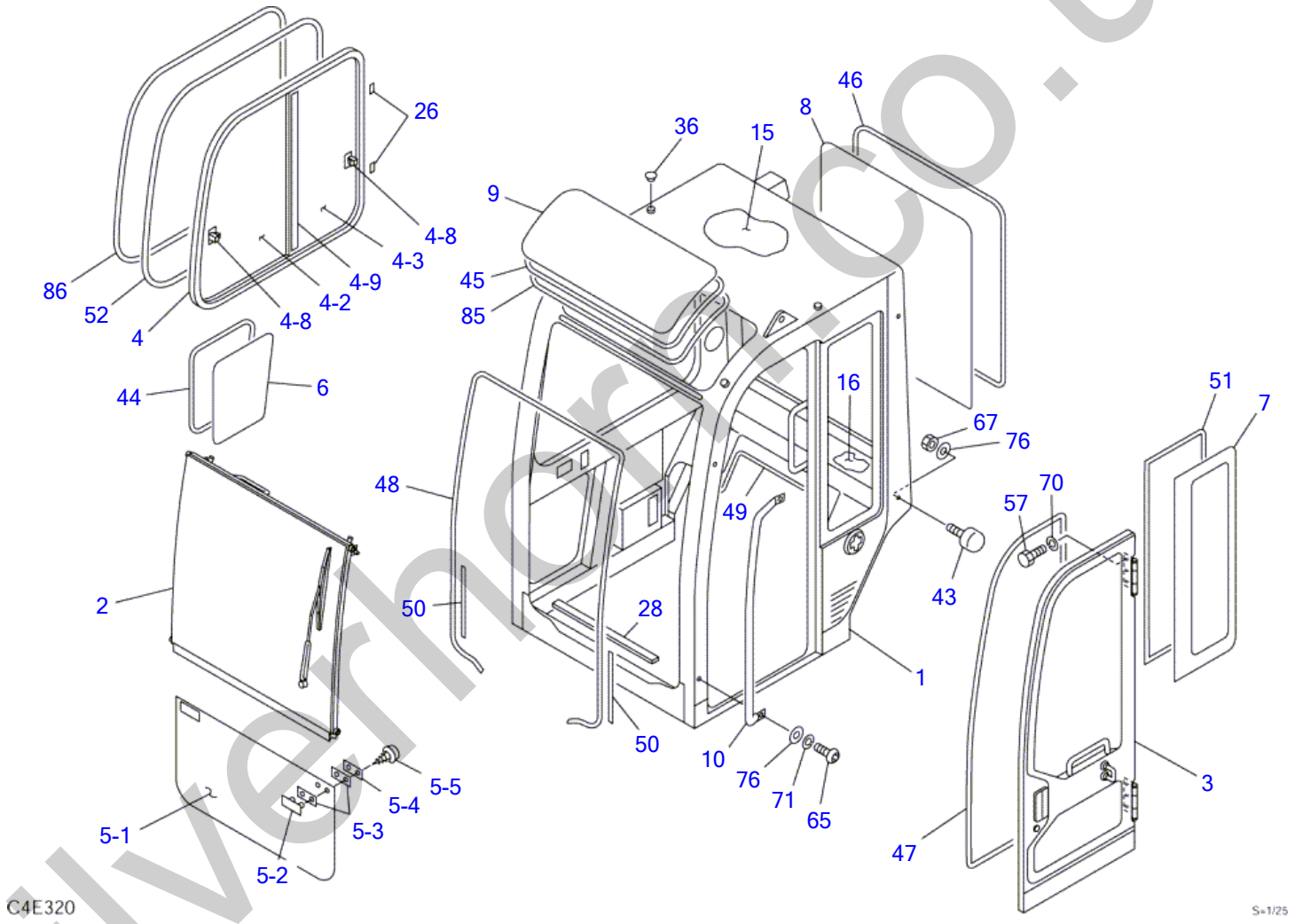

silverhorse.co.uk

CAB (1/4) (#-)

Item	Part number	Description	Q'ty	Chan.	Serial No.	Serv.	Remarks
0	0338642500	CAB ASSY	1			A	X03386-42500-0
1	X **********	・CAB	1			M	
2	0338630400	・SASH, front	1				see page (3/4)
3	0338630500	・DOOR	1				see page (4/4)
4	0338630600	・SASH ASSY	1				
4-2	0338630630	・・GLASS	1				
4-3	0338630640	・・GLASS	1				
4-8	0338630650	・・LOCK ASSY	2				
4-9	0338630006	・・STRIP, weather	1				
5	0338630700	・GLASS, front	1				
5-1	0338630710	・・GLASS	1				
5-2	1654010900	・・RETAINER	2				
5-3	1654011100	・・PACKING	4				
5-4	1654011000	・・PLATE	2				
5-5	1122410412	・・SCREW	4				
6	0338630800	・GLASS	1				
7	0338630810	・GLASS	1				
8	0338630820	・GLASS	1				
9	0358605300	・GLASS	1				
10	0338630840	・HANDLE	1				
15	0338630890	・ABSORBENT, noise	1				
16	0338630900	・ABSORBENT, noise	1				
26	0438601770	・SPACER	7				
28	0568634100	・SEAL	1				
36	1653303010	・CAP	3				
43	1651101042	・RUBBER	2				
44	1654262140	・H-RUBBER	1				sold by the meter
45	1654615216	・DAM	1				sold by the meter
46	1654231336	・H-RUBBER	1				sold by the meter
47	1654605338	・SEAL	1				sold by the meter
48	1654605374	・RUBBER	1				sold by the meter
49	1654520168	・RUBBER	1				sold by the meter
50	1654605033	・RUBBER	2				sold by the meter
51	1654615220	・DAM	1				sold by the meter
52	1653930315	・TRIM	1				sold by the meter
57	1100090820	・BOLT	6				
65	1120800830	・SCREW	2				
67	1130090010	・NUT	2				
70	1140090008	・WASHER, spring	6				
71	1140090010	・WASHER, spring	2				
76	1141190010	・WASHER	4				
85	1653916222	・TRIM	1				sold by the meter
86	1654620330	・SEAL	1				sold by the meter
	C4e320						

silverthorn.co.uk

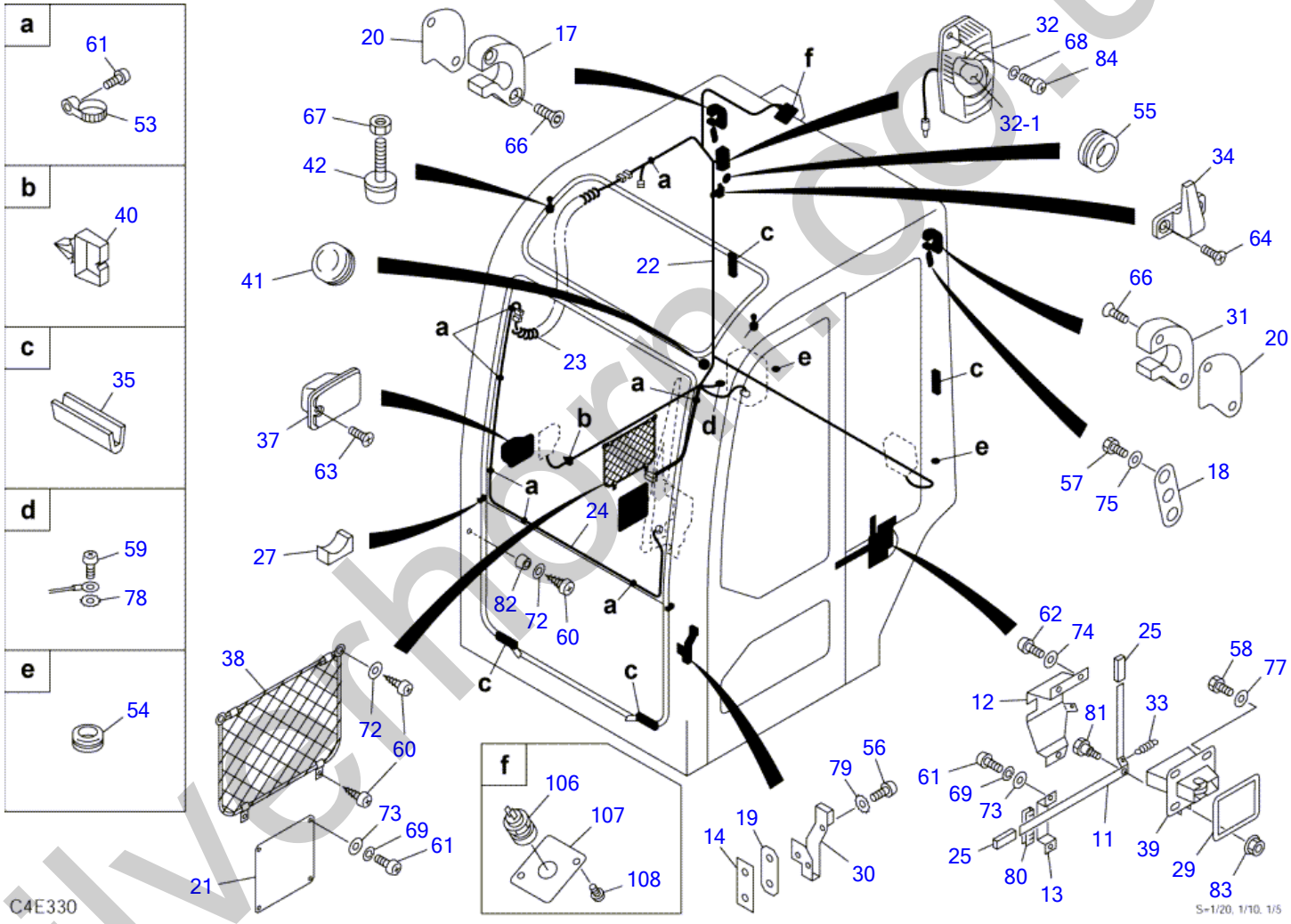

silvethorn.co.uk

CAB (2/4) (#-)

Item	Part number	Description	Q'ty	Chan.	Serial No.	Serv.	Remarks
0	0338642500	CAB ASSY	1			A	X03386-42500-0
11	0338630850	・PLATE	1				
12	0338630860	・PLATE	1				
13	0338630870	・PLATE	1				
14	0338630880	・PLATE	1				
17	0338630910	・STOPPER (R.H.)	1				
18	0338630920	・PLATE	2				
19	0338630930	・PACKING	1				
20	0338630940	・SHIM	2				
21	0338630970	・COVER	1				
22	0338642110	・HARNESS, wiring	1			M	
23	0398802200	・HARNESS, wiring	1				
24	0338631010	・HARNESS, wiring	1				
25	0438601760	・COVER	2				
27	0568633300	・STOPPER	2				
29	0568634400	・SEAL	1				
30	0068620500	・STRIKER	1				
31	0338630960	・STOPPER (L.H.)	1				
32	1703001700	・LAMP, room	1				
32-1	1703001701	・・BULB	1				
33	0007000096	・SPRING	1				
34	1654004800	・HANGER	1				
35	1654004900	・STOPPER	4				
37	1654010500	・ASHTRAY	1				
38	1654010600	・POCKET	1				
39	1654010700	・LOCK	1				
40	1652341547	・CLAMP	1				
41	1652050900	・GROMMET	1				
42	1651101028	・STOPPER	2				
53	1652221050	・BAND	6				
54	1652060016	・GROMMET	2				
55	1652060031	・BUSHING	1				
56	0068621300	・SCREW	2				
57	1100090820	・BOLT	10				
58	1100040825	・BOLT	4				
59	1120590516	・SCREW	1				
60	1122410416	・SCREW	8				
61	1120590512	・SCREW	12				
62	1120590616	・SCREW	5				
63	1120630412	・SCREW	2				
64	1120790412	・SCREW	2				
66	1120890830	・SCREW	4				
67	1130090010	・NUT	4				
68	1140090004	・WASHER, spring	2				
69	1140090005	・WASHER, spring	6				
72	1141190004	・WASHER	6				
73	1141190005	・WASHER	6				
74	1140090006	・WASHER, spring	3				
75	1141190008	・WASHER	4				
77	1141550008	・WASHER	4				
78	1140330005	・WASHER	1				
79	1140330010	・WASHER	2				
80	1653916007	・TRIM	1				sold by the meter
81	1654010800	・PIN	1				
82	1652101811	・RUBBER	2				
83	1131242006	・NUT	1				
84	1120540408	・SCREW	2				
106	1711900066	・SOCKET	1			M	
107	0578600143	・COVER	1			M	
108	1150420512	・SCREW	2			M	
	C4e330						

silverhorn.co.uk

CAB (3/4) (front sash)

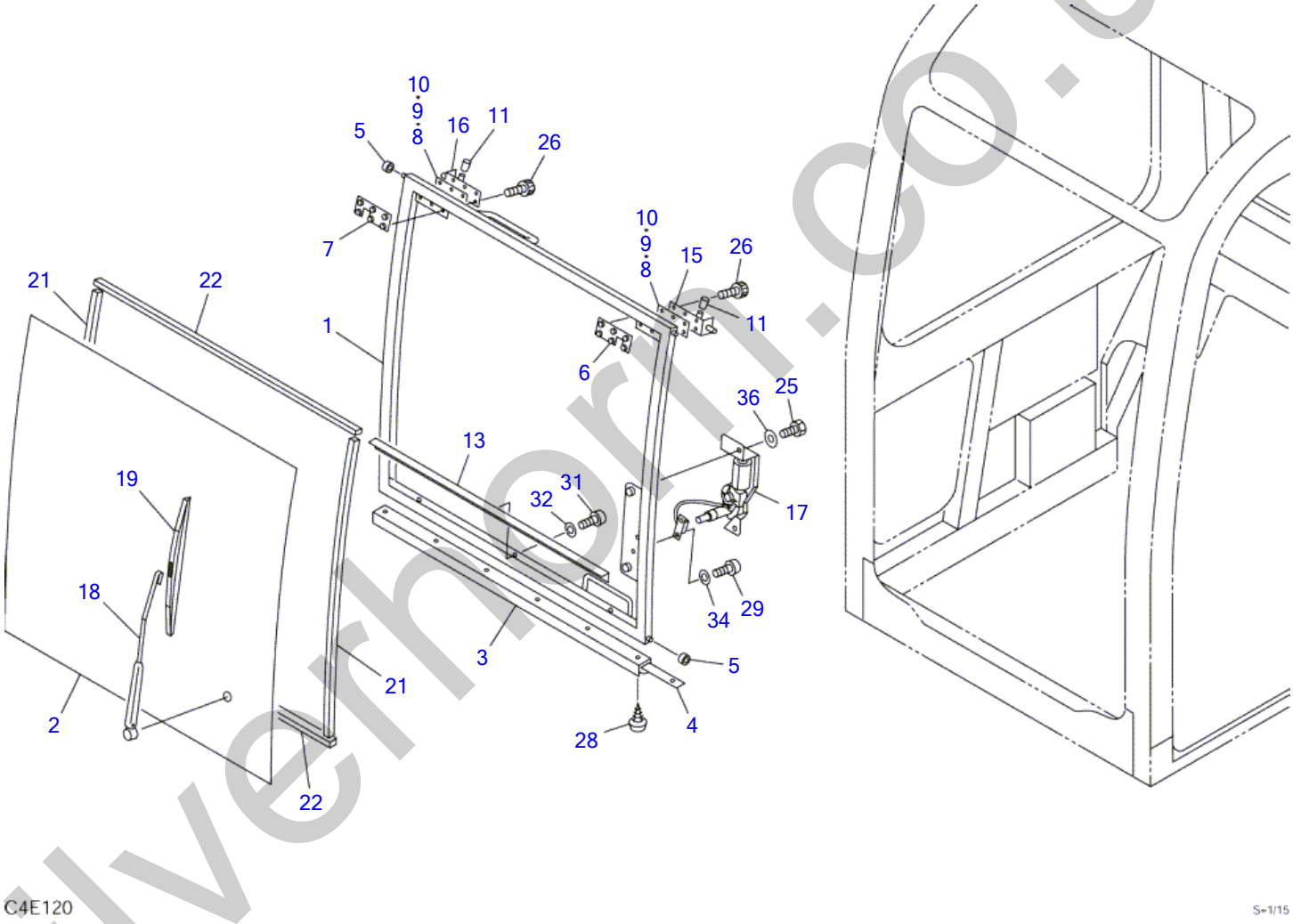

silverhorn.co.uk

CAB (3/4) (front sash)

Item	Part number	Description	Q'ty	Chan.	Serial No.	Serv.	Remarks
0-1	0338630400	SASH ASSY, front	1				
1	0338630430	・SASH, front	1				
2	0568639330	・GLASS	1				
3	0568621800	・SEAL	1				
4	0568621900	・PLATE	1				
5	0568622200	・ROLLER	4				
6	0568622400	・PLATE (L.H.)	1				
7	0568622300	・PLATE	1				
8	0468605031	・SHIM t=0.7	AR				
9	0468605032	・SHIM t=1.2	AR				
10	0468605033	・SHIM t=1.6	AR				
11	0398612500	・COVER	2				
13	0338630440	・PLATE	1				
15	1654005350	・LATCH (L.H.)	1				
16	1654005300	・LATCH (R.H.)	1				
17	1704078912	・MOTOR, wiper	1				
18	1704100530	・ARM, wiper	1				
19	1704200530	・BLADE	1				
21	1654616080	・DAM	2				sold by the meter
22	1654615085	・DAM	2				sold by the meter
25	1100290820	・BOLT	2				
26	1110090516	・SCREW, cap	12				
28	1122510412	・SCREW	6				
29	1120590408	・SCREW	2				
31	1120590516	・SCREW	3				
32	1140090005	・WASHER, spring	3				
34	1140090004	・WASHER, spring	2				
36	1141190008	・WASHER	2				
	C4e122						

silverhorn.co.uk

CAB (4/4) (door)

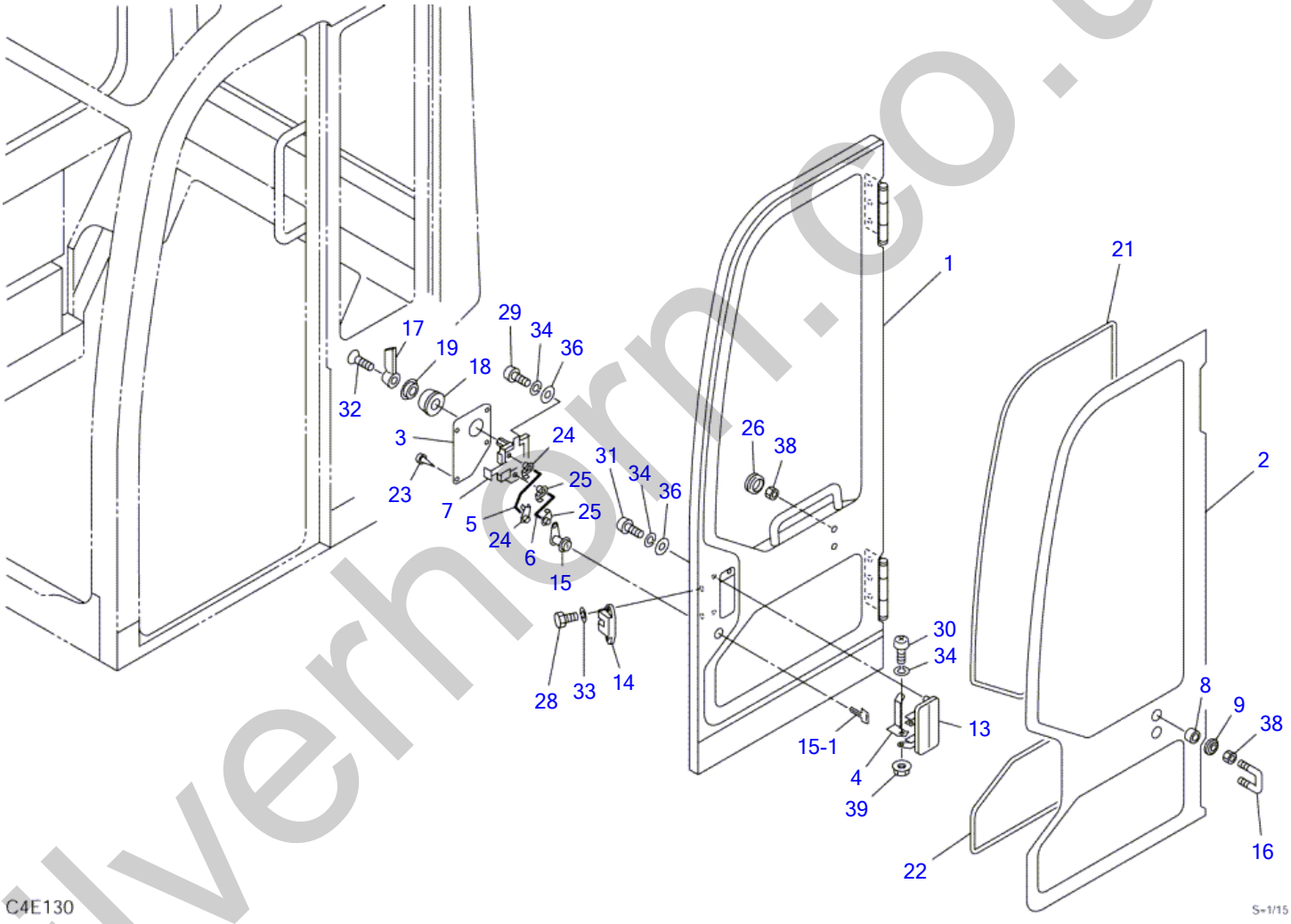

silverhorn.co.uk

CAB (4/4) (door)

Item	Part number	Description	Q'ty	Chan.	Serial No.	Serv.	Remarks
0-2	0338630500	DOOR ASSY	1				
1	0338630540	・DOOR	1				
2	0338630550	・GLASS	1				
3	0568623300	・COVER	1				
4	0568630900	・PLATE	1				
5	0568630800	・ROD	1				
6	0568630600	・ROD	1				
7	0568623400	・UNIT, control	1				
8	0568623500	・COLLAR	2				
9	0568623600	・SEAL	2				
13	1654005600	・HANDLE	1				
14	0068620400	・LOCK	1				
15	1653611527	・LOCK	1				
15-1	1700100019	・KEY	1				
16	1654005900	・STRIKER	1				
17	1654005500	・HANDLE	1				
18	1654005800	・BASE	1				
19	1654005700	・ESCUTCHEON	1				
21	1654615280	・DAM	1				sold by the meter
22	1654615160	・DAM	1				sold by the meter
23	1652711432	・CLIP	4				
24	0068621500	・SNAP	2				
25	0398610900	・SNAP	2				
26	1652053200	・GROMMET	2				
28	1100290616	・BOLT	2				
29	1120530612	・SCREW	2				
30	1120530616	・SCREW	1				
31	1120530608	・SCREW	2				
32	1120790516	・SCREW	1				
33	1140090006	・WASHER, spring	2				
34	1140020006	・WASHER, spring	5				
36	1141110006	・WASHER	4				
38	1130040010	・NUT	4				
39	1131242006	・NUT	1				
	C4e132						

silverhorn.co.uk

CAB ACCESSORIES

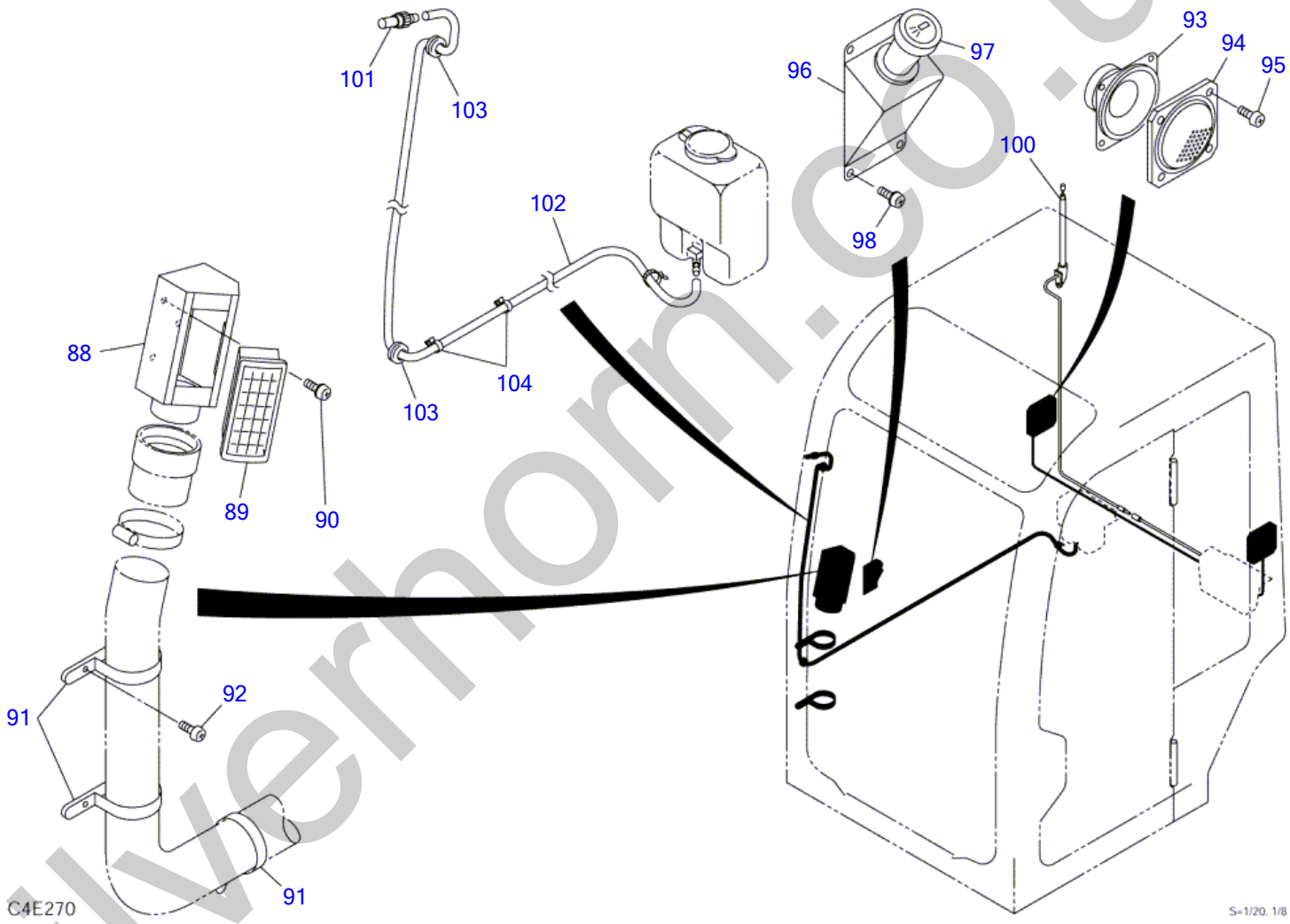

silverhorn.co.uk

CAB ACCESSORIES

Item	Part number	Description	Q'ty	Chan.	Serial No.	Serv.	Remarks
88	0872453510	DEFROSTER	1				
89	1911504000	LOUVER	1				
90	1150120512	SCREW	3				
91	1652261410	BAND	3				
92	1120590514	SCREW	3				
93	1705003500	SPEAKER	2				
94	1705003550	GRILLE	2				
95	1120590410	SCREW	8				
96	0338627020	BRACKET	1				
97	1711900059	LIGHTER	1				
98	1150120410	SCREW	4				
100	1705003400	ANTENNA	1				
101	1711910040	NOZZLE	1				
102	1711919180	HOSE	1				sold by the meter
103	1652001002	GROMMET	2				
104	1652351054	BAND	2				
	C4e270						

silverhorn.co.uk

REARVIEW MIRROR

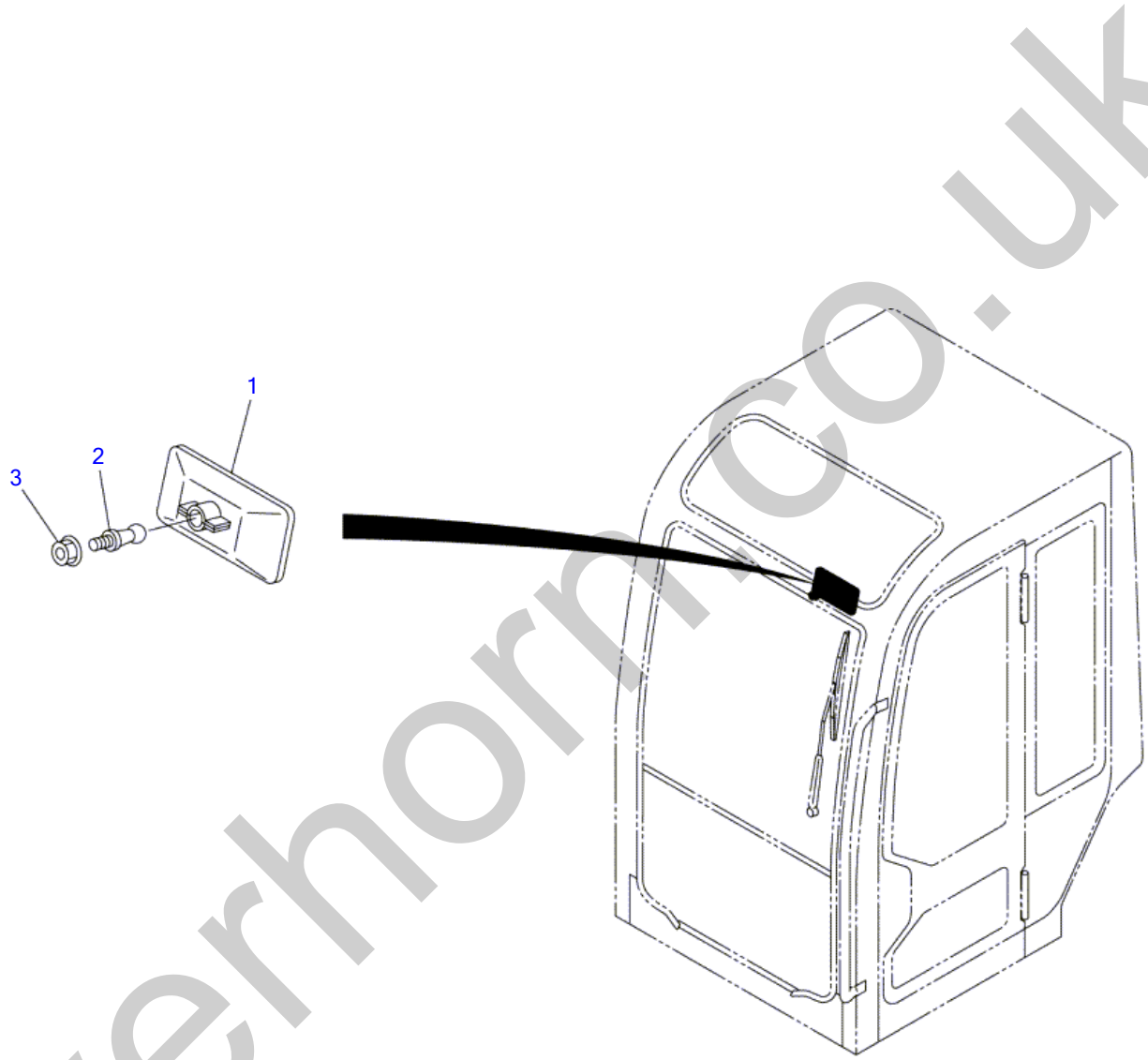

C4E140

S=1/20, 1/5

silverhorn.co.uk

REARVIEW MIRROR

Item	Part number	Description	Q'ty	Chan.	Serial No.	Serv.	Remarks
		MIRROR ASSY, rearview					X03387-00000-0
1	**1654005400**	MIRROR	1				
2	**1654006000**	PIVOT	1				
3	**1131242008**	NUT	1				
	C4e141						

silverhorn.co.uk

CANOPY

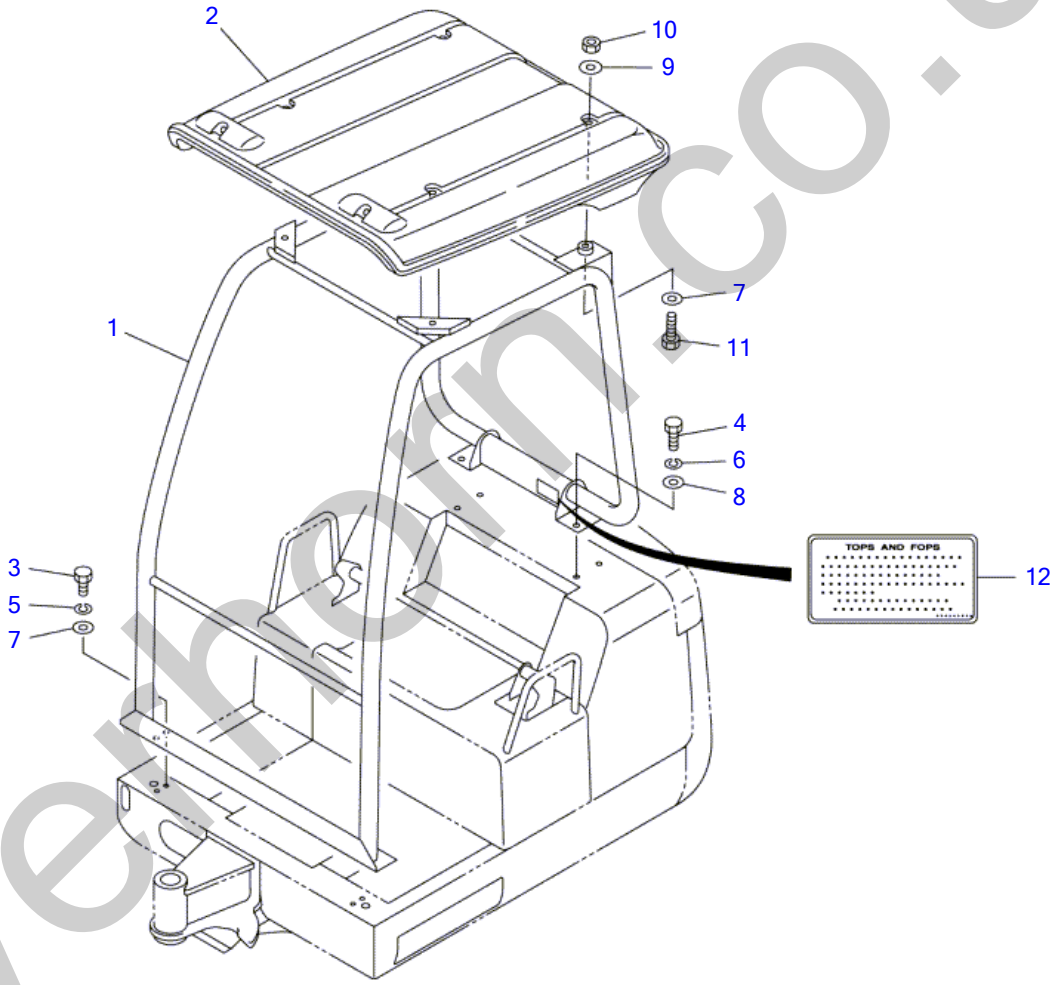

C4E151

S=1/20

silverhorn.co.uk

CANOPY

Item	Part number	Description	Q'ty	Chan.	Serial No.	Serv.	Remarks
		CANOPY ASSY					X03384-25000-4
1	0338424100	POLE	1		11400003~11400262		
	0338425100	POLE	1	(H)	11400263~11400316		
	0338425200	POLE	1	(H)	11400317~		
2	0368416300	ROOF	1				
3	1100041025	BOLT	4				
4	1101041230	BOLT	4				
5	1140020010	WASHER, spring	4				
6	1140020012	WASHER, spring	4				
7	1141110010	WASHER	8				
8	1141110012	WASHER	4				
9	0003600020	WASHER	4				
10	1130040010	NUT	4				
11	1100041045	BOLT	4		11400003~11400010		
	1100041040	BOLT	4		11400011~		
12	0339359200	DECAL	1		11400263~		
	C4e151S						

silverhorn.co.uk

FRONT GUARD (for YBM)

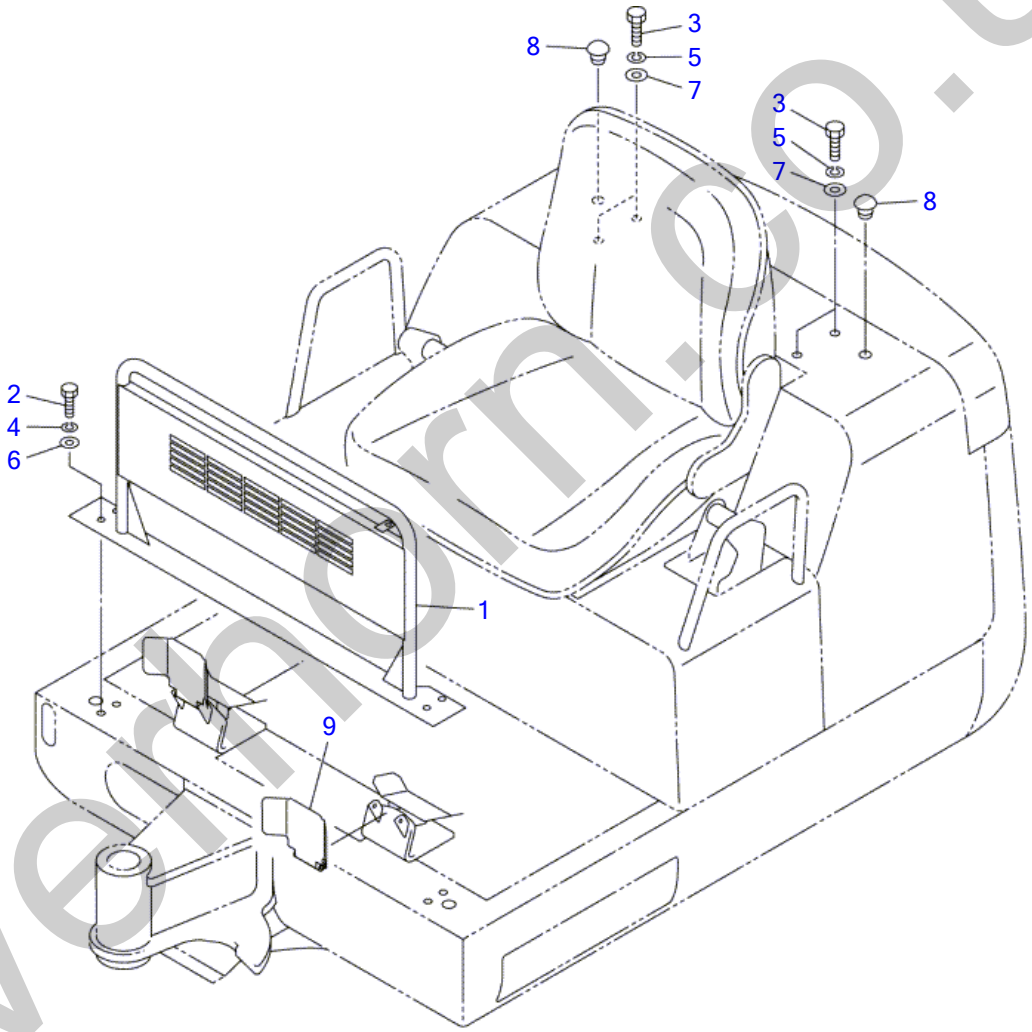

C4E260

S=1/12

silvermorn.co.uk

FRONT GUARD (for YBM)

Item	Part number	Description	Q'ty	Chan.	Serial No.	Serv.	Remarks
		GUARD ASSY	1				X03384-27000-1
1	**0338427200**	GUARD	1				
2	**1100041025**	BOLT	4				
3	**1101041230**	BOLT	4				
4	**1140020010**	WASHER, spring	4				
5	**1140020012**	WASHER, spring	4				
6	**1141110010**	WASHER	4				
7	**1141110012**	WASHER	4				
8	**1652530002**	PLUG	2				
9	**0338427300**	COVER	1				
	C4e260						

silverhorn.co.uk

HEATER (cab)

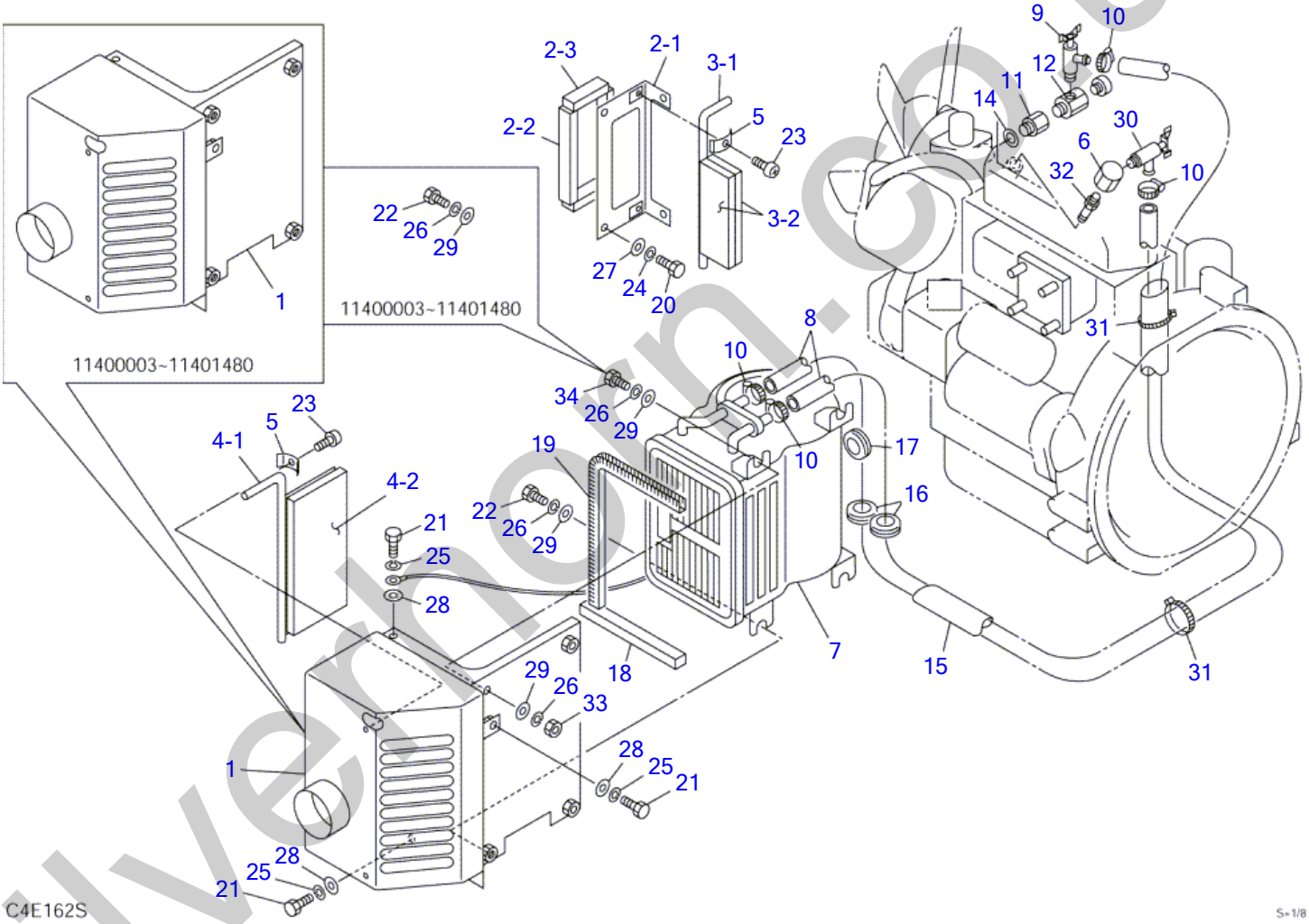

silvernorn.co.uk

HEATER (cab)

Item	Part number	Description	Q'ty	Chan.	Serial No.	Serv.	Remarks
		HEATER ASSY					X03345-19000-5
1	0334517100	BRACKET	1		11400003~11400010		
	0334519100	BRACKET	1	(H)	11400011~		
2	0334517200	PLATE ASSY	1		11400003~11400010		
	0334519200	PLATE ASSY	1	(H)	11400011~		
2-1	0334517210	・PLATE	1		11400003~11400010		
	0334519210	・PLATE	1	(H)	11400011~		
2-2	1654311013	・URETHANE	2				sold by the meter
2-3	1654311007	・URETHANE	2		11400003~11400010		sold by the meter
	1654311006	・URETHANE	2		11400011~		sold by the meter
3	0334515300	LEVER ASSY	1		11400003~11400010		
	0334519300	LEVER ASSY	1		11400011~		
3-1	0334515310	・LEVER	1		11400003~11400010		
	0334519310	・LEVER	1		11400011~		
3-2	0334515320	・SPONGE	2		11400003~11400010		
	0334519320	・SPONGE	2		11400011~		
4	0334517400	LEVER ASSY	1				
4-1	0334515410	・LEVER	1				
4-2	0334517420	・SPONGE	1				
5	0334517500	PLATE	4				
6	0007262009	ELBOW	1				
7	1911508100	HEATER	1				
8	1911521810	HOSE	2				
9	1911502100	VALVE	1				
10	1911500500	CLAMP	4				
11	0007211011	BUSHING	1		11400003~11400022		
	0007211017	BUSHING	1	(H)	11400023~		
12	0007261004	JOINT	1				
14	1541400516	WASHER	1				
15	1531345090	PROTECTOR	1				sold by the meter
16	1652002201	GROMMET	2				
17	1652052800	GROMMET	1				
18	1654304016	SPONGE	1				sold by the meter
19	1654606035	SEAL	1				sold by the meter
20	1100040612	BOLT	4				
21	1100040816	BOLT	4				
22	1100041016	BOLT	3				
23	1120530410	SCREW	4				
24	1140020006	WASHER, spring	4				
25	1140020008	WASHER, spring	4				
26	1140020010	WASHER, spring	5				
27	1141110006	WASHER	4				
28	1141110008	WASHER	4				
29	1141110010	WASHER	5				
30	1911502300	VALVE	1				
31	1652201007	BAND	2				
32	0007205005	NIPPLE	1				
33	1130040010	NUT	1		11401481~		
34	1100041020	BOLT	1		11401481~		
	C4e163S						

silverhorn.co.uk

HEATER (canopy)

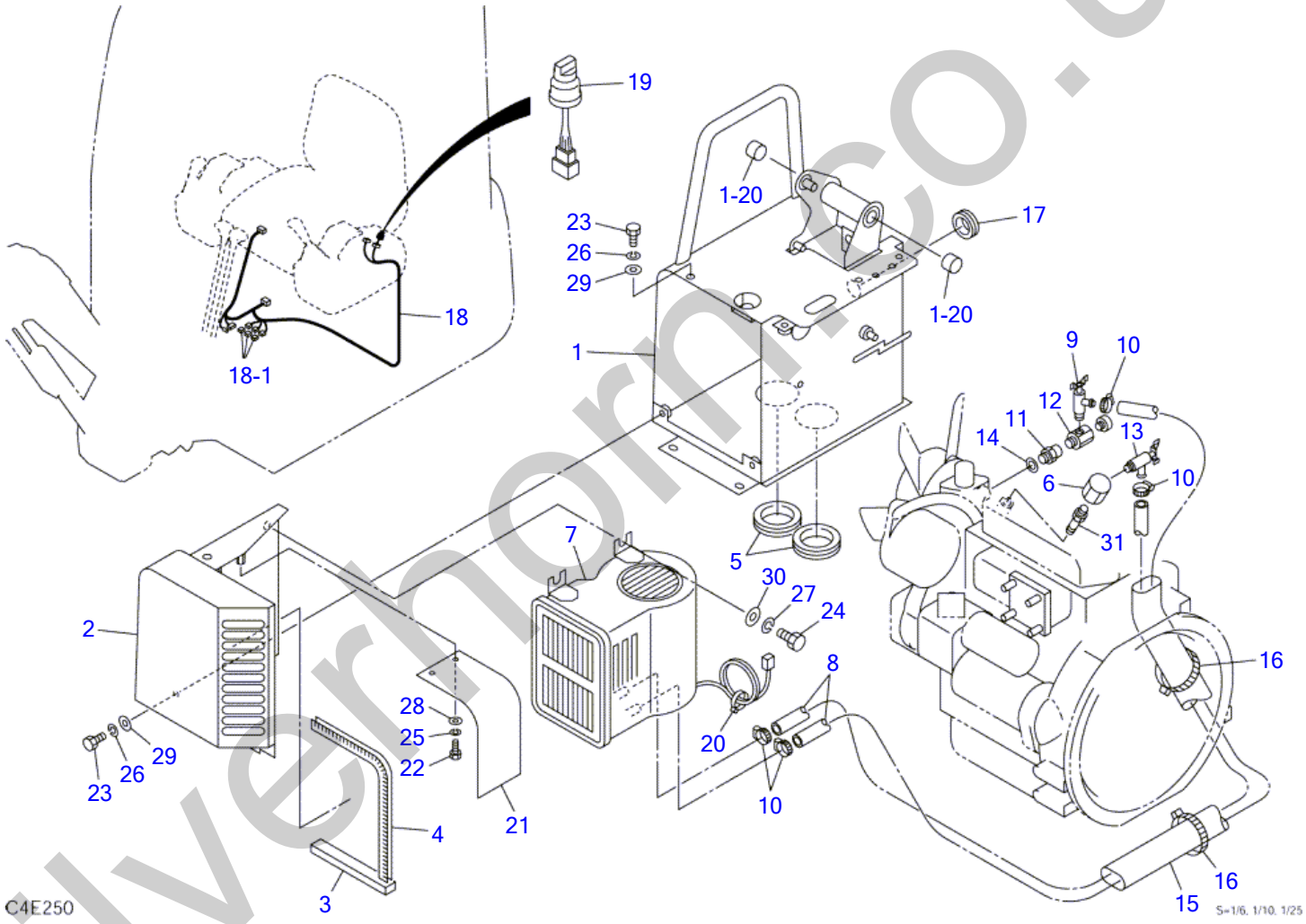

silverhorn.co.uk

HEATER (canopy)

Item	Part number	Description	Q'ty	Chan.	Serial No.	Serv.	Remarks
		HEATER ASSY					X03345-21000-2
1	0334521100	COVER	1				
1-20	1333002015	・BUSHING	2				
2	0334521200	BRACKET	1				
3	1654304016	SPONGE	1				sold by the meter
4	1654606035	TRIM	1				sold by the meter
5	1652060063	GROMMET	2				
6	0007262009	ELBOW	1				
7	1911508100	HEATER	1				
8	1911511890	HOSE	2				sold by the meter
9	1911502100	VALVE	1				
10	1911500500	BAND	4				
11	0007211017	BUSHING	1				
12	0007261004	JOINT	1				
13	1911502300	VALVE	1				
14	1541400516	WASHER	1				
15	1531345090	PROTECTOR	1				sold by the meter
16	1652201007	VALVE	2				
17	1652052800	GROMMET	1				
18	0334242200	HARNESS, wiring	1				
18-1	1730500008	・DIODE (3A, yellow)	3				
19	1700000011	SWITCH, heater	1				
20	1652231250	BAND	1				
21	0334521300	SEAL	1				
22	1100040610	BOLT	2				
23	1100040816	BOLT	3				
24	1100041016	BOLT	4				
25	1140020006	WASHER, spring	2				
26	1140020008	WASHER, spring	3				
27	1140020010	WASHER, spring	4				
28	1141110006	WASHER	2				
29	1141110008	WASHER	3				
30	1141110010	WASHER	4				
31	0007205005	NIPPLE	1				
	C4e251						

silverhorn.co.uk

DEFROSTER

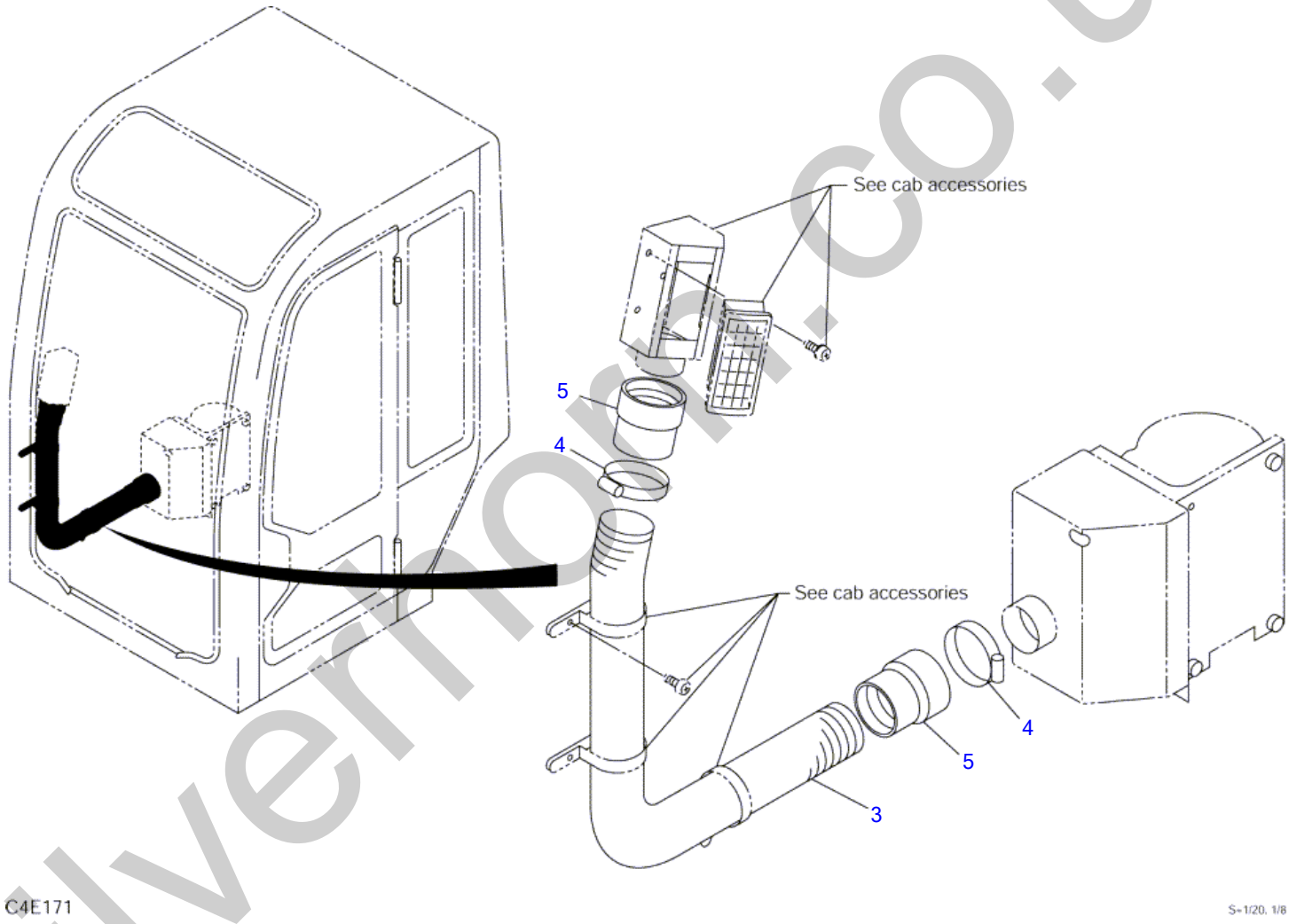

silverhorn.co.uk

DEFROSTER

Item	Part number	Description	Q'ty	Chan.	Serial No.	Serv.	Remarks
		DEFROSTER ASSY					X03345-20000-3
3	**1567315075**	HOSE	1				
4	**1533700070**	BAND	2				
5	**1567325000**	CUFFS	2				
	C4e173						

silverhorn.co.uk

BOOM

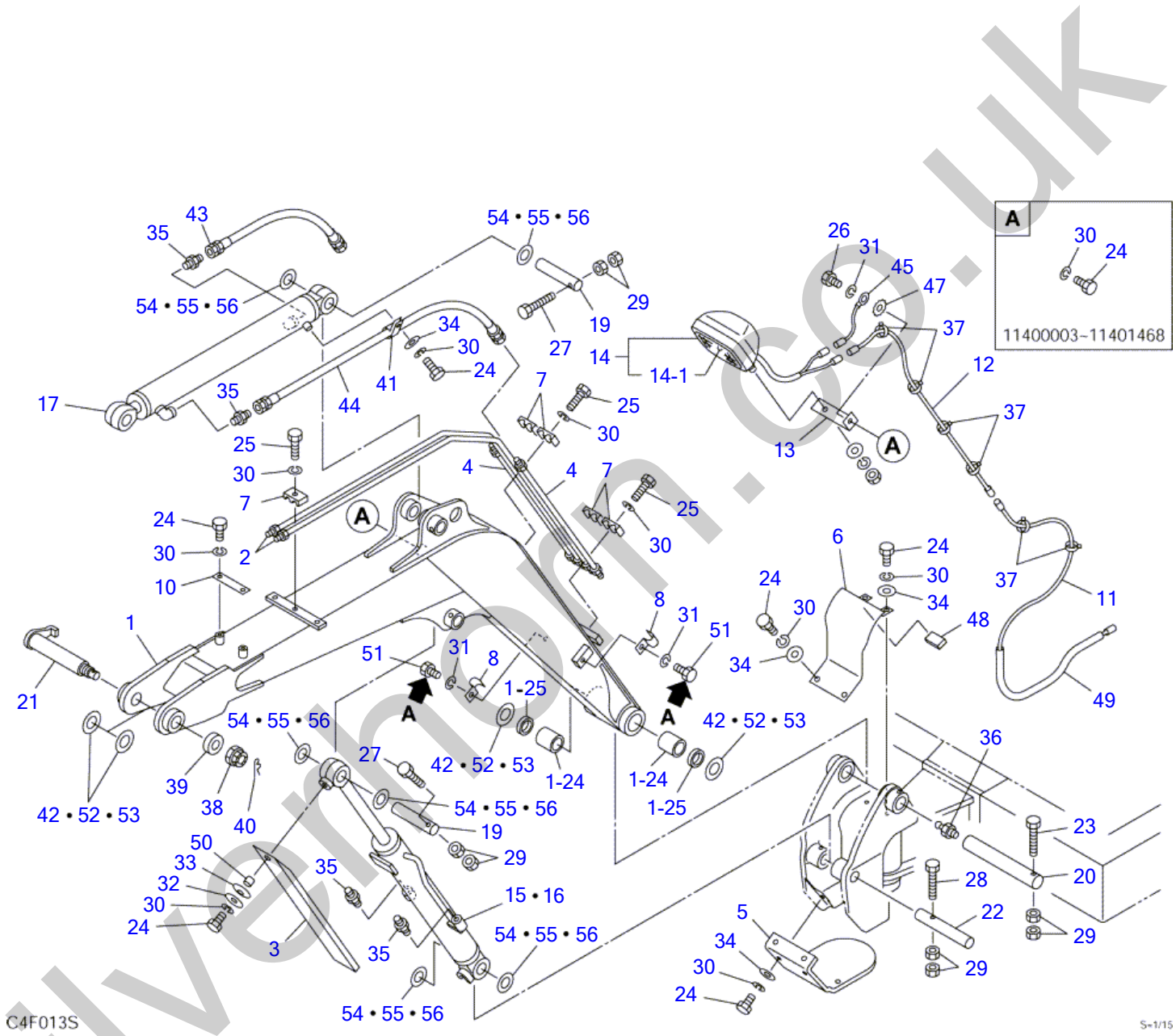

silvermorn.co.uk

BOOM

Item	Part number	Description	Q'ty	Chan.	Serial No.	Serv.	Remarks
		BOOM ASSY (CANOPY)					X03360-29000-14
		BOOM ASSY (CAB)					X03660-30000-14
1	0336019100	BOOM SUB ASSY	1		11400003~11400010		CLAMP M8
	0336029100	BOOM SUB ASSY	1	(H)	11400011~11401142		CLAMP M8
	0336029500	BOOM SUB ASSY	1	(H)	11401143~		CLAMP M10
1-24	0002400044	・BUSHING	2				
1-25	1432200035	・SEAL, dust	2				
2	0336019310	PIPE	2				
3	0336015040	COVER	1		11400003~11400436		
	0336027500	COVER	1	(H)	11400437~		
4	0426007700	PIPE	2				
5	0336023050	COVER	1				
6	0336023060	COVER	1		11400003~11400010		
	0336029060	COVER	1	(H)	11400011~		
7	1534000012	CLAMP	5				
8	0336023080	CLAMP	2		11400003~11400316		
	0336021350	CLAMP	2		11400317~		
10	0336023010	CLAMP	1		11400003~11400010		
	0336021370	CLAMP	1	(H)	11400011~		
11	0336021380	WIRE	1		11400003~11400010		
	0434200500	WIRE	1	(H)	11400011~		
12	0336021390	HARNESS, wiring	1				
13	0336015410	PLATE	1				
14	1703005300	LAMP ASSY	1		11400003~11400010		
	1703006000	LAMP ASSY	1	(H)	11400011~		
14-1	1703005506	・BULB	1				
15	1900070400	CYLINDER, boom	1		11400003~11400436		canopy
	1900080100	CYLINDER, boom	1	(H)	11400437~11400490		canopy
	1900082400	CYLINDER, boom	1	(H)	11400491~		canopy
16	1900072500	CYLINDER, boom	1		11400003~11400436		cab
	1900080200	CYLINDER, boom	1	(H)	11400437~11400490		cab
	1900082500	CYLINDER, boom	1	(H)	11400491~		cab
17	1900074600	CYLINDER, arm	1		11400003~11400358		
	1900078400	CYLINDER, arm	1	(H)	11400359~		
19	0001601130	PIN	2				
20	0011571011	PIN	1				
21	0011901006	PIN	1				
22	0011511004	PIN	1				
23	1103040880	BOLT	1				
24	1100040816	BOLT	12				
25	1100040830	BOLT	5				
26	1100041025	BOLT	1				
27	1103040860	BOLT	2				
28	1103040875	BOLT	1				
29	1130240008	NUT	1				
30	1140020008	WASHER, spring	18				
31	1140020010	WASHER, spring	2				
32	0003608003	WASHER	1				
33	1225121016	WASHER, conical	1				
34	1141110008	WASHER	6				
35	1515600200	ADAPTOR	4				
	1420010110	・O-RING	1			M	
36	1560001000	FITTING, grease	1				
37	1652200005	BAND	6				
38	1132630024	NUT	1				
39	0003900021	WASHER	1				
40	1210010545	PIN, split	1				
41	0007300050	CLAMP	1				
42	0436111700	SHIM t=1.0	AR				
43	0336027300	HOSE ASSY	1				TB016 18015-60044
	0336029300	HOSE ASSY	1				TB014 18015-60034
44	0336027400	HOSE ASSY	1				TB016 18015-60096
	0336029400	HOSE ASSY	1				TB014 18015-60082
45	0336021400	HARNESS, wiring	1				
47	1140330010	WASHER	1				
48	0336023048	RUBBER	1		11400003~11400010		
	0336029048	RUBBER	1	(H)	11400011~		
49	1531312050	PROTECTOR	1				sold by the meter

silvermorn.co.uk

BOOM

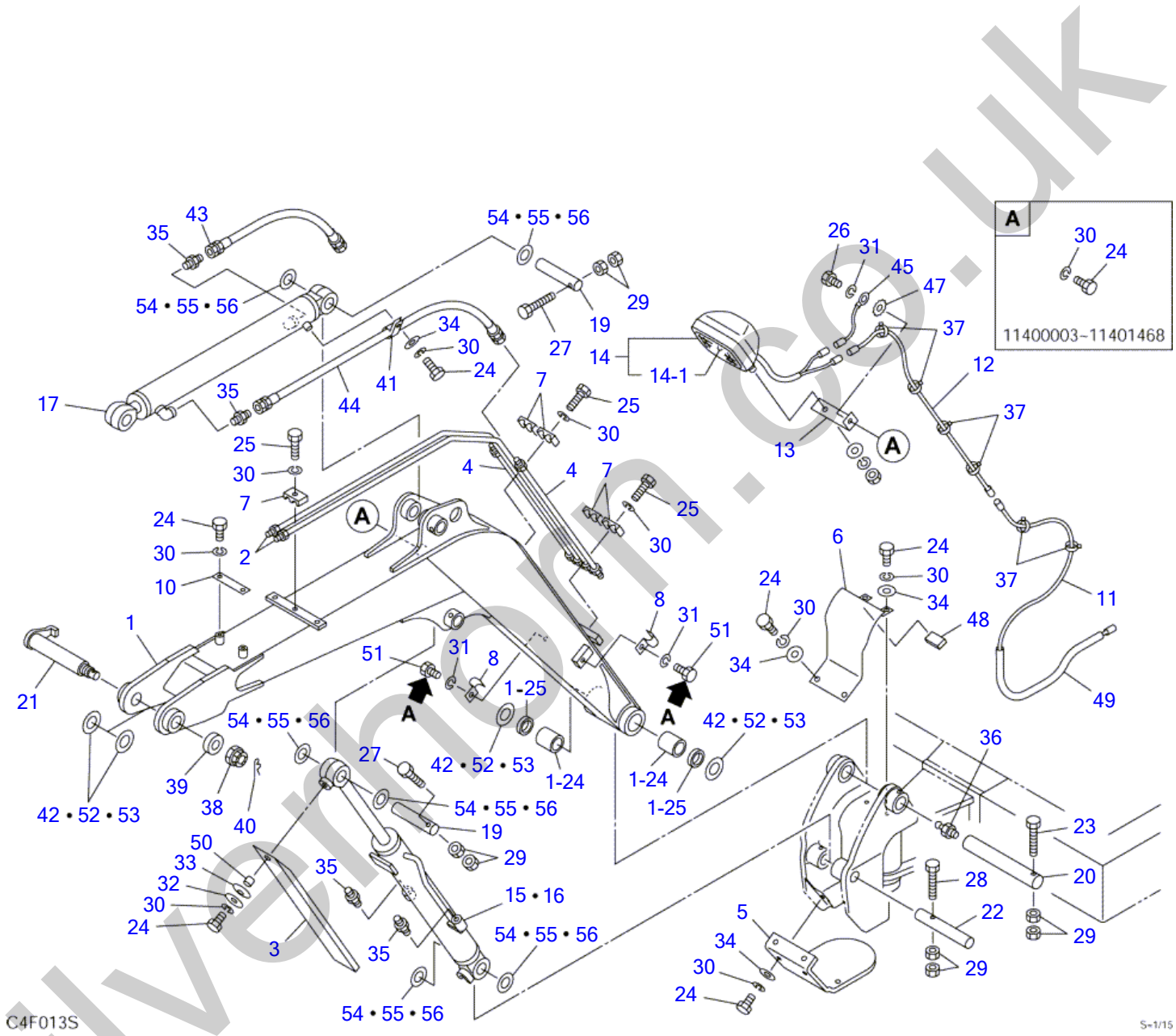

silvermorn.co.uk

BOOM

Item	Part number	Description	Q'ty	Chan.	Serial No.	Serv.	Remarks
50	0003600160	COLLAR	1		11400437~		
51	1100041016	BOLT	2		11401469~		
52	0003600051	SHIM t=0.2	AR				
53	0003600052	SHIM t=0.5	AR				
54	0003600044	SHIM t=0.2	AR				
55	0003600045	SHIM t=0.5	AR				
56	0426109800	SHIM t=1.0	AR				
	C4f014S						

silverhorn.co.uk

ARM

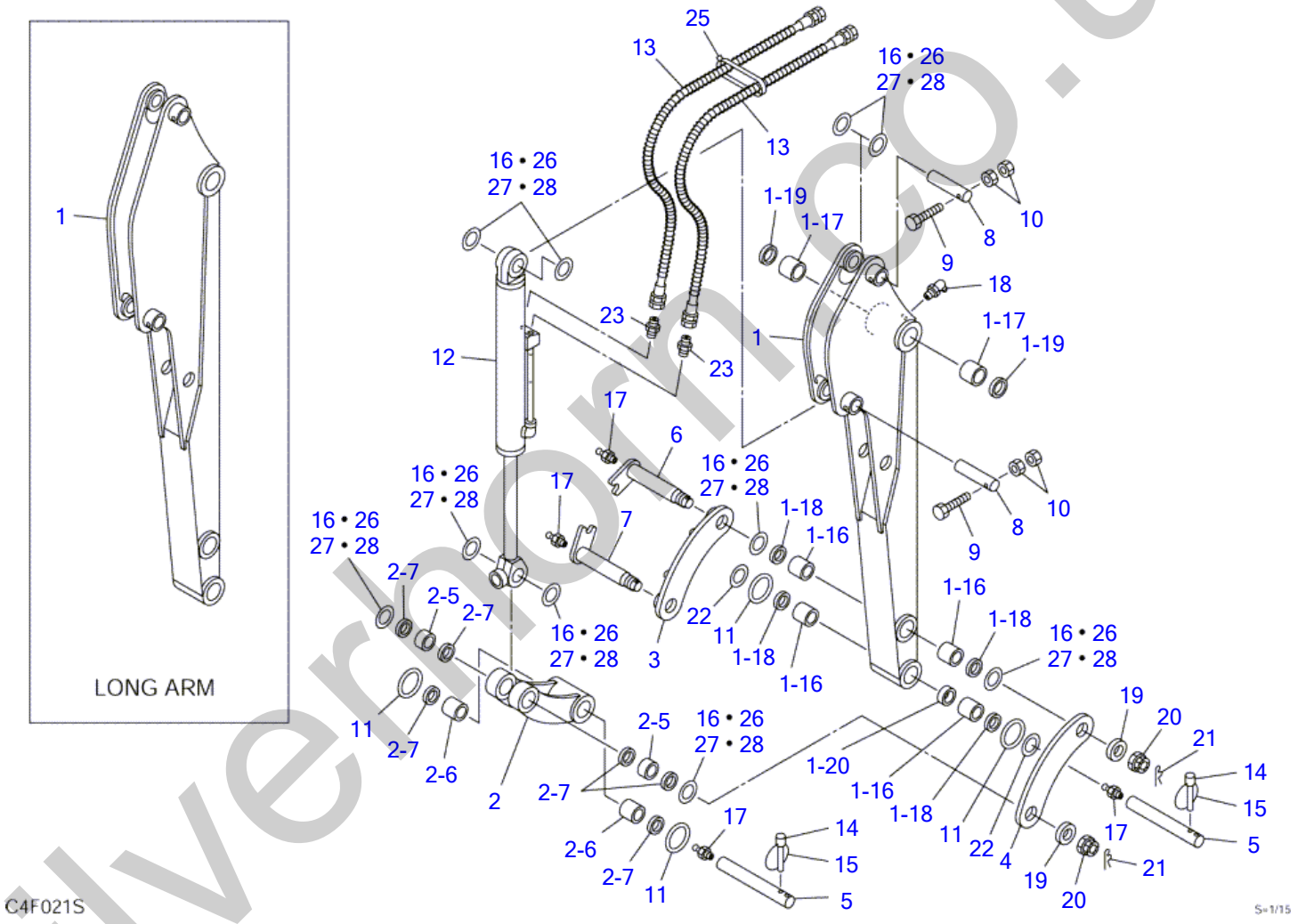

silvernorm.co.uk

ARM

Item	Part number	Description	Q'ty	Chan.	Serial No.	Serv.	Remarks
		ARM ASSY					X03361-30000-2
		ARM ASSY, long					X03361-36000-1
1	0336127100	ARM SUB ASSY	1		11400003~11400010		830mm
	0336130100	ARM SUB ASSY	1	(H)	11400011~		830mm
	0336132100	ARM SUB ASSY, long	1		11400003~11400310		1040mm
	0336136100	ARM SUB ASSY, long	1		11400311~		1040mm
1-16	0002330040	・BUSHING	4				
1-17	0002400045	・BUSHING	2				
1-18	1432200030	・SEAL, dust	4				
1-19	1432200035	・SEAL, dust	2				
1-20	0003033001	・COLLAR	1				
2	0336122400	LINK ASSY, bucket	1				
2-5	0002130022	・BUSHING	2				
2-6	0002330040	・BUSHING	2				
2-7	1432200030	・SEAL, dust	6				
3	0336122500	LINK, guide (R.H.)	1				
4	0336122600	LINK, guide (L.H.)	1				
5	0001521002	PIN	2				
6	0001900151	PIN	1				
7	0011901004	PIN	1				
8	0001601110	PIN	2				
9	1103040860	BOLT	2				
10	1130240008	NUT	4				
11	1432900045	O-RING	4				
12	1900072200	CYLINDER, bucket	1				
13	0336130300	HOSE ASSY	2				18015-60080
13-2	1532212106	・TUBE	1				sold by the meter
13	0336132300	HOSE ASSY (for long arm)	2				18015-60100
13-2	1532212136	・TUBE	1				sold by the meter
14	0426106100	PIN	2				
15	0426106200	RING	2				
16	0426109800	SHIM t=1.0	AR				
17	1560001000	FITTING, grease	4				
18	1560001675	FITTING, grease	1				
19	0003900012	WASHER	2				
20	1132630024	NUT	2				
21	1210010545	PIN, split	2				
23	1515600200	ADAPTOR	2				
	1420010110	・O-RING	1			M	
25	1652200005	BAND	1				
26	0003600044	SHIM t=0.2	AR				
27	0003600045	SHIM t=0.5	AR				
28	0426109800	SHIM t=1.0	AR				
	C4f021S						

silverthorn.co.uk

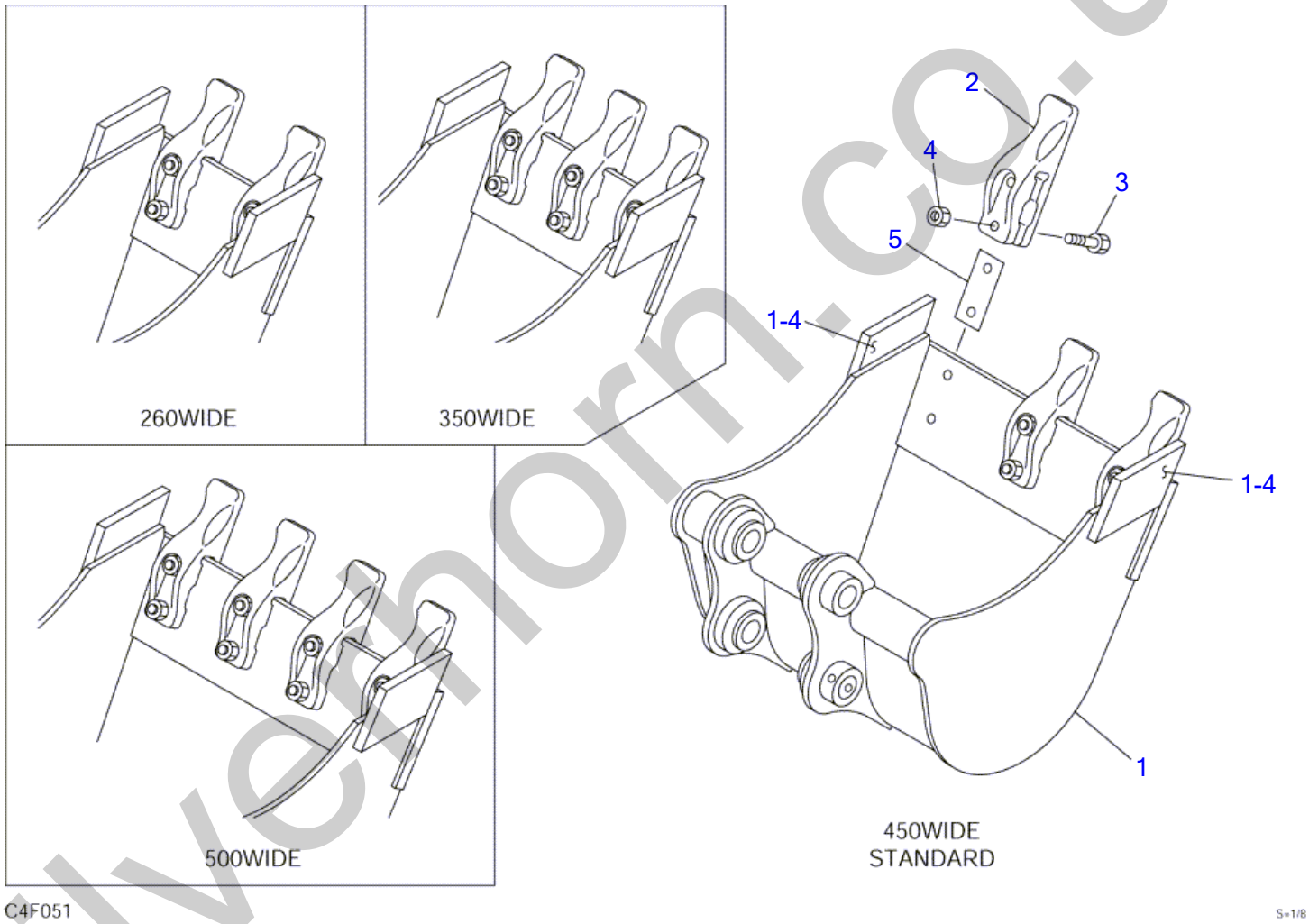

silverhorn.co.uk

BUCKET

Item	Part number	Description	Q'ty	Chan.	Serial No.	Serv.	Remarks
0	0336230000	BUCKET ASSY	1				260mm wide
	0336231000	BUCKET ASSY	1				350mm wide
	0336229000	BUCKET ASSY	1				450mm wide
	0336232000	BUCKET ASSY	1				500mm wide
1	X **********	・BUCKET	1				
1-4	0336228104	・・CUTTER, side	2				
2	0136209900	・TOOTH	2				260W
	0136209900	・TOOTH	3				350W, 450W
	0136209900	・TOOTH	4				550W
3	1101051245	・BOLT	4				260W
	1101051245	・BOLT	6				350W, 450W
	1101051245	・BOLT	8				550W
4	1130550012	・NUT	4				260W
	1130550012	・NUT	6				350W, 450W
	1130550012	・NUT	8				550W
5	0136209801	・SHIM t=0.8	AR				
	0136209802	・SHIM t=1.0	AR				
	0136209803	・SHIM t=1.2	AR				
	C4f052						

silverhorn.co.uk

BUCKET (3-holes bucket)

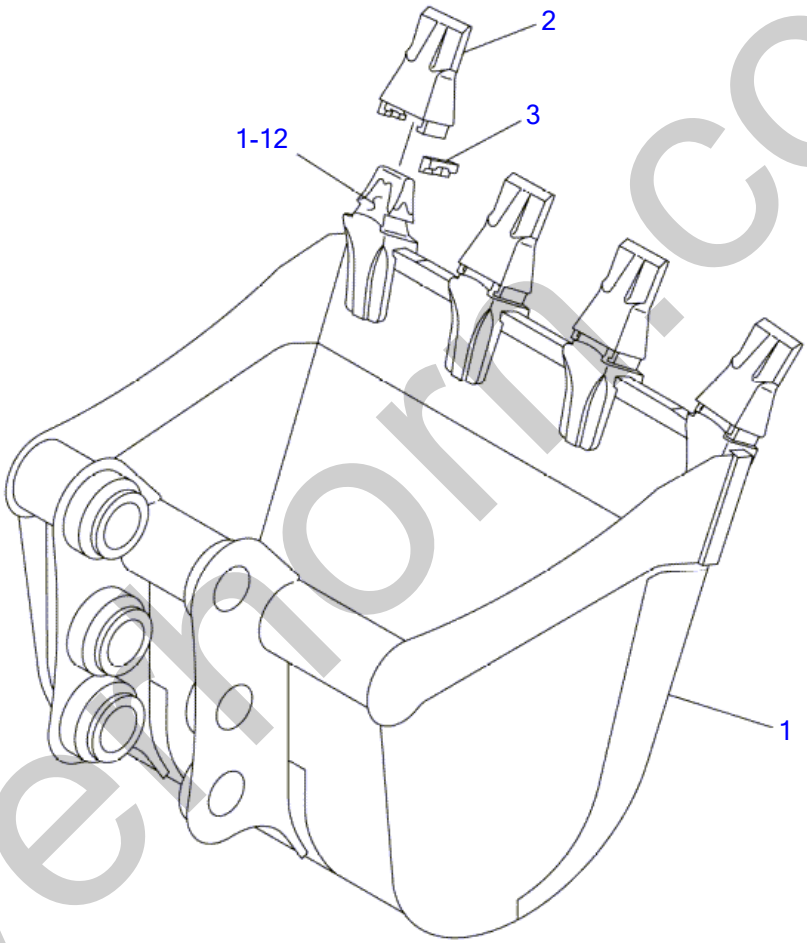

C4F070

S=1/6

silverthorn.co.uk

BUCKET (3-holes bucket)

Item	Part number	Description	Q'ty	Chan.	Serial No.	Serv.	Remarks
0	0336226000	BUCKET ASSY	1				X03362-26000-0
1	X **********	・BUCKET	1				
1-12	1914201201	・・ADAPTOR, tooth	4				
2	1914201202	・POINT, tooth	4				
3	1914201203	・PIN, lock	4				
	C4f070						

silverhorn.co.uk

AUXILIARY LINE (11400003-11400394)

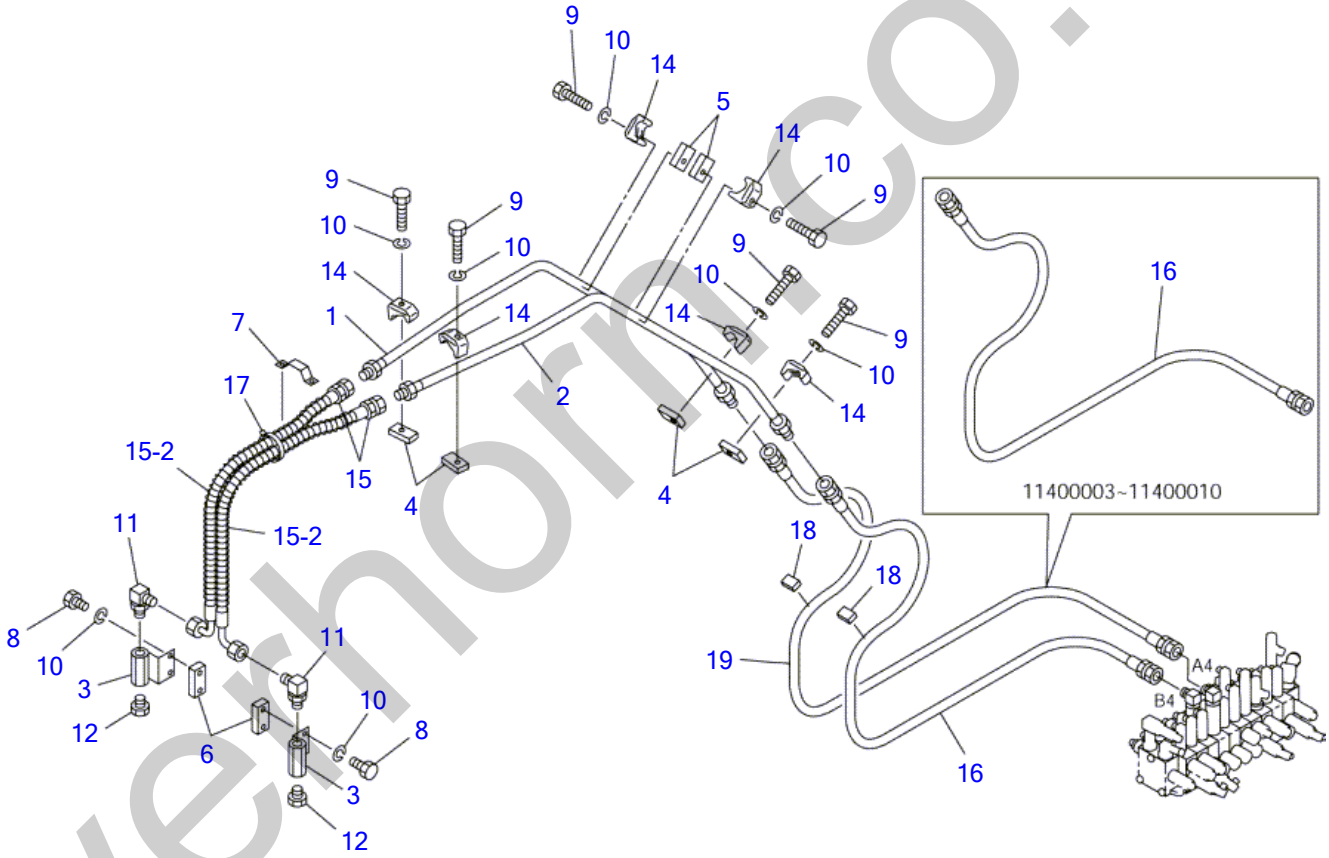

silverthorn.co.uk

AUXILIARY LINE (11400003-11400394)

Item	Part number	Description	Q'ty	Chan.	Serv.	Remarks
0	0337330000	PIPING ASSY	1			X03373-30000-2
	0337336000	PIPING ASSY (for long arm)	1			X03373-36000-0
1	0337324010	・PIPE (R.H.)	1			
2	0337324020	・PIPE (L.H.)	1			
3	0337334030	・SOCKET	2			
4	0337325040	・PLATE	4			
5	0336021217	・BLOCK	2			
6	0337325060	・PLATE	2			
7	0337328007	・CLAMP	1			
8	1100040816	・BOLT	4			
9	1100040840	・BOLT	6			
10	1140020008	・WASHER, spring	10			
11	1515010042	・ELBOW	2			
	1420010180	・・O-RING	1		M	
12	1515600502	・PLUG	2			
	1420010180	・・O-RING	1		M	
14	1534100217	・CLAMP	6			
15	0337330300	・HOSE ASSY	2			18015-41079
15-2	1532218070	・・TUBE	1			sold by the meter
15	0337333300	・HOSE ASSY (for long arm)	2	11400003~11400310		18015-41100
15-2	1532218092	・・TUBE	1	11400003~11400310		sold by the meter
15	0337336300	・HOSE ASSY (for long arm)	2	11400311~11400394		18015-41090
15-2	1532218082	・・TUBE	1	11400311~11400394		sold by the meter
16	1801859002	・HOSE ASSY	2	11400003~11400010		
	0337330100	・HOSE ASSY	1	11400011~		18015-40185
17	1652200005	・BAND	1			
18	0337328018	・RUBBER	2			
19	0337330200	・HOSE ASSY	1	11400011~		18015-40200
	C4f061S					

silverhorn.co.uk

AUXILIARY LINE (11400395-)

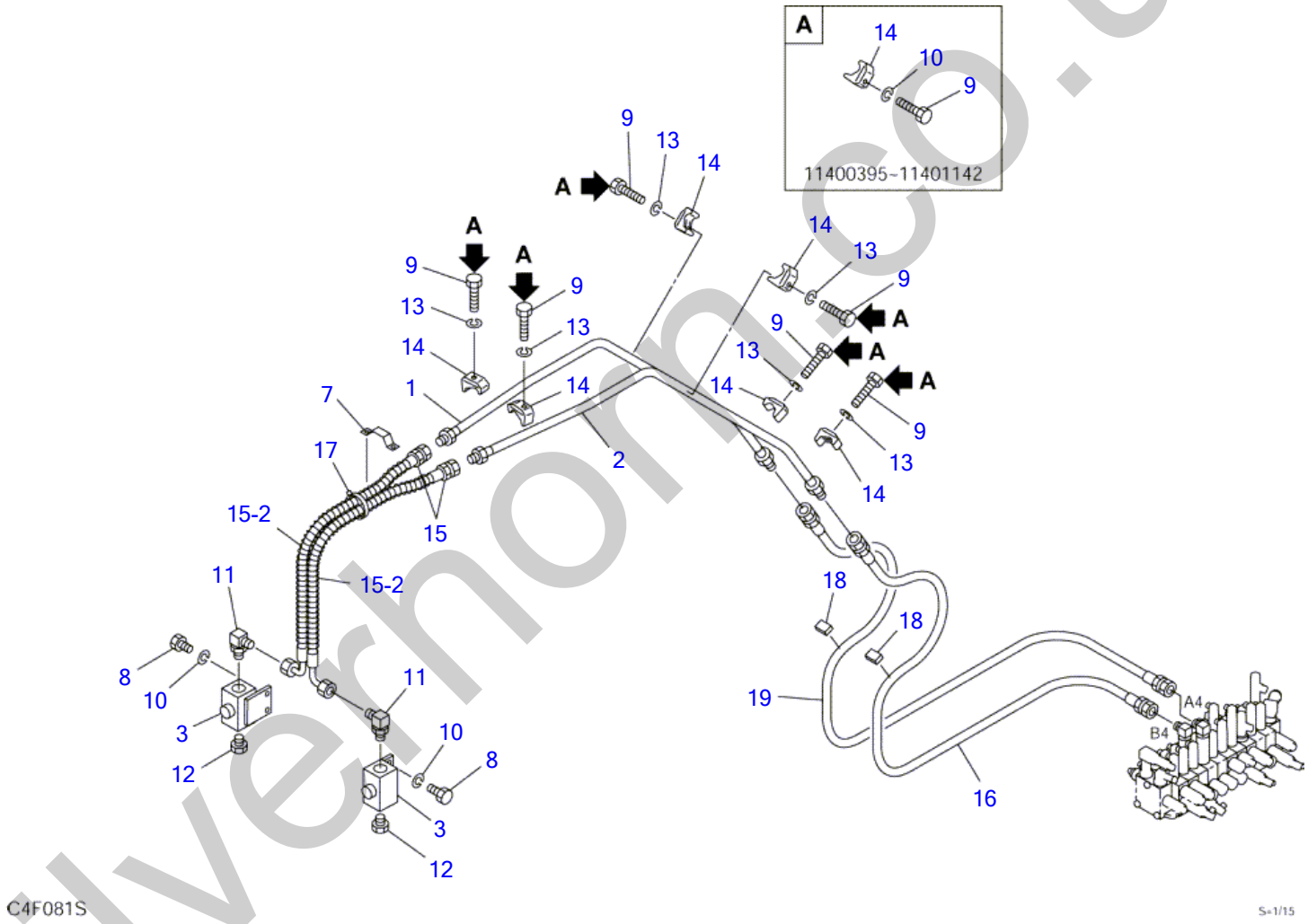

silverhorn.co.uk

AUXILIARY LINE (11400395-)

Item	Part number	Description	Q'ty	Chan.	Serial No.	Serv.	Remarks
0	0337338000	PIPING ASSY	1				X03373-38000-7
	0337339000	PIPING ASSY (for long arm)	1				X03373-39000-7
1	0337324010	・PIPE (R.H.)	1				
2	0337324020	・PIPE (L.H.)	1				
3	1901719800	・VALVE, stop	2				
7	0337328007	・CLAMP	1				
8	1100040816	・BOLT	4				
9	1100040840	・BOLT	6		11400395~11401142		
	1100041045	・BOLT	6		11401143~		
10	1140020008	・WASHER, spring	10		11400395~11401142		
	1140020008	・WASHER, spring	4		11401143~		
11	1515010042	・ELBOW	2				
	1420010180	・・O-RING	1			M	
12	1501750004	・PLUG	2				
	1420010180	・・O-RING	1			M	
13	1140020010	・WASHER, spring	6		11401143~		
14	1534100217	・CLAMP	6		11400395~11401142		
	1534100218	・CLAMP	6		11401143~		
15	0337330300	・HOSE ASSY	2				18015-41079
15-2	1532218070	・・PROTECTOR	1				sold by the meter
15	0337336300	・HOSE ASSY (for long arm)	2				18015-41090
15-2	1532218082	・・PROTECTOR	1				sold by the meter
16	0337330100	・HOSE ASSY	1				18015-40185
17	1652200005	・BAND	1				
18	0337328018	・RUBBER	2				
19	0337330200	・HOSE ASSY	1				18015-40200
	C4f082S						

silverhorn.co.uk

DECAL (canopy)

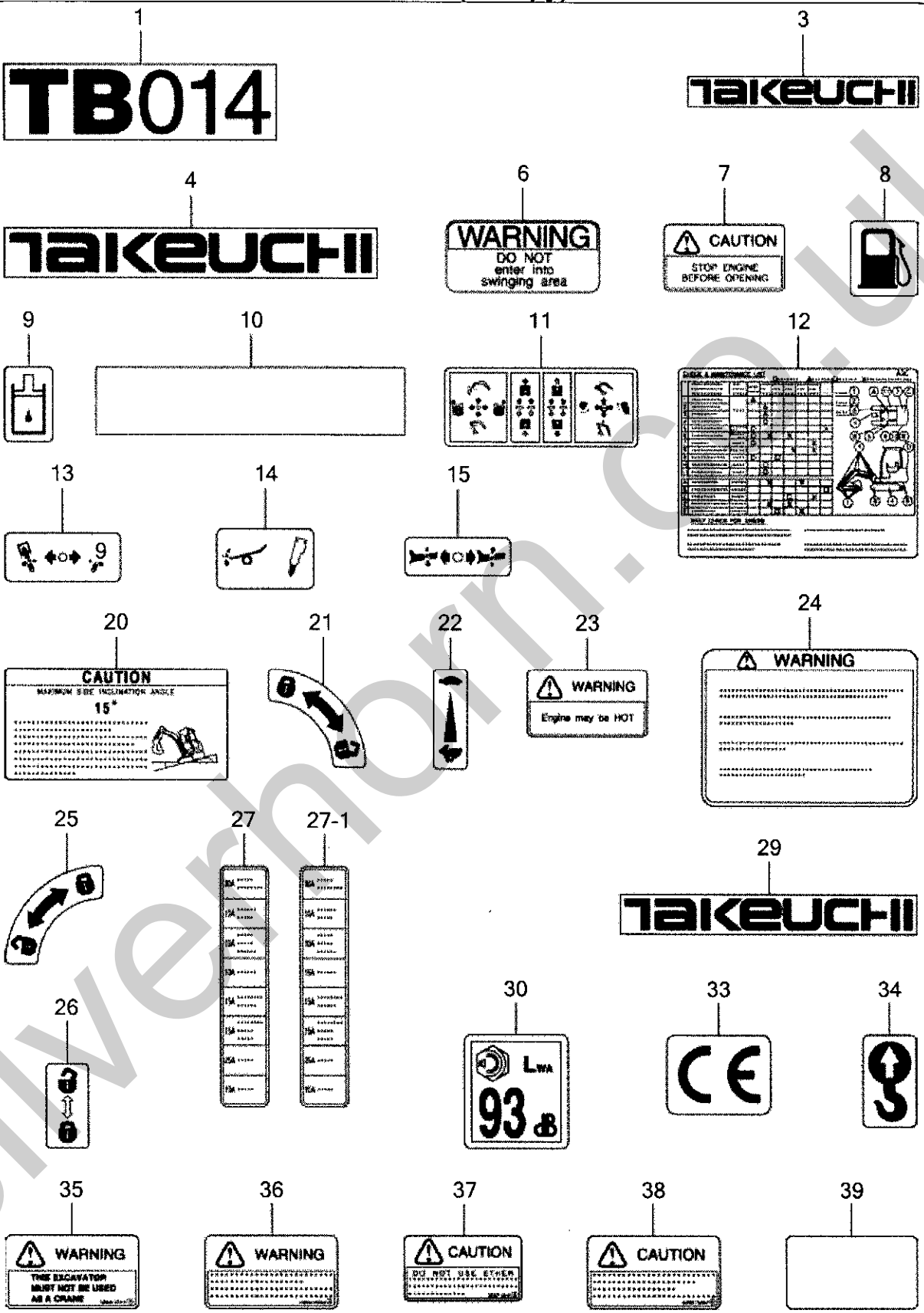

C4G024S

silverhorn.co.uk

DECAL (canopy)

Item	Part number	Description	Q'ty	Chan.	Serial No.	Serv.	Remarks
0	0339340000	DECAL SET (English)	1				X03393-40000-14
	0339342000	DECAL SET (German)	1				X03393-42000-14
	0339344000	DECAL SET (French)	1				X03393-44000-14
	0339346000	DECAL SET (Italian)	1				X03393-46000-14
	0339366000	DECAL SET (Spanish)	1				X03393-66000-14
	0339376700	DECAL SET (Dutch)	1				X03393-76700-14
1	0339330100	・DECAL	2				
3	0359306200	・DECAL	1				
4	0329350200	・DECAL	2				
6	0359306500	・DECAL (English)	4				
	0359308100	・DECAL (German)	4				
	0359309100	・DECAL (French)	4				
	0359310100	・DECAL (Italian)	4				
	0339364100	・DECAL (Spanish)	4				
	0339376506	・DECAL (Dutch)	4			M	
7	0359307400	・DECAL (English)	1				
	0359314400	・DECAL (German)	1				
	0359315400	・DECAL (French)	1				
	0359316400	・DECAL (Italian)	1				
	0339364200	・DECAL (Spanish)	1				
	0339376507	・DECAL (Dutch)	1			M	
8	0359306600	・SYMBOL MARK (English)	1				
	0339375260	・SYMBOL MARK (German)	1				
	0339375460	・SYMBOL MARK (French)	1				
	0339375660	・SYMBOL MARK (Italian, Spanish)	1				
9	0359306700	・SYMBOL MARK	1				
10	0339330900	・DECAL	1				
11	0359325240	・DECAL	1				
12	0339330300	・DECAL (English)	1				
	0339330400	・DECAL (German)	1				
	0339330500	・DECAL (French)	1				
	0339330600	・DECAL (Italian)	1				
	0339364300	・DECAL (Spanish)	1				
	0339376400	・DECAL (Dutch)	1			M	
13	0329360060	・DECAL	1				
14	0339330800	・DECAL	1				
15	0359325190	・DECAL	1				
16	X **********	・DECAL	1				
17	0339340001	・DECAL	1				
18	X **********	・DECAL	1				
19	X **********	・SCREW	4				
20	0339310400	・DECAL (English)	1				
	0339311400	・DECAL (German)	1				
	0339312400	・DECAL (French)	1				
	0339313400	・DECAL (Italian)	1				
	0339364400	・DECAL (Spanish)	1				
	0339376520	・DECAL (Dutch)	1			M	
21	0349325020	・DECAL	1				
22	0359317200	・DECAL	1				
23	0569321980	・DECAL (English)	1				
	0339376523	・DECAL (Dutch)	1			M	
24	0359313700	・DECAL (English)	1				
	0359314700	・DECAL (German)	1				
	0359315700	・DECAL (French)	1				
	0359316700	・DECAL (Italian)	1				
	0339364500	・DECAL (Spanish)	1				
	0339376524	・DECAL (Dutch)	1			M	
25	0329360100	・SYMBOL MARK	1				
26	0329352400	・SYMBOL MARK	1				
27	0339332100	・DECAL (English)	1		11400003~11400316		
27-1	0339332150	・DECAL (English)	1		11400317~		
27	0339334100	・DECAL (German)	1		11400003~11400316		
27-1	0339334150	・DECAL (German)	1		11400317~		
27	0339336100	・DECAL (French)	1		11400003~11400316		
27-1	0339336150	・DECAL (French)	1		11400317~		
27	0339338100	・DECAL (Italian)	1		11400003~11400316		
27-1	0339338150	・DECAL (Italian)	1		11400317~		

silverthorn.co.uk

DECAL (canopy)

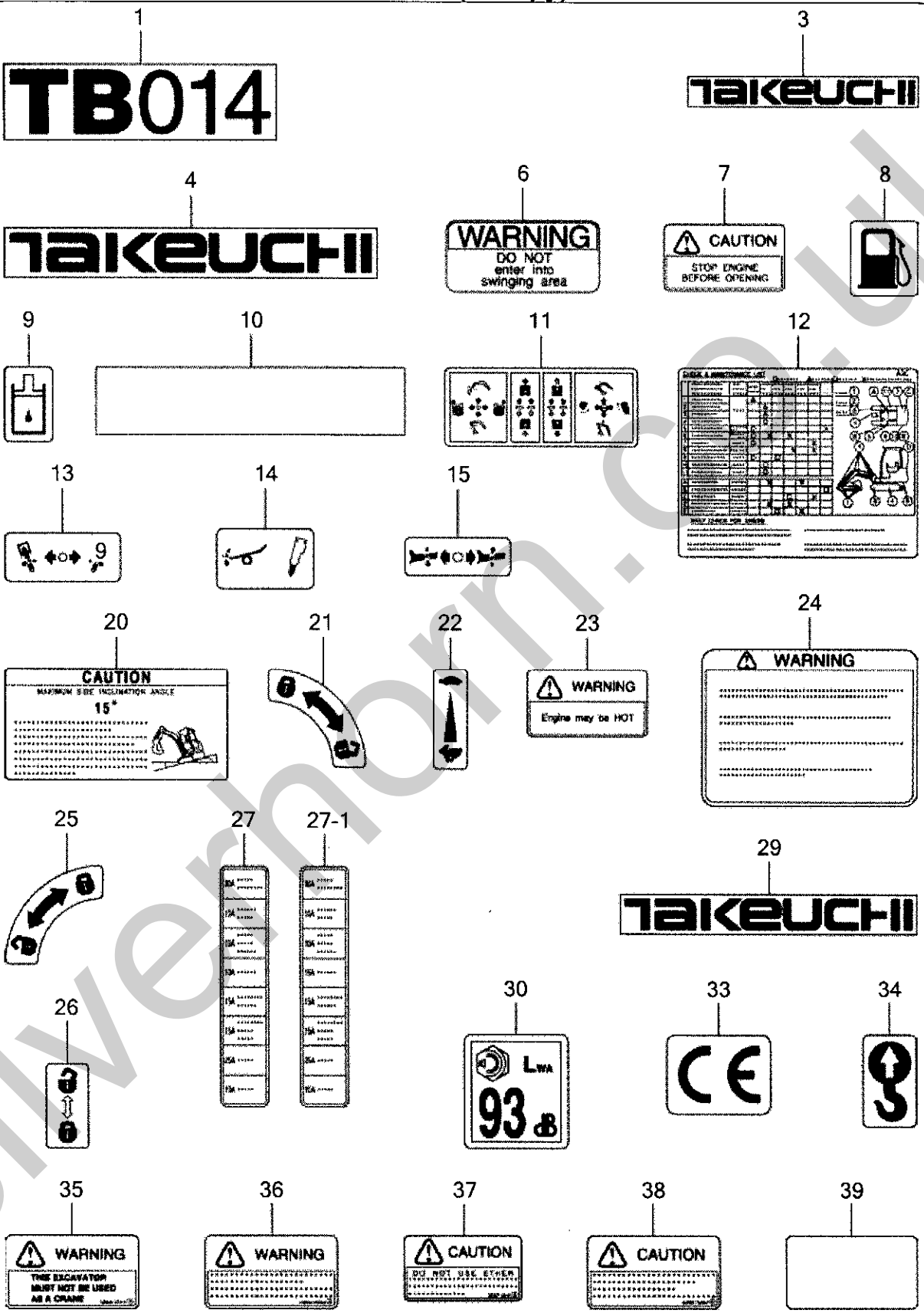

C4G024S

silverhorn.co.uk

DECAL (canopy)

Item	Part number	Description	Q'ty	Chan.	Serial No.	Serv.	Remarks
27	0339364600	・DECAL (Spanish)	1				
29	0359306100	・DECAL	1		11400317~		
30	X **********	・DECAL	1				
33	X **********	・DECAL	1		11400438~		
34	0399300500	・DECAL	3		11400438~		
35	0359347010	・DECAL (English)	1				
35	0339375210	・DECAL (German)	1				
35	0339375410	・DECAL (French)	1				
35	0339375610	・DECAL (Italian)	1				
35	0339375810	・DECAL (Spanish)	1				
36	0359347020	・DECAL (English)	1				
36	0339375220	・DECAL (German)	1				
36	0339375420	・DECAL (French)	1				
36	0339375620	・DECAL (Italian)	1				
36	0339375820	・DECAL (Spanish)	1				
36	0339376536	・DECAL (Dutch)	1			M	
37	0339375040	・DECAL (English)	1				
37	0339375240	・DECAL (German)	1				
37	0339375440	・DECAL (French)	1				
37	0339375640	・DECAL (Italian)	1				
37	0339375840	・DECAL (Spanish)	1				
37	0339376537	・DECAL (Dutch)	1			M	
38	0339375050	・DECAL (English)	1				
38	0339375250	・DECAL (German)	1				
38	0339375450	・DECAL (French)	1				
38	0339375650	・DECAL (Italian)	1				
38	0339375850	・DECAL (Spanish)	1				
38	0339376538	・DECAL (Dutch)	1			M	
39	0379358550	・DECAL	1			M	
	C4g014S						

silverhorn.co.uk

DECAL (cab)

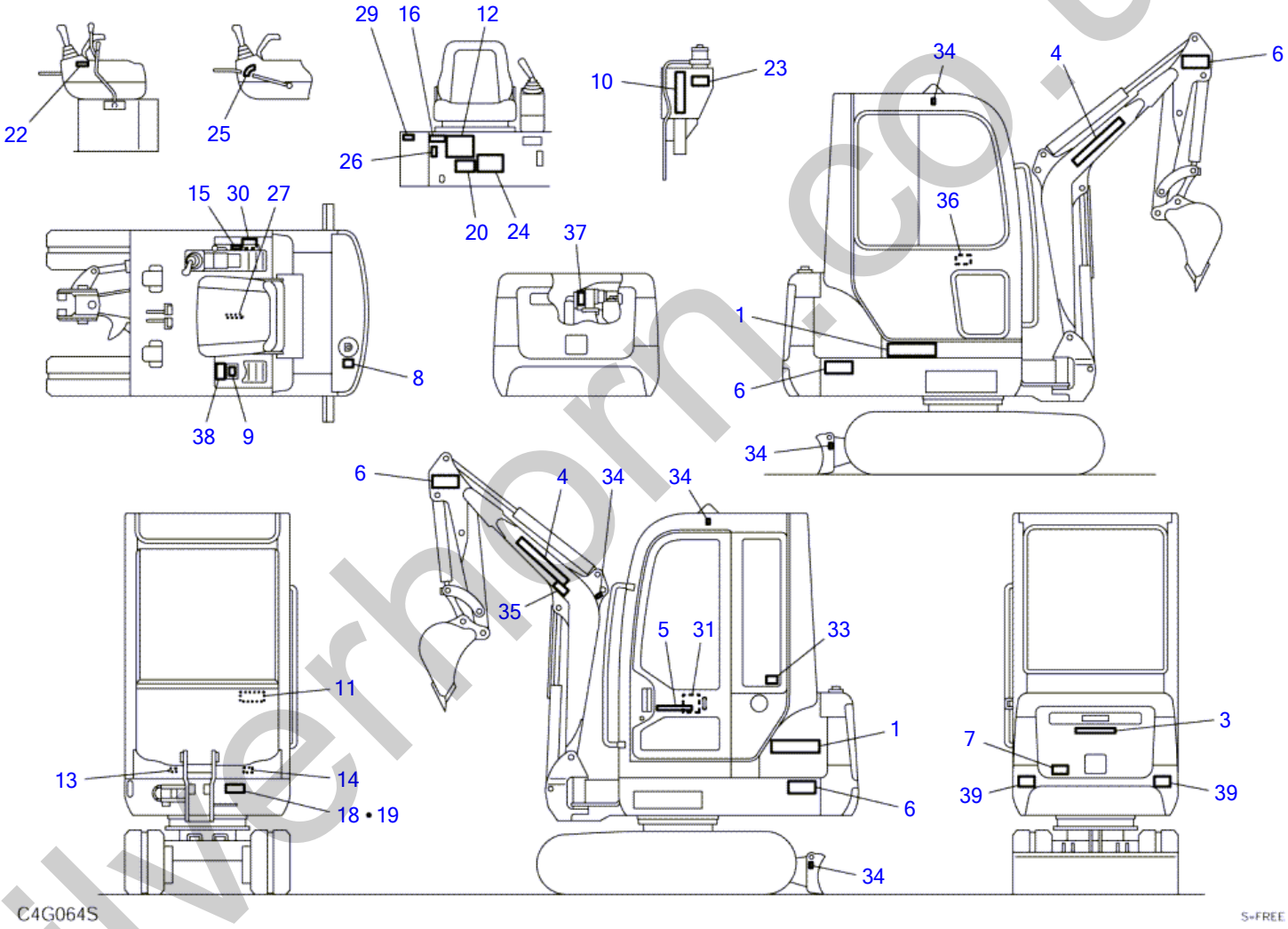

silverhorn.co.uk

DECAL (cab)

Item	Part number	Description	Q'ty	Chan.	Serial No.	Serv.	Remarks
0	0339332000	DECAL SET (English)	1		11400003~11400437		X03393-32000-7
	0339375000	DECAL SET (English)	1		11400438~		X03393-75000-9
	0339334000	DECAL SET (German)	1		11400003~11400437		X03393-34000-7
	0339375200	DECAL SET (German)	1		11400438~		X03393-75200-9
	0339336000	DECAL SET (French)	1		11400003~11400437		X03393-36000-7
	0339375400	DECAL SET (French)	1		11400438~		X03393-75400-9
	0339338000	DECAL SET (Italian)	1		11400003~11400437		X03393-38000-7
	0339375600	DECAL SET (Italian)	1		11400438~		X03393-75600-9
	0339364000	DECAL SET (Spanish)	1		11400003~11400437		X03393-64000-7
	0339375800	DECAL SET (Spanish)	1		11400438~		X03393-75800-9
	0339376500	DECAL SET (Dutch)	1				X03393-76500-9
1	0339330100	・DECAL	2				
3	0359306200	・DECAL	1				
4	0329350200	・DECAL	2				
5	0569321400	・DECAL	1				
6	0359306500	・DECAL (English)	4				
	0359308100	・DECAL (German)	4				
	0359309100	・DECAL (French)	4				
	0359310100	・DECAL (Italian)	4				
	0339364100	・DECAL (Spanish)	4				
	0339376506	・DECAL (Dutch)	4			M	
7	0359307400	・DECAL (English)	1				
	0359314400	・DECAL (German)	1				
	0359315400	・DECAL (French)	1				
	0359316400	・DECAL (Italian)	1				
	0339364200	・DECAL (Spanish)	1				
	0339376507	・DECAL (Dutch)	1			M	
8	0359306600	・SYMBOL MARK (English)	1				
	0339375260	・SYMBOL MARK (German)	1				
	0339375460	・SYMBOL MARK (French)	1				
	0339375660	・SYMBOL MARK (Italian, Spanish)	1				
9	0359306700	・SYMBOL MARK	1				
10	0339330900	・DECAL	1				
11	0359325240	・DECAL	1				
12	0339330300	・DECAL (English)	1				
	0339330400	・DECAL (German)	1				
	0339330500	・DECAL (French)	1				
	0339330600	・DECAL (Italian)	1				
	0339364300	・DECAL (Spanish)	1				
	0339376400	・DECAL (Dutch)	1			M	
13	0329360060	・DECAL	1				
14	0339330800	・DECAL	1				
15	0359325190	・DECAL	1				
16	X **********	・DECAL	1				
18	X **********	・DECAL	1				
19	X **********	・SCREW	4				
20	0339310400	・DECAL (English)	1				
	0339311400	・DECAL (German)	1				
	0339312400	・DECAL (French)	1				
	0339313400	・DECAL (Italian)	1				
	0339364400	・DECAL (Spanish)	1				
	0339376520	・DECAL (Dutch)	1			M	
22	0359317200	・DECAL	1				
23	0569321980	・DECAL (English)	1				
	0339376523	・DECAL (Dutch)	1			M	
24	0359313700	・DECAL (English)	1				
	0359314700	・DECAL (German)	1				
	0359315700	・DECAL (French)	1				
	0359316700	・DECAL (Italian)	1				
	0339364500	・DECAL (Spanish)	1				
	0339376524	・DECAL (Dutch)	1			M	
25	0329360100	・SYMBOL MARK	1				
26	0329352400	・SYMBOL MARK	1				
27	0339332100	・DECAL (English)	1		11400003~11400316		
27-1	0339332150	・DECAL (English)	1		11400317~		
27	0339334100	・DECAL (German)	1		11400003~11400316		
27-1	0339334150	・DECAL (German)	1		11400317~		

silverform.co.uk

DECAL (cab)

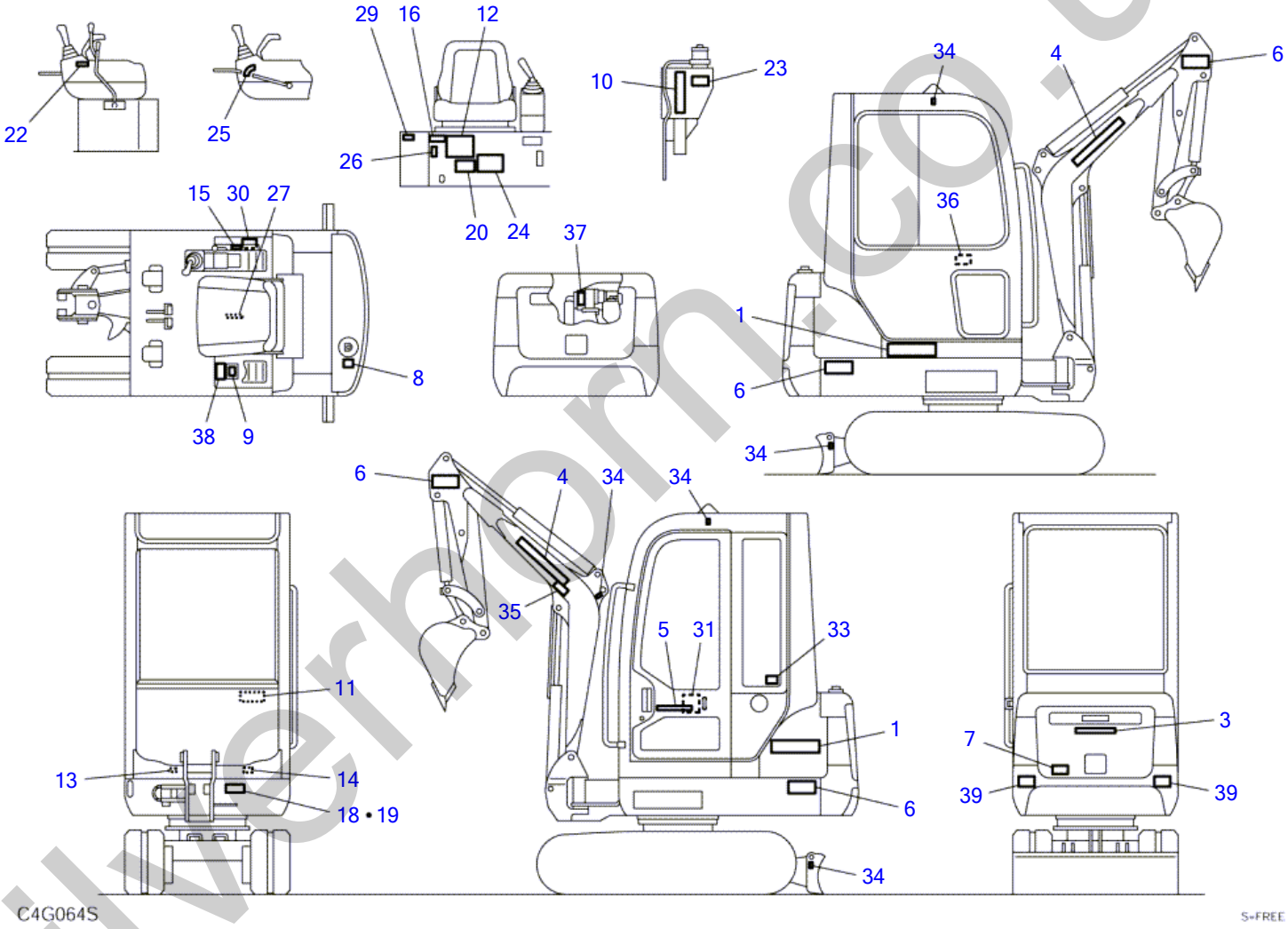

silverhorn.co.uk

DECAL (cab)

Item	Part number	Description	Q'ty	Chan.	Serial No.	Serv.	Remarks
27	0339336100	・DECAL (French)	1		11400003~11400316		
27-1	0339336150	・DECAL (French)	1		11400317~		
27	0339338100	・DECAL (Italian)	1		11400003~11400316		
27-1	0339338150	・DECAL (Italian)	1		11400317~		
27	0339364600	・DECAL (Spanish)	1				
29	0394504900	・DECAL	1				
30	0189311800	・DECAL	1				
31	0359354028	・DECAL	1				
33	0399300800	・DECAL	1		11400438~		
34	0399300500	・DECAL	5		11400438~		
35	0359347010	・DECAL (English)	1				
35	0339375210	・DECAL (German)	1				
35	0339375410	・DECAL (French)	1				
35	0339375610	・DECAL (Italian)	1				
35	0339375810	・DECAL (Spanish)	1				
36	0359347020	・DECAL (English)	1				
36	0339375220	・DECAL (German)	1				
36	0339375420	・DECAL (French)	1				
36	0339375620	・DECAL (Italian)	1				
36	0339375820	・DECAL (Spanish)	1				
36	0339376536	・DECAL (Dutch)	1			M	
37	0339375040	・DECAL (English)	1				
37	0339375240	・DECAL (German)	1				
37	0339375440	・DECAL (French)	1				
37	0339375640	・DECAL (Italian)	1				
37	0339375840	・DECAL (Spanish)	1				
37	0339376537	・DECAL (Dutch)	1			M	
38	0339375050	・DECAL (English)	1				
38	0339375250	・DECAL (German)	1				
38	0339375450	・DECAL (French)	1				
38	0339375650	・DECAL (Italian)	1				
38	0339375850	・DECAL (Spanish)	1				
38	0339376538	・DECAL (Dutch)	1			M	
39	0379358550	・DECAL	1			M	
	C4g064S						

silverhorn.co.uk

DECAL (selector valve)

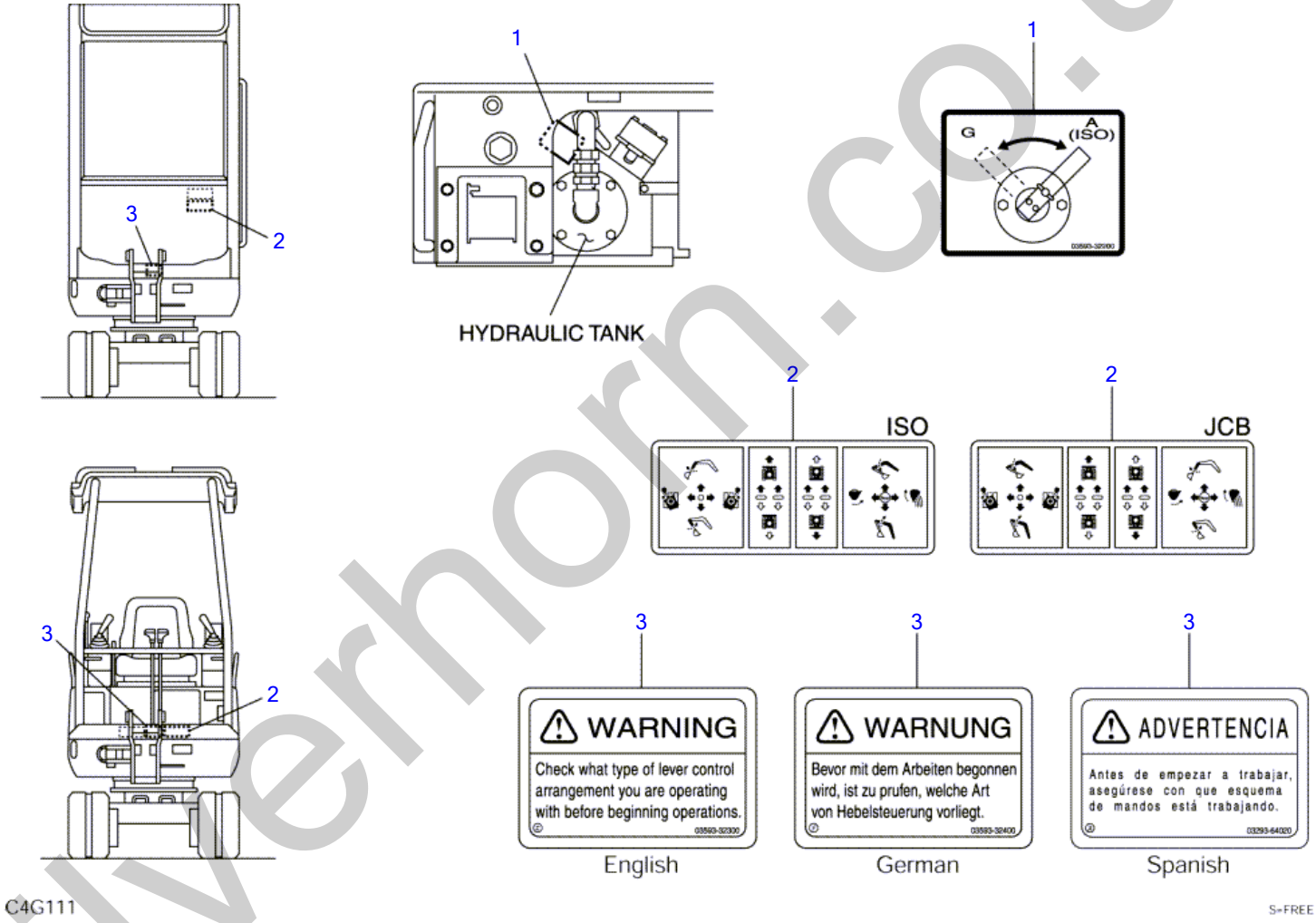

silverhorn.co.uk

DECAL (selector valve)

Item	Part number	Description	Q'ty	Chan.	Serial No.	Serv.	Remarks
0	**0339348000**	DECAL SET (English)	1				X03393-48000-1
	0339349000	DECAL SET (German)	1				X03393-49000-1
	0339349100	DECAL SET (Spanish)	1				X03393-49100-1
1	**0359332200**	・DECAL	1				
2	**0359313800**	・DECAL	1				JCB
	0359325240	・DECAL	1				ISO
3	**0359332300**	・DECAL	1				English
	0359332400	・DECAL	1				German
	0329364020	・DECAL	1			M	Spanish
	C4g112						

silverhorn.co.uk

DECAL (selector valve) (A-B pattern)

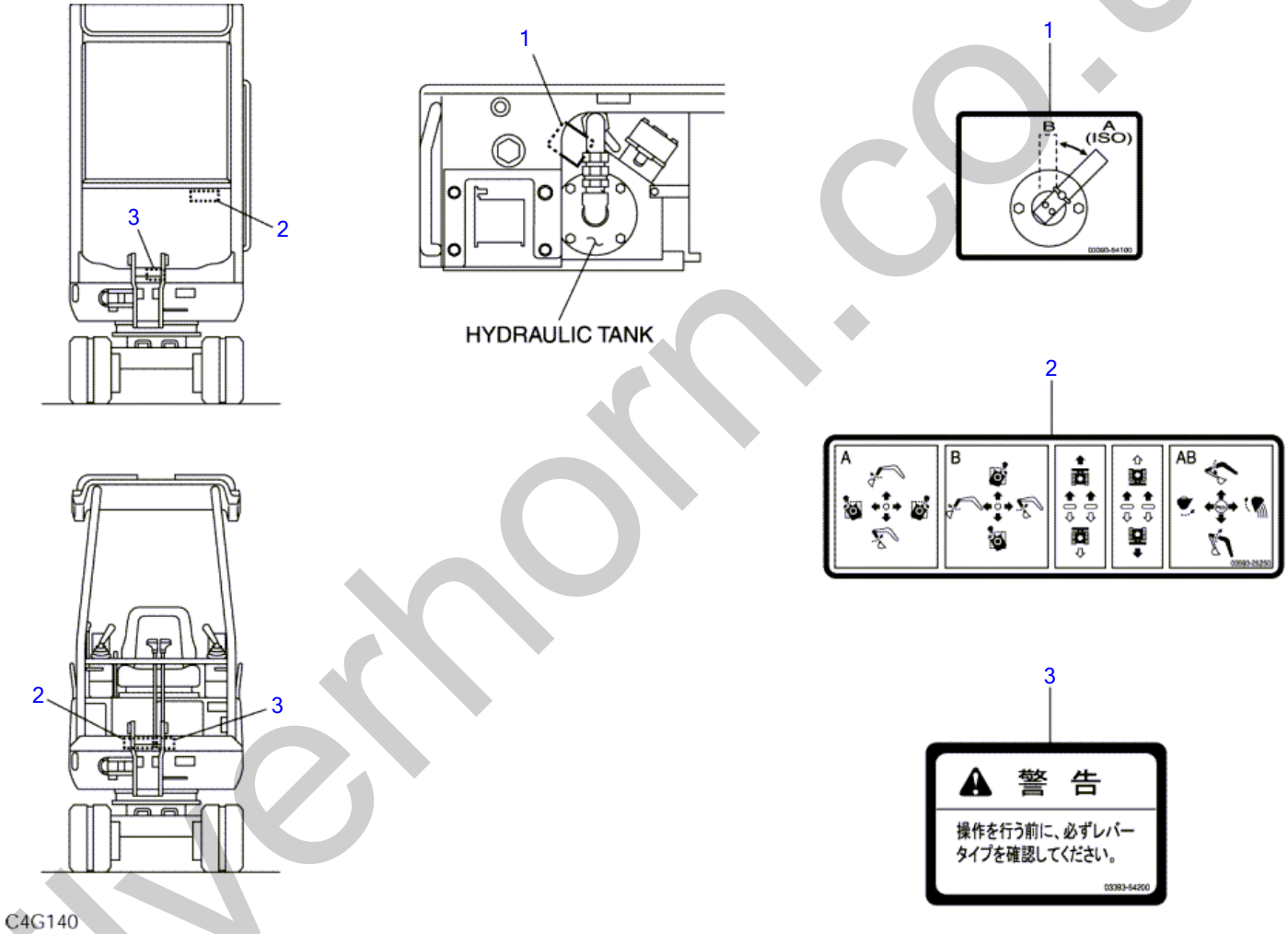

silverhorn.co.uk

DECAL (selector valve) (A-B pattern)

Item	Part number	Description	Q'ty	Chan.	Serial No.	Serv.	Remarks
0	**0339354000**	DECAL SET	1				X03393-54000-0
1	**0339354100**	・DECAL	1				
2	**0359325250**	・DECAL	1				
3	**0339354200**	・DECAL	1				
	C4g141						

silverhorn.co.uk

DECAL (for EU; 11400003-11400437)

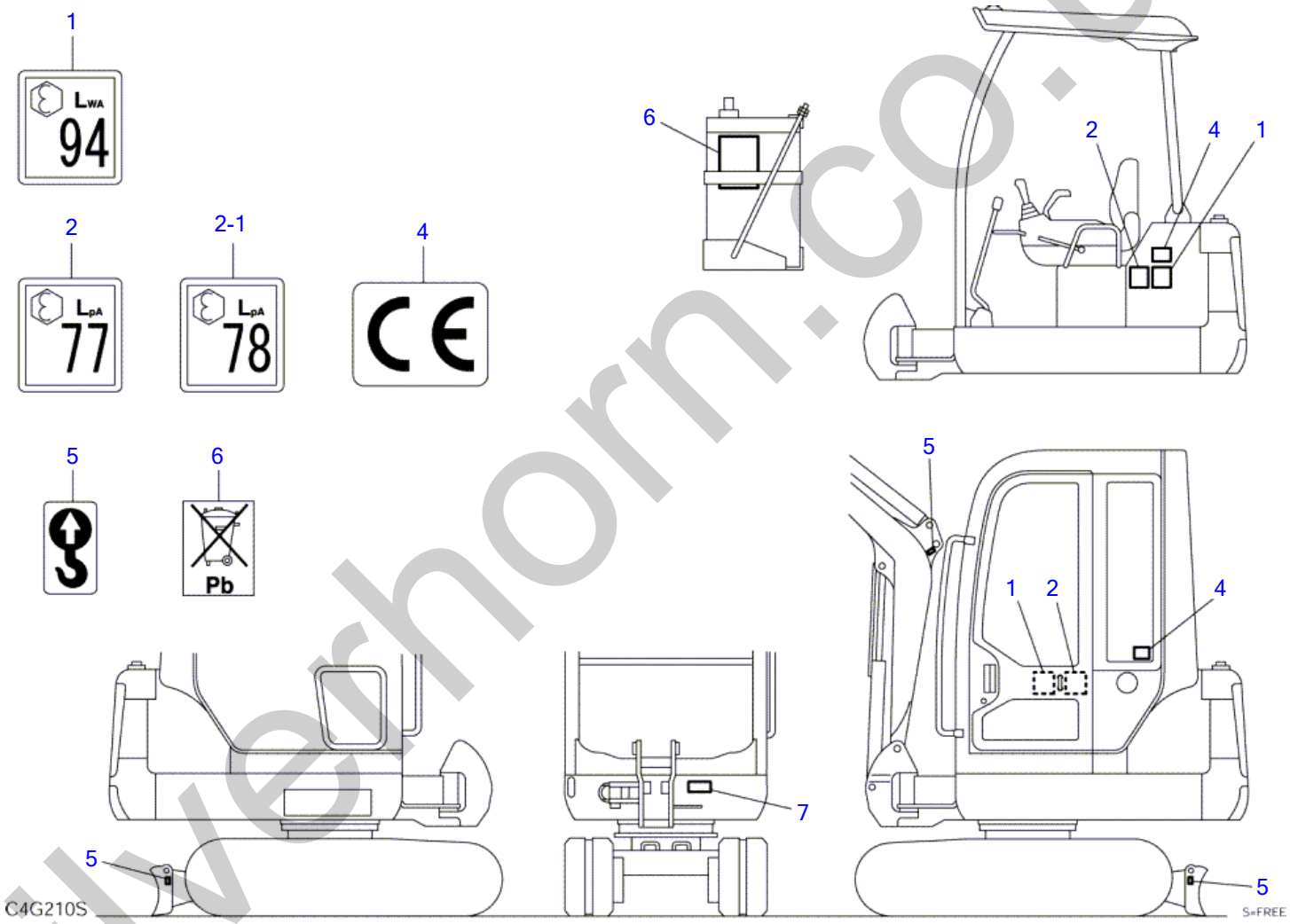

silverhorn.co.uk

DECAL (for EU; 11400003-11400437)

Item	Part number	Description	Q'ty	Chan.	Serial No.	Serv.	Remarks
0	**0339355000**	DECAL SET	1				canopy
	0339356000	DECAL SET	1				cab
1	**0399300600**	・DECAL	1				
2	**0339355100**	・DECAL	1				canopy
2-1	**0399300700**	・DECAL	1				cab
4	**0339300800**	・DECAL	1				
5	**0399300500**	・DECAL	3				
6	**0379347200**	・DECAL	1				
7	**0339355200**	・DECAL	1				
	C4g211S						

silverhorn.co.uk

DECAL (for US TAKEUCHI)

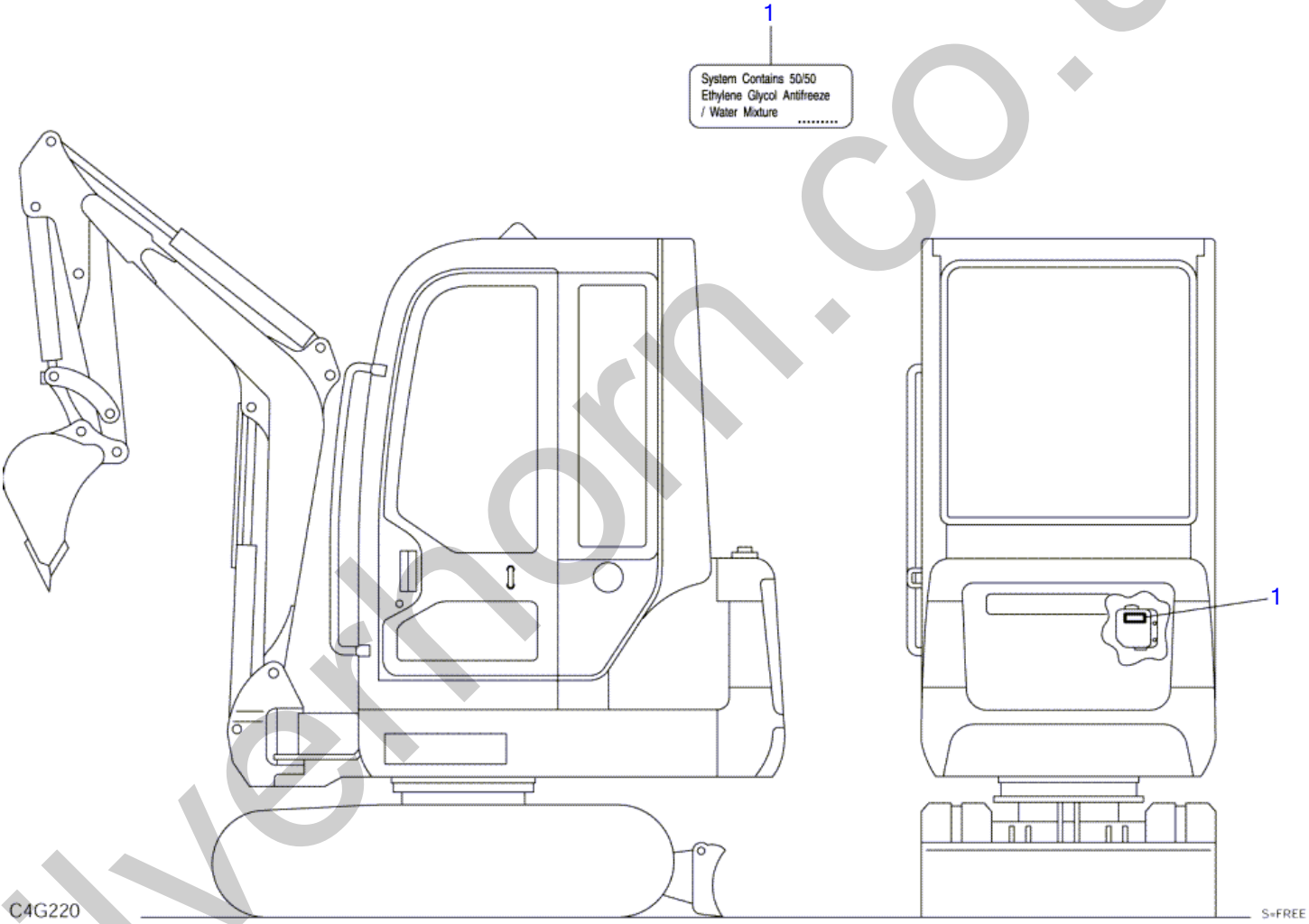

silverthorn.co.uk

DECAL (for US TAKEUCHI)

Item	Part number	Description	Q'ty	Chan.	Serial No.	Serv.	Remarks
0	**0339372000**	DECAL SET	1				X03393-72000-0
1	**0359313900**	・DECAL	1				
	C4g220						

silverhorn.co.uk

DECAL (TOPS) (cab)

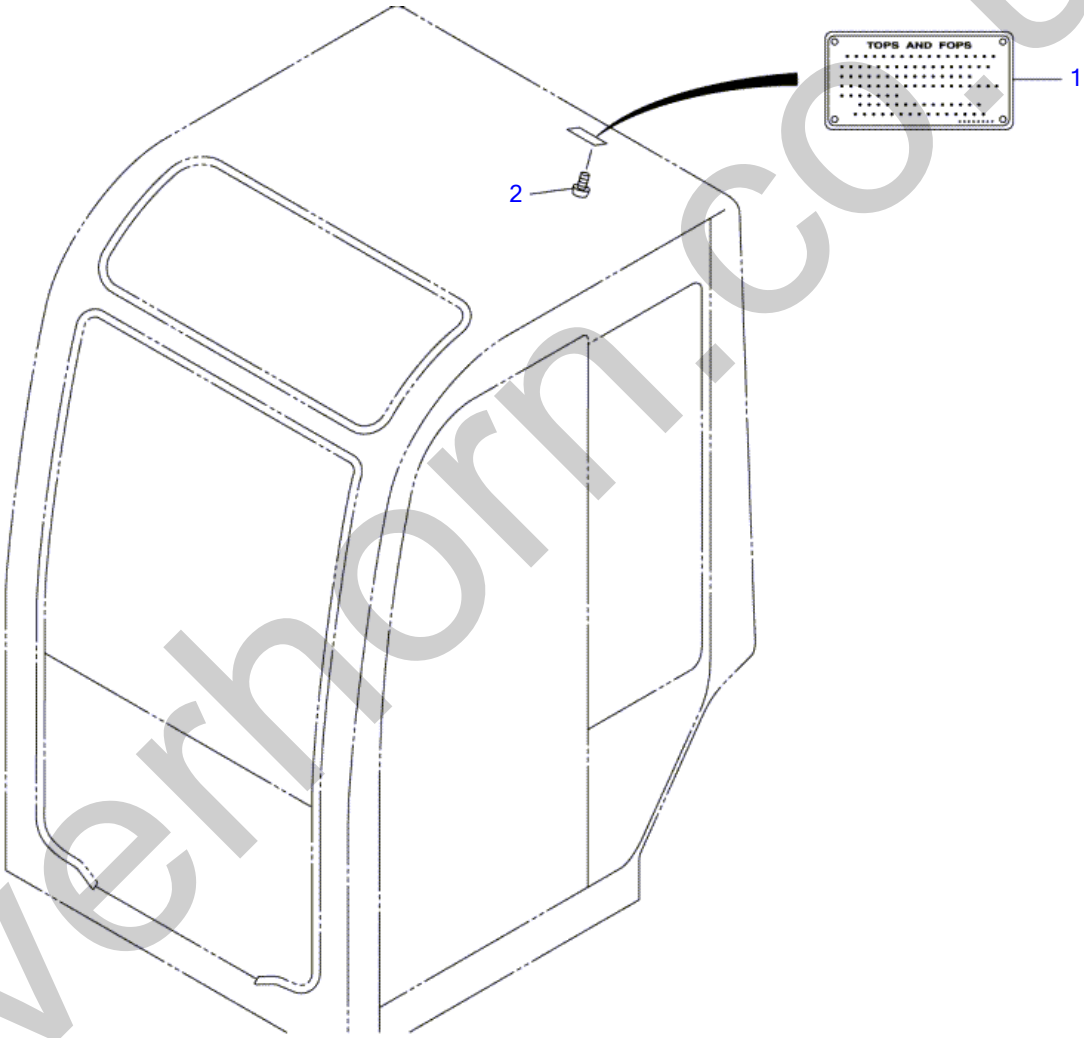

silverhorn.co.uk

DECAL (TOPS) (cab)

Item	Part number	Description	Q'ty	Chan.	Serial No.	Serv.	Remarks
0	0339373000	DECAL SET	1				X03393-73000-0
1	X **********	・DECAL	1				X03393-73100
2	1122800006 C4g231	・SCREW	4				

silverhorn.co.uk

DECAL (TOPS) (canopy)

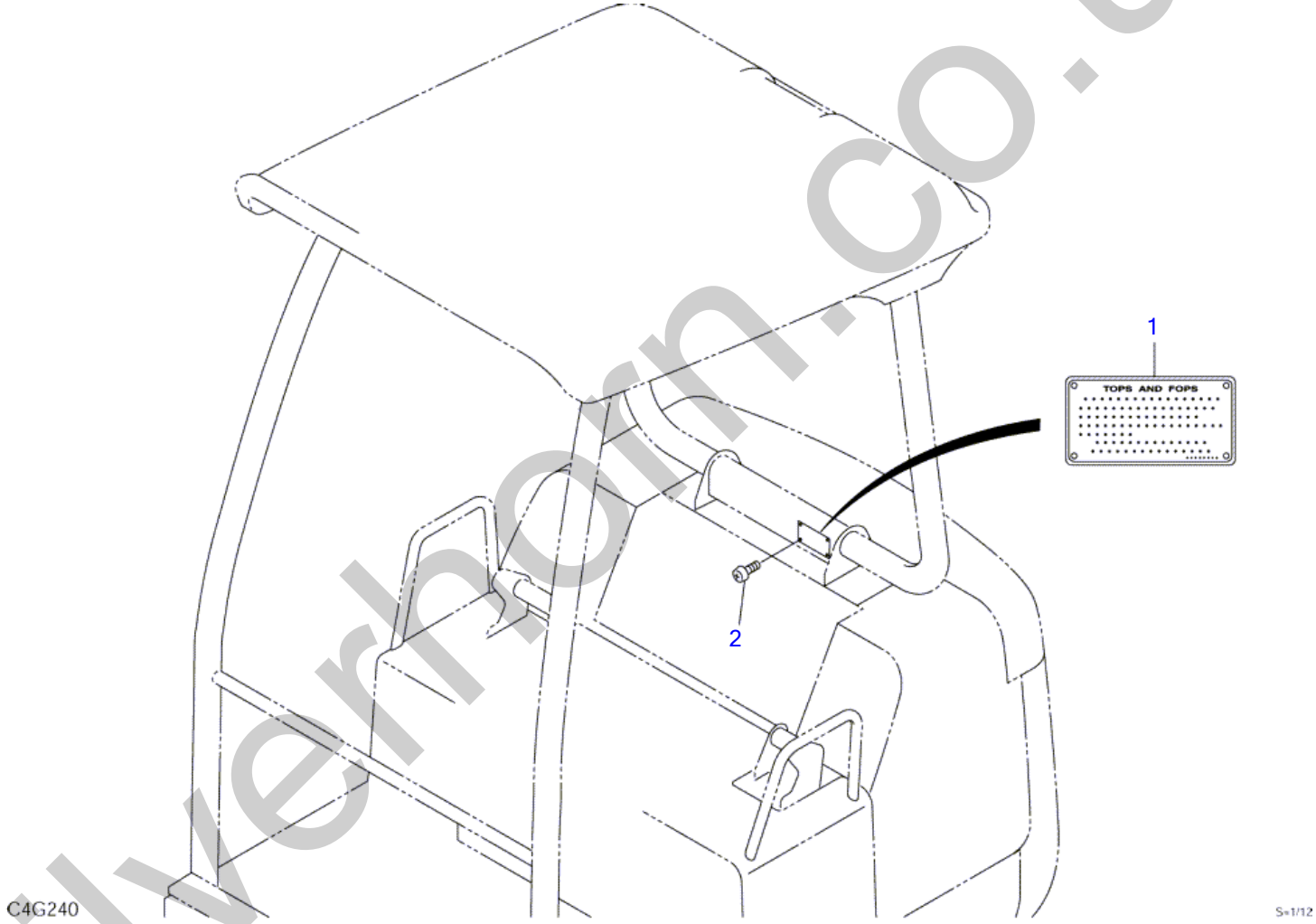

silverhorn.co.uk

DECAL (TOPS) (canopy)

Item		Part number	Description	Q'ty	Chan.	Serial No.	Serv.	Remarks
0		0339374000	DECAL SET	1				X03393-74000-0
1	X	**********	· DECAL	1				X03393-74100
2		1122800006 C4g241	· SCREW	4				

silverhorn.co.uk

TOOL & ACCESSORIES

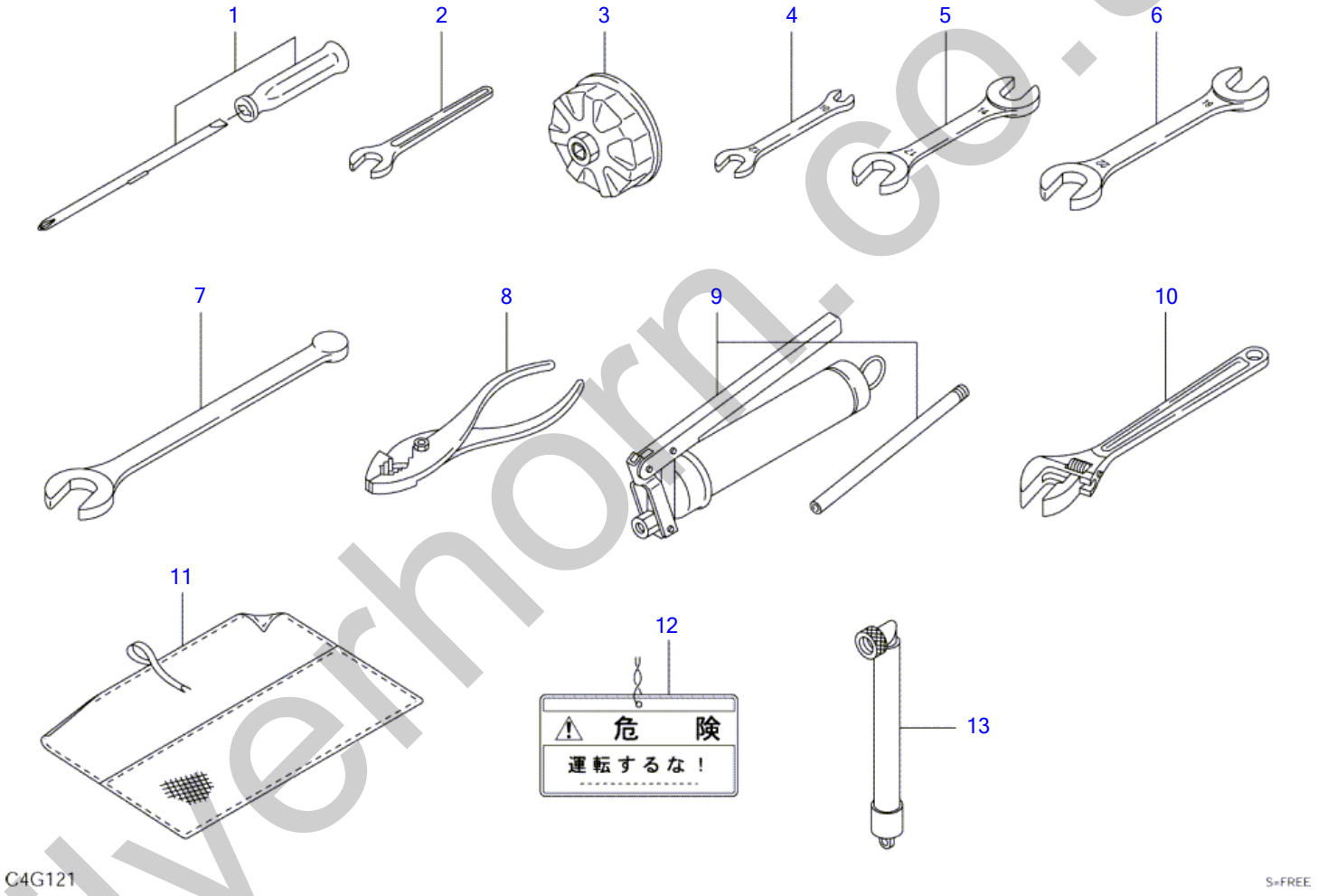

silverhorn.co.uk

TOOL & ACCESSORIES

Item	Part number	Description	Q'ty	Chan.	Serial No.	Serv.	Remarks
		TOOL SET					
1	1910006112	SCREWDRIVER	1				
2	1690100013	SPANNER	1				
3	1910096081	WRENCH, filter	1				
4	1910047081	SPANNER	1				
5	1910047082	SPANNER	1				
6	1690001922	SPANNER	1				
7	1690900026	SPANNER	1				
8	1690500200	PLIER	1				
9	1691010800	GUN, grease	1				for Japan
	1691060600	GUN, grease	1				
10	1690400250	WRENCH, monkey	1				
11	1691400001	CASE, tool	1				
12	0359325160	PLATE	1				for Japan
13	1554512601	TUBE	1		11400003~11400022		for EU
	1554512201	TUBE	1		11400023~		for EU
	C4g121S						

silverhorn.co.uk

PAINTED COLOR

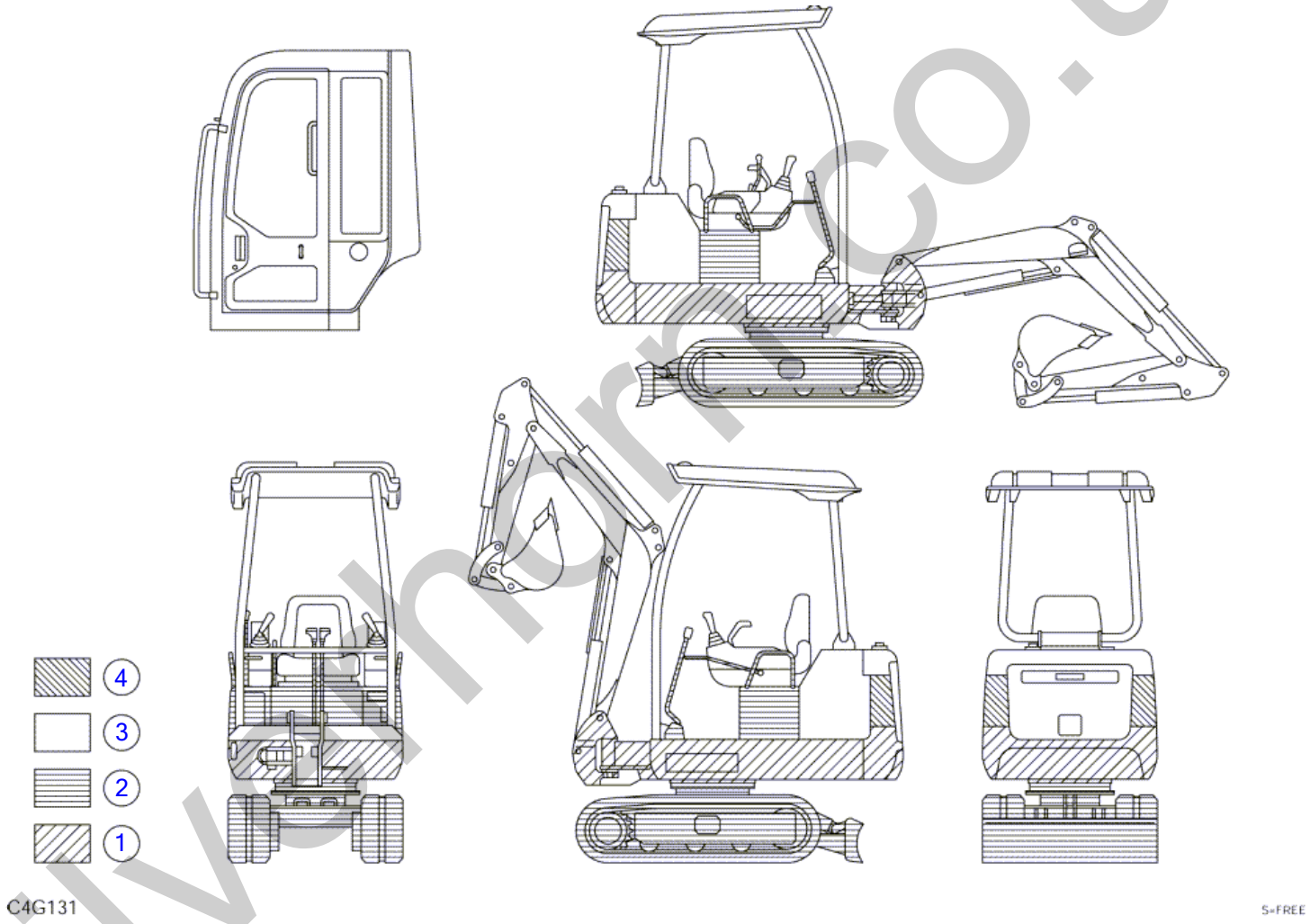

silverhorn.co.uk

PAINTED COLOR

Item	Part number	Description	Q'ty	Chan.	Serial No.	Serv.	Remarks
		PAINTED COLOR (rubber crawler)					canopy
		PAINTED COLOR (steel crawler)					canopy
		PAINTED COLOR (rubber crawler)					cab
		PAINTED COLOR (steel crawler)					cab
1	1919060105	RED					
	1919069025	RED					spray
	1919060167	RED					urethane
2	1919060144	GRAY					
	1919069144	GRAY					spray
3	1919060142	LIGHT GRAY					
	1919069142	LIGHT GRAY					spray
4	1919060005	BLACK					
	C4g132						

silverhorn.co.uk

SWIVEL JOINT (11400003-11400436)

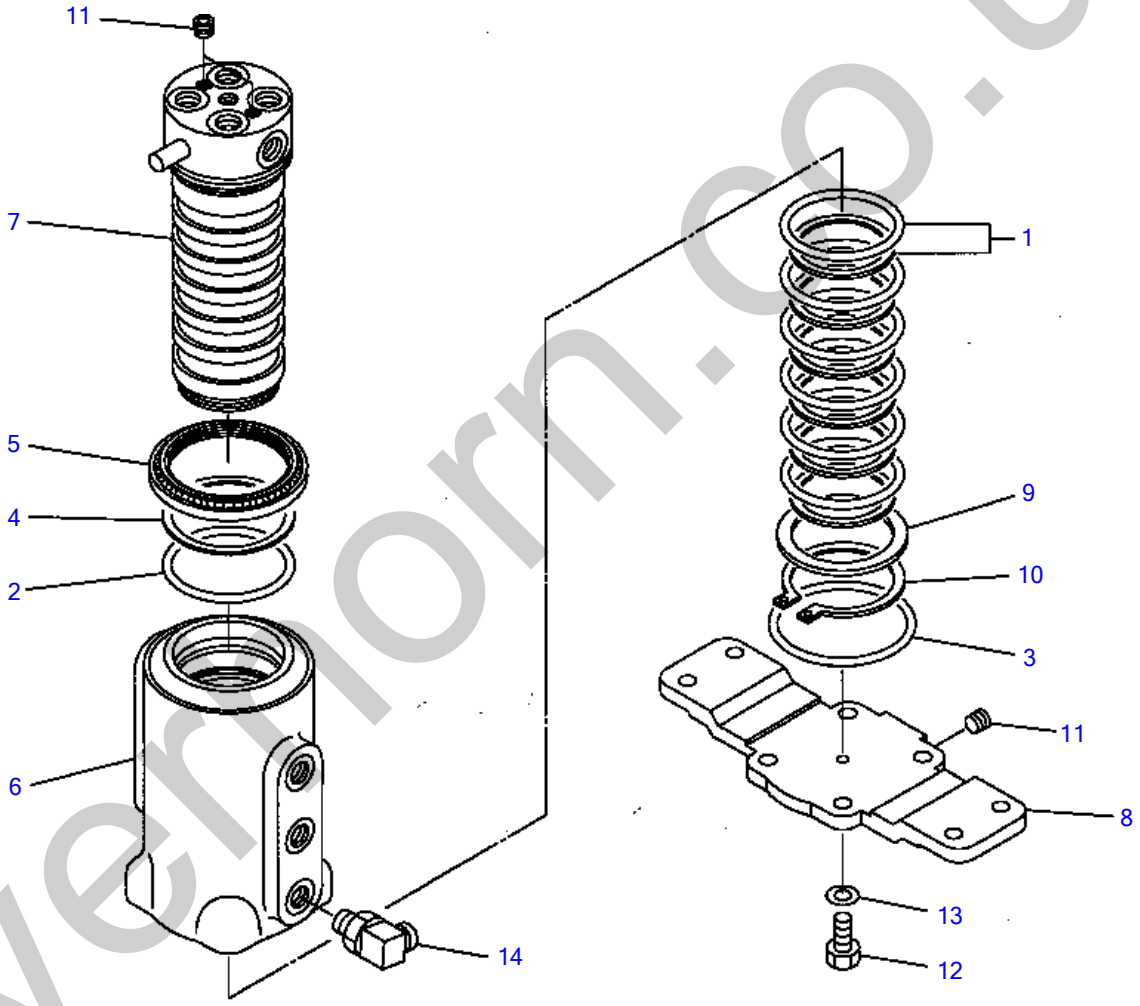

C4H010

silvermorn.co.uk

SWIVEL JOINT (11400003-11400436)

Item		Part number	Description	Q'ty	Chan.	Serial No.	Serv.	Remarks
0		1904007900	JOINT ASSY, swivel	1				
0-1		1904007799	・KIT, seal	1				
1	X	1904006416	・・SEAL, sliper	6				
2	X	1420010600	・・O-RING	1				
3	X	1420310040	・・O-RING	1				
4	X	1421030600	・・RING, back-up	1				
5	X	1904001695	・・SEAL, dust	1				
6	X	**********	・HUB	1				
7	X	**********	・SHAFT	1				
8		1904007121	・FLANGE	1				
9		1904004604	・RING, thrust	1				
10		1220000055	・RING, snap	1				
11		1501810001	・PLUG	3				
12		1100050825	・BOLT	4				
13		1140010008	・WASHER, spring	4				
14		1515010040	・ELBOW	1				
		1420010110	・・O-RING	1			M	
		C4h012						

silverhorn.co.uk

SWIVEL JOINT (11400437-)

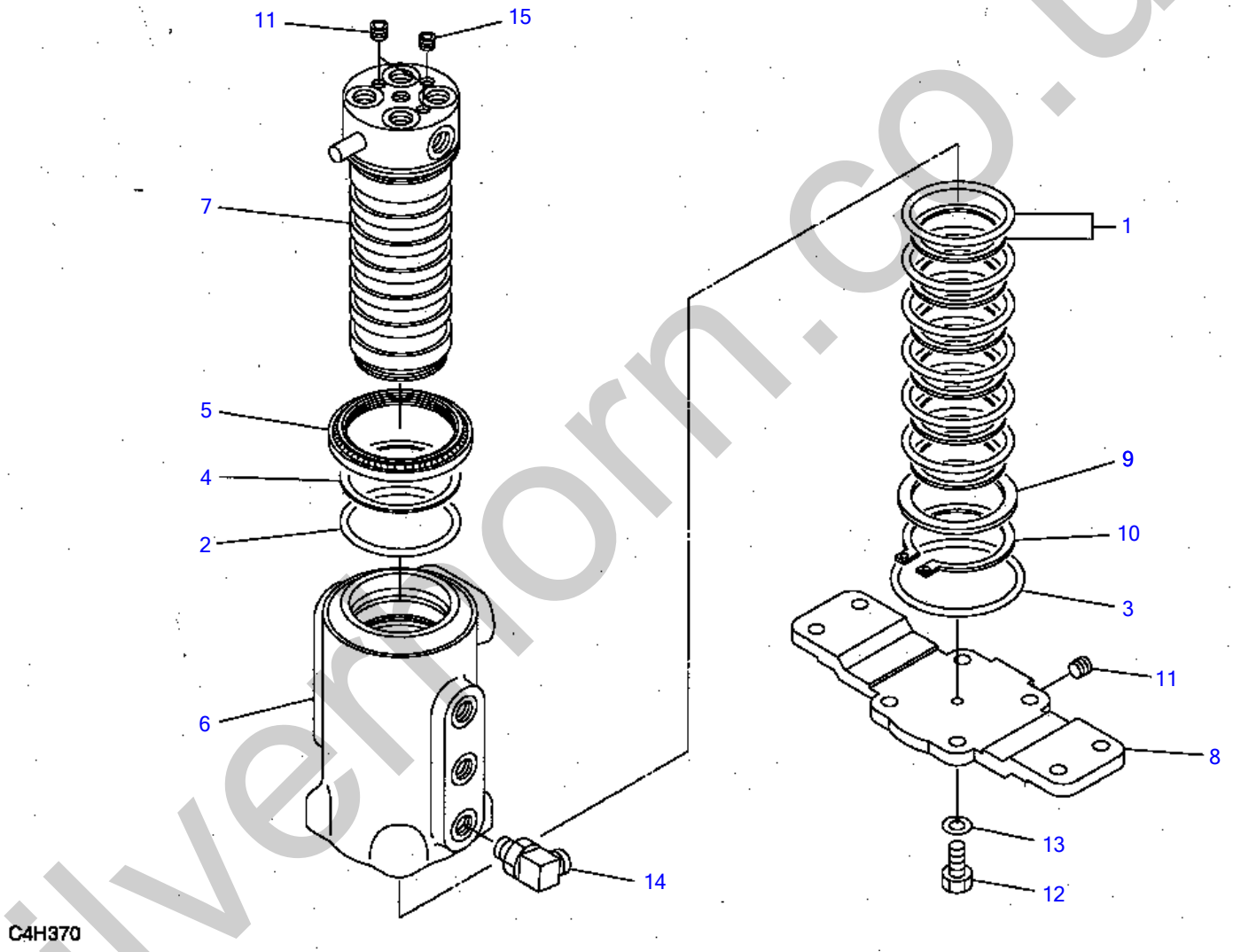

silvermorn.co.uk

SWIVEL JOINT (11400437-)

Item	Part number		Description	Q'ty	Chan.	Serial No.	Serv.	Remarks
0		1904008100	JOINT ASSY, swivel	1				
0-1		1904008199	・KIT, seal	1				
1	X	1904006416	・・SEAL, sliper	6				
2	X	1420010600	・・O-RING	1				
3	X	1420310040	・・O-RING	1				
4	X	1421030600	・・RING, back-up	1				
5	X	1904001695	・・SEAL, dust	1				
6	X	**********	・HUB	1				
7	X	**********	・SHAFT	1				
8		1904007121	・FLANGE	1				
9		1904004604	・RING, thrust	1				
10		1220000055	・RING, snap	1				
11		1501810001	・PLUG	2				
12		1100050825	・BOLT	4				
13		1140010008	・WASHER, spring	4				
14		1515010040	・ELBOW	1				
		1420010110	・・O-RING	1			M	
15		1501810000	・PLUG	1				
		C4h371						

silverhorn.co.uk

CONTROL VALVE (11400003-11400430)

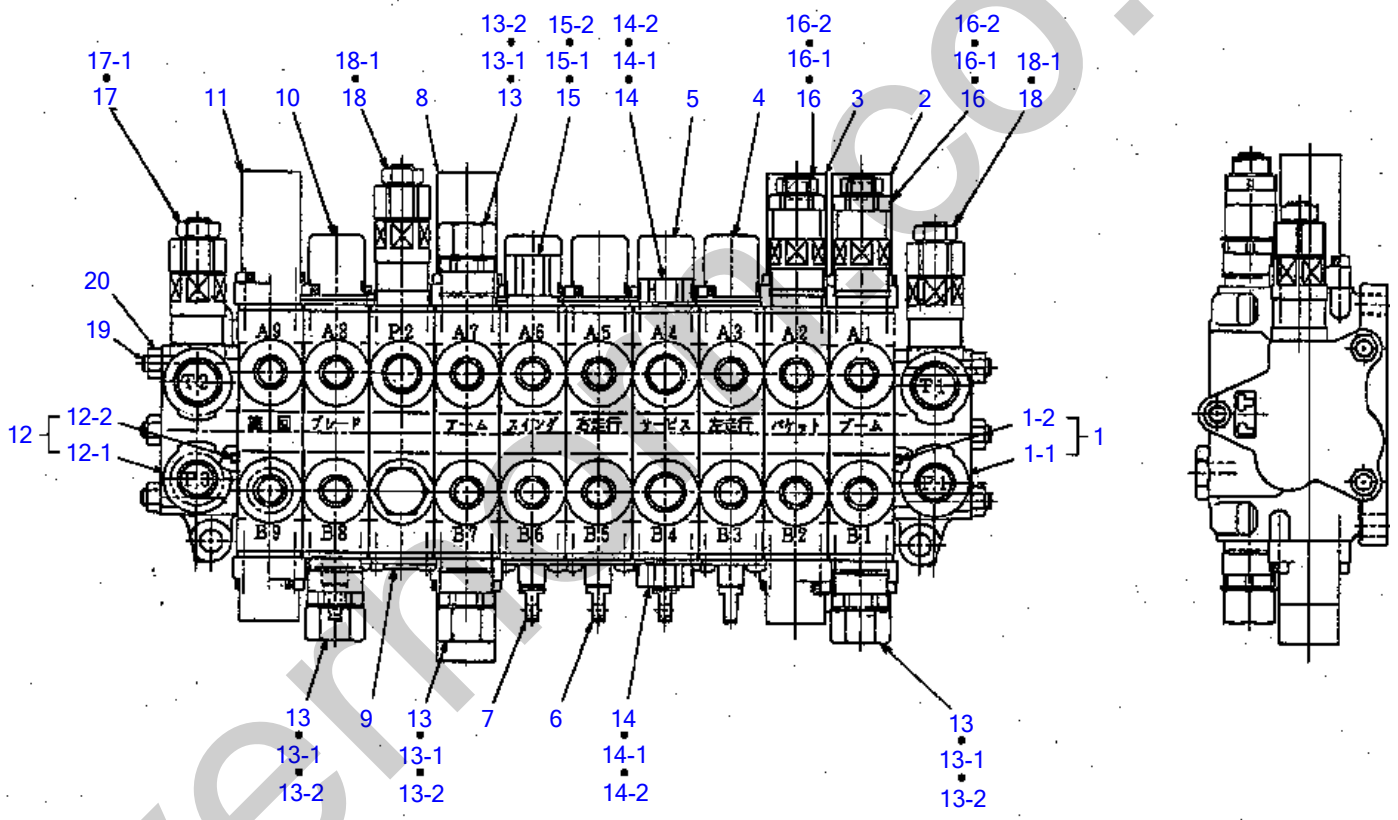

C4H031

silvermacco.uk

CONTROL VALVE (11400003-11400430)

Item	Part number	Description	Q'ty	Chan.	Serial No.	Serv.	Remarks
0	1901036100	VALVE ASSY, control	1				
1	1901029902	・HOUSING ASSY	1				
1-1	1901029904	・・HOUSING	1				
1-2	1420100550	・・O-RING	1				
2	1901033811	・BLOCK ASSY, No. 1	1				boom
3	1901033813	・BLOCK ASSY, No. 2	1				bucket
4	1901033816	・BLOCK ASSY, No. 3	1				traction L.H.
5	1901033819	・BLOCK ASSY, No. 4	1				service
6	1901033815	・BLOCK ASSY, No. 5	1				traction R.H.
7	1901033818	・BLOCK ASSY, No. 6	1				swing
8	1901033812	・BLOCK ASSY, No. 7	1				arm
9	1901030010	・BLOCK ASSY, No. 8	1				
10	1901033817	・BLOCK ASSY, No. 9	1				blade
11	1901033814	・BLOCK ASSY, No. 10	1				slew
12	1901029901	・HOUSING ASSY	1				
12-1	1901029903	・・HOUSING	1				
12-2	1420100550	・・O-RING	1				
13	1901033824	・VALVE ASSY	4				over load
13-1	1420010180	・・O-RING	1				
13-2	1420010140	・・O-RING	1				
14	1901029992	・PLUG	2				
14-1	1420010140	・・O-RING	1				
14-2	1420010180	・・O-RING	1				
15	1901029923	・VALVE ASSY	1				antivoid
15-1	1420010180	・・O-RING	1				
15-2	1420010140	・・O-RING	1				
16	1901033823	・VALVE ASSY	2				over load
16-1	1420010180	・・O-RING	1				
16-2	1420010140	・・O-RING	1				
17	1901033822	・VALVE ASSY	1				relief
17-1	1901025482	・・O-RING	1				
18	1901036121	・VALVE ASSY	2				relief
18-1	1901025482	・・O-RING	1				
19	1901030006	・BOLT	3				
20	1901034907	・NUT	6				
	C4h032S						

silverhorn.co.uk

CONTROL VALVE (11400431-)

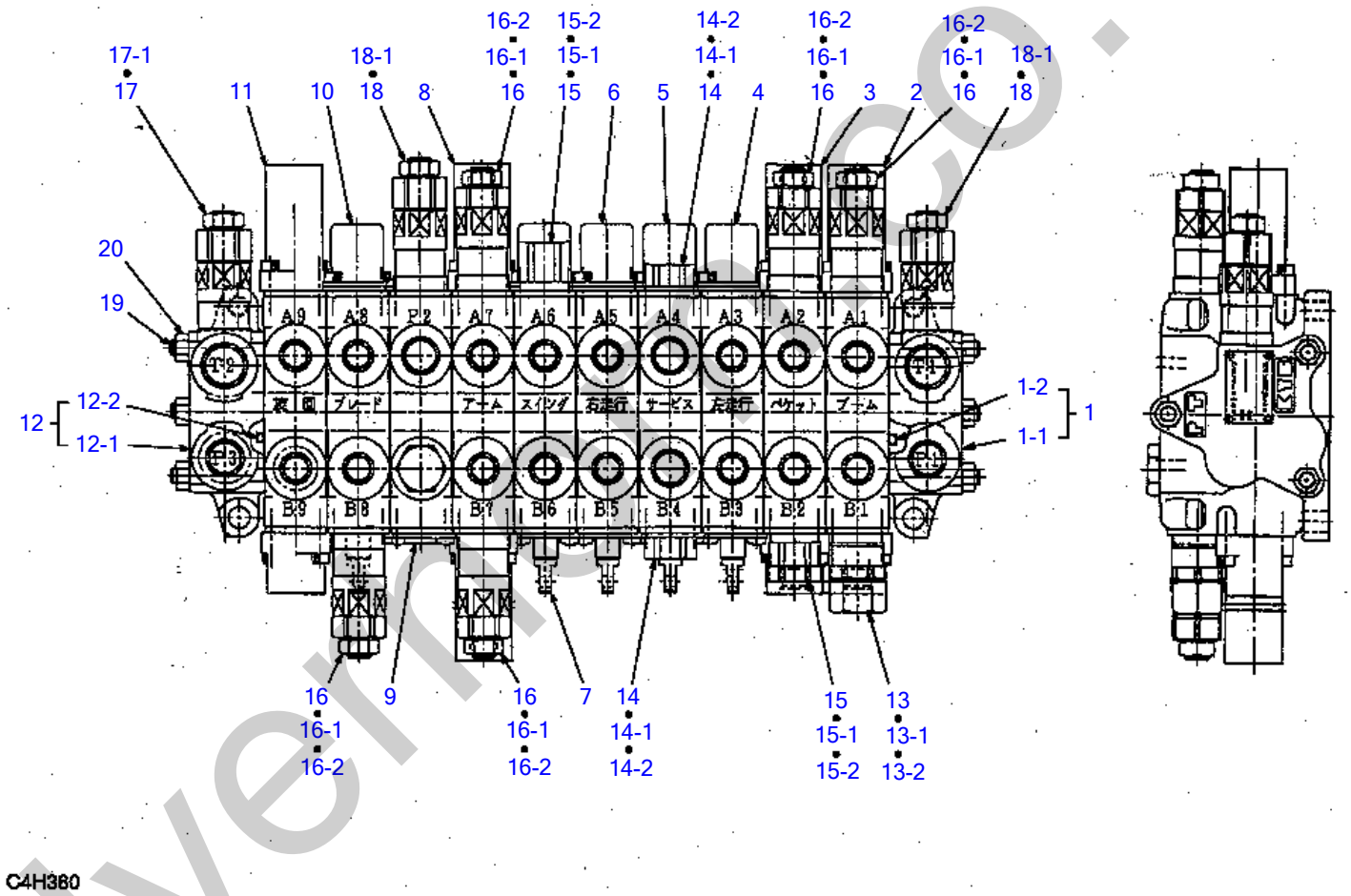

silvermachinery.co.uk

CONTROL VALVE (11400431-)

Item	Part number	Description	Q'ty	Chan.	Serial No.	Serv.	Remarks
0	1901037600	VALVE ASSY, control	1		11400431~11400460		
	1901038400	VALVE ASSY, control	1	(H)	11400461~		
1	1901029902	・HOUSING ASSY	1				
1-1	1901029904	・・HOUSING	1				
1-2	1420100550	・・O-RING	1				
2	1901033811	・BLOCK ASSY, No. 1	1				boom
3	1901033813	・BLOCK ASSY, No. 2	1		11400431~11400460		bucket
	1901038513	・BLOCK ASSY, No. 2	1		11400461~		bucket
4	1901033816	・BLOCK ASSY, No. 3	1				traction L.H.
5	1901033819	・BLOCK ASSY, No. 4	1				service
6	1901033815	・BLOCK ASSY, No. 5	1				traction R.H.
7	1901033818	・BLOCK ASSY, No. 6	1				swing
8	1901033812	・BLOCK ASSY, No. 7	1				arm
9	1901030010	・BLOCK ASSY, No. 8	1		11400431~11400669		
	1901038420	・BLOCK ASSY, No. 8	1	(H)	11400670~		
10	1901033817	・BLOCK ASSY, No. 9	1				blade
11	1901033814	・BLOCK ASSY, No. 10	1				slew
12	1901029901	・HOUSING ASSY	1				
12-1	1901029903	・・HOUSING	1				
12-2	1420100550	・・O-RING	1				
13	1901033824	・VALVE ASSY	1				over load
13-1	1420010180	・・O-RING	1				
13-2	1420010140	・・O-RING	1				
14	1901029992	・PLUG	2				
14-1	1420010140	・・O-RING	1				
14-2	1420010180	・・O-RING	1				
15	1901029923	・VALVE ASSY	1		11400431~11400460		antivoid
	1901029923	・VALVE ASSY	2		11400461~		antivoid
15-1	1420010180	・・O-RING	1				
15-2	1420010140	・・O-RING	1				
16	1901038521	・VALVE ASSY	5				over load
16-1	1420010180	・・O-RING	1				
16-2	1420010140	・・O-RING	1				
17	1901033822	・VALVE ASSY	1				relief
17-1	1901025482	・・O-RING	1				
18	1901037626	・VALVE ASSY	2				relief
18-1	1901025482	・・O-RING	1				
19	1901030006	・BOLT	3				
20	1901034907	・NUT	6				
	C4h382S						

silverhorn.co.uk

BLOCK ASSY; No. 1

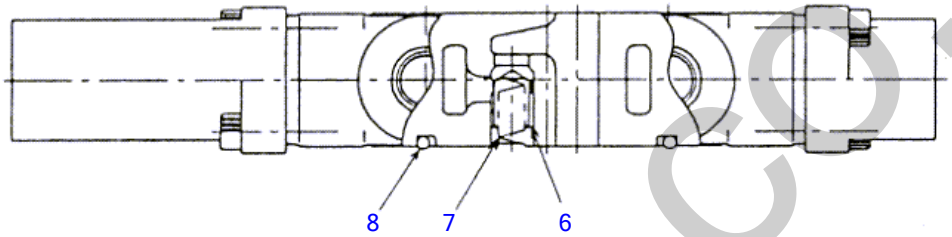

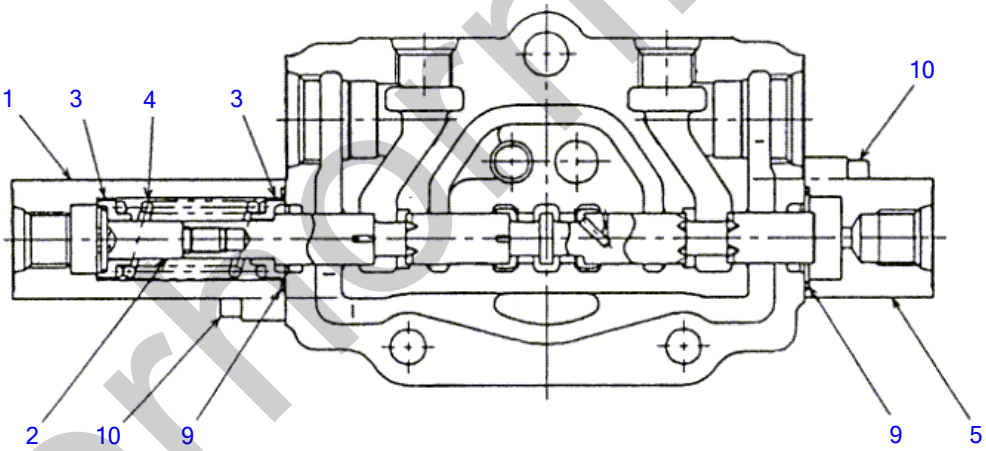

C4H040

S=FREE

silverhorn.co.uk

BLOCK ASSY; No. 1

Item	Part number	Description	Q'ty	Chan.	Serial No.	Serv.	Remarks
0	1901033811	BLOCK ASSY, No. 1	1				boom
1	1901027962	・CAP	1				
2	1901034591	・SCREW, cap	1				
3	1901031752	・HOLDER, spring	2				
4	1901034556	・SPRING	1				
5	1901027961	・CAP	1				
6	1901027768	・PLUNGER	1				
7	1901027757	・SPRING	1				
8	1420100550	・O-RING	1				
9	1420500220	・O-RING	2				
10	1110050518	・SCREW, cap	4				
	C4h040						

silverhorn.co.uk

BLOCK ASSY; No. 2

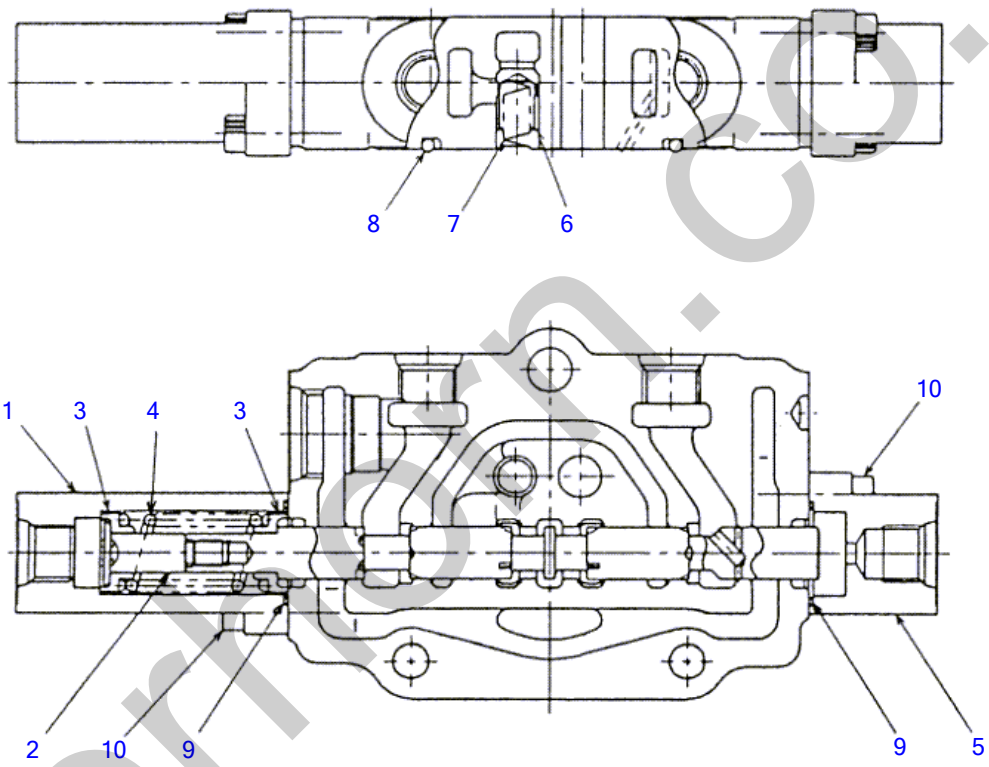

C4H050

S=FREE

silverhorn.co.uk

BLOCK ASSY; No. 2

Item	Part number	Description	Q'ty	Chan.	Serial No.	Serv.	Remarks
0	1901033813	BLOCK ASSY, No. 2	1		11400003~11400460		bucket
	1901038513	BLOCK ASSY, No. 2	1		11400461~		bucket
1	1901027962	・CAP	1				
2	1901034591	・SCREW, cap	1				
3	1901031752	・HOLDER, spring	2				
4	1901033856	・SPRING	1				
5	1901027961	・CAP	1				
6	1901027768	・PLUNGER	1				
7	1901027757	・SPRING	1				
8	1420100550	・O-RING	1				
9	1420500220	・O-RING	2				
10	1110050518	・SCREW, cap	4				
	C4h051S						

silverhorn.co.uk

BLOCK ASSY; No. 3

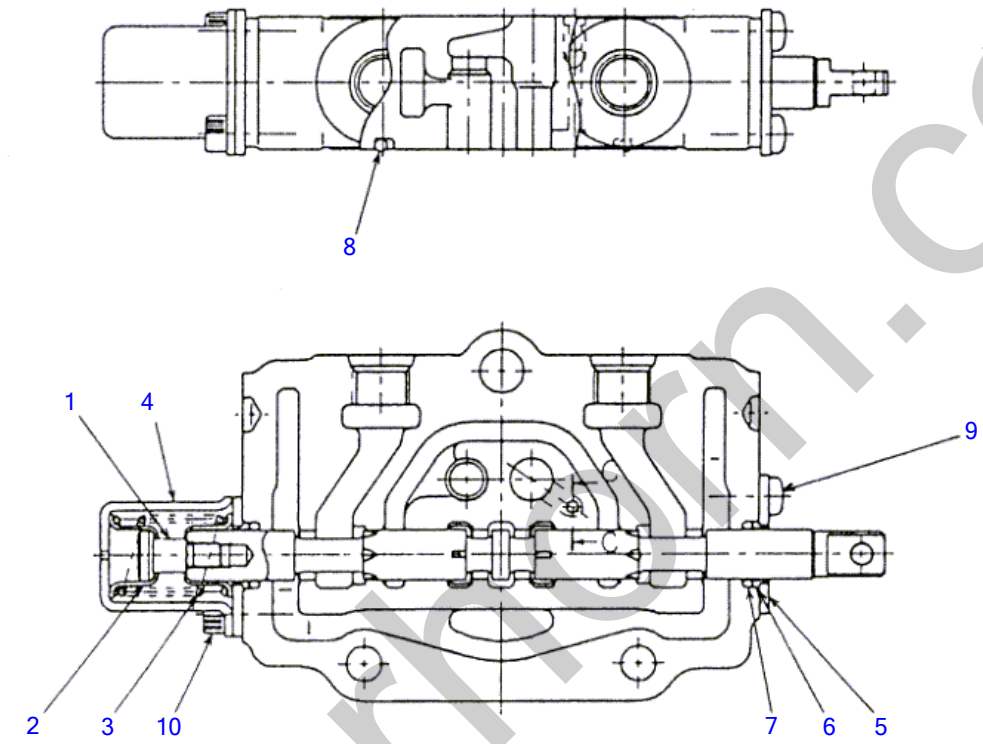

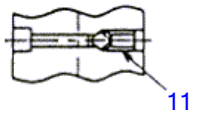

SECTION "C-C"

C4H060

S=FREE

silverhorn.co.uk

BLOCK ASSY; No. 3

Item	Part number	Description	Q'ty	Chan.	Serial No.	Serv.	Remarks
0	1901033816	BLOCK ASSY, No. 3	1				traction L.H.
1	1901031790	・SCREW, cap	1				
2	1901027792	・HOLDER, spring	2				
3	1901027758	・SPRING	1				
4	1901027761	・CAP	1				
5	1901027772	・PLATE	2				
6	1901027771	・SEAL, oil	2				
7	1420000120	・O-RING	2				
8	1420100550	・O-RING	1				
9	1120540510	・SCREW	2				
10	1110050512	・SCREW, cap	2				
11	1901033826	・PLUNGER	1				
	C4h060						

silverhorn.co.uk

BLOCK ASSY; No. 4

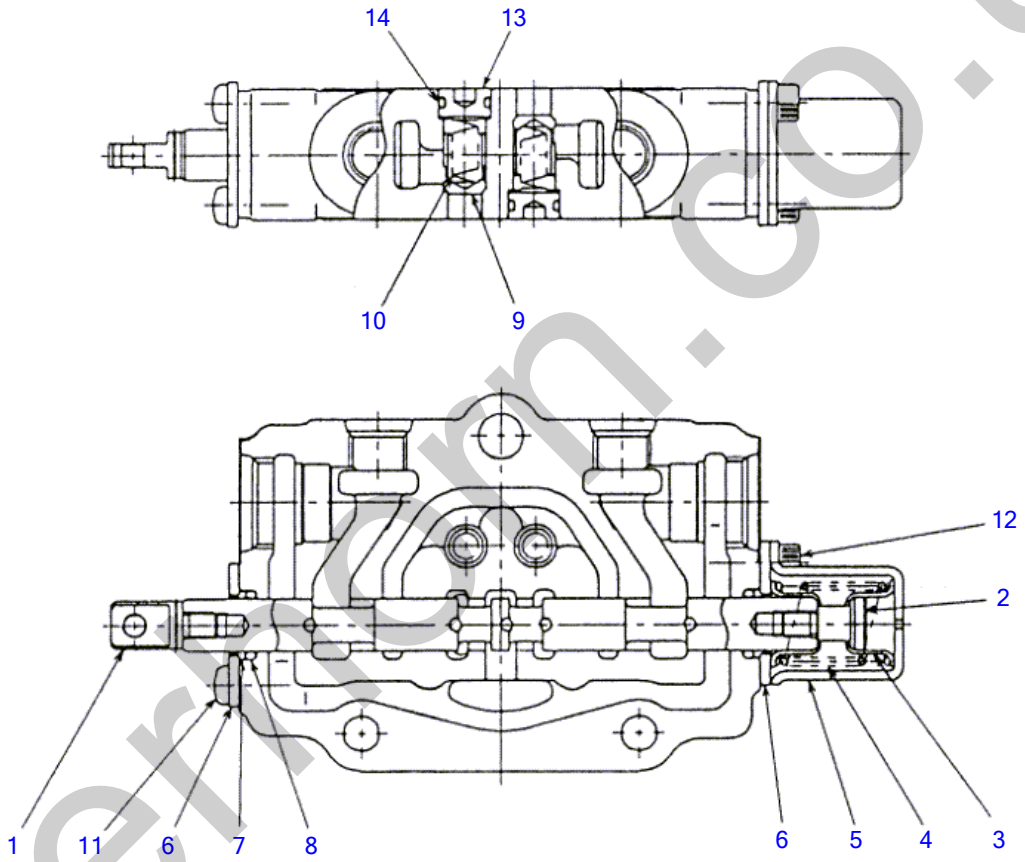

C4H070

S=FREE

silverfern.co.uk

BLOCK ASSY; No. 4

Item	Part number	Description	Q'ty	Chan.	Serial No.	Serv.	Remarks
0	1901033819	BLOCK ASSY, No. 4	1				service
1	1901029930	・HEAD	1				
2	1901031790	・SCREW, cap	1				
3	1901027792	・HOLDER, spring	2				
4	1901027857	・SPRING	1				
5	1901027761	・CAP	1				
6	1901027772	・PLATE	2				
7	1901027771	・SEAL, oil	2				
8	1420000120	・O-RING	2				
9	1901027768	・PLUNGER	1				
10	1901027757	・SPRING	1				
11	1120540510	・SCREW	2				
12	1110050512	・SCREW, cap	2				
13	1901034983	・PLUG	2				
14	1420010090	・O-RING	2				
	C4h070						

silverhorn.co.uk

BLOCK ASSY; No. 5

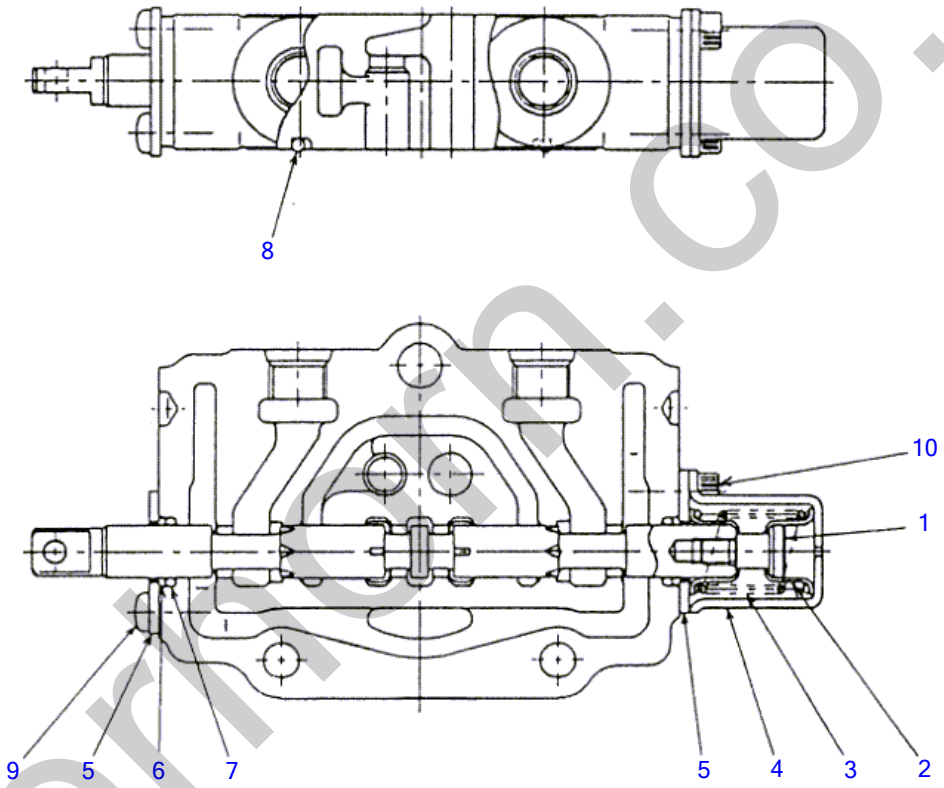

C4H080

S=FREE

silvermarn.co.uk

BLOCK ASSY; No. 5

Item	Part number	Description	Q'ty	Chan.	Serial No.	Serv.	Remarks
0	1901033815	BLOCK ASSY, No. 5	1				traction R.H.
1	1901031790	・SCREW, cap	1				
2	1901027792	・HOLDER, spring	2				
3	1901027758	・SPRING	1				
4	1901027761	・CAP	1				
5	1901027772	・PLATE	2				
6	1901027771	・SEAL, oil	2				
7	1420000120	・O-RING	2				
8	1420100550	・O-RING	1				
9	1120540510	・SCREW	2				
10	1110050512	・SCREW, cap	2				
	C4h080						

silverhorn.co.uk

BLOCK ASSY; No. 6

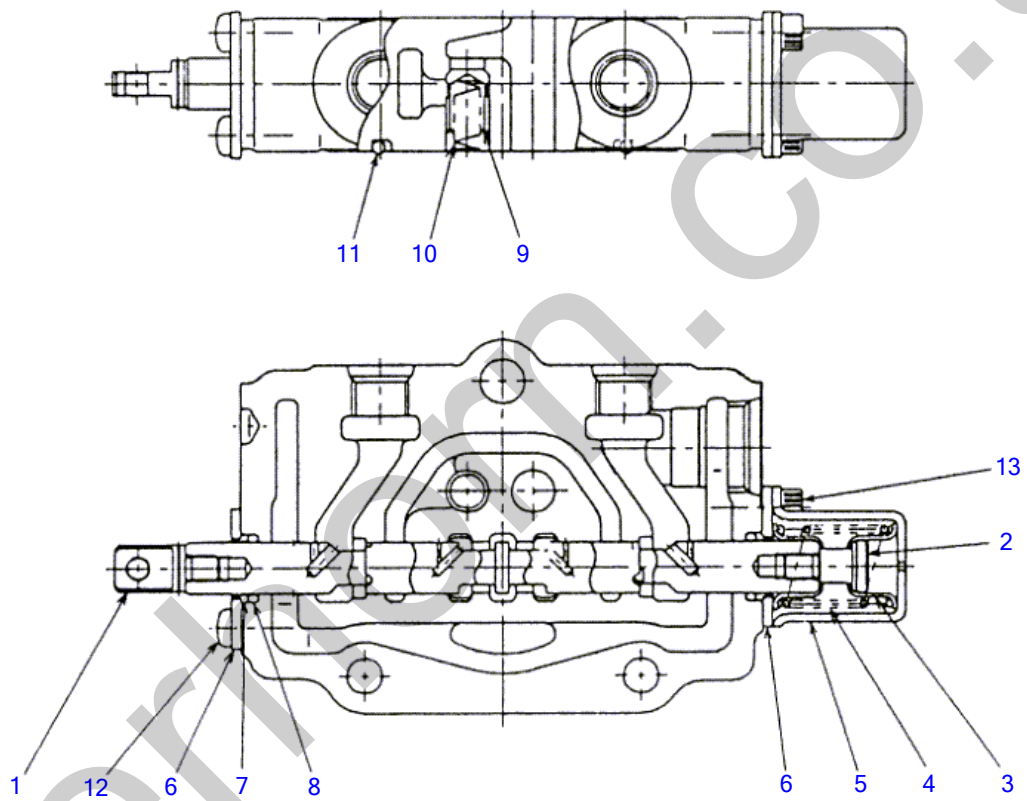

C4H090

S=FREE

silverhorn.co.uk

BLOCK ASSY; No. 6

Item	Part number	Description	Q'ty	Chan.	Serial No.	Serv.	Remarks
0	1901033818	BLOCK ASSY, No. 6	1				swing
1	1901029930	・HEAD	1				
2	1901031790	・SCREW, cap	1				
3	1901027792	・HOLDER, spring	2				
4	1901027857	・SPRING	1				
5	1901027761	・CAP	1				
6	1901027772	・PLATE	2				
7	1901027771	・SEAL, oil	2				
8	1420000120	・O-RING	2				
9	1901027768	・PLUNGER	1				
10	1901027757	・SPRING	1				
11	1420100550	・O-RING	1				
12	1120540510	・SCREW	2				
13	1110050512	・SCREW, cap	2				
	C4h090						

silverhorn.co.uk

BLOCK ASSY; No. 7

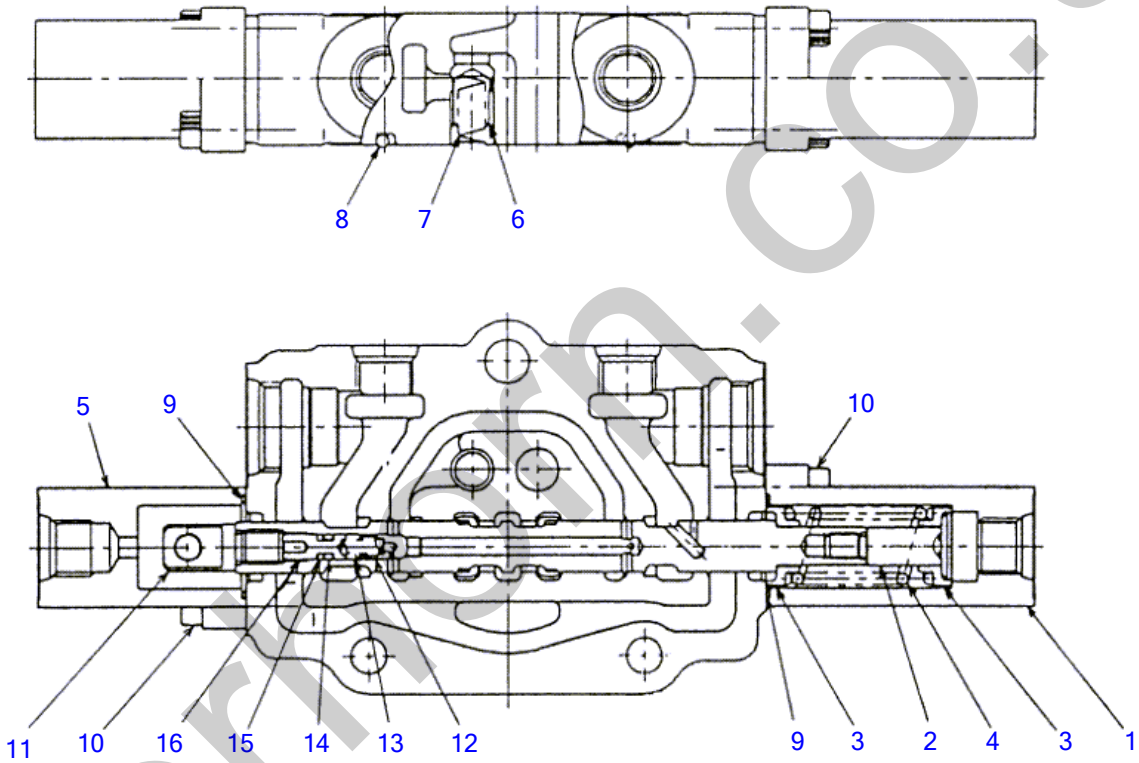

C4H100

S=FREE

silverfern.co.uk

BLOCK ASSY; No. 7

Item	Part number	Description	Q'ty	Chan.	Serial No.	Serv.	Remarks
0	1901033812	BLOCK ASSY, No. 7	1				arm
1	1901027962	・CAP	1				
2	1901034591	・SCREW, cap	1				
3	1901031752	・HOLDER, spring	2				
4	1901033856	・SPRING	1				
5	1901027963	・CAP	1				
6	1901027768	・PLUNGER	1				
7	1901027757	・SPRING	1				
8	1420100550	・O-RING	1				
9	1420500220	・O-RING	2				
10	1110050518	・SCREW, cap	4				
11	1901027831	・HEAD	1				
12	1901029967	・POPPET	1				
13	1901027858	・SPRING	1				
14	1420000030	・O-RING	1				
15	1421020030	・RING, back-up	1				
16	1901029991	・SPACER	1				
	C4h100						

silverhorn.co.uk

BLOCK ASSY; No. 8 (11400003-11400669)

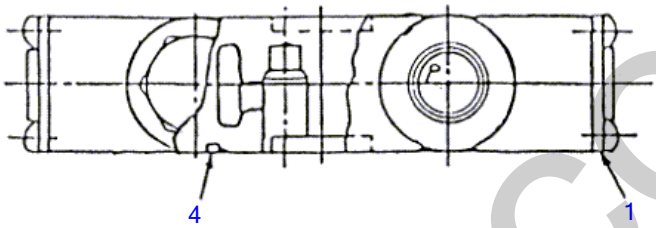

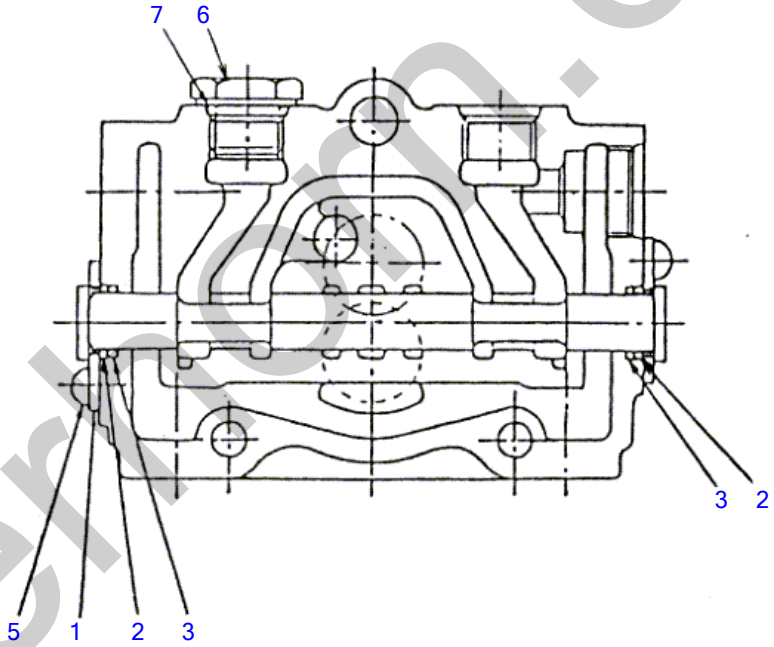

C4H110

S=FREE

silverhorn.co.uk

BLOCK ASSY; No. 8 (11400003-11400669)

Item	Part number	Description	Q'ty	Chan.	Serial No.	Serv.	Remarks
0	1901030010	BLOCK ASSY, No. 8	1				
1	1901027881	・PLATE	2				
2	1901027771	・SEAL, oil	2				
3	1420000120	・O-RING	2				
4	1420100550	・O-RING	1				
5	1120540510	・SCREW	4				
6	1901027693	・PLUG	1				
7	1420010140	・O-RING	1				
	C4h110						

silverhorn.co.uk

BLOCK ASSY; No. 8 (11600003-11602089)

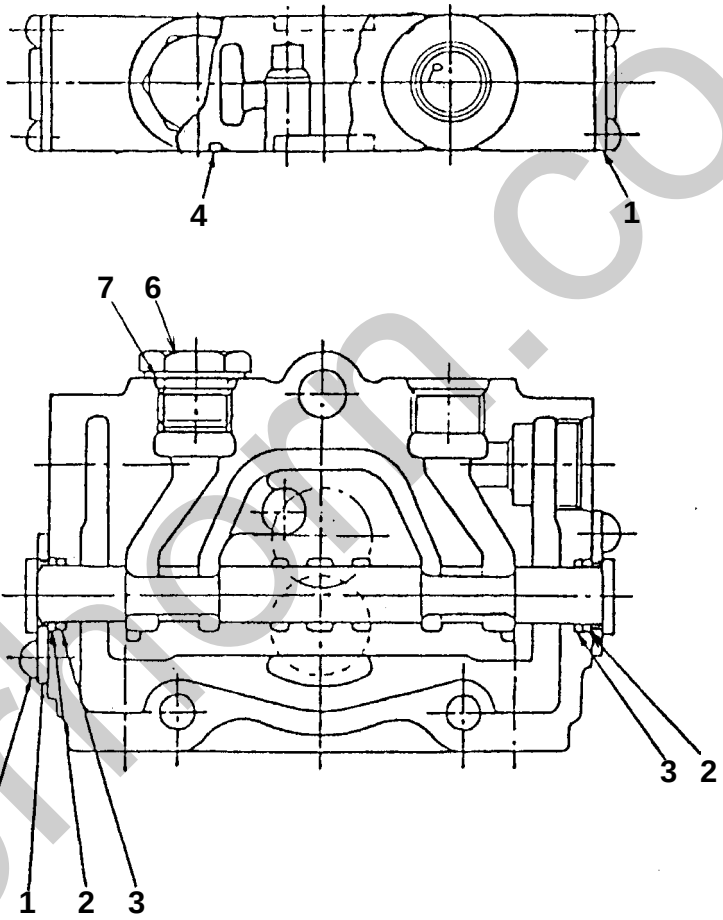

C4H110

S=FREE

silverhorn.co.uk

BLOCK ASSY; No. 8 (11400670-)

Item	Part number	Description	Q'ty	Chan.	Serial No.	Serv.	Remarks
0	1901038420	BLOCK ASSY, No. 8	1				
1	1901038852	・PLATE	2				
2	1421030120	・RING, back up	2				
3	1420000120	・O-RING	2				
4	1420100550	・O-RING	1				
5	1120540510	・SCREW	4				
6	1901034982	・PLUG	1				
7	1420010140	・O-RING	1				
	C4h111						

silverhorn.co.uk

BLOCK ASSY; No. 9

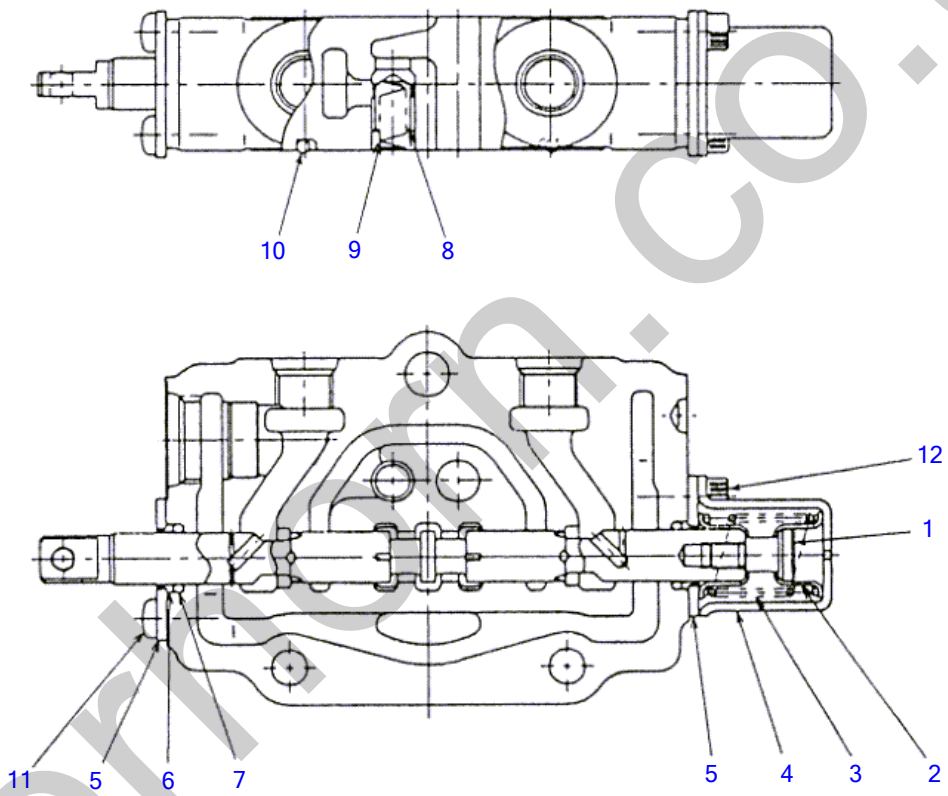

C4H120

S=FREE

silverham.co.uk

BLOCK ASSY; No. 9

Item	Part number	Description	Q'ty	Chan.	Serial No.	Serv.	Remarks
0	1901033817	BLOCK ASSY, No. 9	1				blade
1	1901031790	・SCREW, cap	1				
2	1901027792	・HOLDER, spring	2				
3	1901027857	・SPRING	1				
4	1901027761	・CAP	1				
5	1901027772	・PLATE	2				
6	1901027771	・SEAL, oil	2				
7	1420000120	・O-RING	2				
8	1901027768	・PLUNGER	1				
9	1901027757	・SPRING	1				
10	1420100550	・O-RING	1				
11	1120540510	・SCREW	2				
12	1110050512	・SCREW, cap	2				
	C4h120						

silverhorn.co.uk

BLOCK ASSY; No. 10

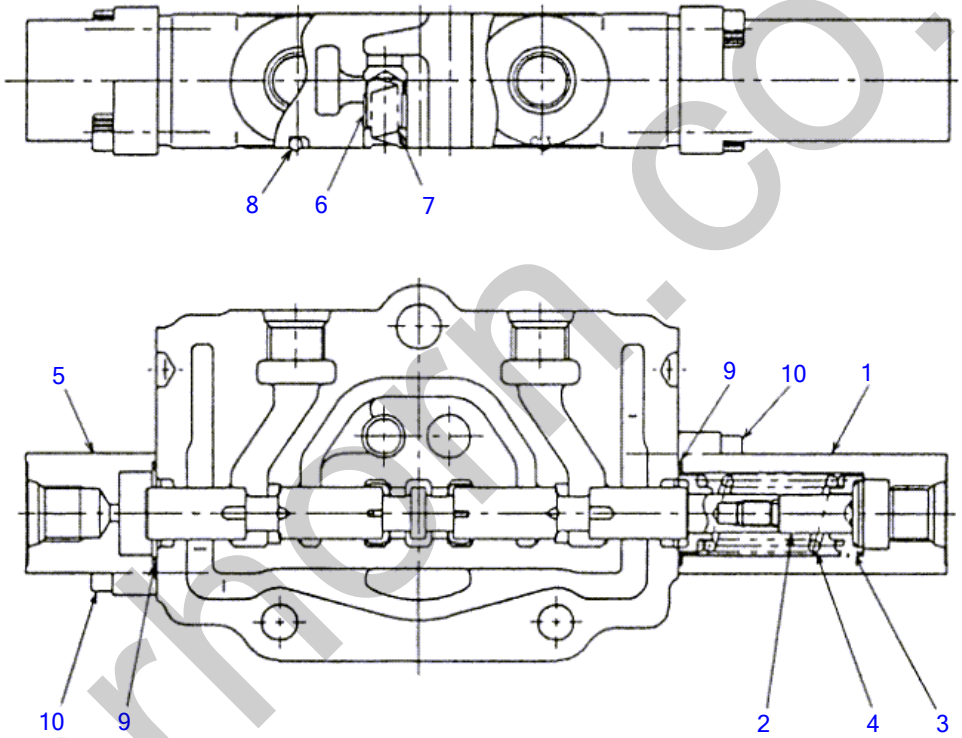

C4H130

S=FREE

silverhorn.co.uk

BLOCK ASSY; No. 10

Item	Part number	Description	Q'ty	Chan.	Serial No.	Serv.	Remarks
0	1901033814	BLOCK ASSY, No. 10	1				slew
1	1901027962	・CAP	1				
2	1901034591	・SCREW, cap	1				
3	1901031752	・HOLDER, spring	2				
4	1901033856	・SPRING	1				
5	1901027961	・CAP	1				
6	1901027768	・PLUNGER	1				
7	1901027757	・SPRING	1				
8	1420100550	・O-RING	1				
9	1420500220	・O-RING	2				
10	1110050518	・SCREW, cap	4				
	C4h130						

silverhorn.co.uk

SOLENOID VALVE (11400003-11400436)

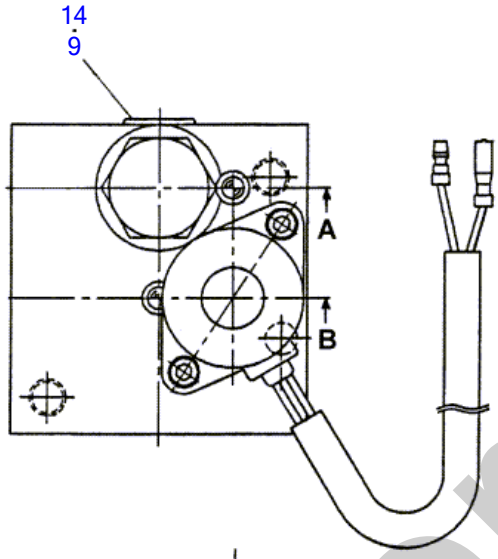

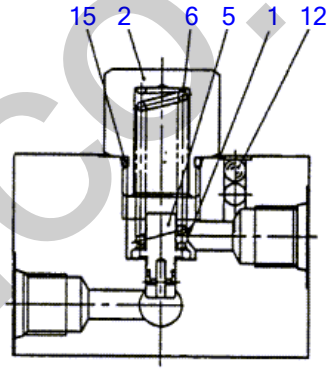

SECTION "A-A"

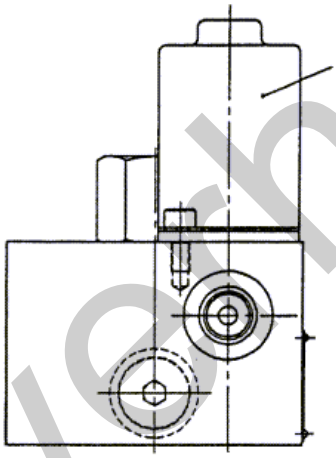

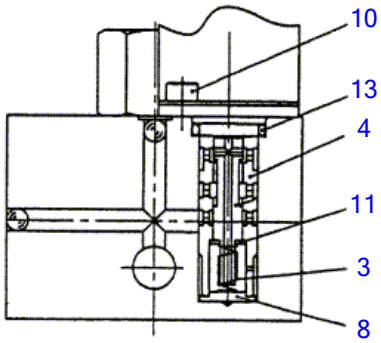

SECTION "B-B"

C4H140

S=FREE

silverhorn.co.uk

SOLENOID VALVE (11400003-11400436)

Item	Part number	Description	Q'ty	Chan.	Serial No.	Serv.	Remarks
0	1901728700	VALVE ASSY, solenoid	1				
1	1901728701	・SHIM	2				
2	1901728702	・PLUG	1				
3	1901728703	・SPRING	1				
4	1901728704	・SLEEVE	1				
5	1901728705	・PLUNGER	1				
6	1901728708	・SPRING	1				
7	1901728709	・SOLENOID	1				
8	1901728711	・STOPPER	1				
9	1501750002	・PLUG	1				
	1420010110	・・O-RING	1			M	
10	1110040510	・SCREW, cap	2				
11	1141110004	・WASHER	1				
12	1901708623	・BALL, steel	4				
13	1420000160	・O-RING	1				
14	1420010110	・O-RING	1				
15	1420010180	・O-RING	1				
	C4h140						

silverhorn.co.uk

SOLENOID VALVE (11400437-)

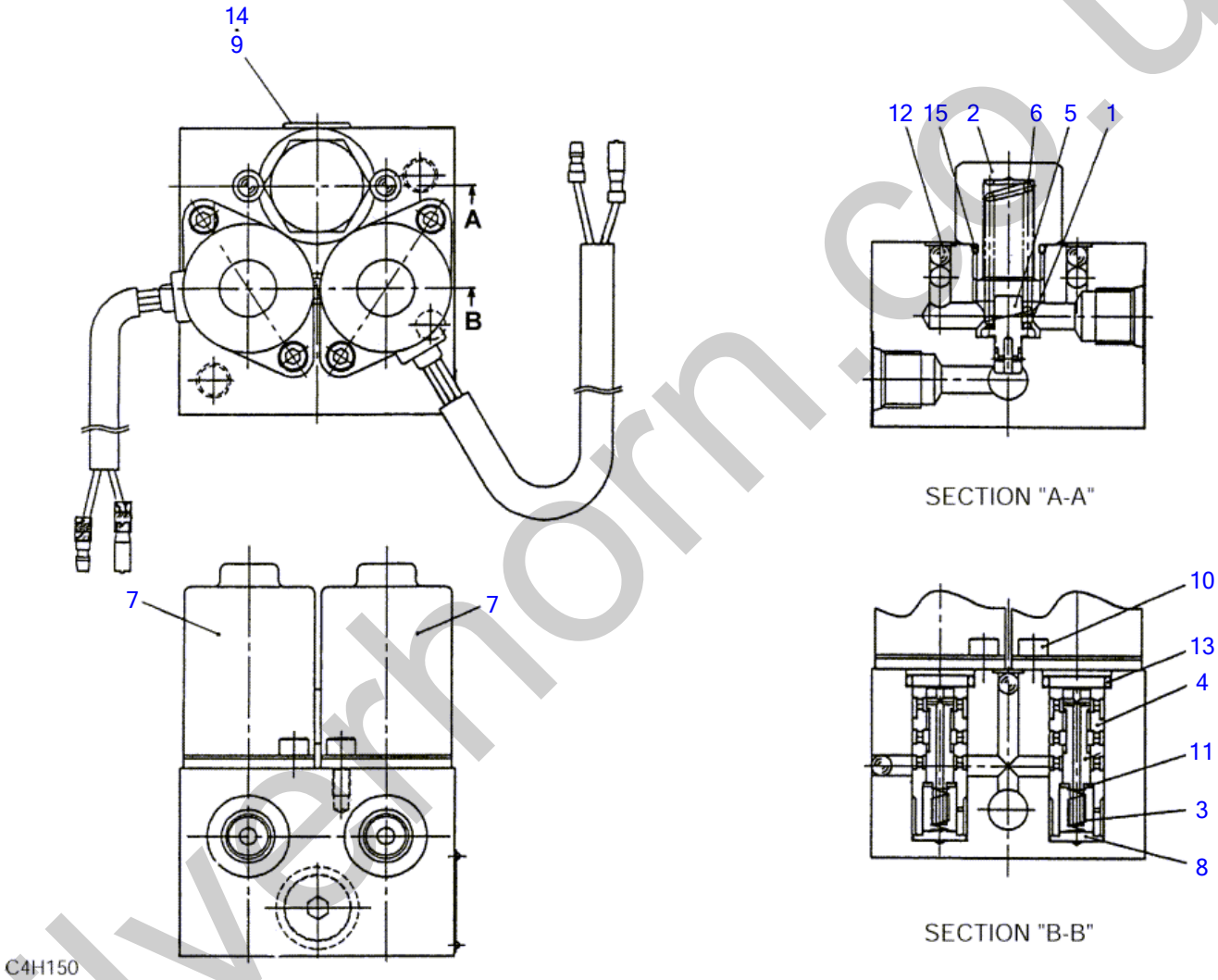

S=FREE

silverhorn.co.uk

SOLENOID VALVE (11400437-)

Item	Part number	Description	Q'ty	Chan.	Serial No.	Serv.	Remarks
0	1901728800	VALVE ASSY, solenoid	1				
1	1901728701	・SHIM	2				
2	1901728702	・PLUG	1				
3	1901728703	・SPRING	2				
4	1901728704	・SLEEVE	2				
5	1901728705	・PLUNGER	1				
6	1901728708	・SPRING	1				
7	1901728709	・SOLENOID	2				
8	1901728711	・STOPPER	2				
9	1501750002	・PLUG	1				
	1420010110	・・O-RING	1			M	
10	1110040510	・SCREW, cap	4				
11	1141110004	・WASHER	2				
12	1901708623	・BALL, steel	6				
13	1420000160	・O-RING	2				
14	1420010110	・O-RING	1				
15	1420010180	・O-RING	1				
	C4h150						

silverhorn.co.uk

PILOT VALVE

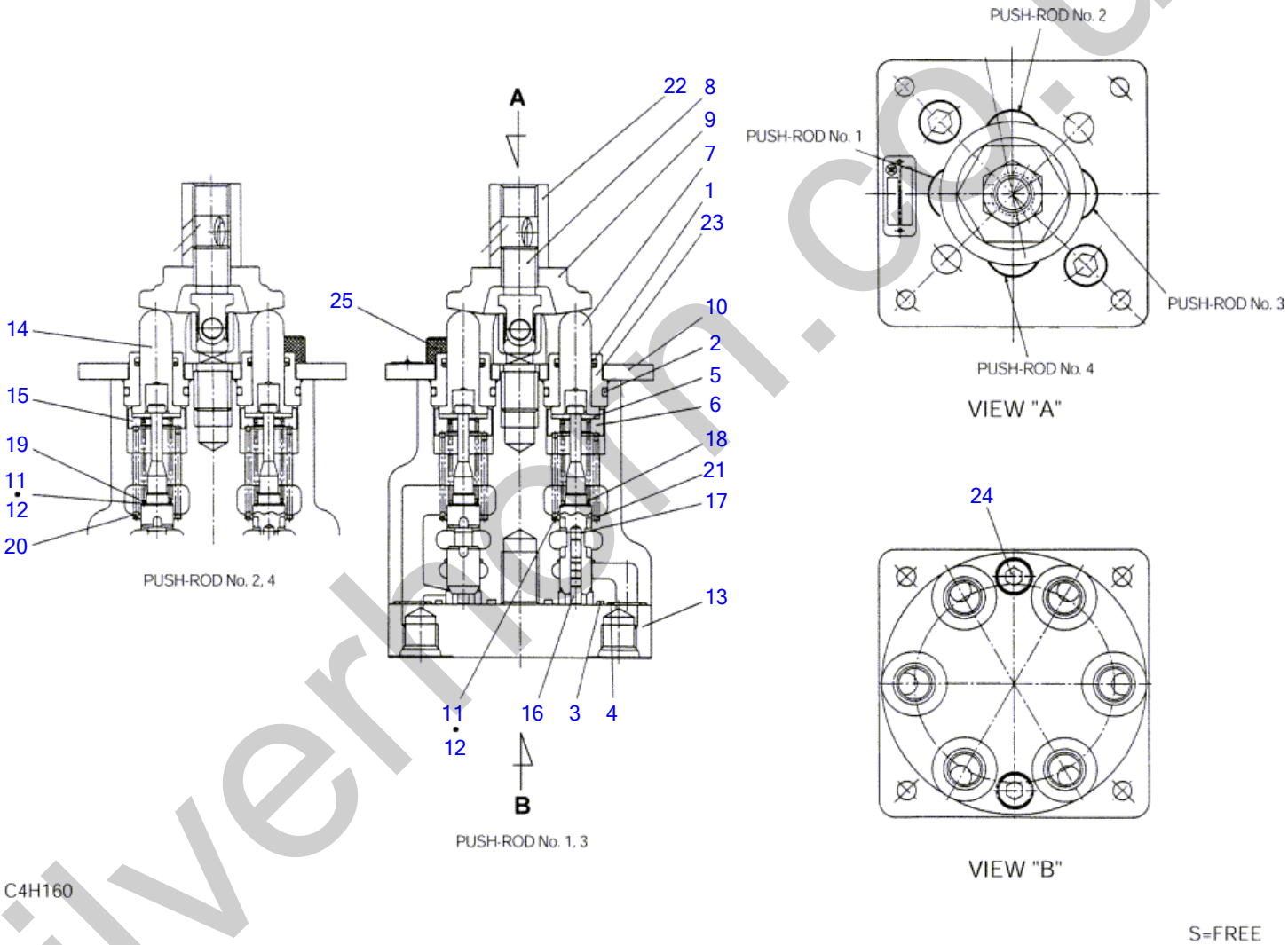

silverhorn.co.uk

PILOT VALVE

Item	Part number	Description	Q'ty	Chan.	Serial No.	Serv.	Remarks
0	1901730400	VALVE ASSY, pilot	2				
0-1	1901730499	・KIT, seal	1				
1	X 1901728523	・・PACKING	4				
2	X 1420000200	・・O-RING	4				
3	X 1420500600	・・O-RING	1				
4	X 1420500120	・・O-RING	6				
5	1901730401	・RETAINER	4				
6	1901730402	・HOLDER	2				
7	1901730403	・ROD	2				
8	1901728501	・JOINT	1				
9	1901728502	・CAM	1				
10	1901730406	・PLATE	1				
11	1901730407	・SHIM	4				t=0.2mm
12	1901730408	・SHIM	4				t=0.1mm
13	1901730409	・PLATE	1				
14	1901730410	・ROD	2				
15	1901730411	・HOLDER	2				
16	1901730412	・PISTON	4				
17	1901730415	・RING	4				
18	1901730416	・SPRING	2				
19	1901730417	・SPRING	2				
20	1901730418	・SPRING	2				
21	1901730419	・SPRING	2				
22	1901728513	・NUT	1				
23	1901730422	・SLEEVE	4				
24	1110050825	・SCREW, cap	2				
25	1110051020	・SCREW, cap	2				
	C4h161						

silverhorn.co.uk

SELECTOR VALVE (A-B pattern)

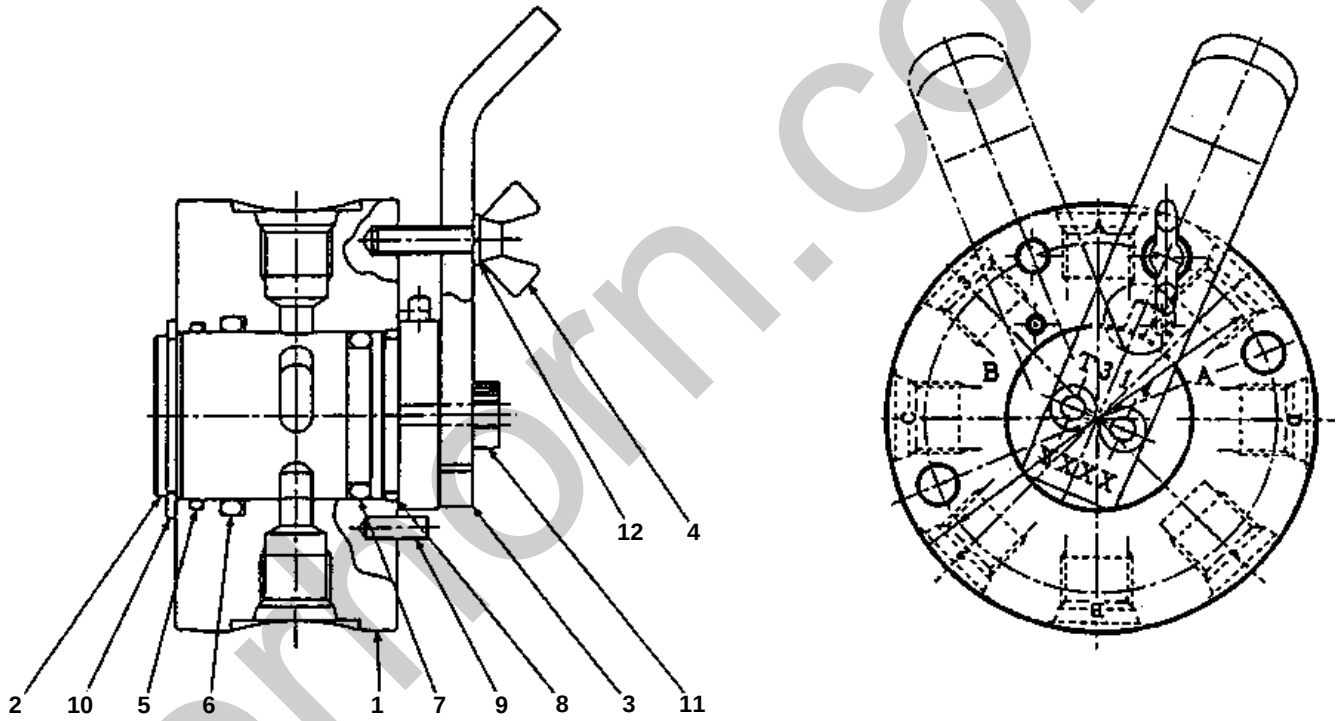

C4H170

silvermorn.co.uk

SELECTOR VALVE (A-B pattern)

Item	Part number	Description	Q'ty	Chan.	Serial No.	Serv.	Remarks
0	1901731400	VALVE ASSY, selector	1				
1	1901731401	・BODY	1				
2	1901731402	・ROTOR	1				
3	1901730503	・LEVER	1				
4	1901730504	・BOLT	1				
5	1901730505	・O-RING	1				
6	1901730506	・O-RING	1				
7	1901730507	・O-RING	1				
8	1901730508	・O-RING	1				
9	1213000412	・PIN, spring	3				
10	1220000030	・RING, snap	1				
11	1110050514	・SCREW, cap	2				
12	1140010005	・WASHER, spring	1				
	C4h170						

silverhorn.co.uk

SELECTOR VALVE (A-G pattern)

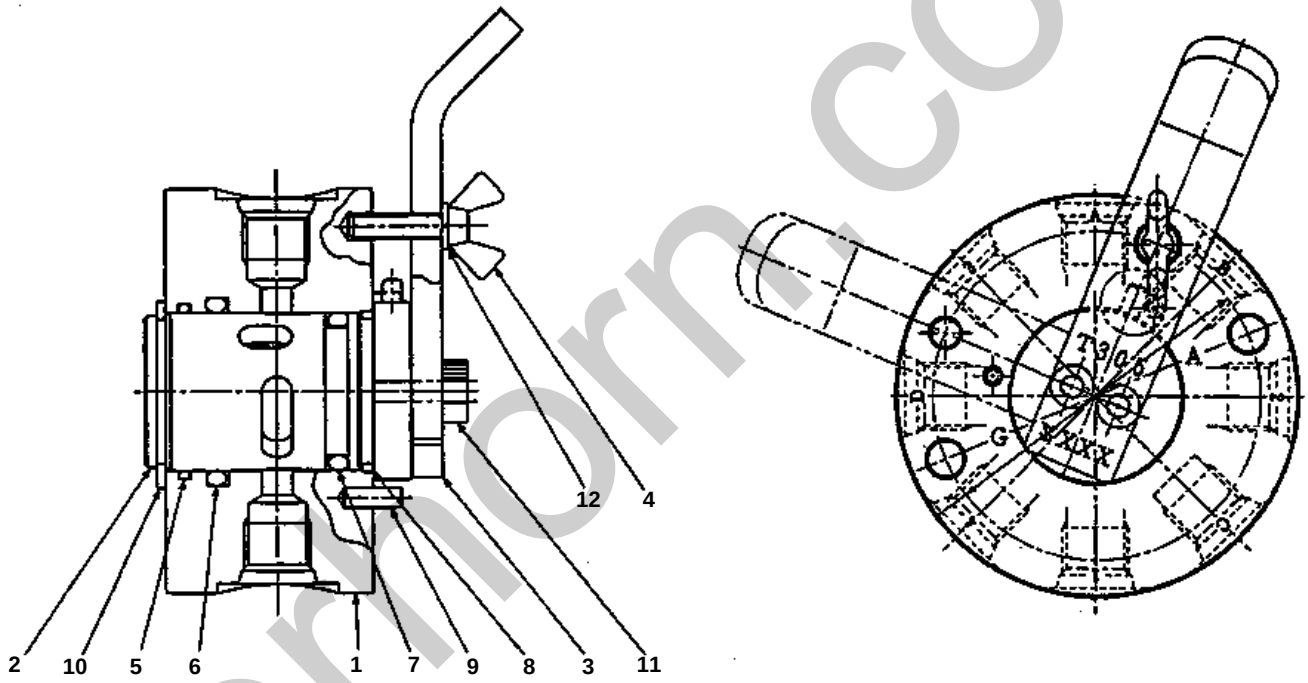

C4H180

silvermorn.co.uk

SELECTOR VALVE (A-G pattern)

Item	Part number	Description	Q'ty	Chan.	Serial No.	Serv.	Remarks
0	1901730500	VALVE ASSY, selector	1				
1	1901730501	・BODY	1				
2	1901730502	・ROTOR	1				
3	1901730503	・LEVER	1				
4	1901730504	・BOLT	1				
5	1901730505	・O-RING	1				
6	1901730506	・O-RING	1				
7	1901730507	・O-RING	1				
8	1901730508	・O-RING	1				
9	1213000412	・PIN, spring	3				
10	1220000030	・RING, snap	1				
11	1110050514	・SCREW, cap	2				
12	1140010005	・WASHER, spring	1				
	C4h180						

silverhorn.co.uk

BOOM CYLINDER

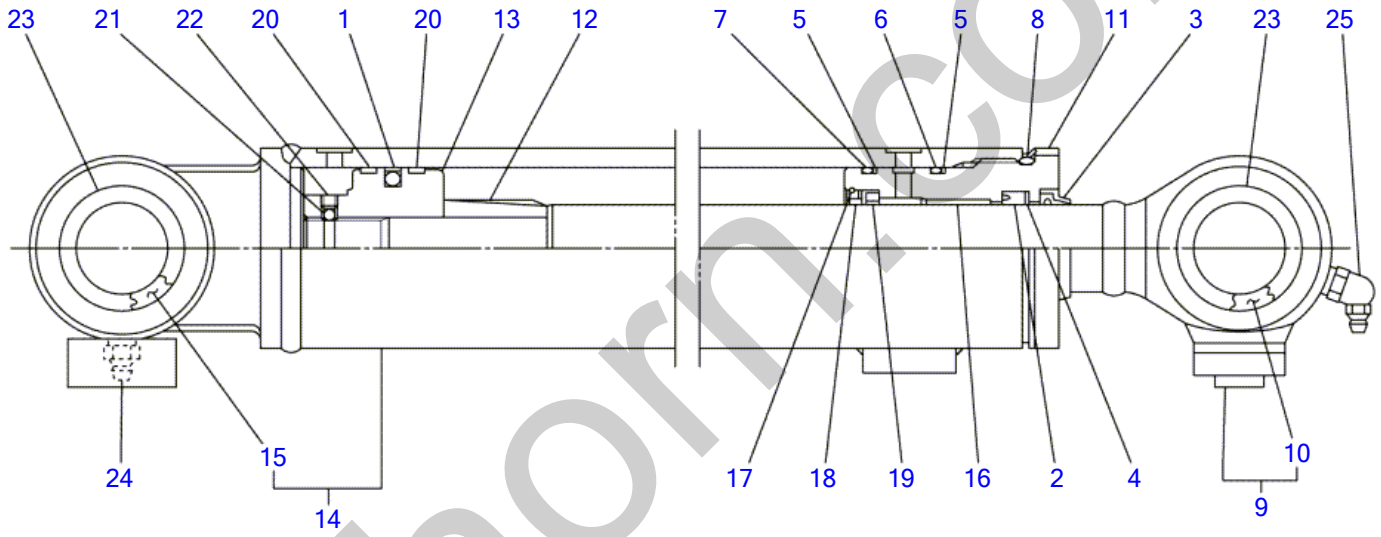

C4H190

S=FREE

silverhorn.co.uk

BOOM CYLINDER

Item	Part number	Description	Q'ty	Chan.	Serial No.	Serv.	Remarks
0	1900070400	CYLINDER ASSY (canopy)	1		11400003~11400436		boom
	1900080100	CYLINDER ASSY (canopy)	1		11400437~11400490		
	1900082400	CYLINDER ASSY (canopy)	1	(H)	11400491~		
	1900072500	CYLINDER ASSY (cab)	1		11400003~11400436		
	1900080200	CYLINDER ASSY (cab)	1		11400437~11400490		
	1900082500	CYLINDER ASSY (cab)	1	(H)	11400491~		
0-1	1900070499	・KIT, seal	1				
1	X 1900051932	・・PACKING, piston	1				
2	X 1410530408	・・PACKING, rod	1				
3	X 1900073733	・・SEAL, dust	1				
4	X 1411240302	・・RING, back-up	1				
5	X 1421130500	・・RING, back-up	2				
6	X 1420110500	・・O-RING	1				
7	X 1420110450	・・O-RING	1				
8	X 1420500550	・・O-RING	1				
9	1900070497	・ROD ASSY, piston	1		11400003~11400436		
	1900080197	・ROD ASSY, piston	1		11400437~11400490		
	1900082497	・ROD ASSY, piston	1	(H)	11400491~		
10	1900024720	・・BUSHING	1				
11	1900058803	・COVER, rod	1				
12	1900058816	・CUSHON, rod	1				
13	1900053506	・PISTON	1				
14	1900070498	・TUBE ASSY	1		11400003~11400436		canopy
	1900080198	・TUBE ASSY	1	(H)	11400437~		canopy
	1900072598	・TUBE ASSY	1		11400003~11400436		cab
	1900080298	・TUBE ASSY	1	(H)	11400437~		cab
15	1900024720	・・BUSHING	1				
16	1333003025	・BUSHING	1				
17	1900058626	・STOPPER	1				
18	1900058615	・SPACER	1				
19	1900058616	・RING, cushion	1				
20	1900066726	・RING, wear	2				
21	1390010250	・BALL, steel	1				
22	1121040606	・SET-SCREW	1				
23	1432200030	・SEAL, dust	4				
24	1560001000	・FITTING, grease	1				
25	1560001675	・FITTING, grease	1				
	C4h191S						

silverhorn.co.uk

ARM CYLINDER

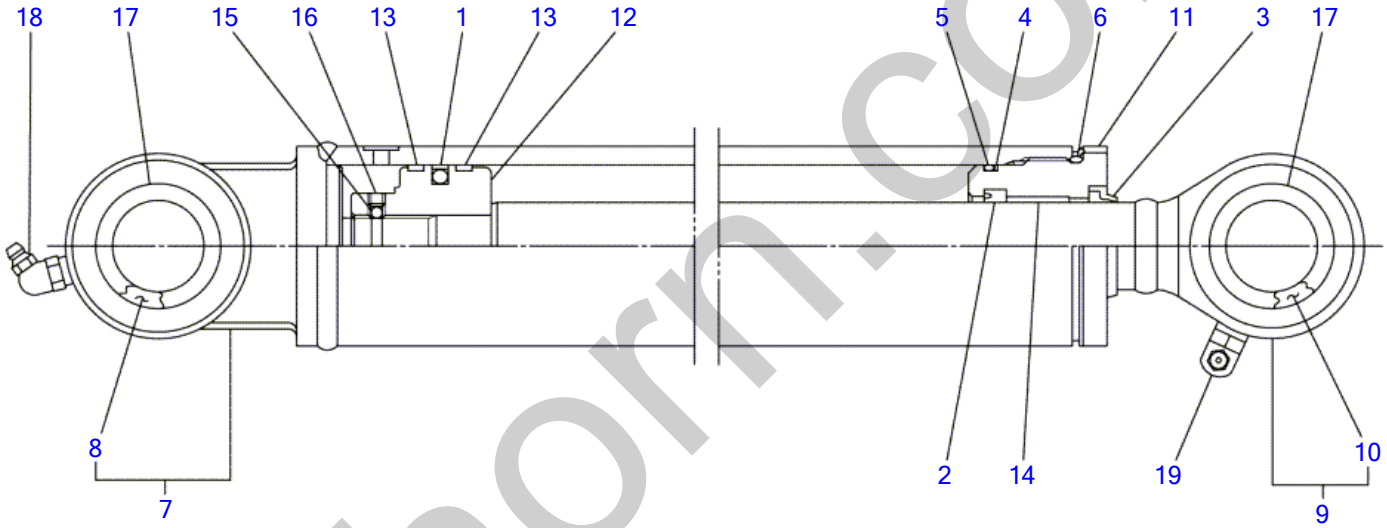

C4H200

S=FREE

silverhorn.co.uk

ARM CYLINDER

Item		Part number	Description	Q'ty	Chan.	Serial No.	Serv.	Remarks
0		1900074600	CYLINDER ASSY	1		11400003~11400358		arm
		1900078400	CYLINDER ASSY	1	(H)	11400359~		TB014
0-1		1900051999	・KIT, seal	1				
1	X	1900051932	・・PACKING, piston	1				
2	X	1410530408	・・PACKING, rod	1				
3	X	1900051931	・・SEAL, dust	1				
4	X	1421130500	・・RING, back-up	1				
5	X	1420110500	・・O-RING	1				
6	X	1420500550	・・O-RING	1				
7		1900074698	・TUBE ASSY	1		11400003~11400358		
		1900078498	・TUBE ASSY	1		11400359~		
8		1900024720	・・BUSHING	1				
9		1900074697	・ROD ASSY, piston	1		11400003~11400358		
		1900078497	・ROD ASSY, piston	1		11400359~		
10		1900024720	・・BUSHING	1				
11		1900053503	・COVER, rod	1				
12		1900053506	・PISTON	1		11400003~11400358		
		1900078306	・PISTON	1		11400359~		
13		1900066726	・RING, wear	2				
14		1333003025	・BUSHING	1				
15		1390020250	・BALL, steel	1				
16		1121050606	・SET-SCREW	1		11400003~11400358		
		1121050608	・SET-SCREW	1		11400359~		
17		1432200030	・SEAL, dust	4				
18		1560001675	・FITTING, grease	1				
19		1560001900	・FITTING, grease	1				
		C4h201S						

silverhorn.co.uk

BUCKET CYLINDER

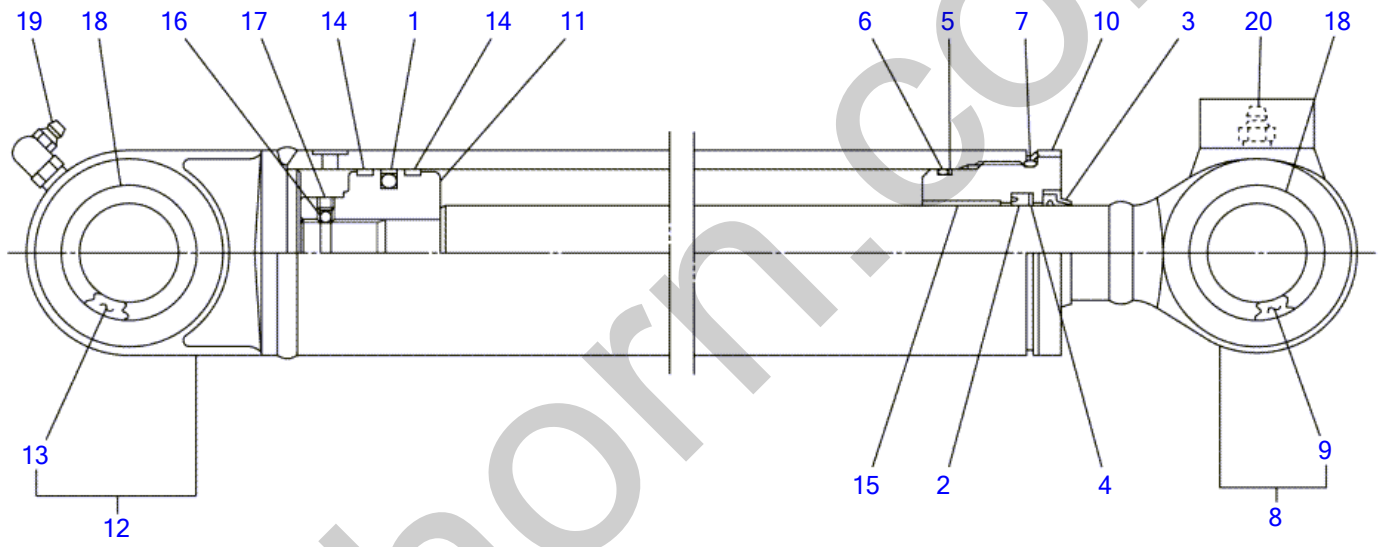

C4H220

S=FREE

silverhorn.co.uk

BUCKET CYLINDER

Item	Part number	Description	Q'ty	Chan.	Serial No.	Serv.	Remarks
0	1900072200	CYLINDER ASSY	1				bucket
0-1	1900072299	・KIT, seal	1				
1	X 1900056931	・・PACKING, piston	1				
2	X 1410530408	・・PACKING, rod	1				
3	X 1900073733	・・SEAL, dust	1				
4	X 1411240302	・・RING, back-up	1				
5	X 1421130450	・・RING, back-up	1				
6	X 1420110450	・・O-RING	1				
7	X 1420500500	・・O-RING	1				
8	1900072297	・ROD ASSY, piston	1				
9	1900046302	・・BUSHING	1				
10	1900059003	・COVER, rod	1				
11	1900061506	・PISTON	1				
12	1900072298	・TUBE ASSY	1				
13	1900046302	・・BUSHING	1				
14	1900061526	・RING, wear	2				
15	1333003025	・BUSHING	1				
16	1390020250	・BALL, steel	1				
17	1121040605	・SET-SCREW	1				
18	1432200030	・SEAL, dust	4				
19	1560001900	・FITTING, grease	1				
20	1560001000	・FITTING, grease	1				
	C4h221						

silverhorn.co.uk

DOZER BLADE CYLINDER

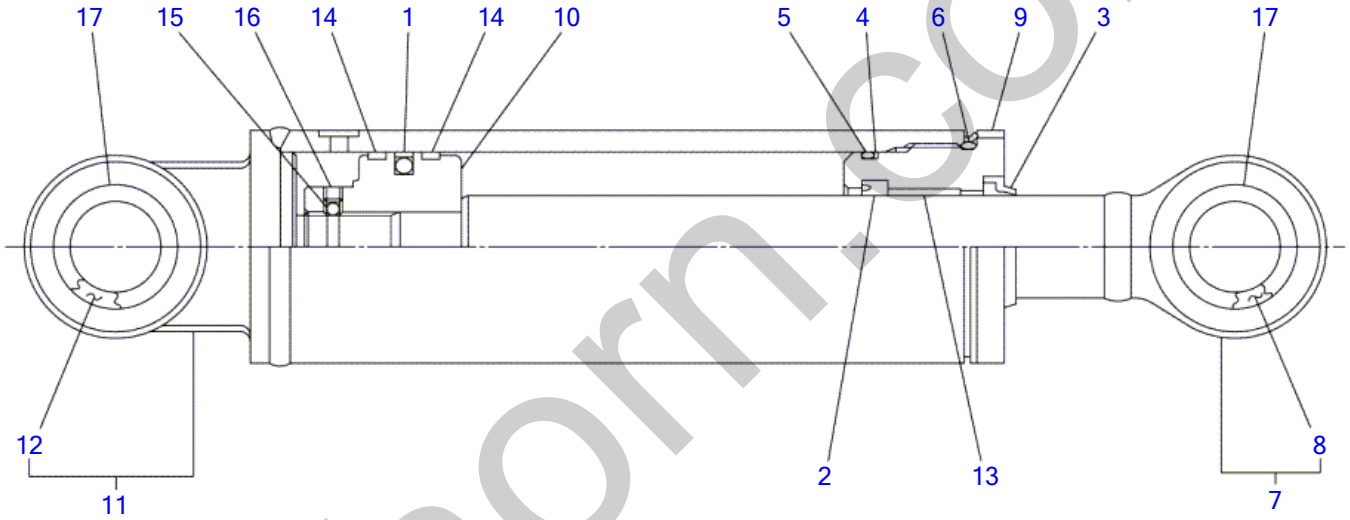

C4H240

S=FREE

silverhorn.co.uk

DOZER BLADE CYLINDER

Item		Part number	Description	Q'ty	Chan.	Serial No.	Serv.	Remarks
0		1900070300	CYLINDER ASSY	1				blade
0-1		1900070399	・KIT, seal	1				
1	X	1900070334	・・PACKING, piston	1				
2	X	1410535458	・・PACKING, rod	1				
3	X	1900073533	・・SEAL, dust	1				
4	X	1900051832	・・RING, back-up	1				
5	X	1420110550	・・O-RING	1				
6	X	1420110600	・・O-RING	1				
7		1900059201	・ROD ASSY, piston	1				
8		1900058502	・・BUSHING	1				
9		1900051803	・COVER, rod	1				
10		1900070306	・PISTON	1				
11		1900070398	・TUBE ASSY	1				
12		1900058502	・・BUSHING	1				
13		1333003525	・BUSHING	1				
14		1900070326	・RING, wear	2				
15		1390010250	・BALL, steel	1				
16		1121040607	・SET-SCREW	1				
17		1432200030	・SEAL, dust	4				
		C4h241						

silverhorn.co.uk

DOZER BLADE CYLINDER (for long dozer blade)

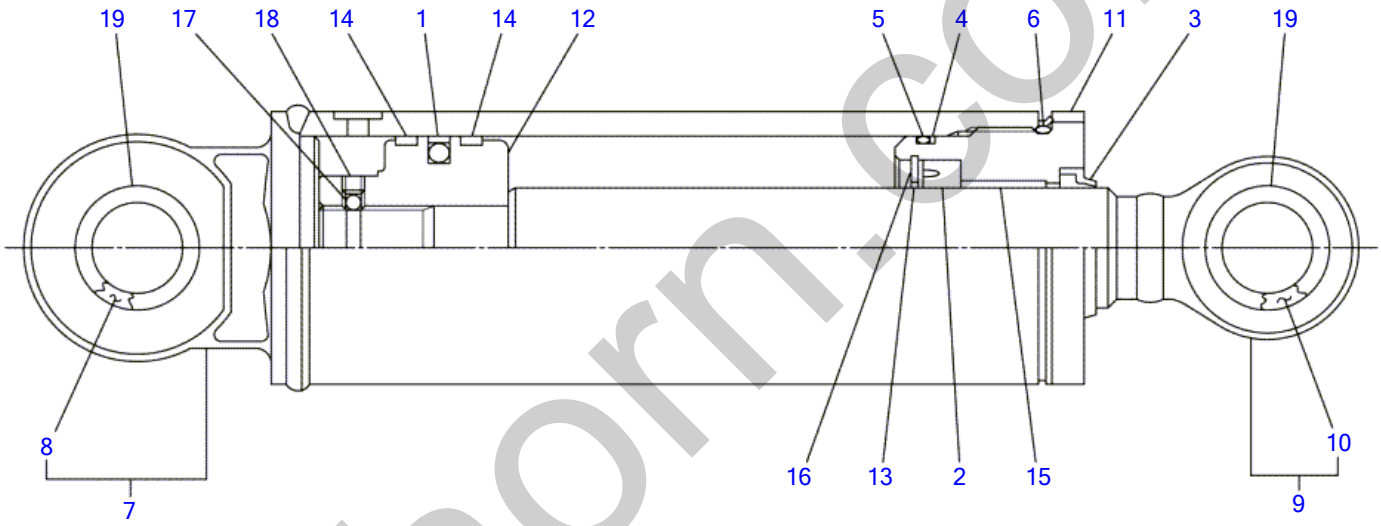

C4H250

S=FREE

silverhorn.co.uk

DOZER BLADE CYLINDER (for long dozer blade)

Item		Part number	Description	Q'ty	Chan.	Serial No.	Serv.	Remarks
0		1900074900	CYLINDER ASSY	1				blade
0-1		1900054399	・KIT, seal	1				
1	X	1900050333	・・PACKING, piston	1				
2	X	1900005612	・・PACKING, rod	1				
3	X	1900048431	・・SEAL, dust	1				
4	X	1421130700	・・RING, back-up	1				
5	X	1420110700	・・O-RING	1				
6	X	1420110750	・・O-RING	1				
7		1900074998	・TUBE ASSY	1				
8		1900058502	・・BUSHING	1				
9		1900074997	・ROD ASSY, piston	1				
10		1900058502	・・BUSHING	1				
11		1900054303	・COVER, rod	1				
12		1900054306	・PISTON	1				
13		1900013508	・HOLDER, rod packing	1				
14		1900050332	・RING, wear	2				
15		1333004030	・BUSHING	1				
16		1221000060	・RING, snap	1				
17		1390020250	・BALL, steel	1				
18		1121050608	・SET-SCREW	1				
19		1432200030	・SEAL, dust	4				
		C4h251						

silverhorn.co.uk

SWING CYLINDER

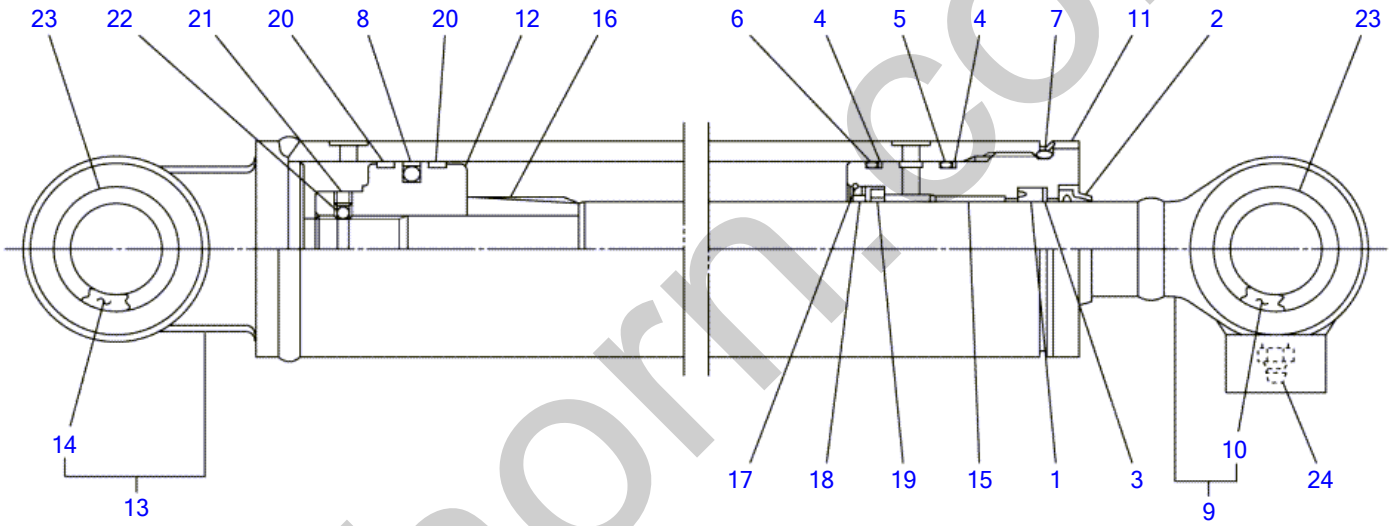

C4H260

S=FREE

silverhorn.co.uk

SWING CYLINDER

Item	Part number	Description	Q'ty	Chan.	Serial No.	Serv.	Remarks
0	1900070500	CYLINDER ASSY	1				swing
0-1	1900070599	・KIT, seal	1				
1	X 1410535458	・・PACKING, rod	1				
2	X 1900073533	・・SEAL, dust	1				
3	X 1411245352	・・RING, back-up	1				
4	X 1421130550	・・RING, back-up	2				
5	X 1420110550	・・O-RING	1				
6	X 1420110500	・・O-RING	1				
7	X 1420110600	・・O-RING	1				
8	X 1900053331	・・PACKING, piston	1				
9	1900070597	・ROD ASSY, piston	1				
10	1900024720	・・BUSHING	1				
11	1900053303	・COVER, rod	1				
12	1900053306	・PISTON	1				
13	1900070598	・TUBE ASSY	1				
14	1900024720	・・BUSHING	1				
15	1333003525	・BUSHING	1				
16	1900057705	・CUSHON, rod	1				
17	1900048826	・STOPPER	1				
18	1900048815	・SPACER	1				
19	1900046316	・RING, cushion	1				
20	1900065326	・RING, wear	2				
21	1121040607	・SET-SCREW	1				
22	1390010250	・BALL, steel	1				
23	1432200030	・SEAL, dust	4				
24	1560001000	・FITTING, grease	1				
	C4h261						

silverhorn.co.uk

TRAVEL MOTOR (11400003-11400436)

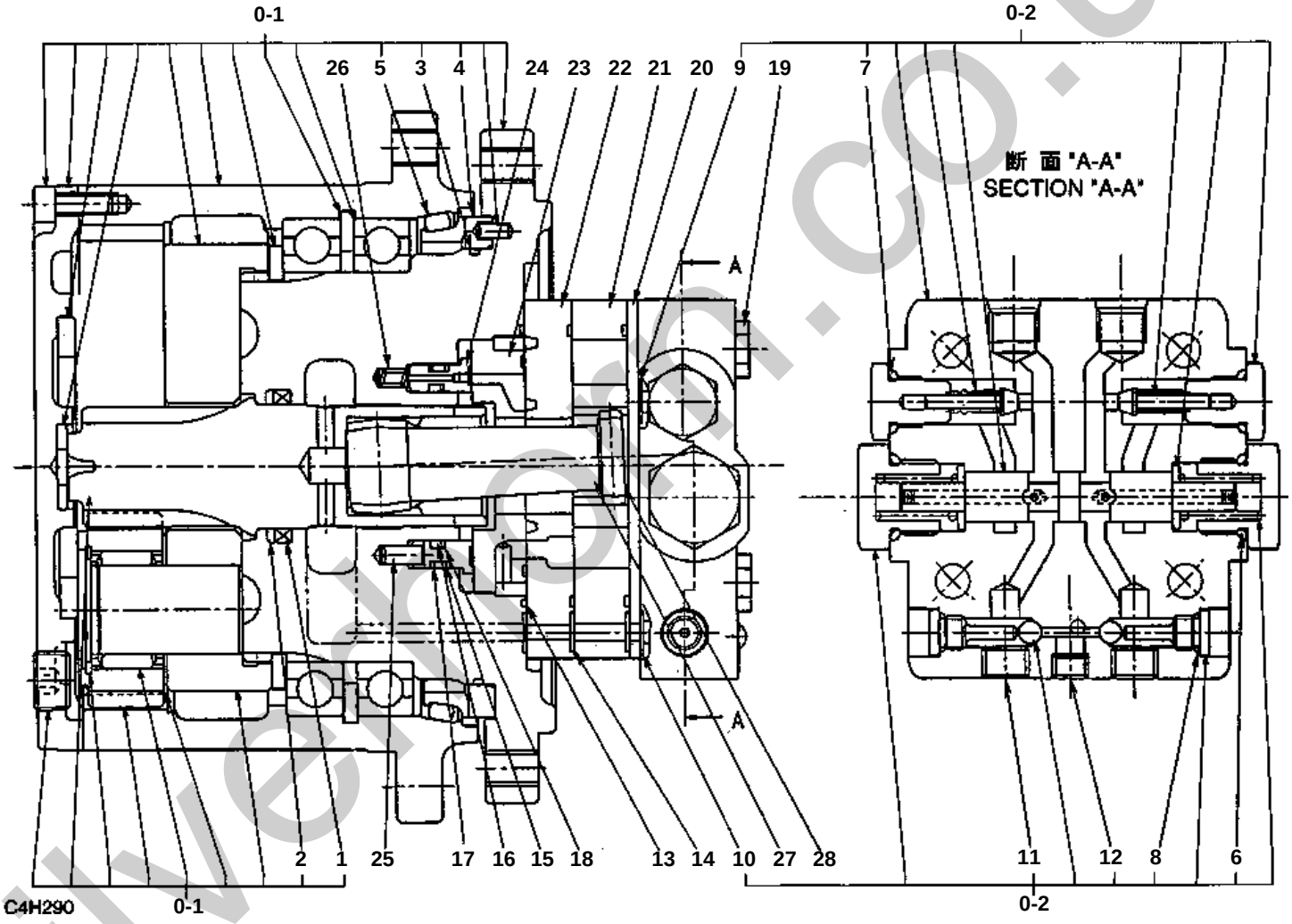

silvermoon.co.uk

TRAVEL MOTOR (11400003-11400436)

Item	Part number		Description	Q'ty	Chan.	Serial No.	Serv.	Remarks
0		1903118000	MOTOR ASSY	1				
0-1		1912904300	・REDUCTION ASSY	1				
0-2		1912904399	・・KIT, seal	1				
1	X	1912904319	・・・X-RING	1				
2	X	1912904320	・・・RING, back-up	1				
3	X	1912904322	・・・O-RING	1				
4		1903104306	・・PLATE	1				
5		1930104308	・・SEAL ASSY, floating	1				
0-3		1901806600	・COVER ASSY	1				
0-4		1901806699	・・KIT, seal	1				
6	X	1901806630	・・・O-RING	2				
7	X	1420310906	・・・O-RING	2				
8	X	1420310903	・・・O-RING	2				
9	X	1901806640	・・・O-RING	2				
10	X	1901806641	・・・O-RING	1				
11		1901806642	・・PLUG	2				
12		1901806662	・・PLUG	1				
0-5		1903111199	・KIT, seal	1				
13	X	1420310041	・・O-RING	3				
14	X	1420310011	・・O-RING	3				
15	X	1903111155	・・O-RING	1				
16	X	1903111156	・・O-RING	1				
17	X	1903111157	・・RING, back-up	2				
18	X	1903111158	・・RING, back-up	1				
19		1903111143	・BOLT	4				
20		1903118044	・PLATE	1				
21		1903118045	・GEROLLER	1				
22		1903118046	・PLATE	1				
23		1903118047	・VALVE	1				
24		1903118048	・PLATE	1				
25		1903103634	・PIN	2				
26		1903103632	・SPRING	2				
27		1903009336	・DRIVE	1				
28		1903111152	・SPACER	1				
		C4h292						

silverhorn.co.uk

TRAVEL MOTOR (1/2) (with P.B.; 11400003-11400436)

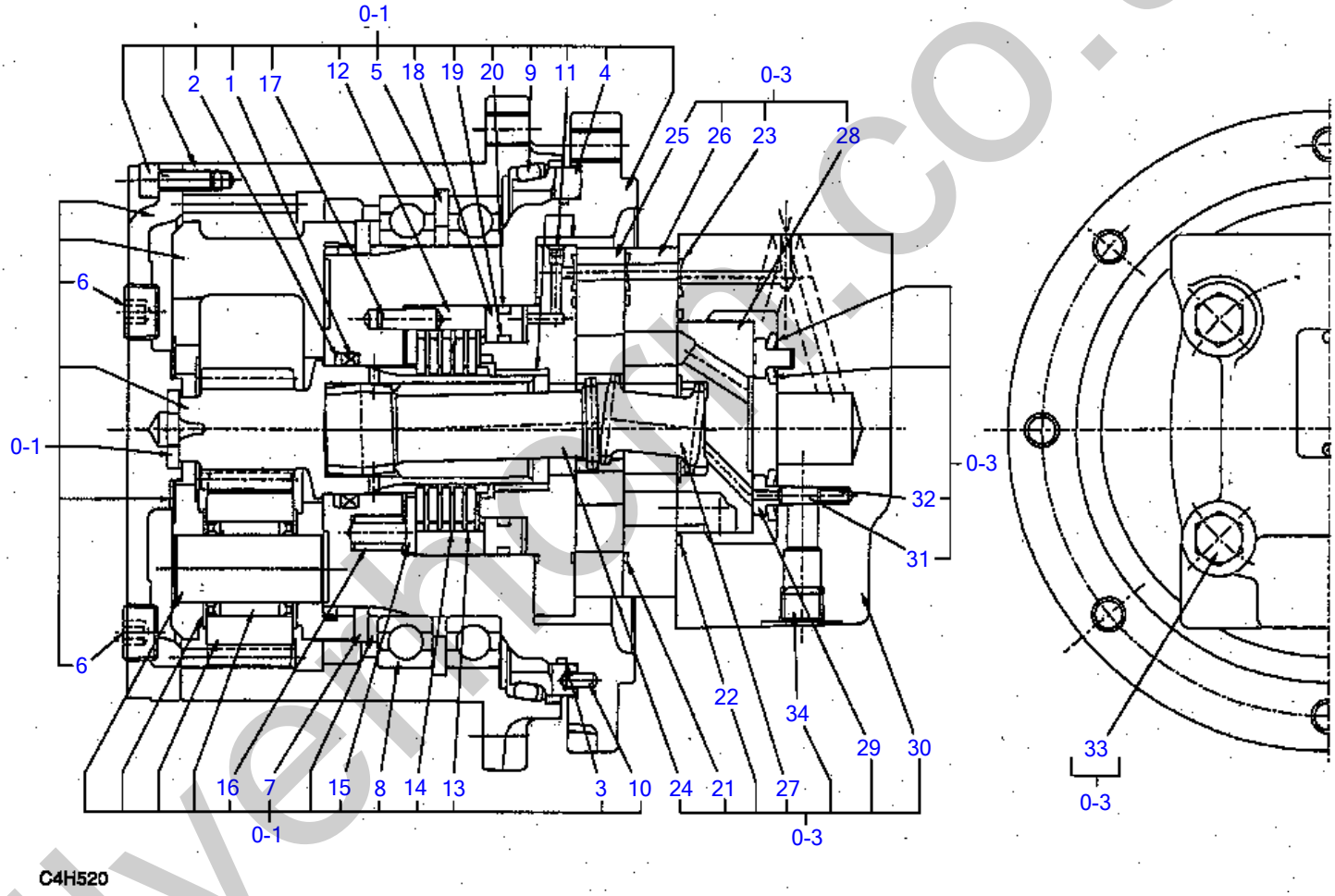

silverhorn.co.uk

TRAVEL MOTOR (1/2) (with P.B.; 11400003-11400436)

Item		Part number	Description	Q'ty	Chan.	Serial No.	Serv.	Remarks
0		1903119800	MOTOR ASSY	1				
0-1		1912906100	・REDUCTION ASSY	1				
0-2		1912902799	・・KIT, seal	1				
1	X	1912900608	・・・X-RING	1				
2	X	1912902605	・・・RING, back-up	1				
3	X	1420501350	・・・O-RING	1				
4		1912906102	・・PLATE	1				
5		1221000140	・・RING, snap	1				
6		1501810003	・・PLUG	2				
7		1220000110	・・RING, snap	1				
8		1300306822	・・BEARING	2				
9		1912906121	・・SEAL, floating	1				
10		1212000408	・・PIN	1				
11		1912906123	・・PLATE	1				
12		1903112529	・・GEAR	1				
13		1903008939	・・PLATE	5				
14		1903112531	・・PLATE	5				
15		1903112532	・・PLATE	1				
16		1903112533	・・SPRING	14				
17		1912902316	・・PIN	2				
18		1903112526	・・PISTON	1				
0-3		1903905100	・MOTOR ASSY	1				
0-4		1903905199	・・KIT, seal	1				
19	X	1420310137	・・・O-RING	1				
20	X	1420310147	・・・O-RING	1				
21	X	1420310041	・・・O-RING	3				
22	X	1420310038	・・・O-RING	1				
23	X	1420310011	・・・O-RING	3				
24		1903905101	・・DRIVE	1				
25		1903905102	・・GEROLLER	1				
26		1903112406	・・PLATE	1				
27		1903102624	・・DRIVE	1				
28		1903905105	・・VALVE	1				
29		1903103631	・・PLATE	1				
30		1903905107	・・HOUSING	1				
31		1903103634	・・PIN	1				
32		1903103632	・・SPRING	2				
33		1903009347	・・BOLT	4				
34		1903905118	・・PLUG	1				
		C4h521						

silverhorn.co.uk

TRAVEL MOTOR (2/2) (with P.B.; 11400003-11400436)

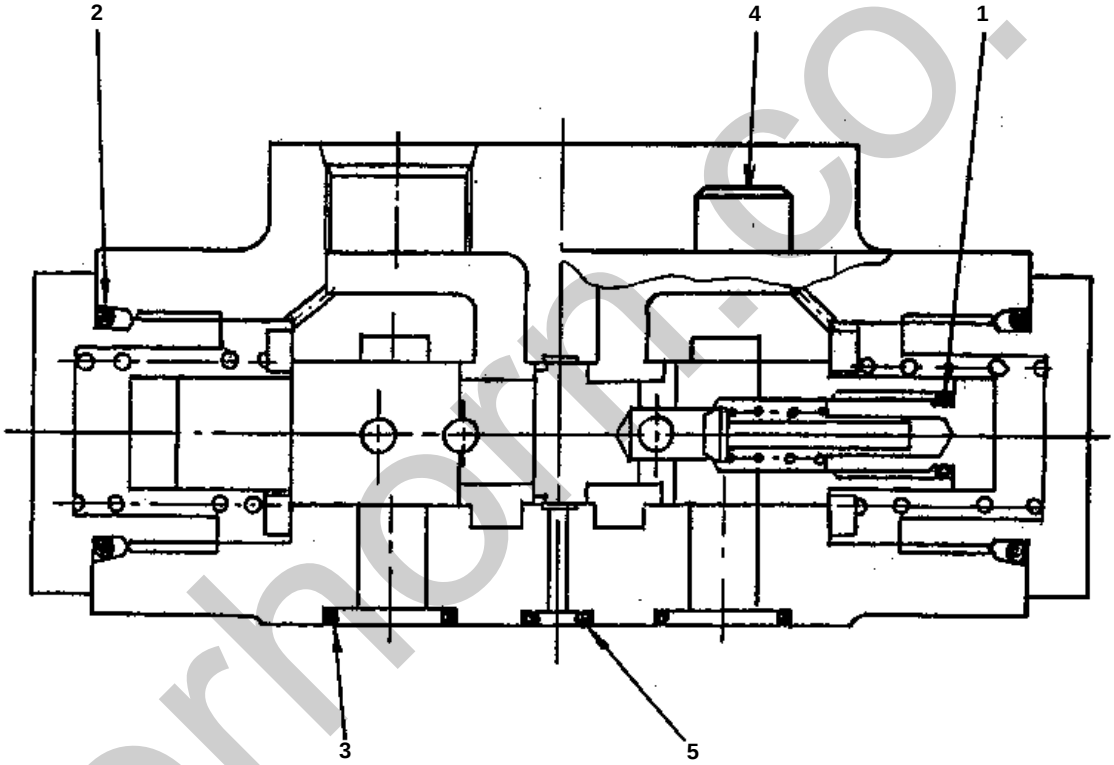

C4H530

silverhorn.co.uk

TRAVEL MOTOR (2/2) (with P.B.; 11400003-11400436)

Item	Part number	Description	Q'ty	Chan.	Serial No.	Serv.	Remarks
0	1903119800	MOTOR ASSY	1				
0-5	1901809400	・VALVE ASSY	1				
1	1420010070	・・O-RING	2				
2	1420010240	・・O-RING	2				
3	1420010120	・・O-RING	2				
4	1110020855	・・SCREW, cap	4				
5	1420010060	・・O-RING	1				
	C4h530						

silverhorn.co.uk

TRAVEL MOTOR (1/3) (reduction sec.; 11400437-)

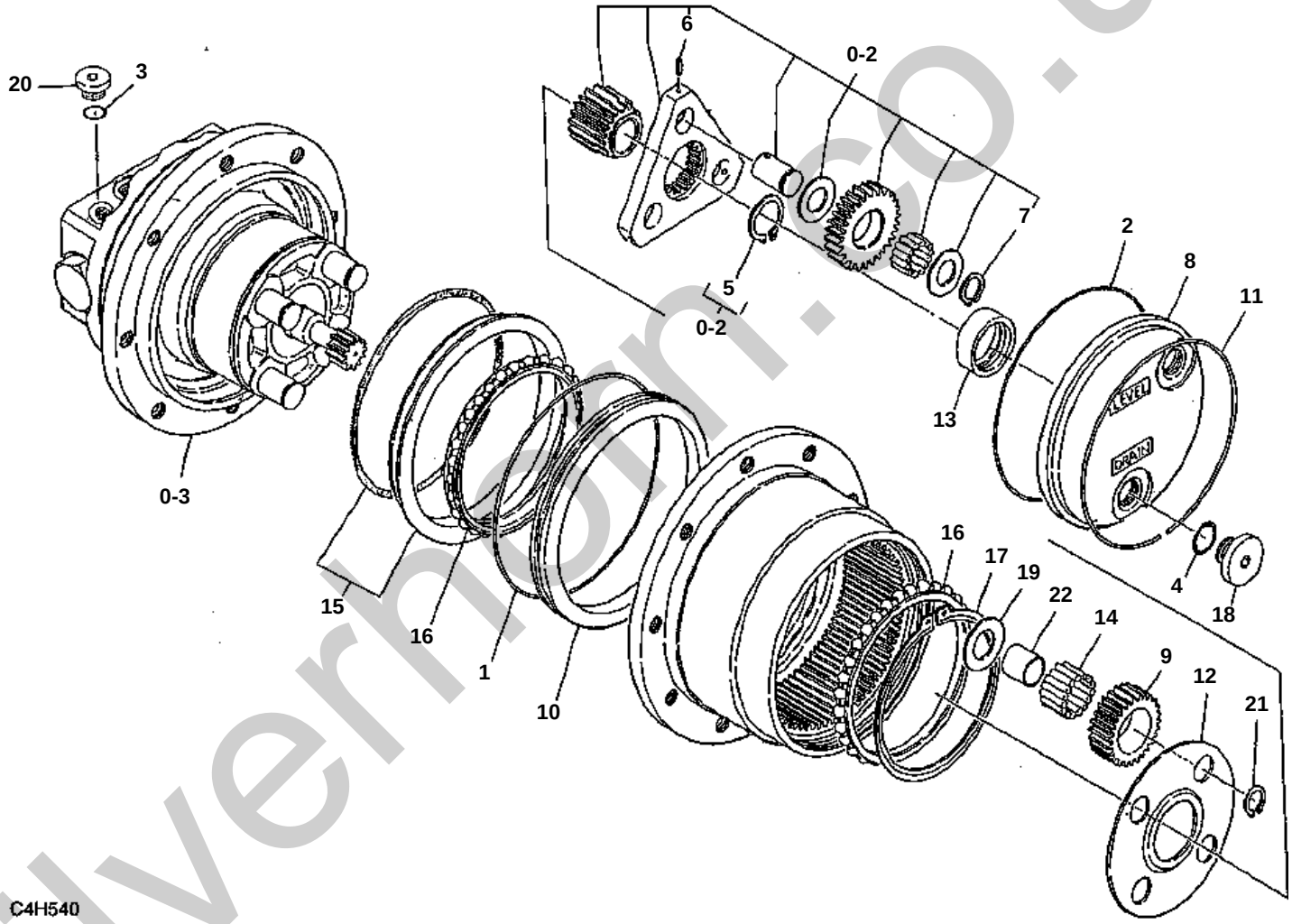

silverhorn.co.uk

TRAVEL MOTOR (1/3) (reduction sec.; 11400437-)

Item	Part number	Description	Q'ty	Chan.	Serial No.	Serv.	Remarks
0	1903121200	MOTOR ASSY	1				
0-1	1903121299	・KIT, seal	1				
1	X 1420101300	・・O-RING	1				
2	X 1420300248	・・O-RING	1				
3	X 1420010110	・・O-RING	2				
4	X 1420010140	・・O-RING	2				
0-2	1903121298	・KIT, carrier 2	1				
5	1220000026	・・RING, snap	1				
6	1213000312	・・PIN, spring	3				
7	1903918137	・・RING, snap	3				
8	1903121202	・COVER	1				
9	1903121206	・GEAR	4				
10	1903121212	・RING, seal	1				
11	1903118113	・RING, snap	1				
12	1903121214	・PLATE	1				
13	1903121215	・RING	1				
14	1903118116	・NEEDLE	60				
15	1903121218	・SEAL, floating	1				
16	1903121220	・BEARING	2				
17	1903121222	・RING, snap	1				
18	1903118932	・PLUG	2				
0-3	1903905200	・KIT, motor	1				
19	1903121234	・WASHER	4				
20	1903121235	・PLUG	2				
21	1903918137	・RING, snap	4				
22	1903121238	・RING	4				
	C4h540						

silverhorn.co.uk

TRAVEL MOTOR (2/3) (motor sec.; 11400437-)

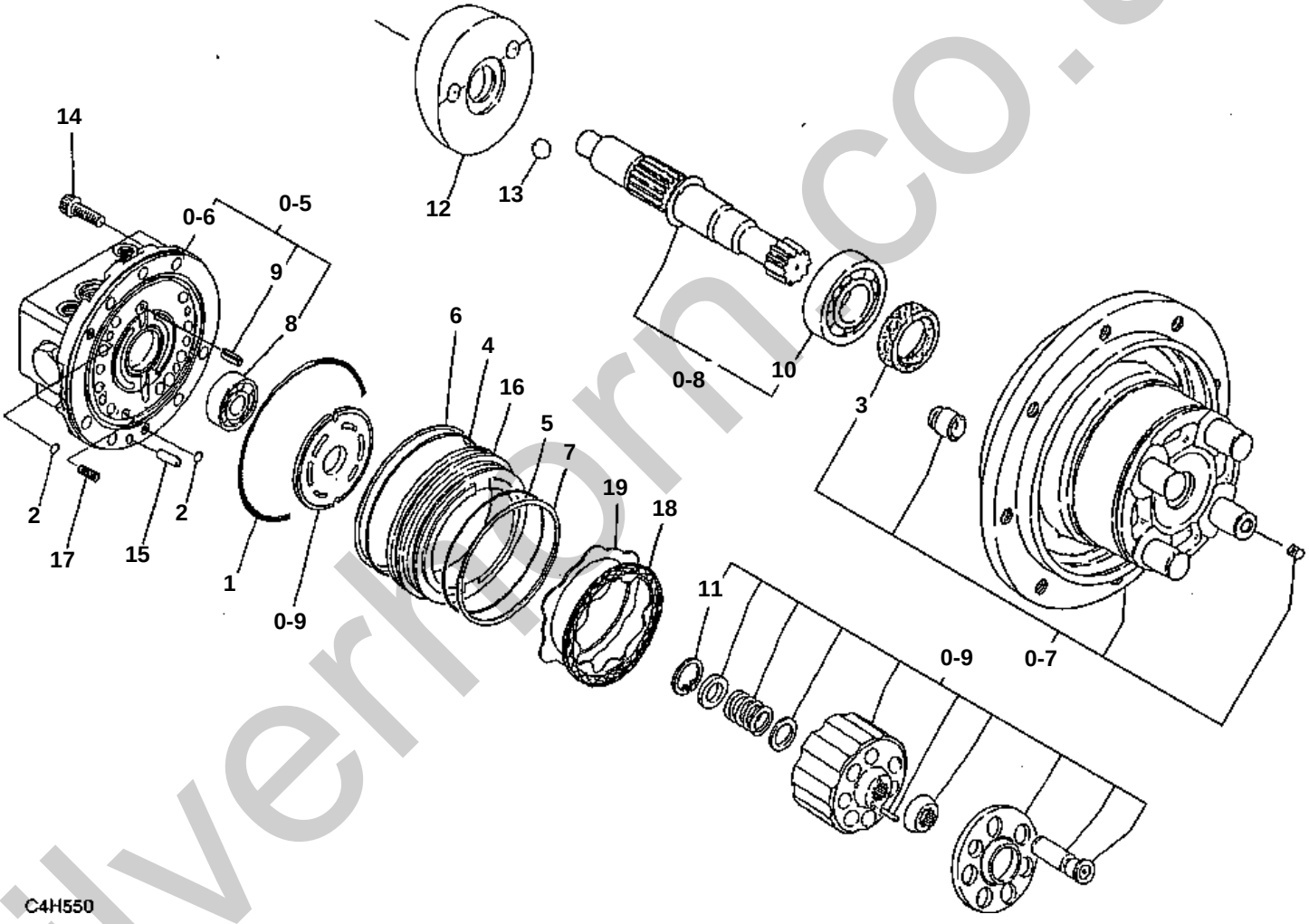

silverhorn.co.uk

TRAVEL MOTOR (2/3) (motor sec.; 11400437-)

Item	Part number	Description	Q'ty	Chan.	Serial No.	Serv.	Remarks
0	1903121200	MOTOR ASSY	1				
0-3	1903905200	・KIT, motor	1				
0-4	1903905299	・・KIT, seal	1				
1	X 1420111050	・・・O-RING	1				
2	X 1420010090	・・・O-RING	1				
3	X 1903904226	・・・SEAL, oil	1				
4	X 1420110950	・・・O-RING	1				
5	X 1420110900	・・・O-RING	1				
6	X 1421130950	・・・RING, back-up	1				
7	X 1421130900	・・・RING, back-up	1				
0-5	1903905298	・・KIT, body 1	1				
0-6	1903905294	・・・BODY ASSY	1				
8	1300006201	・・・BEARING	1				
9	1213000512	・・・PIN, spring	1				
0-7	1903905297	・・KIT, body 2	1				
0-8	1903905296	・・KIT, shaft	1				
10	1300006004	・・・BEARING	1				
0-9	1903905295	・・KIT, cylinder	1				
11	1221000028	・・・RING, snap	1				
12	1903905210	・・PLATE, swash	1				
13	1390010750	・・BALL, steel	2				
14	1903904230	・・SCREW	7				
15	1212010614	・・PIN	1				
16	1903905226	・・PISTON	1				
17	1903904218	・・SPRING	10				
18	1903905228	・・PLATE	1				
19	1903904225	・・PLATE	1				
	C4h550						

silverhorn.co.uk

TRAVEL MOTOR (3/3) (valve sec.; 11400437-)

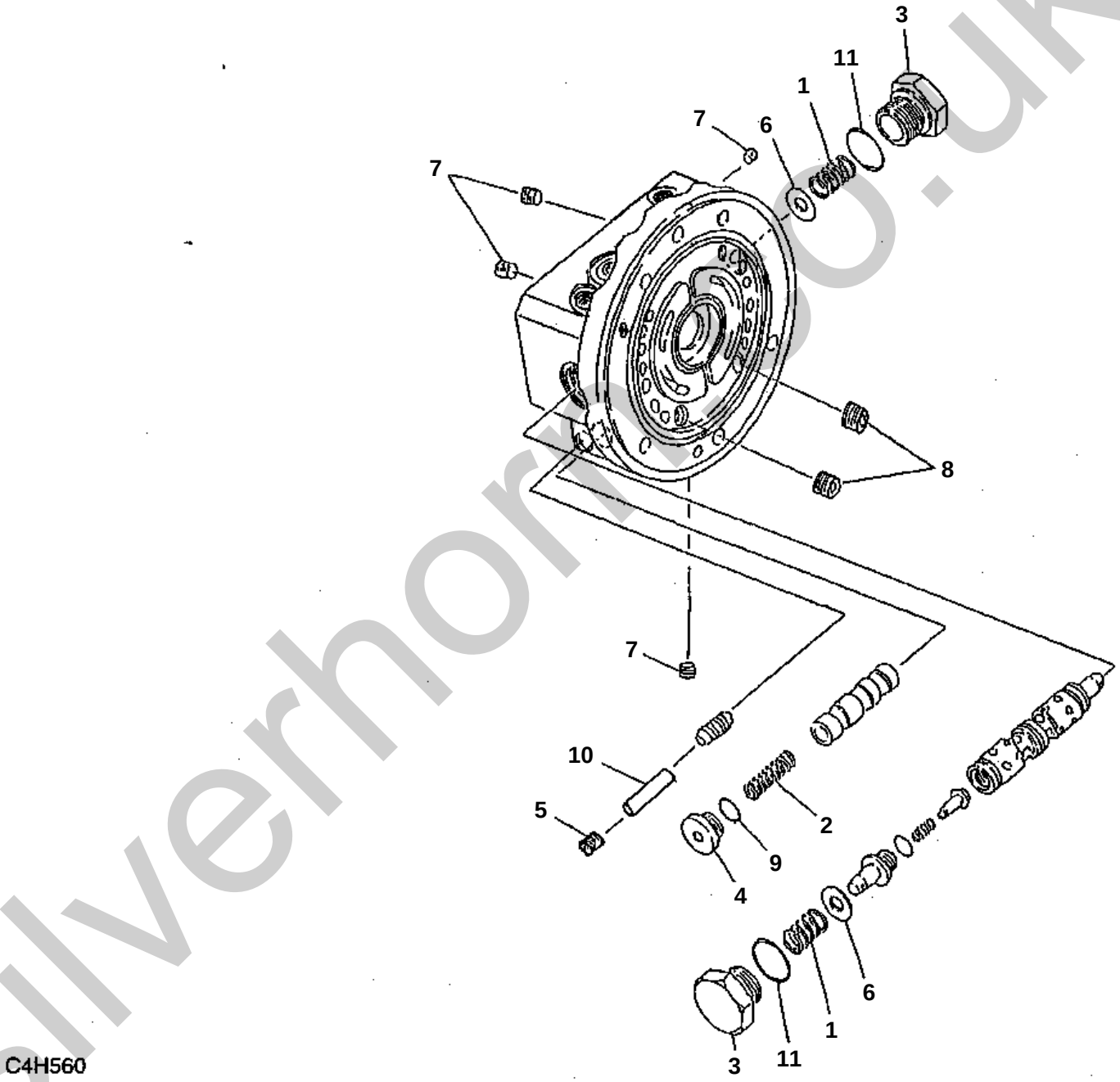

silverhorse.co.uk

TRAVEL MOTOR (3/3) (valve sec.; 11400437-)

Item	Part number	Description	Q'ty	Chan.	Serial No.	Serv.	Remarks
0	1903121200	MOTOR ASSY	1				
0-6	X **********	・BODY ASSY	1				
1	1903905208	・・SPRING	2				
2	1903904139	・・SPRING	1				
3	1901807010	・・PLUG	2				
4	1901807011	・・PLUG	2				
5	1501810000	・・PLUG	2				
6	1901804510	・・RING	2				
7	1501810000	・・PLUG	8				
8	1501810001	・・PLUG	2				
9	1420010140	・・O-RING	2				
10	1903905221	・・NEEDLE	2				
11	1420010180	・・O-RING	2				
	C4h560						

silverhorn.co.uk

SLEW MOTOR (1/2)

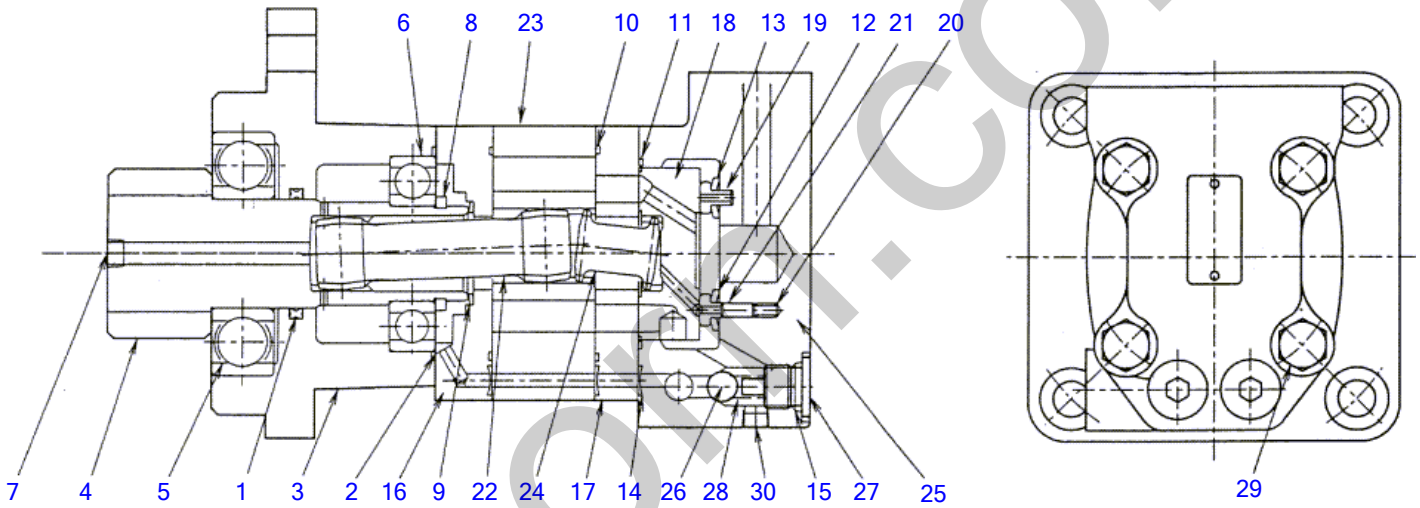

C4H330

S=FREE

silverhorn.co.uk

SLEW MOTOR (1/2)

Item		Part number	Description	Q'ty	Chan.	Serial No.	Serv.	Remarks
0		1903117800	MOTOR ASSY, slew	1				
0-1		1912905200	・GEAR ASSY	1				
0-2		1912905299	・・KIT, seal	1				
1	X	1912905206	・・・X-RING	1				
2	X	1420310041	・・・O-RING	1				
3		1912905201	・・HOUSING	1				
4		1912905202	・・GEAR	1				
5		1903117911	・・BEARING	1				
6		1300006207	・・BEARING	1				
7		1501810001	・・PLUG	1				
8		1903900437	・・RING	1				
0-3		1903904300	・MOTOR ASSY	1				
0-4		1903904399	・・KIT, seal	1				
9	X	1432900017	・・・SEAL	1				
10	X	1420310041	・・・O-RING	2				
11	X	1420310038	・・・O-RING	1				
12	X	1432900016	・・・SEAL	1				
13	X	1432900015	・・・SEAL	1				
14	X	1420310011	・・・O-RING	3				
15	X	1420010140	・・・O-RING	2				
16		1903117817	・・PLATE	1				
17		1903904319	・・PLATE	1				
18		1903117925	・・VALVE	1				
19		1903117926	・・RING	1				
20		1903103632	・・SPRING	2				
21		1903103634	・・PIN	2				
22		1903903627	・・DRIVE	1				
23		1903903628	・・ROLLER	1				
24		1903102624	・・DRIVE	1				
25		1903904331	・・HOUSING	1				
26		1903117932	・・BALL, steel	2				
27		1903117933	・・PLUG	2				
28		1903117935	・・SPRING	2				
29		1903900432	・・BOLT	4				
30		1501810001	・・PLUG	1				
		C4h331						

silverhorn.co.uk

SLEW MOTOR (2/2)

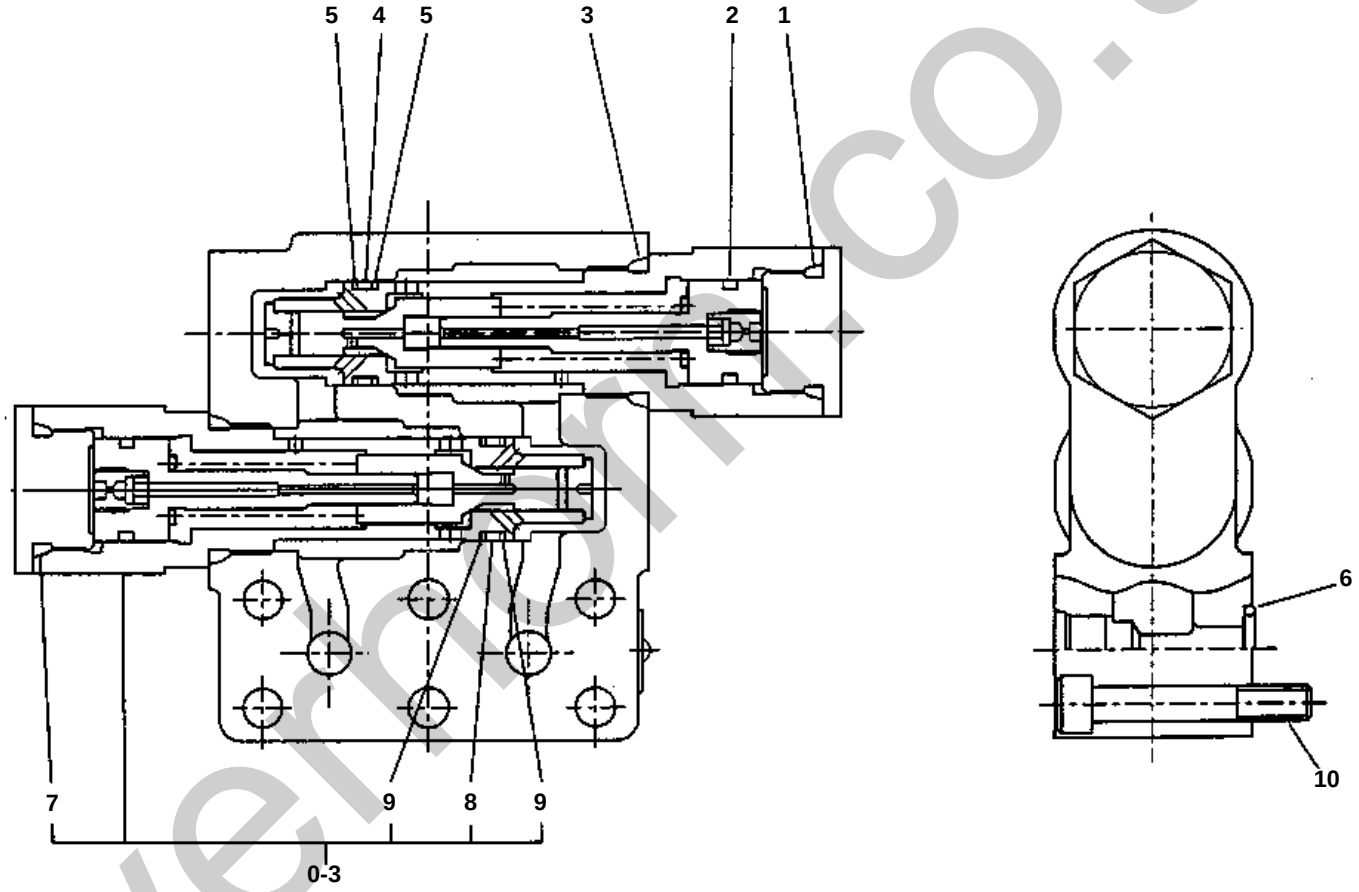

C4H350

silverton.co.uk

SLEW MOTOR (2/2)

Item		Part number	Description	Q'ty	Chan.	Serial No.	Serv.	Remarks
0		1903117800	MOTOR ASSY, slew	1				
0-1		1901808700	・VALVE, relief	1				
0-2		1901808799	・・KIT, seal	1				
1	X	1420010250	・・・O-RING	2				
2	X	1901808511	・・・SEAL	2				
3	X	1420010280	・・・O-RING	2				
4	X	1420010200	・・・O-RING	2				
5	X	1421020200	・・・RING, back-up	4				
6	X	1420010160	・・・O-RING	2				
0-3		1901808598	・・CARTRIDGE ASSY	2				
7		1420010280	・・・O-RING	1				
8		1420010200	・・・O-RING	1				
9		1421020200	・・・RING, back-up	2				
10		1901808719	・・SCREW, cap	6				
		C4h352S						

silverhorn.co.uk

HYDRAULIC PUMP

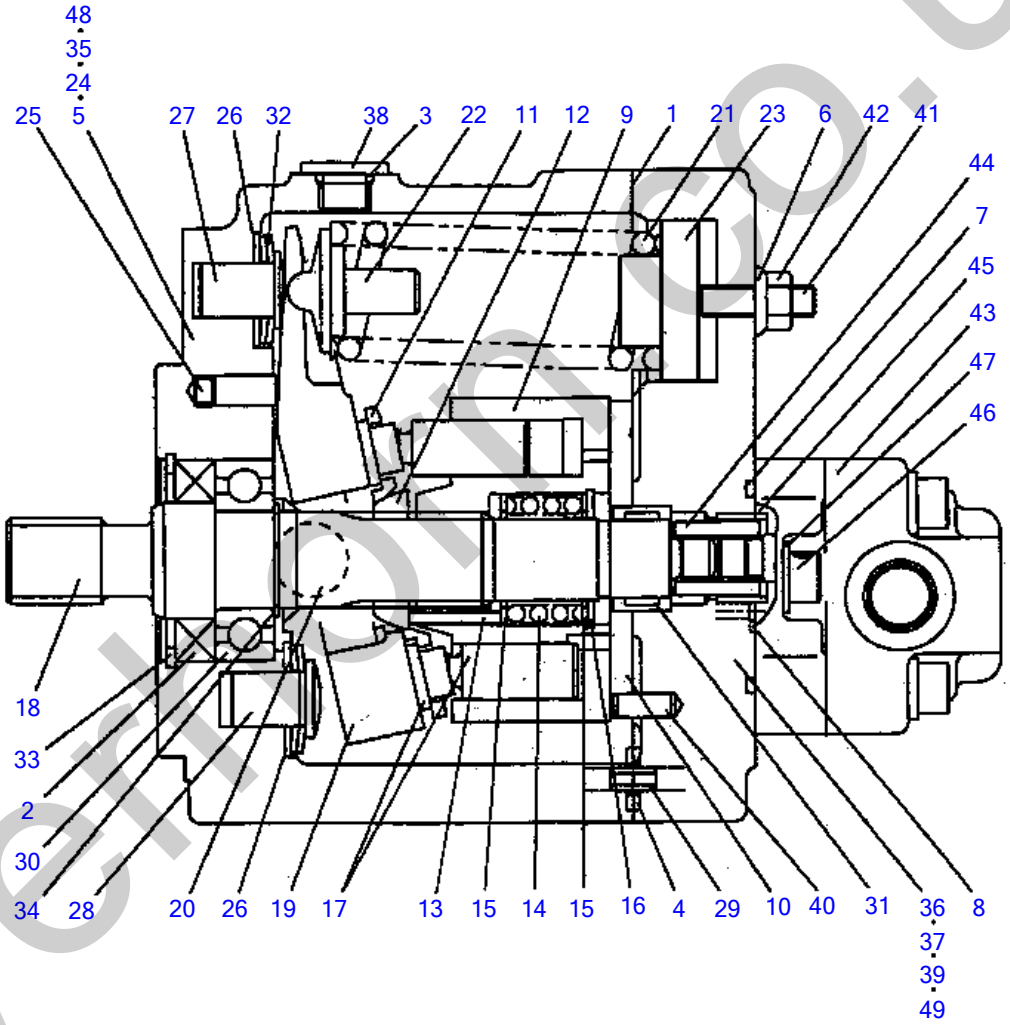

C4H360

silverthorn.co.uk

HYDRAULIC PUMP

Item		Part number	Description	Q'ty	Chan.	Serial No.	Serv.	Remarks
0		1902014700	PUMP ASSY	1		11400003~11400490		
		1902018200	PUMP ASSY	1		11400491~		
0-1		1902014799	・KIT, seal	1				
1	X	1902012013	・・PACKING	1				
2	X	1902016032	・・SEAL, oil	1				
3	X	1420010110	・・O-RING	1				
4	X	1420010120	・・O-RING	2				
5	X	1420010110	・・O-RING	1				
6	X	1902016062	・・WASHER, seal	1				
7	X	1420110500	・・O-RING	1				
8	X	1420010080	・・O-RING	1				
0-2		1902906300	・BARREL KIT, cylinder	1				
9	X	**********	・・BARREL, cylinder	1				
10	X	**********	・・PLATE, valve	1				
11		1902014708	・・HOLDER, shoe	1				
12		1902016009	・・HOLDER, barrel	1				
13		1903901813	・・NEEDLE	3				
14		1902014714	・・SPRING	1				
15		1902014724	・・RETAINER	2				
16		1221000034	・・RING, snap	1				
17		1902906398	・・PISTON ASSY	1				
18		1902014703	・SHAFT	1				
19		1902016010	・PLATE	1				
20		1902016012	・PIN	2				
21		1902014715	・SPRING	1				
22		1902012043	・HOLDER, spring	1				
23		1902016019	・GUIDE, spring	1				
24		1902011526	・PIN	1				
25		1902014721	・ROD	1				
26		1902016023	・WASHER	2				
27		1902014725	・PIN	1				
28		1902014726	・PIN	1				
29		1902016027	・PIN	1				
30		1300006205	・BEARING	1				
31		1902012722	・BEARING	1				
32		1902016033	・WASHER	4				
33		1221000052	・RING, snap	1				
34		1220000025	・RING, snap	1				
35		1902014742	・PLUG	1				
36		1110051035	・SCREW, cap	5				
37		1902016049	・PLUG	5				
38		1902014742	・PLUG	1				
39		1140010010	・WASHER, spring	5				
40		1213000616	・PIN, spring	1				
41		1121050830	・SET-SCREW	1				
42		1130050008	・NUT	1				
43		1902906400	・PUMP ASSY, gear	1				
44		1902014766	・COUPLING	1				
45		1902014767	・COLLAR	1				
46		1110050820	・SCREW, cap	2				
47		1141110008	・WASHER	2				
48	X	**********	・BODY (S)	1				
49	X	**********	・BODY (H)	1				
		C4h363S						

silverthorn.co.uk

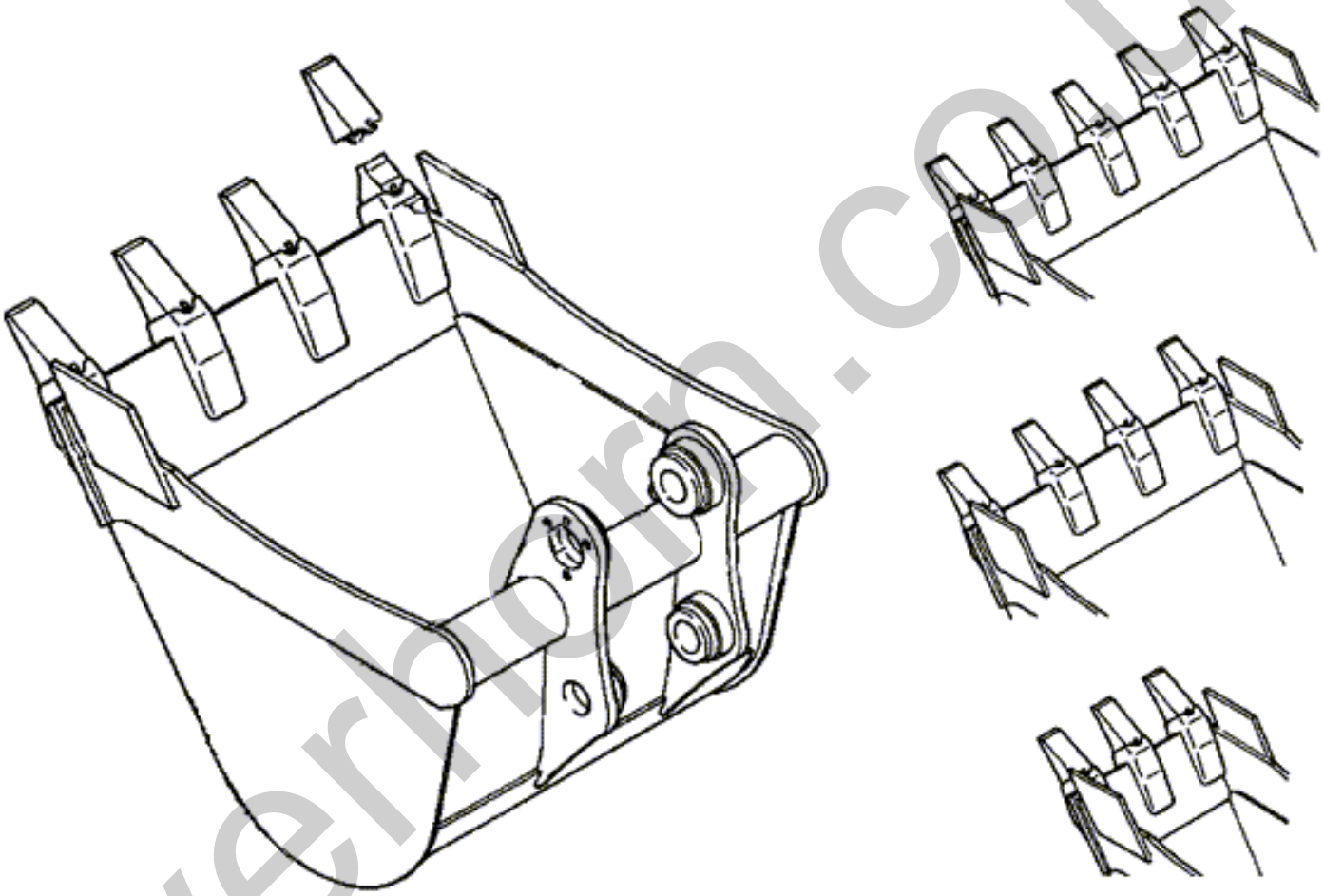

silverhorn.co.uk

TB014 Buckets

Item	Part number	Description	Q'ty	Chan.	Serial No.	Serv.	Remarks
		TB014 Buckets					
	BQC01610	10" Coupler Bucket TB014/TB016)requires BQC01600)(special order)	1				
	BQC01612	12" Coupler Bucket TB014/TB016 (requires BQC01600)	1				
	BQC01616	16" Coupler Bucket TB014/TB016 (requires BQC01600)(special order)	1				
	BQC01618	18" Coupler Bucket TB014/TB016 (requires BQC01600)	1				
	BQC01624	24" Coupler Bucket TB014/TB016 (requires BQC01600)	1				
	BQC01630	30" Coupler Bucket TB014/TB016 (requires BQC01600)(special order)	1				
	BQC01636	36" Coupler Bucket TB014/TB016 (requires BQC01600)(special order)	1				
	BTB01608	8" Pin-on Bucket TB014/TB015/TB016	1				
	BTB01610	10" Pin-on Bucket TB014/TB015/TB016 (special order)	1				
	BTB01612	12" Pin-on Bucket TB014/TB015/TB016	1				
	BTB01616	16" Pin-on Bucket TB014/TB015/TB016 (special order)	1				
	BTB01618	18" Pin-on Bucket TB014/TB015/TB016	1				
	BTB01624	24" Pin-on Bucket TB014/TB015/TB016	1				
	BTB01630	30" Pin-on Bucket TB014/TB015/TB016 (special order)	1				
	BTB01636	36" Pin-on Bucket TB014/TB015/TB016 (special order)	1				

silverhorn.co.uk

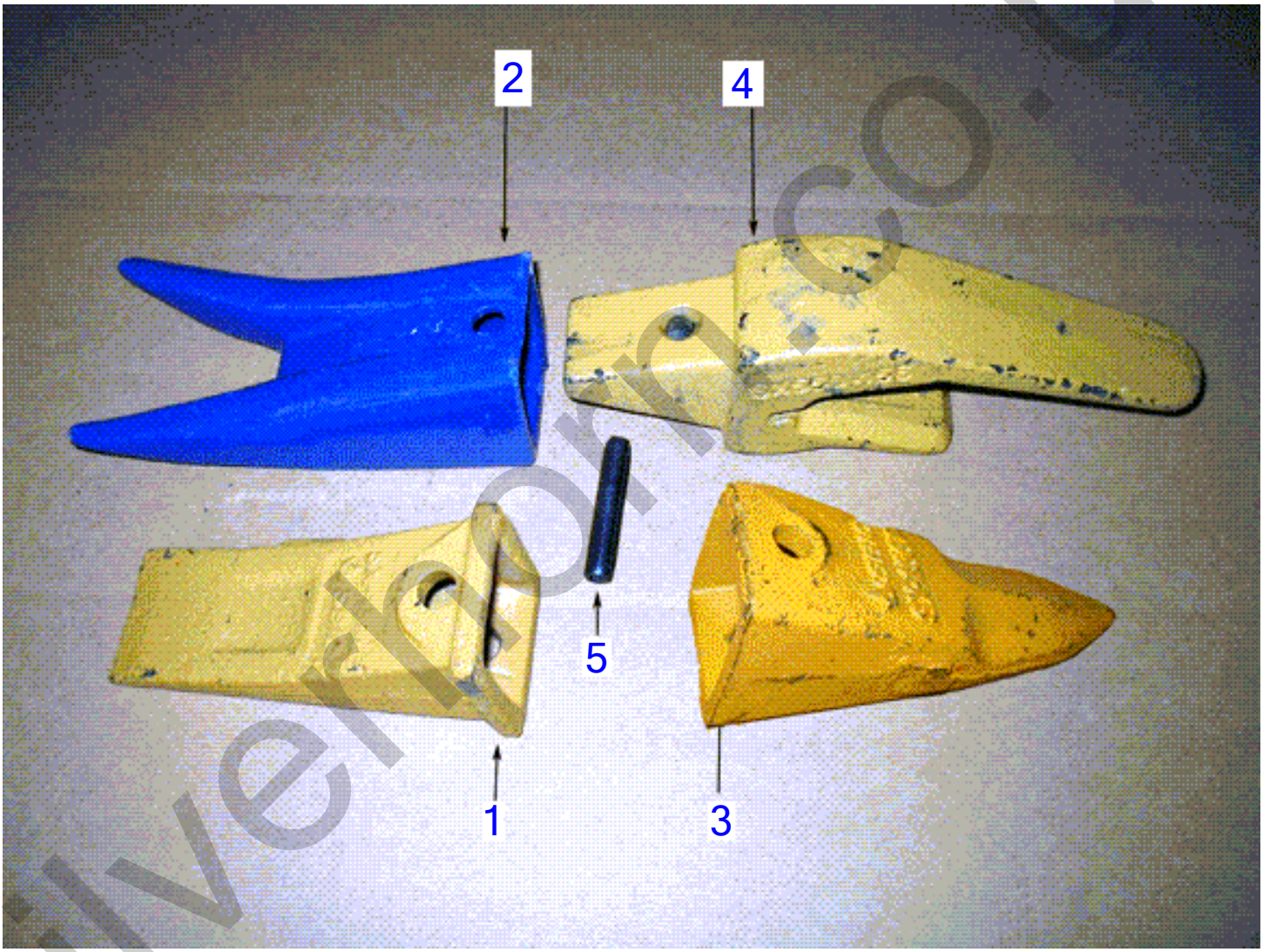

silverhorn.co.uk

Bucket Teeth

Item	Part number	Description	Q'ty	Chan.	Serial No.	Serv.	Remarks
1	**1914210182**	Tooth	1				
2	**1914299142**	Double Tiger	1				
3	**1914299942**	Single Tiger (C&P) Tooth	1				
4	**19142181-1**	Adapter Shank 550 X 156 New Style	1				
	1914210181	Adapter Shank 230 X 156 Old Style	1				
5	**1914210183**	Pin - Metal	1				

silverhorn.co.uk

250 Hour Filter Kit

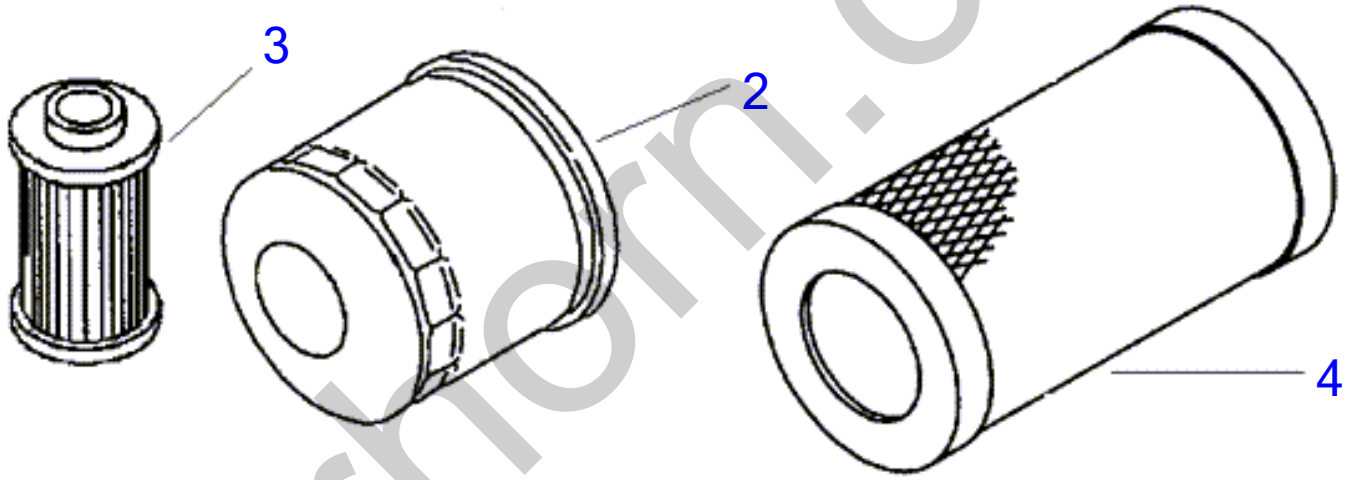

silverhorn.co.uk

250 Hour Filter Kit

Item	Part number	Description	Q'ty	Chan.	Serial No.	Serv.	Remarks
1	**1909901400**	TB014/TB016/TB108 Filter Kit (250 Hour)	1				
2	**Y119305-35150**	* Engine Oil Filter	1				
3	**Y124550-55700**	* Fuel Filter	1				
4	**Y119655-12560**	* Air Filter	1				

silverhorn.co.uk

Annual Filter Kit

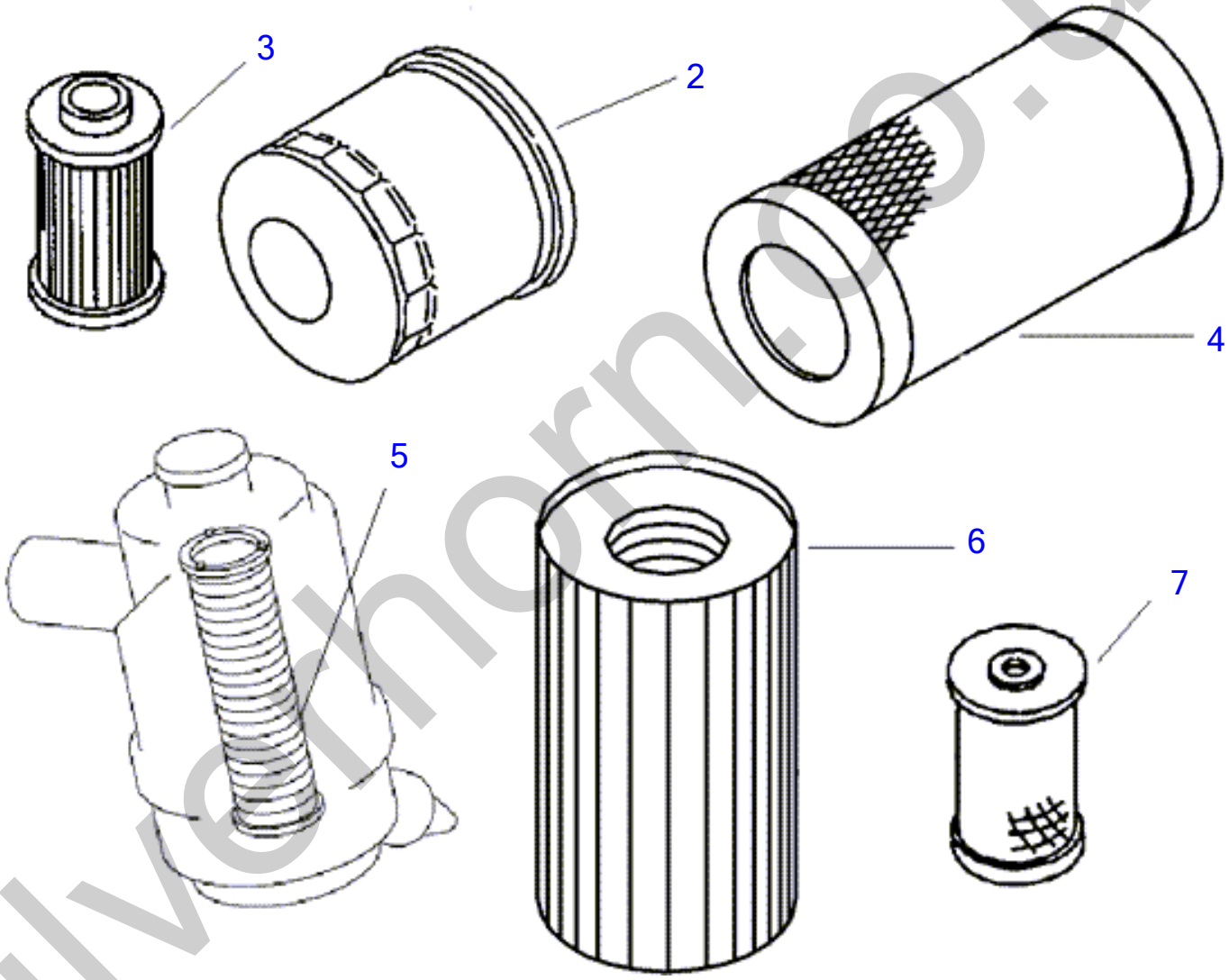

silverthorn.co.uk

Annual Filter Kit

Item	Part number	Description	Q'ty	Chan.	Serial No.	Serv.	Remarks
1	**1909901410**	Annual Filter Kit	1				
2	**Y119305-35150**	* Engine Oil Filter	1				
3	**Y124550-55700**	* Fuel Filter	1				
4	**Y119655-12560**	* Air Filter	1				
5	**1911101342**	* Inner air Filter TB014/TB016	1				
6	**1551101300**	* Hydraulic Filter TB014/TB016	1				
7	**Y171081-55910**	* Screen Check S/N Application TNE	1				

silverhorn.co.uk

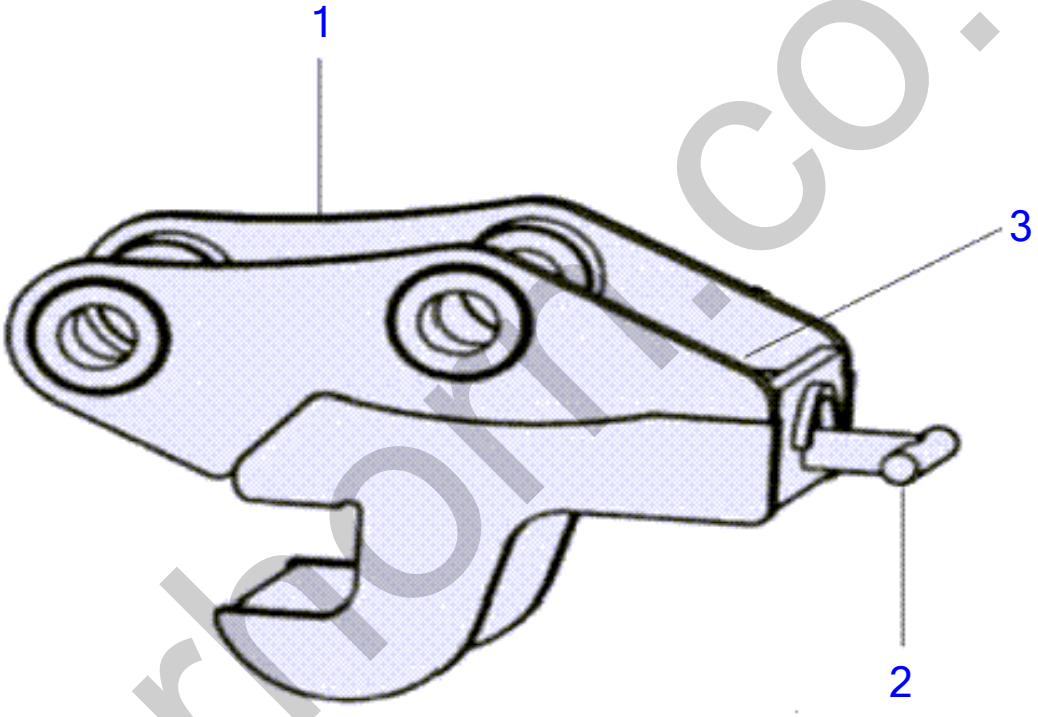

silverhorn.co.uk

Quick Coupler

Item	Part number	Description	Q'ty	Chan.	Serial No.	Serv.	Remarks
1	**BQC01600**	Coupler TB014/TB016	1				
2	**BQC12501**	T Pin TB014/TB016	1				
3	**BQCCLEVIS**	Clevis Pin for all BQC T pins	1				

silverhorn.co.uk

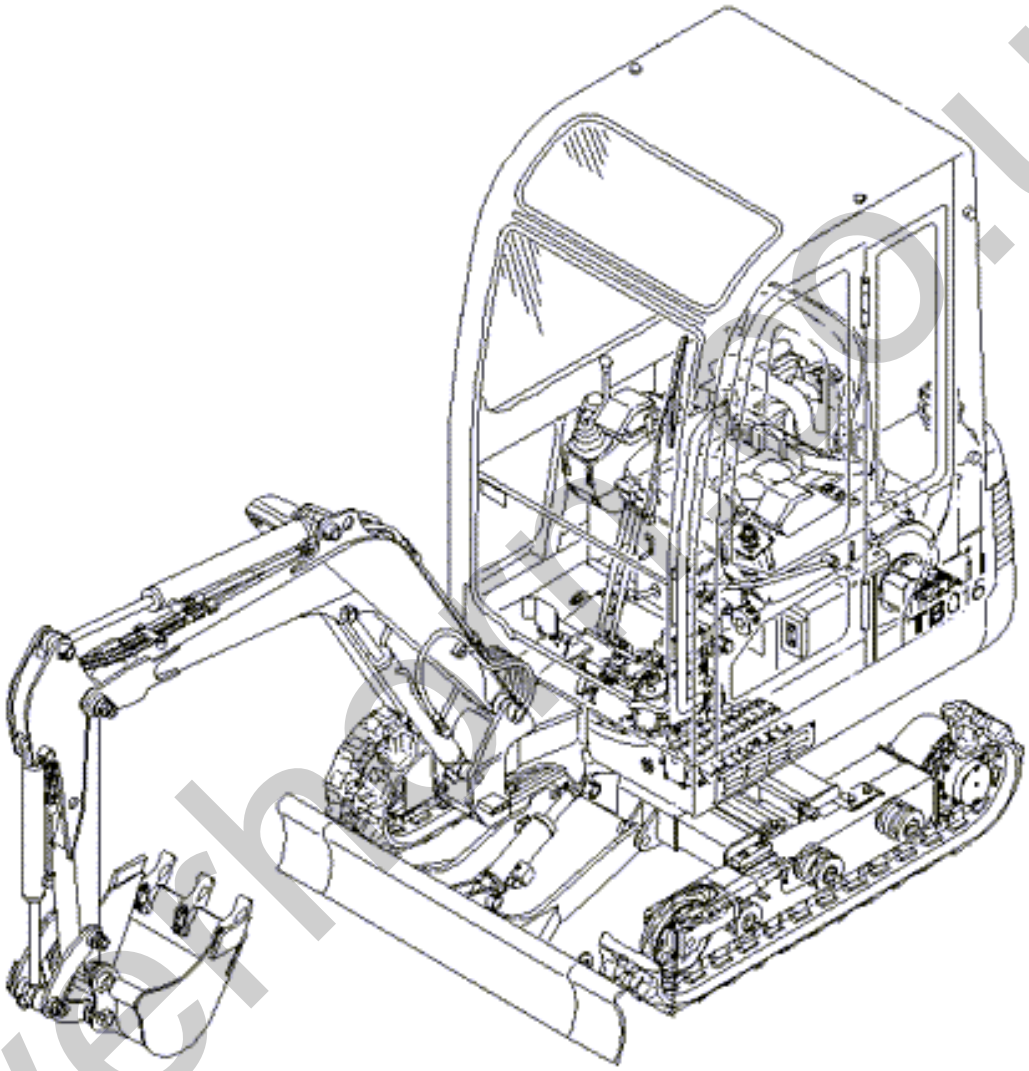

silverhelmco.uk

Reccommended Stock Order List

Item	Part number	Description	Q'ty	Chan.	Serial No.	Serv.	Remarks
	1551101300	Hydraulic Filter TB014/TB016	2				
	Y171081-55910	Screen Check S/N Application TNE	2				
	Y119655-12560	Air Filter	4				
	Y119305-35150	Engine Oil Filter	4				
	Y124550-55700	Fuel Filter	2				
	1900070599	Swing Cylinder Seal Kit	1				
	1900072399	Spanner Cylinder Seal Kit	1				
	1900054399	Blade Cylinder Seal Kit	1				
	1900072299	Bucket Cylinder Seal Kit TB014/TB016	1				
	1900051999	Multi Use Seal Kit (bt)	1				
	1900070499	Boom Cylinder Seal Kit	1				
	1914201202	Tooth TB007/TB015	4				
	1914201203	Lock	4				
	1914201201	Adaptor	4				
	1432200030	Dust Seal 30/40 TB014/TB016	6				
	1432200035	Seal Pin 35/45 T/4	6				
	1541301602	Valve Assy	4				
	1400502033	Seal	4				
	1420010350	O-Ring P-35	4				
	1421020360	Backup Ring P-36 Biascut	4				
	1420111050	O-Ring G-105 1b	2				
	1515600200	Adaptor	2				
	1909920106	1/4" Male Fitting w/O-ring	6				
	1909920109	3/8" Male Fitting Straight	6				
	1909920112	1/2" Male Fitting w/O-Ring BSPP	2				
	1909920406	1/4" Fitting PF	6				
	1909920409	3/8" Fitting PF	6				
	1909920412	1/2" Fitting PF	2				
	1909920506	1/4" 90 degree Female Fitting	2				
	1909920509	3/8" 90 degree Female Fitting	2				
	1909920512	1/2" 90 degree Female Fitting	2				
	1909920606	90 degree Female Fitting (block style)	2				
	1909920609	3/8" Female Fitting	2				
	1909920612	1/2" 90 degree Block Fitting	2				

silverhorn.co.uk

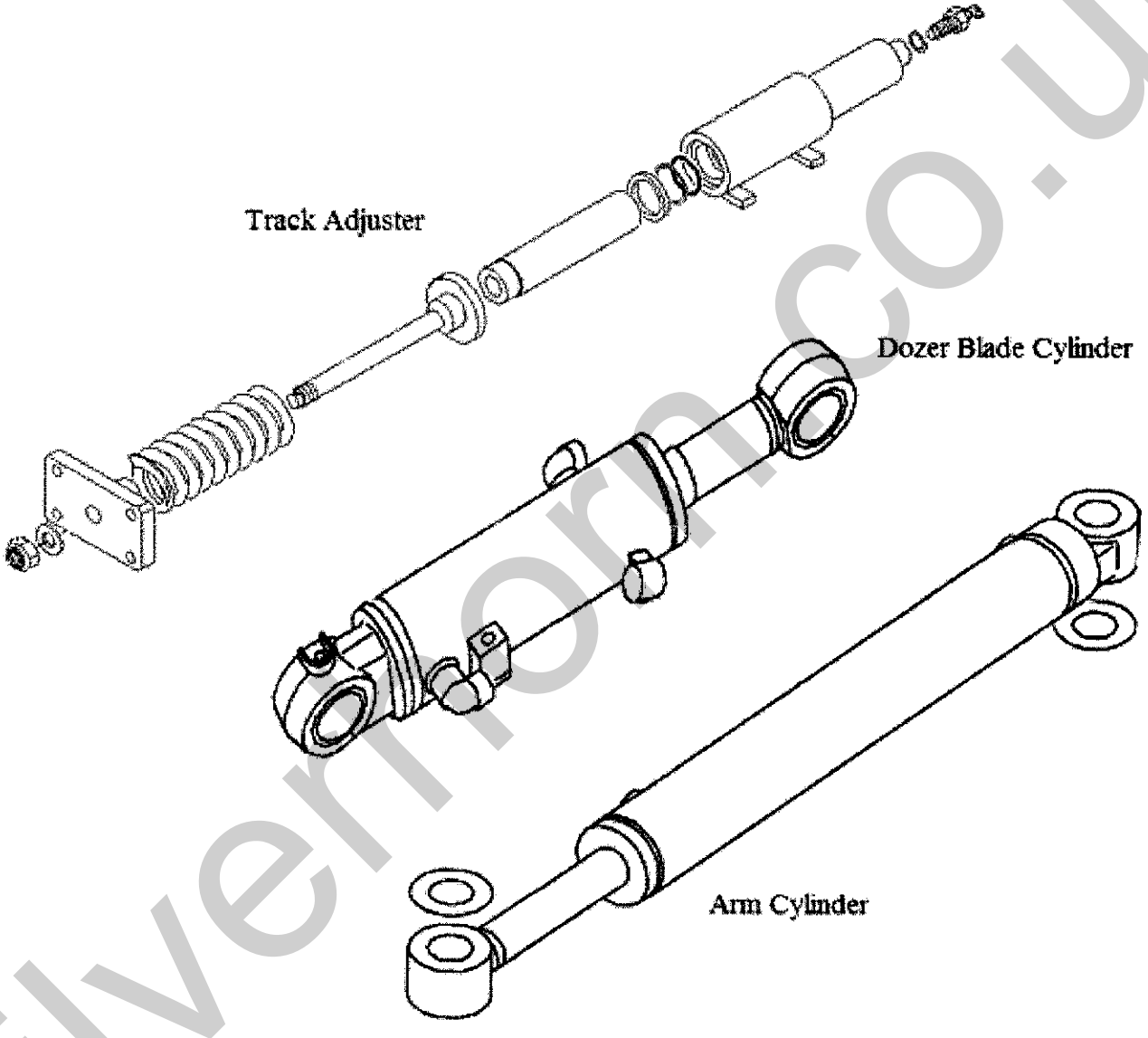

silvermorn.co.uk

Seal Kits

Item	Part number	Description	Q'ty	Chan.	Serial No.	Serv.	Remarks
	1900070599	Swing Cylinder Seal Kit	1				
	1900070399	Blade Cylinder Seal Kit - Short Dozer Blade	1				
	1900054399	Blade Cylinder Seal Kit - Long Dozer Blade	1				
	1900072299	Bucket Cylinder Seal Kit TB014/TB016	1				
	1900051999	Multi Use ARm Cylinder Seal Kit (bt)	1				
	1900070499	Boom Cylinder Seal Kit	1				
	0331506199	TrackSeal Kit please check if Assembly has been changed SN11400003-11400782	1				
	0331508699	Track Seal Kit TB016/TB015 SN11602090-up SN11400783-uo	1				

silverhorn.co.uk

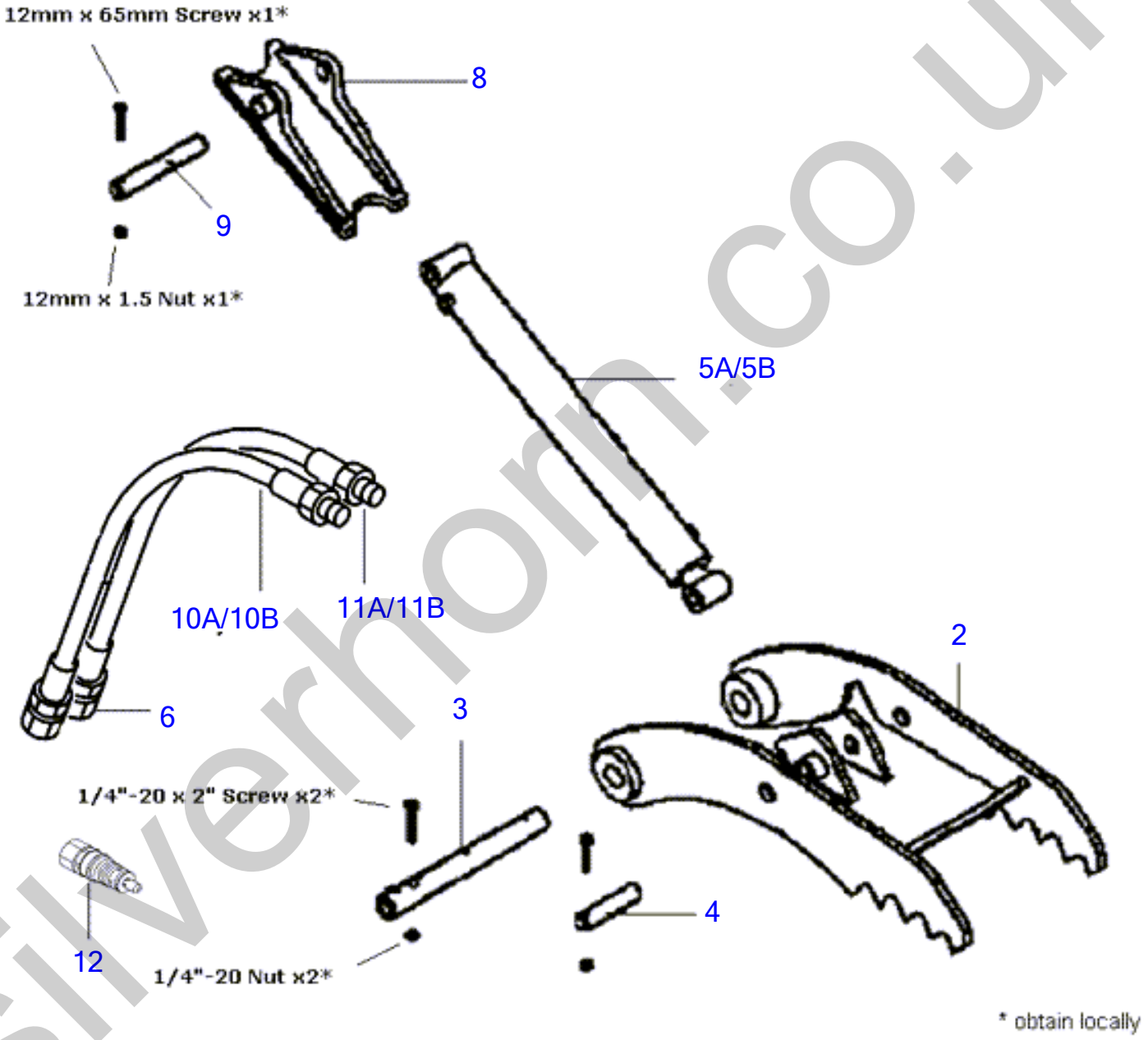

silverhorn.co.uk

Thumbs

Item	Part number	Description	Q'ty	Chan.	Serial No.	Serv.	Remarks
2	01140114TA	Bracket	1				
3	01140114P1	Pivot pin	1				
4	01140114P2	Cylinder Rod Pin	1				
5A	1900021014A	Cylinder Assy - New Style	1				
	1900021014	Cylinder Assy - New Style	1				
	1900021014TA	Tube - New Style	1				
5B	1900021014	Cylinder Assy - Old Style	1				
	1900021014	Rod - Old Style	1				
8	01140114HB	Bracket	1				
9	01140114PC	Cylinder Pin TB016	1				
10B	BTH114A-1	Long Hose TB014/TB016 New Style	1				
11A	BTH114A	Long Hose TB014/TB016 Old Style	1				
	BTH114B-1	Short Hose TB014/TB016 New Style	1				
11B	BTH114B	Short Hse TB014/TB016 Old Style	1				
6	1513110040	1/2" JIC 1/12" BSPP Adpt Newstyle (1513110038-39)	2				
12	1901736200	Valve Overlaod TB016 SN 11602090-up	2				

silverhorn.co.uk

All TB014 Manuals

Item	Part number	Description	Q'ty	Chan.	Serial No.	Serv.	Remarks
		TB014 Manuals					
	L014000001	Operators Manual TB014-016 AC4E017 TNE (English)	1				
	L014000003	Parts Manual TB014 BC4-Z004 SN 1400003-11410000	1				
	L014000004	Service Manual TB014-016 CC4E001 TNE	1				

silverhorn.co.uk

ENGINE MODEL

Œ©lo REF NO.	•"•i"Ôl† PARTS NO.	•"•i-¼	Description	l"–Ê Q'ty	ŒÝŠ·l« I	R	"õll

ENGINE(TNE)

3TNE68-NTB
TB014 S/N 11400003-11400022
TB016 S/N 11600003-11600031

2006.5.22

silverhorn.co.uk

CYLINDER BLOCK

Y00D6550
3TNE68-NTB

1 シリンダブロック
CYLINDER BLOCK

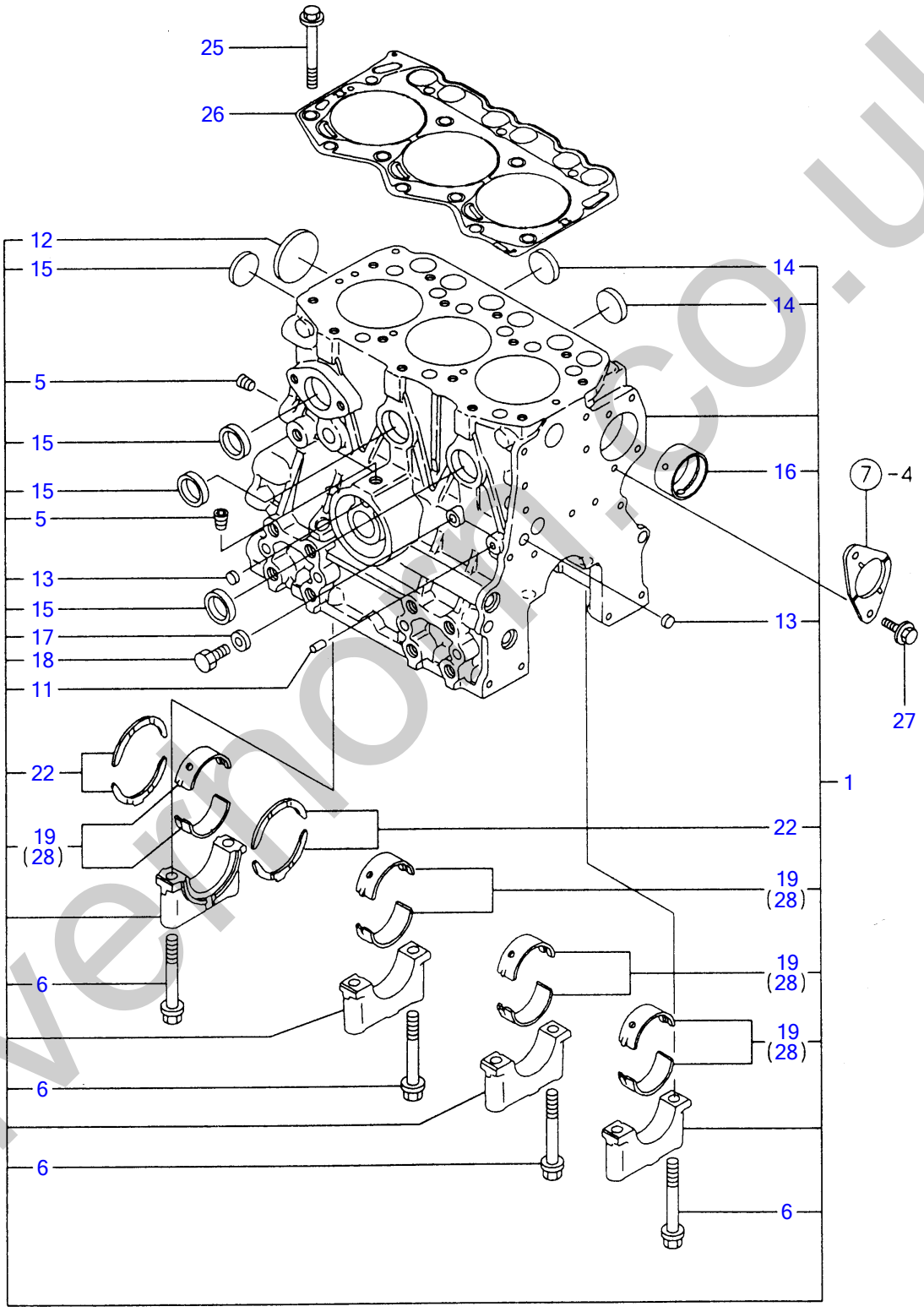

silvermoth.co.uk

¼ØÝÀÞÌÞÛ¯¸ CYLINDER BLOCK

Œ©lo REF NO.	•"•i"Ô†PARTS NO.	•"•i-¼	Description	”–Ê Q'ty	ŒÝŠ·« I	R	”õI
1	Y719266-01560	¼ØÝÀÞÌÞÛÂ¸ASSY	BLOCK ASSY, CYLINDER	1			
5	Y124060-01050	· Ìß×¸Þ PT1/8	· PLUG PT1/8	2			
6	Y119260-02020	· ÎÞÙÄ (ÒÀÙ·ÔÂÌß	· BOLT	8			
11	Y27221-060100	· ³ÁºÐÌß×¸Þ 6X10	· PLUG 6X10	1			
12	Y27231-400000	· »×¶ÞÀÌß×¸Þ 40	· PLUG 40	1			
13	Y27241-100000	· ÜÝ¶ÞÀÌß×¸Þ 10	· PLUG 10	2			
14	Y27241-250000	· ÜÝ¶ÞÀÌß×¸Þ 25	· PLUG 25	3			
15	Y27241-300000	· ÜÝ¶ÞÀÌß×¸Þ 30	· PLUG 30	4			
16	Y119266-02410	· ÌÞÂ¼Õ	· BUSH	1			
17	Y22190-080002	· ¼°ÙÜ¯¼¬ (ºÏÙ. ÆÄØÙ) 8	· SEAL WASHER 8S	1			
18	Y26106-080122	· ÂÊÞÎÞÙÄ 8X12	· BOLT M8X12 PLATED	1			
19	Y119260-02800	· Ò²ÝÍÞ±ØÝ¸Þ (YSM)	· MAIN BEARING	4			
22	Y119260-02930	· ½×½ÄÍÞ±ØÝ¸Þ (YSM)	· THRUST BEARING	2			
25	Y119266-01200	ÍÂÄÞÎÞÙÄ	STUD, CYL. HEAD	14			
26	Y119266-01330	ÍÂÄÞ¶Þ½¹ÂÄ	GASKET, CYL. HEAD	1			
27	Y26106-060122	ÂÊÞÎÞÙÄ M6X12	BOLT M6X12 PLATED	2			
28	Y719260-02870	Ò²ÝÍÞ±ØÝ¸Þ U.S=0.25	MAIN BEARING US=0.25	4		(1)	±ÝÀÞ°»²½Þ(U.S=0.25)ÌÞËÝÃÞ½D

silverhorn.co.uk

GEAR HOUSING

Y00D6550
3TNE68-NTB

2 ギヤケース GEAR HOUSING

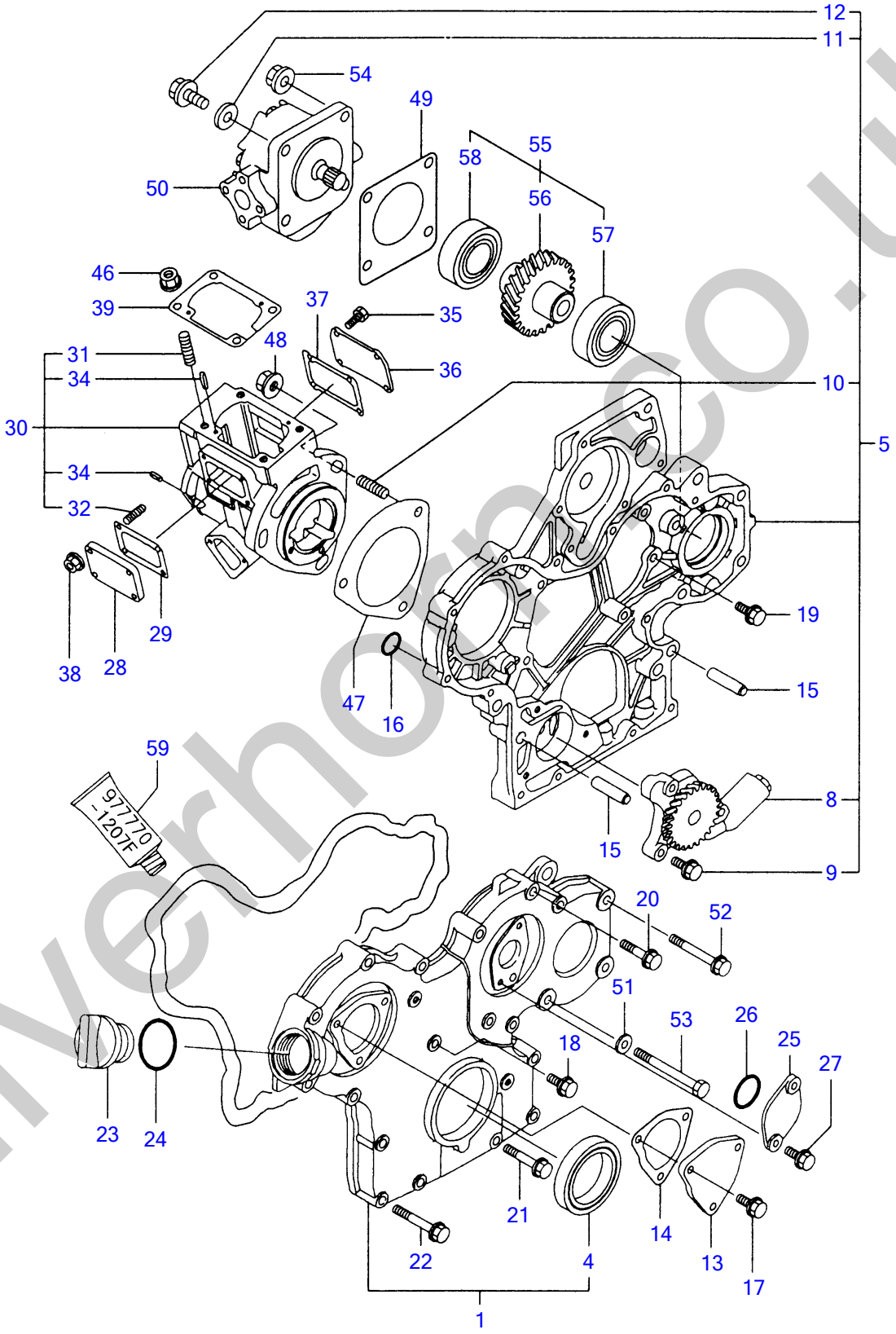

silverhorn.co.uk

·ÞÔ¹-½ GEAR HOUSING

Œ©lo REF NO.	•"•i"Ô†† PARTS NO.	•"•i-¼	Description	l"–Ê Q'ty	ŒÝŠ·l« I	R	"õl
1	Y719266-01601	·ÞÔ¹°½ÌÀ CMP	GEAR CASE ASSY	1			
4	Y119620-01800	· µ²Ù¼°Ù (HTC456208	· SEAL HTC456208, OIL	1			
5	Y119266-01580	·ÞÔ¹°½ CMP	GEAR CASE CMP	1			
8	Y119266-32000	· LOÎßÝÌß CMP	· PUMP ASSY, LUB. OIL	1			
9	Y26106-060252	· ÂÊÞÎÞÙÄ 6X25	· BOLT M6X25 PLATED	3			
10	Y26216-080202	· ³´ºÐÎÞÙÄ 8X20	· STUD M8X20 PLATED	3			
11	Y22190-080002	· ¼°ÙÜ¯¼¬ (ºÎÙ. ÆÄØÙ) 8	· SEAL WASHER 8S	1			
12	Y26106-080222	· ÂÊÞÎÞÙÄ 8X22	· BOLT M8X22 PLATED	1			
13	Y119624-01740	ÌÀ (FI-PÀ²ÐÝ¸Þ	COVER, F. I. PUMP	1			
14	Y119624-01750	PK (FI-PÌÀ	PACKING (FI-P	1			
15	Y119266-01910	Êß²ÌßÉ¯¸	PIPE KNOCK	2			
16	Y24311-000120	OØÝ¸Þ 1A P12.0	O-RING 1A P12.0	2			
17	Y26106-060122	ÂÊÞÎÞÙÄ M6X12	BOLT M6X12 PLATED	3			
18	Y26106-060162	ÂÊÞÎÞÙÄ 6X16	BOLT M6X16 PLATED	1			
19	Y26106-060202	ÂÊÞÎÞÙÄ 6X20	BOLT M6X20 PLATED	6			
20	Y26106-060352	ÂÊÞÎÞÙÄ 6X35	BOLT M6X35 PLATED	7			
21	Y26106-060602	ÂÊÞÎÞÙÄ 6X60	BOLT M6X60 PLATED	8			
22	26106-060652	ÂÊÞÎÞÙÄ 6X65	BOLT M6X65 PLATED	2			
23	124160-01751	ÌÀ (ÎÕº³)	CAP, LUB. OIL SUPPLY	1			
24	24311-000320	OØÝ¸Þ 1A P32.0	O-RING 1A P32.0	1			
25	121023-01550	ÌÀ (À°Ò°À	COVER, BLIND	1			
26	24341-000240	OØÝ¸Þ 1A S24.0	O-RING 1A S-24.0	1			
27	26106-060162	ÂÊÞÎÞÙÄ 6X16	BOLT M6X16 PLATED	2			
28	119660-01551	ÌÀ (FOÎßÝÌß¼Â	COVER	1			
29	119660-01562	PK (ÎßÝÌß¼ÂÌÀ) (ÉÝ±½)	GASKET, (NON-ASB.)	1			
30	119266-01840	FOÎßÝÌß¹°½CMP	COVER	1			
31	121450-01560	· ³´ºÐÎÞÙÄ 8X22	· STUD M8X22	4			
32	119660-01570	· ³´ºÐÎÞÙÄ M6X12	· STUD M6X12	4			
34	22351-040010	· ½ÌßØÝ¸ÞËßÝ 4.0AX10	· SPRING PIN 4X10	4			
35	26116-050082	ÎÞÙÄ 5X8	BOLT M5X8 PLATED	4			
36	119266-01880	ÌÀ (FO-P¹°½	COVER, CASE	1			
37	119266-01890	PK (FO¹°½ÌÀ	PK, COVER	1			
38	26366-060002	ÂÊÞÂ·Å¯Ä 6	NUT M6	4			
39	119623-01950	ÌÝ¼¬¼Þ·¼Ñ CMP	SHIM PACK	1			
46	194990-22050	¹ÌÞ½ (½Êß¯¸8	NUT W/WASHER 8	4			
47	119266-01870	PK (FO-P¹°½	GASKET	1			
48	26366-080002	ÂÊÞÂ·Å¯Ä 8	NUT M8	3			
49	124240-01883	Êß¯·Ý (HO-P) (ÉÝ±½)	GASKET, (NON-ASB.)	1			
50	119462-26010	Õ±ÂÎßÝÌß (PW1-C-4A	PUMP ASSY, HYDRAULIC	1			
51	22137-080000	»Þ¶ÞÈ (Ð¶Þ· 8	WASHER 8, POLISHED	2			
52	26106-080702	ÂÊÞÎÞÙÄ 8X70	BOLT M8X70 PLATED	1			
53	26116-081302	ÎÞÙÄ 8X130	BOLT M8X130 PLATED	2			
54	26366-080002	ÂÊÞÂ·Å¯Ä 8	NUT M8	4			
55	119263-26001	HO-P·ÞÔ CMO	GEAR ASSY, HYDR. PUMP	1			
56	119263-26201	· HO-P·ÞÔ	· GEAR, H. O. PUMP	1			
57	129350-26490	· ÎÞ°ÙÍÞ±ØÝ¸Þ	· BALL BEARING	1			
58	24104-060054	· ÍÞ±ØÝ¸Þ 6005UU	· BALL BEARING	1			
59	977770-1207F	¼Ø°°Ý¹² ´·¼Þ®³¶Þ½¹¯Ä	GASKET, LIQUID	1		(1)	µÌß¼®Ý ÌÞËÝÃÞ½lD

silverform.co.uk

FLYWHEEL HOUSING & OIL SUMP

Y00D6550
3TNE68-NTB

3 フライホイルハウジング & オイルパン
FLYWHEEL HOUSING & OIL SUMP

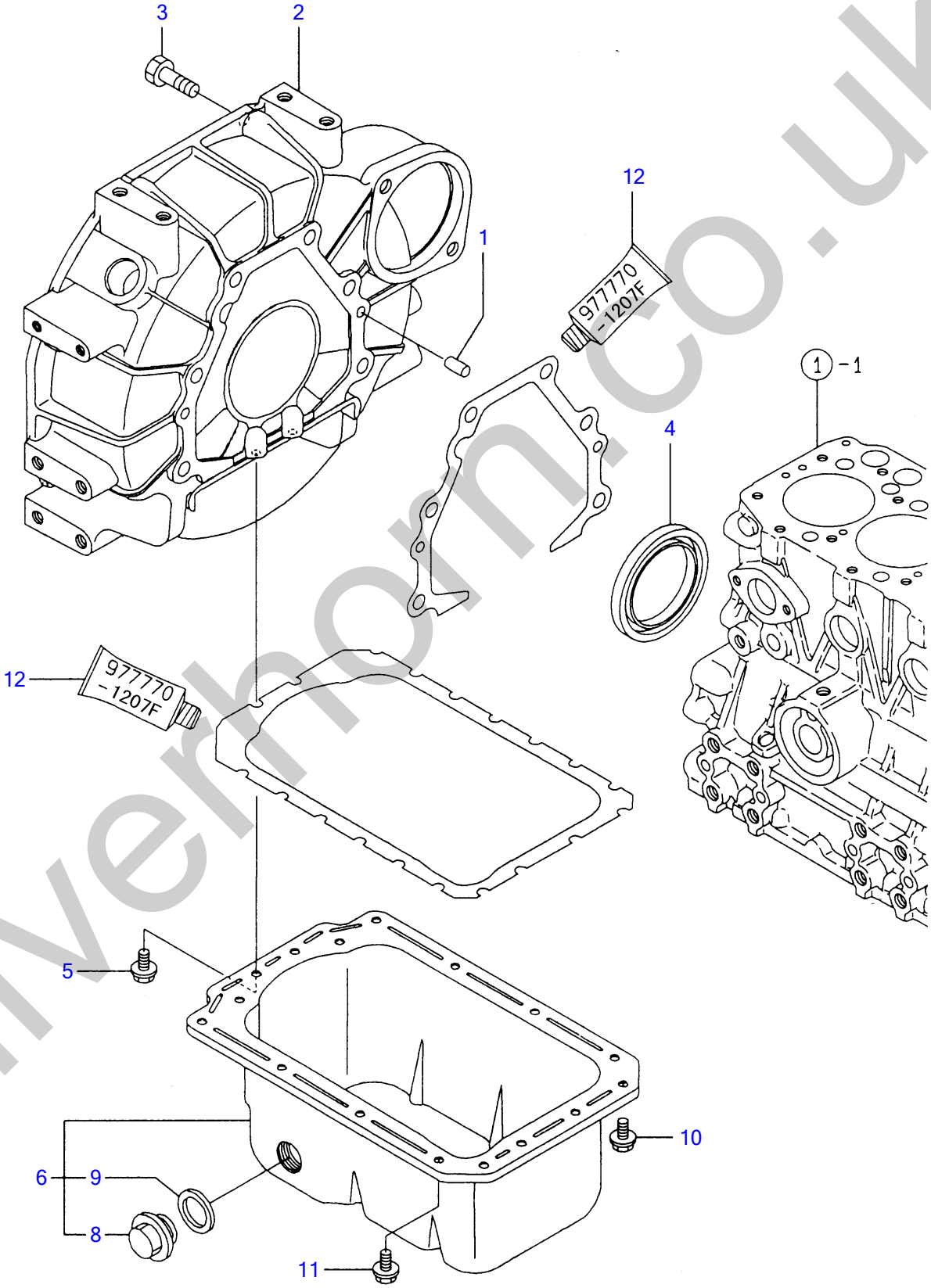

silverhorn.co.uk

Ì×²Î²ÙÊ³¼ÞÝ¸Þ & µ²ÙÊßÝ FLYWHEEL HOUSING & OIL SUMP

Œ©▯o REF NO.	•"•i"Ô▯† PARTS NO.	•"•i-¼	Description	▯"–Ê Q'ty	ŒÝŠ·▯« I	R	"õ▯l
1	**Y129100-01580**	Í²º³ËßÝ 8X16	PARALLEL PIN 8X16	2			
2	**Y119624-01600**	Ì×²Î²Ù Ê³¼ÞÝ¸Þ	HOUSING, FLYWHEEL	1			
3	**Y26206-100202**	ÎÞÙÄ 10X 20	BOLT M10X20	6			
4	**Y124085-02220**	µ²Ù¼-Ù	SEAL, OIL	1			
5	**Y26106-060102**	ÂÊÞÎÞÙÄ 6X 10	BOLT M6X10 PLATED	2			
6	**Y119275-01770**	µ²ÙÊßÝ CMP	SUMP ASSY, OIL	1			
8	**Y119640-01640**	▪ ÄÞÚÝÌß×¸Þ M22	▪ DRAIN PLUG M22	1			
9	**Y22190-220002**	▪ ¼-ÙÜÂ¼Ô (ºÏÙ.ÆÄØÙ) 22	▪ SEAL WASHER 22S	1			
10	**Y26106-060122**	ÂÊÞÎÞÙÄ M6X12	BOLT M6X12 PLATED	4			
11	**Y26106-060102**	ÂÊÞÎÞÙÄ M6X10	BOLT M6X10 PLATED	10			
12	**Y977770-1207F**	¼Øº-Ý¹² ´·¼ÞÖ³¶Þ½¹ÂÄ	GASKET, LIQUID	1			

silverhorn.co.uk

CYLINDER HEAD & BONNET

Y00D6550
3TNE68-NTB

4 シリンダヘッド & ボンネット
CYLINDER HEAD & BONNET

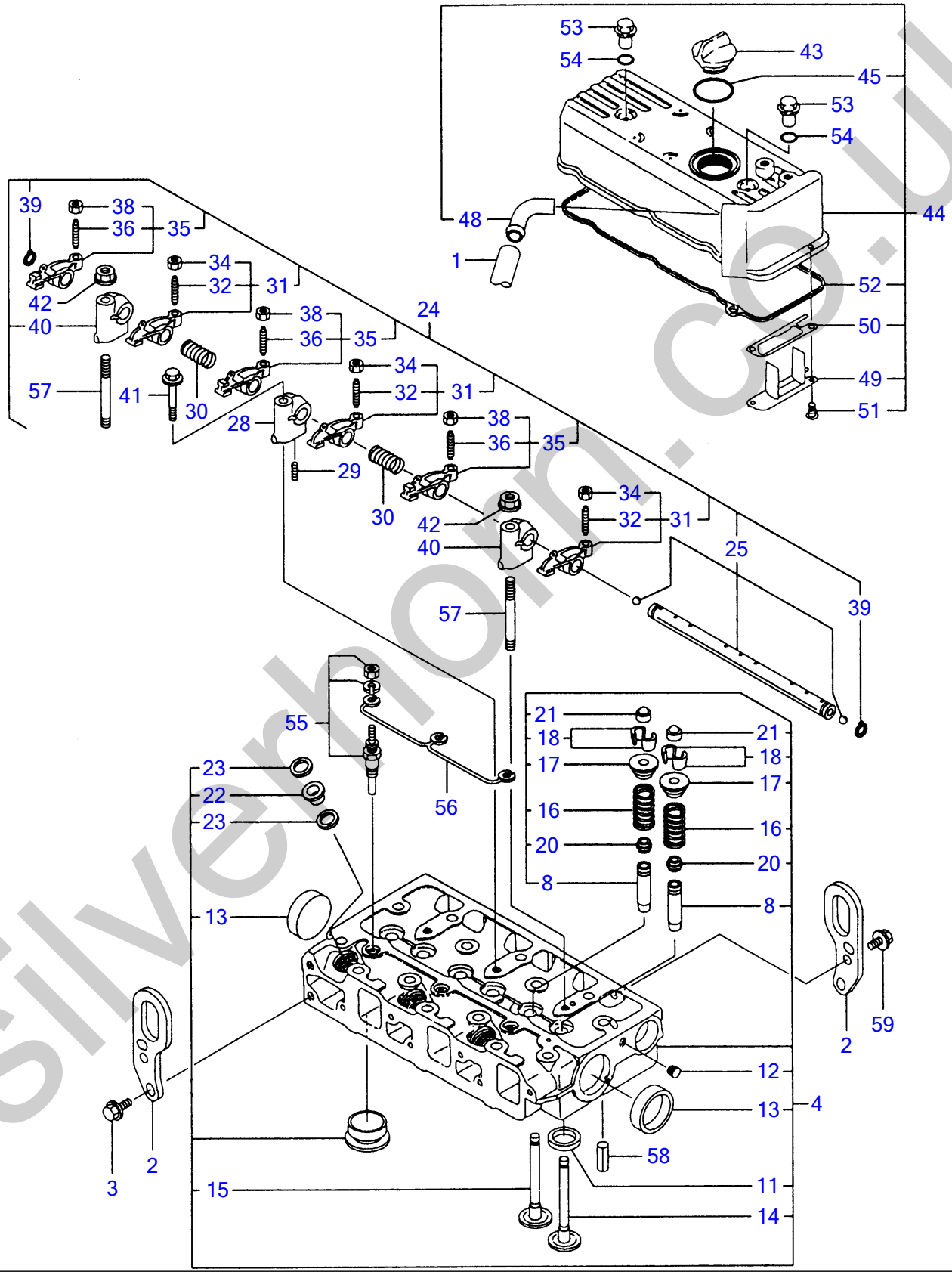

silverhorn.co.uk

¼ØÝÀÞÍÂÄÞ & ÎÞÝÈÂÄ CYLINDER HEAD & BONNET

Œ©lo REF NO.	•"•i"Ô† PARTS NO.	•"•i-¼	Description	”–Ê Q'ty	ŒÝŠ·« I	R	"õl
1	Y23065-120500	ËÞÆ-ÙÊß²Ìß 12X500	PIPE, VINYL 12X500	1			
2	Y119626-07900	ÂØ±¹Þ¶Å¸Þ	LIFTER, ENGINE	2			
3	Y26106-080142	ÂÊÞÎÞÙÄ M 8X 14	BOLT M 8X 14 PLATED	2			
4	Y119266-11710	¼ØÝÀÞÍÂÄÞ CMP	HEAD ASSY, CYLINDER	1			
8	Y119260-11800	· ÊÞÙÌÞ¶Þ²ÄÞ	· GUIDE, VALVE	6		(1)	ÎÖ³ÌÞËÝÃÞ½D
11	Y119620-11080	· ÊÞÙÌÞ¼°Ä (INT	· SEAT, SUCTION VALVE	3			
12	Y23871-005000	· È¼ÞÌß×¸Þ PT 1/16	· PLUG PT 1/16	1			
13	Y27241-350000	· ÜÝ¶ÞÀÌß×¸Þ 35	· PLUG PT 35	2			
14	Y119266-11100	· ÊÞÙÌÞ(INT	· VALVE, SUCTION	3			
15	Y119260-11110	· ÊÞÙÌÞ(EXH	· VALVE, EXHAUST	3			
16	Y114250-11120	· ÊÞÙÌÞ½ÌßØÝ¸Þ	· SPRING, VALVE	6			
17	Y114250-11180	· ÍÞÝÊÞÈµ»´	· RETAINER, SPRING	6			
18	Y714250-11570	· ºÂÀ° 2¹=1¾¯Ä	· COTTER ASSY	6			
20	Y119260-11340	· ÊÞÙÌÞ½ÃÑ¼-Ù	· SEAL, VALVE STEM	6			
21	Y119260-11370	· ·ÔÂÌß(ÊÞÙÌÞ	· CAP, VALVE	6			
22	Y11960011450	· É½ÞÙÌßÛÃ¸À	· PROTECTOR, NOZZLE	3			
23	119600-11460	· PK	· GASKET, NOZZLE	6			
24	119260-11200	ÍÞÝÜÝ»Îß°Ä CMP	SUPPORT ASSY, ARM	1			
25	119260-11240	· ÍÞÝÜÝ¼Þ¸ CMP	· SHAFT ASSY, ARM	1			
28	119260-11260	· ÍÞÝÜÝ»Îß°Ä	· SUPPORT, ROCKER ARM	1			
29	119260-11270	· ÄÒÈ¼Þ	· SCREW	1			
30	119260-11280	· ÊÞÈ (ÍÞÝÜÝ¼Þ¸	· SPRING	2			
31	719260-11650	· ·-³·ÍÞÝÜÝ¼¸Ð	· ARM ASSY, ROCKER	3			
32	105010-11230	· · ±¼Þ¬½À (ÍÞÝ½·Ï)	· · SCREW, VALVE	3			
34	26756-060002	· · ÄÒÅ¯Ä 6	· · LOCK NUT 6	3			
35	719260-11660	· Ê²·ÍÞÝÜÝ¼¸Ð	· ARM ASSY, ROCKER	3			
36	105010-11230	· · ±¼Þ¬½À (ÍÞÝ½·Ï)	· · SCREW, VALVE	3			
38	26756-060002	· · ÄÒÅ¯Ä 6	· · LOCK NUT 6	3			
39	22242-000100	· ÄÒÜC (¼Þ¸ 10	· CIRCLIP 10	2			
40	119265-11260	· ÍÞÝÜÝ»Îß°Ä	· SUPPORT ROCKER ARM	2			
41	26106-080452	ÂÊÞÎÞÙÄ 8X45	BOLT M 8X45 PLATED	1			
42	26366-080002	ÂÊÞÂ·ÅÂÄ 8	NUT M8	2			
43	124160-01751	ÌÀ (ÎÕº³)	CAP, LUB. OIL SUPPLY	1			
44	119266-11530	ÎÞÝÈ¯Ä CMP (¶²Î³	BONNET ASSY	1			
45	24311-000320	· OØÝ¸Þ 1A P 32.0	· O-RING 1A P 32.0	1			
48	119266-11390	· ¼Þ®²ÝÄ	· JOINT	1			
49	119266-03200	· ¼ÞÔÏ²À	· PLATE, SHELTER	1			
50	119266-03210	· PK (¼Þ¬Ï²À) (ÉÝ±½)	· GASKET, (NON-ASB.)	1			
51	22857-500100	· À¯ËßÝÈ¼Þ 5.0X10	· SCREW 5X10 TAPPING	2			
52	119266-11310	· PK (ÎÞÝÈÂÄ	· GASKET, BONNET	1			
53	124160-11360	ÄÂÃ	KNOB	2			
54	24311-000120	OØÝ¸Þ 1A P12.0	O-RING 1A P12.0	2			
55	129155-77801	½°Êß°²¯¸ÞÛ°	PLUG, GLOW	3			
56	119620-77820	ºÈ¸À (¸ÞÛ°Ìß×¸Þ	CONNECTOR, GLOW PLUG	1			
57	119620-11350	½À¯Ä (±°Ñ»Îß°Ä	STUD	2			
58	22351-060012	½ÌßØÝ¸ÞËßÝ 6.0A X12	SPRING PIN 6X12	2			
59	26106-080142	ÂÊÞÎÞÙÄ M8X14	BOLT M8X14 PLATED	1			

silverhorn.co.uk

SUCTION MANIFOLD & AIR CLEANER

Y00D6550
3TNE68-NTB

5 キュウキマニホールド & エアクリーナ
SUCTION MANIFOLD & AIR CLEANER

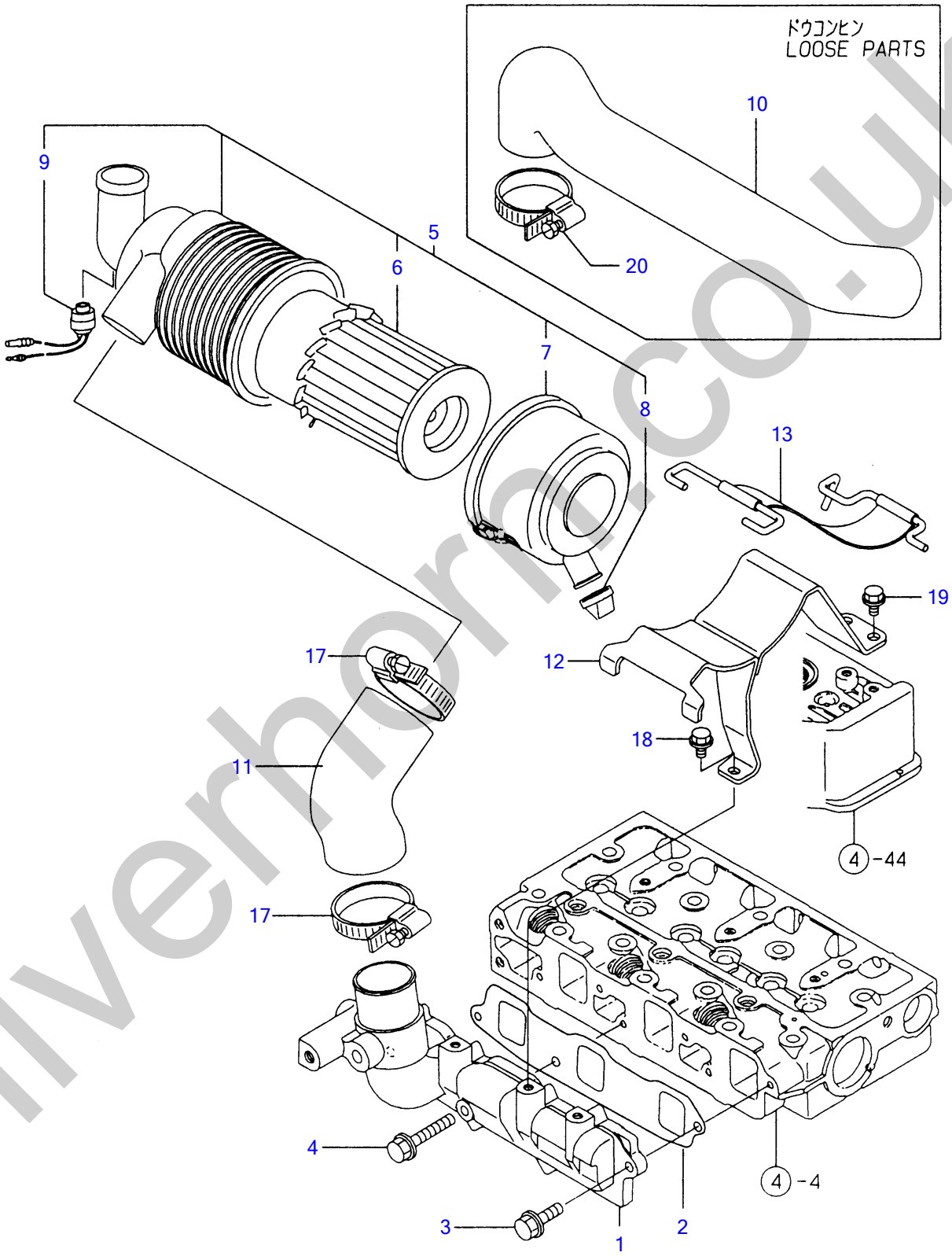

silverhorn.co.uk

·Õ³·ÏÆÎ-ÙÄÞ & ´±¸Ø-Å SUCTION MANIFOLD & AIR CLEANER

Œ©▯o REF NO.	•"•i"Ô▯† PARTS NO.	•"•i-¼	Description	▯"–Ê Q'ty	ŒÝŠ·▯« I	R	"õ▯l
1	**Y119275-12100**	ÏÆÎÙÄÞ (INT	MANIFOLD, SUCTION	1			
2	**Y119270-12110**	PK (ÏÆÎ-ÙÄÞ	GASKET, SUC. MANIFOLD	1			
3	**Y26106-060162**	ÂÊÞÎÞÙÄ 6X16	BOLT M6X16 PLATED	2			
4	**Y26106-060282**	ÂÊÞÎÞÙÄ 6X28	BOLT M6X28 PLATED	1			
5	**Y119254-12500**	´±¸Ø-Å CMP	AIR CLEANER	1			
6	**Y119655-12560**	· ´ÚÒÝÄ	· ELEMENT	1			
7	**Y105027-12570**	· ¶ÊÞ°(´±¸Ø-Å	· COVER, AIR CLEANER	1			
8	**Y105027-12540**	· ±ÝÛ-ÀÞÊÞÙÌÞ	· VALVE, UNLOADER	1			
9	**Y126650-12680**	· ²Ý¼Þ¹-À	· INDICATOR	1			
10	**Y119233-12210**	·Õ³·´ÝÁÖ³¶Ý	PIPE, AIR INTAKE	1			
11	**Y119233-12610**	Êß²Ìß (²ÝÃ°¸	PIPE, INTAKE	1			
12	**Y119266-12580**	ÌÞ×¹¯Ä (´±¸Ø-Å	BRACKET	1			
13	**Y119865-12600**	´±¸Ø-ÅÊÞÝÄÞ CMP	STAY	1			
17	**Y23000-054000**	Î-½¸ØÂÌß 54	CLAMP 54	2			
18	**Y26106-060122**	ÂÊÞÎÞÙÄ M6X12	BOLT M6X12 PLATED	1			
19	**Y26106-080142**	ÂÊÞÎÞÙÄ M8X14	BOLT M8X14 PLATED	2			
20	**Y23000-054000**	Î-½¸ØÂÌß 54	CLAMP 54	1			

silverhorn.co.uk

EXHAUST MANIFOLD & SILENCER

Y00D6550
3TNE68-NTB

6 ハイキマニホールド & サイレンサ
EXHAUST MANIFOLD & SILENCER

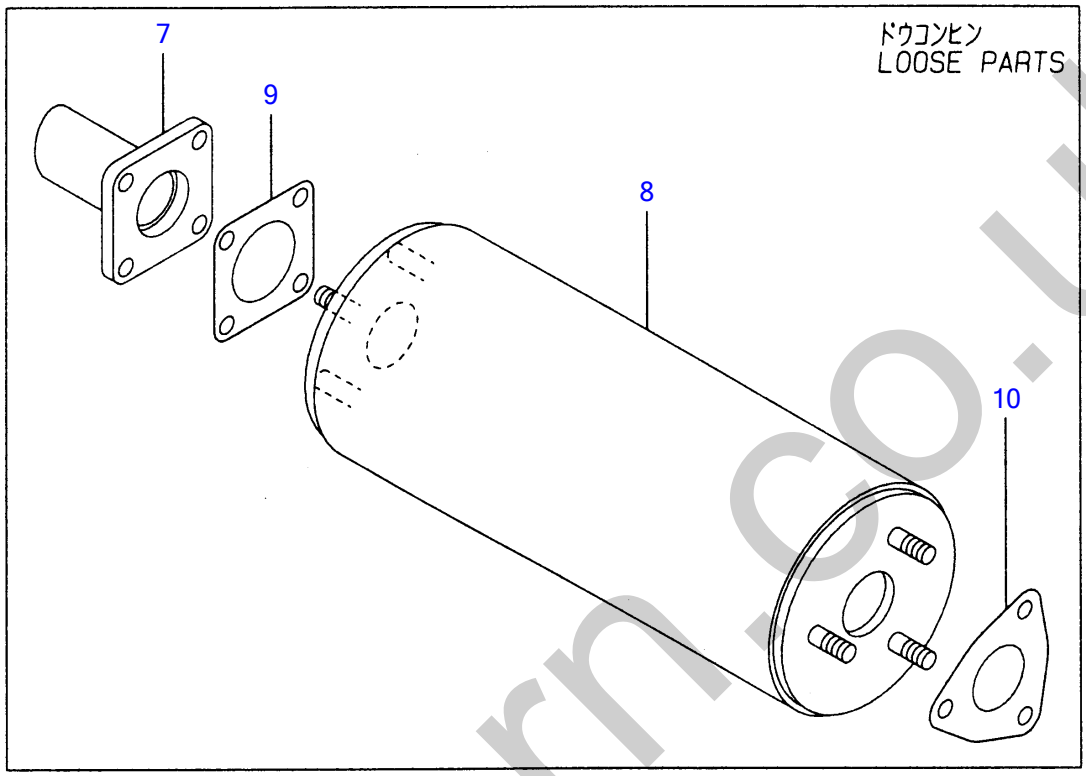

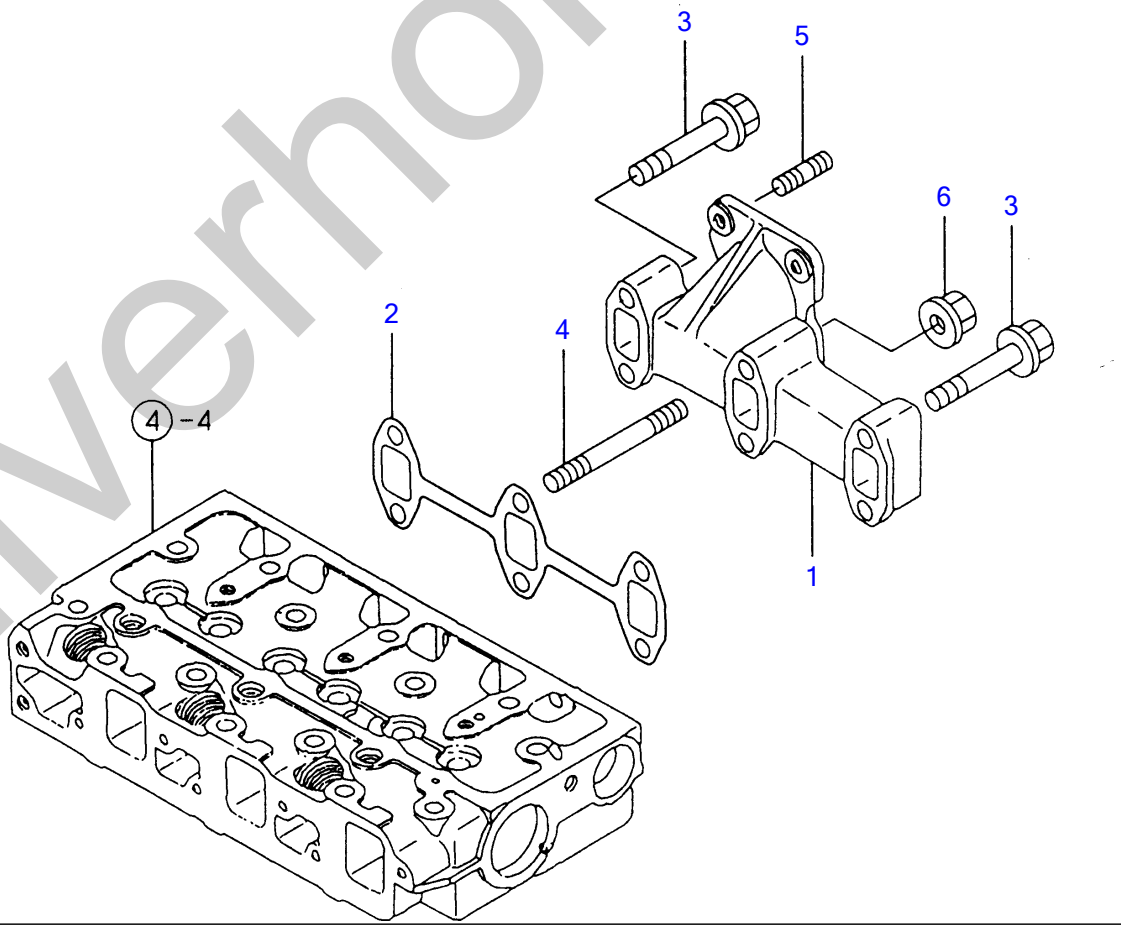

silverhorn.co.uk

Ê²·ÏÆÎ-ÙÄÞ & »²ÚÝ» EXHAUST MANIFOLD & SILENCER

Œ©lo REF NO.	•"•i"Ô† PARTS NO.	•"•i-¼	Description	–Ê Q'ty	ŒÝŠ·« I	R	"õl
1	**Y119260-13100**	ÏÆÎÙÄÞ(EXH	MANIFOLD, EXHAUST	1			
2	**Y119260-13110**	¶Þ½¹ÂÄ (ÏÆÎÙÄÞ	GASKET, EXH. MANIFOLD	1			
3	**Y26106-060352**	ÂÊÞÎÞÙÄ 6X35	BOLT M6X35 PLATED	4			
4	**Y26216-060402**	³´ºÐÎÞÙÄ 6X40	STUD M6X40 PLATED	2			
5	**Y119131-18320**	³´ºÐÎÞÙÄ M8X22	BOLT M8X22	4			
6	**Y26366-060002**	ÂÊÞÂ·ÅÂÄ 6	NUT M6	2			
7	**Y119266-13580**	ÌÝ¼-Âº³ (»²ÚÝ»	TAIL PIPE	1			
8	**Y119232-13500**	»²ÚÝ»	SILENCER COMP	1			
9	**Y124701-11911**	¶Þ½¹ÂÄ(»²ÚÝ») (ÉÝ±½)	GASKET, (NON-ASB.)	2			
10	**Y103954-13201**	¶Þ½¹ÂÄ(»²ÚÝ») (ÉÝ±½)	GASKET, SILENCER	1			

silverhorn.co.uk

CAMSHAFT & DRIVING GEAR

Y00D6550
3TNE68-NTB

7 カムシャフト & クドウギヤ
CAMSHAFT & DRIVING GEAR

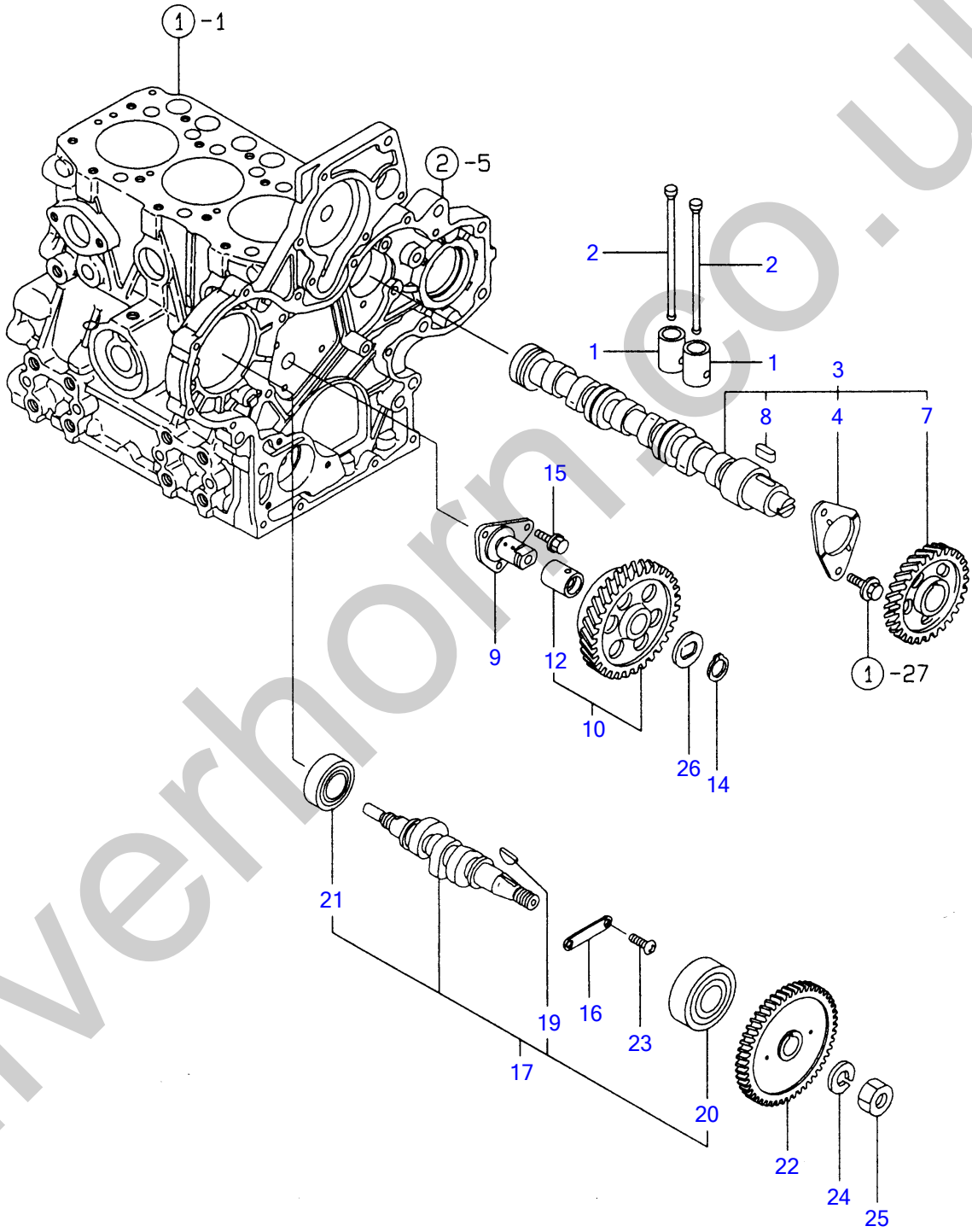

silverhorn.co.uk

¶Ñ¼ÔÌÄ & ¸ÄÞ³·ÞÔ CAMSHAFT & DRIVING GEAR

Œ©lo REF NO.	•"•i"Ôl† PARTS NO.	•"•i-¼	Description	l"–Ê Q'ty	ŒÝŠ·l« I	R	"õlI
1	**Y119260-14200**	ÀÍßÂÄ	TAPPET	6			
2	**Y119260-14400**	ÌßÂ¼ÕÛÂÄÞ	ROD, PUSH	6			
3	**Y119260-14580**	¶Ñ¼ÔÌÄ CMP	CAMSHAFT ASSY	1			
4	**Y119620-02450**	· ½×½ÄÒÀÙ (¶Ñ¼Þ¸	· BEARING,THRUST	1			
7	**Y119260-14100**	· ¶Ñ·ÞÔ	· GEAR, CAMSHAFT	1			
8	**Y22512-040120**	· Ì´»Þ-·- 4X12	· KEY 4X12	1			
9	**Y119266-25050**	¼ÔÌÄ(±²ÄÞÙ·ÞÔ)	SHAFT, IDLE GEAR	1			
10	**Y119260-25100**	±²ÄÞÙ·ÞÔ CMP	GEAR W/BUSH, IDLE	1			
12	**Y119620-25912**	· ÌÞÂ¼Õ	· BUSH	1		(1)	ÎÖ³ÌÞËÝÃÞ½lD
14	**Y22242-000200**	ÄÒÜC (¼Þ¸ 20	CIRCLIP 20	1			
15	**Y26106-060122**	ÂÊÞÎÞÙÄ M6X12	BOLT M6X12 PLATED	3			
16	**Y119266-01900**	ÍÞ±ØÝ¸Þµ»´	RETAINER	1			
17	**Y119266-14200**	FO¶Ñ CMP	CAM ASSY, F. I. PUMP	1			
19	**Y122710-51090**	· ÊÝ¹ÞÂ·°	· KEY	1			
20	**Y24101-060034**	· ÍÞ±ØÝ¸Þ 6003	· BALL BEARING	1			
21	**Y24102-063034**	· ÍÞ±ØÝ¸Þ 6303U	· BALL BEARING 6303U	1			
22	**119266-25900**	·ÞÔ (FI-P	GEAR, F. I. PUMP	1			
23	**26557-060102**	ÅÍÞºÈ¼Þ (+±Å 6X10	SCREW 6X10	2			
24	**22217-120000**	ÊÞÈ»Þ¶ÞÈ 12	SPRING WASHER	1			
25	**26716-120002**	ÅÂÄ 12	NUT 12	1			
26	**119660-25022**	µ»´ (±²ÄÞÙ·ÞÔ	RETAINER, IDLE GEAR	1			

silverhorn.co.uk

CRANKSHAFT & PISTON

Y00D6550
3TNE68-NTB

8 クランクシャフト & ピストン
CRANKSHAFT & PISTON

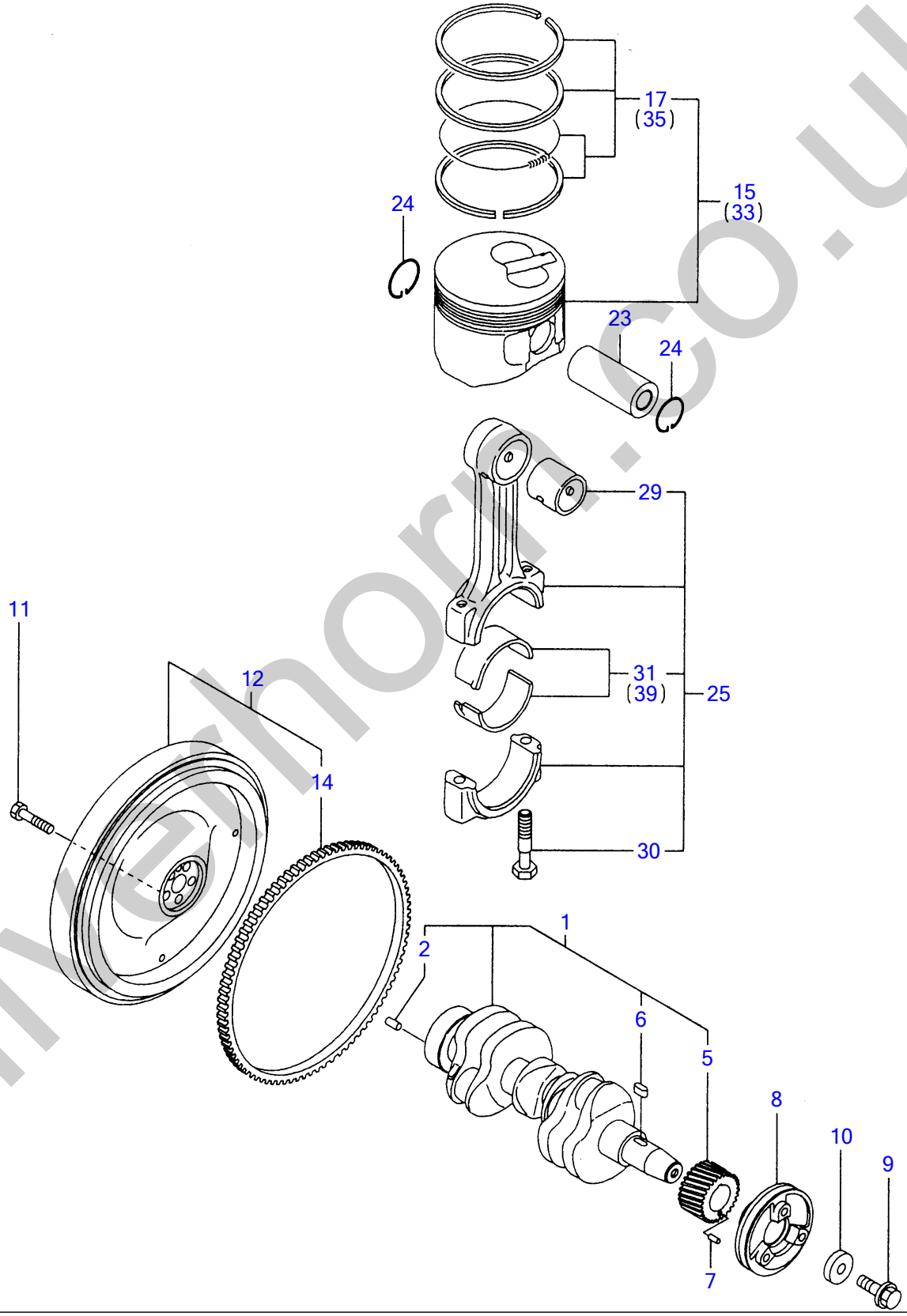

silverhorn.co.uk

¸×Ý¸¼ÔÌÄ & Ëß½ÄÝ CRANKSHAFT & PISTON

Œ©lo REF NO.	•"•i"Ô† PARTS NO.	•"•i-¼	Description	"–Ê Q'ty	ŒÝŠ·« I	R	"õl
1	**Y119266-21700**	¸×Ý¸¼ÔÌÄ CMP	CRANKSHAFT ASSY	1			
2	**Y129100-01580**	· Í²º³ËßÝ 8X16	· PARALLEL PIN 8X16	1			
5	**Y119266-21200**	· ¸×Ý¸·ÞÔ	· GEAR, CRANKSHAFT	1			
6	**Y22512-040120**	· Ì´»Þ-·- 4X12	· KEY 4X12	1			
7	**Y22351-030012**	½ÌßØÝ¸ÞËßÝ 3.0AX12	SPRING PIN 3X12	1			
8	**Y119266-21660**	VÌß-Ø (¸×Ý¸	V-PULLEY	1			
9	**Y119621-21680**	Ì×Ý¼ÞÎÞÙÄ M12X1.25	BOLT M12X1.25 FLANGE	1			
10	**Y119620-21941**	Ü¯¼¬	WASHER	1			
11	**Y121111-21501**	ÎÞÙÄ (Ì×²Î²Ù	BOLT, FLYWHEEL	5			
12	**Y119266-21560**	Ì×²Î²-Ù CMP	FLYWHEEL ASSY	1			
14	**Y119865-21600**	· ØÝ¸Þ·ÞÔ	· GEAR, RING	1			
15	**Y119326-22081**	Ëß½ÄÝ CMP	PISTON W/RINGS	3			
17	**Y119265-22500**	· ØÝ¸Þ¾¯Ä	· RING SET	3			
23	**Y119265-22300**	Ëß½ÄÝËßÝ	PIN, PISTON	3			
24	**Y22252-000200**	ÄÒÜC (±Å 20	CIRCLIP 20	6			
25	**Y119265-23100**	ºÝÛ¯ÄÞ CMP	ROD ASSY, CONNECTING	3			
29	**Y119620-23910**	· Ëß½ÄÝËßÝÒÀÙ	· BUSH, PISTON PIN	3		(1)	ÎÖ³ÌÞËÝÃÞ½D
30	**119265-23200**	· ÛÂÄÞÎÞÙÄ	· BOLT, ROD	6			
31	**719260-23600**	· ÍÞ±ØÝ¸Þ(¸×Ý¸ËßÝ	· BEARING, CRANKPIN	3			
33	**119266-22900**	Ëß½ÄÝ CMP (O.S=0.25	PISTON ASSY OS=0.25	3		(2)	µ°ÊÞ°»²½Þ(O.S=0.25)ÌÞËÝÃÞ½D
35	**119265-22950**	· Ëß½ÄÝØÝ¸ÞSET (O.S=0.25	· RING SET O.S=0.25	3		(2)	µ°ÊÞ°»²½Þ(O.S=0.25)ÌÞËÝÃÞ½D
39	**719260-23610**	¸×Ý¸ËßÝÒÀÙ U.S=0.25	BEARING, PIN U.S=0.25	3		(3)	±ÝÀÞ°»²½Þ(U.S=0.25)ÌÞËÝÃÞ½D

silverhorn.co.uk

Y00D6550
3TNE68-NTB

9 LOシステム
LUB.OIL SYSTEM

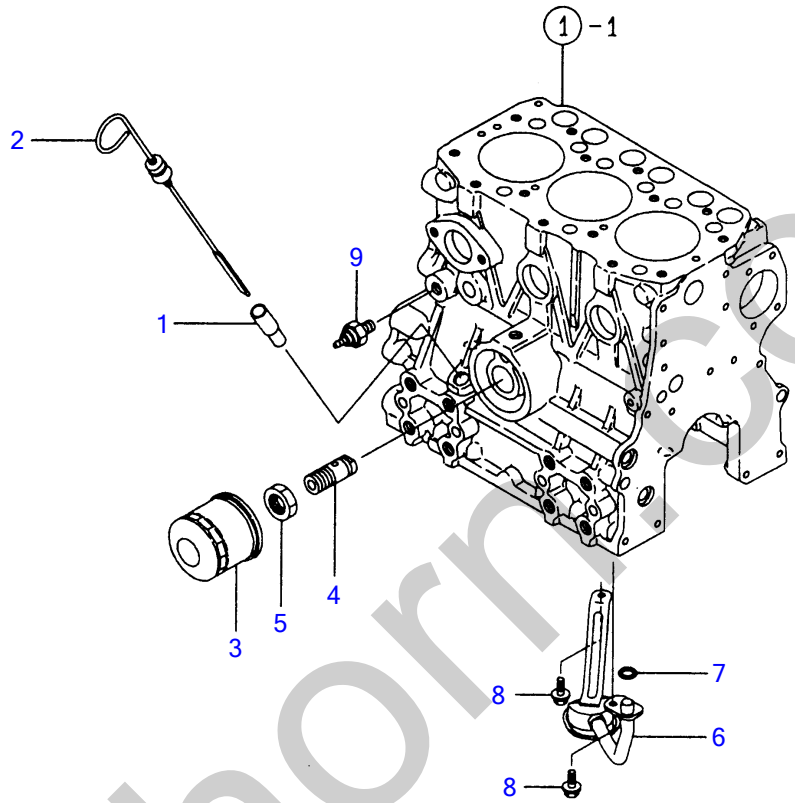

silverhorn.co.uk

LO¼½ÃÑ LUB.OIL SYSTEM

Œ©lo REF NO.	•"•i"Ôl† PARTS NO.	•"•i-¼	Description	l"–Ê Q'ty	ŒÝŠ·l« I	R	"õlI
1	**Y121520-34810**	¶Þ²ÄÞ (¹ÝÕÎÞ³	GUIDE, DIPSTICK	1			
2	**Y129132-34800**	¹ÝÕÎÞ³	DIPSTICK	1			
3	**Y119305-35150**	µ²ÙÌ¨ÙÀ CMP	FILTER, LUB. OIL	1			
4	**Y119266-35310**	½À¯ÄÞ	STUD	1			
5	**Y129150-35350**	Å¯Ä (ÍÞÝÎÝÀ²	NUT	1			
6	**Y119275-35080**	LO··³Æ-³¶Ý	PIPE ASSY, OIL INTAKE	1			
7	**Y119209-35030**	OØÝ¸Þ P11	O-RING	1			
8	**Y26106-060122**	ÂÊÞÎÞÙÄ M6X12	BOLT M6X12 PLATED	2			
9	**Y124160-39451**	Õ±Â½²¯Á 0.5KG ·ÞÎÞ¼	SWITCH, OIL PRESSURE	1			

silverhorn.co.uk

COOLING WATER SYSTEM

Y00D6550
3TNE68-NTB

10 CWシステム COOLING WATER SYSTEM

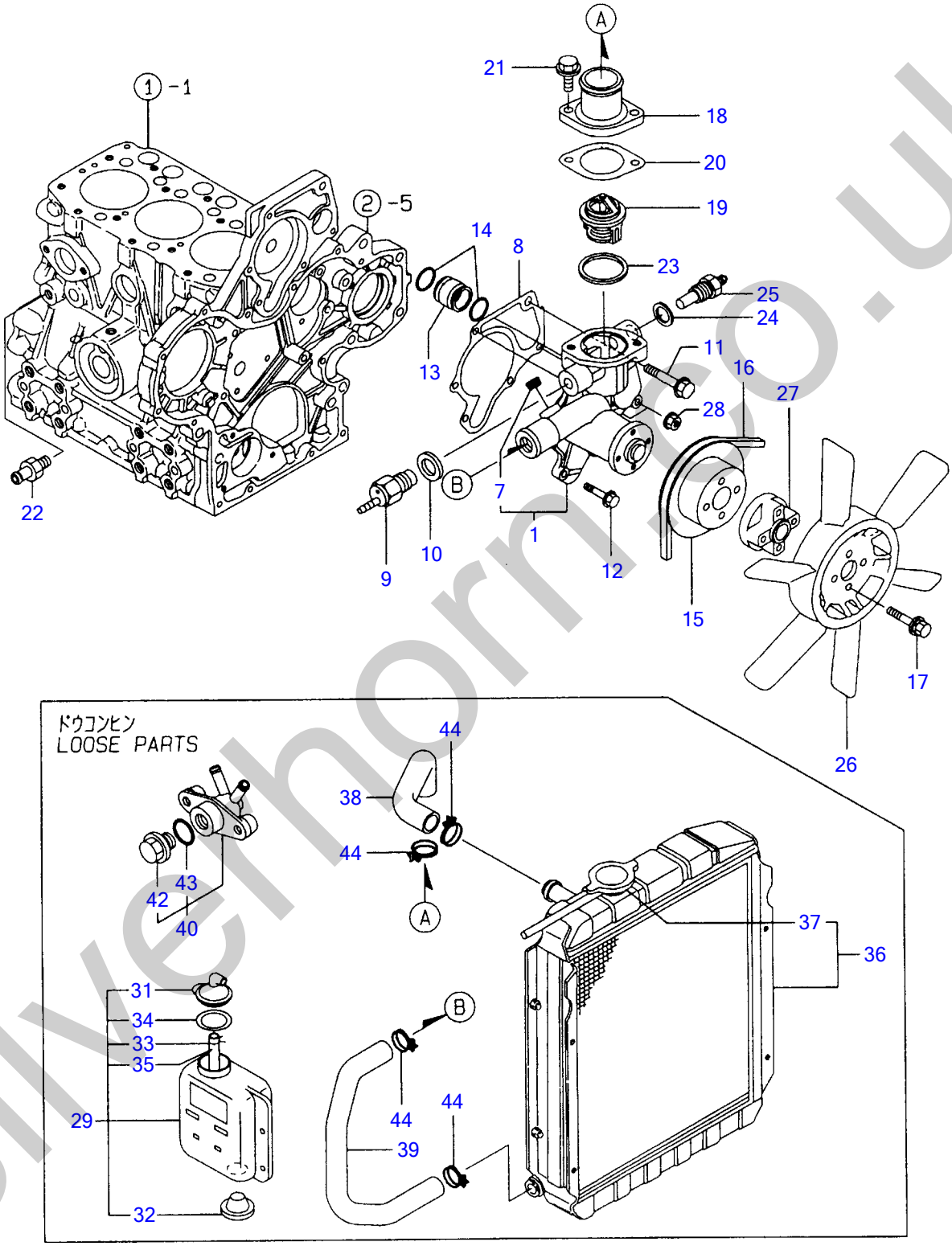

silverhorn.co.uk

CW¼½ÃÑ COOLING WATER SYSTEM

Œ©lo REF NO.	•"•i"Ô† PARTS NO.	•"•i-¼	Description	”–Ê Q'ty	ŒÝŠ·« I	R	”õI
1	Y119266-42100	CWÎßÝÌß CMP	PUMP ASSY, C. WATER	1			
7	Y23871-030000	• È¼ÞÌß×¸Þ PT3/8	• PLUG PT3/8, SCREW	1			
8	Y119266-42020	PK (CWÎßÝÌß	GASKET, C. W. PUMP	1			
9	Y121250-44901	»°Ó½²¯Á (110Ž	SWITCH, THERMO (110Ž	1			
10	Y124465-44950	Êß¯·Ý16	GASKET 16	1			
11	Y26106-080452	ÂÊÞÎÞÙÄ 8X45	BOLT M8X45 PLATED	1			
12	Y26106-060302	ÂÊÞÎÞÙÄ 6X30	BOLT M6X30 PLATED	5			
13	Y119266-42050	¼Þ®²ÝÄ (CW-P	JOINT	1			
14	Y24311-000220	OØÝ¸Þ 1A P22.0	O-RING 1A P-22.0	2			
15	Y119660-42350	VÌß°Ø (CW-P	V-PULLEY, C. W. PUMP	1			
16	Y119620-42291	VÍÞÙÄ (HM:34.5INCH	V-BELT	1			
17	Y26014-060352	ÎÞÙÄ (Ë×+ÊÞÈ 6X35	BOLT M6X35	4			
18	Y129350-49530	»°Ó½À¯Ä¶ÊÞ°	COVER, THERMOSTAT	1			
19	Y129155-49800	»°Ó½À¯Ä	THERMOSTAT	1			
20	Y129795-49551	PK (»°Ó½À¯Ä¶ÊÞ°)(ÉÝ±½	GASKET (NON-ASB.)	1			
21	Y26106-080202	ÂÊÞÎÞÙÄ 8X20	BOLT M8X20 PLATED	2			
22	Y121550-49111	¼Þ®²ÝÄ PT1/4	JOINT PT1/4	1			
23	129150-49811	PK (»°Ó½À¯Ä¼À)(ÉÝ±½	GASKET (NON-ASB.)	1			
24	129150-49360	PK 10	GASKET 10	1			
25	119266-49350	»°Ó¾Ý»°	SENSOR, THERMO.	1			
26	124251-44740	Ì§ÝÌÞÚ°ÄÞ	FAN, COOLING	1			
27	171353-44760	¶Ý»Þ (Ì§Ý	SPACER	1			
28	26366-060002	ÂÊÞÂ·Å¯Ä 6	NUT M6	2			
29	121468-44510	»ÌÞÀÝ¸CMP	SUB-TANK ASSY	1			
31	121450-44531	• ·¬¯Ìß	• CAP	1			
32	121468-44540	• Ìß×¸Þ (»ÌÞÀÝ¸	• PLUG, SUB-TANK	1			
33	124450-44560	• µ»´(µ°ÊÞ°ÌÛ°Êß²Ìß	• CLAMP	1			
34	121470-44581	• Êß¯·Ý	• GASKET	1			
35	23065-070130	• ËÞÆ°ÙÊß²Ìß 7X130	• PIPE 7X130	1			
36	119632-44520	×¼Þ´°À	RADIATOR CMP	1			
37	123682-44120	• ¶±Â·¬¯Ìß	• CAP	1			
38	119688-49010	CW-T (A	PIPE (A), C. WATER	1			
39	119632-49020	CW-T (B	PIPE (B), C. WATER	1			
40	121450-49110	»ÝÎß³º¯¸ CMP	COCK ASSY, 3-WAY	1			
42	121250-49121	• Ìß×¸Þ (Ð½ÞÇ·	• PLUG	1			
43	24311-000160	• OØÝ¸Þ 1A P16.0	• O-RING 1A P-16.0	1			
44	23010-038000	Î°½ÊÞÝÄÞ 38	CLAMP 38	4			

silverhorn.co.uk

FUEL INJECTION PUMP

Y00D6550
3TNE68-NTB

11 FOフンシャポンプ
FUEL INJECTION PUMP

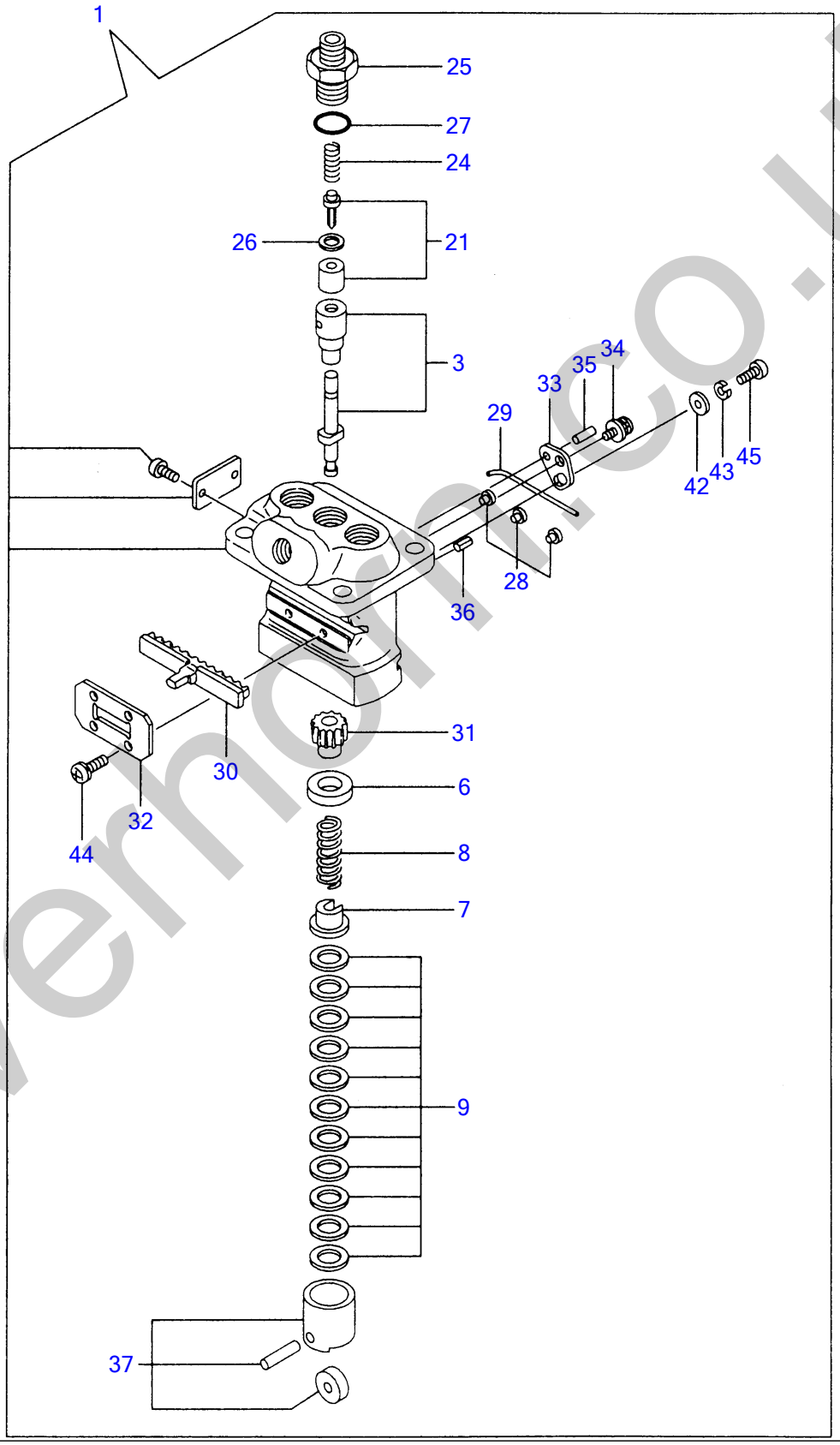

silvermoor.co.uk

FOÌÝ¼ÔÎßÝÌß FUEL INJECTION PUMP

Œ©lo REF NO.	•"•i"Ôl† PARTS NO.	•"•i-¼	Description	l"–Ê Q'ty	ŒÝŠ·l« I	R	"õll
1	Y719266-51100	F. I. ÎßÝÌß CMP	PUMP ASSY, F. INJECT.	1			
3	Y119225-51100	· ÌßxÝ¼Þ¬ÊÞÚÙ CMP	· PLUNGER W/BARREL	3			
6	Y119620-51170	· ÊÞÈ³¹ A	· RETAINER	3			
7	Y119620-51180	· ÊÞÈ³¹ B	· RETAINER	3			
8	Y119620-51190	· SP (ÌßxÝ¼Þ¬	· SPRING, PLUNGER	3			
9	Y119620-51250	· ¼Ñ CMP	· SHIM PACK	3			
21	Y119225-51300	· ÃÞØÍÞØÊÞÙÌÞ CMP	· VALVE W/SEAT, DELIV.	3			
24	Y105546-51330	· ½ÌßØÝ¸Þ	· SPRING, DELIV. VALVE	3			
25	Y119620-51340	· ÃÞØÍÞØÊÞÙÌÞÎÙÀÞ°	· HOLDER, DELIV. VALVE	3			
26	Y119620-51350	· PK (ÃÞØÍÞØ	· GASKET, DELIVERY	3			
27	Y119620-51370	· OØÝ¸Þ	· O-RING	3			
28	Y119620-51450	· ¶Þ²ÄÞËß°½ (ÀÍß¯Ä	· GUIDE, PLUNGER	3			
29	Y119620-51461	· ËßÝ	· PIN	1			
30	Y119660-51500	· x¯¸	· RACK	1			
31	Y119620-51510	· ËßÆµÝ	· PINION	3			
32	Y119660-51530	· x¯¸µ»´	· RETAINER, RACK	1			
33	Y119620-51650	· FOÁ®³¾²ÌßÚ°Ä	· PLATE	2			
34	119620-51660	· FOÁ®³¾²È¼Þ	· SCREW	2			
35	119620-51670	· FOÁ®³¾²ËßÝ	· PIN	2			
36	119620-51680	· ËßÝ (ÚÍÞÙ²Á·ÞÒ	· PIN	1			
37	119620-51700	· ÀÍß¯Ä CMP	· TAPPET ASSY	3			
42	22137-040000	· »Þ¶ÞÈ Ð¶Þ· 4	· WASHER 4, PLATED	2			
43	22217-040000	· ÊÞÈ»Þ¶ÞÈ 4	· SPRING WASHER 4	2			
44	26022-040082	· ÅÍÞºÈ¼Þ (ÊÞÈ 4X8	· SCREW M4X8	4			
45	26033-040102	· ÊÞ²ÝÄÞÈ¼Þ (ÊÞÈ+Ëx 4X10	· SCREW M4X10	2			

silverhorn.co.uk

GOVERNOR

Y00D6550
3TNE68-NTB

12 ガバナ
GOVERNOR

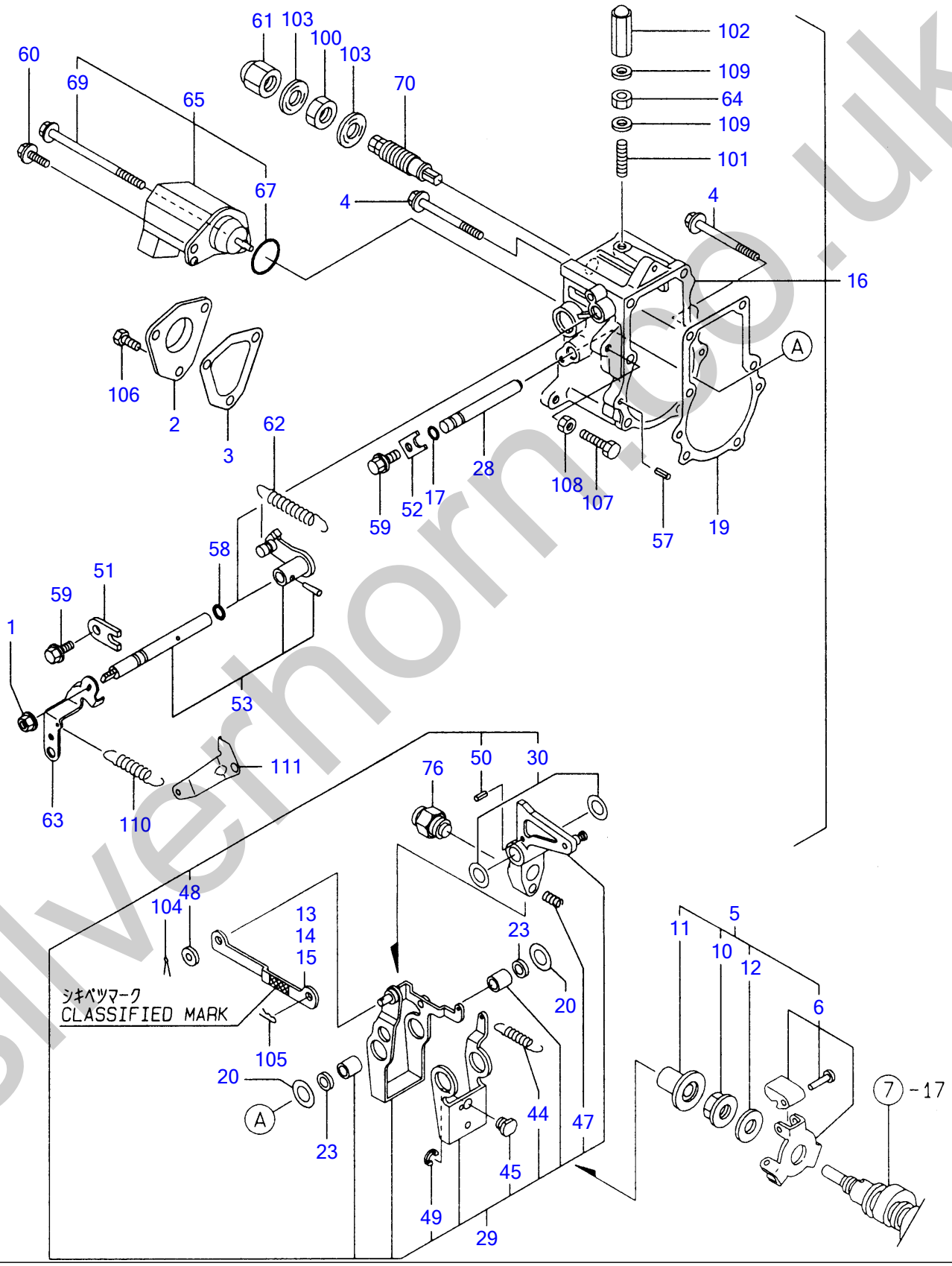

silverthorn.co.uk

¶ÞÊÞÅ GOVERNOR

Œ©lo REF NO.	•"•i"Ôl† PARTS NO.	•"•i-¼	Description	l"–Ê Q'ty	ŒÝŠ·l« I	R	"õlI
1	Y194990-22050	¹ÌÞ½ (½Êß¯¸ 8	NUT W/WASHER 8	1			
2	Y119660-61060	¶ÞÊÞÅ¹°½ÌÀ	COVER, GOVERNOR CASE	1			
3	Y119660-61071	PK (¶ÞÊÞÅ¹°½)(ÉÝ±½)	GASKET, (NON ASB.)	1			
4	Y26106-060702	ÂÊÞÎÞÙÄ 6X70	BOLT M6X70 PLATED	5			
5	Y119266-61100	¶ÞÊÞÅ¸ÄÞ³ COMP	DRIVING SET, GOV.	1			
6	Y119600-61200	· ¶ÞÊÞÅ³´²Ä CMP	· WEIGHT ASSY, GOV.	1			
10	Y119660-61300	· Å¯Ä (¶ÞÊÞÅ»Îß°Ä	· NUT, GOVERNOR WEIGHT	1			
11	Y119660-61341	· ½Ø°ÌÞ	· SLEEVE, GOVERNOR	1			
12	Y119266-61230	· ¶Ý»Þ (³´²Ä»Îß°Ä	· SPACER	1			
13	Y119660-61121	ØÝ¸ L=88.8 (Íß²ÝÄÅ¼)	LINK L=88.8 (NO COLOR	1		(1)	¾ÝÀ¸¼®³ÌÞËÝ: ¼·ÍÞÂÏ°¸ ¦ ¶¸ÆÝÉ ³´Á-³ÓÝÈ¶Þ²Ï½lD(²×½Ä »Ý¼®³)
14	Y119660-61140	ØÝ¸ L=88.6 (Íß²ÝÄ=¼Û)	LINK L=88.6 (WHITE	1		(1)	¾ÝÀ¸¼®³ÌÞËÝ: ¼·ÍÞÂÏ°¸ ¦ ¶¸ÆÝÉ ³´Á-³ÓÝÈ¶Þ²Ï½lD(²×½Ä »Ý¼®³)
15	Y119660-61150	ØÝ¸ L=89.0 (Íß²ÝÄ=±¶)	LINK L=89.0 (RED	1		(1)	¾ÝÀ¸¼®³ÌÞËÝ: ¼·ÍÞÂÏ°¸ ¦ ¶¸ÆÝÉ ³´Á-³ÓÝÈ¶Þ²Ï½lD(²×½Ä »Ý¼®³)
16	Y119266-61200	¶ÞÊÞÅ¹°½ COMP	CASE ASSY GOVERNOR	1			
17	Y129155-51280	· OØÝ¸Þ (S6	· O-RING S6	1			
19	119660-61052	· PK (¶ÞÊÞÅ¹°½)(ÉÝ±½)	· GASKET, (NON ASB.)	1			
20	119660-61460	· ¼Ñ CMP (¶ÞÊÞÅÚÊÞ°¼Þ¸	· SHIM SET	1			
23	129155-61480	· ¶Ý»Þ COMP	· SPACER ASSY	2			
28	119660-61491	· ¼¬ÌÄ (¶ÞÊÞÅÚ²	· SHAFT, GOVERNOR LEVER	1			
29	119266-61510	· ¶ÞÊÞÅÚÊÞ° CMP	· LEVER ASSY, GOVERNOR	1			
30	174307-51700	· · ¼Ñ¾¯Ä (Á®³¾²Ö³	· · SHIM SET	2			
44	119232-61540	· · SP (GÚÊÞ°¾¯Ä	· · SPRING, LEVER	1			
45	119600-61541	· · ¼ÌÀ	· · SHIFTER, P. T. O.	1			
47	119266-61650	· · FO¿Þ³Ø®³ÊÞÈ	· · SPRING, FUEL CONTROL	1			
48	22117-040000	· · »Þ¶ÞÈ (ºÏÙ 4	· · WASHER 4	1			
49	22272-000040	· · ÄÒÜE 4	· · CIRCLIP E-4	1			
50	22351-030014	· · ½ÌßØÝ¸ÞËßÝ 3.0AX14	· · SPRING PIN 3X14	1			
51	119600-61900	· Ç¹ÄÞÒ	· RETAINER, SHAFT	1			
52	119660-61901	· Ç¹ÄÞÒ	· RETAINER, SHAFT	1			
53	119285-66080	· Ú·Þ-Ú°À¼¬ÌÄ CMP	· SHAFT ASSY, REGULATOR	1			
57	22351-040010	· ½ÌßØÝ¸ÞËßÝ 4.0AX10	· SPRING PIN 4X10	2			
58	24341-000070	· OØÝ¸Þ 1A S-7.0	· O-RING 1A S-7.0	1			

silverhorn.co.uk

GOVERNOR

Y00D6550
3TNE68-NTB

12 ガバナ
GOVERNOR

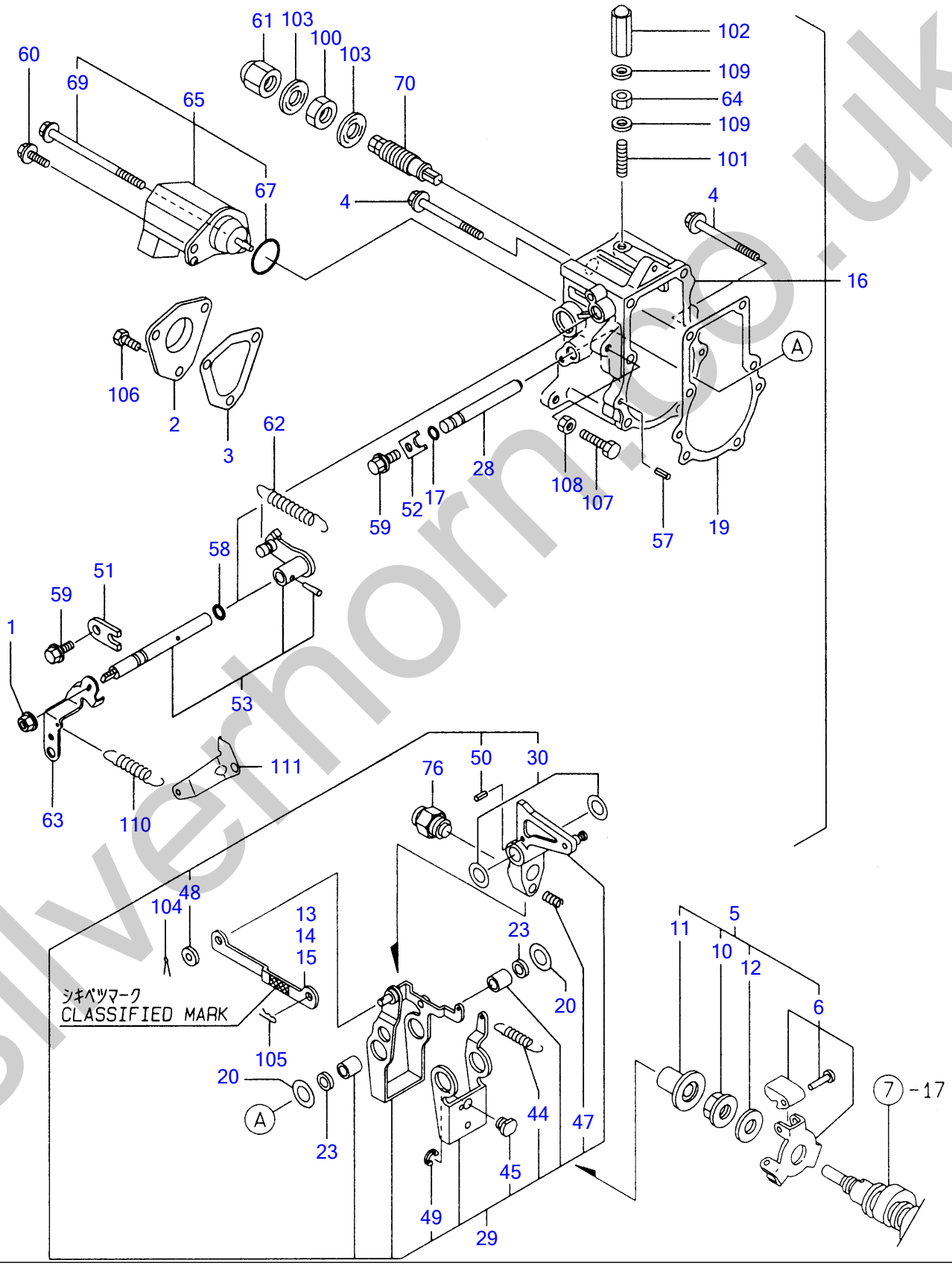

silverthorn.co.uk

¶ÞÊÞÅ GOVERNOR

Œ©lo REF NO.	•"•i"Ôl† PARTS NO.	•"•i-¼	Description	l"–Ê Q'ty	ŒÝŠ·l« I	R	"õll
59	26106-060102	• ÂÊÞÎÞÙÄ M6X10	• BOLT M6X10 PLATED	2			
60	121465-59950	ÎÞÙÄ 6X16	BOLT M6X16 PLATED	1			
61	26687-120002	Ì¸ÛÅ¯Ä (À¶Î¿ 12	CAP NUT M12	1			
62	119600-66020	Ú·Þ-Ú°À½ÌßØÝ¸Þ	SPRING, REGULATOR	1			
63	119640-66051	Ú·Þ-Ú°ÀÊÝÄÞÙ	HANDLE, REGULATOR	1			
64	124550-66370	ÄÒÅ¯Ä 6 (ÂÂÞØ±Å	LOCK NUT M6	1			
65	119285-66500	´Ý¼ÞÝ½Ä¯Ìß CMP	STOP DEVICE	1			
67	24341-000280	• OØÝ¸Þ 1A S-28.0	• O-RING 1A S-28.0	1			
69	26106-060952	• ÂÊÞÎÞÙÄ 6X95	• BOLT M6X95 PLATED	1			
70	119600-66530	FOØÐ¯À CMP	TORQUE APRING ASSY	1			
76	119610-66700	±Ý¸Þ×²Ë CMP	ANGLEICH ASSY	1			
100	26776-120002	ÄÒÅ¯Ä (Î¿ 12	LOCK NUT M12 PLATED	1			
101	121575-66830	½¸Ø- (±¼Þ¬½Ä	SCREW, ADJUST	1			
102	119600-66840	·¬¯ÌßÅ¯Ä	NUT CAP	1			
103	22190-120002	¼°ÙÜ¯¼¬ (ºÏÙ 12	SEAL WASHER 12	2			
104	22360-040000	½Å¯ÌßËßÝ 4	SNAP PIN 4	1			
105	22360-060000	½Å¯ÌßËßÝ 6	SNAP PIN 6	1			
106	26116-050102	ÎÞÙÄ 5X10	BOLT M5X10 PLATED	3			
107	26116-060304	ÎÞÙÄ 6X30	BOLT M6X30 PLATED	1			
108	26756-060002	ÄÒÅ¯Ä 6	LOCK NUT 6	1			
109	22190-060003	¼°ÙÜ¯¼¬ (ÏÙ 6	SEAL WASHER 6	2			
110	119840-61870	½ÌßØÝ¸Þ	SPRING	1			
111	119656-66910	Ì¯¸ (ÓÄÞ¼ÊÞÈ	HOOK	1			

silverhorn.co.uk

FUEL INJECTION VALVE

Y00D6550
3TNE68-NTB

13 FOフンシャベン
FUEL INJECTION VALVE

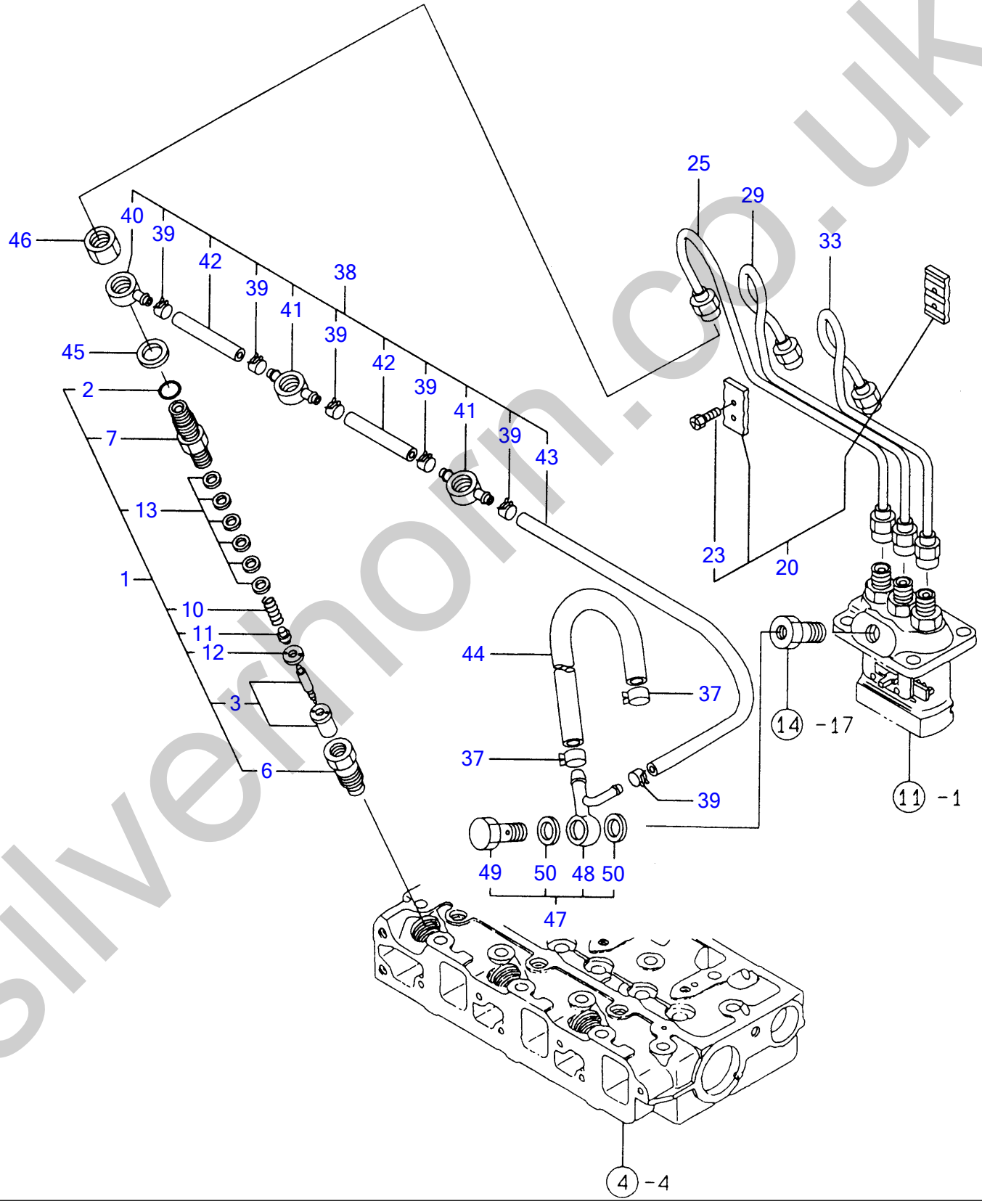

silverhorn.co.uk

FOÌÝ¼ÔÍÞÝ FUEL INJECTION VALVE

Œ©lo REF NO.	•"•i"Ôl† PARTS NO.	•"•i-¼	Description	l"–Ê Q'ty	ŒÝŠ·l« I	R	"õll
1	Y719255-53100	FOÌÝ¼¬ÍÞÝ ASSY	FUEL INJECT, VALVE AS	3			
2	Y129155-61830	· OØÝ¸Þ (S10	· O-RING S10	3			
3	Y119620-53000	· É½ÞÙ CMP	· NOZZLE ASSY, F. INJECT	3			
6	Y119620-53080	· É½ÞÙÄØÂ¹Å¯Ä	· NUT, VALVE W/CASE	3			
7	Y119255-53100	· É½ÞÙÎÙÀÞ°	· HOLDER, NOZZLE	3			
10	Y119620-53120	· SP (É½ÞÙ	· SPRING, VALVE	3			
11	Y114250-53130	· ¼°Ä (É½ÞÙ½ÌßØÝ¸Þ	· SEAT, NOZZLE SPRING	3			
12	Y119620-53140	· ÊÞÙÌÞ½Ä¯Ìß½Íß°»	· SRACER, VALVE STOP	3			
13	Y114250-53400	· ¼Ñ CMP	· SHIM PACK	3			
20	Y129150-59120	ÌÚÄÞÒ (ÌÝ¼¬¶Ý CMP	RETAINER, INJ. PIPE	1			
23	Y129150-59131	· +±Å HB4X14	· BOLT M4X14, HEX. SCKT.	2			
25	Y119266-59811	ÌÝ¼¬¶Ý CMP (NO. 1)	PIPE (1), FUEL INJECT	1			
29	Y119266-59821	ÌÝ¼¬¶Ý CMP (NO. 2)	PIPE (2), FUEL INJECT	1			
33	Y119266-59831	ÌÝ¼¬¶Ý CMP (NO. 3)	PIPE (3), FUEL INJECT	1			
37	Y124766-59050	Î°½¸Ø¯Ìß (ÏÙ 12	CLAMP 12	2			
38	Y119266-59540	FOÊß²Ìß ÓÄÞ¼ CMP	PIPE ASSY, FUEL OVER	1			
39	Y124066-59100	· Î°½¸Ø¯Ìß (ÏÙ 8	· CLAMP 8	6			
40	119260-59520	· ¼Þ®²ÝÄ B	· JOINT (B)	1			
41	119260-59530	· ¼Þ®²ÝÄ A	· JOINT (A)	2			
42	105025-59550	· FOÊß²ÌßÓÄÞ¼	· PIPE, FUEL RETURN	2			
43	119000-59560	· FOÓÄÞ¼¶Ý	· PIPE, FUEL RETURN	1			
44	124767-59080	FOÊß²Ìß	PIPE, F. O.	1			
45	23414-140000	Êß¯·Ý (ÏÙ 14	GASKET 14, ROUND	3			
46	119620-59700	Å¯Ä (É½ÞÙÓÄÞ¼	NUT	3			
47	119266-59501	¶ÝÂ·ÞÃ CMP	PIPE JOINT ASSY	1			
48	119266-59570	· ¼Þ®²ÝÄ (µ°ÊÞ°ÌÛ°	· JOINT	1			
49	119266-59580	· ¶ÝÂ·ÞÃÎÞÙÄ 8	· BOLT 8, PIPE JOINT	1			
50	23414-080012	· Êß¯·Ý (ºÏÙ 8	· GASKET 8	2			

silverhorn.co.uk

FUEL LINE

Y00D6550
3TNE68-NTB

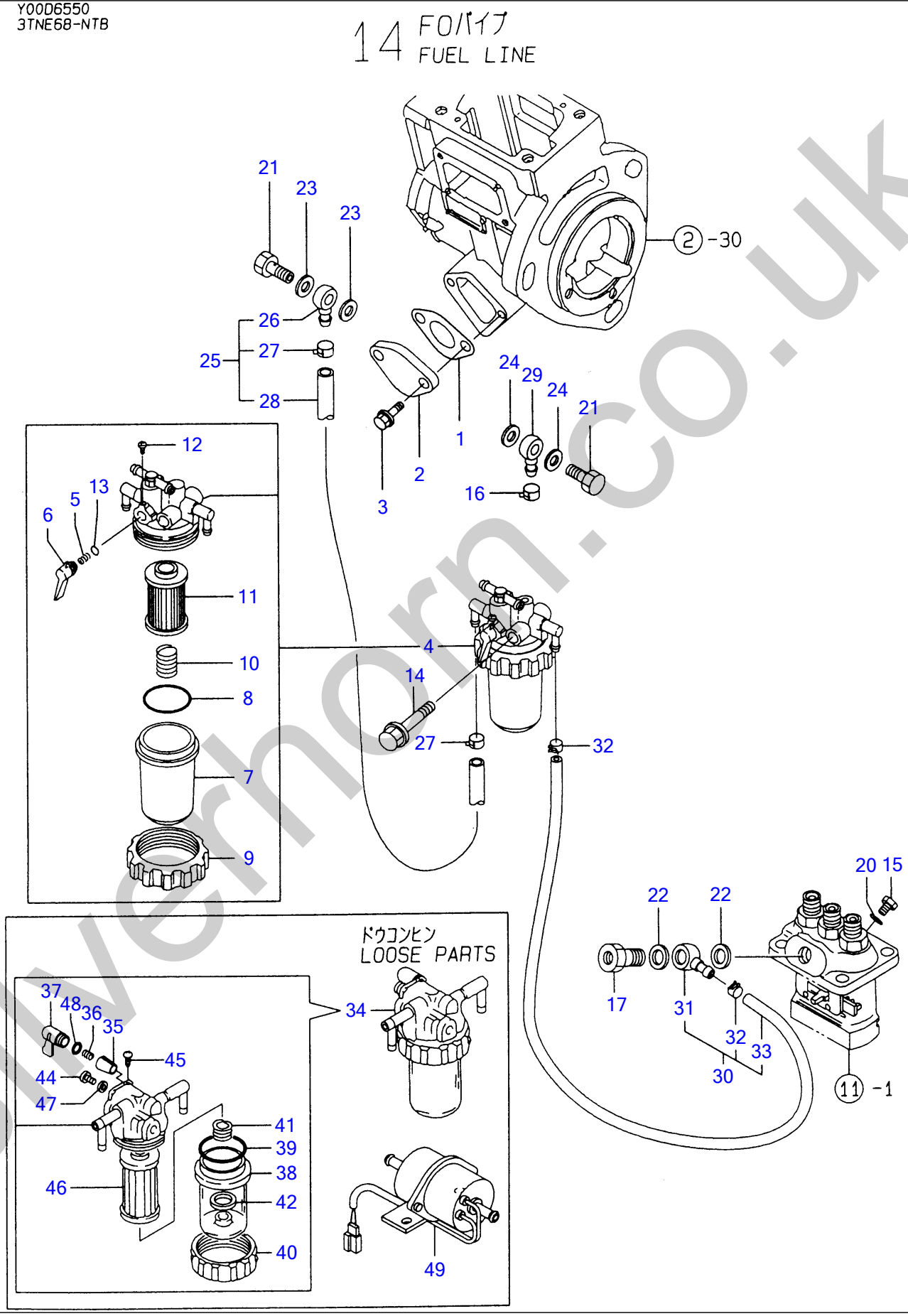

silverthorn.co.uk

FOÊß²Ìß FUEL LINE

Œ©Ìo REF NO.	•"•i"Ô Ì† PARTS NO.	•"•i-¼	Description	Ì"–Ê Q'ty	ŒÝŠ·Ì« I	R	"õÌI
1	Y121520-01851	PK (Ì¨°ÄÞÎßÝÌß)(ÉÝ±½)	GASKET, (NON-ASB.)	1			
2	Y121520-01860	Ò¸×ÌÀ	COVER, BLIND	1			
3	Y26106-060162	ÂÊÞÎÞÙÄ 6X16	BOLT M6X16 PLATED	2			
4	Y119255-55620	Ì¨ÙÀ (FO CMP	STRAINER, FUEL	1			
5	Y104200-55330	• ½ÌßØÝ¸Þ (Ã°ÙÊß²Ìß	• SPRING, TAPER VALVE	1			
6	Y119810-55340	• ÚÊÞ°	• LEVER	1			
7	Y121254-55510	• µµ² (FOº¼·	• CUP, STRAINER	1			
8	Y102103-55520	• OØÝ¸Þ (µµ²	• O-RING	1			
9	Y110250-55610	• ØÃ°ÆÝ¸ÞØÝ¸Þ	• RING, RETAINER	1			
10	Y121250-55620	• ½ÌßØÝ¸Þ (´ÚÒÝÄ	• SPRING	1			
11	Y124550-55700	• ´ÚÒÝÄ (FO) L=90	• T. TNE (2TR22	1			
12	Y104200-55750	• ÅÍÞºÈ¼Þ 4 (FOº¯¸ÊÝÄÞÙ	• SCREW M4	1			
13	Y24311-240100	• OØÝ¸Þ 1A P-10A	• O-RING 1A P-10A	1			
14	Y26014-080702	ÎÞÙÄ (Ë×+ÊÞÈ) M8X70	BOLT W/WASHER M8X70	1			
15	Y123482-01900	6¶¸Ìß×¸Þ 8	PLUG M8	1			
16	Y124766-59050	Î°½¸Ø¯Ìß (ÏÙ 12	CLAMP 12	1			
17	Y119462-59190	¶ÝÂ·ÞÃÎÞÙÄ CMP	BOLT ASSY, PIPE JOINT	1			
20	23414-080012	Êß¯·Ý (ºÏÙ 8	GASKET 8	1			
21	105582-59150	¶ÝÂ·ÞÃÎÞÙÄ (FEEDPÖ³)	BOLT, PIPE JOINT	2			
22	104200-59170	Êß¯·Ý (ÏÙ 12	GASKET 12	2			
23	22190-080002	¼°ÙÜ¯¼¬ (ºÏÙ¤ÆÄØÙ) 8	SEAL WASHER 8S	2			
24	22190-080002	¼°ÙÜ¯¼¬ (ºÏÙ¤ÆÄØÙ) 8	SEAL WASHER 8S	2			
25	119244-50920	FOÊß²Ìß CMP	PIPE W/JOINT, FUEL	1			
26	104264-59030	• ¶ÝÂ·ÞÃ (¶À¸Á 8	• JOINT 8, PIPE	1			
27	124766-59050	• Î°½¸Ø¯Ìß (ÏÙ 12	• CLAMP 12	2			
28	121522-59100	• FOT (D12XL500	• PIPE (L=500), FUEL	1			
29	104264-59030	¶ÝÂ·ÞÃ (¶À¸Á 8	JOINT 8, PIPE	1			
30	119230-59031	FO-T CMP	PIPE ASSY, FUEL OIL	1			
31	101304-59020	• ¶ÝÂ·ÞÃ (¶À¸Á 12	• JOINT 12, PIPE	1			
32	124766-59050	• Î°½¸Ø¯Ìß (ÏÙ 12	• CLAMP 12	2			
33	119230-59080	• FOT (D12XL185	• FO-T	1			
34	129335-55700	³µ°À¾ÊßÚ°À CMP	SEPARATOR, WATER	1			
35	104200-55321	• Ã°ÊßÊÞÙÌÞ	• VALVE, TAPER	1			
36	104200-55330	• ½ÌßØÝ¸Þ (Ã°ÊßÊÞÙÌÞ	• SPRING, TAPER VALVE	1			
37	104200-55341	• ÊÝÄÞÙ (FOº¯¸	• HANDLE, COCK	1			
38	124064-55510	• µµ² (FOº¼·	• BOWL, FUEL STRAINER	1			
39	102103-55520	• OØÝ¸Þ (µµ²	• O-RING	1			
40	110250-55610	• ØÃ°ÆÝ¸ÞØÝ¸Þ	• RING, RETAINER	1			
41	121257-55720	• ½ÌßØÝ¸Þ (½¸Ø°Ý	• SPRING, SCREEN	1			
42	121257-55731	• ÌÛ°Ä	• FLOAT	1			
44	101720-55750	• 6¶¸Ìß×¸Þ 6 (´±°Ç·	• PLUG 6	2			
45	104200-55750	• ÅÍÞºÈ¼Þ 4 (FOº¯¸ÊÝÄÞÙ	• SCREW M4	1			
46	171081-55910	• ½¸Ø°Ý (100Ò¯¼-	• SCREEN	1			
47	23418-060000	• Êß¯·Ý (ÏÙ 6	• GASKET 6 NYLON	2			
48	24311-240100	• OØÝ¸Þ 1A P-10A	• O-RING 1A P-10A	1			
49	129322-77401	Ì¨°ÄÞÎßÝÌß (FP332	FEED PUMP	1			

silverfornco.uk

STARTING MOTOR

Y00D6550
3TNE68-NTB

15 スターティングモータ STARTING MOTOR

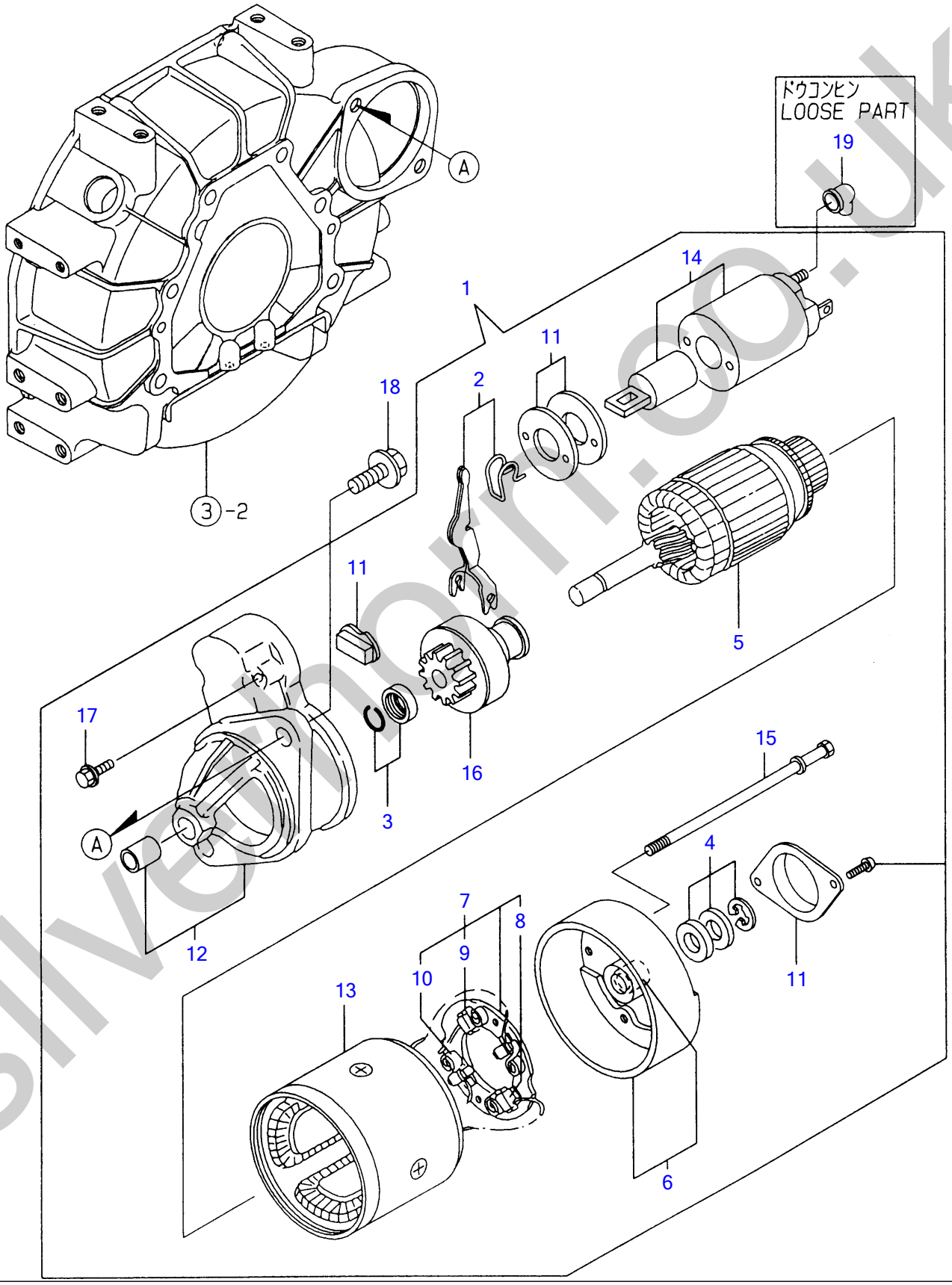

silvermarr.co.uk

½À-Ã²Ý¸ÞÓ-À STARTING MOTOR

Œ©▯o REF NO.	•"•i"Ô▯† PARTS NO.	•"•i-¼	Description	▯"–Ê Q'ty	ŒÝŠ·▯« I	R	"õ▯l
1	**Y119631-77011**	½À°Ã¨Ý¸ÞÓ°À	STARTING MOTOR	1			
2	**Y114371-77180**	・¼ÌÄÚÊÞ°·¯Ä	・SHIFT LEVER KIT	1			
3	**YX2114715500**	・ËßÆµÝ½Ä¯Êß° SET	・STOPPER SET, PINION	1			
4	**YX2114811000**	・½×½ÄÜ¯¼¬ KIT	・WASHER KIT, THRUST	1			
5	**Y114371-77110**	・±°ÏÁ¬°	・ARMATURE	1			
6	**Y114371-77140**	・ØÔ¶ÊÞ° ASSY	・COVER ASSY, REAR	1			
7	**Y114371-77160**	・ÌÞ×¼ÎÙÀÞ°	・HOLDER ASSY, BRUSH	1			
8	**Y114371-79040**	・・ÌÞ×¯¼- (-)	・・BRUSH (-)	2			
9	**Y114371-79050**	・・ÌÞ×¯¼- (+)	・・BRUSH (+)	1			
10	**Y114371-79060**	・・ÌÞ×¼½ÌßØÝ¸Þ	・・SPRING, BRUSH	4			
11	**Y114371-77170**	・ÀÞ½Ä¶ÊÞ°·¯Ä	・COVER KIT, DUST	1			
12	**Y119631-77651**	・·ÞÔ¹°½ CMP	・CASE, GEAR	1			
13	**Y124097-77710**	・Ö°¸ ASSY	・YOKE ASSY	1			
14	**YX2114275010**	・Ï¸ÞÈ¯Ä½²¯Á ASSY	・SWITCH ASSY, MAGNET	1			
15	**Y124195-77770**	・½Ù°ÎÞÙÄ	・THROUGH BOLT	2			
16	**Y119631-77780**	・ËßÆµÝ CMP	・PINION CMP	1			
17	**Y114371-79070**	・ÎÞÙÄ 6X37	・BOLT M6X37	2			
18	**26116-120252**	ÎÞÙÄ 12X25	BOLT M12X25 PLATED	2			
19	**124160-77020**	À°ÐÅÙ¶ÊÞ°	COVER, TERMINAL	1			

silverhorn.co.uk

GENERATOR

Y00D6550
3TNE68-NTB

16 ジェネレータ
GENERATOR

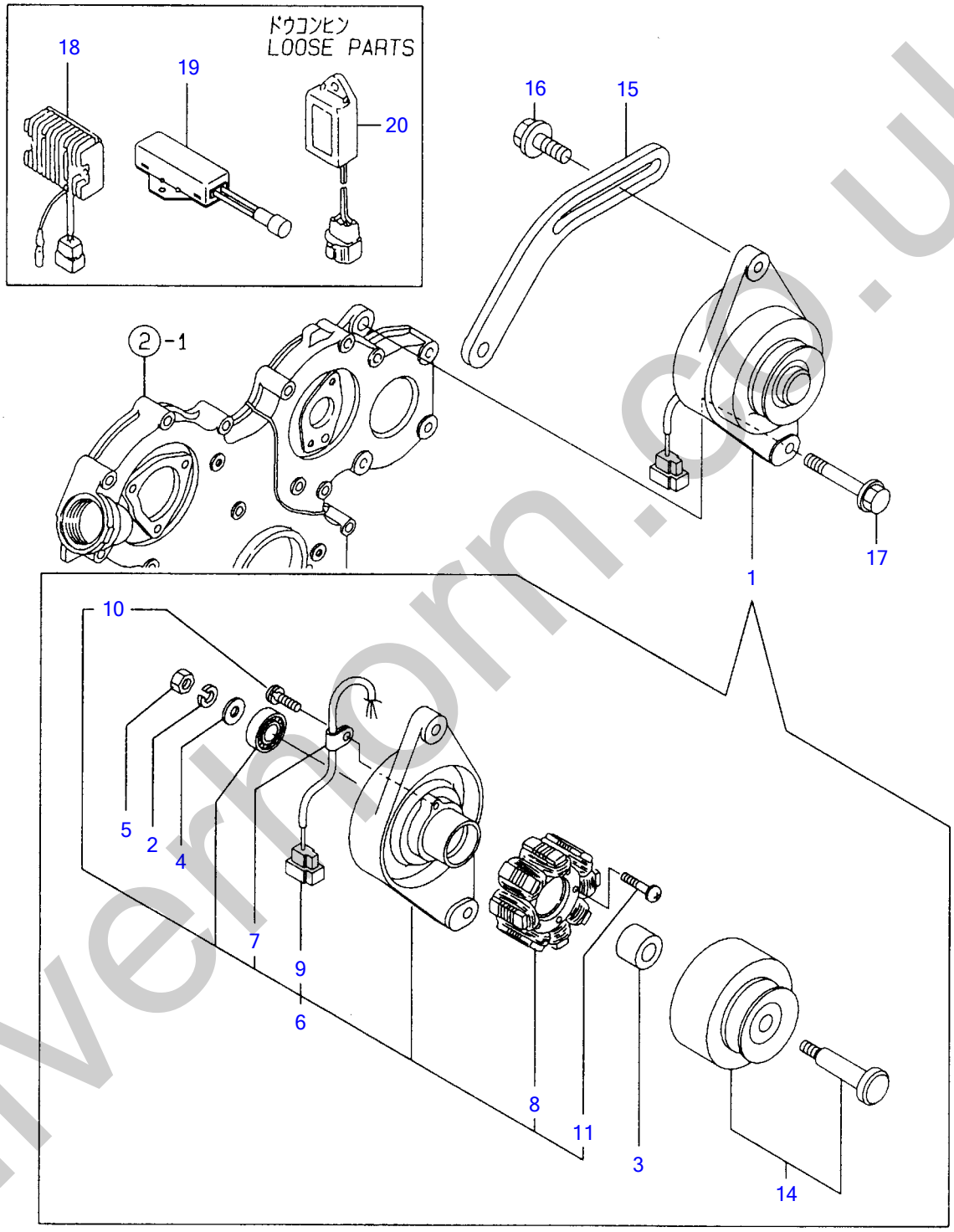

silverhorn.co.uk

¼Þ´ÈÚ-À GENERATOR

Œ©lo REF NO.	•"•i"Ôl† PARTS NO.	•"•i-¼	Description	l"–Ê Q'ty	ŒÝŠ·l« I	R	"õll
1	Y129150-77202	ÀÞ²ÅÓ (GP9165)	GENERATOR	1			
2	YXM219230000	· ½ÌßØÝ¸ÞÜ¯¼¬°	· WASHER, SPRING	1			
3	YXM329830000	· ¶×°	· COLLAR	1			
4	YXM860250000	· Ë×»Þ¶ÞÈ 10	· WASHER 10	1			
5	YXM863720000	· Å¯Ä	· NUT	1			
6	Y129150-77210	· ÌßÚ°Ä CMP	· PLATE ASSY	1			
7	YXM069000000	· · ¸×ÝÌß	· · CLAMP	1			
8	YXM081780000	· · ½Ã°À CMP	· · STATOR	1			
9	YXM178780000	· · ¶Ìß×°	· · COUPLER	1			
10	YXYSPS400800	· · ºÈ¼Þ	· · SCREW	1			
11	YXYSPS402400	· · ºÈ¼Þ	· · SCREW	2			
14	Y129150-77230	· Ì×²Î²°Ù CMP	· FLYWHEEL ASSY	1			
15	Y119266-77330	±¼Þ¬½À (VÍÞÙÄ	ADJUSTER, V-BELT	1			
16	Y119810-77340	ÎÞÙÄ (±¼Þ¬½À	BOLT	1			
17	Y26106-100402	ÂÊÞÎÞÙÄ 10X40	BOLT M10X40 PLATED	1			
18	Y119653-77710	¶°ÚÝÄØÐ¯À	LIMITTER, CORRENT	1			
19	Y129155-77810	Ú¼Þ½À° (¸ÞÛ°	RESISTOR	1			
20	Y119632-77920	À²ï° (1 SEC.	TIMER	1			

silverhorn.co.uk

GASKET SET & TOOLS

Y00D6550
3TNE68-NTB

17 パッキンセット & コウグ
GASKET SET & TOOLS

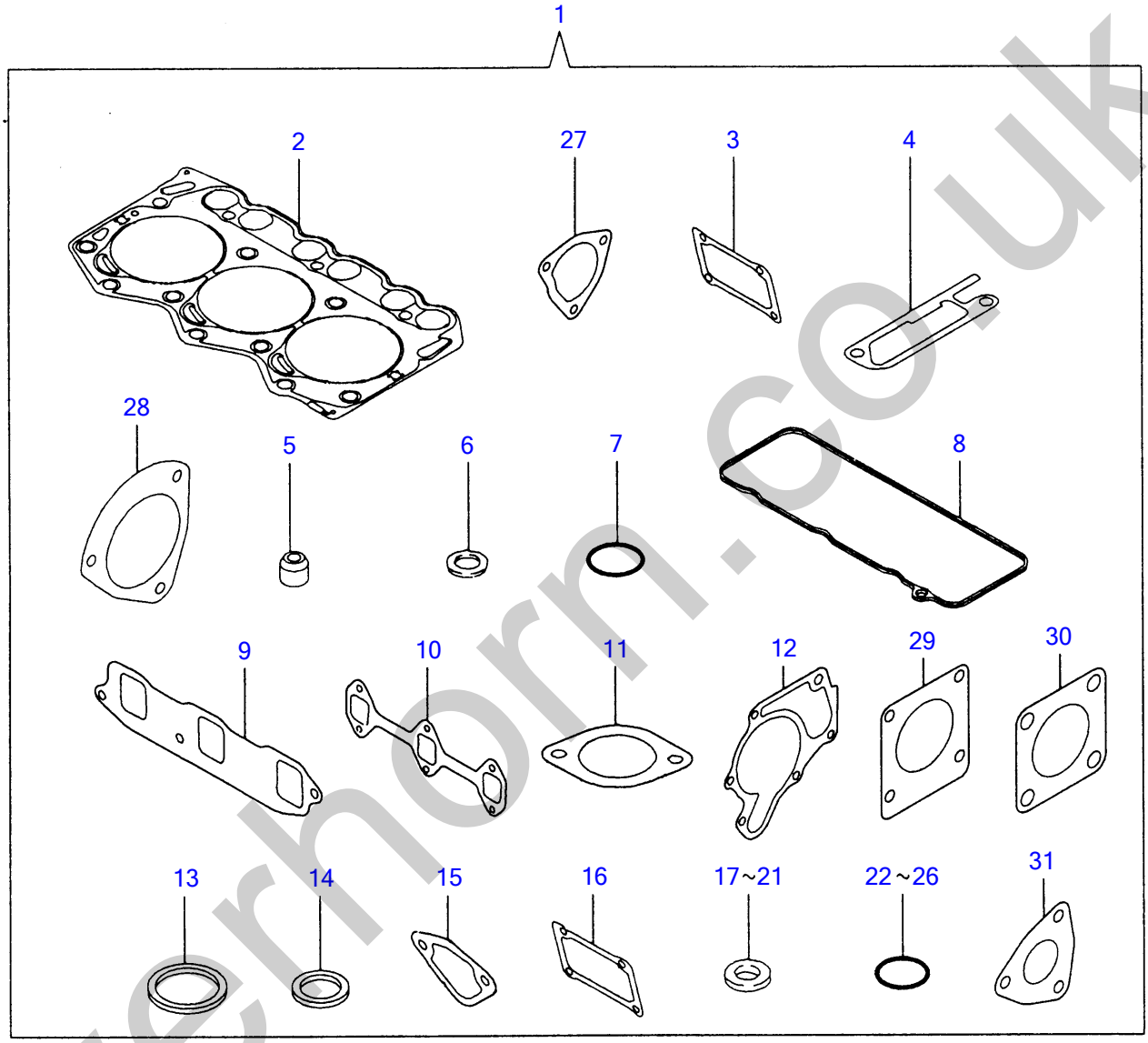

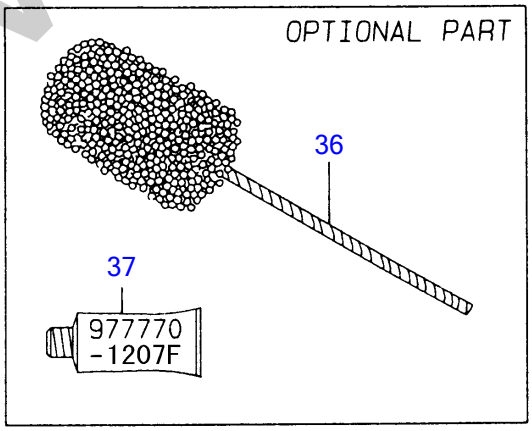

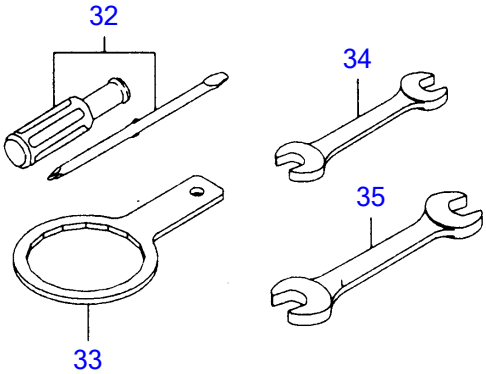

silverhorn.co.uk

ÊßÂ·Ý¾ÂÄ & º³¸Þ GASKET SET & TOOLS

Œ©lo REF NO.	•"•i"Ôl† PARTS NO.	•"•i-¼	Description	l"–Ê Q'ty	ŒÝŠ·l« I	R	"õl I
1	Y719266-92620	ÊßÂ·Ý¾ÂÄ(ÉÝ±½)	GASKET SET, (NON-ASB.)	1		(1)	µÌß¼®Ý ÌÞËÝÃÞ½lD
2	Y119266-01330	ÍÂÄÞ¶Þ½¹ÂÄ	GASKET, CYL. HEAD	1			
3	Y119660-01562	PK (ÎßÝÌß¼ÂÌÀ)(ÉÝ±½)	GASKET, (NON-ASB.)	1			
4	Y119266-03210	PK (¼Þ¬Ï²À)(ÉÝ±½)	GASKET, (NON-ASB.)	1			
5	Y119260-11340	ÊÞÙÌÞ½ÃÑ¼-Ù	SEAL, VALVE STEM	6			
6	Y119600-11460	PK	GASKET, NOZZLE	6			
7	Y24311-000320	OØÝ¸Þ 1A P-32.0	O-RING 1A P-32.0	2			
8	Y119266-11310	PK (ÎÞÝÈÂÄ	GASKET, BONNET	1			
9	Y119270-12110	PK (ÏÆÎ-ÙÄÞ	GASKET, SUC. MANIFOLD	1			
10	Y119260-13110	¶Þ½¹ÂÄ (ÏÆÎ-ÙÄÞ	GASKET, EXH. MANIFOLD	1			
11	Y129795-49551	PK (»-Ó½ÀÂÄ¶ÊÞ-)(ÉÝ±½	GASKET, (NON-ASB.)	1			
12	Y119266-42020	PK (CWÎßÝÌß	GASKET, C.W. PUMP	1			
13	Y129150-49811	PK (»-Ó½ÀÂÄ ¼À)(ÉÝ±½)	GASKET, (NON-ASB.)	1			
14	Y124465-44950	ÊßÂ·Ý16	GASKET 16	1			
15	Y121520-01851	PK (Ì¨°ÄÞÎßÝÌß)(ÉÝ±½)	GASKET, (NON-ASB.)	1			
16	Y119266-01890	PK (FO¹°½ÌÀ	PK, COVER	1			
17	Y104200-59170	ÊßÂ·Ý (ÏÙ 12	GASKET 12	2			
18	Y129150-49360	PK 10	GASKET 10	1			
19	Y22190-080002	¼-ÙÜÂ¼Ô (ºÏÙ¤ÆÄØÙ 8	SEAL WASHER 8S	5			
20	Y23414-080012	ÊßÂ·Ý (ºÏÙ 8	GASKET 8	3			
21	Y23414-140000	ÊßÂ·Ý (ÏÙ 14	GASKET 14, ROUND	3			
22	Y24311-000120	OØÝ¸Þ 1A P 12.0	O-RING 1A P 12.0	4			
23	24311-240100	OØÝ¸Þ 1A P 10A	O-RING 1A P-10A	1			
24	119209-35030	OØÝ¸Þ P11	O-RING	1			
25	24341-000240	OØÝ¸Þ 1A S 24.0	O-RING 1A S-24.0	1			
26	24311-000220	OØÝ¸Þ 1A P 22.0	O-RING 1A P 22.0	2			
27	119624-01750	PK (FI-PÌÀ	PACKING (FI-P	1			
28	119266-01870	PK (FO-P¹°½	GASKET	1			
29	124240-01883	ÊßÂ·Ý (HO-P)(ÉÝ±½)	GASKET, (NON-ASB.)	1			
30	124701-11911	¶Þ½¹¯Ä (»²ÚÝ»)(ÉÝ±½)	GASKET, (NON-ASB.)	2			
31	103954-13201	¶Þ½¹¯Ä (»²ÚÝ»)(ÉÝ±½)	GASKET, SILENCER	1			
32	104200-92350	ÄÞ×²ÊÞ- (»¼¶´¼·	DRIVER, SCREW	1			
33	119332-92751	Ì²ÙÀÚÝÁ 68	WRENCH, FILTER	1			
34	28110-100120	½ÊßÅ 10X12	WRENCH 10X12	1			
35	28110-140170	½ÊßÅ 14X17	WRENCH 14X17	1			
36	129400-92400	ÌÚÂ¸½Î-Ý	FLEX HORN	1		(1)	µÌß¼®Ý ÌÞËÝÃÞ½lD
37	977770-1207F	¼Øº-Ý¹² ´·¼ÞÖ³¶Þ½¹ÂÄ	GASKET, LIQUID	1		(1)	µÌß¼®Ý ÌÞËÝÃÞ½lD

silverfort.co.uk

silverhorn.co.uk

ENGINE MODEL

Œ©lo REF NO.	•"•i"Ô†PARTS NO.	•"•i-¼	Description	”–Ê Q'ty	ŒÝŠ·« I	R	”õI

ENGINE(TNE)

TB014
3TNE68-TB1 S/N 11400023-11400460
3TNE68-ETB1 S/N 11400461-

TB016
3TNE68-TB1 S/N 11600032-11601831
3TNE68-ETB1 S/N 11601832-

2006.5.22

silverhorn.co.uk

CYLINDER BLOCK

Y00D6701
3TNE68-(E)TB1

1 シリンダブロック
CYLINDER BLOCK

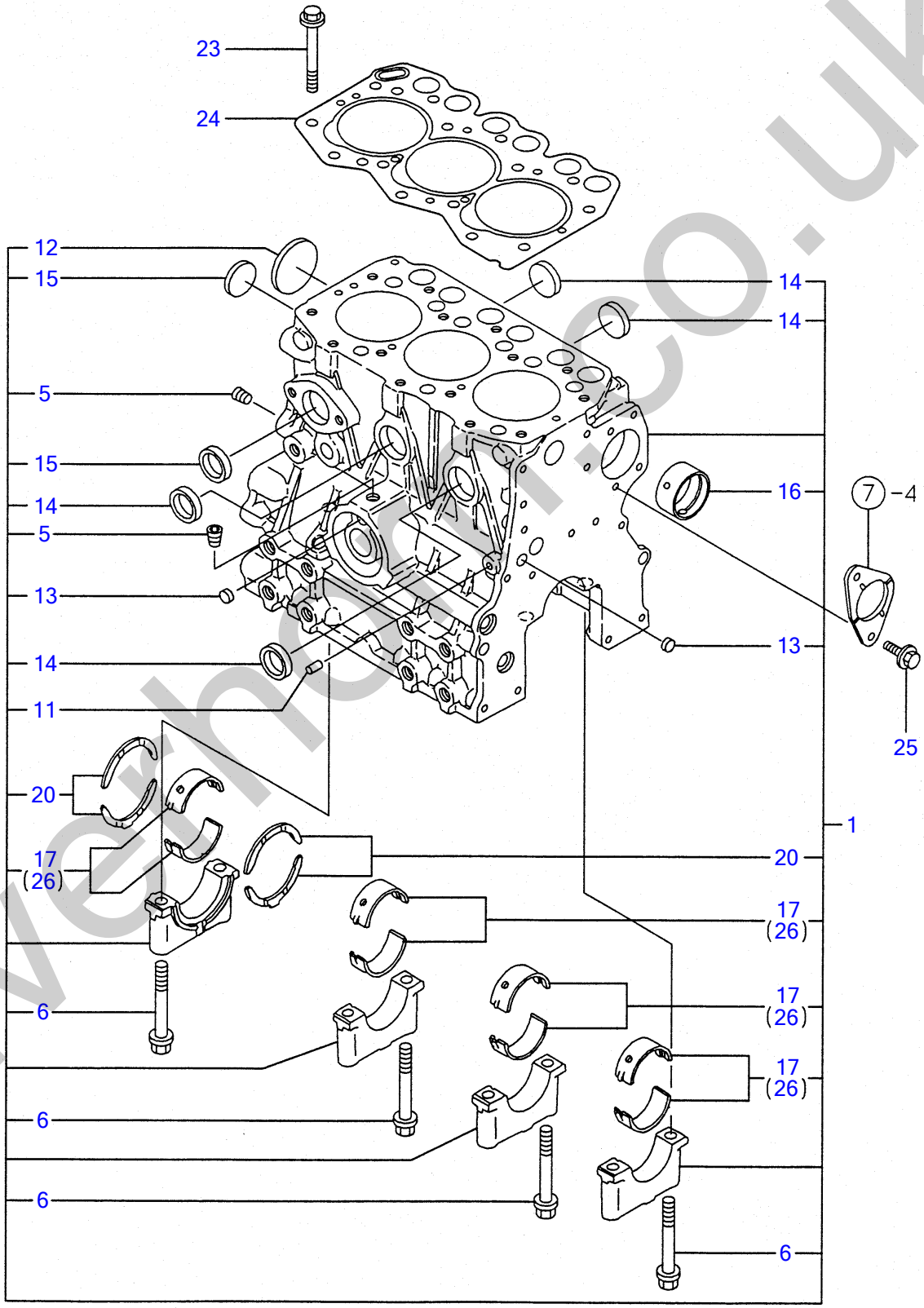

silverhomes.co.uk

¼ØÝÀÞÌÞÛ¯¸ CYLINDER BLOCK

Œ©▯o REF NO.	•”•i”Ô▯† PARTS NO.	•”•i-¼	Description	▯”–Ê Q'ty	ŒÝŠ·▯« I	R	”õ▯I
1	**Y719265-01560**	¼ØÝÀÞÌÞÛÂ¸ASSY	BLOCK ASSY, CYLINDER	1			
5	**Y124060-01050**	・Ìß×¸Þ PT1/8	・PLUG PT1/8	2			
6	**Y119260-02020**	・ÎÞÙÄ (ÒÀÙ·ÔÂÌß	・BOLT	8			
11	**Y27221-060100**	・³ÁºÐÌß×¸Þ 6X10	・PLUG 6X10	1			
12	**Y27231-400000**	・»×¶ÞÀÌß×¸Þ 40	・PLUG 40	1			3TNE68-TB1
I 12-1	**Y119265-01250 (A=EXXX)**	・»×¶ÞÀÌß×¸Þ 40	・PLUG 40	1	N		
13	**Y27241-100000**	・ÜÝ¶ÞÀÌß×¸Þ 10	・PLUG 10	2			
14	**Y27241-250000**	・ÜÝ¶ÞÀÌß×¸Þ 25	・PLUG 25	4			
15	**Y27241-300000**	・ÜÝ¶ÞÀÌß×¸Þ 30	・PLUG 30	2			
16	**Y119266-02410**	・ÌÞÂ¼Õ	・BUSH	1			
17	**Y719260-02800**	・Ò²ÝÍÞ±ØÝ¸Þ	・MAIN BEARING	4			
20	**Y719260-02930**	・½×½ÄÍÞ±ØÝ¸Þ	・BEARING, THRUST	2			
23	**Y119266-01200**	ÍÂÄÞÎÞÙÄ	STUD, CYL. HEAD	14			
24	**Y119265-01341**	ÍÂÄÞ¶Þ½¹ÂÄ	GASKET, CYL. HEAD	1			
25	**Y26106-060122**	ÂÊÞÎÞÙÄ M6X12	BOLT M6X12 PLATED	2			
26	**Y719260-02870**	Ò²ÝÍÞ±ØÝ¸Þ U.S=0.25	MAIN BEARING US=0.25	4		(1)	±ÝÀÞ°»²½Þ(U.S=0.25)ÌÞËÝÃÞ½▯D

silverhorn.co.uk

GEAR HOUSING

Y00D6701
3TNE68-(E)TB1

2 ギヤケース
GEAR HOUSING

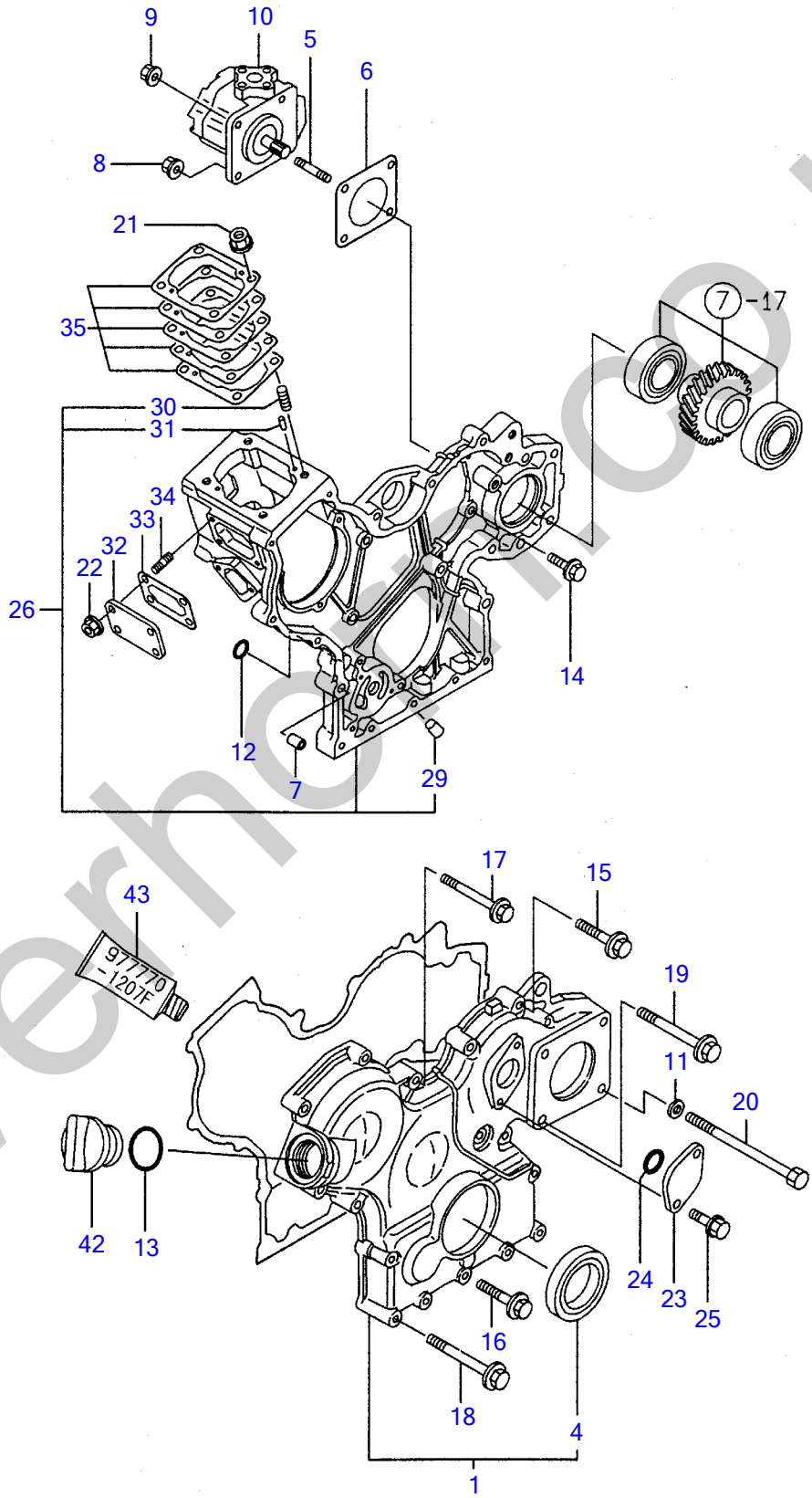

silverhorse.co.uk

·ÞÔ¹-½ GEAR HOUSING

	Œ©⍰o REF NO.	•"•i"Ô⍰† PARTS NO.	•"•i-¼	Description	⍰"–Ê Q'ty	ŒÝŠ·⍰« I	R	"õ⍰l
	1	Y119263-01590	·ÞÔ¹°½ÌÀ CMP	COVER ASSY, GEAR CASE	1			
	4	Y119620-01800	▪ µ²Ù¼°Ù (HTC456208	▪ SEAL HTC456208, OIL	1			
	5	Y121450-01560	³´ºÐÎÞÙÄ 8X22	STUD M8X22	1			
	6	Y124240-01883	Êß¯·Ý (HO-P) (ÉÝ±½)	GASKET, (NON-ASB.)	1			
	7	Y119660-01911	Êß²Ìß É¯	PIPE, KNOCK	4			
	8	Y194990-22050	¹Ìß½ (½Êß¯¸ 8	NUT W/WASHER 8	3			
	9	Y194990-22050	¹Ìß½ (½Êß¯¸ 8	NUT W/WASHER 8	1			
	10	Y119462-26010	Õ±ÂÎßÝÌß (PW1-C-4A	PUMP ASSY, HYDRAULIC	1			
	11	Y22137-080000	»Þ¶ÞÈ (Ð¶Þ· 8	WASHER 8, POLISHED	2			
	12	Y24311-000120	OØÝ¸Þ 1A P12.0	O-RING 1A P12.0	2			3TNE68-TB1
I	12-1	Y119624-32040 (A=FROM 1SET)	OØÝ¸Þ 1A P12.0	O-RING P12.0	2	N		
	13	Y24311-000320	OØÝ¸Þ 1A P32.0	O-RING 1A P32.0	1			
	14	Y26106-060162	ÂÊÞÎÞÙÄ 6X16	BOLT M6X16 PLATED	6			
	15	Y26106-060302	ÂÊÞÎÞÙÄ 6X30	BOLT M6X30 PLATED	4			
	16	Y26106-060402	ÂÊÞÎÞÙÄ 6X40	BOLT M6X40 PLATED	3			
	17	Y26106-060502	ÂÊÞÎÞÙÄ 6X50	BOLT M6X50 PLATED	3			
	18	Y26106-060652	ÂÊÞÎÞÙÄ 6X65	BOLT M6X65 PLATED	6			
	19	Y26106-080702	ÂÊÞÎÞÙÄ 8X70	BOLT M8X70 PLATED	1			
	20	Y26116-081302	ÎÞÙÄ 8X130	BOLT M8X130 PLATED	2			
	21	Y194990-22050	¹Ìß½ (½Êß¯¸ 8	NUT W/WASHER 8	4			
	22	Y26366-060002	ÂÊÞÂ·Å¯Ä 6¸	NUT M6	4			
	23	Y121023-01550	ÌÀ (ÀºÒ°À	COVER, BLIND	1			
	24	Y24341-000240	OØÝ¸Þ 1A S24.0	O-RING 1A S-24.0	1			
	25	Y26106-060162	ÂÊÞÎÞÙÄ 6X16	BOLT M6X16 PLATED	2			
	26	Y119263-01490	·ÞÔ¹°½ CMP	HOUSING ASSY, GEAR	1			
	29	Y119260-01510	▪ ³ÁºÐÌß×¸Þ	▪ PLUG	1			
	30	Y121450-01560	▪ ³´ºÐÎÞÙÄ 8X22	▪ STUD M8X22	4			
	31	Y22351-040010	▪ ½ÌßØÝ¸ÞËßÝ 4.0AX10	▪ SPRING PIN 4X10	2			
	32	Y119660-01551	ÌÀ (FOÎßÝÌß¼Â	COVER	1			
	33	Y119660-01562	PK (ÎßÝÌß¼ÂÌÀ) (ÉÝ±½)	GASKET, (NON-ASB.)	1			
	34	Y119660-01570	³´ºÐÎÞÙÄ M6X12	STUD M6X12	4			
	35	Y119623-01950	ÌÝ¼¬¼Þ·¼Ñ CMP	SHIM PACK	1			
	42	Y124160-01751	ÌÀ (ÎÕº³	CAP, LUB. OIL SUPPLY	1			
	43	Y977770-1207F	¼Øº°Ý¹² ´·¼Þ®³¶Þ½¹¯Ä	GASKET, LIQUID	1		(1)	µÌß¼®Ý ÌÞËÝÃÞ½⍰D

silverhorn.co.uk

FLYWHEEL HOUSING & OIL SUMP

Y00D6701
3TNE68-(E) TB1

3 フライホイルハウジング & オイルパン
FLYWHEEL HOUSING & OIL SUMP

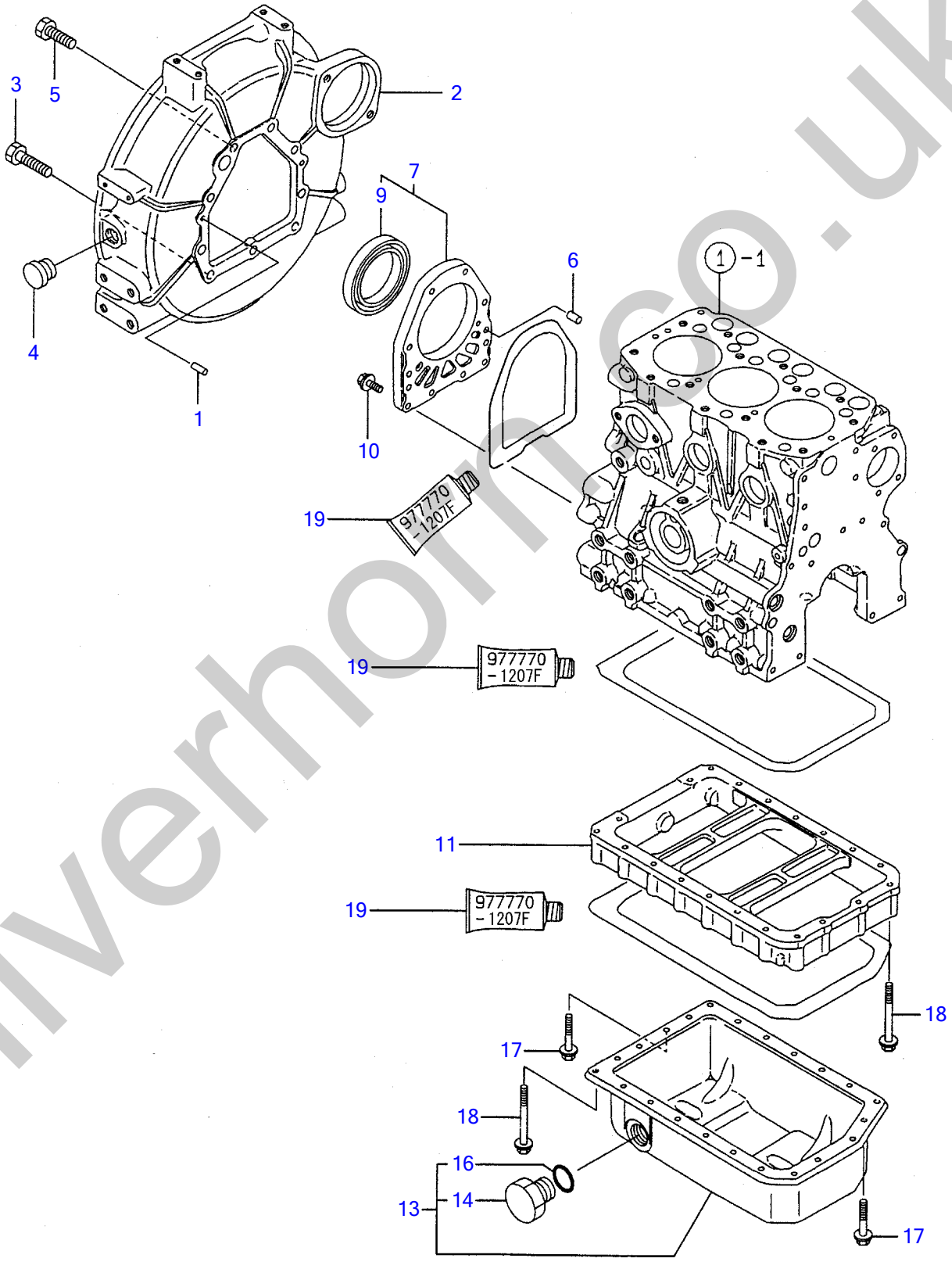

silverhorn.co.uk

Ì×²Î²ÙÊ³¼ÞÝ¸Þ & µ²ÙÊßÝ FLYWHEEL HOUSING & OIL SUMP

Œ©lo REF NO.	•"•i"Ôl† PARTS NO.	•"•i-¼	Description	l"–Ê Q'ty	ŒÝŠ·l« I	R	"õl
1	Y129100-01580	Í²º³ËßÝ 8X16	PARALLEL PIN 8X16	2			
2	Y119600-01600	Ê³¼ÞÝ¸Þ (Ì×²Î²Ù	HOUSING, FLYWHEEL	1			
3	Y121120-01620	ÎÞÙÄ M10X 28	BOLT M10X28	3			
4	Y119620-01750	·¬¯Ìß (Î²Ù¶ÊÞ°	CAP, FLYWHEEL COVER	1			
5	Y26206-100252	ÎÞÙÄ 10X 25	BOLT M10X25	6			
6	Y119620-01620	Í²º³ËßÝ 6X10	PARALLEL PIN 6X10	2			
7	Y119660-01640	µ²Ù¼-Ù¹°½ CMP	CASE ASSY, OIL SEAL	1			
9	Y124085-02220	▪ µ²Ù¼-Ù	▪ SEAL, OIL	1			
10	Y26106-060222	ÂÊÞÎÞÙÄ 6X 22	BOLT M6X22 PLATED	10			
11	Y119454-01721	¶Ý»Þ (µ²ÙÊßÝ	SPACER, OIL SUMP	1			
13	Y119260-01770	µ²ÙÊßÝ CMP	SUMP ASSY, OIL	1			
14	Y121400-01640	▪ Ìß×¸Þ (16)	▪ PLUG M16	1			
16	Y24311-000180	▪ OØÝ¸Þ 1A P18.0	▪ O-RING 1A P-18.0	1			
17	Y26106-060102	ÂÊÞÎÞÙÄ M6X 10	BOLT M6X10 PLATED	3			
18	Y26106-060452	ÂÊÞÎÞÙÄ 6X 45	BOLT M6X45 PLATED	20			
19	Y977770-1207F	¼Ø°-Ý¹² ´·¼ÞÖ³¶Þ½¹ÂÄ	GASKET, LIQUID	1		(1)	µÌß¼®Ý ÌÞËÝÃÞ½lD

silverhorn.co.uk

CYLINDER HEAD & BONNET

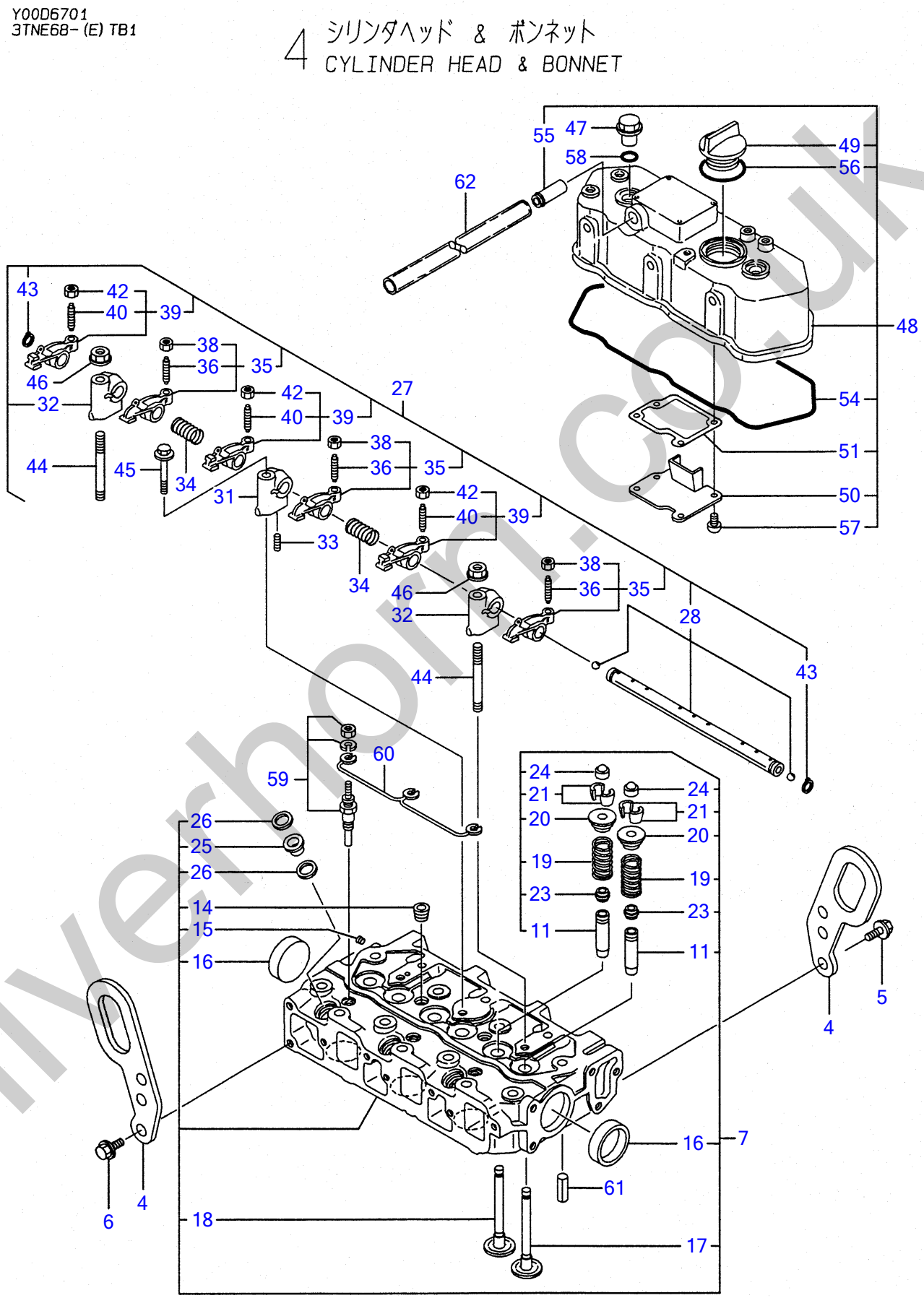

silverhorn.co.uk

¼ØÝÀÞÍÂÄÞ & ÎÞÝÈÂÄ CYLINDER HEAD & BONNET

	Œ©▯o REF NO.	•"•i"Ô▯† PARTS NO.	•"•i-¼	Description	▯"–Ê Q'ty	ŒÝŠ·▯« I	R	"õ▯l
	4	Y119626-07900	ÂØ±¹Þ¶Å¸Þ	LIFTER, ENGINE	2			
	5	Y26106-080142	ÂÊÞÎÞÙÄ M 8X 14	BOLT M 8X 14 PLATED	1			
	6	Y26106-080142	ÂÊÞÎÞÙÄ M 8X 14	BOLT M 8X 14 PLATED	2			
	7	Y119265-11700	¼ØÝÀÞÍÂÄÞ CMP	HEAD ASSY, CYLINDER	1			
	11	Y119260-11800	· ÊÞÙÌÞ¶Þ²ÄÞ	· GUIDE, VALVE	6		(1)	ÎÖ³ÌÞËÝÃÞ½▯D
	14	Y23871-030000	· È¼ÞÌß×¸Þ PT 3/8	· PLUG PT 3/8, SCREW	2			3TNE68-TB1
I	14-1	Y23876-030000 (A=EXXX)	· È¼ÞÌß×¸Þ PT 3/8	· PLUG PT 3/8, SCREW	2	N		
	15	Y27221-050080	· ³ÁºÐÌß×¸Þ 5X8	· PLUG 5X8	1			
	16	Y27241-350000	· ÜÝ¶ÞÀÌß×¸Þ 35	· PLUG 35	2			
	17	Y119260-11100	· ÊÞÙÌÞ(INT	· VALVE, SUCTION	3			
	18	Y119260-11110	· ÊÞÙÌÞ(EXH	· VALVE, EXHAUST	3			
	19	Y114250-11120	· ÊÞÙÌÞ½ÌßØÝ¸Þ	· SPRING, VALVE	6			
	20	Y114250-11180	· ÍÞÝÊÞÈµ»´	· RETAINER, SPRING	6			
	21	Y714250-11570	· ºÂÀ° 2¹=1¾¯Ä	· COTTER ASSY	6			
	23	119260-11340	· ÊÞÙÌÞ½ÃÑ¼-Ù	· SEAL, VALVE STEM	6			
	24	19260-11370	· ·ÔÂÌß(ÊÞÙÌÞ	· CAP, VALVE	6			
	25	11960011450	· É½ÞÙÌßÛÃ¸À	· PROTECTOR, NOZZLE	3			
	26	119600-11460	· PK	· GASKET, NOZZLE	6			
	27	Y119260-11200	· ÍÞÝÜÝ»Îß°Ä CMP	· SUPPORT ASSY, ARM	1			
	28	Y119260-11240	· ÍÞÝÜÝ¼Þ¸ CMP	· SHAFT ASSY, ARM	1			
	31	Y119260-11260	· ÍÞÝÜÝ»Îß°Ä	· SUPPORT, ROCKER ARM	1			
	32	Y119265-11260	· ÍÞÝÜÝ»Îß°Ä	· SUPPORT, ROCKER ARM	2			
	33	Y119260-11270	· ÄÒÈ¼Þ	· SCREW	1			
	34	Y119260-11280	· ÊÞÈ (ÍÞÝÜÝ¼Þ¸	· SPRING	2			
	35	Y719260-11650	· ·-³·ÍÞÝÜÝ¼¸Ð	· ARM ASSY, ROCKER	3			
	36	Y105010-11230	· · ±¼Þ¬½À (ÍÞÝ½·Ï)	· · SCREW, VALVE	3			
	38	Y26756-060002	· · ÄÒÅ¯Ä 6	· · LOCK NUT 6	3			
	39	Y719260-11660	· Ê²·ÍÞÝÜÝ¼¸Ð	· ARM ASSY, ROCKER	3			
	40	Y105010-11230	· · ±¼Þ¬½À (ÍÞÝ½·Ï)	· · SCREW, VALVE	3			
	42	Y26756-060002	· · ÄÒÅ¯Ä 6	· · LOCK NUT 6	3			
	43	Y22242-000100	· ÄÒÜC (¼Þ¸ 10	· CIRCLIP 10	2			
	44	Y119620-11350	½À¯Ä (±°Ñ»Îß°Ä	STUD	2			
	45	Y26106-080452	ÂÊÞÎÞÙÄ 8X45	BOLT M 8X45 PLATED	1			
	46	Y26366-080002	ÂÊÞÂ·ÅÂÄ 8	NUT M8	2			
	47	Y124160-11360	ÄÂÃ	KNOB	2			
	48	119260-11330	ÎÞÝÈ¯Ä CMP (ÉÝ±½)	BONNET ASSY, (NON-ASB	1			3TNE68-TB1
I	48-1	119260-11331 (A=E64997)	ÎÞÝÈ¯Ä CMP	BONNET ASSY	1	N		
	49	Y124160-01751	· ÌÀ (ÎÕº³)	· CAP, LUB. OIL SUPPLY	1			
	50	Y119260-03020	· ¼¬Í²ÊÞÝ	· PLATE, SHELTER	1			
	51	Y119260-03031	· PK (¼¬Í²ÊÞÝ)(ÉÝ±½)	· GASKET, (NON-ASB.)	1			
	54	Y119260-11310	· PK (ÎÞÝÈÂÄ	· GASKET, BONNET	1			
	55	Y118400-03060	· ¼Þ®²ÝÄ (ÌÞØ°»Þ	· JOINT, BREATHER	1			
	56	Y24311-000320	· OØÝ¸Þ 1A P 32.0	· O-RING 1A P-32.0	1			
	57	Y22857-500100	· À¯ËßÝÈ¼Þ 5.0X10	· SCREW 5X10 TAPPING	4			
	58	Y24311-000120	OØÝ¸Þ 1A P12.0	O-RING 1A P12.0	2			
	59	Y129155-77801	½°Êß°¸²¯¸¸ÞÛ°	PLUG, GLOW	3			
	60	Y119620-77820	ºÈ¸À (¸ÞÛ°Ìß×¸Þ	CONNECTOR, GLOW PLUG	1			
	61	Y22351-060012	½ÌßØÝ¸ÞËßÝ 6.0A X12	SPRING PIN 6X12	2			
	62	Y23065-120500	ËÞÆ-ÙÊß²Ìß 12X500	PIPE, VINYL 12X500	1			

silverhorn.co.uk

SUCTION MANIFOLD & AIR CLEANER

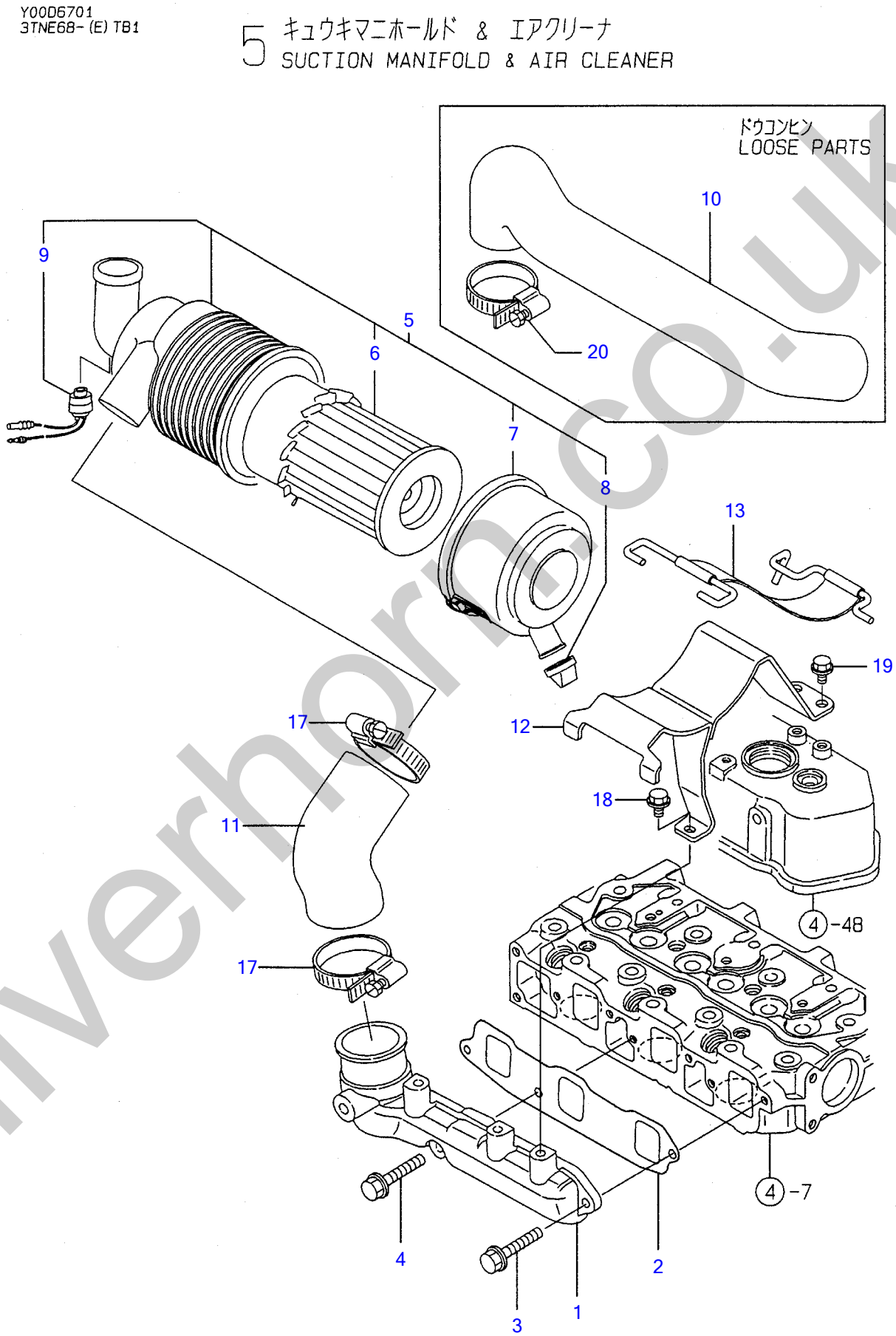

silverhorn.co.uk

·Õ³·ÏÆÎ-ÙÄÞ & ´±¸Ø-Å SUCTION MANIFOLD & AIR CLEANER

Œ©▯o REF NO.	•"•i"Ô▯† PARTS NO.	•"•i-¼	Description	▯"–Ê Q'ty	ŒÝŠ·▯« I	R	"õ▯l
1	**Y119270-12100**	ÏÆÎÙÄÞ (INT	MANIFOLD, SUCTION	1			3TNE68-TB1
I 1-1	**Y119275-12101 (A=E65286)**	·-³·ÏÆÎÙÄÞ	MANIFOLD, INTAKE	1	R		
2	**Y119270-12110**	PK (ÏÆÎ-ÙÄÞ	GASKET, SUC. MANIFOLD	1			
3	**Y26106-060162**	ÂÊÞÎÞÙÄ 6X16	BOLT M6X16 PLATED	2			
4	**Y26106-060282**	ÂÊÞÎÞÙÄ 6X28	BOLT M6X28 PLATED	1			
5	**Y119254-12500**	´±¸Ø-Å CMP	AIR CLEANER	1			
6	**Y119655-12560**	· ´ÚÒÝÄ	· ELEMENT	1			
7	**Y105027-12570**	· ¶ÊÞ°(´±¸Ø-Å	· COVER, AIR CLEANER	1			
8	**Y105027-12540**	· ±ÝÛ-ÀÞÊÞÙÌÞ	· VALVE, UNLOADER	1			
9	**Y126650-12680**	· ²Ý¼Þ¹-À	· INDICATOR	1			
10	**Y119233-12210**	·Õ³·´ÝÁÖ³¶Ý	PIPE, AIR INTAKE	1			
11	**Y119233-12610**	Êß²Ìß (²ÝÃ°¸	PIPE, INTAKE	1			
12	**Y119266-12580**	ÌÞ×¹¯Ä (´±¸Ø-Å	BRACKET	1			
13	**Y119865-12600**	´±¸Ø-ÅÊÞÝÄÞ CMP	STAY	1			
17	**Y23000-054000**	Î-½¸ØÂÌß 54	CLAMP 54	2			
18	**26106-060122**	ÂÊÞÎÞÙÄ M6X12	BOLT M6X12 PLATED	1			
19	**Y26106-080142**	ÂÊÞÎÞÙÄ M8X14	BOLT M8X14 PLATED	2			
20	**Y23000-054000**	Î-½¸ØÂÌß 54	CLAMP 54	1			

silverhorn.co.uk

EXHAUST MANIFOLD & SILENCER

Y00D6701
3TNE68-(E)TB1

6 ハイキマニホールド & サイレンサ
EXHAUST MANIFOLD & SILENCER

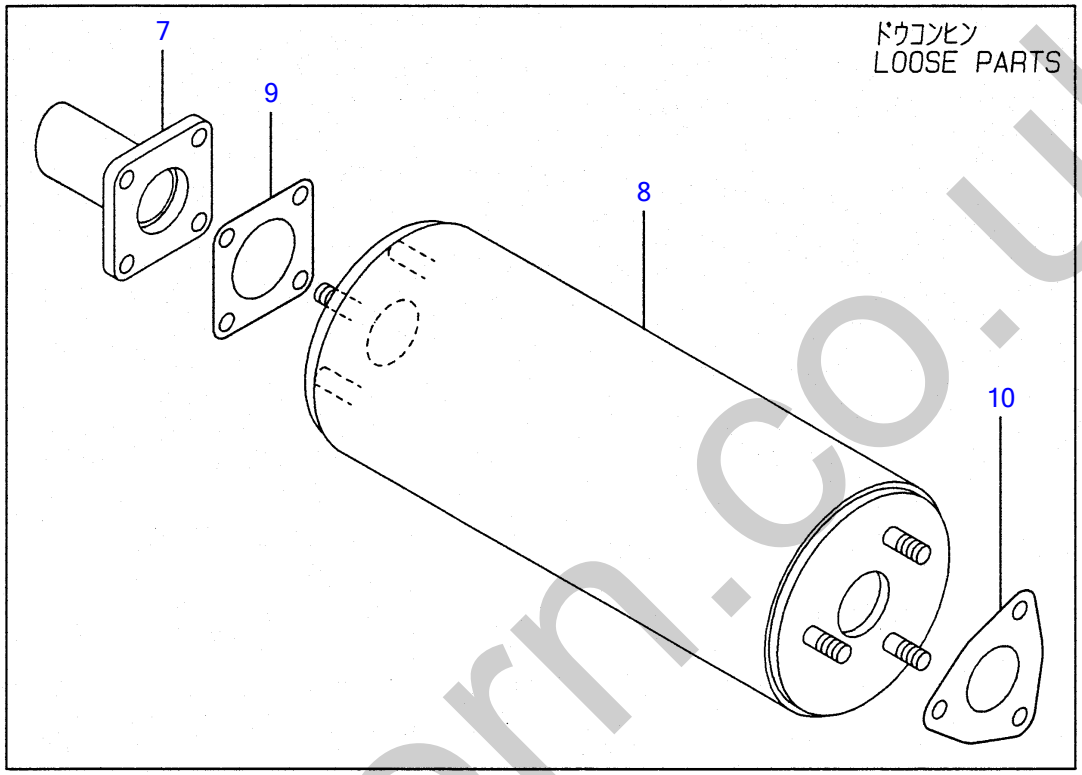

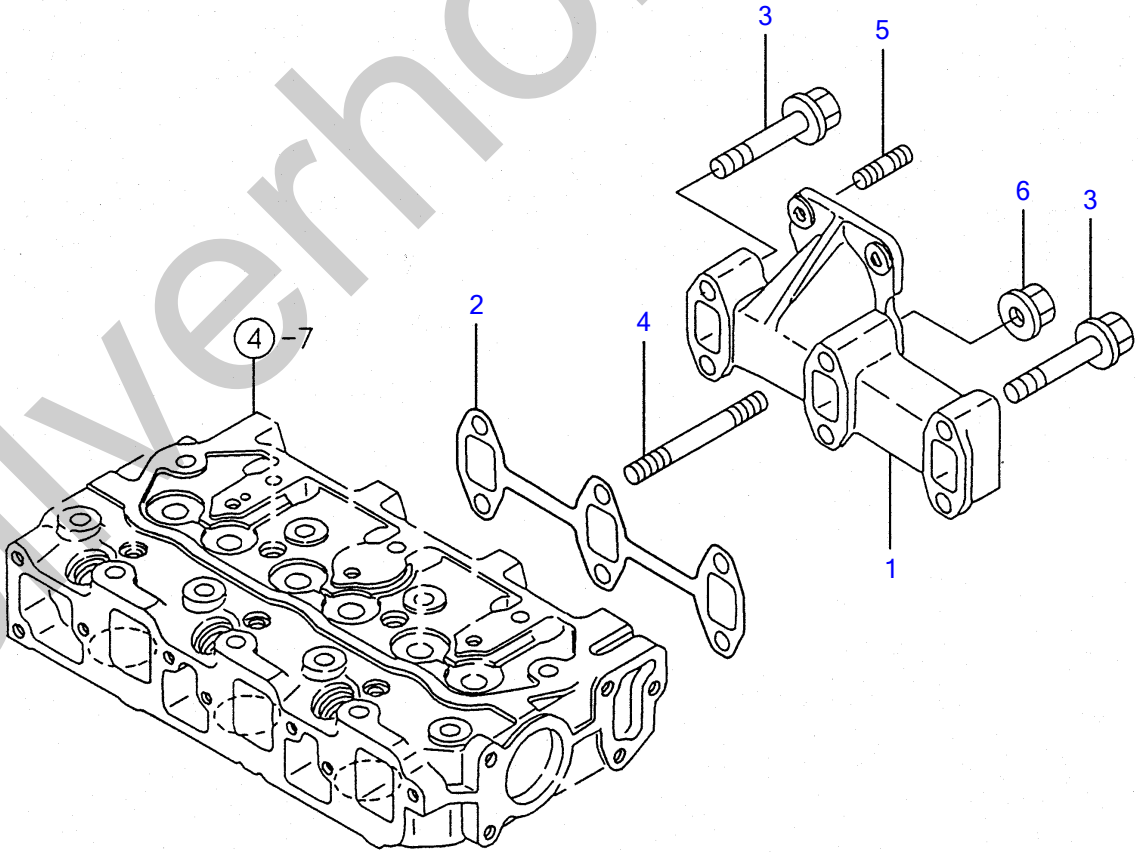

silverhorn.co.uk

Ê²·ÏÆÎ-ÙÄÞ & »²ÚÝ» EXHAUST MANIFOLD & SILENCER

Œ©▯o REF NO.	•"•i"Ô▯† PARTS NO.	•"•i-¼	Description	▯"–Ê Q'ty	ŒÝŠ·▯« I	R	"õ▯I
1	**Y119260-13100**	ÏÆÎÙÄÞ(EXH	MANIFOLD, EXHAUST	1			
2	**Y119260-13110**	¶Þ½¹ÂÄ (ÏÆÎÙÄÞ	GASKET, EXH. MANIFOLD	1			
3	**Y26106-060352**	ÂÊÞÎÞÙÄ 6X35	BOLT M6X35 PLATED	4			
4	**Y26216-060402**	³´ºÐÎÞÙÄ 6X40	STUD M6X40 PLATED	2			
5	**Y119131-18320**	³´ºÐÎÞÙÄ M8X22	BOLT M8X22	4			
6	**Y26366-060002**	ÂÊÞÂ·ÅÂÄ 6	NUT M6	2			
I 7	**Y119266-13580 (A=EXXX)**	ÌÝ¼-Âº³ (»²ÚÝ»	TAIL PIPE	1	Z		3TNE68-TB1
8	**Y119232-13500**	»²ÚÝ»	SILENCER COMP	1			
9	**Y124701-11911**	¶Þ½¹ÂÄ(»²ÚÝ») (ÉÝ±½)	GASKET, (NON-ASB.)	2			
10	**Y103954-13201**	¶Þ½¹ÂÄ(»²ÚÝ») (ÉÝ±½)	GASKET, SILENCER	1			

silverhorn.co.uk

CAMSHAFT & DRIVING GEAR

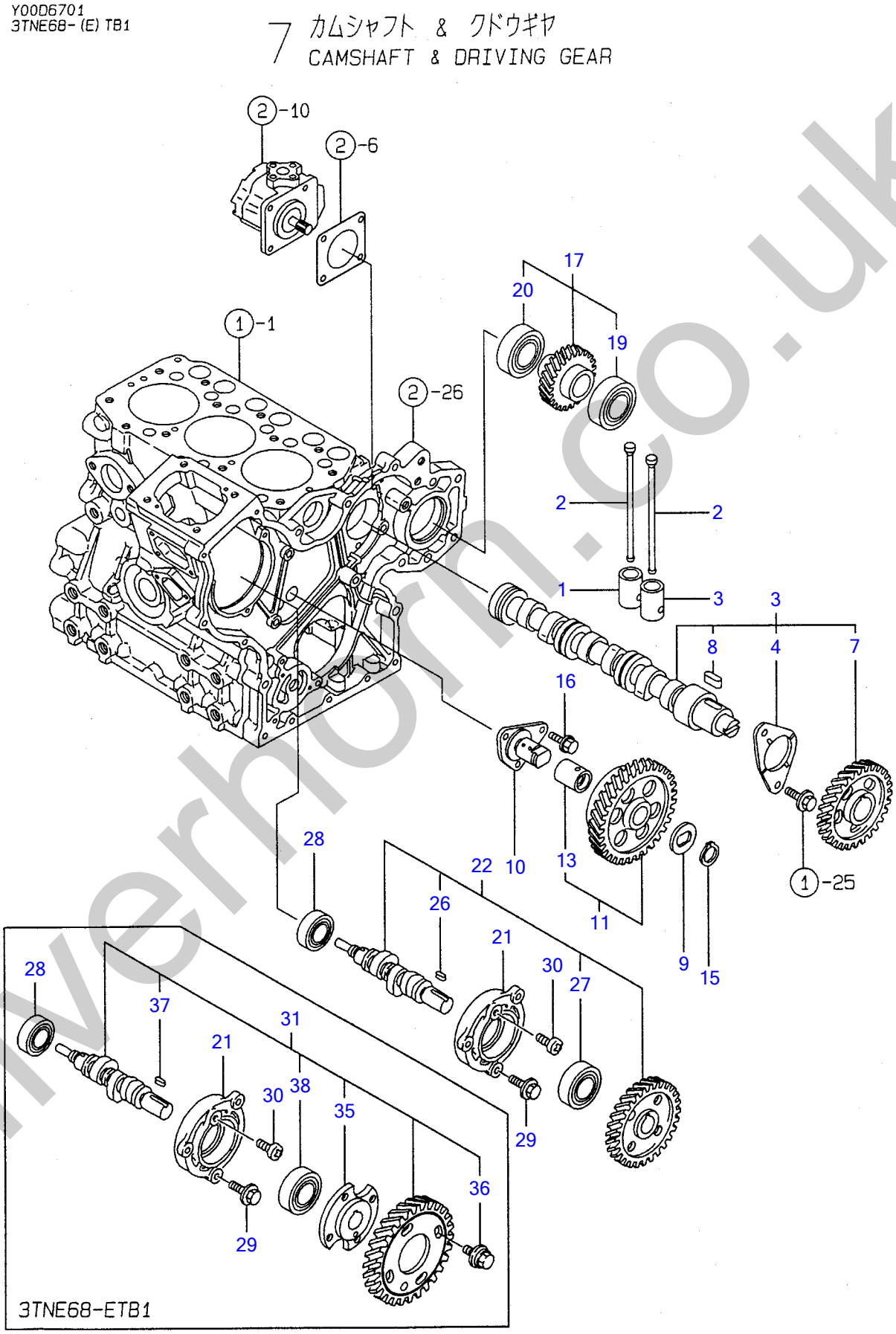

silverhorn.co.uk

¶Ñ¼ÔÌÄ & ¸ÄÞ³·ÞÔ CAMSHAFT & DRIVING GEAR

Œ©lo REF NO.	•"•i"Ôl† PARTS NO.	•"•i-¼	Description	l"–Ê Q'ty	ŒÝŠ·l« I	R	"õl
1	Y119260-14200	ÀÍßÂÄ	TAPPET	6			
2	Y119260-14400	ÌßÂ¼ÕÛÂÄÞ	ROD, PUSH	6			
3	Y119260-14580	¶Ñ¼ÔÌÄ CMP	CAMSHAFT ASSY	1			
4	Y119620-02450	• ½×½ÄÒÀÙ (¶Ñ¼Þ¸	• BEARING, THRUST	1			
7	Y119260-14100	• ¶Ñ·ÞÔ	• GEAR, CAMSHAFT	1			
8	Y22512-040120	• Ì´»Þ-·- 4X12	• KEY 4X12	1			
9	Y119660-25022	µ»´ (±²ÄÞÙ·ÞÔ	RETAINER, IDLE GEAR	1			
10	Y119660-25052	¼ÔÌÄ(±²ÄÞÙ·ÞÔ)	SHAFT, IDLE GEAR	1			
11	Y119260-25100	±²ÄÞÙ·ÞÔ CMP	GEAR W/BUSH, IDLE	1			
13	Y119620-25912	• ÌÞÂ¼Õ	• BUSH	1		(1)	ÎÖ³ÌÞËÝÃÞ½lD
15	Y22242-000200	ÄÒÜC (¼Þ¸ 20	CIRCLIP 20	1			
16	Y26106-060122	ÂÊÞÎÞÙÄ M6X12	BOLT M6X12 PLATED	3			
17	Y119263-26001	HO-P·ÞÔ CMP	GEAR ASSY, HYDR. PUMP	1			
19	Y129350-26490	• ÎÞ°ÙÍÞ±ØÝ¸Þ	• BALL BEARING	1			
20	Y24104-060054	• ÍÞ±ØÝ¸Þ 6005UU	• BALL BEARING	1			
21	Y119660-01821	FO¶Ñ¼Þ¸³¹	BEARING, FUEL CAM.	1			
22	Y119255-14200	FO¶Ñ CMP	CAM ASSY, F. I. PUMP	1			
26	Y22512-040120	• Ì´»Þ-·- 4X12	• KEY 4X12	1			
27	Y24102-063034	• ÍÞ±ØÝ¸Þ 6303U	• BALL BEARING 6303U	1			
28	Y24101-062034	ÍÞ±ØÝ¸Þ 6203	BALL BEARING	1			
29	Y26106-060162	ÂÊÞÎÞÙÄ 6X16	BOLT M6X16 PLATED	3			
30	Y26587-080102	ÊÞ²ÝÄÞºÈ¼Þ (+±Å 8X10	SCREW M8X10	1			
I 31	Y119225-14210	FO¶Ñ CMP	CAM ASSY, F. I. PUMP	1			3TNE68-ETB1
I 35	Y119660-25920	Ì×Ý¼Þ	FLANGE	1			3TNE68-ETB1
I 36	Y119660-25930	ÎÞÙÄ (FIP·ÞÔ	THREAD, FI-P GEAR	4			3TNE68-ETB1
I 37	Y22512-040120	Ì´»Þ-·- 4X12	KEY 4X12	1			3TNE68-ETB1
I 38	Y24102-063034	ÍÞ±ØÝ¸Þ 6303U	BALL BEARING 6303U	1			3TNE68-ETB1

silverhorn.co.uk

Y00D6701
3TNE68-(E) TB1

8 クランクシャフト & ピストン
CRANKSHAFT & PISTON

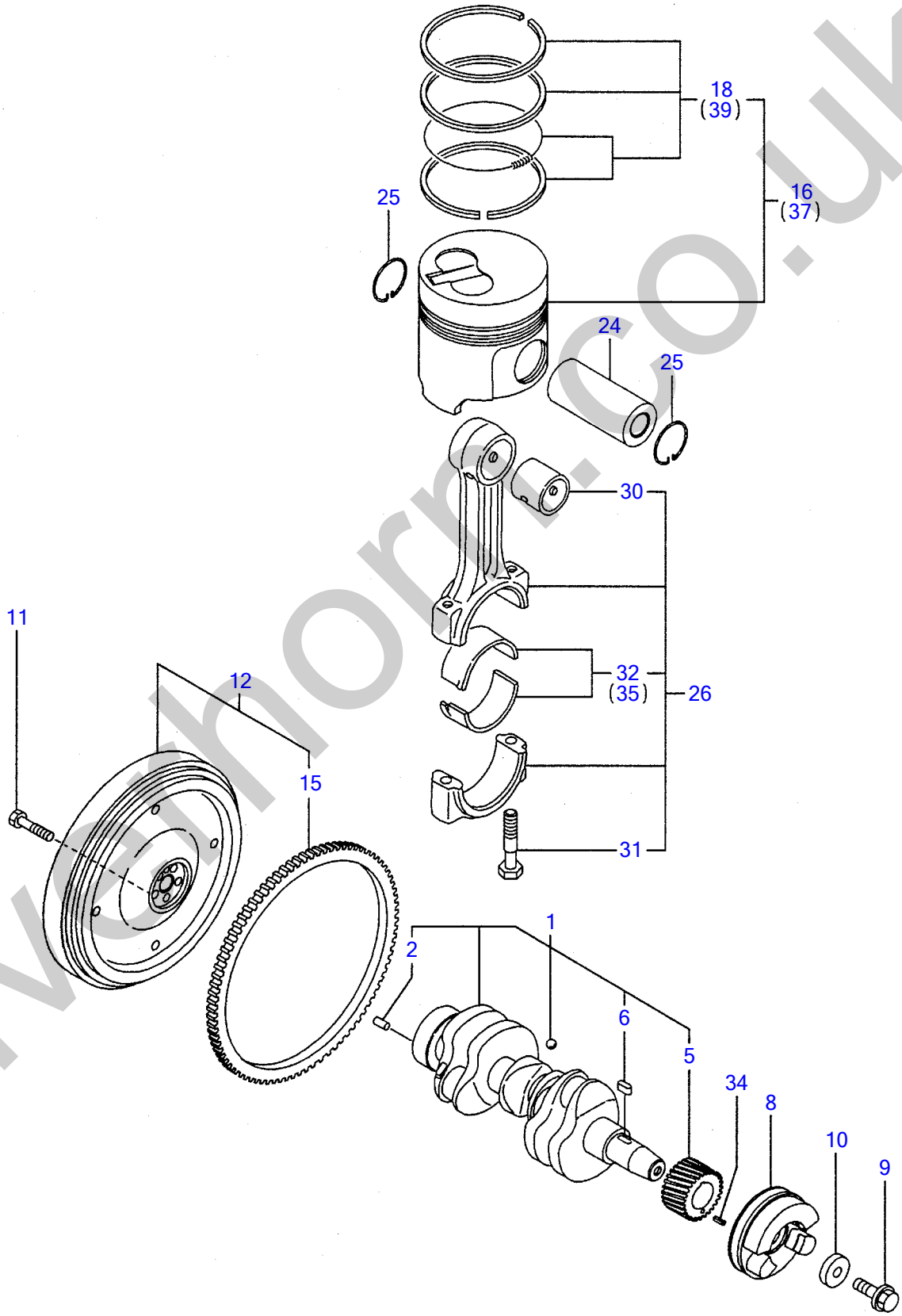

silverthorn.co.uk

¸×Ý¸¼ÔÌÄ & Ëß½ÄÝ CRANKSHAFT & PISTON

Œ©lo REF NO.	•"•¡"Ôl† PARTS NO.	•"•¡-¼	Description	l"–Ê Q'ty	ŒÝŠ·l« I	R	"õl
1	**Y119265-21700**	¸×Ý¸¼ÔÌÄ CMP	CRANKSHAFT ASSY	1			
2	**Y129100-01580**	· Í²º³ËßÝ 8X16	· PARALLEL PIN 8X16	1			
5	**Y119260-21200**	· ¸×Ý¸·ÞÔ	· GEAR, CRANKSHAFT	1			
6	**Y22512-040120**	· Ì´»Þ-·- 4X12	· KEY 4X12	1			
8	**Y119233-21680**	VÌß-Ø°	V-PULLEY	1			3TNE68-TB1
I 8-1	**Y119233-21681**	VÌß-Ø (¸×Ý¸	PULLEY, CRANKSHAFT	1	R		
	(A=E64121)						
9	**Y119621-21680**	Ì×Ý¼ÞÎÞÙÄ M12X1.25	BOLT M12X1.25 FLANGE	1			
10	**Y119620-21941**	Ü¯¼¬	WASHER	1			
11	**Y121111-21501**	ÎÞÙÄ (Ì×²Î²Ù	BOLT, FLYWHEEL	5			
12	**Y119233-21580**	Ì×²Î²-Ù CMP	FLYWHEEL ASSY	1			
15	**Y119865-21600**	· ØÝ¸Þ·ÞÔ	· GEAR, RING	1			
16	**Y119265-22601**	Ëß½ÄÝ ØÝ¸ÞÂ·	PISTON W/RINGS	3			
18	**Y119265-22500**	· ØÝ¸Þ¾¯Ä	· RING SET	3			
24	**Y119265-22300**	Ëß½ÄÝËßÝ	PIN, PISTON	3			
25	**Y22252-000200**	ÄÒÜC (±Å 20	CIRCLIP 20	6			
26	**119265-23100**	ºÝÛ¯ÄÞ CMP	ROD ASSY, CONNECTING	3			
30	**119620-23910**	· Ëß½ÄÝËßÝÒÀÙ	· BUSH, PISTON PIN	3		(1)	ÎÖ³ÌÞËÝÃÞ½lD
31	**Y119265-23200**	· ÛÂÄÞÎÞÙÄ	· BOLT, ROD	6			
32	**Y719260-23600**	· ÍÞ±ØÝ¸Þ(¸×Ý¸ËßÝ	· BEARING, CRANKPIN	3			
34	**Y22351-030010**	½ÌßØÝ¸ÞËßÝ 3.0AX10	SPRING PIN 3X10	1			
35	**Y719260-23610**	¸×Ý¸ËßÝÒÀÙ U.S=0.25	BEARING, PIN U.S=0.25	3		(2)	±ÝÀÞ°»²½Þ(U.S=0.25)ÌÞËÝÃÞ½lD
37	**Y119265-22930**	Ëß½ÄÝ CMP (0.25OS	PISTON W/RING OS=0.25	3		(3)	µ°ÊÞ°»²½Þ(O.S=0.25)ÌÞËÝÃÞ½lD
39	**Y119265-22950**	· Ëß½ÄÝØÝ¸ÞSET (O.S=0.25	· RING SET O.S=0.25	3		(3)	µ°ÊÞ°»²½Þ(O.S=0.25)ÌÞËÝÃÞ½lD

silverhorn.co.uk

LUB.OIL SYSTEM

Y00D6701
3TNE68-(E) TB1

9 LOシステム
LUB.OIL SYSTEM

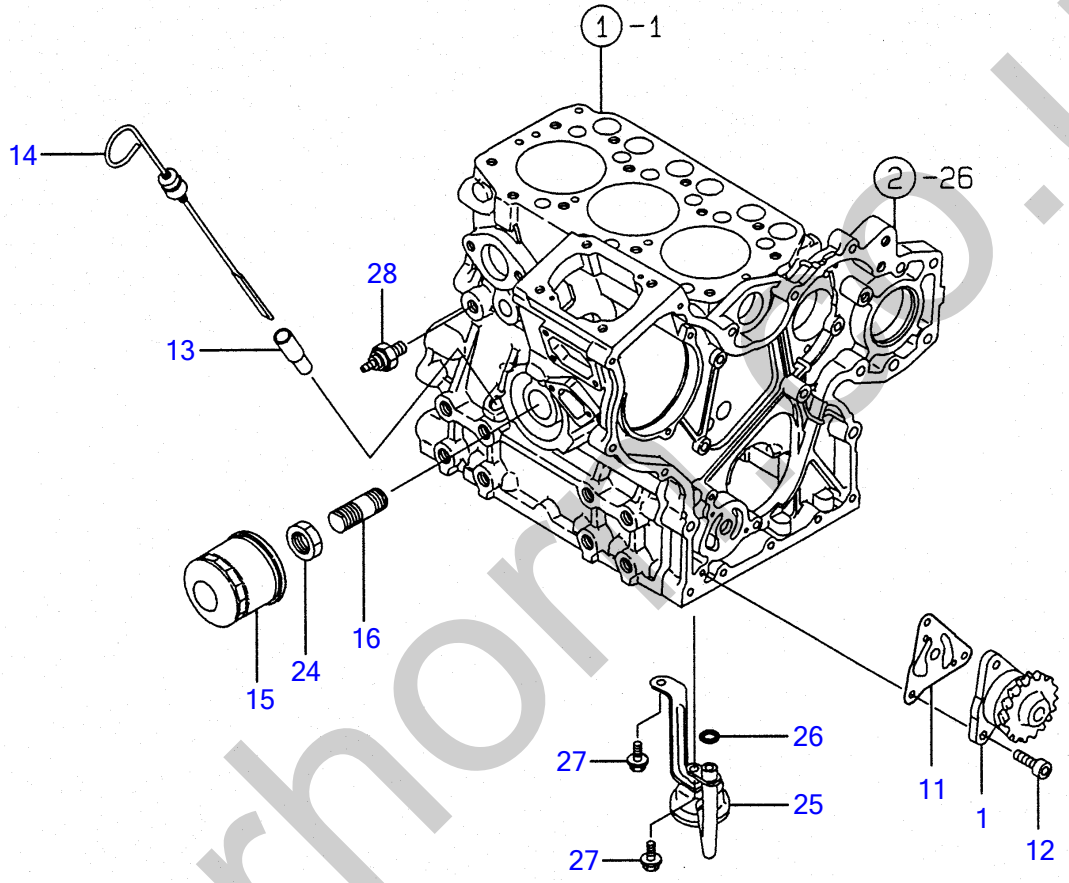

silverhorse.uk

LO¼½ÃÑ LUB.OIL SYSTEM

Œ©▯o REF NO.	•"•i"Ô▯† PARTS NO.	•"•i-¼	Description	▯"–Ê Q'ty	ŒÝŠ·▯« I	R	"õ▯I
1	**Y119260-32000**	LOÎßÝÌß CMP	PUMP ASSY, LUB. OIL	1			
11	**Y119660-32020**	PK (LO-P	GASKET, L. O. PUMP	1			
12	**Y26450-060202**	6¶¸±ÅÎÞÙÄ 6X20	BOLT M6X20	3			
13	**Y121520-34810**	¶Þ²ÄÞ (¹ÝÕÎÞ³	GUIDE, DIPSTICK	1			
14	**Y129132-34800**	¹ÝÕÎÞ³	DIPSTICK	1			
15	**Y119305-35150**	µ²ÙÌ¨ÙÀ CMP	FILTER, LUB. OIL	1			
16	**Y119225-35300**	Á®³±ÂÍÞÝ CMP	VALVE ASSY, OIL PRESS	1			
24	**Y129150-35350**	Å¯Ä (ÍÞÝÎÝÀ²	NUT	1			
25	**Y119260-35081**	LO·-³Æ-³¶Ý	PIPE ASSY, OIL INTAKE	1			
26	**Y119209-35030**	OØÝ¸Þ P11	O-RING	1			
27	**Y26106-060122**	ÂÊÞÎÞÙÄ M6X12	BOLT M6X12 PLATED	2			
28	**Y124160-39451**	Õ±Â½²¯Á (0.5KG	SWITCH, OIL PRESSURE	1			3TNE68-TB1
I 28-1	**Y114250-39450 (A=E65092)**	Õ±Â½²¯Á (0.5KG	SWITCH, (0.5KG) L. O.	1	N		

silverhorn.co.uk

Y00D6701
3TNE68-(E) TB1

10 CWシステム COOLING WATER SYSTEM

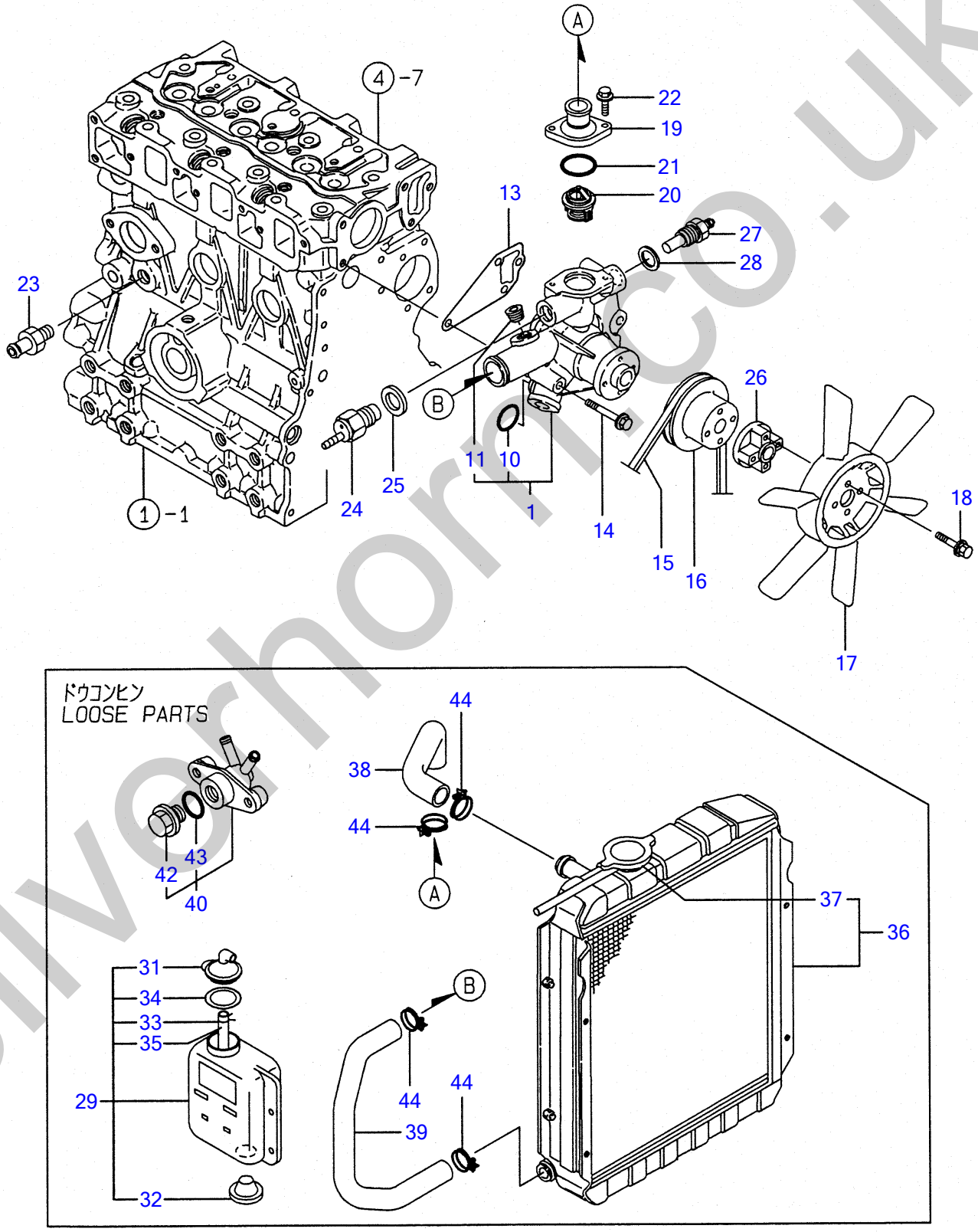

silverhorn.co.uk

CW¼½ÃÑ COOLING WATER SYSTEM

	Œ©▯o REF NO.	•”•i”Ô▯† PARTS NO.	•”•i-¼	Description	▯”–Ê Q'ty	ŒÝŠ·▯« I	R	”õ▯l
	1	**Y119244-42001**	CWÎßÝÌß ASSY	PUMP ASSY, C. WATER	1			
	10	**Y119225-42320**	▪ OØÝ¸Þ	▪ O-RING	1			
	11	**Y23871-030000**	▪ È¼ÞÌß×¸Þ 3/8	▪ PLUG PT3/8, SCREW	1			3TNE68-TB1
I	11-1	**Y23876-030000 (A=EXXX)**	▪ È¼ÞÌß×¸Þ 3/8	▪ PLUG PT3/8, SCREW	1	N		
	13	**Y119260-42020**	PK	GASKET, C. W. PUMP	1			3TNE68-TB1
I	13-1	**Y119260-42021 (A=E65286)**	Êß¯·Ý (CW-P	GASKET, C. W.	1	N		
	14	**Y26106-080452**	ÂÊÞÎÞÙÄ 8X45	BOLT M8X45 PLATED	3			
	15	**Y119620-42291**	VÍÞÙÄ (HM:34.5INCH	V-BELT	1			
	16	**Y119620-42350**	VÌß°Ø (CW-P	V-PULLEY, C. W. PUMP	1			
	17	**Y124251-44740**	Ì§ÝÌÞÚ°ÄÞ	FAN, COOLING	1			
	18	**Y26014-060352**	ÎÞÙÄ (Ë×+ÊÞÈ 6X35	BOLT M6X35	4			
	19	**Y119260-49530**	¶ÊÞ° (»°Ó½À¯Ä	COVER, THERMOSTAT	1			
	20	**Y119260-49800**	»°Ó½À¯Ä (71▯Ž	THERMOSTAT (71▯Ž	1			
	21	**24321-000350**	OØÝ¸Þ 1A G35.0	O-RING 1A G-35.0	1			3TNE68-TB1
I	21-1	**Y119209-42140 (A=E65286)**	OØÝ¸Þ G35.0	O-RING, COVER THERMOS	1	N		
	22	**Y26106-060182**	ÂÊÞÎÞÙÄ 6X18	BOLT M6X18 PLATED	2			
	23	**Y121550-49111**	¼Þ®²ÝÄ PT1/4	JOINT PT1/4	1			
	24	**Y121250-44901**	»°Ó½²¯Á (110▯Ž	SWITCH, THERMO (110▯Ž	1			
	25	**Y124465-44950**	Êß¯·Ý16	GASKET 16	1			
	26	**Y171353-44760**	¶Ý»Þ (Ì§Ý	SPACER	1			
	27	**Y119266-49350**	»°Ó¾Ý»°	SENSOR, THERMO.	1			
	28	**Y129150-49360**	PK 10	GASKET 10	1			
	29	**Y121468-44510**	»ÌÞÀÝ¸CMP	SUB-TANK ASSY	1			
	31	**Y121450-44531**	▪ ·¬¯Ìß	▪ CAP	1			
	32	**Y121468-44540**	▪ Ìß×¸Þ (»ÌÞÀÝ¸	▪ PLUG, SUB-TANK	1			
	33	**Y124450-44560**	▪ µ»´ (µ°ÊÞ°ÌÛ°Êß²Ìß	▪ CLAMP	1			
	34	**Y121470-44581**	▪ Êß¯·Ý	▪ GASKET	1			
	35	**Y23065-070130**	▪ ËÞÆ°ÙÊß²Ìß 7X130	▪ PIPE 7X130	1			
	36	**Y119632-44520**	×¼Þ´°À	RADIATOR CMP	1			
I	37	**Y129107-44590**	▪ ·¬¯Ìß (×¼Þ´°À	▪ CAP, RADIATOR	1			
	38	**Y119688-49010**	CW-T (A	PIPE (A), C. WATER	1			
	39	**Y119632-49020**	CW-T (B	PIPE (B), C. WATER	1			
	40	**Y121450-49110**	»ÝÎß³º¯¸ CMP	COCK ASSY, 3-WAY	1			
	42	**Y121250-49121**	▪ Ìß×¸Þ (Ð½ÞÇ·	▪ PLUG	1			
	43	**Y24311-000160**	▪ OØÝ¸Þ 1A P16.0	▪ O-RING 1A P-16.0	1			
	44	**Y23010-038000**	Î°½ÊÞÝÄÞ 38	CLAMP 38	4			

silverhorn.co.uk

FUEL INJECTION PUMP

Y00D6701
3TNE68-(E)TB1

11 FOフンシャポンプ
FUEL INJECTION PUMP

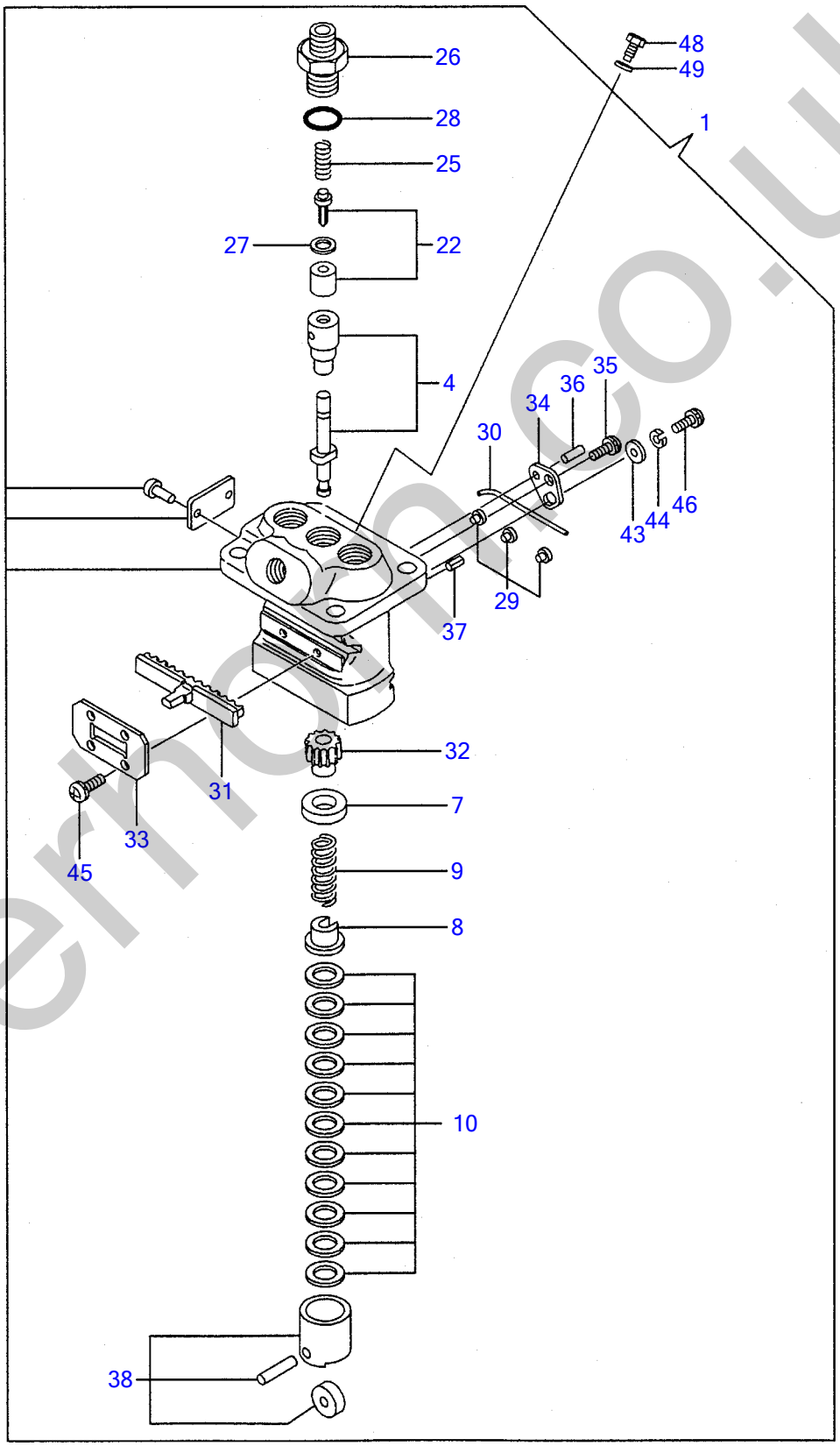

silvermoon.co.uk

FOÌÝ¼ÔÎßÝÌß FUEL INJECTION PUMP

	Œ©▯o REF NO.	•"•i"Ô▯† PARTS NO.	•"•i-¼	Description	▯"–Ê Q'ty	ŒÝŠ·▯« I	R	"õ▯l
	1	**Y719225-51100**	F. I. ÎßÝÌß CMP	PUMP ASSY, F. INJECT.	1			3TNE68-TB1
I	1-1	**Y719266-51100 (A=E65286)**	F. I. ÎßÝÌß CMP	PUMP ASSY, F. INJECT.	1	N		
	4	**Y119225-51100**	▪ Ìß×Ý¼Þ¬ÊÞÚÙ CMP	▪ PLUNGER W/BARREL	3			
	7	**Y119620-51170**	▪ ÊÞÈ³¹ A	▪ RETAINER	3			
	8	**Y119620-51180**	▪ ÊÞÈ³¹ B	▪ RETAINER	3			
	9	**Y119620-51190**	▪ SP (Ìß×Ý¼Þ¬	▪ SPRING, PLUNGER	3			
	10	**Y119620-51250**	▪ ¼Ñ CMP	▪ SHIM PACK	3			
	22	**Y119225-51300**	▪ ÃÞØÍÞØÊÞÙÌÞ CMP	▪ VALVE W/SEAT, DELIV.	3			
	25	**Y105546-51330**	▪ ½ÌßØÝ¸Þ	▪ SPRING, DELIV. VALVE	3			
	26	**Y119620-51340**	▪ ÃÞØÍÞØÊÞÙÌÞÎÙÀÞ°	▪ HOLDER, DELIV. VALVE	3			
	27	**Y119620-51350**	▪ PK (ÃÞØÍÞØ	▪ GASKET, DELIVERY	3			
	28	**Y119620-51370**	▪ OØÝ¸Þ	▪ O-RING	3			
	29	**Y119620-51450**	▪ ¶Þ²ÄÞËß°½ (ÀÍß¯Ä	▪ GUIDE, PLUNGER	3			
	30	**Y119620-51461**	▪ ËßÝ	▪ PIN	1			
	31	**Y119660-51500**	▪ ×¯¸	▪ RACK	1			
	32	**Y119620-51510**	▪ ËßÆµÝ	▪ PINION	3			
	33	**Y119660-51530**	▪ ×¯¸µ»´	▪ RETAINER, RACK	1			
	34	**Y119620-51650**	▪ FOÁ®³¾²ÌßÚ°Ä	▪ PLATE	2			
	35	**Y119620-51660**	▪ FOÁ®³¾²È¼Þ	▪ SCREW	2			
	36	**Y119620-51670**	▪ FOÁ®³¾²ËßÝ	▪ PIN	2			
	37	**Y119620-51680**	▪ ËßÝ (ÚÍÞÙ²Á·ÞÒ	▪ PIN	1			
	38	**Y119620-51700**	▪ ÀÍß¯Ä CMP	▪ TAPPET ASSY	3			
I	43	**Y22137-040000 (A=E65286)**	▪ »Þ¶ÞÈ Ð¶Þ· 4	▪ WASHER 4, POLISHED	2	Z		3TNE68-TB1
I	44	**Y22217-040000 (A=E65286)**	▪ ÊÞÈ»Þ¶ÞÈ 4	▪ SPRING WASHER 4	2	Z		3TNE68-TB1
	45	**Y26022-040082**	▪ ÅÍÞºÈ¼Þ (ÊÞÈ 4X8	▪ SCREW M4X8	4			
	46	**Y26587-040102**	▪ ÊÞ²ÝÄÞÈ¼Þ (+±Å 4X10	▪ SCREW M4X10	2			3TNE68-TB1
I	46-1	**Y26033-040102 (A=E65286)**	▪ ÊÞ²ÝÄÞÈ¼Þ (ÊÞÈ+Ë× 4X10	▪ SCREW M4X10	2	R		
I	48	**Y119266-51900 (A=E65286)**	ÎÞÙÄ (¸³·Ç·	BOLT	1	W		
I	49	**Y22190-080002 (A=E65286)**	¼°ÙÜ¯¼¬ (ºÏÙ¤ÆÄØÙ) 8	SEAL, WASHER 8S	1	W		

silverhorn.co.uk

GOVERNOR

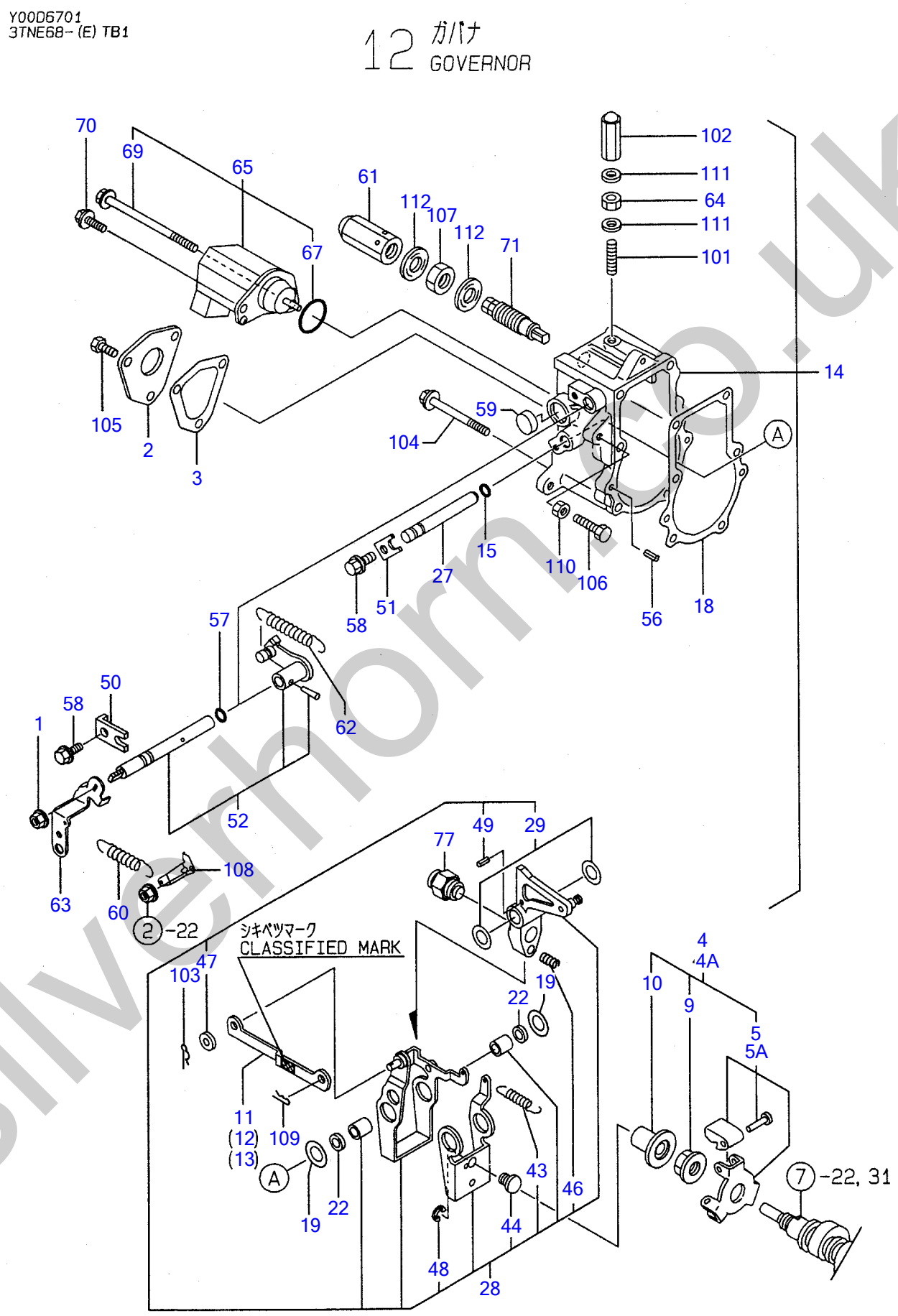

silverthorn.co.uk

¶ÞÊÞÅ GOVERNOR

Œ©lo REF NO.	•"•i"Ô†PARTS NO.	•"•i-¼	Description	”–Ê Q'ty	ŒÝŠ·« I	R	"õl
1	Y194990-22050	¹ÌÞ½ (½Êß¯¸8	NUT W/WASHER 8	1			
2	Y119660-61060	¶ÞÊÞÅ¹°½ÌÅ	COVER, GOVERNOR CASE	1			
3	Y119660-61071	PK (¶ÞÊÞÅ¹°½)(ÉÝ±½)	GASKET, (NON ASB.)	1			
4	Y119600-61100	¶ÞÊÞÅ¸ÄÞ³ COMP	DRIVING SET, GOV.	1			3TNE68-TB1
I 4A	Y119600-61300	¶ÞÊÞÅ¸ÄÞ³ COMP	DRIVING SET, GOV.	1			3TNE68-ETB1
5	Y119600-61200	· ¶ÞÊÞÅ³´²Ä CMP	· WEIGHT ASSY, GOV.	1			3TNE68-TB1
I 5A	Y119600-61400	¶ÞÊÞÅ³´²Ä CMP	WEIGHT ASSY, GOV.	1			3TNE68-ETB1
9	Y119660-61300	· Å¯Ä (¶ÞÊÞÅ»Îß°Ä	· NUT, GOVERNOR WEIGHT	1			
10	Y119660-61341	· ½Ø°ÌÞ	· SLEEVE, GOVERNOR	1			
11	Y119660-61121	ØÝ¸L=88.8 (Íß²ÝÄÅ¼)	LINK L=88.8 (NO COLOR	1		(1)	¾ÝÀ¸¼®³ÌÞËÝ: ¼·ÍÞÂÏ°¸¦ ¶¸ÆÝÉ ³´Á-³ÓÝÈ¶Þ²Ï½D(²×½Ä »Ý¼®³)
12	Y119660-61140	ØÝ¸L=88.6 (Íß²ÝÄ=¼Û)	LINK L=88.6 (WHITE	1		(1)	¾ÝÀ¸¼®³ÌÞËÝ: ¼·ÍÞÂÏ°¸¦ ¶¸ÆÝÉ ³´Á-³ÓÝÈ¶Þ²Ï½D(²×½Ä »Ý¼®³)
13	Y119660-61150	ØÝ¸L=89.0 (Íß²ÝÄ=±¶)	LINK L=89.0 (RED	1		(1)	¾ÝÀ¸¼®³ÌÞËÝ: ¼·ÍÞÂÏ°¸¦ ¶¸ÆÝÉ ³´Á-³ÓÝÈ¶Þ²Ï½D(²×½Ä »Ý¼®³)
14	Y119632-61200	¶ÞÊÞÅ¹°½ COMP	CASE ASSY GOVERNOR	1			
15	Y129155-51280	· OØÝ¸Þ (S6	· O-RING S6	1			
18	Y119660-61052	· PK (¶ÞÊÞÅ¹°½)(ÉÝ±½)	· GASKET, (NON ASB.)	1			
19	Y119660-61460	· ¼Ñ CMP (¶ÞÊÞÅÚÊÞ°¼Þ¸	· SHIM SET	1			
22	Y129155-61480	· ¶Ý»Þ COMP	· SPACER ASSY	2			
27	Y119660-61491	· ¼¬ÌÄ (¶ÞÊÞÅÚÊÞ°	· SHAFT, GOVERNOR LEVER	1			3TNE68-TB1
I 27-1	Y119660-61590 (A=E65286)	· ¼¬ÌÄ (¶ÞÊÞÅÚÊÞ°	· SHAFT	1	N		
28	Y119232-61510	· ¶ÞÊÞÅÚÊÞ° CMP	· LEVER ASSY, GOVERNOR	1			
29	Y174307-51700	· · ¼Ñ¾¯Ä (Á®³³¾²Ö³	· · SHIM SET	2			
43	Y119232-61540	· · SP (GÚÊÞ°¾¯Ä	· · SPRING, LEVER	1			
44	Y119600-61541	· · ¼ÌÀ	· · SHIFTER, P. T. O.	1			
46	Y119660-61651	· · SP (½À°Ä	· · SPRING, STARTING	1			
47	Y22117-040000	· · »Þ¶ÞÈ (ºÏÙ 4	· · WASHER 4	1			
48	Y22272-000040	· · ÄÒÜE 4	· · CIRCLIP E-4	1			
49	Y22351-030014	· · ½ÌßØÝ¸ÞËßÝ 3.0AX14	· · SPRING PIN 3X14	1			
50	Y119600-61900	· Ç¹ÄÞÒ	· RETAINER, SHAFT	1			
51	Y119660-61901	· Ç¹ÄÞÒ	· RETAINER, SHAFT	1			
52	Y119285-66080	· Ú·Þ-Ú°À¼¬ÌÄ CMP	· SHAFT ASSY, REGULATOR	1			
56	Y22351-040010	· ½ÌßØÝ¸ÞËßÝ 4.0AX10	· SPRING PIN 4X10	2			
57	Y24341-000070	· OØÝ¸Þ 1A S-7.0	· O-RING 1A S-7.0	1			
58	Y26106-060102	· ÂÊÞÎÞÙÄ M6X10	· BOLT M6X10 PLATED	2			
59	Y119640-61400	Ìß×¸Þ	PLUG	1			
60	Y119840-61870	½ÌßØÝ¸Þ	SPRING	1			
61	Y26687-120002	Ì¸ÛÅ¯Ä (À¶Î¿ 12	CAP NUT M12	1			

silverhorn.co.uk

GOVERNOR

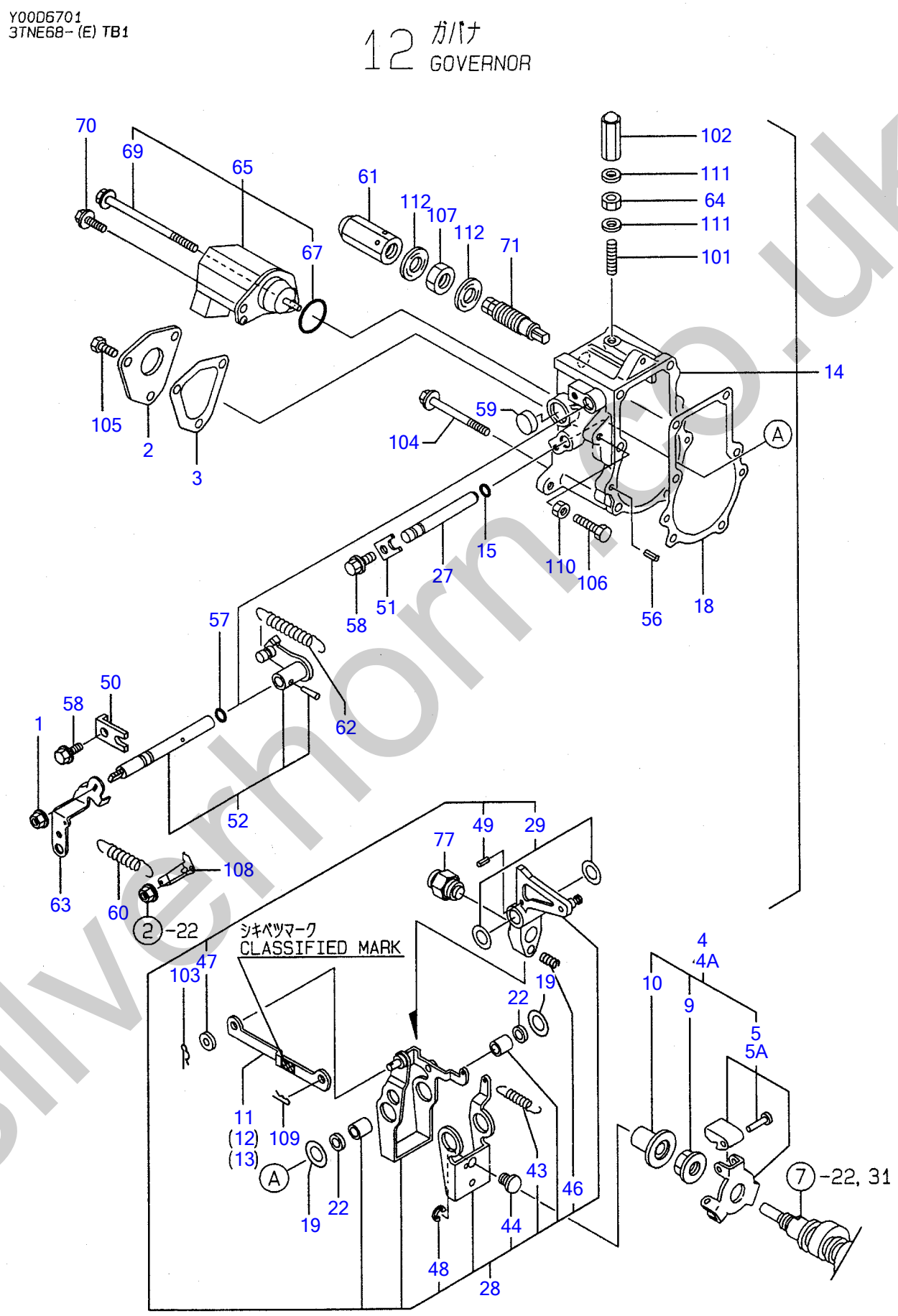

silverthorn.co.uk

¶ÞÊÞÅ GOVERNOR

Œ©▯o REF NO.	•"•i"Ô▯† PARTS NO.	•"•i-¼	Description	▯"–Ê Q'ty	ŒÝŠ·▯« I	R	"õ▯l
62	**Y119600-66020**	Ú·Þ-Ú°À½ÌßØÝ¸Þ	SPRING, REGULATOR	1			
63	**Y119640-66051**	Ú·Þ-Ú°ÀÊÝÄÞÙ	HANDLE, REGULATOR	1			
64	**Y124550-66370**	ÄÒÅ¯Ä 6 (ÂÂÞØ±Å	LOCK NUT M6	1			
65	**Y119285-66500**	´Ý¼ÞÝ½Ä¯Ìß CMP	ENGINE STOP DEVICE	1			
67	**Y24341-000280**	▪ OØÝ¸Þ 1A S-28.0	▪ O-RING 1A S-28.0	1			
69	**Y26106-060952**	▪ ÂÊÞÎÞÙÄ 6X95	▪ BOLT M6X95 PLATED	1			
70	**121465-59950**	ÎÞÙÄ 6X16	BOLT M6X16 PLATED	1			
71	**119600-66530**	FOØÐ¯À CMP	TORQUE SPRING ASSY	1			
77	**119610-66700**	±Ý¸Þ×²Ë CMP	ANGLEICH ASSY	1			
101	**121575-66830**	½¸Ø- (±¼Þ¬½Ä	SCREW, ADJUST	1			
102	**119600-66840**	·¬¯ÌßÅ¯Ä	NUT CAP	1			
103	**22360-040000**	½Å¯ÌßËßÝ 4	SNAP PIN 4	1			
104	**Y26106-060702**	ÂÊÞÎÞÙÄ 6X70	BOLT M6X70 PLATED	5			
105	**Y26116-050102**	ÎÞÙÄ 5X10	BOLT M5X10 PLATED	3			
106	**Y26116-060304**	ÎÞÙÄ 6X30	BOLT M6X30 PLATED	1			
107	**Y26776-120002**	ÄÒÅ¯Ä (Î¿ 12	LOCK NUT 12 PLATED	1			
108	**Y119656-66910**	Ì¯¸ (ÓÄÞ¼ÊÞÈ	HOOK	1			
109	**Y22360-060000**	½Å¯ÌßËßÝ 6	SNAP PIN 6	1			
110	**Y26756-060002**	ÄÒÅ¯Ä 6	LOCK NUT 6	1			
111	**Y22190-060003**	¼°ÙÜ¯¼¬ (ÏÙ¤SPC) 6	SEAL WASHER 6	2			
112	**Y22190-120002**	¼°ÙÜ¯¼¬ (ºÏÙ 12	SEAL WASHER 12	2			

silverhorn.co.uk

FUEL INJECTION VALVE

Y00D6701
3TNE68-(E)TB1

13 FOフンシャベン
FUEL INJECTION VALVE

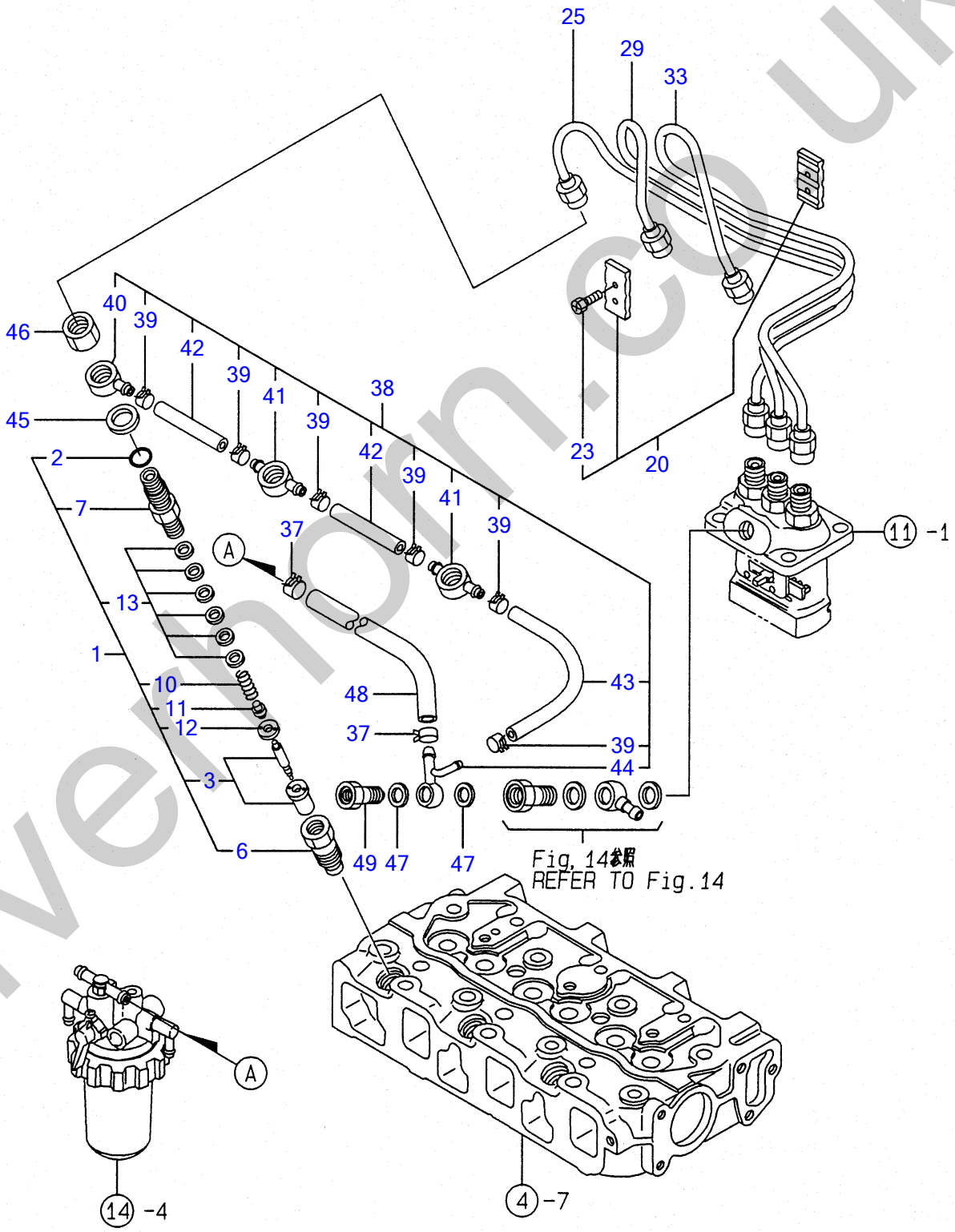

silverthorn.co.uk

FOÌÝ¼ÔÍÞÝ FUEL INJECTION VALVE

Œ©lo REF NO.	•"•i"Ôl† PARTS NO.	•"•i-¼	Description	l"–Ê Q'ty	ŒÝŠ·l« I	R	"õll
1	Y719255-53100	FOÌÝ¼¬ÍÞÝ ASSY	FUEL INJECT, VALVE AS	3			
2	Y129155-61830	• OØÝ¸Þ (S10	• O-RING S10	3			
3	Y119620-53000	• É½ÞÙ CMP	• NOZZLE ASSY, F. INJECT	3			
6	Y119620-53080	• É½ÞÙÄØÂ¹Å¯Ä	• NUT, VALVE W/CASE	3			
7	Y119255-53100	• É½ÞÙÎÙÀÞ°	• HOLDER, NOZZLE	3			
10	Y119620-53120	• SP (É½ÞÙ	• SPRING, VALVE	3			
11	Y114250-53130	• ¼°Ä (É½ÞÙ½ÌßØÝ¸Þ	• SEAT, NOZZLE SPRING	3			
12	Y119620-53140	• ÊÞÙÌÞ½Ä¯Ìß½Íß°»	• SRACER, VALVE STOP	3			
13	Y114250-53400	• ¼Ñ CMP	• SHIM PACK	3			
20	Y129150-59120	ÌÚÄÞÒ (ÌÝ¼¬¶Ý CMP	RETAINER, INJ. PIPE	1			
23	Y129150-59131	• +±Å HB4X14	• BOLT M4X14, HEX. SCKT.	2			
25	Y119209-59810	ÌÝ¼¬¶Ý CMP (NO. 1)	PIPE (1), FUEL INJECT	1			
29	Y119209-59820	ÌÝ¼¬¶Ý CMP (NO. 2)	PIPE (2), FUEL INJECT	1			
33	Y119209-59830	ÌÝ¼¬¶Ý CMP (NO. 3)	PIPE (3), FUEL INJECT	1			
37	Y124766-59050	Î°½¸Ø¯Ìß (ÏÙ 12	CLAMP 12	2			
38	Y119642-59450	FOÊß²Ìß ÓÄÞ¼ CMP	PIPE ASSY, FUEL OVER	1			
39	Y124066-59100	• Î°½¸Ø¯Ìß (ÏÙ 8	• CLAMP 8	6			
40	Y119260-59520	• ¼Þ®²ÝÄ B	• JOINT (B)	1			
41	Y119260-59530	• ¼Þ®²ÝÄ A	• JOINT (A)	2			
42	Y105025-59550	• FOÊß²ÌßÓÄÞ¼	• PIPE, FUEL RETURN	2			
43	Y119642-59550	• FOÊß²ÌßÓÄÞ¼	• PIPE, FUEL RETURN	1			
44	Y119642-59570	• ¼Þ®²ÝÄ (µ°ÊÞ°ÌÛ°	• JOINT, OVER FLOW PIPE	1			
45	Y23414-140000	Êß¯·Ý (ÏÙ 14	GASKET 14, ROUND	3			3TNE68-TB1
I 45-1	Y22190-140002 (A=E64121)	¼°ÙÜ¯¼¬ (ºÏÙ¤ÆÄØÙ) 14	SEAL, WASHER 14S	3	N		
46	Y119620-59700	Å¯Ä (É½ÞÙÓÄÞ¼	NUT	3			
47	Y23414-080012	Êß¯·Ý (ºÏÙ 8	GASKET 8	2			3TNE68-TB1
I 47-1	Y22190-080002 (A=E64121)	¼°ÙÜ¯¼¬ (ºÏÙ¤ÆÄØÙ) 8	SEAL, WASHER 8S	2	N		
48	Y119225-59560	Êß²¯Ìß (L=190	PIPE, FUEL OIL	1			
49	Y124550-59820	¶ÝÂ·ÞÄÎÞÙÄ 8	BOLT 8, PIPE JOINT	1			

silverhorn.co.uk

FUEL LINE

Y00D6701
3TNE68-(E)TB1

14 FOパイプ FUEL LINE

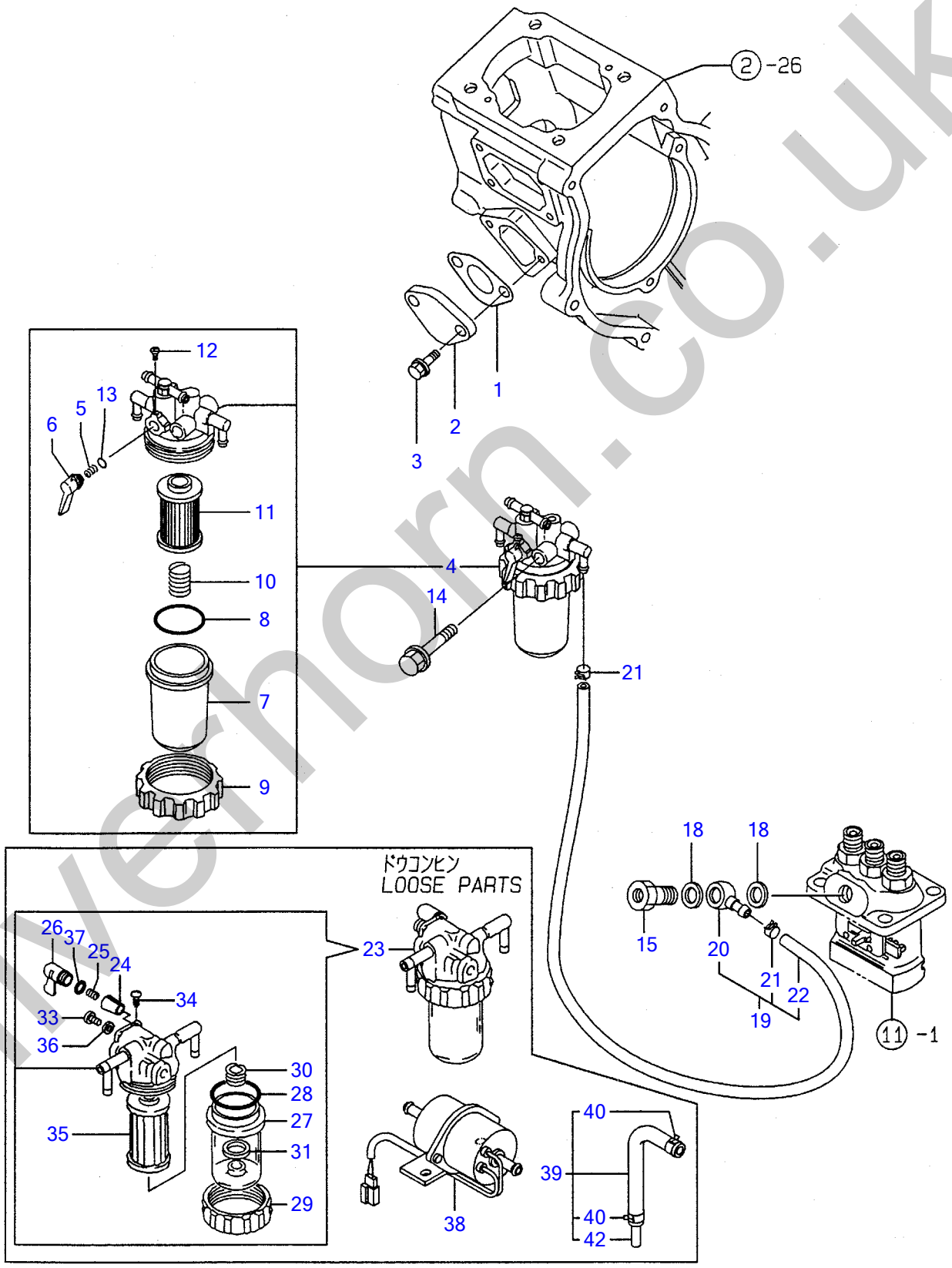

silverthorn.co.uk

FOÊß²Ìß FUEL LINE

Œ©Ìo REF NO.	•"•i"ÔÌ† PARTS NO.	•"•i-¼	Description	Ì"–Ê Q'ty	ŒÝŠ·Ì« I	R	"õÌI
1	Y121520-01851	PK (Ì¨°ÄÞÎßÝÌß)(ÉÝ±½)	GASKET, (NON-ASB.)	1			
2	Y121520-01860	Ò¸×ÌÀ	COVER, BLIND	1			
3	Y26106-060162	ÂÊÞÎÞÙÄ 6X16	BOLT M6X16 PLATED	2			
4	Y119255-55620	Ì¨ÙÀ (FO CMP	STRAINER, FUEL	1			
5	Y104200-55330	・½ÌßØÝ¸Þ (Ã°ÙÊß²Ìß	・SPRING, TAPER VALVE	1			
6	Y119810-55340	・ÚÊÞ°	・LEVER	1			
7	Y121254-55510	・µµ² (FOº¼·	・CUP, STRAINER	1			
8	Y102103-55520	・OØÝ¸Þ (µµ²	・O-RING	1			
9	Y110250-55610	・ØÃ°ÆÝ¸ÞØÝ¸Þ	・RING, RETAINER	1			
10	Y121250-55620	・½ÌßØÝ¸Þ (´ÚÒÝÄ	・SPRING	1			
11	Y124550-55700	・´ÚÒÝÄ (FO) L=90	・ELEMENT	1			
12	Y104200-55750	・ÅÍÞºÈ¼Þ 4 (FOº¯¸ÊÝÄÞÙ	・SCREW M4	1			
13	Y24311-240100	・OØÝ¸Þ 1A P-10A	・O-RING 1A P-10A	1			
14	Y26014-080702	ÎÞÙÄ (Ë×+ÊÞÈ) M8X70	BOLT W/WASHER M8X70	1			
15	Y119462-59190	¶ÝÂ·ÞÃÎÞÙÄ CMP	BOLT ASSY, PIPE JOINT	1			
18	Y104200-59170	Êß¯·Ý (ºÏÙ 12	GASKET 12	2			3TNE68-TB1
I 18-1	Y22190-120002 (A=E64121)	¼°ÙÜ¯¼¬ (ºÏÙ 12	SEAL WASHER 12	2	N		
19	Y119230-59031	FO-T CMP	PIPE ASSY, FUEL OIL	1			
20	Y101304-59020	・¶ÝÂ·ÞÃ (¶À¸Á 12	・JOINT 12, PIPE	1			
21	Y124766-59050	・Î°½¸Ø¯Ìß (ÏÙ 12	・CLAMP 12	2			
22	Y119230-59080	・FO-T (D12XL185	・FO-T	1			
23	Y129335-55700	³µ°À¾ÊßÚ°À CMP	SEPARATOR, WATER	1			
24	Y104200-55321	・Ã°ÊßÊÞÙÌÞ	・VALVE, TAPER	1			
25	Y104200-55330	・½ÌßØÝ¸Þ (Ã°ÊßÊÞÙÌÞ	・SPRING, TAPER VALVE	1			
26	Y104200-55341	・ÊÝÄÞÙ (FOº¯¸	・HANDLE, COCK	1			
27	Y124064-55510	・µµ² (FOº¼·	・BOWL, FUEL STRAINER	1			
28	Y102103-55520	・OØÝ¸Þ (µµ²	・O-RING	1			
29	Y110250-55610	・ØÃ°ÆÝ¸ÞØÝ¸Þ	・RING, RETAINER	1			
30	Y121257-55720	・½ÌßØÝ¸Þ (½¸Ø°Ý	・SPRING, SCREEN	1			
31	Y121257-55731	・ÌÛ°Ä	・FLOAT	1			
33	Y101720-55750	・6¶¸Ìß×¸Þ 6 (´±°Ç·	・PLUG 6	2			
34	Y104200-55750	・ÅÍÞºÈ¼Þ 4 (FOº¯¸ÊÝÄÞÙ	・SCREW M4	1			
35	Y171081-55910	・½¸Ø°Ý (100Ò¯¼-	・SCREEN	1			
36	Y23418-060000	・Êß¯·Ý (ÏÙ 6	・GASKET 6 NYLON	2			
37	Y24311-240100	・OØÝ¸Þ 1A P-10A	・O-RING 1A P-10A	1			
38	Y129322-77401	Ì¨°ÄÞÎßÝÌß (FP332	FEED PUMP	1			
I 39	Y119840-59601 (A=E60051)	ÍÞÝÄÞ (ÓÄÞ¼ CMP	BEND ASSY	4	W		
I 40	Y124766-59050 (A=E60051)	・Î°½¸Ø¯Ìß (ÏÙ 12	・CLAMP 12	8	W		
I 42	Y119840-59621 (A=E60051)	・¼Þ®²ÝÄ	・JOINT	4	W		

silverhorn.co.uk

STARTING MOTOR

Y00D6701
3TNE68-(E) TB1

15 スターティングモータ
STARTING MOTOR

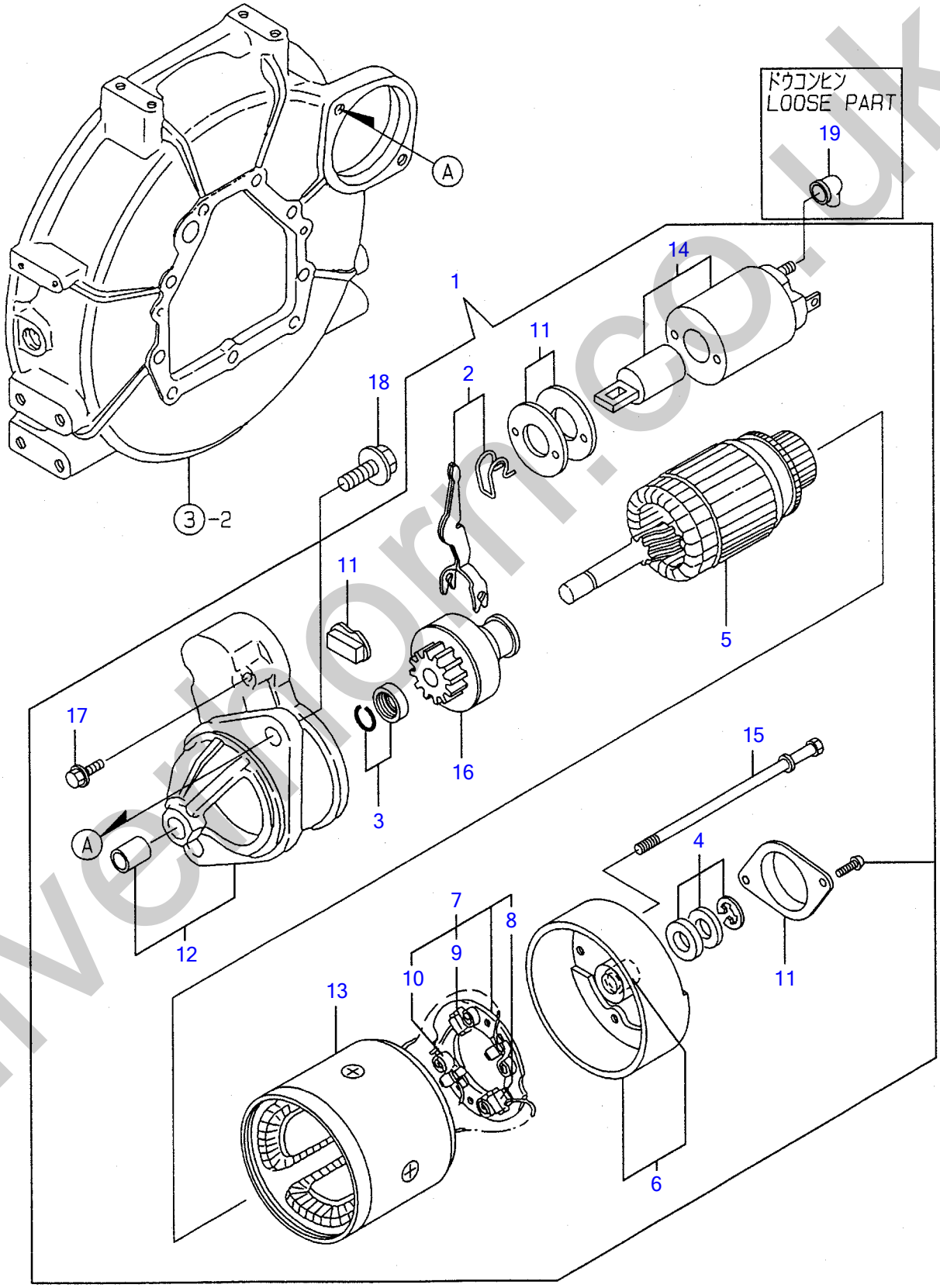

silvermorn.co.uk

½À-Ã²Ý¸ÞÓ-À STARTING MOTOR

Œ©lo REF NO.	•"•i"Ôl† PARTS NO.	•"•i-¼	Description	l"–Ê Q'ty	ŒÝŠ·l« I	R	"õll
1	Y119631-77011	½À°Ã¨Ý¸ÞÓ°À	STARTING MOTOR	1			
2	Y114371-77180	· ¼ÌÄÚÊÞ°·¯Ä	· SHIFT LEVER KIT	1			
3	YX2114715500	· ËßÆµÝ½Ä¯Êß° SET	· STOPPER SET, PINION	1			
4	YX2114811000	· ½×½ÄÜ¯¼¬ KIT	· WASHER KIT, THRUST	1			
5	Y114371-77110	· ±°ÏÁ¬°	· ARMATURE	1			
6	Y114371-77140	· ØÔ¶ÊÞ° ASSY	· COVER ASSY, REAR	1			
7	Y114371-77160	· ÌÞ×¼ÎÙÀÞ°	· HOLDER ASSY, BRUSH	1			
8	Y114371-79040	· · ÌÞ×¯¼- (-)	· · BRUSH (-)	2			
9	Y114371-79050	· · ÌÞ×¯¼- (+)	· · BRUSH (+)	1			
10	Y114371-79060	· · ÌÞ×¼½ÌßØÝ¸Þ	· · SPRING, BRUSH	4			
11	Y114371-77170	· ÀÞ½Ä¶ÊÞ°·¯Ä	· COVER KIT, DUST	1			
12	Y119631-77651	· ·ÞÔ¹°½ CMP	· CASE, GEAR	1			
13	Y124097-77710	· Ö°¸ ASSY	· YOKE ASSY	1			
14	YX2114275010	· Ï¸ÞÈ¯Ä½²¯Á ASSY	· SWITCH ASSY, MAGNET	1			3TNE68-TB1
l 14-1	Y124298-77020 (A=E65286)	· Ï¸ÞÈ¯Ä½²¯Á	· SWITCH, MAGNET	1	N		
15	Y124195-77770	· ½Ù°ÎÞÙÄ	· THROUGH BOLT	2			
16	Y119631-77780	· ËßÆµÝ CMP	· PINION CMP	1			
17	Y114371-79070	· ÎÞÙÄ 6X37	· BOLT M6X37	2			
18	Y26116-120252	ÎÞÙÄ 12X25	BOLT M12X25 PLATED	2			
19	Y124160-77020	À°ÐÅÙ¶ÊÞ°	COVER, TERMINAL	1			

silverhorn.co.uk

GENERATOR

Y00D6701
3TNE68-(E) TB1

16 ジェネレータ GENERATOR

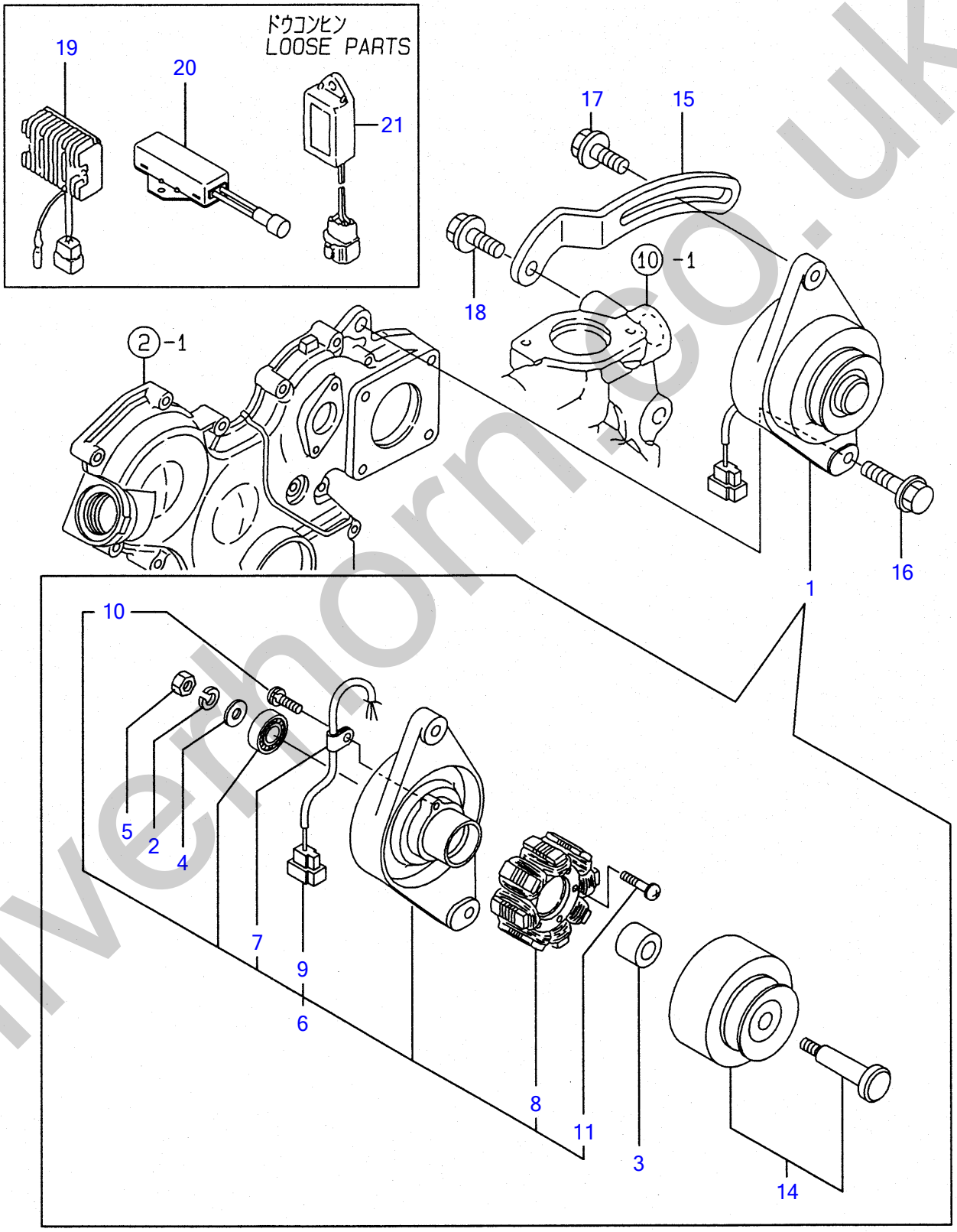

silverhorn.co.uk

¼Þ´ÈÚ-À GENERATOR

Œ©lo REF NO.	•"•¡"Ôl† PARTS NO.	•"•¡-¼	Description	l"–Ê Q'ty	ŒÝŠ·l« I	R	"õl
1	Y129150-77202	ÀÞ²ÅÓ (GP9165)	GENERATOR	1			
2	YXM219230000	· ½ÌßØÝ¸ÞÜ¯¼¬°	· WASHER, SPRING	1			
3	YXM329830000	· ¶×°	· COLLAR	1			
4	YXM860250000	· Ë×»Þ¶ÞÈ 10	· WASHER 10	1			
5	YXM863720000	· Å¯Ä	· NUT	1			
6	Y129150-77210	· ÌßÚ°Ä CMP	· PLATE ASSY	1			
7	YXM069000000	· · ¸×ÝÌß	· · CLAMP	1			
8	YXM081780000	· · ½Ã°À CMP	· · STATOR	1			
9	YXM178780000	· · ¶Ìß×°	· · COUPLER	1			
10	YXYSPS400800	· · ºÈ¼Þ	· · SCREW	1			
11	YXYSPS402400	· · ºÈ¼Þ	· · SCREW	2			
14	Y129150-77230	· Ì×²Î²°Ù CMP	· FLYWHEEL ASSY	1			
15	Y119232-77330	ÍÞÙÄ±¼Þ¬½À	ADJUSTER, V-BELT	1			
16	Y26106-100402	ÂÊÞÎÞÙÄ 10X40	BOLT M10X40 PLATED	1			
17	Y26014-080252	ÎÞÙÄ (Ë×+ÊÞÈ) 8X25	BOLT M8X25	1			
18	Y26106-080202	ÂÊÞÎÞÙÄ 8X20	BOLT M8X20 PLATED	1			
19	Y119653-77710	¶°ÚÝÄØÐ¯À	LIMITTER, CORRENT	1			
20	Y129155-77810	Ú¼Þ½À° (¸ÞÛ°	RESISTOR	1			
21	Y119632-77920	À²ï° (1 SEC.	TIMER	1			

silverhorn.co.uk

GASKET SET

Y00D6701
3TNE68-(E)TB1

17 パッキンセット GASKET SET

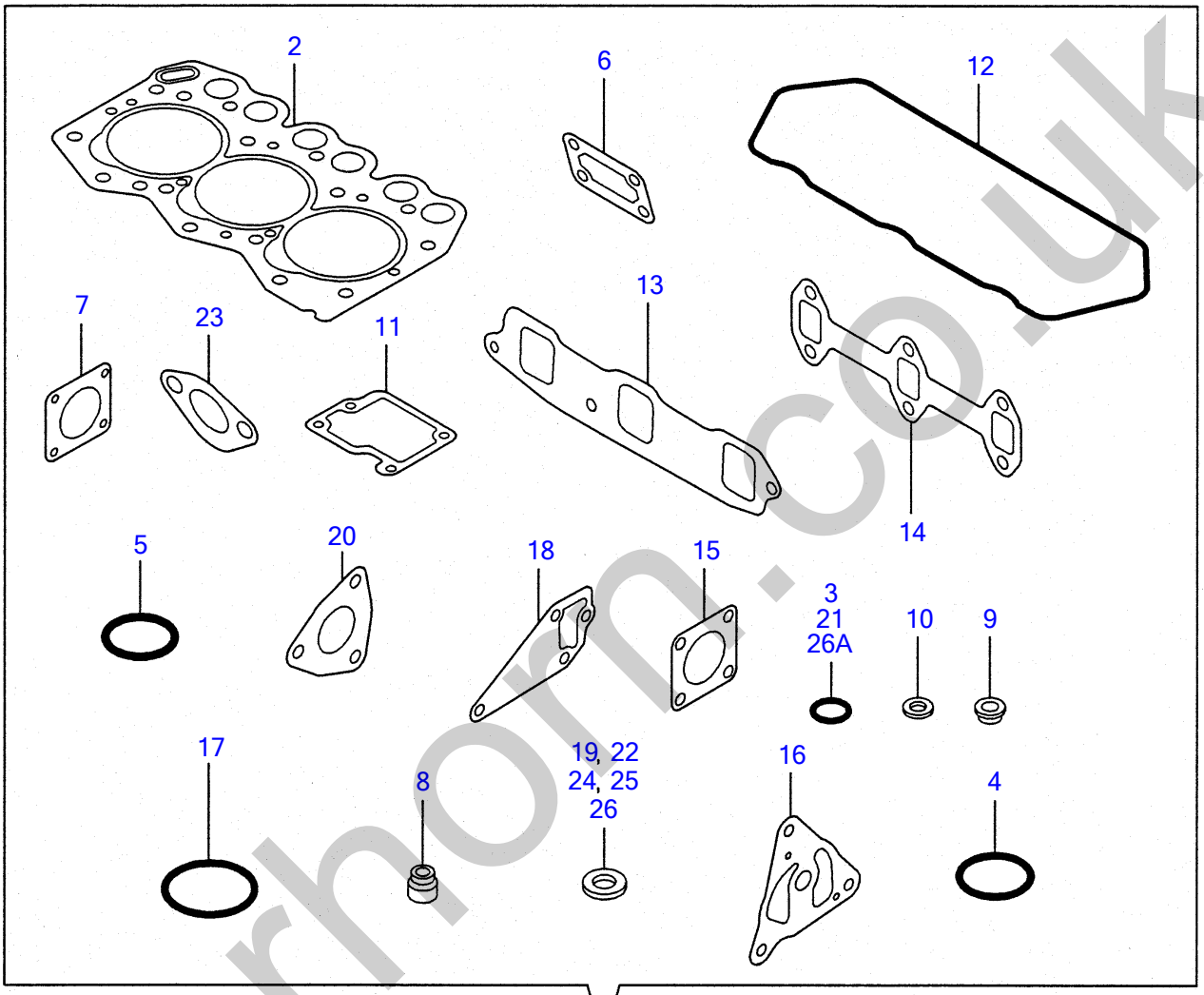

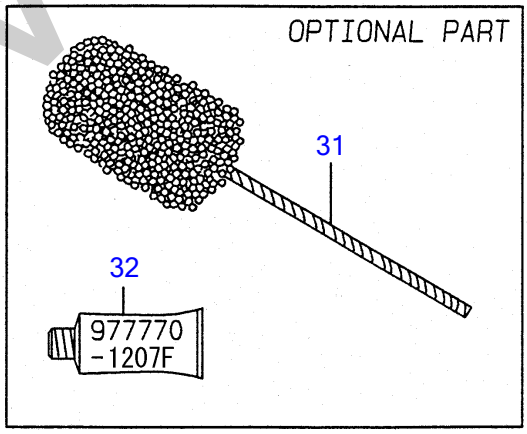

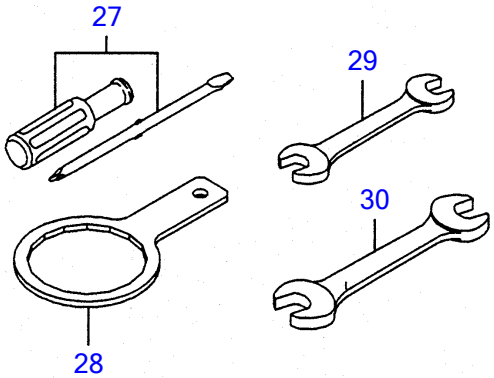

silverhorn.co.uk

ÊßÂ·Ý¾ÂÄ GASKET SET

Œ©lo REF NO.	•"•i"Ôl† PARTS NO.	•"•i-¼	Description	l"–Ê Q'ty	ŒÝŠ·l« I	R	"õl
1	Y719260-92600	ÊßÂ·Ý¾ÂÄ(ÉÝ±½)	GASKET SET, (NON-ASB.)	1		(1)	µÌß¼®Ý ÌÞËÝÃÞ½lD3TNE68-TB1
I 1-1	Y719260-92601	ÊßÂ·Ý¾ÂÄ(ÉÝ±½)	GASKET SET, (NON-ASB.)	1	N	(1)	µÌß¼®Ý ÌÞËÝÃÞ½lD
	(A=EXXX)						
2	Y119265-01341	• ÍÂÄÞ¶Þ½¹ÂÄ	• GASKET, CYL. HEAD	1			
3	Y24311-000120	• OØÝ¸Þ 1A P 12.0	• O-RING 1A P 12.0	4			3TNE68-TB1
I 3-1	Y24311-000120	• OØÝ¸Þ 1A P 12.0	• O-RING 1A P 12.0	2	K		
	(A=FROM 1SET)						
4	Y24311-000320	• OØÝ¸Þ 1A P 32.0	• O-RING 1A P-32.0	2			
5	Y24341-000240	• OØÝ¸Þ 1A S 24.0	• O-RING 1A S-24.0	1			
6	Y119660-01562	• PK (ÎßÝÌß¼ÂÌÀ)(ÉÝ±½)	• GASKET, (NON-ASB.)	1			
7	Y124240-01883	• ÊßÂ·Ý (HO-P)(ÉÝ±½)	• GASKET, (NON-ASB.)	1			
8	Y119260-11340	• ÊÞÙÌÞ½ÃÑ¼-Ù	• SEAL, VALVE STEM	6			
9	Y119600-11450	• É½ÞÙÌßÛÃ¸À	• PROTECTOR, NOZZLE	3			
10	Y119600-11460	• PK	• GASKET, NOZZLE	6			
11	Y119260-03031	• PK (¼¬Í²ÊÞÝ)(ÉÝ±½)	• GASKET, (NON-ASB.)	1			
12	Y119260-11310	• PK (ÎÞÝÈÂÄ	• GASKET, BONNET	1			
13	Y119270-12110	• PK (ÏÆÎ-ÙÄÞ	• GASKET, SUC. MANIFOLD	1			
14	Y119260-13110	• ¶Þ½¹ÂÄ (ÏÆÎ-ÙÄÞ	• GASKET, EXH. MANIFOLD	1			
15	Y124701-11911	• ¶Þ½¹¯Ä (»²ÚÝ»)(ÉÝ±½)	• GASKET, (NON-ASB.)	2			
16	Y119660-32020	• PK (LO-P	• GASKET, L. O. PUMP	1			
17	Y24321-000350	• OØÝ¸Þ 1A G 35.0	• O-RING 1A G-35.0	1			3TNE68-TB1
I 17-1	Y119209-42140	• OØÝ¸Þ G 35	• O-RING, COVER THERMOS.	1	N		
	(A=E65286)						
18	Y119260-42020	• PK	• GASKET, C. W. PUMP	1			3TNE68-TB1
I 18-1	Y119260-42021	• Êß¯·Ý (CW-P	• GASKET, C. W.	1	N		
	(A=E65286)						
19	Y124465-44950	• ÊßÂ·Ý16	• GASKET 16	1			
20	Y103954-13201	• ¶Þ½¹¯Ä (»²ÚÝ»)	• GASKET, SILENCER	1			
21	Y119209-35030	• OØÝ¸Þ P11	• O-RING	1			
22	Y23414-140000	• ÊßÂ·Ý (ÏÙ 14	• GASKET 14, ROUND	3			3TNE68-TB1
I 22-1	Y22190-140002	• ¼-ÙÜÂ¼Ô (ºÏÙ¤ÆÄØÙ) 14	• SEAL WASHER 14S	3	N		
	(A=E64121)						
23	Y121520-01851	• PK (Ì¨°ÄÞÎßÝÌß)(ÉÝ±½)	• GASKET, (NON-ASB.)	1			
24	Y104200-59170	• ÊßÂ·Ý (ÏÙ 12	• GASKET 12	2			3TNE68-TB1
I 24-1	Y22190-120002	• ¼-ÙÜÂ¼Ô (ºÏÙ 12	• SEAL WASHER 12	2	N		
	(A=E64121)						
25	Y23414-080012	• ÊßÂ·Ý (ºÏÙ 8	• GASKET 8	2			3TNE68-TB1
I 25-1	Y22190-080002	• ¼-ÙÜÂ¼Ô (ºÏÙ¤ÆÄØÙ) 8	• SEAL WASHER 8S	2	N		
	(A=E64121)						
26	129150-49360	• PK 10	• GASKET 10	1			
I 26A	119624-32040	• OØÝ¸Þ P12.0	• O-RING P-12.0	2	W		
	(A=FROM 1SET)						
27	Y104200-92350	ÄÞ×²ÊÞ- (»¼¶´¼·	DRIVER, SCREW	1			
28	Y119332-92751	Ì²ÙÀÚÝÁ 68	WRENCH, FILTER	1			
29	Y28110-100120	½ÊßÅ 10X12	WRENCH 10X12	1			
30	Y28110-140170	½ÊßÅ 14X17	WRENCH 14X17	1			
31	Y129400-92400	ÌÚÂ¸½Î-Ý	FLEX HORN	1		(1)	µÌß¼®Ý ÌÞËÝÃÞ½lD
32	Y977770-1207F	¼Øº-Ý¹² ´·¼ÞÖ³¶Þ½¹ÂÄ	GASKET, LIQUID	1		(1)	µÌß¼®Ý ÌÞËÝÃÞ½lD

silvernorn.co.uk