TB016

Book No.BD4Z105
Serial No.11610001-

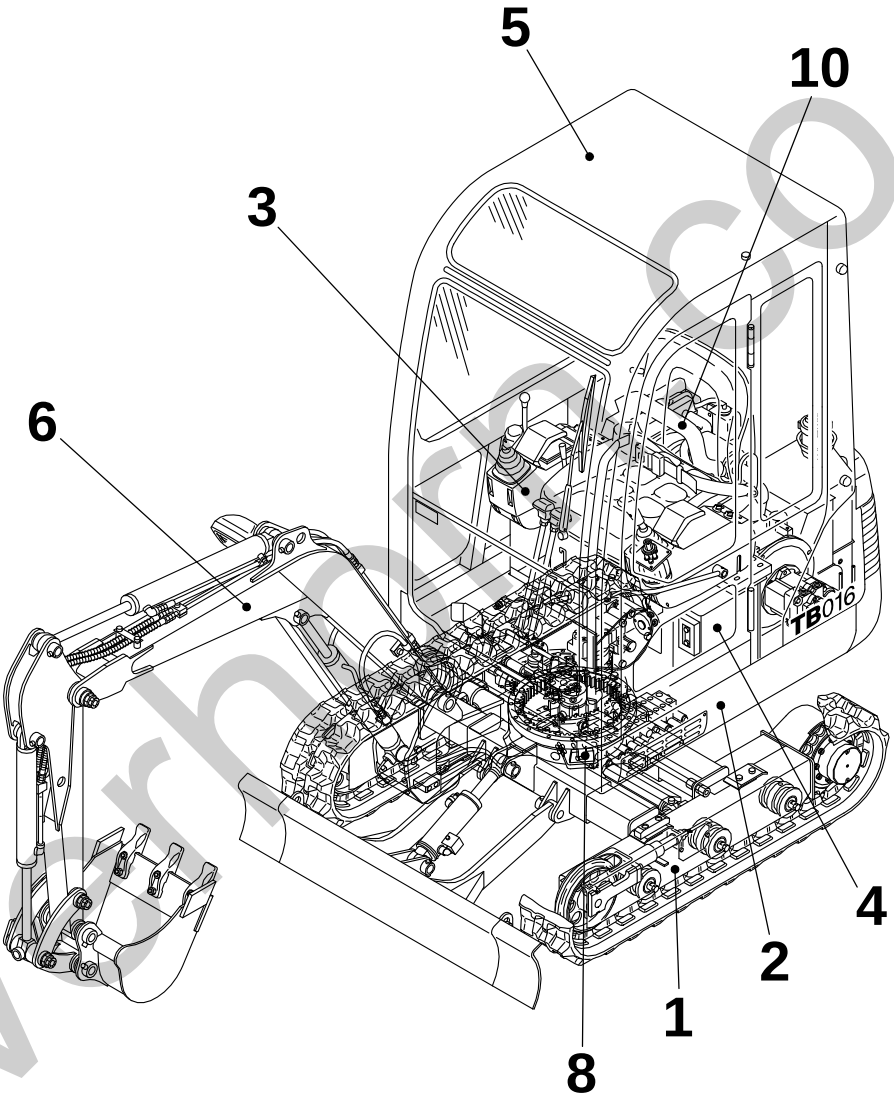

silverhorse.co.uk
TAKEUCHI

silverhorn.co.uk

INDEX

Item	Part number	Description	Q'ty	Chan.	Serial No.	Serv.	Remarks
1		UNDERCARRIAGE					
2		TURNTABLE & CONTROL LEVER					
3		ENGINE & ELECTRICAL SYSTEM					
4		HYDRAULIC PIPNG & TANK					
5		COVER & CAB					
6		HOE ATTACHMENT					
7		DECAL & TOOL					
8		HYDRAULIC DEVICE					
10		ENGINE(3TNV70-STB)					
		2007.4.5					
99		KITS, ATTACHMENTS & QUICK REFERENCE					

silverhorn.co.uk

LOWER FRAME

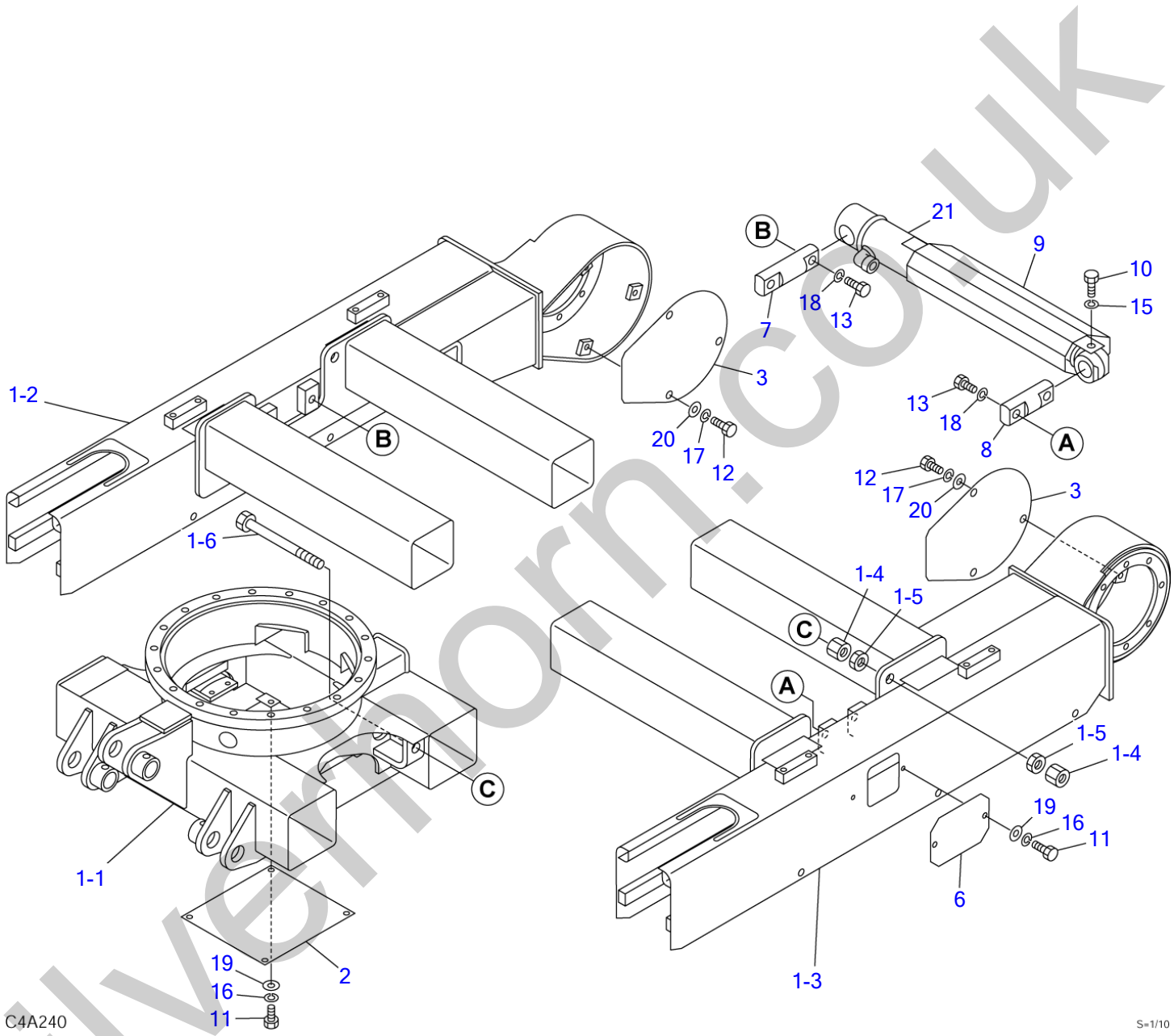

silvermorn.co.uk

LOWER FRAME

Item	Part number	Description	Q'ty	Chan.	Serial No.	Serv.	Remarks
		FRAME ASSY, lower					X03310-34500-0
1	X **********	FRAME	1				
1-1	X **********	・BODY	1				
1-2	X **********	・FRAME (R.H.)	1				
1-3	X **********	・FRAME (L.H.)	1				
1-4	1134821620	・NUT	4				
1-5	1130140016	・NUT	4				
1-6	0421013600	・BOLT	2				
2	0331033110	PLATE	1				
3	0331021003	COVER	2				
6	0331018600	COVER	2				
7	0331010600	PIN	1				
8	0331010700	PIN	1				
9	0331034590	COVER	1				
10	1100040616	BOLT	1				
11	1100040816	BOLT	8				
12	1100041020	BOLT	6				
13	1101041440	BOLT	4				
15	1140020006	WASHER, spring	1				
16	1140020008	WASHER, spring	8				
17	1140020010	WASHER, spring	6				
18	1140020014	WASHER, spring	4				
19	1141110008	WASHER	8				
20	1141110010	WASHER	6				
21	1900095400	CYLINDER, spanner	1				
	C4a240						

silverhorn.co.uk

SHOE SLIDE

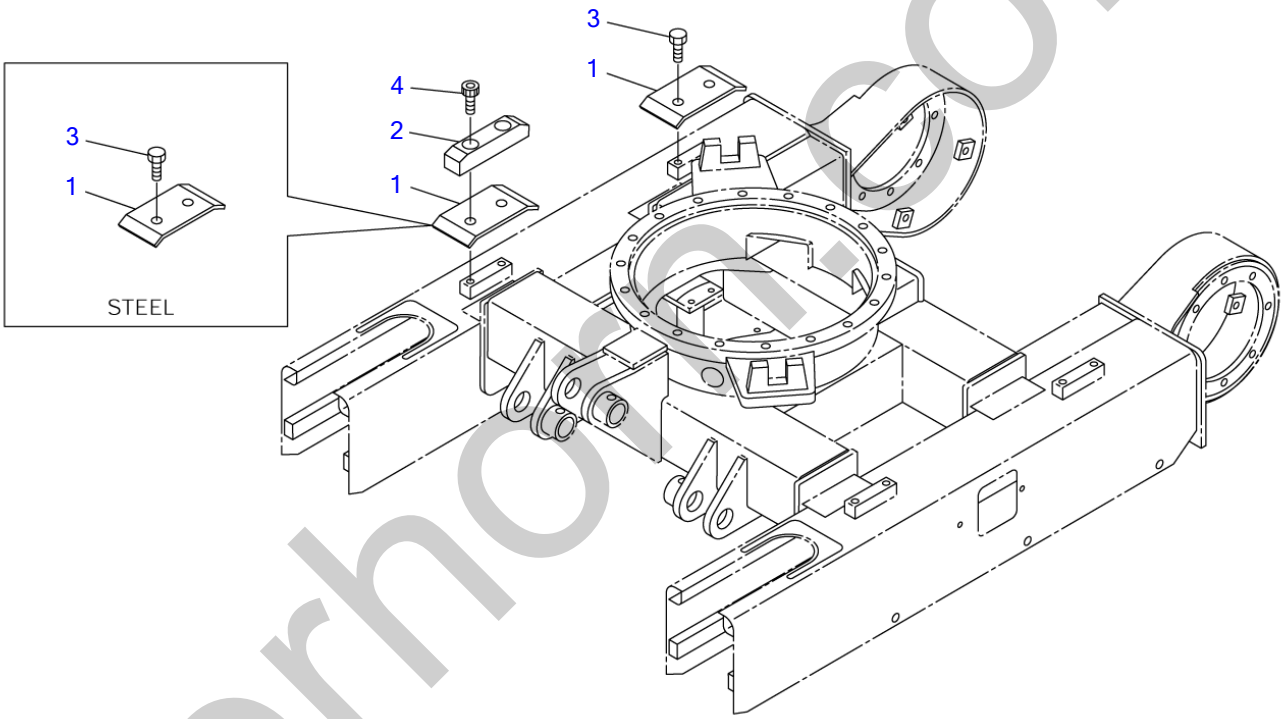

C4A200

S=1/10

silverhorn.co.uk

SHOE SLIDE

Item	Part number	Description	Q'ty	Chan.	Serial No.	Serv.	Remarks
		SHOE SLIDE ASSY (rubber)					X03312-02000-0
		SHOE SLIDE ASSY (steel)					X03312-02100-0
1	0421013800	SLIDE, shoe	4				
2	0331011200	GUIDE	2				rubber
3	1100041020	BOLT	4				rubber
	1100041020	BOLT	8				steel
4	1110041030	SCREW, cap	4				
	C4a200						

silverhorn.co.uk

CRAWLER BELT

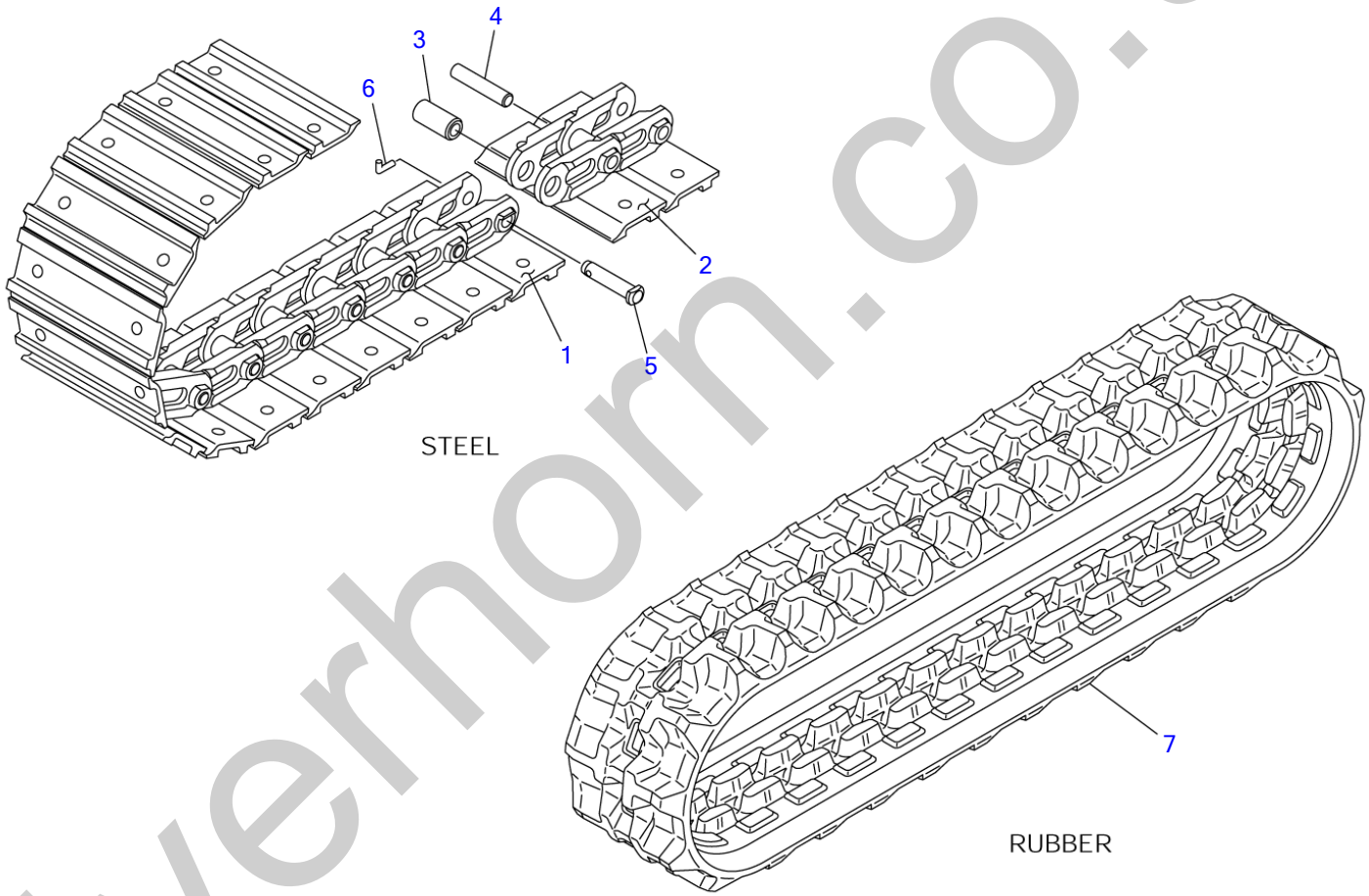

C4A290

S=free

silverhorn.co.uk

CRAWLER BELT

Item	Part number	Description	Q'ty	Chan.	Serial No.	Serv.	Remarks
0	1914302200	BELT ASSY, steel crawler	2				X19143-02200-0
1	1914302314	・PLATE ASSY, master	1				
2	1914302313	・PLATE ASSY	34				
3	1914050005	・BUSHING	35				
4	1914050006	・PIN, track	34				
5	1914050007	・PIN, master	1				
6	1914050008	・PIN, coter	1				
7	1914049500	BELT, rubber crawler	2				
	1914080500	BELT, rubber crawler	2				short pitch
	C4a310						

silverhorn.co.uk

CRAWLER BELT (with rubber pads)

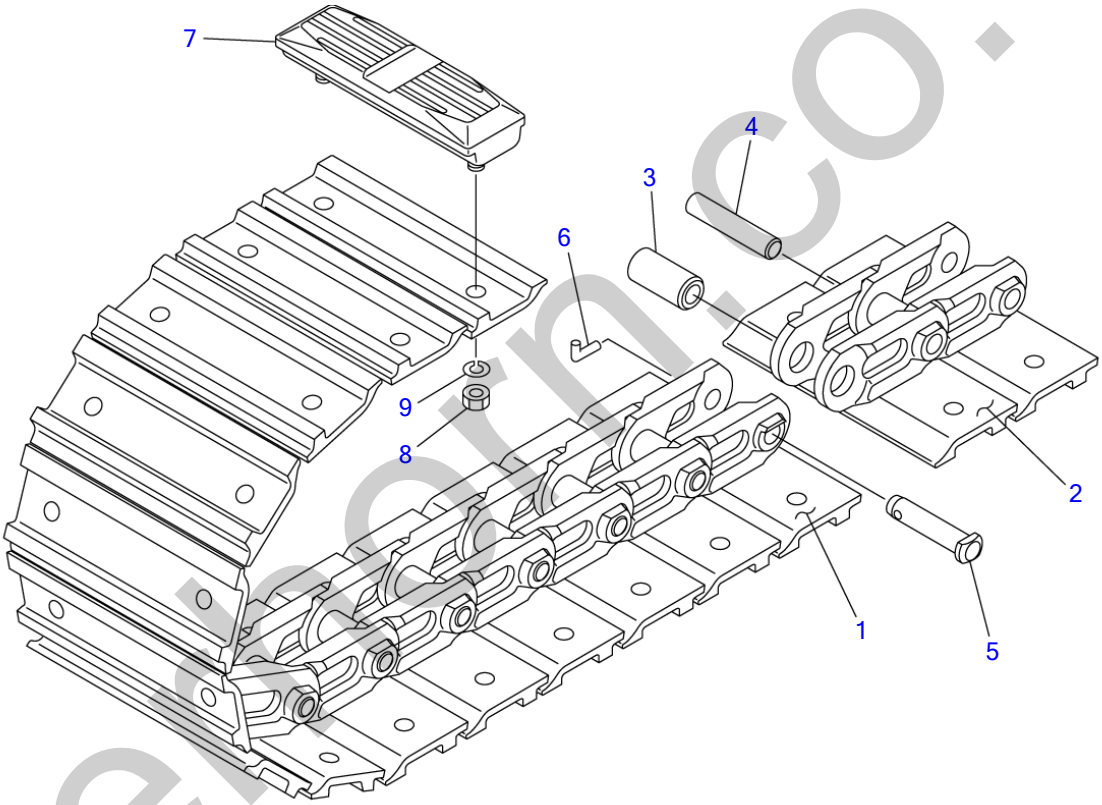

C4A300

S=free

silvethorn.co.uk

CRAWLER BELT (with rubber pads)

Item	Part number	Description	Q'ty	Chan.	Serial No.	Serv.	Remarks
0	**1914302300**	BELT ASSY, steel crawler	2				X19143-02300-0
1	**1914302314**	・PLATE ASSY, master	1				
2	**1914302313**	・PLATE ASSY	34				
3	**1914050005**	・BUSHING	35				
4	**1914050006**	・PIN, track	34				
5	**1914050007**	・PIN, master	1				
6	**1914050008**	・PIN, coter	1				
7	**1914400700**	・PAD, rubber	35				
8	**1130050012**	・・NUT	2				
9	**1140010012**	・・WASHER, spring	2				
	C4a321						

silverhorn.co.uk

TRACK ROLLER

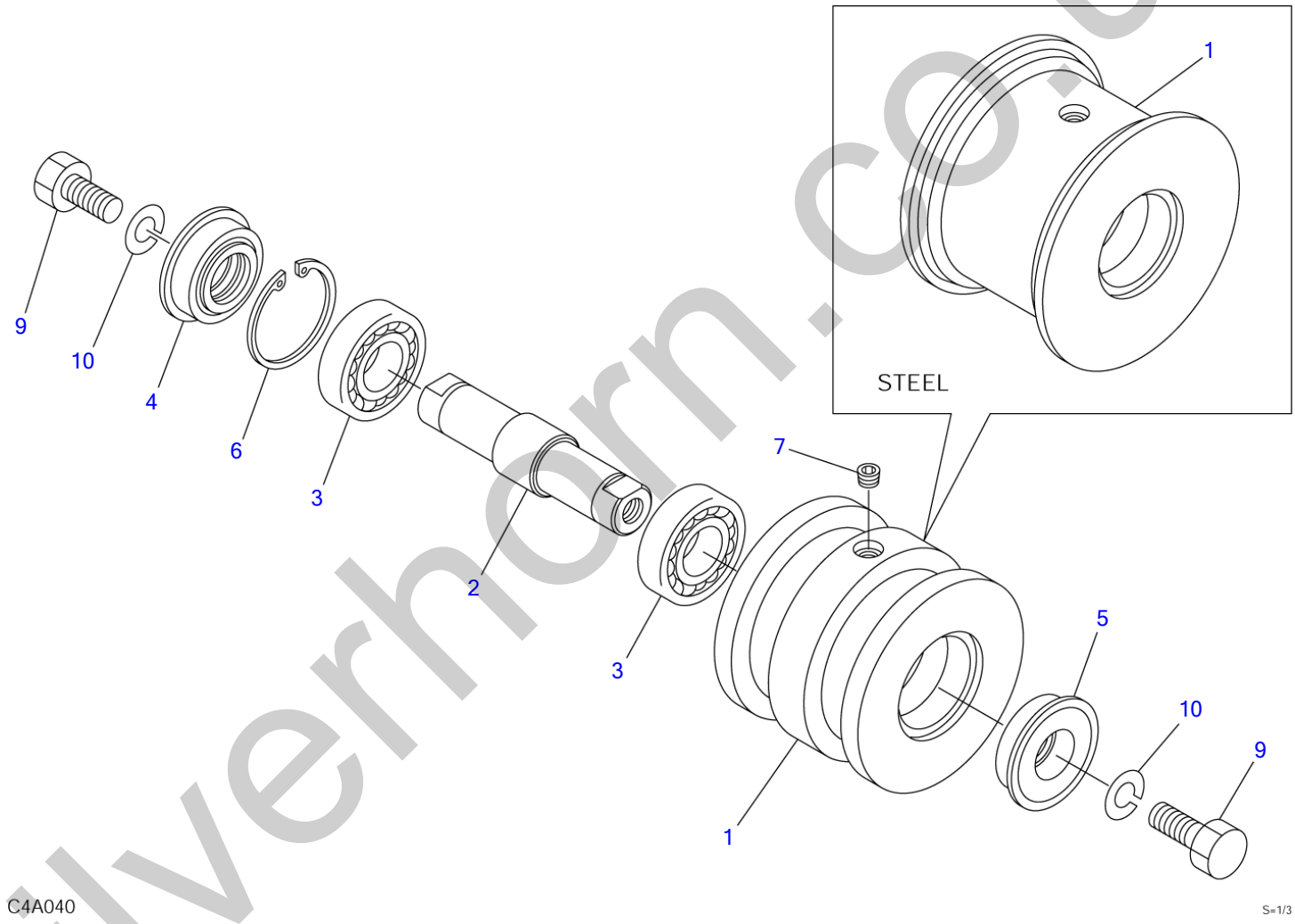

silverhorn.co.uk

TRACK ROLLER

Item	Part number	Description	Q'ty	Chan.	Serial No.	Serv.	Remarks
		ROLLER ASSY, track (rubber crawler)					X03313-06000-1
		ROLLER ASSY, track (steel crawler)					X03313-07000-1
0-1	0331306100	ROLLER SUB ASSY	6				rubber crawler
	0331307100	ROLLER SUB ASSY	6				steel crawler
1	0331306200	・SHELL	1				rubber crawler
	0331307200	・SHELL	1				steel crawler
2	0421301300	・SHAFT	1				
3	1300006205	・BEARING	2				
4	1431202552	・SEAL	1				
5	1431202547	・SEAL	1				
6	1221000052	・RING, snap	1				
7	1501810001	・PLUG	1				
9	1101041225	BOLT	12				
10	1140010012	WASHER, spring	12				
	C4a042						

silverhorn.co.uk

FRONT IDLER

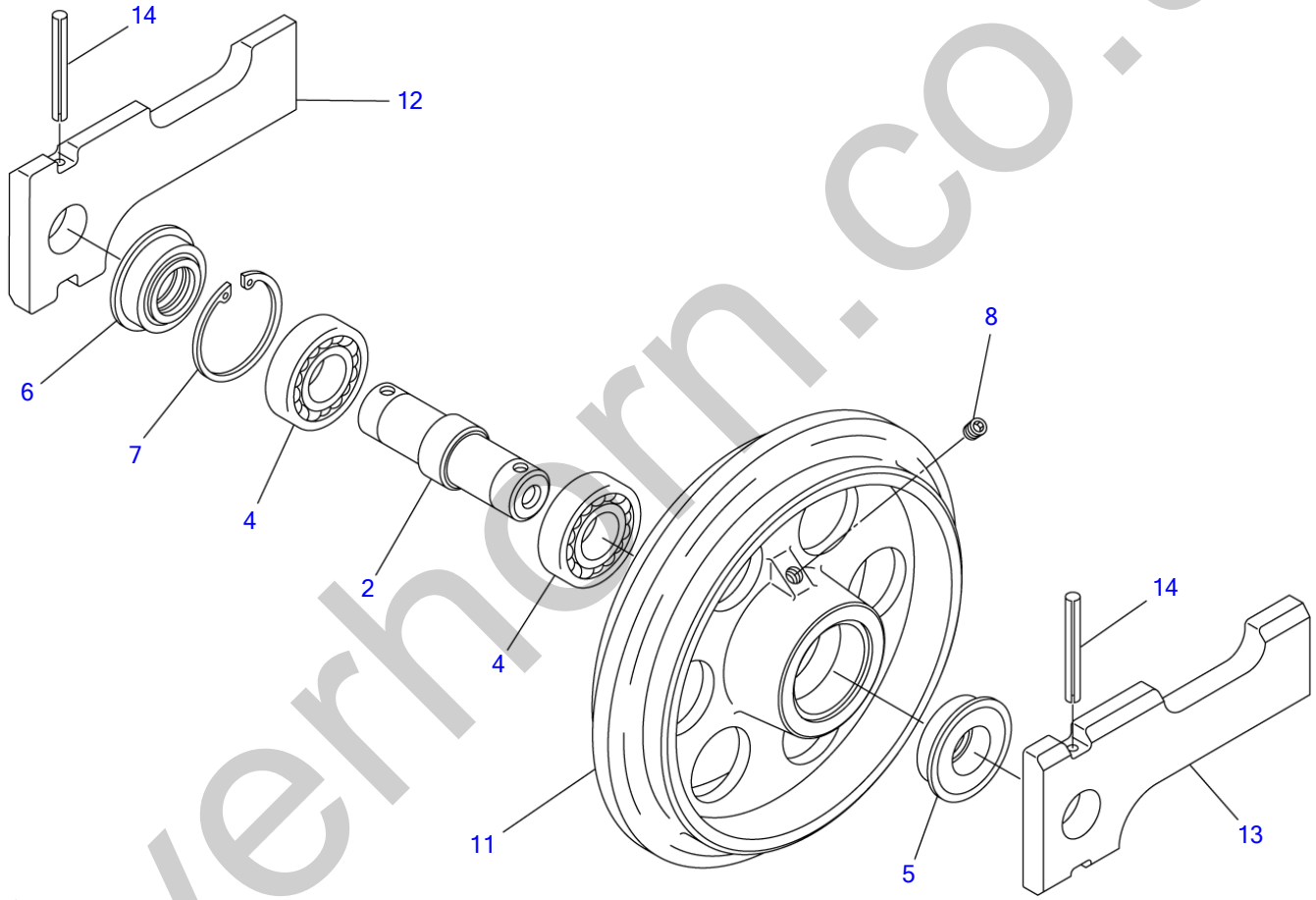

C4A050

S=1/4

silverhorn.co.uk

FRONT IDLER

Item	Part number	Description	Q'ty	Chan.	Serial No.	Serv.	Remarks
		IDLER ASSY, front					X03314-04000-1
0-1	0421401200	IDLER SUB ASSY	2				
2	0421400200	・SHAFT	1				
4	1300006206	・BEARING	2				
5	1431203055	・SEAL	1				
6	1431203062	・SEAL	1				
7	1221000062	・RING, snap	1				
8	1501810001	・PLUG	1				
11	0421401100	・IDLER	1				
12	0331404600	YOKE (R.H.)	2				
13	0331404700	YOKE (L.H.)	2				
14	1213000670	PIN, spring	4				
	C4a052						

silverhorn.co.uk

TRACK ADJUSTER

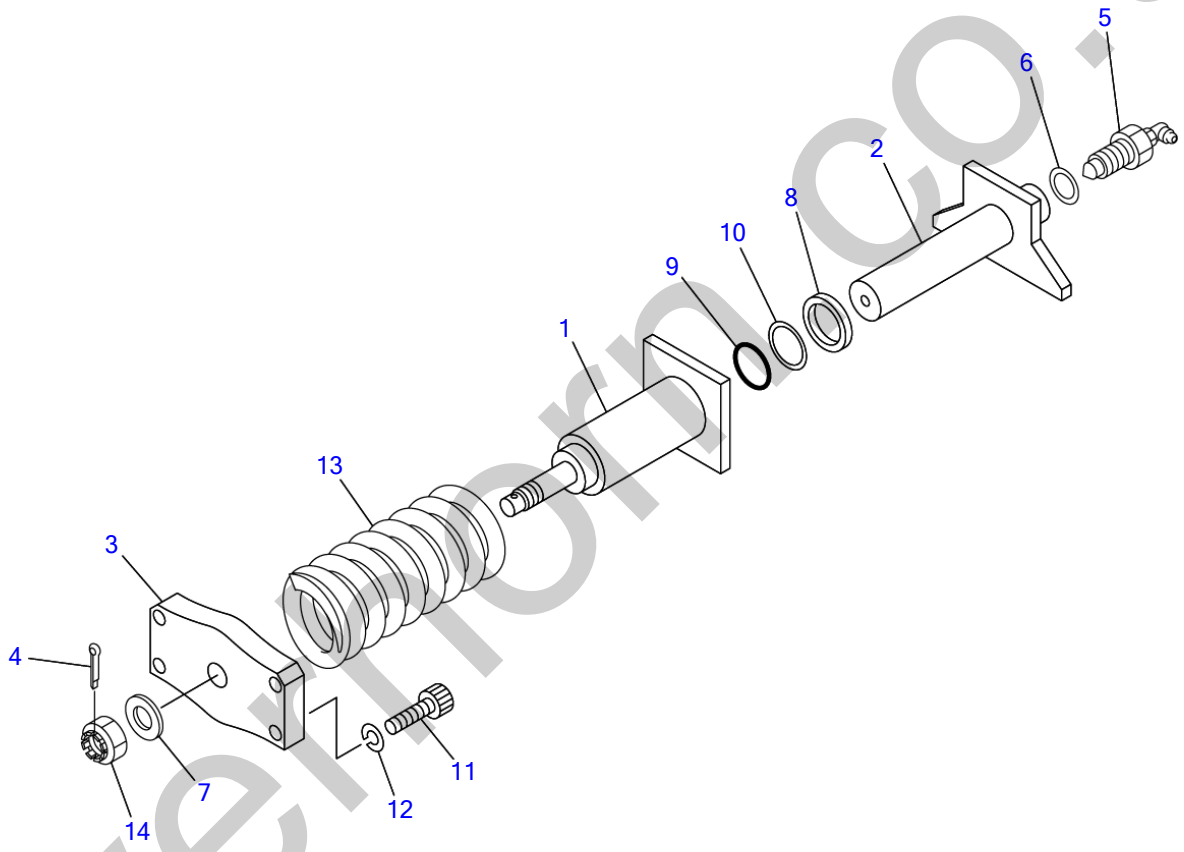

C4A150

S=1/5

silvermorn.co.uk

TRACK ADJUSTER

Item	Part number	Description	Q'ty	Chan.	Serial No.	Serv.	Remarks
0-1	0331508500	ADJUSTER ASSY, track (R)	1				X03315-08500-4
	0331508900	ADJUSTER ASSY, track (L)	1				X03315-08900-4
1	0331508600	・CYLINDER, grease	1				
2	0331508700	・PISTON	1				
3	0331508030	・PLATE	1				
4	1210010440	・PIN, split	1				
5	1541301602	・VALVE ASSY, check	1				
6	1541201616	・WASHER	1				
7	1141540016	・WASHER	1				
8	1400401654	・SEAL, oil	1				
9	1422010300	・O-RING	1				
10	1421020300	・RING, back-up	1				
11	1110041035	SCREW, cap	8				
12	1140420010	WASHER, spring	8				
13	0007000018	SPRING	2				
14	1132080016	NUT	2				
	C4a152						

silverhorn.co.uk

TRAVEL DEVICE

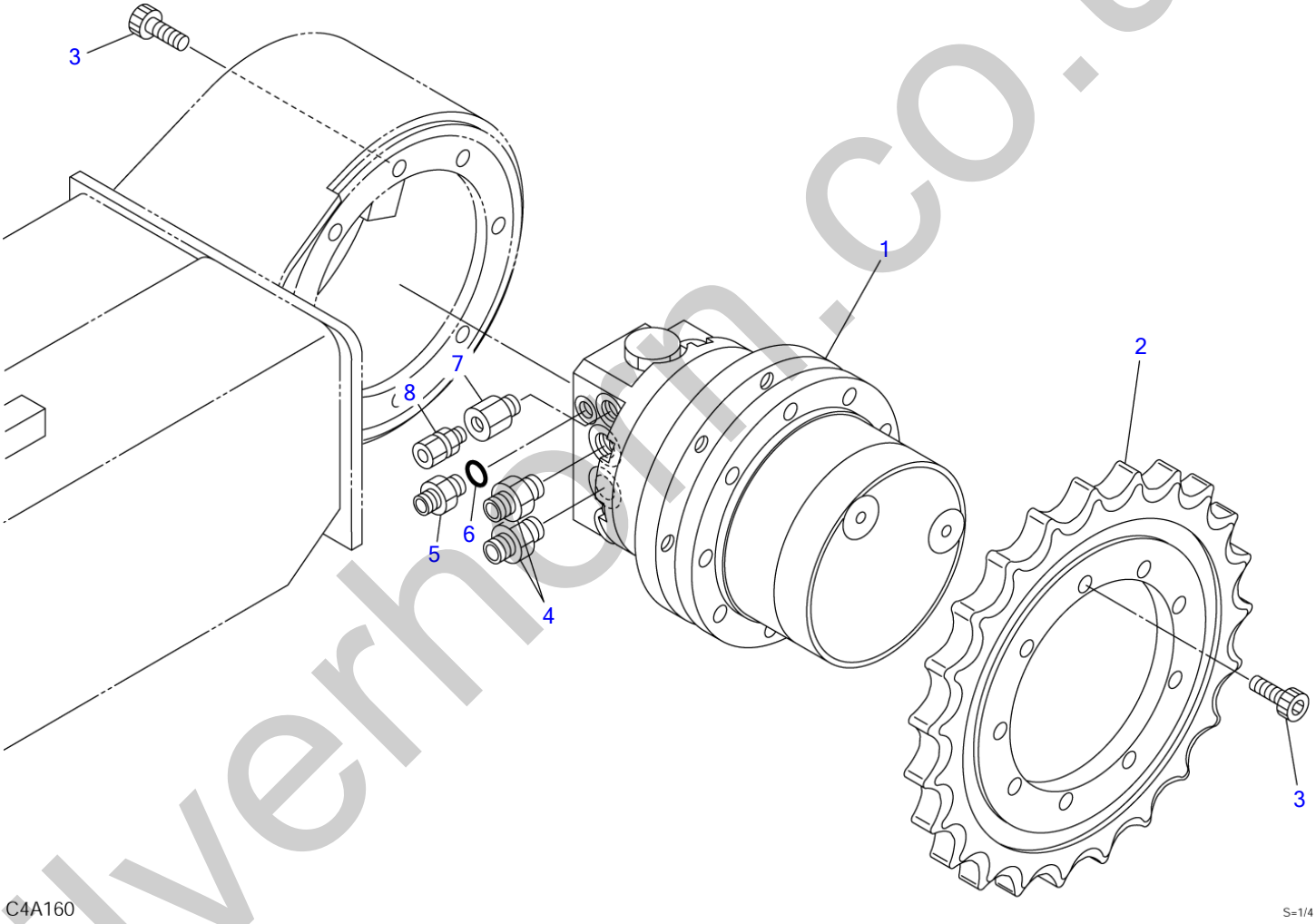

silverhorn.co.uk

TRAVEL DEVICE

Item	Part number	Description	Q'ty	Chan.	Serial No.	Serv.	Remarks
		MOTOR ASSY, travel					X03316-19500-0
1	1903121400	MOTOR, travel	2				
2	0421600100	SPROCKET	2				
3	1110041022	SCREW, cap	34				
4	1515600576	ADAPTOR	4				
	1420010140	・O-RING	1				
5	0007203059	NIPPLE	2				
6	1420010080	O-RING	2				
7	0007211014	BUSHING	2				
8	1532520801	CONNECTOR	2				
	C4a160D						

silverhorn.co.uk

SLEW BEARING

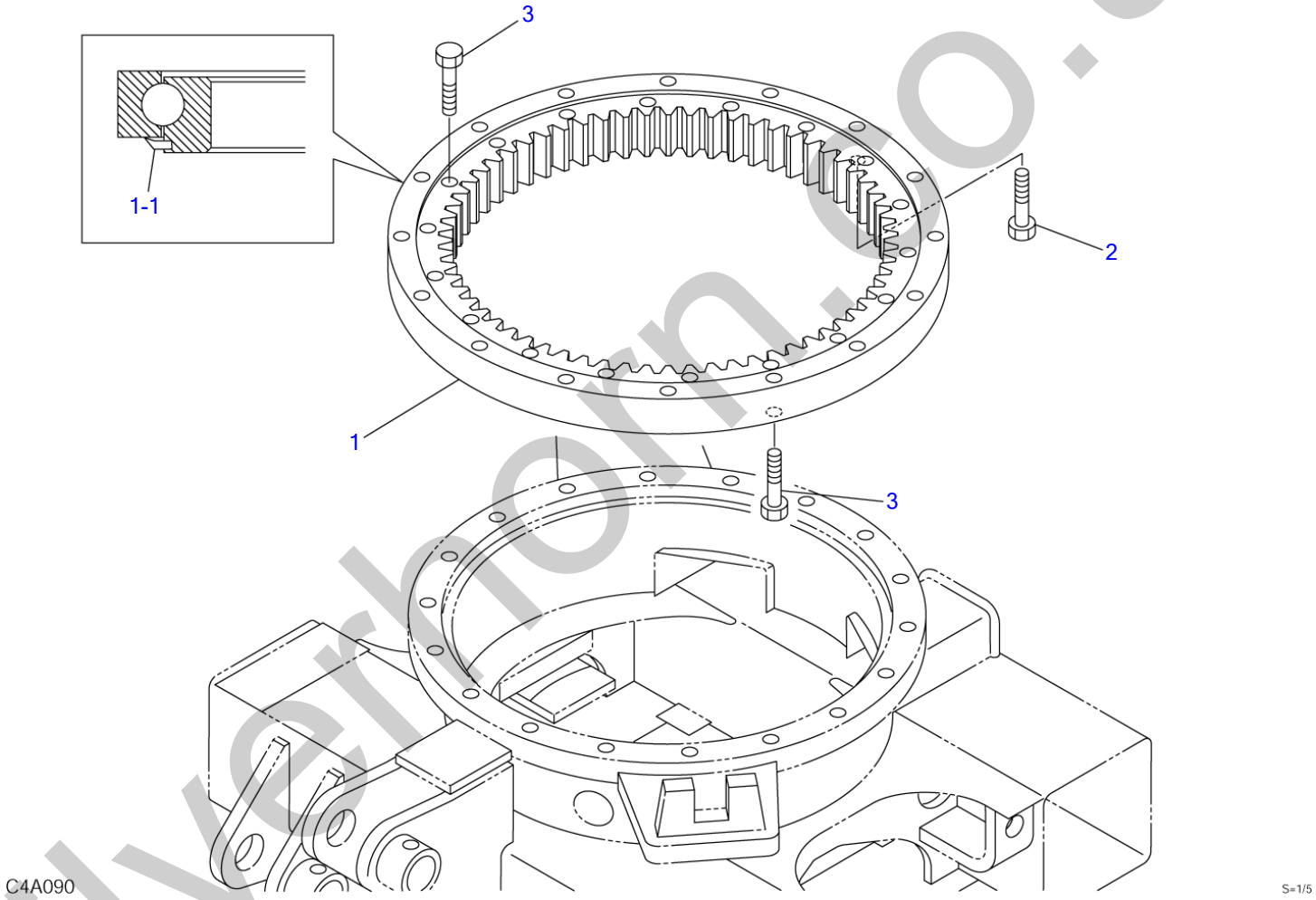

silverhorn.co.uk

SLEW BEARING

Item	Part number	Description	Q'ty	Chan.	Serial No.	Serv.	Remarks
		BEARING ASSY, slew					X03320-02000-1
1	**1913003950**	BEARING	1				
1-1	**1913003959**	・SEAL	1				
2	**0422001100**	BOLT	1				
3	**1106251250**	BOLT	33				
	C4a092						

silverhorn.co.uk

SWIVEL JOINT & ACCESSORIES

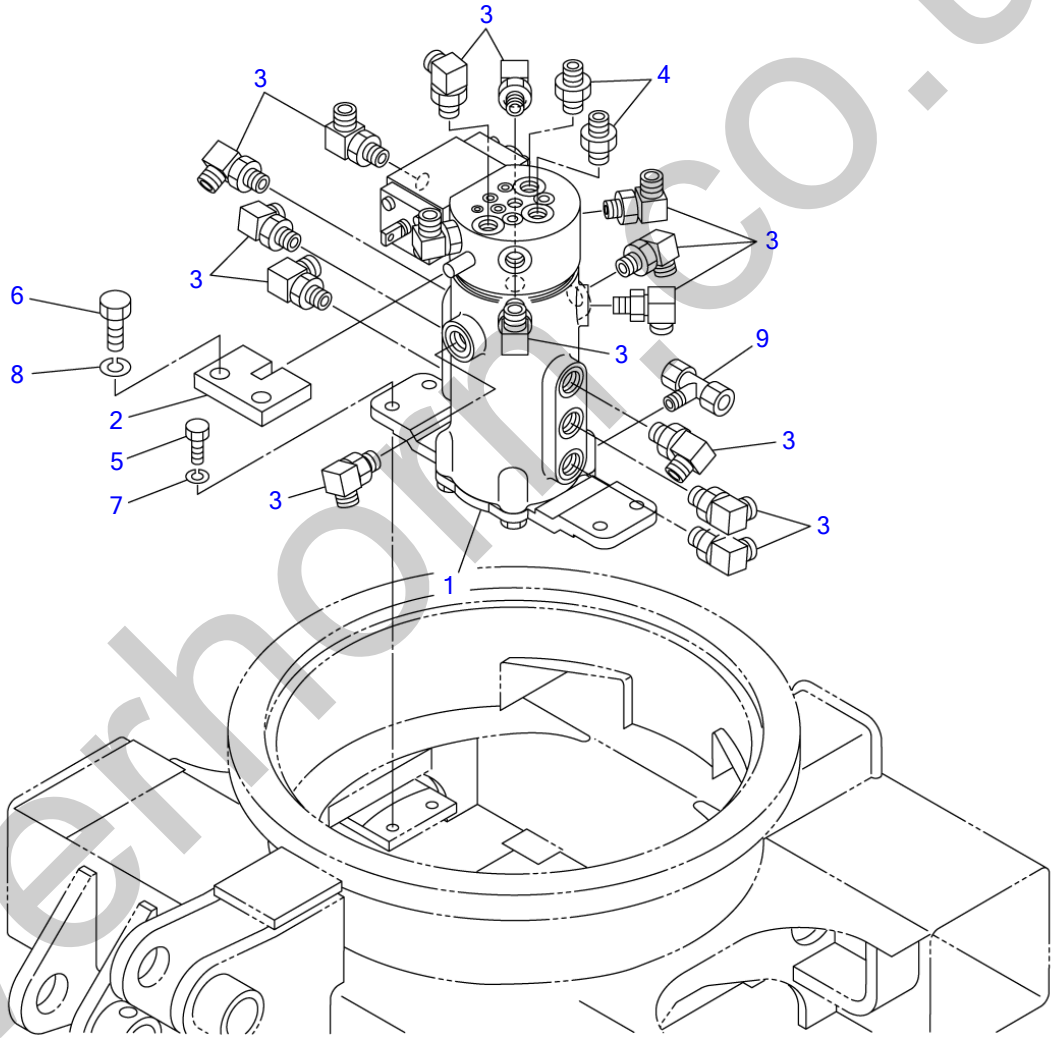

C4A260

S=1/5

silverhomes.co.uk

SWIVEL JOINT & ACCESSORIES

Item	Part number	Description	Q'ty	Chan.	Serial No.	Serv.	Remarks
		JOINT ASSY, swivel					X03321-14000-3
1	1904007600	JOINT, swivel	1				
2	0422110100	COLLAR	1				
3	1515012040	ELBOW	15				
	1420010110	・O-RING	1				
4	1515600200	ADAPTOR	2				
	1420010110	・O-RING	1				
5	1100040820	BOLT	4				
6	1101041235	BOLT	2				
7	1140020008	WASHER, spring	4				
8	1140020012	WASHER, spring	2				
9	1532720801	TEE	1				
	C4a260						

silverhorn.co.uk

DOZER BLADE

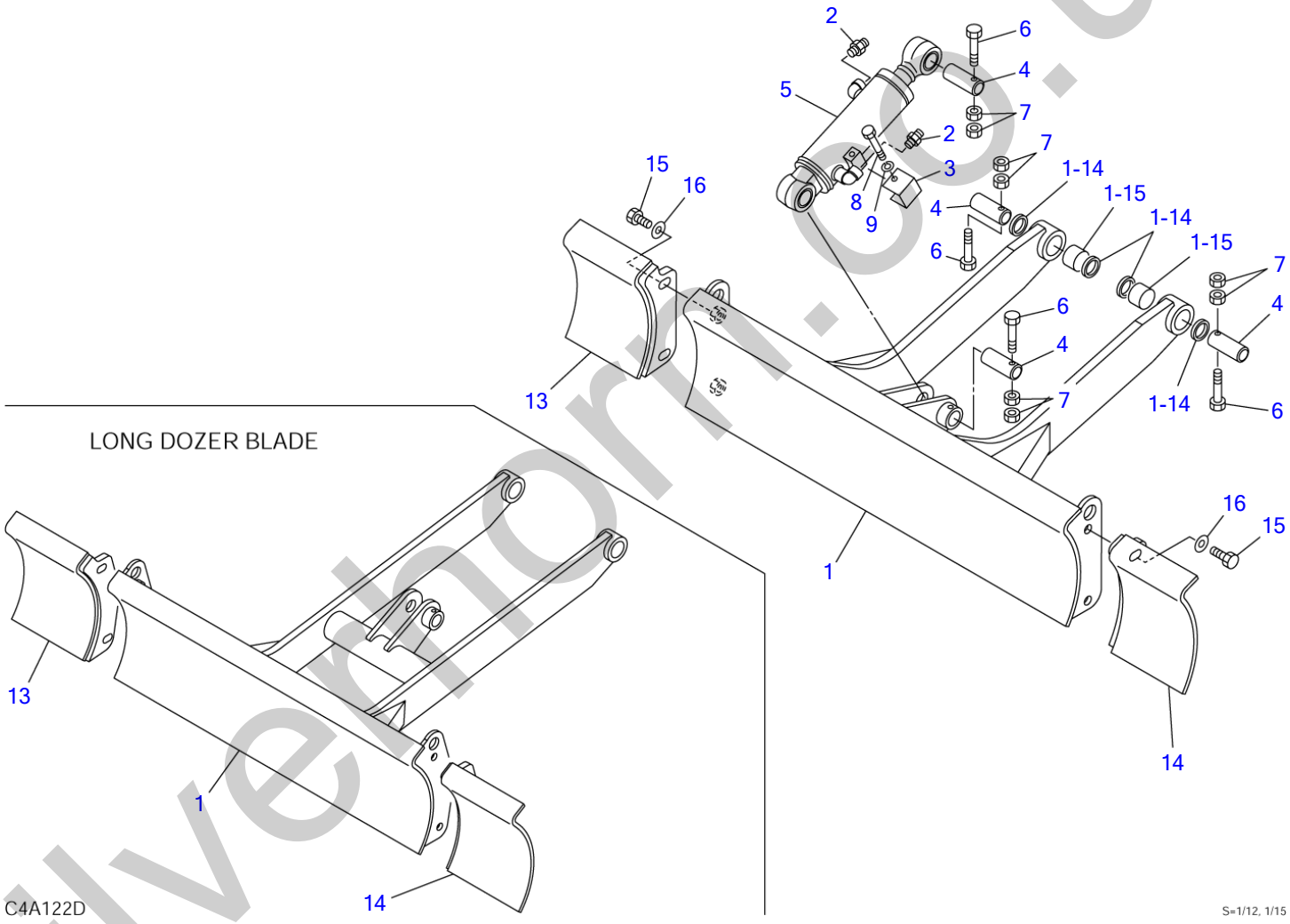

silvermorn.co.uk

DOZER BLADE

Item	Part number	Description	Q'ty	Chan.	Serial No.	Serv.	Remarks
		BLADE ASSY, dozer					X03363-43800-0
		BLADE ASSY, dozer (long)					X03363-43900-0
1	0336341600	BLADE, dozer	1				517mm long
	0336342100	BLADE, dozer (long)	1				872mm long
1-14	1432200030	・SEAL, dust	4				
1-15	0426007300	・BUSHING	2				
2	1515600200	ADAPTOR	2				
	1420010110	・O-RING	1				
3	0426300400	COVER	1				
4	0011601100	PIN	4				
5	1900096000	CYLINDER, dozer blade	1				
	1900096100	CYLINDER, dozer blade (long)	1				
6	1103040860	BOLT	4				
7	1130240008	NUT	8				
8	1100040860	BOLT	1				
9	1140020008	WASHER, spring	1				
13	0336333100	PLATE (R.H.)	1				
	0336335100	PLATE (R.H.)	1				long
14	0336333200	PLATE (L.H.)	1				
	0336335200	PLATE (L.H.)	1				long
15	1100041640	BOLT	4				
16	1141550016	WASHER	4				
	C4a270						

silverhorn.co.uk

PIPING; LOWER

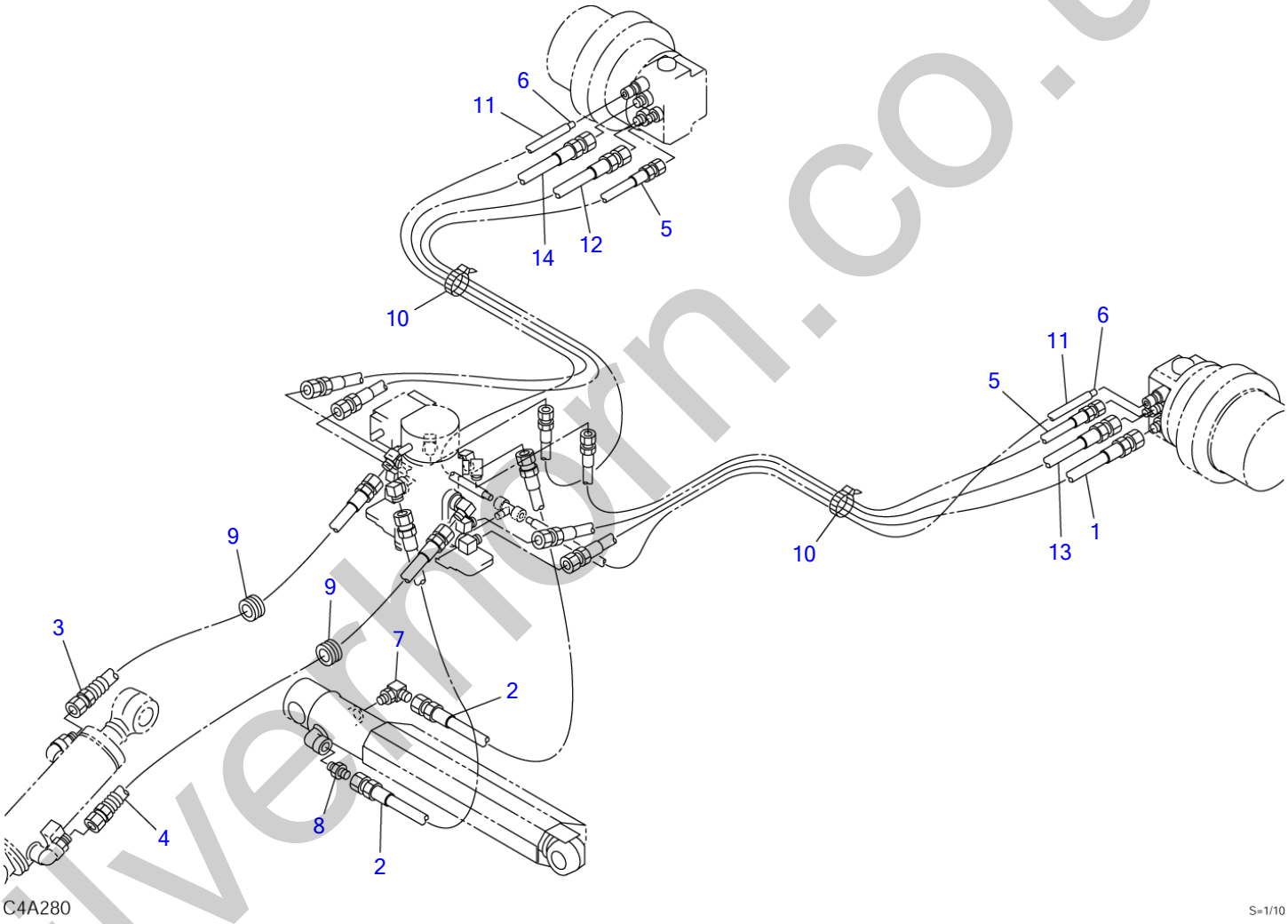

silverthorn.co.uk

PIPING; LOWER

Item	Part number	Description	Q'ty	Chan.	Serial No.	Serv.	Remarks
		PIPING ASSY, lower					X03372-28000-2
1	0337226100	HOSE ASSY	1				18015-60090
2	1801600054	HOSE ASSY	2				
3	0337228300	HOSE ASSY	1				18015-00058
4	0337228400	HOSE ASSY	1				18015-00074
5	0337226140	HOSE ASSY	2				18015-60094
6	1532020897	TUBE	2				sold by the meter
7	1515012040	ELBOW	1				
	1420010110	・O-RING	1				
8	1515600200	ADAPTOR	1				
	1420010110	・O-RING	1				
9	0077200400	GUARD	2				
10	1652201005	BAND	2				
11	1531010087	HOSE	2				sold by the meter
12	0337226110	HOSE ASSY	1				18015-60090
13	0337226120	HOSE ASSY	1				18015-60090
14	0337226130	HOSE ASSY	1				18015-60090
	C4a280						

silverhorn.co.uk

SLEWING DEVICE

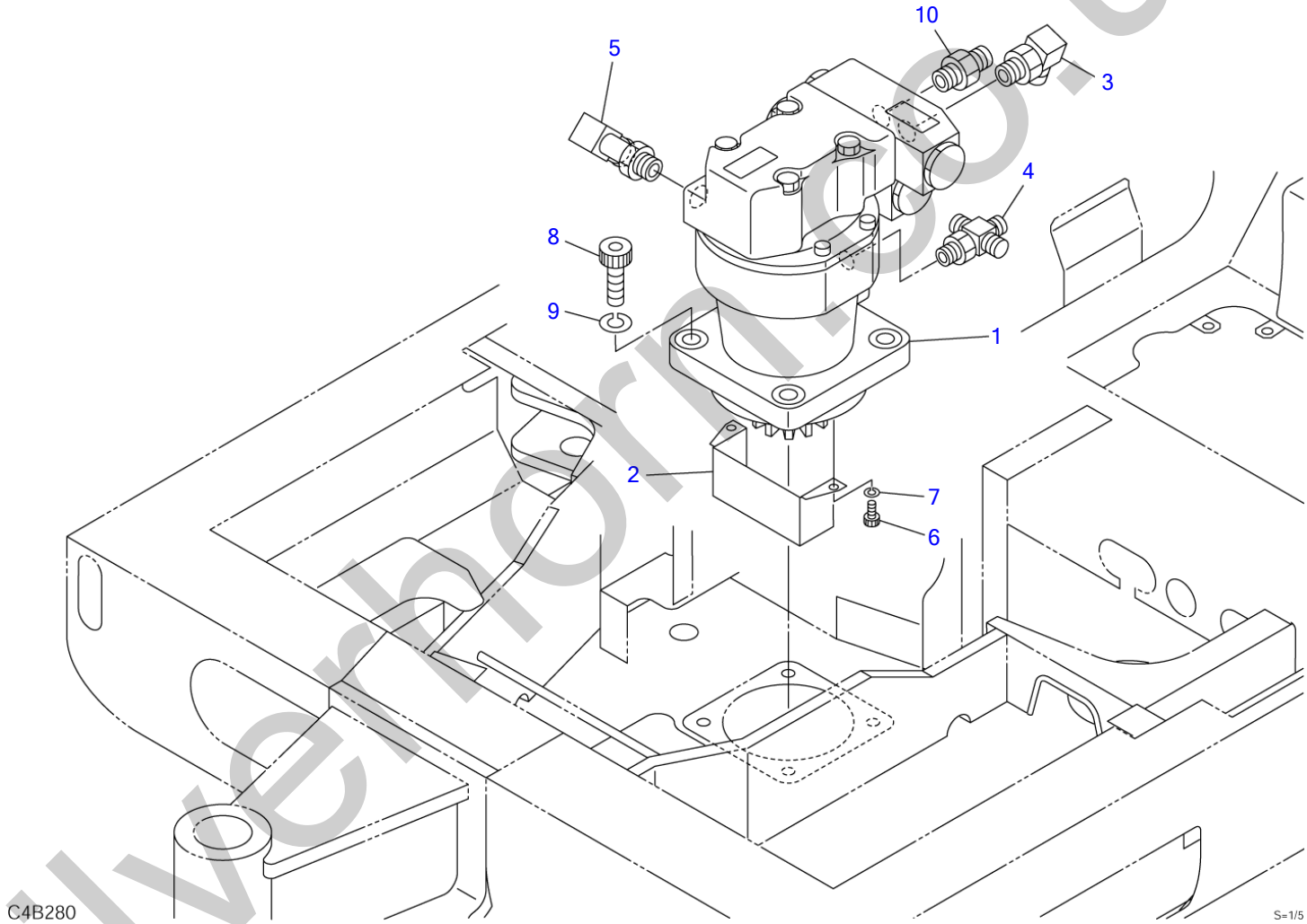

silverhorn.co.uk

SLEWING DEVICE

Item	Part number	Description	Q'ty	Chan.	Serial No.	Serv.	Remarks
		DEVICE ASSY, slewing					X03323-23000-0
1	1903124700	MOTOR, slew	1				
2	0332314100	COVER	1				
3	1515012050	ELBOW	1				
	1420010140	・O-RING	1				
4	1513390027	NIPPLE	1				
	1420010110	・O-RING	1				
5	1513350003	ELBOW	1				
	1420010140	・O-RING	1				
6	1110040610	SCREW, cap	2				
7	1140420006	WASHER, spring	2				
8	1111021235	SCREW, cap	4				
9	0003900036	WASHER	4				
10	1515600576	ADAPTOR	1				
	1420010140	・O-RING	1				
	C4b280						

silverhorn.co.uk

TURNTABLE

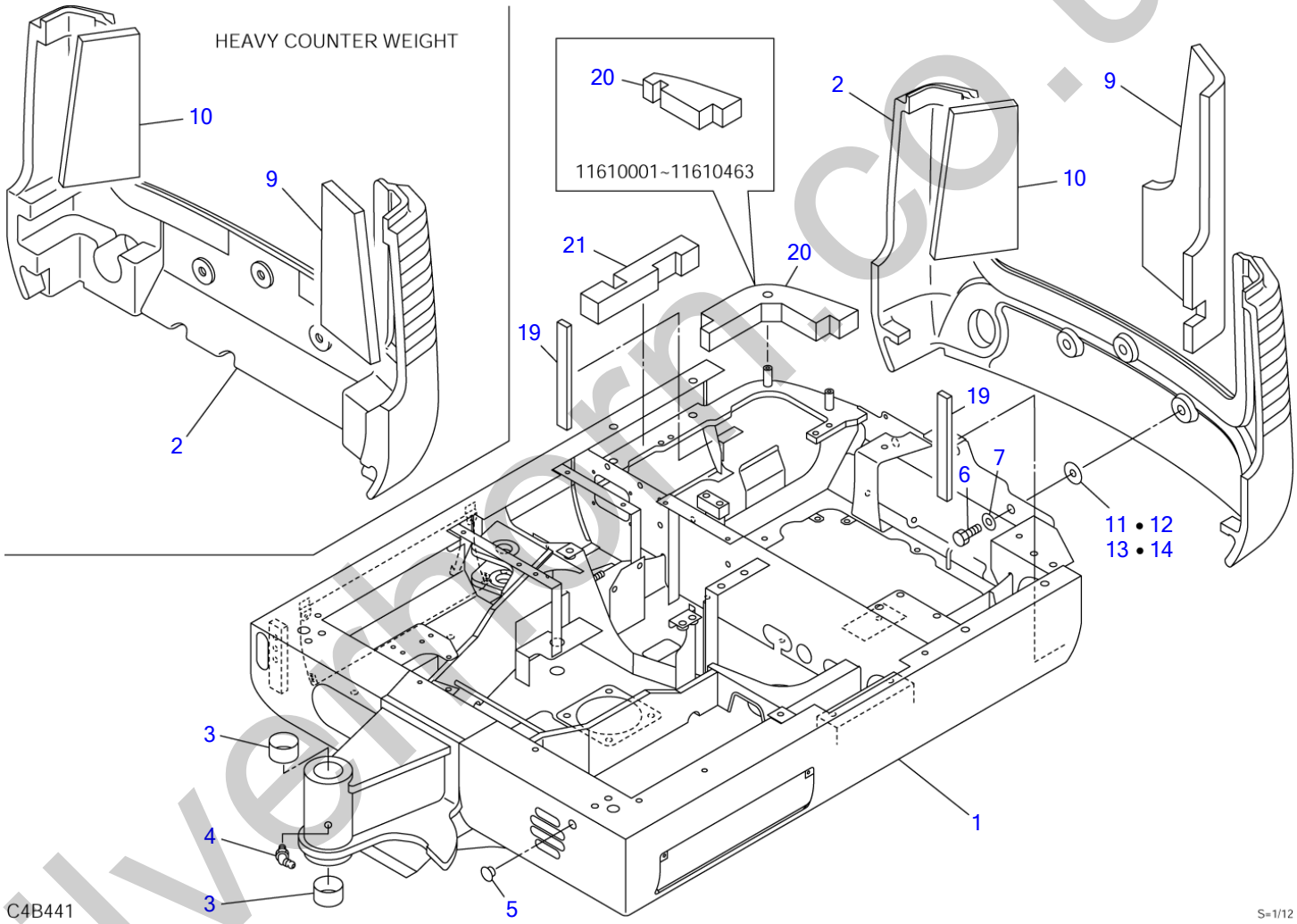

silvernorn.co.uk

TURNTABLE

Item	Part number	Description	Q'ty	Chan.	Serv.	Remarks
		TURNTABLE ASSY				X03330-27700-0
		TURNTABLE ASSY (hevy weight)				X03330-27800-0
1	X **********	TURNTABLE	1			
2	0333018500	COUNTERWEIGHT	1			(69kg)
	0333027200	COUNTERWEIGHT, heavy	1	(L)	11610001~11610463	(116kg)
	0333022500	COUNTERWEIGHT, heavy	1		11610464~	(116kg)
3	0002400050	BUSHING	2			
4	1560001675	FITTING, grease	1			
5	1652533023	CAP	1			
6	1101051435	BOLT	3			
7	1141550014	WASHER	3			
9	0338230840	ABSORBENT, noise	1			
	0333022300	ABSORBENT, noise	1			hevy weight
10	0333027010	ABSORBENT, noise	1			
	0333027020	ABSORBENT, noise	1			hevy weight
11	0003600175	SHIM	AR			t=0.5mm
12	0003600153	SHIM	AR			t=3.2mm
13	0003600152	SHIM	AR			t=2.3mm
14	0003600151	SHIM	AR			t=1.0mm
19	0333027070	SPONGE	2			
20	0333027080	SPONGE	1		11610001~11610463	
	0333027081	SPONGE	1		11610464~	
21	0333027090	SPONGE	1			
	C4b442					

silverhorn.co.uk

BOOM SWING

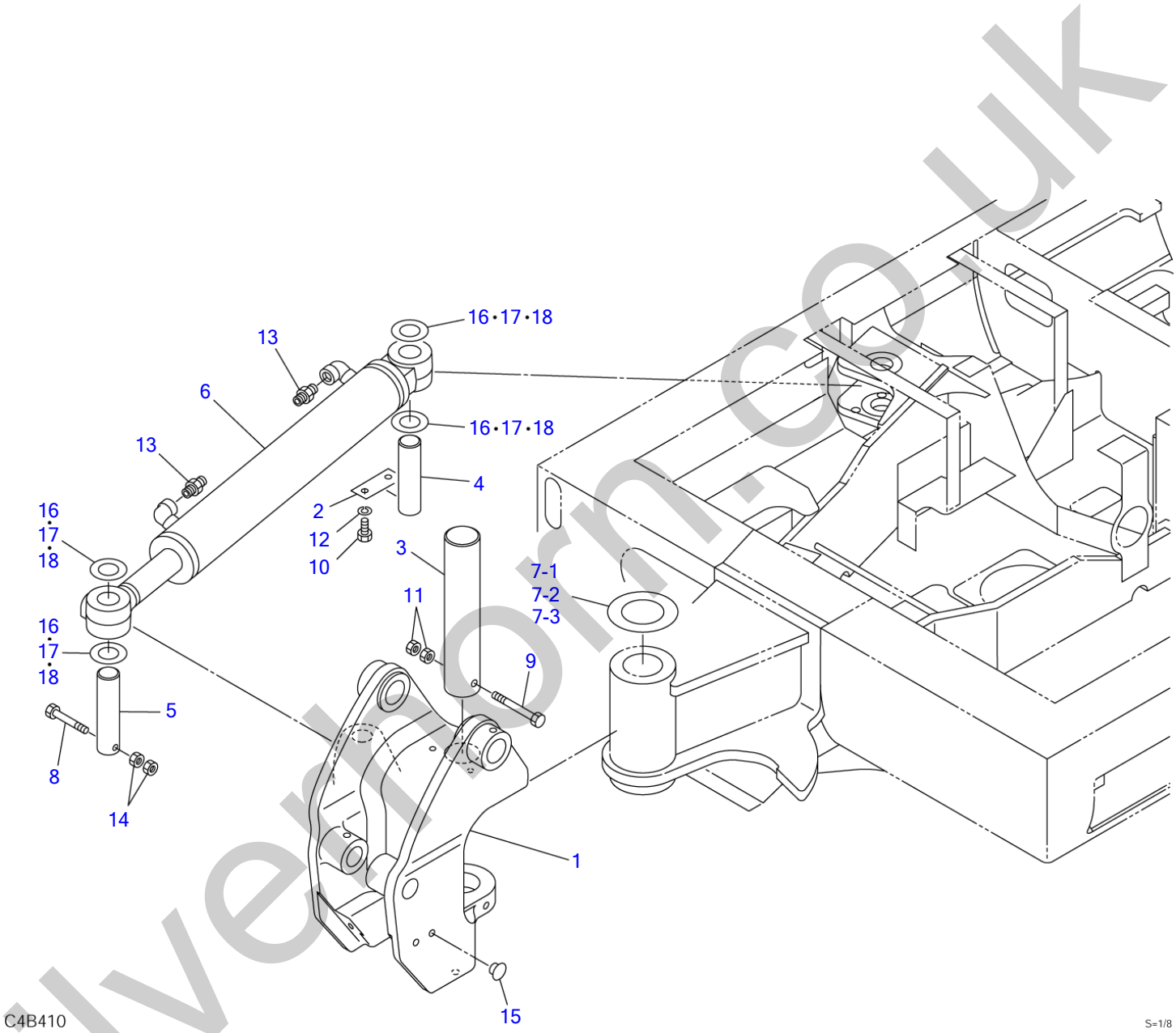

silverhorn.co.uk

BOOM SWING

Item	Part number	Description	Q'ty	Chan.	Serial No.	Serv.	Remarks
		SWING ASSY, boom					X03331-22200-2
1	0333119100	BACKET	1				
2	0423103800	PLATE	1				
3	0011515004	PIN	1				
4	0011691002	PIN	1				
5	0001601130	PIN	1				
6	1900095900	CYLINDER, swing	1				
7	0333114500	WASHER	1				
7-1	0333114501	・WASHER t=4.5	AR				
7-2	0333114502	・WASHER t=5.0	AR				
7-3	0333114503	・WASHER t=5.5	AR				
8	1103040860	BOLT	1				
9	1100140825	BOLT	1				
10	1101041220	BOLT	2				
11	1130040008	NUT	2				
12	1140020012	WASHER, spring	2				
13	1515600200	ADAPTOR	1				
	1420010110	・O-RING	1				
14	1130240008	NUT	2				
15	1652533017	CAP	2			M	
16	0426109800	SHIM t=1.0	AR				
17	0003600045	SHIM t=0.5	AR				
18	0003600044	SHIM t=0.2	AR				
	C4b412						

silverhorn.co.uk

SWING STOPPER

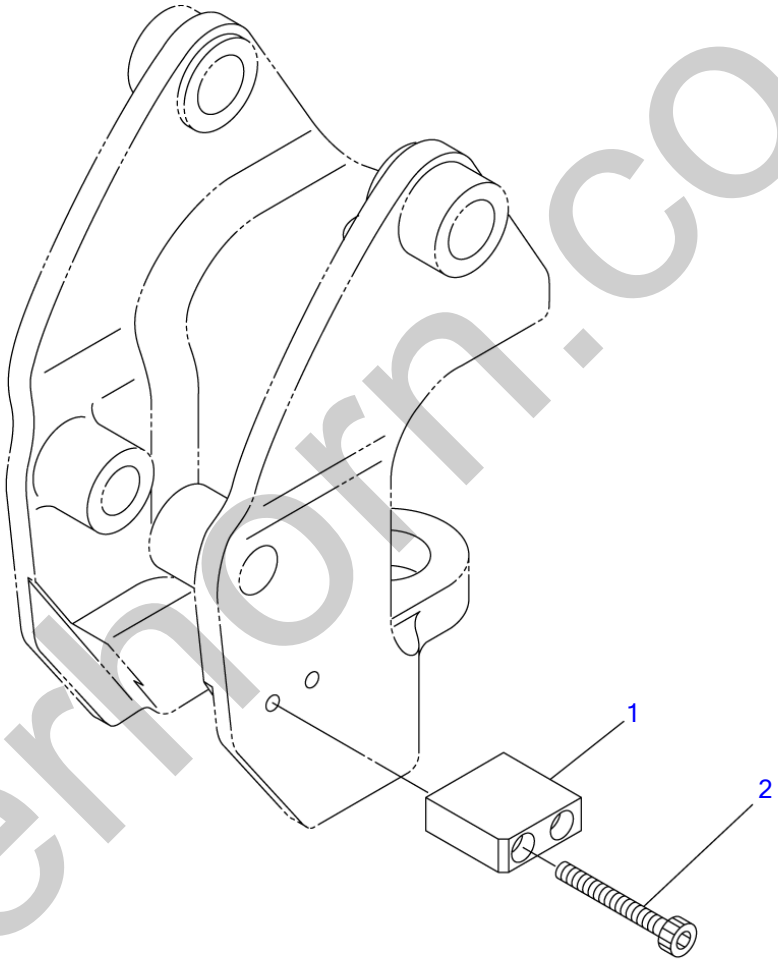

C4B040

S=1/4

silverhorn.co.uk

SWING STOPPER

Item	Part number	Description	Q'ty	Chan.	Serial No.	Serv.	Remarks
		STOPPER ASSY, swing					X03339-03000-0
1	**0333903100**	PLATE	1				
2	**1110041070**	SCREW, cap	2				
	C4b041						

silverhorn.co.uk

TRAVEL LEVER

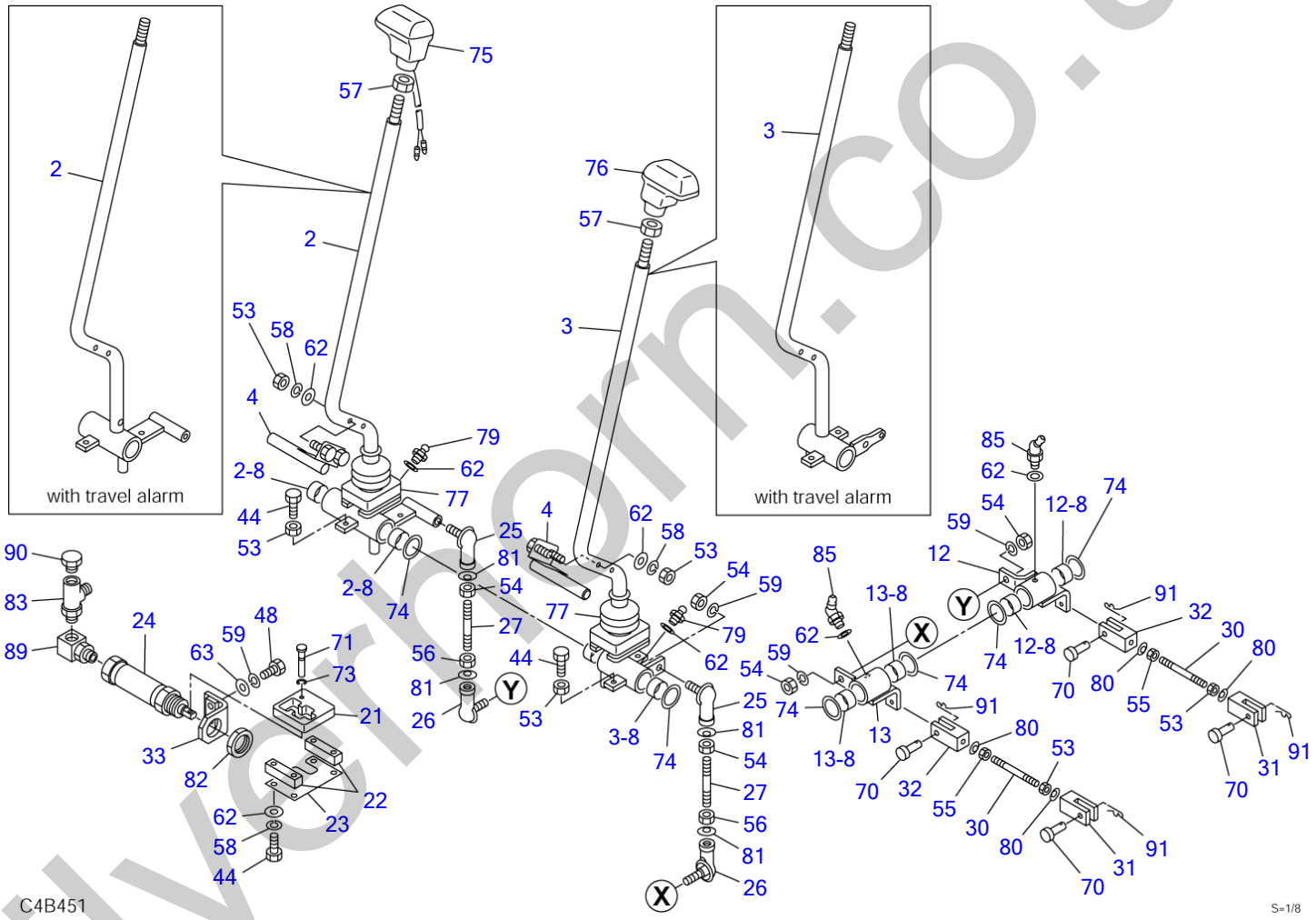

silverhorn.co.uk

TRAVEL LEVER

Item	Part number	Description	Q'ty	Chan.	Serial No.	Serv.	Remarks
		LEVER ASSY, control					X03332-48300-2
		LEVER ASSY, control (with travel alarm)			1161#~		X03332-48500-2 No. 23665
2	0333236500	LEVER (R.H.)	1				
	0334242600	LEVER (R.H.)	1		1161#~		with travel alarm
2-8	1333002015	・BUSHING	2				
3	0333236200	LEVER (L.H.)	1				
	0334242650	LEVER (L.H.)	1		1161#~		with travel alarm
3-8	1333002015	・BUSHING	2				
4	0333236250	LEVER	2				
12	0333248110	LEVER (R.H.)	1				
12-8	1333002015	・BUSHING	2				
13	0333248130	LEVER (L.H.)	1				
13-8	1333002015	・BUSHING	2				
21	0333236320	PLATE	1				
22	0333236330	BAR	2				
23	0333231480	PLATE	1				
24	1900074800	CYLINDER, lock	1				
25	1340010080	END, rod	2				
26	1340010085	END, rod	2				
27	0005008050	ROD	2				
30	0005006060	ROD	2				
31	0005500006	YOKE (R.H.)	2				
32	0005600003	YOKE (L.H.)	2				
33	0333236340	BRACKET	1				
44	1100040625	BOLT	8				
48	1100040825	BOLT	2				
53	1130040006	NUT	10				
54	1130040008	NUT	5				
55	1131540006	NUT	2				
56	1131540008	NUT	2				
57	1131040012	NUT	2				
58	1140020006	WASHER, spring	8				
59	1140020008	WASHER, spring	5				
62	1141110006	WASHER	12				
63	1141110008	WASHER	2				
70	0004005117	PIN	4				
71	0333236350	PIN	2				
73	1224010004	E-RING	1				
74	0093208300	WASHER	6				
75	1650203210	GRIP	1				
76	1650202610	GRIP	1				
77	0563217700	BOOT	2				
79	1560011006	FITTING, grease	2				
80	1225000006	WASHER	4				
81	1225000008	WASHER	4				
82	1130640024	NUT	1				
83	1512340001	ELBOW	1				
	1420010110	・O-RING	1				
85	1560012006	FITTING, grease	2				
89	1513300022	ELBOW	1				
	1420010110	・O-RING	1				
90	1501750002	PLUG	1				
	1420010110	・O-RING	1				
91	1214010005	PIN, snap	4				
	C4b452						

silvermorn.co.uk

SWING PEDAL & AUXILIARY PEDAL

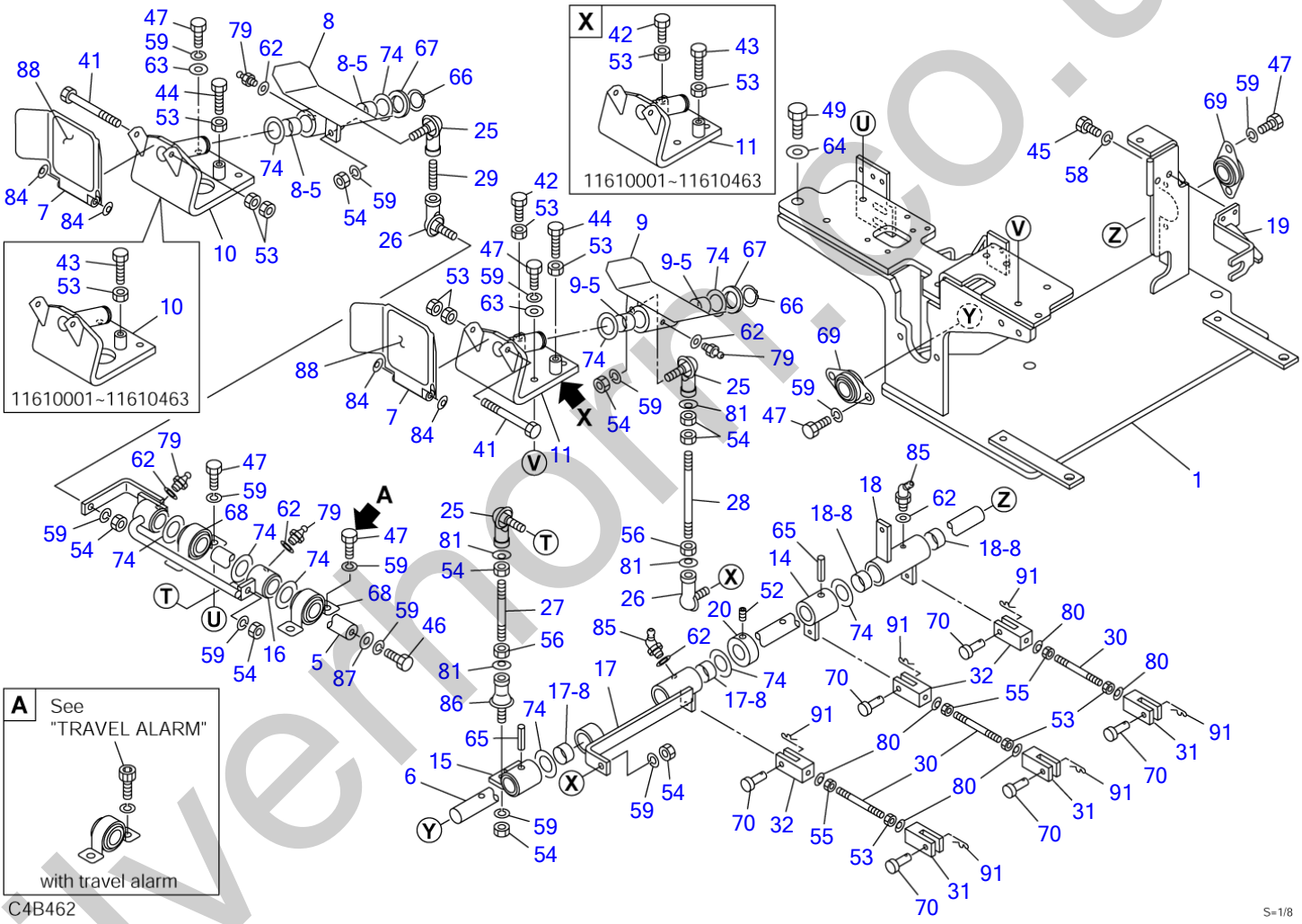

silvermoor.co.uk

SWING PEDAL & AUXILIARY PEDAL

Item	Part number	Description	Q'ty	Chan.	Serial No.	Serv.	Remarks
		LEVER ASSY, control					X03332-48300-2
		LEVER ASSY, control (with travel alarm)			1161#~		X03332-48500-2 No. 23665
1	0333248100	BRACKET	1				
5	0333236650	SHAFT	1				
6	0333248010	SHAFT	1				
7	0333234260	COVER	2				
8	0333234270	PEDAL	1				
8-5	1333002020	・BUSHING	2				
9	0333234290	PEDAL	1				
9-5	1333002020	・BUSHING	2				
10	0333236270	BRACKET (R.H.)	1	A	11610001~11610463		
	0333248200	BRACKET (R.H.)	1	a(H)	11610464~		
11	0333236280	BRACKET (L.H.)	1	A	11610001~11610463		
	0333248250	BRACKET (L.H.)	1	a(H)	11610464~		
14	0333245060	LEVER	1				
15	0333236290	LEVER	1				
16	0333241200	LEVER	1				
17	0333248150	LEVER	1				
17-8	1333002015	・BUSHING	2				
18	0333248170	LEVER	1				
18-8	1333002015	・BUSHING	2				
19	0333248190	BRACKET	1				
20	0163209400	STOPPER	1				
25	1340010080	END, rod	3				
26	1340010085	END, rod	2				
27	0005008050	ROD	1				
28	0005008130	ROD	1	A	11610001~11610463		
	0005008140	ROD	1	a(H)	11610464~		
29	1121040825	SET-SCREW	1	A	11610001~11610463		
	1121040832	SET-SCREW	1	a(H)	11610464~		
30	0005006060	ROD	3				
31	0005500006	YOKE (R.H.)	3				
32	0005600003	YOKE (L.H.)	3				
41	1100040680	BOLT	2				
42	1100040635	BOLT	1	A	11610001~11610463		
	1100040640	BOLT	1	a(H)	11610464~		
43	1100040620	BOLT	2	A	11610001~11610463		
44	1100040625	BOLT	2	a(H)	11610464~		
45	1100040616	BOLT	2				
46	1100040816	BOLT	1				
47	1100040820	BOLT	14				
	1100040820	BOLT	13		1161#~		with travel alarm
49	1100041025	BOLT	3				
52	1121040808	SET-SCREW	1				
53	1130040006	NUT	11				
54	1130040008	NUT	8				
55	1131540006	NUT	3				
56	1131540008	NUT	2				
58	1140020006	WASHER, spring	2				
59	1140020008	WASHER, spring	21				
62	1141110006	WASHER	6				
63	1141110008	WASHER	6				
64	1141550010	WASHER	3				
65	1213000830	PIN, spring	2				
66	1220000020	RING, snap	2				
67	0003600034	WASHER	2				
68	1332002022	MINI-PILLOW	2				
69	1332052022	MINI-PILLOW	2				
70	0004005117	PIN	6				
74	0093208300	WASHER	7				
79	1560011006	FITTING, grease	4				
80	1225000006	WASHER	6				
81	1225000008	WASHER	4				
84	1225110006	WASHER, conical	4				
85	1560012006	FITTING, grease	2				

silvermorn.co.uk

SWING PEDAL & AUXILIARY PEDAL

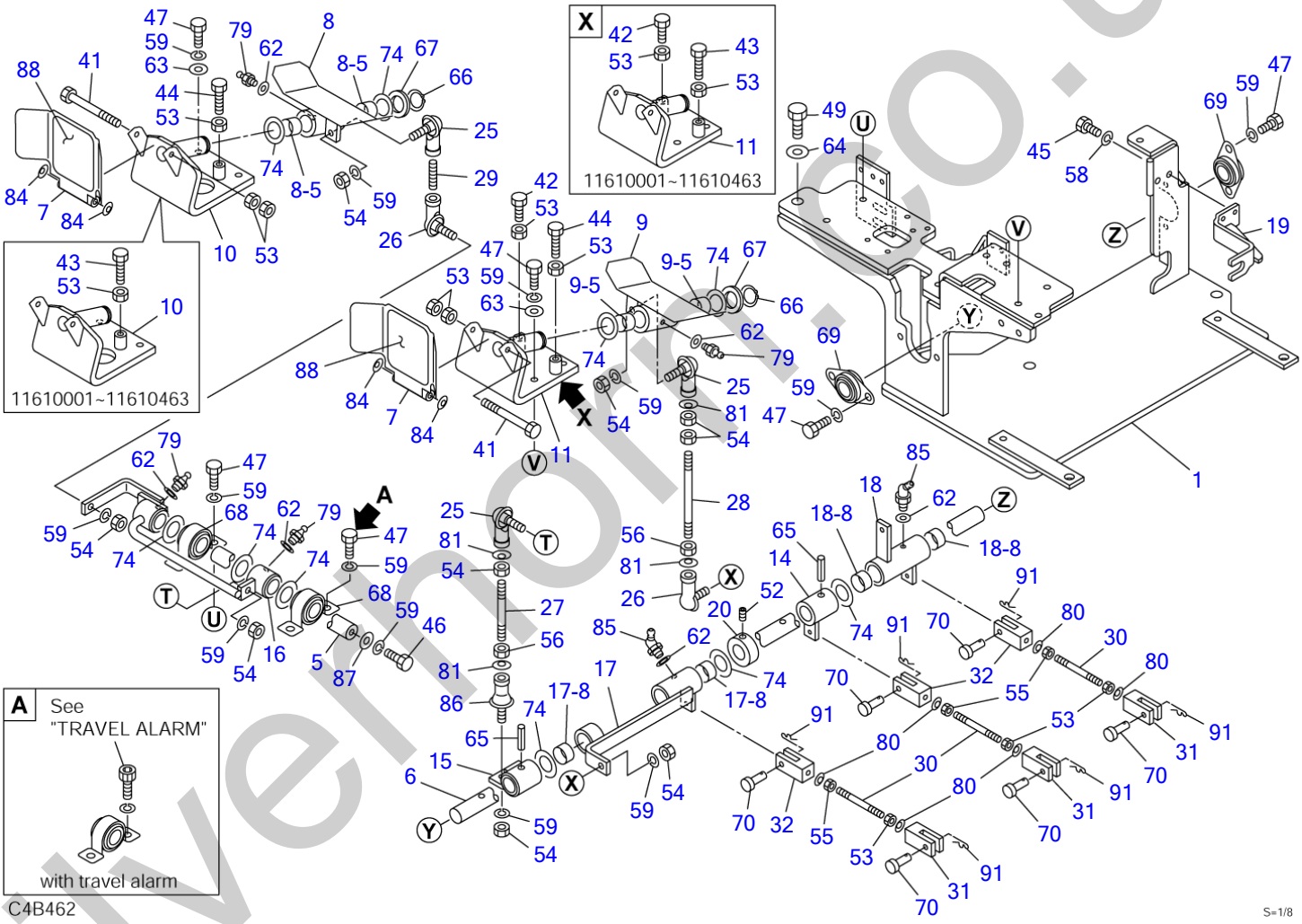

silvermoor.co.uk

SWING PEDAL & AUXILIARY PEDAL

Item	Part number	Description	Q'ty	Chan.	Serial No.	Serv.	Remarks
86	1340300080	END, rod	1				
87	0003608252	WASHER	1				
88	0333241250	SEET	2				
91	1214010005	PIN, snap	6				
91		<<NOTE>>					
91		SET "A" is interchangeable with SET "a".					
	C4b462						

silverhorn.co.uk

SELECT LEVER

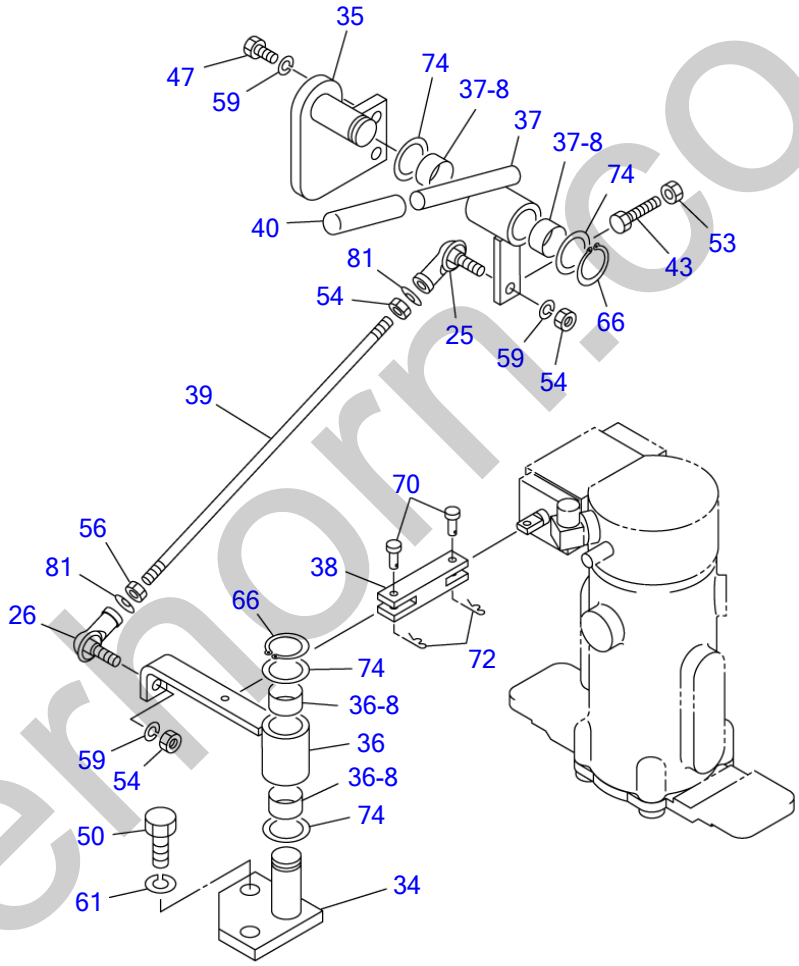

C4B081

S=1/5

silvermorn.co.uk

SELECT LEVER

Item	Part number	Description	Q'ty	Chan.	Serial No.	Serv.	Remarks
		LEVER ASSY, control					X03332-48300-1
25	1340010080	END, rod	1				
26	1340010085	END, rod	1				
34	0333229100	BRACKET	1				
35	0333237100	BRACKET	1				
36	0333237150	LEVER	1				
36-8	1333002015	・BUSHING	2				
37	0333229250	LEVER	1				
37-8	1333002015	・BUSHING	2				
38	0005705059	YOKE	1				
39	0005008290	ROD	1				
40	1650202310	CAP	1				
43	1100040620	BOLT	1				
47	1100040820	BOLT	2				
50	1101041225	BOLT	2				
53	1130040006	NUT	1				
54	1130040008	NUT	3				
56	1131540008	NUT	1				
59	1140020008	WASHER, spring	4				
61	1140020012	WASHER, spring	2				
66	1220000020	RING, snap	2				
70	0004005117	PIN	2				
72	1214000005	PIN, snap	2				
74	0093208300	WASHER	4				
81	1225000008	WASHER	2				
	C4b471						

silverhorn.co.uk

DOZER BLADE LEVER

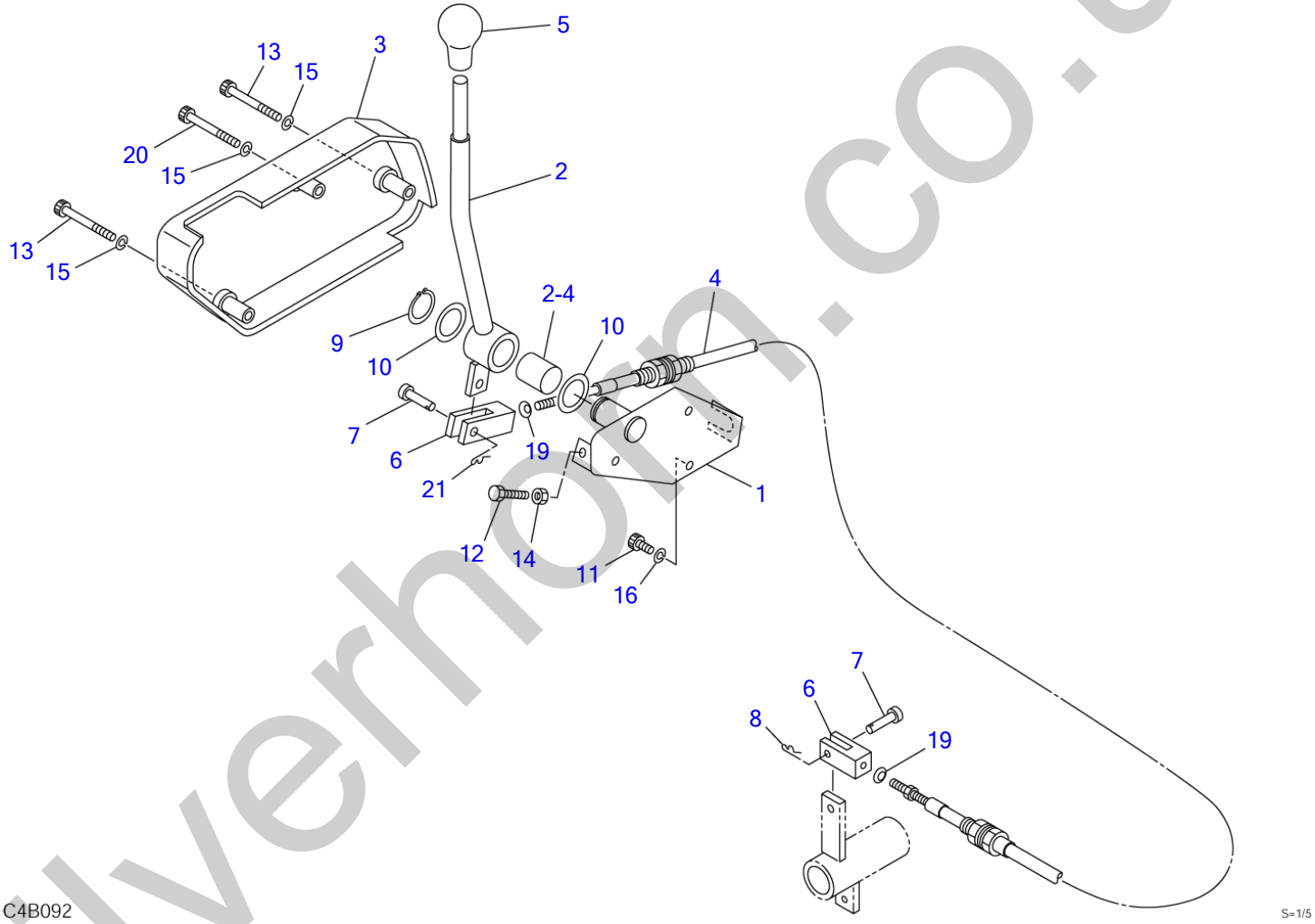

silverhorn.co.uk

DOZER BLADE LEVER

Item	Part number	Description	Q'ty	Chan.	Serial No.	Serv.	Remarks
		LEVER ASSY, dozer blade					X03333-04000-2
1	0333304100	BRACKET	1				
2	0333302200	LEVER	1				
2-4	1333002025	▪ BUSHING	1				
3	0333302350	COVER	1				
4	1630341190	CABLE, control	1				
5	1650153655	GRIP	1				
6	0005506024	YOKE	2				
7	0004006017	PIN	2				
8	1214000006	PIN, snap	1				
9	1220000020	RING, snap	1				
10	0093208300	WASHER	2				
11	1110040616	SCREW, cap	3				
12	1100040625	BOLT	2				
13	1110040535	SCREW, cap	2				
14	1130040006	NUT	2				
15	1140010005	WASHER, spring	3				
16	1140020006	WASHER, spring	3				
19	1225000005	WASHER	2				
20	1110040540	SCREW, cap	2				
21	1214010006	PIN, snap	1				
	C4b430						

silverhorn.co.uk

OPERATION LEVER & STAND; R.H. (canopy)

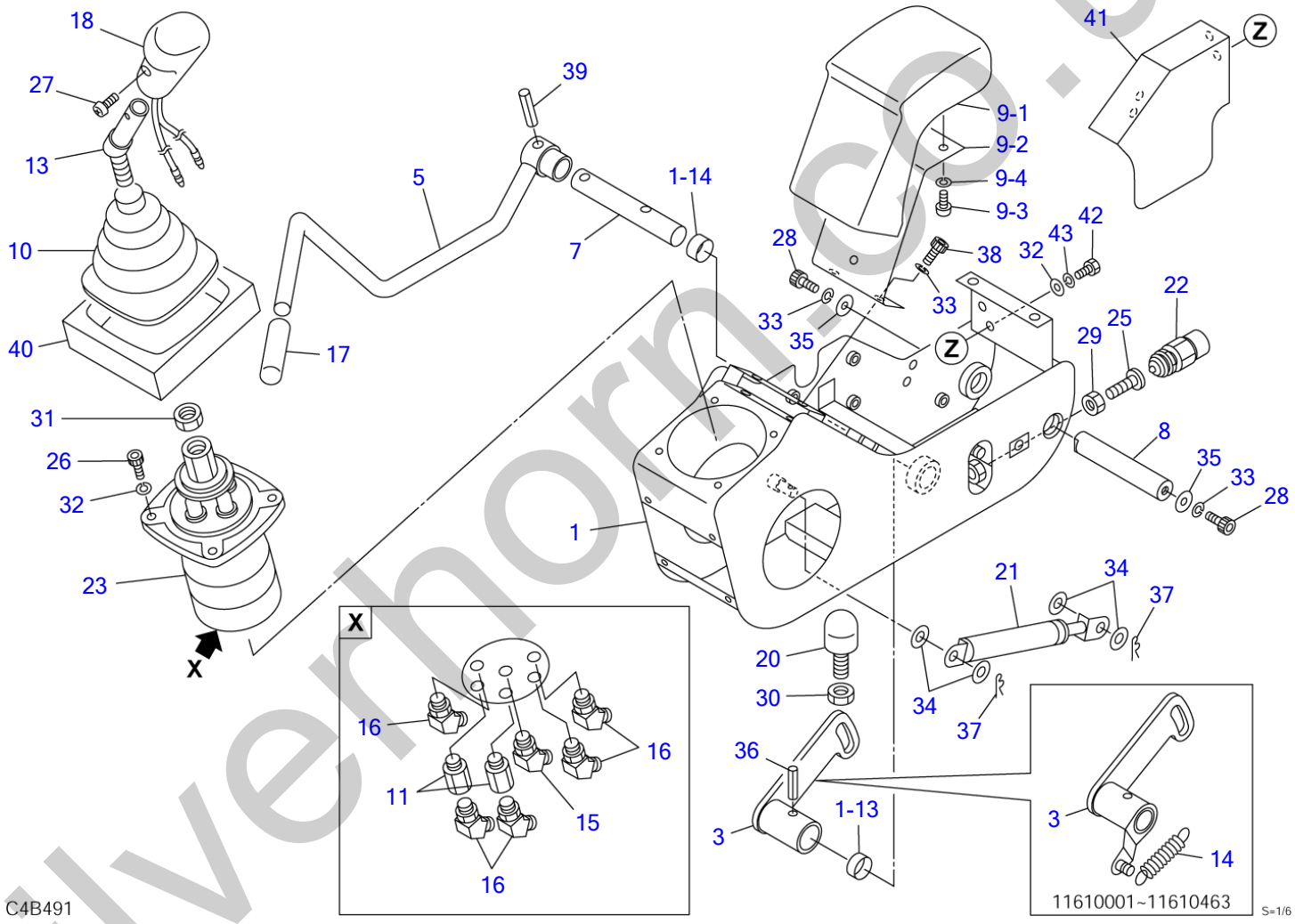

silverhorn.co.uk

OPERATION LEVER & STAND; R.H. (canopy)

Item	Part number	Description	Q'ty	Chan.	Serial No.	Serv.	Remarks
		VALVE ASSY					X03351-37000-2
1	0395113200	BOX, control (R.H.)	1		11610001~11610463		
	0395113600	BOX, control (R.H.)	1		11610464~		
1-13	1333002010	・BUSHING	1				
1-14	1333002015	・BUSHING	1				
3	0335130300	PLATE (R.H.)	1		11610001~11610463		
	0395113400	PLATE (R.H.)	1		11610464~		
5	0375105300	LEVER (R.H.)	1				
7	0335124700	SHAFT	1				
8	0335124750	SHAFT	1				
9	0375105500	REST, arm	1				
9-1	0375105510	・URETHANE	1				
9-2	0375105520	・PLATE	1				
9-3	1120530812	・SCREW	3				
9-4	1140020008	・WASHER, spring	3				
10	0335124900	BOOT	1				
11	1513250202	BUSHING	2				
	1420010110	・O-RING	1				
13	0565102500	LEVER	1				
14	0425105100	SPRING	1		11610001~11610463		
15	1512370012	ELBOW	1				
	1420010110	・O-RING	1				
16	1515100110	ELBOW	5				
	1420010110	・O-RING	1				
17	1650202300	CAP	1				
18	1650203300	GRIP	1				
20	1651101224	STOPPER	1				
21	1653900057	SPRING, gas	1				
22	1700000033	SWITCH, safety	1				
23	1901745600	VALVE, pilot	1				
25	0335120970	BOLT	1				
26	1110040625	SCREW, cap	4				
27	1120590416	SCREW	1				
28	1110040816	SCREW, cap	2				
29	1130040010	NUT	1				
30	1130040012	NUT	1				
31	1130040014	NUT	1				
32	1141110006	WASHER, spring	8				
33	1140020008	WASHER, spring	4				
34	1141110008	WASHER	4				
35	0003600011	WASHER	2				
36	1213000832	PIN, spring	1				
37	1214000008	PIN, snap	2				
38	1110040820	SCREW, cap	2				
39	1213000836	PIN, spring	1				
40	0395113046	SPONGE	1				
41	0395113680	COVER	1		11611442~		
42	1100040612	BOLT	4		11611442~		
43	1140020006	WASHER, spring	4		11611442~		
	C4b491						

silverhorn.co.uk

OPERATION LEVER & STAND; R.H. (cab)

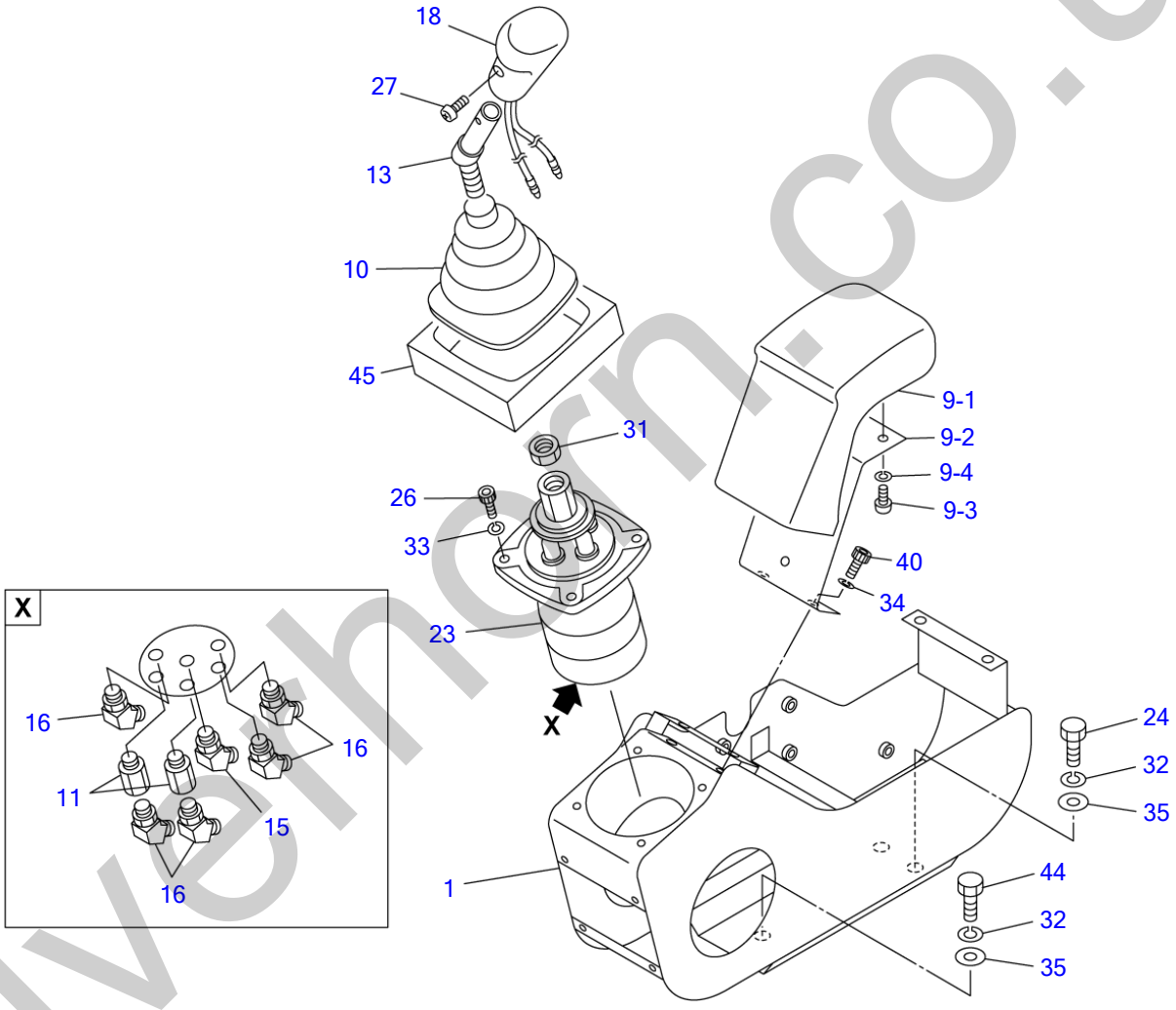

silverthorn.co.uk

OPERATION LEVER & STAND; R.H. (cab)

Item	Part number	Description	Q'ty	Chan.	Serial No.	Serv.	Remarks
		VALVE ASSY					X03351-38000-2
1	0395114100	BOX, control (R.H.)	1				
9	0375105500	REST, arm	1				
9-1	0375105510	・URETHANE	1				
9-2	0375105520	・PLATE	1				
9-3	1120530812	・SCREW	3				
9-4	1140020008	・WASHER, spring	3				
10	0335124900	BOOT	1				
11	1513250202	BUSHING	2				
	1420010110	・O-RING	1				
13	0565102500	LEVER	1				
15	1512370012	ELBOW	1				
	1420010110	・O-RING	1				
16	1515100110	ELBOW	5				
	1420010110	・O-RING	1				
18	1650203300	GRIP	1				
23	1901745600	VALVE, pilot	1				
24	1100041020	BOLT	2				
26	1110040625	SCREW, cap	4				
27	1120590416	SCREW	2				
31	1130040014	NUT	1				
32	1140020010	WASHER, spring	3				
33	1141110006	WASHER, spring	4				
34	1140090008	WASHER, spring	2				
35	1141110010	WASHER	3				
40	1110040820	SCREW, cap	2				
44	1100041030	BOLT	1				
45	0395113046	SPONGE	1				
	C4b331						

silverhorn.co.uk

OPERATION LEVER & STAND; L.H. (canopy)

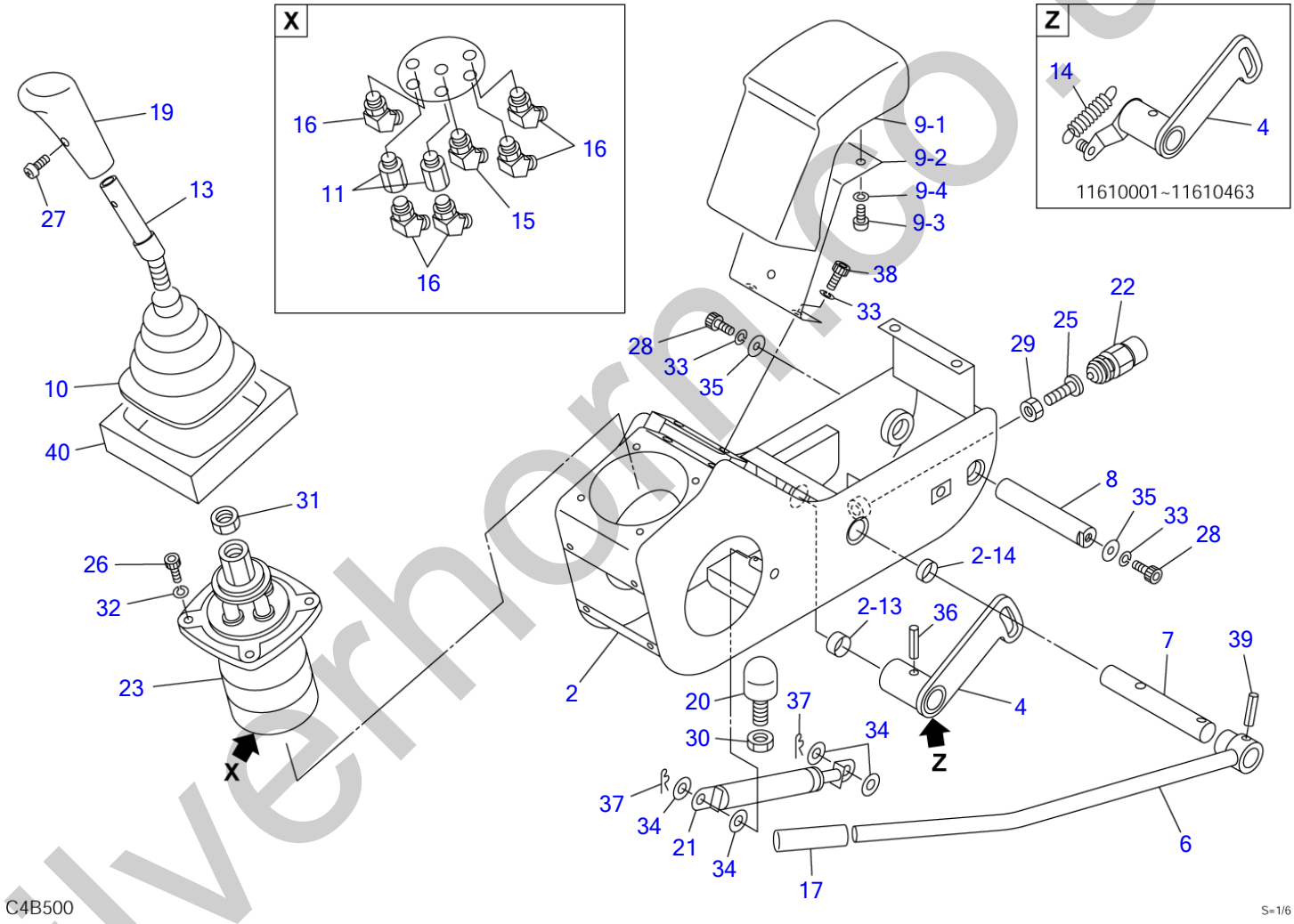

silverhorn.co.uk

OPERATION LEVER & STAND; L.H. (canopy)

Item	Part number	Description	Q'ty	Chan.	Serial No.	Serv.	Remarks
		VALVE ASSY					X03351-37000-1
2	0395113300	BOX, control (L.H.)	1		11610001~11610463		
	0395113700	BOX, control (L.H.)	1		11610464~		
2-13	1333002010	・BUSHING	1				
2-14	1333002015	・BUSHING	1				
4	0335130400	PLATE (L.H.)	1		11610001~11610463		
	0395113450	PLATE (L.H.)	1		11610464~		
6	0375105400	LEVER (L.H.)	1				
7	0335124700	SHAFT	1				
8	0335124750	SHAFT	1				
9	0375105500	REST, arm	1				
9-1	0375105510	・URETHANE	1				
9-2	0375105520	・PLATE	1				
9-3	1120530812	・SCREW	3				
9-4	1140020008	・WASHER, spring	3				
10	0335124900	BOOT	1				
11	1513250202	BUSHING	2				
	1420010110	・O-RING	1				
13	0565102500	LEVER	1				
14	0425105100	SPRING	1		11610001~11610463		
15	1512370012	ELBOW	1				
	1420010110	・O-RING	1				
16	1515100110	ELBOW	5				
	1420010110	・O-RING	1				
17	1650202300	CAP	1				
19	1650203400	GRIP	1				
20	1651101224	STOPPER	1				
21	1653900057	SPRING, gas	1				
22	1700000033	SWITCH, safety	1				
23	1901745600	VALVE, pilot	1				
25	0335120970	BOLT	1				
26	1110040625	SCREW, cap	4				
27	1120590416	SCREW	1				
28	1110040816	SCREW, cap	2				
29	1130040010	NUT	1				
30	1130040012	NUT	1				
31	1130040014	NUT	1				
32	1141110006	WASHER, spring	4				
33	1140020008	WASHER, spring	4				
34	1141110008	WASHER	4				
35	0003600011	WASHER	2				
36	1213000832	PIN, spring	1				
37	1214000008	PIN, snap	2				
38	1110040820	SCREW, cap	2				
39	1213000836	PIN, spring	1				
40	0395113046	SPONGE	1				
	C4b500						

silverthorn.co.uk

OPERATION LEVER & STAND; L.H. (cab)

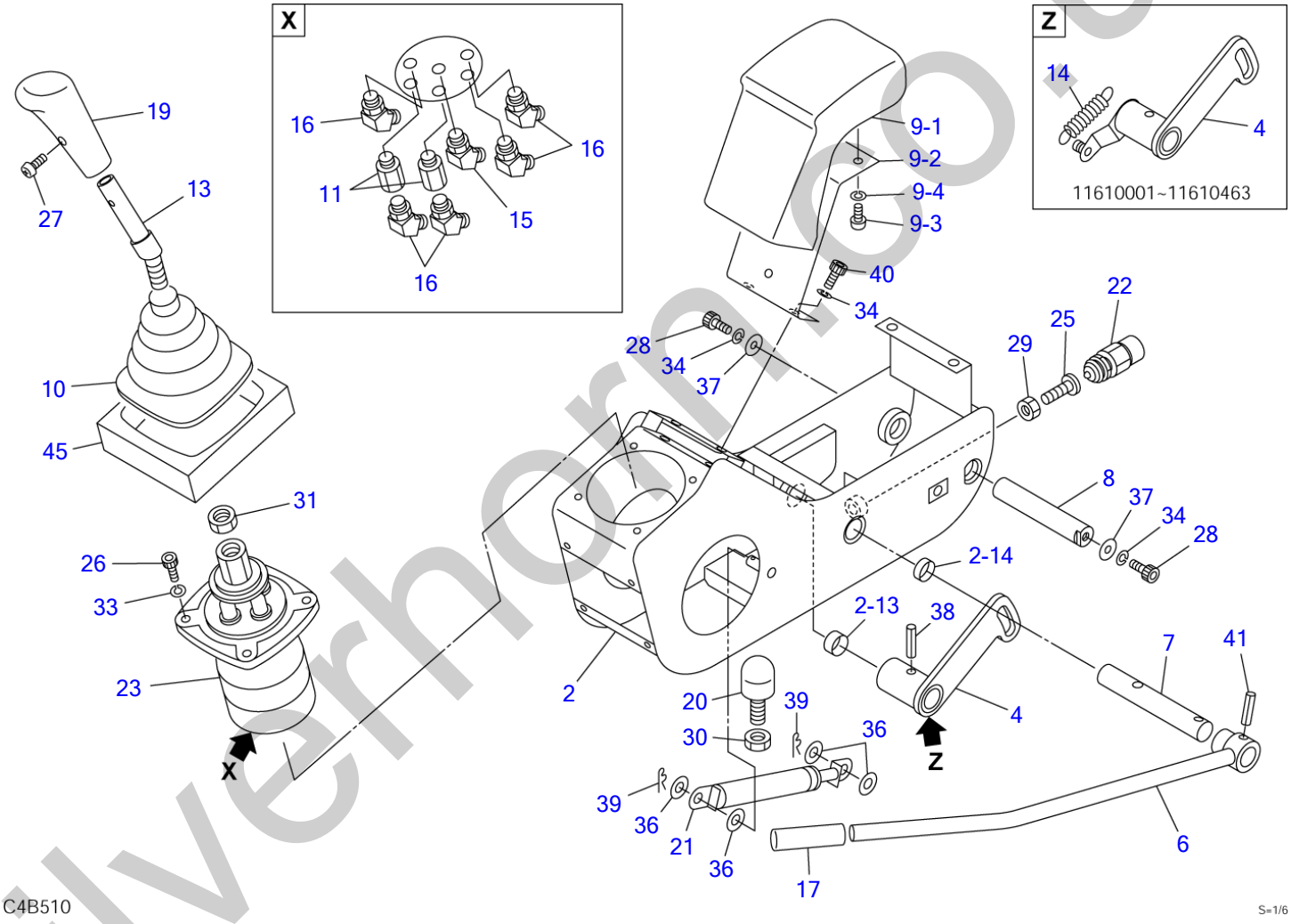

silverhorn.co.uk

OPERATION LEVER & STAND; L.H. (cab)

Item	Part number	Description	Q'ty	Chan.	Serial No.	Serv.	Remarks
		VALVE ASSY					X03351-38000-2
2	0395113300	BOX, control (L.H.)	1		11610001~11610463		
	0395113700	BOX, control (L.H.)	1		11610464~		
2-13	1333002010	・BUSHING	1				
2-14	1333002015	・BUSHING	1				
4	0335130400	PLATE (L.H.)	1		11610001~11610463		
	0395113450	PLATE (L.H.)	1		11610464~		
6	0375105400	LEVER (L.H.)	1				
7	0335124700	SHAFT	1				
8	0335124750	SHAFT	1				
9	0375105500	REST, arm	1				
9-1	0375105510	・URETHANE	1				
9-2	0375105520	・PLATE	1				
9-3	1120530812	・SCREW	3				
9-4	1140020008	・WASHER, spring	3				
10	0335124900	BOOT	1				
11	1513250202	BUSHING	2				
	1420010110	・O-RING	1				
13	0565102500	LEVER	1				
14	0425105100	SPRING	1		11610001~11610463		
15	1512370012	ELBOW	1				
	1420010110	・O-RING	1				
16	1515100110	ELBOW	5				
	1420010110	・O-RING	1				
17	1650202300	CAP	1				
19	1650203400	GRIP	1				
20	1651101224	STOPPER	1				
21	1653900057	SPRING, gas	1				
22	1700000033	SWITCH, safety	1				
23	1901745600	VALVE, pilot	1				
25	0335120970	BOLT	1				
26	1110040625	SCREW, cap	4				
27	1120590416	SCREW	1				
28	1110040816	SCREW, cap	2				
29	1130040010	NUT	1				
30	1130040012	NUT	1				
31	1130040014	NUT	1				
33	1141110006	WASHER, spring	4				
34	1140020008	WASHER, spring	4				
36	1141110008	WASHER	4				
37	0003600011	WASHER	2				
38	1213000832	PIN, spring	1				
39	1214000008	PIN, snap	2				
40	1110040820	SCREW, cap	2				
41	1213000836	PIN, spring	1				
45	0395113046	SPONGE	1				
	C4b510						

silverthorn.co.uk

PIPING; OPERATION LEVER

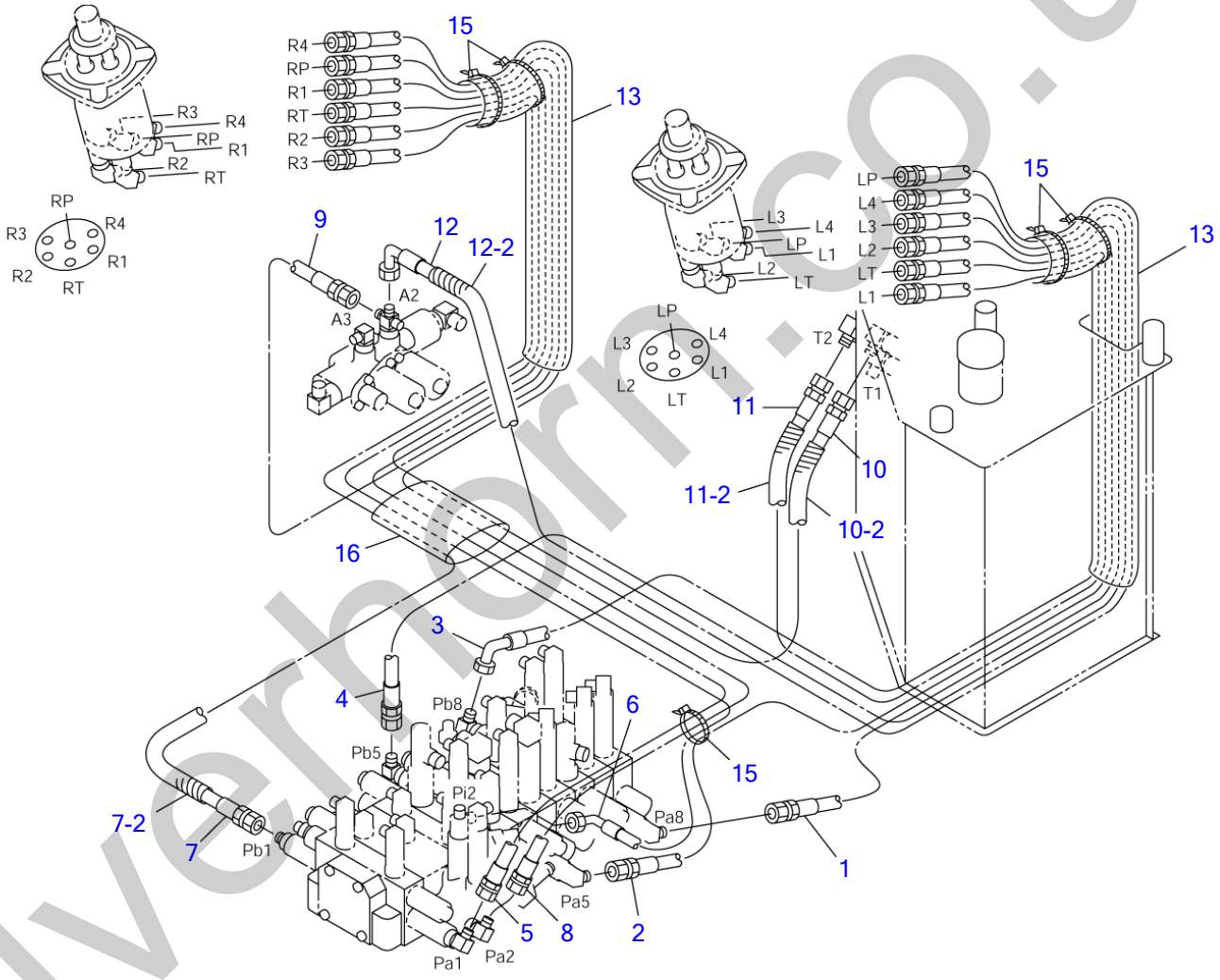

silverhorn.co.uk

PIPING; OPERATION LEVER

Item	Part number	Description	Q'ty	Chan.	Serial No.	Serv.	Remarks
		PIPING ASSY					X03371-42000-1
1	0337137010	HOSE ASSY	1				19347-22136
2	0337138100	HOSE ASSY	1				19347-22150
3	0337142020	HOSE ASSY	1				19347-52160
4	0337137040	HOSE ASSY	1				19347-22170
5	0337137050	HOSE ASSY	1				19347-22215
6	0337142030	HOSE ASSY	1				19347-52217
7	0337137070	HOSE ASSY	1				19347-22212
7-2	1532208055	・PROTECTOR	1				sold by the meter
8	0337137080	HOSE ASSY	1				19347-22210
9	0337131140	HOSE ASSY	1				19348-22110
10	0337131150	HOSE ASSY	1				19348-22144
10-2	1532208015	・PROTECTOR	1				sold by the meter
11	0337131160	HOSE ASSY	1				19348-22185
11-2	1532208015	・PROTECTOR	1				sold by the meter
12	0337131170	HOSE ASSY	1				19348-52185
12-2	1532208025	・PROTECTOR	1				sold by the meter
13	1531645087	PROTECTOR	2				sold by the meter
15	1652200007	BAND	5				
16	1531335025	PROTECTOR	1				sold by the meter
	C4b361						

silverhorn.co.uk

PIPING; OPERATION LEVER (A-B pattern)

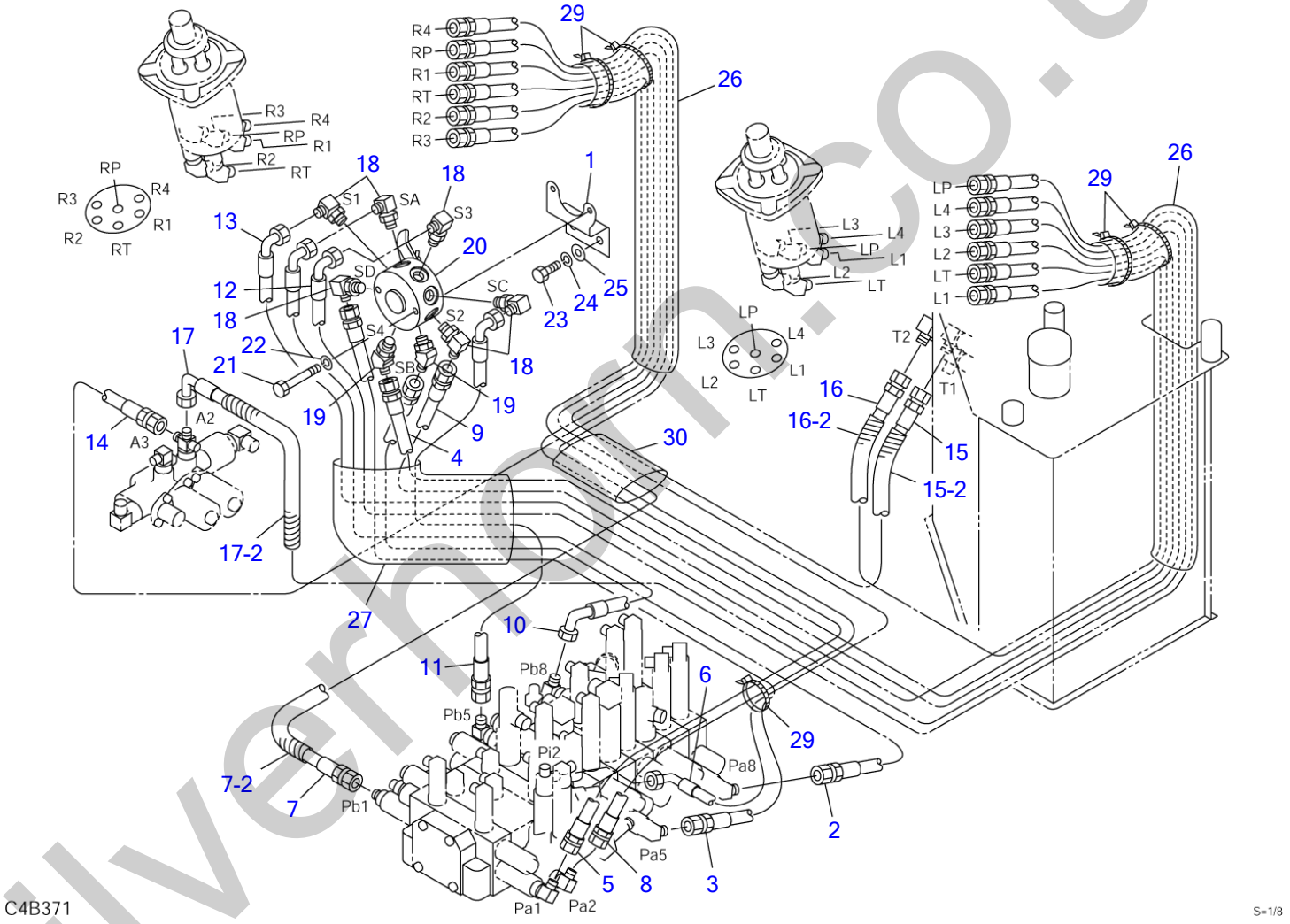

silvermorn.co.uk

PIPING; OPERATION LEVER (A-B pattern)

Item	Part number	Description	Q'ty	Chan.	Serial No.	Serv.	Remarks
		PIPING ASSY (A-B)					X03371-43000-2
1	0337120010	BRACKET	1				
2	0337140010	HOSE ASSY	1				19347-22076
3	0337140020	HOSE ASSY	1				19347-22096
4	0337133130	HOSE ASSY	1				19347-22190
5	0337137050	HOSE ASSY	1				19347-22215
6	0337142030	HOSE ASSY	1				19347-52217
7	0337137070	HOSE ASSY	1				19347-22212
7-2	1532208055	・PROTECTOR	1				sold by the meter
8	0337137080	HOSE ASSY	1				19347-22210
9	0337134120	HOSE ASSY	1				19347-22180
10	0337143010	HOSE ASSY	1				
11	0337140040	HOSE ASSY	1				19347-52074
12	0337133170	HOSE ASSY	1				19347-52190
13	0337134150	HOSE ASSY	1				19347-52185
14	0337131140	HOSE ASSY	1				19348-22110
15	0337131150	HOSE ASSY	1				19348-22144
15-2	1532208015	・PROTECTOR	1				sold by the meter
16	0337131160	HOSE ASSY	1				19348-22185
16-2	1532208015	・PROTECTOR	1				sold by the meter
17	0337131170	HOSE ASSY	1				19348-52185
17-2	1532208025	・PROTECTOR	1				sold by the meter
18	1515012040	ELBOW	6				
	1420010110	・O-RING	1				
19	1515100110	ELBOW	2				
	1420010110	・O-RING	1				
20	1901731400	VALVE, selector	1				
21	1100040650	BOLT	2				
22	1140020006	WASHER, spring	2				
23	1100040816	BOLT	2				
24	1140020008	WASHER, spring	2				
25	1141110008	WASHER	2				
26	1531645087	PROTECTOR	2				sold by the meter
27	1531345025	PROTECTOR	1				sold by the meter
29	1652200007	BAND	5				
30	1531335025	PROTECTOR	1				sold by the meter
	C4b371						

silverhorn.co.uk

PIPING; OPERATION LEVER (ISO-JCB pattern)

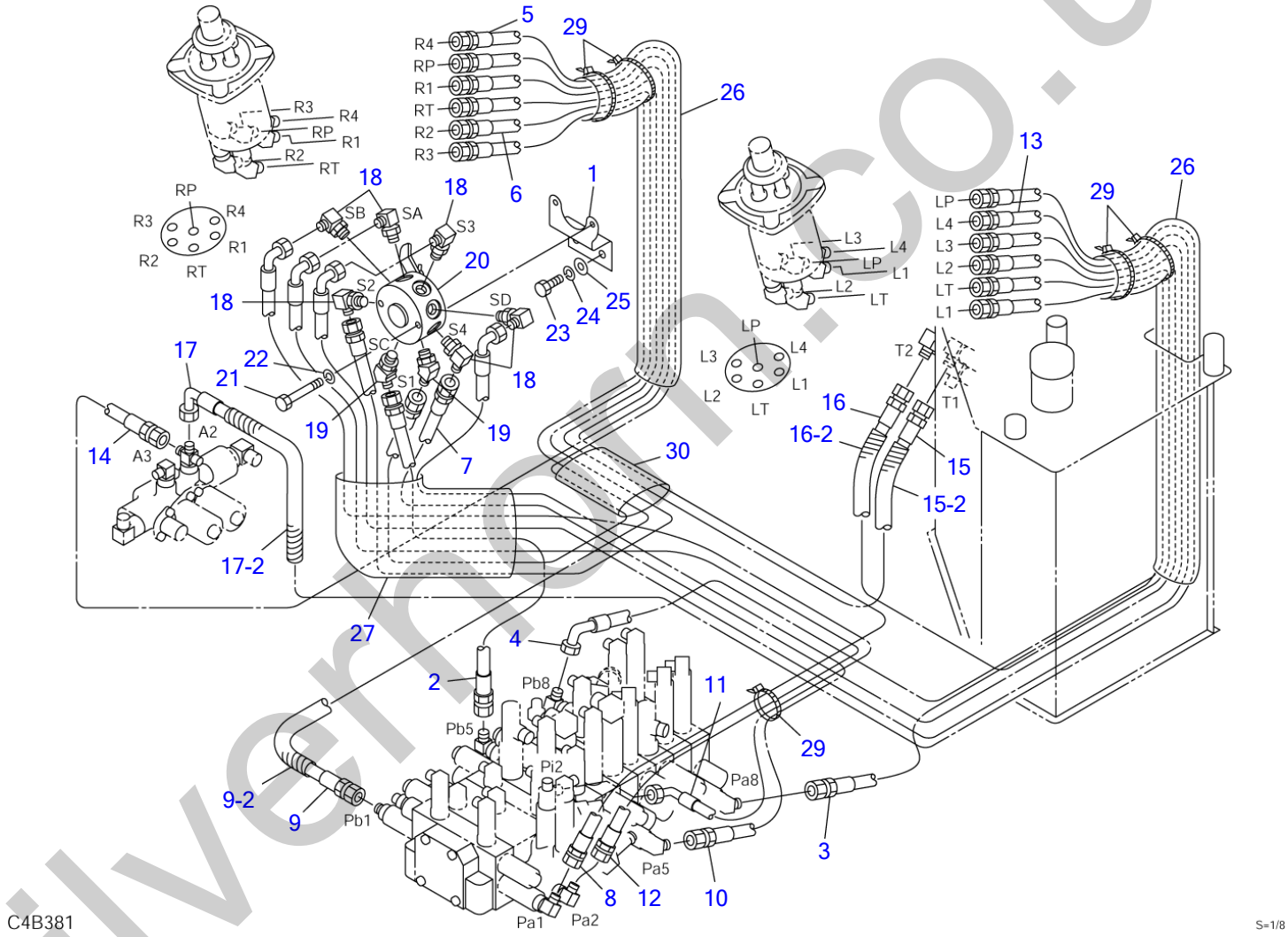

silvermorn.co.uk

PIPING; OPERATION LEVER (ISO-JCB pattern)

Item	Part number	Description	Q'ty	Chan.	Serial No.	Serv.	Remarks
		PIPING ASSY (ISO-JCB)					X03371-44000-3
1	0337120010	BRACKET	1				
2	0337139010	HOSE ASSY	1				19347-22068
3	0337137010	HOSE ASSY	1				19347-22136
4	0337142020	HOSE ASSY	1				19347-52160
5	0337133110	HOSE ASSY	1				19347-22155
6	0337133120	HOSE ASSY	1				19347-22165
7	0337133130	HOSE ASSY	1				19347-22190
8	0337137050	HOSE ASSY	1				19347-22215
9	0337137070	HOSE ASSY	1				19347-22212
9-2	1532208055	・PROTECTOR	1				sold by the meter
10	0337139020	HOSE ASSY	1				19347-52098
11	0337144030	HOSE ASSY	1				
12	0337139040	HOSE ASSY	1				19347-52123
13	0337133170	HOSE ASSY	1				19347-52190
14	0337131140	HOSE ASSY	1				19348-22110
15	0337131150	HOSE ASSY	1				19348-22144
15-2	1532208015	・PROTECTOR	1				sold by the meter
16	0337131160	HOSE ASSY	1				19348-22185
16-2	1532208015	・PROTECTOR	1				sold by the meter
17	0337131170	HOSE ASSY	1				19348-52185
17-2	1532208025	・PROTECTOR	1				sold by the meter
18	1515012040	ELBOW	6				
	1420010110	・O-RING	1				
19	1515100110	ELBOW	2				
	1420010110	・O-RING	1				
20	1901730500	VALVE, selector	1				
21	1100040650	BOLT	2				
22	1140020006	WASHER, spring	2				
23	1100040816	BOLT	2				
24	1140020008	WASHER, spring	2				
25	1141110008	WASHER	2				
26	1531645087	PROTECTOR	2				sold by the meter
27	1531345025	PROTECTOR	1				sold by the meter
29	1652200007	BAND	5				
30	1531335025	PROTECTOR	1				sold by the meter
	C4b383						

silverhorn.co.uk

ENGINE & ACCESSORIES (1/2)

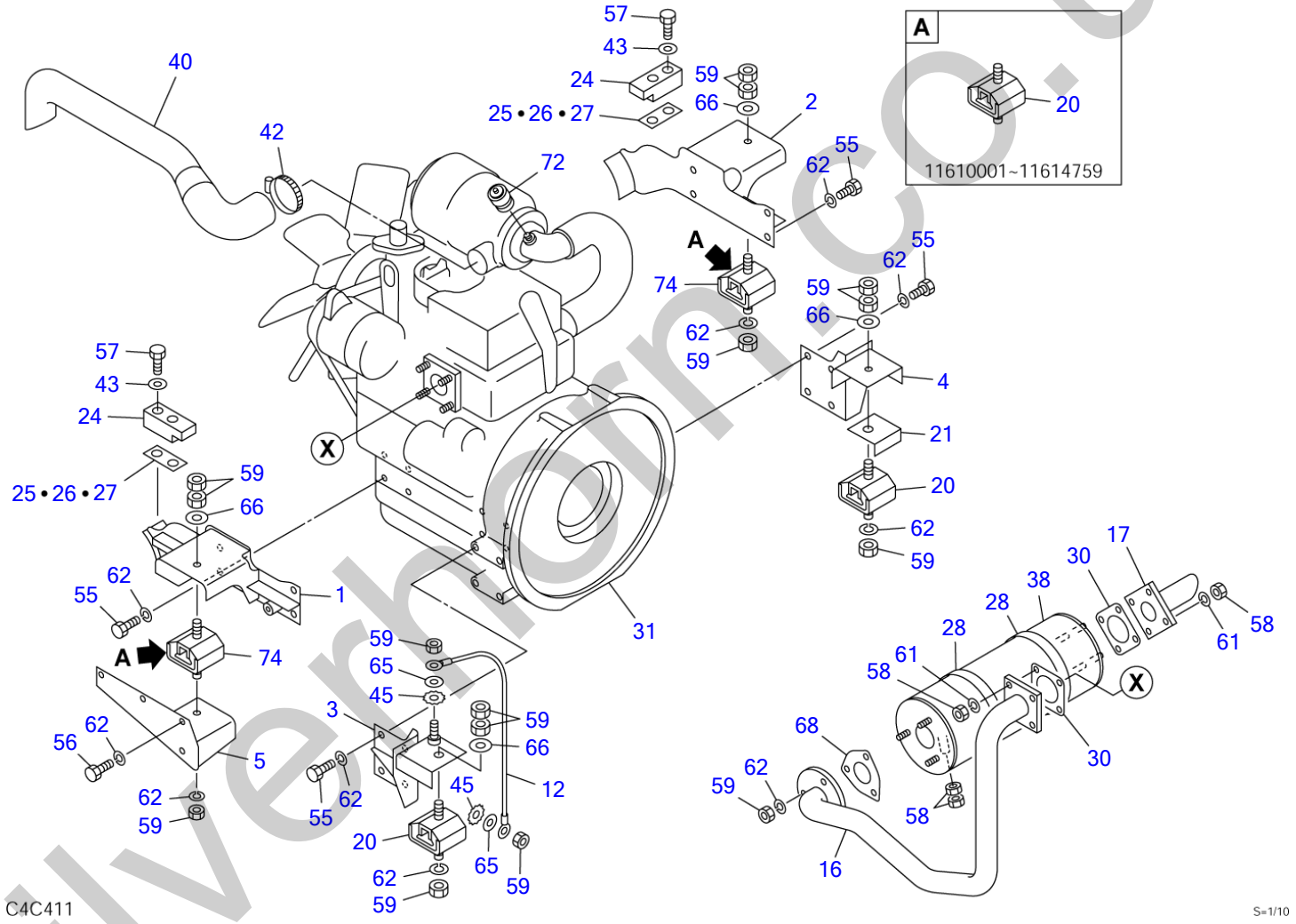

silverhorn.co.uk

ENGINE & ACCESSORIES (1/2)

Item	Part number	Description	Q'ty	Chan.	Serial No.	Serv.	Remarks
		ENGINE ASSY					X03340-26000-6
1	0334026450	FOOT, engine (F.L.)	1				
2	0334026440	FOOT, engine (F.R.)	1				
3	0334017300	FOOT, engine (R.L.)	1				
4	0334017400	FOOT, engine (R.R.)	1				
5	0334027340	MOUNT	1				
12	1702430280	CABLE, earth	1				
16	0334026460	PIPE, exhaust	1				
17	0334020100	PIPE	1		11610001~11610973		
	0334026630	PIPE	1		11610974~		
20	1651081361	RUBBER, cushion	4	A	11610001~11614759		
	1651081362	RUBBER, cushion	2	a	11614760~	M	
21	0334017930	COVER	1				
24	0424003600	STOPPER	2				
25	0424003610	SHIM	AR				t=1.6mm
26	0424003620	SHIM	AR				t=2.3mm
27	0424003630	SHIM	AR				t=0.8mm
28	0064017000	BAND	2				
30	1910181022	GASKET	2				Y 119515-13200
31	1910210001	ENGINE	1				Y 3TNV70-STB
38	1910210005	SILENCER	1				Y 119515-13550
40	0334027390	PIPE, air intake	1				
42	1910116047	BAND	1				Y 23000-054000
43	1141550012	WASHER	4				
45	1140330010	WASHER	2				
55	1100041020	BOLT	16				
56	1100041025	BOLT	4				
57	1101041240	BOLT	4				
58	1130040008	NUT	12				
59	1130040010	NUT	17				
61	1140020008	WASHER, spring	8				
62	1140020010	WASHER, spring	27				
65	1141110010	WASHER	2				
66	1141550010	WASHER	4				
68	1910109022	GASKET	1				Y 103954-13201
72	1910210051	INDICATOR	1				Y 126650-12680
74	1651081363	RUBBER, cushion	2	a	11614760~	M	
		<<NOTE>>					
		"A" is interchangeable with					
		SET "a".					
	C4c413						

silverhorn.co.uk

ENGINE & ACCESSORIES (2/2) (11610001-11610463)

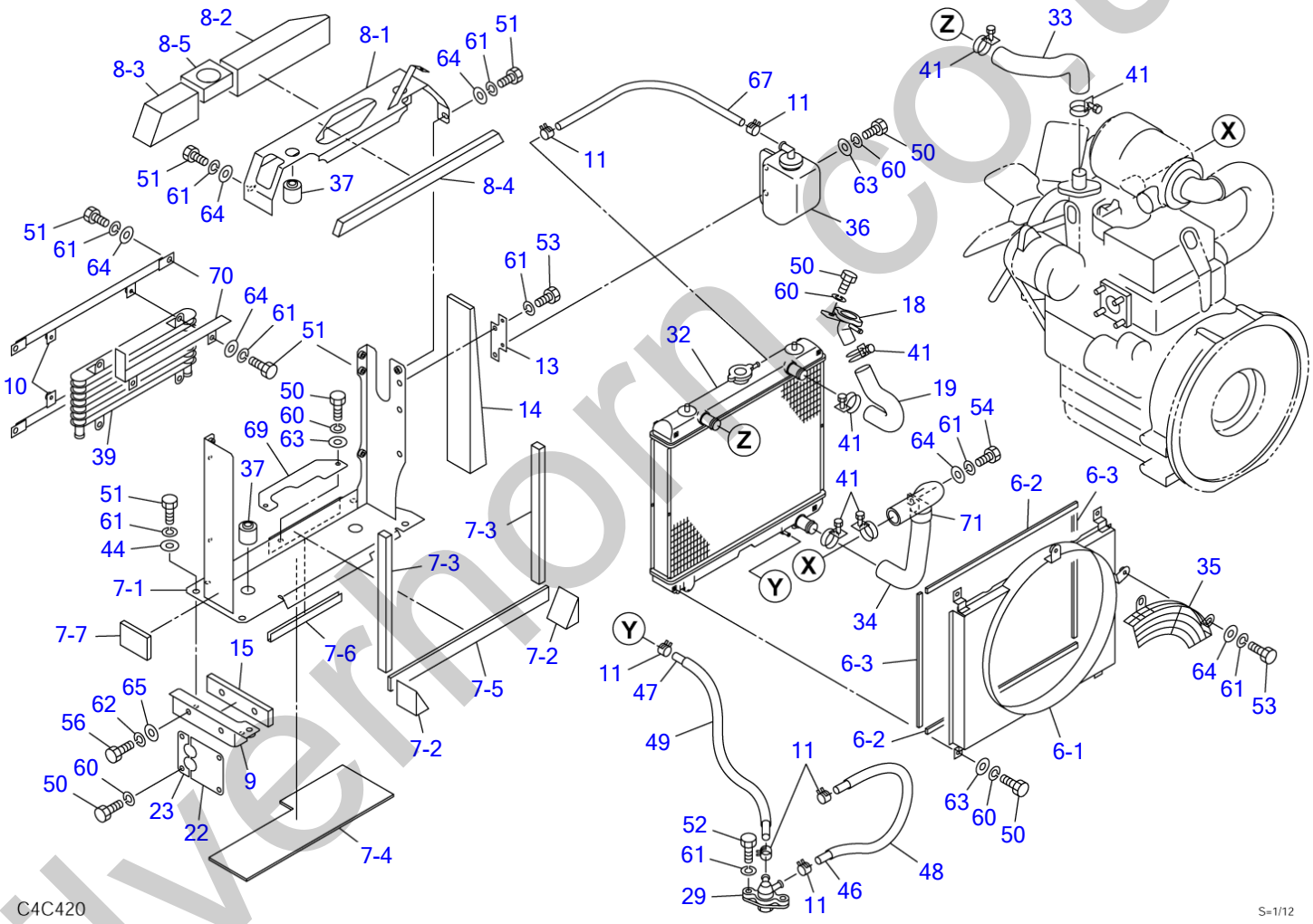

silvernorn.co.uk

ENGINE & ACCESSORIES (2/2) (11610001-11610463)

Item	Part number	Description	Q'ty	Chan.	Serial No.	Serv.	Remarks
		ENGINE ASSY					X03340-26000-1
6	0334027600	SHROUD ASSY, fan	1				
6-1	0334027620	・SHROUD	1				
6-2	1654307039	・SPONGE	2				sold by the meter
6-3	1654307030	・SPONGE	2				sold by the meter
7	0334027100	BRACKET ASSY	1				
7-1	0334027110	・BRACKET	1				
7-2	0334025102	・SPONGE	2				
7-3	1654320030	・SPONGE	2				sold by the meter
7-4	0334027104	・INSULATOR	1				
7-5	1654348041	・SPONGE	1				sold by the meter
7-6	1654607019	・TRIM	1				sold by the meter
7-7	0334027105	・SPONGE	1				
8	0334026200	BRACKET ASSY	1				
8-1	0334027210	・BRACKET	1				
8-2	0334027212	・SPONGE	1				
8-3	0334027213	・SPONGE	1				
8-4	0334025154	・SPONGE	1				
8-5	0334027215	・SPONGE	1				
9	0334026230	BRACKET	1				
10	0334027620	STAY	2				
11	1533120012	BAND	6				
13	0334026310	BRACKET	1				
14	0334027270	SPONGE	1				
15	0334027293	SPONGE	1				
18	1910210019	FILLER	1				Y 119527-44601
19	0334026500	HOSE	1				
22	0334019340	PLATE	1				
23	0334019350	PLATE	1				
29	1910065037	VALVE	1				Y 121450-49110
32	1910210002	RADIATOR	1				Y 119540-44500
33	0334026360	HOSE	1				
34	0334027370	HOSE	1				
35	0334027380	GUARD, fan	1				
36	1910056020	TANK	1				Y 121468-44510
37	1651051002	RUBBER, cushion	4				
39	1911300140	COOLER, oil	1				
41	1910006013	BAND	6				Y 23010-038000
44	0003608252	WASHER	4				
46	1530808055	TUBE	2				
47	1530808040	TUBE	1				
48	1531118051	PROTECTOR	1				sold by the meter
49	1531118036	PROTECTOR	1				sold by the meter
50	1100040616	BOLT	13				
51	1100040820	BOLT	13				
52	1100040825	BOLT	2				
53	1100040816	BOLT	4				
54	1100040812	BOLT	1				
56	1100041025	BOLT	2				
60	1140020006	WASHER, spring	13				
61	1140020008	WASHER, spring	20				
62	1140020010	WASHER, spring	2				
63	1141110006	WASHER	8				
64	1141110008	WASHER	12				
65	1141110010	WASHER	2				
67	1530808032	TUBE	1				
69	0334027230	COVER	1				
70	0334026480	BRACKET	1				
71	0007300030	CLAMP	1				
	C4c420						

silverthorn.co.uk

ENGINE & ACCESSORIES (2/2) (11610464-11611249)

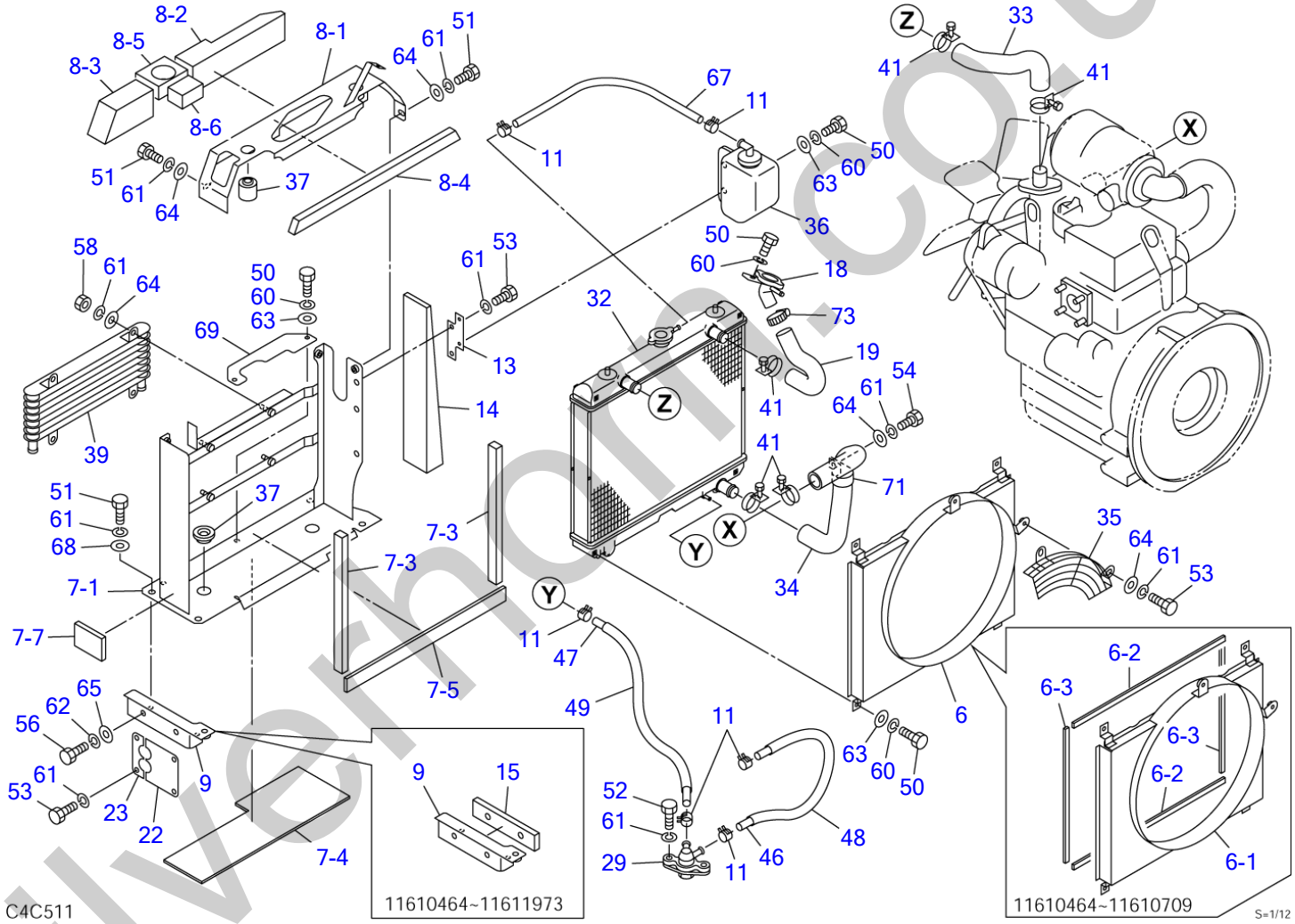

silverhome.co.uk

ENGINE & ACCESSORIES (2/2) (11610464-11611249)

Item	Part number	Description	Q'ty	Chan.	Serial No.	Serv.	Remarks
		ENGINE ASSY					X03340-26000-4
6	0334027600	SHROUD ASSY, fan	1		11610464~11610709		
	0334027620	SHROUD ASSY, fan	1	(H)	11610710~		
6-1	0334027620	・SHROUD	1		11610464~11610709		
6-2	1654307039	・SPONGE	2		11610464~11610709		sold by the meter
6-3	1654307030	・SPONGE	2		11610464~11610709		sold by the meter
7	0334026600	BRACKET ASSY	1				
7-1	0334026610	・BRACKET	1				
7-3	1654320030	・SPONGE	2				sold by the meter
7-4	0334027104	・INSULATOR	1				
7-5	1654348041	・SPONGE	1				sold by the meter
7-7	0334027105	・SPONGE	1				
8	0334026200	BRACKET ASSY	1				
8-1	0334027210	・BRACKET	1				
8-2	0334027212	・SPONGE	1				
8-3	0334027213	・SPONGE	1				
8-4	0334025154	・SPONGE	1				
8-5	0334027215	・SPONGE	1				
8-6	1654308005	・SPONGE	1				sold by the meter
9	0334026230	BRACKET	1				
11	1533120012	BAND	6				
13	0334026310	BRACKET	1				
14	0334027270	SPONGE	1				
15	0334027293	SPONGE	1		11610464~11610973		
18	1910210019	FILLER	1				Y 119527-44601
19	0334026500	HOSE	1				
22	0334019340	PLATE	1				
23	0334019350	PLATE	1				
29	1910065037	VALVE	1				Y 121450-49110
32	1910210002	RADIATOR	1				Y 119540-44500
33	0334026360	HOSE	1				
34	0334027370	HOSE	1				
35	0334027380	GUARD, fan	1				
36	1910056020	TANK	1				Y 121468-44510
37	1651051002	RUBBER, cushion	4				
39	1911300140	COOLER, oil	1				
41	1910006013	BAND	5				Y 23010-038000
44	0003608252	WASHER	4				
46	1530808055	TUBE	2				
47	1530808040	TUBE	1				
48	1531118051	PROTECTOR	1				sold by the meter
49	1531118036	PROTECTOR	1				sold by the meter
50	1100040616	BOLT	9				
51	1100040820	BOLT	5				
52	1100040830	BOLT	2				
53	1100040816	BOLT	8				
54	1100040812	BOLT	1				
56	1100041025	BOLT	2				
58	1130040008	NUT	4				
60	1140020006	WASHER, spring	9				
61	1140020008	WASHER, spring	18				
62	1140020010	WASHER, spring	2				
63	1141110006	WASHER	8				
64	1141110008	WASHER	8				
65	1141110010	WASHER	2				
67	1531407032	TUBE	1				
69	0334027230	COVER	1				
71	0007300030	CLAMP	1				
73	1533700041	BAND	1				
	C4c511						

silvermorn.co.uk

ENGINE & ACCESSORIES (2/2) (11611250-)

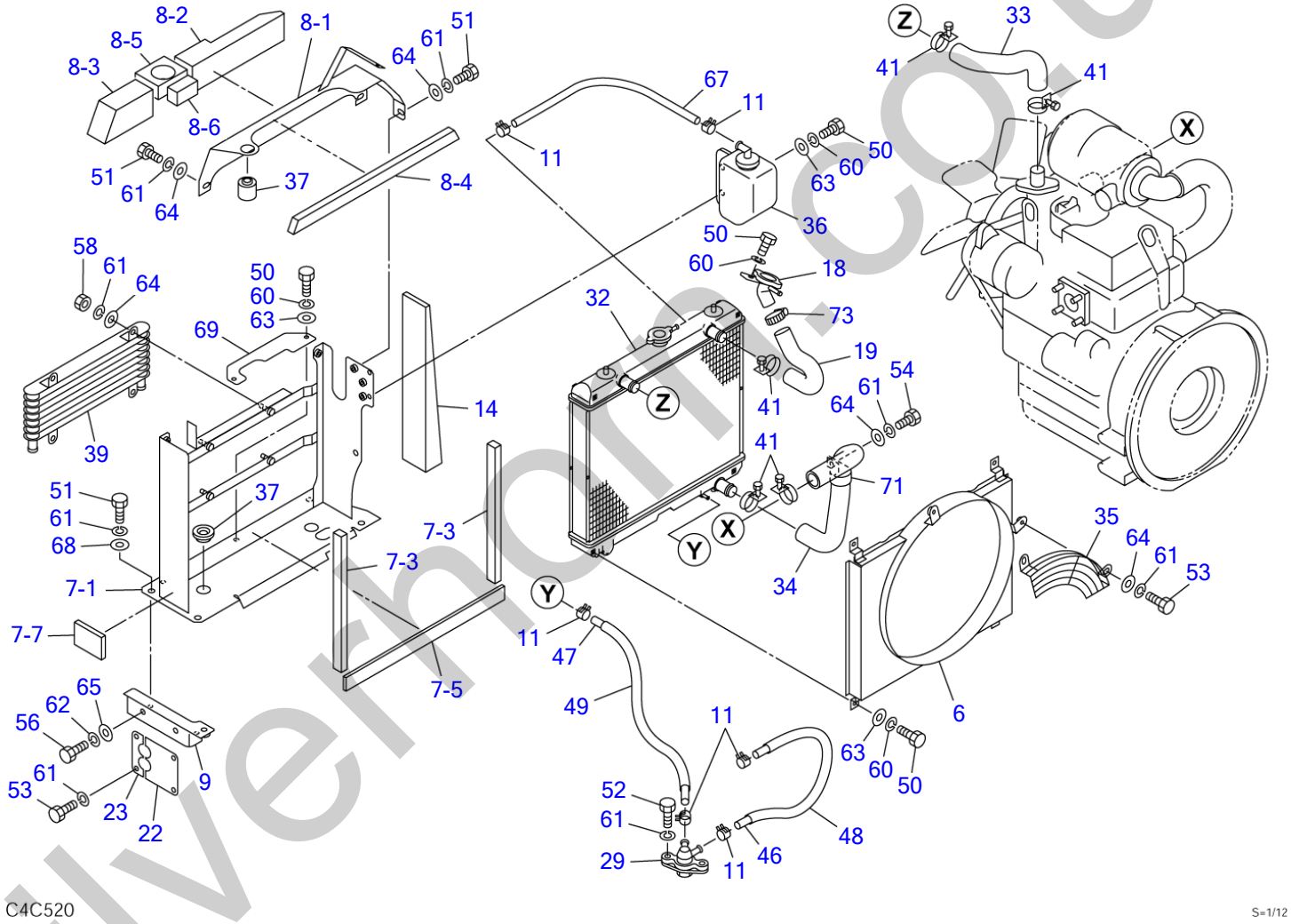

silverhorn.co.uk

ENGINE & ACCESSORIES (2/2) (11611250-)

Item	Part number	Description	Q'ty	Chan.	Serial No.	Serv.	Remarks
		ENGINE ASSY					X03340-26000-6
6	0334026650	SHROUD ASSY, fan	1				
7	0334026600	BRACKET ASSY	1				
7-1	0334026610	・BRACKET	1				
7-3	1654320030	・SPONGE	2				sold by the meter
7-5	1654348041	・SPONGE	1				sold by the meter
7-7	0334027105	・SPONGE	1				
8	0334026200	BRACKET ASSY	1				
8-1	0334027210	・BRACKET	1				
8-2	0334027212	・SPONGE	1				
8-3	0334027213	・SPONGE	1				
8-4	0334025154	・SPONGE	1				
8-5	0334027215	・SPONGE	1				
8-6	1654308005	・SPONGE	1				sold by the meter
9	0334026230	BRACKET	1				
11	1533120012	BAND	6				
14	0334027270	SPONGE	1				
18	1910210019	FILLER	1				Y 119527-44601
19	0334026500	HOSE	1				
22	0334019340	PLATE	1				
23	0334019350	PLATE	1				
29	1910065037	VALVE	1				Y 121450-49110
32	1910210002	RADIATOR	1				Y 119540-44500
33	0334026360	HOSE	1				
34	0334027370	HOSE	1				
35	0334026640	GUARD, fan	1				
36	1910056020	TANK	1				Y 121468-44510
37	1651051002	RUBBER, cushion	4				
39	1911300140	COOLER, oil	1				
41	1910006013	BAND	5				Y 23010-038000
44	0003608252	WASHER	4				
46	1530808055	TUBE	2				
47	1530808040	TUBE	1				
48	1531118051	PROTECTOR	1				sold by the meter
49	1531118036	PROTECTOR	1				sold by the meter
50	1100040616	BOLT	9				
51	1100040820	BOLT	5				
52	1100040830	BOLT	2				
53	1100040816	BOLT	6				
54	1100040812	BOLT	1				
56	1100041025	BOLT	2				
58	1130040008	NUT	4				
60	1140020006	WASHER, spring	9				
61	1140020008	WASHER, spring	18				
62	1140020010	WASHER, spring	2				
63	1141110006	WASHER	8				
64	1141110008	WASHER	8				
65	1141110010	WASHER	2				
67	1531407032	TUBE	1				
69	0334027230	COVER	1				
71	0007300030	CLAMP	1				
73	1533700041	BAND	1				
	C4c521						

silvethorn.co.uk

AIR CLEANER (for double element)

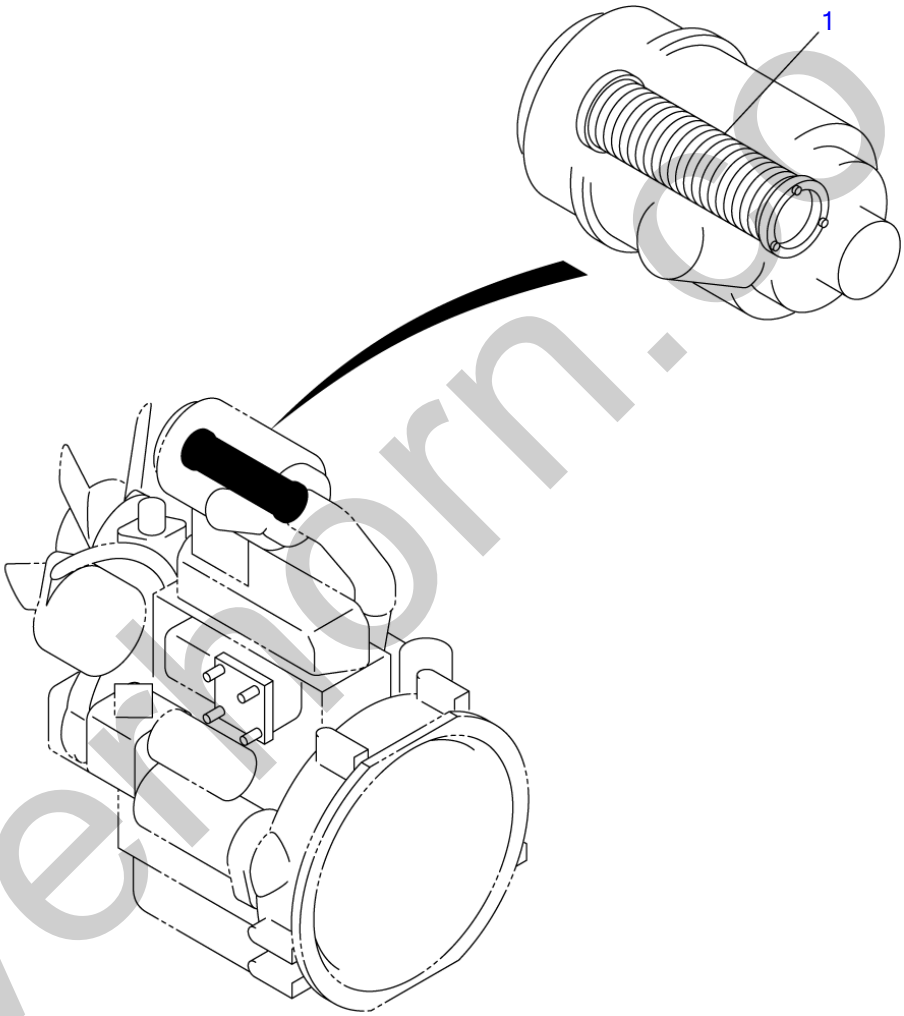

C4C240

S=1/4, 1/8

silvernorn.co.uk

AIR CLEANER (for double element)

Item	Part number	Description	Q'ty	Chan.	Serial No.	Serv.	Remarks
1	**1911101342 C4c240**	CLEANER ASSY, air ELEMENT	1				X03340-22000-0

silverhorn.co.uk

DRAIN PLUG (for EU)

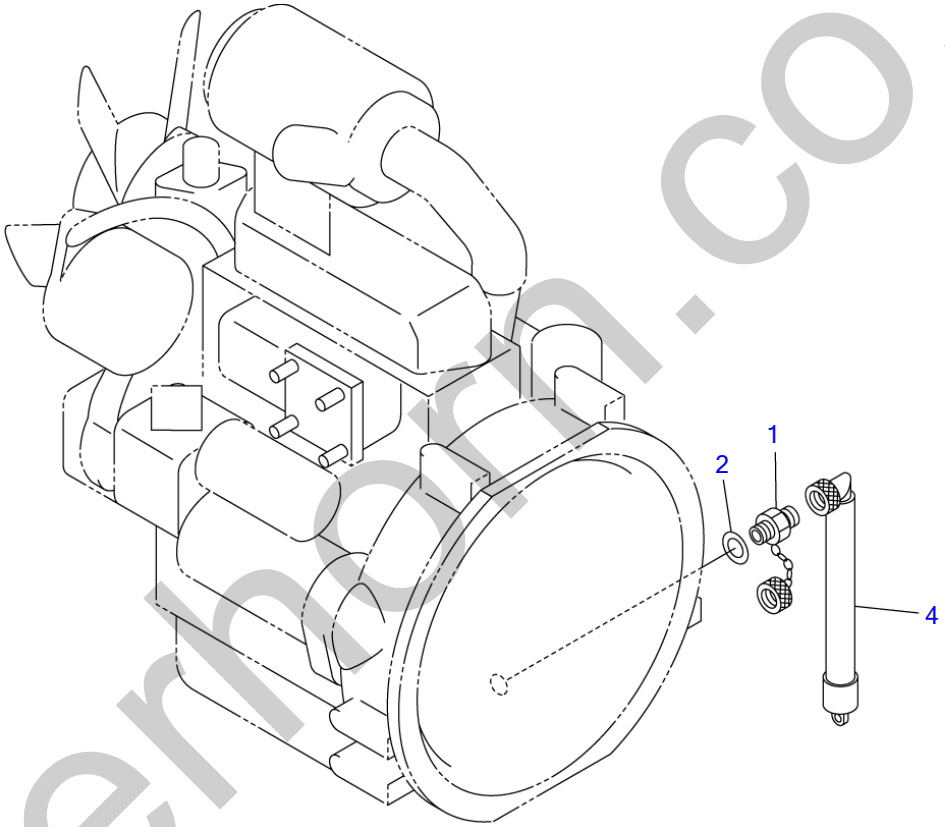

C4C030

S=1/6

silverhorn.co.uk

DRAIN PLUG (for EU)

Item	Part number	Description	Q'ty	Chan.	Serial No.	Serv.	Remarks
		PLUG ASSY, drain					X03240-16000-2
1	1554501650	PLUG	1				
2	1432116221	WASHER	1				
4	1554512201	TUBE	1				
	C4c361						

silverhorn.co.uk

CONTROL BOX; R.H.

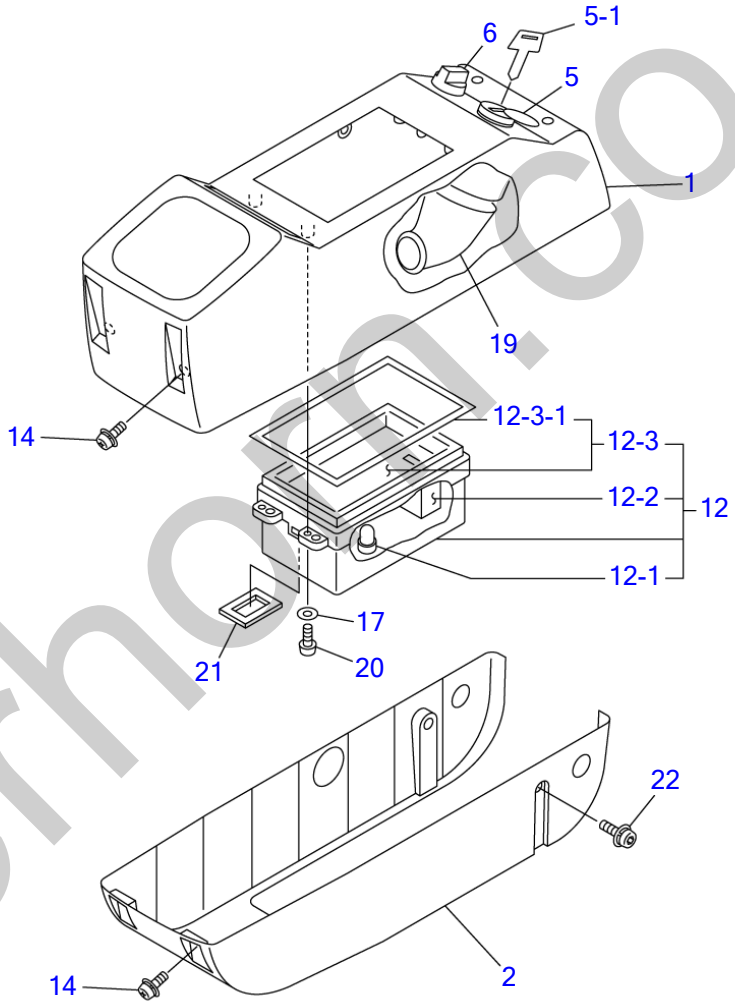

C4C042D

S=1/6

silverhorn.co.uk

CONTROL BOX; R.H.

Item	Part number	Description	Q'ty	Chan.	Serial No.	Serv.	Remarks
		BOX ASSY, control (R.H.) (cab)					X03343-26000-10
		BOX ASSY, control (R.H.) (canopy)					X03343-30200-10
1	0334326150	COVER (R.H.)	1				
2	0334326250	COVER (R.H.)	1				
5	1700100052	SWITCH, starter	1				cab
	1700100072	SWITCH, starter	1				canopy
5-1	1700100019	KEY	1				
6	1700000010	SWITCH, lamp	1				
12	1730140630	GAUGE, cluster	1				
12-1	1730140634	・BULB (14V, 1.4W)	8				
12-2	1730140652	・METER, hour	1				
12-3	1730140653	・GLASS ASSY	1				
12-3-1	1730140654	・・PACKING	1				
14	1150410614	SCREW	6				
17	1141110004	WASHER	4				
19	0870431821	COVER	1				
20	1120530416	SCREW	4				
21	0334326010	SPONGE	1				
22	1110540614	SCREW, cap	2				
	C4c491						

silverhorn.co.uk

CONTROL BOX; L.H.

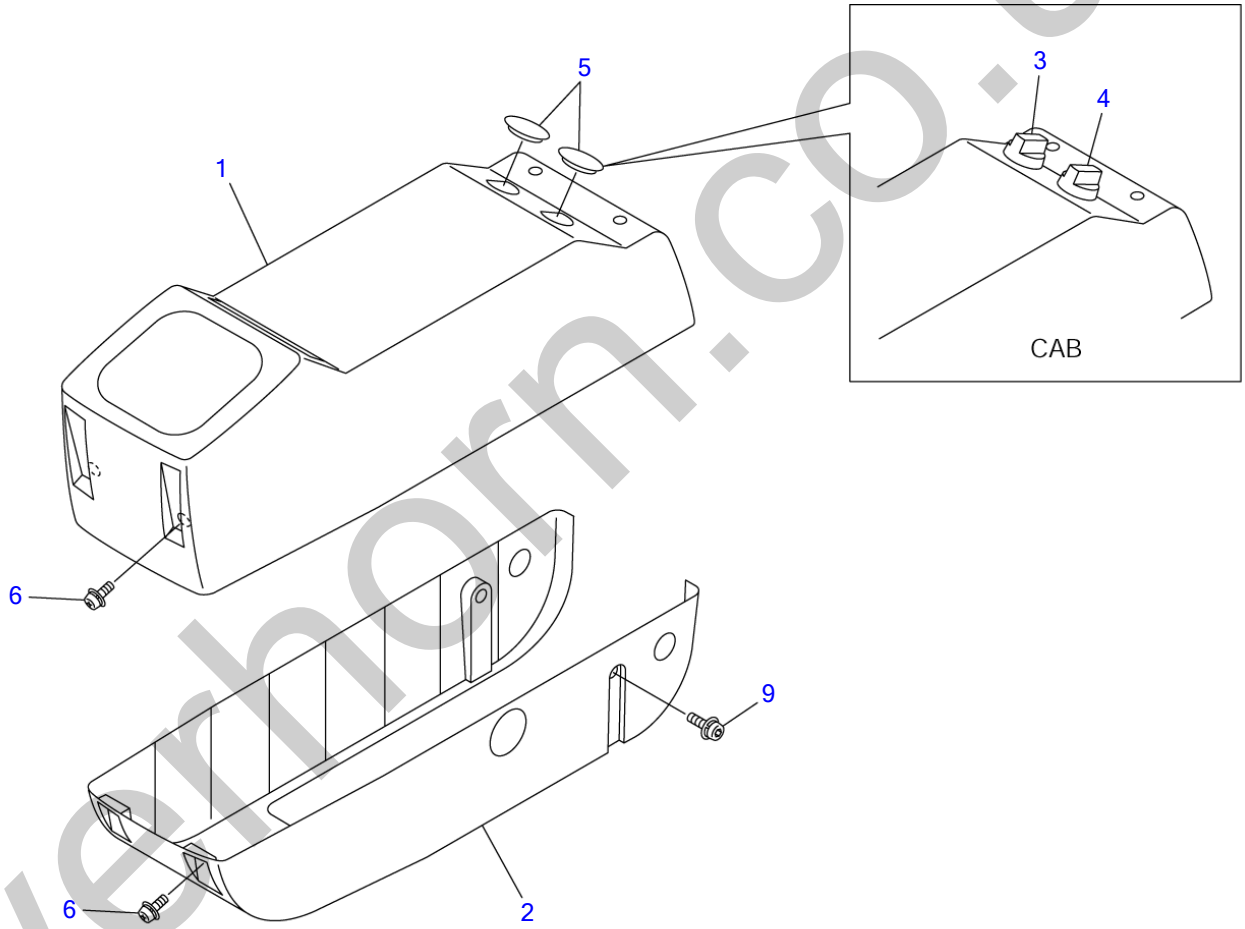

C4C052

S=1/6

silverhorn.co.uk

CONTROL BOX; L.H.

Item	Part number	Description	Q'ty	Chan.	Serial No.	Serv.	Remarks
		BOX ASSY, control (L.H.) (cab)					X03343-27000-4
		BOX ASSY, control (L.H.) (canopy)					X03343-27500-4
1	0334327150	COVER (L.H.)	1				
2	0334327250	COVER (L.H.)	1				
3	1704300007	SWITCH, wiper	1				cab
4	1700000011	SWITCH, heater	1				cab
5	1652533019	CAP	2				canopy
6	1150410614	SCREW	8				
9	1110540614	SCREW, cap	2				
	C4c052						

silverhorn.co.uk

ENGINE CONTROL

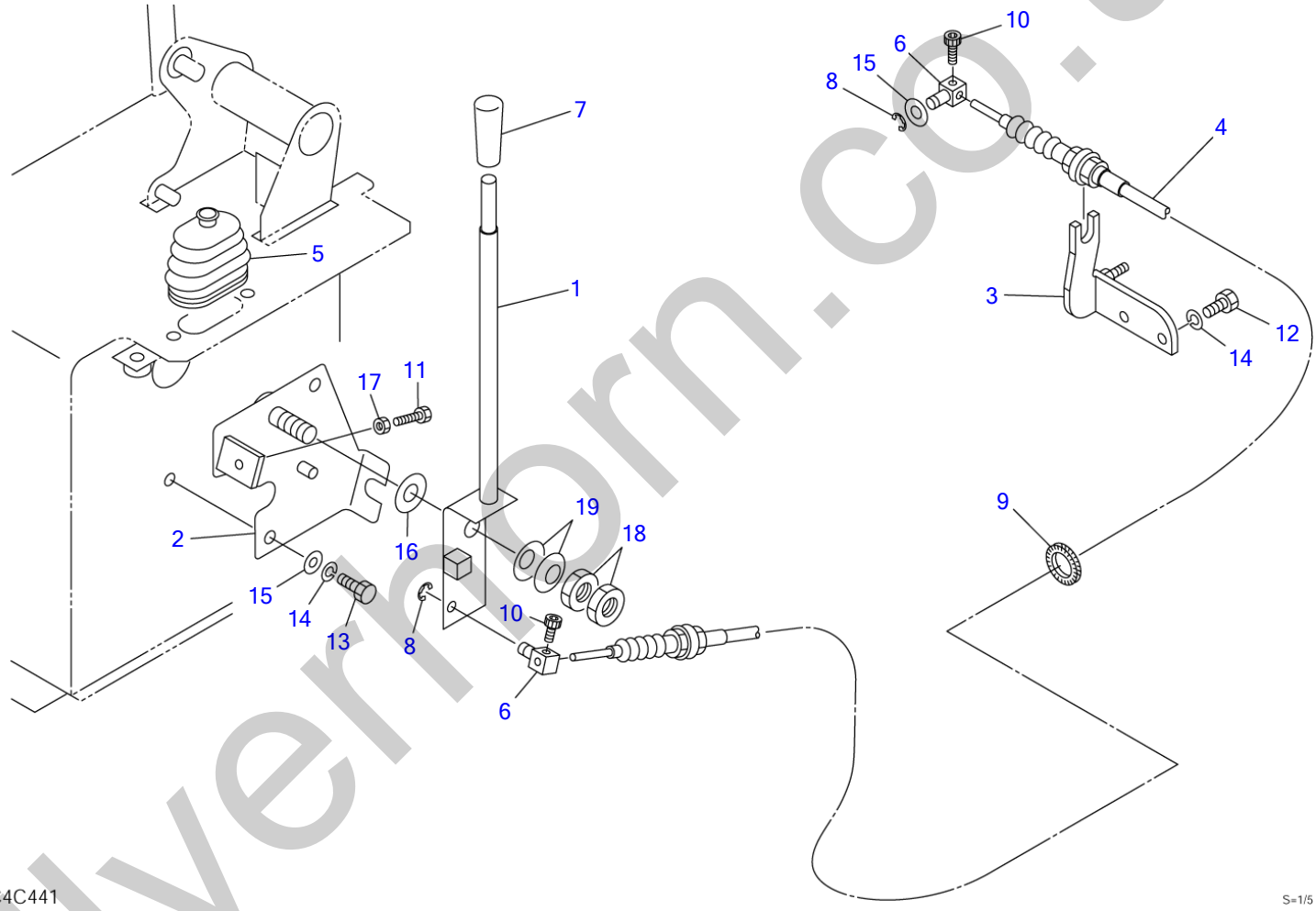

silverhorn.co.uk

ENGINE CONTROL

Item	Part number	Description	Q'ty	Chan.	Serial No.	Serv.	Remarks
		CONTROL ASSY, engine					X03341-23000-0
1	0334119100	LEVER	1				
2	0334119200	BRACKET	1				
3	0334123050	BRACKET	1				
4	0334116300	WIRE	1				
5	0334120100	BOOT	1				
6	0007900020	PIN	2				
7	1650132050	GRIP	1				
8	1224010006	E-RING	2				
9	1652606201	BUSHING	1				
10	1110040510	SCREW, cap	2				
11	1100240640	BOLT	1				
12	1100040816	BOLT	2				
13	1100040820	BOLT	2				
14	1140020008	WASHER, spring	4				
15	1141110008	WASHER	3				
16	1141540014	WASHER	1				
17	1130040006	NUT	1				
18	1130640014	NUT	2				
19	1225110014	WASHER, conical	2				
	C4c440						

silverhorn.co.uk

ELECTRICAL (1/2)

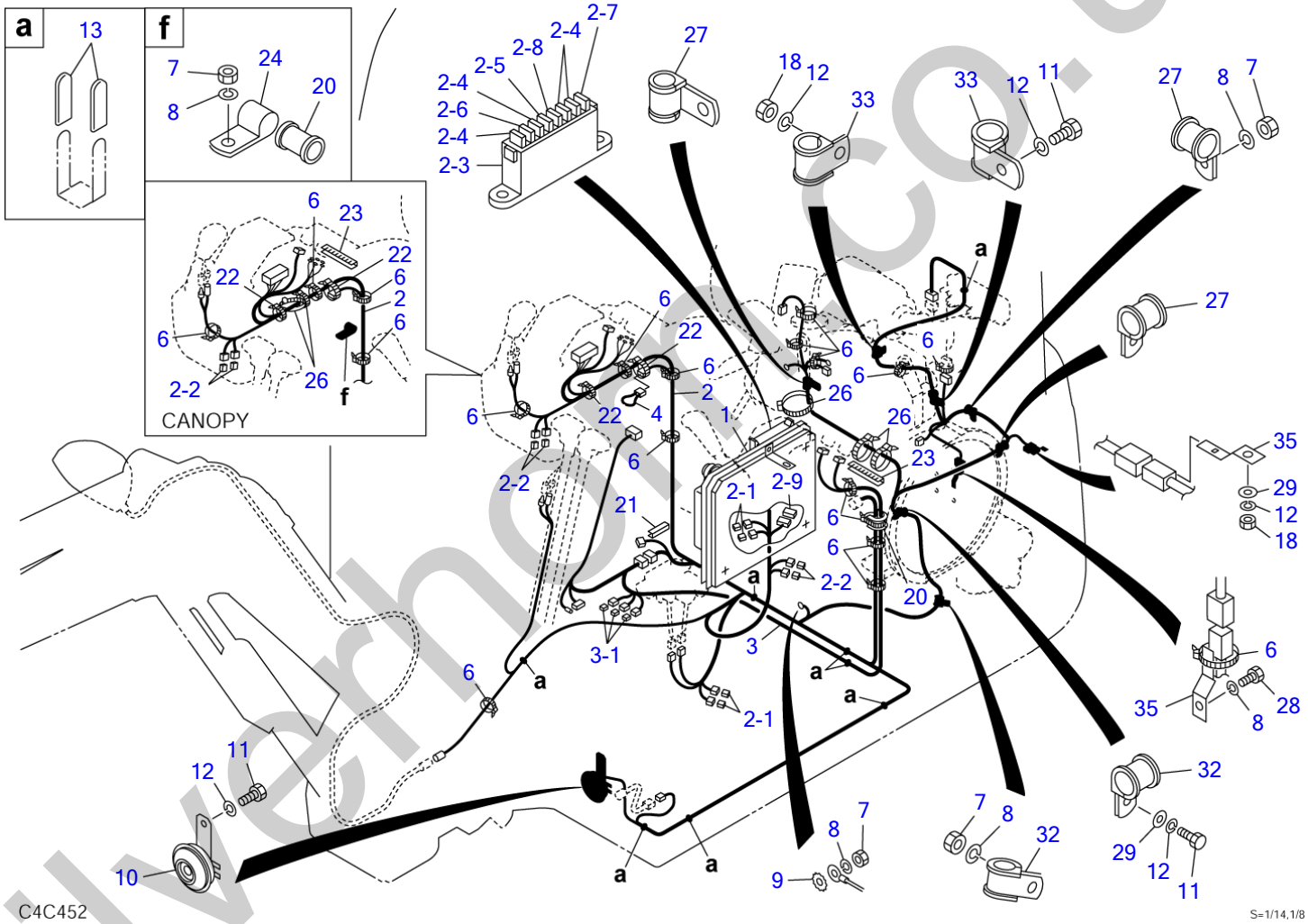

silverhorn.co.uk

ELECTRICAL (1/2)

Item	Part number	Description	Q'ty	Chan.	Serial No.	Serv.	Remarks
		ELECTRICAL ASSY (canopy)					X03342-66900-2
		ELECTRICAL ASSY (cab)					X03342-67000-2
1	0334265600	UNIT, control	1				see page (2/2)
2	0334267100	HARNESS, wiring	1				
2-1	1730500008	・DIODE (3A, yellow)	4				
2-2	1730500017	・DIODE (1A, gray)	4				
2-3	1701203501	・BOX, fuse	1				
2-4	1701310010	・FUSE (10A)	4				
2-5	1701310015	・FUSE (15A)	1				
2-6	1701310025	・FUSE (25A)	1				
2-7	1701310030	・FUSE (30A)	1				
2-8	1701310020	・FUSE (20A)	1				
2-9	0394221010	・CONNECTOR, short	1		1161#~	M	No.23963
3	0334242200	HARNESS, wiring	1				cab
3-1	1730500008	・DIODE (3A, yellow)	3				cab
4	0334230400	CONNECTOR					cab
6	1652231250	BAND	16				
7	1130040010	NUT	3				cab
	1130040010	NUT	4				canopy
8	1140020010	WASHER, spring	5				cab
	1140020010	WASHER, spring	6				canopy
9	1140330010	WASHER	1				
10	1703500712	HORN	1				
11	1100040816	BOLT	4				
12	1140020008	WASHER, spring	5				
13	0872433150	TUBE	16				
18	1130040008	NUT	2				
20	0868423862	GROMMET	1				cab
	0868423862	GROMMET	2				canopy
21	1653916005	TRIM (canopy)	1				sold by the meter
22	1652201005	BAND	2				
23	1653917009	TRIM (canopy)	2				sold by the meter
	1653917009	TRIM (cab)	1				sold by the meter
24	0007300001	CLAMP	1				canopy
26	1652241400	BAND	6				cab
	1652241400	BAND	8				canopy
27	1711900105	CLAMP	3				
28	1100041016	BOLT	1				
29	1141110008	WASHER	2				
32	1711900071	CLAMP	2				
33	1652900005	CLAMP	2				
35	1711900064	CLIP	2				
	C4c453						

silverthorn.co.uk

ELECTRICAL (2/2)

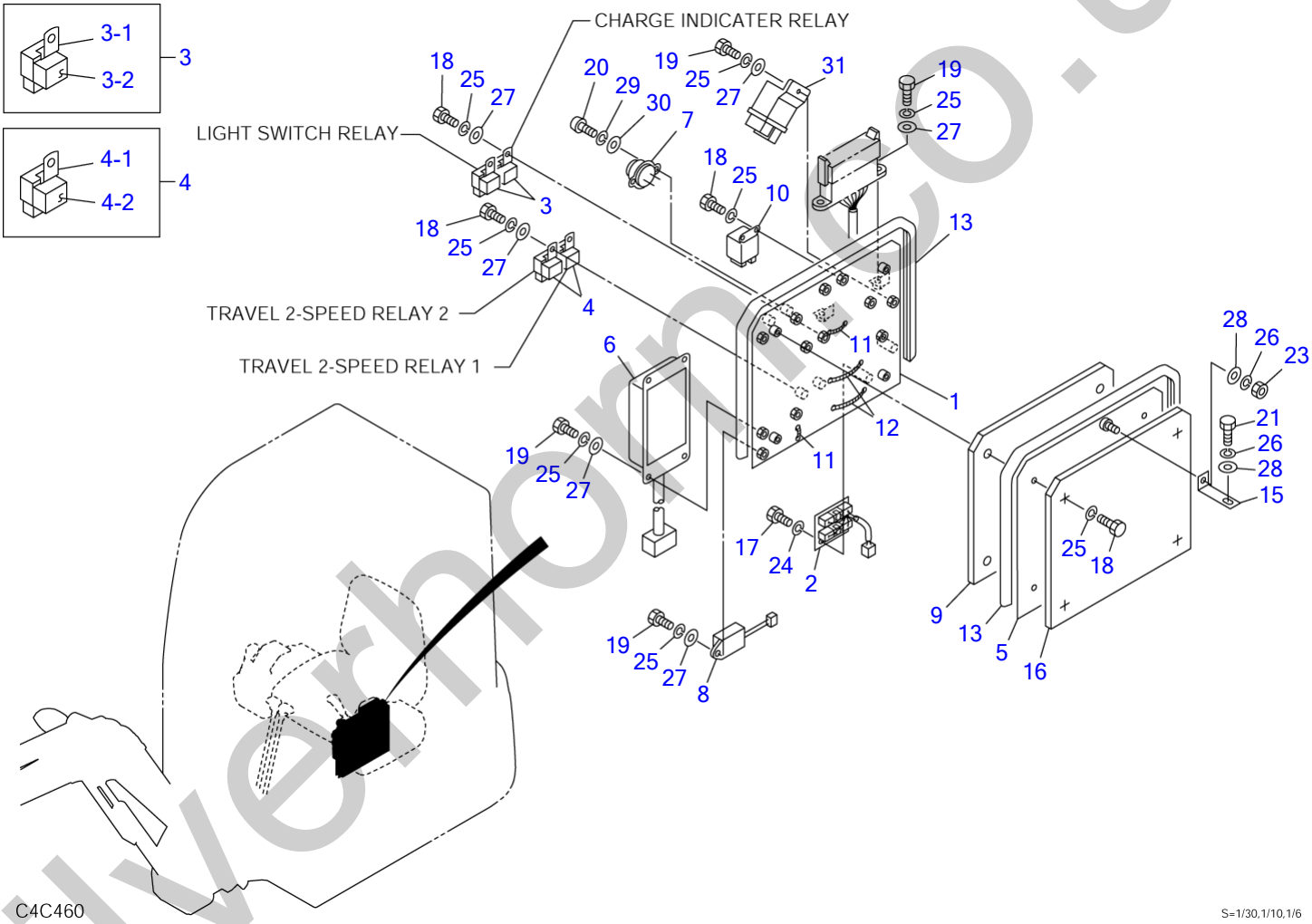

silverhorne.co.uk

ELECTRICAL (2/2)

Item	Part number	Description	Q'ty	Chan.	Serial No.	Serv.	Remarks
0-1	0334265600	UNIT, control	1				X03342-65600-1
1	0334265610	・PLATE	1				
2	0334230120	・RESISTOR	1				
3	0334230130	・RELAY ASSY	2				
3-1	1711900042	・・RELAY	1				
3-2	1654302003	・・SPONGE	1				sold by the meter
4	0334230140	・RELAY ASSY	2				
4-1	1711900042	・・RELAY	1				
4-2	1654304003	・・SPONGE	1				sold by the meter
5	0334243130	・PLATE	1				
6	1730140900	・CONTROLER	1				
7	1730140680	・BUZZER	1				
8	1910150118	・UNIT, timer	1				Y 129211-77920
9	0334239120	・INSULATOR	1				
10	1910161119	・RESISTOR, grow	1				Y 119646-77900
11	1652231100	・BAND	2				
12	1652231250	・BAND	2				
13	1654613083	・PACKING	2				sold by the meter
15	0334230160	・BRACKET	1				
16	0334239140	・INSULATOR	1				
17	1100040510	・BOLT	2				
18	1100040610	・BOLT	9				
19	1100040616	・BOLT	9				
20	1120530310	・SCREW	2				
21	1100040816	・BOLT	1				
23	1130030008	・NUT	1				
24	1140020005	・WASHER, spring	2				
25	1140020006	・WASHER, spring	18				
26	1140020008	・WASHER, spring	2				
27	1141110006	・WASHER	12				
28	1141110008	・WASHER	2				
29	1140020003	・WASHER, spring	2				
30	1141110003	・WASHER	2				
31	1910181106	・RELAY, safety	1				Y 119802-77200
	C4c460						

silverhorn.co.uk

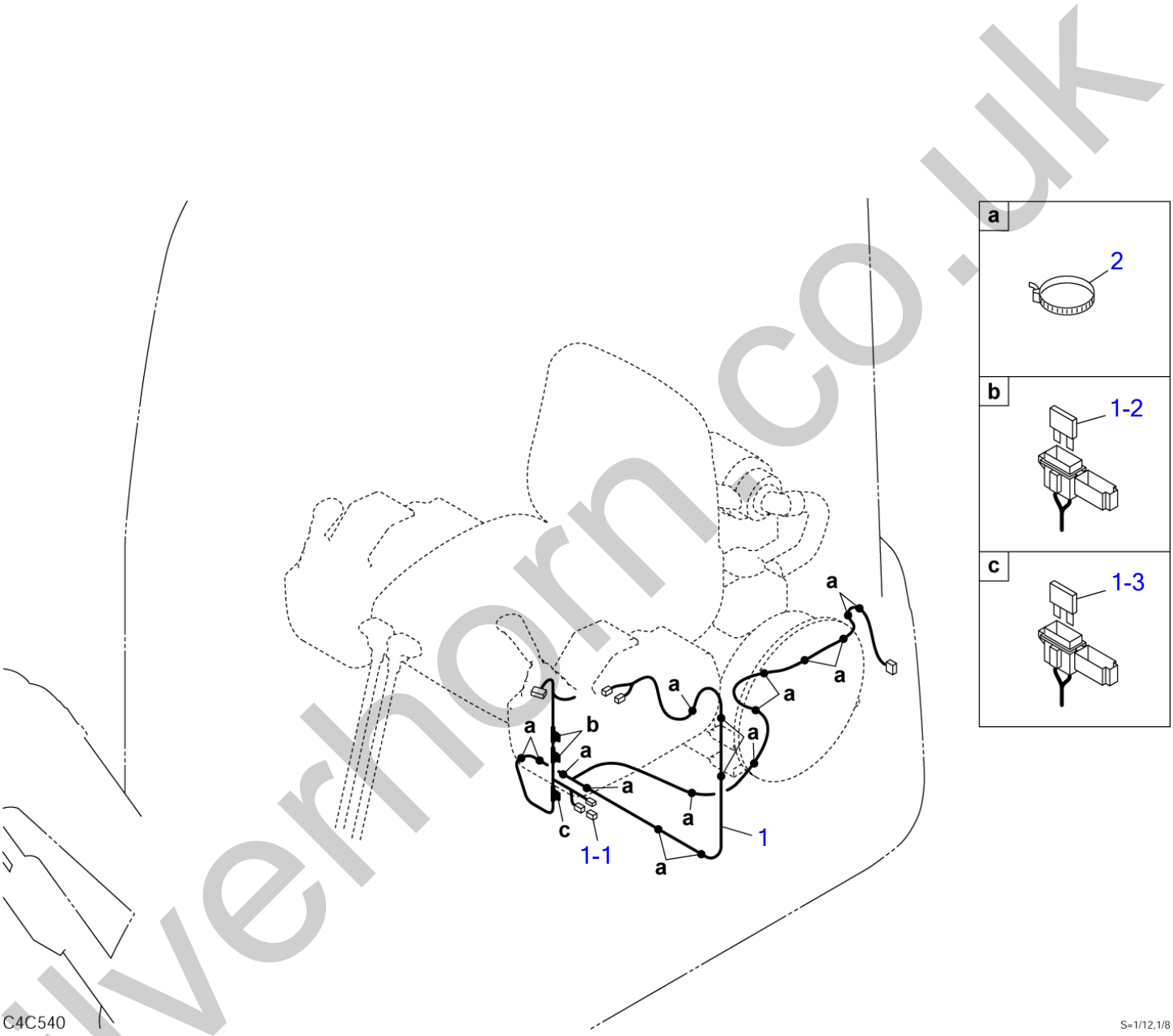

silverhorn.co.uk

ELECTRICAL (for KOSRAN)

Item	Part number	Description	Q'ty	Chan.	Serial No.	Serv.	Remarks
0	0334267300	ELECTRICAL ASSY (for KOSRAN)	1			M	X03342-67300-0
1	0334267310	・HARNESS, wiring	1			M	
1-1	0394224120	・・CONNECTOR, short	1			M	
1-2	1701310005	・・FUSE (5A)	2			M	
1-3	1701310002	・・FUSE (2A)	1			M	
2	1652231250	・BAND	25				
	C4c540						

silverhorn.co.uk

TRAVEL ALARM

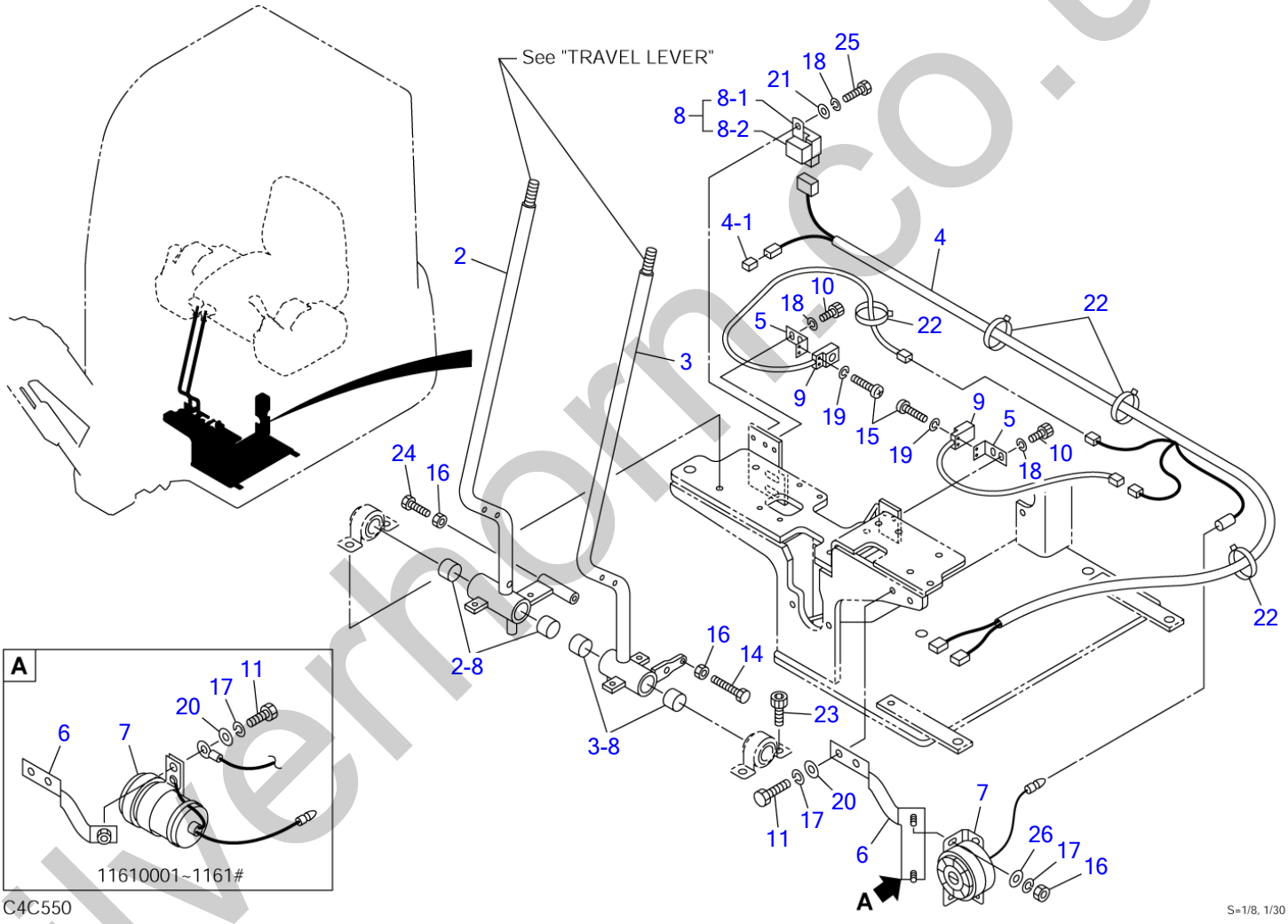

silverhorn.co.uk

TRAVEL ALARM

Item	Part number	Description	Q'ty	Chan.	Serial No.	Serv.	Remarks
		ALARM ASSY, travel			11610001~1161#		X03342-65000-2
		ALARM ASSY, travel			1161#~		X03342-67200-0 No. 23665
2	0334242600	LEVER (R.H.)	1		11610001~1161#		
2-8	1333002015	・BUSHING	2		11610001~1161#		
3	0334242650	LEVER (L.H.)	1		11610001~1161#		
3-8	1333002015	・BUSHING	2		11610001~1161#		
4	0334242520	HARNESS, wiring	1				
4-1	1730500008	・DIODE (3A, yellow)	1				
5	0334242530	BRACKET	2				
6	0334233020	BRACKET	1	A	11610001~1161#		
	0334267210	BRACKET	1	a	1161#~	M	No. 23665
7	0354211050	BUZZER	1	A	11610001~1161#		
	1703700013	BUZZER	1	a	1161#~	M	No. 23665
8	0334242540	RELAY ASSY	1				
8-1	1711900042	・RELAY	1				
8-2	1654301003	・SPONGE	1				sold by the meter
9	1700009010	SWITCH	2				
10	1110040612	SCREW, cap	4				
11	1100040820	BOLT	2				
14	1100040625	BOLT	1				
15	1120530314	SCREW	4				
16	1130040006	NUT	4				
17	1140020008	WASHER, spring	4				
18	1140020006	WASHER, spring	5				
19	1140020003	WASHER, spring	4				
20	1141110008	WASHER	2				
21	1141110006	WASHER	1				
22	1652231250	BAND	4				
23	1110040820	SCREW, cap	1				
24	1100040620	BOLT	1				
25	1100040612	BOLT	1				
26	0003600110	WASHER	2		1161#~	M	
		<<NOTE>> SET "A" is interchangeable with SET "a".					
	C4c550						

silverhorn.co.uk

BATTERY

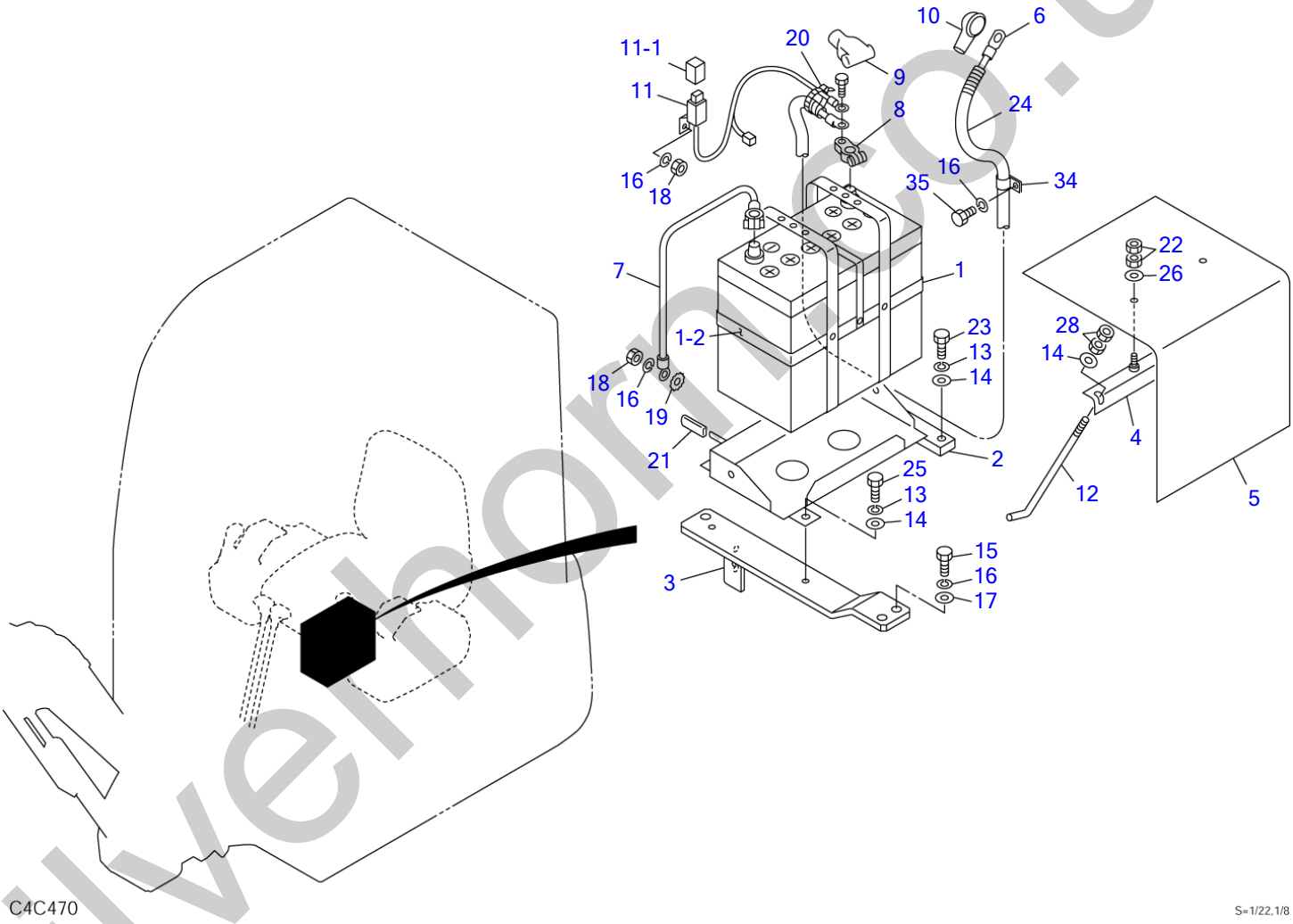

silverhorn.co.uk

BATTERY

Item	Part number	Description	Q'ty	Chan.	Serial No.	Serv.	Remarks
		BATTERY ASSY					X03344-26000-2
		BATTERY ASSY (for USA)					X03344-26100-2
1	0334420100	BATTERY (FZG-24R)	1				
	0334421100	BATTERY (55B24R-S)	1				for USA
1-2	1711900063	・BELT	1				
2	0334420010	BRACKET	1				
3	0334424110	BRACKET	1				
4	0334420060	ANGLE	1				
5	0334420040	SHEET	1				
6	1702522115	CABLE	1				
	1702607115	CABLE	1				for USA
7	1702222038	CABLE, earth	1				
	1702622038	CABLE, earth	1				for USA
8	1702330040	TERMINAL	1				
	1702330000	TERMINAL	1				for USA
9	1702920060	COVER	1				
10	1910007119	CAP	1				Y124550-77030
11	0334420050	LINK, fusible	1				
	0334421010	LINK, fusible	1				for USA
11-1	1701330045	・FUSE (45A)	1				
12	1702108215	BOLT	2				
13	1140020008	WASHER, spring	4				
14	1141110008	WASHER	6				
15	1100241030	BOLT	3				
16	1140020010	WASHER, spring	6				
17	1141110010	WASHER	3				
18	1130040010	NUT	2				
19	1140330010	WASHER	1				
20	1652231140	BAND	1				
21	0872433150	TUBE	4				
22	1130040006	NUT	4				
23	1100240825	BOLT	2				
24	1703221012	PROTECTOR	1			M	sold by the meter
25	1100240816	BOLT	2				
26	1141110006	WASHER	2				
28	1130040008	NUT	4				
34	1711900105	CLAMP	1				
35	1100041016	BOLT	1				
	C4c472						

silverhorn.co.uk

BATTERY (with battery switch)

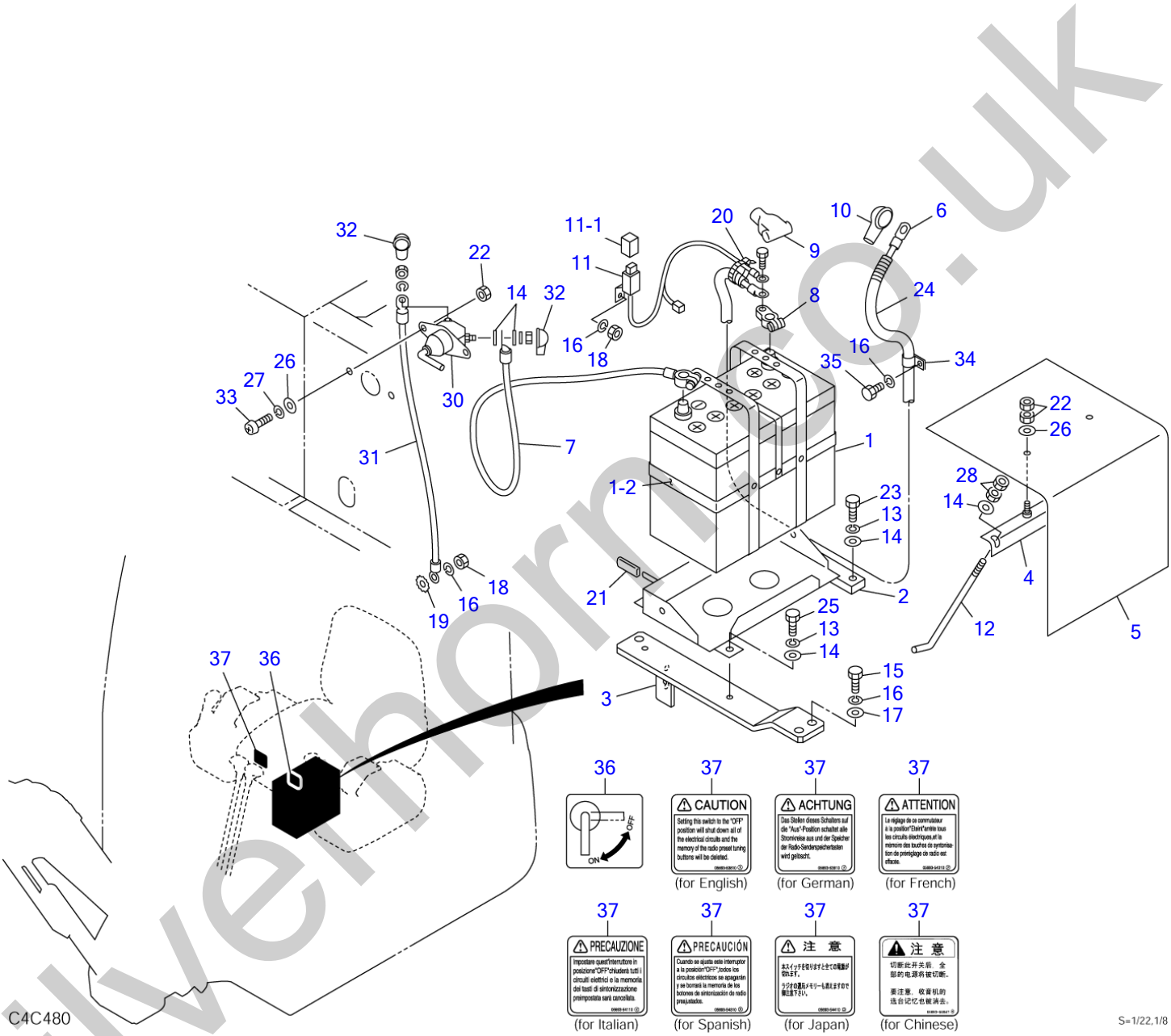

silverhorn.co.uk

BATTERY (with battery switch)

Item	Part number	Description	Q'ty	Chan.	Serial No.	Serv.	Remarks
		BATTERY ASSY (for English)					X03344-26300-2
		BATTERY ASSY (for German)					X03344-26400-2
		BATTERY ASSY (for French)					X03344-26500-2
		BATTERY ASSY (for Italian)					X03344-26600-2
		BATTERY ASSY (for Spanish)					X03344-26700-2
		BATTERY ASSY (for Japanese)					X03344-26800-2
		BATTERY ASSY (for Chinese)					X03344-26900-2
		BATTERY ASSY (for USA)					X03344-26200-2
1	0334420100	BATTERY (FZG-24R)	1				
	0334421100	BATTERY (55B24R-S)	1				for USA
1-2	1711900063	・BELT	1				
2	0334420010	BRACKET	1				
3	0334424110	BRACKET	1				
4	0334420060	ANGLE	1				
5	0334420040	SHEET	1				
6	1702522115	CABLE	1				
	1702607115	CABLE	1				for USA
7	1702222038	CABLE, earth	1				
	1702622038	CABLE, earth	1				for USA
8	1702330040	TERMINAL	1				
	1702330000	TERMINAL	1				for USA
9	1702920060	COVER	1				
10	1910007119	CAP	1				Y124550-77030
11	0334420050	LINK, fusible	1				
	0334421010	LINK, fusible	1				for USA
11-1	1701330045	・FUSE (45A)	1				
12	1702108215	BOLT	2				
13	1140020008	WASHER, spring	4				
14	1141110008	WASHER	8				
15	1100241030	BOLT	3				
16	1140020010	WASHER, spring	6				
17	1141110010	WASHER	3				
18	1130040010	NUT	2				
19	1140330010	WASHER	1				
20	1652231140	BAND	1				
21	0872433150	TUBE	6				
22	1130040006	NUT	6				
23	1100240825	BOLT	2				
24	1703221012	PROTECTOR	1				sold by the meter
25	1100240816	BOLT	2				
26	1141110006	WASHER	4				
27	1140020006	WASHER, spring	2				
28	1130040008	NUT	4				
30	1700100051	SWITCH	1				
31	1702520045	CABLE, earth	1				
32	1702901281	CAP	2				
33	1120590616	SCREW	2				
34	1711900105	CLAMP	1				
35	1100041016	BOLT	1				
36	0399351210	DECAL	1				
37	0569353810	DECAL (English)	1				
	0569353910	DECAL (German)	1				
	0569354010	DECAL (French)	1				
	0569354110	DECAL (Italian)	1				
	0569354310	DECAL (Spanish)	1				
	0569354410	DECAL (Japan)	1				
	0569355847	DECAL (Chinese)	1				
	C4c482						

silvermorn.co.uk

CAB LIGHT

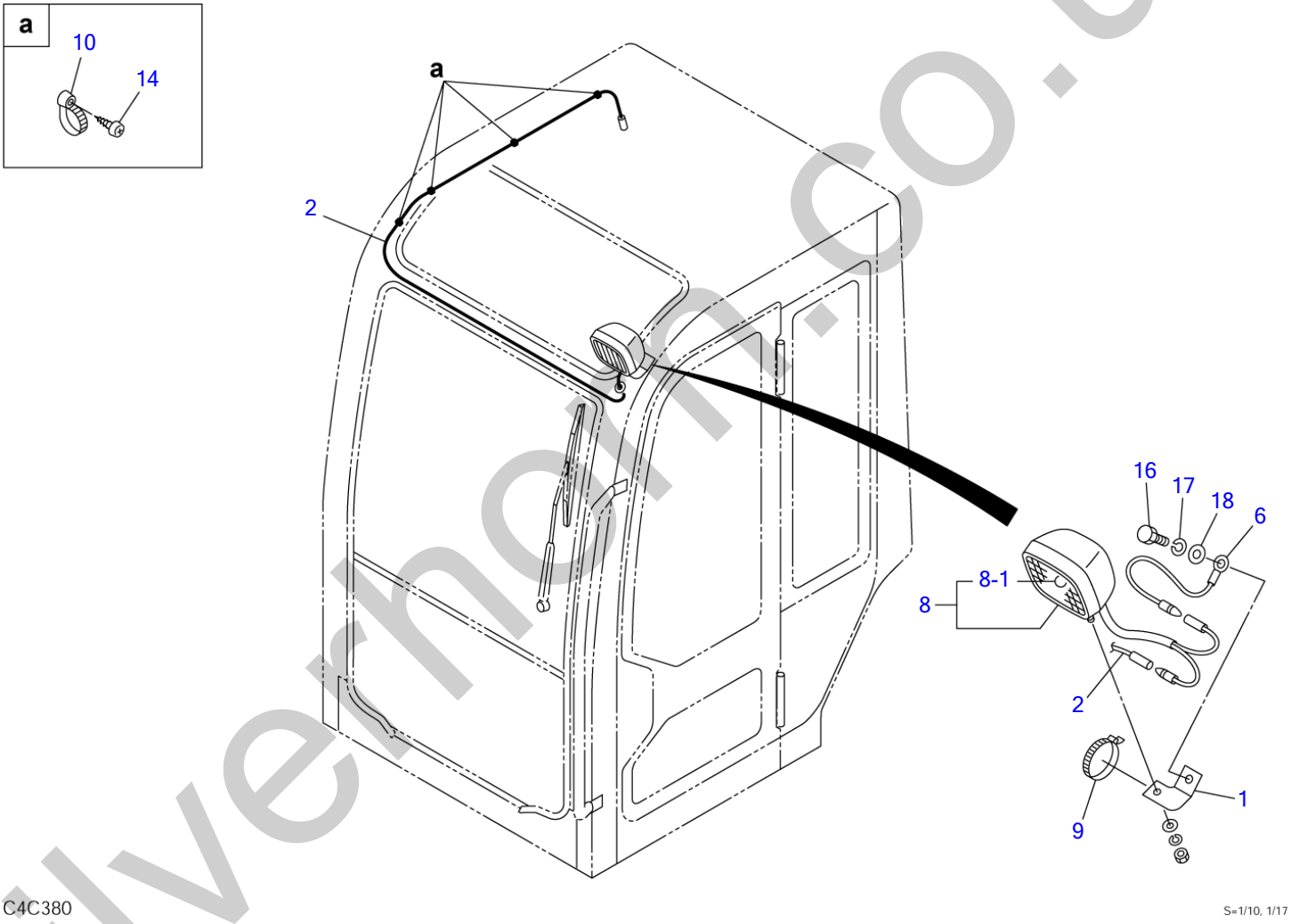

silverhorn.co.uk

CAB LIGHT

Item	Part number	Description	Q'ty	Chan.	Serial No.	Serv.	Remarks
		CAB LIGHT ASSY					X03342-41500-2
1	0334241510	BRACKET	1				
2	0334241520	HARNESS, wiring	1				
6	0336021400	HARNESS, wiring	1				
8	1703006000	LAMP ASSY	1				
8-1	1703005506	・BULB	1				
9	1652231250	BAND	1				
10	1652221050	BAND	4				
14	1122400512	SCREW	4				
16	1100031025	BOLT	1				
17	1140020010	WASHER, spring	1				
18	1140330010	WASHER	1				
	C4c380						

silverhorn.co.uk

CANOPY LIGHT

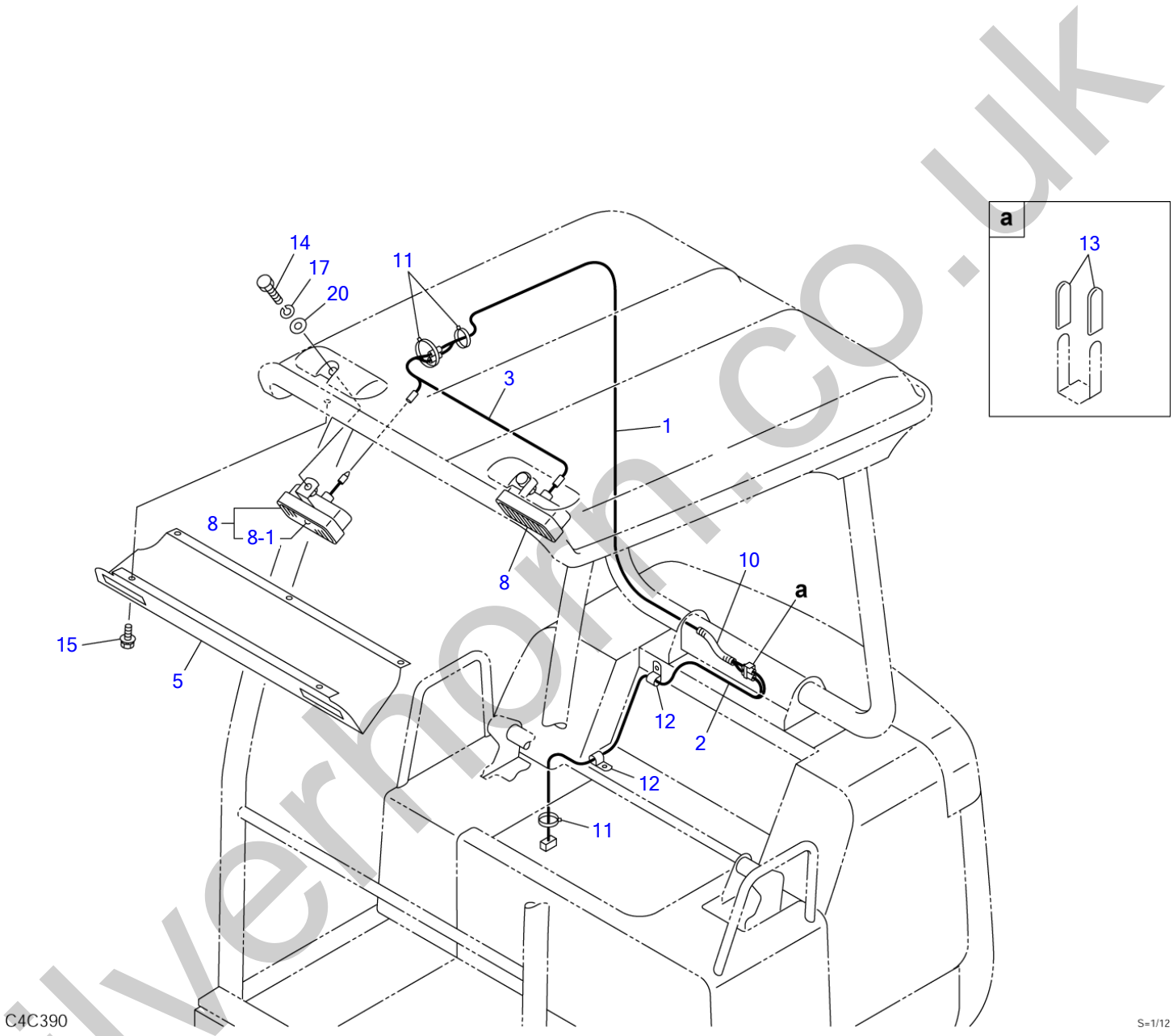

silverhorn.co.uk

CANOPY LIGHT

Item	Part number	Description	Q'ty	Chan.	Serial No.	Serv.	Remarks
		CANOPY LIGHT ASSY					X03342-41600-3
1	0334241630	HARNESS, wiring	1				
2	0334241620	HARNESS, wiring	1				
3	0334241640	HARNESS, wiring	1				
5	0358402700	COVER	1				
8	1703001900	LAMP ASSY	2				
8-1	1703001901	・BULB	1				
10	1703210715	TUBE	1				sold by the meter
11	1652231250	BAND	3				
12	1652900006	CLAMP	2				
13	0872433150	TUBE	2				
14	1100040825	BOLT	2				
15	1150420516	SCREW	5				
17	1140020008	WASHER, spring	2				
20	1141110008	WASHER	2				
	C4c390						

silverhorn.co.uk

RADIO

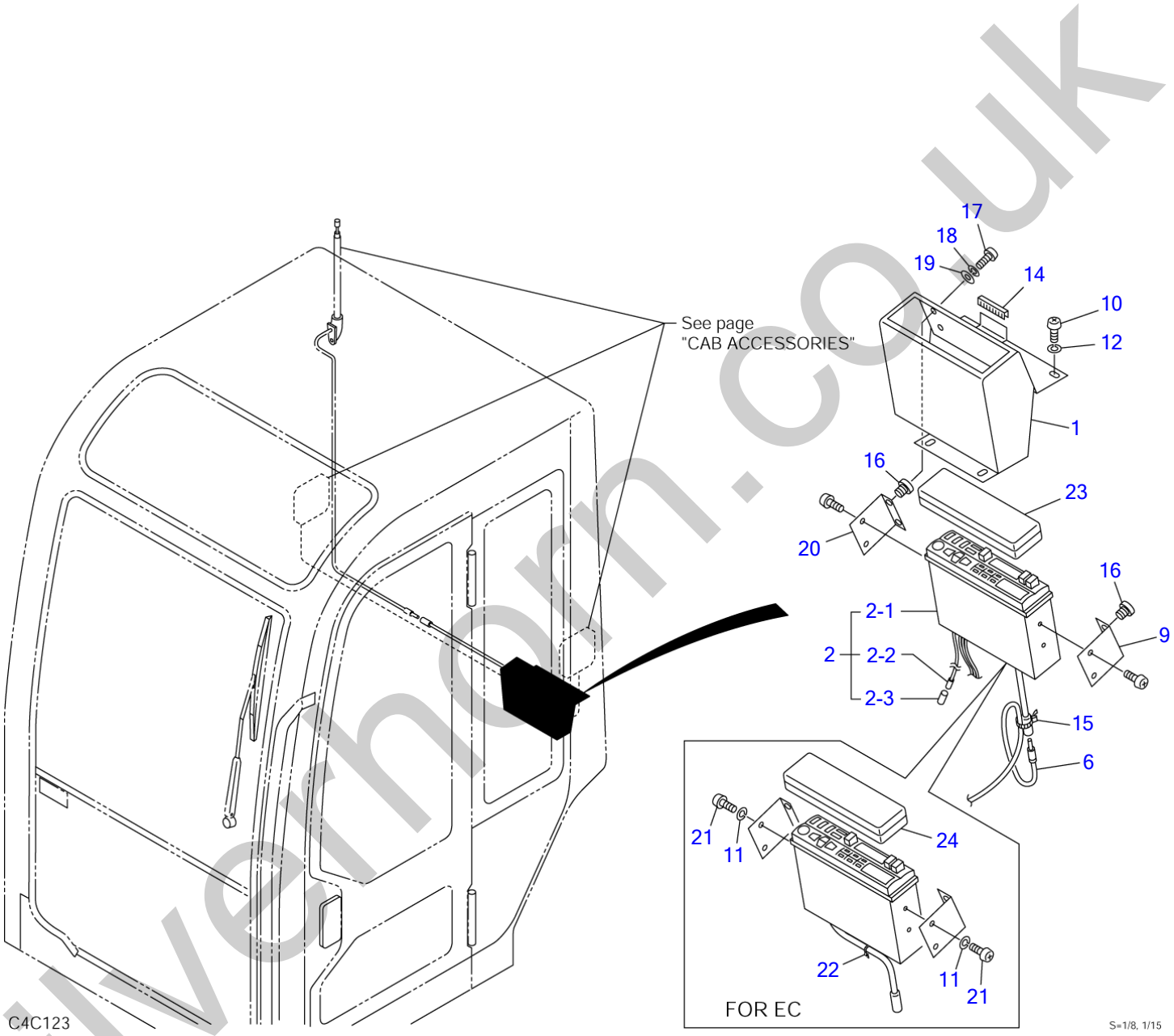

silverhorn.co.uk

RADIO

Item	Part number	Description	Q'ty	Chan.	Serial No.	Serv.	Remarks
		RADIO ASSY (for EC)					X03347-07000-8
		RADIO ASSY (for USA)					X03347-08000-8
		RADIO ASSY (for JAPAN)					X03347-09000-8
1	0334704500	COVER	1				
2	0334704800	CASSETTE STEREO ASSY	1				for EC
	0334704300	CASSETTE STEREO ASSY	1				for USA
	0334704400	CASSETTE STEREO ASSY	1				for JAPAN
2-1	1705004500	・CASSETTE STEREO	1				for EC
	1705003700	・CASSETTE STEREO	1				for USA
	1705003800	・CASSETTE STEREO	1				for JAPAN
2-2	1702700002	・SOCKET	1				
2-3	1702700004	・SLEEVE	1				
6	1705001610	JUMPER	1		11610001~11610793		
9	0334704600	BRACKET (L.H.)	1				
10	1120590616	SCREW	4				
11	1140090005	WASHER, spring	4				for EC
12	1140090006	WASHER, spring	4				
14	1653917005	TRIM	1				sold by the meter
15	1652231100	BAND	1				for JAPAN, USA
16	1652520005	RUBBER, cushion	4				
17	1120530520	SCREW	4				
18	1140020005	WASHER, spring	4				
19	1141110005	WASHER	4				
20	0334704700	BRACKET (R.H.)	1				
21	1120590510	SCREW	4				for EC
22	1652201003	BAND	1				for EC
23	1705003650	COVER	1				
24	1705004550	COVER	1				for EC
	C4c530						

silverhorn.co.uk

MAINTENANCE LIGHT SOCKET

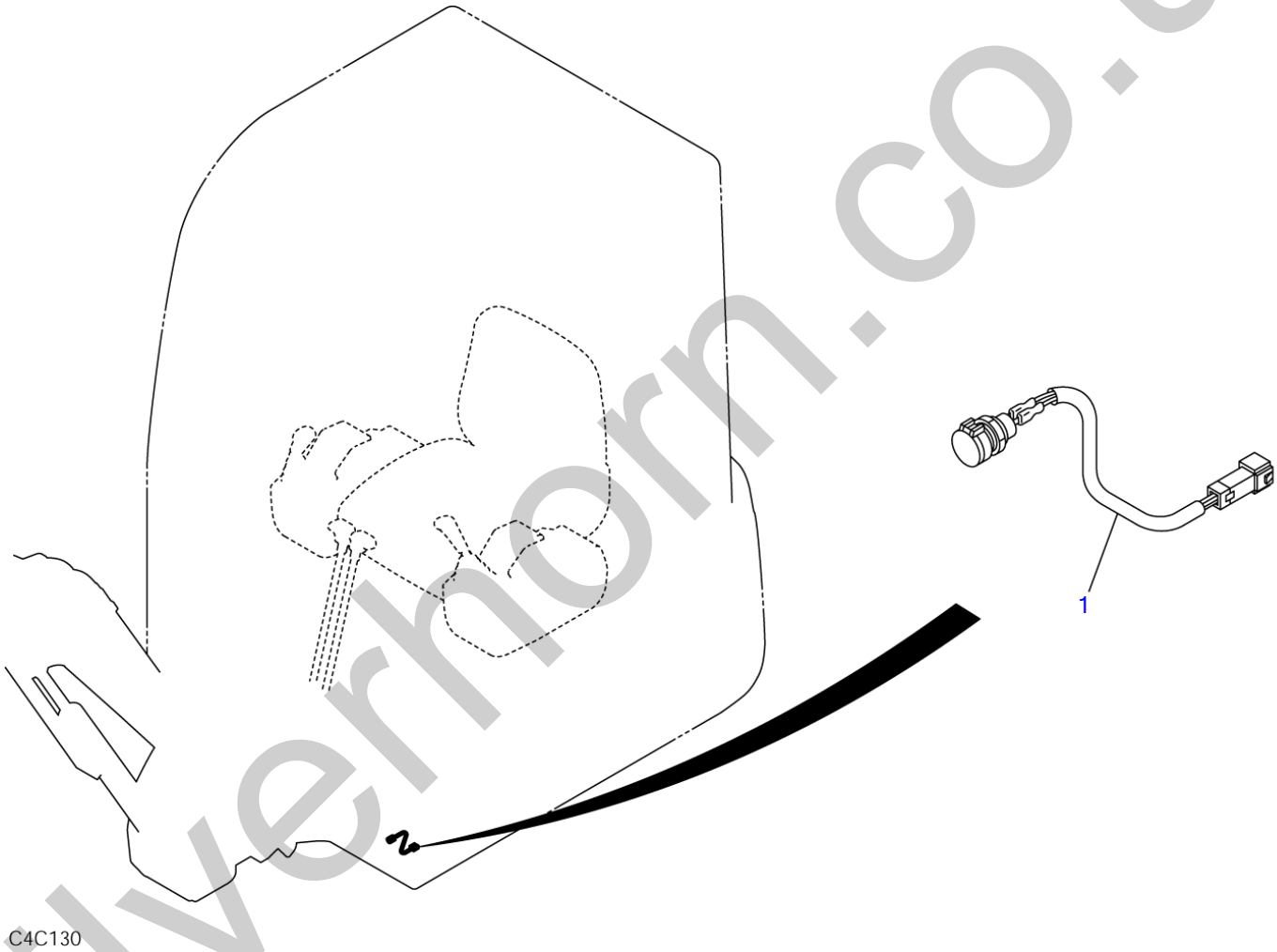

silverhorn.co.uk

MAINTENANCE LIGHT SOCKET

Item	Part number	Description	Q'ty	Chan.	Serial No.	Serv.	Remarks
		SOCKET ASSY, maintenance light					X03942-03000-0
1	**0394203100**	SOCKET ASSY	1				
	C4c131						

silverhorn.co.uk

WINDOW WASHER

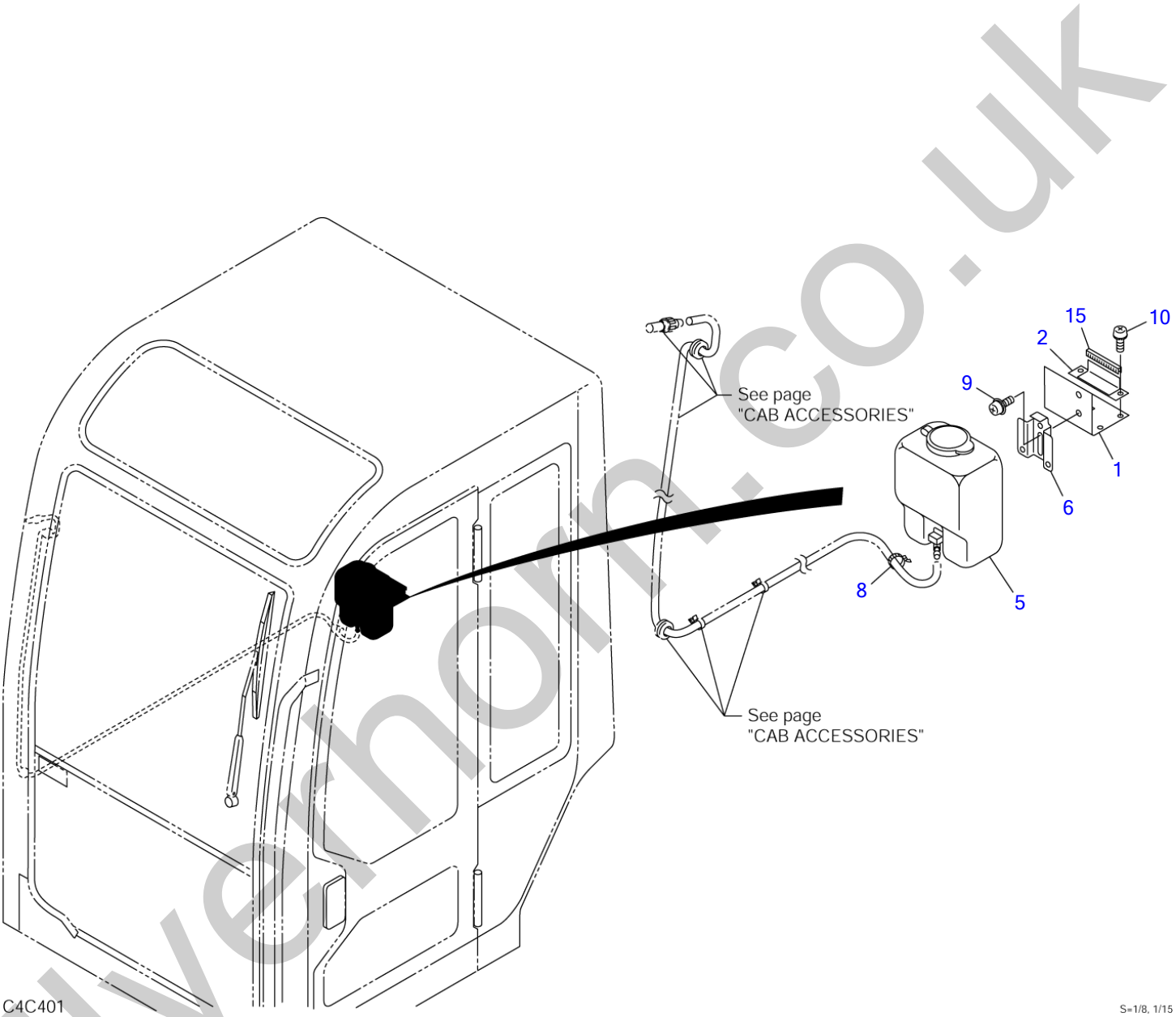

silverhorn.co.uk

WINDOW WASHER

Item	Part number	Description	Q'ty	Chan.	Serial No.	Serv.	Remarks
		WINDOW WASHER ASSY					X03389-16000-3
1	0338916100	PLATE	1				
2	0338915200	PLATE	1				
5	1711910101	TANK	1				
6	1711910062	BRACKET	1				
8	1652200004	BAND	1				
9	1150410612	SCREW	2				
10	1150120616	SCREW	4				
15	1653917006	TRIM	1				sold by the meter
	C4c401						

silverhorn.co.uk

GREASE PIPING

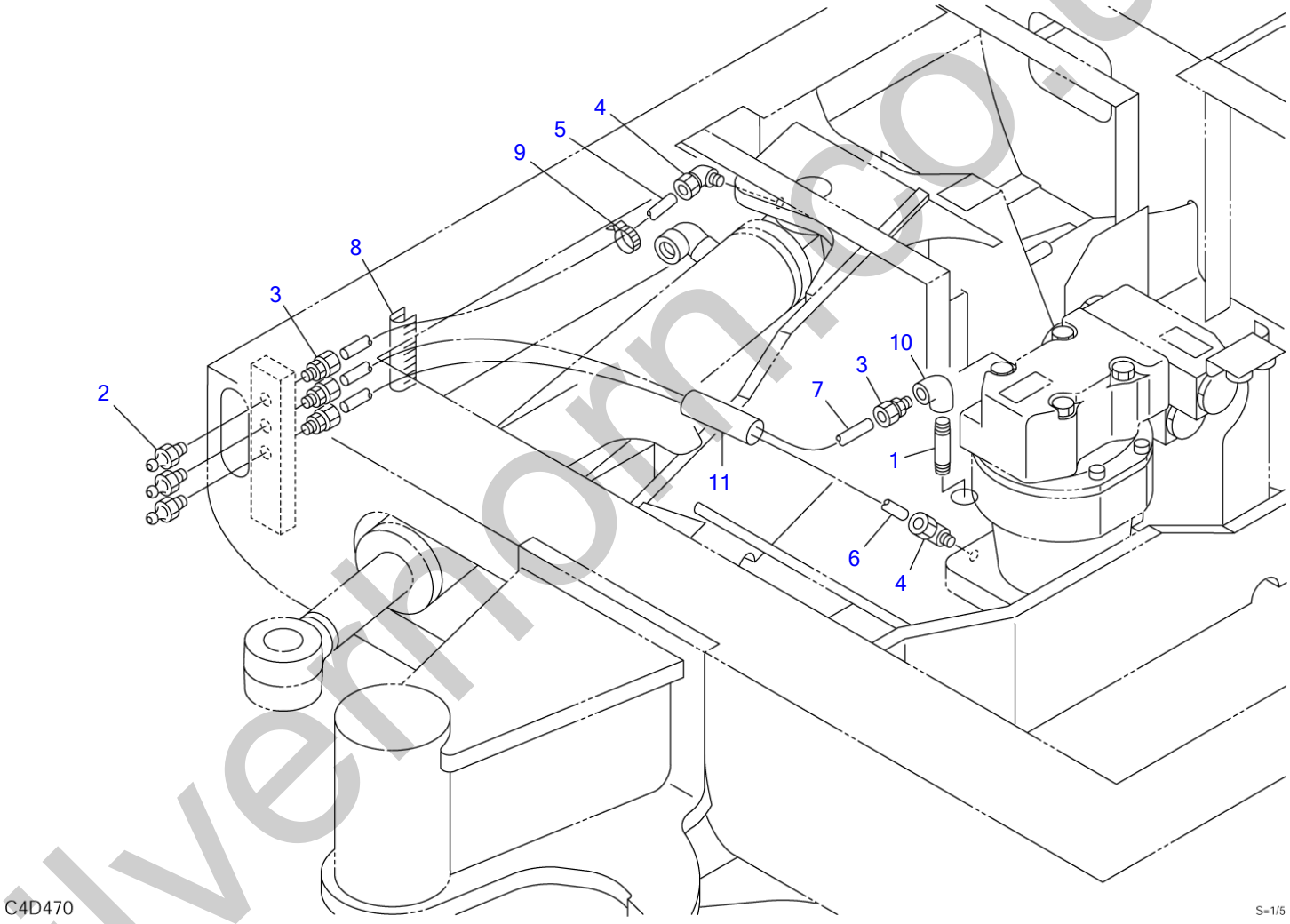

silvermm.co.uk

GREASE PIPING

Item	Part number	Description	Q'ty	Chan.	Serial No.	Serv.	Remarks
		PIPING ASSY, grease					X03324-04000-1
1	**0009101040**	NIPPLE	1				
2	**1560001000**	FITTING, grease	3				
3	**1532520601**	CONNECTOR	4				
4	**1532620601**	ELBOW	2				
5	**1532020655**	TUBE	1				sold by the meter
6	**1532020670**	TUBE	1				sold by the meter
7	**1532020668**	TUBE	1				sold by the meter
8	**1653916002**	TRIM	1				sold by the meter
9	**1652231100**	BAND	1				
10	**1508010001**	ELBOW	1				
11	**1531115006**	HOSE	1				sold by the meter
	C4d470						

silverhorn.co.uk

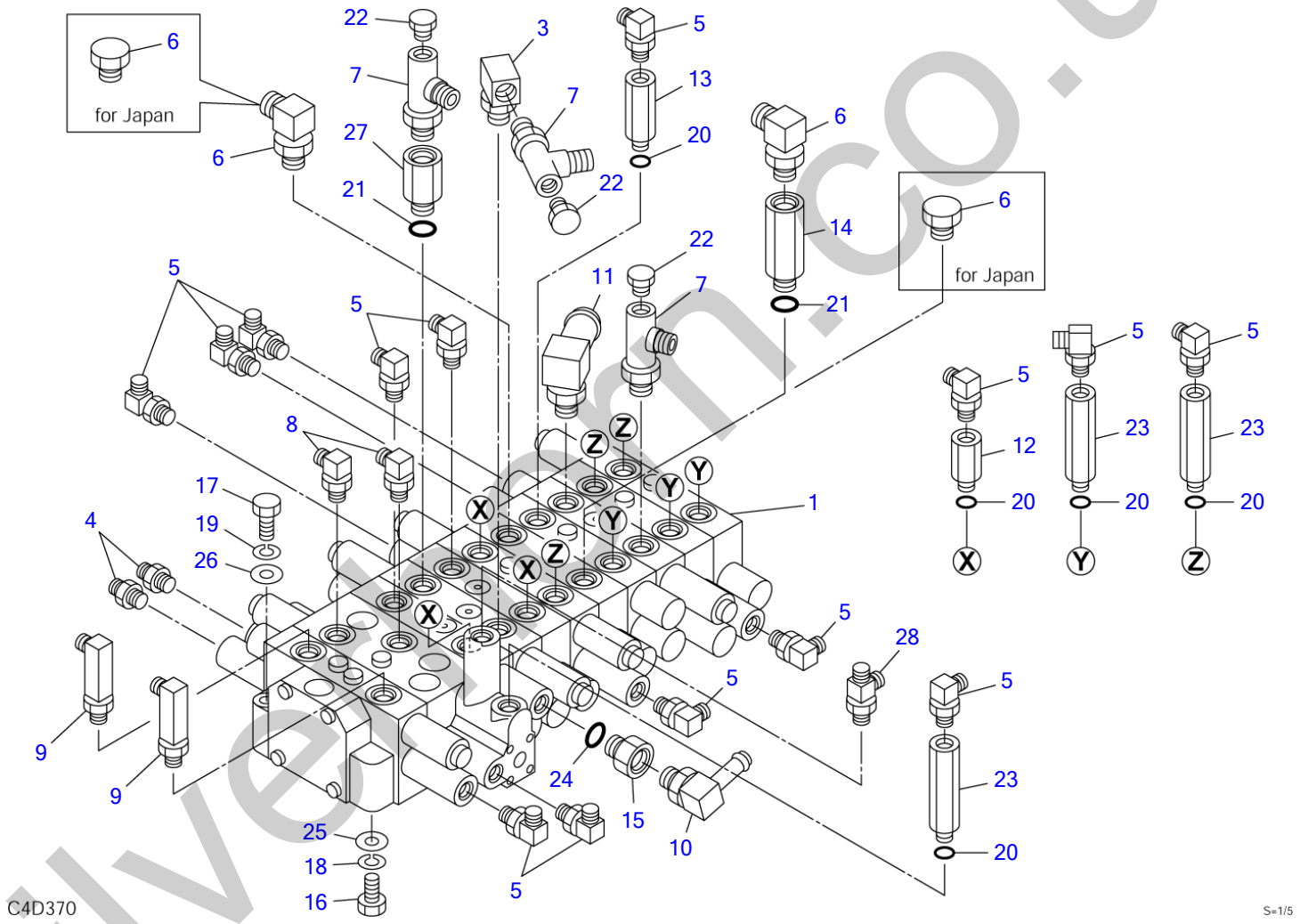

silverfern.co.uk

VALVE & ACCESSORIES

Item	Part number	Description	Q'ty	Chan.	Serial No.	Serv.	Remarks
		VALVE ASSY, control					X03350-38800-0
		VALVE ASSY, control (for JAPAN)					X03350-38900-0
1	1901042700	VALVE, control	1				
3	1513300027	ELBOW	1				
	1420010140	・O-RING	1				
4	1515600200	ADAPTOR	2				
	1420010110	・O-RING	1				
5	1515012040	ELBOW	20				
	1420010110	・O-RING	1				
6	1515010131	ELBOW	2				
	1420010140	・O-RING	1				
	1501750003	PLUG	2				for JAPAN
	1420010140	・O-RING	1				
7	1512340009	ELBOW	3				
	1420010140	・O-RING	1				
8	1515010050	ELBOW	2				
	1420010140	・O-RING	1				
9	1515012510	ELBOW	2				
	1420010110	・O-RING	1				
10	1513350013	ELBOW	1				
	1420010180	・O-RING	1				
11	1513350006	ELBOW	1				
	1420010180	・O-RING	1				
12	0007213028	BUSHING	3				
13	0007213032	BUSHING	1				
14	0007213008	BUSHING	1				
15	0007213055	BUSHING	1				
16	1100041020	BOLT	2				
17	1100040855	BOLT	1				
18	1140020010	WASHER, spring	2				
19	1140020008	WASHER, spring	1				
20	1420010110	O-RING	11				
21	1420010140	O-RING	2				
22	1501750002	PLUG	3				
	1420010110	・O-RING	1				
23	0007213041	BUSHING	7				
24	1420010180	O-RING	1				
25	1141550010	WASHER	2				
26	1141550008	WASHER	1				
27	0007213016	BUSHING	1				
28	1512370011	TEE	1				
	1420010110	・O-RING	1				
	C4d491						

silverthorn.co.uk

SOLENOID VALVE

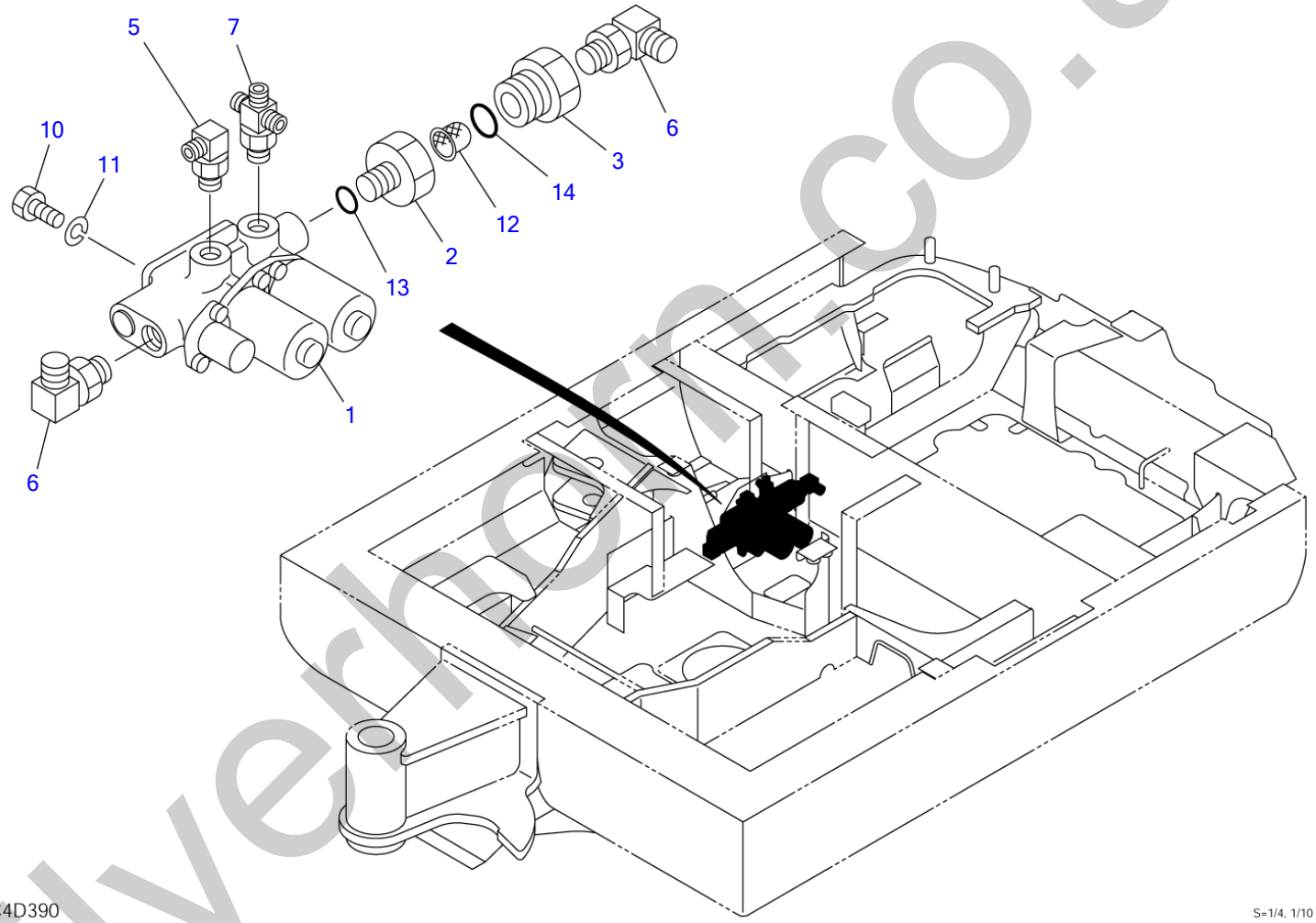

silverhorn.co.uk

SOLENOID VALVE

Item	Part number	Description	Q'ty	Chan.	Serial No.	Serv.	Remarks
		VALVE ASSY, solenoid	1				X03355-03100-0
1	1901742400	VALVE, solenoid	1				
2	0425500100	ADAPTOR	1				
3	0425500200	ADAPTOR	1				
5	1515012040	ELBOW	1				
	1420010110	・O-RING	1				
6	1515010041	ELBOW	2				
	1420010140	・O-RING	1				
7	1513390027	CROSS	1				
	1420010110	・O-RING	1				
10	1101041020	BOLT	2				
11	1140020010	WASHER, spring	2				
12	0425500300	FILTER	1				
13	1420010140	O-RING	1				
14	1420010200	O-RING	1				
	C4d390						

silverhorn.co.uk

PIPING; UPPER (1/3)

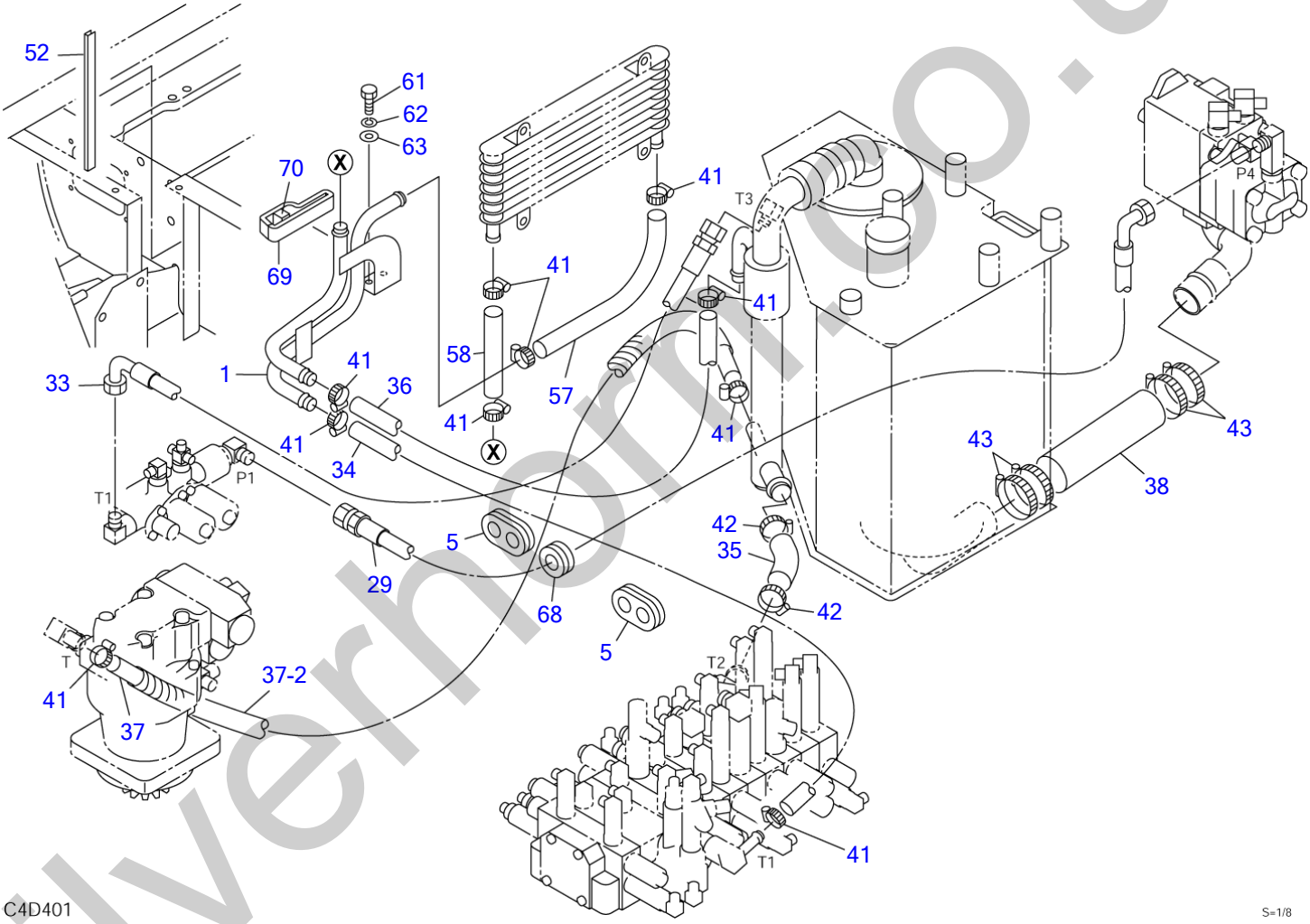

silverhorm.co.uk

PIPING; UPPER (1/3)

Item	Part number	Description	Q'ty	Chan.	Serial No.	Serv.	Remarks
		PIPING ASSY, upper					X03370-36000-4
1	0337035010	PIPE	1				
5	0337017300	GUARD	3				
29	0337035030	HOSE ASSY	1				18010-53083
33	0337035040	HOSE ASSY	1				18010-53026
34	1530516117	HOSE	1				sold by the meter
35	1530525013	HOSE	1				sold by the meter
36	1530516071	HOSE	1				sold by the meter
37	0337027300	HOSE (15305-16049)	1				sold by the meter
37-2	1532224045	・PROTECTOR	1				sold by the meter
38	1530741037	HOSE	1				sold by the meter
41	1533700025	BAND	10				
42	1533700041	BAND	2				
43	1533700060	BAND	4				
52	1654601020	TRIM	1				sold by the meter
57	1530516028	HOSE	1				sold by the meter
58	1530516013	HOSE	1				sold by the meter
61	1100040835	BOLT	2				
62	1140020008	WASHER, spring	2				
63	1141110008	WASHER	2				
68	0437200100	GUARD	1				
69	1654304002	SPONGE	1				sold by the meter
70	1654303024	SPONGE	1				sold by the meter
	C4d503						

silverhorn.co.uk

PIPING; UPPER (2/3)

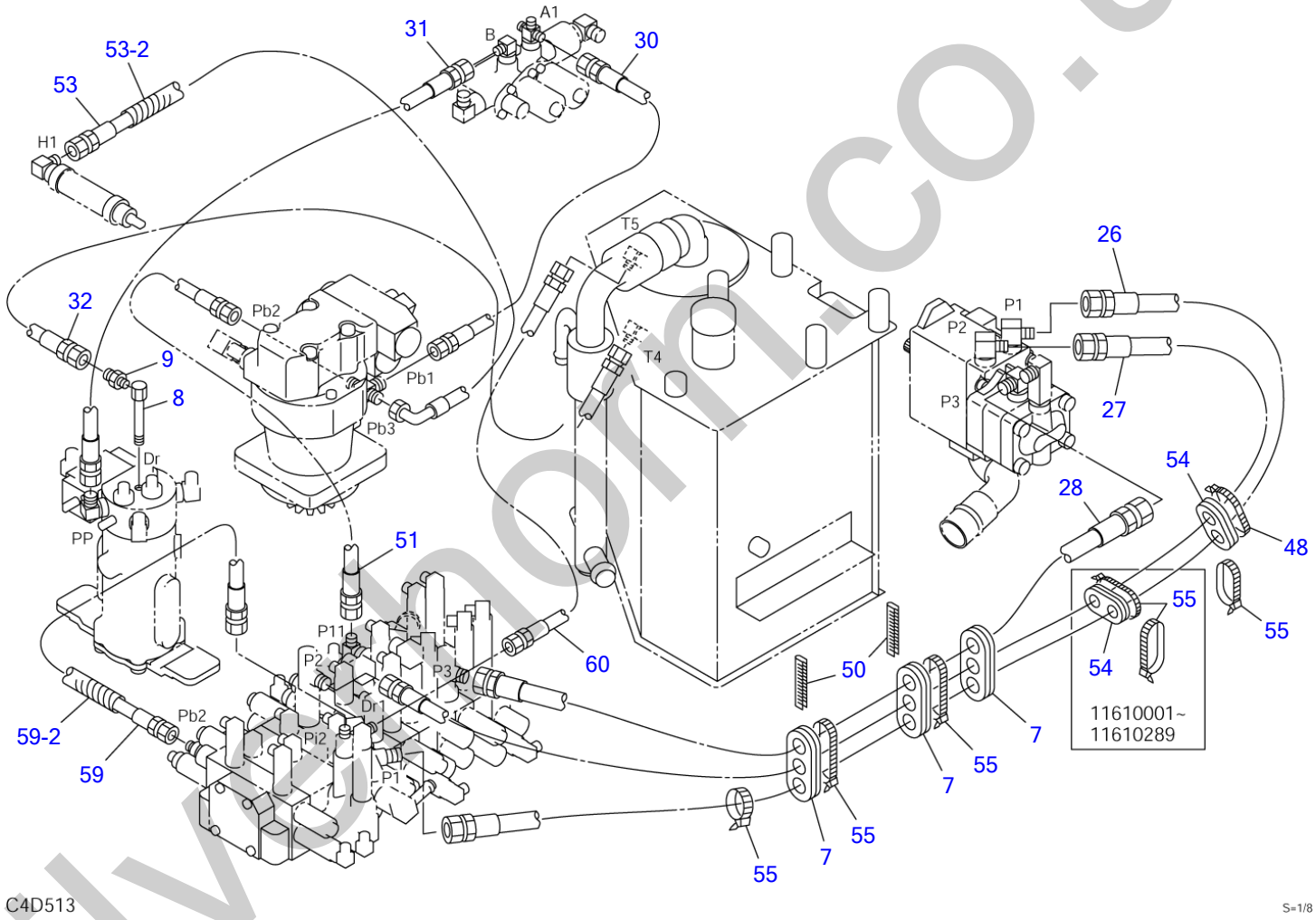

silvethorn.co.uk

PIPING; UPPER (2/3)

Item	Part number	Description	Q'ty	Chan.	Serial No.	Serv.	Remarks
		PIPING ASSY, upper					X03370-36000-4
7	**0097022400**	GUARD	3				
8	**0007262007**	ELBOW	1				
9	**0007203048**	ADAPTOR	1				
26	**0337032100**	HOSE ASSY	1				18015-20121
27	**0337031270**	HOSE ASSY	1				18015-20135
28	**0337032300**	HOSE ASSY	1				18015-21082
30	**0337028190**	HOSE ASSY	1				18010-22025
31	**0337028200**	HOSE ASSY	1				18010-22056
32	**0337028210**	HOSE ASSY	1				18010-22057
48	**1652261410**	BAND	1		11610290~		
50	**1653916008**	TRIM	2				sold by the meter
51	**0337032210**	HOSE ASSY	1				18010-22064
53	**0337032200**	HOSE ASSY	1				18010-52068
53-2	**1532210054**	・PROTECTOR	1				sold by the meter
54	**0097210300**	GUARD	1				
55	**1652201007**	BAND	4				
59	**0337035230**	HOSE ASSY	1				19347-22125
59-2	**1532208055**	・PROTECTOR	1				sold by the meter
60	**0337035060**	HOSE ASSY	1				18010-22120
	C4d513						

silverhorn.co.uk

PIPING; UPPER (3/3)

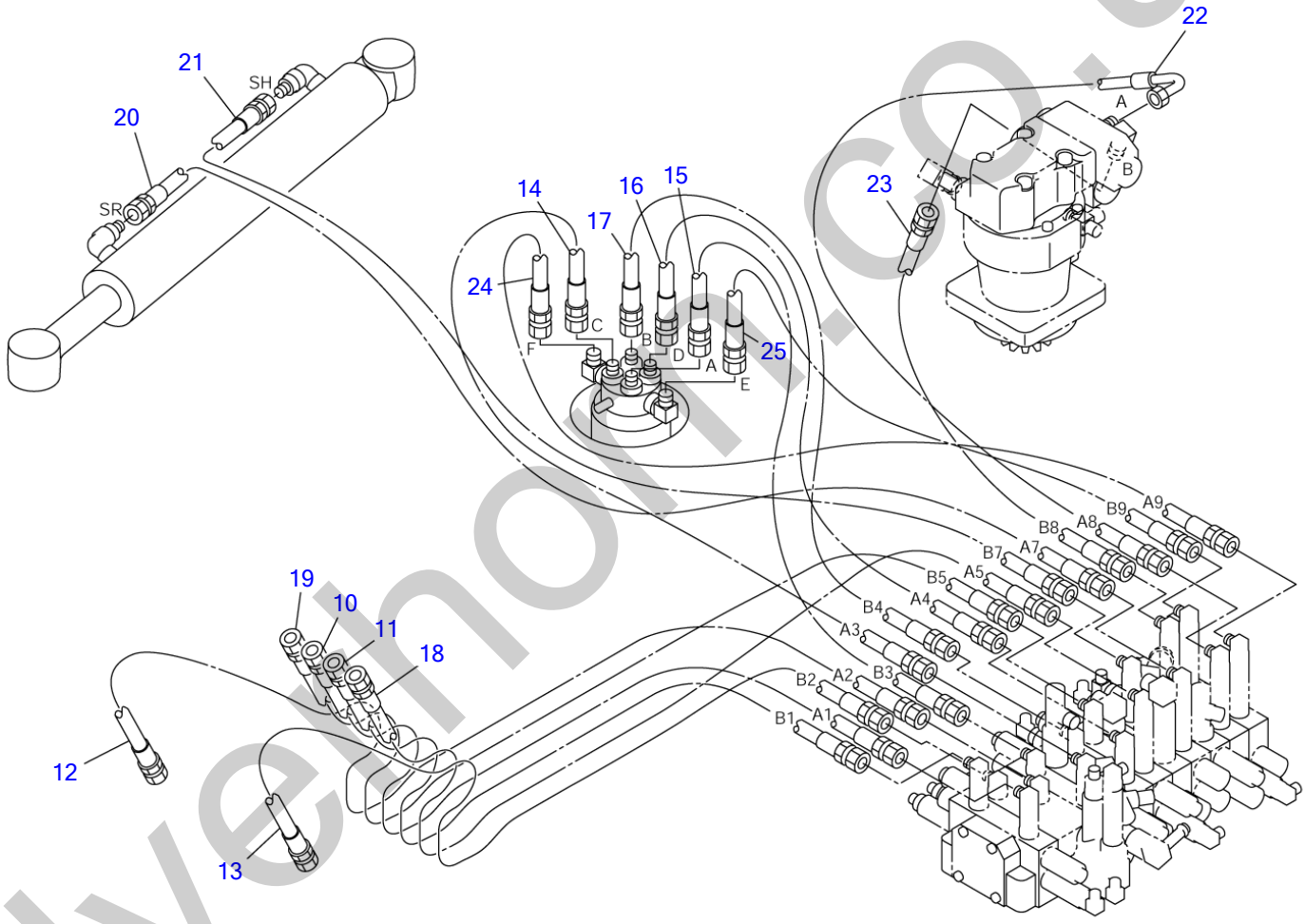

C4D420

S=1/8

silvertonm.co.uk

PIPING; UPPER (3/3)

Item	Part number	Description	Q'ty	Chan.	Serial No.	Serv.	Remarks
		PIPING ASSY, upper					X03370-36000-4
10	0337029260	HOSE ASSY	1				18019-60181
11	0337029270	HOSE ASSY	1				18019-60173
12	0337029280	HOSE ASSY	1				18019-60235
13	0337029290	HOSE ASSY	1				18019-60223
14	0337036010	HOSE ASSY	1				18019-60044
15	0337036020	HOSE ASSY	1				18019-60042
16	0337036030	HOSE ASSY	1				18019-60036
17	0337036040	HOSE ASSY	1				18019-60032
18	0337029300	HOSE ASSY	1				18019-60186
19	0337029310	HOSE ASSY	1				18019-60180
20	0337035180	HOSE ASSY	1				18019-60086
21	0337035190	HOSE ASSY	1				18019-60080
22	0337035070	HOSE ASSY	1				18019-00083
23	0337035200	HOSE ASSY	1				18019-00070
24	0337036050	HOSE ASSY	1				18019-60062
25	0337036060	HOSE ASSY	1				18019-00048
	C4d523						

silverhorn.co.uk

PUMP DRIVE

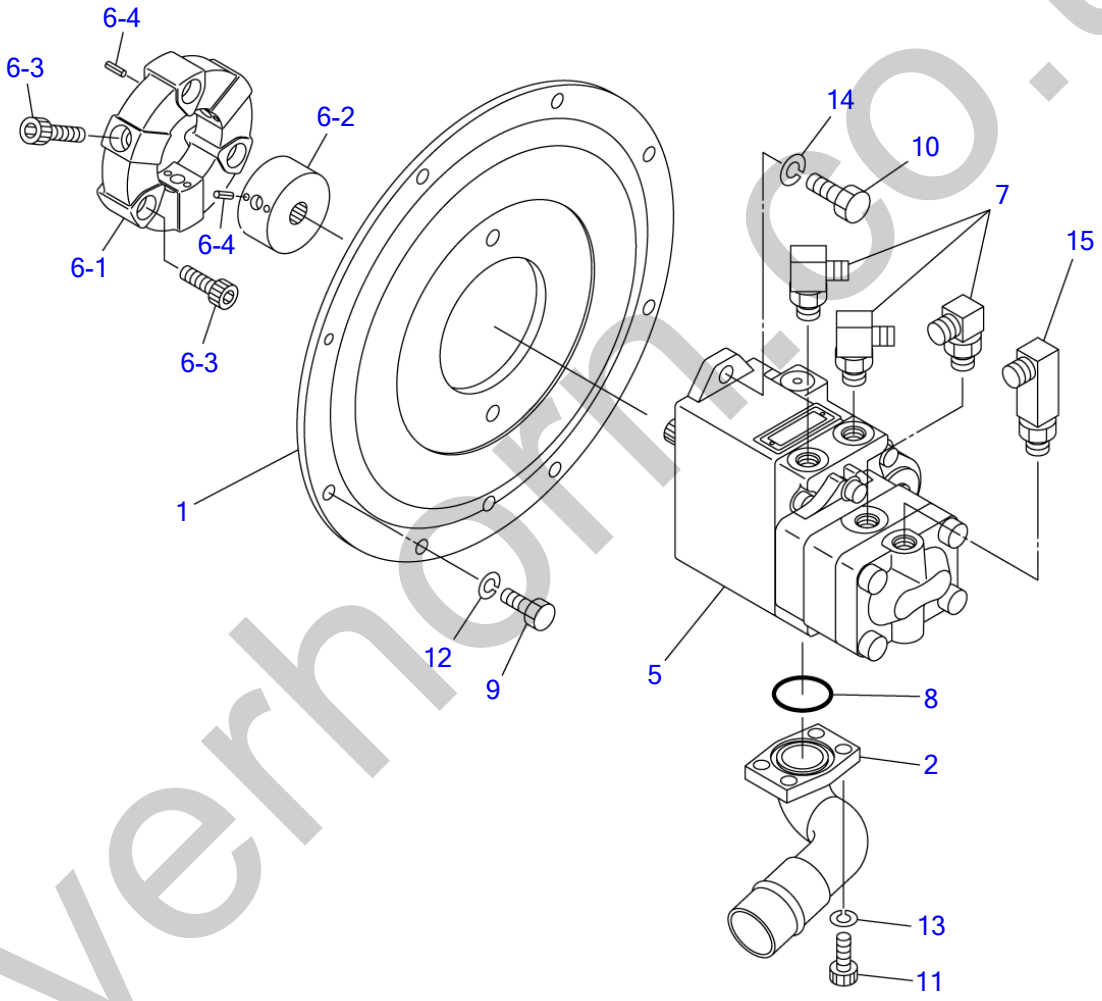

C4D440

S=1/5

silverhorn.co.uk

PUMP DRIVE

Item	Part number	Description	Q'ty	Chan.	Serial No.	Serv.	Remarks
		PUMP ASSY, drive					X03352-21000-0
1	0335220100	HOUSING	1				
2	0335220200	FLANGE	1				
5	1902021500	PUMP, hydraulic	1				
6	0325202100	COUPLING ASSY	1				
6-1	0325202101	・COUPLING, frex	1				
6-2	0325202102	・COUPLING	1				
6-3	1110041030	・SCREW, cap	6				
6-4	1213000408	・PIN, spring	9				
7	1515012041	ELBOW	3				
	1420010140	・O-RING	1				
8	1420100350	O-RING	1				
9	1100041025	BOLT	4				
10	1101041230	BOLT	2				
11	1110041025	SCREW, cap	4				
12	1140020010	WASHER, spring	4				
13	1140420010	WASHER, spring	4				
14	1140020012	WASHER, spring	2				
15	1515012511	ELBOW	1				
	1420010140	・O-RING	1				
	C4d530						

silverhorn.co.uk

HYDRAULIC TANK

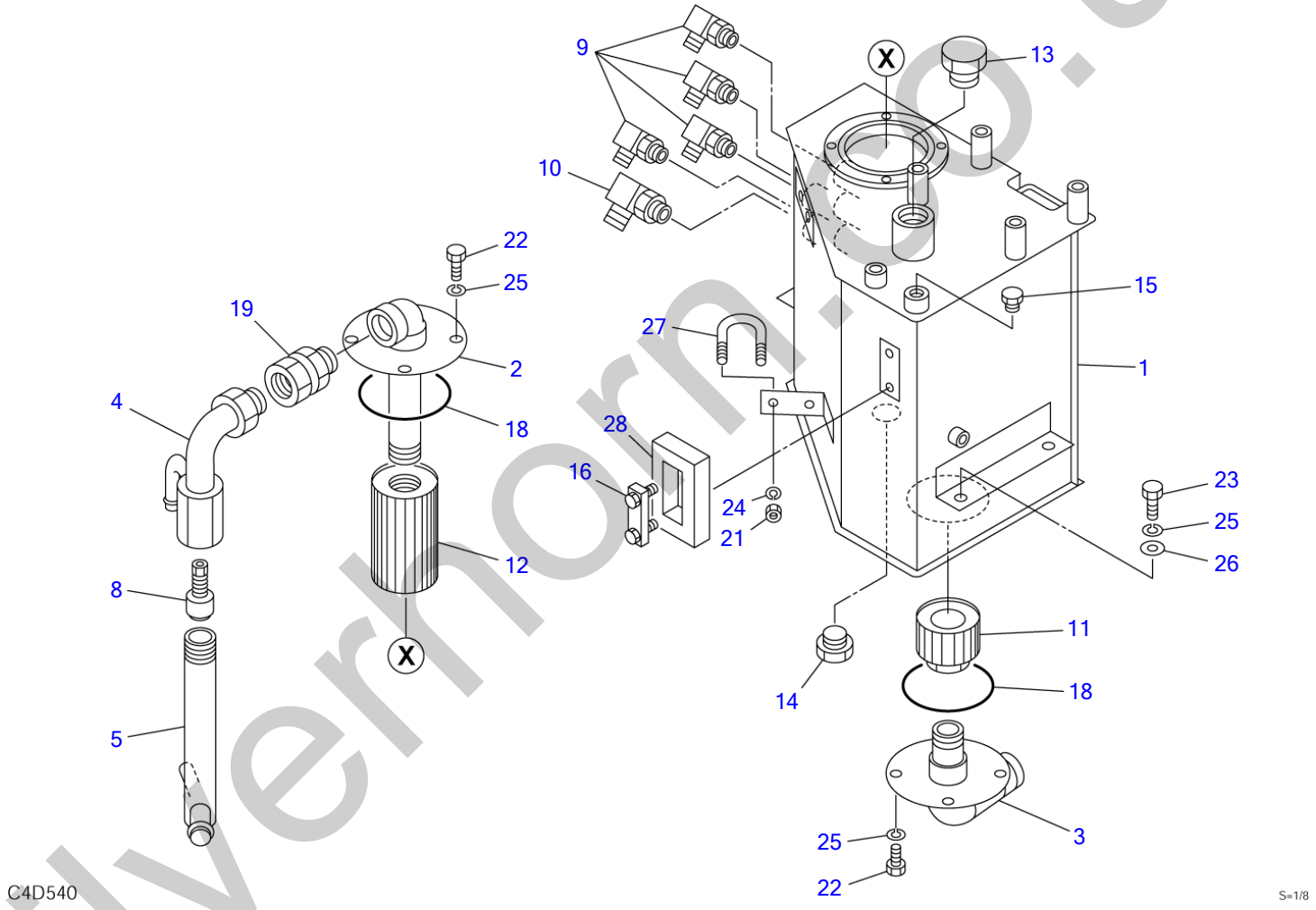

silverhorn.co.uk

HYDRAULIC TANK

Item	Part number	Description	Q'ty	Chan.	Serial No.	Serv.	Remarks
		TANK ASSY, hydraulic					X03380-27300-0
1	0338027400	TANK, hydraulic	1				
2	0338022200	COVER	1				
3	0338019200	PIPE	1				
4	0338019400	JOINT	1				
5	0338026100	JOINT	1				
8	1540140815	VALVE, check	1				
9	1515012040	ELBOW	4				
	1420010110	・O-RING	1				
10	1515010041	ELBOW	1				
	1420010140	・O-RING	1				
11	1550010150	FILTER	1				
12	1551101300	FILTER	1				
13	1501750010	PLUG	1				
	1420010290	・O-RING	1				
14	1501750006	PLUG	1				
	1420010240	・O-RING	1				
15	1501750002	PLUG	1				
	1420010110	・O-RING	1				
16	1553020655	GAUGE	1				
18	1420101050	O-RING	2				
19	1511420010	ADAPTOR	1				
21	1130040008	NUT	2				
22	1100041016	BOLT	8				
23	1100041025	BOLT	4				
24	1140020008	WASHER, spring	2				
25	1140020010	WASHER, spring	12				
26	1141550010	WASHER	4				
27	1533201010	U-BOLT	1				
28	0338021028	URETHANE	1				
	C4d540						

silverhorn.co.uk

FUEL TANK & FUEL PIPING

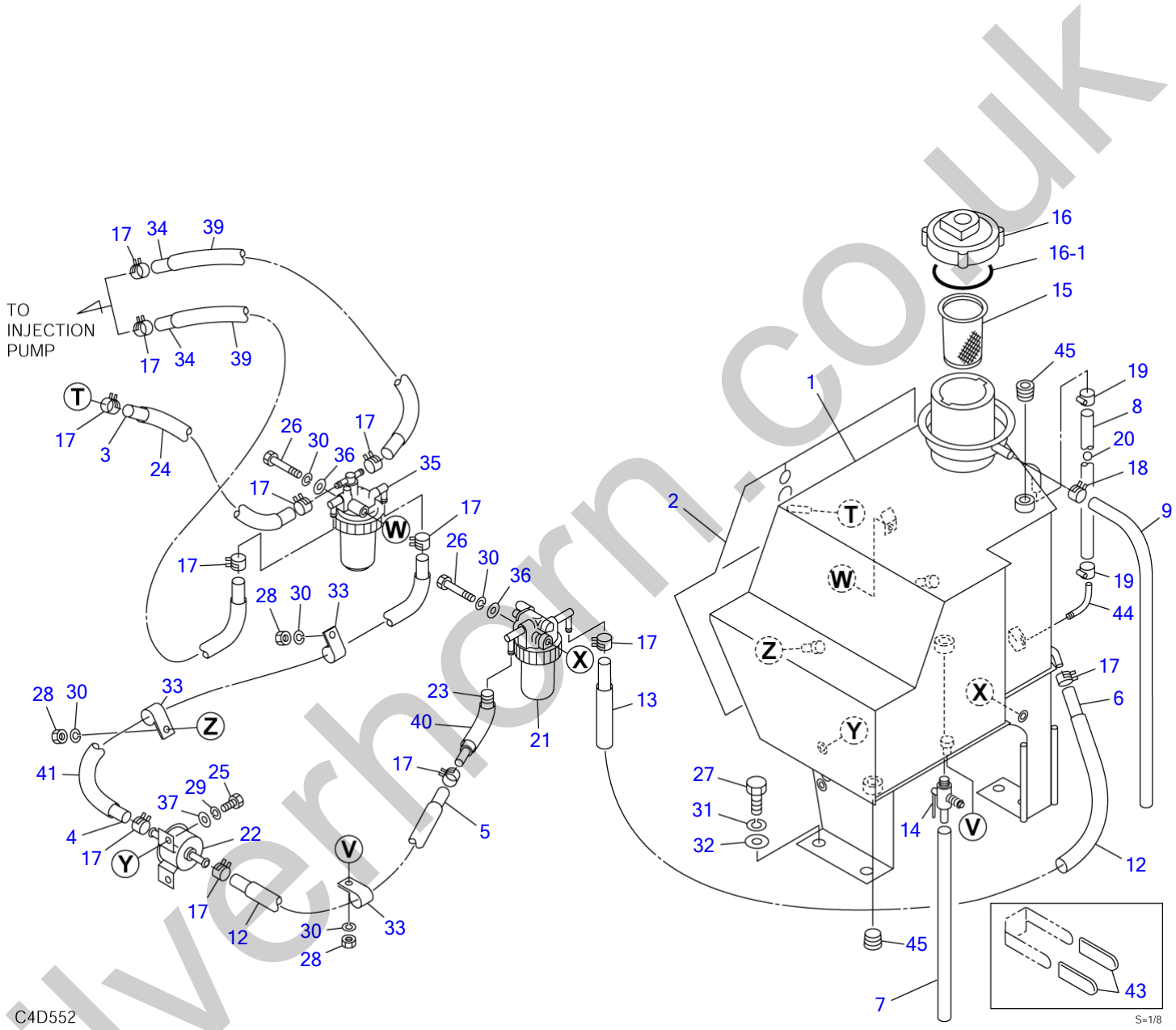

silverhorn.co.uk

FUEL TANK & FUEL PIPING

Item	Part number	Description	Q'ty	Chan.	Serial No.	Serv.	Remarks
		TANK ASSY, fuel					X03381-26000-4
1	0338127100	TANK	1				
2	0338127170	INSULATOR	1				
3	1531207021	HOSE	1				sold by the meter
4	1531207055	HOSE	1				sold by the meter
5	1531207025	HOSE	1				sold by the meter
6	1531207037	HOSE	1				sold by the meter
7	1531007035	HOSE	1				sold by the meter
8	1531010022	HOSE	1				sold by the meter
9	1531010080	HOSE	1				sold by the meter
12	1531115020	PROTECTOR	2				sold by the meter
13	1531115010	PROTECTOR	1				sold by the meter
14	1522100014	VALVE	1				
15	1552100320	STRAINER	1				
16	1552100500	CAP	1				
16-1	1552100507	・O-RING	1				
17	1533120012	BAND	12				
18	1533120015	BAND	1				
19	1533700015	CLIP	2				
20	1553000001	FLOAT	1				
21	1910030033	SEPARATOR, water	1				Y129335-55700
22	1910199034	PUMP, feed	1				Y129612-52100
23	1910065047	HOSE, bend	1				Y119840-59601
24	1531115017	HOSE	1				sold by the meter
25	1100040612	BOLT	2				
26	1100040865	BOLT	2				
27	1100041025	BOLT	4				
28	1130040008	NUT	2				
29	1140020006	WASHER, spring	2				
30	1140020008	WASHER, spring	6				
31	1140020010	WASHER, spring	4				
32	0003600025	WASHER	4				
33	0007300050	CLAMP	3				
34	1531207032	HOSE	2				sold by the meter
35	1910210031	FILTER, fuel	1				Y119833-55620
36	1141110008	WASHER	2				
37	1141110006	WASHER	2				
39	1531115027	HOSE	2				sold by the meter
40	1531115008	HOSE	1				sold by the meter
41	1531115050	HOSE	1				sold by the meter
43	0872433150	TUBE	2		11611250~		
44	0338127010	PIPE	1		11611250~		
45	1501810006	PLUG	2		11611250~		
	C4d553						

silvermorn.co.uk

WATER SEPARATOR (for HE service)

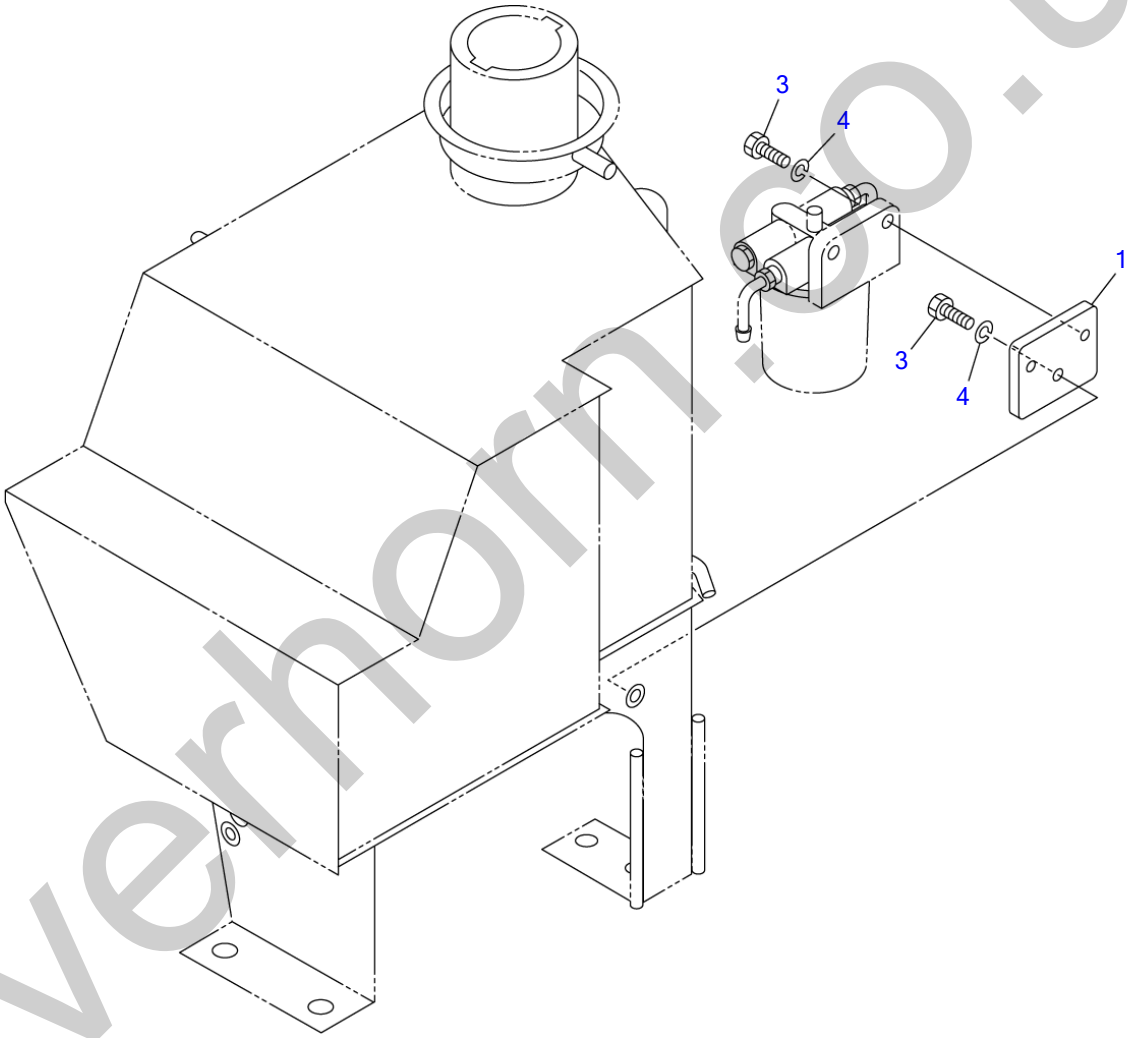

C4D350

S=1/5

silverhorn.co.uk

WATER SEPARATOR (for HE service)

Item	Part number	Description	Q'ty	Chan.	Serial No.	Serv.	Remarks
		SEPARATOR ASSY, water					X03381-23000-1
1	**0338123001**	PLATE	1				
3	**1100240825**	BOLT	3				
4	**1140020008**	WASHER, spring	3				
	C4d350						

silverhorn.co.uk

COVER (1/4)

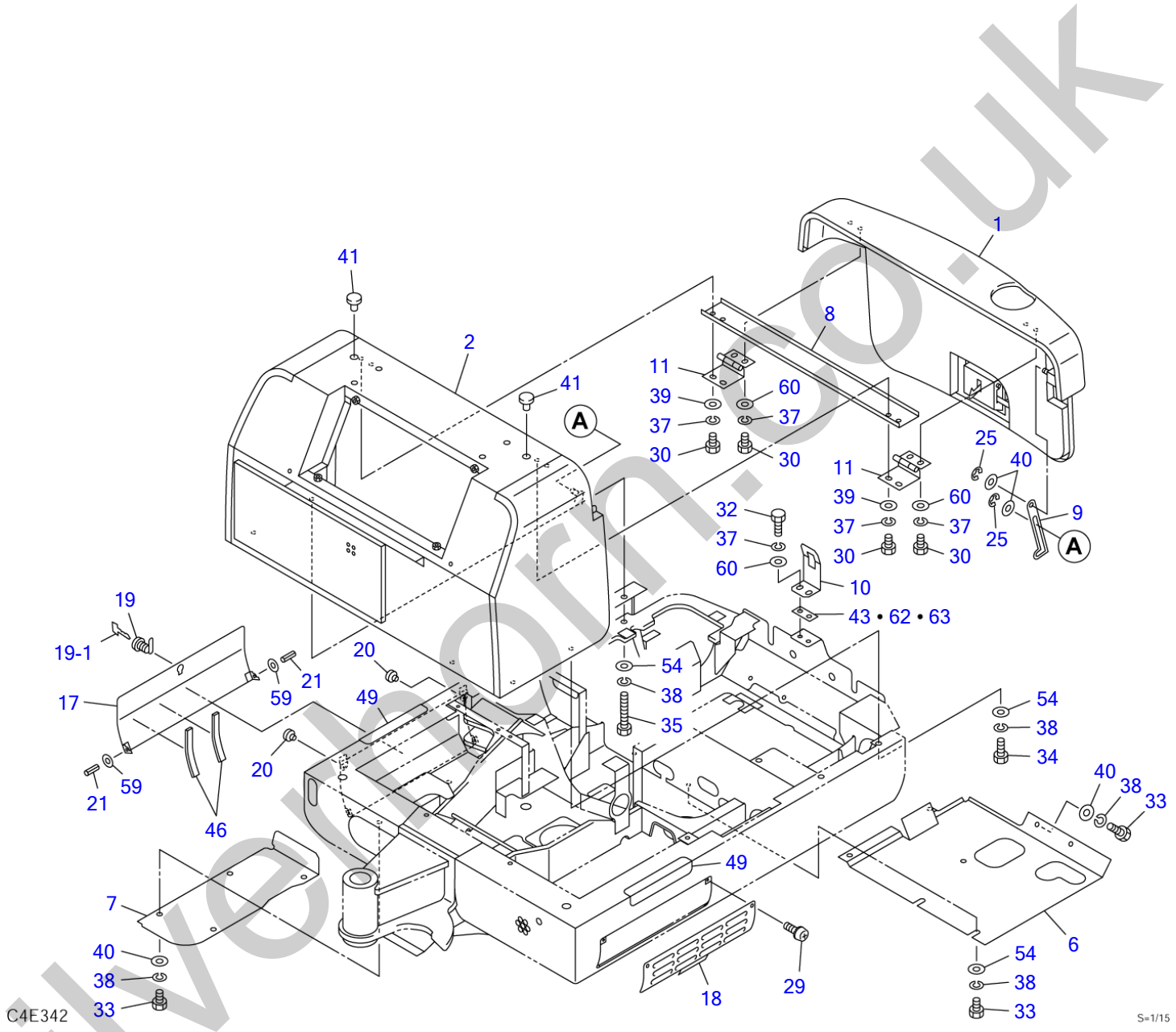

silverthorn.co.uk

COVER (1/4)

Item	Part number	Description	Q'ty	Chan.	Serial No.	Serv.	Remarks
		COVER ASSY (canopy)					X03382-45600-1
		COVER ASSY (cab)					X03382-45700-1
		COVER ASSY (canopy) (with battery switch)					X03382-45800-1
		COVER ASSY (cab) (with battery switch)					X03382-45900-1
		COVER ASSY (canopy) (with heater)					X03382-46000-1
		COVER ASSY (canopy) (with heater & battery switch)					X03382-46100-1
1	0338243400	HOOD, engine	1				see page (3/4)
2	0338243100	COVER, engine	1				see page (4/4)
6	0338243500	COVER	1				
7	0338235710	COVER	1				
8	0338235720	GUTTER	1				
9	0338233730	STOPPER	1				
10	0338235740	HOOK	1				
11	0338230750	HINGE	2				
17	0338235800	COVER (R.H.)	1				
18	0338235810	COVER (L.H.)	1		11610001~11611249		
	0338243510	COVER (L.H.)	1		11611250~		
19	1653601395	LOCK	1				
19-1	1700100019	KEY	1				
20	1652515000	RUBBER, cushion	2				
21	1213000420	PIN, spring	2				
25	1224010009	E-RING	2				
29	1150110612	SCREW	2				
30	1100040816	BOLT	8				
32	1100040825	BOLT	2				
33	1100041020	BOLT	8				
34	1100041035	BOLT	4				
35	1100141010	BOLT	2				
37	1140020008	WASHER, spring	10				
38	1140020010	WASHER, spring	14				
39	1141110008	WASHER	4				
40	1141110010	WASHER	8				
41	1652530002	PLUG	2				canopy
43	0003900028	SPACER	1				
46	1654304010	SPONGE	2				sold by the meter
49	0068228700	SHEET	2				canopy
54	0003600025	WASHER	8				
59	1141110004	WASHER	2				
60	0003608252	WASHER	6				
62	0003900027	SHIM t=2.3	AR				
63	0003900028	SHIM t=4.5	AR				
	C4e471						

silverthorn.co.uk

COVER (2/4) (canopy)

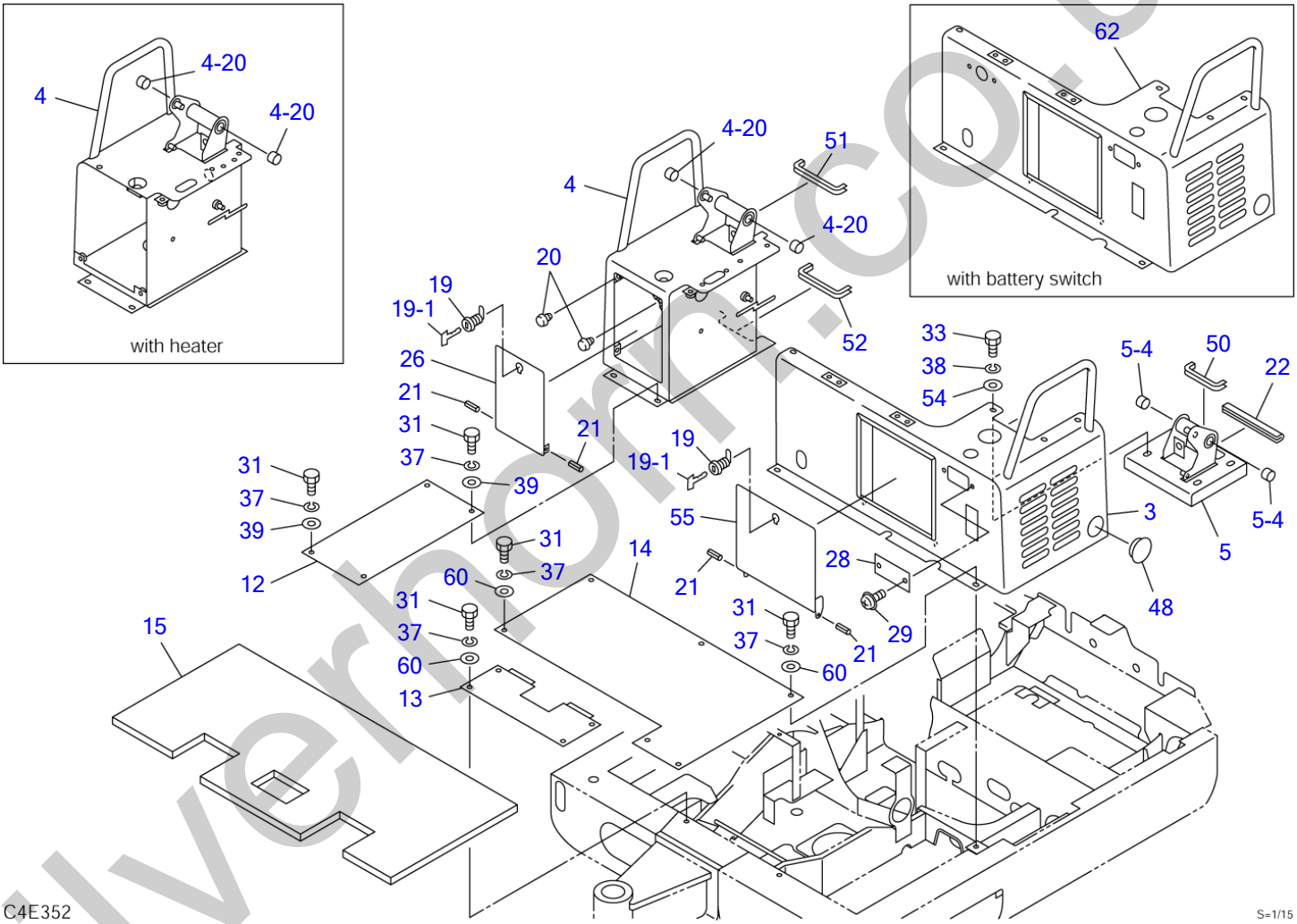

silverhorn.co.uk

COVER (2/4) (canopy)

Item	Part number	Description	Q'ty	Chan.	Serial No.	Serv.	Remarks
		COVER ASSY					X03382-45600-1
		COVER ASSY (with battery switch)					X03382-45800-1
		COVER ASSY (with heater)					X03382-46000-1
		COVER ASSY (with heater & battery switch)					X03382-46100-1
3	0338243200	COVER	1				
4	0338239400	COVER (R.H.)	1				
	0334521100	COVER (R.H.)	1				with heater
4-20	1333002015	・BUSHING	2				
5	0338239500	COVER (L.H.)	1				
5-4	1333002015	・BUSHING	2				
12	0338235760	PLATE	1				
13	0338235770	PLATE	1				
14	0338235830	PLATE	1				
15	0338239350	MAT, floor	1				
19	1653601395	LOCK	3				
19-1	1700100019	KEY	3				
20	1652515000	RUBBER, cushion	4				
21	1213000420	PIN, spring	8				
22	1654606017	SEAL	1				sold by the meter
26	0338230820	COVER	1				
28	0338230850	COVER	1				
29	1150110612	SCREW	2				
31	1100040820	BOLT	17				
33	1100041020	BOLT	4				
37	1140020008	WASHER, spring	16				
38	1140020010	WASHER, spring	4				
39	1141110008	WASHER	6				
48	1652060051	BUSHING	1				
50	1653917010	TRIM	1				sold by the meter
51	1653917015	TRIM	1				sold by the meter
52	1653917017	TRIM	1				sold by the meter
54	0003600025	WASHER	4				
55	0338235950	COVER	1				
60	0003608252	WASHER	10				
62	0338245200	COVER	1				with battery switch
	C4e352						

silverhorn.co.uk

COVER (2/4) (cab)

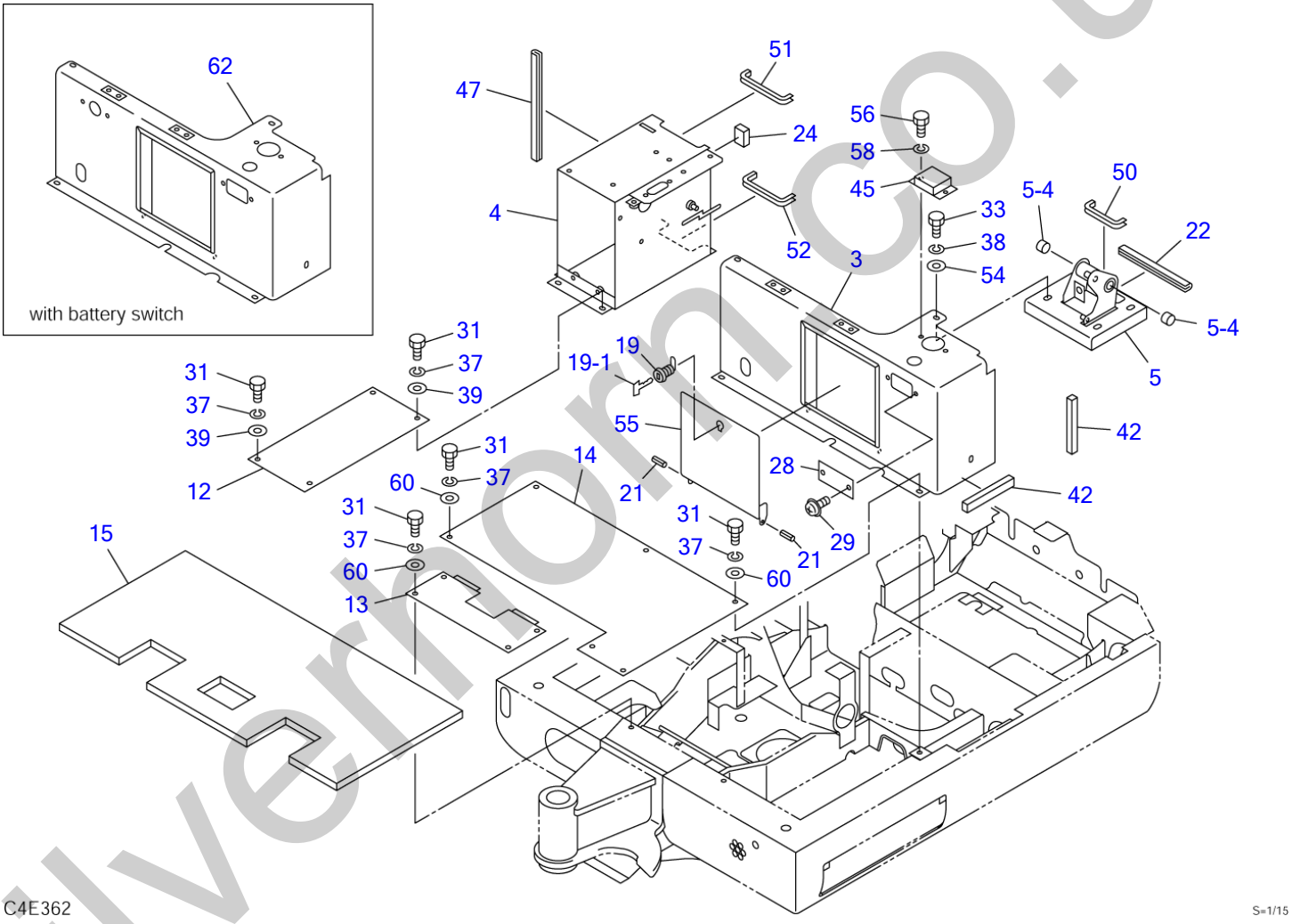

silvermoncco.uk

COVER (2/4) (cab)

Item	Part number	Description	Q'ty	Chan.	Serial No.	Serv.	Remarks
		COVER ASSY					X03382-45700-1
		COVER ASSY (with battery switch)					X03382-45900-1
3	0338244100	COVER	1				
4	0338238100	COVER (R.H.)	1				
5	0338239500	COVER (L.H.)	1				
5-4	1333002015	▪ BUSHING	2				
12	0338235760	PLATE	1				
13	0338235770	PLATE	1				
14	0338235830	PLATE	1				
15	0338239350	MAT, floor	1				
19	1653601395	LOCK	2				
19-1	1700100019	KEY	2				
21	1213000420	PIN, spring	6				
22	1654606021	SEAL	1				sold by the meter
24	1654308004	SPONGE	1				sold by the meter
28	0338230850	COVER	1				
29	1150110612	SCREW	2				
31	1100040820	BOLT	17				
33	1100041020	BOLT	4				
37	1140020008	WASHER, spring	16				
38	1140020010	WASHER, spring	4				
39	1141110008	WASHER	6				
42	1654304015	SPONGE	2				sold by the meter
45	0338236900	COVER	1				
47	1654606030	SEAL	1				sold by the meter
50	1653917010	TRIM	1				sold by the meter
51	1653917015	TRIM	1				sold by the meter
52	1653917017	TRIM	1				sold by the meter
54	0003600025	WASHER	4				
55	0338235950	COVER	1				
56	1100040510	BOLT	2				
58	1140020005	WASHER, spring	2				
60	0003608252	WASHER	10				
62	0338245300	COVER	1				with battery switch
	C4e362						

silverhorn.co.uk

COVER (3/4) (engine hood)

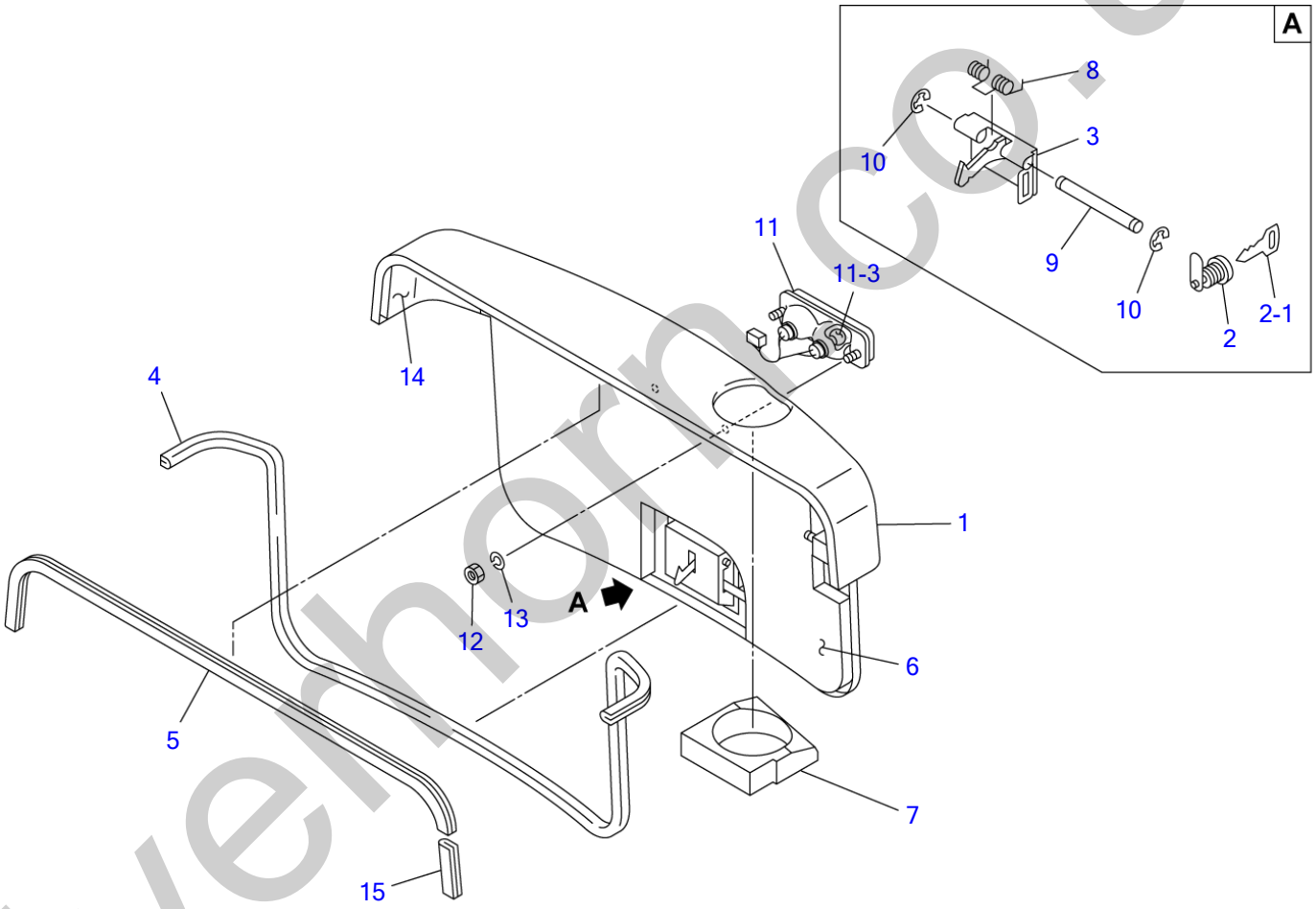

C4E370

S=1/8,1/10

silverhorn.co.uk

COVER (3/4) (engine hood)

Item	Part number	Description	Q'ty	Chan.	Serial No.	Serv.	Remarks
0-1	0338243400	HOOD ASSY, engine	1				X03382-43400-4
1	0338235130	・HOOD, engine	1				
2	1653601395	・LOCK	1				
2-1	1700100019	・KEY	1				
3	0338235180	・LOCK	1				
4	1654606172	・SEAL	1				sold by the meter
5	1654605096	・SEAL	1				sold by the meter
6	0338233111	・ABSORBENT, noise	1				
7	0338233120	・SPONGE	1				
8	0007000095	・SPRING	1				
9	0004206111	・SHAFT	1				
10	1224010004	・E-RING	2				
11	1703002000	・LAMP, tail	1				
11-3	1703002003	・・BULB	2				
12	1130030004	・NUT	2				
13	1140020004	・WASHER, spring	2				
14	0338233112	・ABSORBENT, noise	1				
15	1654319007	・SPONGE	1				sold by the meter
	C4e373						

silverhorn.co.uk

COVER (4/4) (engine cover)

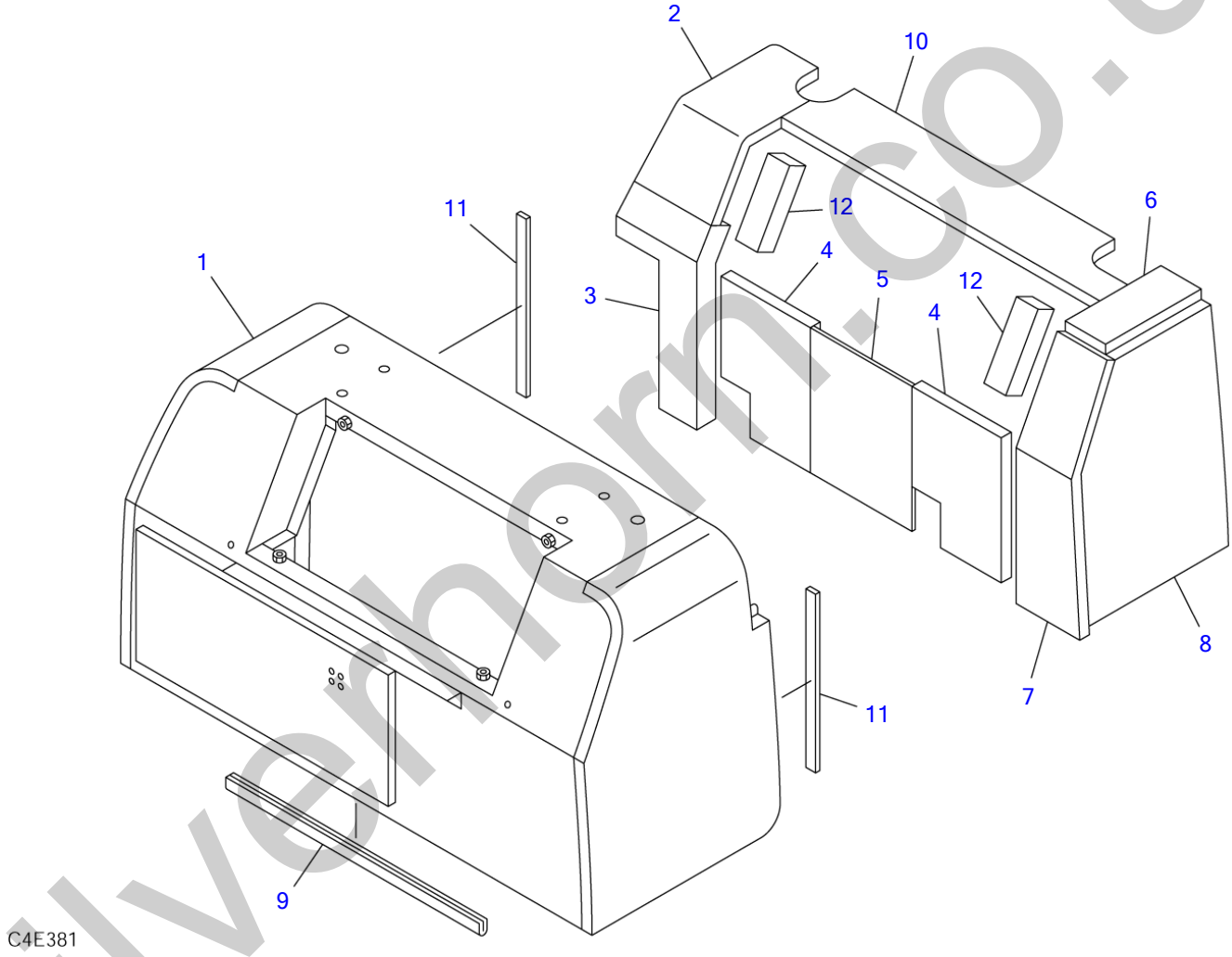

silverthorn.co.uk

COVER (4/4) (engine cover)

Item	Part number	Description	Q'ty	Chan.	Serial No.	Serv.	Remarks
0-2	0338243100	COVER ASSY, engine	1				X03382-43100-2
1	0338239200	・COVER, engine	1				
2	0338243102	・ABSORBENT, noise	1				
3	0338243140	・SPONGE	1				
4	0338243141	・ABSORBENT, noise	2				
5	0338243150	・INSULATOR	1				
6	0338235260	・ABSORBENT, noise	1				
7	0338230270	・ABSORBENT, noise	1				
8	0338230280	・ABSORBENT, noise	1				
9	1654606052	・SEAL	1				sold by the meter
10	0338235222	・ABSORBENT, noise	1				
11	1654303032	・SPONGE	2				sold by the meter
12	0338243142	・ABSORBENT, noise	2				
	C4e381						

silverhorn.co.uk

SEAT (1/2)

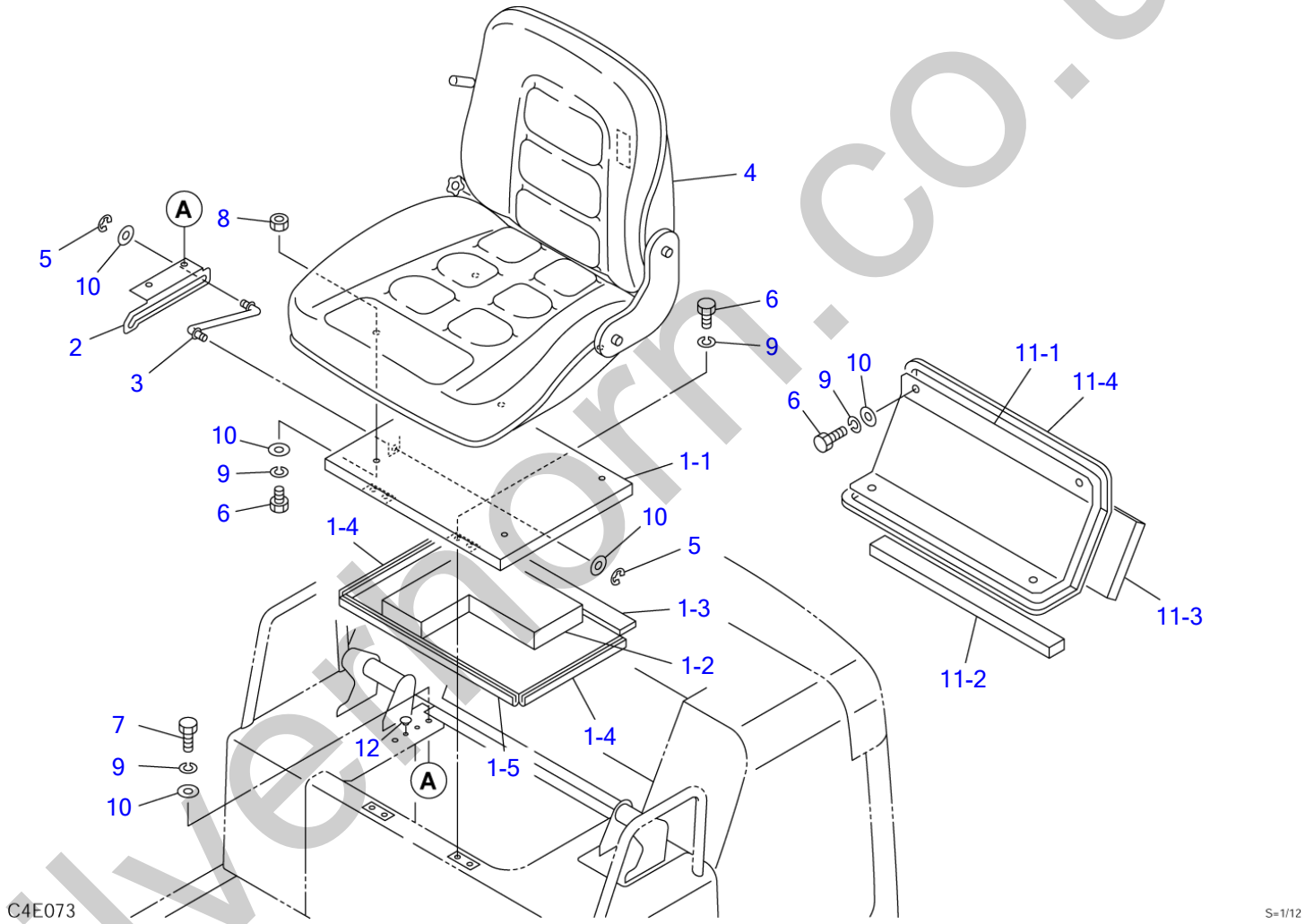

silverthorn.co.uk

SEAT (1/2)

Item	Part number	Description	Q'ty	Chan.	Serial No.	Serv.	Remarks
		SEAT ASSY (P.V.C.)					X03334-31000-3
		SEAT ASSY (fabric)					X03334-35000-3
1	0333427100	COVER ASSY	1				
1-1	0333427110	・COVER	1				
1-2	0333425120	・ABSORBENT, noise	1				
1-3	0333427120	・RUBBER	1				
1-4	1654606025	・SEAL	2				sold by the meter
1-5	1654606044	・SEAL	1				sold by the meter
2	0333425200	BRACKET	1				
3	0333420300	ROD	1				
4	1914100063	SEAT ASSY (P.V.C.)	1				see page (2/2)
	1914100059	SEAT ASSY (fabric)	1				see page (2/2)
5	1224010006	E-RING	2				
6	1100040816	BOLT	12				
7	1100040820	BOLT	2				
8	1130040008	NUT	4				
9	1140020008	WASHER, spring	14				
10	1141110008	WASHER	12				
11	0333431100	COVER ASSY	1				
11-1	0333431110	・COVER ASSY	1				
11-2	0333431120	・ABSORBENT, noise	1				
11-3	0338230793	・ABSORBENT, noise	1				
11-4	1654605149	・SEAL	1				sold by the meter
12	1652515000	CUSHING, rubber	2				
	C4e420						

silverhorn.co.uk

SEAT (2/2)

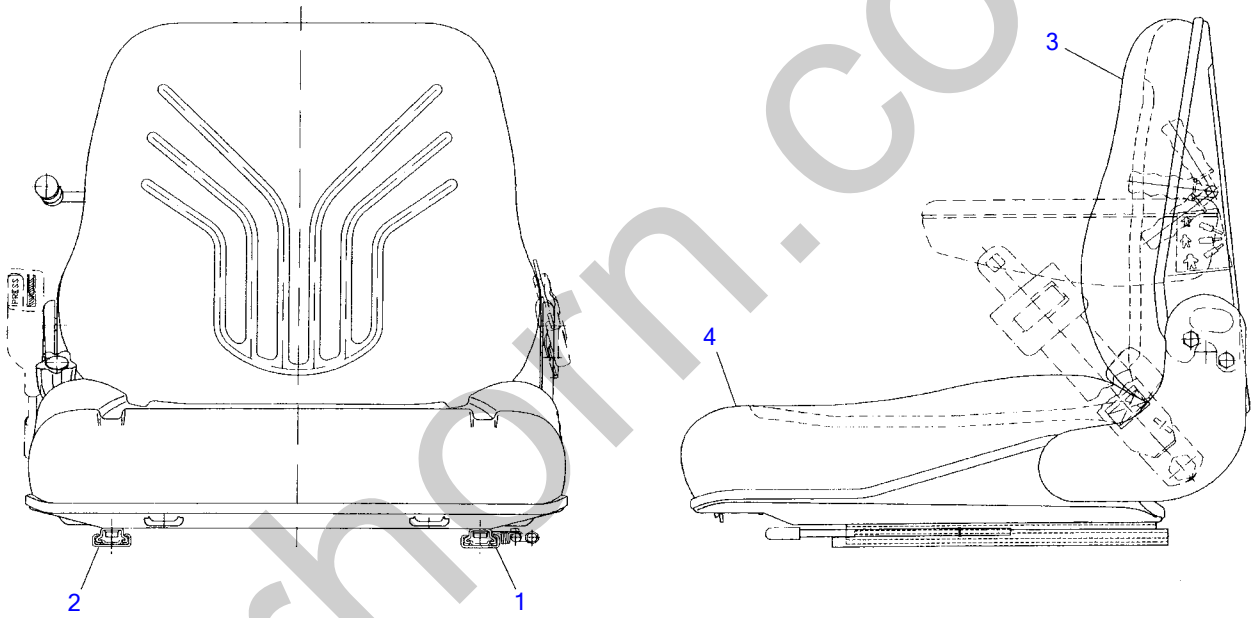

C4E290

S=free

silverhorn.co.uk

SEAT (2/2)

Item	Part number	Description	Q'ty	Chan.	Serial No.	Serv.	Remarks
0	1914100063	SEAT ASSY (P.V.C.)	1				X19141-00063-1
	1914100059	SEAT ASSY (fabric)	1				X19141-00059-1
1	1914103059	・RAIL, slide	1				
2	1914104059	・RAIL, slide	1				
3	1914110063	・CUSHION	1				P.V.C.
	1914110059	・CUSHION	1				fabric
4	1914111063	・CUSHION	1				P.V.C.
	1914111059	・CUSHION	1				fabric
	C4e290						

silverhorn.co.uk

SEAT (1/2) (high back)

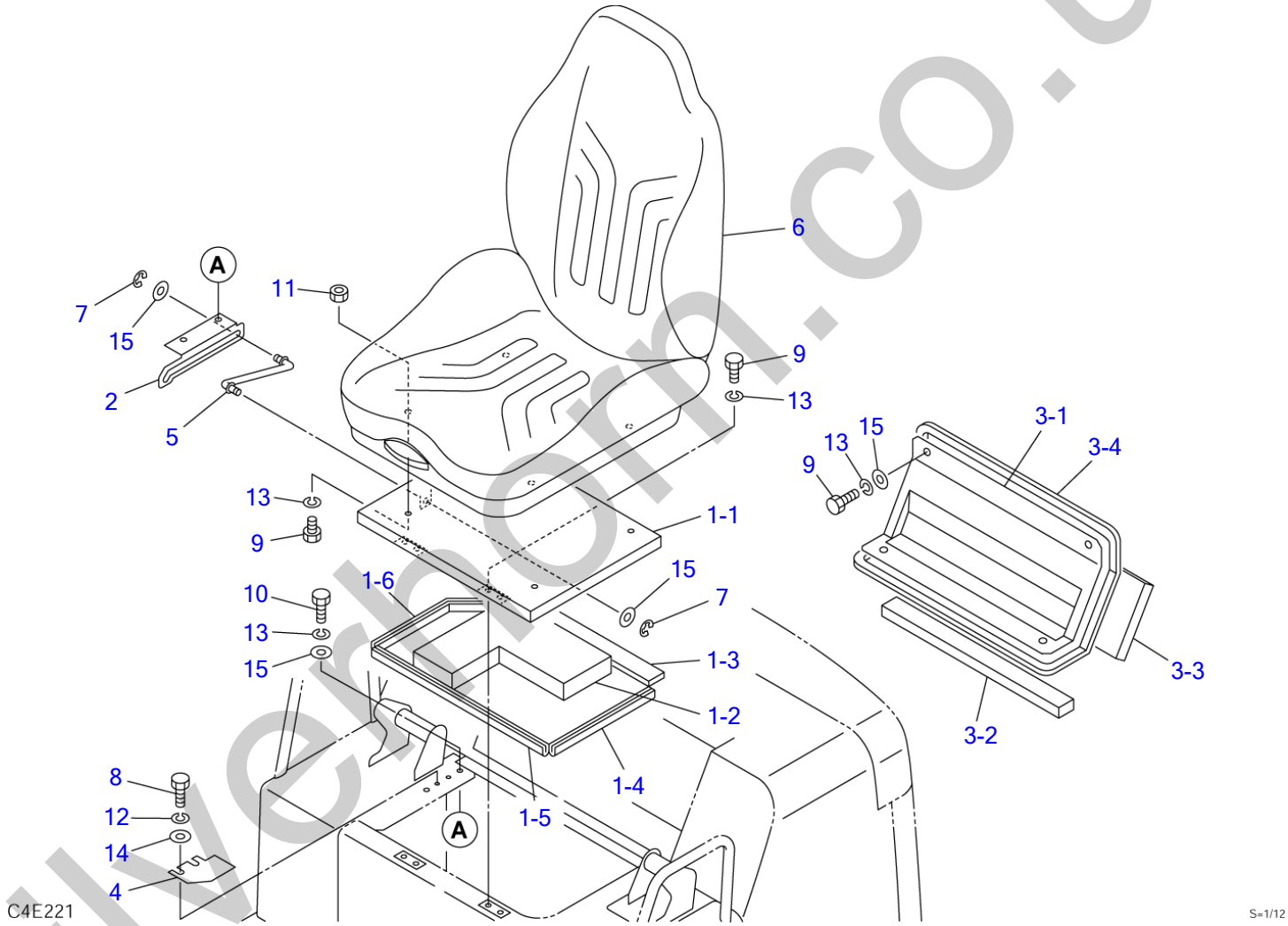

silvernorm.co.uk

SEAT (1/2) (high back)

Item	Part number	Description	Q'ty	Chan.	Serial No.	Serv.	Remarks
		SEAT ASSY (fabric)	1				X03334-29000-0
		SEAT ASSY (PVC)	1				X03334-33000-0
1	0333429100	COVER ASSY	1				
1-1	0333429110	・COVER	1				
1-2	0333425120	・ABSORBENT, noise	1				
1-3	0333429120	・RUBBER	1				
1-4	1654606025	・SEAL	1				sold by the meter
1-5	1654606044	・SEAL	1				sold by the meter
1-6	1654606026	・SEAL	1				sold by the meter
2	0333425200	BRACKET	1				
3	0333429200	COVER ASSY	1				
3-1	0333429210	・COVER	1				
3-2	0333429250	・ABSORBENT, noise	1				
3-3	0333429260	・ABSORBENT, noise	1				
3-4	1654605149	・SEAL	1				sold by the meter
4	0333429130	PLATE	1				
5	0333420300	ROD	1				
6	1914100070	SEAT ASSY (fabric)	1				see page (2/2)
	1914100077	SEAT ASSY (P.V.C.)	1				see page (2/2)
7	1224010006	E-RING	2				
8	1100040616	BOLT	2				
9	1100040816	BOLT	12				
10	1100040820	BOLT	2				
11	1130040008	NUT	4				
12	1140020006	WASHER, spring	2				
13	1140020008	WASHER, spring	14				
14	1141110006	WASHER	2				
15	1141110008	WASHER	8				
	C4e222						

silverhorn.co.uk

SEAT (2/2) (high back)

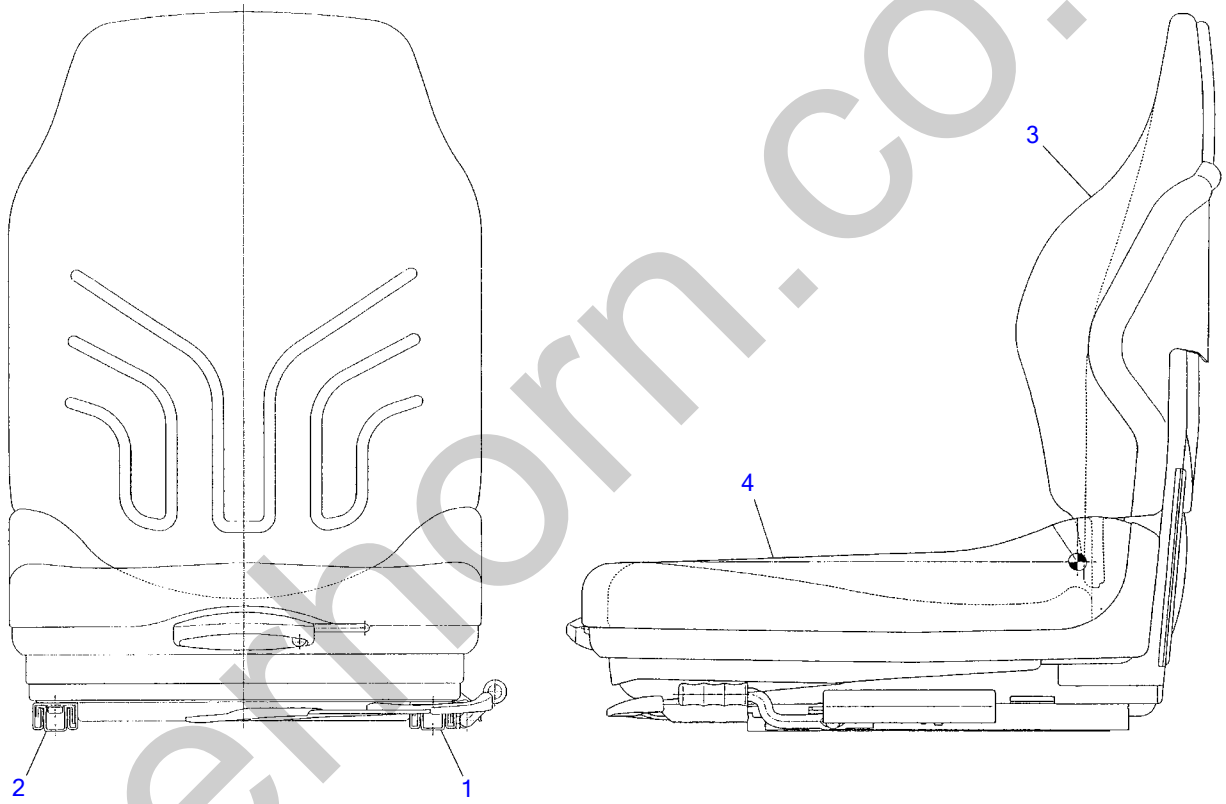

C4E300

S=free

silverhorn.co.uk

SEAT (2/2) (high back)

Item	Part number	Description	Q'ty	Chan.	Serial No.	Serv.	Remarks
0	**1914100070**	SEAT ASSY (fabric)	1				X19141-00070
	1914100077	SEAT ASSY (P.V.C.)	1				X19141-00077
1	**1914103070**	・RAIL, slide	1				
2	**1914104070**	・RAIL, slide	1				
3	**1914110070**	・CUSHION	1				fabric
	1914110077	・CUSHION	1				P.V.C.
4	**1914111070**	・CUSHION	1				fabric
	1914111077	・CUSHION	1				P.V.C.
	C4e300						

silverhorn.co.uk

SEAT BELT

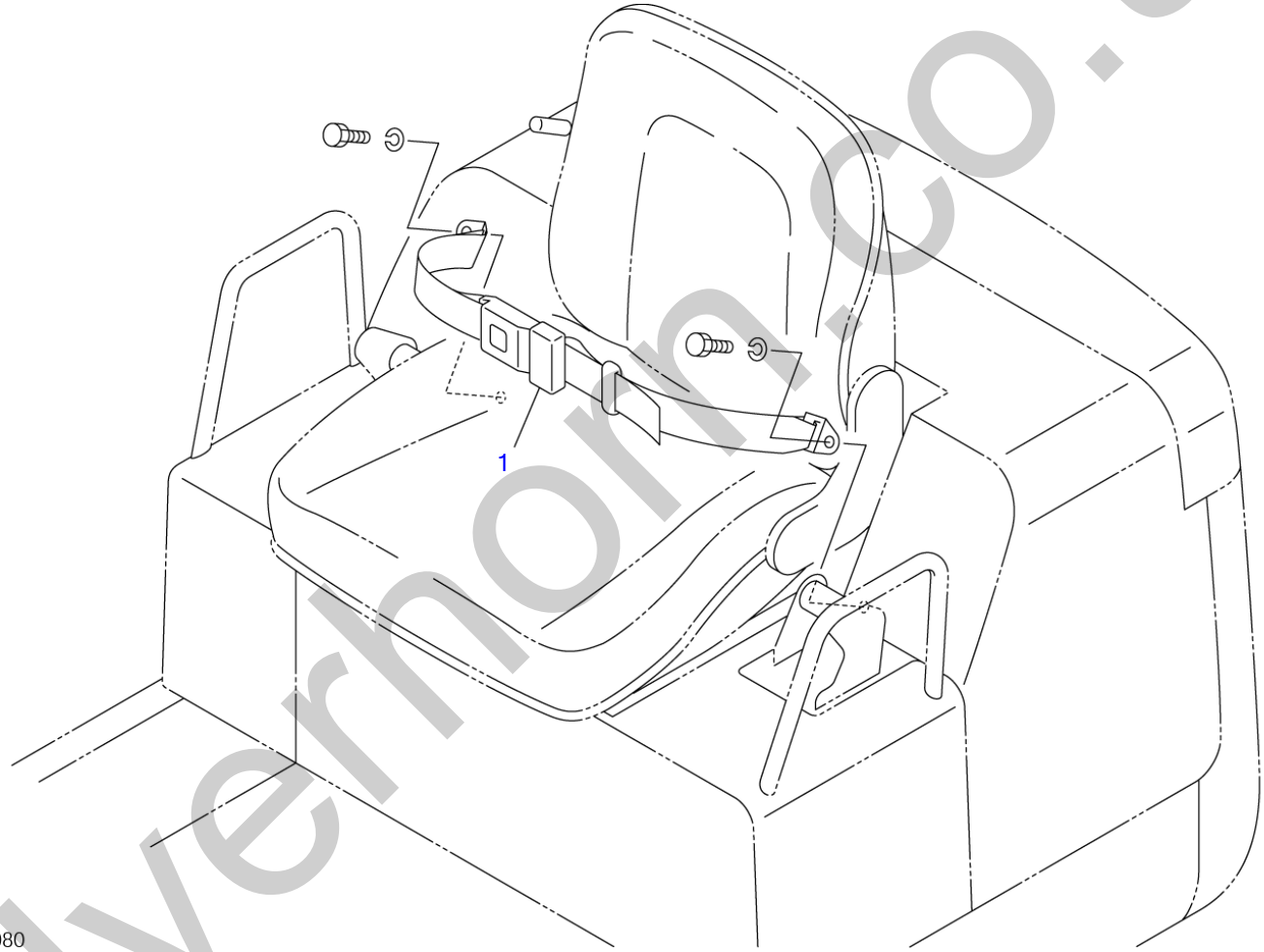

C4E080

S=1/8

silverhorn.co.uk

SEAT BELT

Item	Part number	Description	Q'ty	Chan.	Serial No.	Serv.	Remarks
		BELT ASSY, seat	1				X03334-22000-1
1	1914100080	BELT, seat	1				
	C4e082						

silverhorn.co.uk

SEAT BELT (retractable)

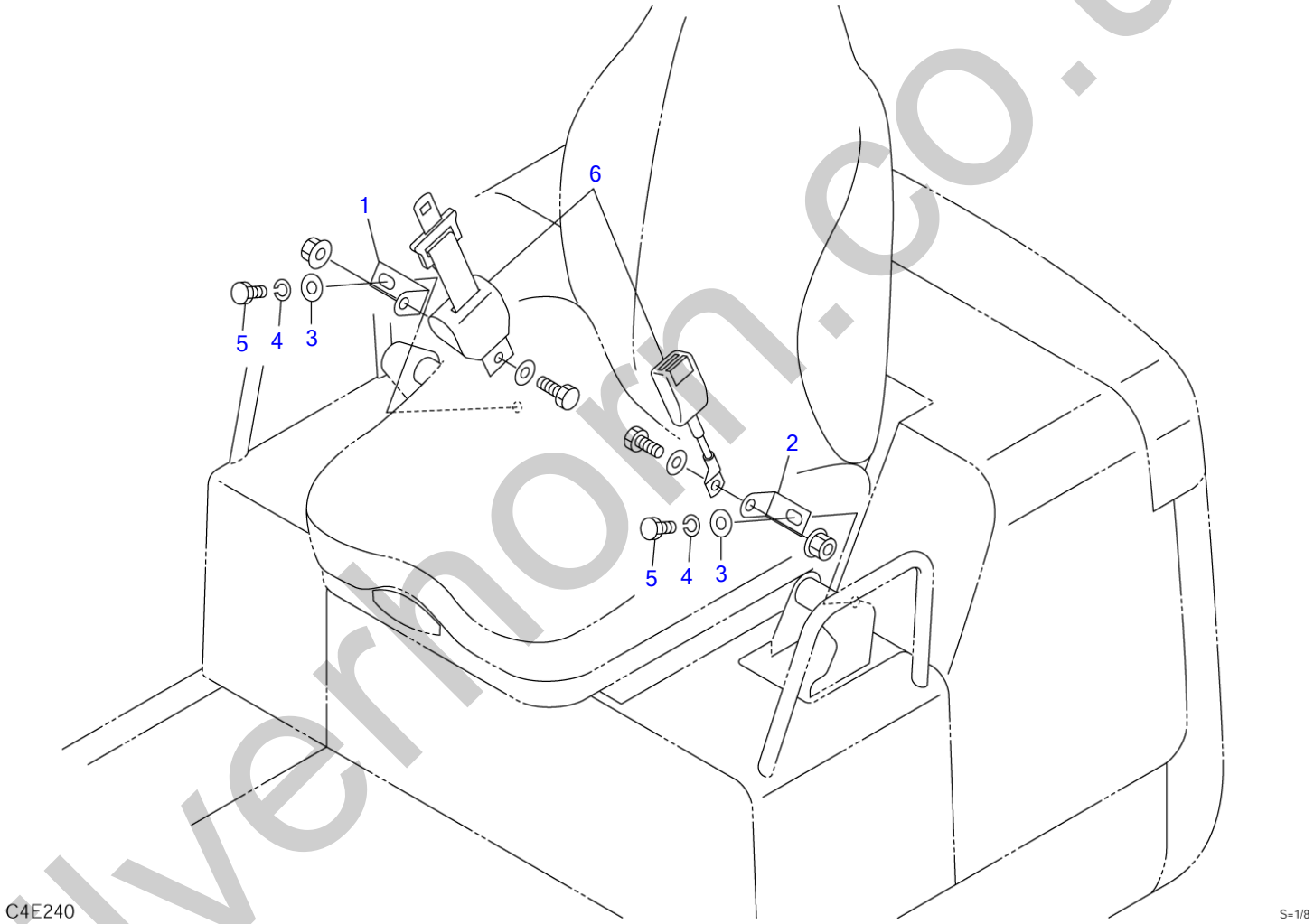

silverhorn.co.uk

SEAT BELT (retractable)

Item	Part number	Description	Q'ty	Chan.	Serial No.	Serv.	Remarks
		BELT ASSY, seat	1				X03334-30000-0
1	0333430100	BRACKET (R.H.)	1				
2	0333430200	BRACKET (L.H.)	1				
3	0003600024	WASHER	2				
4	1140210007	WASHER, spring	2				
5	1111940725	BOLT	2				
6	1914100069	BELT, seat	1				
	C4e241						

silverhorn.co.uk

CAB MOUNT

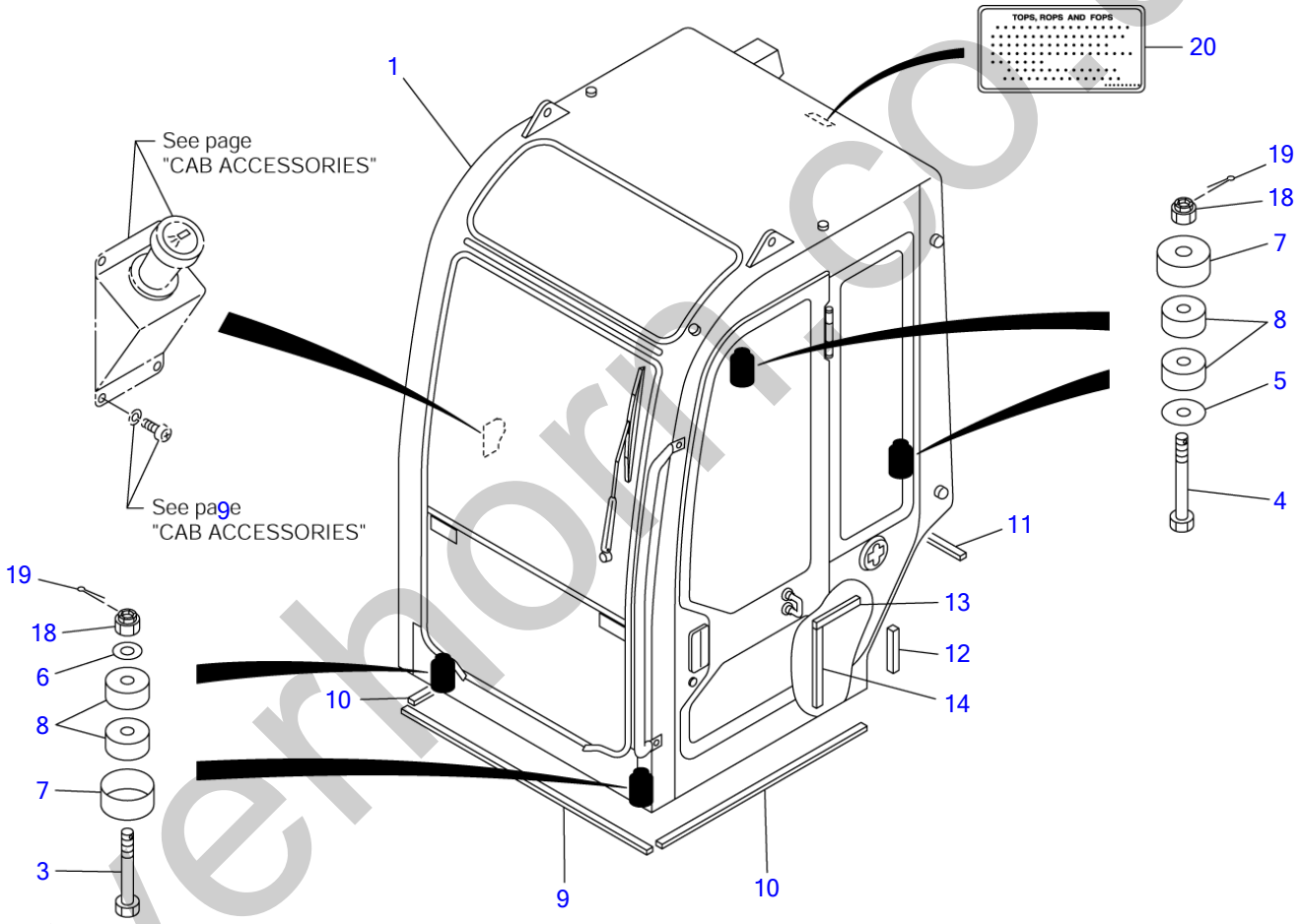

silverhorn.co.uk

CAB MOUNT

Item	Part number	Description	Q'ty	Chan.	Serial No.	Serv.	Remarks
0	0338642000	CAB MOUNT	1				X03386-42000-1
1	0338642500	・CAB	1				see page (1/4)
3	0338624020	・BOLT	2				
4	0338624030	・BOLT	2				
5	0003000010	・COLLAR	2				
6	0003600129	・WASHER	2				
7	0278609000	・STOPPER	4				
8	1651005030	・RUBBER, cushion	8				
9	1654304097	・SPONGE	1				sold by the meter
10	1654304080	・SPONGE	2				sold by the meter
11	1654306085	・SPONGE	1				sold by the meter
12	1654306015	・SPONGE	1				sold by the meter
13	1654304017	・SPONGE	1				sold by the meter
14	1654304027	・SPONGE	1				sold by the meter
18	1132080016	・NUT	4				
19	1210010430	・PIN, split	4				
20	X **********	・DECAL	1				
	C4e312						

silverhorn.co.uk

CAB (1/4)

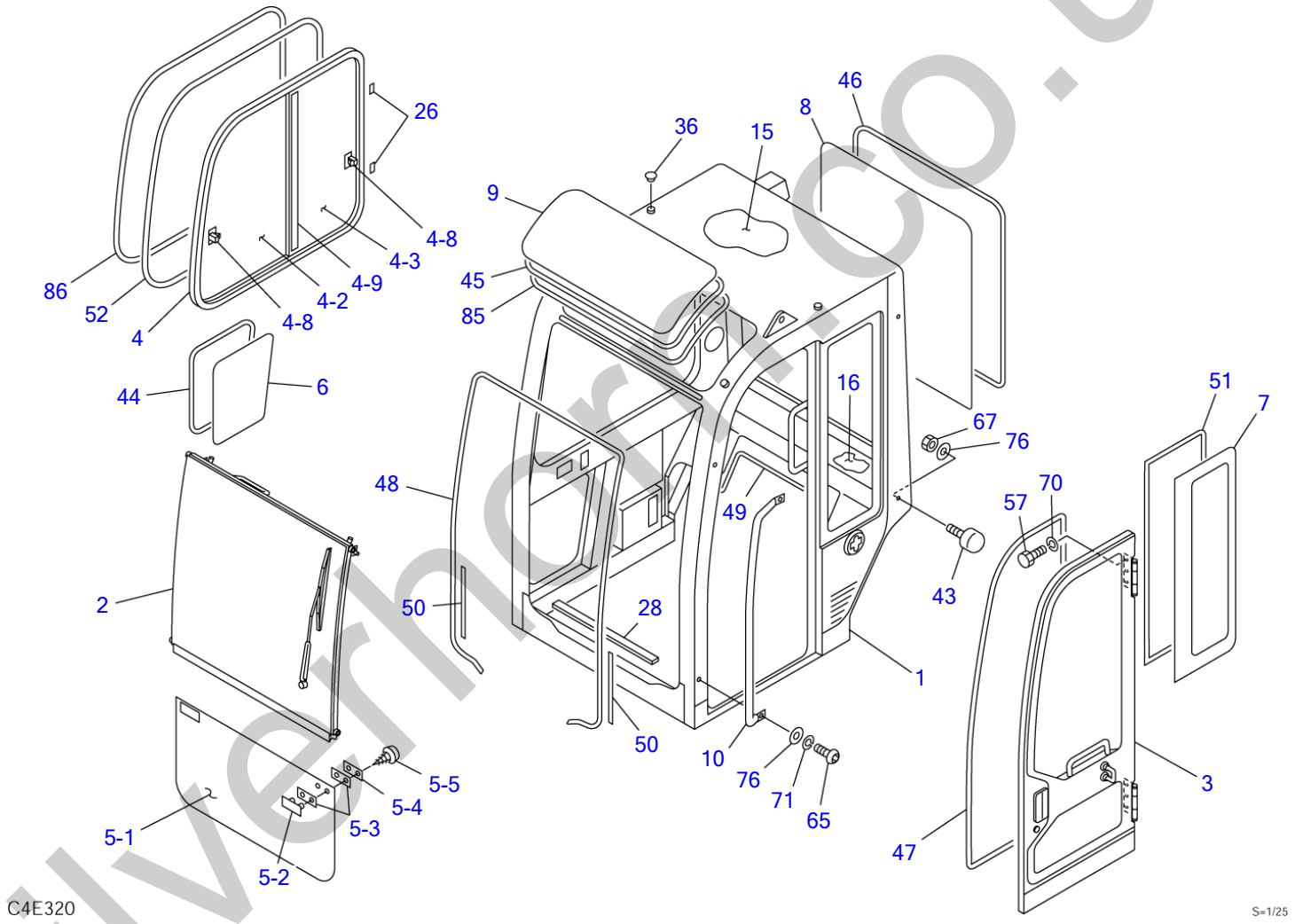

silverhorse.co.uk

CAB (1/4)

Item	Part number	Description	Q'ty	Chan.	Serial No.	Serv.	Remarks
0	0338642500	CAB ASSY	1				X03386-42500-2
1	X **********	・CAB	1				
2	0338630400	・SASH, front	1				see page (3/4)
3	0338630500	・DOOR	1				see page (4/4)
4	0338630600	・SASH ASSY	1				
4-2	0338630630	・・GLASS	1				
4-3	0338630640	・・GLASS	1				
4-8	0338630650	・・LOCK ASSY	2				
4-9	0338630006	・・STRIP, weather	1				
5	0338630700	・GLASS, front	1				
5-1	0338630710	・・GLASS	1				
5-2	1654010900	・・RETAINER	2				
5-3	1654011100	・・PACKING	4				
5-4	1654011000	・・PLATE	2				
5-5	1122410412	・・SCREW	4				
6	0338630800	・GLASS	1				
7	0338630810	・GLASS	1				
8	0338630820	・GLASS	1				
9	0358605300	・GLASS	1				
10	0338630840	・HANDLE	1				
15	0338630890	・ABSORBENT, noise	1				
16	0338630900	・ABSORBENT, noise	1				
26	0438601770	・SPACER	7				
28	0568634100	・SEAL	1				
36	1653303010	・CAP	3				
43	1651101042	・RUBBER	2				
44	1654262140	・H-RUBBER	1				sold by the meter
45	1654615216	・DAM	1				sold by the meter
46	1654231336	・H-RUBBER	1				sold by the meter
47	1654605338	・SEAL	1				sold by the meter
48	1654605374	・RUBBER	1				sold by the meter
49	1654520168	・RUBBER	1				sold by the meter
50	1654605033	・RUBBER	2				sold by the meter
51	1654615220	・DAM	1				sold by the meter
52	1653930315	・TRIM	1				sold by the meter
57	1100090820	・BOLT	6				
65	1120800830	・SCREW	2				
67	1130090010	・NUT	2				
70	1140090008	・WASHER, spring	6				
71	1140090010	・WASHER, spring	2				
76	1141190010	・WASHER	4				
85	1653916222	・TRIM	1				sold by the meter
86	1654620330	・SEAL	1				sold by the meter
	C4e322						

silverthorn.co.uk

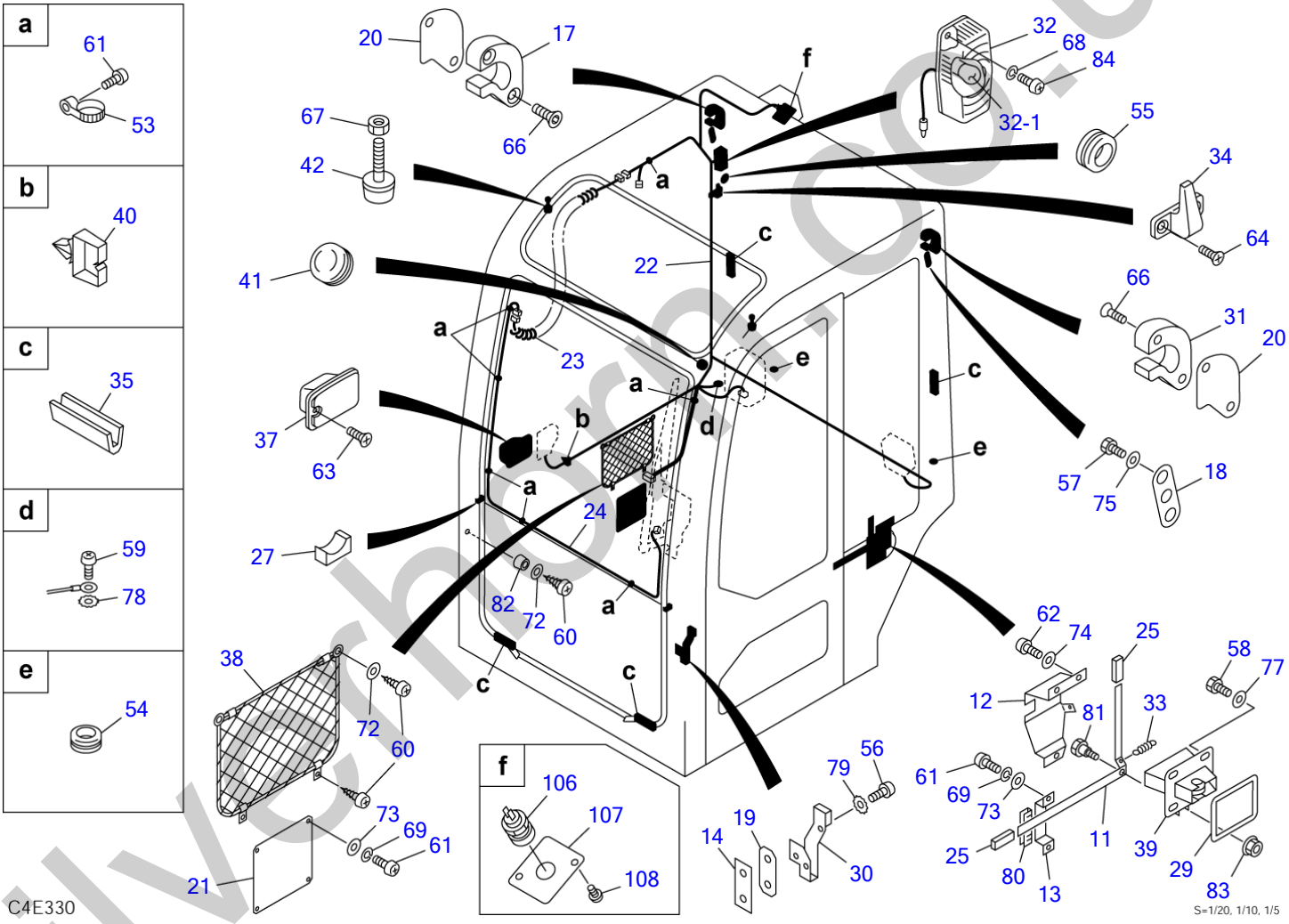

silverhorn.co.uk

CAB (2/4)

Item	Part number	Description	Q'ty	Chan.	Serial No.	Serv.	Remarks
0	0338642500	CAB ASSY	1				X03386-42500-2
11	0338630850	・PLATE	1				
12	0338630860	・PLATE	1				
13	0338630870	・PLATE	1				
14	0338630880	・PLATE	1				
17	0338630910	・STOPPER (R.H.)	1				
18	0338630920	・PLATE	2				
19	0338630930	・PACKING	1				
20	0338630940	・SHIM	2				
21	0338630970	・COVER	1				
22	0338642110	・HARNESS, wiring	1				
23	0398802200	・HARNESS, wiring	1				
24	0338631010	・HARNESS, wiring	1				
25	0438601760	・COVER	2				
27	0568633300	・STOPPER	2				
29	0568634400	・SEAL	1				
30	0068620500	・STRIKER	1				
31	0338630960	・STOPPER (L.H.)	1				
32	1703001700	・LAMP, room	1				
32-1	1703001701	・・BULB	1				
33	0007000096	・SPRING	1				
34	1654004800	・HANGER	1				
35	1654004900	・STOPPER	4				
37	1654010500	・ASHTRAY	1				
38	1654010600	・POCKET	1				
39	1654010700	・LOCK	1				
40	1652341547	・CLAMP	1				
41	1652050900	・GROMMET	1				
42	1651101028	・STOPPER	2				
53	1652221050	・BAND	6				
54	1652060016	・GROMMET	2				
55	1652060031	・BUSHING	1				
56	0068621300	・SCREW	2				
57	1100090820	・BOLT	10				
58	1100040825	・BOLT	4				
59	1120590516	・SCREW	1				
60	1122410416	・SCREW	8				
61	1120590512	・SCREW	12				
62	1120590616	・SCREW	5				
63	1120630412	・SCREW	2				
64	1120790412	・SCREW	2				
66	1120890830	・SCREW	4				
67	1130090010	・NUT	4				
68	1140090004	・WASHER, spring	2				
69	1140090005	・WASHER, spring	6				
72	1141190004	・WASHER	6				
73	1141190005	・WASHER	6				
74	1140090006	・WASHER, spring	3				
75	1141190008	・WASHER	4				
77	1141550008	・WASHER	4				
78	1140330005	・WASHER	1				
79	1140330010	・WASHER	2				
80	1653916007	・TRIM	1				sold by the meter
81	1654010800	・PIN	1				
82	1652101811	・RUBBER	2				
83	1131242006	・NUT	1				
84	1120540408	・SCREW	2				
106	1711900066	・SOCKET	1				
107	0578600143	・COVER	1				
108	1150420512	・SCREW	2				
	C4e332						

silverhorn.co.uk

CAB (3/4) (front sash)

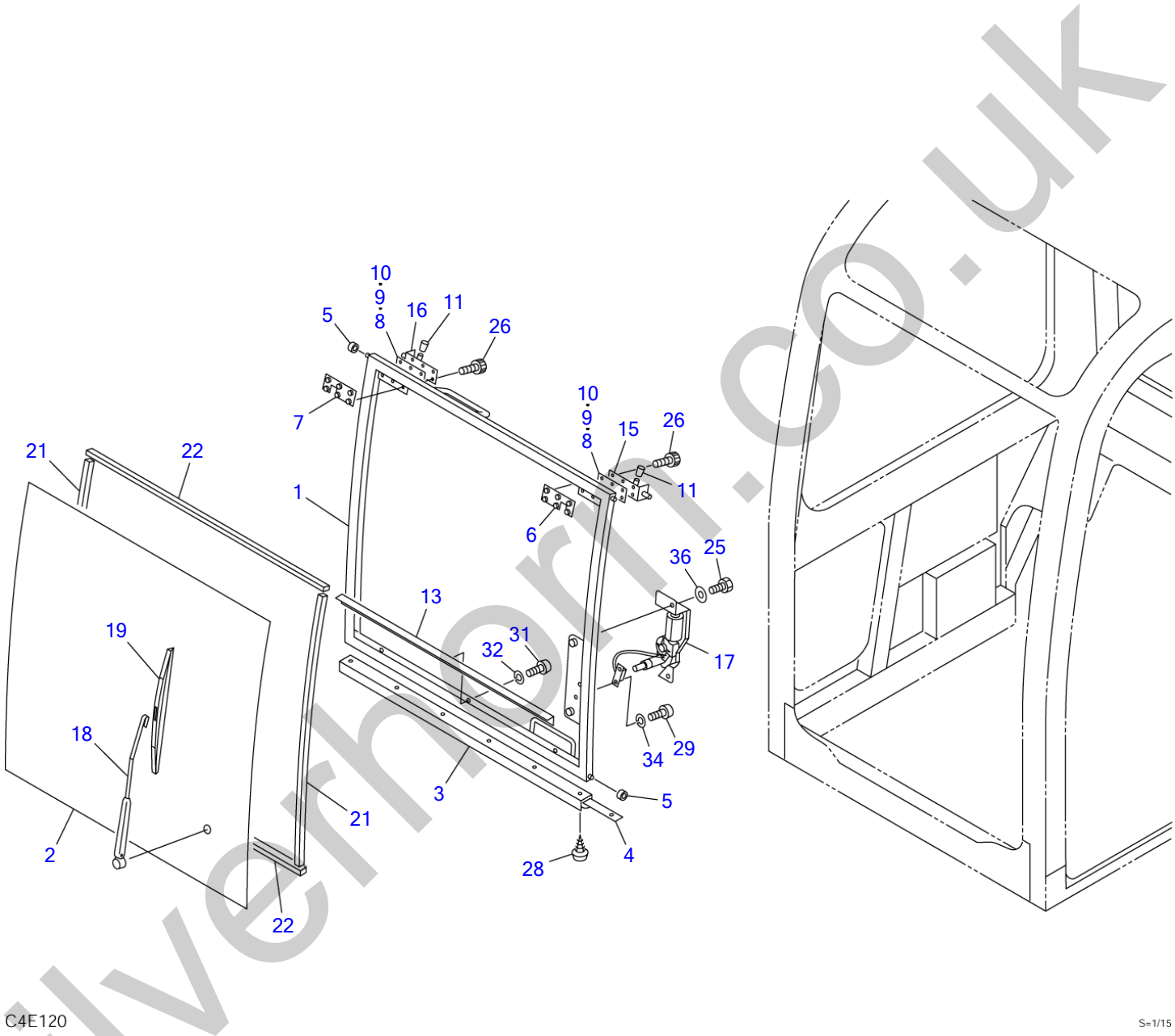

silverhorn.co.uk

CAB (3/4) (front sash)

Item	Part number	Description	Q'ty	Chan.	Serial No.	Serv.	Remarks
0-1	0338630400	SASH ASSY, front	1				
1	0338630430	・SASH, front	1				
2	0568639330	・GLASS	1				
3	0568621800	・SEAL	1				
4	0568621900	・PLATE	1				
5	0568622200	・ROLLER	4				
6	0568622400	・PLATE (L.H.)	1				
7	0568622300	・PLATE	1				
8	0468605031	・SHIM t=0.7	AR				
9	0468605032	・SHIM t=1.2	AR				
10	0468605033	・SHIM t=1.6	AR				
11	0398612500	・COVER	2				
13	0338630440	・PLATE	1				
15	1654005350	・LATCH (L.H.)	1				
16	1654005300	・LATCH (R.H.)	1				
17	1704078912	・MOTOR, wiper	1				
18	1704100530	・ARM, wiper	1				
19	1704200530	・BLADE	1				
21	1654616080	・DAM	2				sold by the meter
22	1654615085	・DAM	2				sold by the meter
25	1100290820	・BOLT	2				
26	1110090516	・SCREW, cap	12				
28	1122510412	・SCREW	6				
29	1120590408	・SCREW	2				
31	1120590516	・SCREW	3				
32	1140090005	・WASHER, spring	3				
34	1140090004	・WASHER, spring	2				
36	1141190008	・WASHER	2				
	C4e122						

silverhorn.co.uk

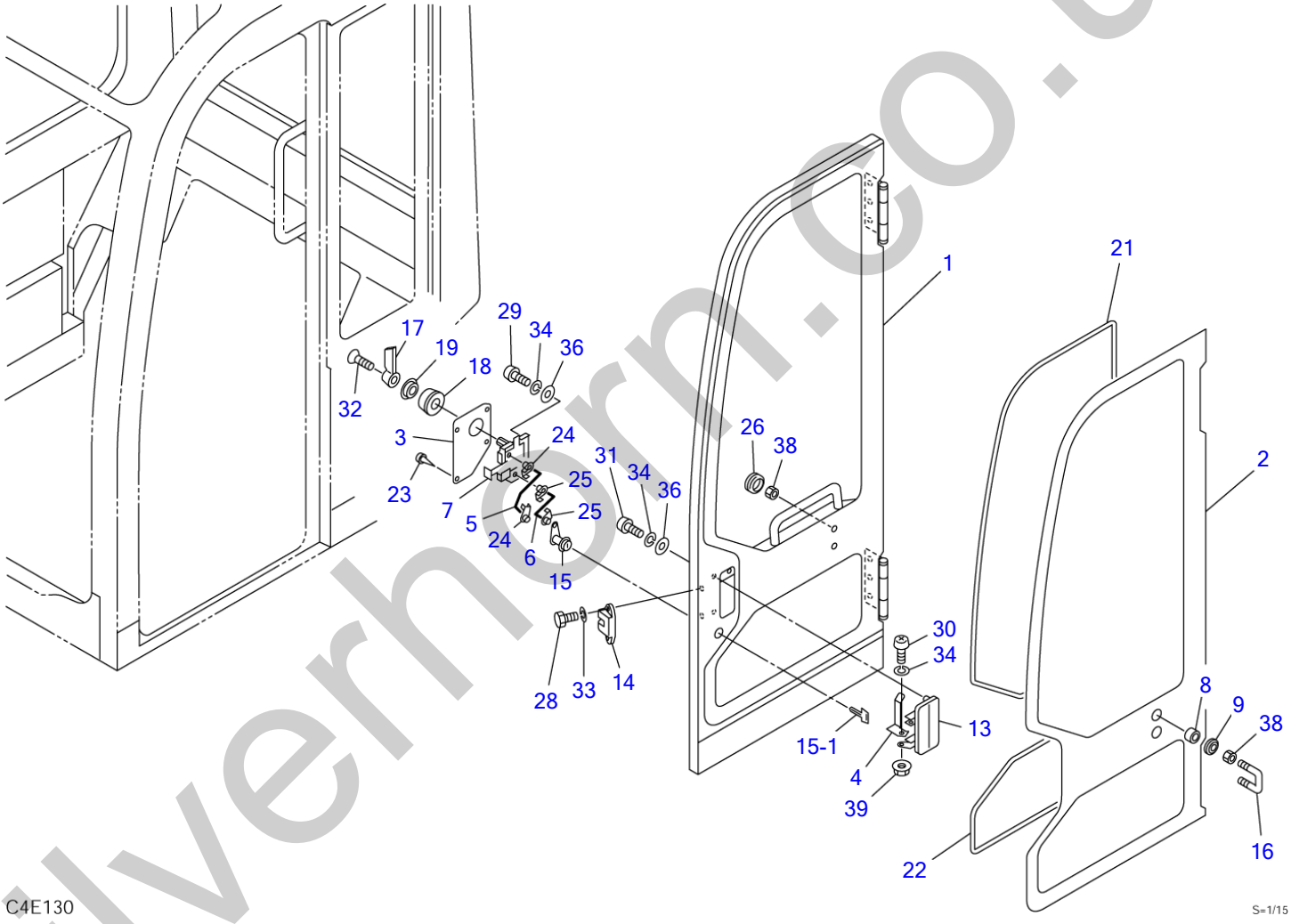

silverhorn.co.uk

CAB (4/4) (door)

Item	Part number	Description	Q'ty	Chan.	Serial No.	Serv.	Remarks
0-2	0338630500	DOOR ASSY	1				
1	0338630540	・DOOR	1				
2	0338630550	・GLASS	1				
3	0568623300	・COVER	1				
4	0568630900	・PLATE	1				
5	0568630800	・ROD	1				
6	0568630600	・ROD	1				
7	0568623400	・UNIT, control	1				
8	0568623500	・COLLAR	2				
9	0568623600	・SEAL	2				
13	1654005600	・HANDLE	1				
14	0068620400	・LOCK	1				
15	1653611527	・LOCK	1				
15-1	1700100019	・KEY	1				
16	1654005900	・STRIKER	1				
17	1654005500	・HANDLE	1				
18	1654005800	・BASE	1				
19	1654005700	・ESCUTCHEON	1				
21	1654615280	・DAM	1				sold by the meter
22	1654615160	・DAM	1				sold by the meter
23	1652711432	・CLIP	4				
24	0068621500	・SNAP	2				
25	0398610900	・SNAP	2				
26	1652053200	・GROMMET	2				
28	1100290616	・BOLT	2				
29	1120530612	・SCREW	2				
30	1120530616	・SCREW	1				
31	1120530608	・SCREW	2				
32	1120790516	・SCREW	1				
33	1140090006	・WASHER, spring	2				
34	1140020006	・WASHER, spring	5				
36	1141110006	・WASHER	4				
38	1130040010	・NUT	4				
39	1131242006	・NUT	1				
	C4e132						

silverhorn.co.uk

CAB ACCESSORIES

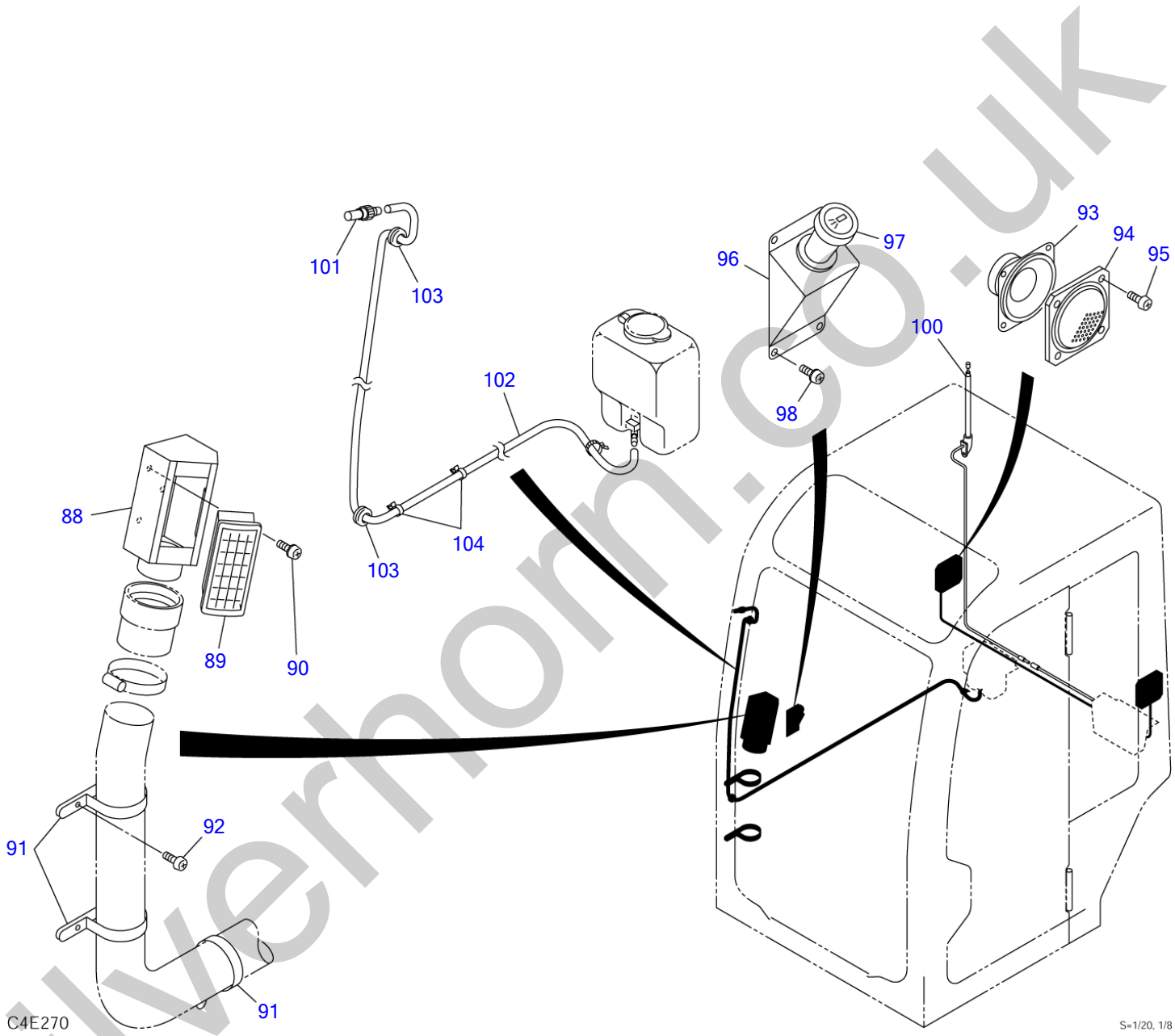

silverhorn.co.uk

CAB ACCESSORIES

Item	Part number	Description	Q'ty	Chan.	Serial No.	Serv.	Remarks
88	0872453510	DEFROSTER	1				
89	1911504000	LOUVER	1				
90	1150120512	SCREW	3				
91	1652261410	BAND	3				
92	1120590514	SCREW	3				
93	1705003500	SPEAKER	2				
94	1705003550	GRILLE	2				
95	1120590410	SCREW	8				
96	0338627020	BRACKET	1				
97	1711900059	LIGHTER	1				
98	1150120410	SCREW	4				
100	1705003400	ANTENNA	1		11610001~11610793		
	1705003450	ANTENNA	1	(H)	11610794~1161#		
	1705003460	ANTENNA	1	(H)	1161#~	M	No. 23948
101	1711910040	NOZZLE	1				
102	1711919180	HOSE	1				sold by the meter
103	1652001002	GROMMET	2				
104	1652351054	BAND	2				
	C4e461						

silverhorn.co.uk

REARVIEW MIRROR

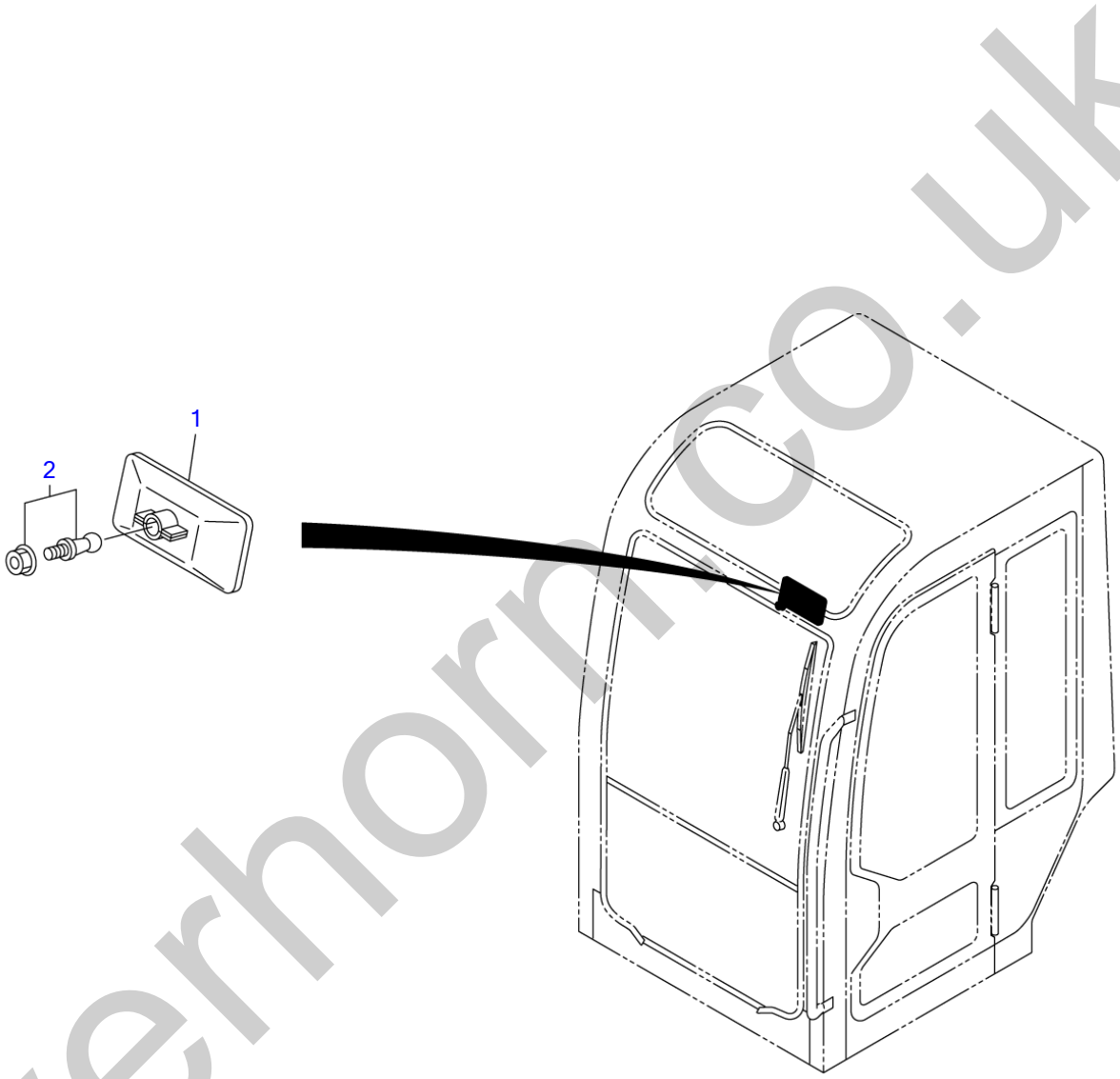

C4E141

S=1/20, 1/5

silverhorn.co.uk

REARVIEW MIRROR

Item	Part number	Description	Q'ty	Chan.	Serial No.	Serv.	Remarks
		MIRROR ASSY, rearview					X03387-00000-1
1	**1654005400**	MIRROR	1				
2	**1654006000**	PIVOT	1				
	C4e142						

silverhorn.co.uk

CANOPY

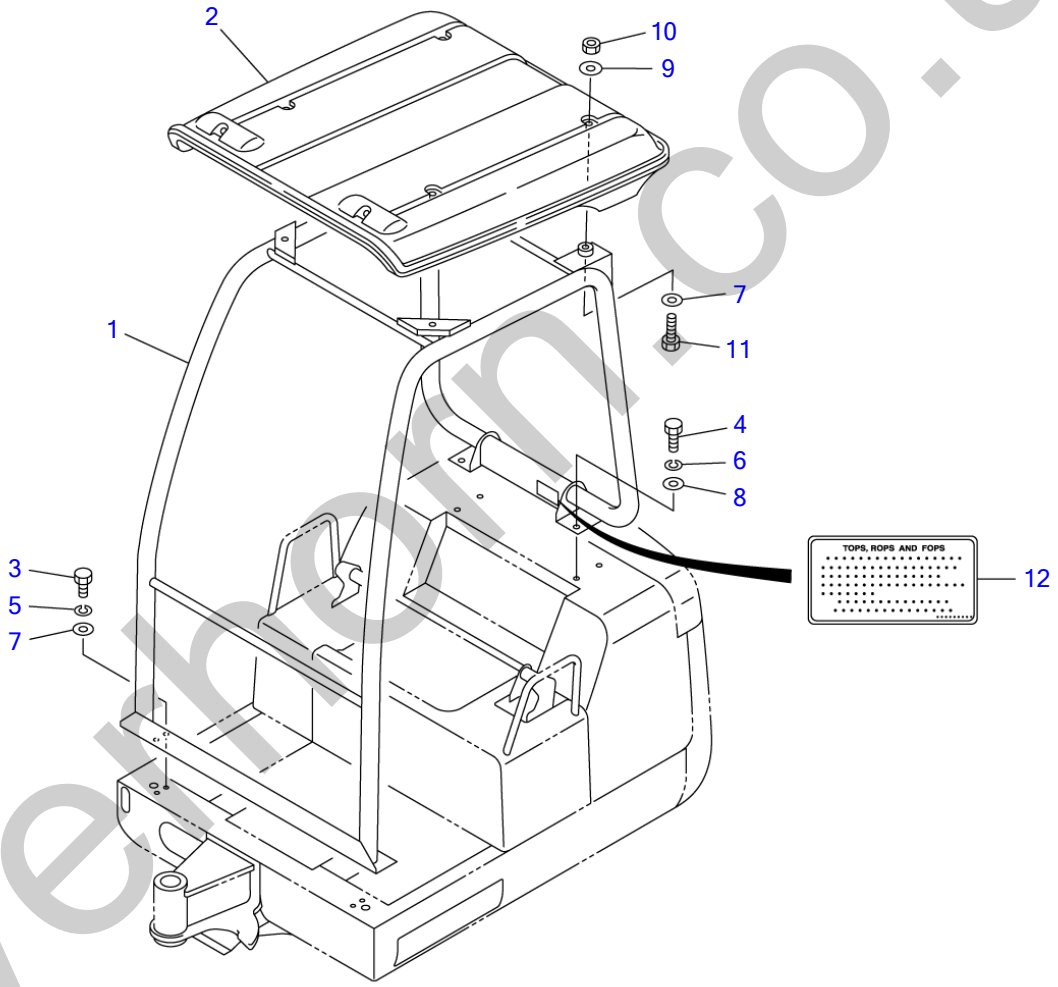

C4E430

S=1/20

silverhorn.co.uk

CANOPY

Item	Part number	Description	Q'ty	Chan.	Serial No.	Serv.	Remarks
		CANOPY ASSY					X03384-25000-6
1	0338425200	POLE	1				
2	0368416300	ROOF	1				
3	1100041025	BOLT	4				
4	1101041230	BOLT	4				
5	1140020010	WASHER, spring	4				
6	1140020012	WASHER, spring	4				
7	1141110010	WASHER	8				
8	0003600024	WASHER	4				
9	0003600020	WASHER	4				
10	1130040010	NUT	4				
11	1100041040	BOLT	4				
12	X **********	DECAL	1				
	C4e432						

silverhorn.co.uk

FRONT GUARD (for YBM)

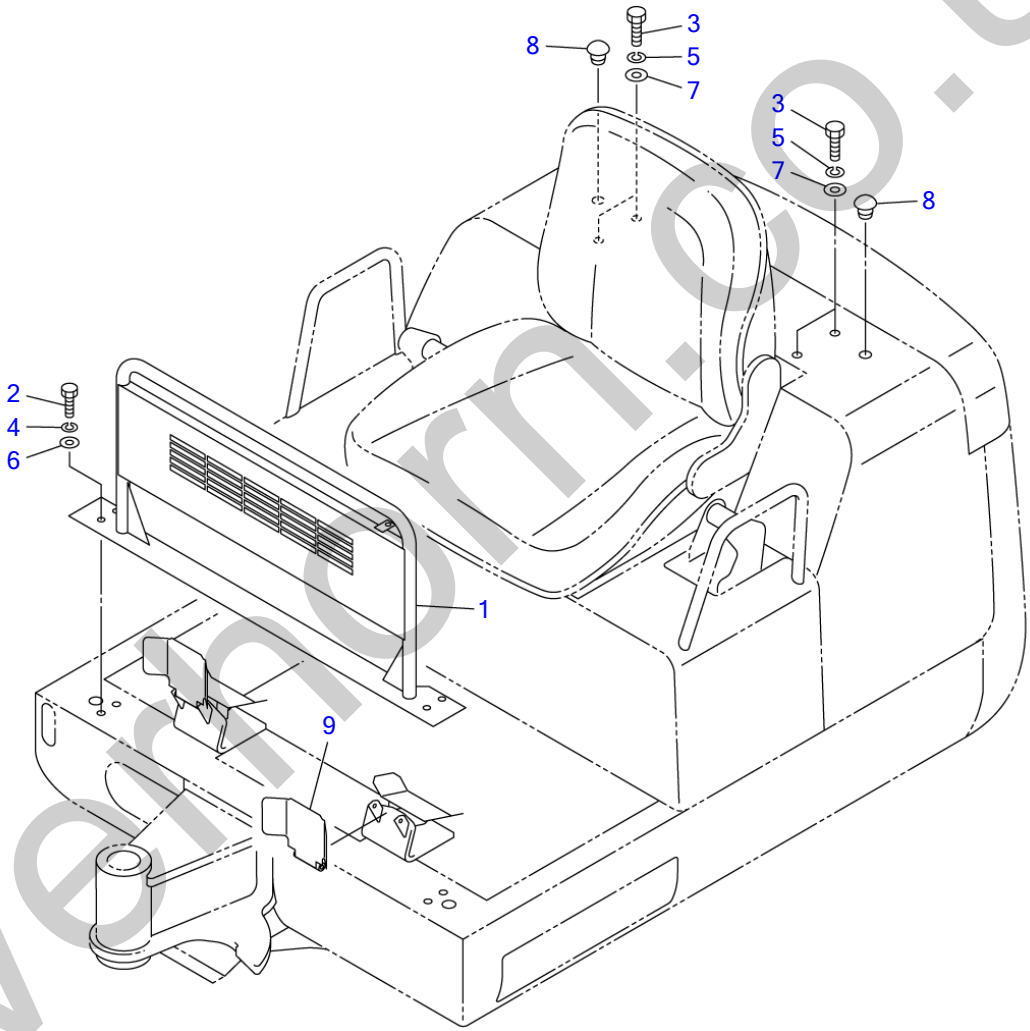

C4E260

S=1/12

silvermorn.co.uk

FRONT GUARD (for YBM)

Item	Part number	Description	Q'ty	Chan.	Serial No.	Serv.	Remarks
		GUARD ASSY	1				X03384-27000-1
1	**0338427200**	GUARD	1				
2	**1100041025**	BOLT	4				
3	**1101041230**	BOLT	4				
4	**1140020010**	WASHER, spring	4				
5	**1140020012**	WASHER, spring	4				
6	**1141110010**	WASHER	4				
7	**1141110012**	WASHER	4				
8	**1652530002**	PLUG	2				
9	**0338427300**	COVER	1				
	C4e260						

silverhorn.co.uk

HEATER (cab)

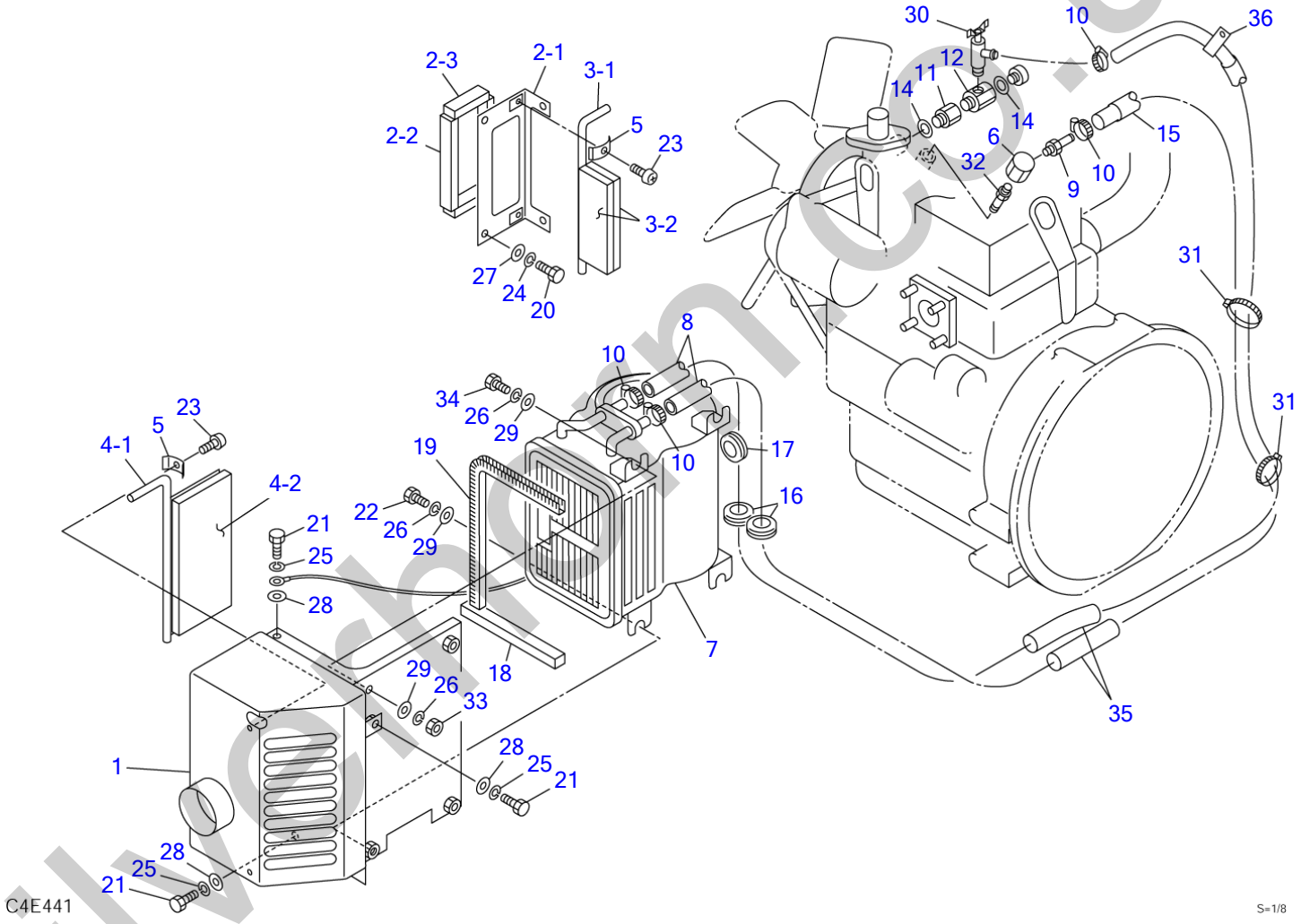

silverborn.co.uk

HEATER (cab)

Item	Part number	Description	Q'ty	Chan.	Serial No.	Serv.	Remarks
		HEATER ASSY					X03345-21700-3
1	0334519100	BRACKET	1				
2	0334519200	PLATE ASSY	1				
2-1	0334519210	・PLATE	1				
2-2	1654311013	・URETHANE	2				sold by the meter
2-3	1654311006	・URETHANE	2				sold by the meter
3	0334519300	LEVER ASSY	1				
3-1	0334519310	・LEVER	1				
3-2	0334519320	・SPONGE	2				
4	0334517400	LEVER ASSY	1				
4-1	0334515410	・LEVER	1				
4-2	0334517420	・SPONGE	1				
5	0334517500	PLATE	4				
6	0007262009	ELBOW	1				
7	1911508100	HEATER	1				
8	1911521850	HOSE	2				sold by the meter
9	1911502200	NIPPLE	1				
10	1911500500	CLAMP	4				
11	0007211017	BUSHING	1				
12	0007261004	JOINT	1				
14	1541400516	WASHER	2				
15	1531325080	PROTECTOR	2				sold by the meter
16	1652002201	GROMMET	2				
17	1652052800	GROMMET	1				
18	1654304016	SPONGE	1				sold by the meter
19	1654606035	SEAL	1				sold by the meter
20	1100040612	BOLT	4				
21	1100040816	BOLT	4				
22	1100041016	BOLT	3				
23	1120530410	SCREW	4				
24	1140020006	WASHER, spring	4				
25	1140020008	WASHER, spring	4				
26	1140020010	WASHER, spring	5				
27	1141110006	WASHER	4				
28	1141110008	WASHER	4				
29	1141110010	WASHER	5				
30	1911502300	VALVE	1				
31	1652201007	BAND	2				
32	1501500003	NIPPLE	1				
33	1130040010	NUT	1				
34	1100041020	BOLT	1				
35	1531325013	PROTECTOR	2				sold by the meter
36	0007300050	CLAMP	1		11611250~		
	C4e443						

silverhorn.co.uk

HEATER (canopy)

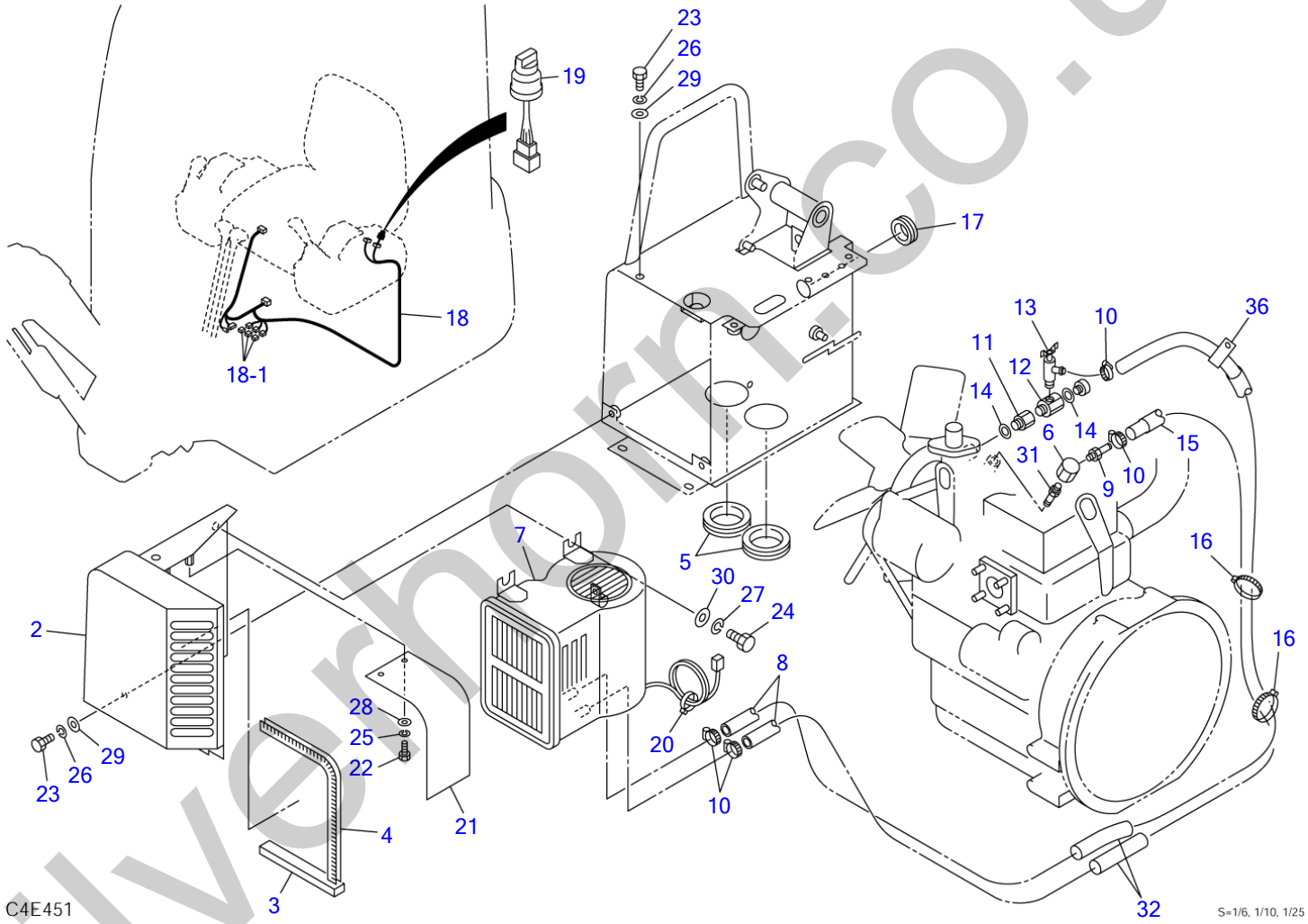

silverhorn.co.uk

HEATER (canopy)

Item	Part number	Description	Q'ty	Chan.	Serial No.	Serv.	Remarks
		HEATER ASSY					X03345-21800-3
2	0334521200	BRACKET	1				
3	1654304016	SPONGE	1				sold by the meter
4	1654606035	TRIM	1				sold by the meter
5	1652060063	GROMMET	2				
6	0007262009	ELBOW	1				
7	1911508100	HEATER	1				
8	1911521830	HOSE	2				sold by the meter
9	1911502200	NIPPLE	1				
10	1911500500	BAND	4				
11	0007211017	BUSHING	1				
12	0007261004	JOINT	1				
13	1911502300	VALVE	1				
14	1541400516	WASHER	2				
15	1531325080	PROTECTOR	2				sold by the meter
16	1652201007	BAND	2				
17	1652052800	GROMMET	1				
18	0334242200	HARNESS, wiring	1				
18-1	1730500008	・DIODE (3A, yellow)	3				
19	1700000011	SWITCH, heater	1				
20	1652231250	BAND	1				
21	0334521300	SEAL	1				
22	1100040610	BOLT	2				
23	1100040816	BOLT	3				
24	1100041016	BOLT	4				
25	1140020006	WASHER, spring	2				
26	1140020008	WASHER, spring	3				
27	1140020010	WASHER, spring	4				
28	1141110006	WASHER	2				
29	1141110008	WASHER	3				
30	1141110010	WASHER	4				
31	1501500003	NIPPLE	1				
32	1531325013	PROTECTOR	2				sold by the meter
36	0007300050	CLAMP	1		11611250~		
	C4e453						

silverhorn.co.uk

DEFROSTER

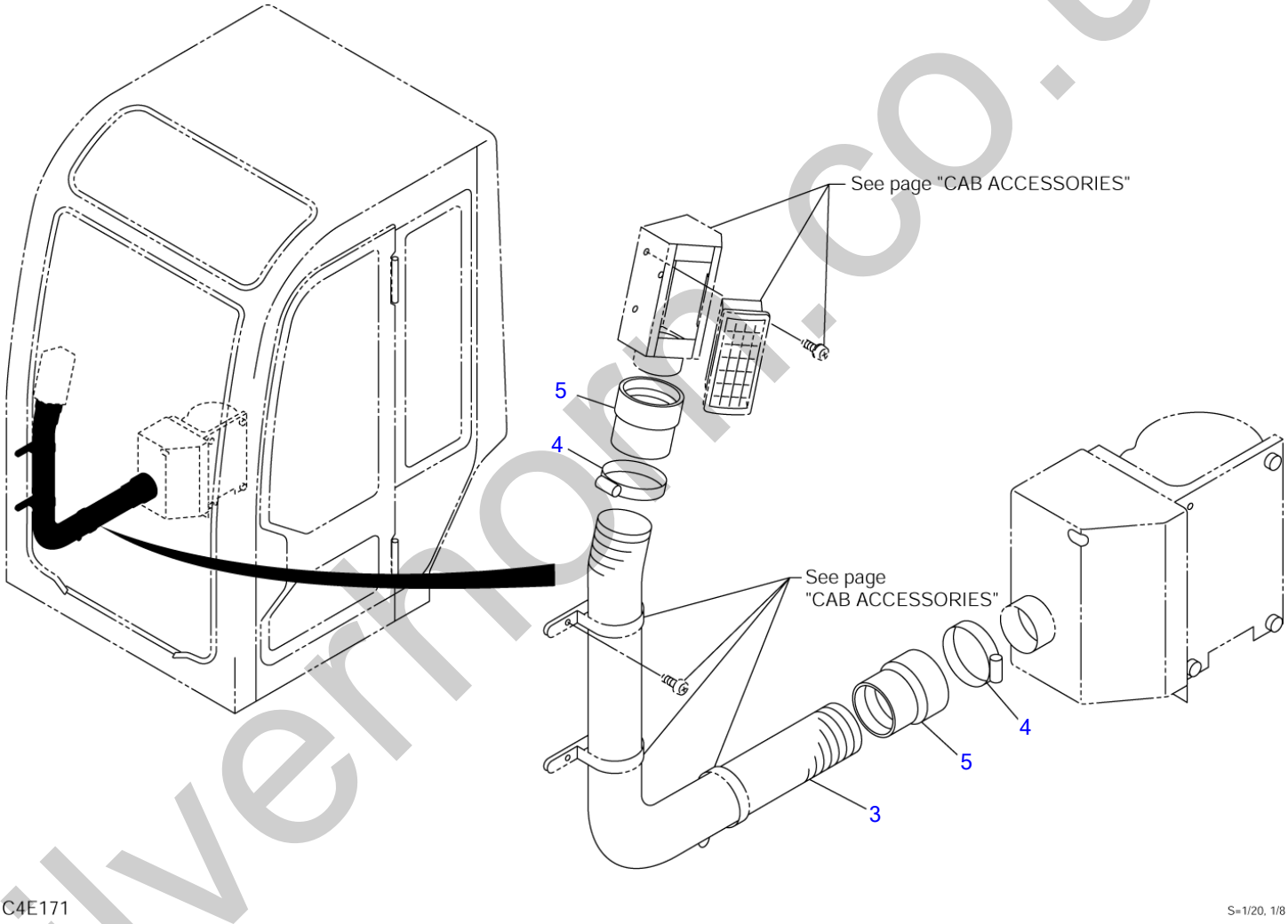

silverhorn.co.uk

DEFROSTER

Item	Part number	Description	Q'ty	Chan.	Serial No.	Serv.	Remarks
		DEFROSTER ASSY					X03345-20000-3
3	**1567315075**	HOSE	1				
4	**1533700070**	BAND	2				
5	**1567325000**	CUFFS	2				
	C4e173						

silverhorn.co.uk

BOOM

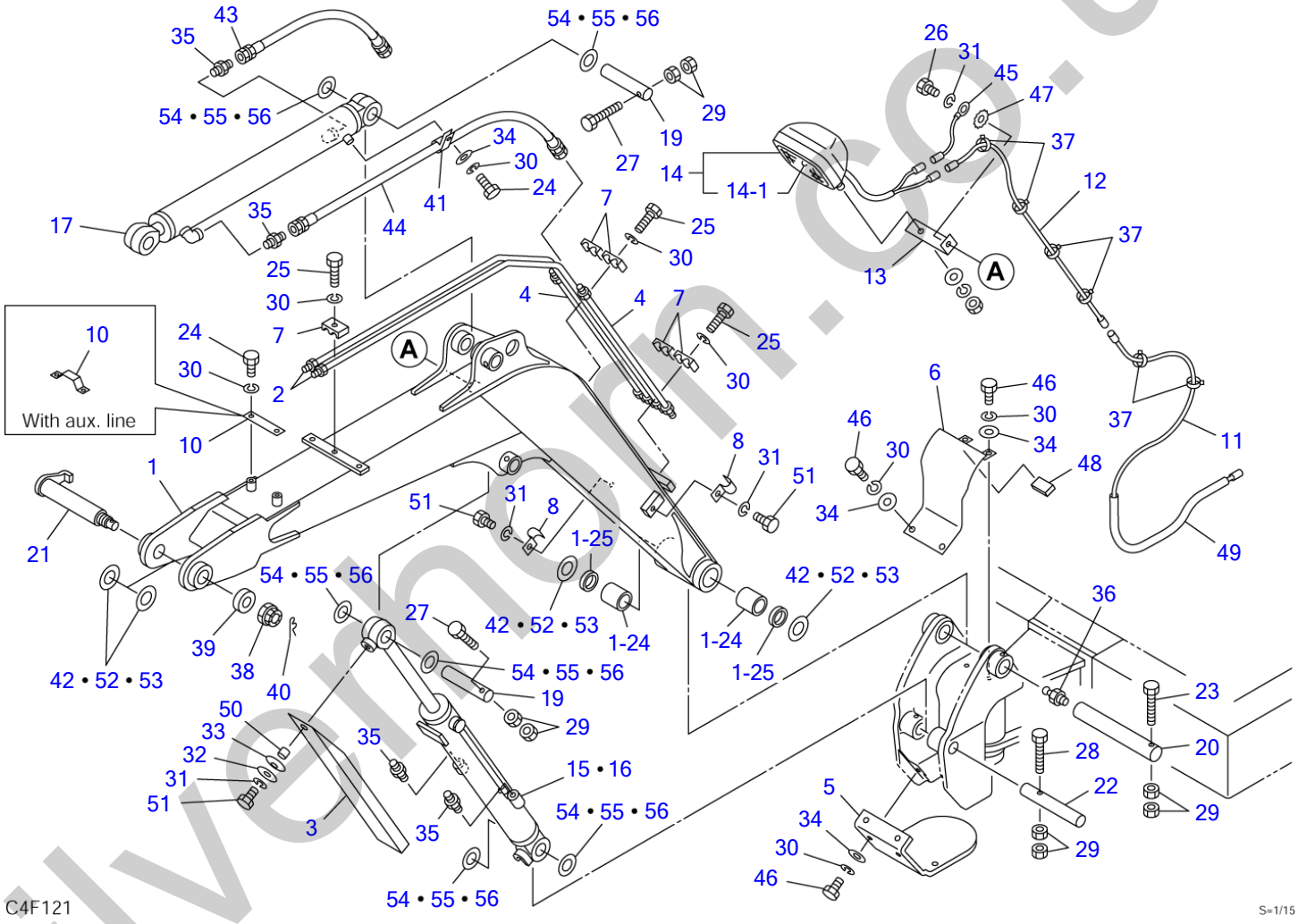

silvernorn.co.uk

BOOM

Item	Part number	Description	Q'ty	Chan.	Serial No.	Serv.	Remarks
		BOOM ASSY (canopy)					X03360-34500-4
		BOOM ASSY (cab)					X03660-34600-4
		BOOM ASSY (canopy) (with aux. line)					X03360-34700-4
		BOOM ASSY (cab) (with aux. line)					X03660-34800-4
1	0336028100	BOOM SUB ASSY	1				
1-24	0002400044	・BUSHING	2				
1-25	1432200035	・SEAL, dust	2				
2	0336021310	PIPE	2				
3	0336034110	COVER	1				
4	0426007700	PIPE	2				
5	0336023050	COVER	1				
6	0336029060	COVER	1				
7	1534000012	CLAMP	5				
8	0336021350	CLAMP	2				
10	0336021370	CLAMP	1				
	0337328007	CLAMP	1				with aux. line
11	0434200500	WIRE	1				
12	0336021390	HARNESS, wiring	1				
13	0336015410	PLATE	1				
14	1703005500	LAMP ASSY	1				
14-1	1703005506	・BULB	1				
15	1900095500	CYLINDER, boom	1				canopy
16	1900095600	CYLINDER, boom	1				cab
17	1900095700	CYLINDER, arm	1				
19	0001601130	PIN	2				
20	0011571011	PIN	1				
21	0011901006	PIN	1				
22	0011511004	PIN	1				
23	1103040880	BOLT	1				
24	1100040816	BOLT	3				
25	1100040830	BOLT	5				
26	1100041025	BOLT	1				
27	1103040860	BOLT	2				
28	1103040875	BOLT	1				
29	1130240008	NUT	8				
30	1140020008	WASHER, spring	17				
31	1140020010	WASHER, spring	4				
32	0003610002	WASHER	1				
33	1225120018	WASHER, conical	1				
34	1141110008	WASHER	6				
35	1515600200	ADAPTOR	4				
	1420010110	・O-RING	1				
36	1560001000	FITTING, grease	1				
37	1652200005	BAND	6				
38	1132630024	NUT	1				
39	0003900021	WASHER	1				
40	1210010545	PIN, split	1				
41	0007300050	CLAMP	1				
42	0436111700	SHIM t=1.0	AR				
43	0336027300	HOSE ASSY	1				18015-60044
44	0336027400	HOSE ASSY	1				18015-60096
45	0336021400	HARNESS, wiring	1				
46	1100040825	BOLT	8				
47	1140330010	WASHER	1				
48	0336029048	RUBBER	1				
49	1531312050	PROTECTOR	1				sold by the meter
50	0003600228	COLLAR	1				
51	1100041016	BOLT	3				
52	0003600051	SHIM t=0.2	AR				
53	0003600052	SHIM t=0.5	AR				
54	0003600044	SHIM t=0.2	AR				
55	0003600045	SHIM t=0.5	AR				
56	0426109800	SHIM t=1.0	AR				
	C4f142						

silverthorn.co.uk

ARM

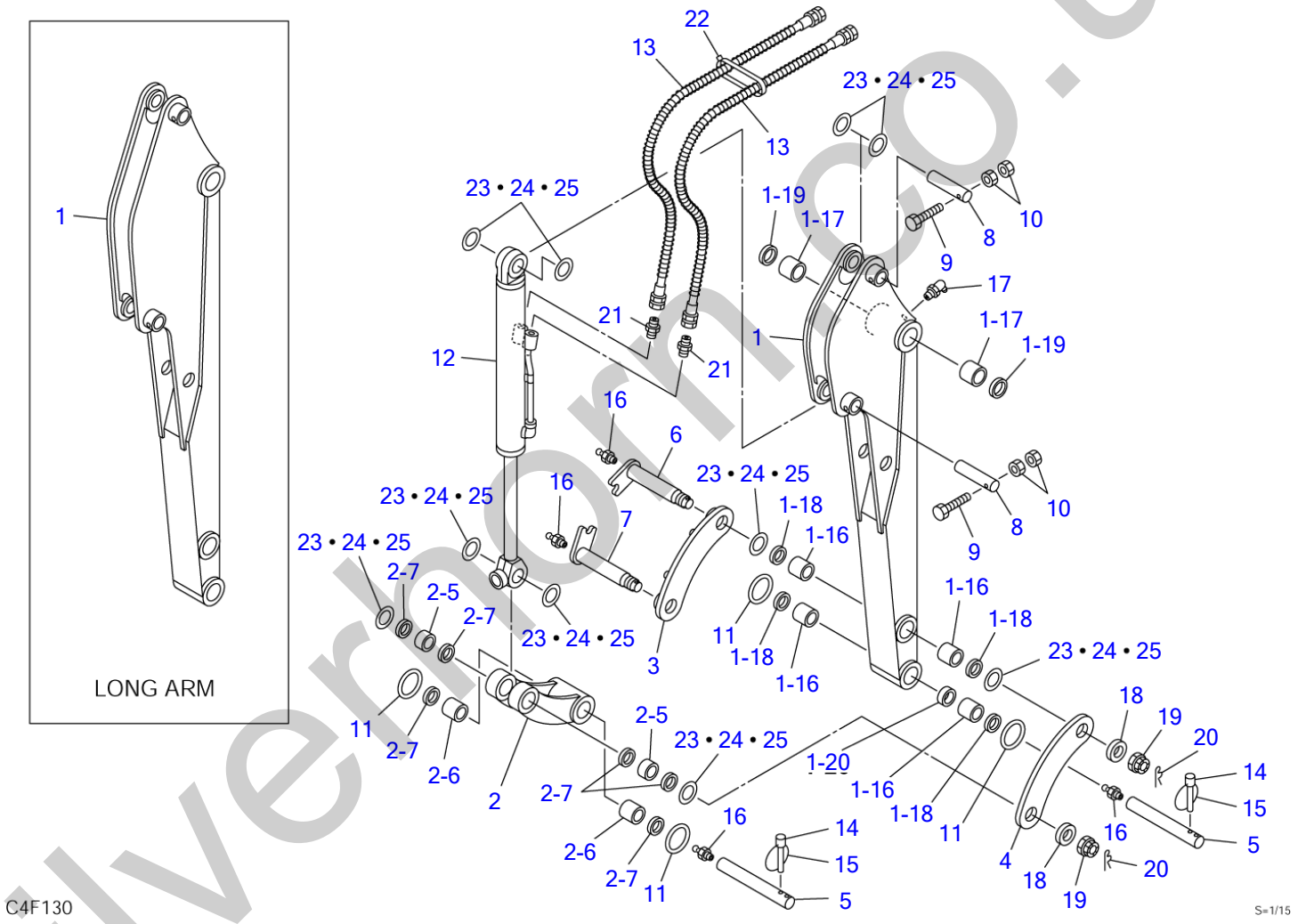

silvernorm.co.uk

ARM

Item	Part number	Description	Q'ty	Chan.	Serial No.	Serv.	Remarks
		ARM ASSY					X03361-36600-0
		ARM ASSY, long					X03361-36700-0
1	0336134100	ARM SUB ASSY	1				930mm
	0336135100	ARM SUB ASSY, long	1				1130mm
1-16	0002330040	・BUSHING	4				
1-17	0002400045	・BUSHING	2				
1-18	1432200030	・SEAL, dust	4				
1-19	1432200035	・SEAL, dust	2				
1-20	0003033001	・COLLAR	1				
2	0336122400	LINK ASSY, bucket	1				
2-5	0002130022	・BUSHING	2				
2-6	0002330040	・BUSHING	2				
2-7	1432200030	・SEAL, dust	6				
3	0336122500	LINK, guide (R.H.)	1				
4	0336122600	LINK, guide (L.H.)	1				
5	0001521002	PIN	2				
6	0001900151	PIN	1				
7	0011901004	PIN	1				
8	0001601110	PIN	2				
9	1103040860	BOLT	2				
10	1130240008	NUT	4				
11	1432900045	O-RING	4				
12	1900095300	CYLINDER, bucket	1				
13	0336134300	HOSE ASSY	2				18015-60092
13-2	1532212127	・PROTECTOR	1				sold by the meter
13	0336135300	HOSE ASSY (for long arm)	2				18015-60110
13-2	1532212158	・PROTECTOR	1				sold by the meter
14	0426106100	PIN	2				
15	0426106200	RING	2				
16	1560001000	FITTING, grease	4				
17	1560001675	FITTING, grease	1				
18	0003900012	WASHER	2				
19	1132630024	NUT	2				
20	1210010545	PIN, split	2				
21	1515600200	ADAPTOR	2				
	1420010110	・O-RING	1				
22	1652200005	BAND	1				
23	0426109800	SHIM t=1.0	AR				
24	0003600045	SHIM t=0.5	AR				
25	0003600044	SHIM t=0.2	AR				
	C4f150						

silverhorn.co.uk

TELESCOPIC ARM (1/2)

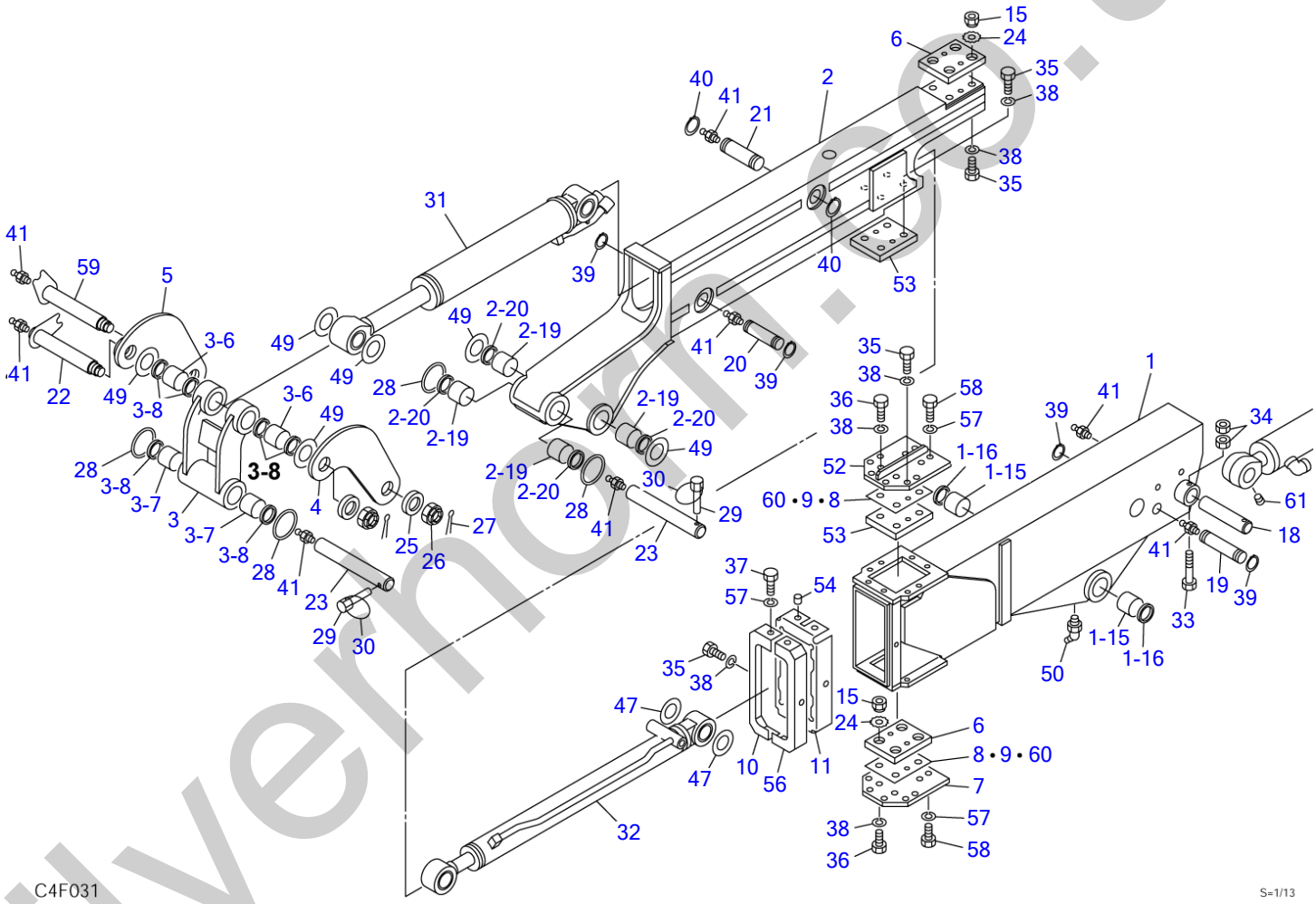

silvermarr.co.uk

TELESCOPIC ARM (1/2)

Item	Part number	Description	Q'ty	Chan.	Serial No.	Serv.	Remarks
		ARM ASSY, telescopic	1				X03361-31000-3
1	0336131100	ARM, outside	1				
1-15	0002400045	・BUSHING	2				
1-16	1432200035	・SEAL, dust	2				
2	0336116300	ARM, inside	1				
2-19	0002330040	・BUSHING	4				
2-20	1432200030	・SEAL, dust	4				
3	0336115300	LINK, bucket	1				
3-6	0002130022	・BUSHING	2				
3-7	0002330040	・BUSHING	2				
3-8	1432200030	・SEAL, dust	6				
4	0336116500	LINK, guide	1				
5	0336116600	LINK, guide	1				
6	0336115650	LINER	2				
7	0336116271	PLATE	1				
8	0336115620	SHIM t=3.2	AR				
9	0336115630	SHIM t=0.5	AR				
10	0336116230	COVER (R.H.)	1				
11	0336116240	SEAL	1				
15	0336115660	NUT	8				
18	0011671006	PIN	1				
19	0001690001	PIN	1				
20	0001690002	PIN	1				
21	0001691006	PIN	1				
22	0011901004	PIN	1				
23	0001521002	PIN	2				
24	1140330012	WASHER	8				
25	0003900012	WASHER	2				
26	1132620024	NUT	2				
27	1210000545	PIN, split	2				
28	1432900045	O-RING	4				
29	0426106100	PIN	2				
30	0426106200	RING	2				
31	1900062700	CYLINDER, bucket	1				
32	1900077500	CYLINDER, telescopic	1				
33	1103040860	BOLT	1				
34	1130240008	NUT	2				
35	1100040816	BOLT	18				
36	1100040820	BOLT	8				
37	1100041030	BOLT	4				
38	1140020008	WASHER, spring	26				
39	1220000025	RING, snap	4				
40	1220000030	RING, snap	2				
41	1560001000	FITTING, grease	8				
47	0003102616	SHIM t=1.6	AR				
49	0426109800	SHIM t=1.0	AR				
50	1560001675	FITTING, grease	1				
52	0336116270	COVER	1				
53	0336116800	LINER	2				
54	0003000079	COLLAR	4				
56	0336116235	COVER (L.H.)	1				
57	1140020010	WASHER, spring	8				
58	1100041020	BOLT	4				
59	0001900151	PIN	1				
60	0336131060	SHIM t=0.2	AR				
61	1501810001	PLUG	1				
	C4f170						

silvermorn.co.uk

TELESCOPIC ARM (2/2)

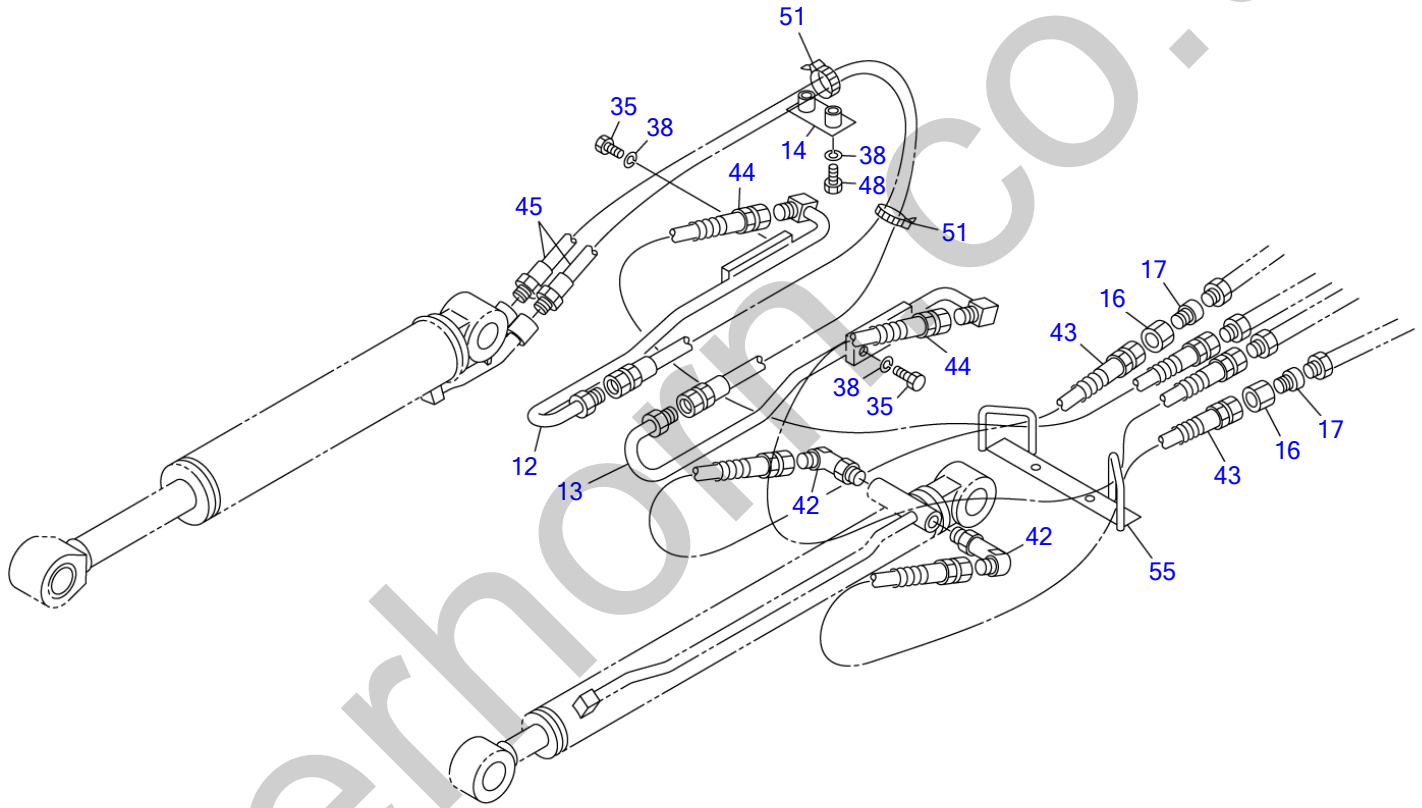

C4F040

S=1/8

silverhorn.co.uk

TELESCOPIC ARM (2/2)

Item	Part number	Description	Q'ty	Chan.	Serial No.	Serv.	Remarks
		ARM ASSY, telescopic	1				X03361-31000-3
12	0336116280	PIPE (R.H.)	1				
13	0336116290	PIPE (L.H.)	1				
14	0336115820	CLAMP	1				
16	0336113300	NUT	2				
17	0336113400	NIPPLE	2				
35	1100040816	BOLT	4				
38	1140020008	WASHER, spring	6				
42	1515010040	ELBOW	2				
	1420010110	・O-RING	1				
	1420010110	・O-RING	1				
43	1801600078	HOSE ASSY	2				
44	1801600094	HOSE ASSY	2				
45	1801802082	HOSE ASSY	2				
48	1100040830	BOLT	2				
51	1652201003	BAND	2				
55	0336131055	CLAMP	1				
	C4f042						

silverhorn.co.uk

BUCKET

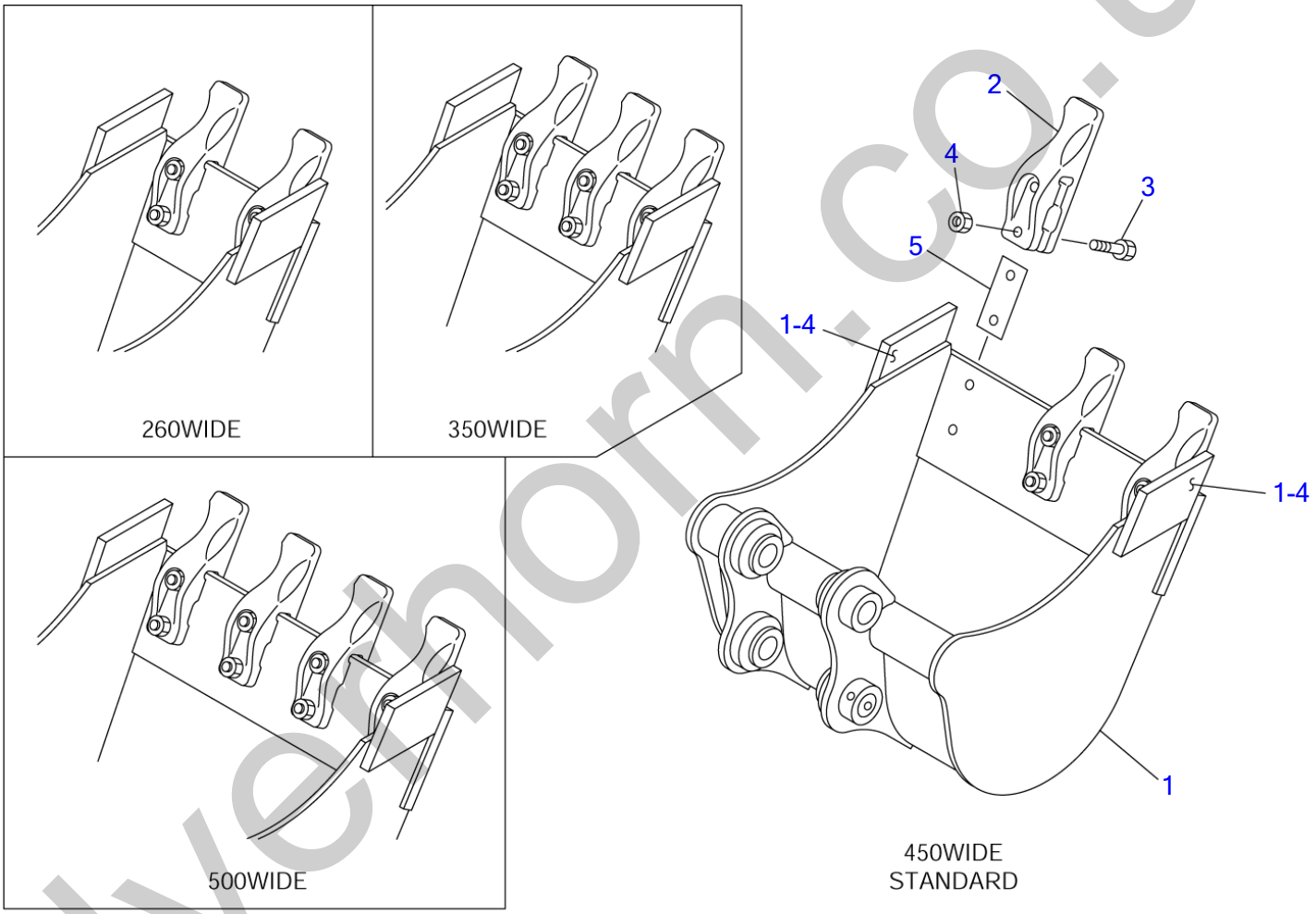

C4F051

S=1/8

silverhorn.co.uk

BUCKET

Item	Part number	Description	Q'ty	Chan.	Serial No.	Serv.	Remarks
0	0336230000	BUCKET ASSY	1				260mm wide
	0336231000	BUCKET ASSY	1				350mm wide
	0336229000	BUCKET ASSY	1				450mm wide
	0336232000	BUCKET ASSY	1				500mm wide
1	X **********	・BUCKET	1				
1-4	0336228104	・・CUTTER, side	2				
2	0136209900	・TOOTH	2				260W
	0136209900	・TOOTH	3				350W, 450W
	0136209900	・TOOTH	4				550W
3	1101051245	・BOLT	4				260W
	1101051245	・BOLT	6				350W, 450W
	1101051245	・BOLT	8				550W
4	1130550012	・NUT	4				260W
	1130550012	・NUT	6				350W, 450W
	1130550012	・NUT	8				550W
5	0136209801	・SHIM t=0.8	AR				
	0136209802	・SHIM t=1.0	AR				
	0136209803	・SHIM t=1.2	AR				
	C4f052						

silverhorn.co.uk

BUCKET (3-holes bucket)

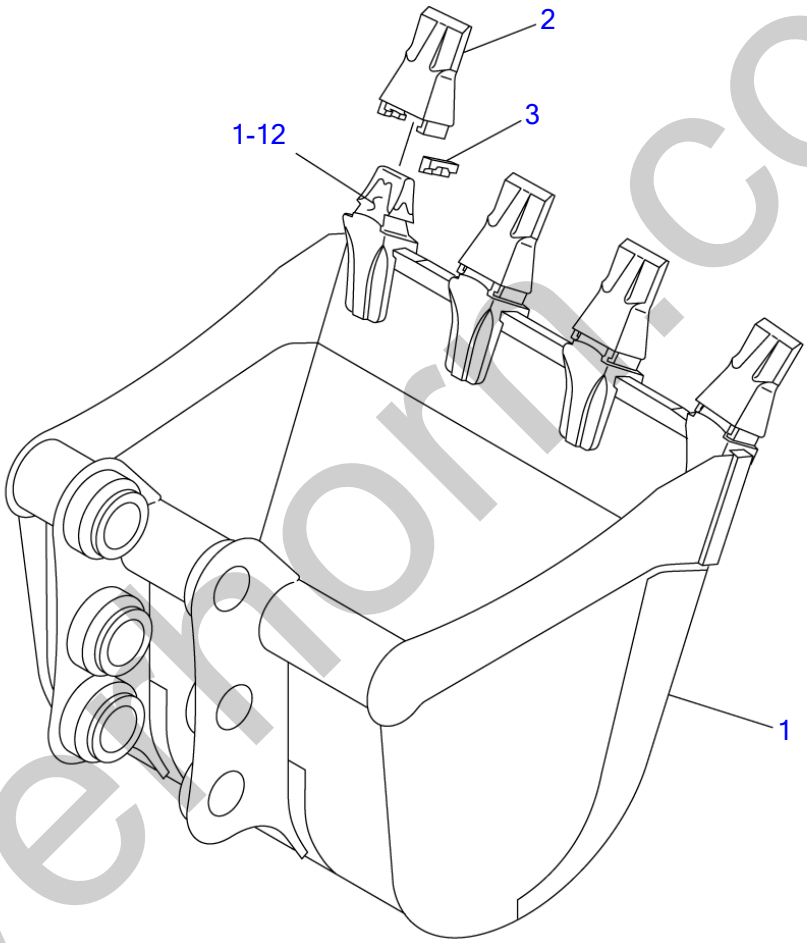

C4F070

S=1/6

silvermorn.co.uk

BUCKET (3-holes bucket)

Item	Part number	Description	Q'ty	Chan.	Serial No.	Serv.	Remarks
0	0336226000	BUCKET ASSY	1				X03362-26000-0
1	X **********	・BUCKET	1				
1-12	1914201201	・・ADAPTOR, tooth	4				
2	1914201202	・POINT, tooth	4				
3	1914201203	・PIN, lock	4				
	C4f070						

silverhorn.co.uk

AUXILIARY LINE

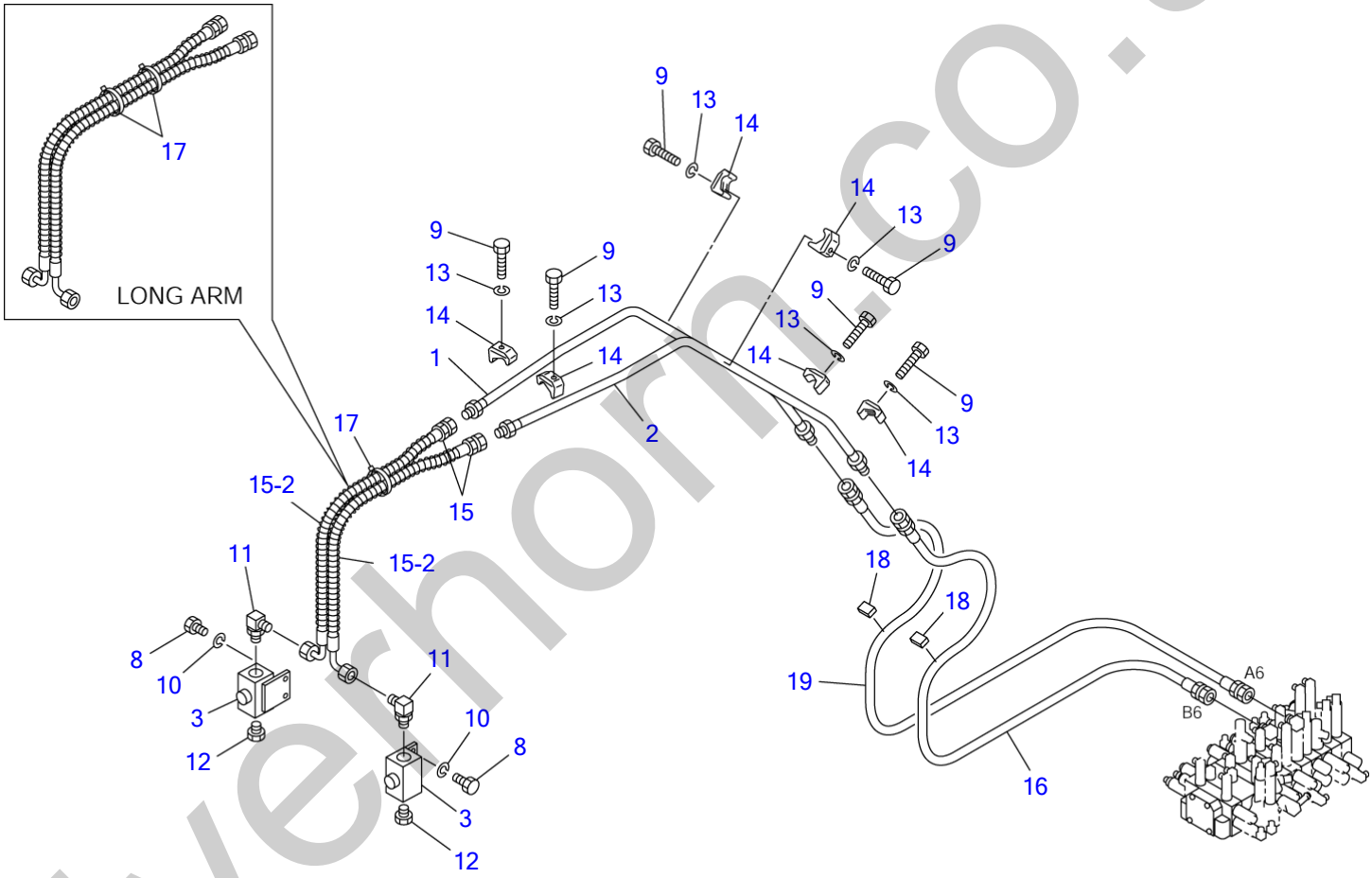

silverhorn.co.uk

AUXILIARY LINE

Item	Part number	Description	Q'ty	Chan.	Serial No.	Serv.	Remarks
0	0337345500	PIPING ASSY	1				X03373-45500-0
	0337346500	PIPING ASSY (for long arm)	1				X03373-46500-0
1	0337325010	・PIPE (R.H.)	1				
2	0337325020	・PIPE (L.H.)	1				
3	1901719800	・VALVE, stop	2				
8	1100040816	・BOLT	4				
9	1100041045	・BOLT	6				
10	1140020008	・WASHER, spring	4				
11	1515010042	・ELBOW	2				
	1420010180	・・O-RING	1				
12	1501750004	・PLUG	2				
	1420010180	・・O-RING	1				
13	1140020010	・WASHER, spring	6				
14	1534100218	・CLAMP	6				
15	0337334300	・HOSE ASSY	2				18015-41082
15-2	1532218073	・・PROTECTOR	1				sold by the meter
15	0337335300	・HOSE ASSY (for long arm)	2				18015-41102
15-2	1532218096	・・PROTECTOR	1				sold by the meter
16	0337345100	・HOSE ASSY	1				18015-40185
17	1652210008	・BAND	1				
	1652210008	・BAND	2				for long arm
18	0337328018	・RUBBER	2				
19	0337345200	・HOSE ASSY	1				18015-40200
	C4f160						

silverhorn.co.uk

AUXILIARY LINE (2nd auxiliary lines)

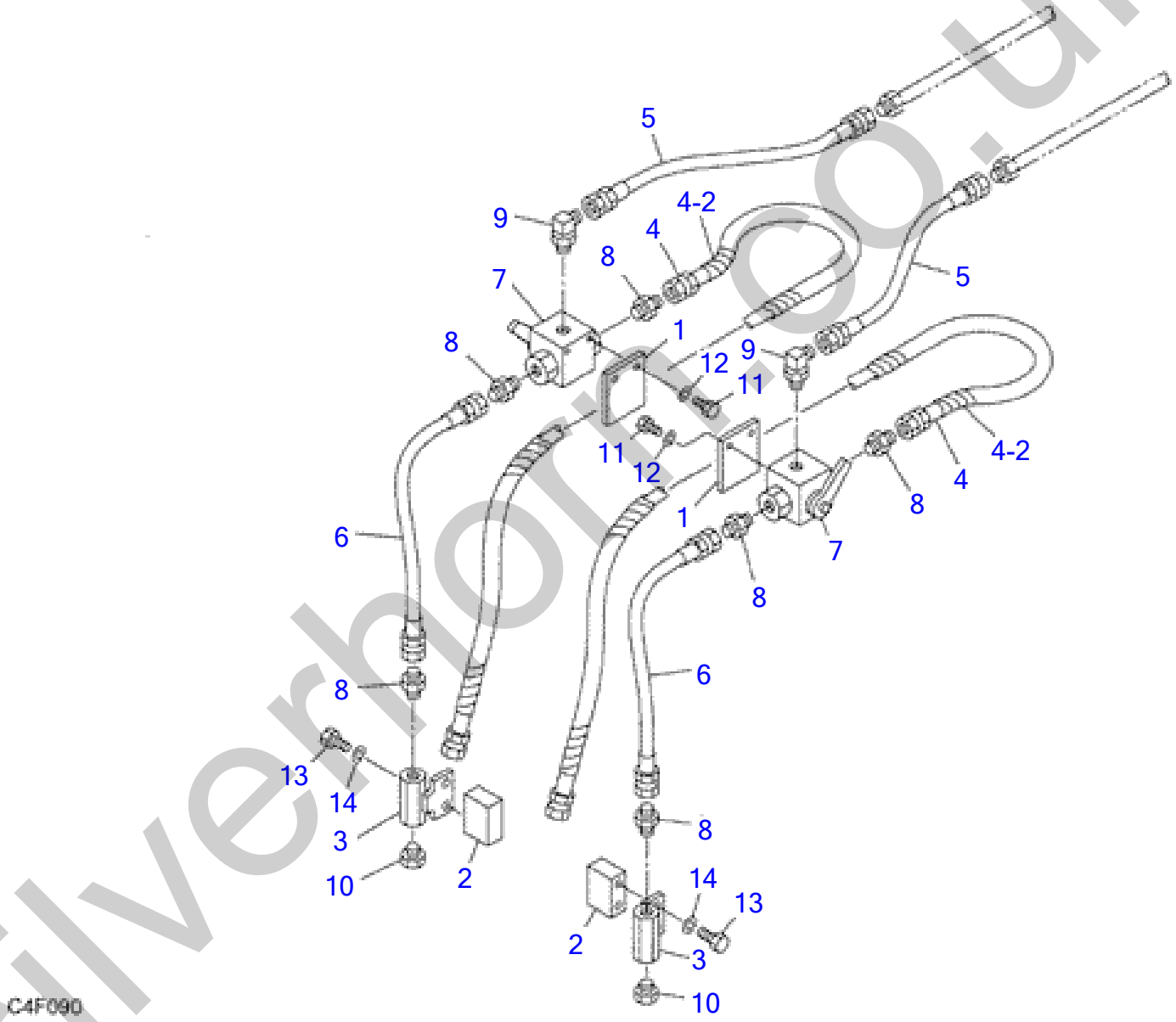

silverhorn.co.uk

AUXILIARY LINE (2nd auxiliary lines)

Item	Part number	Description	Q'ty	Chan.	Serial No.	Serv.	Remarks
0	0337344000	PIPING ASSY	1				X03373-44000-1
	0337343000	PIPING ASSY (long arm)	1				X03373-43000-1
1	0337344500	・PLATE	2				
2	0337344510	・PLATE	2				
3	0337344520	・SOCKET	2				
4	0337344530	・HOSE ASSY	2				18015-60110
4-2	1532212106	・・TUBE	1				sold by the meter
4	0337344540	・HOSE ASSY (for long arm)	2				18015-60130
4-2	1532212126	・・TUBE	1				sold by the meter
5	1801560036	・HOSE ASSY	2				
6	1801600044	・HOSE ASSY	2				
	1801600064	・HOSE ASSY	2				for long arm
7	1901735100	・VALVE, ball	2				
8	1515600200	・ADAPTOR	6				
	1420010110	・・O-RING	1				
	1420010110	・・O-RING	1				
9	1515012040	・ELBOW	2				
	1420010110	・・O-RING	1				
	1420010110	・・O-RING	1				
10	1501750002	・PLUG	2				
	1420010110	・・O-RING	1				
	1420010110	・・O-RING	1				
11	1100040616	・BOLT	4				
12	1140020006	・WASHER, spring	4				
13	1100040820	・BOLT	4				
14	1140020008	・WASHER, spring	4				
	C4f092						

silverhorn.co.uk

DECAL (canopy)

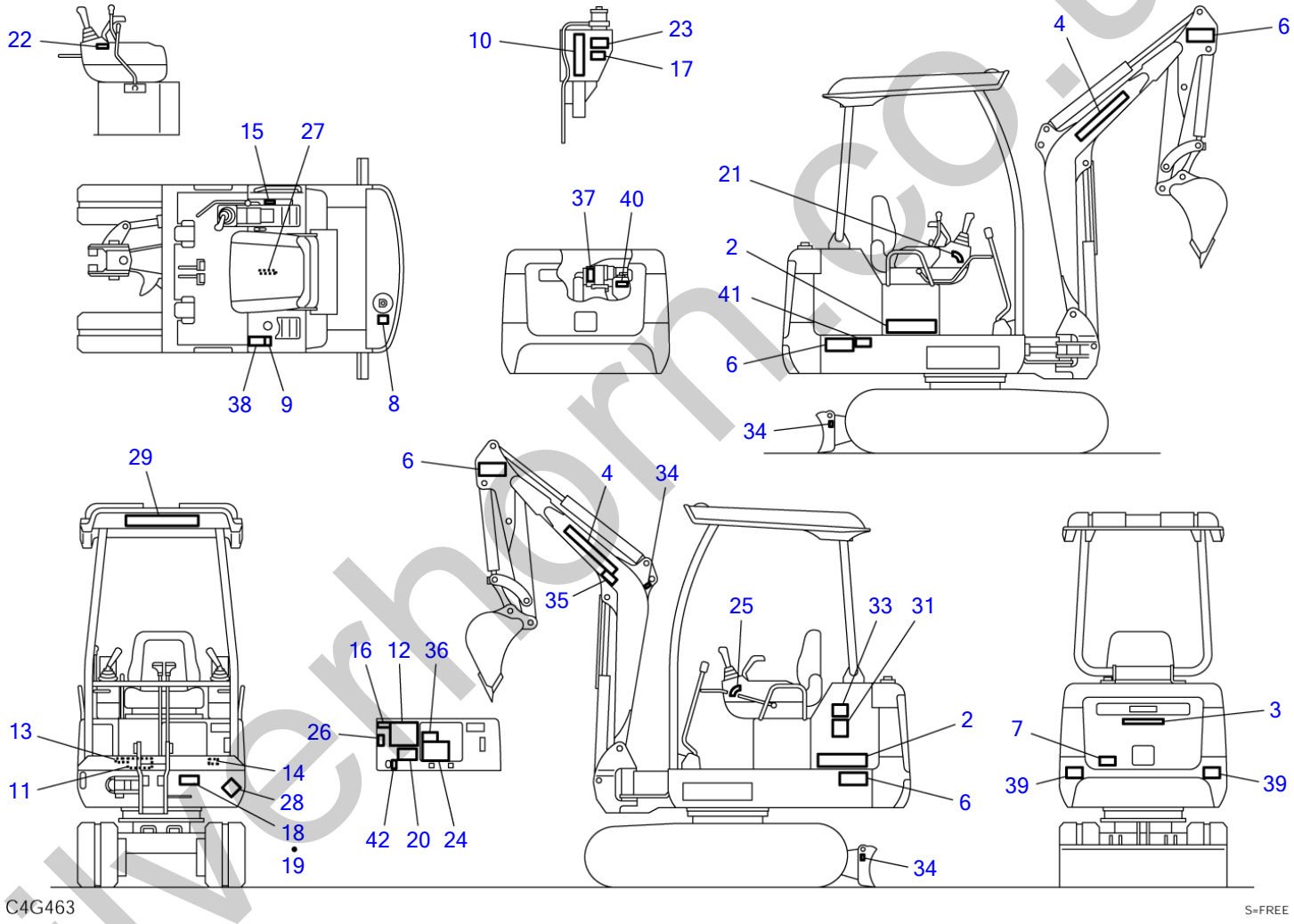

silverhorn.co.uk

2

TB016

3

TAKEUCHI

4

TAKEUCHI

6

WARNING
DO NOT
enter into
swinging area

7

CAUTION
STOP ENGINE
BEFORE OPENING

8

9

10

11

12

CHECK & MAINTENANCE LIST
A3C
DAILY CHECK FOR ENGINE

13

14

15

20

CAUTION
MAXIMUM SIDE INCLINATION ANGLE
10°

21

22

23

WARNING
Engine may be HOT

24

WARNING

25

27

30A
10A
10A
20A
15A
10A
25A
10A

28

TAKEUCHI
CEMA

29

TAKEUCHI

31

LWA
93 dB
(except for U.S. TAKEUCH

26

33

CE
(except for U.S. TAKEUCHI)

34

35

WARNING
THIS EXCAVATOR
MUST NOT BE USED
AS A CRANE
(except for U.K. TAKEUCHI)

36

WARNING

37

CAUTION
DO NOT USE ETHER

38

CAUTION

39

40

System Contains 50/50
Ethylene Glycol Antifreeze
/ Water Mixture

41

IMPORTANT

42

BLADE
TREAD
ADJUSTER
S=free

C4G473

silverhorn.co.uk

DECAL (canopy)

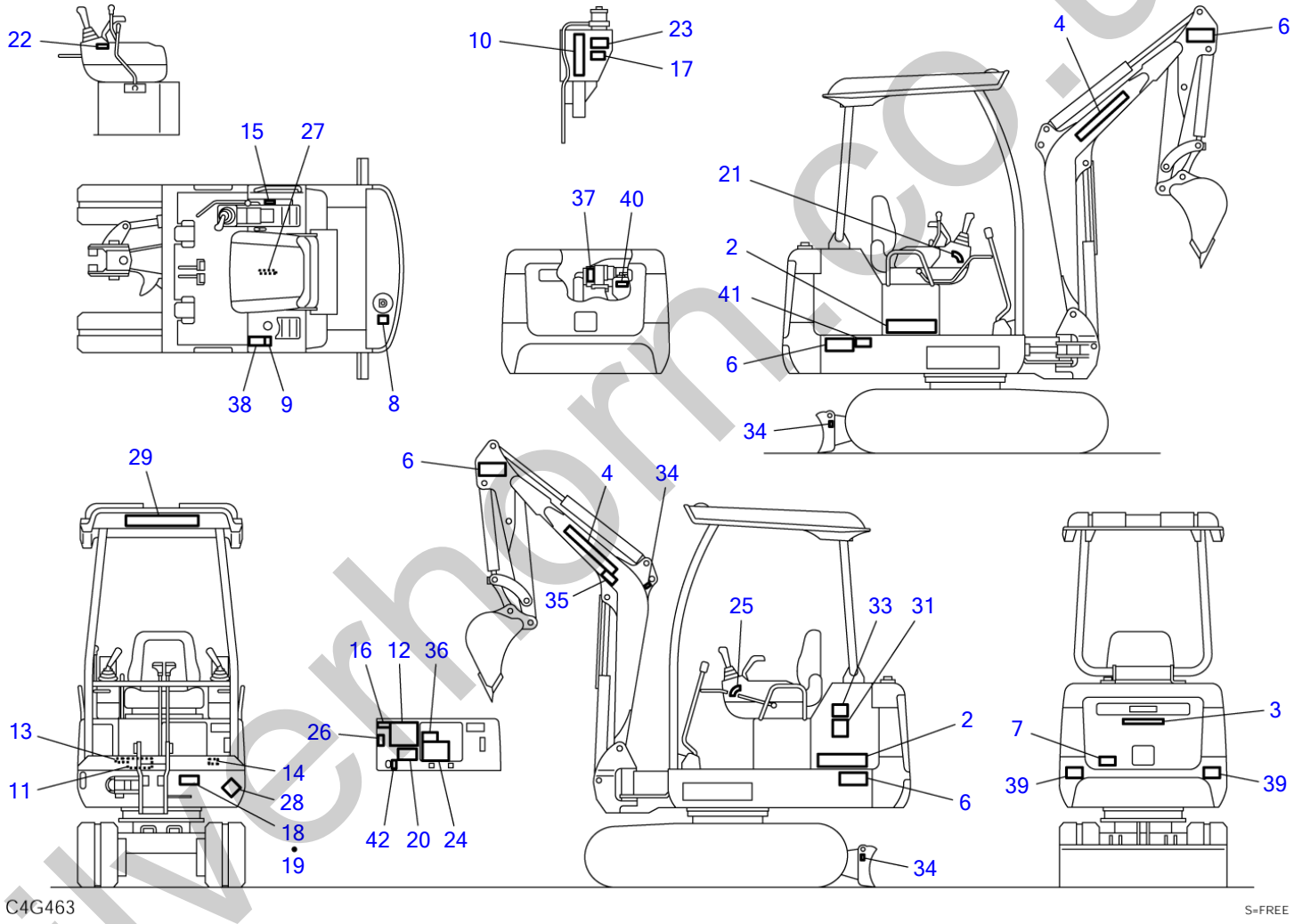

silverhorn.co.uk

DECAL (canopy)

Item	Part number	Description	Q'ty	Chan.	Serial No.	Serv.	Remarks
0	0339377800	DECAL SET (English)	1				X03393-77800-6
	0339377900	DECAL SET (German)	1				X03393-77900-6
	0339378000	DECAL SET (French)	1				X03393-78000-6
	0339378100	DECAL SET (Italian)	1				X03393-78100-6
	0339378200	DECAL SET (Spanish)	1				X03393-78200-6
	0339378300	DECAL SET (Dutch)	1				X03393-78300-6
	0339378400	DECAL SET (US TAKEUCHI)	1				X03393-78400-6
	0339380000	DECAL SET (Russian)	1				X03393-80000-6
	0339380400	DECAL SET (UK TAKEUCHI)	1				X03393-80400-6
2	0339331100	・DECAL	2				
3	0359306200	・DECAL	1				
4	0329350200	・DECAL	2				
6	0359306500	・DECAL (English)	4				
	0359308100	・DECAL (German)	4				
	0359309100	・DECAL (French)	4				
	0359310100	・DECAL (Italian)	4				
	0339364100	・DECAL (Spanish)	4				
	0399356001	・DECAL (Russian)	4				
7	0359307400	・DECAL (English)	1				
	0359314400	・DECAL (German)	1				
	0359315400	・DECAL (French)	1				
	0359316400	・DECAL (Italian)	1				
	0339364200	・DECAL (Spanish)	1				
	0579300602	・DECAL (Russian)	1				
8	0359306600	・SYMBOL MARK (English)	1				
	0339375260	・SYMBOL MARK (German)	1				
	0339375460	・SYMBOL MARK (French)	1				
	0339375660	・SYMBOL MARK (Italian, Spanish)	1				
	0579300603	・SYMBOL MARK (Russian)	1				
9	0359306700	・SYMBOL MARK	1				
10	0339330900	・DECAL	1				
11	0359325240	・DECAL	1				
12	0339330300	・DECAL (English)	1				
	0339330400	・DECAL (German)	1				
	0339330500	・DECAL (French)	1				
	0339330600	・DECAL (Italian)	1				
	0339364300	・DECAL (Spanish)	1				
	0339380301	・DECAL (Russian)	1				
13	0329360060	・DECAL	1				
14	0339330800	・DECAL	1				
15	0359325190	・DECAL	1				
16	X **********	・DECAL	1				
17	1910210201	・DECAL	1				
18	X **********	・DECAL	1				
19	X **********	・SCREW	4				
20	0339379820	・DECAL (English)	1				
	0339376320	・DECAL (German)	1				
	0339379420	・DECAL (French)	1				
	0339379520	・DECAL (Italian)	1				
	0339379620	・DECAL (Spanish)	1				
	0339380302	・DECAL (Russian)	1				
21	0349325020	・DECAL	1				
22	0359317200	・DECAL	1				
23	0569321980	・DECAL (English)	1				
24	0359313700	・DECAL (English)	1				
	0359314700	・DECAL (German)	1				
	0359315700	・DECAL (French)	1				
	0359316700	・DECAL (Italian)	1				
	0339364500	・DECAL (Spanish)	1				
	0579300606	・DECAL (Russian)	1				
25	0329360100	・SYMBOL MARK	1				
26	0329352400	・SYMBOL MARK	1				
27	0339376210	・DECAL (English, Dutch)	1				
	0339376310	・DECAL (German)	1				
	0339379410	・DECAL (French)	1				
	0339379510	・DECAL (Italian)	1				
	0339379610	・DECAL (Spanish)	1				

silverform.co.uk

DECAL (canopy)

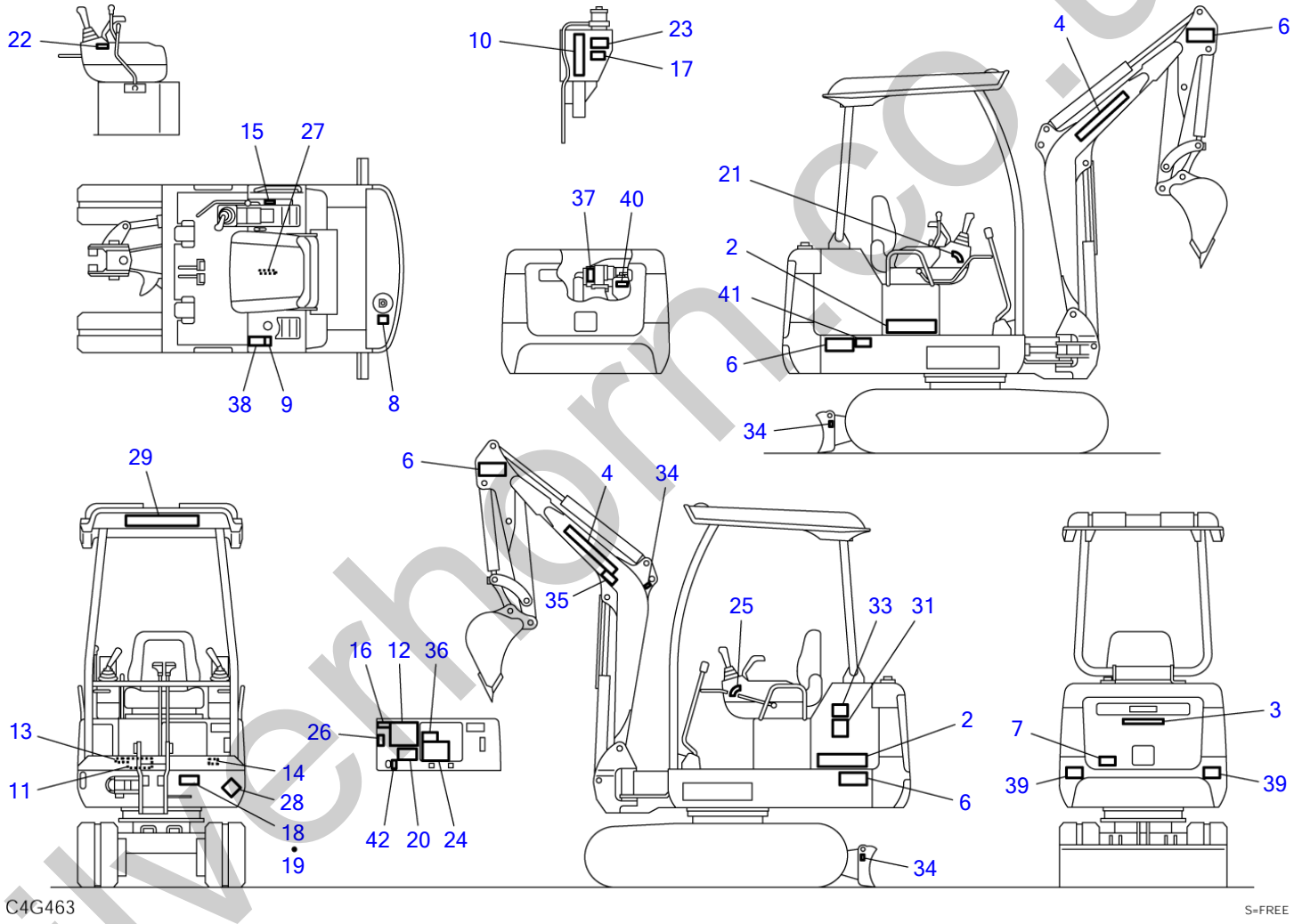

silverhorn.co.uk

DECAL (canopy)

Item	Part number	Description	Q'ty	Chan.	Serial No.	Serv.	Remarks
27	0339380303	・DECAL (Russian)	1				
28	X **********	・DECAL	1				
29	0359306100	・DECAL	1				
31	X **********	・DECAL	1				except for US
33	X **********	・DECAL	1		11610001~11611969		except for US
34	0399300500	・DECAL	3				
35	0359347010	・DECAL (English)	1				except for UK
35	0339375210	・DECAL (German)	1				
35	0339375410	・DECAL (French)	1				
35	0339375610	・DECAL (Italian)	1				
35	0339375810	・DECAL (Spanish)	1				
35	0579300609	・DECAL (Russian)	1				
36	0359347020	・DECAL (English)	1				
36	0339375220	・DECAL (German)	1				
36	0339375420	・DECAL (French)	1				
36	0339375620	・DECAL (Italian)	1				
36	0339375820	・DECAL (Spanish)	1				
36	0579300610	・DECAL (Russian)	1				
37	0339375040	・DECAL (English)	1				
37	0339375240	・DECAL (German)	1				
37	0339375440	・DECAL (French)	1				
37	0339375640	・DECAL (Italian)	1				
37	0339375840	・DECAL (Spanish)	1				
37	0579300611	・DECAL (Russian)	1				
38	0339375050	・DECAL (English)	1				
38	0339375250	・DECAL (German)	1				
38	0339375450	・DECAL (French)	1				
38	0339375650	・DECAL (Italian)	1				
38	0339375850	・DECAL (Spanish)	1				
38	0399356005	・DECAL (Russian)	1				
39	0379358560	・DECAL	2				
40	0359313900	・DECAL	1				
41	0339376240	・DECAL (English)	1				
41	0339376340	・DECAL (German)	1				
41	0339379440	・DECAL (French)	1				
41	0339379540	・DECAL (Italian)	1				
41	0339379640	・DECAL (Spanish)	1				
41	0579300613	・DECAL (Russian)	1				
42	0339332200	・DECAL (English)	1			M	
42	0339334200	・DECAL (German)	1			M	
42	0339336200	・DECAL (French)	1			M	
42	0339338200	・DECAL (Italian)	1			M	
42	0339364700	・DECAL (Spanish)	1			M	
42	0339380304	・DECAL (Russian)	1			M	
	C4g464						

silverthorn.co.uk

DECAL (cab)

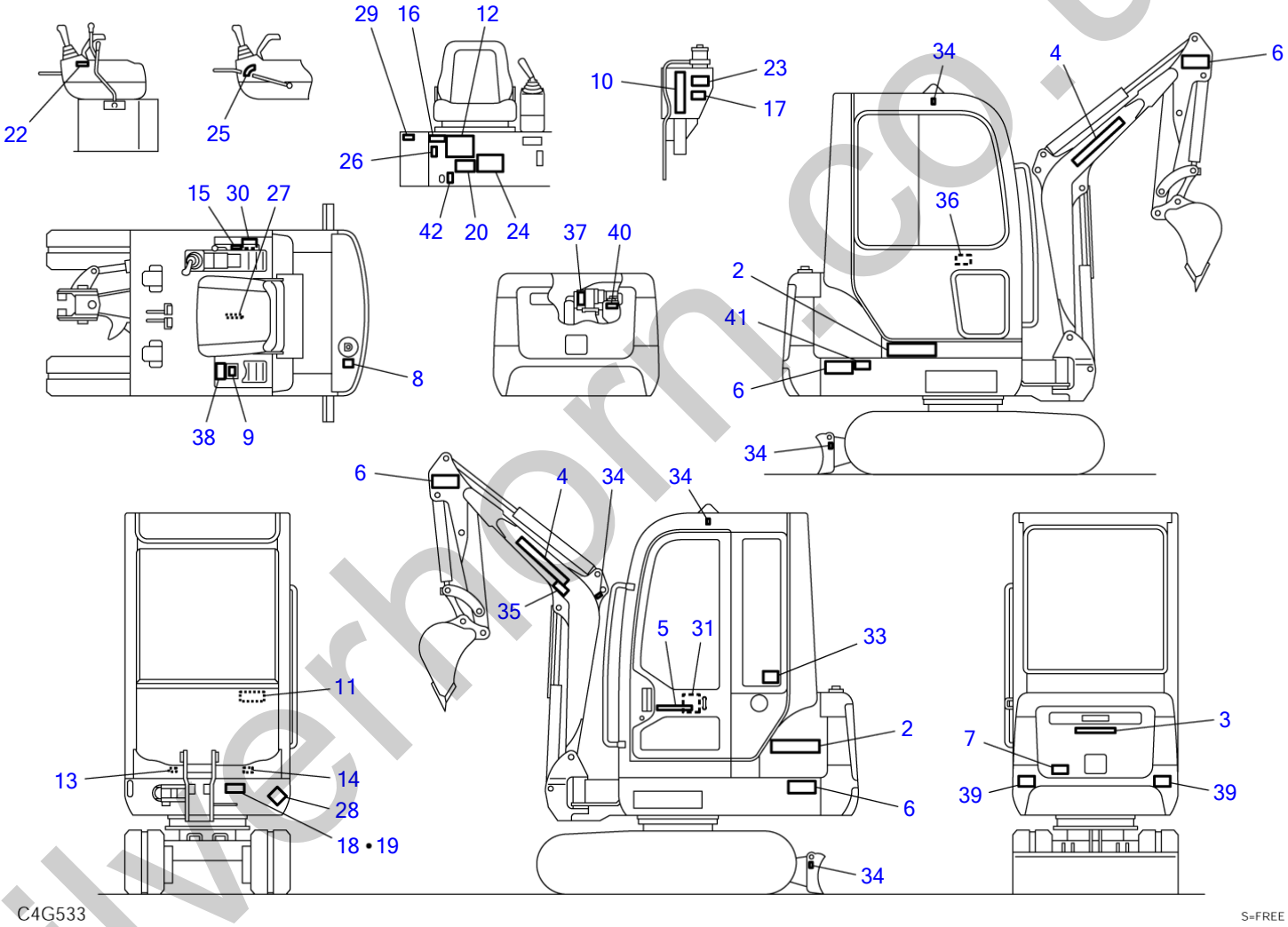

silverhorn.co.uk

2

TB016

3

TAKEUCHI

4

TAKEUCHI

5

TAKEUCHI

6

WARNING
DO NOT
enter into
swinging area

7

CAUTION
STOP ENGINE
BEFORE OPENING

8

9

10

11

12

CHECK & MAINTENANCE LIST
A3C
DAILY CHECK FOR ENGINE

13

15

20

CAUTION
MAXIMUM SIDE INCLINATION ANGLE
10°

14

25

27

22

23

WARNING
Engine may be HOT

24

WARNING
(except for U.K. TAKEUCHI)

26

28

29

31

LWA
93 dB
(except for U.S. TAKEUCHI)

33

CE
(except for U.S. TAKEUCHI)

34

35

WARNING
THIS EXCAVATOR
MUST NOT BE USED
AS A CRANE
(except for U.K. TAKEUCHI)

36

WARNING

37

CAUTION
DO NOT USE ETHER

38

CAUTION

39

40

System Contains 50/50
Ethylene Glycol Antifreeze
/ Water Mixture

41

IMPORTANT

42

BLADE
TREAD
ADJUSTER
S=free

C4G543

silverhorn.co.uk

DECAL (cab)

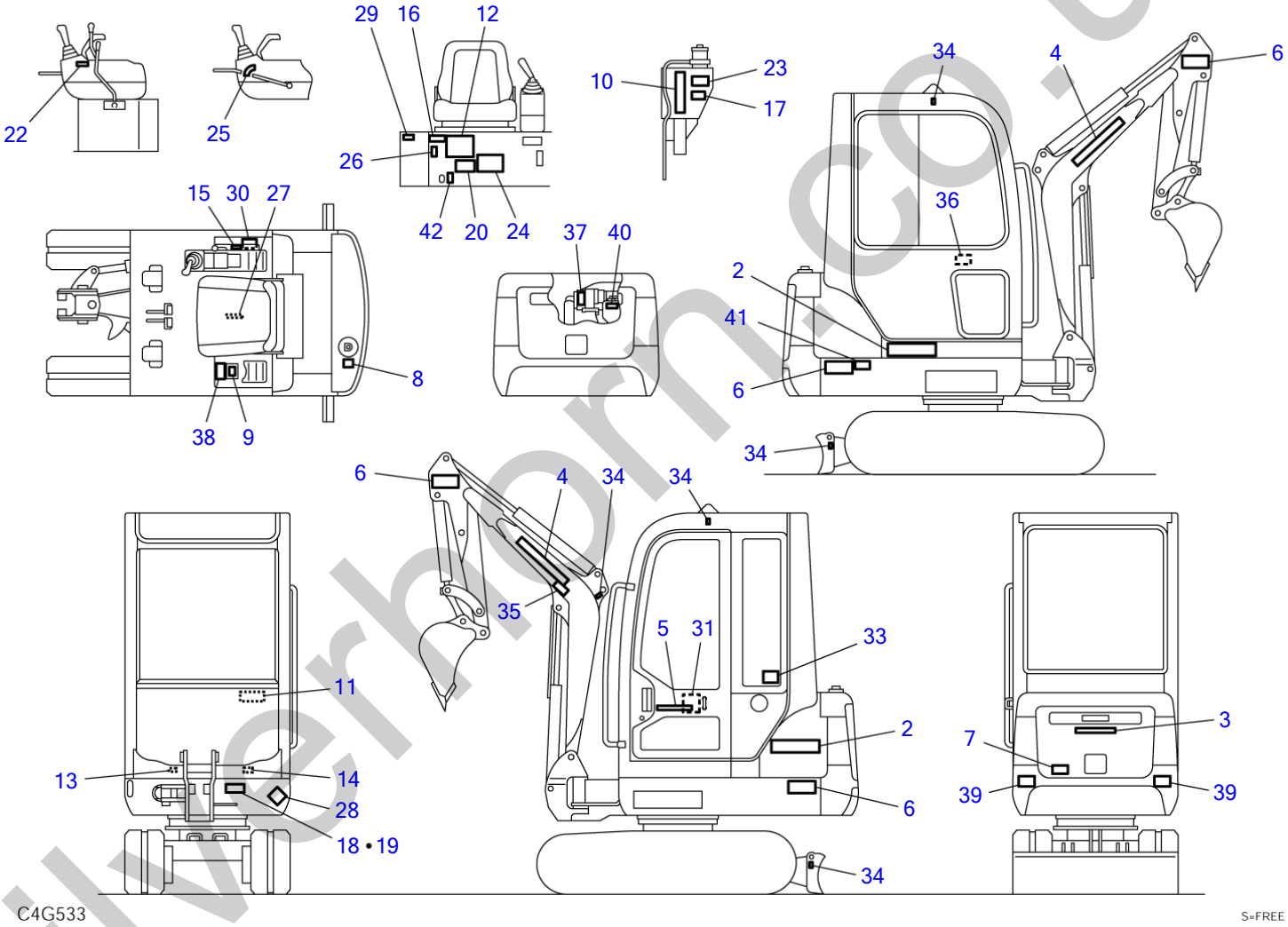

silverhorn.co.uk

DECAL (cab)

Item	Part number	Description	Q'ty	Chan.	Serial No.	Serv.	Remarks
0	0339378500	DECAL SET (English)	1				X03393-78500-6
	0339378600	DECAL SET (German)	1				X03393-78600-6
	0339378700	DECAL SET (French)	1				X03393-78700-6
	0339378800	DECAL SET (Italian)	1				X03393-78800-6
	0339378900	DECAL SET (Spanish)	1				X03393-78900-6
	0339379000	DECAL SET (Dutch)	1				X03393-79000-6
	0339379100	DECAL SET (US TAKEUCHI)	1				X03393-79100-6
	0339380200	DECAL SET (Russian)	1				X03393-80200-6
	0339380600	DECAL SET (UK TAKEUCHI)	1				X03393-80600-6
2	0339331100	・DECAL	2				
3	0359306200	・DECAL	1				
4	0329350200	・DECAL	2				
5	0569321400	・DECAL	1				
6	0359306500	・DECAL (English)	4				
	0359308100	・DECAL (German)	4				
	0359309100	・DECAL (French)	4				
	0359310100	・DECAL (Italian)	4				
	0339364100	・DECAL (Spanish)	4				
	0399356001	・DECAL (Russian)	1				
7	0359307400	・DECAL (English)	1				
	0359314400	・DECAL (German)	1				
	0359315400	・DECAL (French)	1				
	0359316400	・DECAL (Italian)	1				
	0339364200	・DECAL (Spanish)	1				
	0579300602	・DECAL (Russian)	1				
8	0359306600	・SYMBOL MARK (English)	1				
	0339375260	・SYMBOL MARK (German)	1				
	0339375460	・SYMBOL MARK (French)	1				
	0339375660	・SYMBOL MARK (Italian, Spanish)	1				
	0579300603	・SYMBOL MARK (Russian)	1				
9	0359306700	・SYMBOL MARK	1				
10	0339330900	・DECAL	1				
11	0359325240	・DECAL	1				
12	0339330300	・DECAL (English)	1				
	0339330400	・DECAL (German)	1				
	0339330500	・DECAL (French)	1				
	0339330600	・DECAL (Italian)	1				
	0339364300	・DECAL (Spanish)	1				
	0339380301	・DECAL (Russian)	1				
13	0329360060	・DECAL	1				
14	0339330800	・DECAL	1				
15	0359325190	・DECAL	1				
16	X **********	・DECAL	1				
17	1910210201	・DECAL	1				
18	X **********	・DECAL	1				
19	X **********	・SCREW	4				
20	0339379820	・DECAL (English)	1				
	0339376320	・DECAL (German)	1				
	0339379420	・DECAL (French)	1				
	0339379520	・DECAL (Italian)	1				
	0339379620	・DECAL (Spanish)	1				
	0339380302	・DECAL (Russian)	1				
22	0359317200	・DECAL	1				
23	0569321980	・DECAL (English)	1				
24	0359313700	・DECAL (English)	1				except for UK
	0359314700	・DECAL (German)	1				
	0359315700	・DECAL (French)	1				
	0359316700	・DECAL (Italian)	1				
	0339364500	・DECAL (Spanish)	1				
	0579300606	・DECAL (Russian)	1				
25	0329360100	・SYMBOL MARK	1				
26	0329352400	・SYMBOL MARK	1				
27	0339376210	・DECAL (English, Dutch)	1				
	0339376310	・DECAL (German)	1				
	0339379410	・DECAL (French)	1				
	0339379510	・DECAL (Italian)	1				
	0339379610	・DECAL (Spanish)	1				

silverform.co.uk

DECAL (cab)

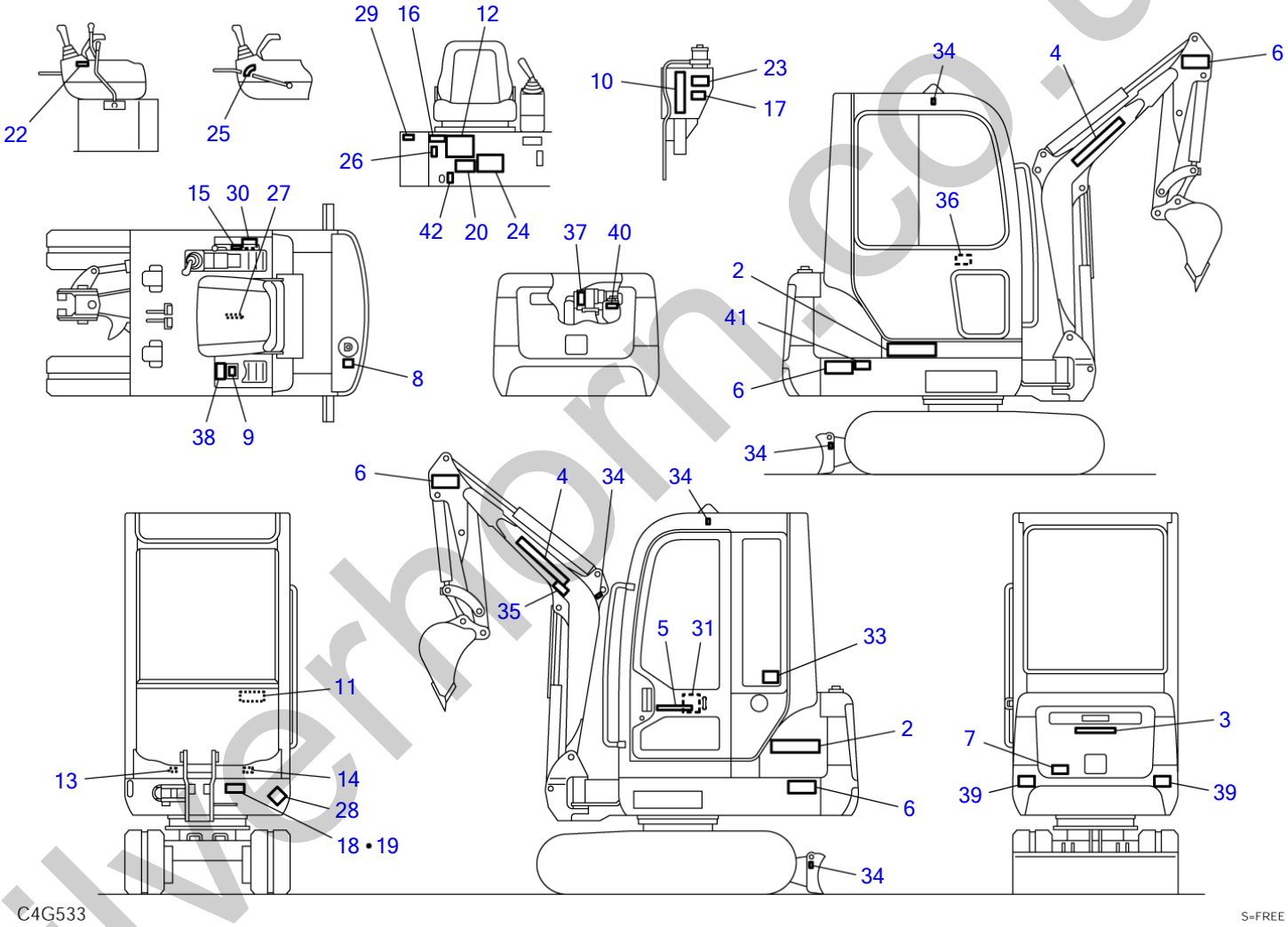

silverhorn.co.uk

DECAL (cab)

Item	Part number	Description	Q'ty	Chan.	Serial No.	Serv.	Remarks
27	0339380303	・DECAL (Russian)	1				
28	X **********	・DECAL	1				
29	0394504900	・DECAL	1				
30	0189311800	・DECAL	1				
31	X **********	・DECAL	1				except for US
33	X **********	・DECAL	1		11610001~11611969		except for US
34	0399300500	・DECAL	5				
35	0359347010	・DECAL (English)	1				except for UK
35	0339375210	・DECAL (German)	1				
35	0339375410	・DECAL (French)	1				
35	0339375610	・DECAL (Italian)	1				
35	0339375810	・DECAL (Spanish)	1				
35	0579300609	・DECAL (Russian)	1				
36	0359347020	・DECAL (English)	1				
36	0339375220	・DECAL (German)	1				
36	0339375420	・DECAL (French)	1				
36	0339375620	・DECAL (Italian)	1				
36	0339375820	・DECAL (Spanish)	1				
36	0579300610	・DECAL (Russian)	1				
37	0339375040	・DECAL (English)	1				
37	0339375240	・DECAL (German)	1				
37	0339375440	・DECAL (French)	1				
37	0339375640	・DECAL (Italian)	1				
37	0339375840	・DECAL (Spanish)	1				
37	0579300611	・DECAL (Russian)	1				
38	0339375050	・DECAL (English)	1				
38	0339375250	・DECAL (German)	1				
38	0339375450	・DECAL (French)	1				
38	0339375650	・DECAL (Italian)	1				
38	0339375850	・DECAL (Spanish)	1				
38	0399356005	・DECAL (Russian)	1				
39	0379358560	・DECAL	2				
40	0359313900	・DECAL	1				
41	0339376240	・DECAL (English)	1				
41	0339376340	・DECAL (German)	1				
41	0339379440	・DECAL (French)	1				
41	0339379540	・DECAL (Italian)	1				
41	0339379640	・DECAL (Spanish)	1				
41	0579300613	・DECAL (Russian)	1				
42	0339332200	・DECAL (English)	1				
42	0339334200	・DECAL (German)	1				
42	0339336200	・DECAL (French)	1				
42	0339338200	・DECAL (Italian)	1				
42	0339364700	・DECAL (Spanish)	1				
42	0339380304	・DECAL (Russian)	1				
	C4g534						

silverthorn.co.uk

DECAL (selector valve)

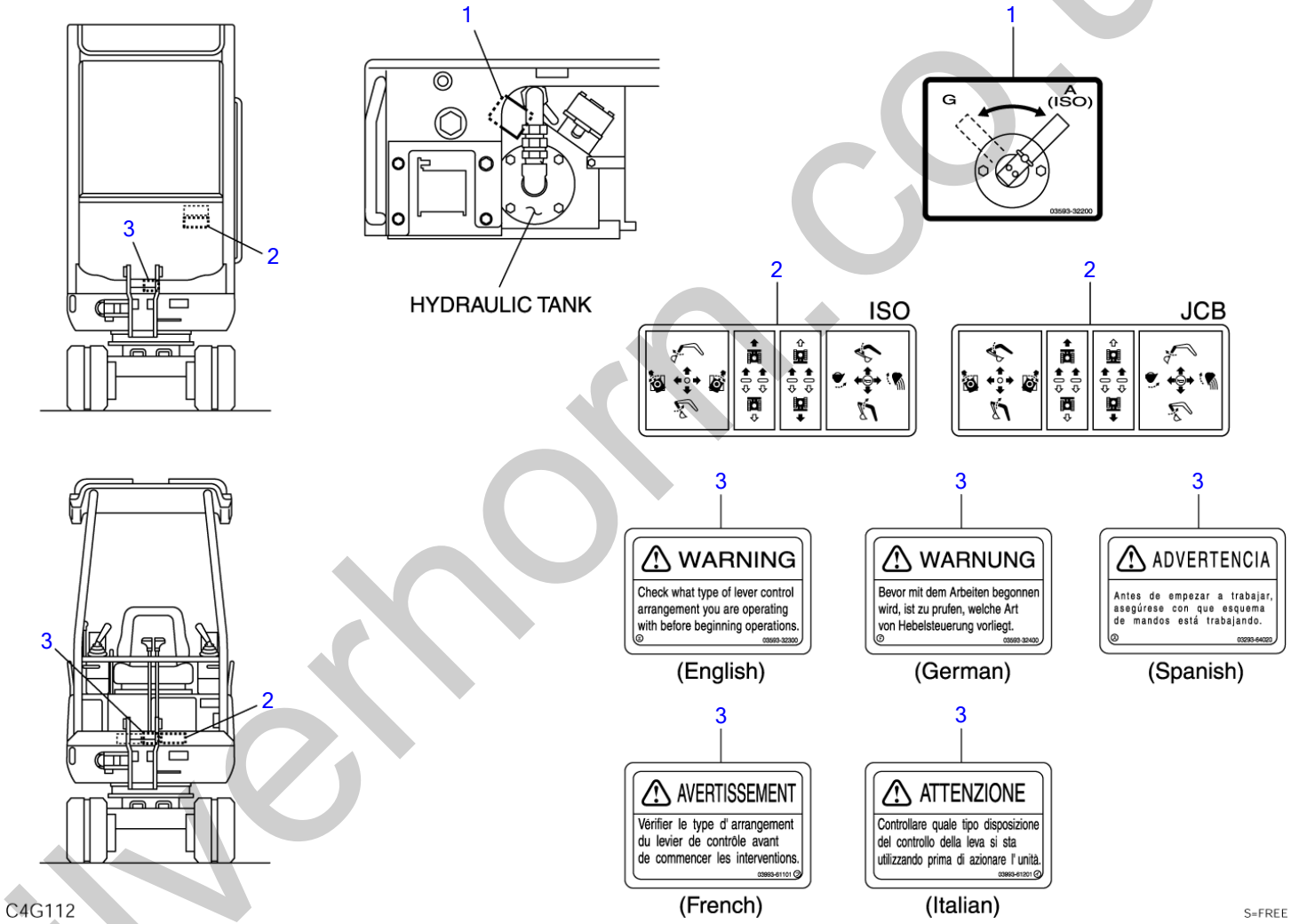

silverhorn.co.uk

DECAL (selector valve)

Item	Part number	Description	Q'ty	Chan.	Serial No.	Serv.	Remarks
0	0339348000	DECAL SET (English)	1				X03393-48000-2
	0339349000	DECAL SET (German)	1				X03393-49000-2
	0339349100	DECAL SET (Spanish)	1				X03393-49100-2
	0339380700	DECAL SET (French)	1			M	X03393-80700-2
	0339380800	DECAL SET (Italian)	1			M	X03393-80800-2
1	0359332200	・DECAL	1				
2	0359313800	・DECAL	1				JCB
	0359325240	・DECAL	1				ISO
3	0359332300	・DECAL	1				English
	0359332400	・DECAL	1				German
	0329364020	・DECAL	1				Spanish
	0399361101	・DECAL	1			M	French
	0399361201	・DECAL	1			M	Italian
	C4g113						

silverhorn.co.uk

DECAL (selector valve, A-B pattern)

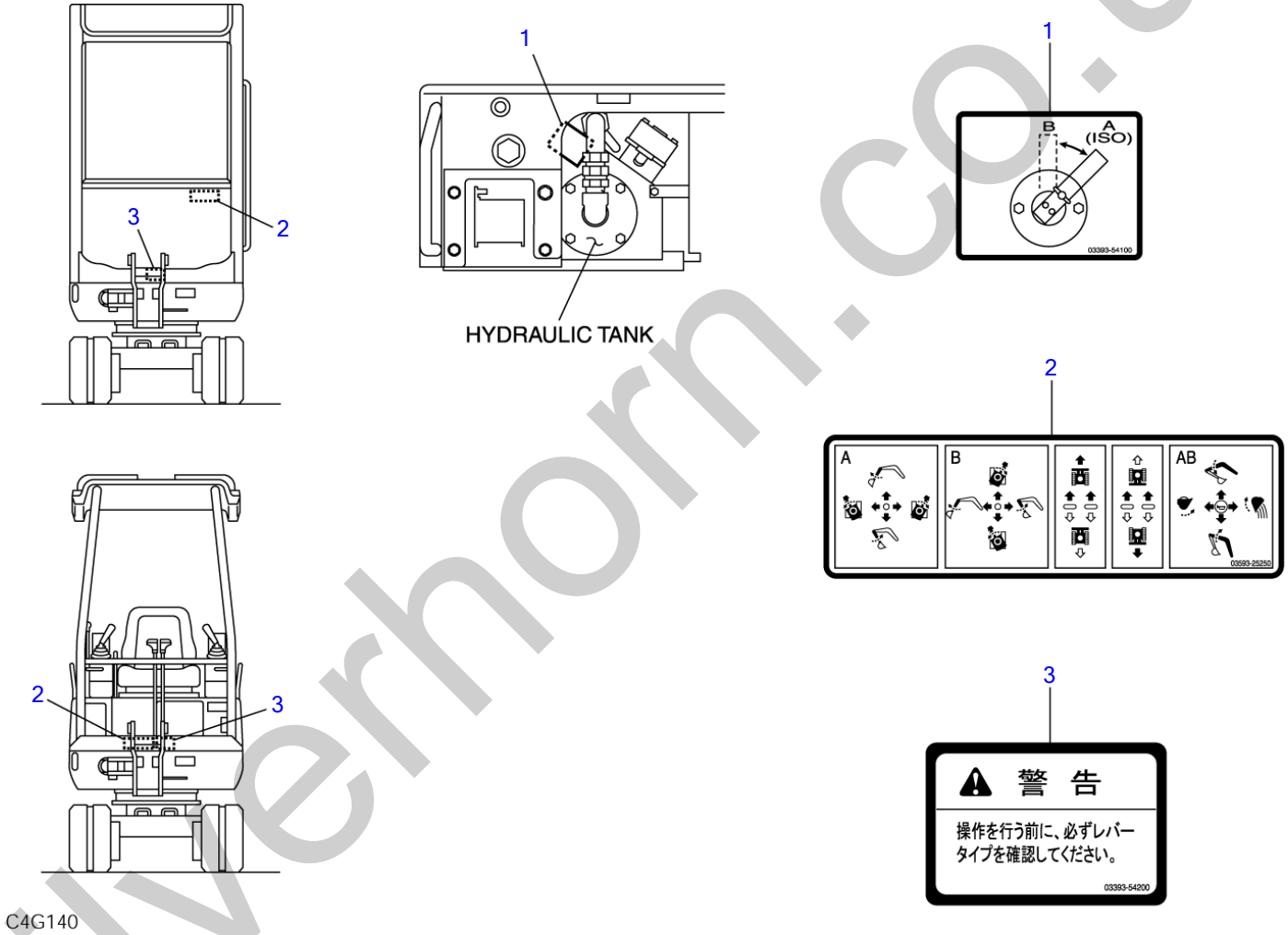

C4G140

S=FREE

silverhorn.co.uk

DECAL (selector valve, A-B pattern)

Item	Part number	Description	Q'ty	Chan.	Serial No.	Serv.	Remarks
0	**0339354000**	DECAL SET	1				X03393-54000-0
1	**0339354100**	・DECAL	1				
2	**0359325250**	・DECAL	1				
3	**0339354200**	・DECAL	1				
	C4g141						

silverhorn.co.uk

DECAL (TOPS) (cab)

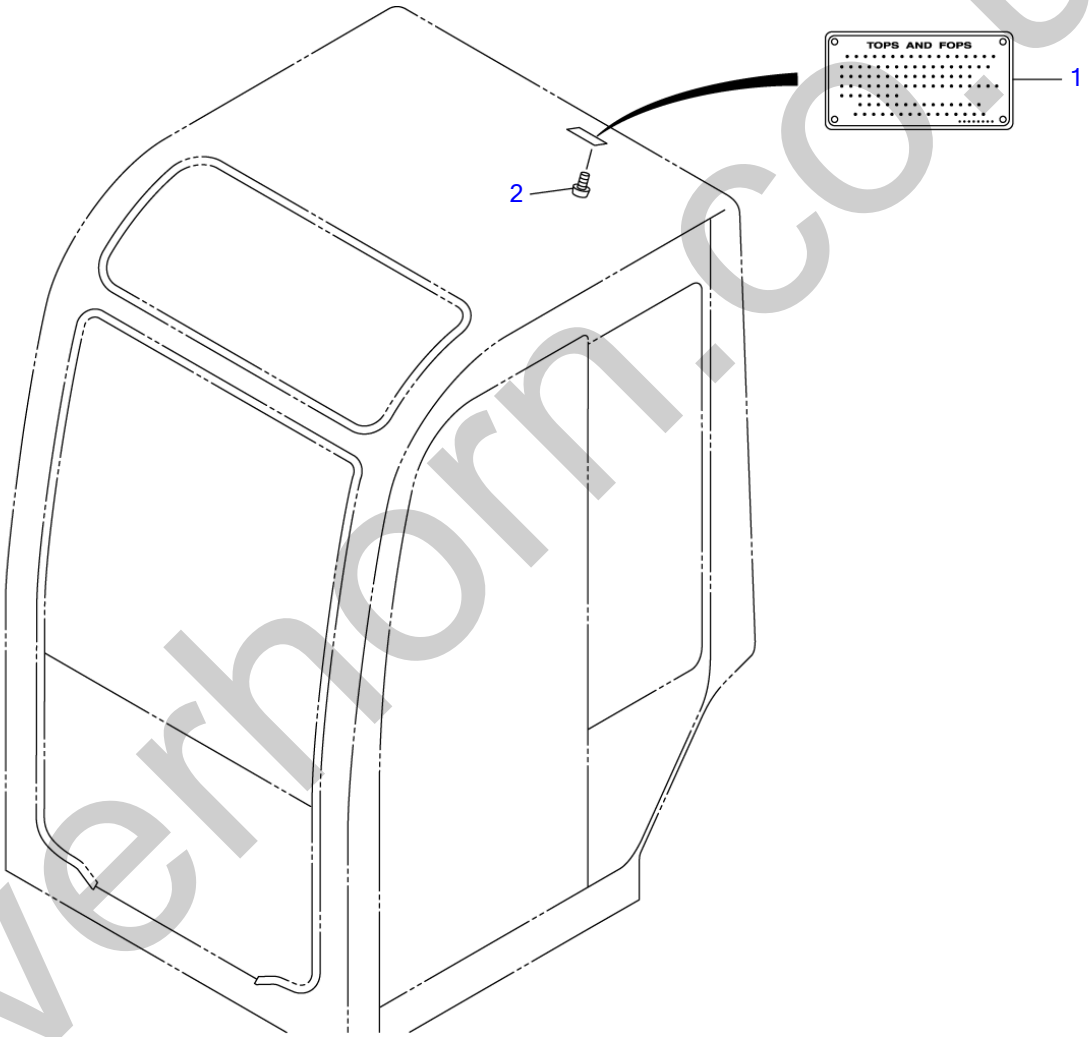

silverhorn.co.uk

DECAL (TOPS) (cab)

Item		Part number	Description	Q'ty	Chan.	Serial No.	Serv.	Remarks
0		0339373000	DECAL SET	1				X03393-73000-0
1	X	**********	・DECAL	1				X03393-73100
2		1122800006 C4g231	・SCREW	4				

silverhorn.co.uk

DECAL (TOPS) (canopy)

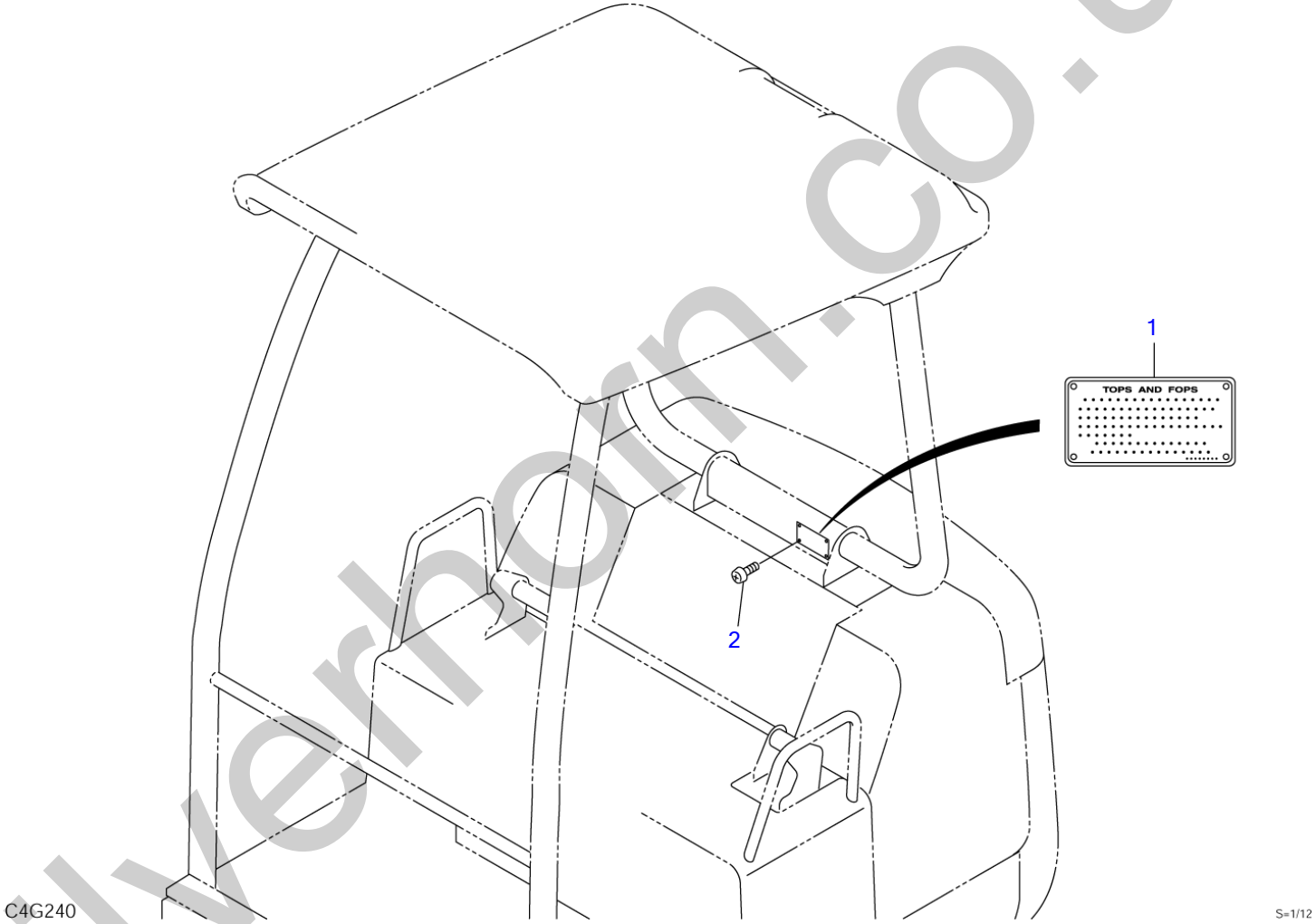

silverhorn.co.uk

DECAL (TOPS) (canopy)

Item		Part number	Description	Q'ty	Chan.	Serial No.	Serv.	Remarks
0		0339374000	DECAL SET	1				X03393-74000-0
1	X	**********	· DECAL	1				X03393-74100
2		1122800006 C4g241	· SCREW	4				

silverhorn.co.uk

DECAL (telescopic arm)

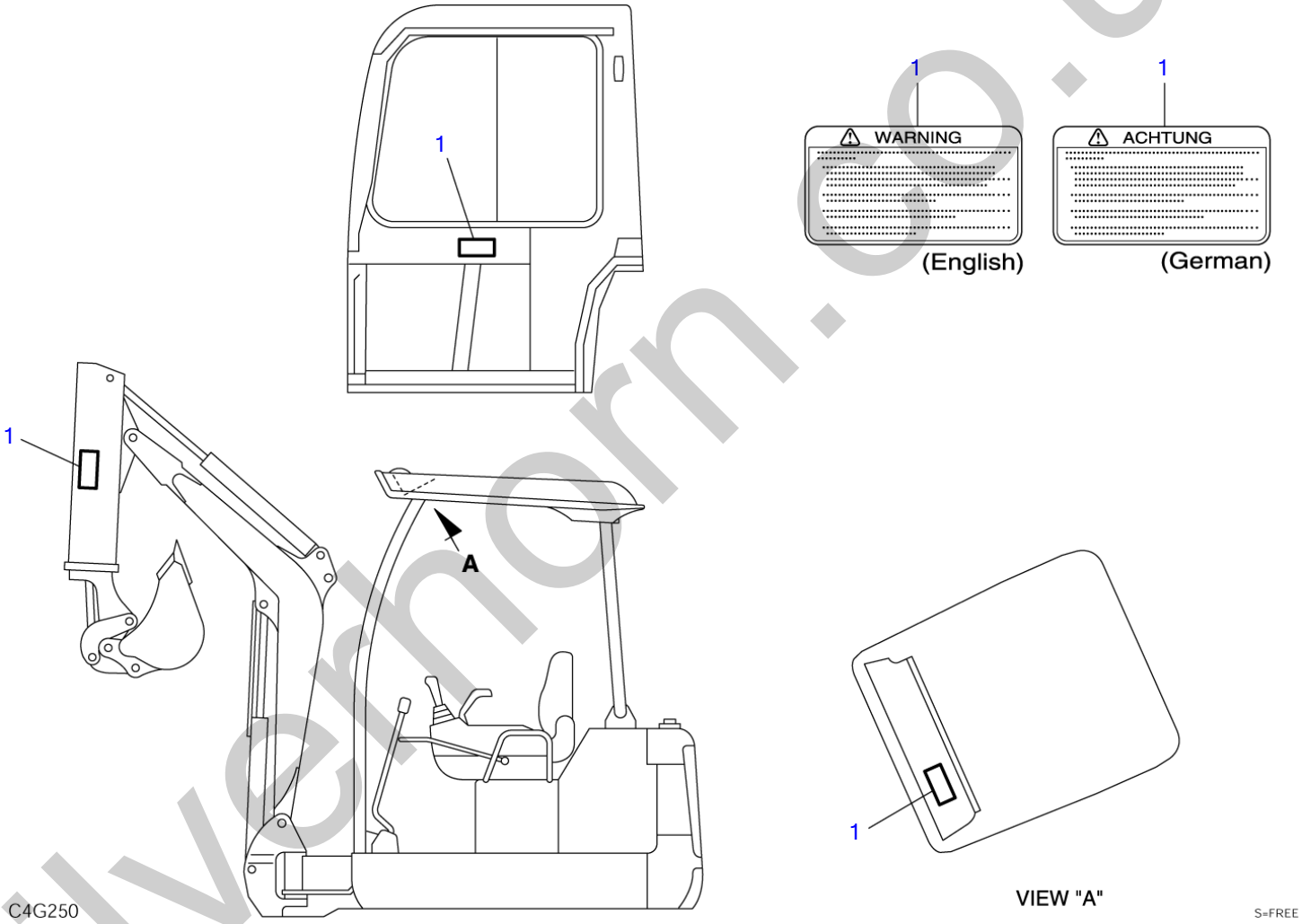

silvernorn.co.uk

DECAL (telescopic arm)

Item	Part number	Description	Q'ty	Chan.	Serial No.	Serv.	Remarks
0	**0339363000**	DECAL SET (English)	1				X03393-63000-0
	0339363500	DECAL SET (German)	1				X03393-63500-0
1	**0339322100**	・DECAL	1				English
	0339326100	・DECAL	1				German
	C4g250						

silverhorn.co.uk

TOOL & ACCESSORIES

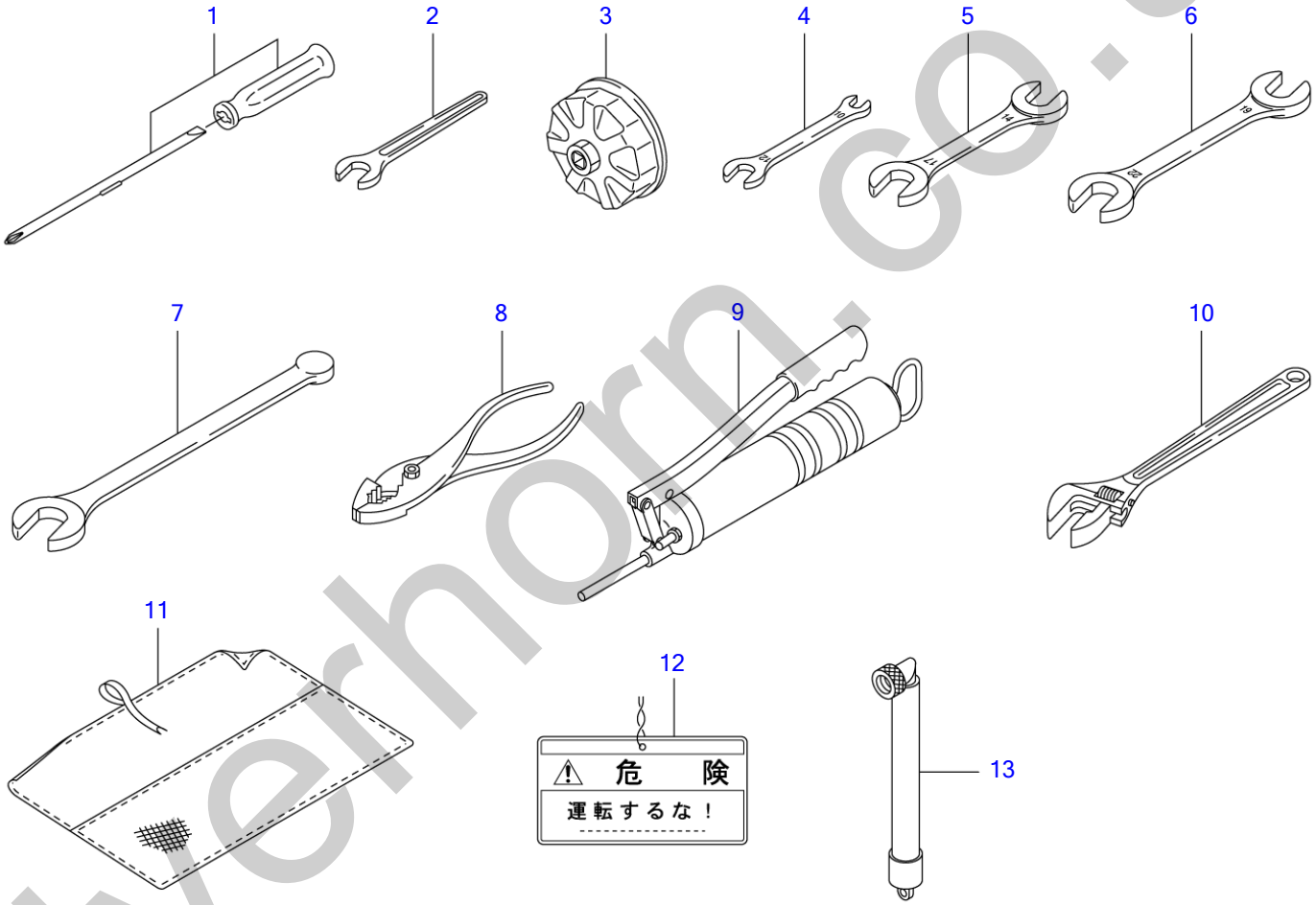

C4G122

S=FREE

silverhorn.co.uk

TOOL & ACCESSORIES

Item	Part number	Description	Q'ty	Chan.	Serial No.	Serv.	Remarks
0	0339216000	TOOL SET					X03392-16000-0
1	1910006112	・SCREWDRIVER	1				
2	1690100013	・SPANNER	1				
3	1910096081	・WRENCH, filter	1				
4	1910047081	・SPANNER	1				
5	1910047082	・SPANNER	1				
6	1690001922	・SPANNER	1				
7	1690900026	・SPANNER	1				
8	1690500200	・PLIER	1				
9	1691010800	・GUN, grease	1				for Japan
	1691060600	・GUN, grease	1				
10	1690400250	・WRENCH, monkey	1				
11	1691400001	・CASE, tool	1				
12	0359325160	PLATE	1				for Japan
13	1554512201	TUBE	1				for EU
	C4g630						

silverhorn.co.uk

PAINTED COLOR

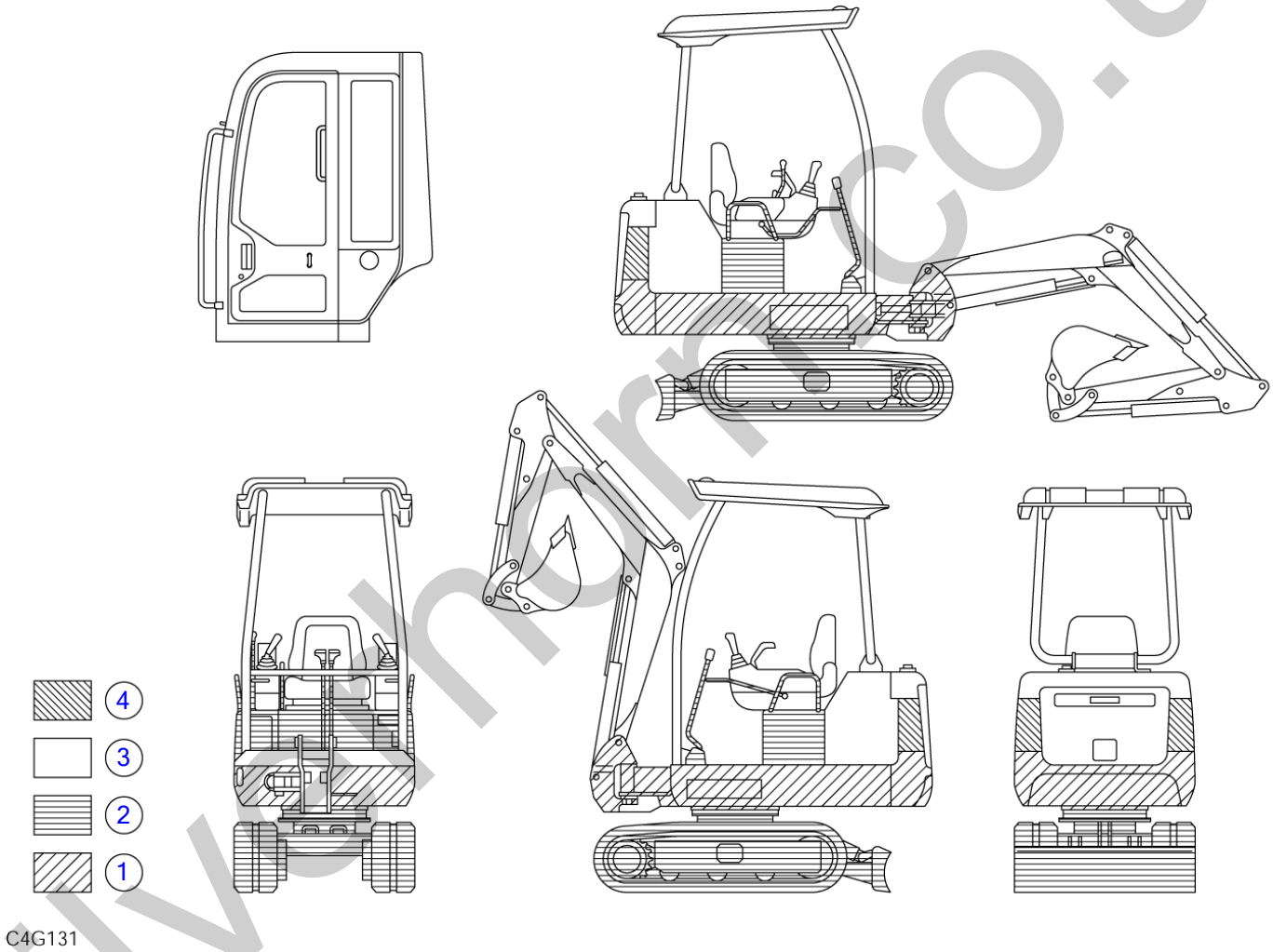

silverhorn.co.uk

PAINTED COLOR

Item	Part number	Description	Q'ty	Chan.	Serial No.	Serv.	Remarks
		PAINTED COLOR (rubber crawler)					canopy
		PAINTED COLOR (steel crawler)					canopy
		PAINTED COLOR (rubber crawler)					cab
		PAINTED COLOR (steel crawler)					cab
1	1919060105	RED					
	1919069025	RED					spray
	1919060167	RED					urethane
2	1919060144	GRAY					
	1919069144	GRAY					spray
3	1919060142	LIGHT GRAY					
	1919069142	LIGHT GRAY					spray
4	1919060005	BLACK					
	C4g132						

silverhorn.co.uk

SWIVEL JOINT

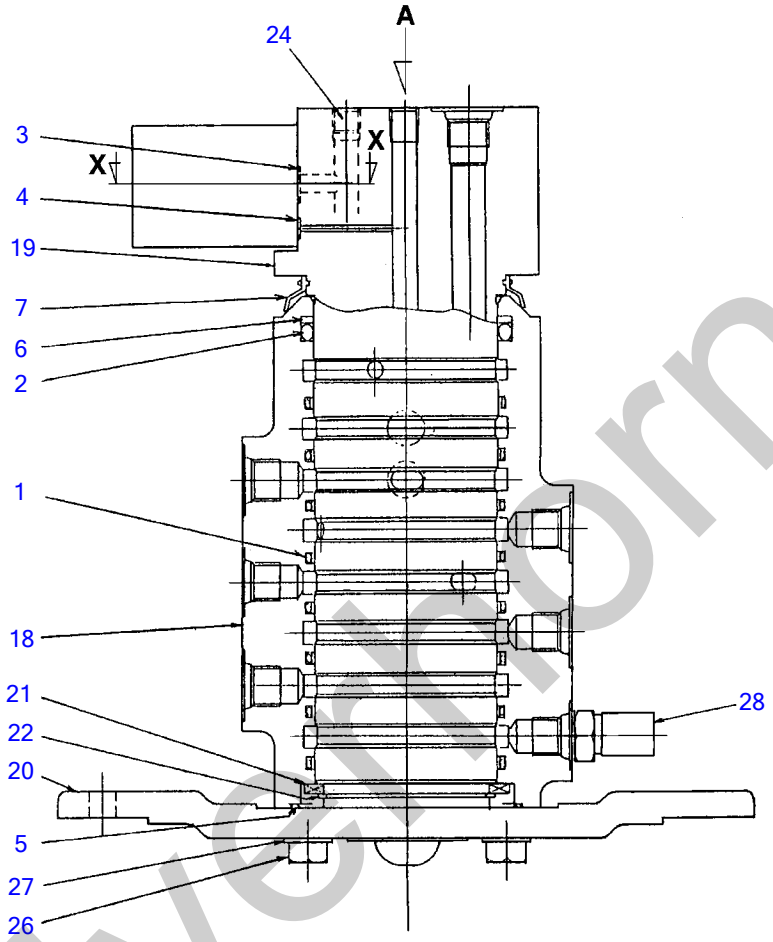

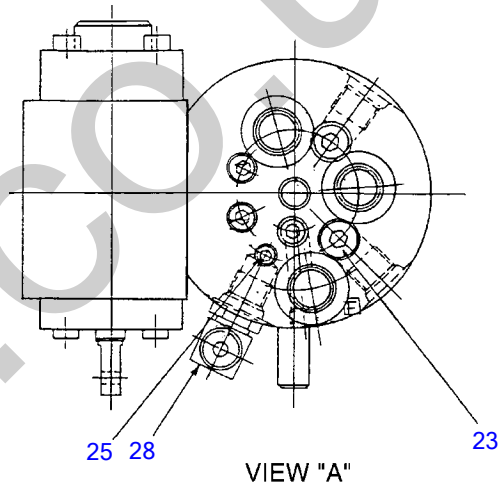

VIEW "A"

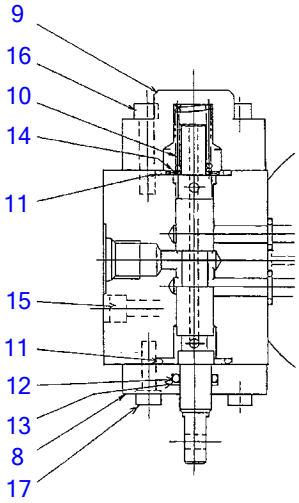

SECTION "X-X"

C4H020

S=FREE

silvermorn.co.uk

SWIVEL JOINT

Item	Part number		Description	Q'ty	Chan.	Serial No.	Serv.	Remarks
0		1904007600	JOINT ASSY, swivel	1				
0-1		1904007099	・KIT, seal	1				
1	X	1904006416	・・SEAL, sliper	8				
2	X	1420010600	・・O-RING	1				
3	X	1420010090	・・O-RING	2				
4	X	1420010050	・・O-RING	1				
5	X	1420310040	・・O-RING	1				
6	X	1421030600	・・RING, back-up	1				
7	X	1904001695	・・SEAL, dust	1				
0-2		1904100300	・SELECTOR ASSY	1				
8		1904006653	・・COVER	1				
9		1904100304	・・COVER	1				
10		1904100305	・・SPRING	1				
11		1420010220	・・O-RING	2				
12		1420000100	・・O-RING	1				
13		1421020100	・・RING, back-up	1				
14		1141190008	・・WASHER	1				
15		1110040555	・・BOLT	4				
16		1110050525	・・SCREW, cap	4				
17		1110040516	・・SCREW, cap	4				
18	X	**********	・HUB	1				
19	X	**********	・SHAFT	1				
20		1904007121	・FLANGE	1				
21		1904004604	・RING, thrust	1				
22		1220000055	・RING, snap	1				
23		1501810002	・PLUG	2				
24		1501810001	・PLUG	3				
25		1501810000	・PLUG	1				
26		1100050825	・BOLT	4				
27		1140010008	・WASHER, spring	4				
28		1515010040	・ELBOW	2				
		1420010110	・・O-RING	1				
		C4h022						

silverhorn.co.uk

CONTROL VALVE

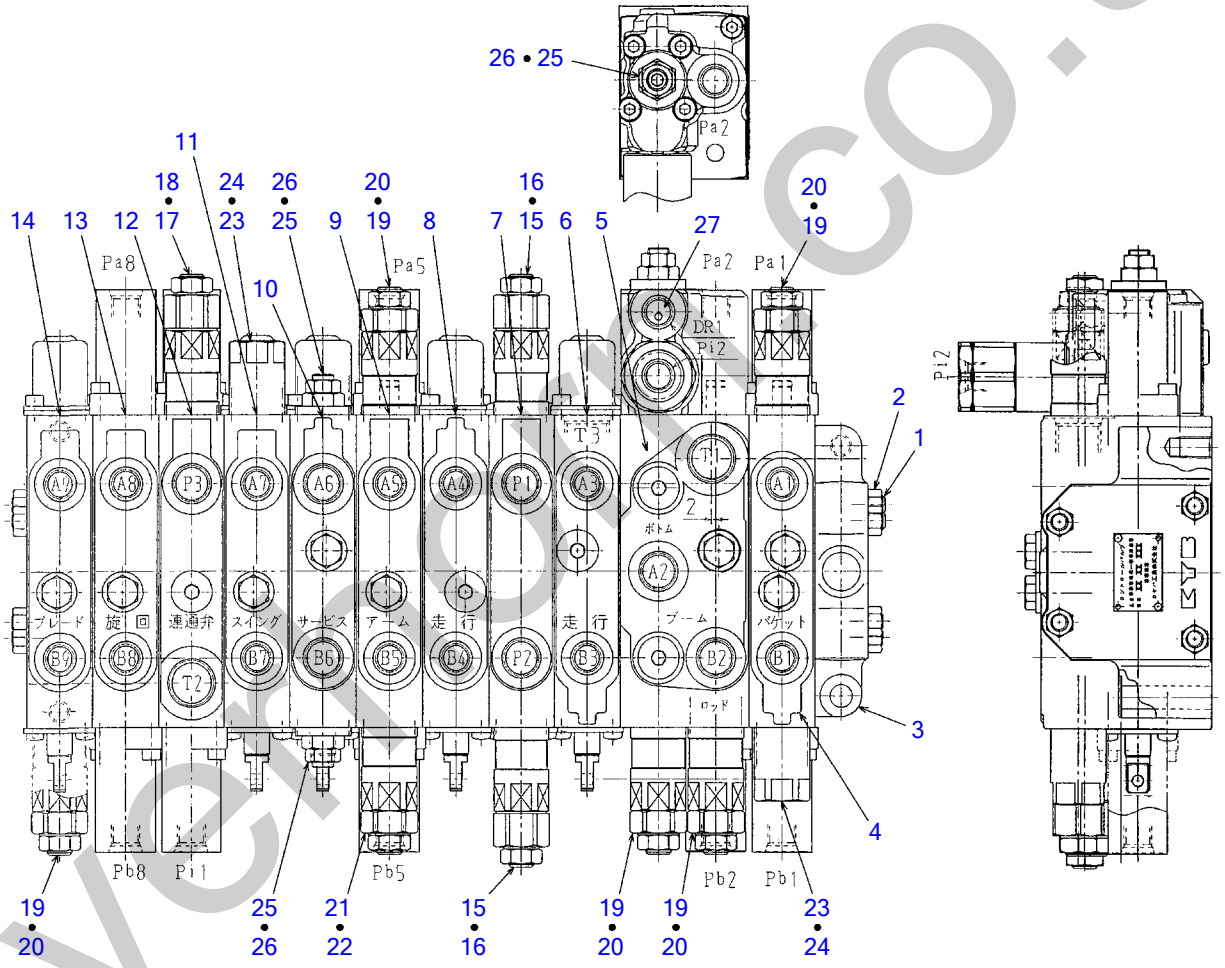

C4H610

S=FREE

silvermoon.co.uk

CONTROL VALVE

Item	Part number	Description	Q'ty	Chan.	Serial No.	Serv.	Remarks
0	1901042700	VALVE ASSY, control	1				
1	1901038807	・BOLT	4				
2	1901034907	・NUT	8				
3	1901038806	・HOUSING	1				
4	1901042713	・BLOCK ASSY, No. 1	1				bucket
5	1901042711	・BLOCK ASSY, No. 2	1				boom
6	1901038816	・BLOCK ASSY, No. 3	1				traction L.H.
7	1901038803	・HOUSING ASSY	1				P1. P2
8	1901038815	・BLOCK ASSY, No. 4	1				traction R.H.
9	1901042712	・BLOCK ASSY, No. 5	1				arm
10	1901038819	・BLOCK ASSY, No. 6	1				service
11	1901038818	・BLOCK ASSY, No. 7	1				swing
12	1901042718	・BLOCK ASSY, No. 8	1				P3, T2
13	1901042714	・BLOCK ASSY, No. 9	1				slew
14	1901042717	・BLOCK ASSY, No. 10	1				blade
15	1901033821	・VALVE ASSY	2				relief
16	1420310910	・・O-RING	1				
17	1901033822	・VALVE ASSY	1				relief
18	1420310910	・・O-RING	1				
19	1901038822	・VALVE ASSY	5				over load
20	1420310910	・・O-RING	1				
21	1901038823	・VALVE ASSY	1				antivoid
22	1420310910	・・O-RING	1				
23	1901042625	・VALVE ASSY	2				antivoid
24	1420310910	・・O-RING	1				
25	1901042626	・VALVE ASSY	3				shut-off
26	1420310910	・・O-RING	1				
27	1901036572	・PLUG ASSY	1				
	C4h620						

silverhorn.co.uk

BLOCK ASSY; No. 1

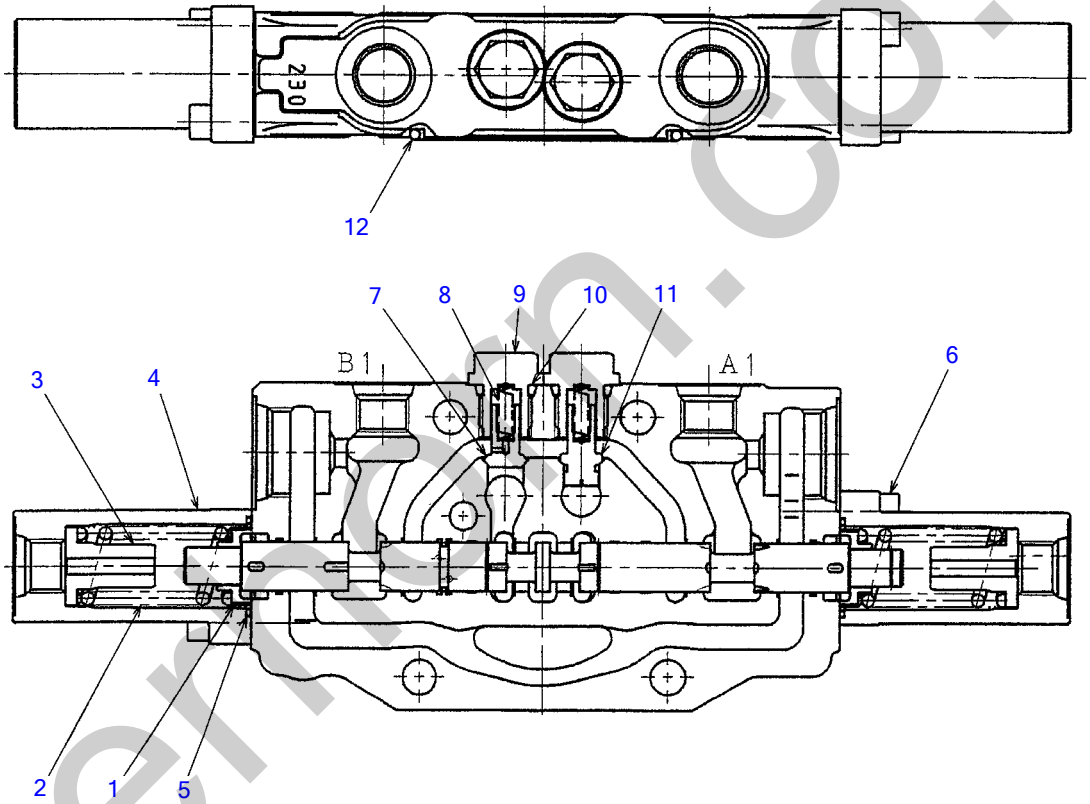

C4H630

S=FREE

silvermoon.co.uk

BLOCK ASSY; No. 1

Item	Part number	Description	Q'ty	Chan.	Serial No.	Serv.	Remarks
0	1901042713	BLOCK ASSY, No. 1	1				bucket
1	1901031752	・HOLDER, spring	2				
2	1901038856	・SPRING	2				
3	1901038851	・HOLDER, spring	2				
4	1901038866	・CAP	2				
5	1420500220	・O-RING	2				
6	1110020518	・SCREW, cap	4				
7	1901038826	・PLUNGER	1				
8	1901038857	・SPRING	2				
9	1901038890	・PLUG	2				
10	1420010110	・O-RING	2				
11	1901038827	・PLUNGER	1				
12	1901038881	・O-RING	1				
	C4h630						

silverhorn.co.uk

BLOCK ASSY; No. 2

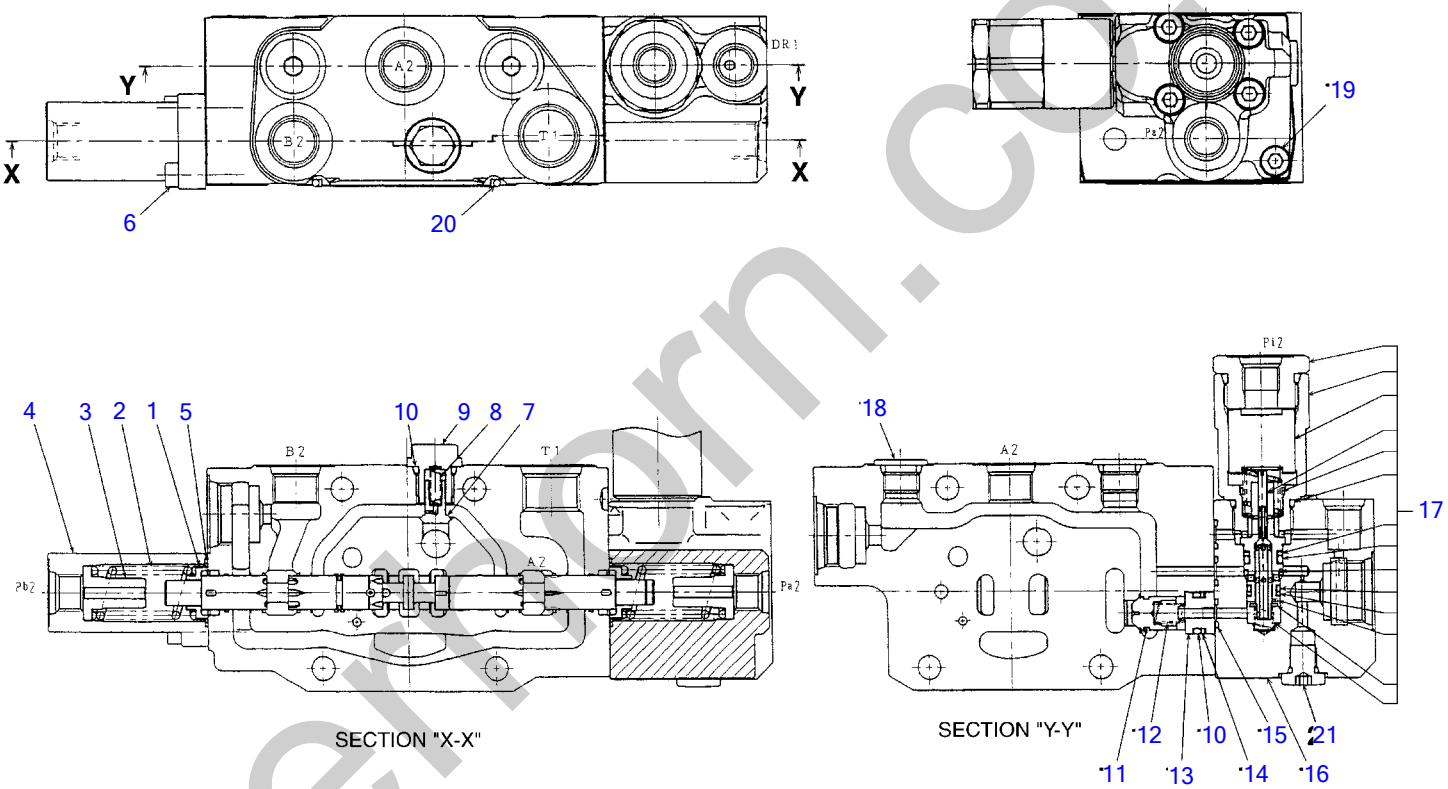

C4H640

S=free

silverthorn.co.uk

BLOCK ASSY; No. 2

Item	Part number	Description	Q'ty	Chan.	Serial No.	Serv.	Remarks
0	1901042711	BLOCK ASSY, No. 2	1				boom
1	1901031752	・HOLDER, spring	2				
2	1901038856	・SPRING	2				
3	1901038851	・SEAT, spring	2				
4	1901038866	・CAP	1				
5	1420500220	・O-RING	2				
6	1110020518	・SCREW, cap	2				
7	1901038826	・PLUNGER	1				
8	1901038857	・SPRING	1				
9	1901038890	・PLUG	1				
10	1420010110	・O-RING	2				
11	1901042660	・PLUNGER	1				
12	1901042659	・SPRING	1				
13	1901042658	・SPACER	1				
14	1421020110	・RING, back-up	1				
15	1420010070	・O-RING	3				
16	1901042701	・BODY	1				
17	1901042798	・PISTON ASSY	1				
18	1901038893	・PLUG ASSY	2				
19	1110020660	・SCREW, cap	5				
20	1901038881	・O-RING	1				
21	1901036677	・PLUG ASSY	1				
	C4h640						

silverhorn.co.uk

BLOCK ASSY; No. 3

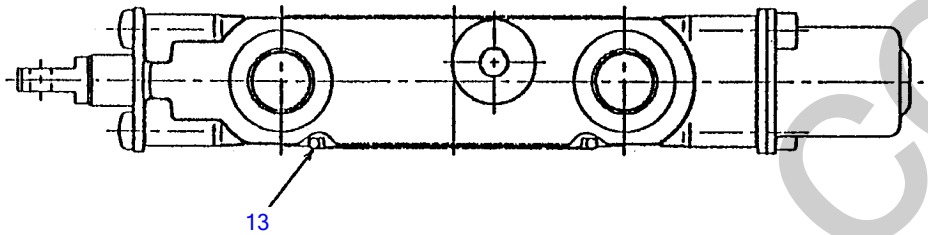

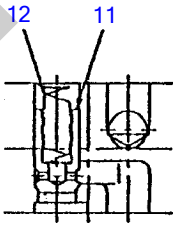

断 面 "X-X"
SECTION "X-X"

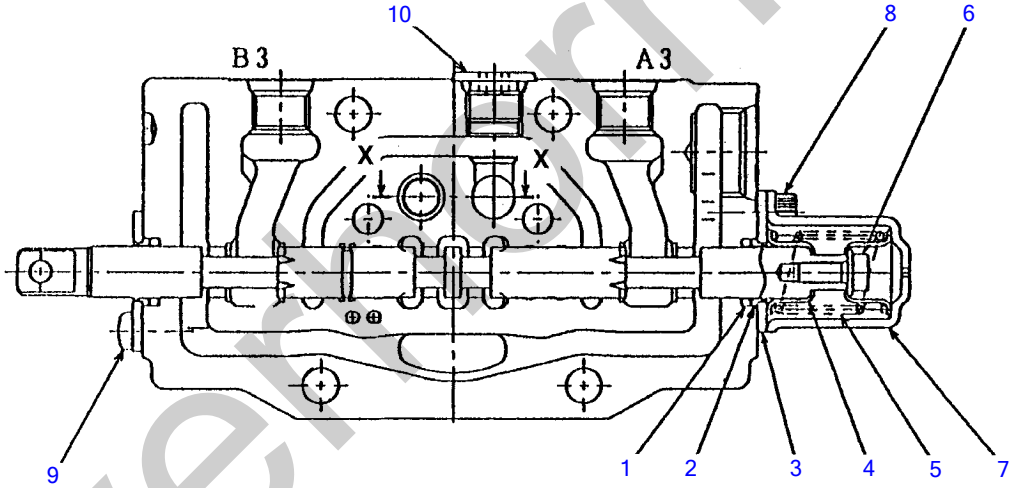

C4H420

silverthorn.co.uk

BLOCK ASSY; No. 3

Item	Part number	Description	Q'ty	Chan.	Serial No.	Serv.	Remarks
0	1901038816	BLOCK ASSY, No. 3	1				traction L.H.
1	1420000120	・O-RING	2				
2	1901027771	・SEAL	2				
3	1901027772	・PLATE	2				
4	1901027792	・HOLDER, spring	2				
5	1901027758	・SPRING	1				
6	1901038831	・SCREW, cap	1				
7	1901038870	・CAP	1				
8	1110020512	・SCREW, cap	2				
9	1120540510	・SCREW	2				
10	1901038893	・PLUG ASSY	1				
11	1901038829	・PLUNGER	1				
12	1901027757	・SPRING	1				
13	1901038881	・O-RING	1				
	C4h420						

silverhorn.co.uk

HOUSUNG ASSY

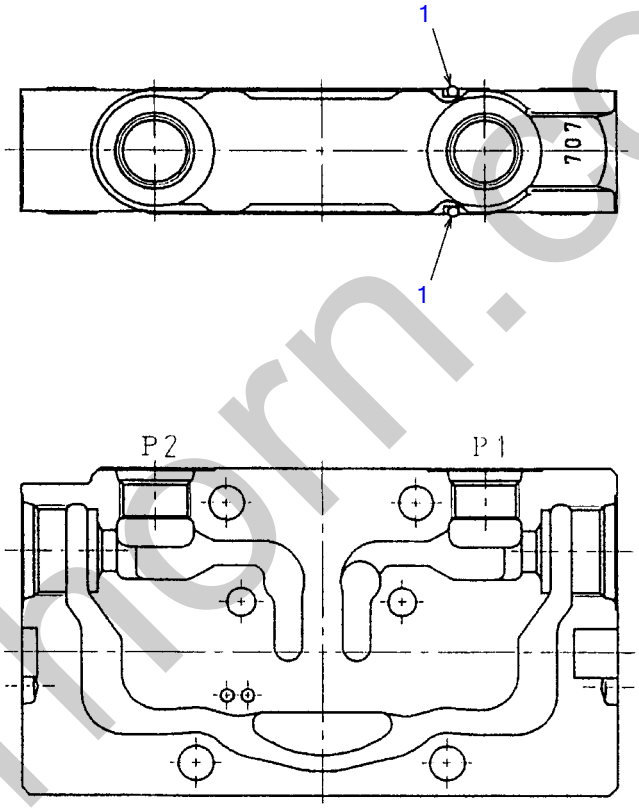

C4H600

S=FREE

silverhorn.co.uk

HOUSUNG ASSY

Item	Part number	Description	Q'ty	Chan.	Serial No.	Serv.	Remarks
0	**1901038803**	HOUSING ASSY	1				P1, P2
1	**1420300144**	・O-RING	2				
	C4h600						

silverhorn.co.uk

BLOCK ASSY; No. 4

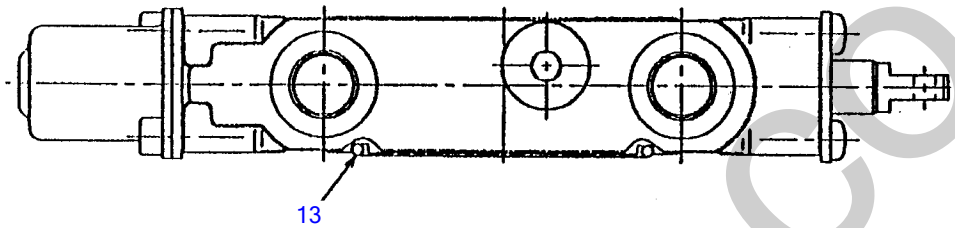

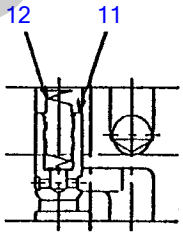

断 面 "X-X"
SECTION "X-X"

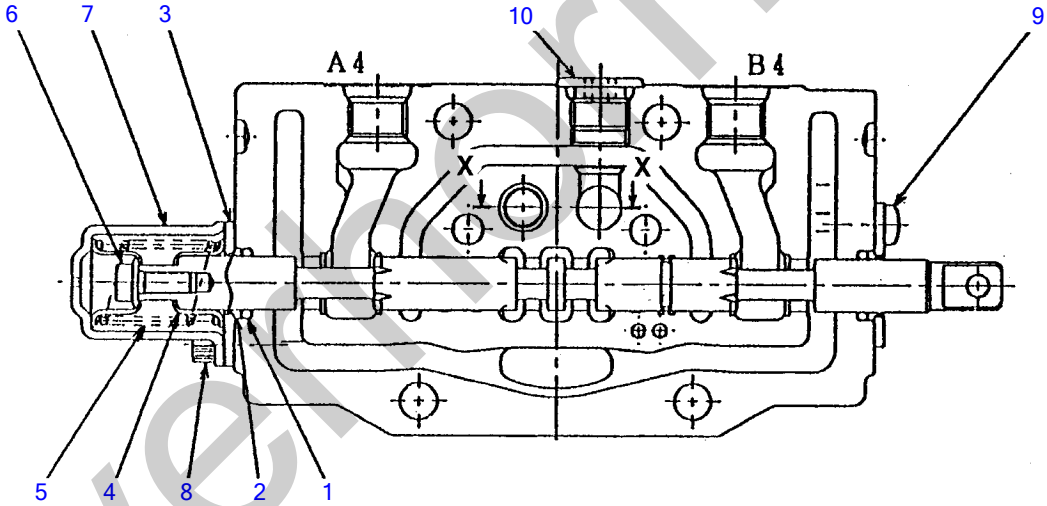

C4H440

silvermorn.co.uk

BLOCK ASSY; No. 4

Item	Part number	Description	Q'ty	Chan.	Serial No.	Serv.	Remarks
0	1901038815	BLOCK ASSY, No. 4	1				traction R.H.
1	1420000120	・O-RING	2				
2	1901027771	・SEAL	2				
3	1901027772	・PLATE	2				
4	1901027792	・HOLDER, spring	2				
5	1901027758	・SPRING	1				
6	1901038831	・SCREW, cap	1				
7	1901038870	・CAP	1				
8	1110020512	・SCREW, cap	2				
9	1120540510	・SCREW	2				
10	1901038893	・PLUG ASSY	1				
11	1901038829	・PLUNGER	1				
12	1901027757	・SPRING	1				
13	1901038881	・O-RING	1				
	C4h440						

silverhorn.co.uk

BLOCK ASSY; No. 5

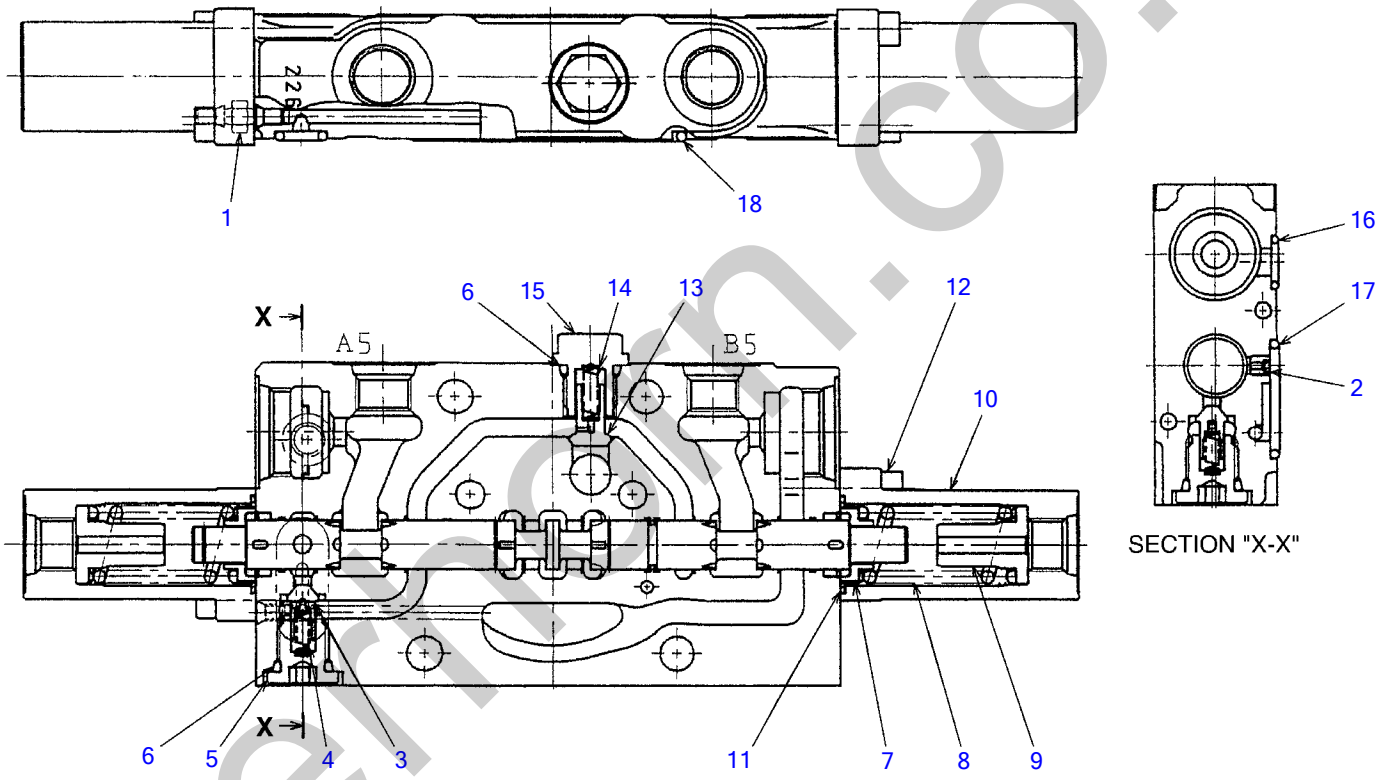

C4H650

S=FREE

silvermern.co.uk

BLOCK ASSY; No. 5

Item	Part number	Description	Q'ty	Chan.	Serial No.	Serv.	Remarks
0	1901042712	BLOCK ASSY, No. 5	1				arm
1	1901042790	・PLUG	1				
2	1901042789	・ORIFICE	1				
3	1901038828	・PLUNGER	1				
4	1901027858	・SPRING	1				
5	1901038892	・PLUG	1				
6	1420010110	・O-RING	2				
7	1901031752	・HOLDER, spring	2				
8	1901038856	・SPRING	2				
9	1901038851	・SEAT, spring	2				
10	1901038866	・CAP	1				
11	1420500220	・O-RING	2				
12	1110020518	・SCREW, cap	4				
13	1901038826	・PLUNGER	1				
14	1901038857	・SPRING	1				
15	1901038890	・PLUG	1				
16	1420000100	・O-RING	1				
17	1420010200	・O-RING	1				
18	1901038881	・O-RING	1				
	C4h650						

silverhorn.co.uk

BLOCK ASSY; No. 6

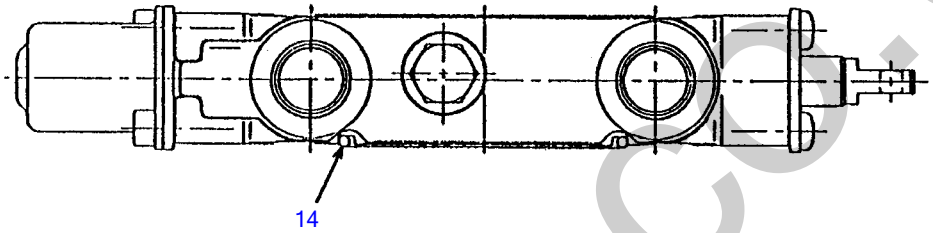

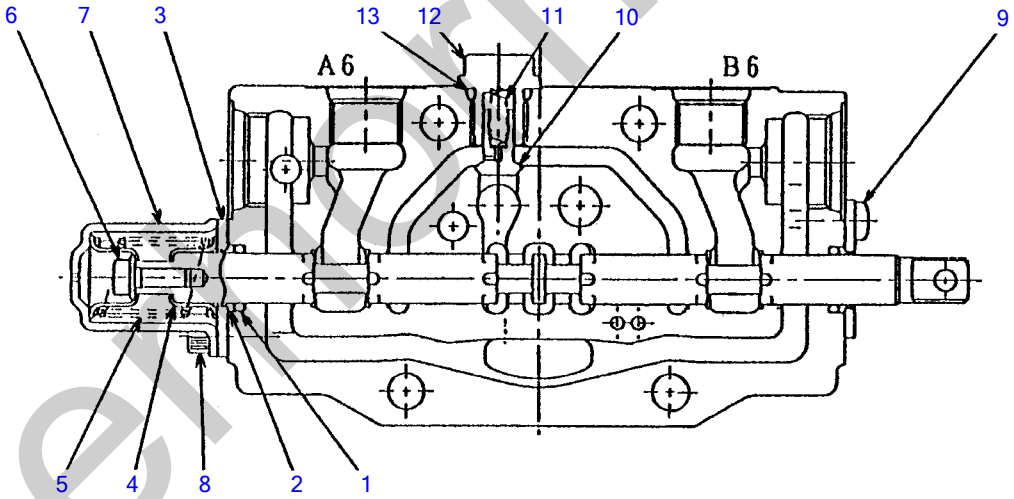

C4H460

silvermorn.co.uk

BLOCK ASSY; No. 6

Item	Part number	Description	Q'ty	Chan.	Serial No.	Serv.	Remarks
0	1901038819	BLOCK ASSY, No. 6	1				service
1	1420000120	・O-RING	2				
2	1901027771	・SEAL	2				
3	1901027772	・PLATE	2				
4	1901027792	・HOLDER, spring	2				
5	1901027857	・SPRING	1				
6	1901038831	・SCREW, cap	1				
7	1901038870	・CAP	1				
8	1110020512	・SCREW, cap	2				
9	1120540510	・SCREW	2				
10	1901038829	・PLUNGER	1				
11	1901038857	・SPRING	1				
12	1901038890	・PLUG	2				
13	1420010110	・O-RING	2				
14	1901038881	・O-RING	1				
	C4h460						

silverhorn.co.uk

BLOCK ASSY; No. 7

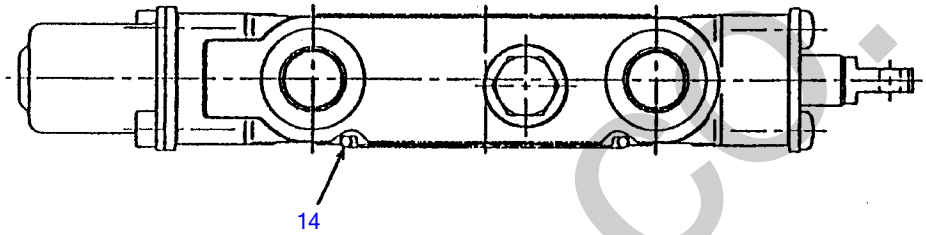

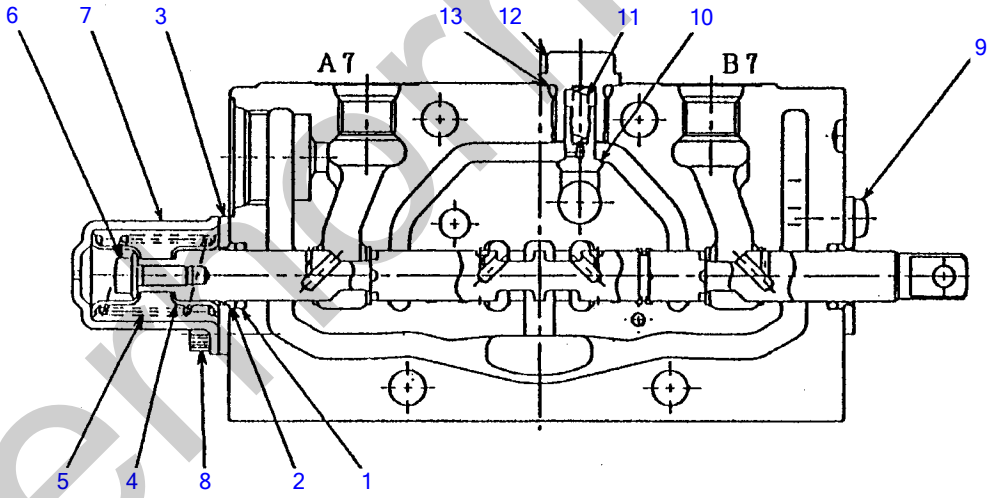

C4H470

silvermarn.co.uk

BLOCK ASSY; No. 7

Item	Part number	Description	Q'ty	Chan.	Serial No.	Serv.	Remarks
0	1901038818	BLOCK ASSY, No. 7	1				swing
1	1420000120	・O-RING	2				
2	1901027771	・SEAL	2				
3	1901027772	・PLATE	2				
4	1901027792	・HOLDER, spring	2				
5	1901027857	・SPRING	1				
6	1901038831	・SCREW, cap	1				
7	1901038870	・CAP	1				
8	1110020512	・SCREW, cap	2				
9	1120540510	・SCREW	2				
10	1901038826	・PLUNGER	1				
11	1901038857	・SPRING	1				
12	1901038890	・PLUG	1				
13	1420010110	・O-RING	1				
14	1901038881	・O-RING	1				
	C4h470						

silverhorn.co.uk

BLOCK ASSY; No. 8

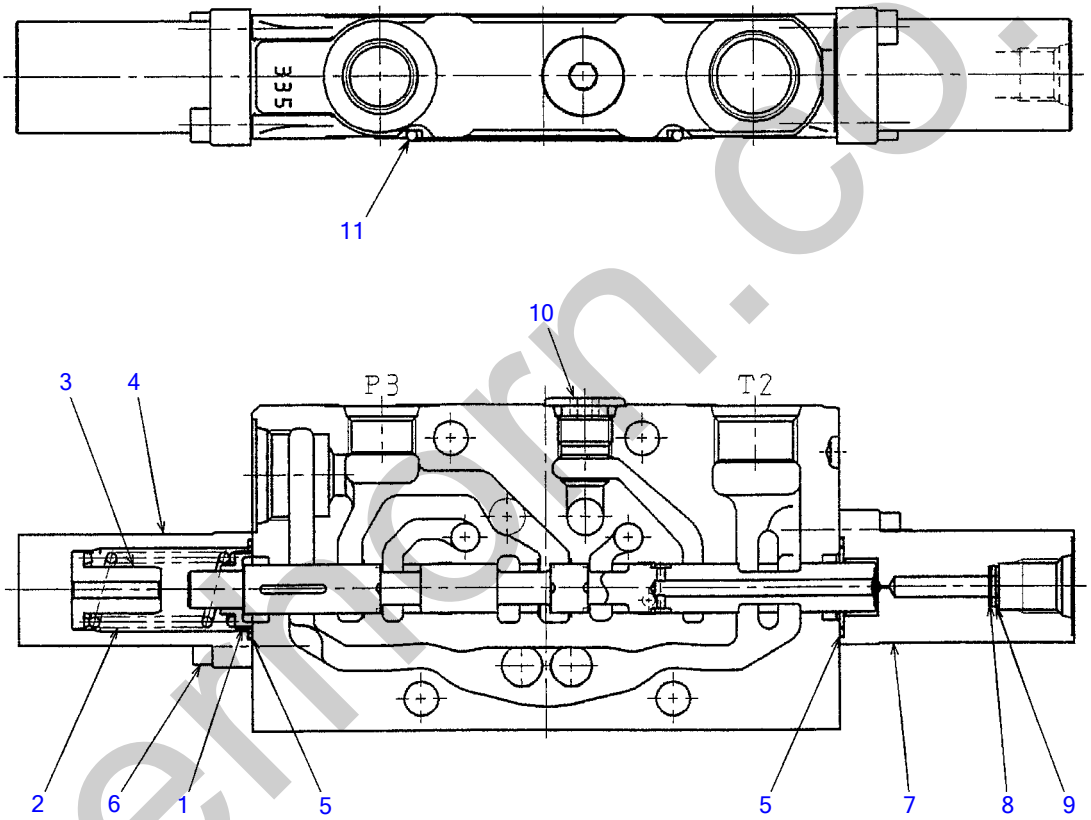

C4H660

S=FREE

silvermorn.co.uk

BLOCK ASSY; No. 8

Item	Part number	Description	Q'ty	Chan.	Serial No.	Serv.	Remarks
	1901042718	BLOCK ASSY, No. 8	1				P3, T2
1	1901031752	・HOLDER, spring	1				
2	1901038859	・SPRING	1				
3	1901038851	・SEAT, spring	1				
4	1901038868	・CAP	1				
5	1420500220	・O-RING	2				
6	1110020518	・SCREW, cap	4				
7	1901038869	・CAP	1				
8	1901042672	・FILTER	1				
9	1901042673	・WASHER	1				
10	1901038893	・PLUG ASSY	1				
11	1901038881	・O-RING	1				
	C4h660						

silverhorn.co.uk

BLOCK ASSY; No. 9

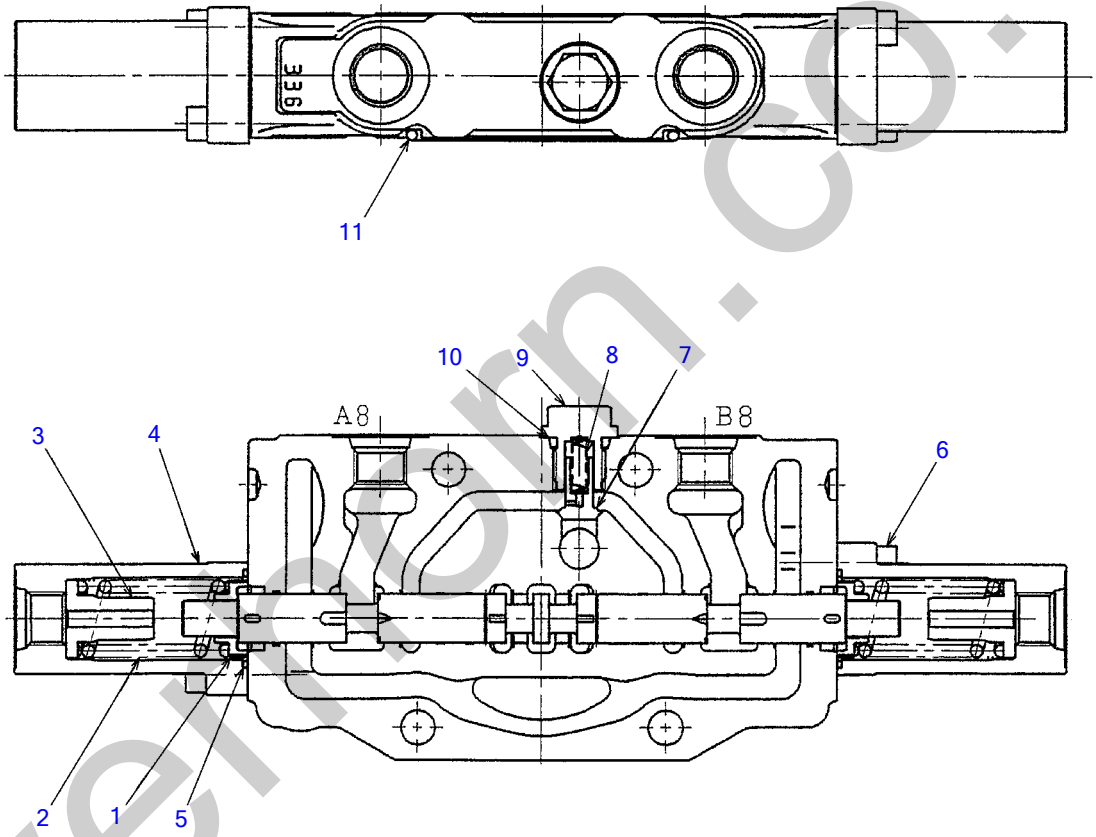

C4H670

S=FREE

silverthorn.co.uk

BLOCK ASSY; No. 9

Item	Part number	Description	Q'ty	Chan.	Serial No.	Serv.	Remarks
0	1901042714	BLOCK ASSY, No. 9	1				slew
1	1901031752	・HOLDER, spring	2				
2	1901038856	・SPRING	2				
3	1901038851	・SEAT, spring	2				
4	1901038866	・CAP	2				
5	1420500220	・O-RING	2				
6	1110020518	・SCREW, cap	4				
7	1901038826	・PLUNGER	1				
8	1901038857	・SPRING	1				
9	1901038890	・PLUG	1				
10	1420010110	・O-RING	1				
11	1901038881	・O-RING	1				
	C4h670						

silverhorn.co.uk

BLOCK ASSY; No. 10

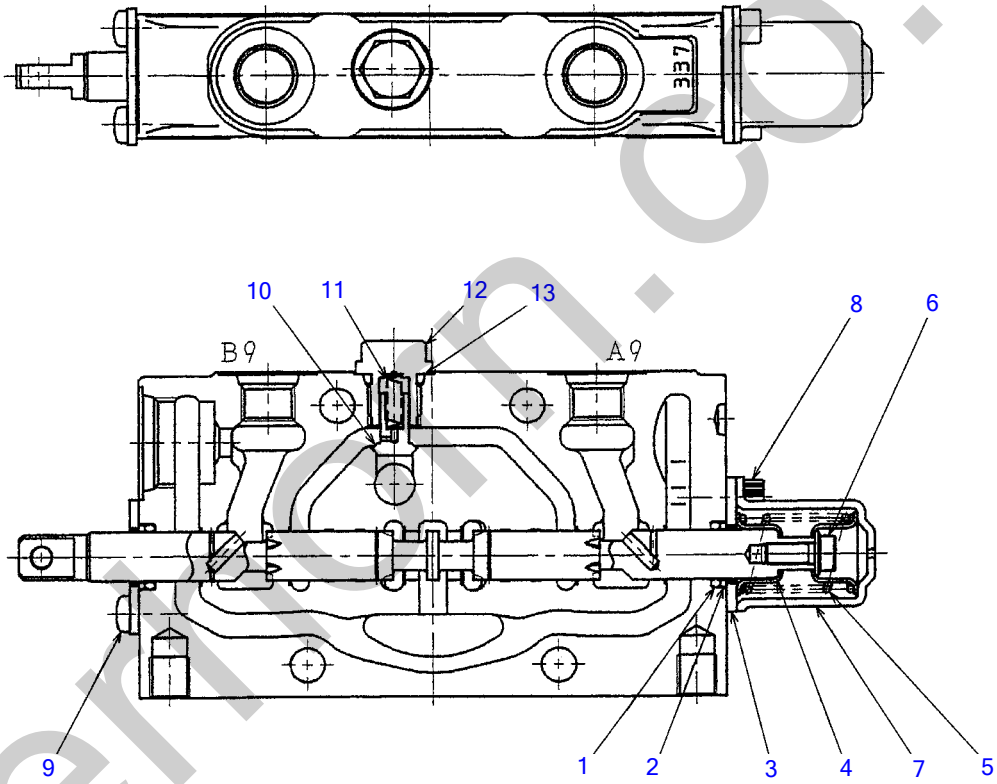

C4H680

S=FREE

silverfern.co.uk

BLOCK ASSY; No. 10

Item	Part number	Description	Q'ty	Chan.	Serial No.	Serv.	Remarks
0	1901042717	BLOCK ASSY, No. 10	1				blade
1	1420000120	・O-RING	2				
2	1901027771	・SEAL	2				
3	1901027772	・PLATE	2				
4	1901027792	・HOLDER, spring	2				
5	1901027857	・SPRING	1				
6	1901038831	・SCREW, cap	1				
7	1901038870	・CAP	1				
8	1110020512	・SCREW, cap	2				
9	1120540510	・SCREW	2				
10	1901038826	・PLUNGER	1				
11	1901038857	・SPRING	1				
12	1901038890	・PLUG	1				
13	1420010110	・O-RING	1				
	C4h680						

silverhorn.co.uk

SOLENOID VALVE (2 blocks)

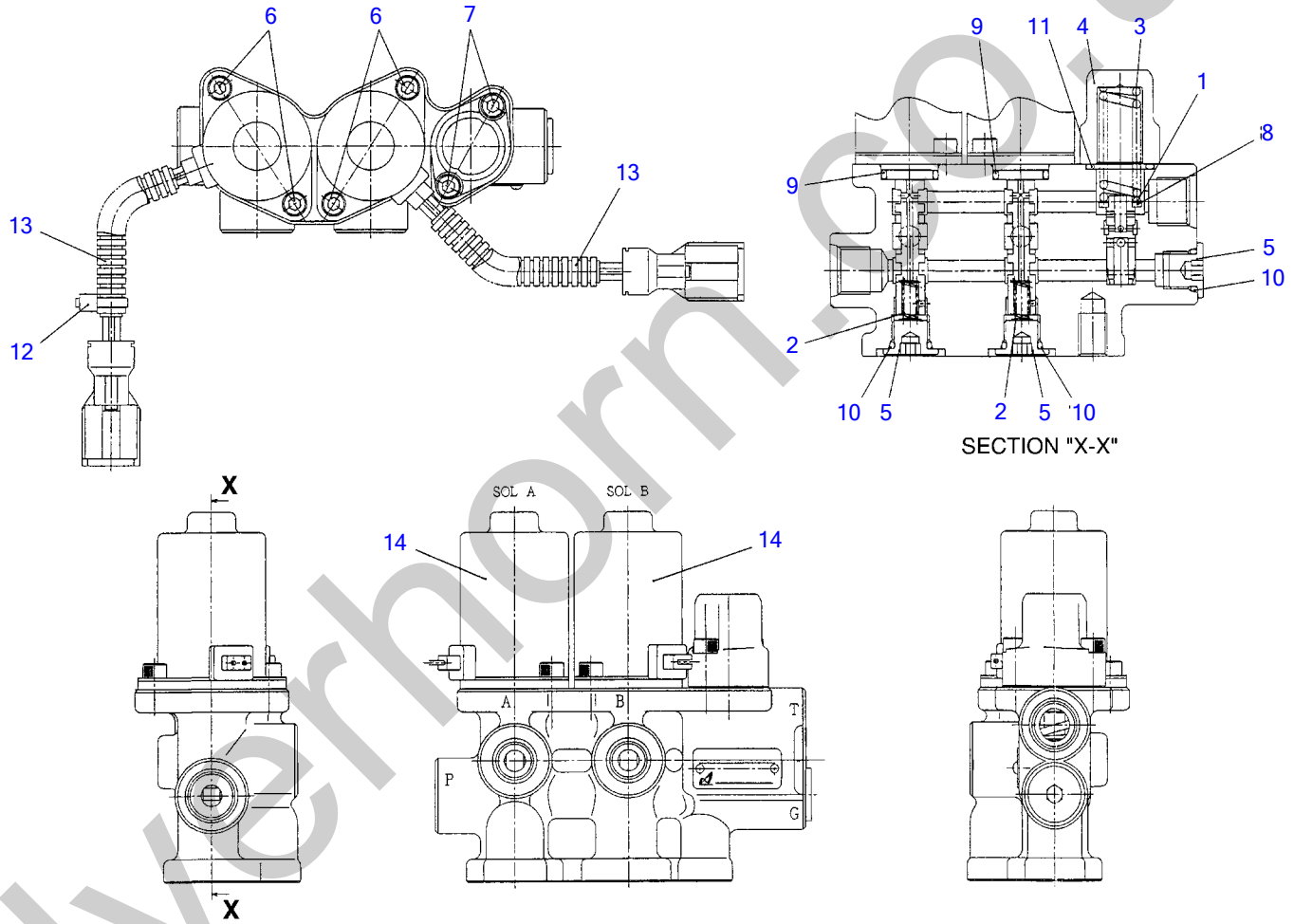

D5H150

S=free

silverhorn.co.uk

SOLENOID VALVE (2 blocks)

Item	Part number	Description	Q'ty	Chan.	Serial No.	Serv.	Remarks
0	1901742400	VALVE ASSY, solenoid (2-blocks)	1				
1	1901728701	・SHIM	1				t=0.2mm
2	1901735511	・SPRING	2				
3	1901742408	・SPRING	1				
4	1901742409	・COVER	1				
5	1901738312	・PLUG	3				
6	1110040512	・SCREW, cap	4				
7	1110040520	・SCREW, cap	2				
8	1141110008	・WASHER	1				
9	1420000160	・O-RING	2				
10	1420010110	・O-RING	3				
11	1420010200	・O-RING	1				
12	1901738918	・BAND	1				
13	1901044619	・TUBE	2				
14	1901746604	・SOLENOID	2				
	D5h151						

silverhorn.co.uk

PILOT VALVE

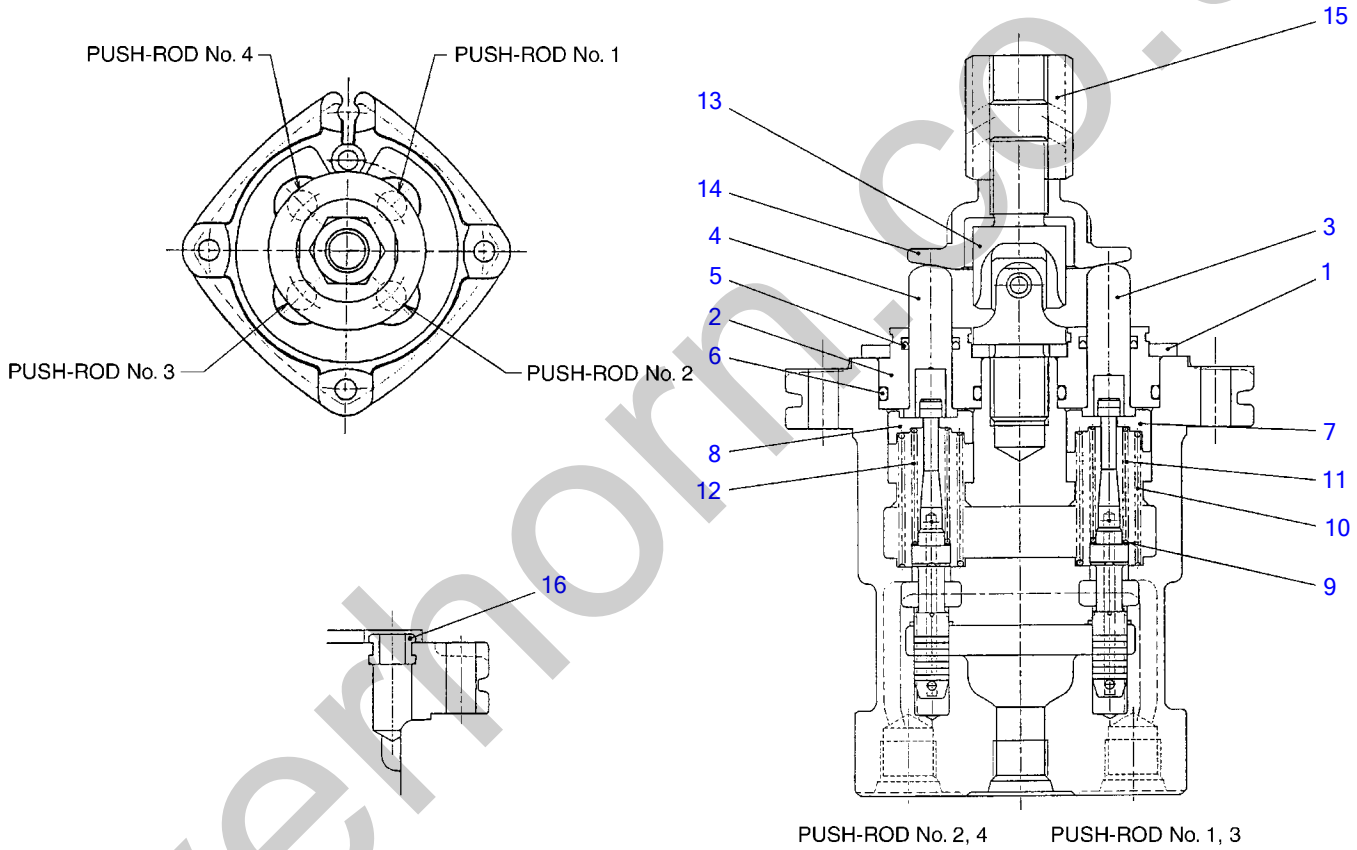

G4H300

S=free

silverhorn.co.uk

PILOT VALVE

Item	Part number	Description	Q'ty	Chan.	Serial No.	Serv.	Remarks
0	1901745600	VALVE ASSY, pilot	1				
1	1901745702	・PLATE	1				
2	1901710912	・PLUG	4				
3	1901710911	・ROD	2				
4	1901719012	・ROD	2				
5	1901710914	・SEAL	4				
6	1420010200	・O-RING	4				
7	1901745709	・HOLDER	2				
8	1901745710	・HOLDER	2				
9	1901710917	・ROD	4				
10	1901745612	・SPRING	4				
11	1901742614	・SPRING	2				
12	1901742615	・SPRING	2				
13	1901720232	・JOINT	1				
14	1901743620	・PLATE	1				
15	1901703222	・NUT	1				
16	1901735630	・BUSHING	1				
	G4h300						

silverhorn.co.uk

SELECTOR VALVE (A-B pattern)

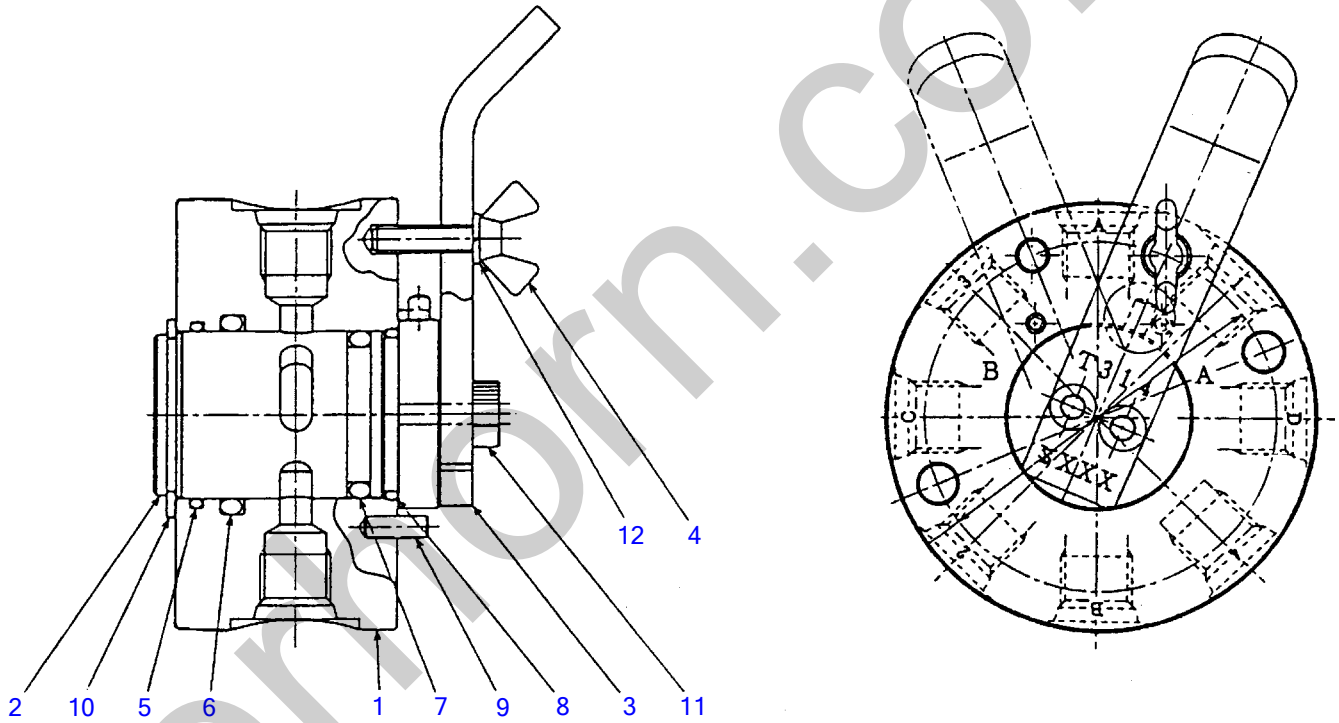

C4H170

silvermorn.co.uk

SELECTOR VALVE (A-B pattern)

Item	Part number	Description	Q'ty	Chan.	Serial No.	Serv.	Remarks
0	1901731400	VALVE ASSY, selector	1				
1	1901731401	・BODY	1				
2	1901731402	・ROTOR	1				
3	1901730503	・LEVER	1				
4	1901730504	・BOLT	1				
5	1901730505	・O-RING	1				
6	1901730506	・O-RING	1				
7	1901730507	・O-RING	1				
8	1901730508	・O-RING	1				
9	1213000412	・PIN, spring	3				
10	1220000030	・RING, snap	1				
11	1110050514	・SCREW, cap	2				
12	1140010005	・WASHER, spring	1				
	C4h170						

silverhorn.co.uk

SELECTOR VALVE (A-G pattern)

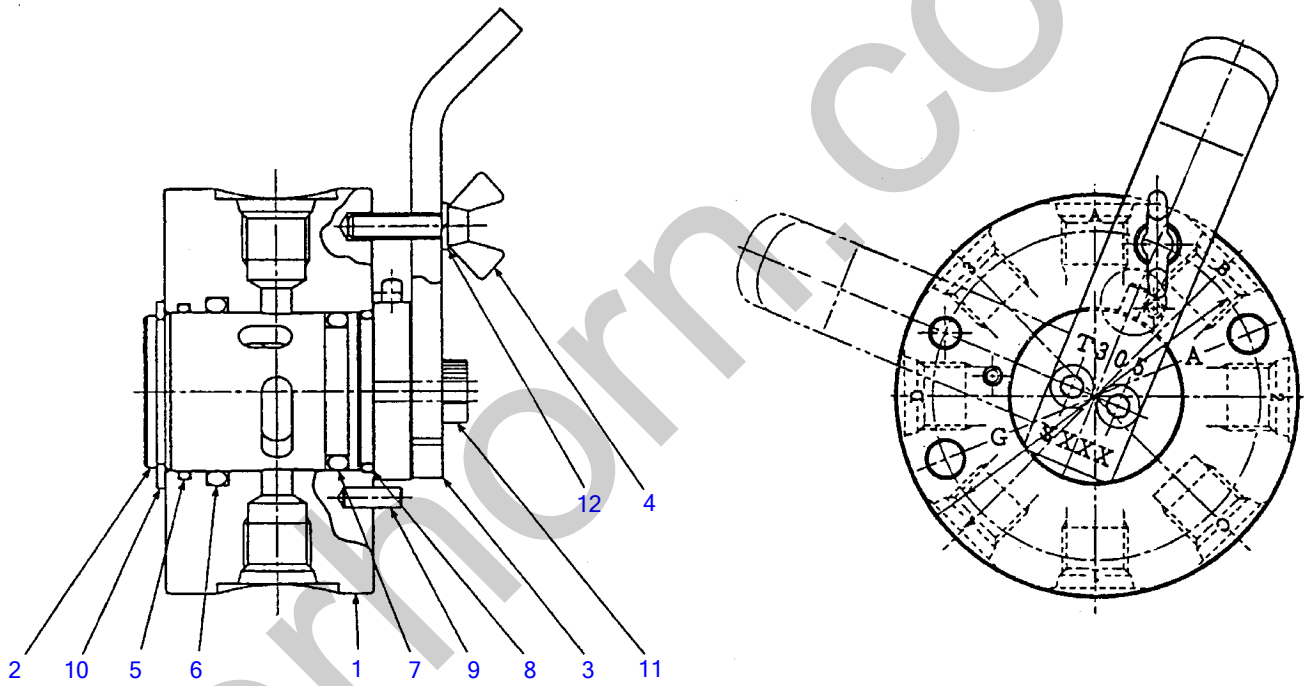

C4H180

silvermorn.co.uk

SELECTOR VALVE (A-G pattern)

Item	Part number	Description	Q'ty	Chan.	Serial No.	Serv.	Remarks
0	1901730500	VALVE ASSY, selector	1				
1	1901730501	・BODY	1				
2	1901730502	・ROTOR	1				
3	1901730503	・LEVER	1				
4	1901730504	・BOLT	1				
5	1901730505	・O-RING	1				
6	1901730506	・O-RING	1				
7	1901730507	・O-RING	1				
8	1901730508	・O-RING	1				
9	1213000412	・PIN, spring	3				
10	1220000030	・RING, snap	1				
11	1110050514	・SCREW, cap	2				
12	1140010005	・WASHER, spring	1				
	C4h180						

silverhorn.co.uk

BOOM CYLINDER

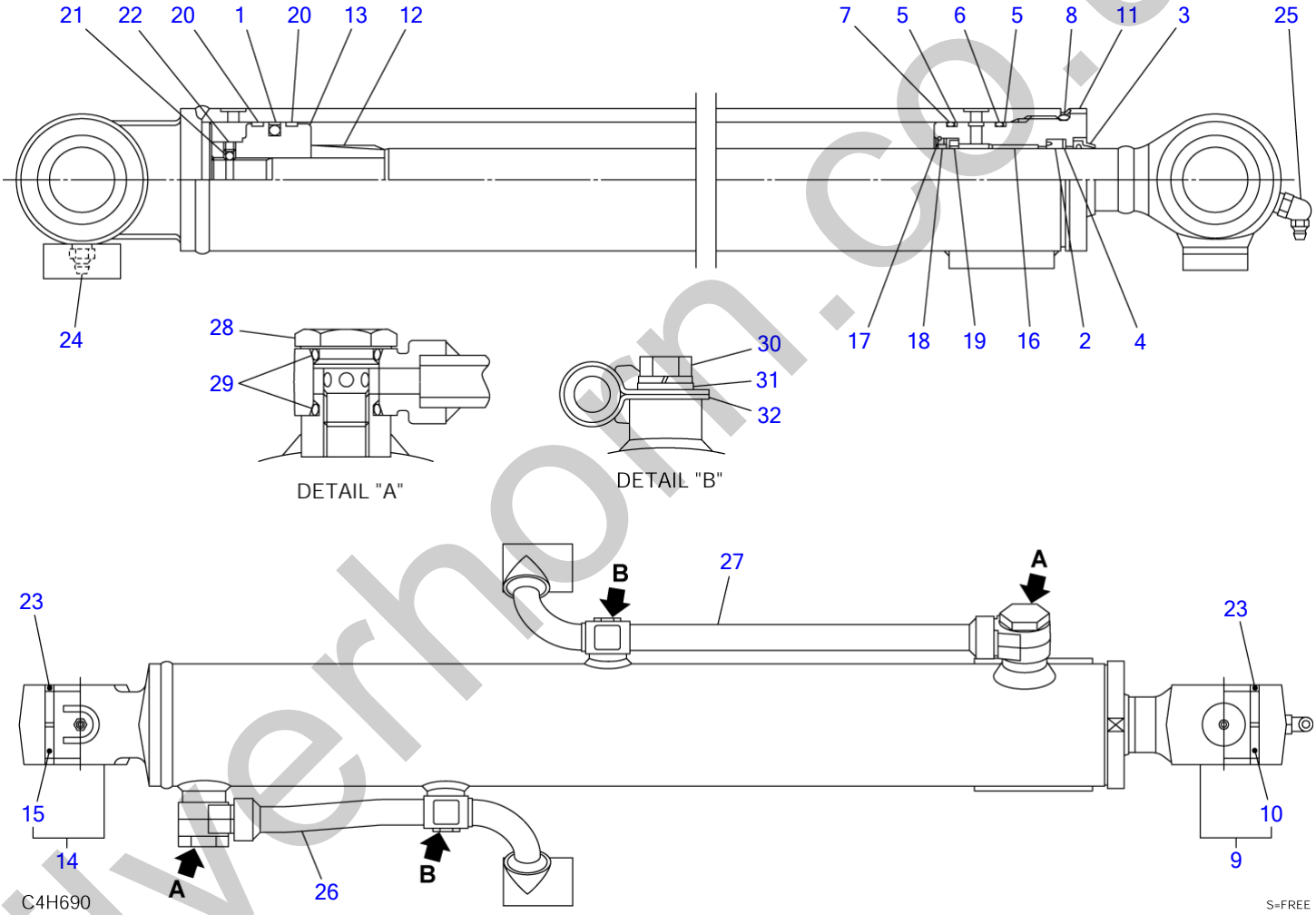

silverhorn.co.uk

BOOM CYLINDER

Item	Part number	Description	Q'ty	Chan.	Serial No.	Serv.	Remarks
0	1900095500	CYLINDER ASSY (canopy)	1				boom
	1900095600	CYLINDER ASSY (cab)	1				
0-1	1900070499	・KIT, seal	1				
1	X 1900051932	・・PACKING, piston	1				
2	X 1410530408	・・PACKING, rod	1				
3	X 1900073733	・・SEAL, dust	1				
4	X 1411240302	・・RING, back-up	1				
5	X 1421130500	・・RING, back-up	2				
6	X 1420110500	・・O-RING	1				
7	X 1420110450	・・O-RING	1				
8	X 1420500550	・・O-RING	1				
9	1900095597	・ROD ASSY, piston	1				
10	1900024720	・・BUSHING	1				
11	1900058803	・COVER, rod	1				
12	1900058816	・CUSHON, rod	1				
13	1900095506	・PISTON	1				
14	1900095598	・TUBE ASSY	1				canopy
	1900095698	・TUBE ASSY	1				cab
15	1900024720	・・BUSHING	1				
16	1333003025	・BUSHING	1				
17	1900058626	・STOPPER	1				
18	1900058615	・SPACER	1				
19	1900058616	・RING, cushion	1				
20	1900066726	・RING, wear	2				
21	1390010250	・BALL, steel	1				
22	1121040606	・SET-SCREW	1				
23	1432200030	・SEAL, dust	4				
24	1560001000	・FITTING, grease	1				
25	1560001675	・FITTING, grease	1				
26	1900095510	・PIPE ASSY	1				
27	1900095519	・PIPE ASSY	1				canopy
	1900097419	・PIPE ASSY	1				cab
28	1900095328	・PLUG	2				
29	1420010150	・O-RING	4				
30	1100040816	・BOLT	2				
31	1141110008	・WASHER	2				
32	1900095317	・HOLDER	2				
	C4h691						

silverhorn.co.uk

ARM CYLINDER

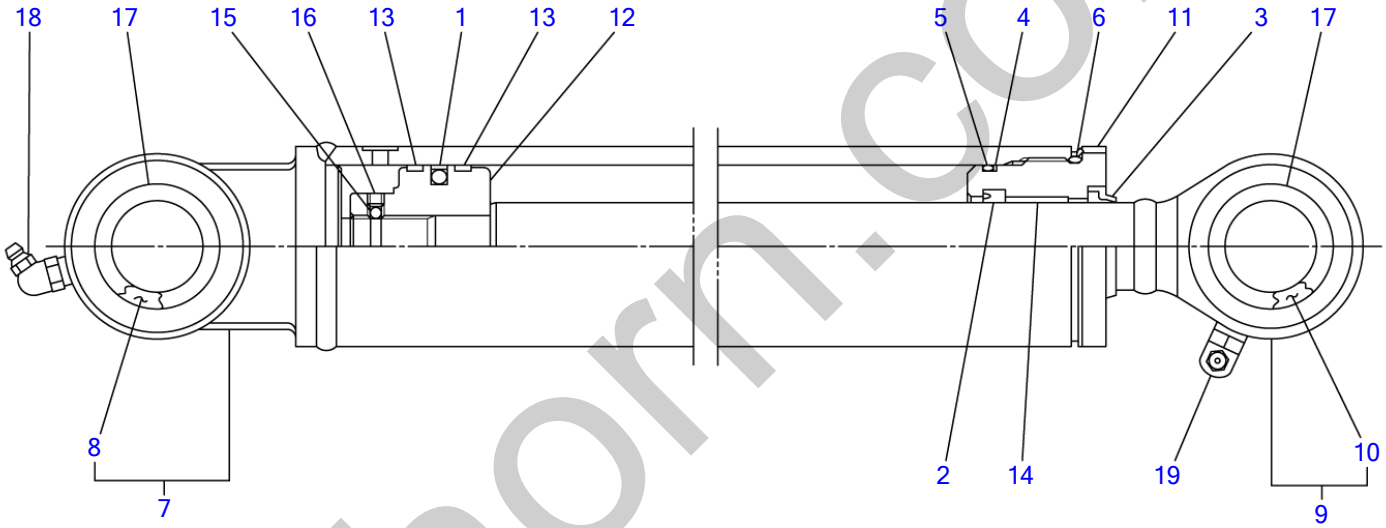

C4H200

S=FREE

silverhorn.co.uk

ARM CYLINDER

Item	Part number		Description	Q'ty	Chan.	Serial No.	Serv.	Remarks
0		1900095700	CYLINDER ASSY	1				arm
0-1		1900051999	・KIT, seal	1				
1	X	1900051932	・・PACKING, piston	1				
2	X	1410530408	・・PACKING, rod	1				
3	X	1900051931	・・SEAL, dust	1				
4	X	1421130500	・・RING, back-up	1				
5	X	1420110500	・・O-RING	1				
6	X	1420500550	・・O-RING	1				
7		1900095798	・TUBE ASSY	1				
8		1900024720	・・BUSHING	1				
9		1900078397	・ROD ASSY, piston	1				
10		1900024720	・・BUSHING	1				
11		1900053503	・COVER, rod	1				
12		1900078306	・PISTON	1				
13		1900066726	・RING, wear	2				
14		1333003025	・BUSHING	1				
15		1390020250	・BALL, steel	1				
16		1121050608	・SET-SCREW	1				
17		1432200030	・SEAL, dust	4				
18		1560001675	・FITTING, grease	1				
19		1560001900	・FITTING, grease	1				
		C4h710						

silverhorn.co.uk

TELESCOPIC CYLINDER

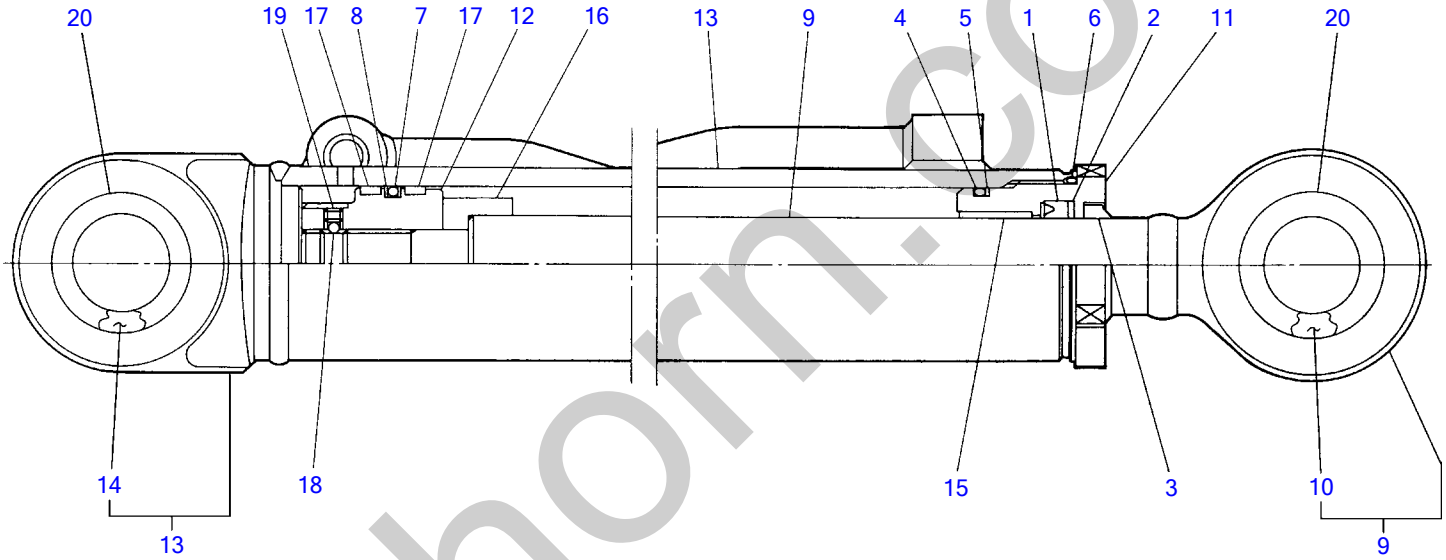

C4H211

S=FREE

silverhorn.co.uk

TELESCOPIC CYLINDER

Item	Part number		Description	Q'ty	Chan.	Serial No.	Serv.	Remarks
0		1900077500	CYLINDER ASSY	1				telescopic
0-1		1900062699	・KIT, seal	1				
1	X	1900056932	・・PACKING, rod	1				
2	X	1900062132	・・RING, back-up	1				
3	X	1900056933	・・SEAL, dust	1				
4	X	1420110350	・・O-RING	1				
5	X	1421130350	・・RING, back-up	1				
6	X	1420500400	・・O-RING	1				
7	X	1900062133	・・PACKING, piston	1				
8	X	1900062134	・・RING, back-up	2				
9		1900062901	・ROD, piston	1				
10		1900062102	・・BUSHING	1				
11		1900062103	・COVER, rod	1				
12		1900062106	・PISTON	1				
13		1900077507	・・BUSHING	1				
14		1900062102	・TUBE	1				
15		1900062113	・BUSHING	1				
16		1900077515	・SPACER	1				
17		1900077526	・RING, wear	2				
18		1390010250	・BALL, steel	1				
19		1121040505	・SET-SCREW	1				
20		1432200025	・SEAL, dust	4				
		C4h211						

silverhorn.co.uk

BUCKET CYLINDER

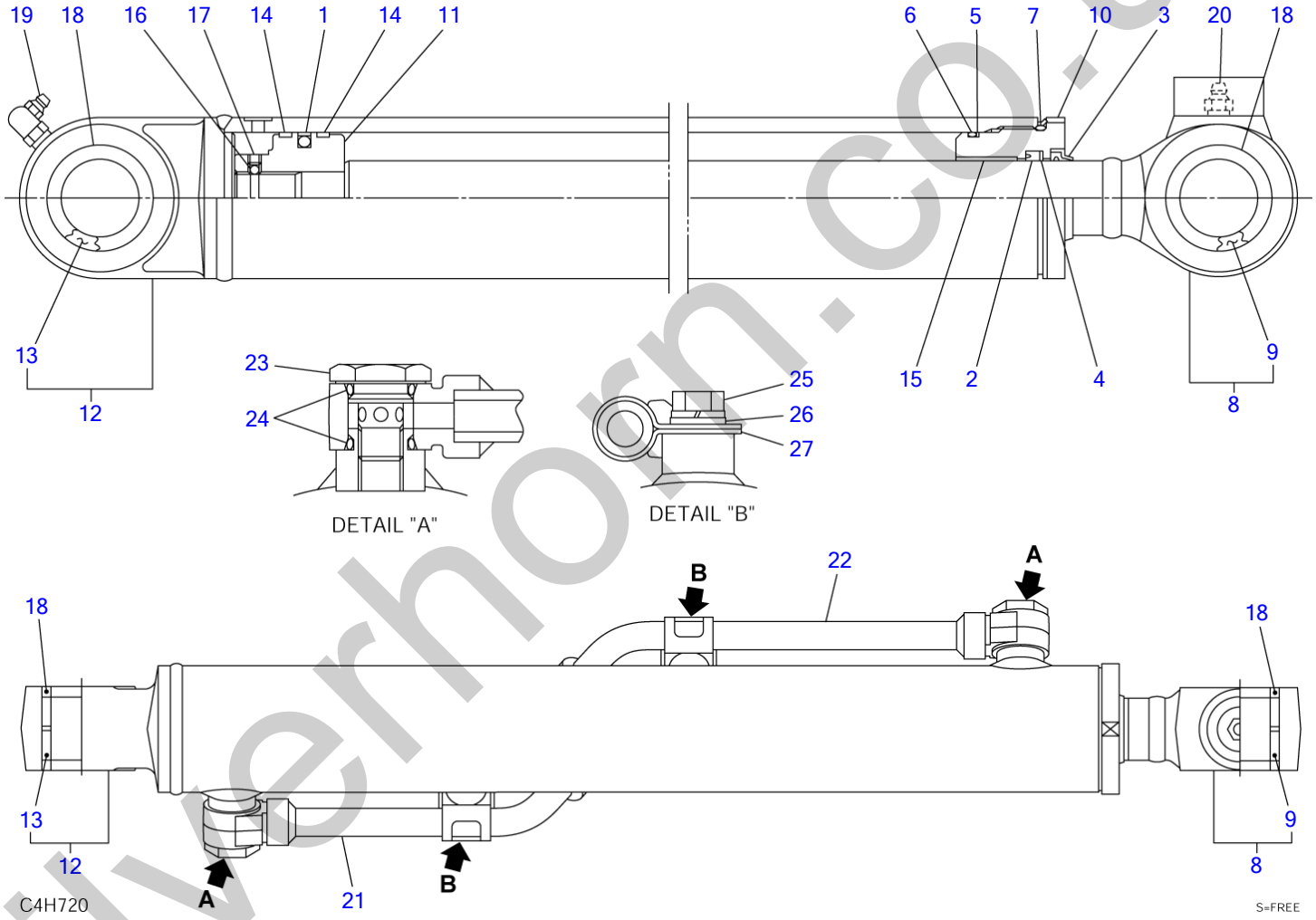

silverhorn.co.uk

BUCKET CYLINDER

Item	Part number	Description	Q'ty	Chan.	Serial No.	Serv.	Remarks
0	1900095300	CYLINDER ASSY	1				bucket
0-1	1900072299	・KIT, seal	1				
1	X 1900056931	・・PACKING, piston	1				
2	X 1410530408	・・PACKING, rod	1				
3	X 1900073733	・・SEAL, dust	1				
4	X 1411240302	・・RING, back-up	1				
5	X 1421130450	・・RING, back-up	1				
6	X 1420110450	・・O-RING	1				
7	X 1420500500	・・O-RING	1				
8	1900072297	・ROD ASSY, piston	1				
9	1900046302	・・BUSHING	1				
10	1900059003	・COVER, rod	1				
11	1900061506	・PISTON	1				
12	1900095398	・TUBE ASSY	1				
13	1900046302	・・BUSHING	1				
14	1900061526	・RING, wear	2				
15	1333003025	・BUSHING	1				
16	1390020250	・BALL, steel	1				
17	1121040605	・SET-SCREW	1				
18	1432200030	・SEAL, dust	4				
19	1560001900	・FITTING, grease	1				
20	1560001000	・FITTING, grease	1				
21	1900095310	・PIPE ASSY	1				
22	1900095319	・PIPE ASSY	1				
23	1900095328	・PLUG	2				
24	1420010150	・O-RING	4				
25	1100040816	・BOLT	2				
26	1141110008	・WASHER	2				
27	1900095317	・HOLDER	2				
	C4h720						

silverhorn.co.uk

BUCKET CYLINDER (telescopic)

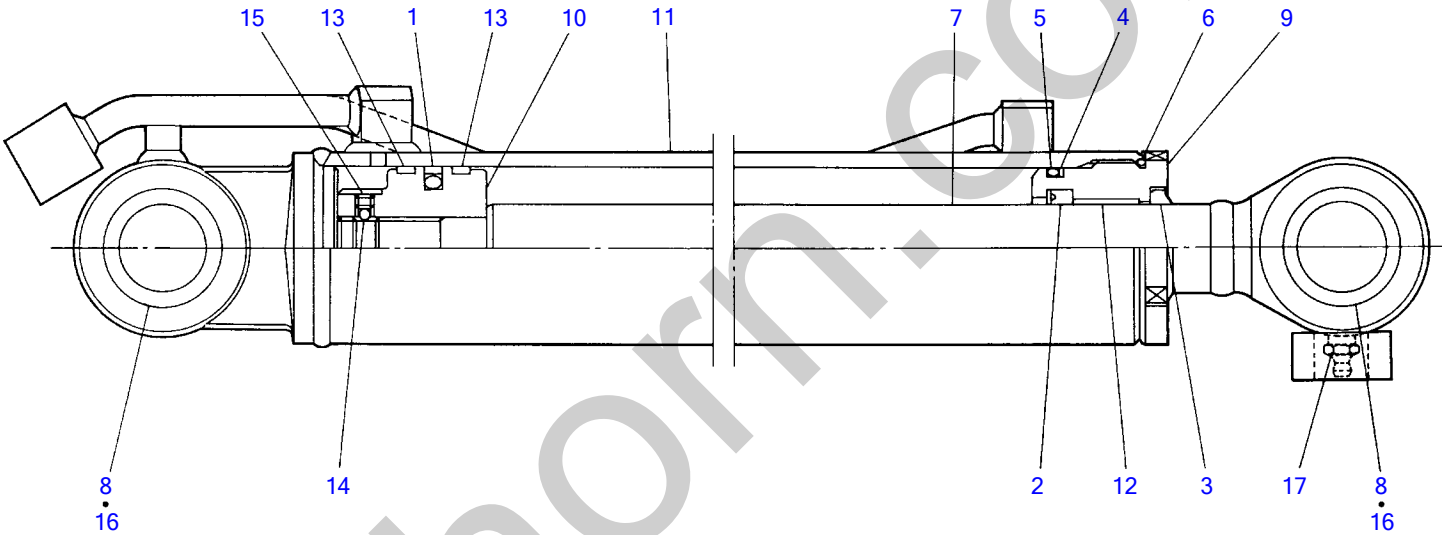

C4H230

S=FREE

silverhorn.co.uk

BUCKET CYLINDER (telescopic)

Item		Part number	Description	Q'ty	Chan.	Serial No.	Serv.	Remarks
0		1900062700	CYLINDER ASSY	1				bucket
0-1		1900051999	・KIT, seal	1				
1	X	1900051932	・・PACKING, piston	1				
2	X	1410530408	・・PACKING, rod	1				
3	X	1900051931	・・SEAL, dust	1				
4	X	1421130500	・・RING, back-up	1				
5	X	1420110500	・・O-RING	1				
6	X	1420500550	・・O-RING	1				
7		1900062701	・ROD, piston	1				
8		1900046320	・BUSHING	2				19000-00202
9		1900053503	・COVER, rod	1				
10		1900053506	・PISTON	1				
11		1900062707	・TUBE	1				
12		1333003025	・BUSHING	1				
13		1900051926	・RING, wear	2				
14		1390010250	・BALL, steel	1				
15		1121050605	・SET-SCREW	1				
16		1432200030	・SEAL, dust	4				
17		1560001000	・FITTING, grease	1				
		C4h231						

silverhorn.co.uk

DOZER BLADE CYLINDER

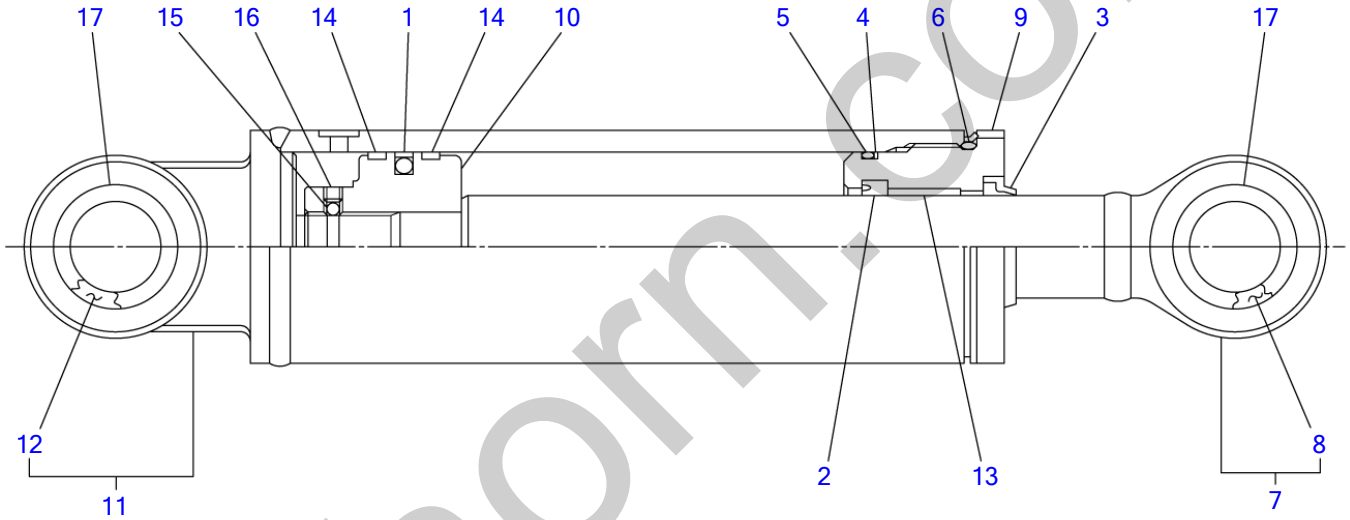

C4H240

S=FREE

silverhorn.co.uk

DOZER BLADE CYLINDER

Item	Part number	Description	Q'ty	Chan.	Serial No.	Serv.	Remarks
0	1900096000	CYLINDER ASSY	1				blade
0-1	1900070399	・KIT, seal	1				
1	X 1900070334	・・PACKING, piston	1				
2	X 1410535458	・・PACKING, rod	1				
3	X 1900073533	・・SEAL, dust	1				
4	X 1900051832	・・RING, back-up	1				
5	X 1420110550	・・O-RING	1				
6	X 1420110600	・・O-RING	1				
7	1900096097	・ROD ASSY, piston	1				
8	1900058502	・・BUSHING	1				
9	1900051803	・COVER, rod	1				
10	1900070306	・PISTON	1				
11	1900096098	・TUBE ASSY	1				
12	1900058502	・・BUSHING	1				
13	1333003525	・BUSHING	1				
14	1900070326	・RING, wear	2				
15	1390010250	・BALL, steel	1				
16	1121040607	・SET-SCREW	1				
17	1432200030	・SEAL, dust	4				
	C4h730						

silverhorn.co.uk

DOZER BLADE CYLINDER (for long dozer blade)

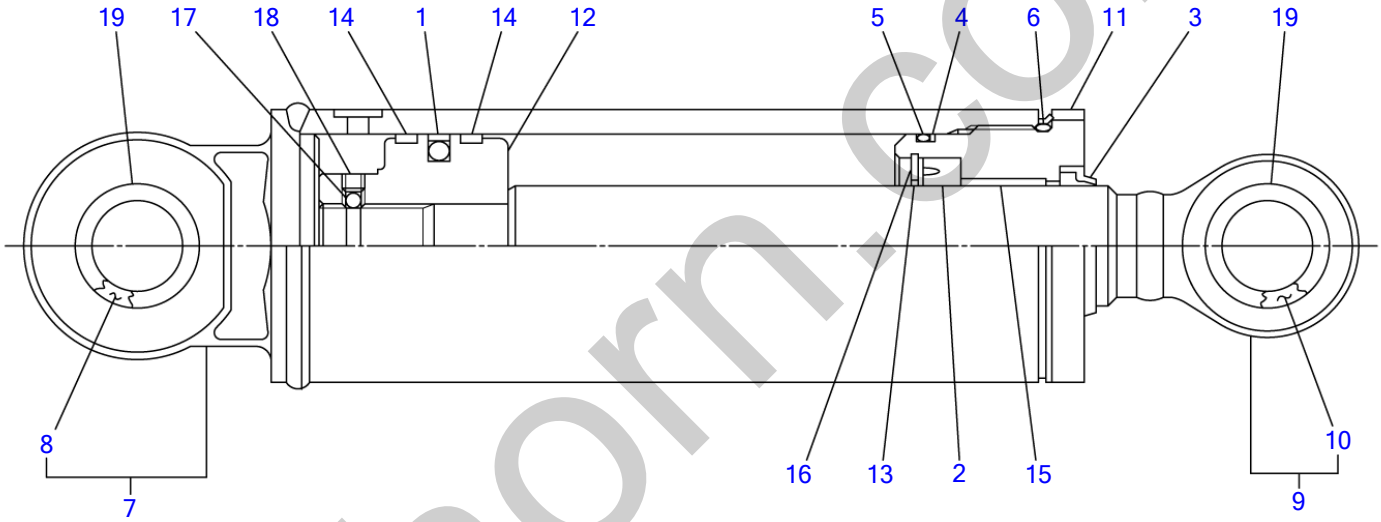

C4H250

S=FREE

silverhorn.co.uk

DOZER BLADE CYLINDER (for long dozer blade)

Item		Part number	Description	Q'ty	Chan.	Serial No.	Serv.	Remarks
0		1900096100	CYLINDER ASSY	1				blade
0-1		1900054399	・KIT, seal	1				
1	X	1900050333	・・PACKING, piston	1				
2	X	1900005612	・・PACKING, rod	1				
3	X	1900048431	・・SEAL, dust	1				
4	X	1421130700	・・RING, back-up	1				
5	X	1420110700	・・O-RING	1				
6	X	1420110750	・・O-RING	1				
7		1900096198	・TUBE ASSY	1				
8		1900058502	・・BUSHING	1				
9		1900074997	・ROD ASSY, piston	1				
10		1900058502	・・BUSHING	1				
11		1900054303	・COVER, rod	1				
12		1900054306	・PISTON	1				
13		1900013508	・HOLDER, rod packing	1				
14		1900050332	・RING, wear	2				
15		1333004030	・BUSHING	1				
16		1221000060	・RING, snap	1				
17		1390020250	・BALL, steel	1				
18		1121050608	・SET-SCREW	1				
19		1432200030	・SEAL, dust	4				
		C4h740						

silverhorn.co.uk

SWING CYLINDER

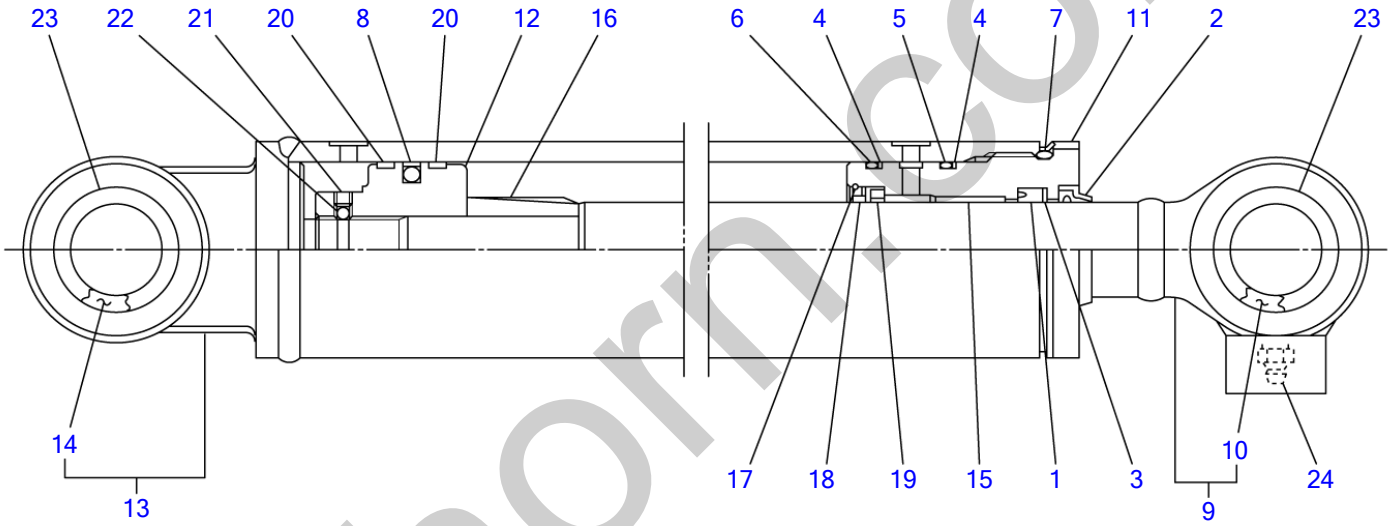

C4H260

S=FREE

silverhorn.co.uk

SWING CYLINDER

Item	Part number	Description	Q'ty	Chan.	Serial No.	Serv.	Remarks
0	1900095900	CYLINDER ASSY	1				swing
0-1	1900070599	・KIT, seal	1				
1	X 1410535458	・・PACKING, rod	1				
2	X 1900073533	・・SEAL, dust	1				
3	X 1411245352	・・RING, back-up	1				
4	X 1421130550	・・RING, back-up	2				
5	X 1420110550	・・O-RING	1				
6	X 1420110500	・・O-RING	1				
7	X 1420110600	・・O-RING	1				
8	X 1900053331	・・PACKING, piston	1				
9	1900070597	・ROD ASSY, piston	1				
10	1900024720	・・BUSHING	1				
11	1900053303	・COVER, rod	1				
12	1900053306	・PISTON	1				
13	1900070598	・TUBE ASSY	1				
14	1900024720	・・BUSHING	1				
15	1333003525	・BUSHING	1				
16	1900057705	・CUSHON, rod	1				
17	1900048826	・STOPPER	1				
18	1900048815	・SPACER	1				
19	1900046316	・RING, cushion	1				
20	1900065326	・RING, wear	2				
21	1121040607	・SET-SCREW	1				
22	1390010250	・BALL, steel	1				
23	1432200030	・SEAL, dust	4				
24	1560001000	・FITTING, grease	1				
	C4h750						

silverhorn.co.uk

SPANNER CYLINDER

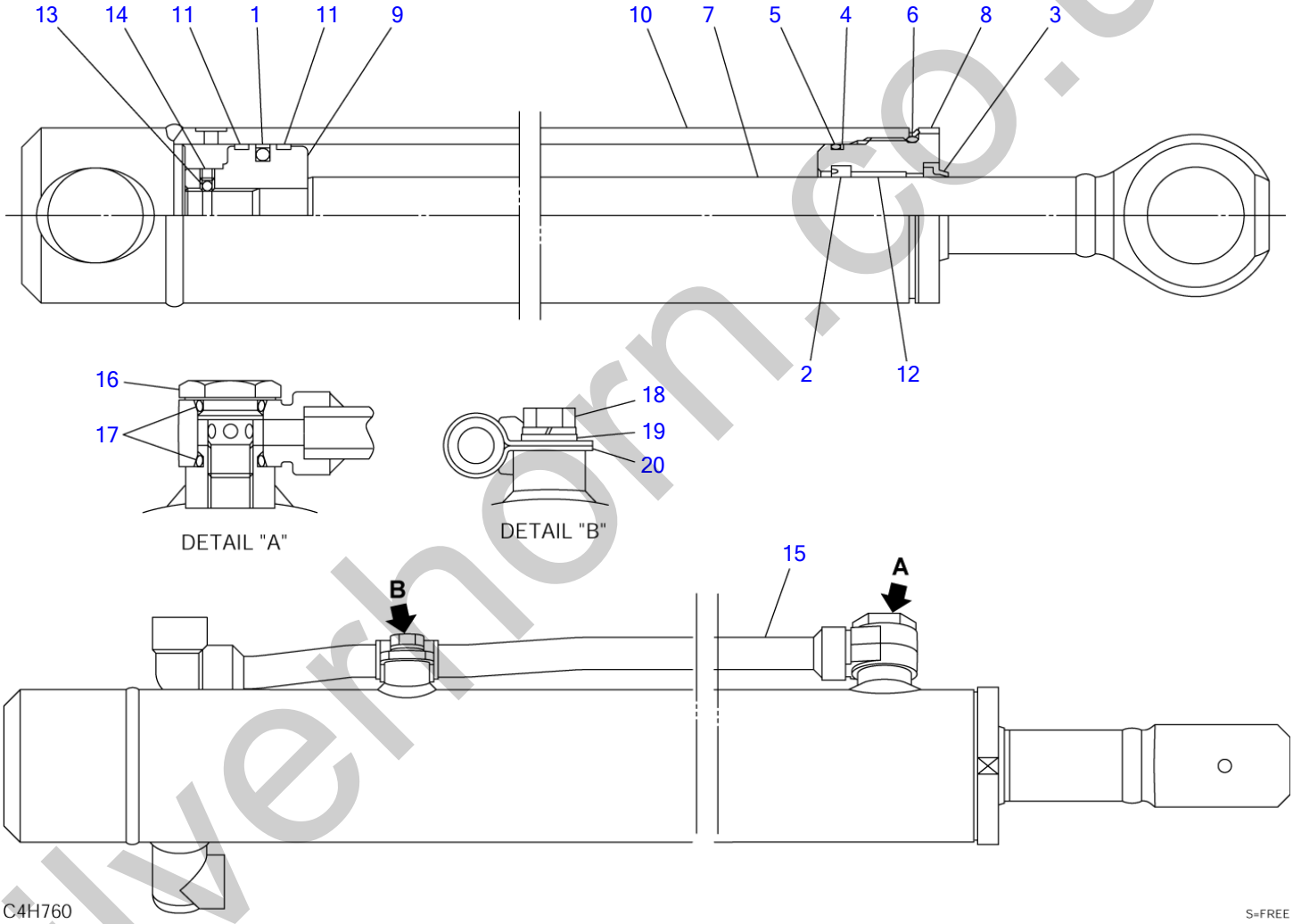

silvernorn.co.uk

SPANNER CYLINDER

Item		Part number	Description	Q'ty	Chan.	Serial No.	Serv.	Remarks
0		1900095400	CYLINDER ASSY	1				spanner
0-1		1900072399	・KIT, seal	1				
1	X	1900051932	・・PACKING, piston	1				
2	X	1410530408	・・PACKING, rod	1				
3	X	1900073733	・・SEAL, dust	1				
4	X	1421130500	・・RING, back-up	1				
5	X	1420110500	・・O-RING	1				
6	X	1420500550	・・O-RING	1				
7		1900072301	・ROD, piston	1				
8		1900053503	・COVER, rod	1				
9		1900053506	・PISTON	1				
10		1900095407	・TUBE	1		11610001~11610192		
		1900095427	・TUBE	1		11610193~		
11		1900066726	・RING, wear	2				
12		1333003025	・BUSHING	1				
13		1390020250	・BALL, steel	1				
14		1121050606	・SET-SCREW	1				
15		1900097610	・PIPE ASSY	1		11610001~11610192		
		1900095420	・PIPE ASSY	1		11610193~		
16		1900095328	・PLUG	1				
17		1420010150	・O-RING	2				
18		1100040816	・BOLT	1				
19		1141110008	・WASHER	1				
20		1900095317	・HOLDER	1				
		C4h761						

silverhorn.co.uk

TRAVEL MOTOR (1/3) (reduction sec.)

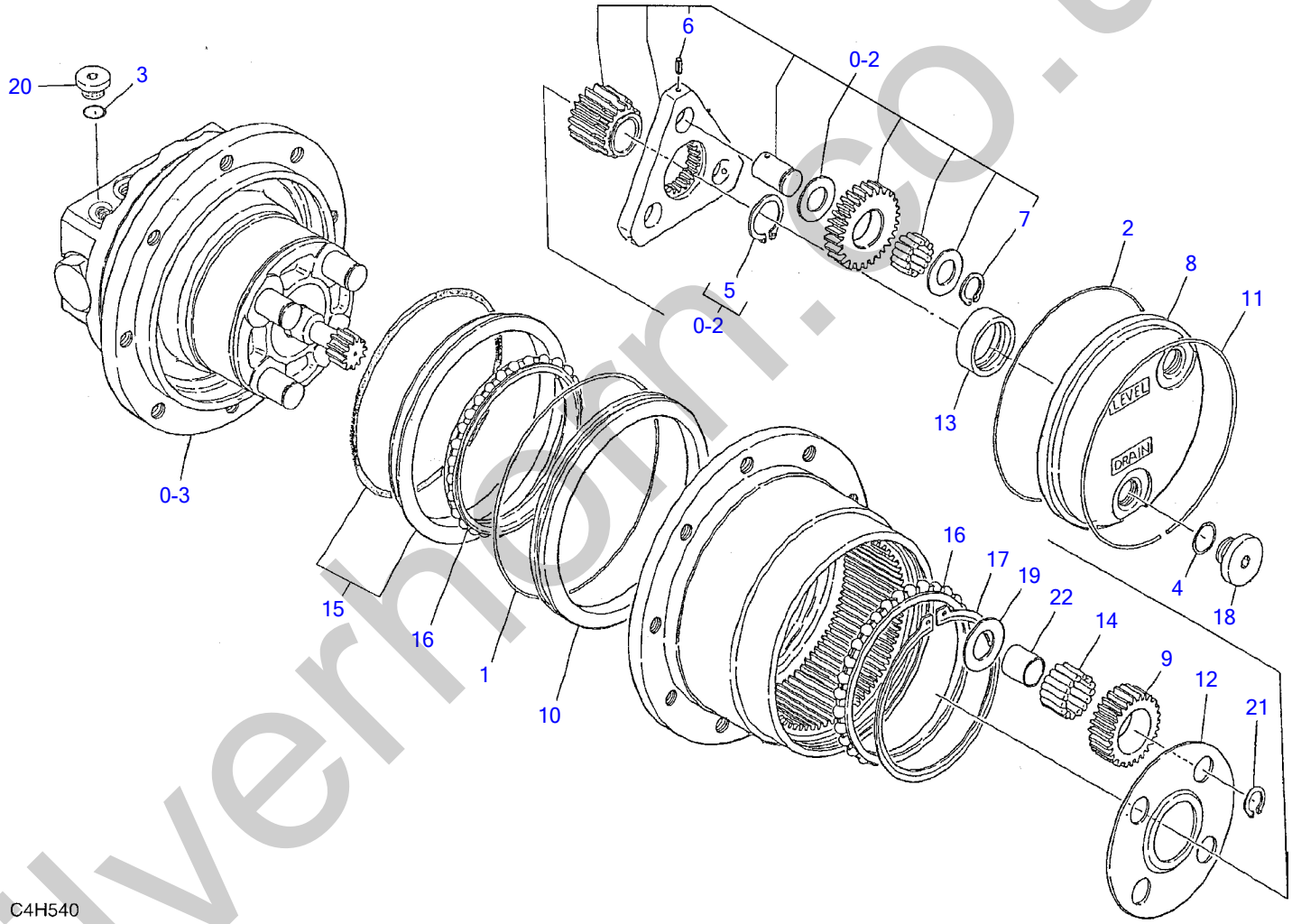

silverhorn.co.uk

TRAVEL MOTOR (1/3) (reduction sec.)

Item	Part number	Description	Q'ty	Chan.	Serial No.	Serv.	Remarks
0	1903121400	MOTOR ASSY	1				
0-1	1903121299	・KIT, seal	1				
1	X 1420101300	・・O-RING	1				
2	X 1420300248	・・O-RING	1				
3	X 1420010110	・・O-RING	2				
4	X 1420010140	・・O-RING	2				
0-2	1903121298	・KIT, carrier 2	1				
5	1220000026	・・RING, snap	1				
6	1213000312	・・PIN, spring	3				
7	1903918137	・・RING, snap	3				
8	1903121202	・COVER	1				
9	1903121206	・GEAR	4				
10	1903121212	・RING, seal	1				
11	1903118113	・RING, snap	1				
12	1903121214	・PLATE	1				
13	1903121215	・RING	1				
14	1903118116	・NEEDLE	60				
15	1903121218	・SEAL, floating	1				
16	1903121220	・BEARING	2				
17	1903121222	・RING, snap	1				
18	1903118932	・PLUG	2				
0-3	1903905300	・KIT, motor	1				
19	1903121234	・WASHER	4				
20	1903121235	・PLUG	2				
21	1903118137	・RING, snap	4				
22	1903121238	・RING	4				
	C4h570						

silverhorn.co.uk

TRAVEL MOTOR (2/3) (motor sec.)

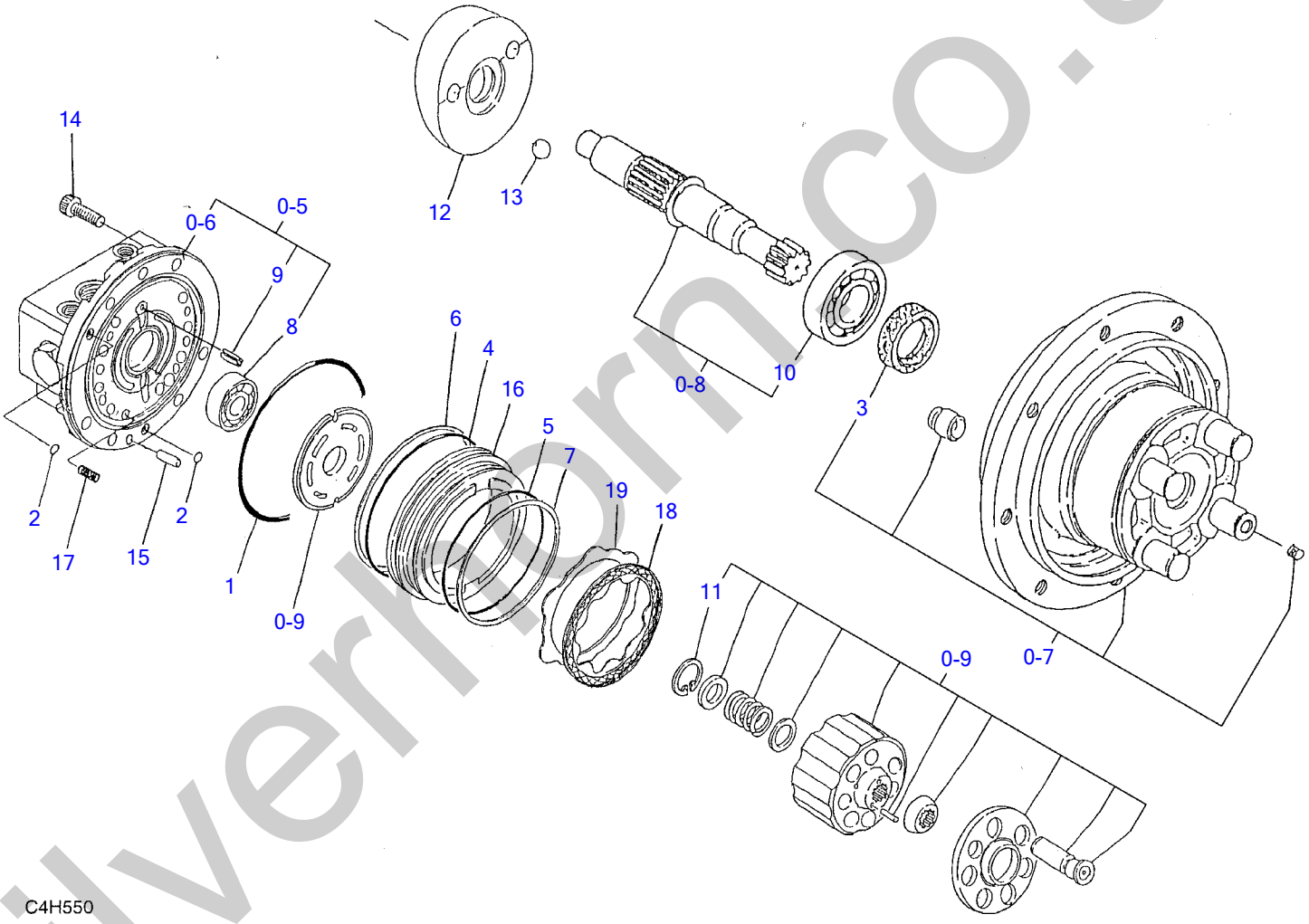

silverthorn.co.uk

TRAVEL MOTOR (2/3) (motor sec.)

Item		Part number	Description	Q'ty	Chan.	Serial No.	Serv.	Remarks
0		1903121400	MOTOR ASSY	1				
0-3		1903905300	・KIT, motor	1				
0-4		1903905299	・・KIT, seal	1				
1	X	1420111050	・・・O-RING	1				
2	X	1420010090	・・・O-RING	1				
3	X	1903904226	・・・SEAL, oil	1				
4	X	1420110950	・・・O-RING	1				
5	X	1420110900	・・・O-RING	1				
6	X	1421130950	・・・RING, back-up	1				
7	X	1421130900	・・・RING, back-up	1				
0-5		1903905298	・・KIT, body 1	1				
0-6	X	**********	・・・BODY ASSY	1				
8		1300006201	・・・BEARING	1				
9		1213000512	・・・PIN, spring	1				
0-7		1903905297	・・KIT, body 2	1				
0-8		1903905296	・・KIT, shaft	1				
10		1300006004	・・・BEARING	1				
0-9		1903905295	・・KIT, cylinder	1				
11		1221000028	・・・RING, snap	1				
12		1903905310	・・SWASH PLATE	1				
13		1390010750	・・BALL, steel	2				
14		1903904230	・・SCREW	7				
15		1212010614	・・PIN	1				
16		1903905226	・・PISTON	1				
17		1903904218	・・SPRING	10				
18		1903905228	・・PLATE	1				
19		1903904225	・・PLATE	1				
		C4h581						

silverhorn.co.uk

TRAVEL MOTOR (3/3) (valve sec.)

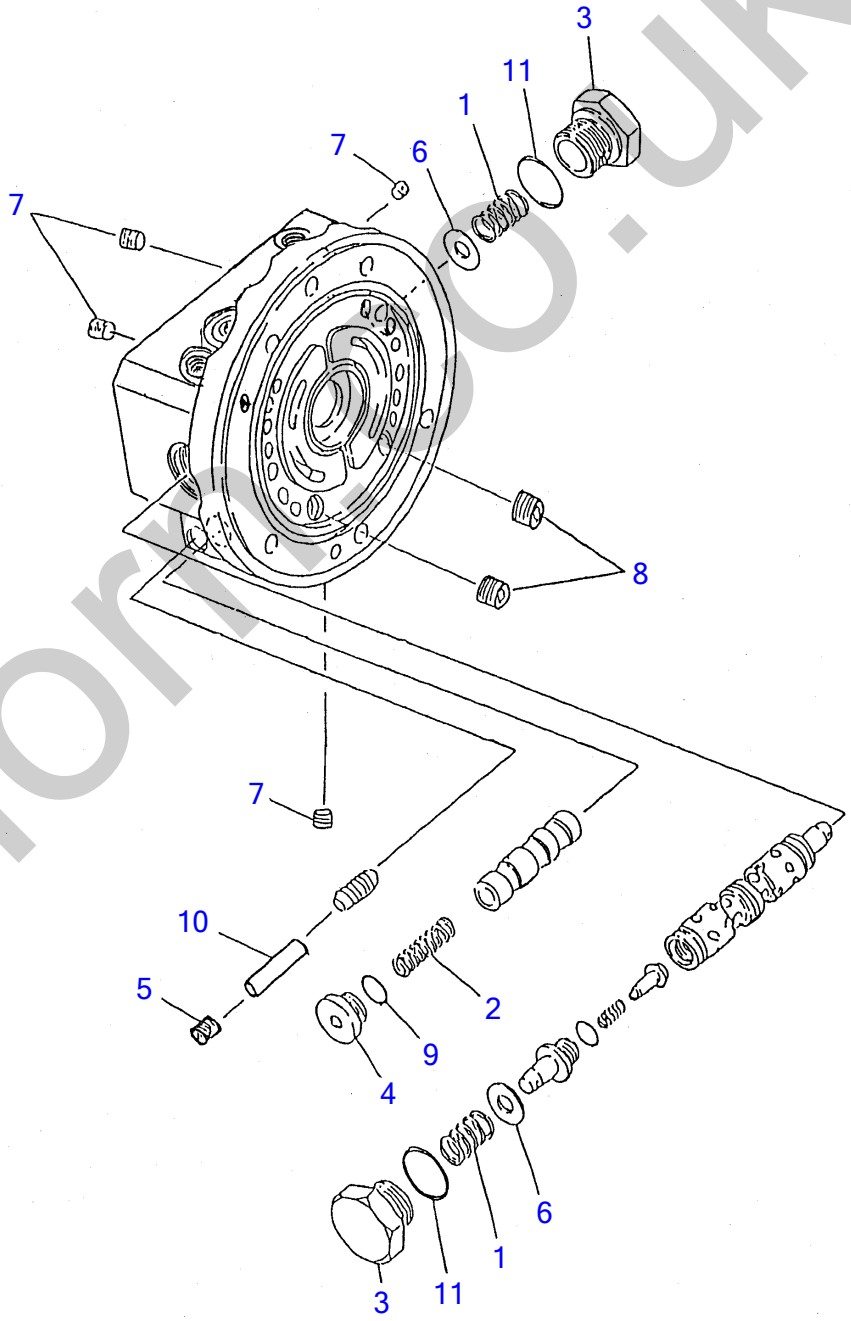

C4H560

silverhorse.co.uk

TRAVEL MOTOR (3/3) (valve sec.)

Item	Part number	Description	Q'ty	Chan.	Serial No.	Serv.	Remarks
0	1903121400	MOTOR ASSY	1				
0-6	X **********	・BODY ASSY	1				
1	1903905208	・・SPRING	2				
2	1903904139	・・SPRING	1				
3	1901807010	・・PLUG	2				
4	1901807011	・・PLUG	2				
5	1501810000	・・PLUG	2				
6	1901804510	・・RING	2				
7	1501810000	・・PLUG	8				
8	1501810001	・・PLUG	2				
9	1420010140	・・O-RING	2				
10	1903905221	・・NEEDLE	2				
11	1420010180	・・O-RING	2				
	C4h591						

silverhorn.co.uk

SLEW MOTOR (1/2) (motor sec.)

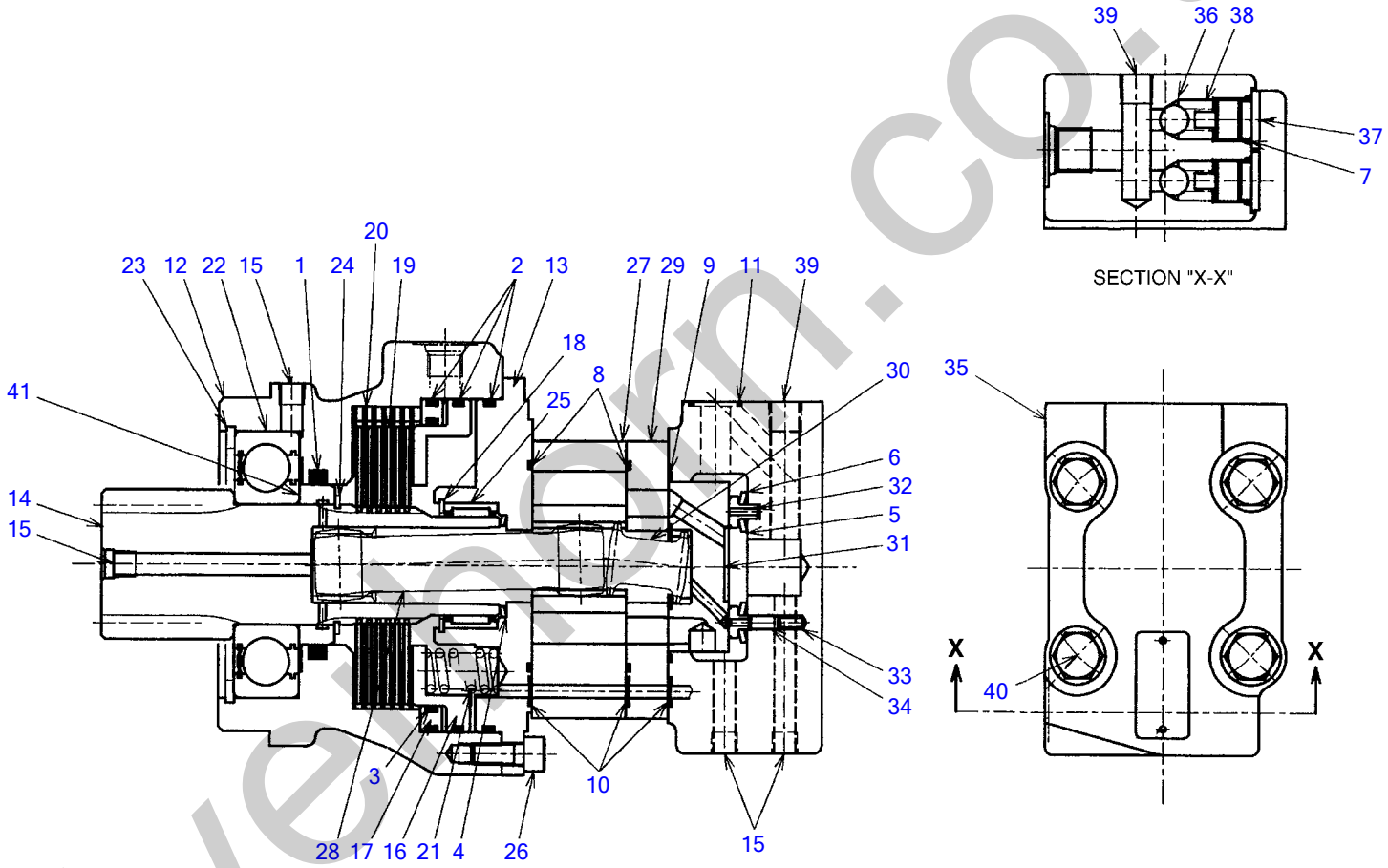

silverthorn.co.uk

SLEW MOTOR (1/2) (motor sec.)

Item		Part number	Description	Q'ty	Chan.	Serial No.	Serv.	Remarks
0		1903124700	MOTOR ASSY, slew	1				
0-1		1903907000	・MOTOR ASSY	1				
0-2		1903124799	・・KIT, seal	1				
1	X	1903124715	・・・X-RING	1				
2	X	1420111200	・・・O-RING	3				
3	X	1420111050	・・・O-RING	1				
4	X	1432900017	・・・SEAL	1				
5	X	1903905918	・・・SEAL	1				
6	X	1903905920	・・・SEAL	1				
7	X	1420010140	・・・O-RING	2				
8	X	1420310041	・・・O-RING	2				
9	X	1420310038	・・・O-RING	1				
10	X	1420310011	・・・O-RING	3				
11	X	1420010180	・・・O-RING	2				
12		1903124701	・・HOUSING	1				
13		1903124702	・・MOUNTING	1				
14		1903124703	・・GEAR	1				
15		1501810001	・・PLUG	4				
16		1903124705	・・PISTON	1				
17		1903124706	・・RING	1				
18		1903124707	・・RING, snap	1				
19		1903124708	・・PLATE	6				
20		1903124709	・・PLATE	7				
21		1903124710	・・SPRING	8				
22		1903124711	・・BEARING	1				
23		1221000100	・・RING, snap	1				
24		1220000045	・・RING, snap	1				
25		1903124714	・・BEARING	1				
26		1110020820	・・SCREW, cap	8				
27		1903903628	・・GEROLLER	1				
28		1903117922	・・DRIVE	1				
29		1903103628	・・PLATE	1				
30		1903102624	・・DRIVE	1				
31		1903103630	・・VALVE	1				
32		1903103631	・・RING	1				
33		1903103632	・・SPRING	2				
34		1903103634	・・PIN	2				
35		1903124730	・・HOUSING	1				
36		1390010700	・・BALL, steel	2				
37		1903117933	・・PLUG	2				
38		1903117935	・・SPRING	2				
39		1903905118	・・PLUG	2				
40		1903009347	・・BOLT	4				
41		1903117942	・・COLLAR	1				
		C4h790						

silverthorn.co.uk

SLEW MOTOR (2/2)(valve sec.)

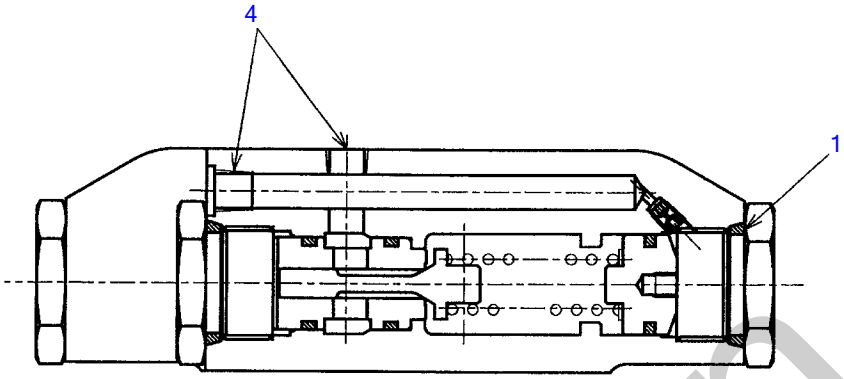

SECTION "A-A"

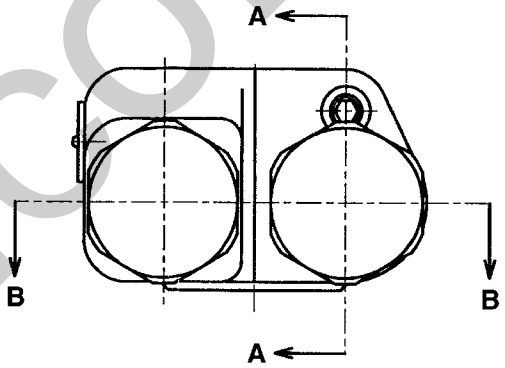

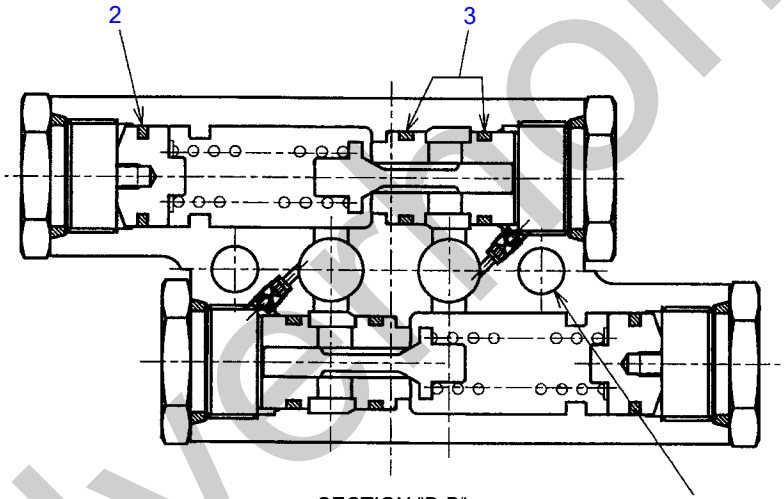

SECTION "B-B"

C4H800

S=free

silverthorn.co.uk

SLEW MOTOR (2/2)(valve sec.)

Item	Part number		Description	Q'ty	Chan.	Serial No.	Serv.	Remarks
0		1903124700	MOTOR ASSY, slew	1				
0-3		1901810600	・VALVE ASSY	1				
0-4		1901810699	・・KIT, seal	1				
1	X	1420010240	・・・O-RING	4				
2	X	1901810607	・・・SEAL	2				
3	X	1420010180	・・・O-RING	4				
4		1501810002	・・PLUG	4				
5		1110021055	・・SCREW, cap	2				
		C4h800						

silverhorn.co.uk

HYDRAULIC PUMP

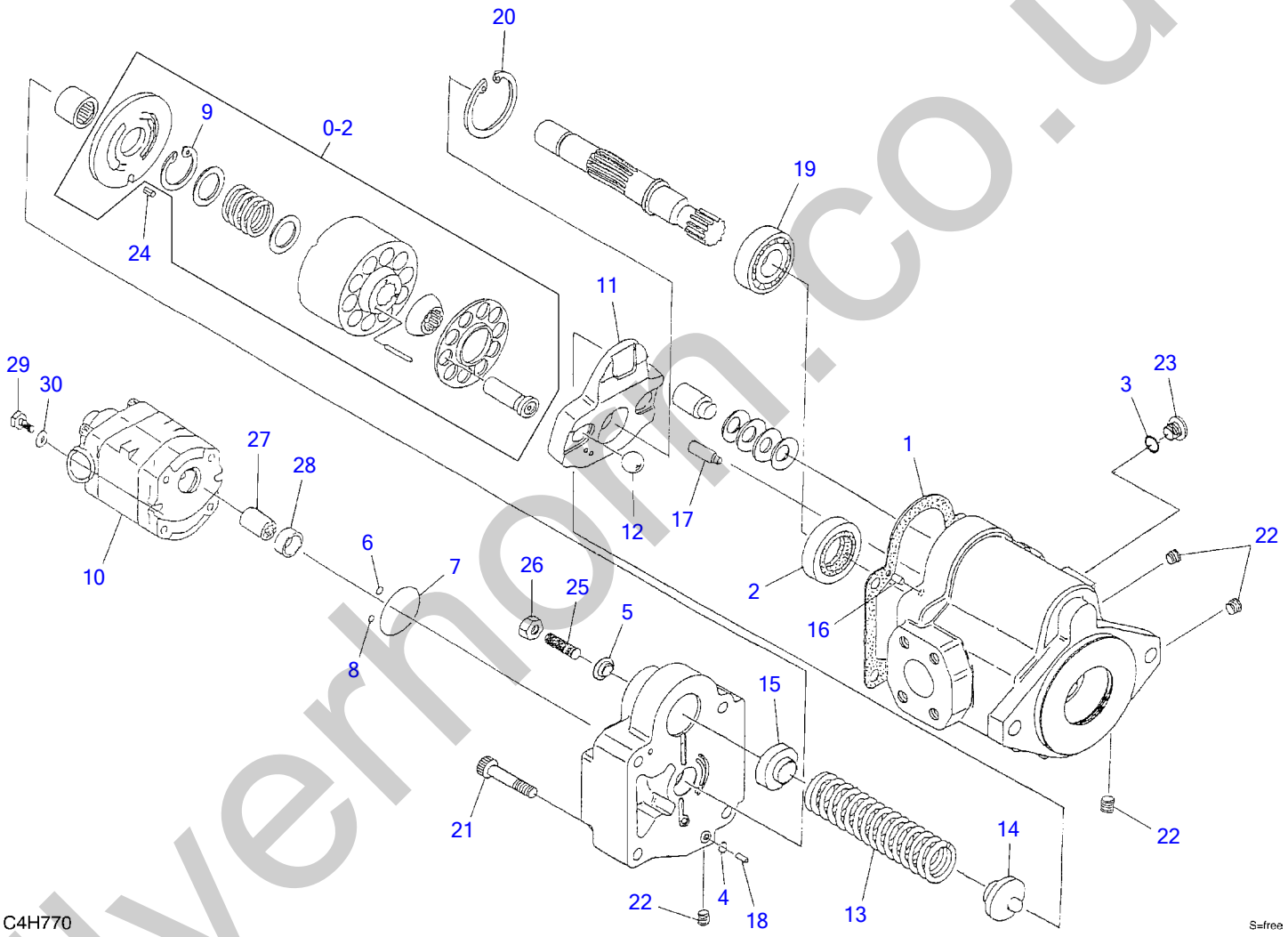

silverhorn.co.uk

HYDRAULIC PUMP

Item		Part number	Description	Q'ty	Chan.	Serial No.	Serv.	Remarks
0		1902021500	PUMP ASSY	1				
0-1		1902021399	・KIT, seal	1				
1	X	1902021313	・・PACKING	1				
2	X	1902021332	・・SEAL, oil	1				
3	X	1420010110	・・O-RING	1				
4	X	1420010080	・・O-RING	2				
5	X	1902016062	・・WASHER, seal	1				
6	X	1420010070	・・O-RING	1				
7	X	1420110550	・・O-RING	1				
8	X	1420010080	・・O-RING	1				
0-2		1902910500	・BARREL KIT	1				
9		1221000028	・・RETAINER	1				
10		1902910600	・PUMP ASSY, gear	1				
11		1902021310	・PLATE, swash	1				
12		1902016012	・PIN	2				
13		1902021315	・SPRING	1				
14		1902011518	・HOLDER, spring	1				
15		1902021319	・GUIDE, spring	1				
16		1902011526	・PIN	1				
17		1902014721	・ROD	1				
18		1902016027	・PIN	1				
19		1300006004	・BEARING	1				
20		1221000042	・RETAINER	1				
21		1110051040	・SCREW, cap	4				
22		1501810000	・PLUG	4				
23		1902014742	・PLUG	1				
24		1213000512	・PIN, spring	1				
25		1121050830	・SET-SCREW	1				
26		1130050008	・NUT	1				
27		1902016166	・COUPLING	1				
28		1902021367	・COLLAR	1				
29		1100050825	・BOLT	2				
30		1902019870	・WASHER	2				
		C4h780						

silverhorn.co.uk

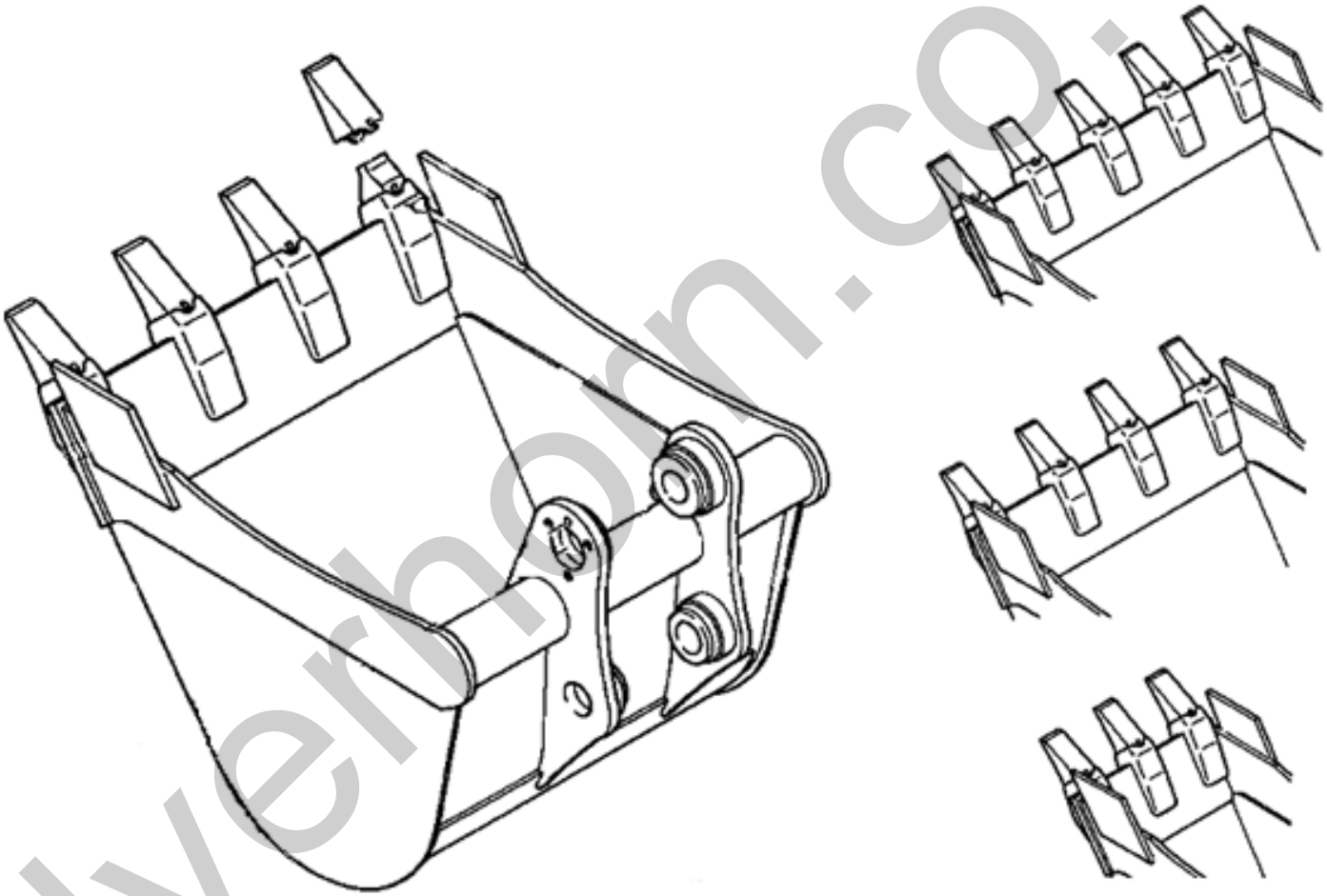

silverhorn.co.uk

TB016 Buckets

Item	Part number	Description	Q'ty	Chan.	Serial No.	Serv.	Remarks
		TB016 Buckets					
	BQC01610	10" Coupler Bucket TB014/TB016 (requires BQC01600)(special)	1				
	BQC01612	12" Coupler Bucket TB014/TB016 (requires BQC01600)	1				
	BQC01616	16" Coupler Bucket TB014/TB016 (requires BQC01600)(special)	1				
	BQC01618	18" Coupler Bucket TB014/TB016 (requies BQC01600)	1				
	BQC01624	24" Coupler Bucket TB014/TB016 (requires BQC01600)	1				
	BQC01630	30" Coupler Bucket TB014/TB016 (requires BQC01600)(special)	1				
	BQC01636	36" Coupler Buclet TB014/TB016 (requires BQC01600)(special)	1				
	BTB01608	8" Pin-on Bucket TB014/TB015/TB016	1				
	BTB01610	10" Pin-on Bucket TB014/TB015/TB016 (special)	1				
	BTB01612	12" Pin-on Bucket TB014/TB015/TB016	1				
	BTB01616	16" Pin-on Bucket TB014/TB015/TB016 (special)	1				
	BTB01618	18" Pin-on Bucket TB014/TB015/TB016	1				
	BTB01624	24" Pin-on Bucket TB014/TB015/TB016	1				
	BTB01630	30" Pin-on Bucket TB014/TB015/TB016 (special)	1				
	BTB01636	36" Pin-on Bucket TB014/TB015/TB016 (special)	1				

silverhorn.co.uk

Bucket Teeth New

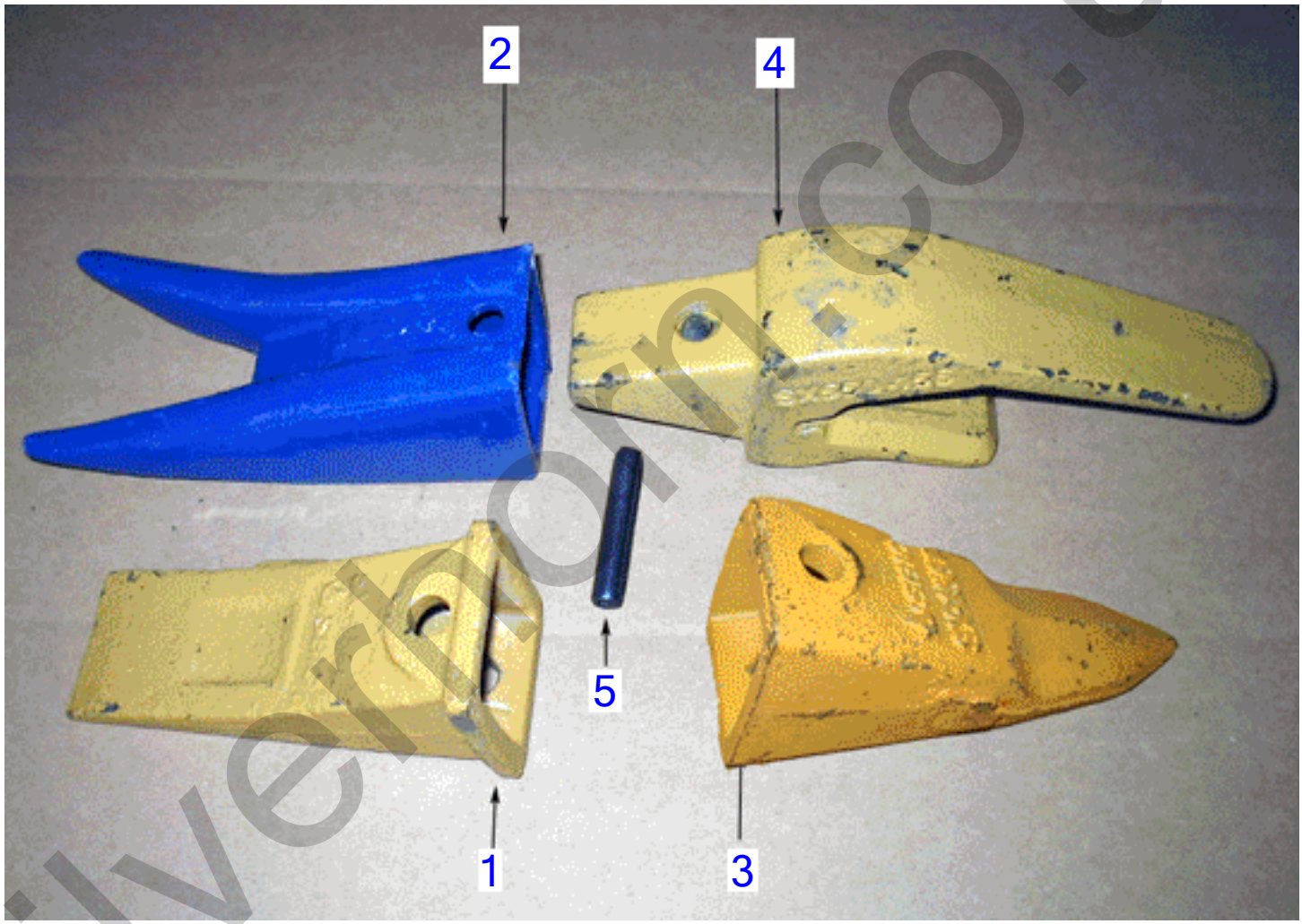

silverhorn.co.uk

Bucket Teeth New

Item	Part number	Description	Q'ty	Chan.	Serial No.	Serv.	Remarks
		TB016 Bucket Teeth New					
1	**1914210182**	Tooth	1				
2	**1914299142**	Double Tiger	1				
3	**1914299942**	Single Tiger (C&P) Tooth	1				
4	**19142181-1**	Adaptor Shank 550 X 156 New Style	1				
	1914210181	Adaptor Shank 230 X 156 Old Style	1				
5	**1914210183**	Pin - Metal	1				

silverhorn.co.uk

250 Hour Filter Kit

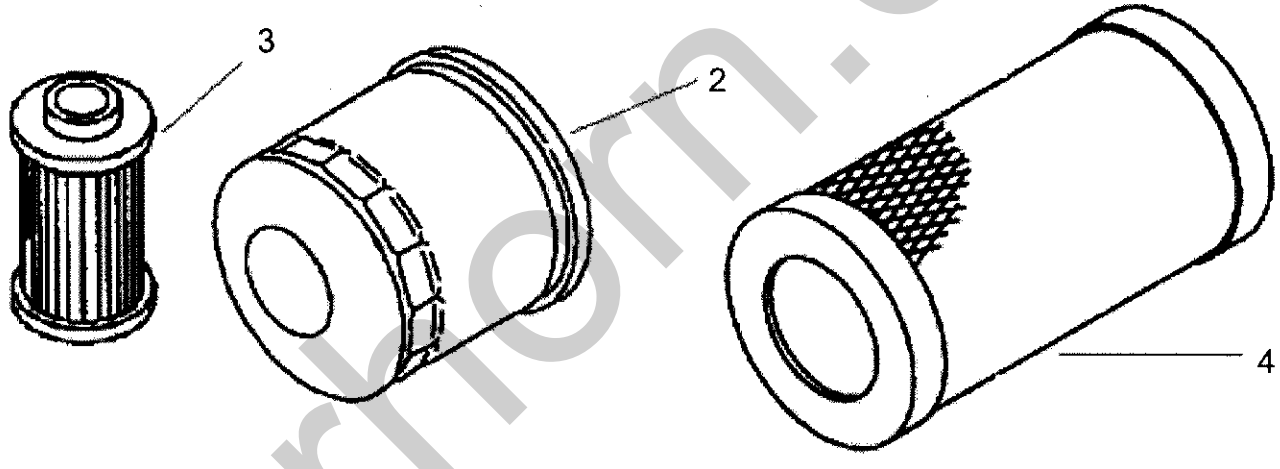

silverhorn.co.uk

250 Hour Filter Kit

Item	Part number	Description	Q'ty	Chan.	Serial No.	Serv.	Remarks
	1909901400	250 Hour Filter Kit TB108/TB014/TB016	1				
2	**Y119305-35150**	* Engine Oil Filter	1				
3	**Y124550-55700**	* Fuel Filter	1				
4	**Y119655-12560**	* Air Filter	1				

silverhorn.co.uk

Annual Filter Kit

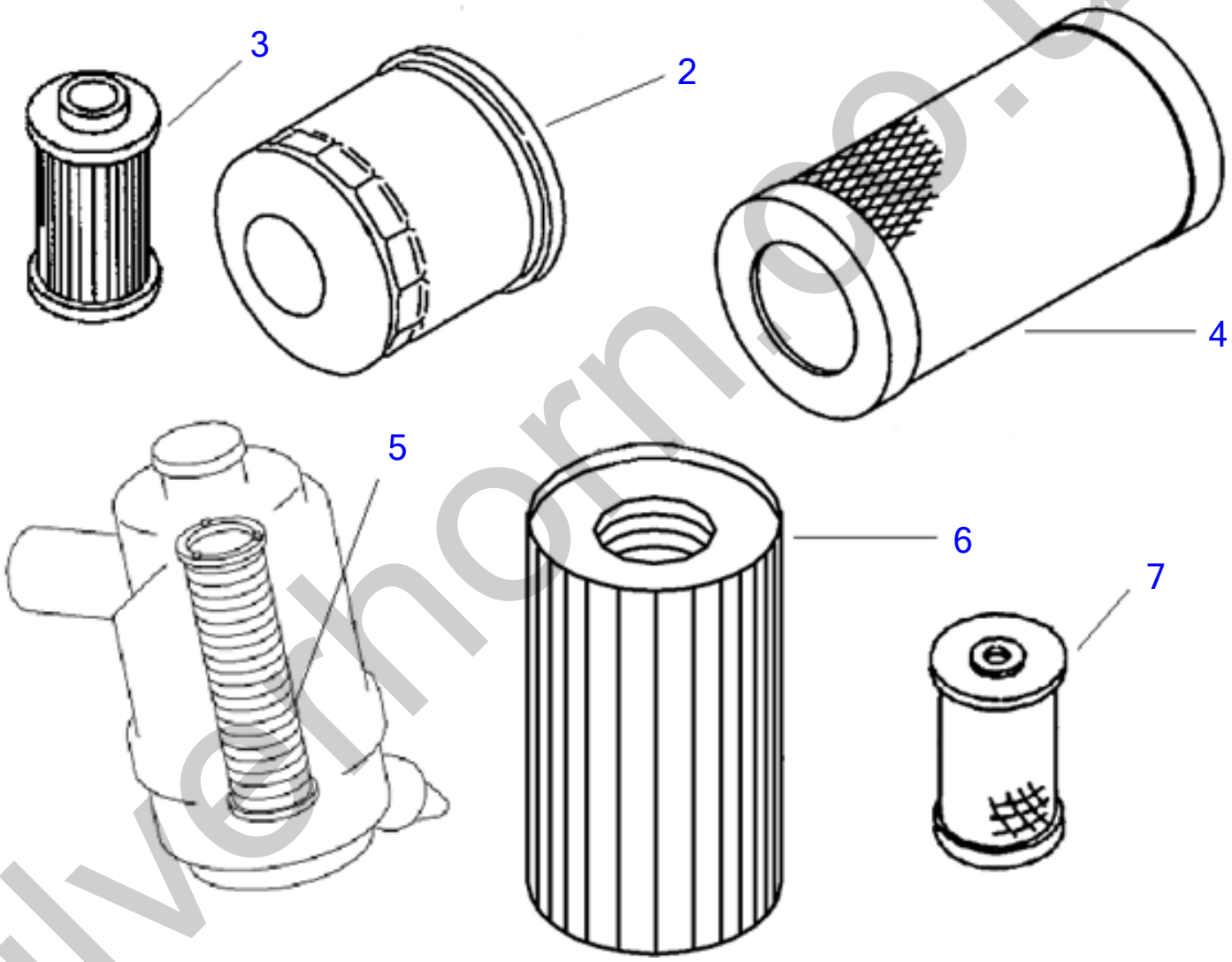

silverthorne.co.uk

Annual Filter Kit

Item	Part number	Description	Q'ty	Chan.	Serial No.	Serv.	Remarks
	1909901410	Annual Filter Kit TB014/TB016	1				
2	**Y119305-35150**	* Engine Oil Filter	1				
3	**Y124550-55700**	* Fuel Filter	1				
4	**Y119655-12560**	* Air Filter	1				
5	**1911101342**	* Inner Air Filter TB014/TB016	1				
6	**1551101300**	* Hydraulic Filter TB014/TB016	1				
7	**Y171081-55910**	* Screen Check SN for Application TNE	1				

silverhorn.co.uk

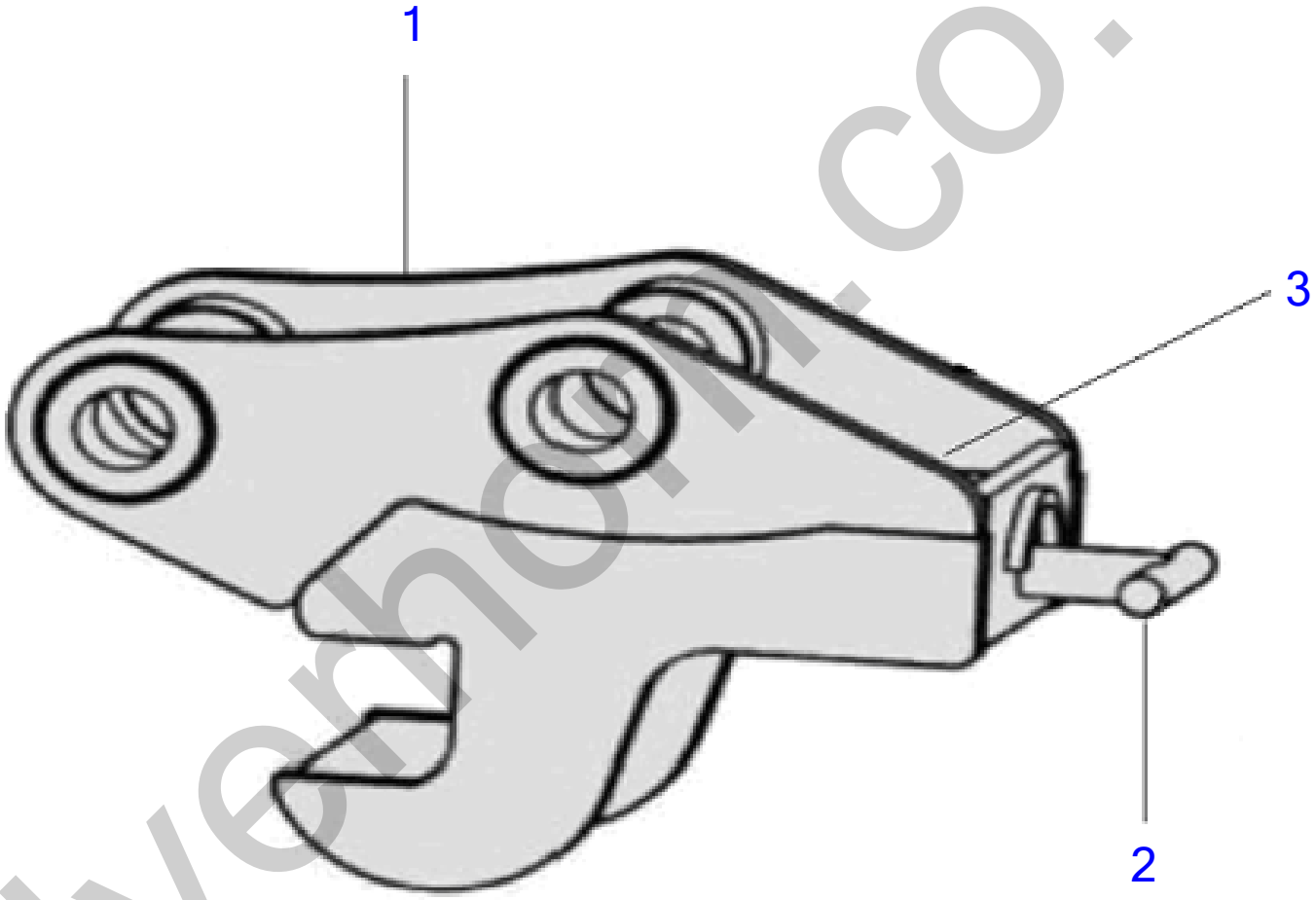

silverhorn.co.uk

Quick Coupler

Item	Part number	Description	Q'ty	Chan.	Serial No.	Serv.	Remarks
1	**BQC01600**	Coupler TB014/TB016	1				
2	**BQC12501**	Coupler T Pin TB125/TB135/TB145	1				
3	**BQCCLEVIS**	Clevis pin for all BQC T-pins	1				

silverhorn.co.uk

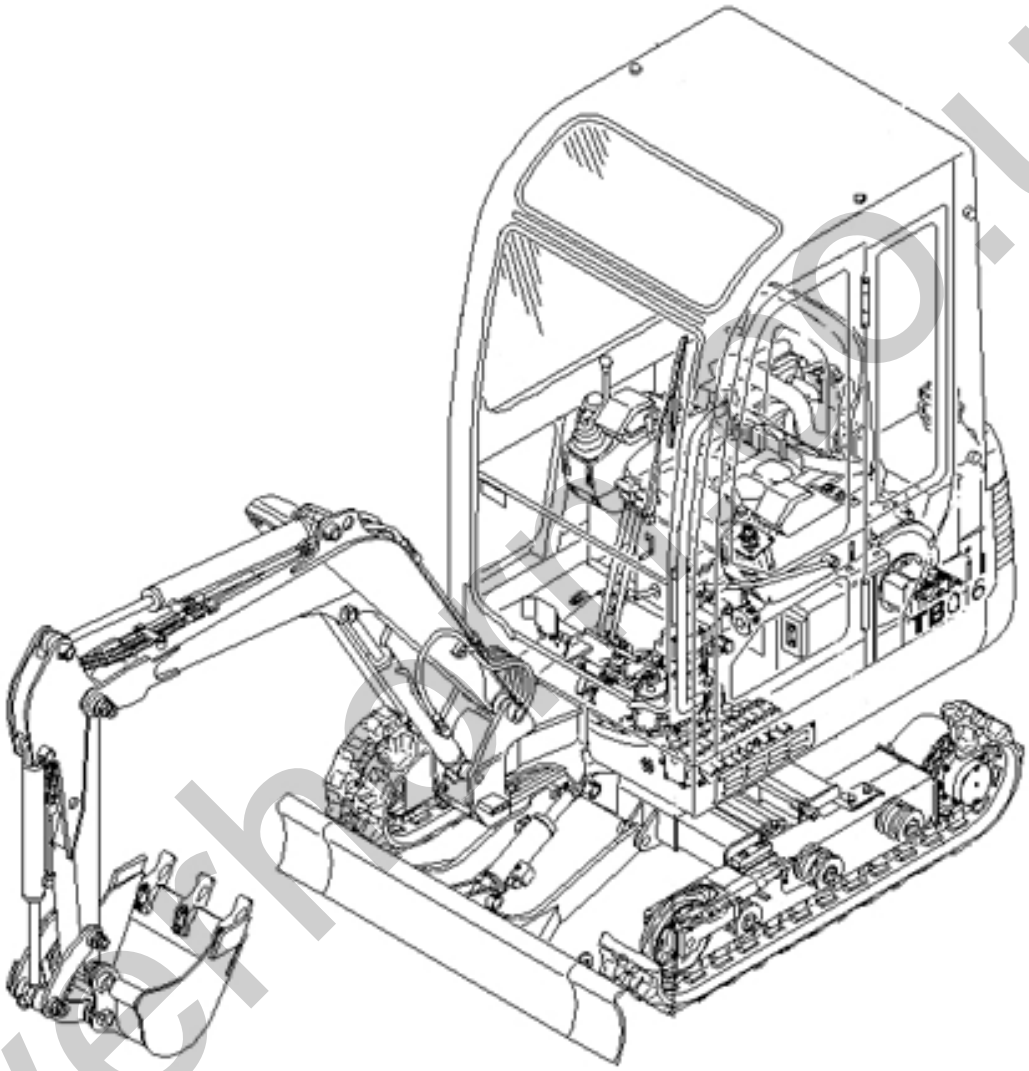

silverhobbies.co.uk
TAKEUCHI

Recommended Stock Order

Item	Part number	Description	Q'ty	Chan.	Serial No.	Serv.	Remarks
		Recommended Stock Order					
	1551101300	Hydraulic Filter TB014/TB016	2				
	Y171081-55910	Screen Check SN for Application TNE	2				
	Y119655-12560	Air Filter	4				
	Y119305-35150	Engine Oil Filter	4				
	Y124550-55700	Fuel Filter	2				
	1900070599	Swing Cylinder Seal Kit	1				
	1900072399	Spanner Cylinder Seal Kit	1				
	1900054399	Blade Cylinder Seal Kit	1				
	1900072299	Bucket Cylinder Seal Kit TB014/TB016	1				
	1900051999	Multi Use Seal Kit (bt)	1				
	1900070499	Boom Cylinder Seal Kit	1				
	1914201202	Tooth TB007/TB015	4				
	1914201203	Lock	4				
	1914201201	Adaptor	4				
	1432200030	Dust Sel 30/40 TB014/TB016	6				
	1432200035	Seal Pin 35/45 T/4	6				
	1541301602	Valve Assy	4				
	1400502033	Seal	4				
	1420010350	O-Ring P-35	4				
	1421020360	Backup Ring P-36 Biascut	4				
	1420111050	O-Ring G-105 1b	2				
	1515600200	Adaptor	2				
	1909920106	Male Fitting w/O-Ring	6				
	1909920109	3/8" Straight Male Fitting	6				
	1909920112	1/2" BSPP Male Fitting w/O-Ring	2				
	1909920406	1/4" PF Fitting	6				
	1909920409	3/8" PF Fitting	6				
	1909920413	1/2" PF Fitting	2				
	1909920506	1/4" 90 degree Female Fitting	2				
	1909920509	3/8" 90 degree Female Fitting	2				
	1909920512	1/2" 90 degree Female Fitting	2				
	1909920696	90 degree Female Fitting (block style)	2				
	1909920609	3/8" Female Fitting	2				
	1909920612	1/2" 90 degree PF Fitting	2				

silverhorn.co.uk

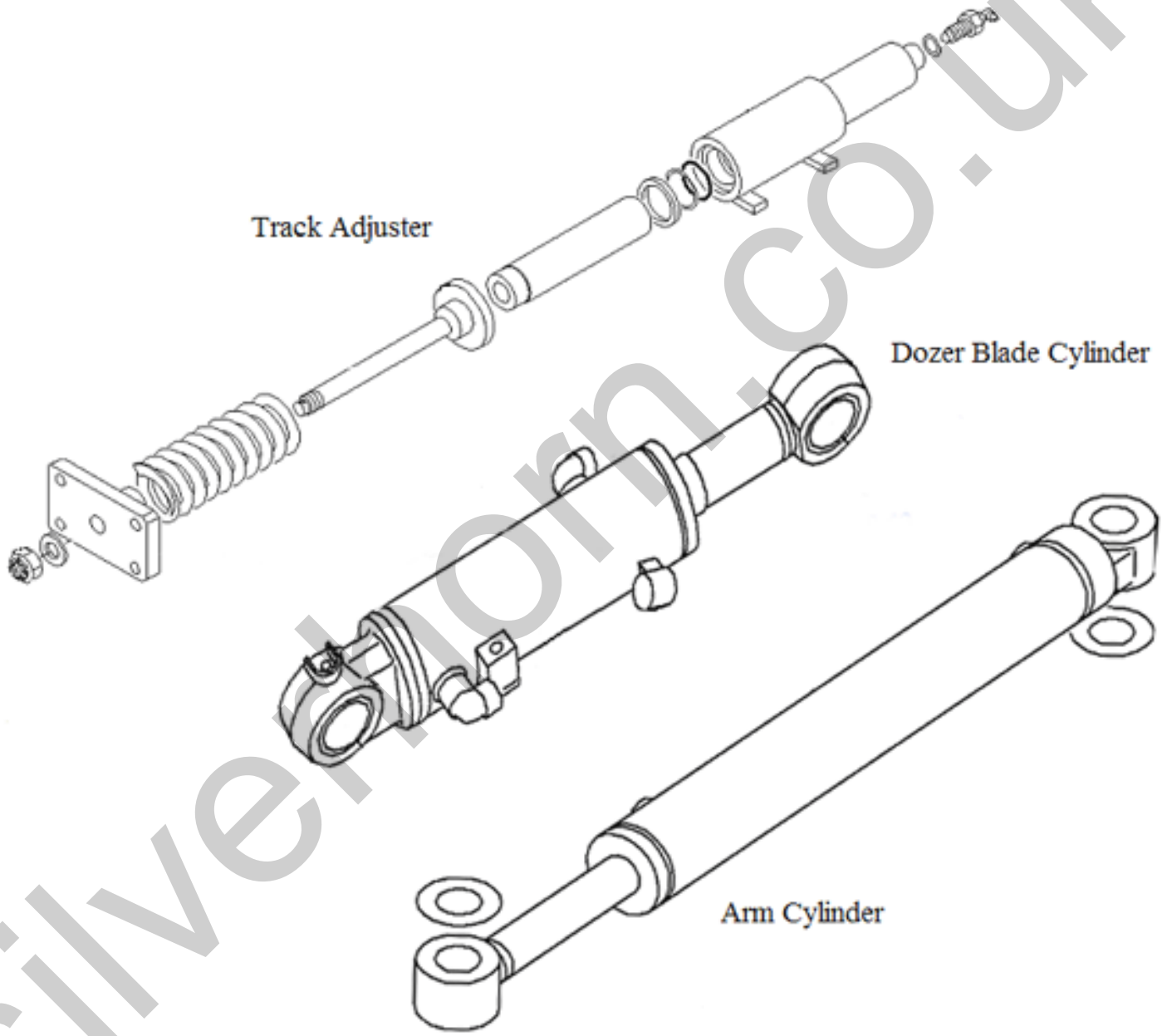

silverhorn.co.uk

Seal Kits

Item	Part number	Description	Q'ty	Chan.	Serial No.	Serv.	Remarks
		Seal Kits					
	1900070599	Swing Cylinder Seal Kit	1				
	1900072399	Spanner Cylinder Seal Kit	1				
	1900054399	Blade Cylinder Seal Kit	1				
	1900072299	Bucket Cylinder Seal Kit TB014/TB016	1				
	1900051999	Multi Use Arm Cylinder Seal Kit (bt)	1				
	1900070499	Boom Cylinder Seal Kit	1				
	0331506199	Seal Kit please check if Assembly has been changed SN11600003-116102089	1				
	0331508699	Seal Kit (tr) TB015/TB016 SN 11602090-up	1				

silverhorn.co.uk

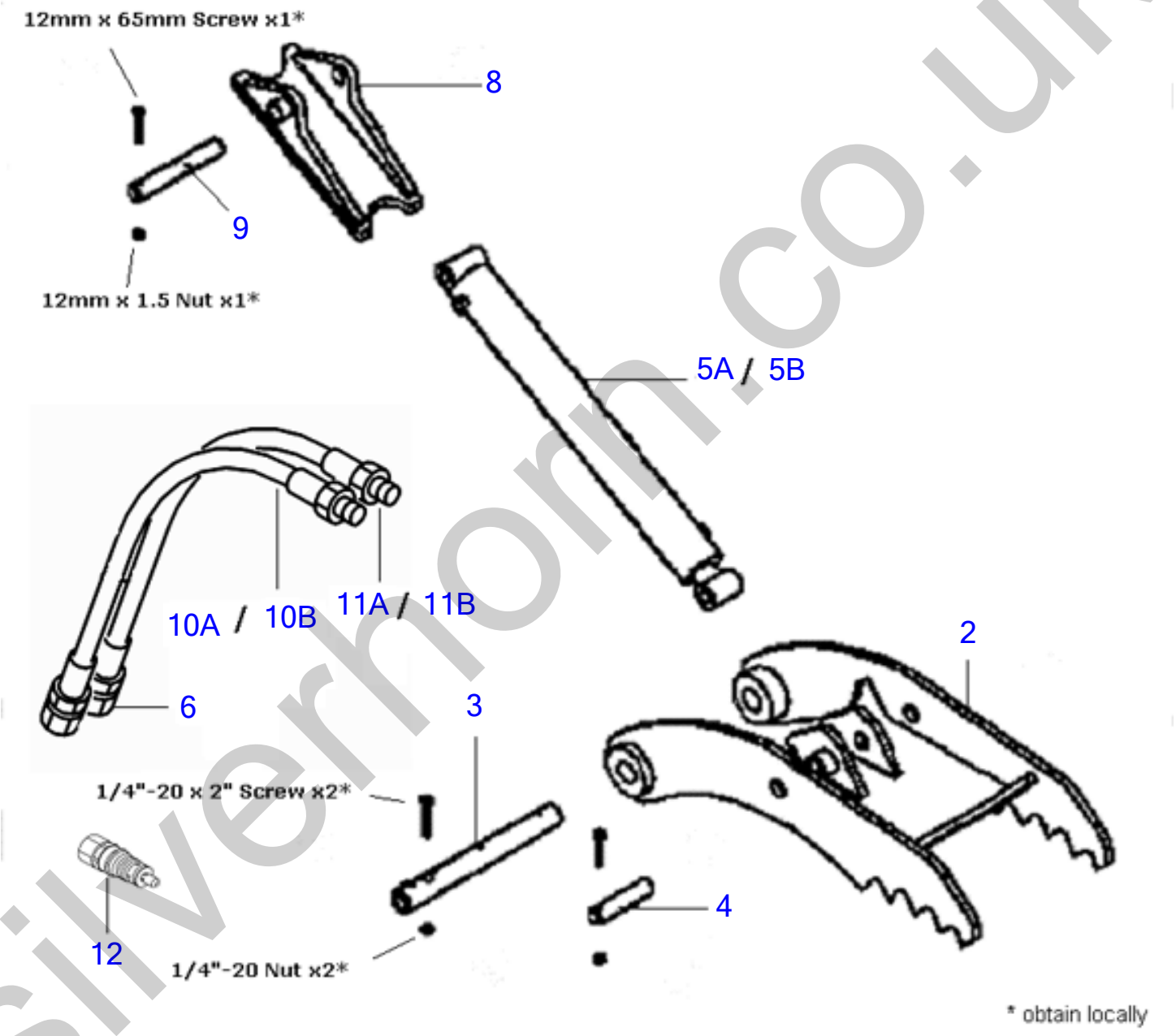

silverhorn.co.uk

Thumbs

Item	Part number	Description	Q'ty	Chan.	Serial No.	Serv.	Remarks
		TB016 Thumbs					
2	**01140114TA**	Bracket	1				
3	**01140114P1**	Pivot pin	1				
4	**01140114P2**	Cylinder Rod pin	1				
5A	**1900021014**	Cylinder Assy - Old Style	1				
5B	**1900021014A**	Cylinder Assy - New Style	1				
	1900021014S	Seal Kit	1				
6	**1513110040**	1/2" JIC X 1/2" BSPP Adpt New Style Thumb(1513110038-39) and Old Style	2				
8	**01140114HB**	Bracket	1				
9	**01140114PC**	Cylinder pin TB016	1				
10A	**BTH114A-1**	Long Hose TB014/TB016 New Style Thumb	1				
10B	**BTH114B-1**	Short Hose TB014/TB016 New Style Thumb	1				
11A	**BTH114A**	Long Hose TB014/TB016 Old Style Thumb	1				
11B	**BTH114B**	Short Hose TB014/TB016 Old Style Thumb	1				
	BTH016K	Seal Kit TB016 (compatible w/12" or Larger Bucket)	1				
12	**1901736200**	Valve Overload TB016 SN 11602090-up	1				

silverhorn.co.uk

TB016 Manuals

Item	Part number	Description	Q'ty	Chan.	Serial No.	Serv.	Remarks
		TB016 Manuals					
	L016000001TNV	Operators Manual TB016 AC4E023 (English) TNV	1				
	L016000001TNVSP	Operators Manual TB016 AC4S000 (Spanish) TNV	1				
	L01600003TNV	Parts Manual TB016 BD4-Z105 SN 11610001-up TNV	1				
	L016000004TNV	Service Manual TB016 CC4E002 TNV	1				

silverhorn.co.uk

ENGINE MODEL

Œ©lo REF NO.	•"•i"Ô† PARTS NO.	•"•i-¼	Description	"–Ê Q'ty	ŒÝŠ·« I	R	"õl
	ENGINE 3TNV70-STB 2006.6.6						

silverhorn.co.uk

CYLINDER BLOCK

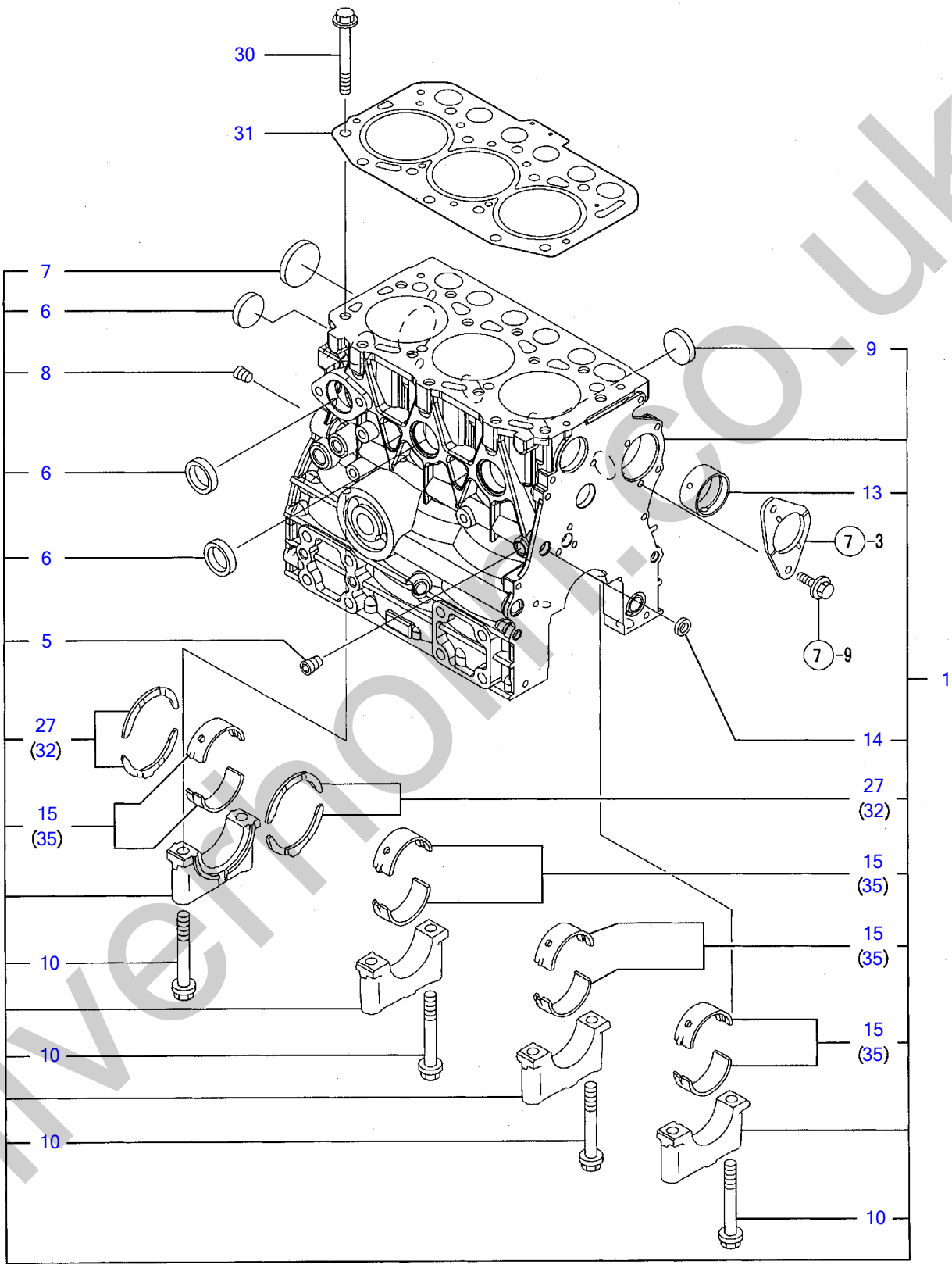

Y00D8560	1. シリンダブロック			
3TNV70-STB	1:05.05			PLUS

silvermoll.co.uk

¼ØÝÀÞÌÞÛ¯¸ CYLINDER BLOCK

Œ©lo REF NO.	•"•i"Ôl† PARTS NO.	•"•i-¼	Description	l"–Ê Q'ty	ŒÝŠ·l« I	R	"õll
1	Y719515-01560		BLOCK ASSY, CYLINDER	1			
5	Y124060-01050	・	・PLUG PT1/8	1			
6	Y105311-01090	・	・PLUG 30 (SUS)	4			
7	Y119623-01250	・	・PLUG 45	1			
8	Y124160-01910	・	・PLUG PT1/4	1			
9	Y119285-01990	・	・PLUG 25	3			
10	Y119620-02020	・	・BOLT	8			
13	Y119717-02410	・	・BUSH, CAMSHAFT	1			
14	Y27241-120000	・	・PLUG 12	1			
15	Y719717-02900	・	・MAIN BEARING SET	4			
27	Y119717-02930	・	・BEARING, THRUST	2			
30	Y119515-01200		BOLT, CYLINDER HEAD	14			
31	Y119515-01330		GASKET, CYL.HEAD	1			
32	Y119810-02940		BEARING,THRUST .25OS	2			
35	Y719717-02910		MAIN METAL US=0.25	4			

silverhorn.co.uk

GEAR HOUSING

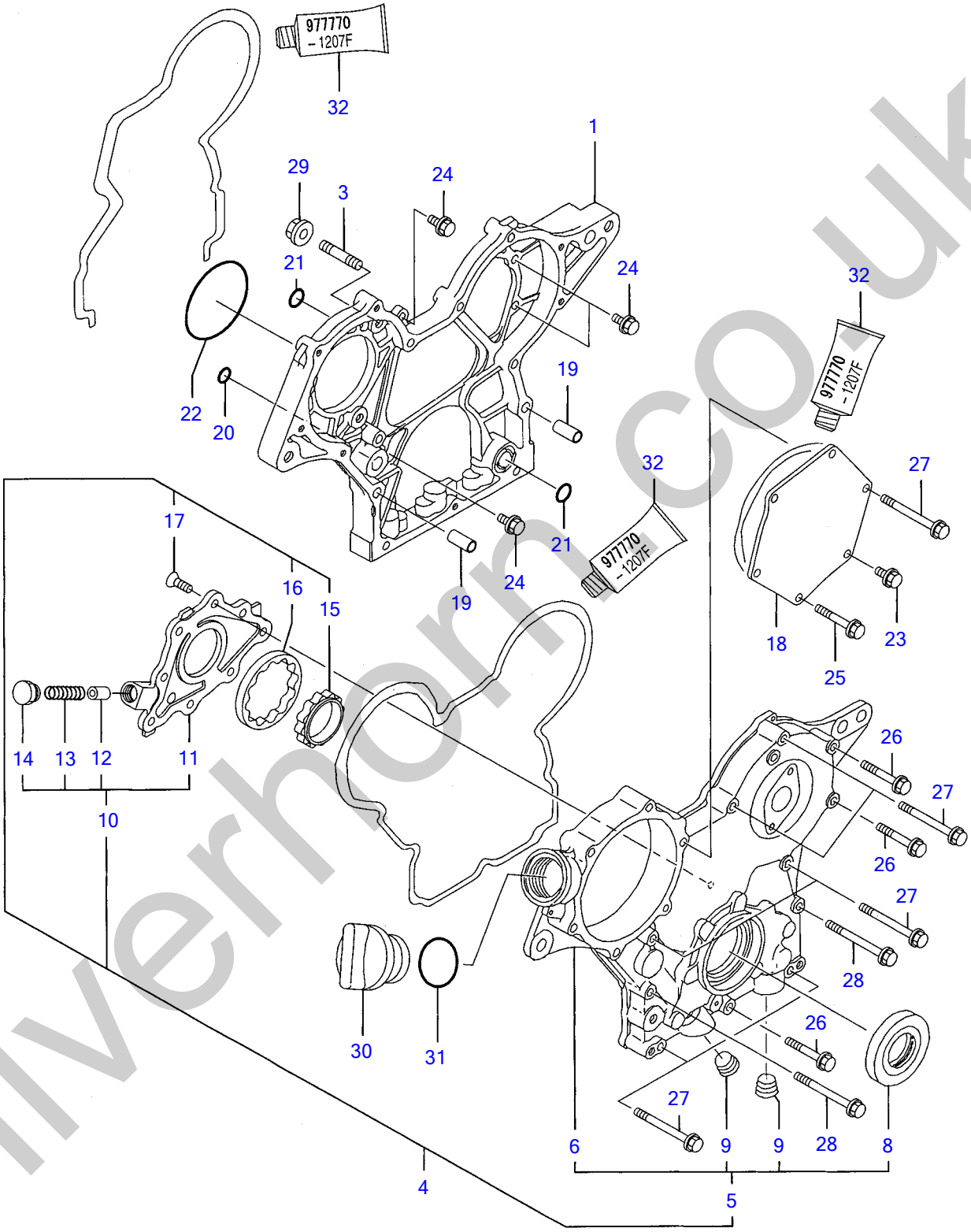

Y00D8560	2. ギヤケース				
3TNV70-STB		1:05.05			PLUS

silverhorn.co.uk

·ÞÔ¹-½ GEAR HOUSING

Œ©lo REF NO.	•"•i"Ôl† PARTS NO.	•"•i-¼	Description	l"–Ê Q'ty	ŒÝŠ·l« I	R	"õlI
1	Y119717-01501		CASE, GEAR	1			
3	Y119717-01570		BOLT, STUD M8	3			
4	Y119734-01590		COVER ASSY,GEAR CASE	1			
5	Y719734-01500	·	· COVER ASSY,GEAR CASE	1			
6	Y119717-01521	· ·	· · COVER, GEAR CASE	1			
8	Y119717-01800	· ·	· · SEAL, OIL	1			
9	Y23876-030000	· ·	· · PLUG PT3/8,SCREW	2			
10	Y119717-32100	·	· COVER ASSY, PUMP	1			
11	Y119717-32080	· ·	· · COVER, LUB.OIL PUMP	1			
12	Y129900-32130	· ·	· · VALVE, RELIEF	1			
13	Y129001-32320	· ·	· · SPRING	1			
14	Y129001-32330	· ·	· · PLUG	1			
15	Y119717-32110	·	· ROTOR, INNER	1			
16	Y119717-32120	·	· ROTOR, OUTER	1			
17	Y119802-32130	·	· SCREW, M6X16	8			
18	Y119717-01750		COVER, PUMP TIMING	1			
19	Y119660-01911		PIPE, KNOCK	4			
20	Y119624-32040		O-RING P 12.0	1			
21	Y119717-32050		O-RING, P17.0	3			
22	Y121850-51960		O-RING, F.I.PUMP	1			
23	Y26106-060122		BOLT M 6X 12 PLATED	1			
24	Y26106-060162		BOLT M 6X 16 PLATED	4			
25	Y26106-060402		BOLT M 6X 40 PLATED	4			
26	Y26106-060402		BOLT M 6X 40 PLATED	3			
27	Y26106-060602		BOLT M 6X 60 PLATED	7			
28	Y26106-060652		BOLT M 6X 65 PLATED	2			
29	Y26306-080002		NUT	3			
30	Y124160-01751		COVER,FILLER	1			
31	Y24311-000320		O-RING 1A P-32.0	1			
32	Y977770-1207F		GASKET, LIQUID	1			

silverhorn.co.uk

FLYWHEEL HOUSING & OIL SUMP

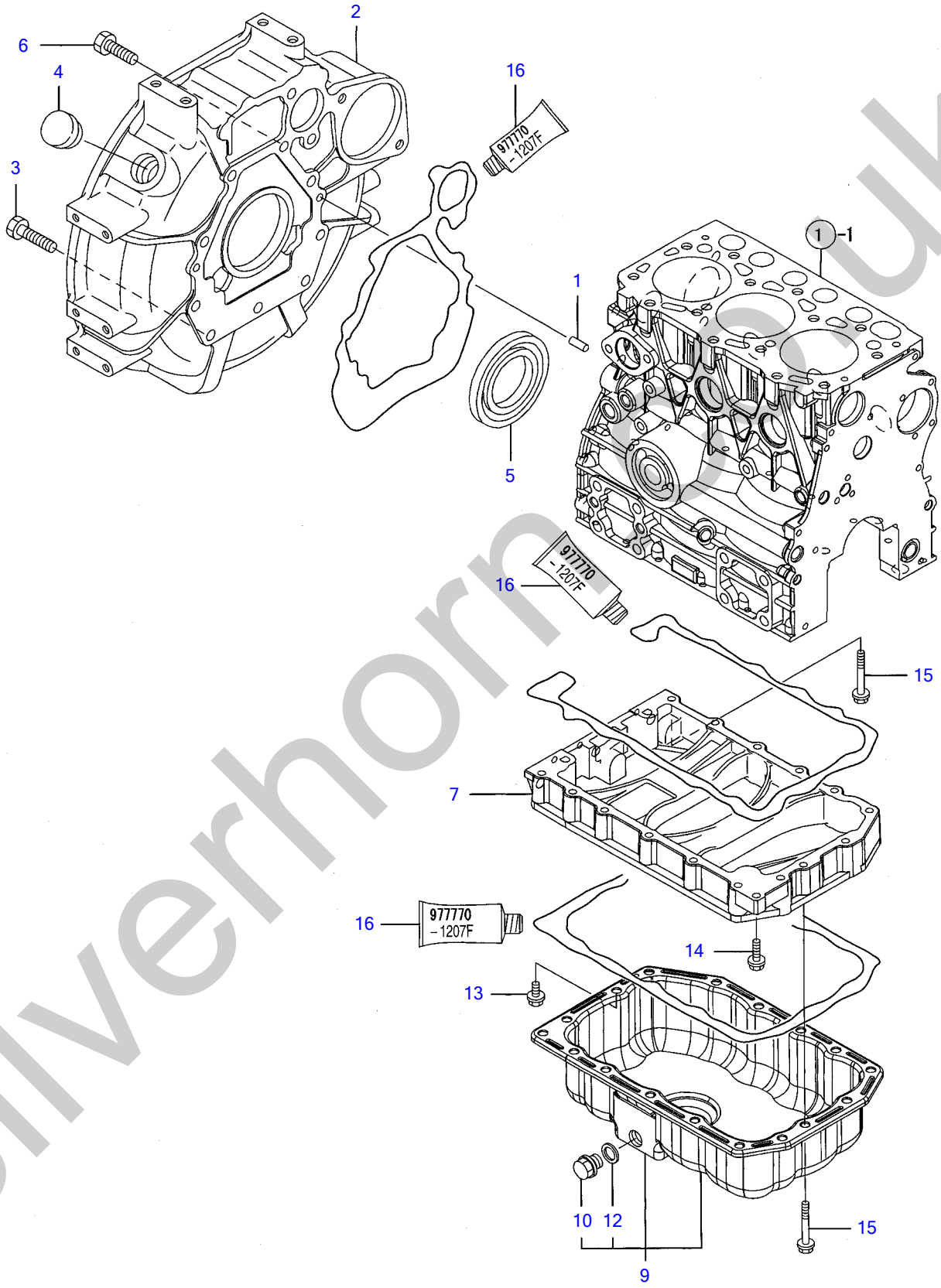

Y00D8560	3. フライホイルハウジング & オイルパン			
3TNV70-STB	1:05.05			PLUS

silverhorn.co.uk

Ì×²Î²ÙÊ³¼ÞÝ¸Þ & µ²ÙÊßÝ FLYWHEEL HOUSING & OIL SUMP

Œ©Ìo REF NO.	•"•i"ÔÌ† PARTS NO.	•"•i-¼	Description	Ì"–Ê Q'ty	ŒÝŠ·Ì« I	R	"õÌl
1	**Y129100-01580**		PARALLEL PIN 8X16	2			
2	**Y119717-01601**		HOUSING, FLYWHEEL	1			
3	**Y121120-01620**		BOLT M 10X 28	3			
4	**Y119620-01750**		CAP, FLYWHEEL COVER	1			
5	**Y124085-02220**		SEAL, OIL	1			
6	**Y26206-100252**		BOLT M10X25	8			
7	**Y119515-01720**		SPACER, OIL SUMP	1			
9	**Y119515-01770**		SUMP ASSY, LUB.OIL	1			
10	**Y105425-01690**	•	• PLUG M16	1			
12	**Y22190-160002**	•	• SEAL WASHER 16S	1			
13	**Y26106-060122**		BOLT M 6X 12 PLATED	1			
14	**Y26106-060252**		BOLT M 6X 25 PLATED	1			
15	**Y26106-060452**		BOLT M 6X 45 PLATED	17			
16	**Y977770-1207F**		GASKET, LIQUID	1			

silverhorn.co.uk

CYLINDER HEAD & BONNET

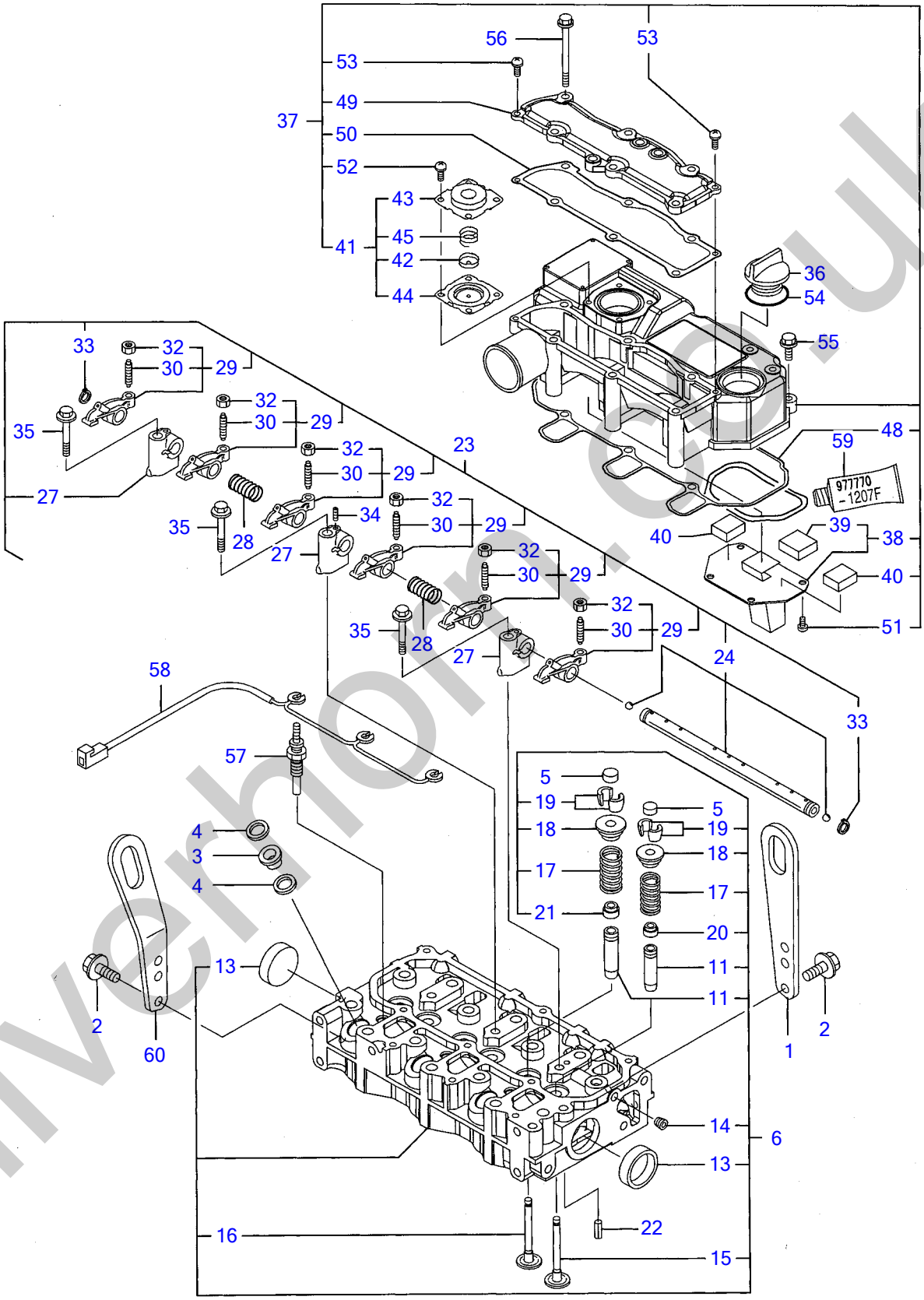

Y00D8560	4. シリンダヘッド & ボンネット				
3TNV70-STB		1:05.05			PLUS

silverhorn.co.uk

¼ØÝÀÞÍÂÄÞ & ÎÞÝÈÂÄ CYLINDER HEAD & BONNET

Œ©lo REF NO.	•"•i"Ôl† PARTS NO.	•"•i-¼	Description	l"–Ê Q'ty	ŒÝŠ·l« I	R	"õll
1	Y129900-07900		LIFTER, ENGINE	1			
2	Y26106-080162		BOLT M 8X 16 PLATED	4			
3	Y129901-11450		PROTECTER, NOZZLE	3			
4	Y119600-11460		GASKET, NOZZLE	6			
5	Y105010-11490		CAP, VALVE	6			
6	Y119515-11740		HEAD ASSY, CYLINDER	1			
11	Y119515-11800	·	· GUIDE, VALVE	6			
13	Y119285-11990	·	· PLUG 35	2			
14	Y23876-005000	·	· PLUG PT 1/16,SCREW	1			
15	Y119515-11100	·	· VALVE, INTAKE	3			
16	Y119515-11110	·	· VALVE, EXHAUST	3			
17	Y119717-11131	·	· SPRING, VALVE	6			
18	Y129508-11180	·	· RETAINER, SPRING	6			
19	Y119717-11190	·	· COTTER, VALVE	12			
20	Y119717-11340	·	· SEAL, VALVE STEM	3			
21	Y119717-11350	·	· SEAL, VALVE STEM	3			
22	22351-060012		SPRING PIN 6X12	2			
23	119515-11200		SUPPORT ASSY, ARM	1			
24	Y119515-11240	·	· SHAFT ASSY, ROCKER	1			
27	Y119717-11260	·	· SUPPORT, ROCKER ARM	3			
28	Y119515-11280	·	· SPRING, SHAFT	2			
29	Y119717-11650	·	· ARM ASSY, ROCKER	6			
30	Y129150-11230	· ·	· · SCREW, VALVE	6			
32	Y129150-11750	· ·	· · NUT M8XP1.0	6			
33	Y22242-000120	·	· CIRCLIP 12	2			
34	Y26979-050162	·	· SCREW M 5X16	1			
35	Y26106-080402		BOLT M 8X 40 PLATED	3			
36	Y124160-01751		COVER,FILLER	1			
37	Y119515-11380		BONNET ASSY, HEAD	1			
38	Y119717-03031	·	· PLATE, BAFFLE	1			
39	Y119717-03070	· ·	· · BAFFLE, BREATHER	1			
40	Y119717-03070	·	· BAFFLE, BREATHER	2			
41	Y119802-03100	·	· DIAPHRAGM ASSY	1			
42	Y119802-03110	· ·	· · PLATE, DIAPHRAGM	1			
43	Y119802-03121	· ·	· · COVER, DIAPHRAGM	1			
44	119802-03131	· ·	· · DIAPHRAGM	1			
45	119802-03141	· ·	· · SPRING, DIAPHRAGM	1			
48	119515-11310	·	· GASKET, BONNET	1			
49	119515-11320	·	· PLATE, BAFFLE	1			
50	119515-11330	·	· PLATE, BAFFLE	1			
51	Y22857-500100	·	· SCREW 5X10,TAPPING	4			
52	Y22857-500100	·	· SCREW 5X10,TAPPING	4			
53	Y22857-500160	·	· SCREW 5X16	2			
54	Y24311-000320		O-RING 1A P-32.0	1			
55	Y26106-060202		BOLT M 6X 20 PLATED	3			
56	Y26106-060752		BOLT M 6X 75 PLATED	6			
57	Y119717-77800		PLUG, GLOW	3			
58	Y119717-77820		CONNECTOR, GLOW PLUG	1			
59	Y977770-1207F		GASKET, LIQUID	1			
60	Y119540-07920		LIFTER, ENGINE	1			

silvermon.co.uk

AIR CLEANER

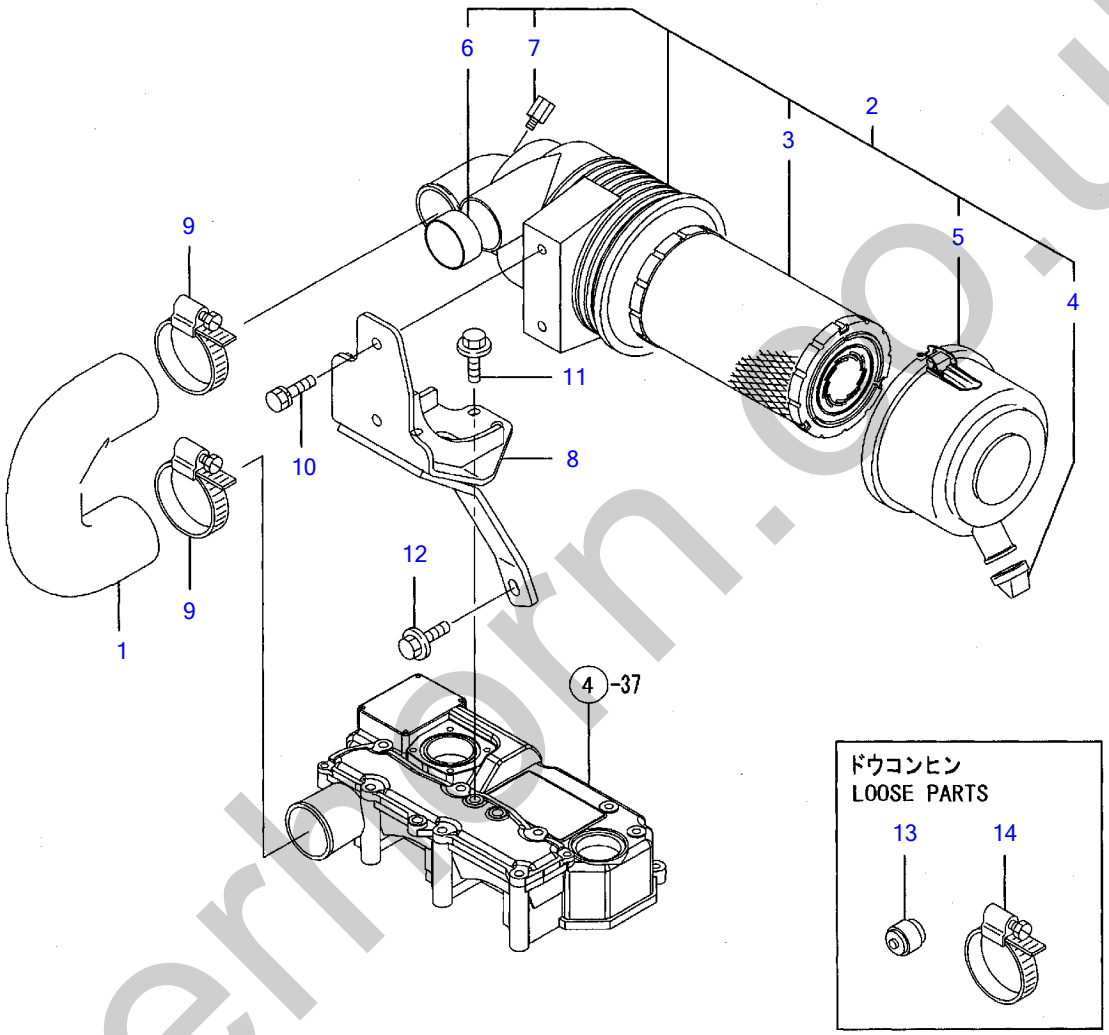

Y00D8560	5. エアクリーナ				
3TNV70-STB		1:05. 05			PLUS

silverhorn.co.uk

´±¸Ø-Å AIR CLEANER

Œ©lo REF NO.	•"•i"Ôl† PARTS NO.	•"•i-¼	Description	l"–Ê Q'ty	ŒÝŠ·l« I	R	"õll
1	Y119761-12020		HOSE, AIR INTAKE	1			
2	Y119540-12500		CLEANER ASSY, AIR	1			
3	Y119515-12520	・	・ ELEMENT 4,CLEANER	1			
4	Y119808-12540	・	・ VALVE, UNLOADER	1			
5	Y119336-12570	・	・ COVER ASY	1			
6	Y105027-12580	・	・ RING	1			
7	Y121820-12590	・	・ NIPPLE	1			
8	Y119515-12600		BRACKET(AIR CLEANER	1			
9	Y23000-054000		CLAMP 54	2			
10	Y26013-080222		BOLT M 8X 22	2			
11	Y26106-060142		BOLT M 6X 14 PLATED	3			
12	Y26106-080162		BOLT M 8X 16 PLATED	1			
13	Y126650-12680		INDICATOR	1			
14	Y23000-054000		CLAMP 54	1			

silverhorn.co.uk

EXHAUST MANIFOLD & SILENCER

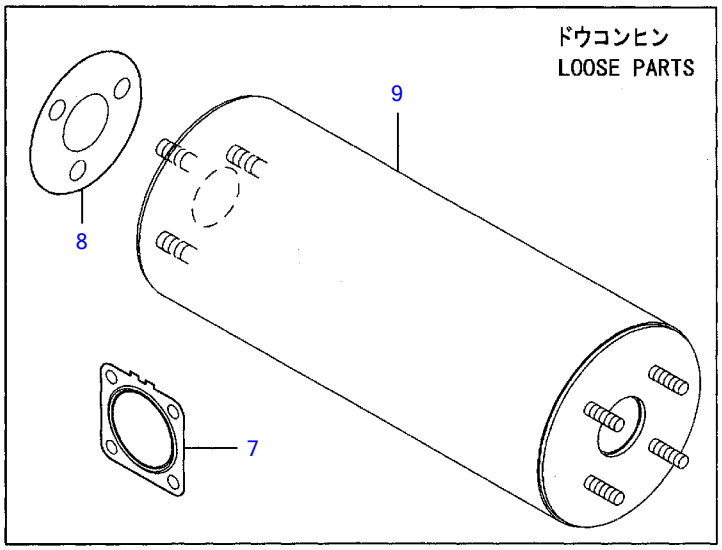

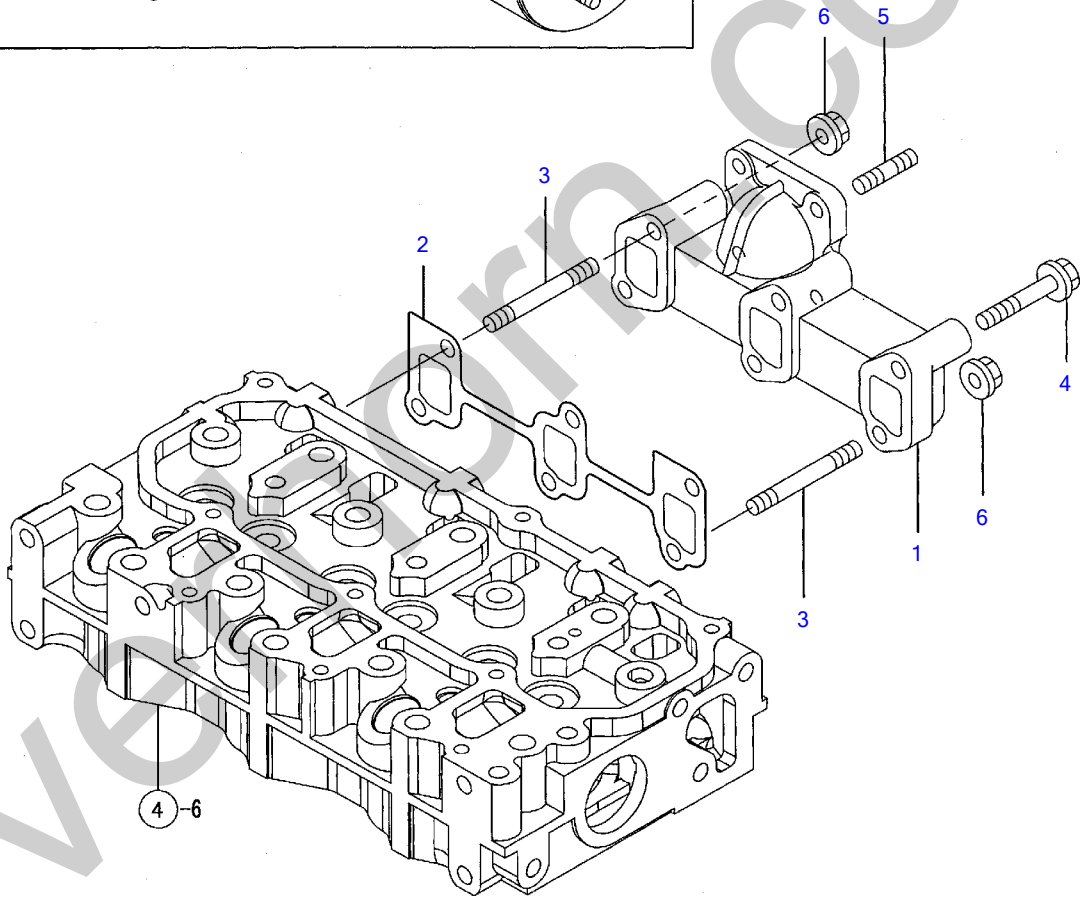

Y00D8560	6. ハイキマニホールド & サイレンサ			
3TNV70-STB	1:05.05			PLUS

silvermorn.co.uk

Ê²·ÏÆÎ-ÙÄÞ & »²ÚÝ» EXHAUST MANIFOLD & SILENCER

Œ©lo	•”•i”Ô††			”–Ê	ŒÝŠ·l«		
REF NO.	PARTS NO.	•”•i-¼	Description	Q'ty	I	R	”õ l
1	**Y119718-13100**		MANIFOLD, EXHAUST	1			
2	**Y119717-13110**		GASKET, MANIFOLD	1			
3	**Y119717-13600**		STUD, M8X50	2			
4	**Y119802-13620**		BOLT M 8X 50 PLATED	4			
5	**Y119131-18320**		BOLT M 8X 22	4			
6	**Y26306-080002**		NUT	2			
7	**Y119515-13200**		GASKET, SILENCER	2			
8	**Y103954-13201**		GASKET, SILENCER	1			
9	**Y119515-13550**		SILENCER	1			

silverhorn.co.uk

CAMSHAFT & DRIVING GEAR

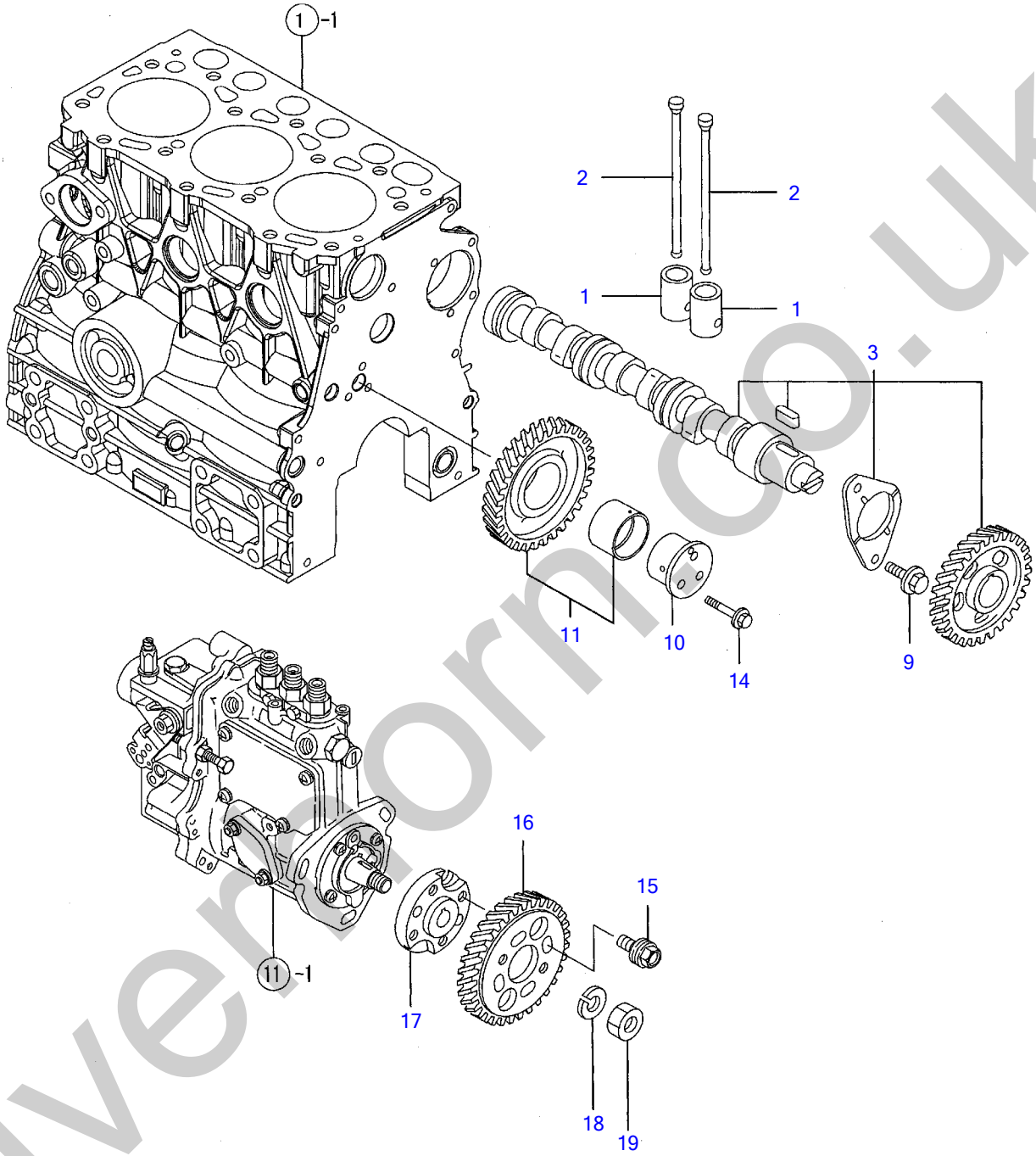

Y00D8560	7. カムシャフト & クドウギヤ				
3TNV70-STB		1・05. 05			PLUS

silvermorn.co.uk

¶Ñ¼ÔÌÄ & ¸ÄÞ³·ÞÔ CAMSHAFT & DRIVING GEAR

Œ©lo REF NO.	•"•i"Ôl† PARTS NO.	•"•i-¼	Description	l"–Ê Q'ty	ŒÝŠ·l« I	R	"õll
1	**Y119620-14200**		TAPPET	6			
2	**Y119515-14400**		ROD, PUSH	6			
3	**Y119515-14580**		CAMSHAFT ASSY	1			
9	**Y26106-060122**		BOLT M 6X 12 PLATED	2			
10	**Y119717-25050**		SHAFT, IDLE GEAR	1			
11	**Y119717-25100**		GEAR ASSY, IDLE	1			
14	**Y26106-060352**		BOLT M 6X 35 PLATED	3			
15	**Y129150-25301**		BOLT,FI-P	4			
16	**Y119717-25930**		GEAR, PUMP	1			
17	**Y119717-51150**		FLANGE	1			
18	**Y22217-120000**		SPRING WASHER 12	1			
19	**Y26716-120002**		NUT 12	1			

silverhorn.co.uk

CRANKSHAFT & PISTON

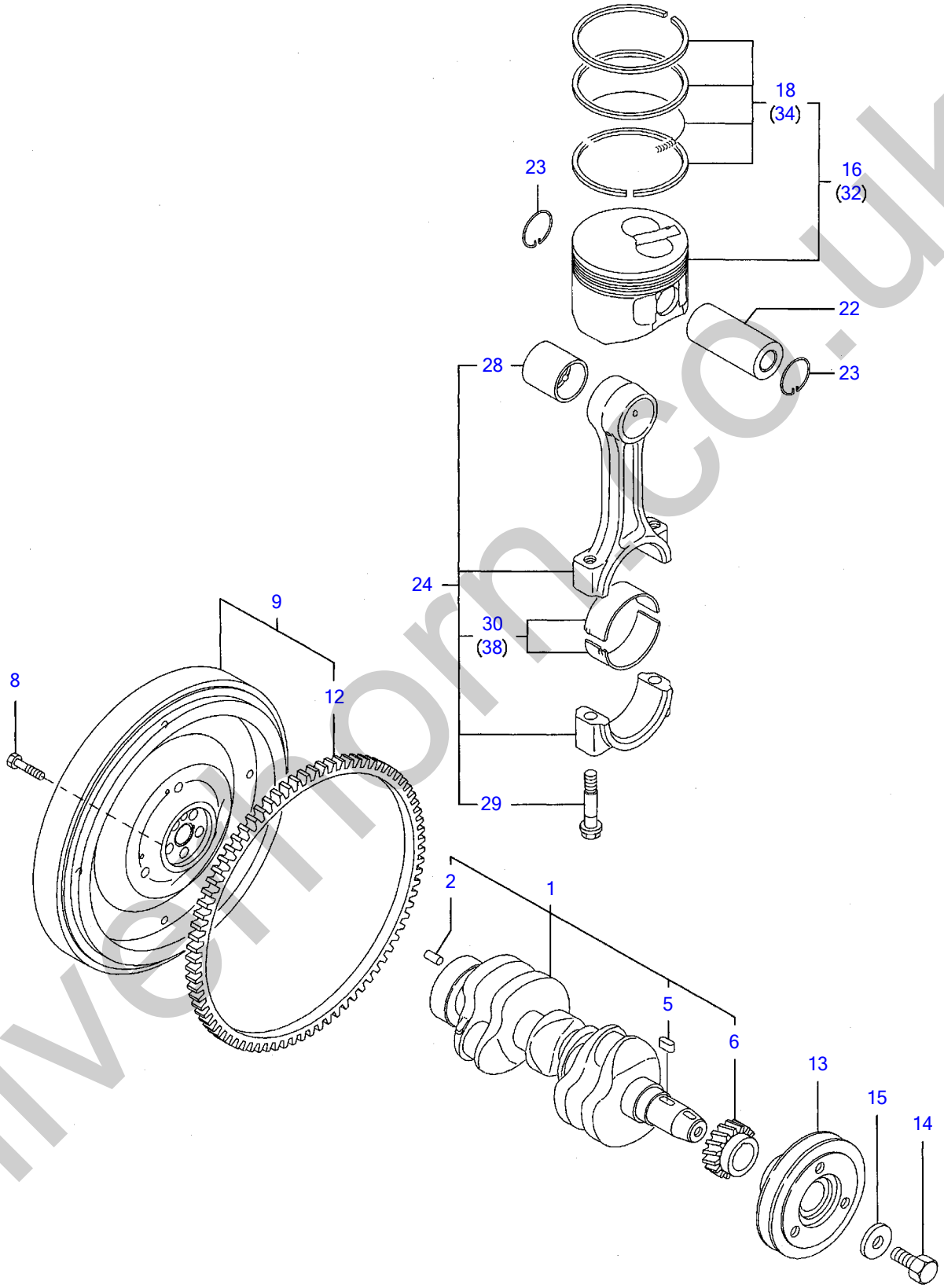

silvermore.co.uk

Y00D8560	8. クランクシャフト & ピストン				
3TNV70-STB		1:05.05			PLUS

¸×Ý¸¼ÔÌÄ & Ëß½ÄÝ CRANKSHAFT & PISTON

Œ©▯o REF NO.	•"•i"Ô▯† PARTS NO.	•"•i-¼	Description	▯"–Ê Q'ty	ŒÝŠ·▯« I	R	"õ▯l
1	Y119515-21700		CRANKSHAFT ASSY	1			
2	Y129100-01580	·	· PARALLEL PIN 8X16	1			
5	Y22512-040120	·	· KEY 4X 12	1			
6	Y119717-21200	·	· GEAR, CRANKSHAFT	1			
8	Y119620-21500		BOLT, FLYWHEEL	5			
9	Y119740-21590		FLYWHEEL ASSY	1			
12	Y119865-21600	·	· GEAR, RING	1			
13	Y119717-21650		V-PULLEY, CRANKSHAFT	1			
14	Y119621-21680		BOLT M12X1.25,FLANGE	1			
15	Y119620-21941		WASHER	1			
16	Y119515-22080		PISTON ASSY	3			
18	Y119515-22500	·	· RING SET	3			
22	Y119515-22300		PIN, PISTON	3			
23	Y22252-000220		CIRCLIP 22	6			
24	Y119515-23000		ROD ASSY, CONNECTING	3			
28	Y119717-23910	·	· BUSH, PISTON PIN	3			
29	Y119717-23200	·	· BOLT, CONNECTING ROD	6			
30	Y119515-23600	·	· METAL ASSY,CRANK PIN	3			
32	Y119515-22900		PISTON ASSY(O.S=0.25	3			
34	Y119515-22550	·	· RING SET (O.S=0.25)	3			
38	Y119515-23610		BEARING,PIN US=0.25	3			

silverhorn.co.uk

LUB.OIL SYSTEM

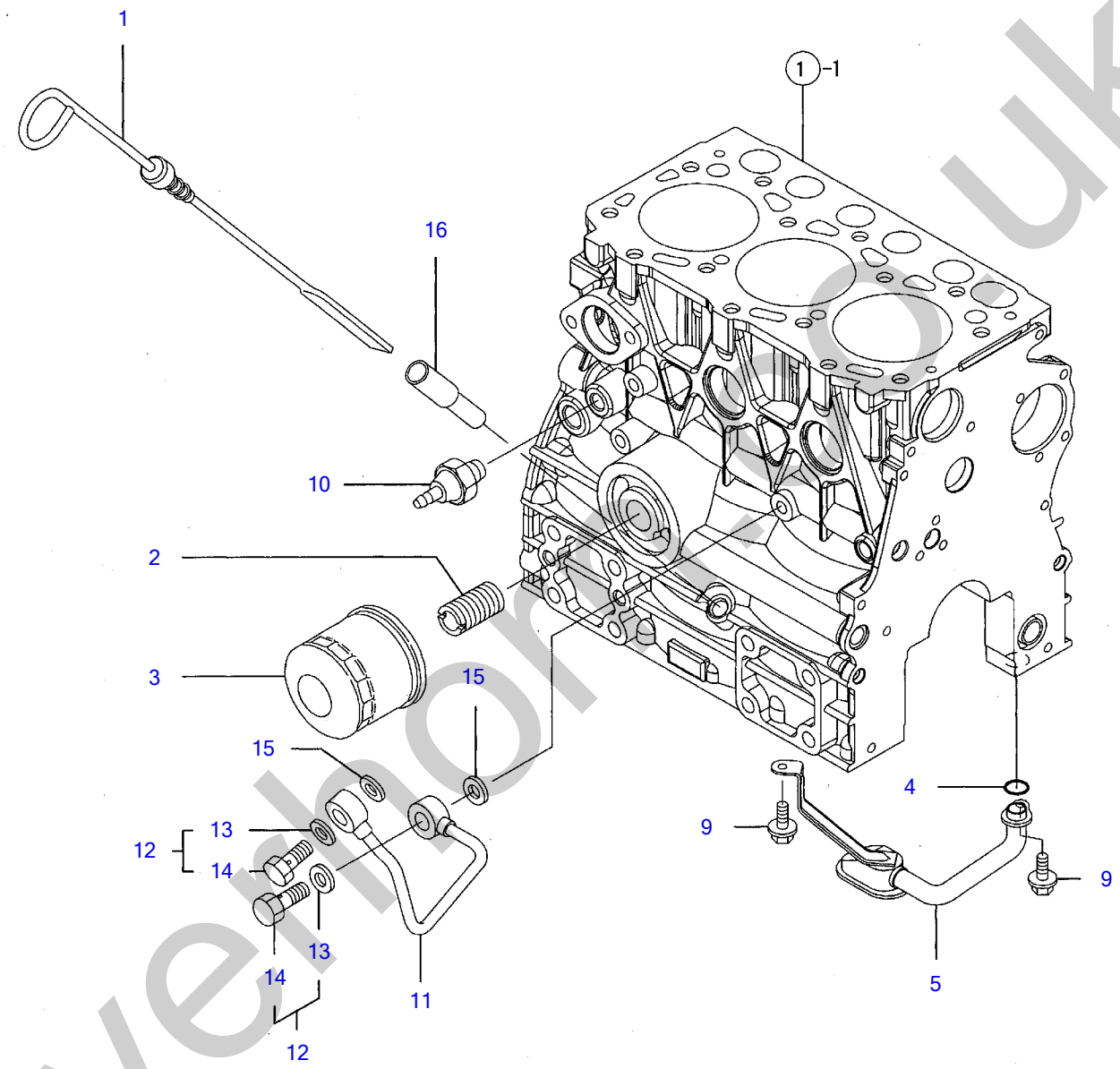

Y00D8560	9. LOシステム				
3TNV70-STB		1·05. 05			PLUS

silverhorse.co.uk

LO¼½ÃÑ LUB.OIL SYSTEM

Œ©lo REF NO.	•"•i"Ôl† PARTS NO.	•"•i-¼	Description	l"–Ê Q'ty	ŒÝŠ·l« I	R	"õll
1	Y119515-34801		DIPSTICK, LUB.OIL	1			
2	Y129100-35140		STUD	1			
3	Y119305-35160		FILTER ASSY, LUB.OIL	1			
4	Y119717-32060		O-RING, P15.0	1			
5	Y119515-35080		PIPE ASSY, LUB,OIL	1			
9	Y26106-060102		BOLT M 6X 10 PLATED	2			
10	Y114250-39450		SWITCH,(0.5KG)L.O.	1			
11	Y119717-39210		PIPE ASSY, HYDRAULIC	1			
12	Y129005-59830		BOLT ASSY, JOINT	2			
13	Y22190-080002	・	・SEAL WASHER 8S	2			
14	Y23857-030000	・	・JOINT BOLT 3	2			
15	Y22190-080002		SEAL WASHER 8S	2			
16	Y121520-34810		GUIDE, DIPSTICK	1			

silverhorn.co.uk

COOLING WATER SYSTEM

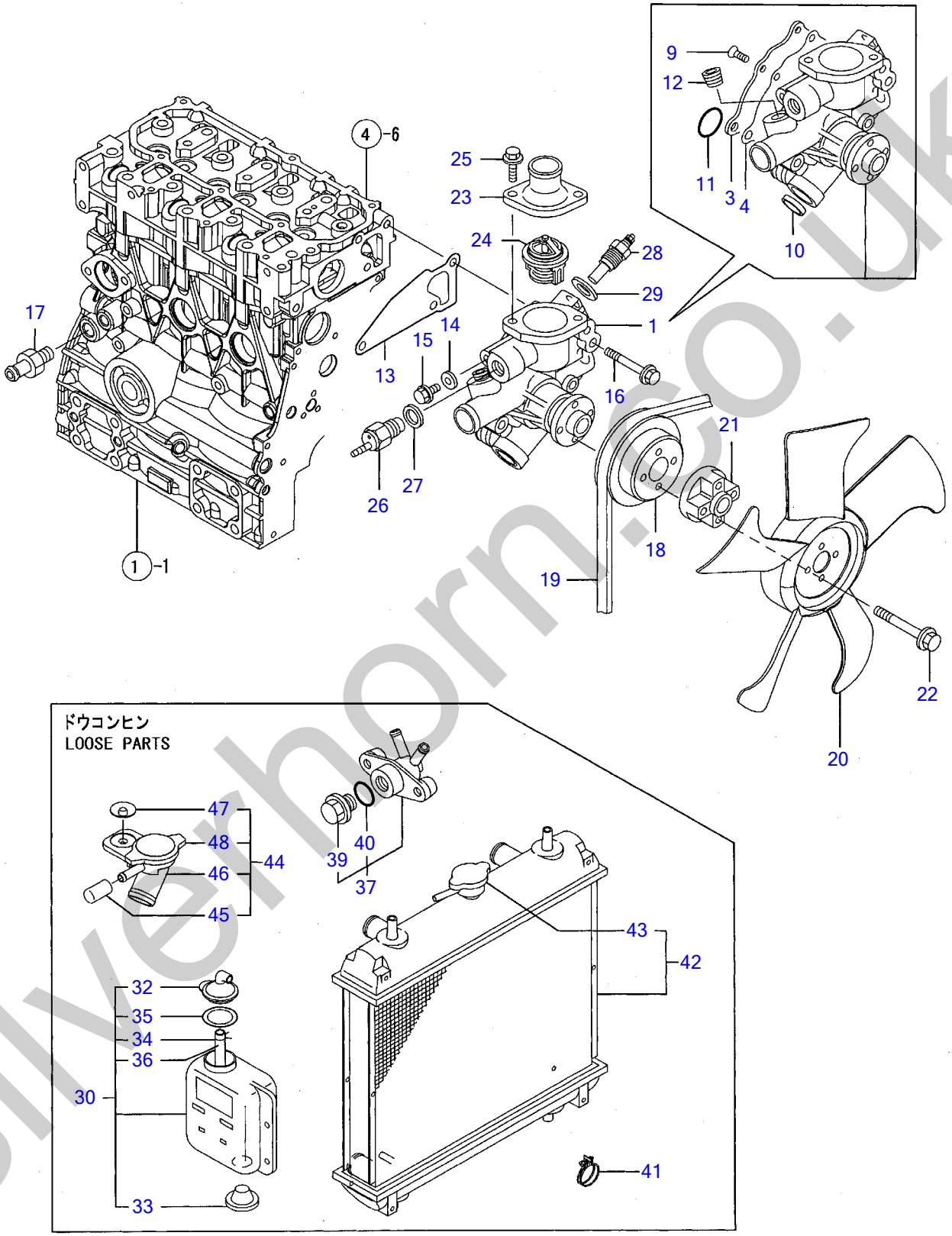

silverhorn.co.uk

Y00D8560	10. CWシステム				
3TNV70-STB		1:05. 05			PLUS

CW¼½ÃÑ COOLING WATER SYSTEM

Œ©lo REF NO.	•"•i"Ôl† PARTS NO.	•"•i-¼	Description	l"–Ê Q'ty	ŒÝŠ·l« I	R	"õll
1	Y119540-42000		PUMP ASSY,WATER	1			
3	Y119515-42041	•	• COVER	1			
4	Y119717-42031	•	• GASKET	1			
9	Y26577-060122	•	• SCREW M 6X 12	4			
10	Y27241-250000	•	• PLUG 25	1			
11	Y119717-42320	•	• O-RING	1			
12	Y129916-49740	•	• PLUG, DRAIN R03	1			
13	Y119515-42020		GASKET, WATER PUMP	1			
14	Y23414-080000		GASKET 8, ROUND	1			
15	Y26106-080122		BOLT M 8X 12 PLATED	1			
16	Y26106-080502		BOLT M 8X 50 PLATED	3			
17	Y121550-49111		JOINT PT1/4	1			
18	Y119717-42350		V-PULLEY, C.W.PUMP	1			
19	Y25152-003500		V BELT, A 35	1			
20	Y119258-44740		FAN(D300,SUCTION	1			
21	Y171353-44760		SPACER	1			
22	Y26106-060402		BOLT M 6X 40 PLATED	4			
23	Y129350-49530		COVER, THERMOSTAT	1			
24	Y119718-49800		THERMOSTAT, 71	1			
25	Y26106-080202		BOLT M 8X 20 PLATED	2			
26	Y121250-44901		SWITCH, THERMO(110ßC	1			
27	Y124465-44950		GASKET 16	1			
28	Y119266-49350		SENSOR, THERMO.	1			
29	Y129150-49360		GASKET 10	1			
30	Y121468-44510		SUB-TANK ASSY	1			
32	Y121450-44531	•	• CAP	1			
33	Y121468-44540	•	• PLUG, SUB-TANK	1			
34	Y124450-44560	•	• CLAMP	1			
35	Y121470-44581	•	• GASKET	1			
36	Y23065-070130	•	• PIPE 7X 130	1			
37	Y121450-49110		COCK ASSY, 3-WAY	1			
39	Y23491-140002	•	• PLUG 14	1			
40	Y24311-000160	•	• O-RING 1A P-16.0	1			
41	Y23010-038000		CLAMP 38	6			
42	Y119540-44500		RADIATOR ASSY	1			
43	Y129107-44590	•	• CAP, RADIATOR	1			
44	Y119527-44601		FILLER ASSY	1			
45	Y129457-44520	•	• CAP	1			
46	Y119527-44610	•	• FILLER BODY	1			
47	Y119527-44630	•	• SPACER	1			
48	Y119527-44640	•	• CAP, RADIATOR	1			

silvermm.co.uk

FUEL INJECTION PUMP

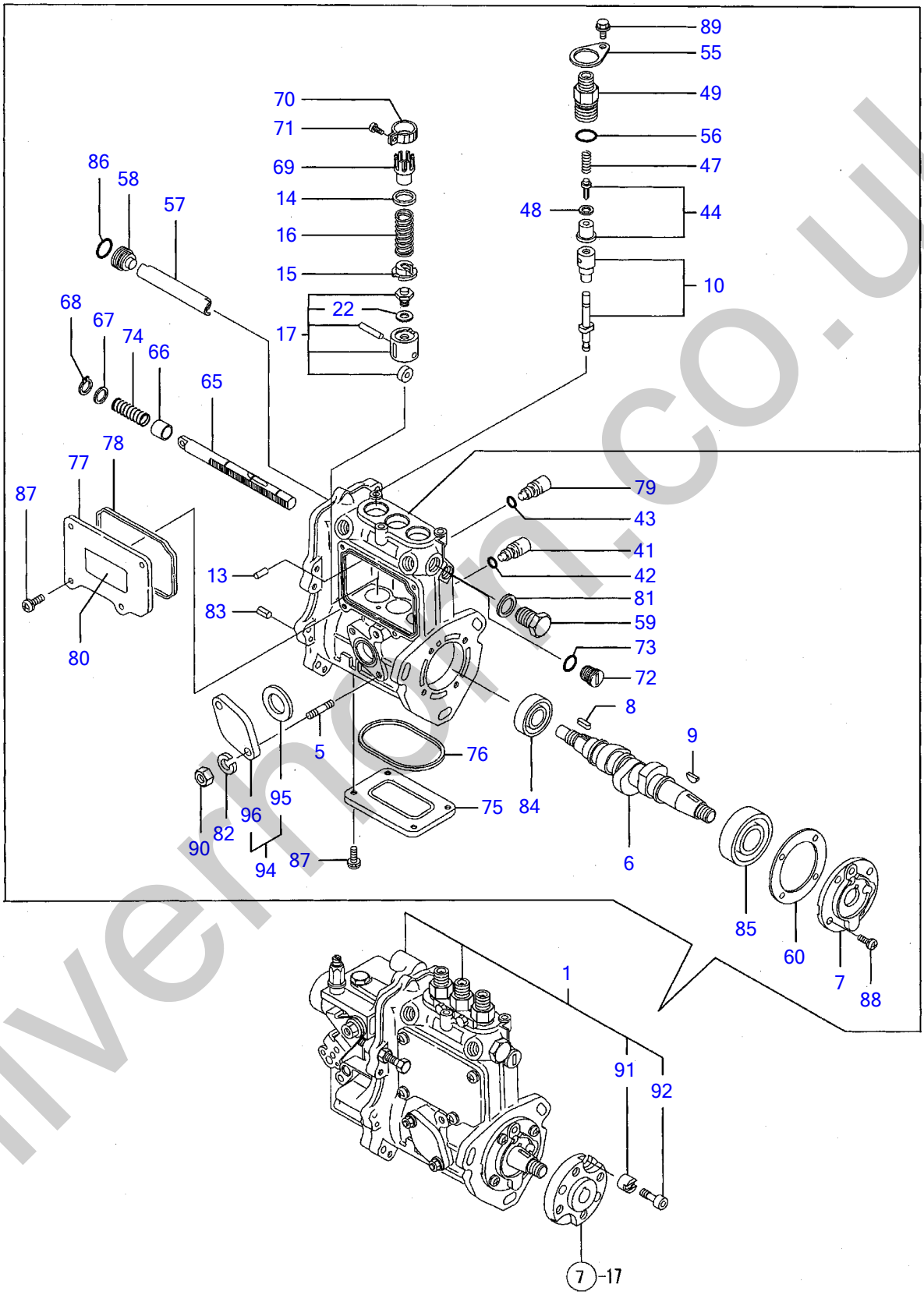

Y00D8560	11. FOフンシャポンプ				
3TNV70-STB		1:05.05			PLUS

silvermarn.co.uk

FOÌÝ¼ÔÎßÝÌß FUEL INJECTION PUMP

Œ©Ìo REF NO.	•"•i"ÔÌ† PARTS NO.	•"•i-¼	Description	ÌÌ"–Ê Q'ty	ŒÝŠ·Ì« I	R	"õÌl
1	Y719540-51380		FIE ASSY,3TNV70-STB	1			
5	Y129155-51020	·	· STUD, FEED PUMP	2			
6	Y119717-51030	·	· CAMSHAFT	1			
7	Y119717-51060	·	· SUPPORT, BEARING	1			
8	Y119717-51070	·	· PARALLEL PIN	1			
9	Y122710-51090	·	· KEY	1			
10	Y119515-51100	·	· PLUNGER ASSY	3			
13	Y129155-51140	·	· PIN, BARREL LOCKING	3			
14	Y158600-51170	·	· SEAT SPRING	3			
15	Y119717-51180	·	· RETAINER, SPRING	3			
16	Y119717-51190	·	· SPRING, PLUNGER	3			
17	Y119717-51200	·	· TAPPET ASSY	3			
22	Y129155-51600	· ·	· · SHIM PACK	3			
41	Y158600-51270	·	· STOPPER	3			
42	Y129155-51280	·	· O-RING S6	3			
43	Y129155-51280	·	· O-RING S6	1			
44	Y119717-51300	·	· VALVE ASSY, DELIVERY	3			
47	Y119717-51330	·	· SPRING, DELIVERY	3			
48	Y124550-51350	·	· GASKET, DELIVERY	3			
49	Y158600-51441	·	· VALVE ASSY, DELIVERY	3			
55	Y118400-51370	·	· LOCKING	3			
56	Y24316-000150	·	· O-RING 4D P15	3			
57	Y129155-51400	·	· DEFLECTOR	1			
58	Y158600-51410	·	· PLUG	1			
59	Y158600-51420	·	· PLUG	1			
60	Y129155-51450	·	· SHIM SET, ADJUSTING	1			
65	Y119717-51500	·	· RACK, CONTROL	1			
66	Y129155-51521	·	· BUSH, RACK	1			
67	129155-51530	·	· SPACER, AUX. SPRING	1			
68	Y129155-51540	·	· CIRCLIP	1			
69	Y129155-51550	·	· PINION, CONTROL	3			
70	Y129100-51560	·	· PINION	3			
71	Y129100-51570	·	· SCREW	3			
72	Y158600-51570	·	· PLUG	1			
73	Y129155-51580	·	· O-RING	1			
74	Y129155-51591	·	· SPRING, RACK	1			
75	Y129155-51701	·	· COVER	1			
76	Y119717-51710	·	· PACKING	1			
77	Y119717-51750	·	· COVER, BODY SIDE	1			
78	Y119717-51760	·	· GASKET	1			
79	Y158600-51790	·	· GUIDE, RACK	1			
80	Y129156-51910	·	· LABEL, CAUTION	1			
81	Y22190-160002	·	· SEAL WASHER 16S	1			
82	Y22217-060000	·	· SPRING WASHER 6	2			
83	Y22351-050010	·	· SPRING PIN 5X10	2			
84	Y24101-060034	·	· BALL BEARING	1			
85	24101-063034	·	· BALL BEARING	1			
86	119717-51420	·	· O-RING	1			
87	26022-050122	·	· SCREW M 5X 12	8			
88	Y26022-060162	·	· SCREW M 6X 16	4			
89	Y26106-050102	·	· BOLT M 5X 10 PLATED	3			
90	Y26716-060002	·	· NUT 6	2			
91	Y119717-51480	·	· COLLAR. FIC FIX	1			
92	Y119717-51490	·	· BOLT, FIXATION	1			
94	Y129255-52000	·	· COVER ASSY,FUEL FEED	1			
95	Y129155-52051	· ·	· · GASKET	1			
96	Y129100-52200	· ·	· · COVER	1			

silvermm.co.uk

GOVERNOR

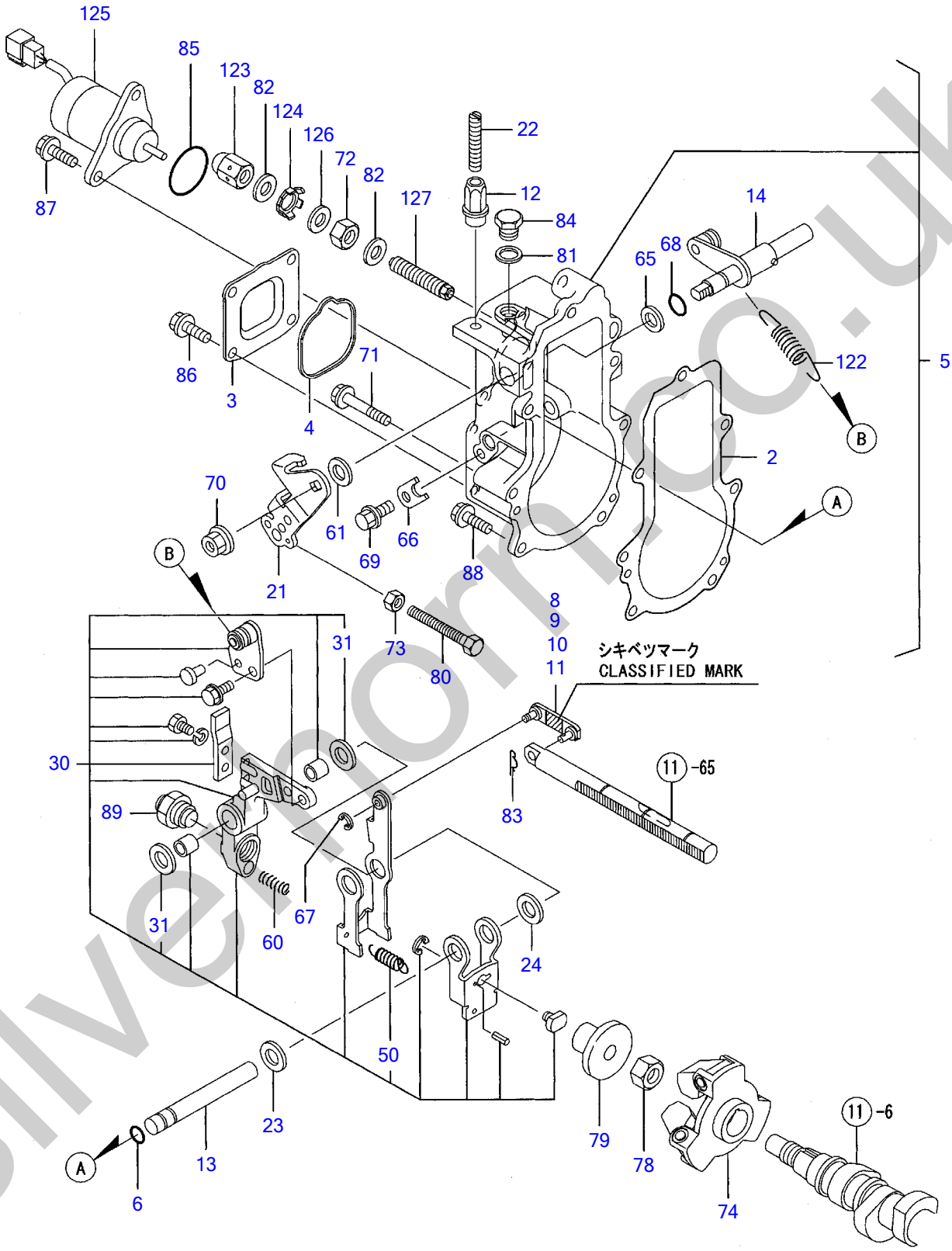

Y00D8560	12. ガバナ				
3TNV70-STB		1·05 05			PLUS

silvermorph.co.uk

¶ÞÊÞÅ GOVERNOR

Œ©lo REF NO.	•"•i"Ôl† PARTS NO.	•"•i-¼	Description	l"–Ê Q'ty	ŒÝŠ·l« l	R	"õll
2	Y119717-61050	·	· GASKET, CASE	1			
3	Y119717-61060	·	· CASE, GOVERNOR	1			
4	Y119717-61070	·	· GASKET, COVER	1			
5	Y119761-61100	·	· CASE ASSY, GOVERNOR	1			
6	Y129155-51280	· ·	· · O-RING S6	1			
8	Y119717-61120	· ·	· · LINK, L=29.3	1			
9	Y119717-61130	· ·	· · LINK, L=29.8	1			
10	Y119717-61140	· ·	· · LINK, L=28.8	1			
11	Y119717-61150	· ·	· · LINK, L=303	1			
12	Y129209-61370	· ·	· · NUT M6	1			
13	Y129052-61390	· ·	· · SHAFT, GOV. LEVER	1			
14	Y119717-61400	· ·	· · SHAFT ASSY, CONTROL	1			
21	Y119515-61440	· ·	· · LEVER, CONTROL	1			
22	129155-61450	· ·	· · BOLT, REVOL. LIMIT	1			
23	129156-61460	· ·	· · SHIM T=0.6	1			
24	Y129155-61480	· ·	· · SPACER ASSY	1			
30	Y119761-61500	· ·	· · LEVER ASSY, GOVERNOR	1			
31	Y174307-51700	· · ·	· · · SHIM SET	2			
50	Y129486-61540	· · ·	· · · SPRING, SET	1			
60	Y129100-61650	· ·	· · SPRING, FUEL CONTROL	1			
61	Y158552-61700	· ·	· · SHIM ASSY	1			
65	Y158552-61710	· ·	· · SHIM T=1.0	1			
66	Y119660-61901	· ·	· · RETAINER, SHAFT	1			
67	Y22272-000030	· ·	· · CIRCLIP E- 3	1			
68	Y24341-000070	· ·	· · O-RING 1A S-7.0	1			
69	Y26106-060102	· ·	· · BOLT M 6X 10 PLATED	1			
70	Y26366-080002	· ·	· · NUT M 8	1			
71	Y26106-060452	·	· BOLT M 6X 45 PLATED	3			
72	Y26736-120002	·	· NUT M12	1			
73	Y26756-060002	·	· LOCK NUT 6	1			
74	Y119717-61200	·	· WEIGHT ASSY	1			
78	Y119660-61300	·	· NUT, GOVERNOR WEIGHT	1			
79	Y129155-61341	·	· SLEEVE	1			
80	Y129155-61460	·	· BOLT, IDLE LIMIT	1			
81	Y22190-100002	·	· SEAL WASHER 10S	1			
82	Y22190-120002	·	· SEAL WASHER 12	2			
83	Y22372-040000	·	· SNAP PIN 4	1			
84	Y23887-100002	·	· PLUG 10	1			
85	Y24341-000280	·	· O-RING 1A S-28.0	1			
86	Y26106-060102	·	· BOLT M 6X 10 PLATED	4			
87	Y26106-060142	·	· BOLT M 6X 14 PLATED	2			
88	Y26106-060202	·	· BOLT M 6X 20 PLATED	4			
89	Y119717-61550	·	· ANGLEICH ASSY	1			
122	Y171353-61720	·	· SPRING, GOVERNOR	1			
123	Y129209-61930	·	· CAP NUT	1			
124	Y129209-61970	·	· PLATE	1			
125	Y119233-77932	·	· SOLENOID, STOP	1			
126	Y23414-120016	·	· GASKET 12	1			
127	Y158601-61790	·	· LIMITER ASSY, FUEL	1			

silvermm.co.uk

FUEL INJECTION VALVE

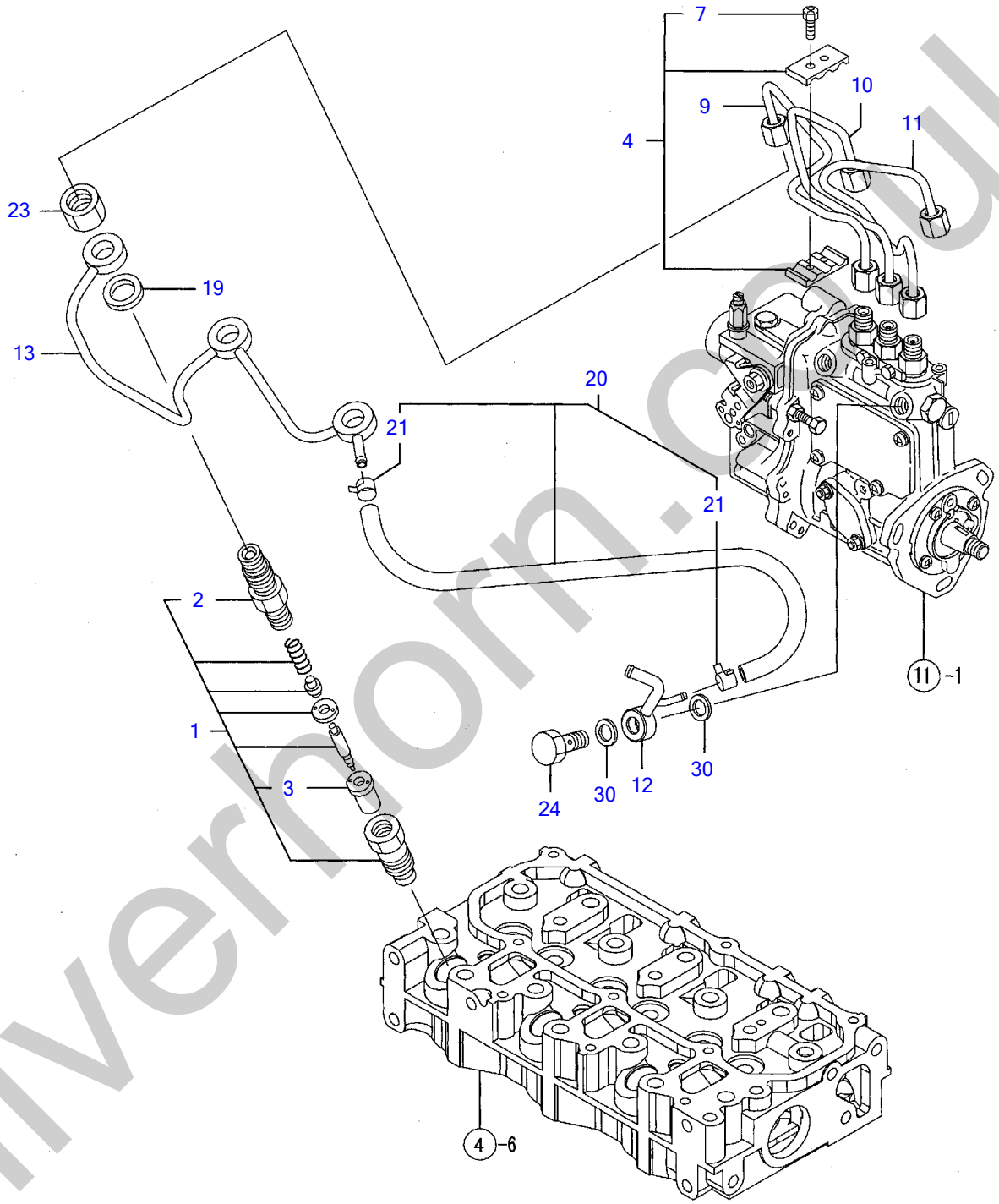

Y00D8560	13. FOフンシャベン				
3TNV70-STB		1:05 05			PLUS

silverhorn.co.uk

FO]Ý¼¬ÍÞÝ FUEL INJECTION VALVE

Œ©lo REF NO.	•"•i"Ô†† PARTS NO.	•"•i-¼	Description	]"–Ê Q'ty	ŒÝŠ·l« I	R	"õll
1	Y119517-53001		VALVE ASSY,INJECTION	3			
2	Y118200-53010	・	・HOLDER, NOZZLE	3			
3	Y119517-53010	・	・NOZZLE ASSY	3			
4	Y129150-59120		RETAINER, INJ. PIPE	1			
7	Y129150-59131	・	・BOLT M4X14,HEX.SCKT.	2			
9	Y119546-59810		PIPE, FUEL INJECTION	1			
10	Y119546-59820		PIPE, FUEL INJECTION	1			
11	Y119546-59830		PIPE, FUEL INJECTION	1			
12	Y119515-59580		JOINT, OVER FLOW	1			
	Y119515-59581 (2005.08-)		JOINT, OVER FLOW	1	S		
13	Y119515-59540		PIPE ASSY, RETURN	1			
19	Y129901-59560		GASKET, RETURN	3			
20	Y119540-59570		PIPE, FUEL RETURN	1			
	Y119744-59560 (2005.08-)		PIPE, FUEL RETURN	1	S		
21	Y124066-59100	・	・CLAMP 8	2			
23	Y119620-59700		NUT	3			
24	Y119813-59950		VALVE ASSY, CHECK	1			
30	Y22190-120002		SEAL WASHER 12	2			

silverhorn.co.uk

FUEL LINE

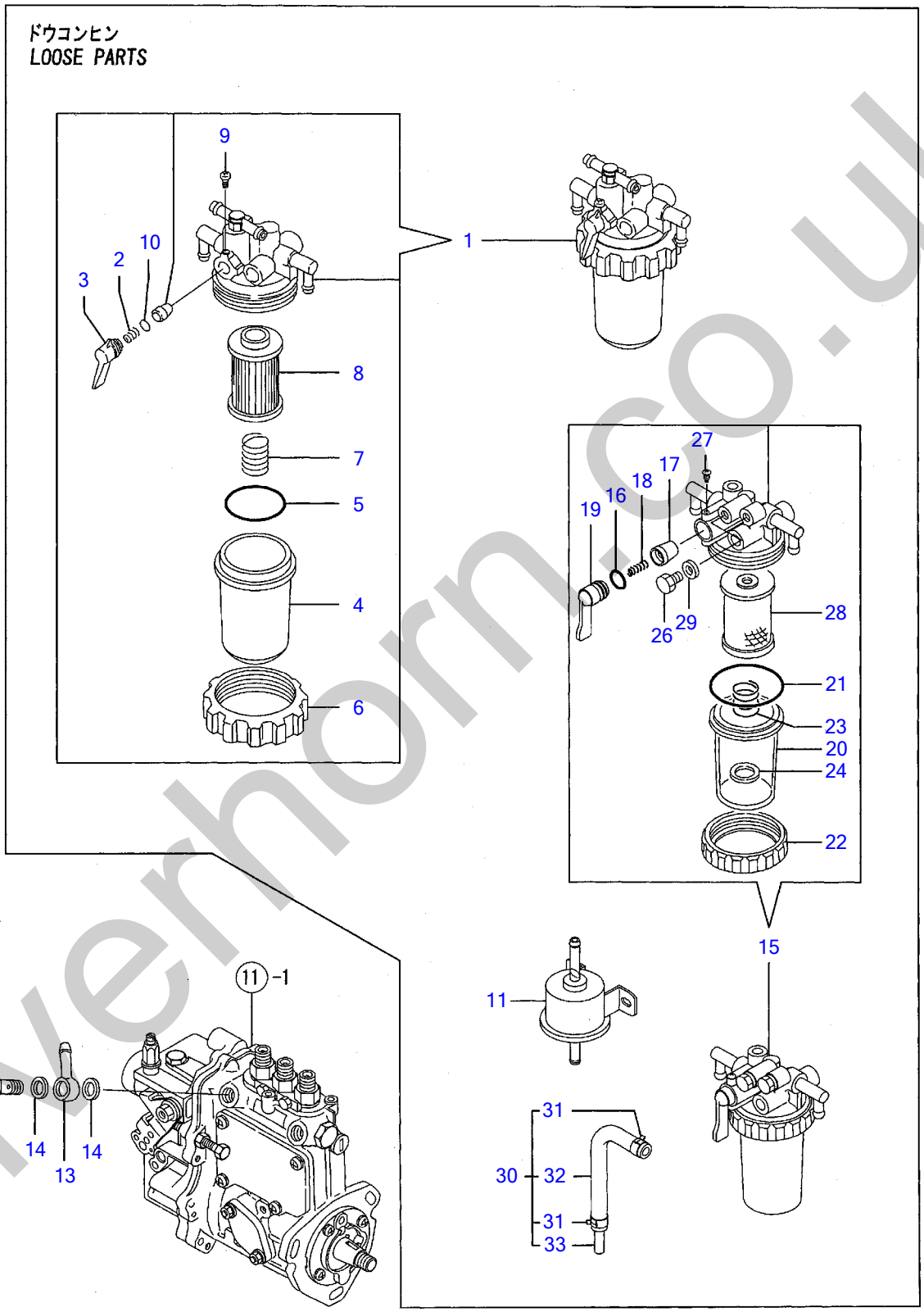

Y00D8560	14. FOパイプ				
3TNV70-STB		1:05. 05			PLUS

silverhorn.co.uk

FOÊß²ìß FUEL LINE

Œ©lo REF NO.	•"•i"Ôl† PARTS NO.	•"•i-¼	Description	l"–Ê Q'ty	ŒÝŠ·l« I	R	"õll
1	Y119833-55620		STRAINER ASSY, FUEL	1			
2	Y104200-55330	·	· SPRING, TAPER VALVE	1			
3	Y119810-55340	·	· LEVER	1			
4	Y121254-55510	·	· CUP, STRAINER	1			
5	Y102103-55520	·	· O-RING	1			
6	Y110250-55610	·	· RING, RETAINING	1			
7	Y121250-55620	·	· SPRING	1			
8	Y119810-55650	·	· ELEMENT	1			
9	Y104200-55750	·	· SCREW M 4	1			
10	Y24311-240100	·	· O-RING 1A P-10A	1			
11	Y129612-52100		FUEL PUMP	1			
12	Y103854-39140		BOLT, PIPE JOINT	1			
13	Y101304-59020		JOINT 12, PIPE	1			
14	Y22190-120002		SEAL WASHER 12	2			
15	Y129335-55700		SEPARATOR, WATER	1			
16	Y24311-240100	·	· O-RING 1A P-10A	1			
17	Y104200-55321	·	· VALVE, TAPER	1			
18	104200-55330	·	· SPRING, TAPER VALVE	1			
19	104200-55341	·	· HANDLE, COCK	1			
20	124064-55510	·	· BOWL, FUEL STRAINER	1			
21	102103-55520	·	· O-RING	1			
22	Y110250-55610	·	· RING, RETAINING	1			
23	Y121257-55720	·	· SPRING, SCREEN	1			
24	Y121257-55731	·	· FLOAT	1			
26	Y101720-55750	·	· PLUG 6	2			
27	Y104200-55750	·	· SCREW M 4	1			
28	Y171081-55910	·	· SCREEN	1			
29	Y23418-060000	·	· GASKET 6, NYLON	2			
30	Y119840-59601		BEND ASSY	1			
31	Y124766-59050	·	· CLAMP 12	2			
32	Y119840-59611	·	· BEND, RETURN	1			
33	Y119840-59621	·	· JOINT	1			

silverhorn.co.uk

STARTING MOTOR

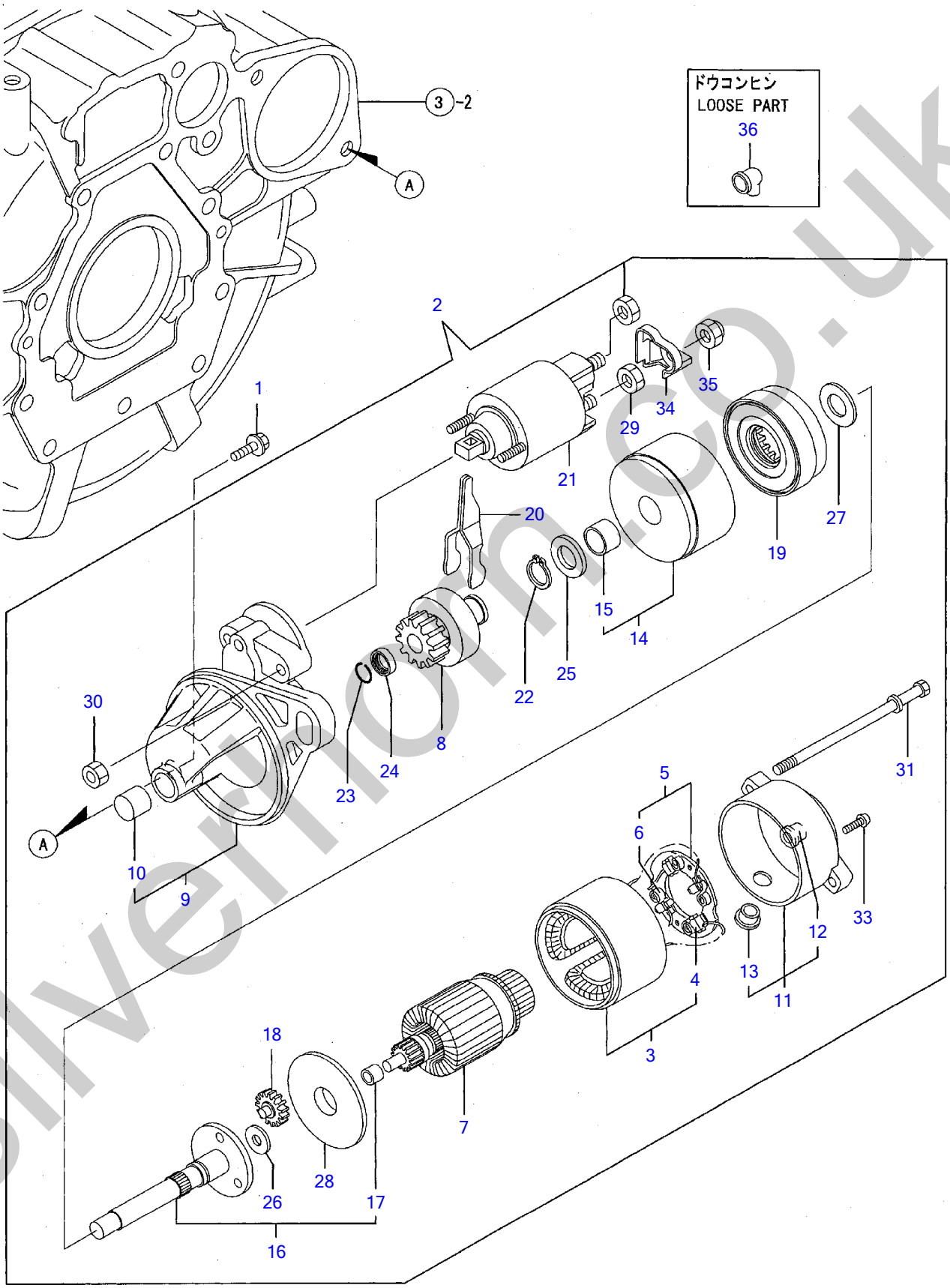

Y00D8560	15. スターティングモータ				
3TNV70-STB		1·05 05			PLUS

silvermoon.co.uk

½À-Ã²Ý¸ÞÓ-À STARTING MOTOR

Œ©lo REF NO.	•"•i"Ôl† PARTS NO.	•"•i-¼	Description	l"–Ê Q'ty	ŒÝŠ·l« I	R	"õll
1	Y26106-100252		BOLT M10X 25 PLATED	2			
2	Y119515-77010		STARTER, P1.1	1			
3	YX0281007680	·	· COIL ASSY, FIELD	1			
4	YX0280996180	· ·	· · STARTER KIT	2			
5	YX0285105190	·	· HOLDER ASSY.	1			
6	YX0285205030	· ·	· · SPRING	4			
7	YX0282005871	·	· ARMATURE ASSY	1			
8	YX0283006960	·	· CLUTCH SUB-ASSY.	1			
9	YX4284001590	·	· HOUSING ASSY,STARTER	1			
10	YX9491050100	· ·	· · NEEDLE BEARING	1			
11	YX0285007030	·	· FRAME ASSY.	1			
12	YX9491040990	· ·	· · BEARING	1			
13	YX0280626010	· ·	· · COVER	1			
14	YX0284105040	·	· BEARING SUB-ASSY.	1			
15	YX9491034330	· ·	· · BEARING	1			
16	YX0286105010	·	· SHAFT SUB-ASSY.	1			
17	YX9491034320	· ·	· · BEARING	1			
18	YX0286305010	·	· GEAR	3			
19	YX0286355010	·	· GEAR	1			
20	YX0287405140	·	· LEVER	1			
21	YX0534007800	·	· SWITCH,EMERGENCY	1			
22	YX9055715000	·	· RING	1			
23	YX9490721360	·	· RING	1			
24	YX0280210331	·	· NUT	1			
25	YX9490138110	·	· WASHER	1			
26	YX9490138090	·	· WASHER	1			
27	YX9490138100	·	· WASHER	1			
28	YX0284525010	·	· PLATE	1			
29	YX9490562360	·	· NUT	1			
30	YX9490560750	·	· NUT	2			
31	YX9490423520	·	· BOLT, THROUGH	2			
33	YX9490065670	·	· SCREW M 4X 6 (BS)	2			
34	YX0280335360	·	· COVER SET, TERMINAL	1			
35	YX1289510130	·	· NUT	1			
36	Y124160-77020		COVER, TERMINAL	1			

silverhorn.co.uk

GENERATOR

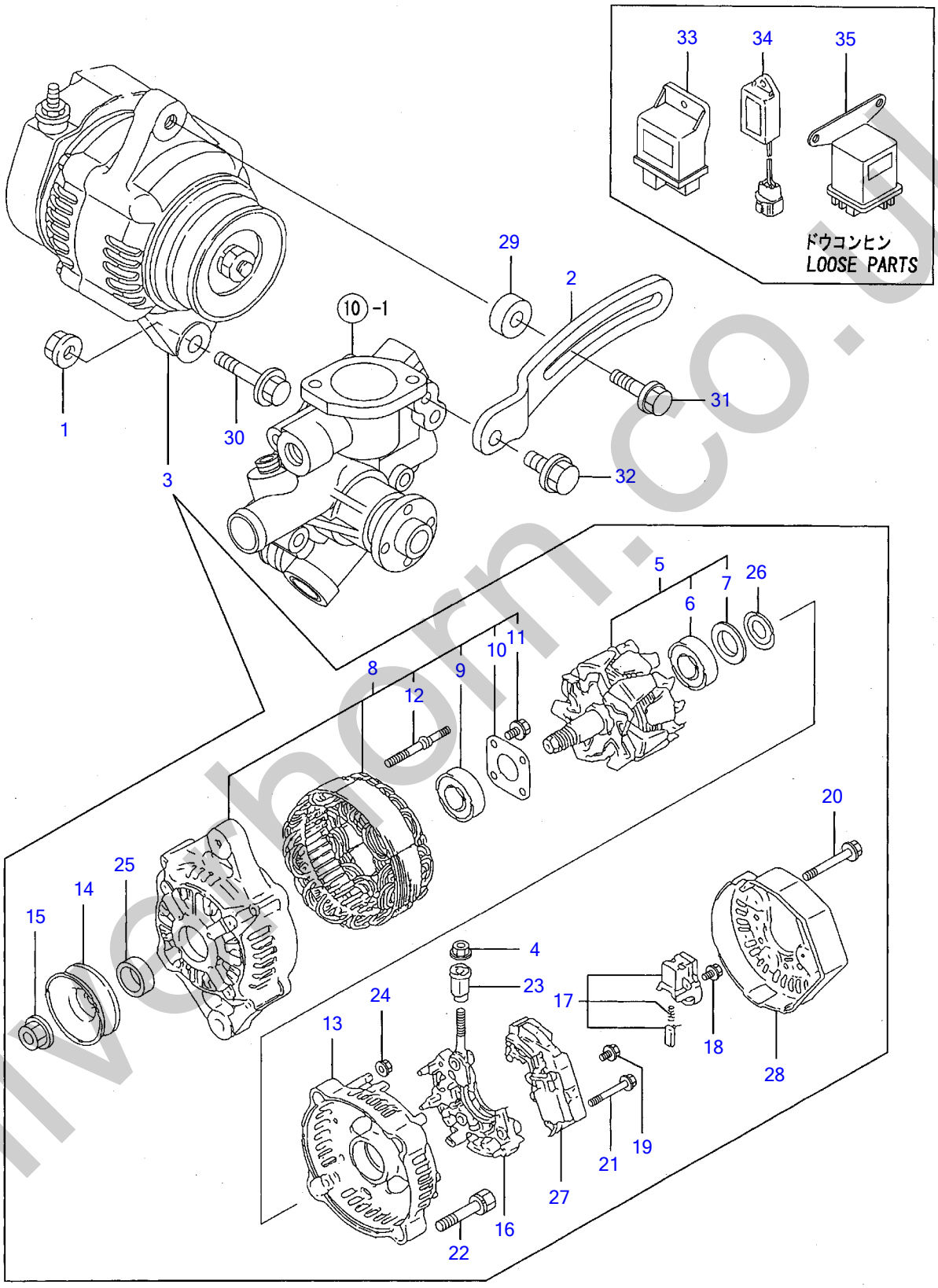

Y00D8560	16. ジェネレータ				
3TNV70-STB		1:05.05			PLUS

silvethorn.co.uk

¼Þ´ÈÚ-À GENERATOR

Œ©lo REF NO.	•"•i"Ôl† PARTS NO.	•"•i-¼	Description	l"–Ê Q'ty	ŒÝŠ·l« I	R	"õll
1	Y26306-100002		NUT	1			
2	Y119717-77340		ADJUSTER, BELT	1			
3	Y129240-77200		ALTERNATOR	1			
4	Y129240-79310	·	· NUT	1			
5	Y119620-77380	·	· ROTOR ASSY	1			
6	Y126501-79240	· ·	· · BALL BEARING	1			
7	Y119620-79250	· ·	· · COVER, BEARING	1			
8	Y119620-77421	·	· FLAME ASSY, DRIVE	1			
9	Y119620-79200	· ·	· · BALL BEARING	1			
10	Y119620-79210	· ·	· · PLATE	1			
11	Y119620-79220	· ·	· · SCREW	4			
12	Y119620-79230	· ·	· · BOLT, STUD	2			
13	Y119620-77440	·	· FLAME ASSY, REAR	1			
14	Y119620-77461	·	· PULLEY	1			
15	Y119620-77471	·	· NUT	1			
16	Y119620-79260	·	· HOLDER	1			
17	Y129052-79270	·	· HOLDER, BRUSH	1			
18	Y119620-79290	·	· SCREW	6			
19	Y119620-79300	·	· SCREW	1			
20	Y119620-79310	·	· BOLT	3			
21	Y119620-79320	·	· SCREW W/WASHER	2			
22	Y119620-79330	·	· BOLT	2			
23	Y119620-79340	·	· INSULATION BUSH	1			
24	Y119620-79350	·	· NUT	2			
25	Y119620-77490	·	· COLLAR	1			
26	Y119620-79360	·	· THRUST WASHER	1			
27	Y129240-77710	·	· REGULATOR ASSY	1			
28	Y129240-79300	·	· COVER	1			
29	Y119940-77270		ADJUSTER, BELT	1			
30	Y119740-77250		BOLT, M10X76	1			
31	Y129972-77341		BOLT, ADJUSTING	1			
32	Y26106-080202		BOLT M 8X 20 PLATED	1			
33	Y119802-77200		RELAY, SAFETY	1			
34	Y129211-77920		TIMER	1			
35	Y119646-77900		RELAY, POWER	1			

silverhorn.co.uk

GASKET SET

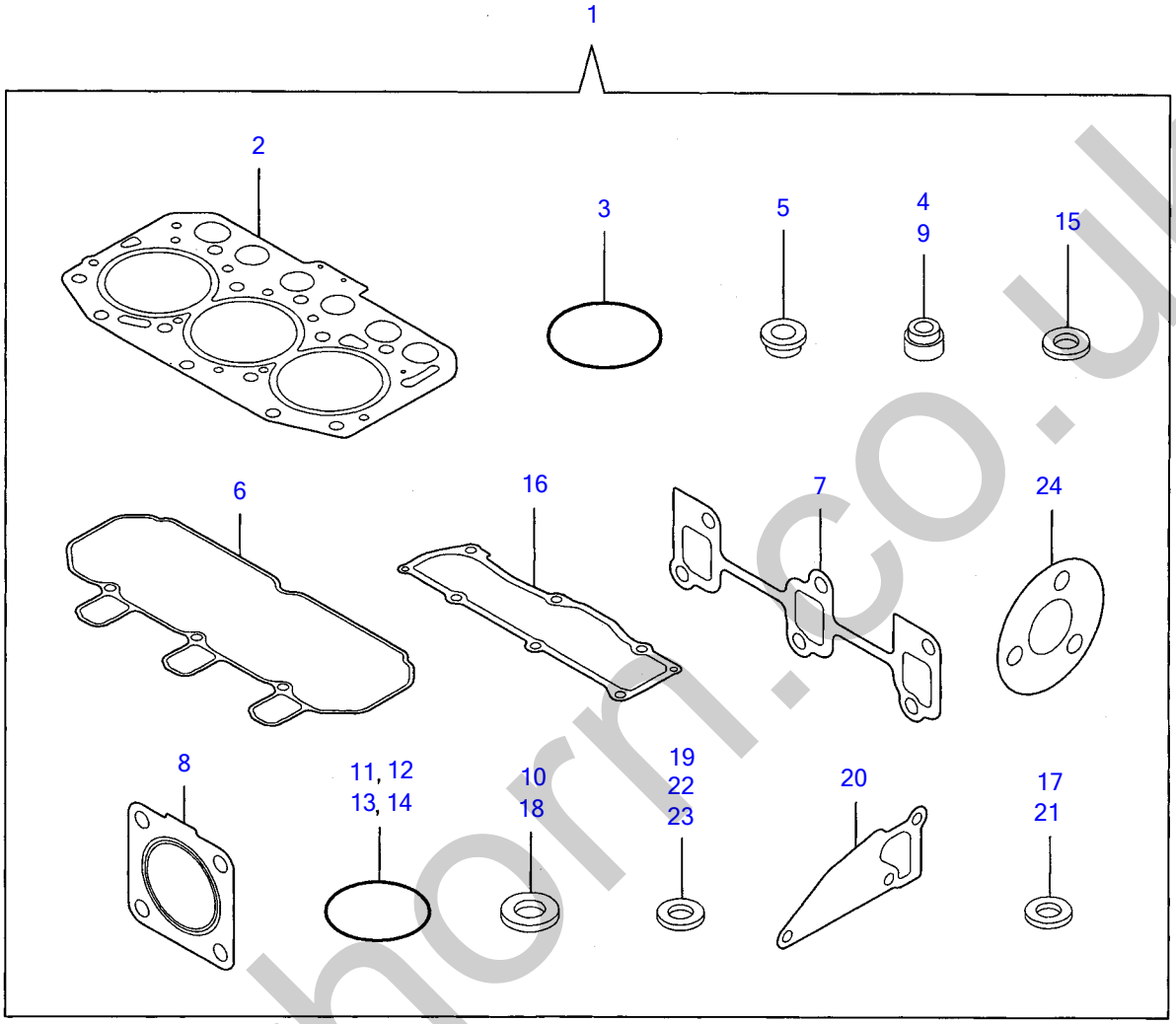

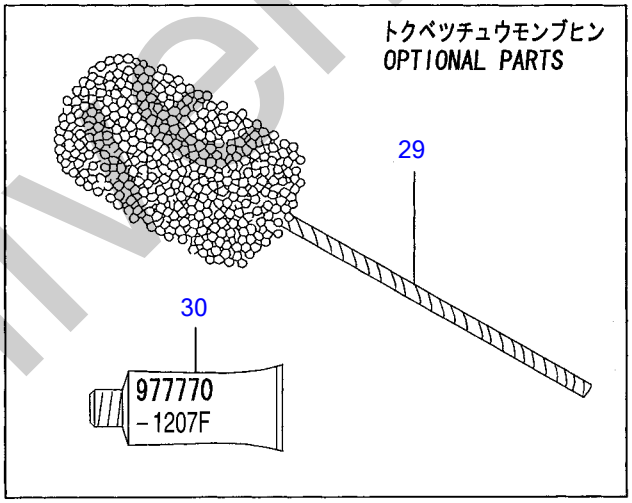

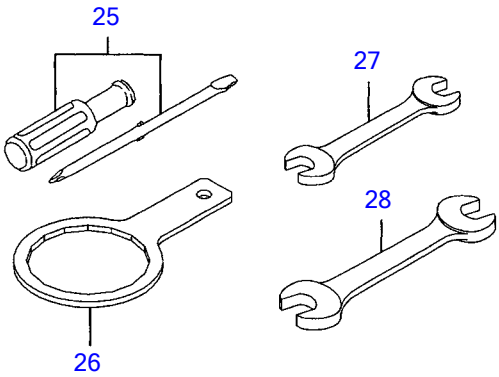

Y00D8560	17. パッキンセット				
3TNV70-STB		1:05.05			PLUS

silverhorn.co.uk

ÊßÂ·Ý¾ÂÄ GASKET SET

Œ©lo REF NO.	•"•i"Ôl† PARTS NO.	•"•i-¼	Description	l"–Ê Q'ty	ŒÝŠ·l« I	R	"õll
1	Y719515-92650		GASKET SET(NON-ASB.)	1			
2	Y119515-01330	•	• GASKET, CYL.HEAD	1			
3	Y121850-51960	•	• O-RING, F.I.PUMP	1			
4	Y119717-11340	•	• SEAL, VALVE STEM	3			
5	Y129901-11450	•	• PROTECTER, NOZZLE	3			
6	Y119515-11310	•	• GASKET, BONNET	1			
7	Y119717-13110	•	• GASKET, MANIFOLD	1			
8	Y119515-13200	•	• GASKET, SILENCER	2			
9	Y119717-11350	•	• SEAL, VALVE STEM	3			
10	Y22190-080002	•	• SEAL WASHER 8S	4			
11	Y24311-000320	•	• O-RING 1A P-32.0	2			
12	Y119717-32060	•	• O-RING, P15.0	1			
13	Y119624-32040	•	• O-RING P 12.0	1			
14	Y119717-32050	•	• O-RING, P17.0	3			
15	Y119600-11460	•	• GASKET, NOZZLE	6			
16	Y119515-11330	•	• PLATE, BAFFLE	1			
17	Y22190-160002	•	• SEAL WASHER 16S	1			
18	Y22190-120002	•	• SEAL WASHER 12	4			
19	Y129901-59560	•	• GASKET, RETURN	3			
20	Y119515-42020	•	• GASKET, WATER PUMP	1			
21	Y23414-080000	•	• GASKET 8, ROUND	1			
22	Y124465-44950	•	• GASKET 16	1			
23	Y129150-49360	•	• GASKET 10	1			
24	Y103954-13201	•	• GASKET, SILENCER	1			
25	Y104200-92350		DRIVER, SCREW	1			
26	Y119332-92751		WRENCH, FILTER	1			
27	Y28110-100120		WRENCH 10X12	1			
28	Y28110-140170		WRENCH 14X17	1			
29	Y129400-92410		FLEX HORN	1			
30	Y977770-1207F		GASKET, LIQUID	1			

silverhorn.co.uk