TB108

Book No.BB5Z004-1
Serial No.10810004-10812001

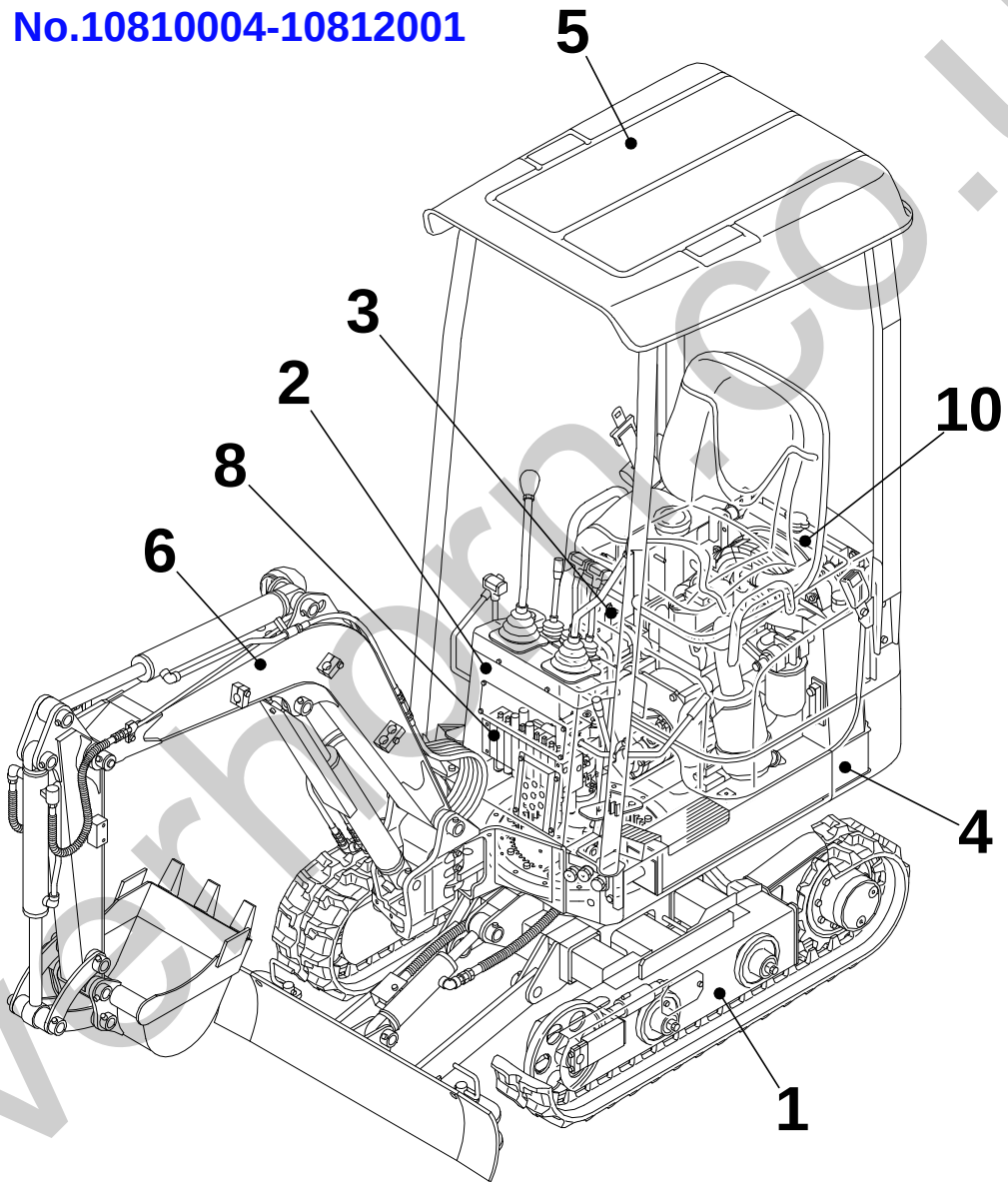

silverhorn.co.uk

silverhorn.co.uk

INDEX

Item	Part number	Description	Q'ty	Chan.	Serial No.	Serv.	Remarks
1		UNDERCARRIAGE					
2		TURNTABLE & CONTROL LEVER					
3		ENGINE & ELECTRICAL SYSTEM					
4		HYDRAULIC PIPNG & TANK					
5		COVER & CAB					
6		HOE ATTACHMENT					
7		DECAL & TOOL					
8		HYDRAULIC DEVICE					
10		ENGINE(2TNE68-ETBA)					
		2008.4.18					
99		KITS, ATTACHMENTS AND QUICK REFERENCE					

silverhorn.co.uk

LOWER FRAME

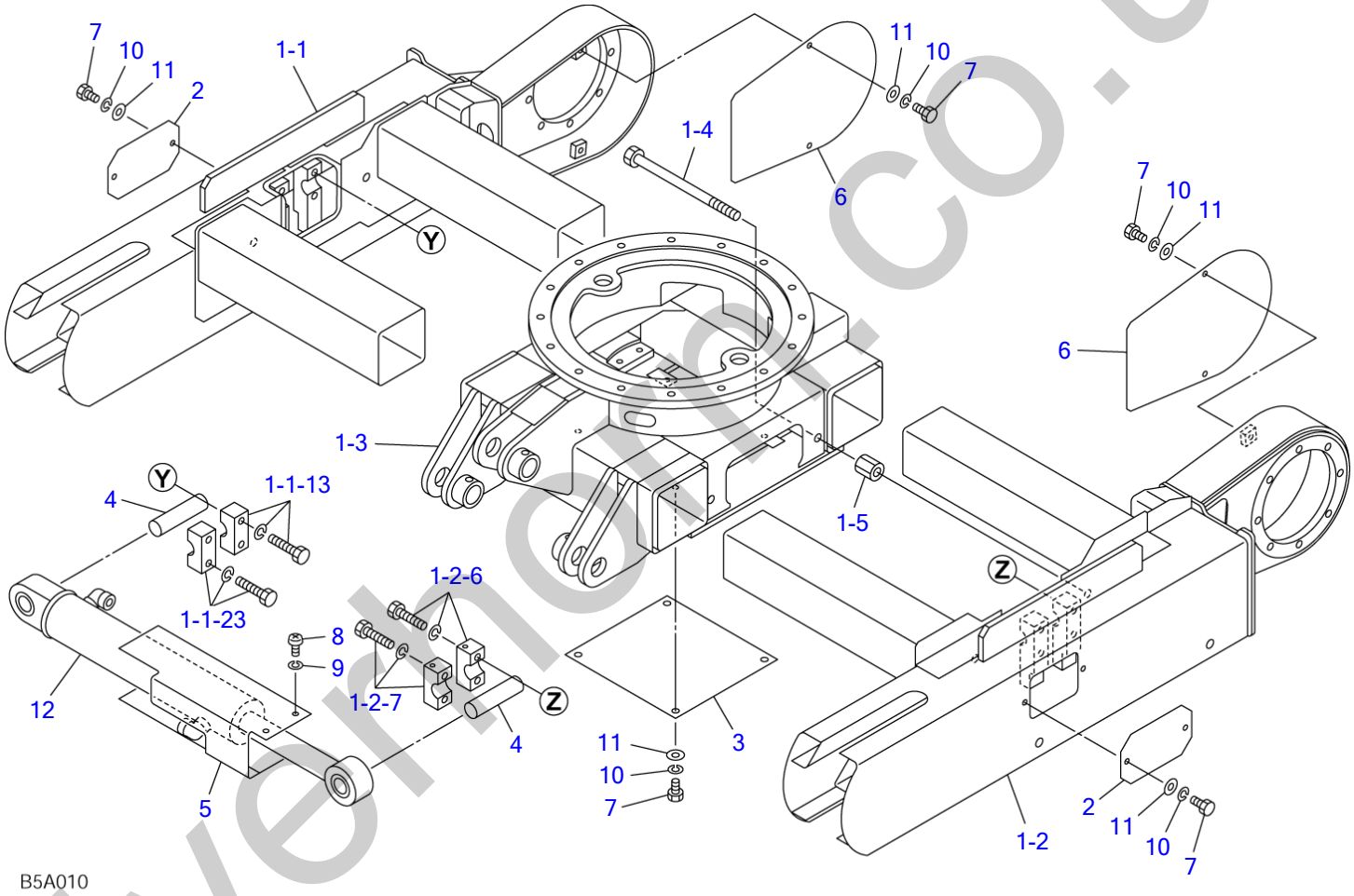

silverhorn.co.uk

LOWER FRAME

Item	Part number	Description	Q'ty	Chan.	Serial No.	Serv.	Remarks
		FRAME ASSY, lower					X03210-55000-0
1	X **********	FRAME ASSY	1				
1-1	X **********	・FRAME (R.H.)	1				
1-1-13	0321055250	・CLAMP	1				
1-1-23	0321055260	・CLAMP	1				
1-2	X **********	・FRAME (L.H.)	1				
1-2-6	0321055350	・CLAMP	1				
1-2-7	0321055360	・CLAMP	1				
1-3	X **********	・BODY	1				
1-4	0411009000	・BOLT	4				
1-5	1134851020	・NUT	4				
2	0321053004	COVER	2				
3	0411008510	PLATE	1				
4	0411008700	PIN	2				
5	0411009300	COVER	1				
6	0321055006	COVER	2				
7	1100040816	BOLT	12				
8	1120530510	SCREW	2				
9	1140020005	WASHER, spring	2				
10	1140020008	WASHER, spring	12				
11	1141110008	WASHER	12				
12	1900087200	CYLINDER, spanner	1				
	B5a010						

silverhorn.co.uk

CRAWLER BELT

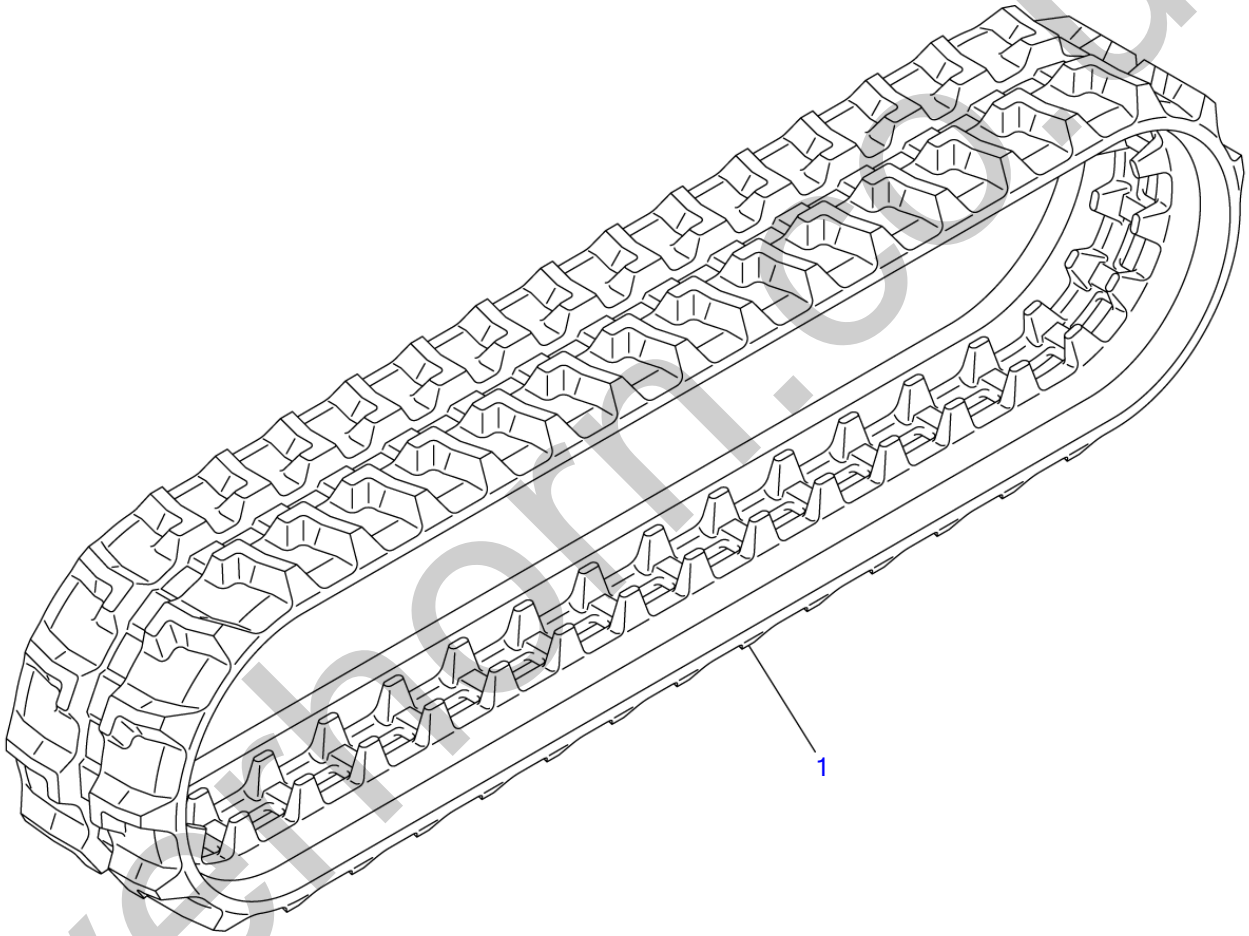

B5A020

S=1/6

silverthorn.co.uk

CRAWLER BELT

Item	Part number	Description	Q'ty	Chan.	Serial No.	Serv.	Remarks
1	**1914090300 B5a020**	BELT, rubber crawler	2				X19140-90300-0

silverhorn.co.uk

TRACK ROLLER

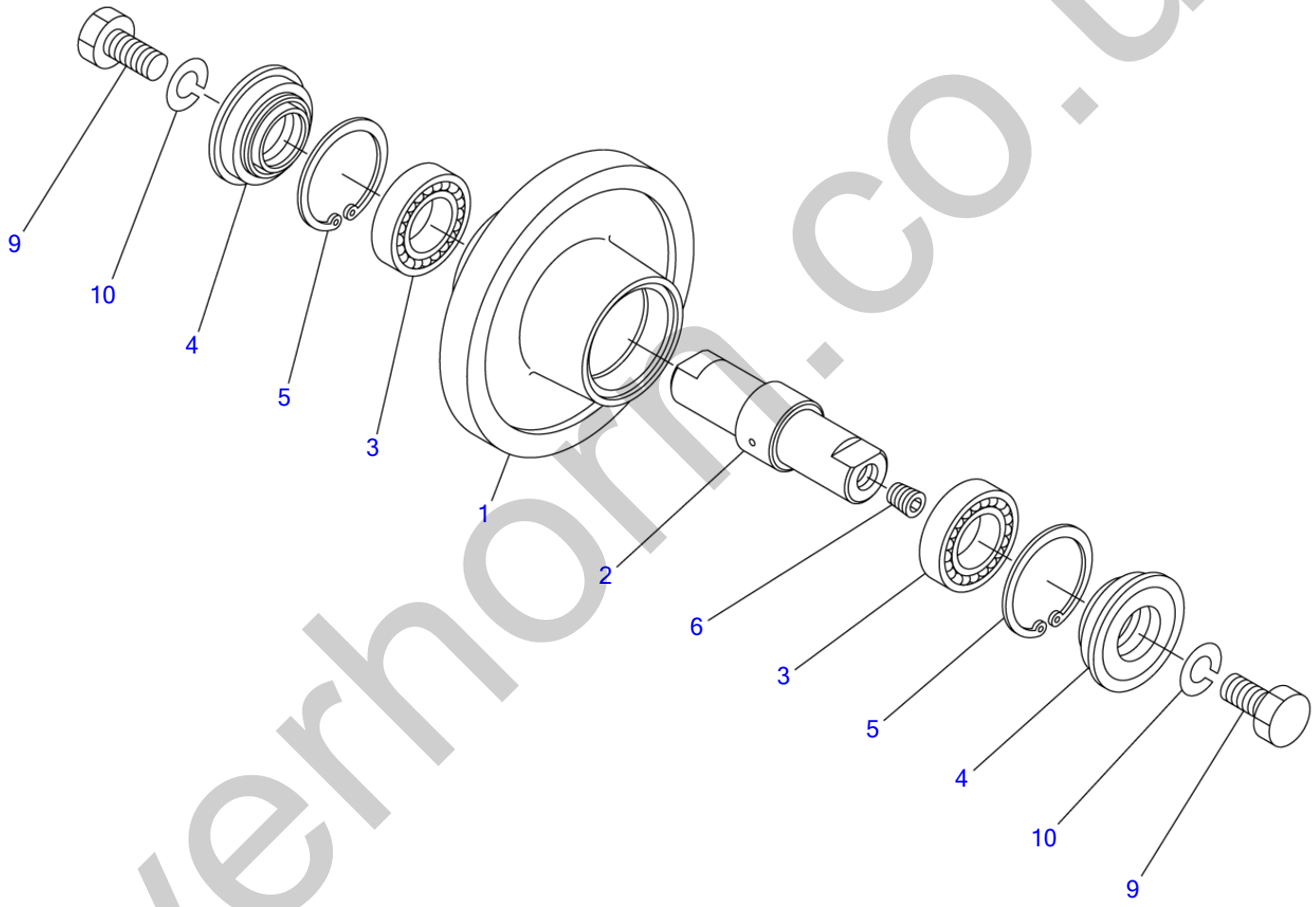

B5A030

S=1/3

silverhorn.co.uk

TRACK ROLLER

Item	Part number	Description	Q'ty	Chan.	Serial No.	Serv.	Remarks
		ROLLER ASSY, track					X04113-00000-3
0-1	0411300400	ROLLER ASSY	4				
1	0071300100	・ROLLER	1				
2	0411300200	・SHAFT	1				
3	1300006005	・BEARING	2				
4	1431202547	・SEAL	2				
5	1221000047	・RING, retaining	2				
6	1501810001	・PLUG	1				
9	1101051225	BOLT	8				
10	1140010012	WASHER, spring	8				
	B5a031						

silverhorn.co.uk

FRONT IDLER

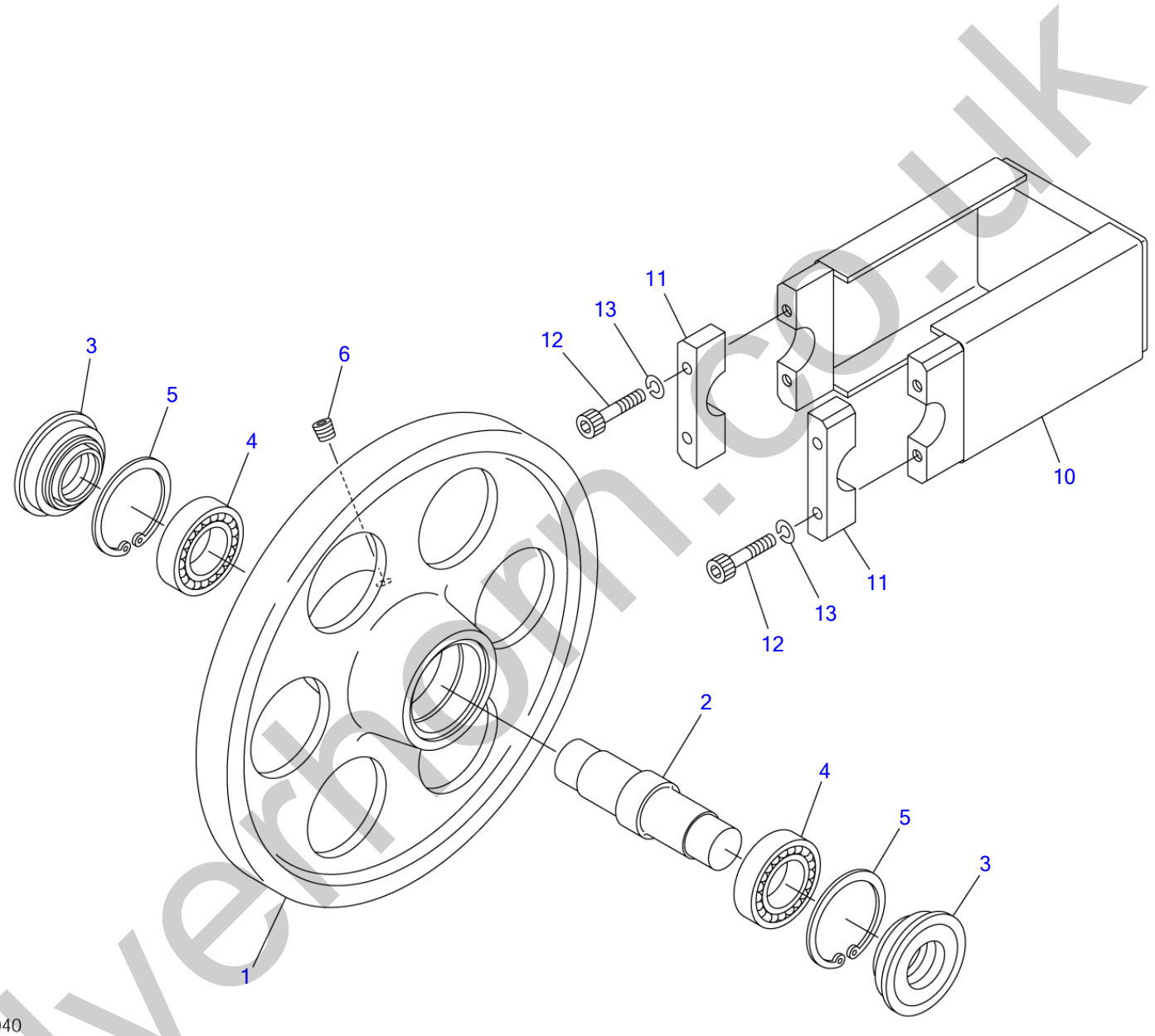

B5A040

S=1/3

silverhorn.co.uk

FRONT IDLER

Item	Part number	Description	Q'ty	Chan.	Serial No.	Serv.	Remarks
		IDLER ASSY, front					X04114-01000-3
0-1	0411401100	IDLER ASSY	2				
1	0411400100	・IDLER	1				
2	0411401200	・SHAFT	1				
3	1431202547	・SEAL	2				
4	1300006005	・BEARING	2				
5	1221000047	・RING, retaining	2				
6	1501810001	・PLUG	1				
10	0411401300	YOKE	2				
11	0411401400	CLAMP	4				
12	1110040635	SCREW, cap	8				
13	1140020006	WASHER, spring	8				
	B5a041						

silverhorn.co.uk

TRACK ADJUSTER

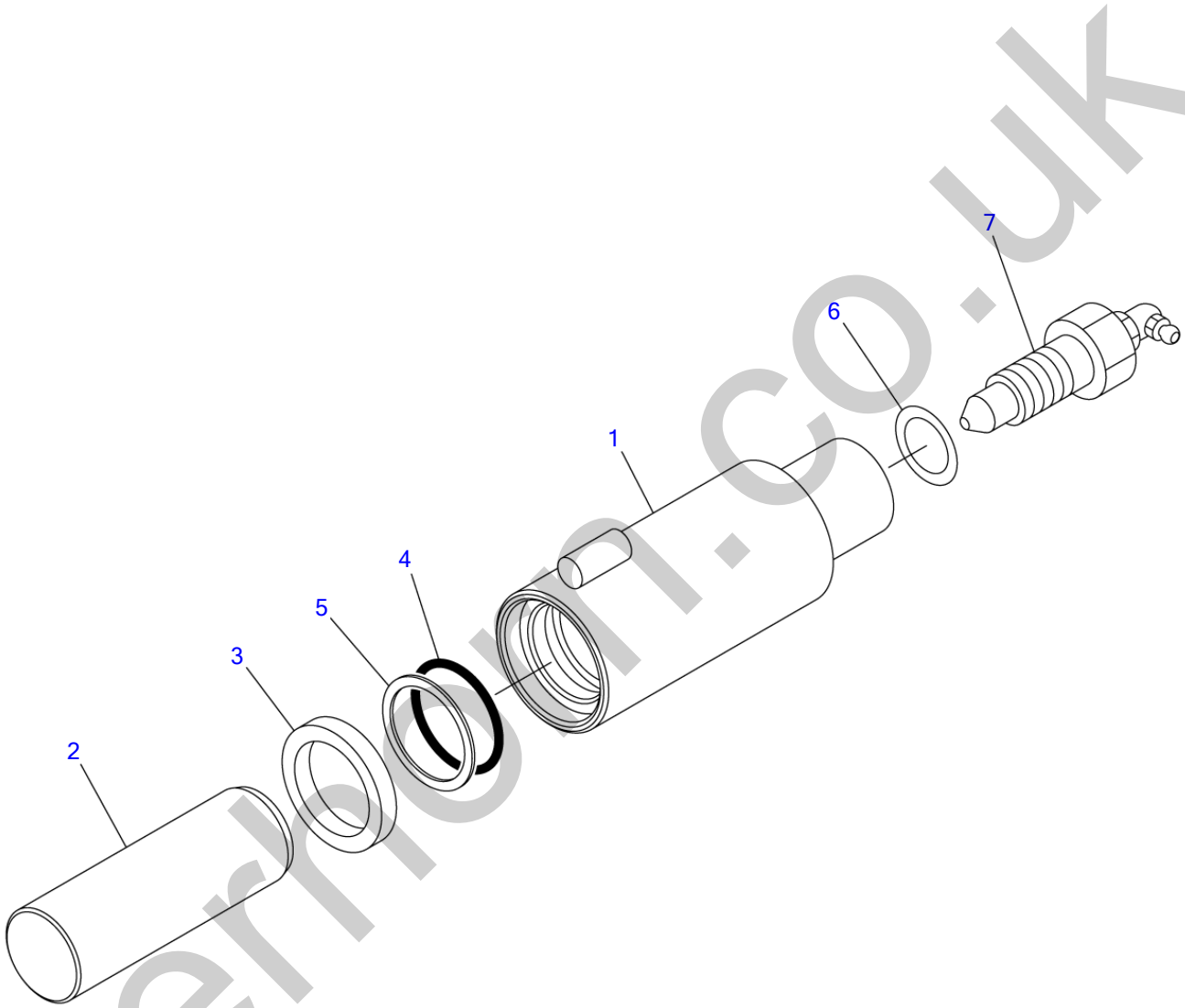

B5A050

S=1/2

silverhorn.co.uk

TRACK ADJUSTER

Item	Part number	Description	Q'ty	Chan.	Serial No.	Serv.	Remarks
0	**0321552000**	CYLINDER ASSY, grease	2				X03215-52000-0
1	**0321552100**	・CYLINDER, grease	1				
2	**0321551400**	・PISTON	1				
3	**1400401654**	・SEAL, oil	1				
4	**1422010300**	・O-RING	1				
5	**1421020300**	・RING, back-up	1				
6	**1541201616**	・WASHER	1				
7	**1541301602**	・VALVE ASSY, check	1				
	B5a050						

silverhorn.co.uk

TRAVEL DEVICE

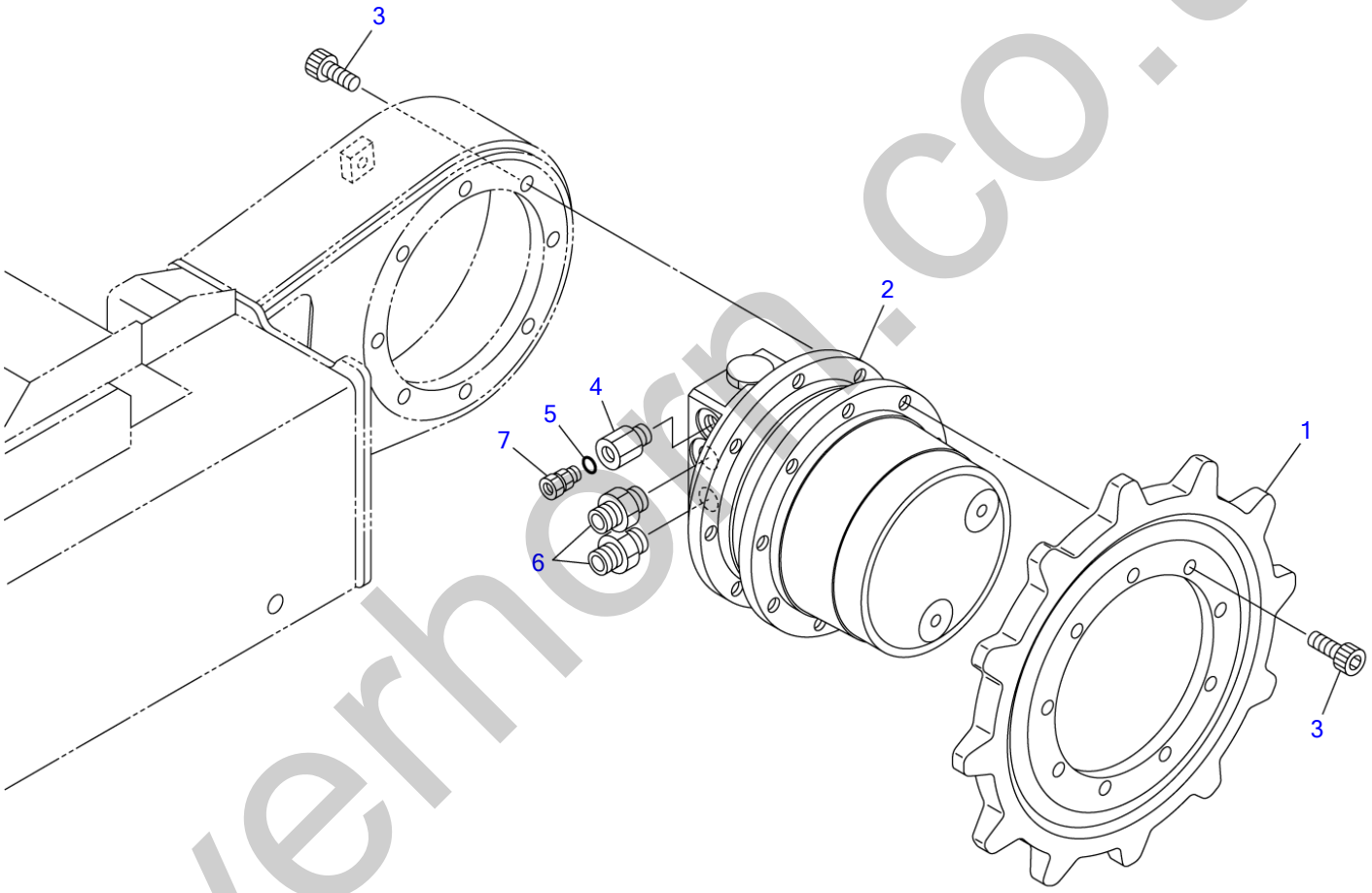

B5A061

S=1/4.5

silverhorn.co.uk

TRAVEL DEVICE

Item	Part number	Description	Q'ty	Chan.	Serial No.	Serv.	Remarks
		MOTOR ASSY, travel					X03216-13000-1
1	0411602100	SPROCKET	2				
2	1903122400	MOTOR, travel	2				
3	1110041022	SCREW, cap	34				
4	0007211014	BUSHING	2				
5	1420010110	O-RING	2				
6	1515600576	ADAPTOR	4				
	1420010140	・O-RING	1			M	
7	1532520601	CONNECTOR	2				
	B5a061						

silverhorn.co.uk

SLEW BEARING (10810004-10810188)

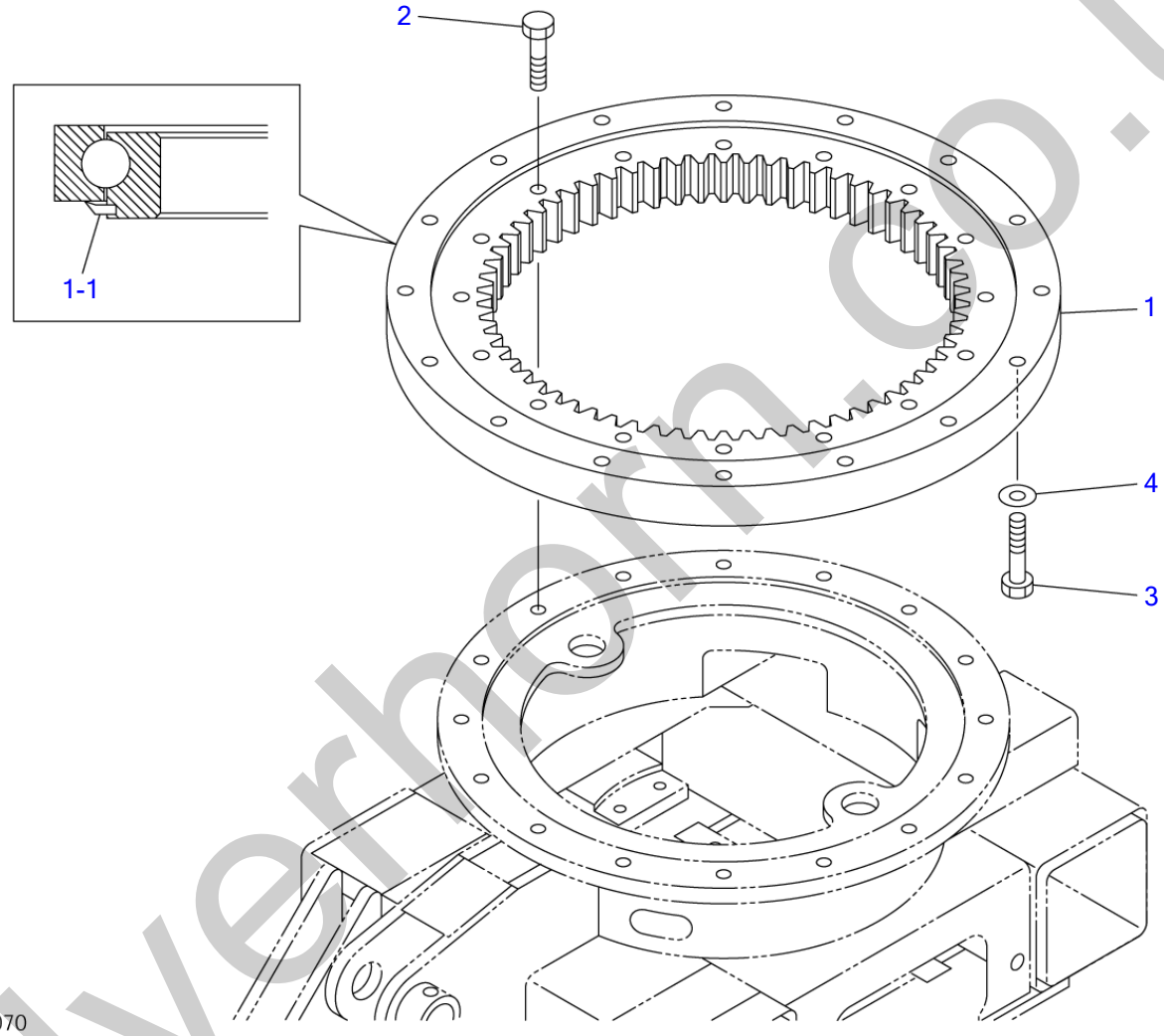

S=1/5

silverhorn.co.uk

SLEW BEARING (10810004-10810188)

Item	Part number	Description	Q'ty	Chan.	Serial No.	Serv.	Remarks
		BEARING ASSY, slew					X04120-00000-1
1	1913003450	BEARING	1				
1-1	1913003459	・SEAL	1				
2	1100051045	BOLT	16				
3	1100051050	BOLT	16				
4	1141540010	WASHER	16				
	B5a070						

silverhorn.co.uk

SLEW BEARING (10810189-)

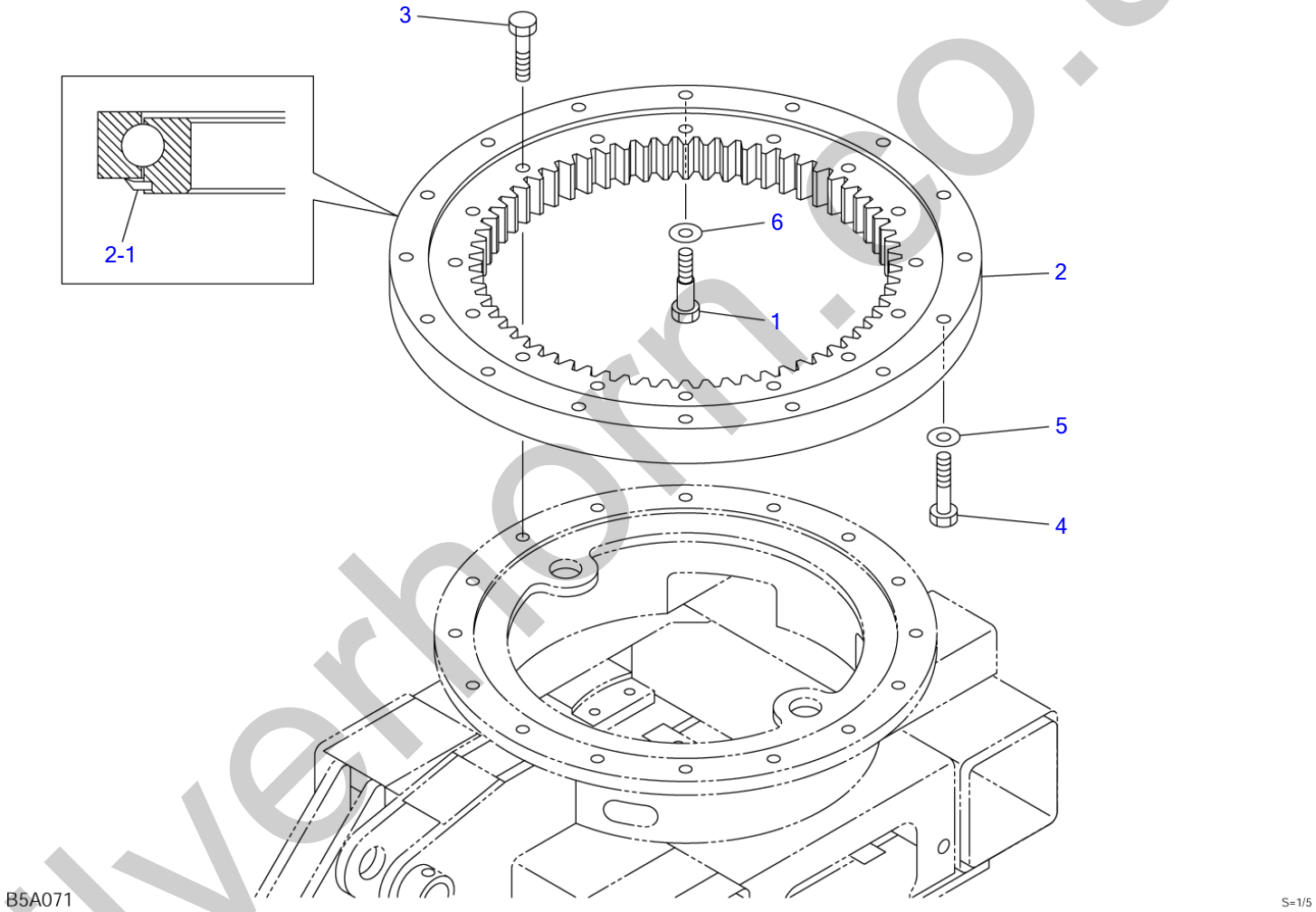

silverhorn.co.uk

SLEW BEARING (10810189-)

Item	Part number	Description	Q'ty	Chan.	Serial No.	Serv.	Remarks
		BEARING ASSY, slew					X03220-01000-2
1	0322001010	BOLT	1				
2	1913003450	BEARING	1				
2-1	1913003459	・SEAL	1				
3	1100051045	BOLT	16				
4	1100051050	BOLT	15				
5	1141540010	WASHER	15				
6	1141540012	WASHER	1				
	B5a072						

silverhorn.co.uk

SWIVEL JOINT & ACCESSORIES

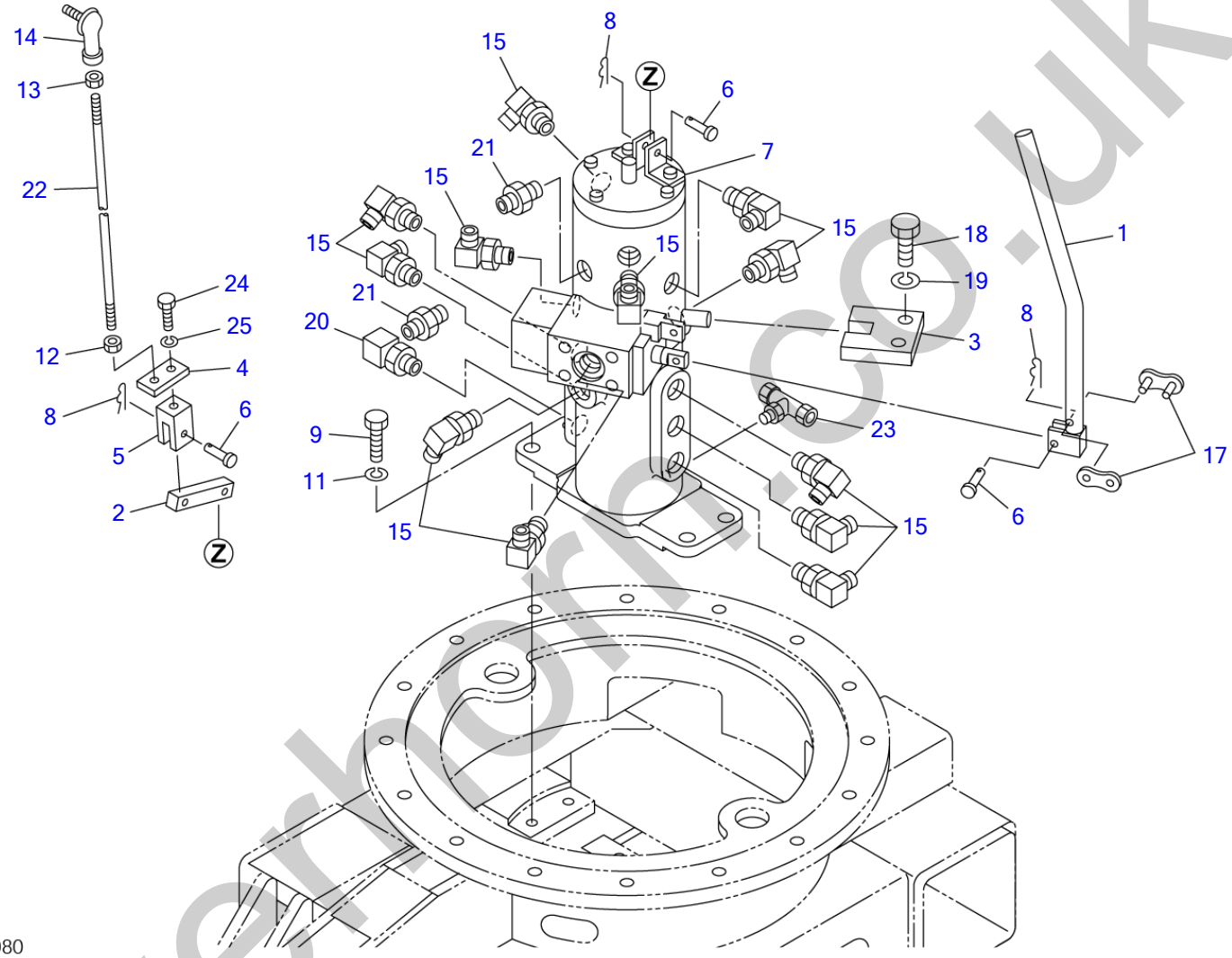

B5A080

S=1/5

silverhorn.co.uk

SWIVEL JOINT & ACCESSORIES

Item	Part number	Description	Q'ty	Chan.	Serial No.	Serv.	Remarks
		JOINT ASSY, swivel					X03221-53000-1
1	0412102100	LEVER	1				
2	0322151100	LEVER	1				
3	0412100100	COLLAR	1				
4	0322151200	PLATE	1				
5	0005505024	YOKE	1				
6	0004005117	PIN	3				
7	1904006800	JOINT, swivel	1				
8	1214000005	PIN, snap	3				
9	1100040820	BOLT	4				
11	1140020008	WASHER, spring	4				
12	1130040006	NUT	1				
13	1131540006	NUT	1				
14	1340000065	END, rod	1				
15	1515012040	ELBOW	12				
	1420010110	・O-RING	1			M	
17	1620050000	LINK ASSY	1				
18	1100041025	BOLT	2				
19	1140020010	WASHER, spring	2				
20	1513300014	ELBOW	1				
	1420010110	・O-RING	1			M	
21	1515600200	ADAPTOR	2				
	1420010110	・O-RING	1			M	
22	0005006260	ROD	1				
23	1532720601	TEE	1				
24	1100040616	BOLT	1				
25	1140020006	WASHER, spring	1				
	B5a081						

silverhorn.co.uk

DOZER BLADE

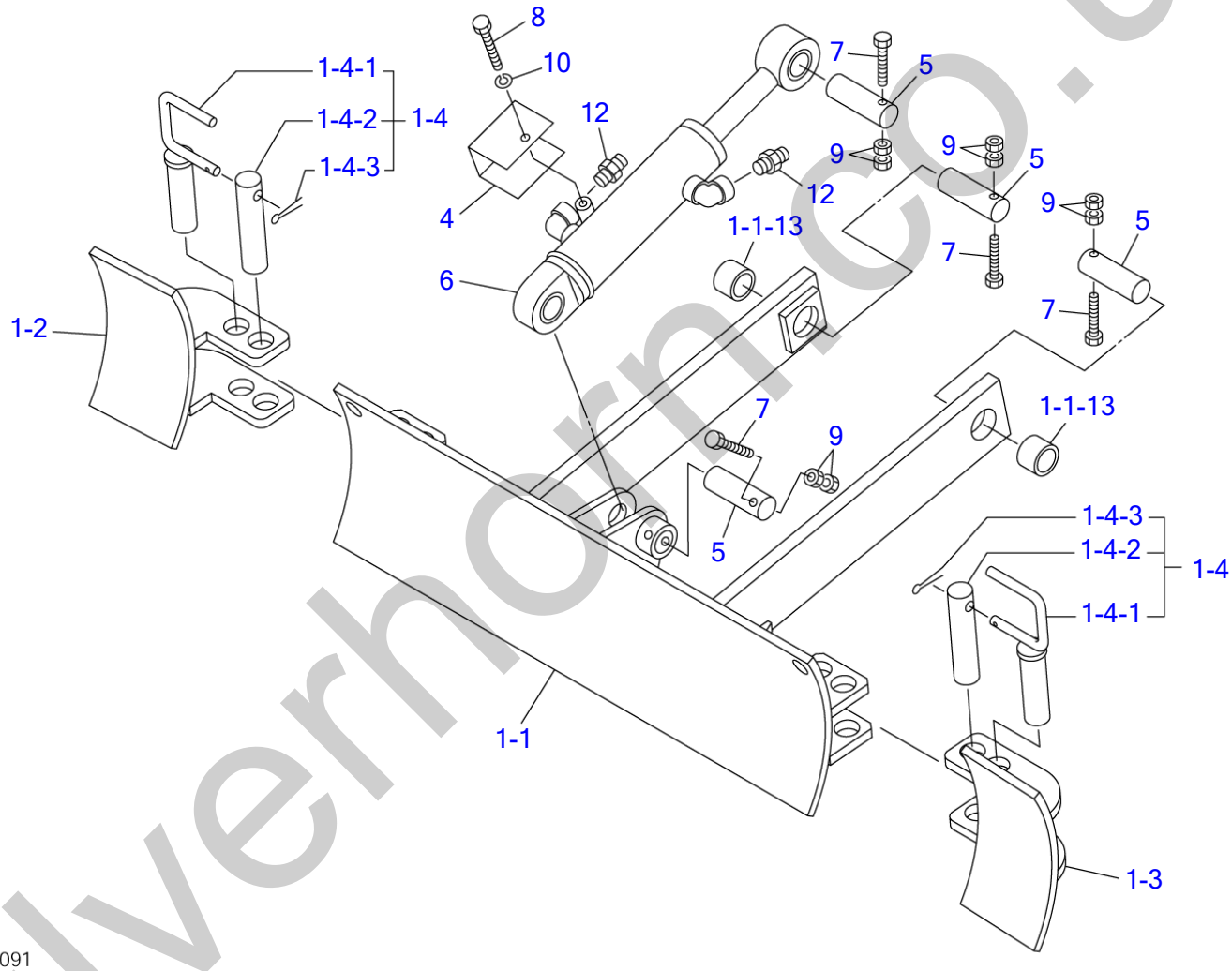

silverhorn.co.uk

DOZER BLADE

Item	Part number	Description	Q'ty	Chan.	Serial No.	Serv.	Remarks
		BLADE ASSY, dozer				M	X03263-53000-3
1	X **********	BLADE, dozer	1				
1-1	0326353200	・BLADE, dozer	1				
1-1-13	0416304220	・・BUSHING	2				
1-2	0326353150	・PLATE (R.H.)	1				
1-3	0326353160	・PLATE (L.H.)	1				
1-4	0326353300	・PIN ASSY	2				
1-4-1	0326353310	・・PIN	1				
1-4-2	0326353320	・・PIN	1				
1-4-3	1210013220	・・PIN, split	1				
4	0426300400	COVER	1				
5	0001502501	PIN	4				
6	1900087100	CYLINDER, dozer blade	1				
7	1103040855	BOLT	4				
8	1100040860	BOLT	1				
9	1130240008	NUT	8				
10	1140020008	WASHER, spring	1				
12	1515600200	ADAPTOR	2				
	1420010110	・O-RING	1			M	
	B5a092						

silverhorn.co.uk

PIPING; LOWER

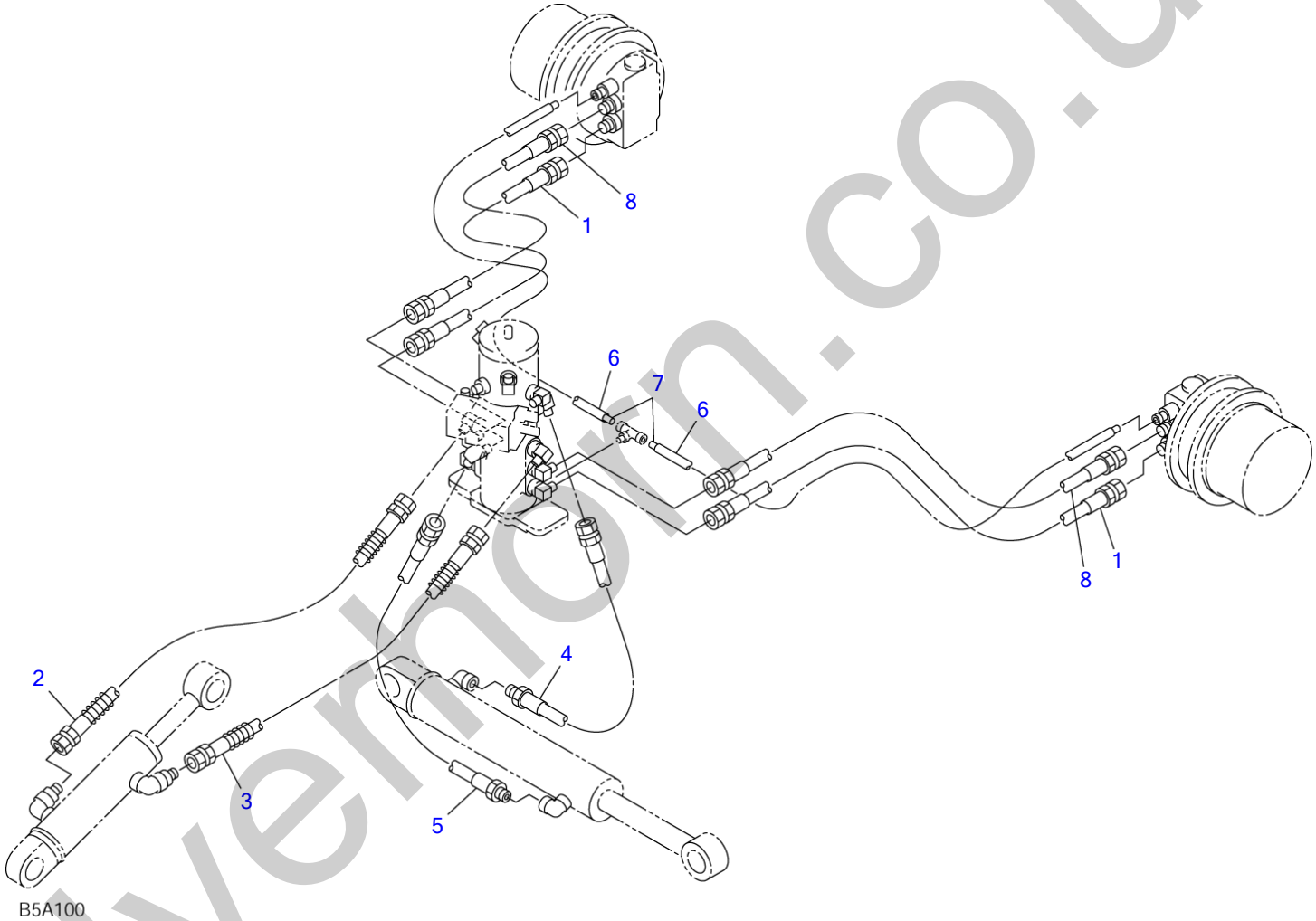

S=1/9

silvermorn.co.uk

PIPING; LOWER

Item	Part number	Description	Q'ty	Chan.	Serial No.	Serv.	Remarks
		PIPING ASSY, lower					X03272-02000-1
1	**1801660060**	HOSE ASSY	2				
2	**0327202050**	HOSE ASSY	1				18015-60062
3	**0327200060**	HOSE ASSY	1				18015-60050
4	**0327200070**	HOSE ASSY	1				18015-62030
5	**0327200080**	HOSE ASSY	1				18015-62038
6	**1531010053**	PROTECTOR	2				sold by the meter
7	**1532020657**	TUBE	2				sold by the meter
8	**0327202080**	HOSE ASSY	2				18016-60060
	B5a100						

silverhorn.co.uk

SLEWING DEVICE

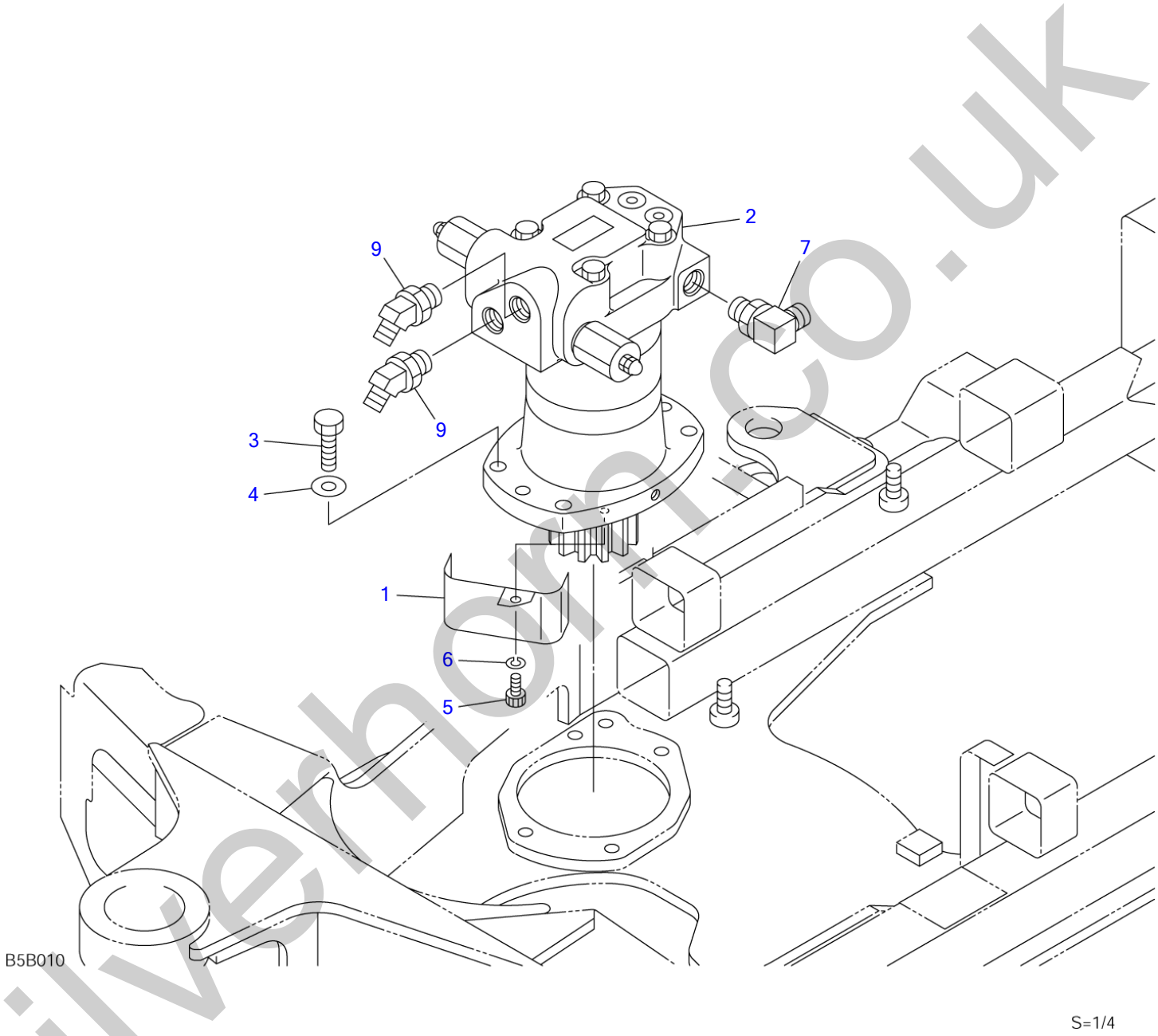

silverhorn.co.uk

SLEWING DEVICE

Item	Part number	Description	Q'ty	Chan.	Serial No.	Serv.	Remarks
		DEVICE ASSY, slewing					X03223-23000-1
1	0322323100	COVER	1				
2	1903122300	MOTOR, slew	1				
3	1100041035	BOLT	4				
4	1141550010	WASHER	4				
5	1110040610	SCREW, cap	1				
6	1140420006	WASHER, spring	1				
7	1515010041	ELBOW	1				
	1420010140	・O-RING	1			M	
9	1515100046	ELBOW	2				
	1420010140	・O-RING	1			M	
	B5b010						

silverhorn.co.uk

TURNTABLE

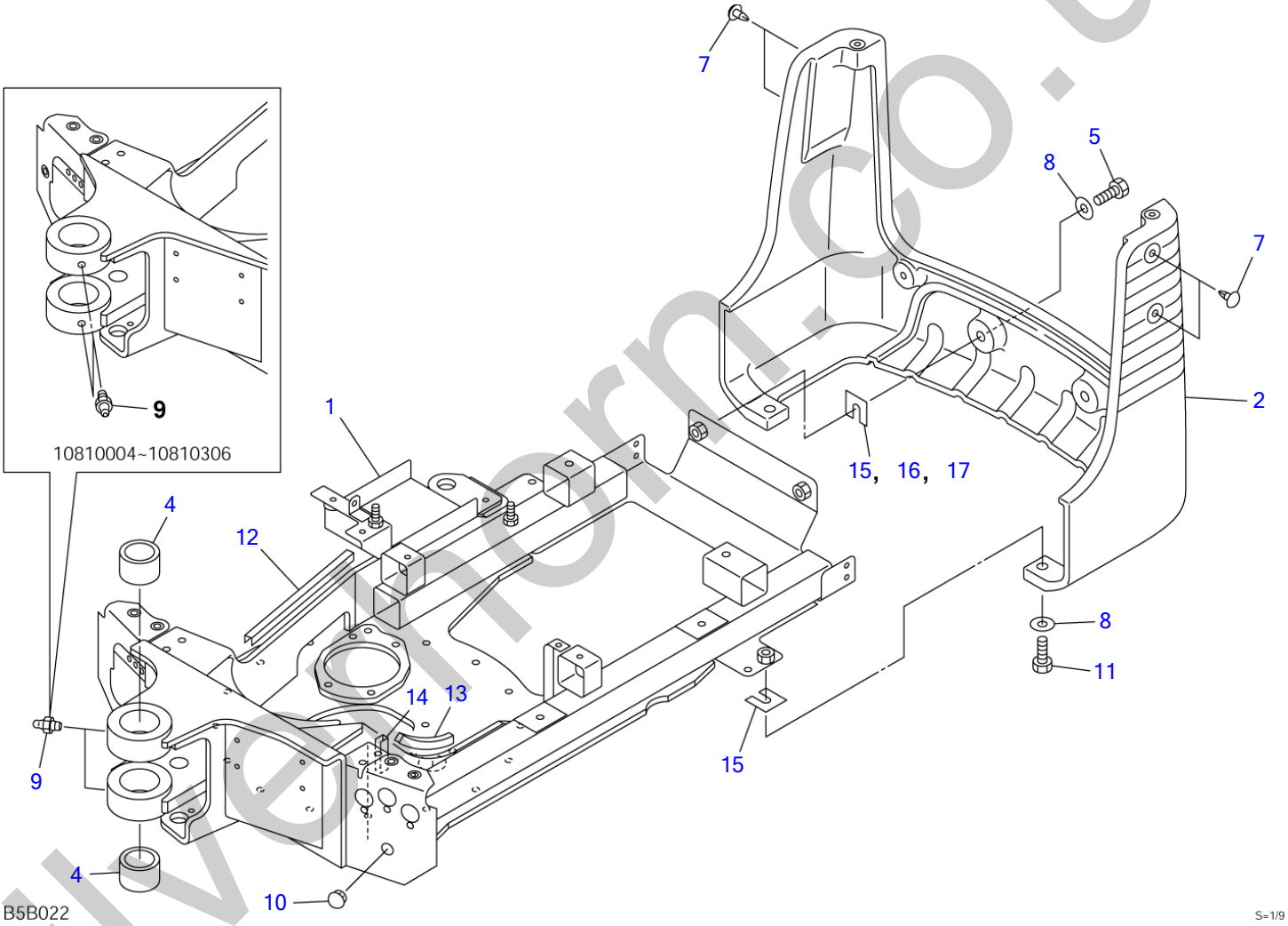

silverthorn.co.uk

TURNTABLE

Item	Part number	Description	Q'ty	Chan.	Serial No.	Serv.	Remarks
		TURNTABLE ASSY					X03230-60500-1
1	X **********	TURNTABLE	1				
2	0323057300	COUNTERWEIGHT	1		10810004~10810306		
	0323057600	COUNTERWEIGHT	1		10810307~		
4	0002400063	BUSHING	2				
5	1101041235	BOLT	2				
7	1654005000	CAP	4	(L)	10810004~10810306		
	1652533017	CAP	4	(H)	10810307~		
8	1141550012	WASHER	4				
9	1560001000	FITTING, grease	2				
10	1652533023	CAP	1				
11	1101041240	BOLT	2				
12	1654624030	TRIM	1				sold by the meter
13	1654624010	TRIM	1				sold by the meter
14	1654601006	TRIM	1				sold by the meter
15	0323054001	SPACER	AR				t=1.0
16	0323054002	SPACER	AR				t=2.3
17	0323054003	SPACER	AR				t=3.2
	B5b023						

silverhorn.co.uk

BOOM SWING (10810004-10810306)

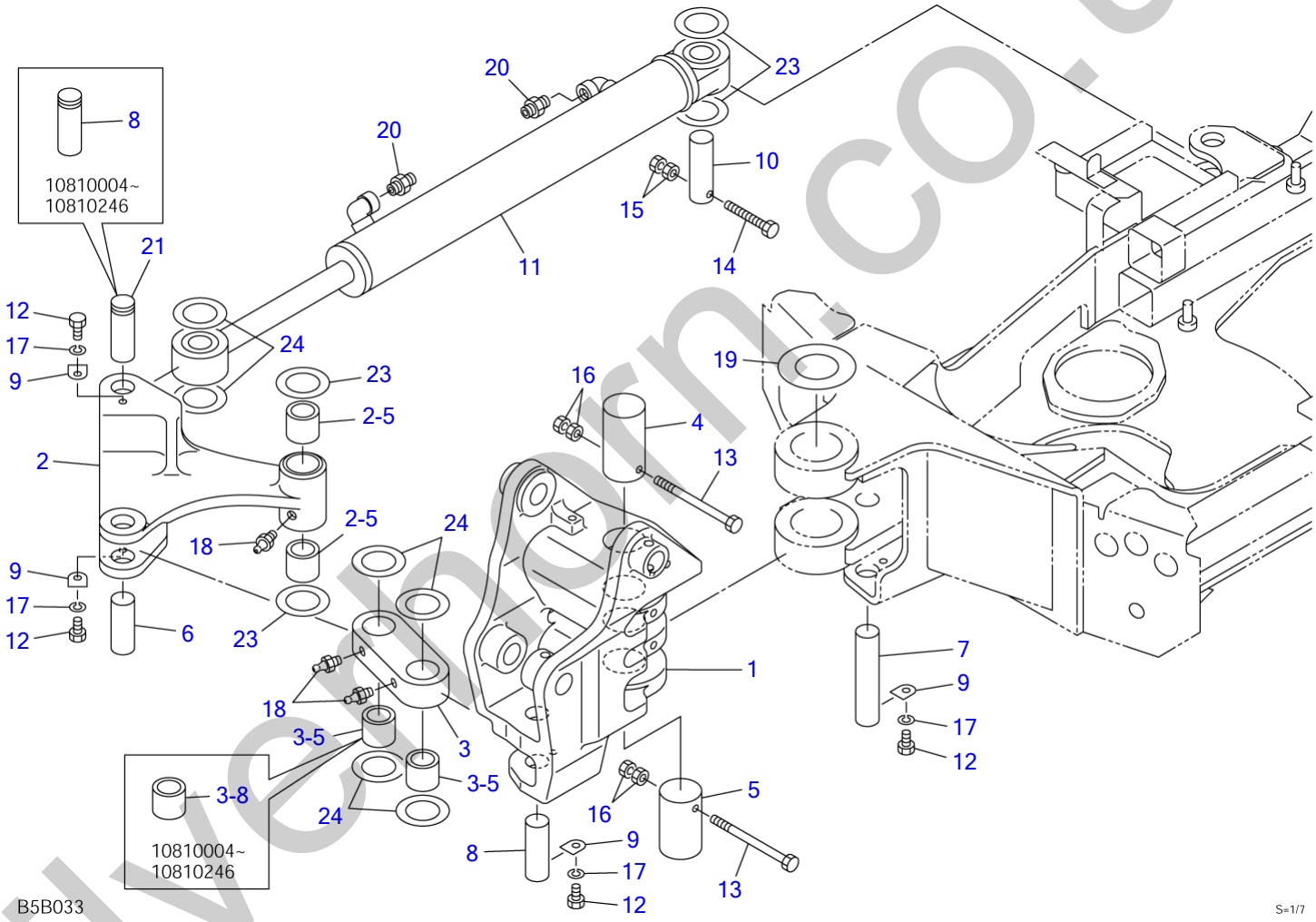

silvermorn.co.uk

BOOM SWING (10810004-10810306)

Item	Part number	Description	Q'ty	Chan.	Serial No.	Serv.	Remarks
		SWING ASSY, boom					X03231-57000-0
1	0323154402	BRACKET	1				
	0323158400	BRACKET	1				
2	0323154700	ARM, link	1		10810004~10810246		
	0323154800	ARM, link	1		10810247~		
2-5	0002200015	・BUSHING	2		10810004~10810246		
	0002400024	・BUSHING	2		10810247~		
3	0413102300	LINK	1		10810004~10810246		
	0323157300	LINK	1		10810247~		
3-8	0002200015	・BUSHING	2		10810004~10810246		
3-5	0002200020	・BUSHING	2		10810247~		
4	0011514013	PIN	1		10810004~10810156		
	0011514015	PIN	1		10810157~		
5	0011514014	PIN	1				
6	0001900156	PIN	1		10810004~10810246		
	0001900160	PIN	1		10810247~		
7	0001900158	PIN	1				
8	0001900155	PIN	2		10810004~10810246		
	0001900161	PIN	1		10810247~		
9	0413102500	WASHER	4				
10	0001502501	PIN	1				
11	1900087600	CYLINDER, swing	1		10810004~10810246		
	1900088900	CYLINDER, swing	1		10810247~		
12	1100040812	BOLT	4				
13	1100140805	BOLT	2				
14	1103040855	BOLT	1				
15	1130240008	NUT	2				
16	1130040008	NUT	4				
17	1140020008	WASHER, spring	4				
18	1560001000	FITTING, grease	3				
19	0423104400	WASHER	1		10810004~10810156		
	0323156100	WASHER	1		10810157~		
20	1515600200	ADAPTOR	2				
	1420010110	・O-RING	1			M	
21	0001900162	PIN	1		10810247~		
23	0003600049	SHIM	AR				t=0.2
	0003600050	SHIM	AR				t=0.5
	0003102610	SHIM	AR				t=1.0
	0003102616	SHIM	AR				t=1.6
24	0003600044	SHIM	AR				t=0.2
	0003600045	SHIM	AR				t=0.5
	0426109800	SHIM	AR				t=1.0
		<<NOTE>> Item 1, 4, 19 and Item 5 (page boom) have interchangeability in a SET.					
	B5b033						

silvernorn.co.uk

BOOM SWING (10810307-10811020)

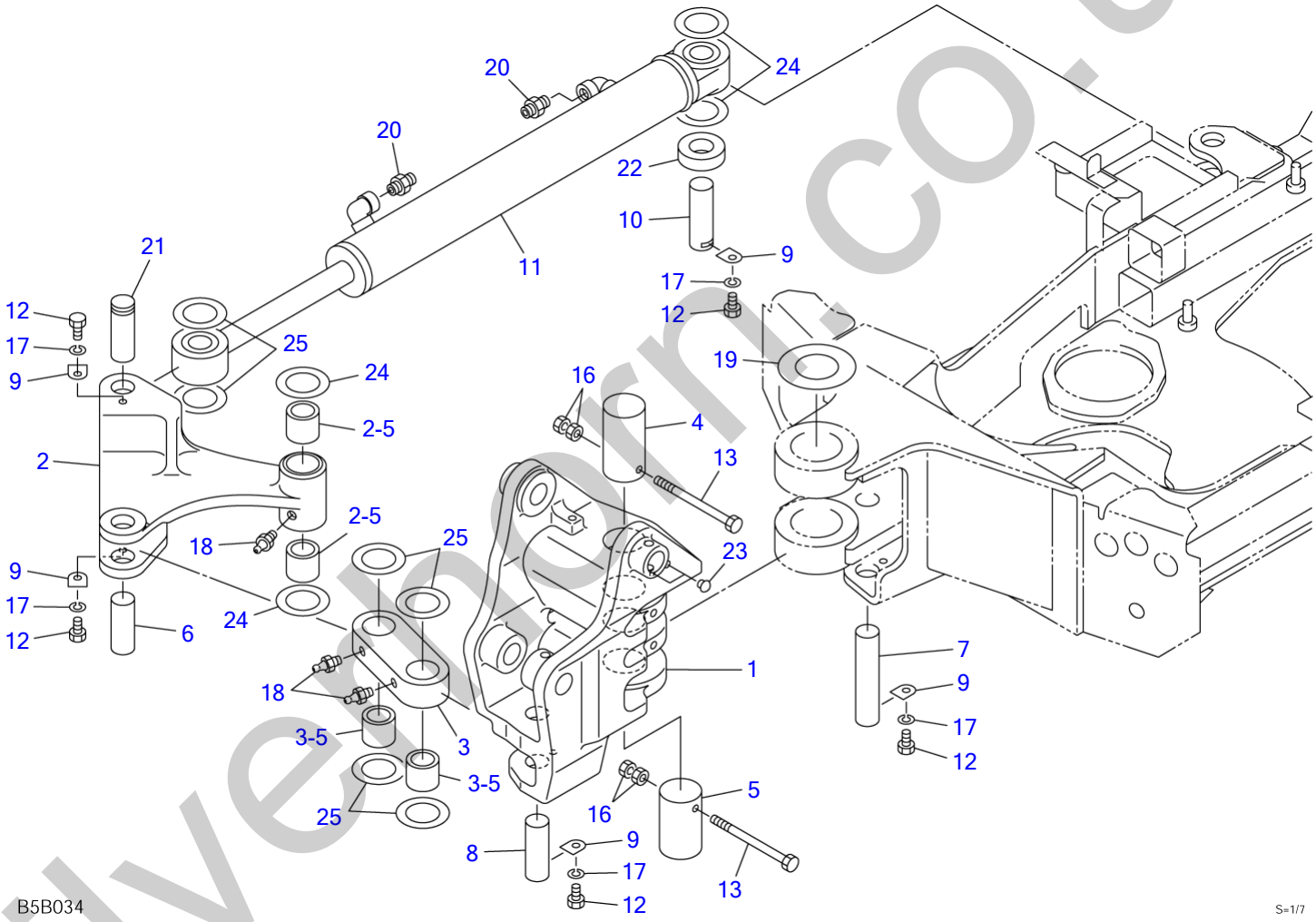

silvermorn.co.uk

BOOM SWING (10810307-10811020)

Item	Part number	Description	Q'ty	Chan.	Serial No.	Serv.	Remarks
		SWING ASSY, boom					X03231-58000-2
1	0323154400	BRACKET	1				
2	0323154800	ARM, link	1				
2-5	0002400024	・BUSHING	2				
3	0323157300	LINK	1				
3-5	0002200020	・BUSHING	2				
4	0011514015	PIN	1				
5	0011514014	PIN	1				
6	0001900160	PIN	1				
7	0001900158	PIN	1				
8	0001900161	PIN	1				
9	0413102500	WASHER	5				
10	0001900159	PIN	1				
11	1900088900	CYLINDER, swing	1				
12	1100040812	BOLT	5				
13	1100140805	BOLT	2				
16	1130040008	NUT	4				
17	1140020008	WASHER, spring	5				
18	1560001000	FITTING, grease	3				
19	0323156100	WASHER	1				
20	1515600200	ADAPTOR	2				
	1420010110	・O-RING	1			M	
21	0001900162	PIN	1				
22	0323154100	WASHER	1				
23	1652533016	CAP	2				
24	0003600049	SHIM	AR				t=0.2
	0003600050	SHIM	AR				t=0.5
	0003102610	SHIM	AR				t=1.0
	0003102616	SHIM	AR				t=1.6
25	0003600044	SHIM	AR				t=0.2
	0003600045	SHIM	AR				t=0.5
	0426109800	SHIM	AR				t=1.0
	B5b034						

silverhorn.co.uk

BOOM SWING (10811021-)

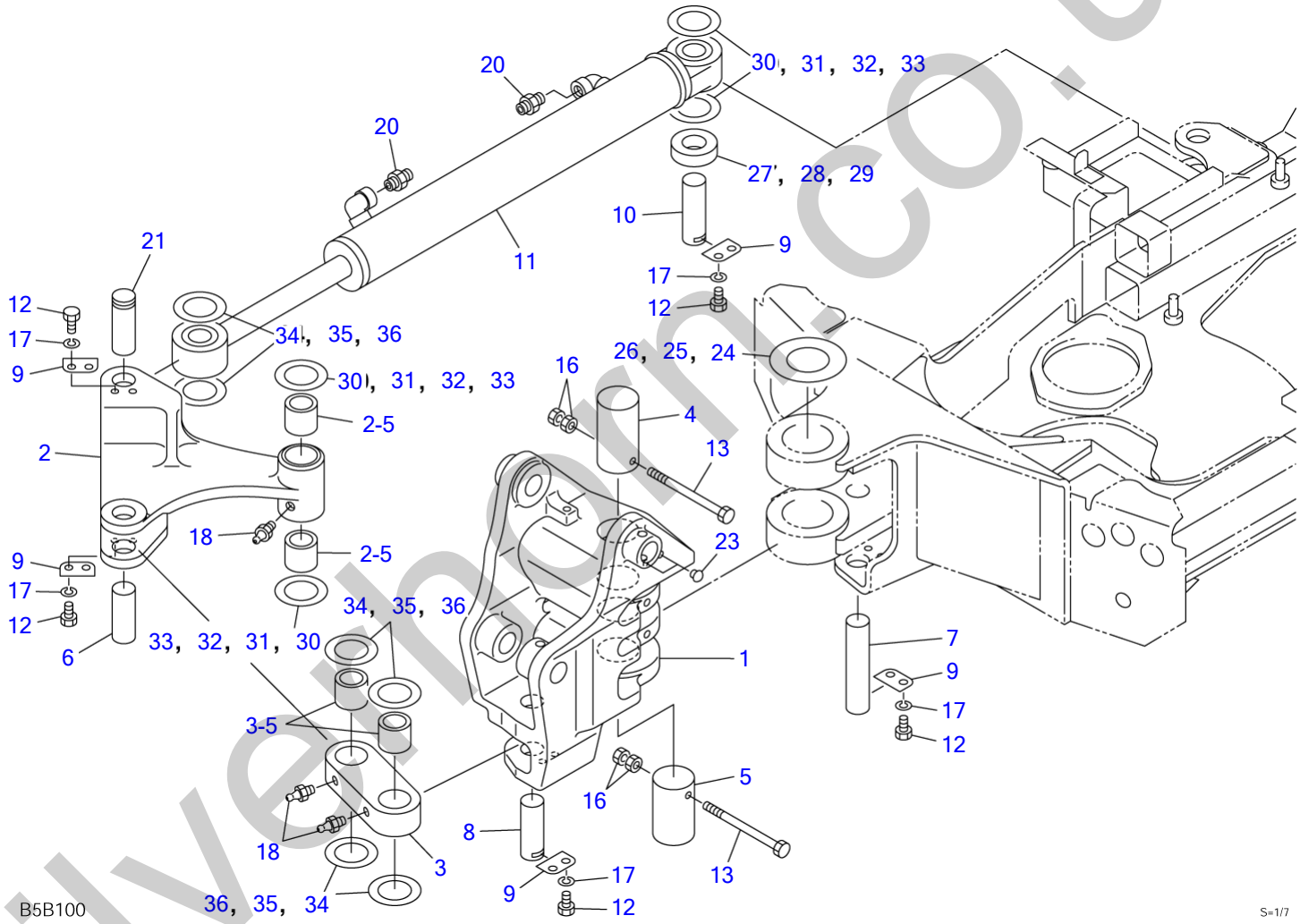

silverthorn.co.uk

BOOM SWING (10811021-)

Item	Part number	Description	Q'ty	Chan.	Serial No.	Serv.	Remarks
		SWING ASSY, boom					X03231-58200-1
1	0323158400	BRACKET	1				
2	0323158800	ARM, link	1				
2-5	0002400024	・BUSHING	2				
3	0323157300	LINK	1				
3-5	0002200020	・BUSHING	2				
4	0011514015	PIN	1				
5	0011514014	PIN	1				
6	0001900163	PIN	1				
7	0001900164	PIN	1				
8	0001900165	PIN	1				
9	0323158210	WASHER	5				
10	0001900166	PIN	1				
11	1900088900	CYLINDER, swing	1				
12	1100040814	BOLT	5				
13	1100140805	BOLT	2				
16	1130040008	NUT	4				
17	1140020008	WASHER, spring	5				
18	1560001000	FITTING, grease	3				
20	1515600200	ADAPTOR	2				
	1420010110	・O-RING	1			M	
21	0001900167	PIN	1				
23	1652533016	CAP	2				
24	0323156101	WASHER	AR				t=2.3
25	0323156102	WASHER	AR				t=2.8
26	0323156103	WASHER	AR				t=3.2
27	0323154101	WASHER	1				t=14.5
28	0323154102	WASHER	1				t=15.0
29	0323154103	WASHER	1				t=15.5
30	0003600049	SHIM	AR				t=0.2
31	0003600050	SHIM	AR				t=0.5
32	0003102610	SHIM	AR				t=1.0
33	0003102616	SHIM	AR				t=1.6
34	0003600044	SHIM	AR				t=0.2
35	0003600045	SHIM	AR				t=0.5
36	0426109800	SHIM	AR				t=1.0
	B5b101						

silverhorn.co.uk

SLEW LOCK

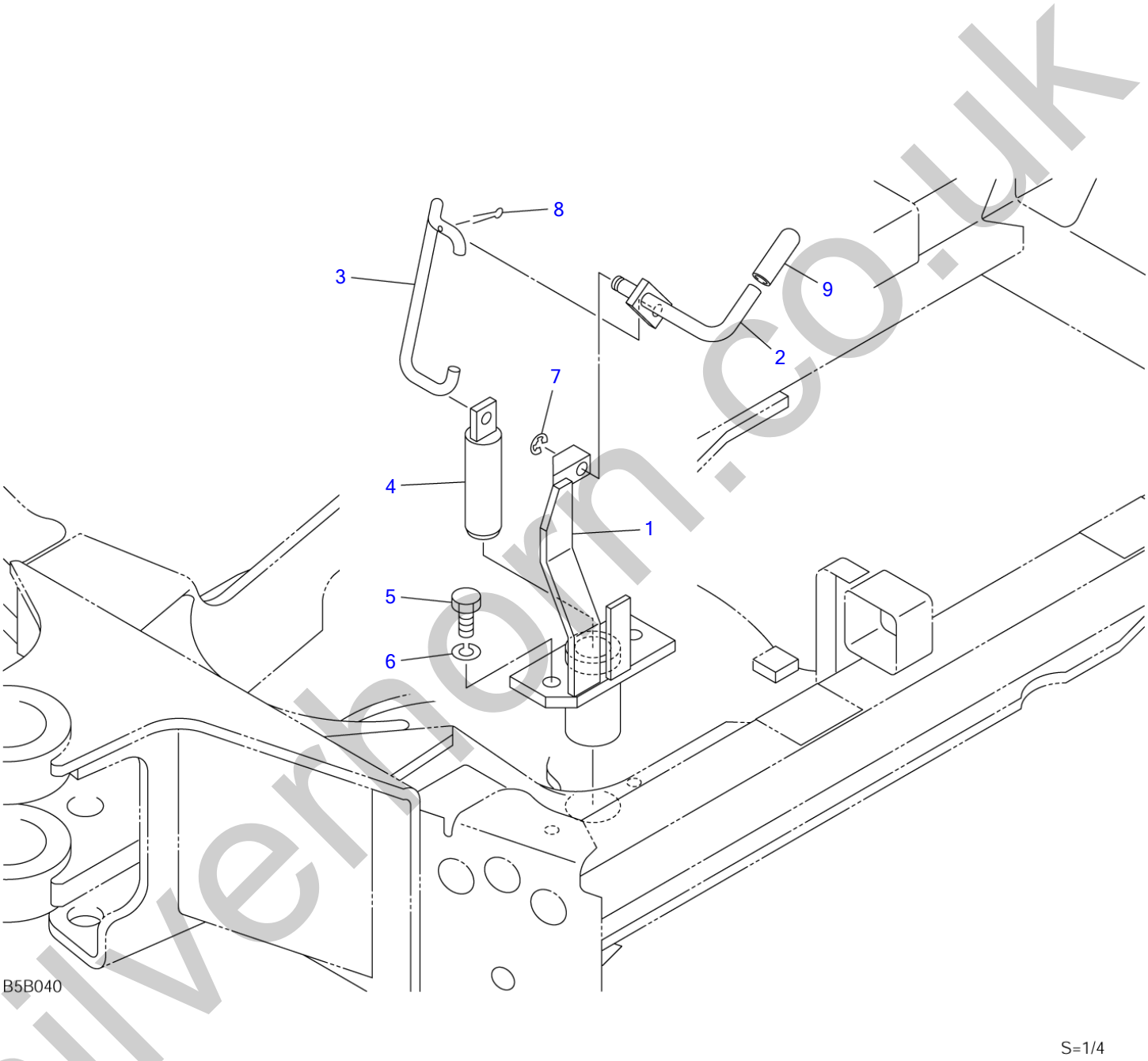

silvernorm.co.uk

SLEW LOCK

Item	Part number	Description	Q'ty	Chan.	Serial No.	Serv.	Remarks
		PIN ASSY, slew lock					X03222-15000-4
1	**0322215100**	BOSS	1		10810004~10810306		
	0322215300	BOSS	1		10810307~10810414		
	0322215510	BOSS	1	(H)	10810415~10810486		
	0322215100	BOSS	1		10810487~		
2	**0322215200**	ROD	1				
3	**0412203300**	ROD	1				
4	**0412203400**	PIN	1				
5	**1100041020**	BOLT	2				
6	**1140020010**	WASHER, spring	2				
7	**1224010008**	RING, retaining	1				
8	**1210012516**	PIN, split	1				
9	**0543208900**	GRIP	1				
	B5b042						

silverhorn.co.uk

TRAVEL LEVER (10810004-10810306)

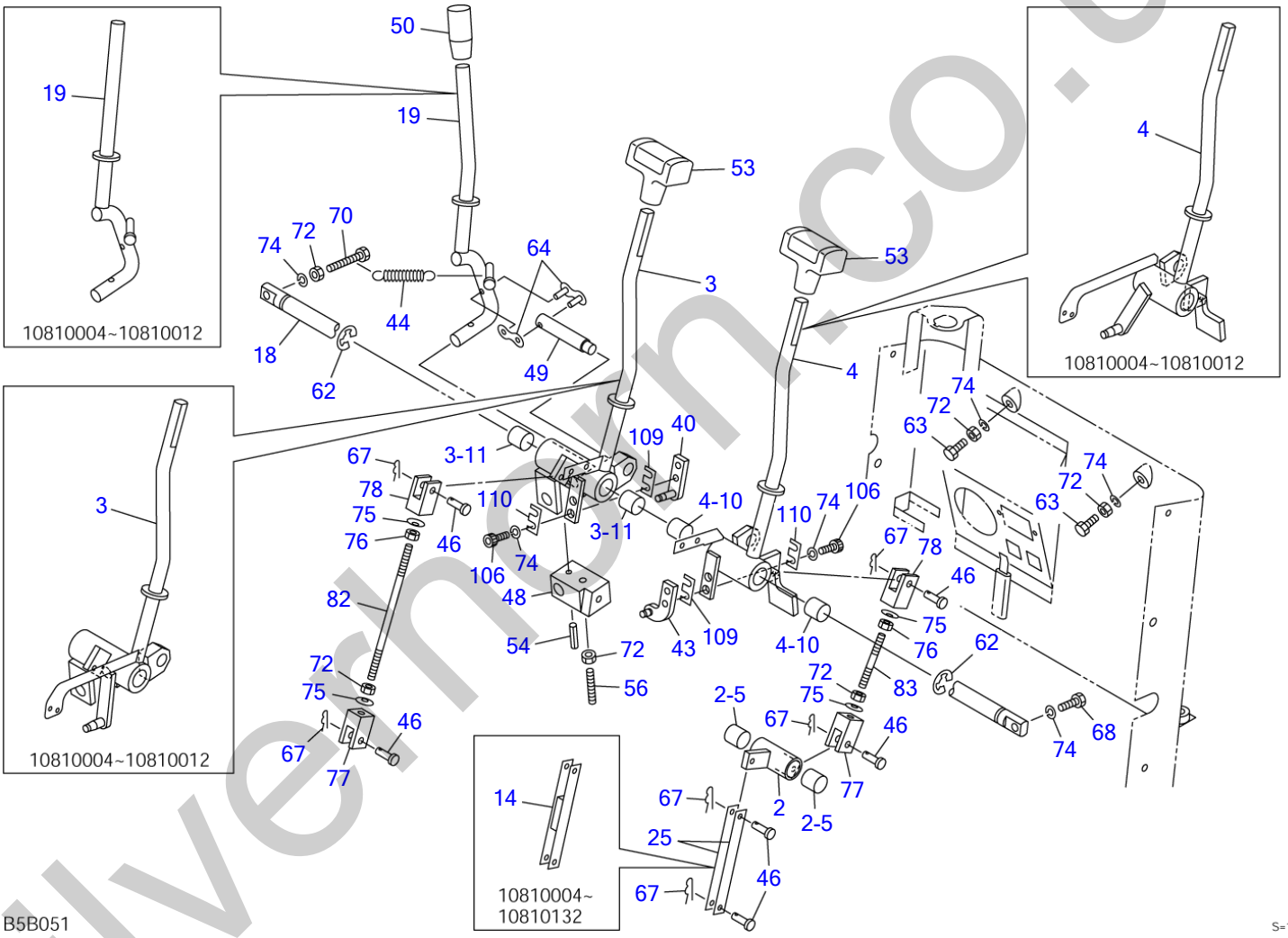

silverhorn.co.uk

TRAVEL LEVER (10810004-10810306)

Item	Part number	Description	Q'ty	Chan.	Serial No.	Serv.	Remarks
		LEVER ASSY, control (ISO-JCB pattern)					X03232-64000-7
		LEVER ASSY, control (A-B pattern)					X03232-65000-7
2	0323264200	LEVER	1				
2-5	1333001515	・BUSHING	2				
3	0323264300	LEVER	1		10810004~10810012		
	0323266300	LEVER	1		10810013~10810047		
	0323267300	LEVER	1		10810048~		
3-11	1333001515	・BUSHING	2				
4	0323264400	LEVER	1		10810004~10810012		
	0323266400	LEVER	1		10810013~10810047		
	0323267400	LEVER	1		10810048~		
4-10	1333001515	・BUSHING	2				
14	0323262930	YOKE	1		10810004~10810132		
18	0323264780	SHAFT	1				
19	0323264790	LEVER	1		10810004~10810012		
	0323266790	LEVER	1	(H)	10810013~		
25	0323262850	PLATE	2		10810133~		
40	0323264360	BRACKET	1		10810013~		
43	0323264460	BRACKET	1		10810013~		
44	0323255900	SPRING	1				
46	0004004815	PIN	6				
48	0323251600	LEVER	1		10810004~10810012		
	0323264020	LEVER	1		10810013~		
49	0323251700	SHAFT	1				
50	1650132050	GRIP	1				
53	1650200520	GRIP	2				
54	1213000520	PIN, spring	1				
56	1121050640	SET-SCREW	1				
62	1224010012	RING, retaining	2				
63	1100040612	BOLT	2				
64	1620050000	LINK	1				
67	1214000005	PIN, snap	6				
68	1100040616	BOLT	1				
70	1100040640	BOLT	1				
72	1130040006	NUT	6				
74	1140020006	WASHER, spring	8				
75	1225000006	WASHER	4				
76	1131540006	NUT	2				
77	0005500010	YOKE	2				
78	0005600004	YOKE	2				
82	0005006130	ROD	1				
83	0005006050	ROD	1				
106	1110040616	SCREW, cap	4		10810013~		
109	0323264370	SHIM	AR		10810013~		t=0.2mm
	0323264371	SHIM	AR		10810013~		t=0.5mm
	0323264372	SHIM	AR		10810013~		t=1.0mm
	0323264373	SHIM	AR		10810013~		t=1.5mm
	0323264374	SHIM	AR		10810013~		t=2.5mm
110	0323264373	SHIM	AR		10810013~		t=1.5mm
	B5b052						

silverthorn.co.uk

OPERATION LEVER (10810004-10810306)

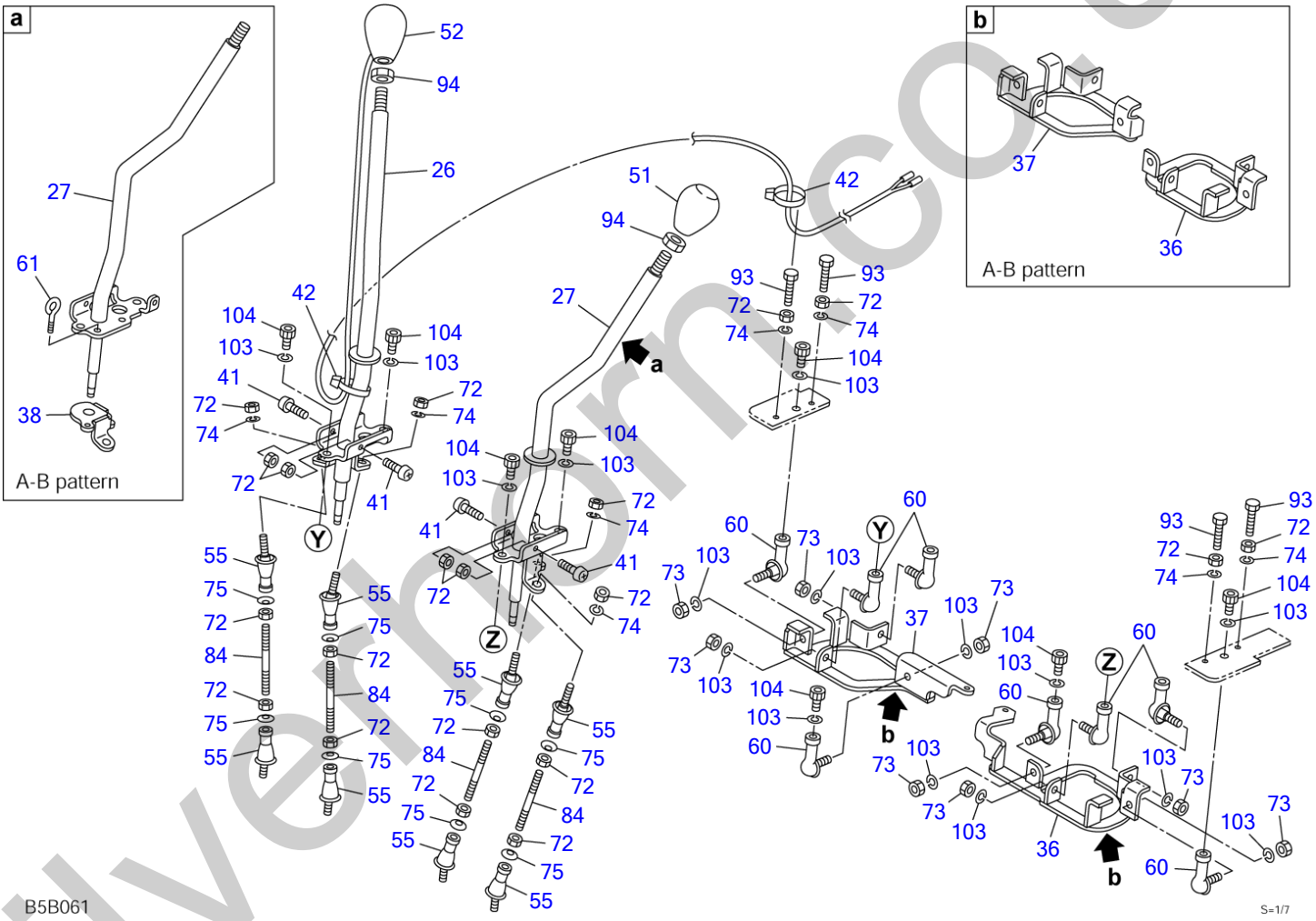

silverhorn.co.uk

OPERATION LEVER (10810004-10810306)

Item	Part number	Description	Q'ty	Chan.	Serial No.	Serv.	Remarks
		LEVER ASSY, control (ISO-JCB pattern)					X03232-64000-7
		LEVER ASSY, control (A-B pattern)					X03232-65000-7
26	0323264860	LEVER (R.H.)	1		10810004~10810012		
	0323266860	LEVER (R.H.)	1		10810013~10810114		
	0323266760	LEVER (R.H.)	1	(H)	10810115~		
27	0323264870	LEVER (L.H.)	1		10810004~10810012		ISO-JCB pattern
	0323266870	LEVER (L.H.)	1		10810013~10810114		ISO-JCB pattern
	0323266770	LEVER (L.H.)	1	(H)	10810115~		ISO-JCB pattern
	0323265870	LEVER (L.H.)	1		10810004~10810012		A-B pattern
	0323267870	LEVER (L.H.)	1		10810013~		A-B pattern
36	0323264960	BRACKET (L.H.)	1		10810004~10810114		ISO-JCB pattern
	0323266980	BRACKET (L.H.)	1	(H)	10810115~		ISO-JCB pattern
	0323265960	BRACKET (L.H.)	1		10810004~10810114		A-B pattern
	0323267960	BRACKET (L.H.)	1	(H)	10810115~		A-B pattern
37	0323264970	BRACKET (R.H.)	1		10810004~10810114		ISO-JCB pattern
	0323266970	BRACKET (R.H.)	1	(H)	10810115~		ISO-JCB pattern
	0323265970	BRACKET (R.H.)	1		10810004~10810114		A-B pattern
	0323267970	BRACKET (R.H.)	1	(H)	10810115~		A-B pattern
38	0323265980	LEVER	1		10810004~10810114		A-B pattern
	0323267980	LEVER	1	(H)	10810115~		A-B pattern
41	1120530612	SCREW	4				
42	1652201003	BAND	2				
51	1650200130	GRIP	1				
52	1650200230	GRIP (with switch)	1				
55	1340300060	END, rod	8				
60	1340010080	END, rod	8				
61	1121601106	BOLT	1				A-B pattern
72	1130040006	NUT	20				
73	1130040008	NUT	8				
74	1140020006	WASHER, spring	8				
75	1225000006	WASHER	8				
84	0413206900	ROD	4				
93	1100040625	BOLT	4				
94	1131140012	NUT	2				
103	1140020008	WASHER, spring	16				
104	1110040816	SCREW, cap	8				
	B5b062						

silverhorn.co.uk

SWING PEDAL & AUX. PEDAL (10810004-10810306)

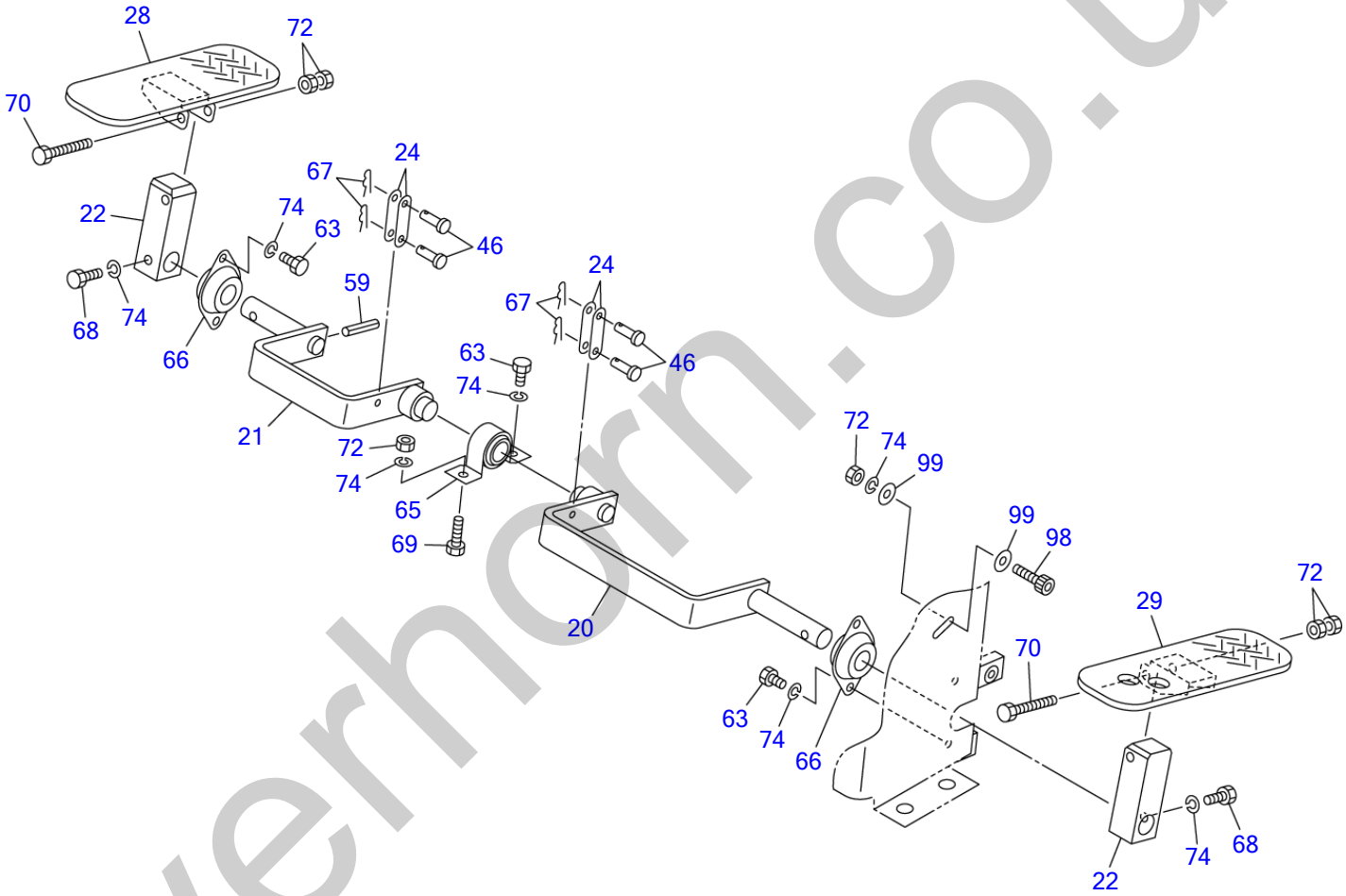

B5B070

S=1/5

silverhorn.co.uk

SWING PEDAL & AUX. PEDAL (10810004-10810306)

Item	Part number	Description	Q'ty	Chan.	Serial No.	Serv.	Remarks
		LEVER ASSY, control (ISO-JCB pattern)					X03232-64000-7
		LEVER ASSY, control (A-B pattern)					X03232-65000-7
20	0323264800	LEVER	1				
21	0323264810	LEVER	1				
22	0323264820	LEVER	2				
24	0323261860	PLATE	4				
28	0323264880	PEDAL	1				
29	0323264890	PEDAL	1				
46	0004004815	PIN	4				
59	1213000325	PIN, spring	1				
63	1100040612	BOLT	5				
65	1332001518	MINI-PILLOW	1				
66	1332051518	MINI-PILLOW	2				
67	1214000005	PIN, snap	4				
68	1100040616	BOLT	2				
69	1100040620	BOLT	1				
70	1100040640	BOLT	2				
72	1130040006	NUT	6				
74	1140020006	WASHER, spring	9				
98	1110040620	SCREW, cap	1				
99	1141110006	WASHER	2				
	B5b071						

silverhorn.co.uk

DOZER BLADE LEVER (10810004-10810306)

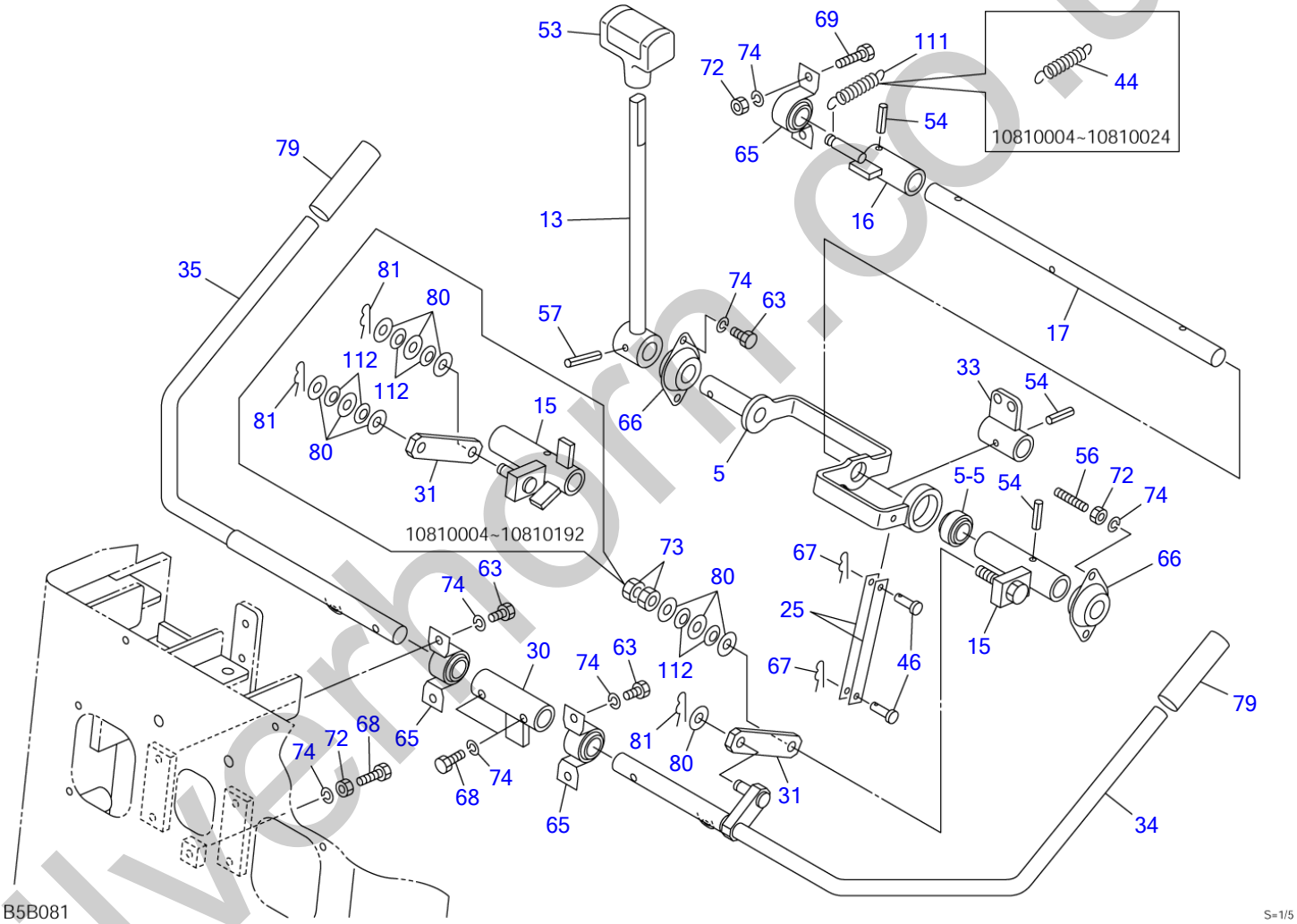

silverhorn.co.uk

DOZER BLADE LEVER (10810004-10810306)

Item	Part number	Description	Q'ty	Chan.	Serial No.	Serv.	Remarks
		LEVER ASSY, control (ISO-JCB pattern)					X03232-64000-7
		LEVER ASSY, control (A-B pattern)					X03232-65000-7
5	0323264500	LEVER	1				
5-5	1334001150	・BUSHING	1				
13	0323264730	LEVER	1				
15	0323264750	LEVER	1				
16	0323264760	LEVER	1				
17	0323264770	SHAFT	1				
25	0323262850	PLATE	2				
30	0323264900	PIPE	1				
31	0323262910	PLATE	1				
33	0323264930	STOPPER	1		10810004~10810012		
	0323266930	STOPPER	1		10810013~		
34	0323264940	LEVER (L.H.)	1		10810004~10810012		
	0323266940	LEVER (L.H.)	1		10810013~		
35	0323264950	LEVER (R.H.)	1		10810004~10810012		
	0323266950	LEVER (R.H.)	1		10810013~		
44	0323255900	SPRING	1		10810004~10810024		
46	0004004815	PIN	2				
53	1650200520	GRIP	1				
54	1213000520	PIN, spring	3				
56	1121050640	SET-SCREW	2				
57	1213000525	PIN, spring	1				
63	1100040612	BOLT	6				
65	1332001518	MINI-PILLOW	3				
66	1332051518	MINI-PILLOW	2				
67	1214000005	PIN, snap	2				
68	1100040616	BOLT	3				
69	1100040620	BOLT	2				
72	1130040006	NUT	5				
73	1130040008	NUT	2		10810193~		
74	1140020006	WASHER, spring	11				
79	1650202300	CAP	2				
80	1141110008	WASHER	6		10810004~10810192		
	1141110008	WASHER	4		10810193~		
81	1214010006	PIN, snap	2		10810004~10810192		
	1214010006	PIN, snap	1		10810193~		
111	0323264090	SPRING	1		10810025~		
112	1225000008	WASHER	4		10810004~10810192		
	1225000008	WASHER	2		10810193~		
	B5b082						

silverthorn.co.uk

STAND (10810004~10810306)

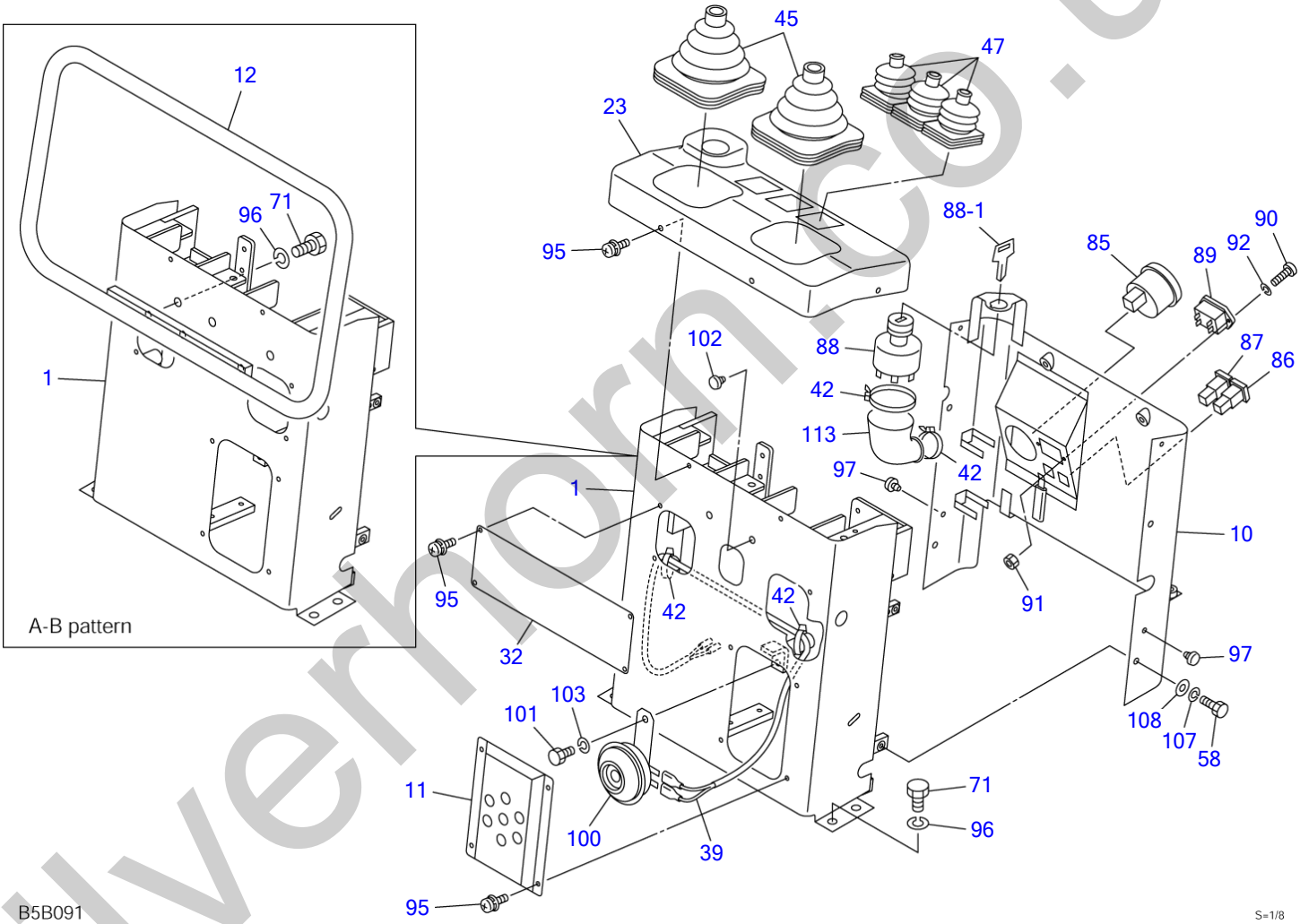

silverhorn.co.uk

STAND (10810004~10810306)

Item	Part number	Description	Q'ty	Chan.	Serial No.	Serv.	Remarks
		LEVER ASSY, control (ISO-JCB pattern)					X03232-64000-7
		LEVER ASSY, control (A-B pattern)					X03232-65000-7
1	0323264100	STAND	1				ISO-JCB pattern
	0323265100	STAND	1				A-B pattern
10	0323264010	COVER	1				
11	0323264710	COVER	1				
12	0323265720	PIPE	1				A-B pattern
23	0323264830	COVER	1				
32	0323262920	PLATE	1				
39	0323264990	HARNESS, wiring	1				
42	1652201003	BAND	4				
45	0335124900	BOOT	2				
47	0363214700	BOOT	3				
58	1100090612	BOLT	4				
71	1100041016	BOLT	4				ISO-JCB pattern
	1100041016	BOLT	7				A-B pattern
85	1730100010	THERMOMETER	1				
86	1700550002	LAMP, charge	1				
87	1700550003	LAMP, oil	1				
88	1700100052	SWITCH, starter	1				not service
	0323273510	SWITCH, starter	1	(H)			
88-1	1700100019	KEY	1				
89	1730000500	METER, hour	1				
90	1120530312	SCREW	2				
91	1130030003	NUT	2				
92	1140020003	WASHER, spring	2				
95	1150420510	BOLT, sems	12				
96	1140020010	WASHER, spring	4				ISO-JCB pattern
	1140020010	WASHER, spring	7				A-B pattern
97	1652515000	RUBBER, cushion	2				
100	1703500712	HORN	1				
101	1100040812	BOLT	1				
102	1652050900	GROMMET	2		10810004~10810012		ISO-JCB pattern
103	1140020008	WASHER, spring	1				
107	1140090006	WASHER, spring	4				
108	1141190006	WASHER	4				
113	0870431821	COVER	1				
	B5b092						

silverhorn.co.uk

TRAVEL LEVER (10810307-10811299)

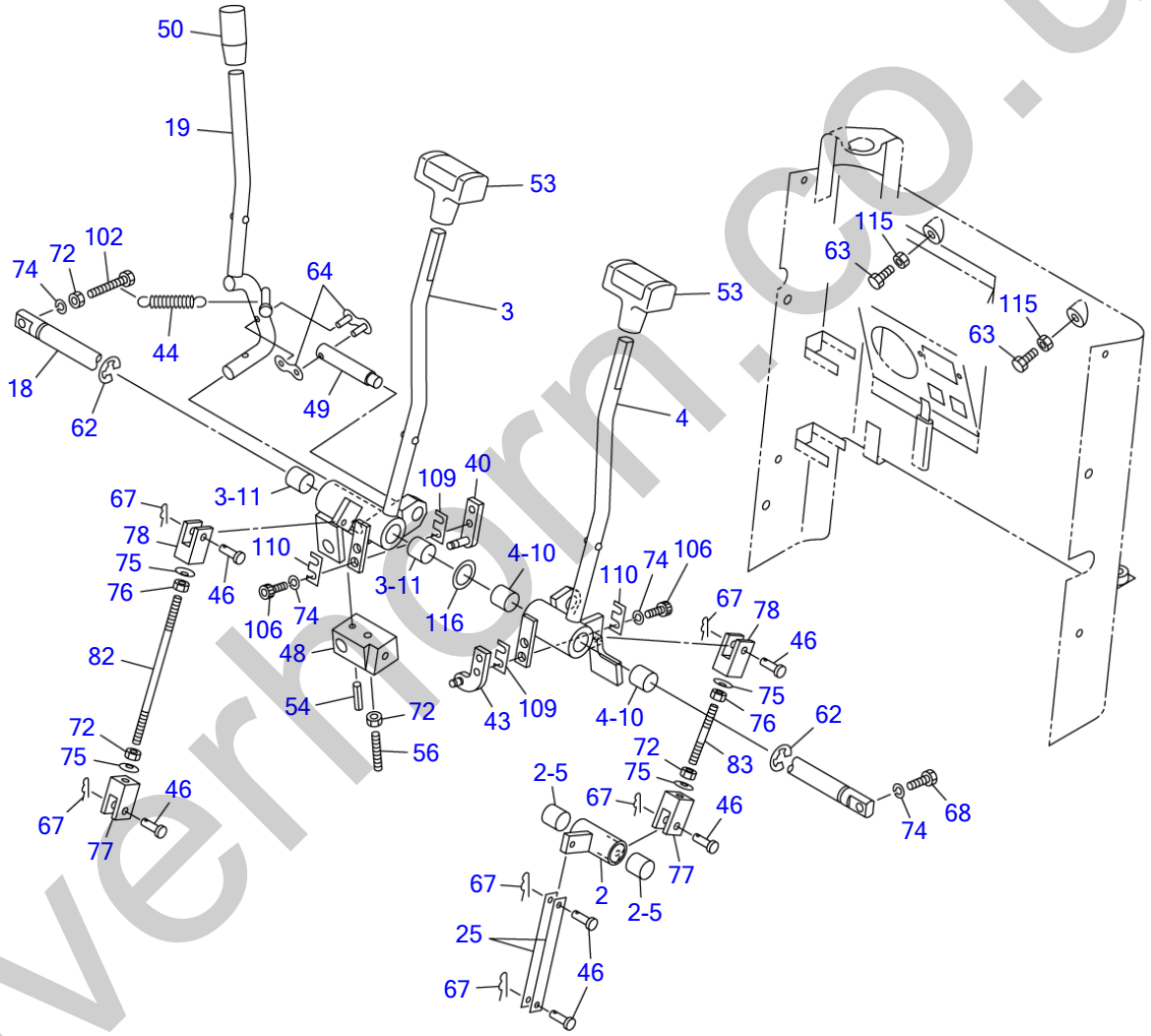

B5B052

S=1/6

silverhorn.co.uk

TRAVEL LEVER (10810307-10811299)

Item	Part number	Description	Q'ty	Chan.	Serial No.	Serv.	Remarks
		LEVER ASSY, control (ISO-JCB pattern)					X03232-68000-7
		LEVER ASSY, control (A-B pattern)					X03232-71000-7
		LEVER ASSY, control (ISO pattern)					X03232-72000-7
2	0323264200	LEVER	1				
2-5	1333001515	・BUSHING	2				
3	0323268300	LEVER	1				
3-11	1333001515	・BUSHING	2				
4	0323268400	LEVER	1				
4-10	1333001515	・BUSHING	2				
18	0323264780	SHAFT	1				
19	0323268790	LEVER	1				
25	0323268850	PLATE	2				
40	0323264360	BRACKET	1				
43	0323264460	BRACKET	1				
44	0323255900	SPRING	1				
46	0004004815	PIN	6				
48	0323264020	LEVER	1				
49	0323251700	SHAFT	1				
50	1650132050	GRIP	1				
53	1650200520	GRIP	2				
54	1213000520	PIN, spring	1				
56	1121050640	SET-SCREW	1				
62	1224010012	RING, retaining	2				
63	1100040612	BOLT	2				
64	1620050000	LINK	1				
67	1214000005	PIN, snap	6				
68	1100040616	BOLT	1				
72	1130040006	NUT	4				
74	1140020006	WASHER, spring	6				
75	1225000006	WASHER	4				
76	1131540006	NUT	2				
77	0005500010	YOKE	2				
78	0005600004	YOKE	2				
82	0005006135	ROD	1				
83	0005006050	ROD	1				
102	1100040630	BOLT	1				
106	1110040616	SCREW, cap	4				
109	0323264370	SHIM	AR				t=0.2mm
	0323264371	SHIM	AR				t=0.5mm
	0323264372	SHIM	AR				t=1.0mm
	0323264373	SHIM	AR				t=1.5mm
	0323264374	SHIM	AR				t=2.5mm
110	0323264373	SHIM	AR				t=1.5mm
115	1130140006	NUT	2				
116	0083252100	WASHER	1				
	B5b053						

silvermorn.co.uk

OPERATION LEVER (10810307-10811299)

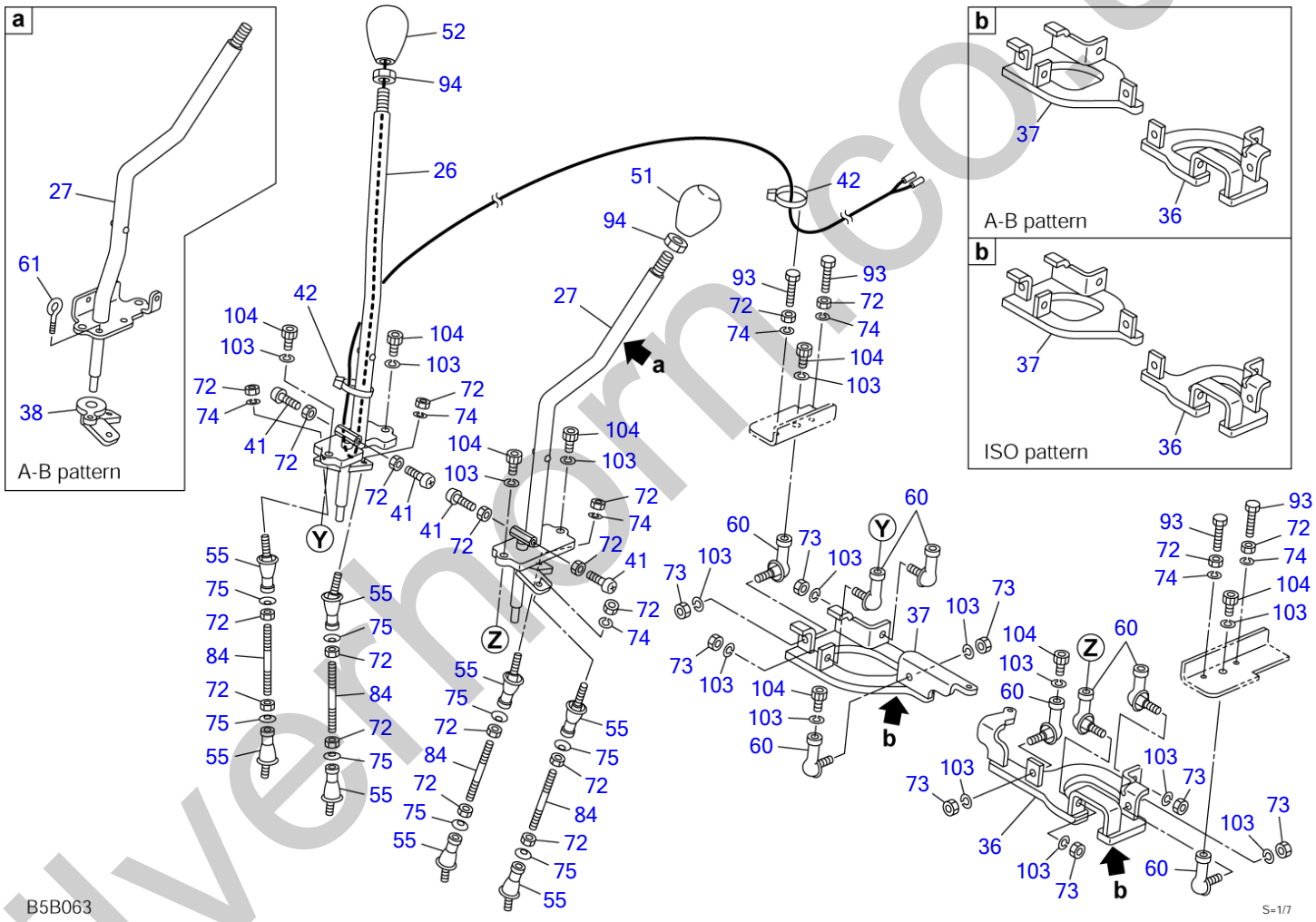

silvermoor.co.uk

OPERATION LEVER (10810307-10811299)

Item	Part number	Description	Q'ty	Chan.	Serial No.	Serv.	Remarks
		LEVER ASSY, control (ISO-JCB pattern)					X03232-68000-7
		LEVER ASSY, control (A-B pattern)					X03232-71000-7
		LEVER ASSY, control (ISO pattern)					X03232-72000-7
26	0323268860	LEVER (R.H.)	1				
27	0323268870	LEVER (L.H.)	1				ISO-JCB pattern
	0323271870	LEVER (L.H.)	1				A-B pattern
	0323268870	LEVER (L.H.)	1				ISO pattern
36	0323268960	BRACKET (L.H.)	1				ISO-JCB pattern
	0323267010	BRACKET (L.H.)	1				A-B pattern
	0323267030	BRACKET (L.H.)	1				ISO pattern
37	0323268970	BRACKET (R.H.)	1				ISO-JCB pattern
	0323267020	BRACKET (R.H.)	1				A-B pattern
	0323267020	BRACKET (R.H.)	1				ISO pattern
38	0323271980	LEVER	1				A-B pattern
41	1120530620	SCREW	4				
42	1652201003	BAND	2				
51	1650200130	GRIP	1				
52	1650200230	GRIP (with switch)	1				
55	1340300060	END, rod	8				
60	1340010080	END, rod	8				
61	1121601106	BOLT	1				A-B pattern
72	1130040006	NUT	20				
73	1130040008	NUT	8				
74	1140020006	WASHER, spring	8				
75	1225000006	WASHER	8				
84	0413206900	ROD	4				
93	1100040625	BOLT	4				
94	1131140012	NUT	2				
103	1140020008	WASHER, spring	16				
104	1110040820	SCREW, cap	8				
	B5b063						

silverhorn.co.uk

SWING PEDAL & AUX. PEDAL (10810307-10811299)

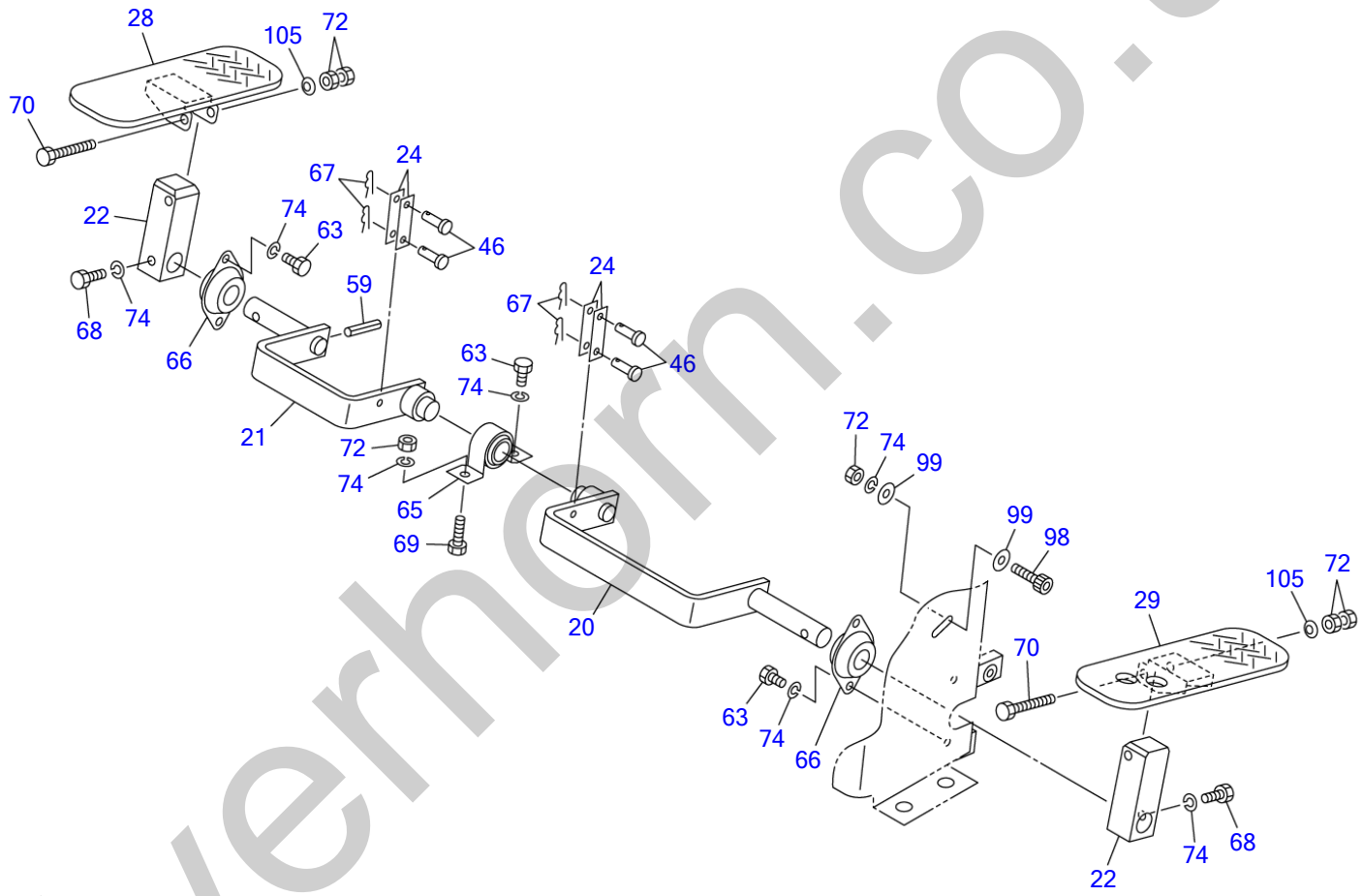

B5B071

S=1/5

silverhorn.co.uk

SWING PEDAL & AUX. PEDAL (10810307-10811299)

Item	Part number	Description	Q'ty	Chan.	Serial No.	Serv.	Remarks
		LEVER ASSY, control (ISO-JCB pattern)					X03232-68000-7
		LEVER ASSY, control (A-B pattern)					X03232-71000-7
		LEVER ASSY, control (ISO pattern)					X03232-72000-7
20	0323264800	LEVER	1				
21	0323264810	LEVER	1				
22	0323264820	LEVER	2				
24	0323268840	PLATE	4				
28	0323264880	PEDAL	1				
29	0323264890	PEDAL	1				
46	0004004815	PIN	4				
59	1213000325	PIN, spring	1				
63	1100040612	BOLT	5				
65	1332001518	MINI-PILLOW	1				
66	1332051518	MINI-PILLOW	2				
67	1214000005	PIN, snap	4				
68	1100040616	BOLT	2				
69	1100040620	BOLT	1				
70	1100040640	BOLT	2				
72	1130040006	NUT	6				
74	1140020006	WASHER, spring	9				
98	1110040620	SCREW, cap	1				
99	1141110006	WASHER	2				
105	1225110006	WASHER	2				
	B5b073						

silverhorn.co.uk

DOZER BLADE LEVER (10810307-10811299)

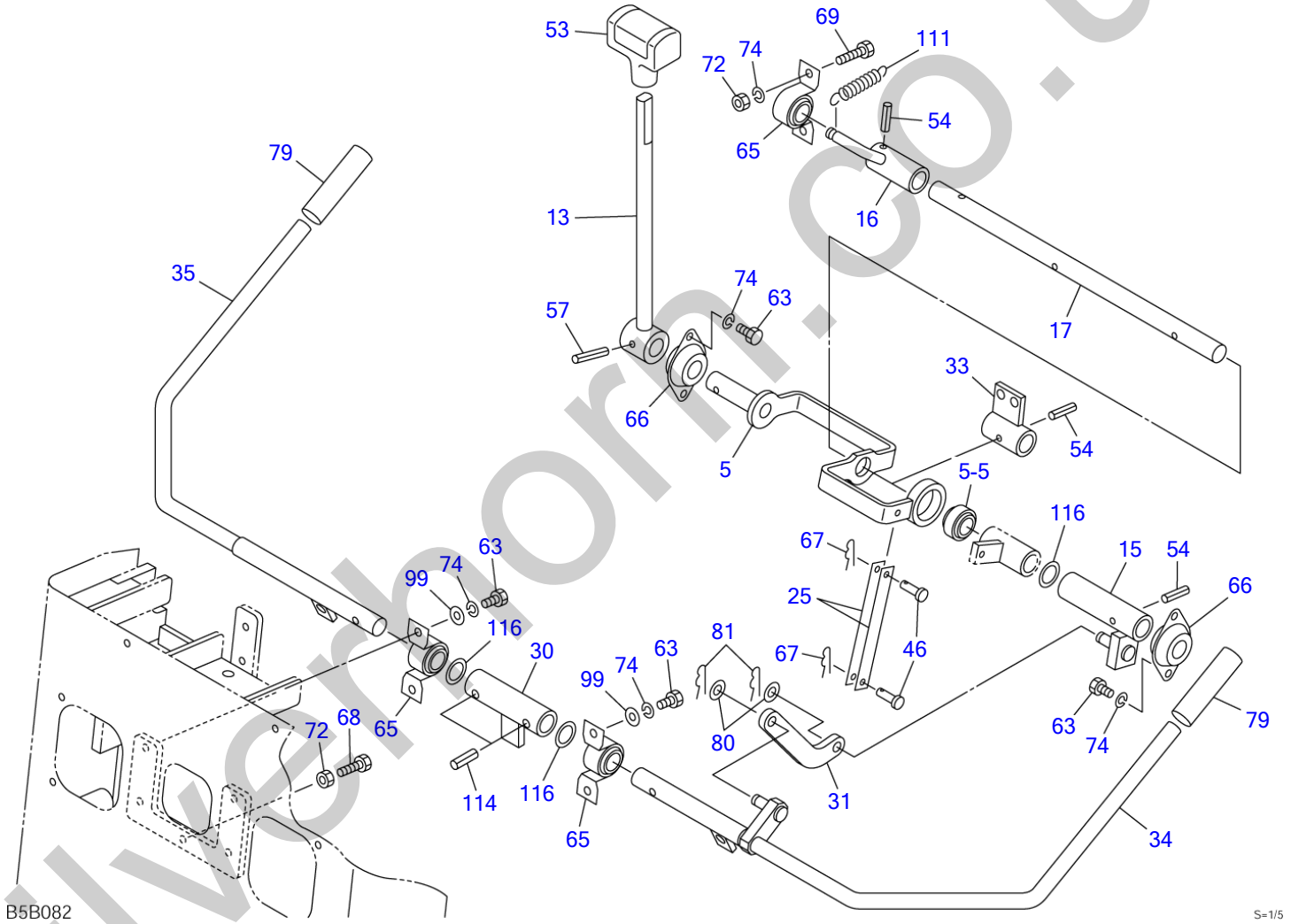

silverhorn.co.uk

DOZER BLADE LEVER (10810307-10811299)

Item	Part number	Description	Q'ty	Chan.	Serial No.	Serv.	Remarks
		LEVER ASSY, control (ISO-JCB pattern)					X03232-68000-7
		LEVER ASSY, control (A-B pattern)					X03232-71000-7
		LEVER ASSY, control (ISO pattern)					X03232-72000-7
5	0323268500	LEVER	1				
5-5	1334001150	・BUSHING	1				
13	0323264730	LEVER	1				
15	0323268750	LEVER	1				
16	0323268760	LEVER	1				
17	0323268770	SHAFT	1				
25	0323268850	PLATE	2				
30	0323267900	PIPE	1				
31	0323268910	PLATE	1				
33	0323268930	STOPPER	1				
34	0323267940	LEVER (L.H.)	1				
35	0323267930	LEVER (R.H.)	1				
46	0004004815	PIN	2				
53	1650200520	GRIP	1				
54	1213000520	PIN, spring	3				
57	1213000525	PIN, spring	1				
63	1100040612	BOLT	8				
65	1332001518	MINI-PILLOW	3				
66	1332051518	MINI-PILLOW	2				
67	1214000005	PIN, snap	2				
68	1100040616	BOLT	1				
69	1100040620	BOLT	2				
72	1130040006	NUT	3				
74	1140020006	WASHER, spring	10				
79	1650202300	CAP	2				
80	1141110008	WASHER	2				
81	1214010006	PIN, snap	2				
99	1141110006	WASHER	4				
111	0323264090	SPRING	1				
114	1213000620	PIN, spring	2				
116	0083252100	WASHER	3				
	B5b083						

silverhorn.co.uk

STAND (10810307-10811299)

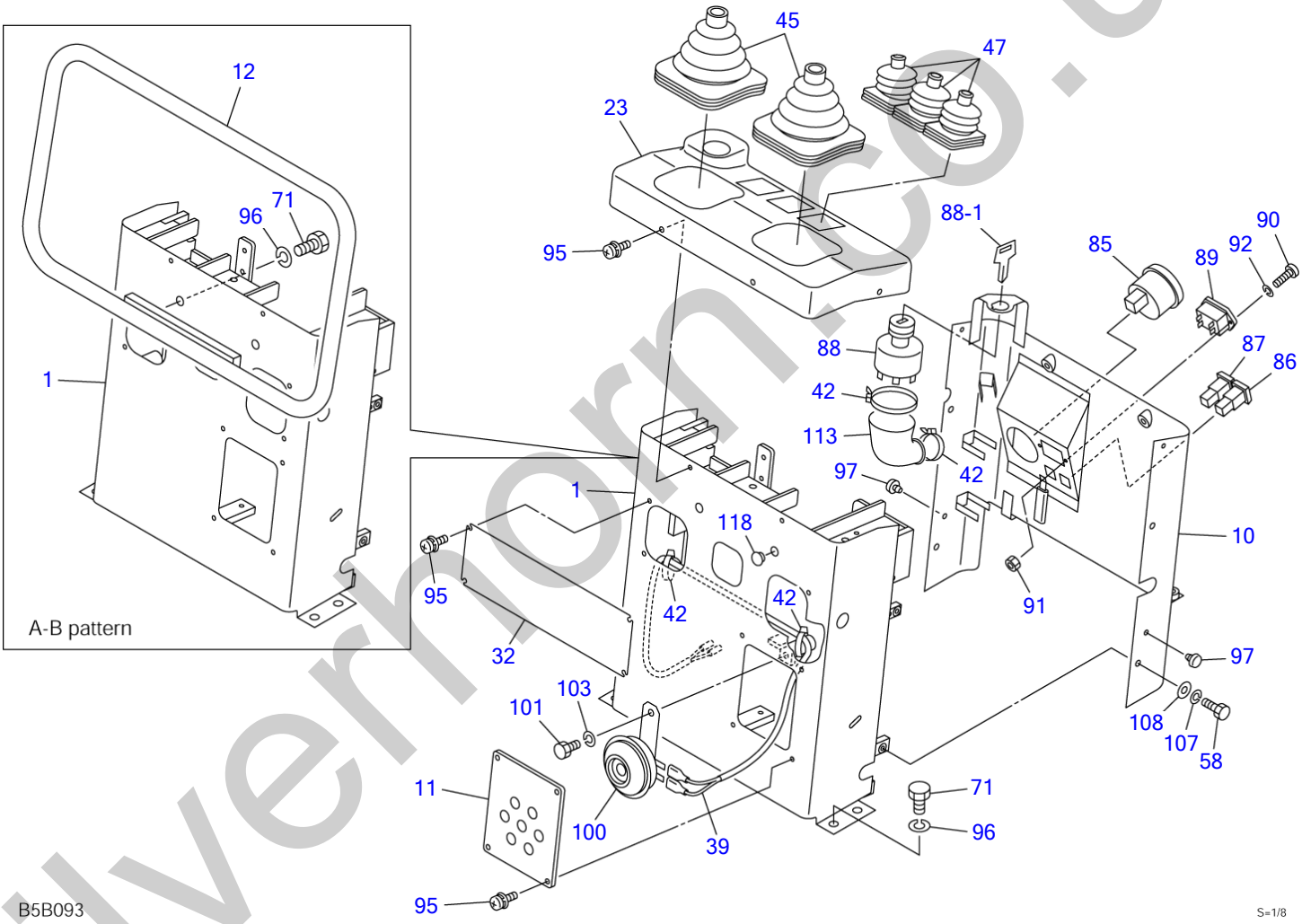

silverhorn.co.uk

STAND (10810307-10811299)

Item	Part number	Description	Q'ty	Chan.	Serial No.	Serv.	Remarks
		LEVER ASSY, control (ISO-JCB pattern)					X03232-68000-7
		LEVER ASSY, control (A-B pattern)					X03232-71000-7
		LEVER ASSY, control (ISO pattern)					X03232-72000-7
1	0323268100	STAND	1		10810307~10810546		ISO-JCB pattern
	0323263100	STAND	1	(H)	10810547~		ISO-JCB pattern
	0323271100	STAND	1		10810307~10810546		A-B pattern
	0323273100	STAND	1	(H)	10810547~		A-B pattern
	0323268100	STAND	1		10810307~10810546		ISO pattern
	0323263100	STAND	1	(H)	10810547~		ISO pattern
10	0323268010	COVER	1				
	0324263200	COVER (with travel alarm)	1				ISO-JCB, ISO
11	0323269710	COVER	1				
12	0323271720	PIPE (A-B pattern)	1				U.S. TAKEUCHI OPT.
23	0323264830	COVER	1				
32	0323267920	PLATE	1				
39	0323264990	HARNESS, wiring	1				
42	1652201003	BAND	4				
45	0335124910	BOOT	2				
47	0363214700	BOOT	3				
58	1100090612	BOLT	4				
71	1100041016	BOLT	7				A-B pattern
	1100041016	BOLT	4				
85	1730100010	THERMOMETER	1				
86	1700550002	LAMP, charge	1				
87	1700550003	LAMP, oil	1				
88	1700100052	SWITCH, starter	1				not service
	0323273510	SWITCH, starter	1	(H)			
88-1	1700100019	KEY	1				
89	1730000500	METER, hour	1				
90	1120530312	SCREW	2				
91	1130030003	NUT	2				
92	1140020003	WASHER, spring	2				
95	1150420510	BOLT, sems	12				
96	1140020010	WASHER, spring	4				
	1140020010	WASHER, spring	7				A-B pattern
97	1652515000	RUBBER, cushion	2				
100	1703500712	HORN	1				
101	1100040812	BOLT	1				
103	1140020008	WASHER, spring	1				
107	1140090006	WASHER, spring	4				
108	1141190006	WASHER	4				
113	0870431821	COVER	1				
118	1652533019	CAP	2		10810685~		
	B5b093						

silverhorn.co.uk

TRAVEL LEVER (10811300-)

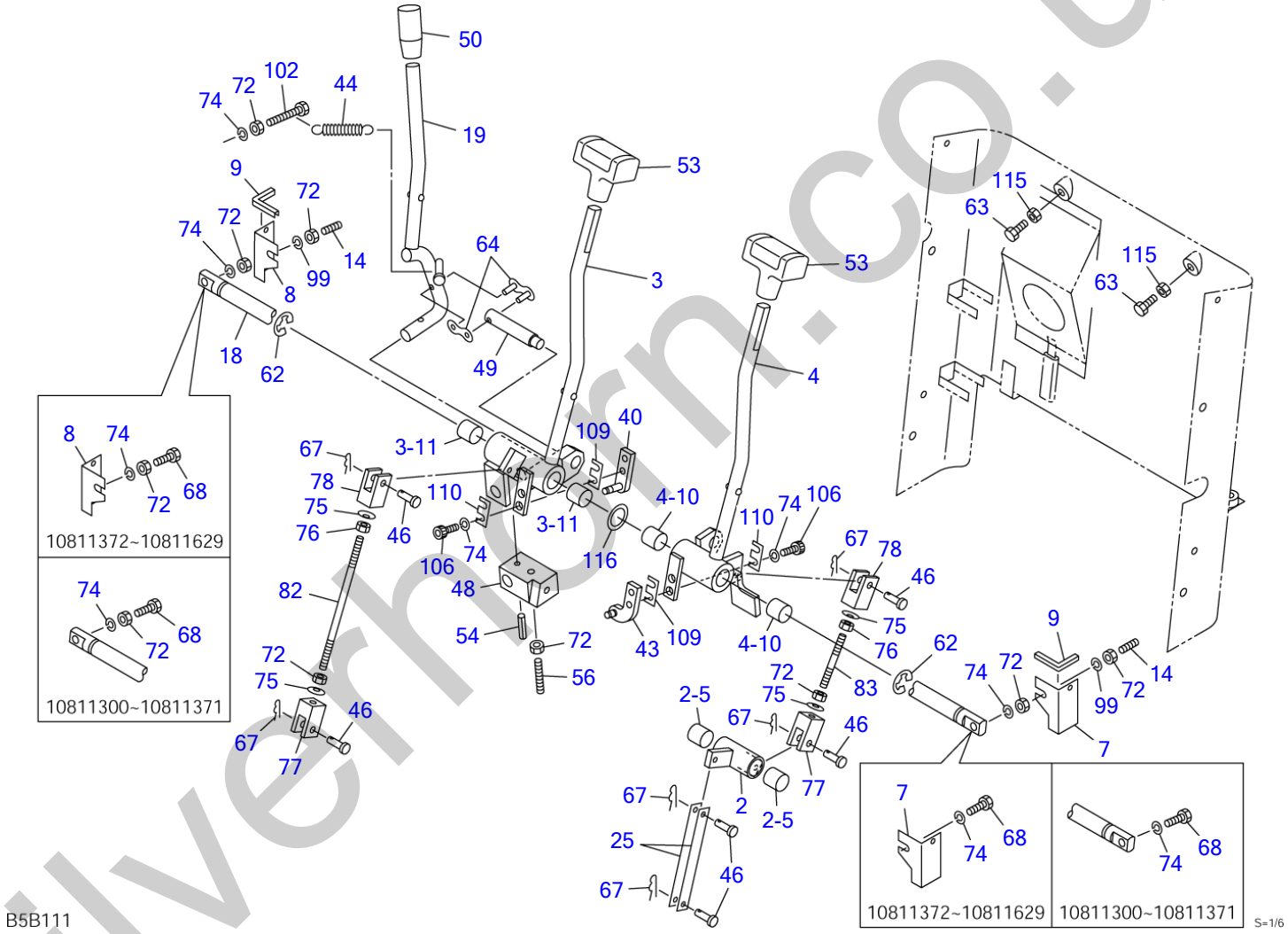

silverhorn.co.uk

TRAVEL LEVER (10811300-)

Item	Part number	Description	Q'ty	Chan.	Serial No.	Serv.	Remarks
		LEVER ASSY, control (ISO-JCB pattern)					X03232-74000-3
		LEVER ASSY, control (A-B pattern)					X03232-76000-3
		LEVER ASSY, control (ISO pattern)					X03232-75000-3
2	0323264200	LEVER	1				
2-5	1333001515	・BUSHING	2				
3	0323268300	LEVER	1	A	10811300~10811356		
	0323274700	LEVER	1	a(H)	10811357~	M	
3-11	1333001515	・BUSHING	2				
4	0323268400	LEVER	1	A	10811300~10811356		
	0323274800	LEVER	1	a(H)	10811357~	M	
4-10	1333001515	・BUSHING	2				
7	0323274360	GUARD	1		10811372~	M	
8	0323274371	GUARD	1		10811372~	M	
9	1653917006	TRIM	2		10811372~	M	sold by the meter
14	1121050630	SET-SCREW	2			M	
18	0323264780	SHAFT	1				
19	0323268790	LEVER	1				
25	0323268850	PLATE	2				
40	0323264360	BRACKET	1				
43	0323264460	BRACKET	1				
44	0323255900	SPRING	1				
46	0004004815	PIN	6				
48	0323264020	LEVER	1				
49	0323251700	SHAFT	1				
50	1650132050	GRIP	1				
53	1650200520	GRIP	2				
54	1213000520	PIN, spring	1				
56	1121050640	SET-SCREW	1				
62	1224010012	RING, retaining	2				
63	1100040612	BOLT	2				
64	1620050000	LINK	1				
67	1214000005	PIN, snap	6				
68	1100040616	BOLT	1				
72	1130040006	NUT	8			M	
74	1140020006	WASHER, spring	6				
75	1225000006	WASHER	4				
76	1131530006	NUT	2				
77	0005500010	YOKE	2				
78	0005600004	YOKE	2				
82	0005006135	ROD	1				
83	0005006050	ROD	1				
99	1141110006	WASHER	2			M	
102	1100040630	BOLT	1				
106	1110040616	SCREW, cap	4				
109	0323206370	SHIM	AR				t=0.2mm
	0323206371	SHIM	AR				t=0.5mm
	0323264372	SHIM	AR				t=1.0mm
	0323206374	SHIM	AR				t=2.5mm
110	0323264373	SHIM	AR				t=1.5mm
115	1130140006	NUT	2				
116	0083252100	WASHER	1				
		<<NOTE>> SET "A" is interchangeable with SET "a".					
	B5b111						

silvermorn.co.uk

OPERATION LEVER (10811300-)

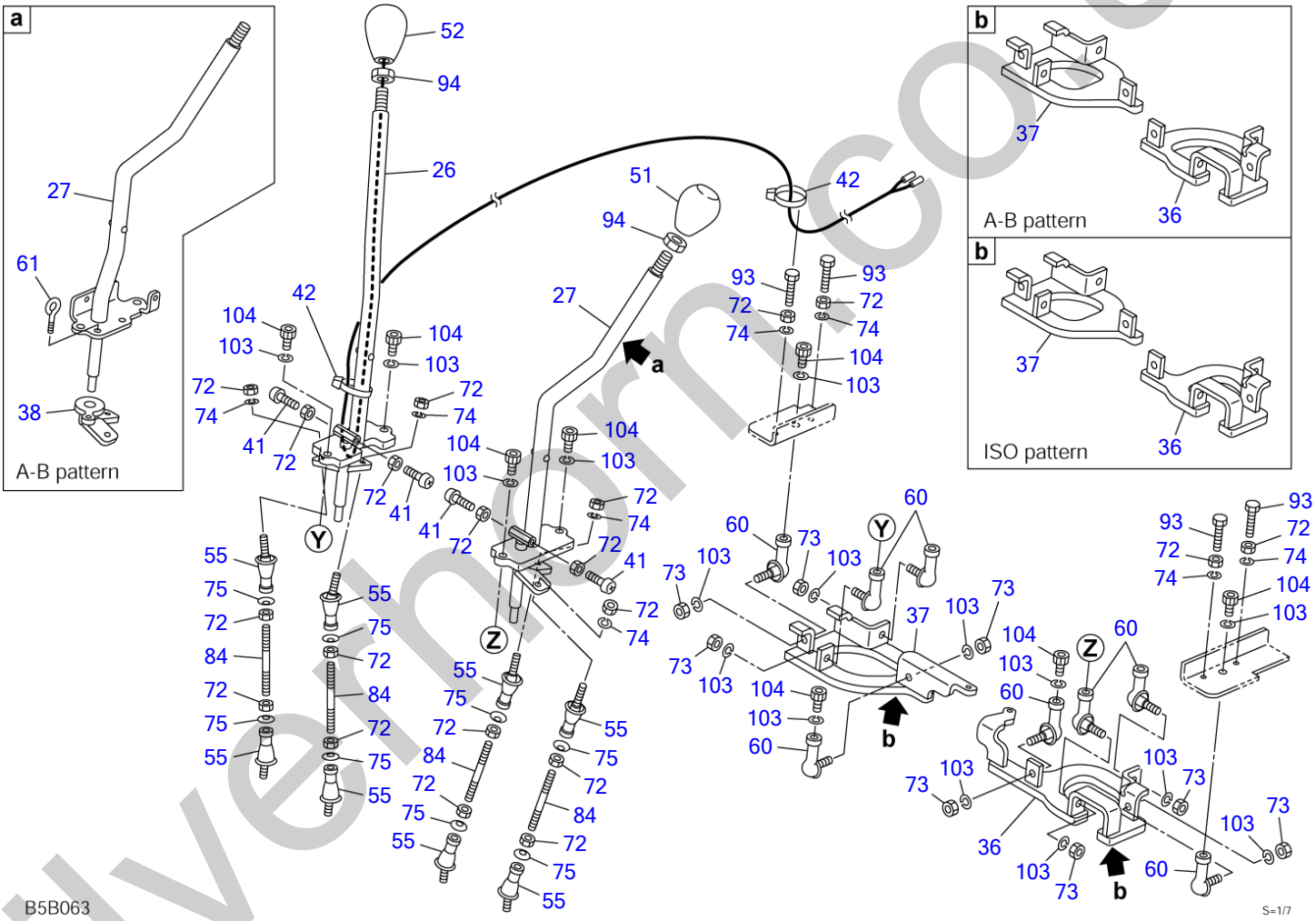

silvermoor.co.uk

OPERATION LEVER (10811300-)

Item	Part number	Description	Q'ty	Chan.	Serial No.	Serv.	Remarks
		LEVER ASSY, control (ISO-JCB pattern)					X03232-74000-3
		LEVER ASSY, control (A-B pattern)					X03232-76000-3
		LEVER ASSY, control (ISO pattern)					X03232-75000-3
26	0323268860	LEVER (R.H.)	1				
27	0323268870	LEVER (L.H.)	1				ISO-JCB pattern
	0323271870	LEVER (L.H.)	1				A-B pattern
	0323268870	LEVER (L.H.)	1				ISO pattern
36	0323268960	BRACKET (L.H.)	1				ISO-JCB pattern
	0323267010	BRACKET (L.H.)	1				A-B pattern
	0323267030	BRACKET (L.H.)	1				ISO pattern
37	0323268970	BRACKET (R.H.)	1				ISO-JCB pattern
	0323267020	BRACKET (R.H.)	1				A-B pattern
	0323267020	BRACKET (R.H.)	1				ISO pattern
38	0323271980	LEVER	1				A-B pattern
41	1120530620	SCREW	4				
42	1652201003	BAND	2				
51	1650200130	GRIP	1				
52	1650200230	GRIP (with switch)	1				
55	1340300060	END, rod	8				
60	1340010080	END, rod	8				
61	1121601106	BOLT	1				A-B pattern
72	1130040006	NUT	20				
73	1130040008	NUT	8				
74	1140020006	WASHER, spring	8				
75	1225000006	WASHER	8				
84	0413206900	ROD	4				
93	1100040625	BOLT	4				
94	1131040012	NUT	2				
103	1140020008	WASHER, spring	16				
104	1110040820	SCREW, cap	8				
	B5b121						

silverhorn.co.uk

SWING PEDAL & AUX. PEDAL (10811300-)

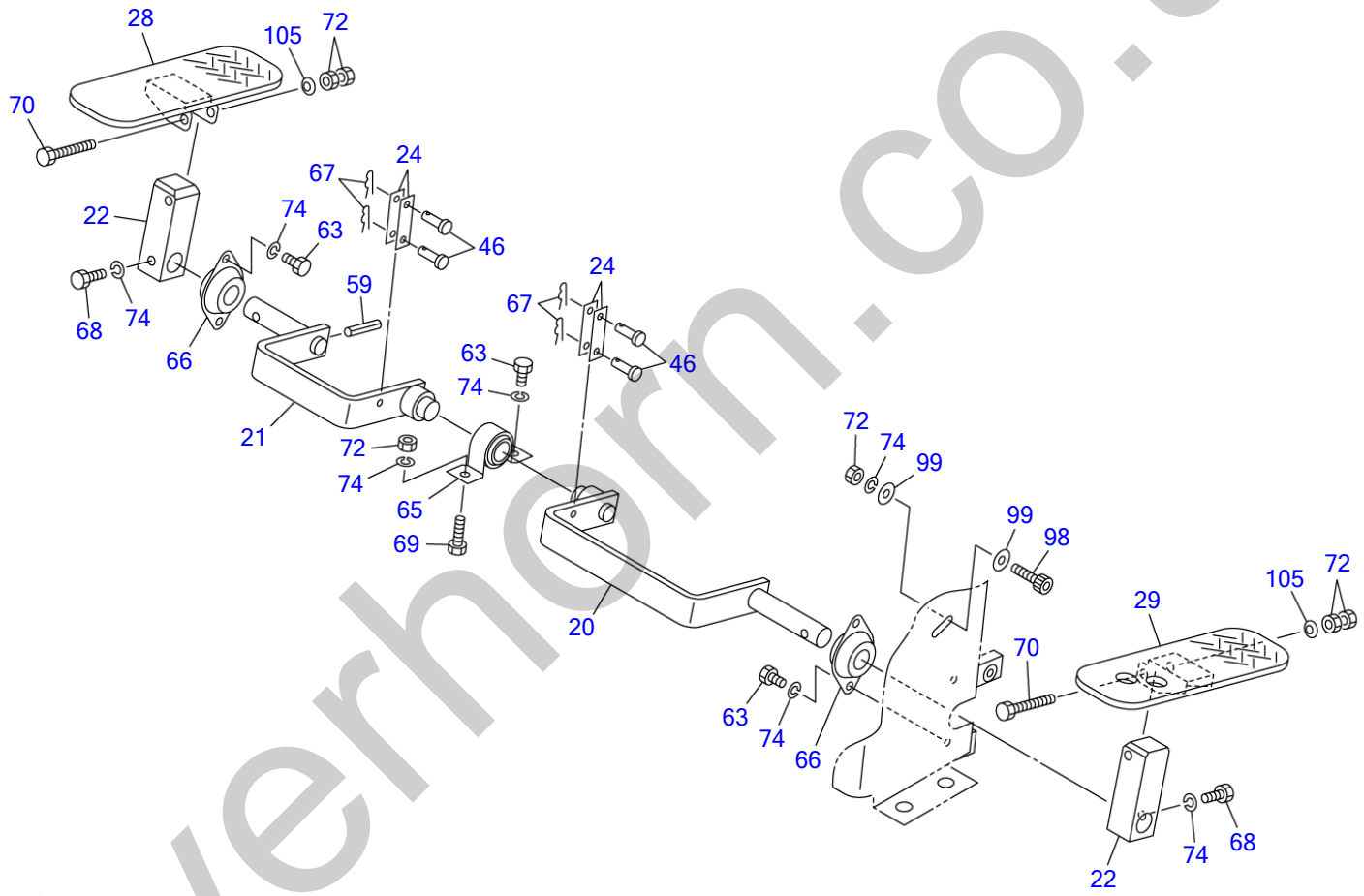

silverhorn.co.uk

SWING PEDAL & AUX. PEDAL (10811300-)

Item	Part number	Description	Q'ty	Chan.	Serial No.	Serv.	Remarks
		LEVER ASSY, control (ISO-JCB pattern)					X03232-74000-3
		LEVER ASSY, control (A-B pattern)					X03232-76000-3
		LEVER ASSY, control (ISO pattern)					X03232-75000-3
20	0323264800	LEVER	1				
21	0323264810	LEVER	1				
22	0323264820	LEVER	2				
24	0323268840	PLATE	4				
28	0323264880	PEDAL	1				
29	0323264890	PEDAL	1				
46	0004004815	PIN	4				
59	1213000325	PIN, spring	1				
63	1100040612	BOLT	5				
65	1332001518	MINI-PILLOW	1				
66	1332051518	MINI-PILLOW	2				
67	1214000005	PIN, snap	4				
68	1100040616	BOLT	2				
69	1100040620	BOLT	1				
70	1100040640	BOLT	2				
72	1130040006	NUT	6				
74	1140020006	WASHER, spring	9				
98	1110040620	SCREW, cap	1				
99	1141110006	WASHER	2				
105	1225110006	WASHER	2				
	B5b131						

silverhorn.co.uk

DOZER BLADE LEVER (10811300-)

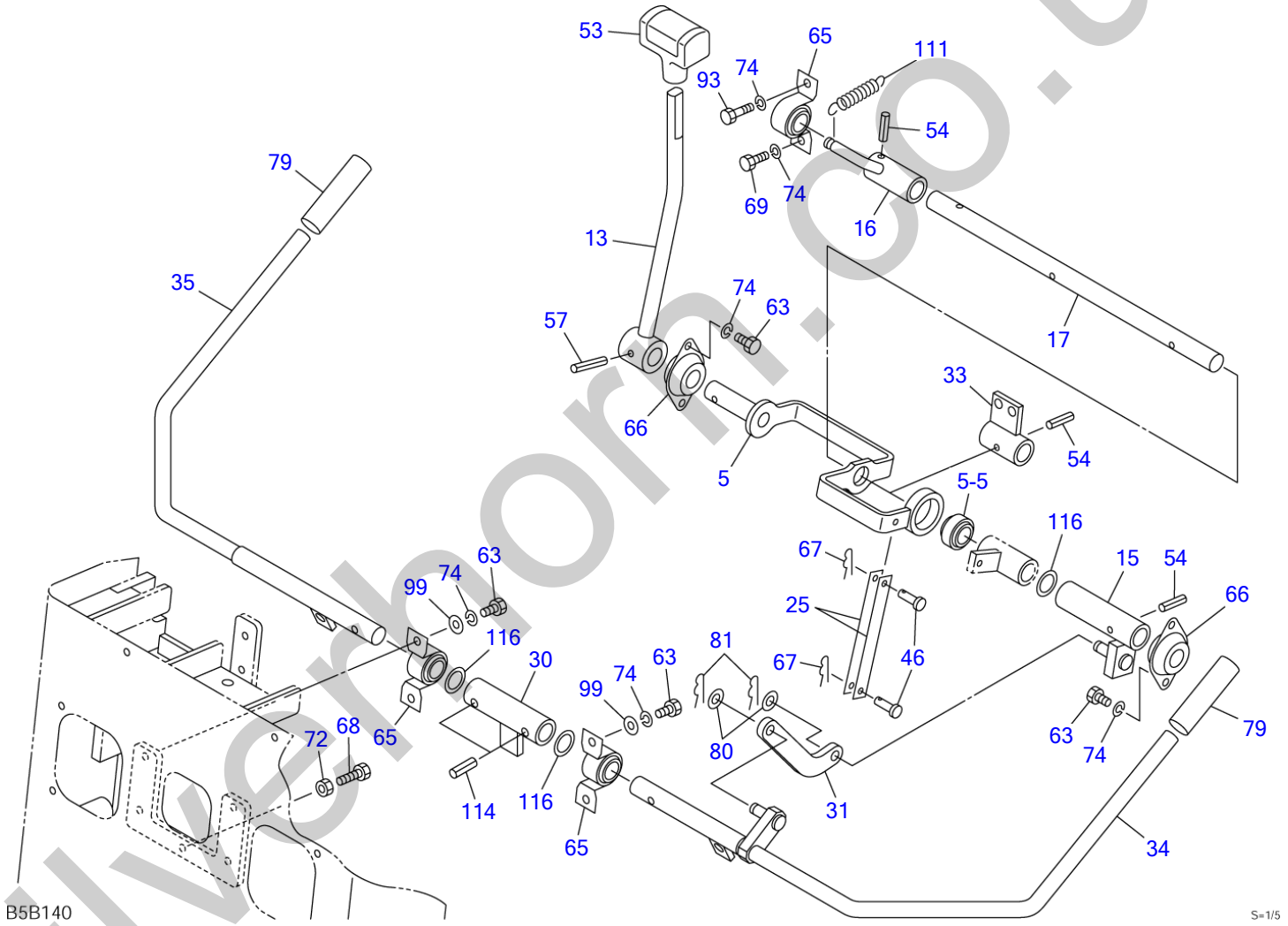

silverhorn.co.uk

DOZER BLADE LEVER (10811300-)

Item	Part number	Description	Q'ty	Chan.	Serial No.	Serv.	Remarks
		LEVER ASSY, control (ISO-JCB pattern)					X03232-74000-3
		LEVER ASSY, control (A-B pattern)					X03232-76000-3
		LEVER ASSY, control (ISO pattern)					X03232-75000-3
5	0323268500	LEVER	1				
5-5	1334001150	・BUSHING	1				
13	0323274300	LEVER	1				
15	0323268750	LEVER	1				
16	0323268760	LEVER	1				
17	0323268770	SHAFT	1				
25	0323268850	PLATE	2				
30	0323267900	PIPE	1				
31	0323268910	PLATE	1				
33	0323268930	STOPPER	1				
34	0323267940	LEVER (L.H.)	1				
35	0323267930	LEVER (R.H.)	1				
46	0004004815	PIN	2				
53	1650200520	GRIP	1				
54	1213000520	PIN, spring	3				
57	1213000525	PIN, spring	1				
63	1100040612	BOLT	8				
65	1332001518	MINI-PILLOW	3				
66	1332051518	MINI-PILLOW	2				
67	1214000005	PIN, snap	2				
68	1100040616	BOLT	1				
69	1100040620	BOLT	1				
72	1130040006	NUT	3				
74	1140020006	WASHER, spring	10				
79	1650202300	CAP	2				
80	1141110008	WASHER	2				
81	1214010006	PIN, snap	2				
93	1100040625	BOLT	1				
99	1141110006	WASHER	4				
111	0323264090	SPRING	1				
114	1213000620	PIN, spring	2				
116	0083252100	WASHER	3				
	B5b141						

silverhorn.co.uk

STAND (10811300-)

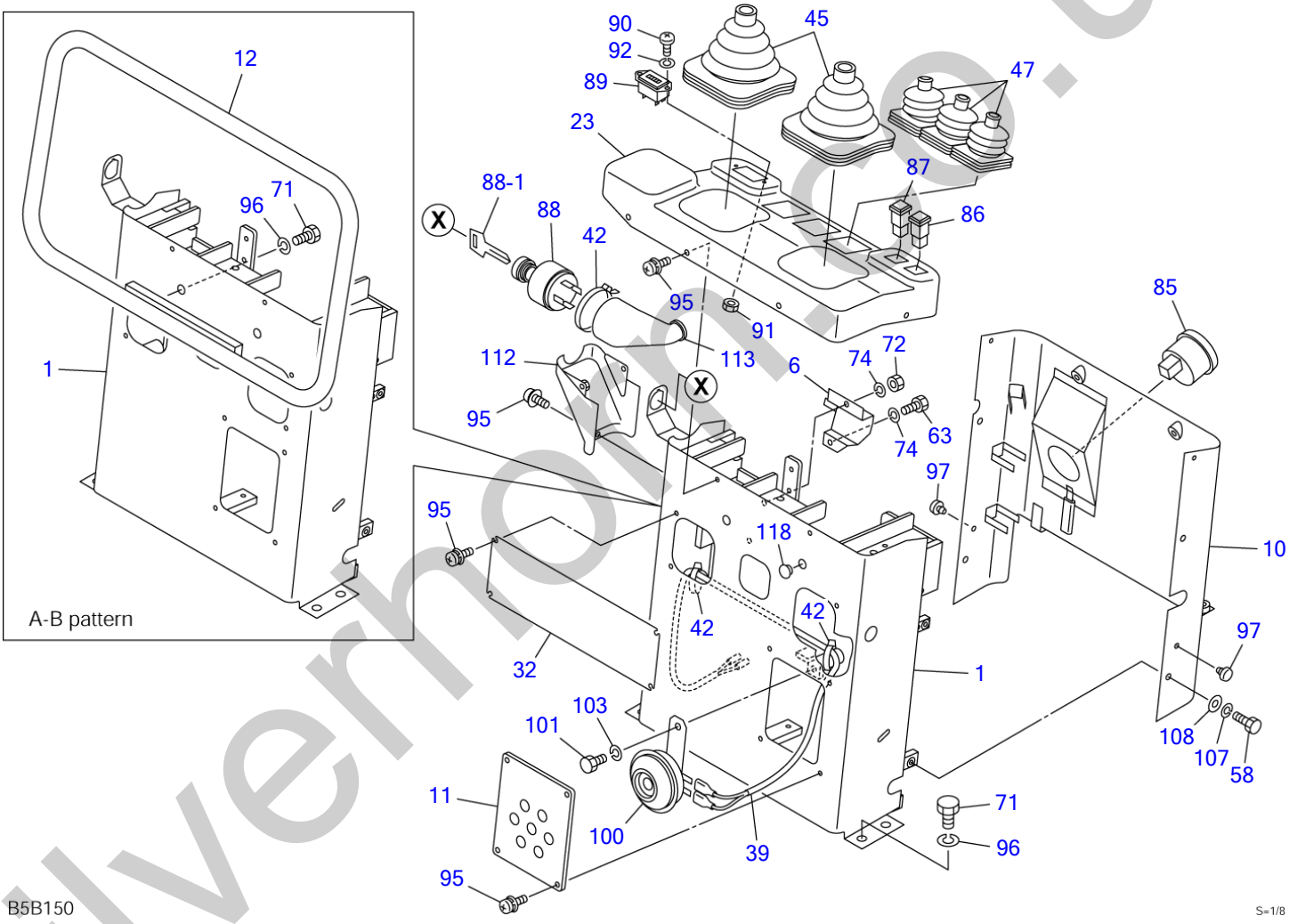

silverhorse.co.uk

STAND (10811300-)

Item	Part number	Description	Q'ty	Chan.	Serial No.	Serv.	Remarks
		LEVER ASSY, control (ISO-JCB pattern)					X03232-74000-3
		LEVER ASSY, control (A-B pattern)					X03232-76000-3
		LEVER ASSY, control (ISO pattern)					X03232-75000-3
1	0324264100	STAND	1			M	
	0323274100	STAND	1				A-B pattern
6	0323274010	GUARD	1				
10	0324265100	COVER	1				
11	0323269710	COVER	1				
12	0323271720	PIPE (A-B pattern)	1				U.S. TAKEUCHI OPT.
23	0323274310	COVER	1				
32	0323267920	PLATE	1				
39	0323264990	HARNESS, wiring	1				
42	1652201003	BAND	4				
45	0335124910	BOOT	2				
47	0363214700	BOOT	3				
58	1100090612	BOLT	4				
63	1100040612	BOLT	1				
71	1100041016	BOLT	7				A-B pattern
	1100041016	BOLT	4				
72	1130040006	NUT	2				
74	1140020006	WASHER, spring	2				
85	1730100010	THERMOMETER	1				
86	1700550002	LAMP, charge	1				
87	1700550003	LAMP, oil	1				
88	1700100052	SWITCH, starter	1				
88-1	1700100019	KEY	1				
89	1730000500	METER, hour	1				
90	1120530312	SCREW	2				
91	1130030003	NUT	2				
92	1140020003	WASHER, spring	2				
95	1150420510	BOLT, sems	14				
96	1140020010	WASHER, spring	4				
	1140020010	WASHER, spring	7				A-B pattern
97	1652515000	RUBBER, cushion	2				
100	1703500712	HORN	1				
101	1100040812	BOLT	1				
103	1140020008	WASHER, spring	1				
107	1140090006	WASHER, spring	4				
108	1141190006	WASHER	4				
112	0323274340	COVER	1				
113	0323274330	COVER	1				
118	1652533019	CAP	2				
	B5b151						

silvernorn.co.uk

ENGINE & ACCESSORIES (1/2)

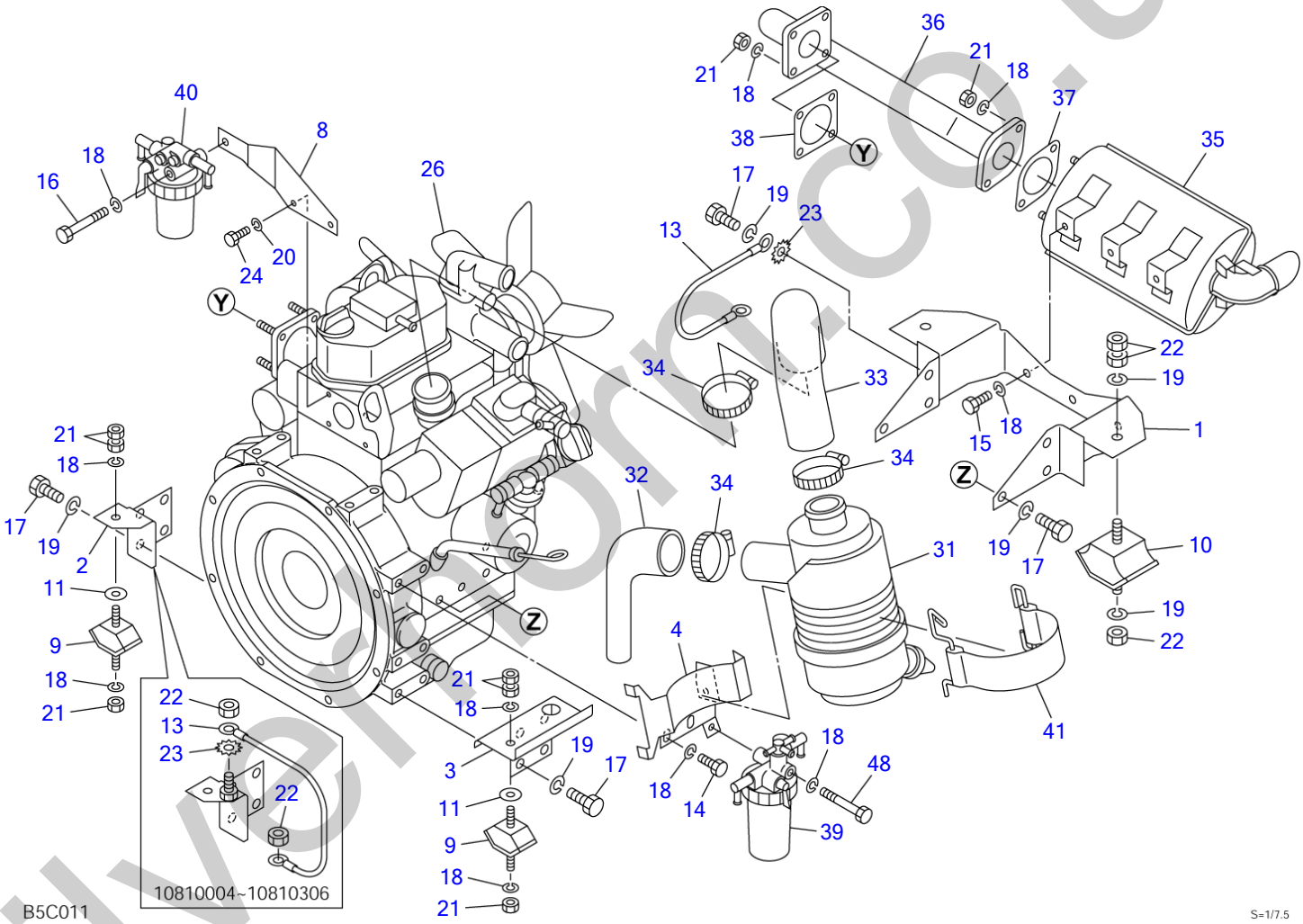

silvermorn.co.uk

ENGINE & ACCESSORIES (1/2)

Item	Part number	Description	Q'ty	Chan.	Serial No.	Serv.	Remarks
		ENGINE ASSY					X03240-24000-3
1	0324021110	FOOT, engine	1				
2	0324021200	FOOT, engine (R.H.)	1		10810004~10810306		
	0324021210	FOOT, engine (R.H.)	1		10810307~		
3	0324021300	FOOT, engine (L.H.)	1				
4	0324021400	BRACKET	1				
8	0324021450	PLATE	1				
9	1651044001	RUBBER, cushion	2				
10	1651044002	RUBBER, cushion	2				
11	0003600177	WASHER	2				
13	1702430280	CABLE, earth	1				
14	1100040816	BOLT	2				
15	1100040820	BOLT	3				
16	1100040865	BOLT	1				
17	1100041020	BOLT	14				
18	1140020008	WASHER, spring	17				
19	1140020010	WASHER, spring	18				
20	1140020006	WASHER, spring	2				
21	1130040008	NUT	12				
22	1130040010	NUT	8		10810004~10810306		
	1130040010	NUT	6		10810307~		
23	1140330010	WASHER	1				
24	1100040616	BOLT	2				
26	1910177001	ENGINE	1				2TNE68-ETBA
31	1910170007	CLEANER, air	1				Y119325-12560
32	0324019911	PIPE	1				
33	0324019920	PIPE	1				
34	1910032047	BAND	3				Y23000-060000
35	1910177005	MUFFLER	1				Y119332-13510
36	0324021600	PIPE	1	(L)	10810004~10810306		
	1910088025	PIPE	1		10810307~		
37	1910066022	GASKET	1				Y129107-13550
38	1910051022	GASKET	1				Y124701-11911
39	1910066031	FILTER	1				Y119632-55620
40	1910030033	SEPARATOR, water	1				Y129335-55700
41	1910170051	BAND	1				Y119865-12600
48	1100040860	BOLT	1				
	B5c013						

silverhorn.co.uk

ENGINE & ACCESSORIES (2/2) (10810004-10810306)

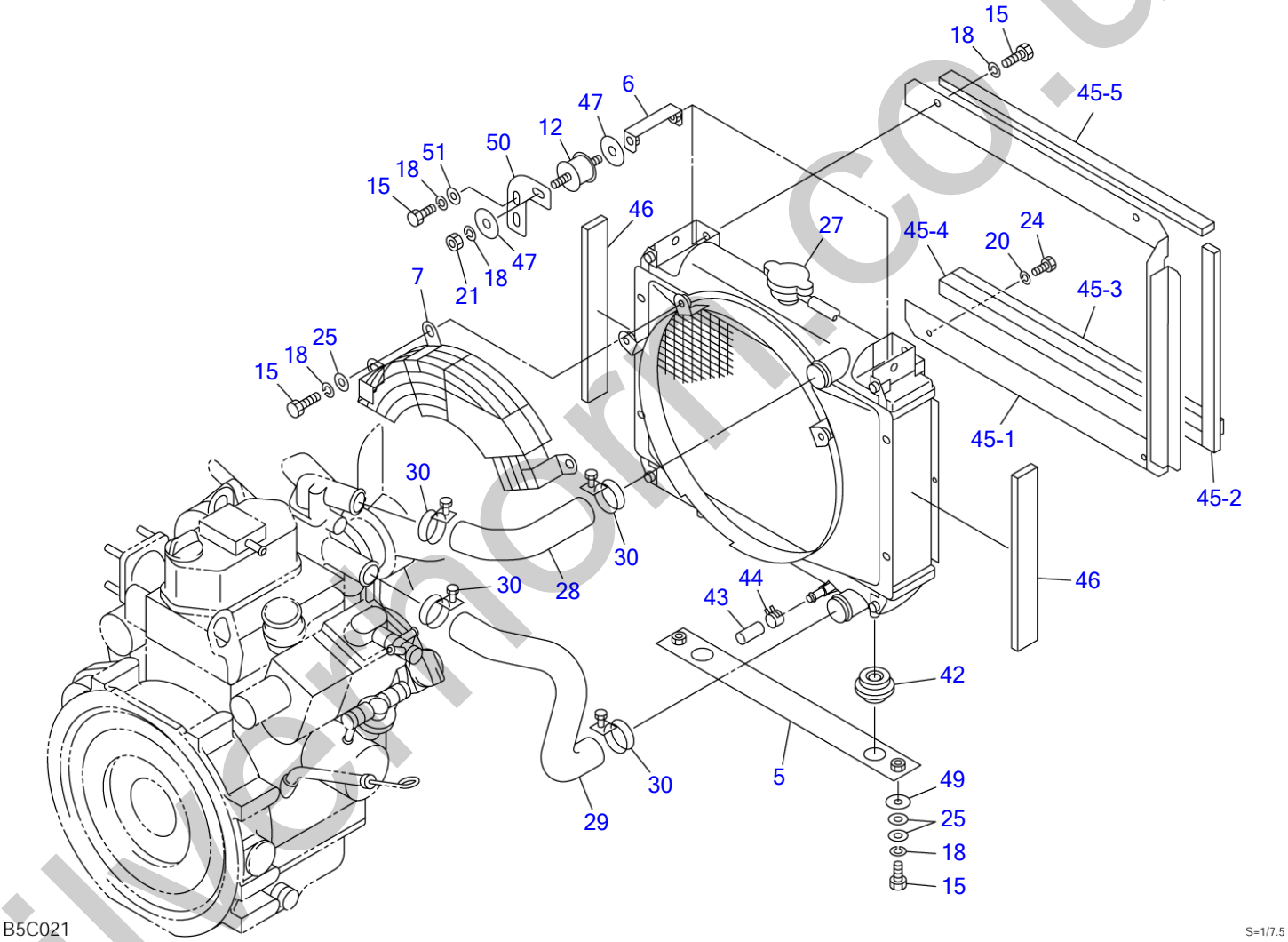

silvermoor.co.uk

ENGINE & ACCESSORIES (2/2) (10810004-10810306)

Item	Part number	Description	Q'ty	Chan.	Serial No.	Serv.	Remarks
		ENGINE ASSY					X03240-22000-0
5	0324021500	PLATE	1				
6	0324019600	BRACKET	2		10810004~10810108		
	0324019610	BRACKET	2	(H)	10810109~		
7	0324021700	NET, wire	1				
12	1651012003	RUBBER, cushion	2				
15	1100040820	BOLT	11				
18	1140020008	WASHER, spring	9				
20	1140020006	WASHER, spring	2				
21	1130040008	NUT	2				
24	1100040616	BOLT	2				
25	1141110008	WASHER	7				
27	1910177002	RADIATOR	1				Y119325-44521
28	0324019810	HOSE	1				
29	0324019820	HOSE	1				
30	1910006013	BAND	4				Y23010-038000
42	1910170052	RUBBER, cushion	2				Y119255-44660
43	0434005600	CAP	1				
44	1533120012	BAND	1				
45	X **********	PLATE ASSY	1				
45-1	0324021020	・PLATE	1				
45-2	1654302028	・SPONGE	1				sold by the meter
45-3	1654304042	・SPONGE	1				sold by the meter
45-4	1654306042	・SPONGE	1				sold by the meter
45-5	1654311042	・SPONGE	1				sold by the meter
46	1654308024	SPONGE	2				sold by the meter
47	0003608003	WASHER	4				
49	0003900042	SPACER	2				
50	0324022050	PLATE	2		10810109~		
51	0003608252	WASHER	4		10810109~		
	B5c021						

silverhorn.co.uk

ENGINE & ACCESSORIES (2/2) (10810307-)

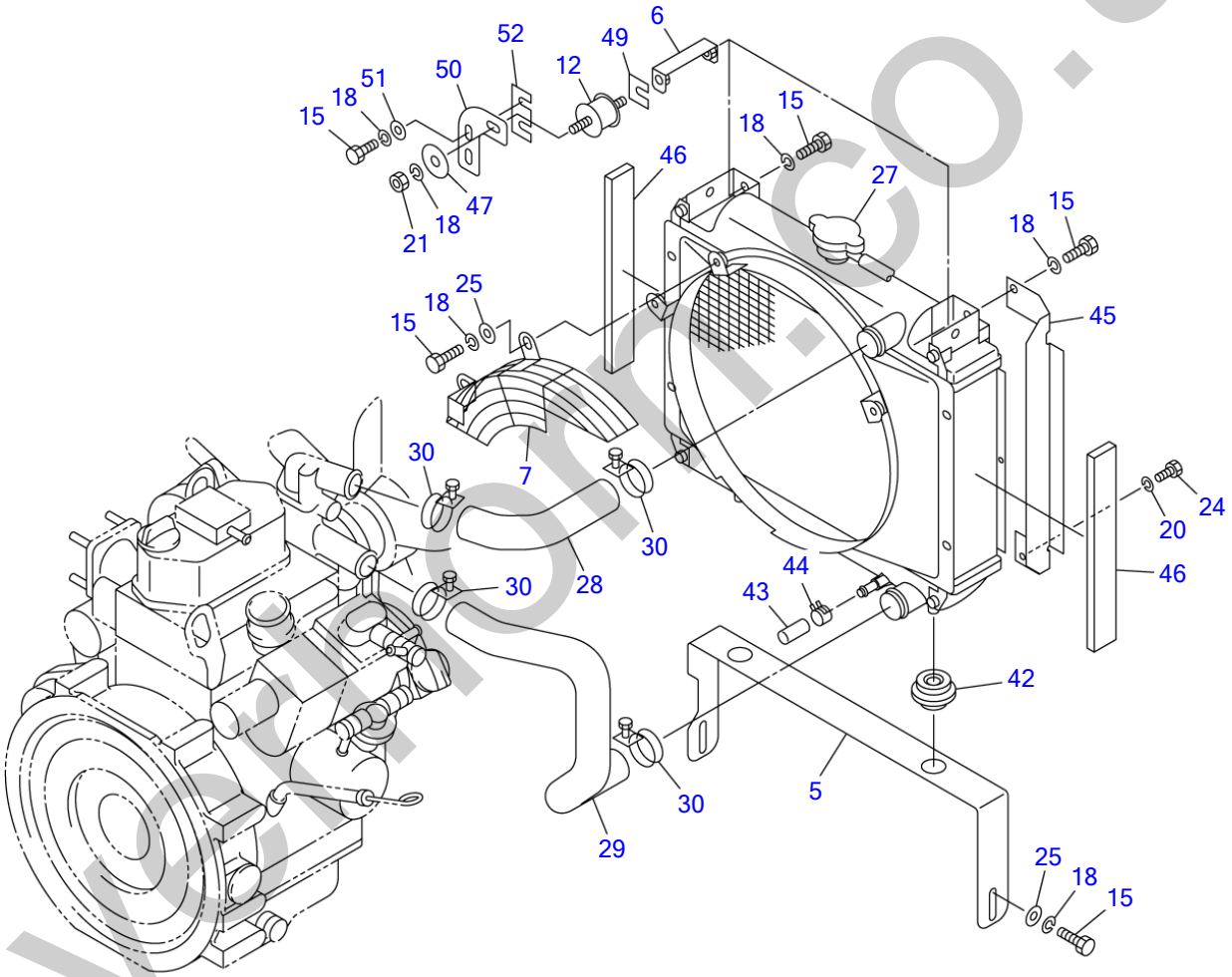

silverthorn.co.uk

ENGINE & ACCESSORIES (2/2) (10810307-)

Item	Part number	Description	Q'ty	Chan.	Serial No.	Serv.	Remarks
		ENGINE ASSY					X03240-24000-3
5	0324022500	PLATE	1				
6	0324019610	BRACKET	2	(H)			
7	0324024700	NET, wire	1	(H)			
12	1651012003	RUBBER, cushion	2				
15	1100040820	BOLT	12				
18	1140020008	WASHER, spring	14				
20	1140020006	WASHER, spring	1				
21	1130040008	NUT	2				
24	1100040616	BOLT	1				
25	1141110008	WASHER	6				
27	1910177002	RADIATOR	1				Y119325-44521
28	0324019810	HOSE	1				
29	0324019820	HOSE	1		10810307~10810960		
	0324024820	HOSE	1	(H)	10810961~		
30	1910006013	BAND	4				Y23010-038000
42	1910170052	RUBBER, cushion	2				Y119255-44660
43	0434005600	CAP	1				
44	1533120012	BAND	1				
45	0324022020	PLATE	1				
46	1654308024	SPONGE	2				sold by the meter
47	0003608003	WASHER	2				
49	0003900042	SPACER	2				
50	0324022050	PLATE	2				
51	0003608252	WASHER	4				
52	0003900043	SPACER	2				
	B5c024						

silverhorn.co.uk

AIR CLEANER (for double element)

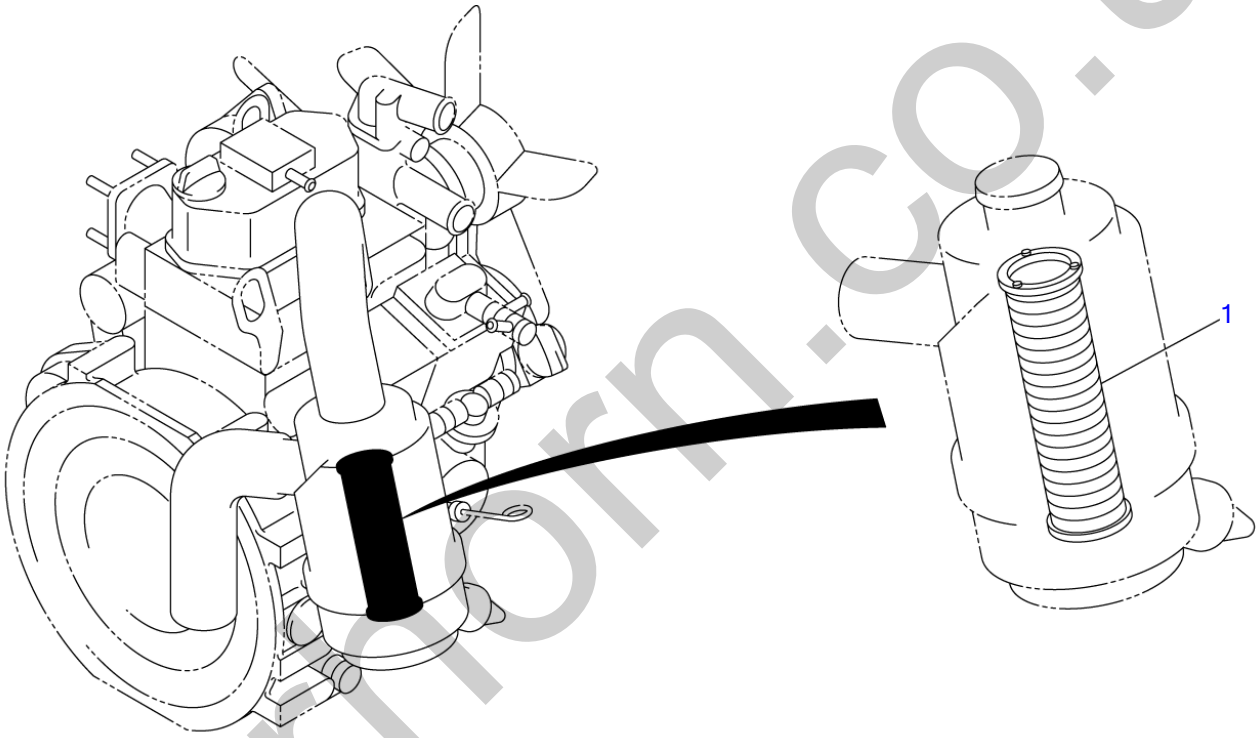

B5C030

S=1/6, 1/4

silvermorn.co.uk

AIR CLEANER (for double element)

Item	Part number	Description	Q'ty	Chan.	Serial No.	Serv.	Remarks
		ELEMENT ASSY, secondary					X03340-22000-0
1	**1911101342**	ELEMENT, secondary	1				ƒhƒiƒ‹ƒhƒ\ƒ“ P53-5396
	B5c030						

silverhorn.co.uk

DRAIN PLUG

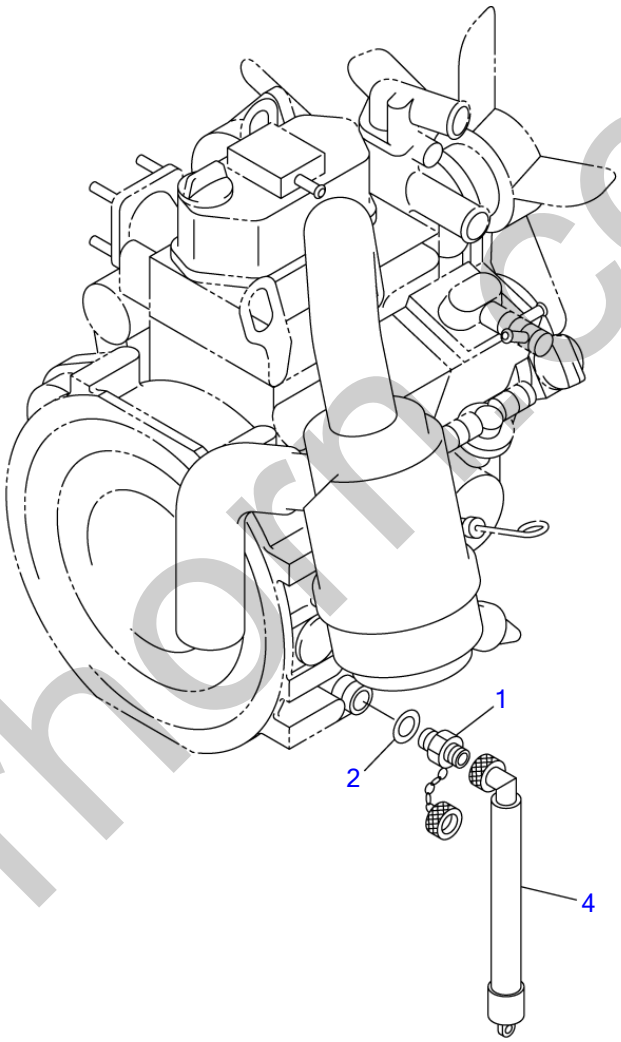

B5C040

S=1/6

silverhorn.co.uk

DRAIN PLUG

Item	Part number	Description	Q'ty	Chan.	Serial No.	Serv.	Remarks
		PLUG ASSY, drain					X03240-16000-1
1	1554501650	PLUG	1				
2	1541400516	WASHER	1				
4	1554512201	TUBE	1				
	B5c040						

silverhorn.co.uk

CONTROL BOX

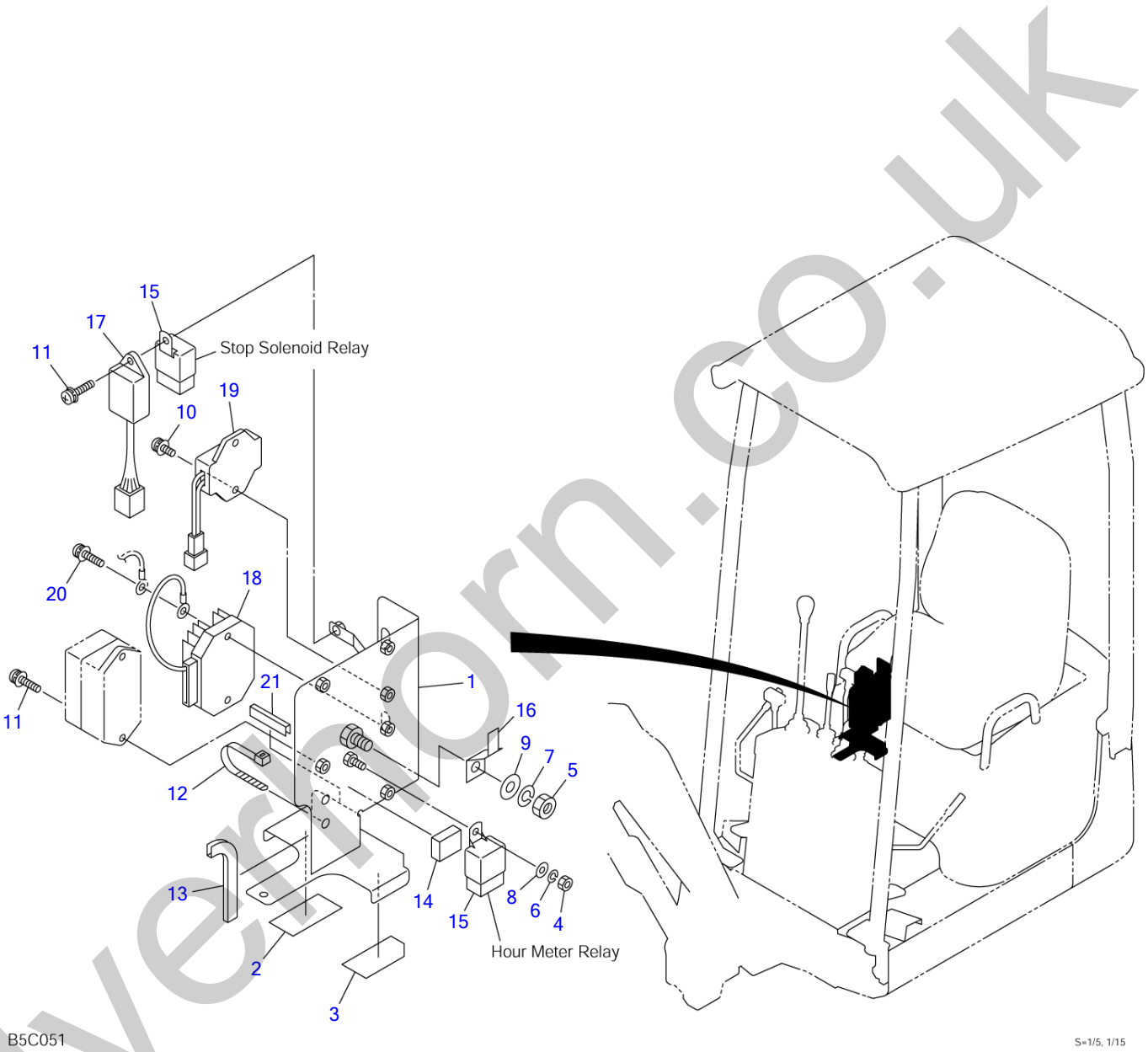

silverthorn.co.uk

CONTROL BOX

Item	Part number	Description	Q'ty	Chan.	Serial No.	Serv.	Remarks
		PANEL ASSY					X03243-18000-4
1	0324318010	PANEL	1				
2	0324318002	PLATE, rubber	1				
3	0324318004	PLATE, rubber	1				
4	1130040006	NUT	1				
5	1130040010	NUT	1				
6	1140020006	WASHER, spring	1				
7	1140020010	WASHER, spring	1				
8	1141110006	WASHER	1				
9	1141110010	WASHER	1				
10	1150410612	SCREW	2				
11	1150410616	SCREW	3				
12	1652231250	BAND	1				
13	1653916011	TRIM	1				
14	1654302003	SPONGE	1				
15	1711900042	RELAY	2				
16	1711900064	PLATE	1				
17	1910152116	UNIT, timer	1				Y 129211-77920
18	1910152104	LIMITER, current	1				Y 119660-77711
19	1910066117	REGISTER, grow	1				Y 119332-77810
20	1150410625	SCREW	2				
21	1653916005	TRIM	1				
	B5c052						

silverhorn.co.uk

ENGINE CONTROL

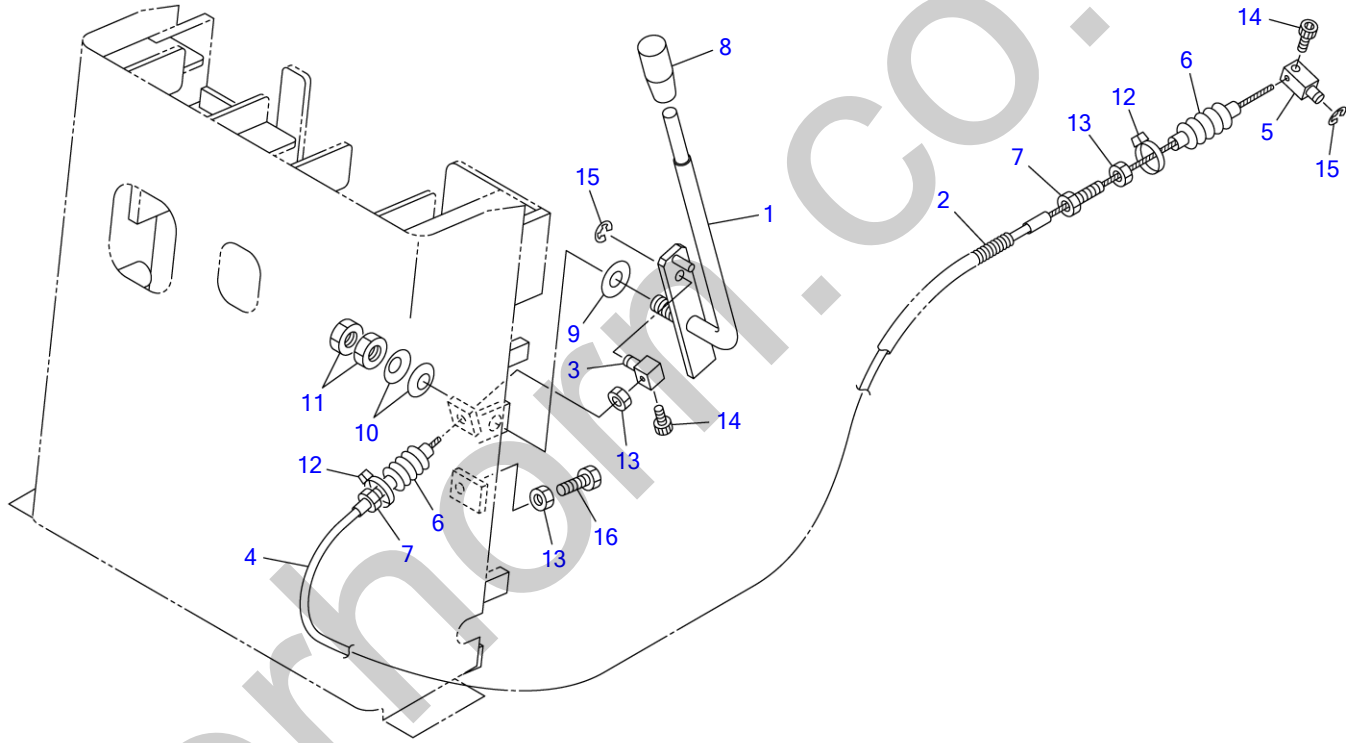

B5C060

S=1/5

silvernorm.co.uk

ENGINE CONTROL

Item	Part number	Description	Q'ty	Chan.	Serial No.	Serv.	Remarks
		CONTROL ASSY, engine					X03241-24000-2
1	0324124100	LEVER	1				
2	1703210745	BOOT	1				
3	0007900020	PIN	1				
4	0414105200	WIRE	1				
5	0007900050	PIN	1				
6	0007900014	BOOT	2				
7	0007900019	BOLT	2				
8	1650132050	GRIP	1				
9	1141540012	WASHER	1				
10	1225120012	WASHER, conical	2				
11	1130540012	NUT	2				
12	1652201003	BAND	2				
13	1130040008	NUT	3				
14	1110040510	SCREW, cap	2				
15	1224010006	RING, retaining	2				
16	1100040825	BOLT	1				
	B5c061						

silverhorn.co.uk

ELECTRICAL (10810004-10811299)

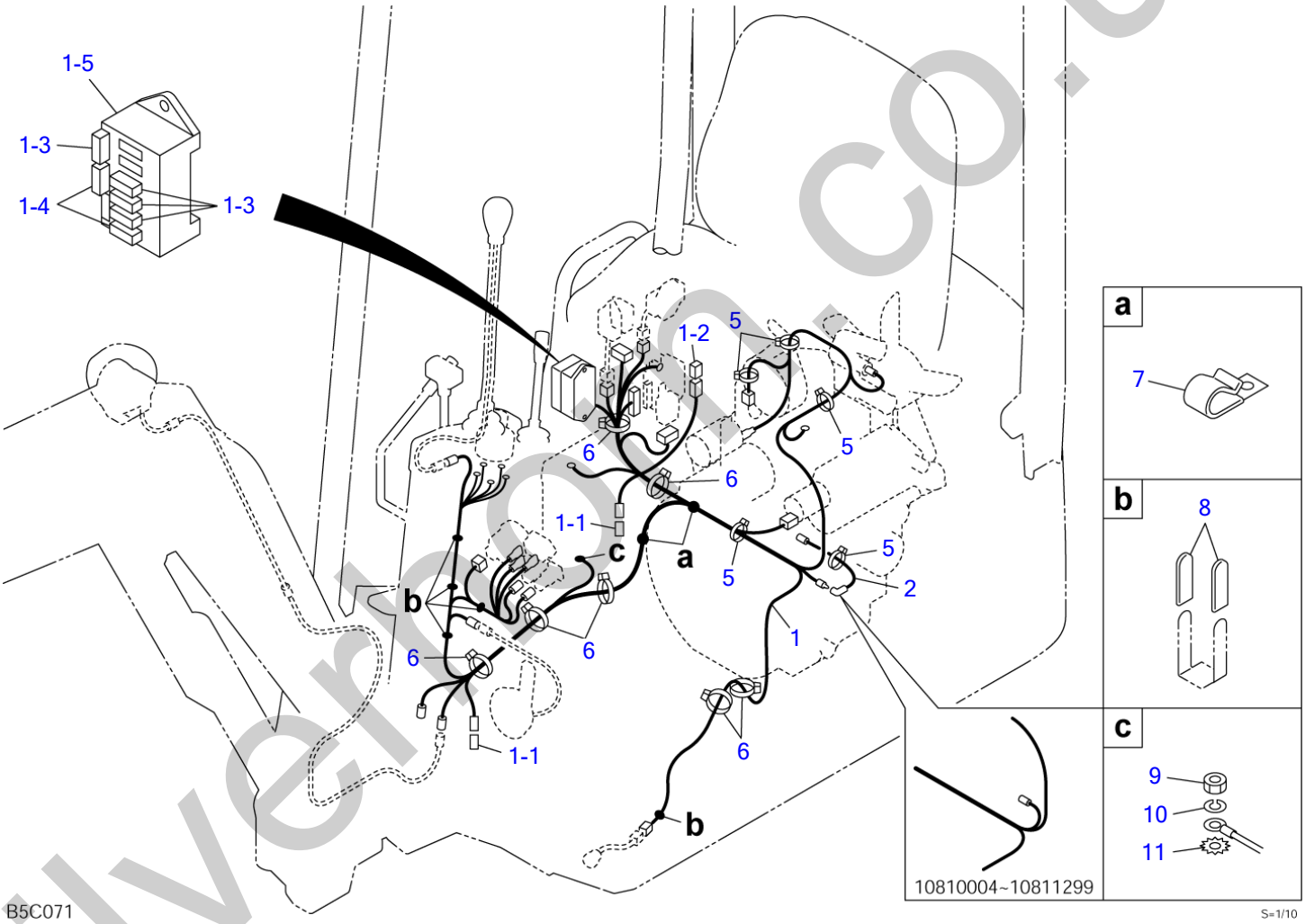

silverton.co.uk

ELECTRICAL (10810004-10811299)

Item	Part number	Description	Q'ty	Chan.	Serial No.	Serv.	Remarks
		ELECTRICAL ASSY					X03242-62000-3
1	0324262100	HARNESS ASSY, wiring	1				
1-1	1730500008	・DIODE (3A yellow)	2				
1-2	1701330045	・LINK, fusible	1				45A
1-3	1701310010	・FUSE	4				10A
1-4	1701310030	・FUSE	2				30A
1-5	0324262129	・BOX, fuse	1				
2	0324262200	HARNESS, wiring	1		10810307~		
5	1652231100	BAND	5				
6	1652231250	BAND	8				
7	1711900071	CLAMP	2				
8	0872433150	TUBE	9				
9	1130040008	NUT	1				
10	1140020008	WASHER, spring	1				
11	1140330008	WASHER	1				
	B5c071						

silverhorn.co.uk

ELECTRICAL (10811300-)

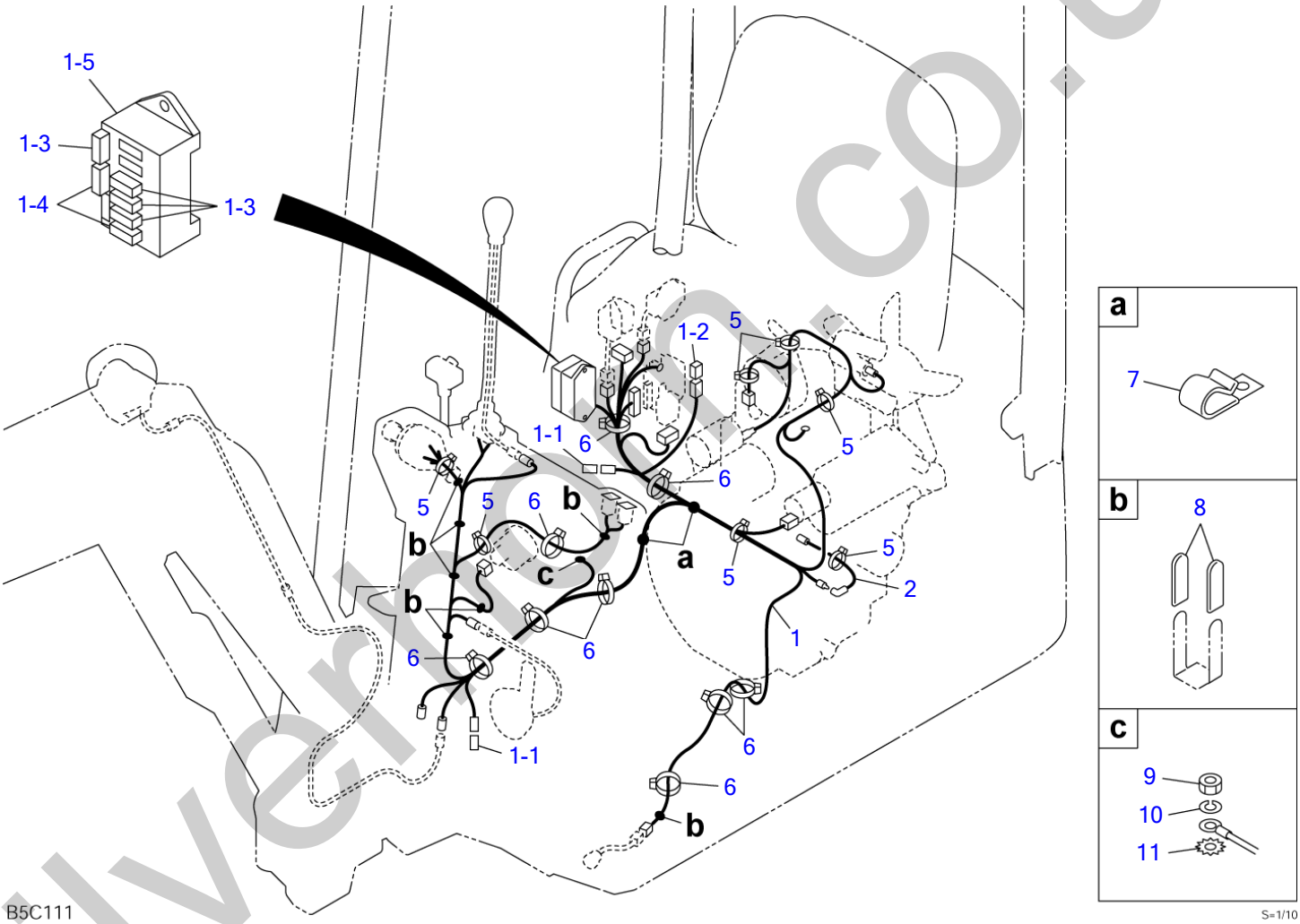

silvermoon.co.uk

ELECTRICAL (10811300-)

Item	Part number	Description	Q'ty	Chan.	Serial No.	Serv.	Remarks
		ELECTRICAL ASSY					X03242-64000-3
1	0324264200	HARNESS ASSY, wiring	1				
1-1	1730500008	・DIODE (3A yellow)	2				
1-2	1701330045	・LINK, fusible	1				45A
1-3	1701310010	・FUSE	4				10A
1-4	1701310030	・FUSE	2				30A
1-5	0324262129	・BOX, fuse	1				
2	0324262200	HARNESS, wiring	1				
5	1652231100	BAND	7			M	
6	1652231250	BAND	9				
7	1711900071	CLAMP	2				
8	0872433150	TUBE	10			M	
9	1130040008	NUT	1				
10	1140020008	WASHER, spring	1				
11	1140330008	WASHER	1				
	B5c111						

silverhorn.co.uk

TRAVEL ALARM (10810004-10810306)

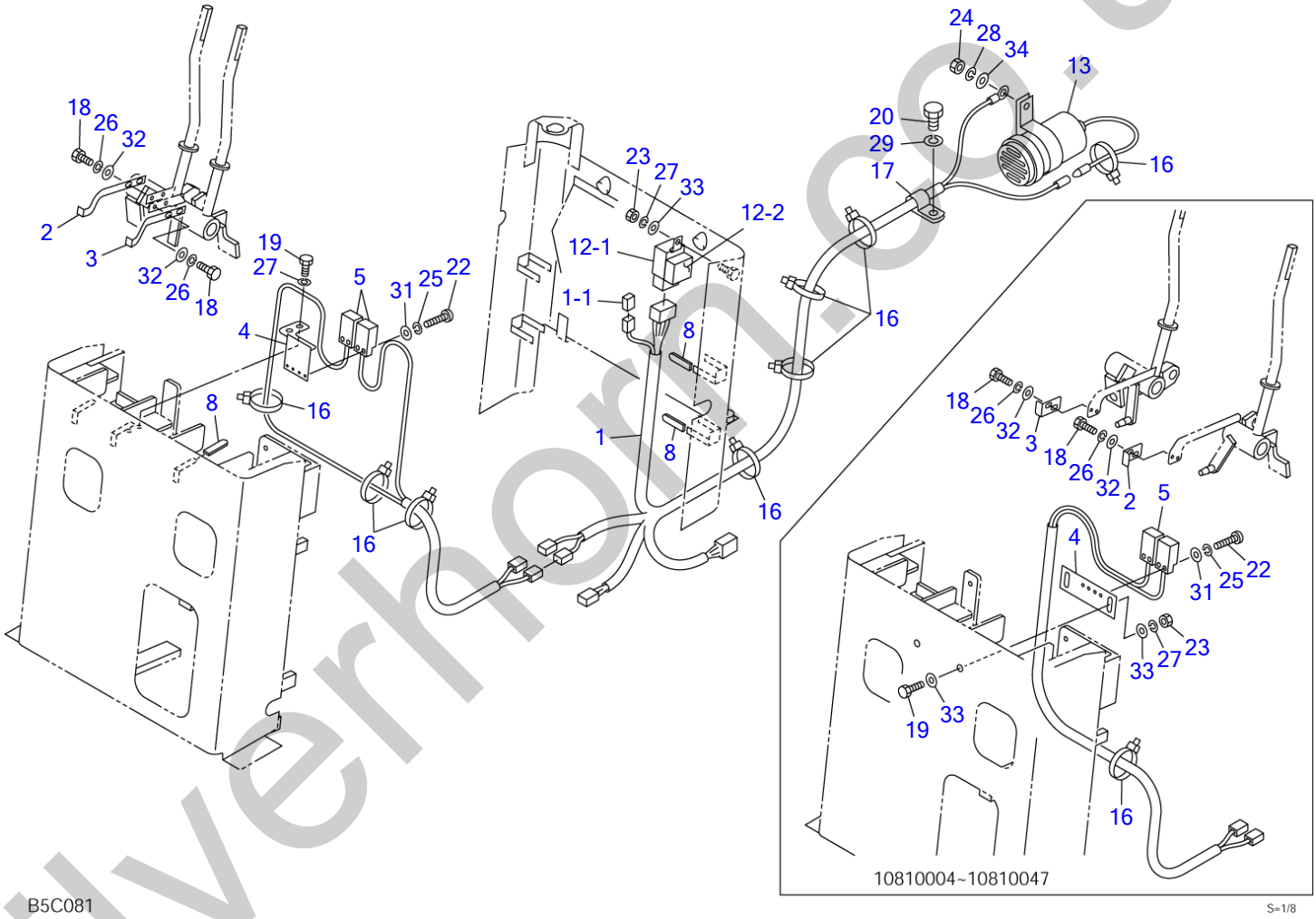

silverhorn.co.uk

TRAVEL ALARM (10810004-10810306)

Item	Part number	Description	Q'ty	Chan.	Serial No.	Serv.	Remarks
		ALAME ASSY, travel					X03242-61100-2
1	0324251150	HARNESS, wiring	1		10810004~10810047		
	0324261140	HARNESS, wiring	1	(H)	10810048~		
1-1	1730500008	・DIODE (3A, yellow)	1				
2	0324261020	PLATE	1		10810004~10810047		
	0324261210	PLATE	1		10810048~		
3	0324261030	PLATE	1		10810004~10810047		
	0324261220	PLATE	1		10810048~		
4	0324261040	PLATE	1		10810004~10810047		
	0324261130	PLATE	1		10810048~		
5	0324252100	SWITCH, proximity	1		10810004~10810047		
	1700009010	SWITCH, proximity	2		10810048~		
8	0872433150	TUBE	7		10810048~		
12	0334230130	RELAY ASSY	1				
12-1	1711900042	・RELAY	1				
12-2	1654302003	・SPONGE	1				
13	0354211050	BUZZER	1				
16	1652231250	BAND	8				
17	0007300035	CLAMP	1		10810004~10810047		
18	1100040410	BOLT	4		10810004~10810047		
	1100040510	BOLT	4		10810048~		
19	1100040616	BOLT	2				
20	1100041016	BOLT	1		10810004~10810047		
22	1120530312	SCREW	4				
23	1130030006	NUT	1				
24	1130030008	NUT	1				
25	1140020003	WASHER, spring	4				
26	1140020004	WASHER, spring	4		10810004~10810047		
	1140020005	WASHER, spring	4		10810048~		
27	1140020006	WASHER, spring	3				
28	1140020008	WASHER, spring	1				
29	1140020010	WASHER, spring	1		10810004~10810047		
31	1141110003	WASHER	4				
32	1141110004	WASHER	4		10810004~10810047		
	1141110005	WASHER	4		10810048~		
33	1141110006	WASHER	1				
34	1141110008	WASHER	1				
	B5c081						

silverhorn.co.uk

TRAVEL ALARM (10810307-)

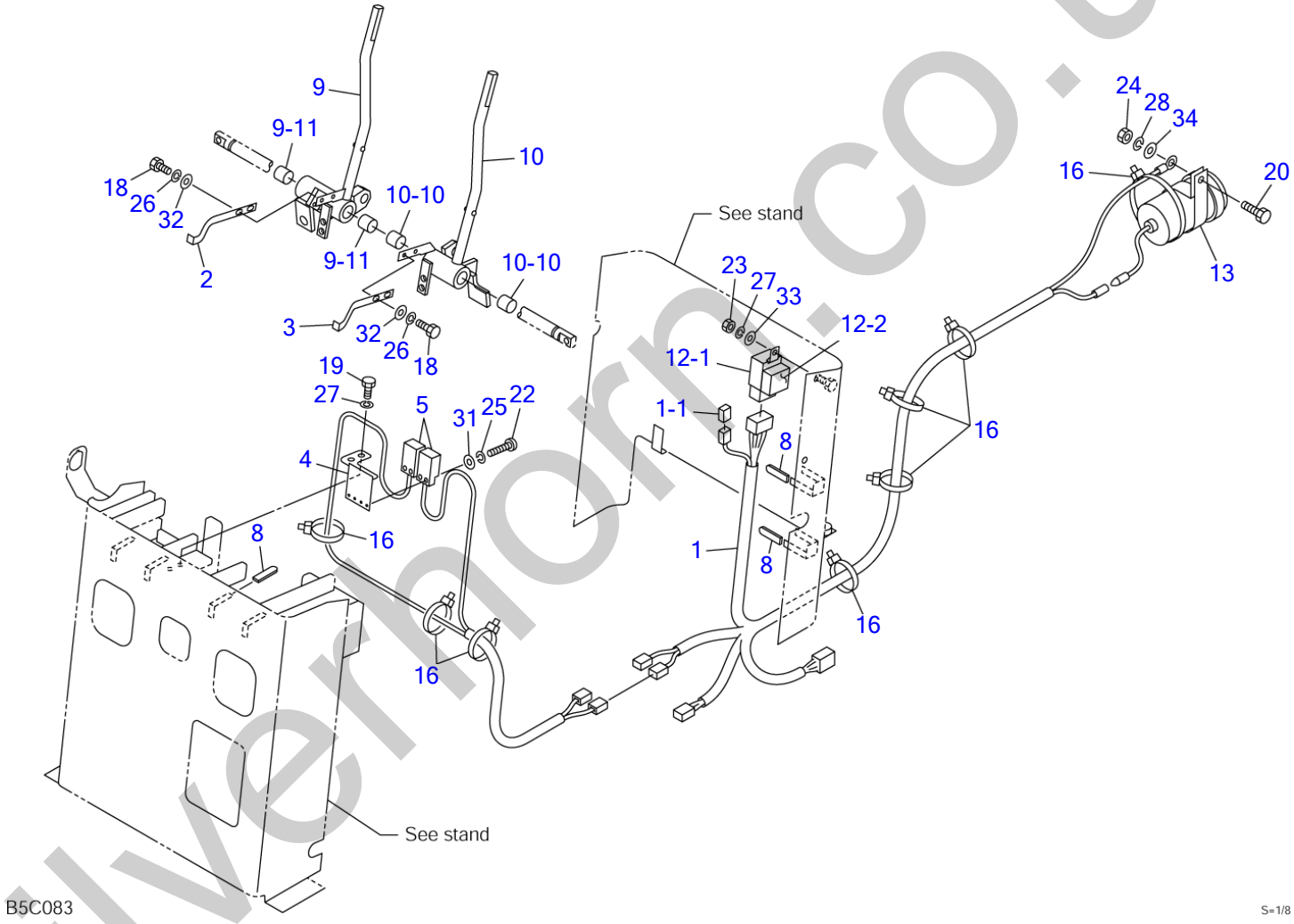

silverhorn.co.uk

TRAVEL ALARM (10810307-)

Item	Part number	Description	Q'ty	Chan.	Serial No.	Serv.	Remarks
		ALAME ASSY, travel					X03242-63000-3
1	0324261140	HARNESS, wiring	1				
1-1	1730500008	・DIODE (3A, yellow)	1				
2	0324261210	PLATE	1				
3	0324263010	PLATE	1				
4	0324261130	PLATE	1				
5	1700009010	SWITCH, proximity	2				
8	0872433150	TUBE	7				
9	0324263300	LEVER	1	A	10810307~10811356		
	0324263700	LEVER	1	a(H)	10811357~	M	
9-11	1333001515	・BUSHING	2				
10	0324263400	LEVER	1	A	10810307~10811356		
	0324263800	LEVER	1	a(H)	10811357~	M	
10-10	1333001515	・BUSHING	2				
12	0334230130	RELAY ASSY	1				
12-1	1711900042	・RELAY	1				
12-2	1654302003	・SPONGE	1				
13	0354211050	BUZZER	1				
16	1652231250	BAND	8				
18	1100040510	BOLT	4				
19	1100040616	BOLT	2				
20	1100040820	BOLT	1				
22	1120530312	SCREW	4				
23	1130030006	NUT	1				
24	1130030008	NUT	1				
25	1140020003	WASHER, spring	4				
26	1140020005	WASHER, spring	4				
27	1140020006	WASHER, spring	3				
28	1140020008	WASHER, spring	1				
31	1141110003	WASHER	4				
32	1141110005	WASHER	4				
33	1141110006	WASHER	1				
34	1141110008	WASHER	1				
		<<NOTE>>					
		SET "A" is interchangeable					
		with SET "a".					
	B5c084						

silverhorn.co.uk

BATTERY

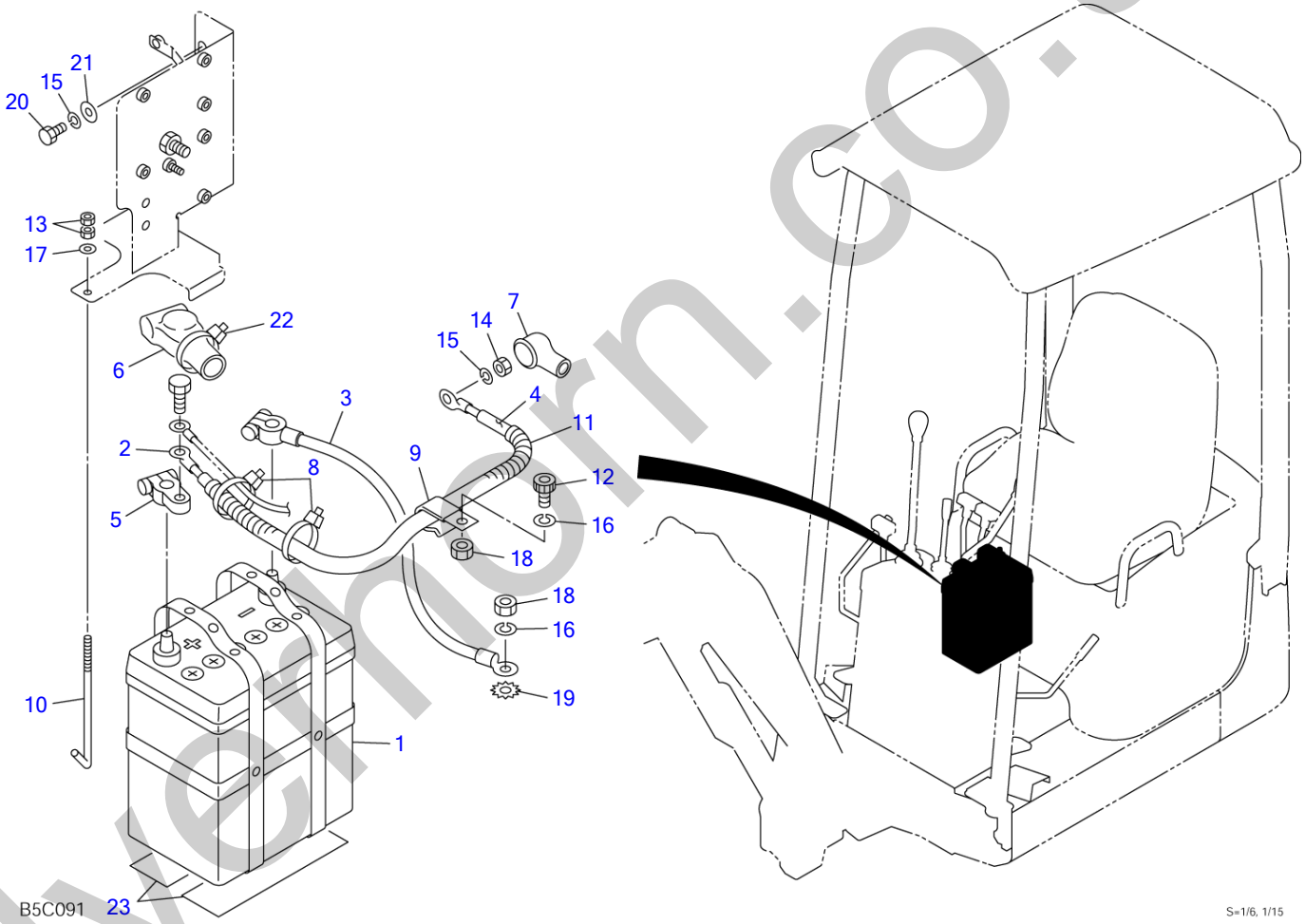

silvernorn.co.uk

BATTERY

Item	Part number	Description	Q'ty	Chan.	Serial No.	Serv.	Remarks
		BATTERY ASSY					X03244-54000-2
1	0324454100	BATTERY	1				
2	1702522035	CABLE, battery	1				
3	1702222032	CABLE, earth	1				
4	1703211024	BOOT	1				
5	1702330040	TERMINAL	1				
6	1702920060	COVER	1				
7	1910011119	CAP	1				Y124160-77020
8	1652231140	BAND	2				
9	1711900076	CLAMP	1				
10	1702106140	BOLT	1				
11	1532215024	TUBE	1				sold by the meter
12	1121041035	SCREW, cap	1				
13	1130040006	NUT	2				
14	1130040008	NUT	1				
15	1140020008	WASHER, spring	3				
16	1140020010	WASHER, spring	1				
17	1141110006	WASHER	1				
18	1130040010	NUT	2				
19	1140330010	WASHER	1				
20	1100040814	BOLT	2				
21	0003608252	WASHER	2				
22	1652201005	BAND	1				
23	1654705016	RUBBER	2				
	B5c091						

silverhorn.co.uk

MAINTENANCE LIGHT SOCKET

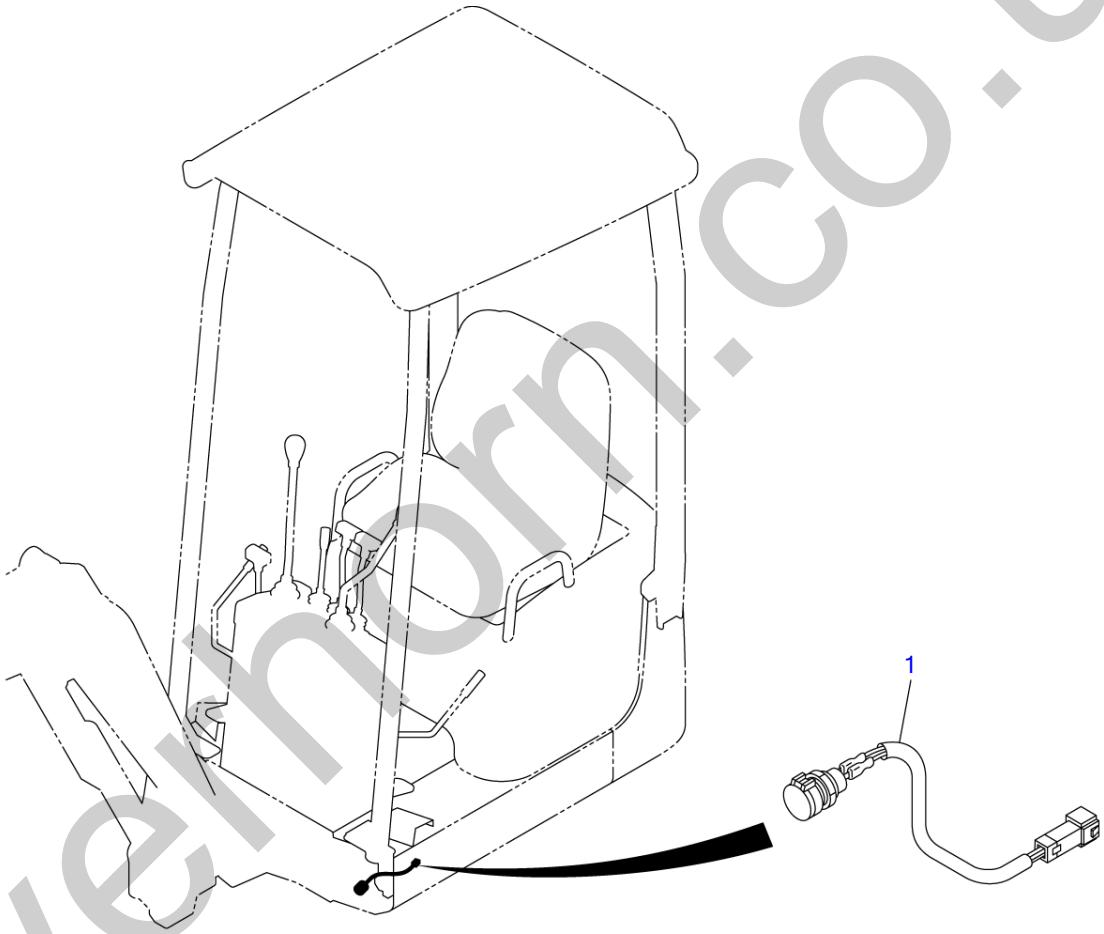

B5C100

S=1/4.5, 1/15

silverthorn.co.uk

MAINTENANCE LIGHT SOCKET

Item	Part number	Description	Q'ty	Chan.	Serial No.	Serv.	Remarks
		SOCKET ASSY, maintenance light					X03942-03000-3
1	**0394203100 B5c100**	SOCKET ASSY	1				

silverhorn.co.uk

GREASE PIPING

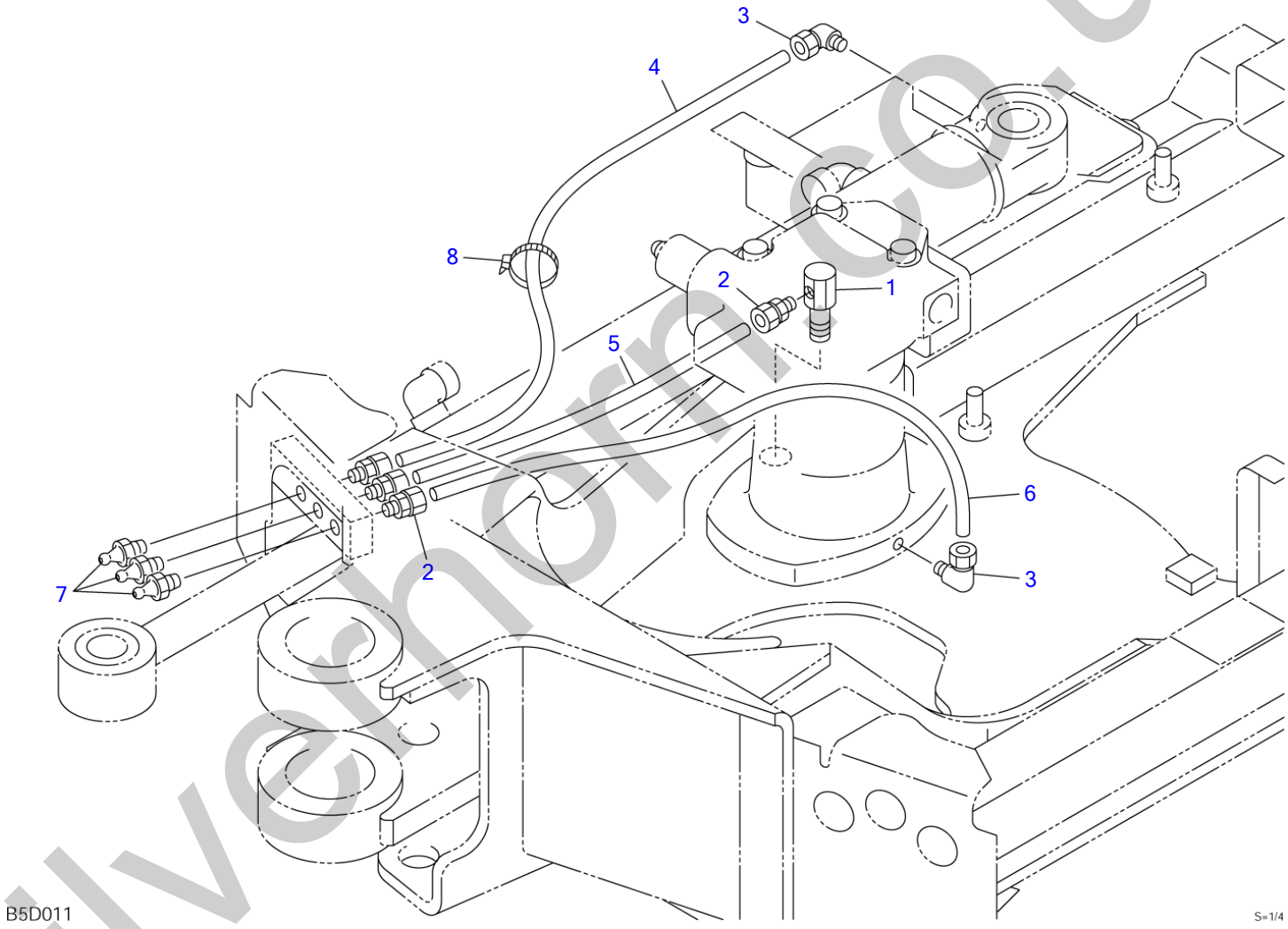

silvernorm.co.uk

GREASE PIPING

Item	Part number	Description	Q'ty	Chan.	Serial No.	Serv.	Remarks
		PIPING ASSY, grease					X03224-01000-0
1	0007262006	ELBOW	1		10810004~10810156		
	0007262011	ELBOW	1	(H)	10810157~		
2	1532520601	CONNECTOR	4				
3	1532620601	ELBOW	2				
4	1532020663	TUBE	1				sold by the meter
5	1532020635	TUBE	1		10810004~10810156		sold by the meter
	1532020634	TUBE	1		10810157~		sold by the meter
6	1532020650	TUBE	1		10810004~10810156		sold by the meter
	1532020644	TUBE	1		10810157~		sold by the meter
7	1560001000	FITTING, grease	3				
8	1652231100	BAND	1		10810157~		
	B5d011						

silverhorn.co.uk

VALVE & ACCESSORIES

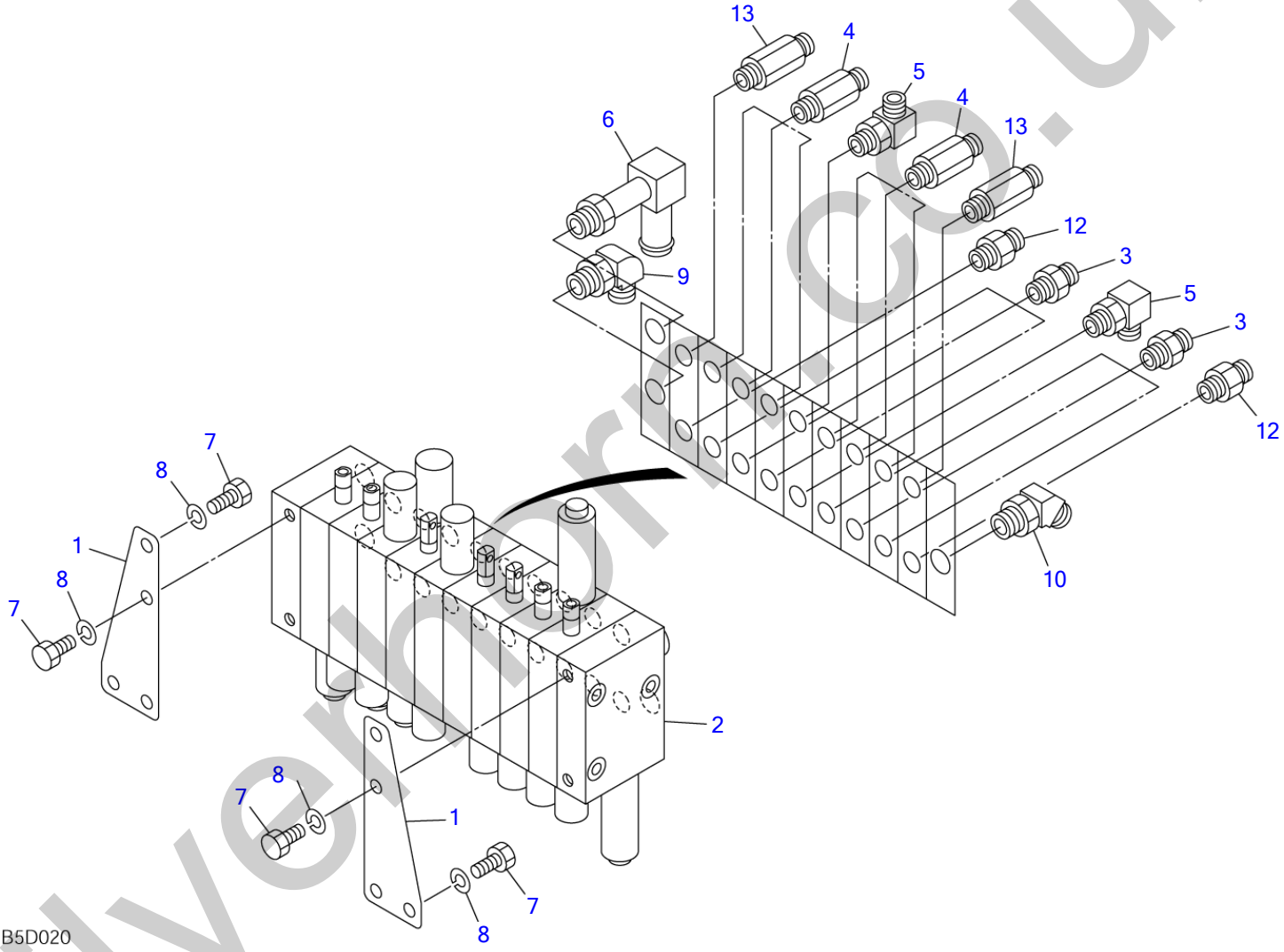

S=1/4

silverhorse.co.uk

VALVE & ACCESSORIES

Item	Part number	Description	Q'ty	Chan.	Serial No.	Serv.	Remarks
		VALVE ASSY, control					X03250-56000-4
1	0325054100	PLATE	2				
2	1901040200	VALVE, control	1				
3	1515600200	ADAPTOR	6				
	1420010110	・O-RING	1			M	
4	0007203034	ADAPTOR	6				
5	1515010130	ELBOW	2				
	1420010110	・O-RING	1			M	
6	1513350002	ELBOW	1				
	1420010140	・O-RING	1			M	
7	1100040816	BOLT	8				
8	1140020008	WASHER, spring	8				
9	1515010041	ELBOW	1				
	1420010140	・O-RING	1			M	
10	1515100111	ELBOW	1				
	1420010140	・O-RING	1			M	
12	0007203079	ADAPTOR	2				
13	0007203080	ADAPTOR	2				
	B5d021						

silverhorn.co.uk

PIPING; UPPER (1/2) (10810004-10810660)

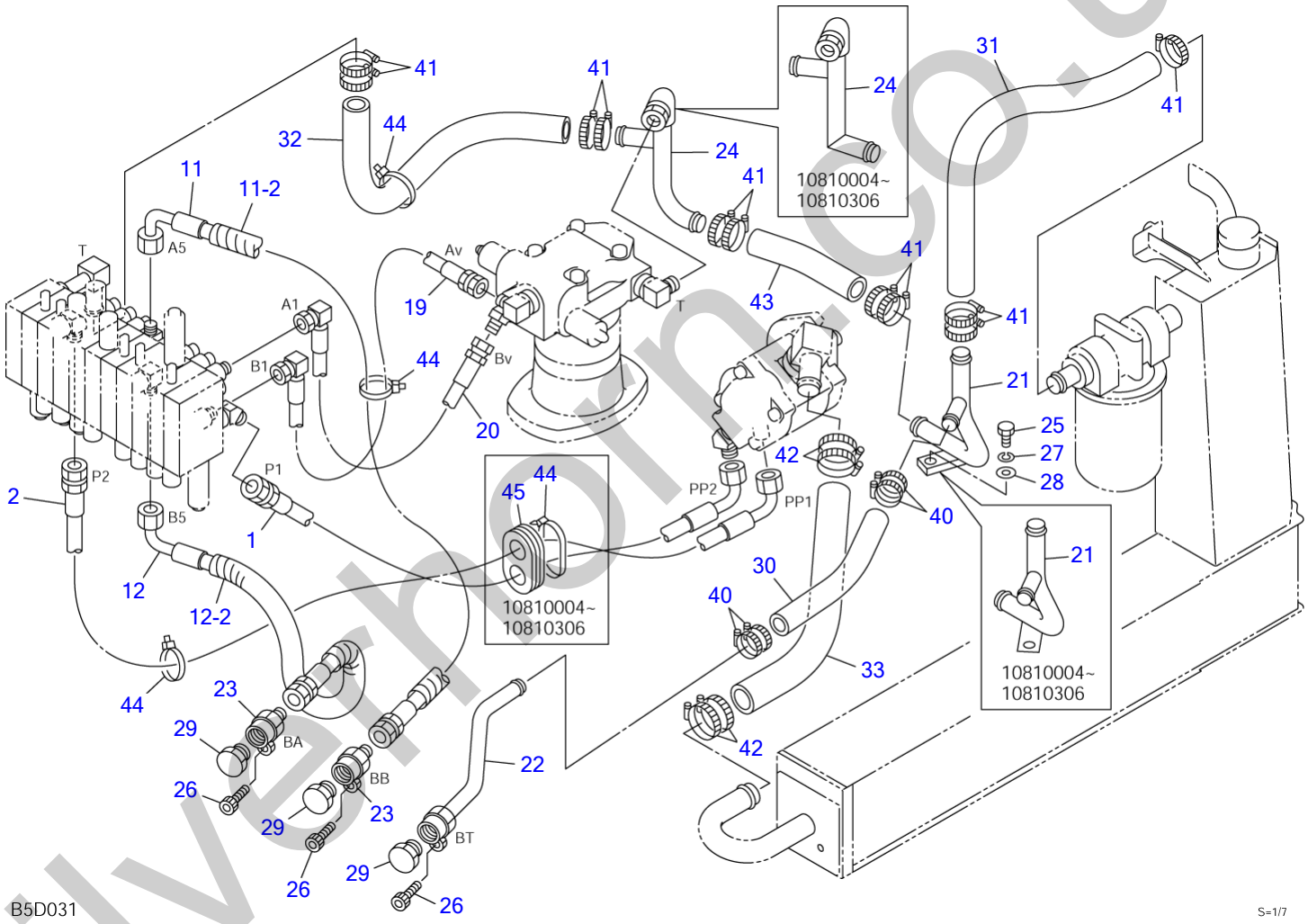

silverhorn.co.uk

PIPING; UPPER (1/2) (10810004-10810660)

Item	Part number	Description	Q'ty	Chan.	Serial No.	Serv.	Remarks
		PIPING ASSY, upper					X03270-58000-1
1	0327058160	HOSE ASSY	1				
2	0327058170	HOSE ASSY	1				
11	0327055110	HOSE ASSY	1				18015-21502
11-2	1532215036	・PROTECTOR	1				sold by the meter
12	0327055130	HOSE ASSY	1				18015-21052
12-2	1532215016	・PROTECTOR	1				sold by the meter
19	0327053420	HOSE ASSY	1				
20	0327053430	HOSE ASSY	1				
21	0327055210	PIPE	1	A	10810004~10810108		
	0327056210	PIPE	1	a(H)	10810109~10810306		
	0327058210	PIPE	1		10810307~		
22	0327055240	PIPE	1	A	10810004~10810108		
	0327056220	PIPE	1	a(H)	10810109~		
23	0417002200	ADAPTOR	2				
24	0327055230	PIPE	1		10810004~10810306		
	0327058230	PIPE	1		10810307~		
25	1100040814	BOLT	1				
26	1110040820	SCREW, cap	3				
27	1140020008	WASHER, spring	1				
28	1141110008	WASHER	1				
29	1501750004	PLUG	3				
	1420010180	・O-RING	1			M	
30	1530516016	HOSE	1	A	10810004~10810108		sold by the meter
	1530516012	HOSE	1	a(H)	10810109~		sold by the meter
31	1530519042	HOSE	1		10810004~10810306		sold by the meter
	1530519043	HOSE	1		10810307~		sold by the meter
32	1530519040	HOSE	1				sold by the meter
33	1530525037	HOSE	1		10810004~10810306		sold by the meter
	1530525035	HOSE	1		10810307~		sold by the meter
40	1533700025	BAND	4				
41	1533700028	BAND	11				
42	1533700041	BAND	4				
43	1530519013	HOSE	1		10810004~10810306		sold by the meter
	1530519010	HOSE	1		10810307~		sold by the meter
44	1652201007	BAND	4		10810004~10810306		
	1652201007	BAND	3		10810307~		
45	0097210300	GUARD	1		10810004~10810306		
		<<NOTE>>					
		SET "A" is interchangeable					
		with SET "a".					
	B5d032						

silverthorn.co.uk

PIPING; UPPER (2/2) (10810004-10810660)

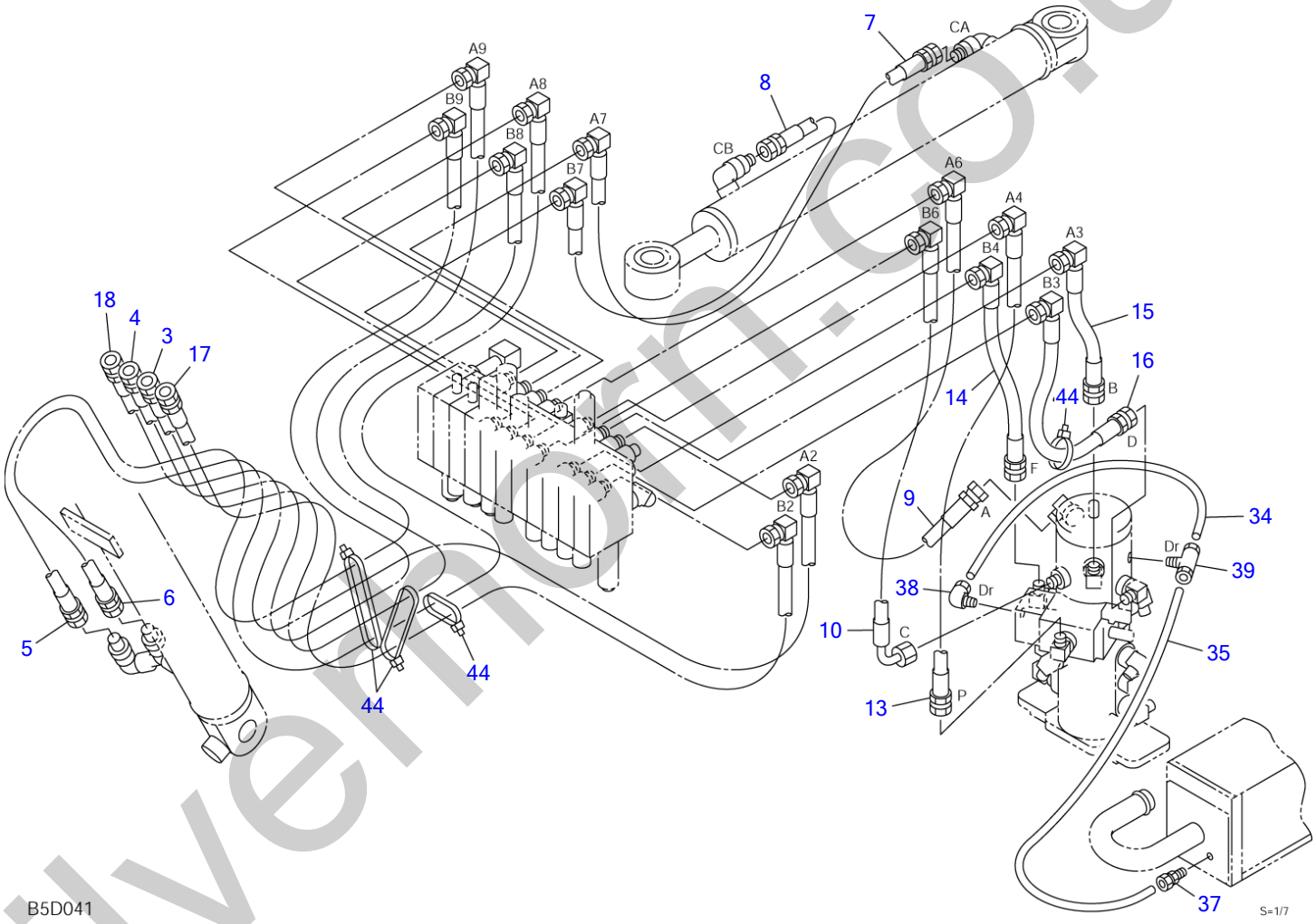

silvermorn.co.uk

PIPING; UPPER (2/2) (10810004-10810660)

Item	Part number	Description	Q'ty	Chan.	Serial No.	Serv.	Remarks
		PIPING ASSY, upper					X03270-58000-1
3	0327053260	HOSE ASSY	1				
4	0327053270	HOSE ASSY	1				
5	0327053280	HOSE ASSY	1				
6	0327053290	HOSE ASSY	1				
7	0327053300	HOSE ASSY	1				
8	0327053310	HOSE ASSY	1				
9	0327053320	HOSE ASSY	1				
10	0327053330	HOSE ASSY	1				
13	0327053360	HOSE ASSY	1				
14	0327053370	HOSE ASSY	1				
15	0327053380	HOSE ASSY	1				
16	0327053390	HOSE ASSY	1				
17	0327053400	HOSE ASSY	1				
18	0327053410	HOSE ASSY	1				
34	1532020624	TUBE	1				sold by the meter
35	1532020646	TUBE	1				sold by the meter
37	1532520601	CONNECTOR	1				
38	1532620601	ELBOW	1				
39	1532720601	TEE	1				
44	1652201007	BAND	4				
	B5d042						

silverhorn.co.uk

PIPING; UPPER (1/2) (10810661-)

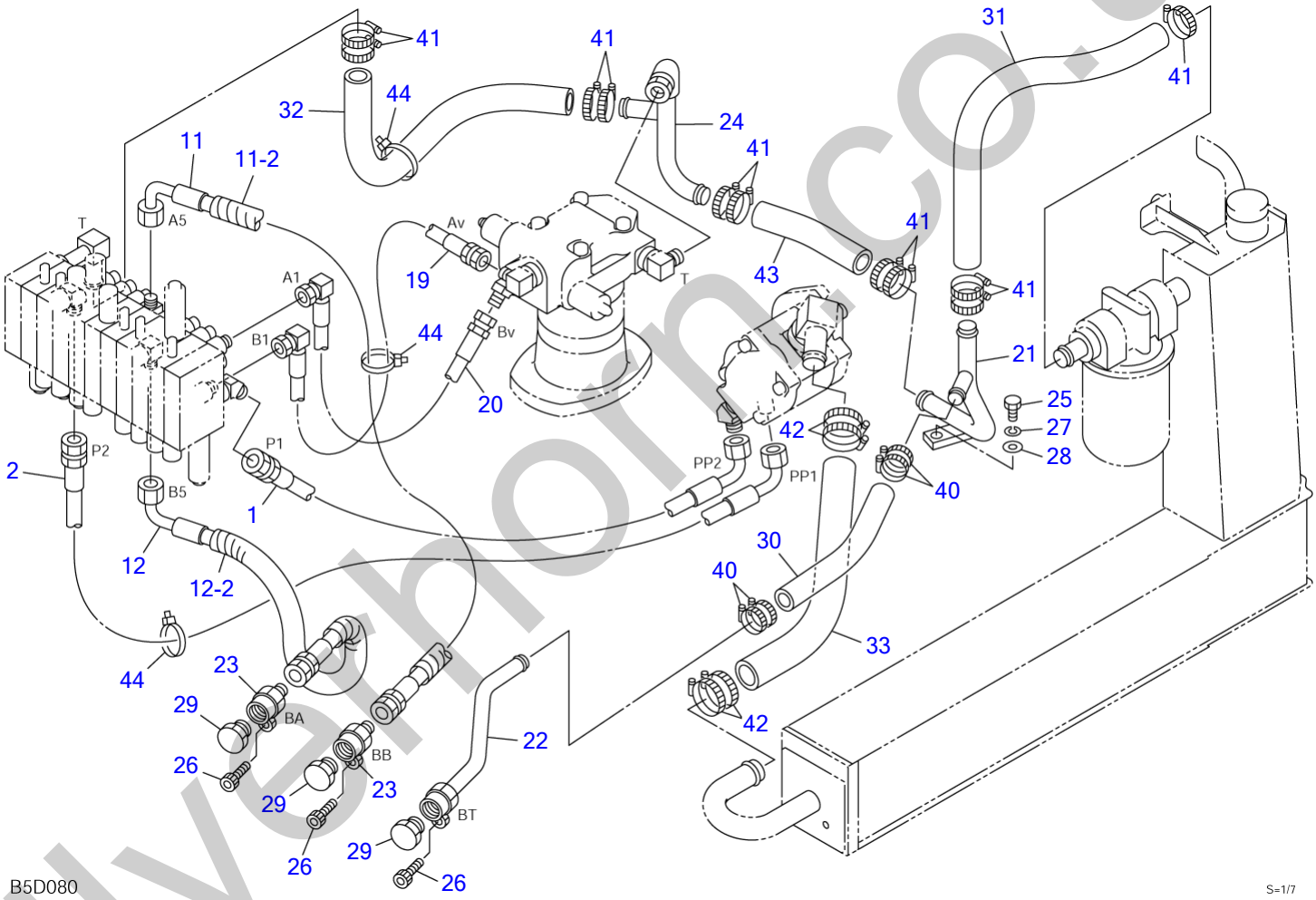

silverhorn.co.uk

PIPING; UPPER (1/2) (10810661-)

Item	Part number	Description	Q'ty	Chan.	Serial No.	Serv.	Remarks
		PIPING ASSY, upper					X03270-58600-0
1	0327058160	HOSE ASSY	1				
2	0327058170	HOSE ASSY	1				
11	0327055110	HOSE ASSY	1				18015-21502
11-2	1532215036	・PROTECTOR	1				sold by the meter
12	0327055130	HOSE ASSY	1				18015-21052
12-2	1532215016	・PROTECTOR	1				sold by the meter
19	0327053420	HOSE ASSY	1				
20	0327053430	HOSE ASSY	1				
21	0327058210	PIPE	1				
22	0327056220	PIPE	1				
23	0417002200	ADAPTOR	2				
24	0327058230	PIPE	1				
25	1100040820	BOLT	1				
26	1110040820	SCREW, cap	3				
27	1140020008	WASHER, spring	1				
28	1141110008	WASHER	1				
29	1501750004	PLUG	3				
	1420010180	・O-RING	1			M	
30	1530516012	HOSE	1				sold by the meter
31	1530519043	HOSE	1				sold by the meter
32	1530519040	HOSE	1				sold by the meter
33	1530525035	HOSE	1				sold by the meter
40	1533700025	BAND	4				
41	1533700028	BAND	11				
42	1533700041	BAND	4				
43	1530519010	HOSE	1				sold by the meter
44	1652201007	BAND	3				
	B5d080						

silverhorn.co.uk

PIPING; UPPER (2/2) (10810661-)

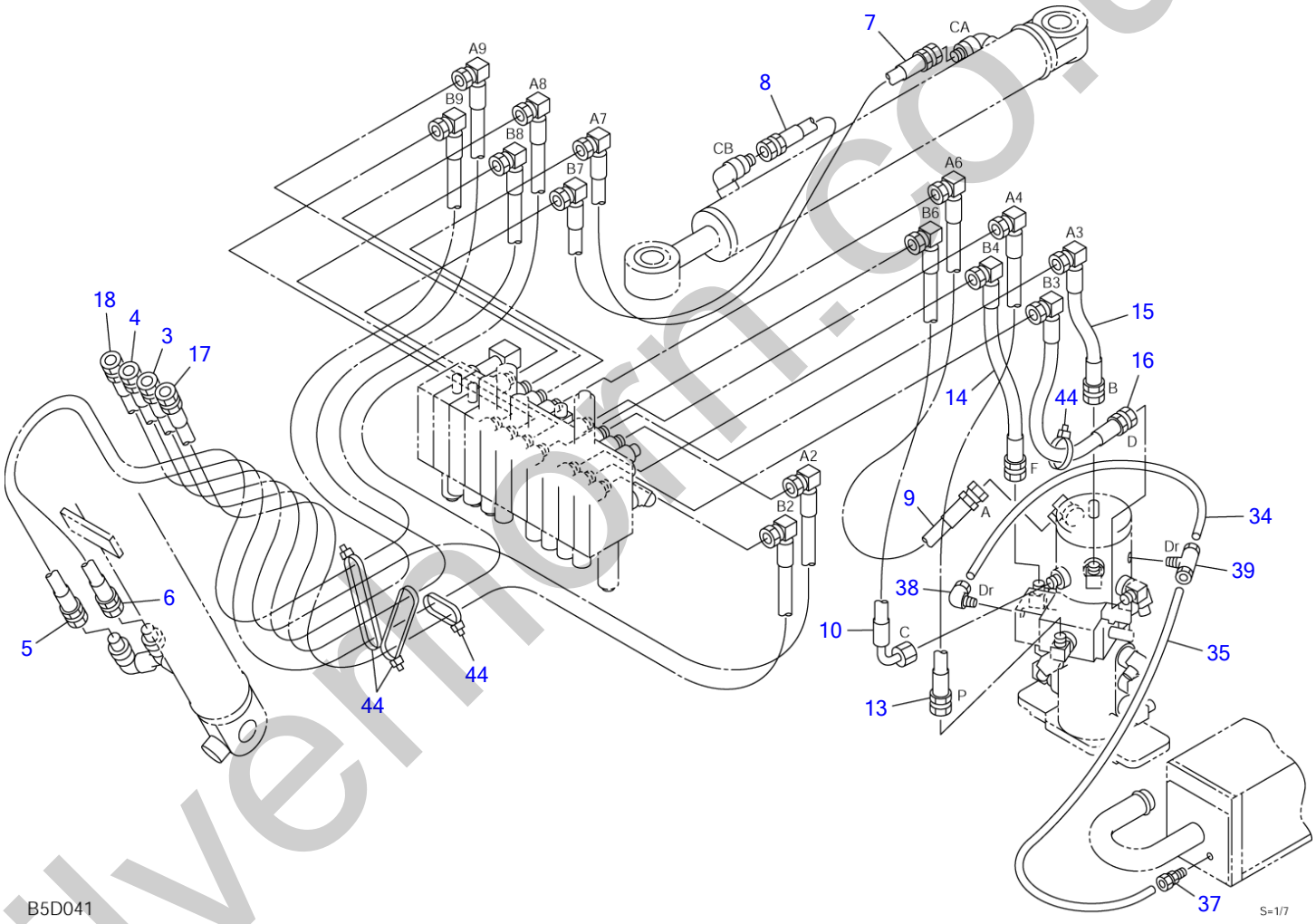

silvermorn.co.uk

PIPING; UPPER (2/2) (10810661-)

Item	Part number	Description	Q'ty	Chan.	Serial No.	Serv.	Remarks
		PIPING ASSY, upper					X03270-58600-0
3	0327058260	HOSE ASSY	1				
4	0327058270	HOSE ASSY	1				
5	0327058280	HOSE ASSY	1				
6	0327058290	HOSE ASSY	1				
7	0327053300	HOSE ASSY	1				
8	0327053310	HOSE ASSY	1				
9	0327053320	HOSE ASSY	1				
10	0327053330	HOSE ASSY	1				
13	0327053360	HOSE ASSY	1				
14	0327053370	HOSE ASSY	1				
15	0327053380	HOSE ASSY	1				
16	0327053390	HOSE ASSY	1				
17	0327058400	HOSE ASSY	1				
18	0327058410	HOSE ASSY	1				
34	1532020624	TUBE	1				sold by the meter
35	1532020646	TUBE	1				sold by the meter
37	1532520601	CONNECTOR	1				
38	1532620601	ELBOW	1				
39	1532720601	TEE	1				
44	1652201007	BAND	4				
	B5d090						

silverhorn.co.uk

PUMP DRIVE

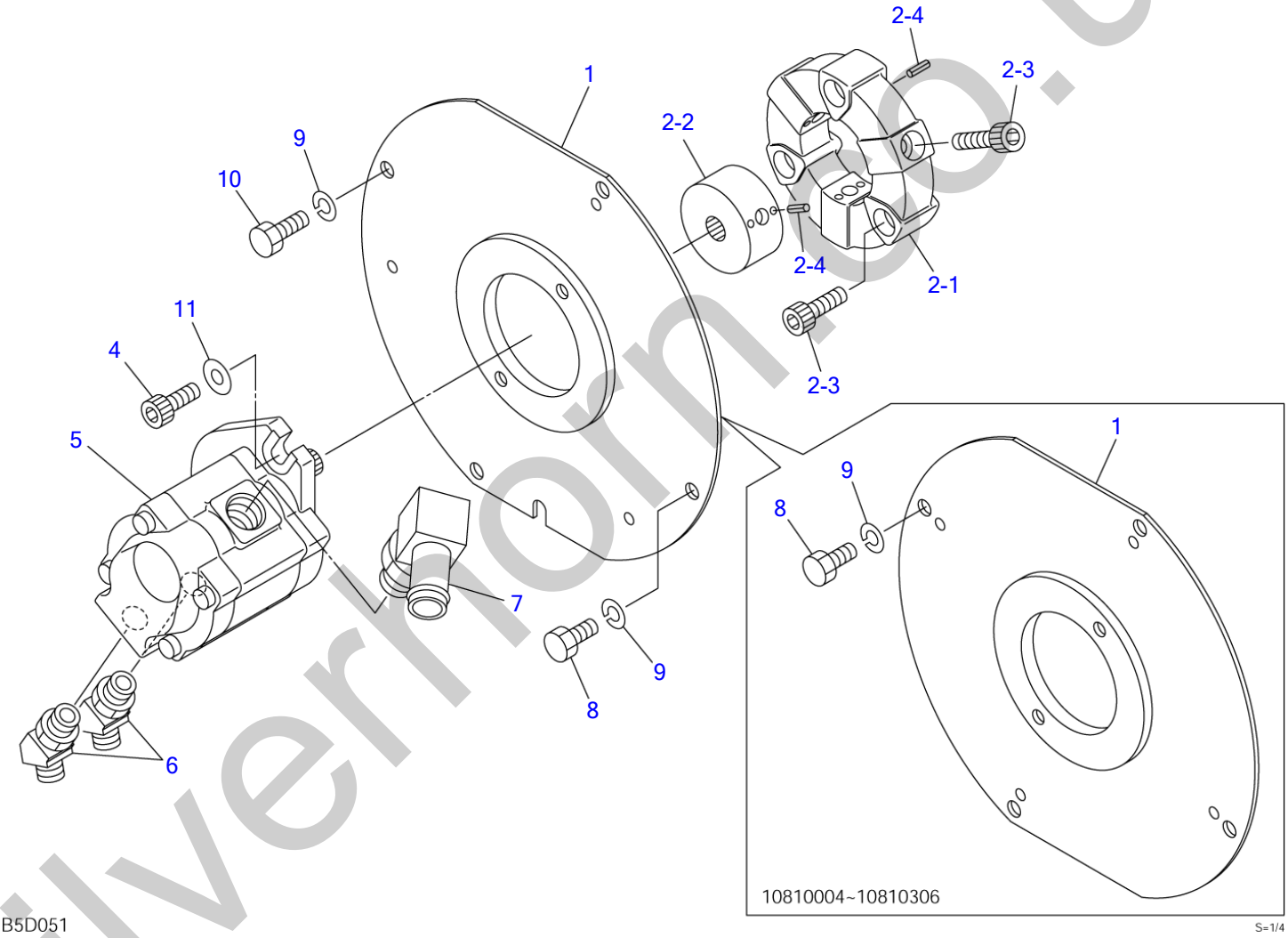

silverhorn.co.uk

PUMP DRIVE

Item	Part number	Description	Q'ty	Chan.	Serial No.	Serv.	Remarks
		PUMP ASSY, drive					X03252-03000-4
1	0325200100	PLATE	1		10810004~10810306		
	0325203200	PLATE	1	(H)	10810307~		
2	0325202100	COUPLING ASSY	1				
2-1	0325202101	・COUPLING, frex	1				
2-2	0325202102	・COUPLING	1				
2-3	1110041030	・SCREW, cap	6				
2-4	1213000408	・PIN, spring	9				
4	1110041025	SCREW, cap	2				
5	1902018900	PUMP, hydraulic	1				
6	1515100111	ELBOW	2				
	1420010140	・O-RING	1			M	
7	1513350005	CONNECTOR	1		10810004~10810114		
	1420010240	・O-RING	1			M	
	1513350023	CONNECTOR	1	(H)	10810115~		
	1420010240	・O-RING	1			M	
8	1100041016	BOLT	4		10810004~10810306		
	1100041016	BOLT	3		10810307~		
9	1140020010	WASHER, spring	6				
10	1100041020	BOLT	1		10810307~		
11	1141550010	WASHER	2				
	B5d051						

silverhorn.co.uk

HYDRAULIC TANK

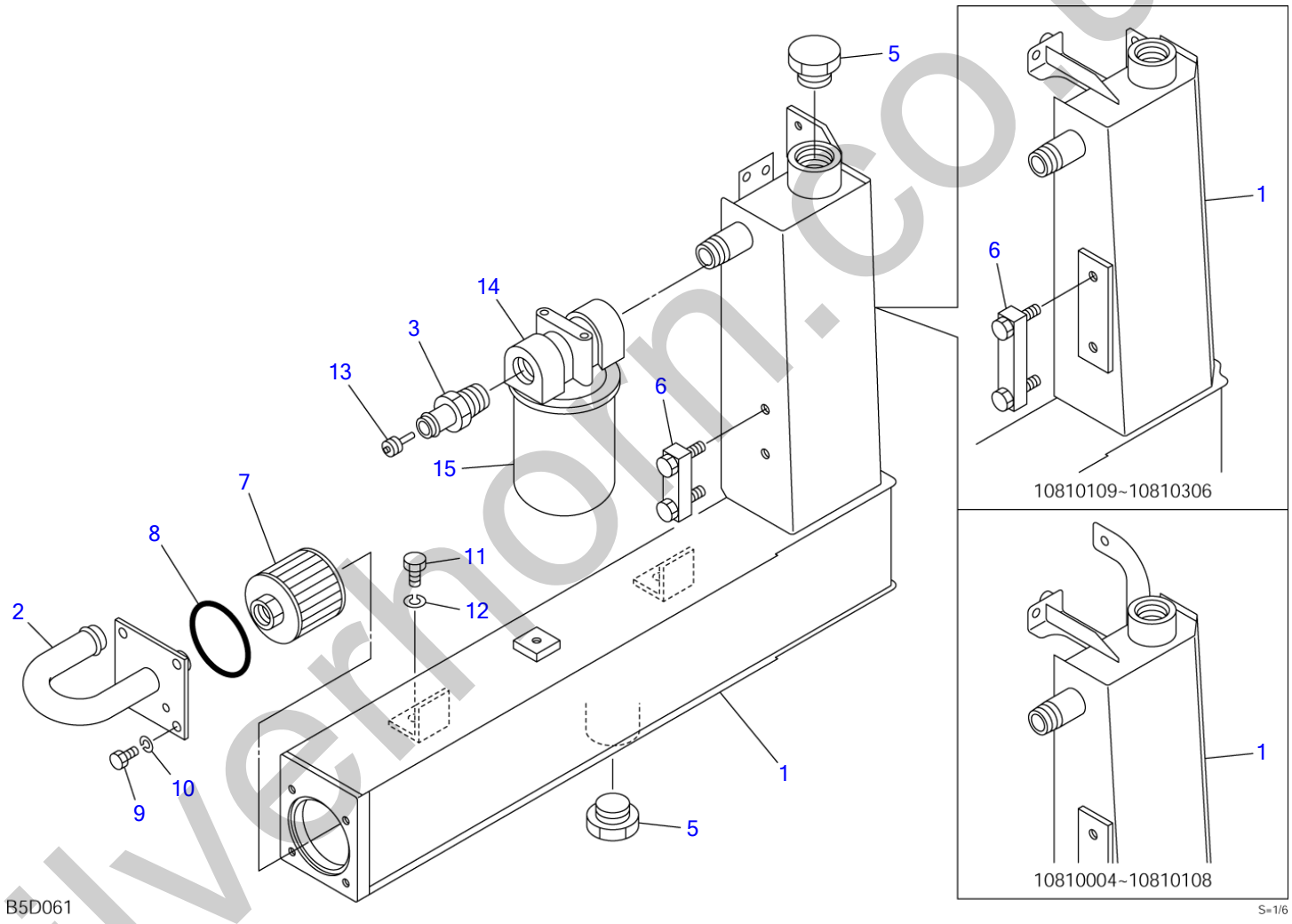

silvernorn.co.uk

HYDRAULIC TANK

Item	Part number	Description	Q'ty	Chan.	Serial No.	Serv.	Remarks
		TANK ASSY, hydraulic					X03280-54500-0
1	0328053100	TANK, hydraulic	1		10810004~10810108		
	0328054100	TANK, hydraulic	1		10810109~10810306		
	0328054700	TANK, hydraulic	1		10810307~		
2	0328053200	FLANGE	1	(L)	10810004~10810306		
	0328054300	FLANGE	1	(H)	10810307~		
3	0418002300	ADAPTOR	1				
5	1501750010	PLUG	2				
	1420010290	・O-RING	1			M	
6	1553020685	GAUGE	1		10810004~10810306		
	1553023650	GAUGE	1		10810307~		
7	1550004150	STRAINER	1				
8	1420100750	O-RING	1				
9	1100040814	BOLT	4				
10	1140020008	WASHER, spring	4				
11	1100041020	BOLT	2				
12	1140020010	WASHER, spring	2				
13	1540142220	VALVE, bypass	1				
14	1551020190	GUARD	1				
15	1551020310	CARTRIDGE	1				
	B5d061						

silverhorn.co.uk

FUEL TANK & FUEL PIPING

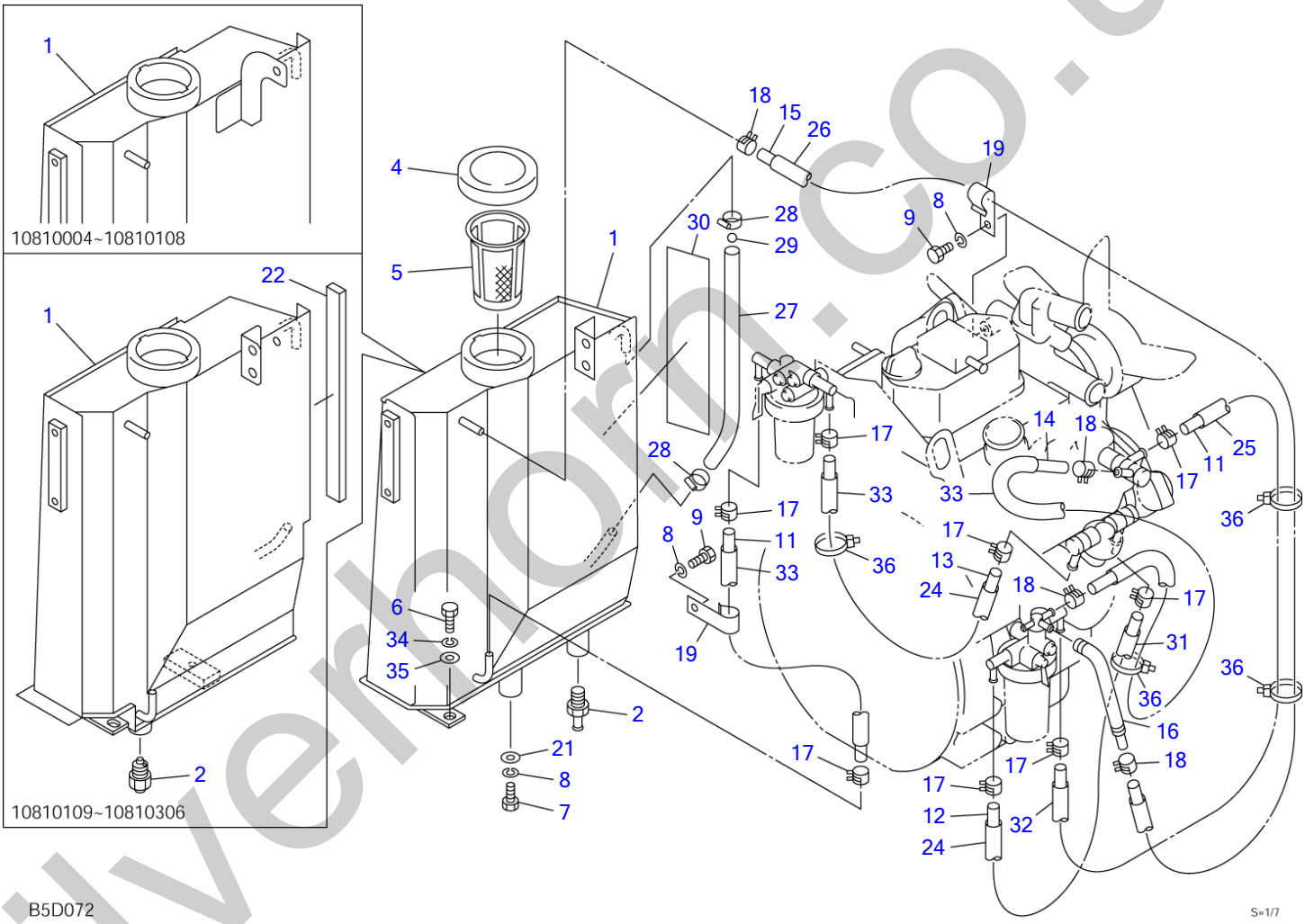

silverthorn.co.uk

FUEL TANK & FUEL PIPING

Item	Part number	Description	Q'ty	Chan.	Serial No.	Serv.	Remarks
		TANK ASSY, fuel					03281-55500-1
1	0328154100	TANK	1		10810004~10810108		
	0328155100	TANK	1		10810109~10810306		
	0328155700	TANK	1		10810307~		
2	0328154002	ADAPTOR	1	(L)	10810004~10810306		
	0007200090	ADAPTOR	1		10810307~		
4	1552001022	COVER	1				
5	1552002012	STRAINER	1				
6	1100041020	BOLT	1				
7	1100040816	BOLT	1				
8	1140020008	WASHER, spring	3				
9	1100040812	BOLT	2				
11	1531207052	HOSE	2				sold by the meter
12	1531207045	HOSE	1				sold by the meter
13	1531207068	HOSE	1				sold by the meter
14	1531211067	HOSE	1				sold by the meter
15	1531211076	HOSE	1				sold by the meter
16	1910065047	BEND	1				Y 119840-59601
17	1533120012	BAND	8				
18	1533120010	BAND	6				
19	0007300035	CLAMP	2				
21	1141110008	WASHER	1				
22	1654306028	SPONGE	1		10810004~10810306		sold by the meter
24	1531115015	PROTECTOR	2				sold by the meter
25	1531115010	PROTECTOR	1				sold by the meter
26	1531115073	PROTECTOR	1				sold by the meter
27	1531010030	PROTECTOR	1				sold by the meter
28	1533700015	BAND	2				
29	1553000001	FLOAT	1				
30	0339330900	DECAL	1				
31	1531115025	PROTECTOR	1				sold by the meter
32	1531115037	PROTECTOR	1				sold by the meter
33	1531115048	PROTECTOR	3				sold by the meter
34	1140020010	WASHER, spring	1				
35	1141110010	WASHER	1				
36	1652201005	BAND	4				
	B5d072						

silverhorn.co.uk

COVER (1/2) (10810004-10810306)

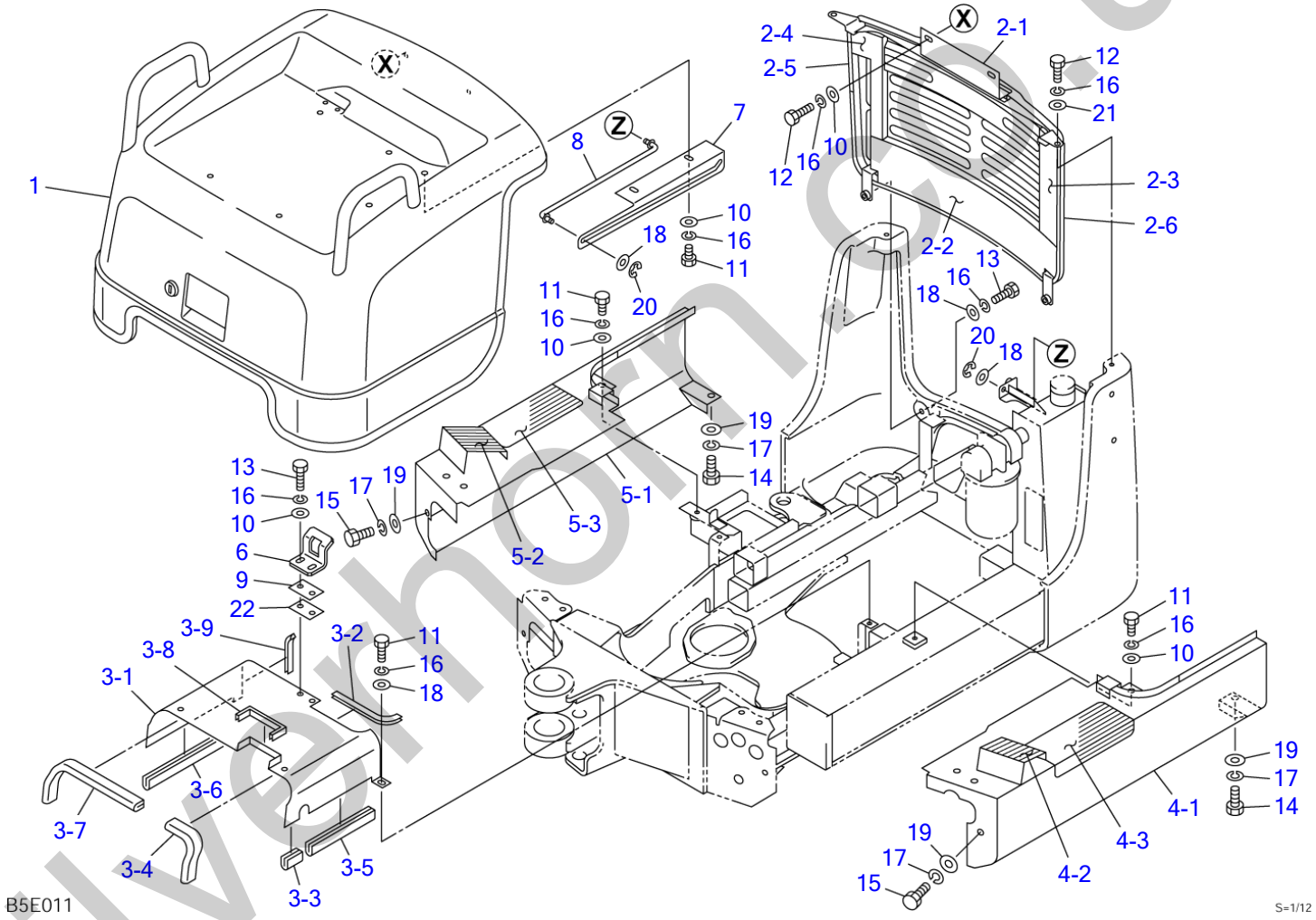

silverhorn.co.uk

COVER (1/2) (10810004-10810306)

Item	Part number	Description	Q'ty	Chan.	Serial No.	Serv.	Remarks
		COVER ASSY					X03282-56000-4
1	0328256100	HOOD, engine	1				2)/see page (2/2)
2	0328256300	COVER ASSY, rear	1				
2-1	0328256400	・COVER	1				
2-2	0328256302	・ABSORBENT, noise	1				
2-3	0328256303	・ABSORBENT, noise	1				
2-4	0328256304	・ABSORBENT, noise	1				
2-5	1654318014	・SPONGE	1				sold by the meter
2-6	1654318100	・SPONGE	1				sold by the meter
3	0328256500	COVER ASSY, center	1				
3-1	0328256510	・COVER	1				
3-2	1653916014	・TRIM	1				sold by the meter
3-3	1654606003	・SEAL	1				sold by the meter
3-4	1654606013	・SEAL	1				sold by the meter
3-5	1654606016	・SEAL	1				sold by the meter
3-6	1654606021	・SEAL	1				sold by the meter
3-7	1654606028	・SEAL	1				sold by the meter
3-8	1654605012	・SEAL	1				sold by the meter
3-9	1653916008	・TRIM	1				sold by the meter
4	0328256600	COVER ASSY, side (L.H.)	1				
4-1	0328256610	・COVER, side (L.H.)	1				
4-2	0333241250	・SHEET	1				
4-3	0358202400	・SHEET	1				
5	0328256700	COVER ASSY, side (R.H.)	1				
5-1	0328256710	・COVER, side (R.H.)	1				
5-2	0333241250	・SHEET	1				
5-3	0358202400	・SHEET	1				
6	0328256006	HOOK	1				
7	0328256007	PLATE	1				
8	0328254080	ROD	1				
9	0003900028	SPACER	1				
10	0003608252	WASHER	8				
11	1100040816	BOLT	8				
12	1100040820	BOLT	4				
13	1100040825	BOLT	4				
14	1100041020	BOLT	2				
15	1100041025	BOLT	6				
16	1140020008	WASHER, spring	16				
17	1140020010	WASHER, spring	8				
18	1141110008	WASHER	8				
19	1141110010	WASHER	8				
20	1224010006	RING, retaining	2				
21	1141550008	WASHER	2				
22	0003900027	SPACER	AR				t=2.3
	B5e011						

silverhorn.co.uk

COVER (2/2) (engine hood; 10810004-10810306)

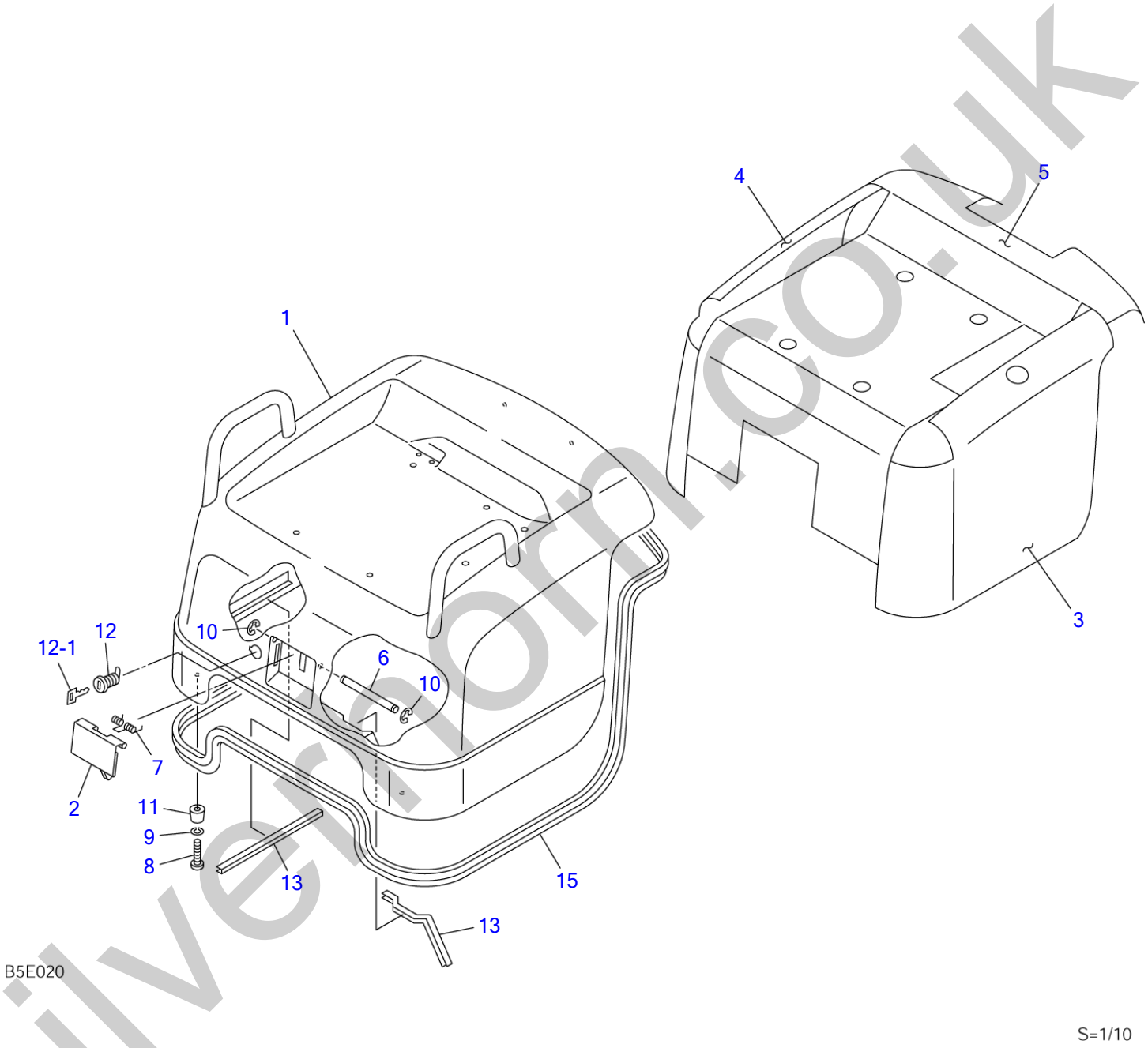

silvermorn.co.uk

COVER (2/2) (engine hood; 10810004-10810306)

Item	Part number	Description	Q'ty	Chan.	Serial No.	Serv.	Remarks
0-1	0328256100	HOOD, engine	1				
1	0328256200	・HOOD, engine	1				
2	0328256120	・HANDLE	1				
3	0328256106	・ABSORBENT, noise (L.H.)	1				
4	0328256107	・ABSORBENT, noise (R.H.)	1				
5	0328256105	・ABSORBENT, noise	1				
6	0004206111	・SHAFT	1				
7	0007000095	・SPRING	1				
8	1120530416	・SCREW	2				
9	1140020004	・WASHER, spring	2				
10	1224010004	・RING, retaining	2				
11	1652112320	・RUBBER	2				
12	1653611836	・LOCK	1				
12-1	1700100019	・KEY	1				
13	1653916023	・TRIM	2				sold by the meter
15	1654606296	・SEAL	1				sold by the meter
	B5e023						

silverhorn.co.uk

COVER (1/2) (10810307-)

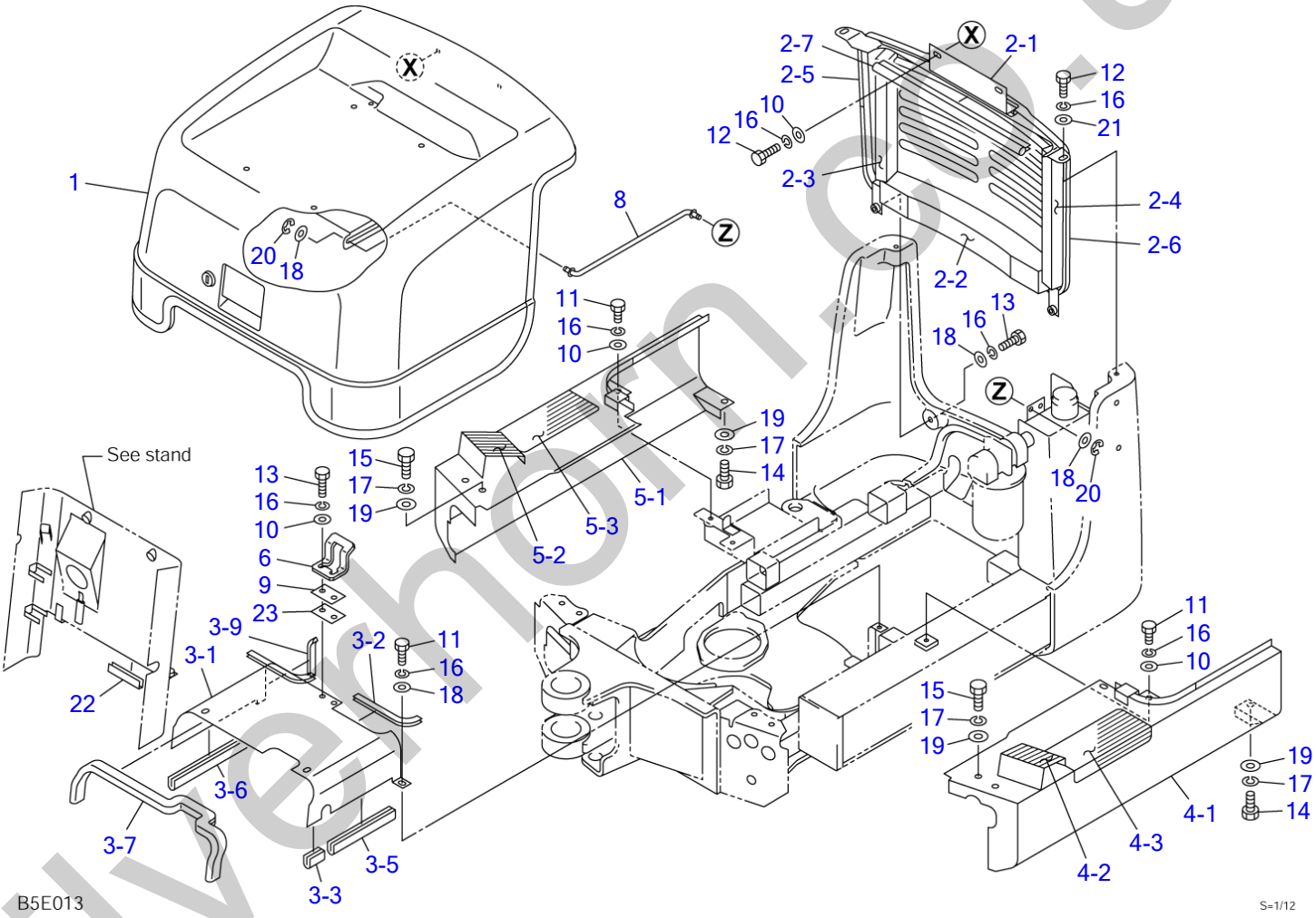

silverhorn.co.uk

COVER (1/2) (10810307-)

Item	Part number	Description	Q'ty	Chan.	Serial No.	Serv.	Remarks
		COVER ASSY					X03282-57000-1
1	0328257100	HOOD, engine	1				2)/see page (2/2)
2	0328257300	COVER ASSY, rear	1				
2-1	0328257900	・COVER	1				
2-2	0328257302	・ABSORBENT, noise	1				
2-3	0328257303	・ABSORBENT, noise	1				
2-4	1654342030	・SPONGE	1				sold by the meter
2-5	1654318014	・SPONGE	1				sold by the meter
2-6	1654318100	・SPONGE	1				sold by the meter
2-7	1654625038	・SEAL	1				sold by the meter
3	0328257500	COVER ASSY, center	1				
3-1	0328257520	・COVER	1				
3-2	1653916014	・TRIM	1				sold by the meter
3-3	1654606003	・SEAL	1				sold by the meter
3-5	1654606015	・SEAL	1				sold by the meter
3-6	1654606020	・SEAL	1				sold by the meter
3-7	1654606050	・SEAL	1				sold by the meter
3-9	1653916008	・TRIM	1				sold by the meter
4	0328257600	COVER ASSY, side (L.H.)	1				
4-1	0328257610	・COVER, side (L.H.)	1				
4-2	0333241250	・SHEET	1				
4-3	0358202400	・SHEET	1				
5	0328257700	COVER ASSY, side (R.H.)	1				
5-1	0328257710	・COVER, side (R.H.)	1				
5-2	0333241250	・SHEET	1				
5-3	0358202400	・SHEET	1				
6	0328257006	HOOK	1				
8	0328257080	ROD	1				
9	0003900028	SPACER	1				
10	0003608252	WASHER	6				
11	1100040816	BOLT	6				
12	1100040820	BOLT	4				
13	1100040825	BOLT	4				
14	1100041020	BOLT	2				
15	1100041025	BOLT	4				
16	1140020008	WASHER, spring	12				
17	1140020010	WASHER, spring	6				
18	1141110008	WASHER	8				
19	1141110010	WASHER	6				
20	1224010006	RING, retaining	2				
21	1141550008	WASHER	2				
22	1654623008	SEAL	1				sold by the meter
23	0003900027	SPACER	AR				t=2.3
		<<NOTE>>					
		Page 5-3 Item 2-1 (03282-57900)					
		is interchangeable with					
		Page 5-1 Item 2-1 (03282-56400)					
	B5e014						

silverform.co.uk

COVER (2/2) (engine hood; 10810307-)

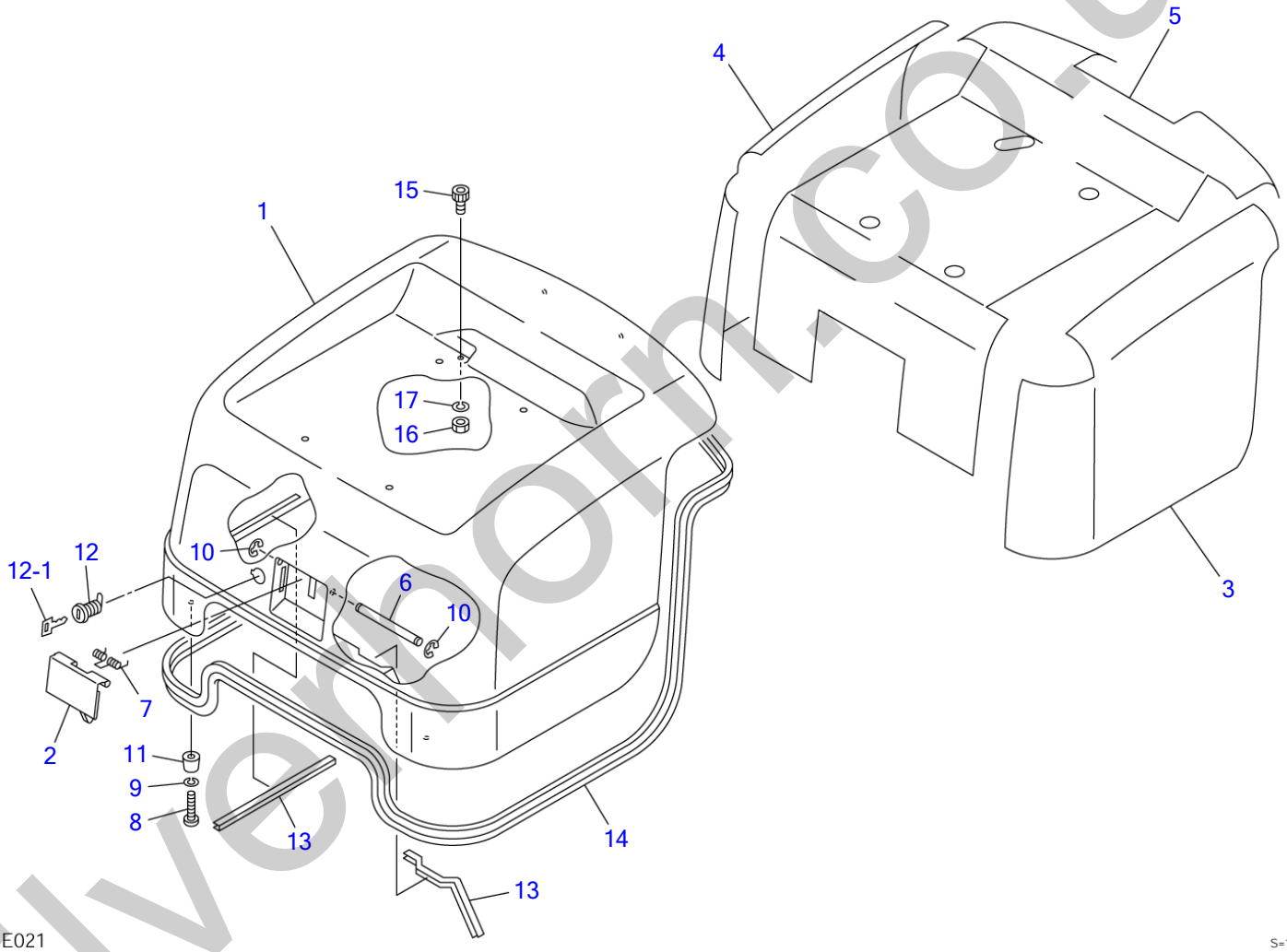

silvernorn.co.uk

COVER (2/2) (engine hood; 10810307-)

Item	Part number	Description	Q'ty	Chan.	Serial No.	Serv.	Remarks
0-1	0328257100	HOOD, engine	1				
1	0328257800	・HOOD, engine	1				
2	0328257120	・HANDLE	1				
3	0328257103	・ABSORBENT, noise (L.H.)	1				
4	0328257104	・ABSORBENT, noise (R.H.)	1				
5	0328257105	・ABSORBENT, noise	1				
6	0004206111	・SHAFT	1				
7	0007000095	・SPRING	1				
8	1120530416	・SCREW	2				
9	1140020004	・WASHER, spring	2				
10	1224010004	・RING, retaining	2				
11	1652112320	・RUBBER	2				
12	1653611836	・LOCK	1				
12-1	1700100019	・KEY	1				
13	1653916023	・TRIM	2				sold by the meter
14	1654606296	・SEAL	1				sold by the meter
15	1110040816	・SCREW, cap	1				
16	1130040008	・NUT	1				
17	1140020008	・WASHER, spring	1				
	B5e024						

silverhorn.co.uk

SEAT

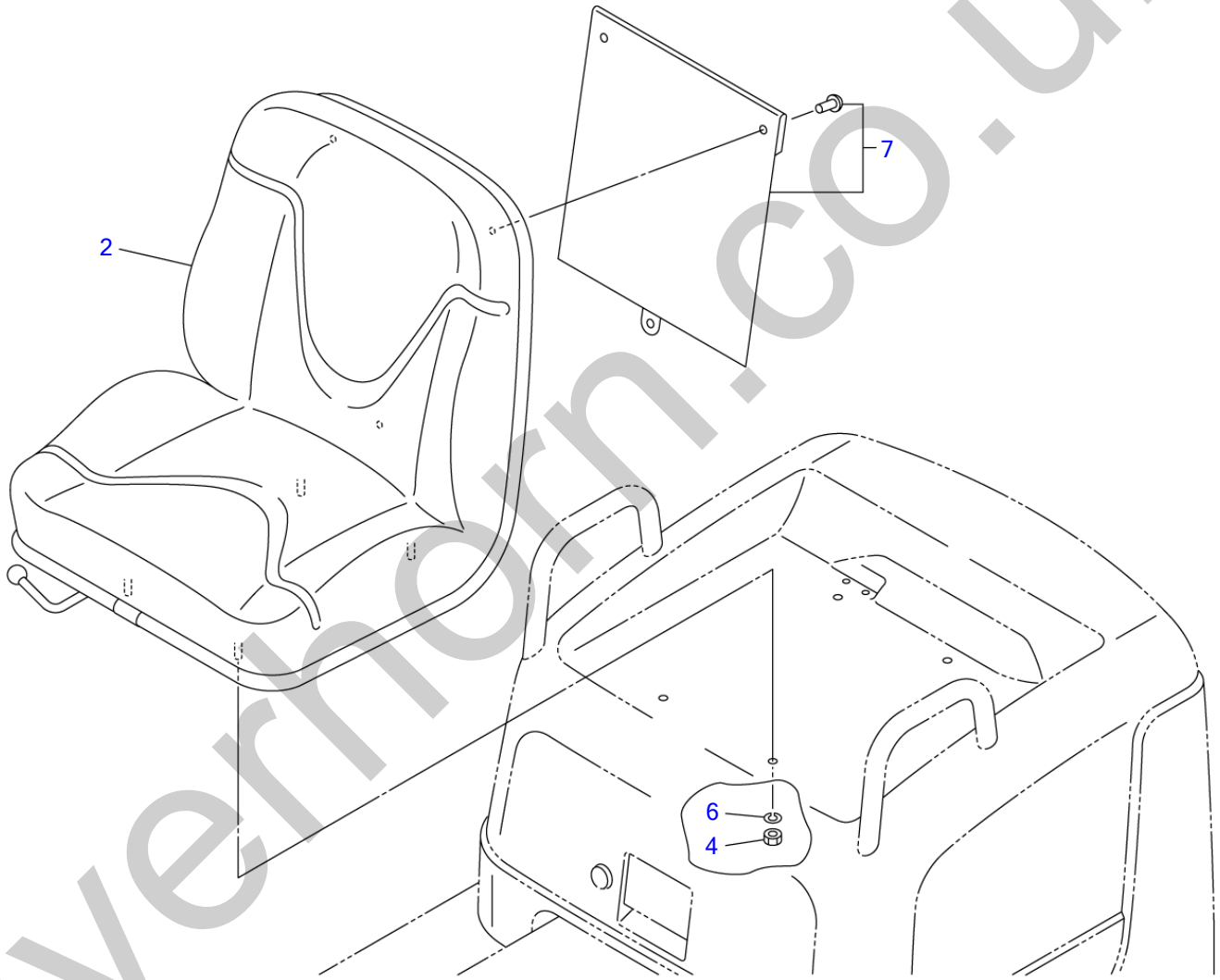

B5E030

S=1/8

silverhorn.co.uk

SEAT

Item	Part number	Description	Q'ty	Chan.	Serial No.	Serv.	Remarks
		SEAT ASSY					X03234-25000-2
2	1914100087	SEAT	1				
4	1130040008	NUT	4				
6	1140020008	WASHER, spring	4				
7	1914100088	CASE	1				
	B5e030						

silverhorn.co.uk

SEAT BELT

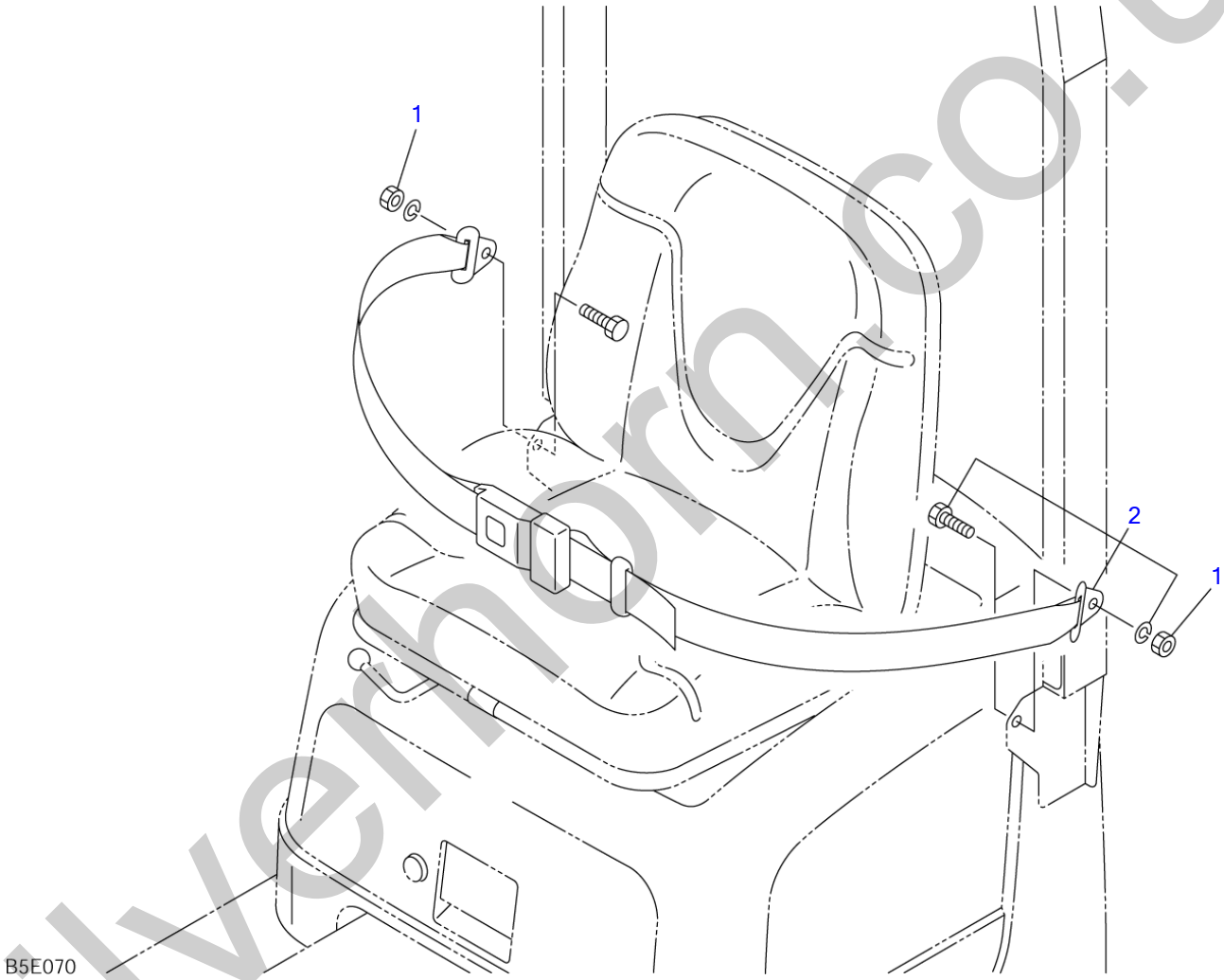

silvermorn.co.uk

SEAT BELT

Item	Part number	Description	Q'ty	Chan.	Serial No.	Serv.	Remarks
		BELT ASSY, seat					X03234-26100-0
1	**1132940719**	NUT	2				
2	**1914100080**	BELT, seat	1				
	B5e070						

silverhorn.co.uk

SEAT BELT (retractable)

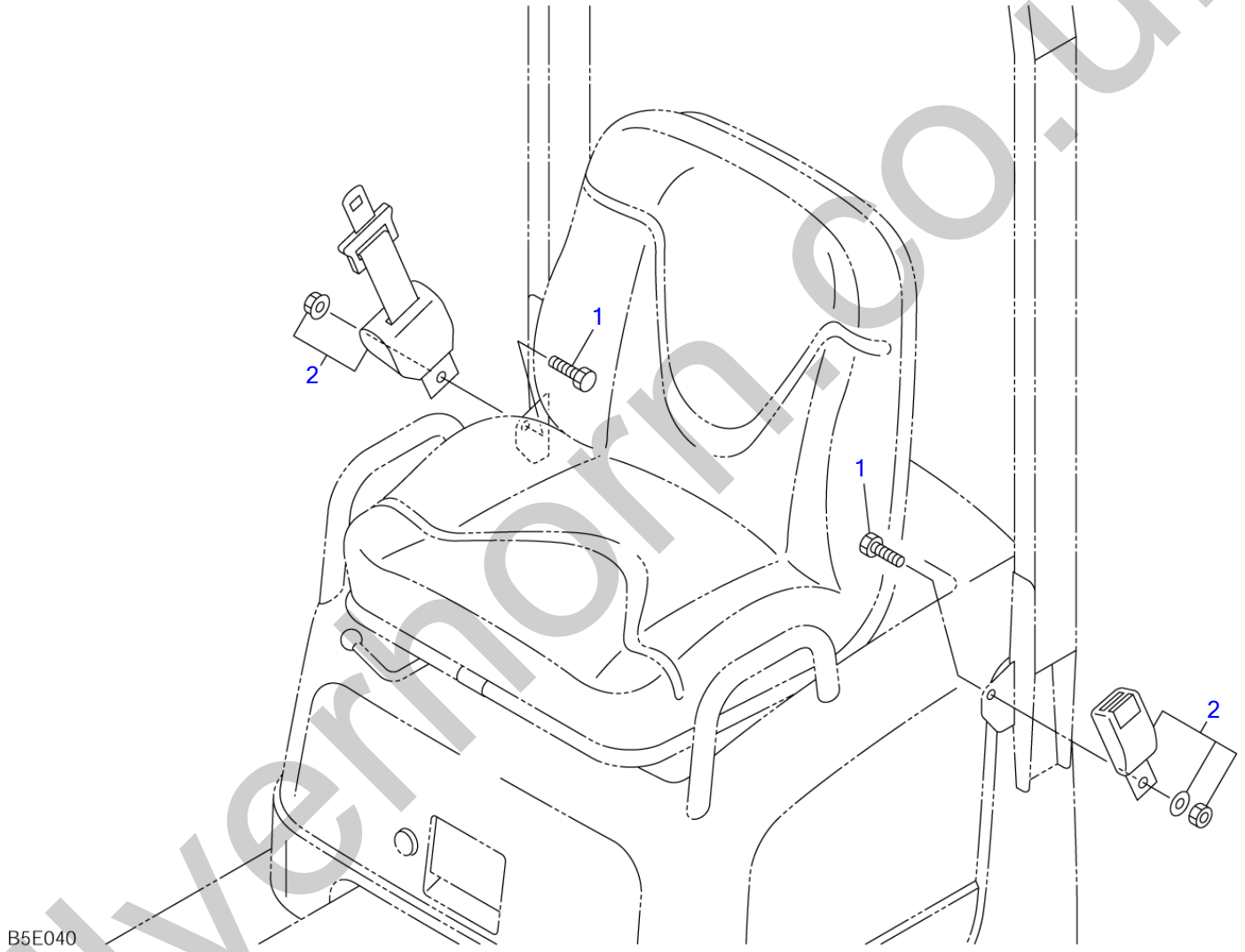

S=1/7

silvermorn.co.uk

SEAT BELT (retractable)

Item	Part number	Description	Q'ty	Chan.	Serial No.	Serv.	Remarks
		RETRACTABLE TYPE BELT ASSY, seat					X03234-26000-0
1	1111940725	BOLT	2				
2	1914100068	BELT, seat	1				
	B5e040						

silverhorn.co.uk

CANOPY (10810004-10810306)

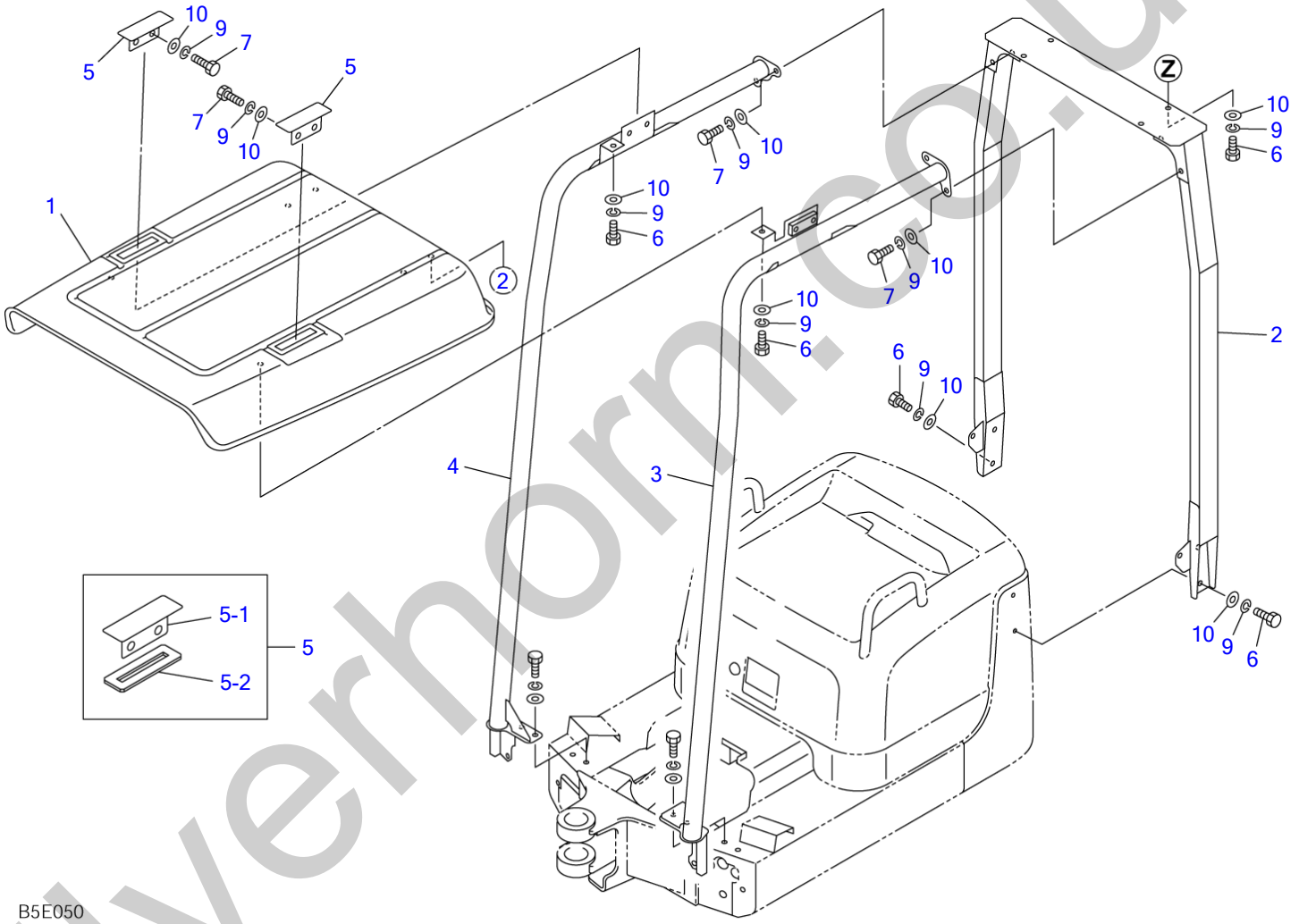

S=1/15, 1/10

silverhorn.co.uk

CANOPY (10810004-10810306)

Item	Part number	Description	Q'ty	Chan.	Serial No.	Serv.	Remarks
		CANOPY ASSY					X03284-55000-1
1	0328455100	ROOF	1				
2	0328455200	POLE	1				
3	0328455300	POLE (L.H.)	1				
4	0328455400	POLE (R.H.)	1				
5	0328455500	PLATE ASSY	2				
5-1	0328455510	・PLATE	1				
5-2	0328455502	・SPONGE	1				
6	1100041020	BOLT	10				
7	1100041025	BOLT	8				
9	1140020010	WASHER, spring	18				
10	1141110010	WASHER	18				
	B5e050						

silverhorn.co.uk

HOOK (10810004-10810306)

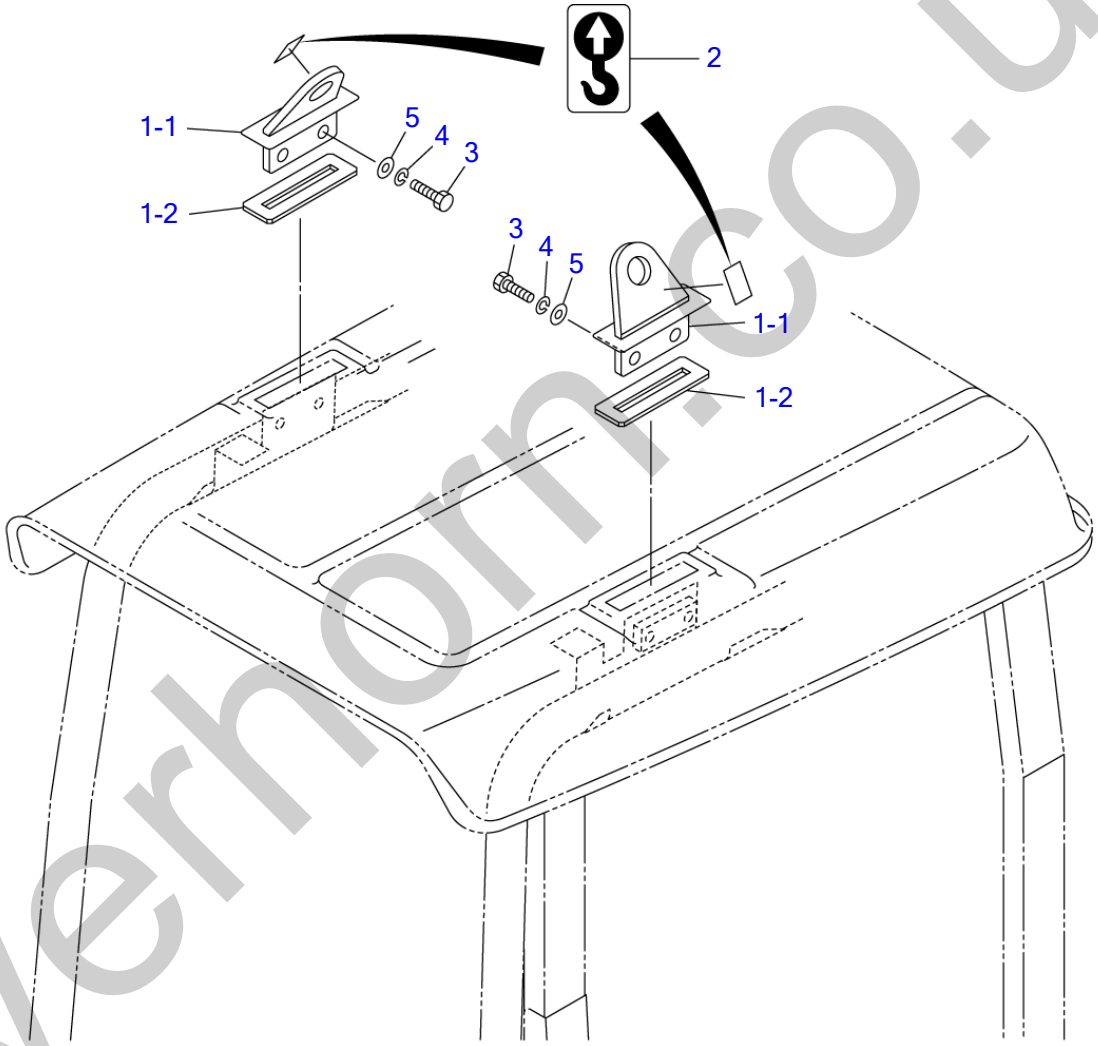

B5E060

S=1/8

silverhorn.co.uk

HOOK (10810004-10810306)

Item	Part number	Description	Q'ty	Chan.	Serial No.	Serv.	Remarks
		HOOK ASSY					X03284-56000-2
1	0328456100	HOOK ASSY	2				
1-1	0328456110	・HOOK	2				
1-2	0328455502	・SPONGE	2				
2	0399300500	DECAL	2				
3	1100041035	BOLT	4				
4	1140020010	WASHER, spring	4				
5	0003600025	WASHER	4				
	B5e060						

silverhorn.co.uk

CANOPY (10810307-)

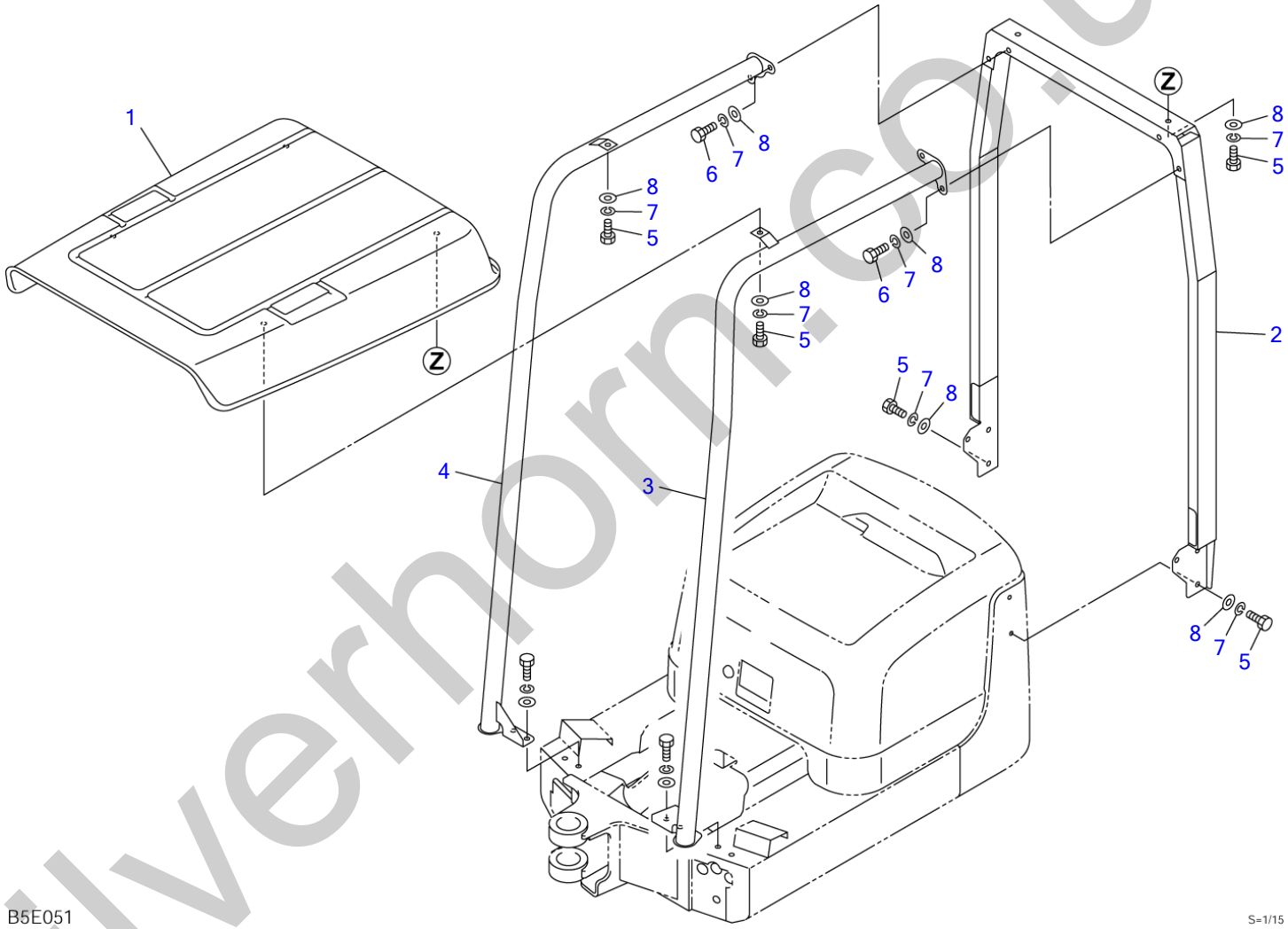

silverhorn.co.uk

CANOPY (10810307-)

Item	Part number	Description	Q'ty	Chan.	Serial No.	Serv.	Remarks
		CANOPY ASSY					X03284-57000-1
1	**0328457100**	ROOF	1				
2	**0328457200**	POLE	1				
3	**0328457300**	POLE (L.H.)	1				
4	**0328457400**	POLE (R.H.)	1				
5	**1100041020**	BOLT	8				
6	**1100041030**	BOLT	8			M	
7	**1140020010**	WASHER, spring	16			M	
8	**1141110010**	WASHER	16			M	
	B5e052						

silverhorn.co.uk

CANOPY (with hook; 10810307-)

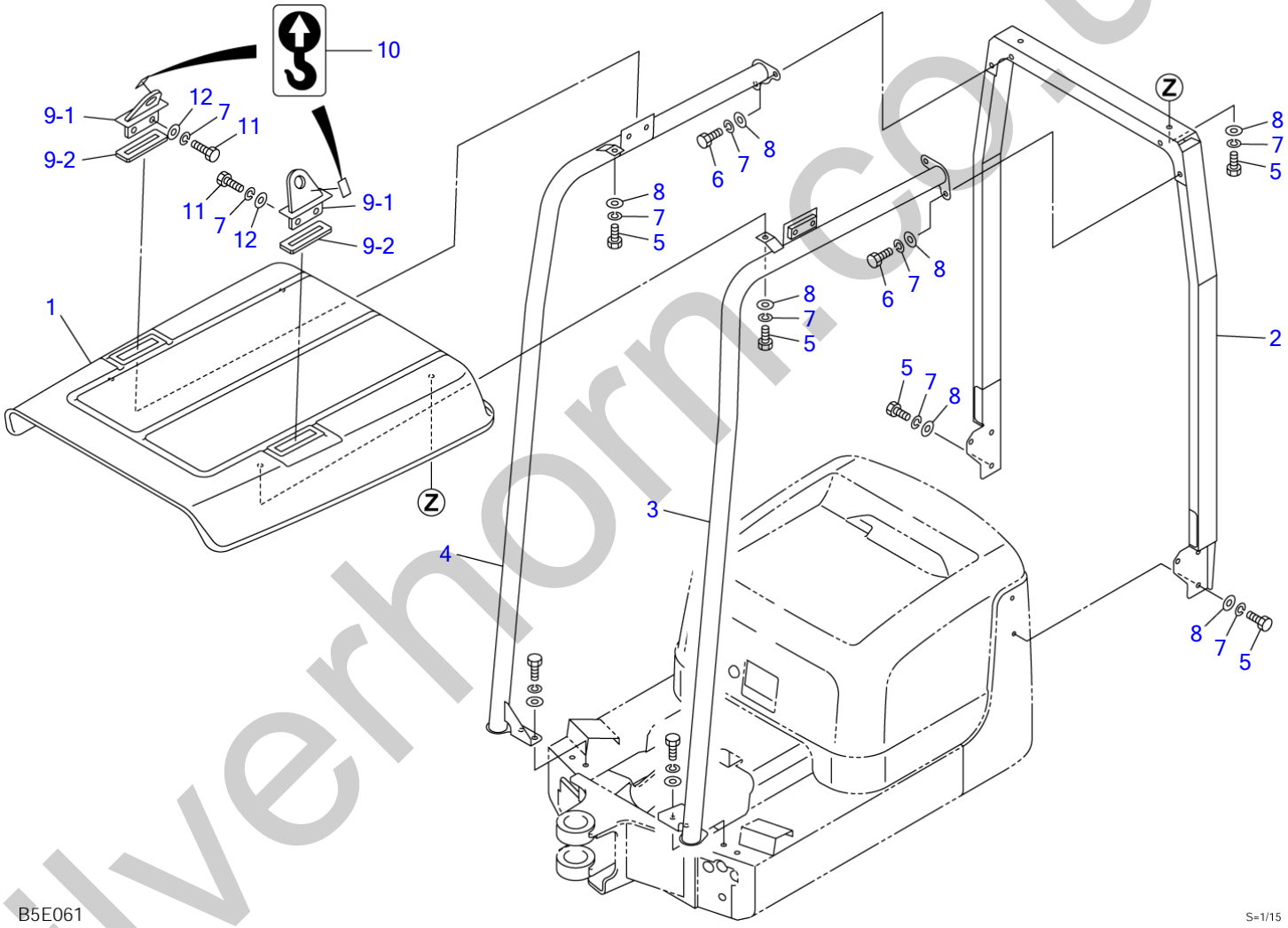

silverhorn.co.uk

CANOPY (with hook; 10810307-)

Item	Part number	Description	Q'ty	Chan.	Serial No.	Serv.	Remarks
		CANOPY ASSY					X03284-59000-1
1	0328459100	ROOF	1				
2	0328457200	POLE	1				
3	0328459300	POLE (L.H.)	1				
4	0328459400	POLE (R.H.)	1				
5	1100041020	BOLT	8				
6	1100041030	BOLT	8			M	
7	1140020010	WASHER, spring	20			M	
8	1141110010	WASHER	16			M	
9	0328456100	HOOK ASSY	2				
9-1	0328456110	・HOOK	1				
9-2	0328455502	・SPONGE	1				
10	0399300500	DECAL	2				
11	1100041035	BOLT	4				
12	0003600025	WASHER	4				
	B5e062						

silverhorn.co.uk

TOOL BOX

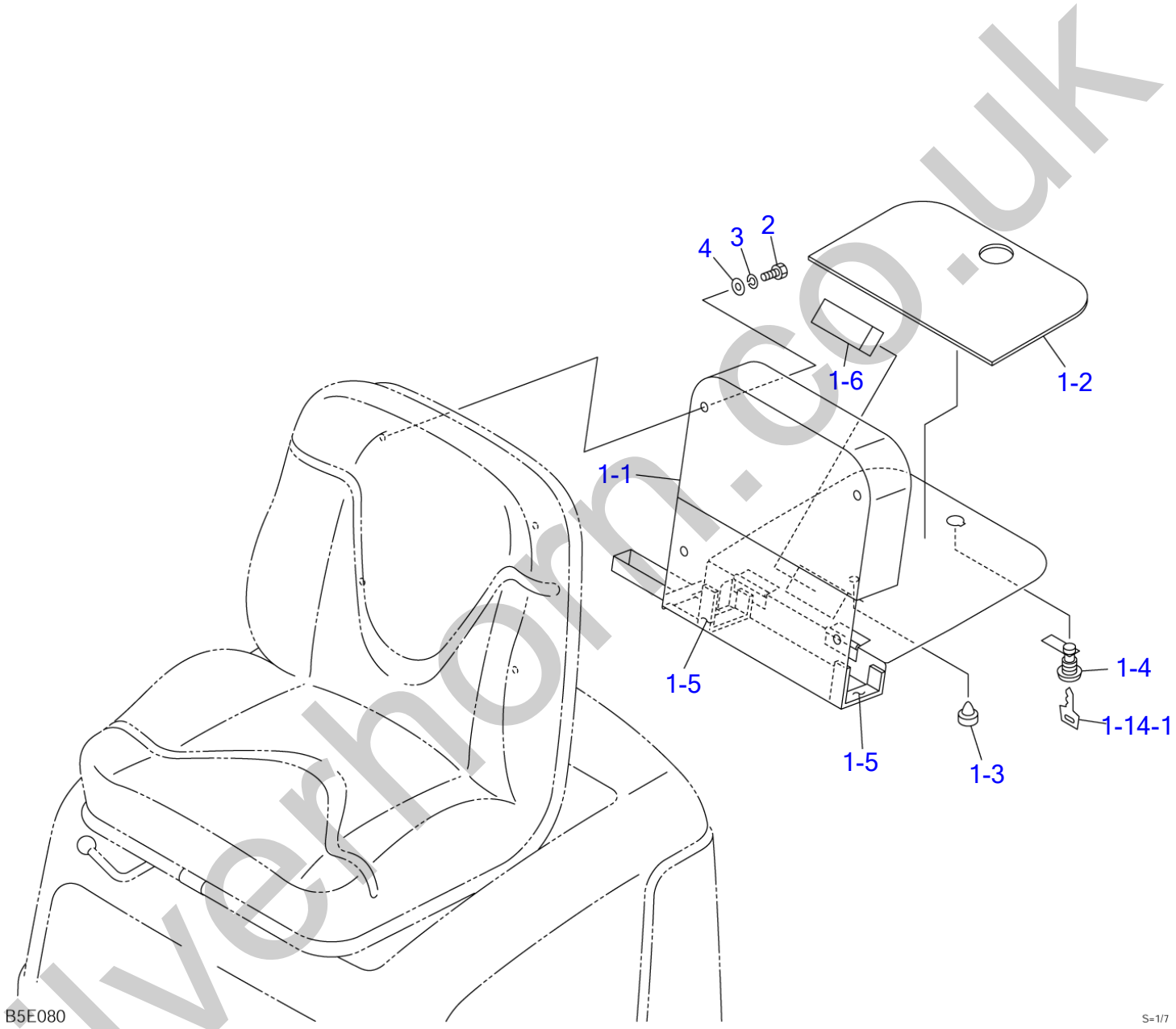

silverhorn.co.uk

TOOL BOX

Item	Part number	Description	Q'ty	Chan.	Serial No.	Serv.	Remarks
		BOX ASSY					X03234-27000-0
1	0323427300	BOX SUB ASSY	1				
1-1	0323427400	・BOX	1				
1-2	0323427302	・SPONGE	1				
1-3	1652505500	・CUSHION, rubber	1				
1-4	1653611836	・LOCK	1				
1-14-1	1700100019	・KEY	1				
1-5	1654301013	・SPONGE	2				
1-6	1654342008	・SPONGE	1				
2	1100040816	BOLT	4				
3	1140020008	WASHER, spring	4				
4	1141110008	WASHER	4				
	B5e080						

silverhorn.co.uk

BOOM

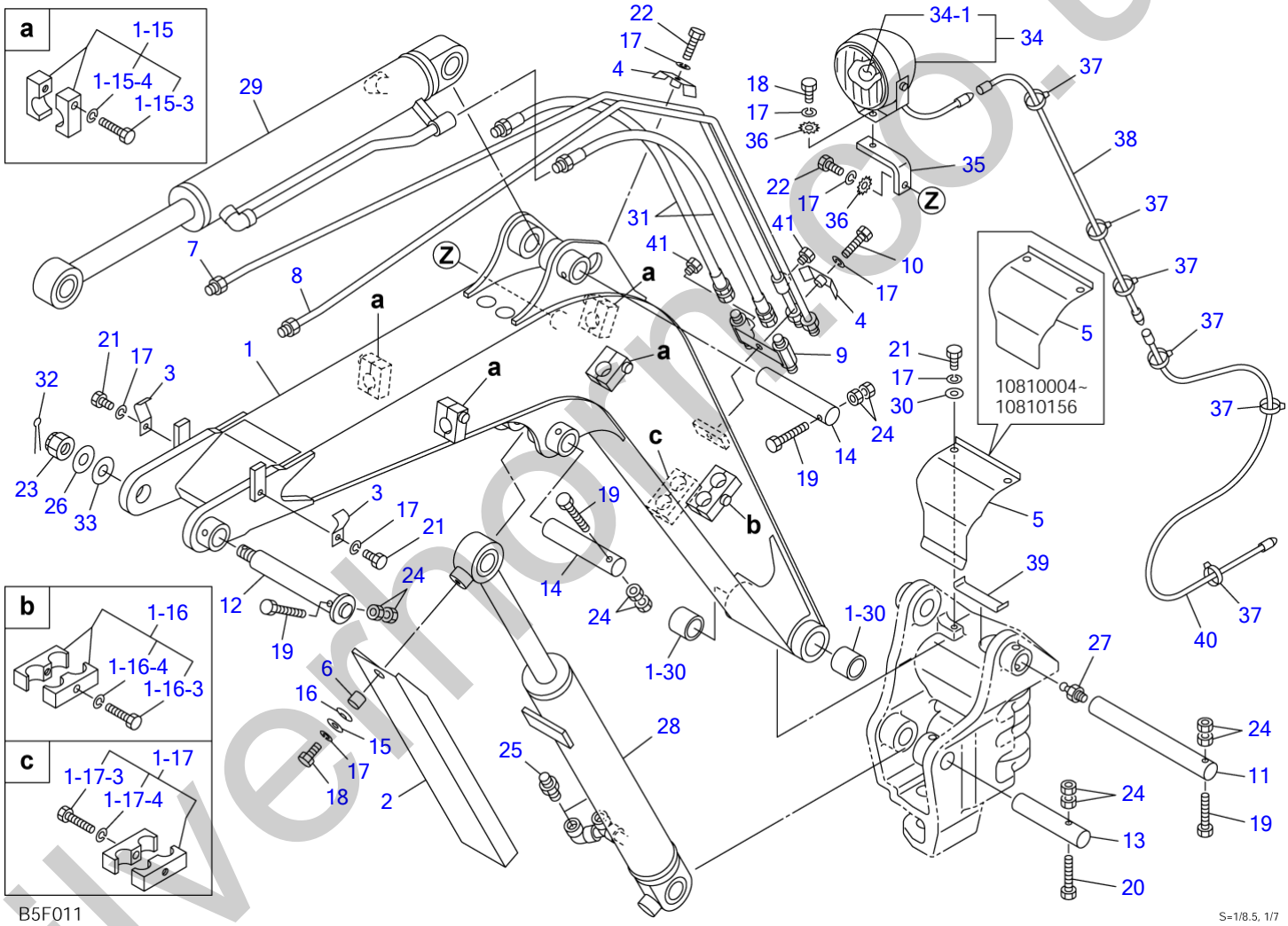

silverhomes.co.uk

BOOM

Item	Part number	Description	Q'ty	Chan.	Serial No.	Serv.	Remarks
		BOOM ASSY					X03260-58500-1
1	0326053100	BOOM	1				
1-15	0326053150	・CLAMP ASSY	4				
1-15-3	1100040835	・・BOLT	1				
1-15-4	1140020008	・・WASHER, spring	1				
1-16	0326053160	・CLAMP ASSY	1				
1-16-3	1100040835	・・BOLT	1				
1-16-4	1140020008	・・WASHER, spring	1				
1-17	0326053170	・CLAMP ASSY	1				
1-17-3	1100040835	・・BOLT	1				
1-17-4	1140020008	・・WASHER, spring	1				
1-30	0002400064	・BUSHING	2				
2	0326053200	COVER, rod	1				
3	0416003300	CLAMP	2				
4	0416003400	CLAMP	2				
5	0326053500	COVER	1		10810004~10810156		
	0326056500	COVER	1		10810157~		
6	0003600160	COLLAR	1				
7	0326053210	PIPE (R.H.)	1				
8	0326051220	PIPE (L.H.)	1				
9	0326053900	JOINT	1				
10	1100040830	BOLT	1				
11	0011570006	PIN	1				
12	0011900003	PIN	1				
13	0011510001	PIN	1		10810004~10810246		
	0011512005	PIN	1		10810247~		
14	0001600125	PIN	2				
15	0003608003	WASHER	1				
16	1225121016	WASHER, conical	1				
17	1140020008	WASHER, spring	9				
18	1100040816	BOLT	3				
19	1103040855	BOLT	4				
20	1103040865	BOLT	1		10810004~10810246		
	1103040875	BOLT	1		10810247~		
21	1100040812	BOLT	4				
22	1100040825	BOLT	2				
23	1132030018	NUT	1				
24	1130240008	NUT	10				
25	1515600200	ADAPTOR	2				
	1420010110	・O-RING	1			M	
26	0003620384	WASHER	1				
27	1560001000	FITTING, grease	1				
28	1900087500	CYLINDER, boom	1		10810004~10810246		
	1900088800	CYLINDER, boom	1		10810247~		
29	1900087400	CYLINDER, arm	1				
30	1141110008	WASHER	4				
31	0326053700	HOSE ASSY	2				
32	1210010435	PIN, split	1				
33	0003102610	SHIM	1				
34	1703002600	LAMP	1				
34-1	1703000203	・BULB	1				
35	0326051800	PLATE	1				
36	1140330008	WASHER	2				
37	1652201005	BAND	6				
38	0326051900	HARNESS, wiring	1				
39	0326053850	RUBBER	1		10810004~10810660		
	0326058550	RUBBER	1		10810661~		
40	0414202600	WIRE	1				
41	1501750002	PLUG	2				
	1420010110	・O-RING	1			M	
	B5f013						

silverthorn.co.uk

ARM

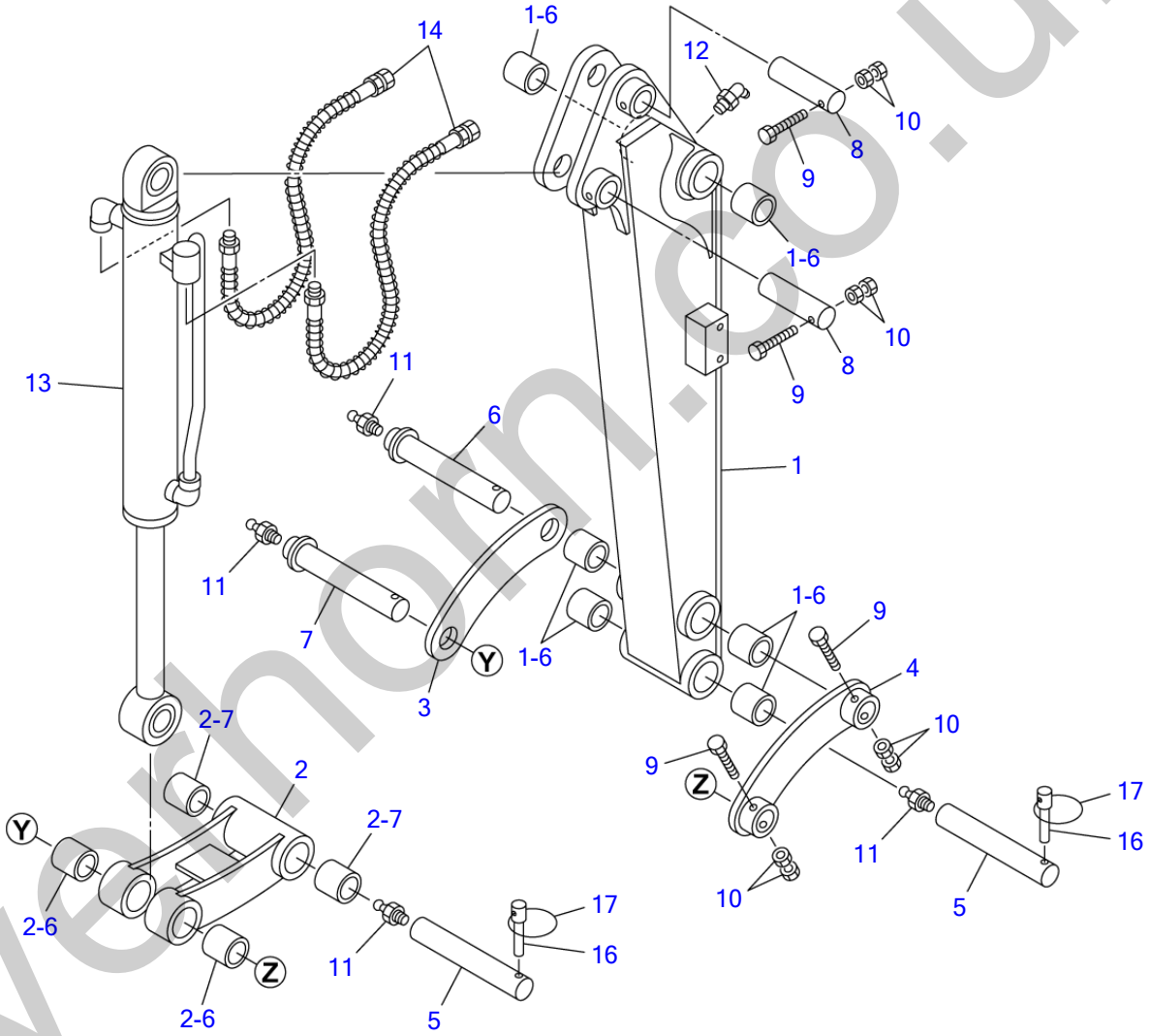

S=1/8

silverhorn.co.uk

ARM

Item	Part number	Description	Q'ty	Chan.	Serial No.	Serv.	Remarks
		ARM ASSY					X03261-58000-1
		ARM ASSY, long					X03261-59000-1
1	0326156100	ARM	1				
	0326157100	ARM, long	1				810mm long
1-6	0002400064	・BUSHING	6				
2	0416101300	LINK, bucket	1				
2-6	0002100026	・BUSHING	2				
2-7	0002400024	・BUSHING	2				
3	0416100300	LINK, guide (R.H.)	1	A	10810004~10810234		
	0326158300	LINK, guide (R.H.)	1	a(H)	10810235~		
4	0416100400	LINK, guide (L.H.)	1	A	10810004~10810234		
	0326158400	LINK, guide (L.H.)	1	a(H)	10810235~		
5	0001670001	PIN	2				
6	0001720001	PIN	1	A	10810004~10810234		
	0001720003	PIN	1	a(H)	10810235~		
7	0001720002	PIN	1	A	10810004~10810234		
	0001720004	PIN	1	a(H)	10810235~		
8	0001600090	PIN	2				
9	1103040855	BOLT	4				
10	1130240008	NUT	8				
11	1560001000	FITTING, grease	4				
12	1560001675	FITTING, grease	1				
13	1900087300	CYLINDER, bucket	1				
14	0326156710	HOSE ASSY	2				
	0326157710	HOSE ASSY	2				long arm
16	0416100800	PIN	2				
17	0416100900	RING	2				
		<<NOTE>>					
		SET "A" is interchangeable					
		with SET "a".					
	B5f021						

silverhorn.co.uk

BUCKET

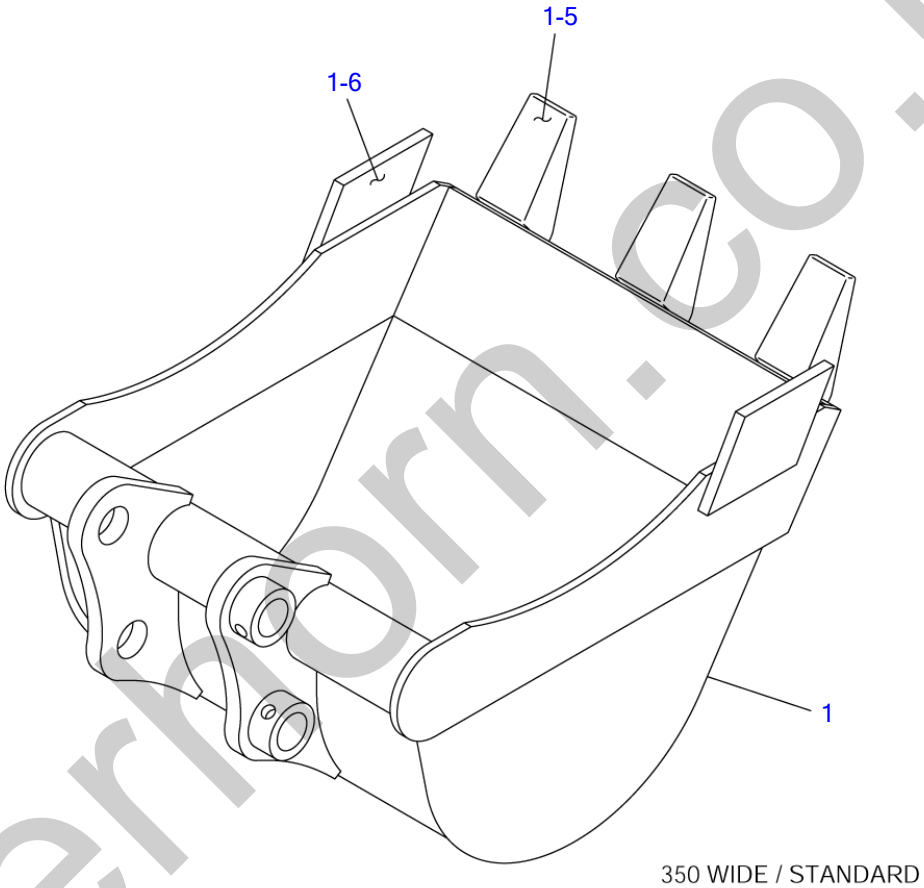

B5F030

S=1/4.5

silverhorn.co.uk

BUCKET

Item	Part number	Description	Q'ty	Chan.	Serial No.	Serv.	Remarks
1	0416200500	BUCKET	1				350mm wide
1-5	0416200505	・ADAPTOR, tooth	3				
1-6	0416200104	・CUTTER	2				
	B5f030						

silverhorn.co.uk

BUCKET (for U.S.A.)

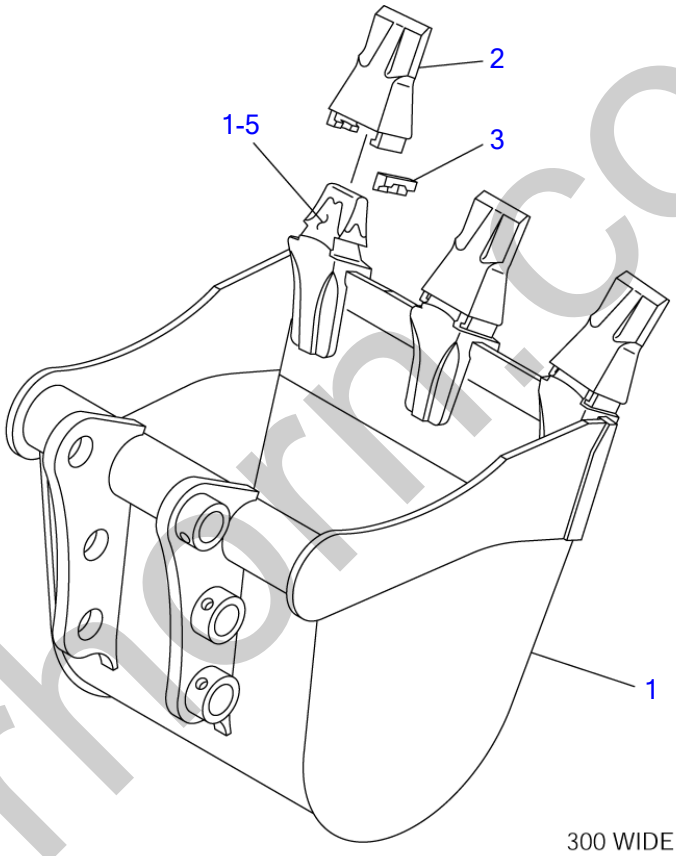

B5F040

S=1/5.5

silverhorn.co.uk

BUCKET (for U.S.A.)

Item	Part number	Description	Q'ty	Chan.	Serial No.	Serv.	Remarks
0	0326215000	BUCKET ASSY	1				300mm wide
1	X **********	・BUCKET	1				
1-5	1914201201	・・ADAPTOR, tooth	3				
2	1914201202	・POINT, tooth	3				
3	1914201203	・PIN	3				
	B5f040						

silverhorn.co.uk

AUXILIARY LINE

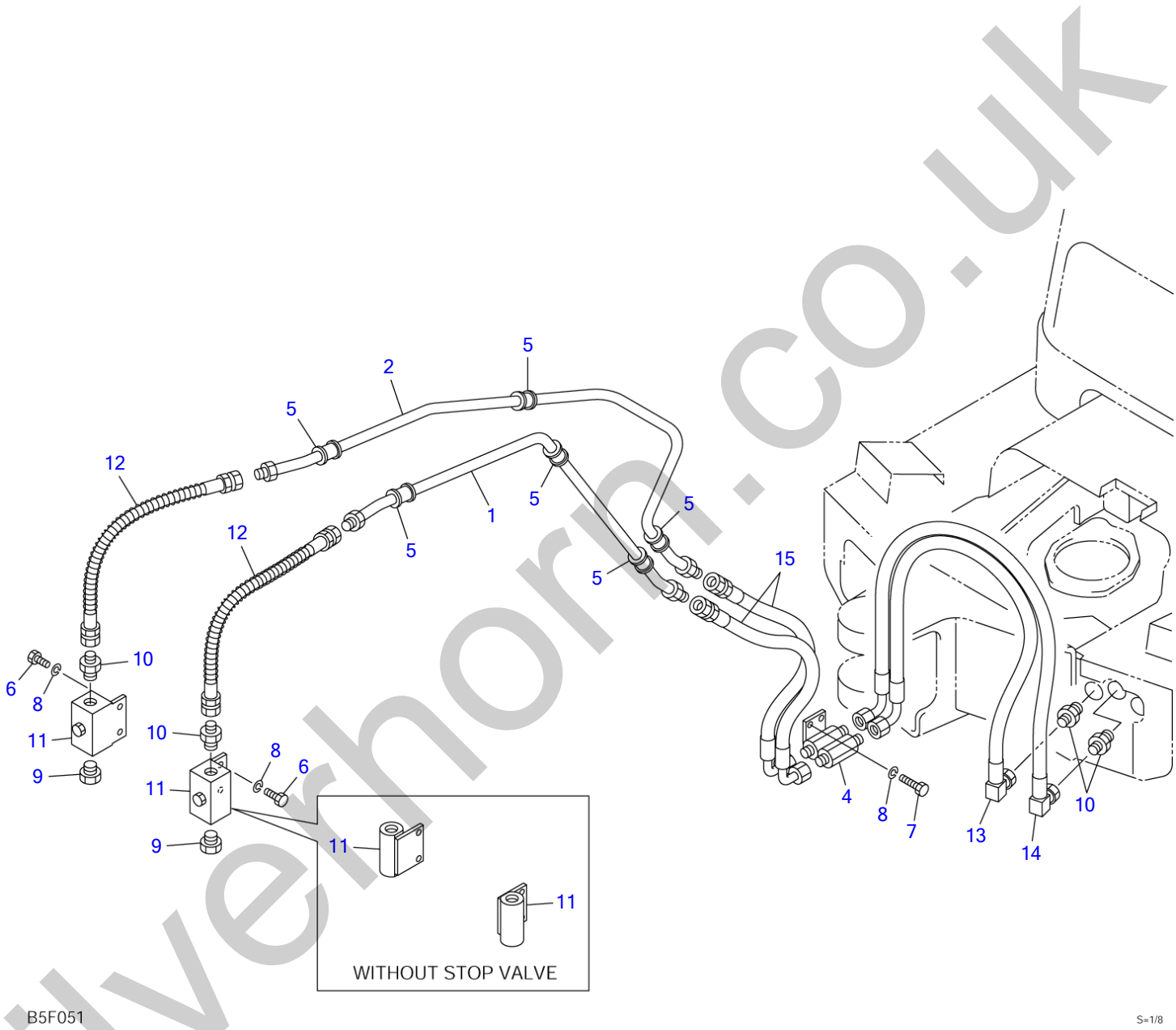

silverhorn.co.uk

AUXILIARY LINE

Item	Part number	Description	Q'ty	Chan.	Serial No.	Serv.	Remarks
	0327354000	AUX. LINE ASSY					X03273-54000-3
	0327356000	AUX. LINE ASSY (without stop valve)					X03273-56000-3
	0327355000	AUX. LINE ASSY (long arm)					X03273-55000-3
	0327357000	AUX. LINE ASSY (long arm) (without stop valve)					X03273-57000-3
1	0327354100	・PIPE	1				
2	0327354200	・PIPE	1				
4	0327351500	・ADAPTOR	1				
5	0147351300	・PROTECTOR	6				
6	1100040816	・BOLT	4				
7	1100040825	・BOLT	2				
8	1140020008	・WASHER, spring	6				
9	1501750004	・PLUG	2				
	1420010180	・・O-RING	1			M	
10	1515600577	・ADAPTOR	4				
	1420010180	・・O-RING	1			M	
11	1901719800	・VALVE , stop	2				
	0327356600	・BLOCK	2				without stop valve
12	0327351310	・HOSE ASSY	2				18015-20062
	0327352310	・HOSE ASSY (long arm)	2				18015-20077
13	0327351700	・HOSE ASSY	1				
14	0327351710	・HOSE ASSY	1				
15	0327354300	・HOSE ASSY	2				
	B5f052						

silverhorn.co.uk

DECAL

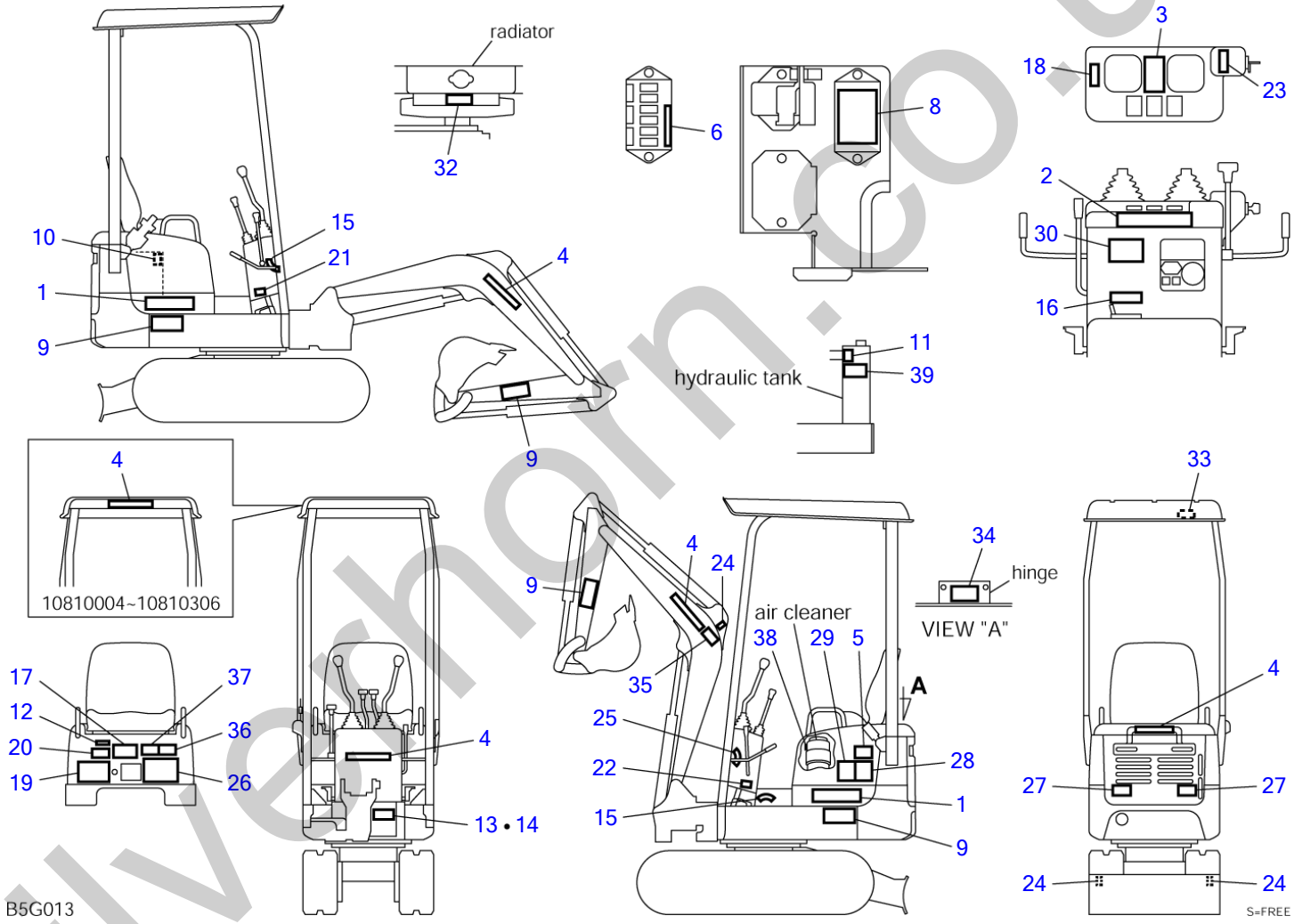

silverthorn.co.uk

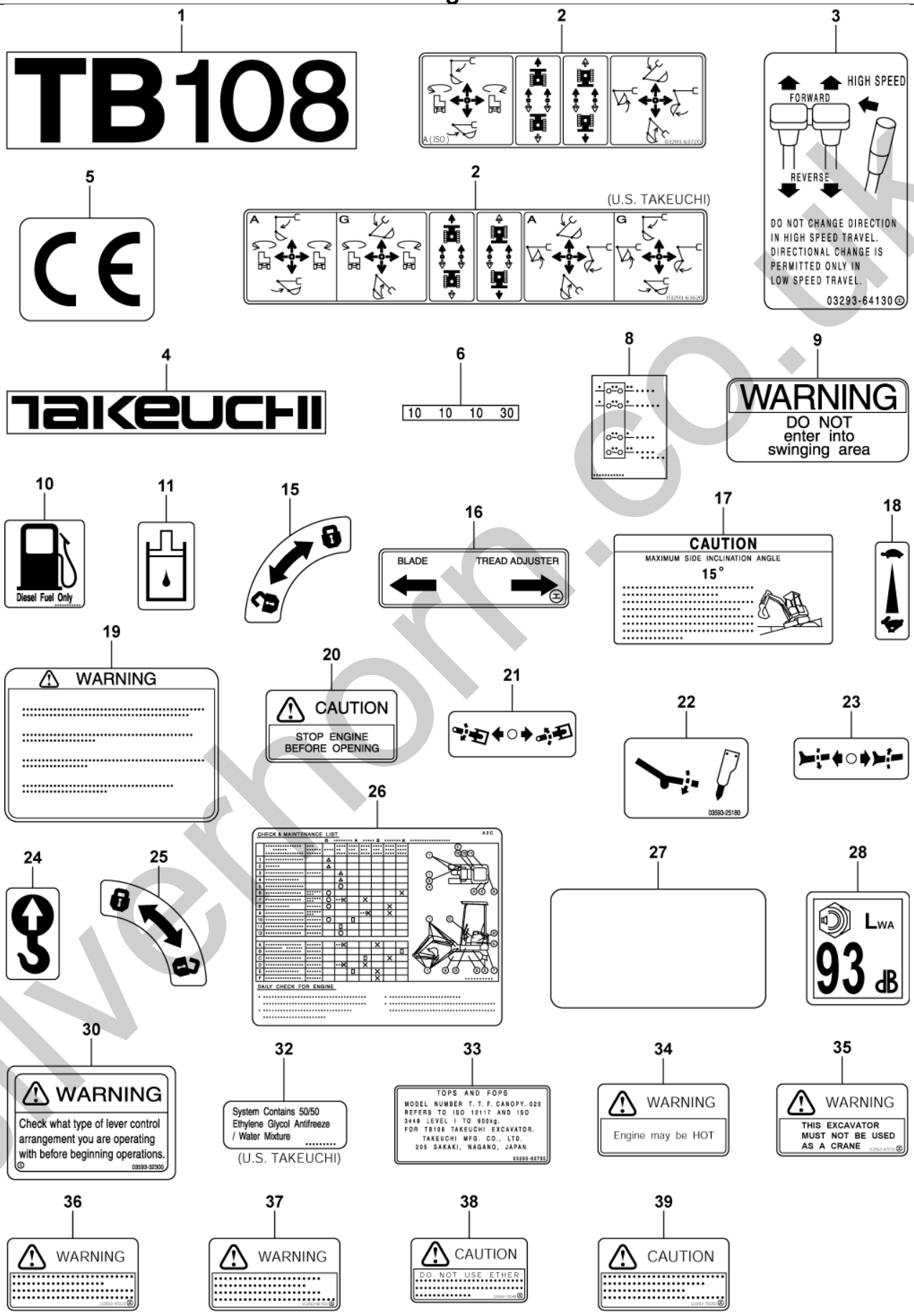

B5G022

S=free

silverhorn.co.uk

1
TB108

2
A (ISO)
03293-63720

3
Qrande vitesse
Marche avant
Marche arrière
Ne changez pas de direction lorsque le moteur tourne en qrande vitesse. Changement de direction seulement permis en petite vitesse.
03293-63830

4
TAKEUCHI

5
CE

6
10 10 10 30

8

9
ATTENTION
Défense d'entrer dans la zone d'orientation

10
GASOIL UNIQUEMENT

11

15

16
Lame bull
Réglage de tension de l'entraînement

17
ATTENTION
Angle d'inclinaison latérale max.
15°

18

19
ATTENTION

20
ATTENTION
Arreter le moteur avant d'ouvrir le capot

21

22
03593-25190

23

24

25

26
Tableau de contrôle et d'entretien
Contrôle journalier du moteur

27

28
LWA
93 dB

30
AVERTISSEMENT
AVANT D'UTILISER LA MACHINE. VERIFIER LA GRILLE DE COMMANDE DES MANIPULATEURS. (SYSTEME ISO OU TYPE US)
03293-63820

33
TOPS AND FOPS
MODEL NUMBER T. T. F. CANOPY. 020 REFERS TO ISO 12117 AND ISO 3449 LEVEL I TO 900kg.
FOR TB108 TAKEUCHI EXCAVATOR.
TAKEUCHI MFG. CO., LTD.
205 SAKAKI, NAGANO, JAPAN
03293-63735

35
AVERTISSEMENT
NE PAS UTILISER CETTE MACHINE POUR LA MANUTENTION

36
AVERTISSEMENT

37
AVERTISSEMENT

38
ATTENTION
NE PAS UTILISER DE STAR PILOTE

39
ATTENTION

silverhorn.co.uk

B5G042 S=free

1
TB108

2
A (ISO)
03293-63720

3
velocidad alta
adelante
atrás
No cambiar la dirección al conducir con velocidad alta.
El cambio de dirección sólo está permitido al conducir con velocidad baja.
03293-64030

4
TAKEUCHI

5
CE

6
10 10 10 30

8

9
ATENCIÓN
Prohibido situarse en el radio de acción de la máquina

10
SOLO DIESEL

11

15

16
PALA DOZER
ENSANCHAMIENTO DE CADENAS

17
PRECAUCIÓN
ÁNGULO MÁXIMODE INCLINACIÓN LATERAL
15°

18

19
ATENCIÓN

20
ATENCIÓN
ANTES DE ABRIR, APAGAR EL MOTOR

21

22
03593-25180

23

24

25

26
Tabla de control y mantenimiento
A2C
Control diario del motor

27

28
LWA
93 dB

30
ADVERTENCIA
Antes de empezar a trabajar, asegúrese con que esquema de mandos está trabajando.
03293-64020

33
TOPS AND FOPS
MODEL NUMBER T. T. F. CANOPY. 020
REFERS TO ISO 12117 AND ISO
3449 LEVEL I TO 900kg.
FOR TB108 TAKEUCHI EXCAVATOR.
TAKEUCHI MFG. CO., LTD.
205 SAKAKI, NAGANO, JAPAN
03293-63735

35
ADVERTENCIA
LA EXCAVADORA NO SE TIENE QUE USAR COMO GRUA.
03293-75620

36
ADVERTENCIA
03293-75620

37
ADVERTENCIA
03293-64040

38
PRECAUCIÓN
03293-75620

39
PRECAUCIÓN
03293-75620

B5G062

S=free

silverhorn.co.uk

DECAL

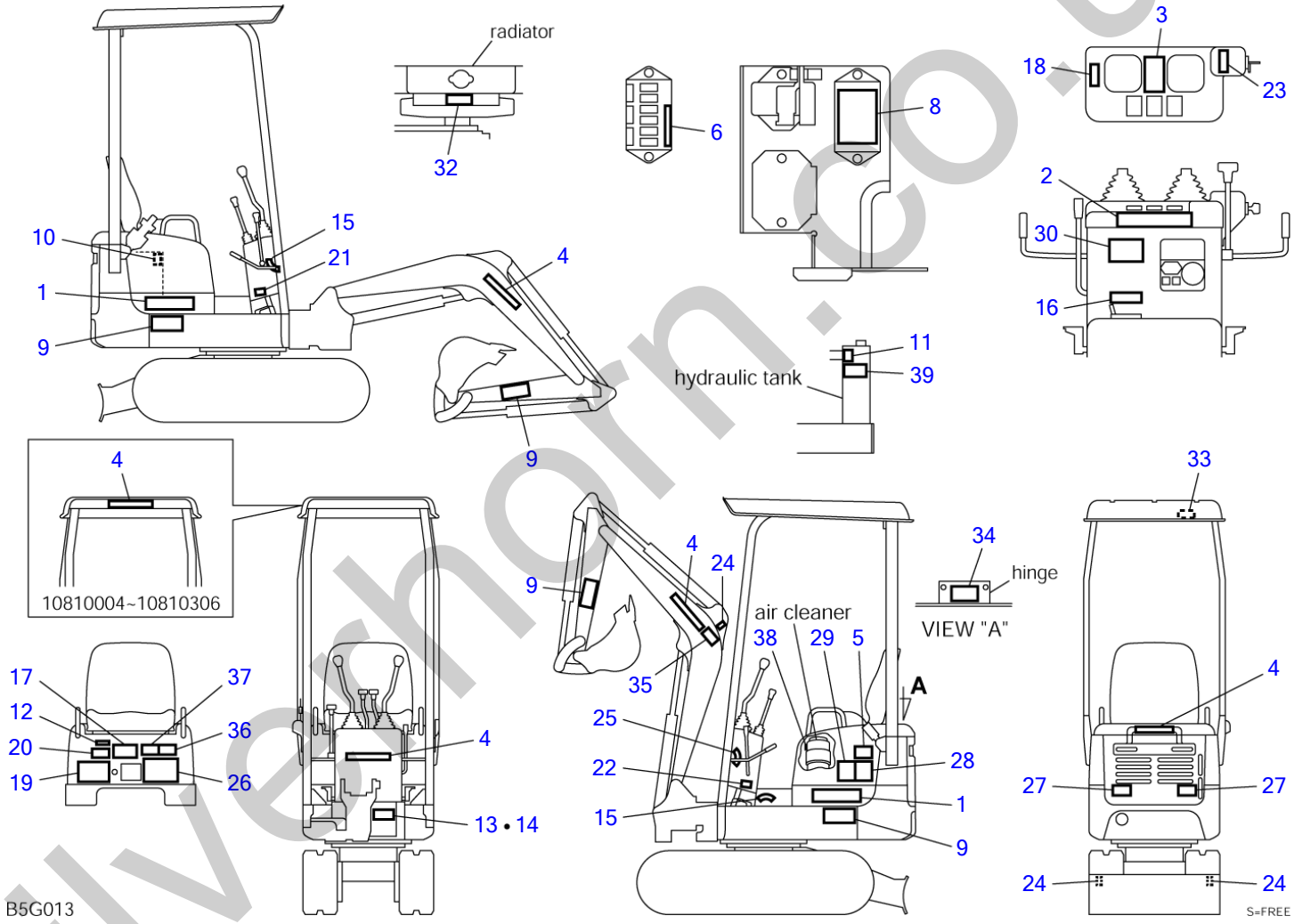

silverthorn.co.uk

DECAL

Item	Part number	Description	Q'ty	Chan.	Serial No.	Serv.	Remarks
0	0329363700	DECAL SET (German)	1				X03293-63700-10
	0329363800	DECAL SET (French)	1				X03293-63800-10
	0329363900	DECAL SET (Italian)	1				X03293-63900-10
	0329364000	DECAL SET (Spanish)	1				X03293-64000-10
	0329364100	DECAL SET (English)	1				X03293-64100-10
	0329364200	DECAL SET (U.S. TAKEUCHI)	1				X03293-64200-10
1	0329363610	・DECAL	2				
2	0329363620	・DECAL (U.S. TAKEUCHI)	1				
	0329363720	・DECAL	1				
3	0329363630	・DECAL (German)	1				
	0329363830	・DECAL (French)	1				
	0329363930	・DECAL (Italian)	1				
	0329364030	・DECAL (Spanish)	1				
	0329364130	・DECAL (English)	1				
4	0359306200	・DECAL	4				
5	X **********	・DECAL	1				
6	0329363002	・DECAL	1				
8	0329363101	・DECAL (German)	1				
	0329363201	・DECAL (French)	1				
	0329363301	・DECAL (Italian)	1				
	0329364001	・DECAL (Spanish)	1				
	0329363001	・DECAL (English)	1				
9	0359308100	・DECAL (German)	4				
	0359309100	・DECAL (French)	4				
	0359310100	・DECAL (Italian)	4				
	0339364100	・DECAL (Spanish)	4				
	0359306500	・DECAL (English)	4				
10	0339375260	・DECAL (German)	1		10810127~		
	0339375460	・DECAL (French)	1		10810127~		
	0339375660	・DECAL (Italian, Spanish)	1		10810127~		
	0359306600	・DECAL (English)	1				
11	0359306700	・DECAL	1				
12	X **********	・DECAL	1				
13	X **********	・DECAL	1				
14	X **********	・SCREW	8				
15	0329360100	・DECAL	2				
16	0329354250	・DECAL (German)	1				
	0329355250	・DECAL (French)	1				
	0329356250	・DECAL (Italian)	1				
	0329364002	・DECAL (Spanish)	1				
	0329350250	・DECAL (English)	1				
17	0339311400	・DECAL (German)	1				
	0339312400	・DECAL (French)	1				
	0339313400	・DECAL (Italian)	1				
	0339364400	・DECAL (Spanish)	1				
	0339310400	・DECAL (English)	1				
18	0359317200	・DECAL	1				
19	0359314700	・DECAL (German)	1				
	0359315700	・DECAL (French)	1				
	0359316700	・DECAL (Italian)	1				
	0339364500	・DECAL (Spanish)	1				
	0359313700	・DECAL (English)	1				
20	0359314400	・DECAL (German)	1				
	0359315400	・DECAL (French)	1				
	0359316400	・DECAL (Italian)	1				
	0339364200	・DECAL (Spanish)	1				
	0359307400	・DECAL (English)	1				
21	0359325170	・DECAL	1				
22	0359325180	・DECAL	1				
23	0359325190	・DECAL	1				
24	0399300500	・DECAL	3				
25	0349325020	・DECAL	1				
26	0329363710	・DECAL (German)	1				
	0329363810	・DECAL (French)	1				
	0329363910	・DECAL (Italian)	1				
	0329364010	・DECAL (Spanish)	1				
	0329364110	・DECAL (English)	1				

silverthorn.co.uk

DECAL

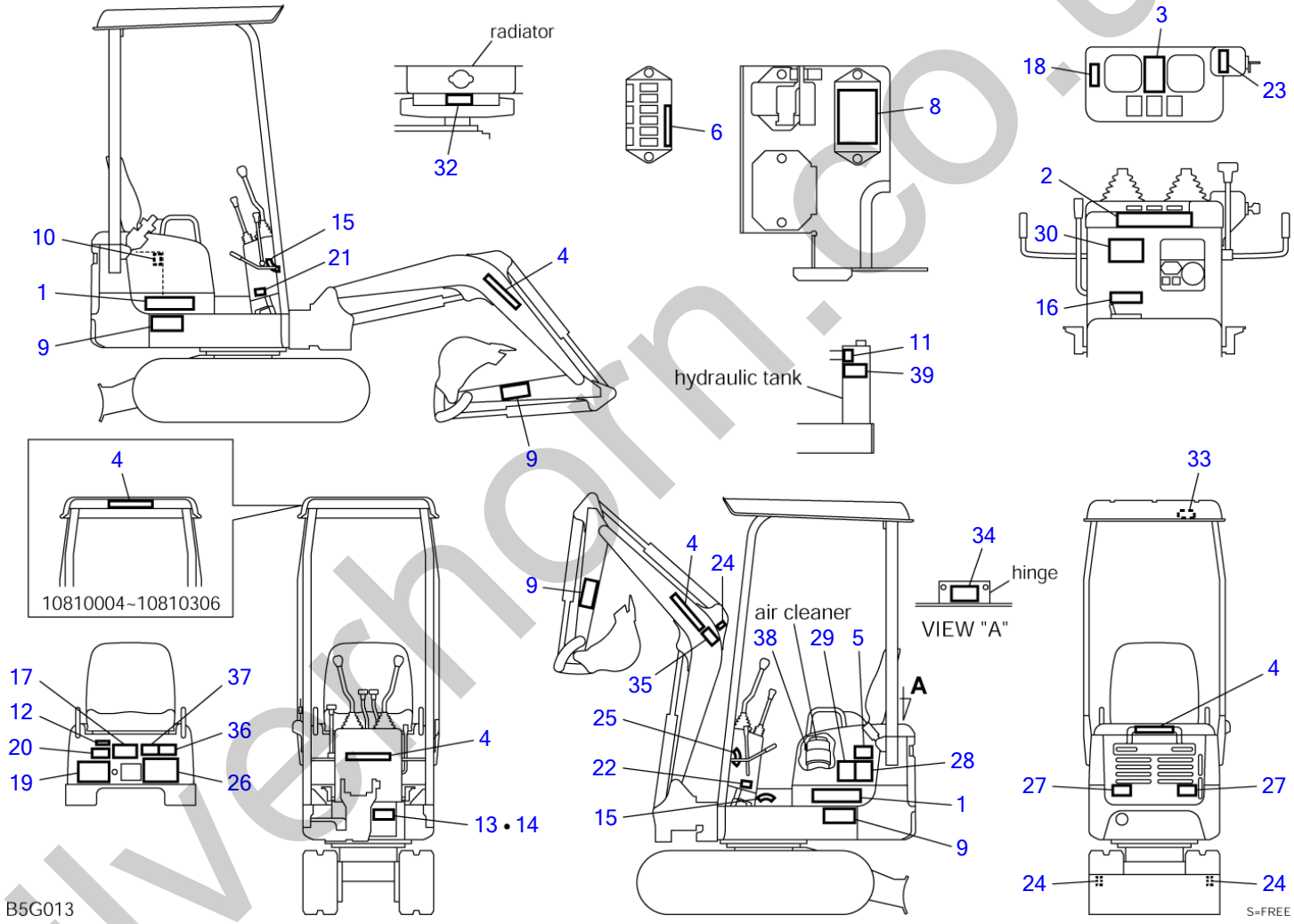

silverthorn.co.uk

DECAL

Item	Part number	Description	Q'ty	Chan.	Serial No.	Serv.	Remarks
27	0329363715	・DECAL	2				
28	0359354028	・DECAL	1				
29	0339369060	・DECAL	1				not service
30	0359332400	・DECAL (German)	1				
30	0329363820	・DECAL (French)	1				
30	0329363920	・DECAL (Italian)	1				
30	0329364020	・DECAL (Spanish)	1				
30	0359332300	・DECAL (English)	1				
32	0359313900	・DECAL (U.S. TAKEUCHI)	1				
33	0329363735	・DECAL	1		10810004~10810306		
33	0329363835	・DECAL	1		10810307~		
34	0569321980	・DECAL (English)	1				
35	0339375210	・DECAL (German)	1		10810127~		
35	0339375410	・DECAL (French)	1		10810127~		
35	0339375610	・DECAL (Italian)	1		10810127~		
35	0339375810	・DECAL (Spanish)	1		10810127~		
35	0359347010	・DECAL (English)	1		10810127~		
36	0339375220	・DECAL (German)	1		10810127~		
36	0339375420	・DECAL (French)	1		10810127~		
36	0339375620	・DECAL (Italian)	1		10810127~		
36	0339375820	・DECAL (Spanish)	1		10810127~		
36	0359347020	・DECAL (English)	1		10810127~		
37	0339369100	・DECAL (German)	1		10810127~		
37	0339370100	・DECAL (French)	1		10810127~		
37	0339371100	・DECAL (Italian)	1		10810127~		
37	0329364040	・DECAL (Spanish)	1		10810127~		
37	0339368100	・DECAL (English)	1		10810127~		
38	0339375240	・DECAL (German)	1		10810127~		
38	0339375440	・DECAL (French)	1		10810127~		
38	0339375640	・DECAL (Italian)	1		10810127~		
38	0339375840	・DECAL (Spanish)	1		10810127~		
38	0339375040	・DECAL (English)	1		10810127~		
39	0339375250	・DECAL (German)	1		10810127~		
39	0339375450	・DECAL (French)	1		10810127~		
39	0339375650	・DECAL (Italian)	1		10810127~		
39	0339375850	・DECAL (Spanish)	1		10810127~		
39	0339375050	・DECAL (English)	1		10810127~		
	B5g013						

silverhorn.co.uk

TOOL & ACCESSORIES (10810004-10810306)

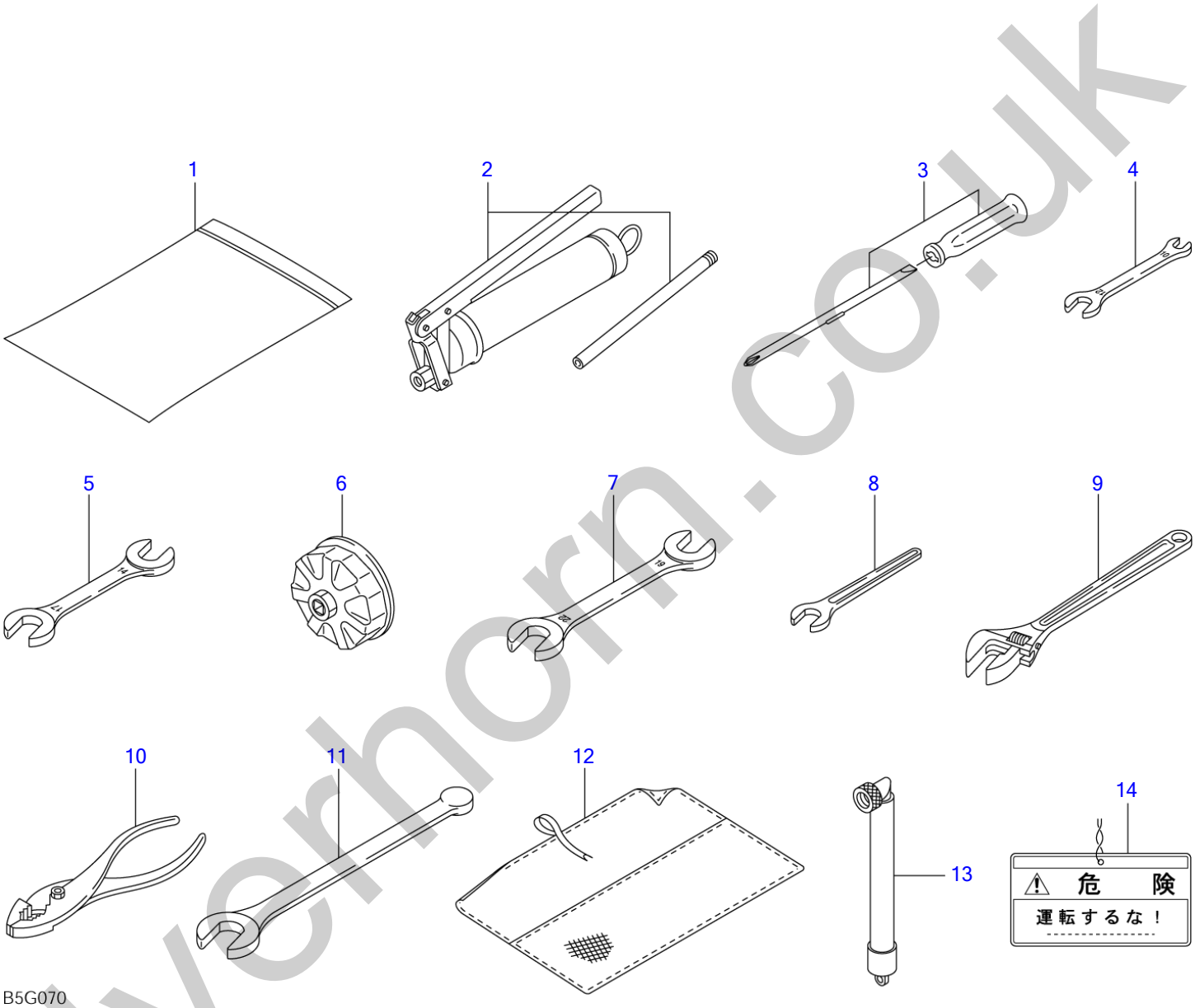

S=FREE

silverhorn.co.uk

TOOL & ACCESSORIES (10810004-10810306)

Item	Part number	Description	Q'ty	Chan.	Serial No.	Serv.	Remarks
0	0329214000	TOOL SET	1				X03292-14000-0
	0329214500	TOOL SET (for Japan)	1				X03292-14500-0
1	1691900001	・CASE	1				
2	1691060600	・GUN, grease	1				
	1691010800	・GUN, grease	1				for Japan
0-1	0329214020	・TOOL SET	1				
3	1910006112	・・SCREWDRIVER	1				
4	1910047081	・・SPANNER	1				
5	1910047082	・・SPANNER	1				
6	1910096081	・・WRENCH, filter	1				
7	1690001922	・・SPANNER	1				
8	1690100013	・・SPANNER	1				
9	1690400250	・・WRENCH, monkey	1				
10	1690500200	・・PLIER	1				
11	1692000026	・・WRENCH, hex	1				
12	1691400001	・・CASE	1				
13	1554512201	TUBE	1				for EU
14	0359325160	PLATE	1				for Japan
	B5g070						

silverhorn.co.uk

TOOL & ACCESSORIES (10810307-)

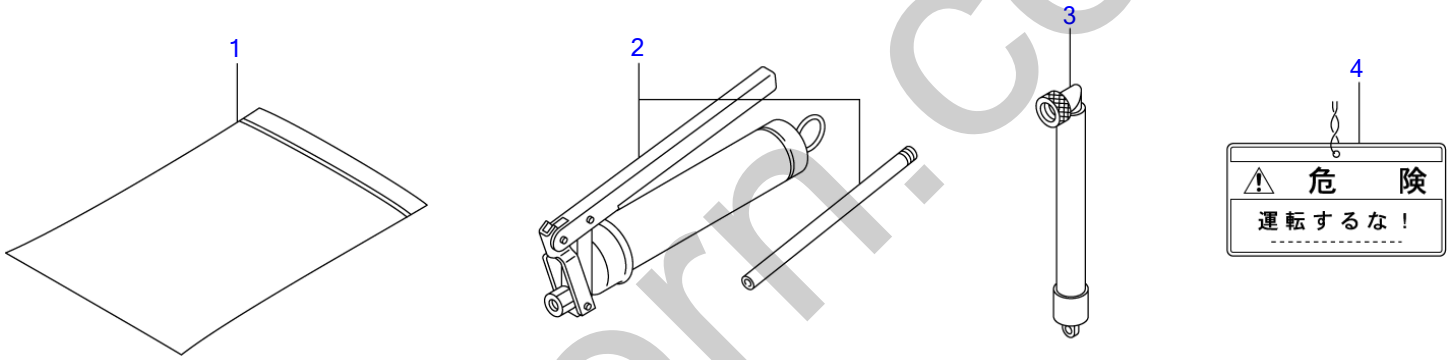

B5G071

S=FREE

silverhorn.co.uk

TOOL & ACCESSORIES (10810307-)

Item	Part number	Description	Q'ty	Chan.	Serial No.	Serv.	Remarks
0	0329214700	TOOL SET	1				X03292-14700-0
	0329214750	TOOL SET (for Japan)	1				X03292-14750-0
1	1691900001	・CASE	1				
2	1691060600	・GUN, grease	1				
	1691010800	・GUN, grease	1				for Japan
3	1554512201	TUBE	1				for EU
4	0359325160	PLATE	1				for Japan
	B5g071						

silverhorn.co.uk

PAINTED COLOR

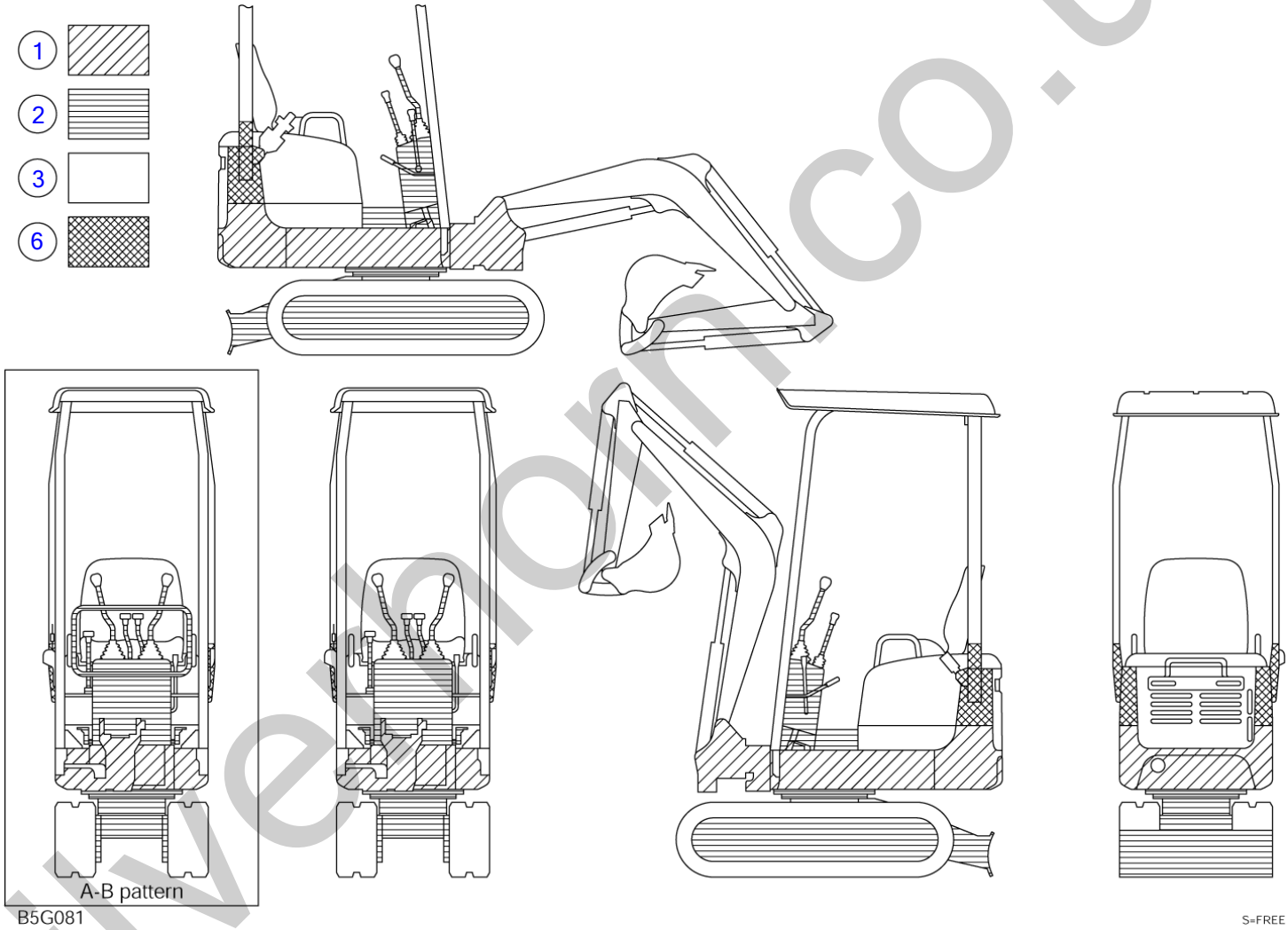

silverhorn.co.uk

PAINTED COLOR

Item	Part number	Description	Q'ty	Chan.	Serial No.	Serv.	Remarks
		PAINTED COLOR					X03291-50700-1
1	1919060105	RED	1				
	1919069105	RED	1				spray
2	1919060144	GRAY	1				
	1919069144	GRAY	1				spray
3	1919060142	LIGHT GRAY	1				
	1919069142	LIGHT GRAY	1				spray
6	1919060159	BLACK	1				
	1919069159	BLACK	1				spray
	B5g082						

silverhorn.co.uk

SWIVEL JOINT

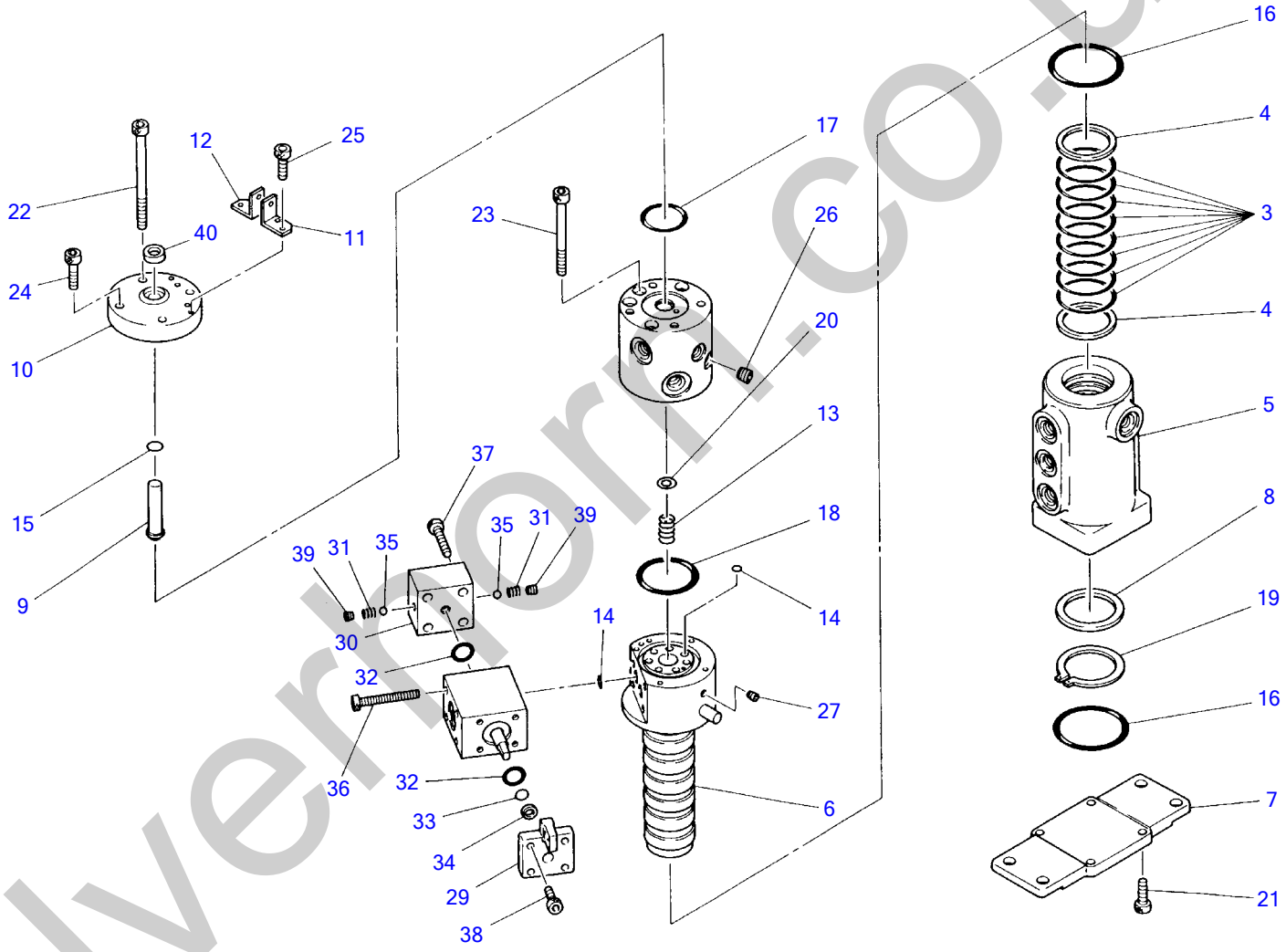

B5H010

silvermorn.co.uk

SWIVEL JOINT

Item		Part number	Description	Q'ty	Chan.	Serial No.	Serv.	Remarks
0		1904006800	JOINT, swivel ASSY	1				
0-1		1904006699	・KIT, seal	1				
3	X	1420010500	・・O-RING	8				
4	X	1421030500	・・RING, back-up	2				
5	X	1904006801	・HUB	1				
6	X	1904006811	・SHAFT	1				
7	X	1904006821	・FLANGE	1				
8	X	1904006604	・RING	1				
9	X	1904006608	・PIN	1				
10	X	1904006809	・COVER	1				
11	X	1904006610	・BRACKET	1				
12	X	1904006633	・BRACKET	1				
13	X	1904006612	・SPRING	1				
14		1420010090	・O-RING	9				
15		1420000080	・O-RING	1				
16		1420110600	・O-RING	2				
17		1420110350	・O-RING	1				
18		1420310033	・O-RING	1				
19		1220000045	・RING, snap	1				
20		1141200008	・WASHER	1				
21		1110050820	・SCREW, cap	4				
22		1110050695	・SCREW, cap	2				
23		1110050675	・SCREW, cap	4				
24		1110050625	・SCREW, cap	2				
25		1110050512	・SCREW, cap	4				
26		1501810002	・PLUG	2				
27		1501810000	・PLUG	1				
0-2		1904006632	・SELECTOR ASSY	1				
29	X	1904006653	・・COVER	1				
30	X	1904006654	・・COVER	1				
31	X	1904006655	・・SPRING	2				
32		1420010160	・・O-RING	2				
33		1420000100	・・O-RING	1				
34		1421020100	・・RING, back-up	1				
35		1390020350	・・BALL, steel	2				
36		1110050555	・・SCREW, cap	4				
37		1110050540	・・SCREW, cap	4				
38		1110050516	・・SCREW, cap	4				
39		1501810000	・・PLUG	2				
40		1411170080	・SEAL, dust	1				
		B5h010						

silverhorn.co.uk

CONTROL VALVE

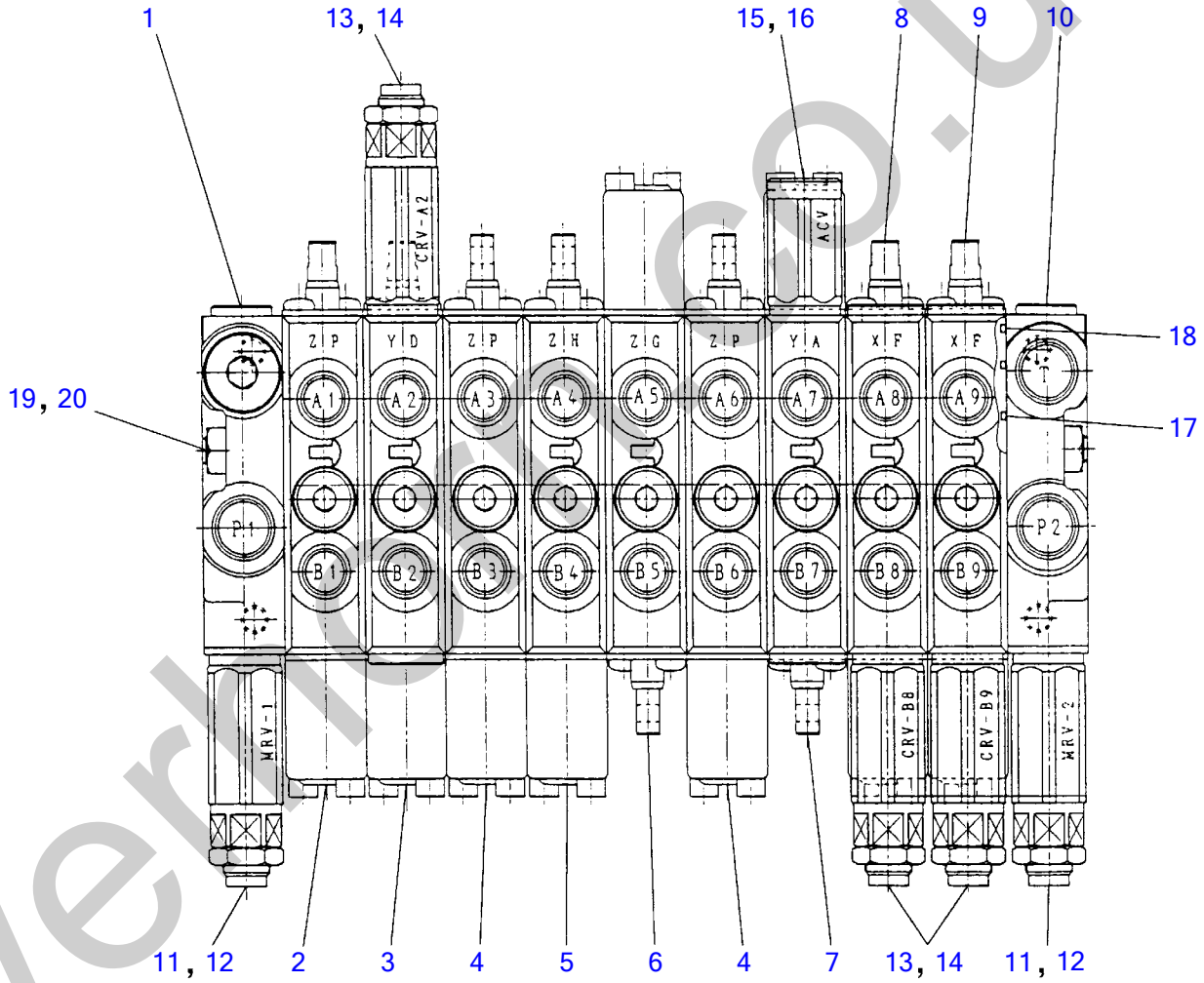

B5H020

silverhome.co.uk

CONTROL VALVE

Item	Part number	Description	Q'ty	Chan.	Serial No.	Serv.	Remarks
0	1901040200	VALVE ASSY, control	1				
1	1901040201	・HOUSING ASSY	1				P1
2	1901040214	・BLOCK ASSY, No.1	1				slew
3	1901040212	・BLOCK ASSY, No.2	1				arm
4	1901040215	・BLOCK ASSY, No.3	2				travel
5	1901040217	・BLOCK ASSY, No.4	1				blade
6	1901040219	・BLOCK ASSY, No.5	1				service
7	1901040218	・BLOCK ASSY, No.6	1				swing
8	1901040211	・BLOCK ASSY, No.7	1				boom
9	1901040213	・BLOCK ASSY, No.8	1				bucket
10	1901040202	・HOUSING ASSY	1				P2, T
11	1901040222	・VALVE ASSY	2				relief
12	1420010140	・・O-RING	1				
13	1901040221	・VALVE ASSY	3				over load
14	1420010140	・・O-RING	1				
15	1901036425	・VALVE ASSY	1				antivoid
16	1420010140	・・O-RING	1				
17	1420310127	・O-RING	10				
18	1420010100	・O-RING	20				
19	1901040207	・BOLT	3				
20	1130050008	・NUT	6				
	B5h020						

silverhorn.co.uk

HOUSING ASSY

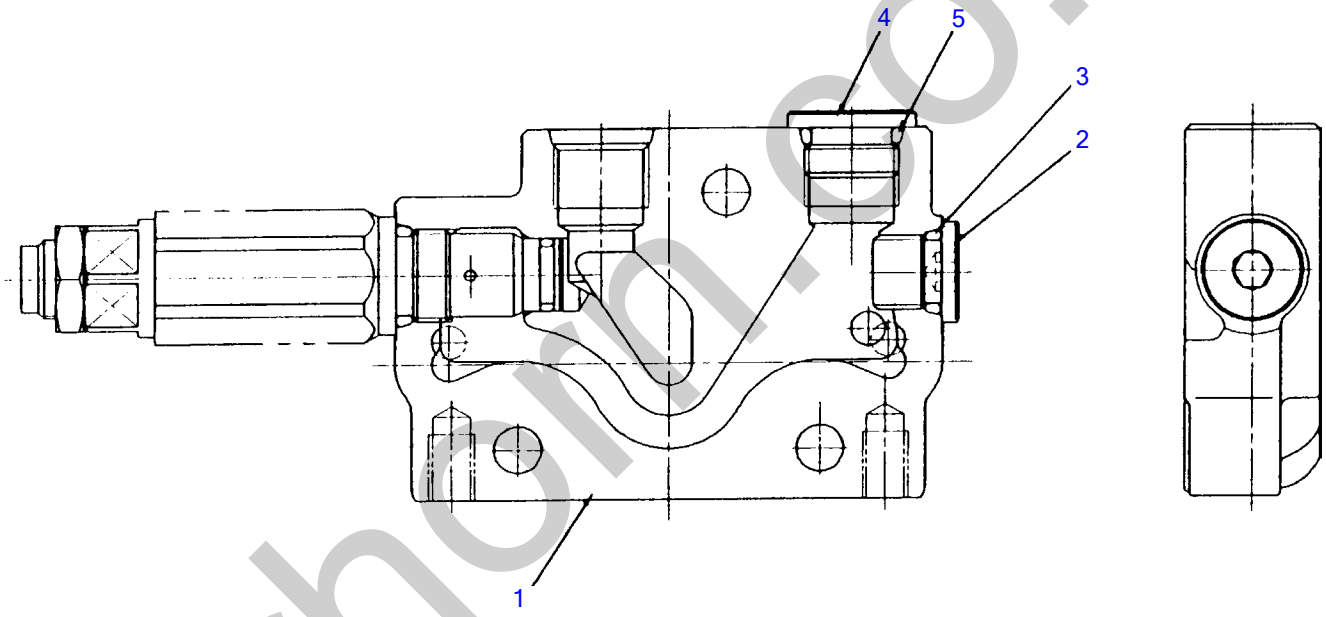

B5H030

silverhorn.co.uk

HOUSING ASSY

Item	Part number	Description	Q'ty	Chan.	Serial No.	Serv.	Remarks
0	1901040201	HOUSING ASSY	1				P1
1	1901014202	・BODY	1				
2	1501750002	・PULG	1				
	1420010110	・・O-RING	1			M	
3	1420010110	・O-RING	1				
4	1501750003	・PULG	1				
	1420010140	・・O-RING	1			M	
5	1420010140	・O-RING	1				
	B5h030						

silverhorn.co.uk

BLOCK ASSY; No. 1

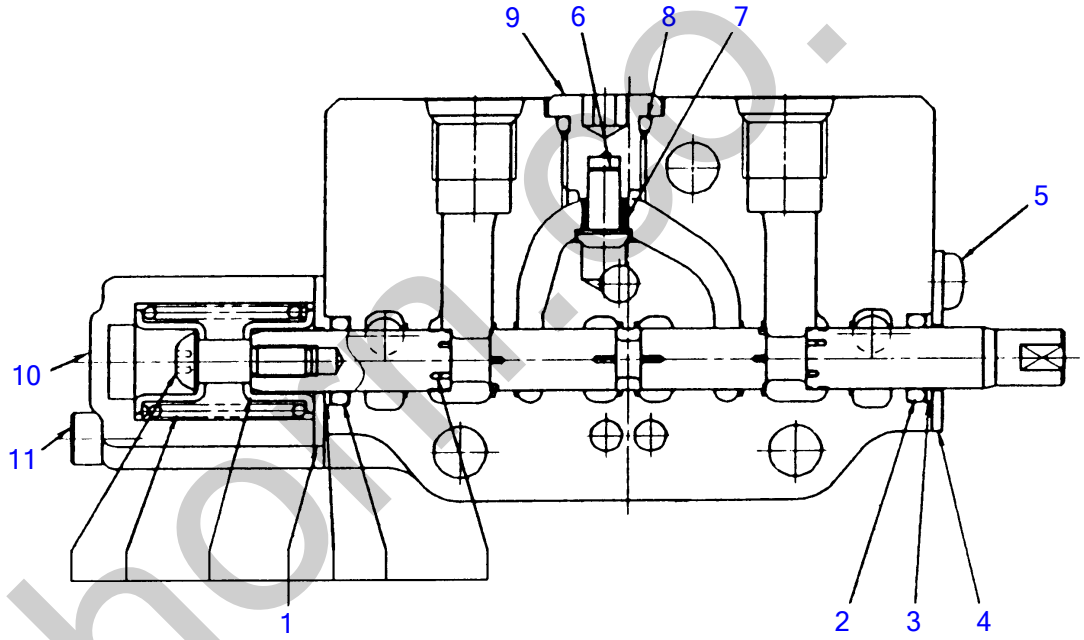

B5H040

silverhome.co.uk

BLOCK ASSY; No. 1

Item	Part number	Description	Q'ty	Chan.	Serial No.	Serv.	Remarks
0	1901040214	BLOCK ASSY, No.1	1				slew
1	1901040293	・SPOOL ASSY	1				
2	1420000101	・O-RING	1				
3	1421030101	・RING, back-up	1				
4	1901040241	・PLATE	1				
5	1120590510	・SCREW	2				
6	1901021366	・VALVE	1				
7	1901040261	・SPRING	1				
8	1420010110	・O-RING	1				
9	1901040251	・PULG	1				
10	1901040256	・HOLDER, spring	1				
11	1110020545	・SCREW, cap	2				
	B5h040						

silverhorn.co.uk

BLOCK ASSY; No. 2

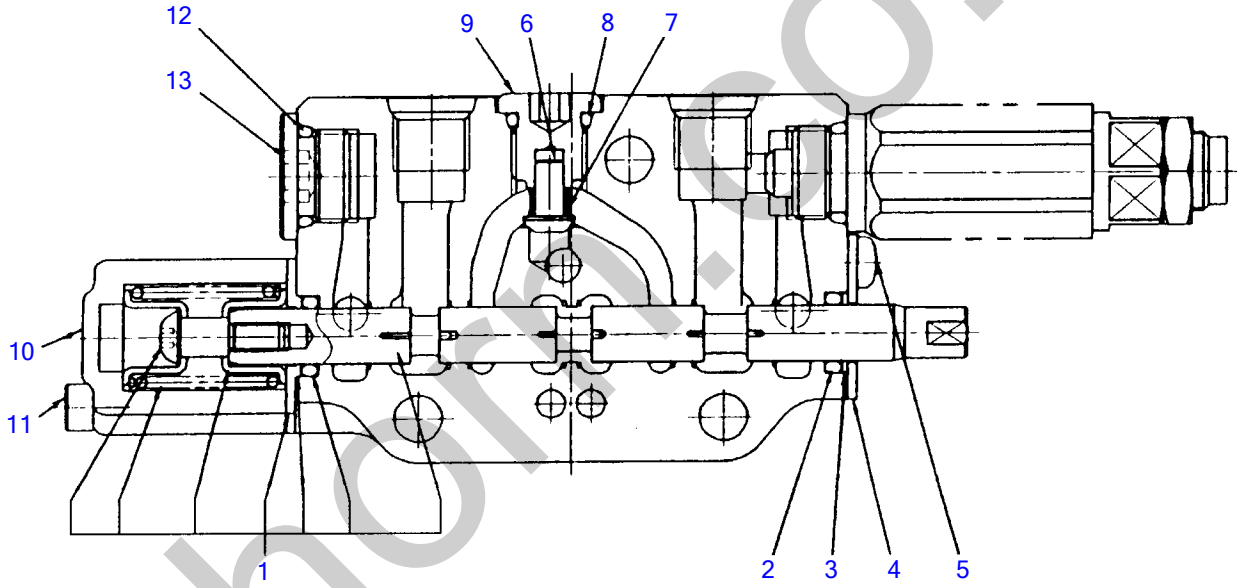

B5H050

silverhorn.co.uk

BLOCK ASSY; No. 2

Item	Part number	Description	Q'ty	Chan.	Serial No.	Serv.	Remarks
0	1901040212	BLOCK ASSY, No.2	1				arm
1	1901040292	・SPOOL ASSY	1				
2	1420000101	・O-RING	1				
3	1421030101	・RING, back-up	1				
4	1901040241	・PLATE	1				
5	1120590510	・SCREW	2				
6	1901021366	・VALVE	1				
7	1901040261	・SPRING	1				
8	1420010110	・O-RING	1				
9	1901040251	・PULG	1				
10	1901040256	・HOLDER, spring	1				
11	1110020545	・SCREW, cap	2				
12	1420010140	・O-RING	1				
13	1501750003	・PULG	1				
	1420010140	・・O-RING	1			M	
	B5h050						

silverhorn.co.uk

BLOCK ASSY; No. 3

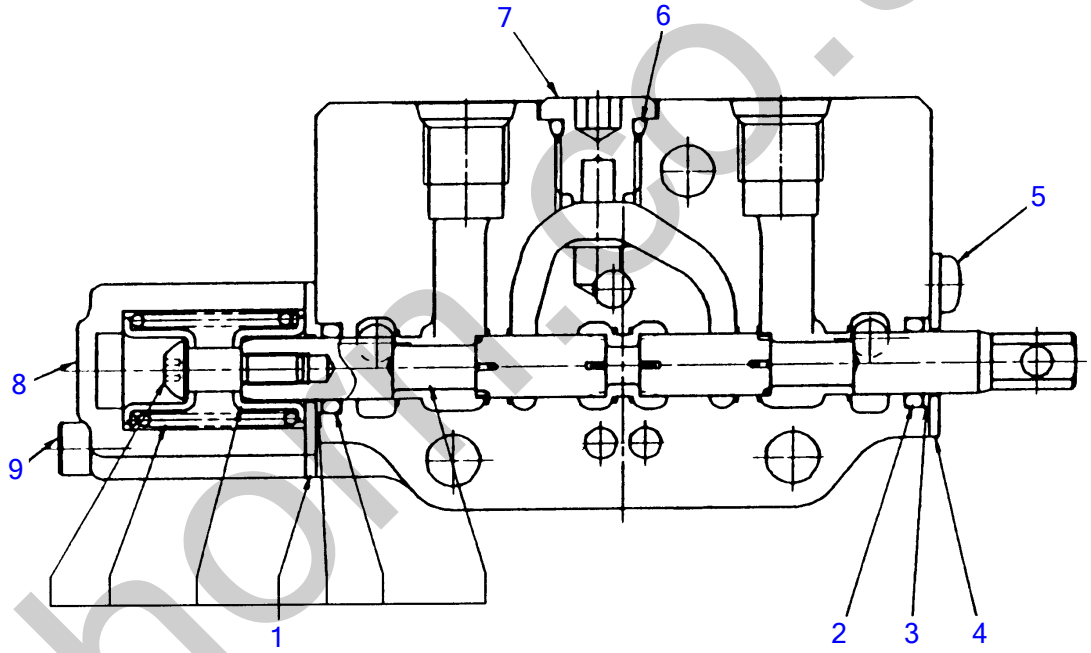

B5H060

silverhorn.co.uk

BLOCK ASSY; No. 3

Item	Part number	Description	Q'ty	Chan.	Serial No.	Serv.	Remarks
0	1901040215	BLOCK ASSY, No.3	2				travel
1	1901040297	・SPOOL ASSY	1				
2	1420000101	・O-RING	1				
3	1421030101	・RING, back-up	1				
4	1901040241	・PLATE	1				
5	1120590510	・SCREW	2				
6	1420010110	・O-RING	1				
7	1901040251	・PULG	1				
8	1901040256	・HOLDER, spring	1				
9	1110020545	・SCREW, cap	2				
	B5h060						

silverhorn.co.uk

BLOCK ASSY; No. 4

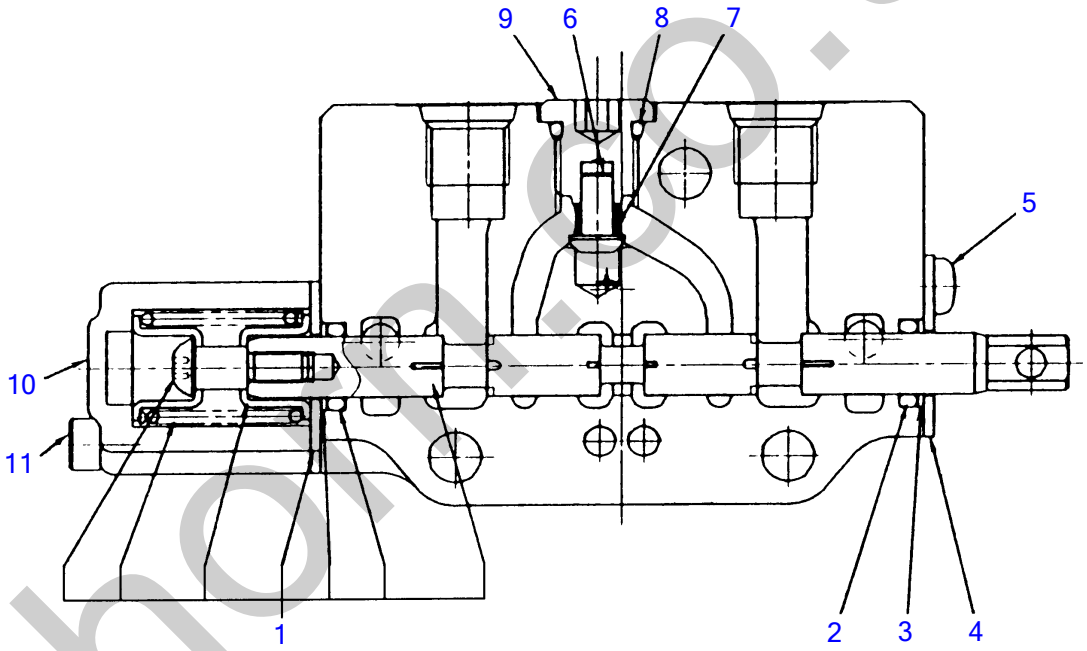

B5H070

silverhorn.co.uk

BLOCK ASSY; No. 4

Item	Part number	Description	Q'ty	Chan.	Serial No.	Serv.	Remarks
0	1901040217	BLOCK ASSY, No.4	1				blade
1	1901040291	・SPOOL ASSY	1				
2	1420000101	・O-RING	1				
3	1421030101	・RING, back-up	1				
4	1901040241	・PLATE	1				
5	1120590510	・SCREW	2				
6	1901021366	・VALVE	1				
7	1901040261	・SPRING	1				
8	1420010110	・O-RING	1				
9	1901040251	・PULG	1				
10	1901040256	・HOLDER, spring	1				
11	1110020545	・SCREW, cap	2				
	B5h070						

silverhorn.co.uk

BLOCK ASSY; No. 5

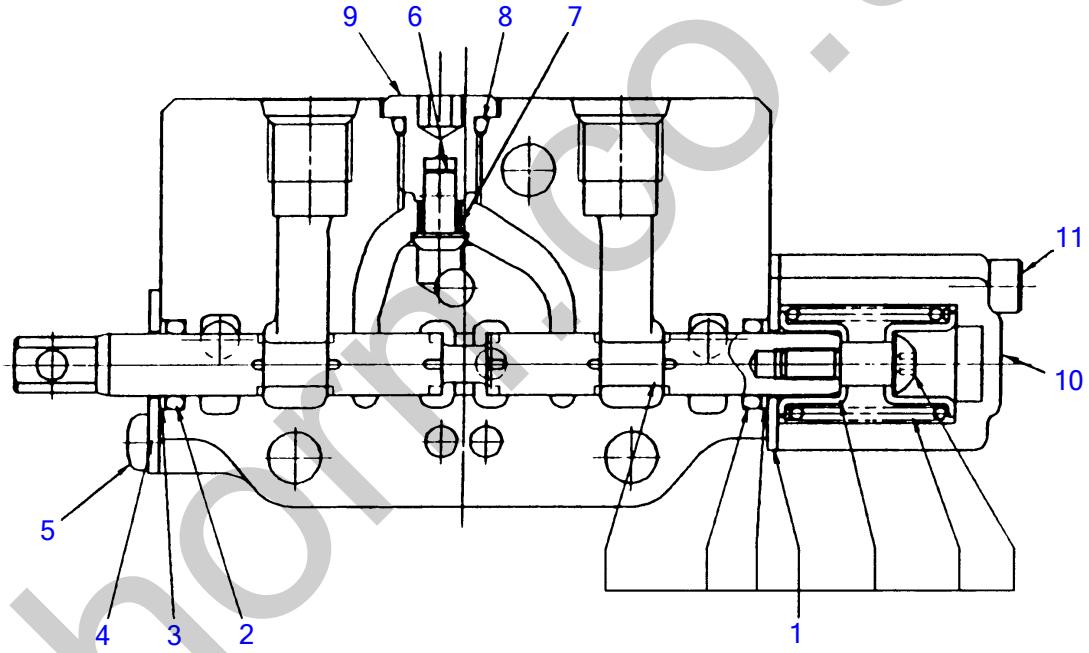

B5H080

silverhorse.co.uk

BLOCK ASSY; No. 5

Item	Part number	Description	Q'ty	Chan.	Serial No.	Serv.	Remarks
0	1901040219	BLOCK ASSY, No.5	1				service
1	1901040298	・SPOOL ASSY	1				
2	1420000101	・O-RING	1				
3	1421030101	・RING, back-up	1				
4	1901040241	・PLATE	1				
5	1120590510	・SCREW	2				
6	1901021366	・VALVE	1				
7	1901040261	・SPRING	1				
8	1420010110	・O-RING	1				
9	1901040251	・PULG	1				
10	1901040256	・HOLDER, spring	1				
11	1110020545	・SCREW, cap	2				
	B5h080						

silverhorn.co.uk

BLOCK ASSY; No. 6

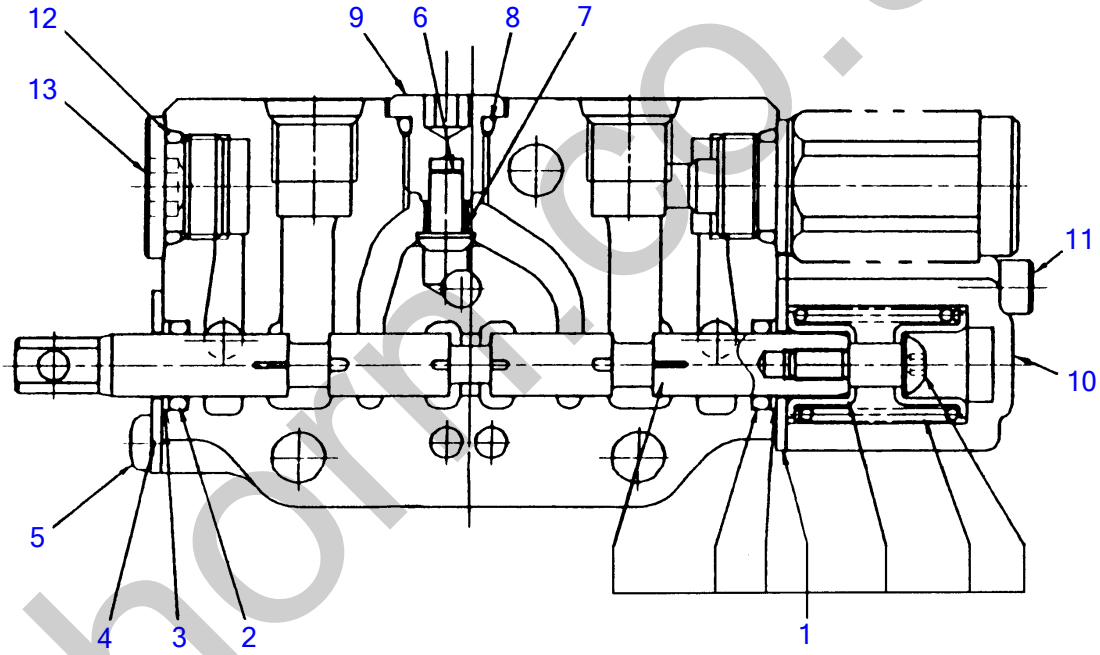

B5H090

silverhorse.co.uk

BLOCK ASSY; No. 6

Item	Part number	Description	Q'ty	Chan.	Serial No.	Serv.	Remarks
0	1901040218	BLOCK ASSY, No.6	1				swing
1	1901040296	・SPOOL ASSY	1				
2	1420000101	・O-RING	1				
3	1421030101	・RING, back-up	1				
4	1901040241	・PLATE	1				
5	1120590510	・SCREW	2				
6	1901021366	・VALVE	1				
7	1901040261	・SPRING	1				
8	1420010110	・O-RING	1				
9	1901040251	・PULG	1				
10	1901040256	・HOLDER, spring	1				
11	1110020545	・SCREW, cap	2				
12	1420010140	・O-RING	1				
13	1501750003	・PULG	1				
	1420010140	・・O-RING	1			M	
	B5h090						

silverhorn.co.uk

BLOCK ASSY; No. 7

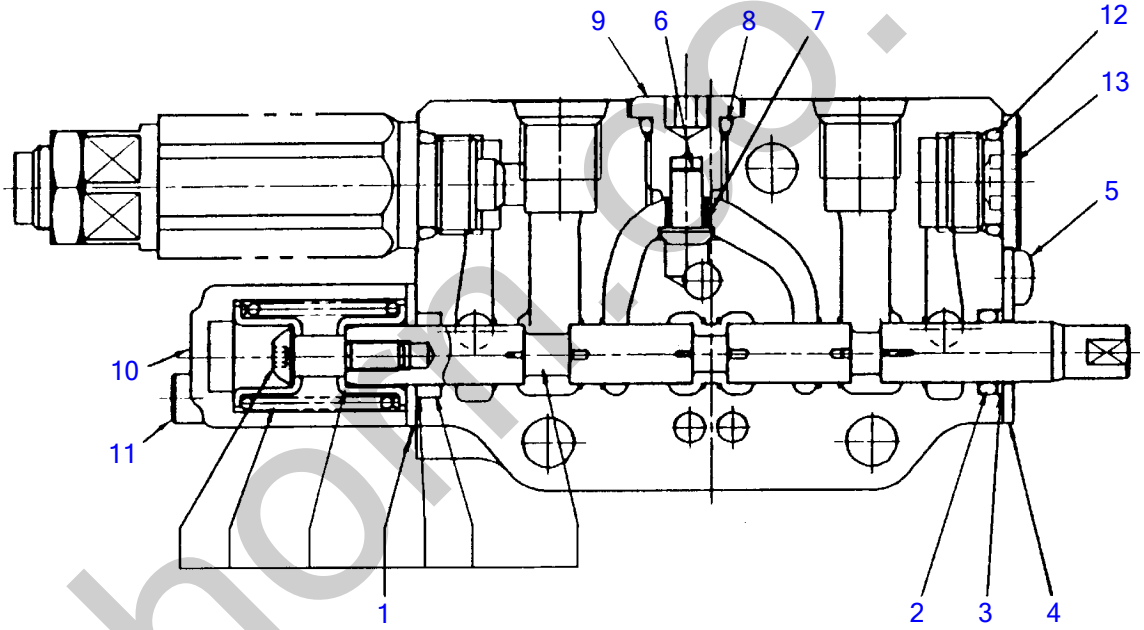

B5H100

silverhorn.co.uk

BLOCK ASSY; No. 7

Item	Part number	Description	Q'ty	Chan.	Serial No.	Serv.	Remarks
0	1901040211	BLOCK ASSY, No.7	1				boom
1	1901040295	・SPOOL ASSY	1				
2	1420000101	・O-RING	1				
3	1421030101	・RING, back-up	1				
4	1901040241	・PLATE	1				
5	1120590510	・SCREW	2				
6	1901021366	・VALVE	1				
7	1901040261	・SPRING	1				
8	1420010110	・O-RING	1				
9	1901040251	・PULG	1				
10	1901040256	・HOLDER, spring	1				
11	1110020545	・SCREW, cap	2				
12	1420010140	・O-RING	1				
13	1501750003	・PULG	1				
	1420010140	・・O-RING	1			M	
	B5h100						

silverhorn.co.uk

BLOCK ASSY; No. 8

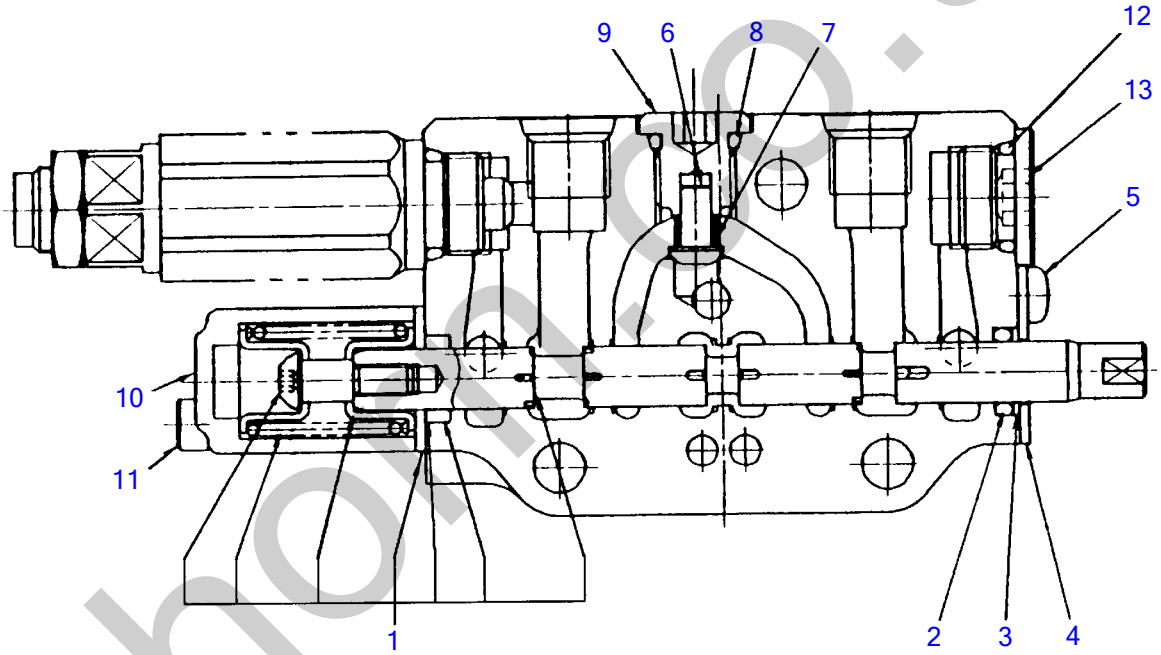

B5H110

silverhorn.co.uk

BLOCK ASSY; No. 8

Item	Part number	Description	Q'ty	Chan.	Serial No.	Serv.	Remarks
0	1901040213	BLOCK ASSY, No.8	1				bucket
1	1901040294	・SPOOL ASSY	1				
2	1420000101	・O-RING	1				
3	1421030101	・RING, back-up	1				
4	1901040241	・PLATE	1				
5	1120590510	・SCREW	2				
6	1901021366	・VALVE	1				
7	1901040261	・SPRING	1				
8	1420010110	・O-RING	1				
9	1901040251	・PULG	1				
10	1901040256	・HOLDER, spring	1				
11	1110020545	・SCREW, cap	2				
12	1420010140	・O-RING	1				
13	1501750003	・PULG	1				
	1420010140	・・O-RING	1			M	
	B5h110						

silverhorn.co.uk

HOUSING ASSY

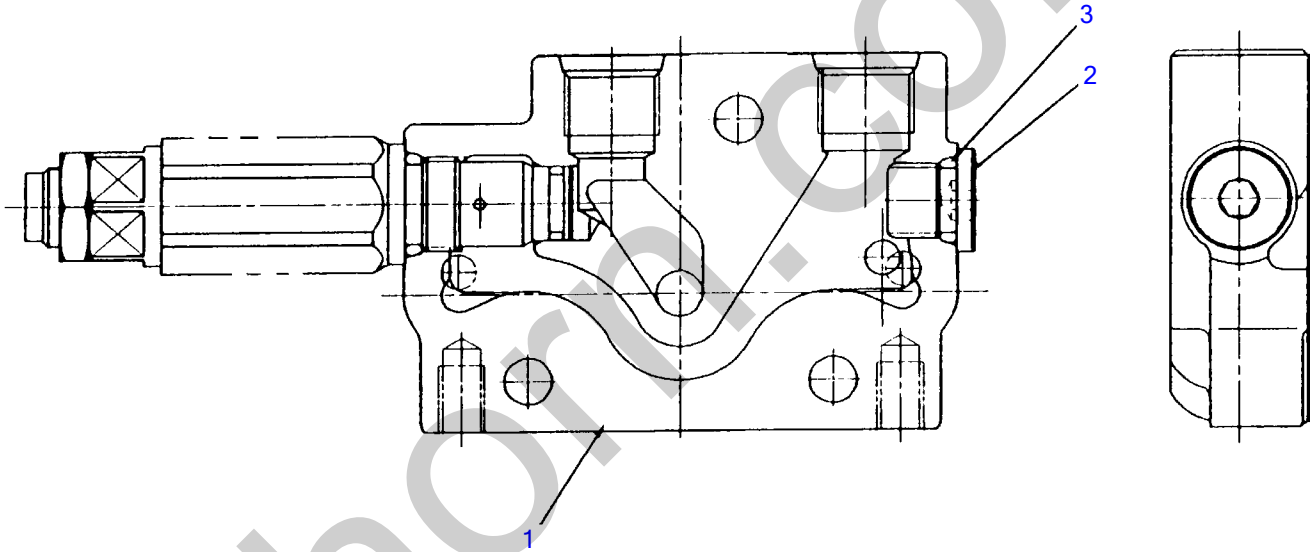

B5H120

silverhorn.co.uk

HOUSING ASSY

Item	Part number	Description	Q'ty	Chan.	Serial No.	Serv.	Remarks
0	**1901040202**	HOUSING ASSY	1				P2, T
1	**1901040203**	・BODY	1				
2	**1501750002**	・PULG	1				
	1420010110	・・O-RING	1			M	
3	**1420010110**	・O-RING	1				
	B5h120						

silverhorn.co.uk

BOOM CYLINDER

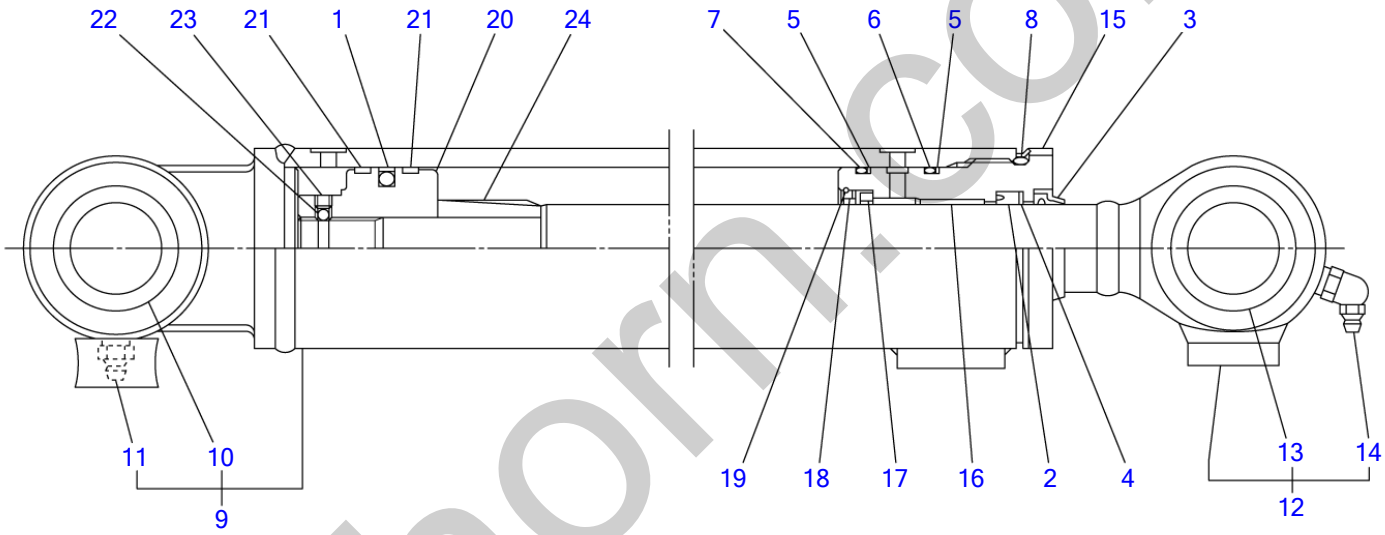

B5H130

S=FREE

silverhorn.co.uk

BOOM CYLINDER

Item	Part number	Description	Q'ty	Chan.	Serial No.	Serv.	Remarks
0	1900087500	CYLINDER ASSY	1		10810004~10810246		boom
	1900088800	CYLINDER ASSY	1		10810247~		boom
0-1	1900087599	・KIT, seal	1				
1	X 1900056931	・・PACKING, piston	1				
2	X 1900056932	・・PACKING, rod	1				
3	X 1900087133	・・SEAL, dust	1				
4	X 1421135252	・・RING, back-up	1				
5	X 1421130450	・・RING, back-up	2				
6	X 1420110450	・・O-RING	1				
7	X 1420110400	・・O-RING	1				
8	X 1420500500	・・O-RING	1				
9	1900087598	・KIT, tube	1		10810004~10810246		
	1900088898	・KIT, tube	1		10810247~		
10	1900056902	・・BUSHING	1		10810004~10810246		
	1900044802	・・BUSHING	1		10810247~		
11	1560001000	・・FITTING, grease	1				
12	1900087597	・KIT, rod	1		10810004~10810246		
	1900088897	・KIT, rod	1		10810247~		
13	1900056902	・・BUSHING	1				
14	1560001675	・・FITTING, grease	1				
15	1900056903	・COVER, rod	1				
16	1900087113	・BUSHING	1				
17	1900056916	・RING, cushion	1				
18	1900056915	・SPACER	1				
19	1900056926	・STOPPER	1				
20	1900057106	・PISTON	1				
21	1900056928	・RING, wear	2				
22	1390020250	・BALL, steel	1				
23	1121050608	・SET-SCREW	1				
24	1900056905	・CUSHION, rod	1				
	B5h131						

silverhorn.co.uk

ARM CYLINDER

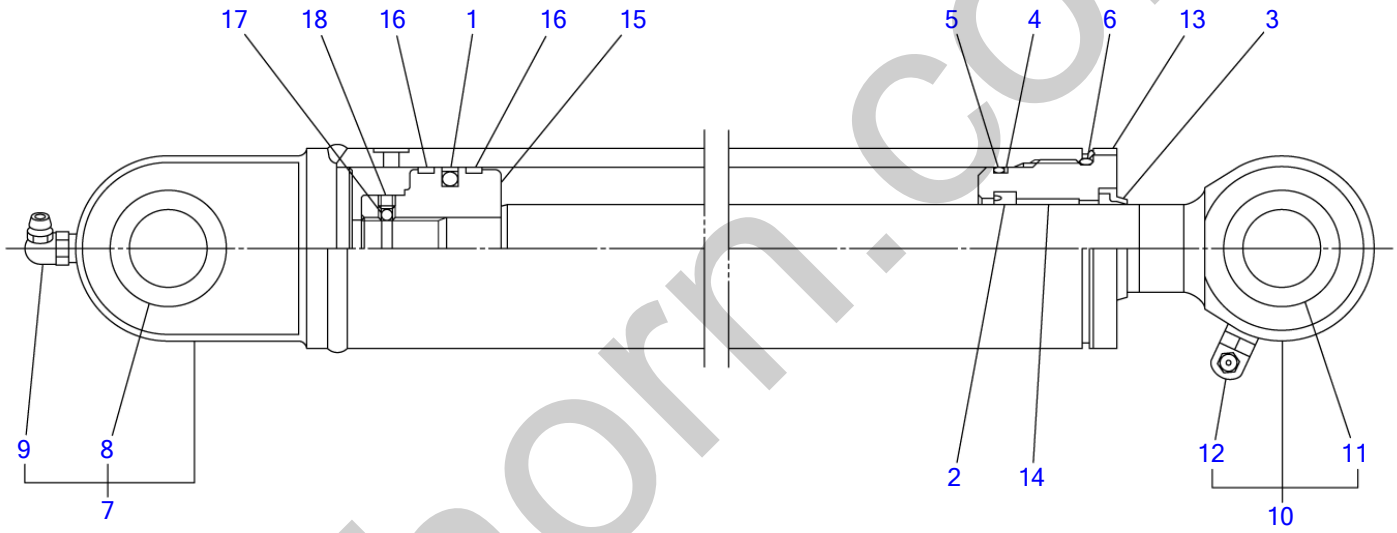

B5H140

S=FREE

silverhorn.co.uk

ARM CYLINDER

Item	Part number	Description	Q'ty	Chan.	Serial No.	Serv.	Remarks
0	1900087400	CYLINDER ASSY	1				arm
0-1	1900087499	・KIT, seal	1				
1	X 1900051932	・・PACKING, piston	1				
2	X 1410530408	・・PACKING, rod	1				
3	X 1900073733	・・SEAL, dust	1				
4	X 1421130500	・・RING, back-up	1				
5	X 1420110500	・・O-RING	1				
6	X 1420500550	・・O-RING	1				
7	1900087498	・KIT, tube	1				
8	1900057002	・・BUSHING	1				
9	1560001900	・・FITTING, grease	1				
10	1900087497	・KIT, rod	1				
11	1900056902	・・BUSHING	1				
12	1560001900	・・FITTING, grease	1				
13	1900053503	・COVER, rod	1				
14	1333003025	・BUSHING	1				
15	1900053506	・PISTON	1				
16	1900066726	・RING, wear	2				
17	1390020250	・BALL, steel	1				
18	1121050606	・SET-SCREW	1				
	B5h140						

silverhorn.co.uk

BUCKET CYLINDER

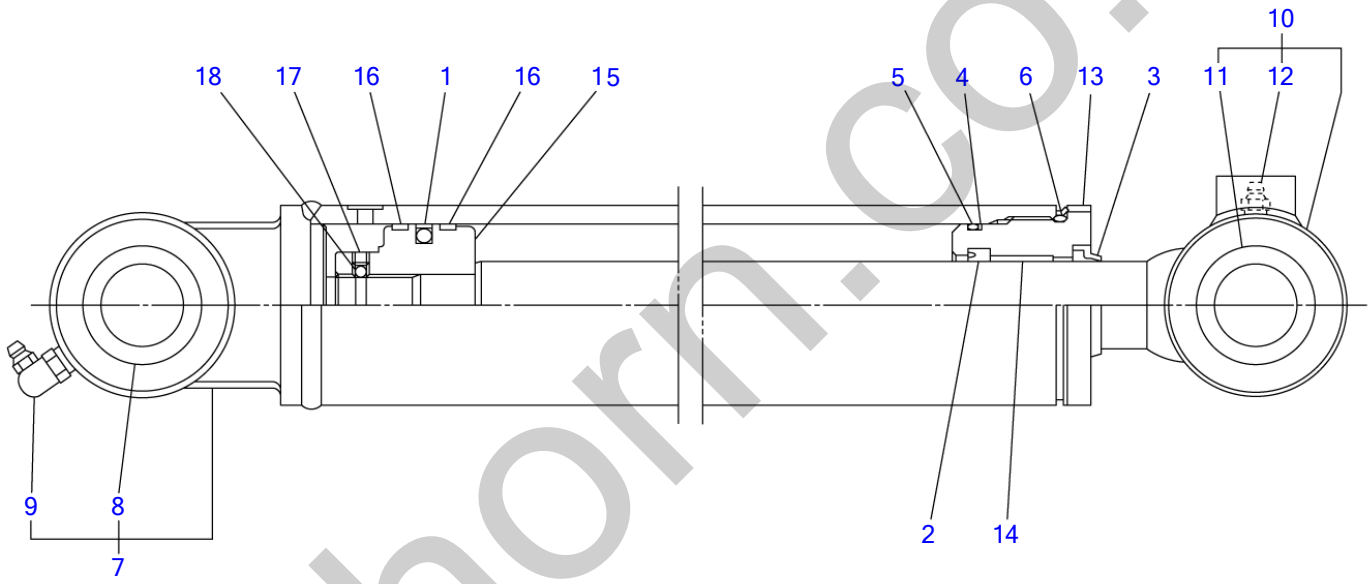

B5H150

S=FREE

silverhorn.co.uk

BUCKET CYLINDER

Item	Part number	Description	Q'ty	Chan.	Serial No.	Serv.	Remarks
0	1900087300	CYLINDER ASSY	1				bucket
0-1	1900087299	・KIT, seal	1				
1	X 1900056931	・・PACKING, piston	1				
2	X 1900056932	・・PACKING, rod	1				
3	X 1900087133	・・SEAL, dust	1				
4	X 1421130450	・・RING, back-up	1				
5	X 1420110450	・・O-RING	1				
6	X 1420500500	・・O-RING	1				
7	1900087398	・KIT, tube	1				
8	1900057002	・・BUSHING	1				
9	1560001900	・・FITTING, grease	1				
10	1900087397	・KIT, rod	1				
11	1900056902	・・BUSHING	1				
12	1560001000	・・FITTING, grease	1				
13	1900057103	・COVER, rod	1				
14	1900087113	・BUSHING	1				
15	1900057106	・PISTON	1				
16	1900056928	・RING, wear	2				
17	1121050608	・SET-SCREW	1				
18	1390020250	・BALL, steel	1				
	B5h150						

silverhorn.co.uk

DOZER BLADE CYLINDER

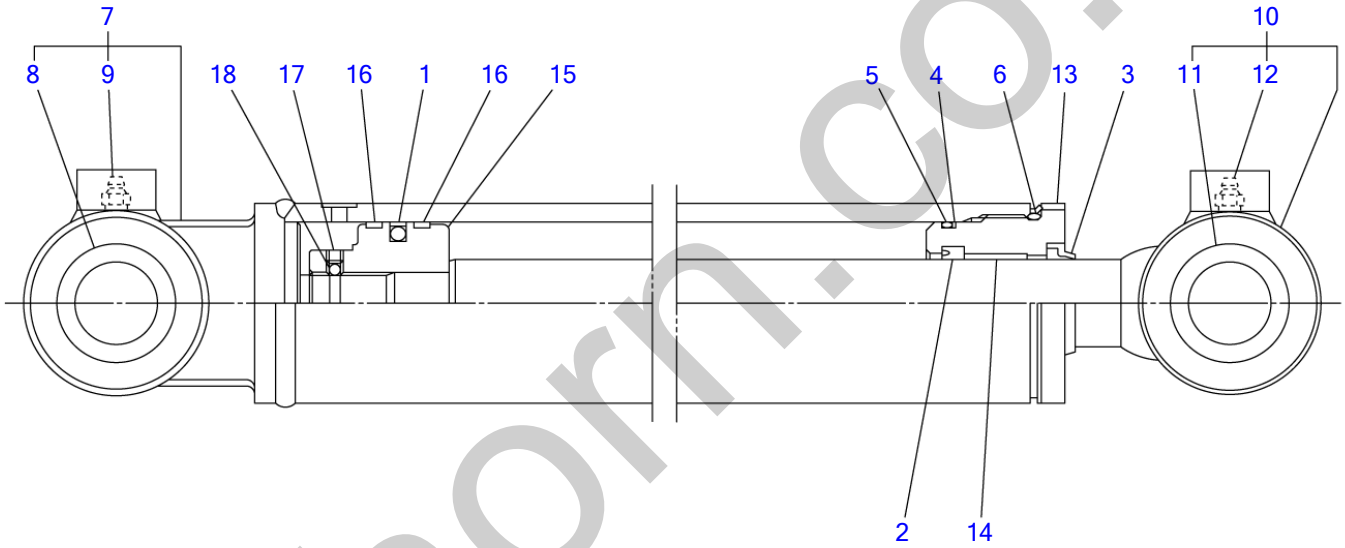

B5H160

S=FREE

silverhorn.co.uk

DOZER BLADE CYLINDER

Item		Part number	Description	Q'ty	Chan.	Serial No.	Serv.	Remarks
0		1900087100	CYLINDER ASSY	1				blade
0-1		1900087299	・KIT, seal	1				
1	X	1900056931	・・PACKING, piston	1				
2	X	1900056932	・・PACKING, rod	1				
3	X	1900087133	・・SEAL, dust	1				
4	X	1421130450	・・RING, back-up	1				
5	X	1420110450	・・O-RING	1				
6	X	1420500500	・・O-RING	1				
7		1900087198	・KIT, tube	1				
8		1900057002	・・BUSHING	1				
9		1560001000	・・FITTING, grease	1				
10		1900087197	・KIT, rod	1				
11		1900057002	・・BUSHING	1				
12		1560001000	・・FITTING, grease	1				
13		1900057103	・COVER, rod	1				
14		1900087113	・BUSHING	1				
15		1900057106	・PISTON	1				
16		1900056928	・RING, wear	2				
17		1121050608	・SET-SCREW	1				
18		1390020250	・BALL, steel	1				
		B5h160						

silverhorn.co.uk

SWING CYLINDER

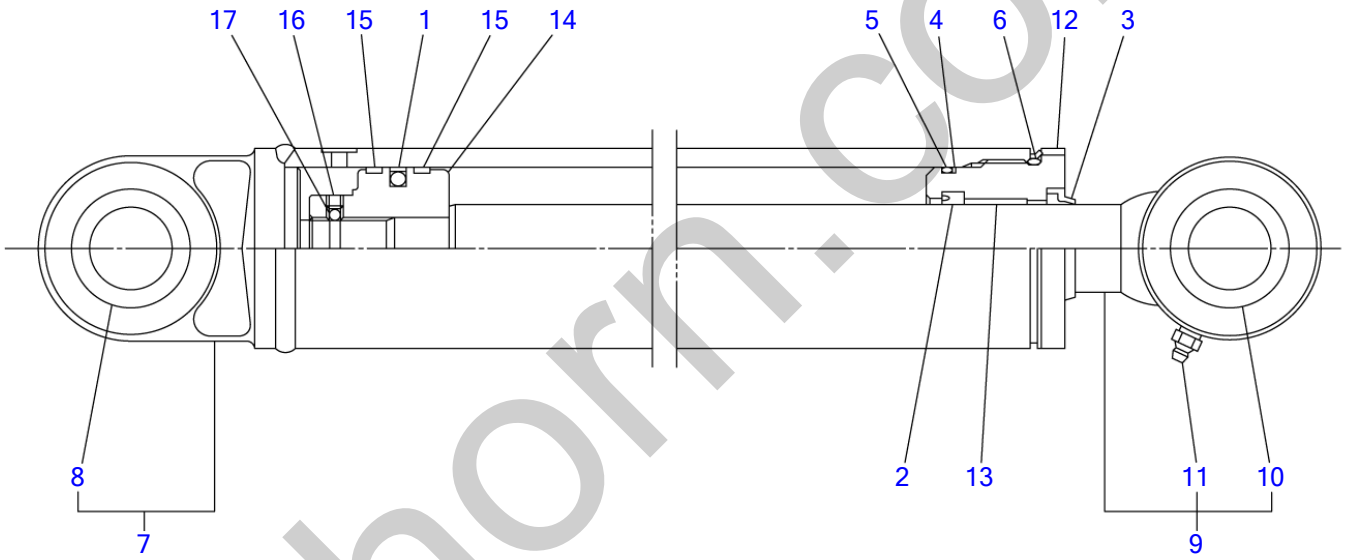

B5H170

S=FREE

silverhorn.co.uk

SWING CYLINDER

Item	Part number	Description	Q'ty	Chan.	Serial No.	Serv.	Remarks
0	1900087600	CYLINDER ASSY	1		10810004~10810246		swing
	1900088900	CYLINDER ASSY	1		10810247~		swing
0-1	1900087299	・KIT, seal	1				
1	X 1900056931	・・PACKING, piston	1				
2	X 1900056932	・・PACKING, rod	1				
3	X 1900087133	・・SEAL, dust	1				
4	X 1421130450	・・RING, back-up	1				
5	X 1420110450	・・O-RING	1				
6	X 1420500500	・・O-RING	1				
7	1900087698	・KIT, tube	1		10810004~10810246		
	1900088998	・KIT, tube	1		10810247~		
8	1900057002	・・BUSHING	1				
9	1900087697	・KIT, rod	1		10810004~10810246		
	1900088997	・KIT, rod	1		10810247~		
10	1900056902	・・BUSHING	1		10810004~10810246		
	1900024720	・・BUSHING	1		10810247~		
11	1560001000	・・FITTING, grease	1				
12	1900057203	・COVER, rod	1				
13	1900087113	・BUSHING	1				
14	1900057106	・PISTON	1				
15	1900056928	・RING, wear	2				
16	1121050608	・SET-SCREW	1				
17	1390020250	・BALL, steel	1				
	B5h171						

silverhorn.co.uk

SPANNER CYLINDER

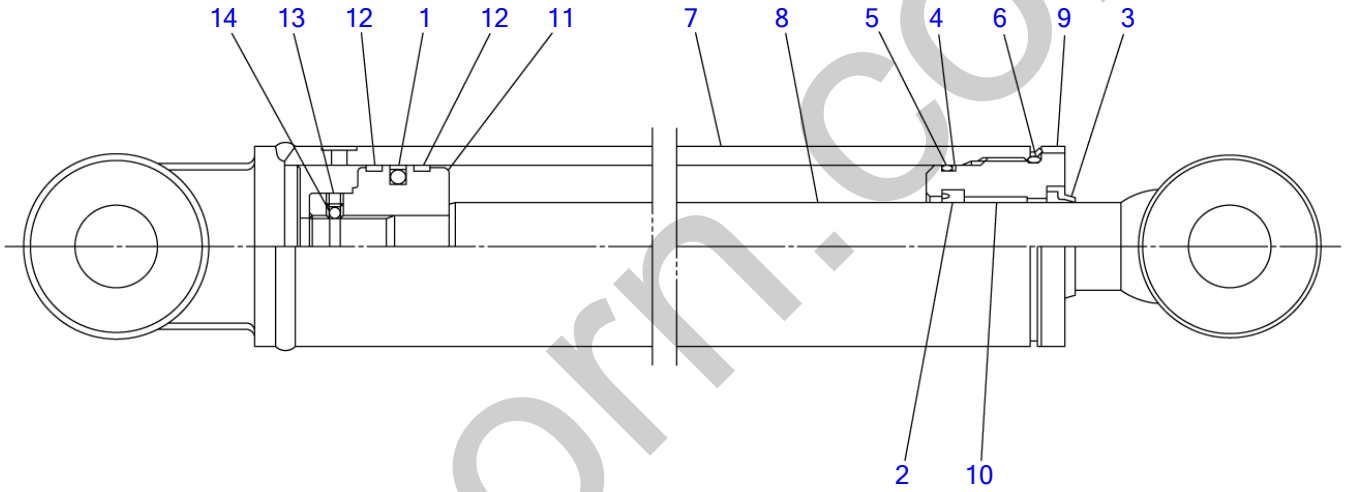

B5H180

S=FREE

silverhorn.co.uk

SPANNER CYLINDER

Item	Part number		Description	Q'ty	Chan.	Serial No.	Serv.	Remarks
0		1900087200	CYLINDER ASSY	1				spanner
0-1		1900087299	・KIT, seal	1				
1	X	1900056931	・・PACKING, piston	1				
2	X	1900056932	・・PACKING, rod	1				
3	X	1900087133	・・SEAL, dust	1				
4	X	1421130450	・・RING, back-up	1				
5	X	1420110450	・・O-RING	1				
6	X	1420500500	・・O-RING	1				
7		1900087207	・TUBE	1				
8		1900087201	・ROD, piston	1				
9		1900057203	・COVER, rod	1				
10		1900087113	・BUSHING	1				
11		1900057106	・PISTON	1				
12		1900056928	・RING, wear	2				
13		1121050608	・SET-SCREW	1				
14		1390020250	・BALL, steel	1				
		B5h180						

silverhorn.co.uk

TRAVEL MOTOR (1/3) (reduction sec.)

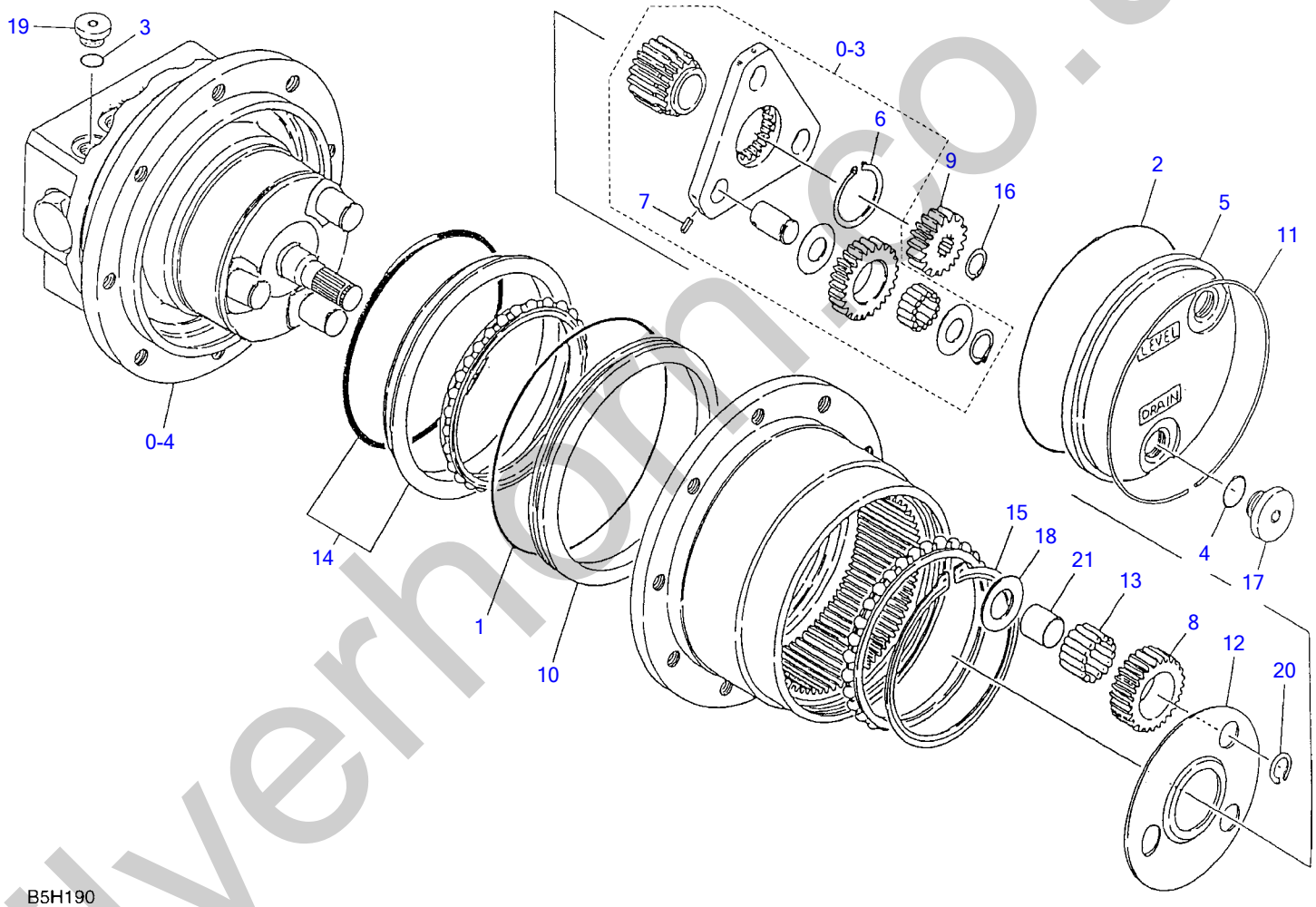

silverhorn.co.uk

TRAVEL MOTOR (1/3) (reduction sec.)

Item		Part number	Description	Q'ty	Chan.	Serial No.	Serv.	Remarks
0		1903122400	MOTOR ASSY, travel	1				
0-1	X	**********	・REDUCTION ASSY	1				
0-2		1912906999	・・KIT, seal	1				
1	X	1420101300	・・・O-RING	1				
2	X	1420300248	・・・O-RING	1				
3	X	1420010110	・・・O-RING	1				
4	X	1420010140	・・・O-RING	2				
5		1903121202	・・COVER	1				
0-3		1912906998	・・CARRIER ASSY, sub	1				
6		1220000026	・・・RING, snap	1				
7		1213000312	・・・PIN, spring	3				
8		1903121206	・・GEAR	3				
9		1912906909	・・GEAR	1				
10		1903121212	・・RING, seal	1				
11		1903118113	・・RING, snap	1				
12		1912906914	・・PLATE	1				
13		1903118116	・・NEEDLE	45				
14		1903121218	・・SEAL, floating	1				
15		1903121222	・・RING, snap	1				
16		1220000013	・・RING, snap	1				
17		1903118932	・・PLUG	2				
0-4		1903906000	・・KIT, motor	1				
18		1903121234	・・WASHER	3				
19		1903901930	・・PLUG	1				
20		1903918137	・・RING, snap	3				
21		1903121238	・・RING	3				
		B5h190						

silverhorn.co.uk

TRAVEL MOTOR (2/3) (motor sec.)

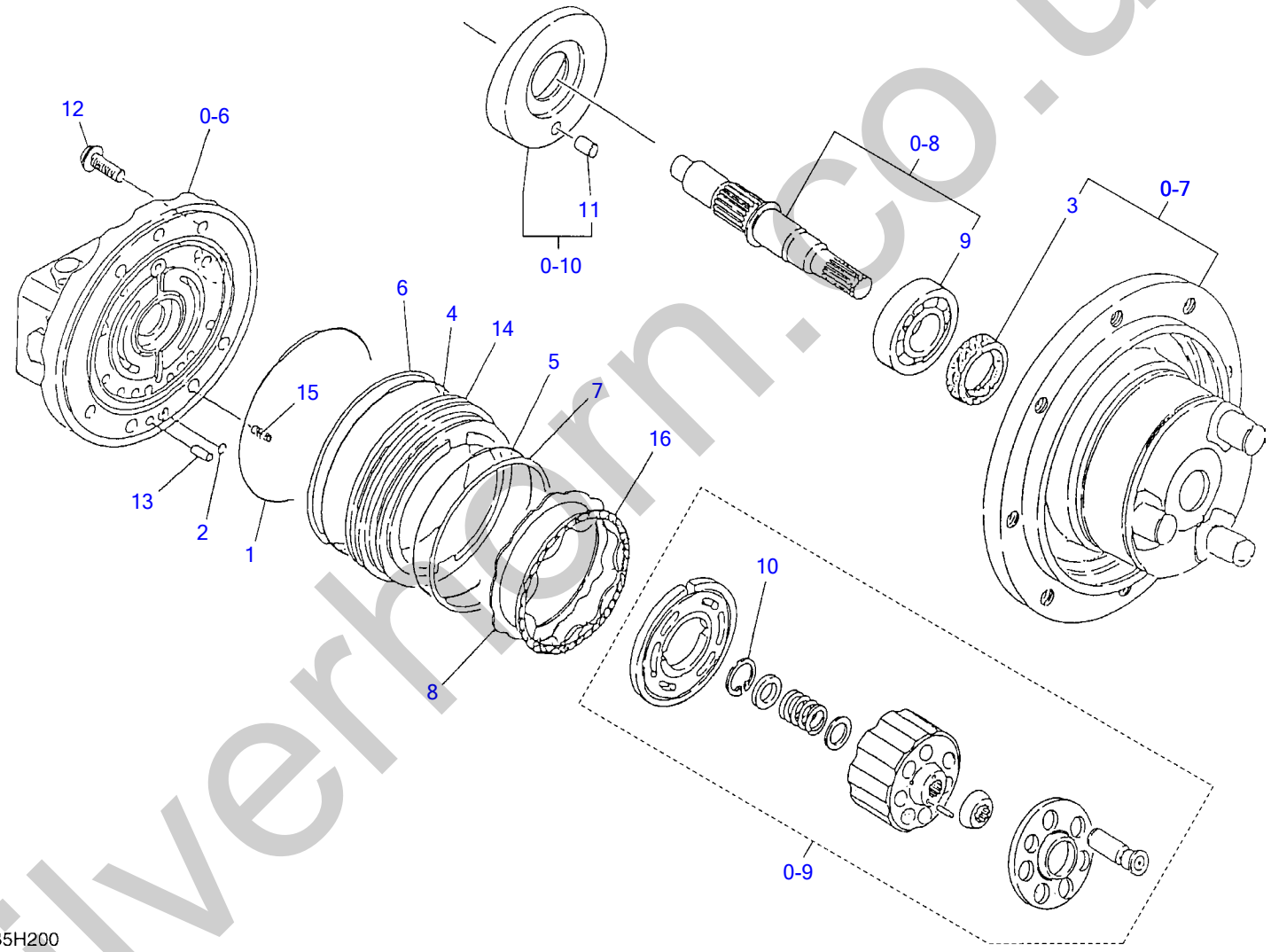

B5H200

silverhorn.co.uk

TRAVEL MOTOR (2/3) (motor sec.)

Item		Part number	Description	Q'ty	Chan.	Serial No.	Serv.	Remarks
0		1903122400	MOTOR ASSY, travel	1				
0-4	X	**********	・KIT, motor	1				
0-5		1903906099	・・KIT, seal	1				
1	X	1420111050	・・・O-RING	1				
2	X	1420010060	・・・O-RING	1				
3	X	1903904226	・・・SEAL, dust	1				
4	X	1420110950	・・・O-RING	1				
5	X	1420110900	・・・O-RING	1				
6	X	1421130950	・・・RING, back-up	1				
7	X	1421130900	・・・RING, back-up	1				
0-6		1903906098	・・KIT, body 1	1				
0-7		1903906097	・・KIT, body 2	1				
8		1903906028	・・PLATE	1				
0-8		1903906096	・・KIT, shaft	1				
9		1300006004	・・・BEARING	1				
0-9		1903905295	・・KIT, cylinder	1				
10		1221000028	・・・RING, snap	1				
0-10		1903906094	・・PLATE, swash	1				
11		1212000810	・・・PIN	1				
12		1903904230	・・SCREW	7				
13		1212000614	・・PIN	1				
14		1903904217	・・PISTON, brake	1				
15		1903906026	・・SPRING	8				
16		1903905228	・・PLATE	1				
		B5h200						

silverhorn.co.uk

TRAVEL MOTOR (3/3) (valve sec.)

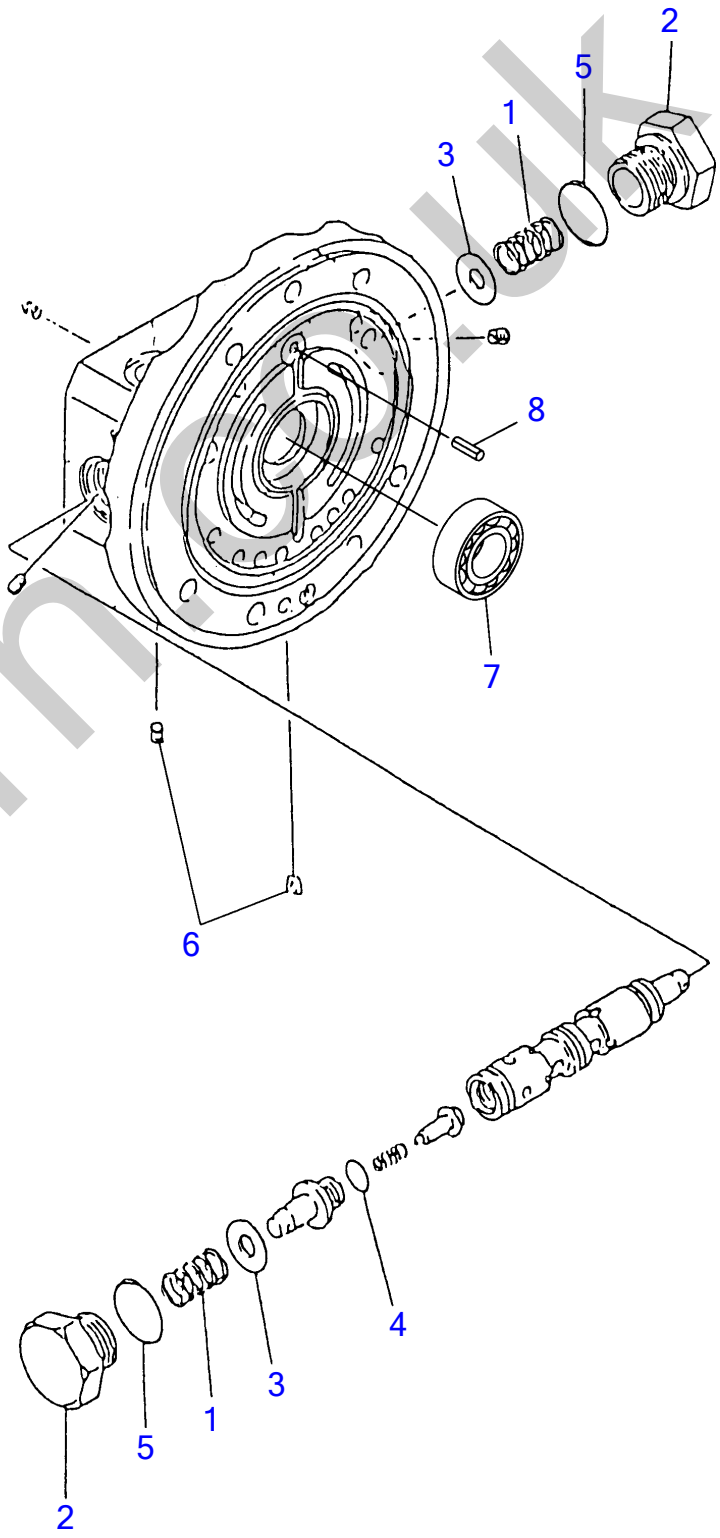

B5H210

silverhorn.co.uk

TRAVEL MOTOR (3/3) (valve sec.)

Item	Part number	Description	Q'ty	Chan.	Serial No.	Serv.	Remarks
0	1903122400	MOTOR ASSY, travel	1				
0-6	1903906098	・KIT, body 1	1				
1	1903904247	・・SPRING	2				
2	1901807010	・・PLUG	2				
3	1901804510	・・RING	2				
4	1420000100	・・O-RING	2				
5	1420010140	・・O-RING	2				
6	1501810000	・・PLUG	2				
7	1300006201	・・BEARING	1				
8	1213000512	・・PIN, spring	1				
	B5h210						

silverhorn.co.uk

SLEW MOTOR

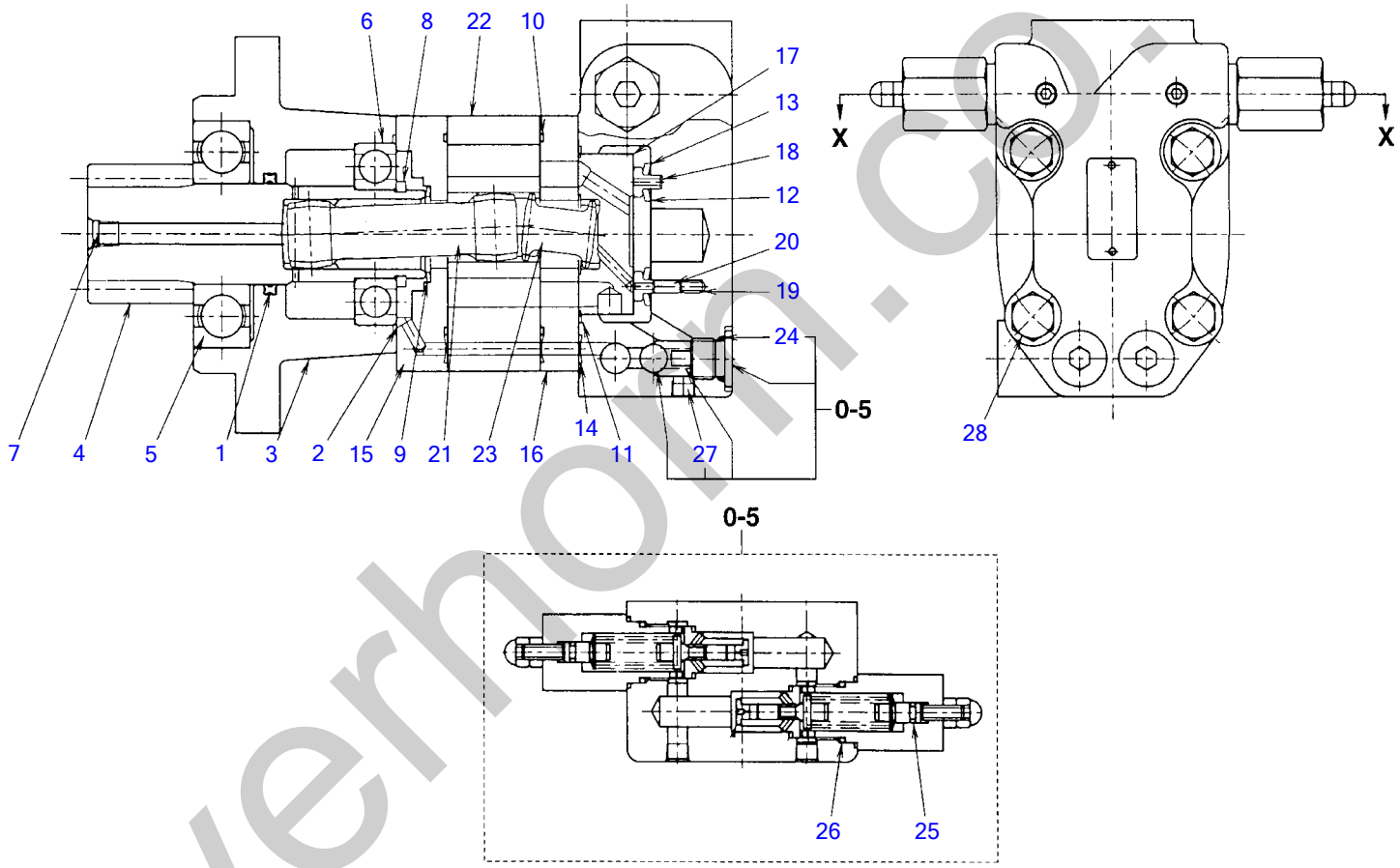

B5H220

silverhorn.co.uk

SLEW MOTOR

Item		Part number	Description	Q'ty	Chan.	Serial No.	Serv.	Remarks
0		1903122300	MOTOR ASSY, slew	1				
0-1		1912906700	・GEAR ASSY	1				
0-2		1912906799	・・KIT, seal	1				
1	X	1912906706	・・・X-RING	1				
2	X	1420310041	・・・O-RING	1				
3		1912906701	・・HOUSING	1				
4		1912906702	・・GEAR	1				
5		1912902203	・・BEARING	1				
6		1903104707	・・BEARING	1				
7		1903103646	・・PLUG	2				
8		1903900437	・・RING, retaining	1				
0-3		1903905900	・MOTOR ASSY	1				
0-4		1903905999	・・KIT, seal	1				
9	X	1432900017	・・・SEAL	1				
10	X	1420310041	・・・O-RING	2				
11	X	1420310038	・・・O-RING	1				
12	X	1903905918	・・・SEAL	1				
13	X	1903905920	・・・SEAL	1				
14	X	1420310011	・・・O-RING	3				
15		1903117817	・・PLATE	1				
16		1903904319	・・PLATE	1				
17		1903117925	・・VALVE	1				
18		1903117926	・・PLATE	1				
19		1903103632	・・SPRING	2				
20		1903103634	・・PIN	2				
21		1903903627	・・DRIVE	1				
22		1903905922	・・ROLLER	1				
23		1903102624	・・DRIVE	1				
0-5		1901811000	・・HOUSING ASSY	1				
0-6		1901811099	・・・KIT, seal	1				
24	X	1420010140	・・・・O-RING	2				
25	X	1420010050	・・・・O-RING	2				
26	X	1420010200	・・・・O-RING	2				
27		1903103646	・・・PLUG	3				
28		1903900432	・・BOLT	4				
		B5h220						

silverhorn.co.uk

HYDRAULIC PUMP

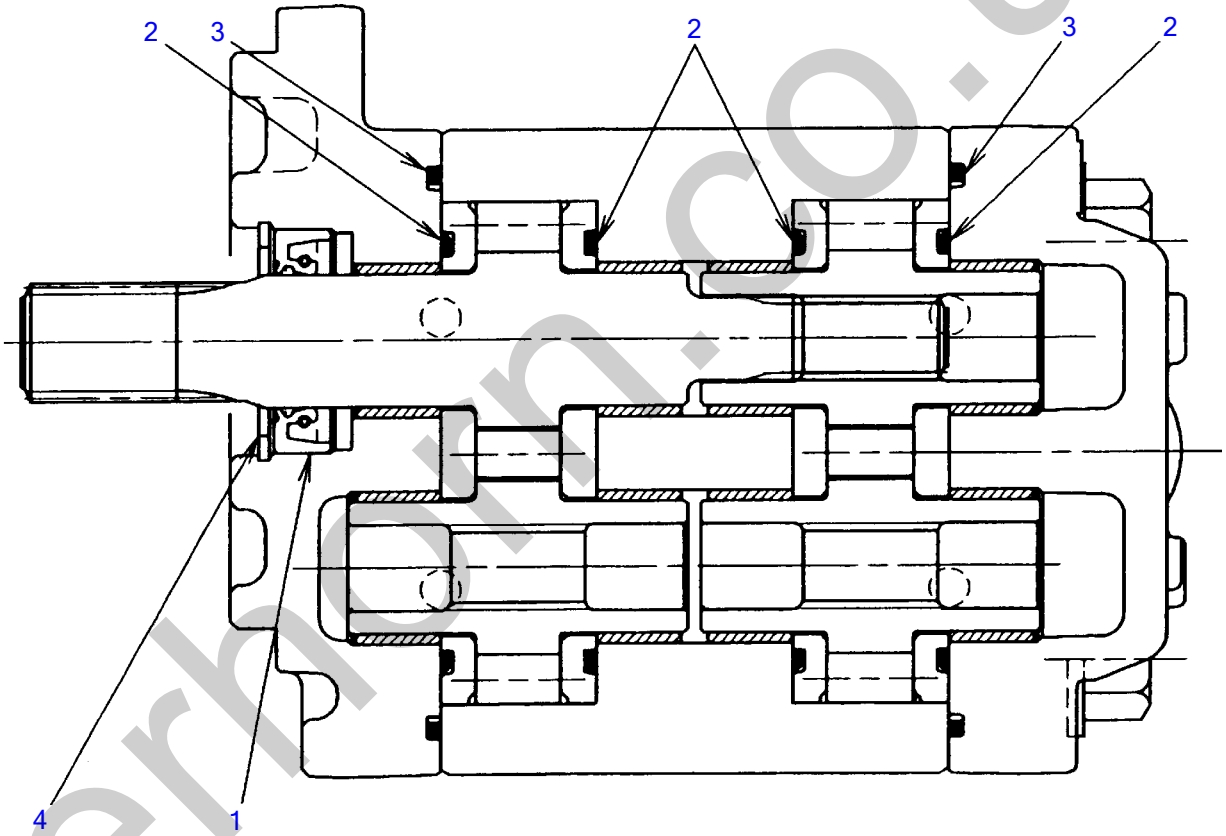

B5H230

silverhorn.co.uk

HYDRAULIC PUMP

Item	Part number	Description	Q'ty	Chan.	Serial No.	Serv.	Remarks
0	1902018900	PUMP ASSY	1				
0-1	1902018999	・KIT, seal	1				
1	X 1902018955	・・SEAL, dust	1				
2	X 1902018950	・・PACKING	4				
3	X 1902018951	・・PACKING	2				
4	X 1221000032	・・RING, snap	1				

B5h230

silverhorn.co.uk

TB108 Buckets

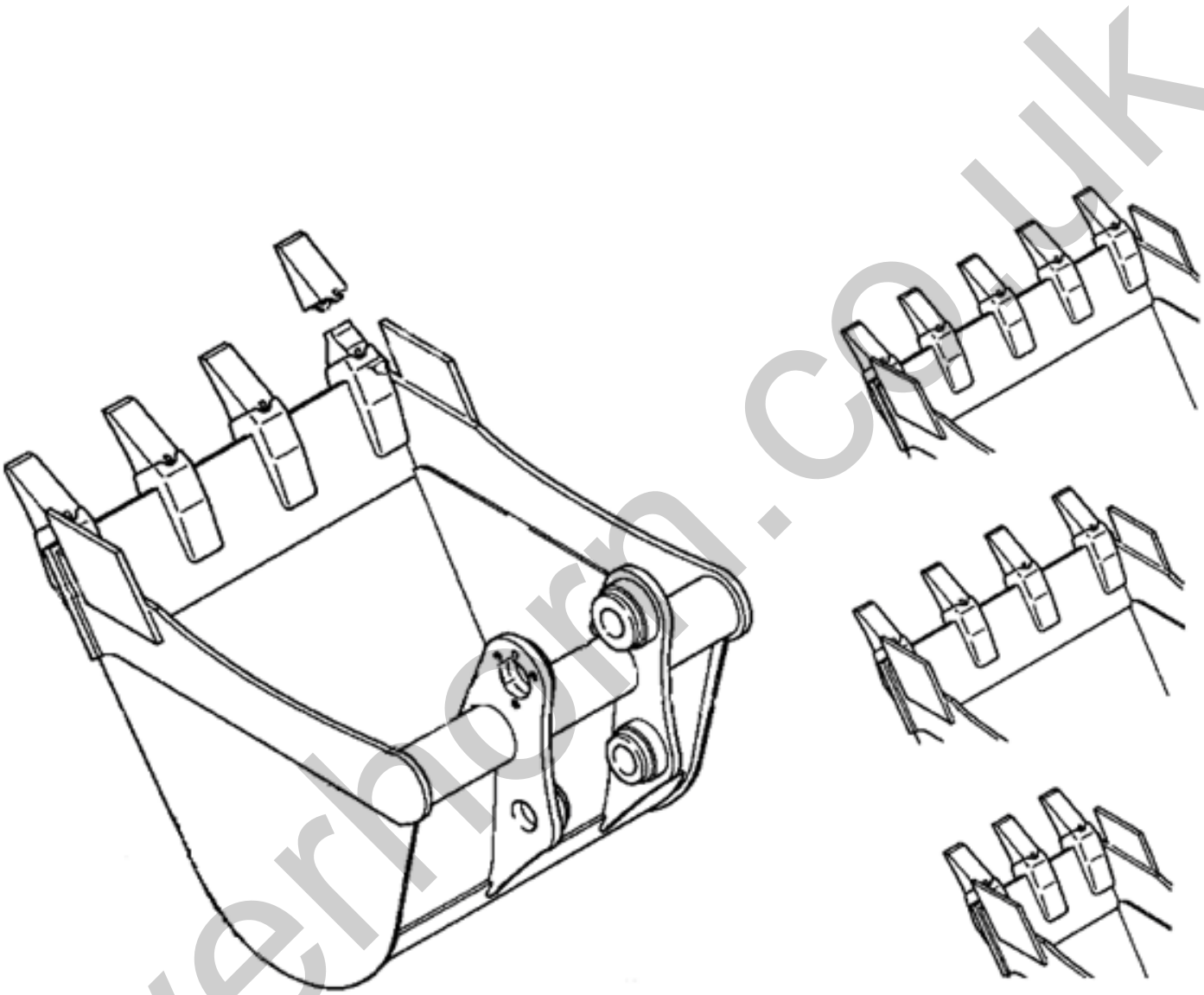

silverhorn.co.uk

TB108 Buckets

Item	Part number	Description	Q'ty	Chan.	Serial No.	Serv.	Remarks
		TB108 Buckets					
	BTB00708	8" Pin-on Bucket TB007/TB108	1				
	BTB00710	10" Pin-on Bucket TB007/TB108 (special order)	1				
	BTB00712	12" Pin-on Bucket TB007/TB108	1				
	BTB00716	16" Pin-on Bucket TB007/TB108 (special order)	1				
	BTB00718	18" Pin-on Bucket TB007/TB108 (special order)	1				

silverhorn.co.uk

Teeth New

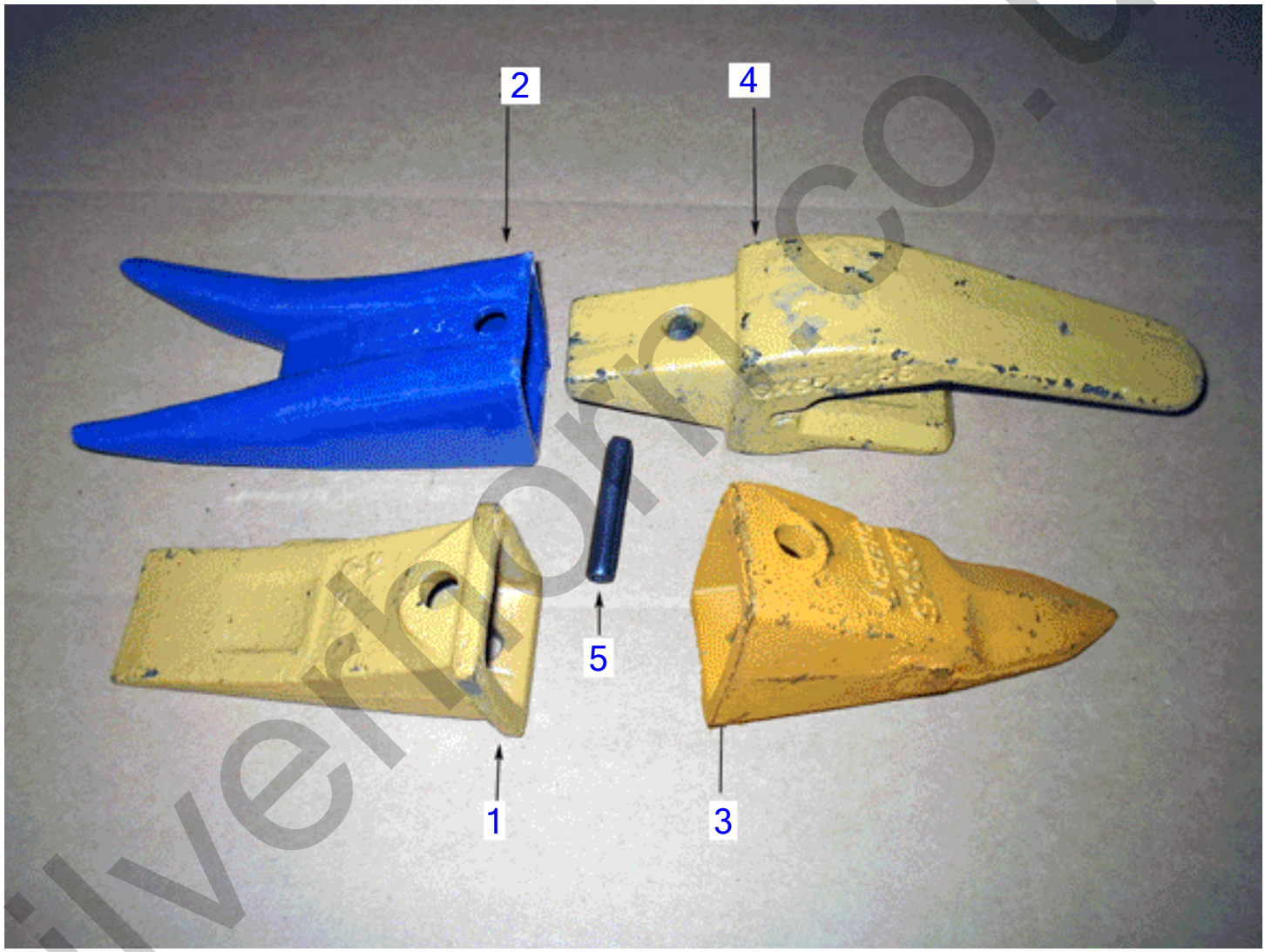

silverhorn.co.uk

Teeth New

Item	Part number	Description	Q'ty	Chan.	Serial No.	Serv.	Remarks
		Teeth New					
1	**1914210182**	Tooth	1				
2	**1914299142**	Double Tiger	1				
3	**191429942**	Single Tiger (C&P) Tooth	1				
4	**1914210181**	AdaptorShank 230 X 156 Old Style	1				
	19142181-1	Adaptor Shank 550 X 156 New Style	1				
5	**1914210183**	Pin	1				

silverhorn.co.uk

Old Teeth

silverhorn.co.uk

Old Teeth

Item	Part number	Description	Q'ty	Chan.	Serial No.	Serv.	Remarks
		Old Teeth					
1	**1914201202**	Tooth TB007/TB015	1				
2	**1914291202**	Rock Tooth V13	1				
3	**1914201201**	Adaptor	1				
4	**1914201203**	Lock	1				

silverhorn.co.uk

250 Hour Filter Kit

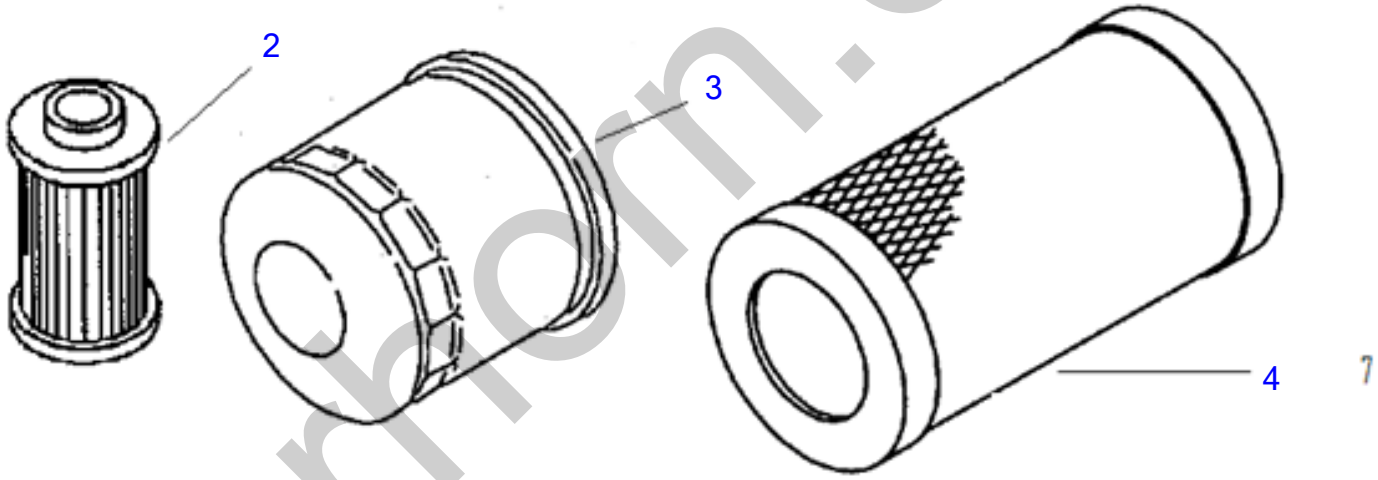

silverhorn.co.uk

250 Hour Filter Kit

Item	Part number	Description	Q'ty	Chan.	Serial No.	Serv.	Remarks
		250 Hour Filter Kit					
	1909901400	250 Hour Filter Kit TB108/TB014/TB016	1				
1	Y119305-35150	* Engine Oil Filter	1				
2	Y124550-5570	* Fuel Filter	1				
3	Y119655-12560	* Air Filter	1				

silverhorn.co.uk

Annual Filter Kit

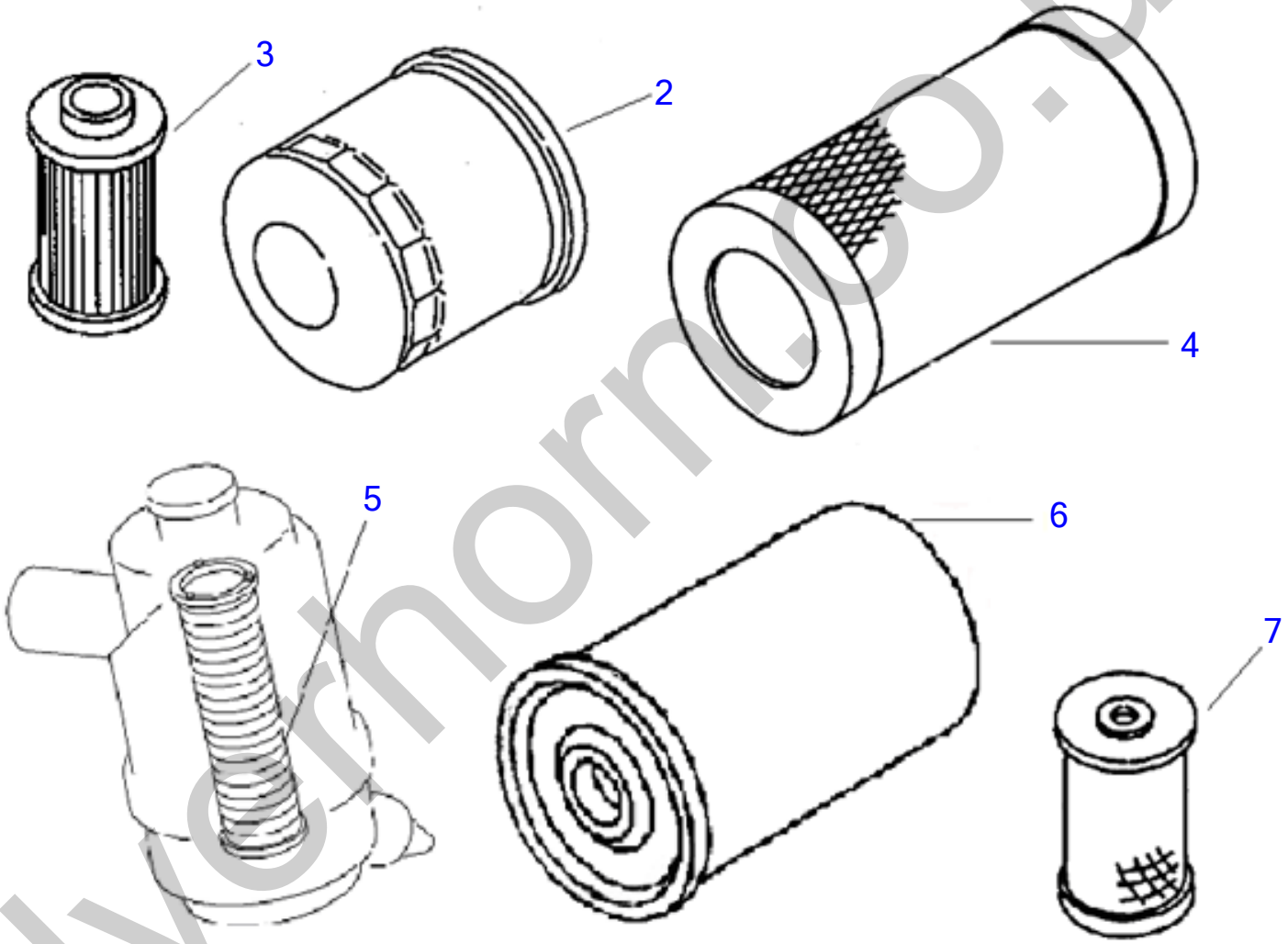

silverhorn.co.uk

Annual Filter Kit

Item	Part number	Description	Q'ty	Chan.	Serial No.	Serv.	Remarks
		Annual Filter Kit					
	1909910810	Filter Kit TB108 (annual)	1				
2	Y119305-35150	* Engine Oil Filter	1				
3	Y124550-55700	* Fuel Filter	1				
4	Y119655-12560	* Air Filter	1				
5	1911101342	* Inner Air Filter	1				
6	1551035110	* Hydraulic Filter	1				
7	Y171081-55910	* Screen check SN for application - TNE	1				

silverhorn.co.uk

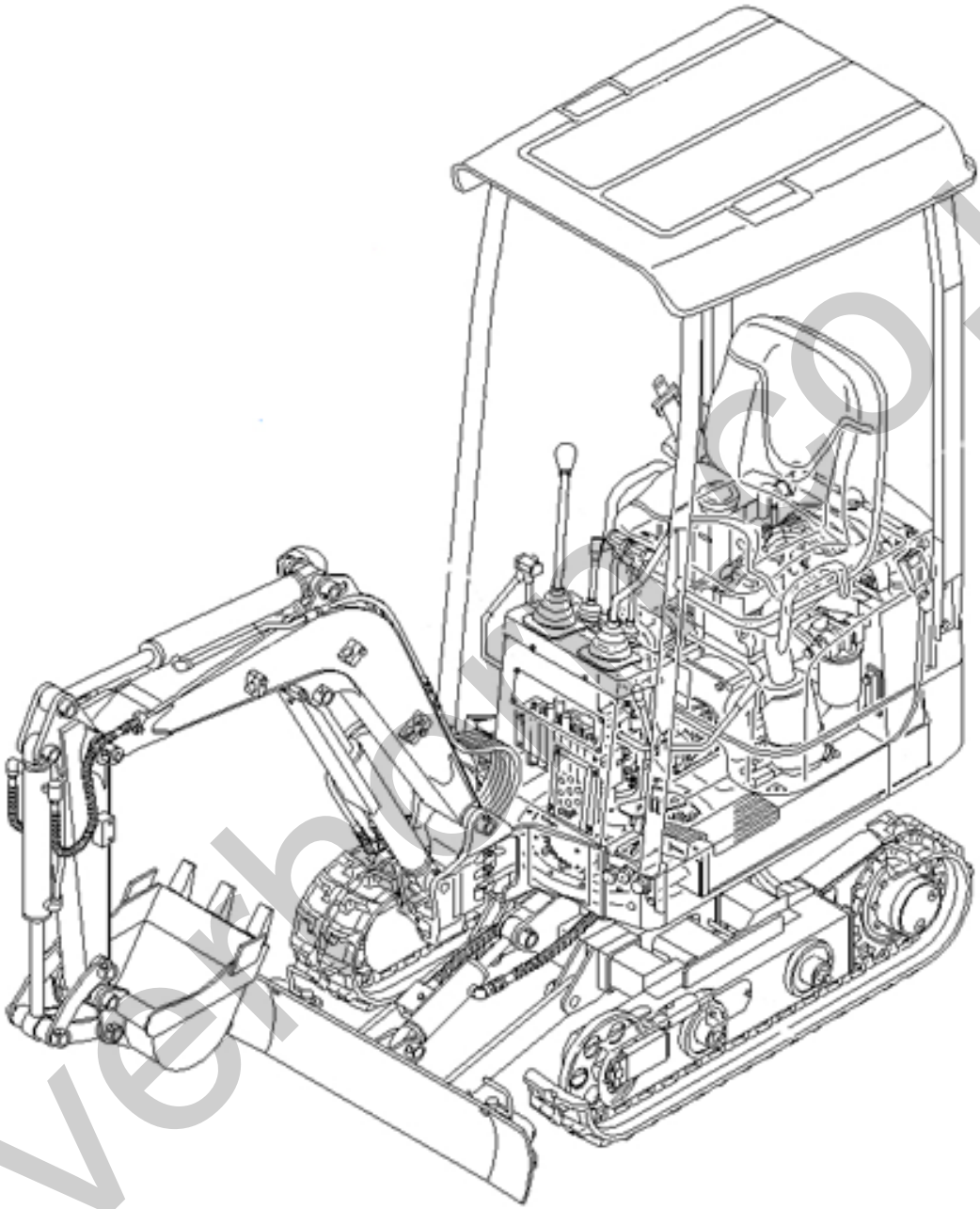

silverhill.co.uk
TAKEUCHI

Recommended Stock Order List

Item	Part number	Description	Q'ty	Chan.	Serial No.	Serv.	Remarks
		Recommended Stock Order List					
	1700100052	Starter Switch	1				
	1700100019	Key (qty 1 - 2 keys)	2				
	Y119233-77932	Solenoid	1				
	Y25152-003500	Fan Belt TB108	1				
	1730500008	Diode (3a Yellow)	1				
	1701330045	Fusible Link 45 Amp	1				
	1701310010	Fuse 10 Amp	1				
	1701310030	Fuse 30 Amp	1				
	1919060104	Red Aerosol Paint	2				
	1919060139	Lt. Gray Aerosol Paint	2				
	Y23010-03800	Clamp 38	2				
	1560001000	Straight Grease Fitting	10				
	1560001675	67.5 degree Grease Fitting	6				
	1560001900	90 degree Grease Fitting	6				
	1552001012	Fuel Tank Cap	1				
	0411602100	Sprocket	2				
	1702054019	Battery TB108	1				
	0411300400	Roller	4				
	1703000300	Lamp Boom	1				
	Y119515-77010	Complete Starter	1				
	0324025210	Upper Rod Hose TB108 SN 10820001-up	1				
	Y171301-77201	Generator	1				
	1914090100	Rubber Track TB007/TB108	2				

silverhorn.co.uk

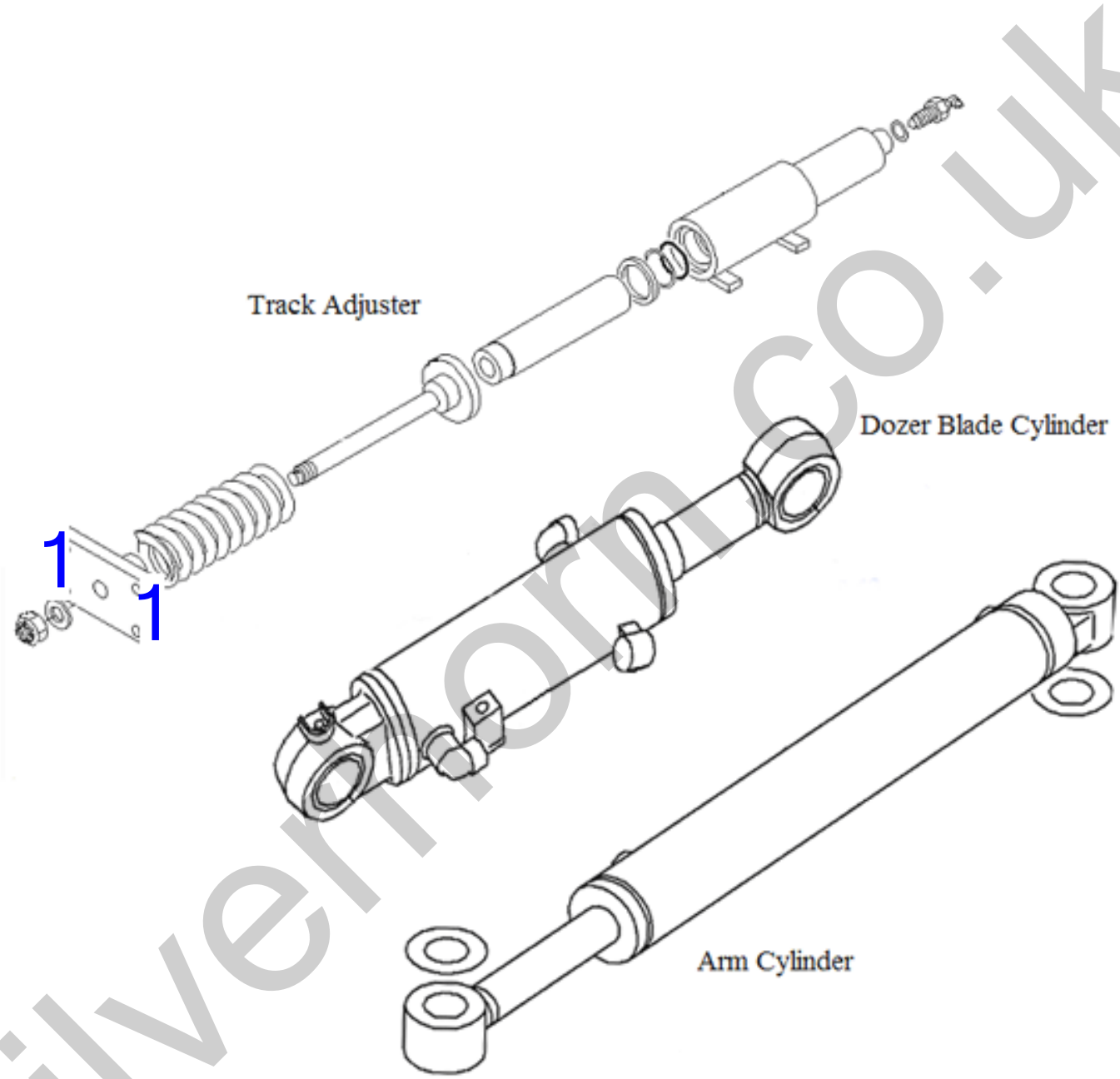

silverhorn.co.uk

Seal Kits

Item	Part number	Description	Q'ty	Chan.	Serial No.	Serv.	Remarks
		TB108 Seal Kits					
	1900087299	Swing Cylinder Seal Kit TB108 Multi Use	1				
	1900087299	Dozer Blade Seal Kit TB108 Multi Use	1				
	1900087299	Bucket Cylinder Seal Kit TB108 Multi Use	1				
	1900087499	Arm Cylinder Seal Kit TB108	1				
	1900087599	Boom Cylinder Seal Kit TB108	1				
	1900087299	Track Adjuster Seal Kit TB108 Mulit Use	1				

silverhorn.co.uk

All TB108 Manuals

Item	Part number	Description	Q'ty	Chan.	Serial No.	Serv.	Remarks
		TB108 Manuals					
	L108000001	Operators Manual TB108 AB5E006 TNE	1				
	L108000003TNE	Parts Manual TB108 BB5Z004 SN 10810004-10820000 TNE Eng	1				
	L108000004TNE	Service Manual TB108 CB5E001 SN 10810004-10812001 TNE	1				

silverhorn.co.uk

How to read this Parts Catalog.

1. Parts mentioned in this Parts Catalog may not necessarily be standard equipping parts.
2. Parts change may be made without prior notice.
3. Form of this Parts Catalog.

Y00F2161 (1997.09.01)

A=	4JH-DT	D=	4JH-DTZA
B=	4JH-DTZ	E=	4JH-DTZY
C=	4JH-DTZP	F=	

Fig. 29 燃料噴射ポンプ(ブーコン用)
FUEL INJECTION PUMP (W/BOOST)

①見出 REF.No.	②レベル LEV.	0	部品番号 PARTS No.	部品名	DESCRIPTION	個数(Q'ty) A	B	C	D	E	F	I	④R
1	•		729595-51390	FOポンプ ASY(ブーコンツキ	FULE INJECTION PUMP	1	1	1	1	1			1
1-1	•		729595-51391	FOポンプ ASY(ブーコンツキ	FULE INJECTION PUMP	1	1	1	1	1		I	1
③ ⑤	(A=E/#00185)(B=E/#00200)												
3	••		26022-060162	ナベコネジ M 6X 16	SCREW M 6X 16	9	9	9	9	9			
I 3-1	••		26022-060162	ナベコネジ M 6X 16	SCREW M 6X 16	4	4	4	4	4		K	
	(A=E/#00185)(B=E/#00200)(C=E/#00156)(D=E/#00156)(E=E/#00156)												
4	••		129470-51040	カムシャフト	CAMSHAFT	1	1	1	1	1			
5	••		122710-51050	ベアリングキローラ	BEARING, ROLLER	2	2	2	2	2			
6	••		129470-51060	ベアリングオサエ	RETAINER	1	1	1	1	1			

備考	Remarks
(1) ブーストコンペンセータ付き、4JH-DT, 4JH-DTZとも E／#00155までは、特別注文仕様とします	(1) BOOST COMPEMSATOR TYPE. OPTIONAL PART, TO E／#00155. (4JH－DT,4JH－DTZ)

① Ref. No.

The Ref. No. in the list may not be accord with the Ref. No. on illustration.

(Ex.) Illustration No. 1 — List head No. 1 (Befor change) ⟶ 1 [－1] (After change)

When interchangeable symbol N, R, and K, illustrations for new parts are sometimes omitted.

② Lev.(Level)

Indication and Meaning of Level

Level : Hereunder is given the relation among the number of dots(•),the level and the nominal parent- child relationship.

- • ……Parent parts(Assembly parts)
- •• ……Child parts included in "•" (Semi- Assembly parts,component parts of Assembly parts.)
- ••• ……Child parts included in "••", Grand- child parts in terms of "•". (Compornent parts of Semi- Assembly parts.)

Note) A parts of non- sale parts are illustlated but not listed.

③ Change Mark

Change Mark "I" is given to the part for which a desigh change was made at this time.
The design change was not shown in the last published Parts Catalog.

④ Interchangeability Mark

In the case where a part change took place,one of the following interchangeability marks is indicated for that part.

Symbol	interchangeability	Contents note
N	Old ←○ ×→ New	New Part is interchangeable for Old Part but not interchangeable conversely.
Q	Old ←× ○→ New	New Part is not interchangeable for Old Part but interchangeable conversely.
R	Old ←○ ○→ New	New Part is interchangeable for Old Part and vice versa.
S	Old ←× ×→ New	New Part is not interchangeable for Old Part and vice versa.
W		Part newly added.
Z		Part discontinued.
F		Not interchangeable single part but interchangeable by set of the related parts.
K		Changed only in quantity used.

⑤ Effective Machine No.

When a part is changed,Effective Machine No. of a Model for which the part is applicable is indication in each column of (A)- (F).

Product Symbol	Product No.	Product Symbol	Product No.
C	Clutch No. Compressor No.	M	Machine No.
D	Drive No.	T	Tractor No.
E	Engine No.	Note1) ※	Date

Note1) Date may follow the symbol in some cases. (Ex.) ※ 1996.01
Note2) As far as engine models shown by "XXX" are concerned, the modification of the parts could not be predicted or the engine models themselves could not be identified.
Note3) (A=E/#00185) means that the design change on the part has been effective for the model at the column (A)(in this case, for 4JH- DT) on and from E/#(Engine Serial Number) 00185.

⑥ Remarks Mark

Figures or alphabets (Symbols) are entered in the remark column.
The comments(remarks)on the pertinent parts are indicated in the lower part of the list by the same symbols as those stated above.

silverform.co.uk

CYLINDER BLOCK

Y00D7640
2TNE68-ETBA

1 シリンダブロック
CYLINDER BLOCK

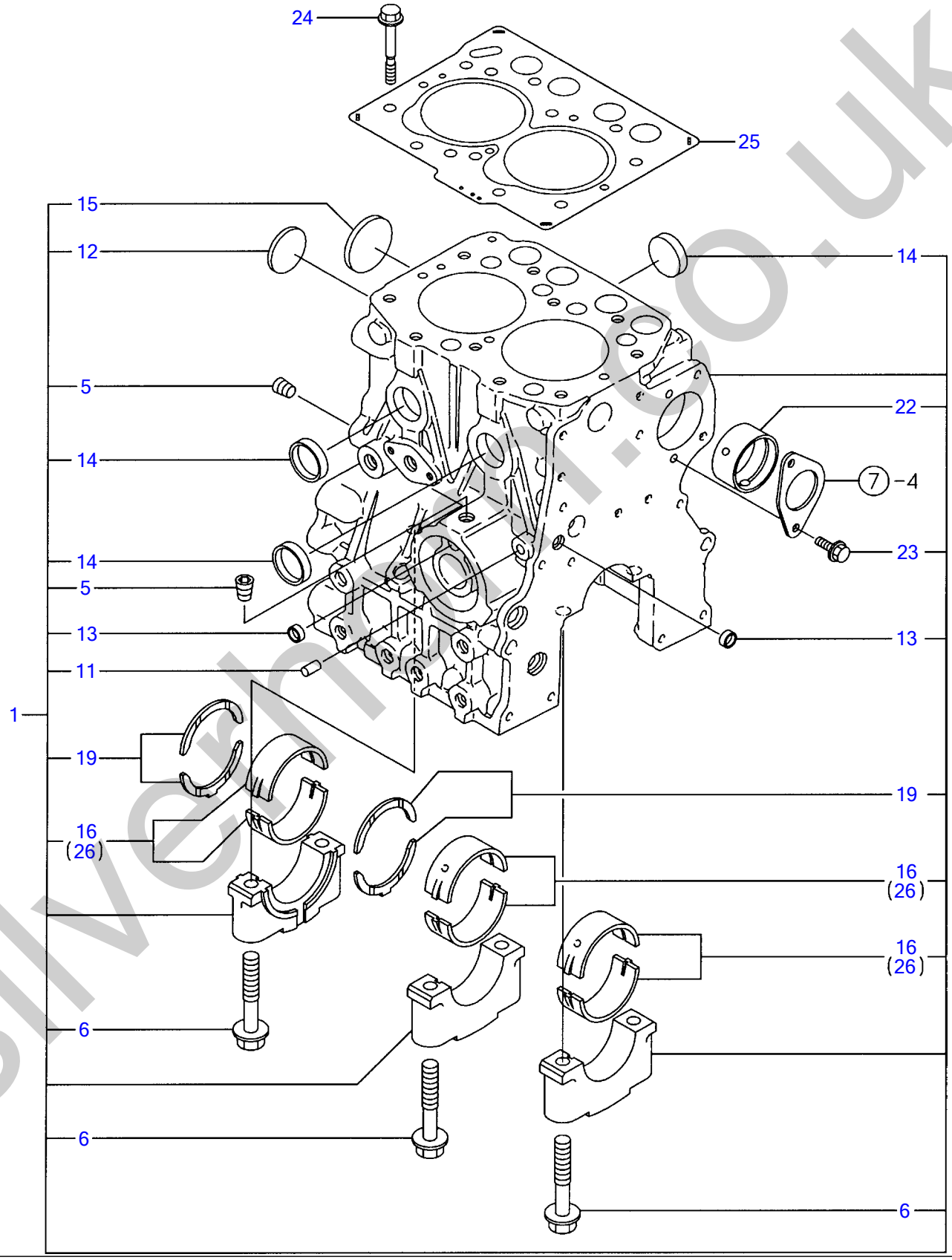

silvermoon.co.uk

¼ØÝÀÞÌÞÛ¯¸ CYLINDER BLOCK

Œ©lo REF NO.	•"•i"Ôl† PARTS NO.	•"•i-¼	Description	l"–Ê Q'ty	ŒÝŠ·l« I	R	"õl
1	Y719325-01560	¼ØÝÀÞÌÞÛÂ¸ ASSY	BLOCK ASSY, CYLINDER	1			
5	Y124060-01050	• Ìß×¸Þ	• PLUG PT1/8	2			
6	Y119260-02020	• ÎÞÙÄ (ÒÀÙ·ÔÂÌß)	• BOLT	6			
11	Y27221-060100	• ³ÁºÐÌß×¸Þ 6X10	• PLUG 6X10	1			
12	Y119265-01250	• »×¶ÞÀÌß×¸Þ 40	• PLUG 40	1			
13	Y27241-100000	• ÜÝ¶ÞÀÌß×¸Þ 10	• PLUG 10	2			
14	Y27241-250000	• ÜÝ¶ÞÀÌß×¸Þ 25	• PLUG 25	3			
15	Y27241-300000	• ÜÝ¶ÞÀÌß×¸Þ 30	• PLUG 30	1			
16	Y119260-02800	• Ò²ÝÍÞ±ØÝ¸Þ(YSM)	• MAIN BEARING	3			
19	Y119260-02930	• ½×½ÄÒÀÙ(YSM)	• THRUST BEARING	2			
22	Y119266-02410	• ÌÞÂ¼Õ	• BUSH	1			
23	Y26106-060122	• ÂÊÞÎÞÙÄ M 6X 12	• BOLT M 6X 12 PLATED	2			
24	Y119266-01200	ÍÂÄÞÎÞÙÄ	STUD, CYL. HEAD	10			
25	Y119309-01330	ÍÂÄÞ¶Þ½¹ÂÄ	GASKET, CYL. HEAD	1			
26	Y719260-02870	Ò²ÝÍÞ±ØÝ¸Þ 025	MAIN BEARING US=0.25	3		(1)	±ÝÀÞ°»²½Þ(U.S=0.25)ÌÞËÝÃÞ½

silverhorn.co.uk

GEAR HOUSING

Y00D7640
2TNE68-ETBA

2 ギヤケース GEAR HOUSING

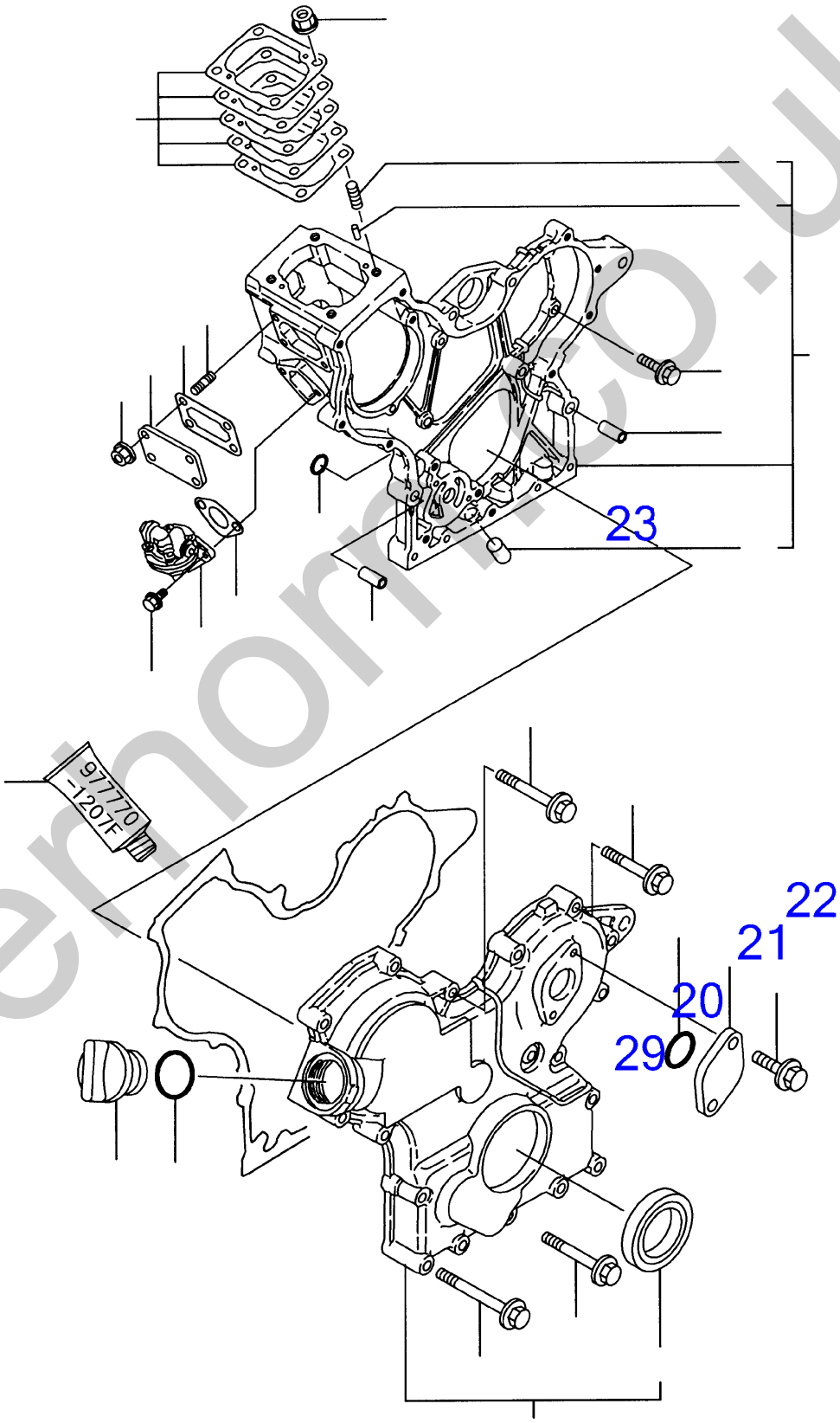

silvermoor.co.uk

·ÞÔ¹-½ GEAR HOUSING

Œ©⍰o REF NO.	•"•i"Ô⍰† PARTS NO.	•"•i-¼	Description	⍰"–Ê Q'ty	ŒÝŠ·⍰« I	R	"õ⍰l
1	Y119260-01590	·ÞÔ¹-½ÌÀ CMP	COVER ASSY,GEAR CASE	1			
4	Y119620-01800	▪ µ²Ù¼-Ù(HTC456208	▪ SEAL HTC456208, OIL	1			
5	Y119660-01911	ÊÈß²Ìß ÉÂ¸	PIPE, KNOCK	4			
6	Y119624-32040	OØÝ¸Þ P 12.0	O-RING P 12.0	2			
7	Y26106-060162	ÂÊÞÎÞÙÄ 6X 16	BOLT M 6X 16 PLATED	5			
8	Y26106-060302	ÂÊÞÎÞÙÄ 6X 30	BOLT M 6X 30 PLATED	5			
9	Y26106-060402	ÂÊÞÎÞÙÄ 6X 40	BOLT M 6X 40 PLATED	3			
10	Y26106-060502	ÂÊÞÎÞÙÄ 6X 50	BOLT M 6X 50 PLATED	4			
11	Y26106-060652	ÂÊÞÎÞÙÄ 6X 65	BOLT M 6X 65 PLATED	6			
12	Y124160-01751	ÌÀ(ÎÕº³)	CAP, LUB.OIL SUPPLY	1			
13	Y24311-000320	OØÝ¸Þ 1A P 32.0	O-RING 1A P-32.0	1			
14	Y119305-01490	·ÞÔ¹-½ CMP	HOUSING, GEAR	1			
17	Y119260-01510	▪ ³ÁºÐÌß×¸Þ	▪ PLUG	1			
18	Y121450-01560	▪ ³´ºÐÎÞÙÄ8X22	▪ STUD M 8X 22	4			
19	Y22351-040010	▪ ½ÌßØÝ¸ÞËßÝ 4.0AX 10	▪ SPRING PIN 4X10	2			
20	Y119660-01551	FOÎßÝÌß¼ÂÌÀ(ÌÞ×Â¸:12	COVER	1			
21	Y119660-01562	PK(ÎßÝÌß¼ÂÌÀ)(ÉÝ±½)	GASKET, (NON-ASB.)	1			
22	Y119660-01570	³´ºÐÎÞÙÄ M6X12	STUD M6X12	4			
23	Y119305-01950	ÌÝ¼Ô¼Þ·¼Ñ CMP	SHIM PACK	1			
28	Y194990-22050	¹Ìß½(½ÊßÂ¸ 8	NUT W/WASHER 8	4			
29	Y26366-060002	ÂÊÞÀ·ÅÂÄ 6	NUT M 6	4			
30	Y121520-01851	PK(Ì²-ÄÞÎßÝÌß)(ÉÝ±½)	GASKET, (NON-ASB.)	1			
31	Y119600-52021	Ì²-ÄÞÎßÝÌß	PUMP ASSY, FUEL FEED	1			
32	Y26106-060162	ÂÊÞÎÞÙÄ 6X 16	BOLT M 6X 16 PLATED	2			
33	Y121023-01550	ÌÀ(ÀºÒ-À	COVER, BLIND	1			
34	Y24341-000240	OØÝ¸Þ 1A S 24.0	O-RING 1A S-24.0	1			
35	Y26106-060162	ÂÊÞÎÞÙÄ 6X 16	BOLT M 6X 16 PLATED	2			
36	Y977770-1207F	¼Øº-Ý¹² ´·¼ÞÖ³¶Þ½¹ÂÄ	GASKET, LIQUID	1		(1)	µÌß¼®Ý ÌÞËÝÃÞ½

silverhorn.co.uk

FLYWHEEL HOUSING & OIL SUMP

Y00D7640
2TNE68-ETBA

3 フライホイルハウジング & オイルパン
FLYWHEEL HOUSING & OIL SUMP

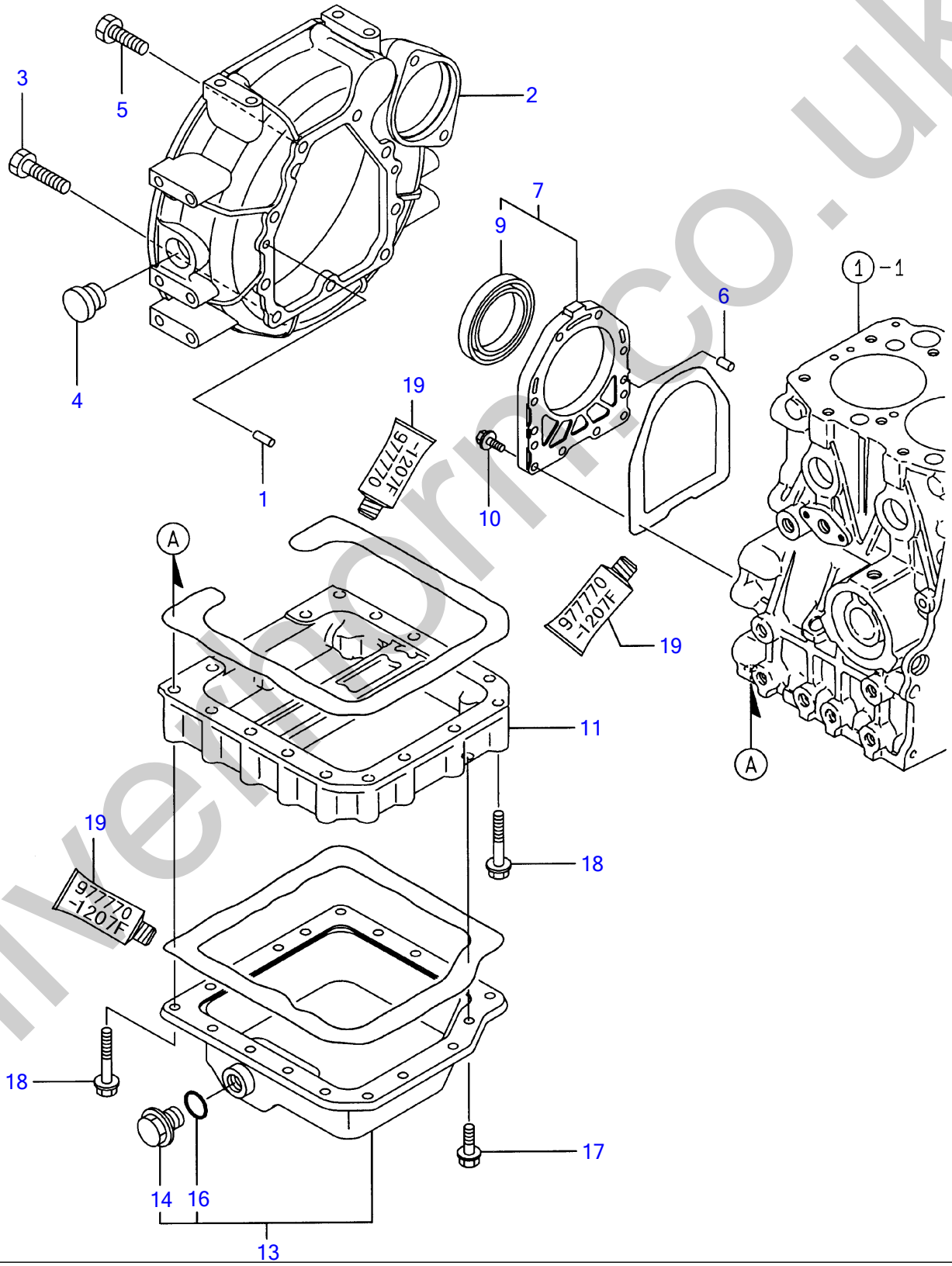

silverthorn.co.uk

Ì×²Î²ÙÊ³¼ÞÝ¸Þ & µ²ÙÊßÝ FLYWHEEL HOUSING & OIL SUMP

Œ©▯o REF NO.	•"•i"Ô▯† PARTS NO.	•"•i-¼	Description	▯"–Ê Q'ty	ŒÝŠ·▯« I	R	"õ▯l
1	**Y129100-01580**	Í²º³ËßÝ 8X16	PARALLEL PIN 8X16	2			
2	**Y119230-01600**	Ì×²Î²ÙÊ³¼ÞÝ¸Þ	HOUSING,FLYWHEEL	1			
3	**Y121120-01620**	ÎÞÙÄ M10X28	BOLT M 10X 28	3			
4	**Y119620-01750**	·ÔÂÌß (Î²Ù¶ÊÞ-	CAP, FLYWHEEL COVER	1			
5	**Y26206-100252**	ÎÞÙÄ 10X 25	BOLT M10X25	6			
6	**Y119620-01620**	Í²º³ËßÝ 6X10	PARALLEL PIN 6X10	2			
7	**Y119660-01640**	µ²Ù¼-Ù¹-½ CMP	CASE ASSY, OIL SEAL	1			
9	**Y124085-02220**	▪ µ²Ù¼-Ù	▪ SEAL, OIL	1			
10	**Y26106-060222**	ÂÊÞÎÞÙÄ 6X 22	BOLT M 6X 22 PLATED	10			
11	**Y119305-01760**	¶Ý»Þ(µ²ÙÊßÝ	SPACER, SUMP	1			
13	**Y119332-01771**	µ²ÙÊßÝ(±»¶ÞÀ CMP	SUMP ASSY, LUB. OIL	1			
14	**Y121400-01640**	▪ Ìß×¸Þ(16)	▪ PLUG M16	1			
16	**Y24311-000180**	▪ OØÝ¸Þ 1A P 18.0	▪ O-RING 1A P-18.0	1			
17	**Y26106-060102**	ÂÊÞÎÞÙÄ M 6X 10	BOLT M 6X 10 PLATED	3			
18	**Y26106-060452**	ÂÊÞÎÞÙÄ 6X 45	BOLT M 6X 45 PLATED	16			
19	**Y977770-1207F**	¼Øº-Ý¹² ´·¼ÞÖ³¶Þ½¹ÂÄ	GASKET, LIQUID	1		(1)	µÌß¼®Ý ÌÞËÝÃÞ½

silverhorn.co.uk

CYLINDER HEAD & BONNET

Y00D7640
2TNE68-ETBA

4 シリンダヘッド & ボンネット
CYLINDER HEAD & BONNET

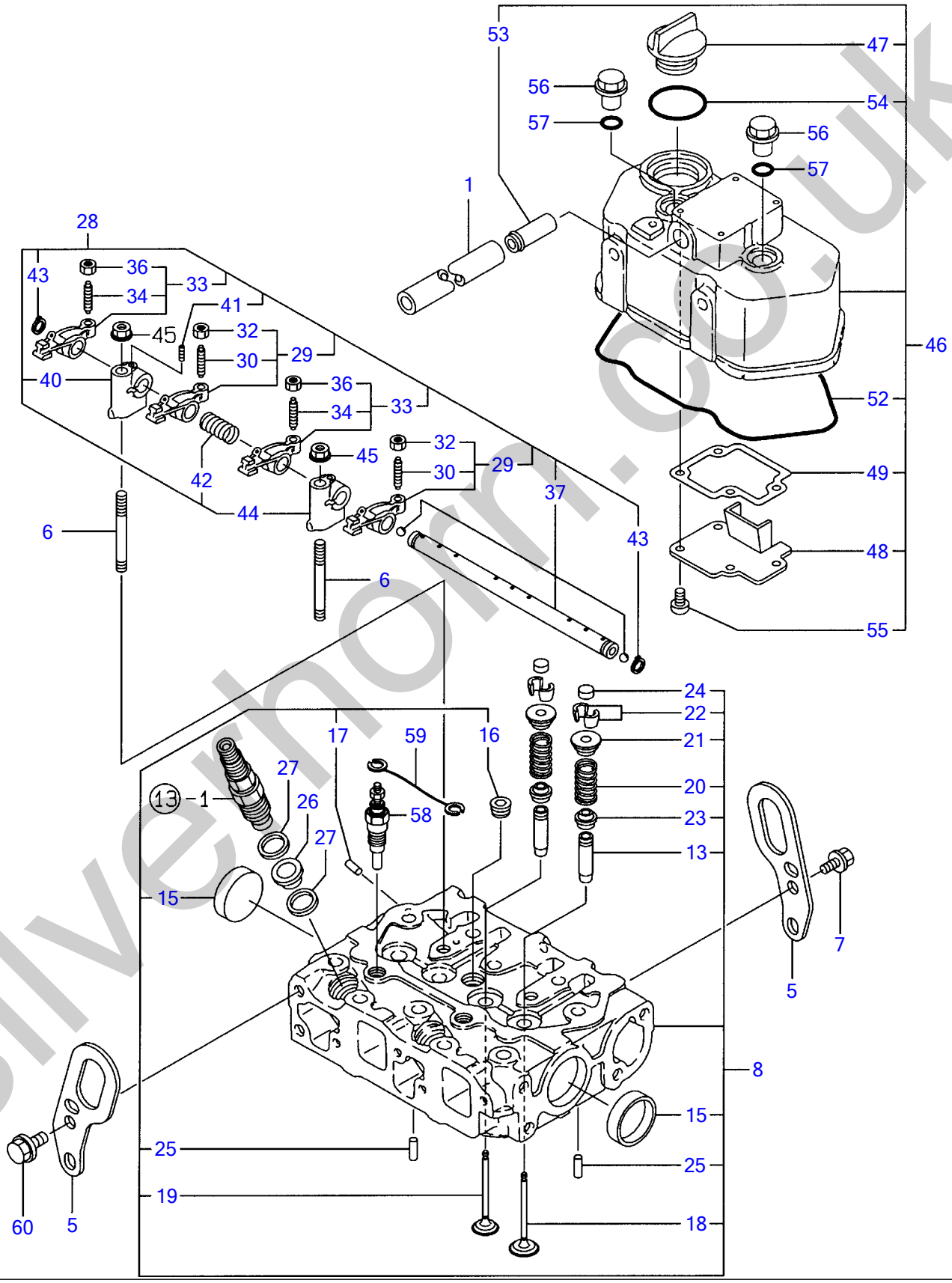

silverhorn.co.uk

¼ØÝÀÞÍÂÄÞ & ÎÞÝÈÂÄ CYLINDER HEAD & BONNET

Œ©⍰o REF NO.	•"•i"Ô⍰† PARTS NO.	•"•i-¼	Description	⍰"–Ê Q'ty	ŒÝŠ·⍰« I	R	"õ⍰l
1	Y23065-120500	ËÞÆÙÊß²Ìß 12X 500	PIPE, VINYL 12X 500	1			
5	Y119626-07900	ÂØ±¹Þ¶Å¸Þ (ÌÞ×Â¸:12)	LIFTER, ENGINE	2			
6	Y119620-11350	½ÀÂÄ (±-Ñ»Îß-Ä	STUD	2			
7	Y26106-080142	ÂÊÞÎÞÙÄ M 8X 14	BOLT M 8X 14 PLATED	1			
8	Y719325-11700	¼ØÝÀÞÍÂÄÞ ASSY	HEAD ASSY, CYLINDER	1			
13	Y119260-11800	· ÊÞÙÌÞ¶Þ²ÄÞ	· GUIDE, VALVE	4		(1)	ÎÖ³ÌÞËÝÃÞ½
15	Y27241-350000	· ÜÝ¶ÞÀÌß×¸Þ 35	· PLUG 35	2			
16	Y23876-020000	· È¼ÞÌß×¸Þ 1/4	· PLUG 1/4	1			
17	Y27221-050080	· ³ÁºÐÌß×¸Þ 5X 8	· PLUG 5X 8	1			
18	Y119260-11100	· ÊÞÙÌÞ (INT	· VALVE, SUCTION	2			
19	Y119260-11110	· ÊÞÙÌÞ (EXH	· VALVE, EXHAUST	2			
20	Y114250-11120	· ÊÞÙÌÞ½ÌßØÝ¸Þ	· SPRING, VALVE	4			
21	Y114250-11180	· ÍÞÝÊÞÈµ»´	· RETAINER, SPRING	4			
22	Y27310-055000	· ºÂÀ(½ÃÑ 5.5	· COTTER	8			
23	Y119260-11340	· ÊÞÙÌÞ½ÃÑ¼-Ù	· SEAL, VALVE STEM	4			
24	Y119260-11370	· ·ÔÂÌß(ÊÞÙÌÞ	· CAP, VALVE	4			
25	Y22351-060012	· ½ÌßØÝ¸ÞËßÝ 6.0AX 12	· SPRING PIN 6X12	2			
26	Y119600-11450	É½ÞÙÌßÛÃ¸À	PROTECTOR, NOZZLE	2			
27	Y119600-11460	PK	GASKET, NOZZLE	4			
28	Y119305-11200	ÍÞÝÜÝ»Îß-Ä CMP	SUPPORT ASSY, ARM	1			
29	Y719260-11650	· ·Õ³·ÍÞÝÜÝ¼¸Ð	· ARM ASSY, ROCKER	2			
30	Y105010-11230	· · ±¼ÞÔ½À(ÍÞÝ½·Ï)	· · SCREW, VALVE	2			
32	Y26856-060002	· · ÅÂÄ2¼Õ 6	· · LOCK NUT 6	2			
33	Y719260-11660	· Ê²·ÍÞÝÜÝ¼¸Ð	· ARM ASSY, ROCKER	2			
34	Y105010-11230	· · ±¼ÞÔ½À(ÍÞÝ½·Ï)	· · SCREW, VALVE	2			
36	Y26856-060002	· · ÅÂÄ2¼Õ 6	· · LOCK NUT 6	2			
37	Y119305-11240	· ÍÞÝÜÝ¼Þ¸ CMP	· SHAFT ASSY, ARM	1			
40	Y119260-11260	· ÍÞÝÜÝ»Îß-Ä	· SUPPORT, ROCKER ARM	1			
41	Y119260-11270	· ÄÒÈ¼Þ	· SCREW	1			
42	Y119260-11280	· ÊÞÈ(ÍÞÝÜÝ¼Þ¸	· SPRING	1			
43	Y22242-000100	· ÄÒÜC(¼Þ¸ 10	· CIRCLIP 10	2			
44	Y119265-11260	· ÍÞÝÜÝ»Îß-Ä	· SUPPORT, ROCKER ARM	1			
45	Y26306-080002	ÂÊÞÂ·ÅÂÄ(UBS 8	NUT	2			
46	Y119305-11350	ÎÞÝÈÂÄ CMP	BONNET ASSY	1			
47	Y124160-01751	· ÌÀ(ÎÕº³)	· CAP, LUB.OIL SUPPLY	1			
48	Y119305-03020	· ¼ÒÍ²ÊÞÝ	· PLATE	1			
49	Y119305-03031	· PK(¼ÒÍ²ÊÞÝ	· GASKET, PLATE	1			
52	Y119305-11310	· PK(ÎÞÝÈÂÄ	· GASKET, BONNET	1			
53	Y118400-03060	· ¼ÞÖ²ÝÄ(ÌÞØ-»Þ	· JOINT, BREATHER	1			
54	Y24311-000320	· OØÝ¸Þ 1A P 32.0	· O-RING 1A P-32.0	1			
55	Y22857-500100	· ÀÂËßÝÈ¼Þ 5.0X10	· SCREW 5X10,TAPPING	4			
56	Y124160-11360	ÄÂÃ	KNOB	2			
57	Y24311-000120	OØÝ¸Þ 1A P 12.0	O-RING 1A P 12.0	2			
58	Y129155-77801	½-ÊÈß-¸²Â¸¸ÞÛ-	PLUG, GLOW	2			
59	Y119305-77820	ºÈ¸À (¸ÞÛ-Ìß×¸Þ	CONNECTOR, GLOW PLUG	1			
	Y26106-080142	ÂÊÞÎÞÙÄ M 8X 14	BOLT M 8X 14 PLATED	2			

silverform.co.uk

SUCTION MANIFOLD & AIR CLEANER

Y00D7640
2TNE68-ETBA

5 キュウキマニホールド & エアクリーナ
SUCTION MANIFOLD & AIR CLEANER

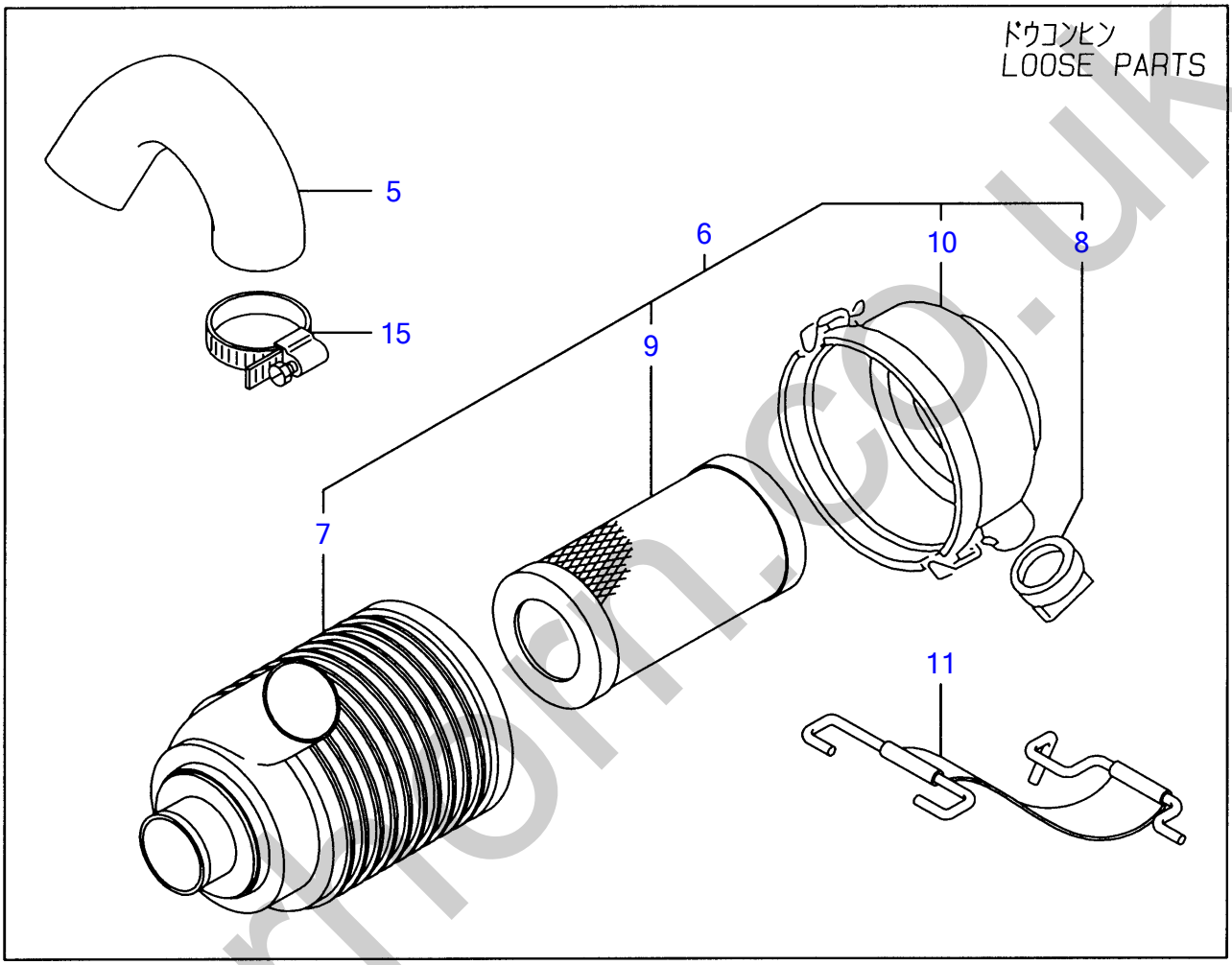

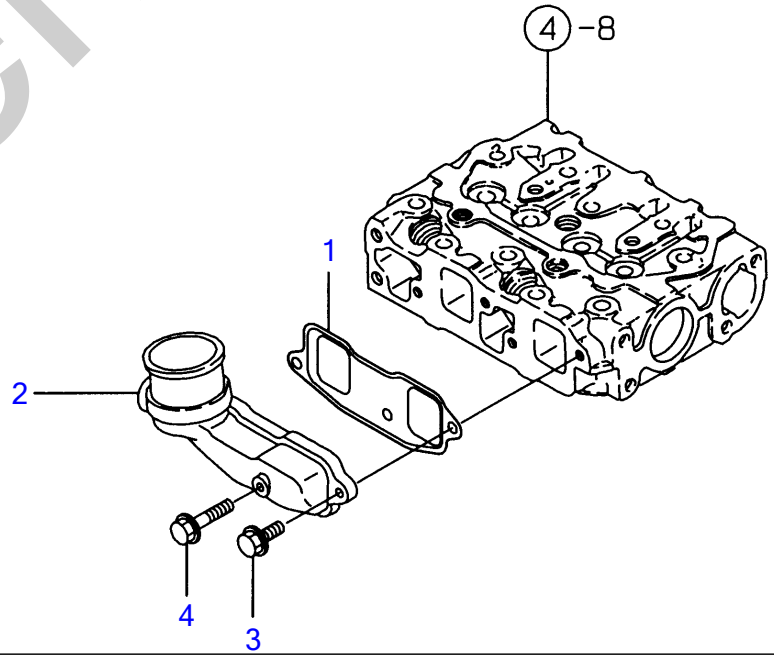

silverhorn.co.uk

·Õ³·ÏÆÎ-ÙÄÞ & ´±¸Ø-Å SUCTION MANIFOLD & AIR CLEANER

Œ©▯o REF NO.	•"•i"Ô▯† PARTS NO.	•"•i-¼	Description	▯"–Ê Q'ty	ŒÝŠ·▯« I	R	"õ▯l
1	**Y119326-12111**	PK(ÏÆÎ-ÙÄÞ	GASKET	1			
2	**Y119305-12150**	ÏÆÎ-ÙÄÞ (INT	MANIFOLD, SUCTION	1			
3	**Y26106-060162**	ÂÊÞÎÞÙÄ 6X 16	BOLT M 6X 16 PLATED	2			
4	**Y26106-060282**	ÂÊÞÎÞÙÄ 6X 28	BOLT M 6X 28 PLATED	1			
5	**Y119332-12210**	·Õ³·¶Ý A	PIPE (A), AIR INTAKE	1			
6	**Y119325-12560**	´±¸Ø-Å CMP	AIR CLEANER	1			
7	**Y119258-12510**	· ÎÞÃÞ²-	· BODY,AIRCLEANER	1			
8	**Y119808-12540**	· ±ÝÛ-ÀÞÊÞÙÌÞ	· VALVE, UNLOADER	1			
9	**Y119655-12560**	· ´ÚÒÝÄ	· ELEMENT	1			
10	**Y119686-12570**	· ¶ÊÞ- ASSY	· COVER ASSY	1			
11	**Y119865-12600**	´±¸Ø-ÅÊÞÝÄÞCMP	STAY	1			
15	**Y23000-060000**	Î-½¸ØÂÌß 60	CLAMP 60	3			

silverhorn.co.uk

EXHAUST MANIFOLD & SILENCER

Y00D7640
2TNE68-ETBA

6 ハイキマニホールド & サイレンサ
EXHAUST MANIFOLD & SILENCER

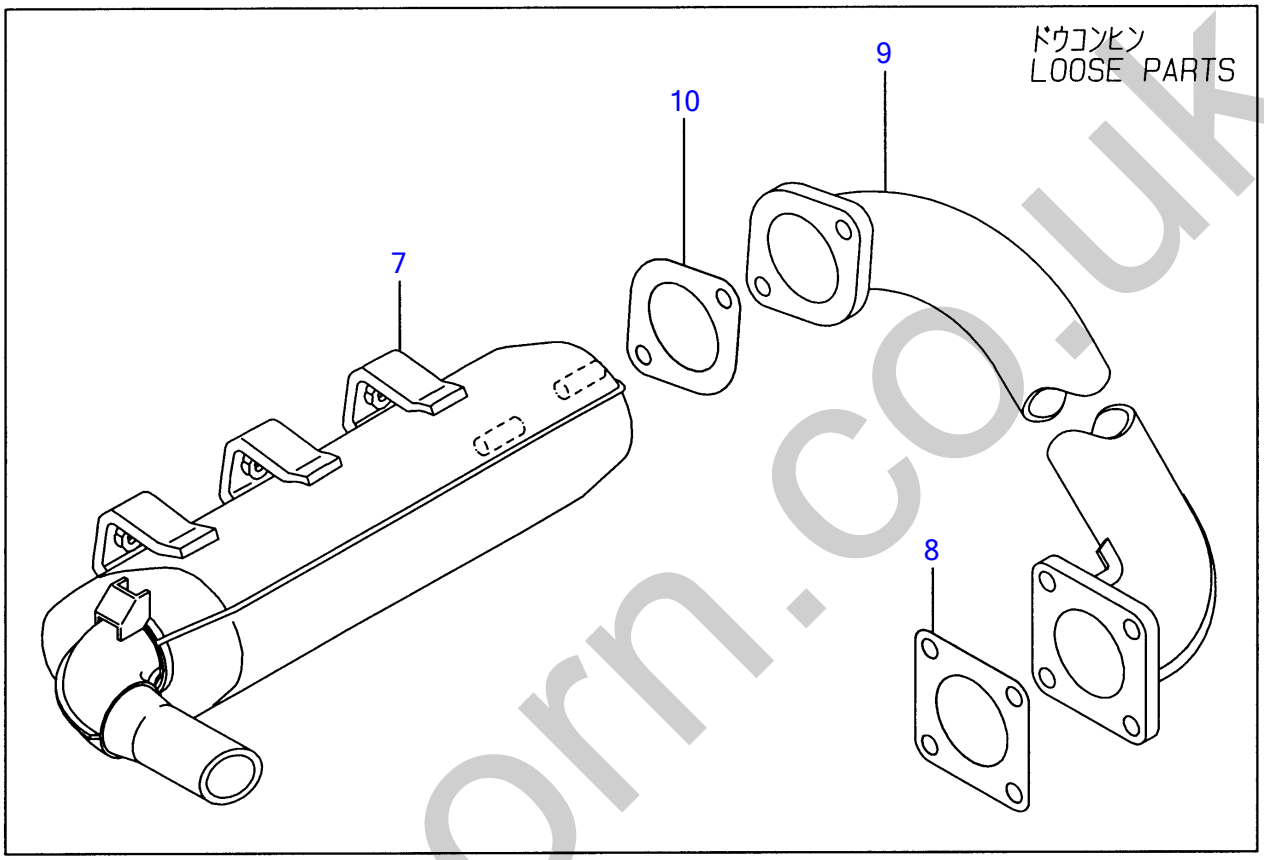

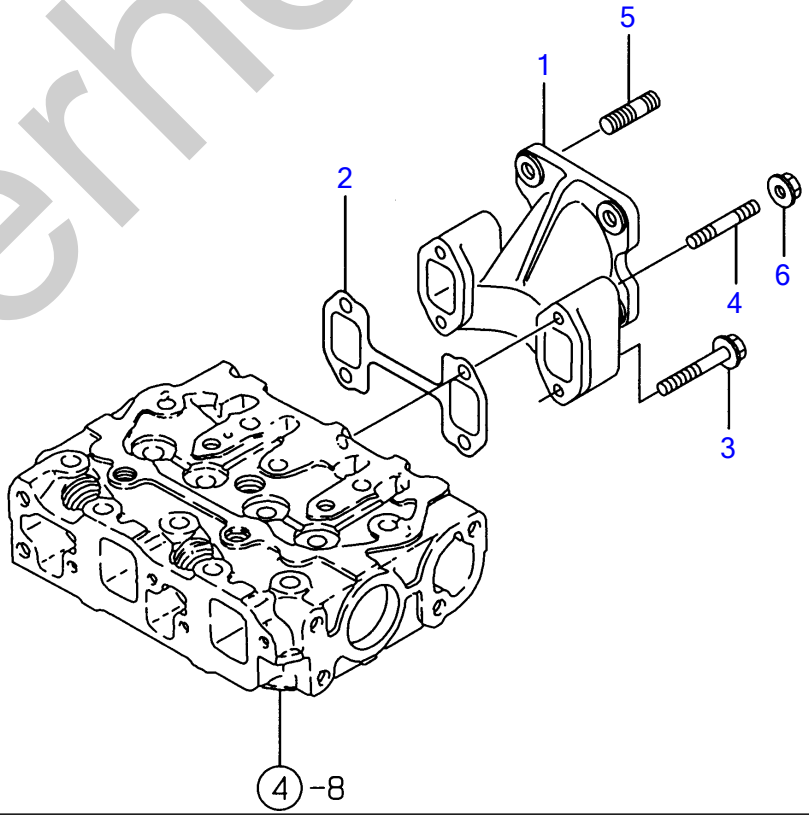

silverhorn.co.uk

Ê²·ÏÆÎ-ÙÄÞ & »²ÚÝ» EXHAUST MANIFOLD & SILENCER

Œ©lo REF NO.	•"•i"Ôl† PARTS NO.	•"•i-¼	Description	l"–Ê Q'ty	ŒÝŠ·l« l	R	"õll
1	**Y119305-13100**	ÏÆÎ-ÙÄÞ (EXH	MANIFOLD, EXHAUST	1			
2	**Y119305-13110**	¶Þ½¹ÂÄ (ÌÆÎ-ÙÄÞ	GASKET, EXH.MANIFOLD	1			
3	**Y26106-060402**	ÂÊÞÎÞÙÄ 6X 40	BOLT M 6X 40 PLATED	2			
4	**Y26216-060402**	³´ºÐÎÞÙÄ 6X 40	STUD M 6X 40 PLATED	2			
5	**Y119131-18320**	³´ºÐÎÞÙÄ M8*22	BOLT M 8X 22	4			
6	**Y26366-060002**	ÂÊÞÂ·ÅÂÄ 6	NUT M 6	2			
7	**Y119332-13510**	»²ÚÝ»-	SILENCER	1			
8	**Y124701-11911**	¶Þ½¹ÂÄ(»²ÚÝ»)(ÉÝ±½)	GASKET, (NON-ASB.)	1			
9	**Y119332-13551**	Ê²·ÚÝ×¸¶Ý	PIPE, EXHAUST	1			
10	**Y129107-13550**	¶Þ½¹ÂÄ(ÌÝ¼ÕÂº³	GASKET, NOZZLE	1			

silverhorn.co.uk

CAMSHAFT & DRIVING GEAR

Y00D7640
2TNE68-ETBA

7 カムシャフト & クドウギヤ
CAMSHAFT & DRIVING GEAR

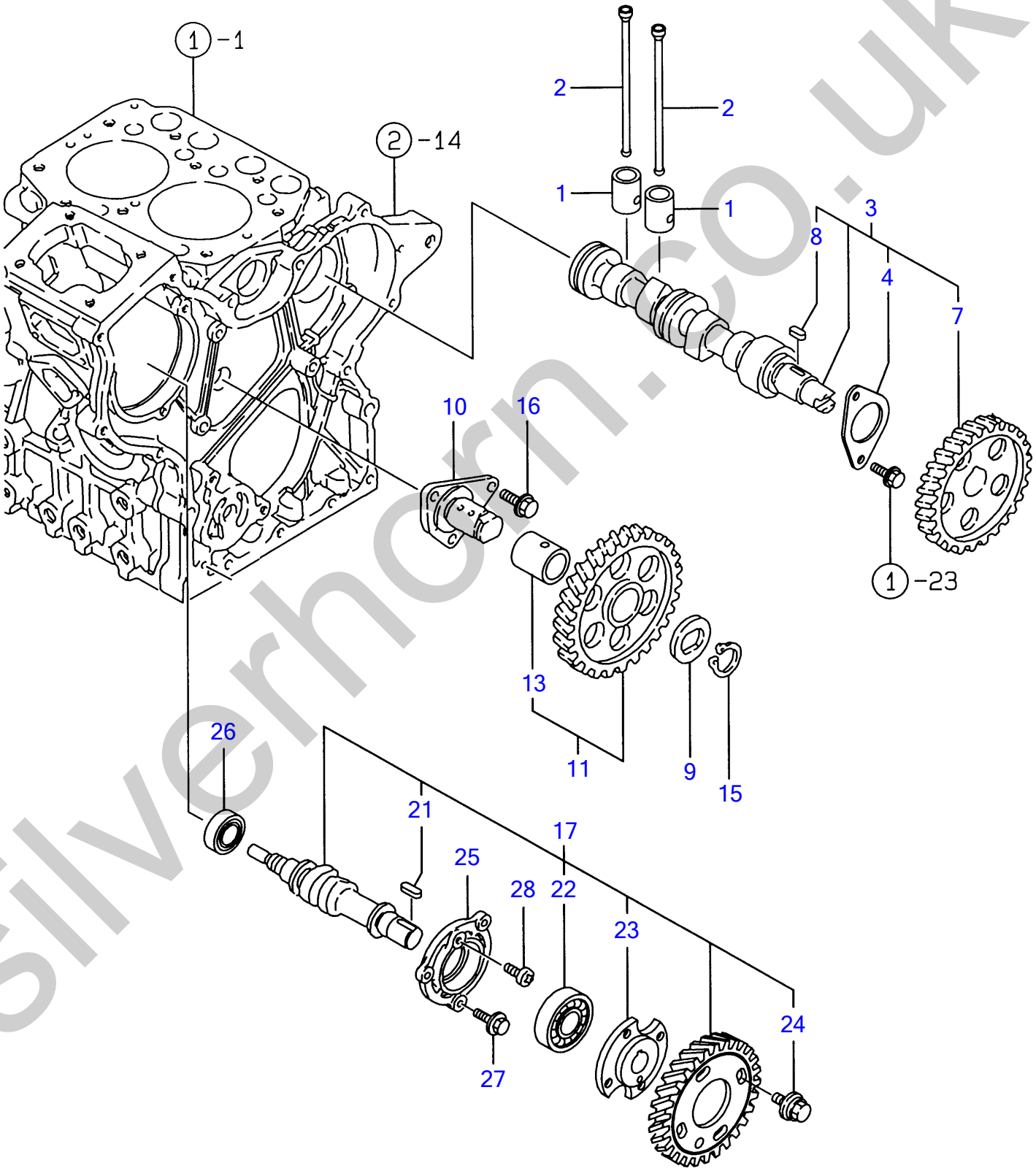

silverhorn.co.uk

¶Ñ¼ÔÌÄ & ¸ÄÞ³·ÞÔ CAMSHAFT & DRIVING GEAR

Œ©lo REF NO.	•"•i"Ôl† PARTS NO.	•"•i-¼	Description	l"–Ê Q'ty	ŒÝŠ·l« I	R	"õll
1	Y119260-14200	ÀÍßÂÄ	TAPPET	4			
2	Y119260-14400	ÌßÂ¼ÕÛÂÄÞ	ROD, PUSH	4			
3	Y119305-14580	¶Ñ¼ÔÌÄ CMP	CAMSHAFT ASSY	1			
4	Y119620-02450	· ½×½ÄÒÀÙ (¶Ñ¼Þ¸	· BEARING, THRUST	1			
7	Y119260-14100	· ¶Ñ·ÞÔ	· GEAR, CAMSHAFT	1			
8	Y22512-040120	· Ì´»Þ-·- 4X12	· KEY 4X 12	1			
9	Y119660-25022	µ»´(±²ÄÞÙ·ÞÔ	RETAINER, IDLE GEAR	1			
10	Y119660-25052	¼ÔÌÄ(±²ÄÞÙ·ÞÔ)	SHAFT, IDLE GEAR	1			
11	Y119260-25100	±²ÄÞÙ·ÞÔCMP	GEAR W/BUSH, IDLE	1			
13	Y119620-25912	· ÌÞÂ¼Õ	· BUSH	1		(1)	ÎÖ³ÌÞËÝÃÞ½
15	Y22242-000200	ÄÒÜC(¼Þ¸ 20	CIRCLIP 20	1			
16	Y26106-060122	ÂÊÞÎÞÙÄ M 6X 12	BOLT M 6X 12 PLATED	3			
17	Y119305-14210	FO¶Ñ CMP	CAM ASSY, PUMP	1			
21	Y22512-040120	· Ì´»Þ-·- 4X12	· KEY 4X 12	1			
22	Y24102-063034	· ÍÞ±ØÝ¸Þ 6303U	· BALL BEARING 6303U	1			
23	Y119660-25920	· Ì×Ý¼Þ	· FLANGE	1			
24	Y119660-25930	· ÎÞÙÄ(FIP·ÞÔ	· THREAD, FI-P GEAR	4			
25	Y119660-01821	FO¶Ñ¼Þ¸³¹	BEARING, FUEL CAM.	1			
26	Y24101-062034	ÍÞ±ØÝ¸Þ 6203	BALL BEARING	1			
27	Y26106-060162	ÂÊÞÎÞÙÄ 6X 16	BOLT M 6X 16 PLATED	3			
28	Y26587-080102	ÊÞ²ÝÄÞºÈ¼Þ(+±Å 8X10	SCREW M 8X 10	1			

silverhorn.co.uk

CRANKSHAFT & PISTON

Y00D7640
2TNE68-ETBA

8 クランクシャフト & ピストン
CRANKSHAFT & PISTON

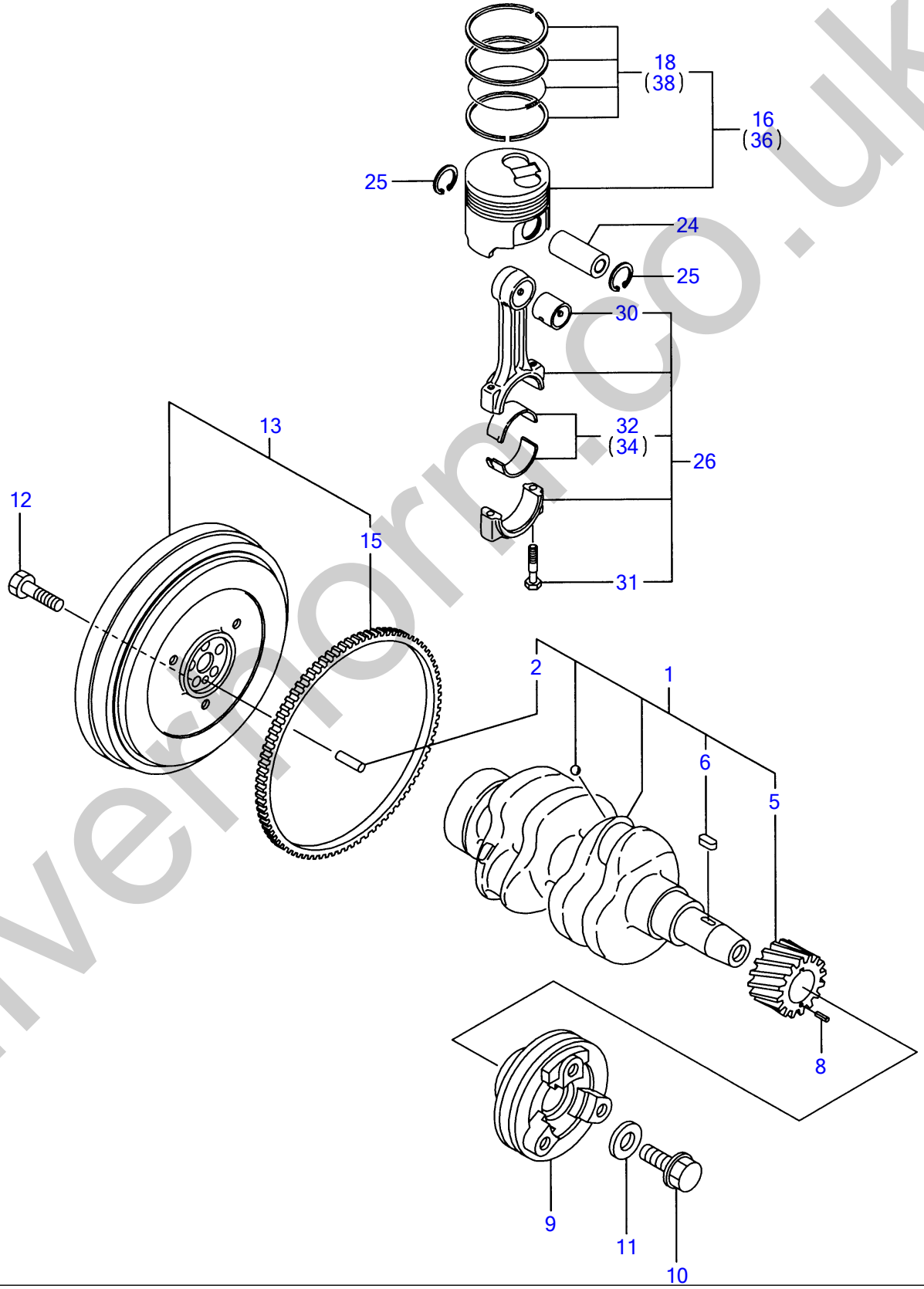

silverthorn.co.uk

¸×Ý¸¼ÔÌÄ & Ëß½ÄÝ CRANKSHAFT & PISTON

Œ©▯o REF NO.	•"•i"Ô▯† PARTS NO.	•"•i-¼	Description	▯"–Ê Q'ty	ŒÝŠ·▯« I	R	"õ▯l
1	**Y119309-21700**	¸×Ý¸¼ÔÌÄ CMP	CRANKSHAFT ASSY	1			
2	**Y129100-01580**	▪ Í²º³ËßÝ 8X16	▪ PARALLEL PIN 8X16	1			
5	**Y119260-21200**	▪ ¸×Ý¸·ÞÔ	▪ GEAR, CRANKSHAFT	1			
6	**Y22512-040120**	▪ Ì´»Þ-·- 4X12	▪ KEY 4X 12	1			
8	**Y22351-030012**	½ÌßØÝ¸ÞËßÝ 3.0AX 12	SPRING PIN 3X12	1			
9	**Y119305-21650**	VÌß-Ø(¸×Ý¸	V-PULLEY	1			
10	**Y119621-21680**	Ì×Ý¼ÞÎÞÙÄ M12X1.25	BOLT M12X1.25,FLANGE	1			
11	**Y119620-21941**	ÜÂ¼Ô-	WASHER	1			
12	**Y119620-21500**	ÎÞÙÄ (Ì×²Î²Ù	BOLT, FLYWHEEL	5			
13	**Y119325-21580**	Ì×²Î²Ù CMP	FLYWHEEL ASSY	1			
15	**Y124950-21600**	▪ ØÝ¸Þ·ÞÔ	▪ GEAR, RING	1			
16	**Y119265-22601**	Ëß½ÄÝ ØÝ¸ÞÂ·	PISTON W/RINGS	2			
18	**Y119265-22500**	▪ ØÝ¸Þ¾ÂÄ	▪ RING SET	2			
24	**Y119265-22300**	Ëß½ÄÝËßÝ	PIN, PISTON	2			
25	**Y22252-000200**	ÄÒÜC(±Å 20	CIRCLIP 20	4			
26	**Y119265-23100**	ºÝÛÂÄÞ CMP	ROD ASSY, CONNECTING	2			
30	**Y119260-23910**	▪ Ëß½ÄÝËßÝÒÀÙ	▪ BUSH, PISTON PIN	2		(1)	ÎÖ³ÌÞËÝÃÞ½
31	**Y119265-23200**	▪ ÛÂÄÞÎÞÙÄ	▪ BOLT, ROD	4			
32	**Y719260-23600**	▪ ÍÞ±ØÝ¸Þ(¸×Ý¸ËßÝ	▪ BEARING, CRANKPIN	2			
34	**Y719260-23610**	¸×Ý¸ËßÝÒÀÙ U.S=0.25	BEARING,PIN U.S=0.25	2		(2)	±ÝÀÞ°»²½Þ(U.S=0.25)ÌÞËÝ
36	**Y119265-22930**	Ëß½ÄÝ CMP(0.25OS	PISTON W/RING OS=.25	2		(3)	µ°ÊÞ°»²½Þ(O.S=0.25)ÌÞËÝ
38	**Y119265-22950**	▪ Ëß½ÄÝØÝ¸ÞSET(OS=0.25	▪ RING SET O.S=0.25	2		(3)	µ°ÊÞ°»²½Þ(O.S=0.25)ÌÞËÝ

silverhorn.co.uk

LUB.OIL SYSTEM

Y00D7640
2TNE68-ETBA

9 LOシステム
LUB.OIL SYSTEM

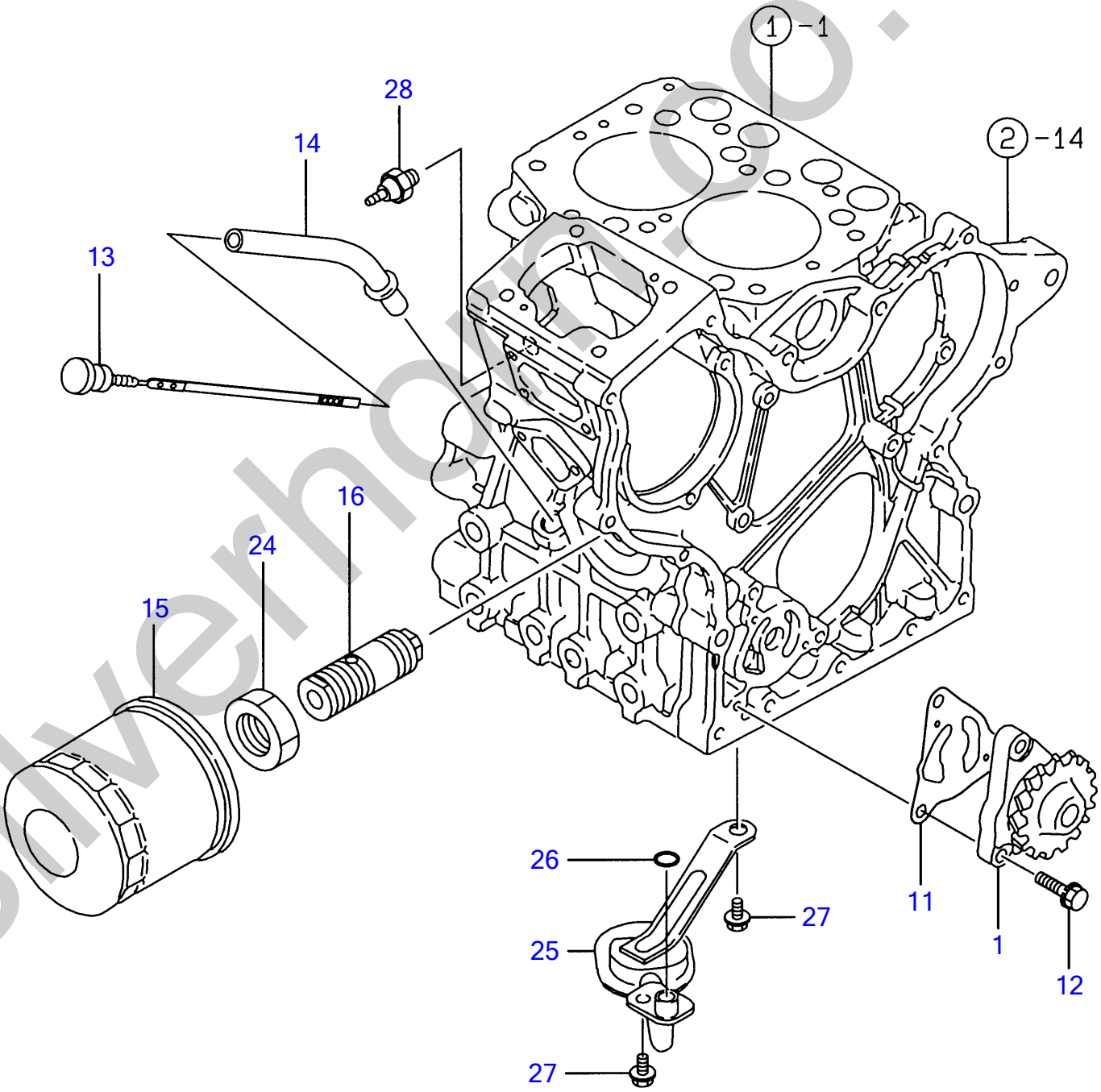

silverhorn.co.uk

LO¼½ÃÑ LUB.OIL SYSTEM

Œ©lo REF NO.	•"•i"Ôl† PARTS NO.	•"•i-¼	Description	l"–Ê Q'ty	ŒÝŠ·l« I	R	"õl
1	**Y119260-32000**	LOÎßÝÌß CMP	PUMP ASSY, LUB. OIL	1			
11	**Y119660-32020**	PK(LO-P	GASKET, L.O.PUMP	1			
12	**Y26450-060202**	6¶¸±ÅÎÞÙÄ 6X 20	BOLT M 6X 20	3			
13	**Y119332-34880**	¹ÝÕÎÞ³	DIPSTICK, LUB.OIL	1			
14	**Y119332-34890**	¹ÝÕÎÞ³¶Þ²ÄÞ	GUIDE, DIPSTICK	1			
15	**Y119305-35151**	µ²Ù²ÙÀ CMP	FILTER, LUB. OIL	1			
16	**Y119225-35300**	ÁÖ³±ÂÍÞÝ CMP	VALVE ASSY,OIL PRESS	1			
24	**Y129150-35350**	ÅÂÄ(ÍÞÝÎÝÀ²	NUT	1			
25	**Y119332-35080**	LO·Õ³ÆÕ³¶Ý CMP	PIPE, OIL INLET	1			
26	**Y119209-35030**	OØÝ¸Þ P11	O-RING	1			
27	**Y26106-060122**	ÂÊÞÎÞÙÄ M 6X 12	BOLT M 6X 12 PLATED	2			
28	**Y114250-39450**	Õ±Â½²ÂÁ (0.5KG)	SWITCH,(0.5KG)L.O.	1			

silverhorn.co.uk

Y00D7640
2TNE68-ETBA

10 CWシステム COOLING WATER SYSTEM

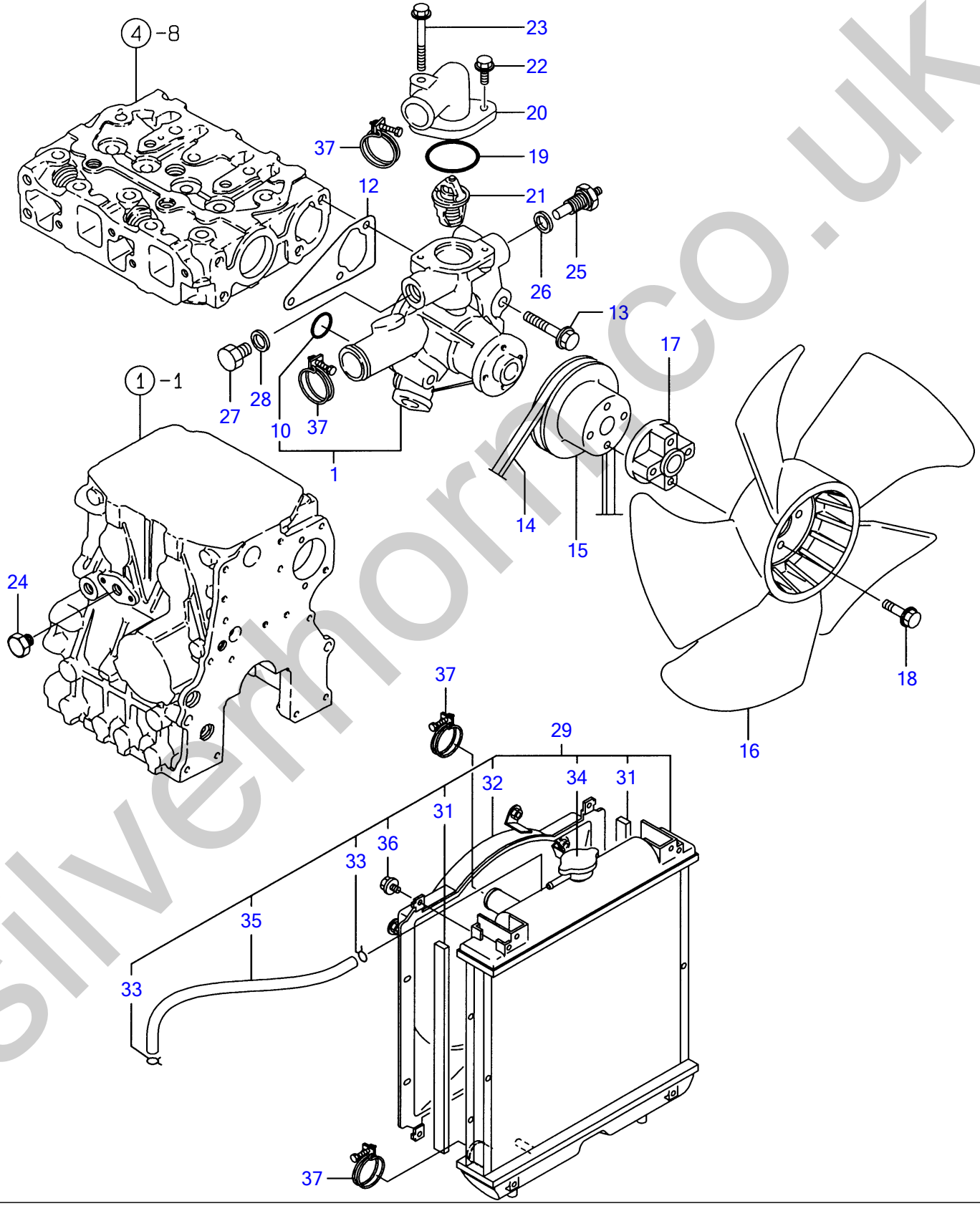

silvermorrco.uk

CW¼½ÃÑ COOLING WATER SYSTEM

Œ©lo REF NO.	•"•i"Ôl† PARTS NO.	•"•i-¼	Description	l"–Ê Q'ty	ŒÝŠ·l« l	R	"õll
1	Y119260-42002	CWÎßÝÌß CMP	PUMP ASSY, C.WATER	1			
10	Y119225-42320	• O-ØÝ¸Þ	• O-RING	1			
12	Y119260-42021	ÊßÂ·Ý(CW-P	GASKET, C.W.	1			
13	Y26106-080452	ÂÊÞÎÞÙÄ 8X 45	BOLT M 8X 45 PLATED	3			
14	Y119256-42290	VÍÞÙÄ(º¸Þ 33.5	V-BELT 33.5	1			
15	Y119256-42360	VÌß-Ø(CW-P	V-PULLEY	1			
16	Y119233-44740	Ì±Ý(D=290*UH	FAN (D=290)	1			
17	Y171009-44760	½Íß-» (ÌÞ×Â¸:12)	SPACER	1			
18	Y26106-060302	ÂÊÞÎÞÙÄ 6X 30	BOLT M 6X 30 PLATED	4			
19	Y119209-42140	OØÝ¸Þ G 35	O_RING,COVER_THERMOS	1			
20	Y119256-49530	¶ÊÞ-(»-Ó½ÀÂÄ	COVER, THERMOSTAT	1			
21	Y119289-49800	»-Ó½ÀÂÄ	THERMOSTAT,82 DEG	1			
22	Y26106-060162	ÂÊÞÎÞÙÄ 6X 16	BOLT M 6X 16 PLATED	1			
23	Y26106-060552	ÂÊÞÎÞÙÄ 6X 55	BOLT M 6X 55 PLATED	1			
24	Y171056-49120	ÄÞÚÝÌß×¸Þ	PLUG, DRAIN	1			
25	Y124250-49351	½²µÝ¾Ý»-	THERMOMETER	1			
26	Y129150-49360	PK 10	GASKET 10	1			
27	Y121450-42450	Ìß×¸Þ M16	PLUG M16	1			
28	Y124465-44950	ÊßÂ·Ý16	GASKET 16	1			
29	Y119325-44521	×¼Þ´-À CMP	RADIATOR	1			
31	Y119325-44560	• ÊßÂ·Ý	• PK	2			
32	Y119325-44570	• ¼Õ×³ÄÞ	• SHROUD, RADIATOR	1			
33	Y121250-44590	• ¸×ÝÌß	• CLAMP	2			
34	Y129107-44590	• ·ÔÂÌß(RAD 0.9KG/CM2	• CAP, RADIATOR	1			
35	Y121492-59090	• FO-T (L=650	• PIPE, FUEL OIL	1			
36	Y26014-060122	• ÎÞÙÄ(Ë×+ÊÞÈ 6X 12	• BOLT M 6X 12	4			
37	Y23010-038000	Î-½ÊÞÝÄÞ 38	CLAMP 38	4			

silverhorn.co.uk

FUEL INJECTION PUMP

Y00D7640
2TNE68-ETBA

11 FOフンシャポンプ
FUEL INJECTION PUMP

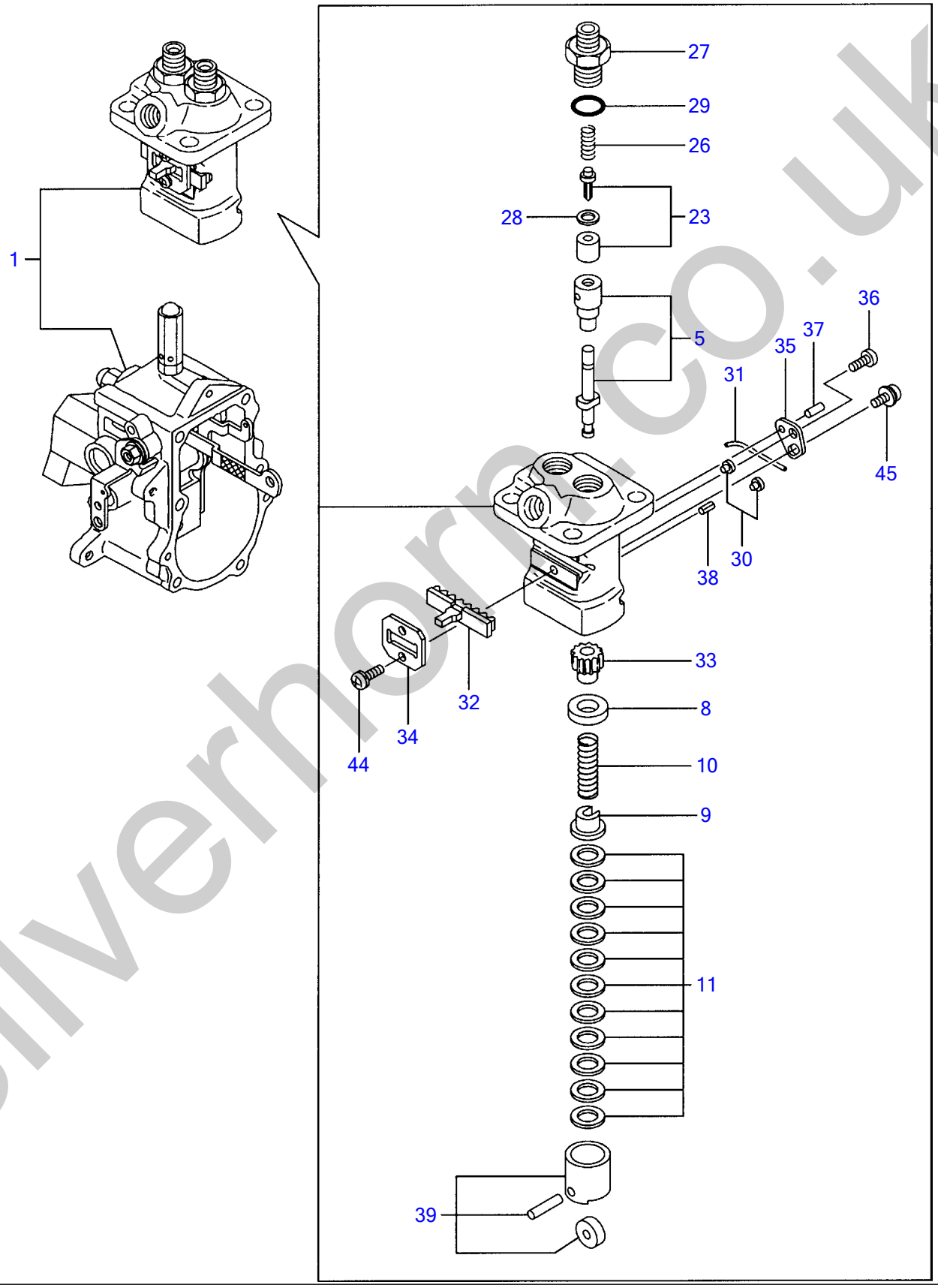

silverhorn.co.uk

FOÌÝ¼ÔÎßÝÌß FUEL INJECTION PUMP

Œ©lo REF NO.	•"•i"Ô†† PARTS NO.	•"•i-¼	Description	”–Ê Q'ty	ŒÝŠ·l« I	R	”õll
1	Y719325-51740	FIE(ÎÖ³ ASY	FIE(SERVICE ASSY	1		(1)	ÐÀÞ¼ NO.1¤ FIE(ÎÖ³ ASSY ÆÊº³Ó¸ NO.12 ¶ÞÊÞÅ µ Ì¸Ñ.
5	Y119225-51100	· Ìß×Ý¼ÞÔÊÞÚÙ CMP	· PLUNGER W/BARREL	2			
8	Y119620-51170	· ÊÞÈ³¹ A	· RETAINER	2			
9	Y119620-51180	· ÊÞÈ³¹ B	· RETAINER	2			
10	Y119620-51190	· SP(Ìß×Ý¼ÞÔ	· SPRING, PLUNGER	2			
11	Y119620-51250	· ¼Ñ CMP	· SHIM PACK	2			
23	Y119225-51300	· ÃÞØÍÞØÊÞÙÌÞ CMP	· VALVE W/SEAT, DELIV.	2			
26	Y105546-51330	· ½ÌßØÝ¸Þ	· SPRING, DELIV. VALVE	2			
27	Y119620-51340	· ÃÞØÍÞØÊÞÙÌÞÎÙÀÞ-	· HOLDER, DELIV. VALVE	2			
28	Y119620-51350	· PK(ÃÞØÍÞØ	· GASKET, DELIVERY	2			
29	Y119620-51370	· OØÝ¸Þ	· O-RING	2			
30	Y119620-51450	· ¶Þ²ÄÞËß-½(ÀÍßÂÄ	· GUIDE, PLUNGER	2			
31	Y174307-51460	· ËßÝ(¶Þ²ÄÞÏÜØÄÞÒ	· PIN	1			
32	Y119305-51500	· ×Â¸	· RACK	1			
33	Y119620-51510	· ËßÆµÝ	· PINION	2			
34	Y119305-51530	· ×Â¸µ»´	· RETAINER, RACK	1			
35	Y119620-51650	· FOÁÖ³³¾²ÌßÚ-Ä	· PLATE	1			
36	Y119620-51660	· FOÁÖ³³¾²È¼Þ	· SCREW	1			
37	Y119620-51670	· FOÁÖ³³¾²ËßÝ	· PIN	1			
38	Y119620-51680	· ËßÝ(ÍÞÚÙ²Á·ÞÒ	· PIN	1			
39	Y119620-51700	· ÀÍßÂÄ CMP	· TAPPET ASSY	2			
44	Y26022-040082	· ÅÍÞºÈ¼Þ(ÊÞÈ4X 8	· SCREW M 4X 8	2			
45	Y26033-040102	· ÊÞ²ÝÄÞÈ¼Þ(ÊÞÈ+Ë×4X10	· SCREW M 4X 10	1			

silverhorn.co.uk

GOVERNOR

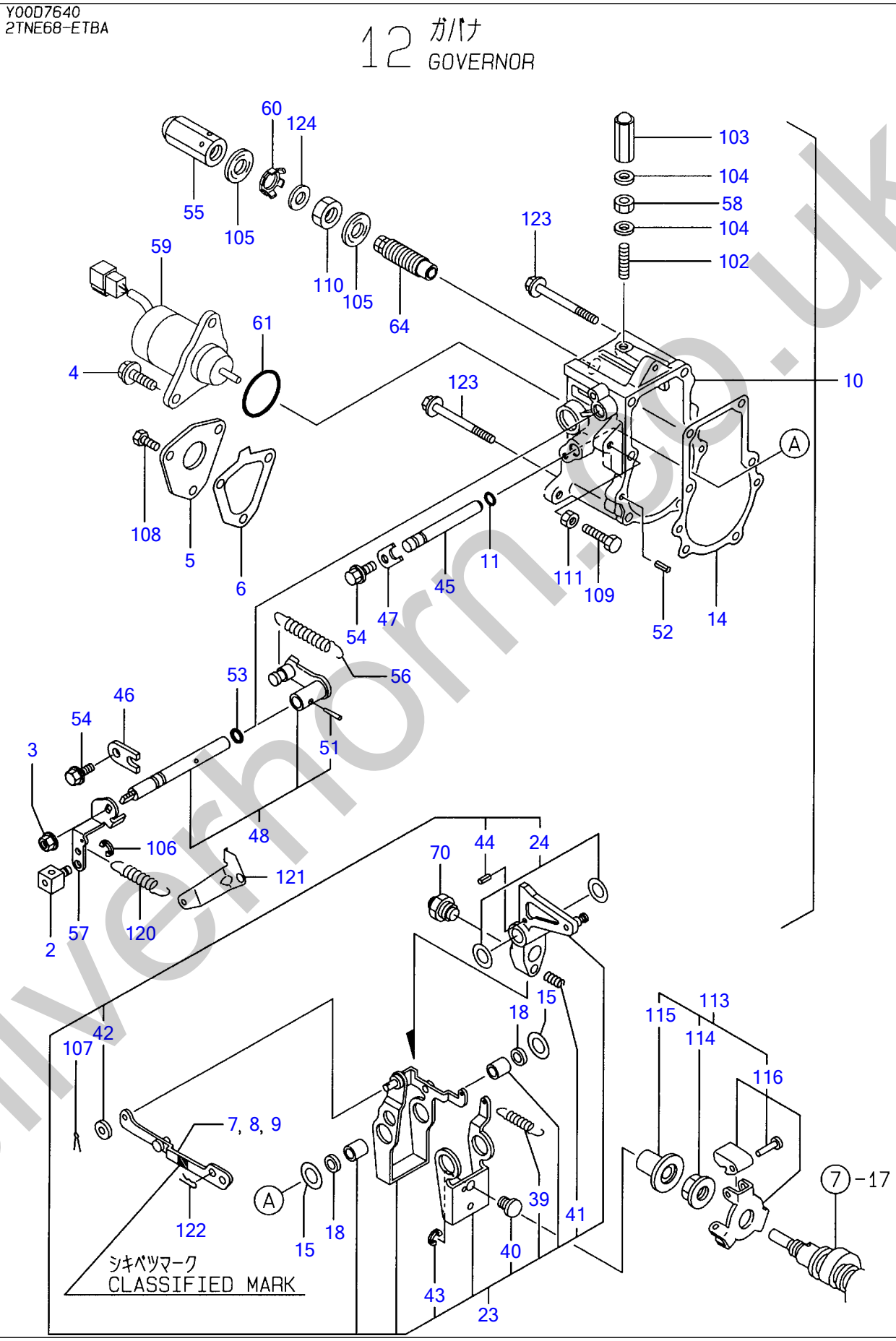

silverhorn.co.uk

¶ÞÊÞÅ GOVERNOR

Œ©lo REF NO.	•"•i"Ô†† PARTS NO.	•"•i-¼	Description	]"–Ê Q'ty	ŒÝŠ·l« I	R	"õl
2	Y124756-67510	· Ü²Ô-ÄÒ¶Å¸Þ	· RETAINER	1			
3	Y194990-22050	· ¹Ìß½(½ÊßÅ¸ 8	· NUT W/WASHER 8	1			
4	Y26106-060142	· ÎÞÙÄ 6X14	· BOLT M 6X 14, PLATED	2			
5	Y119660-61060	· ¶ÞÊÞÅ¹-½ÌÀ(ÌÞ×Â¸:12)	· COVER, GOVERNOR CASE	1			
6	Y119660-61071	· PK(¶ÞÊÞÅ¹-½)(ÉÝ±½)	· GASKET, (NON-ASB.)	1			
7	Y119285-61120	· ØÝ¸(L=88.8)	· LINK (L=88.8)	1		(1)	¾ÝÀ¸¼Ö³ÌÞËÝ: ¼·ÍÞÅ·ºÞ³ µ ¶¸ÆÝ É³´ Á-³ÓÝÈ¶Þ²Ï½.(²×½Ä »Ý¼®³).
8	Y119285-61130	· ØÝ¸(L=88.6)	· LINK (L=88.6)	1		(1)	¾ÝÀ¸¼Ö³ÌÞËÝ: ¼·ÍÞÅ·ºÞ³ µ ¶¸ÆÝ É³´ Á-³ÓÝÈ¶Þ²Ï½.(²×½Ä »Ý¼®³).
9	Y119285-61140	· ØÝ¸(L=89.0)	· LINK (L=89.0)	1		(1)	¾ÝÀ¸¼Ö³ÌÞËÝ: ¼·ÍÞÅ·ºÞ³ µ ¶¸ÆÝ É³´ Á-³ÓÝÈ¶Þ²Ï½.(²×½Ä »Ý¼®³).
10	Y119632-61200	· ¶ÞÊÞÅ¹°½ COMP	· CASE ASSY, GOVERNOR	1			
11	Y129155-51280	· · OØÝ¸Þ(S6	· · O-RING S6	1			
14	Y119660-61052	· · PK(¶ÞÊÞÅ¹-½)(ÉÝ±½)	· · GASKET, (NON-ASB.)	1			
15	Y119660-61460	· · ¼ÑCMP(¶ÞÊÞÅÚÊÞ-¼Þ¸	· · SHIM SET	2			
18	Y129155-61480	· · ¶Ý»Þ COMP	· · SPACER ASSY	2			
23	Y119232-61510	· · ¶ÞÊÞÅÚÊÞ° CMP	· · LEVER ASSY, GOVERNOR	2			
24	Y174307-51700	· · · ¼Ñ¾ÂÄ(ÁÖ³¾²Ö³	· · · SHIM SET	2			
39	Y119232-61540	· · · SP(GÚÊÞ°¾ÂÄ	· · · SPRING, LEVER	1			
40	Y119600-61541	· · · ¼ÌÀ	· · · SHIFTER,P.T.O.	1			
41	Y119660-61651	· · · SP(½À-Ä	· · · SPRING, STARTING	1			
42	Y22117-040000	· · · »Þ¶ÞÈ(ºÏÙ 4	· · · WASHER 4	1			
43	Y22272-000040	· · · ÄÒÜE 4	· · · CIRCLIP E- 4	1			
44	Y22351-030014	· · · ½ÌßØÝ¸ÞËßÝ 3.0AX 14	· · · SPRING PIN 3X14	1			
45	Y119660-61590	· · ¼ÔÌÄ(¶ÞÊÞÅÚÊÞ-	· · SHAFT	1			
46	Y119600-61900	· · Ç¹ÄÞÒ	· · RETAINER, SHAFT	1			
47	Y119660-61901	· · Ç¹ÄÞÒ	· · RETAINER, SHAFT	1			
48	Y119285-66080	· · Ú·ÞÕÚ-À ¼ÔÌÄ CMP	· · SHAFT ASSY,REGULATOR	1			
51	Y22322-030160	· · · Ã-Êß-ËßÝ 3X16	· · · TAPER PIN 3X16	1			
52	Y22351-040010	· · ½ÌßØÝ¸ÞËßÝ 4.0AX 10	· · SPRING PIN 4X10	2			
53	Y24341-000070	· · O-ØÝ¸Þ 1A S-7.0	· · O-RING 1A S-7.0	1			
54	Y26106-060102	· · ÂÊÞÎÞÙÄ M 6X 10	· · BOLT M 6X 10 PLATED	2			
55	Y129100-61930	· Ì¸ÛÅÂÄ	· NUT, CAP	1			
56	Y119600-66020	· Ú·ÞÕÚ-À½ÌßØÝ¸Þ	· SPRING, REGULATOR	1			
57	Y119640-66051	· Ú·ÞÕÚ-ÀÊÝÄÞÙ	· HANDLE, REGULATOR	1			
58	Y26857-060002	· ÄÒÅÂÄ 6 (ÂÂÞØ±Å	· LOCK NUT M 6	1			
59	Y119233-77932	· ´Ý¼ÞÝ½ÄÂÌßCMP	· ENG. STOP SOLENOID	1			
60	Y129209-61970	· ÌßÚ°Ä	· PLATE	1			
61	Y24341-000280	· OØÝ¸Þ 1A S 28.0	· O-RING 1A S-28.0	1			
64	Y119600-66530	· FOØÐÂÀ CMP	· TORQUE SPRING ASSY	1			
70	Y119610-66700	· ±Ý¸Þ×²Ë CMP	· ANGLEICH ASSY	1			
102	Y121575-66830	· ½¸ØÕ(±¼ÞÔ½Ä	· SCREW, ADJUST	1			
103	Y119285-66600	· ·ÔÂÌß ÅÂÄ	· NUT, CAP	1			
104	Y119285-66620	· ¼-ÙÜÂ¼Ô(ÏÙ 6	· WASHER,SEAL 6	2			
105	Y22190-120002	· ¼-ÙÜÂ¼Ô(ºÏÙ 12	· SEAL WASHER 12	2			

silverform.co.uk

GOVERNOR

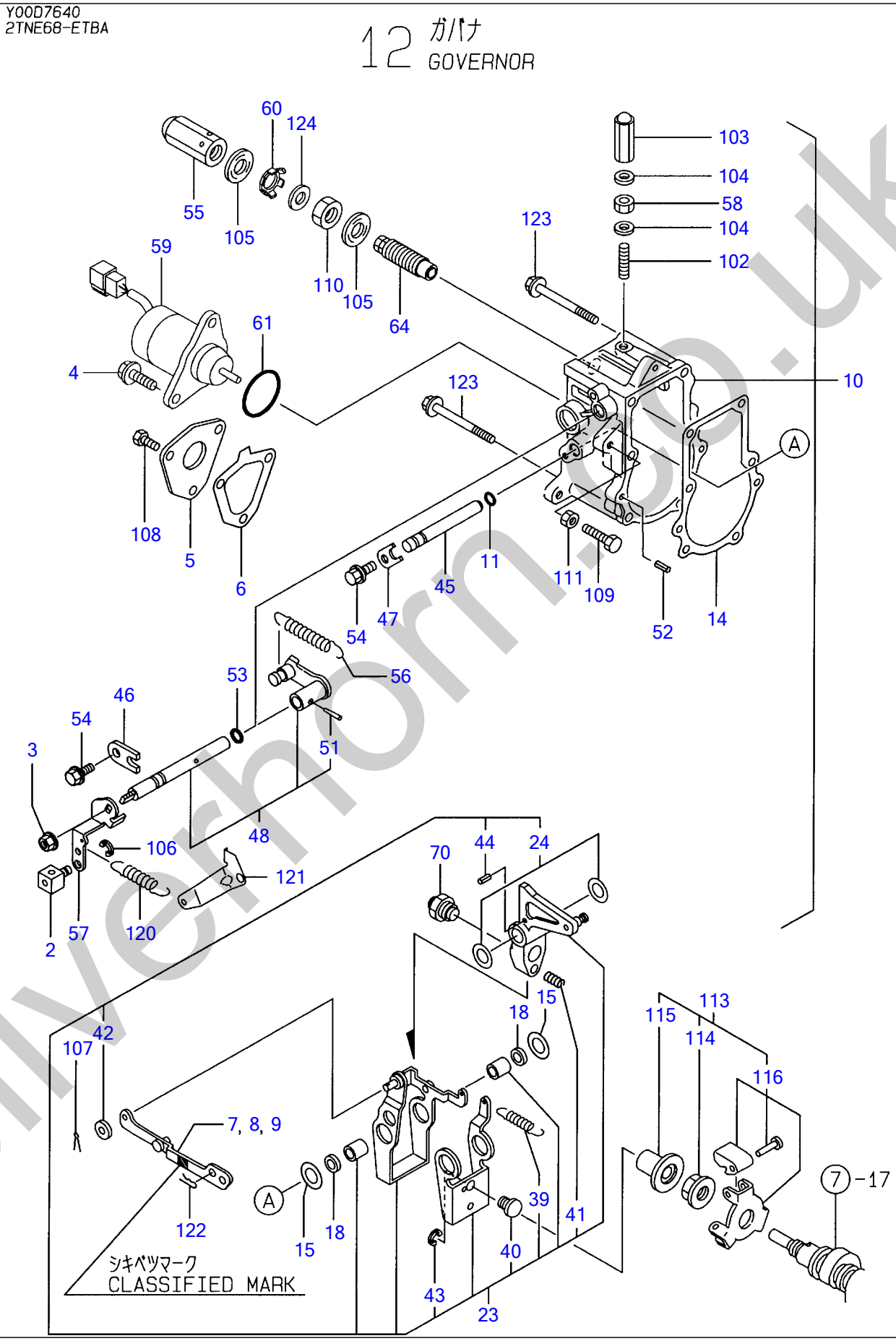

silverhorn.co.uk

¶ÞÊÞÅ GOVERNOR

Œ©lo REF NO.	•"•i"Ôl† PARTS NO.	•"•i-¼	Description	l"–Ê Q'ty	ŒÝŠ·l« I	R	"õll
106	Y22272-000070	· ÄÒÜE 7	· CIRCLIP E- 7	1			
107	Y22360-040000	· ½ÅÂÌßËßÝ 4	· SNAP PIN 4	1			
108	Y26116-050102	· ÎÞÙÄ 5X 10	· BOLT M 5X 10 PLATED	3			
	Y119266-61460	· ÎÞÙÄ 6X 30	· BOLT M 6X 30 PLATED	1			
	26736-120002	· ÅÂÄ(Î¿ 12	· NUT M12	1			
	Y26756-060002	· ÄÒÅÂÄ 6	· LOCK NUT 6	1			
	Y119600-61300	¶ÞÊÞÅ¸ÄÞ³ COMP	DRIVING SET, GOV.	1			
	Y119660-61300	· ÅÂÄ(¶ÞÊÞÅ»Îß-Ä	· NUT, GOVERNOR WEIGHT	1			
	Y119660-61341	· ½Ø-ÌÞ	· SLEEVE, GOVERNOR	1			
	Y119600-61400	· ¶ÞÊÞÅ³´²Ä CMP	· WEIGHT ASSY, GOV.	1			
	Y119840-61870	½ÌßØÝ¸Þ	SPRING	1			
	Y119656-66910	ÌÂ¸(ÓÄÞ¼ÊÞÈ	HOOK	1			
	Y22360-060000	½ÅÂÌßËßÝ 6	SNAP PIN 6	1			
	Y26106-060702	ÂÊÞÎÞÙÄ 6X 70	BOLT M 6X 70 PLATED	5			
	Y23414-120016	ÊßÂ·Ý	GASKET	1			

silverhorn.co.uk

FUEL INJECTION VALVE

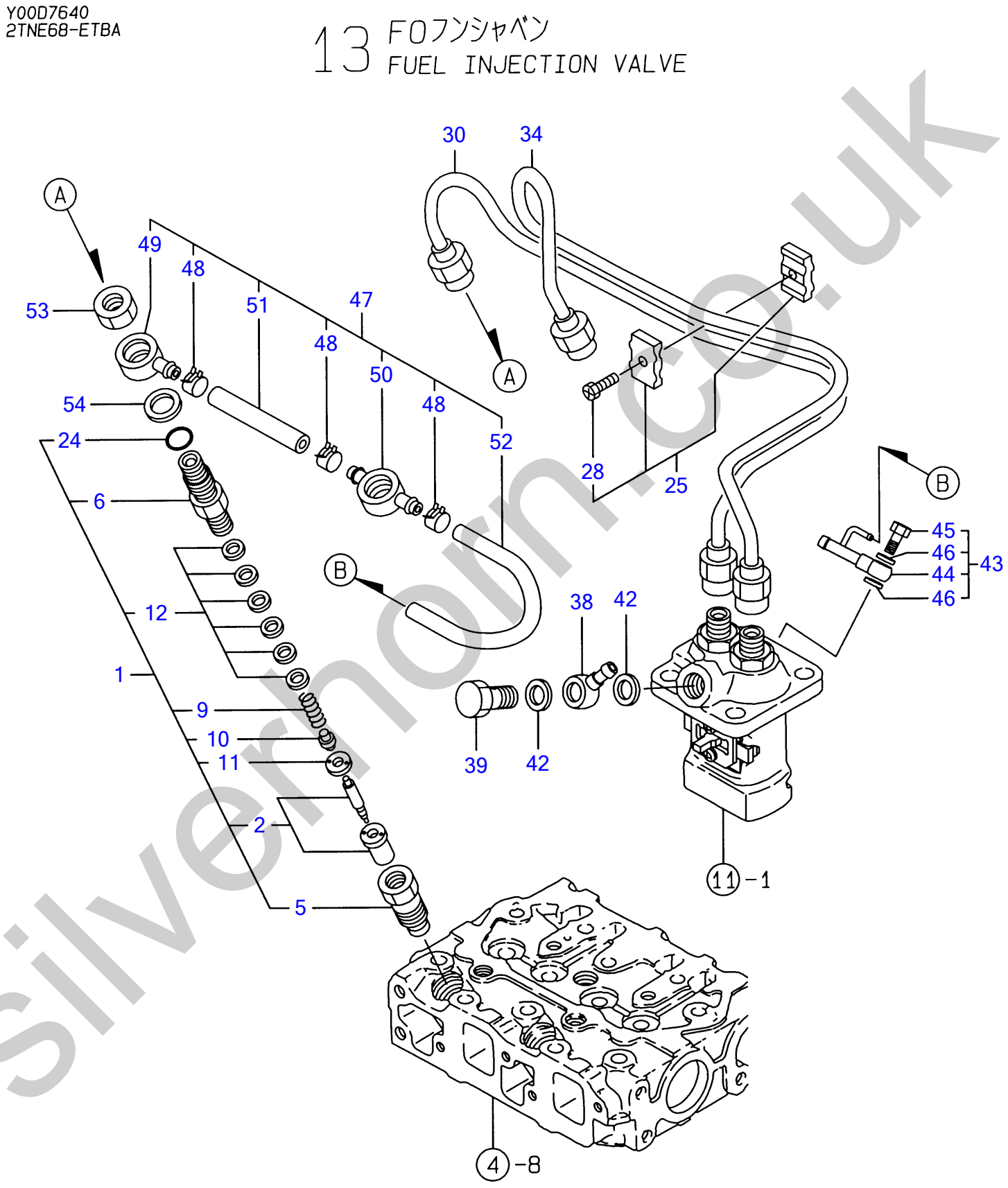

silvernorn.co.uk

FOÌÝ¼ÔÍÞÝ FUEL INJECTION VALVE

Œ©lo REF NO.	•"•i"Ô†† PARTS NO.	•"•i-¼	Description	”–Ê Q'ty	ŒÝŠ·« I	R	”õl
1	Y719255-53100	FOÌÝ¼ÔÍÞÝ ASY	FUEL INJECT.VALVE AS	2			
2	Y119620-53000	· É½ÞÙ CMP	· NOZZLE ASSY,F.INJECT	2			
5	Y119620-53080	· É½ÞÙÄØÂ¹ÅÂÄ	· NUT, VALVE W/CASE	2			
6	Y119255-53100	· É½ÞÙÎÙÀÞ	· HOLDER,NOZZLE	2			
9	Y119620-53120	· SP(É½ÞÙ	· SPRING, VALVE	2			
10	Y114250-53130	· ¼-Ä(É½ÞÙ½ÌßØÝ¸Þ	· SEAT, NOZZLE SPRING	2			
11	Y119620-53140	· ÊÞÙÌÞ½ÄÂÌß½íß-»	· SPACER, VALVE STOP	2			
12	Y114250-53400	· ¼Ñ CMP	· SHIM PACK	2			
24	Y129155-61830	· OØÝ¸Þ (S10	· O-RING S10	2			
25	Y119305-59120	· ÌÚÄÞÒ(ÌÝ¼Ô¶ÝCMP	· RETAINER	1			
28	Y129150-59131	· +±Å HB4X14	· BOLT M4X14,HEX.SCKT.	1			
30	Y119309-59810	ÌÝ¼Ô¶Ý CMP	PIPE ASSY, FUEL	1			
34	Y119309-59820	ÌÝ¼Ô¶Ý CMP	PIPE ASSY, FUEL	1			
38	Y101304-59020	¶ÝÂ·ÞÃ(¶À¸Á 12	JOINT 12, PIPE	1			
39	Y105340-59190	¶ÝÂ·ÞÃÎÞÙÄ CMP	BOLT ASSY	1			
42	Y22190-120002	¼-ÙÜÂ¼Ô(ºÏÙ 12	SEAL WASHER 12	2			
43	Y119266-59501	¶ÝÂ·ÞÃCMP	PIPE JOINT ASSY	1			
44	Y119266-59570	· ¼ÞÖ²ÝÄ(µ-ÊÞ-ÌÛ-	· JOINT	1			
45	Y119266-59580	· ¶ÝÂ·ÞÃÎÞÙÄ 8	· BOLT 8,PIPE JOINT	1			
46	Y22190-080002	· ¼-ÙÜÂ¼Ô(ºÏÙ.ÆÄØÙ) 8	· SEAL WASHER 8S	2			
47	Y119520-59540	FOÓÄÞ¼ CMP	PIPE, FUEL RETURN	1			
48	Y124066-59100	· Î-½¸ØÂÌß(ÏÙ 8	· CLAMP 8	3			
49	Y119260-59520	· ¼ÞÖ²ÝÄB (ÌÞ×Â¸:12)	· JOINT (B)	1			
50	Y119260-59530	· ¼ÞÖ²ÝÄA (ÌÞ×Â¸:12)	· JOINT (A)	1			
51	Y119260-59550	· FOÊß²Ìß	· PIPE, FUEL	1			
52	Y119000-59560	· FOÓÄÞ¼¶Ý	· PIPE, FUEL RETURN	1			
53	Y119620-59700	ÅÂÄ(É½ÞÙÓÄÞ¼	NUT	2			
54	Y22190-140002	¼-ÙÜÂ¼Ô(ºÏÙ.ÆÄØÙ)14	SEAL WASHER 14S	2			

silverhorn.co.uk

FUEL FILTER

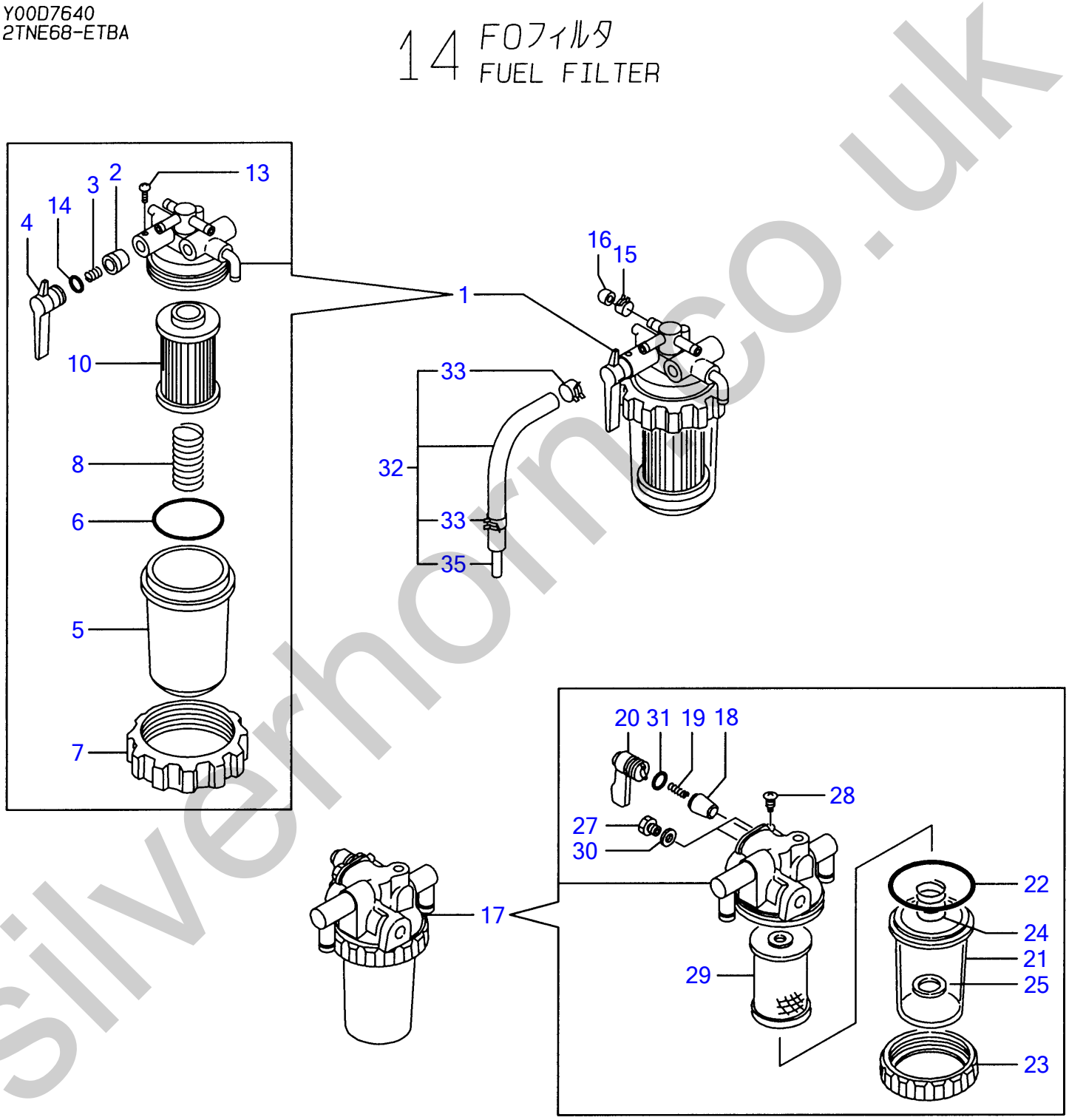

silverhorn.co.uk

FOÌ¨ÙÀ FUEL FILTER

Œ©lo REF NO.	•"•i"Ôl† PARTS NO.	•"•i-¼	Description	l"–Ê Q'ty	ŒÝŠ·l« I	R	"õll
1	Y119632-55620	FOº¼· CMP	STRAINER ASSY, F.O.	1			
2	Y104200-55321	Ã-ÊßÊÞÙÌÞ	VALVE, TAPER	1			
3	Y104200-55330	· ½ÌßØÝ¸Þ(Ã-ÊßÊÞÙÌÞ	· SPRING, TAPER VALVE	1			
4	Y119810-55340	· ÚÊÞ-	· LEVER	1			
5	Y121254-55510	· µµ²(FOº¼·	· CUP, STRAINER	1			
6	Y102103-55520	· OØÝ¸Þ(µµ²	· O-RING	1			
7	Y110250-55610	· ØÃ-ÆÝ¸ÞØÝ¸Þ	· RING, RETAINING	1			
8	Y121250-55620	· ½ÌßØÝ¸Þ(´ÚÕÝÄ	· SPRING	1			
10	Y124550-55700	· ´ÚÒÝÄ(FO) L=90	· ELEMENT	1			
13	Y104200-55750	· ÅÍÞºÈ¼Þ 4(FOºÂ¸ÊÝÄÞÙ	· SCREW M 4	1			
14	Y24311-240100	· OØÝ¸Þ 1A P 10A	· O-RING 1A P-10A	1			
15	Y124066-59100	Î-½¸ØÂÌß(ÏÙ 8	CLAMP 8	1			
16	Y129150-59580	·ÔÂÌß(FO-TÓÄÞ¼	CAP	1			
17	Y129335-55700	³µ-À¾ÊßÚ-À CMP	SEPARATOR, WATER	1			
18	Y104200-55321	· Ã-ÊßÊÞÙÌÞ	· VALVE, TAPER	1			
19	Y104200-55330	· ½ÌßØÝ¸Þ(Ã-ÊßÊÞÙÌÞ	· SPRING, TAPER VALVE	1			
20	Y104200-55341	· ÊÝÄÞÙ(FOºÂ¸	· HANDLE, COCK	1			
21	Y124064-55510	· µµ²(FOº¼·	· BOWL, FUEL STRAINER	1			
22	Y102103-55520	· OØÝ¸Þ(µµ²	· O-RING	1			
23	Y110250-55610	· ØÃ-ÆÝ¸ÞØÝ¸Þ	· RING, RETAINING	1			
24	Y121257-55720	· ½ÌßØÝ¸Þ(½¸Ø-Ý	· SPRING, SCREEN	1			
25	Y121257-55731	· ÌÛ-Ä	· FLOAT	1			
27	Y101720-55750	· 6¶¸Ìß×¸Þ 6(´±-Ç·	· PLUG 6	2			
28	Y104200-55750	· ÅÍÞºÈ¼Þ 4(FOºÂ¸ÊÝÄÞÙ	· SCREW M 4	1			
29	Y171081-55910	· ½¸Ø-Ý (100ÒÂ¼Ô	· SCREEN	1			
30	Y23418-060000	· ÊßÂ·Ý(ÏÙ 6	· GASKET 6, NYLON	2			
31	Y24311-240100	· OØÝ¸Þ 1A P 10A	· O-RING 1A P-10A	1			
32	Y119840-59601	ÍÞÝÄÞ(ÓÄÞ¼CMP	BEND ASSY	1			
33	Y124766-59050	· Î-½¸ØÂÌß(ÏÙ 12	· CLAMP 12	2			
35	Y119840-59621	· ¼ÞÖ²ÝÄ	· JOINT	1			

silverhorn.co.uk

STARTING MOTOR

Y00D7640
2TNE68-ETBA

15 スターティングモータ STARTING MOTOR

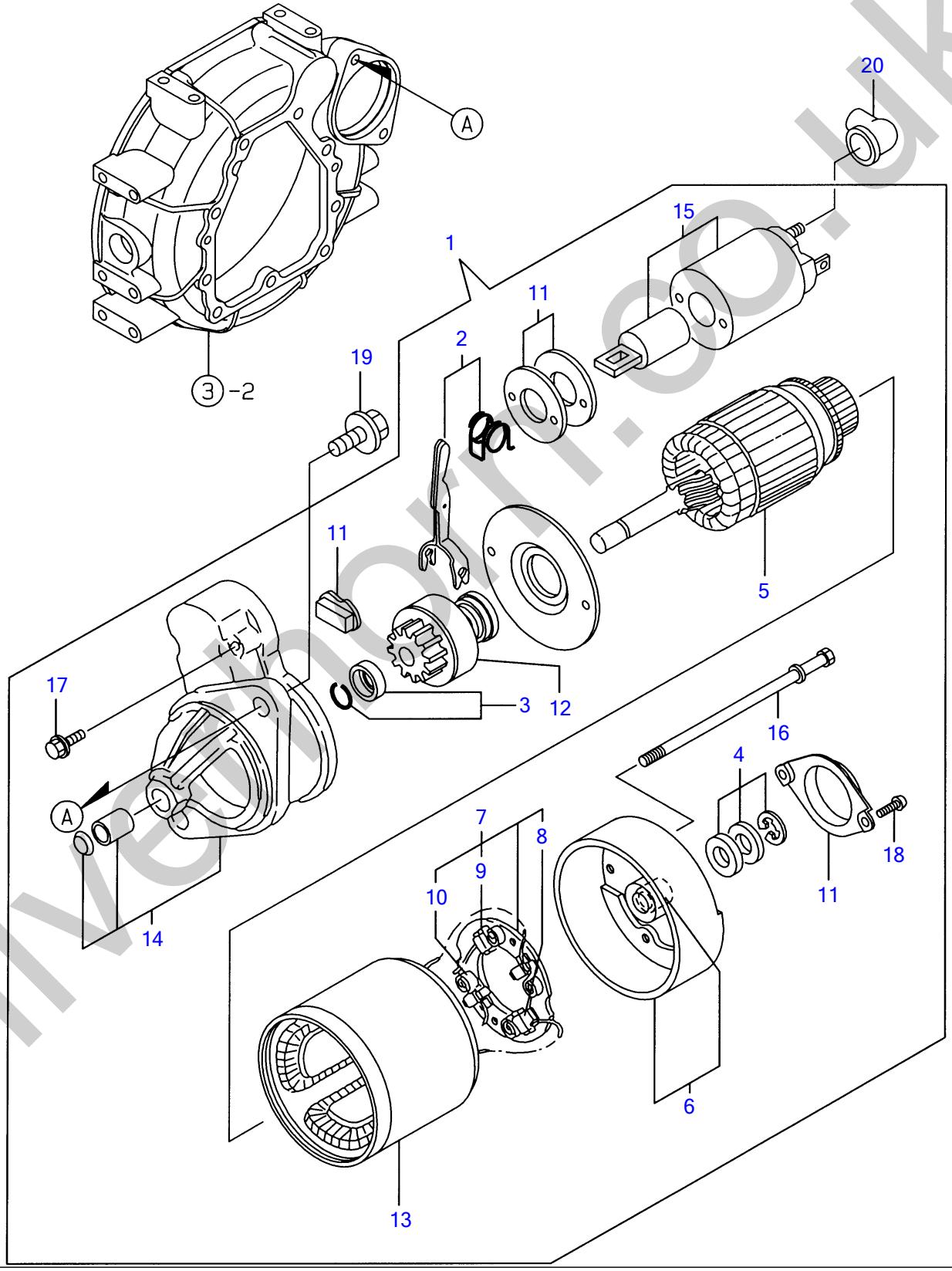

silvermorr.co.uk

½À-Ã²Ý¸ÞÓ-À STARTING MOTOR

Œ©lo REF NO.	•"•i"Ôl† PARTS NO.	•"•i-¼	Description	l"–Ê Q'ty	ŒÝŠ·l« I	R	"õll
1	Y119226-77010	½À-ÀCMP(0.8KW-90	STARTER,12V-0.8KW	1			
2	YX2114560130	· ¼ÌÄÚÊÞ-·ÂÄ	· LEVER KIT, SHIFT	1			
3	YX2114715500	· ËßÆµÝ½ÄÂÊß-SET	· STOPPER SET, PINION	1			
4	YX2114811000	· ½×½ÄÜÂ¼Ô- KIT	· WASHER KIT, THRUST	1			
5	Y114371-77110	· ±-ÏÁÔ-	· ARMATURE	1			
6	Y114371-77140	· ØÔ¶ÊÞ- ASSY	· COVER ASSY, REAR	1			
7	Y114371-77160	· ÌÞ×¼ÎÙÀÞ-	· HOLDER ASSY, BRUSH	1			
8	Y114371-79040	· · ÌÞ×Â¼Õ(-)	· · BRUSH (-)	2			
9	Y114371-79050	· · ÌÞ×Â¼Õ(+)	· · BRUSH (+)	1			
10	Y114371-79060	· · ÌÞ×¼½ÌßØÝ¸Þ	· · SPRING, BRUSH	4			
11	Y114371-77170	· ÀÞ½Ä¶ÊÞ-·ÂÄ	· COVER KIT, DUST	1			
12	Y119226-77650	· ËßÆµÝ¸×ÂÁ ASY	· PINION ASSY	1			
13	Y124097-77710	· Ö-¸ ASSY	· YOKE ASSY.	1			
14	Y124097-77760	· ·ÞÖ¹°½ ASSY	· CASE ASSY.,GEAR	1			
15	Y124195-77760	· Ï¸ÞÈÂÄ½²ÂÁ	· MAGNETIC SWITCH ASSY	1			
16	Y124195-77770	· ½Ù-ÎÞÙÄ	· THROUGH BOLT	2			
17	Y114371-79070	· ÎÞÙÄ 6X 37	· BOLT M 6X 37	2			
18	Y26022-040122	· ÅÍÞºÈ¼Þ(ÊÞÈ4X12	· SCREW M 4X 12	2			
19	Y26106-100252	ÂÊÞÎÞÙÄ 10X 25	BOLT M10X 25 PLATED	2			
20	Y124160-77020	À-ÐÅÙ¶ÊÞ-	COVER, TERMINAL	1			

silverhorn.co.uk

GENERATOR

Y00D7640
2TNE68-ETBA

16 ジェネレータ GENERATOR

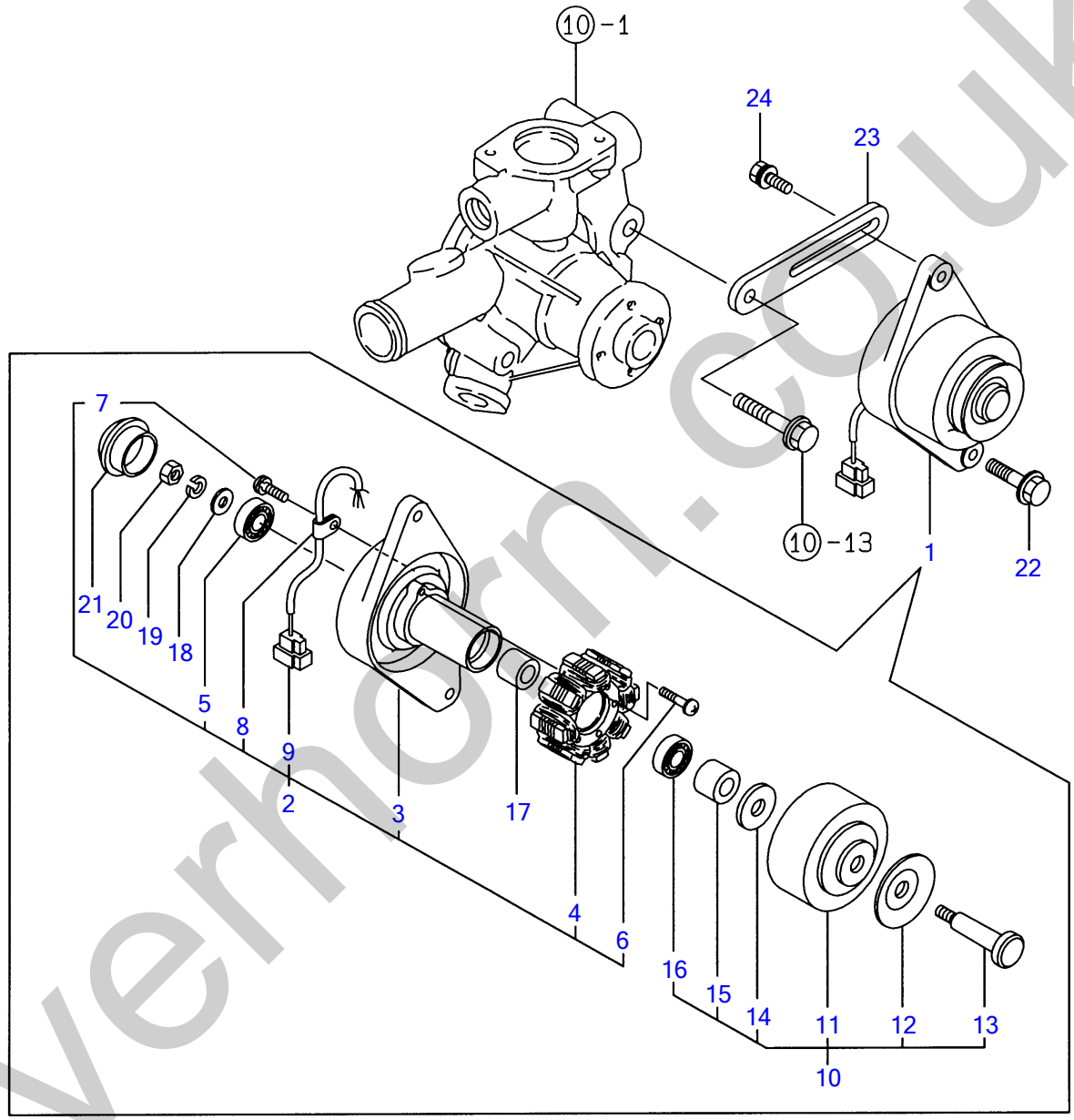

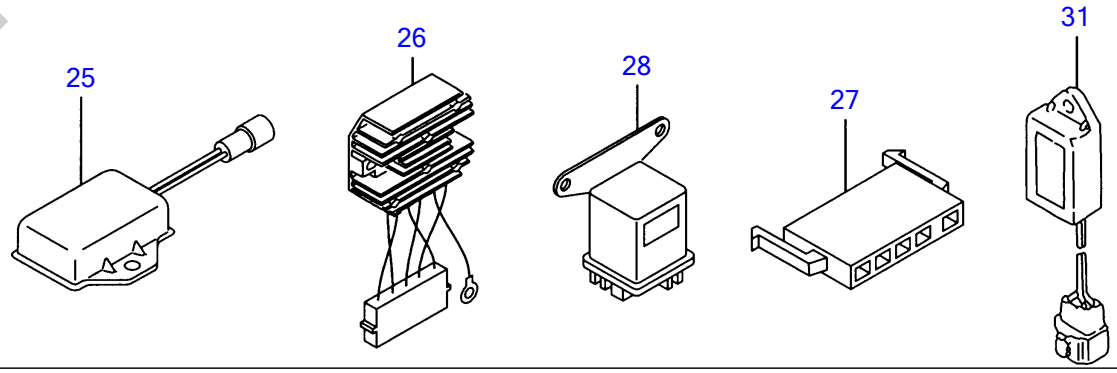

silverhorn.co.uk

¼Þ´ÈÚ-À GENERATOR

Œ©lo REF NO.	•"•i"Ôl† PARTS NO.	•"•i-¼	Description	l"–Ê Q'ty	ŒÝŠ·l« I	R	"õlI
1	Y19663-77200	ÀÞ²ÅÓ(FWM	GENERATOR	1			
2	YXM91967	· ÌßÚ-Ä CMP	· PLATE ASSY	1			
3	YXM91968	· · ÌßÚ-Ä	· · PLATE	1			
4	YXM91969	· · ½Ã-À	· · STATOR	1			
5	YXM27436	· · ÍÞ±ØÝ¸Þ #NSK6201ZZC3	· · BALL BEARING	1			
6	Y26022-040252	· · ÅÍÞºÈ¼Þ(ÊÞÈ 4X25	· · SCREW M 4X 25	2			
7	YXYSPS4008	· · ÜÂ¼Ô¾ÂÄÈ¼Þ	· · SCREW	1			
8	YXM36410	· · ¸×ÝÌß	· · CLAMP	1			
9	YXM17878	· · ¶Ìß×	· · COUPLER	1			
10	YXM82099	· Ì×²Î²Ù CMP	· FLYWHEEL ASSY	1			
11	YXM82110	· · Ì×²Î²Ù	· · FLYWHEEL	1			
12	YXM72174	· · Ìß-Ø	· · PULLEY	1			
13	YXM42927	· · ¼ÔÌÄ	· · SHAFT	1			
14	YXM47549	· · ÜÂ¼Ô	· · WASHER	1			
15	YXM72701	· · ¶×-	· · COLLAR	1			
16	YXM27436	· · ÍÞ±ØÝ¸Þ #NSK6201ZZC3	· · BALL BEARING	1			
17	Y106383-44720	· ¶Ý¶¸Ä³	· SPACER	1			
18	Y106383-44730	· »Þ¶ÞÈ	· WASHER	1			
19	Y22212-100000	· ÊÞÈ»Þ¶ÞÈ	· SPRING WASHER 10	1			
20	Y26716-100002	· ÅÂÄ 10	· NUT 10	1			
21	Y105225-44790	· ÎÞ³¼ÞÝ·ÔÂÌß(Ì±Ý¹-½)	· CAP	1			
22	Y26106-100402	ÂÊÞÎÞÙÄ 10X 40	BOLT M10X 40 PLATED	1			
23	Y121450-77330	±¼ÞÔ½À(ÍÞÙÄ)	ADJUSTER, BELT	1			
24	Y119810-77340	ÎÞÙÄ(±¼ÞÔ½À	BOLT	1			
25	Y119332-77810	¸ÞÛ-Ú¼Þ½À-	RESISTOR	1			
26	Y119660-77711	¶-ÚÝÄØÐÂÀ(15A	CURRENT LIMITER(15A)	1			
27	Y171301-77720	¶Ìß×	COUPLER	1			
28	Y119650-77910	¸ÞÛ-ØÚ-	RELAY, GROW	2			
31	Y129211-77920	À²Ï-(1 SEC.	TIMER	1			

silverhorn.co.uk

TOOL & GASKET SET

Y00D7640
2TNE68-ETBA

17 コウグ & パッキンセット
TOOL & GASKET SET

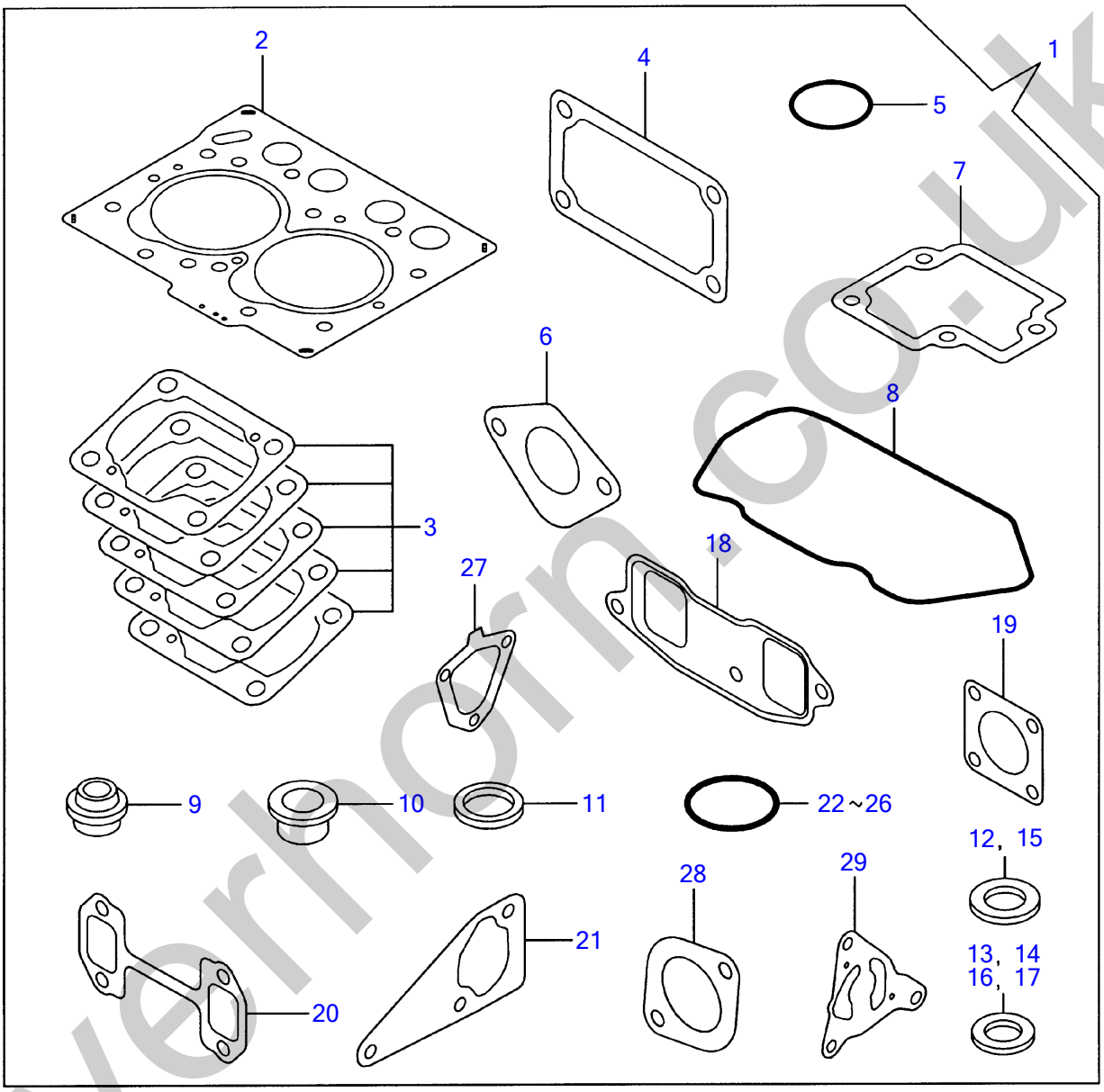

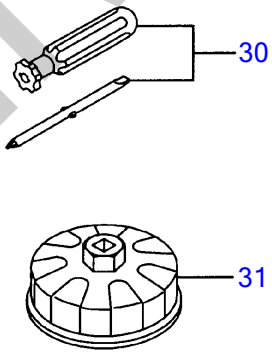

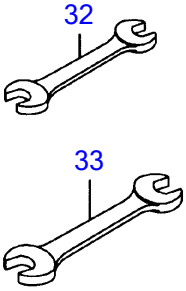

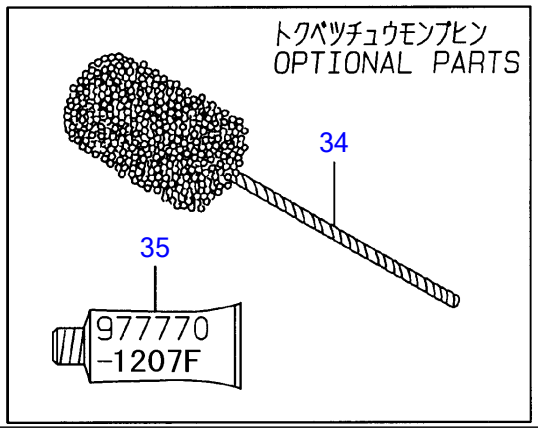

silverhorn.co.uk

º³ºÞ & ÊßÂ·Ý¾ÂÄ TOOL & GASKET SET

Œ©▯o REF NO.	•"•i"Ô▯† PARTS NO.	•"•i-¼	Description	▯"–Ê Q'ty	ŒÝŠ·▯« I	R	"õ▯l
1	**Y719325-92620**	¶Þ½¹ÂÄ ¾ÂÄ	GASKET SET	1		(1)	µÌß¼®Ý ÌÞËÝÃÞ½
2	**Y119309-01330**	· ÍÂÄÞ¶Þ½¹ÂÄ	· GASKET, CYL. HEAD	1			
3	**Y119305-01950**	· ÌÝ¼Ô¼Þ·¼Ñ CMP	· SHIM PACK	1			
4	**Y119660-01562**	· PK(ÎßÝÌß¼ÂÌÀ)(ÉÝ±½)	· GASKET, (NON-ASB.)	1			
5	**Y24311-000320**	· OØÝ¸Þ 1A P 32.0	· O-RING 1A P-32.0	2			
6	**Y121520-01851**	· PK(Ì²-ÄÞÎßÝÌß)(ÉÝ±½)	· GASKET, (NON-ASB.)	1			
7	**Y119305-03031**	· PK(¼ÔÍ²ÊÞÝ	· GASKET, PLATE	1			
8	**Y119305-11310**	· PK(ÎÞÝÈÂÄ	· GASKET, BONNET	1			
9	**Y119260-11340**	· ÊÞÙÌÞ½ÃÑ¼-Ù	· SEAL, VALVE STEM	4			
10	**Y119600-11450**	· É½ÞÙÌßÛÃ¸À	· PROTECTOR, NOZZLE	2			
11	**Y119600-11460**	· PK	· GASKET, NOZZLE	4			
12	**Y124465-44950**	· ÊßÂ·Ý16	· GASKET 16	1			
13	**Y22190-060003**	· ¼-ÙÜÂ¼Ô-(SPCC.ÏÙ. 6)	· SEAL WASHER 6	2			
14	**Y22190-120002**	· ¼-ÙÜÂ¼Ô(ºÏÙ 12	· SEAL WASHER 12	4			
15	**Y129150-49360**	· PK 10	· GASKET 10	1			
16	**Y22190-080002**	· ¼-ÙÜÂ¼Ô(ºÏÙ.ÆÄØÙ) 8	· SEAL WASHER 8S	2			
17	**Y22190-140002**	· ¼-ÙÜÂ¼Ô(ºÏÙ.ÆÄØÙ)14	· SEAL WASHER 14S	2			
18	**Y119326-12111**	· PK(ÏÆÎ-ÙÄÞ	· GASKET	1			
19	**Y124701-11911**	· ¶Þ½¹ÂÄ(»²ÚÝ»)(ÉÝ±½)	· GASKET, (NON-ASB.)	1			
20	**Y119305-13110**	· ¶Þ½¹ÂÄ (ÏÆÎ-ÙÄÞ	· GASKET, EXH.MANIFOLD	1			
21	**Y119260-42021**	· ÊßÂ·Ý(CW-P	· GASKET, C.W.	1			
22	**Y119209-42140**	· OØÝ¸Þ G 35	· O_RING,COVER_THERMOS	1			
23	**Y24311-000120**	· OØÝ¸Þ 1A P 12.0	· O-RING 1A P 12.0	2			
24	**Y24341-000240**	· OØÝ¸Þ 1A S 24.0	· O-RING 1A S-24.0	1			
25	**Y119209-35030**	· OØÝ¸Þ P11	· O-RING	1			
26	**Y119624-32040**	· OØÝ¸Þ P 12.0	· O-RING P 12.0	2			
27	**Y119660-61071**	· PK(¶ÞÊÞÅ¹-½)(ÉÝ±½)	· GASKET, (NON-ASB.)	1			
28	**Y129107-13550**	· ¶Þ½¹ÂÄ(ÌÝ¼ÕÂº³	· GASKET, NOZZLE	1			
29	**Y119660-32020**	· PK(LO-P	· GASKET, L.O.PUMP	1			
30	**Y104200-92350**	ÄÞ×²ÊÞ-(»¼¶´¼·	DRIVER, SCREW	1			
31	**Y119332-92751**	Ì²ÙÀÚÝÁ 68	WRENCH, FILTER	1			
32	**Y28110-100120**	½ÊßÅ 10X12	WRENCH 10X12	1			
33	**Y28110-140170**	½ÊßÅ 14X17	WRENCH 14X17	1			
34	**Y129400-92400**	ÌÚÂ¸½Î-Ý	FLEX HORN	1		(1)	µÌß¼®Ý ÌÞËÝÃÞ½
35	**Y977770-1207F**	¼Øº-Ý¹² ´·¼ÞÖ³¶Þ½¹ÂÄ	GASKET, LIQUID	1		(1)	µÌß¼®Ý ÌÞËÝÃÞ½

silverhorn.co.uk