TB108

BookNo.BB5Z104-1
SerialNo.10820001-

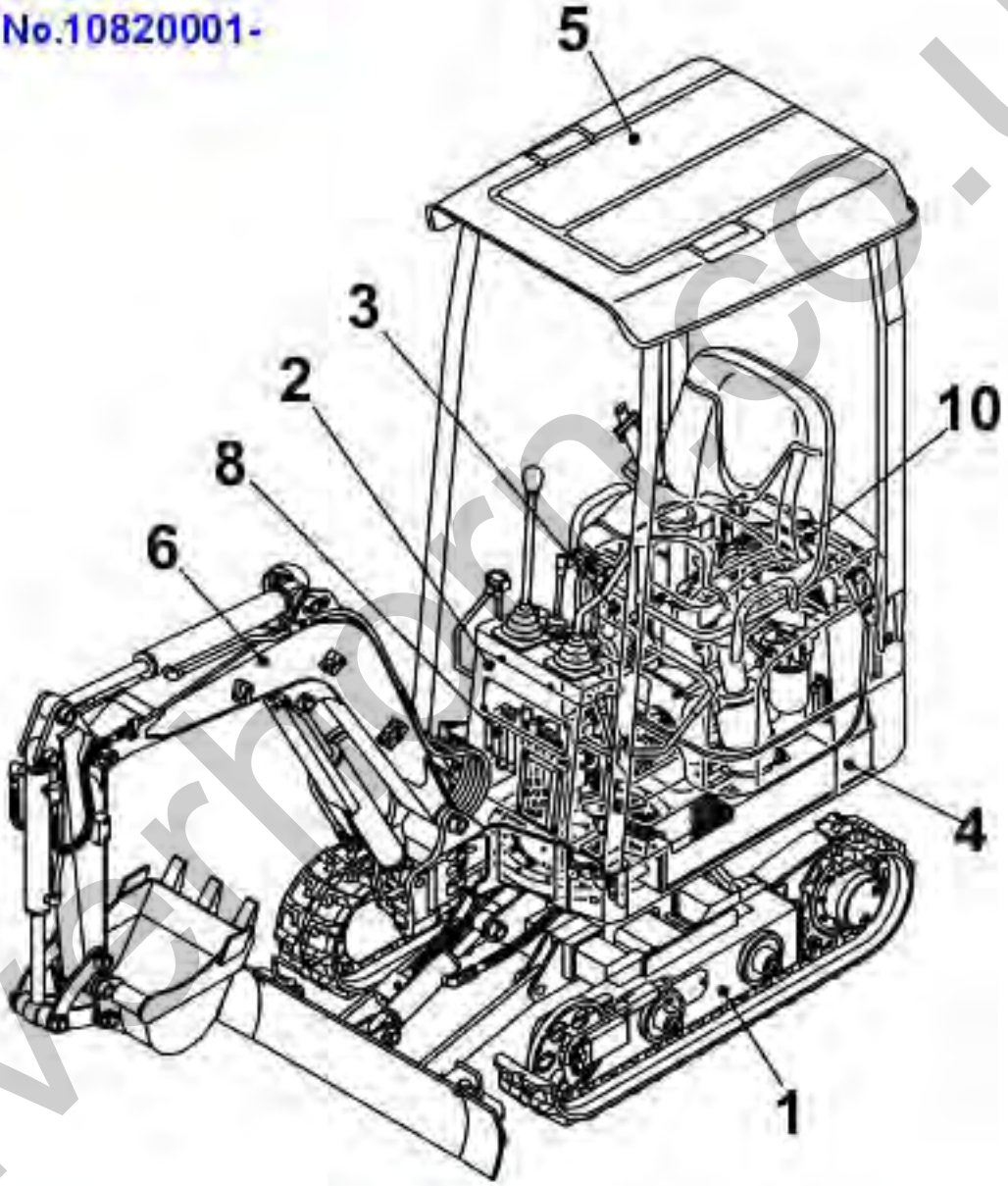

silvermorpco.uk

silverhorn.co.uk

INDEX

Item	Part number	Description	Q'ty	Chan.	Serial No.	Serv.	Remarks
1		UNDERCARRIAGE					
2		TURNTABLE & CONTROL LEVER					
3		ENGINE & ELECTRICAL SYSTEM					
4		HYDRAULIC PIPNG & TANK					
5		COVER & CAB					
6		HOE ATTACHMENT					
7		DECAL & TOOL					
8		HYDRAULIC DEVICE					
10		ENGINE(2TNV70-PTB)					
		2007.01.10					
99		KITS, ATTACHMENTS AND QUICK REFERENCE					

silverhorn.co.uk

LOWER FRAME

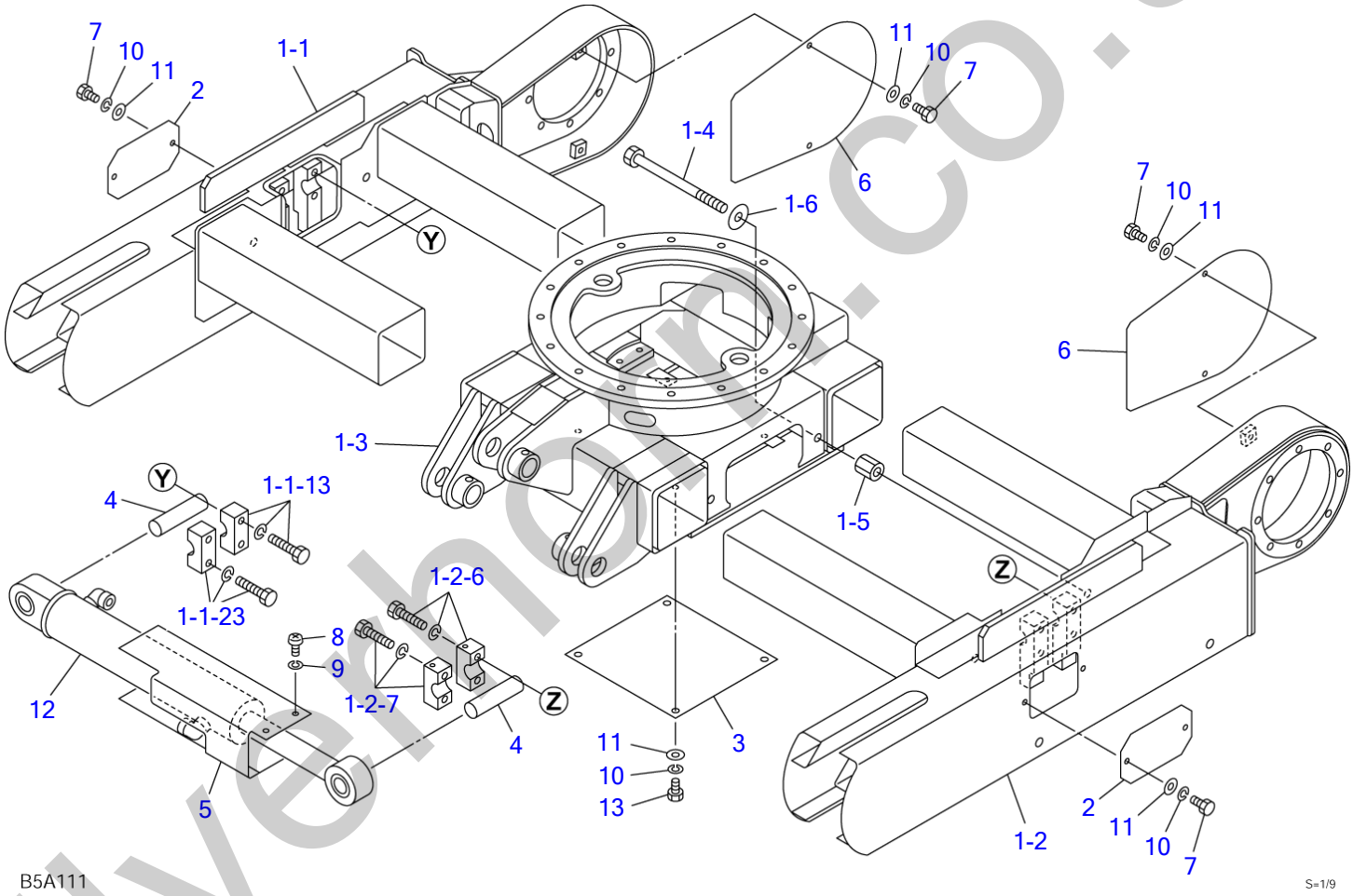

silverhorn.co.uk

LOWER FRAME

Item	Part number	Description	Q'ty	Chan.	Serial No.	Serv.	Remarks
		FRAME ASSY, lower					X03210-55500-1
1	X **********	FRAME ASSY	1				
1-1	X **********	・FRAME (R.H.)	1				
1-1-13	0321055250	・CLAMP	1				
1-1-23	0321055260	・CLAMP	1				
1-2	X **********	・FRAME (L.H.)	1				
1-2-6	0321055350	・CLAMP	1				
1-2-7	0321055360	・CLAMP	1				
1-3	X **********	・BODY	1				
1-4	0411009000	・BOLT	4				
1-5	1134851020	・NUT	4				
1-6	0003600025	・WASHER	4				
2	0321053004	COVER	2				
3	0411008510	PLATE	1				
4	0411008700	PIN	2				
5	0411009300	COVER	1				
6	0321055006	COVER	2				
7	1100040816	BOLT	8				
8	1120530510	SCREW	2				
9	1140020005	WASHER, spring	2				
10	1140020008	WASHER, spring	12				
11	1141110008	WASHER	12				
12	1900096700	CYLINDER, spanner	1				
13	1100040812	BOLT	4				
	B5a111						

silverhorn.co.uk

CRAWLER BELT

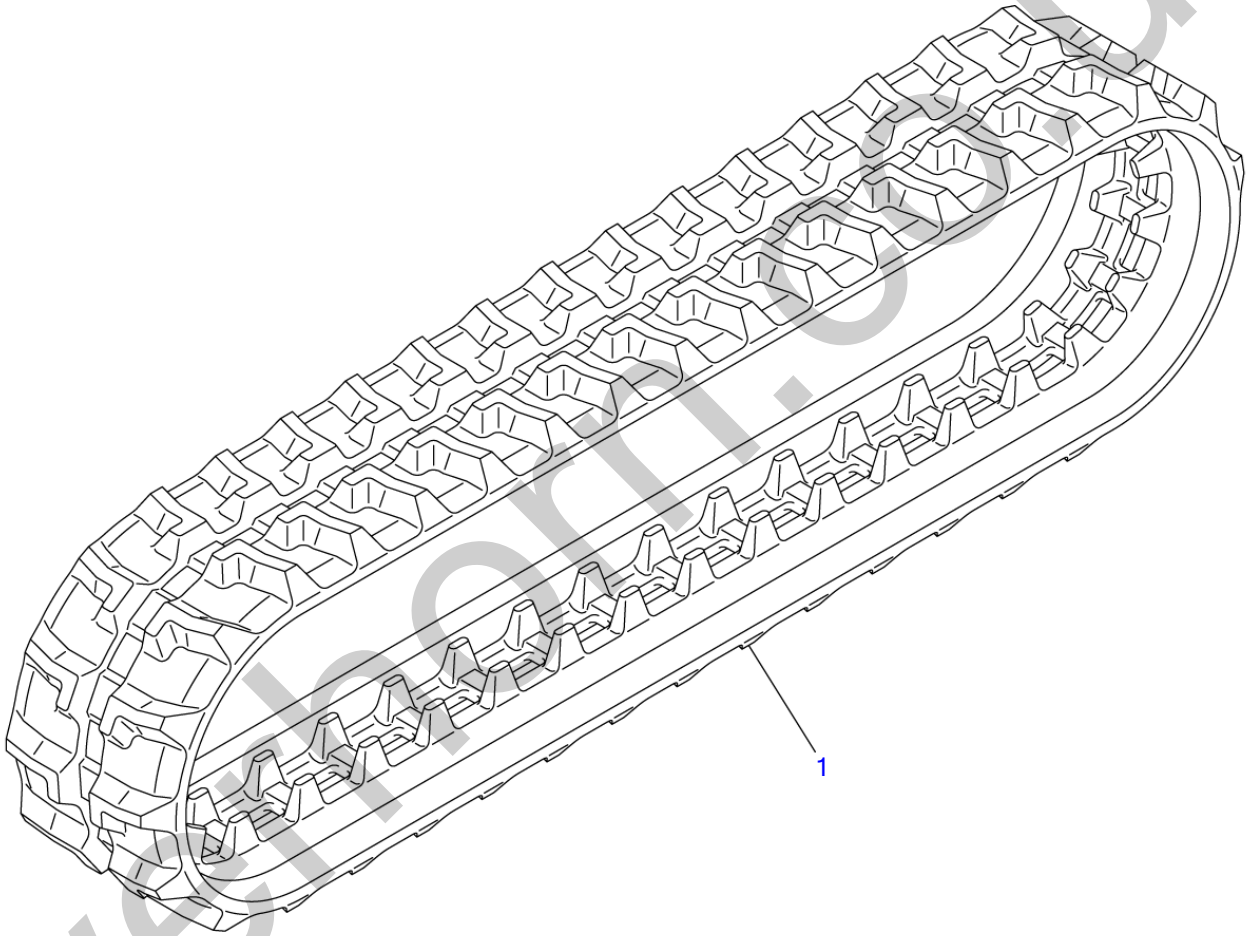

B5A020

S=1/6

silverthorn.co.uk

CRAWLER BELT

Item	Part number	Description	Q'ty	Chan.	Serial No.	Serv.	Remarks
1	**1914090300 B5a020**	BELT, rubber crawler	2				X19140-90300-0

silverhorn.co.uk

TRACK ROLLER

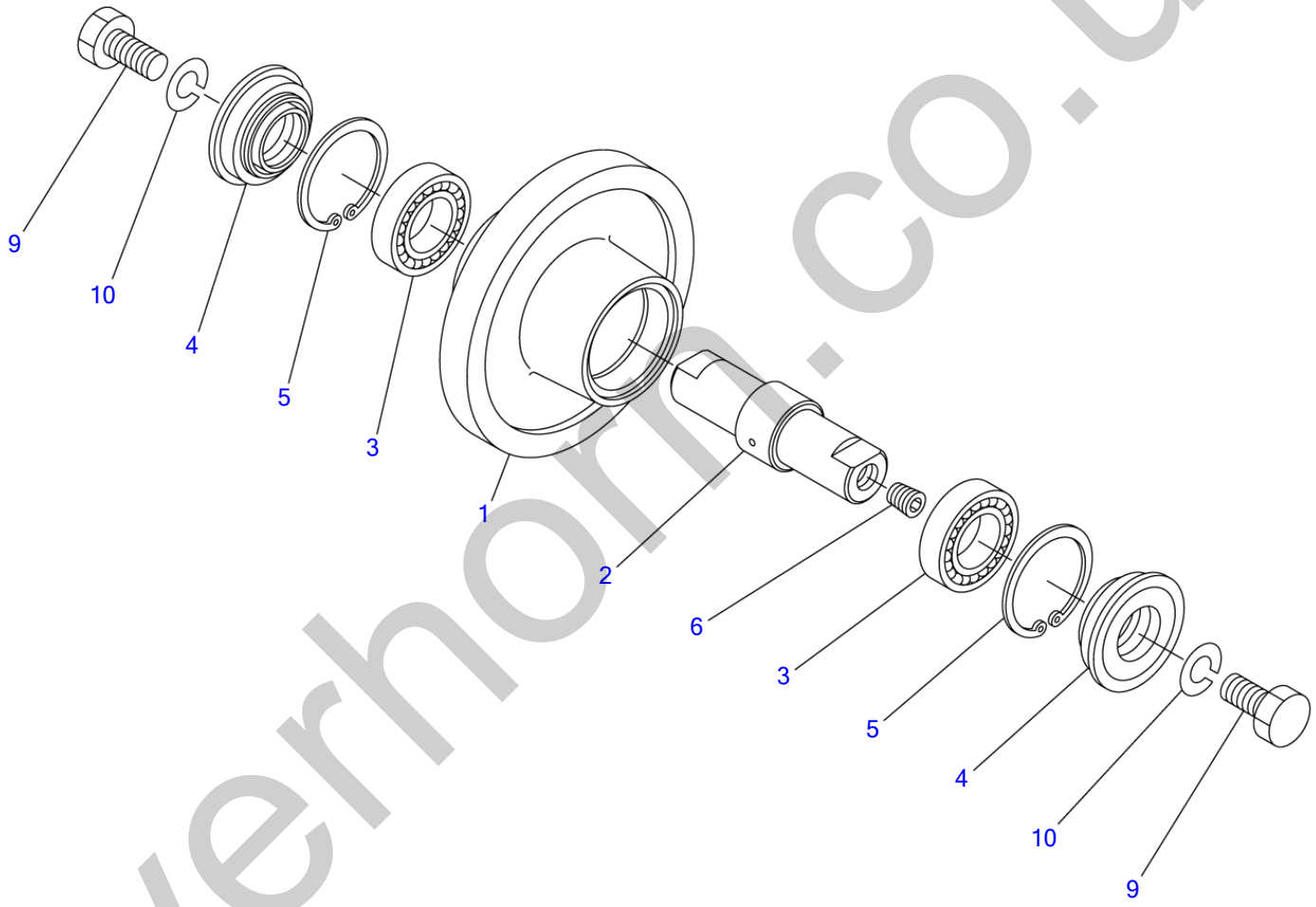

B5A030

S=1/3

silverhorn.co.uk

TRACK ROLLER

Item	Part number	Description	Q'ty	Chan.	Serial No.	Serv.	Remarks
		ROLLER ASSY, track					X04113-00000-3
0-1	0411300400	ROLLER ASSY	4				
1	0071300100	・ROLLER	1				
2	0411300200	・SHAFT	1				
3	1300006005	・BEARING	2				
4	1431202547	・SEAL	2				
5	1221000047	・RING, retaining	2				
6	1501810001	・PLUG	1				
9	1101051225	BOLT	8				
10	1140010012	WASHER, spring	8				
	B5a031						

silverhorn.co.uk

FRONT IDLER

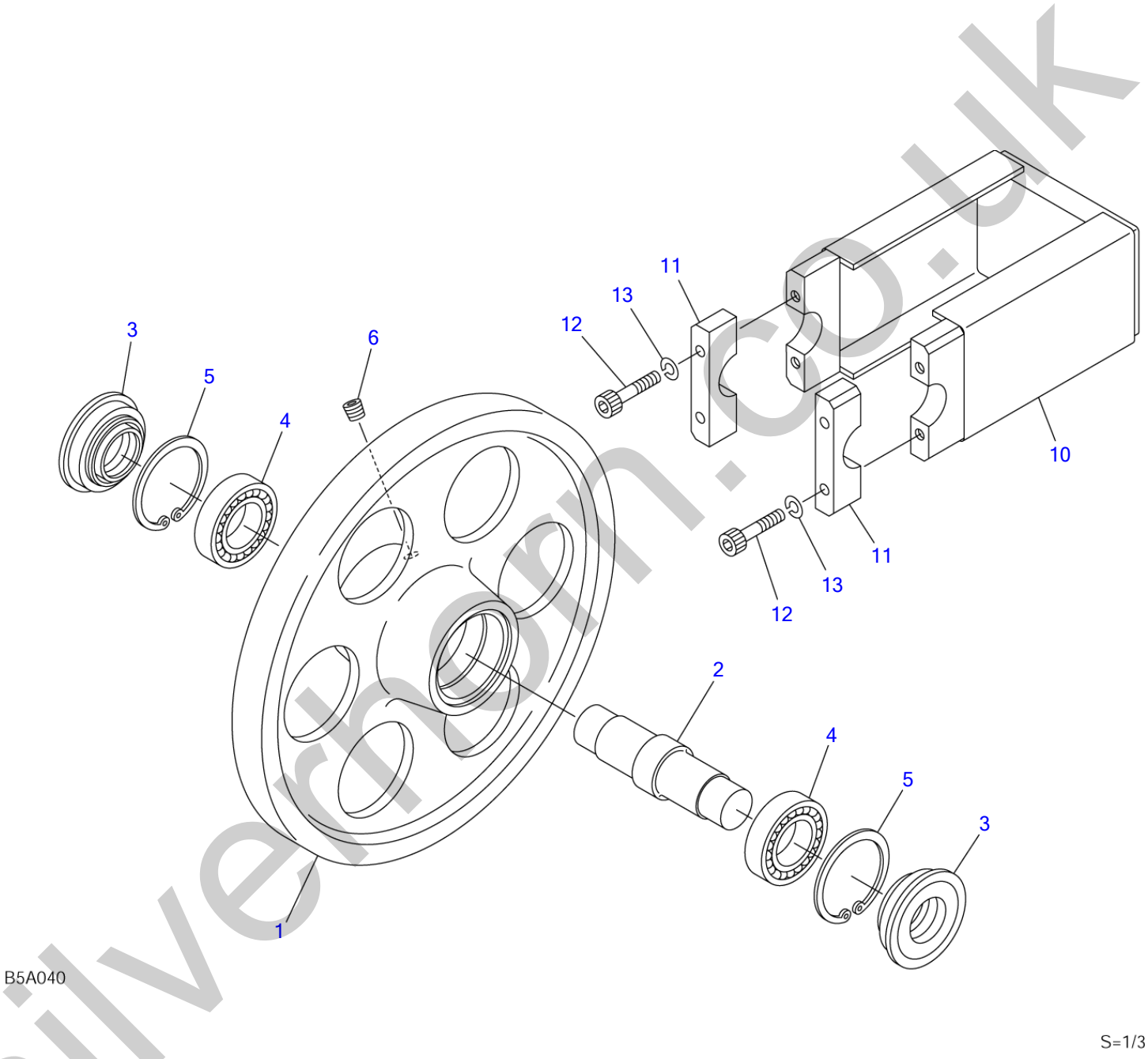

silverhorn.co.uk

FRONT IDLER

Item	Part number	Description	Q'ty	Chan.	Serial No.	Serv.	Remarks
		IDLER ASSY, front					X04114-01000-3
0-1	0411401100	IDLER ASSY	2				
1	0411400100	・IDLER	1				
2	0411401200	・SHAFT	1				
3	1431202547	・SEAL	2				
4	1300006005	・BEARING	2				
5	1221000047	・RING, retaining	2				
6	1501810001	・PLUG	1				
10	0411401300	YOKE	2				
11	0411401400	CLAMP	4				
12	1110040635	SCREW, cap	8				
13	1140020006	WASHER, spring	8				
	B5a041						

silverhorn.co.uk

TRACK ADJUSTER

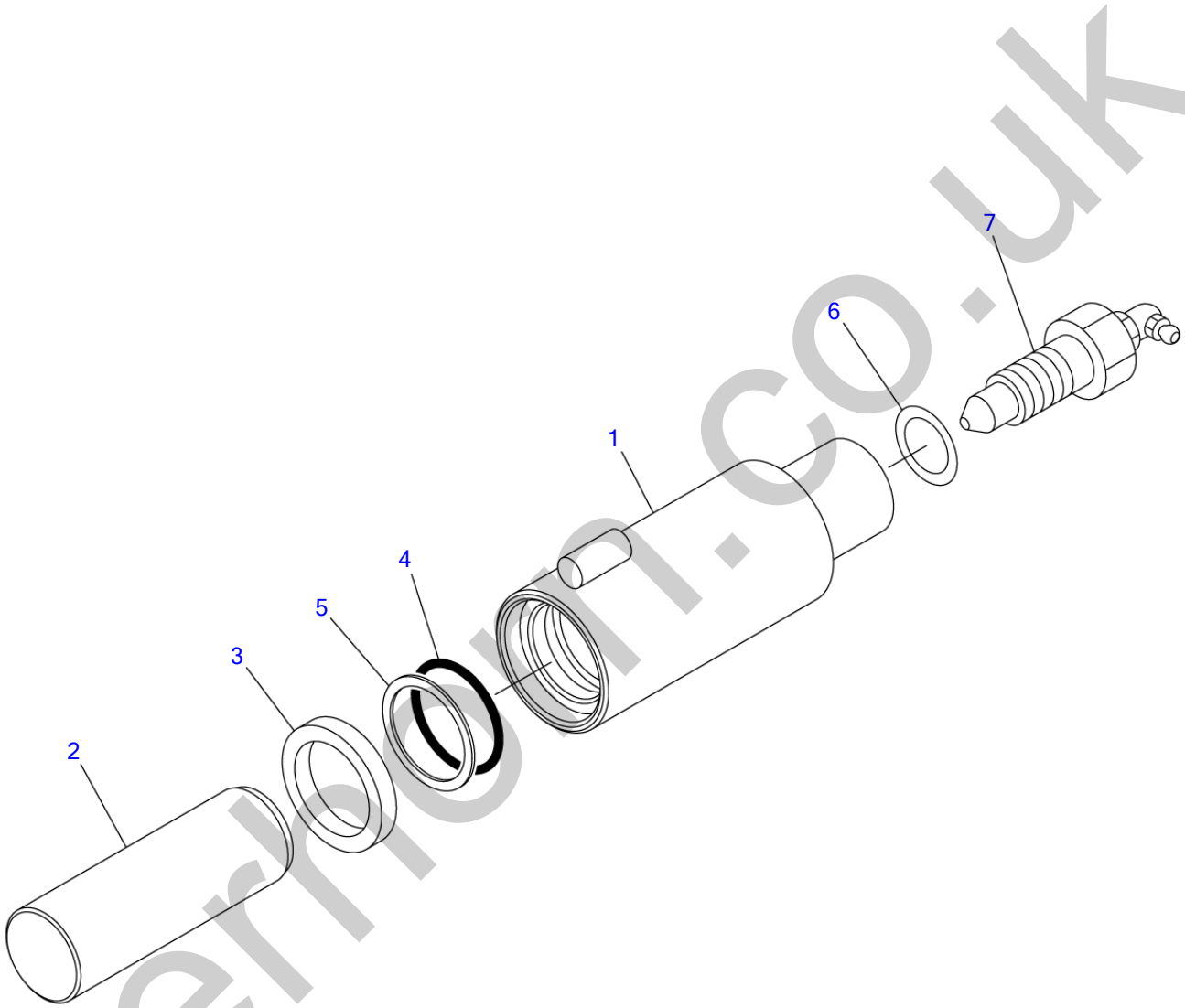

B5A050

S=1/2

silverhorn.co.uk

TRACK ADJUSTER

Item	Part number	Description	Q'ty	Chan.	Serial No.	Serv.	Remarks
0	**0321552000**	CYLINDER ASSY, grease	2				X03215-52000-0
1	**0321552100**	・CYLINDER, grease	1				
2	**0321551400**	・PISTON	1				
3	**1400401654**	・SEAL, oil	1				
4	**1422010300**	・O-RING	1				
5	**1421020300**	・RING, back-up	1				
6	**1541201616**	・WASHER	1				
7	**1541301602**	・VALVE ASSY, check	1				
	B5a050						

silverhorn.co.uk

TRAVEL DEVICE

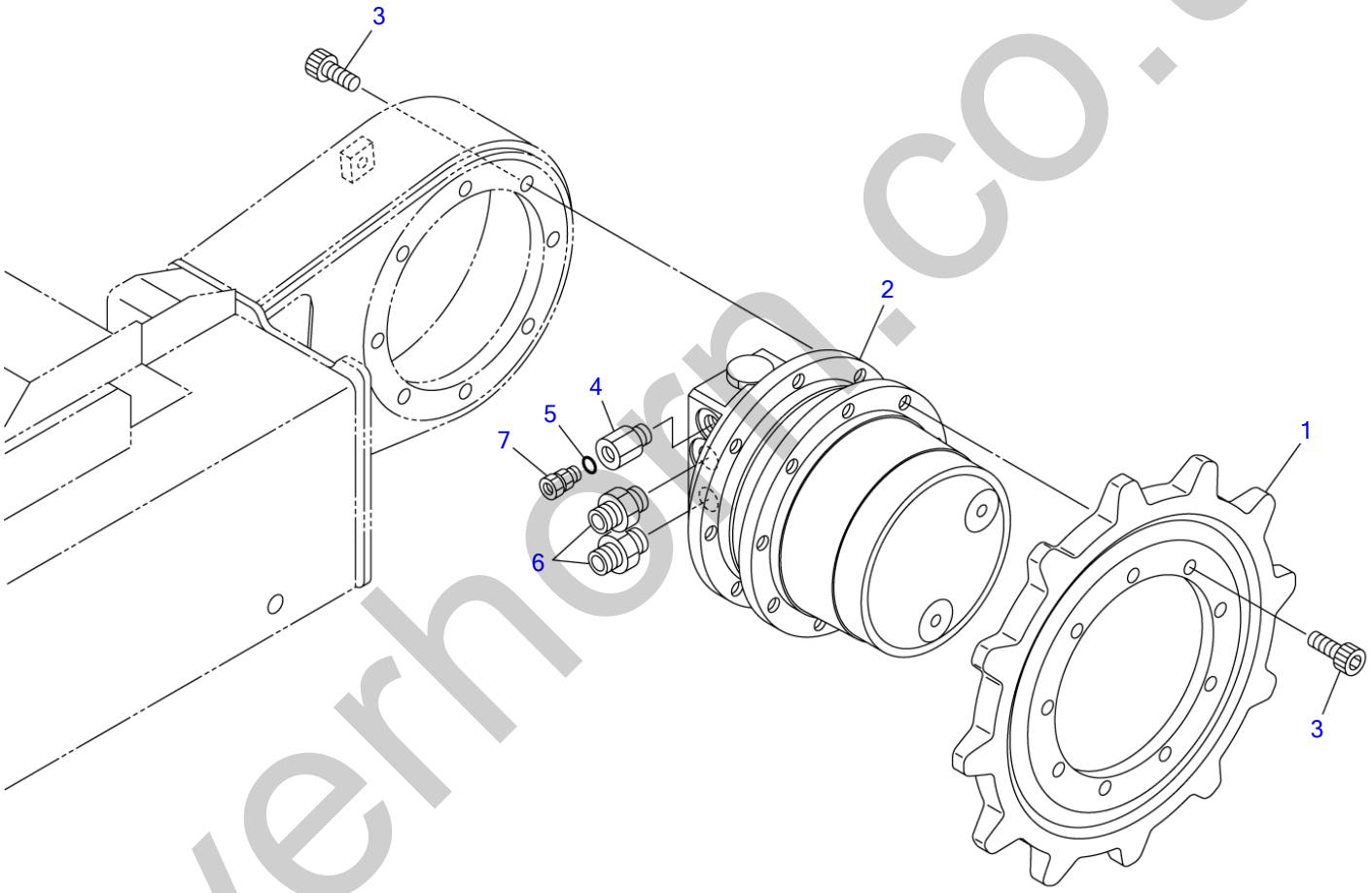

B5A061

S=1/4.5

silverhorn.co.uk

TRAVEL DEVICE

Item	Part number	Description	Q'ty	Chan.	Serial No.	Serv.	Remarks
		MOTOR ASSY, travel					X03216-13000-1
1	0411602100	SPROCKET	2				
2	1903122400	MOTOR, travel	2				
3	1110041022	SCREW, cap	34				
4	0007211014	BUSHING	2				
5	1420010110	O-RING	2				
6	1515600576	ADAPTOR	4				
	1420010140	・O-RING	1				
7	1532520601	CONNECTOR	2				
	B5a061						

silverhorn.co.uk

SLEW BEARING

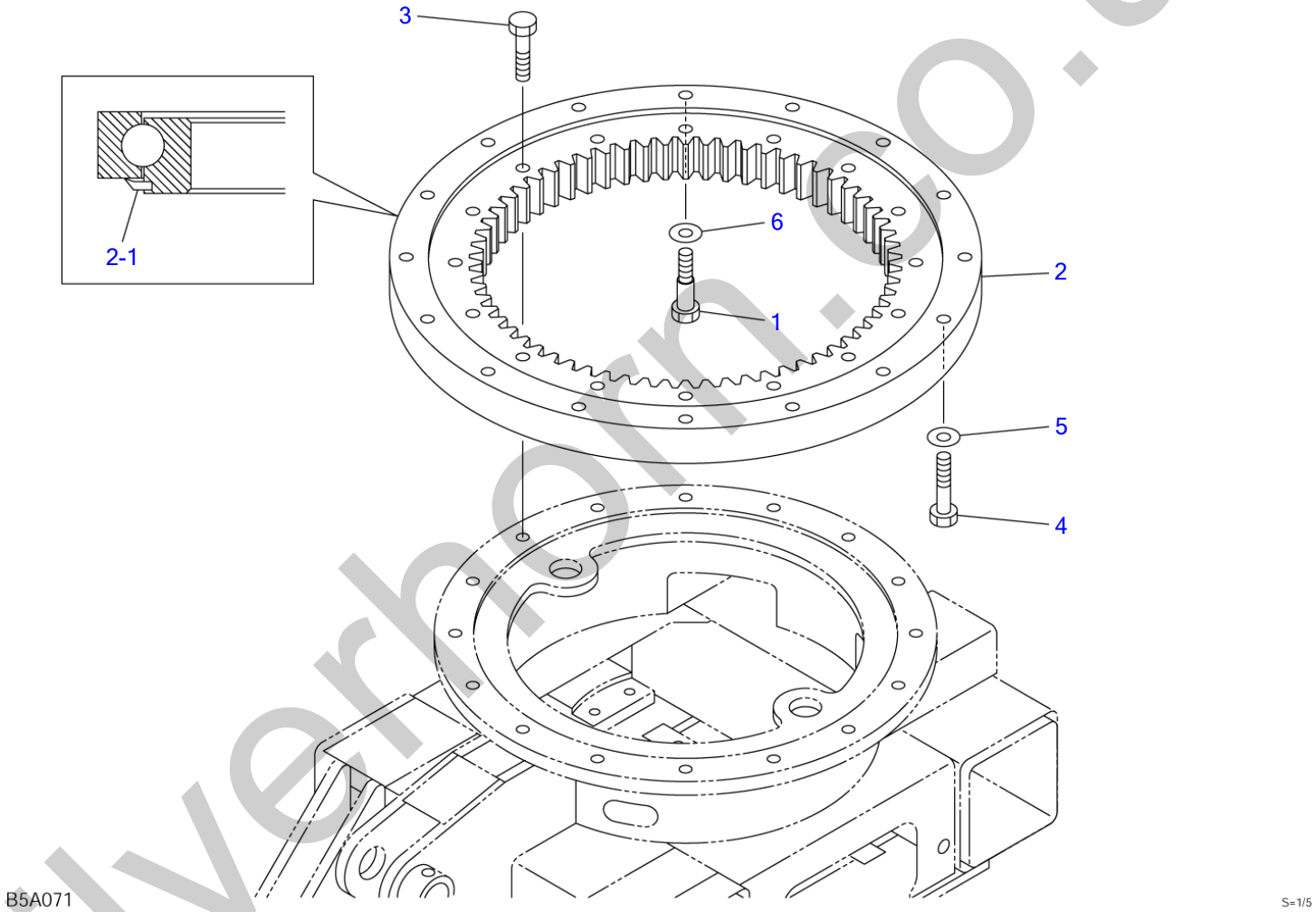

silverhorn.co.uk

SLEW BEARING

Item	Part number	Description	Q'ty	Chan.	Serial No.	Serv.	Remarks
		BEARING ASSY, slew					X03220-01000-2
1	0322001010	BOLT	1				
2	1913003450	BEARING	1				
2-1	1913003459	・SEAL	1				
3	1100051045	BOLT	16				
4	1100051050	BOLT	15				
5	1141540010	WASHER	15				
6	1141540012	WASHER	1				
	B5a072						

silverhorn.co.uk

SWIVEL JOINT & ACCESSORIES

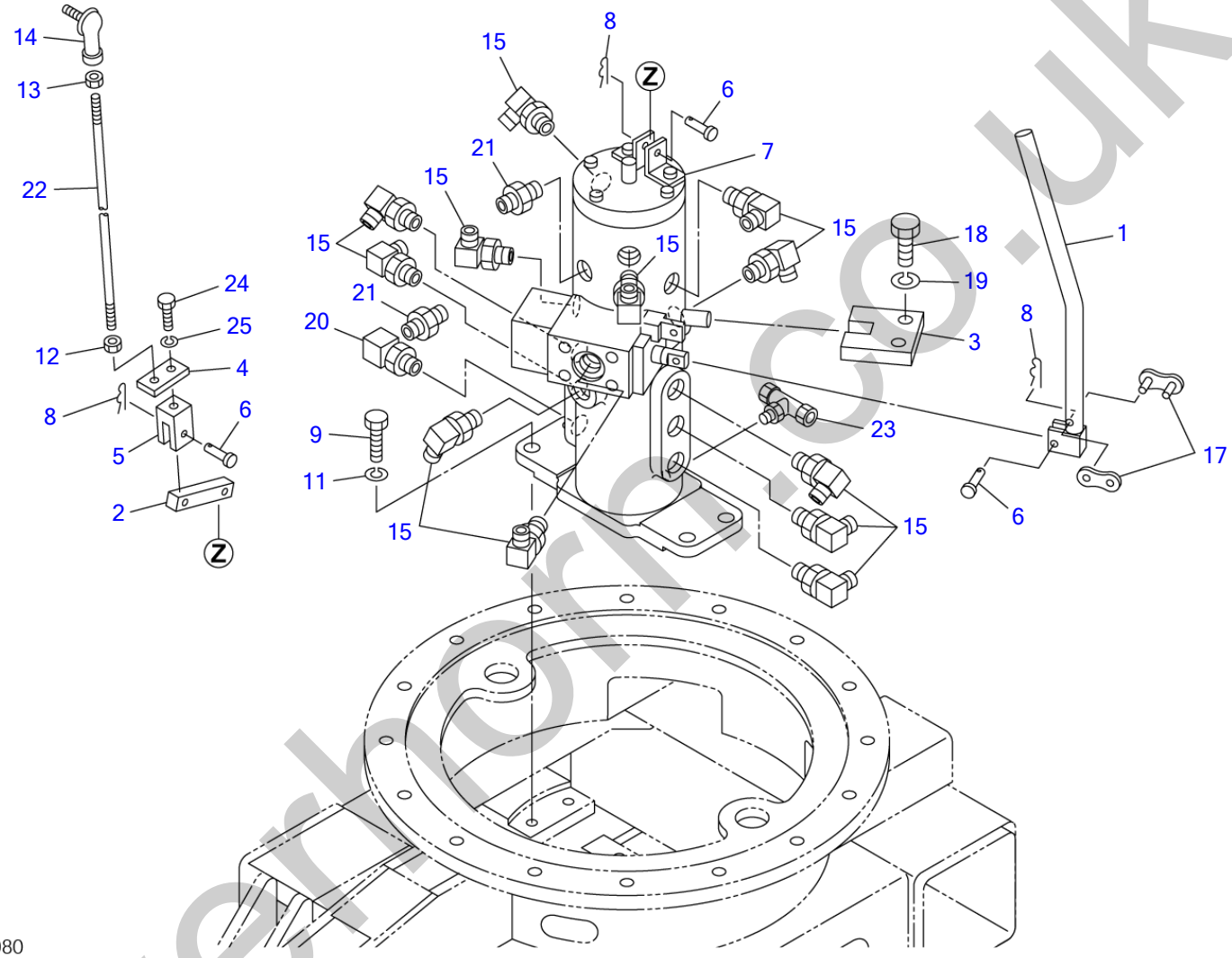

B5A080

S=1/5

silverhorn.co.uk

SWIVEL JOINT & ACCESSORIES

Item	Part number	Description	Q'ty	Chan.	Serial No.	Serv.	Remarks
		JOINT ASSY, swivel					X03221-53000-1
1	0412102100	LEVER	1				
2	0322151100	LEVER	1				
3	0412100100	COLLAR	1				
4	0322151200	PLATE	1				
5	0005505024	YOKE	1				
6	0004005117	PIN	3				
7	1904006800	JOINT, swivel	1				
8	1214000005	PIN, snap	3				
9	1100040820	BOLT	4				
11	1140020008	WASHER, spring	4				
12	1130040006	NUT	1				
13	1131540006	NUT	1				
14	1340000065	END, rod	1				
15	1515012040	ELBOW	12				
	1420010110	・O-RING	1				
17	1620050000	LINK ASSY	1				
18	1100041025	BOLT	2				
19	1140020010	WASHER, spring	2				
20	1513300014	ELBOW	1				
	1420010110	・O-RING	1				
21	1515600200	ADAPTOR	2				
	1420010110	・O-RING	1				
22	0005006260	ROD	1				
23	1532720601	TEE	1				
24	1100040616	BOLT	1				
25	1140020006	WASHER, spring	1				
	B5a081						

silverhorn.co.uk

DOZER BLADE

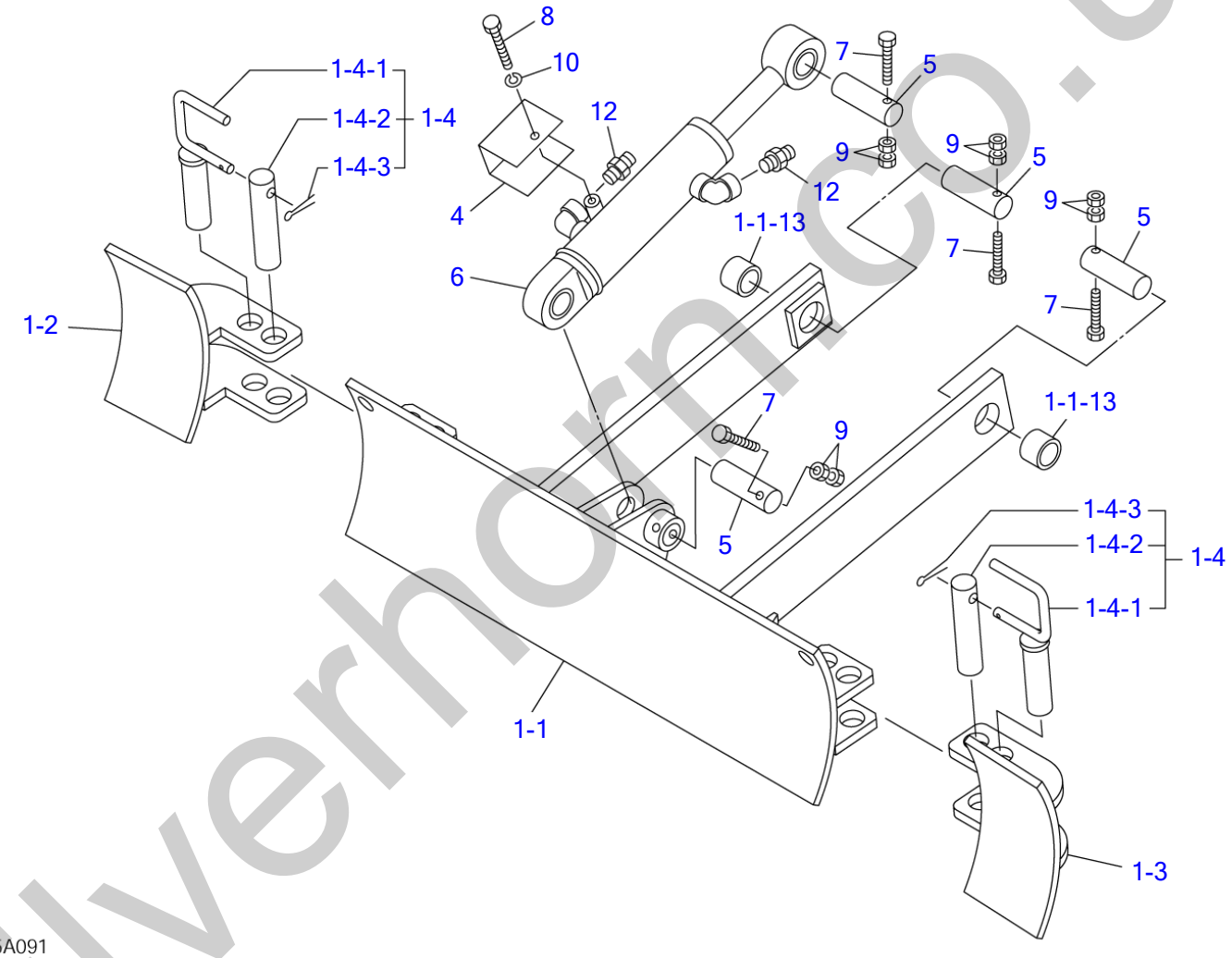

silverhorn.co.uk

DOZER BLADE

Item	Part number	Description	Q'ty	Chan.	Serial No.	Serv.	Remarks
		BLADE ASSY, dozer					X03263-53400-0
1	X **********	BLADE, dozer	1				
1-1	0326353200	・BLADE, dozer	1				
1-1-13	0416304220	・・BUSHING	2				
1-2	0326353150	・PLATE (R.H.)	1				
1-3	0326353160	・PLATE (L.H.)	1				
1-4	0326353300	・PIN ASSY	2				
1-4-1	0326353310	・・PIN	1				
1-4-2	0326353320	・・PIN	1				
1-4-3	1210013220	・・PIN, split	1				
4	0426300400	COVER	1				
5	0001502501	PIN	4				
6	1900096600	CYLINDER, dozer blade	1				
7	1103040855	BOLT	4				
8	1100040860	BOLT	1				
9	1130240008	NUT	8				
10	1140020008	WASHER, spring	1				
12	1515600200	ADAPTOR	2				
	1420010110	・O-RING	1				
	B5a120						

silverhorn.co.uk

PIPING; LOWER

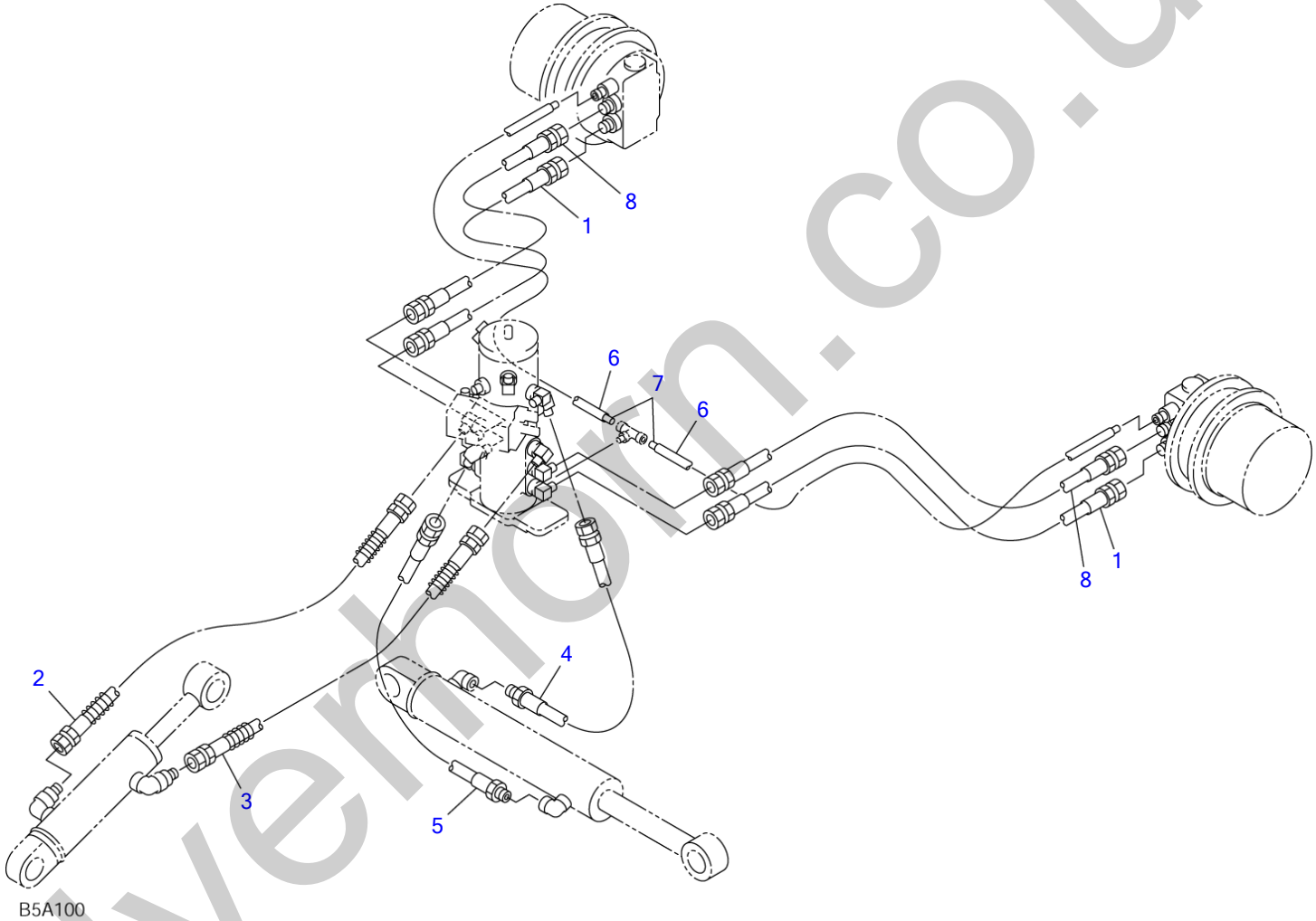

S=1/9

silvermorn.co.uk

PIPING; LOWER

Item	Part number	Description	Q'ty	Chan.	Serial No.	Serv.	Remarks
		PIPING ASSY, lower					X03272-02000-1
1	**1801660060**	HOSE ASSY	2				
2	**0327202050**	HOSE ASSY	1				18015-60062
3	**0327200060**	HOSE ASSY	1				18015-60050
4	**0327200070**	HOSE ASSY	1				18015-62030
5	**0327200080**	HOSE ASSY	1				18015-62038
6	**1531010053**	PROTECTOR	2				sold by the meter
7	**1532020657**	TUBE	2				sold by the meter
8	**0327202080**	HOSE ASSY	2				18016-60060
	B5a100						

silverhorn.co.uk

SLEWING DEVICE

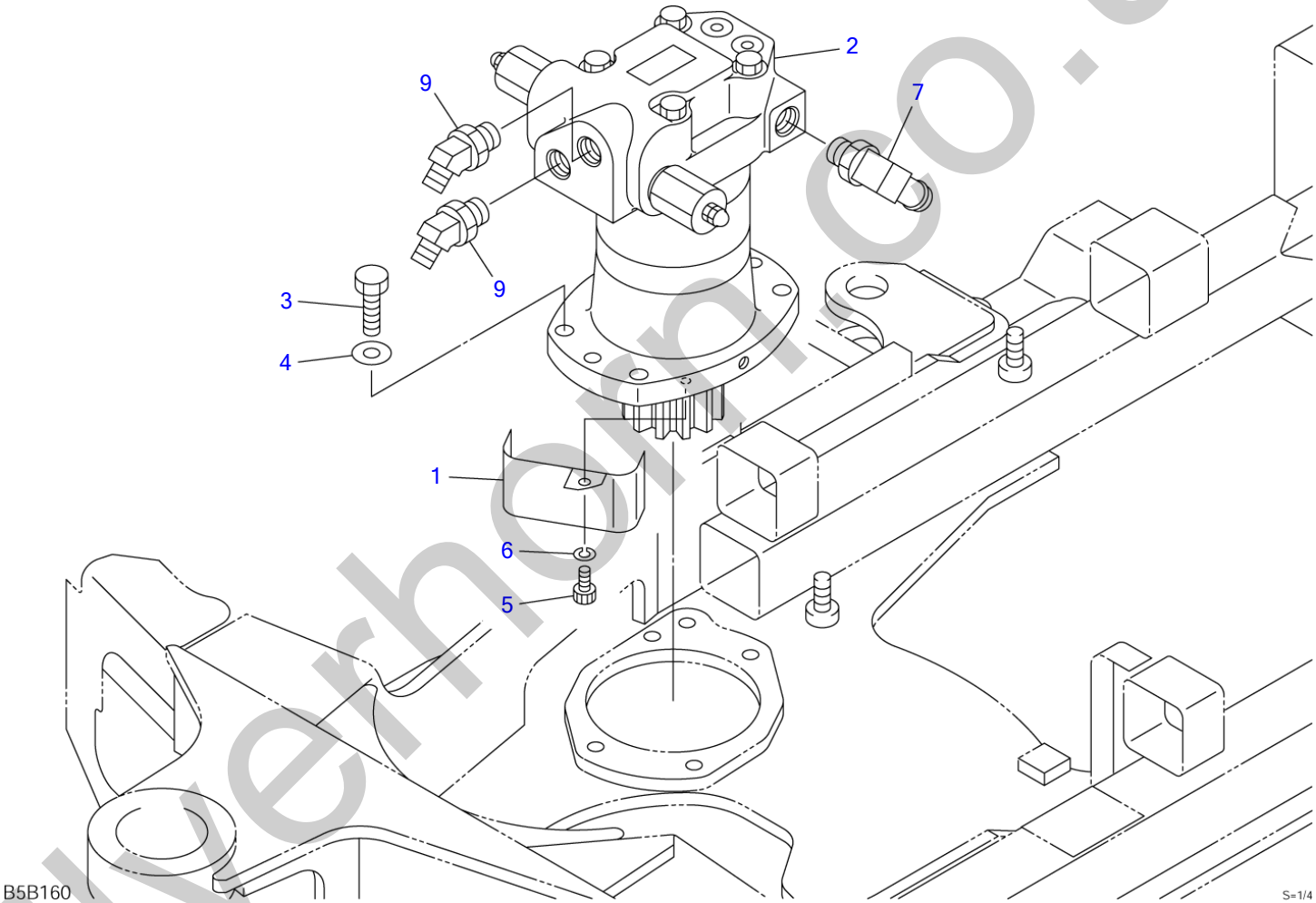

silverhorn.co.uk

SLEWING DEVICE

Item	Part number	Description	Q'ty	Chan.	Serial No.	Serv.	Remarks
		DEVICE ASSY, slewing					X03223-25000-0
1	0322323100	COVER	1				
2	1903122300	MOTOR, slew	1				
3	1100041035	BOLT	4				
4	1141550010	WASHER	4				
5	1110040610	SCREW, cap	1				
6	1140420006	WASHER, spring	1				
7	1513350003	ELBOW	1				
	1420010140	・O-RING	1				
9	1515100046	ELBOW	2				
	1420010140	・O-RING	1				
	B5b160						

silverhorn.co.uk

TURNTABLE

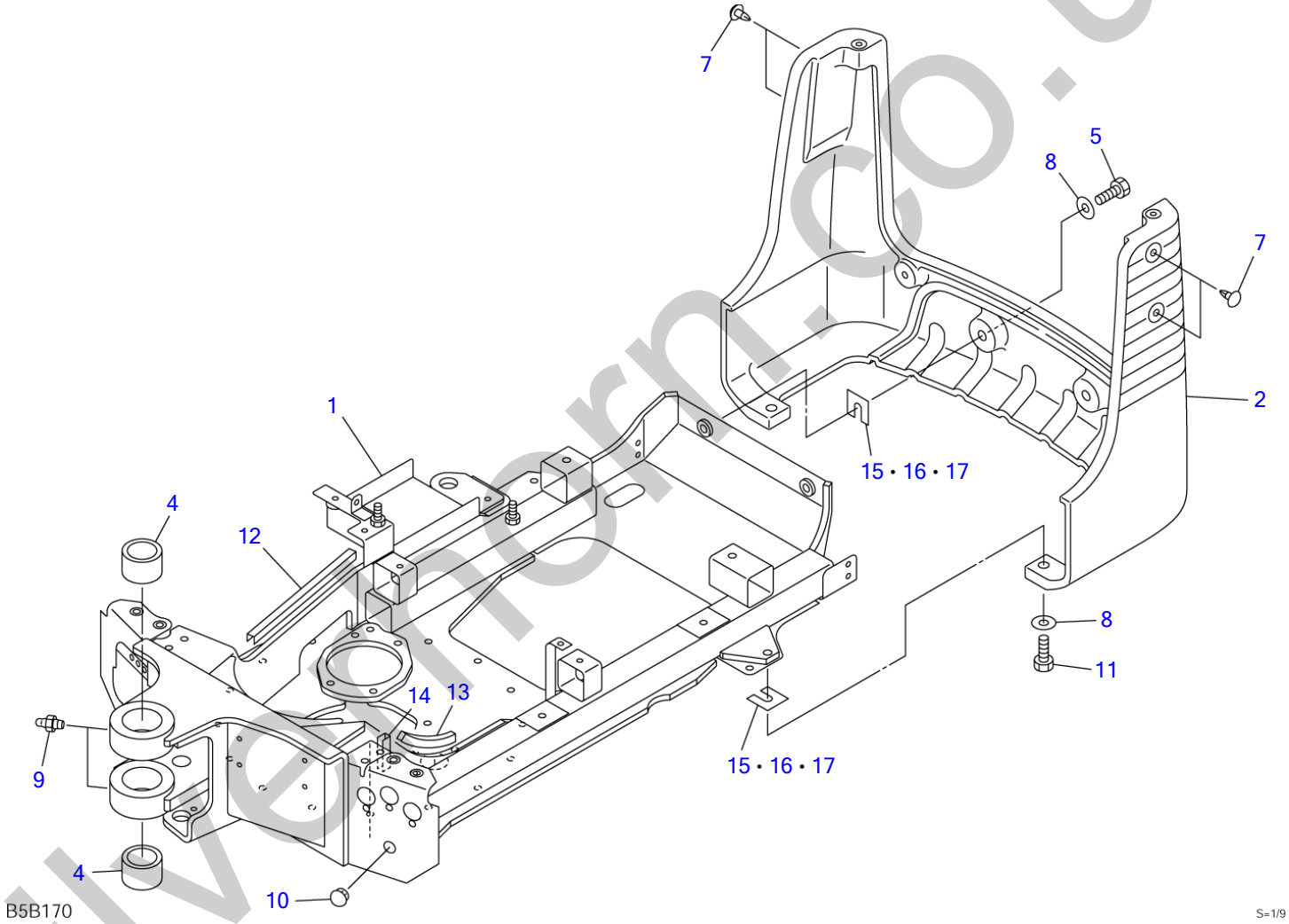

silverthorn.co.uk

TURNTABLE

Item	Part number	Description	Q'ty	Chan.	Serial No.	Serv.	Remarks
		TURNTABLE ASSY					X03230-61000-0
1	X **********	TURNTABLE	1				
2	0323057600	COUNTERWEIGHT	1				
4	0002400063	BUSHING	2				
5	1101041230	BOLT	2				
7	1652533017	CAP	4				
8	1141550012	WASHER	4				
9	1560001000	FITTING, grease	2				
10	1652533023	CAP	1				
11	1101041240	BOLT	2				
12	1654624030	TRIM	1				sold by the meter
13	1654624010	TRIM	1				sold by the meter
14	1654601006	TRIM	1				sold by the meter
15	0323054001	SPACER	AR				t=1.0
16	0323054002	SPACER	AR				t=2.3
17	0323054003	SPACER	AR				t=3.2
	B5b170						

silverhorn.co.uk

BOOM SWING

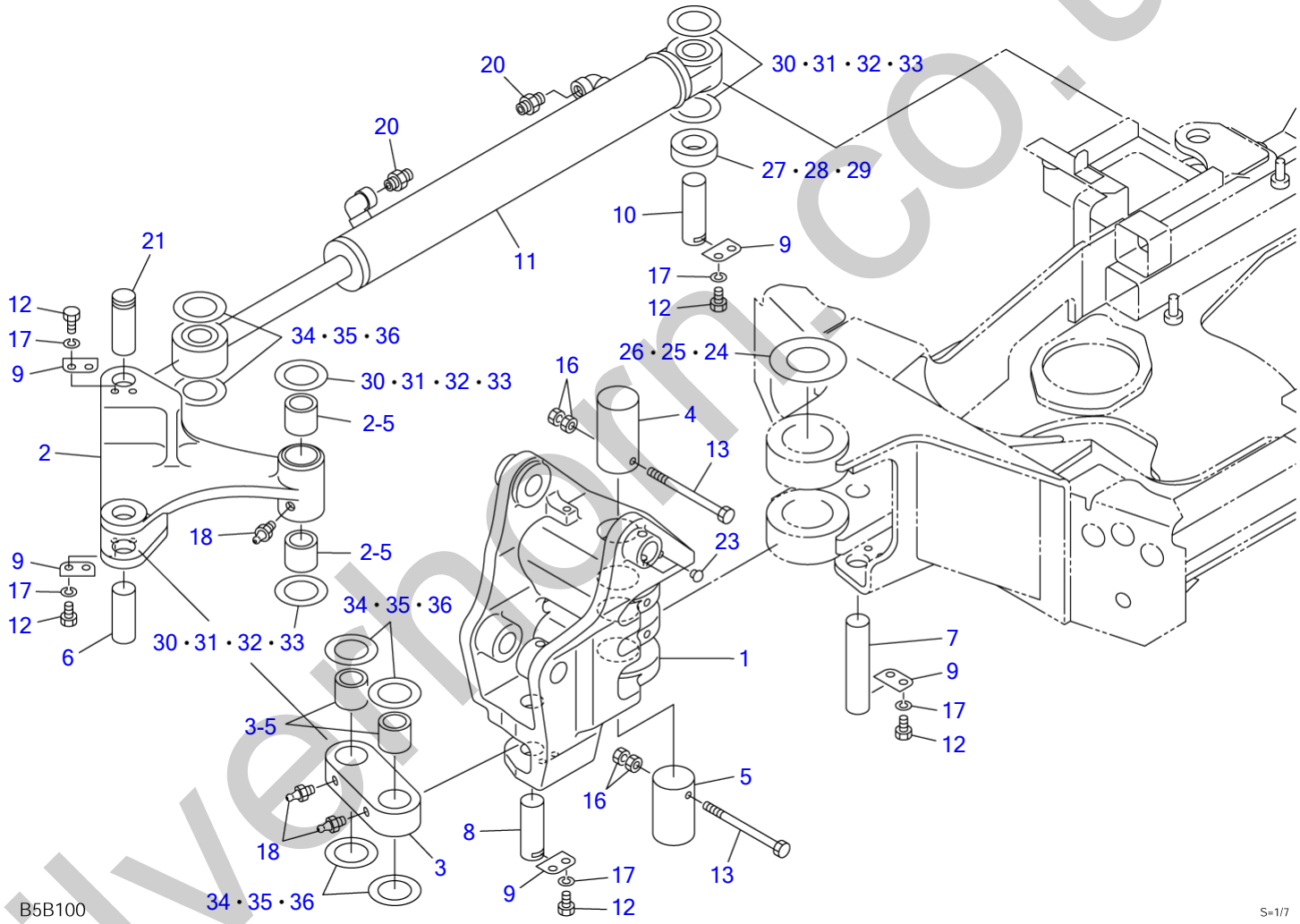

silverthorn.co.uk

BOOM SWING

Item	Part number	Description	Q'ty	Chan.	Serial No.	Serv.	Remarks
		SWING ASSY, boom					X03231-58900-1
1	0323158400	BRACKET	1				
2	0323158800	ARM, link	1				
2-5	0002400024	・BUSHING	2				
3	0323157300	LINK	1				
3-5	0002200020	・BUSHING	2				
4	0011514015	PIN	1				
5	0011514014	PIN	1				
6	0001900163	PIN	1				
7	0001900164	PIN	1				
8	0001900165	PIN	1				
9	0323158210	WASHER	5				
10	0001900166	PIN	1				
11	1900096500	CYLINDER, swing	1				
12	1100040814	BOLT	10				
13	1100140805	BOLT	2				
16	1130040008	NUT	4				
17	1140020008	WASHER, spring	10				
18	1560001000	FITTING, grease	3				
20	1515600200	ADAPTOR	2				
	1420010110	・O-RING	1				
21	0001900167	PIN	1				
23	1652533016	CAP	2				
24	0323156101	WASHER	AR				t=2.3
25	0323156102	WASHER	AR				t=2.8
26	0323156103	WASHER	AR				t=3.2
27	0323154101	WASHER	1				t=14.5
28	0323154102	WASHER	1				t=15.0
29	0323154103	WASHER	1				t=15.5
30	0003600049	SHIM	AR				t=0.2
31	0003600050	SHIM	AR				t=0.5
32	0003102610	SHIM	AR				t=1.0
33	0003102616	SHIM	AR				t=1.6
34	0003600044	SHIM	AR				t=0.2
35	0003600045	SHIM	AR				t=0.5
36	0426109800	SHIM	AR				t=1.0
	B5b181						

silverhorn.co.uk

SLEW LOCK

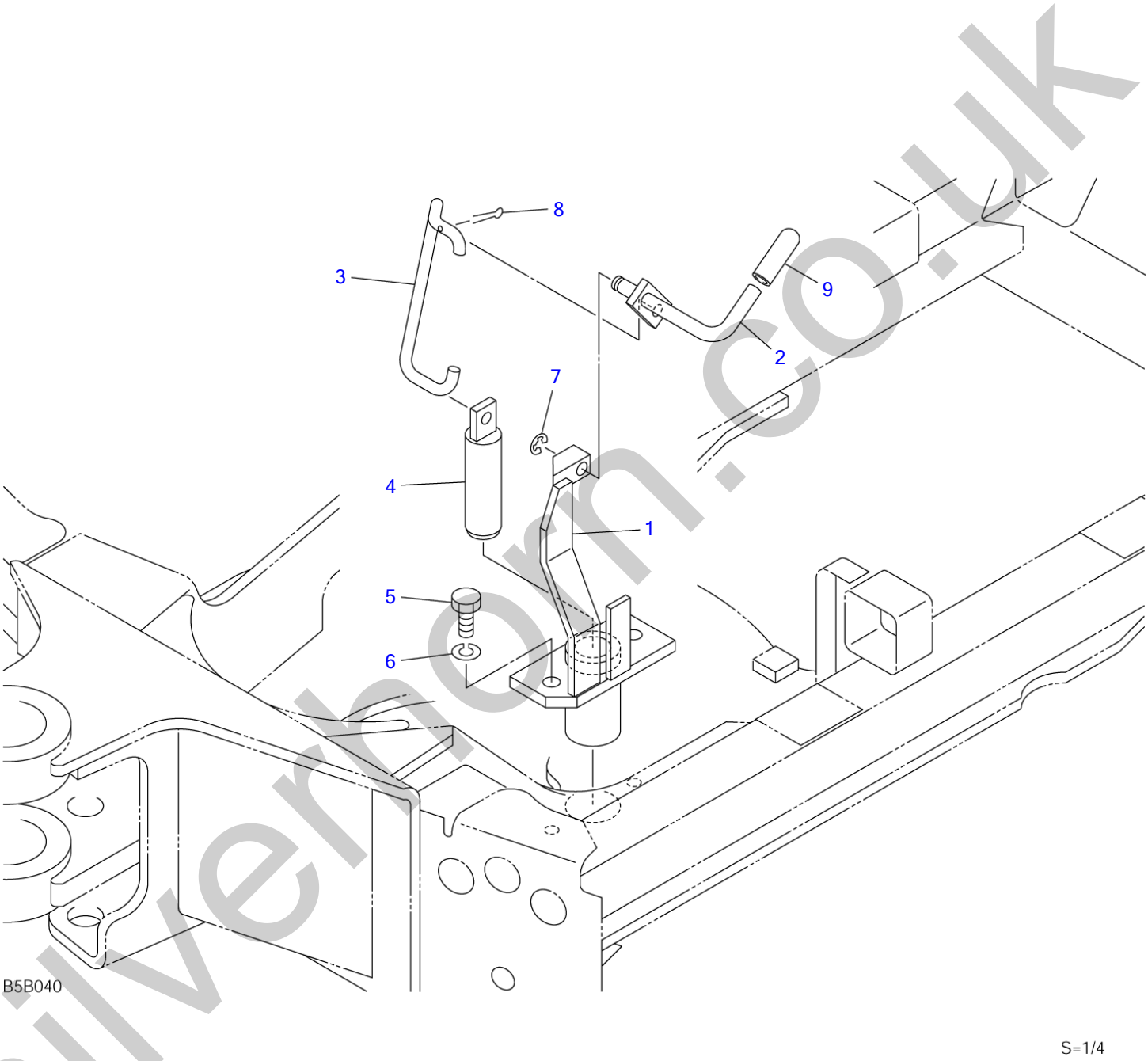

silverhorn.co.uk

SLEW LOCK

Item	Part number	Description	Q'ty	Chan.	Serial No.	Serv.	Remarks
		PIN ASSY, slew lock					X03222-15000-4
1	**0322215100**	BOSS	1				
2	**0322215200**	ROD	1				
3	**0412203300**	ROD	1				
4	**0412203400**	PIN	1				
5	**1100041020**	BOLT	2				
6	**1140020010**	WASHER, spring	2				
7	**1224010008**	RING, retaining	1				
8	**1210012516**	PIN, split	1				
9	**0543208900**	GRIP	1				
	B5b190						

silverhorn.co.uk

TRAVEL LEVER

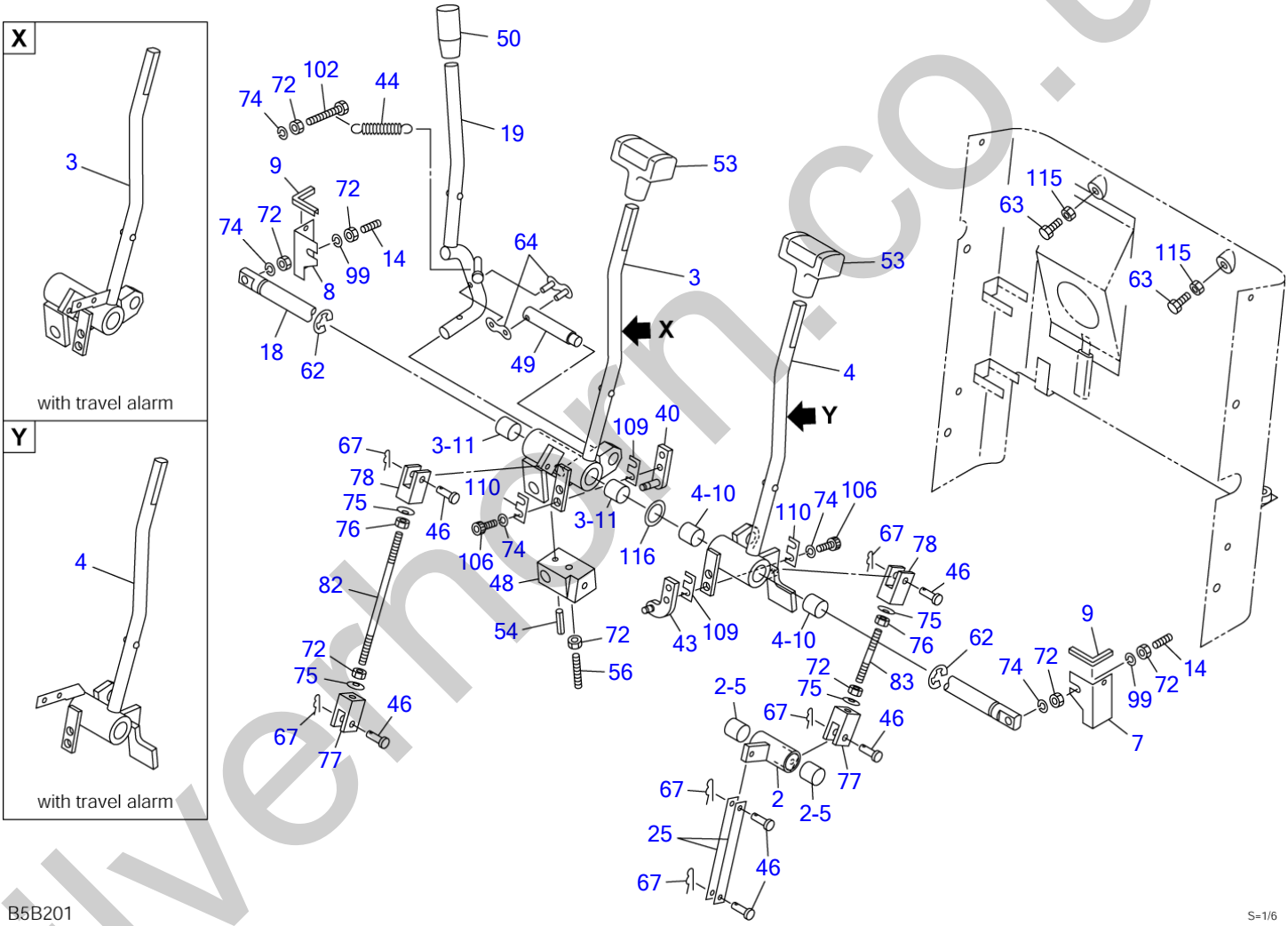

B5B201

S=1/6

silverhorn.co.uk

TRAVEL LEVER

Item	Part number	Description	Q'ty	Chan.	Serial No.	Serv.	Remarks
		LEVER ASSY, control (ISO-JCB pattern)					X03232-78000-2
		LEVER ASSY, control (ISO-JCB pattern) (with travel alarm)					X03232-78600-2
		LEVER ASSY, control (A-B pattern)					X03232-78300-1
		LEVER ASSY, control (ISO pattern)					X03232-78200-2
		LEVER ASSY, control (ISO pattern) (with travel alarm)					X03232-78700-2
2	0323264200	LEVER	1				
2-5	1333001515	・BUSHING	2				
3	0323274700	LEVER	1				
	0324263700	LEVER	1			M	with travel alarm
3-11	1333001515	・BUSHING	2				
4	0323274800	LEVER	1				
	0324263800	LEVER	1			M	with travel alarm
4-10	1333001515	・BUSHING	2				
7	0323274360	GUARD	1				
8	0323274371	GUARD	1				
9	1653917006	TRIM	2				sold by the meter
14	1121050630	SET-SCREW	2				
18	0323264780	SHAFT	1				
19	0323268790	LEVER	1				
25	0323268850	PLATE	2				
40	0323264360	BRACKET	1				
43	0323264460	BRACKET	1				
44	0323255900	SPRING	1				
46	0004004815	PIN	6				
48	0323264020	LEVER	1				
49	0323251700	SHAFT	1				
50	1650132050	GRIP	1				
53	1650200520	GRIP	2				
54	1213000520	PIN, spring	1				
56	1121050640	SET-SCREW	1				
62	1224010012	RING, retaining	2				
63	1100040612	BOLT	2				
64	1620050000	LINK	1				
67	1214000005	PIN, snap	6				
68	1100040616	BOLT	1				
72	1130040006	NUT	8				
74	1140020006	WASHER, spring	6				
75	1225000006	WASHER	4				
76	1131530006	NUT	2				
77	0005500010	YOKE	2				
78	0005600004	YOKE	2				
82	0005006135	ROD	1				
83	0005006050	ROD	1				
99	1141110006	WASHER	2				
102	1100040630	BOLT	1				
106	1110040616	SCREW, cap	4				
109	0323206370	SHIM	AR				t=0.2mm
	0323206371	SHIM	AR				t=0.5mm
	0323264372	SHIM	AR				t=1.0mm
	0323206374	SHIM	AR				t=2.5mm
110	0323264373	SHIM	AR				t=1.5mm
115	1130140006	NUT	2				
116	0083252100	WASHER	1				
	B5b202						

silverthorn.co.uk

OPERATION LEVER

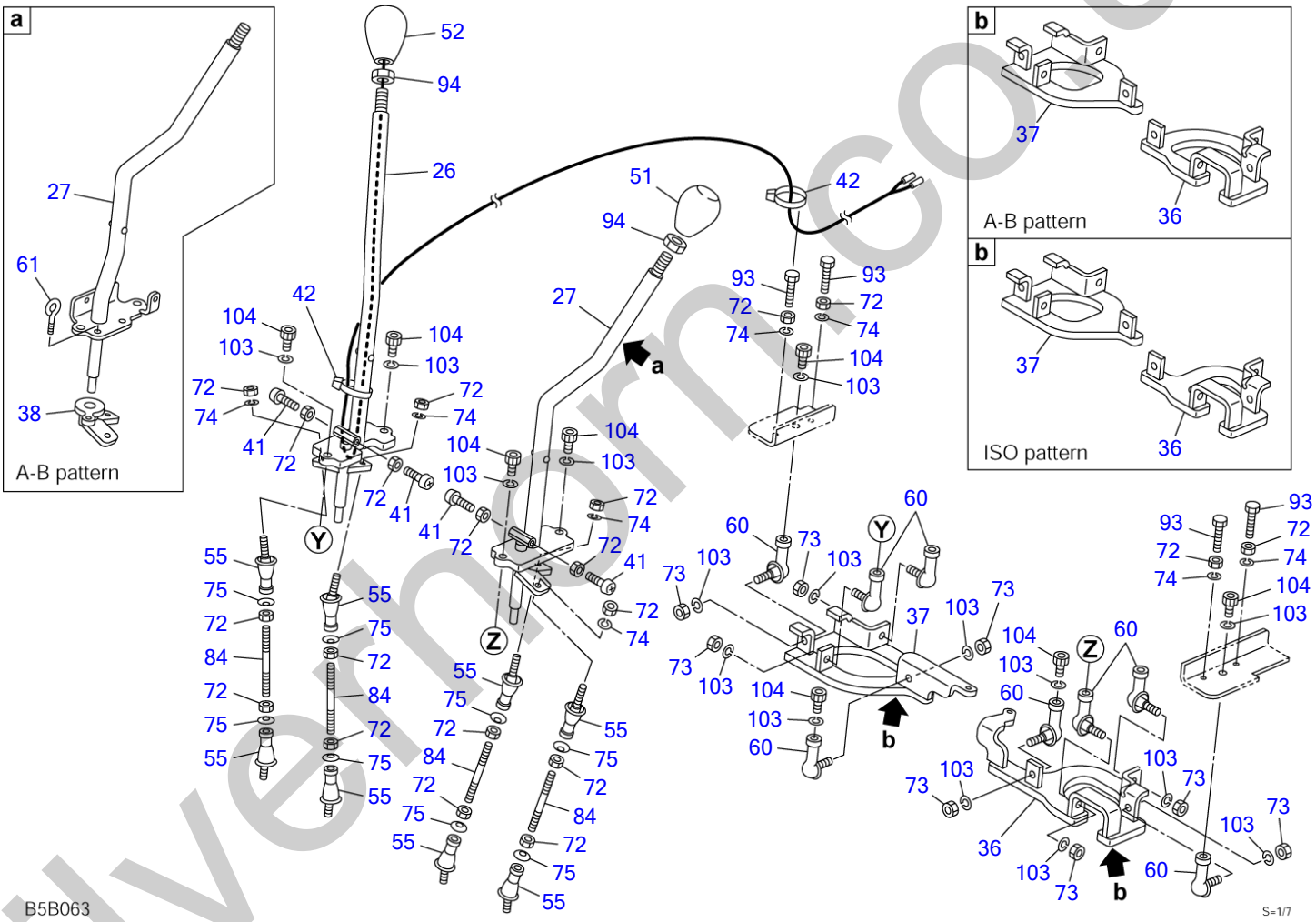

silvermore.co.uk

OPERATION LEVER

Item	Part number	Description	Q'ty	Chan.	Serial No.	Serv.	Remarks
		LEVER ASSY, control (ISO-JCB pattern)					X03232-78000-2
		LEVER ASSY, control (ISO-JCB pattern) (with travel alarm)					X03232-78600-2
		LEVER ASSY, control (A-B pattern)					X03232-78300-1
		LEVER ASSY, control (ISO pattern)					X03232-78200-2
		LEVER ASSY, control (ISO pattern) (with travel alarm)					X03232-78700-2
26	0323268860	LEVER (R.H.)	1				
27	0323268870	LEVER (L.H.)	1				ISO-JCB pattern
	0323271870	LEVER (L.H.)	1				A-B pattern
	0323268870	LEVER (L.H.)	1				ISO pattern
36	0323268960	BRACKET (L.H.)	1				ISO-JCB pattern
	0323267010	BRACKET (L.H.)	1				A-B pattern
	0323267030	BRACKET (L.H.)	1				ISO pattern
37	0323268970	BRACKET (R.H.)	1				ISO-JCB pattern
	0323267020	BRACKET (R.H.)	1				A-B pattern
	0323267020	BRACKET (R.H.)	1				ISO pattern
38	0323271980	LEVER	1				A-B pattern
41	1120530620	SCREW	4				
42	1652201003	BAND	2				
51	1650200130	GRIP	1				
52	1650200230	GRIP (with switch)	1				
55	1340300060	END, rod	8				
60	1340010080	END, rod	8				
61	1121601106	BOLT	1				A-B pattern
72	1130040006	NUT	20				
73	1130040008	NUT	8				
74	1140020006	WASHER, spring	8				
75	1225000006	WASHER	8				
84	0413206900	ROD	4				
93	1100040625	BOLT	4				
94	1131040012	NUT	2				
103	1140020008	WASHER, spring	16				
104	1110040820	SCREW, cap	8				
	B5b212						

silverhorn.co.uk

SWING PEDAL & AUX. PEDAL

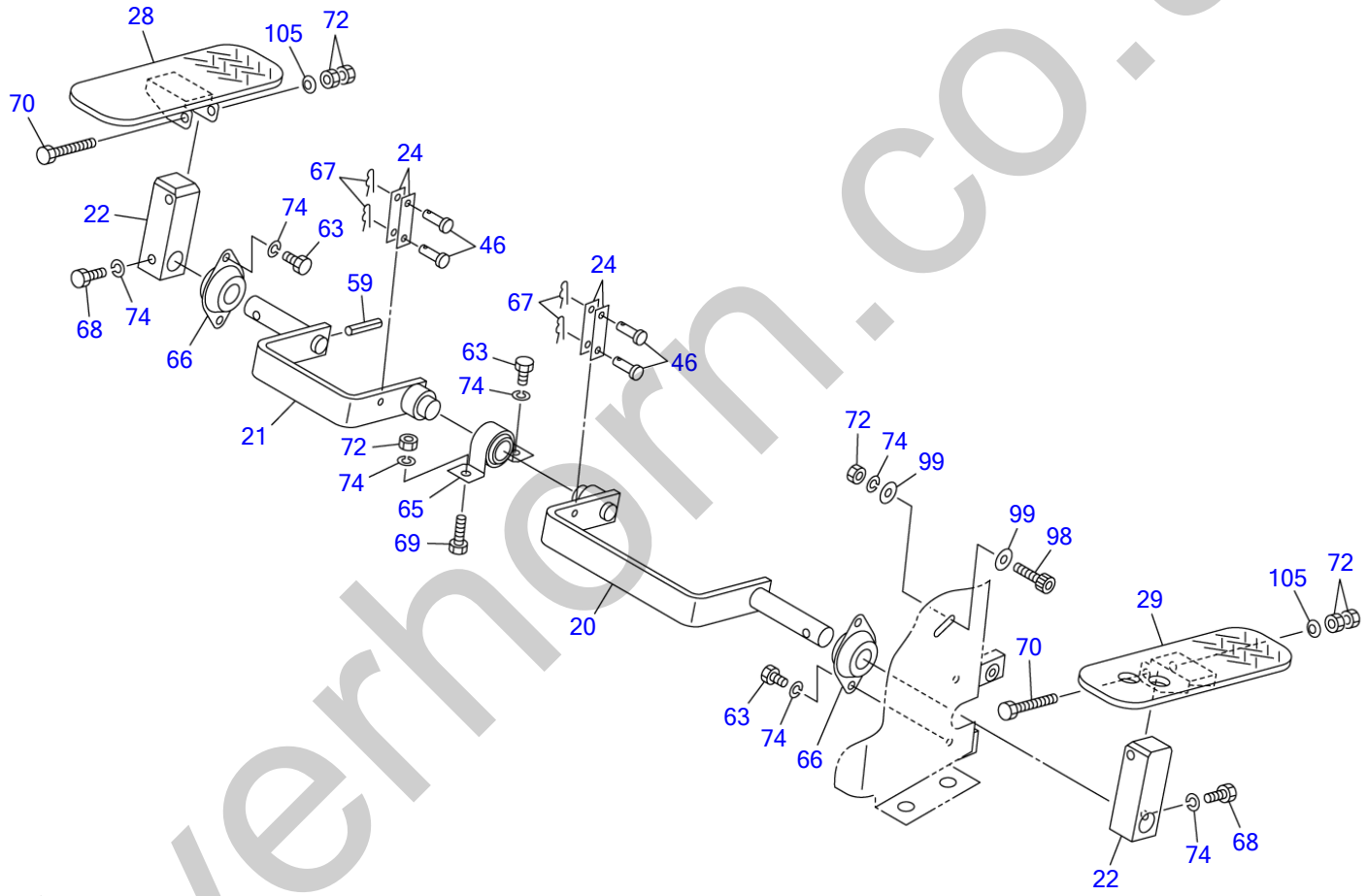

silverhorn.co.uk

SWING PEDAL & AUX. PEDAL

Item	Part number	Description	Q'ty	Chan.	Serial No.	Serv.	Remarks
		LEVER ASSY, control (ISO-JCB pattern)					X03232-78000-2
		LEVER ASSY, control (ISO-JCB pattern) (with travel alarm)					X03232-78600-2
		LEVER ASSY, control (A-B pattern)					X03232-78300-1
		LEVER ASSY, control (ISO pattern)					X03232-78200-2
		LEVER ASSY, control (ISO pattern) (with travel alarm)					X03232-78700-2
20	0323264800	LEVER	1				
21	0323264810	LEVER	1				
22	0323264820	LEVER	2				
24	0323268840	PLATE	4				
28	0323264880	PEDAL	1				
29	0323264890	PEDAL	1				
46	0004004815	PIN	4				
59	1213000325	PIN, spring	1				
63	1100040612	BOLT	5				
65	1332001518	MINI-PILLOW	1				
66	1332051518	MINI-PILLOW	2				
67	1214000005	PIN, snap	4				
68	1100040616	BOLT	2				
69	1100040620	BOLT	1				
70	1100040640	BOLT	2				
72	1130040006	NUT	6				
74	1140020006	WASHER, spring	9				
98	1110040620	SCREW, cap	1				
99	1141110006	WASHER	2				
105	1225110006	WASHER	2				
	B5b222						

silverhorn.co.uk

DOZER BLADE LEVER

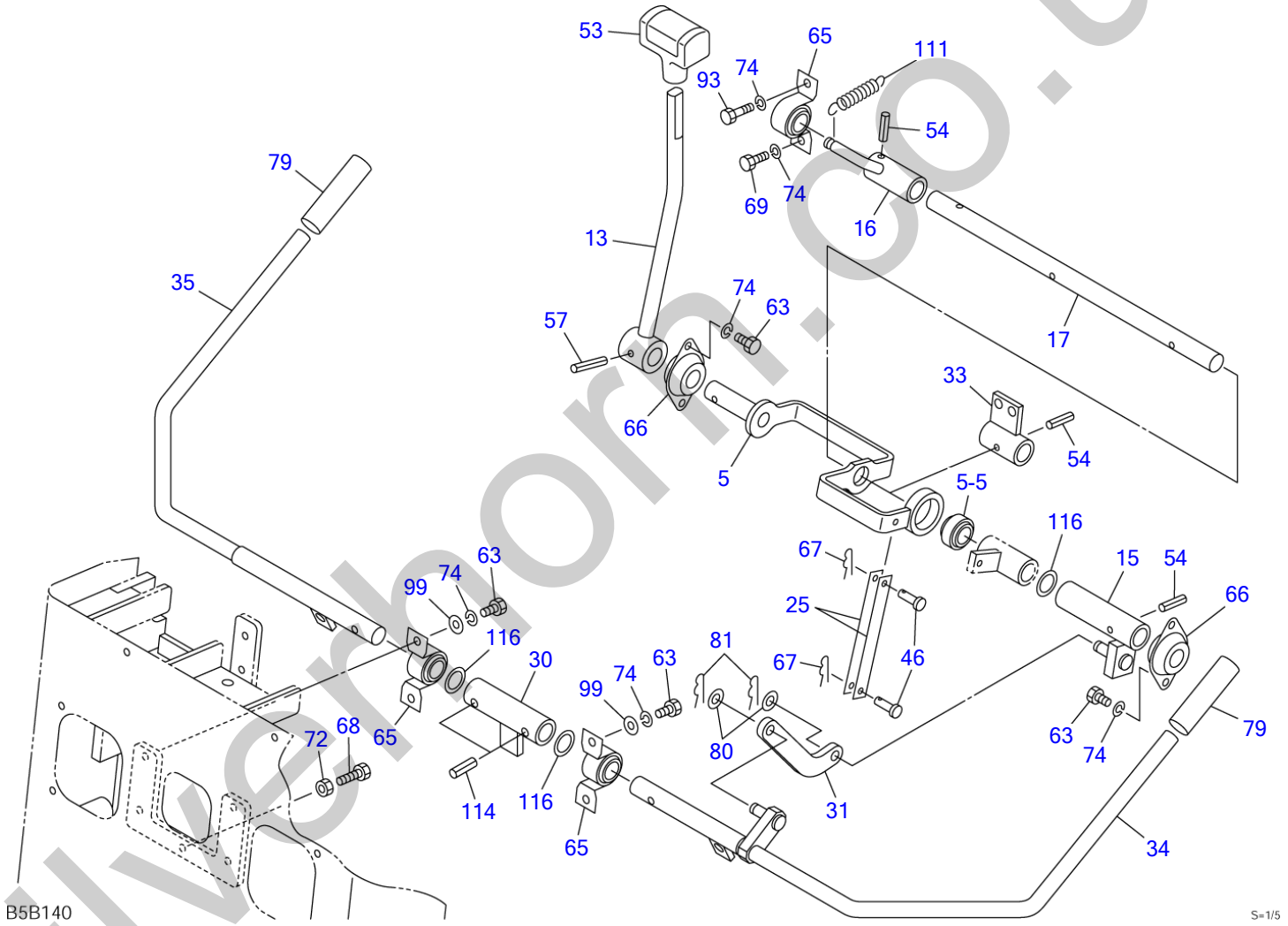

silverhorn.co.uk

DOZER BLADE LEVER

Item	Part number	Description	Q'ty	Chan.	Serial No.	Serv.	Remarks
		LEVER ASSY, control (ISO-JCB pattern)					X03232-78000-2
		LEVER ASSY, control (ISO-JCB pattern) (with travel alarm)					X03232-78600-2
		LEVER ASSY, control (A-B pattern)					X03232-78300-1
		LEVER ASSY, control (ISO pattern)					X03232-78200-2
		LEVER ASSY, control (ISO pattern) (with travel alarm)					X03232-78700-2
5	0323268500	LEVER	1				
5-5	1334001150	・BUSHING	1				
13	0323274300	LEVER	1				
15	0323268750	LEVER	1				
16	0323268760	LEVER	1				
17	0323268770	SHAFT	1				
25	0323268850	PLATE	2				
30	0323267900	PIPE	1				
31	0323268910	PLATE	1				
33	0323268930	STOPPER	1				
34	0323267940	LEVER (L.H.)	1				
35	0323267930	LEVER (R.H.)	1				
46	0004004815	PIN	2				
53	1650200520	GRIP	1				
54	1213000520	PIN, spring	3				
57	1213000525	PIN, spring	1				
63	1100040612	BOLT	8				
65	1332001518	MINI-PILLOW	3				
66	1332051518	MINI-PILLOW	2				
67	1214000005	PIN, snap	2				
68	1100040616	BOLT	1				
69	1100040620	BOLT	1				
72	1130040006	NUT	3				
74	1140020006	WASHER, spring	10				
79	1650202300	CAP	2				
80	1141110008	WASHER	2				
81	1214010006	PIN, snap	2				
93	1100040625	BOLT	1				
99	1141110006	WASHER	4				
111	0323264090	SPRING	1				
114	1213000620	PIN, spring	2				
116	0083252100	WASHER	3				
	B5b232						

silverhorn.co.uk

STAND

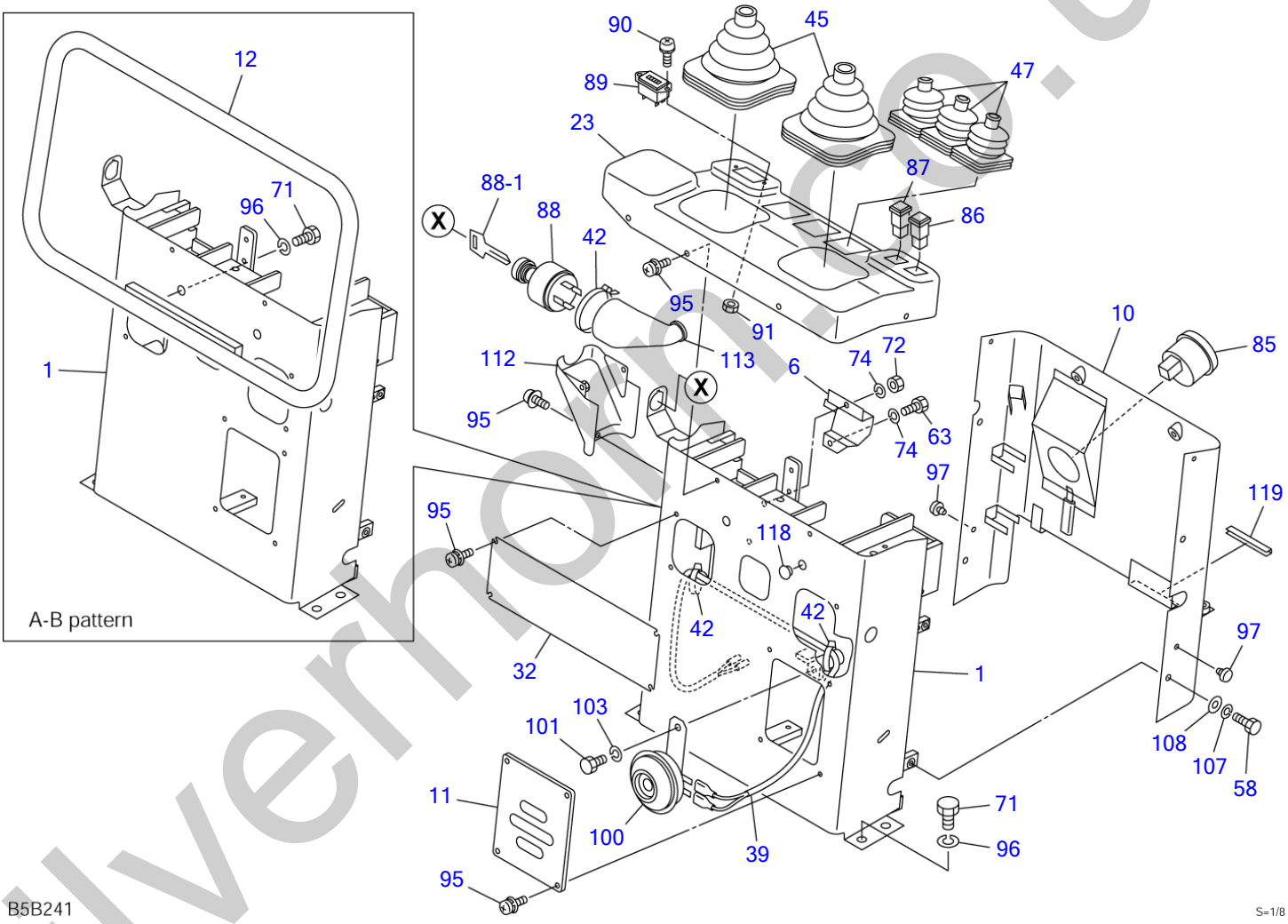

silverhorse.co.uk

STAND

Item	Part number	Description	Q'ty	Chan.	Serial No.	Serv.	Remarks
		LEVER ASSY, control (ISO-JCB pattern)					X03232-78000-2
		LEVER ASSY, control (ISO-JCB pattern) (with travel alarm)					X03232-78600-2
		LEVER ASSY, control (A-B pattern)					X03232-78300-1
		LEVER ASSY, control (ISO pattern)					X03232-78200-2
		LEVER ASSY, control (ISO pattern) (with travel alarm)					X03232-78700-2
1	0324264100	STAND	1				
	0323274100	STAND	1				A-B pattern
6	0323274010	GUARD	1				
10	0323278500	COVER	1				
11	0323269710	COVER	1				
12	0323271720	PIPE (A-B pattern)	1				U.S. TAKEUCHI OPT.
23	0323274310	COVER	1				
32	0323267920	PLATE	1				
39	0323264990	HARNESS, wiring	1				
42	1652201003	BAND	4				
45	0335124910	BOOT	2				
47	0363214700	BOOT	3				
58	1100090612	BOLT	4				
63	1100040612	BOLT	1				
71	1100041016	BOLT	6				A-B pattern
	1100041016	BOLT	4				
72	1130040006	NUT	2				
74	1140020006	WASHER, spring	2				
85	1730100010	THERMOMETER	1				
86	1700550002	LAMP, charge	1				
87	1700550003	LAMP, oil	1				
88	1700100052	SWITCH, starter	1				
88-1	1700100019	KEY	1				
89	1730000500	METER, hour	1				
90	1150110312	SCREW	2				
91	1130030003	NUT	2				
95	1150420510	BOLT, sems	14				
96	1140020010	WASHER, spring	4				
	1140020010	WASHER, spring	6				A-B pattern
97	1652515000	RUBBER, cushion	2				
100	1703500712	HORN	1				
101	1100040812	BOLT	1				
103	1140020008	WASHER, spring	1				
107	1140090006	WASHER, spring	4				
108	1141190006	WASHER	4				
112	0323274340	COVER	1				
113	0323274330	COVER	1				
118	1652533019	CAP	2				
119	1654606007	SEAL	1				sold by the meter
	B5b242						

silverhorn.co.uk

FRONT PIPE

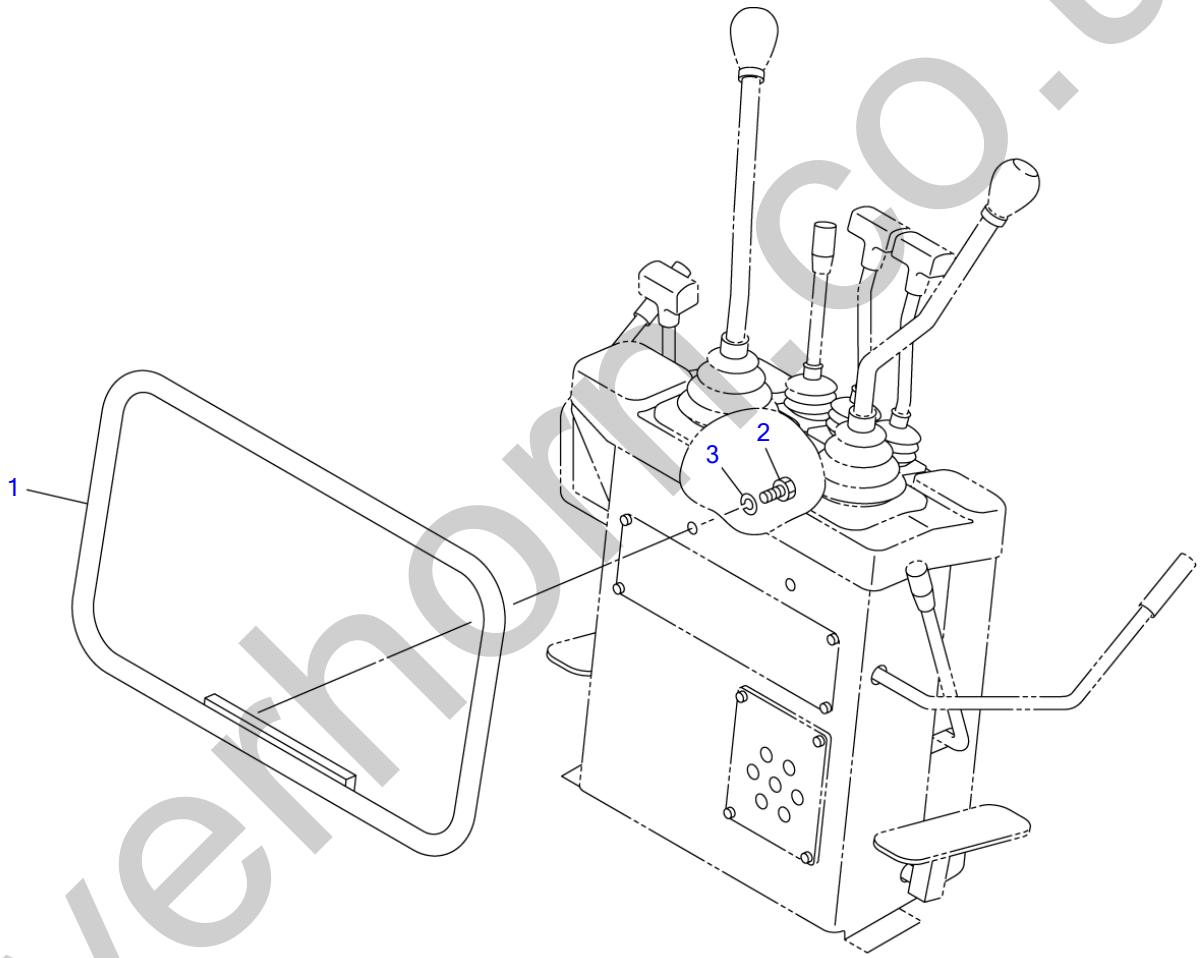

B5B250

S=1/7

silverthorn.co.uk

FRONT PIPE

Item	Part number	Description	Q'ty	Chan.	Serial No.	Serv.	Remarks
		PIPE ASSY, front					X03232-72500-1
1	**0323271720**	PIPE	1				
2	**1100041016**	BOLT	1				
3	**1140020010**	WASHER, spring	4				
	B5b250						

silverhorn.co.uk

ENGINE & ACCESSORIES (1/2)

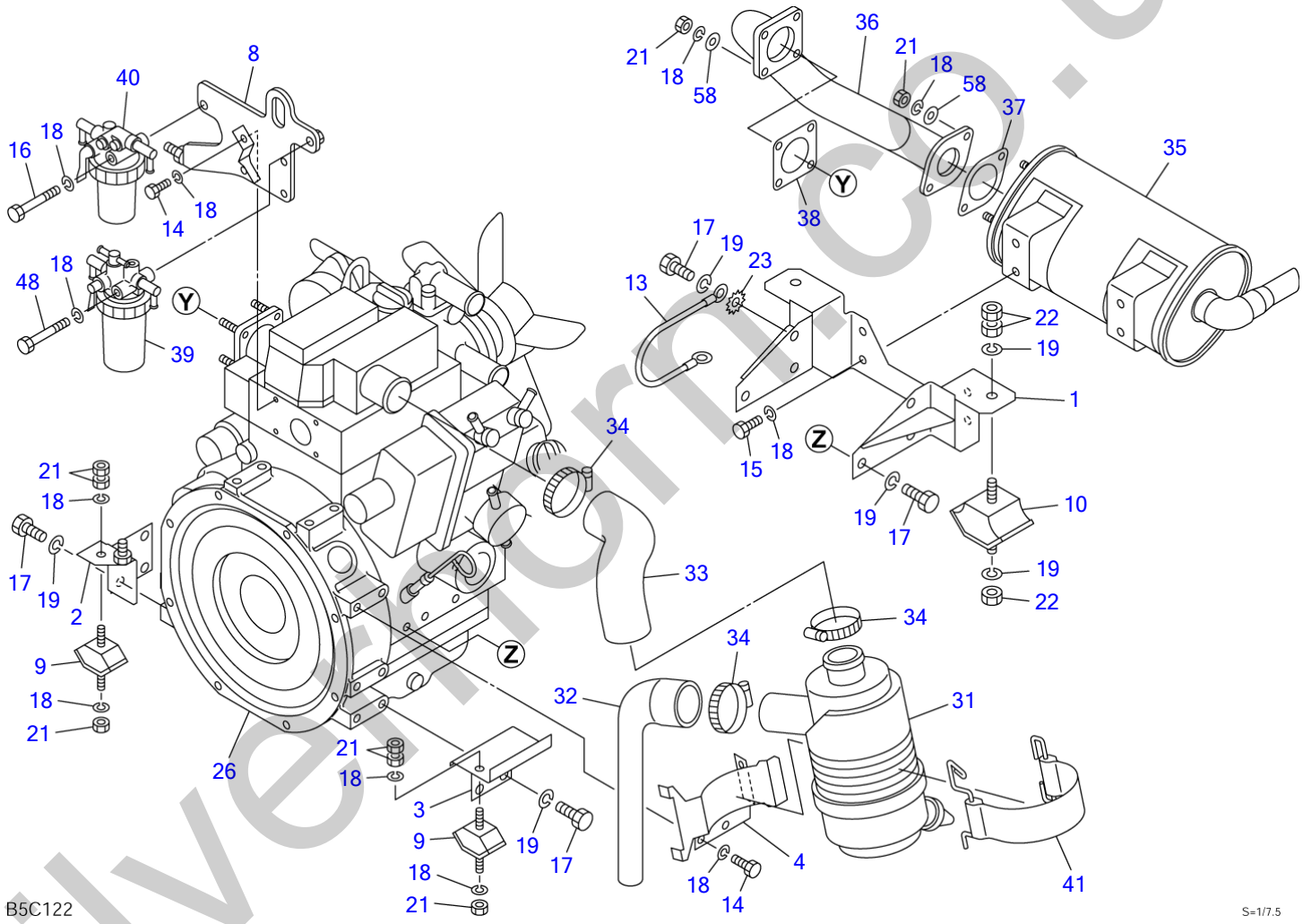

silverframe.co.uk

ENGINE & ACCESSORIES (1/2)

Item	Part number	Description	Q'ty	Chan.	Serial No.	Serv.	Remarks
		ENGINE ASSY					X03240-25000-2
1	0324025010	FOOT, engine	1				
2	0324025020	FOOT, engine (R.H.)	1				
3	0324025030	FOOT, engine (L.H.)	1				
4	0324025400	BRACKET	1				
8	0324025080	PLATE	1				
9	1651044001	RUBBER, cushion	2				
10	1651044002	RUBBER, cushion	2				
13	1702430280	CABLE, earth	1				
14	1100040816	BOLT	6				
15	1100040820	BOLT	4				
16	1100040865	BOLT	1				
17	1100041020	BOLT	14				
18	1140020008	WASHER, spring	22				
19	1140020010	WASHER, spring	18				
21	1130040008	NUT	12				
22	1130040010	NUT	6				
23	1140330010	WASHER	1				
26	1910213001	ENGINE	1				2TNV70-PTB
31	1910170007	CLEANER, air	1				Y119325-12560
32	0324025100	PIPE	1				
33	0324025090	PIPE	1				
34	1910032047	BAND	3				Y23000-060000
35	1910213005	MUFFLER	1				Y119440-13500
36	0324025050	PIPE	1				
37	1910066022	GASKET	1				Y129107-13550
38	1910181022	GASKET	1				Y119515-13200
39	1910210031	FILTER	1				Y119833-55620
40	1910030033	SEPARATOR, water	1				Y129335-55700
41	1910170051	BAND	1				Y119865-12600
48	1100040870	BOLT	1				
58	1141550008	WASHER	6				
	B5c122						

silverhorn.co.uk

ENGINE & ACCESSORIES (2/2)

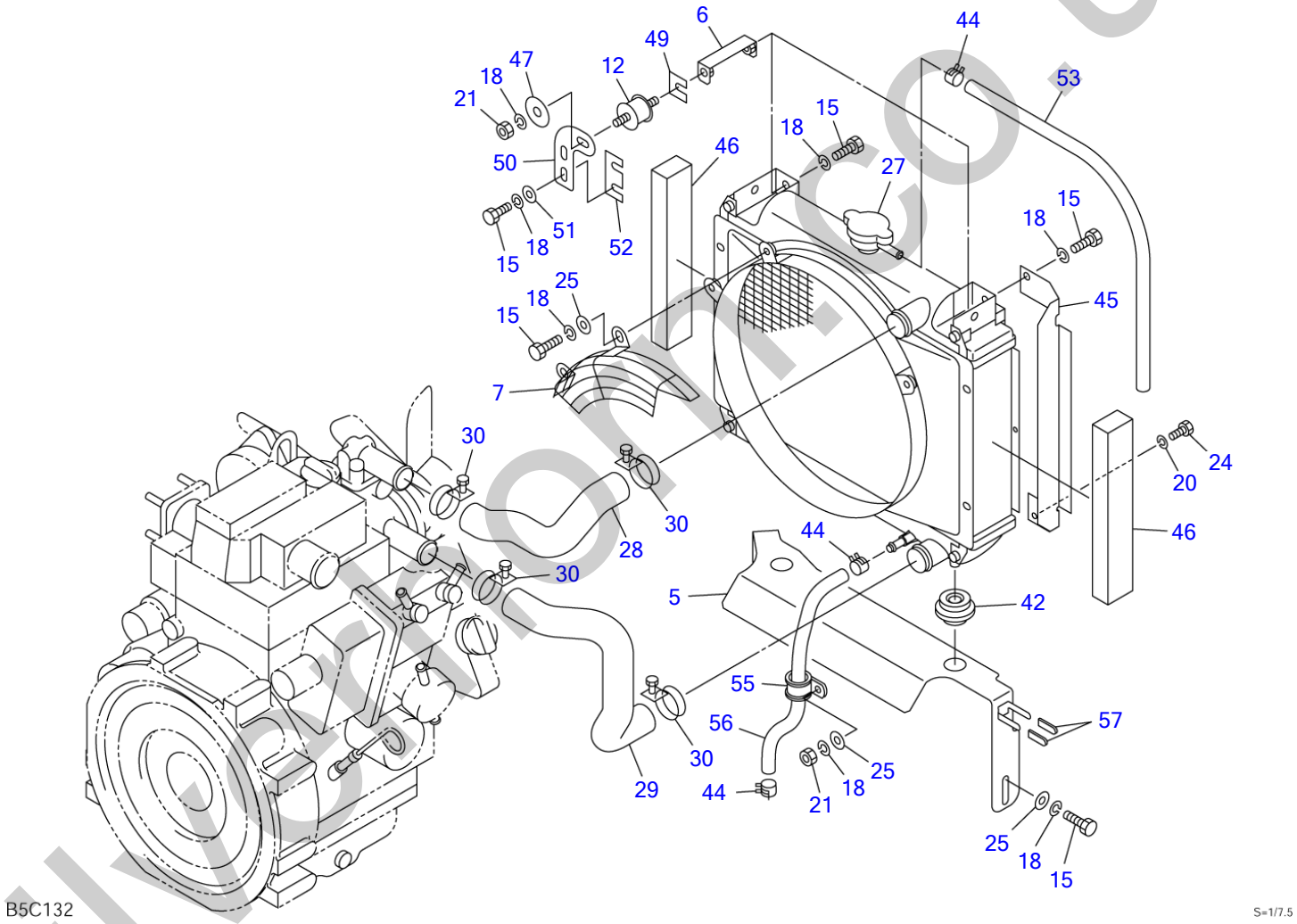

silvermoon.co.uk

ENGINE & ACCESSORIES (2/2)

Item	Part number	Description	Q'ty	Chan.	Serial No.	Serv.	Remarks
		ENGINE ASSY					X03240-25000-2
5	0324025005	PLATE	1				
6	0324019610	BRACKET	2				
7	0324025500	NET, wire	1				
12	1651014003	RUBBER, cushion	2				
15	1100040820	BOLT	12				
18	1140020008	WASHER, spring	15				
20	1140020006	WASHER, spring	1				
21	1130040008	NUT	3				
24	1100040616	BOLT	1				
25	1141110008	WASHER	7				
27	1910213002	RADIATOR	1				Y119440-44500
28	0324025210	HOSE	1				
29	0324025220	HOSE	1				
30	1910006013	BAND	4				Y23010-038000
42	1910170052	RUBBER, cushion	2				Y119255-44660
44	1533120012	BAND	3				
45	0324022020	PLATE	1				
46	0324025046	SPONGE	2				
47	0003608003	WASHER	2				
49	0003900042	SPACER	2				
50	0324025151	PLATE	2				
51	0003608252	WASHER	4				
52	0003900043	SPACER	2				
53	1530808065	HOSE	1		10820001~10820090		sold by the meter
	1531407065	HOSE	1	(H)	10820091~		sold by the meter
55	1711900076	CLAMP	1				
56	1530808036	HOSE	1				sold by the meter
57	0872433150	TUBE	2		10820091~		
	B5c132						

silverhorn.co.uk

AIR CLEANER (for double element)

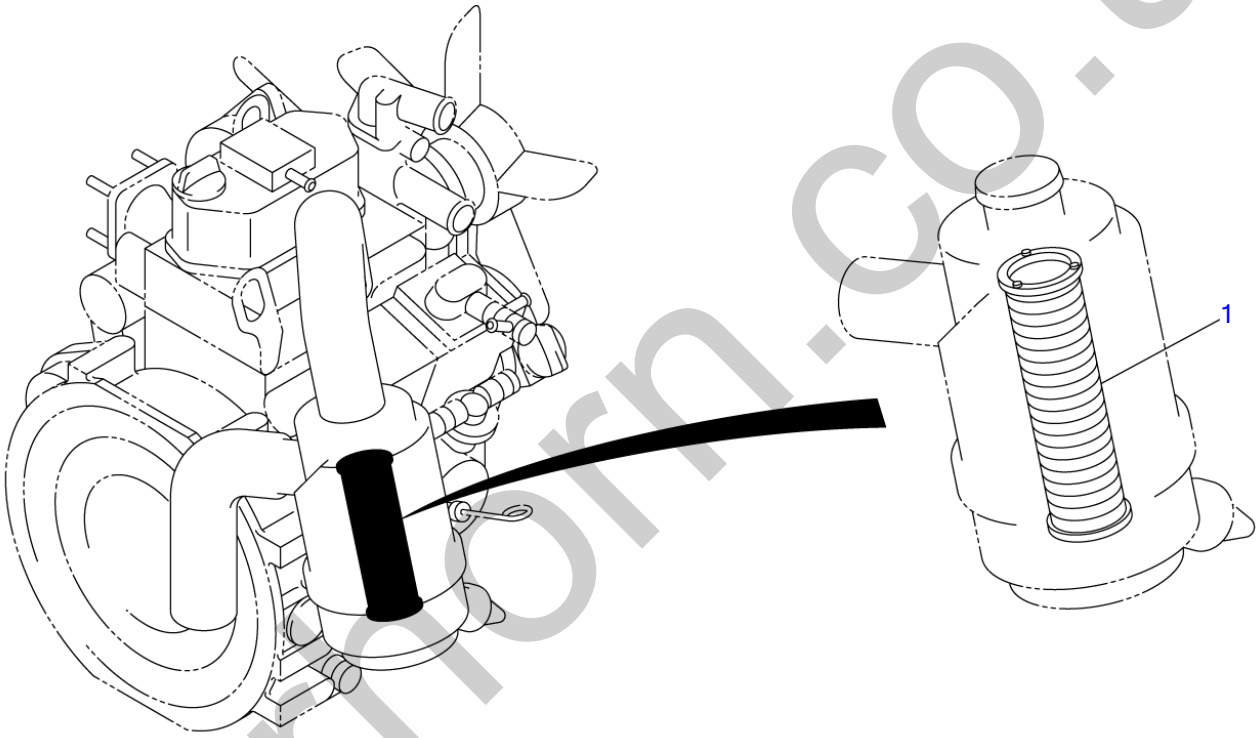

B5C030

S=1/6, 1/4

silvermorn.co.uk

AIR CLEANER (for double element)

Item	Part number	Description	Q'ty	Chan.	Serial No.	Serv.	Remarks
		ELEMENT ASSY, secondary					X03340-22000-0
1	**1911101342**	ELEMENT, secondary	1				ƒhƒiƒ‹ƒhƒ\ƒ“ P53-5396
	B5c030						

silverhorn.co.uk

DRAIN PLUG

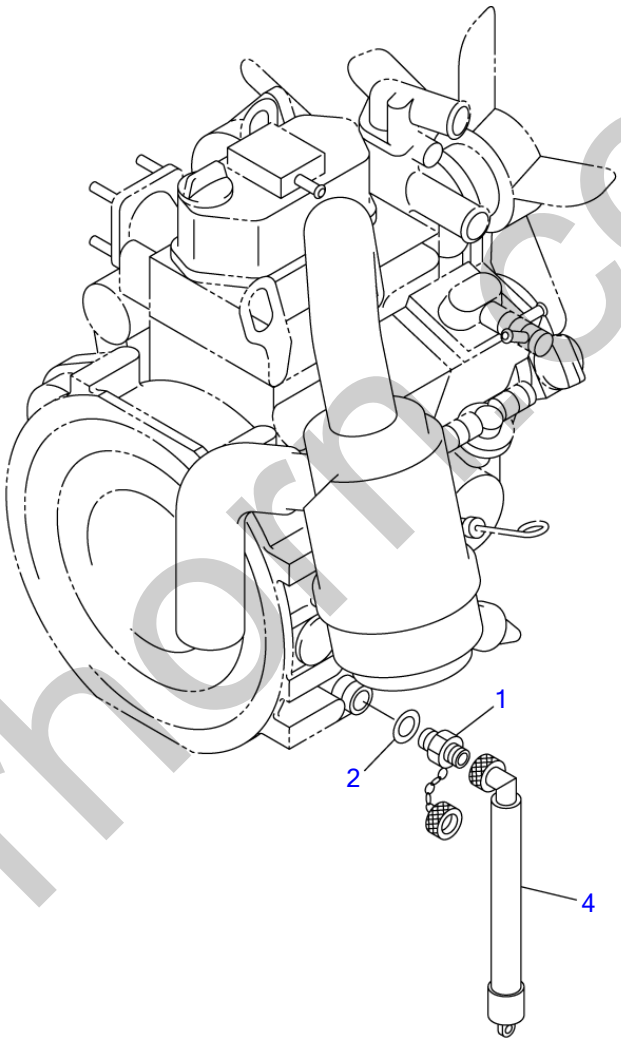

B5C040

S=1/6

silverhorn.co.uk

DRAIN PLUG

Item	Part number	Description	Q'ty	Chan.	Serial No.	Serv.	Remarks
		PLUG ASSY, drain					X03240-16000-2
1	1554501650	PLUG	1				
2	1432116221	WASHER	1				
4	1554512201	TUBE	1				
	B5c041						

silverhorn.co.uk

CONTROL BOX

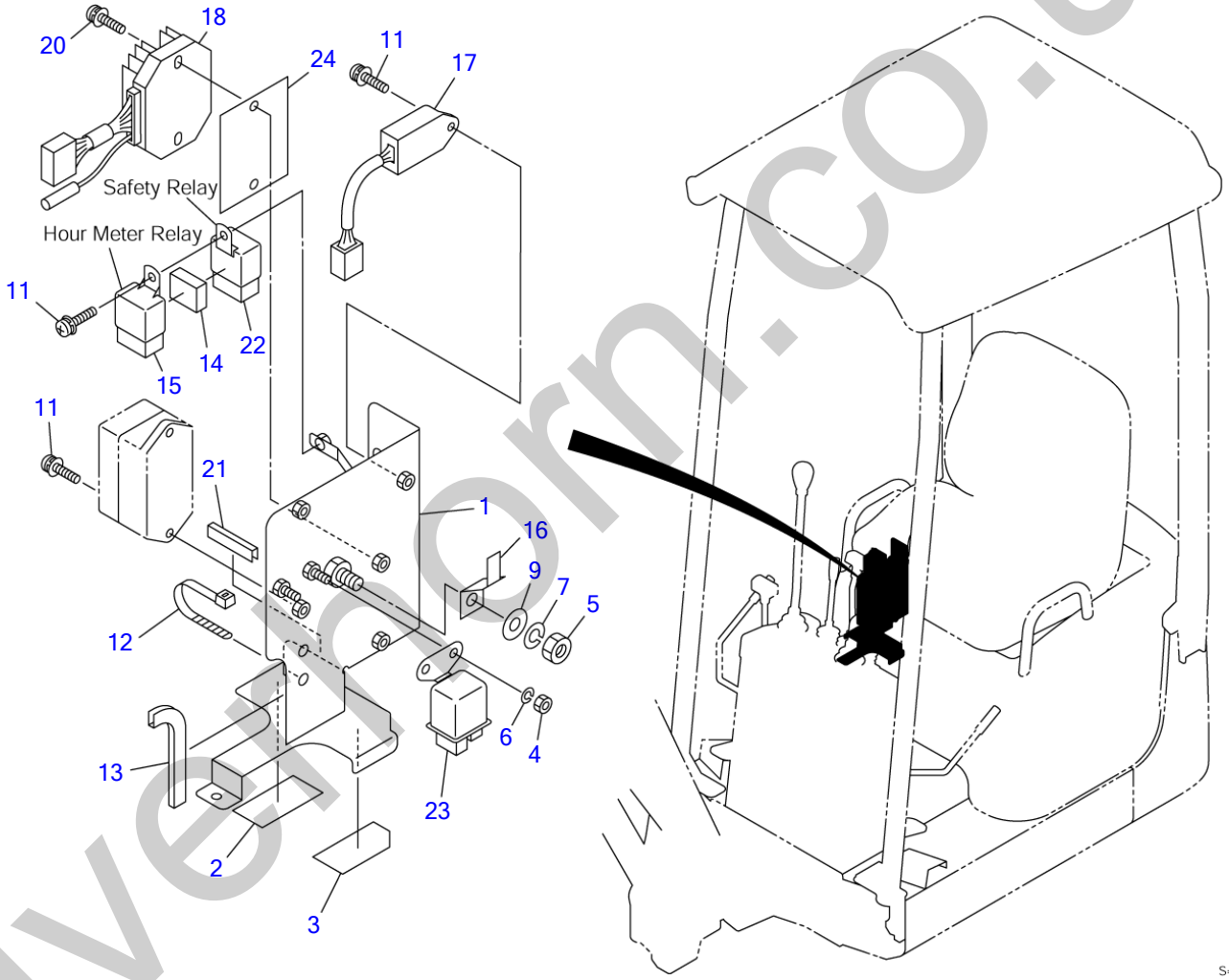

B5C141

S=1/5, 1/15

silvermorn.co.uk

CONTROL BOX

Item	Part number	Description	Q'ty	Chan.	Serial No.	Serv.	Remarks
		PANEL ASSY					X03243-18100-1
1	0324318110	PANEL	1				
2	0324318002	PLATE, rubber	1				
3	0324318004	PLATE, rubber	1				
4	1130040006	NUT	2				
5	1130040010	NUT	1				
6	1140020006	WASHER, spring	2				
7	1140020010	WASHER, spring	1				
9	1141110010	WASHER	1				
11	1150410616	SCREW	4				
12	1652231250	BAND	1				
13	1653916011	TRIM	1				
14	1654302003	SPONGE	1				
15	1711900042	RELAY	1				
16	1711900064	PLATE	1				
17	1910152116	UNIT, timer	1				Y 129211-77920
18	1910213104	LIMITER, current	1				Y 119233-77710
20	1150410625	SCREW	2				
21	1653916005	TRIM	1				
22	1910213106	RELAY	1				Y 119247-77100
23	1910161119	RELAY	1				Y 119646-77900
24	0334243300	SHEET	1				
	B5c141						

silverhorn.co.uk

ENGINE CONTROL

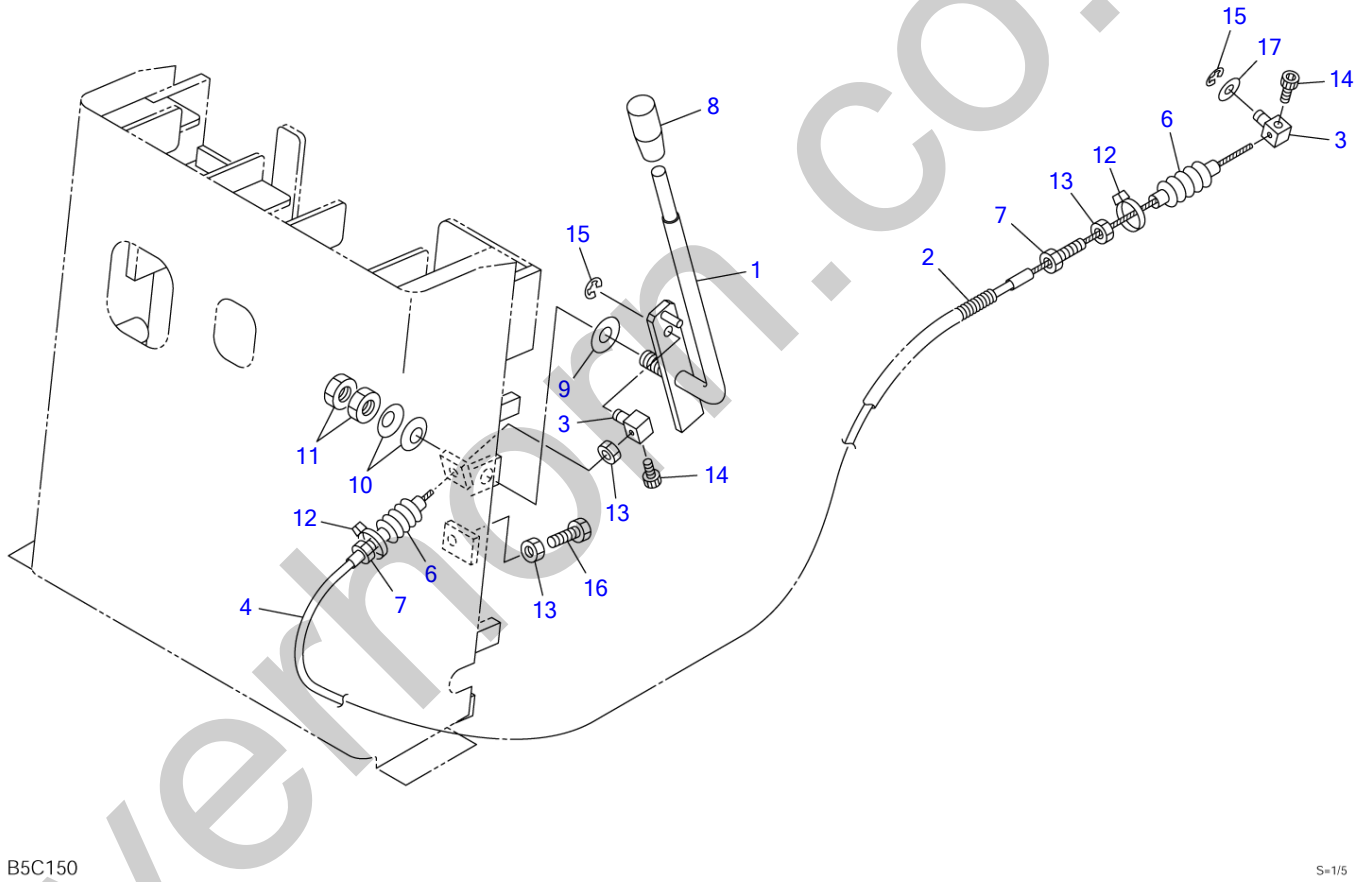

silverton.co.uk

ENGINE CONTROL

Item	Part number	Description	Q'ty	Chan.	Serial No.	Serv.	Remarks
		CONTROL ASSY, engine					X03241-24500-0
1	0324124100	LEVER	1				
2	1703210745	BOOT	1				
3	0007900020	PIN	2				
4	0414105200	WIRE	1				
6	0007900014	BOOT	2				
7	0007900019	BOLT	2				
8	1650132050	GRIP	1				
9	1141540012	WASHER	1				
10	1225120012	WASHER, conical	2				
11	1130540012	NUT	2				
12	1652201003	BAND	2				
13	1130040008	NUT	3				
14	1110040510	SCREW, cap	2				
15	1224010006	RING, retaining	2				
16	1100040825	BOLT	1				
17	1141110008	WASHER	1				
	B5c150						

silverhorn.co.uk

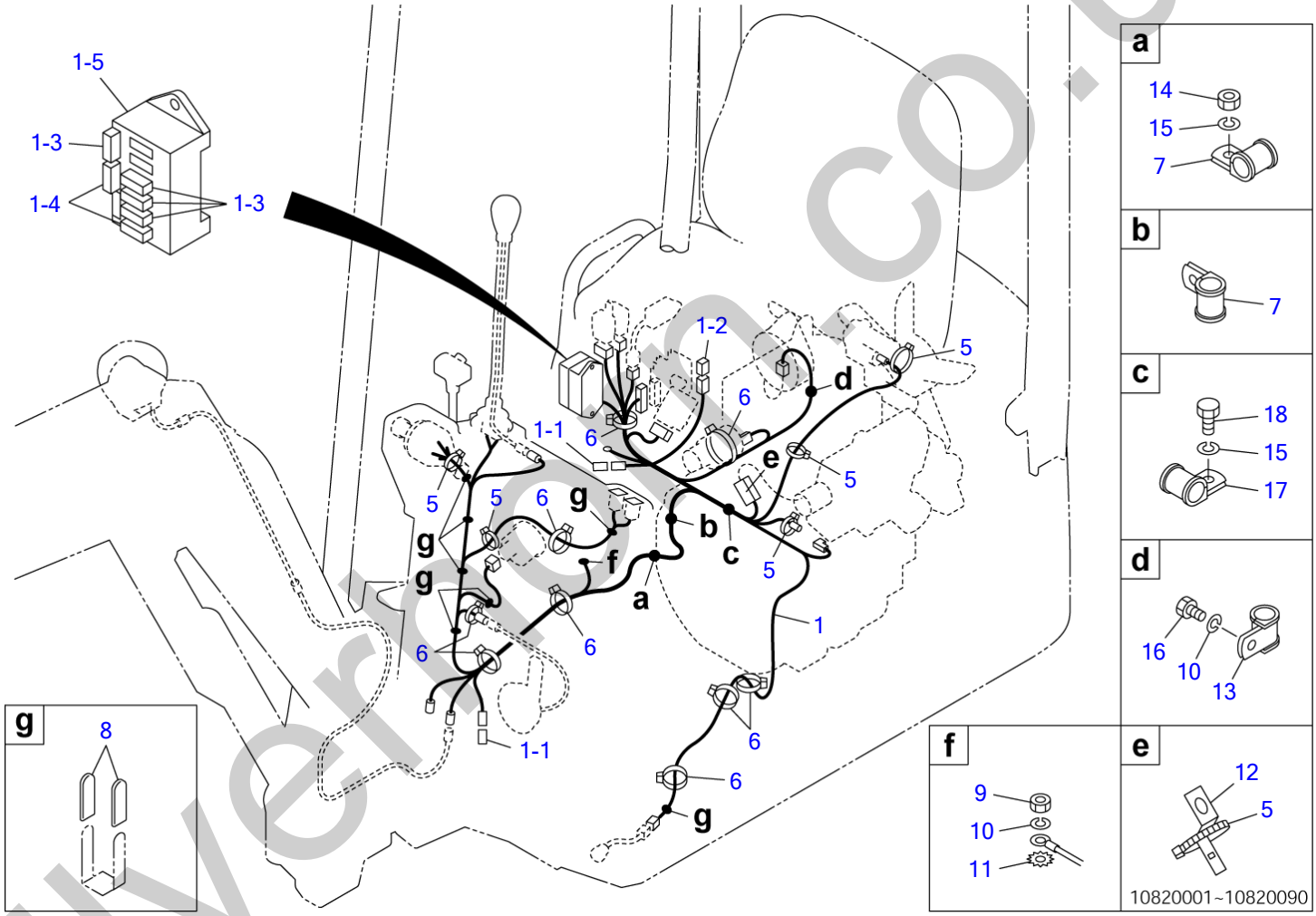

silvermoon.co.uk

ELECTRICAL

Item	Part number	Description	Q'ty	Chan.	Serial No.	Serv.	Remarks
		ELECTRICAL ASSY					X03242-64300-2
1	0324264400	HARNESS ASSY, wiring	1				
1-1	1730500008	・DIODE (3A yellow)	2				
1-2	1701330045	・LINK, fusible	1				45A
1-3	1701310010	・FUSE	4				10A
1-4	1701310030	・FUSE	2				30A
1-5	0324262129	・BOX, fuse	1				
5	1652231100	BAND	5				
6	1652231250	BAND	10				
7	1711900071	CLAMP	2				
8	0872433150	TUBE	10				
9	1130040008	NUT	1				
10	1140020008	WASHER, spring	2				
11	1140330008	WASHER	1				
12	1711900064	PLATE	1		10820001~10820090		
13	1652900007	CLAMP	1				
14	1130040010	NUT	1				
15	1140020010	WASHER, spring	2				
16	1100040816	BOLT	1				
17	1711900076	CLAMP	1				
18	1100041016	BOLT	1				
	B5c162						

silverhorn.co.uk

TRAVEL ALARM

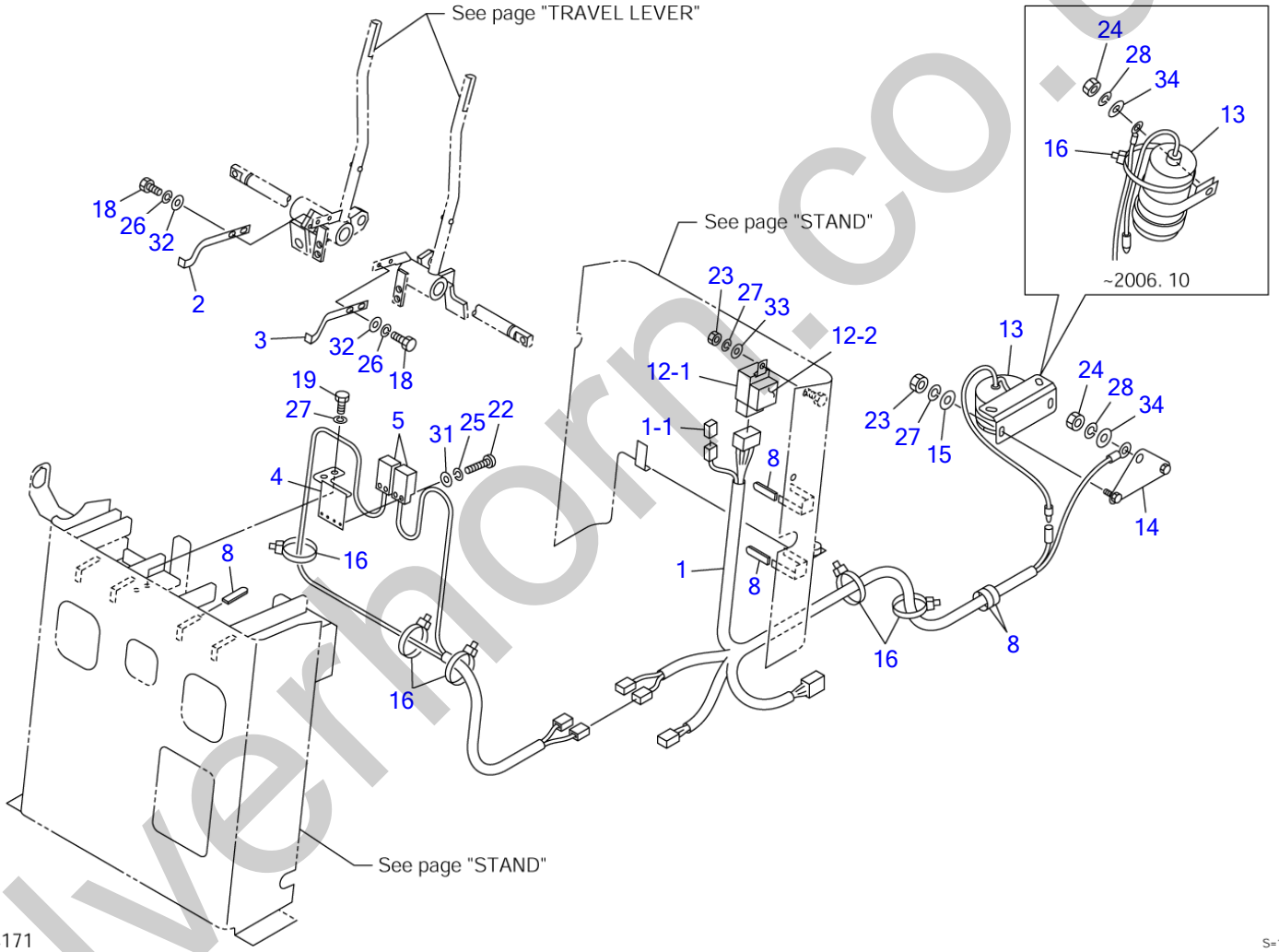

silverhorn.co.uk

TRAVEL ALARM

Item	Part number	Description	Q'ty	Chan.	Serial No.	Serv.	Remarks
		ALAME ASSY, travel					X03242-69000-1
1	0324269010	HARNESS, wiring	1				
1-1	1730500008	・DIODE (3A, yellow)	1				
2	0324261210	PLATE	1				
3	0324263010	PLATE	1				
4	0324261130	PLATE	1				
5	1700009010	SWITCH, proximity	2				
8	0872433150	TUBE	8				
12	0334230130	RELAY ASSY	1				
12-1	1711900042	・RELAY	1				
12-2	1654302003	・SPONGE	1				
13	0354211050	BUZZER	1		~2006. 10		
	1703700013	BUZZER	1		2006. 10~	M	No. 23665
14	0564228010	BRACKET	1		2006. 10~	M	
15	0003600110	WASHER	2		2006. 10~	M	
16	1652231250	BAND	6				
18	1100040510	BOLT	4				
19	1100040616	BOLT	2				
22	1120530312	SCREW	4				
23	1130030006	NUT	3				
24	1130030008	NUT	1				
25	1140020003	WASHER, spring	4				
26	1140020005	WASHER, spring	4				
27	1140020006	WASHER, spring	5				
28	1140020008	WASHER, spring	1				
31	1141110003	WASHER	4				
32	1141110005	WASHER	4				
33	1141110006	WASHER	1				
34	1141110008	WASHER	1				
	B5c171						

silverhorn.co.uk

BATTERY

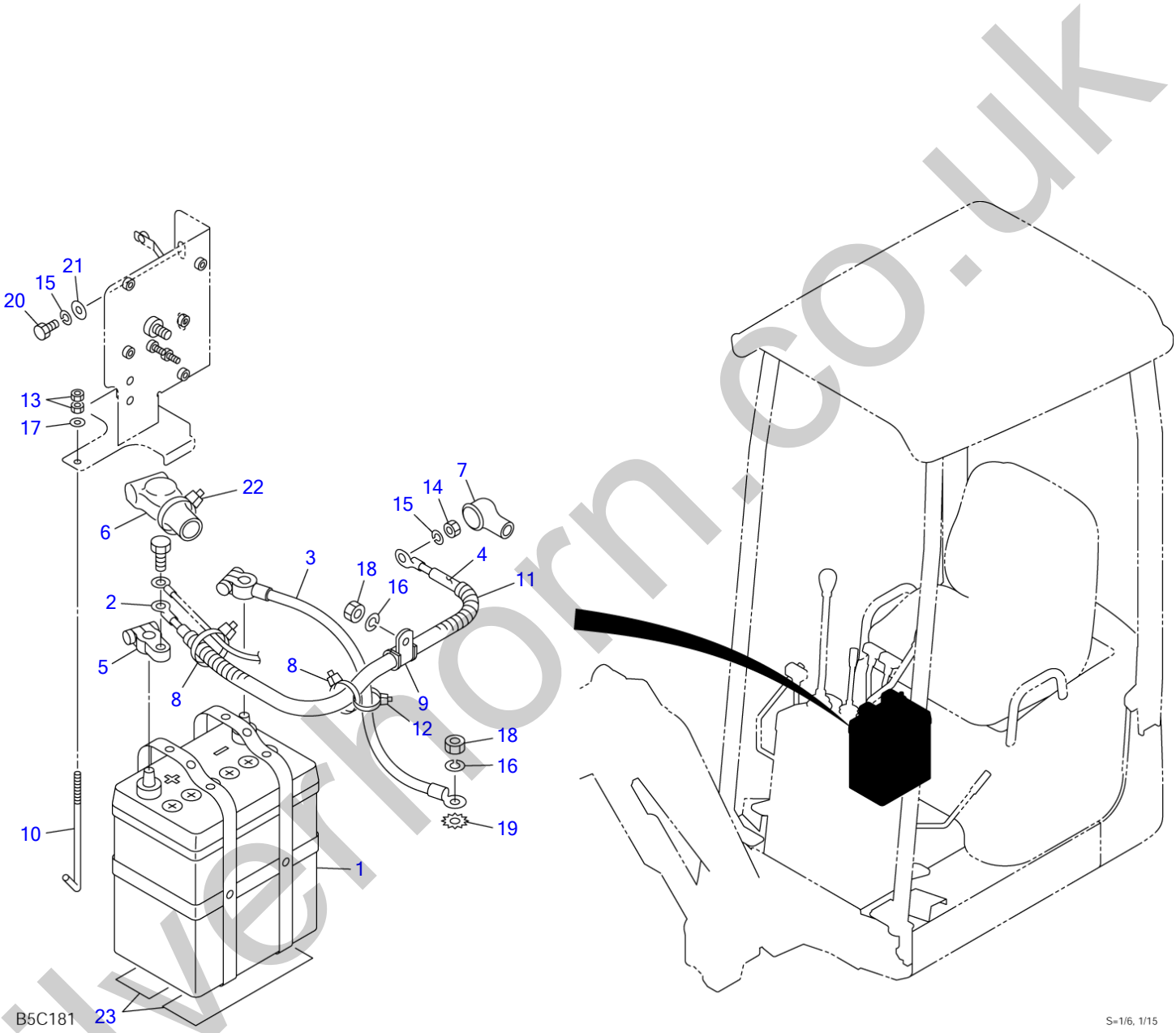

silverhorn.co.uk

BATTERY

Item	Part number	Description	Q'ty	Chan.	Serial No.	Serv.	Remarks
		BATTERY ASSY					X03244-54200-2
1	0324454100	BATTERY	1				
2	1702522035	CABLE, battery	1				
3	1702222032	CABLE, earth	1				
4	1703211024	BOOT	1				
5	1702330040	TERMINAL	1				
6	1702920060	COVER	1				
7	1910213126	CAP	1				Y119773-77030
8	1652231140	BAND	2				
9	1711900076	CLAMP	1				
10	1702106140	BOLT	1		10820001~10820153		
	1702106120	BOLT	1		10820154~		
11	1532215024	TUBE	1				sold by the meter
12	1652231250	BAND	1		10820127~		
13	1130040006	NUT	2				
14	1130040008	NUT	1				
15	1140020008	WASHER, spring	3				
16	1140020010	WASHER, spring	1				
17	1141110006	WASHER	1				
18	1130040010	NUT	2				
19	1140330010	WASHER	1				
20	1100040814	BOLT	2				
21	0003608252	WASHER	2				
22	1652201005	BAND	1				
23	1654705016	RUBBER	2				
	B5c181						

silverhorn.co.uk

MAINTENANCE LIGHT SOCKET

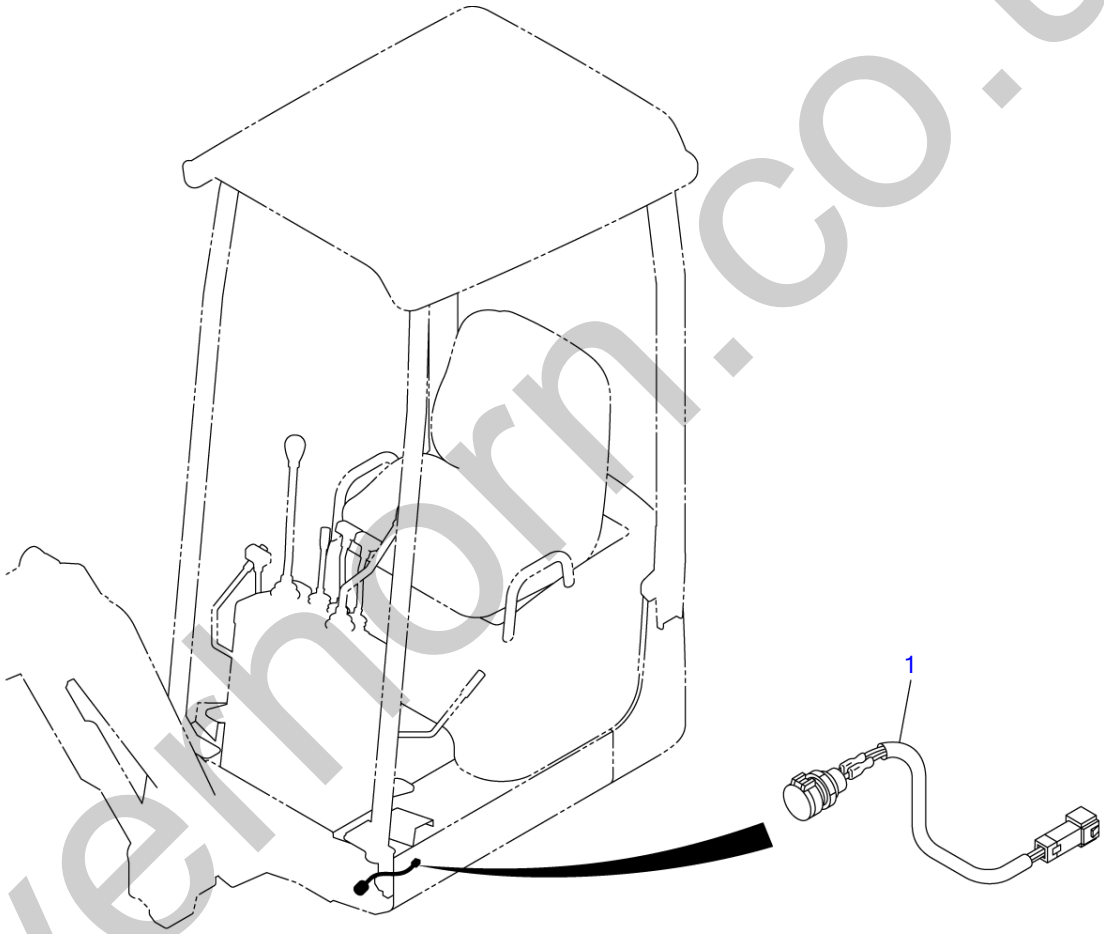

B5C100

S=1/4.5, 1/15

silverthorn.co.uk

MAINTENANCE LIGHT SOCKET

Item	Part number	Description	Q'ty	Chan.	Serial No.	Serv.	Remarks
		SOCKET ASSY, maintenance light					X03942-03000-3
1	**0394203100 B5c100**	SOCKET ASSY	1				

silverhorn.co.uk

GREASE PIPING

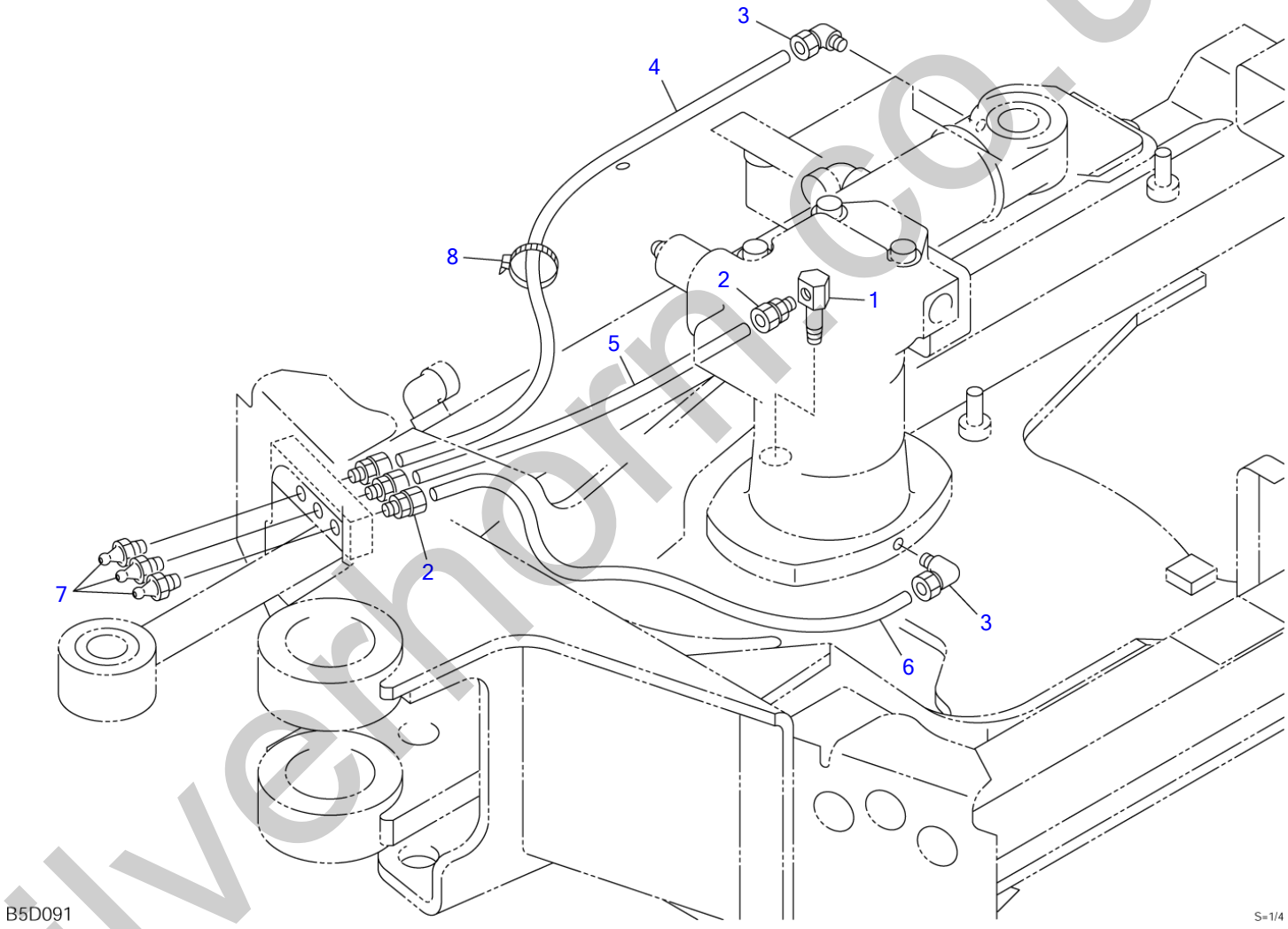

silvernorm.co.uk

GREASE PIPING

Item	Part number	Description	Q'ty	Chan.	Serial No.	Serv.	Remarks
		PIPING ASSY, grease					X03224-01100-1
1	0007262011	ELBOW	1				
2	1532520601	CONNECTOR	4				
3	1532620601	ELBOW	2				
4	1532020663	TUBE	1				sold by the meter
5	1532020634	TUBE	1				sold by the meter
6	1532020644	TUBE	1				sold by the meter
7	1560001000	FITTING, grease	3				
8	1652231100	BAND	1				
	B5d091						

silverhorn.co.uk

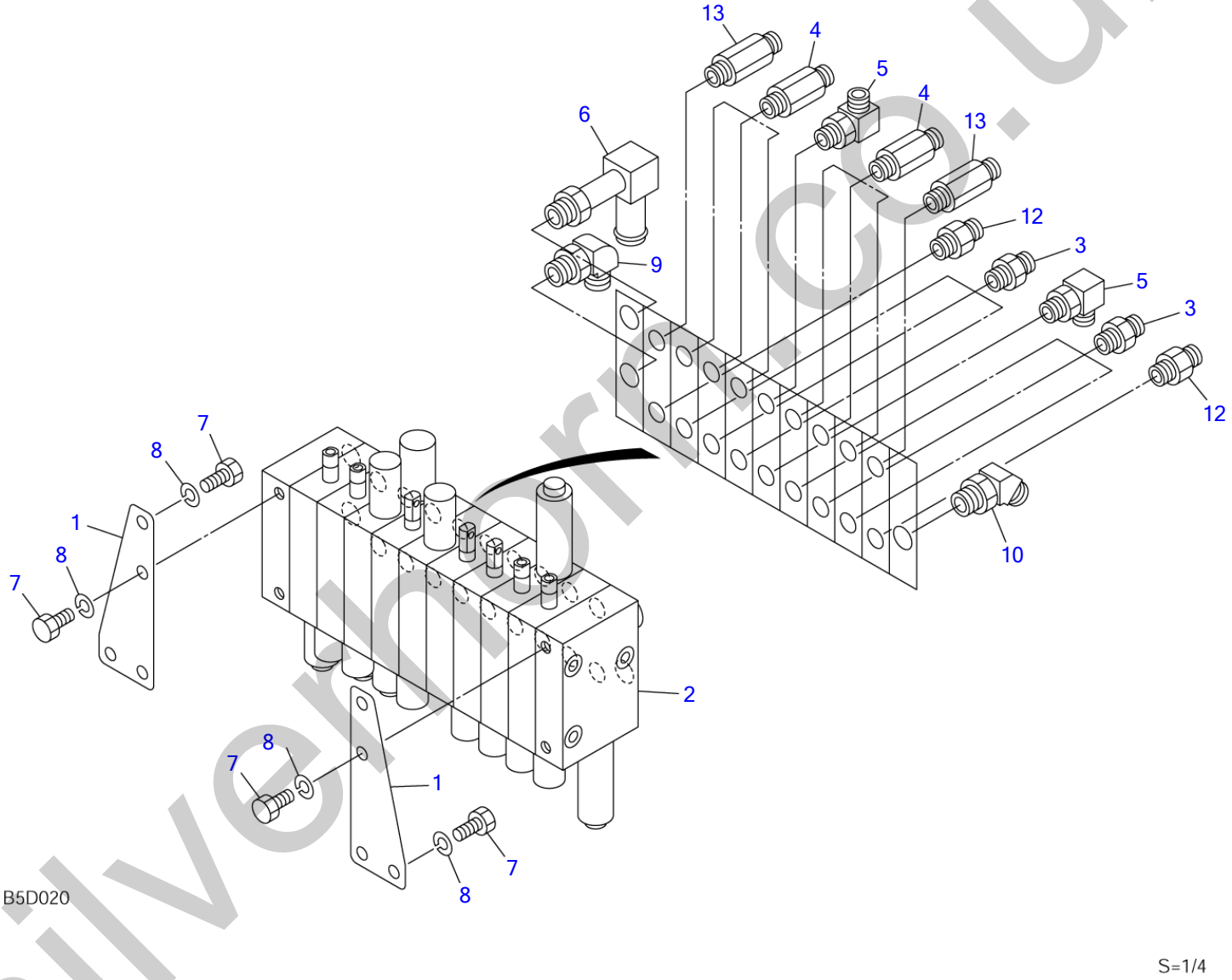

silverhorse.co.uk

VALVE & ACCESSORIES

Item	Part number	Description	Q'ty	Chan.	Serial No.	Serv.	Remarks
		VALVE ASSY, control					X03250-56000-4
1	0325054100	PLATE	2				
2	1901040200	VALVE, control	1				
3	1515600200	ADAPTOR	6				
	1420010110	・O-RING	1				
4	0007203034	ADAPTOR	6				
5	1515010130	ELBOW	2				
	1420010110	・O-RING	1				
6	1513350002	ELBOW	1				
	1420010140	・O-RING	1				
7	1100040816	BOLT	8				
8	1140020008	WASHER, spring	8				
9	1515010041	ELBOW	1				
	1420010140	・O-RING	1				
10	1515100111	ELBOW	1				
	1420010140	・O-RING	1				
12	0007203079	ADAPTOR	2				
13	0007203080	ADAPTOR	2				
	B5d021						

silverhorn.co.uk

PIPING; UPPER (1/2)

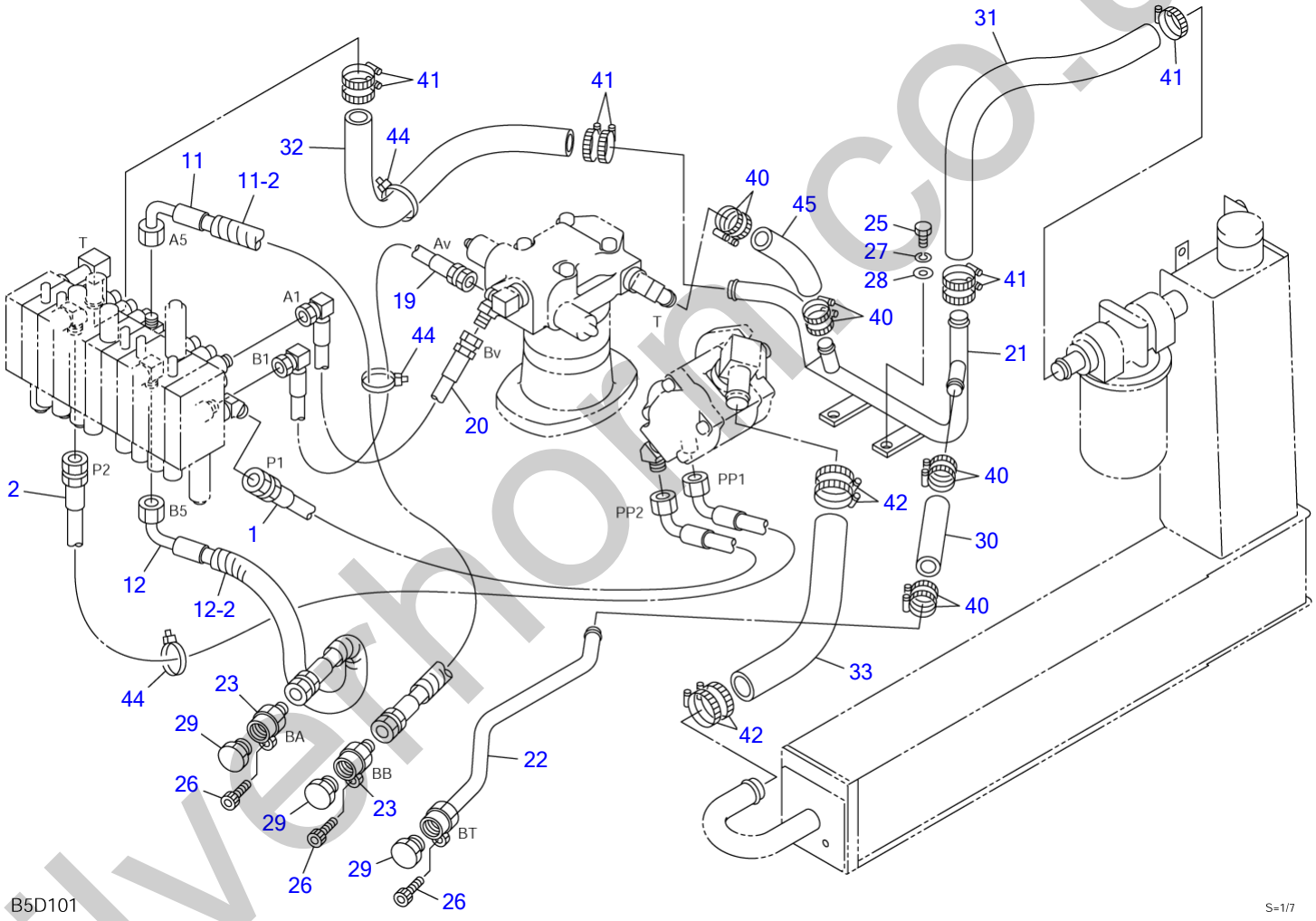

silverthorn.co.uk

PIPING; UPPER (1/2)

Item	Part number	Description	Q'ty	Chan.	Serial No.	Serv.	Remarks
		PIPING ASSY, upper					X03270-59000-2
1	0327059160	HOSE ASSY	1				
2	0327059170	HOSE ASSY	1				
11	0327055110	HOSE ASSY	1				18015-21502
11-2	1532215036	・PROTECTOR	1				sold by the meter
12	0327055130	HOSE ASSY	1				18015-21052
12-2	1532215016	・PROTECTOR	1				sold by the meter
19	0327053420	HOSE ASSY	1				
20	0327053430	HOSE ASSY	1				
21	0327059010	PIPE	1				
22	0327056220	PIPE	1				
23	0417002200	ADAPTOR	2				
25	1100040820	BOLT	2				
26	1110040820	SCREW, cap	3				
27	1140020008	WASHER, spring	2				
28	1141110008	WASHER	2				
29	1501750004	PLUG	3				
	1420010180	・O-RING	1				
30	1530516012	HOSE	1				sold by the meter
31	1530519044	HOSE	1				sold by the meter
32	1530519036	HOSE	1				sold by the meter
33	1530525032	HOSE	1		10820001~10820078		sold by the meter
	0327059020	HOSE	1	(H)	10820079~		
40	1533700025	BAND	8				
41	1533700028	BAND	9				
42	1533700041	BAND	4				
44	1652201007	BAND	3				
45	1530516013	HOSE	1				sold by the meter
	B5d102						

silverhorn.co.uk

PIPING; UPPER (2/2)

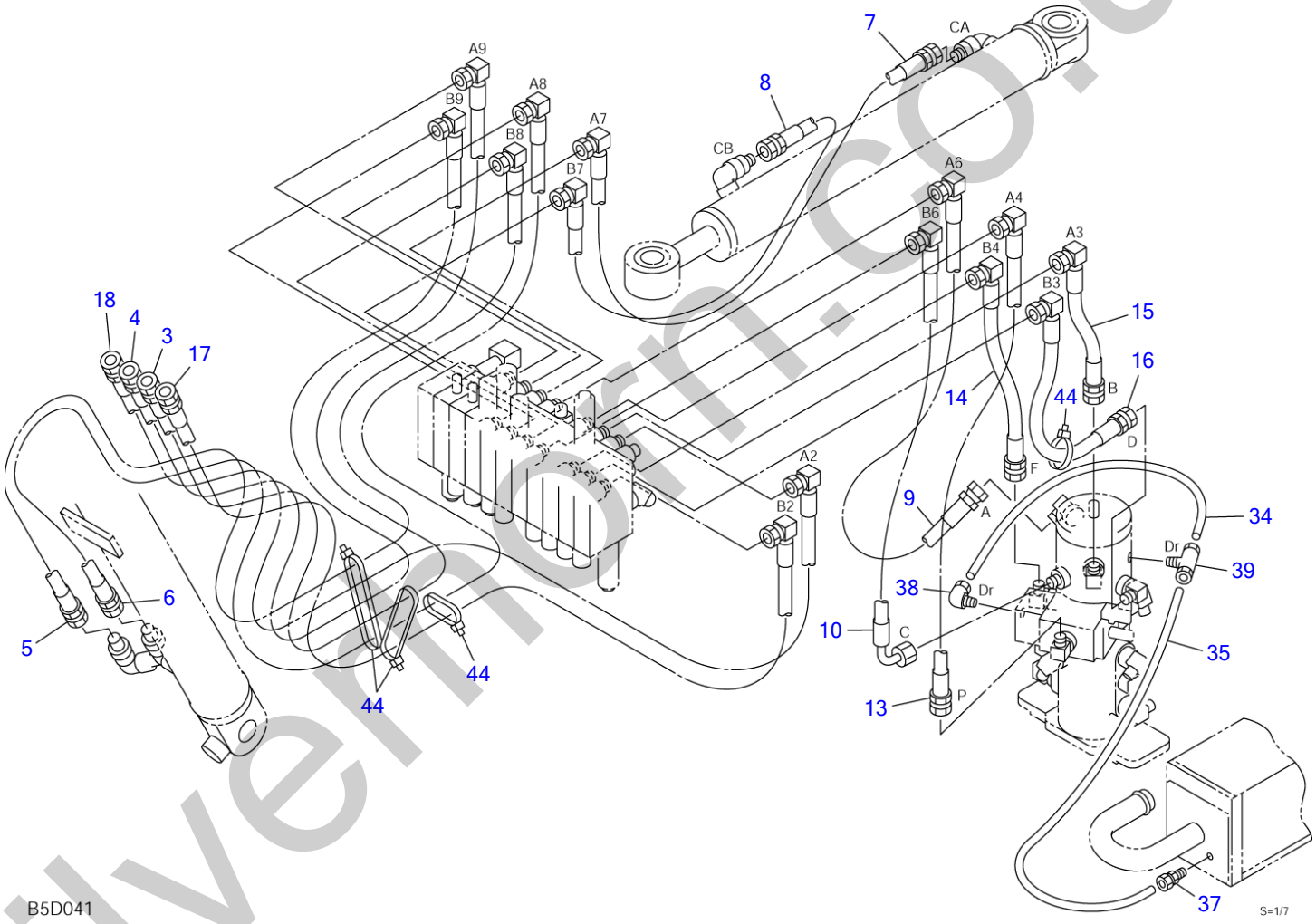

silvermorn.co.uk

PIPING; UPPER (2/2)

Item	Part number	Description	Q'ty	Chan.	Serial No.	Serv.	Remarks
		PIPING ASSY, upper					X03270-59000-2
3	0327058260	HOSE ASSY	1				
4	0327058270	HOSE ASSY	1				
5	0327058280	HOSE ASSY	1				
6	0327058290	HOSE ASSY	1				
7	0327053300	HOSE ASSY	1				
8	0327053310	HOSE ASSY	1				
9	0327053320	HOSE ASSY	1				
10	0327053330	HOSE ASSY	1				
13	0327053360	HOSE ASSY	1				
14	0327053370	HOSE ASSY	1				
15	0327053380	HOSE ASSY	1				
16	0327053390	HOSE ASSY	1				
17	0327058400	HOSE ASSY	1				
18	0327058410	HOSE ASSY	1				
34	1532020624	TUBE	1				sold by the meter
35	1532020646	TUBE	1				sold by the meter
37	1532520601	CONNECTOR	1				
38	1532620601	ELBOW	1				
39	1532720601	TEE	1				
44	1652201007	BAND	4				
	B5d112						

silverhorn.co.uk

PUMP DRIVE

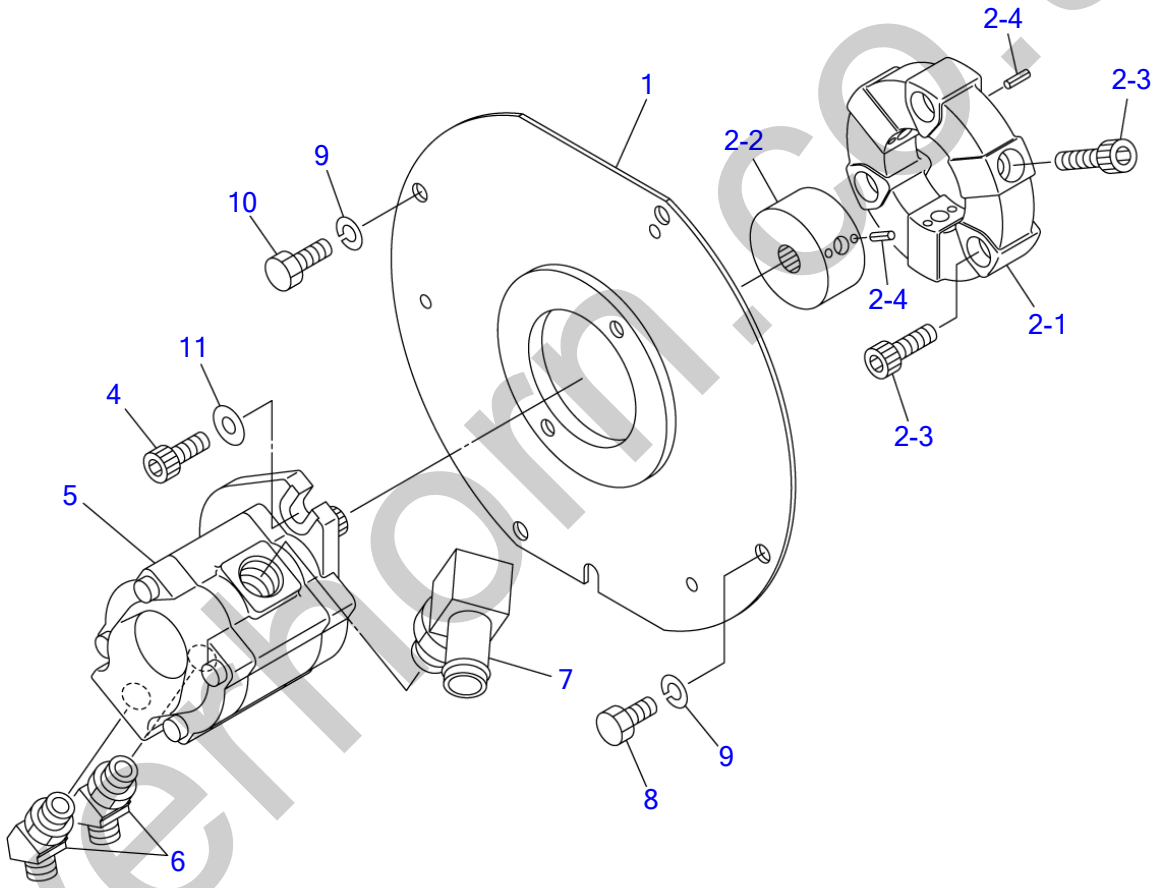

B5D120

S=1/4

silverhorn.co.uk

PUMP DRIVE

Item	Part number	Description	Q'ty	Chan.	Serial No.	Serv.	Remarks
		PUMP ASSY, drive					X03252-03000-5
1	0325203200	PLATE	1				
2	0325202100	COUPLING ASSY	1				
2-1	0325202101	・COUPLING, frex	1				
2-2	0325202102	・COUPLING	1				
2-3	1110041030	・SCREW, cap	6				
2-4	1213000408	・PIN, spring	9				
4	1110041025	SCREW, cap	2				
5	1902018900	PUMP, hydraulic	1				
6	1515100111	ELBOW	2				
	1420010140	・O-RING	1				
7	1513350023	CONNECTOR	1				
	1420010240	・O-RING	1				
8	1100041016	BOLT	3				
9	1140020010	WASHER, spring	6				
10	1100041020	BOLT	1				
11	1141550010	WASHER	2				
	B5d120						

silverhorn.co.uk

HYDRAULIC TANK

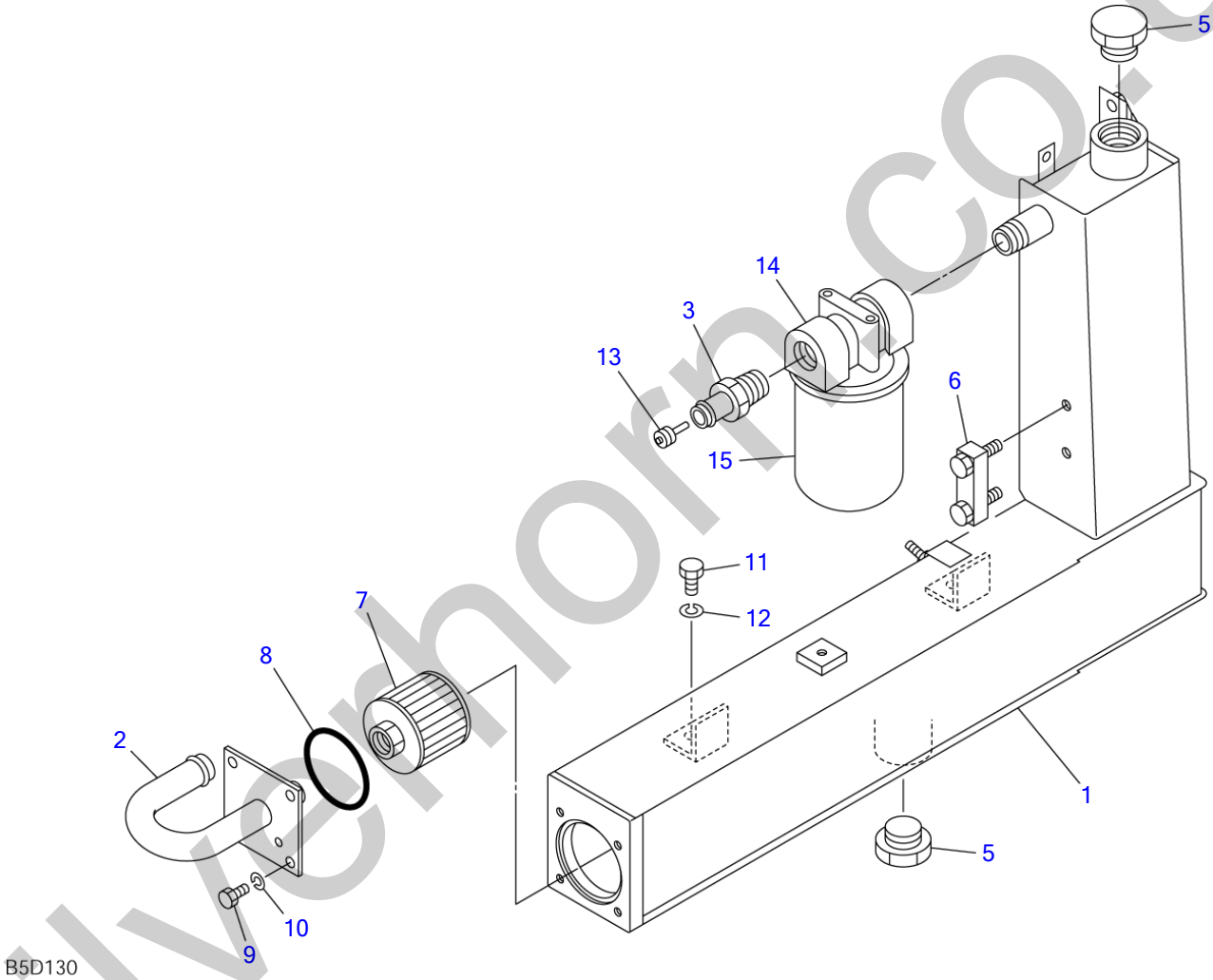

silverhorn.co.uk

HYDRAULIC TANK

Item	Part number	Description	Q'ty	Chan.	Serial No.	Serv.	Remarks
		TANK ASSY, hydraulic					X03280-57000-1
1	0328057100	TANK, hydraulic	1				
2	0328054300	FLANGE	1				
3	0418002300	ADAPTOR	1				
5	1501750010	PLUG	2				
	1420010290	▪ O-RING	1				
6	1553023650	GAUGE	1				
7	1550004150	STRAINER	1				
8	1420100750	O-RING	1				
9	1100040814	BOLT	4				
10	1140020008	WASHER, spring	4				
11	1100041020	BOLT	2				
12	1140020010	WASHER, spring	2				
13	1540142220	VALVE, bypass	1				
14	1551020190	GUARD	1				
15	1551020310	CARTRIDGE	1				
	B5d131						

silverhorn.co.uk

FUEL TANK & FUEL PIPING

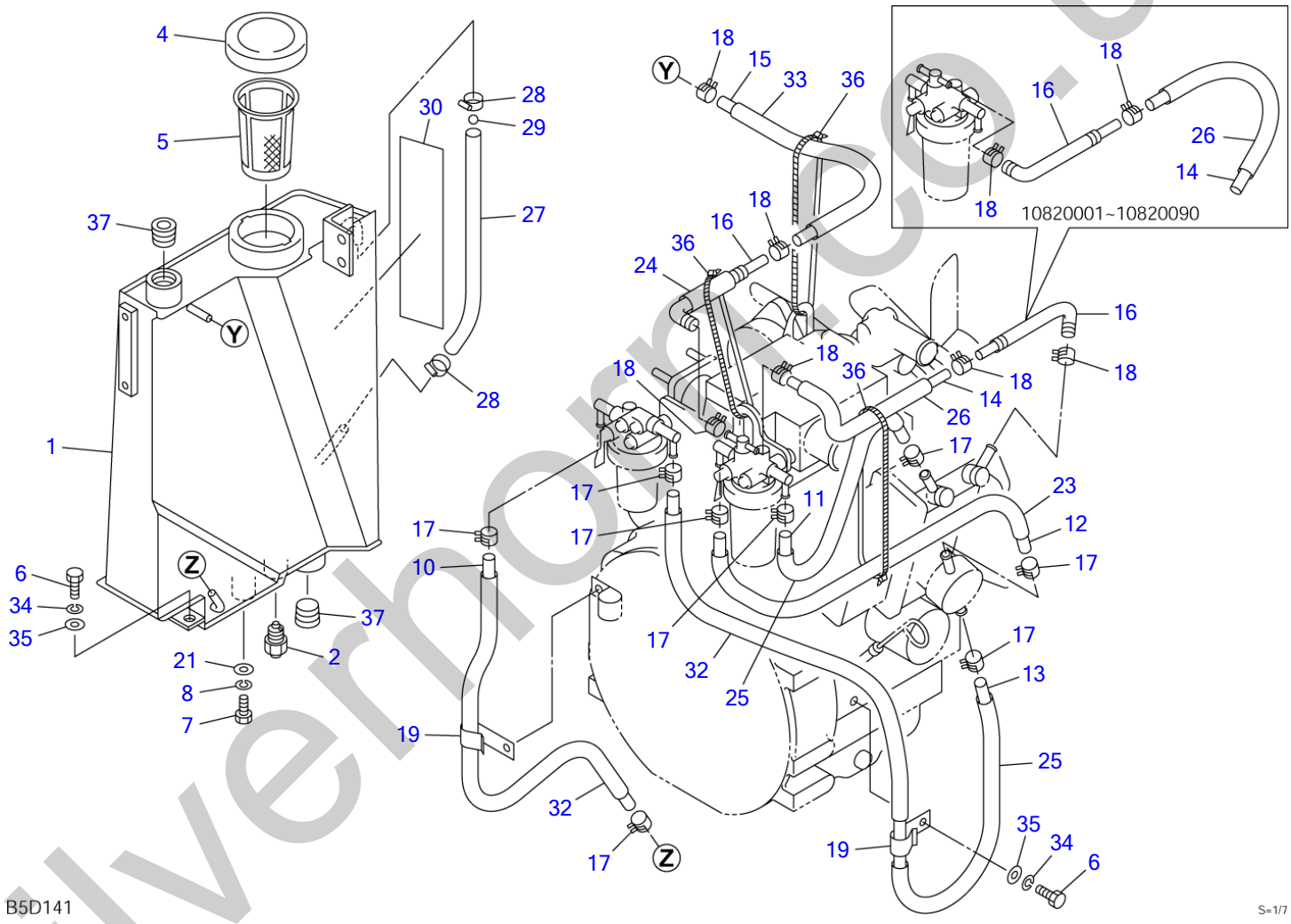

silverhorse.co.uk

FUEL TANK & FUEL PIPING

Item	Part number	Description	Q'ty	Chan.	Serial No.	Serv.	Remarks
		TANK ASSY, fuel					03281-57000-1
1	0328157200	TANK	1				
2	0328154002	ADAPTOR	1				
4	1552001022	CAP	1				
5	1552002012	STRAINER	1				
6	1100041020	BOLT	2				
7	1100040816	BOLT	1				
8	1140020008	WASHER, spring	2				
10	1531207055	HOSE	1				sold by the meter
11	1531207024	HOSE	1				sold by the meter
12	1531207051	HOSE	1				sold by the meter
13	1531207073	HOSE	1				sold by the meter
14	1531211029	HOSE	1				sold by the meter
15	1531211033	HOSE	1				sold by the meter
16	1910065047	BEND	2				Y 119840-59601
17	1533120012	BAND	8				
18	1533120010	BAND	8				
19	0007300035	CLAMP	2				
21	1141110008	WASHER	1				
23	1531115045	PROTECTOR	1				sold by the meter
24	1531115008	PROTECTOR	1				sold by the meter
25	1531115018	PROTECTOR	2				sold by the meter
26	1531115023	PROTECTOR	1				sold by the meter
27	1531010033	HOSE	1				sold by the meter
28	1533700015	BAND	2				
29	1553000001	FLOAT	1				
30	0339330900	DECAL	1				
32	1531115049	PROTECTOR	2				sold by the meter
33	1531115028	PROTECTOR	1				sold by the meter
34	1140020010	WASHER, spring	2				
35	1141110010	WASHER	2				
36	1652201005	BAND	3				
37	1501810006	PLUG	2				
	B5d141						

silverhorn.co.uk

COVER (1/2)

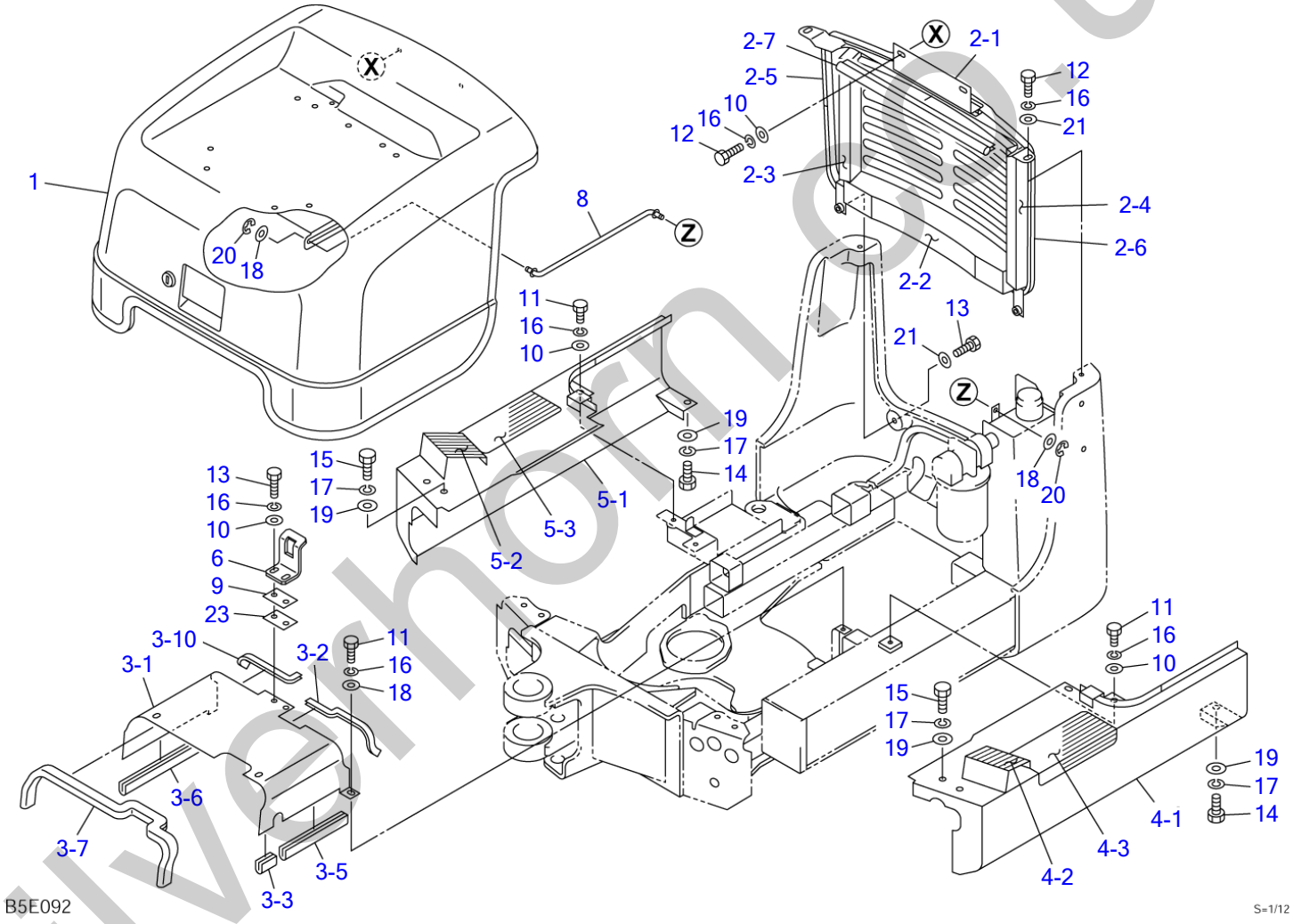

silverhorn.co.uk

COVER (1/2)

Item	Part number	Description	Q'ty	Chan.	Serial No.	Serv.	Remarks
		COVER ASSY					X03282-60000-1
1	0328260100	HOOD, engine	1				see page (2/2)
2	0328260200	COVER ASSY, rear	1				
2-1	0328260210	・COVER	1				
2-2	0328257302	・ABSORBENT, noise	1				
2-3	0328257303	・ABSORBENT, noise	1				
2-4	1654342030	・SPONGE	1				sold by the meter
2-5	1654318014	・SPONGE	1				sold by the meter
2-6	1654318100	・SPONGE	1				sold by the meter
2-7	1654625041	・SEAL	1				sold by the meter
3	0328260300	COVER ASSY, center	1				
3-1	0328260310	・COVER	1				
3-2	1653916021	・TRIM	1				sold by the meter
3-3	1654606003	・SEAL	1				sold by the meter
3-5	1654606015	・SEAL	1				sold by the meter
3-6	1654606020	・SEAL	1				sold by the meter
3-7	1654606052	・SEAL	1				sold by the meter
3-10	1653916014	・TRIM	1				sold by the meter
4	0328257600	COVER ASSY, side (L.H.)	1				
4-1	0328257610	・COVER, side (L.H.)	1				
4-2	0333241250	・SHEET	1				
4-3	0358202400	・SHEET	1				
5	0328257700	COVER ASSY, side (R.H.)	1				
5-1	0328257710	・COVER, side (R.H.)	1				
5-2	0333241250	・SHEET	1				
5-3	0358202400	・SHEET	1				
6	0328259006	HOOK	1				
8	0328257080	ROD	1				
9	0003900028	SPACER	1				
10	0003608252	WASHER	6				
11	1100040816	BOLT	6				
12	1100040820	BOLT	4				
13	1100040825	BOLT	4				
14	1100041020	BOLT	2				
15	1100041025	BOLT	4				
16	1140020008	WASHER, spring	10				
17	1140020010	WASHER, spring	6				
18	1141110008	WASHER	6				
19	1141110010	WASHER	6				
20	1224010006	RING, retaining	2				
21	1141550008	WASHER	4				
23	0003900027	SPACER	AR				t=2.3
	B5e091						

silverthorn.co.uk

COVER (2/2) (engine hood)

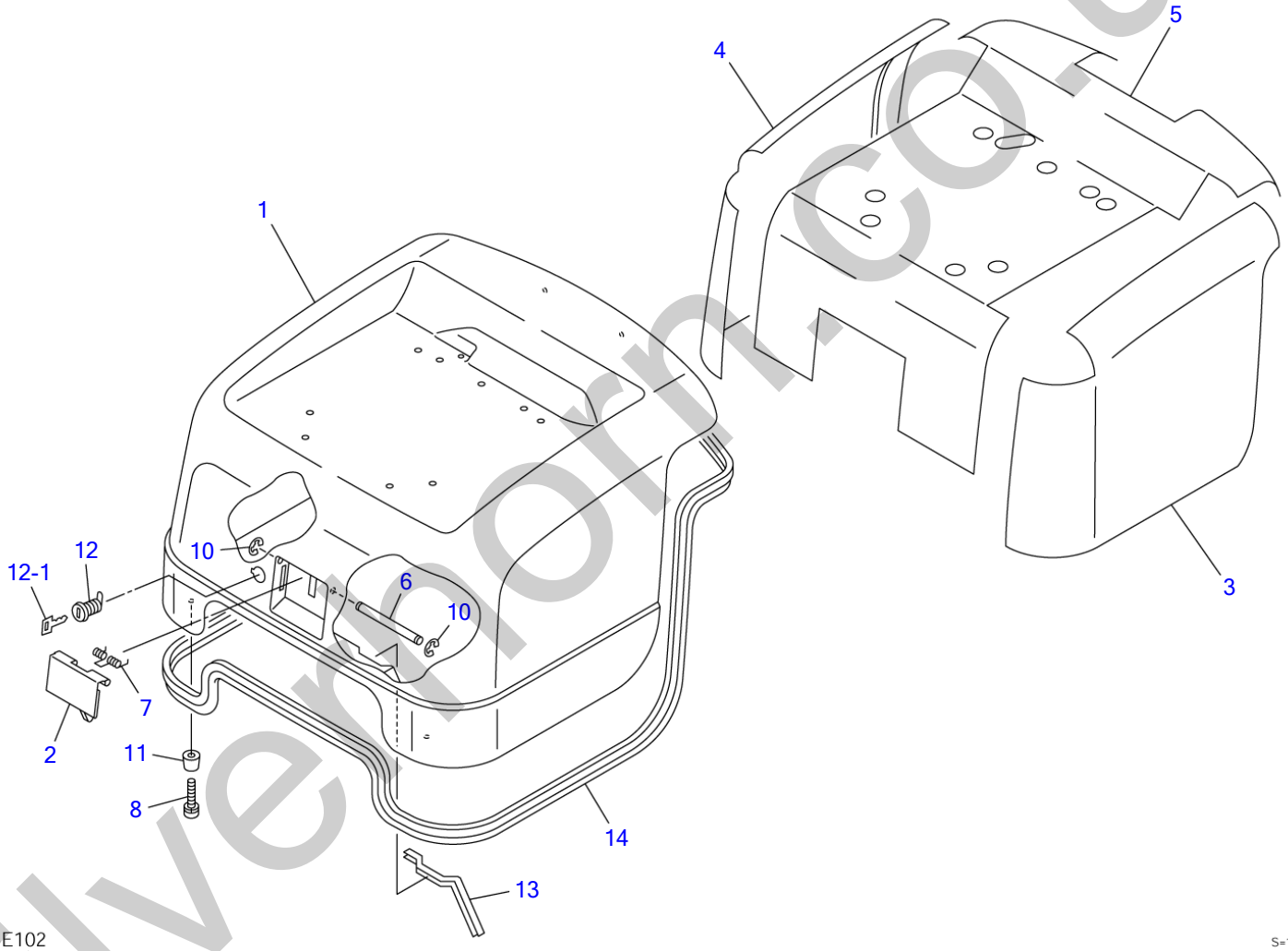

silvermorn.co.uk

COVER (2/2) (engine hood)

Item	Part number	Description	Q'ty	Chan.	Serial No.	Serv.	Remarks
0-1	0328260100	HOOD, engine	1				X03282-60100-2
1	0328260110	・HOOD, engine	1				
2	0328259520	・HANDLE	1				
3	0328257103	・ABSORBENT, noise (L.H.)	1				
4	0328260104	・ABSORBENT, noise (R.H.)	1				
5	0328260105	・ABSORBENT, noise	1				
6	0004206111	・SHAFT	1				
7	0007000095	・SPRING	1				
8	1150110416	・SCREW	2				
10	1224010004	・RING, retaining	2				
11	1652112320	・RUBBER	2				
12	1653611836	・LOCK	1				
12-1	1700100019	・KEY	1				
13	1653916023	・TRIM	1				sold by the meter
14	1654606298	・SEAL	1				sold by the meter
	B5e102						

silverhorn.co.uk

SEAT

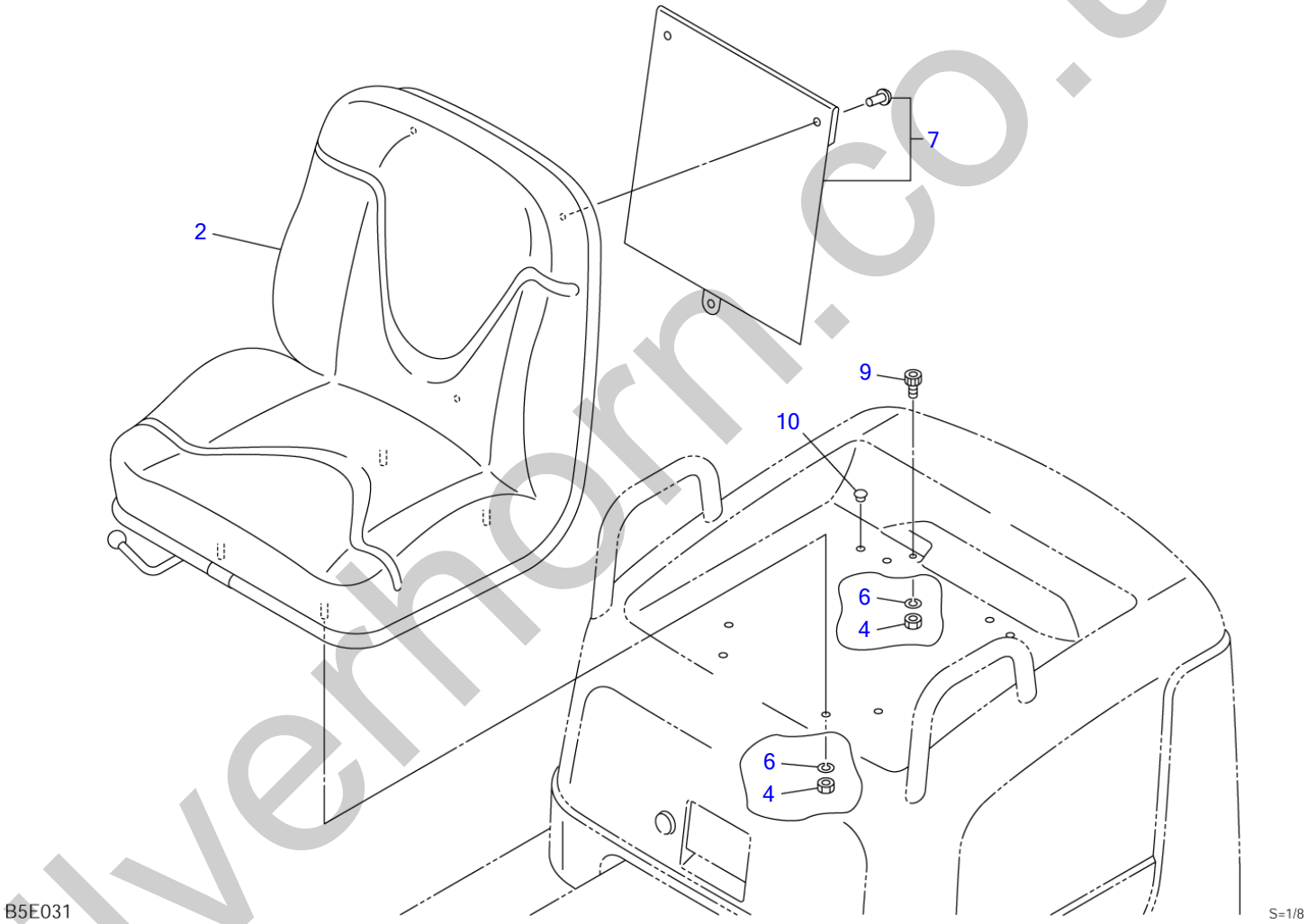

silverhorn.co.uk

SEAT

Item	Part number	Description	Q'ty	Chan.	Serial No.	Serv.	Remarks
		SEAT ASSY					X03234-25000-3
2	1914100087	SEAT	1				
4	1130040008	NUT	5				
6	1140020008	WASHER, spring	5				
7	1914100088	CASE	1				
9	1110040816	SCREW, cap	1				
10	1652533018	CAP	5			M	
	B5e031						

silverhorn.co.uk

SEAT BELT

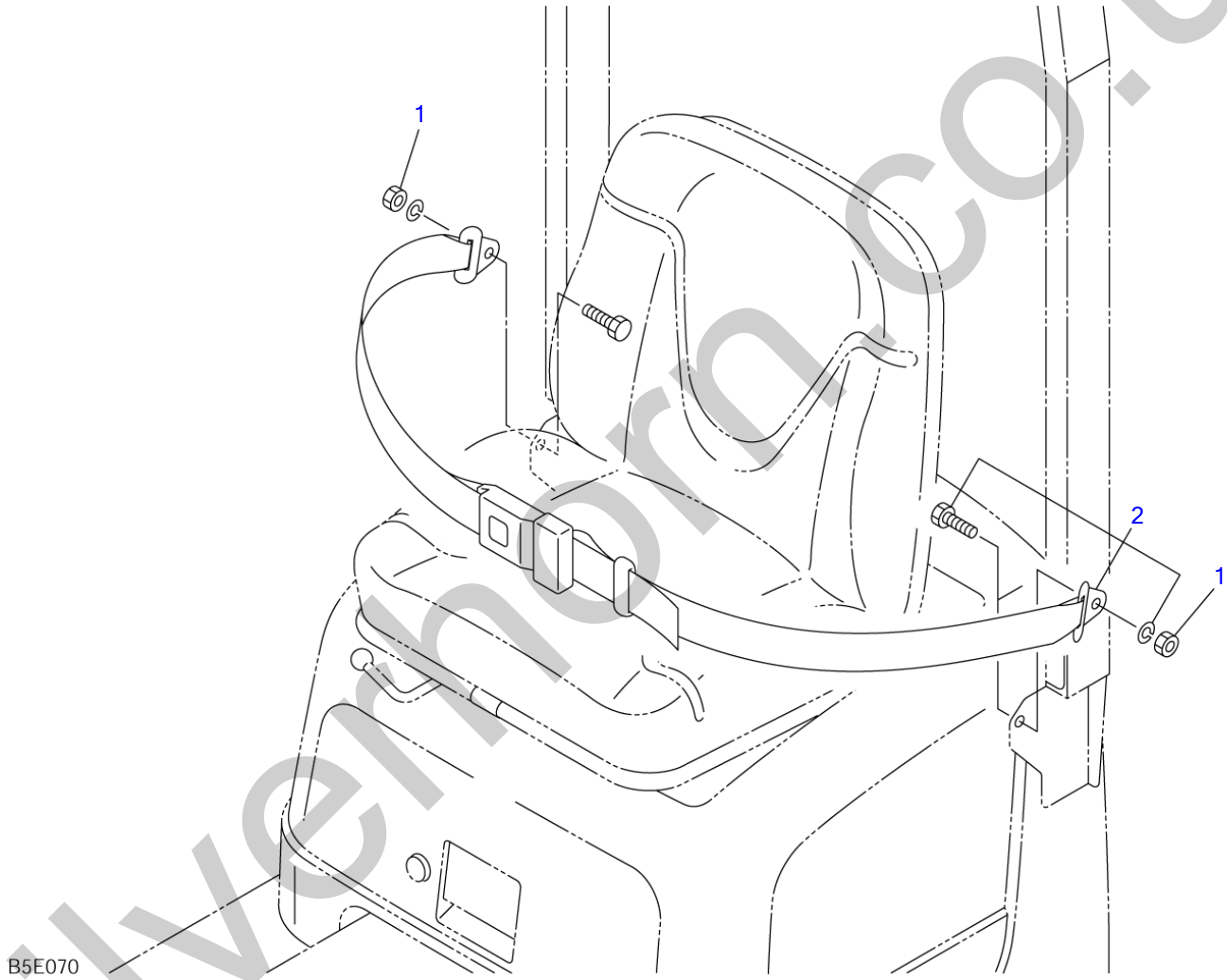

silvermorn.co.uk

SEAT BELT

Item	Part number	Description	Q'ty	Chan.	Serial No.	Serv.	Remarks
		BELT ASSY, seat					X03234-26100-0
1	1132940719	NUT	2				
2	1914100080	BELT, seat	1				
	B5e070						

silverhorn.co.uk

SEAT BELT (retractable)

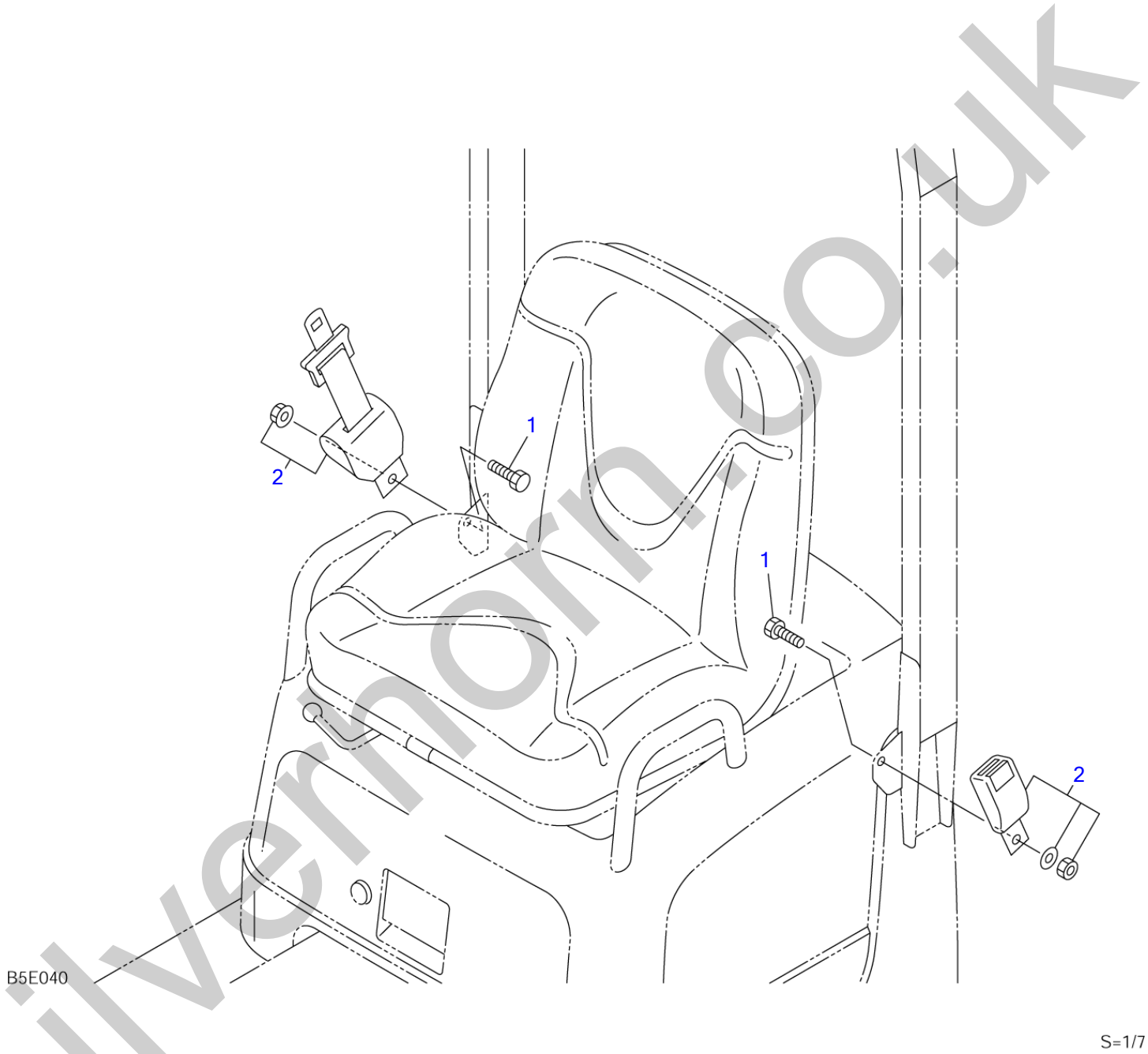

silvermorn.co.uk

SEAT BELT (retractable)

Item	Part number	Description	Q'ty	Chan.	Serial No.	Serv.	Remarks
		RETRACTABLE TYPE BELT ASSY, seat					X03234-26000-0
1	1111940725	BOLT	2				
2	1914100068	BELT, seat	1				
	B5e040						

silverhorn.co.uk

CANOPY

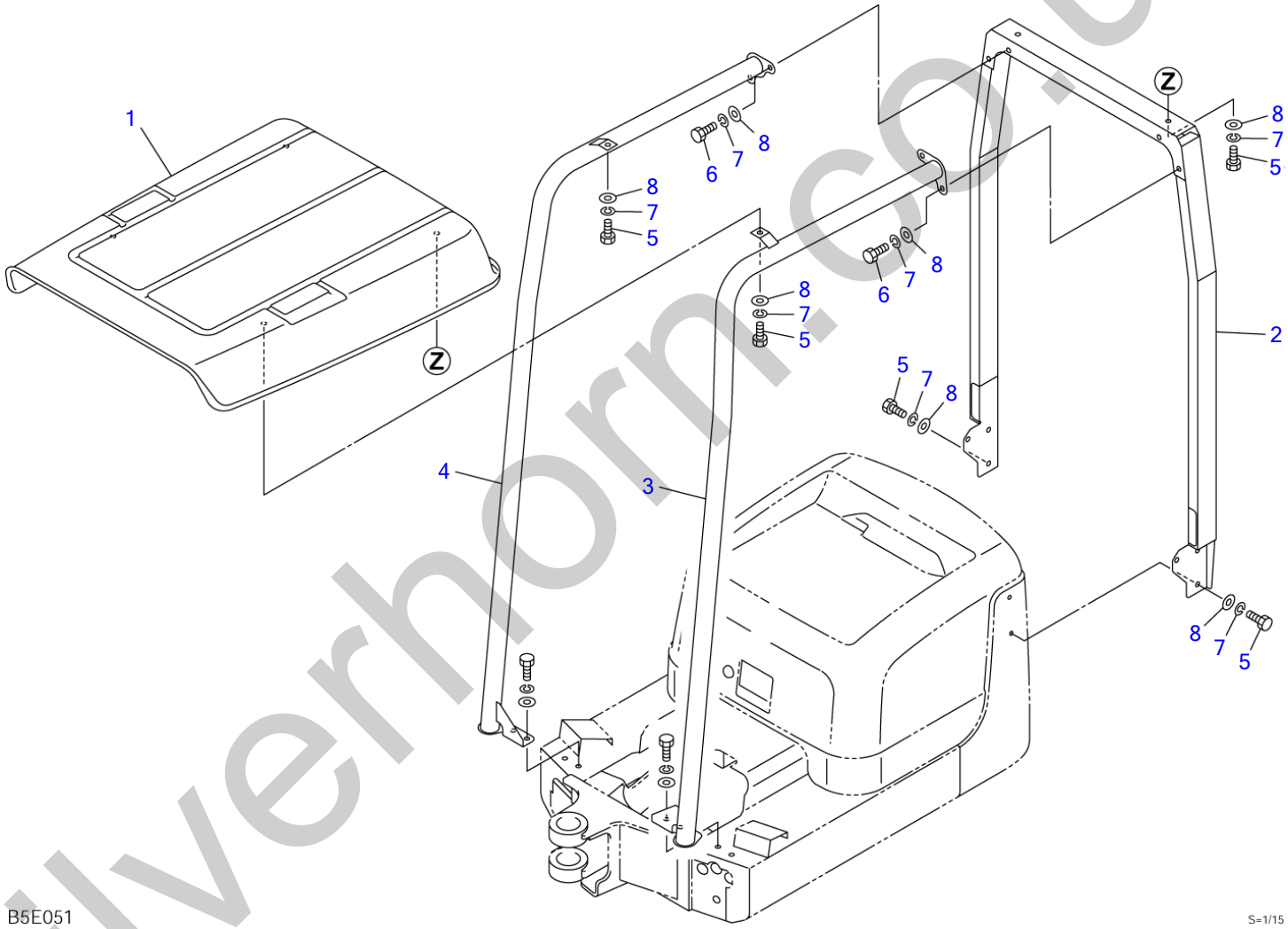

silverhorn.co.uk

CANOPY

Item	Part number	Description	Q'ty	Chan.	Serial No.	Serv.	Remarks
		CANOPY ASSY					X03284-57000-1
1	0328457100	ROOF	1				
2	0328457200	POLE	1				
3	0328457300	POLE (L.H.)	1				
4	0328457400	POLE (R.H.)	1				
5	1100041020	BOLT	8				
6	1100041030	BOLT	8				
7	1140020010	WASHER, spring	16				
8	1141110010	WASHER	16				
	B5e052						

silverhorn.co.uk

CANOPY (with hook)

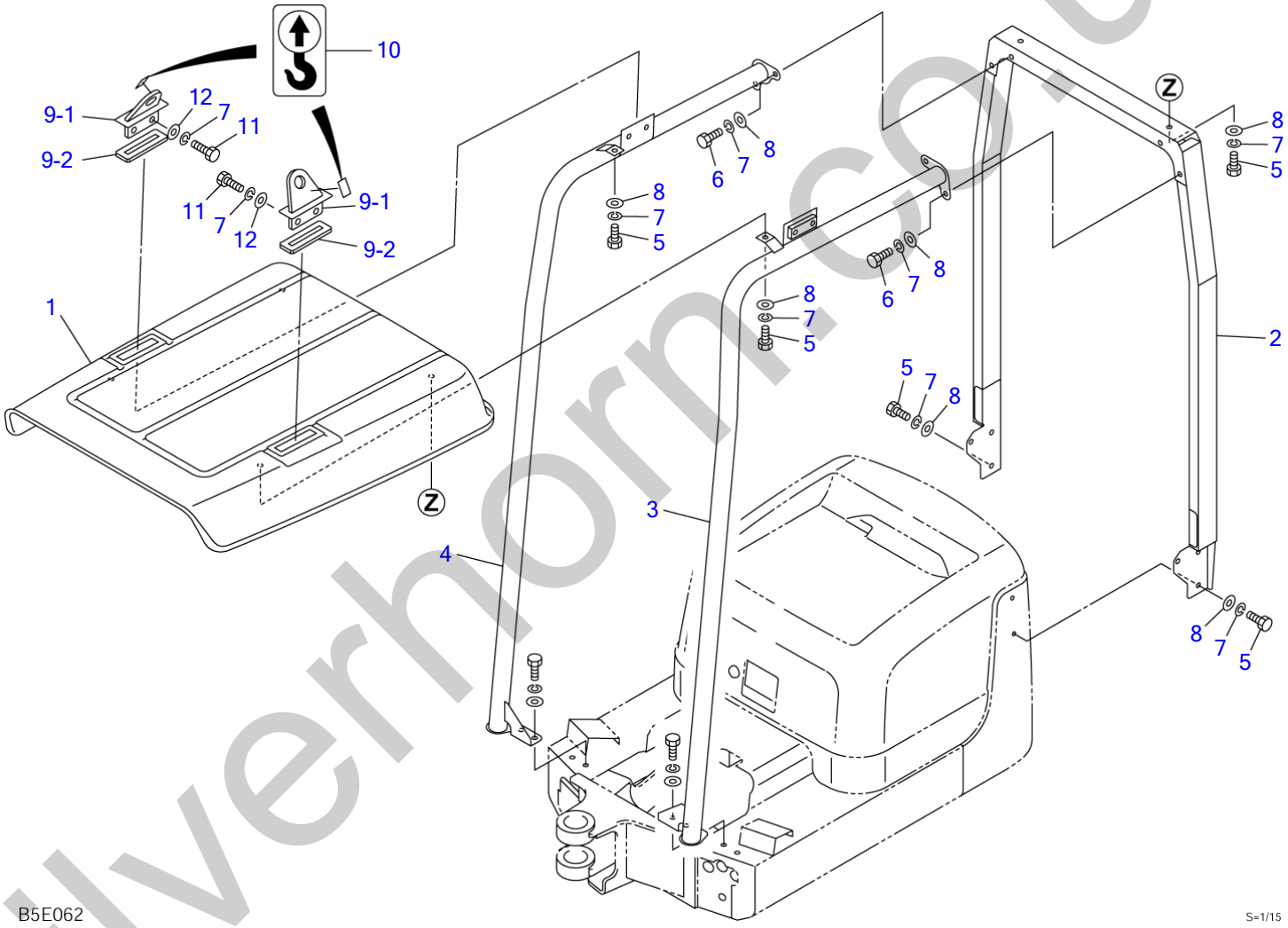

silverhorn.co.uk

CANOPY (with hook)

Item	Part number	Description	Q'ty	Chan.	Serial No.	Serv.	Remarks
		CANOPY ASSY					X03284-59000-1
1	0328459100	ROOF	1				
2	0328457200	POLE	1				
3	0328459300	POLE (L.H.)	1				
4	0328459400	POLE (R.H.)	1				
5	1100041020	BOLT	8				
6	1100041030	BOLT	8				
7	1140020010	WASHER, spring	20				
8	1141110010	WASHER	16				
9	0328456100	HOOK ASSY	2				
9-1	0328456110	・HOOK	1				
9-2	0328455502	・SPONGE	1				
10	0399300500	DECAL	2				
11	1100041035	BOLT	4				
12	0003600025	WASHER	4				
	B5e062						

silverhorn.co.uk

TOOL BOX

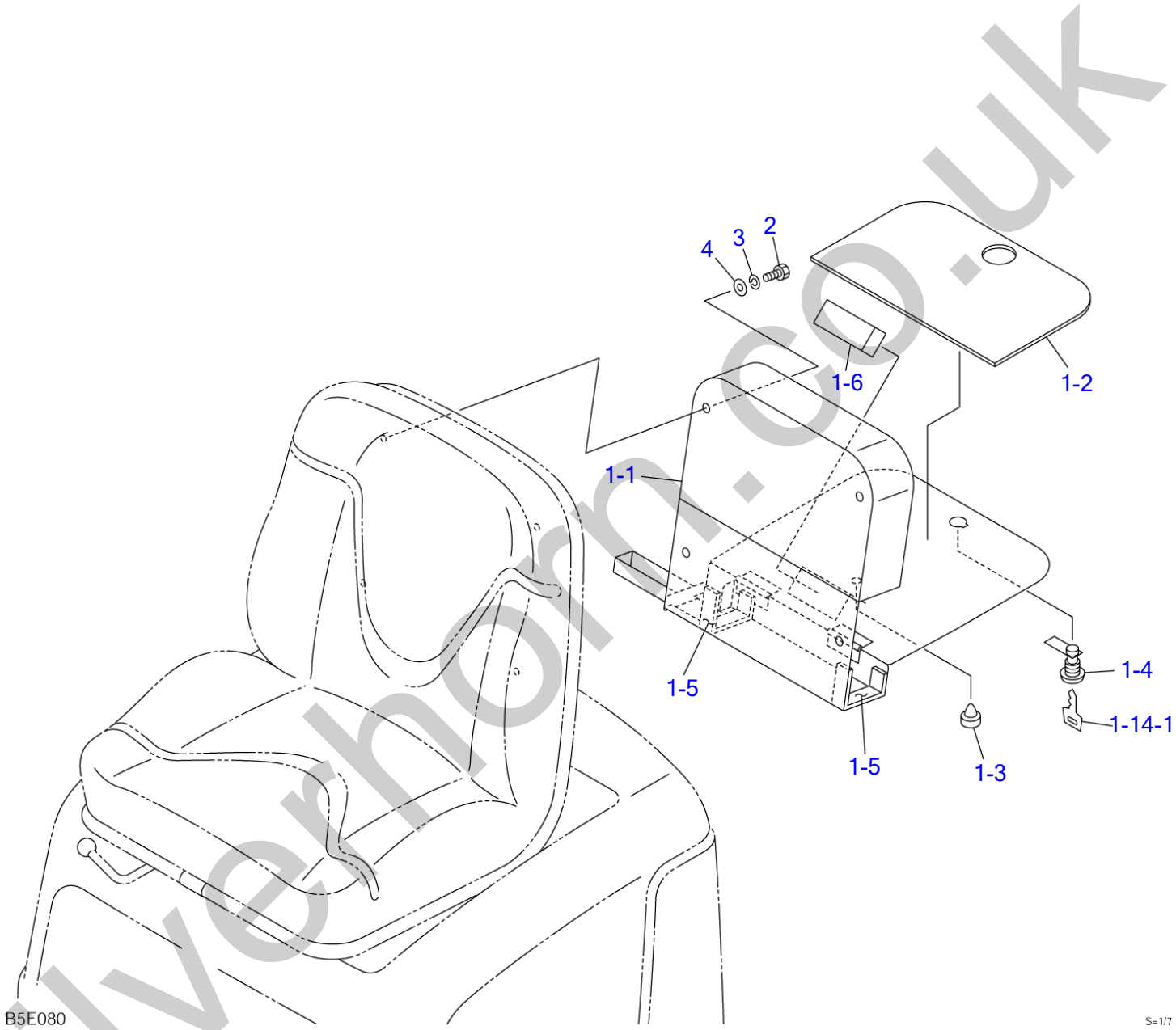

silverhorn.co.uk

TOOL BOX

Item	Part number	Description	Q'ty	Chan.	Serial No.	Serv.	Remarks
		BOX ASSY					X03234-27000-0
1	0323427300	BOX SUB ASSY	1				
1-1	0323427400	・BOX	1				
1-2	0323427302	・SPONGE	1				
1-3	1652505500	・CUSHION, rubber	1				
1-4	1653611836	・LOCK	1				
1-14-1	1700100019	・KEY	1				
1-5	1654301013	・SPONGE	2				
1-6	1654342008	・SPONGE	1				
2	1100040816	BOLT	4				
3	1140020008	WASHER, spring	4				
4	1141110008	WASHER	4				
	B5e080						

silverhorn.co.uk

BOOM

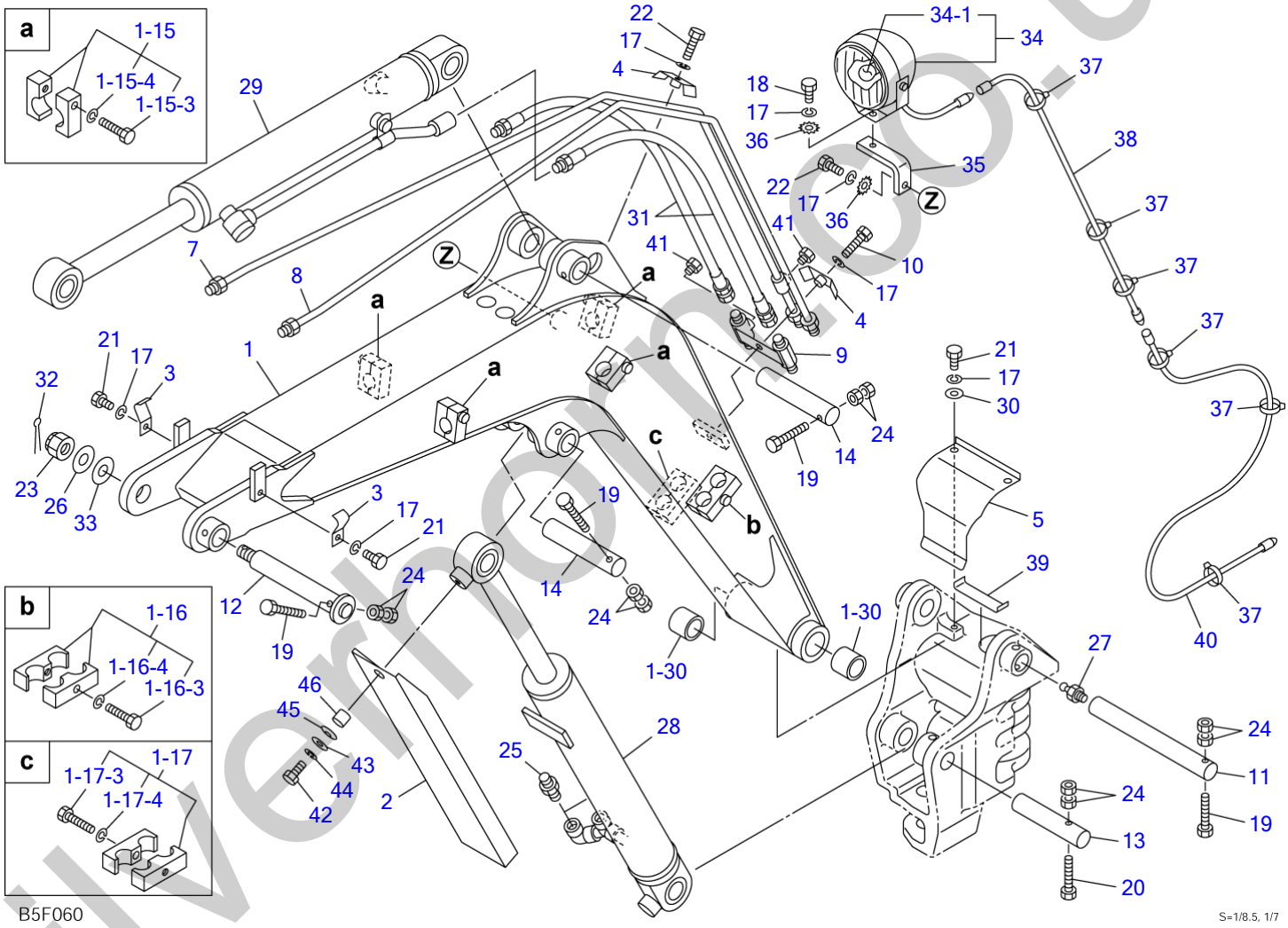

silverhomes.co.uk

BOOM

Item	Part number	Description	Q'ty	Chan.	Serial No.	Serv.	Remarks
		BOOM ASSY					X03260-59000-2
1	0326053100	BOOM	1				
1-15	0326053150	・CLAMP ASSY	4				
1-15-3	1100040835	・・BOLT	1				
1-15-4	1140020008	・・WASHER, spring	1				
1-16	0326053160	・CLAMP ASSY	1				
1-16-3	1100040835	・・BOLT	1				
1-16-4	1140020008	・・WASHER, spring	1				
1-17	0326053170	・CLAMP ASSY	1				
1-17-3	1100040835	・・BOLT	1				
1-17-4	1140020008	・・WASHER, spring	1				
1-30	0002400064	・BUSHING	2				
2	0326059020	COVER, rod	1				
3	0416003300	CLAMP	2				
4	0416003400	CLAMP	2				
5	0326056500	COVER	1				
7	0326053210	PIPE (R.H.)	1				
8	0326051220	PIPE (L.H.)	1				
9	0326053900	JOINT	1				
10	1100040830	BOLT	1				
11	0011570006	PIN	1				
12	0011900003	PIN	1				
13	0011512005	PIN	1				
14	0001600125	PIN	2				
17	1140020008	WASHER, spring	8				
18	1100040816	BOLT	2				
19	1103040855	BOLT	4				
20	1103040875	BOLT	1				
21	1100040812	BOLT	4				
22	1100040825	BOLT	2				
23	1132030018	NUT	1				
24	1130240008	NUT	10				
25	1515600200	ADAPTOR	2				
	1420010110	・O-RING	1				
26	0003620384	WASHER	1				
27	1560001000	FITTING, grease	1				
28	1900096200	CYLINDER, boom	1				
29	1900096300	CYLINDER, arm	1				
30	1141110008	WASHER	4				
31	0326053700	HOSE ASSY	2				
32	1210010435	PIN, split	1				
33	0003102610	SHIM	1				
34	1703000300	LAMP	1				
34-1	1703000203	・BULB	1				
35	0326051800	PLATE	1				
36	1140330008	WASHER	2				
37	1652201005	BAND	6				
38	0326051900	HARNESS, wiring	1				
39	0326058550	RUBBER	1				
40	0414202600	WIRE	1				
41	1501750002	PLUG	2				
	1420010110	・O-RING	1				
42	1100041016	BOLT	1				
43	0003610002	WASHER	1				
44	1140020010	WASHER, spring	1				
45	1225120018	WASHER, conical	1				
46	0003600228	COLLAR	1				
	B5f062						

silverthorn.co.uk

ARM

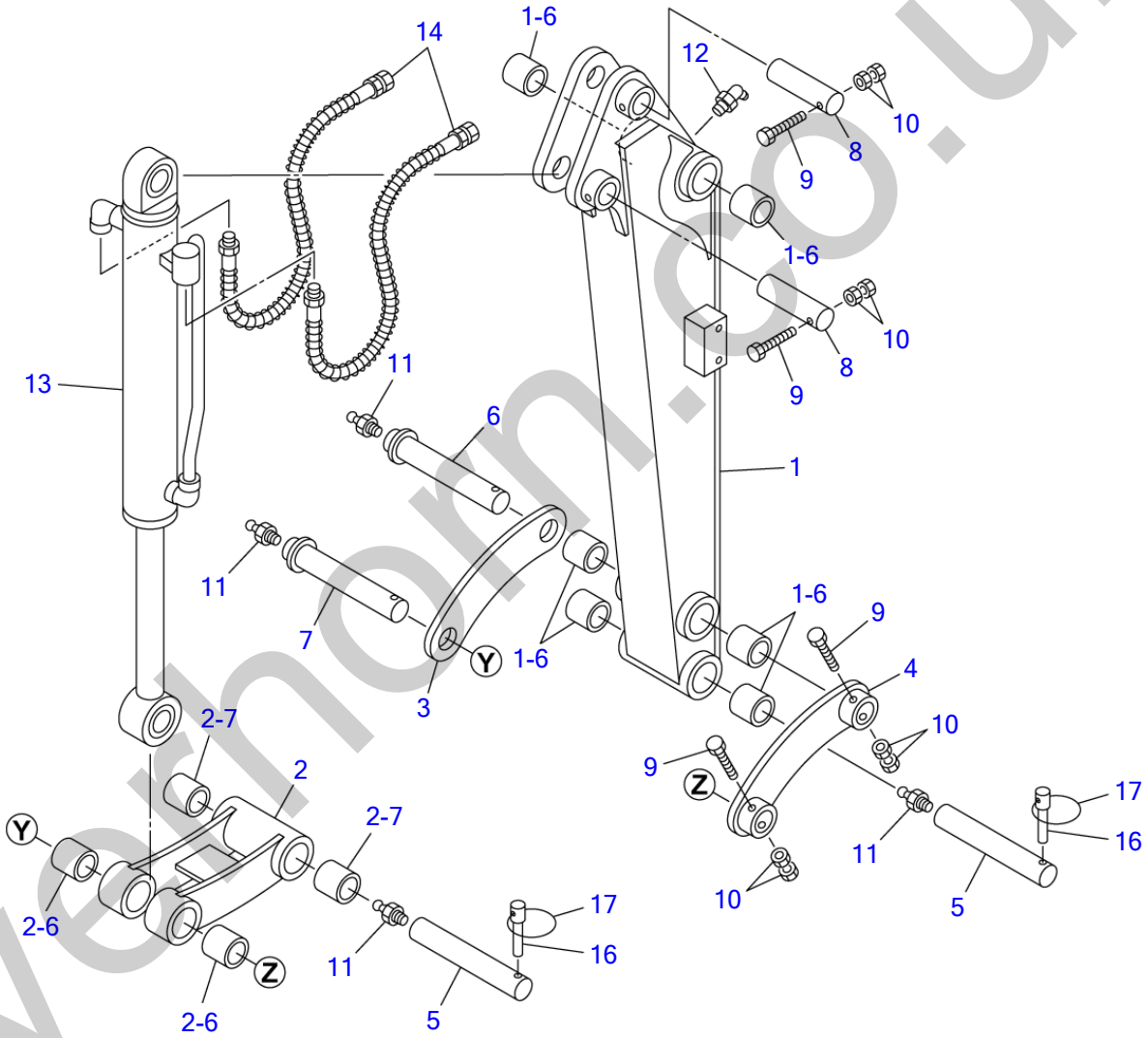

S=1/8

silverhorn.co.uk

ARM

Item	Part number	Description	Q'ty	Chan.	Serial No.	Serv.	Remarks
		ARM ASSY					X03261-61300-0
		ARM ASSY, long					X03261-61500-0
1	0326156100	ARM	1				
	0326157100	ARM, long	1				810mm long
1-6	0002400064	・BUSHING	6				
2	0416101300	LINK, bucket	1				
2-6	0002100026	・BUSHING	2				
2-7	0002400024	・BUSHING	2				
3	0326158300	LINK, guide (R.H.)	1				
4	0326158400	LINK, guide (L.H.)	1				
5	0001670001	PIN	2				
6	0001720003	PIN	1				
7	0001720004	PIN	1				
8	0001600090	PIN	2				
9	1103040855	BOLT	4				
10	1130240008	NUT	8				
11	1560001000	FITTING, grease	4				
12	1560001675	FITTING, grease	1				
13	1900096400	CYLINDER, bucket	1				
14	0326156710	HOSE ASSY	2				
	0326157710	HOSE ASSY	2				long arm
16	0416100800	PIN	2				
17	0416100900	RING	2				
	B5f070						

silverhorn.co.uk

BUCKET

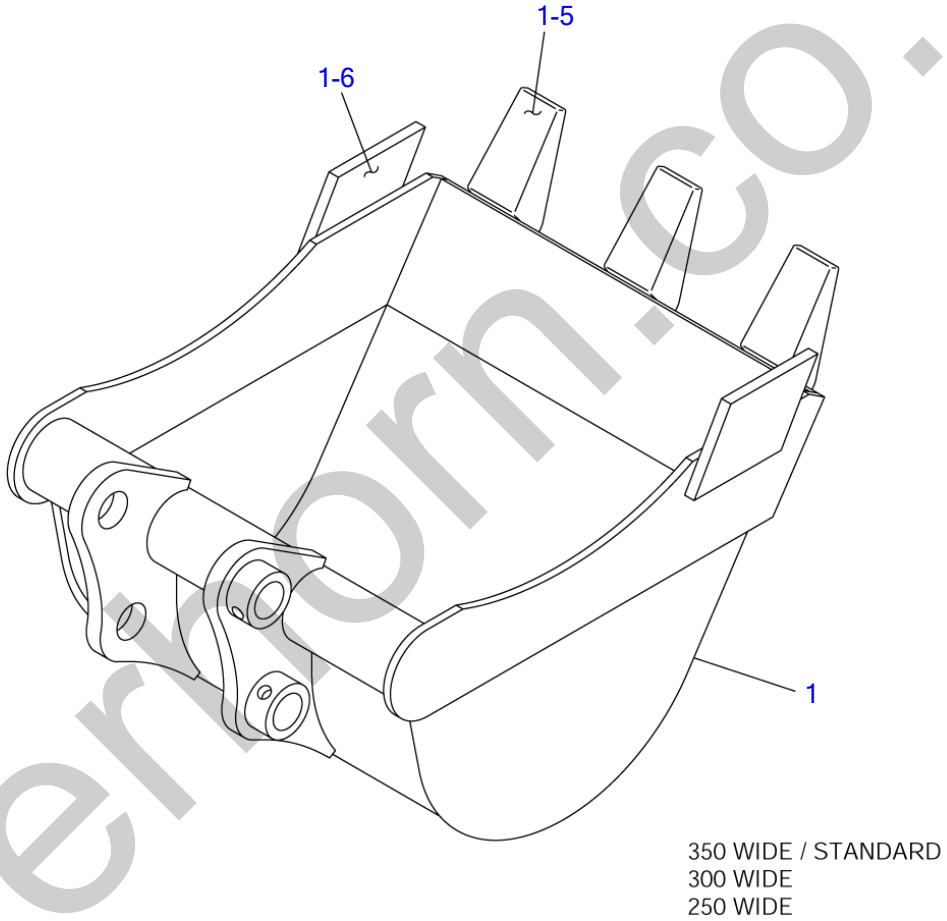

B5F031

S=1/4.5

silverthorn.co.uk

BUCKET

Item	Part number	Description	Q'ty	Chan.	Serial No.	Serv.	Remarks
1	**0416200500**	BUCKET	1				350mm wide
	0416200600	BUCKET	1				250mm wide
	0416200700	BUCKET	1				300mm wide
1-5	**0416200505**	・ADAPTOR, tooth	3				
1-6	**0416200104**	・CUTTER	2				
	B5f031						

silverhorn.co.uk

BUCKET (for U.S.A.)

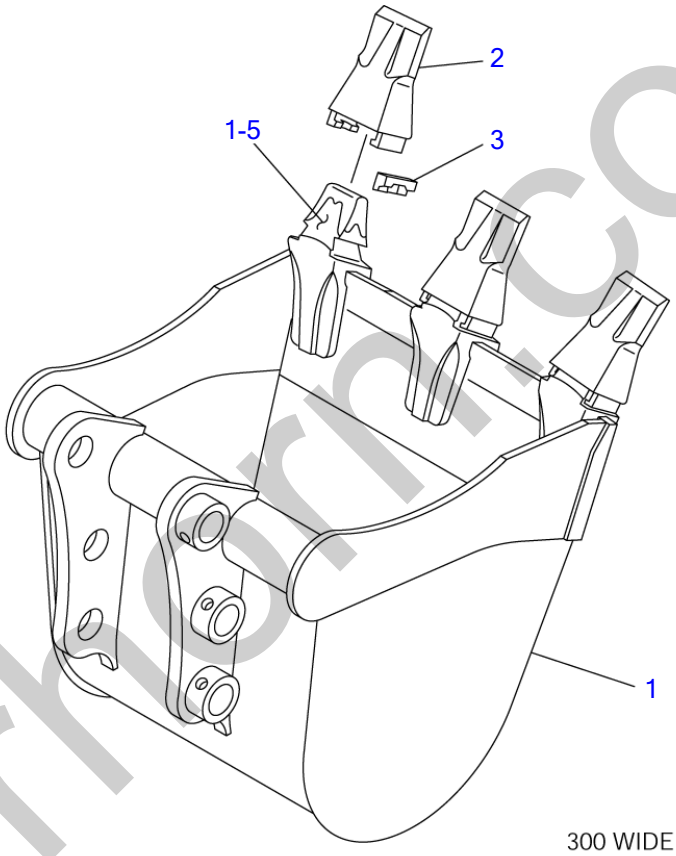

B5F040

S=1/5.5

silverhorn.co.uk

BUCKET (for U.S.A.)

Item	Part number	Description	Q'ty	Chan.	Serial No.	Serv.	Remarks
0	0326215000	BUCKET ASSY	1				300mm wide
1	X **********	・BUCKET	1				
1-5	1914201201	・・ADAPTOR, tooth	3				
2	1914201202	・POINT, tooth	3				
3	1914201203	・PIN	3				
	B5f040						

silverhorn.co.uk

AUXILIARY LINE

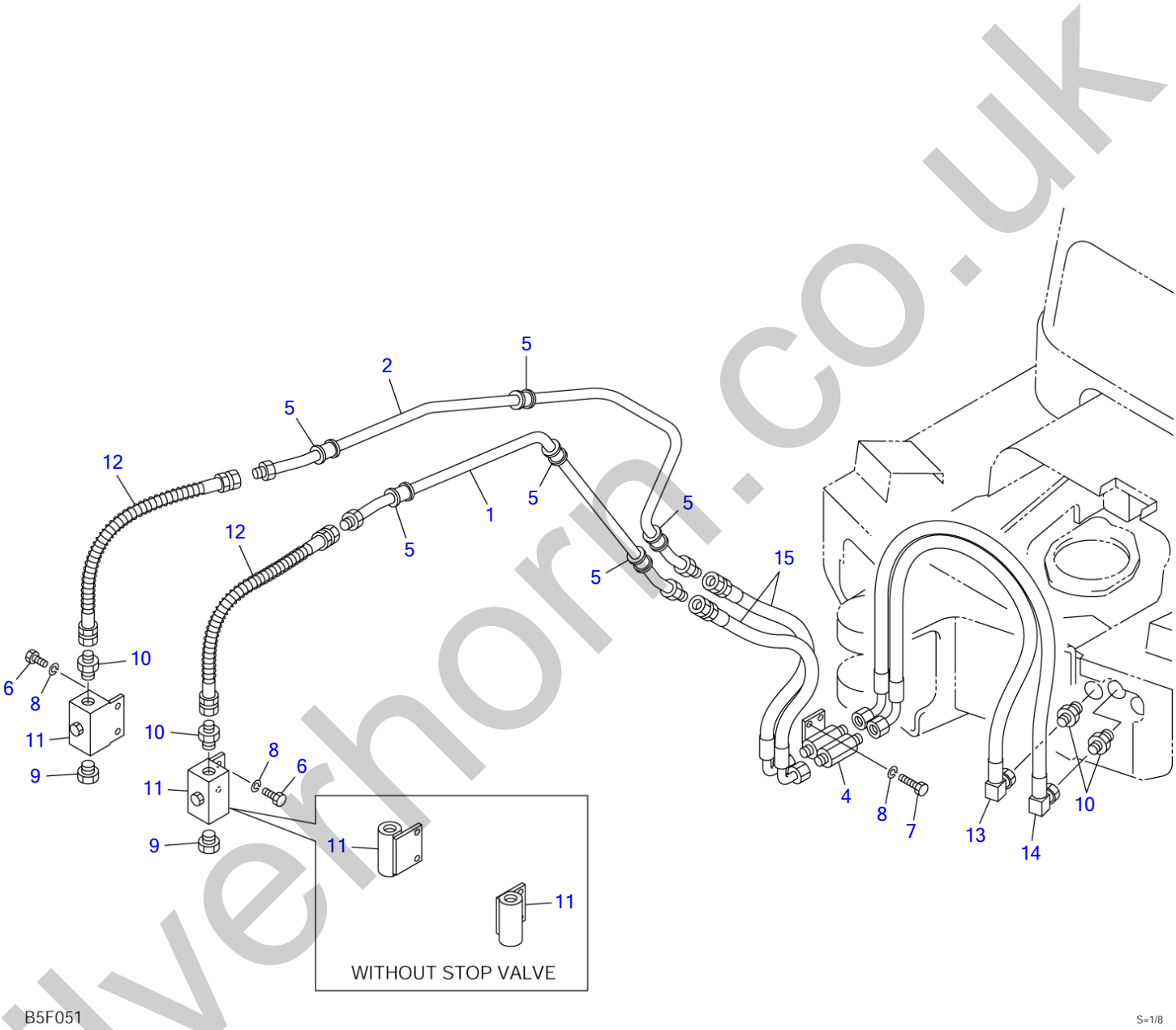

silverhorn.co.uk

AUXILIARY LINE

Item	Part number	Description	Q'ty	Chan.	Serial No.	Serv.	Remarks
	0327354000	AUX. LINE ASSY					X03273-54000-3
	0327356000	AUX. LINE ASSY (without stop valve)					X03273-56000-3
	0327355000	AUX. LINE ASSY (long arm)					X03273-55000-3
	0327357000	AUX. LINE ASSY (long arm) (without stop valve)					X03273-57000-3
1	0327354100	・PIPE	1				
2	0327354200	・PIPE	1				
4	0327351500	・ADAPTOR	1				
5	0147351300	・PROTECTOR	6				
6	1100040816	・BOLT	4				
7	1100040825	・BOLT	2				
8	1140020008	・WASHER, spring	6				
9	1501750004	・PLUG	2				
	1420010180	・・O-RING	1				
10	1515600577	・ADAPTOR	4				
	1420010180	・・O-RING	1				
11	1901719800	・VALVE , stop	2				
	0327356600	・BLOCK	2				without stop valve
12	0327351310	・HOSE ASSY	2				18015-20062
	0327352310	・HOSE ASSY (long arm)	2				18015-20077
13	0327351700	・HOSE ASSY	1				
14	0327351710	・HOSE ASSY	1				
15	0327354300	・HOSE ASSY	2				
	B5f052						

silverhorn.co.uk

DECAL

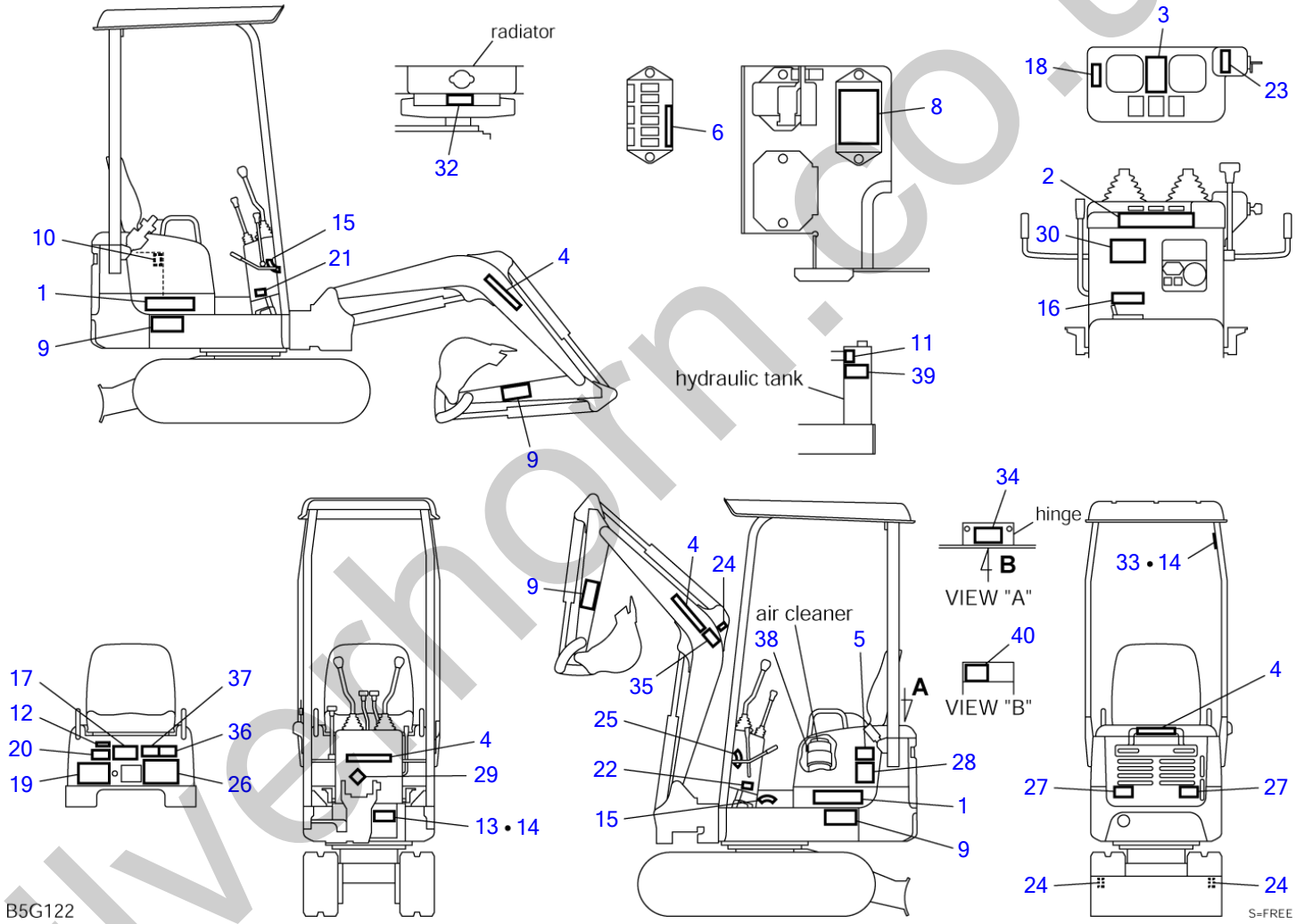

silverthorn.co.uk

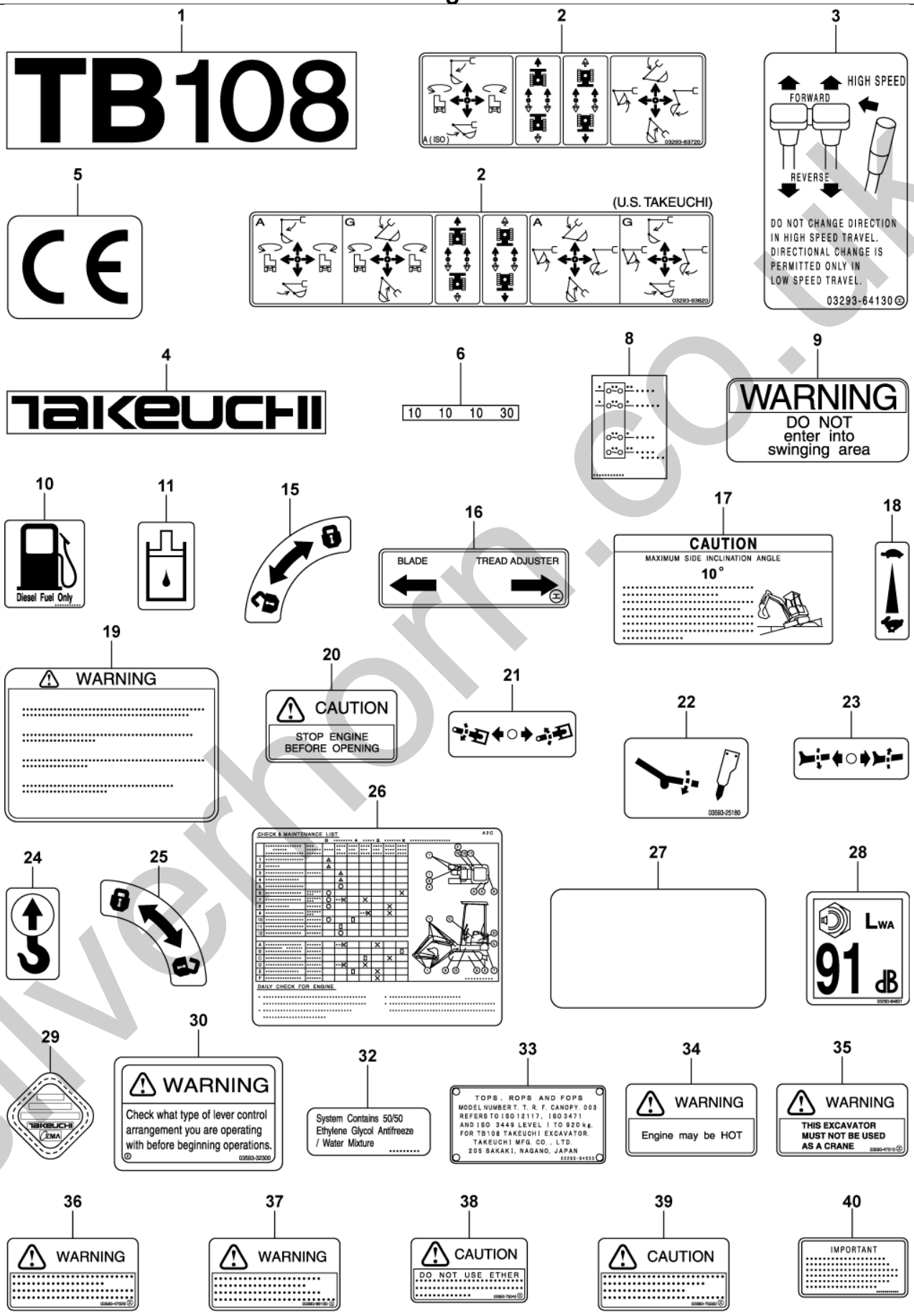

B5G132 S=free

silverhorn.co.uk

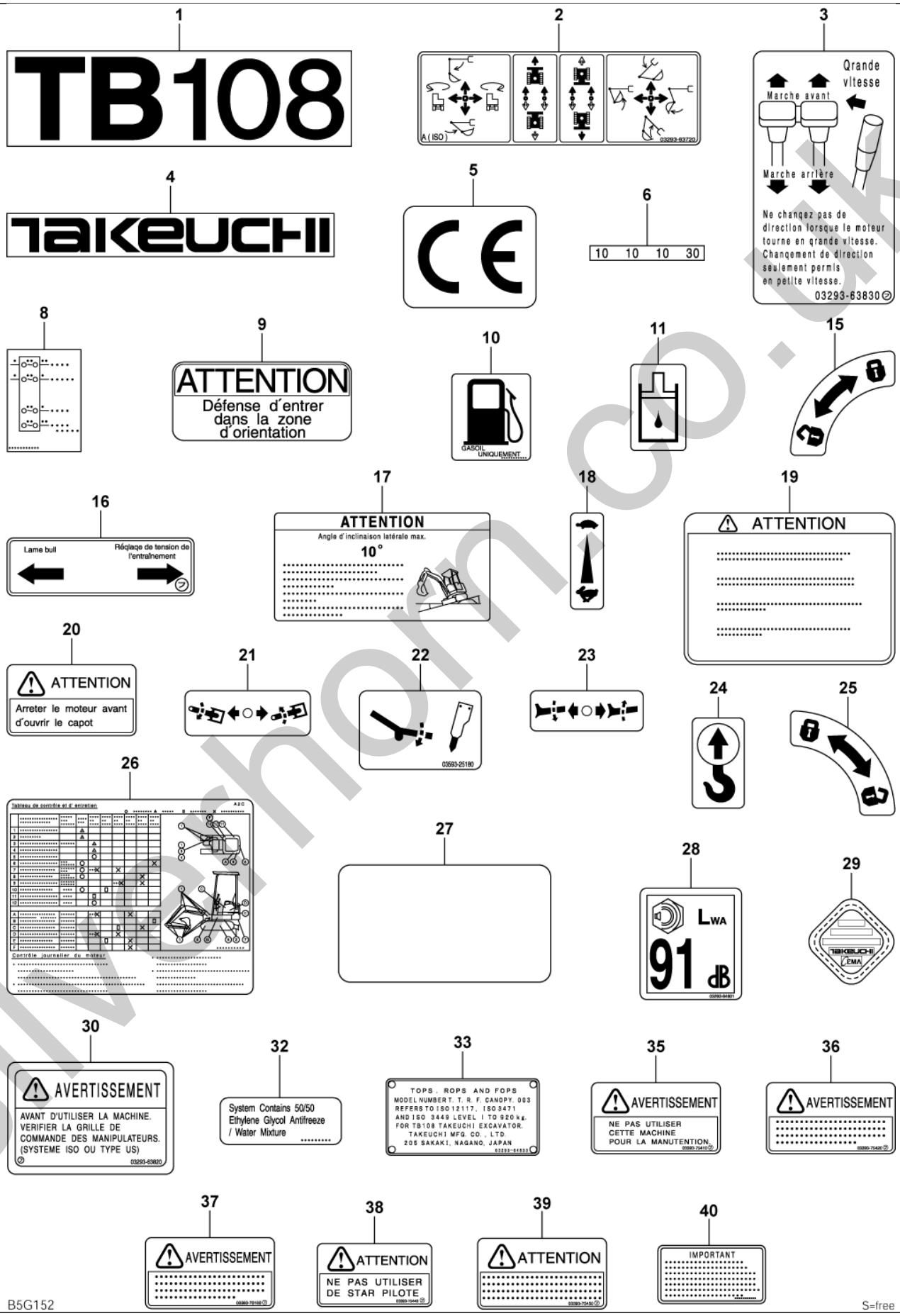

silverhorn.co.uk

1
TB108

2
A (ISO)
03293-63720

3
velocidad alta
adelante
atrás
No cambiar la dirección al conducir con velocidad alta.
El cambio de dirección sólo está permitido al conducir con velocidad baja.
03293-64030

4
TAKEUCHI

5
CE

6
10 10 10 30

8

9
ATENCIÓN
Prohibido situarse en el radio de acción de la máquina

10
SOLO DIESEL

11

15

16
PALA DOZER
ENSANCHAMIENTO DE CADENAS

17
PRECAUCIÓN
ÁNGULO MÁXIMODE INCLINACIÓN LATERAL
10°

18

19
ATENCIÓN

20
ATENCIÓN
ANTES DE ABRIR, APAGAR EL MOTOR

21

22
03593-25180

23

24

25

26
Tabla de control y mantenimiento
Control diario del motor

27

28
LWA
91 dB
03293-64020

29
TAKEUCHI
EMA

30
ADVERTENCIA
Antes de empezar a trabajar, asegúrese con que esquema de mandos está trabajando.
03293-64020

32
System Contains 50/50 Ethylene Glycol Antifreeze / Water Mixture

33
TOPS, ROPS AND FOPS
MODEL NUMBER T. T. R. F. CANOPY. 003
REFERS TO ISO 12117, ISO 3471
AND ISO 3449 LEVEL I TO 920 kg.
FOR TB108 TAKEUCHI EXCAVATOR.
TAKEUCHI MFG. CO., LTD.
205 SAKAKI, NAGANO, JAPAN
03293-64032

35
ADVERTENCIA
LA EXCAVADORA NO SE TIENE QUE USAR COMO GRUA.
03293-75810

36
ADVERTENCIA
03293-75820

37
ADVERTENCIA
03293-64040

38
PRECAUCIÓN
03293-75830

39
PRECAUCIÓN
03293-75850

40
IMPORTANTE

B5G172

S=free

silverhorn.co.uk

DECAL

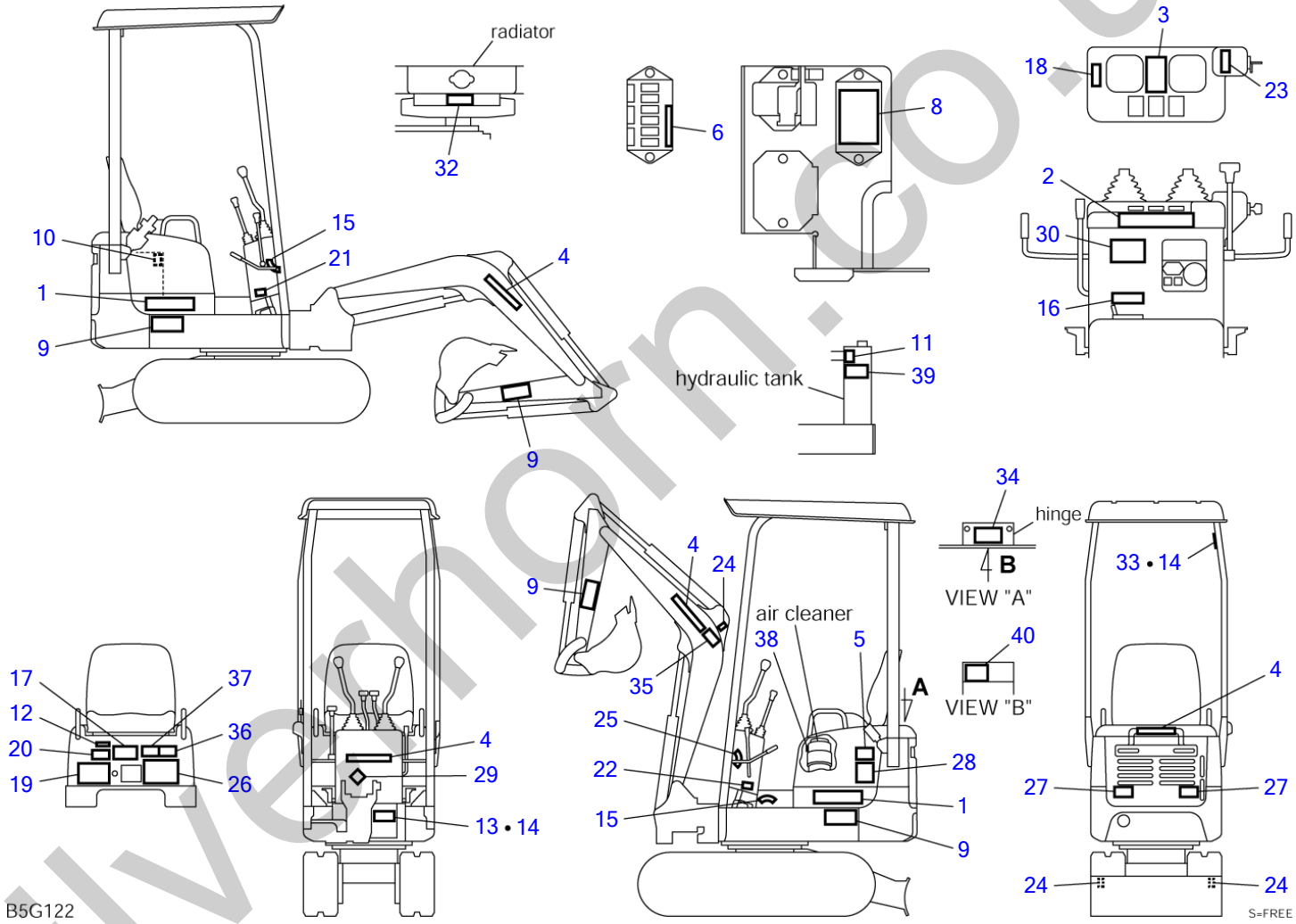

silverthorn.co.uk

DECAL

Item	Part number	Description	Q'ty	Chan.	Serial No.	Serv.	Remarks
0	0329364600	DECAL SET (German)	1				X03293-64600-5
	0329364700	DECAL SET (French)	1				X03293-64700-5
	0329364800	DECAL SET (Italian)	1				X03293-64800-5
	0329364900	DECAL SET (Spanish)	1				X03293-64900-5
	0329365000	DECAL SET (English)	1				X03293-65000-5
	0329365100	DECAL SET (U.S. TAKEUCHI)	1				X03293-65100-5
	0329365400	DECAL SET (Dutch)	1			M	X03293-65400-5
	0329365500	DECAL SET (Russian)	1			M	X03293-65500-5
	0329365600	DECAL SET (U.K. TAKEUCHI)	1			M	X03293-65600-5
1	0329363610	・DECAL	2				
2	0329363620	・DECAL (U.S. TAKEUCHI)	1				
	0329363720	・DECAL	1				
3	0329363630	・DECAL (German)	1				
	0329363830	・DECAL (French)	1				
	0329363930	・DECAL (Italian)	1				
	0329364030	・DECAL (Spanish)	1				
	0329364130	・DECAL (English)	1				
	0329365501	・DECAL (Russian)	1			M	
4	0359306200	・DECAL	4				
5	X **********	・DECAL	1		10820001~10820417		
6	0329363002	・DECAL	1				
8	0329363101	・DECAL (German)	1				
	0329363201	・DECAL (French)	1				
	0329363301	・DECAL (Italian)	1				
	0329364001	・DECAL (Spanish)	1				
	0329363001	・DECAL (English)	1				
	0329365502	・DECAL (Russian)	1			M	
9	0359308100	・DECAL (German)	4				
	0359309100	・DECAL (French)	4				
	0359310100	・DECAL (Italian)	4				
	0339364100	・DECAL (Spanish)	4				
	0359306500	・DECAL (English)	4				
	0399356001	・DECAL (Russian)	4			M	
10	0339375260	・DECAL (German)	1				
	0339375460	・DECAL (French)	1				
	0339375660	・DECAL (Italian, Spanish)	1				
	0359306600	・DECAL (English)	1				
	0579300603	・DECAL (Russian)	1			M	
11	0359306700	・DECAL	1				
12	X **********	・DECAL	1				
13	X **********	・DECAL	1				
14	X **********	・SCREW	8				
15	0329360100	・DECAL	2				
16	0329354250	・DECAL (German)	1				
	0329355250	・DECAL (French)	1				
	0329356250	・DECAL (Italian)	1				
	0329364002	・DECAL (Spanish)	1				
	0329350250	・DECAL (English)	1				
	0329365503	・DECAL (Russian)	1			M	
17	0339376320	・DECAL (German)	1				
	0339379420	・DECAL (French)	1				
	0339379520	・DECAL (Italian)	1				
	0339379620	・DECAL (Spanish)	1				
	0339379820	・DECAL (English)	1				
	0339380302	・DECAL (Russian)	1			M	
18	0359317200	・DECAL	1				
19	0359314700	・DECAL (German)	1				
	0359315700	・DECAL (French)	1				
	0359316700	・DECAL (Italian)	1				

silverthorn.co.uk

DECAL

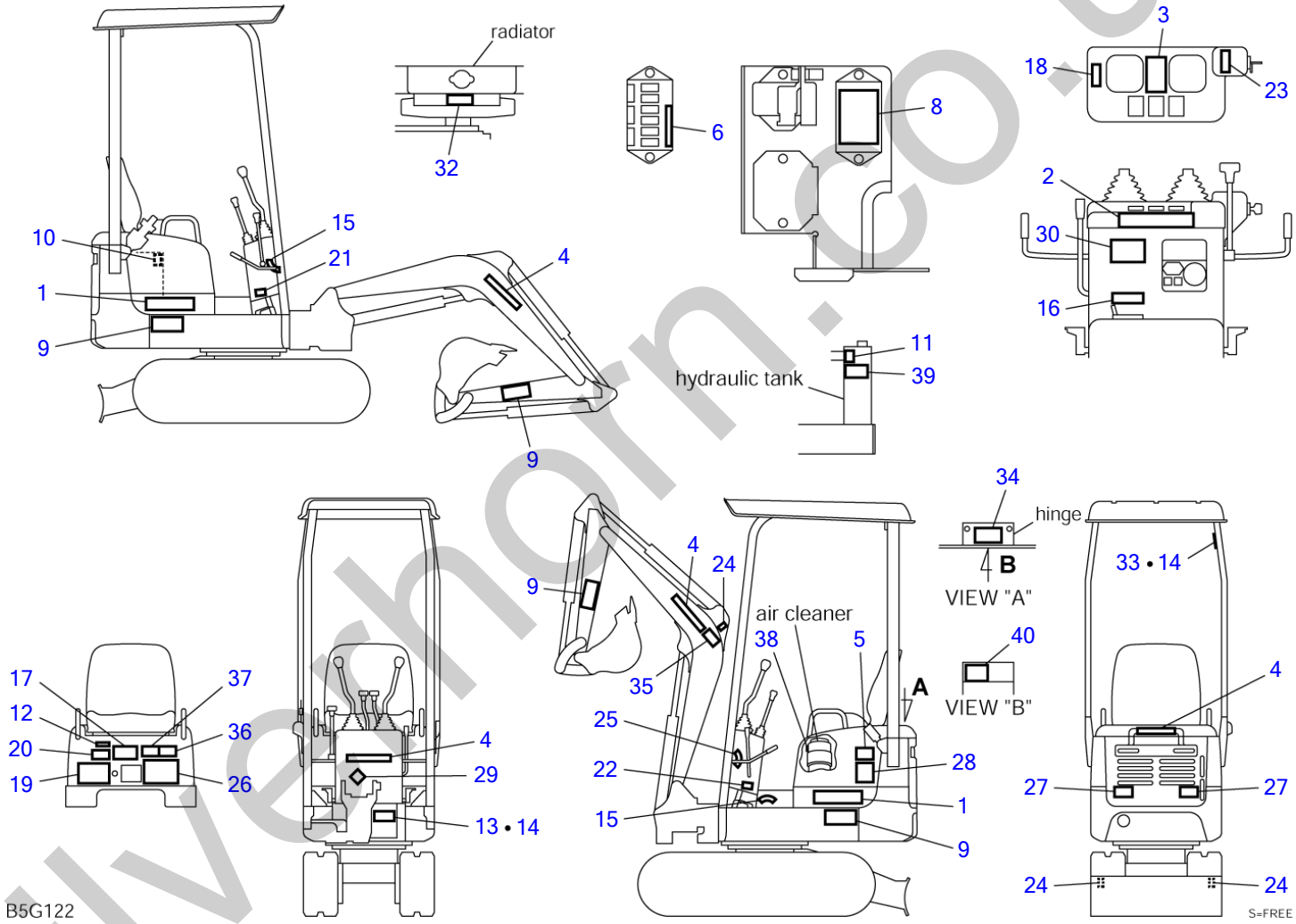

silverthorn.co.uk

DECAL

Item	Part number	Description	Q'ty	Chan.	Serial No.	Serv.	Remarks
19	0339364500	・DECAL (Spanish)	1				
19	0359313700	・DECAL (English)	1				
19	0579300606	・DECAL (Russian)	1			M	
20	0359314400	・DECAL (German)	1				
20	0359315400	・DECAL (French)	1				
20	0359316400	・DECAL (Italian)	1				
20	0339364200	・DECAL (Spanish)	1				
20	0359307400	・DECAL (English)	1				
20	0579300602	・DECAL (Russian)	1			M	
21	0359325170	・DECAL	1				
22	0359325180	・DECAL	1				
23	0359325190	・DECAL	1				
24	0399300500	・DECAL	3				
25	0349325020	・DECAL	1				
26	0329363710	・DECAL (German)	1				
26	0329363810	・DECAL (French)	1				
26	0329363910	・DECAL (Italian)	1				
26	0329364010	・DECAL (Spanish)	1				
26	0329364110	・DECAL (English)	1				
26	0329365504	・DECAL (Russian)	1			M	
27	0379358560	・DECAL	2				
28	0329364601	・DECAL	1				
29	X **********	・DECAL	1				
30	0359332400	・DECAL (German)	1				
30	0329363820	・DECAL (French)	1				
30	0329363920	・DECAL (Italian)	1				
30	0329364020	・DECAL (Spanish)	1				
30	0359332300	・DECAL (English)	1				
30	0329365505	・DECAL (Russian)	1			M	
32	0359313900	・DECAL	1				
33	0329364633	・DECAL	1				
34	0569321980	・DECAL (English)	1				
35	0339375210	・DECAL (German)	1				
35	0339375410	・DECAL (French)	1				
35	0339375610	・DECAL (Italian)	1				
35	0339375810	・DECAL (Spanish)	1				
35	0359347010	・DECAL (English)	1				except for U.K. TAKEUCHI
35	0579300609	・DECAL (Russian)	1			M	
36	0339375220	・DECAL (German)	1				
36	0339375420	・DECAL (French)	1				
36	0339375620	・DECAL (Italian)	1				
36	0339375820	・DECAL (Spanish)	1				
36	0359347020	・DECAL (English)	1				
36	0579300610	・DECAL (Russian)	1			M	
37	0339369100	・DECAL (German)	1				
37	0339370100	・DECAL (French)	1				
37	0339371100	・DECAL (Italian)	1				
37	0329364040	・DECAL (Spanish)	1				
37	0339368100	・DECAL (English)	1				
37	0329365506	・DECAL (Russian)	1			M	
38	0339375240	・DECAL (German)	1				
38	0339375440	・DECAL (French)	1				
38	0339375640	・DECAL (Italian)	1				
38	0339375840	・DECAL (Spanish)	1				
38	0339375040	・DECAL (English)	1				
38	0579300611	・DECAL (Russian)	1			M	
39	0339375250	・DECAL (German)	1				
39	0339375450	・DECAL (French)	1				
39	0339375650	・DECAL (Italian)	1				
39	0339375850	・DECAL (Spanish)	1				
39	0339375050	・DECAL (English)	1				
39	0399356005	・DECAL (Russian)	1			M	
40	0339376340	・DECAL (German)	1				
40	0339379440	・DECAL (French)	1				
40	0339379540	・DECAL (Italian)	1				
40	0339379640	・DECAL (Spanish)	1				
40	0339376240	・DECAL (English)	1				
40	0579300613	・DECAL (Russian)	1			M	

silverthorn.co.uk

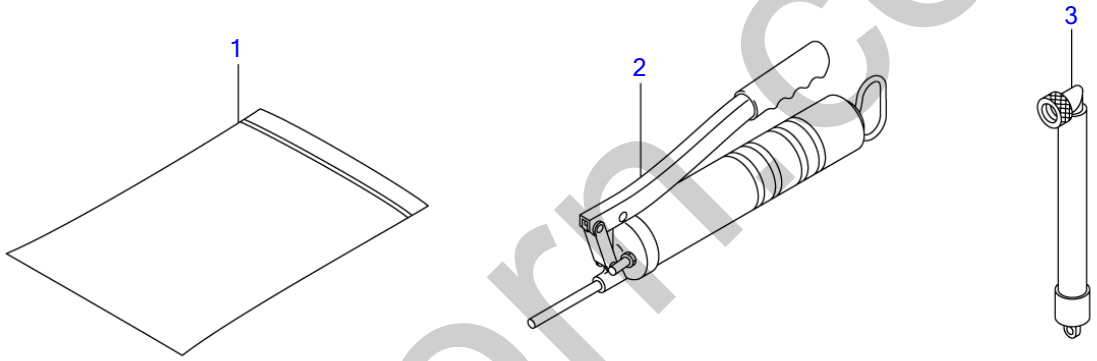

B5G072

S=FREE

silverhorn.co.uk

TOOL & ACCESSORIES

Item	Part number	Description	Q'ty	Chan.	Serial No.	Serv.	Remarks
0	**0329214700**	TOOL SET	1				X03292-14700-0
1	**1691900001**	・CASE	1				
2	**1691060600**	・GUN, grease	1				
3	**1554512201**	TUBE	1				for EU
	B5g072						

silverhorn.co.uk

TOOL & ACCESSORIES (for Japan)

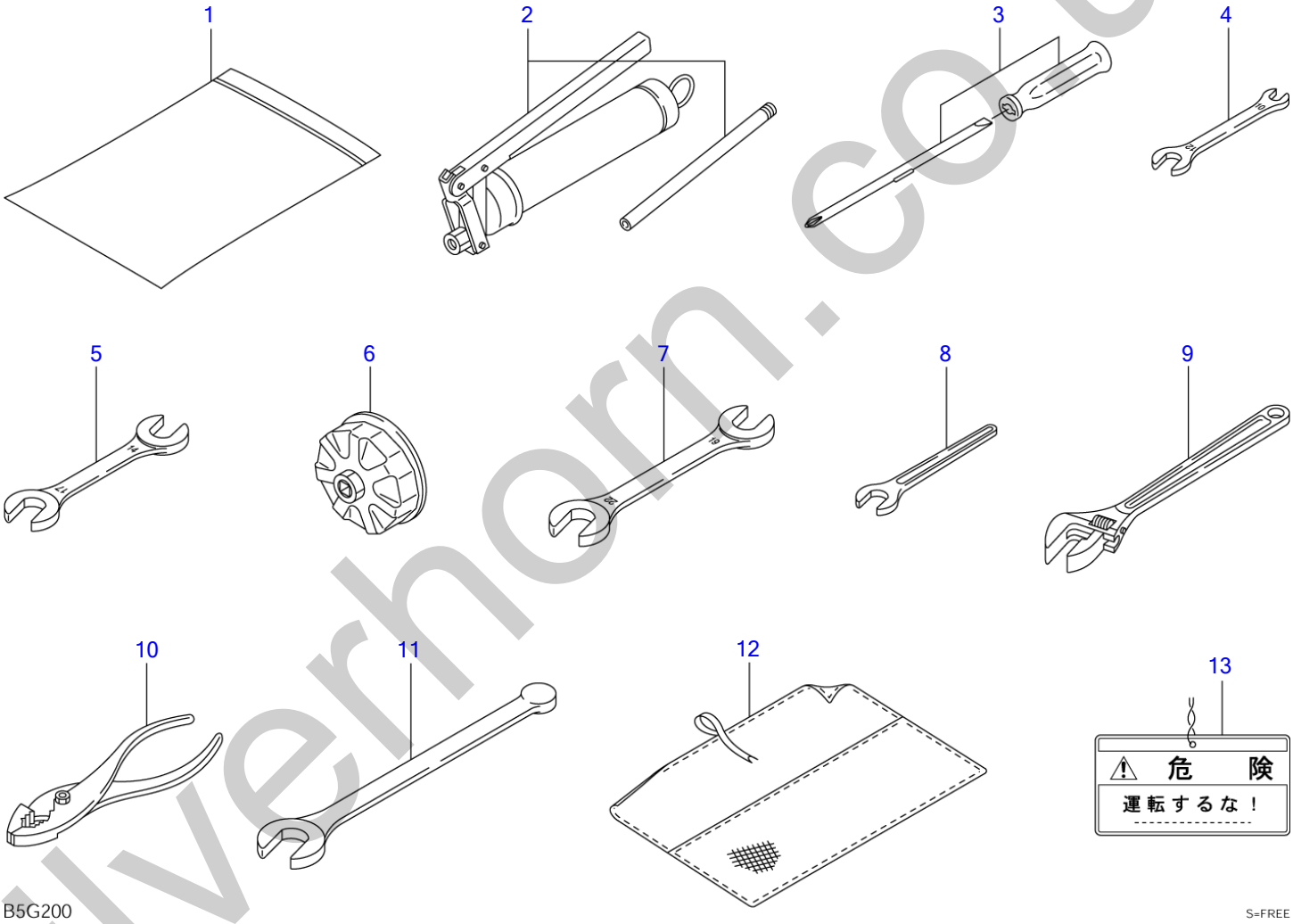

silverhorn.co.uk

TOOL & ACCESSORIES (for Japan)

Item	Part number	Description	Q'ty	Chan.	Serial No.	Serv.	Remarks
0	0329214500	TOOL SET	1				X03292-14500-0
1	1691900001	・CASE	1				
2	1691010800	・GUN, grease	1				
0-1	0329214020	・TOOL SET	1				
3	1910006112	・・SCREWDRIVER	1				
4	1910047081	・・SPANNER	1				
5	1910047082	・・SPANNER	1				
6	1910096081	・・WRENCH,filter	1				
7	1690001922	・・SPANNER	1				
8	1690100013	・・SPANNER	1				
9	1690400250	・・WRENCH,monkey	1				
10	1690500200	・・PLIER	1				
11	1692000026	・・WRENCH,hex	1				
12	1691400001	・・CASE	1				
13	0359325160	PLATE	1				
	B5g200						

silverhorn.co.uk

PAINTED COLOR

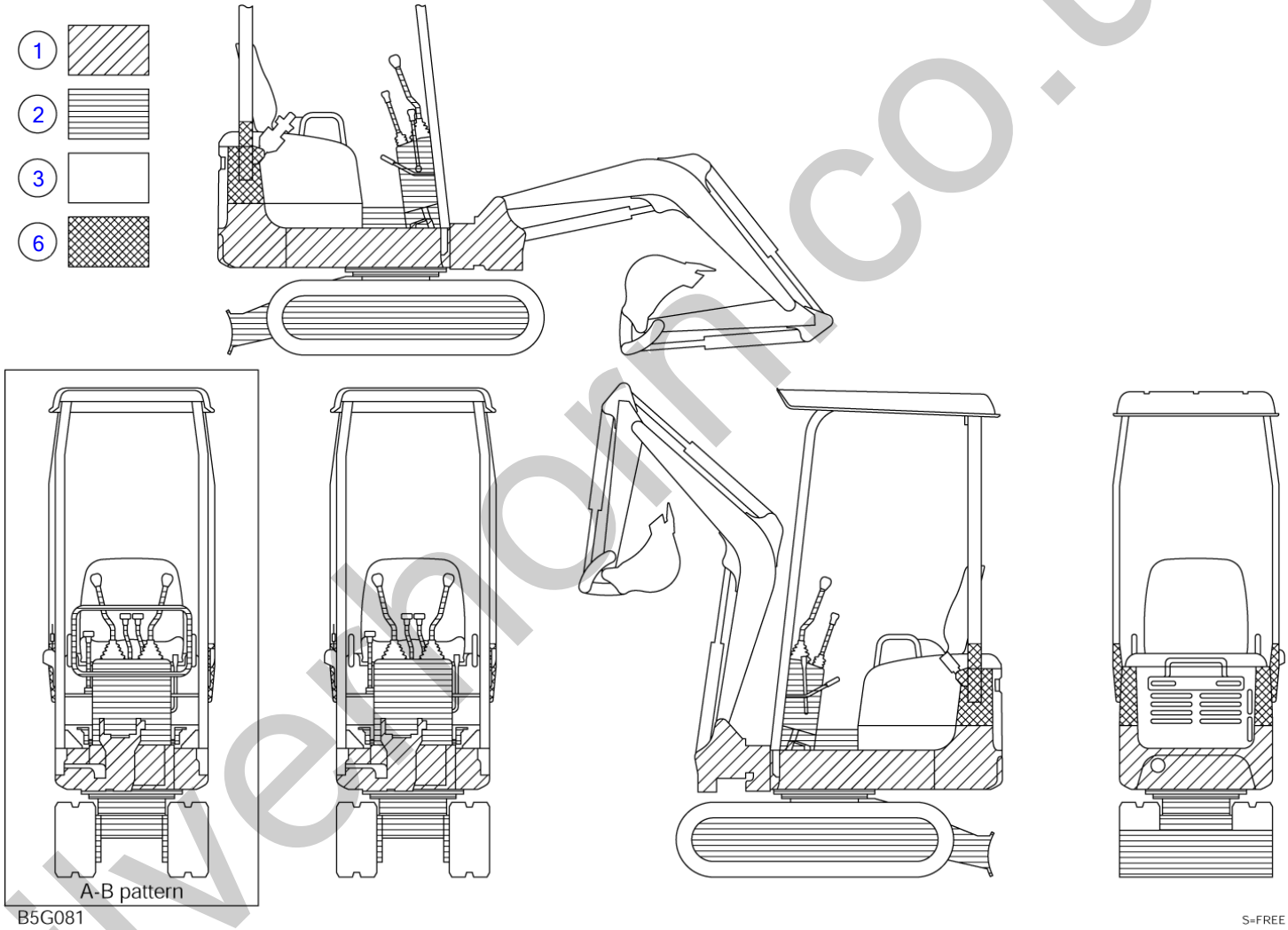

silverhorn.co.uk

PAINTED COLOR

Item	Part number	Description	Q'ty	Chan.	Serial No.	Serv.	Remarks
		PAINTED COLOR					X03291-50700-1
1	1919060105	RED	1				
	1919069105	RED	1				spray
2	1919060144	GRAY	1				
	1919069144	GRAY	1				spray
3	1919060142	LIGHT GRAY	1				
	1919069142	LIGHT GRAY	1				spray
6	1919060159	BLACK	1				
	1919069159	BLACK	1				spray
	B5g082						

silverhorn.co.uk

SWIVEL JOINT

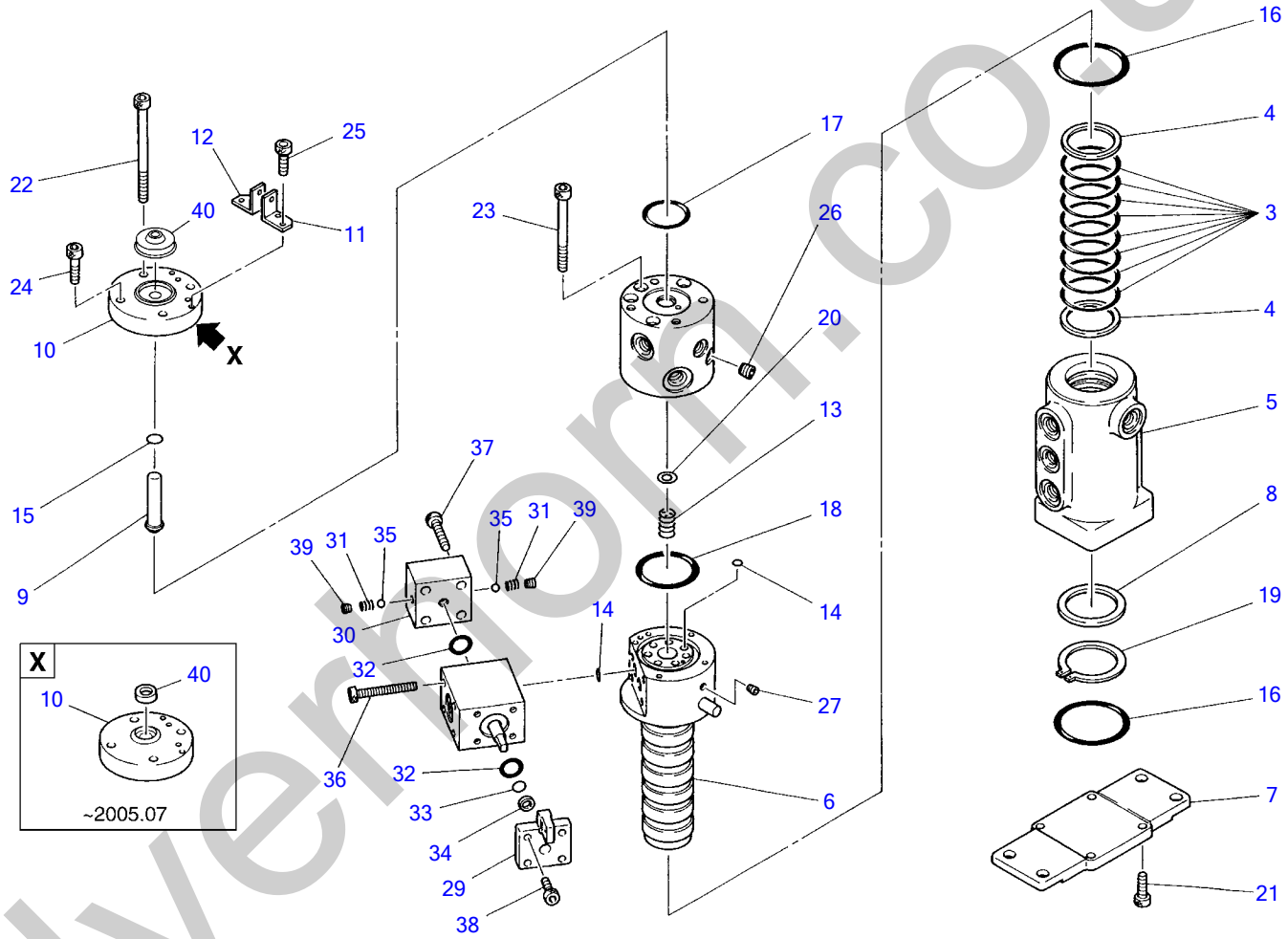

silverfern.co.uk

SWIVEL JOINT

Item	Part number	Description	Q'ty	Chan.	Serial No.	Serv.	Remarks
0	1904006800	JOINT, swivel ASSY	1				
0-1	1904006699	・KIT, seal	1				
3	X 1420010500	・・O-RING	8				
4	X 1421030500	・・RING, back-up	2				
5	X 1904006801	・HUB	1				
6	X 1904006811	・SHAFT	1				
7	X 1904006821	・FLANGE	1				
8	X 1904006604	・RING	1				
9	X 1904006608	・PIN	1				
10	X 1904006809	・COVER	1	A	~2005.07		
	X 1904006819	・COVER	1	a(H)	2005.07~		
11	X 1904006610	・BRACKET	1				
12	X 1904006633	・BRACKET	1				
13	X 1904006612	・SPRING	1				
14	1420010090	・O-RING	9				
15	1420000080	・O-RING	1				
16	1420110600	・O-RING	2				
17	1420110350	・O-RING	1				
18	1420310033	・O-RING	1				
19	1220000045	・RING, snap	1				
20	1141200008	・WASHER	1				
21	1110050820	・SCREW, cap	4				
22	1110050695	・SCREW, cap	2				
23	1110050675	・SCREW, cap	4				
24	1110050625	・SCREW, cap	2				
25	1110050512	・SCREW, cap	4				
26	1501810002	・PLUG	2				
27	1501810000	・PLUG	1				
0-2	1904006632	・SELECTOR ASSY	1				
29	X 1904006653	・・COVER	1				
30	X 1904006654	・・COVER	1				
31	X 1904006655	・・SPRING	2				
32	1420010160	・・O-RING	2				
33	1420000100	・・O-RING	1				
34	1421020100	・・RING, back-up	1				
35	1390020350	・・BALL, steel	2				
36	1110050555	・・SCREW, cap	4				
37	1110050540	・・SCREW, cap	4				
38	1110050516	・・SCREW, cap	4				
39	1501810000	・・PLUG	2				
40	1411170080	・SEAL, dust	1	A	~2005.07		
	1411100008	・SEAL, dust	1	a(H)	2005.07~		
		<<NOTE>>					
		SET "A" is interchangeable with SET "a".					
	B5h011						

silverthorn.co.uk

CONTROL VALVE

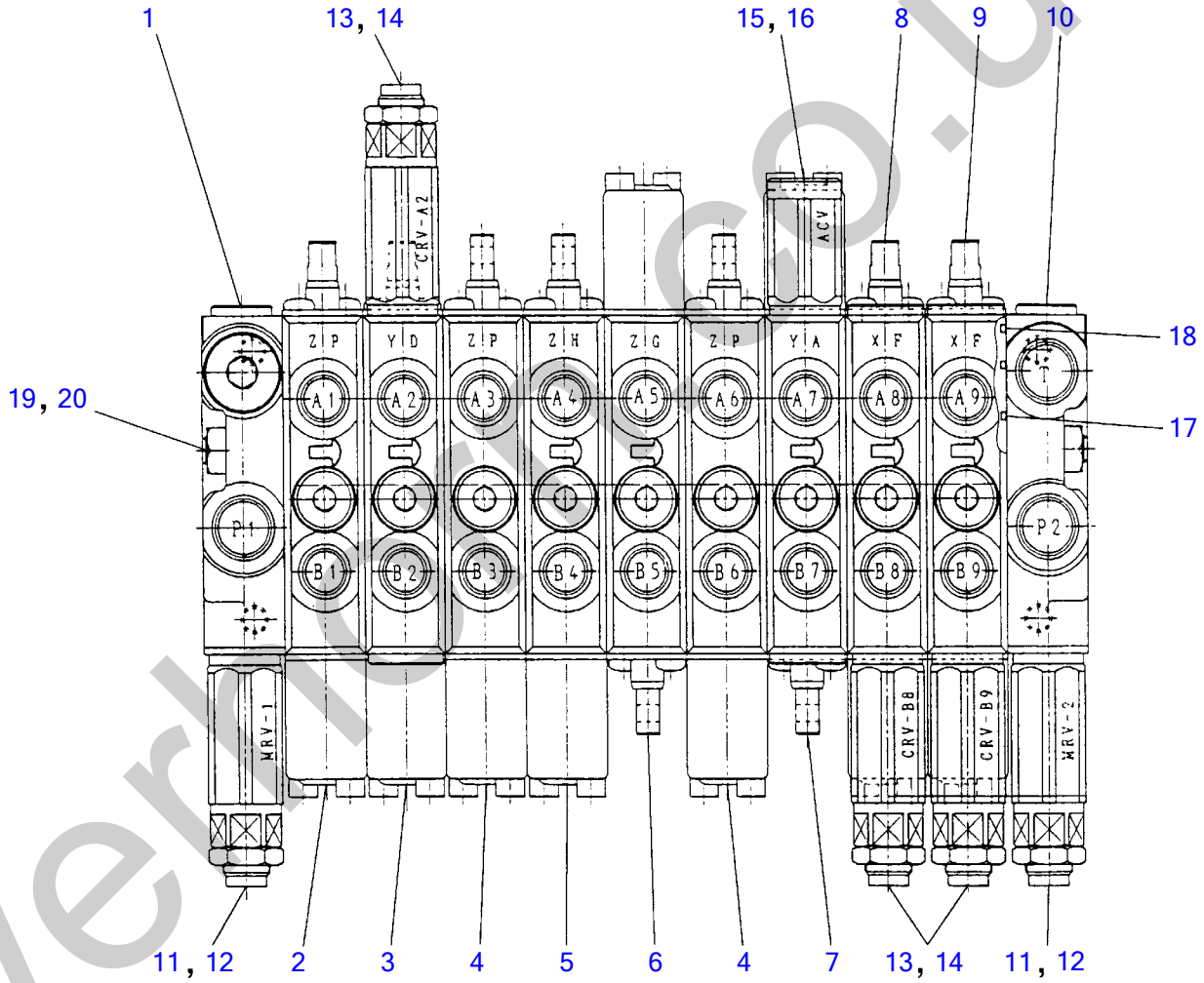

B5H020

silverhome.co.uk

CONTROL VALVE

Item	Part number	Description	Q'ty	Chan.	Serial No.	Serv.	Remarks
0	1901040200	VALVE ASSY, control	1				
1	1901040201	・HOUSING ASSY	1				P1
2	1901040214	・BLOCK ASSY, No.1	1				slew
3	1901040212	・BLOCK ASSY, No.2	1				arm
4	1901040215	・BLOCK ASSY, No.3	2				travel
5	1901040217	・BLOCK ASSY, No.4	1				blade
6	1901040219	・BLOCK ASSY, No.5	1				service
7	1901040218	・BLOCK ASSY, No.6	1				swing
8	1901040211	・BLOCK ASSY, No.7	1				boom
9	1901040213	・BLOCK ASSY, No.8	1				bucket
10	1901040202	・HOUSING ASSY	1				P2, T
11	1901040222	・VALVE ASSY	2				relief
12	1420010140	・・O-RING	1				
13	1901040221	・VALVE ASSY	3				over load
14	1420010140	・・O-RING	1				
15	1901036425	・VALVE ASSY	1				antivoid
16	1420010140	・・O-RING	1				
17	1420310127	・O-RING	10				
18	1420010100	・O-RING	20				
19	1901040207	・BOLT	3				
20	1130050008	・NUT	6				
	B5h020						

silverhorn.co.uk

HOUSING ASSY

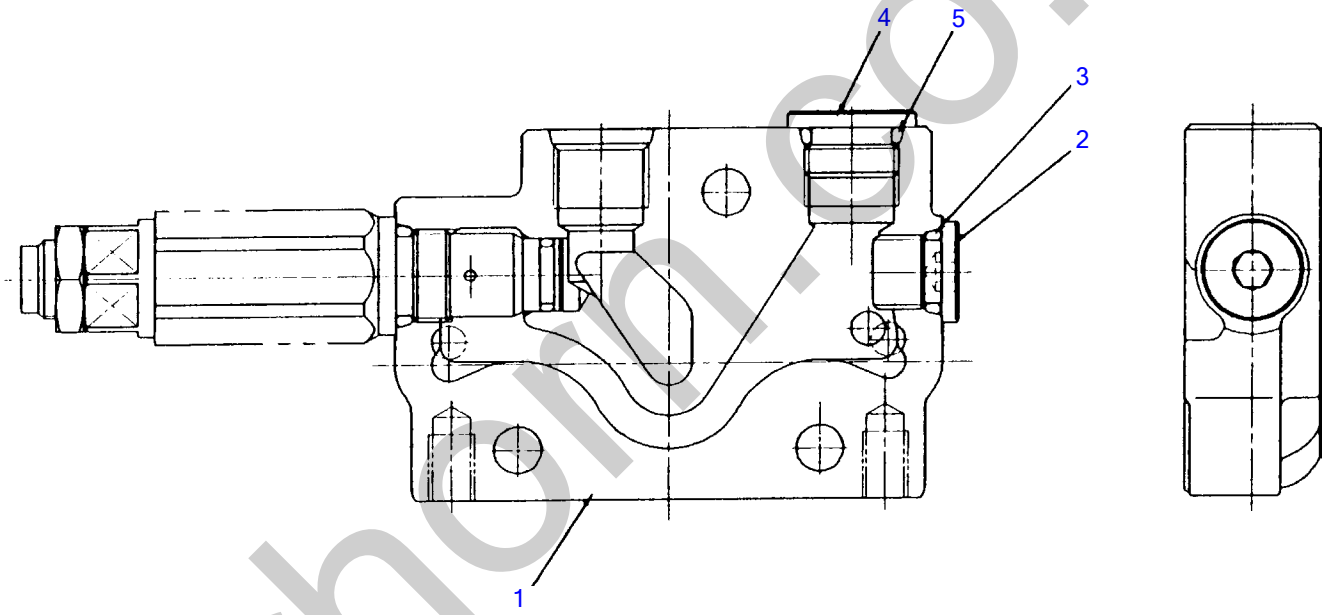

B5H030

silverhorn.co.uk

HOUSING ASSY

Item	Part number	Description	Q'ty	Chan.	Serial No.	Serv.	Remarks
0	1901040201	HOUSING ASSY	1				P1
1	1901014202	・BODY	1				
2	1501750002	・PULG	1				
	1420010110	・・O-RING	1				
3	1420010110	・O-RING	1				
4	1501750003	・PULG	1				
	1420010140	・・O-RING	1				
5	1420010140	・O-RING	1				
	B5h030						

silverhorn.co.uk

BLOCK ASSY; No. 1

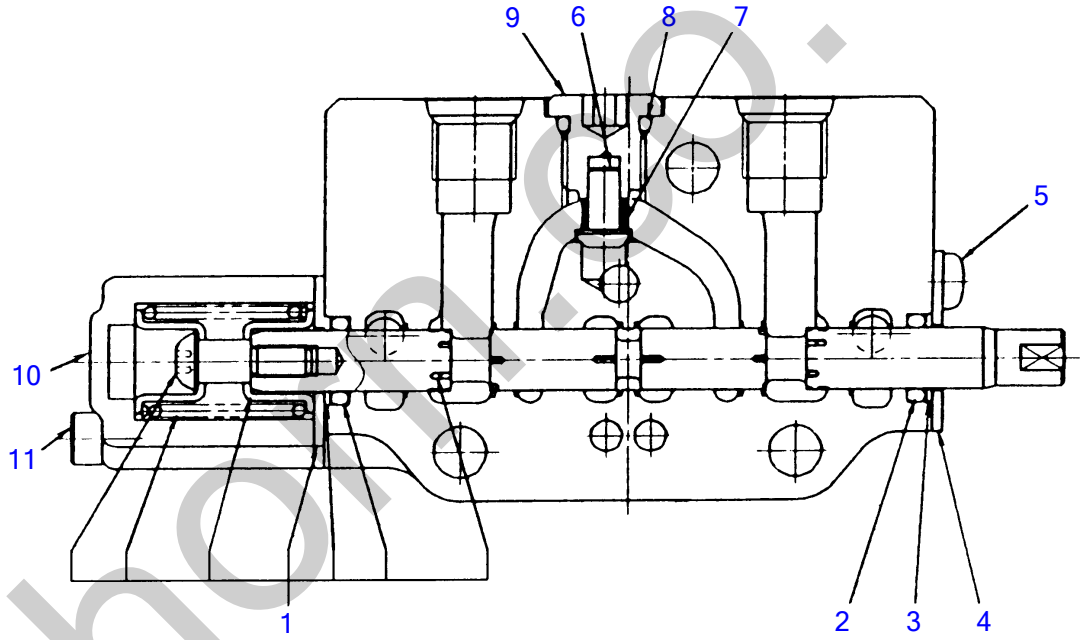

B5H040

silverhome.co.uk

BLOCK ASSY; No. 1

Item	Part number	Description	Q'ty	Chan.	Serial No.	Serv.	Remarks
0	1901040214	BLOCK ASSY, No.1	1				slew
1	1901040293	・SPOOL ASSY	1				
2	1420000101	・O-RING	1				
3	1421030101	・RING, back-up	1				
4	1901040241	・PLATE	1				
5	1120590510	・SCREW	2				
6	1901021366	・VALVE	1				
7	1901040261	・SPRING	1				
8	1420010110	・O-RING	1				
9	1901040251	・PULG	1				
10	1901040256	・HOLDER, spring	1				
11	1110020545	・SCREW, cap	2				
	B5h040						

silverhorn.co.uk

BLOCK ASSY; No. 2

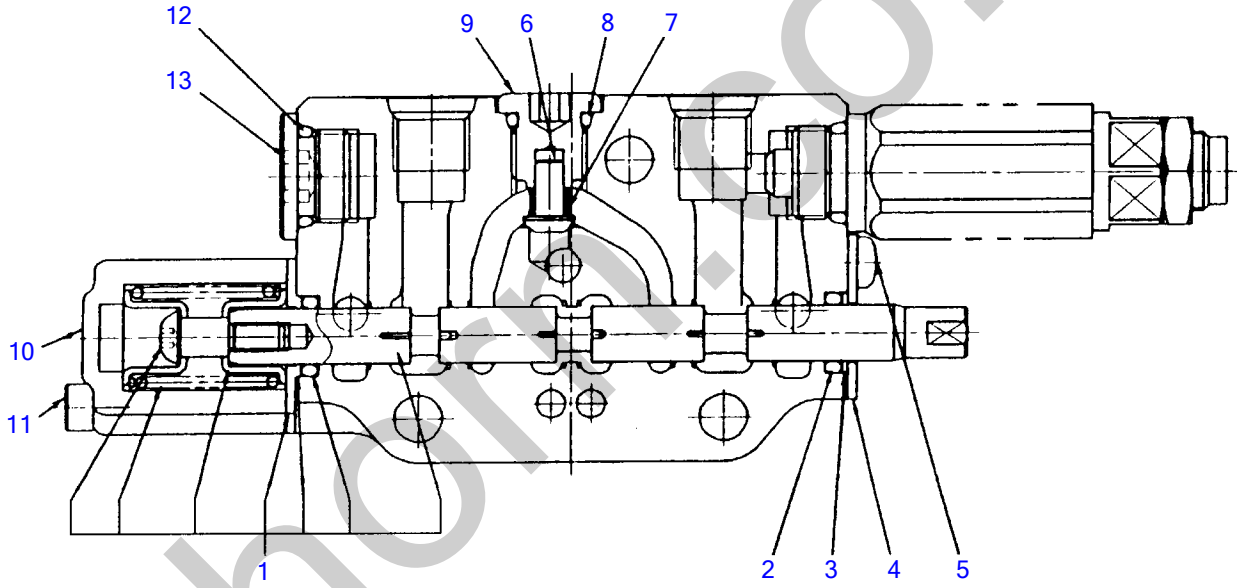

B5H050

silverhorn.co.uk

BLOCK ASSY; No. 2

Item	Part number	Description	Q'ty	Chan.	Serial No.	Serv.	Remarks
0	1901040212	BLOCK ASSY, No.2	1				arm
1	1901040292	・SPOOL ASSY	1				
2	1420000101	・O-RING	1				
3	1421030101	・RING, back-up	1				
4	1901040241	・PLATE	1				
5	1120590510	・SCREW	2				
6	1901021366	・VALVE	1				
7	1901040261	・SPRING	1				
8	1420010110	・O-RING	1				
9	1901040251	・PULG	1				
10	1901040256	・HOLDER, spring	1				
11	1110020545	・SCREW, cap	2				
12	1420010140	・O-RING	1				
13	1501750003	・PULG	1				
	1420010140	・・O-RING	1				
	B5h050						

silverhorn.co.uk

BLOCK ASSY; No. 3

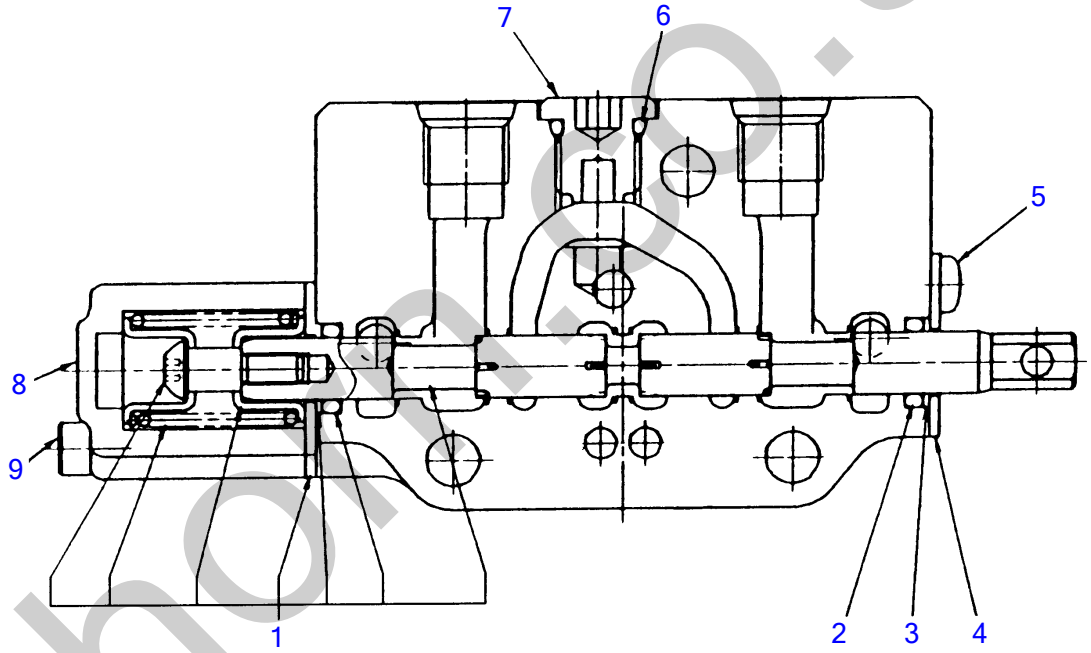

B5H060

silverhorn.co.uk

BLOCK ASSY; No. 3

Item	Part number	Description	Q'ty	Chan.	Serial No.	Serv.	Remarks
0	1901040215	BLOCK ASSY, No.3	2				travel
1	1901040297	・SPOOL ASSY	1				
2	1420000101	・O-RING	1				
3	1421030101	・RING, back-up	1				
4	1901040241	・PLATE	1				
5	1120590510	・SCREW	2				
6	1420010110	・O-RING	1				
7	1901040251	・PULG	1				
8	1901040256	・HOLDER, spring	1				
9	1110020545	・SCREW, cap	2				
	B5h060						

silverhorn.co.uk

BLOCK ASSY; No. 4

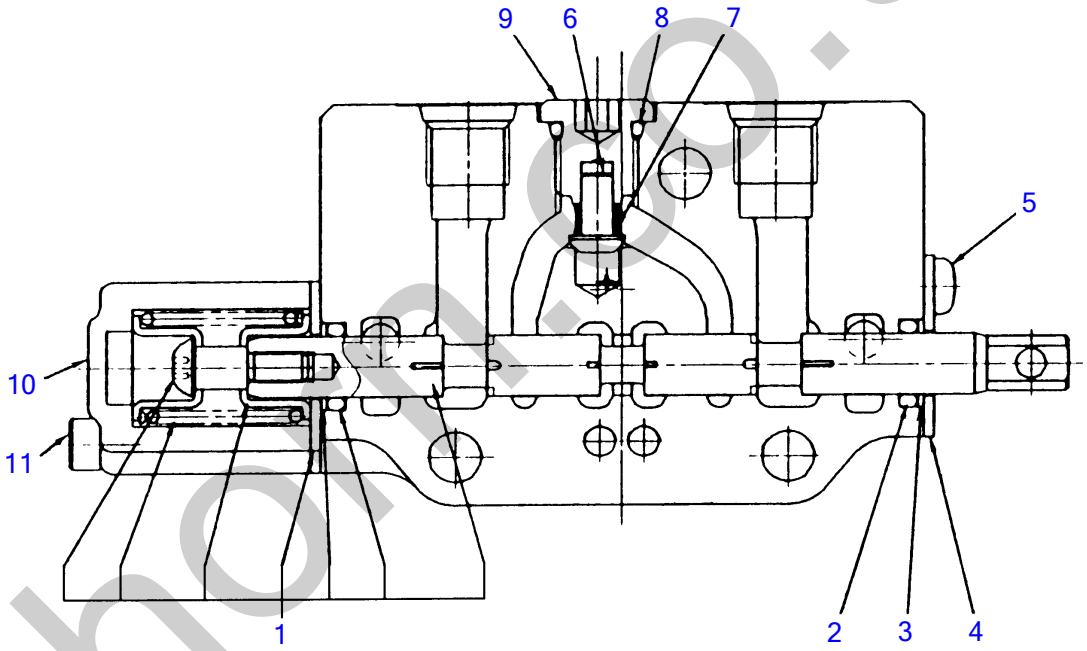

B5H070

silverhorn.co.uk

BLOCK ASSY; No. 4

Item	Part number	Description	Q'ty	Chan.	Serial No.	Serv.	Remarks
0	1901040217	BLOCK ASSY, No.4	1				blade
1	1901040291	・SPOOL ASSY	1				
2	1420000101	・O-RING	1				
3	1421030101	・RING, back-up	1				
4	1901040241	・PLATE	1				
5	1120590510	・SCREW	2				
6	1901021366	・VALVE	1				
7	1901040261	・SPRING	1				
8	1420010110	・O-RING	1				
9	1901040251	・PULG	1				
10	1901040256	・HOLDER, spring	1				
11	1110020545	・SCREW, cap	2				
	B5h070						

silverhorn.co.uk

BLOCK ASSY; No. 5

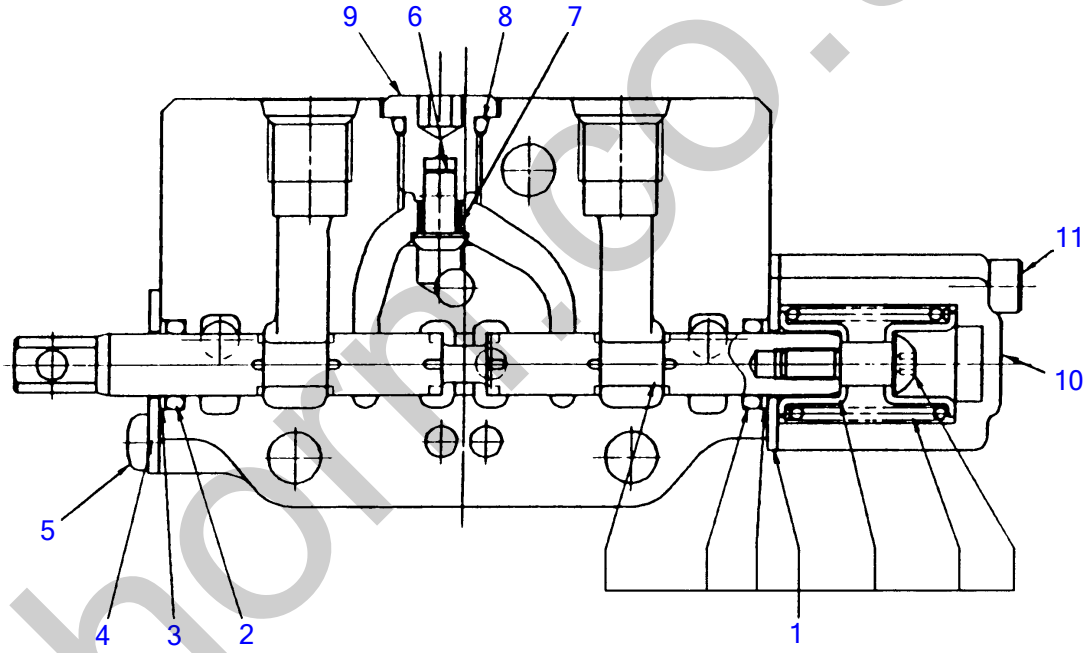

B5H080

silverhorse.co.uk

BLOCK ASSY; No. 5

Item	Part number	Description	Q'ty	Chan.	Serial No.	Serv.	Remarks
0	1901040219	BLOCK ASSY, No.5	1				service
1	1901040298	・SPOOL ASSY	1				
2	1420000101	・O-RING	1				
3	1421030101	・RING, back-up	1				
4	1901040241	・PLATE	1				
5	1120590510	・SCREW	2				
6	1901021366	・VALVE	1				
7	1901040261	・SPRING	1				
8	1420010110	・O-RING	1				
9	1901040251	・PULG	1				
10	1901040256	・HOLDER, spring	1				
11	1110020545	・SCREW, cap	2				
	B5h080						

silverhorn.co.uk

BLOCK ASSY; No. 6

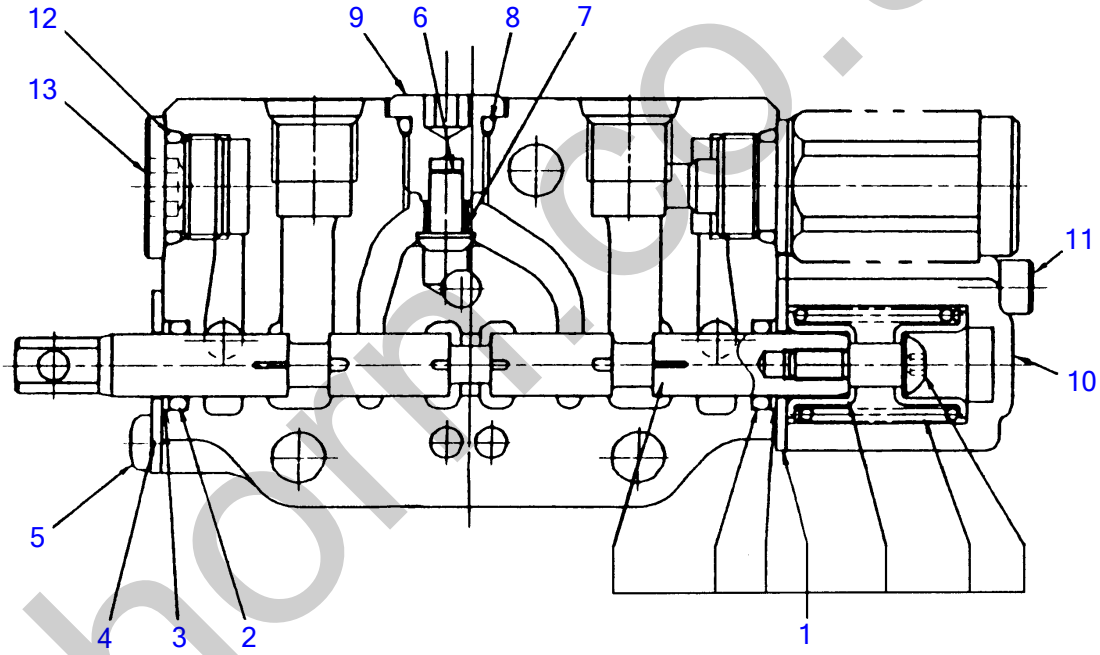

B5H090

silverhorse.co.uk

BLOCK ASSY; No. 6

Item	Part number	Description	Q'ty	Chan.	Serial No.	Serv.	Remarks
0	1901040218	BLOCK ASSY, No.6	1				swing
1	1901040296	・SPOOL ASSY	1				
2	1420000101	・O-RING	1				
3	1421030101	・RING, back-up	1				
4	1901040241	・PLATE	1				
5	1120590510	・SCREW	2				
6	1901021366	・VALVE	1				
7	1901040261	・SPRING	1				
8	1420010110	・O-RING	1				
9	1901040251	・PULG	1				
10	1901040256	・HOLDER, spring	1				
11	1110020545	・SCREW, cap	2				
12	1420010140	・O-RING	1				
13	1501750003	・PULG	1				
	1420010140	・・O-RING	1				
	B5h090						

silverhorn.co.uk

BLOCK ASSY; No. 7

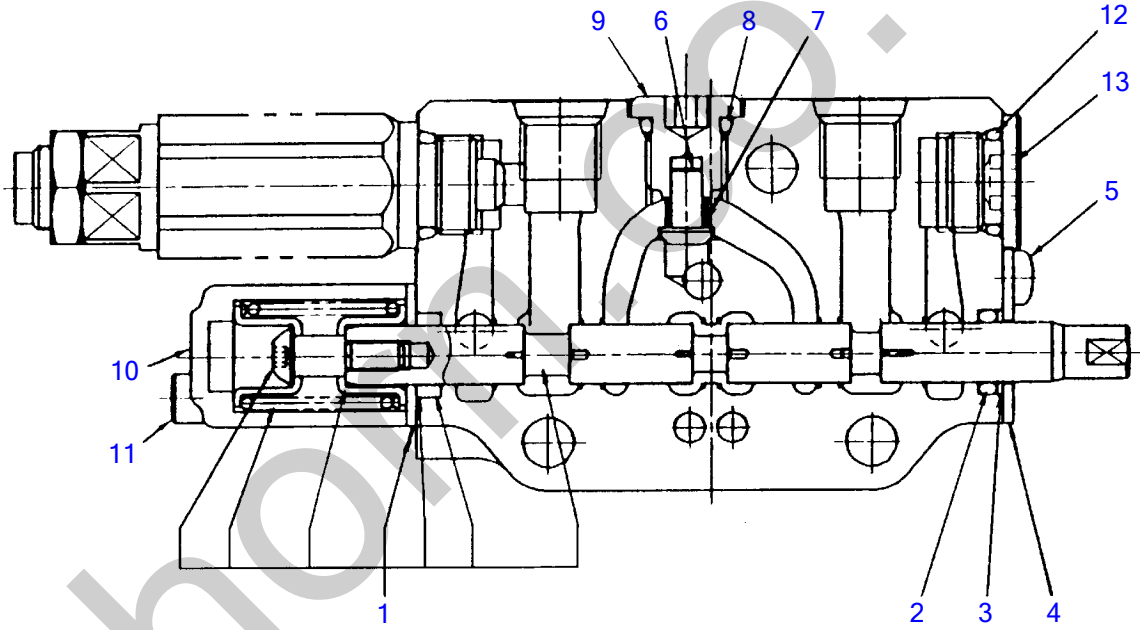

B5H100

silverhorn.co.uk

BLOCK ASSY; No. 7

Item	Part number	Description	Q'ty	Chan.	Serial No.	Serv.	Remarks
0	1901040211	BLOCK ASSY, No.7	1				boom
1	1901040295	・SPOOL ASSY	1				
2	1420000101	・O-RING	1				
3	1421030101	・RING, back-up	1				
4	1901040241	・PLATE	1				
5	1120590510	・SCREW	2				
6	1901021366	・VALVE	1				
7	1901040261	・SPRING	1				
8	1420010110	・O-RING	1				
9	1901040251	・PULG	1				
10	1901040256	・HOLDER, spring	1				
11	1110020545	・SCREW, cap	2				
12	1420010140	・O-RING	1				
13	1501750003	・PULG	1				
	1420010140	・・O-RING	1				
	B5h100						

silverhorn.co.uk

BLOCK ASSY; No. 8

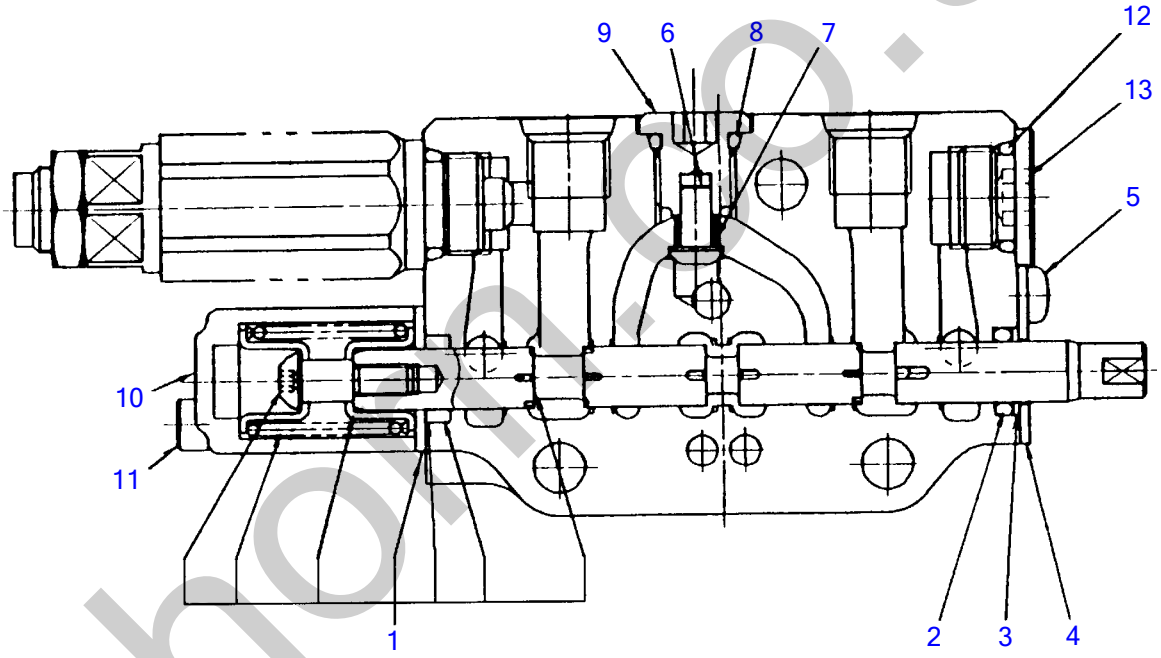

B5H110

silverhorn.co.uk

BLOCK ASSY; No. 8

Item	Part number	Description	Q'ty	Chan.	Serial No.	Serv.	Remarks
0	1901040213	BLOCK ASSY, No.8	1				bucket
1	1901040294	・SPOOL ASSY	1				
2	1420000101	・O-RING	1				
3	1421030101	・RING, back-up	1				
4	1901040241	・PLATE	1				
5	1120590510	・SCREW	2				
6	1901021366	・VALVE	1				
7	1901040261	・SPRING	1				
8	1420010110	・O-RING	1				
9	1901040251	・PULG	1				
10	1901040256	・HOLDER, spring	1				
11	1110020545	・SCREW, cap	2				
12	1420010140	・O-RING	1				
13	1501750003	・PULG	1				
	1420010140	・・O-RING	1				
	B5h110						

silverhorn.co.uk

HOUSING ASSY

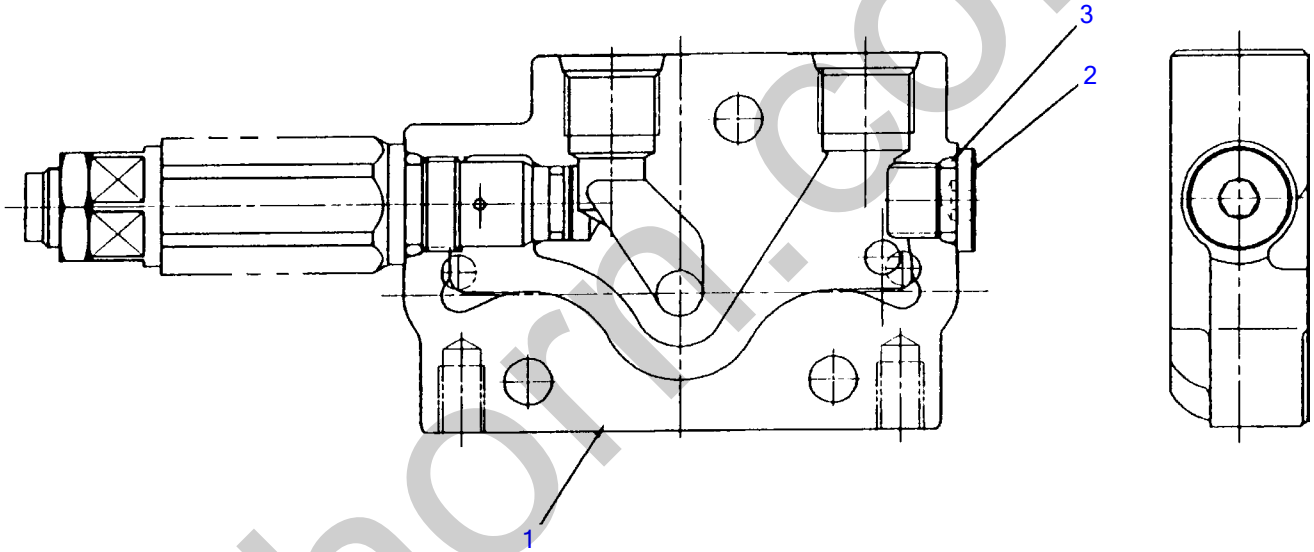

B5H120

silverhorn.co.uk

HOUSING ASSY

Item	Part number	Description	Q'ty	Chan.	Serial No.	Serv.	Remarks
0	1901040202	HOUSING ASSY	1				P2, T
1	1901040203	・BODY	1				
2	1501750002	・PULG	1				
	1420010110	・・O-RING	1				
3	1420010110	・O-RING	1				
	B5h120						

silverhorn.co.uk

BOOM CYLINDER (10821318~)

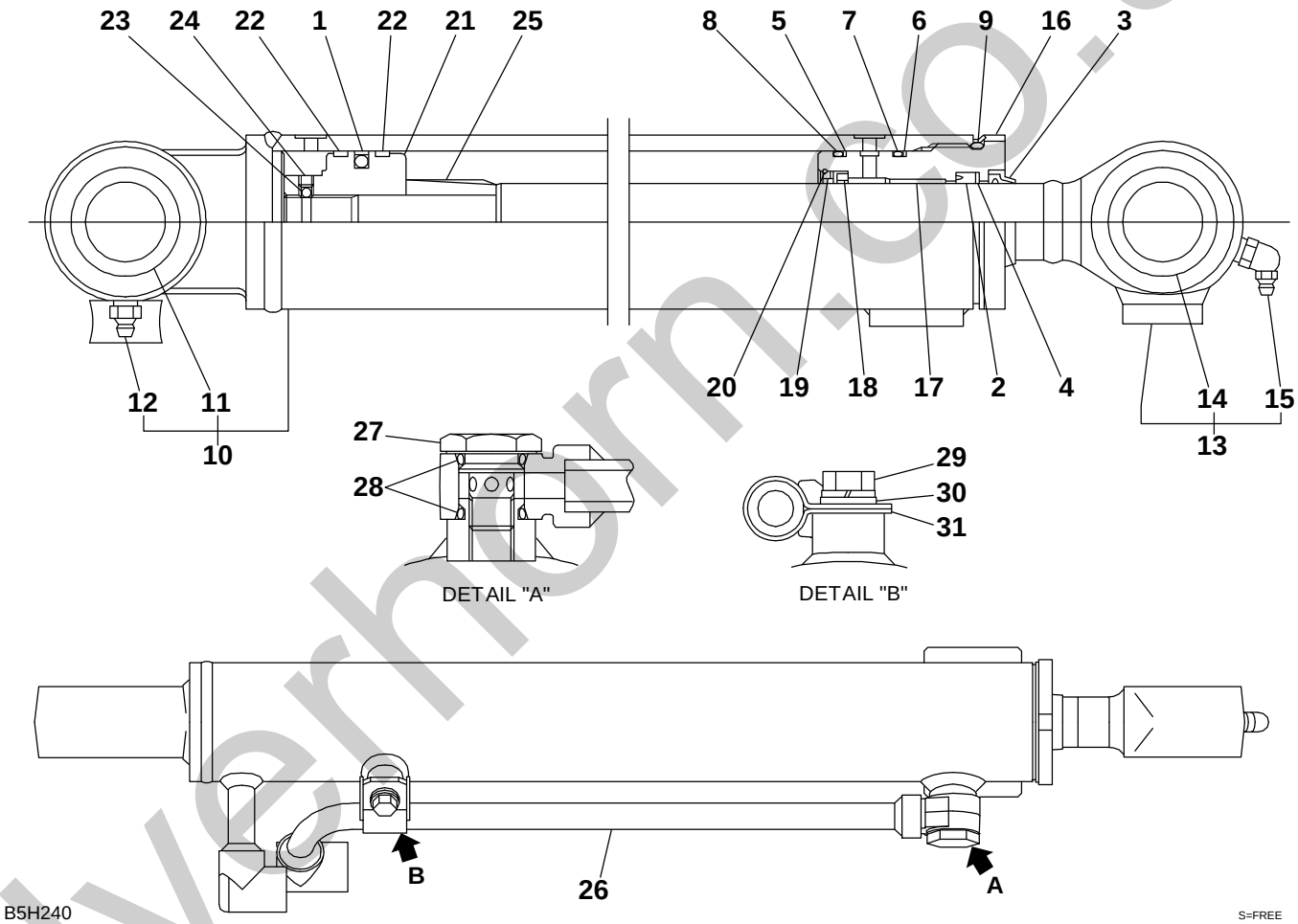

silverhorn.co.uk

BOOM CYLINDER

Item	Part number	Description	Q'ty	Chan.	Serial No.	Serv.	Remarks
0	1900096200	CYLINDER ASSY	1				boom
0-1	1900087599	・KIT, seal	1				
1	X 1900056931	・・PACKING, piston	1				
2	X 1900056932	・・PACKING, rod	1				
3	X 1900087133	・・SEAL, dust	1				
4	X 1421135252	・・RING, back-up	1				
5	X 1421130450	・・RING, back-up	2				
6	X 1420110450	・・O-RING	1				
7	X 1420110400	・・O-RING	1				
8	X 1420500500	・・O-RING	1				
9	1900096298	・KIT, tube	1				
10	1900044802	・・BUSHING	1				
11	1560001000	・・FITTING, grease	1				
12	1900096297	・KIT, rod	1				
13	1900056902	・・BUSHING	1				
14	1560001675	・・FITTING, grease	1				
15	1900056903	・COVER, rod	1				
16	1900087113	・BUSHING	1				
17	1900056916	・RING, cushion	1				
18	1900056915	・SPACER	1				
19	1900056926	・STOPPER	1				
20	1900057106	・PISTON	1				
21	1900056928	・RING, wear	2				
22	1390020250	・BALL, steel	1				
23	1121050608	・SET-SCREW	1				
24	1900056905	・CUSHION, rod	1				
25	1900096210	・PIPE ASSY	1				
26	1900095328	・PLUG	1				
27	1420010150	・O-RING	2				
28	1100040816	・BOLT	1				
29	1141110008	・WASHER	1				
30	1900095317	・HOLDER	1				
	B5h240						

silverhorn.co.uk

BOOM CYLINDER

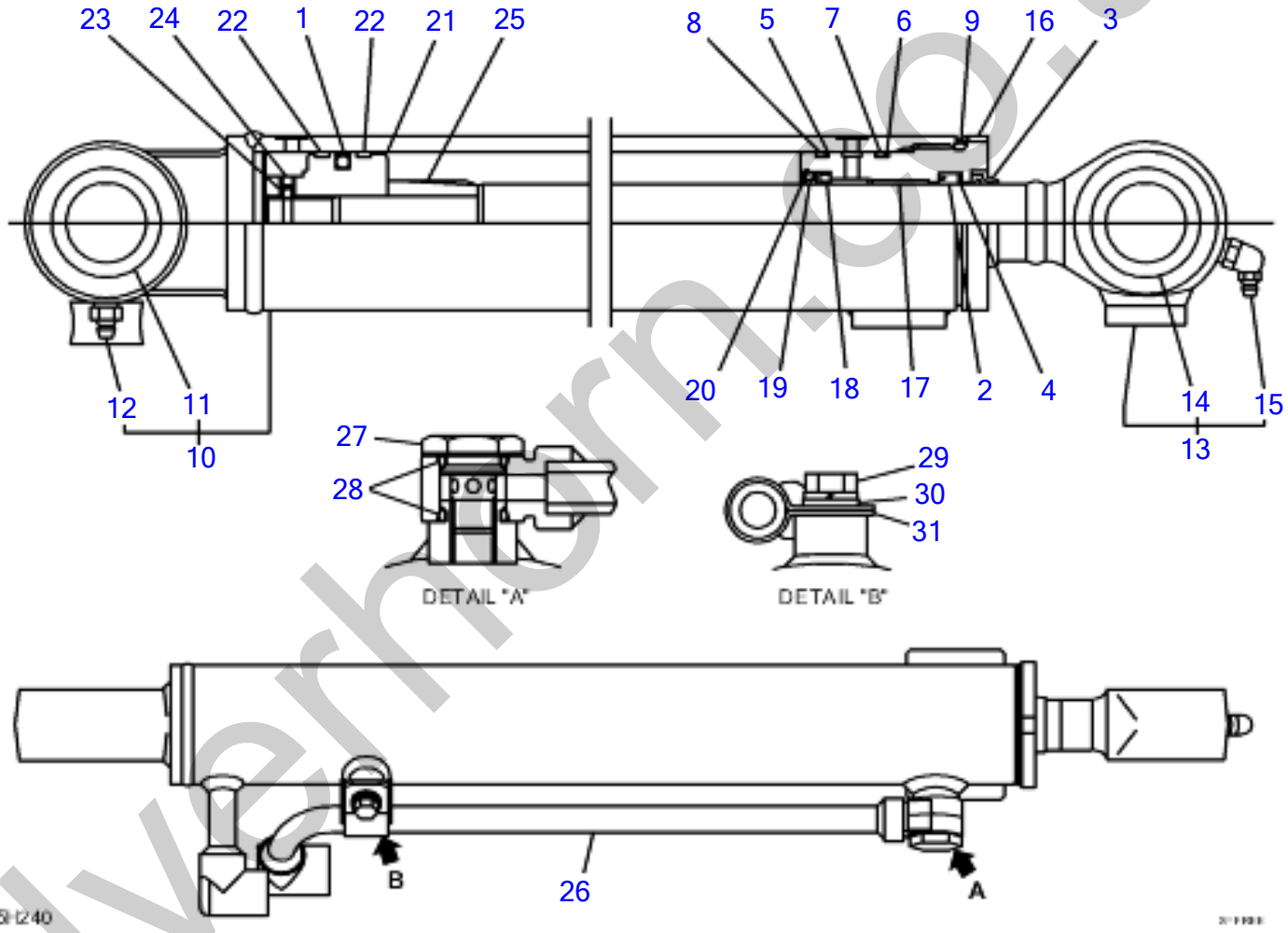

silverhorn.co.uk

BOOM CYLINDER

Item		Part number	Description	Q'ty	Chan.	Serial No.	Serv.	Remarks
0		1900103600	CYLINDER ASSY	1				boom
0-1		1900103699	・KIT, seal	1				
1	X	1900056931	・・PACKING, piston	1				
2	X	1900056932	・・PACKING, rod	1				
3	X	1900087133	・・SEAL, dust	1				
4	X	1900062132	・・RING, back-up	1				
5	X	1421130450	・・RING, back-up	1				
6	X	1421120450	・・RING, BACK-UP	1				
7	X	1420110450	・・O-RING	1				
8	X	1420110400	・・O-RING	1				
9		1420500500	* * O-RING	1				
10		1900103698	・KIT, tube	1				
11		1900044802	・・BUSHING	1				
12		1560001000	・・FITTING, grease	1				
13		1900103697	・KIT, rod	1				
14		1900056902	・・BUSHING	1				
15		1560001675	・・FITTING, grease	1				
16		1900056903	・COVER, rod	1				
17		1900103602	・BUSHING	1				
18		1900056916	・RING, cushion	1				
19		1900056915	・SPACER	1				
20		1900056926	・STOPPER	1				
21		1900103606	・PISTON	1				
22		1900056928	・RING, wear	2				
23		1390020250	・BALL, steel	1				
24		1121050608	・SET-SCREW	1				
25		1900103616	・CUSHION, rod	1				
26		1900096210	・PIPE ASSY	1				
27		1900095328	・PLUG	1				
28		1420010150	・O-RING	2				
29		1900008162	・BOLT	1				
30		1141110008	・WASHER	1				
31		1900095317	・HOLDER	1				
		B5H300						

silverhorn.co.uk

ARM CYLINDER

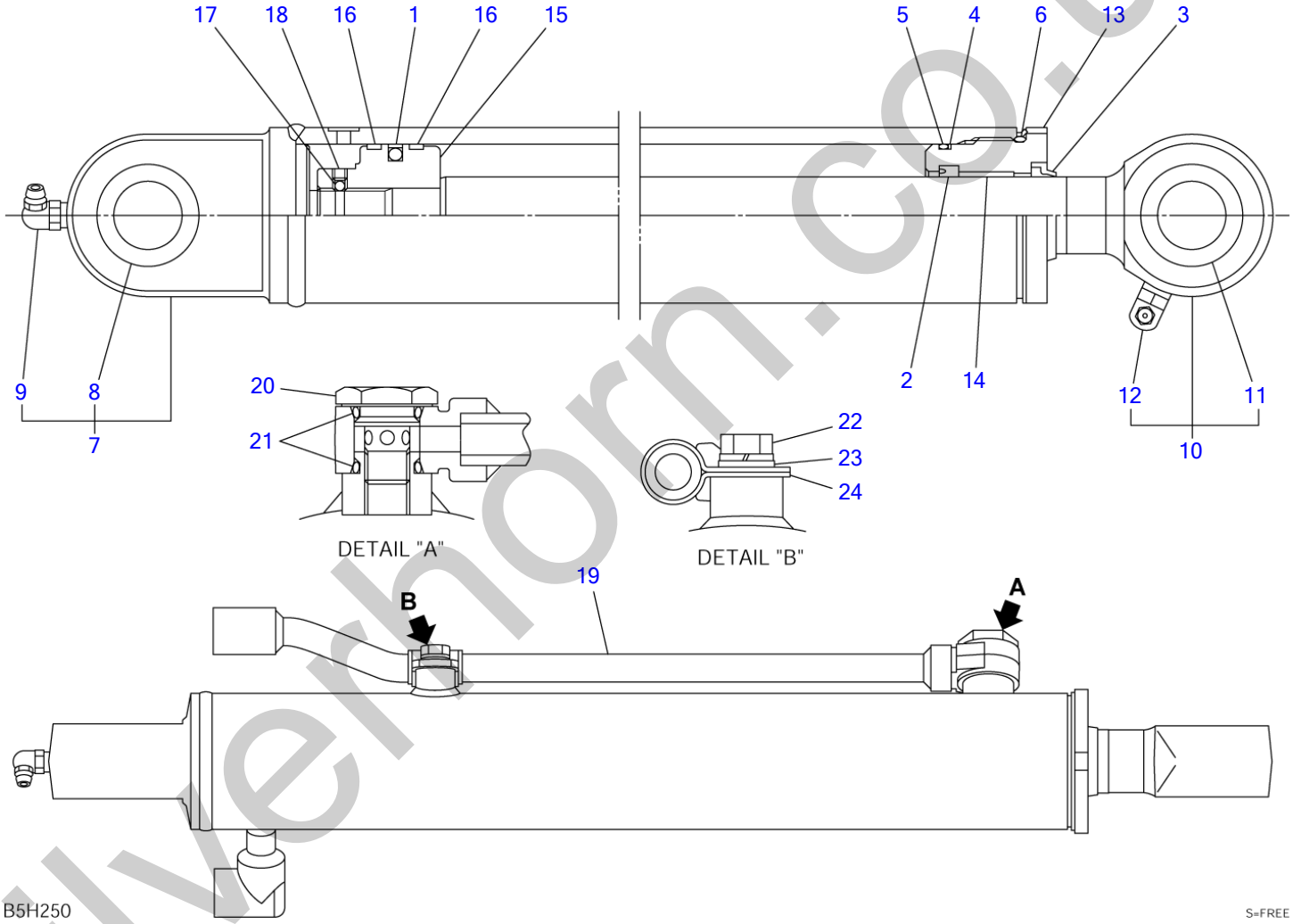

silverhorn.co.uk

ARM CYLINDER

Item	Part number	Description	Q'ty	Chan.	Serial No.	Serv.	Remarks
0	1900096300	CYLINDER ASSY	1				arm
0-1	1900087499	・KIT, seal	1				
1	X 1900051932	・・PACKING, piston	1				
2	X 1410530408	・・PACKING, rod	1				
3	X 1900073733	・・SEAL, dust	1				
4	X 1421130500	・・RING, back-up	1				
5	X 1420110500	・・O-RING	1				
6	X 1420500550	・・O-RING	1				
7	1900096398	・KIT, tube	1				
8	1900057002	・・BUSHING	1				
9	1560001900	・・FITTING, grease	1				
10	1900087497	・KIT, rod	1				
11	1900056902	・・BUSHING	1				
12	1560001900	・・FITTING, grease	1				
13	1900053503	・COVER, rod	1				
14	1333003025	・BUSHING	1				
15	1900053506	・PISTON	1				
16	1900066726	・RING, wear	2				
17	1390020250	・BALL, steel	1				
18	1121050606	・SET-SCREW	1				
19	1900096310	・PIPE ASSY	1				
20	1900095328	・PLUG	1				
21	1420010150	・O-RING	2				
22	1100040816	・BOLT	1				
23	1141110008	・WASHER	1				
24	1900095317	・HOLDER	1				
	B5h250						

silverhorn.co.uk

BUCKET CYLINDER

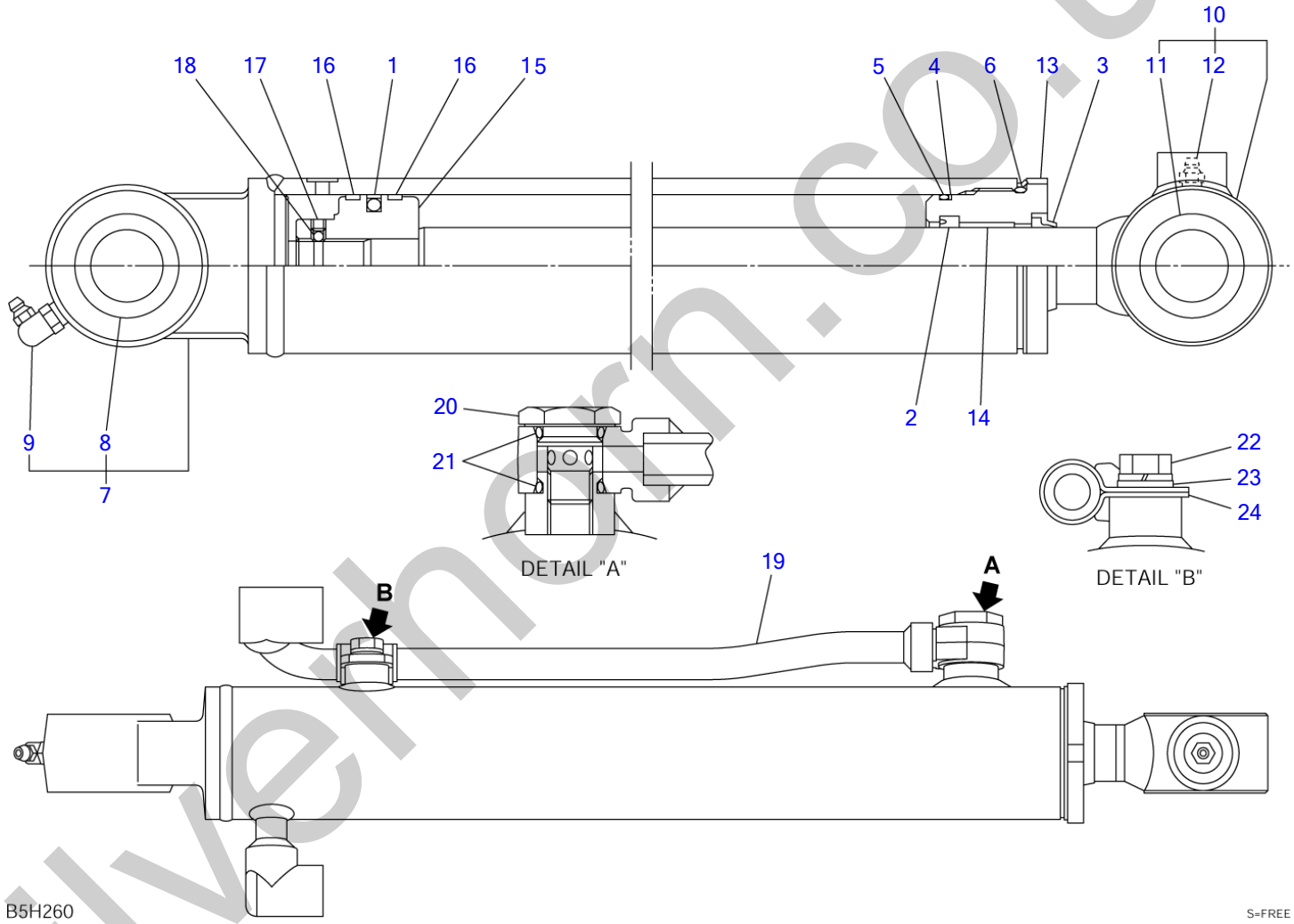

silvernorn.co.uk

BUCKET CYLINDER

Item	Part number	Description	Q'ty	Chan.	Serial No.	Serv.	Remarks
0	1900096400	CYLINDER ASSY	1				bucket
0-1	1900087299	・KIT, seal	1				
1	X 1900056931	・・PACKING, piston	1				
2	X 1900056932	・・PACKING, rod	1				
3	X 1900087133	・・SEAL, dust	1				
4	X 1421130450	・・RING, back-up	1				
5	X 1420110450	・・O-RING	1				
6	X 1420500500	・・O-RING	1				
7	1900096498	・KIT, tube	1				
8	1900057002	・・BUSHING	1				
9	1560001900	・・FITTING, grease	1				
10	1900087397	・KIT, rod	1				
11	1900056902	・・BUSHING	1				
12	1560001000	・・FITTING, grease	1				
13	1900057103	・COVER, rod	1				
14	1900087113	・BUSHING	1				
15	1900057106	・PISTON	1				
16	1900056928	・RING, wear	2				
17	1121050608	・SET-SCREW	1				
18	1390020250	・BALL, steel	1				
19	1900096410	・PIPE ASSY	1				
20	1900095328	・PLUG	1				
21	1420010150	・O-RING	2				
22	1100040816	・BOLT	1				
23	1141110008	・WASHER	1				
24	1900095317	・HOLDER	1				
	B5h260						

silverhorn.co.uk

DOZER BLADE CYLINDER

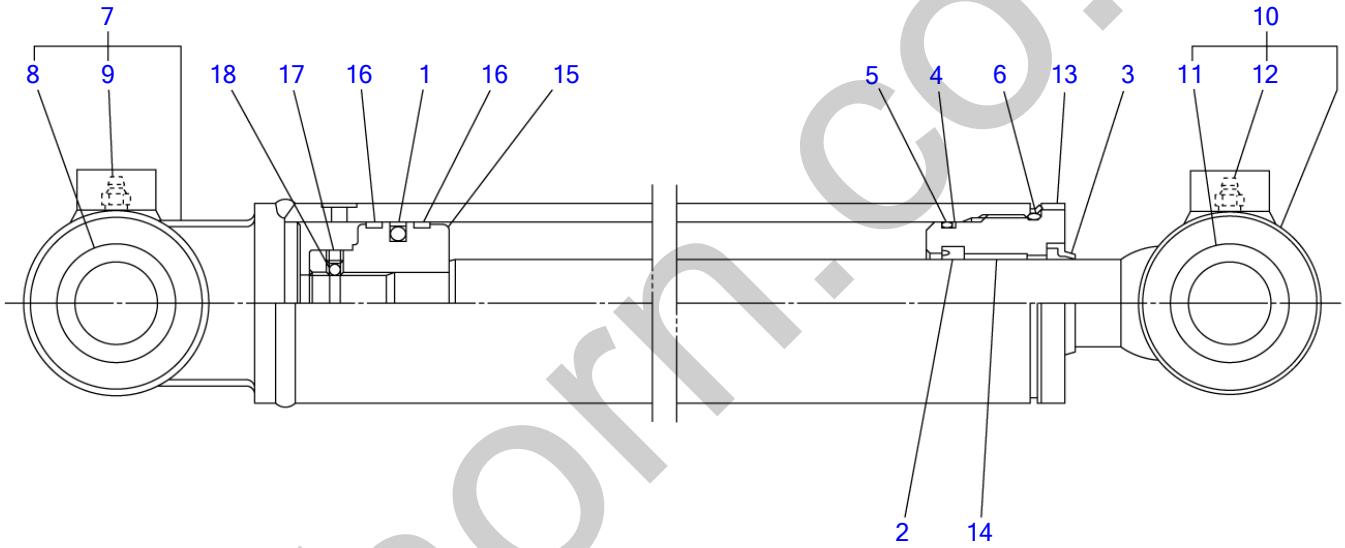

B5H160

S=FREE

silverhorn.co.uk

DOZER BLADE CYLINDER

Item	Part number		Description	Q'ty	Chan.	Serial No.	Serv.	Remarks
0		1900096600	CYLINDER ASSY	1				blade
0-1		1900087299	・KIT, seal	1				
1	X	1900056931	・・PACKING, piston	1				
2	X	1900056932	・・PACKING, rod	1				
3	X	1900087133	・・SEAL, dust	1				
4	X	1421130450	・・RING, back-up	1				
5	X	1420110450	・・O-RING	1				
6	X	1420500500	・・O-RING	1				
7		1900096698	・KIT, tube	1				
8		1900057002	・・BUSHING	1				
9		1560001000	・・FITTING, grease	1				
10		1900087197	・KIT, rod	1				
11		1900057002	・・BUSHING	1				
12		1560001000	・・FITTING, grease	1				
13		1900057103	・COVER, rod	1				
14		1900087113	・BUSHING	1				
15		1900057106	・PISTON	1				
16		1900056928	・RING, wear	2				
17		1121050608	・SET-SCREW	1				
18		1390020250	・BALL, steel	1				
		B5h270						

silverhorn.co.uk

SWING CYLINDER

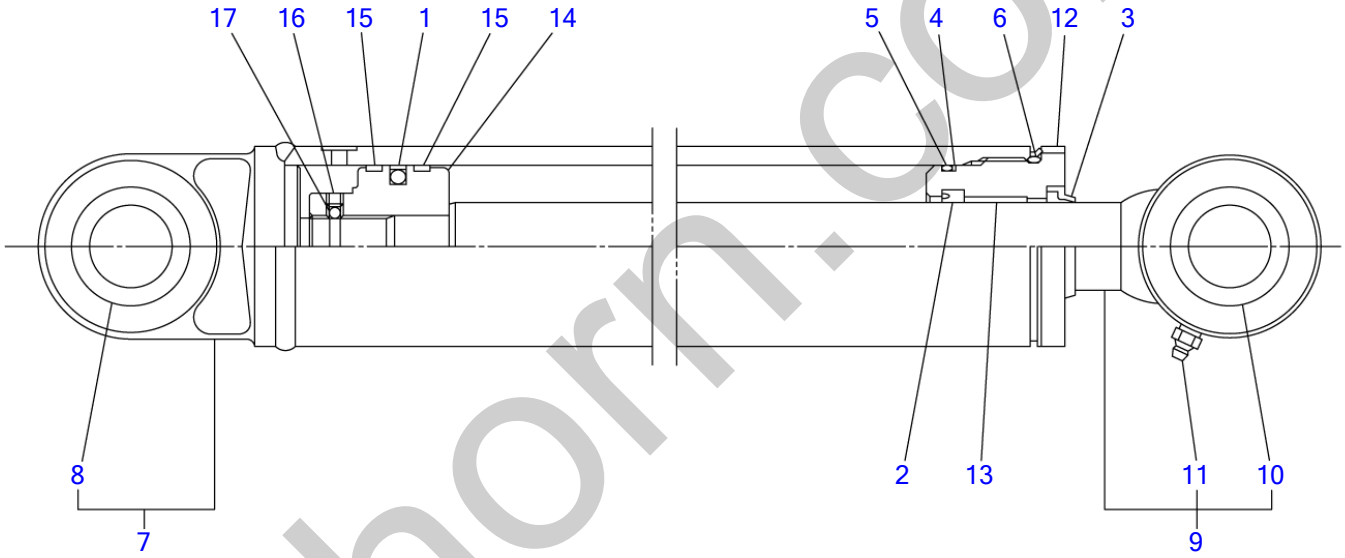

B5H170

S=FREE

silverhorn.co.uk

SWING CYLINDER

Item		Part number	Description	Q'ty	Chan.	Serial No.	Serv.	Remarks
0		1900096500	CYLINDER ASSY	1				swing
0-1		1900087299	・KIT, seal	1				
1	X	1900056931	・・PACKING, piston	1				
2	X	1900056932	・・PACKING, rod	1				
3	X	1900087133	・・SEAL, dust	1				
4	X	1421130450	・・RING, back-up	1				
5	X	1420110450	・・O-RING	1				
6	X	1420500500	・・O-RING	1				
7		1900096598	・KIT, tube	1				
8		1900057002	・・BUSHING	1				
9		1900096597	・KIT, rod	1				
10		1900024720	・・BUSHING	1				
11		1560001000	・・FITTING, grease	1				
12		1900057203	・COVER, rod	1				
13		1900087113	・BUSHING	1				
14		1900057106	・PISTON	1				
15		1900056928	・RING, wear	2				
16		1121050608	・SET-SCREW	1				
17		1390020250	・BALL, steel	1				
		B5h280						

silverhorn.co.uk

SPANNER CYLINDER

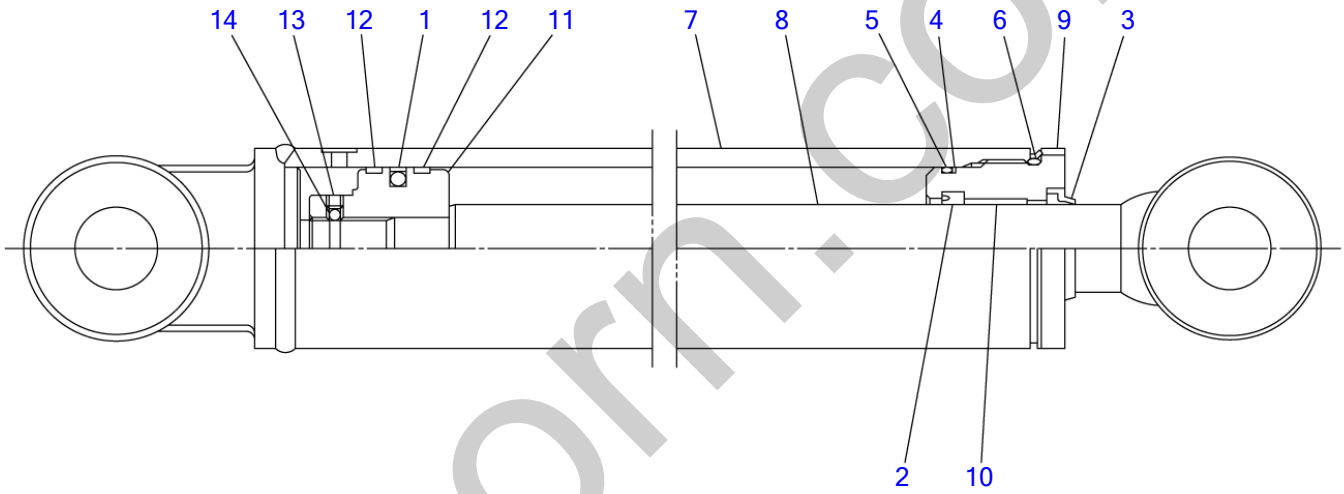

B5H180

S=FREE

silverhorn.co.uk

SPANNER CYLINDER

Item	Part number	Description	Q'ty	Chan.	Serial No.	Serv.	Remarks
0	1900096700	CYLINDER ASSY	1				spanner
0-1	1900087299	・KIT, seal	1				
1	X 1900056931	・・PACKING, piston	1				
2	X 1900056932	・・PACKING, rod	1				
3	X 1900087133	・・SEAL, dust	1				
4	X 1421130450	・・RING, back-up	1				
5	X 1420110450	・・O-RING	1				
6	X 1420500500	・・O-RING	1				
7	1900096798	・TUBE	1				
8	1900087201	・ROD, piston	1				
9	1900057203	・COVER, rod	1				
10	1900087113	・BUSHING	1				
11	1900057106	・PISTON	1				
12	1900056928	・RING, wear	2				
13	1121050608	・SET-SCREW	1				
14	1390020250	・BALL, steel	1				
	B5h290						

silverhorn.co.uk

TRAVEL MOTOR (1/3) (reduction sec.)

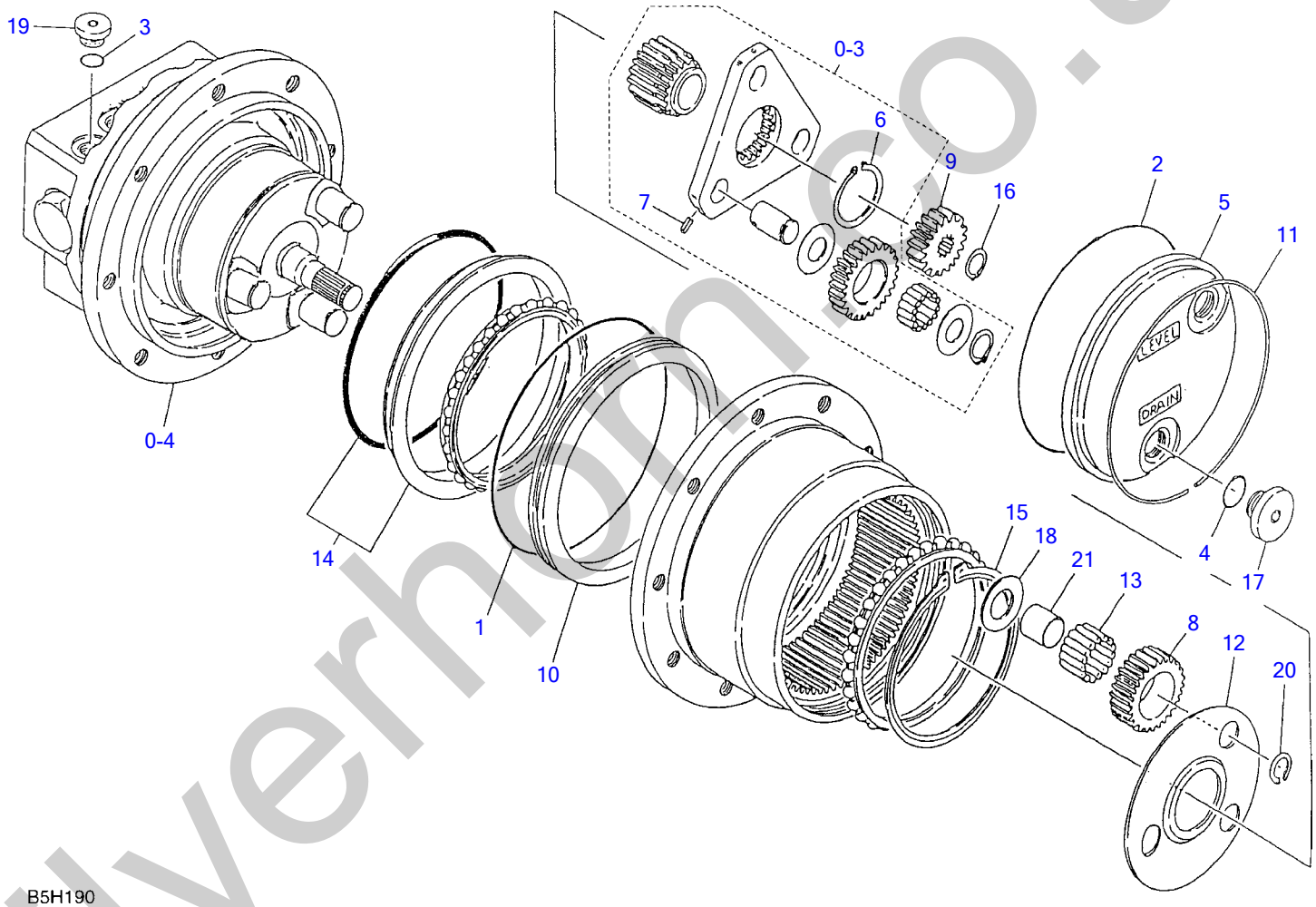

silverhorn.co.uk

TRAVEL MOTOR (1/3) (reduction sec.)

Item		Part number	Description	Q'ty	Chan.	Serial No.	Serv.	Remarks
0		1903122400	MOTOR ASSY, travel	1				
0-1	X	**********	・REDUCTION ASSY	1				
0-2		1912906999	・・KIT, seal	1				
1	X	1420101300	・・・O-RING	1				
2	X	1420300248	・・・O-RING	1				
3	X	1420010110	・・・O-RING	1				
4	X	1420010140	・・・O-RING	2				
5		1903121202	・・COVER	1				
0-3		1912906998	・・CARRIER ASSY, sub	1				
6		1220000026	・・・RING, snap	1				
7		1213000312	・・・PIN, spring	3				
8		1903121206	・・GEAR	3				
9		1912906909	・・GEAR	1				
10		1903121212	・・RING, seal	1				
11		1903118113	・・RING, snap	1				
12		1912906914	・・PLATE	1				
13		1903118116	・・NEEDLE	45				
14		1903121218	・・SEAL, floating	1				
15		1903121222	・・RING, snap	1				
16		1220000013	・・RING, snap	1				
17		1903118932	・・PLUG	2				
0-4		1903906000	・・KIT, motor	1				
18		1903121234	・・WASHER	3				
19		1903901930	・・PLUG	1				
20		1903918137	・・RING, snap	3				
21		1903121238	・・RING	3				
		B5h190						

silverhorn.co.uk

TRAVEL MOTOR (2/3) (motor sec.)

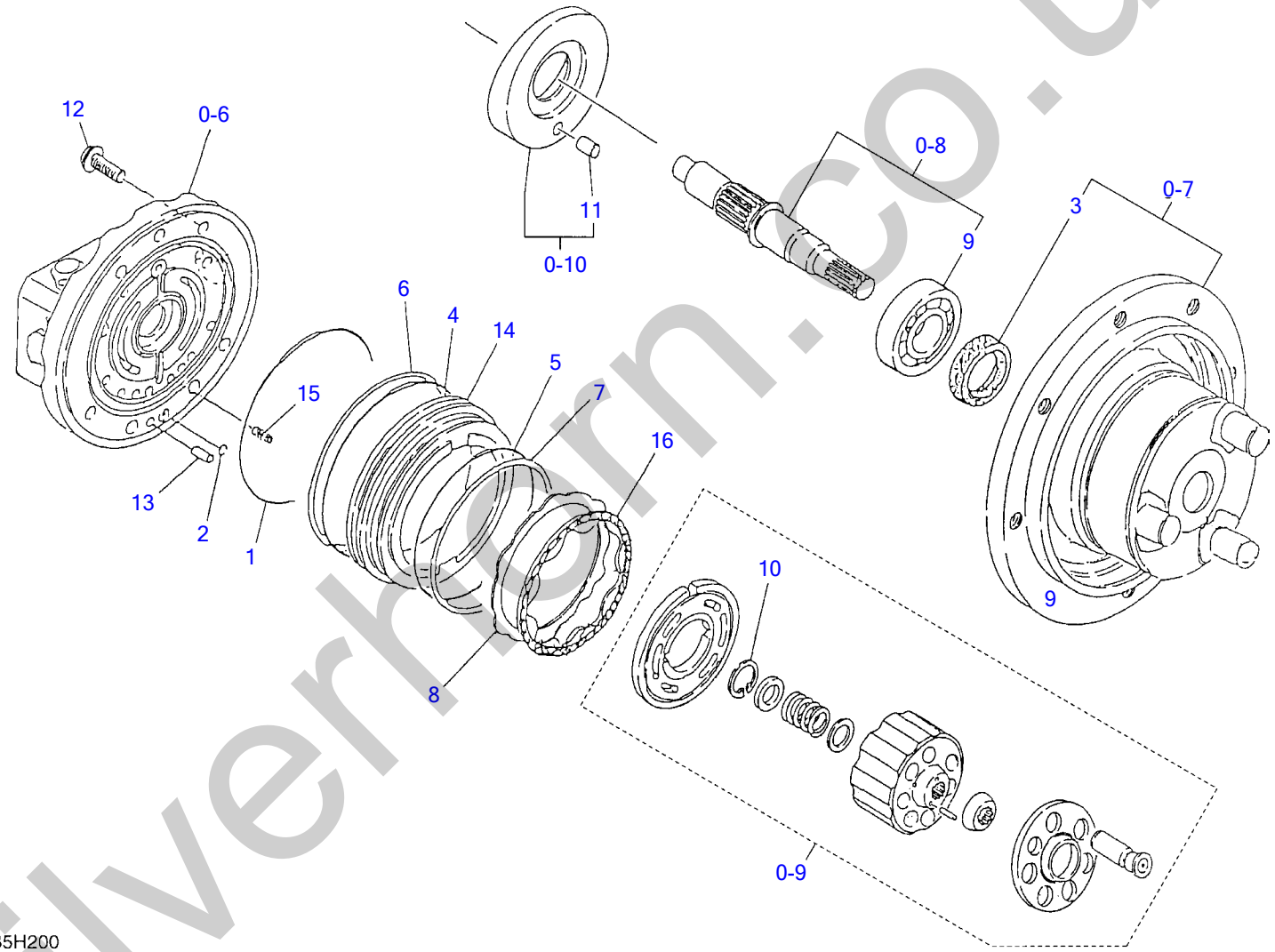

B5H200

silverhorn.co.uk

TRAVEL MOTOR (2/3) (motor sec.)

Item		Part number	Description	Q'ty	Chan.	Serial No.	Serv.	Remarks
0		1903122400	MOTOR ASSY, travel	1				
0-4	X	**********	・KIT, motor	1				
0-5		1903906099	・・KIT, seal	1				
1	X	1420111050	・・・O-RING	1				
2	X	1420010060	・・・O-RING	1				
3	X	1903904226	・・・SEAL, dust	1				
4	X	1420110950	・・・O-RING	1				
5	X	1420110900	・・・O-RING	1				
6	X	1421130950	・・・RING, back-up	1				
7	X	1421130900	・・・RING, back-up	1				
0-6		1903906098	・・KIT, body 1	1				
0-7		1903906097	・・KIT, body 2	1				
8		1903906028	・・PLATE	1				
0-8		1903906096	・・KIT, shaft	1				
9		1300006004	・・・BEARING	1				
0-9		1903905295	・・KIT, cylinder	1				
10		1221000028	・・・RING, snap	1				
0-10		1903906094	・・PLATE, swash	1				
11		1212000810	・・・PIN	1				
12		1903904230	・・SCREW	7				
13		1212000614	・・PIN	1				
14		1903904217	・・PISTON, brake	1				
15		1903906026	・・SPRING	8				
16		1903905228	・・PLATE	1				
		B5h200						

silverhorn.co.uk

TRAVEL MOTOR (3/3) (valve sec.)

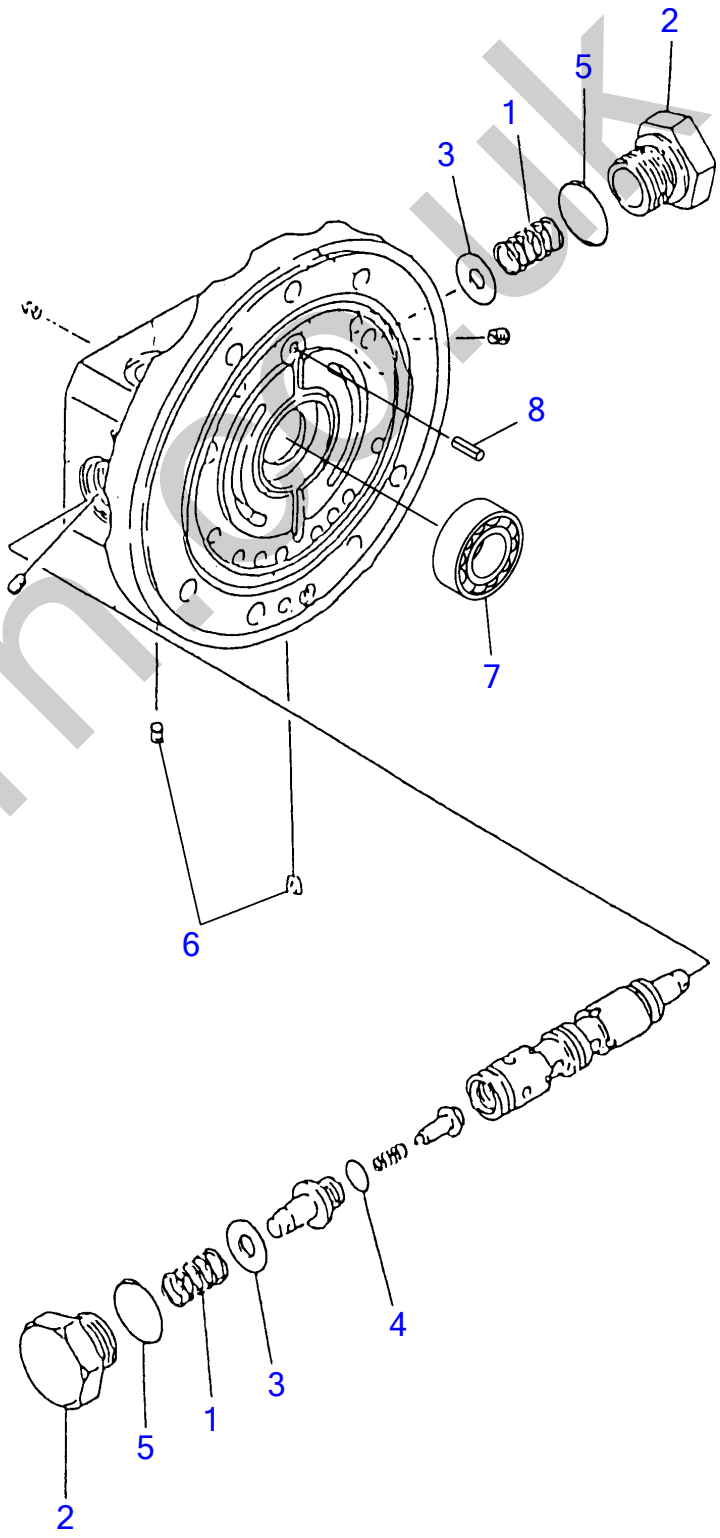

B5H210

silverhorn.co.uk

TRAVEL MOTOR (3/3) (valve sec.)

Item	Part number	Description	Q'ty	Chan.	Serial No.	Serv.	Remarks
0	1903122400	MOTOR ASSY, travel	1				
0-6	1903906098	・KIT, body 1	1				
1	1903904247	・・SPRING	2				
2	1901807010	・・PLUG	2				
3	1901804510	・・RING	2				
4	1420000100	・・O-RING	2				
5	1420010140	・・O-RING	2				
6	1501810000	・・PLUG	2				
7	1300006201	・・BEARING	1				
8	1213000512	・・PIN, spring	1				
	B5h210						

silverhorn.co.uk

SLEW MOTOR

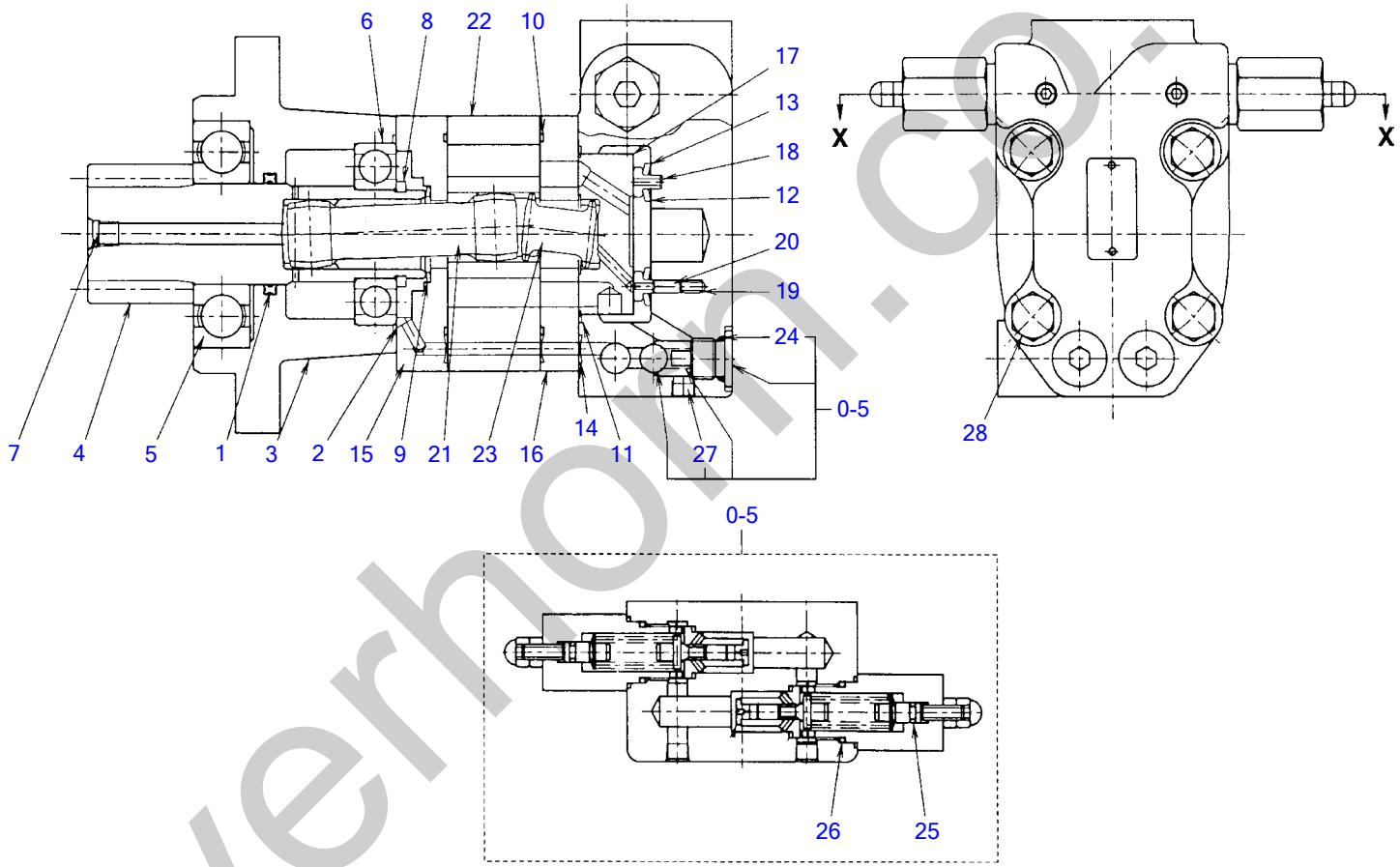

SECTION "X-X"

B5H220

silverhorn.co.uk

SLEW MOTOR

Item		Part number	Description	Q'ty	Chan.	Serial No.	Serv.	Remarks
0		1903122300	MOTOR ASSY, slew	1				
0-1		1912906700	・GEAR ASSY	1				
0-2		1912906799	・・KIT, seal	1				
1	X	1912906706	・・・X-RING	1				
2	X	1420310041	・・・O-RING	1				
3		1912906701	・・HOUSING	1				
4		1912906702	・・GEAR	1				
5		1912902203	・・BEARING	1				
6		1903104707	・・BEARING	1				
7		1903103646	・・PLUG	2				
8		1903900437	・・RING, retaining	1				
0-3		1903905900	・MOTOR ASSY	1				
0-4		1903905999	・・KIT, seal	1				
9	X	1432900017	・・・SEAL	1				
10	X	1420310041	・・・O-RING	2				
11	X	1420310038	・・・O-RING	1				
12	X	1903905918	・・・SEAL	1				
13	X	1903905920	・・・SEAL	1				
14	X	1420310011	・・・O-RING	3				
15		1903117817	・・PLATE	1				
16		1903904319	・・PLATE	1				
17		1903117925	・・VALVE	1				
18		1903117926	・・PLATE	1				
19		1903103632	・・SPRING	2				
20		1903103634	・・PIN	2				
21		1903903627	・・DRIVE	1				
22		1903905922	・・ROLLER	1				
23		1903102624	・・DRIVE	1				
0-5		1901811000	・・HOUSING ASSY	1				
0-6		1901811099	・・・KIT, seal	1				
24	X	1420010140	・・・・O-RING	2				
25	X	1420010050	・・・・O-RING	2				
26	X	1420010200	・・・・O-RING	2				
27		1903103646	・・・PLUG	3				
28		1903900432	・・BOLT	4				
		B5h220						

silverhorn.co.uk

HYDRAULIC PUMP

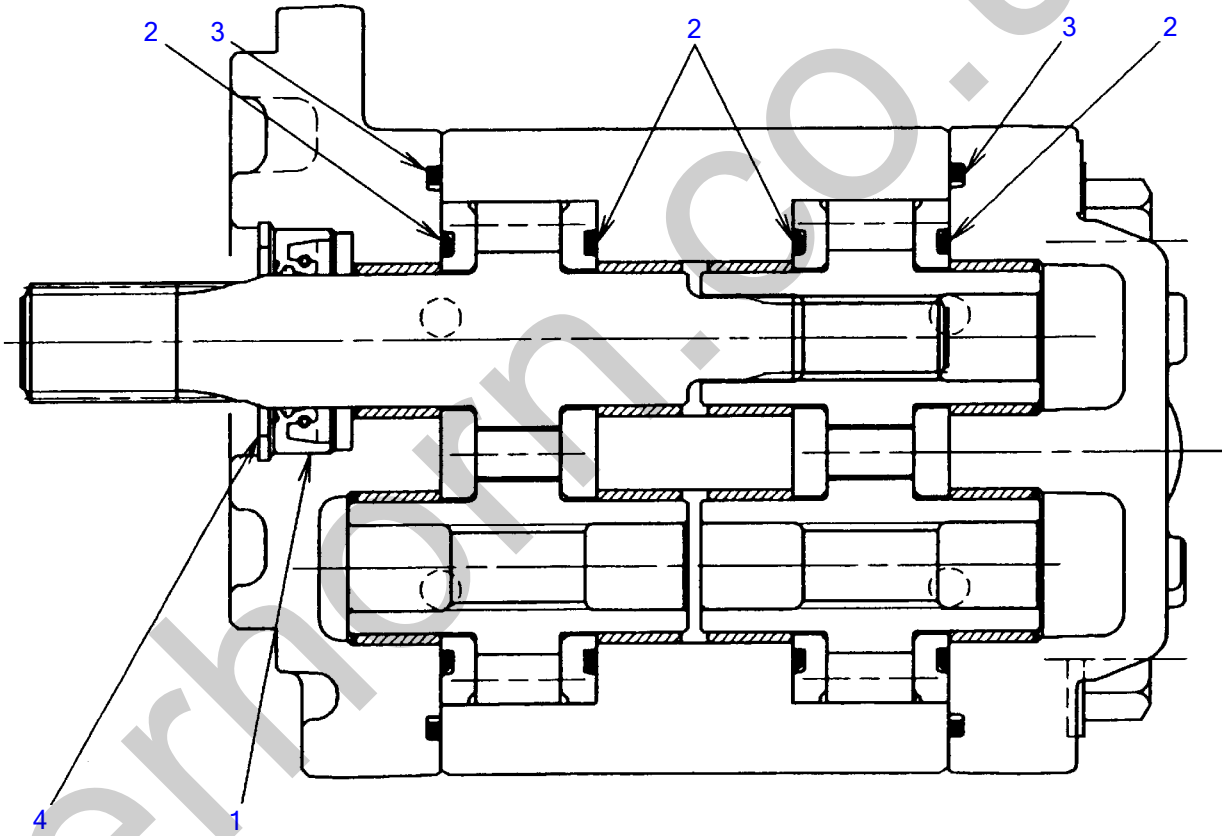

B5H230

silverhorn.co.uk

HYDRAULIC PUMP

Item	Part number	Description	Q'ty	Chan.	Serial No.	Serv.	Remarks
0	1902018900	PUMP ASSY	1				
0-1	1902018999	・KIT, seal	1				
1	X 1902018955	・・SEAL, dust	1				
2	X 1902018950	・・PACKING	4				
3	X 1902018951	・・PACKING	2				
4	X 1221000032	・・RING, snap	1				

B5h230

silverhorn.co.uk

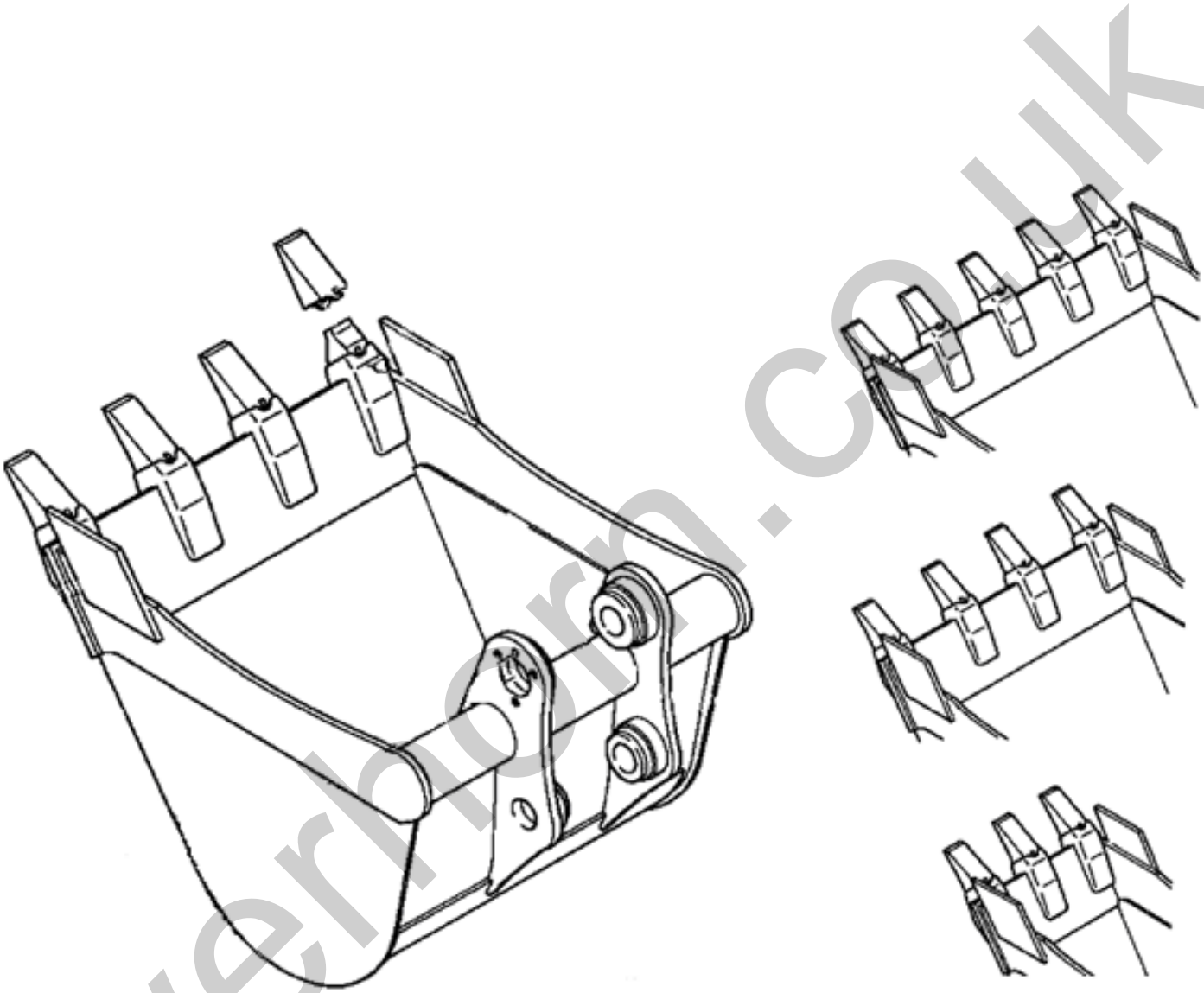

silverhorn.co.uk

TB108 Buckets

Item	Part number	Description	Q'ty	Chan.	Serial No.	Serv.	Remarks
		TB108 Buckets					
	BTB00708	8" Pin-on Bucket TB007/TB108	1				
	BTB00710	10" Pin-on Bucket TB007/TB108 (special order)	1				
	BTB00712	12" Pin-on Bucket TB007/TB108	1				
	BTB00716	16" Pin-on Bucket TB007/TB108 (special order)	1				
	BTB00718	18" Pin-on Bucket TB007/TB108 (special order)	1				

silverhorn.co.uk

Teeth New

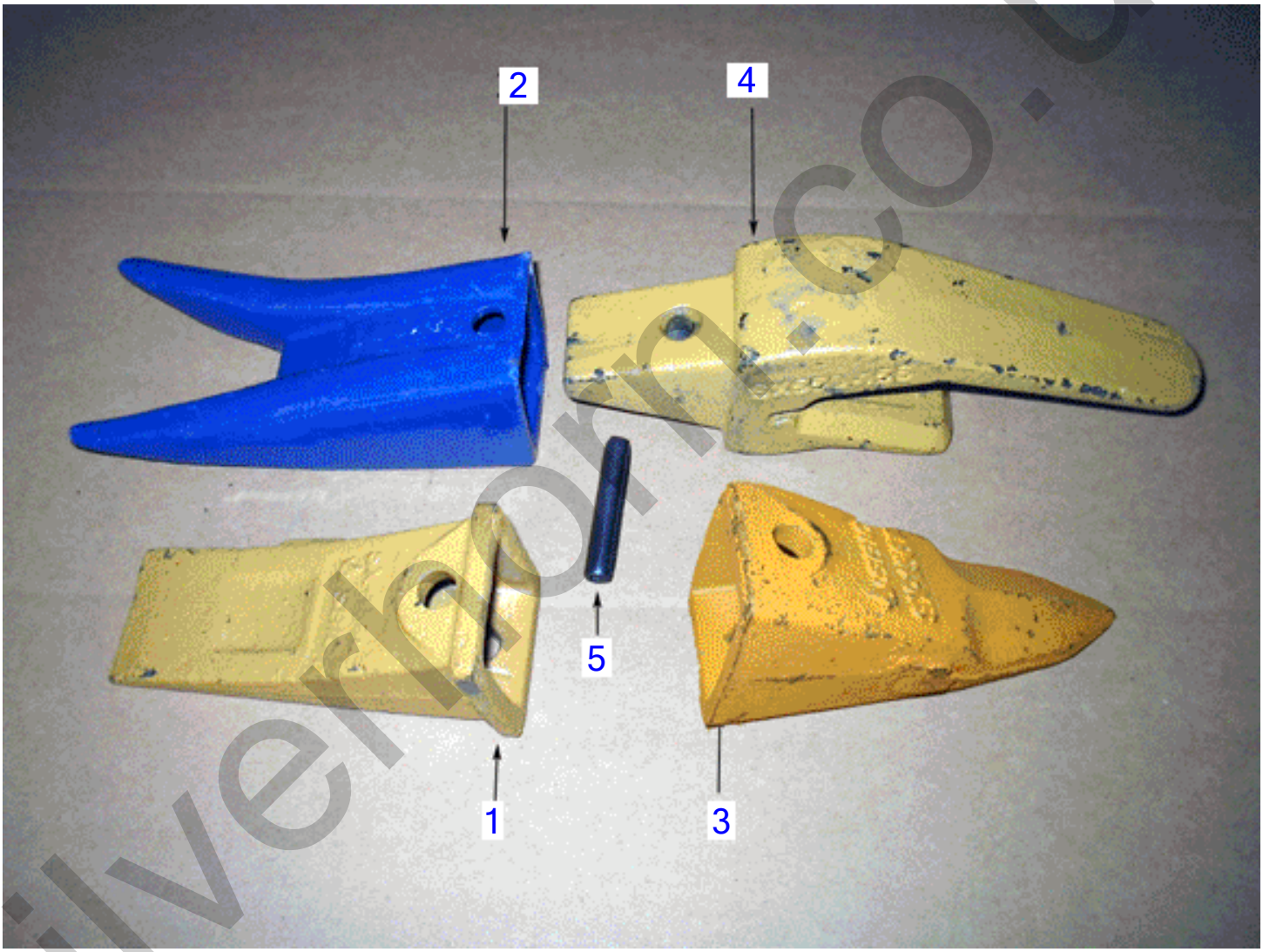

silverhorn.co.uk

Teeth New

Item	Part number	Description	Q'ty	Chan.	Serial No.	Serv.	Remarks
		Teeth New					
1	**1914210182**	Tooth	1				
2	**1914299142**	Double Tiger	1				
3	**191429942**	Single Tiger (C&P) Tooth	1				
4	**1914210181**	AdaptorShank 230 X 156 Old Style	1				
	19142181-1	Adaptor Shank 550 X 156 New Style	1				
5	**1914210183**	Pin	1				

silverhorn.co.uk

Old Teeth

silverhorn.co.uk

Old Teeth

Item	Part number	Description	Q'ty	Chan.	Serial No.	Serv.	Remarks
		Old Teeth					
1	**1914201202**	Tooth TB007/TB015	1				
2	**1914291202**	Rock Tooth V13	1				
3	**1914201201**	Adaptor	1				
4	**1914201203**	Lock	1				

silverhorn.co.uk

250 Hour Filter Kit

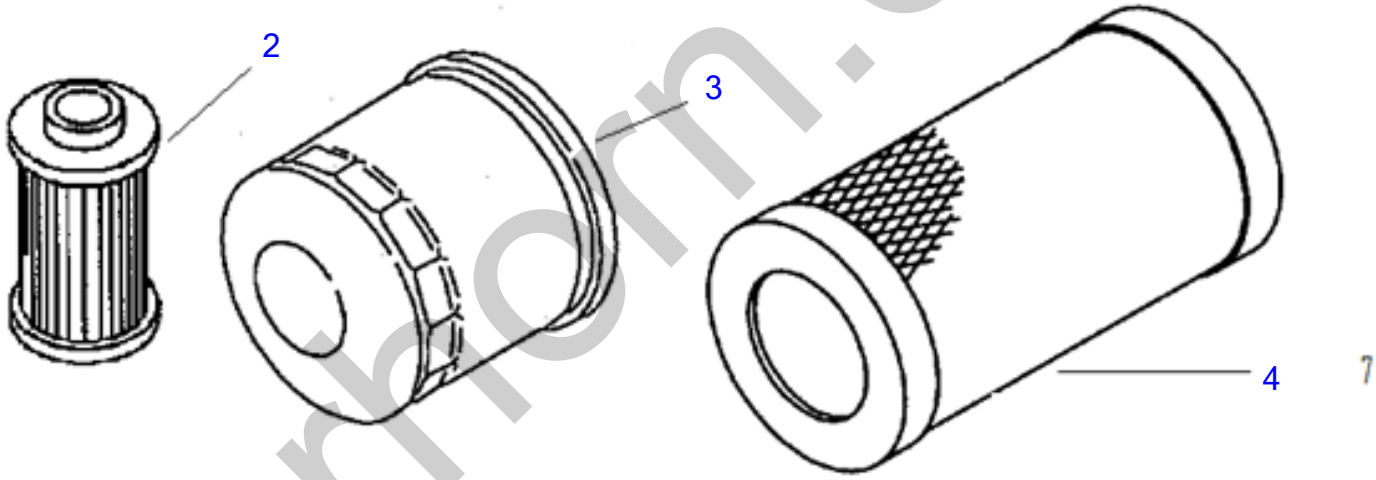

silverhorn.co.uk

250 Hour Filter Kit

Item	Part number	Description	Q'ty	Chan.	Serial No.	Serv.	Remarks
		250 Hour Filter Kit					
	1909901400	250 Hour Filter Kit TB108/TB014/TB016	1				
1	Y119305-35150	* Engine Oil Filter	1				
2	Y124550-5570	* Fuel Filter	1				
3	Y119655-12560	* Air Filter	1				

silverhorn.co.uk

Annual Filter Kit

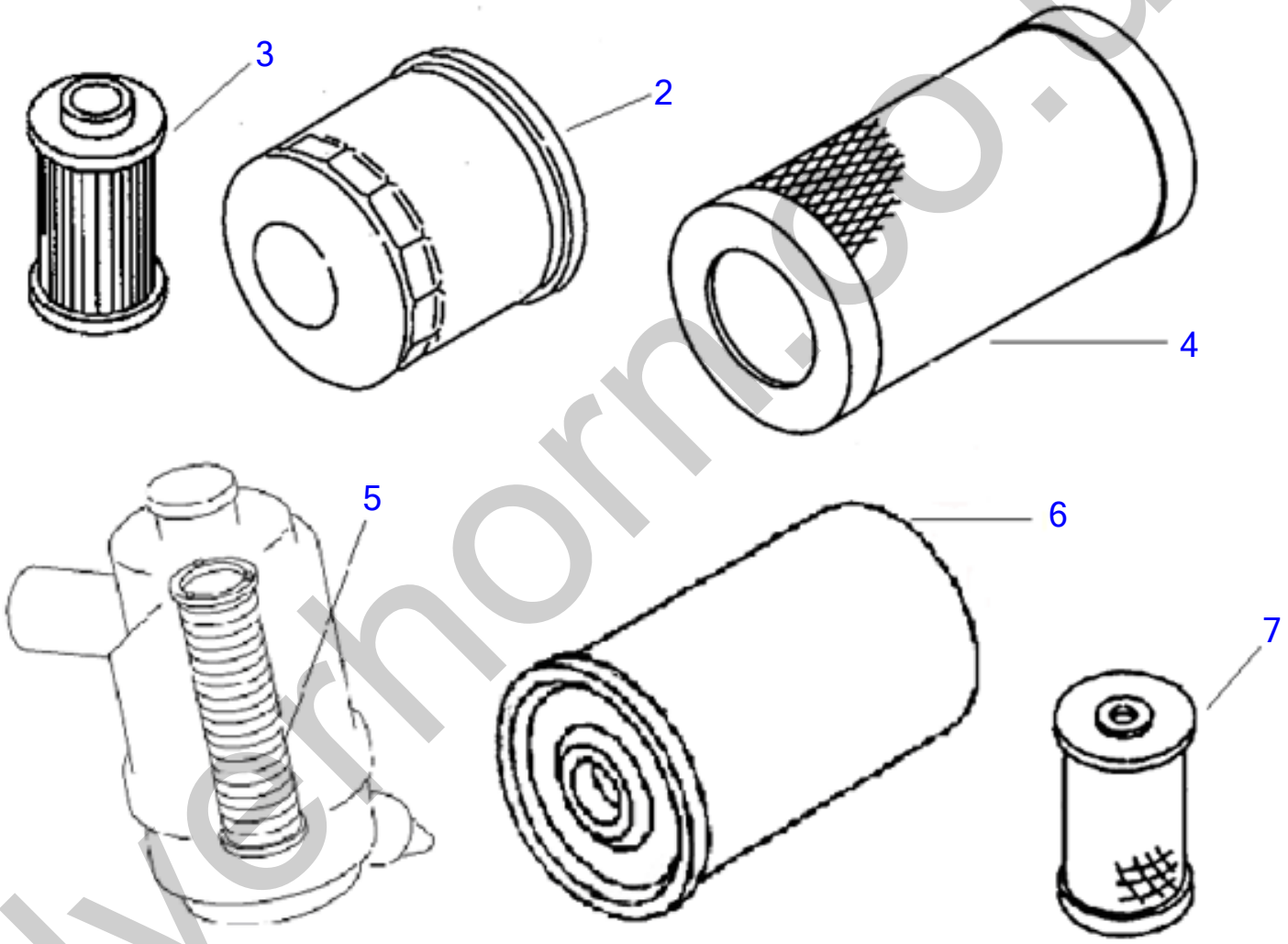

silverhorn.co.uk

Annual Filter Kit

Item	Part number	Description	Q'ty	Chan.	Serial No.	Serv.	Remarks
		Annual Filter Kit					
	1909910813	Filter Kit TB108 (annual)	1				
2	Y119305-35150	* Engine Oil Filter	1				
3	Y124550-55700	* Fuel Filter	1				
4	Y119655-12560	* Air Filter	1				
5	1911101342	* Inner Air Filter	1				
6	1551035110	* Hydraulic Filter	1				
7	Y171081-55910	* Screen check SN for application - TNE	1				

silverhorn.co.uk

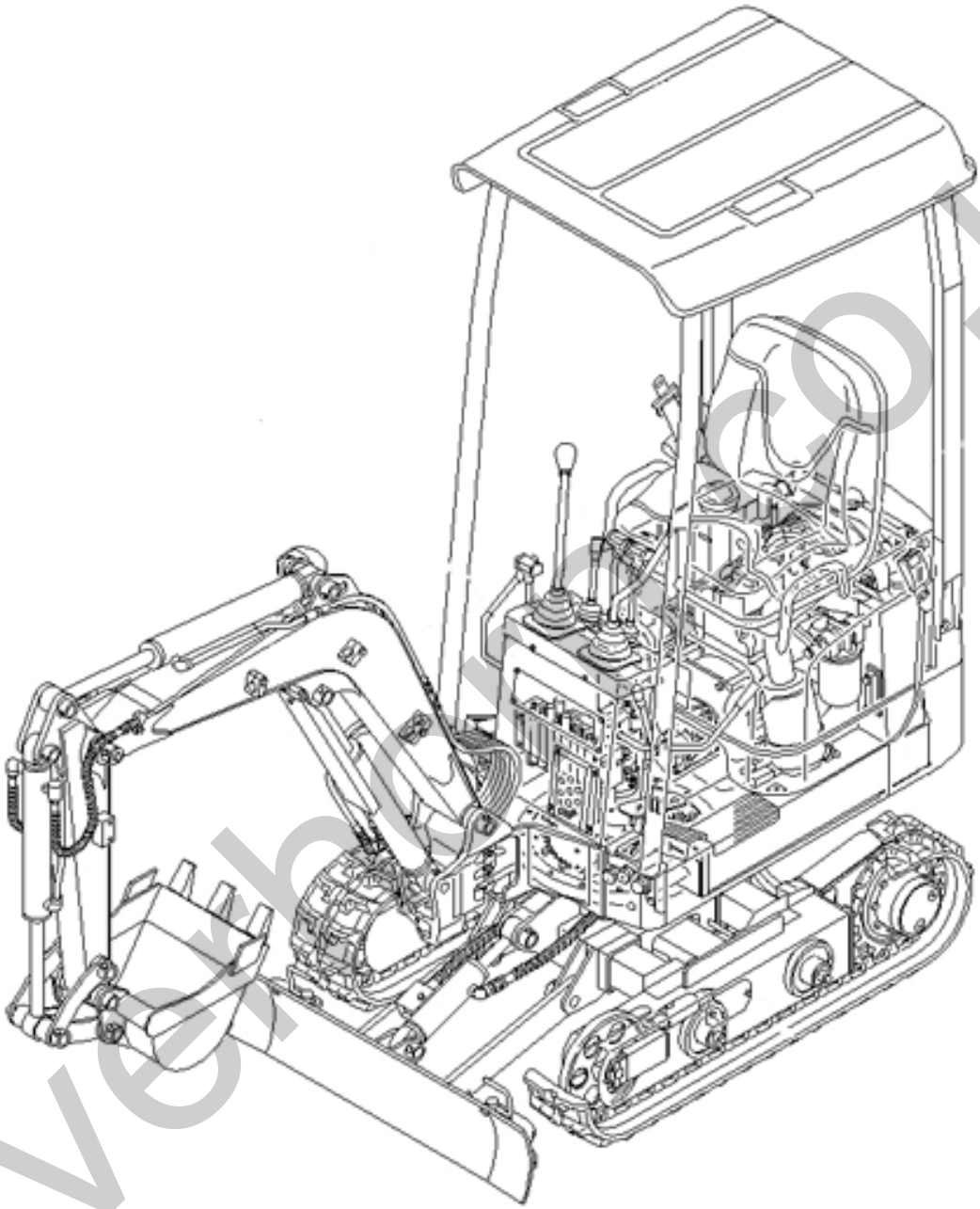

silverhill.co.uk
TAKEUCHI

Recommended Stock Order List

Item	Part number	Description	Q'ty	Chan.	Serial No.	Serv.	Remarks
		Recommended Stock Order List					
	1700100052	Starter Switch	1				
	1700100019	Key (qty 1 - 2 keys)	2				
	Y119233-77932	Solenoid	1				
	Y25152-003500	Fan Belt TB108	1				
	1730500008	Diode (3a Yellow)	1				
	1701330045	Fusible Link 45 Amp	1				
	1701310010	Fuse 10 Amp	1				
	1701310030	Fuse 30 Amp	1				
	1919060104	Red Aerosol Paint	2				
	1919060139	Lt. Gray Aerosol Paint	2				
	Y23010-03800	Clamp 38	2				
	1560001000	Straight Grease Fitting	10				
	1560001675	67.5 degree Grease Fitting	6				
	1560001900	90 degree Grease Fitting	6				
	1552001012	Fuel Tank Cap	1				
	0411602100	Sprocket	2				
	1702054019	Battery TB108	1				
	0411300400	Roller	4				
	1703000300	Lamp Boom	1				
	Y119515-77010	Complete Starter	1				
	0324025210	Upper Rod Hose TB108 SN 10820001-up	1				
	Y171301-77201	Generator	1				
	1914090100	Rubber Track TB007/TB108	2				

silverhorn.co.uk

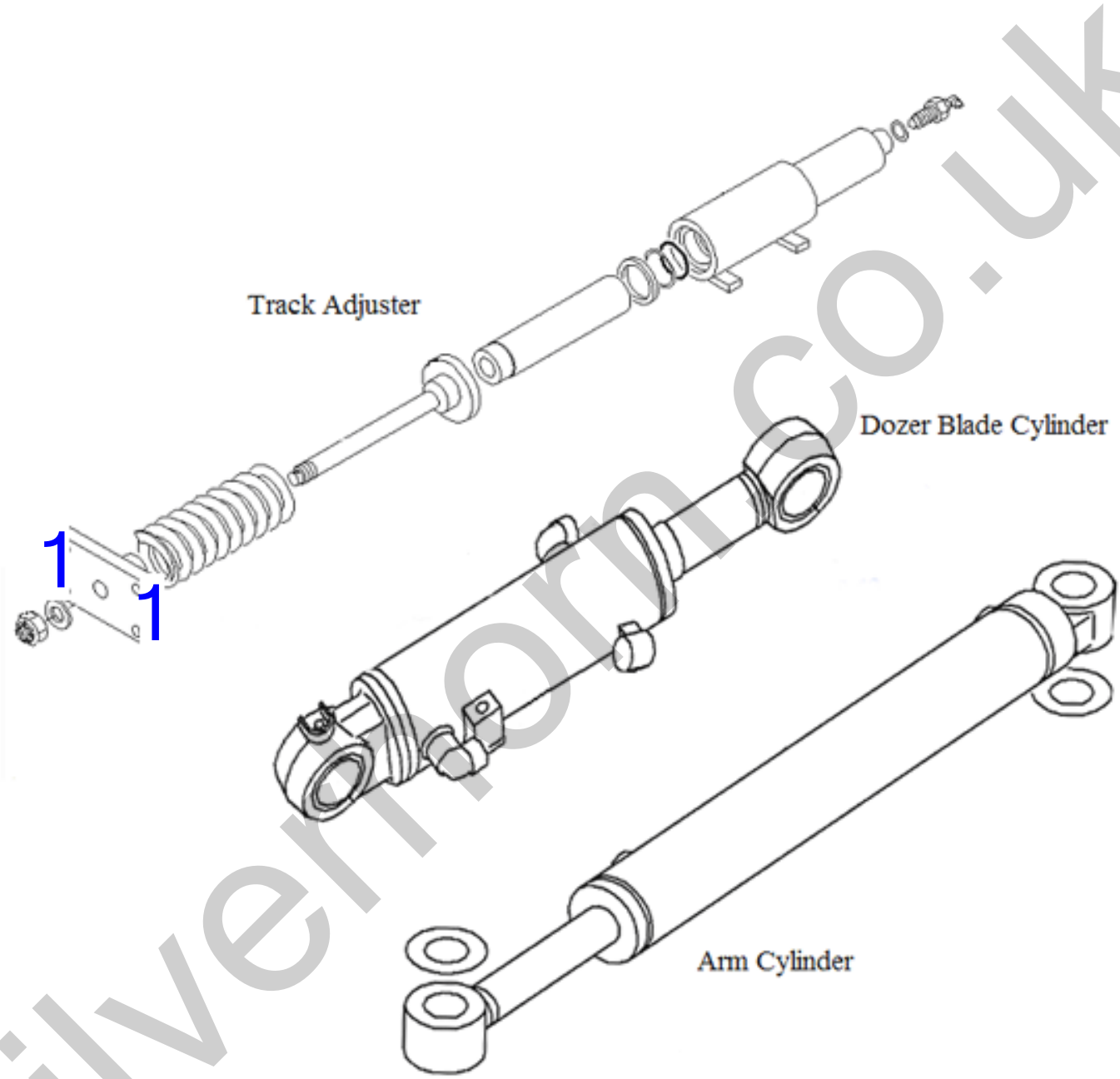

silverhorn.co.uk

Seal Kits

Item	Part number	Description	Q'ty	Chan.	Serial No.	Serv.	Remarks
		TB108 Seal Kits					
	1900087299	Swing Cylinder Seal Kit TB108 Multi Use	1				
	1900087299	Dozer Blade Seal Kit TB108 Multi Use	1				
	1900087299	Bucket Cylinder Seal Kit TB108 Multi Use	1				
	1900087499	Arm Cylinder Seal Kit TB108	1				
	1900087599	Boom Cylinder Seal Kit TB108	1				
	1900087299	Track Adjuster Seal Kit TB108 Mulit Use	1				

silverhorn.co.uk

Item	Part number	Description	Q'ty	Chan.	Serial No.	Serv.	Remarks
		TB108TNV Manuals					
	L108000001TNV	Operators Manual TB108 AB5E010 TNV (English)	1				
	L108000001TNVSP	Operators Manual TB108 AB5S001 TNV (Spanish)	1				
	L108000003	Parts Manual TB108 BB5Z004 SN 10820004-up TNV Eng	1				
	L108000004	Service Manual TB108 CB5E002 SN 10820001-up TNV	1				

silverhorn.co.uk

silverhorn.co.uk

CYLINDER BLOCK

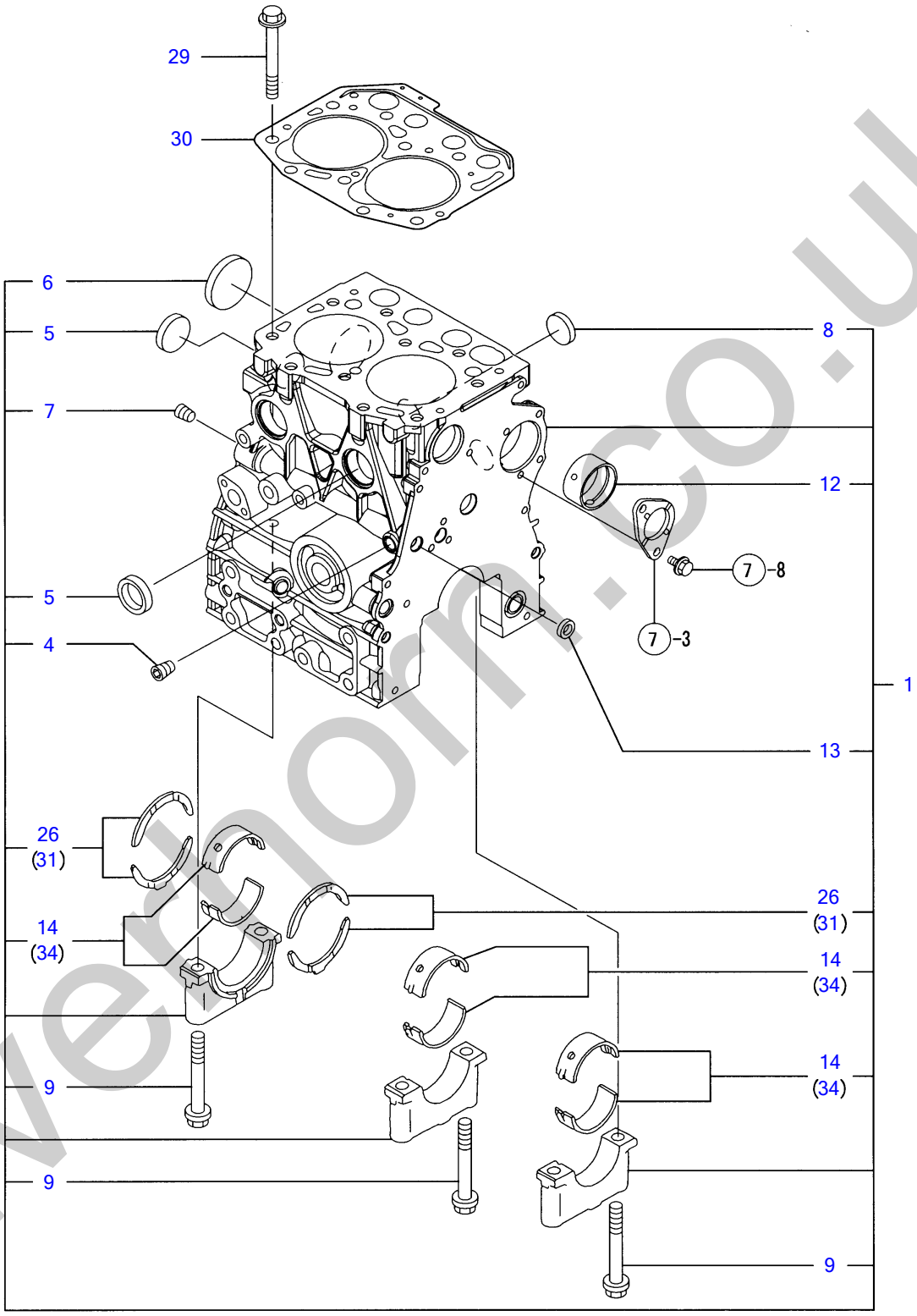

Y00D8590	1. シリンダブロック				
2TNV70-PTB		1·05 06			PLUS

silverthorn.co.uk

¼ØÝÀÞÌÞÛ¯¸ CYLINDER BLOCK

Œ©lo REF NO.	•"•i"Ôl† PARTS NO.	•"•i-¼	Description	l"–Ê Q'ty	ŒÝŠ·l« I	R	"õll
1	Y719415-01560	¼ØÝÀÞÌÞÛÂ¸ ASSY	BLOCK ASSY, CYLINDER	1			
4	Y124060-01050	· Ìß×¸Þ	· PLUG PT1/8	1			
5	Y105311-01090	· ÜÝ¶ÞÀÌß×¸Þ30	· PLUG 30 (SUS)	3			
6	Y119623-01250	· »×¶ÞÀÌß×¸Þ 45	· PLUG 45	1			
7	Y124160-01910	· Ìß×¸Þ PT1/4	· PLUG PT1/4	1			
8	Y119285-01990	· ÜÝ¶ÞÀÌß×¸Þ 25	· PLUG 25	2			
9	Y119620-02020	· ÎÞÙÄ (ÒÀÙ·ÔÂÌß	· BOLT	6			
12	Y119717-02410	· ÌÞÂ¼Ô	· BUSH, CAMSHAFT	1			
13	Y27241-120000	· ÜÝ¶ÞÀÌß×¸Þ 12	· PLUG 12	1			
14	Y719717-02900	· Ò²ÝÒÀÙ CMP(STDÎÖ³ËÝ)	· MAIN BEARING SET	3		(1)	ÎÖ³ÌÞËÝÃÞ½
26	Y119717-02930	· ½×½ÄÍÞ±ØÝ¸Þ	· BEARING, THRUST	2			
29	Y119515-01200	ÍÂÄÞÎÞÙÄ	BOLT, CYLINDER HEAD	10			
30	Y119415-01330	ÍÂÄÞ¶Þ½¹ÂÄ	GASKET, CYL.HEAD	1			
31	Y119810-02940	½×½ÄÒÀÙCMP O.S=0.25	BEARING,THRUST .25OS	2		(2)	µ°ÊÞ°»²½Þ(O.S=0.25)ÌÞËÝÃÞ½
34	Y719717-02910	Ò²ÝÒÀÙ CMP 0.25US	MAIN METAL US=0.25	3		(3)	±ÝÀÞ°»²½Þ(U.S=0.25)ÌÞËÝÃÞ½

silverhorn.co.uk

GEAR HOUSING

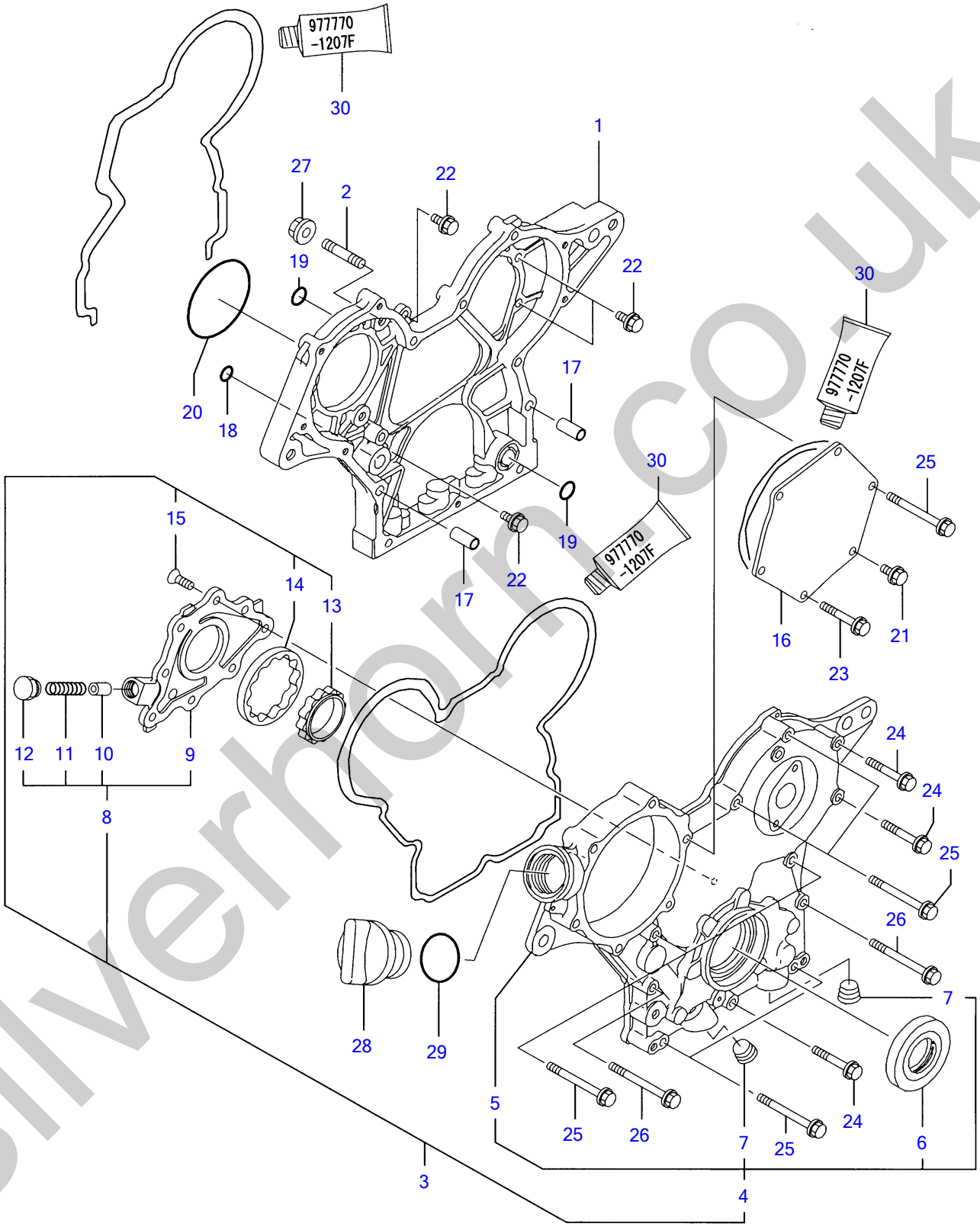

Y00D8590	2. ギヤケース				
2TNV70-PTB		1·05 06			PLUS

silverhorn.co.uk

·ÞÔ¹-½ GEAR HOUSING

Œ©▯o REF NO.	•"•i"Ô▯† PARTS NO.	•"•i-¼	Description	▯"–Ê Q'ty	ŒÝŠ·▯« I	R	"õ▯l
1	**Y119717-01501**	·ÞÔ¹-½	CASE, GEAR	1			
2	**Y119717-01570**	³´ºÐÎÞÙÄ	BOLT, STUD M8	3			
3	**Y119734-01590**	·ÞÔ¹-½ÌÀ CMP	COVER ASSY,GEAR CASE	1			
4	**Y719734-01500**	▪ ·ÞÔ¹-½ÌÀ CMP	▪ COVER ASSY,GEAR CASE	1			
5	**Y119717-01521**	▪ ▪ ·ÞÔ¹-½ÌÀ	▪ ▪ COVER, GEAR CASE	1			
6	**Y119717-01800**	▪ ▪ µ²Ù¼-Ù	▪ ▪ SEAL, OIL	1			
7	**Y23876-030000**	▪ ▪ È¼ÞÌß×¸ÞPT 3/8	▪ ▪ PLUG PT3/8,SCREW	2			
8	**Y119717-32100**	▪ ¶ÊÞ-CMP(LOP	▪ COVER ASSY, PUMP	1			
9	**Y119717-32080**	▪ ▪ ¶ÊÞ-(LOP	▪ ▪ COVER, LUB.OIL PUMP	1			
10	**Y129900-32130**	▪ ▪ ØØ-ÌÊÞÙÌÞ	▪ ▪ VALVE, RELIEF	1			
11	**Y129001-32320**	▪ ▪ ½ÌßØÝ¸Þ	▪ ▪ SPRING	1			
12	**Y129001-32330**	▪ ▪ Ìß×¸Þ	▪ ▪ PLUG	1			
13	**Y119717-32110**	▪ ²ÝÅ-Û-À-	▪ ROTOR, INNER	1			
14	**Y119717-32120**	▪ ±³À-Û-À-	▪ ROTOR, OUTER	1			
15	**Y119802-32130**	▪ »×ºÈ¼Þ(+±Å 6X16	▪ SCREW, M6X16	8			
16	**Y119717-01750**	ÌÀ(FI-P	COVER, PUMP TIMING	1			
17	**Y119660-01911**	Êß²Ìß ÉÂ¸	PIPE, KNOCK	2			
18	**Y119624-32040**	OØÝ¸Þ P 12.0	O-RING P 12.0	1			
19	**Y119717-32050**	OØÝ¸Þ P17.0	O-RING, P17.0	3			
20	**Y121850-51960**	OØÝ¸Þ(FOPÄØÂ¹)	O-RING, F.I.PUMP	1			
21	**Y26106-060122**	ÂÊÞÎÞÙÄ M 6X 12	BOLT M 6X 12 PLATED	1			
22	**Y26106-060162**	ÂÊÞÎÞÙÄ 6X 16	BOLT M 6X 16 PLATED	4			
23	**Y26106-060402**	ÂÊÞÎÞÙÄ 6X 40	BOLT M 6X 40 PLATED	4			
24	**Y26106-060402**	ÂÊÞÎÞÙÄ 6X 40	BOLT M 6X 40 PLATED	3			
25	**Y26106-060602**	ÂÊÞÎÞÙÄ 6X 60	BOLT M 6X 60 PLATED	7			
26	**Y26106-060652**	ÂÊÞÎÞÙÄ 6X 65	BOLT M 6X 65 PLATED	2			
27	**Y26306-080002**	ÂÊÞÂ·ÅÂÄ(UBS 8	NUT	3			
28	**Y124160-01751**	ÌÀ(ÎÕº³)	COVER,FILLER	1			
29	**Y24311-000320**	OØÝ¸Þ 1A P 32.0	O-RING 1A P-32.0	1			
30	**Y977770-1207F**	¼Øº-Ý¹² ´·¼ÞÖ³¶Þ½¹ÂÄ	GASKET.LIQUID	1		(1)	µÌß¼®Ý ÌÞËÝÃÞ½

silverhorn.co.uk

FLYWHEEL HOUSING & OIL SUMP

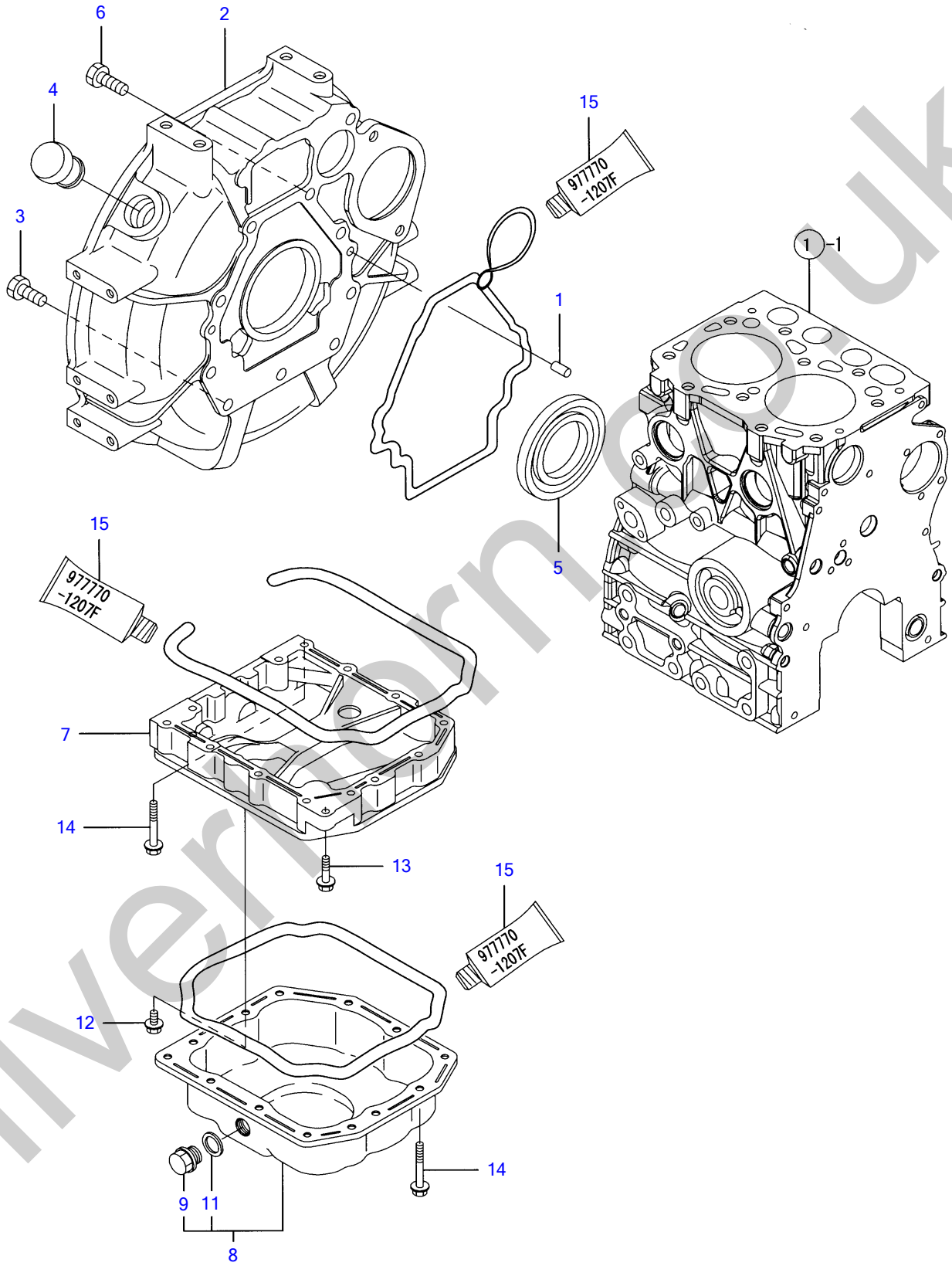

Y00D8590	3. フライホイルハウジング & オイルパン				
2TNV70-PTB		1·05 06			PLUS

silvermarn.co.uk

Ì×²Î²ÙÊ³¼ÞÝ¸Þ & µ²ÙÊßÝ FLYWHEEL HOUSING & OIL SUMP

Œ©lo REF NO.	•"•i"Ôl† PARTS NO.	•"•i-¼	Description	l"–Ê Q'ty	ŒÝŠ·l« I	R	"õl
1	Y129100-01580	Í²º³ËßÝ 8X16	PARALLEL PIN 8X16	2			
2	Y119515-01601	Ì×²Î²ÙÊ³¼ÞÝ¸Þ	HOUSING, FLYWHEEL	1			
3	Y121120-01620	ÎÞÙÄ M10X28	BOLT M 10X 28	3			
4	Y119620-01750	·ÔÂÌß (Î²Ù¶ÊÞ-	CAP, FLYWHEEL COVER	1			
5	Y124085-02220	µ²Ù¼-Ù	SEAL, OIL	1			
6	Y26206-100252	ÎÞÙÄ 10X 25	BOLT M10X25	7			
7	Y119415-01720	µ²ÙÊßÝ¶Ý»Þ	SPACER, OIL SUMP	1			
8	Y119415-01770	µ²ÙÊßÝCMP(±»¶ÞÀ	SUMP ASSY, LUB.OIL	1			
9	Y105425-01690	• Ìß×¸Þ(16)	• PLUG M16	1			
11	Y22190-160002	• ¼-ÙÜÂ¼Ô(ºïÙ.ÆÄØÙ)16	• SEAL WASHER 16S	1			
12	Y26106-060122	ÂÊÞÎÞÙÄ M 6X 12	BOLT M 6X 12 PLATED	1			
13	Y26106-060252	ÂÊÞÎÞÙÄ 6X 25	BOLT M 6X 25 PLATED	1			
14	Y26106-060452	ÂÊÞÎÞÙÄ 6X 45	BOLT M 6X 45 PLATED	13			
15	Y977770-1207F	¼Øº-Ý¹² ´·¼ÞÖ³¶Þ½¹ÂÄ	GASKET.LIQUID	1		(1)	µÌß¼®Ý ÌÞËÝÃÞ½

silverhorn.co.uk

CYLINDER HEAD & BONNET

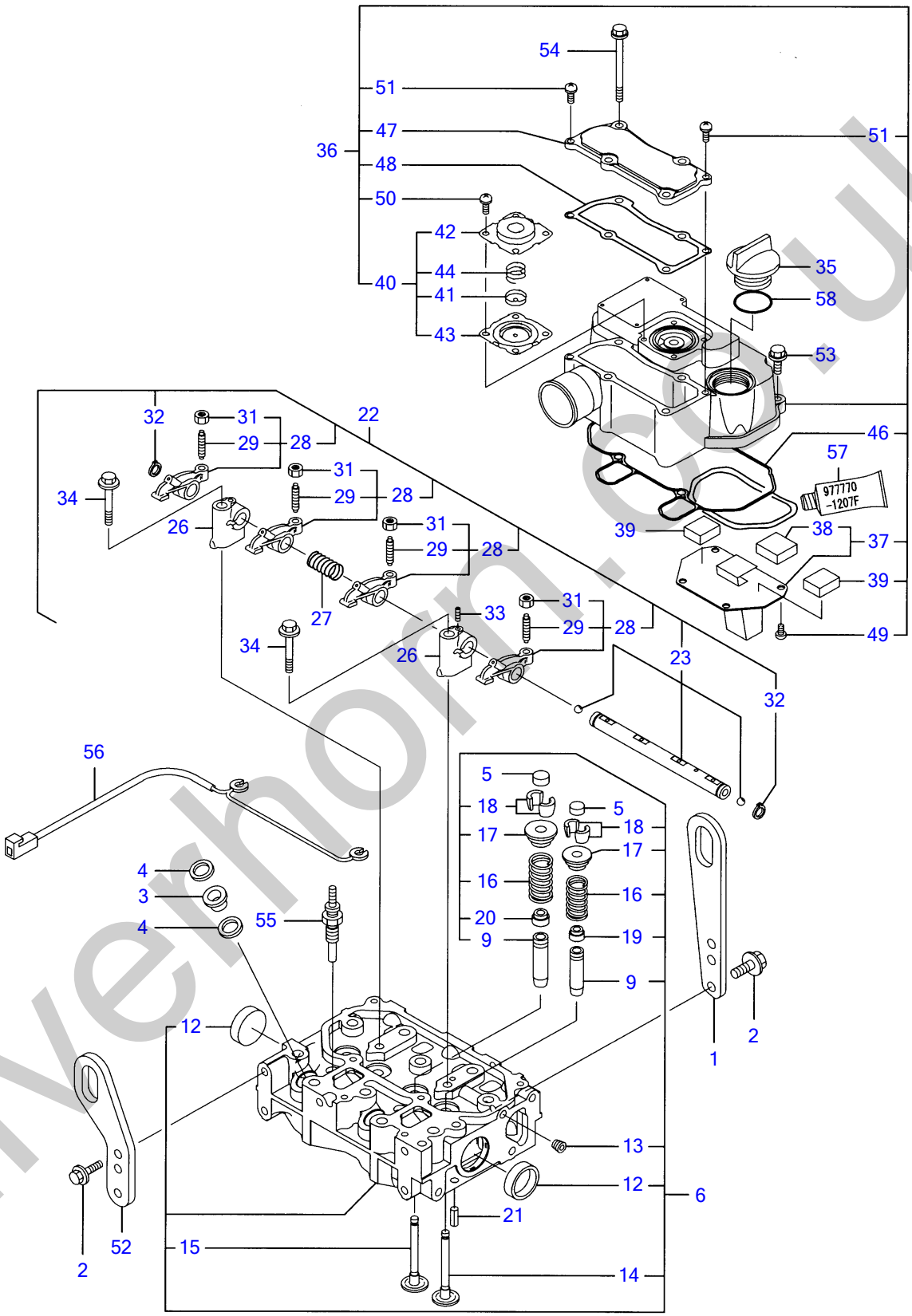

Y00D8590	4. シリンダヘッド & ボンネット			
2TNV70-PTB	1·05 06			PLUS

silverhorn.co.uk

¼ØÝÀÞÍÂÄÞ & ÎÞÝÈÂÄ CYLINDER HEAD & BONNET

Œ©lo REF NO.	•"•i"Ôl† PARTS NO.	•"•i-¼	Description	l"–Ê Q'ty	ŒÝŠ·l« I	R	"õlI
1	Y129900-07900	ÂØ±¹Þ¶Å¸Þ	LIFTER, ENGINE	1			
2	Y26106-080162	ÂÊÞÎÞÙÄ 8X 16	BOLT M 8X 16 PLATED	4			
3	Y129901-11450	ÌßÛÃ¸À (É½ÞÙ	PROTECTER, NOZZLE	2			
4	Y119600-11460	PK	GASKET, NOZZLE	4			
5	Y105010-11490	·ÔÂÌß(ÊÞÙÌÞ)	CAP, VALVE	4			
6	Y119415-11740	¼ØÝÀÞÍÂÄÞ CMP1	HEAD ASSY, CYLINDER	1			
9	Y119515-11800	・ÊÞÙÌÞ¶Þ²ÄÞ(ÎÖ³ËÝ)	・GUIDE, VALVE	4		(1)	ÎÖ³ÌÞËÝÃÞ½
12	Y119285-11990	・ÜÝ¶ÞÀÌß×¸Þ 35(½ÃÝÚ½	・PLUG 35	2			
13	Y23876-005000	・È¼ÞÌß×¸Þ PT 1/16	・PLUG PT 1/16,SCREW	1			
14	Y119515-11100	・ÊÞÙÌÞ (INT	・VALVE, INTAKE	2			
15	Y119515-11110	・ÊÞÙÌÞ (EXH	・VALVE, EXHAUST	2			
16	Y119717-11131	・ÍÞÝÊÞÈ	・SPRING, VALVE	4			
17	Y129508-11180	・ÍÞÝÊÞÈµ»´	・RETAINER, SPRING	4			
18	Y119717-11190	・ºÂÀ	・COTTER, VALVE	8			
19	Y119717-11340	・ÊÞÙÌÞ½ÃÑ¼-Ù(INT	・SEAL, VALVE STEM	2			
20	Y119717-11350	・ÊÞÙÌÞ½ÃÑ¼-Ù(EXH	・SEAL, VALVE STEM	2			
21	Y22351-060012	½ÌßØÝ¸ÞËßÝ 6.0AX 12	SPRING PIN 6X12	2			
22	Y119415-11200	ÍÞÝÜÝ»ÎÏß-Ä CMP	SUPPORT ASSY, ARM	1			
23	Y119415-11240	・ÍÞÝÜÝ¼Þ¸ CMP	・SHAFT ASSY, ROCKER	1			
26	Y119717-11260	・ÍÞÝÜÝ»ÎÏß-Ä	・SUPPORT, ROCKER ARM	2			
27	Y119515-11280	・ÊÞÈ(ÍÞÝÜÝ¼Þ¸	・SPRING, SHAFT	1			
28	Y119717-11650	・·Õ³·ÍÞÝÜÝ KIT	・ARM ASSY, ROCKER	4			
29	Y129150-11230	・・±¼ÞÔ½À (ÍÞÝ½·Ï	・・SCREW, VALVE	4			
31	Y129150-11750	・・ÅÂÄ M8XP1.0	・・NUT M8XP1.0	4			
32	Y22242-000120	・ÄÒÜC(¼Þ¸ 12	・CIRCLIP 12	2			
33	Y26979-050162	・6¶¸±ÅÄÒÈ¼Þ 5X16	・SCREW M 5X16	1			
34	Y26106-080402	ÂÊÞÎÞÙÄ 8X 40	BOLT M 8X 40 PLATED	2			
35	Y124160-01751	ÌÀ(ÎÕº³)	COVER,FILLER	1			
36	Y119415-11380	ÎÞÝÈÂÄCMP	BONNET ASSY, HEAD	1			
37	Y119717-03031	・ÊÞÂÌÙÌßÚ-Ä	・PLATE, BAFFLE	1			
38	Y119717-03070	・・ÊÞÂÌÙ(ÌÞØ-»Þ	・・BAFFLE, BREATHER	1			
39	Y119717-03070	・ÊÞÂÌÙ(ÌÞØ-»Þ	・BAFFLE, BREATHER	2			
40	Y119802-03100	・ÀÞ²ÔÌ×ÑCMP	・DIAPHRAGM ASSY	1			
41	Y119802-03110	・・¾ÝÀÌßÚ-Ä	・・PLATE, DIAPHRAGM	1			
42	Y119802-03121	・・ÌÀ,ÀÞ²ÔÌ×Ñ	・・COVER, DIAPHRAGM	1			
43	Y119802-03131	・・ÀÞ²ÔÌ×Ñ	・・DIAPHRAGM	1			
44	Y119802-03141	・・ÊÞÈ,ÀÞ²ÔÌ×Ñ	・・SPRING, DIAPHRAGM	1			
46	Y119415-11310	・PK(ÎÞÝÈÂÄ	・GASKET, BONNET	1			
47	Y119415-11320	・ÎÞÝÈÂÄÌÀ	・PLATE, BAFFLE	1			
48	Y119415-11330	・PK(ÎÞÝÈÂÄÌÀ	・PLATE, BAFFLE	1			
49	Y22857-500100	・ÀÂËßÝÈ¼Þ 5.0X10	・SCREW 5X10,TAPPING	4			
50	Y22857-500100	・ÀÂËßÝÈ¼Þ 5.0X10	・SCREW 5X10,TAPPING	4			
51	Y22857-500160	・ÀÂËßÝÈ¼Þ 5.0X16	・SCREW 5X16	2			
52	Y129486-07901	ÂØ±¹Þ¶Å¸Þ	LIFTINGS	1			
53	Y26106-060202	ÂÊÞÎÞÙÄ 6X 20	BOLT M 6X 20 PLATED	2			
54	Y26106-060752	ÂÊÞÎÞÙÄ 6X 75	BOLT M 6X 75 PLATED	4			
55	Y119717-77800	¸ÞÛ-Ìß×¸Þ	PLUG, GLOW	2			
56	Y119415-77820	ºÈ¸À (¸ÞÛ-Ìß×¸Þ	CONNECTOR, GLOW PLUG	1			
57	Y977770-1207F	¼Øº-Ý¹² ´·¼ÞÖ³¶Þ½¹ÂÄ	GASKET.LIQUID	1		(2)	µÌß¼®Ý ÌÞËÝÃÞ½
58	Y24311-000320	OØÝ¸Þ 1A P 32.0	O-RING 1A P-32.0	1			

silverhorn.co.uk

AIR CLEANER

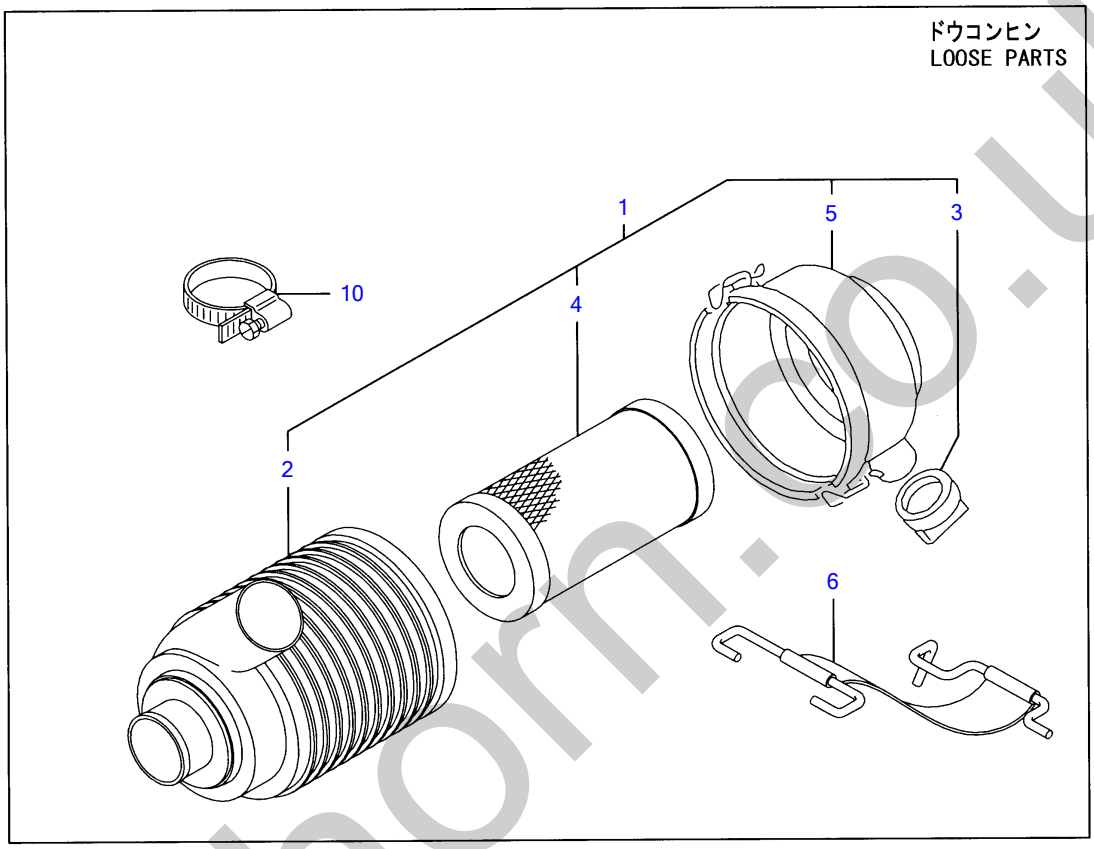

Y00D8590	5. エアクリーナ				
2TNV70-PTB		1·05 06			PI US

silverhorn.co.uk

´±¸Ø-Å AIR CLEANER

Œ©lo REF NO.	•"•i"Ôl† PARTS NO.	•"•i-¼	Description	l"–Ê Q'ty	ŒÝŠ·l« I	R	"õll
1	**Y119325-12560**	´±¸Ø-Å CMP	AIR CLEANER	1			
2	**Y119258-12510**	· ÎÞÃÞ²-	· BODY,AIRCLEANER	1			
3	**Y119808-12540**	· ±ÝÛ-ÀÞÊÞÙÌÞ	· VALVE, UNLOADER	1			
4	**Y119655-12560**	· ´ÚÒÝÄ	· ELEMENT	1			
5	**Y119686-12570**	· ¶ÊÞ- ASSY	· COVER ASSY	1			
6	**Y119865-12600**	´±¸Ø-ÅÊÞÝÄÞCMP	STAY	1			
10	**Y23000-060000**	Î-½¸ØÂÌß 60	CLAMP 60	3			

silverhorn.co.uk

EXHAUST MANIFOLD & SILENCER

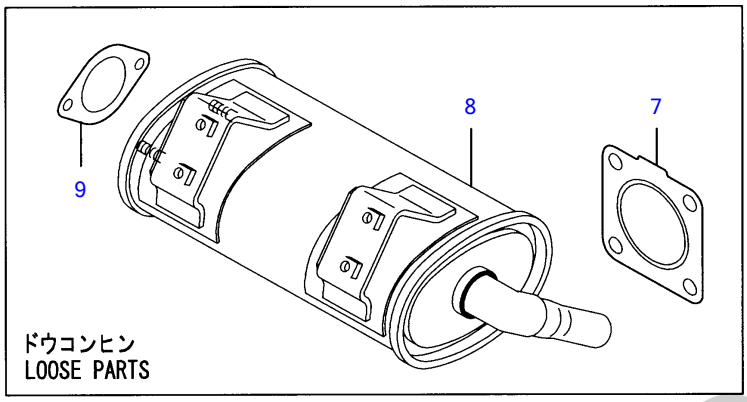

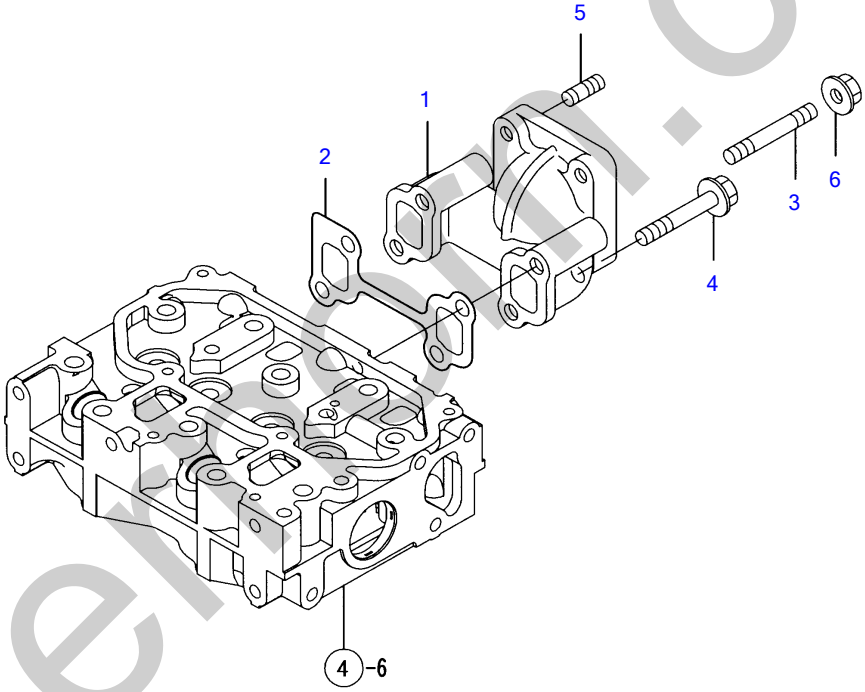

Y00D8590	6. ハイキマニホールド & サイレンサ				
2TNV70-PTB		1·05 06			PLUS

silvermoon.co.uk

Ê²·ÏÆÎ-ÙÄÞ & »²ÚÝ» EXHAUST MANIFOLD & SILENCER

Œ©lo REF NO.	•"•i"Ô† PARTS NO.	•"•i-¼	Description	”–Ê Q'ty	ŒÝŠ·« l	R	”õl
1	**Y119415-13100**	ÏÆÎ-ÙÄÞ(EXH	MANIFOLD, EXHAUST	1			
2	**Y119415-13110**	¶Þ½¹ÂÄ (ÏÆÎÙÄÞ	GASKET, MANIFOLD	1			
3	**Y119717-13600**	³´ºÐÎÞÙÄ 8X50	STUD, M8X50	2			
4	**Y119802-13620**	ÂÊÞÎÞÙÄ 50	BOLT M 8X 50 PLATED	2			
5	**Y119131-18320**	³´ºÐÎÞÙÄ M8*22	BOLT M 8X 22	4			
6	**Y26306-080002**	ÂÊÞÂ·ÅÂÄ(UBS 8	NUT	2			
7	**Y119515-13200**	¶Þ½¹ÂÄPK(»²ÚÝ»	GASKET, SILENCER	1			
8	**Y119440-13500**	»²ÚÝ»(ÀÞ´Ý	SILENCER	1			
9	**Y129107-13550**	¶Þ½¹ÂÄ(ÌÝ¼ÕÂº³	GASKET, NOZZLE	1			

silverhorn.co.uk

CAMSHAFT & DRIVING GEAR

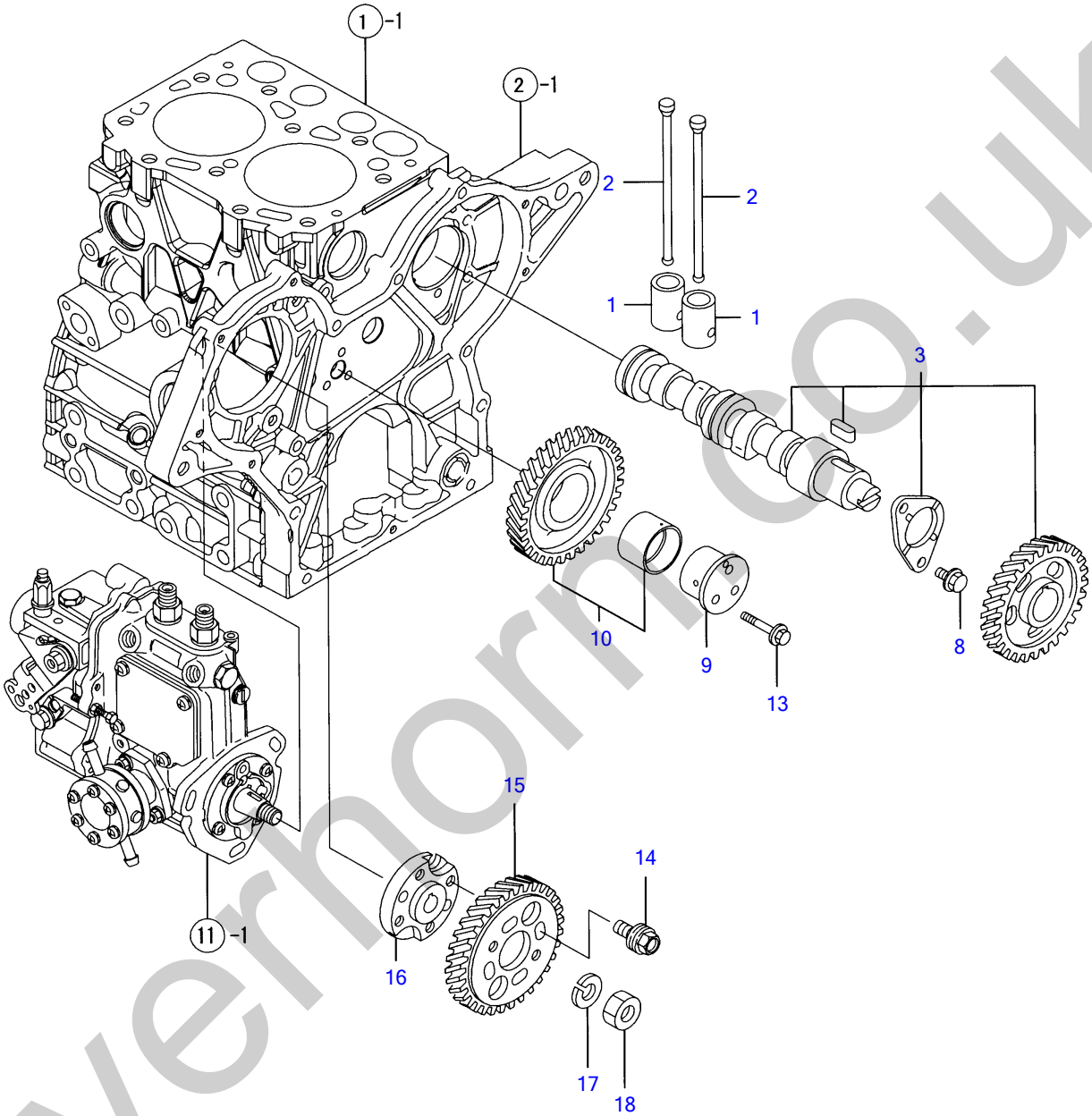

Y00D8590	7. カムシャフト & クドウギヤ				
2TNV70-PTB	1·05 06				PLUS

silverhorn.co.uk

¶Ñ¼ÔÌÄ & ¸ÄÞ³·ÞÔ CAMSHAFT & DRIVING GEAR

Œ©lo REF NO.	•"•i"Ôl† PARTS NO.	•"•i-¼	Description	l"–Ê Q'ty	ŒÝŠ·l« l	R	"õl l
1	**Y119620-14200**	ÀÍßÂÄ	TAPPET	4			
2	**Y119515-14400**	ÌßÂ¼ÕÛÂÄÞ	ROD, PUSH	4			
3	**Y119415-14580**	¶Ñ¼ÔÌÄ CMP	CAMSHAFT ASSY	1			
8	**Y26106-060122**	ÂÊÞÎÞÙÄ M 6X 12	BOLT M 6X 12 PLATED	2			
9	**Y119717-25050**	¼ÔÌÄ(±²ÄÞÙ	SHAFT, IDLE GEAR	1			
10	**Y119717-25100**	±²ÄÞÙ·ÞÔ CMP	GEAR ASSY, IDLE	1			
13	**Y26106-060352**	ÂÊÞÎÞÙÄ 6X 35	BOLT M 6X 35 PLATED	3			
14	**Y129150-25301**	ÎÞÙÄ(FI-P	BOLT,FI-P	4			
15	**Y119717-25930**	·ÞÔ (FI-P	GEAR, PUMP	1			
16	**Y119717-51150**	Ì×Ý¼Þ(¶Ñ¼Þ¸ºÃ²	FLANGE	1			
17	**Y22217-120000**	ÊÞÈ»Þ¶ÞÈ 12	SPRING WASHER 12	1			
18	**Y26716-120002**	ÅÂÄ 12	NUT 12	1			

silverhorn.co.uk

CRANKSHAFT & PISTON

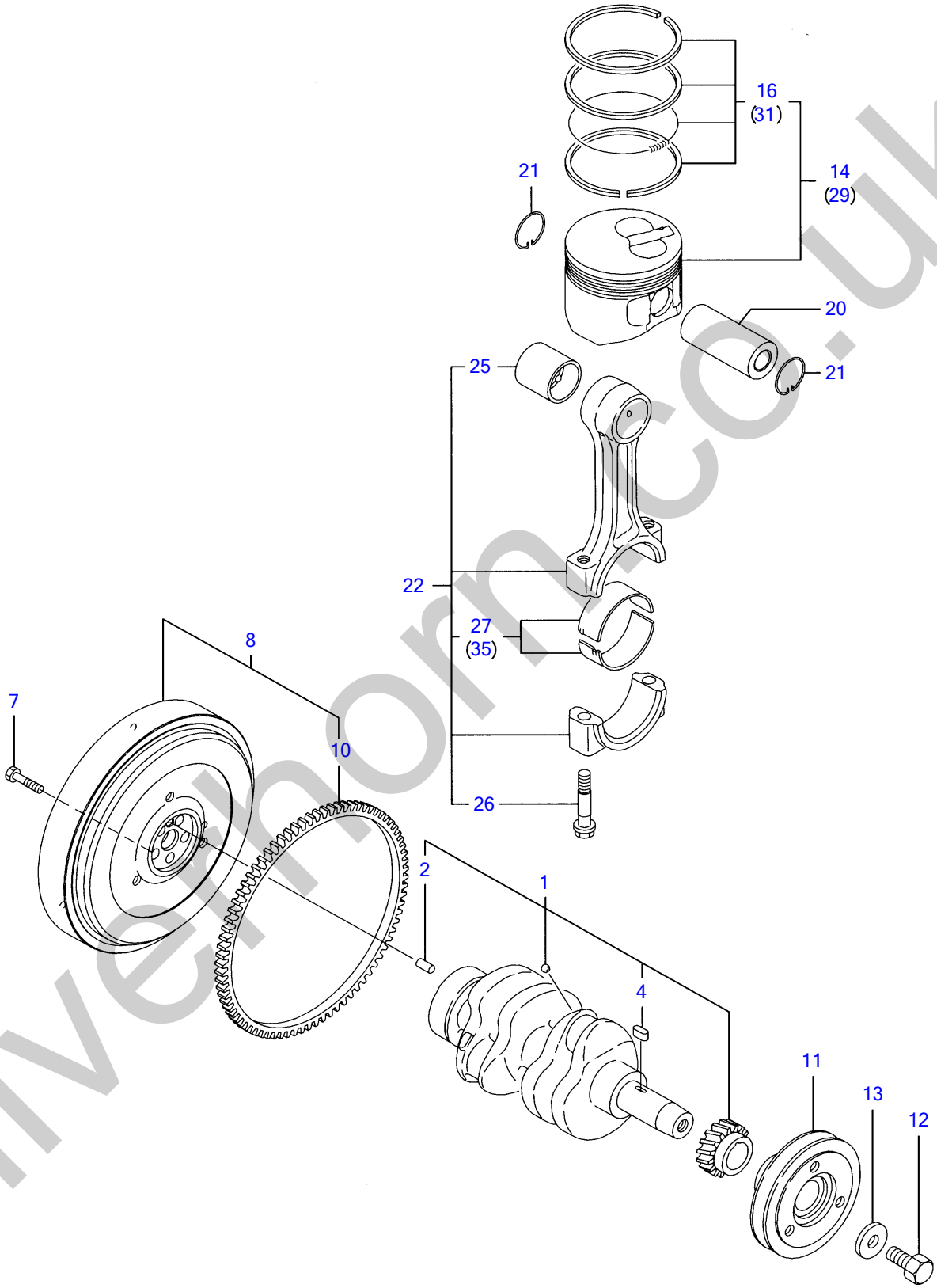

Y00D8590	8. クランクシャフト & ピストン				
2TNV70-PTB		1·05 06			PIUS

silverhorn.co.uk

¸×Ý¸¼ÔÌÄ & Ëß½ÄÝ CRANKSHAFT & PISTON

Œ©▯o REF NO.	•"•i"Ô▯† PARTS NO.	•"•i-¼	Description	▯"–Ê Q'ty	ŒÝŠ·▯« I	R	"õ▯l
1	**Y119415-21700**	¸×Ý¸¼ÔÌÄ CMP	CRANKSHAFT ASSY	1			
2	**Y129100-01580**	▪ Í²º³ËßÝ 8X16	▪ PARALLEL PIN 8X16	1			
4	**Y22512-040120**	▪ Ì´»Þ-·- 4X12	▪ KEY 4X 12	1			
7	**Y119620-21500**	ÎÞÙÄ (Ì×²Î²Ù	BOLT, FLYWHEEL	5			
8	**Y119415-21590**	Ì×²Î²Ù CMP	FLYWHEEL ASSY	1			
10	**Y124950-21600**	▪ ØÝ¸Þ·ÞÔ	▪ GEAR, RING	1			
11	**Y119717-21650**	VÌß-Ø(¸×Ý¸	V-PULLEY, CRANKSHAFT	1			
12	**Y119621-21680**	Ì×Ý¼ÞÎÞÙÄ M12X1.25	BOLT M12X1.25,FLANGE	1			
13	**Y119620-21941**	ÜÂ¼Ô-	WASHER	1			
14	**Y119515-22080**	Ëß½ÄÝ CMP	PISTON ASSY	2			
16	**Y119515-22500**	▪ ØÝ¸ÞCMP	▪ RING SET	2			
20	**Y119515-22300**	Ëß½ÄÝËßÝ	PIN, PISTON	2			
21	**Y22252-000220**	ÄÒÜC(±Å 22	CIRCLIP 22	4			
22	**Y119515-23000**	ºÝÛÂÄÞ CMP	ROD ASSY, CONNECTING	2			
25	**Y119717-23910**	▪ Ëß½ÄÝËßÝÒÀÙ(ÎÖ³ËÝÖ³)	▪ BUSH, PISTON PIN	2		(1)	ÎÖ³ÌÞËÝÃÞ½
26	**Y119717-23200**	▪ ÛÂÄÞÎÞÙÄ	▪ BOLT, CONNECTING ROD	4			
27	**Y119515-23600**	▪ ¸×Ý¸ËßÝÒÀÙCMP	▪ METAL ASSY,CRANK PIN	2			
29	**Y119515-22900**	Ëß½ÄÝCMP (O.S=0.25)	PISTON ASSY(O.S=0.25	2		(3)	µ°ÊÞ°»²½Þ(O.S=0.25)ÌÞËÝ
31	**Y119515-22550**	▪ ØÝ¸Þ¾ÂÄ (O.S=0.25)	▪ RING SET (O.S=0.25)	2		(3)	µ°ÊÞ°»²½Þ(O.S=0.25)ÌÞËÝ
35	**Y119515-23610**	¸×Ý¸ËßÝÒÀÙ U.S=0.25	BEARING,PIN US=0.25	2		(2)	±ÝÀÞ°»²½Þ(U.S=0.25)ÌÞËÝ

silverhorn.co.uk

LUB.OIL SYSTEM

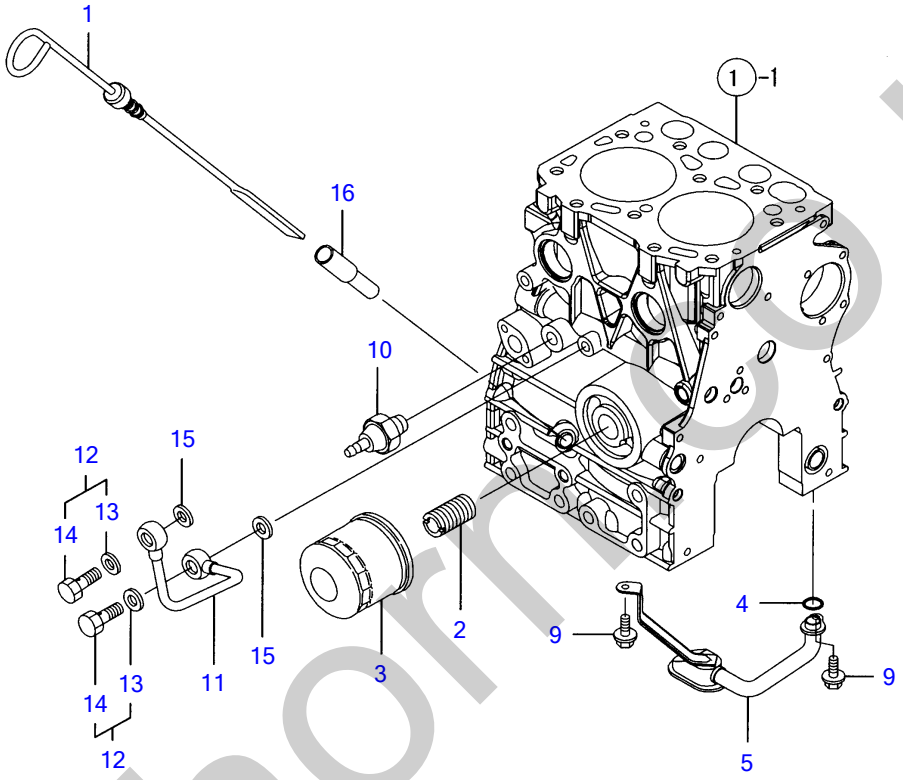

Y00D8590	9. LOシステム				
2TNV70-PTB		1·05 06			PLUS

silverhorne.co.uk

LO¼½ÃÑ LUB.OIL SYSTEM

Œ©▯o REF NO.	•”•i”Ô▯† PARTS NO.	•”•i-¼	Description	▯”–Ê Q'ty	ŒÝŠ·▯« I	R	”õ▯l
1	**Y119415-34801**	¹ÝÕÎÞ³	DIPSTICK	1			
2	**Y129100-35140**	½ÀÂÄÞ	STUD	1			
3	**Y119305-35151**	µ²ÙÌ²ÙÀ CMP (D68XL65	FILTER ASSY, LUB.OIL	1			
4	**Y119717-32060**	OØÝ¸Þ P15.0	O-RING, P15.0	1			
5	**Y119415-35080**	LO·Õ³ÆÕ³¶Ý CMP	PIPE ASSY, LUB,OIL	1			
9	**Y26106-060102**	ÂÊÞÎÞÙÄ M 6X 10	BOLT M 6X 10 PLATED	2			
10	**Y114250-39450**	Õ±Â½²ÂÁ 0.5KG ·ÞÎÞ¼	SWITCH,(0.5KG)L.O.	1			
11	**Y119415-39210**	LO-T(FO-P	PIPE ASSY, HYDRAULIC	1			
12	**Y129005-59830**	¶ÝÂ·ÞÃÎÞÙÄCMP 8	BOLT ASSY, JOINT	2			
13	**Y22190-080002**	▪ ¼-ÙÜÂ¼Ô(ºÏÙ.ÆÄØÙ) 8	▪ SEAL WASHER 8S	2			
14	**Y23857-030000**	▪ ¶ÝÂ·ÞÃÎÞÙÄ 3	▪ JOINT BOLT 3	2			
15	**Y22190-080002**	¼-ÙÜÂ¼Ô(ºÏÙ.ÆÄØÙ) 8	SEAL WASHER 8S	2			
16	**Y121520-34810**	¶Þ²ÄÞ(¹ÝÕÎÞ³	GUIDE, DIPSTICK	1			

silverhorn.co.uk

COOLING WATER SYSTEM

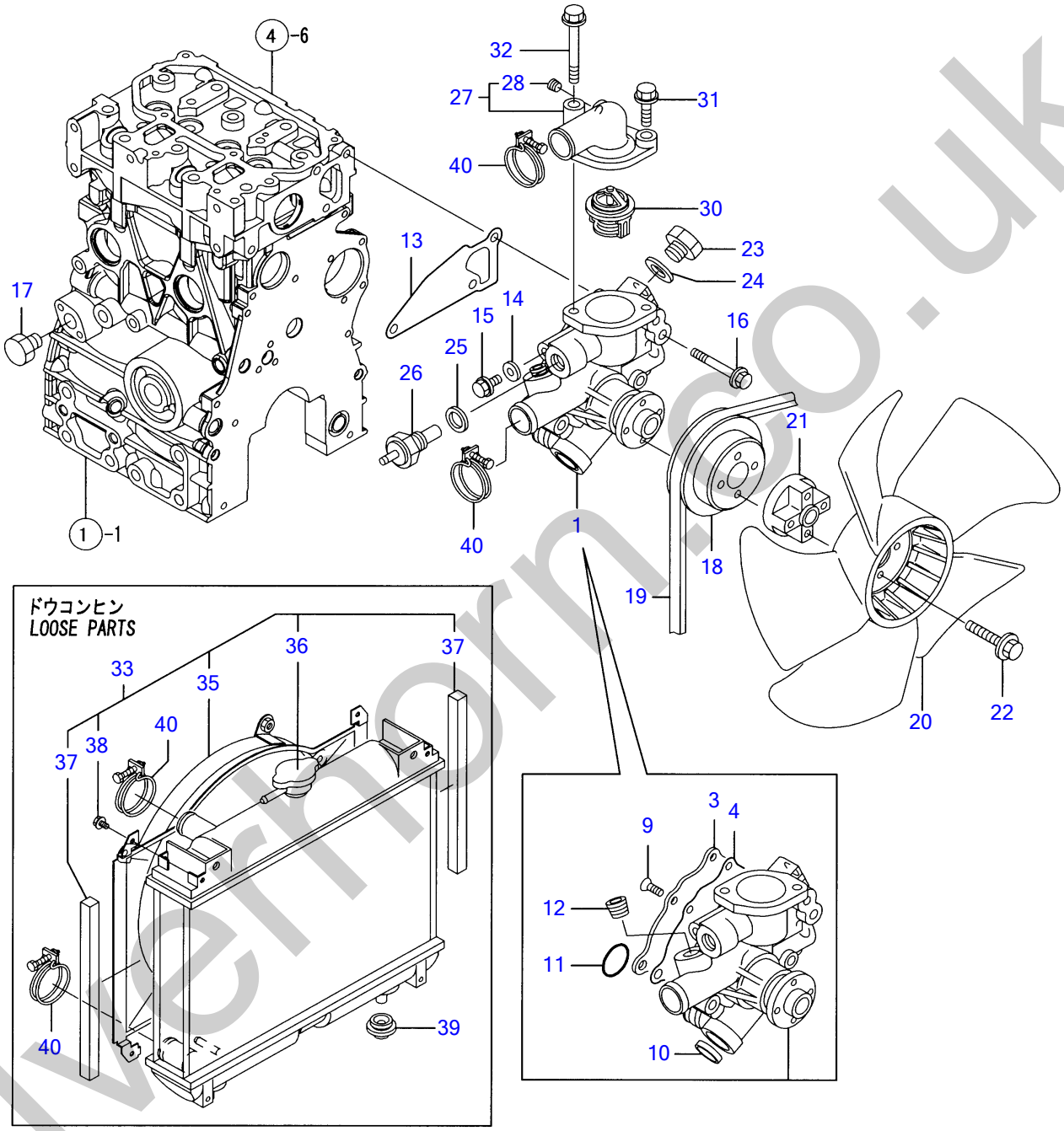

Y00D8590	10. CWシステム				
2TNV70-PTB		1·05 06			PLUS

silvermorn.co.uk

CW¼½ÃÑ COOLING WATER SYSTEM

Œ©lo REF NO.	•"•i"Ôl† PARTS NO.	•"•i-¼	Description	l"–Ê Q'ty	ŒÝŠ·l« I	R	"õll
1	Y119540-42000	CWÎßÝÌß	PUMP ASSY,WATER	1			
3	Y119515-42041	▪ ¶ÊÞ-	▪ COVER	1			
4	Y119717-42031	▪ ÊßÂ·Ý	▪ GASKET	1			
9	Y26577-060122	▪ »×ºÈ¼Þ(+±Å 6X12	▪ SCREW M 6X 12	4			
10	Y27241-250000	▪ ÜÝ¶ÞÀÌß×¸Þ 25	▪ PLUG 25	1			
11	Y119717-42320	▪ OØÝ¸Þ P-26	▪ O-RING	1			
12	Y129916-49740	▪ È¼ÞÌß×¸Þ R03	▪ PLUG, DRAIN R03	1			
13	Y119515-42020	PK(CWÎßÝÌß	GASKET, WATER PUMP	1			
14	Y23414-080000	ÊßÂ·Ý(ÏÙ 8	GASKET 8, ROUND	1			
15	Y26106-080122	ÂÊÞÎÞÙÄ 8X 12	BOLT M 8X 12 PLATED	1			
16	Y26106-080502	ÂÊÞÎÞÙÄ 8X 50	BOLT M 8X 50 PLATED	3			
17	Y171056-49120	ÄÞÚÝÌß×¸Þ	PLUG, DRAIN	1			
18	Y119717-42350	VÌß-Ø(CW-P D=100	V-PULLEY, C.W.PUMP	1			
19	Y25152-003500	VÍÞÙÄ º¸ÞA35	V BELT, A 35	1			
20	Y119233-44740	Ì±Ý(D=290*UH	FAN (D=290)	1			
21	Y121267-44760	½Íß-» (ÌÞ×Â¸:12)	SPACER	1			
22	Y26106-060302	ÂÊÞÎÞÙÄ 6X 30	BOLT M 6X 30 PLATED	4			
23	Y121450-42450	Ìß×¸Þ M16	PLUG M16	1			
24	Y124465-44950	ÊßÂ·Ý16	GASKET 16	1			
25	Y129150-49360	PK 10	GASKET 10	1			
26	Y124250-49351	½²µÝ¾Ý»-	THERMOMETER	1			
27	Y119609-49520	»-Ó½ÀÂÄ¶ÊÞ- CMP	COVER, THERMOSTAT	1			
28	Y119285-01731	▪ È¼ÞÌß×¸ÞNPT1/8	▪ PLUG NPT1/8	1			
30	Y119718-49800	»-Ó½ÀÂÄ(82ßC	THERMOSTAT, 71	1			
31	Y26106-080252	ÂÊÞÎÞÙÄ 8X 25	BOLT M 8X 25 PLATED	1			
32	Y26106-080602	ÂÊÞÎÞÙÄ 8X 60	BOLT M 8X 60 PLATED	1			
33	Y119440-44500	×¼Þ´-À CMP	RADIATOR ASSY	1			
35	Y119325-44571	▪ ¼Õ×³ÄÞ	▪ SHROUD	1			
36	Y129107-44590	▪ ·ÔÂÌß(0.9KG/CM2) D46	▪ CAP, RADIATOR	1			
37	Y119325-44600	▪ Ü²ÔÈÂÄ(Ì±Ý	▪ NET, FAN	2			
38	Y26014-060122	▪ ÎÞÙÄ(Ë×+ÊÞÈ 6X 12	▪ BOLT M 6X 12	4			
39	Y119255-44660	ÎÞ³¼ÝºÞÑ(×¼Þ´À	RUBBER	2			
40	Y23010-038000	Î-½ÊÞÝÄÞ 38	CLAMP 38	4			

silverhorse.co.uk

FUEL INJECTION PUMP

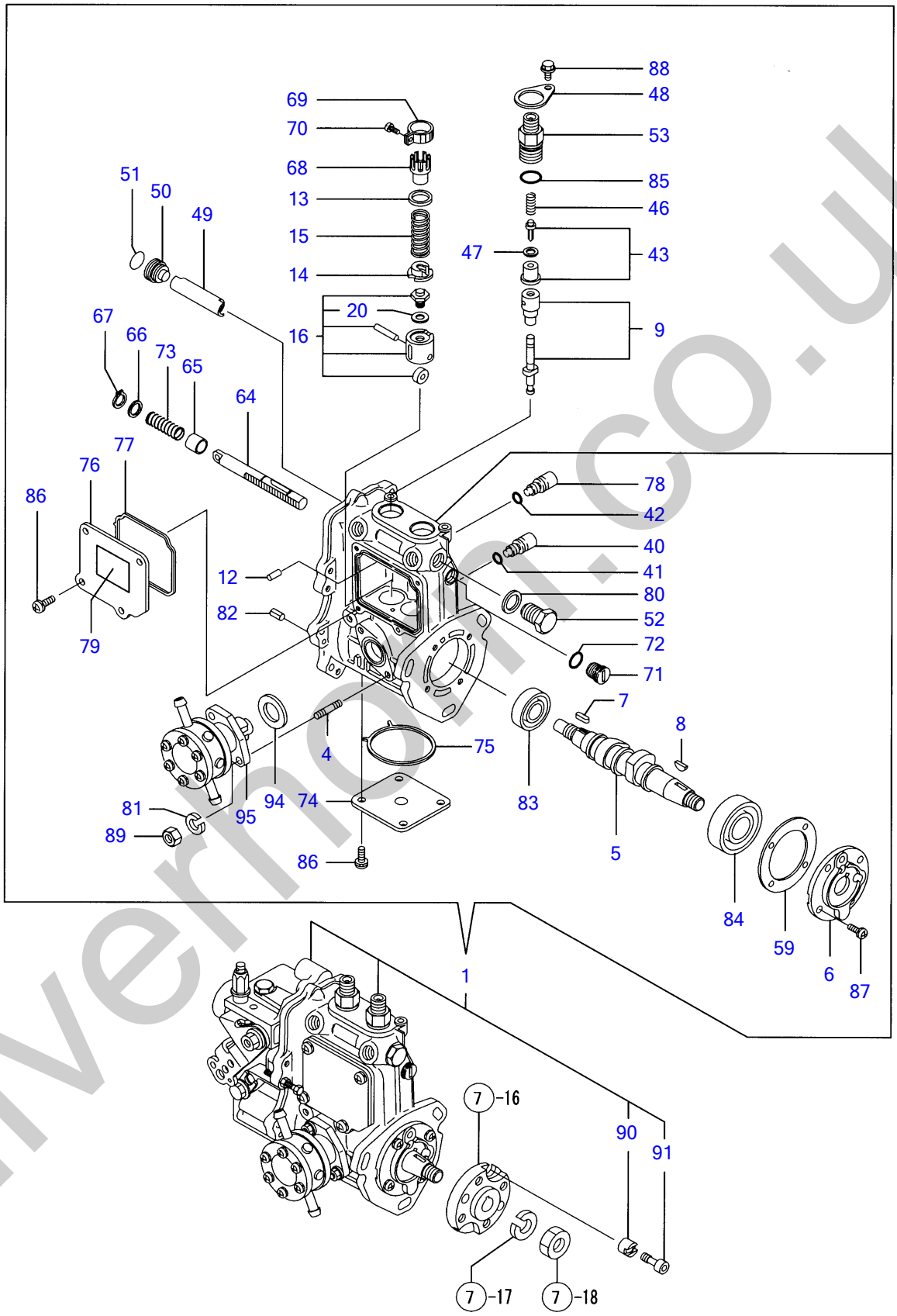

Y00D8590	11. FOフンシャポンプ				
2TNV70-PTB		1·05 06			PLUS

silvermoon.co.uk

FOÌÝ¼ÔÎßÝÌß FUEL INJECTION PUMP

Œ©lo REF NO.	•"•i"Ôl† PARTS NO.	•"•i-¼	Description	l"–Ê Q'ty	ŒÝŠ·l« I	R	"õl
1	Y719440-51380	FIE ASY(2TNV70-PTB	FIE ASSY(2TNV70-PTB	1		(1)	ÐÀÞ¼ NO.1 FOÌÝ¼¬ÎßÝÌß ASSY ÆÊº³Ó¸ NO.12 ¶ÞÊÞÅ µ Ì¸Ñ.
4	Y129155-51020	·³´ºÐÎÞÙÄ(Ì²-ÄÞP)	· STUD, FEED PUMP	2			
5	Y119415-51030	·¶Ñ¼ÔÌÄ	· CAMSHAFT	1			
6	Y119717-51060	·»Îß-Ä(¶Ñ¼Þ¸	· SUPPORT, BEARING	1			
7	Y119717-51070	·Í²º³·-	· PARALLEL PIN	1			
8	Y122710-51090	·ÊÝ¹ÞÂ·	· KEY	1			
9	Y119515-51100	·ÌßxÝ¼ÞÔ CMP	· PLUNGER ASSY	2			
12	Y129155-51140	·ËßÝ(ÊÞÚÙÏÜØÄÞÒ	· PIN, BARREL LOCKING	2			
13	Y158600-51170	·ÌßxÝ¼ÞÔ½ÌßØÝ¸Þ³¹¶ÞÈ	· SEAT SPRING	2			
14	Y119717-51180	·ÊÞÈ³¹	· RETAINER, SPRING	2			
15	Y119717-51190	·SP(ÌßxÝ¼ÞÔ	· SPRING, PLUNGER	2			
16	Y119717-51200	·ÀÍßÂÄ CMP	· TAPPET ASSY	2			
20	Y129155-51600	·· ÁÖ³³¾²¼Ñ CMP	·· SHIM PACK	2			
40	Y158600-51270	·ÏÜØÄÞÒ(ÀÍßÂÄ	· STOPPER	2			
41	Y129155-51280	·OØÝ¸Þ(S6	· O-RING S6	2			
42	Y129155-51280	·OØÝ¸Þ(S6	· O-RING S6	1			
43	Y119717-51300	·ÃÞØÍÞØÊÞÙÌÞ CMP	· VALVE ASSY, DELIVERY	2			
46	Y119717-51330	·ÊÞÈ(ÃÞØÍÞØÊÞÙÌÞ	· SPRING, DELIVERY	2			
47	Y124550-51350	·ÊßÂ·Ý(ÃÞØÍÞØ	· GASKET, DELIVERY	2			
48	Y118400-51370	·ÎÙÀÞÕÙÐÄÞÒ	· LOCKING	2			
49	Y119415-51400	·ÌßÛÃ¸À	· PROTECTOR	1			
50	Y158600-51410	·Ìßx¸Þ(ÃÞÌÚ¸À	· PLUG	1			
51	Y119717-51420	·OØÝ¸Þ	· O-RING	1			
52	Y158600-51420	·Ìßx¸Þ(B)(ÃÞÌÚ¸À	· PLUG	1			
53	Y158600-51441	·¹ÞÝ½²ÍÞÝCMP	· VALVE ASSY, DELIVERY	2			
59	Y129155-51450	·ÁÖ³³¾²ÊßÂ·Ý CMP	· SHIM SET, ADJUSTING	1			
64	Y119415-51500	·×Â¸(ºÝÄÛ-Ù	· RACK, CONTROL	1			
65	Y129155-51521	·ÌÞÂ¼Õ (×Â¸	· BUSH, RACK	1			
66	Y129155-51530	·¶Ý»Þ(×Â¸Î¼ÞÖSP	· SPACER, AUX. SPRING	1			
67	Y129155-51540	·ÄÒÜ(C¶ÞÀ	· CIRCLIP	1			
68	Y129155-51550	·ºÝÄÛ-ÙËßÆµÝ (B	· PINION, CONTROL	2			
69	Y129100-51560	·ËßÆµÝ	· PINION	2			
70	Y129100-51570	·ËßÆµÝÖ³È¼Þ	· SCREW	2			
71	Y158600-51570	·Ìßx¸Þ(FO ×Â¸	· PLUG	1			
72	Y129155-51580	·OØÝ¸Þ	· O-RING	1			
73	Y129155-51591	·×Â¸Î¼ÞÖÊÞÈ	· SPRING, RACK	1			
74	Y119415-51700	·¿ºÌÀ(ÎÝÀ²	· COVER,LOWER	1			
75	Y119415-51710	·PK(ÎÝÀ²¿ºÌÀ	· PACKING	1			
76	Y119415-51750	·¿¸ÌÀ(ÎÝÀ²	· COVER, BODY SIDE	1			
77	Y119415-51760	·PK(ÎÝÀ²¿¸ÌÀ	· GASKET	1			
78	Y158600-51790	·ÏÜØÄÞÒ(×Â¸	· GUIDE, RACK	1			
79	Y129156-51910	·Ò²ÊÞÝ (ÁÕ³²	· LABEL, CAUTION	1			
80	Y22190-160002	·¼-ÙÜÛÂ¼Ô(ºÏÙ.ÆÄØÙ)16	· SEAL WASHER 16S	1			
81	Y22217-060000	·ÊÞÈ»Þ¶ÞÈ 6	· SPRING WASHER 6	2			
82	Y22351-050010	·½ÌßØÝ¸ÞËßÝ 5.0AX 10	· SPRING PIN 5X10	2			
83	Y24101-060034	·ÍÞ±ØÝ¸Þ 6003	· BALL BEARING	1			
84	Y24101-063034	·ÍÞ±ØÝ¸Þ 6003	· BALL BEARING	1			
85	Y24316-000150	·OØÝ¸Þ 4D P 15.0	· O-RING 4D P15	2			
86	Y26022-050122	·ÅÍÞºÈ¼Þ(ÊÞÈ5X12	· SCREW M 5X 12	8			
87	Y26022-060162	·ÅÍÞºÈ¼Þ(ÊÞÈ6X16	· SCREW M 6X 16	4			
88	Y26106-050102	·ÂÊÞÎÞÙÄ 5X 10	· BOLT M 5X 10 PLATED	2			
89	Y26716-060002	·ÅÂÄ 6	· NUT 6	2			
90	Y119717-51480	·¶×-(FICºÃ²	· COLLAR. FIC FIX	1			
91	Y119717-51490	·ÎÞÙÄ(FICºÃ²	· BOLT, FIXATION	1			
94	Y129155-52051	·PK(ÄØÂ¹	· GASKET	1			
95	Y129100-52101	·Ì²-ÄÞÎßÝÌß CMP	· PUMP ASSY, FUEL FEED	1			

silverhorn.co.uk

GOVERNOR

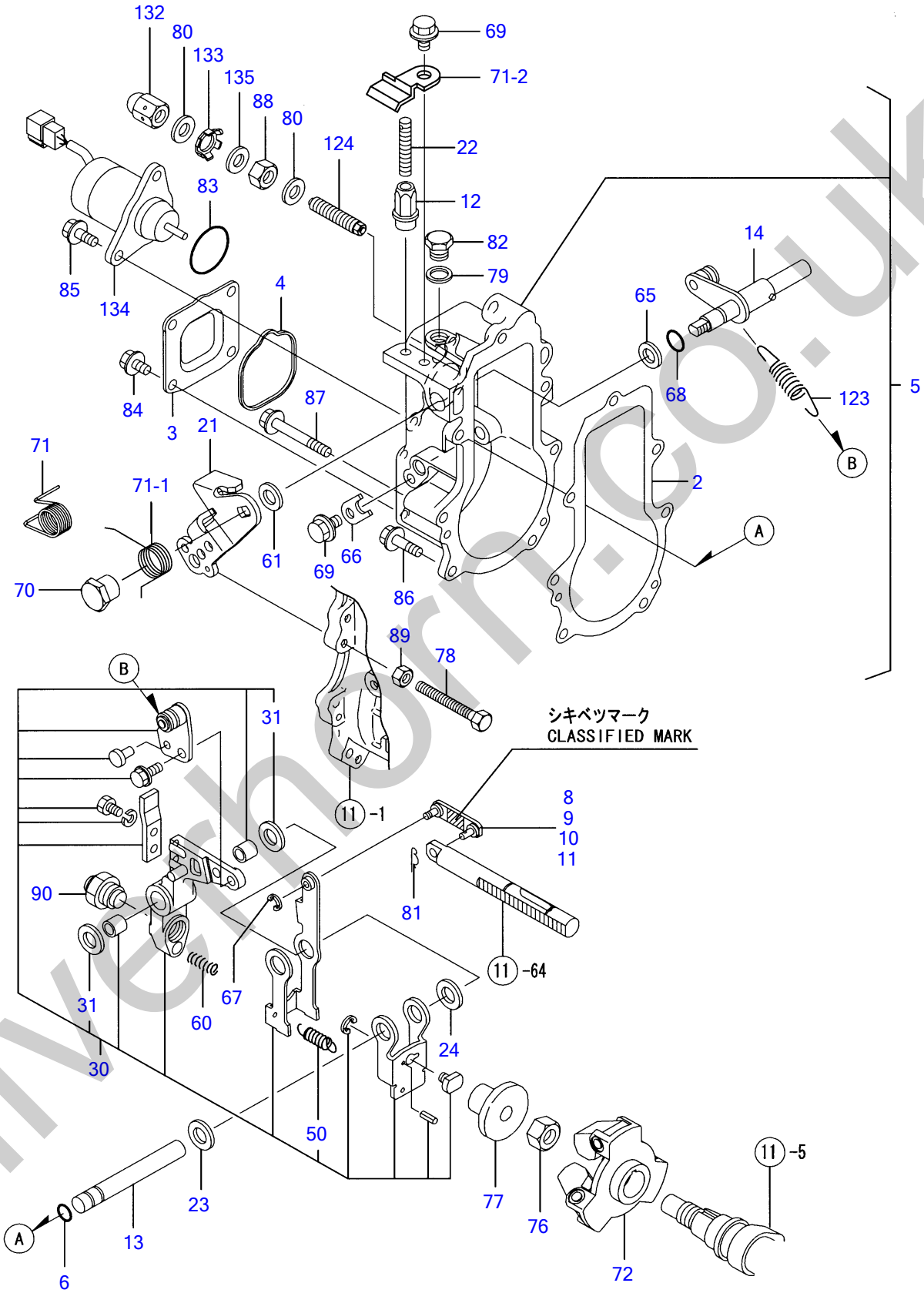

Y00D8590	12. ガバナ				
2TNV70-PTB		1·05 06			PLUS

silverthorn.co.uk

¶ÞÊÞÅ GOVERNOR

Œ©lo REF NO.	•"•i"Ô† PARTS NO.	•"•i-¼	Description	”–Ê Q'ty	ŒÝŠ·« I	R	”õl
2	Y119717-61050	PK(¶ÞÊÞÅ¹-½	GASKET, CASE	1			
3	Y119717-61060	ÌÀ(¶ÞÊÞÅ¹-½	CASE, GOVERNOR	1			
4	Y119717-61070	PK(¶ÞÊÞÅ¹-½ÌÀ	GASKET, COVER	1			
5	Y119744-61100	¶ÞÊÞÅ¹-½CMP	CASE ASSY, GOVERNOR	1			
6	Y129155-51280	• OØÝ¸Þ(S6	• O-RING S6	1			
8	Y119717-61120	• ØÝ¸(L=29.3	• LINK, L=29.3	1		(1)	¾ÝÀ¸¼Ö³ÌÞËÝ: ¼·ÍÞÂ·ºÞ³ µ ¶¸ÆÝ É³´ Á-³ÓÝÈ¶Þ²Ï½.(²×½Ä »Ý¼®³).* ºÉ º³Ó¸(¶ÞÊÞÅ ASSY)ÊFIG.11 FOÌÝ¼ÔÎßÝÌß Æ Ì¸ÐÏ½.
9	Y119717-61130	• ØÝ¸(L=29.8	• LINK, L=29.8	1		(1)	¾ÝÀ¸¼Ö³ÌÞËÝ: ¼·ÍÞÂ·ºÞ³ µ ¶¸ÆÝ É³´ Á-³ÓÝÈ¶Þ²Ï½.(²×½Ä »Ý¼®³).* ºÉ º³Ó¸(¶ÞÊÞÅ ASSY)ÊFIG.11 FOÌÝ¼ÔÎßÝÌß Æ Ì¸ÐÏ½.
10	Y119717-61140	• ØÝ¸(L=28.8	• LINK, L=28.8	1		(1)	¾ÝÀ¸¼Ö³ÌÞËÝ: ¼·ÍÞÂ·ºÞ³ µ ¶¸ÆÝ É³´ Á-³ÓÝÈ¶Þ²Ï½.(²×½Ä »Ý¼®³).* ºÉ º³Ó¸(¶ÞÊÞÅ ASSY)ÊFIG.11 FOÌÝ¼ÔÎßÝÌß Æ Ì¸ÐÏ½.
11	Y119717-61150	• ØÝ¸(L=30.3	• LINK, L=303	1		(1)	¾ÝÀ¸¼Ö³ÌÞËÝ: ¼·ÍÞÂ·ºÞ³ µ ¶¸ÆÝ É³´ Á-³ÓÝÈ¶Þ²Ï½.(²×½Ä »Ý¼®³).* ºÉ º³Ó¸(¶ÞÊÞÅ ASSY)ÊFIG.11 FOÌÝ¼ÔÎßÝÌß Æ Ì¸ÐÏ½.
12	Y129209-61370	• ÅÂÄ(ARB	• NUT M6	1			
13	Y129052-61390	• ¼ÔÌÄ(¶ÞÊÞÅÚÊÞ	• SHAFT, GOV. LEVER	1			
14	Y119717-61400	• ºÝÄÛ-ÙÚÊÞ-¼Þ¸CMP	• SHAFT ASSY, CONTROL	1			
21	Y119515-61440	• ÚÊÞ-(ºÝÄÛ-Ù	• LEVER, CONTROL	1			
22	Y129155-61450	• ¶²ÃÝ¾²¹ÞÝÎÞÙÄ	• BOLT, REVOL. LIMIT	1			
23	Y129156-61460	• ¼Ñ(T=0.6 ¶ÞÊÞÅÚÊÞ-	• SHIM T=0.6	1			
24	Y129155-61480	• ¶Ý»Þ COMP	• SPACER ASSY	1			
30	Y119717-61500	• ÚÊÞ- CMP(¶ÞÊÞÅ	• LEVER ASSY, GOVERNOR	1			
31	Y174307-51700	• • ¼Ñ¾ÂÄ(ÁÖ³³¾²Ö³	• • SHIM SET	2			
50	Y129486-61540	• • ¾ÂÄ½ÌßØÝ¸Þ	• • SPRING, SET	1			
60	Y129100-61650	• FO¿Þ³ØÖ³ÊÞÈ	• SPRING, FUEL CONTROL	1			
61	Y158552-61700	• ¼ÑCMP(ºÝÄÛ-ÙÚÊÞ-	• SHIM ASSY	1			
65	Y158552-61710	• ¼Ñ(1.0	• SHIM T=1.0	1			
66	Y119660-61901	• Ç¹ÄÞÒ	• RETAINER, SHAFT	1			
67	Y22272-000030	• ÄÒÜE 3	• CIRCLIP E- 3	1			
68	Y24341-000070	• O-ØÝ¸Þ 1A S-7.0	• O-RING 1A S-7.0	1			
69	Y26106-060102	• ÂÊÞÎÞÙÄ M 6X 10	• BOLT M 6X 10 PLATED	2			
70	Y129255-61410	• ÄÒÅÂÄ(ºÝÄÛ-ÙÚÊÞ-	• NUT	1			
71	Y129255-61420	• ÓÄÞ¼SP(ºÝÄÛ-ÙÚÊÞ-	• SPRING	1			
71-1	Y119534-61420 (A=E/2005.10-)	• ÓÄÞ¼SP(ºÝÄÛ-ÙÚÊÞ-	• SPRING	1	F		
71-2	Y119534-61430 (A=E/2005.10-)	• ±Ã¶ÞÈ	• PLATE	1	F		
72	Y119717-61200	³´²Ä CMP(¶ÞÊÞÅ	WEIGHT ASSY	1			

silverhorn.co.uk

GOVERNOR

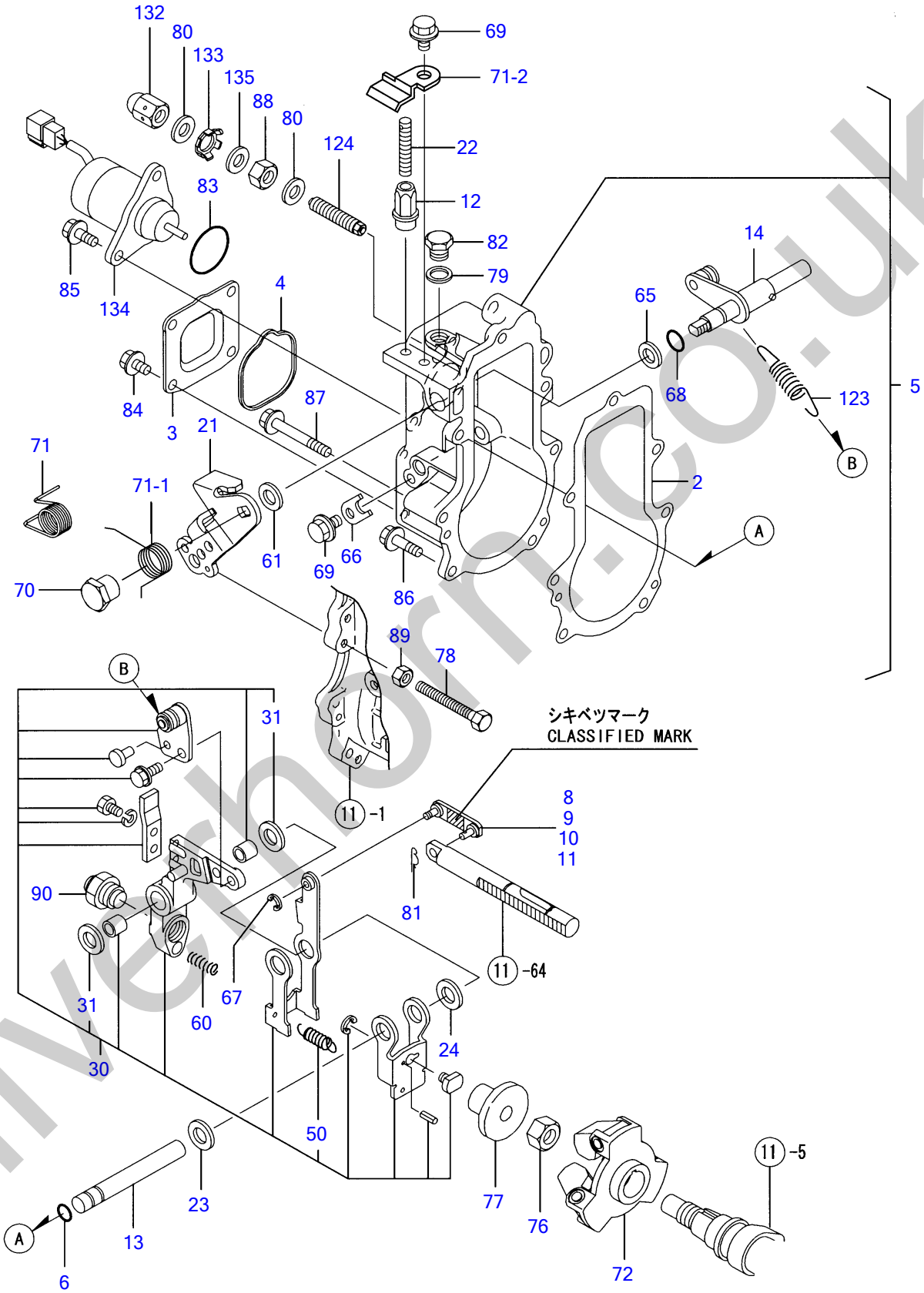

Y00D8590	12. ガバナ				
2TNV70-PTB		1·05 06			PLUS

silverthorn.co.uk

¶ÞÊÞÅ GOVERNOR

Œ©▯o REF NO.	•"•i"Ô▯† PARTS NO.	•"•i-¼	Description	▯"–Ê Q'ty	ŒÝŠ·▯« I	R	"õ▯I
76	Y119660-61300	ÅÂÄ(¶ÞÊÞÅ»Îß-Ä	NUT, GOVERNOR WEIGHT	1			
77	Y129155-61341	½Ø-ÌÞ	SLEEVE	1			
78	Y129155-61460	±²ÄÞÙ¾²¹ÞÝÎÞÙÄ	BOLT, IDLE LIMIT	1			
79	Y22190-100002	¼-ÙÜÂ¼Ô(ºÏÙ.ÆÄØÙ)10	SEAL WASHER 10S	1			
80	Y22190-120002	¼-ÙÜÂ¼Ô(ºÏÙ 12	SEAL WASHER 12	2			
81	Y22372-040000	½ÅÂÌßËßÝJASO 4	SNAP PIN 4	1			
82	Y23887-100002	• 6¶¸Ìß×¸Þ 10	• PLUG 10	1			
83	Y24341-000280	OØÝ¸Þ 1A S 28.0	O-RING 1A S-28.0	1			
84	Y26106-060102	ÂÊÞÎÞÙÄ M 6X 10	BOLT M 6X 10 PLATED	4			
85	Y26106-060142	ÂÊÞÎÞÙÄ 6X 14	BOLT M 6X 14 PLATED	2			
86	Y26106-060202	ÂÊÞÎÞÙÄ 6X 20	BOLT M 6X 20 PLATED	4			
87	Y26106-060452	ÂÊÞÎÞÙÄ 6X 45	BOLT M 6X 45 PLATED	3			
88	Y26736-120002	ÅÂÄ(Î¿ 12	NUT M12	1			
89	Y26756-060002	ÄÒÅÂÄ 6	LOCK NUT 6	1			
90	Y119740-61560	±Ý¸Þ×²Ë CMP	ANGLEICH ASSY	1			
123	Y171353-61700	¶ÞÊÞÅ½ÌßØÝ¸Þ	SPRING, GOVERNOR	1			
124	Y158601-61790	FOØÐÂÀ CMP	LIMITER ASSY, FUEL	1			
132	Y129209-61930	Ì¸ÛÅÂÄ(FO¾²¹ÞÝ	CAP NUT	1			
133	Y129209-61970	ÌßÚ-Ä	PLATE	1			
134	Y119233-77932	½ÄÂÌß¿ÚÉ²ÄÞ	SOLENOID, STOP	1			
135	Y23414-120016	ÊßÂ·Ý(ºÏÙ 12	GASKET 12	1			

silverhorn.co.uk

FUEL INJECTION VALVE

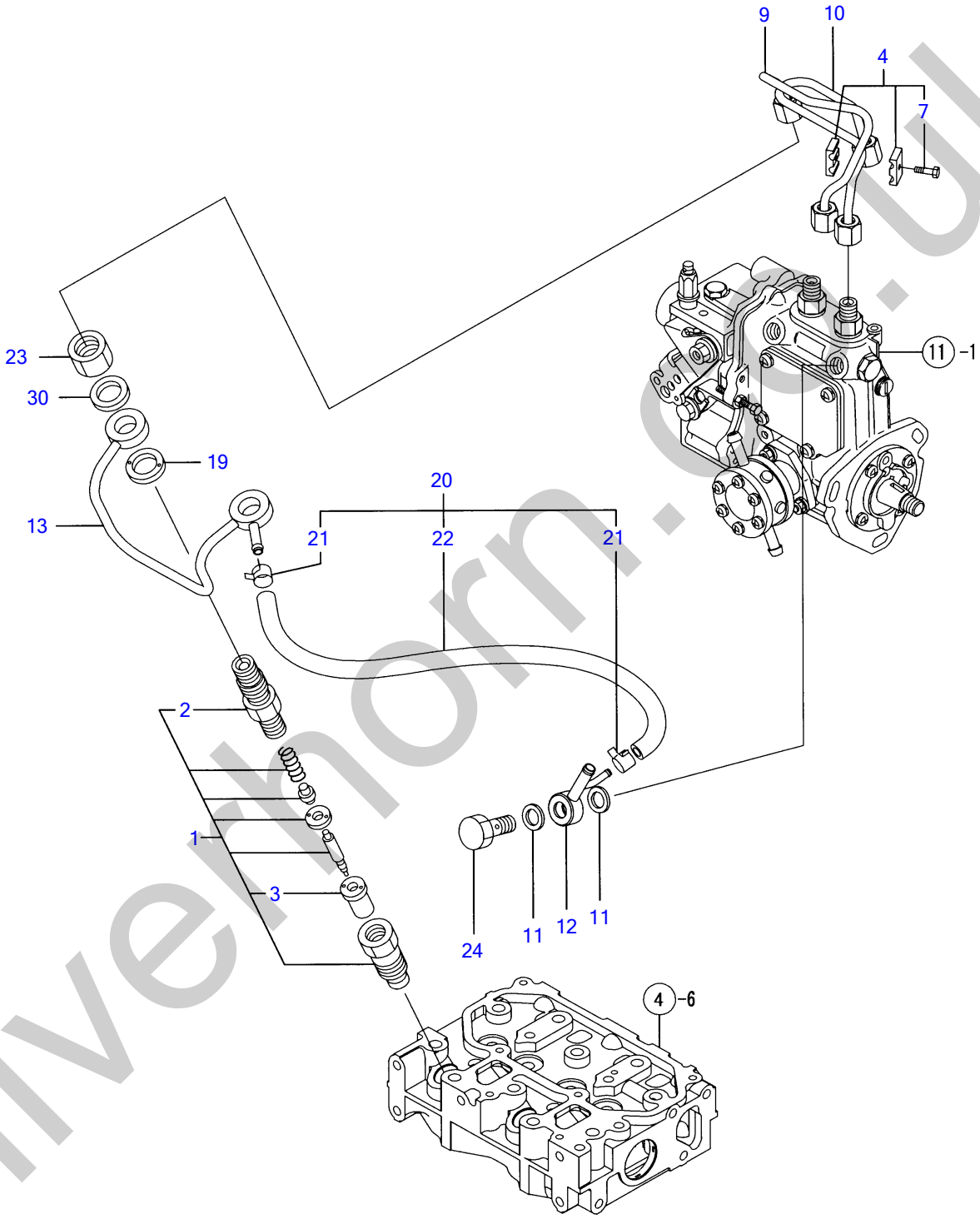

Y00D8590	13. FOフンシャベン				
2TNV70-PTB		1·05 06			PLUS

silvermorn.co.uk

FOÌÝ¼ÔÍÞÝ FUEL INJECTION VALVE

Œ©lo REF NO.	•"•i"Ôl† PARTS NO.	•"•i-¼	Description	l"–Ê Q'ty	ŒÝŠ·l« I	R	"õll
1	Y119515-53001	FOÍÞÝ CMP	VALVE ASSY,INJECTION	2			
2	Y118200-53010	• É½ÞÙÎÙÀÞ-	• HOLDER, NOZZLE	2			
3	Y119515-53010	• É½ÞÙ CMP	• NOZZLE ASSY	2			
4	Y119305-59120	ÌÚÄÞÒ(ÌÝ¼Ô¶ÝCMP	RETAINER	1			
7	Y129150-59131	• HB4X14	• BOLT M4X14,HEX.SCKT.	1			
9	Y119415-59810	ÌÝ¼Ô¶Ý NO1	PIPE, FUEL INJECTION	1			
10	Y119415-59820	ÌÝ¼Ô¶Ý NO2	PIPE, FUEL INJECTION	1			
11	Y22190-120002	¼-ÙÜÂ¼Ô(ºÏÙ 12	SEAL WASHER 12	2			
12	Y119840-59570	Â·ÞÃ	JOINT	1			
13	Y119415-59540	FOÓÄÞ¼ CMP	PIPE ASSY, RETURN	1			
19	Y129901-59560	ÊßÂ·Ý (FOÓÄÞ¼	GASKET, RETURN	2			
20	Y119540-59570	FO-T(ÓÄÞ¼ CMP	PIPE, FUEL RETURN	1			
21	Y124066-59100	• Î-½¸ØÂÌß(ÏÙ 8	• CLAMP 8	2			
22	Y119540-59560	• FO-T(ÓÄÞ¼ CMP	• PIPE, FUEL RETURN	1			
23	Y119620-59700	ÅÂÄ(É½ÞÙÓÄÞ¼	NUT	2			
24	Y119813-59950	Á´Â¸ ÊÞÙÌÞ CMP	VALVE ASSY, CHECK	1			
30	Y22190-120002	¼-ÙÜÂ¼Ô(ºÏÙ 12	SEAL WASHER 12	2			

silverhorn.co.uk

FUEL LINE

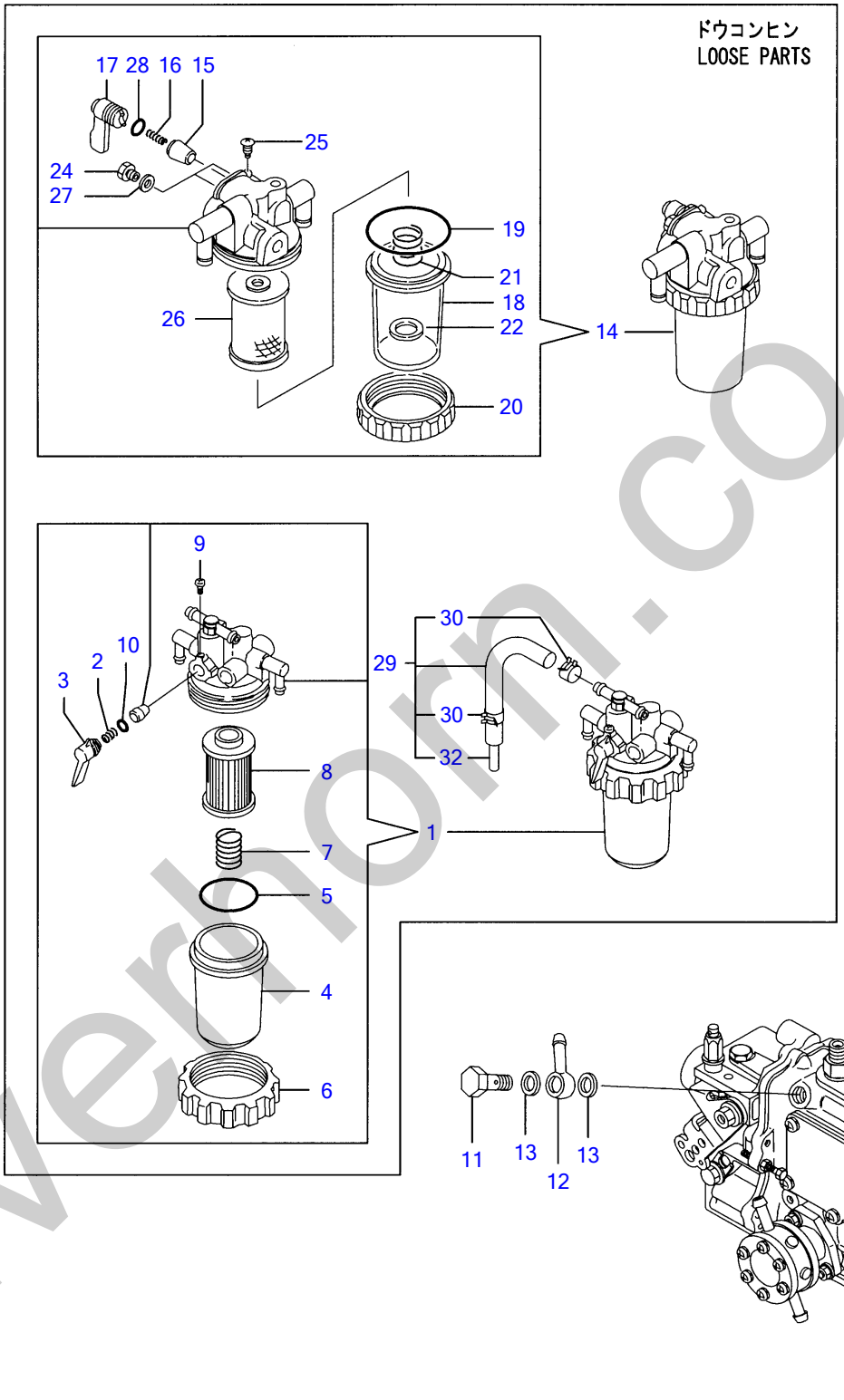

Y00D8590	14. FOパイプ				
2TNV70-PTB		1·05 06			PLUS

silverhorn.co.uk

FOÊß²Ìß FUEL LINE

Œ©⍰o REF NO.	•"•i"Ô⍰† PARTS NO.	•"•i-¼	Description	⍰"–Ê Q'ty	ŒÝŠ·⍰« I	R	"õ⍰I
1	Y119833-55620	Ì²ÙÀ(FO CMP	STRAINER ASSY, FUEL	1			
2	Y104200-55330	· ½ÌßØÝ¸Þ(Ã-ÊßÊÞÙÌÞ	· SPRING, TAPER VALVE	1			
3	Y119810-55340	· ÚÊÞ-	· LEVER	1			
4	Y121254-55510	· µµ²(FO º¼·	· CUP, STRAINER	1			
5	Y102103-55520	· OØÝ¸Þ(µµ²	· O-RING	1			
6	Y110250-55610	· ØÃ-ÆÝ¸ÞØÝ¸Þ	· RING, RETAINING	1			
7	Y121250-55620	· ½ÌßØÝ¸Þ(´ÚÒÝÄ	· SPRING	1			
8	Y119810-55650	· ´ÚÒÝÄ	· ELEMENT	1			
9	Y104200-55750	· ÅÍÞºÈ¼Þ 4(FOºÂ¸ÊÝÄÞÙ	· SCREW M 4	1			
10	Y24311-240100	· OØÝ¸Þ 1A P 10A	· O-RING 1A P-10A	1			
11	Y103854-39140	¶ÝÃ·ÞÃÎÞÙÄ	BOLT, PIPE JOINT	1			
12	Y101304-59020	¶ÝÃ·ÞÃ(¶À¸Á 12	JOINT 12, PIPE	1			
13	Y22190-120002	¼-ÙÜÂ¼Ô(ºÏÙ 12	SEAL WASHER 12	2			
14	Y129335-55700	³µ-À¾ÊßÚ-À CMP	SEPARATOR, WATER	1			
15	Y104200-55321	· Ã-ÊßÊÞÙÌÞ	· VALVE, TAPER	1			
16	Y104200-55330	· ½ÌßØÝ¸Þ(Ã-ÊßÊÞÙÌÞ	· SPRING, TAPER VALVE	1			
17	Y104200-55341	· ÊÝÄÞÙ(FOºÂ¸	· HANDLE, COCK	1			
18	Y124064-55510	· µµ²(FO º¼·	· BOWL, FUEL STRAINER	1			
19	Y102103-55520	· OØÝ¸Þ(µµ²	· O-RING	1			
20	Y110250-55610	· ØÃ-ÆÝ¸ÞØÝ¸Þ	· RING, RETAINING	1			
21	Y121257-55720	· ½ÌßØÝ¸Þ(½¸Ø-Ý	· SPRING, SCREEN	1			
22	Y121257-55731	· ÌÛ-Ä	· FLOAT	1			
24	Y101720-55750	· 6¶¸Ìß×¸Þ 6(´±-Ç·	· PLUG 6	2			
25	Y104200-55750	· ÅÍÞºÈ¼Þ 4(FOºÂ¸ÊÝÄÞÙ	· SCREW M 4	1			
26	Y171081-55910	· ½¸Ø-Ý (100ÒÂ¼Ô	· SCREEN	1			
27	Y23418-060000	· ÊßÂ·Ý(ÏÙ 6	· GASKET 6, NYLON	2			
28	Y24311-240100	· OØÝ¸Þ 1A P 10A	· O-RING 1A P-10A	1			
29	Y119840-59601	ÍÞÝÄÞ(ÓÄÞ¼CMP	BEND ASSY	1			
30	Y124766-59050	· Î-½¸ØÂÌß(ÏÙ 12	· CLAMP 12	2			
32	Y119840-59621	· ¼ÞÖ²ÝÄ	· JOINT	1			

silverhorn.co.uk

STARTING MOTOR

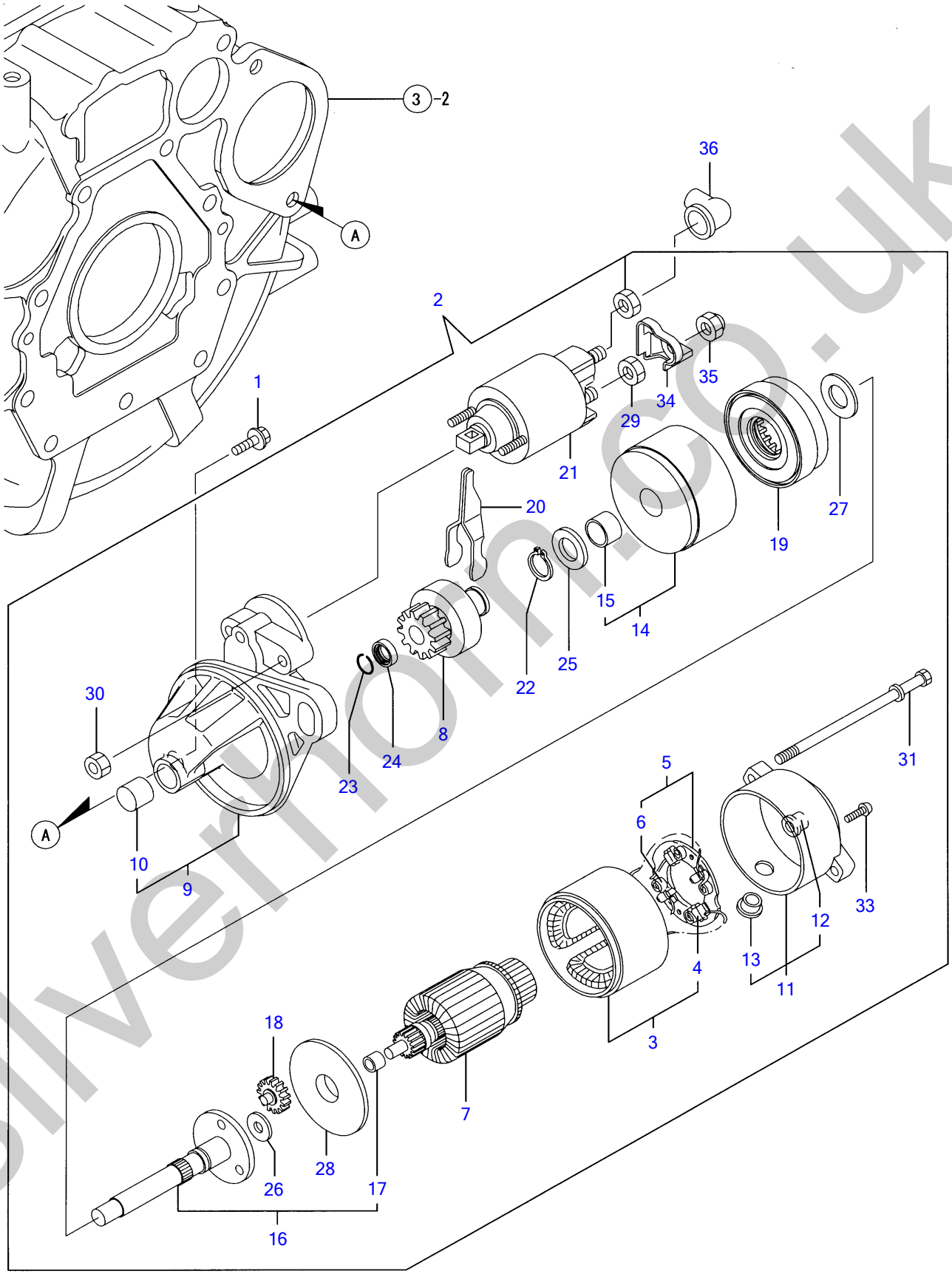

Y00D8590	15. スターティングモータ			
2TNV70-PTB	1·05 06			PLUS

silverthorn.co.uk

½À-Ã²Ý¸ÞÓ-À STARTING MOTOR

Œ©lo REF NO.	•"•i"Ôl† PARTS NO.	•"•i-¼	Description	l"–Ê Q'ty	ŒÝŠ·l« I	R	"õll
1	Y26106-100252	ÂÊÞÎÞÙÄ 10X 25	BOLT M10X 25 PLATED	2			
2	Y119515-77010	½À-À(P1.1	STARTER, P1.1	1			
3	YX0281007680	· Ö-¸ ASSY	· COIL ASSY, FIELD	1			
4	YX0280996180	· · ½À-À KIT	· · STARTER KIT	2			
5	YX0285105190	· ÎÙÀÞ ASSY	· HOLDER ASSY.	1			
6	YX0285205030	· · ½ÌßØÝ¸Þ	· · SPRING	4			
7	YX0282005871	· ±-ÏÁÕ± ASSY	· ARMATURE ASSY	1			
8	YX0283006960	· ¸×ÂÁ »ÌÞ ASSY	· CLUTCH SUB-ASSY.	1			
9	YX4284001590	· Ê³¼ÞÝ¸ÞASSY, ½À°À	· HOUSING ASSY,STARTER	1			
10	YX9491050100	· · Æ-ÄÞÙÍÞ±ØÝ¸Þ	· · NEEDLE BEARING	1			
11	YX0285007030	· ÌÚ-Ñ ASSY	· FRAME ASSY.	1			
12	YX9491040990	· · ÍÞ±ØÝ¸Þ	· · BEARING	1			
13	YX0280626010	· · ¶ÊÞ-	· · COVER	1			
14	YX0284105040	· ÍÞ±ØÝ¸Þ »ÌÞ ASSY	· BEARING SUB-ASSY.	1			
15	YX9491034330	· · ÍÞ±ØÝ¸Þ	· · BEARING	1			
16	YX0286105010	· ¼ÔÌÄ »ÌÞ ASSY	· SHAFT SUB-ASSY.	1			
17	YX9491034320	· · ÍÞ±ØÝ¸Þ	· · BEARING	1			
18	YX0286305010	· ·ÞÔ	· GEAR	3			
19	YX0286355010	· ·ÞÔ	· GEAR	1			
20	YX0287405140	· ÚÊÞ-	· LEVER	1			
21	YX0534007800	· ½²ÂÁ ASSY	· SWITCH,EMERGENCY	1			
22	YX9055715000	· ØÝ¸Þ	· RING	1			
23	YX9490721360	· ØÝ¸Þ	· RING	1			
24	YX0280210331	· ÅÂÄ	· NUT	1			
25	YX9490138110	· »Þ¶ÞÈ	· WASHER	1			
26	YX9490138090	· »Þ¶ÞÈ	· WASHER	1			
27	YX9490138100	· »Þ¶ÞÈ	· WASHER	1			
28	YX0284525010	· ÌßÚ-Ä	· PLATE	1			
29	YX9490562360	· ÅÂÄ	· NUT	1			
30	YX9490560750	· ÅÂÄ	· NUT	2			
31	YX9490423520	· ½Ù-ÎÞÙÄ	· BOLT, THROUGH	2			
33	YX9490065670	· ½¸ØÕ³	· SCREW M 4X 6 (BS)	2			
34	YX0280335360	· À-ÐÅÙ¶ÊÞ-	· COVER SET, TERMINAL	1			
35	YX1289510130	· ÅÂÄ	· NUT	1			
36	Y124160-77020	À-ÐÅÙ¶ÊÞ-	COVER, TERMINAL	1			

silverhorn.co.uk

GENERATOR

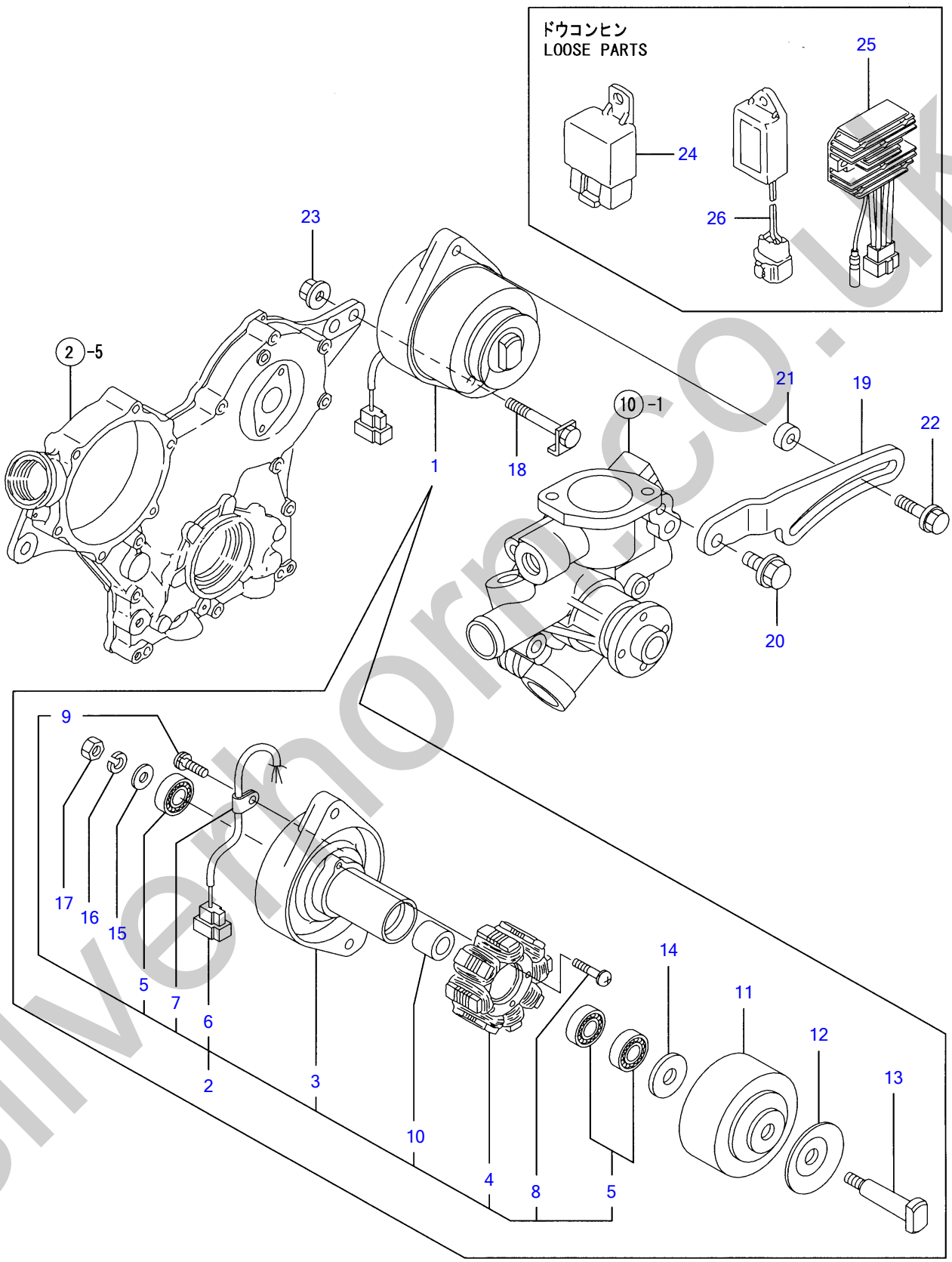

Y00D8590	16. ジェネレータ				
2TNV70-PTB		1·05 06			PLUS

silvermorn.co.uk

¼Þ´ÈÚ-À GENERATOR

Œ©lo REF NO.	•"•i"Ôl† PARTS NO.	•"•i-¼	Description	l"–Ê Q'ty	ŒÝŠ·l« I	R	"õll
1	Y171301-77201	ÀÞ²ÅÓ(15A	GENERATOR (15A)	1			
2	YXM08137	· ÌßÚ-Ä ASSY	· PLATE ASSY	1			
3	YX2A07073KA	· · ÌßÚ-Ä	· · PLATE	1			
4	YX4A07023KB	· · ½Ã-À COMP	· · STATOR ASSY	1			
5	Y24104-062010	· · ÍÞ±ØÝ¸Þ(6201DDUC3)	· · BALL BEARING	3			
6	YX417878	· · ¶Ìß×	· · COUPLER	1			
7	YXM069000000	· · ¸×ÝÌß	· · CLAMP	1			
8	YXYSPS402400	· · ºÈ¼Þ	· · SCREW	2			
9	YXYSPS400800	· · ºÈ¼Þ	· · SCREW	1			
10	YXM329830000	· · ¶×-	· · COLLAR	1			
11	YX3A08877KA	· Ì×²Î²Ù	· FLYWHEEL	1			
12	YXM721740000	· Ìß-Ø-	· PULLEY	1			
13	YX4A07403K01	· ¼ÔÌÄ	· SHAFT	1			
14	YXM67935	· ÜÂ¼Ô	· WASHER	1			
15	YXM860250000	· Ë×»Þ¶ÞÈ 10	· WASHER 10	1			
16	YXM219230000	· ½ÌßØÝ¸ÞÜÂ¼Ô-	· WASHER, SPRING	1			
17	YXM863720000	· ÅÂÄ	· NUT	1			
18	Y119740-77250	ÎÞÙÄ 10X76 (GEN	BOLT, M10X76	1			
19	Y119742-77300	±¼ÞÔ½À(ÍÞÙÄ	ADJUSTER, BELT	1			
20	Y26106-080202	ÂÊÞÎÞÙÄ 8X 20	BOLT M 8X 20 PLATED	1			
21	Y119940-77270	¶Ý»Þ(GEN	ADJUSTER, BELT	1			
22	Y129972-77341	ÎÞÙÄ(±¼ÞÔ½À,L=50	BOLT, ADJUSTING	1			
23	Y26306-100002	ÂÊÞÂ·ÅÂÄ(UBS 10	NUT	1			
24	Y119247-77100	¾ÌÃ²ØÚ-(SN2206)	RELAY, SAFETY	1			
25	Y119233-77710	¶-ÚÝÄØÐÂÀ	LIMITER, CURRENT	1			
26	Y129211-77920	À²Ï-(1 SEC.	TIMER	1			

silverhorn.co.uk

GASKET SET

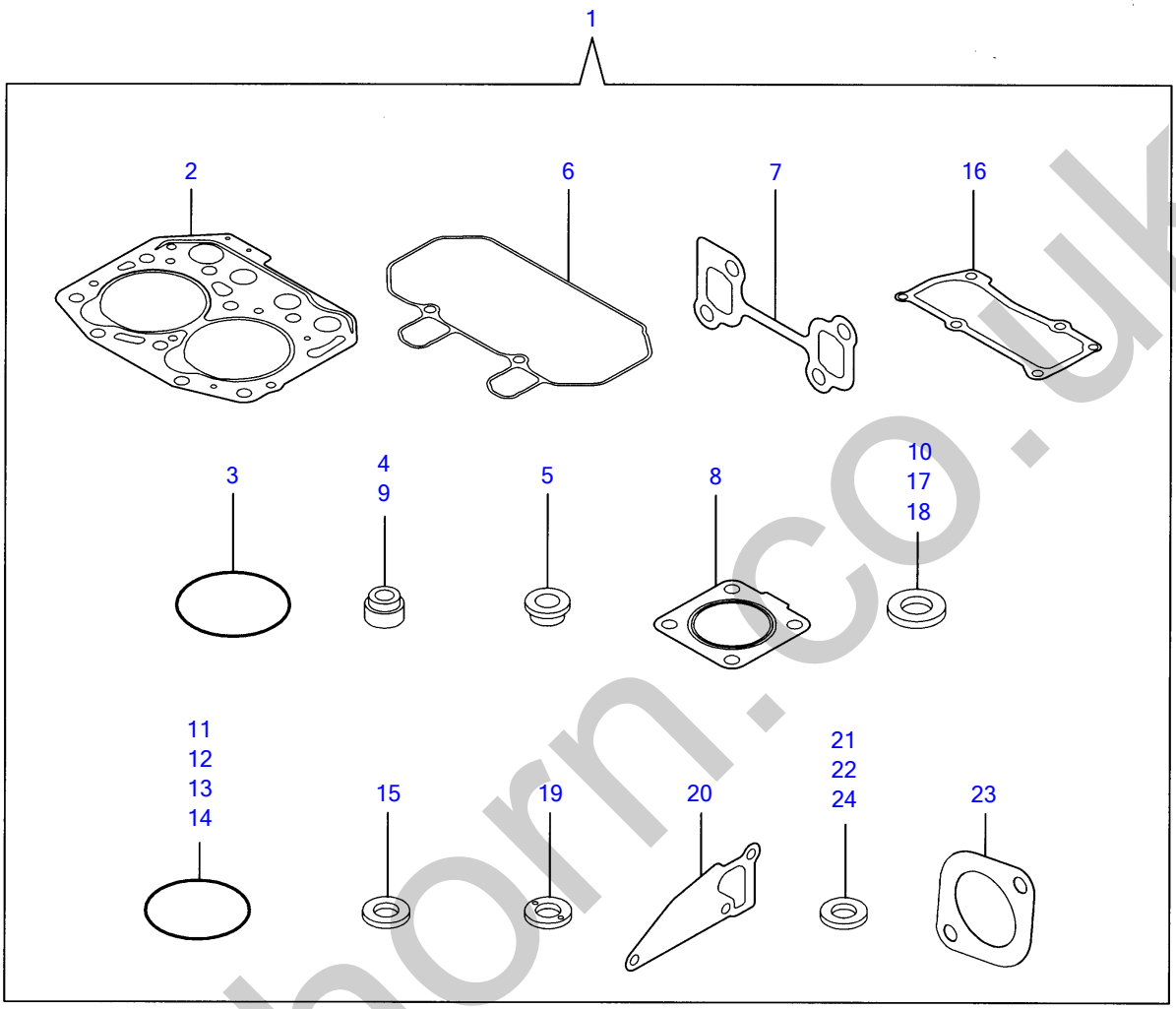

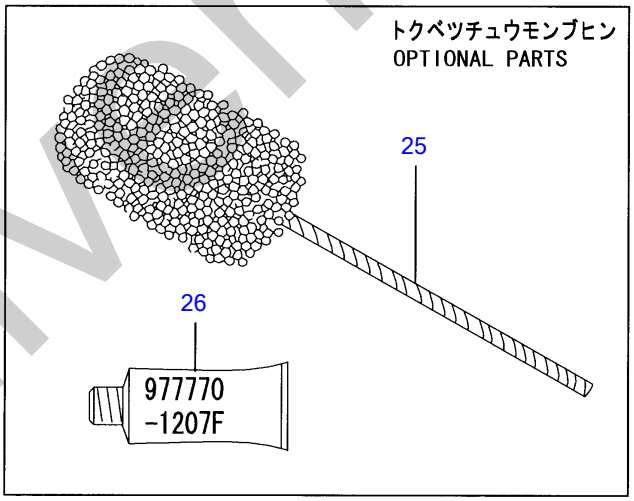

Y00D8590	17. パッキンセット				
2TNV70-PTB		1·05 06			PLUS

silverhorn.co.uk

ÊßÂ·Ý¾ÂÄ GASKET SET

Œ©lo REF NO.	•"•i"Ôl† PARTS NO.	•"•i-¼	Description	l"–Ê Q'ty	ŒÝŠ·l« I	R	"õl
1	Y719415-92660	ÊßÂ·Ý ¾ÂÄ (ÉÝ±½)	GASKET SET(NON-ASB.)	1		(1)	µÌß¼®Ý ÌÞËÝÃÞ½
2	Y119415-01330	· ÍÂÄÞ¶Þ½¹ÂÄ	· GASKET, CYL.HEAD	1			
3	Y121850-51960	· OØÝ¸Þ(FOPÄØÂ¹)	· O-RING, F.I.PUMP	1			
4	Y119717-11340	· ÊÞÙÌÞ½ÃÑ¼-Ù(INT	· SEAL, VALVE STEM	2			
5	Y129901-11450	· ÌßÛÃ¸À (É½ÞÙ	· PROTECTER, NOZZLE	2			
6	Y119415-11310	· PK(ÎÞÝÈÂÄ	· GASKET, BONNET	1			
7	Y119415-13110	· ¶Þ½¹ÂÄ (ÏÆÎÙÄÞ	· GASKET, MANIFOLD	1			
8	Y119515-13200	· ¶Þ½¹ÂÄPK(»²ÚÝ»	· GASKET, SILENCER	1			
9	Y119717-11350	· ÊÞÙÌÞ½ÃÑ¼-Ù(EXH	· SEAL, VALVE STEM	2			
10	Y22190-080002	· ¼-ÙÜÂ¼Ô(ºÏÙ.ÆÄØÙ) 8	· SEAL WASHER 8S	4			
11	Y24311-000320	· OØÝ¸Þ 1A P 32.0	· O-RING 1A P-32.0	2			
12	Y119717-32060	· OØÝ¸Þ P15.0	· O-RING, P15.0	1			
13	Y119624-32040	· OØÝ¸Þ P 12.0	· O-RING P 12.0	1			
14	Y119717-32050	· OØÝ¸Þ P17.0	· O-RING, P17.0	3			
15	Y119600-11460	· PK	· GASKET, NOZZLE	4			
16	Y119415-11330	· PK(ÎÞÝÈÂÄÌÀ	· PLATE, BAFFLE	1			
17	Y22190-160002	· ¼-ÙÜÂ¼Ô(ºÏÙ.ÆÄØÙ)16	· SEAL WASHER 16S	1			
18	Y22190-120002	· ¼-ÙÜÂ¼Ô(ºÏÙ 12	· SEAL WASHER 12	6			
19	Y129901-59560	· ÊßÂ·Ý (FOÓÄÞ¼	· GASKET, RETURN	2			
20	Y119515-42020	· PK(CWÎßÝÌß	· GASKET, WATER PUMP	1			
21	Y23414-080000	· ÊßÂ·Ý(ÏÙ 8	· GASKET 8, ROUND	1			
22	Y124465-44950	· ÊßÂ·Ý16	· GASKET 16	1			
23	Y129107-13550	· ¶Þ½¹ÂÄ(ÌÝ¼ÕÂº³	· GASKET, NOZZLE	1			
24	Y129150-49360	· PK 10	· GASKET 10	1			
25	Y129400-92410	ÌÚÂ¸½Î-Ý	FLEX HORN	1		(1)	µÌß¼®Ý ÌÞËÝÃÞ½
26	Y977770-1207F	¼Øº-Ý¹² ´·¼ÞÖ³¶Þ½¹ÂÄ	GASKET.LIQUID	1		(1)	µÌß¼®Ý ÌÞËÝÃÞ½

silverhorn.co.uk