TB153FR

Book No. BJ2Z004
Serial No.15820004-

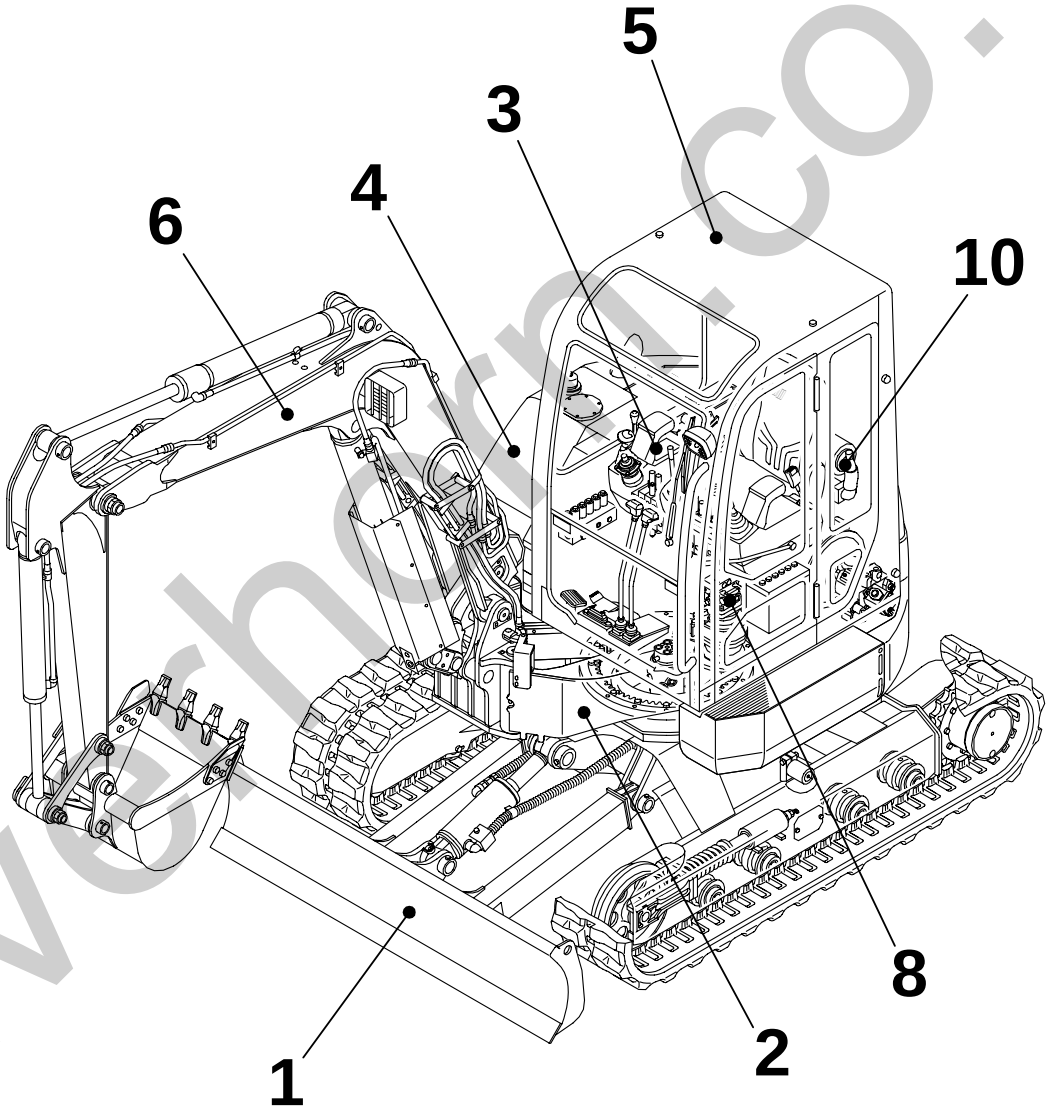

silverhorn.co.uk

silverhorn.co.uk

INDEX

Item	Part number	Description	Q'ty	Chan.	Serial No.	Serv.	Remarks
1		UNDERCARRIAGE					
2		TURNTABLE & CONTROL LEVER					
3		ENGINE & ELECTRICAL SYSTEM					
4		HYDRAULIC PIPNG & TANK					
5		COVER & CAB					
6		HOE ATTACHMENT					
7		DECAL & TOOL					
8		HYDRAULIC DEVICE					
10		ENGINE(4TNV88-PTBZ1)					
		2008.4.21					

silverhorn.co.uk

LOWER FRAME

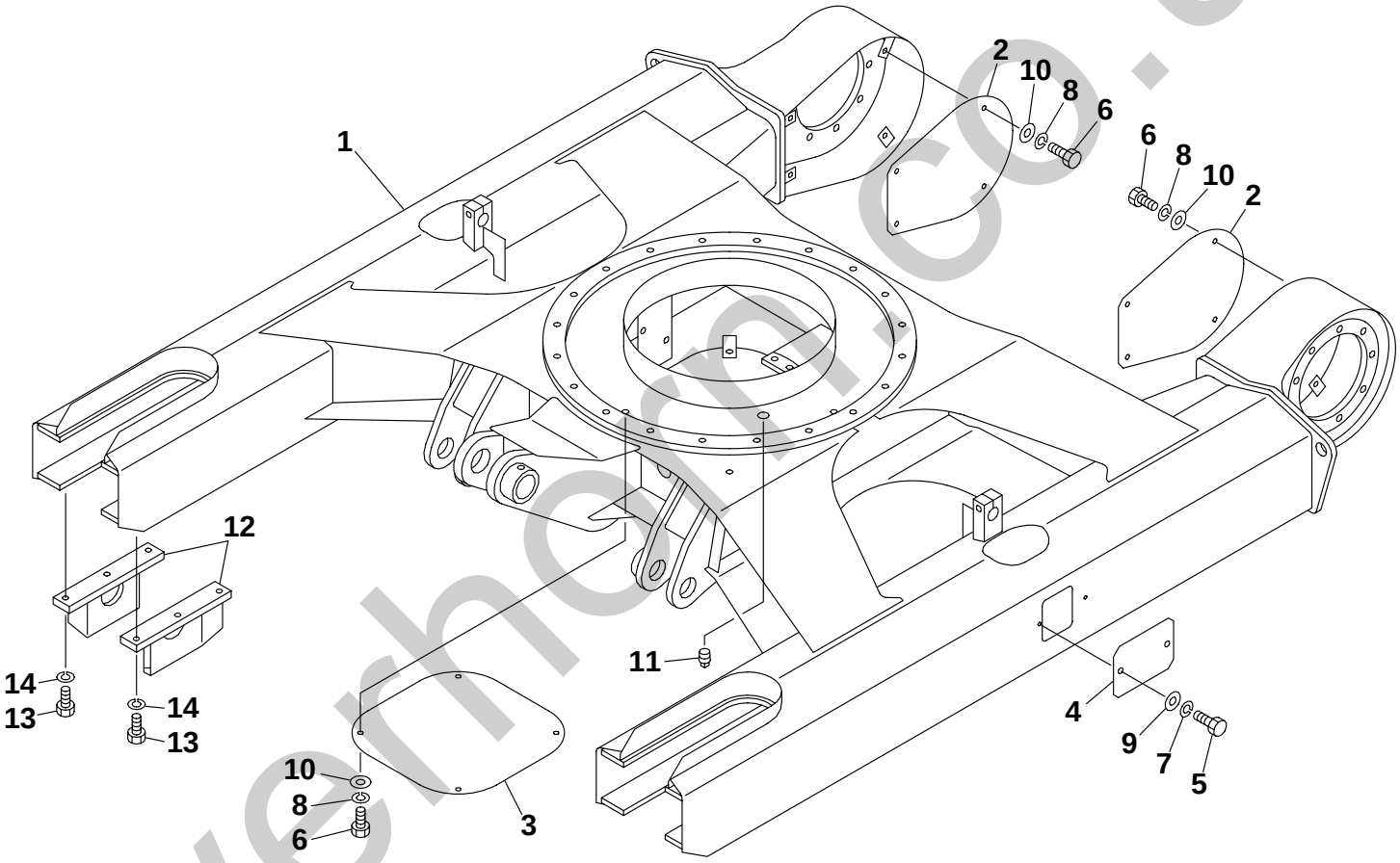

J2A010

S=1/14

silverhorn.co.uk

LOWER FRAME

Item		Part number	Description	Q'ty	Chan.	Serial No.	Serv.	Remarks
			FRAME ASSY, lower (rubber)					X03910-11000-0
			FRAME ASSY, lower (steel)					X03910-11500-0
1	X	*******-*******	FRAME	1				
2		**03910-04002**	COVER	2				
3		**03910-04003**	COVER	1				
4		**05610-17400**	COVER	2				
5		**11000-40816**	BOLT	4				
6		**11000-41020**	BOLT	12				
7		**11400-20008**	WASHER, spring	4				
8		**11400-20010**	WASHER, spring	12				
9		**11411-10008**	WASHER	4				
10		**11411-10010**	WASHER	12				
11		**15087-10010**	PLUG	1				
12		**04610-00700**	GUIDE, shoe	4				steel
13		**11010-41230**	BOLT	12				steel
14		**11400-20012**	WASHER, spring	12				steel
		J2a010						

silverhorn.co.uk

CRAWLER BELT

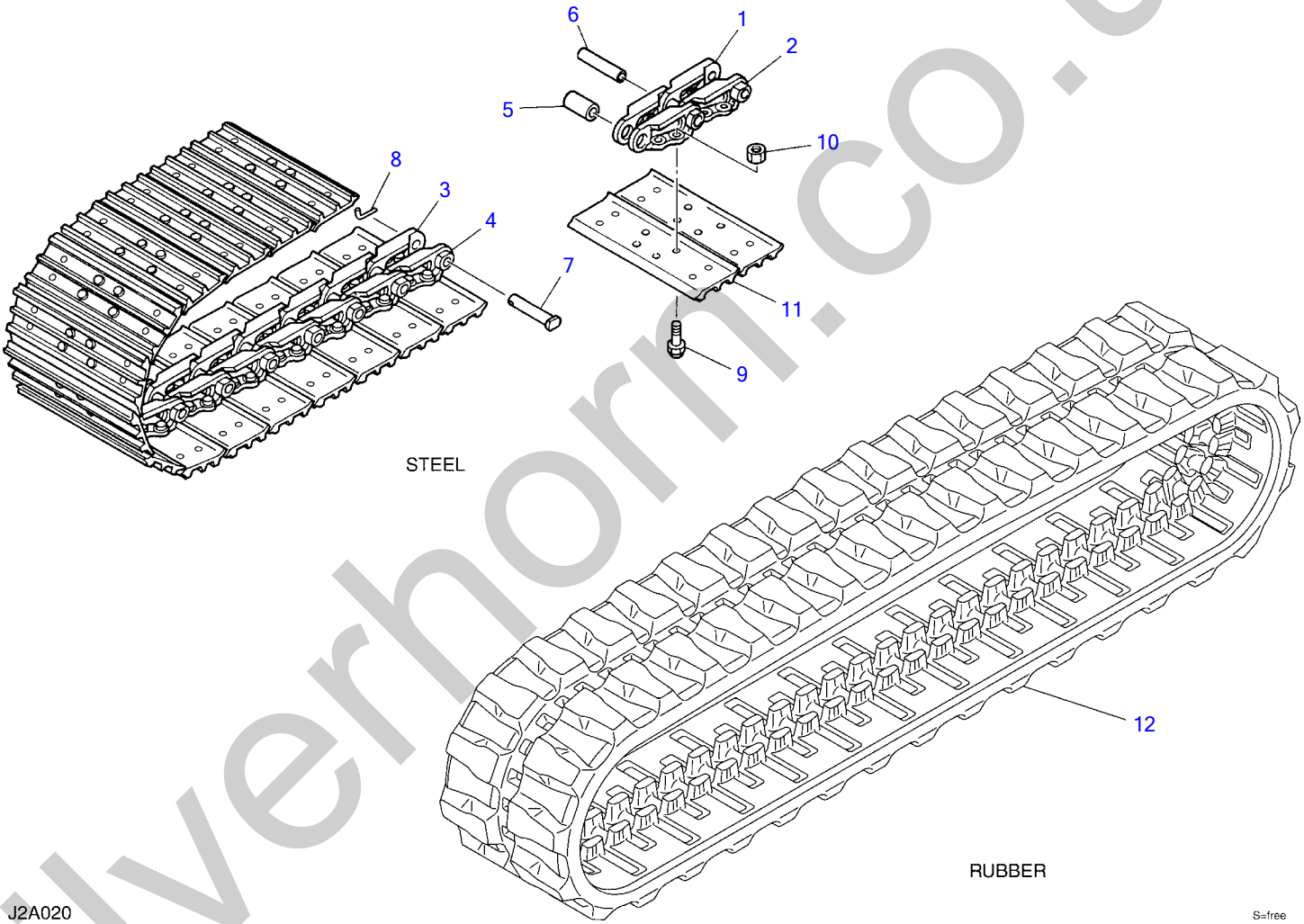

silverhorn.co.uk

CRAWLER BELT

Item	Part number	Description	Q'ty	Chan.	Serial No.	Serv.	Remarks
0	1914051600	BELT ASSY, steel crawler	2				X19140-51600-0
1	1914039001	・LINK (R.H.)	37				
2	1914039002	・LINK (L.H.)	37				
3	1914039003	・LINK, master (R.H.)	1				
4	1914039004	・LINK, master (L.H.)	1				
5	1914039012	・BUSHING	38				
6	1914039006	・PIN, track	37				
7	1914039007	・PIN, master	1				
8	1914039008	・PIN	1				
9	1914039009	・BOLT	152				
10	1914033010	・NUT	152				
11	1914051611	・PLATE, shoe	38				
12	1914065610	BELT, rubber crawler	2				
	J2a020						

silverhorn.co.uk

CRAWLER BELT (with rubber pads)

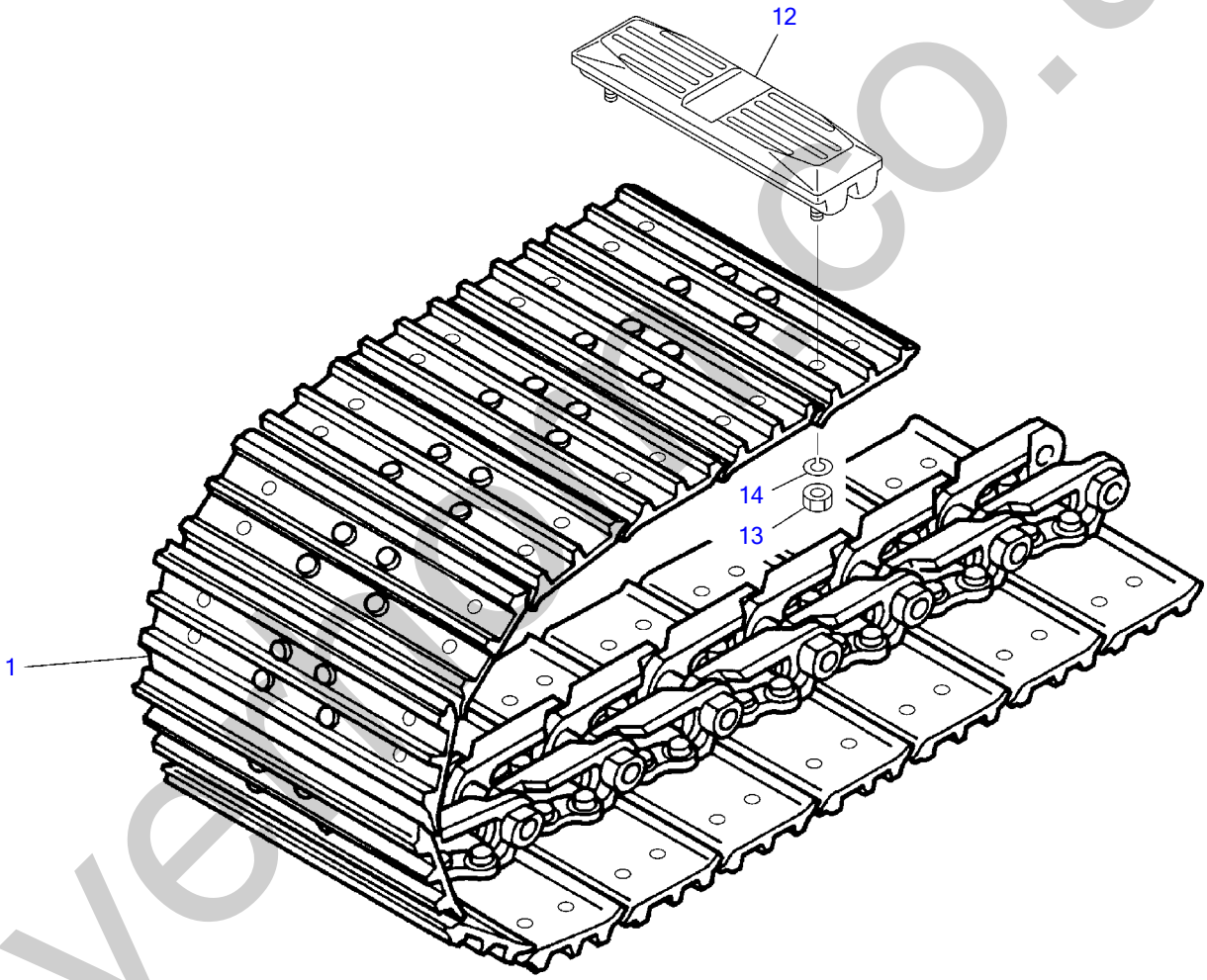

K3A152

S=free

silverado.co.uk

CRAWLER BELT (with rubber pads)

Item	Part number	Description	Q'ty	Chan.	Serial No.	Serv.	Remarks
0	**1914051700**	BELT ASSY, steel crawler (with rubber pads)	2				X19140-51700-0
1	**1914051600**	・BELT, steel crawler	1				
12	**1914400500**	・PAD, rubber	38				
13	**1130020012**	・・NUT	4				
14	**1140020012**	・・WASHER, spring	4				
	K3a153						

silverhorn.co.uk

CARRIER ROLLER

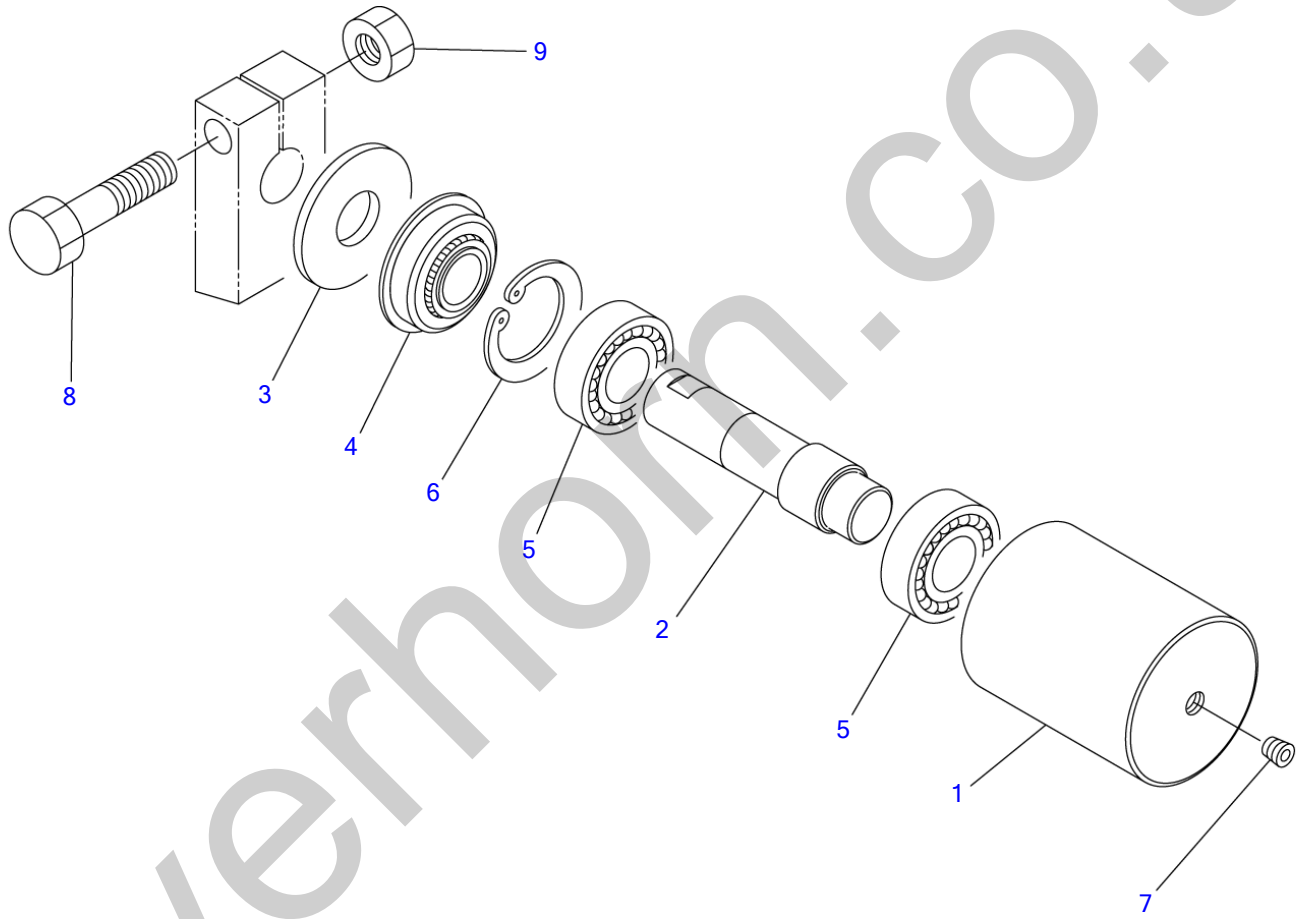

G4A100

S=1/3

silverhorn.co.uk

CARRIER ROLLER

Item	Part number	Description	Q'ty	Chan.	Serial No.	Serv.	Remarks
		ROLLER ASSY, carrier					X03912-00000-2
0-1	0391200100	ROLLER SUB ASSY	2				
1	0391200110	・ROLLER	1				
2	0391200120	・SHAFT	1				
3	0141201300	・COVER	1				
4	1431203062	・SEAL	1				
5	1300006206	・BEARING	2				
6	1221000062	・RING, snap	1				
7	1501820001	・PLUG	1				
8	1101041670	BOLT	2				
9	1130540016	NUT	2				
	K3a141						

silverhorn.co.uk

TRACK ROLLER

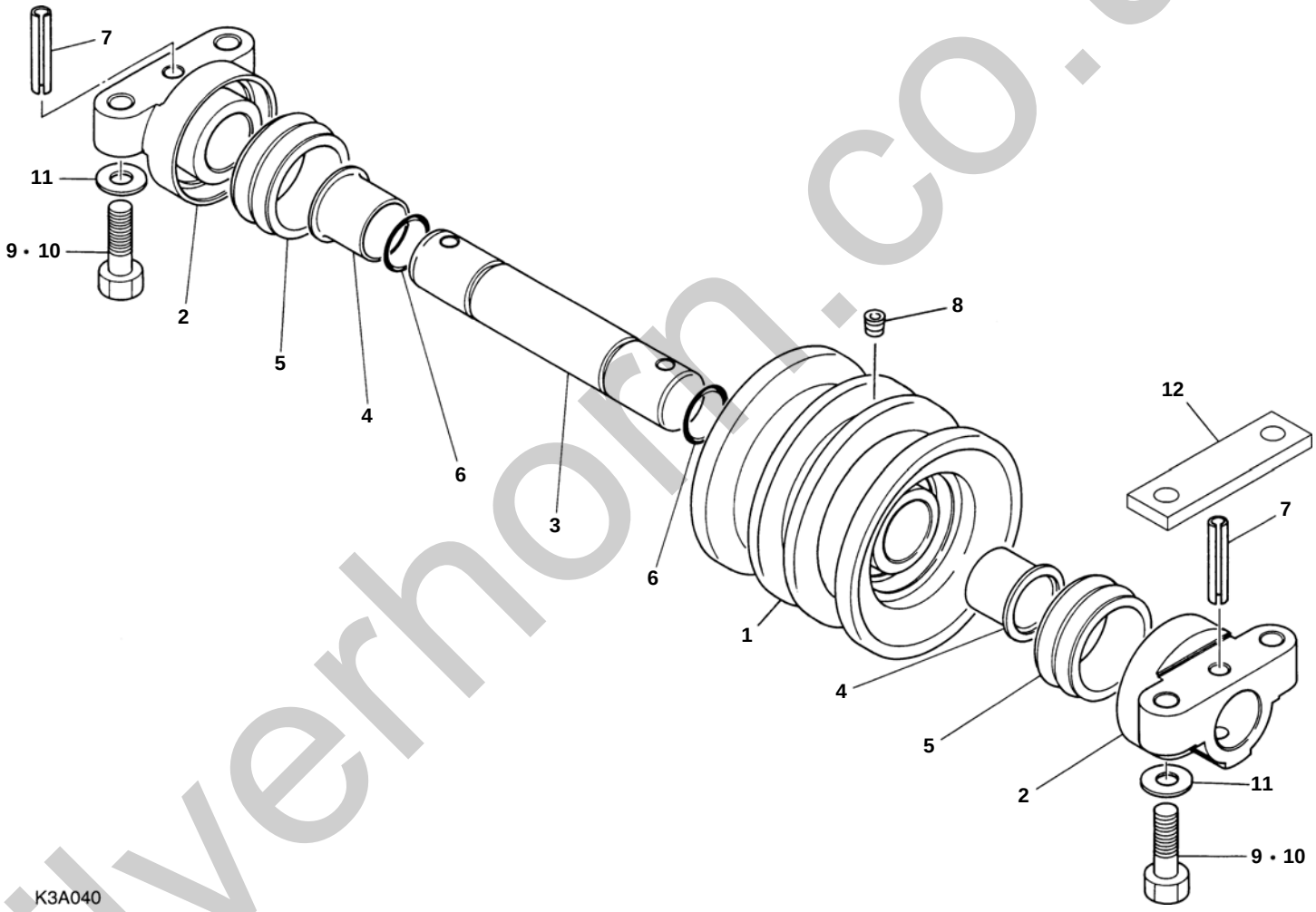

silverhorn.co.uk

TRACK ROLLER

Item	Part number	Description	Q'ty	Chan.	Serial No.	Serv.	Remarks
		ROLLER ASSY, track (rubber)					X03913-02000-5
		ROLLER ASSY, track (steel)					X03913-03000-5
0-1	0391302100	ROLLER SUB ASSY, track	10				
1	0391302300	・ROLLER	1				
2	0461300300	・COVER	2				
3	0461300400	・SHAFT	1				
4	1333073535	・BUSHING	2				
5	1432500560	・SEAL, floating	2				
6	1420100300	・O-RING	2				
7	1213001055	・PIN, spring	2				
8	1501810001	・PLUG	2				
9	1101051245	BOLT	40				
10	1101051255	BOLT	40				steel
11	1141540012	WASHER	40				
12	0391300400	PLATE	20				steel
	K3a042						

silverhorn.co.uk

FRONT IDLER

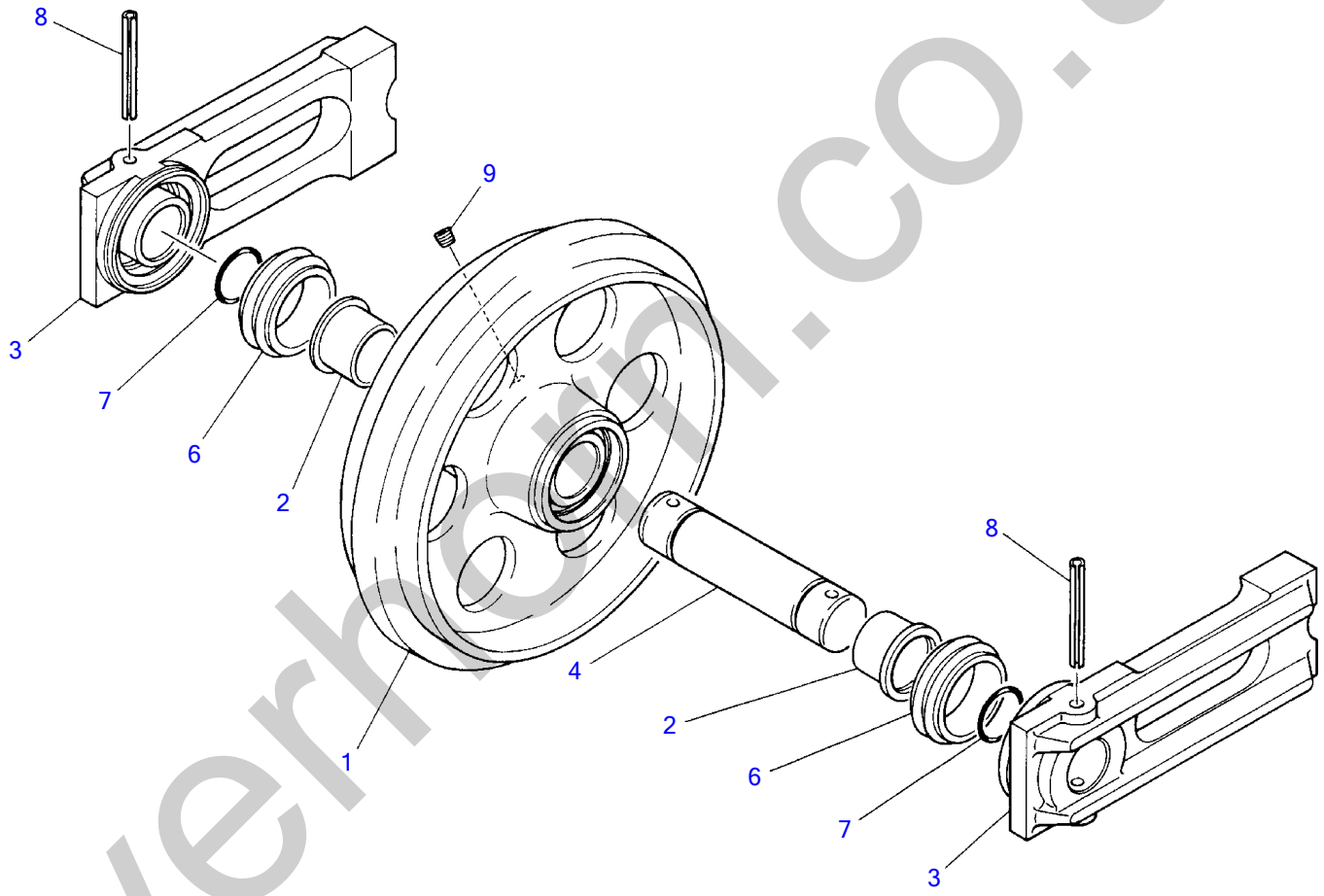

K3A050

silverhorn.co.uk

FRONT IDLER

Item	Part number	Description	Q'ty	Chan.	Serial No.	Serv.	Remarks
		IDLER ASSY, front					X04614-01000-4
0-1	0461490010	IDLER ASSY, sub	2				
1	0461401100	・IDLER	1				
2	1333064540	・BUSHING	2				
3	0461400300	・BLOCK	2				
4	0461400400	・SHAFT	1				
6	1432500640	・SEAL, floating	2				
7	1420100400	・O-RING	2				
8	1213101000	・PIN, spring	2				
9	1501810001	・PLUG	2				
	K3a053						

silverhorn.co.uk

TRACK ADJUSTER

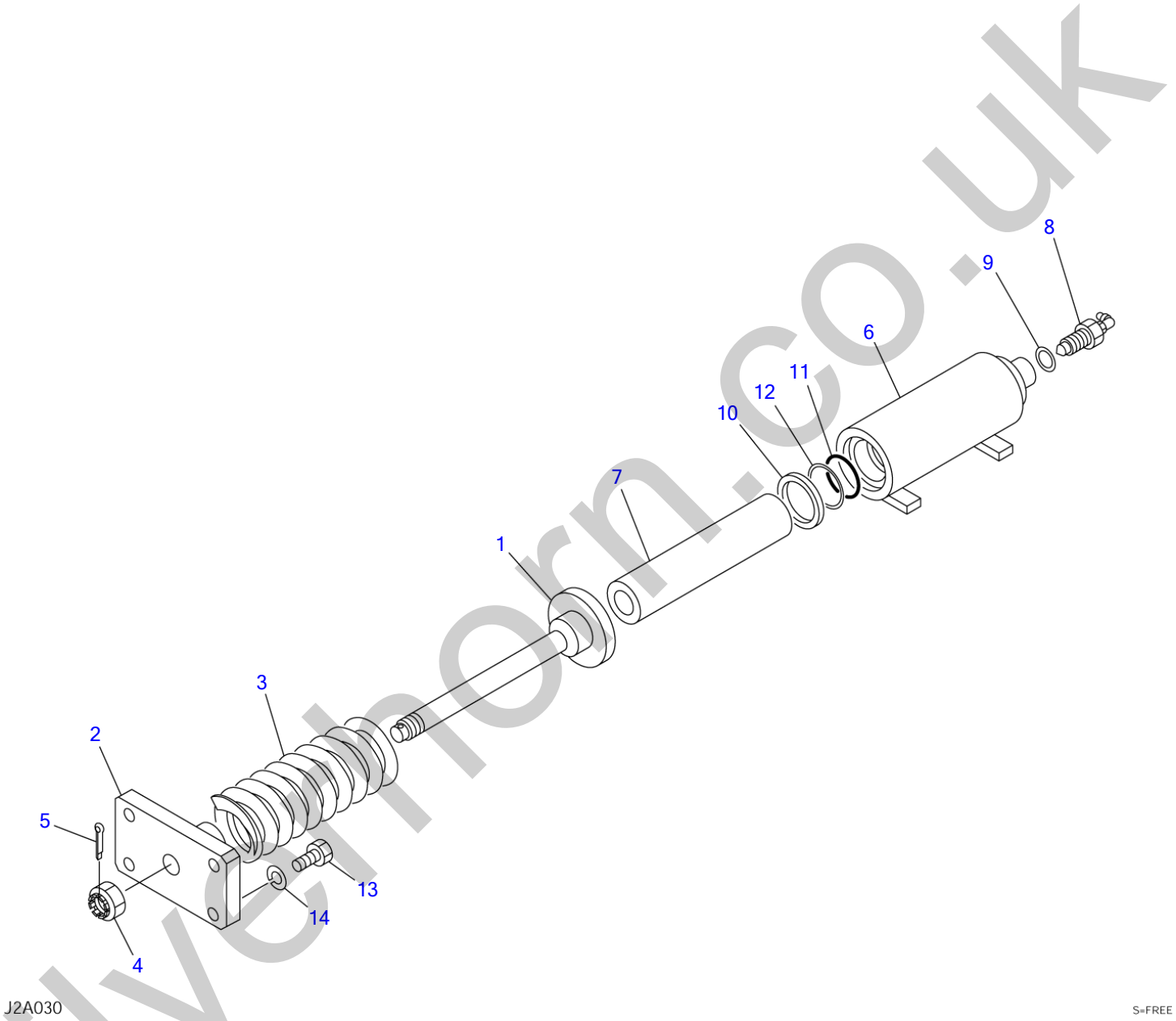

silverhorn.co.uk

TRACK ADJUSTER

Item	Part number	Description	Q'ty	Chan.	Serial No.	Serv.	Remarks
		SPRING ASSY					X03915-08000-1
0-1	0391508100	SPRING SUB ASSY	2				
1	0881151200	・ROD	1				
2	0391508120	・PLATE	1				
3	0007000002	・SPRING	1				
4	1132530027	・NUT	1				
5	1210000545	・PIN, split	1				
0-2	0391508200	CYLINDER ASSY, grease	2				
6	0391508210	・CYLINDER, grease	1				
7	0391508220	・PISTON	1				
8	1541301602	・VALVE ASSY, check	1				
9	1541201616	・WASHER	1				
10	1400403038	・SEAL	1				
11	1422010550	・O-RING	1				
12	1421020550	・RING, back-up	1				
13	1101041245	BOLT	8				
14	1140020012	WASHER, spring	8				
	J2a030						

silverhorn.co.uk

TRAVEL DEVICE

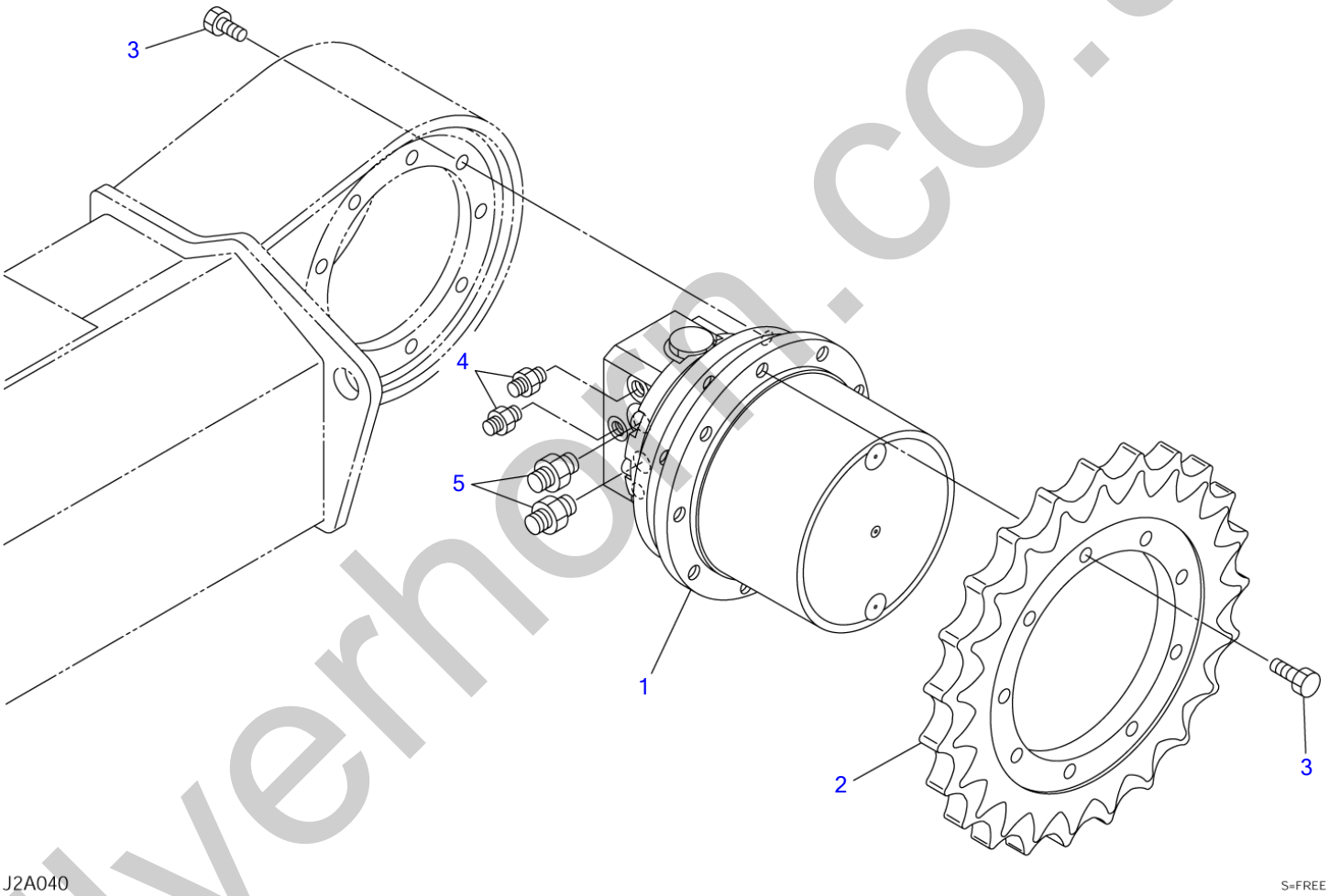

silverhorn.co.uk

TRAVEL DEVICE

Item	Part number	Description	Q'ty	Chan.	Serial No.	Serv.	Remarks
		MOTOR ASSY, travel					X03916-06000-0
1	1903124800	MOTOR, travel	2				
2	0261603100	SPROCKET	2				
3	1100051435	BOLT	36				
4	1515600200	ADAPTOR	4				
	1420010110	・O-RING	1				
5	1515600202	ADAPTOR	4				
	1420010180	・O-RING	1				
	J2a040						

silverhorn.co.uk

SLEW BEARING

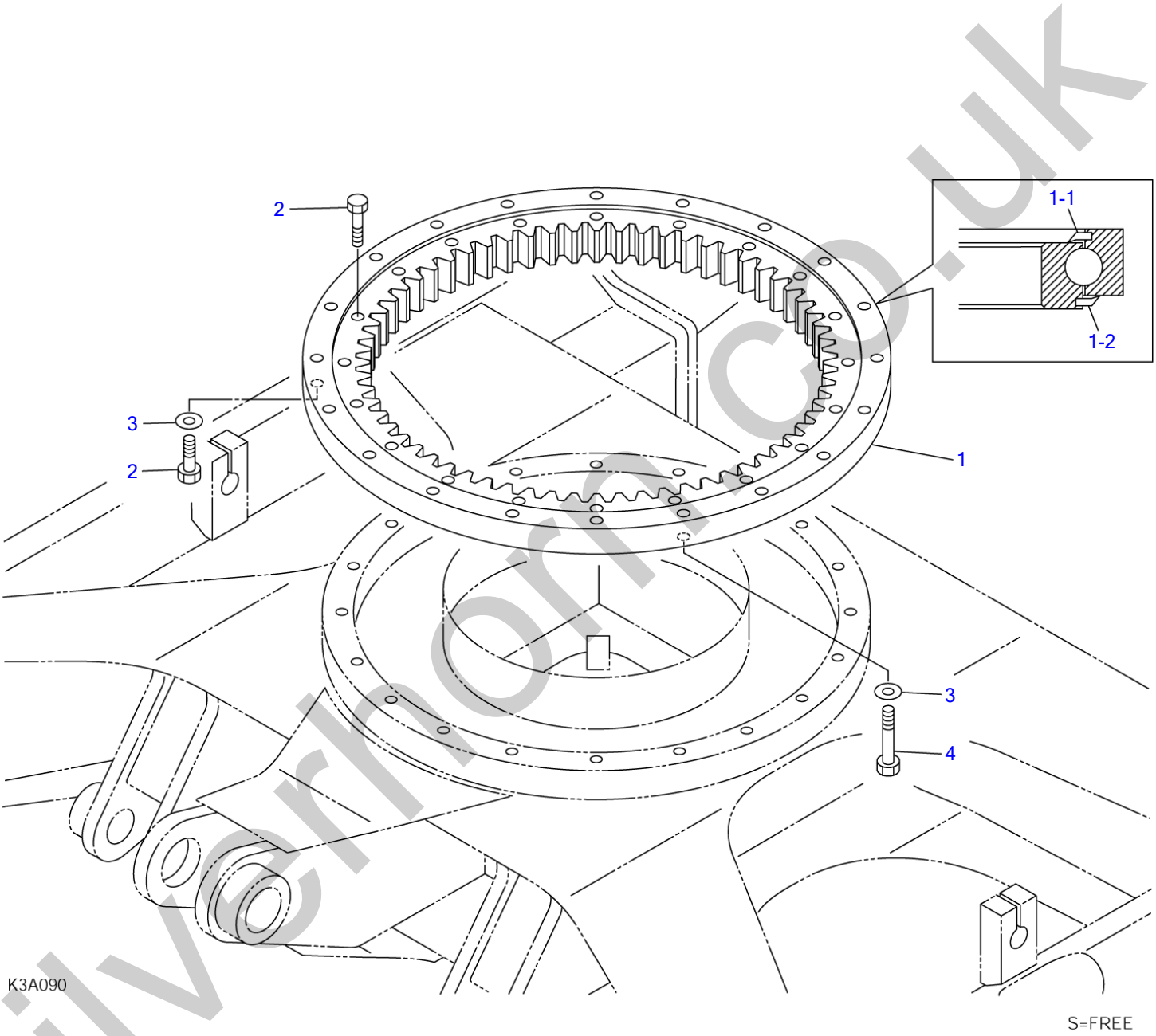

silverhorn.co.uk

SLEW BEARING

Item	Part number	Description	Q'ty	Chan.	Serial No.	Serv.	Remarks
		BEARING ASSY, slew					X03920-00000-1
1	1913003500	BEARING	1				
1-1	1913003508	・SEAL	1				
1-2	1913003509	・SEAL	1				
2	1101051680	BOLT	39				
3	1141540016	WASHER	20				
4	0392000100	BOLT	1				
	K3a090						

silverhorn.co.uk

SWIVEL JOINT & ACCESSORIES

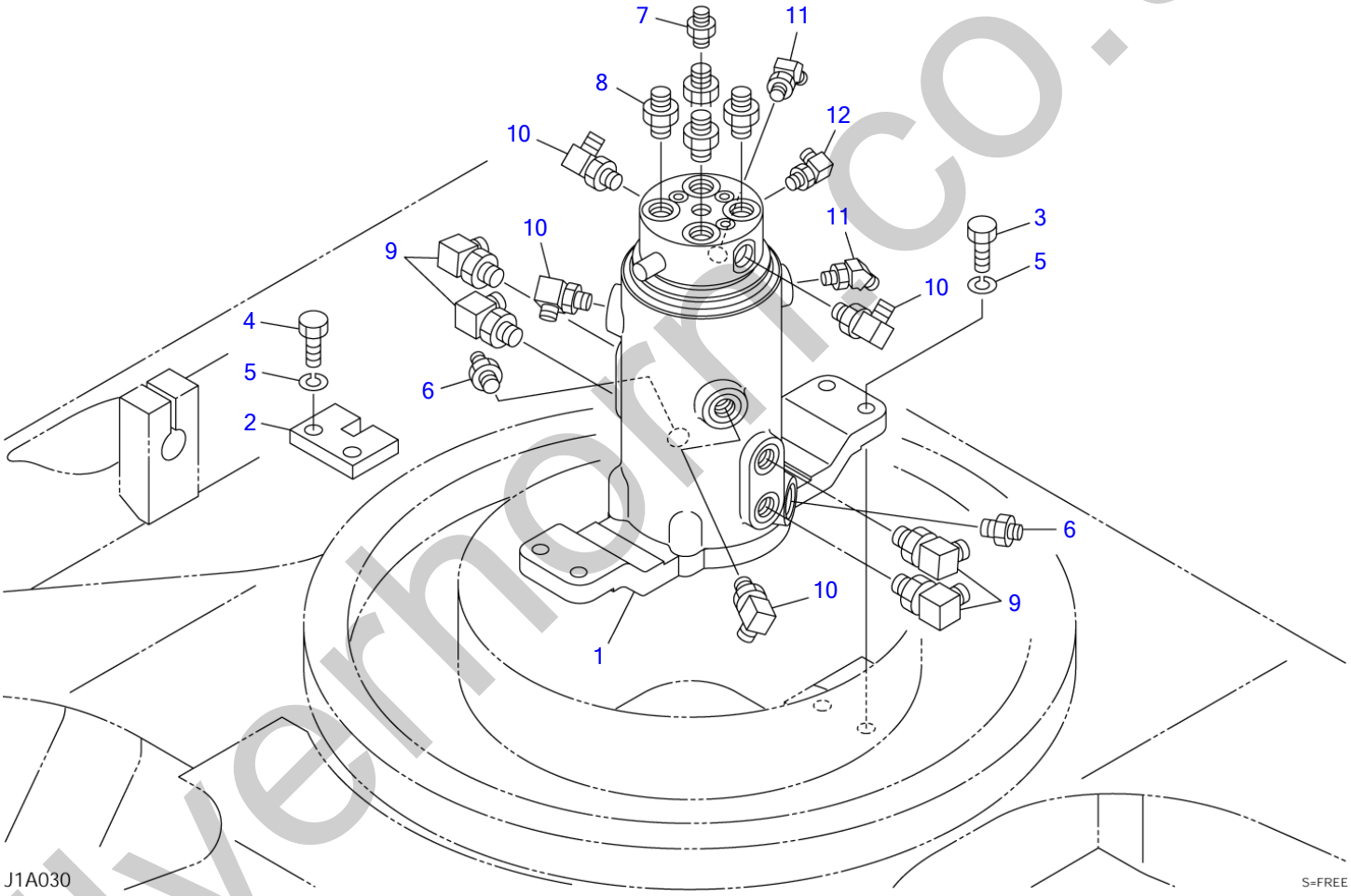

silverhorn.co.uk

SWIVEL JOINT & ACCESSORIES

Item	Part number	Description	Q'ty	Chan.	Serial No.	Serv.	Remarks
		JOINT ASSY, swivel					X03921-02000-1
1	1904006300	JOINT, swivel	1				
2	0442100100	STOPPER	1				
3	1101041245	BOLT	4				
4	1101041240	BOLT	2				
5	1140020012	WASHER, spring	6				
6	0007203057	NIPPLE	2				
7	1511050003	ADAPTOR	1				
8	1515600202	ADAPTOR	4				
	1420010180	・O-RING	1				
9	1515010042	ELBOW	4				
	1420010180	・O-RING	1				
10	1515010041	ELBOW	4				
	1420010140	・O-RING	1				
11	1515100110	ELBOW	2				
	1420010110	・O-RING	1				
12	1515012040	ELBOW	1				
	1420010110	・O-RING	1				
	J1a031						

silverhorn.co.uk

DOZER BLADE

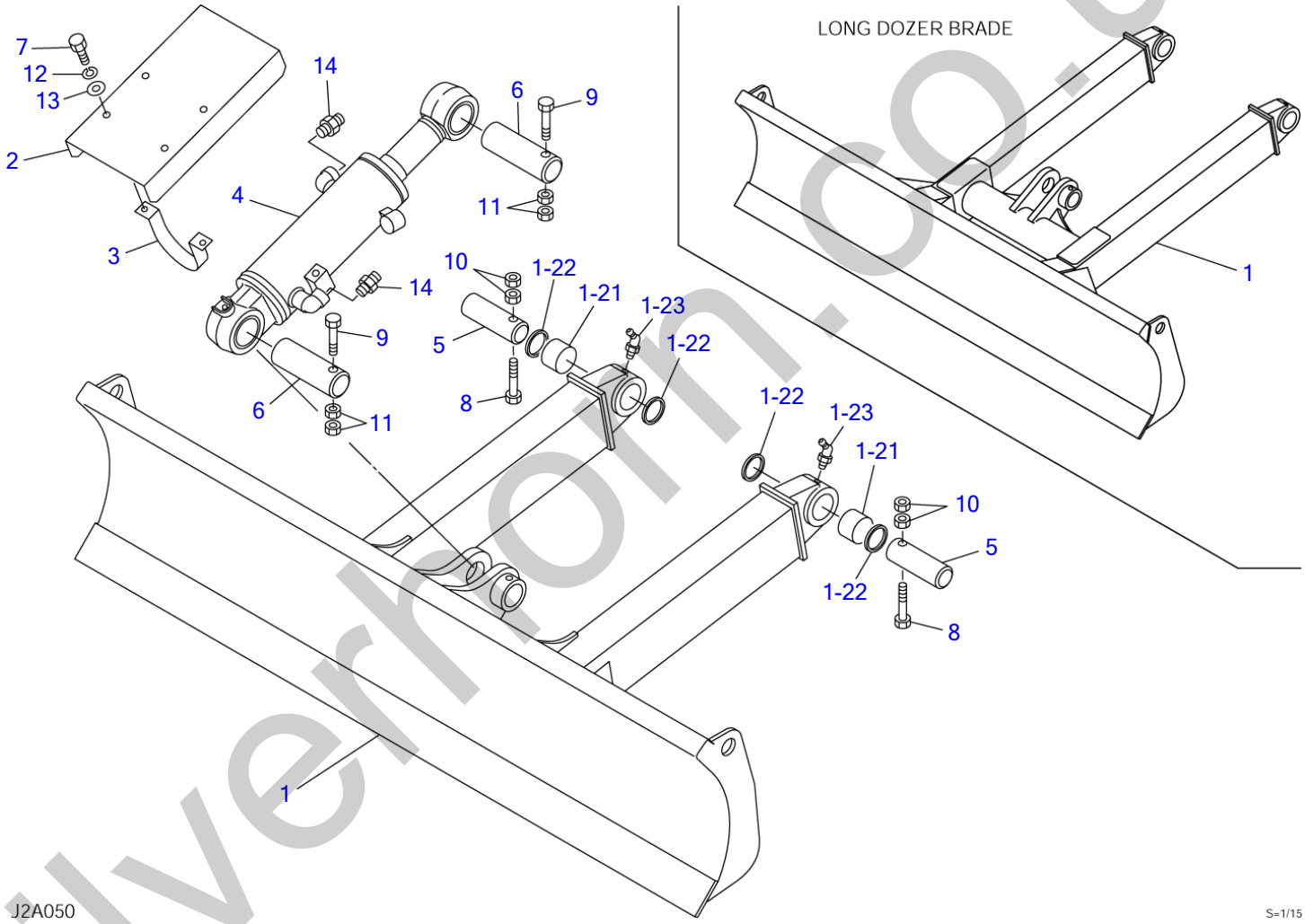

silverhorn.co.uk

DOZER BLADE

Item	Part number	Description	Q'ty	Chan.	Serial No.	Serv.	Remarks
		BLADE ASSY, dozer					X03963-11000-0
		BLADE ASSY, long dozer					X03963-11300-0
1	0396311100	BLADE, dozer	1				
	0396311400	BLADE, dozer	1				long
1-21	0002200014	・BUSHING	2				
1-22	1432200045	・SEAL, dust	4				
1-23	1560001675	・FITTING, grease	2				
2	0396308520	COVER	1				
3	0396308530	CLAMP	2				
4	1900077100	CYLINDER, dozer blade	1				
5	0001604135	PIN	2				
6	0001606150	PIN	2				
7	1100041030	BOLT	4				
8	1103041085	BOLT	2				
9	1103141200	BOLT	2				
10	1130240010	NUT	4				
11	1130240012	NUT	4				
12	1140020010	WASHER, spring	4				
13	1141110010	WASHER	4				
14	1515600201	ADAPTOR	2				
	1420010140	・O-RING	1				
	J2a050						

silverhorn.co.uk

PIPING; LOWER

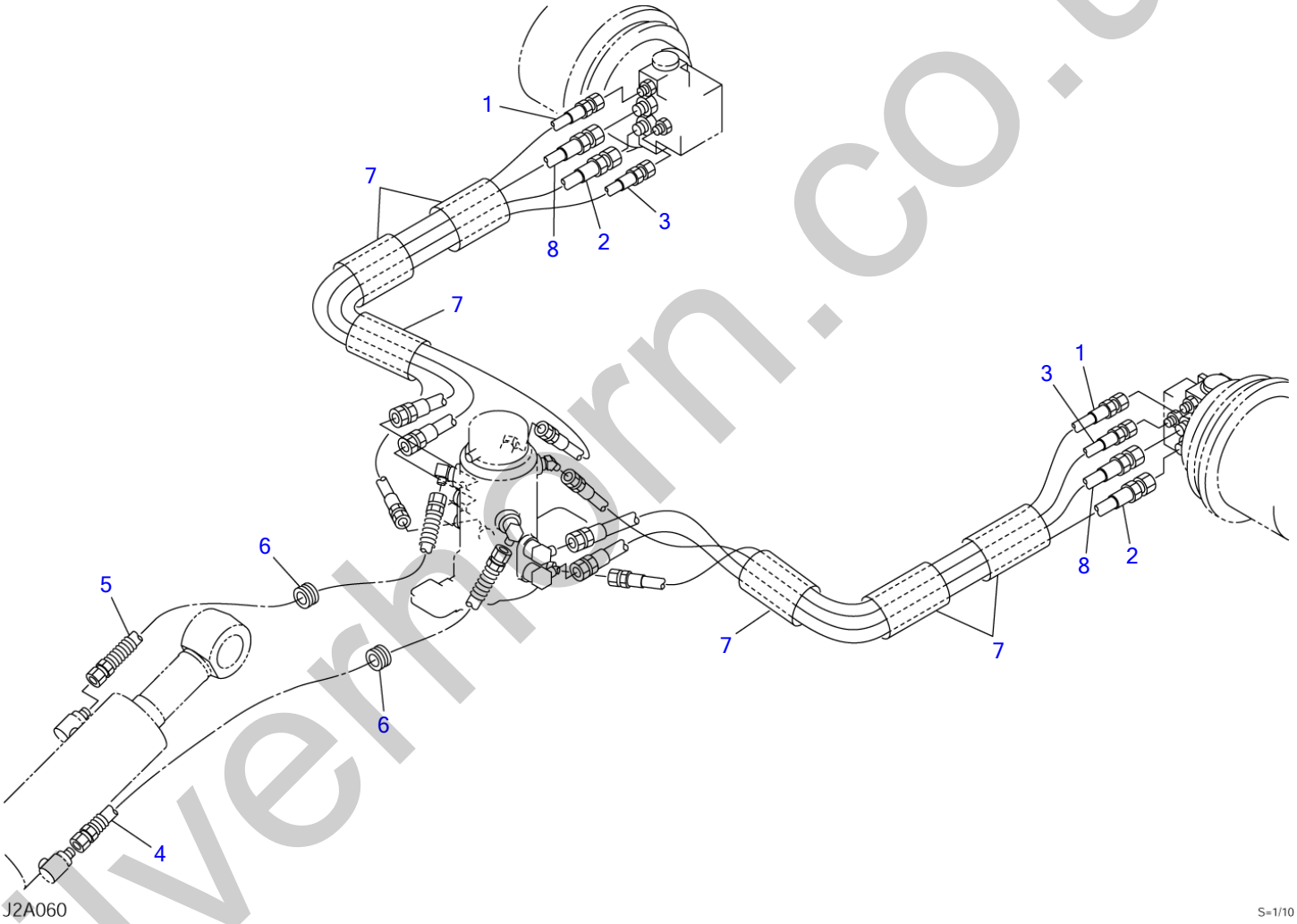

silverhorn.co.uk

PIPING; LOWER

Item	Part number	Description	Q'ty	Chan.	Serial No.	Serv.	Remarks
		PIPING ASSY, lower					X03972-04000-2
1	**1801022132**	HOSE ASSY	2				
2	**1801540132**	HOSE ASSY	2				
3	**0397204030**	HOSE ASSY	2				18010-22140
4	**1801620116**	HOSE ASSY	1				
5	**1801620094**	HOSE ASSY	1				
6	**0437200100**	GUARD	2				
7	**1531350020**	PROTECTOR	6				sold by the meter
8	**0397204080**	HOSE ASSY	2				18010-22140
	J2a060						

silverhorn.co.uk

SLEWING DEVICE

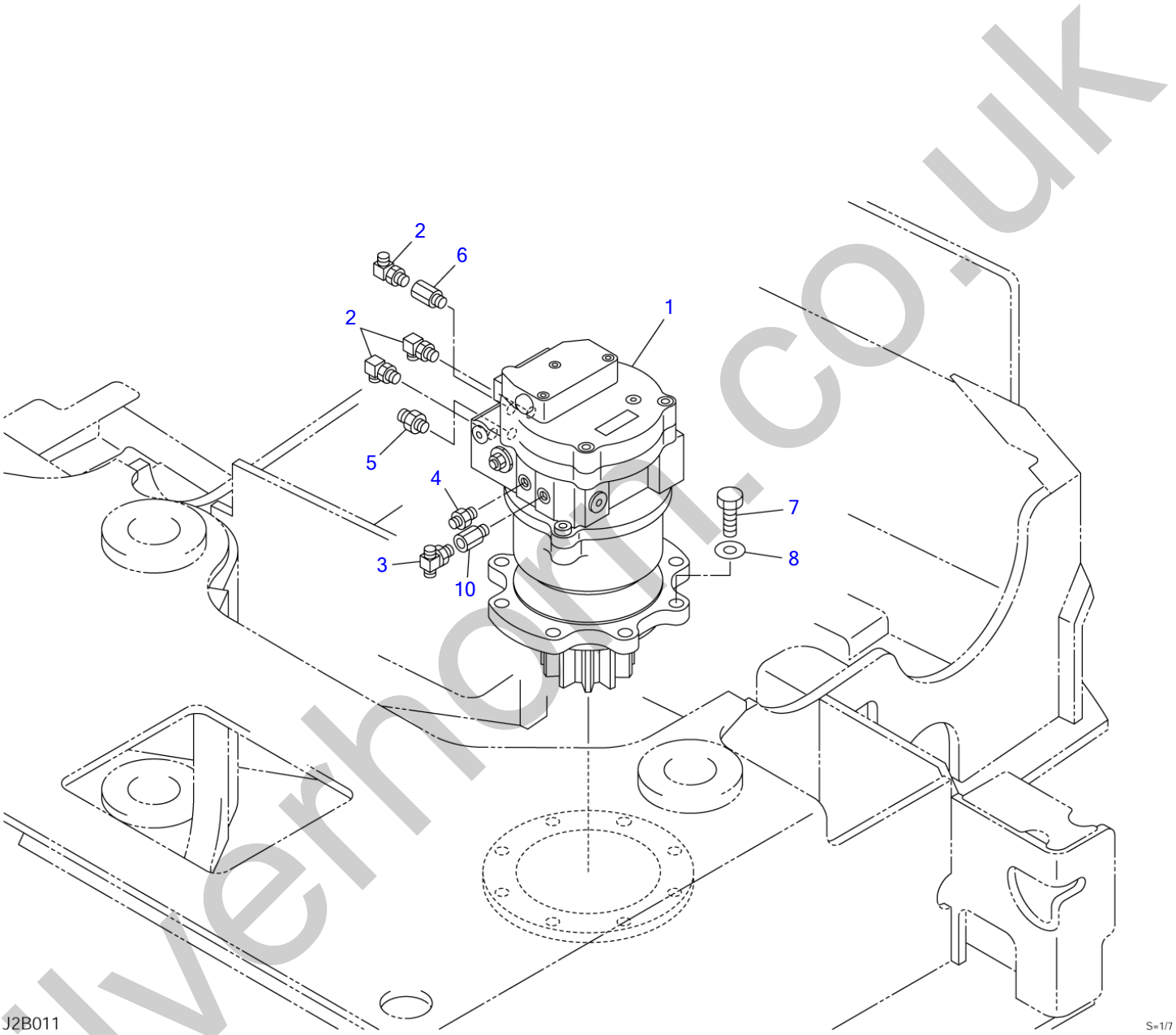

silverhorn.co.uk

SLEWING DEVICE

Item	Part number	Description	Q'ty	Chan.	Serial No.	Serv.	Remarks
		DEVICE ASSY, slewing					X03923-17600-3
1	1903125500	MOTOR, slew	1				
2	1515010131	ELBOW	3				
	1420010140	・O-RING	1				
3	1512370010	TEE	1				
	1420010110	・O-RING	1				
4	1515600200	ADAPTOR	1				
	1420010110	・O-RING	1				
5	1515600201	ADAPTOR	1				
	1420010140	・O-RING	1				
6	0007213016	BUSHING	1				
	1420010140	・O-RING	1				
7	1101041640	BOLT	8				
8	1141550016	WASHER	8				
10	1513250202	BUSHING	1				
	1420010110	・O-RING	1				
	J2b011						

silverhorn.co.uk

TURNTABLE

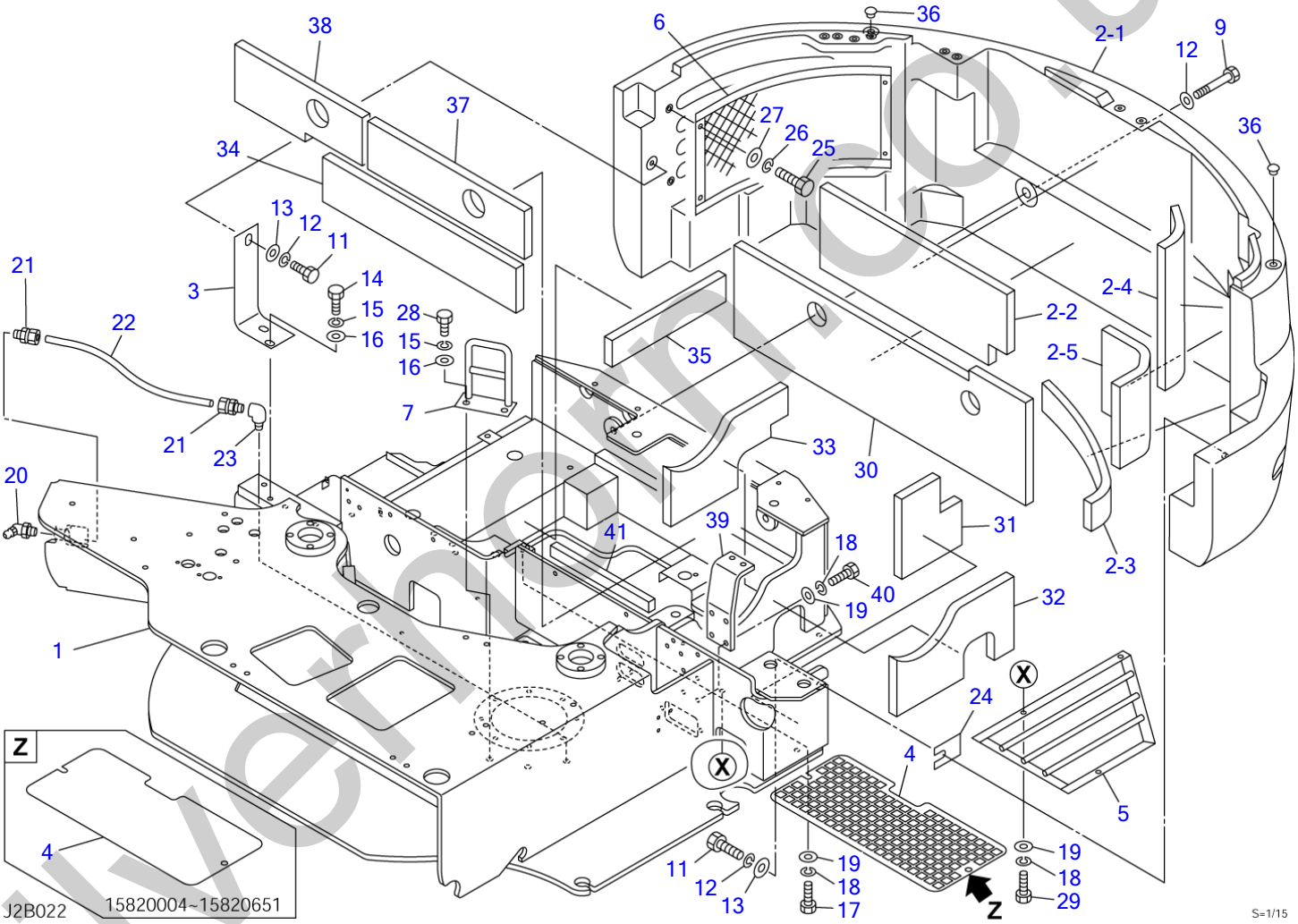

silvernorm.co.uk

TURNTABLE

Item	Part number	Description	Q'ty	Chan.	Serial No.	Serv.	Remarks
		TURNTABLE ASSY (cab)					X03930-22000-7
		TURNTABLE ASSY (canopy)					X03930-22500-7
1	X **********	TURNTABLE	1				
2	0393022400	COUNTERWEIGHT ASSY	1				cab
	0393022700	COUNTERWEIGHT ASSY	1				canopy
2-1	0393022200	・COUNTERWEIGHT	1				cab
	0393022600	・COUNTERWEIGHT	1				canopy
2-2	0393022420	・ABSORBENT, noise	1				
2-3	0393022430	・ABSORBENT, noise	1				
2-4	0393022440	・ABSORBENT, noise	1				
2-5	0393022450	・ABSORBENT, noise	1				
3	0393022300	ANGLE	1				
4	0393022310	COVER	1		15820004~15820651		
	0393022315	COVER	1	(H)	15820652~		
5	0393022340	GUARD	1				
6	0393022350	NET	1				
7	0393015200	BRACKET	1				
9	1101141640	BOLT	2				
11	1101041645	BOLT	2				
12	0003000010	WASHER	4				
13	1140020016	WASHER, spring	2				
14	1101041240	BOLT	2				
15	1140020012	WASHER, spring	4				
16	1141110012	WASHER	4				
17	1100041020	BOLT	2				
18	1140020010	WASHER, spring	9				
19	1141110010	WASHER	9				
20	1560001675	FITTING, grease	1				
21	1532520601	CONNECTOR	2				
22	1532120663	TUBE	1				sold by the meter
23	0007262005	ELBOW	1				
24	0393014200	PLATE	1				
25	1100040820	BOLT	4				
26	1140020008	WASHER, spring	4				
27	1141110008	WASHER	4				
28	1101041220	BOLT	2				
29	1100041025	BOLT	3				
30	0393022360	ABSORBENT, noise	1				
31	0393022361	ABSORBENT, noise	1				
32	0393022362	ABSORBENT, noise	1				
33	0393022363	ABSORBENT, noise	1				
34	0393022364	ABSORBENT, noise	1				
35	0393022365	ABSORBENT, noise	1				
36	1652533021	CAP	2				
37	0393022366	ABSORBENT, noise	1				
38	0393022367	ABSORBENT, noise	1				
39	0393022370	PLATE	1				
40	1100041030	BOLT	4				
41	1654314032	SPONGE	1				sold by the meter
	J2b022						

silvethorn.co.uk

BOOM OFFSET (1/2)

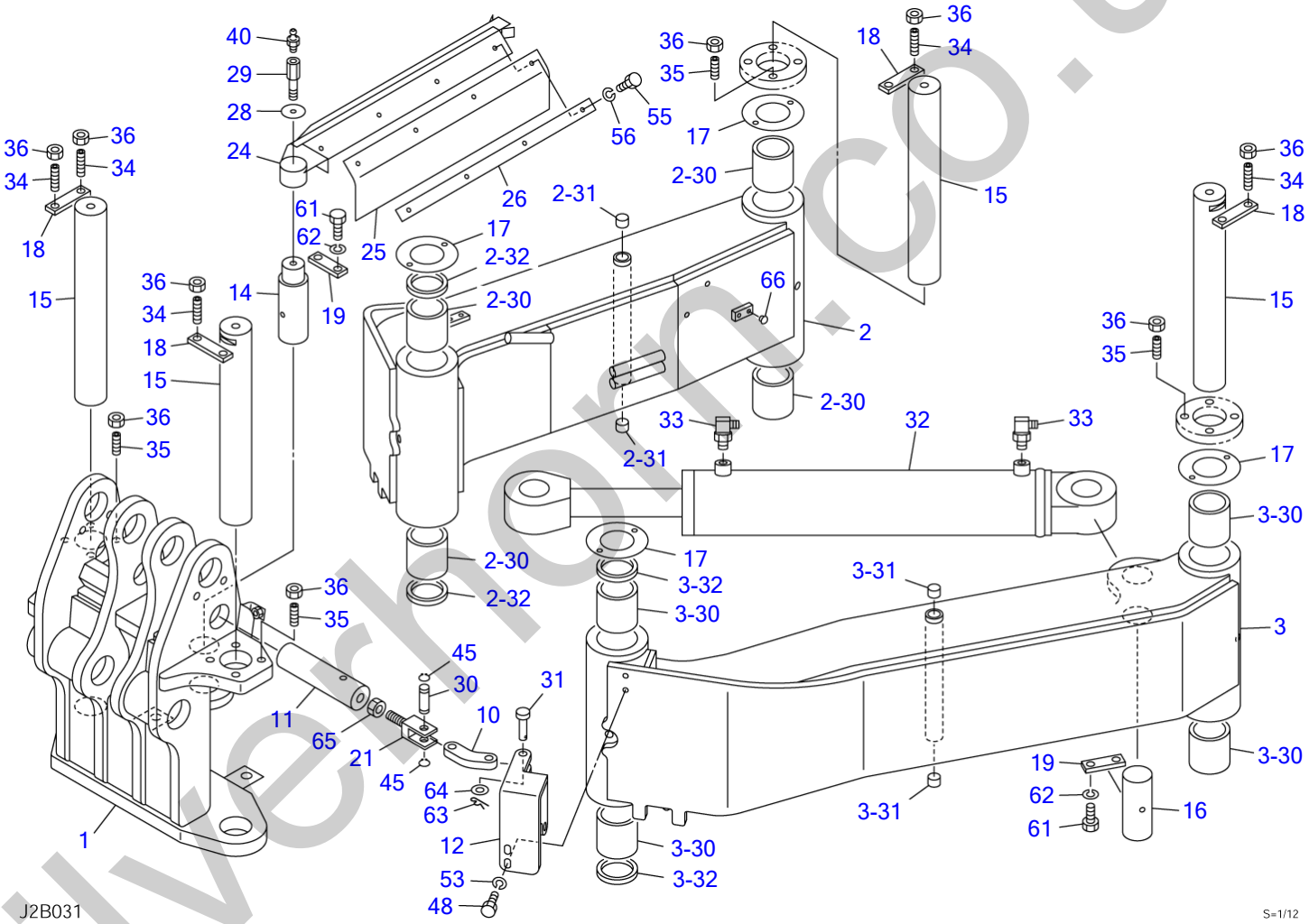

silverhorn.co.uk

BOOM OFFSET (1/2)

Item	Part number	Description	Q'ty	Chan.	Serial No.	Serv.	Remarks
		OFFSET ASSY, boom					X03931-12000-5
1	0393112500	BRACKET	1				
2	0393112200	OFFSET, arm (R.H)	1				
2-30	0002400048	・BUSHING	4				
2-31	1333002015	・BUSHING	2				
2-32	1432200060	・SEAL, dust	2				
3	0393112300	OFFSET, arm (L.H)	1		15820004~15820123		
	0393112700	OFFSET, arm (L.H)	1	(H)	15820124~		
3-30	0002400048	・BUSHING	4				
3-31	1333002015	・BUSHING	2				
3-32	1432200060	・SEAL, dust	2				
10	0393104510	LINK	1				
11	0393109450	PIN	1				
12	0393104500	BRACKET	1				
14	0393107600	PIN	1				
15	0393104620	PIN	4				
16	0393104630	PIN	1				
17	0393104640	SPACER	4				
18	0393109400	PLATE	4				
19	0393109410	PLATE	2				
21	0393109460	YOKE	1				
24	0393107700	GUARD	1				
25	0393107710	RUBBER	1				
26	0393107720	PLATE	1				
28	0003600057	WASHER	1				
29	0007210027	BUSHING	1				
30	0004215032	SHAFT	1				
31	0004015003	PIN	1				
32	1900092300	CYLINDER, offset	1				
33	1515010041	ELBOW	2				
	1420010140	・O-RING	1				
34	1121041455	SET-SCREW	8				
35	1121041445	SET-SCREW	8				
36	1130040014	NUT	16				
40	1560001000	FITTING, grease	1				
45	1220000015	RING, retaining	2				
48	1100041025	BOLT	2				
53	1140020010	WASHER, spring	3				
55	1100040616	BOLT	4				
56	1140020006	WASHER, spring	4				
61	1100041425	BOLT	4				
62	1140020014	WASHER, spring	4				
63	1214000012	PIN, snap	1				
64	1141110016	WASHER	1				
65	1130040016	NUT	1				
66	1652533016	CAP	6				
	J2b031						

silvermorn.co.uk

BOOM OFFSET (2/2)

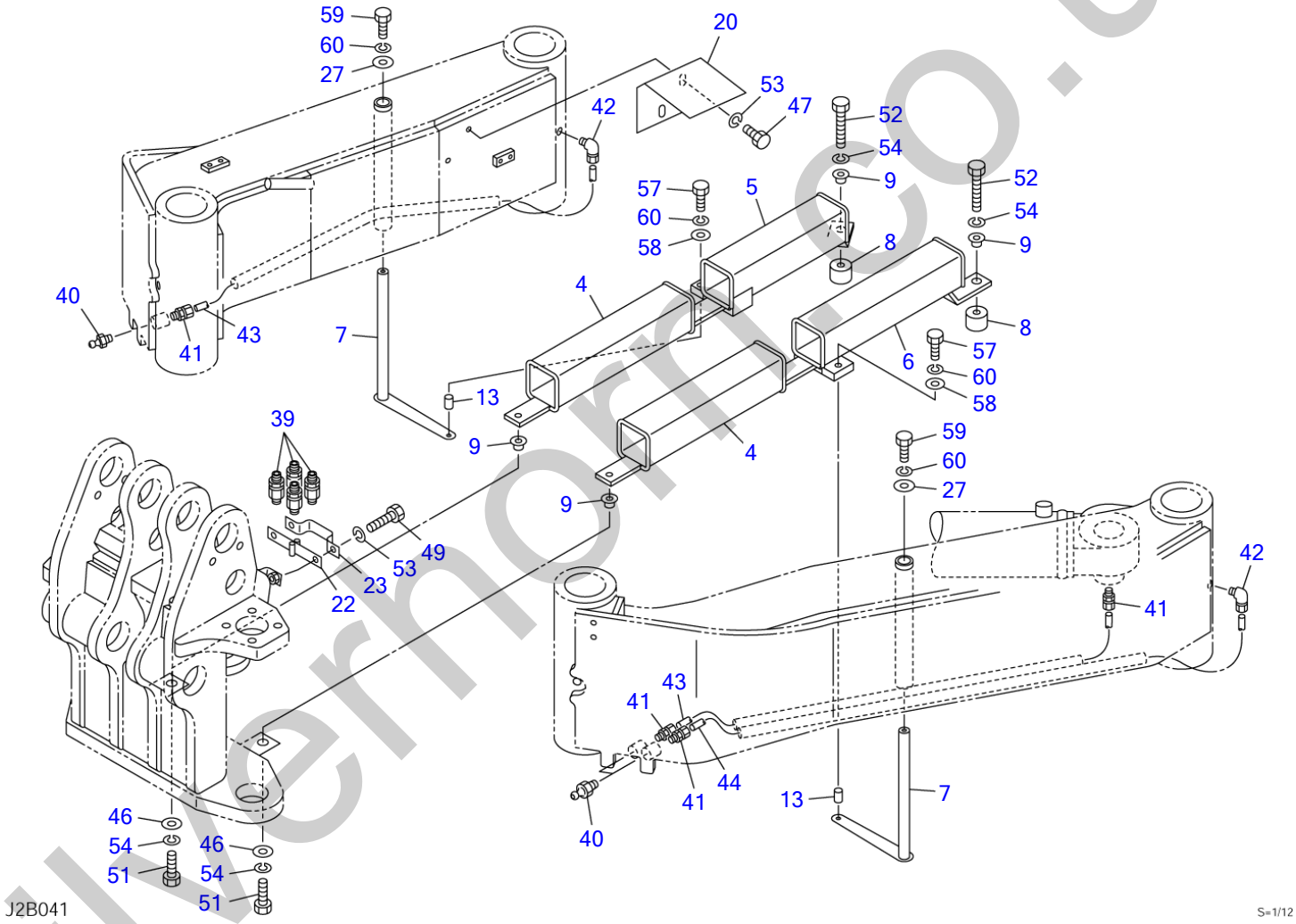

silverhomes.co.uk

BOOM OFFSET (2/2)

Item	Part number	Description	Q'ty	Chan.	Serial No.	Serv.	Remarks
		OFFSET ASSY, boom					X03931-12000-5
4	0397310160	GUIDE	2				
5	0397310170	GUIDE	1				
6	0397310180	GUIDE	1				
7	0393108420	LEVER	2				
8	0393108430	COLLAR	2				
9	0393107450	COLLAR	4				
13	0393108440	COLLAR	2				
20	0393104670	ANGLE	1				
22	0393107610	CLAMP	2				
23	0393107620	CLAMP	2				
27	0003608003	WASHER	2				
39	1514011104	ADAPTOR	8				
40	1560001000	FITTING, grease	5				
41	1532520601	CONNECTOR	4				
42	1532620601	ELBOW	2				
43	1532120600	TUBE	2				sold by the meter
44	1532120620	TUBE	1				sold by the meter
46	1141110012	WASHER	2				
47	1100041016	BOLT	2				
49	1100041030	BOLT	4				
51	1101041230	BOLT	2				
52	1101041260	BOLT	2				
53	1140020010	WASHER, spring	6				
54	1140020012	WASHER, spring	4				
57	1100040830	BOLT	2				
58	1141110008	WASHER	2				
59	1100040816	BOLT	2				
60	1140020008	WASHER, spring	4				
	J2b041						

silverhorn.co.uk

OFFSET SWITCH

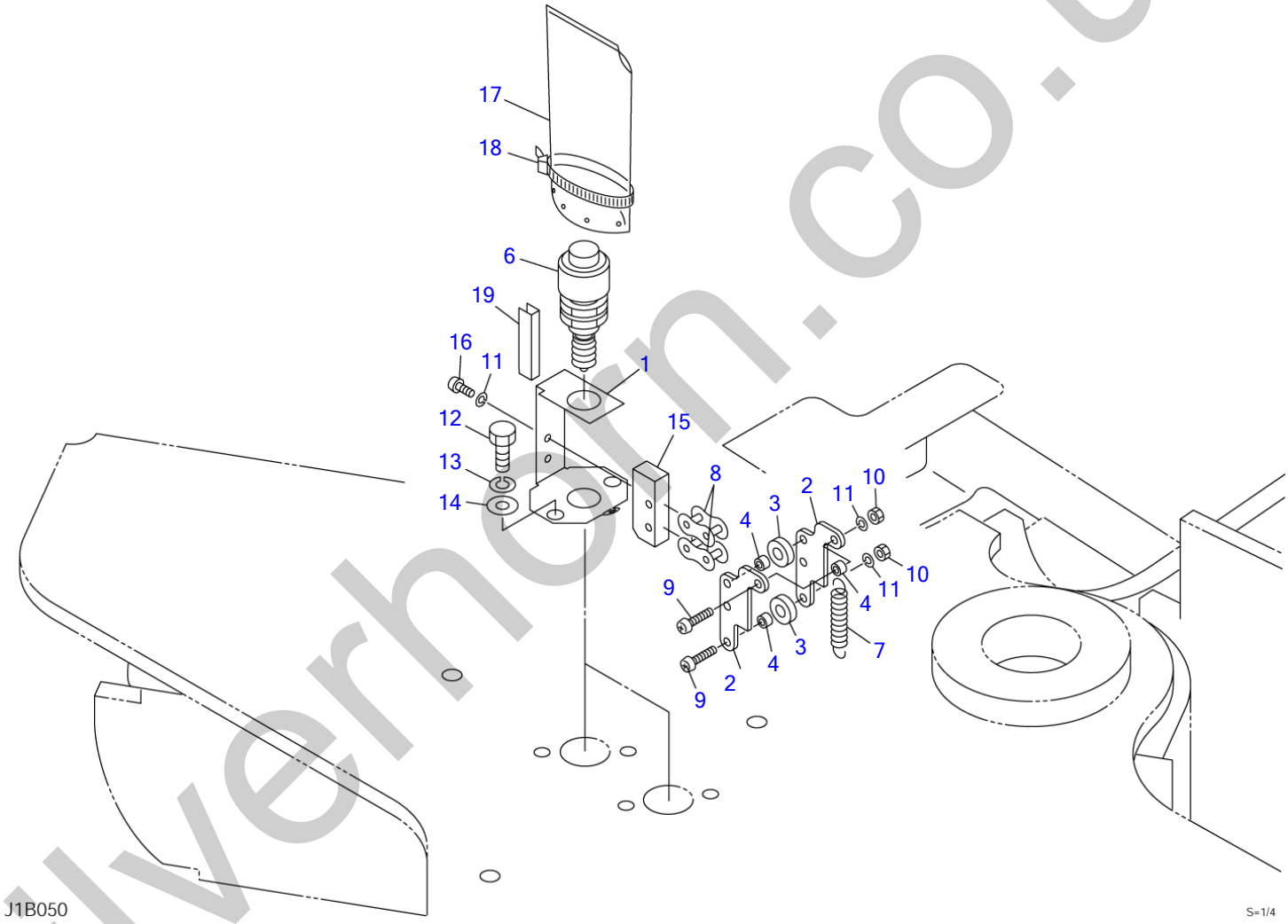

silverhorn.co.uk

OFFSET SWITCH

Item	Part number	Description	Q'ty	Chan.	Serial No.	Serv.	Remarks
		SWITCH ASSY, offset					X03331-20900-4
1	0333120930	BRACKET	1				
2	0333120920	PIPE	2				
3	0353108830	ROLLER	2				
4	0353108840	COLLAR	3				
6	1700000014	SWITCH	1				
7	0323255900	SPRING	1				
8	1620550000	LINK ASSY	2				
9	1120530520	SCREW	2				
10	1130030005	NUT	2				
11	1140020005	WASHER, spring	4				
12	1100040816	BOLT	2				
13	1140020008	WASHER, spring	2				
14	1141110008	WASHER	2				
15	0333120940	BLOCK	1				
16	1120530512	SCREW	2				
17	0333120950	COVER	1				
18	1652201007	BAND	1				
19	1654606005	TRIM	1				sold by the meter
	J1b051						

silverhorn.co.uk

TRAVEL LEVER

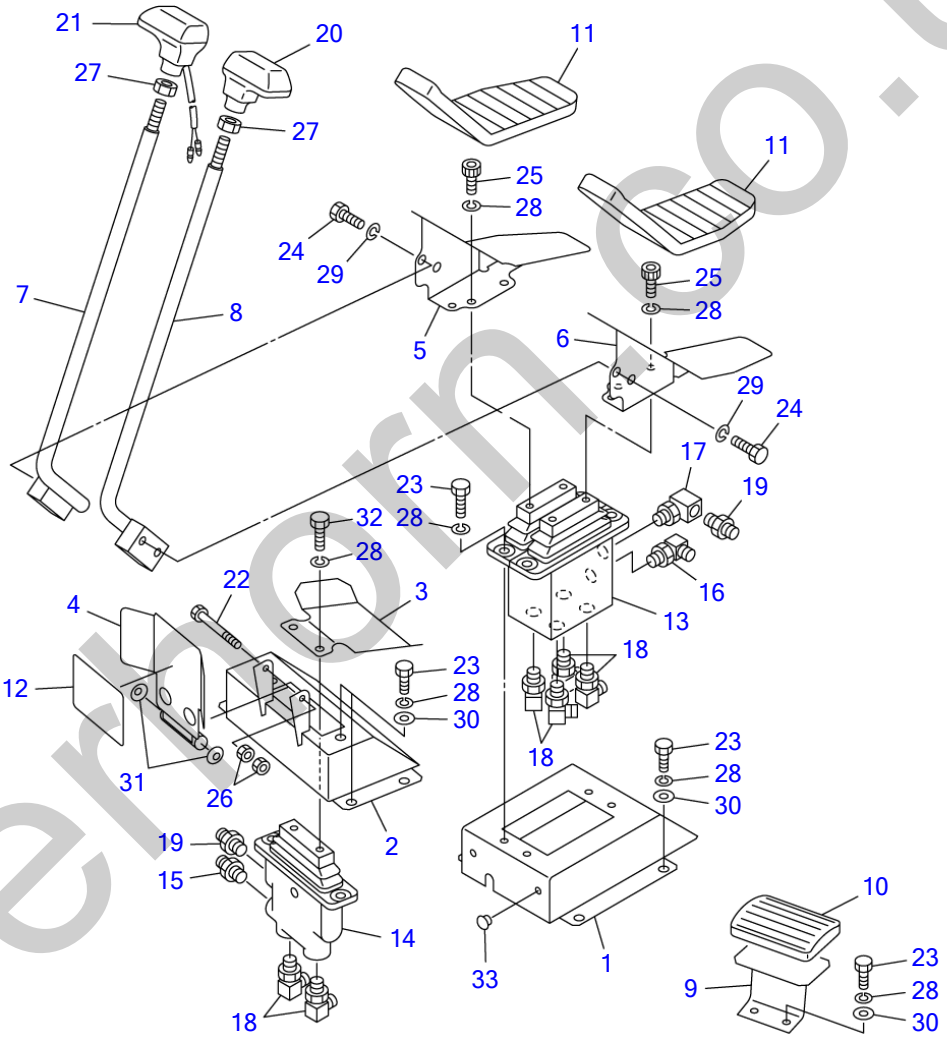

silvermorn.co.uk

TRAVEL LEVER

Item	Part number	Description	Q'ty	Chan.	Serial No.	Serv.	Remarks
		LEVER ASSY, control					X05632-30500-2
1	0563230510	BRACKET	1				
2	0563230520	BRACKET	1				
3	0563230530	PEDAL	1				
4	0563230550	COVER	1				
5	0563230020	PEDAL (R.H.)	1				
6	0563230030	PEDAL (L.H.)	1				
7	0563226400	LEVER (R.H.)	1				
8	0563226300	LEVER (L.H.)	1				
9	0563219700	REST, foot	1				
10	0563218500	COVER	1				
11	0563226200	COVER	2				
12	0333241250	SHEET	1				
13	1901739100	VALVE, pilot	1				
14	1901746300	VALVE, pilot	1				
15	1512370008	ADAPTOR (with filter)	1				
	1420010110	・O-RING	1				
16	1512375004	ELBOW	1				
	1420010110	・O-RING	1				
17	1513300014	ELBOW	1				
	1420010110	・O-RING	1				
18	1515012040	ELBOW	6				
	1420010110	・O-RING	1				
19	1515600200	ADAPTOR	2				
	1420010110	・O-RING	1				
20	1650202610	GRIP	1				
21	1650203210	GRIP (with switch)	1				
22	1100040680	BOLT	1				
23	1100040820	BOLT	16				
24	1100041020	BOLT	4				
25	1110040816	SCREW, cap	4				
26	1130040006	NUT	2				
27	1131040012	NUT	2				
28	1140020008	WASHER, spring	22				
29	1140020010	WASHER, spring	4				
30	1141110008	WASHER	14				
31	1225110006	WASHER, conical	2				
32	1100040816	BOLT	2				
33	1652533016	CAP	2			M	
	L5b061						

silverhorn.co.uk

DOZER BLADE LEVER

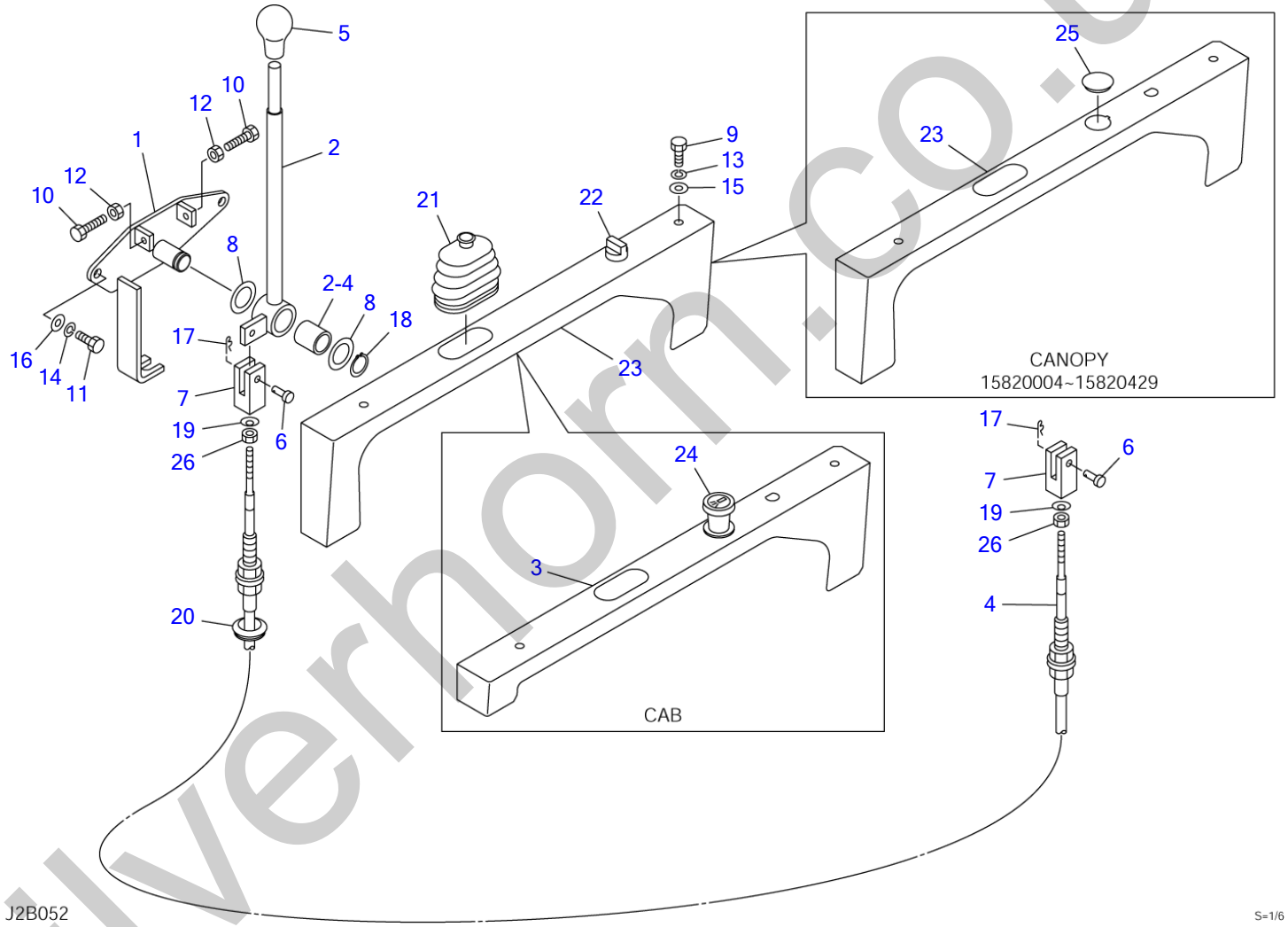

silverhorn.co.uk

DOZER BLADE LEVER

Item	Part number	Description	Q'ty	Chan.	Serial No.	Serv.	Remarks
		LEVER ASSY, blade (cab)					X03933-01100-4
		LEVER ASSY, blade (canopy)					X03933-01200-4
1	0393301150	BRACKET	1				
2	0393301160	LEVER	1				
2-4	1333002025	▪ BUSHING	1				
3	0393301180	COVER	1				cab
4	1630776310	CABLE, control	1				
5	1650153655	GRIP	1				
6	0004006017	PIN	2				
7	0005506024	YOKE	2				
8	0093208300	WASHER	2				
9	1100090612	BOLT	2				
10	1100040625	BOLT	2				
11	1100040816	BOLT	2				
12	1130040006	NUT	2				
13	1140090006	WASHER, spring	2				
14	1140020008	WASHER, spring	2				
15	1141190006	WASHER	2				
16	1141110008	WASHER	2				
17	1214000006	PIN, snap	2				
18	1220000020	RING, retaining	1				
19	1225000005	WASHER	2				
20	1652052600	GROMMET	1				
21	0334120100	BOOT	1				
22	1700000038	SWITCH	1				
23	0393301190	COVER	1				canopy
24	1711900059	LIGHTER	1				cab
25	1652533003	CAP	1		15820004~15820429		canopy
26	1130040005	NUT	2				
	J2b052						

silverhorn.co.uk

OPERATION LEVER & STAND

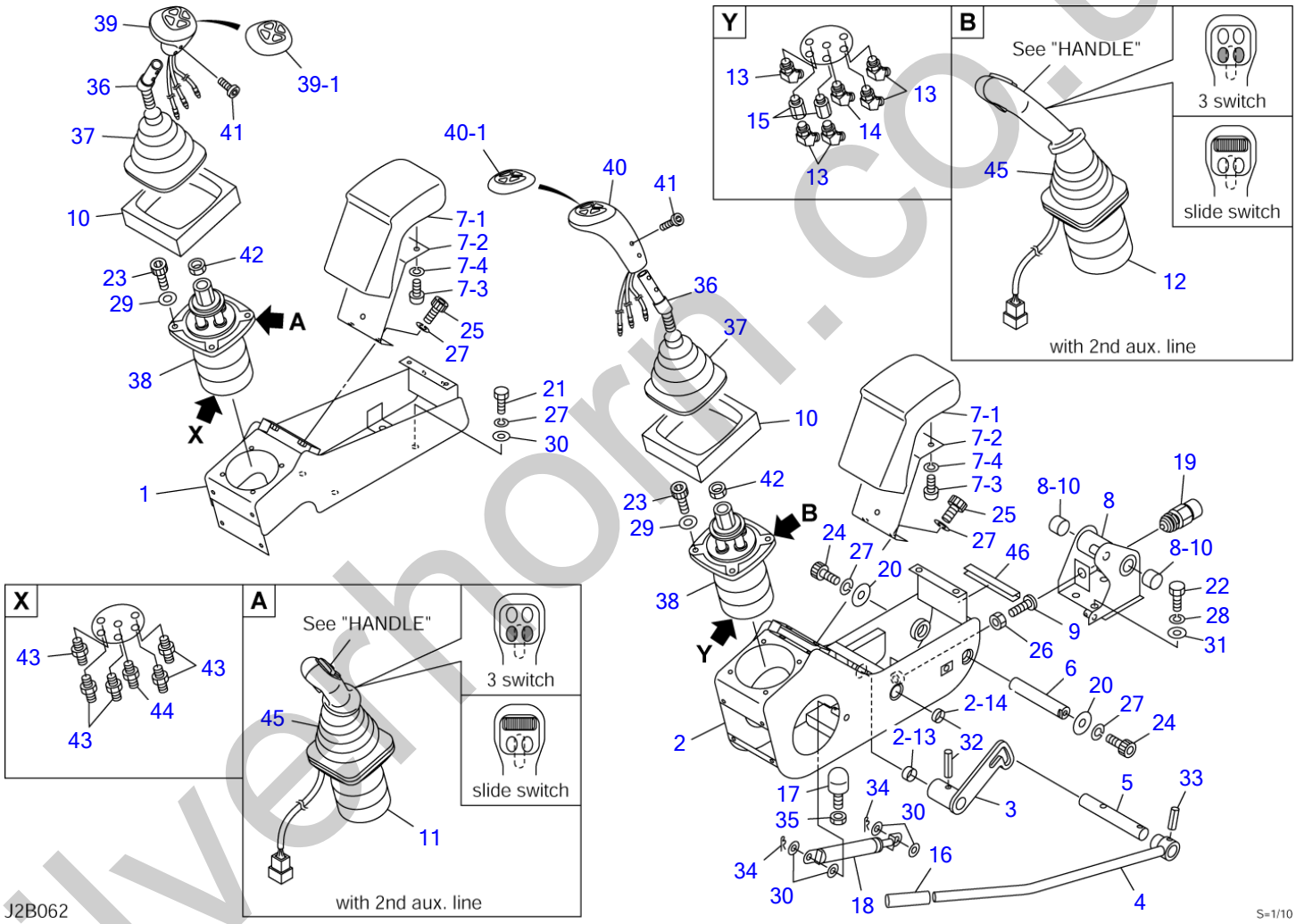

silverhorn.co.uk

OPERATION LEVER & STAND

Item	Part number	Description	Q'ty	Chan.	Serial No.	Serv.	Remarks
		VALVE ASSY					X03951-14600-3
		VALVE ASSY (2nd aux. proportion)					X03951-14700-3
		VALVE ASSY (1st aux. proportion)					X03951-14800-3
		VALVE ASSY (1st & 2nd aux. proportion)					X03951-14900-3
1	0345108080	BOX, control (R.H.)	1				
2	0395113700	BOX, control (L.H.)	1				
2-13	1333002010	・BUSHING	1				
2-14	1333002015	・BUSHING	1				
3	0395113450	PLATE (L.H.)	1				
4	0375105400	LEVER (L.H.)	1				
5	0335124700	SHAFT	1				
6	0335124750	SHAFT	1				
7	0375105500	REST, arm	2				
7-1	0375105510	・URETHANE	1				
7-2	0375105520	・PLATE	1				
7-3	1120530812	・SCREW	3				
7-4	1140020008	・WASHER, spring	3				
8	0375104400	BRACKET (L.H.)	1				
8-10	1333002015	・BUSHING	2				
9	0335120970	BOLT	1				
10	0395113046	SPONGE	2				
11	1901748700	VALVE ASSY (R.H.) (3 switch)	1				with 2nd aux. lines
	1901746400	VALVE ASSY (R.H.) (slide switch)	1				with 2nd aux. lines
12	1901746500	VALVE ASSY (L.H.) (3 switch)	1				with 2nd aux. lines
	1901748600	VALVE ASSY (L.H.) (slide switch)	1				with 2nd aux. lines
13	1515100110	ELBOW	5				
	1420010110	・O-RING	1				
14	1512370012	ADAPTOR (with filter)	1				
	1420010110	・O-RING	1				
15	1513250202	BUSHING	2				
	1420010110	・O-RING	1				
16	1650202300	CAP	1				
17	1651101224	STOPPER	1				
18	1653900057	SPRING, gas	1				
19	1700000033	SWITCH, limit	1				
20	0003600011	WASHER	2				
21	1100040820	BOLT	4				
22	1100041020	BOLT	4				
23	1110040625	SCREW, cap	8				
24	1110040816	SCREW, cap	2				
25	1110040820	SCREW, cap	4				
26	1130040010	NUT	1				
27	1140020008	WASHER, spring	10				
28	1140020010	WASHER, spring	4				
29	1141110006	WASHER	8				
30	1141110008	WASHER	8				
31	1141110010	WASHER	4				
32	1213000832	PIN, spring	1				
33	1213000836	PIN, spring	1				
34	1214000008	PIN, snap	2				
35	1130040012	NUT	1				
36	0375105100	LEVER	2				only 1st aux. lines
37	0335124900	BOOT	2				only 1st aux. lines
38	1901745600	VALVE, pilot	2				only 1st aux. lines
39	1650204600	GRIP (R.H.)	1				only 1st aux. lines
39-1	1650204601	・COVER	1				only 1st aux. lines
40	1650204700	GRIP (L.H.)	1				only 1st aux. lines
40-1	1650204701	・COVER	1				only 1st aux. lines
41	1111810610	SCREW, cap	4				only 1st aux. lines
42	1130040014	NUT	2				only 1st aux. lines
43	1515600200	ADAPTOR	5				
	1420010110	・O-RING	1				
44	1512370008	ADAPTOR (with filter)	1				
	1420010110	・O-RING	1				
45	0881510020	BOOT	2				
46	1653917009	TRIM	1			M	sold by the meter
	J2b062						

silvermorn.co.uk

PIPING; OPERATION LEVER (1/2)

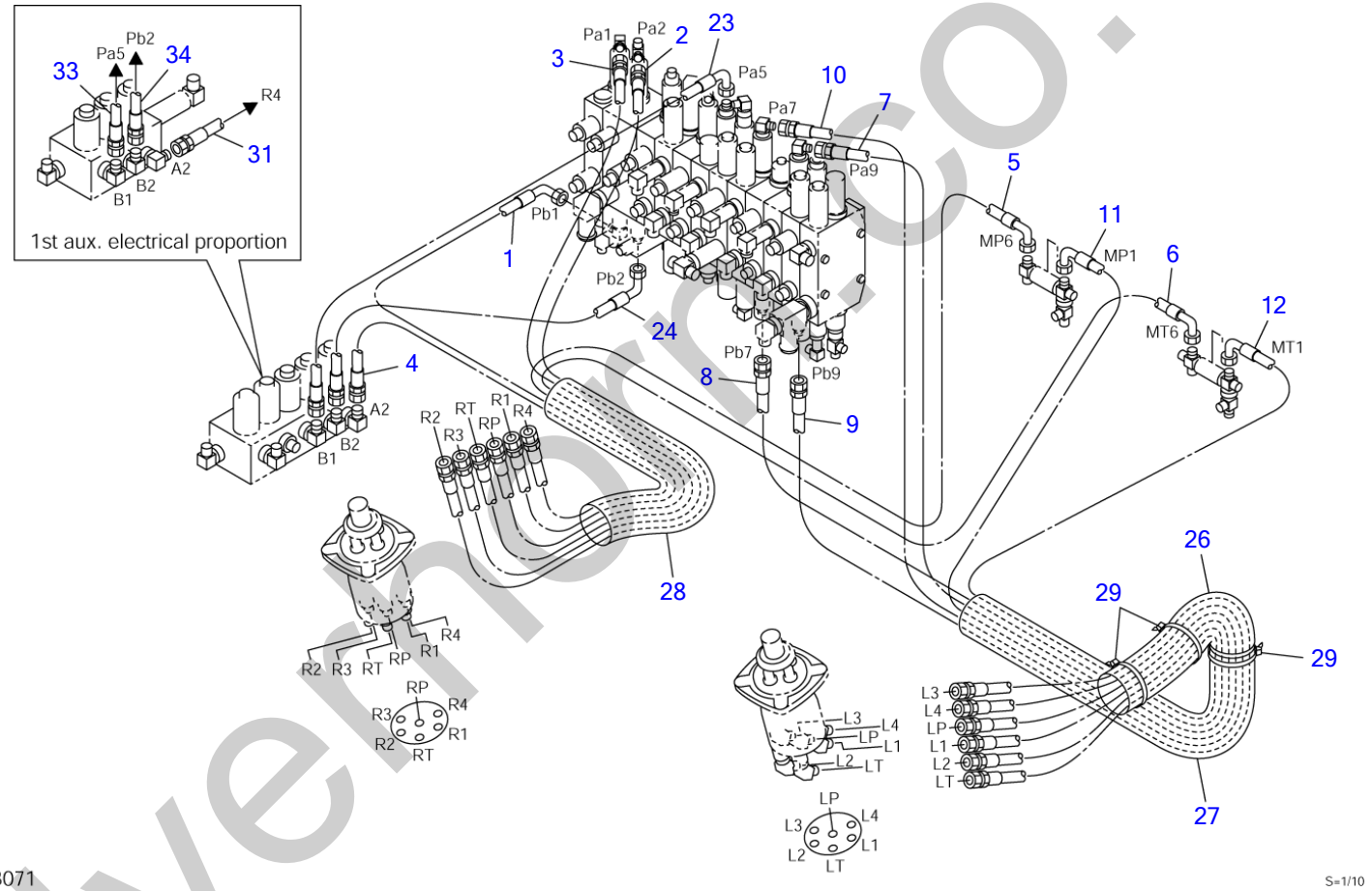

silvermore.co.uk

PIPING; OPERATION LEVER (1/2)

Item	Part number	Description	Q'ty	Chan.	Serial No.	Serv.	Remarks
		PIPING ASSY					X03971-15000-4
		PIPING ASSY (1st aux. proportion)					X03971-15400-4
1	0397115010	HOSE ASSY	1				18010-52120
2	0397115020	HOSE ASSY	1				18010-22100
3	0397115030	HOSE ASSY	1				18010-22088
4	0397115040	HOSE ASSY	1				18010-22100
5	0397115050	HOSE ASSY	1				18010-52145
6	0397115060	HOSE ASSY	1				18010-52165
7	0397115070	HOSE ASSY	1				18010-22155
8	0397115080	HOSE ASSY	1				18010-22180
9	0397115090	HOSE ASSY	1				18010-22170
10	0397115100	HOSE ASSY	1				18010-22155
11	0397115110	HOSE ASSY	1				18010-52135
12	0397115120	HOSE ASSY	1				18010-52150
23	0397115230	HOSE ASSY	1				18010-52057
24	0397115240	HOSE ASSY	1				18010-52115
26	1531645030	PROTECTOR	1				sold by the meter
27	1567525080	PROTECTOR	1				sold by the meter
28	1567525060	PROTECTOR	1				sold by the meter
29	1652200007	BAND	3				
31	0397115410	HOSE ASSY (1st aux. proportion)	1				18010-22135
33	0397115430	HOSE ASSY (1st aux. proportion)	1				18010-52065
34	0397115440	HOSE ASSY (1st aux. proportion)	1				18010-52125
	J2b071						

silverhorn.co.uk

PIPING; OPERATION LEVER (2/2)

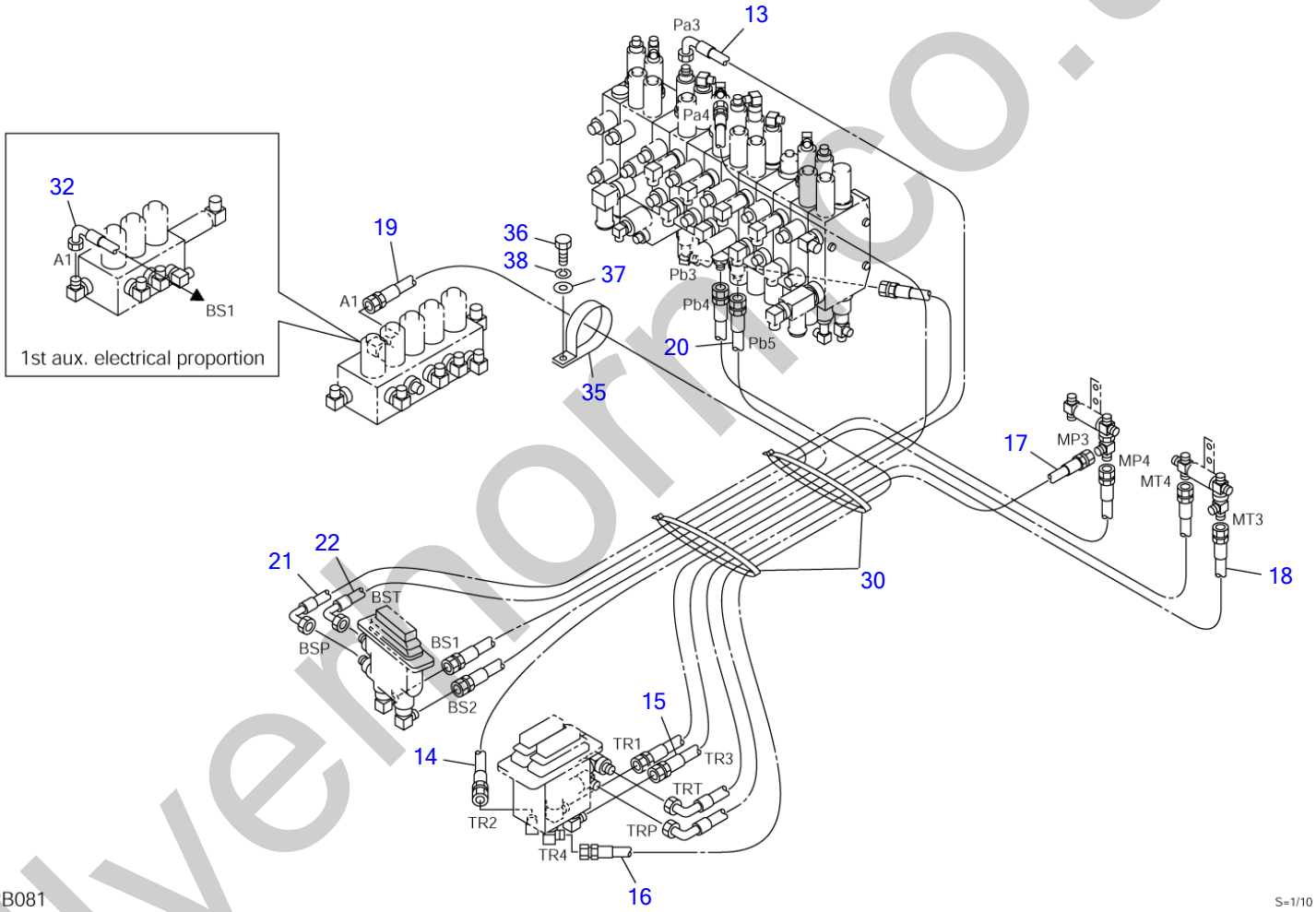

silvermorrico.uk

PIPING; OPERATION LEVER (2/2)

Item	Part number	Description	Q'ty	Chan.	Serial No.	Serv.	Remarks
		PIPING ASSY					X03971-15000-4
		PIPING ASSY (1st aux. proportion)					X03971-15400-4
13	0397115130	HOSE ASSY	1				18010-52115
14	0397115140	HOSE ASSY	1				18010-22120
15	0397115150	HOSE ASSY	1				18010-22105
16	0397115160	HOSE ASSY	1				18010-22125
17	0397115170	HOSE ASSY	1				18010-52075
18	0397115180	HOSE ASSY	1				18010-52075
19	0397115190	HOSE ASSY	1				18010-22115
20	0397115200	HOSE ASSY	1				18010-22125
21	0397115210	HOSE ASSY	1				18010-52100
22	0397115220	HOSE ASSY	1				18010-52100
30	1652231250	BAND	2				
32	0397115420	HOSE ASSY (1st aux. proportion)	1				18010-52130
35	0007300044	CLAMP	1				
36	1100040816	BOLT	1				
37	1141110008	WASHER	1				
38	1140020008	WASHER, spring	1				
	J2b081						

silverhorn.co.uk

PIPING; OPERATION LEVER (1/2) (ISO-JCB pattern)

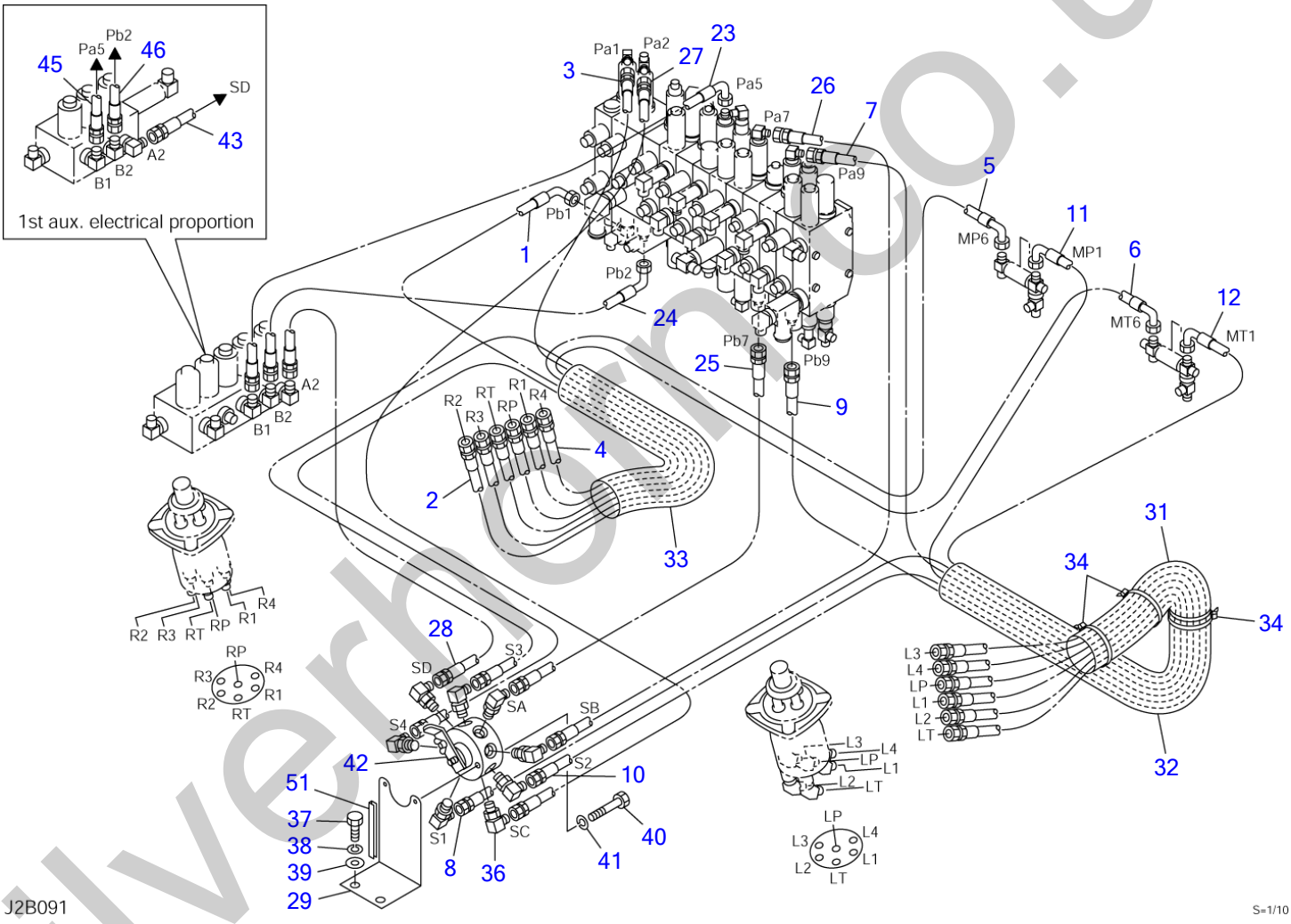

silverhorn.co.uk

PIPING; OPERATION LEVER (1/2) (ISO-JCB pattern)

Item	Part number	Description	Q'ty	Chan.	Serial No.	Serv.	Remarks
		PIPING ASSY					X03971-15300-4
		PIPING ASSY (1st aux. proportion)					X03971-15500-4
1	0397115010	HOSE ASSY	1				18010-52120
2	0397115310	HOSE ASSY	1				18010-22165
3	0397115030	HOSE ASSY	1				18010-22088
4	0397115320	HOSE ASSY	1				18010-22170
5	0397115050	HOSE ASSY	1				18010-52145
6	0397115060	HOSE ASSY	1				18010-52165
7	0397115070	HOSE ASSY	1				18010-22155
8	0397115330	HOSE ASSY	1				18010-22165
9	0397115090	HOSE ASSY	1				18010-22170
10	0397115340	HOSE ASSY	1				18010-22150
11	0397115110	HOSE ASSY	1				18010-52135
12	0397115120	HOSE ASSY	1				18010-52150
23	0397115230	HOSE ASSY	1				18010-52057
24	0397115240	HOSE ASSY	1				18010-52115
25	0397115350	HOSE ASSY	1				18010-22075
26	0397115360	HOSE ASSY	1				18010-22060
27	0397115370	HOSE ASSY	1				18010-22080
28	0397115380	HOSE ASSY	1				18010-22080
29	0567149490	PLATE	1				
31	1531645030	PROTECTOR	1				sold by the meter
32	1567525080	PROTECTOR	1				sold by the meter
33	1567525060	PROTECTOR	1				sold by the meter
34	1652200007	BAND	3				
36	1515012040	ELBOW	8				
	1420010110	▪ O-RING	1				
37	1100041225	BOLT	2				
38	1140020012	WASHER, spring	2				
39	1141110012	WASHER	2				
40	1100040650	BOLT	2				
41	1140020006	WASHER, spring	2				
42	1901730500	VALVE, selector	1				
43	0397115510	HOSE ASSY (1st aux. proportion)	1				18010-22088
45	0397115430	HOSE ASSY (1st aux. proportion)	1				18010-52065
46	0397115440	HOSE ASSY (1st aux. proportion)	1				18010-52125
51	1654601010	TRIM	1				sold by the meter
	J2b091						

silverhorn.co.uk

PIPING; OPERATION LEVER (2/2) (ISO-JCB pattern)

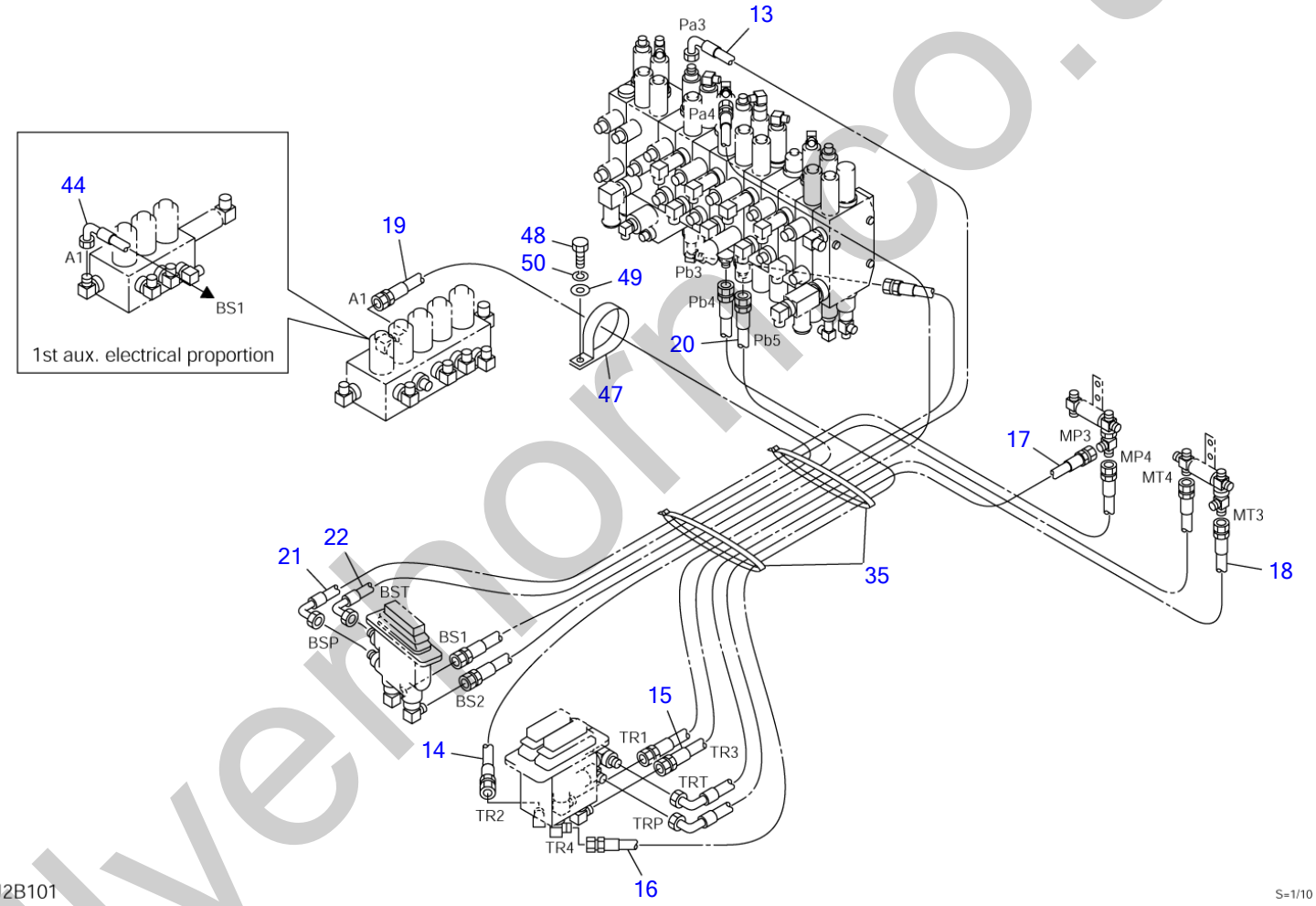

silvermorrico.uk

PIPING; OPERATION LEVER (2/2) (ISO-JCB pattern)

Item	Part number	Description	Q'ty	Chan.	Serial No.	Serv.	Remarks
		PIPING ASSY					X03971-15300-4
		PIPING ASSY (1st aux. proportion)					X03971-15500-4
13	0397115130	HOSE ASSY	1				18010-22115
14	0397115140	HOSE ASSY	1				18010-22120
15	0397115150	HOSE ASSY	1				18010-22105
16	0397115160	HOSE ASSY	1				18010-22125
17	0397115170	HOSE ASSY	1				18010-52075
18	0397115180	HOSE ASSY	1				18010-52075
19	0397115190	HOSE ASSY	1				18010-22115
20	0397115200	HOSE ASSY	1				18010-22125
21	0397115210	HOSE ASSY	1				18010-52100
22	0397115220	HOSE ASSY	1				18010-52100
35	1652231250	BAND	2				
44	0397115420	HOSE ASSY (1st aux. proportion)	1				18010-52130
47	0007300044	CLAMP	1				
48	1100040816	BOLT	1				
49	1141110008	WASHER	1				
50	1140020008	WASHER, spring	1				
	J2b101						

silverhorn.co.uk

ENGINE & ACCESSORIES (1/3)

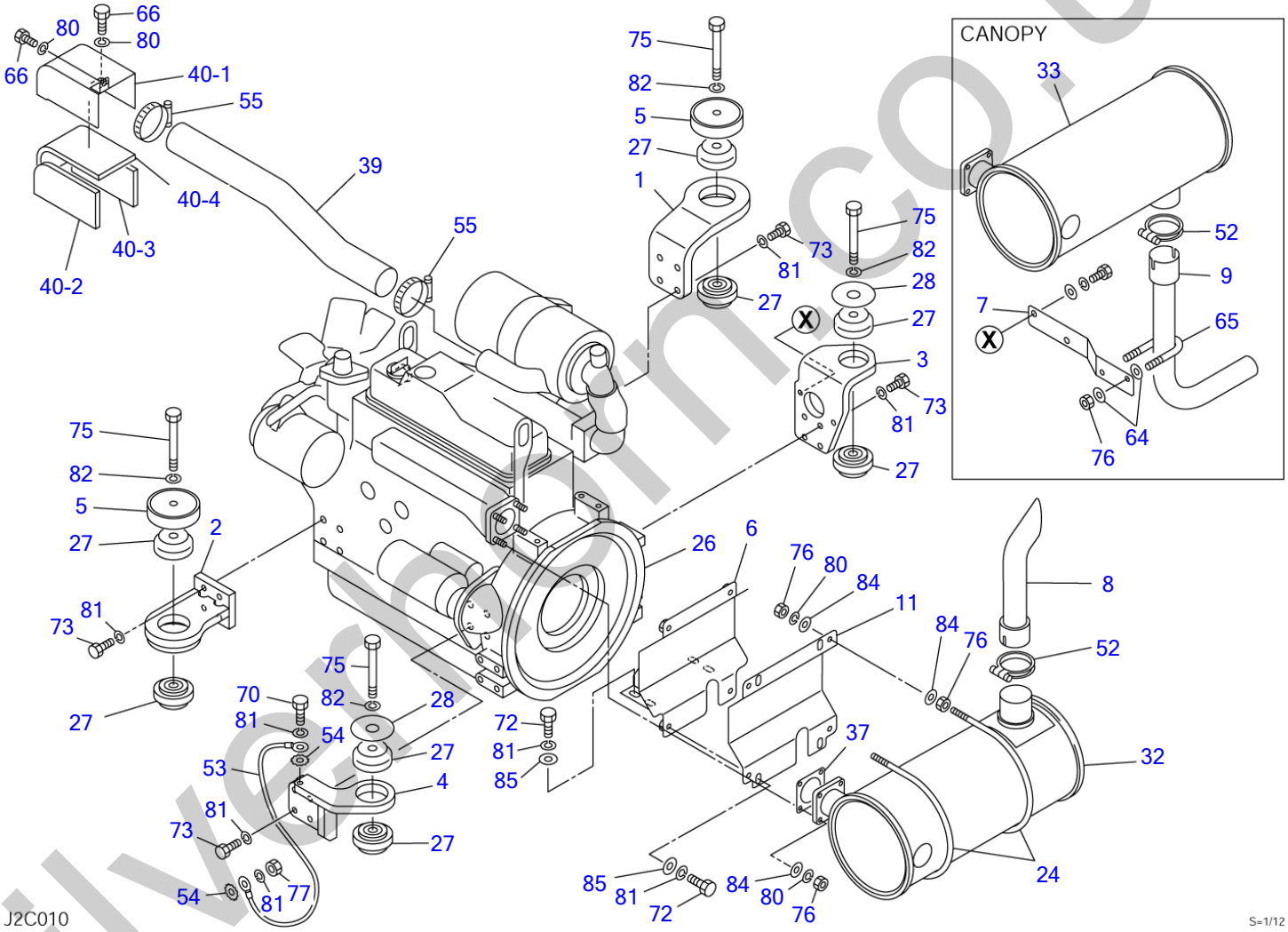

silverfishinc.co.uk

ENGINE & ACCESSORIES (1/3)

Item	Part number	Description	Q'ty	Chan.	Serial No.	Serv.	Remarks
		ENGINE ASSY (cab)					X03940-21000-9
		ENGINE ASSY (canopy)					X03940-21900-9
1	0394021010	FOOT, engine (F.R.)	1				
2	0394021020	FOOT, engine (F.L.)	1				
3	0394021030	FOOT, engine (R.R.)	1				
4	0394021040	FOOT, engine (R.L.)	1				
5	0394021050	STOPPER	2				
6	0394021060	BRACKET	1				
7	0394021070	PLATE	1				canopy
8	0394021670	PIPE	1				cab
9	0394021090	PIPE	1				canopy
11	0394021110	PLATE	1				
24	0394021240	U-BOLT	2				
26	1910216001	ENGINE	1				4TNV88-PTBZ1
27	1651030015	RUBBER, cushion	8				
28	0394021028	WASHER	2				
32	1911000400	SILENCER	1				cab
33	1911000500	SILENCER	1				canopy
37	1910197023	GASKET	1				Y129930-13201
39	0394021390	PIPE	1				
40	0394021410	DUCT ASSY	1				
40-1	0394021450	・DUCT	1				
40-2	0394021412	・ABSORBENT, noise	1				
40-3	0394019013	・ABSORBENT, noise	1				
40-4	0394019014	・ABSORBENT, noise	1				
52	1910195027	CLAMP	1				Y129642-13590
53	1702430280	CABLE, earth	1				
54	1140330010	WASHER	2				
55	1910032047	BAND	2				Y23000-06000
64	0003608252	WASHER	4				canopy
65	1533201012	U-BOLT	1				canopy
66	1100040816	BOLT	2				
70	1100041016	BOLT	2				
72	1100041025	BOLT	8				
73	1100041030	BOLT	16				
75	1101141200	BOLT	4				
76	1130040008	NUT	12				cab
	1130040008	NUT	14				canopy
77	1130040010	NUT	1				
80	1140020008	WASHER, spring	10				
81	1140020010	WASHER, spring	26				
82	1140020012	WASHER, spring	4				
84	1141110008	WASHER	12				
85	1141110010	WASHER	8				
	J2c012						

silverhorn.co.uk

ENGINE & ACCESSORIES (2/3)

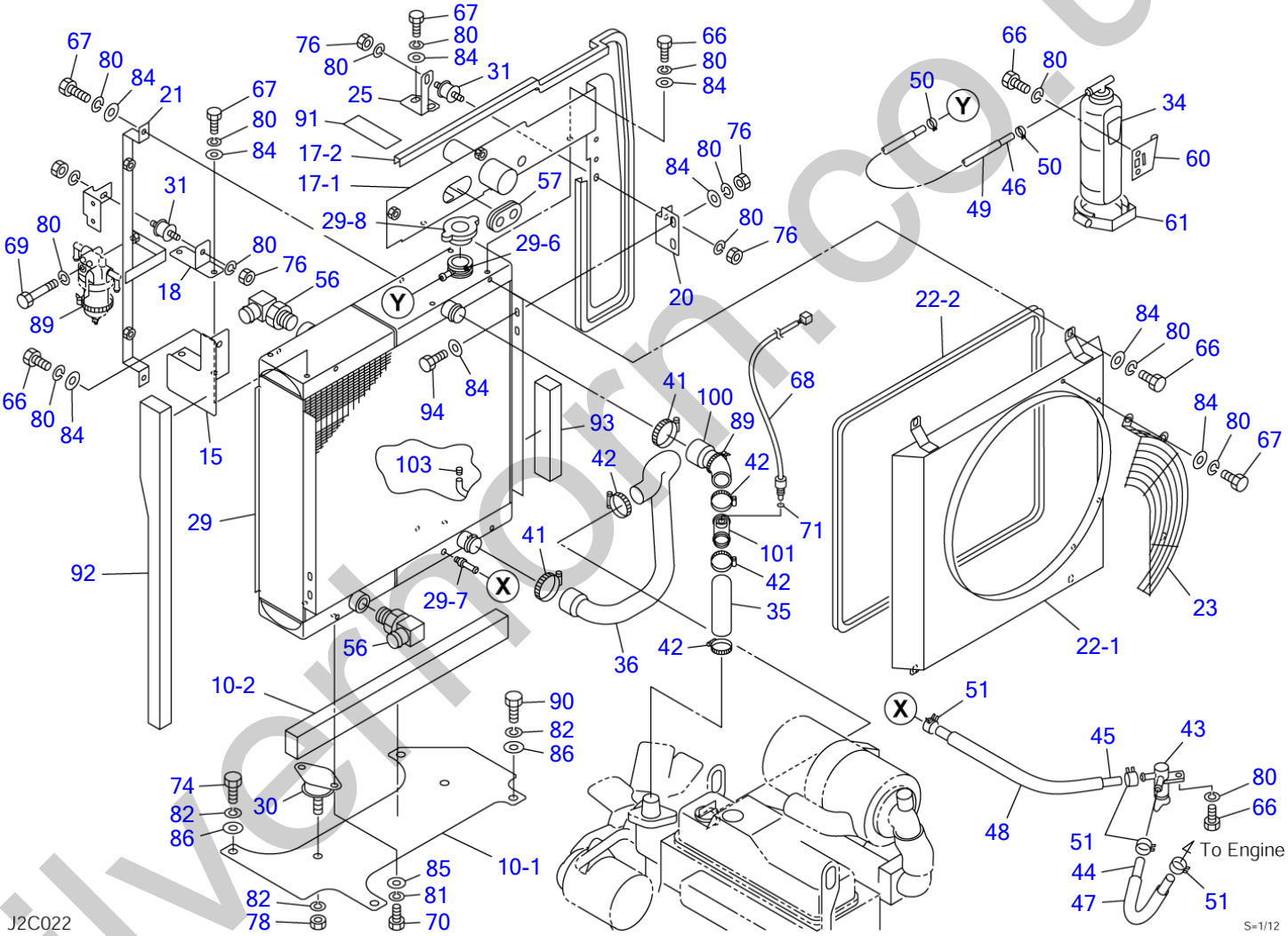

silverthorn.co.uk

ENGINE & ACCESSORIES (2/3)

Item	Part number	Description	Q'ty	Chan.	Serial No.	Serv.	Remarks
		ENGINE ASSY (cab)					X03940-21000-9
		ENGINE ASSY (canopy)					X03940-21900-9
10	0394021100	PLATE ASSY	1				
10-1	0394021101	・PLATE	1				
10-2	0394021102	・SPONGE	1				
15	0394021150	PLATE	1				
17	0394021170	PLATE ASSY	1				
17-1	0394021570	・PLATE	1				
17-2	1654606154	・TRIM	1				sold by the meter
18	0394021180	PLATE	1				
20	0394021200	PLATE	1				
21	0394021300	BRACKET	1				
22	0394021210	SHROUD ASSY	1				
22-1	0394021510	・SHROUD	1				
22-2	1654606205	・TRIM	1				sold by the meter
23	0394021500	GUARD	1				
25	0394021250	PLATE	1				
29	1911300230	RADIATOR & OIL COOLER	1				AKG
29-6	1911300076	・FITTING, hose	1				
29-7	1911300077	・NIPPLE	1				
29-8	1911300078	・CAP, radiator	1				
30	1651024009	RUBBER, cushion	2				
31	1651014003	RUBBER, cushion	2				
34	1910146020	TANK, sub	1				Y129466-44510
35	0394021351	HOSE	1				
36	0394021360	HOSE	1				
41	1910116047	BAND	2				Y23000-054000
42	1910006013	BAND	4				Y23010-038000
43	1910078037	VALVE, drain	1				Y129150-49100
44	1530808040	HOSE	1				sold by the meter
45	1530808055	HOSE	1				sold by the meter
46	1531211050	TUBE	1				sold by the meter
47	1531118035	PROTECTOR	1				sold by the meter
48	1531118050	PROTECTOR	1				sold by the meter
49	1531115045	PROTECTOR	1				sold by the meter
50	1533120010	BAND	2				
51	1533120012	BAND	4				
56	1513350027	ELBOW	2				
	1420010240	・O-RING	1				
57	0337017300	GUARD	1				
60	1910047052	BRACKET	1				Y121256-44600
61	1910047047	BAND	1				Y124450-44550
66	1100040816	BOLT	11				
67	1100040820	BOLT	10				
68	1700100046	SENSOR	1				
69	1100040865	BOLT	1				
70	1100041016	BOLT	4				
71	1420000100	O-RING	1				
74	1101041225	BOLT	3				
76	1130040008	NUT	6				
78	1130040012	NUT	2				
80	1140020008	WASHER, spring	27				
81	1140020010	WASHER, spring	4				
82	1140020012	WASHER, spring	6				
84	1141110008	WASHER	22				
85	1141110010	WASHER	4				
86	1141110012	WASHER	4				
89	1652231250	BAND	2				
90	1101041235	BOLT	1				
91	1654354011	SPONGE	1				sold by the meter
92	0394021310	SPONGE	1				
93	0394021312	SPONGE	1				
94	1100040825	BOLT	2				
100	0394021352	HOSE	1				
101	0394021700	JOINT	1				
103	1501820002	PLUG	1		15820004~1582#		
	J2c022						

silverthorn.co.uk

ENGINE & ACCESSORIES (3/3)

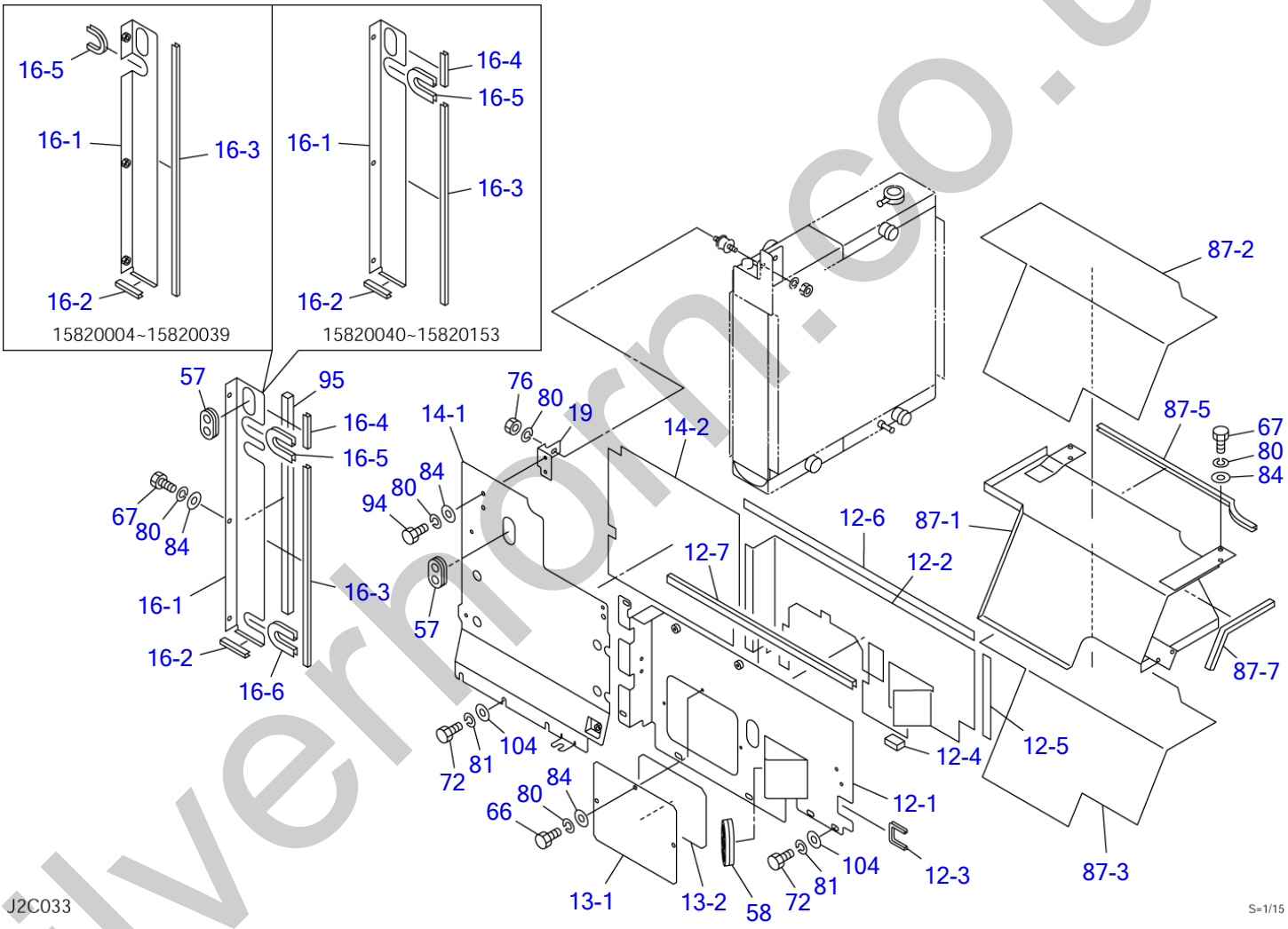

silverhorn.co.uk

ENGINE & ACCESSORIES (3/3)

Item	Part number	Description	Q'ty	Chan.	Serial No.	Serv.	Remarks
		ENGINE ASSY (cab)					X03940-21000-9
		ENGINE ASSY (canopy)					X03940-21900-9
12	0394021420	PLATE ASSY	1				X03940-21420-3
12-1	0394021120	・PLATE	1				
12-2	0394021260	・INSULATOR	1				
12-3	1654625014	・TRIM	1				sold by the meter
12-4	1654343004	・SPONGE	1				sold by the meter
12-5	1654401023	・TAPE	1				sold by the meter
12-6	1654401075	・TAPE	1				sold by the meter
12-7	1654625061	・TRIM	1			M	sold by the meter
13	0394021430	COVER ASSY	1				
13-1	0394021130	・COVER	1				
13-2	0394021280	・INSULATOR	1				
14	0394021440	PLATE ASSY	1				
14-1	0394021140	・PLATE	1				
14-2	0394021270	・INSULATOR	1				
16	0394021160	PLATE ASSY	1		15820004~15820039		
	0394021460	PLATE ASSY	1		15820040~15820153		
	0394021720	PLATE ASSY	1	(H)	15820154~		
16-1	0394021560	・PLATE	1		15820004~15820039		
	0394021470	・PLATE	1		15820040~15820153		
	0394021710	・PLATE	1		15820154~		
16-2	1654605008	・RUBBER	1		15820004~15820363		sold by the meter
16-3	1654605070	・SEAL	1		15820004~15820039		sold by the meter
	1654605056	・RUBBER	1		15820040~		sold by the meter
16-4	1654605009	・RUBBER	1		15820040~		sold by the meter
16-5	1654606012	・SEAL	1		15820004~15820039		sold by the meter
	1654606016	・SEAL	1		15820040~		sold by the meter
16-6	1653916013	・TRIM	1				sold by the meter
19	0394021190	PLATE	1				
57	0337017300	GUARD	2				
58	0097022400	GUARD	2				
66	1100040816	BOLT	6				
67	1100040820	BOLT	9				
72	1100041025	BOLT	7				
76	1130040008	NUT	1				
80	1140020008	WASHER, spring	15				
81	1140020010	WASHER, spring	7				
84	1141110008	WASHER	14				
87	0394021640	HOOD ASSY	1				
87-1	0394021650	・HOOD	1				
87-2	0394021660	・INSULATOR	1				
87-3	0394021663	・INSULATOR	1				
87-5	1654606055	・TRIM	1				sold by the meter
87-7	1654606027	・SEAL	1				sold by the meter
94	1100040825	BOLT	2				
95	1654349061	SPONGE	1				sold by the meter
104	1141550010	WASHER	7				
	J2c033						

silverthorn.co.uk

AIR CLEANER (for double element)

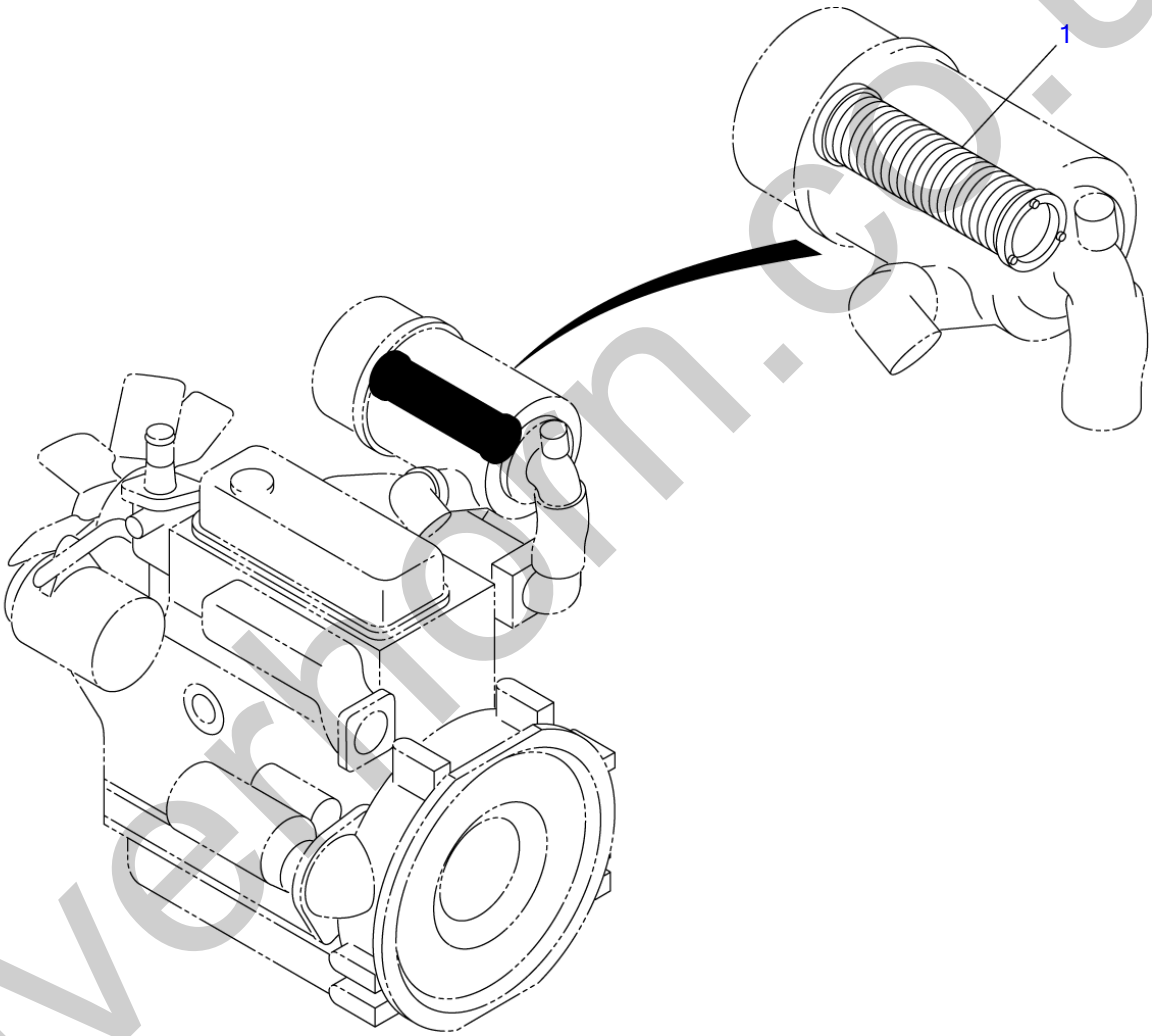

J1C110

S=1/4, 1/8

silverhorn.co.uk

AIR CLEANER (for double element)

Item	Part number	Description	Q'ty	Chan.	Serial No.	Serv.	Remarks
1	**1911102772 G4c150**	CLEANER ASSY, air ELEMENT	1				X03740-07500-0 ƒhƒiƒ‹ƒhƒ\ƒ“ P82-2858

silverhorn.co.uk

DRAIN PLUG

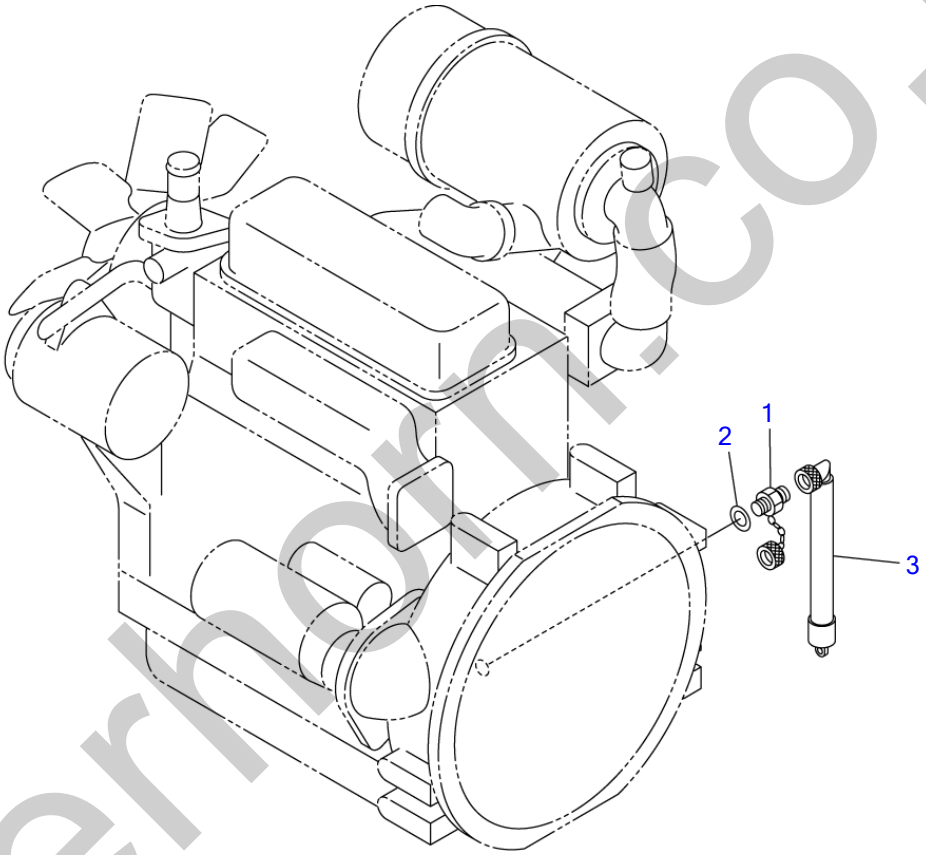

K3C030

S=1/8

silverhorn.co.uk

DRAIN PLUG

Item	Part number	Description	Q'ty	Chan.	Serial No.	Serv.	Remarks
		PLUG ASSY, drain					X03340-13000-2
1	1554502250	PLUG	1				
2	1432122302	WASHER	1				
3	1554512601	TUBE	1				
	J1c031						

silverhorn.co.uk

CONTROL BOX

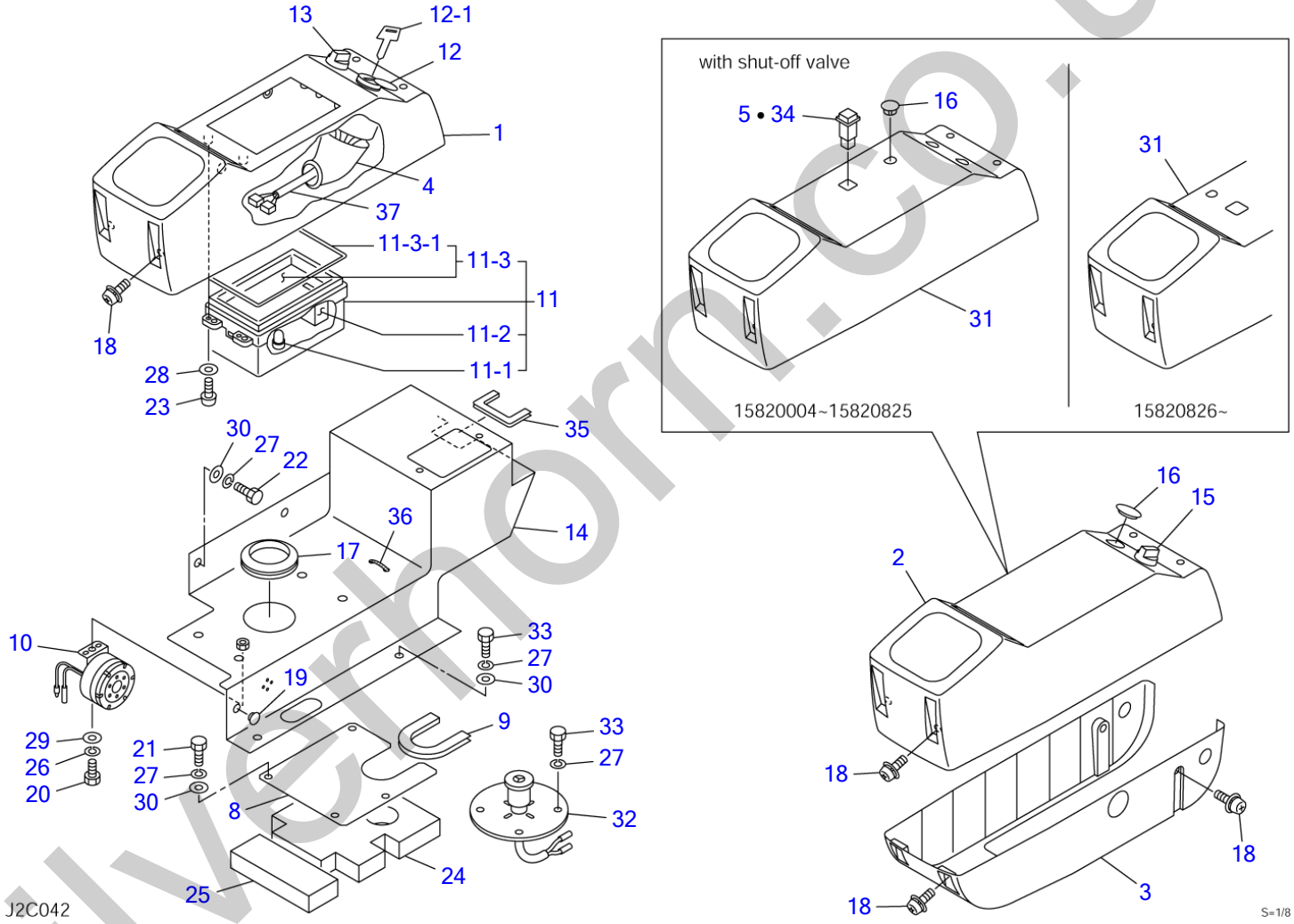

silvermorn.co.uk

CONTROL BOX

Item	Part number	Description	Q'ty	Chan.	Serial No.	Serv.	Remarks
		BOX ASSY, control (cab)					X03943-93500-7
		BOX ASSY, control (canopy)					X03943-93700-7
		BOX ASSY, control (cab, with 3rd aux. lines)					X03943-93600-7
		BOX ASSY, control (canopy, with 3rd aux. lines)					X03943-93800-7
		BOX ASSY, control (cab, without 3rd aux. lines)					X03943-93900-7
		BOX ASSY, control (canopy, without 3rd aux. lines)					X03943-94000-7
1	0334326150	COVER (R.H.)	1				
2	0334327150	COVER (L.H.)	1				
3	0334327250	COVER (L.H.)	1				
4	0870431821	COVER	1				
5	1700550024	ORNAMENT	1				without 3rd aux. lines
8	0564335050	PLATE	1				
9	1653916011	TRIM	1				sold by the meter
10	1703700010	BUZZER	1				
11	1730141330	GAUGE, cluster	1				
11-1	1730140634	・BULB	10				
11-2	1730140652	・METER, hour	1				
11-3	1730140653	・GLASS	1				
11-3-1	1730140654	・・PACKING	1				
12	1700100052	SWITCH, starter	1				cab
	1700100072	SWITCH, starter	1				canopy
12-1	1700100019	KEY	1				
13	1700000010	SWITCH, lamp	1				
14	0394393520	BOX	1				
15	1704300007	SWITCH, wiper	1				cab
16	1652533019	CAP	1				
17	1652060063	BUSHING	1				
18	1110540614	BOLT, sems	10				
19	1652553017	CAP	1				cab
20	1100040616	BOLT	1				
21	1100040816	BOLT	4				
22	1100040814	BOLT	3				
23	1120530416	SCREW	4				
24	0564335001	URETHAN	1				
25	0564335002	URETHAN	1				
26	1140020006	WASHER, spring	1				
27	1140020008	WASHER, spring	9				
	1140020008	WASHER, spring	13				with 3rd aux. lines
28	1141110004	WASHER	4				
29	1141110006	WASHER	1				
30	1141110008	WASHER	9				
31	0397313270	COVER (L.H.)	1		15820004~15820825		with shut-off valve
	0374304100	COVER (L.H.)	1	(H)	15820826~	M	with shut-off valve
32	1700100064	SWITCH, foot	1				with 3rd aux. lines
33	1100040820	BOLT	2				
	1100040820	BOLT	6				with 3rd aux. lines
34	1700550032	LAMP, pilot	1				with 3rd aux. lines
35	1653916010	TRIM	1				sold by the meter
36	1652201005	BAND	1				
37	0564335070	HARNESS, wiring	1				
	J2c042						

silvermorn.co.uk

ENGINE CONTROL

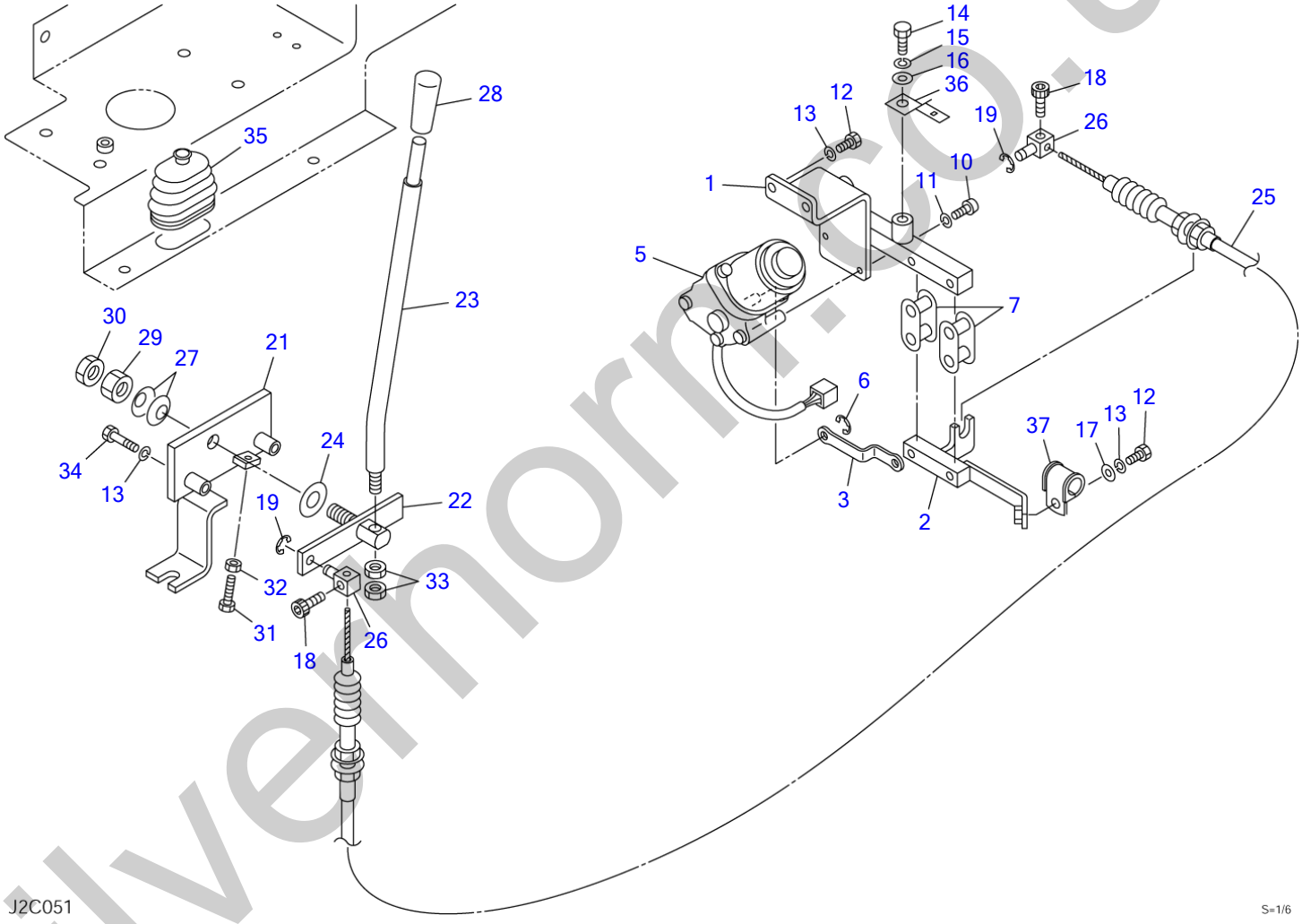

silverthorn.co.uk

ENGINE CONTROL

Item	Part number	Description	Q'ty	Chan.	Serial No.	Serv.	Remarks
		CONTROL ASSY, engine					X03941-10000-2
1	0394110010	BRACKET	1				
2	0394110020	LINK, wire	1				
3	0394110030	PLATE	1				
5	1910065116	MOTOR, stop	1				
6	1224010007	RING, retaining	1				
7	1620580000	LINK ASSY	2				
10	1120530516	SCREW	3				
11	1140020005	WASHER, spring	3				
12	1100040816	BOLT	3				
13	1140020008	WASHER, spring	5				
14	1100041020	BOLT	2		15820082~		
15	1140020010	WASHER, spring	2		15820082~		
16	1141110010	WASHER	2		15820082~		
17	1141110008	WASHER	1		15820052~		
18	1110040510	SCREW, cap	2				
19	1224010006	RING, retaining	2				
21	0394110040	PLATE	1				
22	0394110050	LEVER	1				
23	0394110060	SHAFT	1				
24	0344100400	WASHER	1				
25	0394110070	WIRE	1				
26	0007900016	PIN	2				
27	1225110014	WASHER, conical	2				
28	1650132050	GRIP	1				
29	1130540014	NUT	1				
30	1130640014	NUT	1				
31	1100240635	BOLT	1				
32	1130140006	NUT	1				
33	1130140010	NUT	2				
34	1100040845	BOLT	2				
35	0334120100	BOOT	1				
36	1711900064	CLIP	2		15820082~		
37	1711900105	CLAMP	1		15820052~		
	J2c051						

silverhorn.co.uk

ELECTRICAL (1/2)

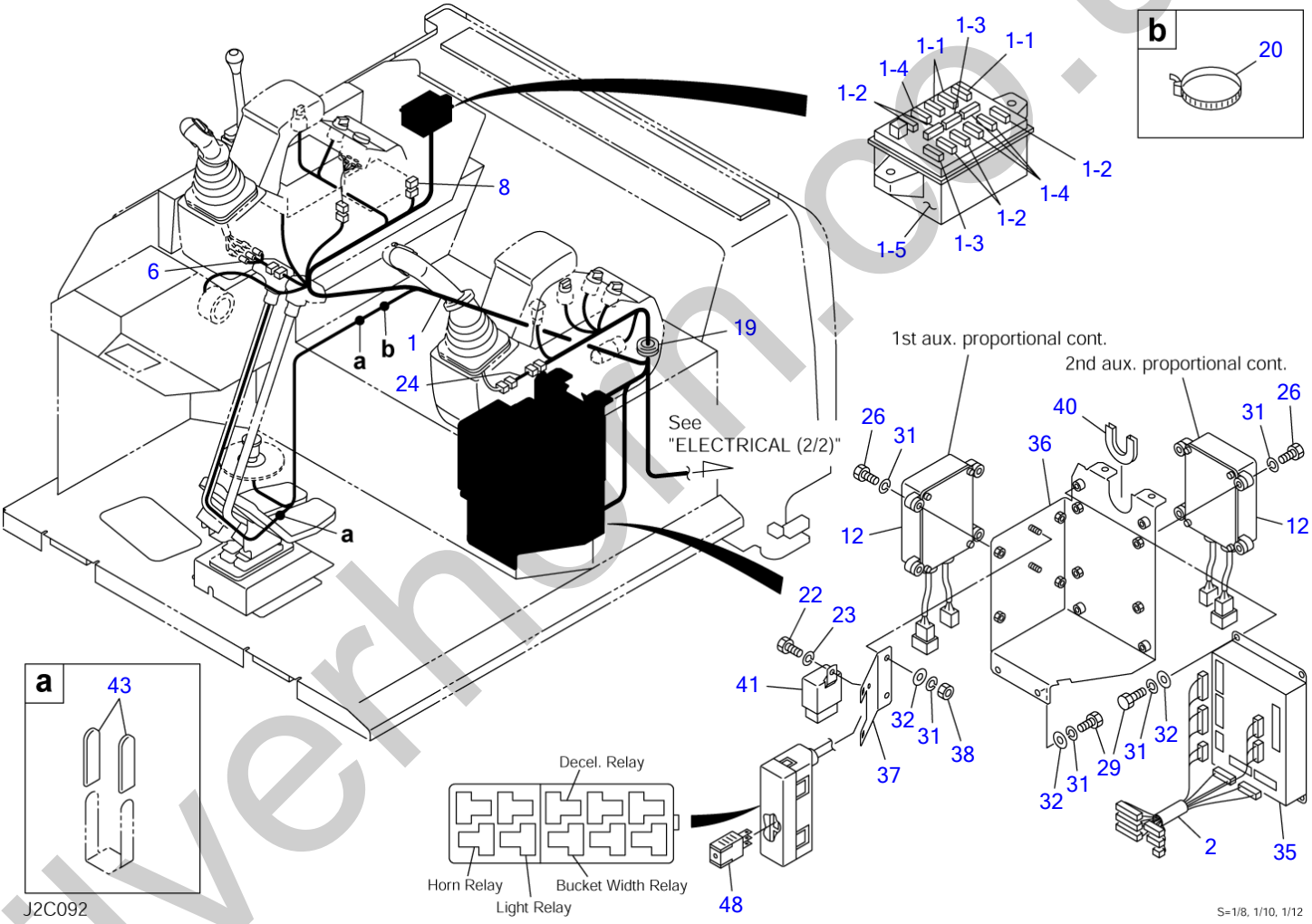

silverhorn.co.uk

ELECTRICAL (1/2)

Item	Part number	Description	Q'ty	Chan.	Serial No.	Serv.	Remarks
		ELECTRICAL ASSY					X03942-23000-7
		ELECTRICAL ASSY (2nd aux. proportion)					X03942-23100-7
		ELECTRICAL ASSY (1st & 2nd aux. proportion)					X03942-23200-7
1	0394223050	HARNESS ASSY, wiring	1				
1-1	1701310005	・FUSE	3				5A
1-2	1701310010	・FUSE	5				10A
1-3	1701310020	・FUSE	2				20A
1-4	1701310030	・FUSE	4				30A
1-5	1701200002	・BOX, fuse	1				
2	0564243520	HARNESS, wiring	1	(L)	15820004~15820363		
	0394223350	HARNESS, wiring	1	(H)	15820364~		
6	0394223040	HARNESS, wiring	1				1st aux. ON-OFF
8	0564243540	HARNESS, wiring	1				
12	1730140730	CONTROLLER	1				2nd aux. proportion
	1730140730	CONTROLLER	2				1st & 2nd aux. proportion
19	1652022506	GROMMET	1				
20	1652231250	BAND	1				
22	1100040616	BOLT	1				
23	1140020006	WASHER, spring	1				
24	0394223060	HARNESS, wiring	1		15820094~		2nd aux. proportion
26	1100040835	BOLT	4				2nd aux. proportion
	1100040835	BOLT	8				1st & 2nd aux. proportion
29	1100040816	BOLT	8				
31	1140020008	WASHER, spring	14				
32	1141110008	WASHER	10				
35	1730141350	CONTROLLER	1	(L)	15820004~15820363		
	1730141380	CONTROLLER	1	(H)	15820364~		
36	0564243900	BOX	1				
37	0564243910	BRACKET	1				
38	1130040008	NUT	2				
40	1653916011	TRIM	1				sold by the meter
41	1711900131	DETECTOR	1				
43	0872433150	TUBE	4				
48	1711900132	RELAY	4				12V
	J2c092						

silverhorn.co.uk

ELECTRICAL (2/2)

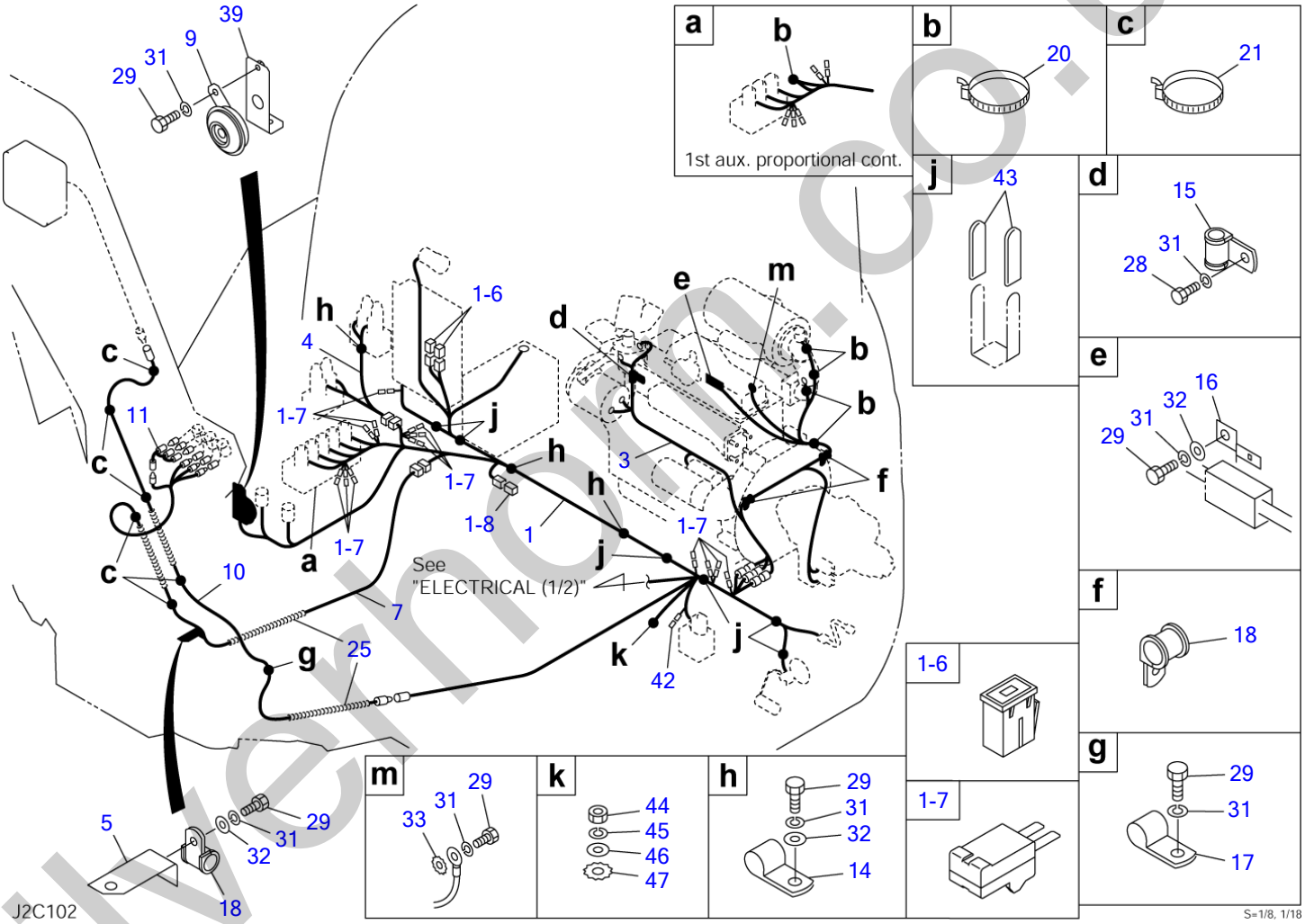

silvernem.co.uk

ELECTRICAL (2/2)

Item	Part number	Description	Q'ty	Chan.	Serial No.	Serv.	Remarks
		ELECTRICAL ASSY					X03942-23000-7
		ELECTRICAL ASSY (2nd aux. proportion)					X03942-23100-7
		ELECTRICAL ASSY (1st & 2nd aux. proportion)					X03942-23200-7
1	0394223050	HARNESS ASSY, wiring	1				
1-6	1701330045	・LINK, fusible	2				45A
1-7	1730500023	・DIODE	13				
1-8	0564243571	・CONNECTOR, short	1		15820028~		
3	0394223030	HARNESS, wiring	1				
4	0574200050	HARNESS, wiring	1				with 2nd aux. lines
5	0394216800	ANGLE	1				
7	0564243550	HARNESS, wiring	1				
9	1703500712	HORN	1				
10	0394210350	WIRE	1				
11	0564243560	HARNESS, wiring	1				
14	0007300003	CLAMP	3				
15	1652900007	CLAMP	1				
16	1711900064	CLAMP	1				
17	0007300050	CLAMP	1				
18	1711900076	CLAMP	3				
20	1652231250	BAND	8				
21	1652201008	BAND	13				
25	0394216980	SPRING	2				
28	1100040812	BOLT	1				
29	1100040816	BOLT	8				
31	1140020008	WASHER, spring	9				
32	1141110008	WASHER	5				
33	1140330008	WASHER	1				
39	0564243580	BRACKET	1				
42	0564243920	CONNECTOR	1				
43	0872433150	TUBE	16				
44	1130040010	NUT	1				
45	1140020010	WASHER, spring	1				
46	1141110010	WASHER	1				
47	1140330010	WASHER	1				
	J2c102						

silverhorn.co.uk

TRAVEL ALARM (15820004-15820399)

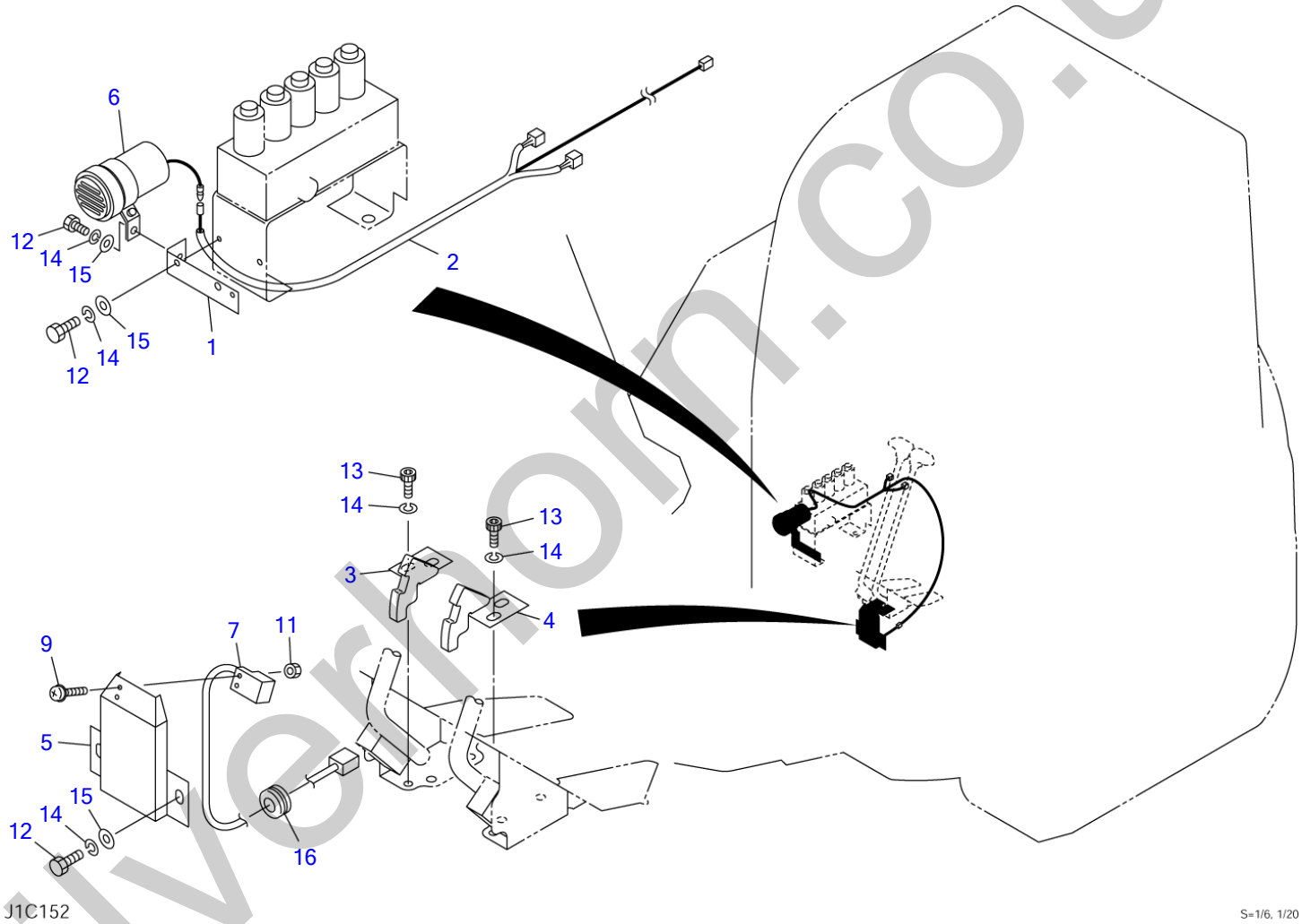

silverhorn.co.uk

TRAVEL ALARM (15820004-15820399)

Item	Part number	Description	Q'ty	Chan.	Serial No.	Serv.	Remarks
		ALAME ASSY, travel					X03932-21500-1
1	0393219572	ANGLE	1				
2	0393219770	HARNESS	1				
3	0564230810	PLATE (R.H.)	1				
4	0564230820	PLATE (L.H.)	1				
5	0564230830	COVER	1				
6	0354211050	BUZZER	1				
7	1700009010	SWITCH, proximity	1				
9	1150110312	SCREW	2				
11	1130030003	NUT	2				
12	1100040816	BOLT	4				
13	1110040816	SCREW, cap	2				
14	1140020006	WASHER, spring	6				
15	1141110006	WASHER	4				
16	1652000602	GROMMET	1				
	J1c151						

silverhorn.co.uk

TRAVEL ALARM (15820400-)

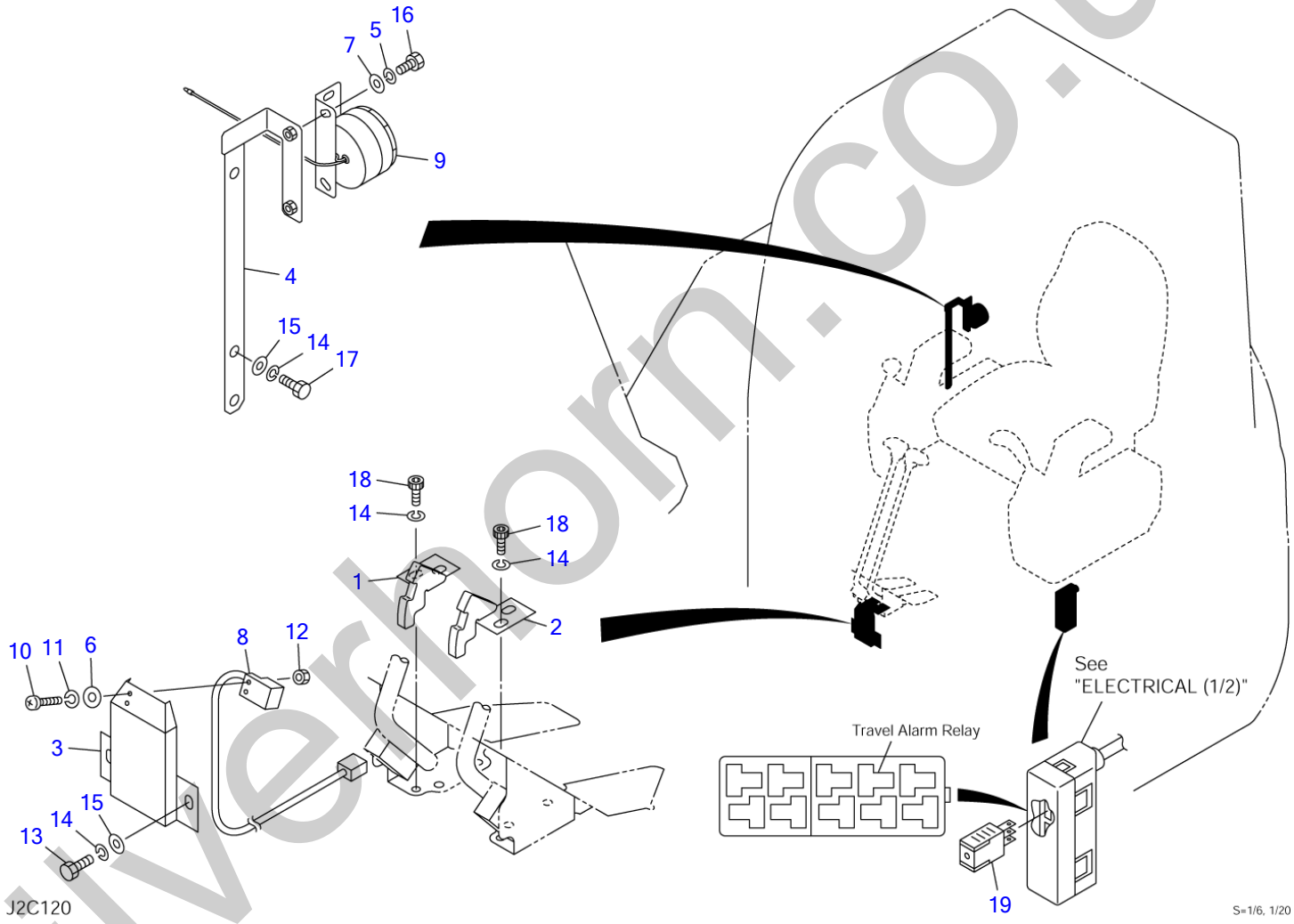

silverhorn.co.uk

TRAVEL ALARM (15820400-)

Item	Part number	Description	Q'ty	Chan.	Serial No.	Serv.	Remarks
		ALAME ASSY, travel					X03942-23300-2
1	0564230810	PLATE (R.H.)	1				
2	0564230820	PLATE (L.H.)	1				
3	0564230830	COVER	1				
4	0564247720	BRACKET	1				
5	1140020006	WASHER, spring	2				
6	1141110003	WASHER	2				
7	1141110006	WASHER	2				
8	1700009010	SWITCH, proximity	1				
9	1703700013	BUZZER	1				
10	1120530312	SCREW	2				
11	1140020003	WASHER, spring	2				
12	1130030003	NUT	2				
13	1100040816	BOLT	2				
14	1140020008	WASHER, spring	6				
15	1141110008	WASHER	4				
16	1100040614	BOLT	2				
17	1100040825	BOLT	2				
18	1110040816	SCREW, cap	2				
19	1711900132	RELAY	1				12V
	J2c121						

silverhorn.co.uk

BATTERY (15820004-15820309)

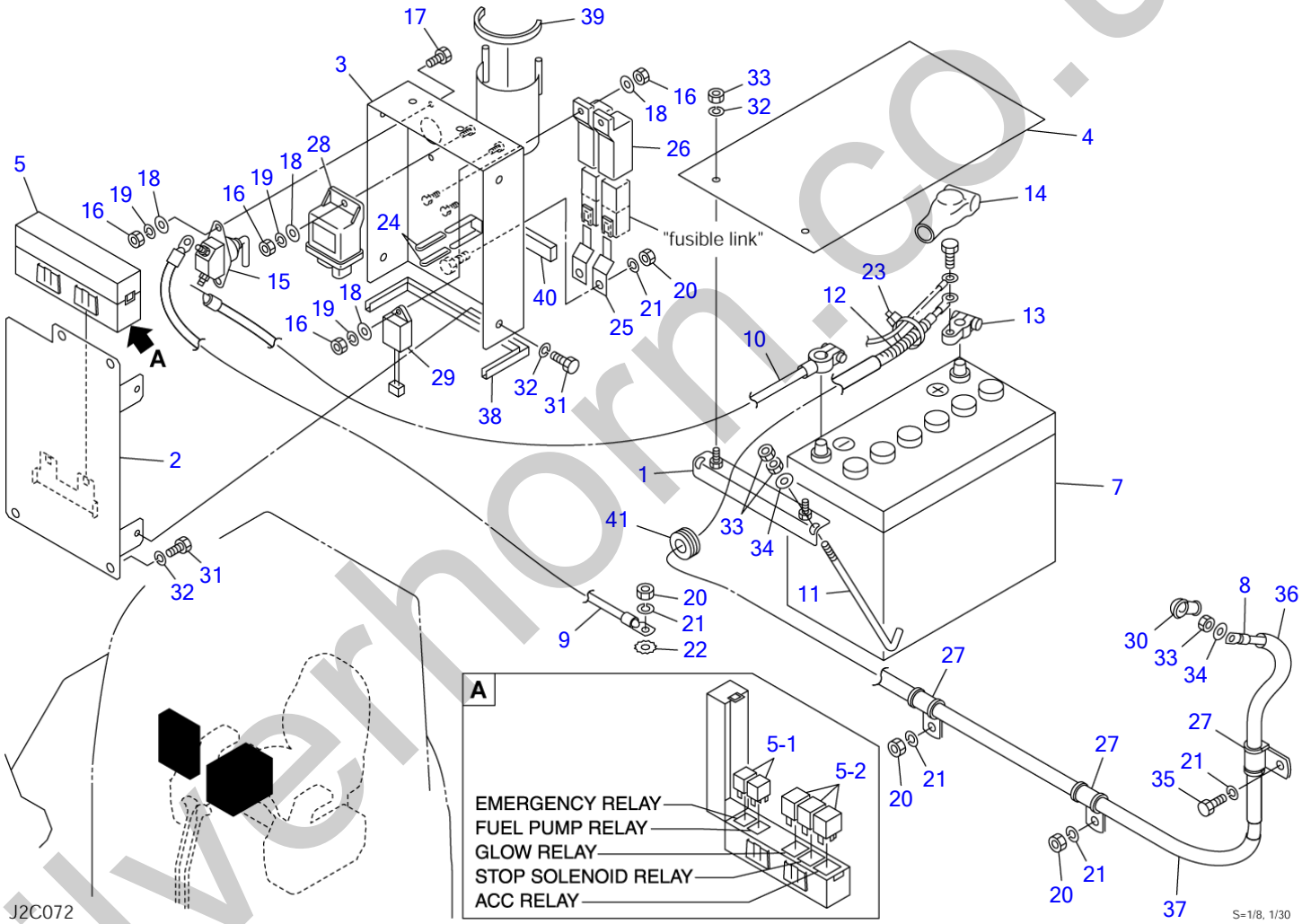

silverhorn.co.uk

BATTERY (15820004-15820309)

Item	Part number	Description	Q'ty	Chan.	Serial No.	Serv.	Remarks
		BATTERY ASSY					X03944-09100-2
1	0564423610	CLAMP	1				
2	0394409120	PLATE	1				
3	0394409130	COVER	1				
4	0564423640	SHEET	1				
5	1730600001	BOX ASSY, relay	1				
5-1	1711900132	・RELAY	2			M	
5-2	1711900137	・RELAY	3			M	
7	1702051531	BATTERY	1				
8	1702607160	CABLE, battery	1				
9	0394409150	CABLE, earth	1				17025-30060
10	1702230030	CABLE, battery	1				
11	1702108245	BOLT	2				
12	1703221382	PROTECTOR	1				sold by the meter
13	1702330000	TERMINAL	1				
14	1702920060	COVER	1				
15	1700100051	SWITCH	1				
16	1130040006	NUT	6				
17	1100040616	BOLT	2				
18	1141110006	WASHER	6				
19	1140020006	WASHER, spring	4				
20	1130040010	NUT	5				
21	1140020010	WASHER, spring	6				
22	1140330010	WASHER	1				
23	1652231140	BAND	5				
24	0872433150	TUBE	4				
25	1711900064	CLAMP	2				
26	1700100038	COVER	2				
27	1711900072	CLAMP	3				
28	1910181106	RELAY, safety	1				Y119802-77200
29	1910150118	UNIT, timer	1				Y129211-77920
30	1910007119	COVER	1				Y124550-77030
31	1100040816	BOLT	8				
32	1140020008	WASHER, spring	10				
33	1130040008	NUT	7				
34	1141110008	WASHER	3				
35	1100041020	BOLT	1				
36	1531325080	PROTECTOR	1				sold by the meter
37	1531325100	PROTECTOR	1				sold by the meter
38	1654601033	TRIM	1				sold by the meter
39	1654601013	TRIM	1				sold by the meter
40	1654302008	SPONGE	1				sold by the meter
41	0437200100	GUARD	1				
	J2c073						

silverthorn.co.uk

BATTERY (15820310-)

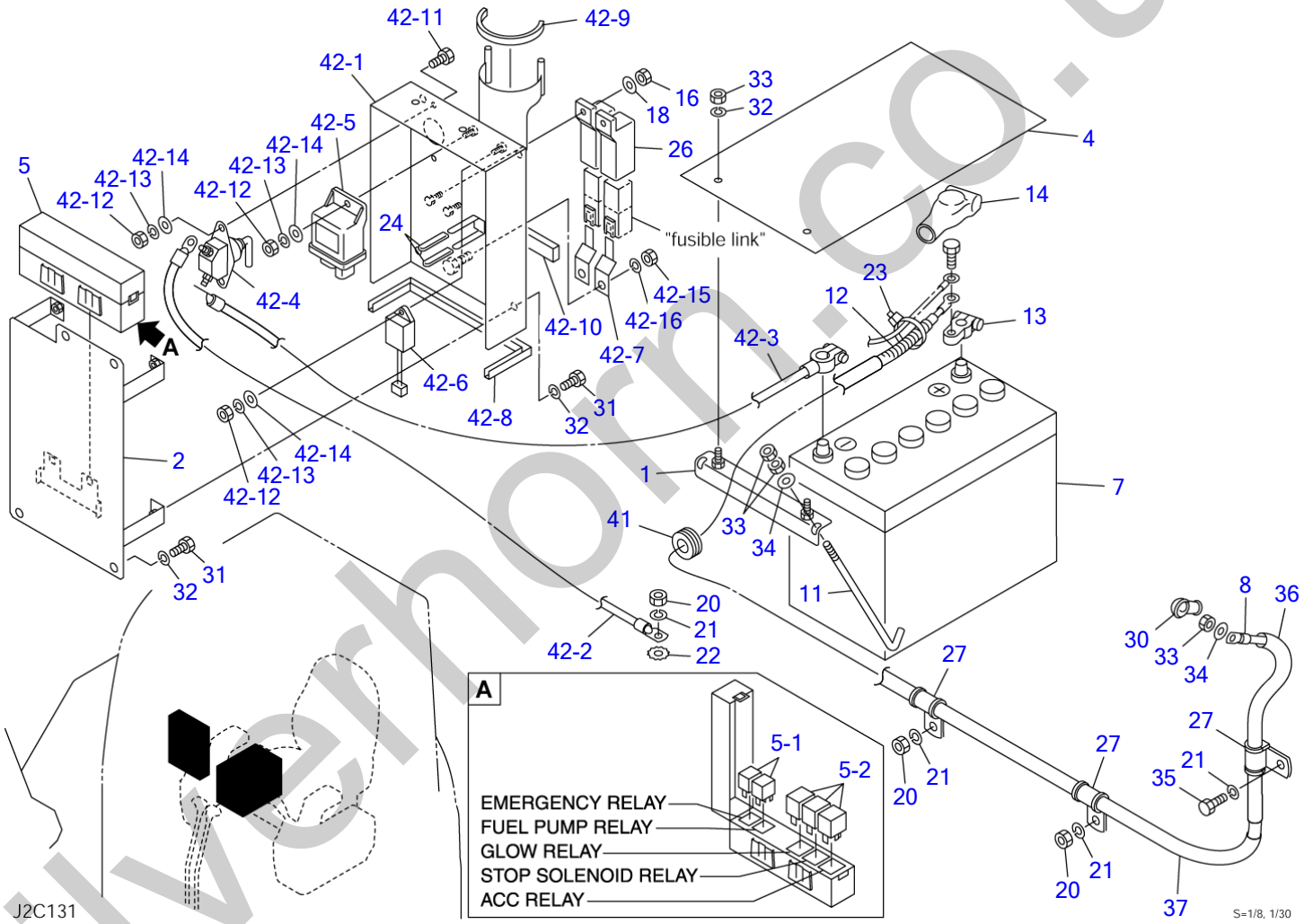

silverhorn.co.uk

BATTERY (15820310-)

Item	Part number	Description	Q'ty	Chan.	Serial No.	Serv.	Remarks
		BATTERY ASSY					X03944-09100-5
1	0564423610	CLAMP	1				
2	0394409160	PLATE	1				
4	0564423640	SHEET	1				
5	1730600001	BOX ASSY, relay	1				
5-1	1711900132	・RELAY	2				
5-2	1711900137	・RELAY	3				
7	1702051531	BATTERY	1				
8	1702530160	CABLE, battery	1				
11	1702108245	BOLT	2				
12	1703221382	PROTECTOR	1				sold by the meter
13	1702330000	TERMINAL	1				
14	1702920060	COVER	1				
16	1130040006	NUT	2				
18	1141110006	WASHER	2				
20	1130040010	NUT	3				
21	1140020010	WASHER, spring	4				
22	1140330010	WASHER	1				
23	1652231140	BAND	5				
24	0872433150	TUBE	4				
26	1700100038	COVER	2				
27	1711900072	CLAMP	3				
30	1910007119	COVER	1				Y124550-77030
31	1100040816	BOLT	8				
32	1140020008	WASHER, spring	10				
33	1130040008	NUT	7				
34	1141110008	WASHER	3				
35	1100041020	BOLT	1				
36	1531325080	PROTECTOR	1				sold by the meter
37	1531325100	PROTECTOR	1				sold by the meter
41	0437200100	GUARD	1				
42	0394409200	RELAY ASSY	1				
42-1	0394409170	・COVER	1				
42-2	1702531055	・CABLE, earth	1				
42-3	1702230030	・CABLE, battery	1				
42-4	1700100051	・SWITCH	1				
42-5	1910181106	・RELAY, safety	1				Y119802-77200
42-6	1910150118	・UNIT, timer	1				Y129211-77920
42-7	1711900064	・CLAMP	2				
42-8	1654601033	・TRIM	1				sold by the meter
42-9	1654601013	・TRIM	1				sold by the meter
42-10	1654302008	・SPONGE	1				sold by the meter
42-11	1100040616	・BOLT	2				
42-12	1130040006	・NUT	4				
42-13	1140020006	・WASHER, spring	4				
42-14	1141110006	・WASHER	4				
42-15	1130040010	・NUT	2				
42-16	1140020010	・WASHER, spring	2				
	J2c131						

silverthorn.co.uk

RADIO

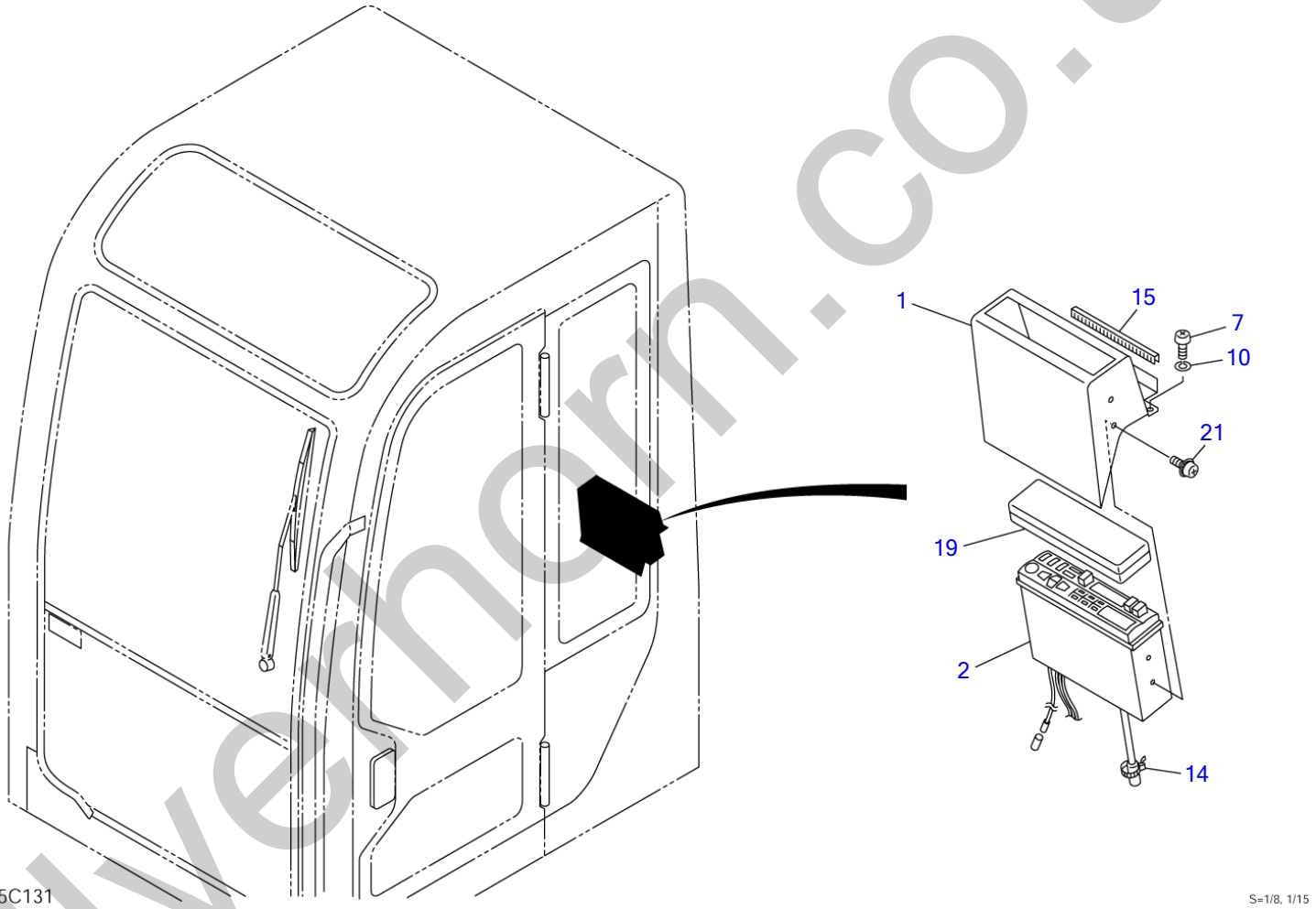

silvernorn.co.uk

RADIO

Item	Part number	Description	Q'ty	Chan.	Serial No.	Serv.	Remarks
		RADIO ASSY (for EC)					X05647-08000-6
		RADIO ASSY (for U.S.A.)					X05647-08500-6
		RADIO ASSY (for JAPAN)					X05647-08600-6
1	0564708100	COVER	1				
2	1705003900	CASSETTE STEREO	1				for EC
	1705004000	CASSETTE STEREO	1				for U.S.A.
	1705004100	CASSETTE STEREO	1				for JAPAN
7	1120590616	SCREW	2				
10	1140090006	WASHER, spring	2				
14	1652231100	BAND	1				
15	1653917005	TRIM	1				sold by the meter
19	1705003650	COVER	1				
21	1150420520	SCREW	4				
	L5c131						

silverhorn.co.uk

MAINTENANCE LIGHT SOCKET

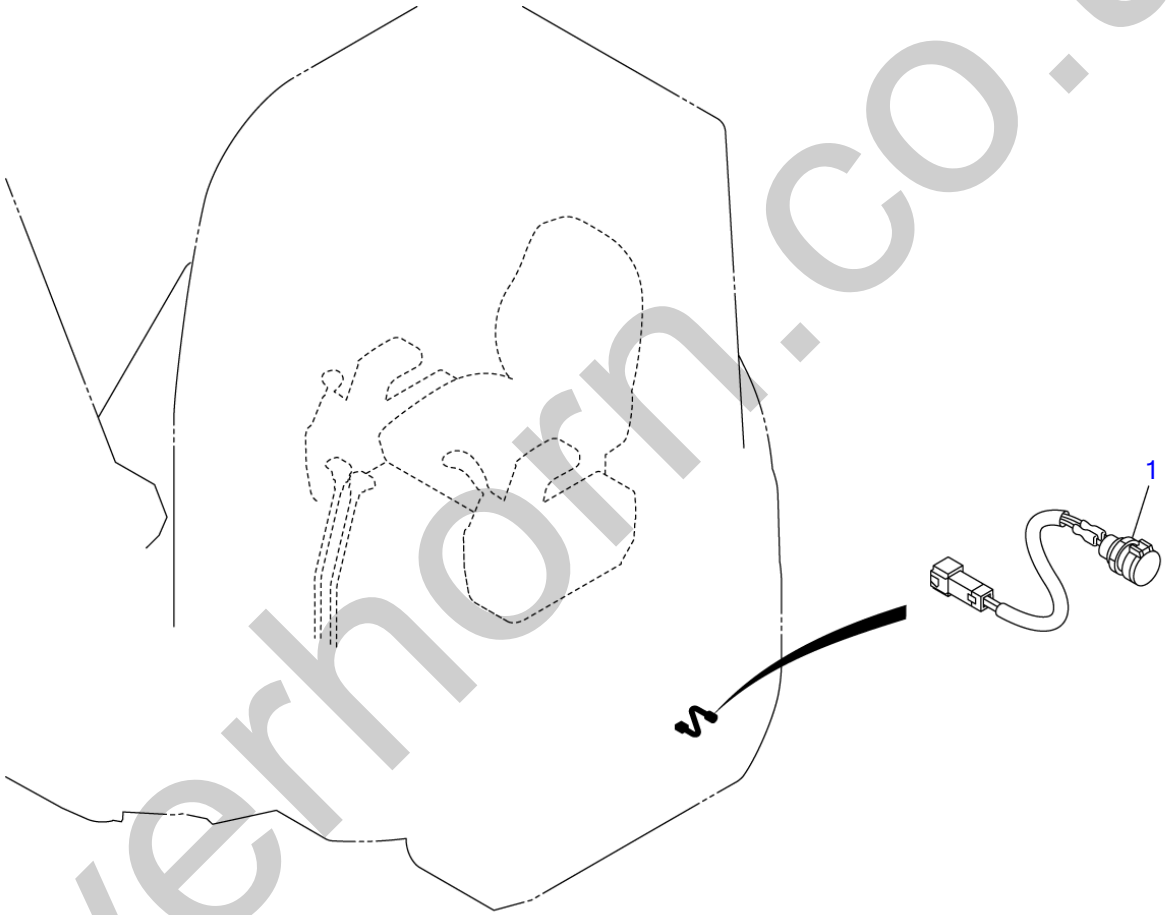

J2C110

S=1/5, 1/20

silverhorn.co.uk

MAINTENANCE LIGHT SOCKET

Item	Part number	Description	Q'ty	Chan.	Serial No.	Serv.	Remarks
		SOCKET ASSY, maintenance light					X03942-03000-0
1	**0394203100 G4c120**	SOCKET ASSY	1				

silverhorn.co.uk

WINDOW WASHER

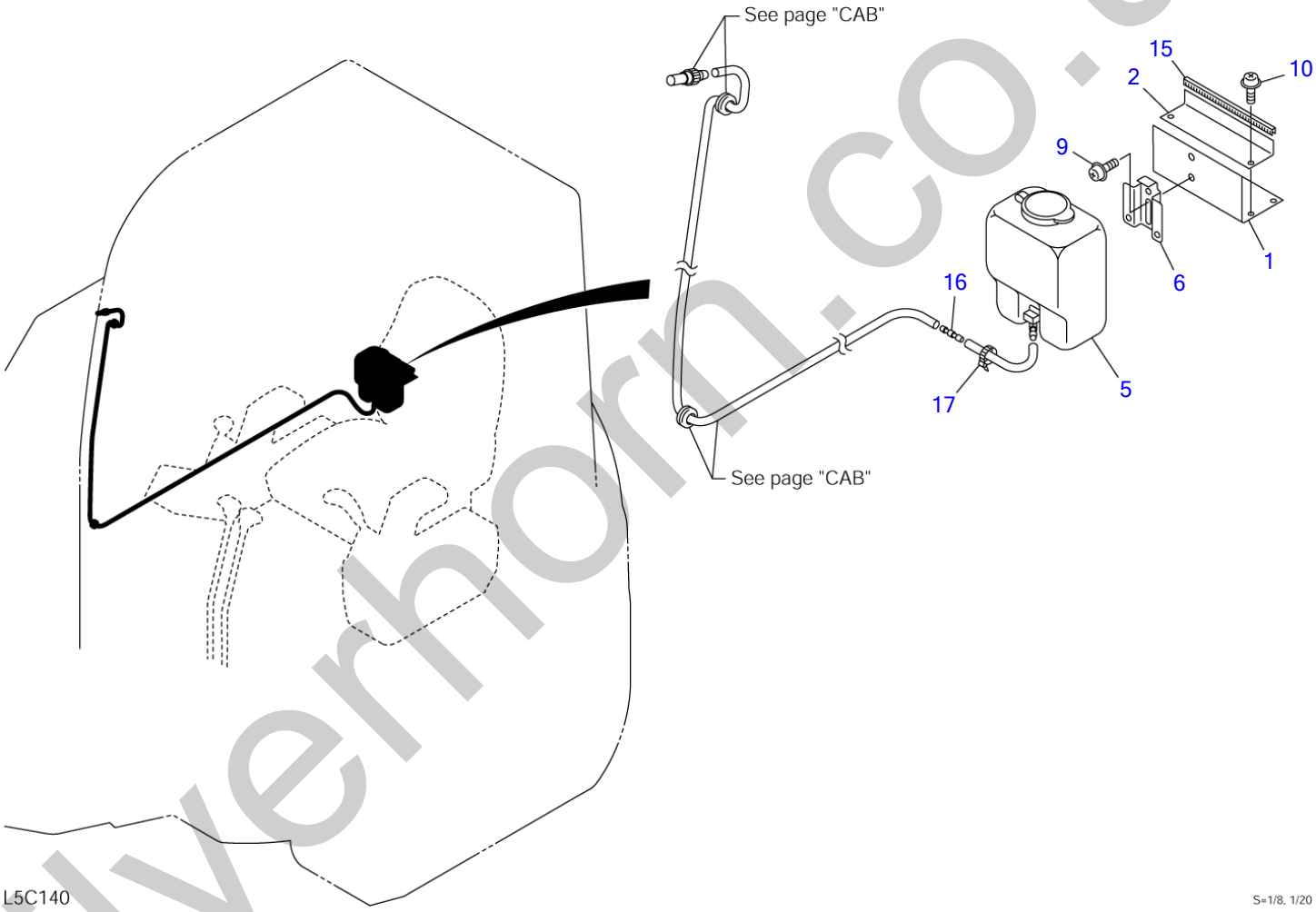

silverhorn.co.uk

WINDOW WASHER

Item	Part number	Description	Q'ty	Chan.	Serial No.	Serv.	Remarks
		WASHER ASSY, window					X05689-03000-2
1	0568903100	PLATE	1				
2	0568903200	PLATE	1				
5	1711910101	TANK	1				
6	1711910062	BRACKET	1				
9	1150410612	SCREW	2				
10	1150120616	SCREW	4				
15	1653917011	TRIM	1				sold by the meter
16	1711910080	VALVE, check	1				
17	1652231250	BAND	1				
	L5c140						

silverhorn.co.uk

CANOPY LIGHT

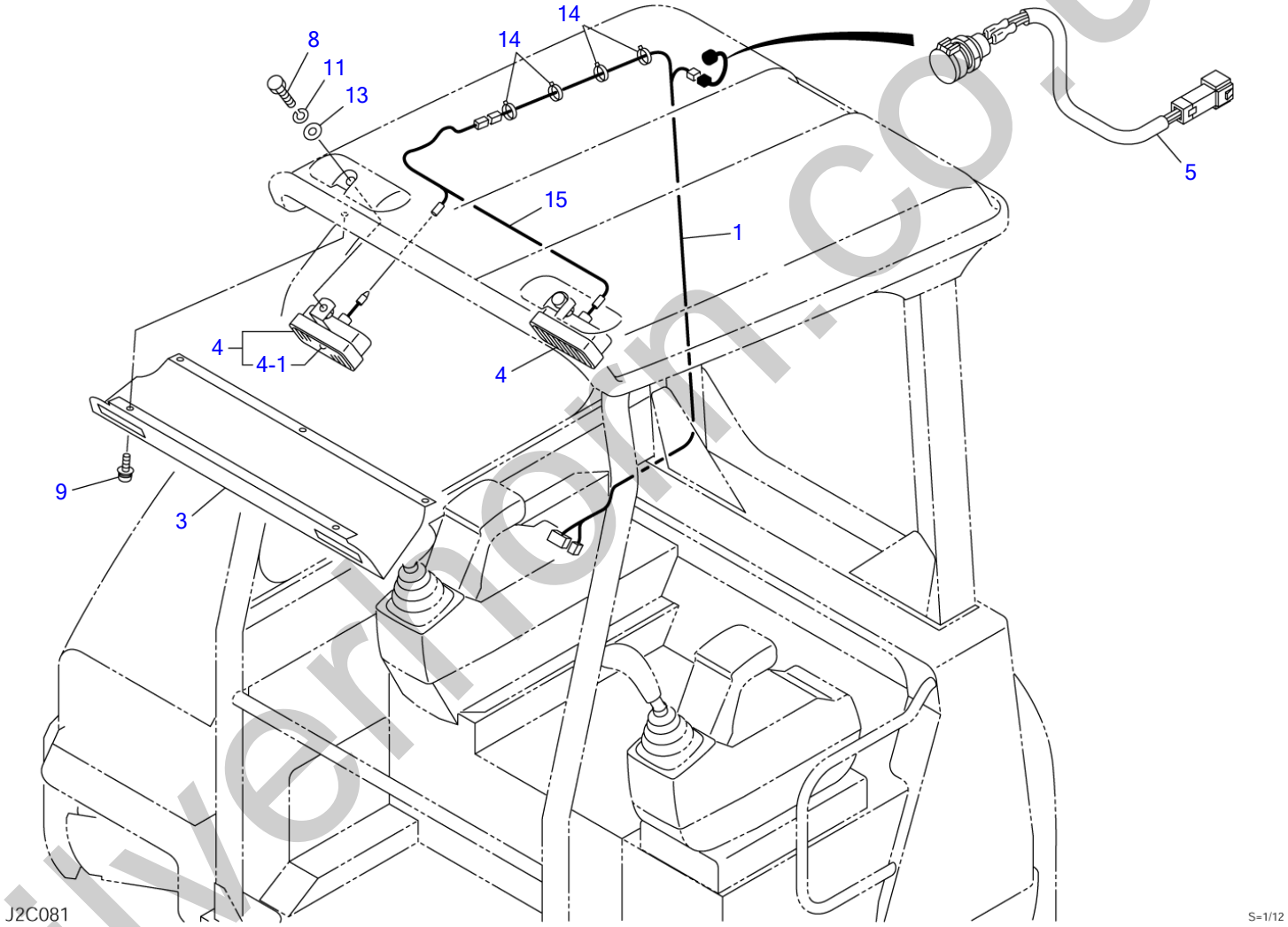

silvermorn.co.uk

CANOPY LIGHT

Item	Part number	Description	Q'ty	Chan.	Serial No.	Serv.	Remarks
		LAMP ASSY, canopy					X03984-04000-2
1	0398404100	HARNESS, wiring	1				
3	0358402700	COVER	1				
4	1703001900	LAMP	2				
4-1	1703001901	▪ BULB	1				12V, 20W
5	0394203100	SOCKET ASSY	1				
8	1100040820	BOLT	2				
9	1150420516	SCREW	5				
11	1140020008	WASHER, spring	2				
13	1141110008	WASHER	2				
14	1652221050	BAND	3				
15	0398402300	HARNESS, wiring	1				
16	1120530512	SCREW	3				
	J2c082						

silverhorn.co.uk

VALVE & ACCESSORIES (1/2)

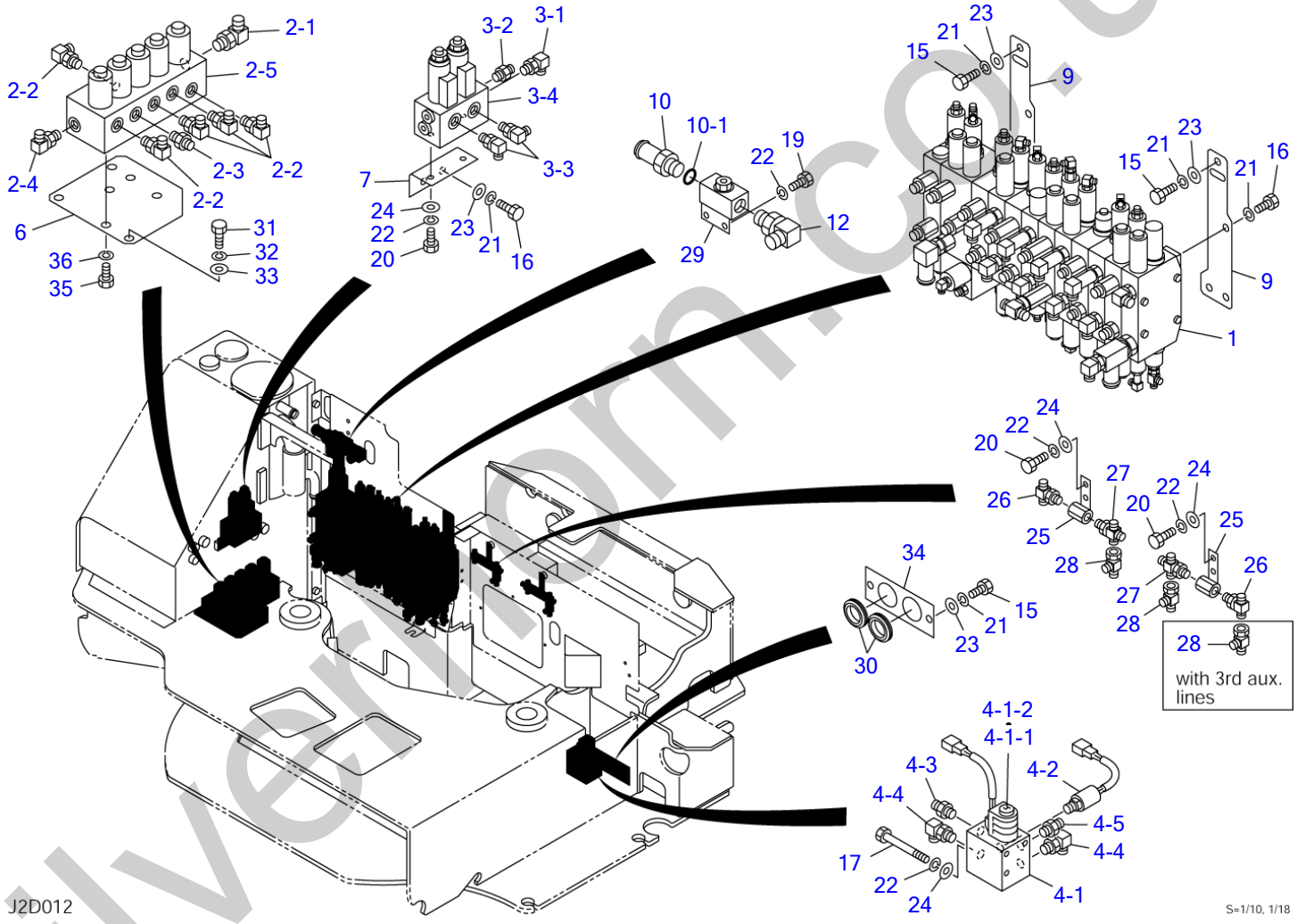

silverthorn.co.uk

VALVE & ACCESSORIES (1/2)

Item	Part number	Description	Q'ty	Chan.	Serial No.	Serv.	Remarks
		VALVE ASSY					X03950-23000-5
		VALVE ASSY (with 2nd aux. lines)					X03950-22900-5
		VALVE ASSY (with 3rd aux. lines)					X03950-22800-5
1	X **********	VALVE ASSY, control	1				X03950-23010-3
	X **********	VALVE ASSY, control (with 2nd aux. lines)	1				X03950-23110-3
2	X **********	VALVE ASSY, solenoid	1				X03950-23020-2
2-1	1515010051	・ELBOW	1				
	1420010180	・・O-RING	1				
2-2	1515012040	・ELBOW	5				
	1420010110	・・O-RING	1				
2-3	1515600200	・ADAPTOR	1				
	1420010110	・・O-RING	1				
2-4	1512375001	・ELBOW	1				
	1420010110	・・O-RING	1				
2-5	1901749200	・VALVE, solenoid	1				
3	X **********	VALVE ASSY, solenoid (with 2nd, 3rd aux. lines)	1				X03950-23030-1
3-1	1512375004	・ELBOW	1				
	1420010110	・・O-RING	1				
3-2	1515600200	・ADAPTOR	1				
	1420010110	・・O-RING	1				
3-3	1515012040	・ELBOW	2				
	1420010110	・・O-RING	1				
3-4	1901738400	・VALVE, solenoid	1				
4	X **********	VALVE ASSY, solenoid (with 3rd aux. lines)	1				X03950-23040-2
4-1	1901747100	・VALVE, solenoid	1				
4-1-1	1901741402	・・SOLENOID	1				
4-1-2	1901741703	・・COIL	1				
4-2	1700100065	・SWITCH, pressure	1				
	1420010110	・・O-RING	1				
4-3	1515600200	・ADAPTOR	1				
	1420010110	・・O-RING	1				
4-4	1515012040	・ELBOW	2				
	1420010110	・・O-RING	1				
4-5	1512370008	・ADAPTOR (with filter)	1				
	1420010110	・・O-RING	1				
6	0395023065	PLATE	1				
7	0395023070	PLATE	1				with 2nd & 3rd aux. lines
9	0395023090	PLATE	2				
10	0007224006	ADAPTOR	1				
10-1	1420010180	・O-RING	1				
12	1515010042	ELBOW	1				
	1420010180	・O-RING	1				
15	1100041020	BOLT	5				
16	1100041016	BOLT	6				
	1100041016	BOLT	8				with 2nd, 3rd aux. lines
17	1100040890	BOLT	3				with 3rd aux. lines
19	1100040820	BOLT	2				
20	1100040816	BOLT	2				
	1100040816	BOLT	5				with 2nd, 3rd aux. lines
21	1140020010	WASHER, spring	11				
	1140020010	WASHER, spring	13				with 2nd, 3rd aux. lines
22	1140020008	WASHER, spring	4				
	1140020008	WASHER, spring	7				with 2nd aux. lines
	1140020008	WASHER, spring	7				with 3rd aux. lines
23	1141110010	WASHER	9				
	1141110010	WASHER	12				with 2nd, 3rd aux. lines
24	1141110008	WASHER	4				
	1141110008	WASHER	7				with 2nd aux. lines
	1141110008	WASHER	13				with 3rd aux. lines
25	0565032710	BUSHING	2				
26	1512370010	ADAPTOR	2				
	1420010110	・O-RING	1				
27	1513390027	CROSS	2				

silverform.co.uk

VALVE & ACCESSORIES (1/2)

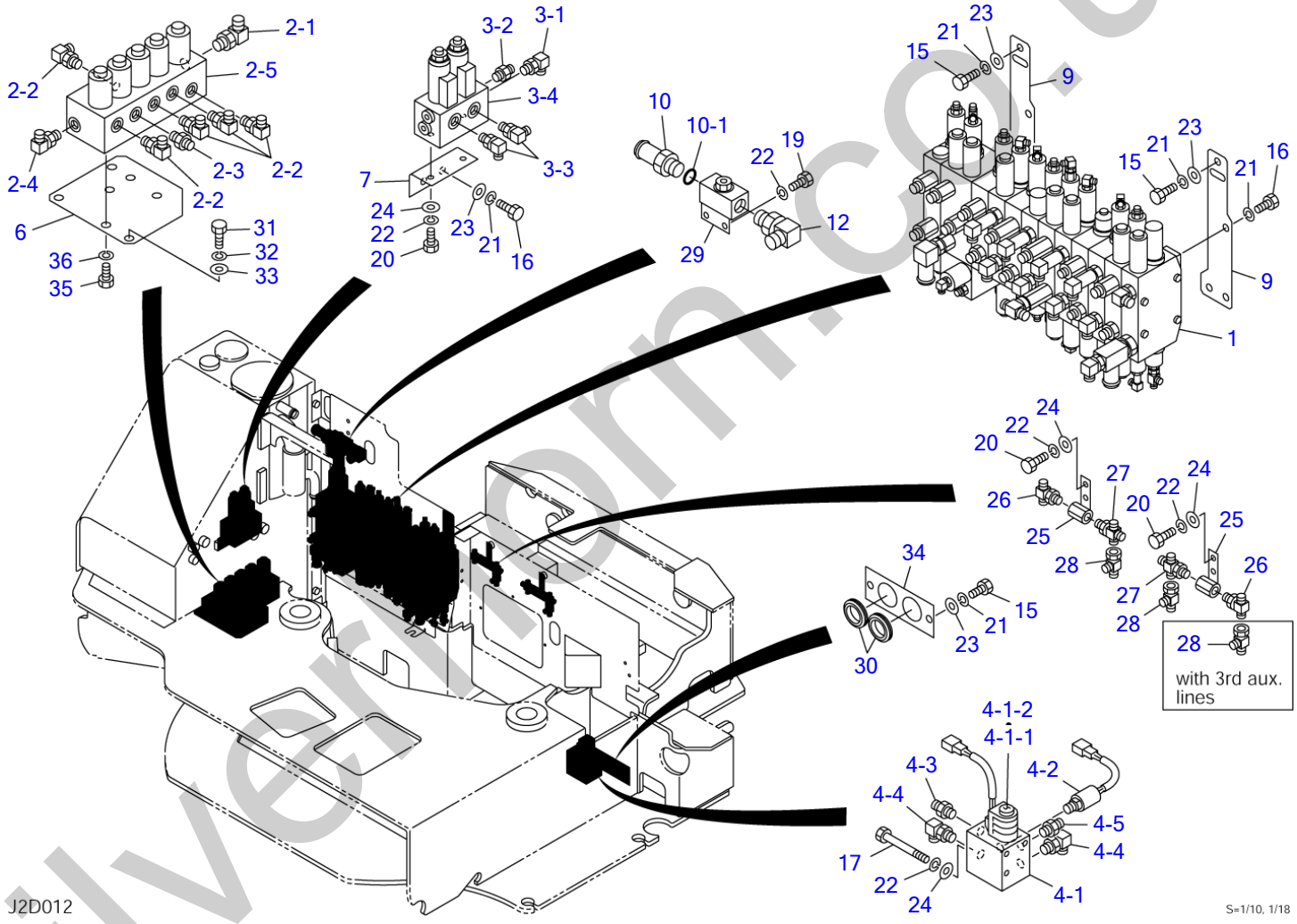

silverthorn.co.uk

VALVE & ACCESSORIES (1/2)

Item	Part number	Description	Q'ty	Chan.	Serial No.	Serv.	Remarks
27	1420010110	・O-RING	1				
28	1513390015	TEE	2				
28	1513390015	TEE	3				with 3rd aux. lines
29	1901719800	VALVE, stop	1				
30	1652053800	GROMMET	2				
31	1101041220	BOLT	3				
32	1140020012	WASHER, spring	3				
33	1141110012	WASHER	3				
34	0395023034	PLATE	1				
35	1100041016	SCREW, cap	3				
36	1140420010	WASHER, spring	3				
	J2d012						

silverhorn.co.uk

VALVE & ACCESSORIES (1/2) (1st aux. proportional cont.)

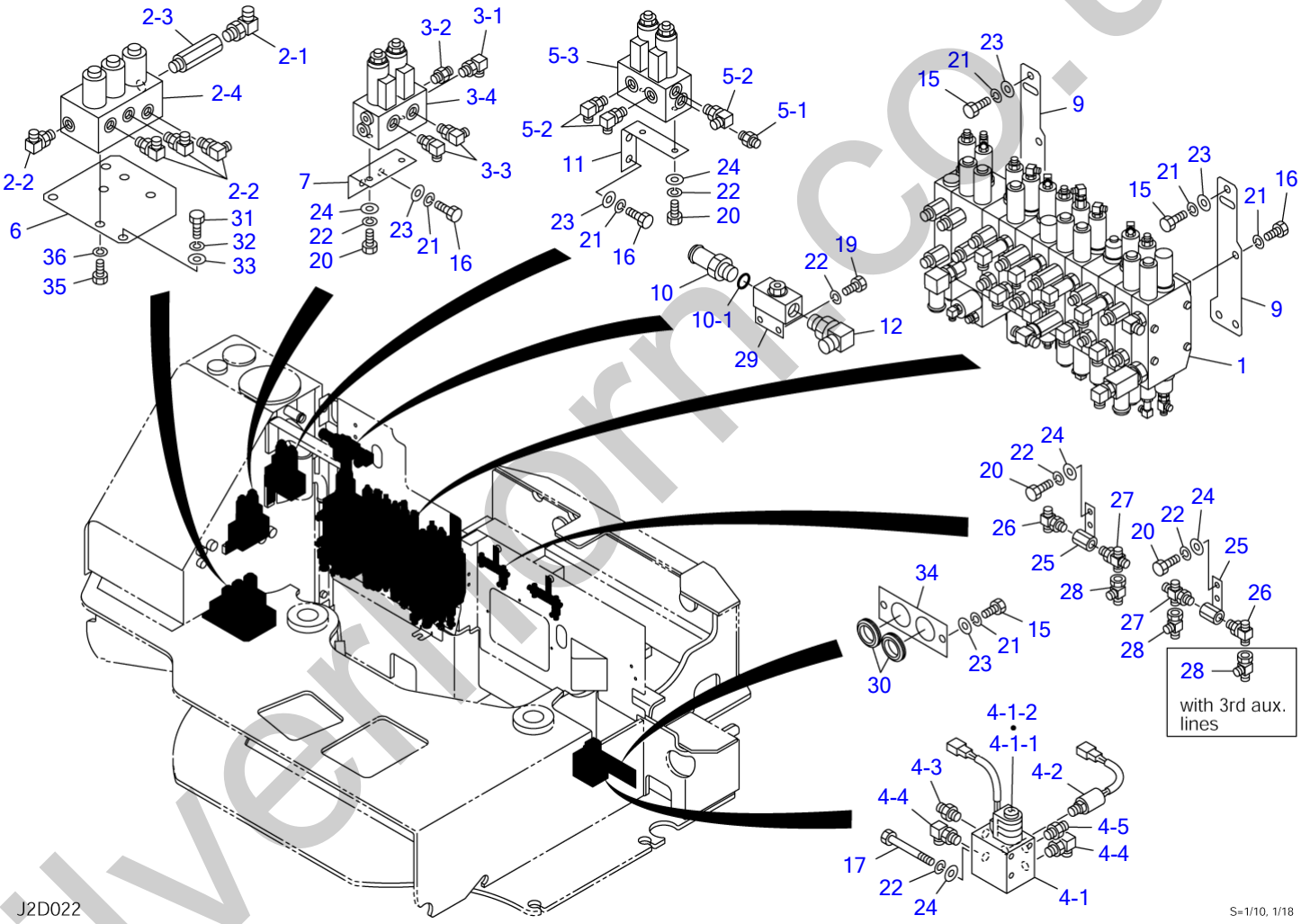

silvermorn.co.uk

VALVE & ACCESSORIES (1/2) (1st aux. proportional cont.)

Item	Part number	Description	Q'ty	Chan.	Serial No.	Serv.	Remarks
		VALVE ASSY					X03950-23600-3
		VALVE ASSY (with 2nd aux. lines)					X03950-23700-3
		VALVE ASSY (with 3rd aux. lines)					X03950-23800-3
1	X **********	VALVE ASSY, control	1				X03950-23010-3
	X **********	VALVE ASSY, control (with 2nd aux. lines)	1				X03950-23110-3
2	X **********	VALVE ASSY, solenoid	1				X03950-23620-0
2-1	1515010051	・ELBOW	1				
	1420010180	・・O-RING	1				
2-2	1515012040	・ELBOW	4				
	1420010110	・・O-RING	1				
2-3	0007213013	・BUSHING	1				
2-4	1901748800	・VALVE, solenoid	1				
3	X **********	VALVE ASSY, solenoid (with 2nd, 3rd aux. lines)	1				X03950-23030-1
3-1	1512375004	・ELBOW	1				
	1420010110	・・O-RING	1				
3-2	1515600200	・ADAPTOR	1				
	1420010110	・・O-RING	1				
3-3	1515012040	・ELBOW	2				
	1420010110	・・O-RING	1				
3-4	1901738400	・VALVE, solenoid	1				
4	X **********	VALVE ASSY, solenoid (with 3rd aux. lines)	1				X03950-23040-2
4-1	1901747100	・VALVE, solenoid	1				
4-1-1	1901741402	・・SOLENOID	1				
4-1-2	1901741703	・・COIL	1				
4-2	1700100065	・SWITCH, pressure	1				
	1420010110	・・O-RING	1				
4-3	1515600200	・ADAPTOR	1				
	1420010110	・・O-RING	1				
4-4	1515012040	・ELBOW	2				
	1420010110	・・O-RING	1				
4-5	1512370008	・ADAPTOR (with filter)	1				
	1420010110	・・O-RING	1				
5	X **********	VALVE ASSY, solenoid	1				X03950-23650-0
5-1	1512370008	・ADAPTOR (with filter)	1				
	1420010110	・・O-RING	1				
5-2	1515012040	・ELBOW	3				
	1420010110	・・O-RING	1				
5-3	1901738400	・VALVE, solenoid	1				
6	0395023065	PLATE	1				
7	0395023070	PLATE	1				with 2nd, 3rd aux. lines
9	0395023090	PLATE	2				
10	0007224006	ADAPTOR	1				
10-1	1420010180	・O-RING	1				
11	0395023611	PLATE	1				
12	1515010042	ELBOW	1				
	1420010180	・O-RING	1				
15	1100041020	BOLT	5				
16	1100041016	BOLT	8				
	1100041016	BOLT	10				with 2nd, 3rd aux. lines
17	1100040890	BOLT	3				with 3rd aux. lines
19	1100040820	BOLT	2				
20	1100040816	BOLT	4				
	1100040816	BOLT	7				with 2nd, 3rd aux. lines
21	1140020010	WASHER, spring	13				
	1140020010	WASHER, spring	15				with 2nd, 3rd aux. lines
22	1140020008	WASHER, spring	6				
	1140020008	WASHER, spring	9				with 2nd aux. lines
	1140020008	WASHER, spring	12				with 3rd aux. lines
23	1141110010	WASHER	9				
	1141110010	WASHER	11				with 2nd, 3rd aux. lines
24	1141110008	WASHER	6				
	1141110008	WASHER	9				with 2nd aux. lines
	1141110008	WASHER	15				with 3rd aux. lines
25	0565032710	BUSHING	2				
26	1512370010	ADAPTOR	2				

silverhorn.co.uk

VALVE & ACCESSORIES (1/2) (1st aux. proportional cont.)

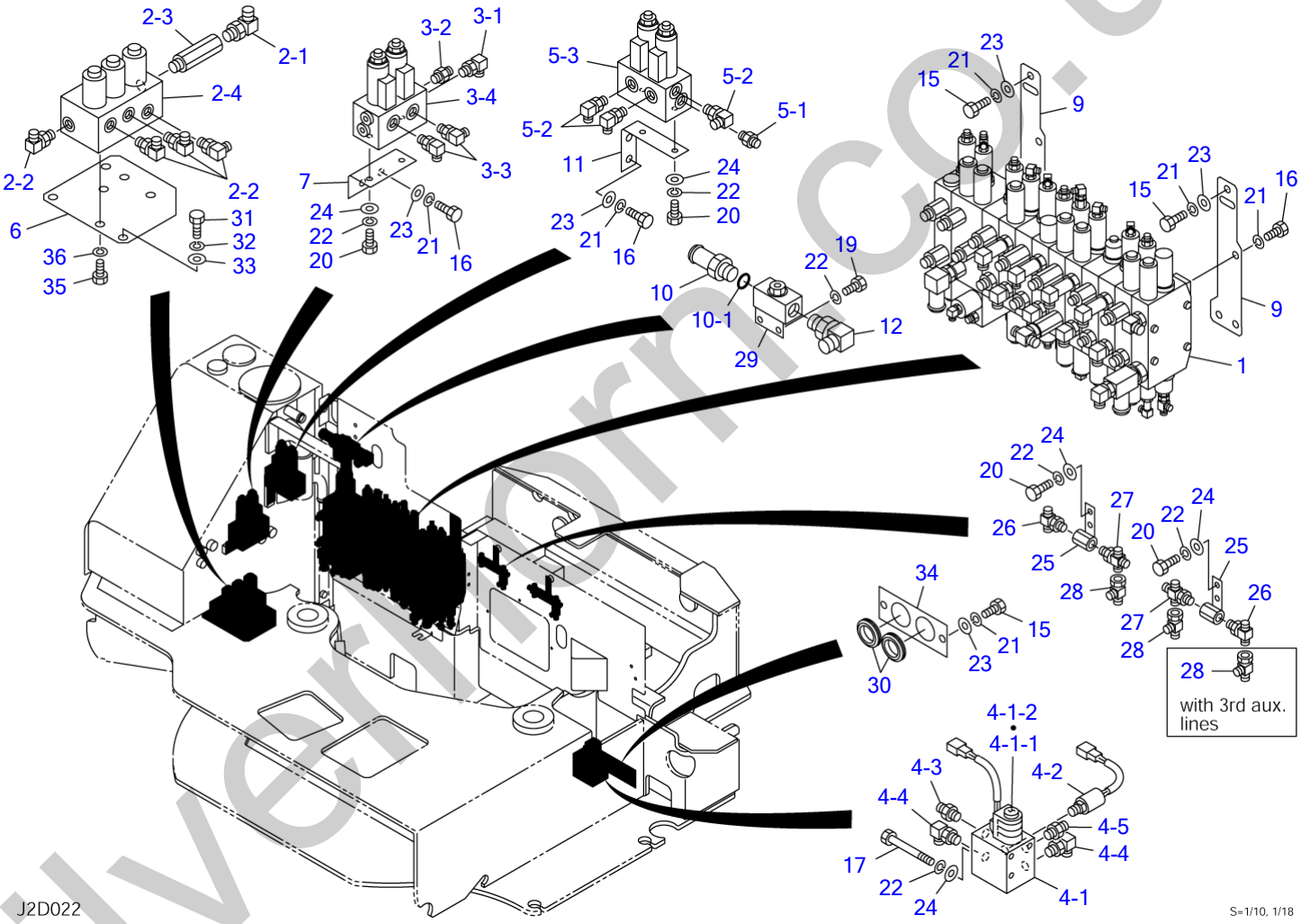

silvermorn.co.uk

VALVE & ACCESSORIES (1/2) (1st aux. proportional cont.)

Item	Part number	Description	Q'ty	Chan.	Serial No.	Serv.	Remarks
26	1420010110	・O-RING	1				
27	1513390027	CROSS	2				
27	1420010110	・O-RING	1				
28	1513390015	TEE	2				
28	1513390015	TEE	3				with 3rd aux. lines
29	1901719800	VALVE, stop	1				
30	1652053800	GROMMET	2				
31	1101041220	BOLT	3				
32	1140020012	WASHER, spring	3				
33	1141110012	WASHER	3				
34	0395023034	PLATE	1				
35	1100041016	SCREW, cap	3				
36	1140420010	WASHER, spring	3				
	J2d022						

silverhorn.co.uk

VALVE & ACCESSORIES (2/2)

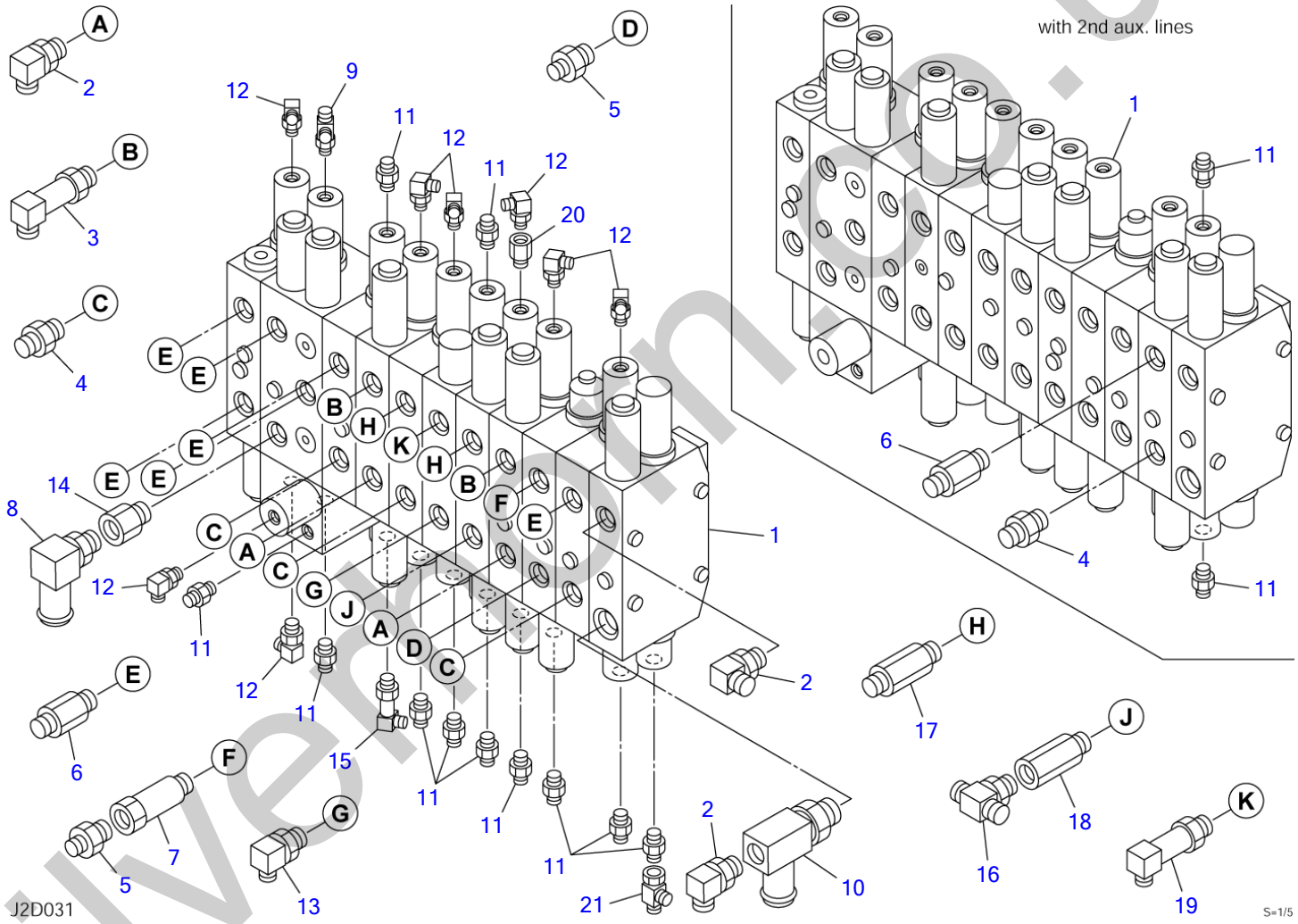

silverstone.co.uk

VALVE & ACCESSORIES (2/2)

Item	Part number	Description	Q'ty	Chan.	Serial No.	Serv.	Remarks
0	0395023010	VALVE ASSY, control	1				X03950-23010-3
	0395023110	VALVE ASSY, control (with 2nd aux. lines)	1				X03950-23110-3
1	1901043200	・VALVE, control	1				
	1901043300	・VALVE, control	1				with 2nd aux. lines
2	1515010042	・ELBOW	4				
	1420010180	・・O-RING	1				
3	1515010512	・ELBOW	2				
	1420010180	・・O-RING	1				
4	1515600202	・ADAPTOR	3				
	1515600202	・ADAPTOR	4				with 2nd aux. lines
	1420010180	・・O-RING	1				
5	1515600577	・ADAPTOR	2				
	1420010180	・・O-RING	1				
6	0007203041	・ADAPTOR	6				
	0007203041	・ADAPTOR	7				with 2nd aux. lines
	1420010180	・・O-RING	1				
7	0007213055	・ADAPTOR	1				
	1420010180	・・O-RING	1				
8	1513350006	・ADAPTOR	1				
	1420010180	・・O-RING	1				
9	1512370011	・TEE	1				
	1420010110	・・O-RING	1				
10	0395010600	・NIPPLE	1				
	1420010240	・・O-RING	1				
11	1515600200	・ADAPTOR	11				
	1515600200	・ADAPTOR	13				with 2nd aux. lines
	1420010110	・・O-RING	1				
12	1515012040	・ELBOW	8				
	1420010110	・・O-RING	1				
13	1515010051	・ELBOW	1				
	1420010180	・・O-RING	1				
14	0007213010	・BUSHING	1				
	1420010180	・・O-RING	1				
15	1515012510	・ELBOW	1				
	1420010110	・・O-RING	1				
16	1512374002	・TEE	1				
	1420010180	・・O-RING	1				
17	0007203074	・ADAPTOR	2				
	1420010180	・・O-RING	1				
18	0007213038	・BUSHING	1				
	1420010180	・・O-RING	1				
19	1515010517	・ELBOW	1				
	1420010180	・・O-RING	1				
20	1513250202	・BUSHING	1				
	1420010110	・・O-RING	1				
21	1513390015	・TEE	1				
	J2d031						

silverthorn.co.uk

PIPING; UPPER (1/4)

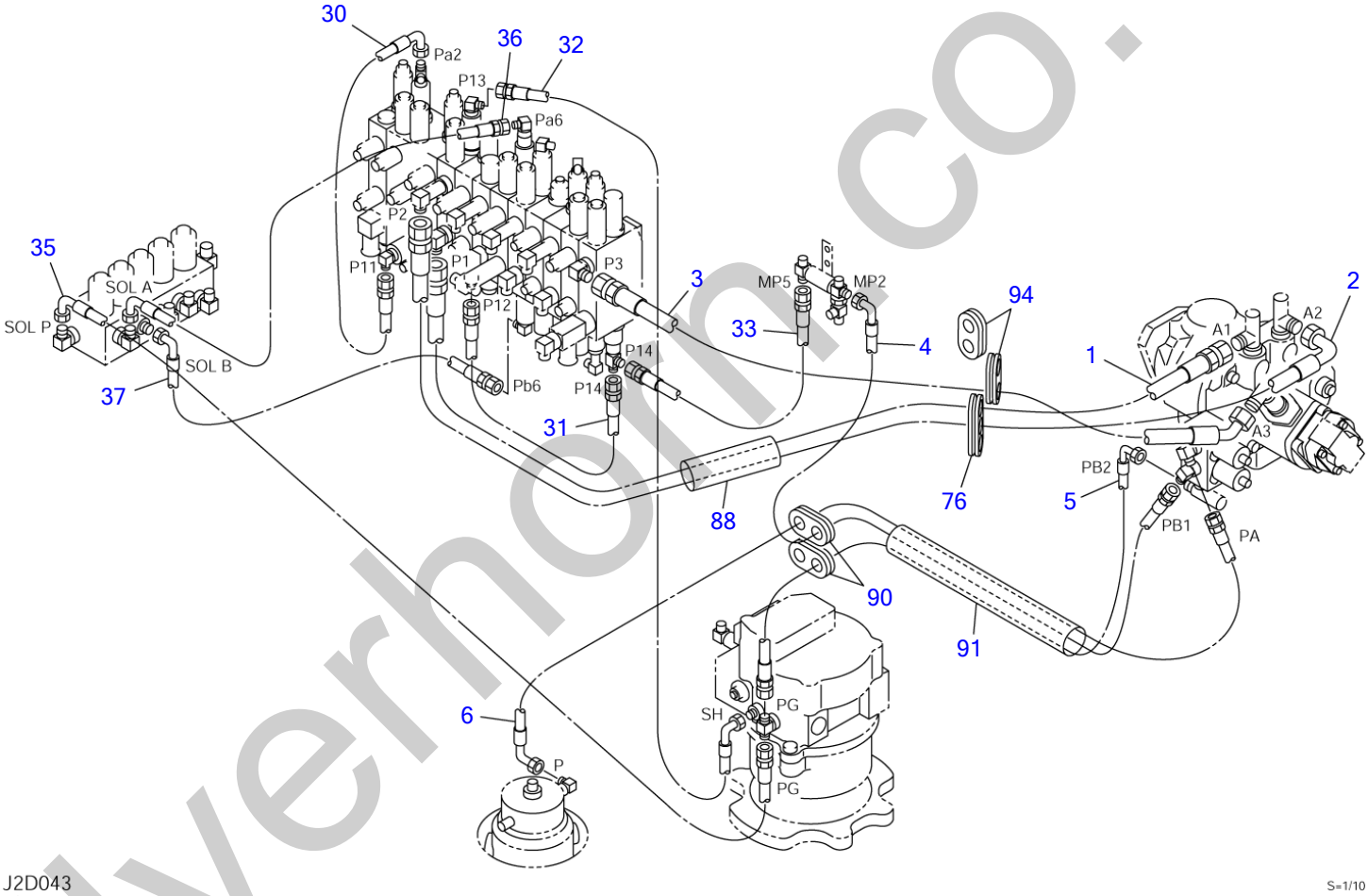

silverhorn.co.uk

PIPING; UPPER (1/4)

Item	Part number	Description	Q'ty	Chan.	Serial No.	Serv.	Remarks
		PIPING ASSY, upper					X03970-14000-10
		PIPING ASSY, upper (with 2nd aux. lines)					X03970-13900-10
		PIPING ASSY, upper (with 3rd aux. lines, with air con.)					X03970-13800-10
		PIPING ASSY, upper (with 3rd aux. lines, without air con.)					X03970-14800-10
1	0397014010	HOSE ASSY	1				18019-70140
2	0397014020	HOSE ASSY	1				18019-71147
3	0397014030	HOSE ASSY	1				18019-47078
4	0397014040	HOSE ASSY	1				18010-52115
5	0397014050	HOSE ASSY	1				18010-52125
6	0397014060	HOSE ASSY	1				18010-52110
30	0397014300	HOSE ASSY	1				18010-52070
31	0397014310	HOSE ASSY	1				18010-22060
32	0397014320	HOSE ASSY	1				18010-52085
33	0397014330	HOSE ASSY	1				18010-22035
35	0397014350	HOSE ASSY	1				18010-52110
36	0397014360	HOSE ASSY	1				18010-52060
37	0397014370	HOSE ASSY	1				18010-52075
76	0097022400	GUARD	1				
88	1531350033	PROTECTOR	1			M	sold by the meter
90	0097210300	GUARD	2				
91	1531645045	PROTECTOR	1				sold by the meter
94	0337017300	GUARD	2				
	J2d043						

silverhorn.co.uk

PIPING; UPPER (2/4)

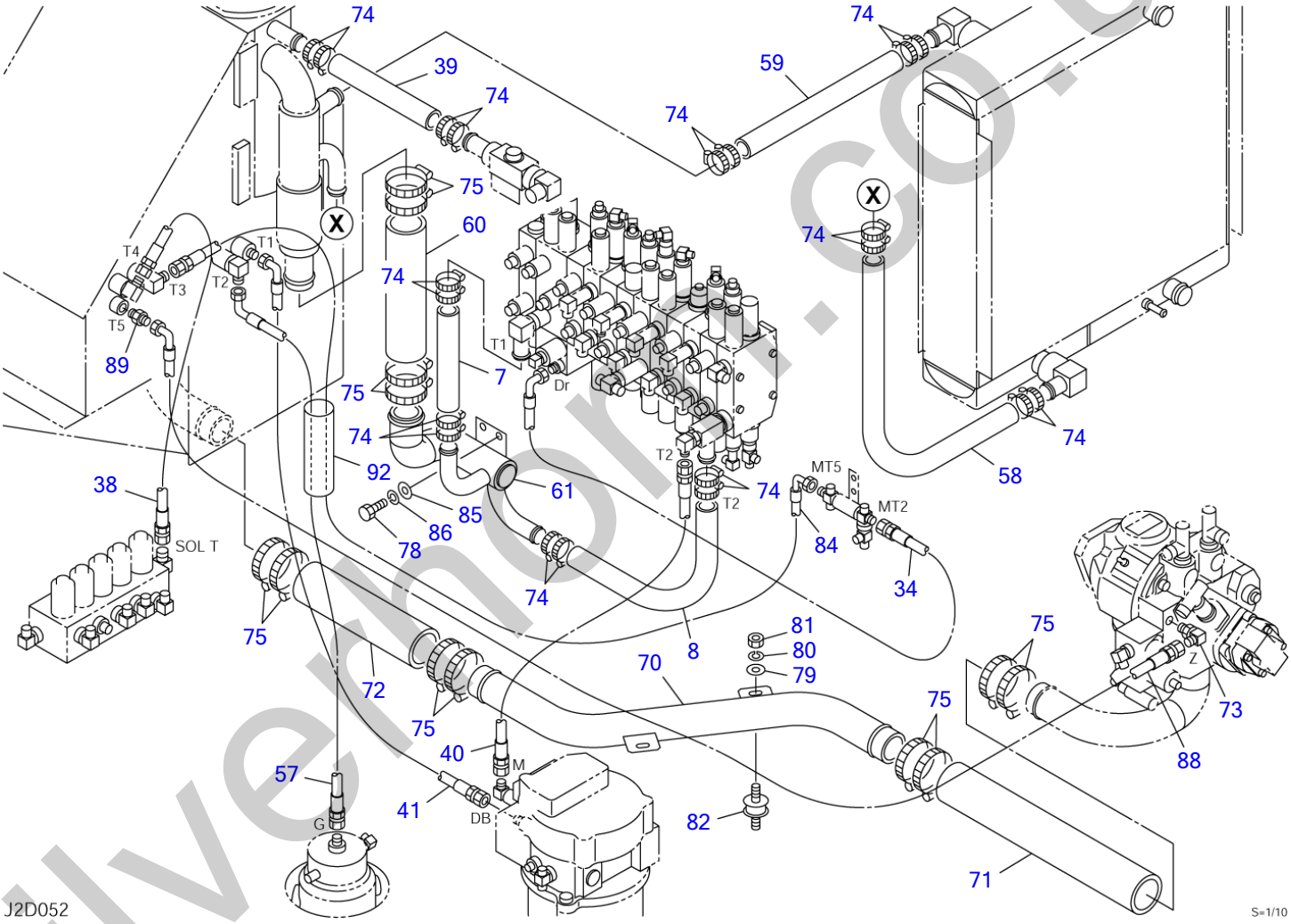

silverhorn.co.uk

PIPING; UPPER (2/4)

Item	Part number	Description	Q'ty	Chan.	Serial No.	Serv.	Remarks
		PIPING ASSY, upper					X03970-14000-10
		PIPING ASSY, upper (with 2nd aux. lines)					X03970-13900-10
		PIPING ASSY, upper (with 3rd aux. lines, with air con.)					X03970-13800-10
		PIPING ASSY, upper (with 3rd aux. lines, without air con.)					X03970-14800-10
7	1530525018	HOSE	1				sold by the meter
8	1530525057	HOSE	1				sold by the meter
34	0397014340	HOSE ASSY	1				18010-52105
38	0397014380	HOSE ASSY	1				18010-23053
39	1530525019	HOSE	1				sold by the meter
40	0397014400	HOSE ASSY	1				18010-24023
41	0397014410	HOSE ASSY	1				18010-53090
57	0397014570	HOSE ASSY	1				18010-53095
58	1530525077	HOSE	1				sold by the meter
59	1530525028	HOSE	1				sold by the meter
60	1530547024	HOSE	1				sold by the meter
61	0397014610	PIPE	1				
70	0397014700	PIPE	1				
71	0397014710	HOSE	1				
72	0397014720	HOSE	1				
73	1515012040	ELBOW	1		15820004~1582#		without air con. 23431
	1420010110	・O-RING	1				
74	1533700041	BAND	20				
75	1533700070	BAND	12				
78	1100041025	BOLT	2				
79	1141110008	WASHER	2				
80	1140020008	WASHER, spring	2				
81	1130040008	NUT	2				
82	1651012004	RUBBER, cushion	2				
84	0397014840	HOSE ASSY	1				18010-53120
85	1141110010	WASHER	2				
86	1140020010	WASHER, spring	2				
88	0397014880	HOSE ASSY (18010-52175)	1		15820004~1582#		without air con. 23431
89	1515600200	ADAPTOR	1		15820004~1582#		with 1st aux. lines
	1420010110	・O-RING	1				
92	1531645015	PROTECTOR	1				sold by the meter
	J2d053						

silverhorn.co.kr

PIPING; UPPER (3/4)

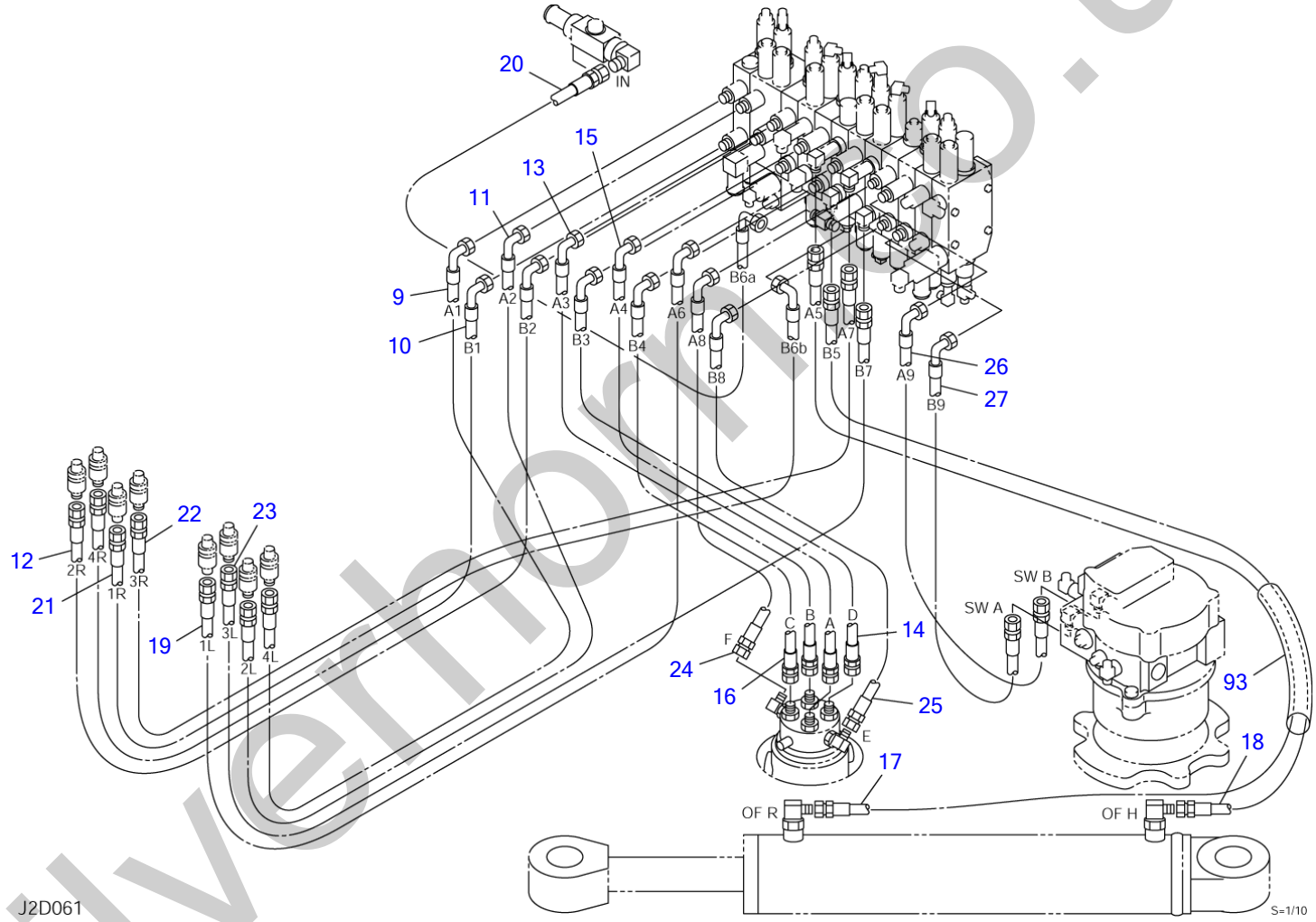

silverhorse.uk

PIPING; UPPER (3/4)

Item	Part number	Description	Q'ty	Chan.	Serial No.	Serv.	Remarks
		PIPING ASSY, upper					X03970-14000-10
		PIPING ASSY, upper (with 2nd aux. lines)					X03970-13900-10
		PIPING ASSY, upper (with 3rd aux. lines, with air con.)					X03970-13800-10
		PIPING ASSY, upper (with 3rd aux. lines, without air con.)					X03970-14800-10
9	0397014090	HOSE ASSY	1				18019-41215
10	0397014100	HOSE ASSY	1				18019-41175
11	0397014110	HOSE ASSY	1				18019-41220
12	0397014120	HOSE ASSY	1				18019-41175
13	0397014130	HOSE ASSY	1				18019-41070
14	0397014140	HOSE ASSY	1				18019-41070
15	0397014150	HOSE ASSY	1				18019-41065
16	0397014160	HOSE ASSY	1				18019-41060
17	0397014170	HOSE ASSY	1				18019-20195
18	0397014180	HOSE ASSY	1				18019-20135
19	0397014190	HOSE ASSY	1				18019-41195
20	0397014200	HOSE ASSY	1				18015-41043
21	0397014210	HOSE ASSY	1				18019-41175
22	0397014220	HOSE ASSY	1				18019-40180
23	0397014230	HOSE ASSY	1				18019-40195
24	0397014240	HOSE ASSY	1				18019-21065
25	0397014250	HOSE ASSY	1				18019-21065
26	0397014260	HOSE ASSY	1				18028-41070
27	0397014270	HOSE ASSY	1				18028-41068
93	1531335033 J2d063	PROTECTOR	1				sold by the meter

silverhorn.co.uk

PIPING; UPPER (4/4) (with 2nd & 3rd aux. lines)

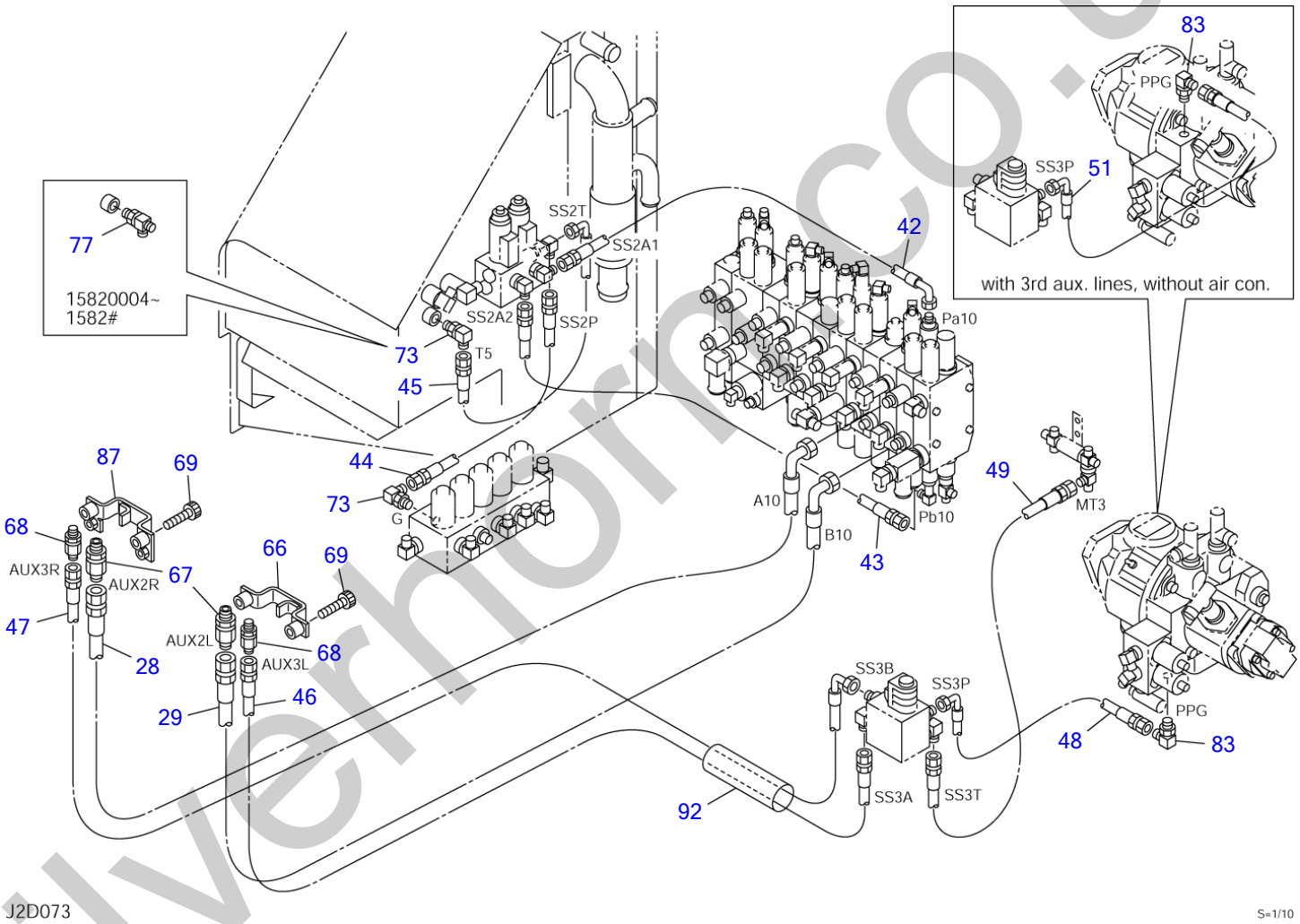

silverhorn.co.uk

PIPING; UPPER (4/4) (with 2nd & 3rd aux. lines)

Item	Part number	Description	Q'ty	Chan.	Serial No.	Serv.	Remarks
		PIPING ASSY, upper (with 2nd aux. lines)					X03970-13900-10
		PIPING ASSY, upper (with 3rd aux. lines, with air con.)					X03970-13800-10
		PIPING ASSY, upper (with 3rd aux. lines, without air con.)					X03970-14800-10
28	0397014280	HOSE ASSY	1				18019-41160
29	0397014290	HOSE ASSY	1				18019-41175
42	0397014420	HOSE ASSY	1				18010-52070
43	0397014430	HOSE ASSY	1				18010-22100
44	0397014440	HOSE ASSY	1				18010-52033
45	0397014450	HOSE ASSY	1				18010-52040
46	0397014460	HOSE ASSY (with 3rd aux. lines)	1				18010-22175
47	0397014470	HOSE ASSY (with 3rd aux. lines)	1				18010-52195
48	0397014480	HOSE ASSY (with 3rd aux. lines, with air con.)	1				18010-52045
49	0397014490	HOSE ASSY (with 3rd aux. lines)	1				18010-22090
51	0397014810	HOSE ASSY (with 3rd aux. lines, without air con.)	1			M	18010-52063
66	0397014670	CLAMP	1				
67	1514011104	ADAPTOR	2				
68	1514011102	ADAPTOR (with 3rd aux. lines)	2				
69	1110041050	SCREW, cap	4				
73	1515012040	ELBOW	2				
	1420010110	・O-RING	1				
77	1512370011	TEE	1		15820004~1582#		23431
	1420010110	・O-RING	1				
83	1512370015	ELBOW (with 3rd aux. lines)	1				
	1420010080	・O-RING	1				
87	0397014680	CLAMP	1				
92	1531645015	PROTECTOR	1				sold by the meter
	J2d073						

silverhorn.co.uk

PIPING; UPPER (1/4) (1st aux. proportional cont.)

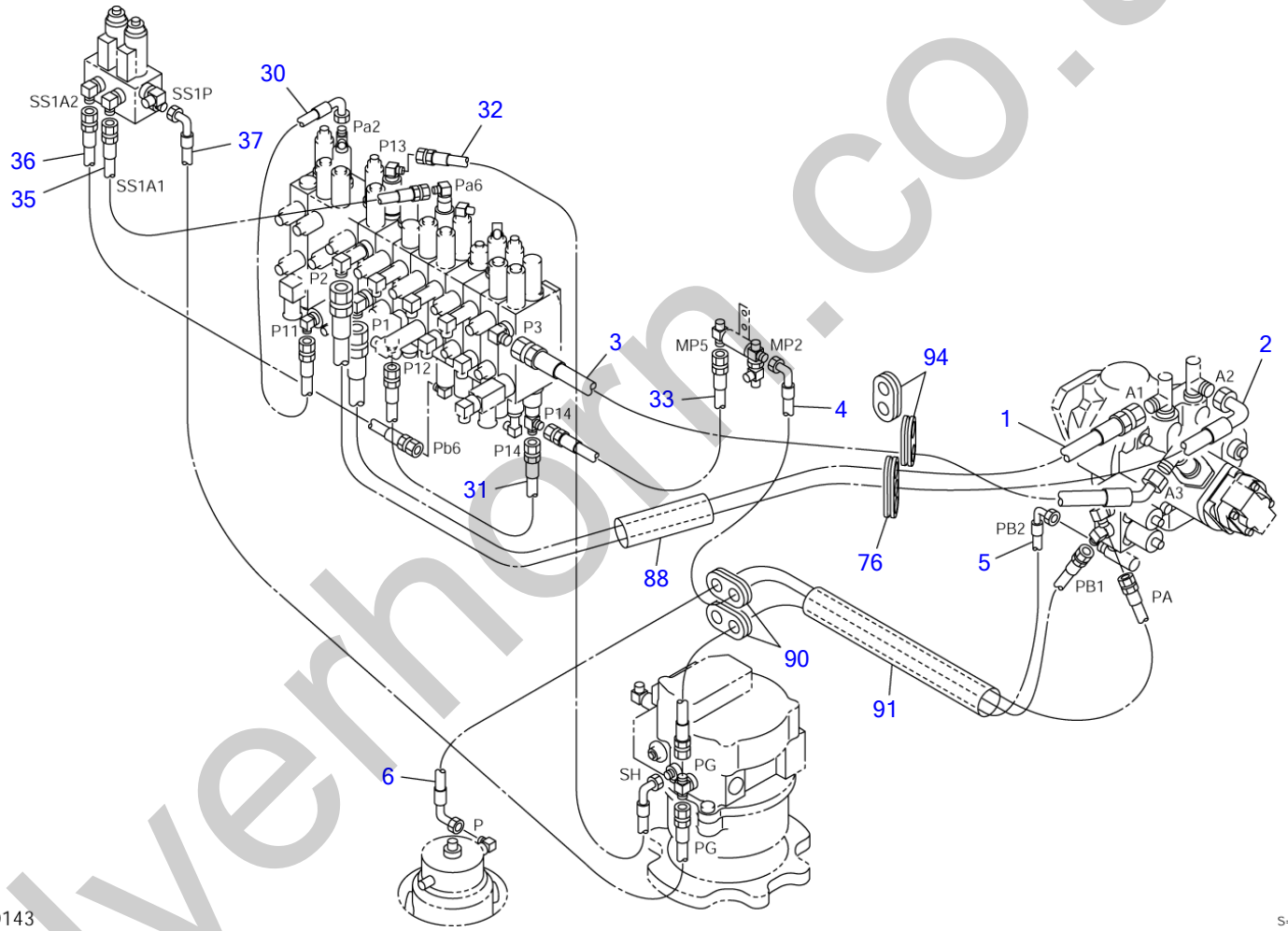

silverhorn.co.uk

PIPING; UPPER (1/4) (1st aux. proportional cont.)

Item	Part number	Description	Q'ty	Chan.	Serial No.	Serv.	Remarks
		PIPING ASSY, upper					X03970-15100-6
		PIPING ASSY, upper (with 2nd aux. lines)					X03970-15200-6
		PIPING ASSY, upper (with 3rd aux. lines, with air con.)					X03970-15300-6
		PIPING ASSY, upper (with 3rd aux. lines, without air con.)					X03970-15400-6
1	0397014010	HOSE ASSY	1				18019-70140
2	0397014020	HOSE ASSY	1				18019-71147
3	0397014030	HOSE ASSY	1				18019-47078
4	0397014040	HOSE ASSY	1				18010-52115
5	0397014050	HOSE ASSY	1				18010-52125
6	0397014060	HOSE ASSY	1				18010-52110
30	0397014300	HOSE ASSY	1				18010-52070
31	0397014310	HOSE ASSY	1				18010-22060
32	0397014320	HOSE ASSY	1				18010-52085
33	0397014330	HOSE ASSY	1				18010-22035
35	0397015110	HOSE ASSY	1				18010-22040
36	0397015120	HOSE ASSY	1				18010-22085
37	0397015130	HOSE ASSY	1				18010-52105
76	0097022400	GUARD	1				
88	1531350033	PROTECTOR	1			M	sold by the meter
90	0097210300	GUARD	2				
91	1531645045	PROTECTOR	1				sold by the meter
94	0337017300	GUARD	2				
	J2d143						

silverhorn.co.uk

PIPING; UPPER (2/4) (1st aux. proportional cont.)

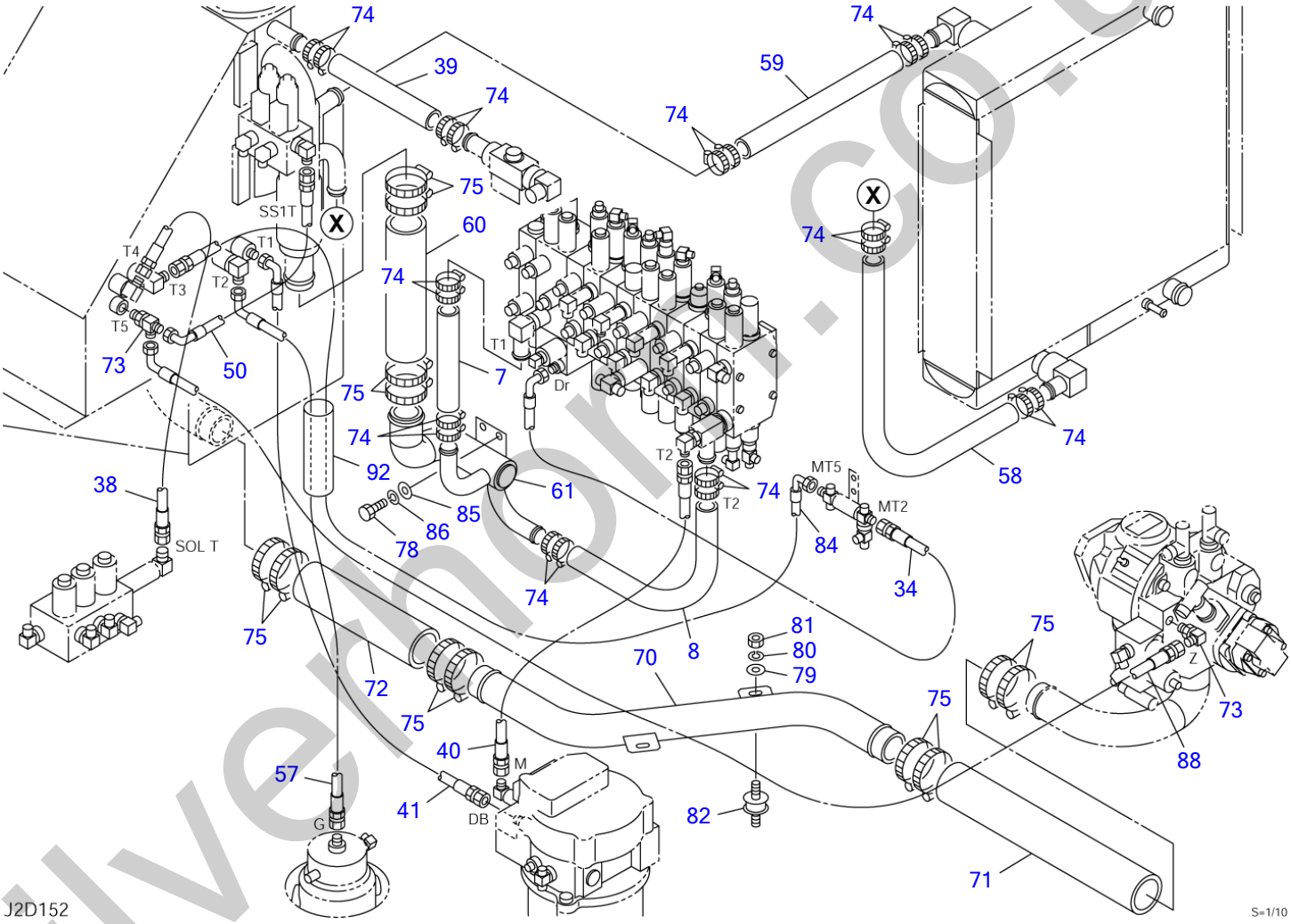

silverhorn.co.uk

PIPING; UPPER (2/4) (1st aux. proportional cont.)

Item	Part number	Description	Q'ty	Chan.	Serial No.	Serv.	Remarks
		PIPING ASSY, upper					X03970-15100-6
		PIPING ASSY, upper (with 2nd aux. lines)					X03970-15200-6
		PIPING ASSY, upper (with 3rd aux. lines, with air con.)					X03970-15300-6
		PIPING ASSY, upper (with 3rd aux. lines, without air con.)					X03970-15400-6
7	1530525018	HOSE	1				sold by the meter
8	1530525057	HOSE	1				sold by the meter
34	0397014340	HOSE ASSY	1				18010-52105
38	0397014380	HOSE ASSY	1				18010-23053
39	1530525019	HOSE	1				sold by the meter
40	0397014400	HOSE ASSY	1				18010-24023
41	0397014410	HOSE ASSY	1				18010-53090
50	0397015150	HOSE ASSY	1				18010-52040
57	0397014570	HOSE ASSY	1				18010-53095
58	1530525077	HOSE	1				sold by the meter
59	1530525028	HOSE	1				sold by the meter
60	1530547024	HOSE	1				sold by the meter
61	0397014610	PIPE	1				
70	0397014700	PIPE	1				
71	0397014710	HOSE	1				
72	0397014720	HOSE	1				
73	1512370011	TEE	2				
	1420010110	▪ O-RING	1				
74	1533700041	BAND	20				
75	1533700070	BAND	12				
78	1100041025	BOLT	2				
79	1141110008	WASHER	2				
80	1140020008	WASHER, spring	2				
81	1130040008	NUT	2				
82	1651012004	RUBBER, cushion	2				
84	0397014840	HOSE ASSY	1				18010-53120
85	1141110010	WASHER	2				
86	1140020010	WASHER, spring	2				
88	0397014880	HOSE ASSY (18010-52175)	1		15820004~1582#		without air con. 23431
92	1531645015	PROTECTOR	1				sold by the meter
	J2d153						

silverhorn.co.kr

PIPING; UPPER (3/4) (1st aux. proportional cont.)

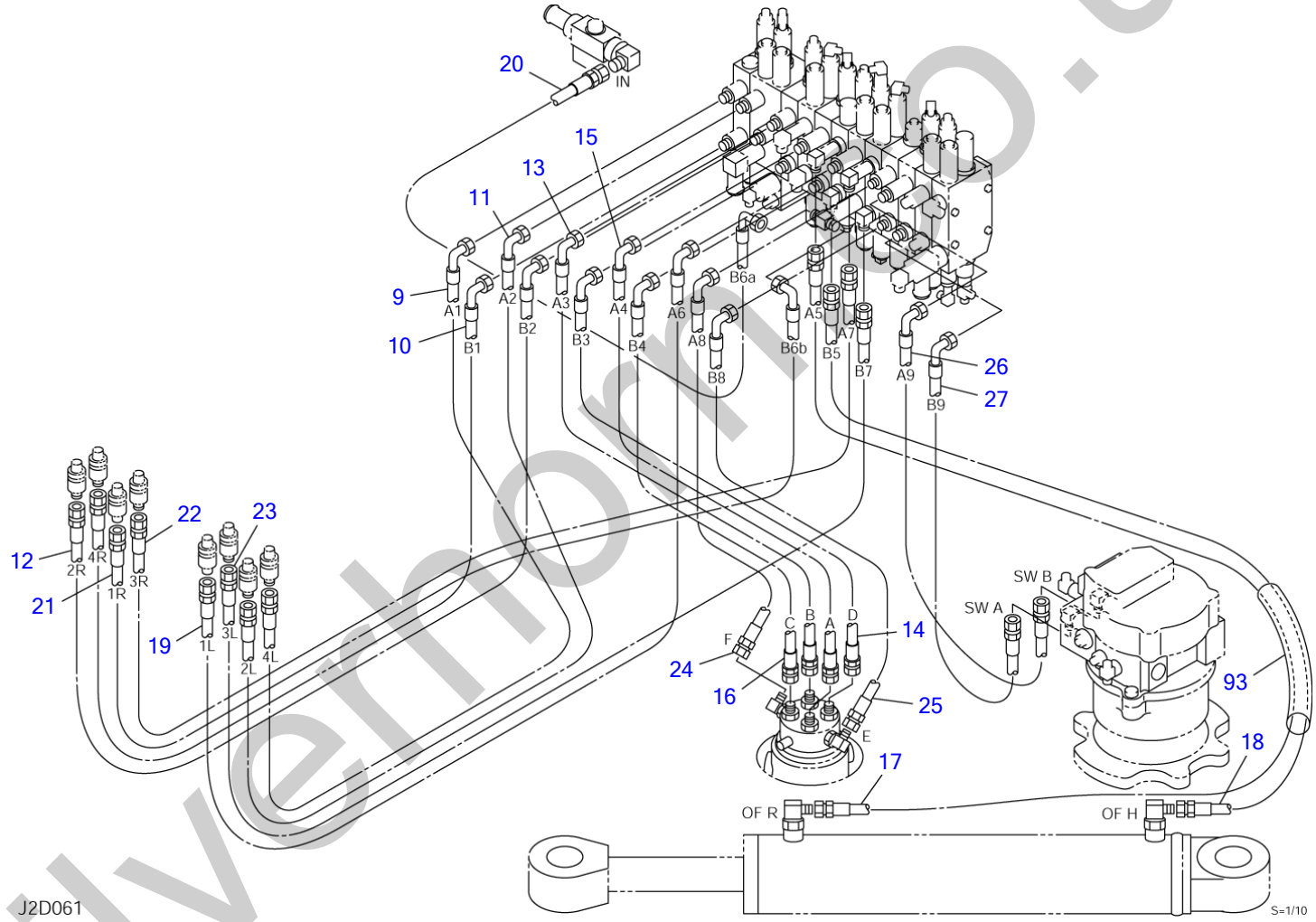

silverhorse.uk

PIPING; UPPER (3/4) (1st aux. proportional cont.)

Item	Part number	Description	Q'ty	Chan.	Serial No.	Serv.	Remarks
		PIPING ASSY, upper					X03970-15100-6
		PIPING ASSY, upper (with 2nd aux. lines)					X03970-15200-6
		PIPING ASSY, upper (with 3rd aux. lines, with air con.)					X03970-15300-6
		PIPING ASSY, upper (with 3rd aux. lines, without air con.)					X03970-15400-6
9	0397014090	HOSE ASSY	1				18019-41215
10	0397014100	HOSE ASSY	1				18019-41175
11	0397014110	HOSE ASSY	1				18019-41220
12	0397014120	HOSE ASSY	1				18019-41175
13	0397014130	HOSE ASSY	1				18019-41070
14	0397014140	HOSE ASSY	1				18019-41070
15	0397014150	HOSE ASSY	1				18019-41065
16	0397014160	HOSE ASSY	1				18019-41060
17	0397014170	HOSE ASSY	1				18019-20195
18	0397014180	HOSE ASSY	1				18019-20135
19	0397014190	HOSE ASSY	1				18019-41195
20	0397014200	HOSE ASSY	1				18015-41043
21	0397014210	HOSE ASSY	1				18019-41175
22	0397014220	HOSE ASSY	1				18019-40180
23	0397014230	HOSE ASSY	1				18019-40195
24	0397014240	HOSE ASSY	1				18019-21065
25	0397014250	HOSE ASSY	1				18019-21065
26	0397014260	HOSE ASSY	1				18028-41070
27	0397014270	HOSE ASSY	1				18028-41068
93	1531335033 J2d163	PROTECTOR	1				sold by the meter

silverhorn.co.uk

PIPING; UPPER (4/4) (1st aux. proportional cont., with 2nd & 3rd aux. lines)

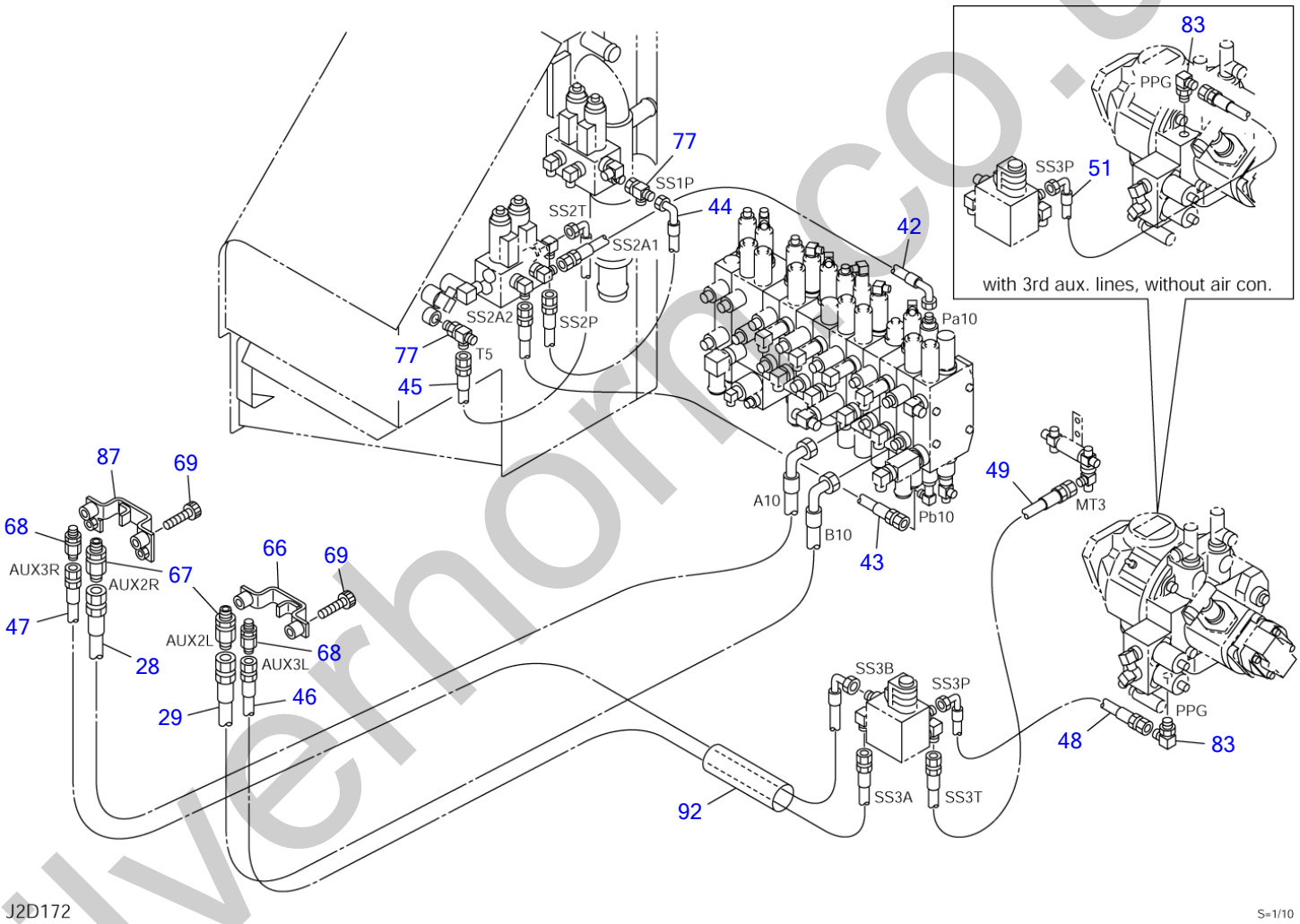

silverhorn.co.uk

PIPING; UPPER (4/4) (1st aux. proportional cont., with 2nd & 3rd aux. lines)

Item	Part number	Description	Q'ty	Chan.	Serial No.	Serv.	Remarks
		PIPING ASSY, upper (with 2nd aux. lines)					X03970-15200-6
		PIPING ASSY, upper (with 3rd aux. lines, with air con.)					X03970-15300-6
		PIPING ASSY, upper (with 3rd aux. lines, without air con.)					X03970-15400-6
28	0397014280	HOSE ASSY	1				18019-41160
29	0397014290	HOSE ASSY	1				18019-41175
42	0397014420	HOSE ASSY	1				18010-52070
43	0397014430	HOSE ASSY	1				18010-22100
44	0397015140	HOSE ASSY	1				18010-52030
45	0397014450	HOSE ASSY	1				18010-52040
46	0397014460	HOSE ASSY (with 3rd aux. lines)	1				18010-22175
47	0397014470	HOSE ASSY (with 3rd aux. lines)	1				18010-52195
48	0397014480	HOSE ASSY (with 3rd aux. lines, with air con.)	1				18010-52045
49	0397014490	HOSE ASSY (with 3rd aux. lines)	1				18010-22090
51	0397014810	HOSE ASSY (with 3rd aux. lines, without air con.)	1			M	18010-52063
66	0397014670	CLAMP	1				
67	1514011104	ADAPTOR	2				
68	1514011102	ADAPTOR (with 3rd aux. lines)	2				
69	1110041050	SCREW, cap	4				
77	1513390015	TEE	2				
83	1512370015	ELBOW (with 3rd aux. lines)	1				
	1420010080	・O-RING	1				
87	0397014680	CLAMP	1				
92	1531645015	PROTECTOR	1				sold by the meter
	J2d173						

silverhorn.co.uk

ACCUMULATOR

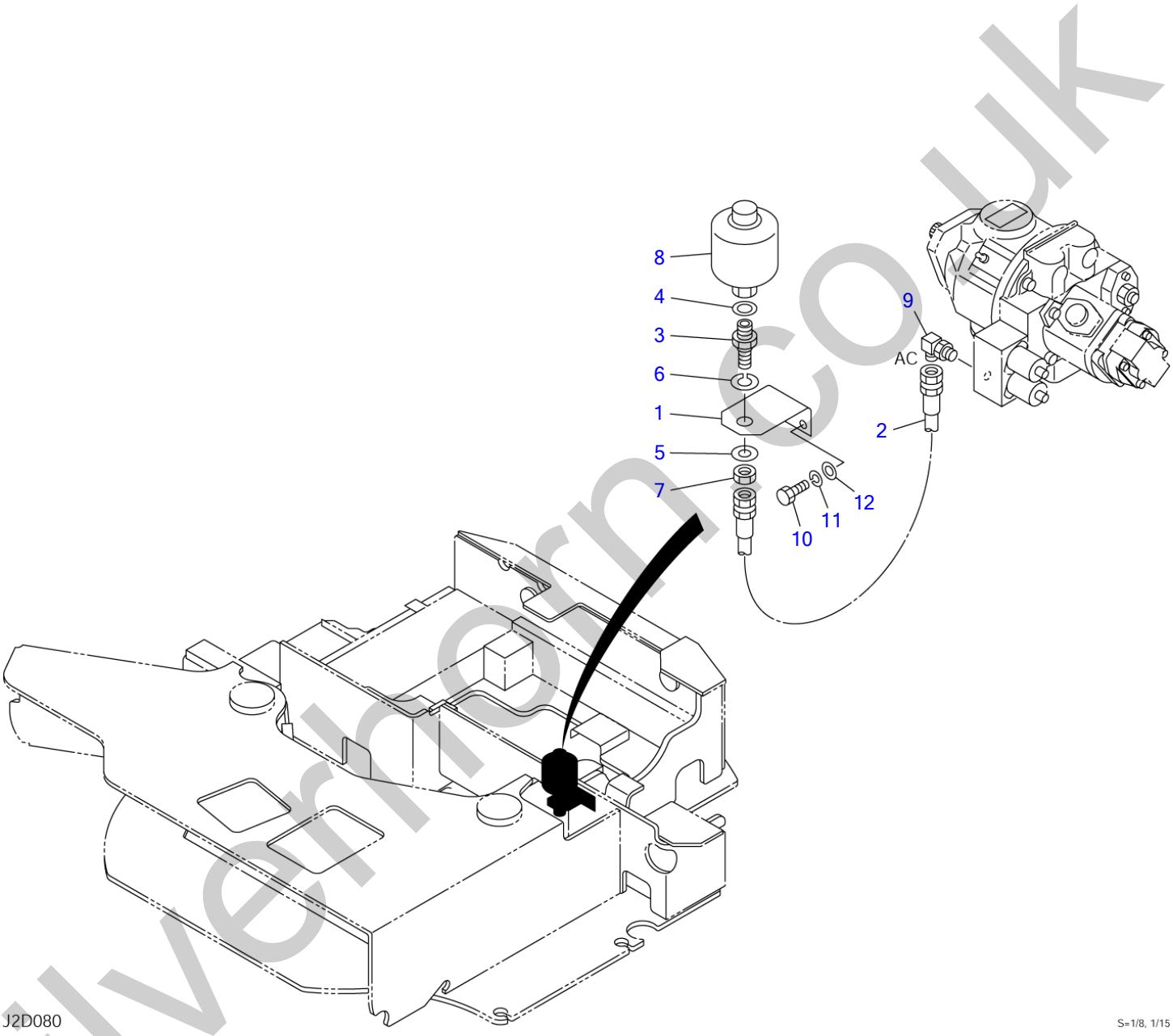

silvermorn.co.uk

ACCUMULATOR

Item	Part number	Description	Q'ty	Chan.	Serial No.	Serv.	Remarks
0	0395022400	ACCUMULATOR ASSY	1				X03950-22400-0
1	0395022410	・BRACKET	1				
2	0395022420	・HOSE ASSY	1				18010-23038
3	0007200222	・ADAPTOR	1				
4	1432160004	・SEAL	1				
5	1141110016	・WASHER	1				
6	1140020020	・WASHER, spring	1				
7	0007200154	・NUT	1				
8	1552200020	・ACCUMULATOR	1				
9	1515010130	・ELBOW	1				
	1420010110	・・O-RING	1				
10	1100041025	・BOLT	2				
11	1140020010	・WASHER, spring	2				
12	1141110010	・WASHER	2				
	J2d080						

silverhorn.co.uk

BOOM EMERGENCY SHUT-OFF VALVE

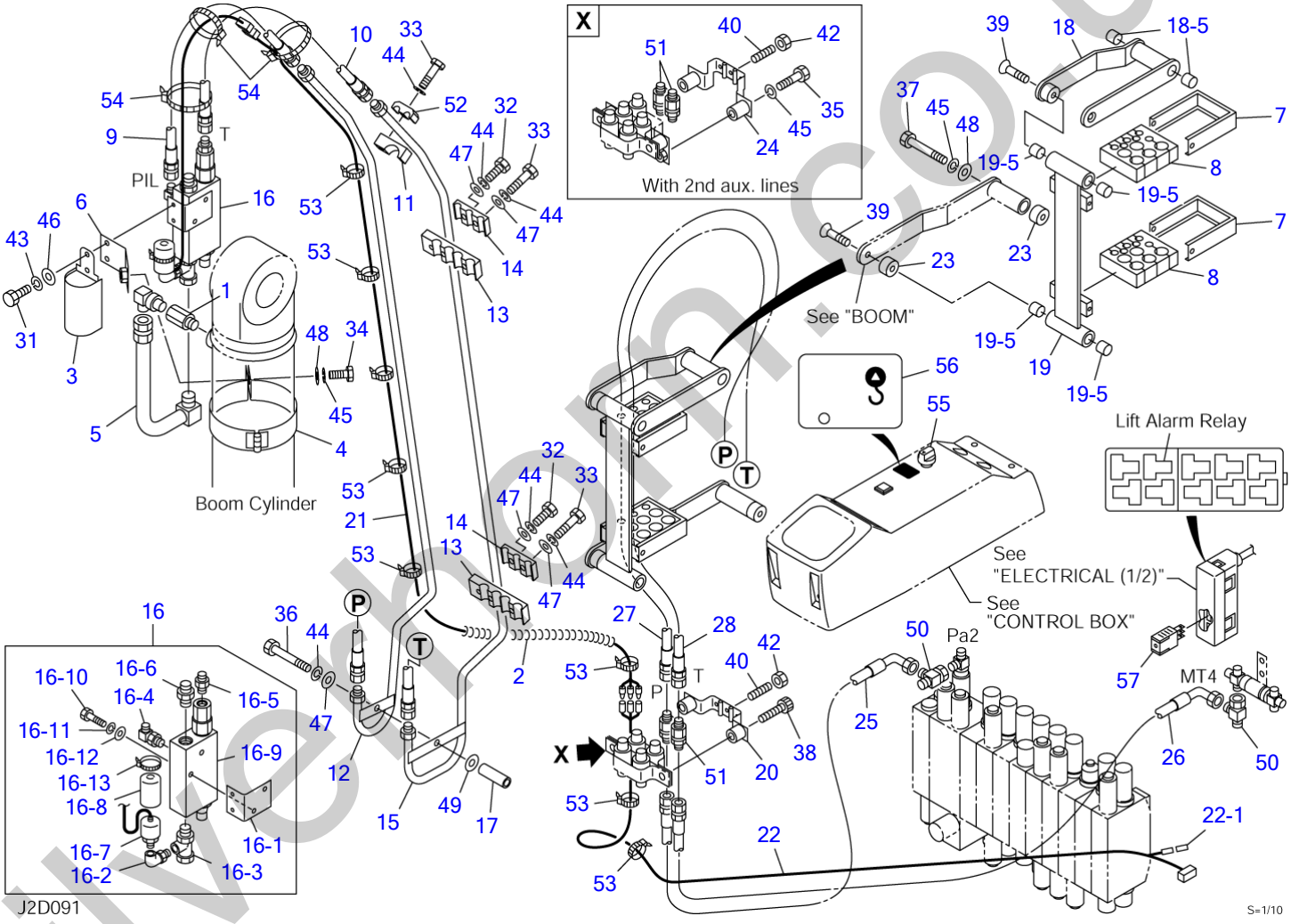

silverhorn.co.uk

BOOM EMERGENCY SHUT-OFF VALVE

Item	Part number	Description	Q'ty	Chan.	Serial No.	Serv.	Remarks
0	0395024000	VALVE ASSY, emergency shut-off (with 1st aux. lines)	1				X03950-24000-3
	0395024100	VALVE ASSY, emergency shut-off (with 2nd & 3rd aux. lines)	1				X03950-24100-3
	0395024200	VALVE ASSY, emergency shut-off (with 1st aux. lines & arm shut-off valve)	1				X03950-24200-3
	0395024300	VALVE ASSY, emergency shut-off (with 2nd & 3rd aux. lines & arm shut-off valve)	1				X03950-24300-3
1	0007213010	・BUSHING	1				
	1420010180	・・O-RING	1				
2	0394216980	・SPRING	1				
3	0395009620	・COVER	1				
4	0395010810	・CLAMP	1				
5	0395012710	・PIPE	1				
6	0395012740	・PLATE	1				
7	0395012770	・HOLDER	2				
8	0397324660	・RUBBER	2				
9	0395012840	・HOSE ASSY	1				18010-22072
10	0395012850	・HOSE ASSY	1				18010-22060
11	0395012870	・CLAMP	1				
12	0395012910	・PIPE	1				
13	0395012940	・CLAMP	2				
14	0395012950	・CLAMP	2				
15	0395022010	・PIPE	1				without arm shut-off valve
16	0395022020	・VALVE ASSY, emergency shut-off	1				
16-1	0395009600	・・BRACKET	1				
16-2	1513300022	・・ELBOW	1				
	1420010110	・・・O-RING	1				
16-3	1513390039	・・ADAPTOR	1				
	1420010180	・・・O-RING	1				
16-4	1515012040	・・ELBOW	1				
	1420010110	・・・O-RING	1				
16-5	1515600200	・・ADAPTOR	1				
	1420010110	・・・O-RING	1				
16-6	1515600202	・・ADAPTOR	1				
	1420010180	・・・O-RING	1				
16-7	1700100080	・・SWITCH, pressure	1				
16-8	1700100061	・・COVER	1				
16-9	1901742700	・・VALVE, emergency shut-off	1				
16-10	1100040645	・・BOLT	2				
16-11	1140020006	・・WASHER, spring	2				
16-12	1141110006	・・WASHER	2				
16-13	1652231250	・・BAND	1				
17	0395022030	・PIPE	1				
18	0395022040	・ARM	1				
18-5	1333001515	・・BUSHING	2				
19	0395022050	・LINK, hose	1				
19-5	1333001515	・・BUSHING	4				
20	0395022060	・CLAMP	1				with 1st aux. line
21	0395024030	・HARNESS ASSY	1				
22	0565048060	・HARNESS ASSY	1				
22-1	1730500008	・DIODE (3A yellow)	1				
23	0395022090	・SPACER	2				
24	0395022110	・CLAMP	1				with 2nd & 3rd aux. line
25	0395024010	・HOSE ASSY	1				18010-52200
26	0395024020	・HOSE ASSY	1				18010-52195
27	0395022140	・HOSE ASSY	1				18010-22195
28	0395022150	・HOSE ASSY	1				18010-22190
31	1100040620	・BOLT	2				
32	1100040830	・BOLT	2				
33	1100040855	・BOLT	3				

silverhorn.co.uk

BOOM EMERGENCY SHUT-OFF VALVE

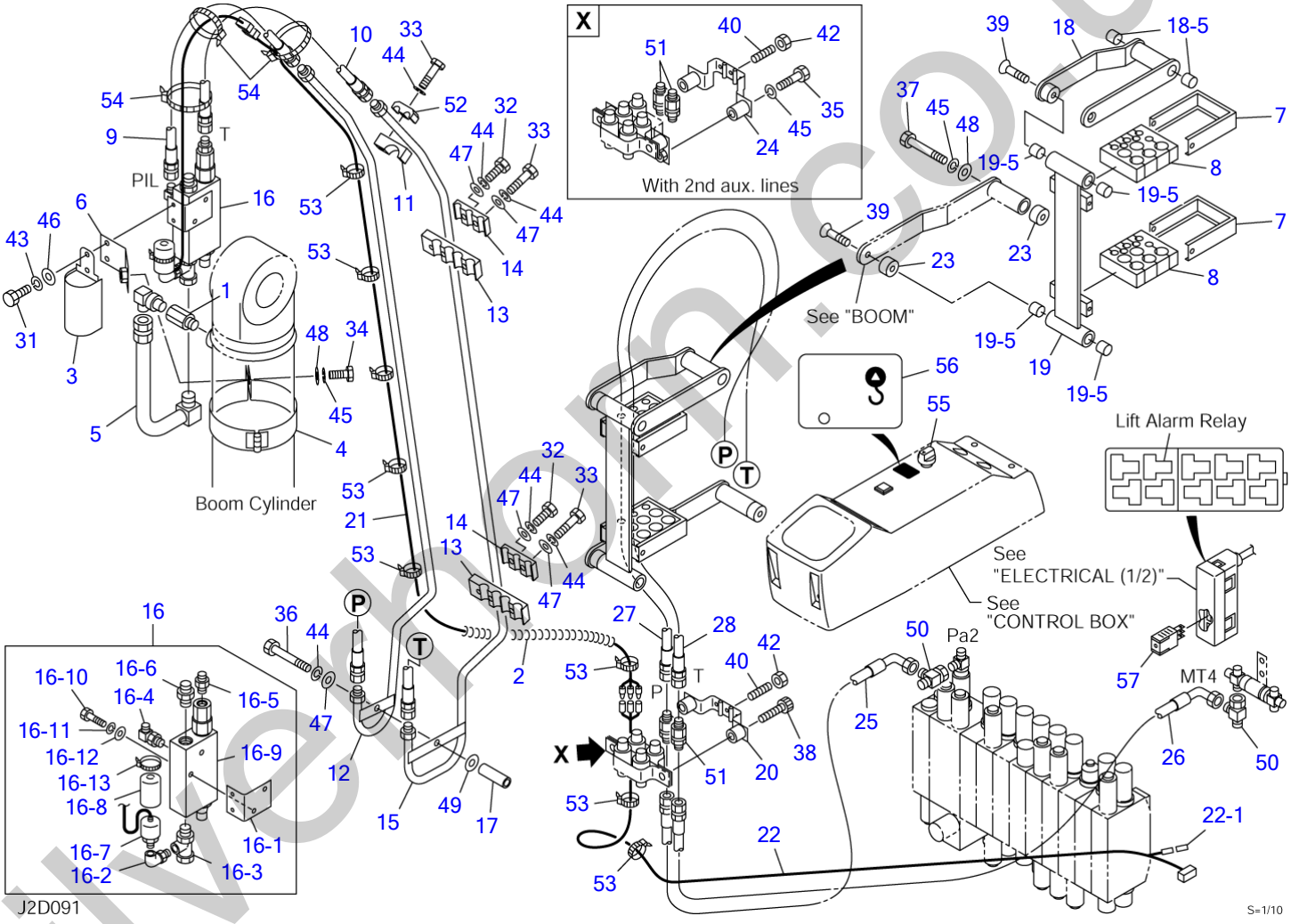

silverhorn.co.uk

BOOM EMERGENCY SHUT-OFF VALVE

Item	Part number	Description	Q'ty	Chan.	Serial No.	Serv.	Remarks
34	1100041030	・BOLT	1				
35	1100041050	・BOLT	2				with 2nd & 3rd aux. line
36	1100040880	・BOLT	1				
37	1100141015	・BOLT	1				
38	1110041050	・SCREW, cap	2				with 1st aux. line
39	1120800830	・SCREW	2				
40	1121040616	・SET-SCREW	2				
42	1130040006	・NUT	2				
43	1140020006	・WASHER, spring	2				
44	1140020008	・WASHER, spring	6				
45	1140020010	・WASHER, spring	2				with 1st aux. line
45	1140020010	・WASHER, spring	4				with 2nd & 3rd aux. line
46	1141110006	・WASHER	2				
47	1141110008	・WASHER	5				
48	1141110010	・WASHER	2				
49	1141550008	・WASHER	1				without arm shut-off valve
50	1513390015	・TEE	2				
51	1514011102	・ADAPTOR	2				
52	1534000012	・CLAMP	1				
53	1652201005	・BAND	11				
54	1652201007	・BAND	3				
55	1700000019	・SWITCH, rotary	1				
56	0565017400	・DECAL	1				
57	1711900132	・RELAY	1				12V
	J2d092						

silverhorn.co.uk

ARM EMERGENCY SHUT-OFF VALVE

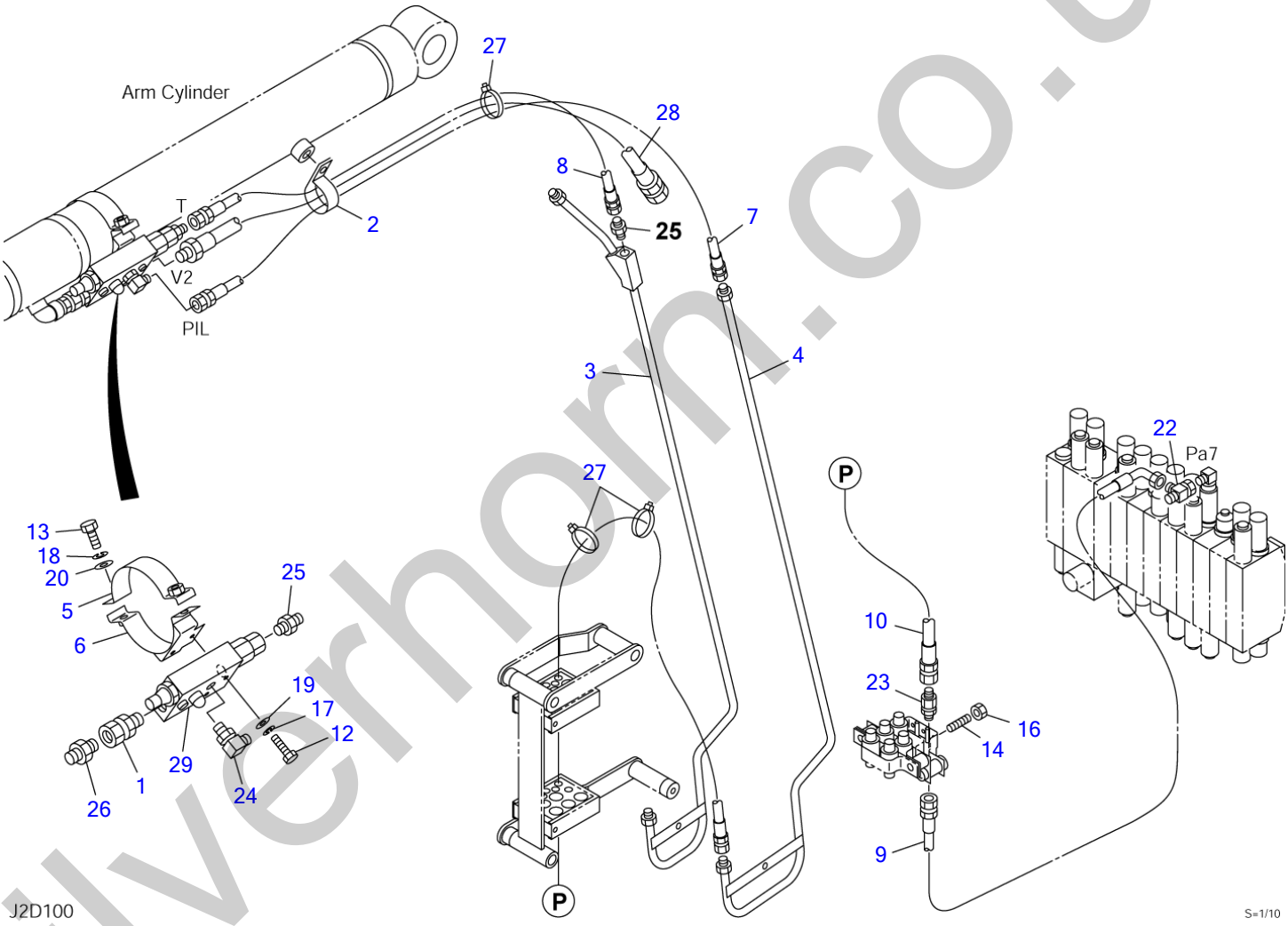

silverhorn.co.uk

ARM EMERGENCY SHUT-OFF VALVE

Item	Part number	Description	Q'ty	Chan.	Serial No.	Serv.	Remarks
0	0395023100	VALVE ASSY, emergency shut-off	1				X03950-23100-1
1	0007236041	・ADAPTOR	1				
	1420010180	・・O-RING	1				
2	0007300030	・CLAMP	1				
3	0395012920	・PIPE	1				
4	0395012930	・PIPE	1				
5	0395013100	・BAND	1				
6	0395013110	・BAND	1				
7	0395013170	・HOSE ASSY	1				18010-22139
8	0395013180	・HOSE ASSY	1				18010-22130
9	0395023190	・HOSE ASSY	1				18010-52210
10	0395022520	・HOSE ASSY	1				18010-22180
12	1100040645	・BOLT	2				
13	1100041035	・BOLT	2				
14	1121040616	・SET-SCREW	1				
16	1130040006	・NUT	1				
17	1140020006	・WASHER, spring	2				
18	1140020010	・WASHER, spring	2				
19	1141110006	・WASHER	2				
20	1141110010	・WASHER	2				
22	1513390015	・TEE	1				
23	1514011102	・ADAPTOR	1				
24	1515012040	・ELBOW	1				
	1420010110	・・O-RING	1				
25	1515600200	・ADAPTOR	2				
	1420010110	・・O-RING	1				
26	1515600202	・ADAPTOR	1				
	1420010180	・・O-RING	1				
27	1652201005	・BAND	3				
28	1801742115	・HOSE ASSY	1				
29	1901742800	・VALVE, emergency shut-off	1				
	J2d100						

silverhorn.co.uk

PUMP DRIVE

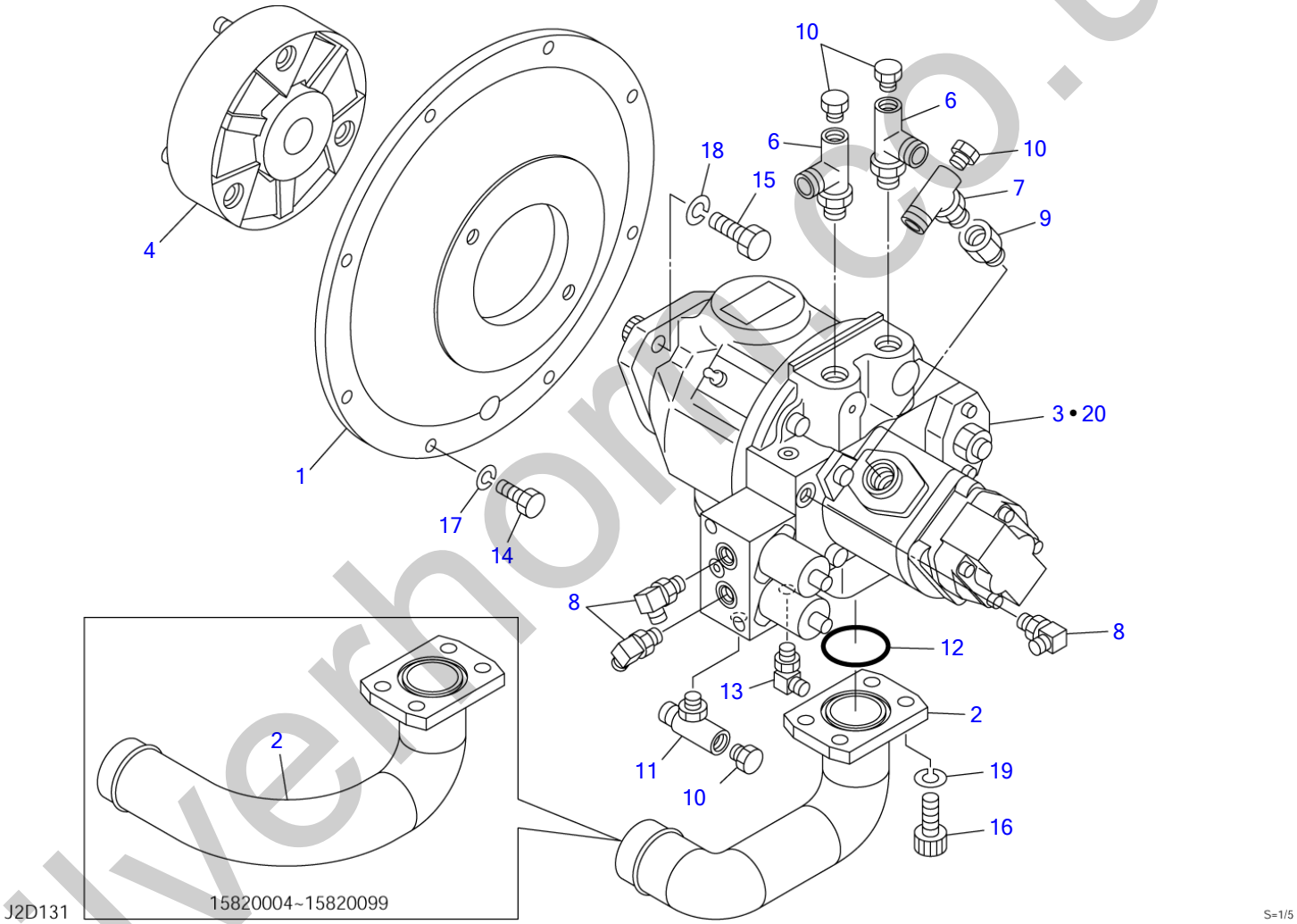

silverhorn.co.uk

PUMP DRIVE

Item	Part number	Description	Q'ty	Chan.	Serial No.	Serv.	Remarks
		PUMP ASSY, drive (with air conditioner)					X03952-09000-3
		PUMP ASSY, drive					X03952-09300-3
1	0395206100	HOUSING	1				
2	0395209150	FLANGE	1		15820004~15820099		
	0395209200	FLANGE	1		15820100~		
3	1902022000	PUMP, hydraulic	1				with air con.
4	1603102500	COUPLING	1				
6	1512340004	ELBOW	2				
	1420010180	・O-RING	1				
7	1513390014	TEE	1				
	1420010180	・O-RING	1				
8	1515012040	ELBOW	2				without air con.
	1515012040	ELBOW	3				with air con.
	1420010110	・O-RING	1				
9	0007213010	BUSHING	1				
	1420010180	・O-RING	1				
10	1501750002	PLUG	4				
	1420010110	・O-RING	1				
11	1513390029	TEE	1				
	1420010110	・O-RING	1				
12	1420100450	O-RING	1				
13	1512370015	ELBOW	1				with air con.
	1420010080	・O-RING	1				
14	1100041025	BOLT	8				
15	1101041230	BOLT	2				
16	1110041230	SCREW, cap	4				
17	1140020010	WASHER, spring	8				
18	1140020012	WASHER, spring	2				
19	1140420012	WASHER, spring	4				
20	1902022600	PUMP, hydraulic	1				without air con.
	J2d131						

silverhorn.co.uk

HYDRAULIC TANK

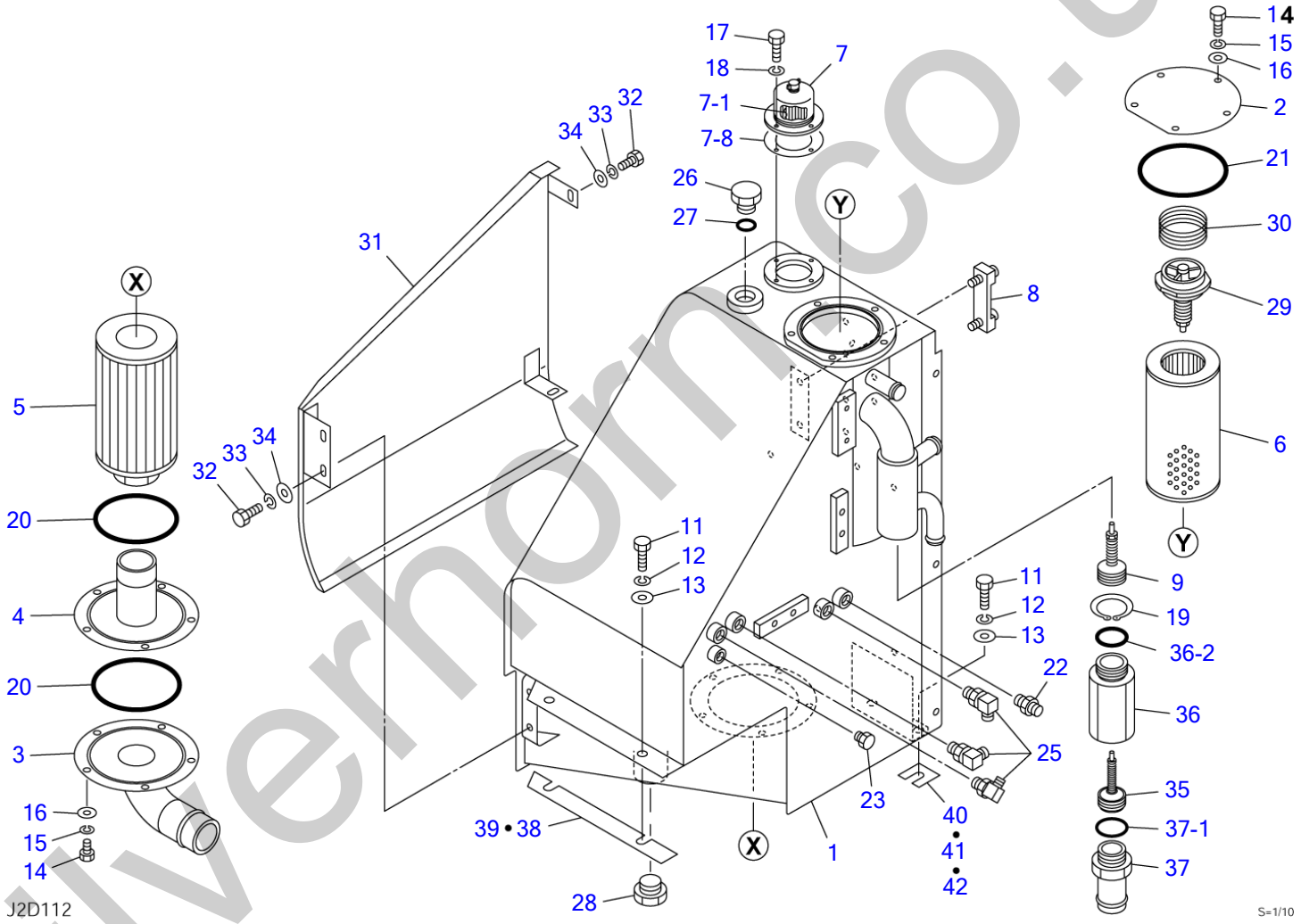

silverhorn.co.uk

HYDRAULIC TANK

Item	Part number	Description	Q'ty	Chan.	Serial No.	Serv.	Remarks
		TANK ASSY, hydraulic					X03980-08500-6
1	0398008900	TANK, hydraulic	1		15820004~15820153		
	0398009000	TANK, hydraulic	1		15820154~15820183		
	0398009100	TANK, hydraulic	1	(H)	15820184~		
2	0568035102	COVER	1				
3	0398008550	COVER	1				
4	0568035170	PLATE	1				
5	1550000116	FILTER	1				
6	1551102600	ELEMENT	1				
7	1552000900	BREATHER, air	1				
7-1	1552000902	・ELEMENT	1				
7-8	1552000908	・PACKING	1				
8	1553020685	GAUGE	1				
9	1540141225	VALVE, check	1				
11	1101041225	BOLT	4				
12	1140020012	WASHER, spring	4				
13	1141550012	WASHER	4				
14	1100041020	BOLT	10				
15	1140020010	WASHER, spring	10				
16	1141110010	WASHER	10				
17	1100040614	BOLT	4				
18	1140020006	WASHER, spring	4				
19	1221000047	RING, retaining	1				
20	1420101450	O-RING	2				
21	1420101250	O-RING	1				
22	1515600201	ADAPTOR	1				
	1420010140	・O-RING	1				
23	1501750002	PLUG	1				
	1420010110	・O-RING	1				
25	1515010041	ELBOW	3				
	1420010140	・O-RING	1				
26	0007256006	PLUG	1				
27	1420010290	O-RING	1				
28	1501750010	PLUG	1				
	1420010290	・O-RING	1				
29	1551100300	VALVE ASSY	1				
30	0007000031	SPRING	1				
31	0398008570	COVER	1		15820004~15820183		
	0398009110	COVER	1	(H)	15820184~		
32	1100040820	BOLT	4				
33	1140020008	WASHER, spring	4				
34	0003608252	WASHER	4				
35	1540141210	VALVE, check	1				
36	0398008560	BUSHING	1				
36-2	1420010440	・O-RING	1				
37	0397011140	ADAPTOR	1				
37-1	1420010110	・O-RING	1				
38	0568035138	SHIM	AR				t=1.6mm
39	0568035139	SHIM	AR				t=2.3mm
40	0323054001	SHIM	AR			M	t=1.0mm
41	0323054002	SHIM	AR			M	t=2.3mm
42	0323054003	SHIM	AR			M	t=3.2mm
	J2d112						

silverthorn.co.uk

FUEL TANK & FUEL PIPING

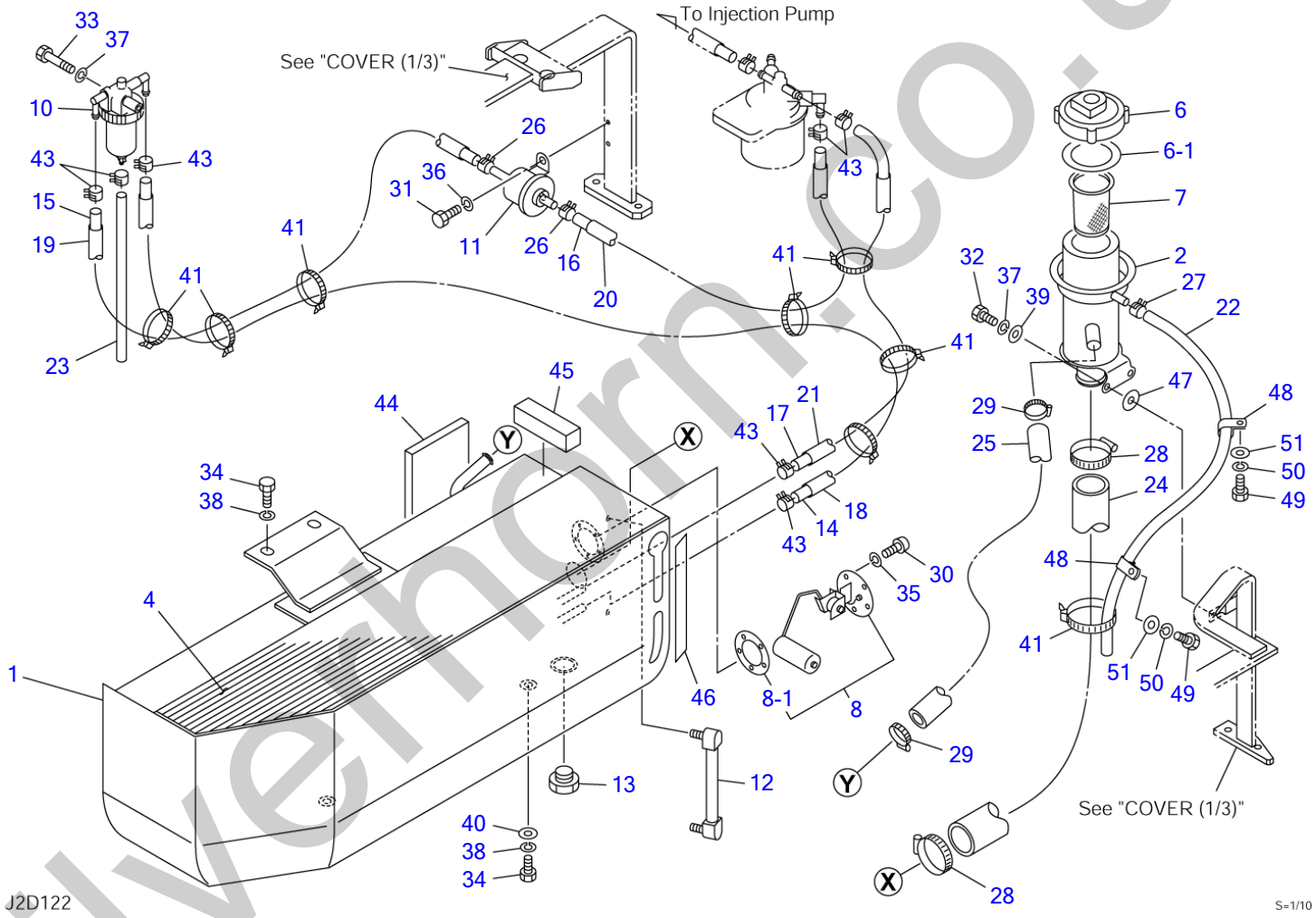

silverthorn.co.uk

FUEL TANK & FUEL PIPING

Item	Part number	Description	Q'ty	Chan.	Serial No.	Serv.	Remarks
		TANK ASSY, fuel					X03981-19500-7
1	0398119400	TANK	1				
2	0398119250	PORT, supply	1				
4	0398119204	SHEET	1				
6	1552100500	CAP	1				
6-1	1552100507	・PACKING	1				
7	1552100320	STRAINER	1				
8	1553202000	UNIT, gauge	1				
8-1	1553200800	・PACKING	1				
10	1910186033	SEPARATOR, water	1				Y129906-55700
11	1910199034	PUMP, feed	1				Y129612-52100
12	1553001250	GAUGE, level	1				
13	1501750006	PLUG	1				
	1420010240	・O-RING	1				
14	1531207210	HOSE	1				sold by the meter
15	1531207075	HOSE	1				sold by the meter
16	1531207068	HOSE	1				sold by the meter
17	1531207130	HOSE	1				sold by the meter
18	1531115200	PROTECTOR	1				sold by the meter
19	1531115065	PROTECTOR	1				sold by the meter
20	1531115058	PROTECTOR	1				sold by the meter
21	1531115125	PROTECTOR	1				sold by the meter
22	1531110090	HOSE	1				sold by the meter
23	1531007020	HOSE	1				sold by the meter
24	1530541131	HOSE	1				sold by the meter
25	1530519110	HOSE	1				sold by the meter
26	1533120012	BAND	2				
27	1533700016	BAND	1				
28	1533700060	BAND	2				
29	1533700028	BAND	2				
30	1120530510	SCREW	5				
31	1100040616	BOLT	2				
32	1100040825	BOLT	2				
33	1100040870	BOLT	1				
34	1101041225	BOLT	4				
35	1140020005	WASHER, spring	5				
36	1140020006	WASHER, spring	2				
37	1140020008	WASHER, spring	3				
38	1140020012	WASHER, spring	4				
39	1141110008	WASHER	2				
40	0003600023	WASHER	2				
41	1652201005	BAND	8				
43	1533120511	BAND	7				
44	0398119544	SPONGE	1				
45	1654341011	SPONGE	1				sold by the meter
46	0339330900	DECAL	1				
47	0003608252	WASHER	2				
48	0007300003	CLAMP	2		15820454~		
49	1100041016	BOLT	2		15820454~		
50	1140020010	WASHER, spring	2		15820454~		
51	1141110010	WASHER	2		15820454~		
	J2d122						

silverhorn.co.uk

COVER (1/3) (15820004-15820183)

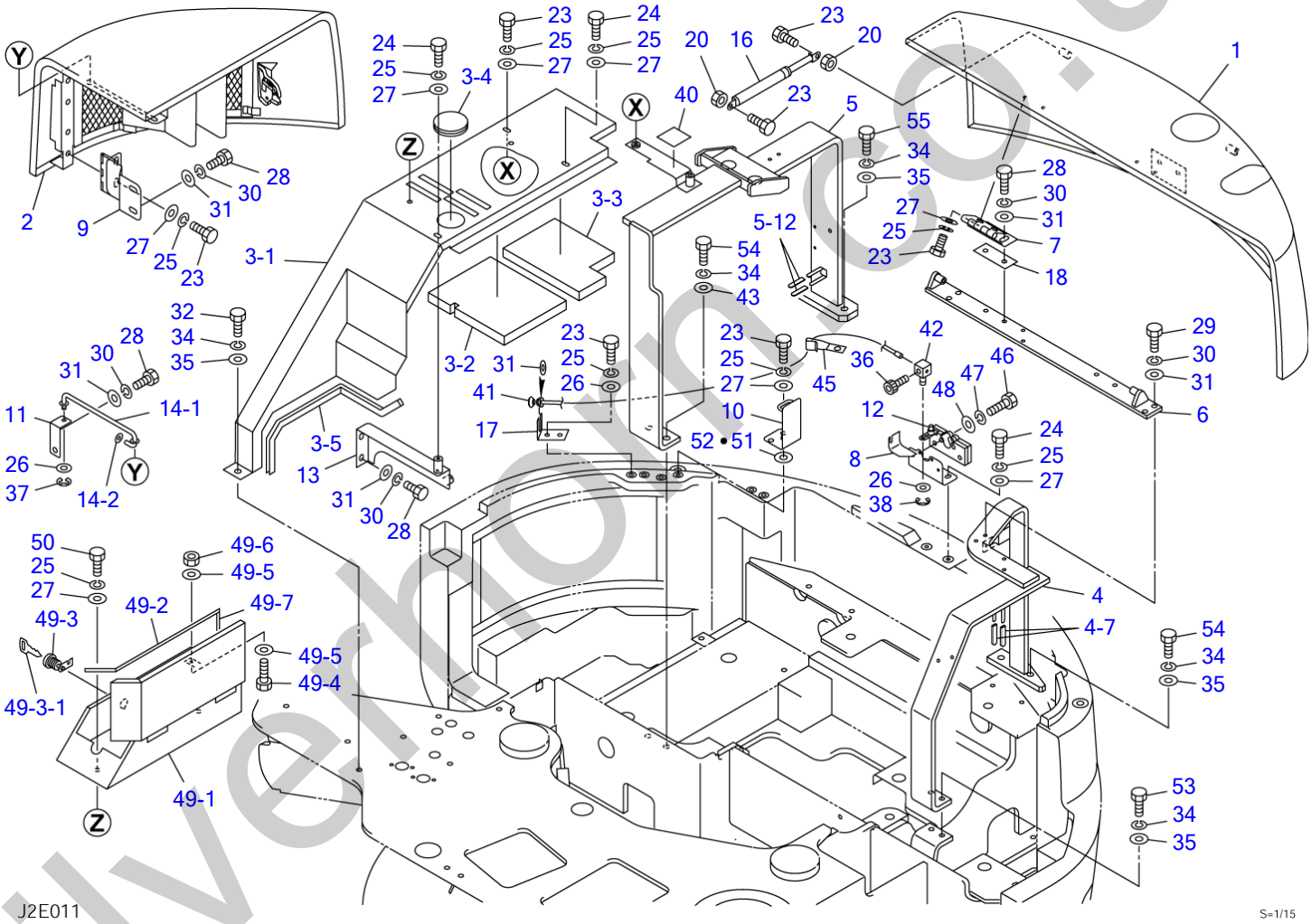

silverhorn.co.uk

COVER (1/3) (15820004-15820183)

Item	Part number	Description	Q'ty	Chan.	Serial No.	Serv.	Remarks
		COVER ASSY (cab)					X03982-18000-2
		COVER ASSY (canopy)					X03982-18500-2
1	0398218100	HOOD ASSY, engine (cab) (FRP)	1				see page (2/3)
	0398218600	HOOD ASSY, engine (canopy) (FRP)	1				see page (2/3)
2	0398218200	COVER, side (FRP)	1				see page (3/3)
3	0398216400	COVER ASSY, center	1				
3-1	0398216300	・COVER	1				
3-2	0398216410	・ABSORBENT, noise	1				
3-3	0398216420	・ABSORBENT, noise	1				
3-4	1652060063	・GROMMET	1				
3-5	1654606055	・RUBBER	1				sold by the meter
4	0398216500	BRACKET (L.H.)	1				
4-7	0872433150	・TUBE	4				
5	0398216530	BRACKET (R.H.)	1				
5-12	0872433150	・TUBE	2				
6	0398216550	BRACKET	1				
7	0568253470	HINGE	2				
8	0568256550	BRACKET	1				
9	0398216560	HINGE	2				
10	0568256570	BRACKET	1				
11	0398216570	PLATE	1				
12	1654011300	LOCK	1				
13	0398216580	BRACKET	1		15820004~15820153		
	0398218620	BRACKET	1		15820154~		
14	0398218010	ROD ASSY	1				
14-1	0398218011	・ROD	1				
14-2	0348204682	・WASHER	1				
16	1653900057	DAMPER	1				
17	0568256580	BRACKET	1				
18	0568239520	SHIM	AR				t=1.6mm
20	1130040008	NUT	2				
23	1100040820	BOLT	15				
24	1100040825	BOLT	4				
25	1140020008	WASHER, spring	19				
26	1141110008	WASHER	4				
27	0003608252	WASHER	17				
28	1100041020	BOLT	11				
29	1100041025	BOLT	4				
30	1140020010	WASHER, spring	15				
31	1141110010	WASHER	16				
32	1101041225	BOLT	1				
34	1140020012	WASHER, spring	9				
35	1141110012	WASHER	7				
36	1110040510	WASHER	1				
37	1224010008	RING, retaining	1				
38	1224010006	E-RING	1				
40	1654353006	SPONGE	1				sold by the meter
41	0568225380	ROPE, wire	1				
42	0007900023	PIN	1				
43	0003600136	SHIM	AR				
45	0007300005	CLAMP	1				
46	1100040630	BOLT	4				
47	1140020006	WASHER, spring	4				
48	1141110006	WASHER	4				
49	0398218300	BOX ASSY, tool	1				
49-1	0398218310	・BOX, tool	1				
49-2	0398218320	・RUBBER	1				
49-3	1653612836	・LOCK	1				
49-3-1	1700100019	・KEY	1				
49-4	1100040620	・BOLT	1				
49-5	1141110006	・WASHER	2				
49-6	1130040006	・NUT	1				
49-7	0398218330	・RUBBER	1				
50	1100040830	BOLT	2				
51	0003900049	SPACER	AR				
52	0003900050	SPACER	AR				

silvermorn.co.uk

COVER (1/3) (15820004-15820183)

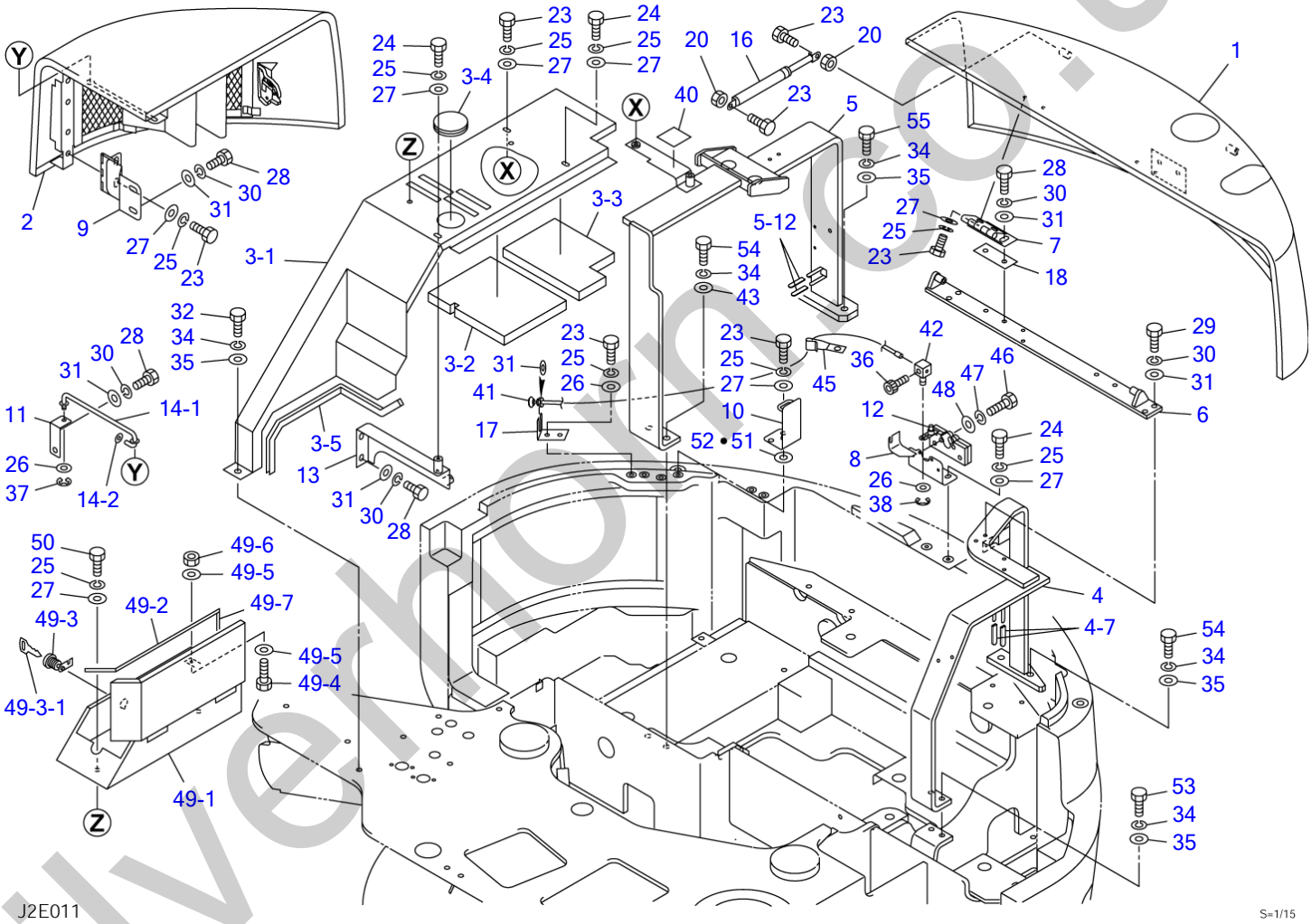

silverhorn.co.uk

COVER (1/3) (15820004-15820183)

Item	Part number	Description	Q'ty	Chan.	Serial No.	Serv.	Remarks
53	**1101041230**	BOLT	2				
54	**1101041240**	BOLT	4				
55	**1101041245**	BOLT	2				
	J2e011						

silverhorn.co.uk

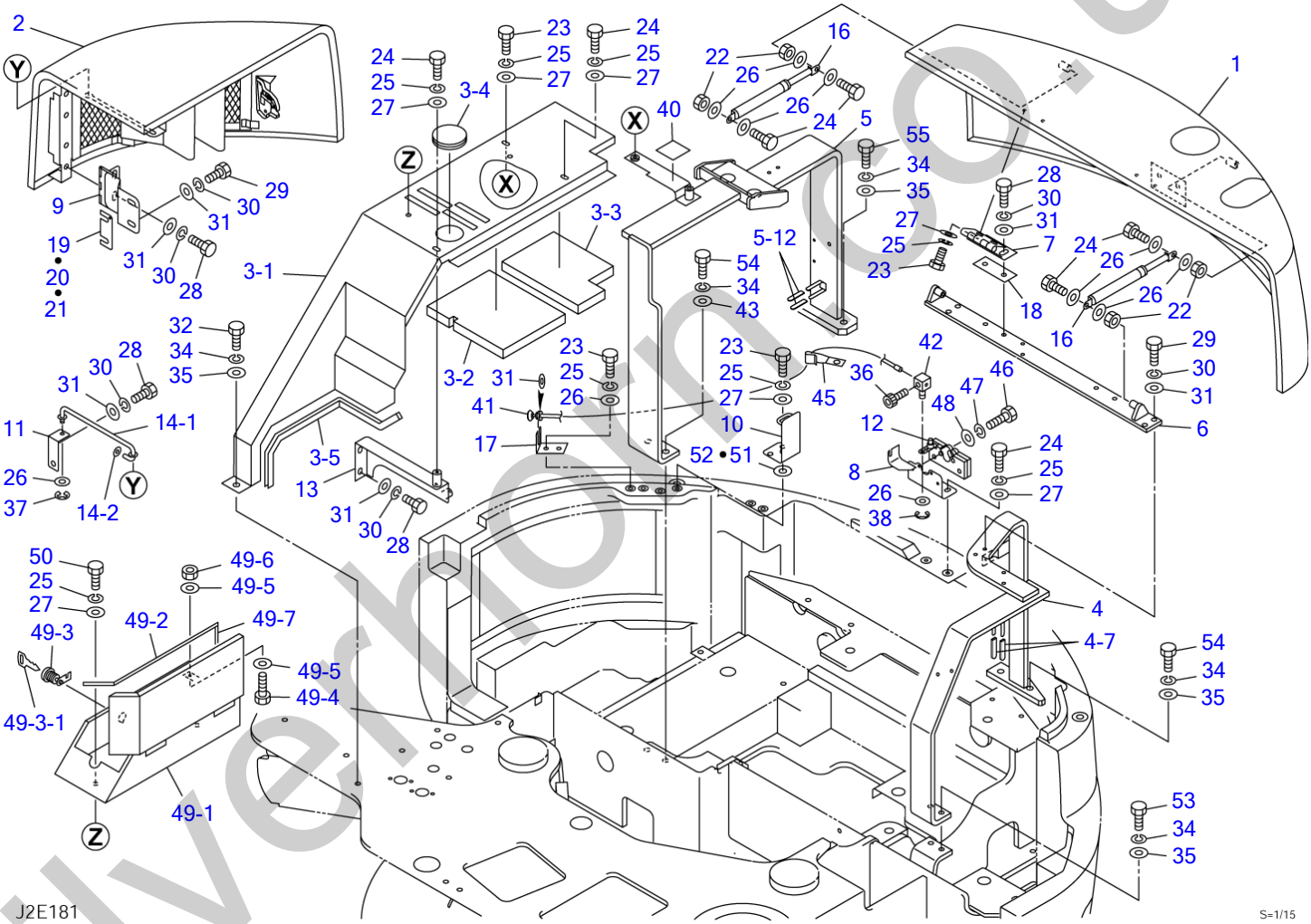

silverhorn.co.uk

COVER (1/3) (15820184-)

Item	Part number	Description	Q'ty	Chan.	Serial No.	Serv.	Remarks
		COVER ASSY (cab)					X03982-19000-3
		COVER ASSY (canopy)					X03982-19500-3
1	0398216200	HOOD ASSY, engine (cab) (steel)	1				see page (2/3)
	0398217200	HOOD ASSY, engine (canopy) (steel)	1				see page (2/3)
2	0568256300	COVER, side (steel)	1				see page (3/3)
3	0398216400	COVER ASSY, center	1				
3-1	0398216300	・COVER	1				
3-2	0398216410	・ABSORBENT, noise	1				
3-3	0398216420	・ABSORBENT, noise	1				
3-4	1652060063	・GROMMET	1				
3-5	1654606055	・RUBBER	1				sold by the meter
4	0398216500	BRACKET (L.H.)	1				
4-7	0872433150	・TUBE	4		15820184~15820454		
5	0398216530	BRACKET (R.H.)	1				
5-12	0872433150	・TUBE	2				
6	0398216550	BRACKET	1				
7	0568253470	HINGE	2				
8	0568256550	BRACKET	1				
9	0398216560	HINGE	2	A	15820184~15820399		
	0398219060	HINGE	2	a(H)	15820400~		
10	0568256570	BRACKET	1				
11	0398216570	PLATE	1				
12	1654011300	LOCK	1				
13	0398218620	BRACKET	1				
14	0398218010	ROD ASSY	1				
14-1	0398218011	・ROD	1				
14-2	0348204682	・WASHER	1				
16	1653900057	DAMPER	2				
17	0568256580	BRACKET	1				
18	0568239520	SHIM	AR				t=1.6mm
19	0003900054	SHIM	AR	a	15820400~		t=4.5mm
20	0003900055	SHIM	AR	a	15820400~		t=2.3mm
21	0003900056	SHIM	AR	a	15820400~		t=1.6mm
22	1130040008	NUT	4				
23	1100040820	BOLT	9				
24	1100040825	BOLT	8				
25	1140020008	WASHER, spring	15				
26	1141110008	WASHER	12				
27	0003608252	WASHER	13				
28	1100041020	BOLT	11				
29	1100041025	BOLT	8				
30	1140020010	WASHER, spring	19				
31	1141110010	WASHER	20				
32	1101041225	BOLT	1				
34	1140020012	WASHER, spring	9				
35	1141110012	WASHER	7				
36	1110040510	WASHER	1				
37	1224010008	RING, retaining	1				
38	1224010006	E-RING	1				
40	1654353006	SPONGE	1				sold by the meter
41	0568225380	ROPE, wire	1				
42	0007900023	PIN	1				
43	0003600136	SHIM	AR				
45	0007300005	CLAMP	1				
46	1100040630	BOLT	4				
47	1140020006	WASHER, spring	4				
48	1141110006	WASHER	4				
49	0398218300	BOX ASSY, tool	1				
49-1	0398218310	・BOX, tool	1				
49-2	0398218320	・RUBBER	1				
49-3	1653612836	・LOCK	1				
49-3-1	1700100019	・KEY	1				
49-4	1100040620	・BOLT	1				
49-5	1141110006	・WASHER	2				
49-6	1130040006	・NUT	1				
49-7	0398218330	・RUBBER	1				

silverhorn.co.uk

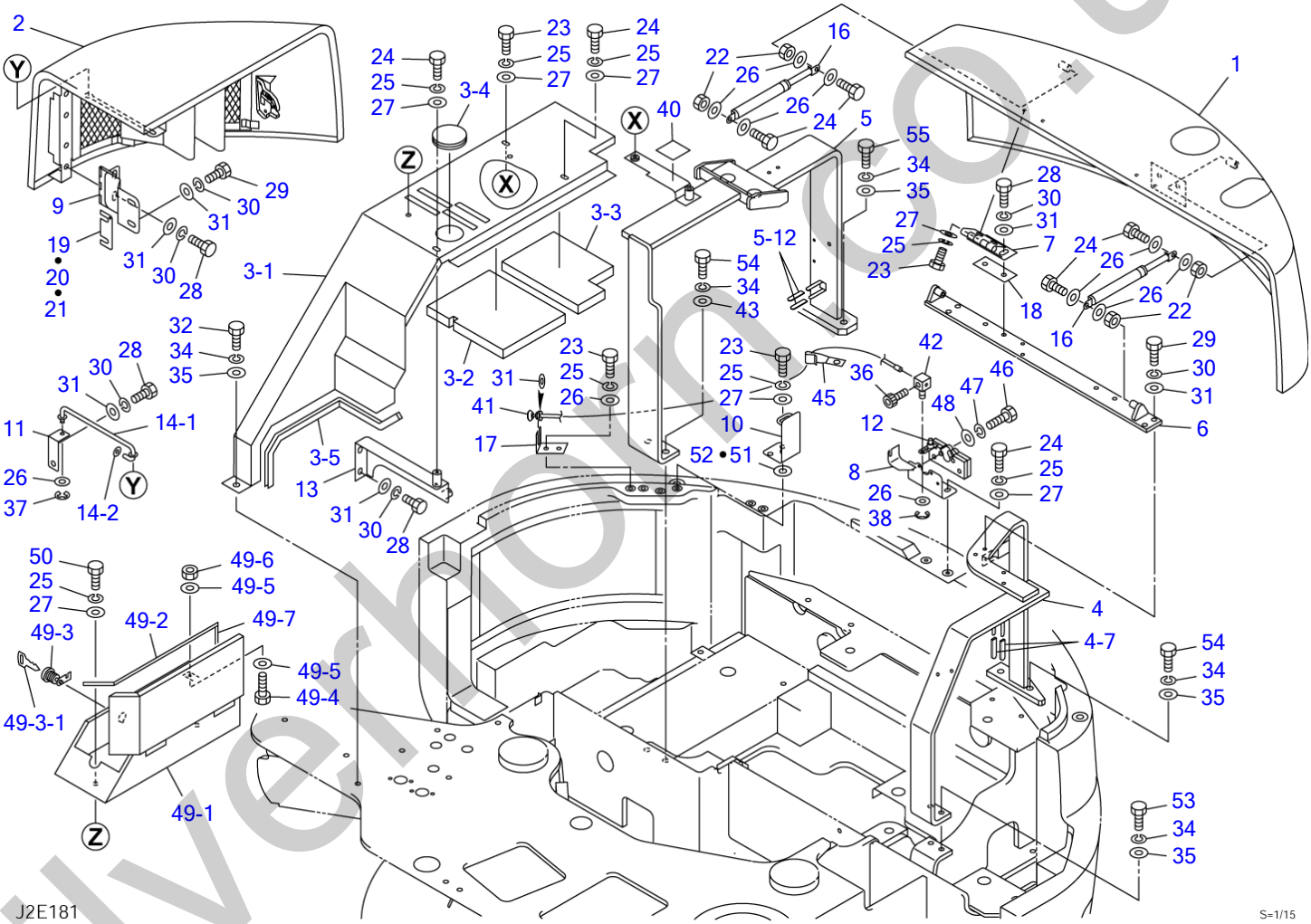

silverhorn.co.uk

COVER (1/3) (15820184-)

Item	Part number	Description	Q'ty	Chan.	Serial No.	Serv.	Remarks
50	1100040830	BOLT	2				
51	0003900049	SPACER	AR				
52	0003900050	SPACER	AR				
53	1101041230	BOLT	2				
54	1101041240	BOLT	4				
55	1101041245	BOLT	2				
55		<<NOTE>>					
55		"A" is interchangeable with SET "a".					
	J2e182						

silverhorn.co.uk

COVER (2/3) (engine hood)

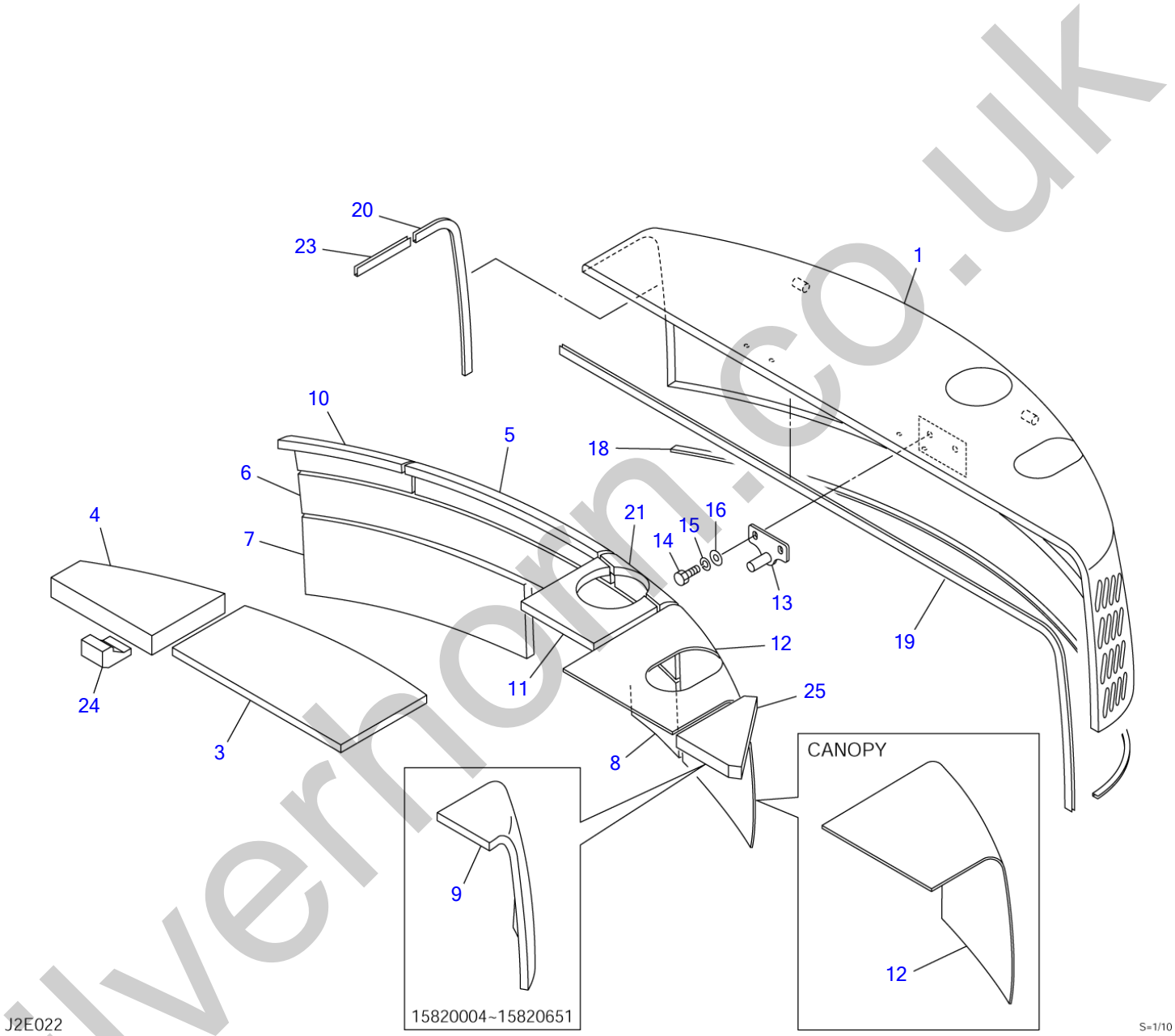

silverhorn.co.uk

COVER (2/3) (engine hood)

Item	Part number	Description	Q'ty	Chan.	Serial No.	Serv.	Remarks
0-1	0398218100	HOOD ASSY, engine (cab) (FRP)	1	A	15820004~15820183		X03982-18100-2
	0398216200	HOOD ASSY, engine (cab) (steel)	1	a (H)	15820184~		X03982-16200-5
	0398218600	HOOD ASSY, engine (canopy) (FRP)	1	A	15820004~15820183		X03982-18600-2
	0398217200	HOOD ASSY, engine (canopy) (steel)	1	a (H)	15820184~		X03982-17200-5
1	0398218110	・HOOD, engine	1		15820004~15820183		cab
	0398216100	・HOOD, engine	1		15820184~		cab
	0398218610	・HOOD, engine	1		15820004~15820183		canopy
	0398217100	・HOOD, engine	1		15820184~		canopy
3	0398216220	・ABSORBENT, noise	1		15820004~15820183		
	0398216240	・ABSORBENT, noise	1		15820184~		
4	0398216231	・ABSORBENT, noise	1		15820004~15820183		
	0398216241	・ABSORBENT, noise	1		15820184~		
5	0398216222	・ABSORBENT, noise	1		15820004~15820183		
	0398216242	・ABSORBENT, noise	1		15820184~		
6	0398216223	・ABSORBENT, noise	1		15820004~15820183		
	0398216243	・ABSORBENT, noise	1		15820184~		
7	0398216224	・ABSORBENT, noise	1		15820004~15820183		
	0398216244	・ABSORBENT, noise	1		15820184~		
8	0398216225	・ABSORBENT, noise	1		15820004~15820183		
	0398216245	・ABSORBENT, noise	1		15820184~		
9	0398216226	・ABSORBENT, noise	1		15820004~15820183		
	0398216246	・ABSORBENT, noise	1		15820184~15820651		
10	0398216227	・ABSORBENT, noise	1		15820004~15820183		
	0398216247	・ABSORBENT, noise	1		15820184~		
11	0398218101	・SPONGE	1		15820004~15820183		
	0398216228	・SPONGE	1		15820184~		
12	0398216229	・INSULATOR	1		15820004~15820183		cab
	0398216249	・INSULATOR	1		15820184~		cab
	0398217229	・INSULATOR	1		15820004~15820183		canopy
	0398217249	・INSULATOR	1		15820184~		canopy
13	0568256220	・PLATE	1				
14	1100040825	・BOLT	2				
15	1140020008	・WASHER, spring	2				
16	1141110008	・WASHER	2				
18	1654605138	・RUBBER	1				sold by the meter
19	1654605151	・RUBBER	1				sold by the meter
20	1654605051	・RUBBER	1		15820004~15820183		sold by the meter
	1654605035	・RUBBER	1		15820184~		sold by the meter
21	0398218102	・SPONGE	1		15820004~15820183		
	0398216230	・SPONGE	1		15820184~		
23	1654605013	・RUBBER	1		15820184~		
24	0398216250	・SPONGE	1		15820652~		
25	0398216251	・ABSORBENT, noise	1		15820652~		
26	1653900057	DAMPER	2	a			
		<<NOTE>> "A" is interchangeable with SET "a".					
	J2e022						

silverform.co.uk

COVER (3/3) (side cover)

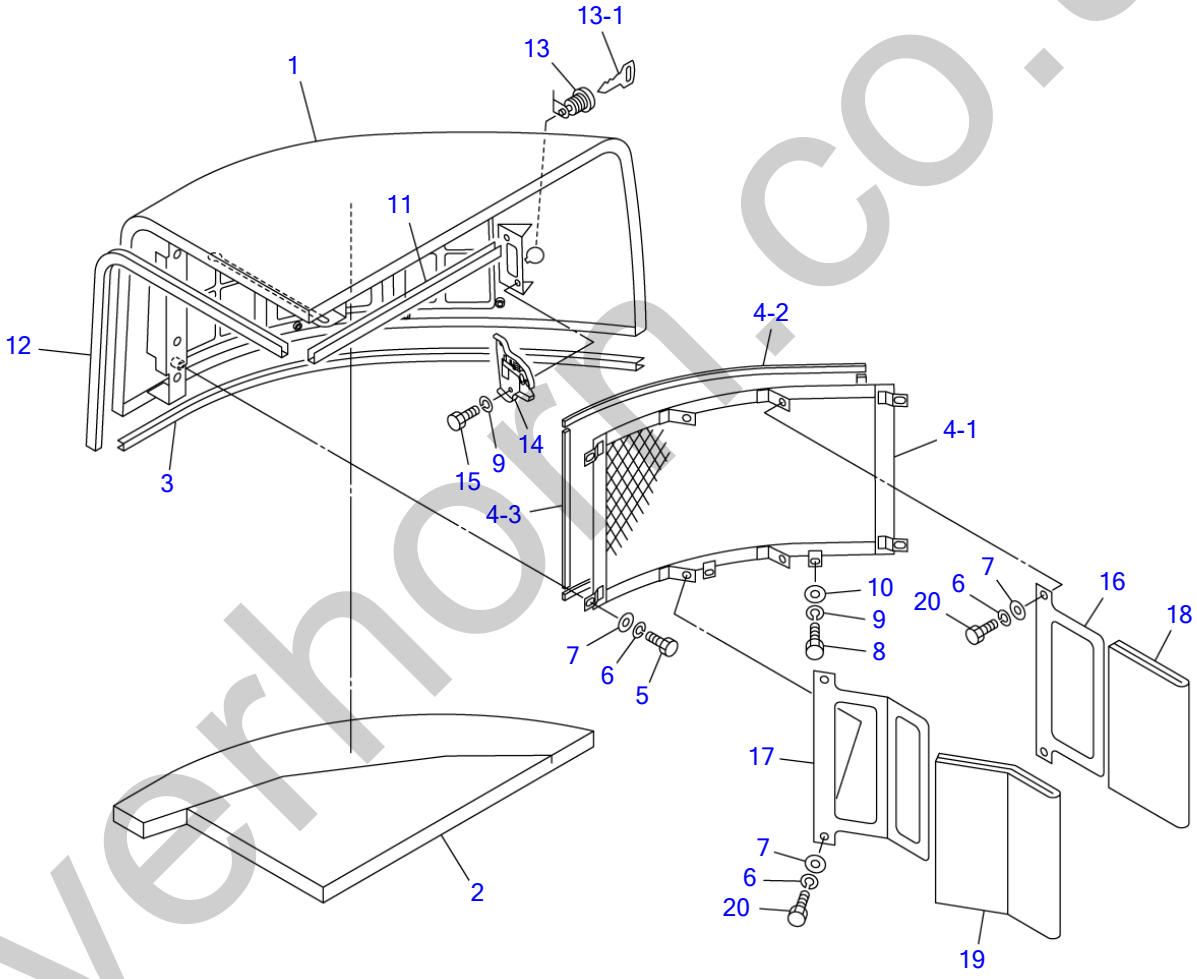

silverhorn.co.uk

COVER (3/3) (side cover)

Item	Part number	Description	Q'ty	Chan.	Serial No.	Serv.	Remarks
0-2	0398218200	COVER, side (FRP)	1		15820004~15820183		X03982-18200-1
	0568256300	COVER, side (steel)	1	(H)	15820184~		X05682-56300-0
1	0568257310	・COVER	1		15820004~15820183		
	0568256310	・COVER	1		15820184~		
2	0568256380	・ABSORBENT, noise	1				
3	1653916077	・TRIM	1				sold by the meter
4	0568256350	・NET ASSY	1				
4-1	0568256360	・・NET	1				
4-2	1654307048	・・SPONGE	2				sold by the meter
4-3	1654307026	・・SPONGE	2				sold by the meter
5	1100040814	・BOLT	4				
6	1140020008	・WASHER, spring	8				
7	1141110008	・WASHER	8				
8	1100040614	・BOLT	2				
9	1140020006	・WASHER, spring	4				
10	1141110006	・WASHER	2				
11	1654625042	・RUBBER	1		15820004~15820183		sold by the meter
	1654625036	・RUBBER	1		15820184~		sold by the meter
12	1654605063	・RUBBER	1		15820184~		sold by the meter
13	0568221700	・LOCK	1				
13-1	1700100019	・KEY	1				
14	1653900024	・CATCH	1				
15	1100040612	・BOLT	2				
16	0568256590	・BLADE	1				
17	0568256610	・BLADE	1				
18	0568256621	・ABSORBENT, noise	1				
19	0568256622	・ABSORBENT, noise	1				
20	1100040816	・BOLT	4				
	J2e031						

silverhorn.co.uk

FLOOR FRAME (1/3)

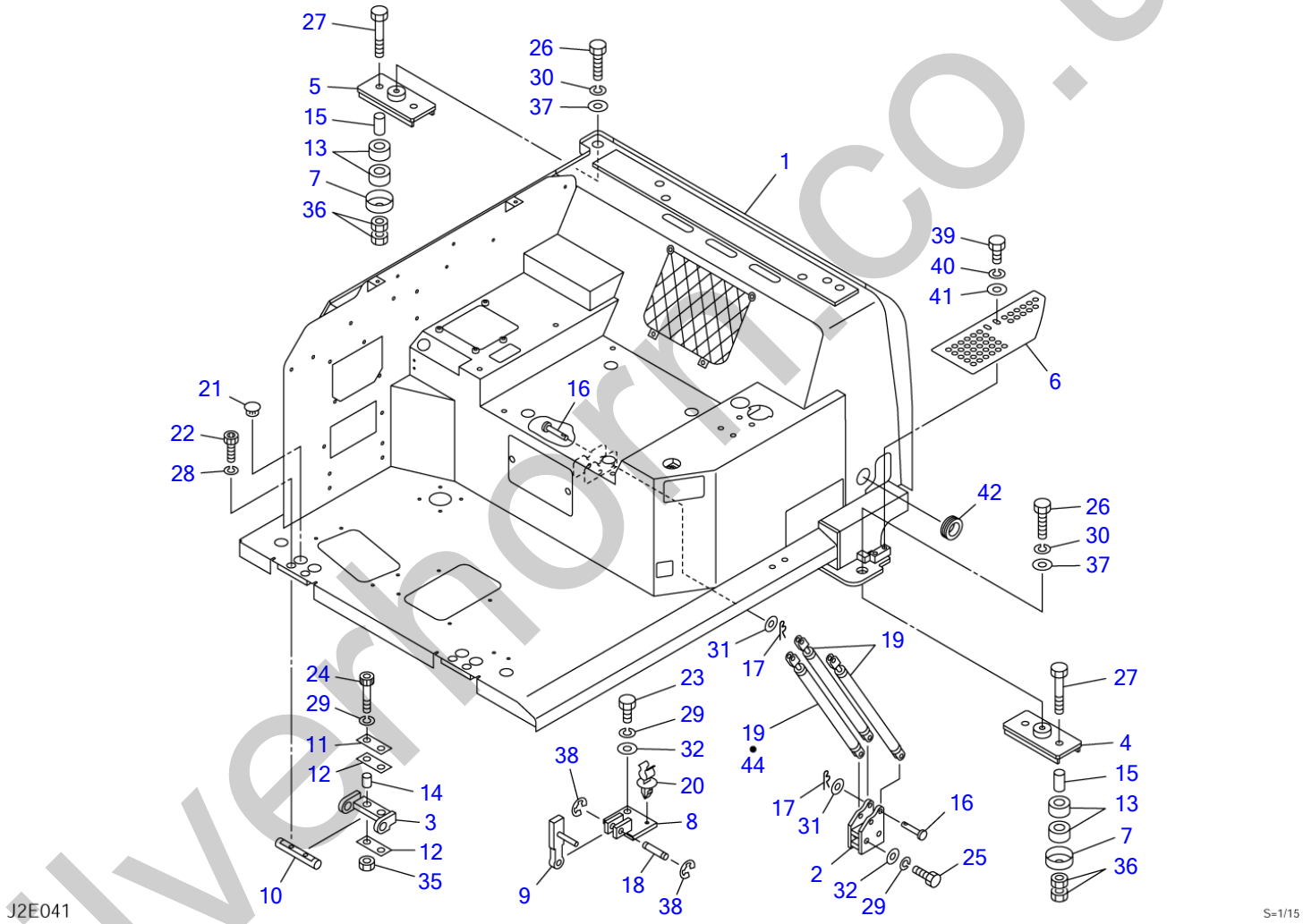

silverhorn.co.uk

FLOOR FRAME (1/3)

Item	Part number	Description	Q'ty	Chan.	Serial No.	Serv.	Remarks
		FRAME ASSY, floor (canopy)					X03935-23700-3
		FRAME ASSY, floor (cab)					X03935-23900-3
1	X **********	FRAME ASSY	1				see page (2/3, 3/3)
2	0563531300	BRACKET	1				
3	0563531310	BRACKET	2				
4	0563531320	MOUNT, floor	1				
5	0393523710	MOUNT, floor	1		15820004~15820627		
	0393523720	MOUNT, floor	1	(H)	15820628~		
6	0393523706	COVER	1				
7	0433503200	COVER	4				
8	0563511500	BRACKET	1				
9	0563511510	LEVER	1				
10	0343507070	SHAFT	2				
11	0343508102	PLATE	2				
12	0373502995	CUSHION	4				
13	0433503100	RUBBER	8				
14	0343515086	SPACER	4				
15	0393517250	PIPE	4				
16	0004010038	PIN	4				
17	1214000008	PIN, snap	4				
18	0004212040	SHAFT	1				
19	1653900043	SPRING, gas	2				cab
	1653900043	SPRING, gas	3				canopy
20	1652702023	HOLDER	1				
21	1652533008	CAP	4				
22	1110041035	SCREW, cap	4				
23	1101041225	BOLT	2				
24	1111041260	SCREW, cap	4				
25	1101041270	BOLT	2				
26	1101041440	BOLT	2				
27	1101041480	BOLT	4				
28	1140020010	WASHER, spring	4				
29	1140020012	WASHER, spring	8				
30	1140020014	WASHER, spring	2				
31	1141110010	WASHER	4				
32	1141110012	WASHER	4				
35	1130540012	NUT	4				
36	1130540014	NUT	8				
37	0003600013	WASHER	2				
38	1224000010	RING, retaining	2				
39	1100040820	BOLT	2				
40	1140020008	WASHER, spring	2				
41	0003608252	WASHER	2				
42	1652060038	BUSHING	1				
44	1653900047	SPRING, gas	1				cab
	J2e042						

silverhorn.co.uk

FLOOR FRAME (2/3)

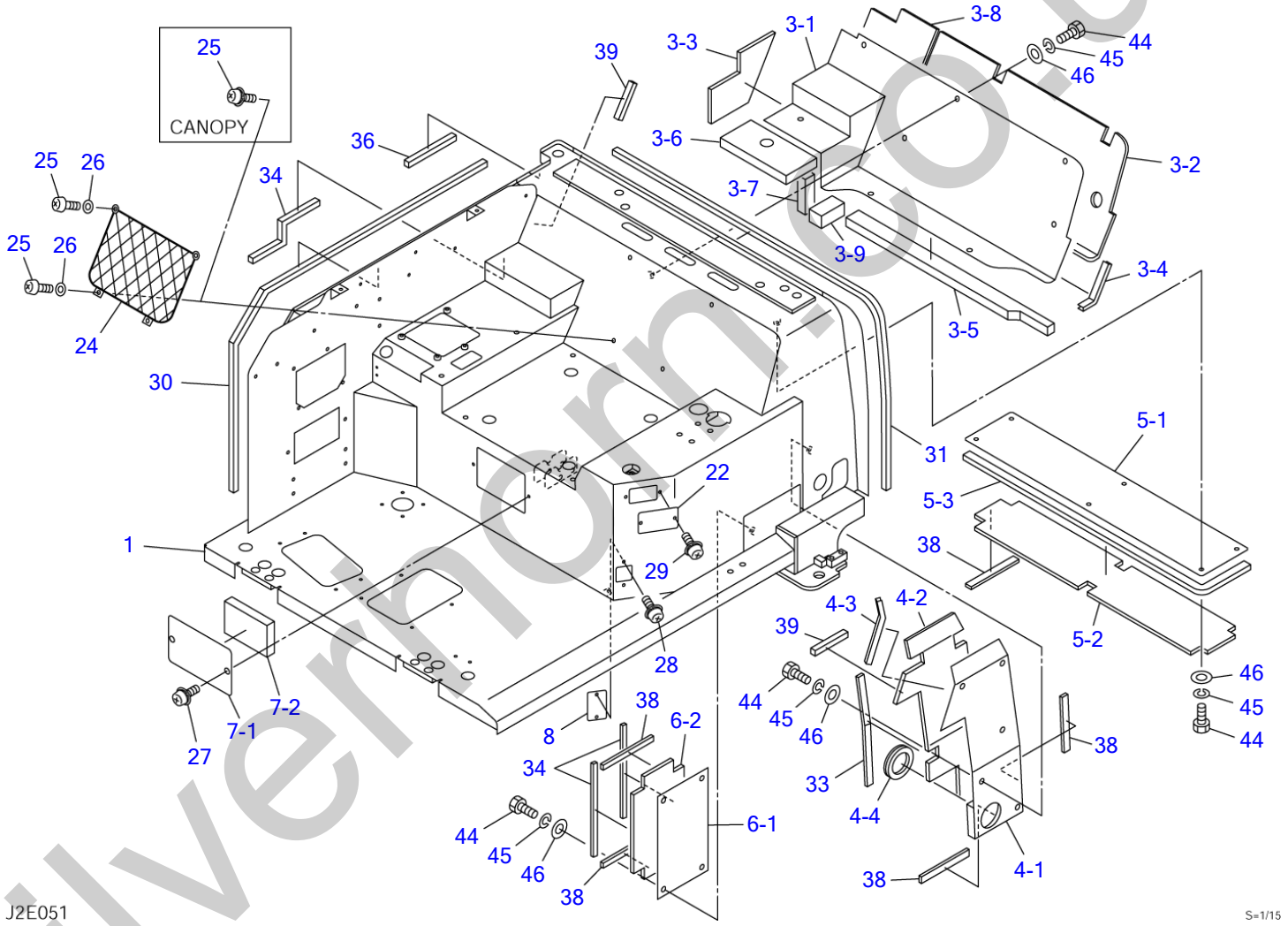

silvernorn.co.uk

FLOOR FRAME (2/3)

Item	Part number	Description	Q'ty	Chan.	Serial No.	Serv.	Remarks
0	0563523800	FRAME ASSY (canopy)	1				X05635-23800-1
	0563532300	FRAME ASSY (cab)	1				X05635-32300-1
1	0563532400	・FRAME	1				
3	0563532330	・PLATE ASSY	1				X05635-32330-2
3-1	0563532331	・・BRACKET	1				
3-2	0563532336	・・INSULATOR	1				
3-3	0563532333	・・INSULATOR	1				
3-4	1654606012	・・SEAL	1				sold by the meter
3-5	0563532334	・・ABSORBENT, noise	1				
3-6	0563532339	・・ABSORBENT, noise	1				
3-7	0563532337	・・ABSORBENT, noise	1				
3-8	0563532338	・・INSULATOR	1				
3-9	0563532325	・・ABSORBENT, noise	1				
4	0563532340	・PLATE ASSY	1				
4-1	0563532390	・・BRACKET	1				
4-2	0563532343	・・INSULATOR	1				
4-3	1654601016	・・TRIM	1				sold by the meter
4-4	1652060075	・・BUSHING	1				
5	0563532350	・PLATE ASSY	1				
5-1	0563532351	・・PLATE	1				
5-2	0563532352	・・INSULATOR	1				
5-3	1654606087	・・SEAL	1				sold by the meter
6	0563532360	・PLATE ASSY	1				
6-1	0563532361	・・PLATE	1				
6-2	0563532362	・・INSULATOR	1				
7	0563532370	・PLATE ASSY	1				
7-1	0563532371	・・PLATE	1				
7-2	0563532372	・・ABSORBENT, noise	1				
8	0563532380	・PLATE	1				
22	0338230850	・COVER	1				
24	1654010600	・POCKET	1				cab
25	1120530416	・SCREW	4				cab
	1150410410	・SCREW	4				canopy
26	1141190004	・WASHER	4				cab
27	1150420816	・BOLT, sems	2				
28	1150420616	・BOLT, sems	2				
29	1150420612	・SCREW	2				
30	1654352067	・SPONGE	1				sold by the meter
31	1654356100	・SPONGE	1				sold by the meter
33	1654356030	・SPONGE	1				sold by the meter
34	1654356028	・SPONGE	3				sold by the meter
36	1654352023	・SPONGE	1				sold by the meter
38	1654356017	・SPONGE	5				sold by the meter
39	1654356011	・SPONGE	2				sold by the meter
44	1100040816	・BOLT	23				
45	1140020008	・WASHER, spring	23				
46	0003608252	・WASHER	23				
	J2e051						

silverthorn.co.uk

FLOOR FRAME (3/3)

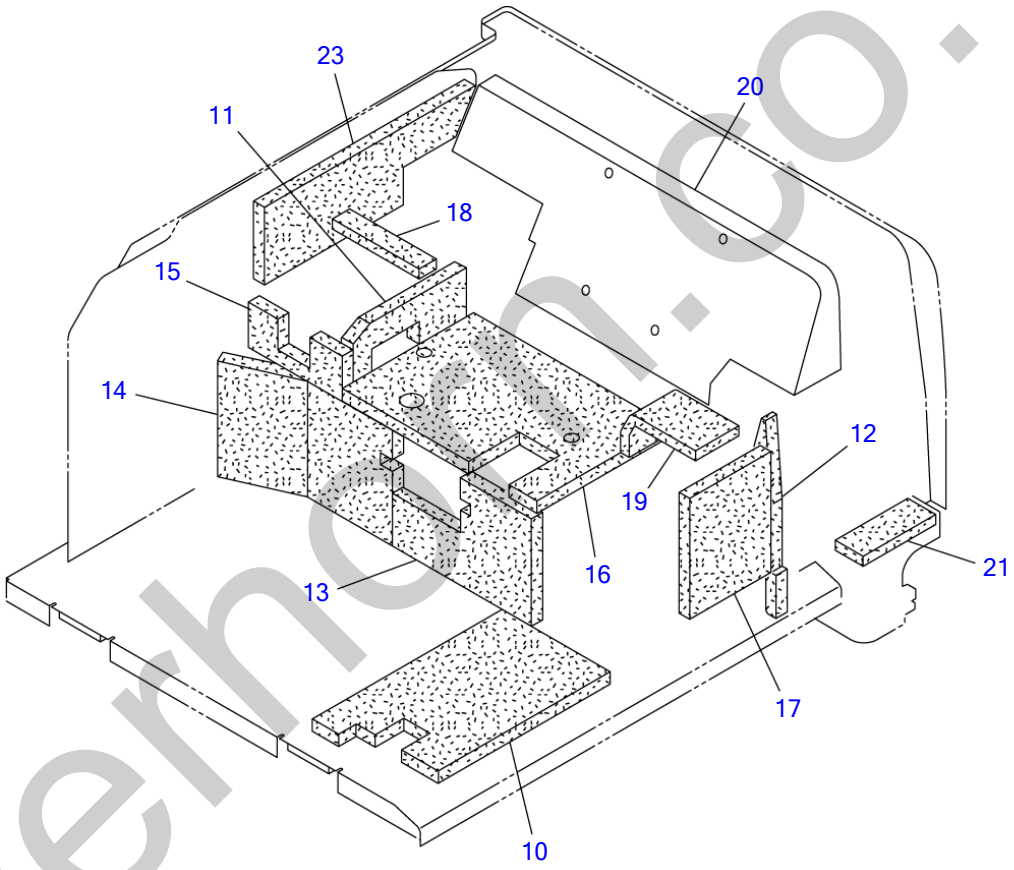

L5E171

S=1/12

silverhorn.co.uk

FLOOR FRAME (3/3)

Item	Part number	Description	Q'ty	Chan.	Serial No.	Serv.	Remarks
0	0563523800	FRAME ASSY (canopy)	1				X05635-23800-1
	0563532300	FRAME ASSY (cab)	1				X05635-32300-1
10	0563532310	・INSULATOR	1				
11	0563532311	・ABSORBENT, noise	1				
12	0563532312	・ABSORBENT, noise	1				
13	0563532313	・ABSORBENT, noise	1				
14	0563532314	・ABSORBENT, noise	1				
15	0563532315	・ABSORBENT, noise	1				
16	0563532316	・ABSORBENT, noise	1				
17	0563532317	・ABSORBENT, noise	1				
18	0563532318	・ABSORBENT, noise	1				
19	0563532319	・ABSORBENT, noise	1				
20	0563532320	・SHEET	1				cab
21	0378206720	・ABSORBENT, noise	1				
23	0563531123	・ABSORBENT, noise	1				
	J2e061						

silverhorn.co.uk

FLOOR MAT

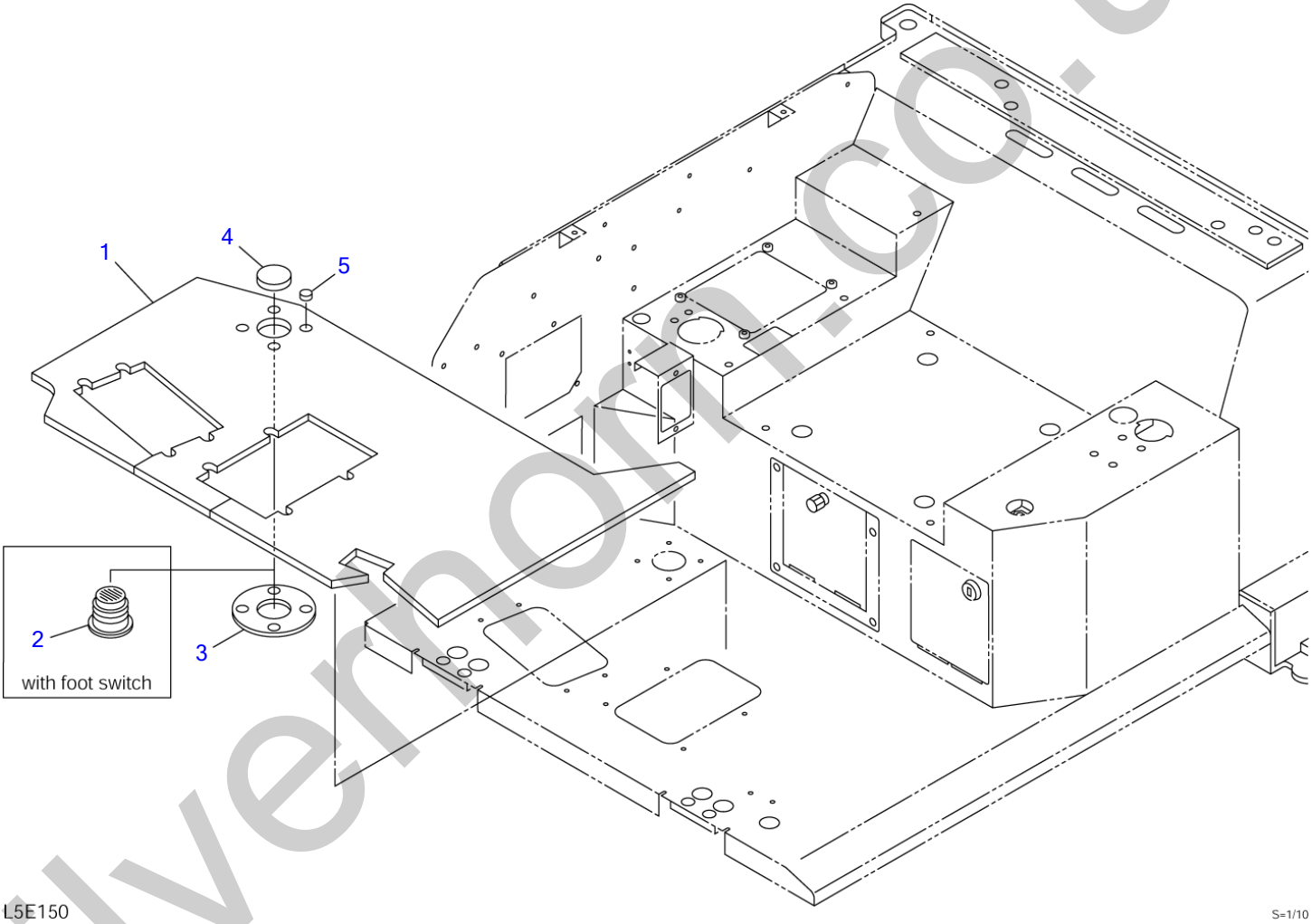

silverhorn.co.uk

FLOOR MAT

Item	Part number	Description	Q'ty	Chan.	Serial No.	Serv.	Remarks
		MAT ASSY, floor (without foot switch) (cab)					X05635-32600-0
		MAT ASSY, floor (with foot switch) (cab)					X05635-32700-0
		MAT ASSY, floor (without foot switch) (canopy)					X03935-24100-0
		MAT ASSY, floor (with foot switch) (canopy)					X03935-24200-0
1	0563532610	MAT, floor	1				cab
	0393524110	MAT, floor	1				canopy
2	0573500240	BOOT	1				with foot switch
3	0573500225	SPONGE	1				without foot switch
4	1652533013	CAP	1				without foot switch
5	1652533002	CAP	4				
	J2e250						

silverhorn.co.uk

SEAT (1/2)

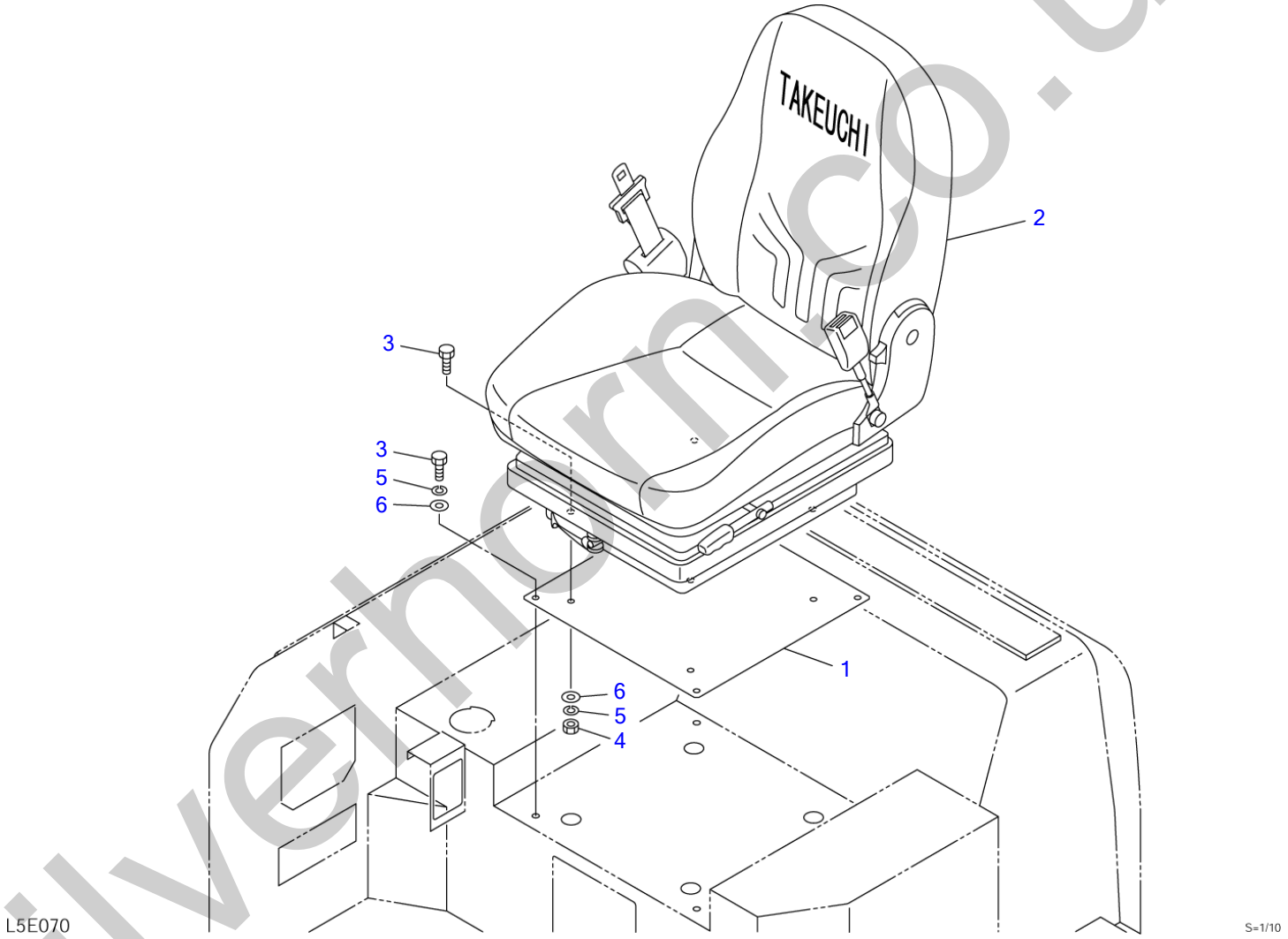

silverhorm.co.uk

SEAT (1/2)

Item	Part number	Description	Q'ty	Chan.	Serial No.	Serv.	Remarks
		SEAT ASSY (canopy)					X03934-08600-1
		SEAT ASSY (cab)					X05634-16500-1
1	0563416510	PLATE	1				
2	1914100071	SEAT (cab)	1				see page (2/2)
	1914100072	SEAT (canopy)	1				see page (2/2)
3	1100040820	BOLT	8				
4	1130040008	NUT	4				
5	1140020008	WASHER, spring	8				
6	1141110008	WASHER	8				
	J2e070						

silverhorn.co.uk

SEAT (2/2)

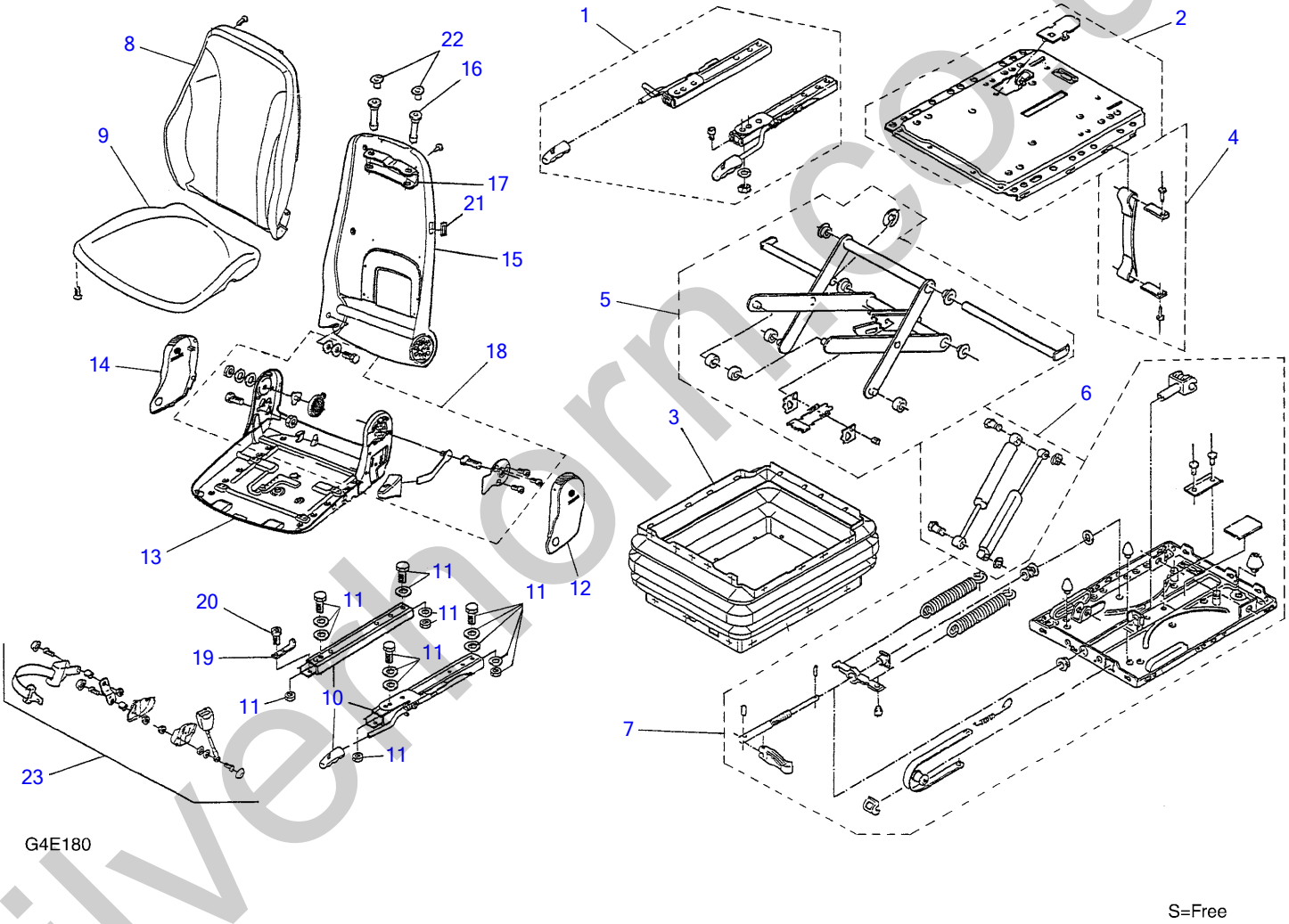

silverthorne.co.uk

SEAT (2/2)

Item	Part number	Description	Q'ty	Chan.	Serial No.	Serv.	Remarks
0	1914100071	SEAT (fabric)	1				
	1914100072	SEAT (PVC)	1				
1	1914101071	・RAIL ASSY	1				fabric
	1914101072	・RAIL ASSY	1				PVC
2	1914102071	・PLATE ASSY	1				fabric
	1914102072	・PLATE ASSY	1				PVC
3	1914103071	・BOOT	1				fabric
	1914103072	・BOOT	1				PVC
4	1914104072	・ANGLE ASSY	1				
5	1914105072	・LINK ASSY	1				
6	1914106072	・DAMPER ASSY	1				
7	1914107072	・SPRING ASSY	1				
8	1914108072	・TRIM	1				
9	1914109072	・TRIM	1				
10	1914110072	・RAIL ASSY	1				
11	1914111072	・BOLT ASSY	1				
12	1914112072	・COVER (L.H.)	1				
13	1914113072	・FRAME	1				
14	1914114072	・COVER (R.H.)	1				
15	1914115072	・FRAME	1				
16	1914116072	・GUIDE	2				
17	1914117072	・BRACKET	1				
18	1914118072	・JOINT ASSY	1				
19	1914119072	・PLATE	1				
20	1914120072	・SCREW, cap	1				
21	1914121072	・PLATE	1				
22	1914122072	・PLUG	2				
23	1914123072	・BELT ASSY, seat	1				
	J1e140						

silverhorn.co.uk

HEAD REST

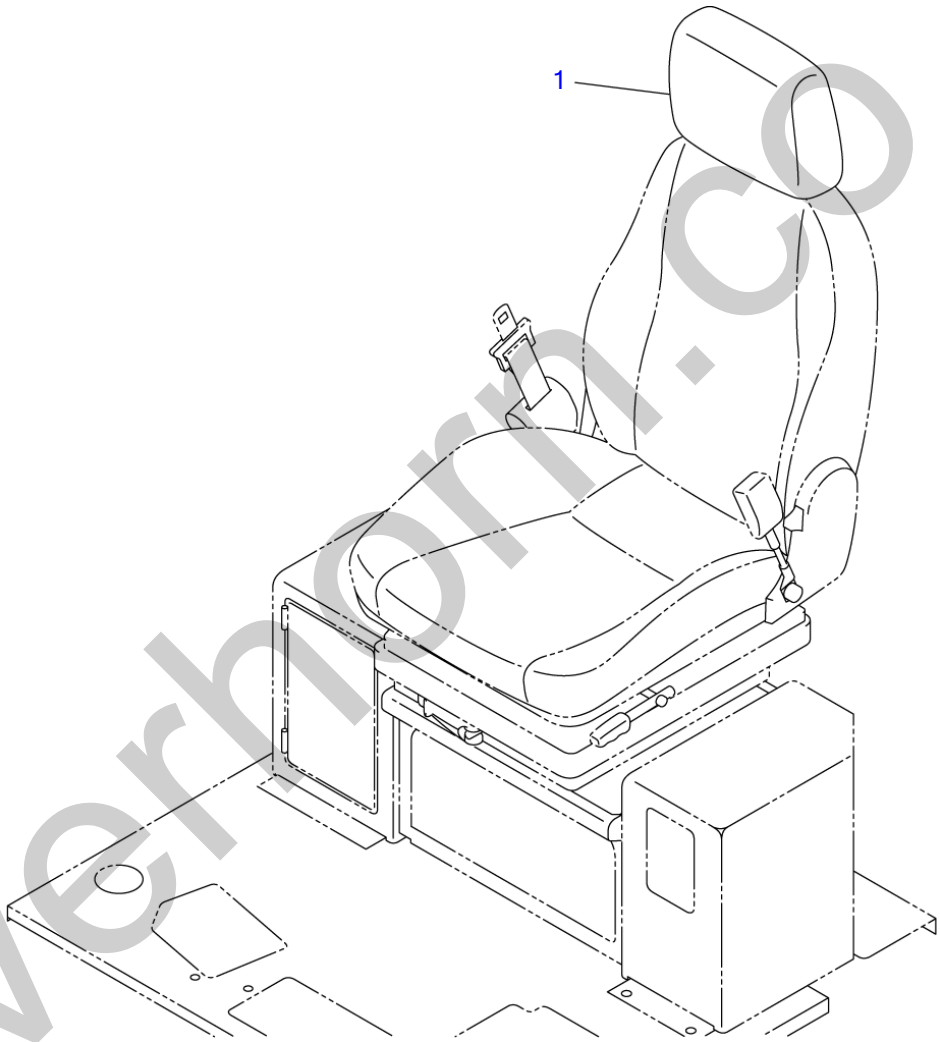

G4E070

S=1/10

silverhorn.co.uk

HEAD REST

Item	Part number	Description	Q'ty	Chan.	Serial No.	Serv.	Remarks
		REST ASSY, head (fabric)					X03734-09000-0
		REST ASSY, head (PVC)					X03734-10000-0
1	1914100075	REST, head (fabric)	1			M	
	1914100076	REST, head (PVC)	1			M	
	G4e070						

silverhorn.co.uk

CAB MOUNT

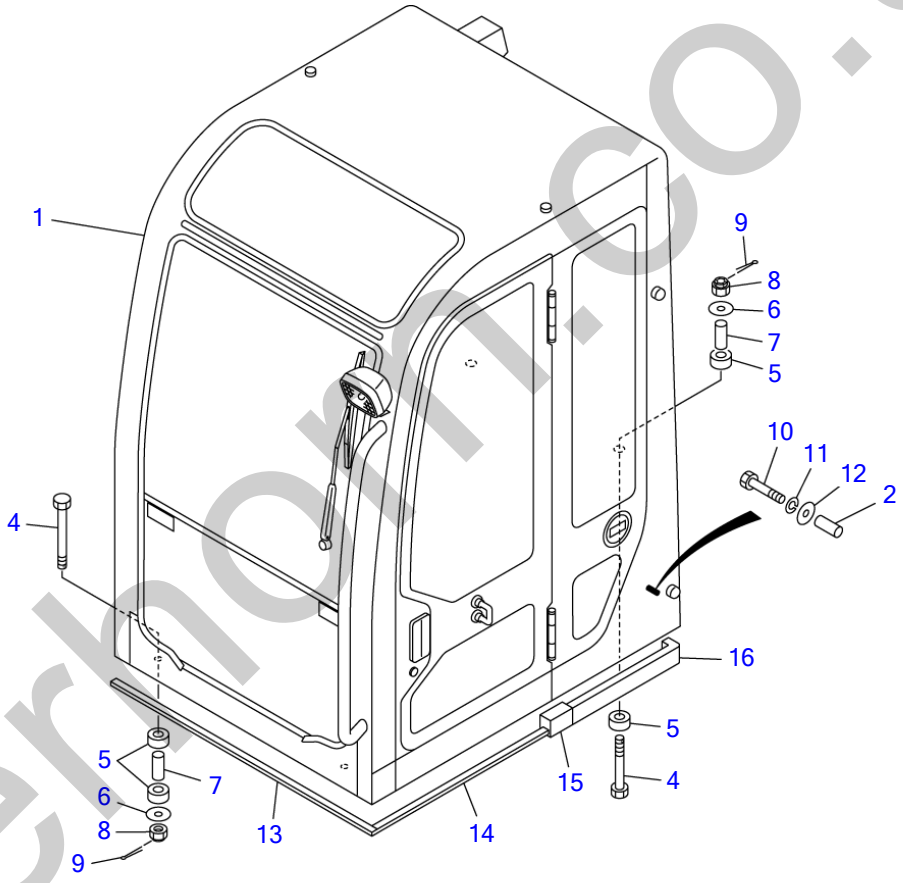

J2E081

S=1/20

silverhorn.co.uk

CAB MOUNT

Item	Part number	Description	Q'ty	Chan.	Serial No.	Serv.	Remarks
		CAB MOUNT	1				X03986-22500-1
1	0398622600	CAB ASSY	1				see page cab (1/7)
2	0398619002	COLLAR	1				
4	0568640900	BOLT	4				
5	0433503100	RUBBER	8				
6	0003000010	WASHER	4				
7	0563500600	TUBE	4				
8	1132080016	NUT	4				
9	1210010430	PIN, split	4				
10	1101041475	BOLT	1				
11	1140020014	WASHER, spring	1				
12	0003600174	WASHER	1				
13	1654312100	SPONGE	1				sold by the meter
14	1654302090	SPONGE	1				sold by the meter
15	0568652210	SPONGE	1				
16	0568652220	SPONGE	1				
	J2e081						

silverhorn.co.uk

CAB (1/7)

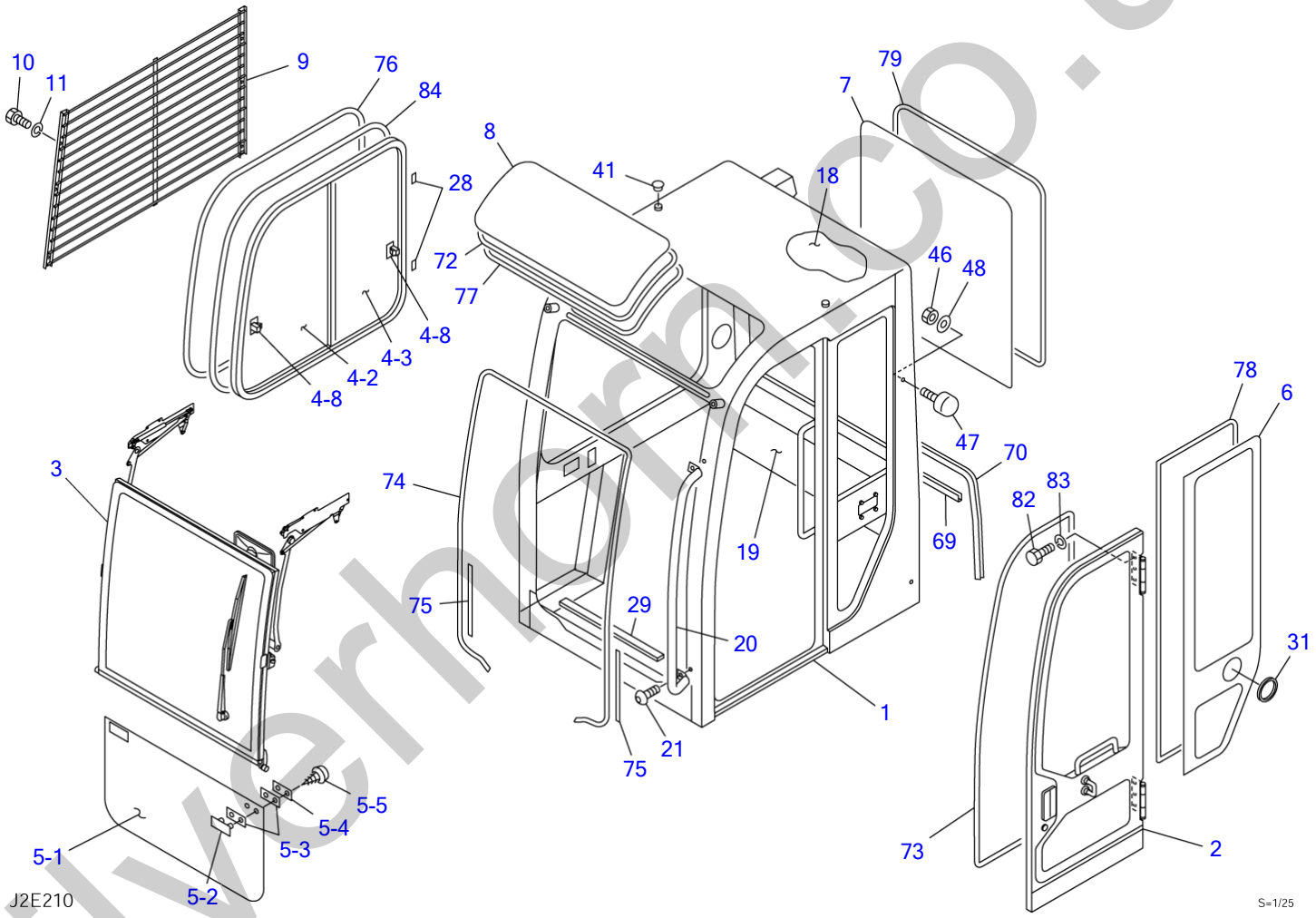

silverhorn.co.uk

CAB (1/7)

Item	Part number	Description	Q'ty	Chan.	Serial No.	Serv.	Remarks
0	0398622600	CAB ASSY	1				X03986-22600-1
1	X **********	・CAB	1				
2	0568652800	・DOOR ASSY	1				see page (4/7)
3	0568652500	・ASSIST ASSY, front sash	1				see page (5/7)
4	0378601300	・SASH ASSY, side	1				
4-2	0378601320	・・GLASS	1				
4-3	0378601330	・・GLASS	1				
4-8	0338630650	・・LOCK ASSY	2				
5	0378601600	・GLASS ASSY, front	1				
5-1	0378601610	・・GLASS	1				
5-2	1654010900	・・RETAINER	2				
5-3	1654011100	・・PACKING	4				
5-4	1654011000	・・PLATE	2				
5-5	1122410412	・・SCREW	4				
6	0568652306	・GLASS	1				
7	0378601900	・GLASS	1				
8	0358605300	・GLASS	1				
9	0398619500	・GUARD	1				
10	1100040825	・BOLT	10				
11	1141110008	・WASHER	14				
18	0398622620	・SPONGE	1				
19	0568640710	・SPONGE	1				
20	0568625500	・HANDRAIL	1				
21	1120991205	・BOLT	2				
28	0438601770	・SPACER	7				
29	0568634100	・SEAL	1				
31	0568626600	・GROMMET	1				
41	1653303010	・CAP	2				
46	1130090010	・NUT	6				
47	1651101042	・RUBBER	4				
48	1654011706	・WASHER	4				
69	1654636140	・TRIM	1				sold by the meter
70	1654636260	・TRIM	1				sold by the meter
72	1653916222	・TRIM	1				sold by the meter
73	1654605326	・RUBBER	1				sold by the meter
74	1654605374	・RUBBER	1				sold by the meter
75	1654605033	・RUBBER	2				sold by the meter
76	1653930355	・TRIM	1				sold by the meter
77	1654615216	・DAM	1				
78	1654615278	・DAM	1				
79	1654231295	・H-RUBBER	1				sold by the meter
82	1100040814	・BOLT	6				
83	1140090008	・WASHER, spring	6				
84	1654620350	・TAPE	1				sold by the meter
	J2e210						

silverthorn.co.uk

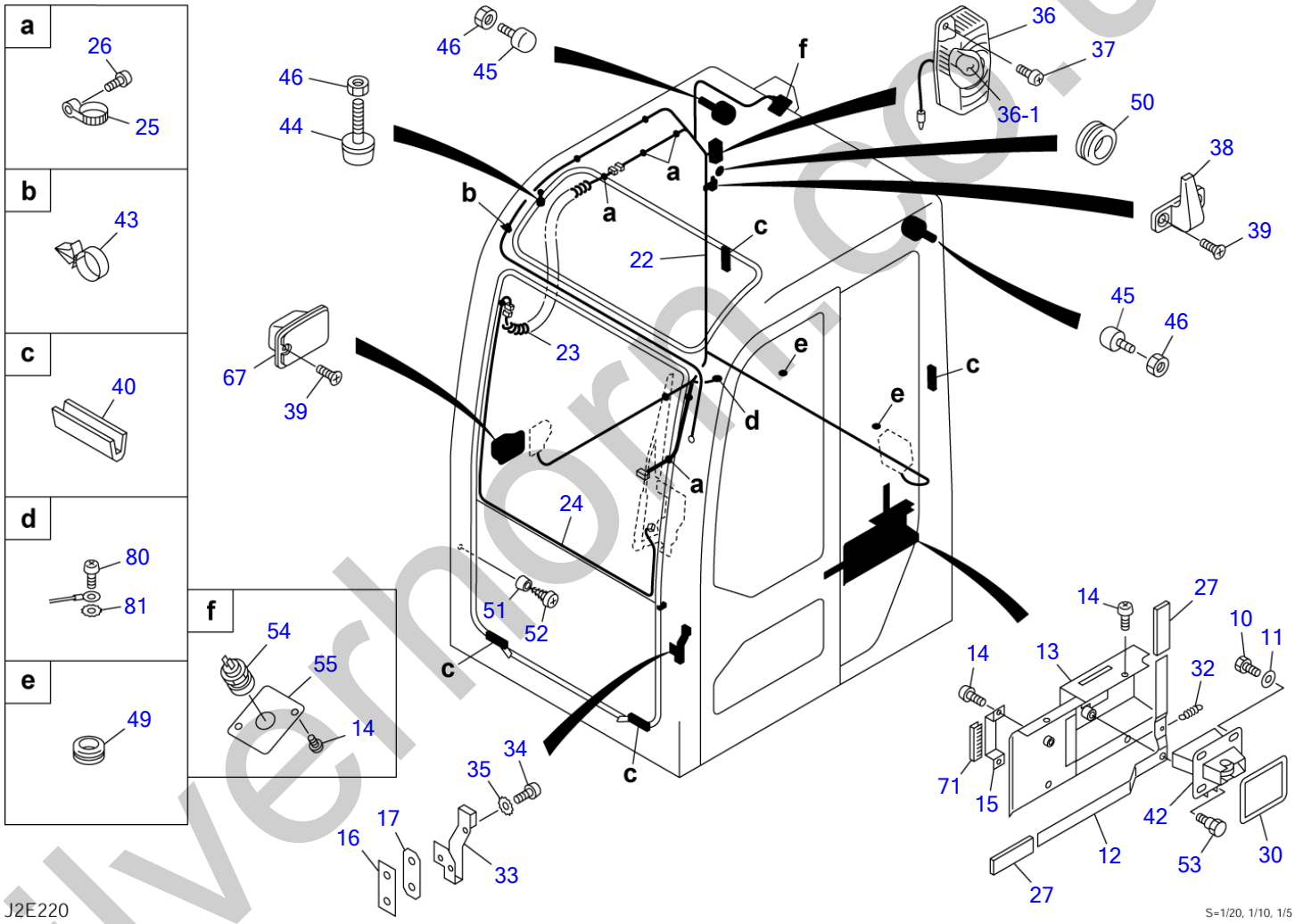

silverhorn.co.uk

CAB (2/7)

Item	Part number	Description	Q'ty	Chan.	Serial No.	Serv.	Remarks
0	0398622600	CAB ASSY	1				X03986-22600-1
10	1100040825	・BOLT	4				
11	1141110008	・WASHER	4				
12	0378601420	・PLATE	1				
13	0398622610	・COVER	1				
14	1150420512	・SCREW	8				
15	0338630870	・PLATE	1				
16	0338630880	・PLATE	1				
17	0338630930	・PACKING	1				
22	0568652910	・HARNESS, wiring	1				
23	0398802200	・HARNESS, wiring	1				
24	0338631010	・HARNESS, wiring	1				
25	1652221050	・BAND	3				
26	1120590512	・SCREW	3				
27	0438601760	・COVER	2				
30	0568634400	・SEAL	1				
32	0007000096	・SPRING	1				
33	0068620500	・STRIKER	1				
34	1120891025	・BOLT	2				
35	1140330010	・WASHER	2				
36	1703001700	・LAMP, room	1				
36-1	1703001701	・・BULB	1				
37	1150410420	・SCREW	2				
38	1654004800	・HANGER	1				
39	1120690412	・SCREW	4				
40	1654004900	・STOPPER	4				
42	1654010500	・LOCK ASSY	1				
43	1652351054	・CLAMP	3				
44	1651101028	・STOPPER	2				
45	1651101045	・STOPPER	2				
46	1130090010	・NUT	6				
49	1652060016	・GROMMET	2				
50	1652060031	・BUSHING	1				
51	1652102320	・RUBBER	2				
52	1122400416	・SCREW	2				
53	0378601510	・PIN	1				
54	1711900066	・SOCKET	1				
55	0578600143	・COVER	1				
67	1654010500	・ASHTRAY	1				
71	1653916007	・TRIM	1				sold by the meter
80	1150420516	・SCREW	1				
81	1140330005	・WASHER	1				
	J2e220						

silverthorn.co.uk

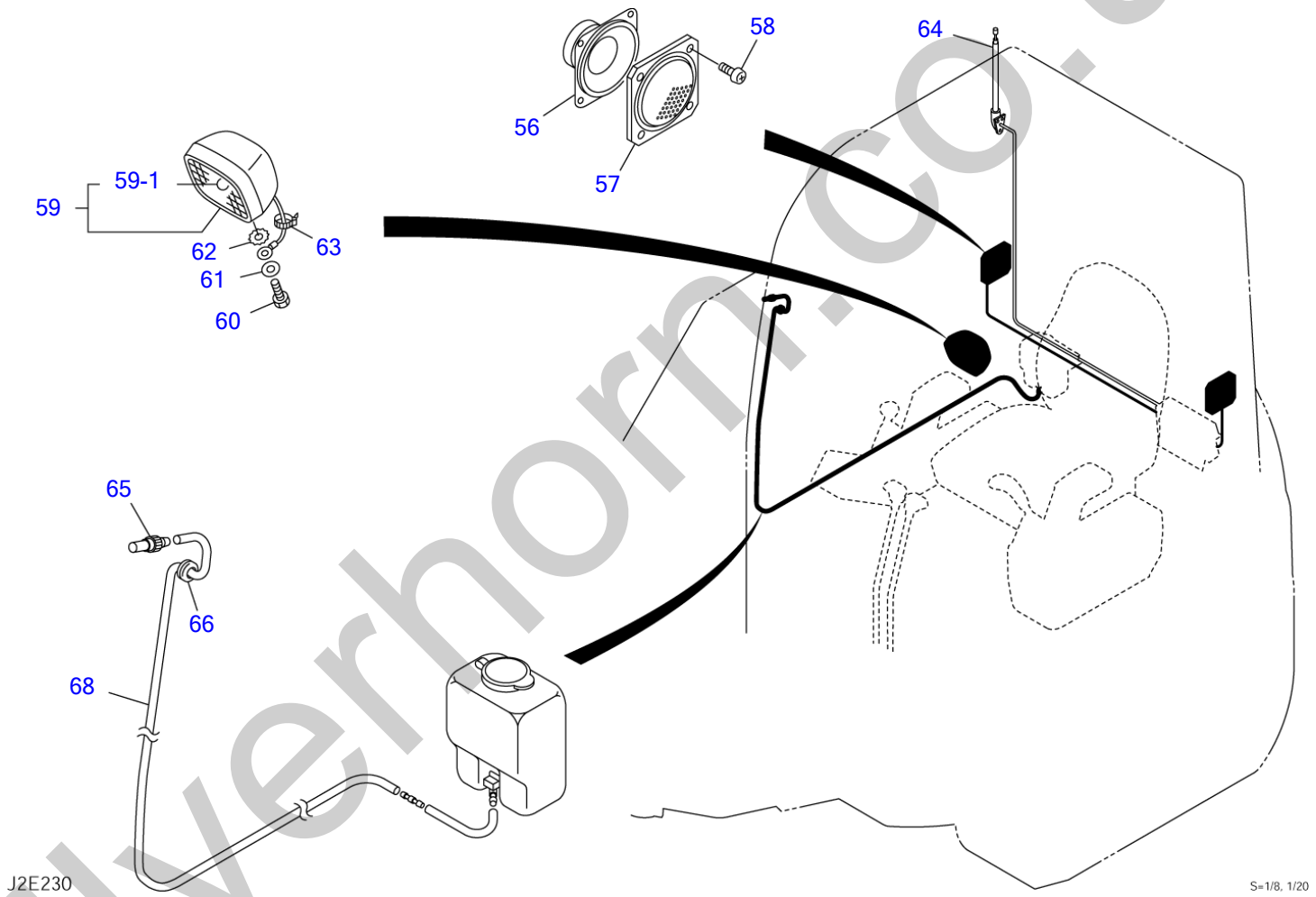

silverhorn.co.uk

CAB (3/7)

Item	Part number	Description	Q'ty	Chan.	Serial No.	Serv.	Remarks
0	0398622600	CAB ASSY	1				X03986-22600-1
56	1705003500	・SPEAKER	2				
57	1705003550	・GRILLE	2				
58	1120590412	・SCREW	8				
59	1703007600	・LAMP ASSY	1				
59-1	1703007605	・・BULB	1				12V, 55W
60	1100040816	・BOLT	1				
61	1141110008	・WASHER	1				
62	1140330008	・WASHER	1				
63	1652231250	・BAND	1				
64	1705004650	・ANTENNA	1				
65	1711910040	・NOZZLE	1				
66	1652001002	・GROMMET	1				
67	1711919180	・HOSE	1				
	J2e230						

silverhorn.co.uk

CAB (4/7) (door)

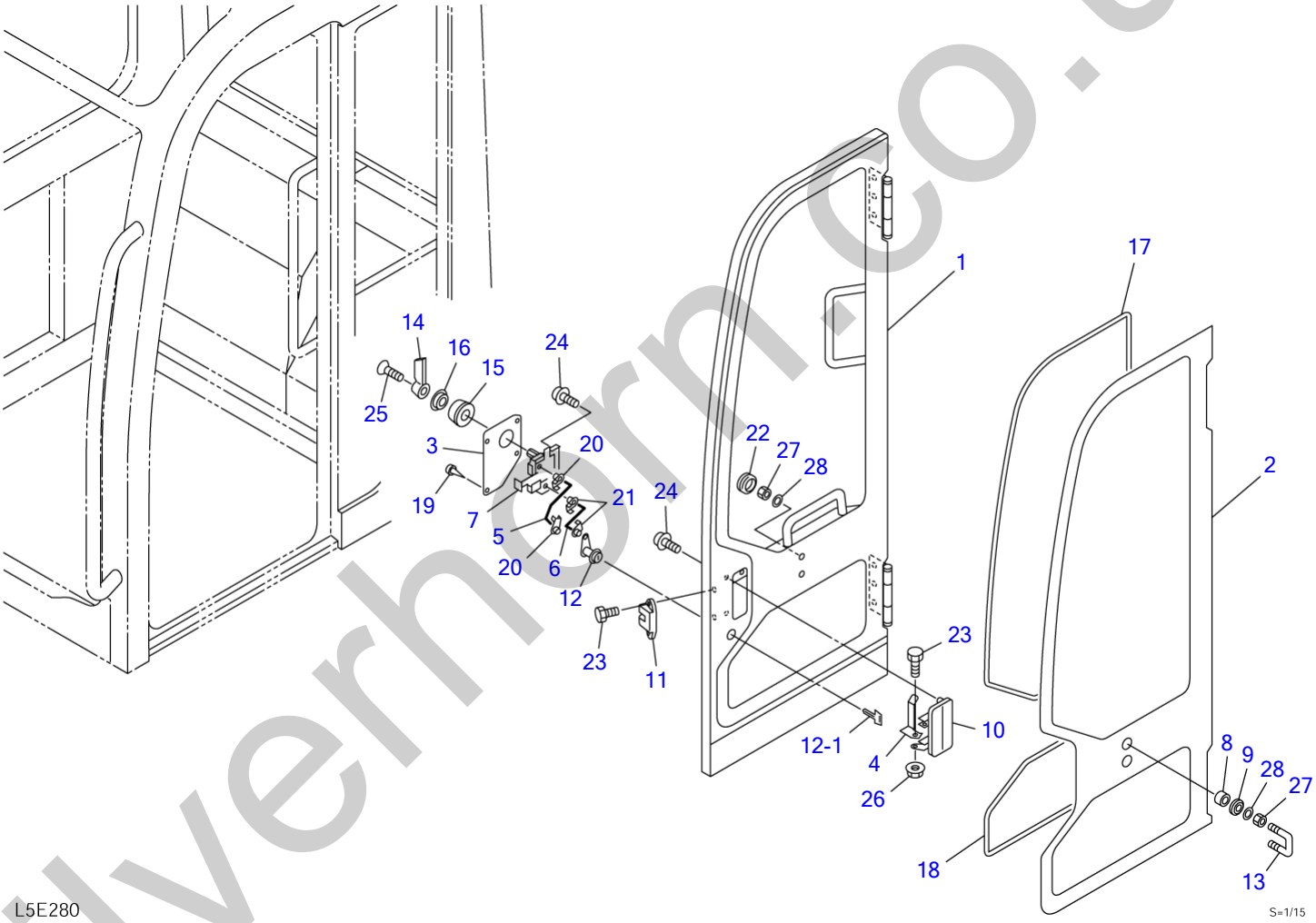

silverhorn.co.uk

CAB (4/7) (door)

Item	Part number	Description	Q'ty	Chan.	Serial No.	Serv.	Remarks
0-1	0568652800	DOOR ASSY	1				X05686-52800-0
1	0568652810	・DOOR	1				
2	0568652802	・GLASS	1				
3	0568623300	・COVER	1				
4	0568630900	・PLATE	1				
5	0568630800	・ROD	1				
6	0568630600	・ROD	1				
7	0568623400	・CONTROL ASSY	1				
8	0568623500	・COLLAR	2				
9	0568623600	・SEAL	2				
10	1654005600	・HANDLE	1				
11	0068620400	・LOCK ASSY	1				
12	1653611527	・LOCK	1				
12-1	1700100019	・KEY	1				
13	1654005900	・STRIKER	1				
14	1654005500	・HANDLE	1				
15	1654005800	・BASE	1				
16	1654005700	・ESCUTCHEON	1				
17	1654615260	・DAM	1				sold by the meter
18	1654615145	・DAM	1				sold by the meter
19	1652711432	・CLIP	4				
20	0068621500	・SNAP	2				
21	0398610900	・SNAP	2				
22	1652053200	・GROMMET	2				
23	1100090612	・BOLT	3				
24	1150410612	・SCREW	4				
25	1120790516	・SCREW	1				
26	1131283006	・NUT	1				
27	1130090010	・NUT	4				
28	1654011706	・WASHER	4				
	L5e280						

silverhorn.co.uk

CAB (5/7) (front sash assist)

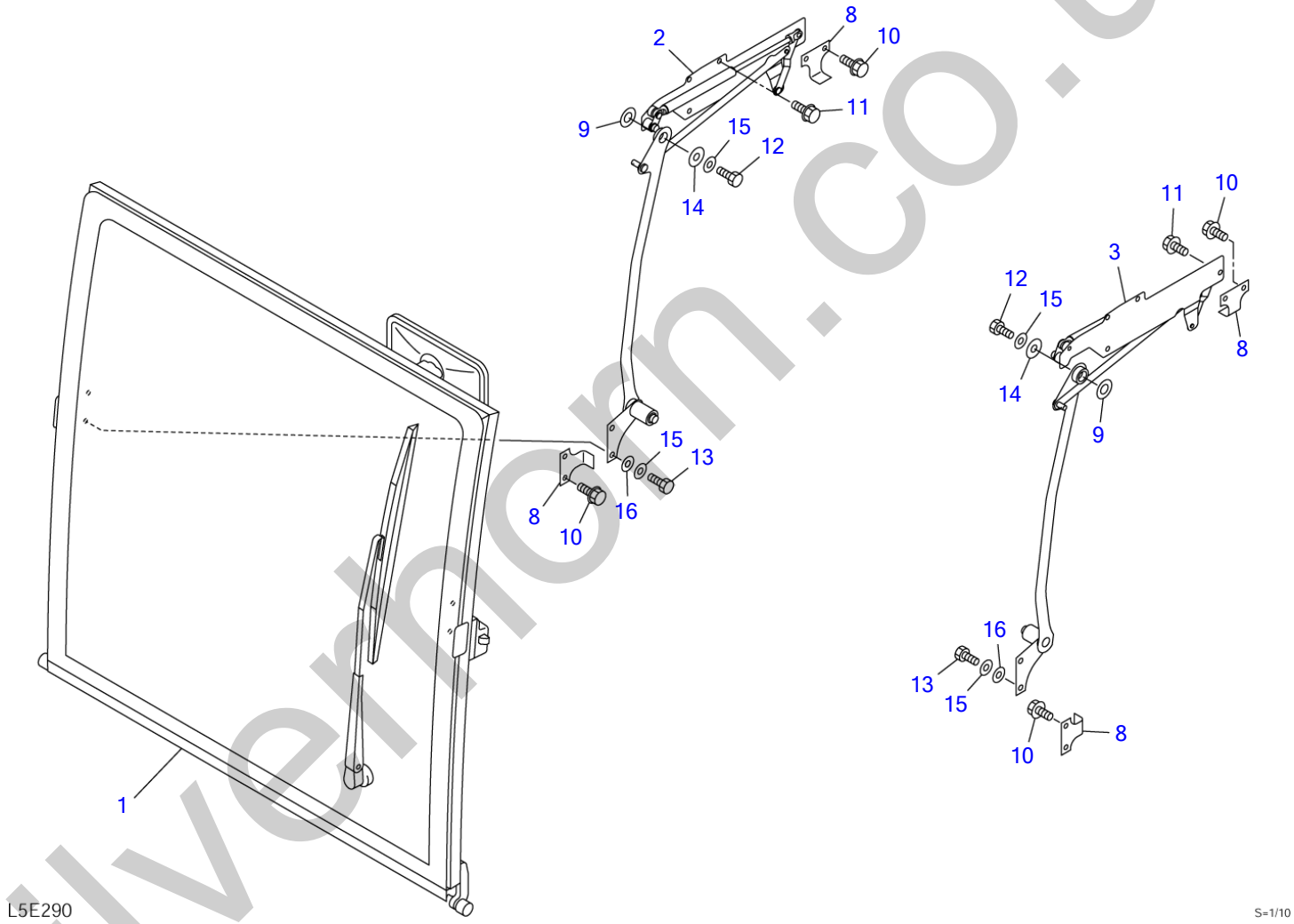

silverhorn.co.uk

CAB (5/7) (front sash assist)

Item	Part number	Description	Q'ty	Chan.	Serial No.	Serv.	Remarks
0-2	0568652500	ASSIST ASSY, front sash	1				
1	0568652600	・SASH ASSY, front	1				see page (7/7)
2	0568652700	・ASSIST ASSY (R.H.)	1				see page (6/7)
3	0568652750	・ASSIST ASSY (L.H.)	1				see page (6/7)
8	0378603710	・PLATE	4				
9	0083252100	・WASHER	2				
10	1106690616	・BOLT	8				
11	1106690620	・BOLT	8				
12	1100090820	・BOLT	2				
13	1100090816	・BOLT	4				
14	0578600401	・WASHER	2				
15	1654011705	・WASHER	6				
16	1141190008	・WASHER	4				
	L5e290						

silverhorn.co.uk

CAB (6/7) (assist)

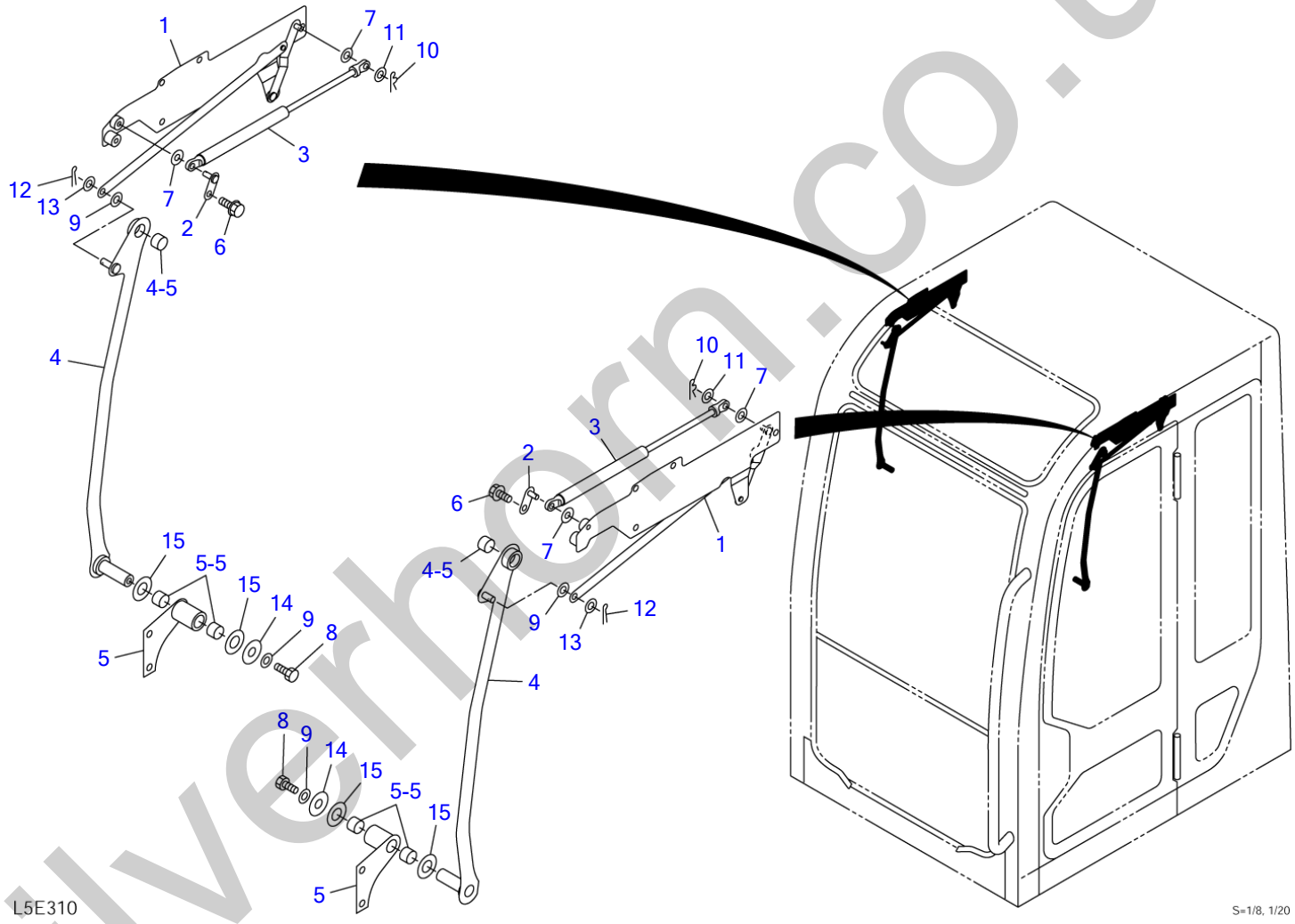

silverhorn.co.uk

CAB (6/7) (assist)

Item	Part number	Description	Q'ty	Chan.	Serial No.	Serv.	Remarks
0-3	0568652700	ASSIST ASSY (R.H.)	1				
	0568652750	ASSIST ASSY (L.H.)	1				
1	0568652720	・LINK ASSY (R.H.)	1				
	0568652770	・LINK ASSY (L.H.)	1				
2	0358601840	・PLATE	1				
3	1653900063	・SPRING, gas	1				
4	0378603720	・ARM ASSY (R.H.)	1				
	0378603740	・ARM ASSY (L.H.)	1				
4-5	1333001512	・・BUSHING	1				
5	0378603760	・PLATE ASSY (R.H.)	1				
	0378603780	・PLATE ASSY (L.H.)	1				
5-5	1333001515	・・BUSHING	2				
6	1106690616	・BOLT	1				
7	1654011756	・WASHER	2				
8	1100090820	・BOLT	1				
9	1654011705	・WASHER	2				
10	1214000006	・PIN, snap	1				
11	1654011712	・WASHER	1				
12	1210002015	・PIN, split	1				
13	1141190008	・WASHER	1				
14	0578600401	・WASHER	1				
15	0083252100	・WASHER	2				
	L5e310						

silverhorn.co.uk

CAB (7/7) (front sash)

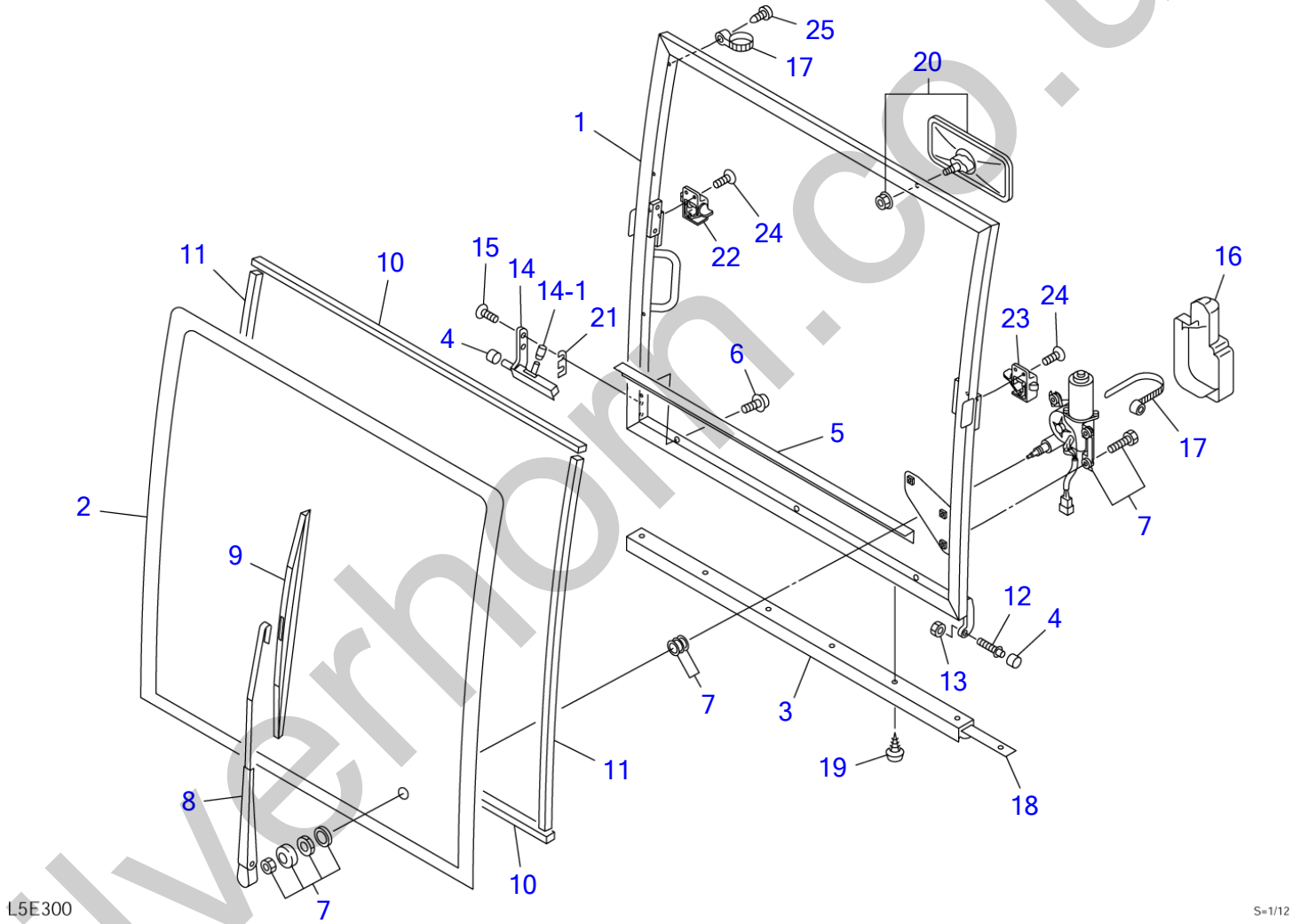

silverhorn.co.uk

CAB (7/7) (front sash)

Item	Part number	Description	Q'ty	Chan.	Serial No.	Serv.	Remarks
0-4	0568652600	SASH ASSY, front	1				
1	0568652610	・SASH, front	1				
2	0568652630	・GLASS	1				
3	0568621800	・SEAL	1				
4	0568622200	・ROLLER	2				
5	0338630440	・PLATE	1				
6	1150420512	・SCREW	3				
7	1704051212	・MOTOR, wiper	1				
8	1704100530	・ARM, wiper	1				
9	1704200530	・BLADE	1				
10	1654615080	・DAM	2				sold by the meter
11	1654616080	・DAM	2				sold by the meter
12	0578600406	・SHAFT	1				
13	1130090010	・NUT	1				
14	0568652640	・LATCH	1				
14-1	0568652647	・・CAP	1				
15	1120890820	・BOLT	2				
16	1704400001	・COVER	1				
17	1652221050	・BAND	5				
18	0568621900	・PLATE	1				
19	1122500412	・SCREW	6				
20	1654005460	・MIRROR	1				
21	0568652650	・PLATE	2				
22	0578600490	・HANDLE (R.H.)	1				
23	0578600480	・HANDLE (L.H.)	1				
24	1120840612	・SCREW	4				
25	1122400510	・SCREW	4				
	L5e300						

silverhorn.co.uk

CANOPY

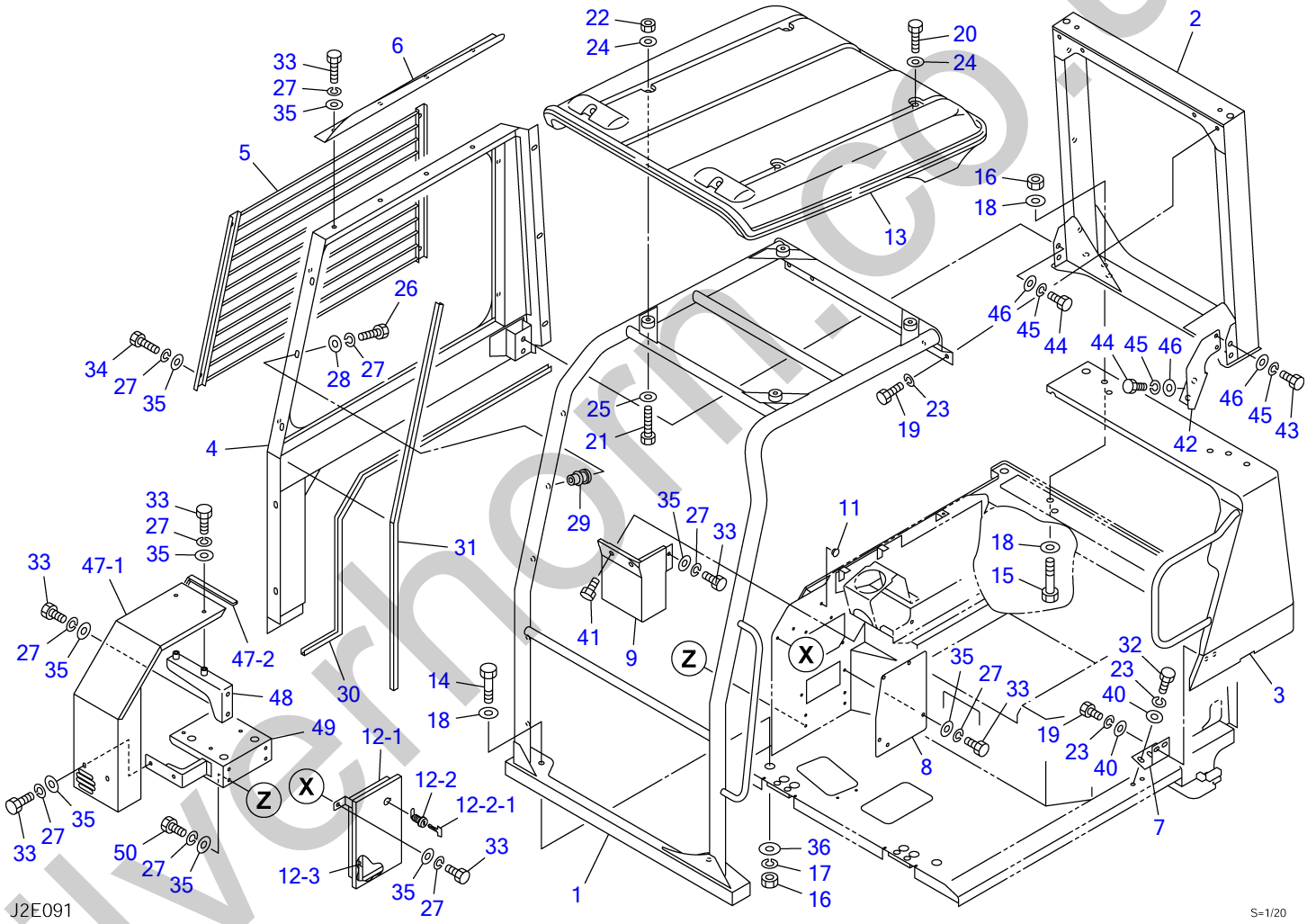

silvernorn.co.uk

CANOPY

Item	Part number	Description	Q'ty	Chan.	Serial No.	Serv.	Remarks
		CANOPY ASSY					X03984-03500-5
1	0398403600	POLE	1				
2	0398403700	POLE	1				
3	0398403300	COVER	1				
4	0398403800	PANEL	1				
5	0398401500	GUARD	1				
6	0398403560	COVER	1				
7	0398403570	ANGLE	1				
8	0398403580	COVER	1				
9	0398403590	COVER	1				
11	1652533016	CAP	2		15820022~		
12	0398403900	MANUAL STORAGE ASSY	1		15820022~		
12-1	0398403910	・MANUAL STORAGE	1		15820022~		
12-2	1653601395	・LOCK	1		15820022~		
12-2-1	1700100019	・KEY	1		15820022~		
12-3	1654601096	・TRIM	1		15820022~		sold by the meter
13	0368416300	ROOF	1				
14	1101041445	BOLT	2				
15	1101041460	BOLT	4				
16	1130540014	NUT	6				
17	1140020014	WASHER, spring	2				
18	1141550014	WASHER	10				
19	1100041020	BOLT	6				
20	1100041035	BOLT	2				
21	1100041050	BOLT	2				
22	1130040010	NUT	2				
23	1140020010	WASHER, spring	8				
24	0003600020	WASHER	4				
25	1141110010	WASHER	2				
26	1100040835	BOLT	8				
27	1140020008	WASHER, spring	33				
28	0003608252	WASHER	8				
29	1652520008	NUT	8				
30	1654607140	SEAL	1				sold by the meter
31	1654605135	RUBBER	1				sold by the meter
32	1100041025	BOLT	2				
33	1100040816	BOLT	17				
34	1100040825	BOLT	4				
35	1141110008	WASHER	25				
36	0003600122	WASHER	2				
40	0003600025	WASHER	4				
41	1100040612	BOLT	2				
42	0398403780	BRACKET	1		15820022~		
43	1101041225	BOLT	2		15820022~		
44	1101041235	BOLT	4		15820022~		
45	1140020012	WASHER, spring	6		15820022~		
46	1141110012	WASHER	6		15820022~		
47	0398404200	COVER ASSY, unit	1		15820022~		
47-1	0398404210	・COVER	1		15820022~		
47-2	1654606036	・RUBBER	1		15820022~		sold by the meter
48	0564630860	BRACKET	1		15820022~		
49	0564531730	BRACKET	1		15820022~		
50	1100040814	BOLT	4		15820022~		
	J2e093						

silverhorn.co.uk

HEATER (1/3) (15820004-15820723)

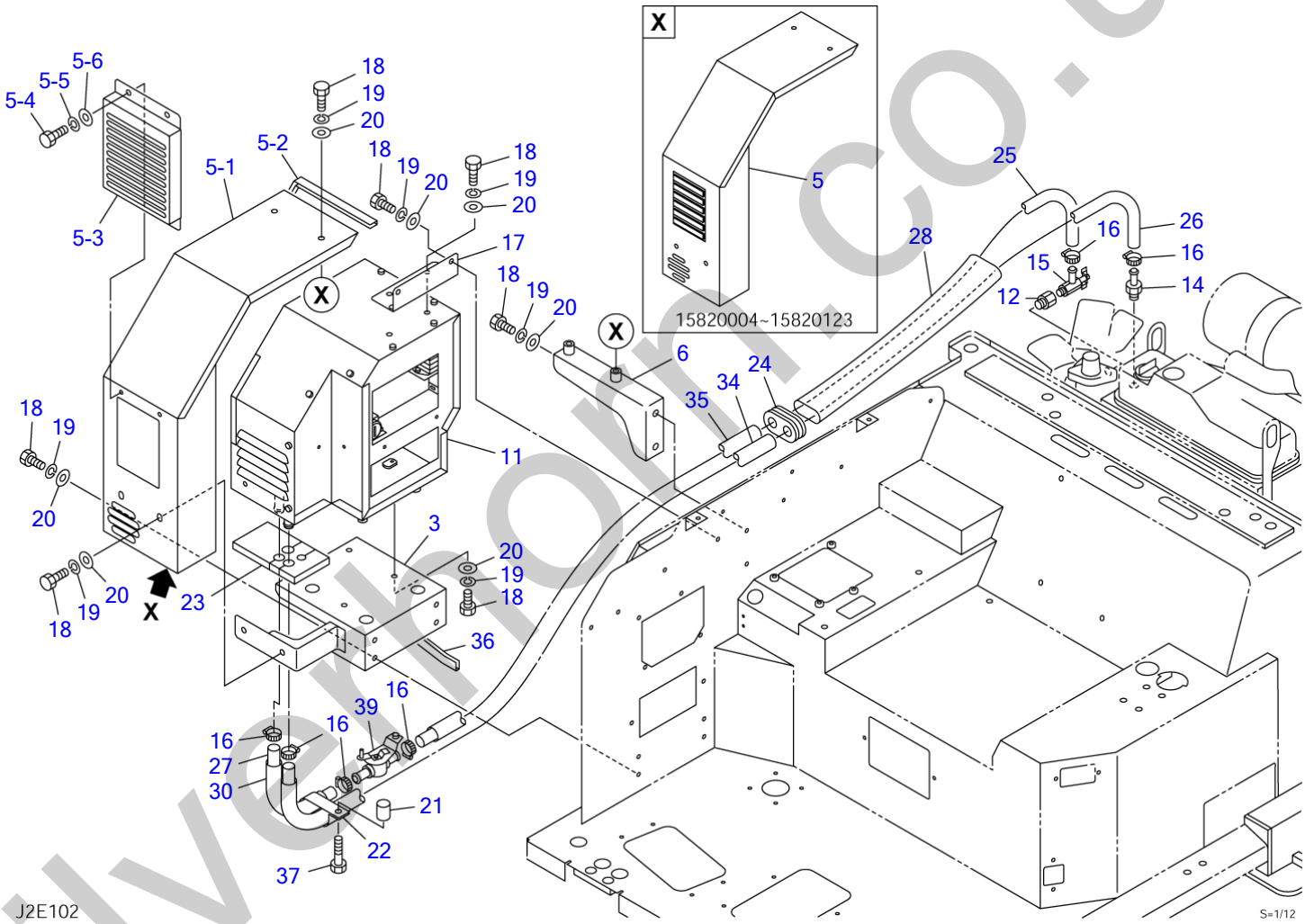

silverhorn.co.uk

HEATER (1/3) (15820004-15820723)

Item	Part number	Description	Q'ty	Chan.	Serial No.	Serv.	Remarks
		HEATER ASSY					X03945-13400-5
3	0564531730	BRACKET	1				
5	0394513410	COVER	1		15820004~15820123		
	0394513420	COVER ASSY	1	(H)	15820124~		
5-1	0394617660	・COVER	1		15820124~		
5-2	1654606036	・RUBBER	1		15820124~		sold by the meter
5-3	0564531820	・COVER	1		15820124~		
5-4	1100040816	・BOLT	2		15820124~		
5-5	1140020008	・WASHER, spring	2		15820124~		
5-6	1141110008	・WASHER	2		15820124~		
6	0564630860	BRACKET	1				
11	1911509410	HEATER UNIT	1				
12	1501910303	CONNECTOR	1				
14	1911502200	ADAPTOR	1				
15	1911502100	VALVE	1				
16	1911500500	CLAMP	6				
17	0564631230	BRACKET	1				
18	1100040816	BOLT	17				
19	1140020008	WASHER, spring	18				
20	1141110008	WASHER	18				
21	0394211020	COLLAR	1				
22	0007300018	CLAMP	1				
23	0564631220	URETHANE	1				
24	0097210300	GUARD	1				
25	1911511860	HOSE	1				
26	1911515135	HOSE	1				
27	1911501820	HOSE	1				
28	1531345030	PROTECTOR	1				sold by the meter
30	1531325012	PROTECTOR	1				sold by the meter
34	1531325075	PROTECTOR	1				sold by the meter
35	1531325050	PROTECTOR	1				sold by the meter
36	1653916022	TRIM	1				sold by the meter
37	1100040850	BOLT	1				
39	1911506008	VALVE, water	1				
	J2e102						

silverhorn.co.uk

HEATER (2/3) (15820004-15820723)

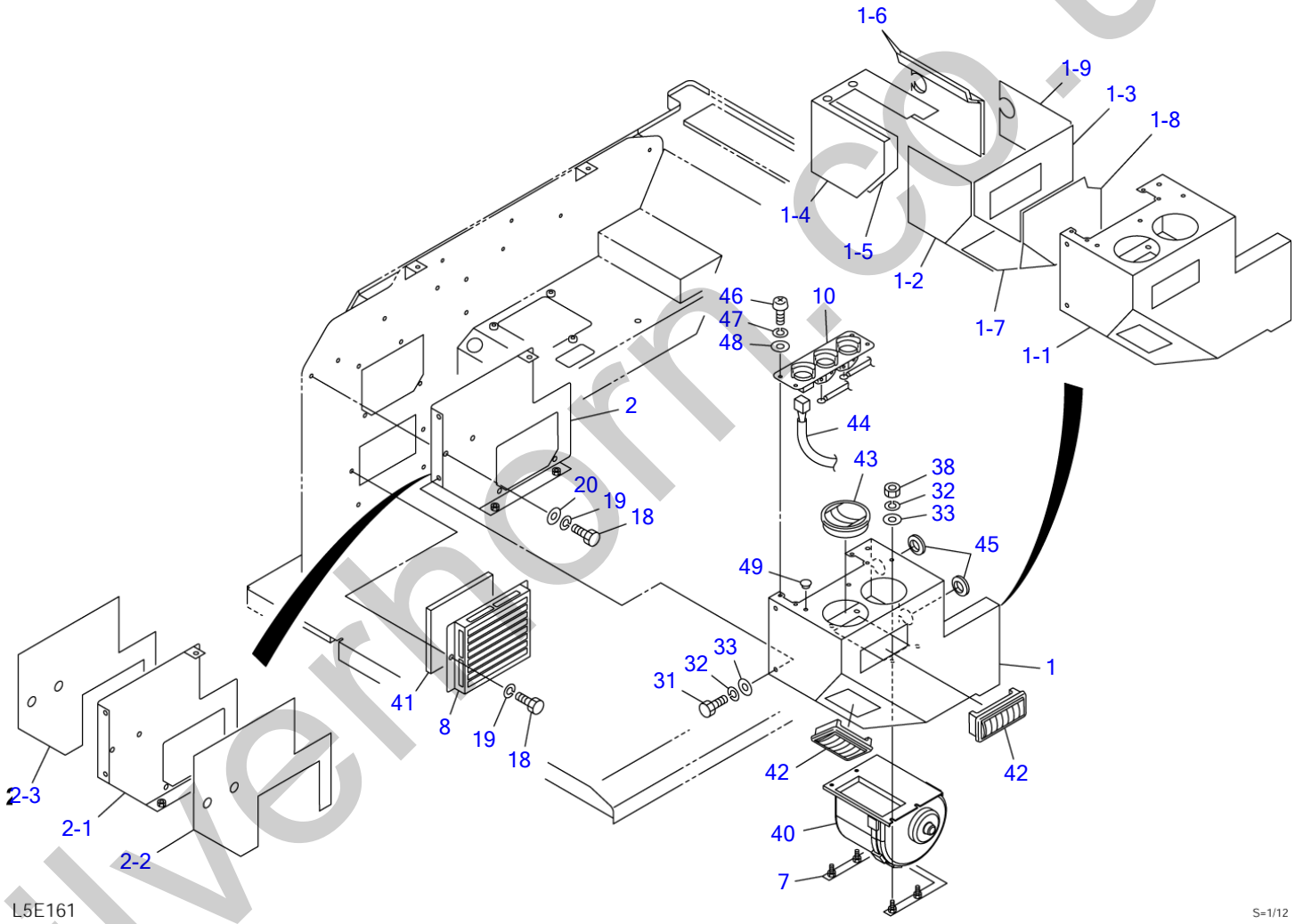

silvernorm.co.uk

HEATER (2/3) (15820004-15820723)

Item	Part number	Description	Q'ty	Chan.	Serial No.	Serv.	Remarks
		HEATER ASSY					X03945-13400-5
1	0564531710	BOX ASSY	1				
1-1	0564531711	・BOX	1				
1-2	0564531712	・URETHANE	1				
1-3	0564531713	・URETHANE	1				
1-4	0564531714	・URETHANE	1				
1-5	0564531715	・URETHANE	1				
1-6	0564531716	・URETHANE	2				
1-7	0564531717	・URETHANE	1				
1-8	0564531718	・URETHANE	1				
1-9	0564531719	・URETHANE	1				
2	0564531720	PLATE ASSY	1				
2-1	0564531721	・PLATE	1				
2-2	0564531722	・URETHANE	1				
2-3	0564531723	・RUBBER	1				
7	0564531770	BRACKET	1				
8	0564631180	COVER	1				
10	1911509426	PANEL ASSY, control	1				
18	1100040816	BOLT	4				
19	1140020008	WASHER, spring	4				
20	1141110008	WASHER	2				
31	1100040612	BOLT	5				
32	1140020006	WASHER, spring	9				
33	1141110006	WASHER	9				
38	1130040016	NUT	4				
40	1911509206	MOTOR, blower	1				
41	0564631190	FILTER	1				
42	1911505723	LOUVER	2				
43	1911505722	LOUVER	2				
44	1911509425	HARNESS, wiring	1				
45	1652053200	GROMMET	2				
46	1120590510	SCREW	4				
47	1140090005	WASHER, spring	4				
48	1141190005	WASHER	4				
49	1652533016	CAP	3				
	J2e112						

silverhorn.co.uk

HEATER (3/3) (15820004-15820723)

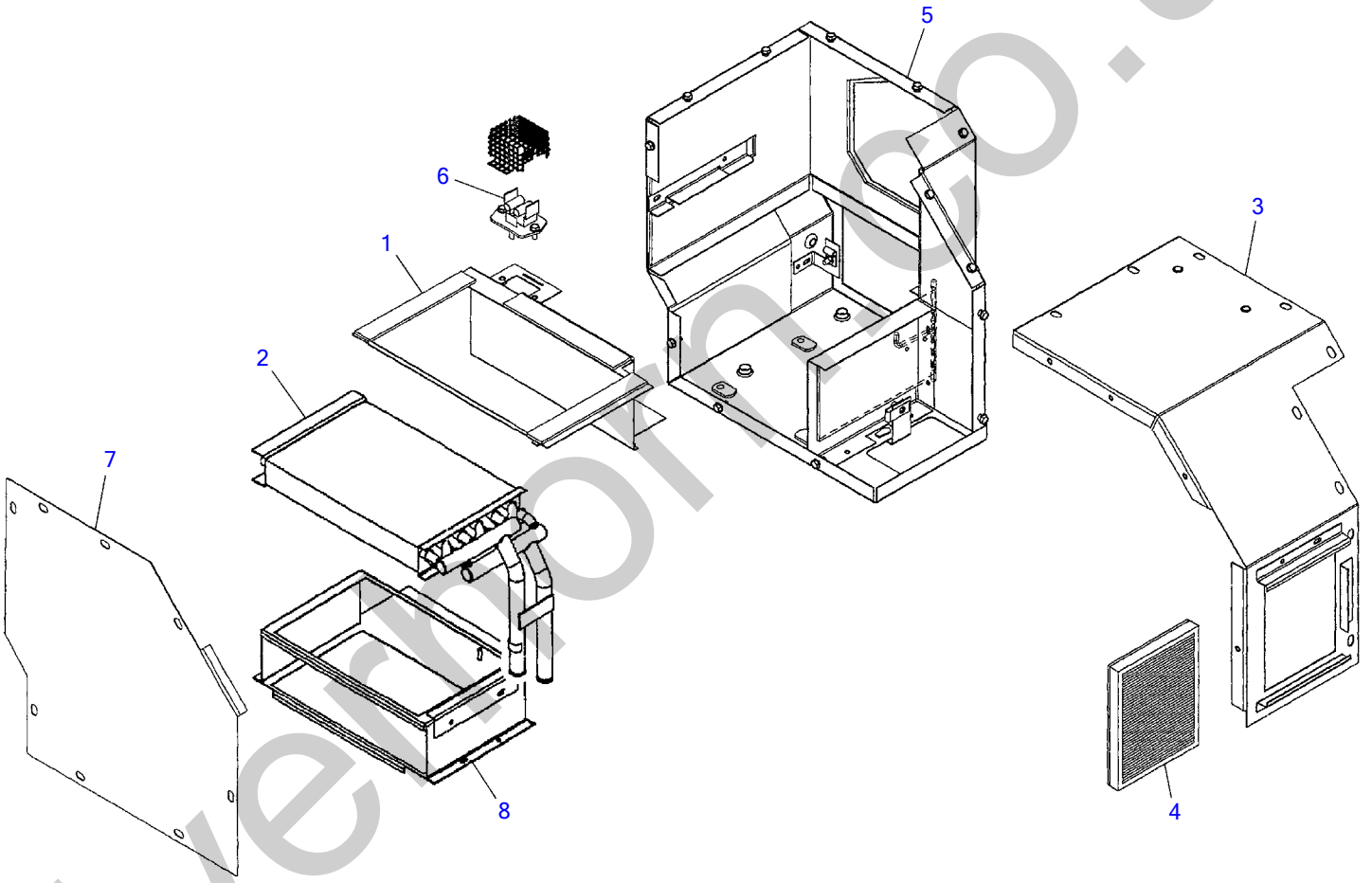

silvermorn.co.uk

HEATER (3/3) (15820004-15820723)

Item	Part number	Description	Q'ty	Chan.	Serial No.	Serv.	Remarks
0	1911509410	HEATER UNIT	1				
1	1911509232	・COVER	1				
2	1911509234	・CORE, heater	1				
3	1911509235	・COVER	1				
4	1911509413	・FILTER	1				
5	1911509236	・HOUSING	1				
6	1911506343	・RESISTOR	1			M	
7	1911509411	・COVER	1				
8	1911509412	・COVER	1				
	L5e221						

silverhorn.co.uk

HEATER (1/2) (15820724-)

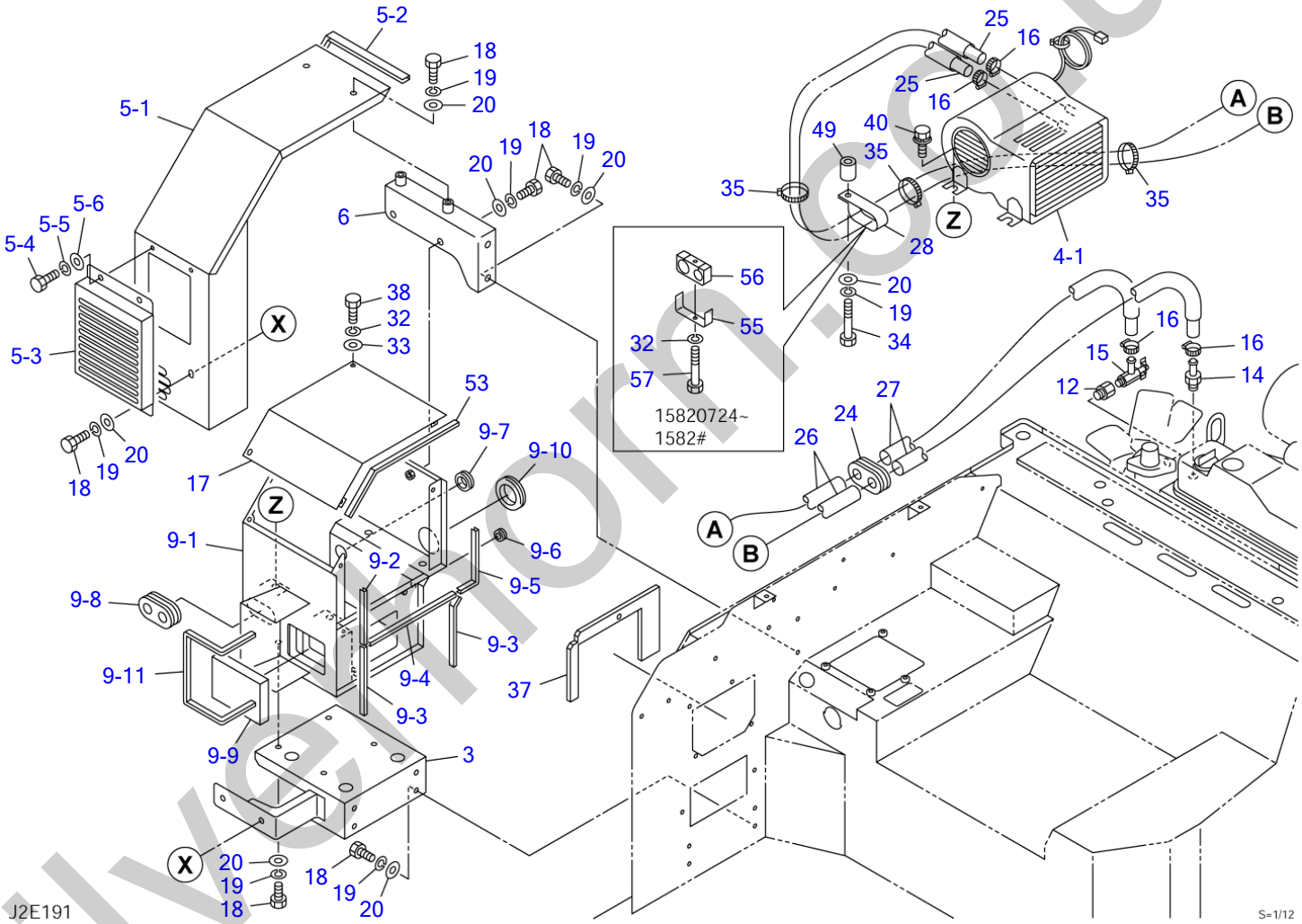

silvermorn.co.uk

HEATER (1/2) (15820724-)

Item	Part number	Description	Q'ty	Chan.	Serial No.	Serv.	Remarks
		HEATER ASSY					X03945-13600-3
3	0564531730	BRACKET	1				
4	0564531910	HEATER UNIT ASSY	1				X05645-31910-0
4-1	1911508100	・HEATER UNIT	1				
5	0394513420	COVER ASSY	1				
5-1	0394617660	・COVER	1				
5-2	1654606036	・RUBBER	1				sold by the meter
5-3	0564531820	・COVER	1				
5-4	1100040816	・BOLT	2				
5-5	1140020008	・WASHER, spring	2				
5-6	1141110008	・WASHER	2				
6	0394513510	BRACKET	1				
9	0564531920	BOX ASSY, heater	1				
9-1	0564531930	・BOX	1				
9-2	1654606012	・TRIM	1				sold by the meter
9-3	1654606015	・TRIM	2				sold by the meter
9-4	1654606022	・TRIM	1				sold by the meter
9-5	1654606014	・TRIM	1				sold by the meter
9-6	1652051200	・GROMMET	1				
9-7	1652060028	・GROMMET	1				
9-8	0337017300	・GUARD	1				
9-9	0564519550	・FILTER	1				
9-10	1652060051	・GROMMET	1				
9-11	1654606033	・TRIM	1				sold by the meter
12	1501910303	CONNECTOR	1				
14	1911502200	ADAPTOR	1				
15	1911502100	VALVE	1				
16	1911500500	BAND	4				
17	0564531940	COVER	1				
18	1100040816	BOLT	16				
19	1140020008	WASHER, spring	17				
20	1141110008	WASHER	21				
24	0097210300	GUARD	1				
25	1911521815	HOSE	2				
26	1531325107	PROTECTOR	2			M	sold by the meter
27	1531325050	PROTECTOR	2				sold by the meter
28	0007300018	CLAMP	1		1582#~	M	No. 24219
32	1140020006	WASHER, spring	4				
33	1141110006	WASHER	4				
34	1100040845	BOLT	1		1582#~		No. 24219
35	1652231250	BAND	3				
37	0564531937	SPONGE	1				
38	1100040616	BOLT	4				
40	1110561016	SCREW	3				
49	0394211020	COLLAR	1		1582#~	M	No. 24219
53	1654606030	TRIM	1				sold by the meter
55	0564631200	CLAMP	1		15820724~1582#		No. 24219
56	0564631210	RUBBER	1		15820724~1582#		
57	1100040650	BOLT	1		15820724~1582#		
	J2e191						

silverform.co.uk

HEATER (2/2) (15820724-)

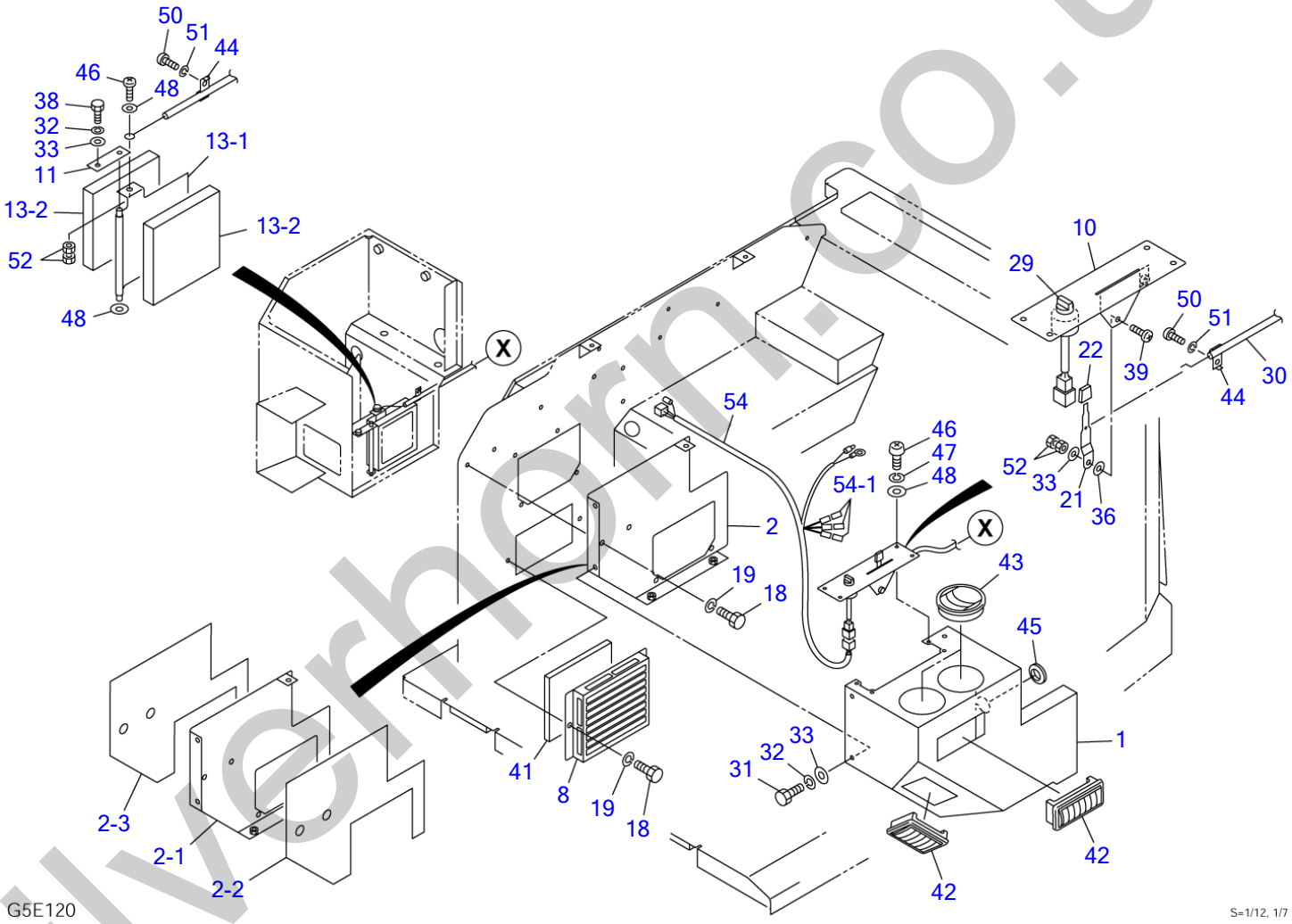

silverhorn.co.uk

HEATER (2/2) (15820724-)

Item	Part number	Description	Q'ty	Chan.	Serial No.	Serv.	Remarks
		HEATER ASSY					X03945-13600-3
1	0564531960	BOX	1				
2	0564531720	PLATE ASSY	1				
2-1	0564531721	・PLATE	1				
2-2	0564531722	・URETHANE	1				
2-3	0564531723	・RUBBER	1				
8	0564631180	COVER	1				
10	0394513550	PANEL, control	1				
11	0394513501	PLATE	1				
13	0394513560	DAMPER ASSY	1				X03945-13560-0
13-1	0394513570	・DAMPER	1				
13-2	0394513562	・SPONGE	2				
18	1100040816	BOLT	8				
19	1140020008	WASHER, spring	8				
21	0564525300	LEVER	1				
22	0564612550	KNOB	1				
29	1700000011	SWITCH, heater	1				
30	0564525460	WIRE	1			M	
31	1100040612	BOLT	5				
32	1140020006	WASHER, spring	6				
33	1141110006	WASHER	7				
36	1652540014	SPACER	1				
38	1100040616	BOLT	1				
39	1120590516	SCREW	1				
41	0564631190	FILTER	1				
42	1911505723	LOUVER	2				
43	1911505722	LOUVER	2				
44	0564612530	CLAMP	2				
45	1652053200	GROMMET	1				
46	1120590510	SCREW	5				
47	1140090005	WASHER, spring	4				
48	1141190005	WASHER	6				
50	1120530408	SCREW	2				
51	1141110004	WASHER	2				
52	1130040005	NUT	4				
54	0564531950	HARNESS ASSY, wiring	1				
54-1	1730500008	・DIODE (3A yellow)	3				
	J2e201						

silverhorn.co.uk

AIR CONDITIONER (1/7) (compressor)

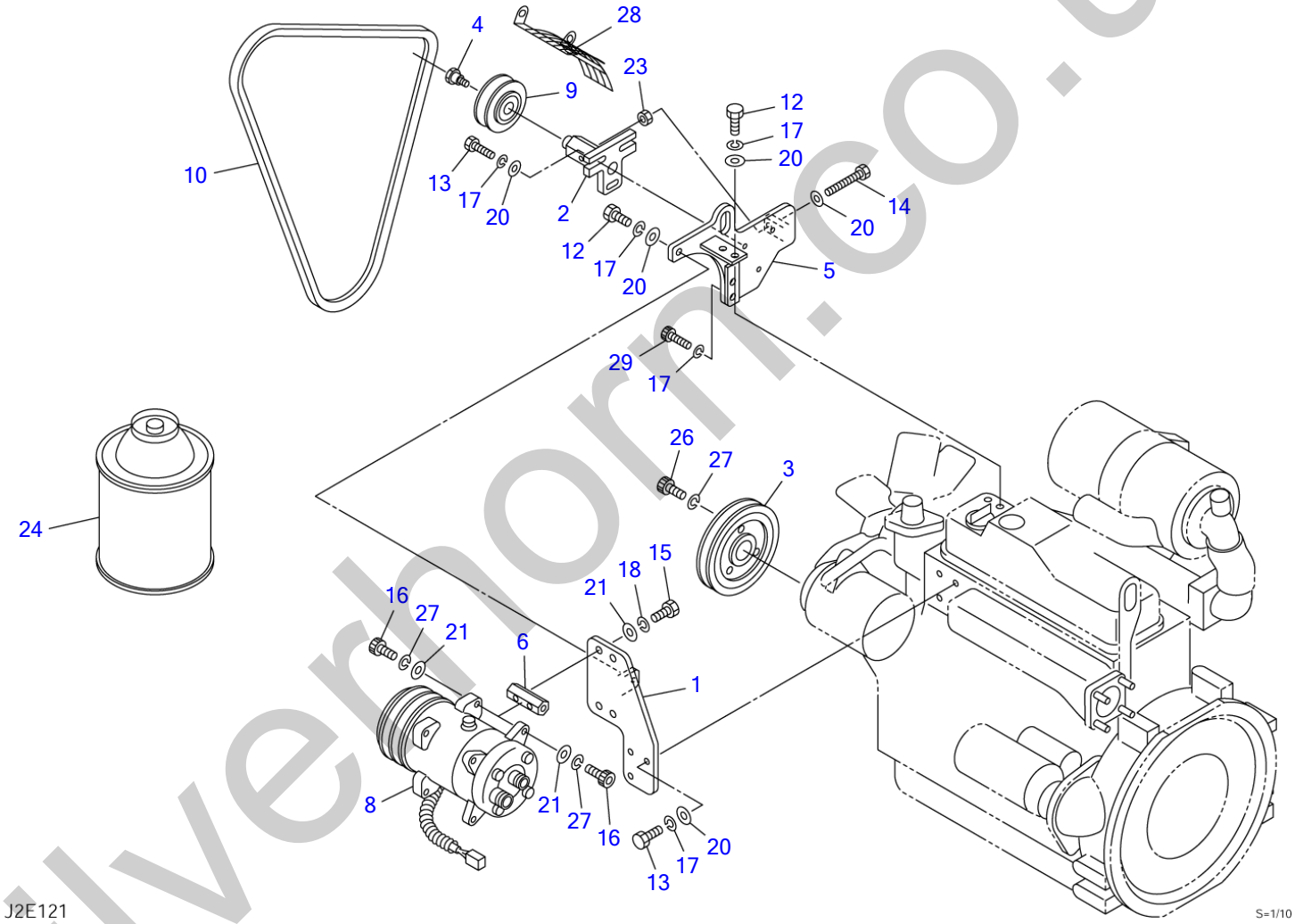

silverhorn.co.uk

AIR CONDITIONER (1/7) (compressor)

Item	Part number	Description	Q'ty	Chan.	Serv.	Remarks
		CONDITIONER ASSY, air				X03946-17000-1
		CONDITIONER ASSY, air (with 3rd aux. lines)				X03946-17050-1
0-1	X **********	COMPRESSOR ASSY	1			X03946-16100-3
1	0394616110	・BRACKET	1			
2	0564630650	・BOSS	1	15820004~15820128		M10
	0564630670	・BOSS	1	15820129~		M12
3	0394614710	・PULLEY	1			
4	0564630640	・SHAFT	1	15820004~15820128		M10
	0564630660	・SHAFT	1	15820129~		M12
5	0394616150	・BRACKET	1			
6	0564620110	・BOSS	2			
8	1911506010	・COMPRESSOR	1			
9	1911505700	・PULLEY	1			
10	1621071056	・V-BELT	1			
12	1100040820	・BOLT	3			
13	1100040825	・BOLT	6			
14	1100240885	・BOLT	1			
15	1100041030	・BOLT	4			
16	1110041025	・BOLT	4			
17	1140020008	・WASHER, spring	11			
18	1140020010	・WASHER, spring	8			
20	1141110008	・WASHER	10			
21	1141110010	・WASHER	8			
23	1130040008	・NUT	1			
24	1919055000	・GAS	8			100g
26	1110041020	・SCREW, cap	3			
27	1140420010	・WASHER, spring	7			
28	0394616160	・GUARD, fan	1			
29	1111820825	・SCREW, cap	2			
	J2e121					

silverhorn.co.uk

AIR CONDITIONER (2/7) (condenser)

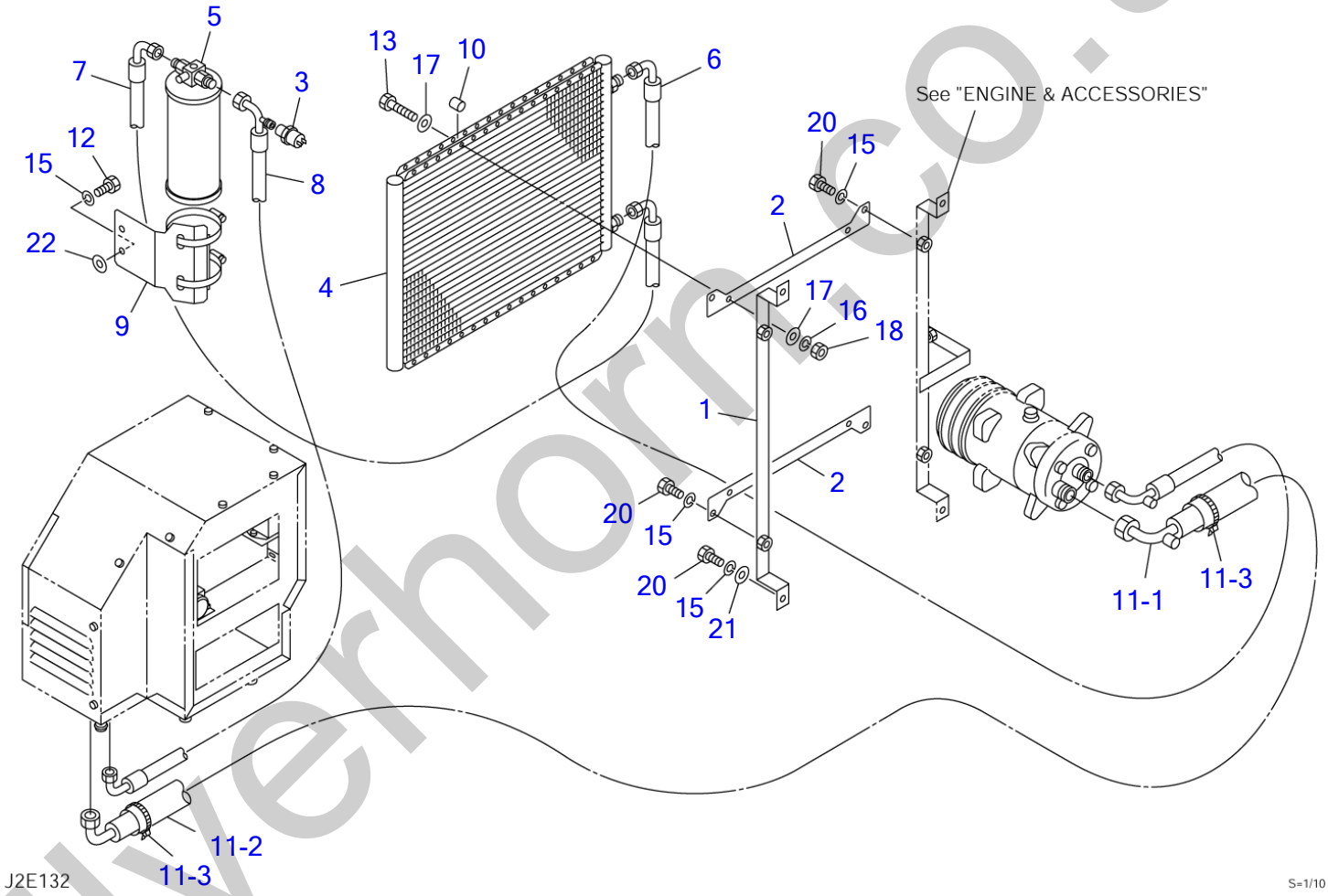

silverhorn.co.uk

AIR CONDITIONER (2/7) (condenser)

Item	Part number	Description	Q'ty	Chan.	Serial No.	Serv.	Remarks
		CONDITIONER ASSY, air					X03946-17000-1
		CONDITIONER ASSY, air (with 3rd aux. lines)					X03946-17050-1
0-2	X **********	CONDENSER ASSY	1				X03946-17200-3
1	0394617210	・BRACKET	1				
2	0394617230	・BRACKET	2				
3	1911505514	・SWITCH, pressure	1				
4	1911506620	・CONDENSER	1				
5	1911505511	・DRIER	1				
6	1911509403	・HOSE	1				
	1911505602	・・O-RING	2				
7	1911509401	・HOSE	1				
	1911505601	・・O-RING	2				
8	1911509402	・HOSE	1				
	1911505601	・・O-RING	2				
9	1911506301	・BRACKET	1				
10	0574600250	・COLLAR	4				
11	0394617620	・HOSE ASSY	1				
11-1	1911509404	・・HOSE	1				
	1911505603	・・・O-RING	2				
11-2	0394615141	・・INSULATOR	1				
11-3	1652241150	・・BAND	2				
12	1100040816	・BOLT	2				
13	1100040640	・BOLT	4				
15	1140020008	・WASHER, spring	8				
16	1140020006	・WASHER, spring	4				
17	1141110006	・WASHER	12				
18	1130040006	・NUT	4				
20	1100040820	・BOLT	6				
21	1141110008	・WASHER	2				
22	0003900039	・WASHER	2				
	J2e132						

silverhorn.co.uk

AIR CONDITIONER (3/7) (air conditioner unit)

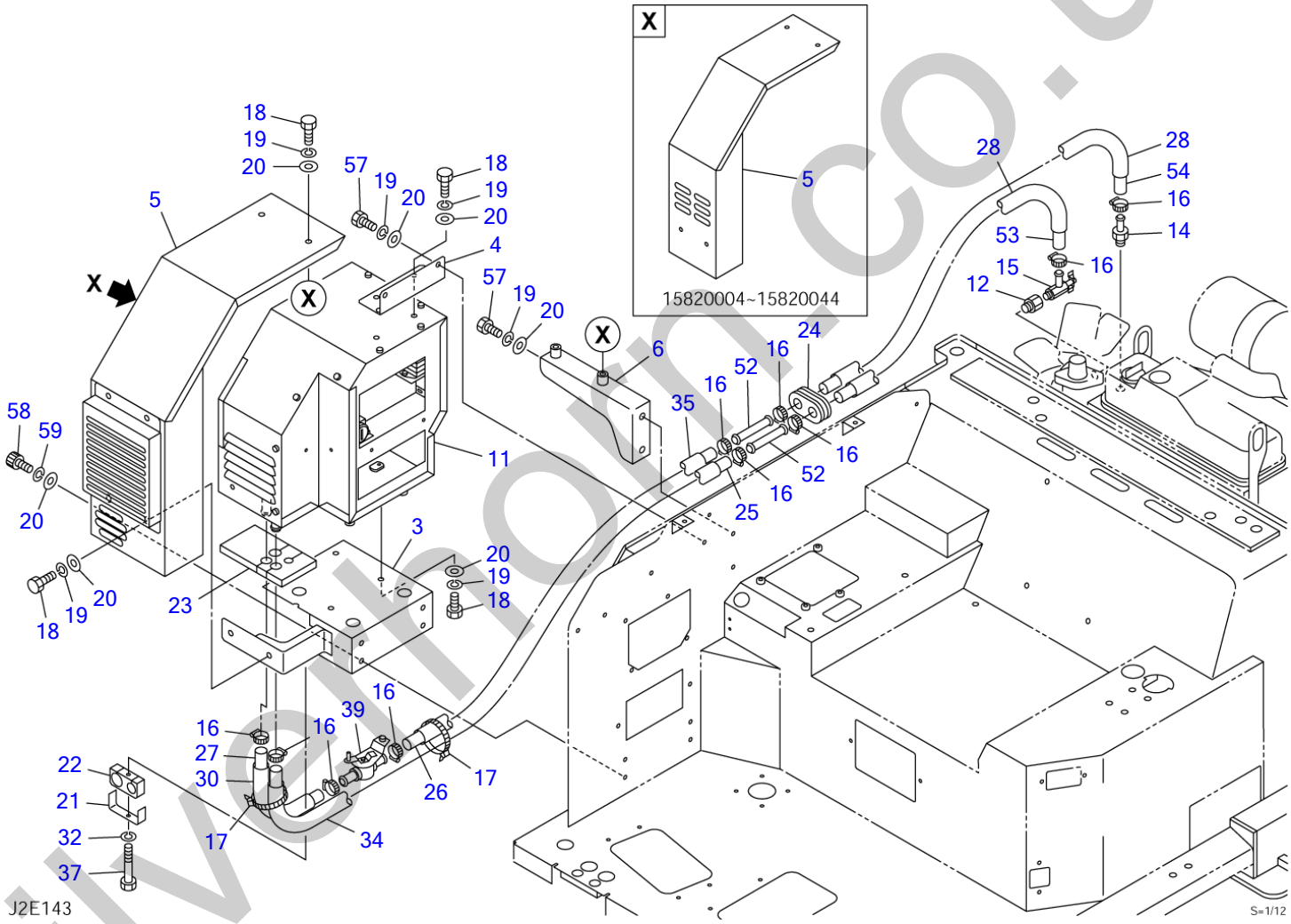

silverhorn.co.uk

AIR CONDITIONER (3/7) (air conditioner unit)

Item	Part number	Description	Q'ty	Chan.	Serial No.	Serv.	Remarks
		CONDITIONER ASSY, air					X03946-17000-1
		CONDITIONER ASSY, air (with 3rd aux. lines)					X03946-17050-1
0-3	X **********	UNIT ASSY	1				X03946-17600-7
3	0564531730	・BRACKET	1				
4	0564631230	・BRACKET	1				
5	0394513410	・COVER	1		15820004~15820044		
	0394617610	・COVER ASSY	1	(H)	15820045~		see page (5/7)
6	0564630860	・BRACKET	1				
11	0564631100	・UNIT ASSY, air conditioner	1		15820004~15820147		see page (5/7)
	0564631240	・UNIT ASSY, air conditioner	1		15820148~		see page (5/7)
12	1501910303	・CONNECTOR	1				
14	1911502200	・ADAPTOR	1				
15	1911502100	・VALVE	1				
16	1911500500	・CLAMP	10				
17	1652241300	・BAND	2				
18	1100040816	・BOLT	10				
19	1140020008	・WASHER, spring	14				
20	1141110008	・WASHER	18				
21	0564631200	・CLAMP	1				
22	0564631210	・RUBBER	1				
23	0564631220	・URETHANE	1				
24	0097210300	・GUARD	1				
25	1911501890	・HOSE	1				
26	1911505615	・HOSE	1				
27	1911501820	・HOSE	1				
28	1531325050	・PROTECTOR	2				sold by the meter
30	1531325012	・PROTECTOR	1				sold by the meter
32	1140020006	・WASHER, spring	1				
34	1531325075	・PROTECTOR	1				sold by the meter
35	1531325050	・PROTECTOR	1				sold by the meter
37	1100040650	・BOLT	1				
39	1911506008	・VALVE, water	1				
52	0394617670	・PIPE	2				
53	1911501870	・HOSE	1				
54	1911505170	・HOSE	1				
57	1100040814	・BOLT	4				
58	1110040814	・SCREW, cap	4				
59	1140420008	・WASHER, spring	4				
	J2e143						

silverhorn.co.uk

AIR CONDITIONER (4/7) (air conditioner unit; 15820004-15820723)

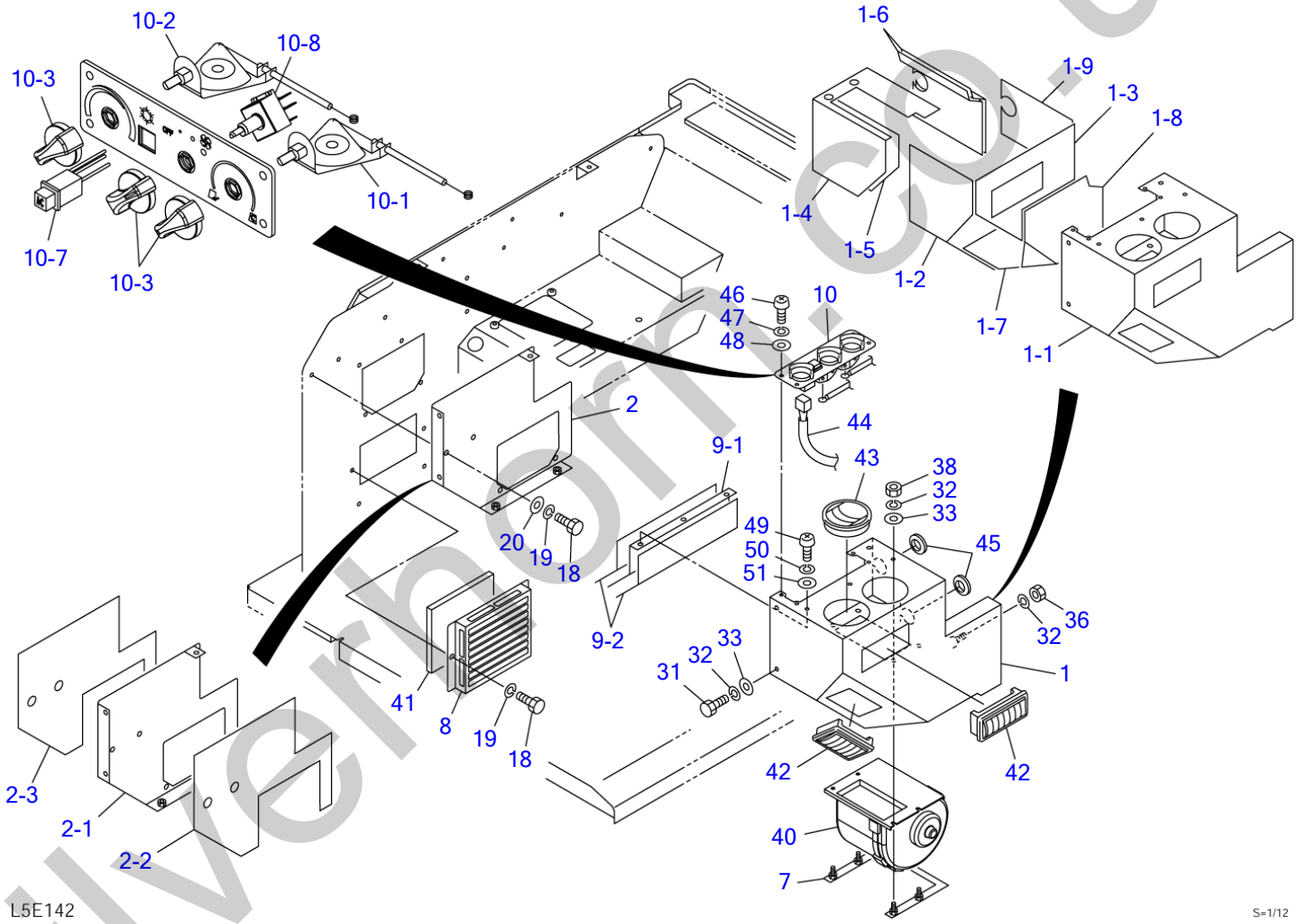

silvermoni.co.uk

AIR CONDITIONER (4/7) (air conditioner unit; 15820004-15820723)

Item	Part number	Description	Q'ty	Chan.	Serial No.	Serv.	Remarks
		CONDITIONER ASSY, air					X03946-17000-1
		CONDITIONER ASSY, air (with 3rd aux. lines)					X03946-17050-1
0-3	X **********	UNIT ASSY	1				X03946-17600-5
1	0564531710	・BOX ASSY	1				
1-1	0564531711	・・BOX	1				
1-2	0564531712	・・URETHANE	1				
1-3	0564531713	・・URETHANE	1				
1-4	0564531714	・・URETHANE	1				
1-5	0564531715	・・URETHANE	1				
1-6	0564531716	・・URETHANE	2				
1-7	0564531717	・・URETHANE	1				
1-8	0564531718	・・URETHANE	1				
1-9	0564531719	・・URETHANE	1				
2	0564531720	・PLATE ASSY	1				
2-1	0564531721	・・PLATE	1				
2-2	0564531722	・・URETHANE	1				
2-3	0564531723	・・RUBBER	1				
7	0564531770	・BRACKET	1				
8	0564631180	・COVER	1				
9	0564531780	・PLATE ASSY	1				
9-1	0564531781	・・PLATE	1				
9-2	0564531782	・・URETHANE	2				
10	1911509208	・PANEL ASSY, control	1				
10-1	1911509210	・・CONVERTER, cable control	1			M	
10-2	1911509220	・・CONVERTER, cable control	1			M	
10-3	1911505763	・・KNOB	3			M	
10-7	1911505767	・・SWTCH, air con.	1			M	
10-8	1911509280	・・ROTARY SWITCH, 3-speed	1			M	
18	1100040816	・BOLT	4				
19	1140020008	・WASHER, spring	4				
20	1141110008	・WASHER	2				
31	1100040612	・BOLT	5				
32	1140020006	・WASHER, spring	10				
33	1141110006	・WASHER	9				
36	1130040006	・NUT	1				
38	1130040016	・NUT	4				
40	1911509206	・MOTOR, blower	1				
41	0564631190	・FILTER	1				
42	1911505723	・LOUVER	2				
43	1911505722	・LOUVER	2				
44	1911509205	・HARNESS, wiring	1				
45	1652053200	・GROMMET	2				
46	1120590510	・SCREW	4				
47	1140090005	・WASHER, spring	4				
48	1141190005	・WASHER	4				
49	1120590610	・SCREW	3				
50	1140090006	・WASHER, spring	3				
51	1141190006	・WASHER	3				
	J2e153						

silverthorn.co.uk

AIR CONDITIONER (4/7) (air conditioner unit; 15820724-)

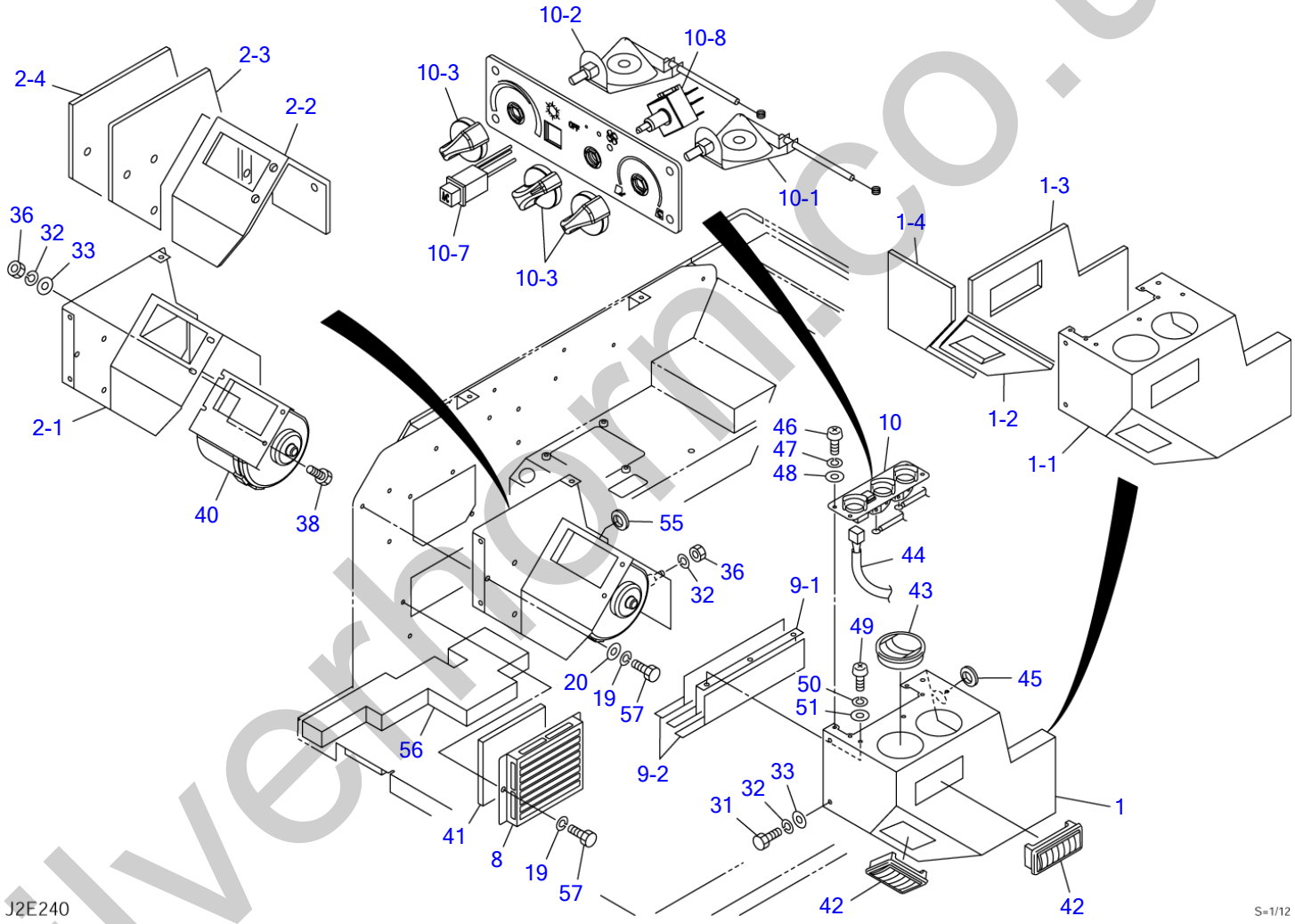

silverthorn.co.uk

AIR CONDITIONER (4/7) (air conditioner unit; 15820724-)

Item	Part number	Description	Q'ty	Chan.	Serial No.	Serv.	Remarks
		CONDITIONER ASSY, air					X03946-17000-1
		CONDITIONER ASSY, air (with 3rd aux. lines)					X03946-17050-1
0	X **********	UNIT ASSY	1				X03946-17600-7
1	0564532200	・BOX ASSY	1			M	
1-1	0564531870	・・BOX	1			M	
1-2	0564532210	・・INSULATOR	1			M	
1-3	0564532220	・・INSULATOR	1			M	
1-4	0564532230	・・INSULATOR	1			M	
2	0564532300	・PLATE ASSY	1			M	
2-1	0564532310	・・PLATE	1			M	
2-2	0564532320	・・INSULATOR	1			M	
2-3	0564532330	・・INSULATOR	1			M	
2-4	0564532340	・・INSULATOR	1			M	
8	0564631180	・COVER	1				
9	0564631300	・PLATE ASSY	1			M	
9-1	0564631310	・・PLATE	1			M	
9-2	0564631320	・・URETHANE	2			M	
10	1911509208	・PANEL ASSY, control	1				
10-1	1911509210	・・CONVERTER, cable control	1				
10-2	1911509220	・・CONVERTER, cable control	1				
10-3	1911505763	・・KNOB	3				
10-7	1911505767	・・SWTCH, air con.	1				
10-8	1911509280	・・ROTARY SWITCH, 3-speed	1				
19	1140020008	・WASHER, spring	6				
20	1141110008	・WASHER	4				
31	1100040612	・BOLT	5				
32	1140020006	・WASHER, spring	8				
33	1141110006	・WASHER	7				
36	1130040006	・NUT	3				
38	1100040616	・BOLT	2				
40	1911509206	・MOTOR, blower	1				
41	0564631190	・FILTER	1				
42	1911505723	・LOUVER	2				
43	1911505722	・LOUVER	2				
44	1911509205	・HARNESS, wiring	1				
45	1652053200	・GROMMET	1				
46	1120590510	・SCREW	4				
47	1140090005	・WASHER, spring	4				
48	1141190005	・WASHER	4				
49	1120590610	・SCREW	3				
50	1140090006	・WASHER, spring	3				
51	1141190006	・WASHER	3				
55	1652053600	・GROMMET	1			M	
56	0564631256	・INSULATOR	1			M	
57	1100040814	・BOLT	6				
	J2e240						

silverform.co.uk

AIR CONDITIONER (5/7) (air conditioner unit)

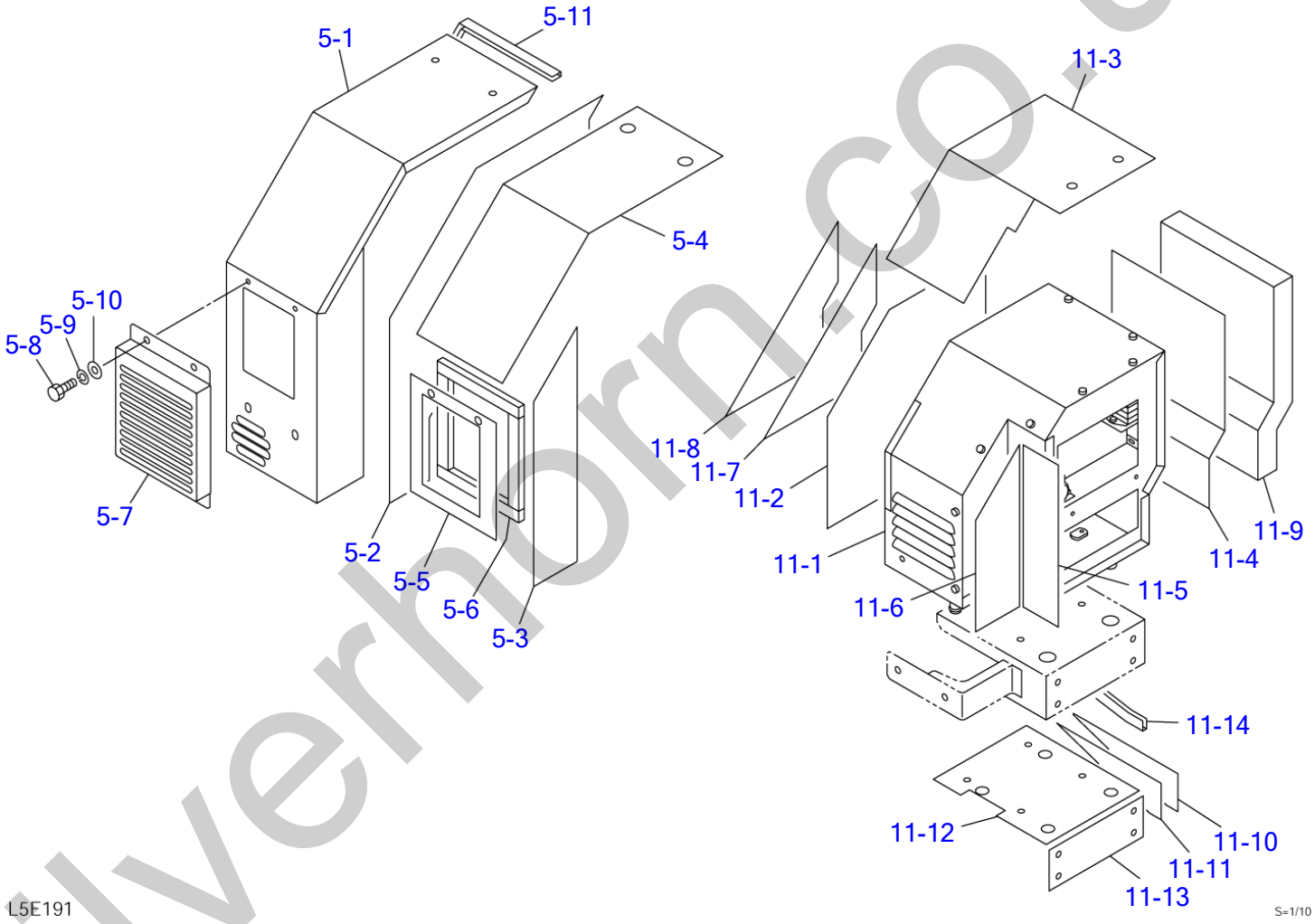

silverhorn.co.uk

AIR CONDITIONER (5/7) (air conditioner unit)

Item	Part number	Description	Q'ty	Chan.	Serv.	Remarks
		CONDITIONER ASSY, air				X03946-17000-1
		CONDITIONER ASSY, air (with 3rd aux. lines)				X03946-17050-1
0-3	X **********	UNIT ASSY	1			X03946-17600-7
5	0394617610	・COVER ASSY	1			
5-1	0394617660	・・COVER	1			
5-2	0394617611	・・INSULATOR	1			
5-3	0564631122	・・INSULATOR	1			
5-4	0564631123	・・INSULATOR	1			
5-5	0564631124	・・INSULATOR	1			
5-6	1654304017	・・SPONGE	4			sold by the meter
5-7	0564531820	・・COVER	1			
5-8	1100040816	・・BOLT	2			
5-9	1140020008	・・WASHER, spring	2			
5-10	1141110008	・・WASHER	2			
5-11	1654606036	・・RUBBER	1			sold by the meter
11	0564631100	・UNIT ASSY, air conditioner	1	15820004~15820147		
	0564631240	・UNIT ASSY, air conditioner	1	15820148~		
11-1	1911509230	・UNIT, air conditioner	1			see page (7/7)
11-2	0564631101	・・INSULATOR	1	15820004~15820147		
	0564631113	・・INSULATOR	1	15820148~		
11-3	0564631102	・・INSULATOR	1			
11-4	0564631103	・・INSULATOR	1	15820004~15820147		
	0564631115	・・INSULATOR	1	15820148~		
11-5	0564631104	・・INSULATOR	1	15820004~15820147		
	0564631116	・・INSULATOR	1	15820148~		
11-6	0564631105	・・INSULATOR	1	15820004~15820147		
	0564631117	・・INSULATOR	1	15820148~		
11-7	0564631106	・・INSULATOR	1			
11-8	0564631107	・・URETHANE	1			
11-9	0564631108	・・URETHANE	1	15820004~15820147		
	0564631114	・・URETHANE	1	15820148~		
11-10	0564631109	・・INSULATOR	1			
11-11	0564631110	・・INSULATOR	1			
11-12	0564631111	・・INSULATOR	1			
11-13	0564631112	・・INSULATOR	1			
11-14	1653916022	・・TRIM	1			sold by the meter
	J2e172					

silverhorn.co.uk

AIR CONDITIONER (6/7) (air conditiner solenoid)

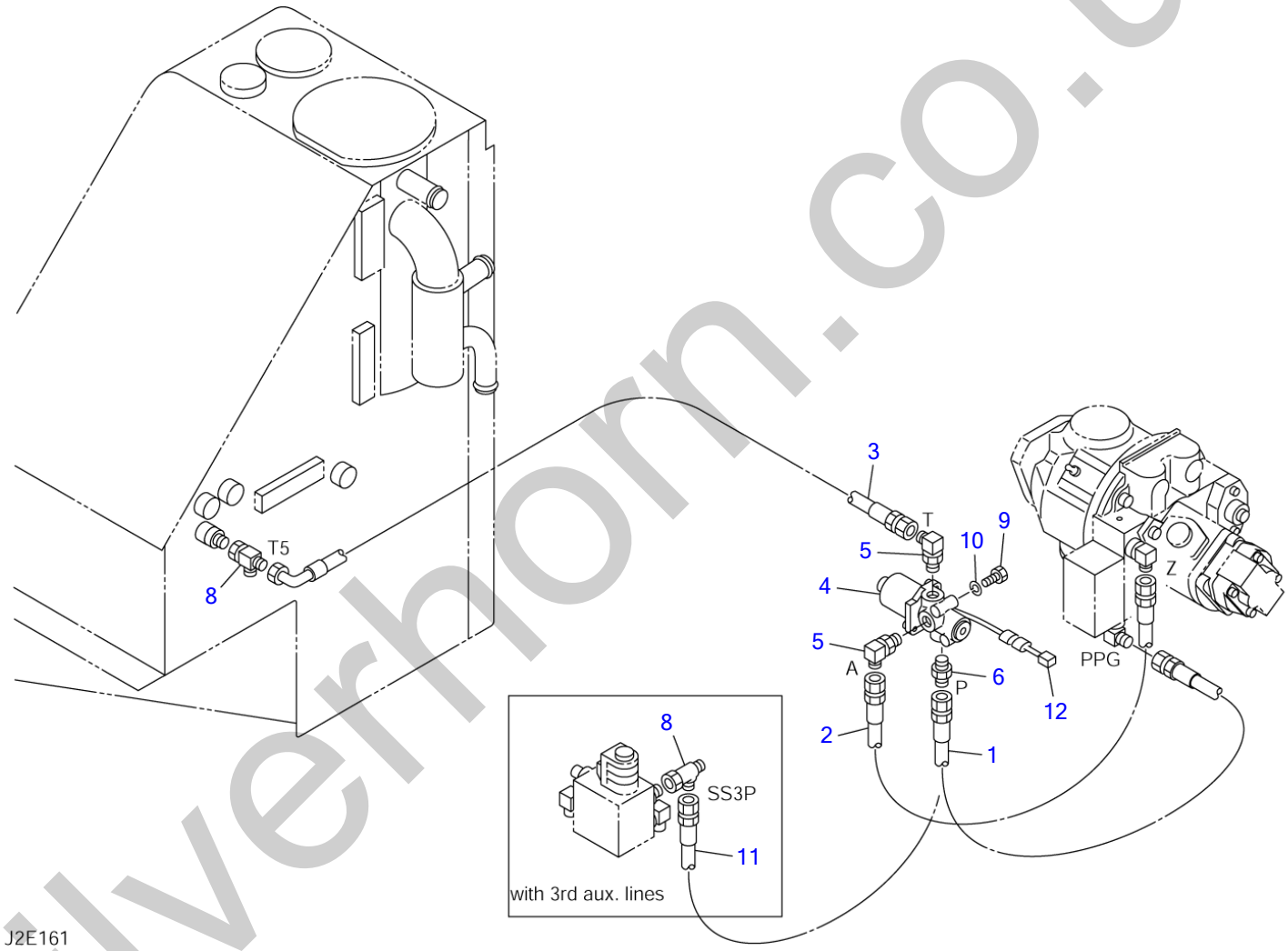

silverhorn.co.uk

AIR CONDITIONER (6/7) (air conditiner solenoid)

Item	Part number	Description	Q'ty	Chan.	Serial No.	Serv.	Remarks
		CONDITIONER ASSY, air					X03946-17000-1
		CONDITIONER ASSY, air (with 3rd aux. lines)					X03946-17050-1
0-4	X **********	SOLENOID ASSY, air conditioner	1				X03946-17400-2
	X **********	SOLENOID ASSY, air conditioner (with 3rd aux. lines)	1				X03946-17500-2
1	0394617410	・HOSE ASSY (18010-22065)	1				without 3rd aux. lines
2	0394617420	・HOSE ASSY	1				18010-22070
3	0394617430	・HOSE ASSY	1				18010-52155
4	1901746600	・VALVE, solenoid	1				
5	1515012040	・ELBOW	2				
	1420010110	・・O-RING	1				
6	1515600200	・ADAPTOR	1				
	1515600200	・ADAPTOR	2				with 3rd aux. lines
	1420010110	・・O-RING	1				
8	1513390015	・TEE	1				
	1513390015	・TEE	2				with 3rd aux. lines
9	1100040616	・BOLT	2				
10	1140020006	・WASHER, spring	2				
11	0394617440	・HOSE ASSY (18010-22047)	1				with 3rd aux. lines
12	0564630901	・HARNESS	1				
	J2e161						

silverhorn.co.uk

AIR CONDITIONER (7/7)

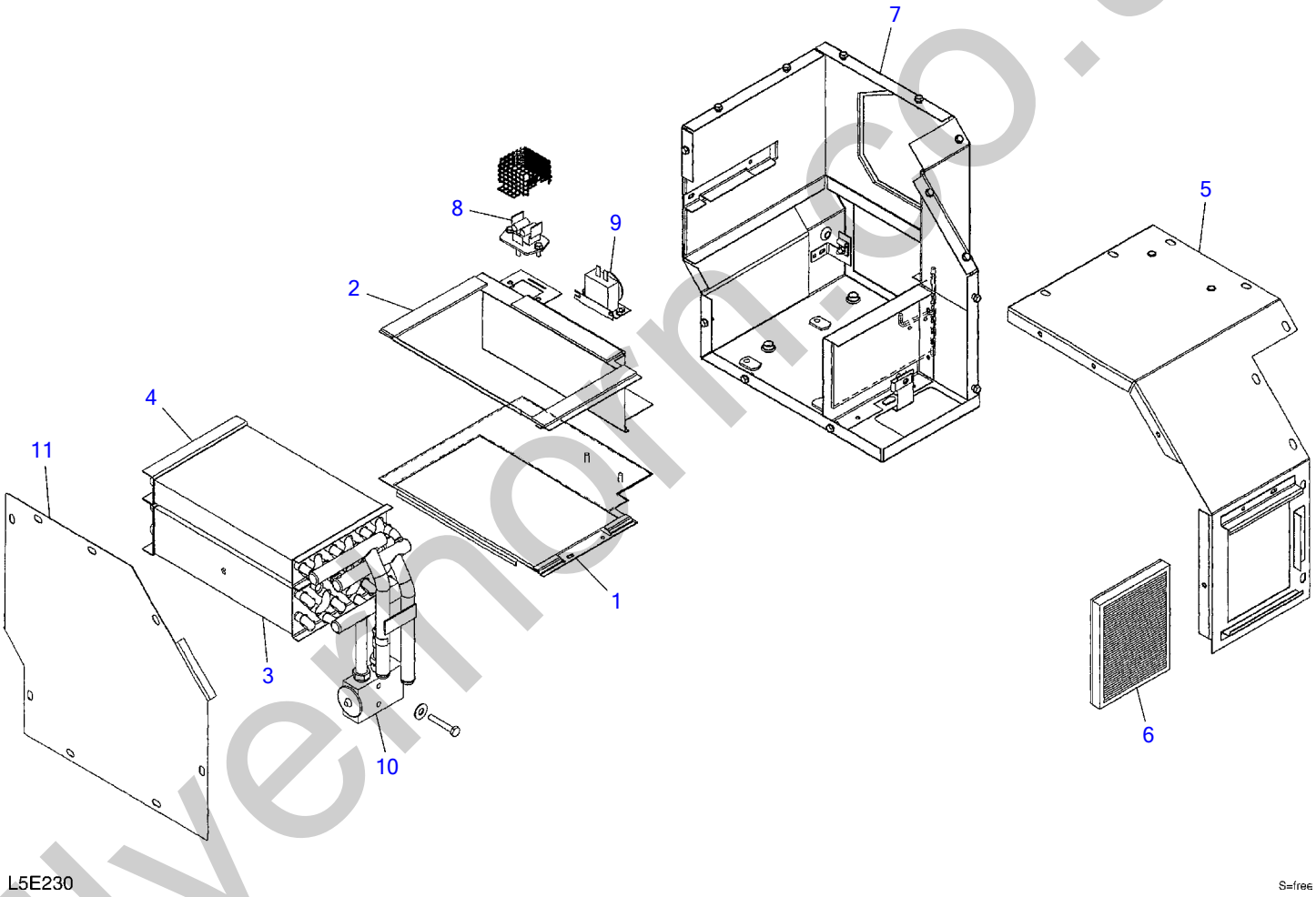

silvermorn.co.uk

AIR CONDITIONER (7/7)

Item	Part number	Description	Q'ty	Chan.	Serial No.	Serv.	Remarks
0	1911509230	UNIT, air conditioner	1				
1	1911509231	・COVER	1				
2	1911509232	・COVER	1				
3	1911509233	・CORE, evaporator	1				
4	1911509234	・CORE, heater	1				
5	1911509235	・COVER	1				
6	1911509413	・FILTER	1				
7	1911509236	・HOUSING	1				
8	1911506343	・RESISTOR	1			M	
9	1911505421	・THERMOSTAT	1			M	
10	1911505422	・VALVE, expansion	1			M	
11	1911509411	・COVER	1				
	L5e231						

silverhorn.co.uk

BOOM (1/2)

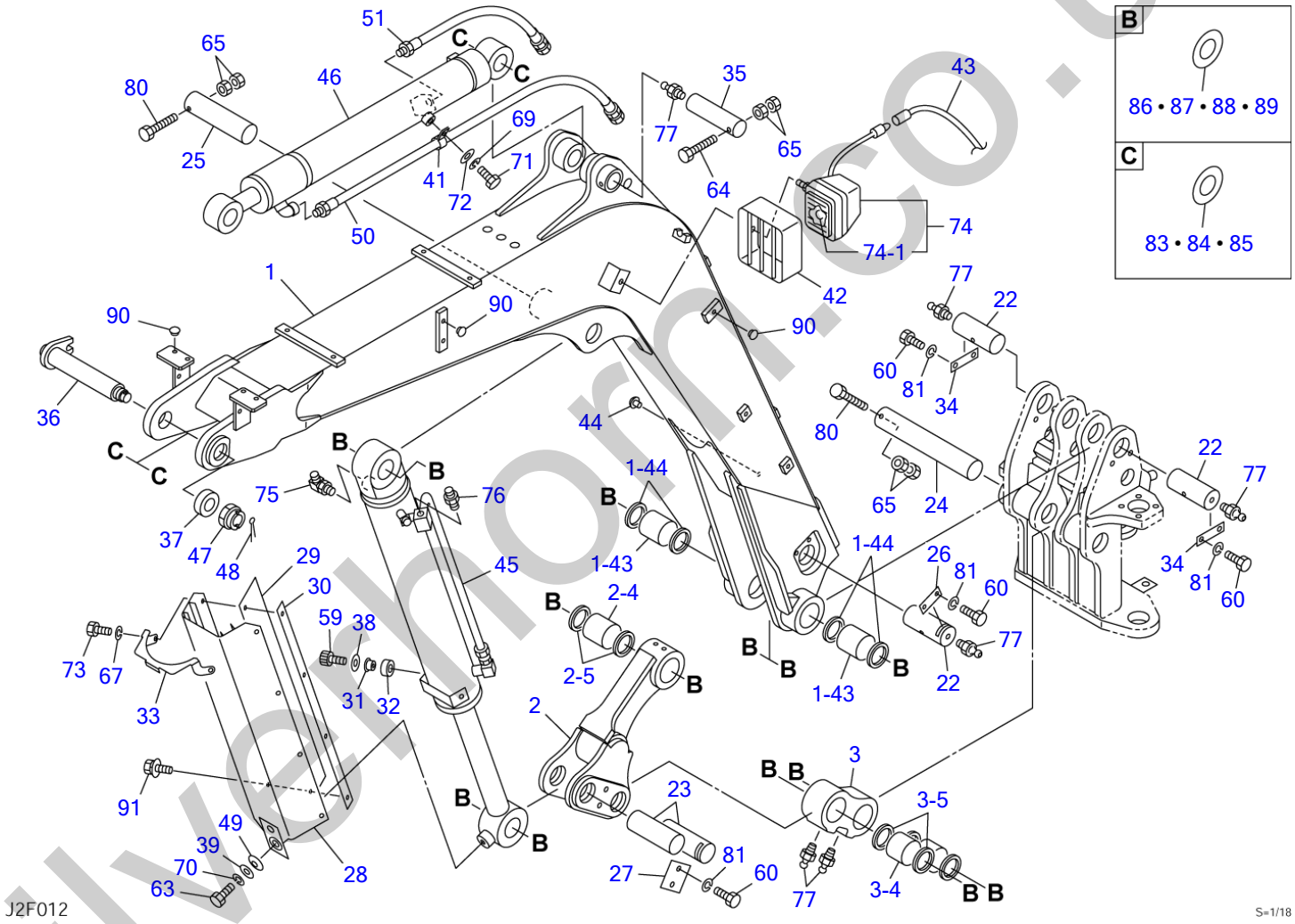

J2F012

S=1/18

silvermorn.co.uk

BOOM (1/2)

Item	Part number	Description	Q'ty	Chan.	Serial No.	Serv.	Remarks
		BOOM ASSY	1				X03960-16600-2
1	0396015900	BOOM	1		15820004~15820807		
	0396016200	BOOM	1	(H)	15820808~	M	
1-43	0396011350	・BUSHING	2				
1-44	1432200060	・SEAL, dust	4				
2	0396011300	LINK ASSY, boom	1		15820004~15820825		
	0396015220	LINK ASSY, boom	1		15820826~	M	casting
2-4	0396011350	・BUSHING	1				
2-5	1432200060	・SEAL, dust	2				
3	0396007300	LINK	1		15820004~15820543		
	0396015570	LINK	1	(H)	15820544~15820825		
	0396015280	LINK	1	(H)	15820826~	M	casting
3-4	0396011350	・BUSHING	2		15820004~15820543		
	0396015574	・BUSHING	2	(H)	15820544~		
3-5	1432200060	・SEAL, dust	4				
22	0396011600	PIN	3				
23	0396007610	PIN	2				
24	0011507355	PIN	1				
25	0011507215	PIN	1				
26	0396012330	PLATE	1				
27	0396007650	PLATE	1				
28	0396015700	PROTECTOR	1				
29	0396007710	RUBBER	2				
30	0396007720	PLATE	2				
31	0396011710	COLLAR	2				
32	1300206003	BEARING	2				
33	0396011750	COVER	1				
34	0393109400	PLATE	2				
35	0001675001	PIN	1				
36	0011905003	PIN	1				
37	0003900019	WASHER	1				
38	0003600079	WASHER	2				
39	0003600024	WASHER	1				
41	0007300051	CLAMP	1				
42	0056031510	PROTECTOR	1				
43	0434200600	WIRE	1				
44	1652533016	CAP	1				
45	1900092200	CYLINDER, boom	1				
46	1900087900	CYLINDER, arm	1				
47	1132630039	NUT	1				
48	1210010670	PIN, split	1				
49	1225120022	WASHER, conical	1				
50	0396011800	HOSE ASSY	1				
51	0396012320	HOSE ASSY	1				
59	1110040812	SCREW, cap	2				
60	1101041425	BOLT	8				
63	1101041220	BOLT	1				
64	1103041295	BOLT	1				
65	1130240012	NUT	6				
67	1140020006	WASHER, spring	2				
69	1140020010	WASHER, spring	1				
70	1140020012	WASHER, spring	1				
71	1100041016	BOLT	1				
72	1141110010	WASHER	1				
73	1100040620	BOLT	2				
74	1703006100	LAMP ASSY	1				
74-1	1703006106	・BULB	1				
75	1515010042	ELBOW	1				
	1420010180	・O-RING	1				
76	1515600202	ADAPTOR	1				
	1420010180	・O-RING	1				
77	1560001000	FITTING, grease	6				
80	1103141205	BOLT	2				
81	1140020014	WASHER, spring	8				
83	0003600154	SHIM	AR				t=1.0mm
84	0003600061	SHIM	AR				t=0.5mm
85	0003600060	SHIM	AR				t=0.2mm
86	0003600157	SHIM	AR				t=1.0mm

silvermorn.co.uk

BOOM (1/2)

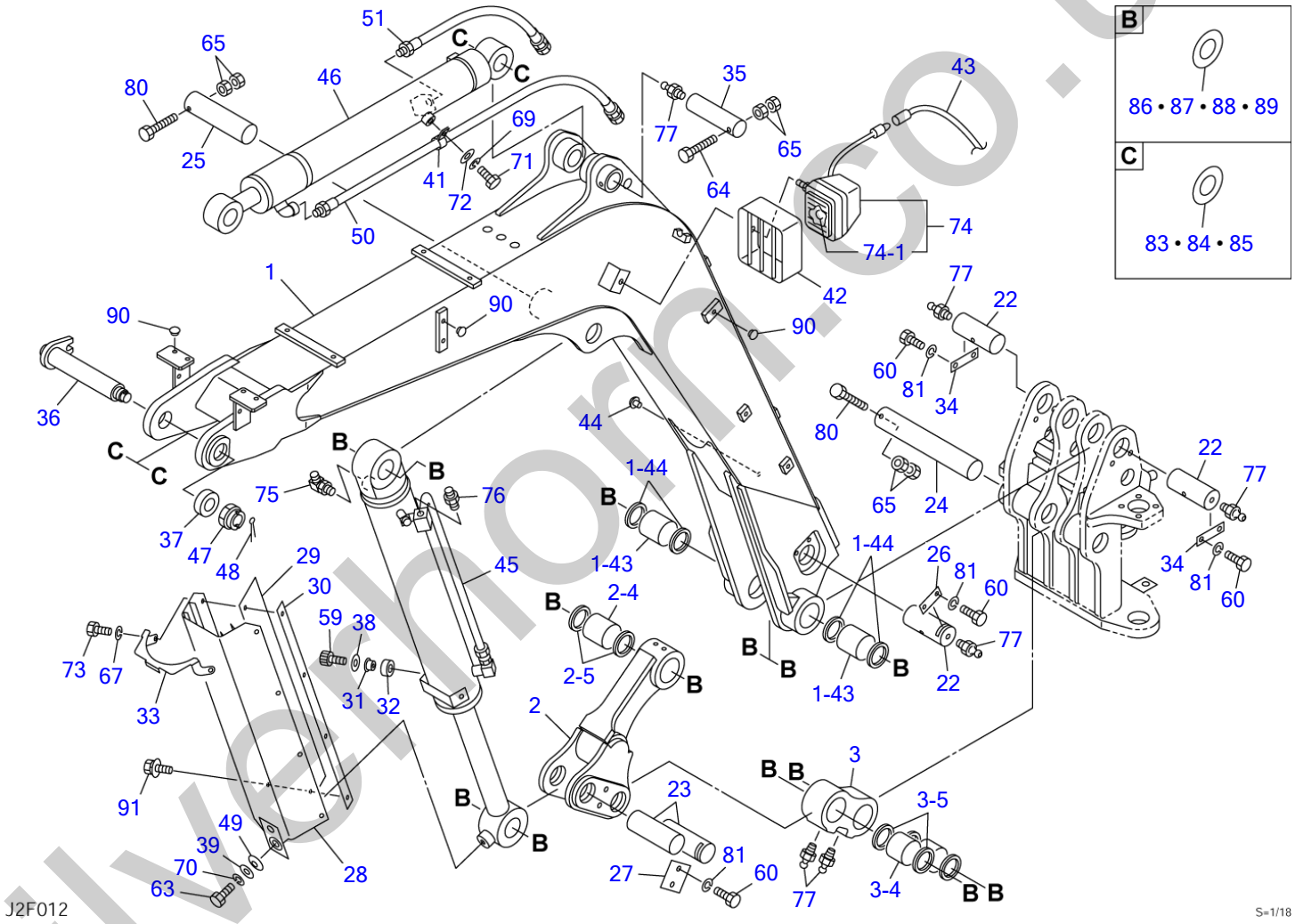

J2F012

S=1/18

silvermorn.co.uk

BOOM (1/2)

Item	Part number	Description	Q'ty	Chan.	Serial No.	Serv.	Remarks
87	0003600095	SHIM	AR				t=0.5mm
88	0003600094	SHIM	AR				t=0.2mm
89	0003600124	SHIM	AR				
90	1652533016	CAP	12				
91	1100560616	BOLT	6				
91		<<NOTE>>					
91		item 2 (03960-15220) & item 1 (INTERFERENCE SENSOR)					
91		has interchangeability in a set.					
	J2f013						

silverhorn.co.uk

BOOM (2/2)

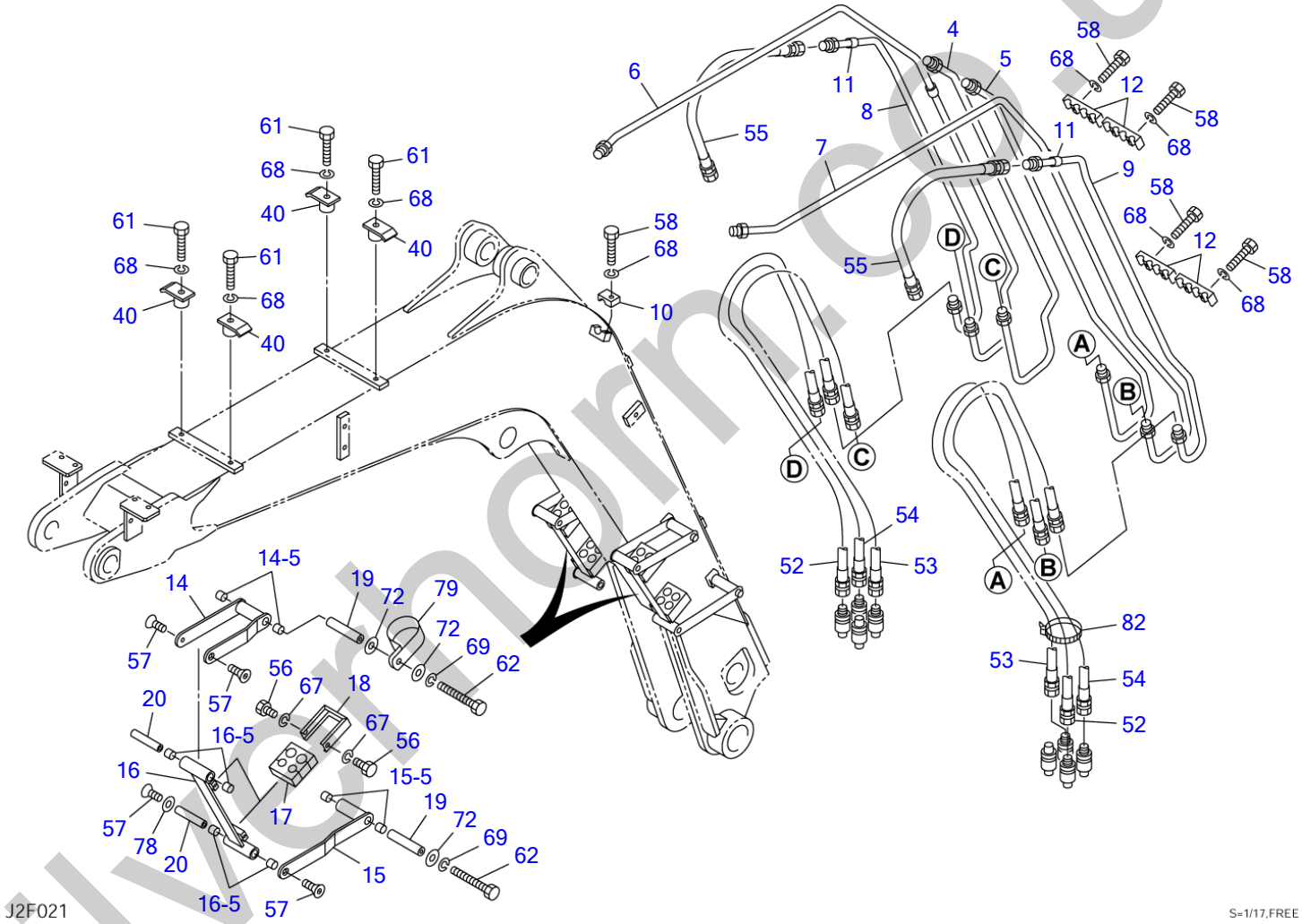

silvernorm.co.uk

BOOM (2/2)

Item	Part number	Description	Q'ty	Chan.	Serial No.	Serv.	Remarks
		BOOM ASSY	1				X03960-16600-2
4	0396015230	PIPE (R.H.)	1				
5	0396015240	PIPE	1				
6	0396015290	PIPE (R.H.)	1				
7	0396015310	PIPE (L.H.)	1				
8	0396014310	PIPE (R.H.)	1				
9	0396014320	PIPE (L.H.)	1				
10	0447310602	CLAMP	2				
11	1531419003	PROTECTOR	2				sold by the meter
12	0396007480	CLAMP	4				
14	0397310450	ARM	2				
14-5	1333001515	・BUSHING	4				
15	0397310470	ARM	2				
15-5	1333001515	・BUSHING	4				
16	0397310550	LINK, hose	2				
16-5	1333001515	・BUSHING	8				
17	0396011560	RUBBER	4				
18	0396011570	HOLDER	4				
19	0396007560	SHAFT	4				
20	0397310570	SHAFT	4				
40	0396015270	CLAMP	4				
52	0396011820	HOSE ASSY	2				18015-40200
53	0396011830	HOSE ASSY	2				18015-40180
54	0396011840	HOSE ASSY	2				18015-10195
55	0396014330	HOSE ASSY	2				
56	1100040616	BOLT	8				
57	1120800816	SCREW	8				
58	1100040835	BOLT	10				
61	1100040830	BOLT	4				
62	1100141000	BOLT	4				
67	1140020006	WASHER, spring	8				
68	1140020008	WASHER, spring	14				
69	1140020010	WASHER, spring	4				
72	1141110010	WASHER	6				
78	0356015500	WASHER	2				
79	0007300061	CLAMP	2				
82	1652201008	BAND	1				
	J2f023						

silverhorn.co.uk

BOOM (1/2) (with emergency shut-off valve)

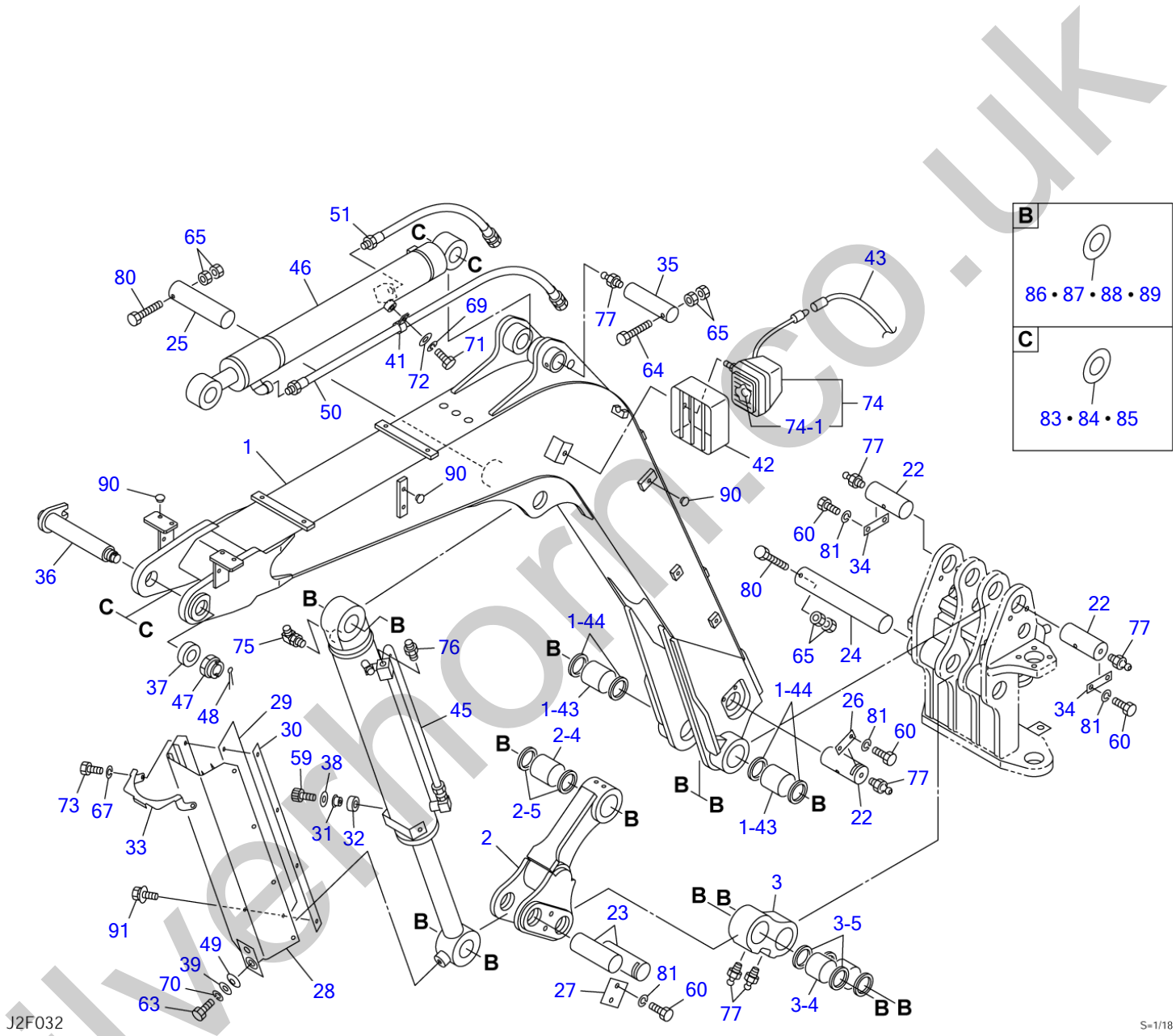

J2F032

S=1/18

silverhorn.co.uk

BOOM (1/2) (with emergency shut-off valve)

Item	Part number	Description	Q'ty	Chan.	Serv.	Serial No.	Remarks
		BOOM ASSY (with boom shut-off valve)					X03960-16700-2
		BOOM ASSY (with boom & arm shut-off valve)	1				X03960-16800-2
1	0396015900	BOOM	1			15820004~15820807	
	0396016200	BOOM	1	(H)		15820808~	
1-43	0396011350	・BUSHING	2				
1-44	1432200060	・SEAL, dust	4				
2	0396011300	LINK ASSY, boom	1			15820004~15820825	
	0396015220	LINK ASSY, boom	1			15820826~	casting
2-4	0396011350	・BUSHING	1				
2-5	1432200060	・SEAL, dust	2				
3	0396007300	LINK	1			15820004~15820543	
	0396015570	LINK	1	(H)		15820544~15820825	
	0396015280	LINK	1	(H)		15820826~	casting
3-4	0396011350	・BUSHING	2			15820004~15820543	
	0396015574	・BUSHING	2	(H)		15820544~	
3-5	1432200060	・SEAL, dust	4				
22	0396011600	PIN	3				
23	0396007610	PIN	2				
24	0011507355	PIN	1				
25	0011507215	PIN	1				
26	0396012330	PLATE	1				
27	0396007650	PLATE	1				
28	0396015700	PROTECTOR	1				
29	0396007710	RUBBER	2				
30	0396007720	PLATE	2				
31	0396011710	COLLAR	2				
32	1300206003	BEARING	2				
33	0396011750	COVER	1				
34	0393109400	PLATE	2				
35	0001675001	PIN	1				
36	0011905003	PIN	1				
37	0003900019	WASHER	1				
38	0003600079	WASHER	2				
39	0003600024	WASHER	1				
41	0007300051	CLAMP	1				with boom shut-off valve
42	0056031510	PROTECTOR	1				
43	0434200600	WIRE	1				
45	1900092200	CYLINDER, boom	1				
46	1900087900	CYLINDER, arm	1				
47	1132630039	NUT	1				
48	1210010670	PIN, split	1				
49	1225120022	WASHER, conical	1				
50	0396011800	HOSE ASSY	1				with boom shut-off valve
51	0396012320	HOSE ASSY	1				
59	1110040812	SCREW, cap	2				
60	1101041425	BOLT	8				
63	1101041220	BOLT	1				
64	1103041295	BOLT	1				
65	1130240012	NUT	6				
67	1140020006	WASHER, spring	2				
69	1140020010	WASHER, spring	1				with boom shut-off valve
70	1140020012	WASHER, spring	1				
71	1100041016	BOLT	1				with boom shut-off valve
72	1141110010	WASHER	1				with boom shut-off valve
73	1100040620	BOLT	2				
74	1703006100	LAMP ASSY	1				
74-1	1703006106	・BULB	1				
75	1515010042	ELBOW	1				
	1420010180	・O-RING	1				
76	1515600202	ADAPTOR	1				
	1420010180	・O-RING	1				
77	1560001000	FITTING, grease	6				
80	1103141205	BOLT	2				
81	1140020014	WASHER, spring	8				
83	0003600154	SHIM	AR				t=1.0mm

silverthorn.co.uk

BOOM (2/2)

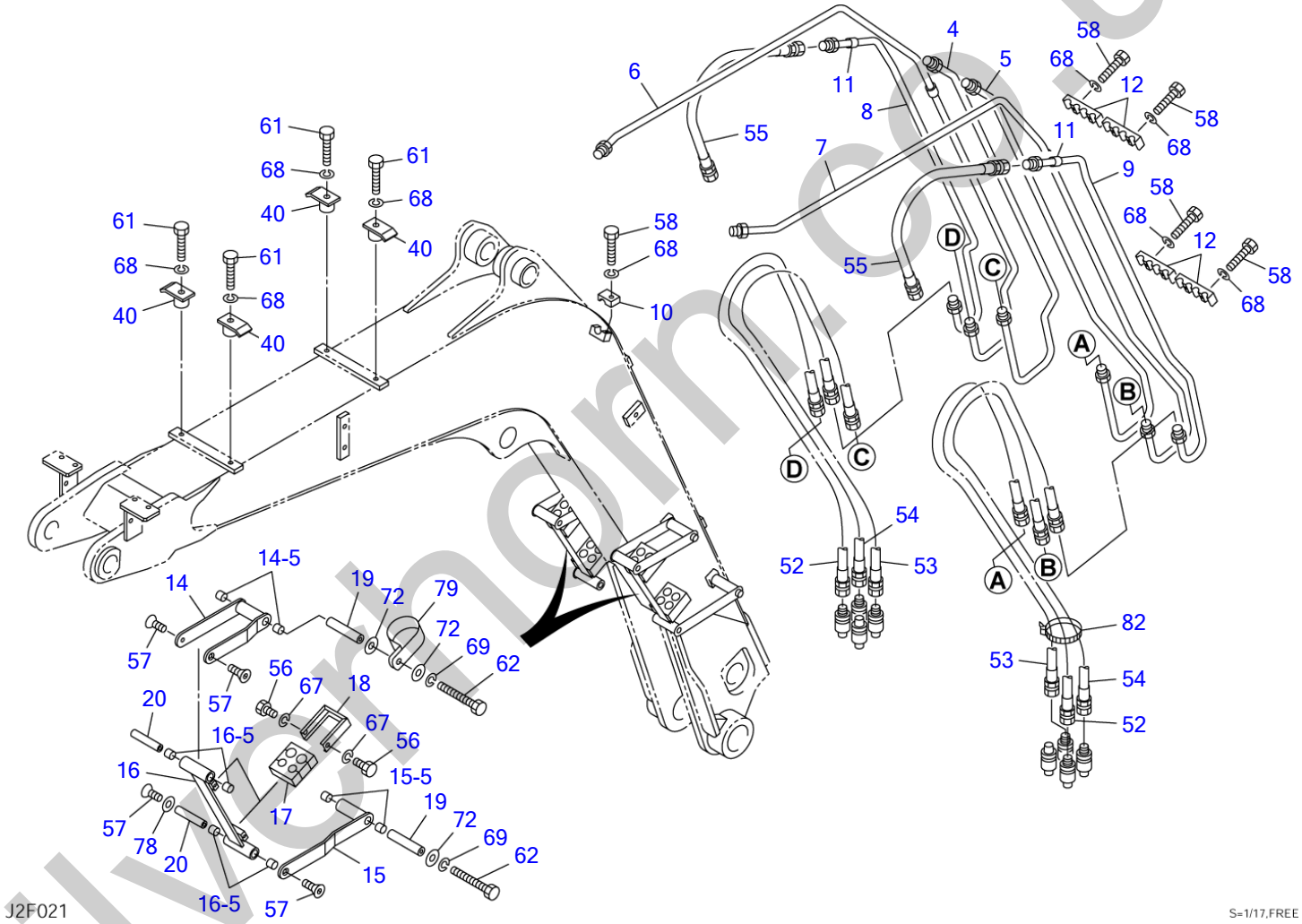

silvernorm.co.uk

BOOM (1/2) (with emergency shut-off valve)

Item	Part number	Description	Q'ty	Chan.	Serial No.	Serv.	Remarks
84	0003600061	SHIM	AR				t=0.5mm
85	0003600060	SHIM	AR				t=0.2mm
86	0003600157	SHIM	AR				t=1.0mm
87	0003600095	SHIM	AR				t=0.5mm
88	0003600094	SHIM	AR				t=0.2mm
89	0003600124	SHIM	AR				
90	1652533016	CAP	12				
91	1100560616	BOLT	6				
91		<<NOTE>>					
91		item 2 (03960-15220) & item 1 (INTERFERENCE SENSOR)					
91		has interchangeability in a set.					
	J2f033						

silverhorn.co.uk

BOOM (2/2) (with emergency shut-off valve)

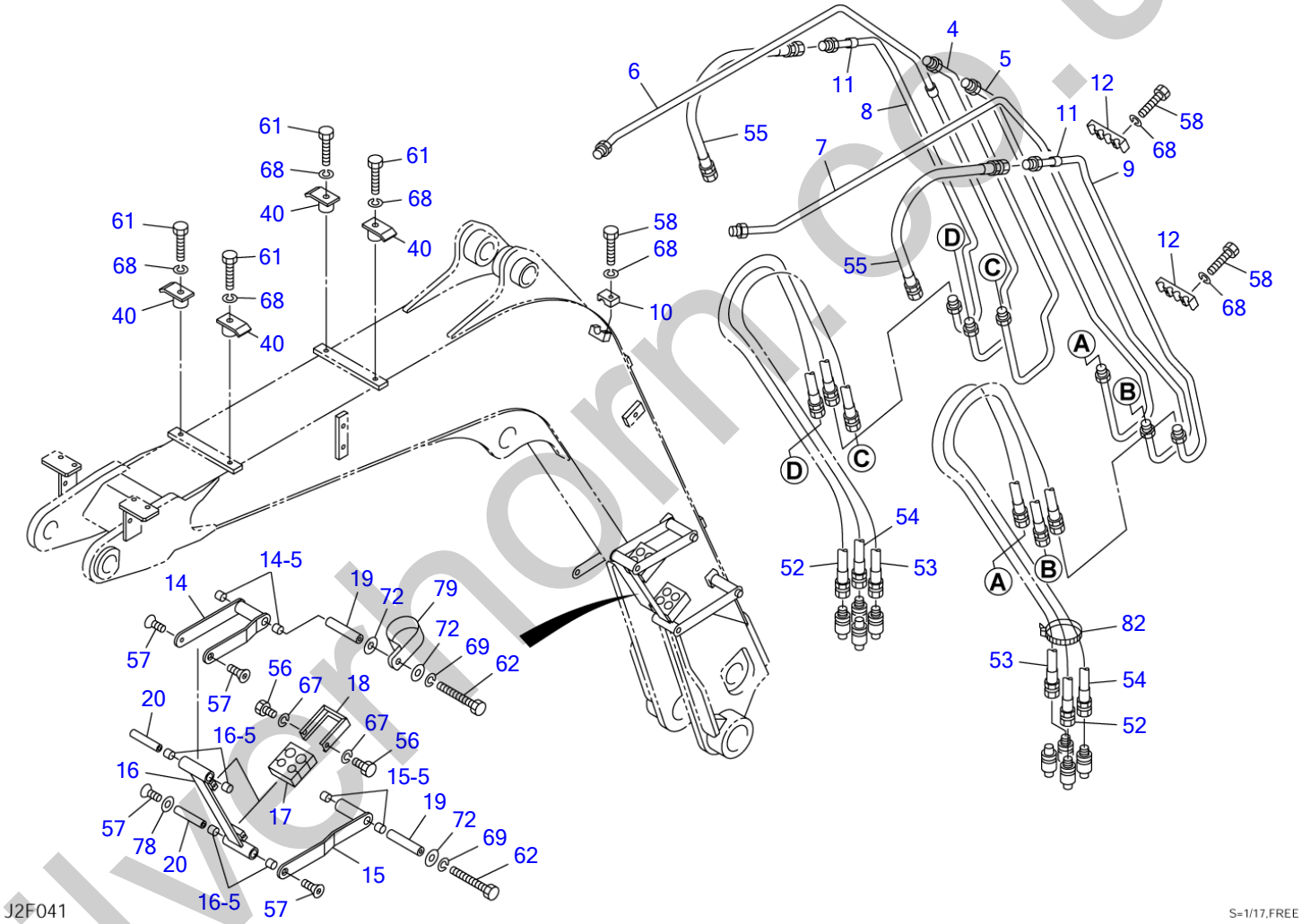

silvernorm.co.uk

BOOM (2/2) (with emergency shut-off valve)

Item	Part number	Description	Q'ty	Chan.	Serial No.	Serv.	Remarks
		BOOM ASSY (with boom shut-off valve)	1				X03960-16700-2
		BOOM ASSY (with boom & arm shut-off valve)					X03960-16800-2
4	0396015230	PIPE (R.H.)	1				
5	0396015240	PIPE	1				
6	0396015290	PIPE (R.H.)	1				
7	0396015310	PIPE (L.H.)	1				
8	0396014310	PIPE (R.H.)	1				
9	0396014320	PIPE (L.H.)	1				
10	0447310602	CLAMP	2				
11	1531419003	PROTECTOR	2				sold by the meter
12	0396007480	CLAMP	2				
14	0397310450	ARM	2				
14-5	1333001515	・BUSHING	4				
15	0397310470	ARM	2				
15-5	1333001515	・BUSHING	4				
16	0397310550	LINK, hose	1				
16-5	1333001515	・BUSHING	8				
17	0396011560	RUBBER	2				
18	0396011570	HOLDER	2				
19	0396007560	SHAFT	4				
20	0397310570	SHAFT	4				
40	0396015270	CLAMP	4				
52	0396011820	HOSE ASSY	2				18015-40200
53	0396011830	HOSE ASSY	2				18015-40180
54	0396011840	HOSE ASSY	2				18015-10195
55	0396014330	HOSE ASSY	2				
56	1100040616	BOLT	8				
57	1120800816	SCREW	6				
58	1100040835	BOLT	6				
61	1100040830	BOLT	4				
62	1100141000	BOLT	2				
67	1140020006	WASHER, spring	8				
68	1140020008	WASHER, spring	10				
69	1140020010	WASHER, spring	6				
72	1141110010	WASHER	6				
78	0356015500	WASHER	2				
79	0007300061	CLAMP	2				
82	1652201008	BAND	1				
	J2f043						

silverhorn.co.uk

INTERFERENCE SENSOR

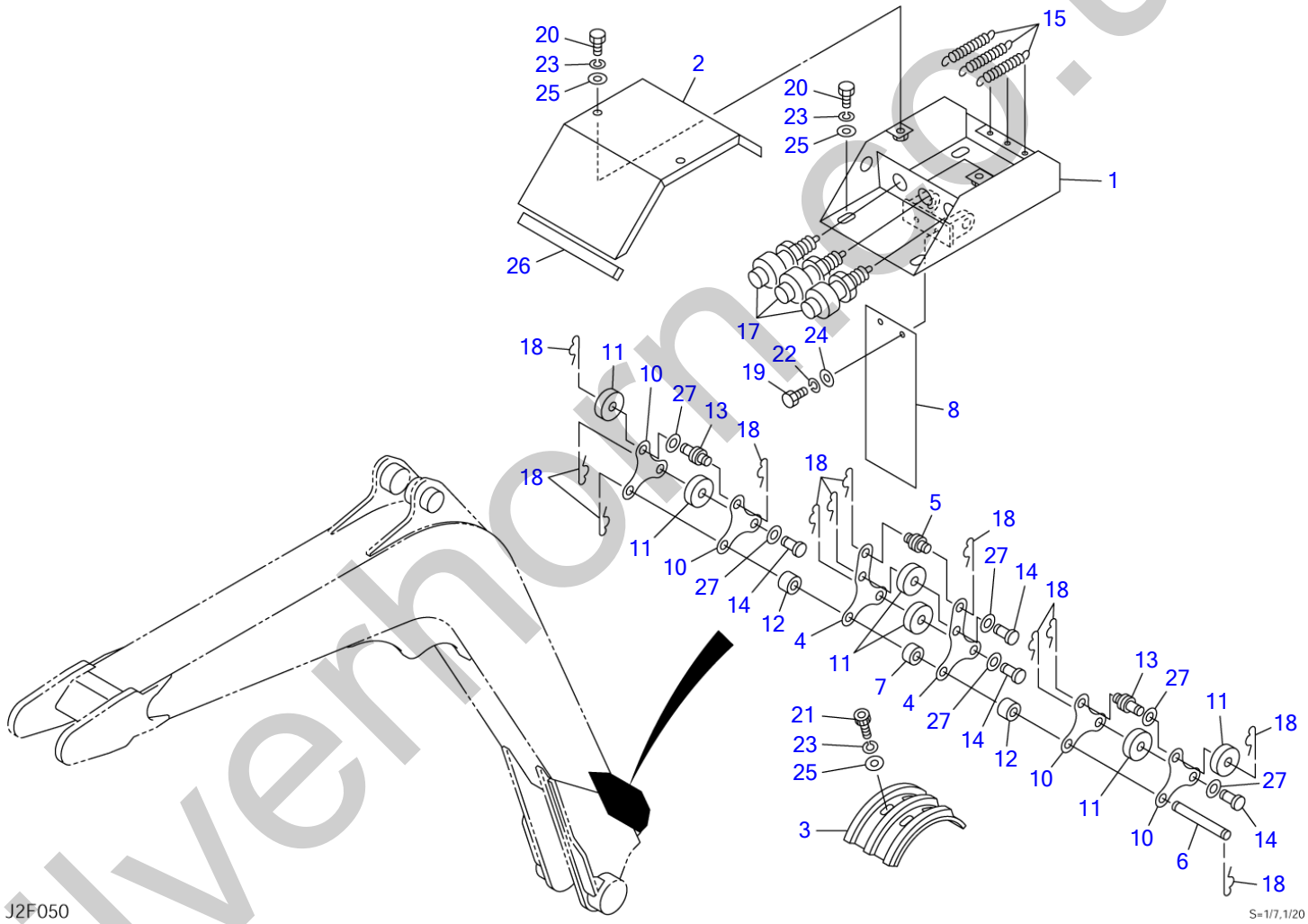

silverhorse.co.uk

INTERFERENCE SENSOR

Item	Part number	Description	Q'ty	Chan.	Serial No.	Serv.	Remarks
		SWITCH ASSY, boom					X03960-16900-0
1	0396012910	BOX, switch	1		15820004~15820825		
	0396016910	BOX, switch	1		15820826~	M	
2	0396012920	COVER	1				
3	0396015810	PLATE	1				
4	0396007840	PLATE	2				
5	0396007850	PIN	1				
6	0396007860	PIN	1				
7	0396007870	COLLAR	1				
8	0396011980	RUBBER	1				
10	0356012540	PLATE	4				
11	0356012550	COLLAR	6				
12	0356012560	COLLAR	2				
13	0356012570	PIN	2				
14	0356012590	PIN	4				
15	0007000074	SPRING	3				
17	1700000014	SWITCH	3				
18	1214000008	PIN, snap	12				
19	1100040616	BOLT	2				
20	1100040816	BOLT	6				
21	1110040816	SCREW, cap	4				
22	1140020006	WASHER, spring	2				
23	1140020008	WASHER, spring	10				
24	1141110006	WASHER	2				
25	1141110008	WASHER	10				
26	1654319015	SPONGE	1				sold by the meter
27	0003600173	SHIM	AR				t=1.0mm
		<<NOTE>>					
		item 1 & item 2 (BOOM) has interchangeability in a set.					
	J2f051						

silverhorn.co.uk

ARM

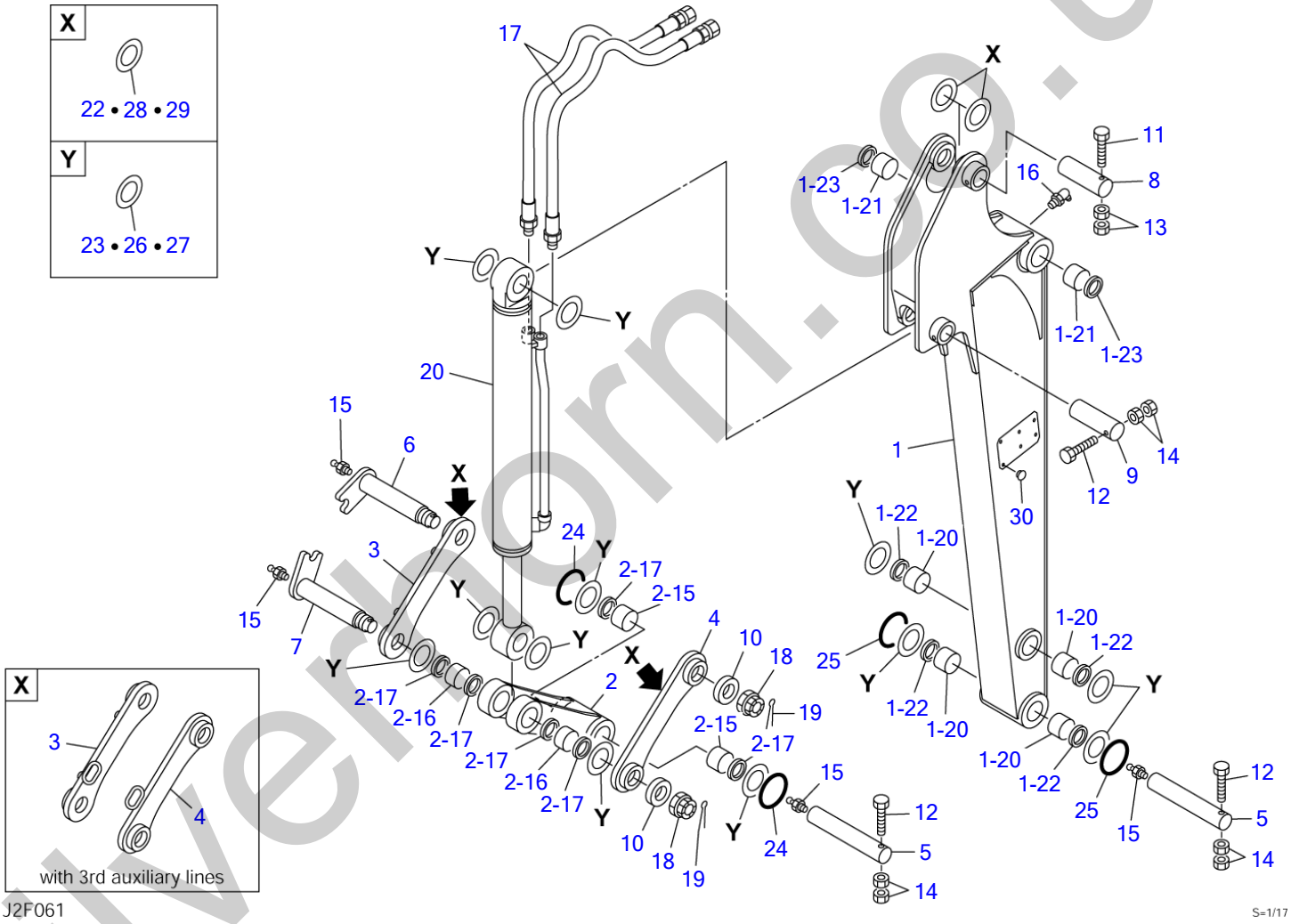

silverthorn.co.uk

ARM

Item	Part number	Description	Q'ty	Chan.	Serial No.	Serv.	Remarks
		ARM ASSY					X03961-17700-6
		ARM ASSY (with 3rd aux. lines)					X03961-18000-6
		LONG ARM ASSY					X03961-17400-5
		LONG ARM ASSY (with 3rd aux. lines)					X03961-18100-5
1	0396117800	ARM	1				
	0396117950	LONG ARM	1				
1-20	0002400040	・BUSHING	4				
1-21	0002400050	・BUSHING	2				
1-22	1432200045	・SEAL, dust	4				
1-23	1432200050	・SEAL, dust	2				
2	0396111300	LINK, bucket	1				
2-15	0002400040	・BUSHING	2				
2-16	0002100027	・BUSHING	2				
2-17	1432200045	・SEAL, dust	6				
3	0396114300	LINK, guide	1				
	0396118010	LINK, guide	1				with 3rd aux. lines
4	0396114400	LINK, guide	1				
	0396118020	LINK, guide	1				with 3rd aux. lines
5	0001524501	PIN	2				
6	0001794012	PIN	1				
7	0001794013	PIN	1				
8	0001605155	PIN	1				
9	0001604150	PIN	1				
10	0003900020	WASHER	2				
11	1103041295	BOLT	1				
12	1103041085	BOLT	3				
13	1130240012	NUT	2				
14	1130240010	NUT	6				
15	1560001000	FITTING, grease	4				
16	1560001675	FITTING, grease	1				
17	1801742100	HOSE ASSY	2				
	1801742125	HOSE ASSY	2				long arm
18	1132630030	NUT	2				
19	1210010655	PIN, split	2				
20	1900075800	CYLINDER, bucket	1				
22	0003600154	SHIM	AR				t=1.0mm ƒÓ85
23	0003600161	SHIM	AR				t=1.0mm ƒÓ75
24	1432900046	O-RING	2				
25	1432900008	O-RING	2				
26	0003600055	SHIM	AR				t=0.2mm ƒÓ76
27	0003600056	SHIM	AR				t=0.5mm ƒÓ76
28	0003600060	SHIM	AR				t=0.2mm ƒÓ82
29	0003600061	SHIM	AR				t=0.5mm ƒÓ82
30	1652533016	CAP	12				
	J2f062						

silverthorn.co.uk

BUCKET (15820004-1582#)

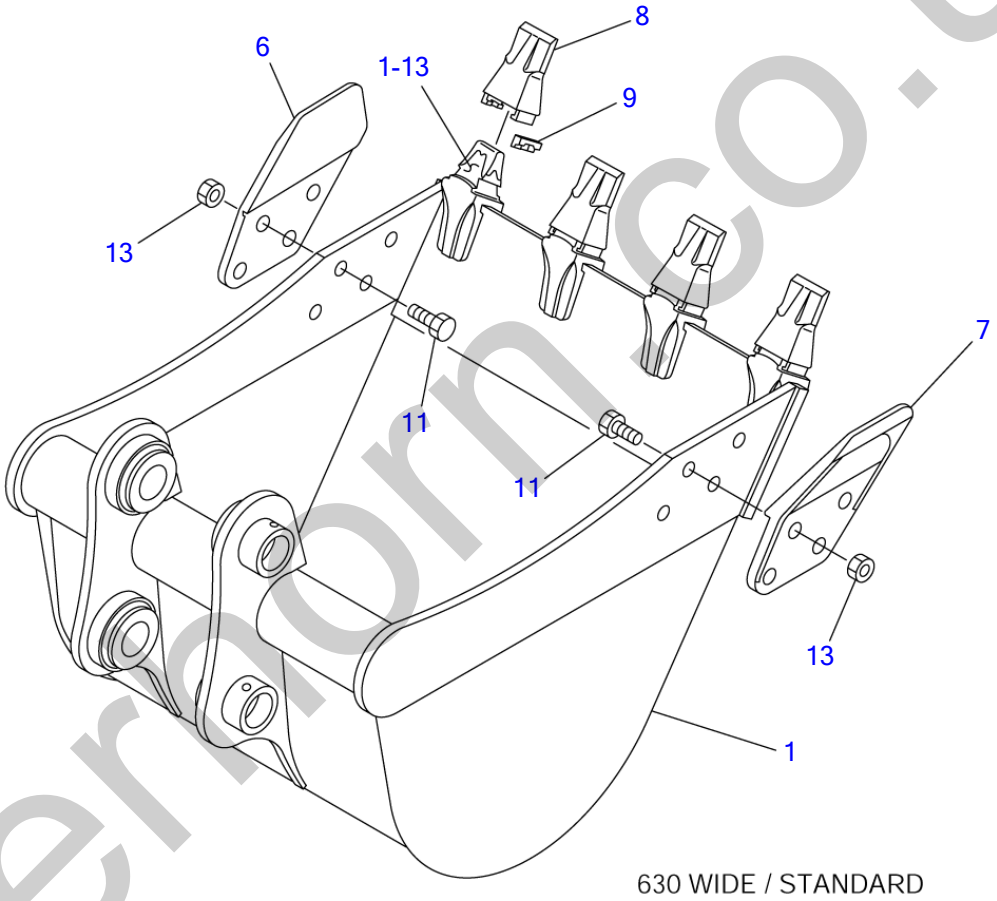

K3F050

S=1/8

silvermorn.co.uk

BUCKET (15820004-1582#)

Item	Part number	Description	Q'ty	Chan.	Serial No.	Serv.	Remarks
0	0396216000	BUCKET ASSY	1				630wide
	0396217000	BUCKET ASSY	1				530wide
1	X **********	・BUCKET	1				
1-13	1914201302	・・ADAPTOR, tooth	4				
6	1914210001	・CUTTER (R.H.)	1				
7	1914210002	・CUTTER (L.H.)	1				
8	1914201301	・POINT, tooth	4				
9	1914201203	・PIN	4				
11	1100051635	・BOLT	8				
13	1130050016	・NUT	8				
	K3f050						

silverhorn.co.uk

BUCKET (1582#-)

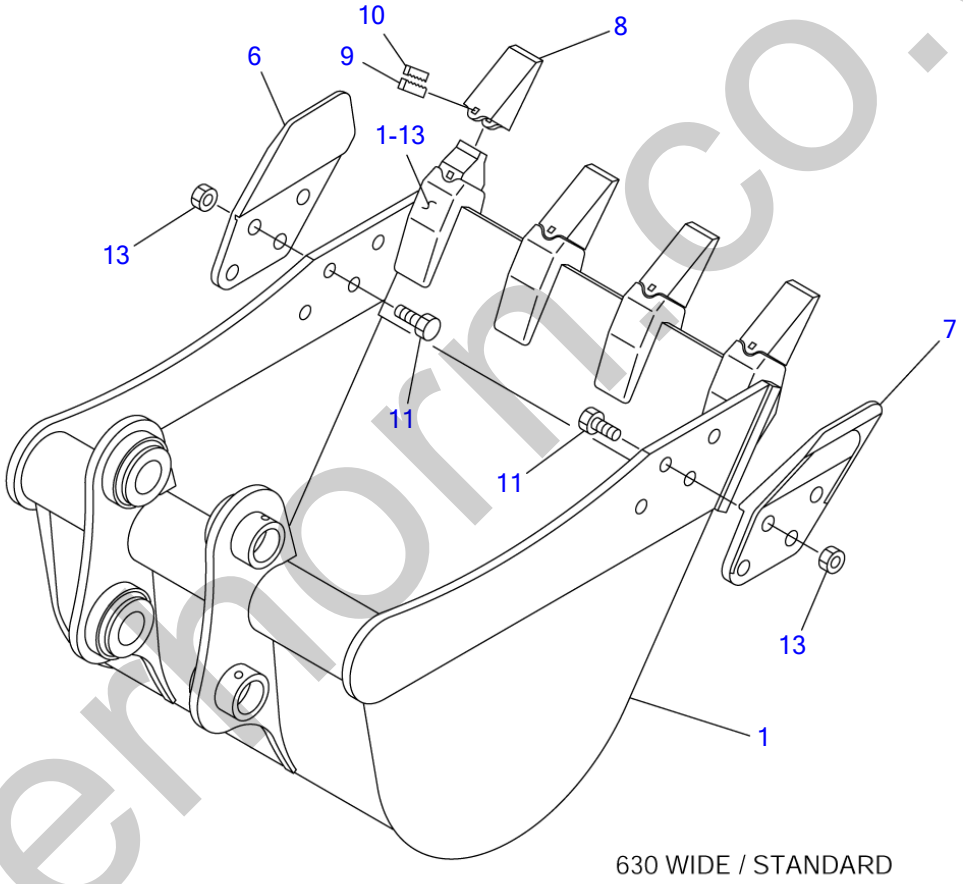

K3F210

S=1/8

silvermorn.co.uk

BUCKET (1582#-)

Item	Part number	Description	Q'ty	Chan.	Serial No.	Serv.	Remarks
0	0396217200	BUCKET ASSY	1				630wide No23613
	0396217300	BUCKET ASSY	1				530wide No23613
1	X **********	・BUCKET	1				
1-13	1914200381	・・ADAPTOR, tooth	4				
6	1914210001	・CUTTER (R.H.)	1				
7	1914210002	・CUTTER (L.H.)	1				
8	1914200182	・POINT, tooth	4				
9	1914200183	・PIN, lock	4				
10	1914200184	・PIN	4				
11	1100051635	・BOLT	8				
13	1130050016	・NUT	8				
	K3f210						

silverhorn.co.uk

AUXILIARY LINE

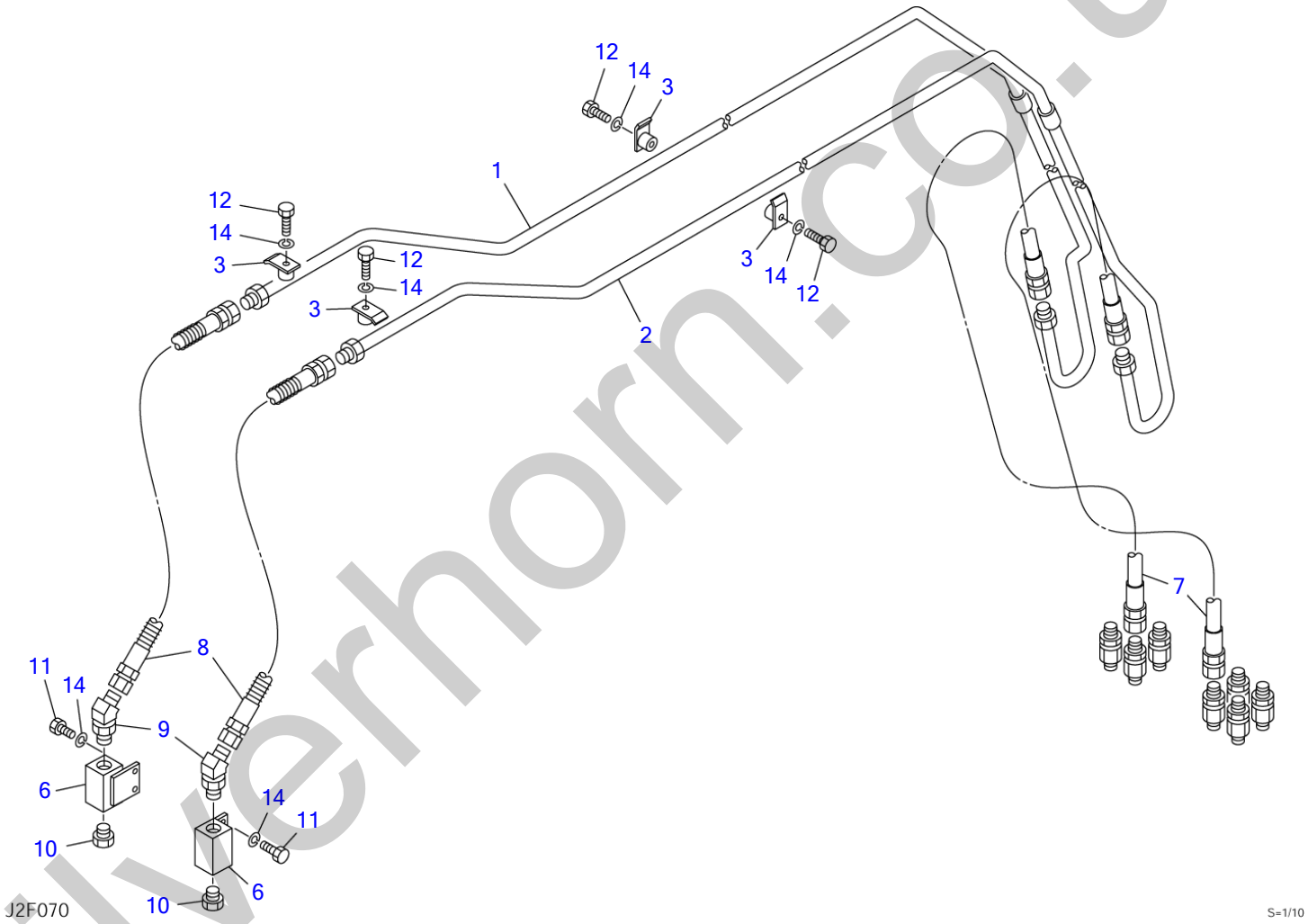

silverhorn.co.uk

AUXILIARY LINE

Item	Part number	Description	Q'ty	Chan.	Serial No.	Serv.	Remarks
0	0397324000	AUXILIARY LINE ASSY	1				X03973-24000-4
	0397324100	AUXILIARY LINE ASSY (long arm)	1				X03973-24100-4
1	0397324030	・PIPE (R.H.)	1				
2	0397324040	・PIPE (L.H.)	1				
3	0396015270	・CLAMP	4				
6	1901719800	・VALVE, stop	2				
7	0397307320	・HOSE ASSY	2				18015-40195
8	1801640095	・HOSE ASSY	2				
	1801640116	・HOSE ASSY	2				long arm
9	1515100112	・ELBOW	2				
	1420010180	・・O-RING	1				
10	1501750004	・PLUG	2				
	1420010180	・・O-RING	1				
11	1100040816	・BOLT	4				
12	1100040835	・BOLT	4				
14	1140020008	・WASHER, spring	8				
	J2f071						

silverhorn.co.uk

2ND AUXILIARY LINE

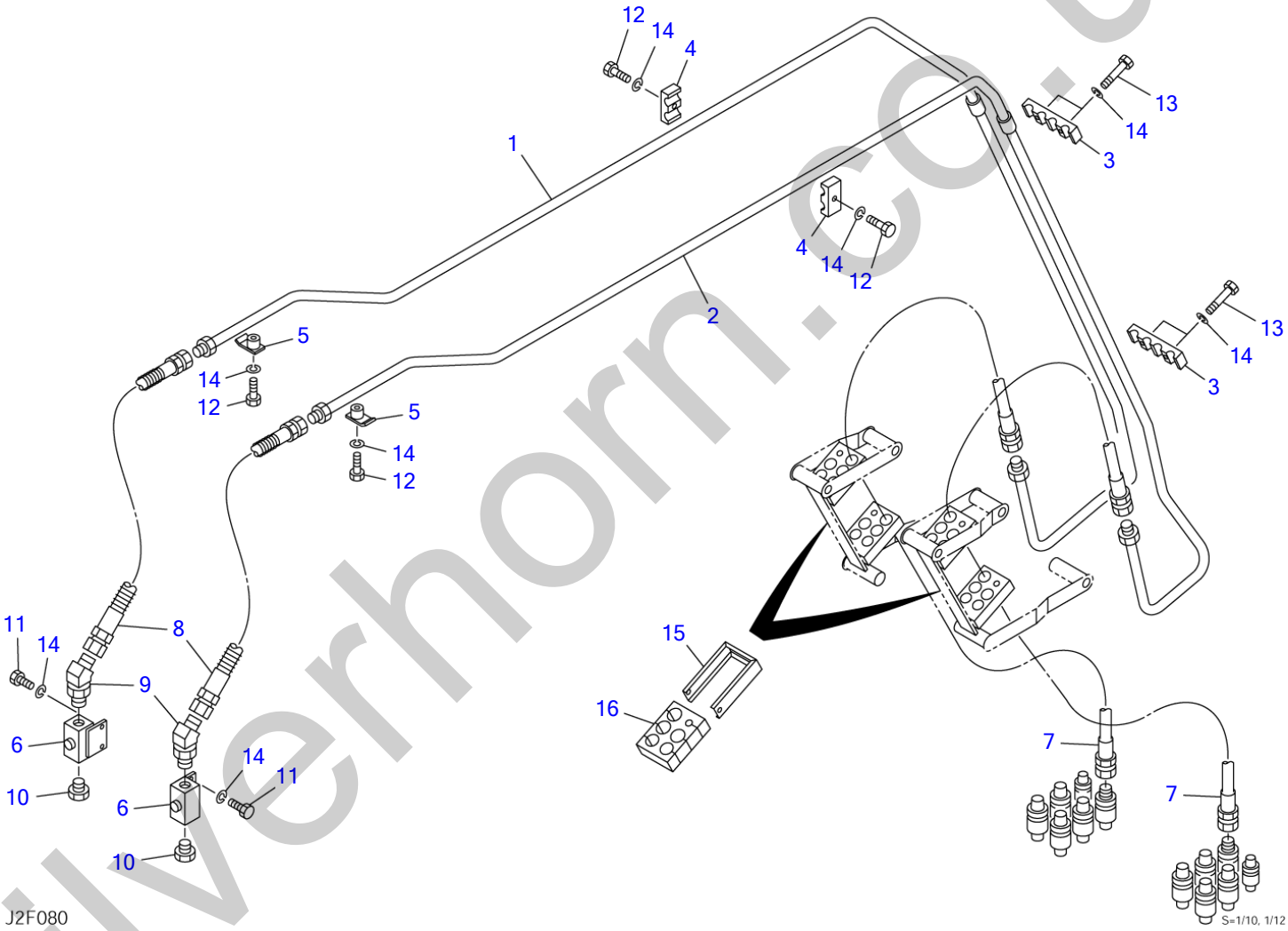

silverhorn.co.uk

2ND AUXILIARY LINE

Item	Part number	Description	Q'ty	Chan.	Serial No.	Serv.	Remarks
0	0397324200	LINE ASSY, 2nd auxiliary	1				X03973-24200-2
	0397324300	LINE ASSY, 2nd auxiliary (long arm)	1				X03973-24300-2
1	0397324210	・PIPE (R.H.)	1				
2	0397324220	・PIPE (L.H.)	1				
3	0397324230	・CLAMP	2				
4	1534000018	・CLAMP	2				
5	0396015270	・CLAMP	2				
6	1901719800	・VALVE, stop	2				
7	0397310220	・HOSE ASSY	2				18015-40195
8	1801640095	・HOSE ASSY	2				
	1801640116	・HOSE ASSY	2				long arm
9	1515100112	・ELBOW	2				
	1420010180	・・O-RING	1				
10	1501750004	・PLUG	2				
	1420010180	・・O-RING	1				
11	1100040816	・BOLT	4				
12	1100040835	・BOLT	4				
13	1100040860	・BOLT	4				
14	1140020008	・WASHER, spring	12				
15	0397310210	・HOLDER	4				
16	0397324240	・RUBBER	4				
	J2f081						

silverhorn.co.uk

3RD AUXILIARY LINE (available only with 2nd aux. lines)

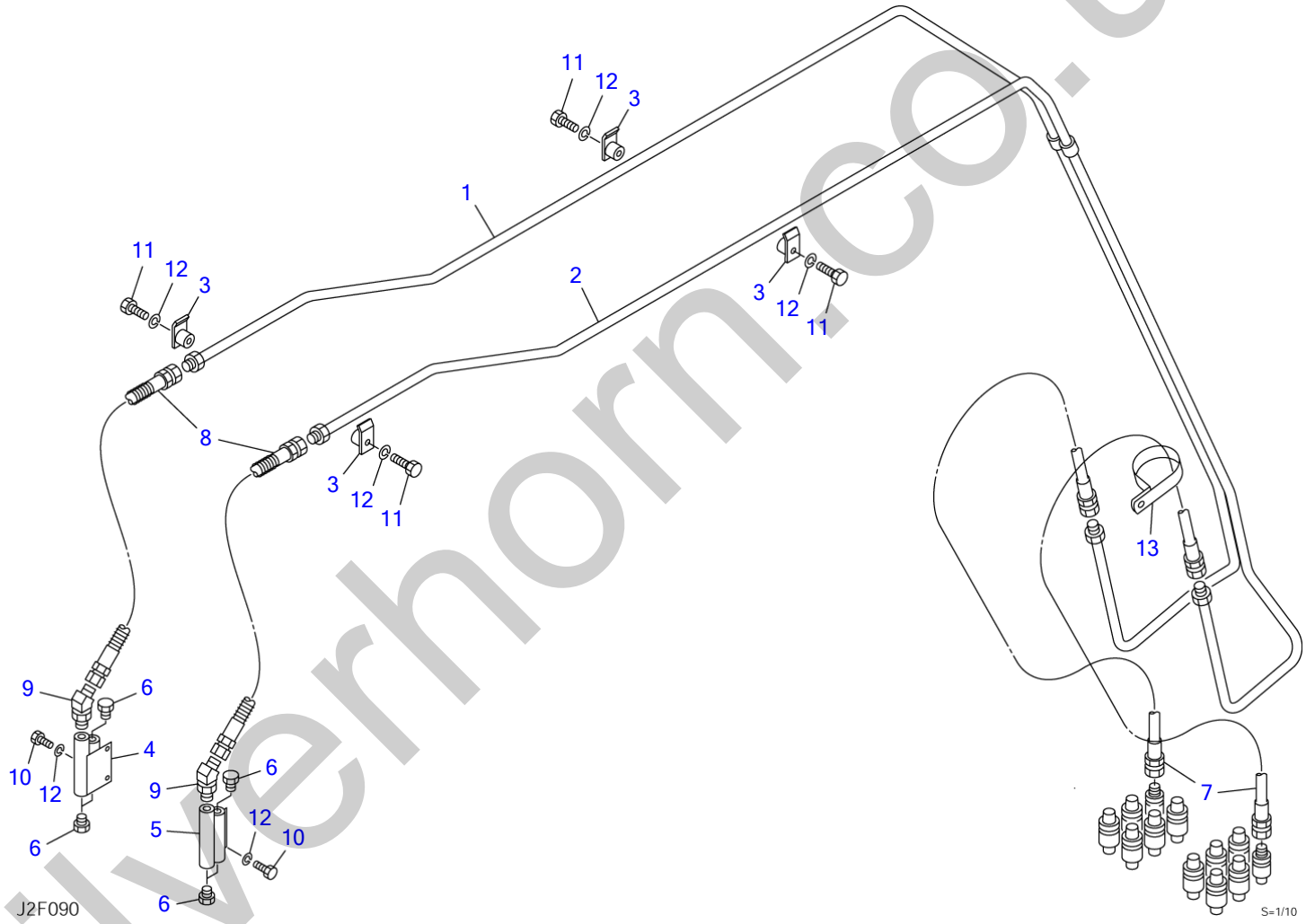

silverhorn.co.uk

3RD AUXILIARY LINE (available only with 2nd aux. lines)

Item	Part number	Description	Q'ty	Chan.	Serial No.	Serv.	Remarks
	0397324400	LINE ASSY, 3rd auxiliary	1				X03973-24400-3
	0397324500	LINE ASSY, 3rd auxiliary (long arm)	1				X03973-24500-3
1	0397324450	・PIPE (R.H.)	1				
2	0397324460	・PIPE (L.H.)	1				
3	0577307100	・CLAMP	4				
4	0567346430	・ADAPTOR (R.H.)	1				
5	0567346440	・ADAPTOR (L.H.)	1				
6	1501750002	・PLUG	6				
	1420010110	・・O-RING	1				
7	0397324440	・HOSE ASSY	2				18010-22180
8	1801032083	・HOSE ASSY	2				
	1801032104	・HOSE ASSY	2				long arm
9	1515100110	・ELBOW	2				
	1420010110	・・O-RING	1				
10	1100040816	・BOLT	4				
11	1100040830	・BOLT	4				
12	1140020008	・WASHER, spring	8				
13	0007300064	・CLAMP	1				
	J2f092						

silverhorn.co.uk

DECAL (cab)

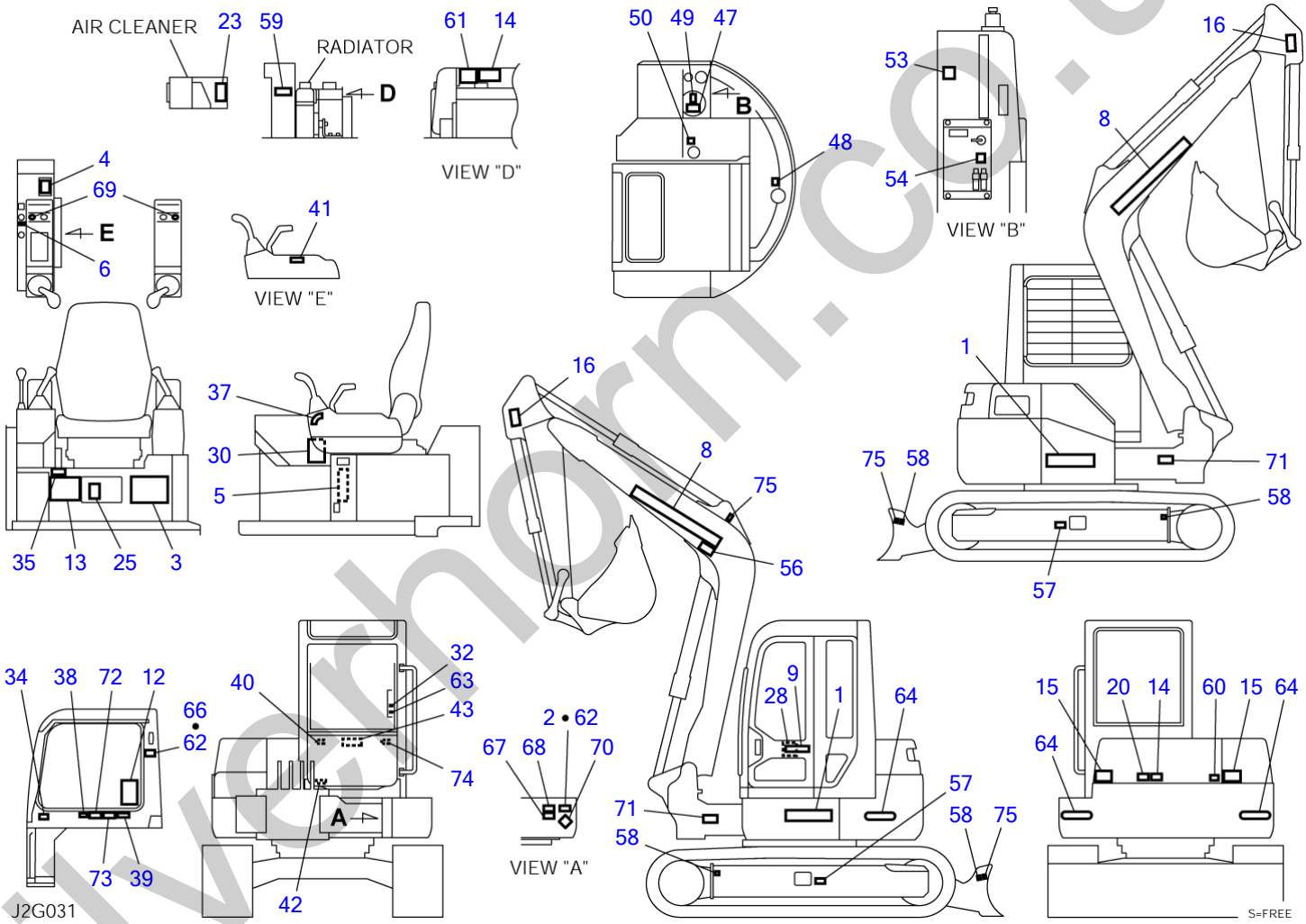

silverhorn.co.uk

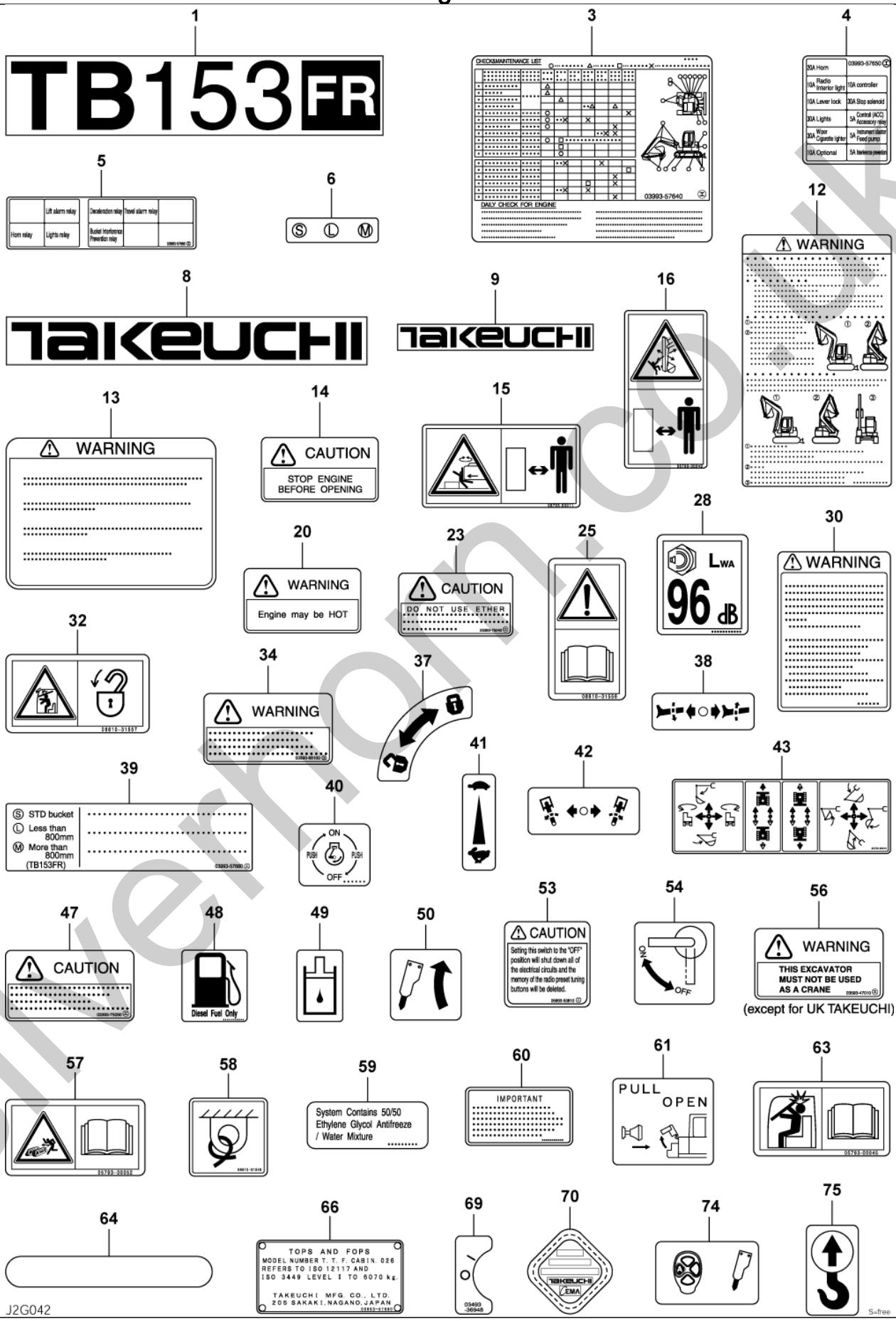

silverhorn.co.uk

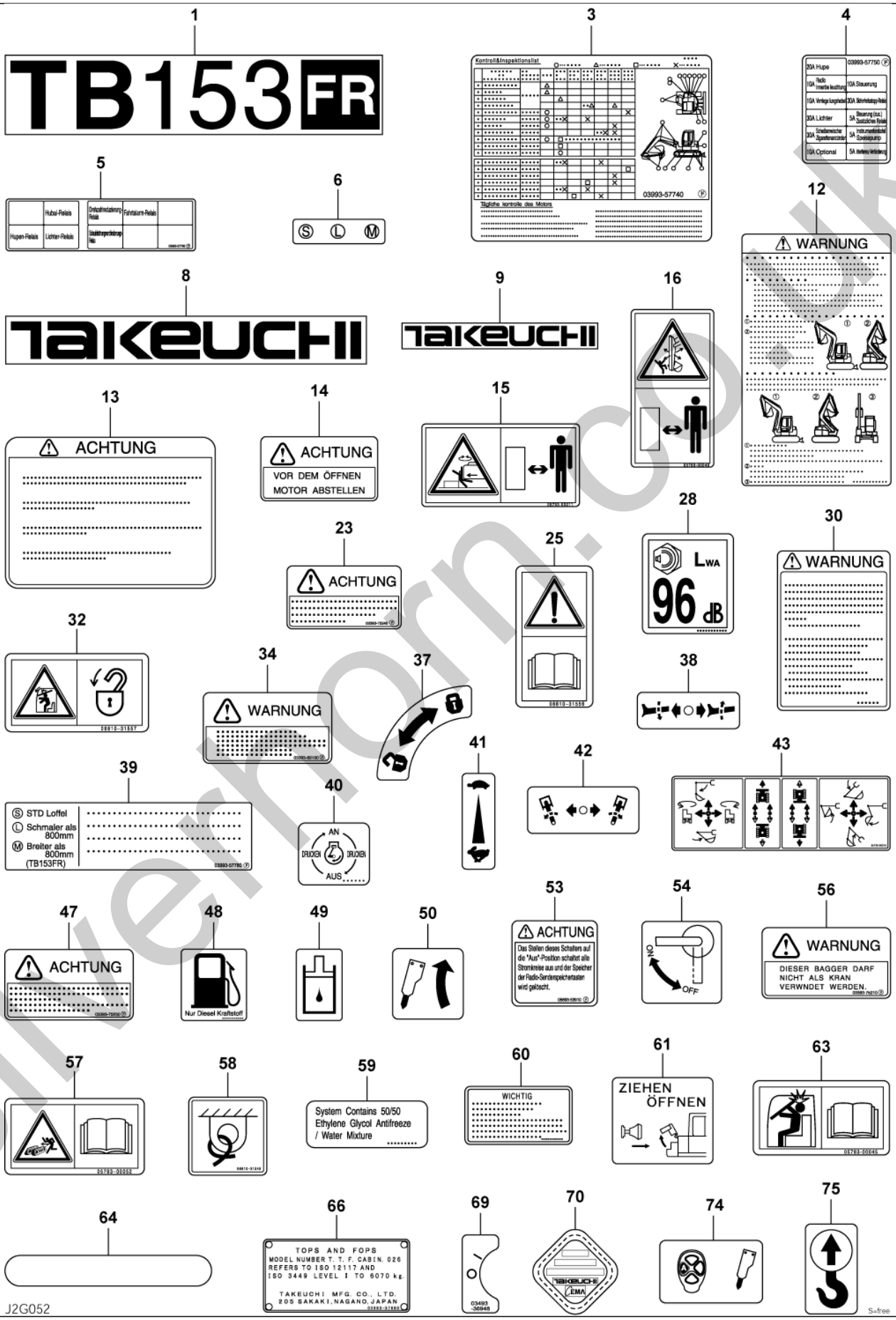

silverhorn.co.uk

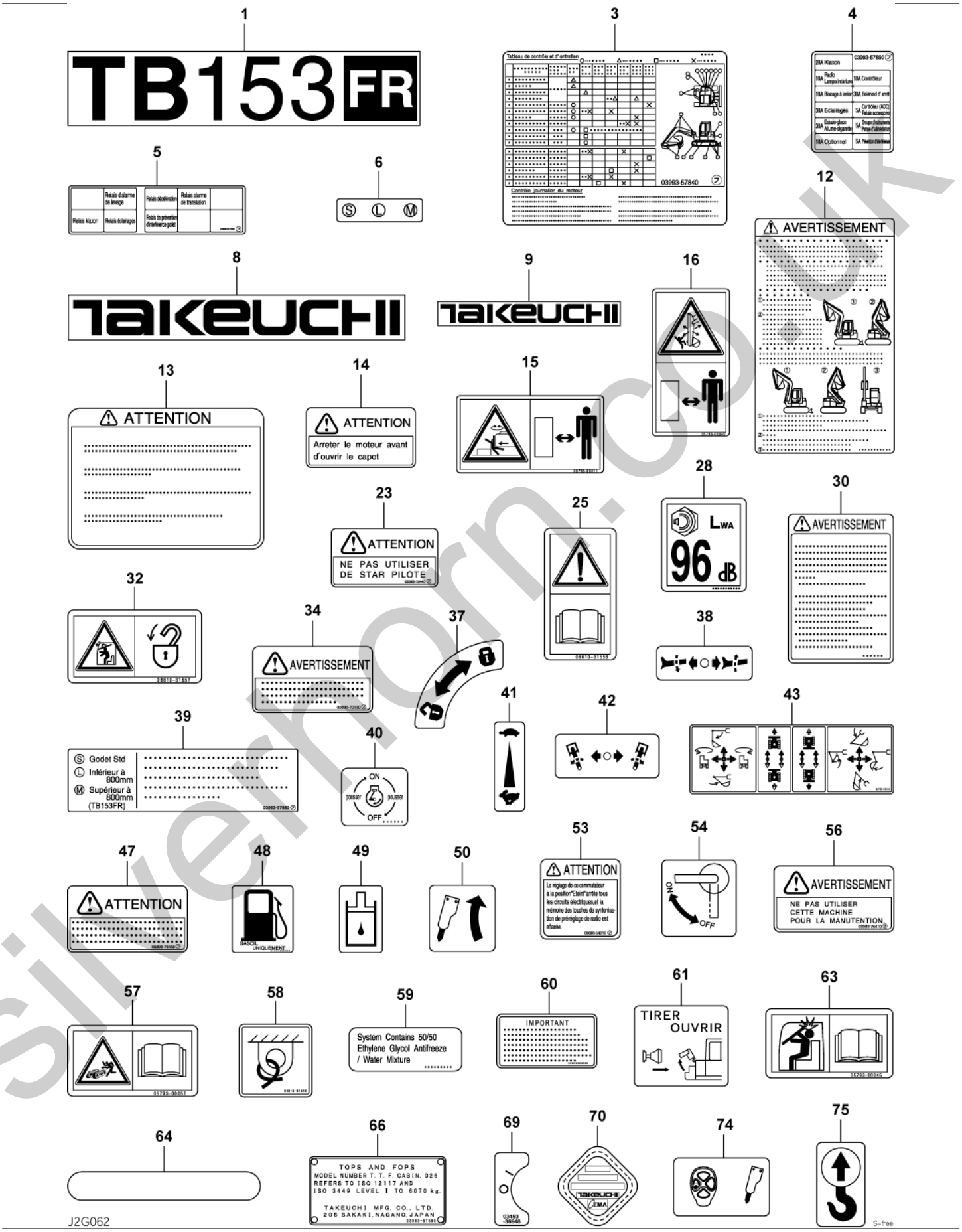

silverhorn.co.uk

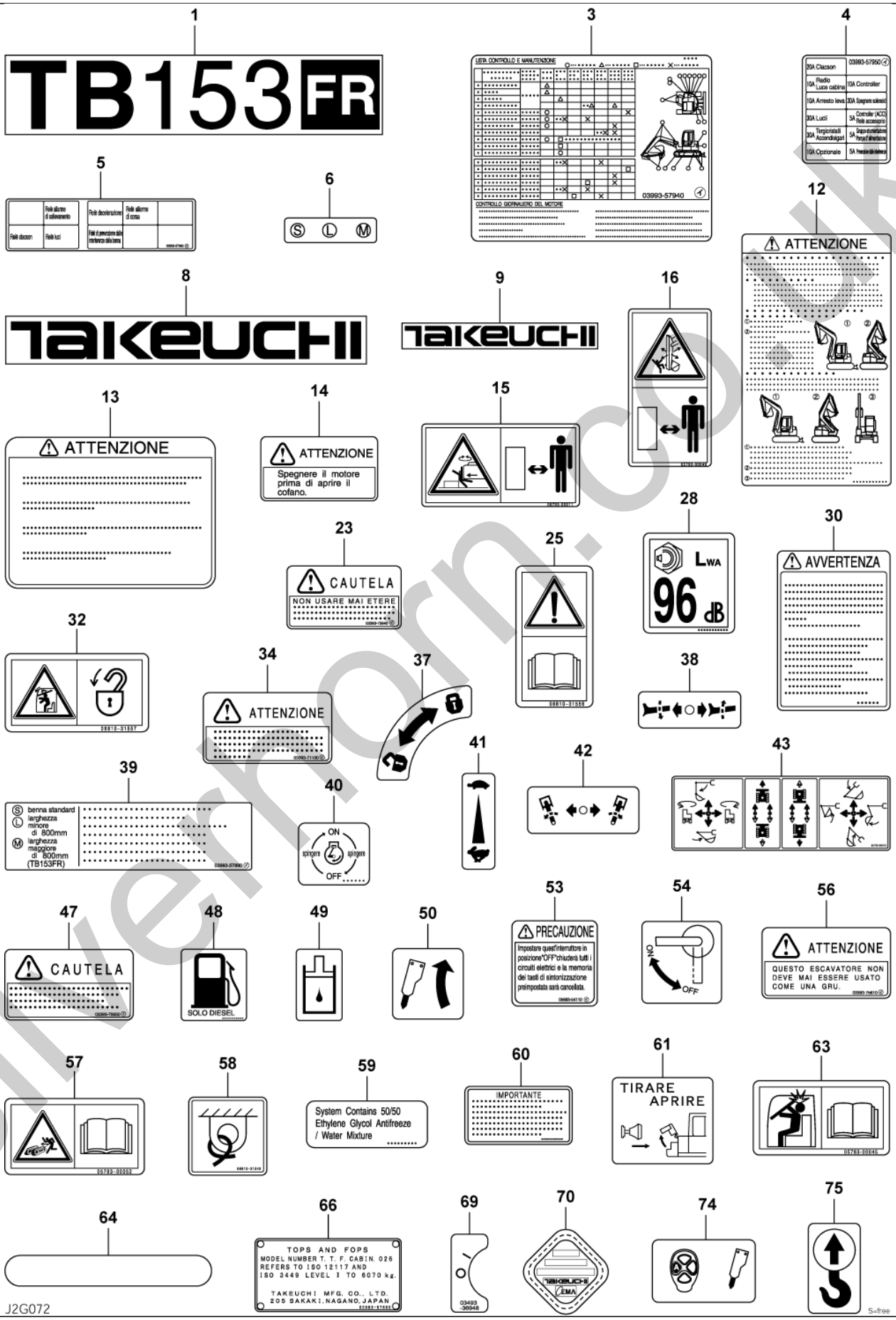

silverhorn.co.uk

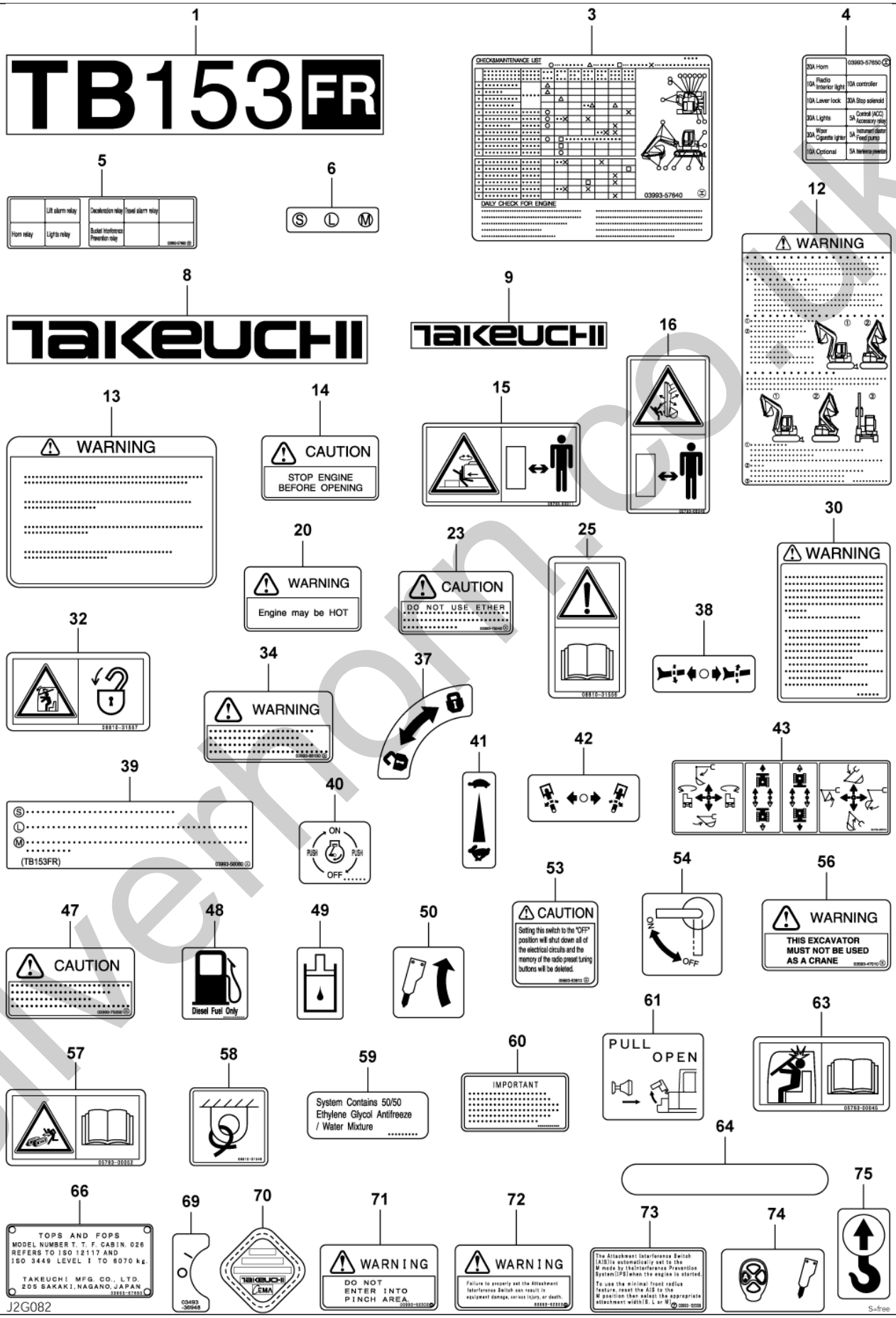

silverhorn.co.uk

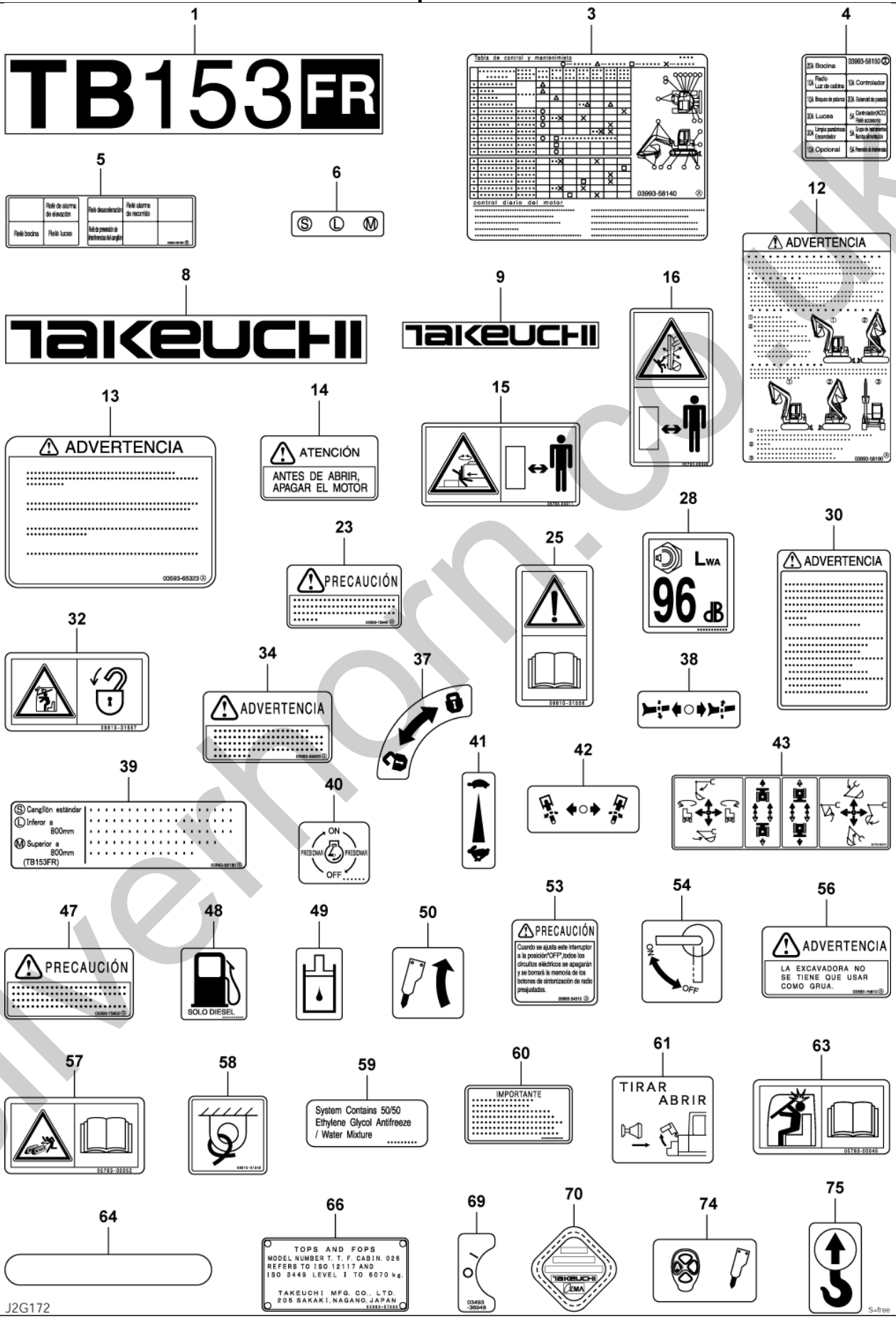

silverhorn.co.uk

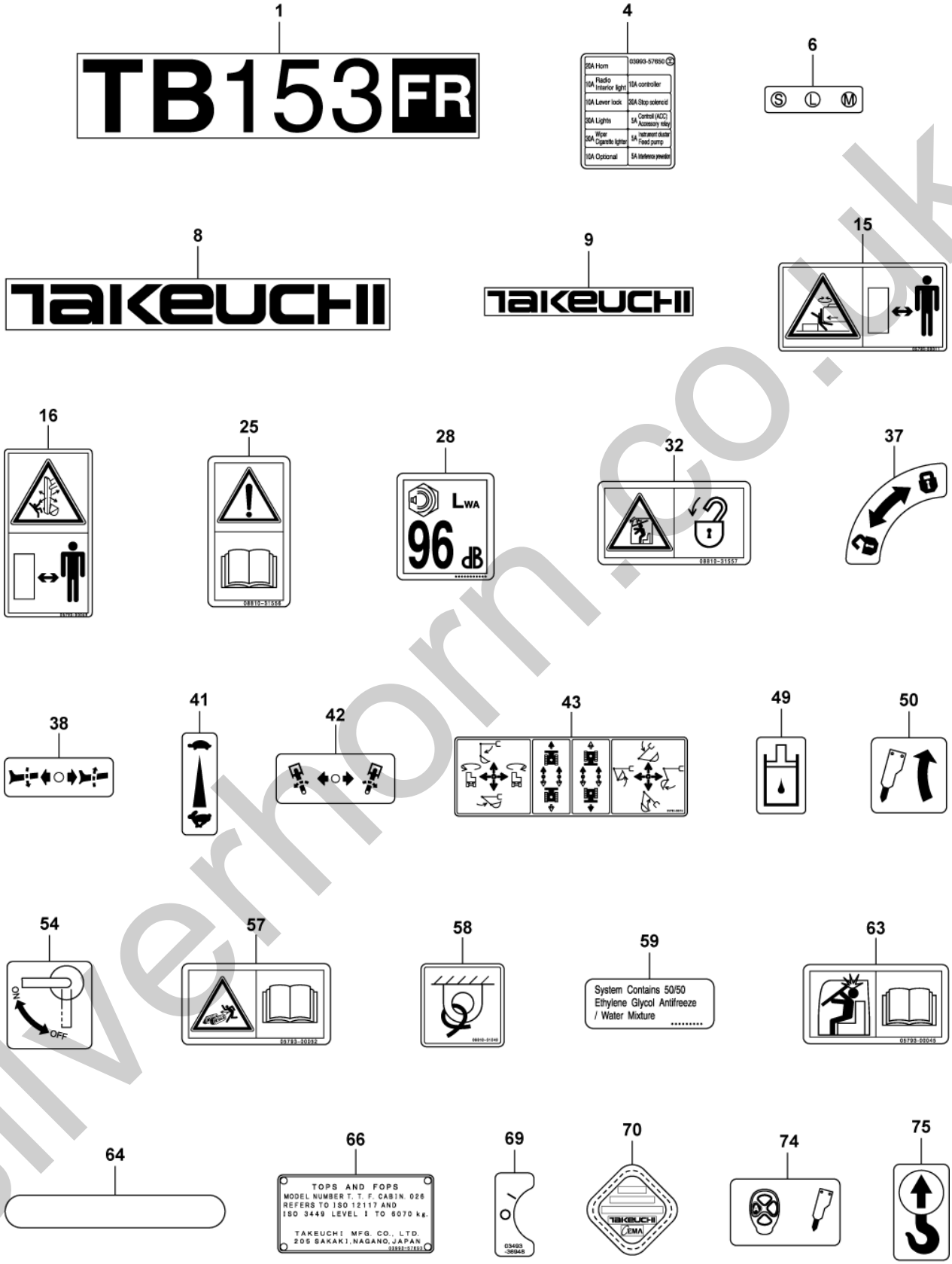

silverhorn.co.uk

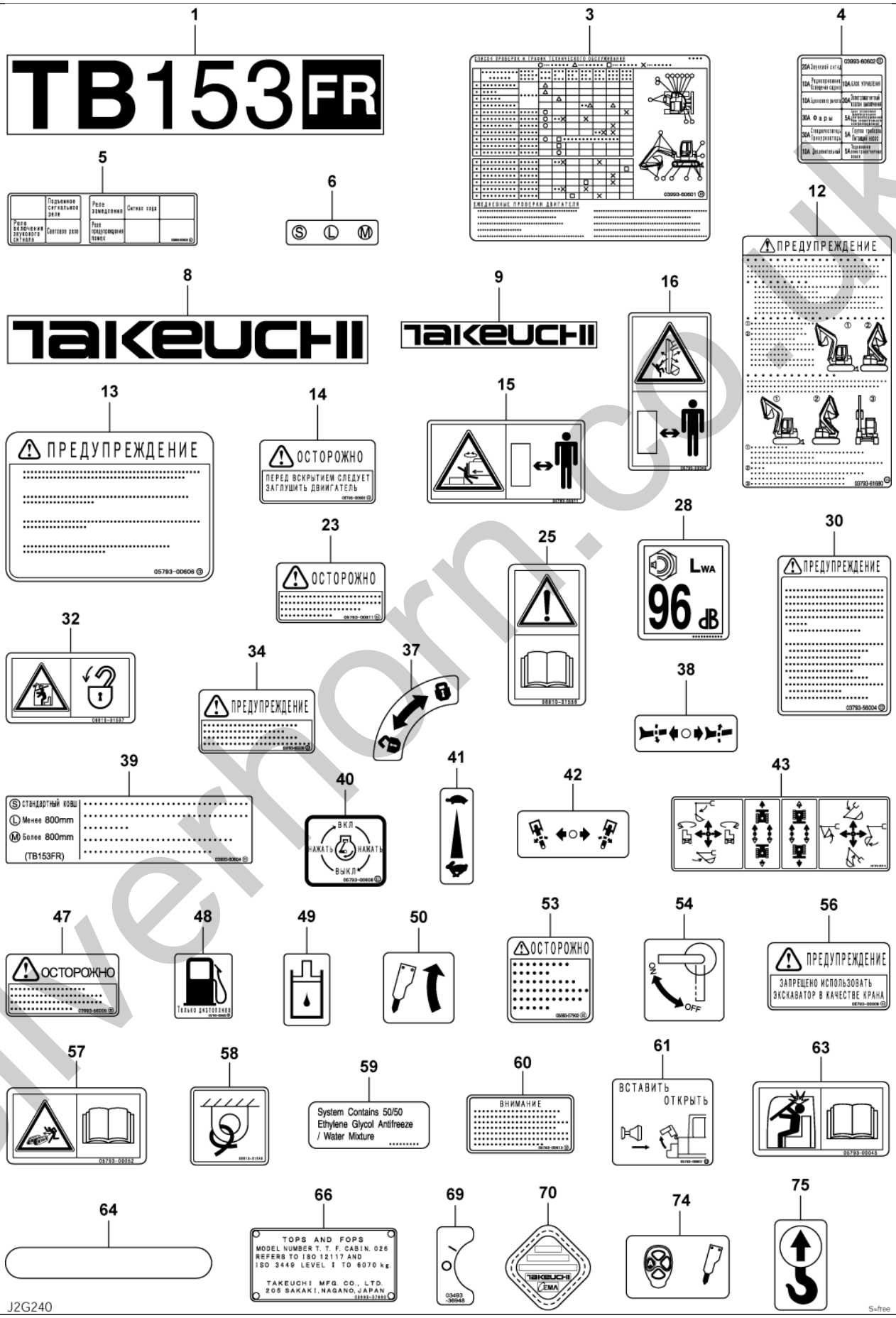

silverhorn.co.uk

silverhorn.co.uk

DECAL (cab)

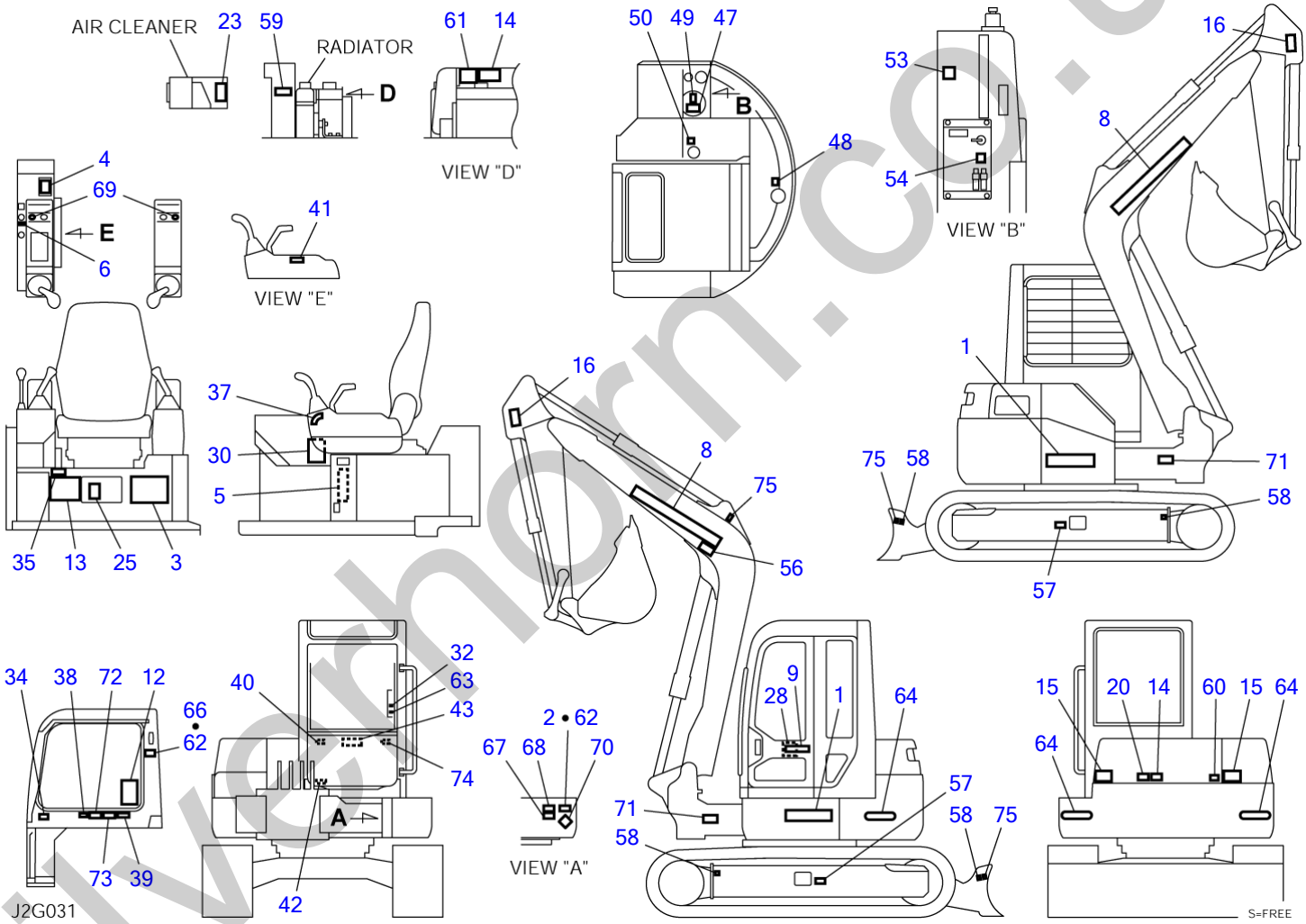

silverhorn.co.uk

DECAL (cab)

Item	Part number	Description	Q'ty	Chan.	Serial No.	Serv.	Remarks
0	0399357600	DECAL SET (English)	1				X03993-57600-3
	0399357700	DECAL SET (German)	1				X03993-57700-3
	0399357800	DECAL SET (French)	1				X03993-57800-3
	0399357900	DECAL SET (Italian)	1				X03993-57900-3
	0399358000	DECAL SET (U. S. TAKEUCHI)	1				X03993-58000-3
	0399358100	DECAL SET (Spanish)	1				X03993-58100-3
	0399360500	DECAL SET (Dutch)	1				X03993-60500-3
	0399360600	DECAL SET (Russian)	1				X03993-60600-3
	0399360700	DECAL SET (U.K. TAKEUCHI)	1				X03993-60700-3
1	0399357610	・DECAL	2				
2	X **********	・DECAL	1				
3	0399357640	・DECAL (English)	1				
	0399357740	・DECAL (German)	1				
	0399357840	・DECAL (French)	1				
	0399357940	・DECAL (Italian)	1				
	0399358140	・DECAL (Spanish)	1				
	0399360601	・DECAL (Russian)	1				
4	0399357650	・DECAL (English, Dutch)	1				
	0399357750	・DECAL (German)	1				
	0399357850	・DECAL (French)	1				
	0399357950	・DECAL (Italian)	1				
	0399358150	・DECAL (Spanish)	1				
	0399360602	・DECAL (Russian)	1				
5	0399357660	・DECAL (English)	1				
	0399357760	・DECAL (German)	1				
	0399357860	・DECAL (French)	1				
	0399357960	・DECAL (Italian)	1				
	0399358160	・DECAL (Spanish)	1				
	0399360603	・DECAL (Russian)	1				
6	0569358060	・DECAL	1				
8	0359306300	・DECAL	2				
9	0569321400	・DECAL	1				
12	0569352506	・DECAL (English)	1				
	0569352206	・DECAL (German)	1				
	0569352306	・DECAL (French)	1				
	0569352406	・DECAL (Italian)	1				
	0399358190	・DECAL (Spanish)	1				
	0379361680	・DECAL (Russian)	1				
13	0359313700	・DECAL (English)	1				
	0359314700	・DECAL (German)	1				
	0359315700	・DECAL (French)	1				
	0359316700	・DECAL (Italian)	1				
	0359365323	・DECAL (Spanish)	1				
	0579300606	・DECAL (Russian)	1				
14	0359307400	・DECAL (English)	2				
	0359314400	・DECAL (German)	2				
	0359315400	・DECAL (French)	2				
	0359316400	・DECAL (Italian)	2				
	0339364200	・DECAL (Spanish)	2				
	0579300602	・DECAL (Russian)	2				
15	0579300011	・DECAL	2				
16	0579300049	・DECAL	2				
20	0569321980	・DECAL (English)	1				
23	0339375040	・DECAL (English)	1				
	0339375240	・DECAL (German)	1				
	0339375440	・DECAL (French)	1				
	0339375640	・DECAL (Italian)	1				
	0339375840	・DECAL (Spanish)	1				
	0579300611	・DECAL (Russian)	1				
25	0881031556	・DECAL	1				
28	X **********	・DECAL	1				except for U.S. TAKEUCHI
30	0379337300	・DECAL (English)	1				
	0379338300	・DECAL (German)	1				
	0379339300	・DECAL (French)	1				
	0379340300	・DECAL (Italian)	1				
	0379354200	・DECAL (Spanish)	1				
	0399356004	・DECAL (Russian)	1				
32	0881031557	・DECAL	1				

silverthorn.co.uk

DECAL (cab)

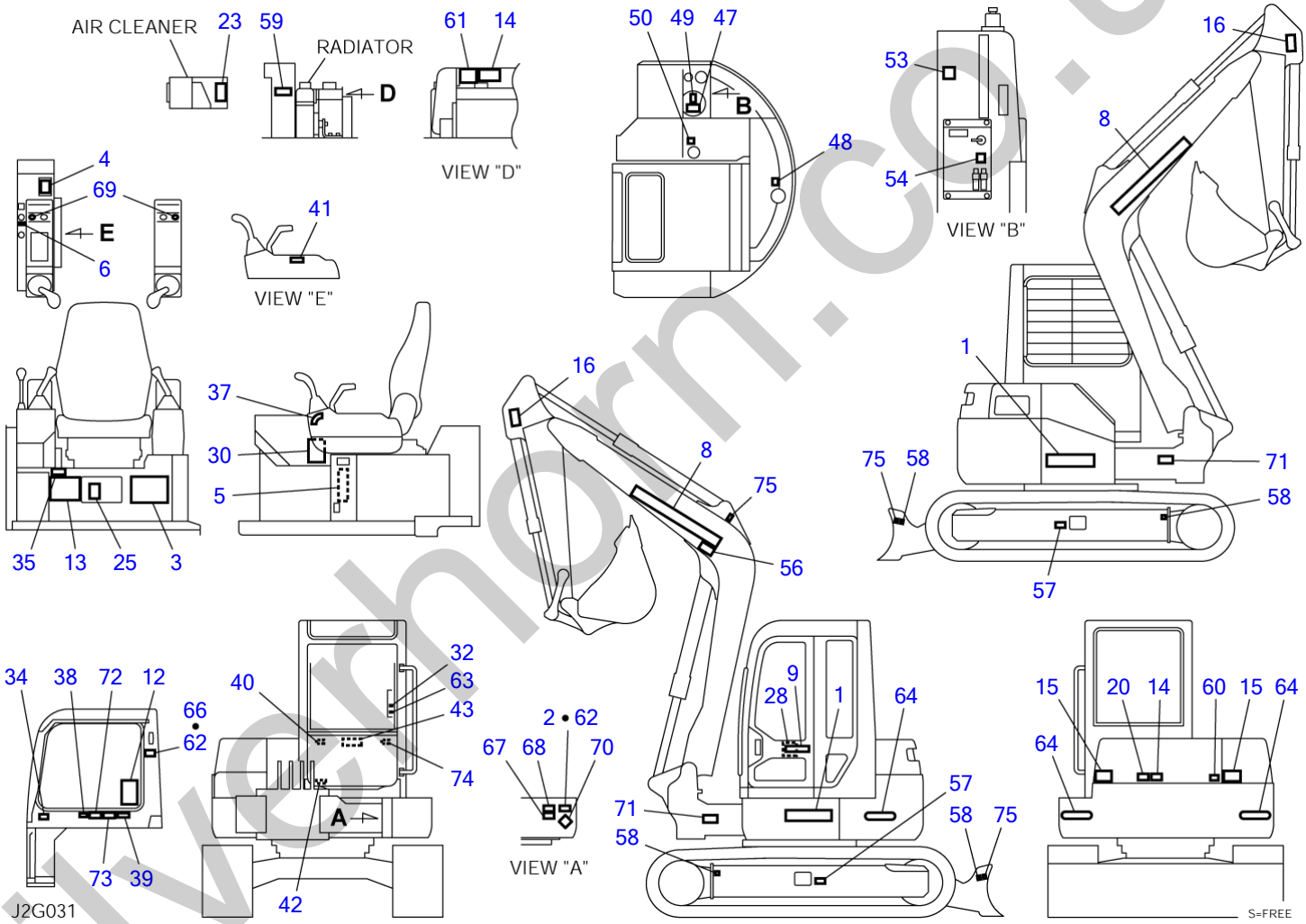

silverhorn.co.uk

DECAL (cab)

Item	Part number	Description	Q'ty	Chan.	Serial No.	Serv.	Remarks
34	0339368100	・DECAL (English)	1				
34	0339369100	・DECAL (German)	1				
34	0339370100	・DECAL (French)	1				
34	0339371100	・DECAL (Italian)	1				
34	0399355820	・DECAL (Spanish)	1				
34	0329365506	・DECAL (Russian)	1				
35	X **********	・DECAL	1				
37	0329360100	・DECAL	1				
38	0359325190	・DECAL	1				
39	0399357680	・DECAL (English)	1				
39	0399357780	・DECAL (German)	1				
39	0399357880	・DECAL (French)	1				
39	0399357980	・DECAL (Italian)	1				
39	0399358080	・DECAL (U. S. TAKEUCHI)	1				
39	0399358180	・DECAL (Spanish)	1				
39	0399360604	・DECAL (Russian)	1				
40	0569335060	・DECAL (English)	1				
40	0569327800	・DECAL (German)	1				
40	0569328800	・DECAL (French)	1				
40	0569329800	・DECAL (Italian)	1				
40	0569348500	・DECAL (Spanish)	1				
40	0579300608	・DECAL (Russian)	1				
41	0359317200	・DECAL	1				
42	0329360060	・DECAL	1				
43	0579300015	・DECAL	1				
47	0339375050	・DECAL (English)	1				
47	0339375250	・DECAL (German)	1				
47	0339375450	・DECAL (French)	1				
47	0339375650	・DECAL (Italian)	1				
47	0339375850	・DECAL (Spanish)	1				
47	0399356005	・DECAL (Russian)	1				
48	0359306600	・DECAL (English)	1				
48	0339375260	・DECAL (German)	1				
48	0339375460	・DECAL (French)	1				
48	0339375660	・DECAL (Italian, Spanish)	1				
48	0579300603	・DECAL (Russian)	1				
49	0359306700	・DECAL	1				
50	0359325220	・DECAL	1				
53	0569353810	・DECAL (English)	1				
53	0569353910	・DECAL (German)	1				
53	0569354010	・DECAL (French)	1				
53	0569354110	・DECAL (Italian)	1				
53	0569354310	・DECAL (Spanish)	1				
53	0569357903	・DECAL (Russian)	1				
54	0399351210	・DECAL	1				
56	0359347010	・DECAL (English)	1				except for U.K. TAKEUCHI
56	0339375210	・DECAL (German)	1				
56	0339375410	・DECAL (French)	1				
56	0339375610	・DECAL (Italian)	1				
56	0339375810	・DECAL (Spanish)	1				
56	0579300609	・DECAL (Russian)	1				
57	0579300052	・DECAL	2				
58	0881031549	・DECAL	4				
59	0359313900	・DECAL	1				
60	0339376240	・DECAL (English)	1				
60	0339376340	・DECAL (German)	1				
60	0339379440	・DECAL (French)	1				
60	0339379540	・DECAL (Italian)	1				
60	0339379640	・DECAL (Spanish)	1				
60	0579300613	・DECAL (Russian)	1				
61	0569326400	・DECAL (English)	1				
61	0569327400	・DECAL (German)	1				
61	0569328400	・DECAL (French)	1				
61	0569329400	・DECAL (Italian)	1				
61	0569348400	・DECAL (Spanish)	1				
61	0579300607	・DECAL (Russian)	1				
62	X **********	・SCREW	8				
63	0579300045	・DECAL	1				

silverthorn.co.uk

DECAL (cab)

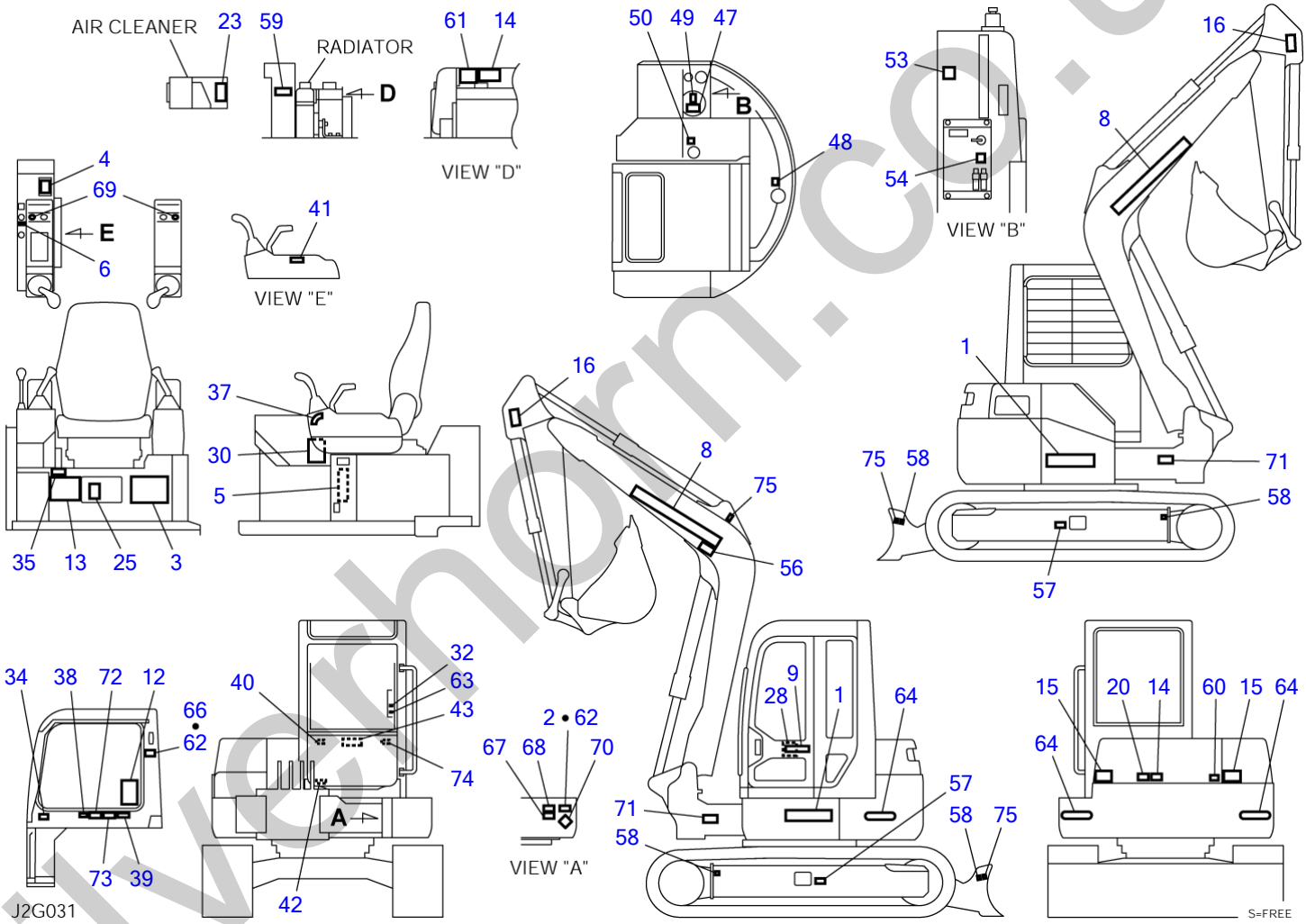

silverhorn.co.uk

DECAL (cab)

Item	Part number	Description	Q'ty	Chan.	Serial No.	Serv.	Remarks
64	0569358070	・DECAL	2				
66	X **********	・DECAL	1				
67	X **********	・DECAL	1				
68	X **********	・DECAL	1				
69	0349336948	・DECAL	2				
70	X **********	・DECAL	1				
71	0399352302	・DECAL (U. S. TAKEUCHI)	2				
72	0399352303	・DECAL (U. S. TAKEUCHI)	1				
73	0399352309	・DECAL (U. S. TAKEUCHI)	1				
74	0379336800	・DECAL	1				
75	0399300500	・DECAL	3				
	J2g033						

silverhorn.co.uk

DECAL (canopy)

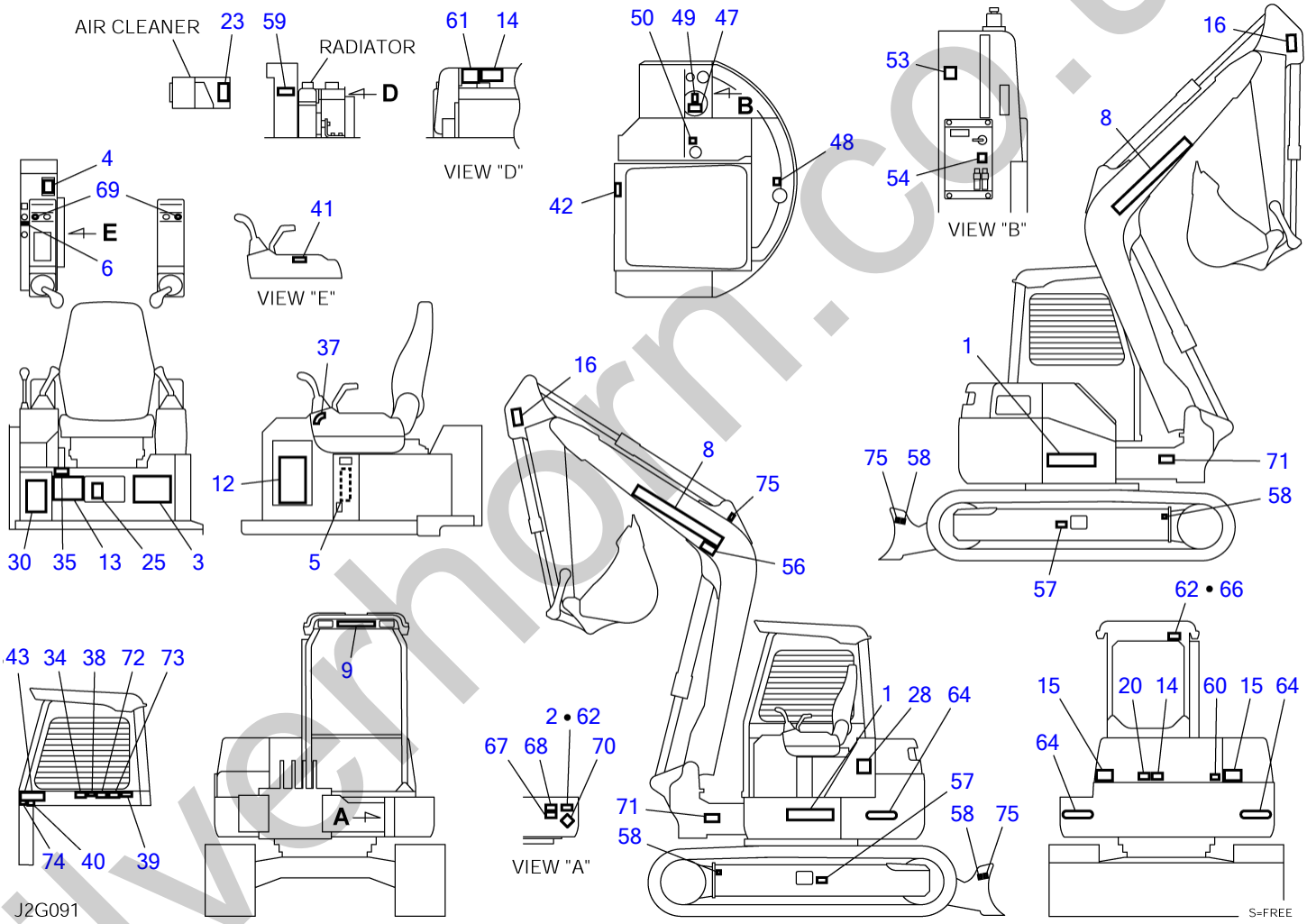

silverhorn.co.uk

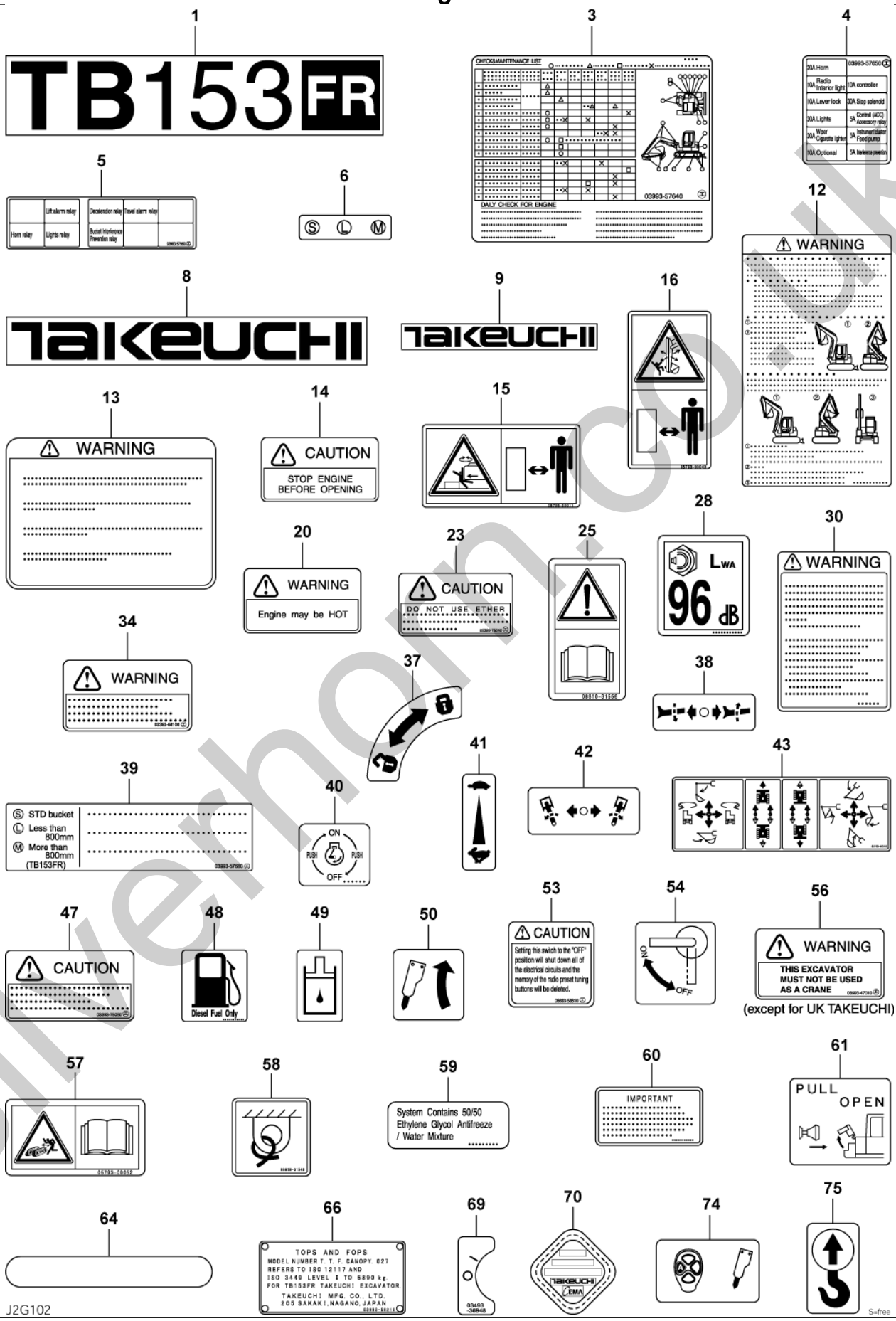

silverhorn.co.uk

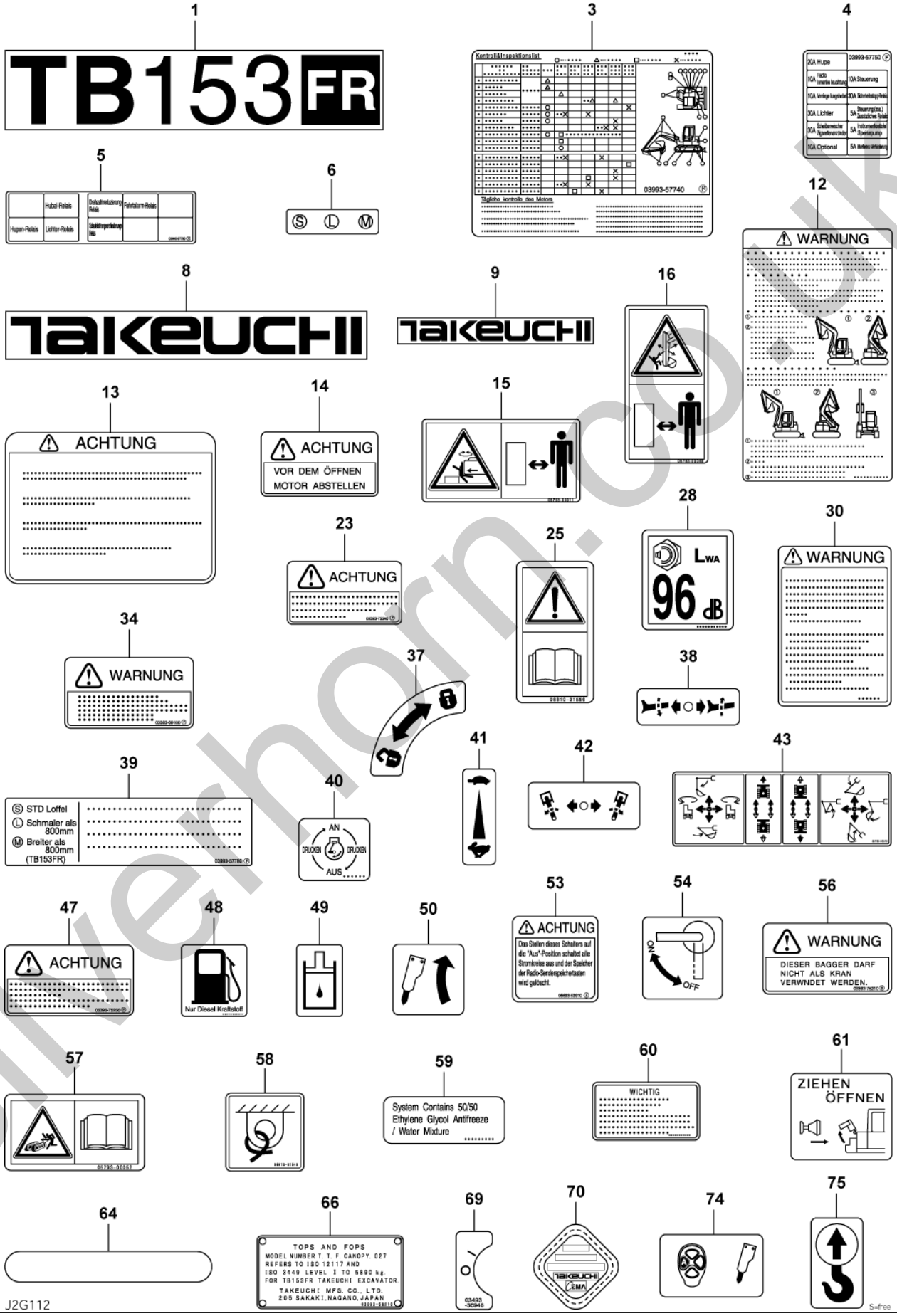

silverhorn.co.uk

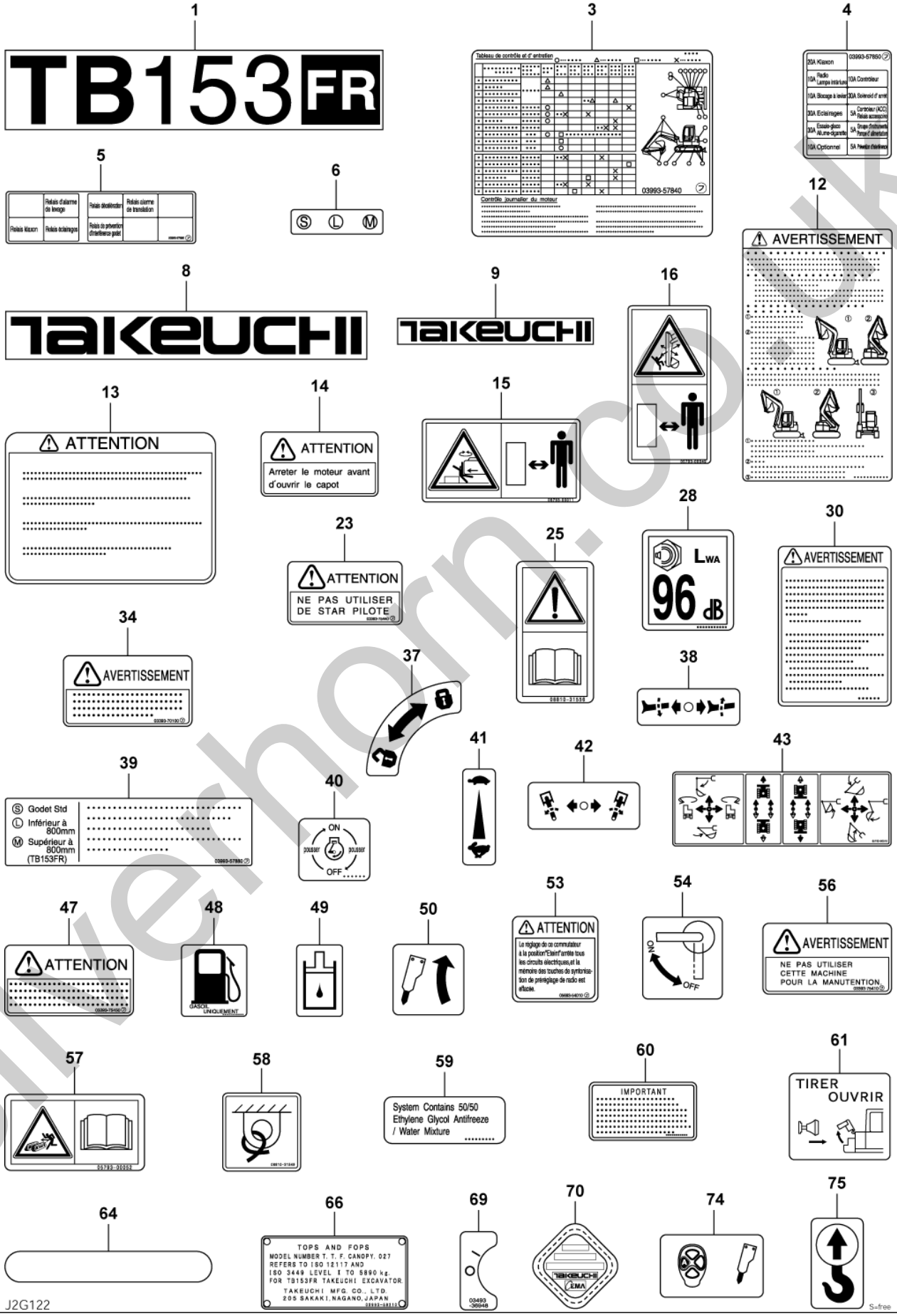

silverhorn.co.uk

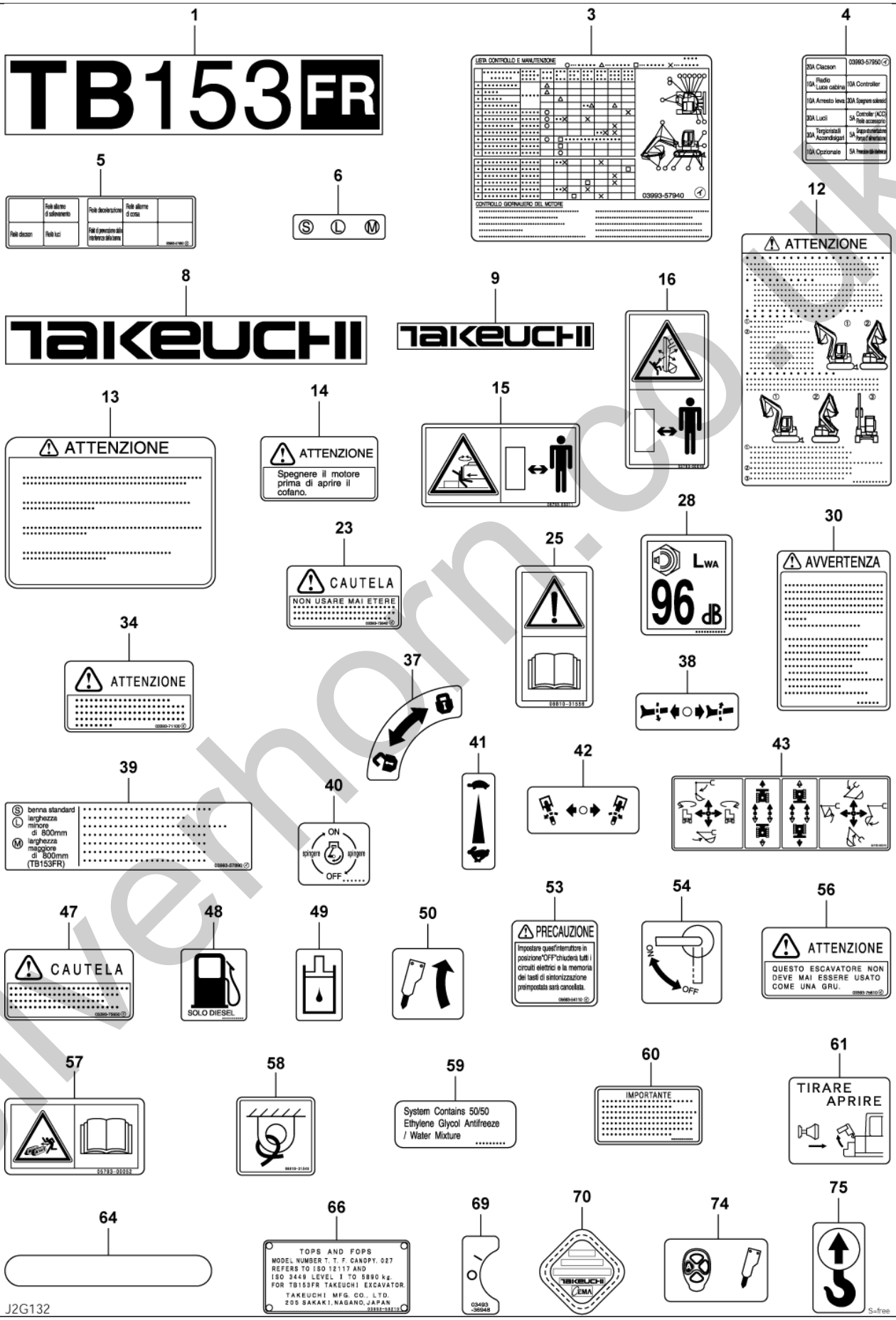

silverhorn.co.uk

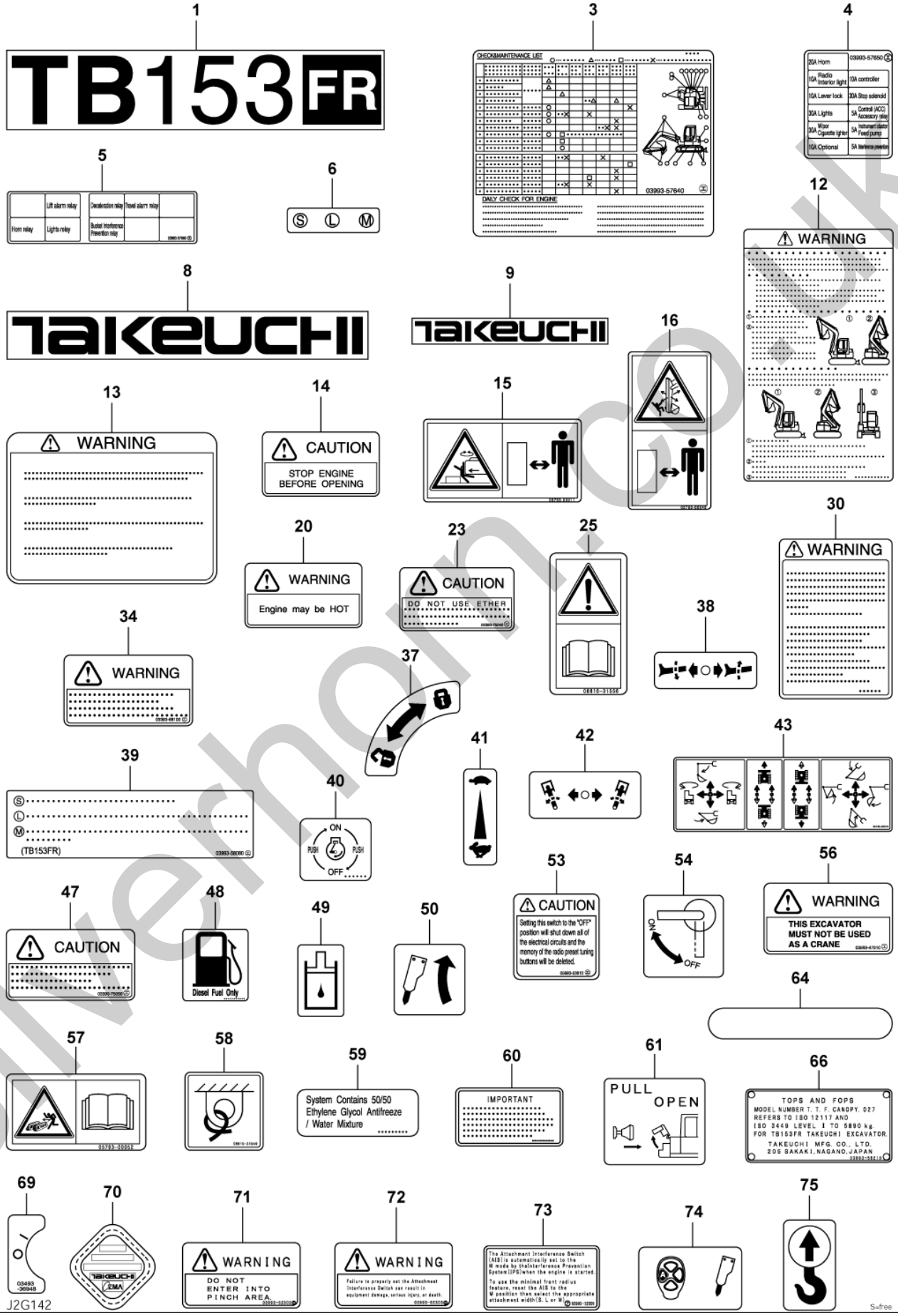

silverhorn.co.uk

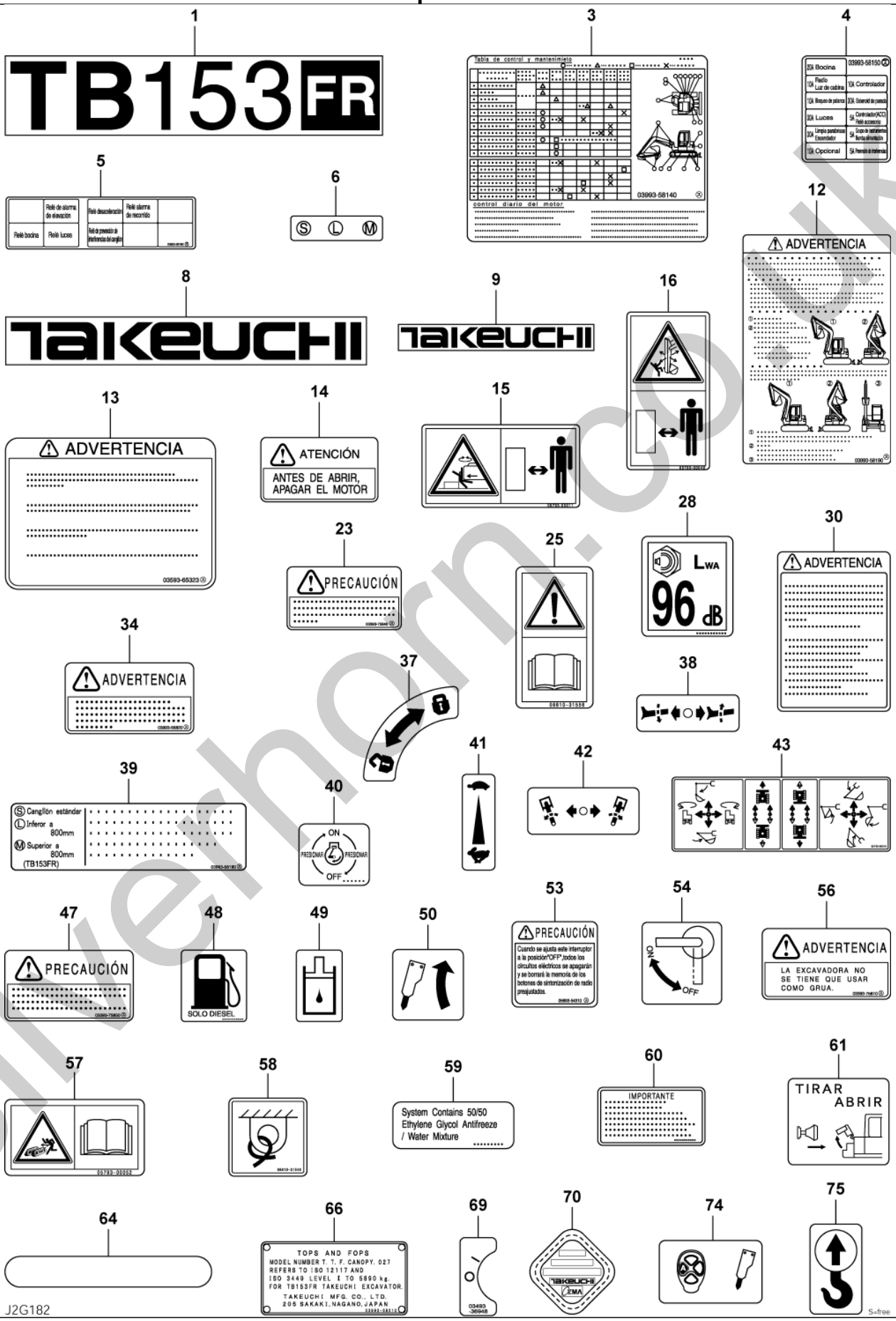

silverhorn.co.uk

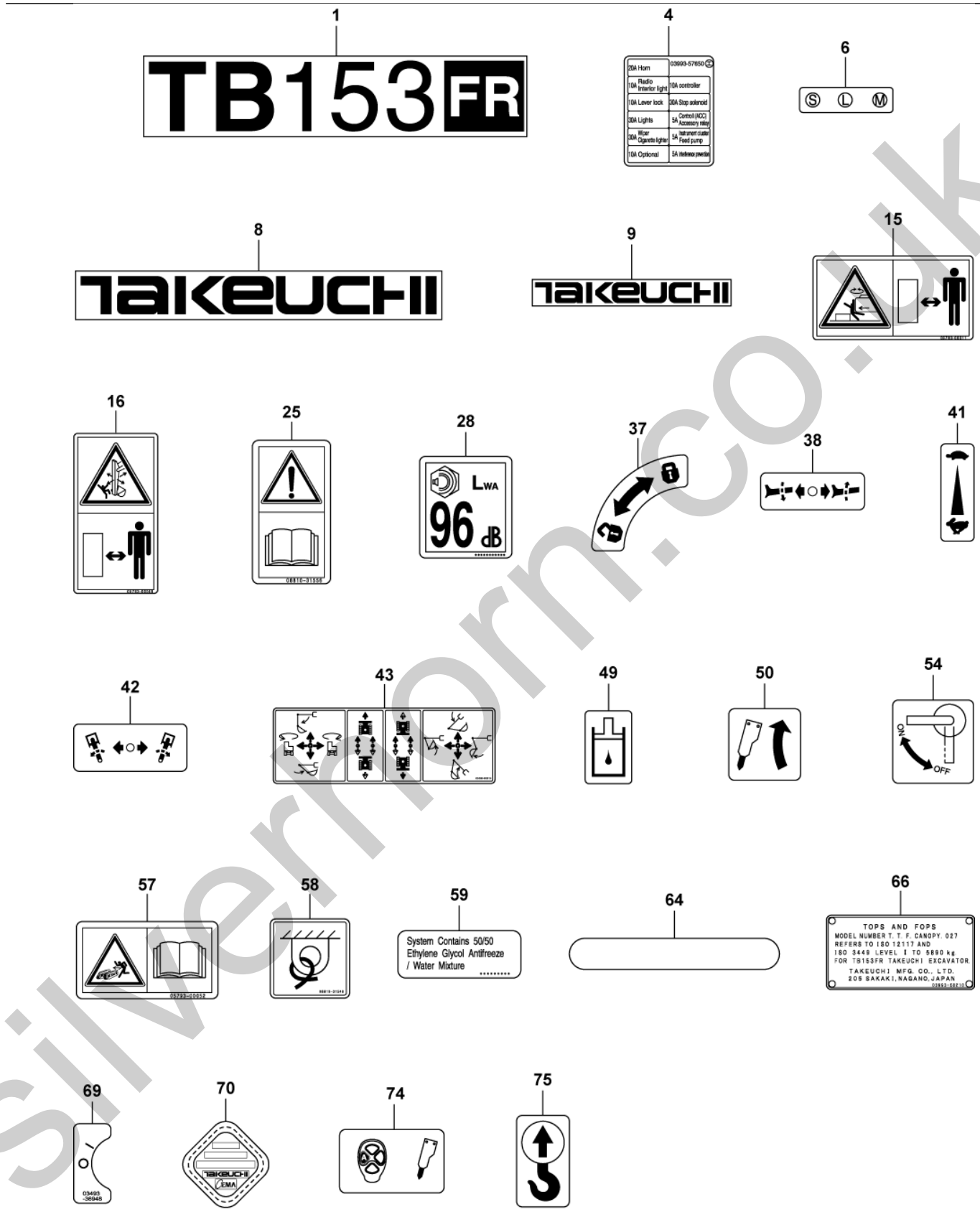

silverthorn.co.uk

DECAL (canopy)

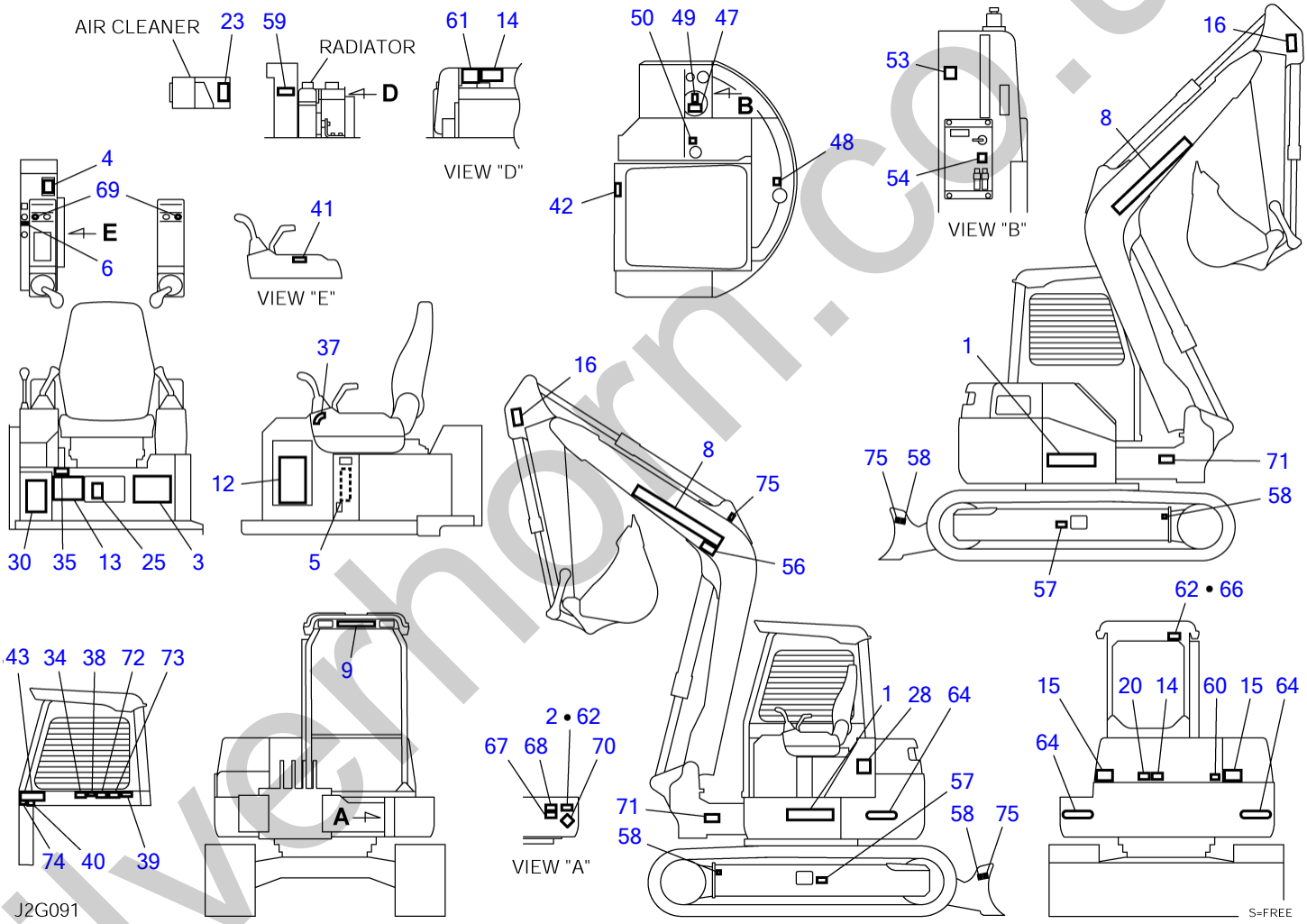

silverhorn.co.uk

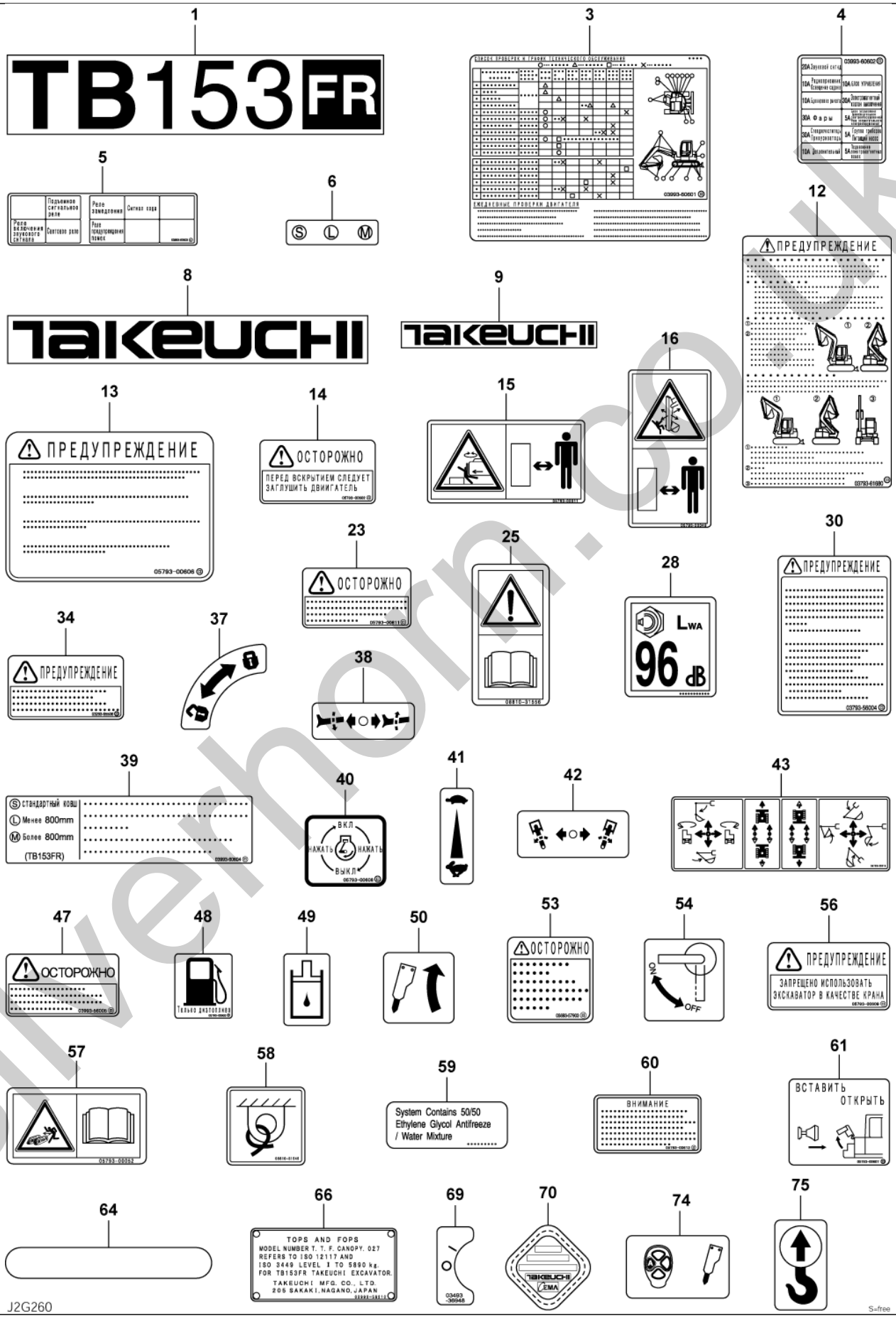

silverhorn.co.uk

DECAL (canopy)

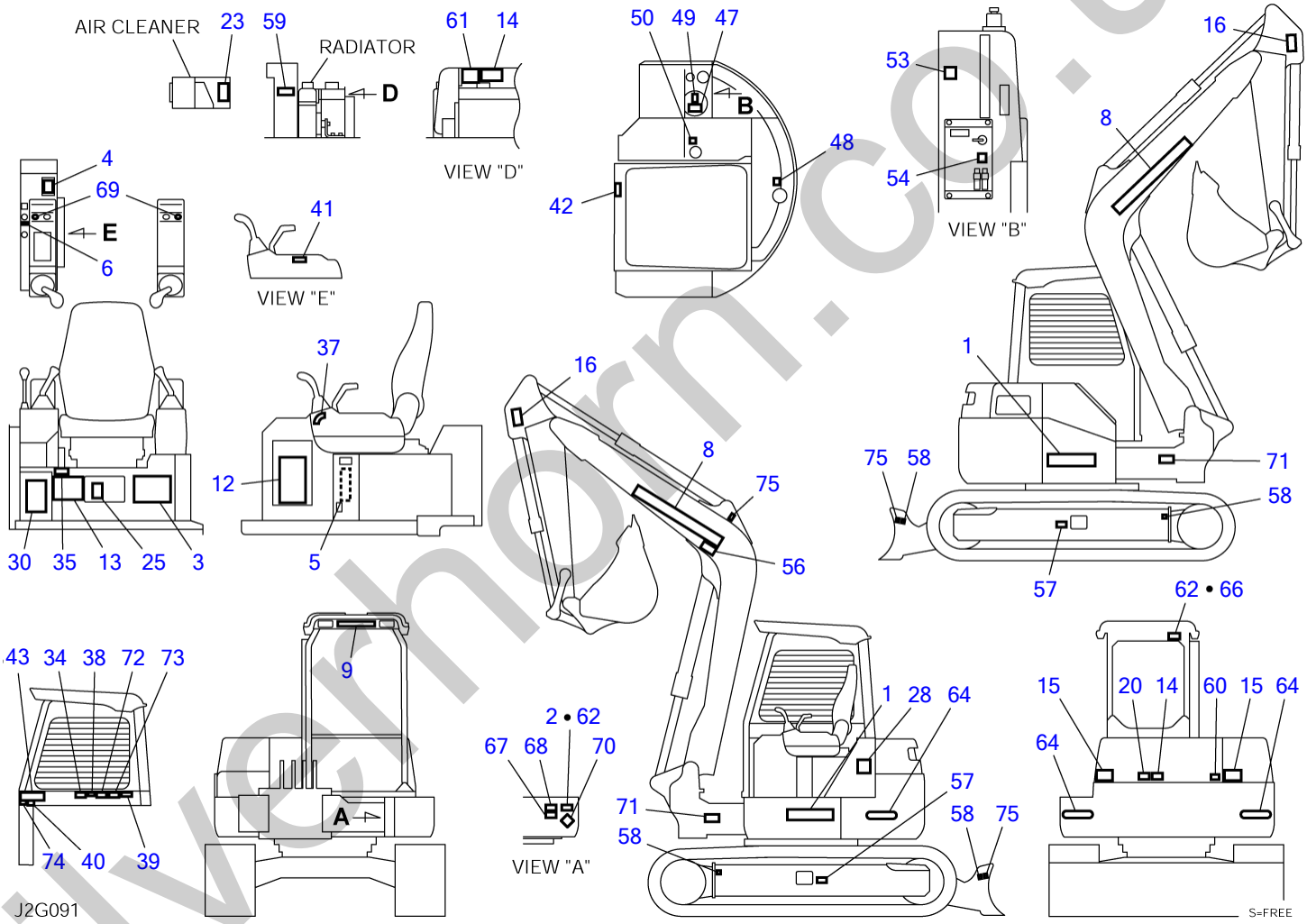

silverhorn.co.uk

DECAL (canopy)

Item	Part number	Description	Q'ty	Chan.	Serial No.	Serv.	Remarks
0	0399358200	DECAL SET (English)	1				X03993-58200-3
	0399358300	DECAL SET (German)	1				X03993-58300-3
	0399358400	DECAL SET (French)	1				X03993-58400-3
	0399358500	DECAL SET (Italian)	1				X03993-58500-3
	0399358600	DECAL SET (U. S. TAKEUCHI)	1				X03993-58600-3
	0399358700	DECAL SET (Spanish)	1				X03993-58700-3
	0399360800	DECAL SET (Dutch)	1				X03993-60800-3
	0399360900	DECAL SET (Russian)	1				X03993-60900-3
	0399361000	DECAL SET (U.K. TAKEUCHI)	1				X03993-61000-3
1	0399357610	・DECAL	2				
2	X **********	・DECAL	1				
3	0399357640	・DECAL (English)	1				
	0399357740	・DECAL (German)	1				
	0399357840	・DECAL (French)	1				
	0399357940	・DECAL (Italian)	1				
	0399358140	・DECAL (Spanish)	1				
	0399360601	・DECAL (Russian)	1				
4	0399357650	・DECAL (English, Dutch)	1				
	0399357750	・DECAL (German)	1				
	0399357850	・DECAL (French)	1				
	0399357950	・DECAL (Italian)	1				
	0399358150	・DECAL (Spanish)	1				
	0399360602	・DECAL (Russian)	1				
5	0399357660	・DECAL (English)	1				
	0399357760	・DECAL (German)	1				
	0399357860	・DECAL (French)	1				
	0399357960	・DECAL (Italian)	1				
	0399358160	・DECAL (Spanish)	1				
	0399360603	・DECAL (Russian)	1				
6	0569358060	・DECAL	1				
8	0359306300	・DECAL	2				
9	0359306100	・DECAL	1				
12	0569352506	・DECAL (English)	1				
	0569352206	・DECAL (German)	1				
	0569352306	・DECAL (French)	1				
	0569352406	・DECAL (Italian)	1				
	0399358190	・DECAL (Spanish)	1				
	0379361680	・DECAL (Russian)	1				
13	0359313700	・DECAL (English)	1				
	0359314700	・DECAL (German)	1				
	0359315700	・DECAL (French)	1				
	0359316700	・DECAL (Italian)	1				
	0359365323	・DECAL (Spanish)	1				
	0579300606	・DECAL (Russian)	1				
14	0359307400	・DECAL (English)	2				
	0359314400	・DECAL (German)	2				
	0359315400	・DECAL (French)	2				
	0359316400	・DECAL (Italian)	2				
	0339364200	・DECAL (Spanish)	2				
	0579300602	・DECAL (Russian)	2				
15	0579300011	・DECAL	2				
16	0579300049	・DECAL	2				
20	0569321980	・DECAL (English)	1				
23	0339375040	・DECAL (English)	1				
	0339375240	・DECAL (German)	1				
	0339375440	・DECAL (French)	1				
	0339375640	・DECAL (Italian)	1				
	0339375840	・DECAL (Spanish)	1				
	0579300611	・DECAL (Russian)	1				
25	0881031556	・DECAL	1				
28	X **********	・DECAL	1				except for U.S. TAKEUCHI
30	0379337300	・DECAL (English)	1				
	0379338300	・DECAL (German)	1				
	0379339300	・DECAL (French)	1				
	0379340300	・DECAL (Italian)	1				
	0379354200	・DECAL (Spanish)	1				
	0399356004	・DECAL (Russian)	1				
34	0339368100	・DECAL (English)	1				

silverthorn.co.uk

DECAL (canopy)

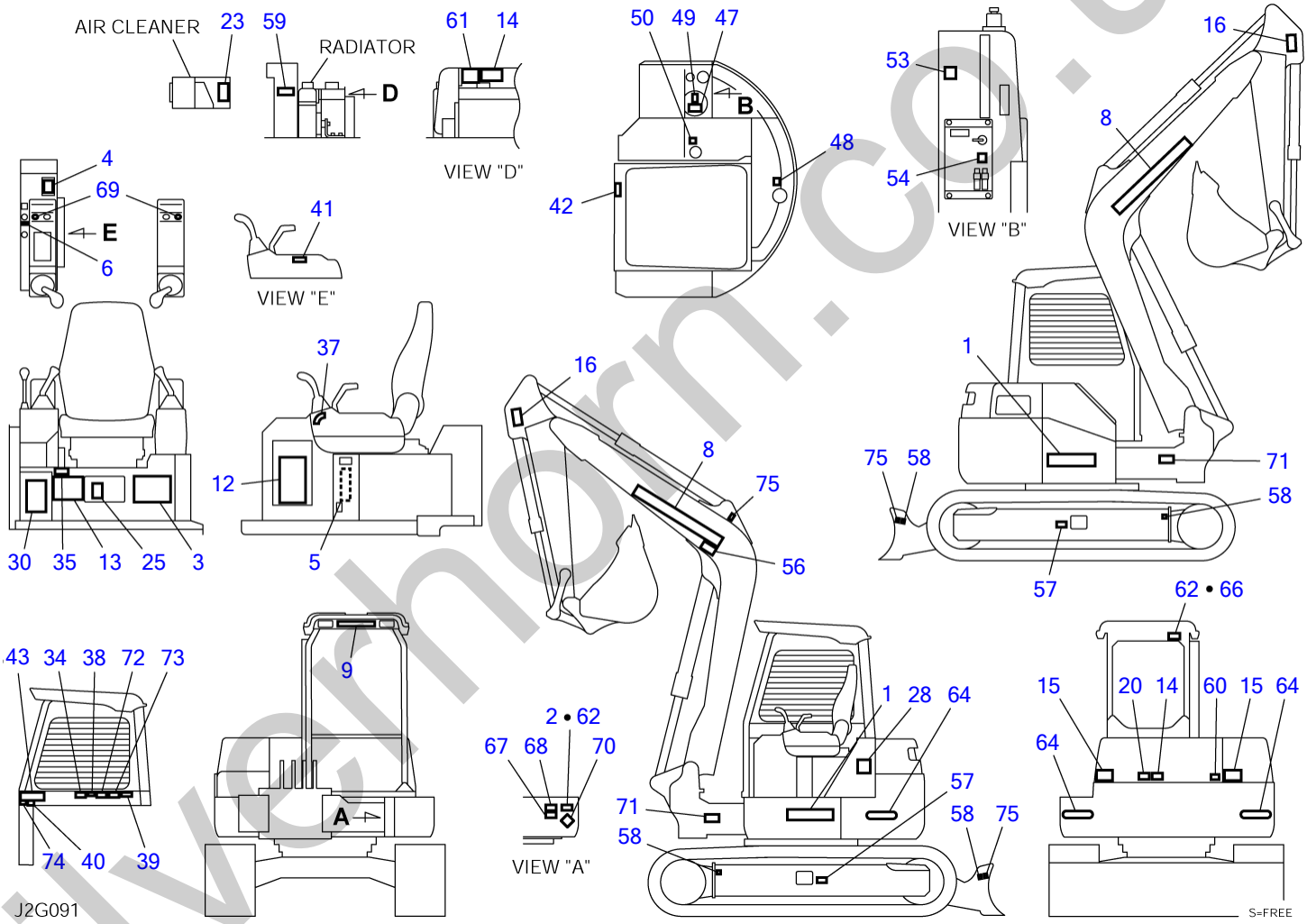

silverhorn.co.uk

DECAL (canopy)

Item	Part number	Description	Q'ty	Chan.	Serial No.	Serv.	Remarks
34	0339369100	・DECAL (German)	1				
34	0339370100	・DECAL (French)	1				
34	0339371100	・DECAL (Italian)	1				
34	0399355820	・DECAL (Spanish)	1				
34	0329365506	・DECAL (Russian)	1				
35	X **********	・DECAL	1				
37	0329360100	・DECAL	1				
38	0359325190	・DECAL	1				
39	0399357680	・DECAL (English)	1				
39	0399357780	・DECAL (German)	1				
39	0399357880	・DECAL (French)	1				
39	0399357980	・DECAL (Italian)	1				
39	0399358080	・DECAL (U. S. TAKEUCHI)	1				
39	0399358180	・DECAL (Spanish)	1				
39	0399360604	・DECAL (Russian)	1				
40	0569335060	・DECAL (English)	1				
40	0569327800	・DECAL (German)	1				
40	0569328800	・DECAL (French)	1				
40	0569329800	・DECAL (Italian)	1				
40	0569348500	・DECAL (Spanish)	1				
40	0579300608	・DECAL (Russian)	1				
41	0359317200	・DECAL	1				
42	0329360060	・DECAL	1				
43	0579300015	・DECAL	1				
47	0339375050	・DECAL (English)	1				
47	0339375250	・DECAL (German)	1				
47	0339375450	・DECAL (French)	1				
47	0339375650	・DECAL (Italian)	1				
47	0339375850	・DECAL (Spanish)	1				
47	0399356005	・DECAL (Russian)	1				
48	0359306600	・DECAL (English)	1				
48	0339375260	・DECAL (German)	1				
48	0339375460	・DECAL (French)	1				
48	0339375660	・DECAL (Italian, Spanish)	1				
48	0579300603	・DECAL (Russian)	1				
49	0359306700	・DECAL	1				
50	0359325220	・DECAL	1				
53	0569353810	・DECAL (English)	1				
53	0569353910	・DECAL (German)	1				
53	0569354010	・DECAL (French)	1				
53	0569354110	・DECAL (Italian)	1				
53	0569354310	・DECAL (Spanish)	1				
53	0569357903	・DECAL (Russian)	1				
54	0399351210	・DECAL	1				
56	0359347010	・DECAL (English)	1				except for U.K. TAKEUCHI
56	0339375210	・DECAL (German)	1				
56	0339375410	・DECAL (French)	1				
56	0339375610	・DECAL (Italian)	1				
56	0339375810	・DECAL (Spanish)	1				
56	0579300609	・DECAL (Russian)	1				
57	0579300052	・DECAL	2				
58	0881031549	・DECAL	4				
59	0359313900	・DECAL	1				
60	0339376240	・DECAL (English)	1				
60	0339376340	・DECAL (German)	1				
60	0339379440	・DECAL (French)	1				
60	0339379540	・DECAL (Italian)	1				
60	0339379640	・DECAL (Spanish)	1				
60	0579300613	・DECAL (Russian)	1				
61	0569326400	・DECAL (English)	1				
61	0569327400	・DECAL (German)	1				
61	0569328400	・DECAL (French)	1				
61	0569329400	・DECAL (Italian)	1				
61	0569348400	・DECAL (Spanish)	1				
61	0579300607	・DECAL (Russian)	1				
62	X **********	・SCREW	8				
64	0569358070	・DECAL	2				
66	X **********	・DECAL	1				

silverthorn.co.uk

DECAL (canopy)

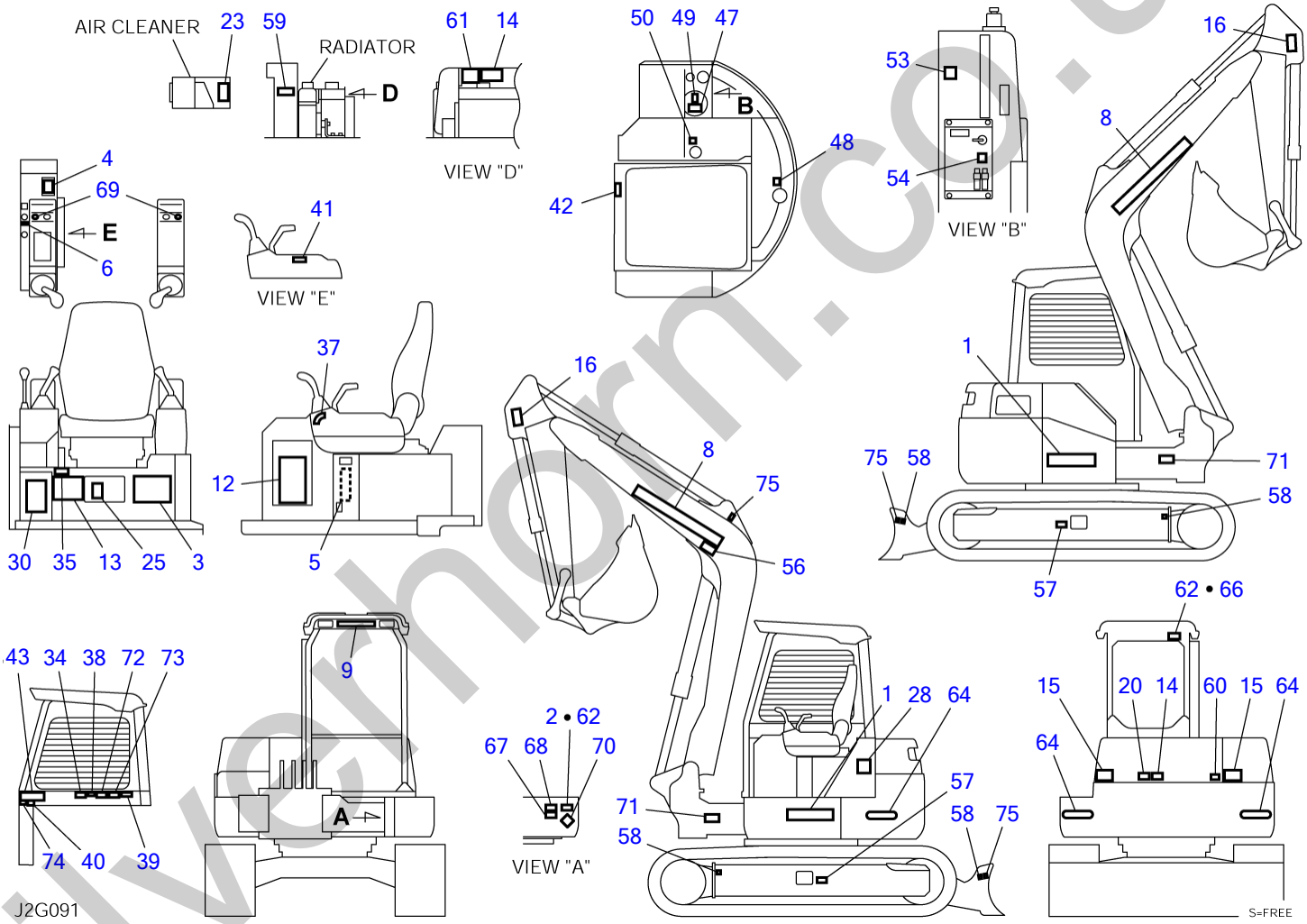

silverhorn.co.uk

DECAL (canopy)

Item	Part number	Description	Q'ty	Chan.	Serial No.	Serv.	Remarks
67	X **********	・DECAL	1				
68	X **********	・DECAL	1				
69	0349336948	・DECAL	2				
70	X **********	・DECAL	1				
71	0399352302	・DECAL (U. S. TAKEUCHI)	2				
72	0399352303	・DECAL (U. S. TAKEUCHI)	1				
73	0399352309	・DECAL (U. S. TAKEUCHI)	1				
74	0379336800	・DECAL	1				
75	0399300500	・DECAL	3				
	J2g092						

silverhorn.co.uk

DECAL (operation lever, cab)

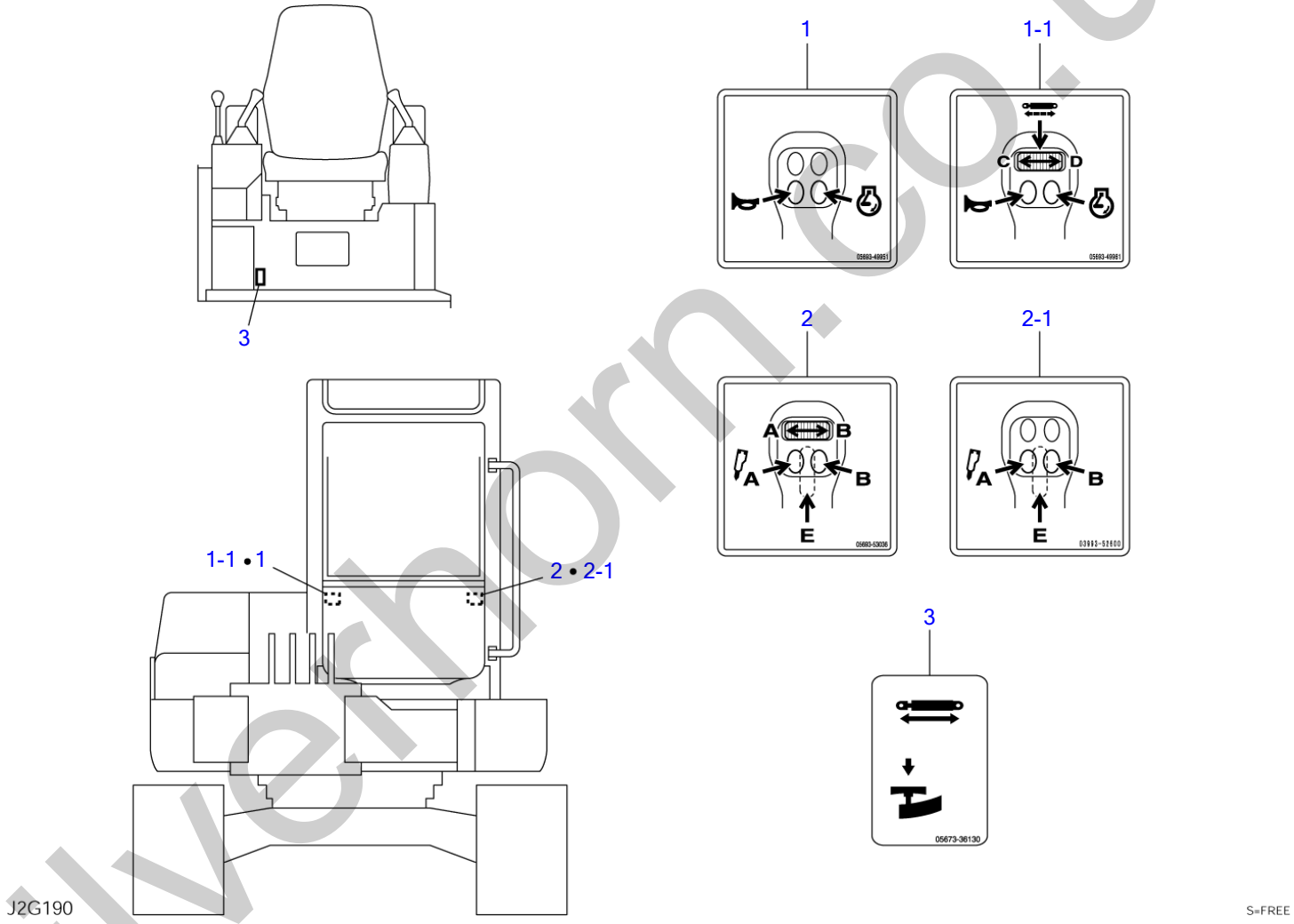

silverhorn.co.uk

DECAL (operation lever, cab)

Item	Part number	Description	Q'ty	Chan.	Serial No.	Serv.	Remarks
0	0399359200	DECAL SET (1st aux. proportion)	1				X03993-59200-0
	0399359300	DECAL SET (2nd aux. proportion)	1				X03993-59300-0
	0399359400	DECAL SET (1st & 2nd aux. proportion)	1				X03993-59400-0
	0399359500	DECAL SET (with 3rd aux. 2nd aux. proportion)	1				X03993-59500-0
	0399359600	DECAL SET (with 3rd aux. 1st & 2nd aux. proportion)	1				X03993-59600-0
1	0569349951	・DECAL	1				
1-1	0569349961	・DECAL	1				2nd aux. proportion
2	0569353036	・DECAL	1				1st aux. proportion
2-1	0399352600	・DECAL	1				
3	0567336130	・DECAL	1				with 3rd aux. lines
	J2g190						

silverhorn.co.uk

DECAL (operation lever, canopy)

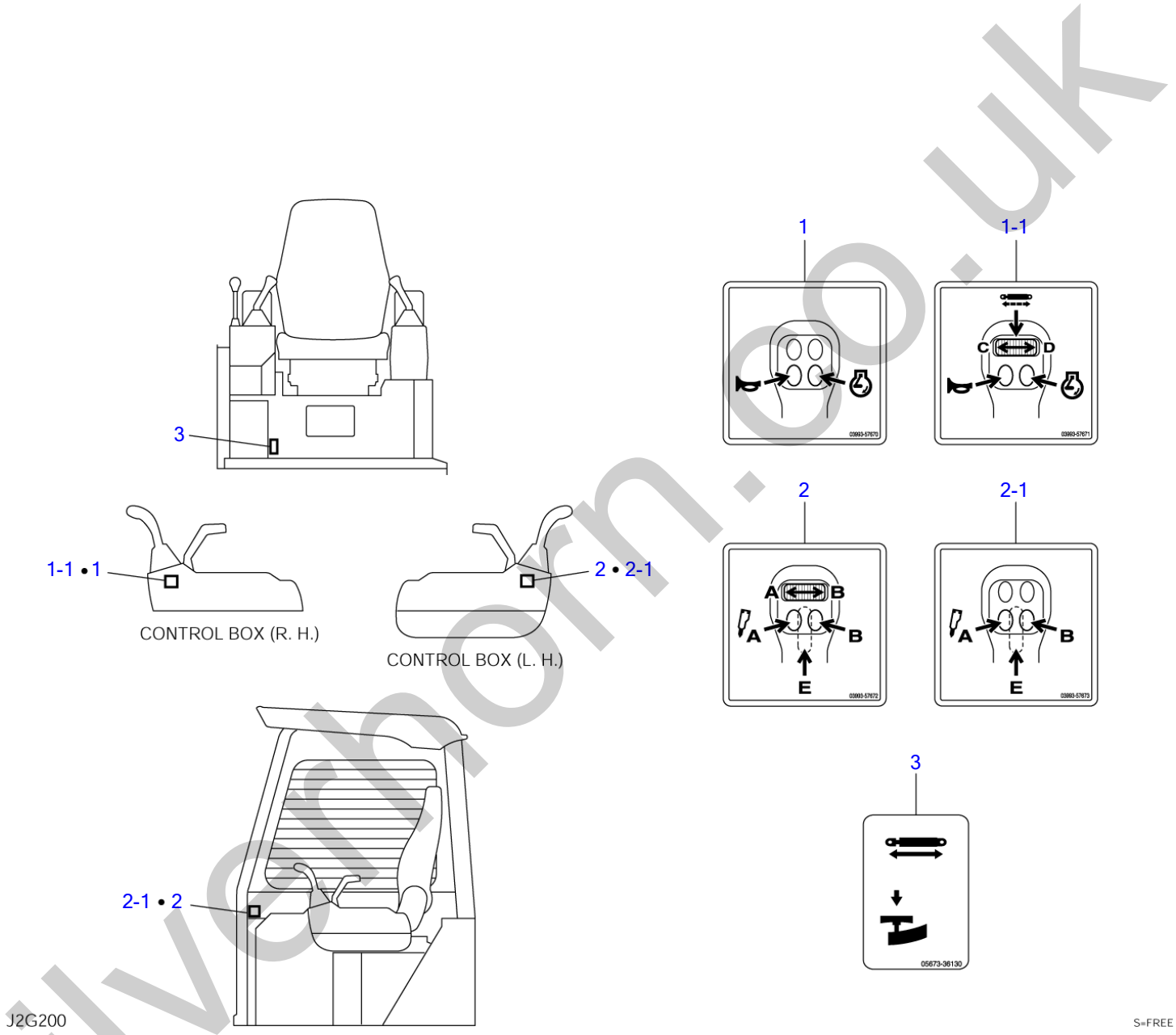

silverhorn.co.uk

DECAL (operation lever, canopy)

Item	Part number	Description	Q'ty	Chan.	Serial No.	Serv.	Remarks
0	0399360000	DECAL SET (1st aux. proportion)	1				X03993-60000-0
	0399360100	DECAL SET (2nd aux. proportion)	1				X03993-60100-0
	0399360200	DECAL SET (1st & 2nd aux. proportion)	1				X03993-60200-0
	0399360300	DECAL SET (with 3rd aux. 2nd aux. proportion)	1				X03993-60300-0
	0399360400	DECAL SET (with 3rd aux. 1st & 2nd aux. proportion)	1				X03993-60400-0
1	0399357670	・DECAL	1				
1-1	0399357671	・DECAL	1				2nd aux. proportion
2	0399357672	・DECAL	1				1st aux. proportion
2-1	0399357673	・DECAL	1				
3	0567336130	・DECAL	1				with 3rd aux. lines
	J2g200						

silverhorn.co.uk

DECAL (selecter valve, cab)

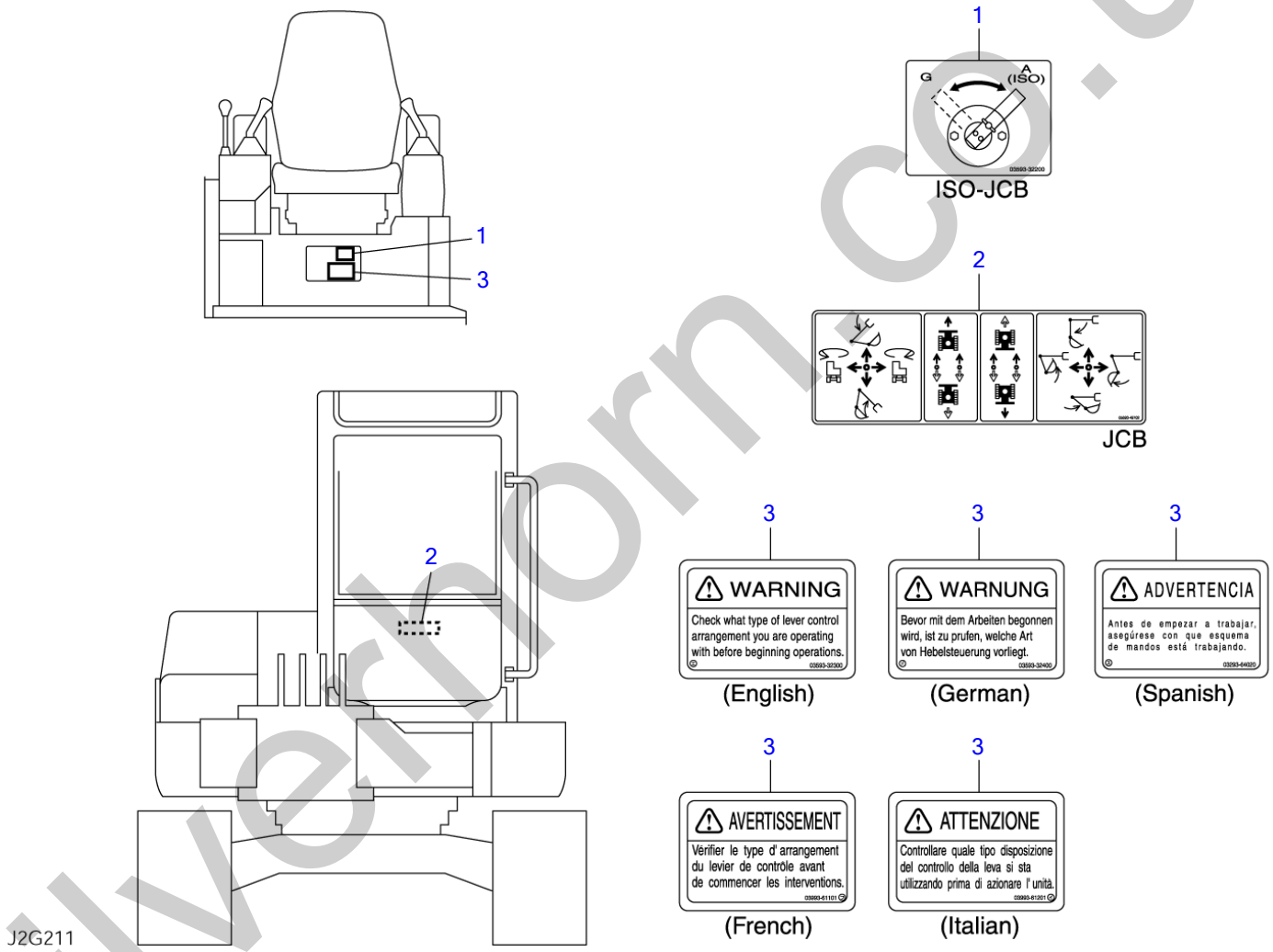

silverhorn.co.uk

DECAL (selecter valve, cab)

Item	Part number	Description	Q'ty	Chan.	Serial No.	Serv.	Remarks
0	0399358900	DECAL SET (English)	1				X03993-58900-1
	0399359000	DECAL SET (German)	1				X03993-59000-1
	0399359100	DECAL SET (Spanish)	1				X03993-59100-1
	0399361100	DECAL SET (French)	1				X03993-61100-1
	0399361200	DECAL SET (Italian)	1				X03993-61200-1
1	0359332200	・DECAL	1				ISO-JCB
2	0569349702	・DECAL	1				JCB
3	0359332300	・DECAL	1				English
	0359332400	・DECAL	1				German
	0329364020	・DECAL	1				Spanish
	0399361101	・DECAL	1				French
	0399361201	・DECAL	1				Italian
	J2g211						

silverhorn.co.uk

DECAL (selecter valve, canopy)

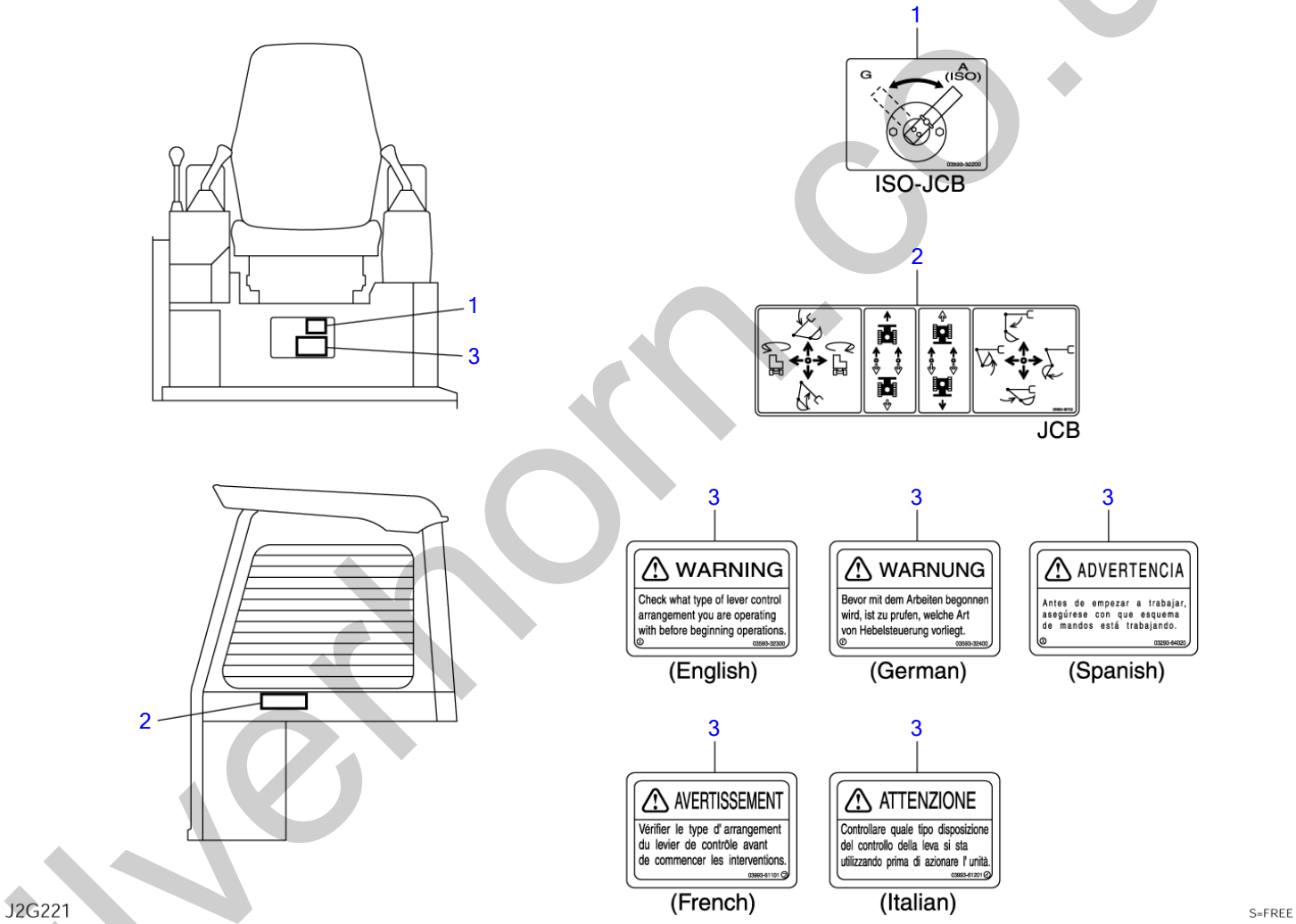

silvernorn.co.uk

DECAL (selecter valve, canopy)

Item	Part number	Description	Q'ty	Chan.	Serial No.	Serv.	Remarks
0	0399359700	DECAL SET (English)	1				X03993-59700-1
	0399359800	DECAL SET (German)	1				X03993-59800-1
	0399359900	DECAL SET (Spanish)	1				X03993-59900-1
	0399361400	DECAL SET (French)	1				X03993-61400-1
	0399361500	DECAL SET (Italian)	1				X03993-61500-1
1	0359332200	・DECAL	1				ISO-JCB
2	0569349702	・DECAL	1				JCB
3	0359332300	・DECAL	1				English
	0359332400	・DECAL	1				German
	0329364020	・DECAL	1				Spanish
	0399361101	・DECAL	1				French
	0399361201	・DECAL	1				Italian
	J2g221						

silverhorn.co.uk

TOOL & ACCESSORIES

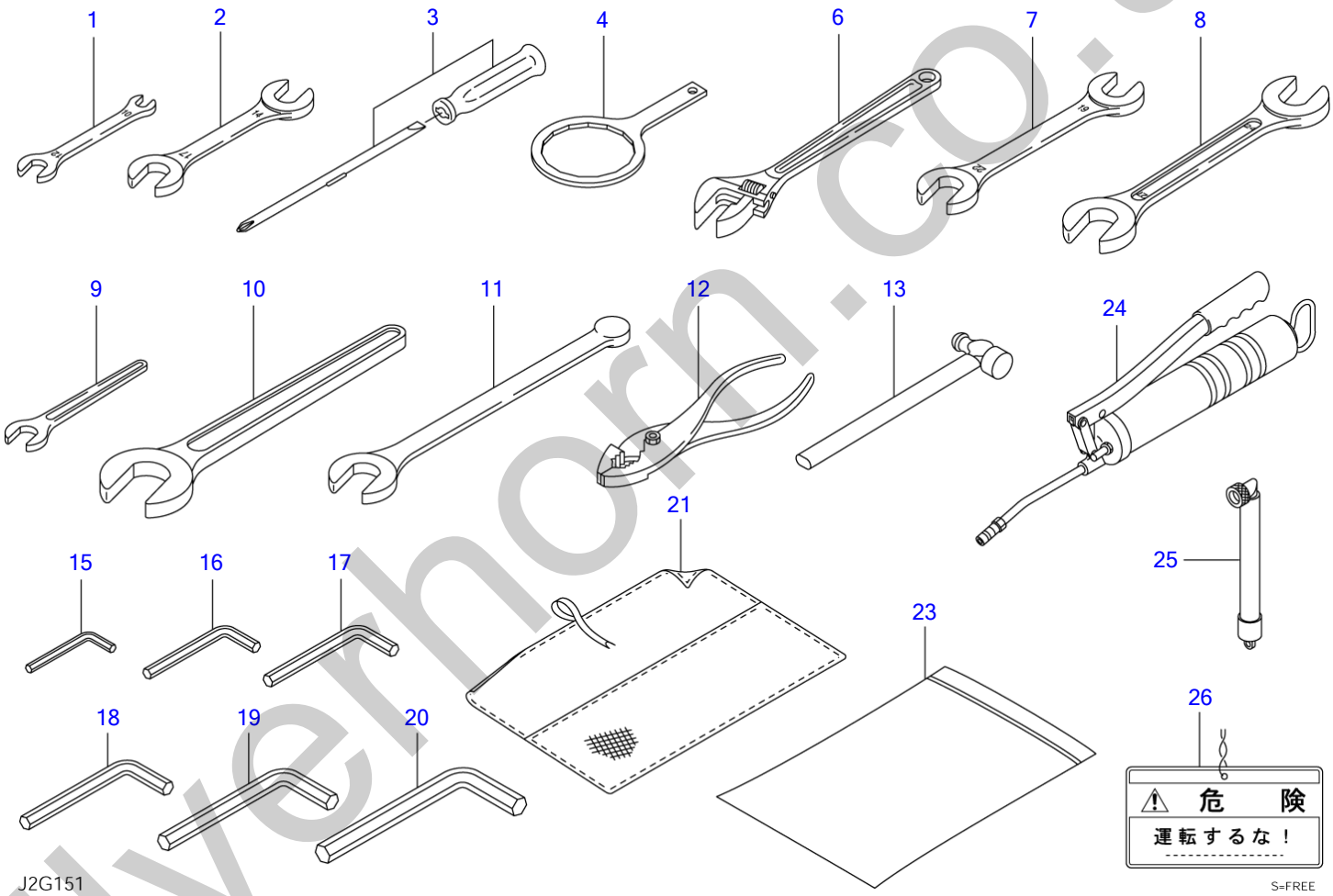

silverhorn.co.uk

TOOL & ACCESSORIES

Item	Part number	Description	Q'ty	Chan.	Serial No.	Serv.	Remarks
		TOOL ASSY (for Japan)					X03992-12000-1
		TOOL ASSY					X03992-12100-1
0	0379207010	TOOL ASSY	1				
1	1910047081	・SPANNER	1				Y28110-100120
2	1910047082	・SPANNER	1				Y28110-140170
3	1910006112	・SCREWDRIVER	1				Y104200-92350
4	1910065081	・WRENCH, filter	1				Y119640-92750
6	1690400250	・WRENCH, monkey	1				
7	1690001922	・SPANNER	1				
8	1690002427	・SPANNER	1				
9	1690100013	・SPANNER	1				
10	1690100041	・SPANNER	1				
11	1690900026	・SPANNER	1				
12	1690500200	・PLIER	1				
13	1690300330	・HAMMER	1				
15	1690600400	・WRENCH, hex.	1				
16	1690600500	・WRENCH, hex.	1				
17	1690600600	・WRENCH, hex.	1				
18	1690600800	・WRENCH, hex.	1				
19	1690601000	・WRENCH, hex.	1				
20	1690601400	・WRENCH, hex.	1				
21	1691400001	・CASE, tool	1				
23	1691900001	・CASE	1				
24	1691060610	GUN, grease	1				
	1691010800	GUN, grease	1				for Japan
25	1554512601	TUBE	1				for EU
26	0359325160	PLATE	1				for Japan
	J2g151						

silverhorn.co.uk

PAINTED COLOR

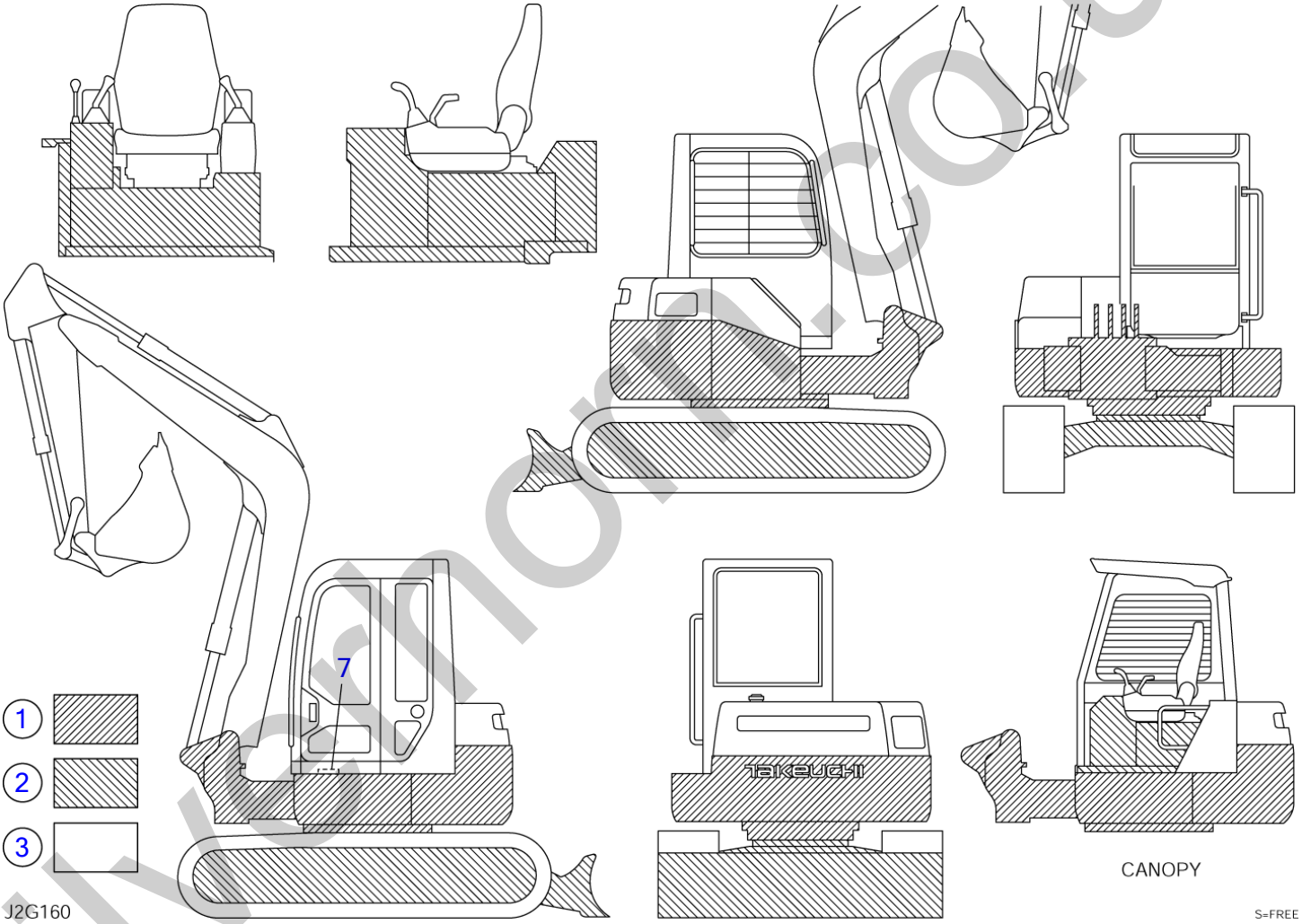

silvermoor.co.uk

PAINTED COLOR

Item	Part number	Description	Q'ty	Chan.	Serial No.	Serv.	Remarks
		PAINTED COLOR (cab, rubber crawler)					X03991-09600-0
		PAINTED COLOR (canopy, rubber crawler)					X03991-09700-0
		PAINTED COLOR (cab, steel crawler)					X03991-09800-0
		PAINTED COLOR (canopy, steel crawler)					X03991-09900-0
1	1919060105	RED					
	1919069105	RED					spray
2	1919060208	GRAY					
	1919069208	GRAY					spray
3	1919060207	LIGHT GRAY					
	1919069207	LIGHT GRAY					spray
7	1919060175	YELLOW					
	1919069175	YELLOW					spray
		<<NOTE>>					
		The part of the steel carawler uses item 2.					
	J2g160						

silverhorn.co.uk

SWIVEL JOINT

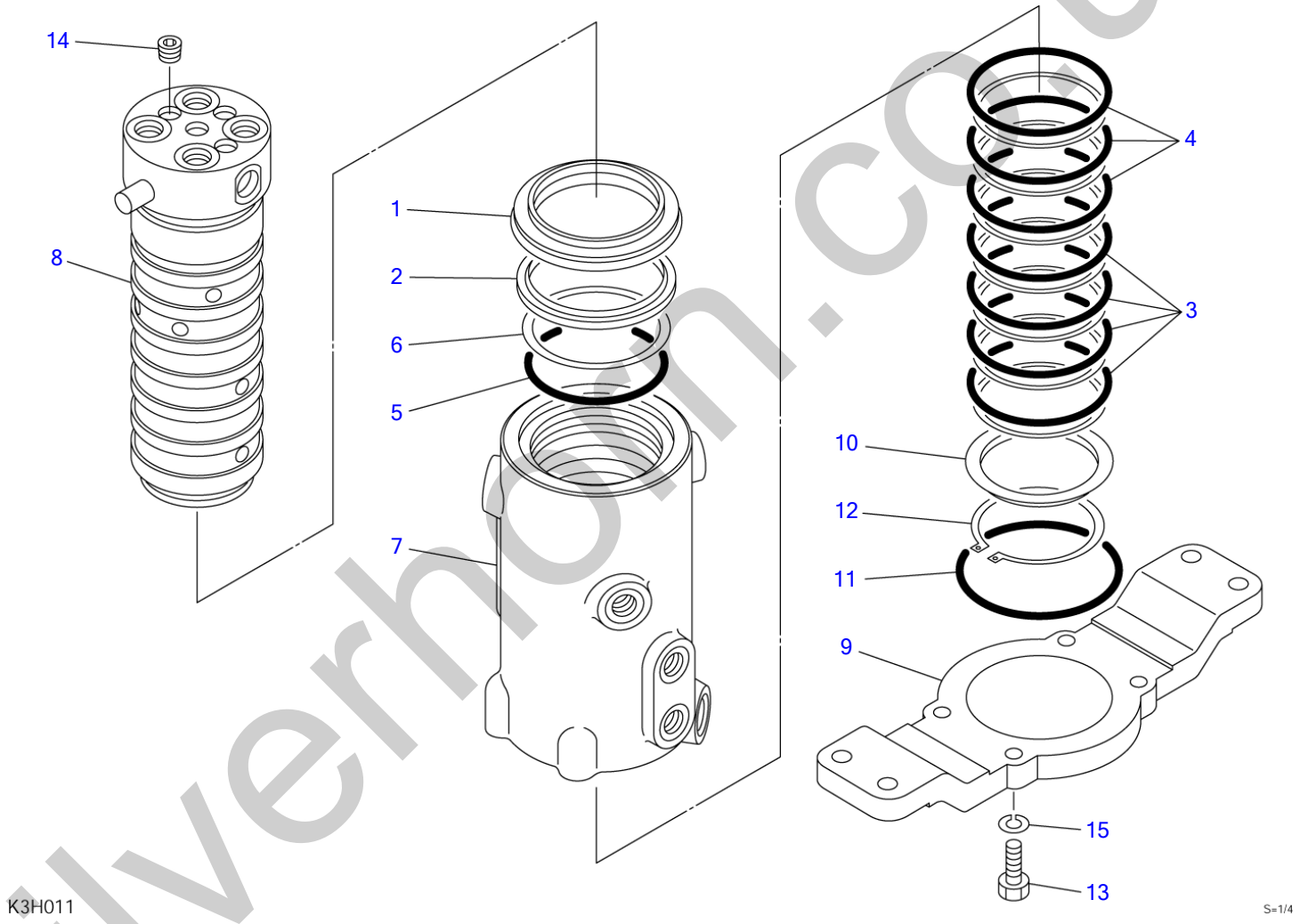

silverhorn.co.uk

SWIVEL JOINT

Item	Part number		Description	Q'ty	Chan.	Serial No.	Serv.	Remarks
0		1904006300	JOINT, swivel	1				
0-1		1904006399	・KIT, seal	1				
1	X	1904002391	・・SEAL, dust	1				
2	X	1904000494	・・SEAL, dust	1				
3	X	1904006316	・・SEAL, slipper	4				
4	X	1904006317	・・SEAL, slipper	3				
5	X	1420010800	・・O-RING	1				
6	X	1421030800	・・RING, back-up	1				
7		1904006301	・HUB	1				
8		1904006311	・SHAFT	1				
9		1904003621	・FRANGE	1				
10		1904003691	・SPACER	1				
11		1420110950	・O-RING	1				
12		1220000072	・RING, snap	1				
13		1100041030	・BOLT	4				
14		1501810002	・PLUG	3				
15		1140010010	・WASHER, spring	4				
		K3h012						

silverhorn.co.uk

CONTROL VALVE

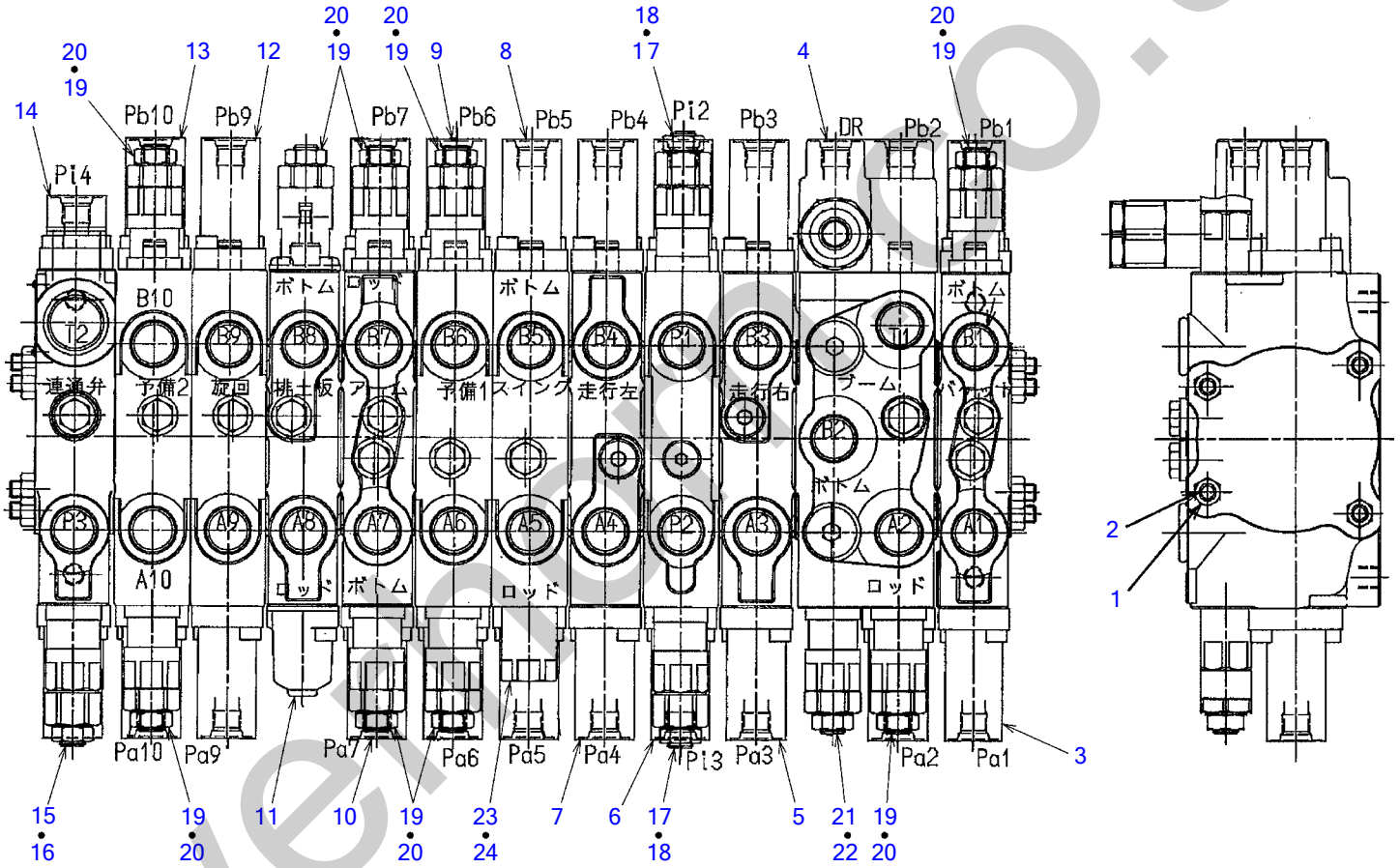

silverengineering.co.uk

CONTROL VALVE

Item	Part number	Description	Q'ty	Chan.	Serial No.	Serv.	Remarks
0	1901043200	VALVE ASSY, control	1				
	1901043300	VALVE ASSY, control	1				with 2nd aux. lines
1	1130050008	・NUT	6				
2	1901043207	・ROD, tie	3				
	1901043307	・ROD, tie	3				with 2nd aux. lines
3	1901043213	・BLOCK ASSY; No.1	1				bucket
4	1901043211	・BLOCK ASSY; No.2	1				boom
5	1901043215	・BLOCK ASSY; No.3	1				traction R.H.
6	1901043203	・BLOCK ASSY; No.4	1				P1, P2
7	1901043216	・BLOCK ASSY; No.5	1				traction L.H.
8	1901043218	・BLOCK ASSY; No.6	1				swing
9	1901043219	・BLOCK ASSY; No.7	1				auxiliary 1
10	1901043212	・BLOCK ASSY; No.8	1				arm
11	1901043217	・BLOCK ASSY; No.9	1				blade
12	1901043214	・BLOCK ASSY; No.10	1				slew
13	1901043319	・BLOCK ASSY; No.11 (with 2nd aux. lines)	1				auxiliary 2
14	1901043220	・BLOCK ASSY; No.12	1				
15	1901043221	・VALVE ASSY	1				relief
16	1420310910	・・O-RING	1				
17	1901042322	・VALVE ASSY	2				relief
18	1420310910	・・O-RING	1				
19	1901043021	・VALVE ASSY	7				over load
	1901043021	・VALVE ASSY (with 2nd aux. lines)	9				over load
20	1420310910	・・O-RING	1				
21	1901043022	・VALVE ASSY	1				over load
22	1420310910	・・O-RING	1				
23	1901042625	・VALVE ASSY	1				antivoid
24	1420310910	・・O-RING	1				
	J2h010						

silverhorn.co.uk

BLOCK ASSY; No. 1

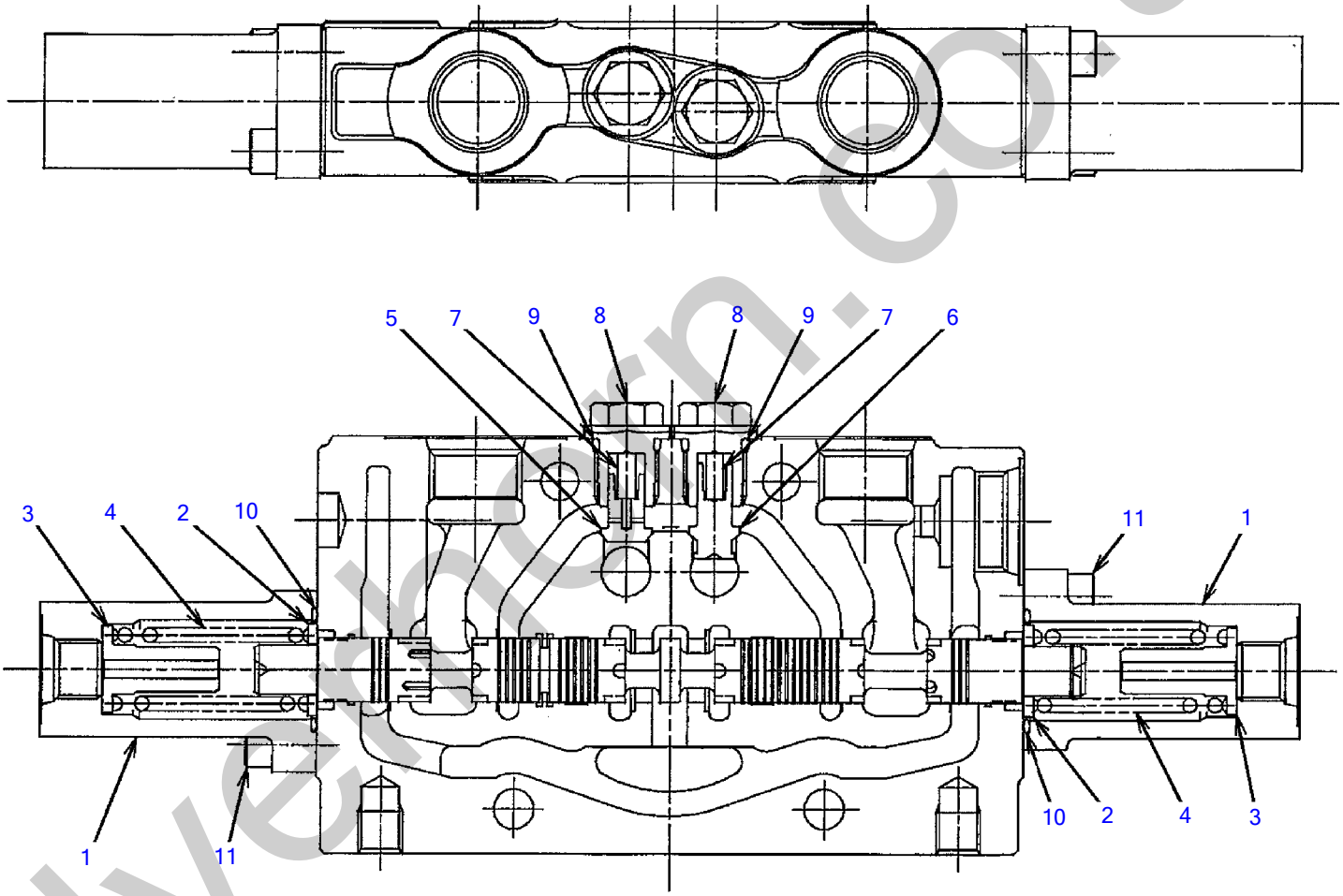

silverthern.co.uk

BLOCK ASSY; No. 1

Item	Part number	Description	Q'ty	Chan.	Serial No.	Serv.	Remarks
0	1901043213	BLOCK ASSY; No.1	1				bucket
1	1901043266	・CAP	2				
2	1901029754	・HOLDER, spring	2				
3	1901043231	・HOLDER, spring	2				
4	1901043256	・SPRING	2				
5	1901043226	・PLUNGER	1				
6	1901043227	・PLUNGER	1				
7	1901043257	・SPRING	2				
8	1901043271	・PLUG	2				
9	1901043282	・O-RING	2				
10	1420500240	・O-RING	2				
11	1110020618	・SCREW, cap	4				
	J2h030						

silverhorn.co.uk

BLOCK ASSY; No. 2

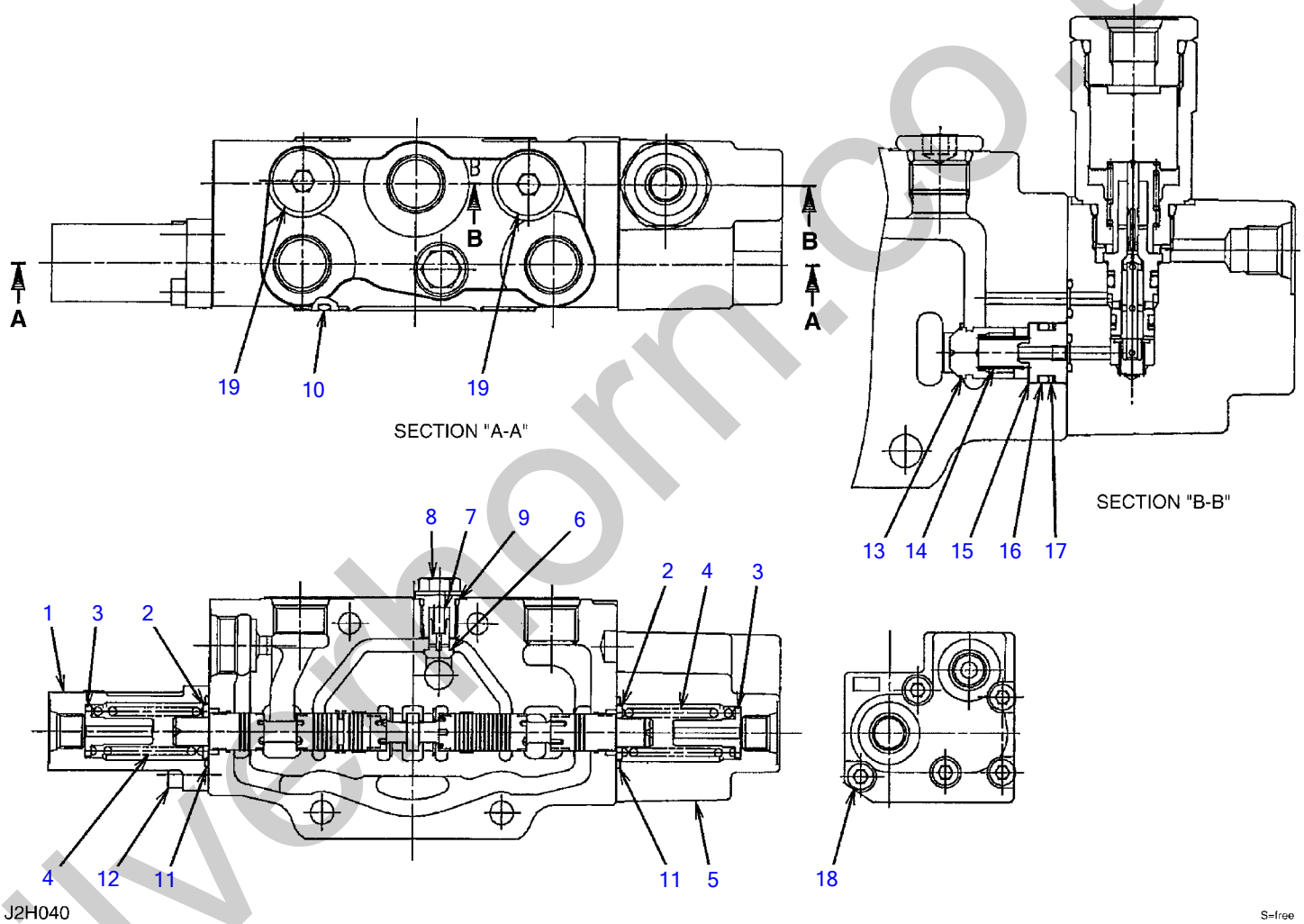

silverthorn.co.uk

BLOCK ASSY; No. 2

Item	Part number	Description	Q'ty	Chan.	Serial No.	Serv.	Remarks
0	1901043211	BLOCK ASSY; No.2	1				boom
1	1901043266	・CAP	1				
2	1901029754	・HOLDER, spring	2				
3	1901043231	・HOLDER, spring	2				
4	1901043256	・SPRING	2				
5	1901043228	・VALVE ASSY	1				
6	1901043226	・PLUNGER	1				
7	1901043257	・SPRING	1				
8	1901043271	・PLUG	1				
9	1901043282	・O-RING	1				
10	1420500700	・O-RING	1				
11	1420500240	・O-RING	2				
12	1110020618	・SCREW, cap	2				
13	1901043229	・PLUNGER	1				
14	1901043258	・SPRING	1				
15	1901036641	・SPACER	1				
16	1420000125	・O-RING	1				
17	1421020125	・RING, back-up	1				
18	1110020650	・SCREW, cap	5				
19	1901036678	・PLUG	2				
	J2h041						

silverhorn.co.uk

BLOCK ASSY; No. 3

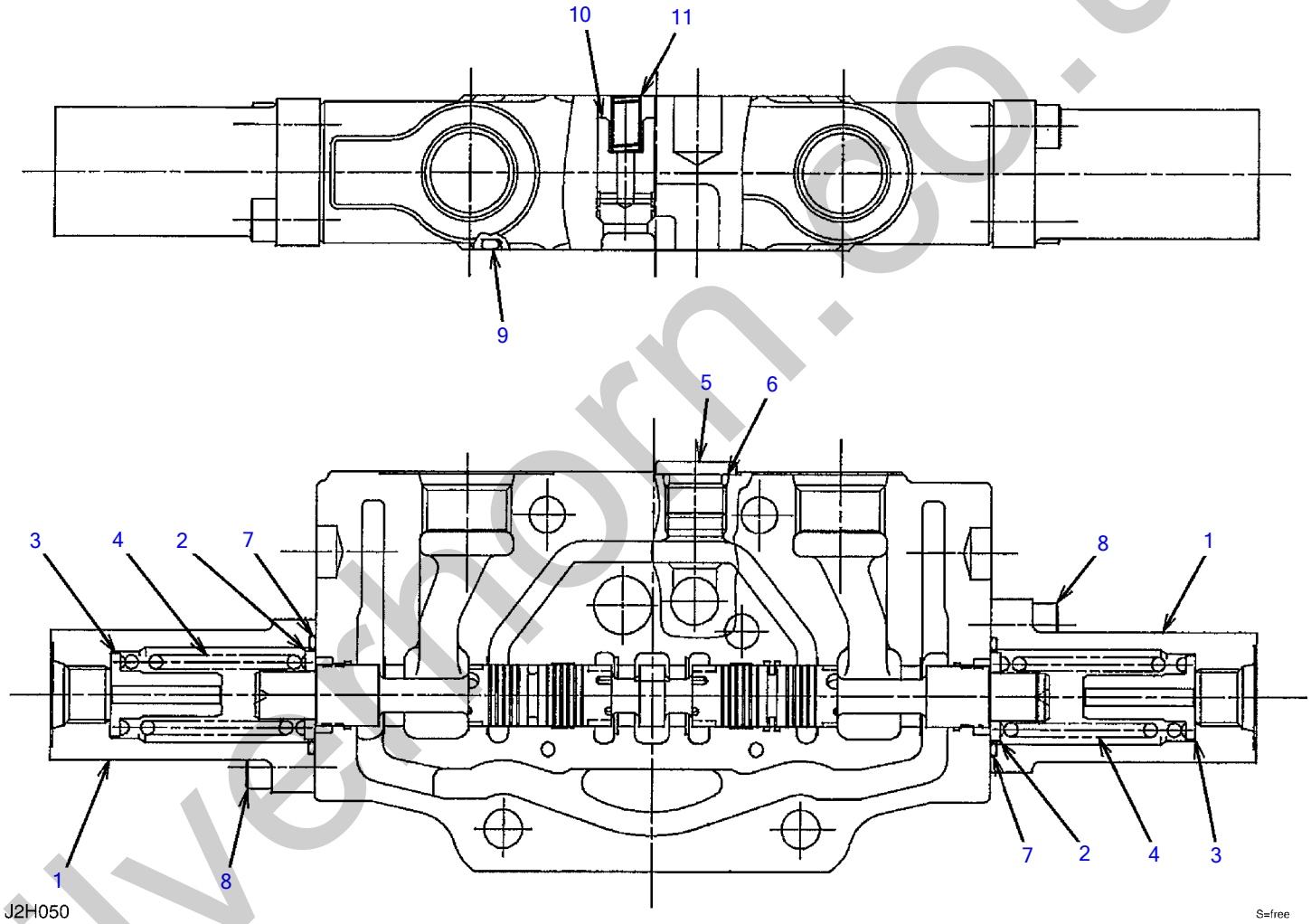

silverthorn.co.uk

BLOCK ASSY; No. 3

Item	Part number	Description	Q'ty	Chan.	Serial No.	Serv.	Remarks
0	1901043215	BLOCK ASSY; No.3	1				traction R.H.
1	1901043266	・CAP	2				
2	1901029754	・HOLDER, spring	2				
3	1901043231	・HOLDER, spring	2				
4	1901043256	・SPRING	2				
5	1901043271	・PLUG	1				
6	1901043282	・O-RING	1				
7	1420500240	・O-RING	2				
8	1110020618	・SCREW, cap	4				
9	1420100700	・O-RING	1				
10	1901036528	・PLUNGER	1				
11	1901034239	・SPRING	1				
	J2h051						

silverhorn.co.uk

BLOCK ASSY; No. 4

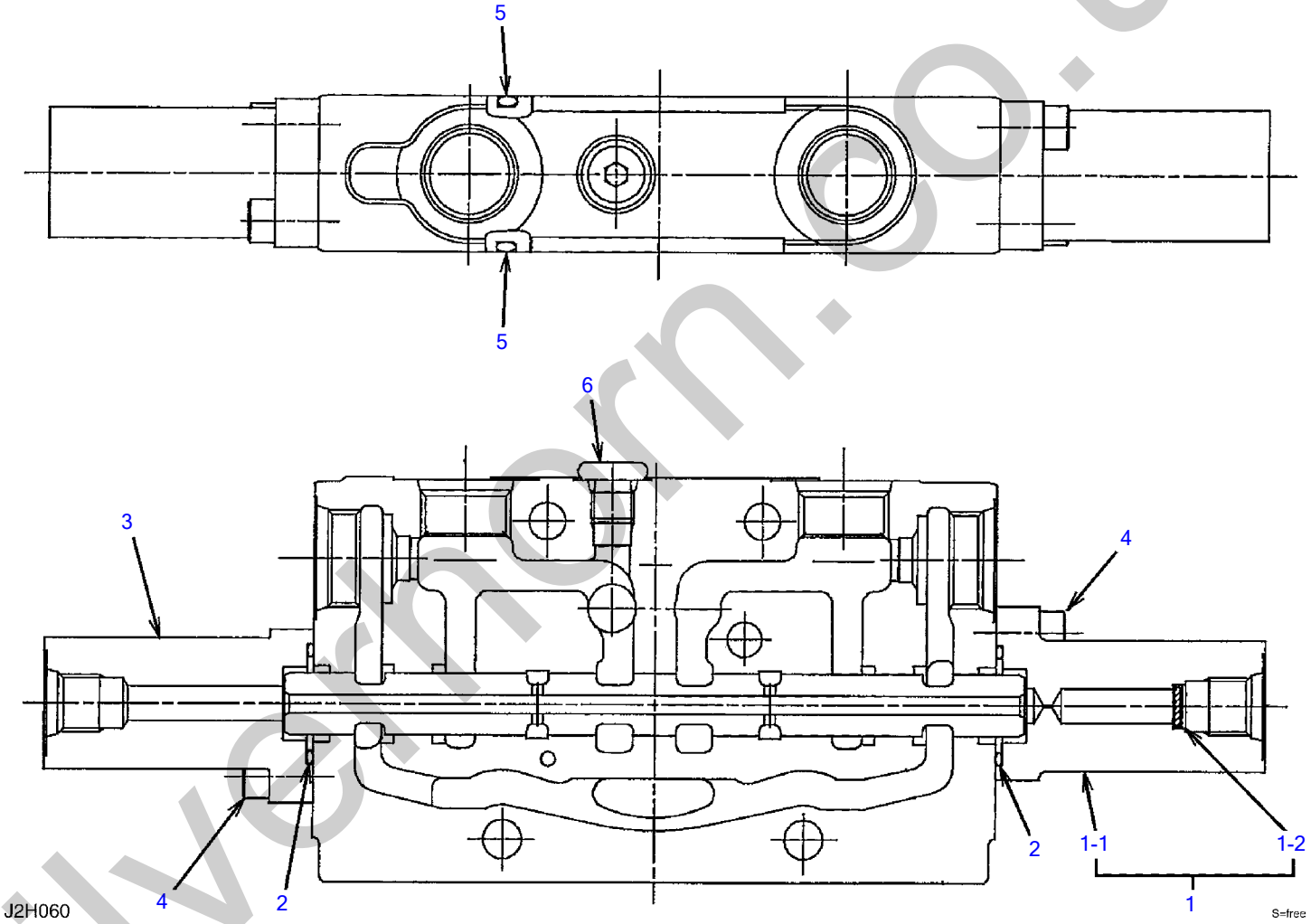

silvermorn.co.uk

BLOCK ASSY; No. 4

Item		Part number	Description	Q'ty	Chan.	Serial No.	Serv.	Remarks
0		1901043203	BLOCK ASSY; No.4	1				P1, P2
1		1901043298	・CAP ASSY	1				
1-1	X	**********	・・CAP	1				X19010-43268
1-2	X	**********	・・FILTER	1				X19010-43283
2		1420500240	・O-RING	2				
3		1901043267	・CAP	1				
4		1110020618	・SCREW, cap	4				
5		1420100700	・O-RING	2				
6		1901036677	・PLUG	1				
		J2h061						

silverhorn.co.uk

BLOCK ASSY; No. 5

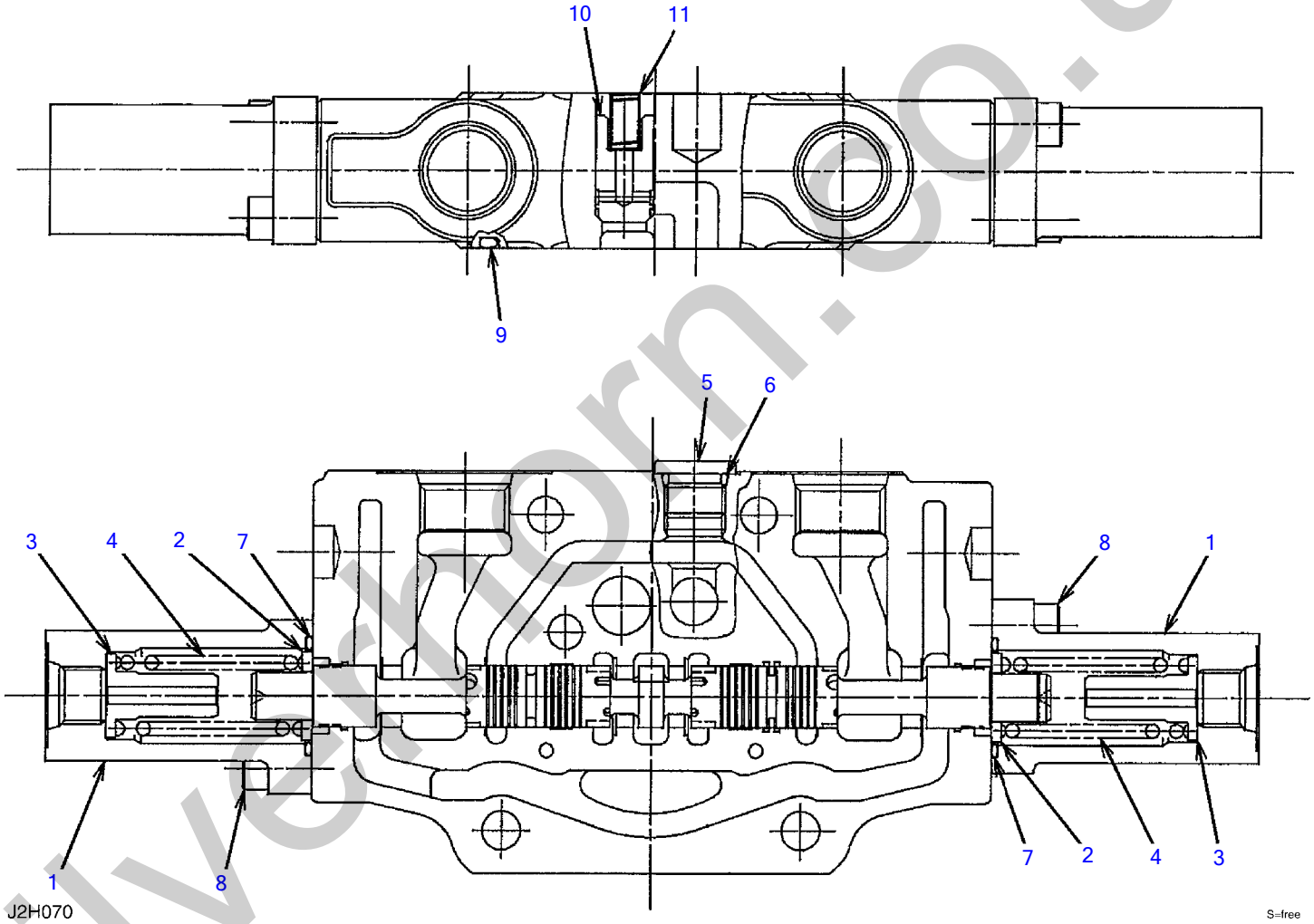

silverhorn.co.uk

BLOCK ASSY; No. 5

Item	Part number	Description	Q'ty	Chan.	Serial No.	Serv.	Remarks
0	1901043216	BLOCK ASSY; No.5	1				traction L.H.
1	1901043266	・CAP	2				
2	1901029754	・HOLDER, spring	2				
3	1901043231	・HOLDER, spring	2				
4	1901043256	・SPRING	2				
5	1901043271	・PLUG	1				
6	1901043282	・O-RING	1				
7	1420500240	・O-RING	2				
8	1110020618	・SCREW, cap	4				
9	1420100700	・O-RING	1				
10	1901036528	・PLUNGER	1				
11	1901034239	・SPRING	1				
	J2h071						

silverhorn.co.uk

BLOCK ASSY; No. 6

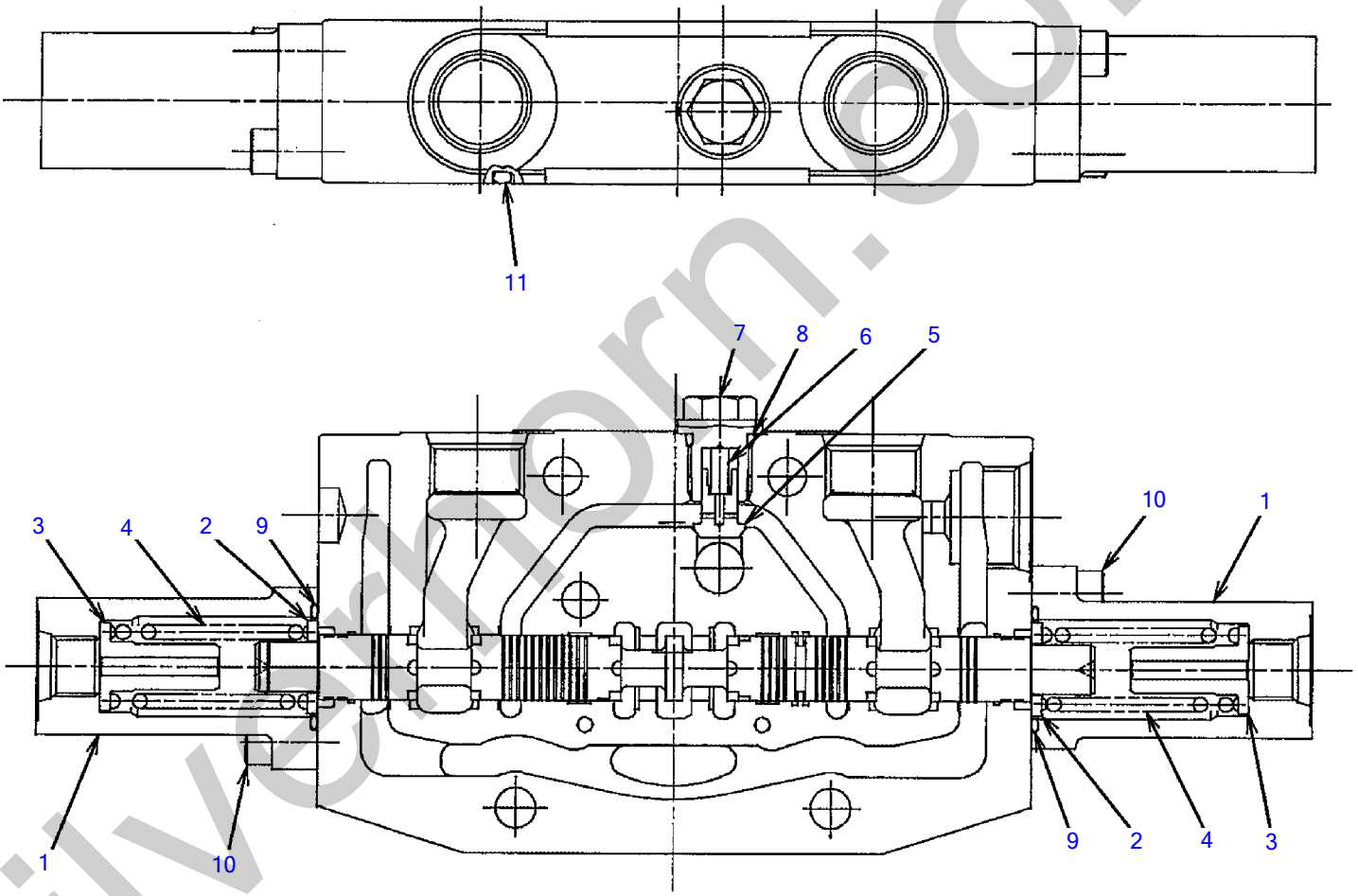

J2H080

S=free

silverthorn.co.uk

BLOCK ASSY; No. 6

Item	Part number	Description	Q'ty	Chan.	Serial No.	Serv.	Remarks
0	1901043218	BLOCK ASSY; No.6	1				swing
1	1901043266	・CAP	2				
2	1901029754	・HOLDER, spring	2				
3	1901043231	・HOLDER, spring	2				
4	1901043256	・SPRING	2				
5	1901043226	・PLUNGER	1				
6	1901043257	・SPRING	1				
7	1901043271	・PLUG	1				
8	1901043282	・O-RING	1				
9	1420500240	・O-RING	2				
10	1110020618	・SCREW, cap	4				
11	1420100700	・O-RING	1				
	J2h081						

silverhorn.co.uk

BLOCK ASSY; No. 7

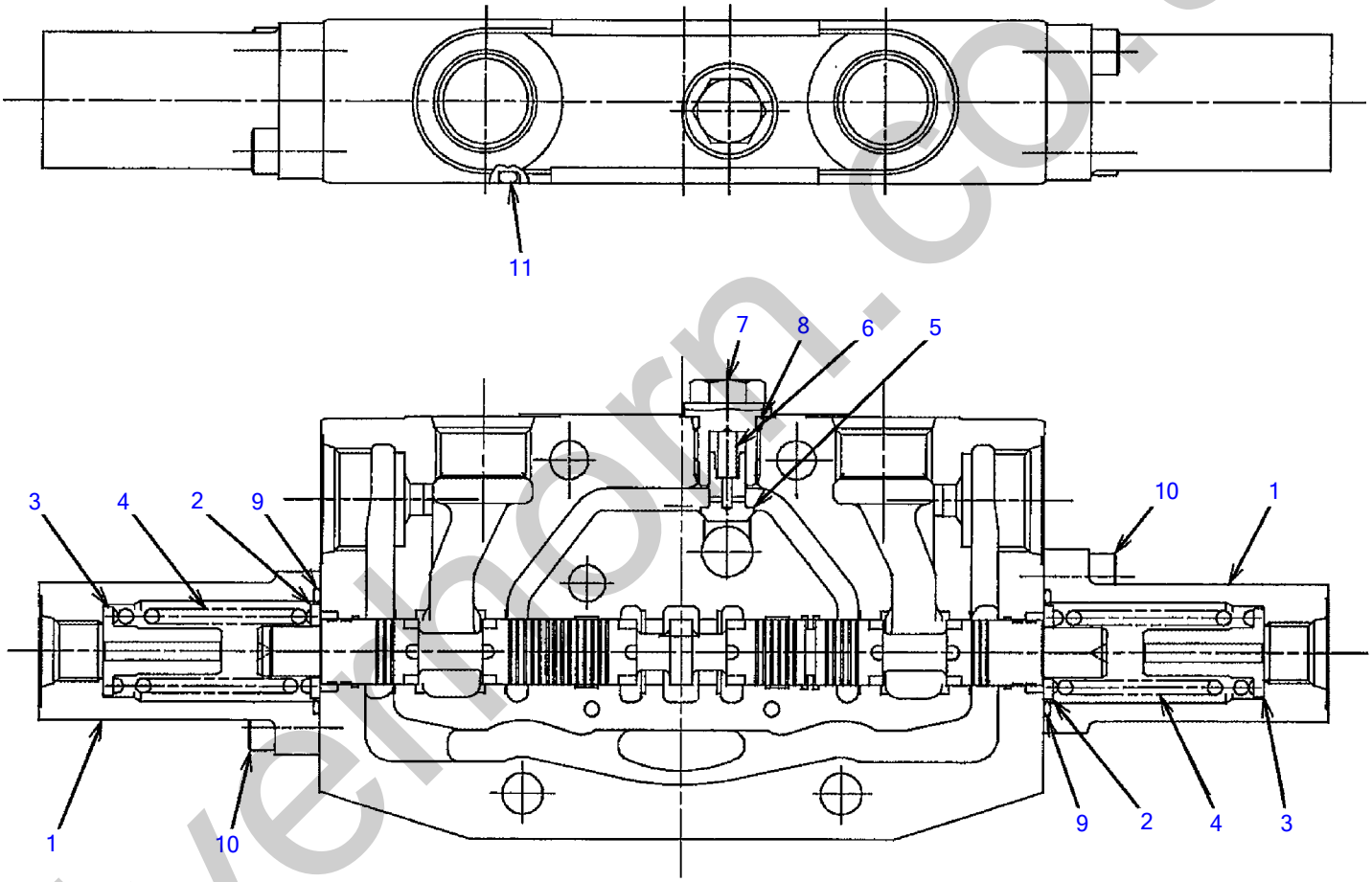

J2H090

S=free

silverthorn.co.uk

BLOCK ASSY; No. 7

Item	Part number	Description	Q'ty	Chan.	Serial No.	Serv.	Remarks
0	1901043219	BLOCK ASSY; No.7	1				auxiliary 1
1	1901043266	・CAP	2				
2	1901029754	・HOLDER, spring	2				
3	1901043231	・HOLDER, spring	2				
4	1901043256	・SPRING	2				
5	1901043226	・PLUNGER	1				
6	1901043257	・SPRING	1				
7	1901043271	・PLUG	1				
8	1901043282	・O-RING	1				
9	1420500240	・O-RING	2				
10	1110020618	・SCREW, cap	4				
11	1420100700	・O-RING	1				
	J2h091						

silverhorn.co.uk

BLOCK ASSY; No. 8

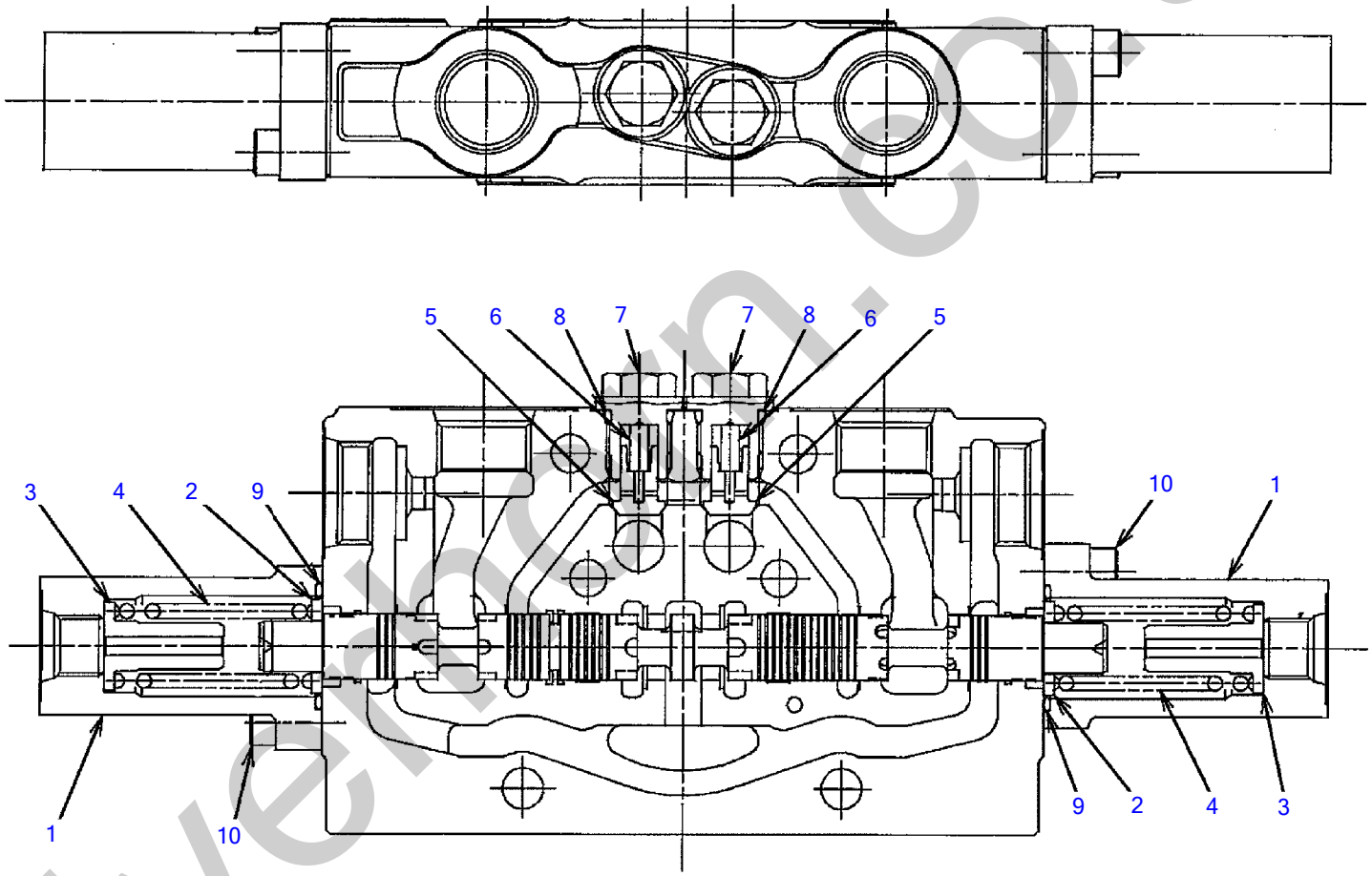

J2H100

S=free

silverthorn.co.uk

BLOCK ASSY; No. 8

Item	Part number	Description	Q'ty	Chan.	Serial No.	Serv.	Remarks
0	1901043212	BLOCK ASSY; No.8	1				arm
1	1901043266	・CAP	2				
2	1901029754	・HOLDER, spring	2				
3	1901043231	・HOLDER, spring	2				
4	1901043256	・SPRING	2				
5	1901043226	・PLUNGER	2				
6	1901043257	・SPRING	2				
7	1901043271	・PLUG	2				
8	1901043282	・O-RING	2				
9	1420500240	・O-RING	2				
10	1110020618	・SCREW, cap	4				
	J2h100						

silverhorn.co.uk

BLOCK ASSY; No. 9

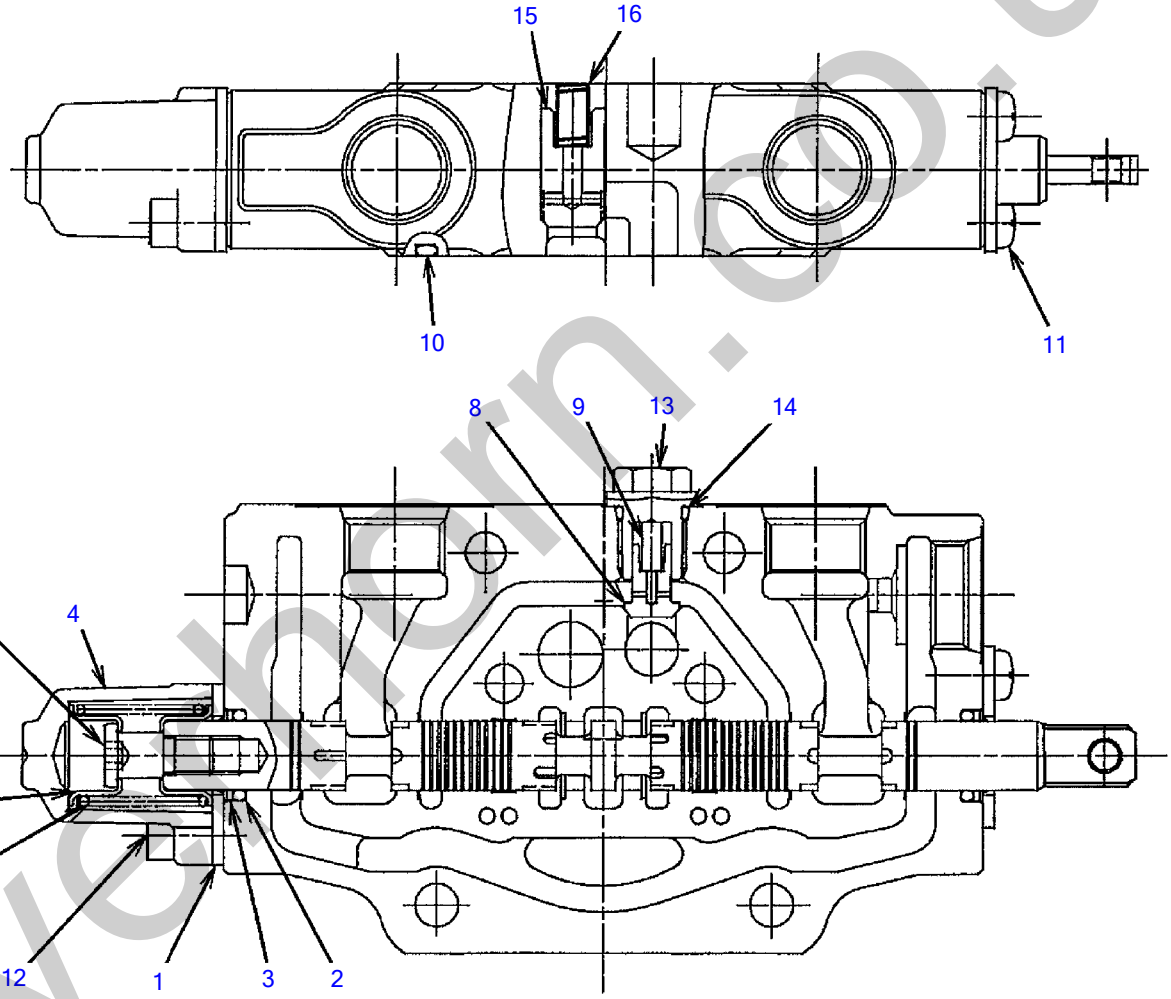

J2H110

S=free

silvermorn.co.uk

BLOCK ASSY; No. 9

Item	Part number	Description	Q'ty	Chan.	Serial No.	Serv.	Remarks
0	1901043217	BLOCK ASSY; No.9	1				blade
1	1901025483	・PLATE, seal	2				
2	1901025484	・O-RING	2				
3	1901025485	・SEAL	2				
4	1901043269	・CAP	1				
5	1901025453	・HOLDER, spring	2				
6	1901043232	・SCREW, cap	1				
7	1901025457	・SPRING	1				
8	1901043226	・PLUNGER	1				
9	1901043257	・SPRING	1				
10	1420100700	・O-RING	1				
11	1120540610	・SCREW	2				
12	1110020618	・SCREW, cap	2				
13	1901043271	・PLUG	1				
14	1901043282	・O-RING	1				
15	1901036528	・PLUNGER	1				
16	1901034239	・SPRING	1				
	J2h111						

silverhorn.co.uk

BLOCK ASSY; No. 10

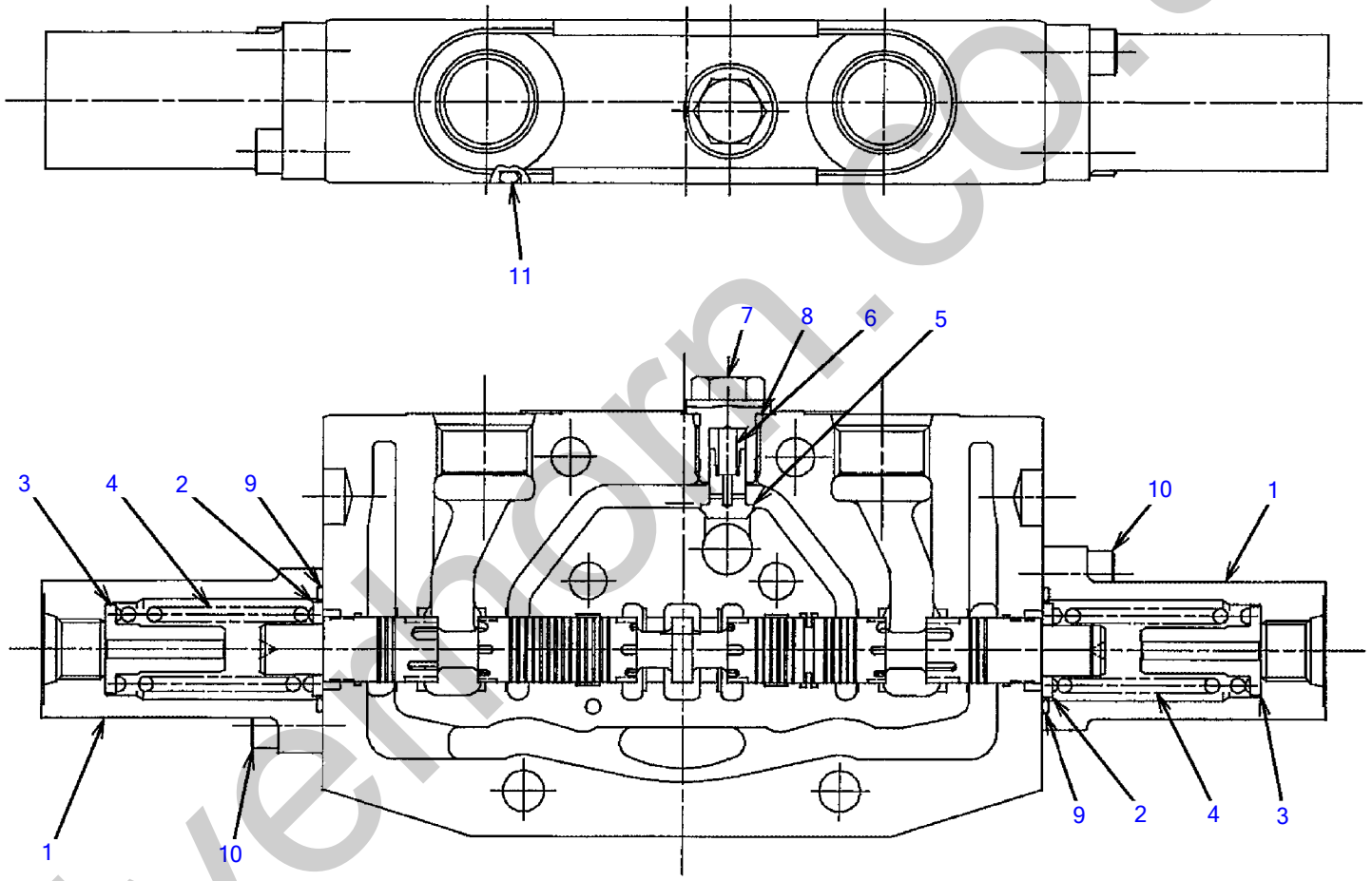

J2H120

S=free

silverthorn.co.uk

BLOCK ASSY; No. 10

Item	Part number	Description	Q'ty	Chan.	Serial No.	Serv.	Remarks
0	1901043214	BLOCK ASSY; No.10	1				slew
1	1901043266	・CAP	2				
2	1901029754	・HOLDER, spring	2				
3	1901043231	・HOLDER, spring	2				
4	1901043256	・SPRING	2				
5	1901043226	・PLUNGER	1				
6	1901043257	・SPRING	1				
7	1901043271	・PLUG	1				
8	1901043282	・O-RING	1				
9	1420500240	・O-RING	2				
10	1110020618	・SCREW, cap	4				
11	1420100700	・O-RING	1				
	J2h121						

silverhorn.co.uk

BLOCK ASSY; No. 11 (with 2nd aux. lines)

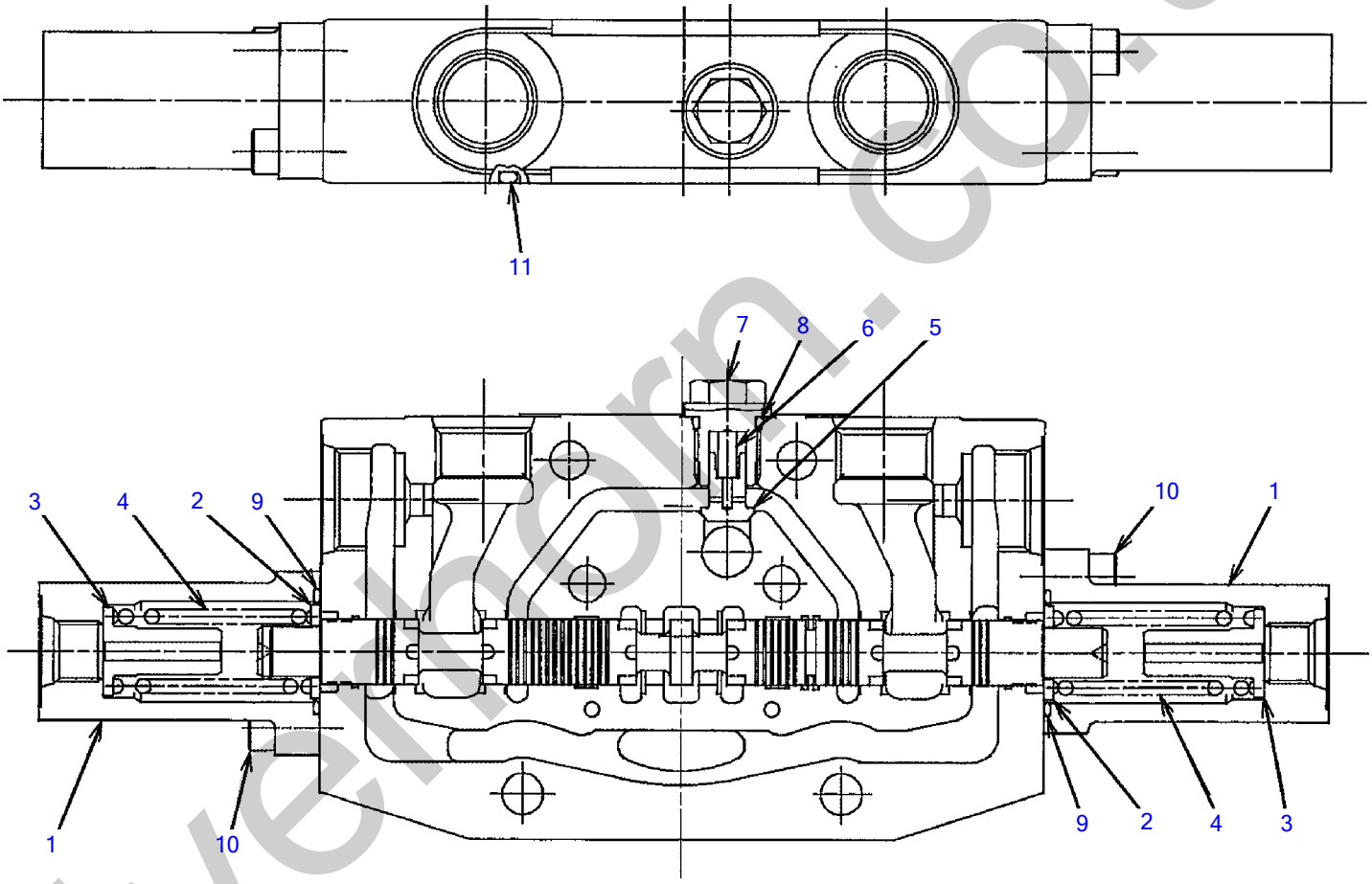

J2H130

S=free

silverthorn.co.uk

BLOCK ASSY; No. 11 (with 2nd aux. lines)

Item	Part number	Description	Q'ty	Chan.	Serial No.	Serv.	Remarks
0	**1901043319**	BLOCK ASSY; No.11	1				auxiliary 2
1	**1901043266**	・CAP	2				
2	**1901029754**	・HOLDER, spring	2				
3	**1901043231**	・HOLDER, spring	2				
4	**1901043256**	・SPRING	2				
5	**1901043226**	・PLUNGER	1				
6	**1901043257**	・SPRING	1				
7	**1901043271**	・PLUG	1				
8	**1901043282**	・O-RING	1				
9	**1420500240**	・O-RING	2				
10	**1110020618**	・SCREW, cap	4				
11	**1420100700**	・O-RING	1				
	J2h131						

silverhorn.co.uk

BLOCK ASSY; No. 12

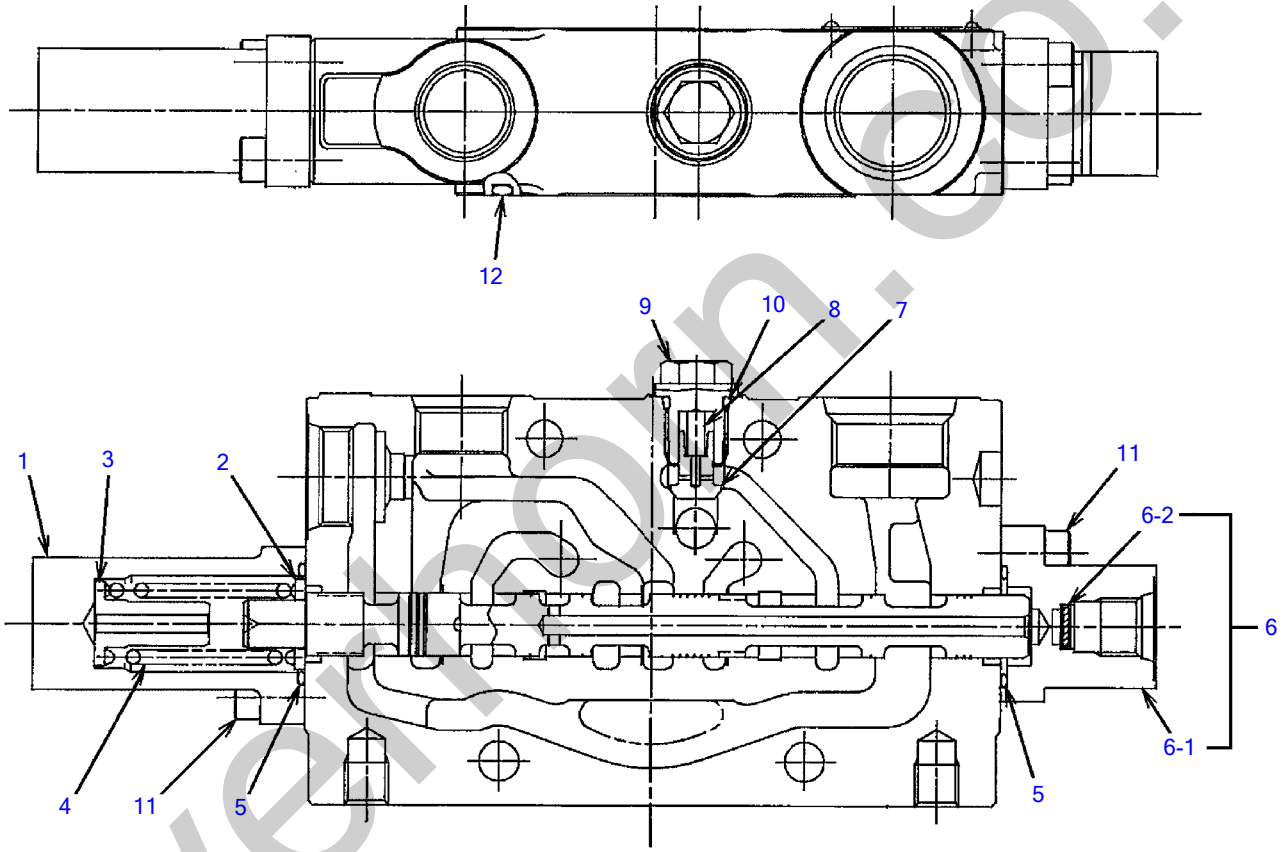

00

J2H140

S=free

silverthorn.co.uk

BLOCK ASSY; No. 12

Item	Part number	Description	Q'ty	Chan.	Serial No.	Serv.	Remarks
0	1901043220	BLOCK ASSY; No.12	1				
1	1901043270	・CAP	1				
2	1901029754	・HOLDER, spring	1				
3	1901043231	・HOLDER, spring	1				
4	1901043259	・SPRING	1				
5	1420500240	・O-RING	2				
6	1901043297	・CAP ASSY	1				
6-1	X **********	・・CAP	1				X19010-43265
6-2	X **********	・・FILTER	1				X19010-43283
7	1901043226	・PLUNGER	1				
8	1901043257	・SPRING	1				
9	1901043271	・PLUG	1				
10	1901043282	・O-RING	1				
11	1110020618	・SCREW, cap	4				
12	1420100700	・O-RING	1				
	J2h141						

silverhorn.co.uk

SOLENOID VALVE; 3 BLOCKS

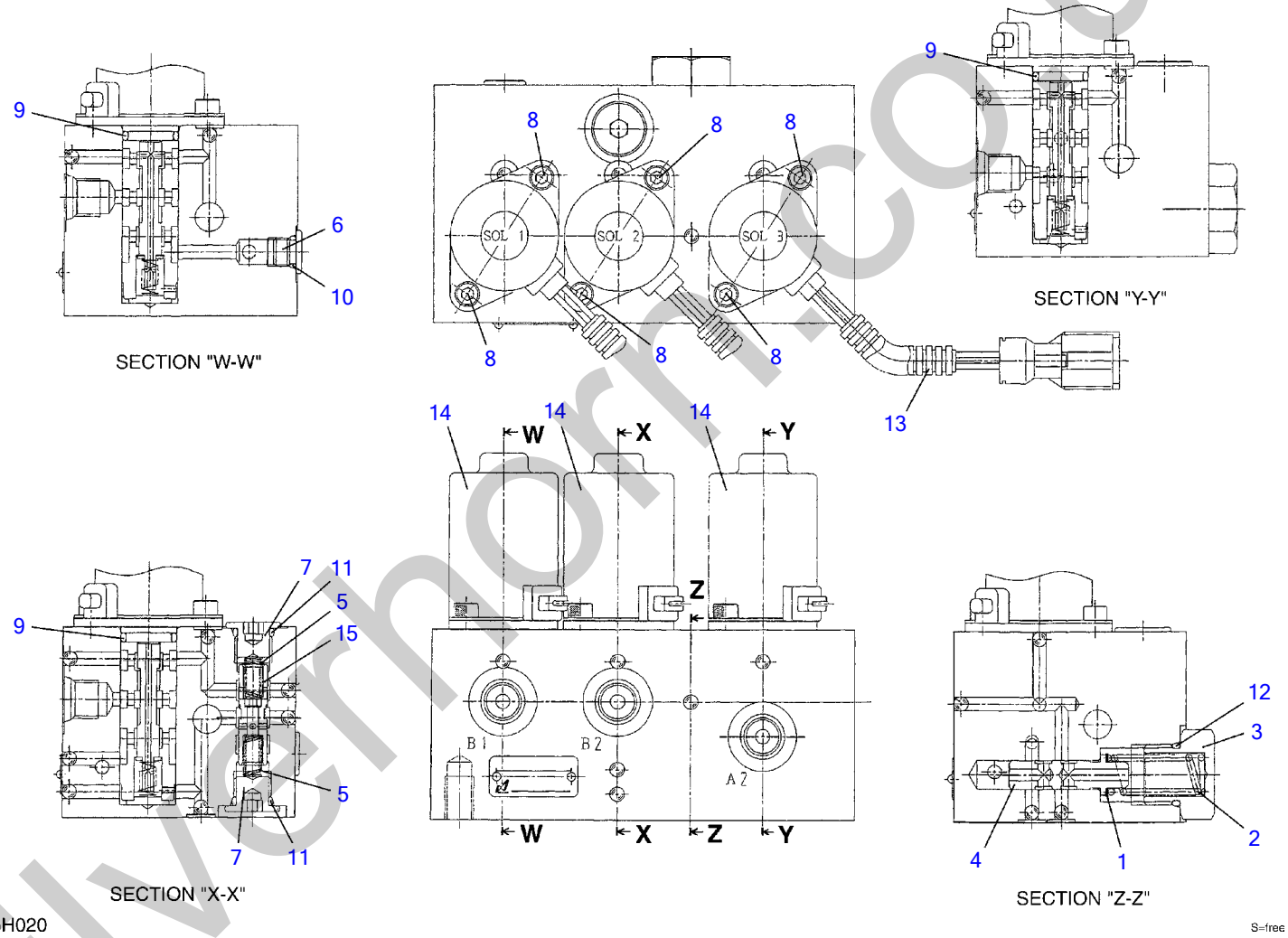

L5H020

S=free

silverhorn.co.uk

SOLENOID VALVE; 3 BLOCKS

Item	Part number	Description	Q'ty	Chan.	Serial No.	Serv.	Remarks
0	19017-48800	VALVE ASSY, solenoid	1				
1	19017-32003	・SHIM	4				
2	19017-32502	・SPRING	1				
3	19017-32004	・PLUG	1				
4	19017-48805	・SPOOL	1				
5	19017-29605	・SPRING	2				
6	19017-29618	・PLUG	1				
7	19017-20720	・PLUG	2				
8	11100-50510	・SCREW, cap	6				
9	14200-10160	・O-RING	3				
10	14200-10080	・O-RING	1				
11	14200-10110	・O-RING	2				
12	14200-10180	・O-RING	1				
13	19017-48828	・TUBE	3				
14	19017-48816	・SOLENOID	3				
15	19017-37727	・PLUNGER	1				
	L5h020						

silverhorn.co.uk

SOLENOID VALVE; 2 BLOCKS

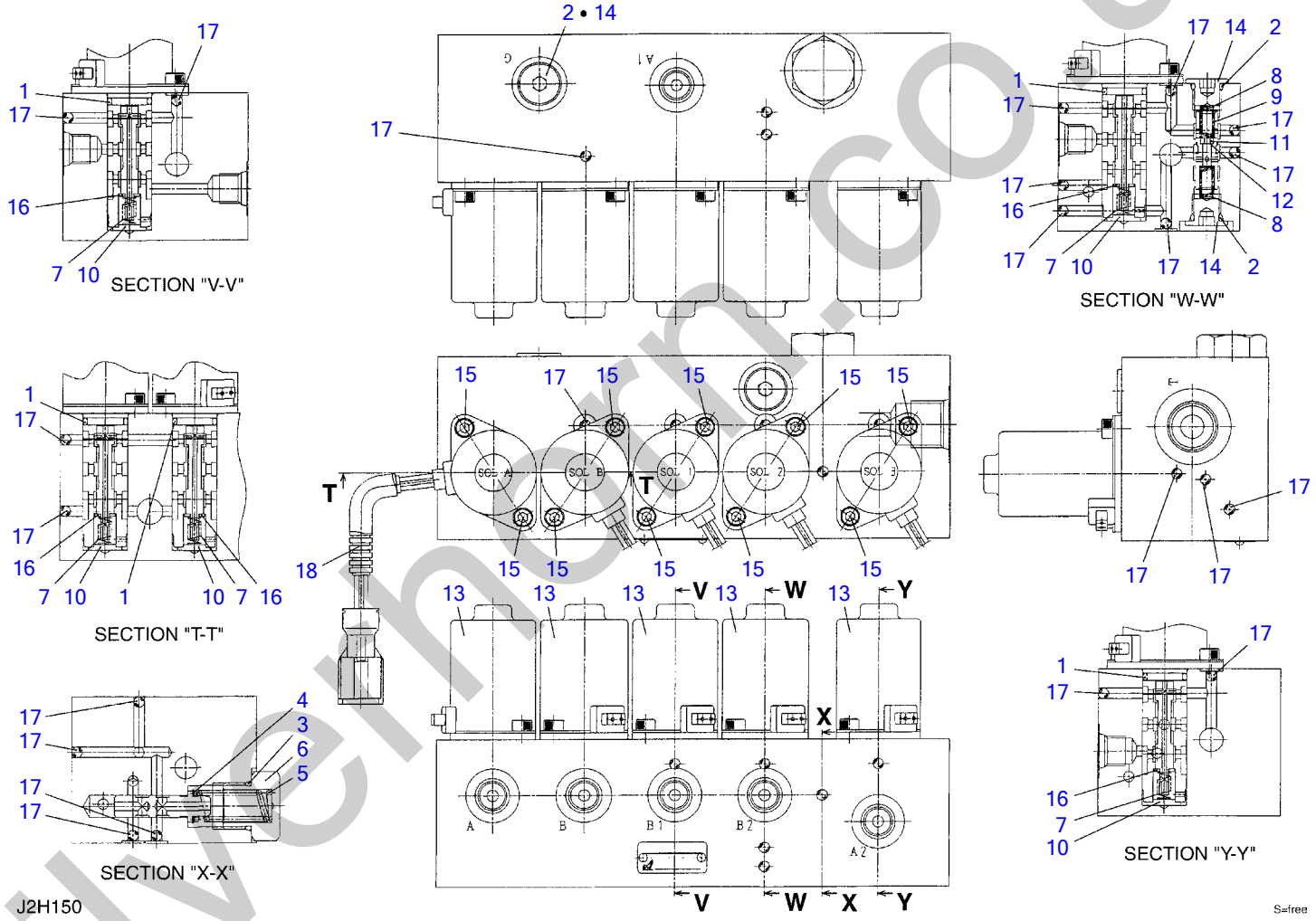

silverthorn.co.uk

SOLENOID VALVE; 2 BLOCKS

Item	Part number	Description	Q'ty	Chan.	Serial No.	Serv.	Remarks
0	1901749200	VALVE ASSY, solenoid	1				
0-1	1901732499	・KIT, seal	1				
1	X 1420000160	・・O-RING	5				
2	X 1420010110	・・O-RING	3				
3	X 1420010180	・・O-RING	1				
4	1901732003	・SHIM	4				
5	1901732502	・SPRING	1				
6	1901732004	・PLUG	1				
7	1901728703	・SPRING	5				
8	1901729605	・SPRING	2				
9	1901729610	・PLUNGER	1				
10	1901728711	・STOPPER	5				
11	1901729616	・RING	1				
12	1901732407	・ORIFICE	1				
13	1901748816	・SOLENOID	5				
14	1901720720	・PLUG	3				
15	1110020510	・SCREW, cap	10				
16	1140010004	・WASHER	5				
17	1901017793	・BALL, steel	22				
18	1901748828	・TUBE	5				
	J2h150						

silverhorn.co.uk

SOLENOID VALVE (for air conditioner)

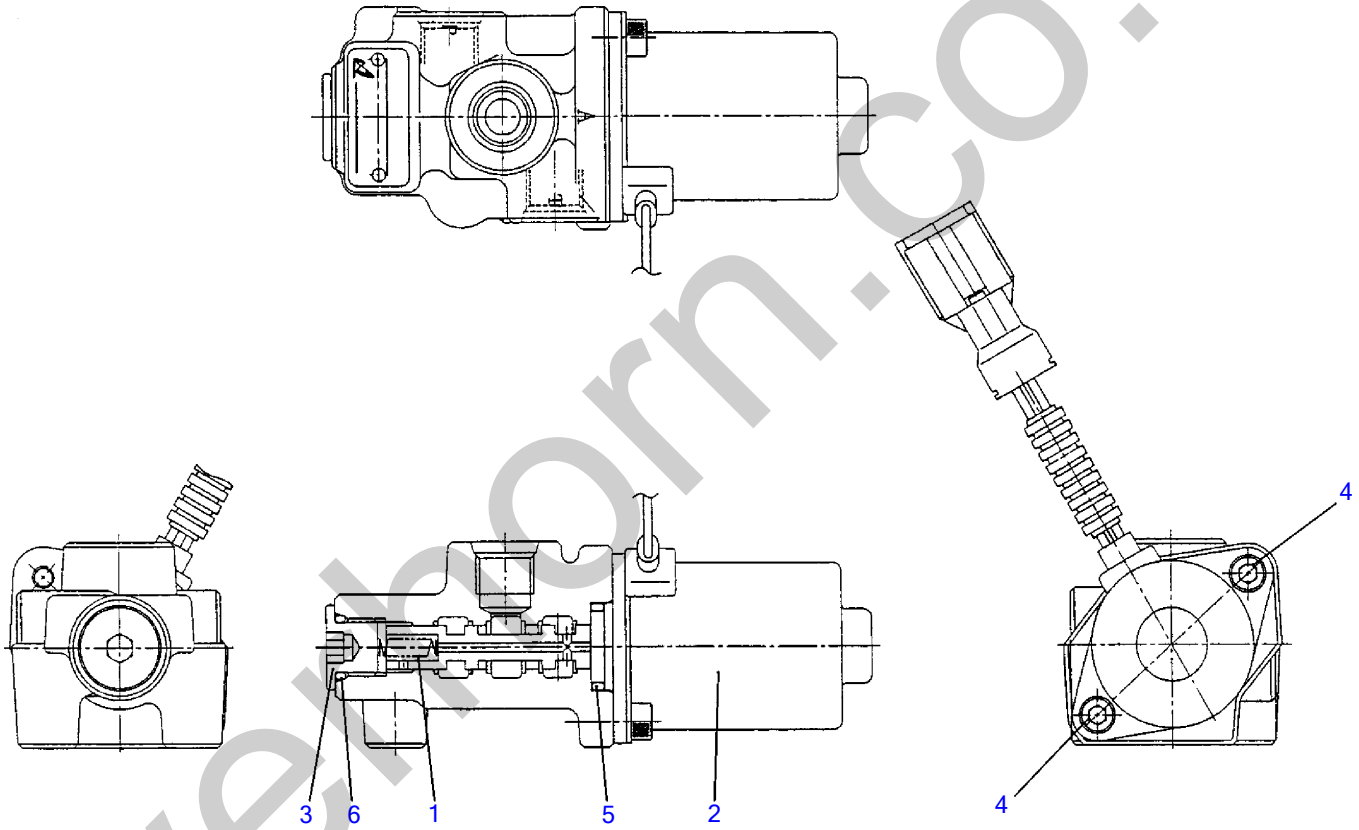

G4H310

S=FREE

silverthorn.co.uk

SOLENOID VALVE (for air conditioner)

Item	Part number	Description	Q'ty	Chan.	Serial No.	Serv.	Remarks
0	1901746600	VALVE ASSY, solenoid	1				
1	1901734404	・SPRING	1				
2	1901746604	・SOLENOID	1				
3	1901738312	・PLUG	1				
4	1110050512	・SCREW, cap	2				
5	1420000160	・O-RING	1				
6	1420010110	・O-RING	1				
	G4h310						

silverhorn.co.uk

PROPORTIONAL VALVE

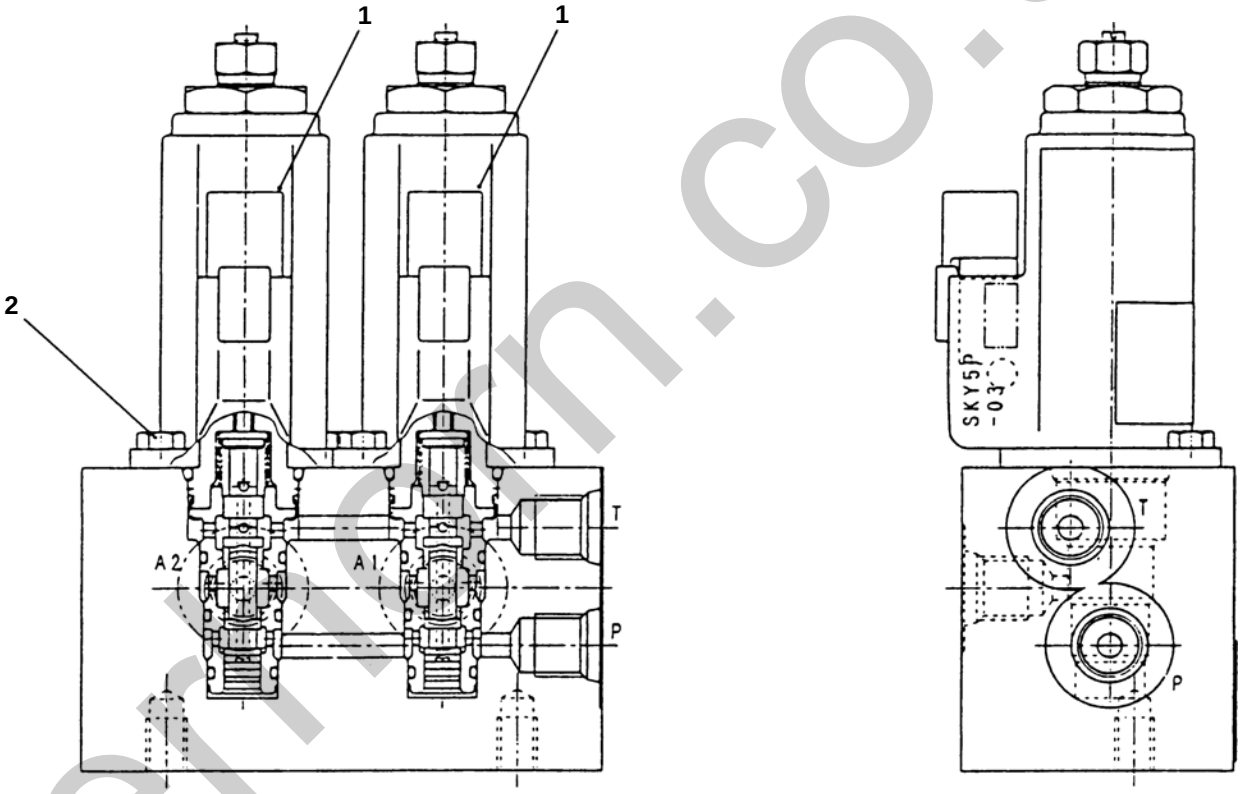

W2H140

silverfern.co.uk

PROPORTIONAL VALVE

Item	Part number	Description	Q'ty	Chan.	Serial No.	Serv.	Remarks
0	**1901738400**	VALVE, proportional	1				
1	**1901738460**	・VALVE ASSY, proportional	2				
2	**1100050512**	・BOLT	4				
	K3h370						

silverhorn.co.uk

PILOT VALVE

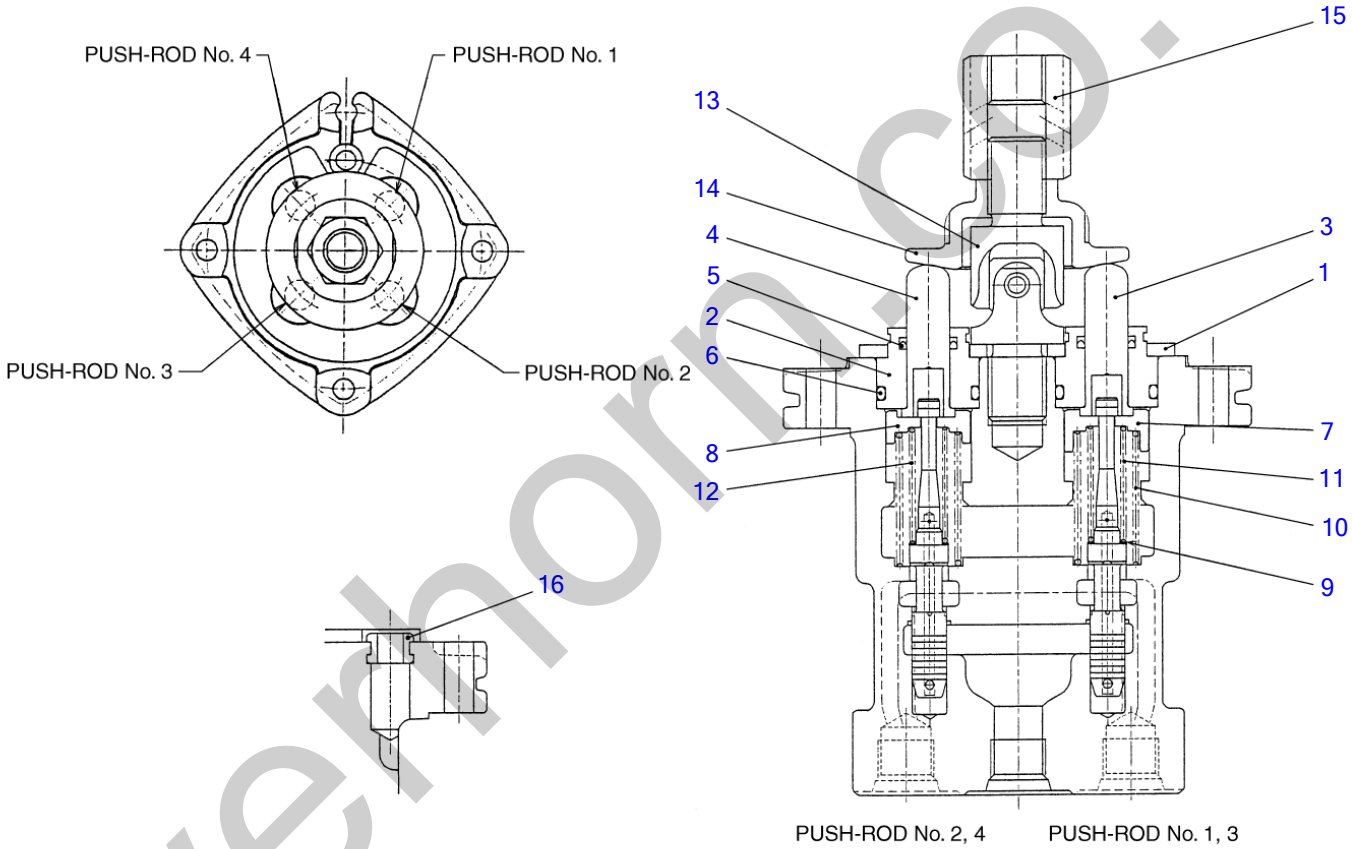

G4H300

S=free

silverhorn.co.uk

PILOT VALVE

Item	Part number	Description	Q'ty	Chan.	Serial No.	Serv.	Remarks
0	1901745600	VALVE ASSY, pilot	1				
1	1901745702	・PLATE	1				
2	1901710912	・PLUG	4				
3	1901710911	・ROD	2				
4	1901719012	・ROD	2				
5	1901710914	・SEAL	4				
6	1420010200	・O-RING	4				
7	1901745709	・HOLDER	2				
8	1901745710	・HOLDER	2				
9	1901710917	・ROD	4				
10	1901745612	・SPRING	4				
11	1901742614	・SPRING	2				
12	1901742615	・SPRING	2				
13	1901720232	・JOINT	1				
14	1901743620	・PLATE	1				
15	1901703222	・NUT	1				
16	1901735630	・BUSHING	1				
	G4h300						

silverhorn.co.uk

PILOT VALVE (R) (with 2nd aux. lines)

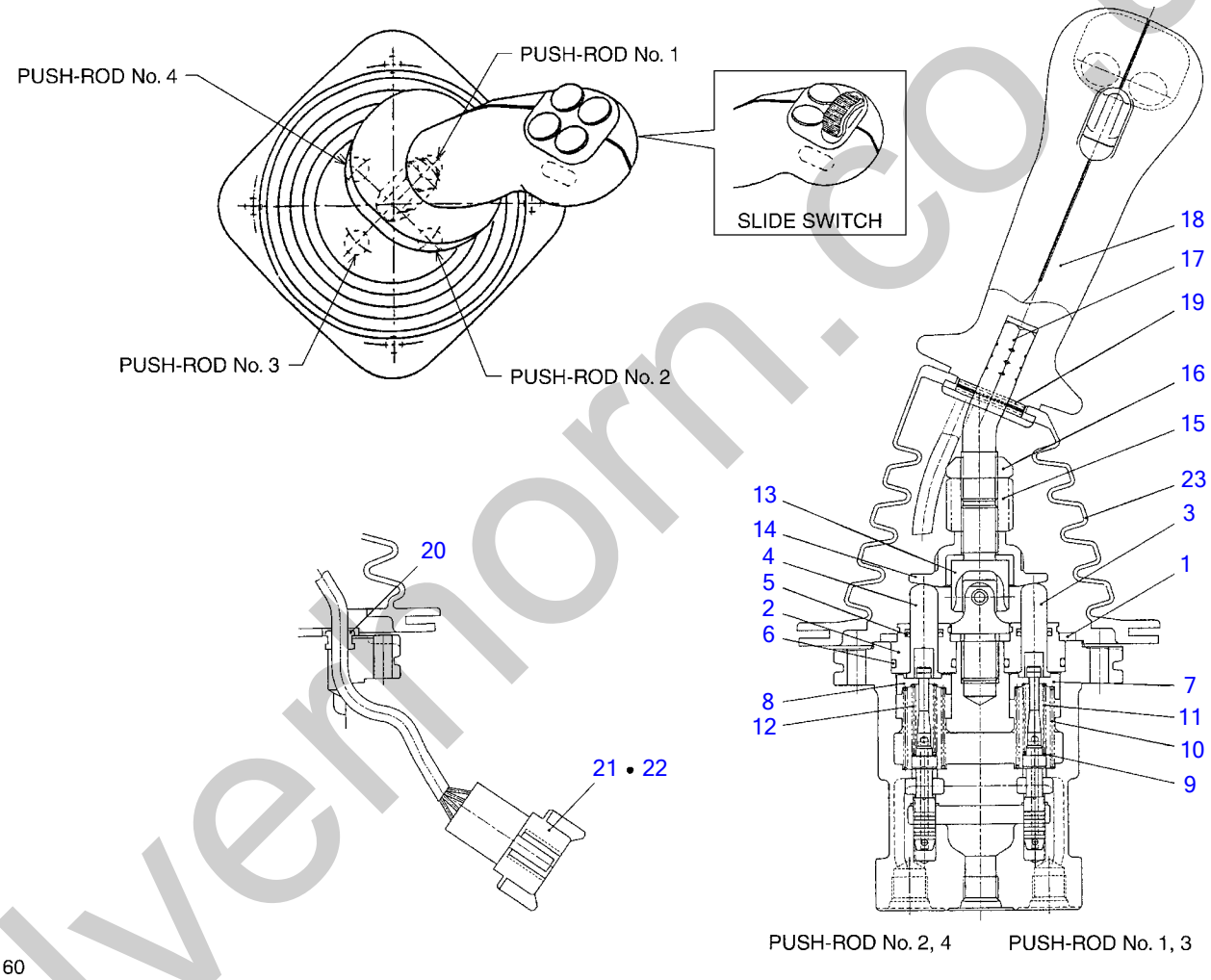

silvermorn.co.uk

PILOT VALVE (R) (with 2nd aux. lines)

Item	Part number	Description	Q'ty	Chan.	Serial No.	Serv.	Remarks
0	1901746400	VALVE ASSY, pilot (slide switch)	1				right
	1901748700	VALVE ASSY, pilot (3 switch)	1				
1	1901745702	・PLATE	1				
2	1901710912	・PLUG	4				
3	1901719011	・ROD	2				
4	1901719012	・ROD	2				
5	1901710914	・SEAL	4				
6	1420010200	・O-RING	4				
7	1901745709	・HOLDER	2				
8	1901745710	・HOLDER	2				
9	1901710917	・WASHER	4				
10	1901745612	・SPRING	4				
11	1901742614	・SPRING	2				
12	1901742615	・SPRING	2				
13	1901720232	・JOINT	1				
14	1901743620	・PLATE	1				
15	1901735625	・NUT	1				
16	1901735626	・NUT	1				
17	1901740432	・LEVER	1				
18	1901740410	・HANDLE	1				slide switch
	1901741210	・HANDLE	1				3 switch
19	1901746521	・PIN, spring	1				
20	1901735630	・BUSHING	1				
21	1901740446	・RECEPTACLE	1				
22	1901740447	・WEDGE	1				
23	1901735632	・BOOT	1				
	J2h160						

silverhorn.co.uk

PILOT VALVE (L) (with 2nd aux. lines)

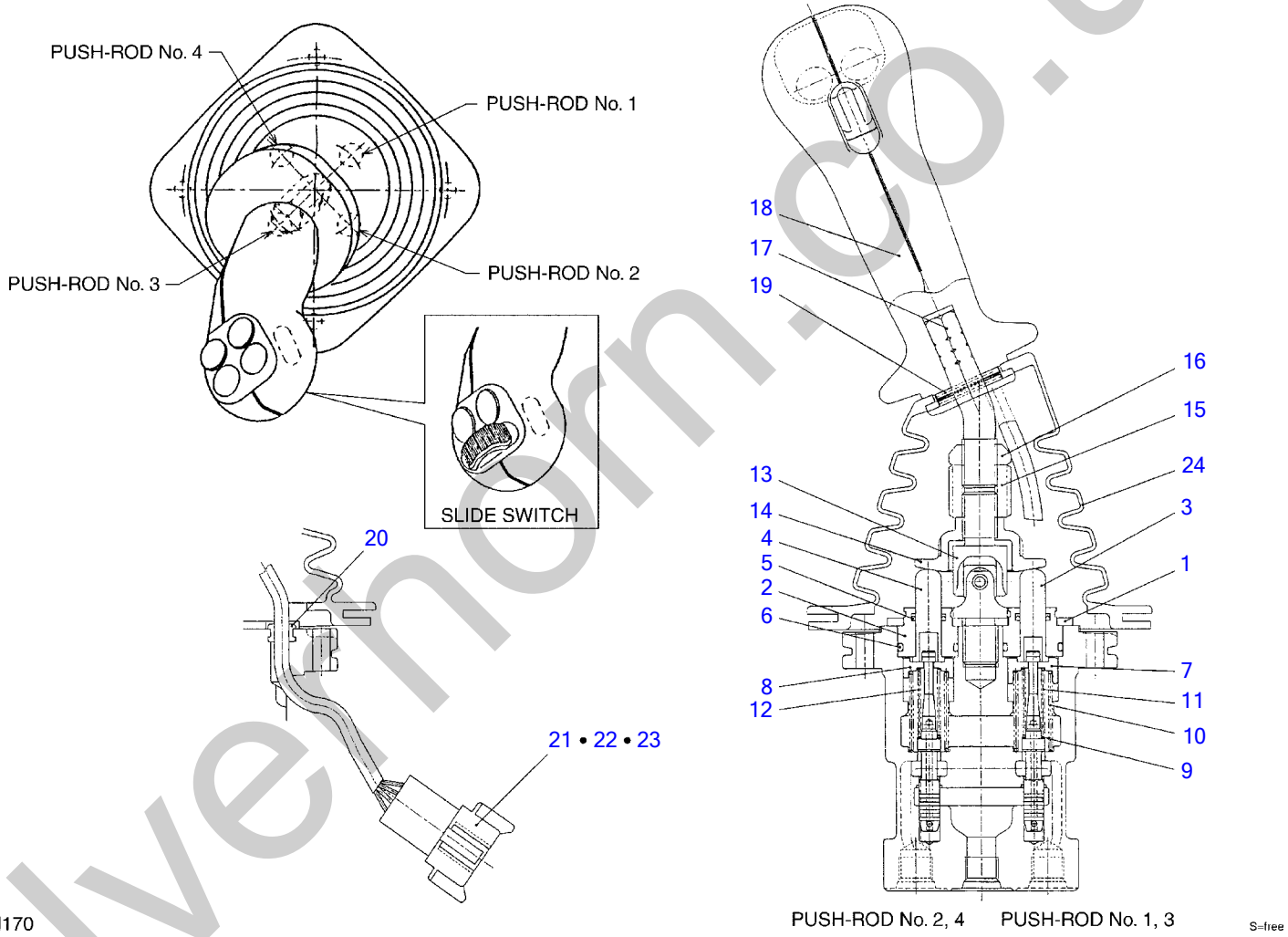

J2H170

silvernorn.co.uk

PILOT VALVE (L) (with 2nd aux. lines)

Item	Part number	Description	Q'ty	Chan.	Serial No.	Serv.	Remarks
0	1901746500	VALVE ASSY, pilot (3 switch)	1				left
	1901748600	VALVE ASSY, pilot (slide switch)	1				
1	1901745702	・PLATE	1				
2	1901710912	・PLUG	4				
3	1901719011	・ROD	2				
4	1901719012	・ROD	2				
5	1901710914	・SEAL	4				
6	1420010200	・O-RING	4				
7	1901745709	・HOLDER	2				
8	1901745710	・HOLDER	2				
9	1901710917	・WASHER	4				
10	1901745612	・SPRING	4				
11	1901742614	・SPRING	2				
12	1901742615	・SPRING	2				
13	1901720232	・JOINT	1				
14	1901743620	・PLATE	1				
15	1901735625	・NUT	1				
16	1901735626	・NUT	1				
17	1901740432	・LEVER	1				
18	1901741210	・HANDLE	1				3 switch
	1901740410	・HANDLE	1				slide switch
19	1901746521	・PIN, spring	1				
20	1901735630	・BUSHING	1				
21	1901740446	・RECEPTACLE	1				
22	1901740447	・WEDGE	1				
23	1901741263	・PLUG	3				
24	1901735632	・BOOT	1				
	J2h170						

silverhorn.co.uk

HANDLE (with slide switch)

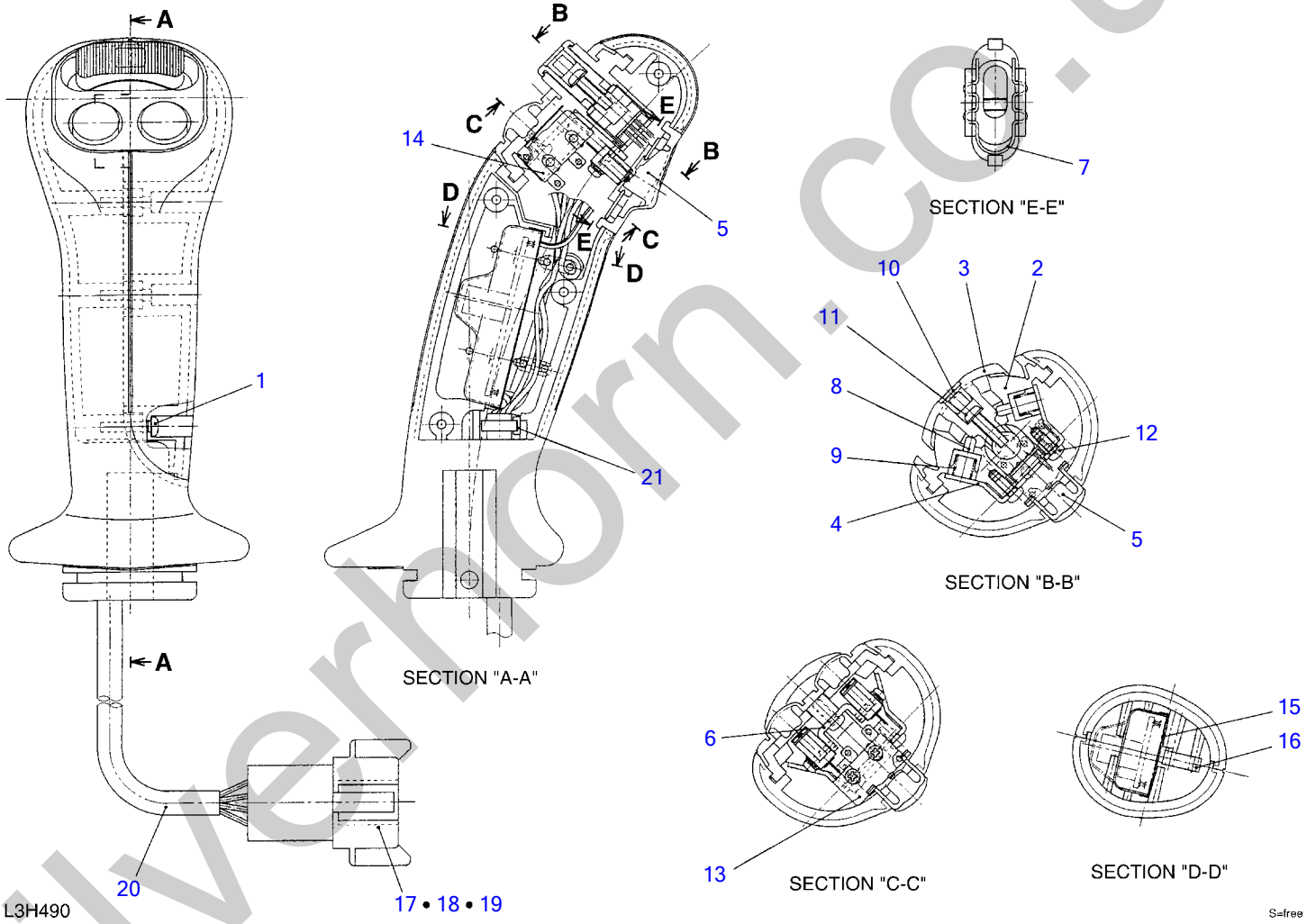

silverhorn.co.uk

HANDLE (with slide switch)

Item	Part number	Description	Q'ty	Chan.	Serial No.	Serv.	Remarks
0	1901740410	HANDLE ASSY	1				
1	1122400312	・SCREW	4				
2	1901740417	・CASE	1				
3	1901740418	・CAM	1				
4	1901740401	・PLATE	1				
5	1901740402	・BUTTON	1				
6	1901740403	・BRACKET	1				
7	1901740404	・CLIP	1				
8	1901740405	・PISTON	2				
9	1901740406	・SPRING	2				
10	1901740407	・CAP	1				
11	1150010312	・SCREW	1				
12	1122400306	・SCREW	3				
13	1901740408	・SWITCH	1				
14	1901740409	・SWITCH	2				
15	1901740411	・COVER	1				
16	1901740412	・CAP	2				
17	1901740446	・RECEPTACLE	1				
18	1901740447	・WEDGE	1				
19	1901740413	・PIN	8				
20	1901740414	・PROTECTOR	1				
21	1901740415	・BAND	1				
	L3h490						

silverhorn.co.uk

HANDLE (with 3 switchs)

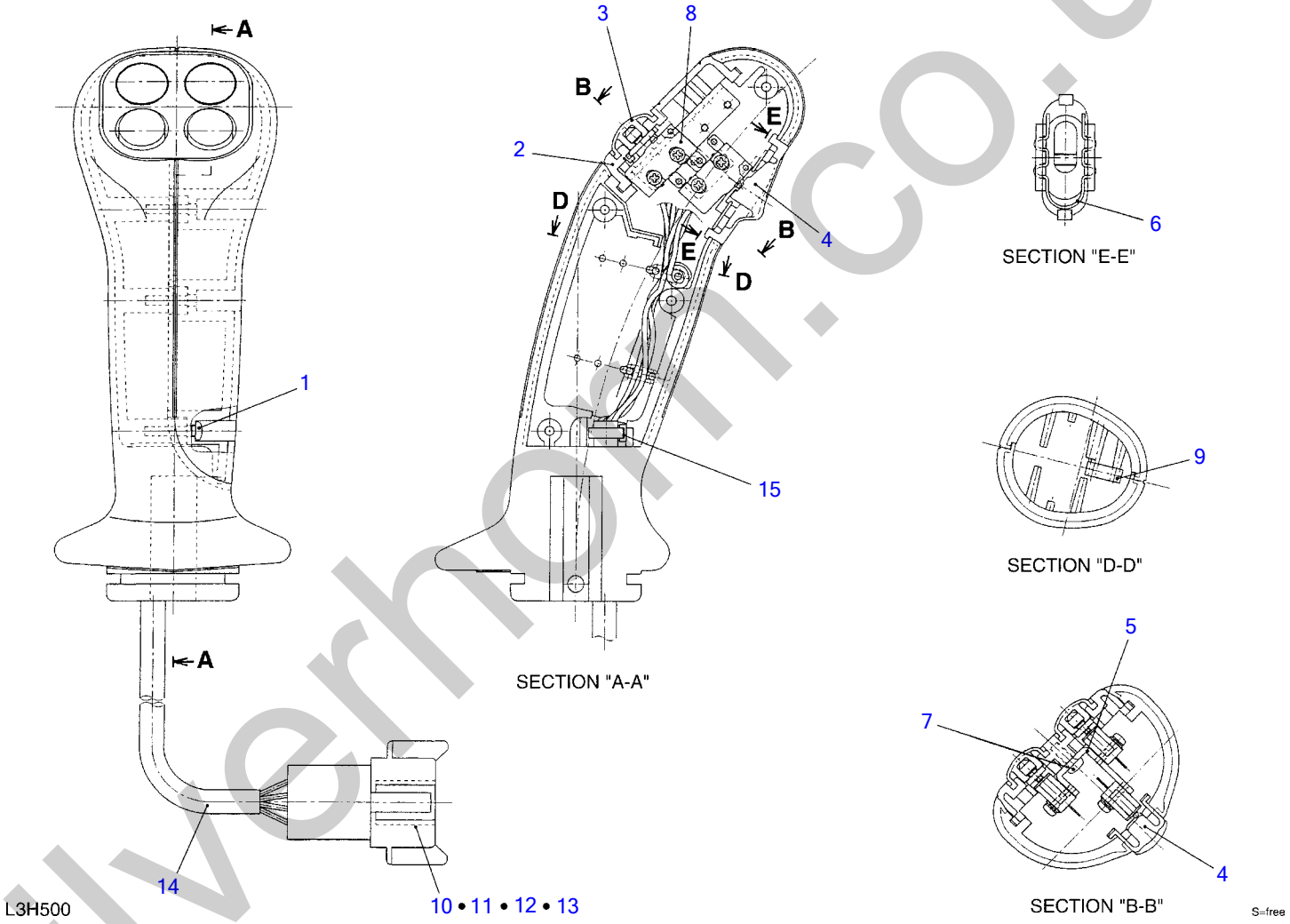

silverhorn.co.uk

HANDLE (with 3 switchs)

Item	Part number	Description	Q'ty	Chan.	Serial No.	Serv.	Remarks
0	1901741210	HANDLE ASSY	1				
1	1122400312	・SCREW	4				
2	1901741211	・CASE	1				
3	1901741216	・BUTTON	2				
4	1901740402	・BUTTON	1				
5	1901741218	・BRACKET	1				
6	1901740404	・CLIP	1				
7	1122400306	・SCREW	2				
8	1901740408	・SWITCH	3				
9	1901740412	・CAP	2				
10	1901740446	・RECEPTACLE	1				
11	1901740447	・WEDGE	1				
12	1901740413	・PIN	5				
13	1901741263	・PIN, BLANKING	3				
14	1901740414	・PROTECTOR	1				
15	1901740415	・BAND	1				
	L3h500						

silverhorn.co.uk

REMOTE CONTROL VALVE (for travel)

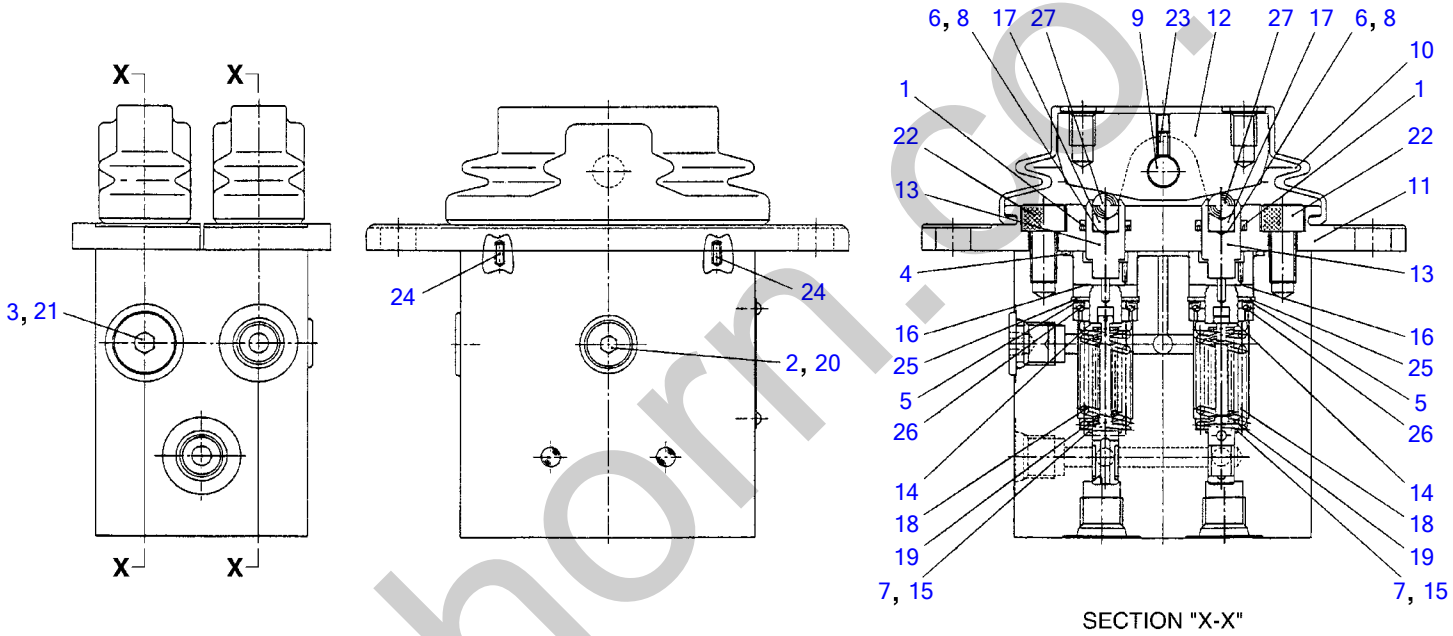

L4H110

S=FREE

silverhorn.co.uk

REMOTE CONTROL VALVE (for travel)

Item	Part number	Description	Q'ty	Chan.	Serial No.	Serv.	Remarks
0	1901739100	VALVE ASSY, remote control	1				
0-1	1901739199	・KIT, seal	1				
1	X 1901728523	・・U-PACKING	4				
2	X 1420010080	・・O-RING	1				
3	X 1420010110	・・O-RING	1				
4	X 1420510460	・・O-RING	2				
5	1901739101	・SHIM	4				
6	1901739102	・ORIFICE	4				
7	1901739103	・SHIM	4				
8	1901739104	・ORIFICE	4				
9	1901729706	・PIN	2				
10	1901729708	・BOOT	2				
11	1901739108	・COVER	2				
12	1901739129	・CAM	2				
13	1901739113	・PUSHER	4				
14	1901739114	・RETAINER	4				
15	1901739115	・SHIM	4				
16	1901739116	・WASHER	4				
17	1901739118	・HOLDER	4				
18	1901739119	・SPRING	4				
19	1901739120	・SPRING	4				
20	1901729618	・PLUG	1				
21	1901720720	・PLUG	1				
22	1110050816	・SCREW, cap	4				
23	1121040606	・SET-SCREW	2				
24	1213040306	・PIN, spring	4				
25	1221000020	・RING, snap	4				
26	1390020020	・BALL, steel	8				
27	1390020500	・BALL, steel	4				
	L5h050						

silverhorn.co.uk

REMOTE CONTROL VALVE (for offset, for 2nd aux. lines)

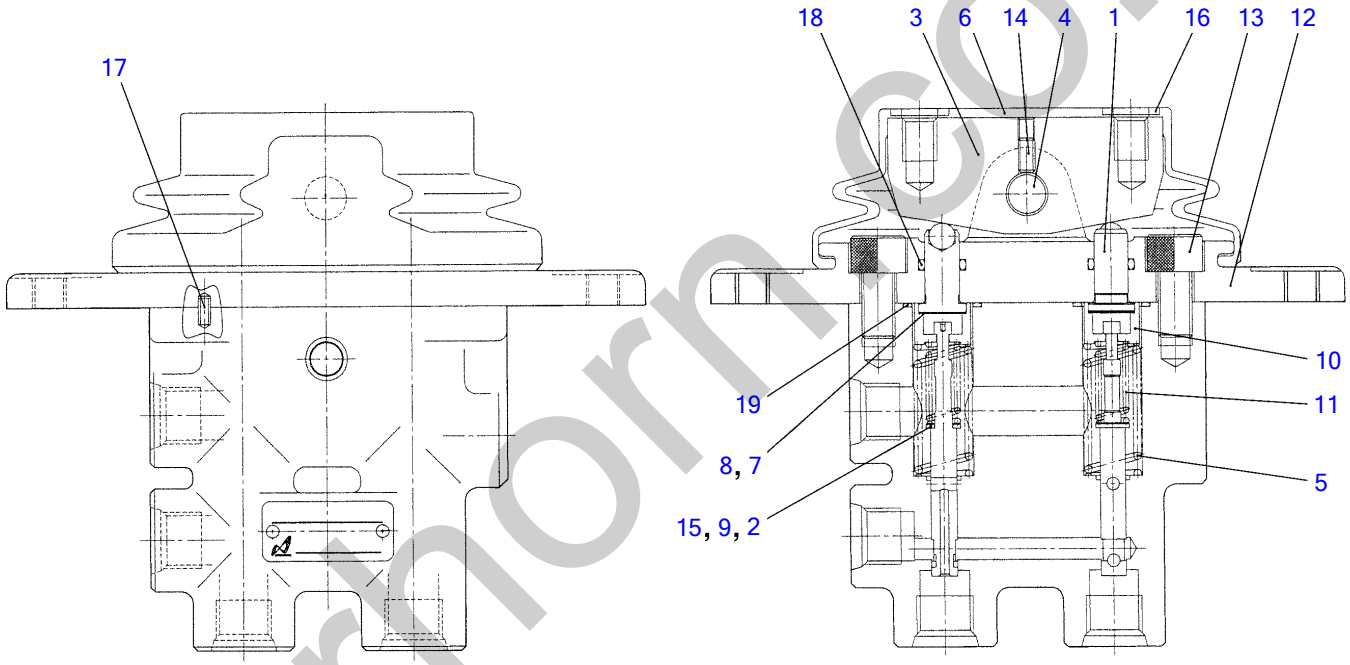

J1H160

S=free

silvermorn.co.uk

REMOTE CONTROL VALVE (for offset, for 2nd aux. lines)

Item	Part number	Description	Q'ty	Chan.	Serial No.	Serv.	Remarks
0	1901746300	VALVE ASSY, pilot	1				
1	1901746301	・PUSHER	2				
2	1901729704	・SHIM t=0.1	2				
3	1901729705	・CAM	1				
4	1901729706	・PIN	1				
5	1901729707	・SPRING	2				
6	1901729708	・BOOT	1				
7	1901729709	・SHIM t=0.1	2				
8	1901729710	・SHIM t=0.2	2				
9	1901729711	・SHIM t=0.2	2				
10	1901729713	・HOLDER, spring	2				
11	1901729714	・SPRING	2				
12	1901746315	・COVER	1				
13	1100040816	・SCREW, cap	2				
14	1121340408	・SET-SCREW	1				
15	1141100004	・WASHER	2				
16	1141100008	・WASHER	2				
17	1213000306	・PIN, spring	2				
18	1420000080	・O-RING	2				
19	1420310016	・O-RING	2				
	J1h160						

silverhorn.co.uk

SELECTOR VALVE (ISO-JCB pattern)

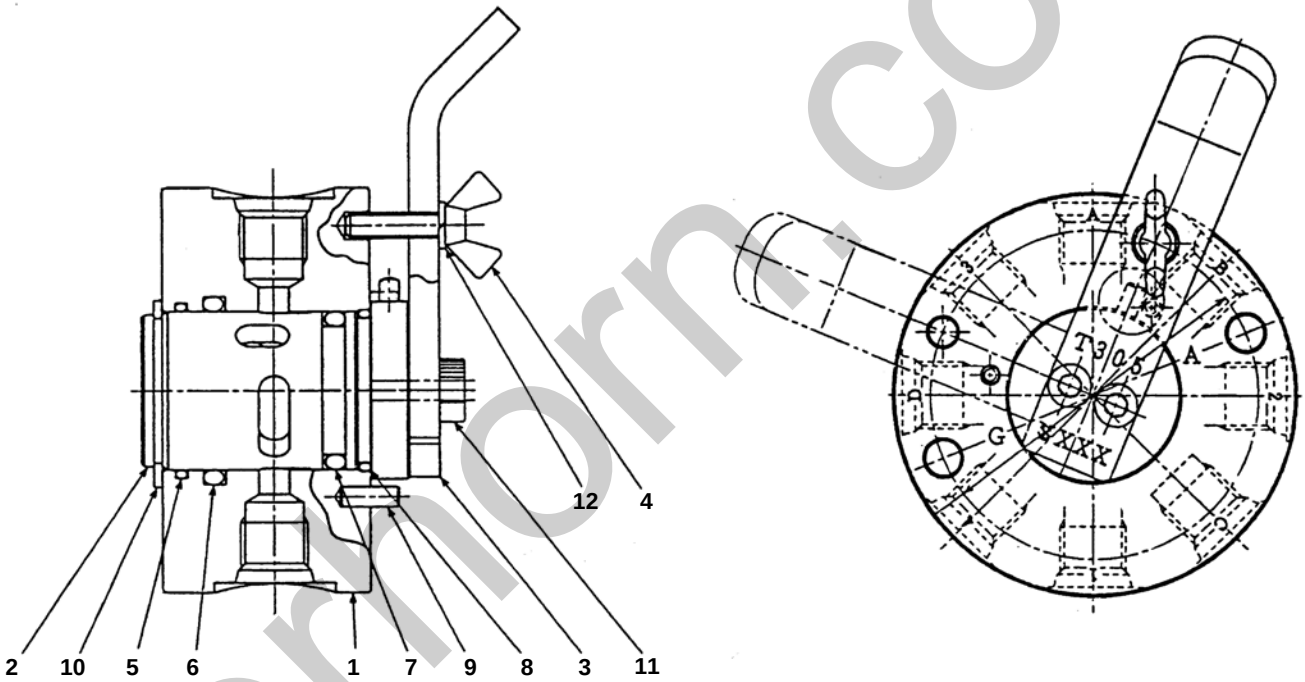

C4H180

silvermorn.co.uk

SELECTOR VALVE (ISO-JCB pattern)

Item	Part number	Description	Q'ty	Chan.	Serial No.	Serv.	Remarks
0	1901730500	VALVE ASSY, selector	1				
1	1901730501	・BODY	1				
2	1901730502	・ROTOR	1				
3	1901730503	・LEVER	1				
4	1901730504	・BOLT	1				
5	1901730505	・O-RING	1				
6	1901730506	・O-RING	1				
7	1901730507	・O-RING	1				
8	1901730508	・O-RING	1				
9	1213000412	・PIN, spring	3				
10	1220000030	・RING, snap	1				
11	1110050514	・SCREW, cap	2				
12	1140010005	・WASHER, spring	1				
	C4h180						

silverhorn.co.uk

EMERGENCY SHUT-OFF VALVE

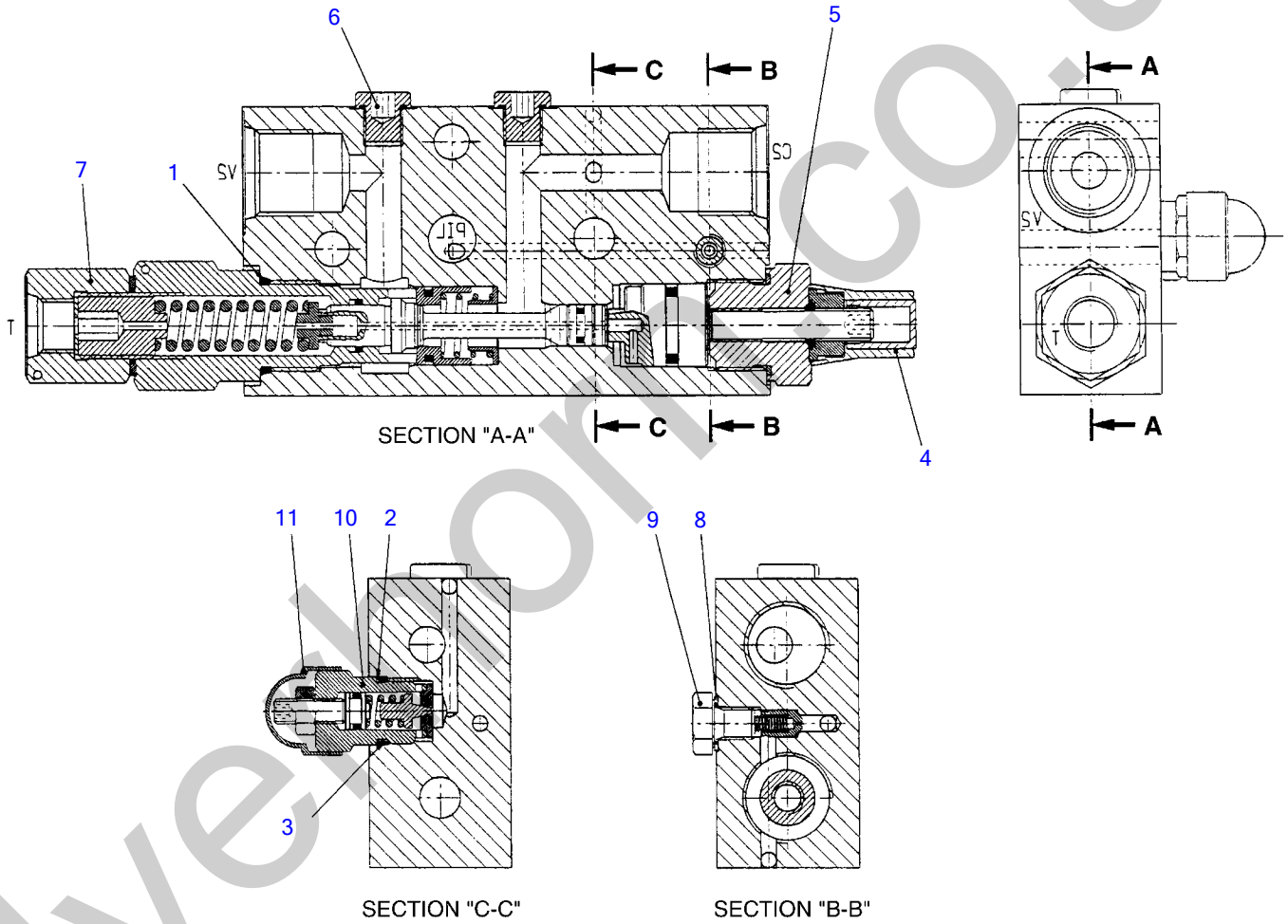

K3H380

S=free

silverhorn.co.uk

EMERGENCY SHUT-OFF VALVE

Item	Part number	Description	Q'ty	Chan.	Serial No.	Serv.	Remarks
0	1901742700	VALVE ASSY, load holding	1				boom
	1901742800	VALVE ASSY, load holding	1				arm
0-1	1901742799	・KIT, seal	1				
1	1901742904	・・O-RING	1				
2	1901742908	・・RING, back-up	1				
3	1901742708	・・O-RING	1				
4	1901742901	・CAP	1				
5	1901742902	・PLUG	1				
6	1901742903	・PLUG	2				
7	1901742704	・SOCKET	1				
8	1901742906	・SEAL	1				
9	1901742907	・PLUG	1				
10	1901742909	・PLUG	1				
11	1901742711	・CAP	1				
	K3h380						

silverhorn.co.uk

BOOM CYLINDER

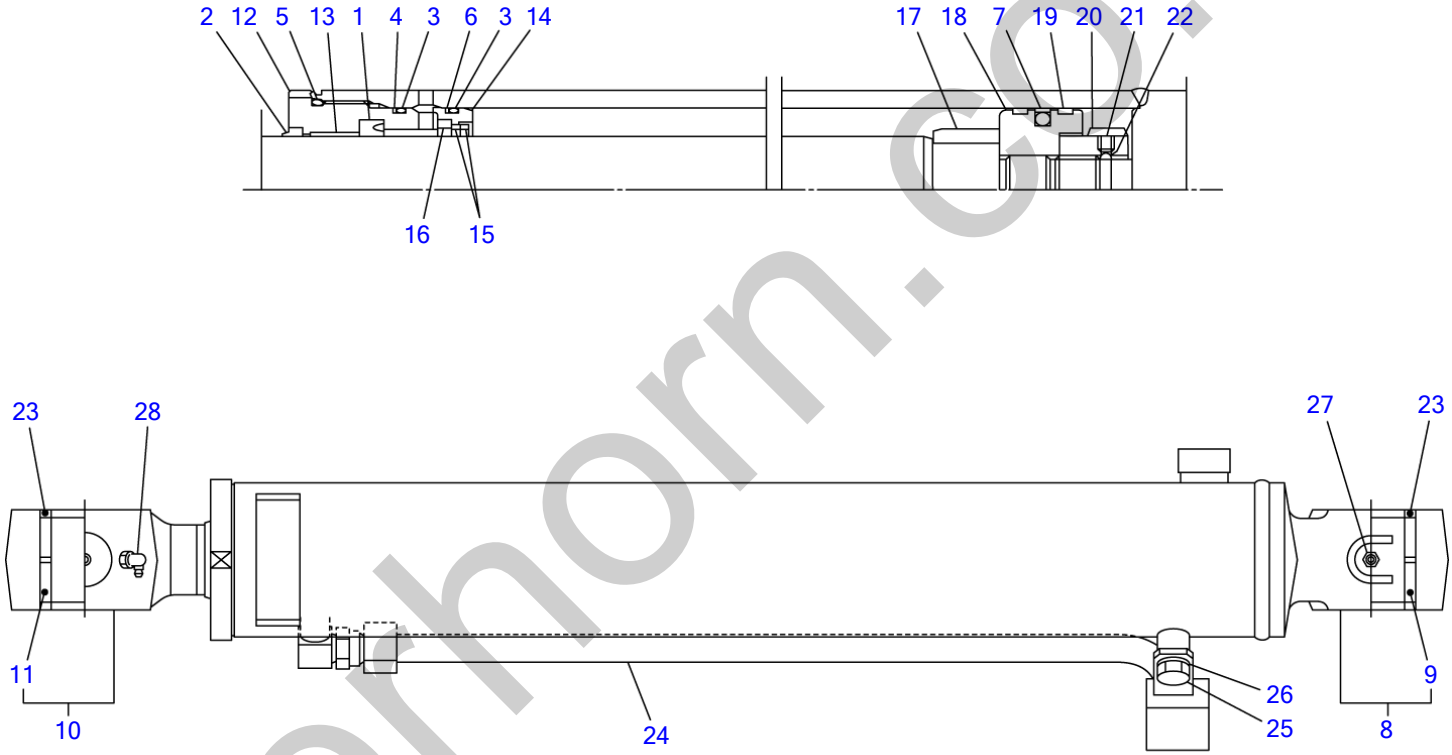

silverhorn.co.uk

BOOM CYLINDER

Item	Part number	Description	Q'ty	Chan.	Serial No.	Serv.	Remarks
0	1900092200	CYLINDER ASSY	1				boom
0-1	1900092299	・KIT, seal	1				
1	X 1900047433	・・PACKING, rod	1				
2	X 1900071532	・・SEAL, dust	1				
3	X 1420111050	・・O-RING	2				
4	X 1900092227	・・RING, back-up	1				
5	X 1420101100	・・O-RING	1				
6	X 1900083527	・・RING, back-up	1				
7	X 1900047431	・・PACKING, piston	1				
8	1900092298	・TUBE KIT	1				
9	1900063702	・・BUSHING	1				
10	1900092297	・ROD KIT, piston	1				
11	1900092220	・・BUSHING	1				
12	1900092203	・COVER, rod	1				
13	1900092202	・BUSHING	1				
14	1900092208	・HOLDER	1				
15	1900092216	・RING, cushion	2				
16	1900092228	・COLLAR	1				
17	1900092205	・CUSHION, rod	1				
18	1900092207	・PISTON	1				
19	1900091824	・RING, wear	2				
20	1900092209	・NUT	1				
21	1121041010	・SET-SCREW	1				
22	1390020400	・BALL, steel	1				
23	1900083533	・SEAL, dust	4				
24	1900092210	・PIPE	1				
25	1100041016	・BOLT	1				
26	1141110010	・WASHER	1				
27	1560001000	・FITTING, grease	1				
28	1560001900	・FITTING, grease	1				
	J1h192						

silverhorn.co.uk

ARM CYLINDER

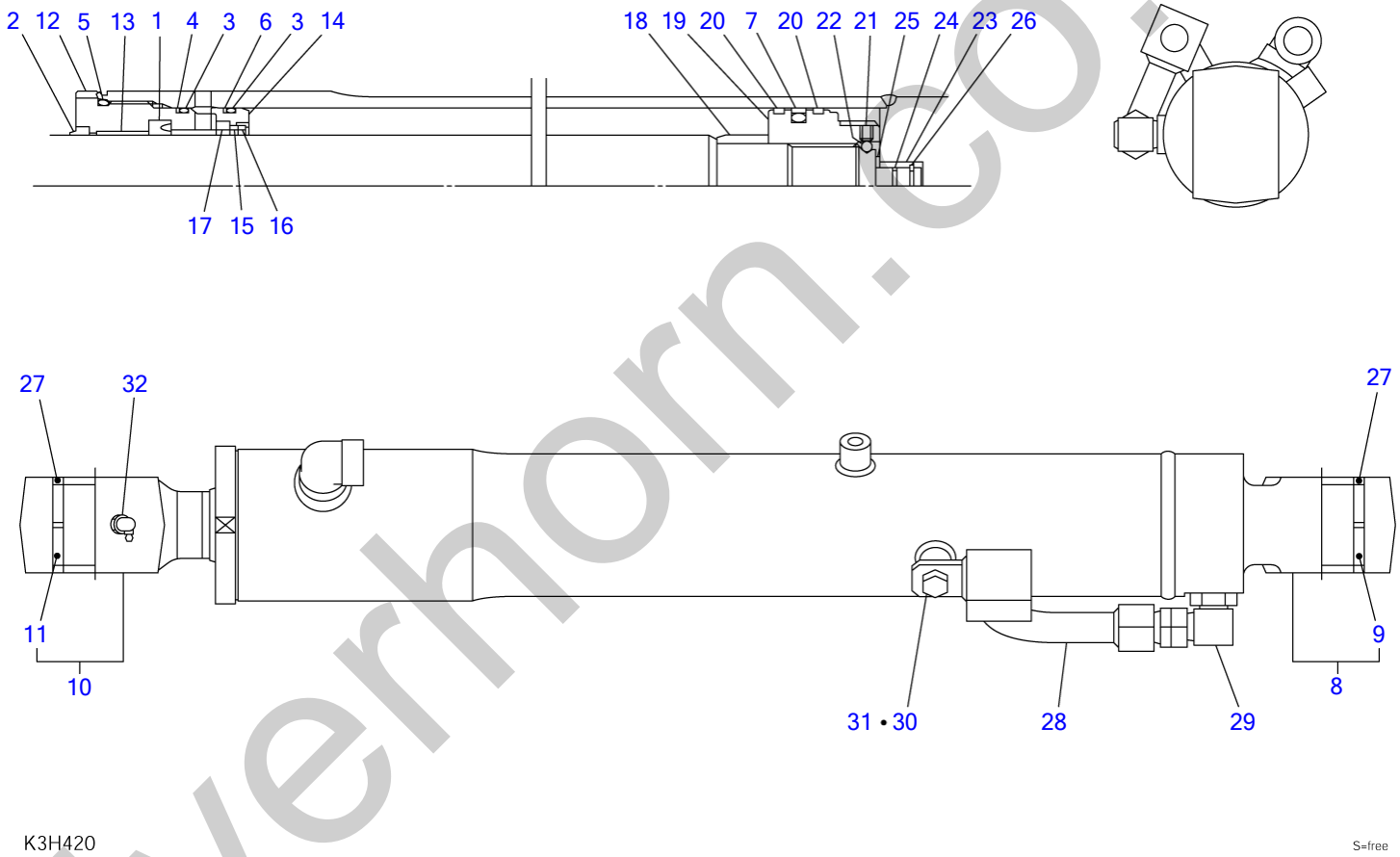

silverhorn.co.uk

ARM CYLINDER

Item	Part number	Description	Q'ty	Chan.	Serial No.	Serv.	Remarks
0	1900087900	CYLINDER ASSY	1				arm
0-1	1900087999	・KIT, seal	1				
1	X 1900005812	・・PACKING, rod	1				
2	X 1900073933	・・SEAL, dust	1				
3	X 1420110850	・・O-RING	2				
4	X 1900087028	・・RING, back-up	1				
5	X 1420100900	・・O-RING	1				
6	X 1900081529	・・RING, back-up	1				
7	X 1900047131	・・PACKING, piston	1				
8	1900087998	・TUBE	1				
9	1900047102	・・BUSHING	1				
10	1900087997	・ROD, piston	1				
11	1900081502	・・BUSHING	1				
12	1900087903	・COVER, rod	1				
13	1900087913	・BUSHING	1				
14	1900087908	・HOLDER	1				
15	1900087916	・BEARING, cushion	1				
16	1900087915	・SPACER	1				
17	1900087919	・COLLAR	1				
18	1900087917	・BEARING, cushion	1				
19	1900087906	・PISTON	1				
20	1900087926	・RING, wear	2				
21	1121050808	・SET-SCREW	1				
22	1390020350	・BALL, steel	1				
23	1900081505	・BEARING, cushion	1				
24	1900076335	・SEAL, cushion	1				
25	1900047114	・RING, snap	1				
26	1900047122	・STOPPER	2				
27	1900047023	・SEAL, dust	4				
28	1900081528	・PIPE ASSY	1				
29	1900081519	・NIPPLE	1				
30	1100051016	・BOLT	1				
31	1141110010	・WASHER	1				
32	1560001900	・FITTING, grease	1				
	K3h421						

silverhorn.co.uk

OFFSET CYLINDER

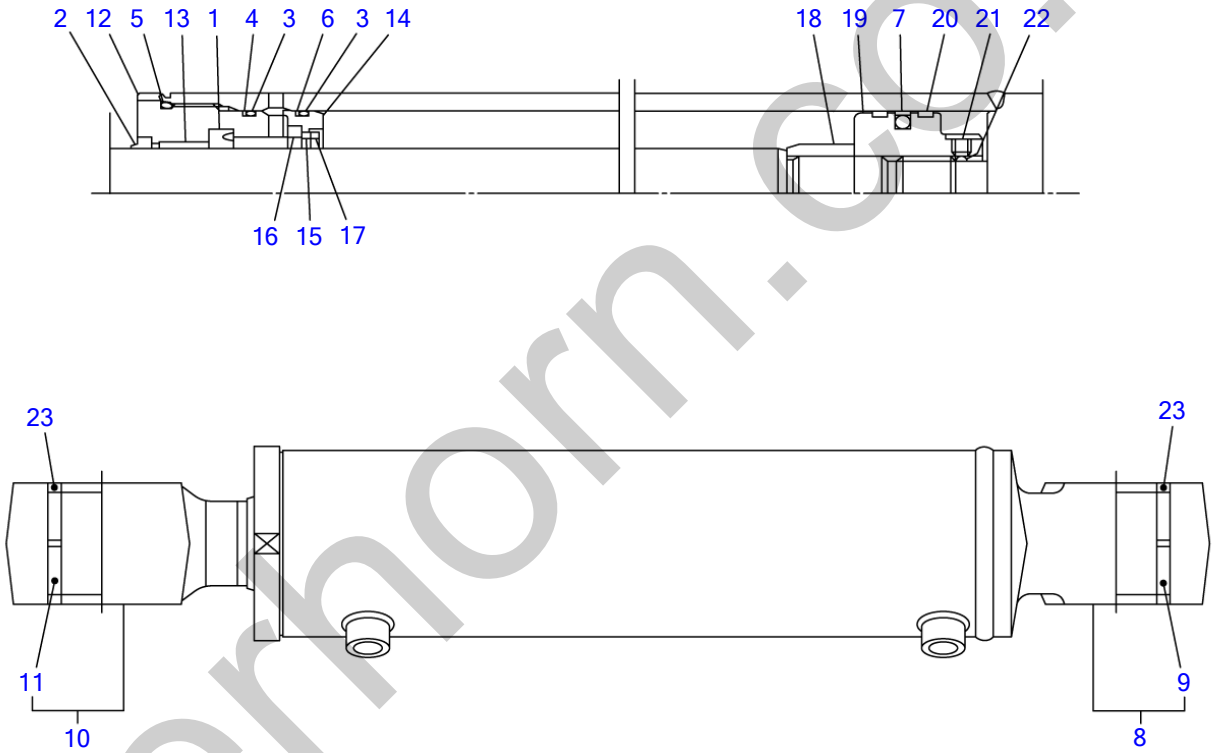

J1H220

S=free

silverhorn.co.uk

OFFSET CYLINDER

Item	Part number	Description	Q'ty	Chan.	Serial No.	Serv.	Remarks
0	1900092300	CYLINDER ASSY	1				offset
0-1	1900092399	・KIT, seal	1				
1	X 1900047033	・・PACKING, rod	1				
2	X 1900070831	・・SEAL, dust	1				
3	X 1420110950	・・O-RING	2				
4	X 1900086928	・・RING, back-up	1				
5	X 1420101000	・・O-RING	1				
6	X 1900063728	・・RING, back-up	1				
7	X 1900047031	・・PACKING, piston	1				
8	1900092398	・TUBE KIT	1				
9	1900083602	・・BUSHING	1				
10	1900092397	・ROD KIT, piston	1				
11	1900083602	・・BUSHING	1				
12	1900087803	・COVER, rod	1				
13	1900087813	・BUSHING	1				
14	1900086908	・HOLDER	1				
15	1900086916	・RING, cushion	1				
16	1900086919	・COLLAR	1				
17	1900087815	・SPACER	1				
18	1900087816	・CUSHION, rod	1				
19	1900087806	・PISTON	1				
20	1900089525	・RING, wear	2				
21	1121041010	・SET-SCREW	1				
22	1390020400	・BALL, steel	1				
23	1900047423	・SEAL, dust	4				
	J1h221						

silverhorn.co.uk

BUCKET CYLINDER

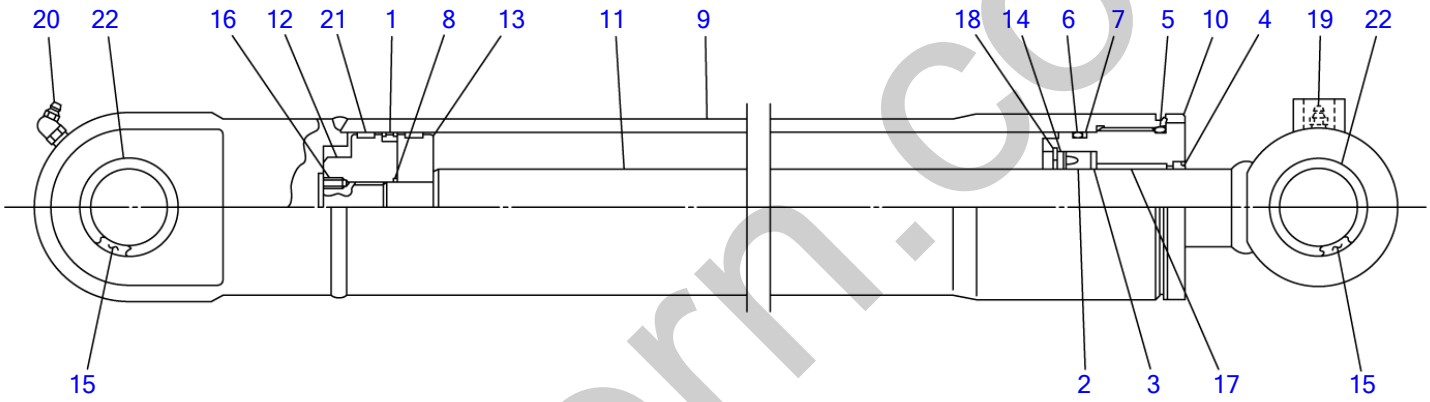

K3H180

S=FREE

silverhorn.co.uk

BUCKET CYLINDER

Item	Part number	Description	Q'ty	Chan.	Serial No.	Serv.	Remarks
0	1900075800	CYLINDER ASSY	1				bucket
0-1	1900075899	KIT, seal	1				
1	X 1410220800	・・PACKING, piston	1				
2	X 1410545612	・・PACKING, rod	1				
3	X 1411261453	・・RING, back-up	1				
4	X 1900075823	・・SEAL, dust	1				
5	X 1420110800	・・O-RING	1				
6	X 1420110750	・・O-RING	1				
7	X 1421130750	・・RING, back-up	1				
8	X 1420110750	・・O-RING	1				
9	1900075807	・TUBE	1				
10	1900075803	・COVER, rod	1				
11	1900075801	・ROD, piston	1				
12	1900059606	・PISTON	1				
13	1900075855	・HOLDER, packing	1				
14	1900075808	・HOLDER, packing rod	1				
15	1900075802	・BUSHING	2				
16	1121050812	・SET-SCREW	1				
17	1333004540	・BUSHING	1				
18	1221000060	・RING, snap	1				
19	1560001000	・FITTING, grease	1				
20	1560001675	・FITTING, grease	1				
21	1410810800	・RING, wear	2				
22	1432200045	・SEAL, dust	4				
	K3h182						

silverhorn.co.uk

DOZER BLADE CYLINDER

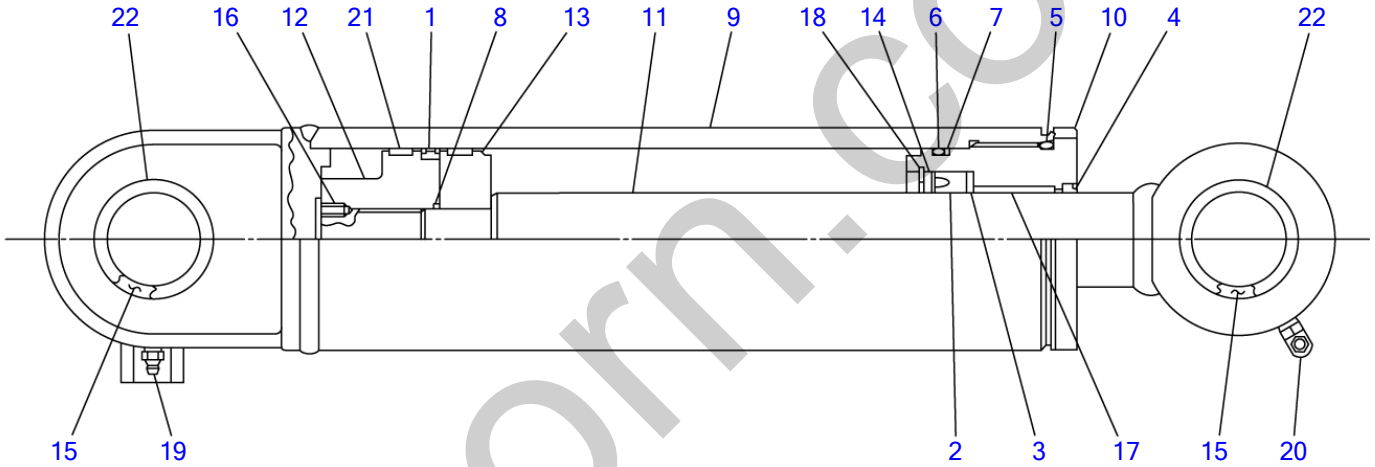

K3H200

S=FREE

silverhorn.co.uk

DOZER BLADE CYLINDER

Item	Part number		Description	Q'ty	Chan.	Serial No.	Serv.	Remarks
0		1900077100	CYLINDER ASSY	1				blade
0-1		1900077199	・KIT, seal	1				
1	X	1410221100	・・PACKING, piston	1				
2	X	1410560762	・・PACKING, rod	1				
3	X	1411276603	・・RING, back-up	1				
4	X	1900077123	・・SEAL, dust	1				
5	X	1420111100	・・O-RING	1				
6	X	1420111050	・・O-RING	1				
7	X	1421131050	・・RING, back-up	1				
8	X	1420110450	・・O-RING	1				
9		1900077107	・TUBE	1				
10		1900077103	・COVER, rod	1				
11		1900077101	・ROD, piston	1				
12		1900077106	・PISTON	1				
13		1900077155	・HOLDER, packing	1				
14		1900077108	・HOLDER, rod packing	1				
15		1900077102	・BUSHING	2				
16		1121050812	・SET-SCREW	1				
17		1333006040	・BUSHING	1				
18		1221000075	・RING, snap	1				
19		1560001000	・FITTING, grease	1				
20		1560001675	・FITTING, grease	1				
21		1410811100	・RING, wear	2				
22		1432200055	・SEAL, dust	4				
		K3h202						

silverhorn.co.uk

TRAVEL MOTOR (1/3) (reduction sec.)

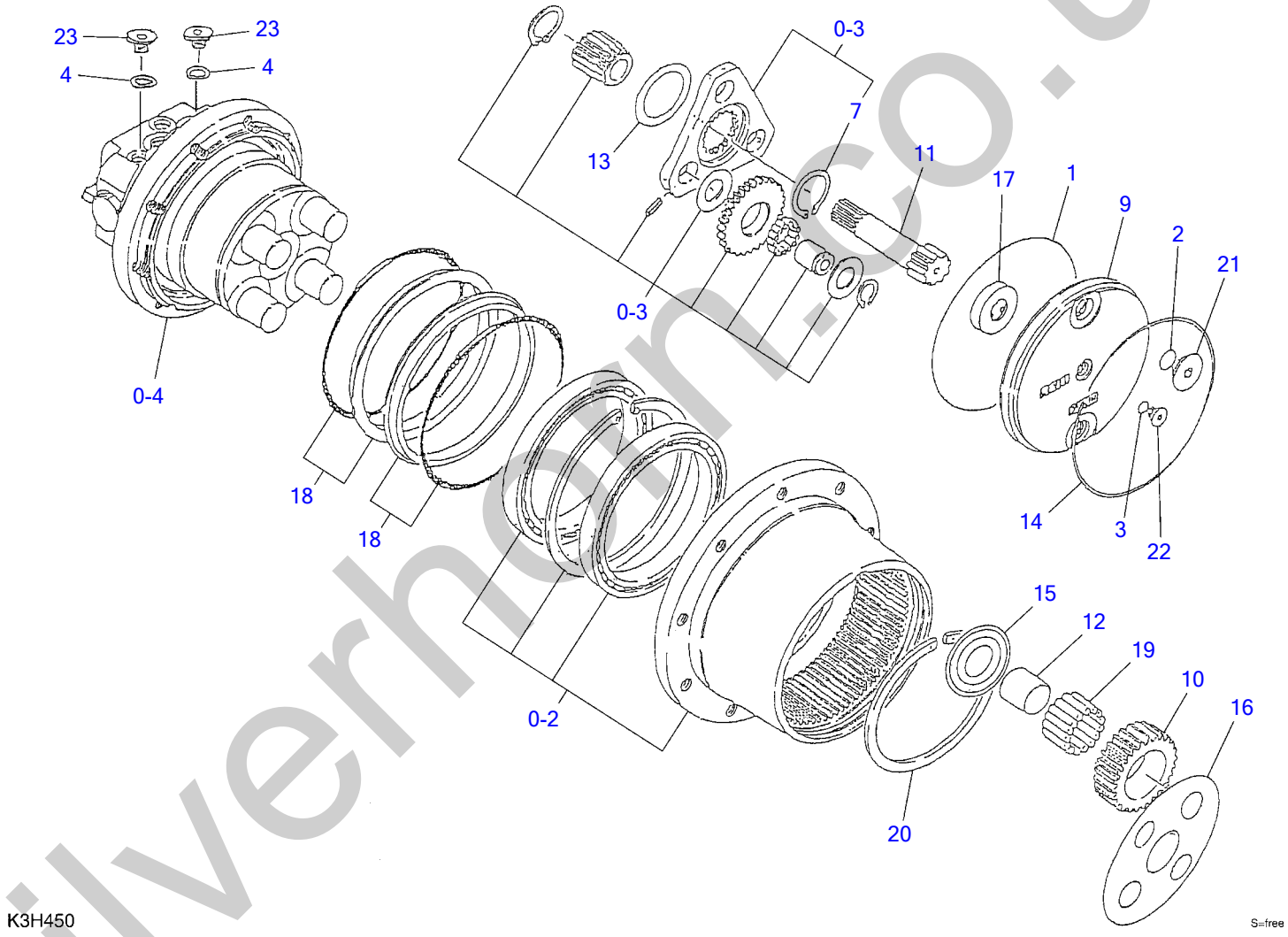

silverhorn.co.uk

TRAVEL MOTOR (1/3) (reduction sec.)

Item	Part number	Description	Q'ty	Chan.	Serial No.	Serv.	Remarks
0	1903124800	MOTOR ASSY, travel	1				
0-1	1903119599	・KIT, seal	1				
1	X 1420300264	・・O-RING	1				
2	X 1420010140	・・O-RING	2				
3	X 1420010080	・・O-RING	1				
4	X 1420010110	・・O-RING	2				
0-2	1903124898	・KIT, body	1				
0-3	1903124897	・KIT, carrier2	1				
7	1220000035	・・RING, snap	4				
9	1903119502	・COVER	1				
10	1903124806	・GEAR	4				
11	1903124809	・GEAR	1				
12	1903124810	・RING	4				
13	1903124812	・WASHER	1				
14	1903119513	・RING, snap	1				
15	1903124814	・PLATE	4				
16	1903124815	・PLATE	1				
17	1903118916	・RING	1				
18	1903124817	・SEAL, floating	2				
19	1903124820	・BEARING	136				
20	1903119523	・RING, snap	1				
21	1903118932	・PLUG	2				
22	1903118933	・PLUG	1				
23	1903901930	・PLUG	2				
0-4	1903907300	・MOTOR, hydraulic	1				
	K3h451						

silverhorn.co.uk

TRAVEL MOTOR (2/3) (motor sec.)

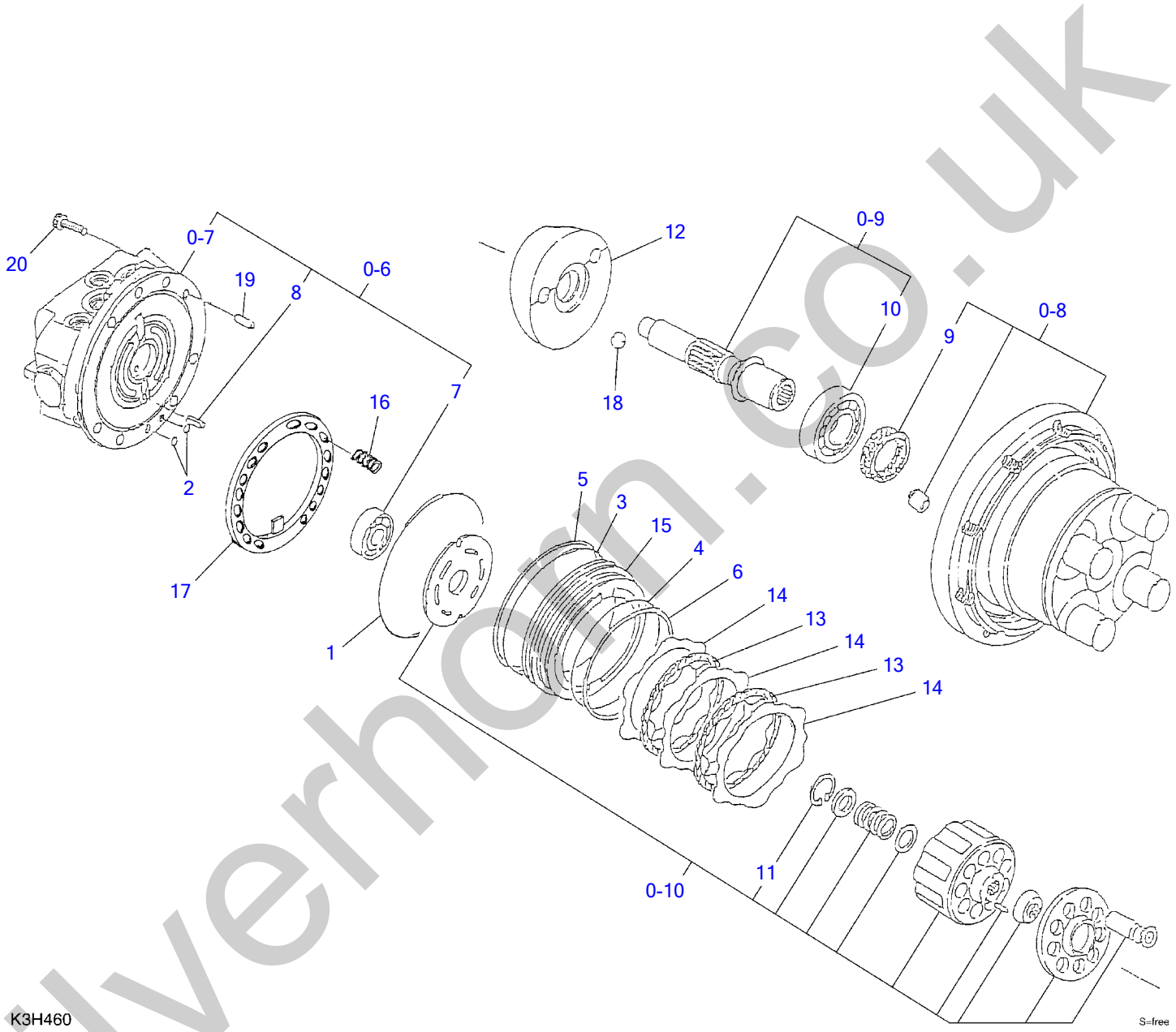

silverhorn.co.uk

TRAVEL MOTOR (2/3) (motor sec.)

Item		Part number	Description	Q'ty	Chan.	Serial No.	Serv.	Remarks
0		1903124800	MOTOR ASSY, travel	1				
0-4		1903907300	・MOTOR, hydraulic	1				
0-5		1903907399	・・KIT, seal	1				
1	X	1420111350	・・・O-RING	1				
2	X	1420010070	・・・O-RING	2				
3	X	1420111250	・・・O-RING	1				
4	X	1420111150	・・・O-RING	1				
5	X	1421131250	・・・RING, back-up	1				
6	X	1421131150	・・・RING, back-up	1				
0-6		1903907398	・・KIT, body1	1				
0-7	X	**********	・・・BODY ASSY	1				
7		1300006206	・・・BEARNIG	1				
8		1213000616	・・・PIN, spring	1				
0-8		1903907397	・・KIT, body2	1				
9		1903902319	・・・SEAL, oil	1				
0-9		1903907396	・・SHAFT ASSY	1				
10		1300006206	・・・BEARING	1				
0-10		1903907395	・・BARREL KIT, cylinder	1				
11		1221000035	・・・RING, snap	1				
12		1903907310	・・PLATE	1				
13		1903904615	・・PLATE	2				
14		1903907316	・・PLATE	3				
15		1903907317	・・PISTON	1				
16		1903907319	・・SPRING	10				
17		1903907320	・・RETAINER	1				
18		1390021000	・・BALL, steel	2				
19		1212010815	・・PIN	2				
20		1110021025	・・SCREW, cap	7				
		K3h460						

silverhorn.co.uk

TRAVEL MOTOR (3/3) (valve sec.)

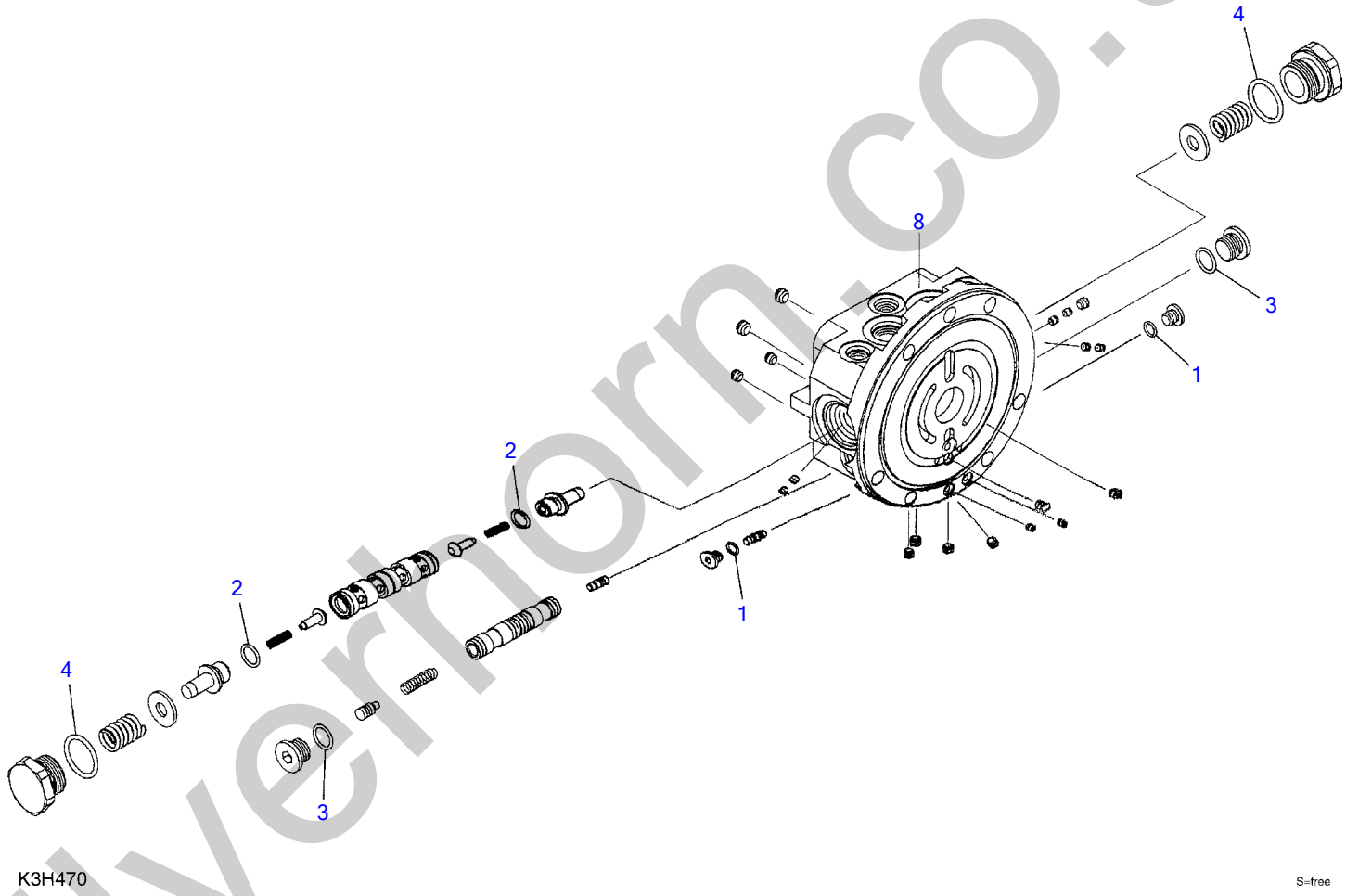

silverhorn.co.uk

TRAVEL MOTOR (3/3) (valve sec.)

Item	Part number	Description	Q'ty	Chan.	Serial No.	Serv.	Remarks
0	1903124800	MOTOR ASSY, travel	1				
0-7	X **********	・BODY ASSY	1				
0-8	1903907393	・・KIT, seal	1				
1	1420010080	・・・O-RING	2				
2	1420000125	・・・O-RING	2				
3	1420010140	・・・O-RING	2				
4	1420010250	・・・O-RING	2				
	K3h470						

silverhorn.co.uk

SLEW MOTOR (1/2) (reduction sec.)

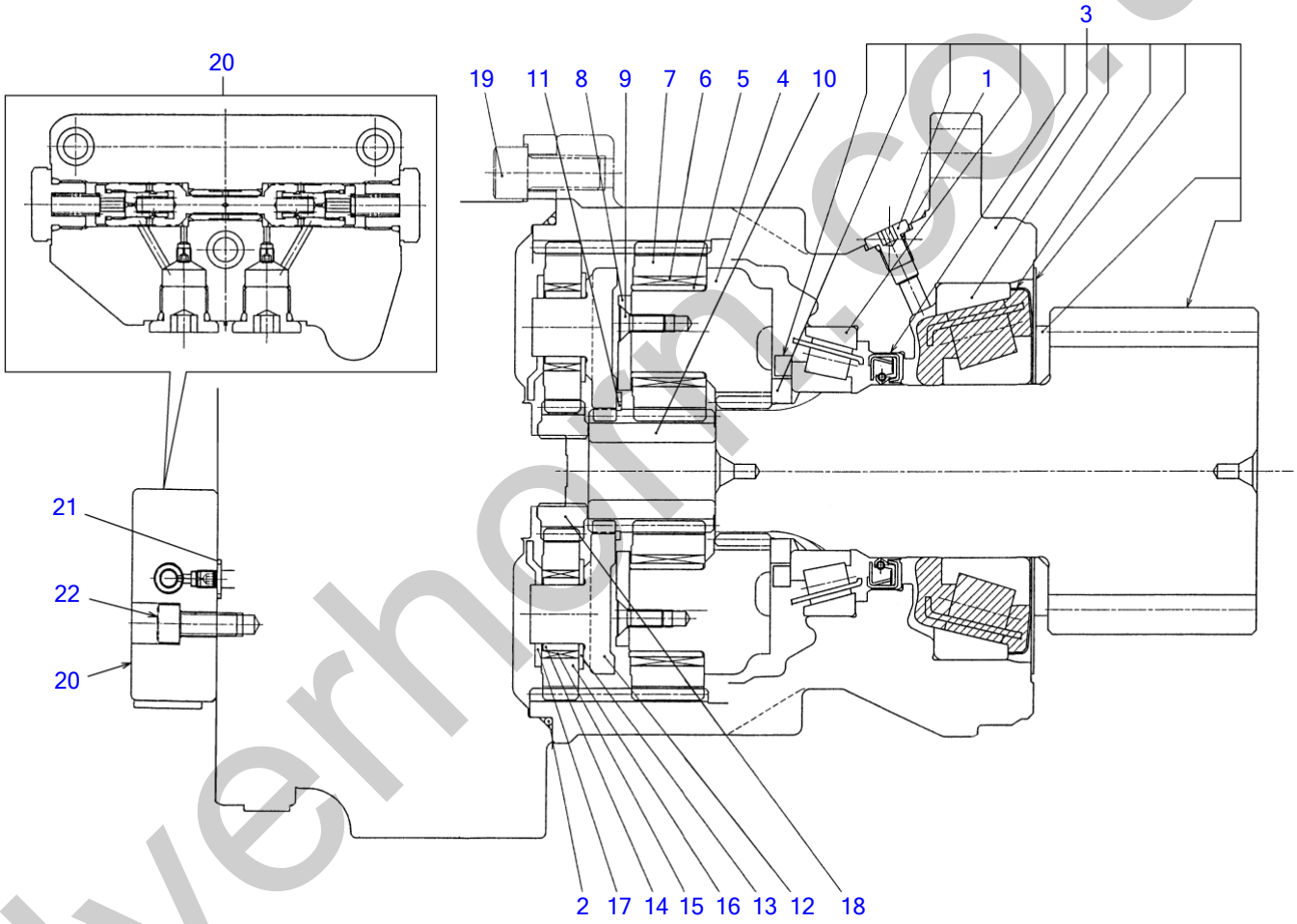

K3H263

S=free

silverhorn.co.uk

SLEW MOTOR (1/2) (reduction sec.)

Item	Part number		Description	Q'ty	Chan.	Serial No.	Serv.	Remarks
0		1903125500	MOTOR ASSY, slew	1				
0-1	X	**********	・GEAR, reduction	1				X19129-07700
0-2		1912907799	・・KIT, seal	1				
1	X	1420010080	・・・O-RING	1				
2	X	1420300260	・・・O-RING	1				
3		1912907798	・・HOUSING ASSY	1				
4		1912907011	・・HOLDER	1				
5		1912905415	・・LACE, inner	4				
6		1912905416	・・BEARING	4				
7		1912904517	・・GEAR	4				
8		1912907015	・・PLATE, thrust	1				
9		1912900714	・・SCREW	4				
10		1912906009	・・GEAR	1				
11		1220000042	・・RING, snap	1				
12		1912907019	・・HOLDER	1				
13		1912907020	・・WASHER, thrust	3				
14		1912900720	・・LACE, inner	3				
15		1912905422	・・CAGE&ROLLER	3				
16		1912907023	・・GEAR	3				
17		1912907097	・・PLATE, thrust	1				
18		1912907025	・・GEAR	1				
19		1110041230	・SCREW, cap	2				
20		1903119920	・VALVE ASSY	1				
21		1420010100	・O-RING	3				
22		1110040820	・SCREW, cap	3				
		J2h180						

silverhorn.co.uk

SLEW MOTOR (2/2) (motor sec.)

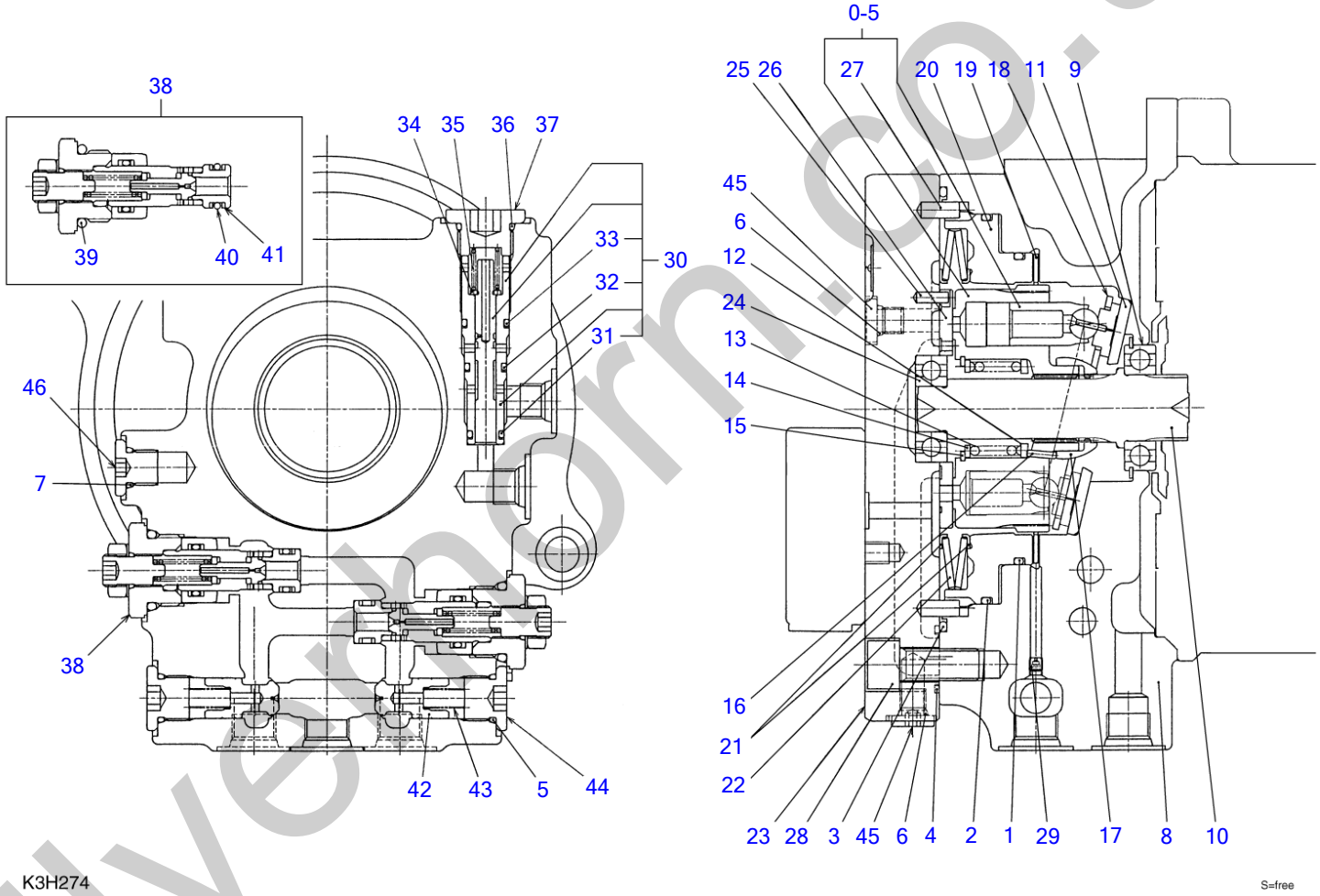

silverhorn.co.uk

SLEW MOTOR (2/2) (motor sec.)

Item		Part number	Description	Q'ty	Chan.	Serial No.	Serv.	Remarks
0		1903125500	MOTOR ASSY, slew	1				
0-3	X	**********	・MOTOR, piston	1				X19039-07600
0-4		1903906799	・・KIT, seal	1				
1	X	1420111100	・・・O-RING	1				
2	X	1420111350	・・・O-RING	1				
3	X	1903007227	・・・O-RING	1				
4	X	1420010210	・・・O-RING	2				
5	X	1420010140	・・・O-RING	2				
6	X	1420010080	・・・O-RING	2				
7	X	1420010110	・・・O-RING	1				
8		1903906701	・・CASE	1				
9		1903904502	・・BEARING, ball	1				
10		1903904503	・・SHAFT	1				
11		1903904504	・・PLATE, thrust	1				
0-5		1903120698	・・KIT, cylinder block	1				
12		1903106808	・・COLLAR	1				
13		1903904507	・・SPRING	1				
14		1903904508	・・WASHER	1				
15		1221000037	・・RING, snap	1				
16		1903904510	・・PIN	3				
17		1903106813	・・HOLDER	1				
18		1903904511	・・PLATE	1				
19		1903904514	・・DISK	1				
20		1903904515	・・PISTON	1				
21		1903904518	・・SHEET, spring	2				
22		1903904519	・・SPRING	1				
23		1903904521	・・COVER	1				
24		1903107927	・・BEARING	1				
25		1903005224	・・PIN	1				
26		1903904524	・・PLATE, valve	1				
27		1903904525	・・PIN	2				
28		1110041230	・・SCREW, cap	5				
29		1901802713	・・ORIFICE	1				
30		1901809200	・・VALVE ASSY	1				
31		1420010101	・・・O-RING	1				
32		1420010120	・・・O-RING	1				
33		1420010140	・・・O-RING	1				
34		1141110008	・・WASHER	1				
35		1903906135	・・SPRING	1				
36		1420010180	・・O-RING	1				
37		1903904537	・・PLUG	1				
38		1903906798	・・VALVE ASSY, relief	2				
39		1420010240	・・・O-RING	1				
40		1420010120	・・・O-RING	1				
41		1421020120	・・・RING, back-up	2				
42		1903904539	・・VALVE, check	2				
43		1903904540	・・SPRING	2				
44		1903106843	・・PLUG	2				
45		1912905325	・・PLUG	2				
46		1903108655	・・PLUG	1				
		J2h191						

silverhorn.co.uk

HYDRAULIC PUMP (1/3)

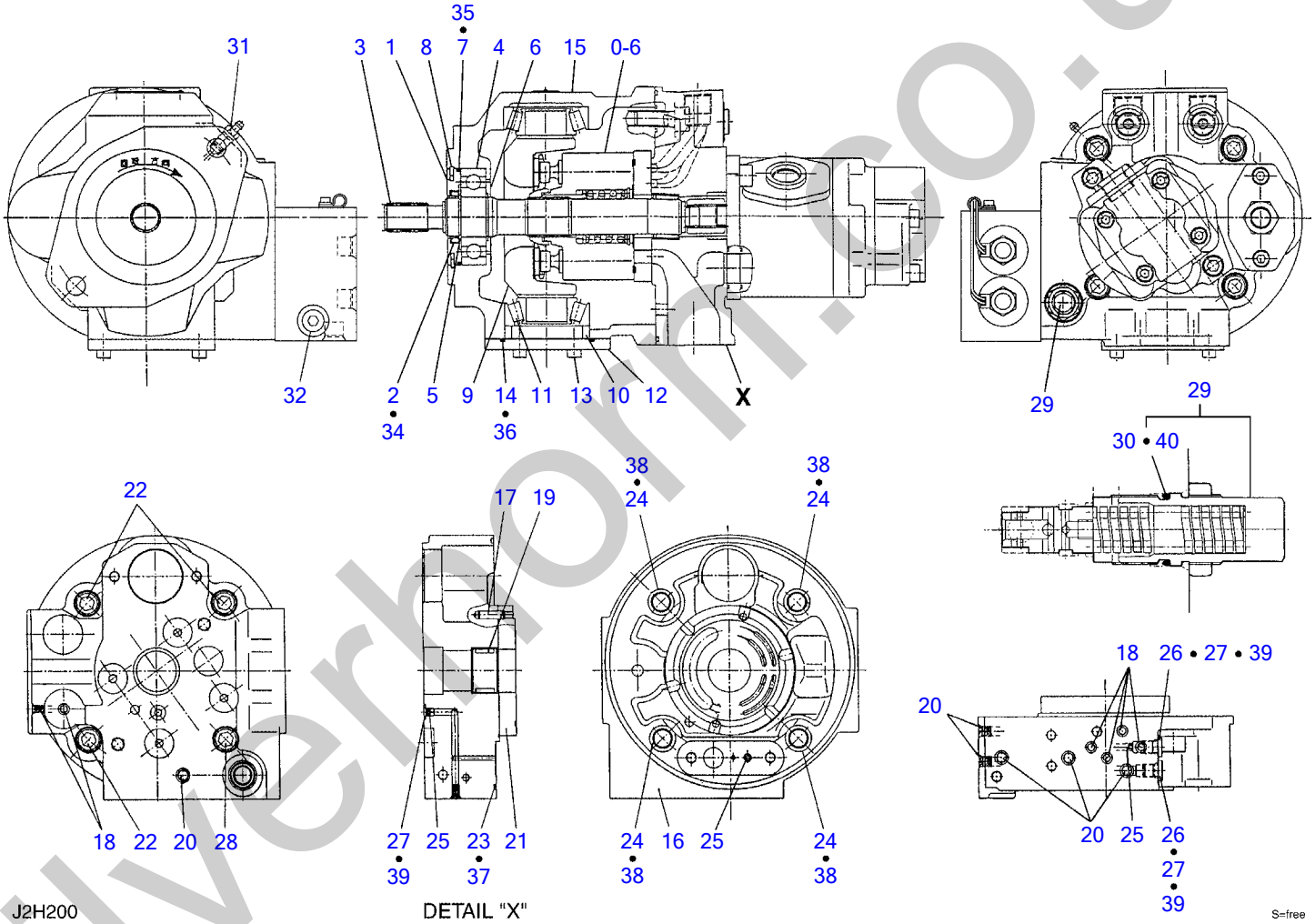

silverhorn.co.uk

HYDRAULIC PUMP (1/3)

Item		Part number	Description	Q'ty	Chan.	Serial No.	Serv.	Remarks
0		1902022600	PUMP, hydraulic	1				
0-1		1902903400	・SHAFT ASSY	1				
0-2		1902903498	・・CASE ASSY, seal	1				
1	X	**********	・・・CASE, seal	1				
2	X	**********	・・・SEAL, dust	1				
3		1902903401	・・SHAFT	1				
4		1902903403	・・BEARING	1				
5		1220000028	・・RING, snap	1				
6		1220000030	・・RING, snap	1				
7		1420300147	・・O-RING	1				
8		1221000072	・・RING, snap	1				
0-3		1902017098	・HANGER ASSY	1				
0-4	X	**********	・・HANGER ASSY	1				
0-5		1902906798	・・・HANGER SUB ASSY	1				
9	X	**********	・・・・HANGER	1				
10	X	**********	・・・・PIECE, distance	1				
11	X	**********	・・・・BEARING	2				
12		1902903501	・・・PLATE	1				
13		1110020616	・・・SCREW, cap	4				
14		1420300144	・・・O-RING	1				
15	X	**********	・・HOUSING	1				
0-6		1902906800	・ROTARY ASSY	1				
0-7		1902906900	・COVER ASSY	1				
0-8		1902906998	・・COVER SUB ASSY	1				
16	X	**********	・・・COVER	1				
17	X	**********	・・・PIN	2				
18	X	**********	・・・PLUG	3				
19	X	**********	・・・BEARING	1				
20	X	**********	・・・PLUG	3				
21		1902906902	・・PLATE	1				
22		1110021230	・・SCREW, cap	3				
23		1420300168	・・O-RING	1				
24		1902903602	・・O-RING	4				
25		1902903603	・・ORIFICE	3				
26		1902900964	・・PLUG	2				
27		1420010080	・・O-RING	3				
28		1110021255	・・SCREW, cap	1				
29		1901800050	・VALVE, relief	1				
30		1902903602	・・O-RING	1				
31		1902017011	・VALVE	1				
32		1901034371	・PLUG					
33		1902017099	・KIT, seal 1	1				
34	X	**********	・・SEAL, dust	1				
35		1420300147	・・O-RING	1				
36		1420300144	・・O-RING	1				
37		1420300168	・・O-RING	1				
38		1902903602	・・O-RING	4				
39		1420010080	・・O-RING	3				
40		1902903602	・・O-RING	1				
		J2h201						

silverthorn.co.uk

HYDRAULIC PUMP (2/3)

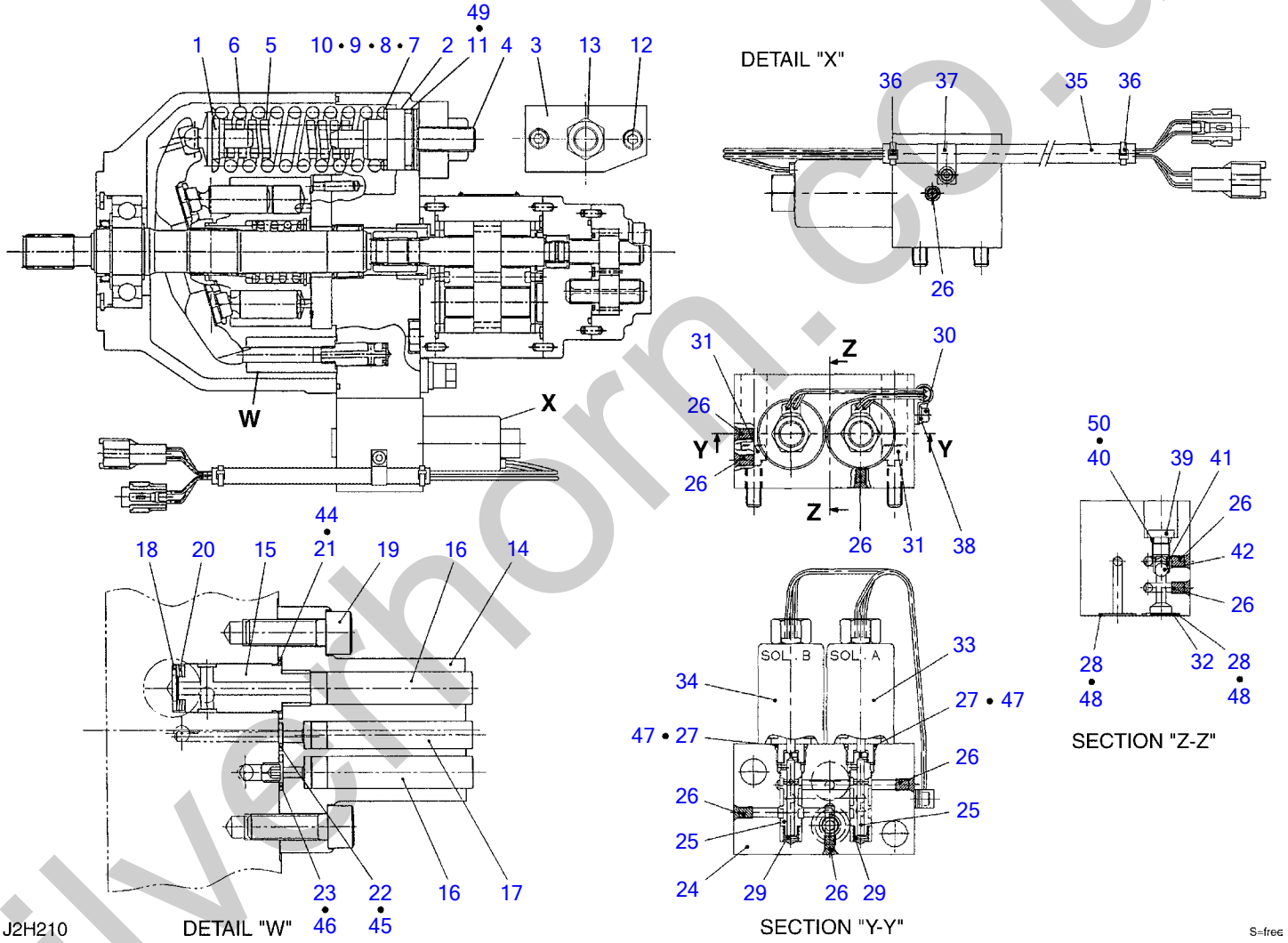

silverthorn.co.uk

HYDRAULIC PUMP (2/3)

Item	Part number	Description	Q'ty	Chan.	Serial No.	Serv.	Remarks
0	1902022600	PUMP, hydraulic	1				
0-9	1902911300	・SPRING ASSY	1				
1	1902903502	・・HOLDER, spring	1				
2	1902907002	・・HOLDER, spring	1				
3	1902909203	・・COVER	1				
0-10	1902911398	・・SCREW ASSY, adjust	1				
4	1902903505	・・・SCREW	1				
5	1902903506	・・・SPRING	1				
6	1902022613	・・・SPRING	1				
7	1902911334	・・・SHIM t=0.3	2				
8	1902911344	・・・SHIM t=0.5	2				
9	1902903510	・・・SHIM t=1.0	2				
10	1902903511	・・・SHIM t=2.0	2				
11	1420000340	・・O-RING	1				
12	1110020830	・・SCREW, cap	2				
13	1130050016	・・NUT	1				
0-11	1902911400	・CONTROL ASSY, piston	1				
14	1902907101	・・CYLINDER	1				
15	1902911402	・・PISTON	1				
16	1902907103	・・PIN	2				
17	1902911404	・・PIN	1				
18	1902907105	・・HOLDER, spring	1				
19	1110020825	・・SCREW, cap	2				
20	1902903608	・・WASHER, conical	3				
21	1420310016	・・O-RING	1				
22	1420310009	・・O-RING	1				
23	1420310011	・・O-RING	1				
0-12	1902911600	・VALVE ASSY	1				
0-13	1902911698	・・BODY SUB ASSY	1				
24	X **********	・・・BODY	1				
25	X **********	・・・SPOOL	2				
26	1902900727	・・PLUG	7				
27	1420010140	・・O-RING	2				
28	1420300017	・・O-RING	2				
29	1902911606	・・SPRING	2				
30	1110020410	・・SCREW, cap	5				
31	1110020825	・・SCREW, cap	2				
32	1902907309	・・ELEMENT, filter	1				
33	1902911610	・・SOLENOID	1				
34	1902911611	・・SOLENOID	1				
35	1902907313	・・COVER	1				
36	1902907314	・・BAND	2				
37	1902907315	・・CLAMP	1				
38	1141110004	・・WASHER	1				
39	1901729103	・・PLUG	1				
40	1420010080	・・O-RING	1				
41	1901729105	・・SPRING	1				
42	1390010450	・・BALL, steel	1				
43	1902017097	・KIT, seal 2	1				
44	1420310016	・・O-RING	1				
45	1420310009	・・O-RING	1				
46	1420310011	・・O-RING	1				
47	1420010140	・・O-RING	2				
48	1420300017	・・O-RING	2				
49	1420000340	・・O-RING	1				
50	1420010080	・・O-RING	1				
	J2h210						

silverthorn.co.uk

HYDRAULIC PUMP (3/3)

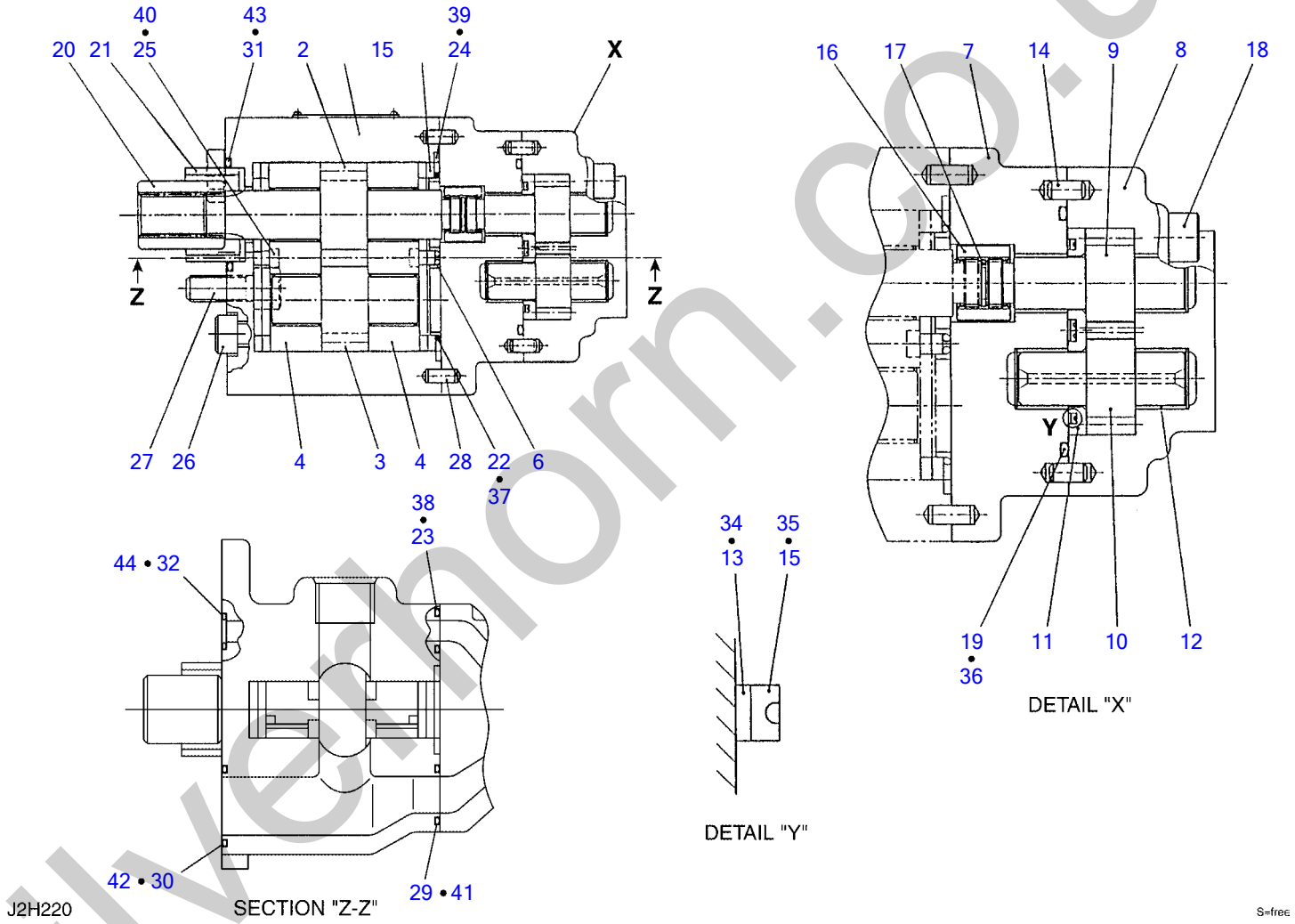

silverthorn.co.uk

HYDRAULIC PUMP (3/3)

Item	Part number	Description	Q'ty	Chan.	Serial No.	Serv.	Remarks
0	1902022600	PUMP, hydraulic	1				
0-14	1902911500	・PUMP ASSY, gear	1				
0-15	1902911598	・・KIT, body	1				
1	X **********	・・・CASE	1				
2	X **********	・・・GEAR	1				
3	X **********	・・・GEAR	1				
4	X **********	・・・PLATE, side	2				
5	1902909310	・・PLATE	2				
6	1902901609	・・GUIDE	2				
0-16	1902907400	・・PUMP ASSY, sub gear	1				
0-17	1902907498	・・・KIT, body	1				
7	X **********	・・・・FRAME	1				
8	X **********	・・・・HOUSING	1				
9	X **********	・・・・GEAR	1				
10	X **********	・・・・GEAR	1				
11	X **********	・・・・PLATE, side	1				
12	X **********	・・・・METAL	4				
13	1902905907	・・・RING, back-up	1				
14	1902900716	・・・PIN	2				
15	1902905908	・・・RING	1				
16	1902905909	・・・RING	1				
17	1221000012	・・・RING, snap	1				
18	1110020840	・・・SCREW, cap	4				
19	1420300138	・・・O-RING	1				
20	1902907212	・・COUPLING	1				
21	1902907213	・・BUSHING	1				
22	1902907214	・・O-RING	2				
23	1420310014	・・O-RING	1				
24	1902901611	・・RING	1				
25	1902903714	・・RING	2				
26	1110021090	・・SCREW, cap	4				
27	1110021025	・・SCREW, cap	2				
28	1902900716	・・PIN	2				
29	1420300018	・・O-RING	1				
30	1420300023	・・O-RING	1				
31	1420300128	・・O-RING	1				
32	1420010100	・・O-RING	1				
33	1902911599	・KIT, seal	1				
34	1902905907	・・RING, back-up	1				
35	1902905908	・・RING	1				
36	1420300138	・・O-RING	1				
37	1902907214	・・O-RING	2				
38	1420310014	・・O-RING	1				
39	1902901611	・・RING	1				
40	1902903714	・・RING	2				
41	1420300018	・・O-RING	1				
42	1420300023	・・O-RING	1				
43	1420300128	・・O-RING	1				
44	1420010100	・・O-RING	1				
	J2h220						

silverthorn.co.uk

HYDRAULIC PUMP (1/3) (for air conditioner)

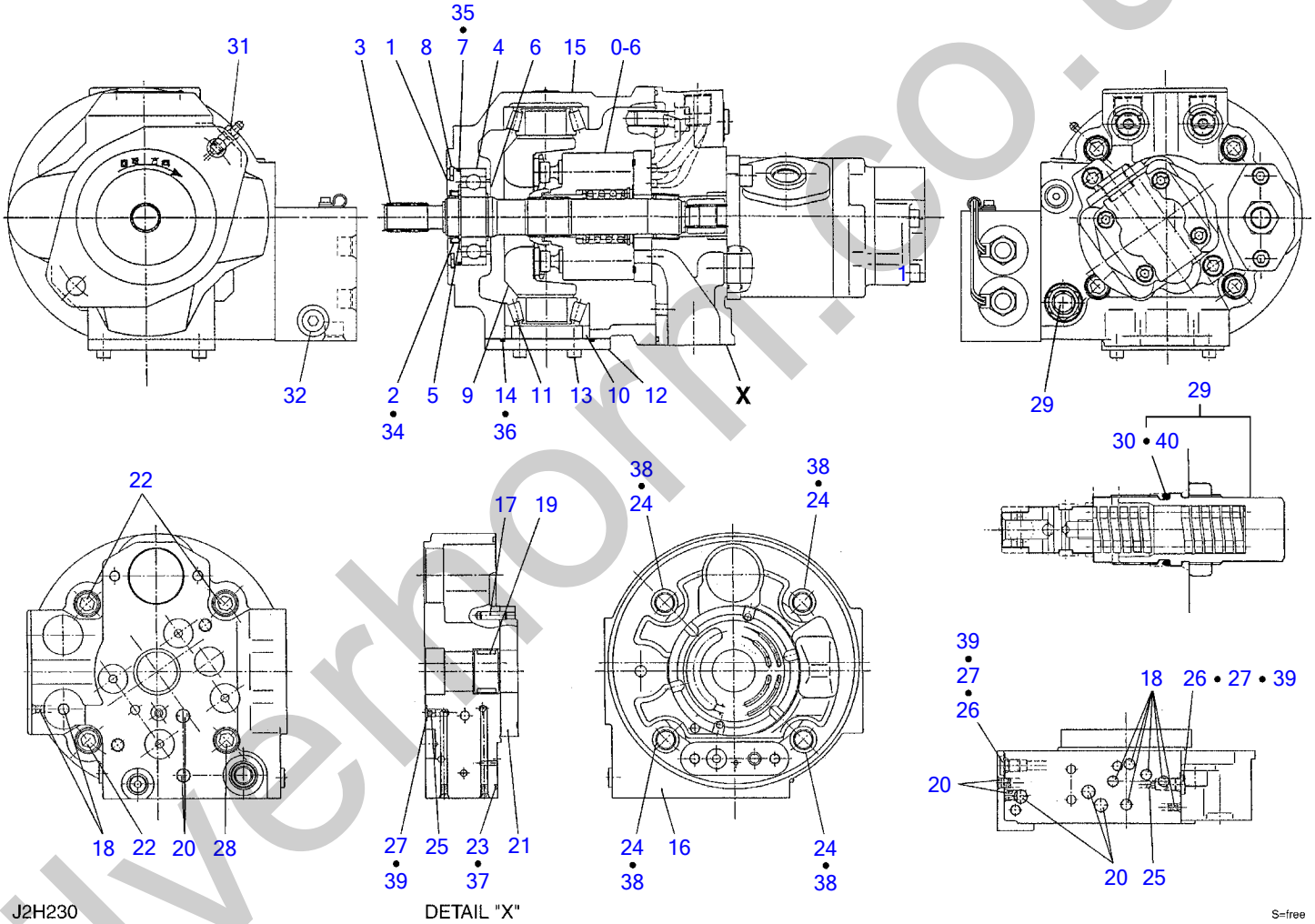

silverhorn.co.uk

HYDRAULIC PUMP (1/3) (for air conditioner)

Item		Part number	Description	Q'ty	Chan.	Serial No.	Serv.	Remarks
0		1902022000	PUMP, hydraulic	1				
0-1		1902903400	・SHAFT ASSY	1				
0-2		1902903498	・・CASE ASSY, seal	1				
1	X	**********	・・・CASE, seal	1				
2	X	**********	・・・SEAL, dust	1				
3		1902903401	・・SHAFT	1				
4		1902903403	・・BEARING	1				
5		1220000028	・・RING, snap	1				
6		1220000030	・・RING, snap	1				
7		1420300147	・・O-RING	1				
8		1221000072	・・RING, snap	1				
0-3		1902017098	・HANGER ASSY	1				
0-4	X	**********	・・HANGER ASSY	1				
0-5		1902906798	・・・HANGER SUB ASSY	1				
9	X	**********	・・・・HANGER	1				
10	X	**********	・・・・PIECE, distance	1				
11	X	**********	・・・・BEARING	2				
12		1902903501	・・・PLATE	1				
13		1110020616	・・・SCREW, cap	4				
14		1420300144	・・・O-RING	1				
15	X	**********	・・HOUSING	1				
0-6		1902906800	・ROTARY ASSY	1				
0-7		1902907500	・COVER ASSY	1				
0-8		1902907598	・・COVER SUB ASSY	1				
16	X	**********	・・・COVER	1				
17	X	**********	・・・PIN	2				
18	X	**********	・・・PLUG	3				
19	X	**********	・・・BEARING	1				
20	X	**********	・・・PLUG	3				
21		1902906902	・・PLATE	1				
22		1110021230	・・SCREW, cap	3				
23		1420300168	・・O-RING	1				
24		1902903602	・・O-RING	4				
25		1902903603	・・ORIFICE	3				
26		1902905703	・・PLUG	2				
27		1420010080	・・O-RING	3				
28		1110021255	・・SCREW, cap	1				
29		1901800050	・VALVE, relief	1				
30		1902903602	・・O-RING	1				
31		1902017011	・VALVE	1				
32		1901034371	・PLUG					
33		1902017099	・KIT, seal 1	1				
34	X	**********	・・SEAL, dust	1				
35		1420300147	・・O-RING	1				
36		1420300144	・・O-RING	1				
37		1420300168	・・O-RING	1				
38		1902903602	・・O-RING	4				
39		1420010080	・・O-RING	3				
40		1902903602	・・O-RING	1				
		J2h231						

silverthorn.co.uk

HYDRAULIC PUMP (2/3) (for air conditioner)

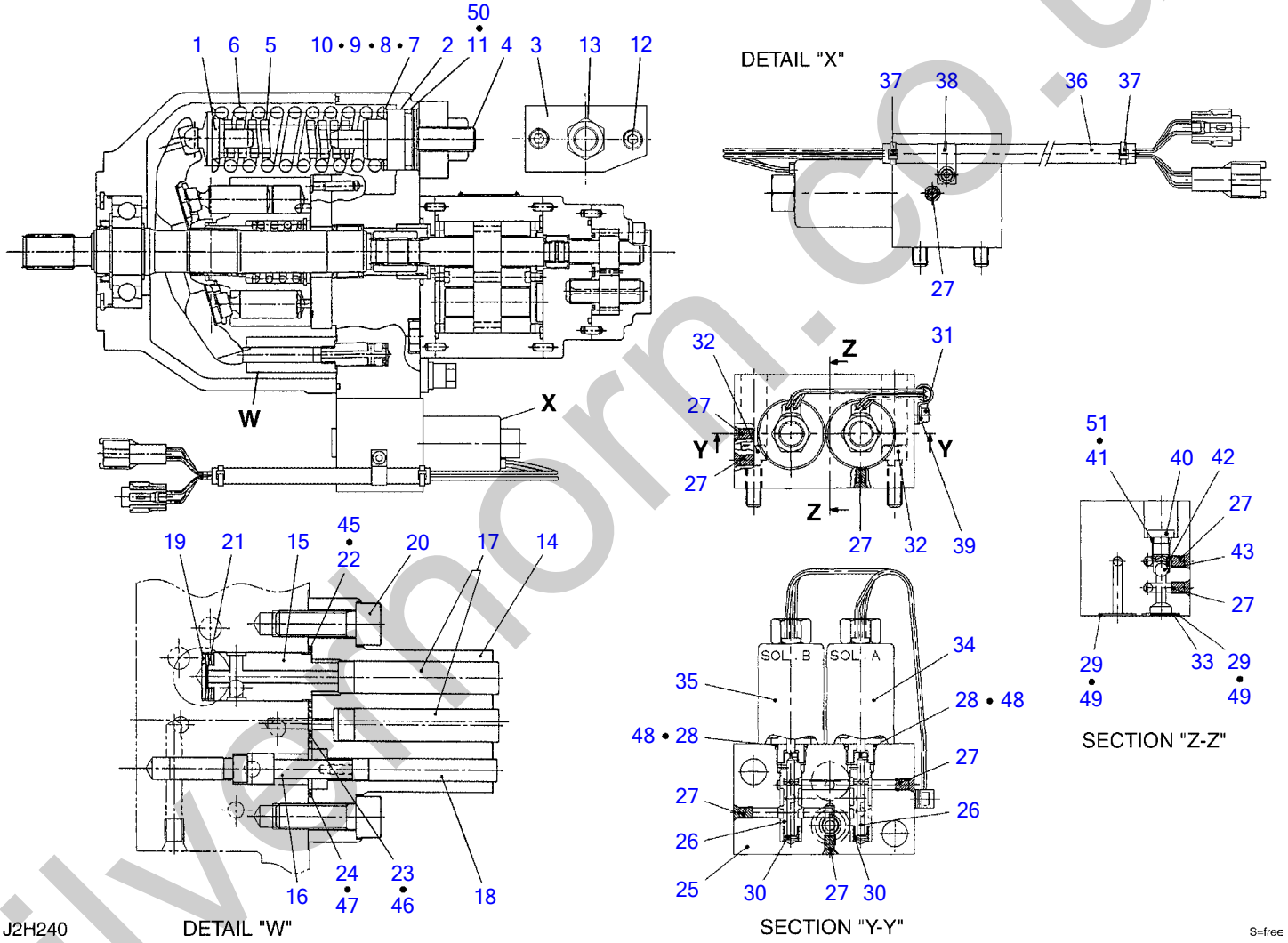

silvernorm.co.uk

HYDRAULIC PUMP (2/3) (for air conditioner)

Item	Part number	Description	Q'ty	Chan.	Serial No.	Serv.	Remarks
0	1902022000	PUMP, hydraulic	1				
0-9	1902911300	・SPRING ASSY	1				
1	1902903502	・・HOLDER, spring	1				
2	1902907002	・・HOLDER, spring	1				
3	1902909203	・・COVER	1				
0-10	1902911398	・・SCREW ASSY, adjust	1				
4	1902903505	・・・SCREW	1				
5	1902903506	・・・SPRING	1				
6	1902022613	・・・SPRING	1				
7	1902911334	・・・SHIM t=0.3	2				
8	1902911344	・・・SHIM t=0.5	2				
9	1902903510	・・・SHIM t=1.0	2				
10	1902903511	・・・SHIM t=2.0	2				
11	1420000340	・・O-RING	1				
12	1110020830	・・SCREW, cap	2				
13	1130050016	・・NUT	1				
0-11	1902911700	・CONTROL ASSY, piston	1				
14	1902907601	・・CYLINDER	1				
15	1902911402	・・PISTON	1				
16	1902907611	・・PISTON	1				
17	1902907103	・・PIN	2				
18	1902907604	・・PIN	1				
19	1902907105	・・HOLDER, spring	1				
20	1110020825	・・SCREW, cap	2				
21	1902903608	・・WASHER, conical	3				
22	1420310016	・・O-RING	1				
23	1420310009	・・O-RING	1				
24	1420310015	・・O-RING	1				
0-12	1902911600	・VALVE ASSY	1				
0-13	1902911698	・・BODY SUB ASSY	1				
25	X **********	・・・BODY	1				
26	X **********	・・・SPOOL	2				
27	1902900727	・・PLUG	7				
28	1420010140	・・O-RING	2				
29	1420300017	・・O-RING	2				
30	1902911606	・・SPRING	2				
31	1110020410	・・SCREW, cap	5				
32	1110020825	・・SCREW, cap	2				
33	1902907309	・・ELEMENT, filter	1				
34	1902911610	・・SOLENOID	1				
35	1902911611	・・SOLENOID	1				
36	1902907313	・・COVER	1				
37	1902907314	・・BAND	2				
38	1902907315	・・CLAMP	1				
39	1141110004	・・WASHER	1				
40	1901729103	・・PLUG	1				
41	1420010080	・・O-RING	1				
42	1901729105	・・SPRING	1				
43	1390010450	・・BALL, steel	1				
44	1902017097	・KIT, seal 2	1				
45	1420310016	・・O-RING	1				
46	1420310009	・・O-RING	1				
47	1420310015	・・O-RING	1				
48	1420010140	・・O-RING	2				
49	1420300017	・・O-RING	2				
50	1420000340	・・O-RING	1				
51	1420010080	・・O-RING	1				
	J2h240						

silverthorn.co.uk

HYDRAULIC PUMP (3/3) (for air conditioner)

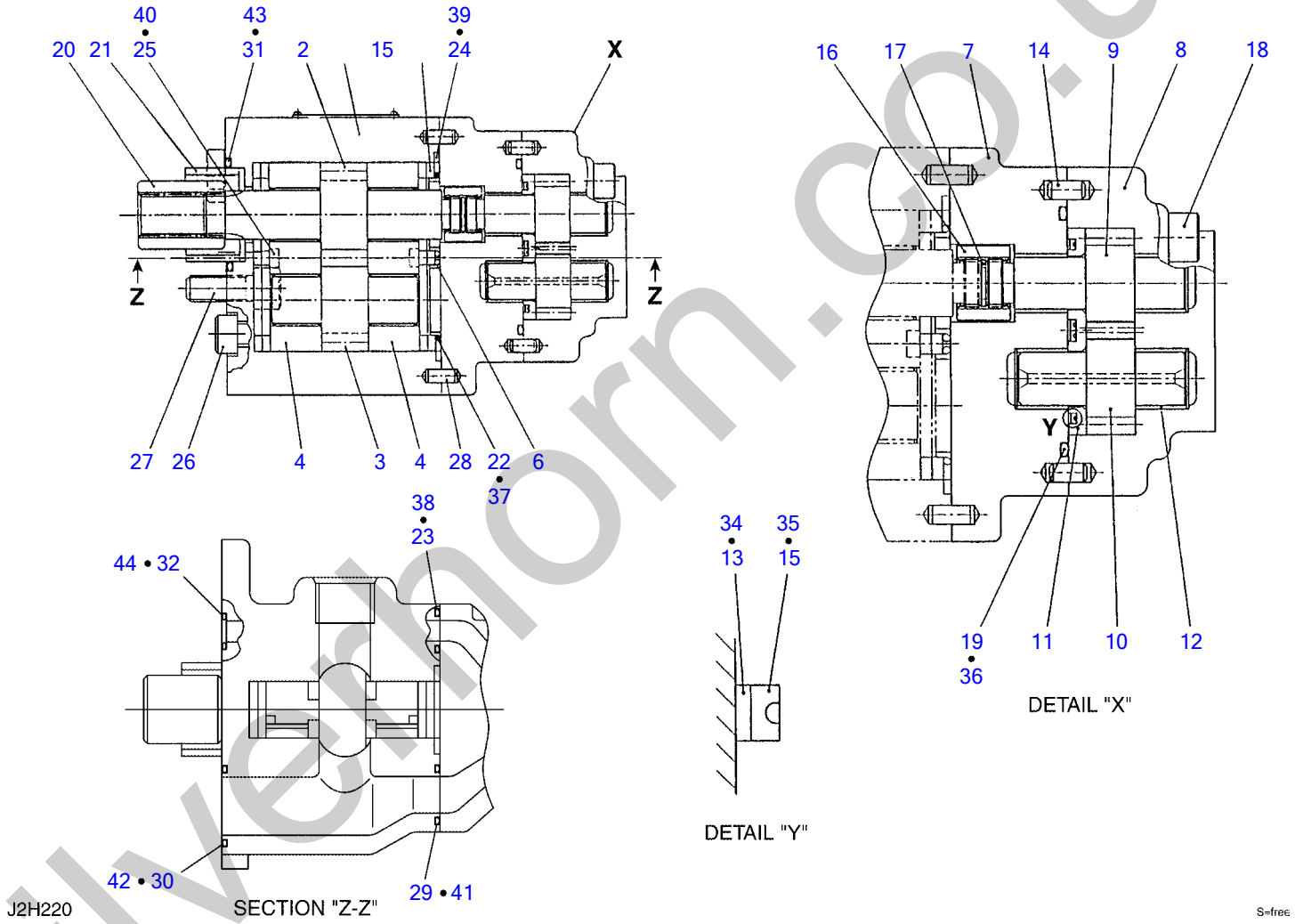

silverthorn.co.uk

HYDRAULIC PUMP (3/3) (for air conditioner)

Item	Part number	Description	Q'ty	Chan.	Serial No.	Serv.	Remarks
0	1902022000	PUMP, hydraulic	1				
0-14	1902911800	・PUMP ASSY, gear	1				
0-15	1902911898	・・KIT, body	1				
1	X **********	・・・CASE	1				
2	X **********	・・・GEAR	1				
3	X **********	・・・GEAR	1				
4	X **********	・・・PLATE, side	2				
5	1902909310	・・PLATE	2				
6	1902901609	・・GUIDE	2				
0-16	1902907400	・・PUMP ASSY, sub gear	1				
0-17	1902907498	・・・KIT, body	1				
7	X **********	・・・・FRAME	1				
8	X **********	・・・・HOUSING	1				
9	X **********	・・・・GEAR	1				
10	X **********	・・・・GEAR	1				
11	X **********	・・・・PLATE, side	1				
12	X **********	・・・・METAL	4				
13	1902905907	・・・RING, back-up	1				
14	1902900716	・・・PIN	2				
15	1902905908	・・・RING	1				
16	1902905909	・・・RING	1				
17	1221000012	・・・RING, snap	1				
18	1110020840	・・・SCREW, cap	4				
19	1420300138	・・・O-RING	1				
20	1902907212	・・COUPLING	1				
21	1902907213	・・BUSHING	1				
22	1902907214	・・O-RING	2				
23	1420310014	・・O-RING	1				
24	1902901611	・・RING	1				
25	1902903714	・・RING	2				
26	1110021090	・・SCREW, cap	4				
27	1110021025	・・SCREW, cap	2				
28	1902900716	・・PIN	2				
29	1420300018	・・O-RING	1				
30	1420300023	・・O-RING	1				
31	1420300128	・・O-RING	1				
32	1420010100	・・O-RING	1				
33	1902911599	・KIT, seal	1				
34	1902905907	・・RING, back-up	1				
35	1902905908	・・RING	1				
36	1420300138	・・O-RING	1				
37	1902907214	・・O-RING	2				
38	1420310014	・・O-RING	1				
39	1902901611	・・RING	1				
40	1902903714	・・RING	2				
41	1420300018	・・O-RING	1				
42	1420300023	・・O-RING	1				
43	1420300128	・・O-RING	1				
44	1420010100	・・O-RING	1				
	J2h250						

silverthorn.co.uk

How to read this Parts Catalog.

1. Parts mentioned in this Parts Catalog may not necessarily be standard equipping parts.
2. Parts change may be made without prior notice.
3. Form of this Parts Catalog.

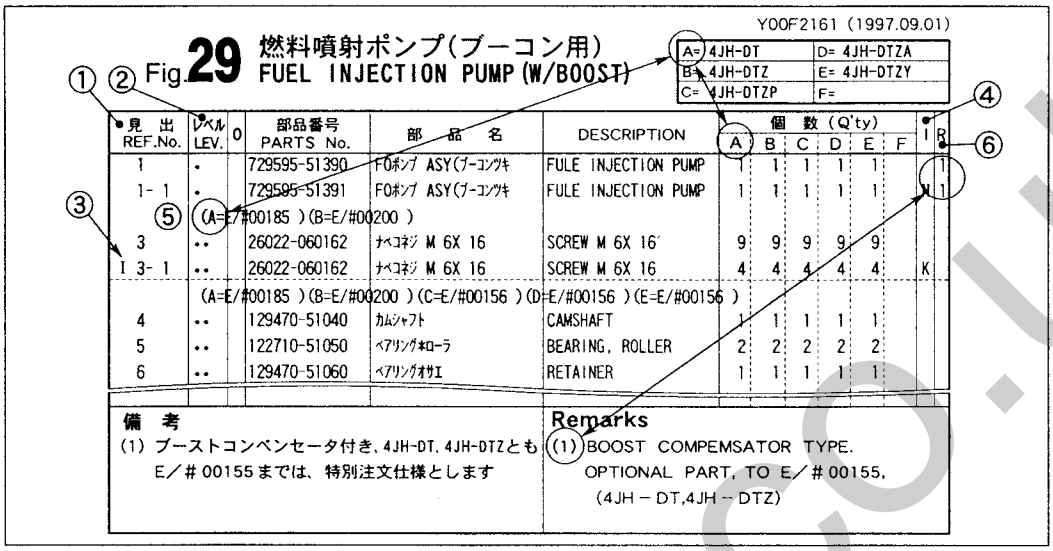

Y00F2161 (1997.09.01)

A=	4JH-DT	D=	4JH-DTZA
B=	4JH-DTZ	E=	4JH-DTZY
C=	4JH-DTZP	F=	

Fig. 29 燃料噴射ポンプ(ブーコン用)
FUEL INJECTION PUMP (W/BOOST)

•見出 REF.No.	レベル LEV.	O	部品番号 PARTS No.	部品名	DESCRIPTION	個数 (Q'ty) A	B	C	D	E	F	I	R
1	•		729595-51390	FOポンプ ASY(ブーコンツキ	FULE INJECTION PUMP	1	1	1	1	1			1
1- 1	•		729595-51391	FOポンプ ASY(ブーコンツキ	FULE INJECTION PUMP	1	1	1	1	1			1
	(A=E/#00185)(B=E/#00200)												
3	••		26022-060162	ナベコネジ M 6X 16	SCREW M 6X 16	9	9	9	9	9			
I 3- 1	••		26022-060162	ナベコネジ M 6X 16	SCREW M 6X 16	4	4	4	4	4		K	
	(A=E/#00185)(B=E/#00200)(C=E/#00156)(D=E/#00156)(E=E/#00156)												
4	••		129470-51040	カムシャフト	CAMSHAFT	1	1	1	1	1			
5	••		122710-51050	ベアリングキローラ	BEARING, ROLLER	2	2	2	2	2			
6	••		129470-51060	ベアリングオサエ	RETAINER	1	1	1	1	1			

備考
(1) ブーストコンペンセータ付き、4JH-DT, 4JH-DTZとも E／#00155までは、特別注文仕様とします

Remarks
(1) BOOST COMPEMSATOR TYPE. OPTIONAL PART, TO E／#00155. (4JH－DT,4JH－DTZ)

① Ref. No.

The Ref. No. in the list may not be accord with the Ref. No. on illustration.

(Ex.) Illustration No. 1 — List head No. 1 (Befor change) ⟶ 1 [－1] (After change)

When interchangeable symbol N, R, and K, illustrations for new parts are sometimes omitted.

② Lev.(Level)

Indication and Meaning of Level

Level : Hereunder is given the relation among the number of dots(•),the level and the nominal parent- child relationship.

- • ……Parent parts(Assembly parts)
- •• ……Child parts included in "•" (Semi- Assembly parts,component parts of Assembly parts.)
- ••• ……Child parts included in "••", Grand- child parts in terms of "•". (Compornent parts of Semi- Assembly parts.)

Note) A parts of non- sale parts are illustlated but not listed.

③ Change Mark

Change Mark "I" is given to the part for which a desigh change was made at this time.
The design change was not shown in the last published Parts Catalog.

④ Interchangeability Mark

In the case where a part change took place,one of the following interchangeability marks is indicated for that part.

Symbol	interchangeability	Contents note
N	Old ←○ ×→ New	New Part is interchangeable for Old Part but not interchangeable conversely.
Q	Old ←× ○→ New	New Part is not interchangeable for Old Part but interchangeable conversely.
R	Old ←○ ○→ New	New Part is interchangeable for Old Part and vice versa.
S	Old ←× ×→ New	New Part is not interchangeable for Old Part and vice versa.
W		Part newly added.
Z		Part discontinued.
F		Not interchangeable single part but interchangeable by set of the related parts.
K		Changed only in quantity used.

⑤ Effective Machine No.

When a part is changed,Effective Machine No. of a Model for which the part is applicable is indication in each column of (A)- (F).

Product Symbol	Product No.	Product Symbol	Product No.
C	Clutch No. Compressor No.	M	Machine No.
D	Drive No.	T	Tractor No.
E	Engine No.	Note1) ※	Date

Note1) Date may follow the symbol in some cases. (Ex.) ※ 1996.01
Note2) As far as engine models shown by "XXX" are concerned, the modification of the parts could not be predicted or the engine models themselves could not be identified.
Note3) (A=E/#00185) means that the design change on the part has been effective for the model at the column (A)(in this case, for 4JH- DT) on and from E/#(Engine Serial Number) 00185.

⑥ Remarks Mark

Figures or alphabets (Symbols) are entered in the remark column.
The comments(remarks)on the pertinent parts are indicated in the lower part of the list by the same symbols as those stated above.

silverform.co.uk

silverhorn.co.uk

Engine for TB153FR 4TNV88-PTBZ1
CYLINDER BLOCK

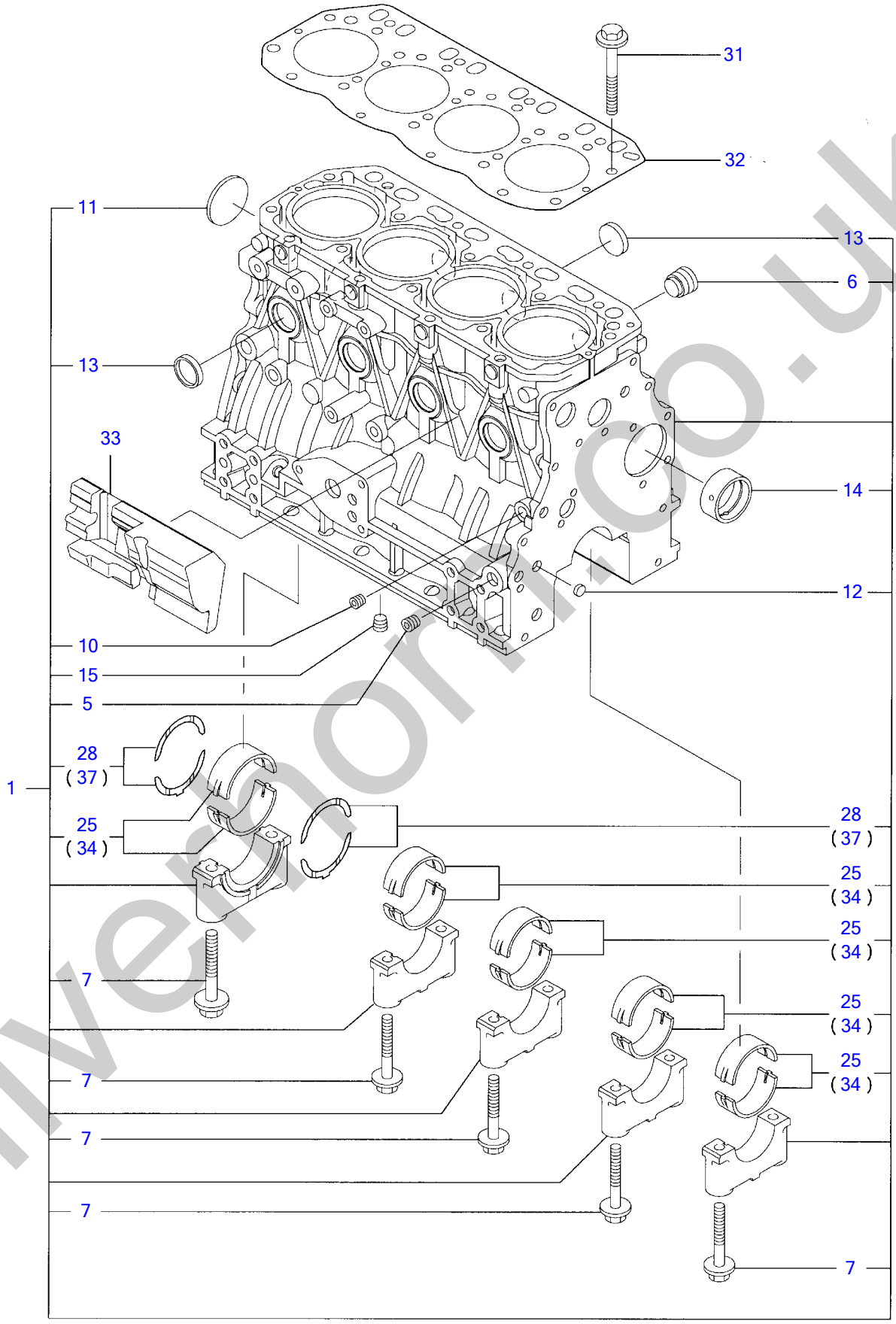

Y00D8900	1. シリンダブロック				
4TNV88-PTBZ1		1:06, 02			PLUS

silvermoor.co.uk

¼ØÝÀÞÌÞÛ¯¸ CYLINDER BLOCK

Œ©lo REF NO.	•"•i"Ô†† PARTS NO.	•"•i-¼	Description	l"–Ê Q'ty	ŒÝŠ·l« I	R	"õll
1	Y729602-01560	¼ØÝÀÞÌÞÛÂ¸ CMP	BLOCK ASSY, CYLINDER	1			
5	Y124160-01910	· Ìß×¸Þ PT1/4	· PLUG PT1/4	2			
6	Y171051-01921	· Ìß×¸Þ NPTF1	· PLUG	1			
7	Y129150-02020	· ÎÞÙÄ(ÒÀÙ·ÔÂÌß	· BOLT, METAL CAP	10			
10	Y124060-01050	· Ìß×¸Þ	· PLUG PT1/8	1			
11	Y129001-01250	· »×¶ÞÀÌß×¸Þ 50	· PLUG 50	1			
12	Y27241-120000	· ÜÝ¶ÞÀÌß×¸Þ 12	· PLUG 12	2			
13	Y27241-300000	· ÜÝ¶ÞÀÌß×¸Þ 30	· PLUG 30	8			
14	Y129795-02411	· ÌÞÂ¼Õ (A	· BUSH, CAMSHAFT	1			
15	Y124160-01910	· Ìß×¸Þ PT1/4	· PLUG PT1/4	1			
25	Y129001-02930	· Ò²ÝÒÀÙCMP(STDÎÖ³ËÝ)	· MAIN BEARING SET	5		(3)	ÎÖ³ÌÞËÝÃÞ½
28	Y129150-02930	· ½×½ÄÍÞ±ØÝ¸Þ	· METAL, THRUST	2			
31	Y129150-01200	ÍÂÄÞÎÞÙÄ	STUD, CYL. HEAD	18			
32	Y129407-01340	ÍÂÄÞ¶Þ½¹ÂÄ	GASKET,CYL.HEAD	1			
33	Y129004-01190	Ã²»Þ²Ê½Íß-»	SPACER	1			
34	Y129150-02870	Ò²ÝÒÀÙ U.S=0.25	MAIN METAL US=0.25	5		(1)	±ÝÀÞ°»²½Þ(U.S=0.25
37	Y129150-02940	½×½ÄÒÀÙOS=.25(2¹/¾ÂÄ	METAL,THRUST.25(2PIE	1		(2)	µ°ÊÞ°»²½Þ(O.S=0.25)

silverhorn.co.uk

GEAR HOUSING

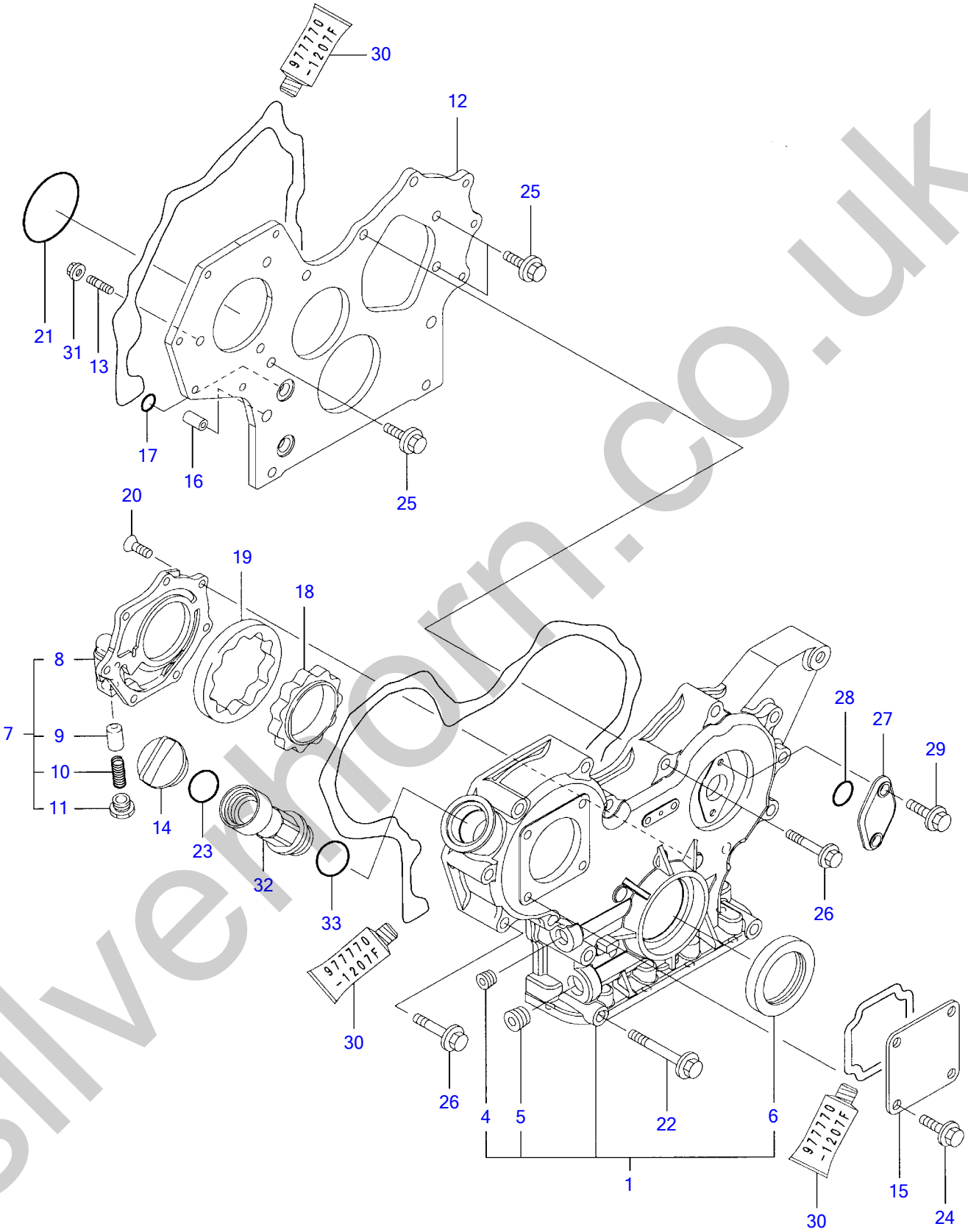

silverhorn.co.uk

Y00D8900	2. ギヤケース			
4TNV88-PTBZ1	1:06. 02			PLUS

·ÞÔ¹-½ GEAR HOUSING

Œ©lo REF NO.	•"•i"Ôl† PARTS NO.	•"•i-¼	Description	l"–Ê Q'ty	ŒÝŠ·l« I	R	"õll
1	Y729233-01500	·ÞÔ¹-½ CMP	GEAR CASE ASSY	1			
4	Y23876-030000	• È¼ÞÌß×¸ÞPT 3/8	• PLUG PT3/8,SCREW	1			
5	Y23876-040000	• È¼ÞÌß×¸ÞPT 1/2	• PLUG PT 1/2	1			
6	Y119934-01800	• µ²Ù¼-Ù	• SEAL, OIL	1			
7	Y119802-32100	¶ÊÞ-CMP(LOP	COVER ASSY, PUMP	1			
8	Y119802-32070	• ¶ÊÞ-(LOP	• COVER, LUB.OIL PUMP	1			
9	Y129900-32130	• ØØ-ÌÊÞÙÌÞ	• VALVE, RELIEF	1			
10	Y129418-32320	• ½ÌßØÝ¸Þ	• SPRING	1			
11	Y129001-32330	• Ìß×¸Þ	• PLUG	1			
12	Y119802-01520	Ì×Ý¼Þ (·ÞÔ¹-½	FRANGE, GEAR CASE	1			
13	Y119802-01561	½ÀÂÄÞÎÞÙÄ 8X25	STUD, M8X25	3			
14	Y124160-01751	ÌÀ(ÎÕº³)	COVER,FILLER	1			
15	Y124240-01871	ÌÀ(HO-P	COVER, HO-P	1			
16	Y129795-01950	Êß²ÌßÉÂ¸	PIPE, KNOCK L=18	2			
17	Y119609-32040	OØÝ¸Þ	O-RING P16	4			
18	Y119802-32111	²ÝÅ-Ů-À(LOP	ROTOR, INNER	1			
19	Y119802-32120	±³À-Û-À(LOP	ROTOR, OUTER	1			
20	Y119802-32130	»×ºÈ¼Þ(+±Å 6X16	SCREW, M6X16	7			
21	Y121850-51960	OØÝ¸Þ(FOPÄØÂ¹)	O-RING, F.I.PUMP	1			
22	Y129001-91841	ÂÊÞÎÞÙÄM8X85(¼ÞÄÞ³¸Ð	BOLT M 8X 85 PLATED	3			
23	Y24311-000320	OØÝ¸Þ 1A P 32.0	O-RING 1A P-32.0	1			
24	Y26106-080162	ÂÊÞÎÞÙÄ 8X 16	BOLT M 8X 16 PLATED	4			
25	Y26106-080162	ÂÊÞÎÞÙÄ 8X 16	BOLT M 8X 16 PLATED	3			
26	Y26106-080552	ÂÊÞÎÞÙÄ 8X 55	BOLT M 8X 55 PLATED	12			
27	Y121023-01551	ÌÀ(ÀºÒ-À	COVER, BLIND	1			
28	Y24341-000240	OØÝ¸Þ 1A S 24.0	O-RING 1A S-24.0	1			
29	Y26106-060162	ÂÊÞÎÞÙÄ 6X 16	BOLT M 6X 16 PLATED	2			
30	Y977770-1207F	¼Øº-Ý¹² ´·¼ÞÖ³¶Þ½¹ÂÄ	GASKET.LIQUID	1		(1)	µÌß¼®Ý ÌÞËÝÃÞ½
31	Y26306-080002	ÂÊÞÂ·ÅÂÄ(UBS 8	NUT	3			
32	Y171031-11741	ÎÕº³Êß²Ìß	PIPE	1			
33	Y24311-000320	OØÝ¸Þ 1A P 32.0	O-RING 1A P-32.0	1			

silverhorn.co.uk

FLYWHEEL HOUSING & OIL SUMP

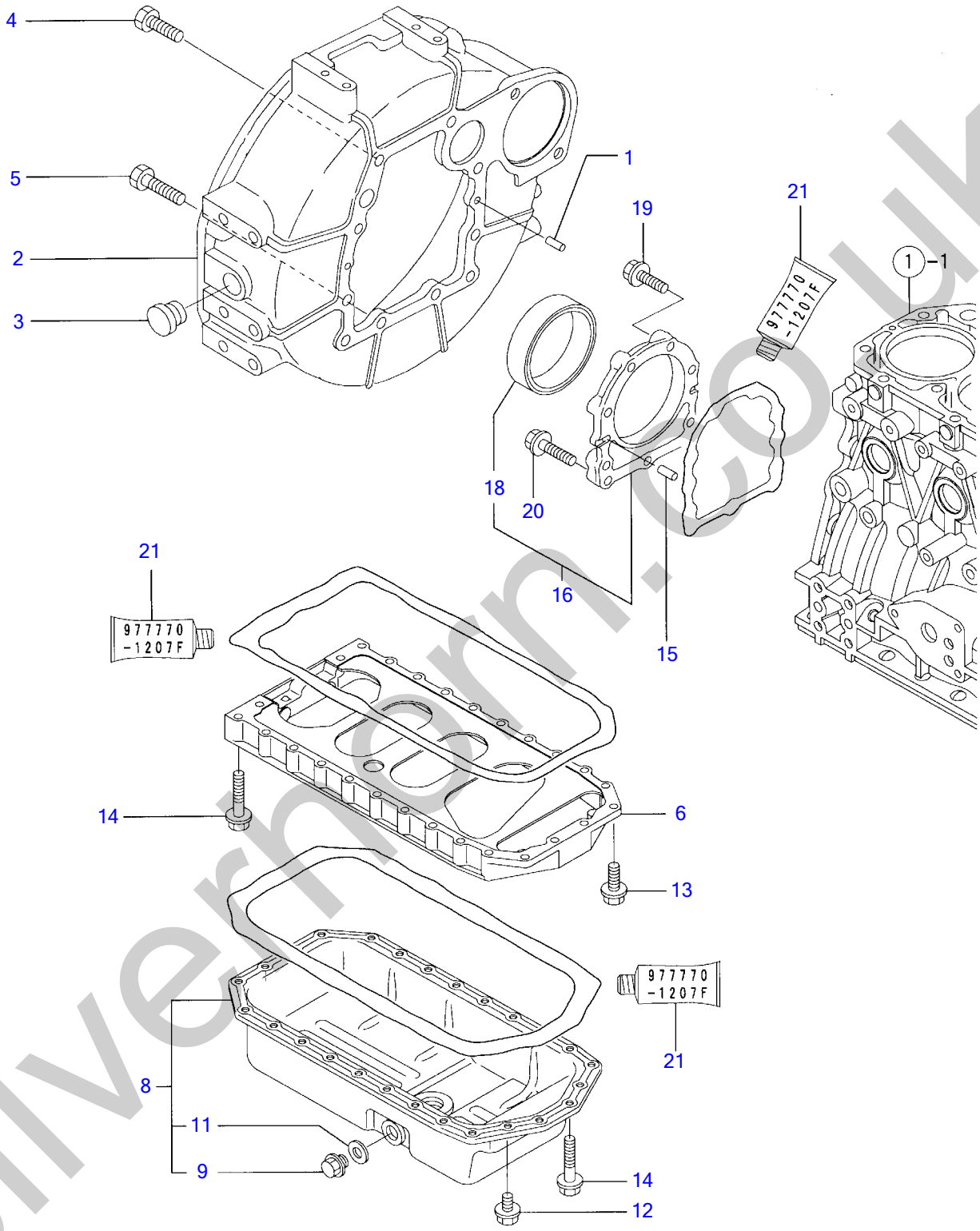

Y00D8900	3. フライホイルハウジング & オイルパン				
4TNV88-PTBZ1		1:06.02			PLUS

silvermarn.co.uk

Ì×²Î²ÙÊ³¼ÞÝ¸Þ & µ²ÙÊßÝ FLYWHEEL HOUSING & OIL SUMP

Œ©▯o REF NO.	•"•i"Ô▯† PARTS NO.	•"•i-¼	Description	▯"–Ê Q'ty	ŒÝŠ·▯« I	R	"õ▯l
1	**Y129100-01580**	Í²º³ËßÝ 8X16	PARALLEL PIN 8X16	2			
2	**Y129612-01600**	Ì×²Î²ÙÊ³¼ÞÝ¸Þ	HOUSING,FLYWHEEL	1			
3	**Y119620-01750**	·ÔÂÌß (Î²Ù¶ÊÞ-	CAP, FLYWHEEL COVER	1			
4	**Y26206-100252**	ÎÞÙÄ 10X 25	BOLT M10X25	6			
5	**Y26206-100302**	ÎÞÙÄ 10X 30	BOLT M10X30	4			
6	**Y129400-01730**	µ²ÙÊßÝ¶Ý»Þ(ÌÞ×Â¸:12)	SPACER, OIL SUMP	1			
8	**Y129400-01770**	µ²ÙÊßÝ(Ì¶¶ÞÀ CMP	SUMP ASSY, LUB. OIL	1			
9	**Y119640-01640**	▪ ÄÞÚÝÌß×¸Þ M22	▪ DRAIN PLUG M22	1			
11	**Y22190-220002**	▪ ¼-ÙÜÂ¼Ô(ºÏÙ.ÆÄØÙ)22	▪ SEAL WASHER 22S	1			
12	**Y26106-080162**	ÂÊÞÎÞÙÄ 8X 16	BOLT M 8X 16 PLATED	4			
13	**Y26106-080252**	ÂÊÞÎÞÙÄ 8X 25	BOLT M 8X 25 PLATED	2			
14	**Y26106-080452**	ÂÊÞÎÞÙÄ 8X 45	BOLT M 8X 45 PLATED	24			
15	**Y129100-01580**	Í²º³ËßÝ 8X16	PARALLEL PIN 8X16	2			
16	**Y129100-01640**	µ²Ù¼-Ù¹-½ CMP	CASE ASSY, OIL SEAL	1			
18	**Y129795-01780**	▪ µ²Ù¼-Ù	▪ SEAL, OIL	1			
19	**Y129486-01670**	ÂÊÞÎÞÙÄ 8X30	BOLT M8X30,COLLAR HD	6			
20	**Y26106-080352**	ÂÊÞÎÞÙÄ 8X 35	BOLT M 8X 35 PLATED	3			
21	**Y977770-1207F**	¼Øº-Ý¹² ´·¼ÞÖ³¶Þ½¹ÂÄ	GASKET.LIQUID	1		(1)	µÌß¼®Ý ÌÞËÝÃÞ½

silverhorn.co.uk

CYLINDER HEAD & BONNET

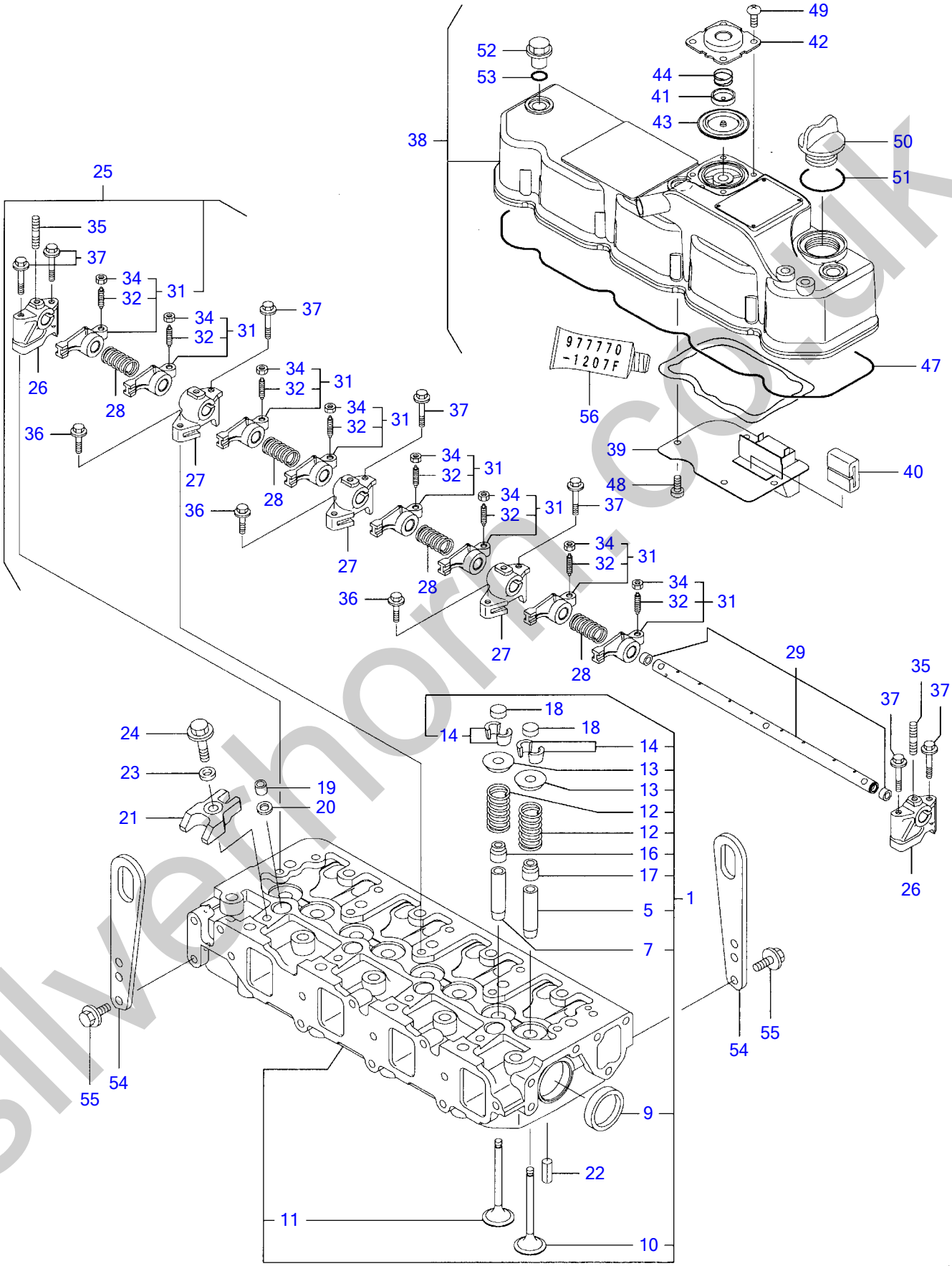

silverhorn.co.uk

Y00D8900	4. シリンダヘッド & ボンネット			
4TNV88-PTBZ1	1:06.02			PLUS

¼ØÝÀÞÍÂÄÞ & ÎÞÝÈÂÄ CYLINDER HEAD & BONNET

Œ©⍰o REF NO.	•"•i"Ô⍰† PARTS NO.	•"•i-¼	Description	⍰"–Ê Q'ty	ŒÝŠ·⍰« I	R	"õ⍰l
1	Y129601-11700	¼ØÝÀÞÍÂÄÞ CMP	HED ASSY, CYLINDER	1			
5	Y120130-11860	· ÊÞÙÌÞ¶Þ²ÄÞ(SUC	· GUIDE, VALVE	4		(1)	ÎÖ³ÌÞËÝÃÞ½
7	Y129150-11810	· ÊÞÙÌÞ¶Þ²ÄÞ(EXH	· GUIDE, VALVE	4		(1)	ÎÖ³ÌÞËÝÃÞ½
9	Y27241-400000	· ÜÝ¶ÞÀÌß×¸Þ 40	· PLUG 40	2			
10	Y129004-11130	· ÊÞÙÌÞ(INT	· VALVE, INTAKE	4			
11	Y129100-11112	· ÊÞÙÌÞ(EXH	· VALVE, EXHAUST	4			
12	Y129795-11120	· ÍÞÝÊÞÈ	· SPRING, VALVE	8			
13	Y129795-11180	· µ»´(ÍÞÝÊÞÈ)	· RETAINER, SPRING	8			
14	Y27310-080001	· ºÂÀ-(½ÃÑ)8 2¹=1SET	· COTTER 8	8			
16	Y121400-11340	· ÊÞÙÌÞ½ÃÑ¼-Ù	· SEAL, VALVE STEM	4			
17	Y124460-11340	· ÊÞÙÌÞ½ÃÑ¼-Ù	· SEAL, VALVE STEM	4			
18	Y129150-11370	·ÔÂÌß(ÍÞÝ	CAP, VALVE	8			
19	Y119802-11870	ÌßÙÃ¸À(É½ÞÙ	PROTECTOR, NOZZLE	4			
20	Y119625-11880	É½ÞÙ¼-Ä	SEAT, NOZZLE	4			
21	Y129004-11900	É½ÞÙµ»´	RETAINER, NOZZLE	4			
22	Y22351-060012	½ÌßØÝ¸ÞËßÝ 6.0AX 12	SPRING PIN 6X12	2			
23	Y120270-54410	»Þ¶ÞÈ(²Ý¼Þ´¸À	WASHER	4			
24	Y26106-080352	ÂÊÞÎÞÙÄ 8X 35	BOLT M 8X 35 PLATED	4			
25	Y129601-11241	ÍÞÝÜÝ¼Þ¸ CMP	SHAFT ASSY, ROCKER	1			
26	Y119802-11260	· ÍÞÝÜÝ»Îß-Ä (A	· SUPPORT, ROCKER ARM	2			
27	Y119802-11270	· ÍÞÝÜÝ»Îß-Ä (B	· SUPPORT, ROCKER ARM	3			
28	Y129150-11280	· ÍÞÝÜÝ¼Þ¸ÊÞÈ	· SPRING	4			
29	Y129601-11251	· ÍÞÝÜÝ¼Þ¸	· SHAFT	1			
31	Y129004-11650	· ÍÞÝÜÝ(SUC KIT	· ARM ASSY, ROCKER	8			
32	Y129150-11230	· · ±¼ÞÔ½À (ÍÞÝ½·Ï	· · SCREW, VALVE	8			
34	Y129150-11750	· · ÅÂÄ M8XP1.0	· · NUT M8XP1.0	8			
35	Y26226-080182	· ³´ºÐÎÞÙÄ(2D 8X 18	· STUD M 8X 18 PLATED	3			
36	Y26106-080252	ÂÊÞÎÞÙÄ 8X 25	BOLT M 8X 25 PLATED	3			
37	Y26106-080502	ÂÊÞÎÞÙÄ 8X 50	BOLT M 8X 50 PLATED	7			
38	Y129601-11350	ÎÞÝÈÂÄ CMP	BONNET ASSY	1			
39	Y129004-03010	· ÊÞÂÌÙÌßÚ-Ä	· PLATE, BAFFLE	1			
40	Y129150-03070	· ÊÞÂÌÙ(ÌÞØ-»Þ	· BAFFLE, BREATHER	1			
41	Y119802-03110	· ¾ÝÀÌßÚ-Ä	· PLATE, DIAPHRAGM	1			
42	Y119802-03121	· ÌÀ¸ÀÞ²ÔÌ×Ñ	· COVER, DIAPHRAGM	1			
43	Y119802-03130	· ÀÞ²ÔÌ×Ñ	· DIAPHRAGM	1			
44	Y119802-03141	· ÊÞÈ¸ÀÞ²ÔÌ×Ñ	· SPRING, DIAPHRAGM	1			
47	Y129601-11310	· PK(ÎÞÝÈÂÄ	· GASKET,COVER	1			
48	Y22857-500100	· ÀÂËßÝÈ¼Þ 5.0X10	· SCREW 5X10,TAPPING	4			
49	Y22857-500100	· ÀÂËßÝÈ¼Þ 5.0X10	· SCREW 5X10,TAPPING	4			
50	Y124160-01751	ÌÀ(ÎÕº³)	COVER,FILLER	1			
51	Y24311-000320	OØÝ¸Þ 1A P 32.0	O-RING 1A P-32.0	1			
52	Y124160-11360	ÄÂÃ	KNOB	3			
53	Y24311-000120	OØÝ¸Þ 1A P 12.0	O-RING 1A P 12.0	3			
54	Y129900-07900	ÂØ±¹Þ¶Å¸Þ	LIFTER, ENGINE	2			
55	Y26106-080162	ÂÊÞÎÞÙÄ 8X 16	BOLT M 8X 16 PLATED	4			
56	Y977770-1207F	¼Øº-Ý¹² ´·¼ÞÖ³¶Þ½¹ÂÄ	GASKET.LIQUID	1		(2)	µÌß¼®Ý ÌÞËÝÃÞ½

silverton.co.uk

SUCTION MANIFOLD & AIR CLEANER

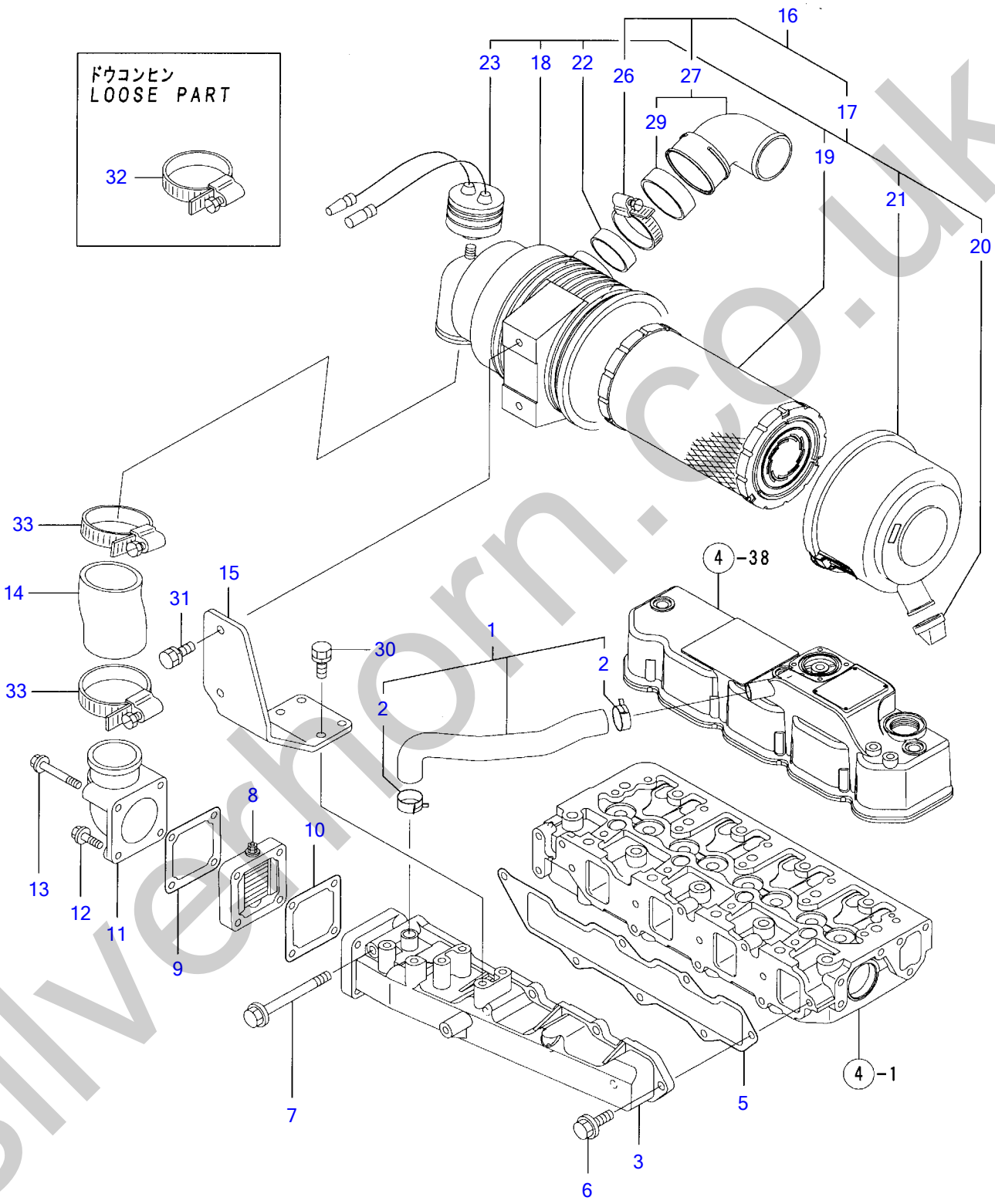

Y00D8900	5. キュウキマニホールド & エアクリーナ				
4TNV88-PTBZ1	1:06.02				PLUS

silverhorn.co.uk

·Õ³·ÏÆÎ-ÙÄÞ & ´±¸Ø-Å SUCTION MANIFOLD & AIR CLEANER

Œ©▯o REF NO.	•"•i"Ô▯† PARTS NO.	•"•i-¼	Description	▯"–Ê Q'ty	ŒÝŠ·▯« I	R	"õ▯l
1	**Y129601-03080**	ÌÞØ-»ÞÊß²Ìß	PIPE,BREATHER	1			
2	**Y129410-03990**	▪ Î-½¸ØÂÌß 24	▪ CLAMP 24	2			
3	**Y129601-12100**	ÏÆÎ-ÙÄÞ(INT Öº	MANIFOLD,INT	1			
5	**Y129407-12110**	PK(SUCÏÆÎ-ÙÄÞ	GASKET,INT.MANOFOLD	1			
6	**Y26106-080202**	ÂÊÞÎÞÙÄ 8X 20	BOLT M 8X 20 PLATED	6			
7	**Y26106-080802**	ÂÊÞÎÞÙÄ 8X 80	BOLT M 8X 80 PLATED	1			
8	**Y129100-77500**	Ë-À- (´±-	HEATER, AIR	1			
9	**Y129100-77510**	ÊßÂ·Ý(´±-Ë-À-	GASKET, AIR HEATER	1			
10	**Y129150-77511**	PK(´±Ë-À)(ÉÝ±½)	GASKET, (NON-ASB.)	1			
11	**Y171340-77520**	ÍÞÝÄÞ	BEND	1			
12	**Y26106-080402**	ÂÊÞÎÞÙÄ 8X 40	BOLT M 8X 40 PLATED	2			
13	**Y26106-080802**	ÂÊÞÎÞÙÄ 8X 80	BOLT M 8X 80 PLATED	2			
14	**Y119910-12210**	·Õ³·Î-½	PIPE,INTAKE	1			
15	**Y119802-12560**	ÌÞ×¹ÂÄ,´±¸Ø-Å	BRACKET,AIRCLEANER	1			
16	**Y129612-12681**	´±¸Ø-Å CMP	CLEANER ASSY, AIR	1			
17	**Y129612-12691**	▪ ´±¸Ø-Å CMP	▪ CLEANER ASSY, AIR	1			
18	**Y119910-12510**	▪ ▪ ÎÞÃÞ²	▪ ▪ BODY, AIR CLEANER	1			
19	**Y119808-12520**	▪ ▪ ´ÚÒÝÄ(±³À	▪ ▪ ELEMENT, OUTER	1			
20	**Y119808-12540**	▪ ▪ ±ÝÛ-ÀÞÊÞÙÌÞ	▪ ▪ VALVE, UNLOADER	1			
21	**Y119866-12541**	▪ ▪ ¶ÊÞ-ASSY	▪ ▪ COVER ASSY	1			
22	**Y129259-12570**	▪ ▪ ØÝ¸Þ	▪ ▪ RING	1			
23	**Y129953-12620**	▪ ▪ ²Ý¼Þ¹-À CMP(³´	▪ ▪ INDICATOR ASSY	1			
26	**Y23000-060000**	▪ Î-½¸ØÂÌß 60	▪ CLAMP 60	1			
27	**Y129612-12560**	▪ ´ÙÎÞ(²ÝÀ-¸	▪ ELBOW, AIR INTAKE	1			
29	**Y129612-12590**	▪ ▪ ¶Þ½¹ÂÄ(²ÝÃ-¸	▪ ▪ ELBOW,AIR INTAKE	1			
30	**Y26013-080222**	ÎÞÙÄ(ÊÞÈ 8X 22	BOLT M 8X 22	4			
31	**Y26013-080222**	ÎÞÙÄ(ÊÞÈ 8X 22	BOLT M 8X 22	2			
32	**Y23000-060000**	Î-½¸ØÂÌß 60	CLAMP 60	1			
33	**Y23000-060000**	Î-½¸ØÂÌß 60	CLAMP 60	2			

silverhorn.co.uk

EXHAUST MANIFOLD

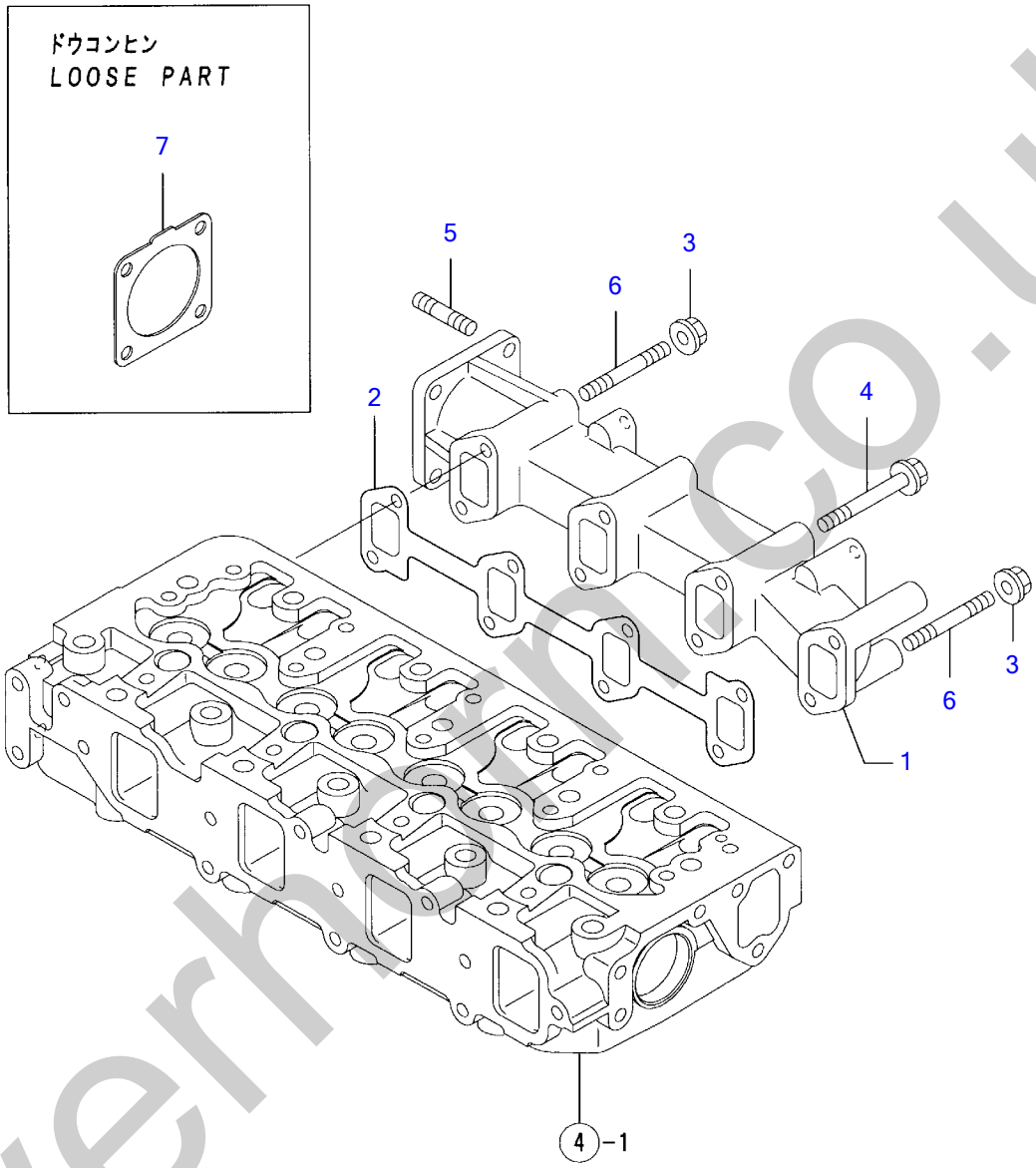

Y00D8900	6. ハイキマニホールド & サイレンサ				
4TNV88-PTBZ1		1:06.02			PLUS

silverhorn.co.uk

Ê²·ÏÆÎ-ÙÄÞ EXHAUST MANIFOLD

Œ©lo REF NO.	•"•i"Ôl† PARTS NO.	•"•i-¼	Description	l"–Ê Q'ty	ŒÝŠ·l« I	R	"õll
1	**Y129640-13109**	ÏÆÎ-ÙÄÞ(EXH »ÞÝÃ²	MANIFOLD, EXHAUST	1			
2	**Y129550-13110**	PK(EXHÏÆÎÙÄÞ	GASKET, EXH.MANIFOLD	1			
3	**Y26306-080002**	ÂÊÞÂ·ÅÂÄ(UBS 8	NUT	2			
4	**Y123900-13630**	ÂÊÞÎÞÙÄ 80	BOLT 8X80	6			
5	**Y119131-18320**	³´ºÐÎÞÙÄ M8X22	BOLT M 8X 22	4			
6	**Y123900-13610**	³´ºÐÎÞÙÄ 8X80	STUD BOLT M 8X 80	2			
7	**Y129930-13201**	¶Þ½¹ÂÄ(»²ÚÝ»	GASKET, SILENCER	1			

silverhorn.co.uk

CAMSHAFT & DRIVING GEAR

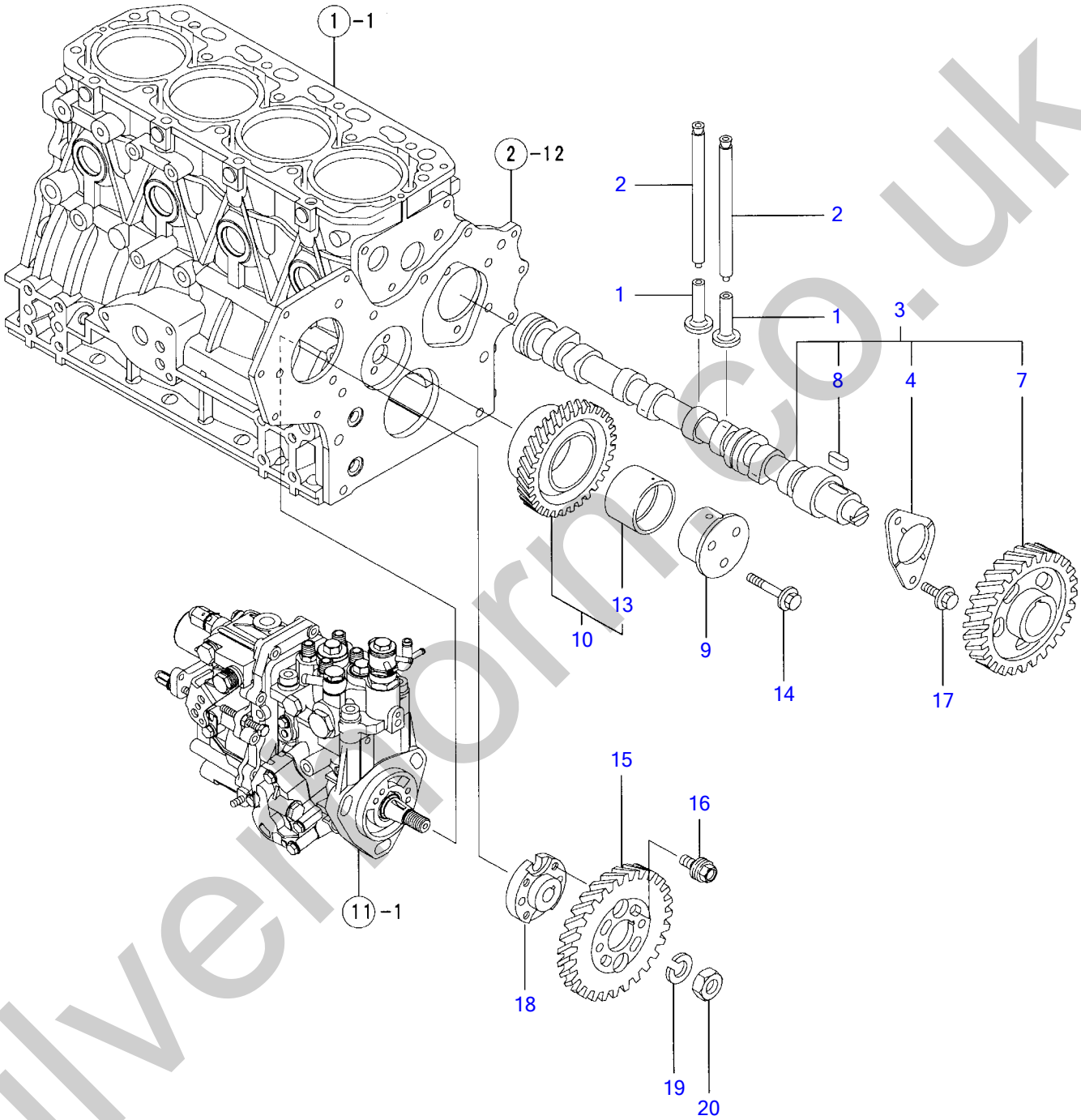

Y00D8900	7. カムシャフト & クドウギヤ				
4TNV88-PTBZ1		1:06.02			PLUS

silverthorn.co.uk

¶Ñ¼ÔÌÄ & ¸ÄÞ³·ÞÔ CAMSHAFT & DRIVING GEAR

Œ©lo REF NO.	•"•i"Ôl† PARTS NO.	•"•i-¼	Description	l"–Ê Q'ty	ŒÝŠ·l« I	R	"ŏl I
1	Y129150-14200	ÀÍßÂÄ	TAPPET	8			
2	Y129150-14400	ÌßÂ¼ÕÛÂÄÞ	ROD, PUSH	8			
3	Y729402-14580	¶Ñ¼ÔÌÄ CMP	CAMSHAFT ASSY	1			
4	Y129150-02450	· ½×½ÄÒÀÙ(¶Ñ	· METAL,THRUST(CAM	1			
7	Y129150-14101	· ¶Ñ·ÞÔ	· GEAR, CAMSHAFT	1			
8	Y22512-070140	· Ì´»Þ-·- 7X14	· KEY 7X 14	1			
9	Y119802-25051	¼ÔÌÄ(±²ÄÞ×-	SHAFT, IDLE GEAR	1			
10	Y119802-25100	±²ÄÞÙ·ÞÔ CMP	GEAR ASSY, IDLE	1			
13	Y119802-25070	· ÌÞÂ¼Õ(ÎÖ³ËÝ	· BUSH, IDLE GEAR	1		(1)	ÎÖ³ÌÞËÝÃÞ½
14	Y26106-080402	ÂÊÞÎÞÙÄ 8X 40	BOLT M 8X 40 PLATED	3			
15	Y119802-25901	·ÞÔ (FI-P	GEAR, PUMP	1			
16	Y129150-25301	ÎÞÙÄ(FI-P	BOLT,FI-P	4			
17	Y26106-080142	ÂÊÞÎÞÙÄ 8X 14	BOLT 8X 14 PLATED	2			
18	Y158552-51151	Ì×Ý¼Þ(¶Ñ¼Þ¸ºÃ²	FLANGE	1			
19	Y22217-140000	ÊÞÈ»Þ¶ÞÈ 14	SPRING WASHER 14	1			
20	Y26776-140002	ÄÒÅÂÄ(Î¿ 14	LOCK NUT M14 PLATED	1			

silverhorn.co.uk

CRANKSHAFT & PISTON

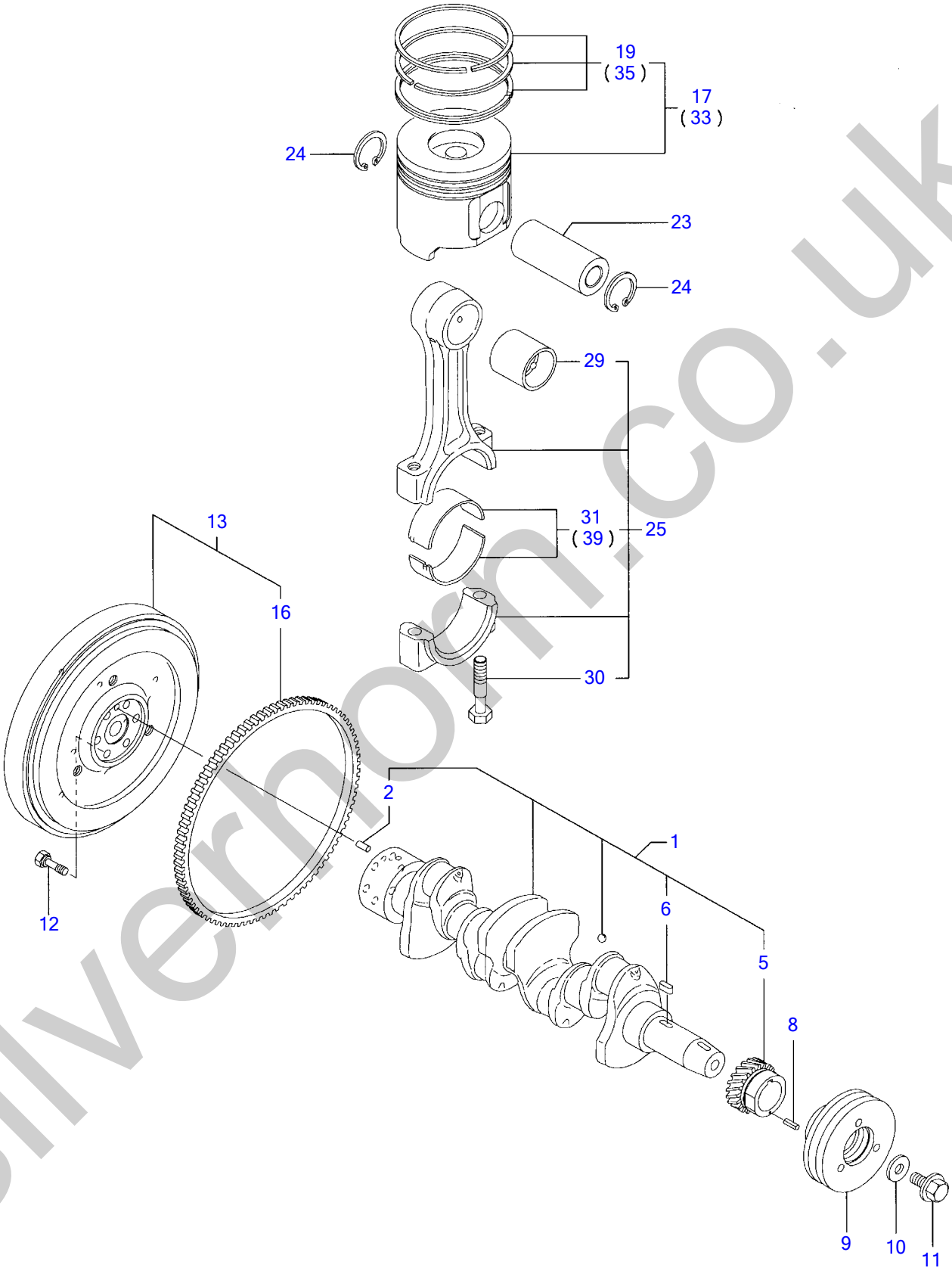

Y00D8900	8. クランクシャフト & ピストン				
4TNV88-PTBZ1		1:06.02			PLUS

silverhorn.co.uk

¸×Ý¸¼ÔÌÄ & Ëß½ÄÝ CRANKSHAFT & PISTON

Œ©▯o REF NO.	•"•i"Ô▯† PARTS NO.	•"•i-¼	Description	▯"–Ê Q'ty	ŒÝŠ·▯« I	R	"õ▯l
1	**Y129601-21002**	¸×Ý¸¼ÔÌÄ CMP	CRANKSHAFT ASSY	1			
2	**Y129100-01580**	· Í²º³ËßÝ 8X16	· PARALLEL PIN 8X16	1			
5	**Y119802-21202**	· ¸×Ý¸·ÞÔ	· GEAR, CRANKSHAFT	1			
6	**Y22512-070140**	· Ì´»Þ-·- 7X14	· KEY 7X 14	1			
8	**Y22351-030010**	½ÌßØÝ¸ÞËßÝ 3.0AX 10	SPRING PIN 3X10	1			
9	**Y119802-21650**	VÌß-Ø(¸×Ý¸ D110	V-PULLEY, CRANKSHAFT	1			
10	**Y129795-21661**	»Þ¶ÞÈ	WASHER	1			
11	**Y121850-21680**	ÎÞÙÄ(VÌß-Ø)	BOLT, V-PULLEY	1			
12	**Y121111-21501**	ÎÞÙÄ (Ì×²Î²Ù	BOLT, FLYWHEEL	6			
13	**Y129642-21590**	Ì×²Î²Ù CMP	FLYWHEEL ASSY	1			
16	**Y119865-21600**	· ØÝ¸Þ·ÞÔ	· GEAR, RING	1			
17	**Y129005-22080**	Ëß½ÄÝ CMP	PISTON ASSY	4			
19	**Y129005-22500**	· Ëß½ÄÝØÝ¸ÞSET	· RING SET, PISTON	4			
23	**Y129202-22300**	Ëß½ÄÝËßÝ(D26,L70)	PIN, PISTON(D26,L70)	4			
24	**Y22252-000260**	ÄÒÜC(±Å 26	CIRCLIP 26	8			
25	**Y729402-23100**	ºÈ¸Ã²Ý¸ÞÛÂÄÞ CMP	ROD ASSY, CONNECTING	4			
29	**Y129100-23910**	· Ëß½ÄÝËßÝÒÀÙ	· BUSH, PISTON PIN	4		(1)	ÎÖ³ÌÞËÝÃÞ½
30	**Y121550-23200**	· ÛÂÄÞÎÞÙÄ	· BOLT, CONNECTING ROD	8			
31	**Y129150-23600**	· ÍÞ±ØÝ¸Þ(¸×Ý¸ËßÝ	· METAL, CRANKPIN	4			
33	**Y129005-22900**	Ëß½ÄÝ CMP(O.S=0.25	PISTON W/RING OS=.25	4		(2)	µ°ÊÞ°»²½Þ(O.S=0.25)ÌÞËÝÃÞ½
35	**Y129005-22950**	· Ëß½ÄÝØÝ¸ÞSET OS=0.25	· RING SET O.S=0.25	4		(2)	µ°ÊÞ°»²½Þ(O.S=0.25)ÌÞËÝÃÞ½
39	**Y129150-23610**	¸×Ý¸ËßÝÒÀÙ(U.S=0.25	METAL.PIN US=0.25	4		(3)	±ÝÀÞ°»²½Þ(U.S=0.25)ÌÞËÝÃÞ½

silverhorn.co.uk

LUB.OIL SYSTEM

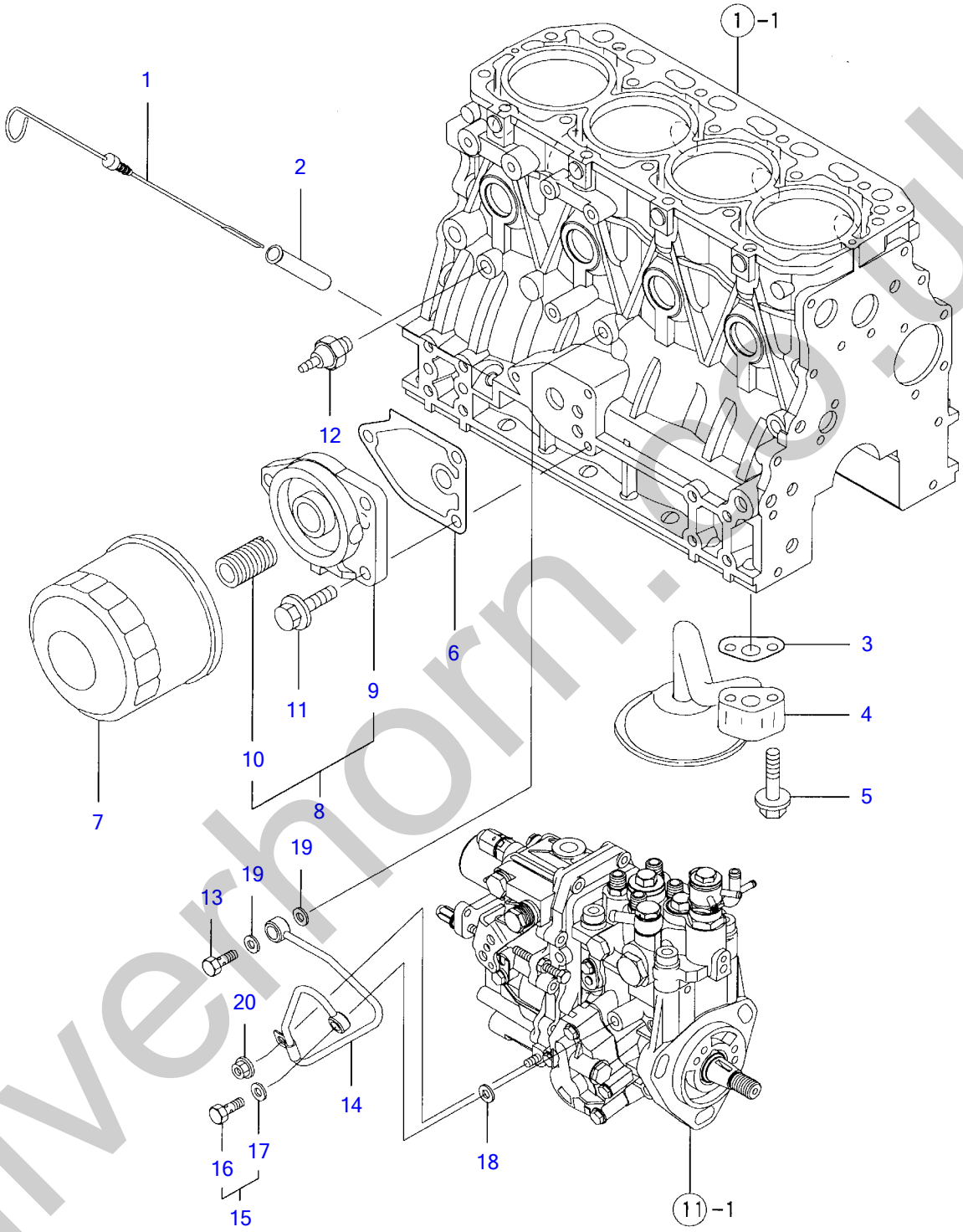

Y00D8900	9. LOシステム			
4TNV88-PTBZ1	1:06. 02			PLUS

silverhorn.co.uk

LO¼½ÃÑ LUB.OIL SYSTEM

Œ©lo REF NO.	•"•i"Ôl† PARTS NO.	•"•i-¼	Description	l"–Ê Q'ty	ŒÝŠ·l« I	R	"õll
1	Y129004-34802	¹ÝÕÎÞ³(Ì¶¶ÞÀ	DIPSTICK, LUB.OIL	1			
2	Y121520-34810	¶Þ²ÄÞ(¹ÝÕÎÞ³	GUIDE, DIPSTICK	1			
3	Y129150-35042	PK(·Õ³ÆÕ³¶Ý)(ÉÝ±½)	GASKET, (NON-ASB.)	1			
4	Y129436-35091	LO·Õ³ÆÕ³¶Ý CMP	PIPE ASSY, LUB. OIL	1			
5	Y26106-080352	ÂÊÞÎÞÙÄ 8X 35	BOLT M 8X 35 PLATED	2			
6	Y129150-35111	PK(Ì²ÙÀÌÞ×¹ÂÄ)(ÉÝ±½)	GASKET, (NON-ASB.)	1			
7	Y129150-35152	Ì²ÙÀ°	FILTER 80X80L	1			
8	Y119802-35100	ÌÞ×¹ÂÄ CMP	BRACKET ASSY, FILTER	1			
9	Y119802-35110	・ ÌÞ×¹ÂÄ(LOÌ²ÙÀ	・ BRACKET, FILTER	1			
10	Y129100-35140	・ ½ÀÂÄÞ	・ STUD	1			
11	Y26106-080202	ÂÊÞÎÞÙÄ 8X 20	BOLT M 8X 20 PLATED	3			
12	Y114250-39450	Õ±Â½²ÂÁ 0.5KG ·ÞÎÞ¼	SWITCH,(0.5KG)L.O.	1			
13	Y124160-39140	¶ÝÂ·ÞÃÎÞÙÄ 10	BOLT 10, PIPE JOINT	1			
14	Y119802-39450	LO-T CMP	PIPE ASSY, LUB. OIL	1			
15	Y129005-59830	¶ÝÂ·ÞÃÎÞÙÄCMP 8	BOLT ASSY, JOINT	1			
16	Y23857-030000	・ ¶ÝÂ·ÞÃÎÞÙÄ 3	・ JOINT BOLT 3	1			
17	Y22190-080002	・ ¼-ÙÜÂ¼Ô(ºÏÙ.ÆÄØÙ) 8	・ SEAL WASHER 8S	1			
18	Y22190-080002	¼-ÙÜÂ¼Ô(ºÏÙ.ÆÄØÙ) 8	SEAL WASHER 8S	1			
19	Y22190-100002	¼-ÙÜÂ¼Ô(ºÏÙ.ÆÄØÙ)10	SEAL WASHER 10S	2			
20	Y26366-060002	ÂÊÞÂ·ÅÂÄ 6	NUT M 6	1			

silverhorn.co.uk

COOLING WATER SYSTEM

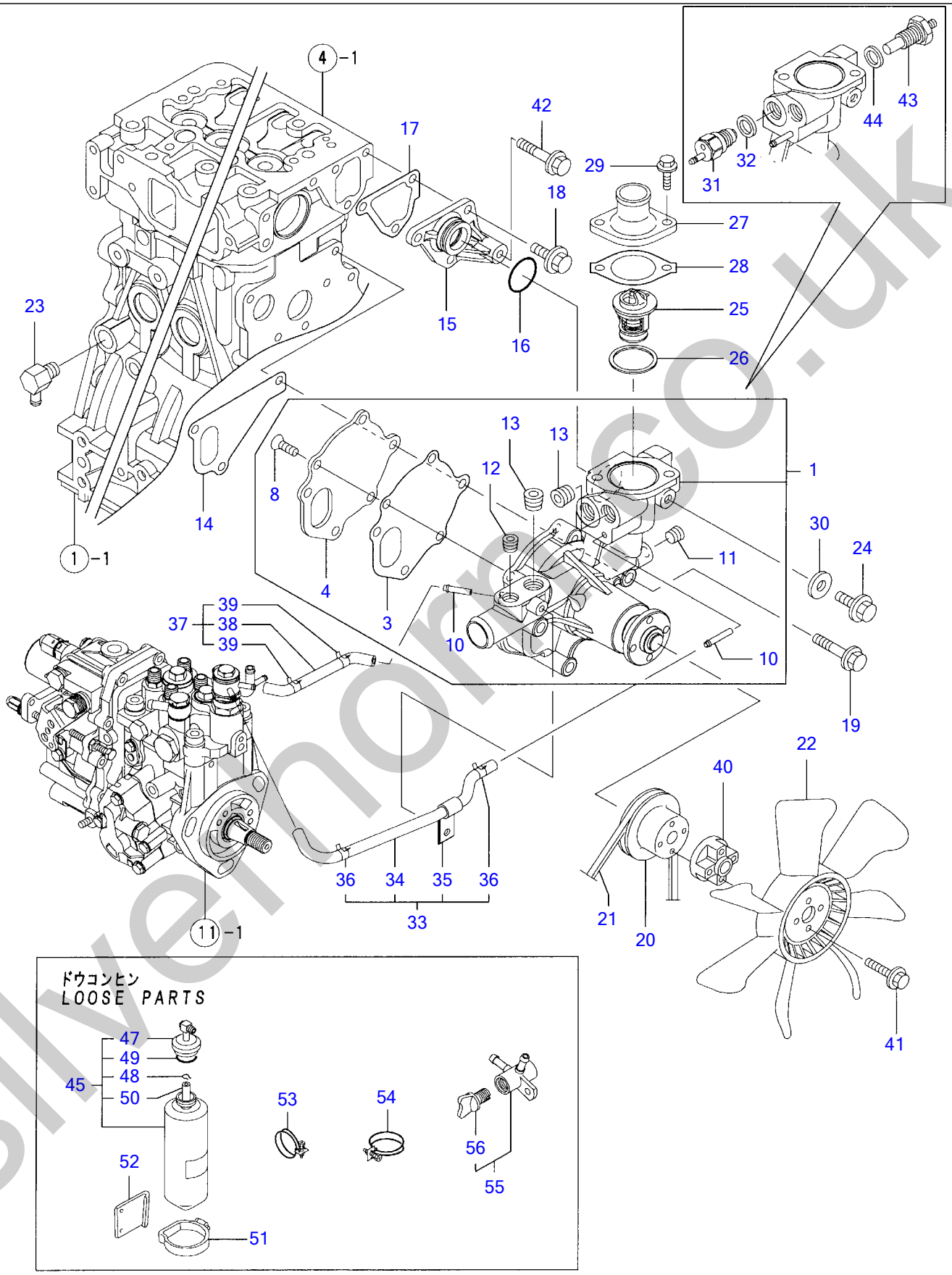

silverhorse.co.uk

CW¼½ÃÑ COOLING WATER SYSTEM

Œ©lo REF NO.	•"•i"Ôl† PARTS NO.	•"•i-¼	Description	l"–Ê Q'ty	ŒÝŠ·l« I	R	"õll
1	Y129004-42001	CWÎßÝÌß CMP	PUMP ASSY, WATER	1			
3	Y129100-42051	· PK(CW-P)(ÉÝ±½)	· GASKET, (NON-ASB.)	1			
4	Y129100-42121	· ÌßÚ-Ä	· PLATE	1			
8	Y121850-42410	· ½¸ØÕ³	· SCREW	3			
10	Y119802-49113	· CW-T Â·ÞÃ	· JOINT	2			
11	Y23876-010000	· È¼ÞÌß×¸ÞPT1/8	· PLUG PT1/8,SCREW	1			
12	Y23876-020000	· È¼ÞÌß×¸ÞPT1/4	· PLUG PT1/4,SCREW	1			
13	Y129916-49740	· È¼ÞÌß×¸Þ R03	· PLUG, DRAIN R03	2			
14	Y129486-42021	PK(CW-P	GASKET	1			
15	Y129004-42040	¼ÞÖ²ÝÄ(CW-P	JOINT	1			
16	Y129486-42140	OØÝ¸Þ G 30	O-RING,CW-P	1			
17	Y124395-49840	PK(»-Ó½ÀÂÄ¹-½	GASKET, THERMO. CASE	1			
18	Y26106-080162	ÂÊÞÎÞÙÄ 8X 16	BOLT M 8X 16 PLATED	3			
19	Y26106-080602	ÂÊÞÎÞÙÄ 8X 60	BOLT M 8X 60 PLATED	3			
20	Y129403-42380	VÌß-Ø(D=110)	V-PULLEY(D=110)	1			
21	Y25132-003800	VÍÞÙÄ(Û-´Â¼ÞA38	V-BELT (A-38)	1			
22	Y129655-44740	Ì±Ý(D380	FAN, COOLING	1			
23	Y121750-49110	Â·ÞÃ(Ð½ÞÇ·ÊßÌß)	JOINT	1			
24	Y26106-080122	ÂÊÞÎÞÙÄ 8X 12	BOLT M 8X 12 PLATED	1			
25	Y129457-49801	»-Ó½ÀÂÄ(82ßC	THERMOSTAT(82	1			
26	Y129150-49811	PK(»-Ó½ÀÂÄ ¼À)(ÉÝ±½)	GASKET, (NON-ASB.)	1			
27	Y129350-49530	»-Ó½ÀÂÄ¶ÊÞ-(ÌÞ×Â¸:12	COVER, THERMOSTAT	1			
28	Y129795-49551	PK(»-Ó½ÀÂÄ¶ÈÞ-)(ÉÝ±½	GASKET, (NON-ASB.)	1			
29	Y26106-080222	ÂÊÞÎÞÙÄ 8X 22	BOLT M 8X 22 PLATED	2			
30	Y23414-080000	ÊßÂ·Ý(ÏÙ 8	GASKET 8, ROUND	1			
31	Y121250-44901	»-Ó½²ÂÁ(110ßC 1¾Ý¼·	SWITCH, THERMO(110ßC	1			
32	Y124465-44950	ÊßÂ·Ý16	GASKET 16	1			
33	Y129004-49610	CW-T A CMP(MP2	PIPE ASSY, A MP2	1			
34	Y129004-49711	· CW-T A(MP2	· PIPE ASSY, A MP2	1			
35	Y119802-49730	· ÌÚÄÞÒ(CW-T	· CLAMP,CW-T	1			
36	Y124722-59050	· Î-½¸ØÂÌß(ÏÙ 9	· CLAMP 9	2			
37	Y129004-49620	CW-T B CMP(MP2	PIPE ASSY, B MP2	1			
38	Y129004-49721	· CW-T B(MP2	· PIPE, WATER B MP2	1			
39	Y124722-59050	· Î-½¸ØÂÌß(ÏÙ 9	· CLAMP 9	2			
40	Y121267-44760	½Íß-» (ÌÞ×Â¸:12)	SPACER	1			
41	Y26106-060302	ÂÊÞÎÞÙÄ 6X 30	BOLT M 6X 30 PLATED	4			
42	Y26106-080452	ÂÊÞÎÞÙÄ 8X 45	BOLT M 8X 45 PLATED	1			
43	Y119266-49350	»-Ó¾Ý»-	SENSOR, THERMO.	1			
44	Y129150-49360	PK 10	GASKET 10	1			
45	Y171064-44510	»ÌÞÀÝ¸ CMP	SUB-TANK ASSY	1			
47	Y121450-44531	· ·ÔÂÌß	· CAP	1			
48	Y124450-44560	· µ»´(µ-ÊÞ-ÌÛ-Êß²Ìß	· CLAMP	1			
49	Y121470-44581	· ÊßÂ·Ý	· GASKET	1			
50	Y23065-070225	· ËÞÆÊß²ÌßºÞÑ 7X 9X225	· HOSE 7X 225	1			
51	Y124450-44550	ÊÞÝÄÞ(»ÌÞÀÝ¸	CLAMP, SUB-TANK	1			
52	Y121256-44600	ÌÞ×¹ÂÄ (ÌÞ×Â¸:12)	BRACKET, SUB-TANK	1			
53	Y23010-038000	Î-½ÊÞÝÄÞ 38	CLAMP 38	2			
54	Y23010-044000	Î-½ÊÞÝÄÞ 44	CLAMP 44	2			
55	Y129150-49100	»ÝÎß³ºÂ¸ CMP	COCK ASSY, 3-WAY	1			
56	Y129150-49080	· ÄÞÚÝºÂ¸	· COCK, DRAIN	1			

silverfrost.co.uk

FUEL INJECTION PUMP

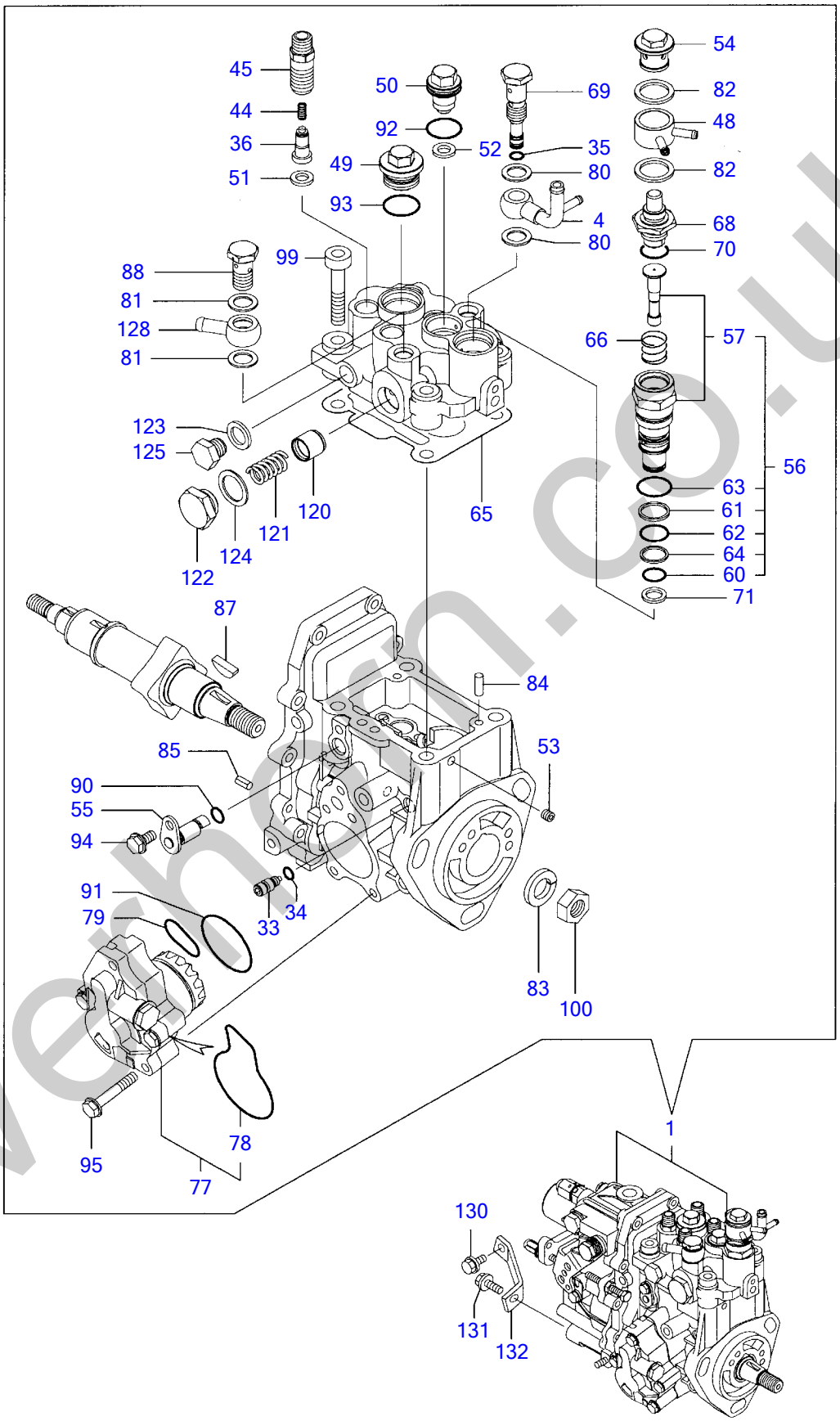

Y00D8900	11. FOフンシヤポンプ				
4TNV88-PTBZ1		1:06.02			PLUS

silverhorn.co.uk

FOÌÝ¼ÔÎßÝÌß FUEL INJECTION PUMP

Œ©lo REF NO.	•"•i"Ôl† PARTS NO.	•"•i-¼	Description	l"–Ê Q'ty	ŒÝŠ·l« I	R	"õll
1	Y729642-51490	FOÌÝ¼ÔÎßÝÌßASSY	PUMP ASSY, F.INJECT	1		(1)	ÐÀÞ¼ NO.1 FOÌÝ¼ÔÎßÝÌßASSY ÆÊº³Ó¸ NO.12 ¶ÞÊÞÅ µ Ì¸ÐÏ½.
4	Y158552-51670	·¼ÞÖ²ÝÄ(µ-ÊÞ-ÌÛ-	·JOINT	1			
33	Y158600-51270	·ÏÜØÄÞÒ(ÀÍßÂÄ	·STOPPER	1			
34	Y158563-51281	·OØÝ¸Þ 4D S6	·O-RING	1			
35	Y158563-51281	·OØÝ¸Þ 4D S6	·O-RING	1			
36	Y158560-51300	·ÃÞØÍÞØÊÞÙÌÞ CMP	·VALVE ASSY, DILEVERY	4			
44	Y158563-51330	·SP(ÃÞØÍÞØÊÞÙÌÞ	·SPRING	4			
45	Y158601-51340	·ÎÙÀÞ(ÃÞØÍÞØ	·HOLDER, DELIVERY	4			
48	Y158553-51551	·¼ÞÖ²ÝÄ(Ú²·Ô¸½²	·JOINT, COOLING WATER	1			
49	Y158601-51550	·Ìß×¸Þ(ÌÞÝÊß²¼Þ¸	·PLUG	1			
50	Y119802-51560	·ÊÞÚÙÌß×¸Þ	·BARREL PLUG	1			
51	Y158552-51570	·PK(ÊÞÚÙÌß×¸Þ	·PK(BARREL PLUG	4			
52	Y158552-51570	·PK(ÊÞÚÙÌß×¸Þ	·PK(BARREL PLUG	1			
53	Y158557-51570	·Ìß×¸Þ(×Â¸	·PLUG	1			
54	Y158601-51570	·Ìß×¸Þ(Ú²·Ô¸½²	·PLUG,WATER PUMP	1			
55	Y158552-51580	·ØÝ¸ØÌÀ-	·LIFTER	1			
56	Y119802-51590	·À²Ï-¾ÂÄ	·TIMER SET	1			
57	Y119802-51600	··À²Ï-CMP(»-Ó´ÚÒÝÄ	··TIMER CMP	1			
60	Y158553-51670	··OØÝ¸Þ 1011	··O-RING, 1011	1			
61	Y119802-51680	··ÊÞÂ¸±ÂÌßØÝ¸Þ	··BACKUP RING	1			
62	Y119802-51690	··OØÝ¸Þ	··O RING	1			
63	Y24356-010200	··OØÝ¸Þ 4D 1020	··PACKING, 1020	1			
64	Y24372-000150	··ÊÞÂ¸±ÂÌßØÝ¸Þ	··RING, BACKUP T2 P 15	1			
65	Y158552-51600	·PK(HÍÂÄÞ	·PACKING, HEAD	1			
66	Y158553-51630	·SP(À²Ï-	·SPRING,TIMER	1			
68	Y158553-51640	·»-Ó´ÚÒÝÄ	·ELEMENT, THERMO	1			
69	Y158601-51650	·µ-ÊÞÌÛ-Â·ÞÃ	·JOINT	1			
70	Y158553-51660	·OØÝ¸Þ P14	·O-RING,P14	1			
71	Y158553-51680	·PK(À²Ï-	·PACKING,TIMER	1			
77	Y158552-52100	·Ì²-ÄÞÎßÝÌßCMP	·PUMP ASSY,FEED	1			
78	Y158552-52500	··O ØÝ¸Þ(Ì²°ÄÞP²ÝÅ°	··O-RING(FEED P INNER	1			
79	Y158552-52310	·OØÝ¸Þ(Ì²-ÄÞÎßÝÌß	·O-RING	1			
80	Y22190-120002	·¼-ÙÜÂ¼Ô(ºÏÙ 12	·SEAL WASHER 12	2			
81	Y22190-120002	·¼-ÙÜÂ¼Ô(ºÏÙ 12	·SEAL WASHER 12	2			
82	Y22190-180002	·¼-ÙÜÂ¼Ô(ºÏÙ 18	·SEAL WASHER 18	2			
83	Y22217-140000	·ÊÞÈ»Þ¶ÞÈ 14	·SPRING WASHER 14	1			
84	Y22312-050140	·Í²º³ËßÝ 5X14	·PARALLEL PIN 5X14	2			
85	Y22351-050010	·½ÌßØÝ¸ÞËßÝ 5.0AX 10	·SPRING PIN 5X10	2			
87	Y119802-51090	·ÊÝ¹ÞÂ·° 4X16	·KEY,WOODRUFF 4X16	1			
88	Y23857-060000	·¶ÝÂ·ÞÃÎÞÙÄ 6	·JOINT BOLT 6,PIPE	1			
90	Y24311-000070	·OØÝ¸Þ 1A P 7.0	·O-RING 1A P-7.0	1			
91	Y158552-52400	·O ØÝ¸Þ 4E S42	·O-RING 4E S42	1			
92	Y24356-010180	·OØÝ¸Þ 4D 1018	·O-RING	1			
93	Y24356-010200	·OØÝ¸Þ 4D 1020	·PACKING, 1020	1			
94	Y26106-060102	·ÂÊÞÎÞÙÄ 6X 10	·BOLT 6X 10 PLATED	1			
95	Y158553-51770	·ÎÞÙÄ	·BOLT	4			

silverfort.co.uk

FUEL INJECTION PUMP

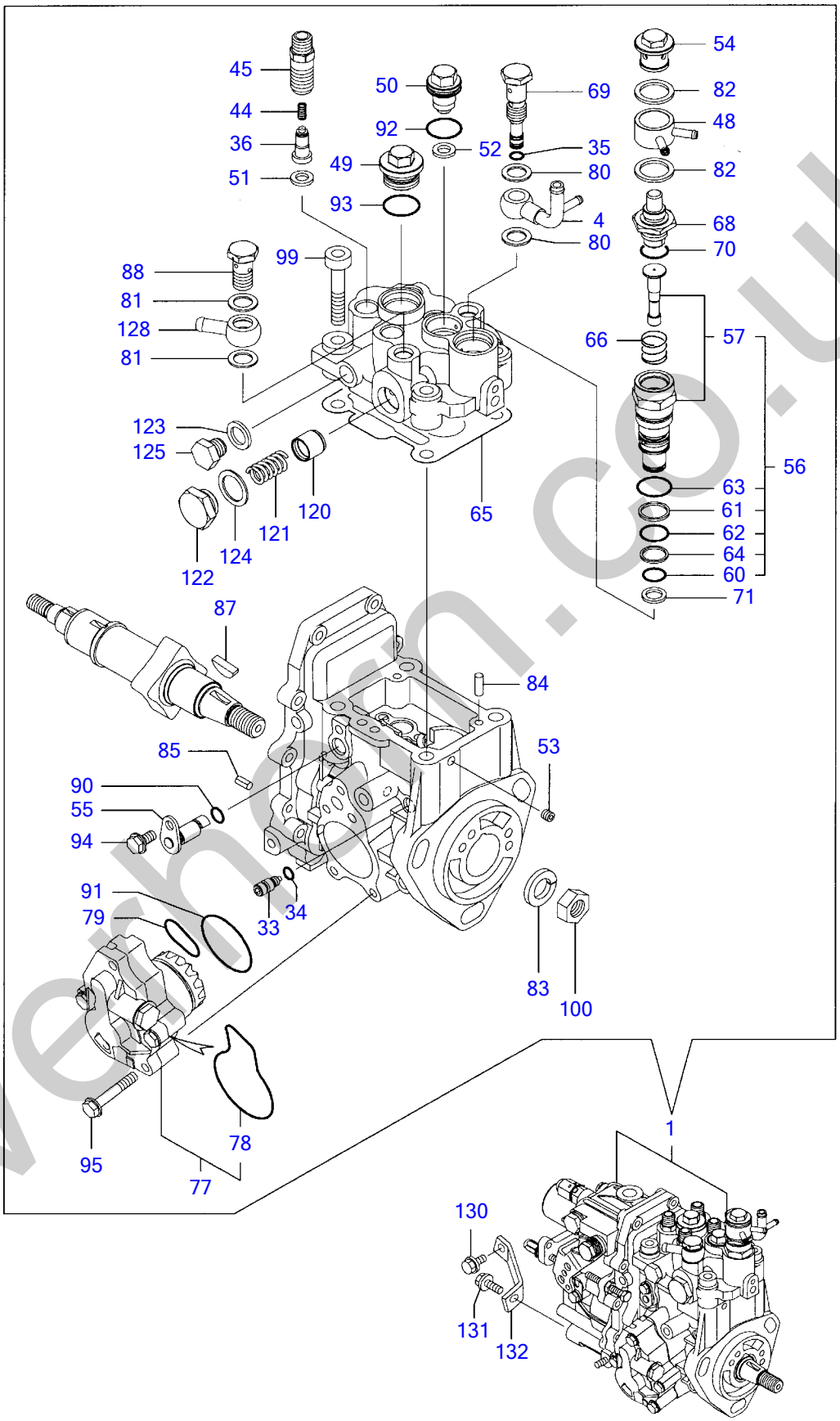

Y00D8900	11. FOフンシヤポンプ				
4TNV88-PTBZ1		1:06.02			PLUS

silverhorn.co.uk

FOÌÝ¼ÔÎßÝÌß FUEL INJECTION PUMP

Œ©lo REF NO.	•"•i"Ôl† PARTS NO.	•"•i-¼	Description	l"–Ê Q'ty	ŒÝŠ·l« I	R	"õl I
99	Y26450-080452	• 6¶¸±ÅÎÞÙÄ 8X 45	• BOLT M 8X 45	4			
100	Y26776-140002	• ÄÖÅÂÄ(Î¿ 14	• LOCK NUT M14 PLATED	1			
120	Y158601-51770	• ±·ÕÑÚ-ÀËß½ÄÝ	• PISTON	1			
121	Y158552-51780	• ±·ÕÑÚ-ÀSP	• DAMPER ASSY	1			
122	Y158601-51790	• ±·ÕÑÚ-ÀÌß×¸Þ	• PLUG	1			
123	Y22190-120002	• ¼-ÙÜÂ¼Ô(ºÏÙ 12	• SEAL WASHER 12	1			
124	Y22190-180002	• ¼-ÙÜÂ¼Ô(ºÏÙ 18	• SEAL WASHER 18	1			
125	Y23887-120002	• 6¶¸Ìß×¸Þ M12	• PLUG M12,HEX.	1			
128	Y129916-59020	• ¶ÝÂ·ÞÄ(¶À¸Á 12	• JOINT 12, PIPE	1			
130	Y26106-080162	ÂÊÞÎÞÙÄ 8X 16	BOLT M 8X 16 PLATED	1			
131	Y26106-080202	ÂÊÞÎÞÙÄ 8X 20	BOLT M 8X 20 PLATED	1			
132	Y129601-51250	ÌÚÄÞÒ(FOP	SUPPORT,FIP	1			

silverhorn.co.uk

GOVERNOR

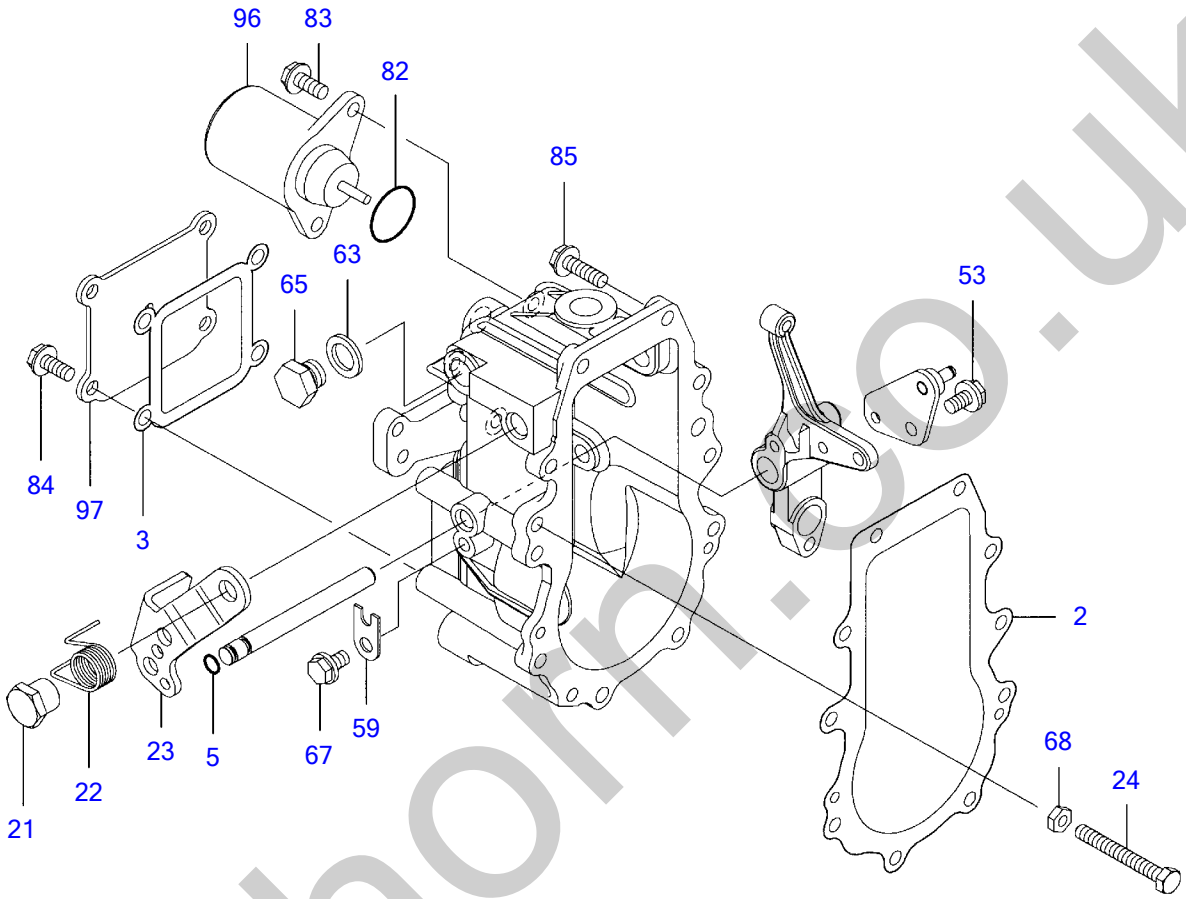

Y00D8900	12. ｶﾞﾊﾞﾅ				
4TNV88-PTBZ1		1:06.02			PLUS

silverhorn.co.uk

¶ÞÊÞÅ GOVERNOR

Œ©lo REF NO.	•"•i"Ôl† PARTS NO.	•"•i-¼	Description	l"–Ê Q'ty	ŒÝŠ·l« I	R	"õlI
2	**Y158553-61050**	PK(¶ÞÊÞÅ¹-½	PACKING, CASE	1			
3	**Y158553-61070**	PK(¶ÞÊÞÅ¹-½ÌÀ	PACKING	1			
5	**Y129155-51280**	OØÝ¸Þ(S6	O-RING S6	1			
21	**Y129255-61410**	ÄÒÅÂÄ(ºÝÄÛ-ÙÚÊÞ-	NUT	1			
22	**Y119807-61420**	ÓÄÞ¼SP(ºÝÄÛ-ÙÚÊÞ-	SPRING	1			
23	**Y158552-61441**	Ú·ÞÕÚ-ÀÙÊÞ-	LEVER, REGULATOR	1			
24	**Y129155-61460**	±²ÄÞÙ¾²¹ÞÝÎÞÙÄ	BOLT, IDLE LIMIT	1			
53	**Y26106-060102**	ÂÊÞÎÞÙÄ 6X 10	BOLT 6X 10 PLATED	1			
59	**Y119660-61901**	Ç¹ÄÞÒ	RETAINER, SHAFT	1			
63	**Y22190-120000**	¼-ÙÜÂ¼Ô(ÎÞÙÄÖ³)12	SEAL WASHER 12(BOLT)	1			
65	**Y23887-120002**	6¶¸ÌßØ¸Þ M12	PLUG M12,HEX.	1			
67	**Y26106-060102**	ÂÊÞÎÞÙÄ 6X 10	BOLT 6X 10 PLATED	1			
68	**Y26756-060002**	ÄÒÅÂÄ 6	LOCK NUT 6	1			
82	**Y24341-000280**	OØÝ¸Þ 1A S 28.0	O-RING 1A S-28.0	1			
83	**Y26106-060142**	ÂÊÞÎÞÙÄ 6X 14	BOLT M 6X 14 PLATED	2			
84	**Y26106-060142**	ÂÊÞÎÞÙÄ 6X 14	BOLT M 6X 14 PLATED	4			
85	**Y26106-060202**	ÂÊÞÎÞÙÄ 6X 20	BOLT M 6X 20 PLATED	10			
96	**Y119233-77932**	½ÄÂÌß¿ÚÉ²ÄÞ	SOLENOID, STOP	1			
97	**Y129642-61060**	¶ÞÊÞÅ¹-½ÌÀ	COVER, CASE	1			

silverhorn.co.uk

FUEL INJECTION VALVE

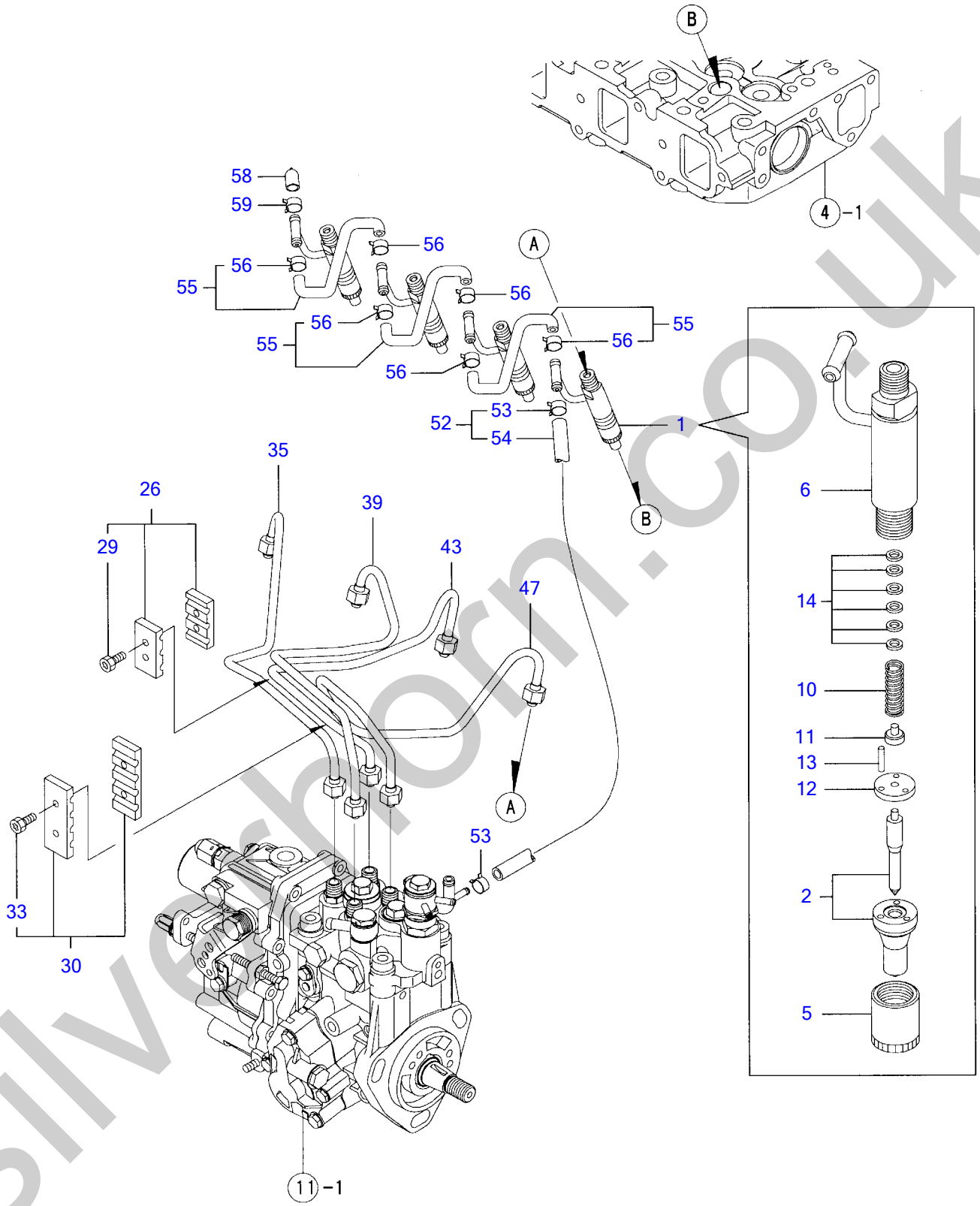

silverthorn.co.uk

Y00D8900	13. FOフンシャベン			
4TNV88-PTBZ1	1:06.02			PLUS

FOÌÝ¼¬ÍÞÝ FUEL INJECTION VALVE

Œ©lo REF NO.	•"•i"Ôl† PARTS NO.	•"•i-¼	Description	l"–Ê Q'ty	ŒÝŠ·l« I	R	"õlI
1	Y729645-53100	FOÍÞÝ ASSY(WBG	FUEL INJECTOR(WBG	4			
2	Y129602-53001	· É½ÞÙ CMP	· NOZZLE ASSY	4			
5	Y114250-53080	· ¹-½ÅÂÄ(D16.95)	· NUT, NOZZLE CASE	4			
6	Y119802-53100	· É½ÞÙÎÙÀÞ CMP	· HOLDER ASSY, NOZZLE	4			
10	Y114250-53120	· ½ÌßØÝ¸Þ(É½ÞÙ	· SPRING, NOZZLE	4			
11	Y114250-53130	· ¼-Ä(É½ÞÙ½ÌßØÝ¸Þ	· SEAT, NOZZLE SPRING	4			
12	Y114250-53140	· ½ÄÂÌßÌßÚ-Ä	· PLATE, STOP	4			
13	Y114250-53210	· ËßÝ(É½ÞÙ²Á·ÞÒ	· PIN	8			
14	Y114250-53400	· ¼Ñ CMP	· SHIM PACK	4			
26	Y129150-59120	ÌÚÄÞÒ(ÌÝ¼Ô¶Ý CMP	RETAINER, INJ. PIPE	1			
29	Y129150-59131	· HB4X14	· BOLT M4X14,HEX.SCKT.	2			
30	Y129550-59120	ÌÚÄÞÒ(ÌÝ¼Ô¶ÝCMP	RETAINER	1			
33	Y129150-59131	· HB4X14	· BOLT M4X14,HEX.SCKT.	2			
35	Y129601-59810	FO-T(ÌÝ¼Ô CMP	PIPE ASSY, INJECTION	1			
39	Y129601-59820	FO-T(ÌÝ¼Ô CMP	PIPE ASSY, INJECTION	1			
43	Y129601-59830	FO-T(ÌÝ¼Ô CMP	PIPE ASSY, INJECTION	1			
47	Y129601-59840	FO-T(ÌÝ¼Ô CMP	PIPE ASSY, INJECTION	1			
52	Y119802-59550	FO-T(ÓÄÞ¼ CMP	PIPE ASSY, RETURN	1			
53	Y124722-59050	· Î-½¸ØÂÌß(ÏÙ 9	· CLAMP 9	2			
54	Y119802-59560	· FO-T(ÓÄÞ¼	· PIPE, FUEL RETURN	1			
55	Y129486-59551	FO-T(ÓÄÞ¼ CMP	PIPE, FUEL RETURN	3			
56	Y124722-59050	· Î-½¸ØÂÌß(ÏÙ 9	· CLAMP 9	6			
58	Y119593-59581	·ÔÂÌß(FO-TÓÄÞ¼	CAP	1			
59	Y124060-77680	Î-½¸ØÀÌß(ÏÙ 10	CLAMP 10	1			

silverhorn.co.uk

FUEL LINE

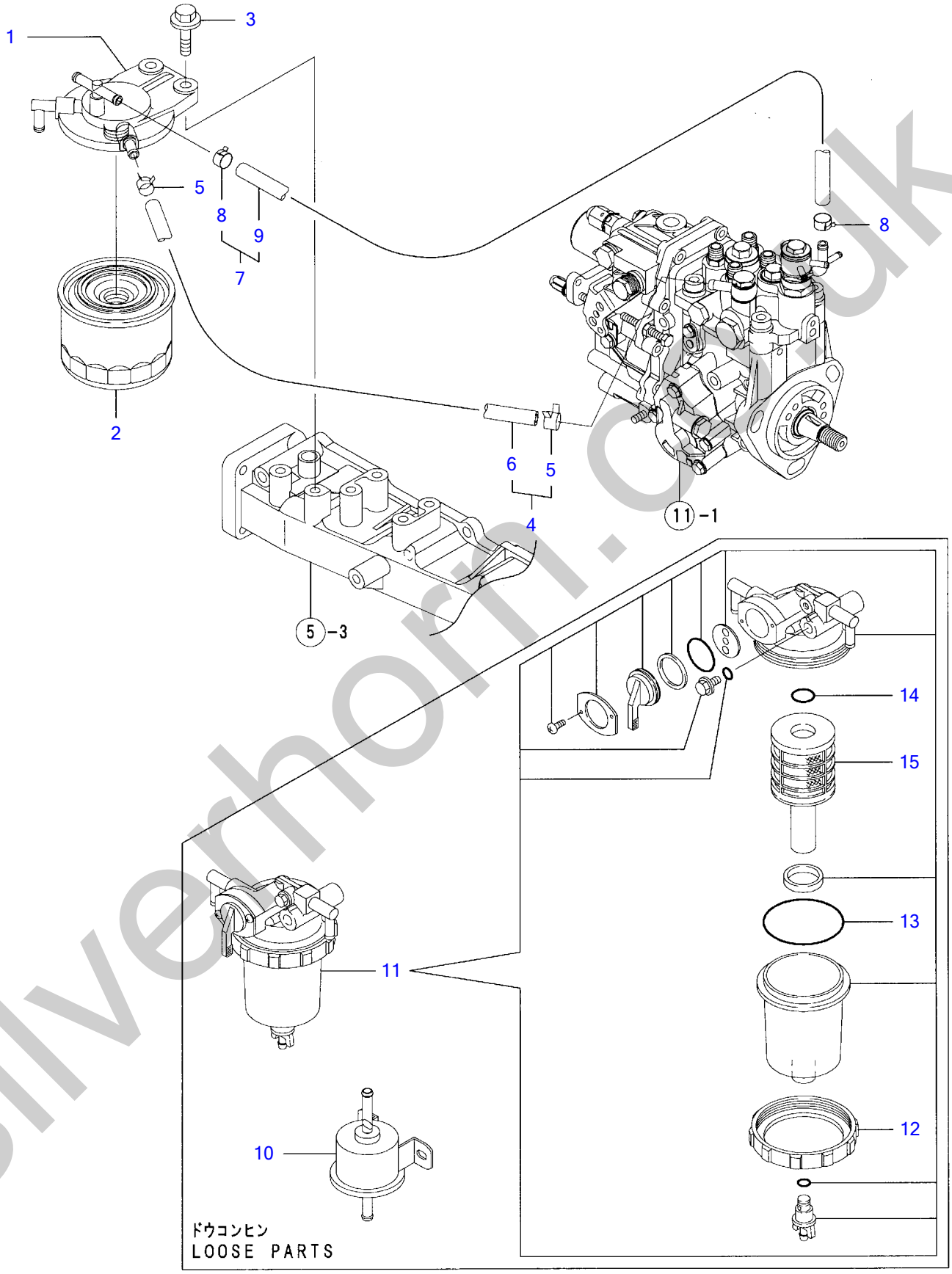

Y00D8900	14. FOパイプ				
4TNV88-PTBZ1		1:06.02			PLUS

silverhorn.co.uk

FOÊß²Ìß FUEL LINE

Œ©lo REF NO.	•"•i"Ôl† PARTS NO.	•"•i-¼	Description	l"–Ê Q'ty	ŒÝŠ·l« I	R	"õl
1	Y129004-55611	ÄØÂ¹ÀÞ²(FOÌ²ÙÀ	BRACKET, FILTER	1			
2	Y119802-55800	FOÌ²ÙÀ	FILTER, FUEL	1			
3	Y26106-080302	ÂÊÞÎÞÙÄ 8X 30	BOLT M 8X 30 PLATED	2			
4	Y129210-59090	FO-T CMP	PIPE ASSY, FUEL OIL	1			
5	Y124766-59050	· Î-½¸ØÂÌß(ÏÙ 12	· CLAMP 12	2			
6	Y105325-59570	· FO-T(FOP-º¼·	· PIPE, FUEL OIL	1			
7	Y129210-59150	FO-T CMP	PIPE ASSY, FUEL OIL	1			
8	Y124766-59050	· Î-½¸ØÂÌß(ÏÙ 12	· CLAMP 12	2			
9	Y105025-59530	· FO-T(D13XL400	· PIPE,FUEL (D13XL400)	1			
10	Y129612-52100	FOÌ²-ÄÞÎßÝÌß	FUEL PUMP	1			
11	Y129906-55700	º½²ÌÞÝØ· CMP	SEPARATOR ASSY	1			
12	Y129100-55690	· ØÃ-ÆÝ¸ÞØÝ¸Þ	· RING, RETAINING	1			
13	Y24321-000650	· OØÝ¸Þ 1A G 65.0	· O-RING 1A G-65.0	1			
14	Y24311-000160	· OØÝ¸Þ 1A P 16.0	· O-RING 1A P-16.0	1			
15	Y119802-55710	· ´ÚÒÝÄ(Õ½²ÌÞÝØ·	· ELEMENT	1			

silverhorn.co.uk

STARTING MOTOR

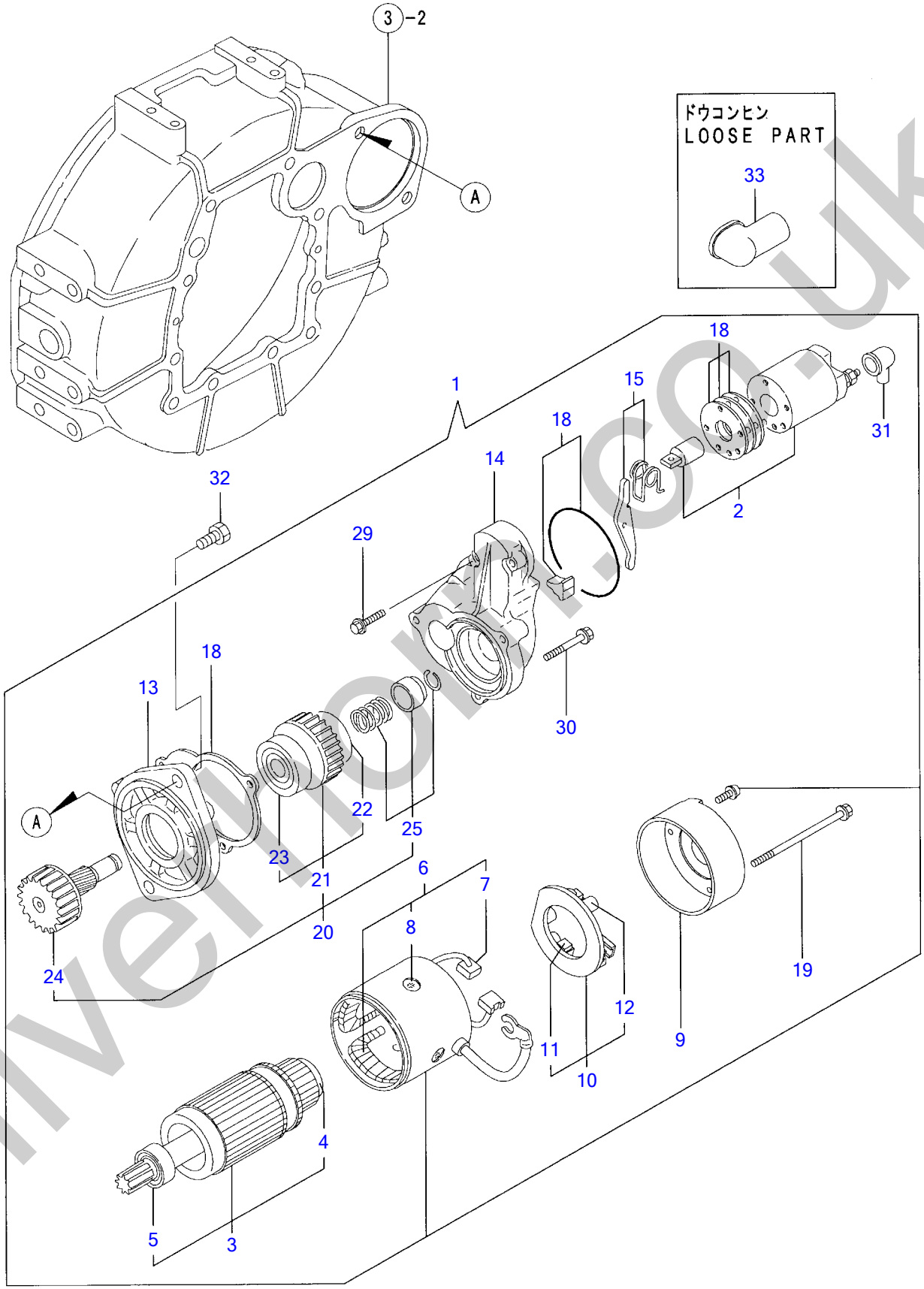

Y00D8900	15. スターティングモータ				
4TNV88-PTBZ1		1:06.02			PLUS

silverhorse.co.uk

½À-Ã²Ý¸ÞÓ-À STARTING MOTOR

Œ©lo REF NO.	•"•i"Ô†PARTS NO.	•"•i-¼	Description	”–Ê Q'ty	ŒÝŠ·« I	R	”õl
1	Y129136-77011	½À-À	STARTER	1			
2	Y129136-77310	· Ï¸ÞÈÃ²Â¸½²ÂÁ ASY	· SHAFT, PINION	1			
3	Y129900-77400	· ±-ÏÁÔ ASY	· ARMATURE ASSY	1			
4	YX2130350900	· · ÎÞ-ÙÍÞ±ØÝ¸Þ (1	· · BALL BEARING	1			
5	YX2114255110	· · ÎÞ-ÙÍÞ±ØÝ¸Þ (2	· · BALL BEARING	1			
6	Y129900-77440	· Ì²-ÙÄÞº²Ù ASY	· COIL ASSY, FIELD	1			
7	Y129900-77450	· · ÌÞ×¼(+	· · BRUSH (+)	2			
8	Y171008-77450	· · Îß-Ù°±¾ÂÄ½¸ØÕ³	· · SCREW, POLE CORE SET	4			
9	Y129900-77460	· ØÔ¶ÊÞ-	· COVER, REAR	1			
10	Y129900-77480	· ÌÞ×¼ÎÙÀÞ ASY	· HOLDER ASSY, BRASH	1			
11	Y129900-77450	· · ÌÞ×¼(+	· · BRUSH (+)	2			
12	Y129400-77490	· · ÌÞ×¼½ÌßØÝ¸Þ	· · SPRING, BRUSH	4			
13	Y171008-77510	· ·Þ±¹-½	· HOUSING ASSY, GEAR	1			
14	Y129136-77520	· ¾ÝÀ-Ê³¼ÞÝ¸Þ	· CENTER HOUSING	1			
15	Y171008-77540	· ÚÊÞ- ¾ÂÄ	· LEVER SET, SHIFT	1			
18	Y129400-77571	· ÀÞ½Ä¶ÊÞ-·ÂÄ(ÉÝ±½)	· DUST COVER,(NON-ASB.	1			
19	Y129900-77640	· ½Û-ÄÎÞÙÄ	· BOLT, THROUGHT	2			
20	Y171008-77650	· ËßÆµÝ ¼¸Ð	· PINION ASSY	1			
21	YX2114555500	· · ¸×ÂÁ ASY	· · CLUTCH ASSY	1			
22	YX2114955020	· · · ÎÞ-ÙÍÞ±ØÝ¸Þ(3	· · · BALL BEARING	1			
23	YX2240410100	· · · ÎÞ-ÙÍÞ±ØÝ¸Þ(4	· · · BALL BEARING	1			
24	Y171008-77660	· · ËßÆµÝ¼ÔÌÄ	· · SHAFT, PINION	1			
25	Y171008-77670	· · ½ÄÂÊß-¾ÂÄ	· · STOPPER SET, PINION	1			
29	Y26106-060322	· ÂÊÞÎÞÙÄ 6X 32	· BOLT M 6X 32 PLATED	2			
30	Y26106-060402	· ÂÊÞÎÞÙÄ 6X 40	· BOLT M 6X 40 PLATED	3			
31	Y171008-77750	· ¶ÊÞ-(À-ÐÅÙ	· COVER, M TERMINAL	1			
32	Y26116-120252	ÎÞÙÄ 12X 25	BOLT M12X 25 PLATED	2			
33	Y124550-77030	¶ÊÞ-(ST:BÀ-ÐÅÙ	COVER, TERMINAL	1			

silverhorn.co.uk

GENERATOR

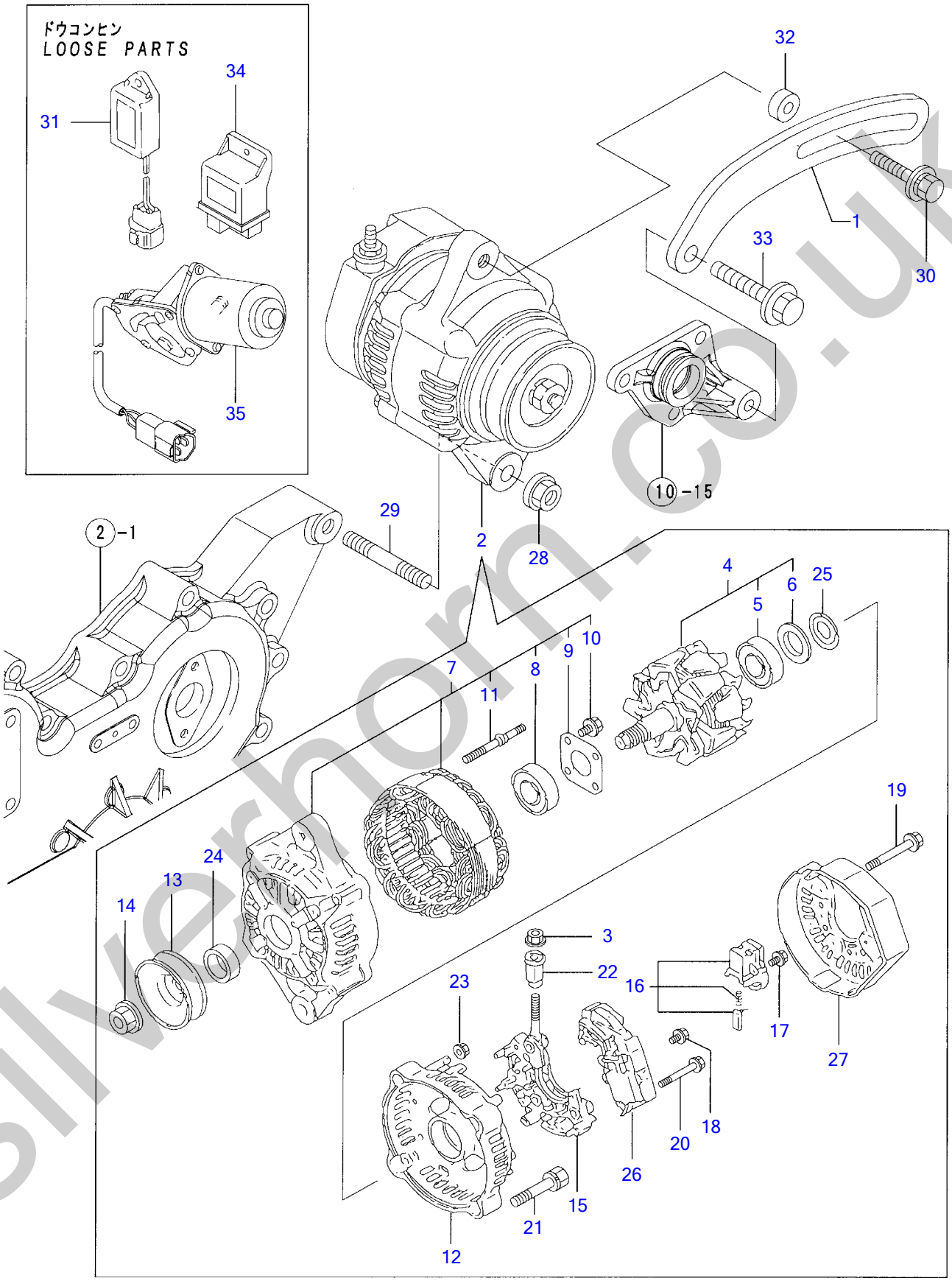

Y00D8900	16. ジェネレータ				
4TNV88-PTBZ1		1:06.02			PLUS

silverhorn.co.uk

¼Þ´ÈÚ-À GENERATOR

Œ©▯o REF NO.	•”•i”Ô▯† PARTS NO.	•”•i-¼	Description	▯”–Ê Q'ty	ŒÝŠ·▯« I	R	”õ▯l
1	**Y119802-77330**	±¼ÞÔ½À(VÍÞÙÄ	ADJUSTER, BELT	1			
2	**Y129240-77200**	µÙÀÈ°À(40A	ALTERNATOR	1			
3	**Y129240-79310**	▪ ÅÂÄ	▪ NUT	1			
4	**Y119620-77380**	▪ Û-À ASSY	▪ ROTOR ASSY	1			
5	**Y126501-79240**	▪ ▪ ÎÞ-ÙÍÞ±ØÝ¸Þ	▪ ▪ BALL BEARING	1			
6	**Y119620-79250**	▪ ▪ ÍÞ±ØÝ¸Þ¶ÊÞ-	▪ ▪ COVER, BEARING	1			
7	**Y119620-77421**	▪ ÌÚ-ÑASSY,DRIVE	▪ FLAME ASSY, DRIVE	1			
8	**Y119620-79200**	▪ ▪ ÎÞ-ÙÍÞ±ØÝ¸Þ	▪ ▪ BALL BEARING	1			
9	**Y119620-79210**	▪ ▪ ÌßÚ-Ä,ØÃ-Å	▪ ▪ PLATE	1			
10	**Y119620-79220**	▪ ▪ ½¸ØÕ-	▪ ▪ SCREW	4			
11	**Y119620-79230**	▪ ▪ ÎÞÙÄ,½ÀÂÄÞ	▪ ▪ BOLT, STUD	2			
12	**Y119620-77440**	▪ ÌÚ-Ñ ASSY,REAR	▪ FLAME ASSY, REAR	1			
13	**Y119620-77461**	▪ Ìß-Ø	▪ PULLEY	1			
14	**Y119620-77471**	▪ ÅÂÄ	▪ NUT	1			
15	**Y119620-79260**	▪ ÎÙÀÞ-	▪ HOLDER	1			
16	**Y129052-79270**	▪ ÌÞ×¼ÎÙÀÞ-	▪ HOLDER, BRUSH	1			
17	**Y119620-79290**	▪ ½¸ØÕ³	▪ SCREW	6			
18	**Y119620-79300**	▪ ½¸ØÕ³	▪ SCREW	1			
19	**Y119620-79310**	▪ ÎÞÙÄ	▪ BOLT	3			
20	**Y119620-79320**	▪ ½¸ØÕ³,W/ÜÂ¼Ô	▪ SCREW W/WASHER	2			
21	**Y119620-79330**	▪ ÎÞÙÄ	▪ BOLT	2			
22	**Y119620-79340**	▪ ²Ý¼ÕÚ-¼ÖÝÌÞÂ¼Õ	▪ INSULATION BUSH	1			
23	**Y119620-79350**	▪ ÅÂÄ	▪ NUT	2			
24	**Y119620-77490**	▪ ¶×-	▪ COLLAR	1			
25	**Y119620-79360**	▪ ½×½ÄÜÂ¼Ô-	▪ THRUST WASHER	1			
26	**Y129240-77710**	▪ Ú·ÞÕÚ-À ASSY	▪ REGULATOR ASSY	1			
27	**Y129240-79300**	▪ ¶ÊÞ-,ØÔ´ÝÄÞ	▪ COVER	1			
28	**Y26306-100002**	ÂÊÞÂ·ÅÂÄ(UBS 10	NUT	1			
29	**Y129795-01900**	³´ºÐ ÎÞÙÄ	STUD	1			
30	**Y129972-77341**	ÎÞÙÄ(±¼ÞÔ½À,L=50	BOLT, ADJUSTING	1			
31	**Y129211-77920**	À²Ï-(1 SEC.	TIMER	1			
32	**Y119940-77270**	¶Ý»Þ(GEN	ADJUSTER, BELT	1			
33	**Y26106-080452**	ÂÊÞÎÞÙÄ 8X 45	BOLT M 8X 45 PLATED	1			
34	**Y119802-77200**	¾-ÌÃ²ØÚ-	RELAY, SAFETY	1			
35	**Y129136-66810**	½ÄÂÌßÓ-À-	MOTOR, ENGINE STOP	1			

silverhorn.co.uk

GASKET SET & TOOL

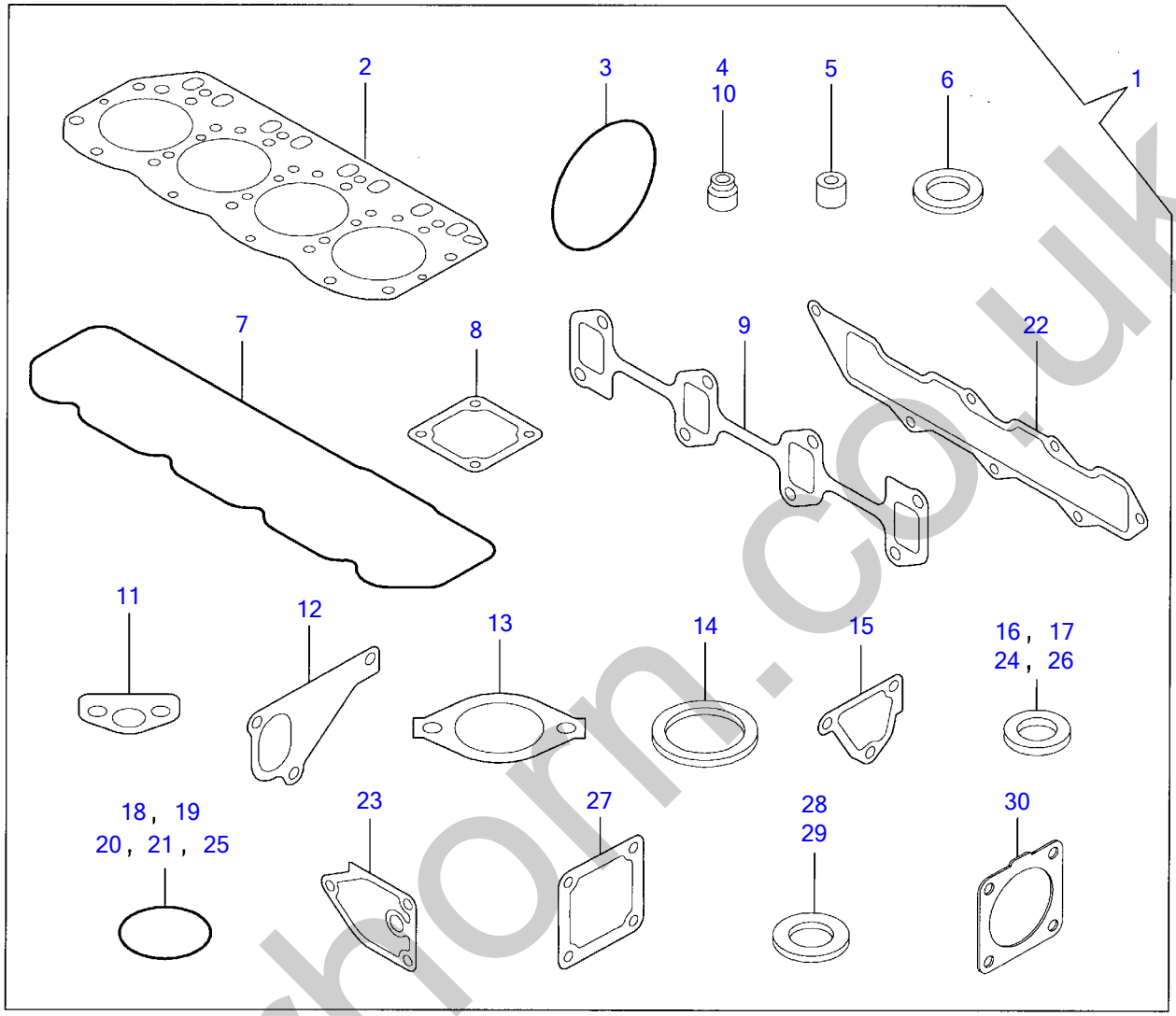

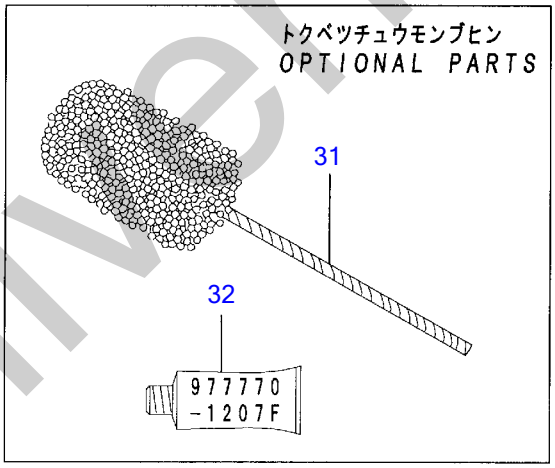

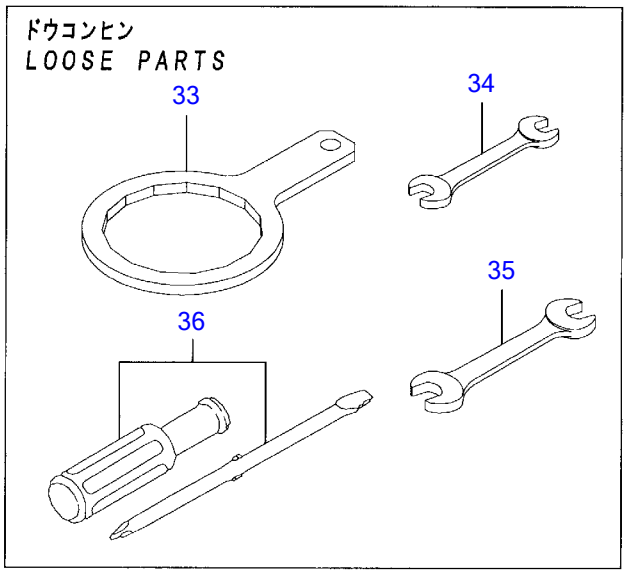

Y00D8900	17. パッキンセット & コウグ				
4TNV88-PTBZ1	1:06. 02				PLUS

silverhorn.co.uk

ÊßÂ·Ý¾ÂÄ & º³¸Þ GASKET SET & TOOL

Œ©lo REF NO.	•"•i"Ôl† PARTS NO.	•"•i-¼	Description	l"–Ê Q'ty	ŒÝŠ·l« I	R	"õll
1	Y729601-92950	ÊßÂ·Ý ¾ÂÄ (ÉÝ±½)	GASKET SET(NON-ASB.)	1		(1)	µÌß¼®Ý ÌÞËÝÃÞ½
2	Y129407-01340	· ÍÂÄÞ¶Þ½¹ÂÄ	· GASKET,CYL.HEAD	1			
3	Y121850-51960	· OØÝ¸Þ(FOPÄØÂ¹)	· O-RING, F.I.PUMP	1			
4	Y124460-11340	· ÊÞÙÌÞ½ÃÑ¼-Ù	· SEAL, VALVE STEM	4			
5	Y119802-11870	· ÌßÛÃ¸À(É½ÞÙ	· PROTECTOR, NOZZLE	4			
6	Y119625-11880	· É½ÞÙ¼-Ä	· SEAT, NOZZLE	4			
7	Y129601-11310	· PK(ÎÞÝÈÂÄ	· GASKET,COVER	1			
8	Y129150-77511	· PK(´±Ë-À)(ÉÝ±½)	· GASKET, (NON-ASB.)	1			
9	Y129550-13110	· PK(EXHÏÆÎÙÄÞ	· GASKET, EXH.MANIFOLD	1			
10	Y121400-11340	· ÊÞÙÌÞ½ÃÑ¼-Ù	· SEAL, VALVE STEM	4			
11	Y129150-35042	· PK(·Ô³ÆÕ³¶Ý)(ÉÝ±½)	· GASKET, (NON-ASB.)	1			
12	Y129486-42021	· PK(CW-P	· GASKET	1			
13	Y129795-49551	· PK(»-Ó½ÀÂÄ¶ÊÞ-)(ÉÝ±½	· GASKET, (NON-ASB.)	1			
14	Y129150-49811	· PK(»-Ó½ÀÂÄ ¼À)(ÉÝ±½)	· GASKET, (NON-ASB.)	1			
15	Y124395-49840	· PK(»-Ó½ÀÂÄ¹-½	· GASKET, THERMO. CASE	1			
16	Y22190-080002	· ¼-ÙÜÂ¼Ô(ºÏÙ.ÆÄØÙ) 8	· SEAL WASHER 8S	2			
17	Y124465-44950	· ÊßÂ·Ý16	· GASKET 16	1			
18	Y24311-000120	· OØÝ¸Þ 1A P 12.0	· O-RING 1A P 12.0	3			
19	Y24311-000320	· OØÝ¸Þ 1A P 32.0	· O-RING 1A P-32.0	3			
20	Y24341-000240	· OØÝ¸Þ 1A S 24.0	· O-RING 1A S-24.0	1			
21	Y129486-42140	· OØÝ¸Þ G 30	· O-RING,CW-P	1			
22	Y129407-12110	· PK(SUCÏÆÎ-ÙÄÞ	· GASKET,INT.MANOFOLD	1			
23	Y129150-35111	· PK(Ì²ÙÀÌÞ×¹ÂÄ)(ÉÝ±½)	· GASKET, (NON-ASB.)	1			
24	Y22190-220002	· ¼-ÙÜÂ¼Ô(ºÏÙ.ÆÄØÙ)22	· SEAL WASHER 22S	1			
25	Y119609-32040	· OØÝ¸Þ	· O-RING P16	4			
26	Y22190-100002	· ¼-ÙÜÂ¼Ô(ºÏÙ.ÆÄØÙ)10	· SEAL WASHER 10S	2			
27	Y129100-77510	· ÊßÂ·Ý(´±-Ë-À-	· GASKET, AIR HEATER	1			
28	Y23414-080000	· ÊßÂ·Ý(ÏÙ 8	· GASKET 8, ROUND	1			
29	Y129150-49360	· PK 10	· GASKET 10	1			
30	Y129930-13201	· ¶Þ½¹ÂÄ(»²ÚÝ»	· GASKET, SILENCER	1			
31	Y129400-92430	ÌÚÂ¸½Î-Ý	HORN, FLEX	1		(1)	µÌß¼®Ý ÌÞËÝÃÞ½
32	Y977770-1207F	¼Øº-Ý¹² ´·¼ÞÖ³¶Þ½¹ÂÄ	GASKET.LIQUID	1		(1)	µÌß¼®Ý ÌÞËÝÃÞ½
33	Y119640-92750	Ì²ÙÀÚÝÁ 80	WRENCH, FILTER	1			
34	Y28110-100120	½ÊßÅ 10X12	WRENCH 10X12	1			
35	Y28110-140170	½ÊßÅ 14X17	WRENCH 14X17	1			
36	Y104200-92350	ÄÞ×²ÊÞ-(»¼¶´¼·	DRIVER, SCREW	1			

silvermoor.co.uk