TB180FR

Book No.BL5Z004
Serial No.17830004-

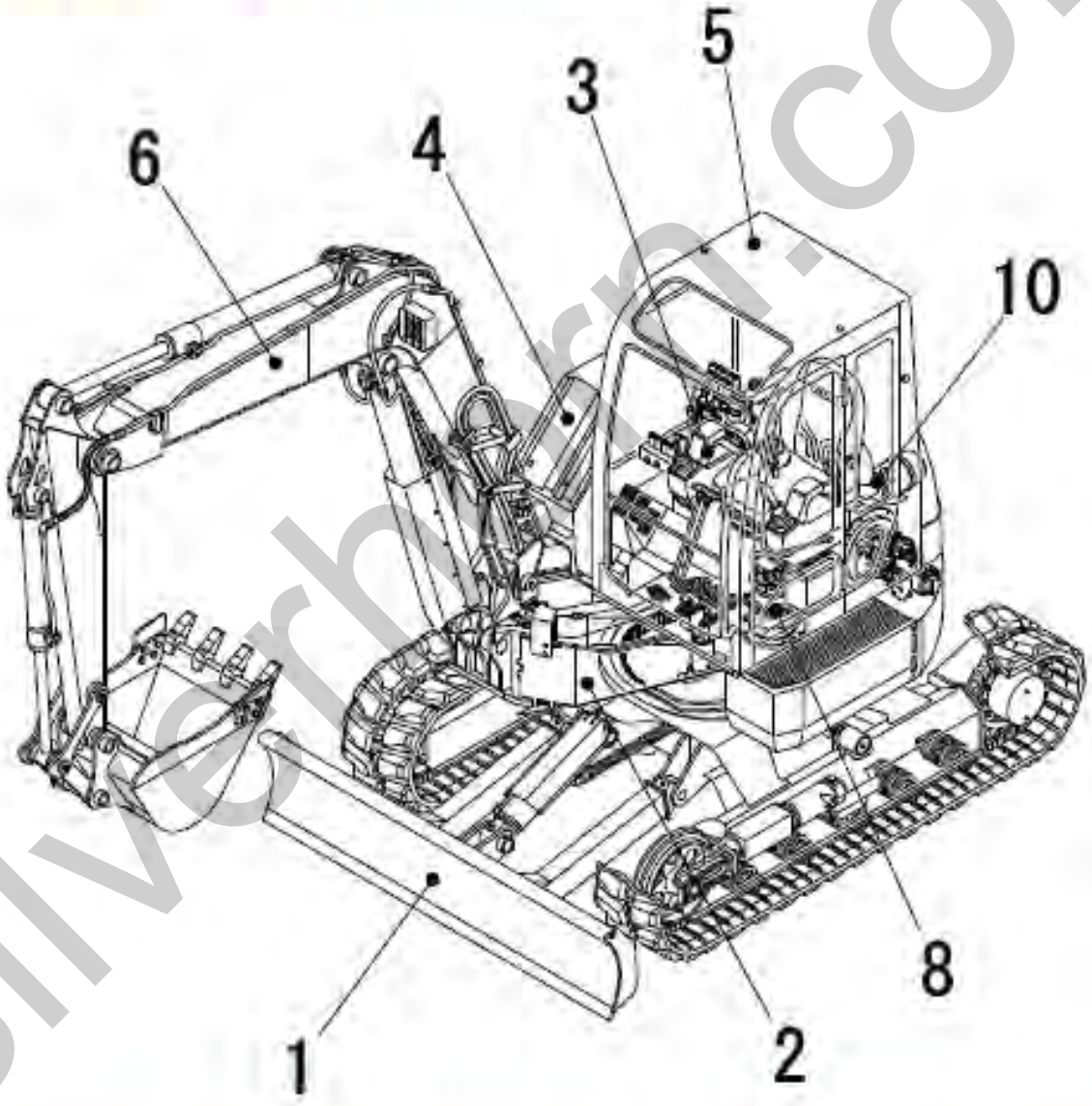

silverhorn.co.uk

silverhorn.co.uk

INDEX

Item	Part number	Description	Q'ty	Chan.	Serial No.	Serv.	Remarks
1		UNDERCARRIAGE					
2		TURNTABLE & CONTROL LEVER					
3		ENGINE & ELECTRICAL SYSTEM					
4		HYDRAULIC PIPNG & TANK					
5		COVER & CAB					
6		HOE ATTACHMENT					
7		DECAL & TOOL					
8		HYDRAULIC DEVICE					
10		ENGINE (4TNV98-STB1)					
		2007.06.27					

silverhorn.co.uk

LOWER FRAME

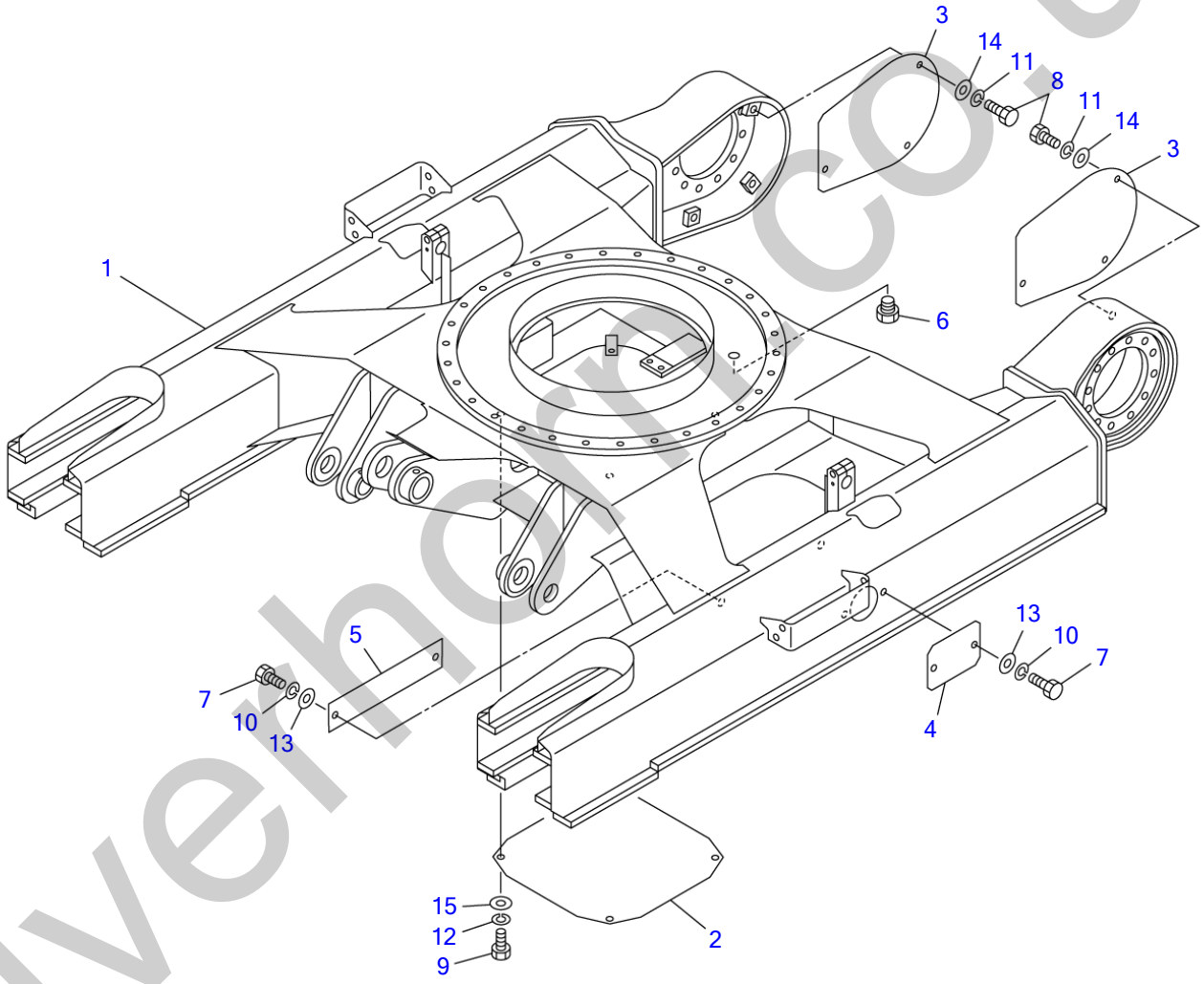

silverhalm.co.uk

LOWER FRAME

Item	Part number	Description	Q'ty	Chan.	Serial No.	Serv.	Remarks
		FRAME ASSY, lower					X05610-31000-1
1	X **********	FRAME	1				
2	0561021010	COVER	1				
3	0561027020	COVER	2				
4	0561017400	COVER	2				
5	0561019400	COVER	2				
6	1501710010	PLUG	1				
7	1100040816	BOLT	8				
8	1100041020	BOLT	6				
9	1100041225	BOLT	4				
10	1140020008	WASHER, spring	8				
11	1140020010	WASHER, spring	6				
12	1140020012	WASHER, spring	4				
13	1141110008	WASHER	8				
14	1141110010	WASHER	6				
15	1141110012	WASHER	4				
	L5a011						

silverhorn.co.uk

CRAWLER BELT

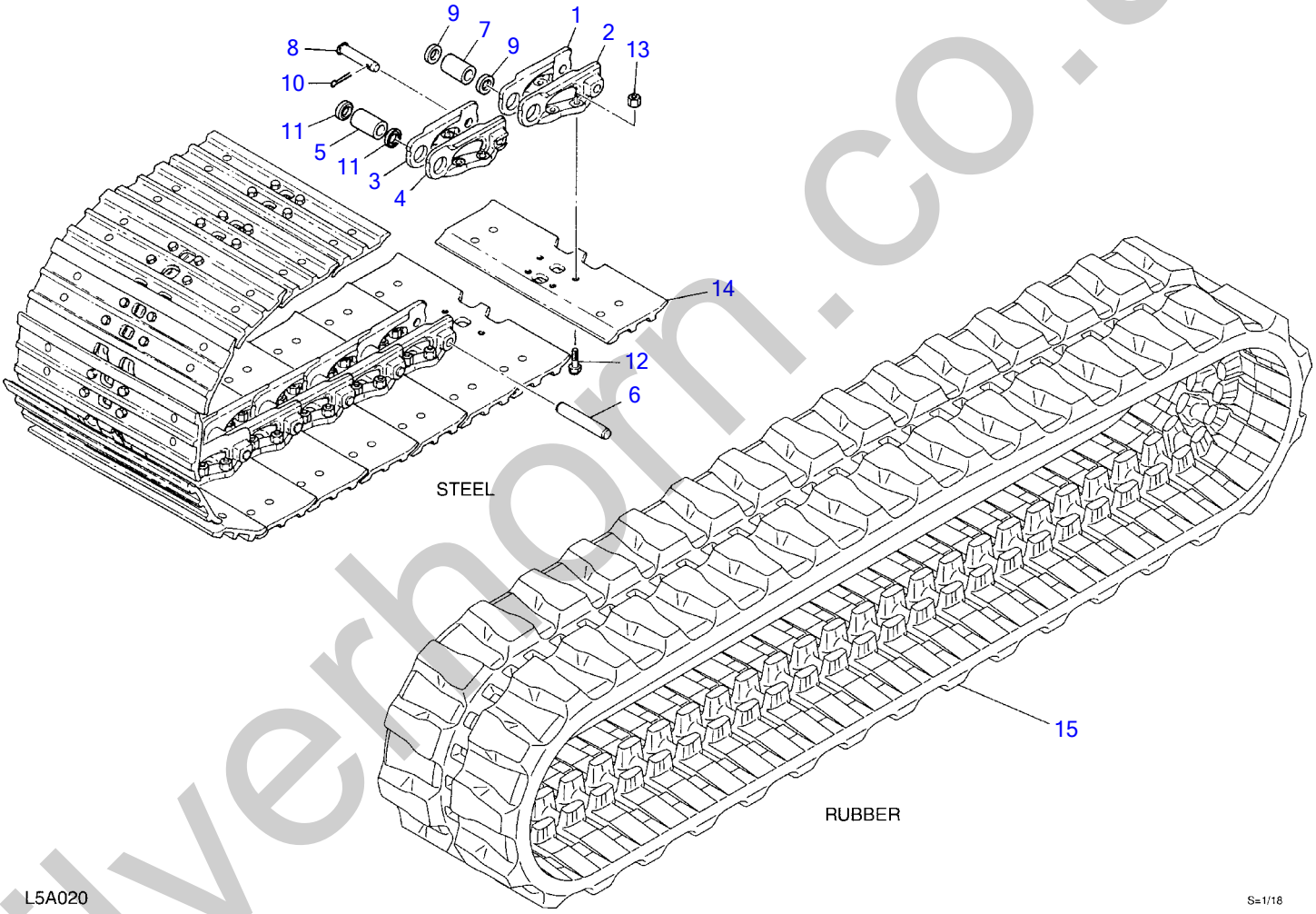

silverhorn.co.uk

CRAWLER BELT

Item	Part number	Description	Q'ty	Chan.	Serial No.	Serv.	Remarks
0	1914087300	BELT, steel crawler	2				X19140-87300-0
0-1	1914087199	・LINK ASSY	2				
1	1914087001	・・LINK (R.H.)	38				
2	1914087002	・・LINK (L.H.)	38				
3	1914087003	・・LINK, master (R.H.)	1				
4	1914087004	・・LINK, master (L.H.)	1				
5	1914087005	・・BUSHING	38				
6	1914087006	・・PIN, track	38				
7	1914087012	・・BUSHING	1				
8	1914087007	・・PIN, master	1				
9	1914087013	・・COLLAR	2				
10	1914087014	・・PIN, split	1				
11	1914087015	・・SEAL	76				
12	1914087009	・BOLT	156				
13	1914087010	・NUT	156				
14	1914087311	・PLATE	39				
15	1914086410	BELT, rubber crawler	2	(L)	17830004~17800139		X19140-86410-0
	1914086420	BELT, rubber crawler	2	(H)	17800140~		X19140-86420-0
	L5a021						

silverhorn.co.uk

CRAWLER BELT (with rubber pads)

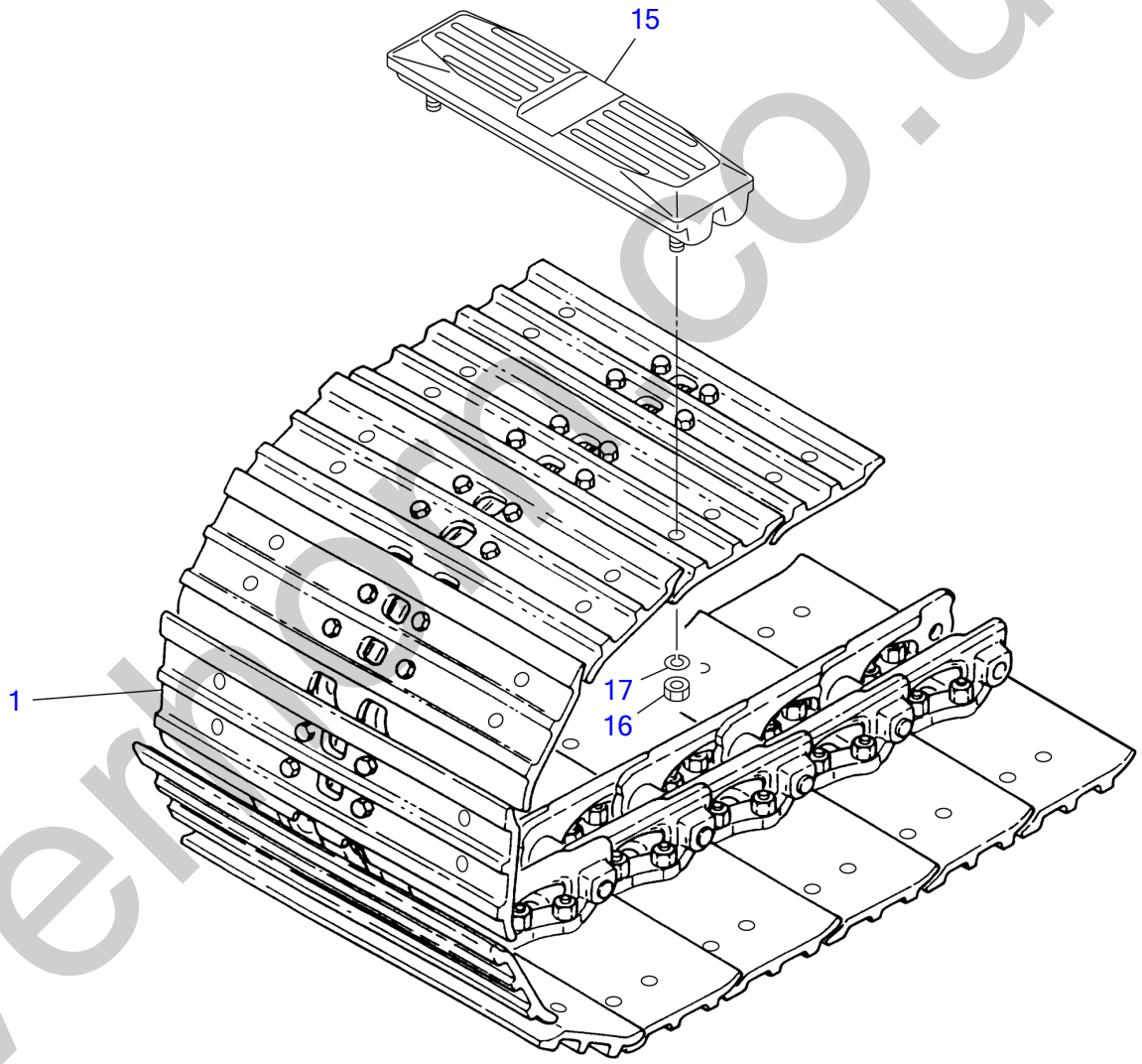

L4A082

silvermoor.co.uk

CRAWLER BELT (with rubber pads)

Item	Part number	Description	Q'ty	Chan.	Serial No.	Serv.	Remarks
0	**1914087400**	BELT ASSY, steel crawler (with rubber pads)	2				X19140-87400-0
1	**1914087300**	・BELT, steel crawler	1				
15	**1914400600**	・PAD, rubber	39				
16	**1130050014**	・・NUT	4				
17	**1140010014**	・・WASHER, spring	4				
	L4a083						

silverhorn.co.uk

CARRIER ROLLER

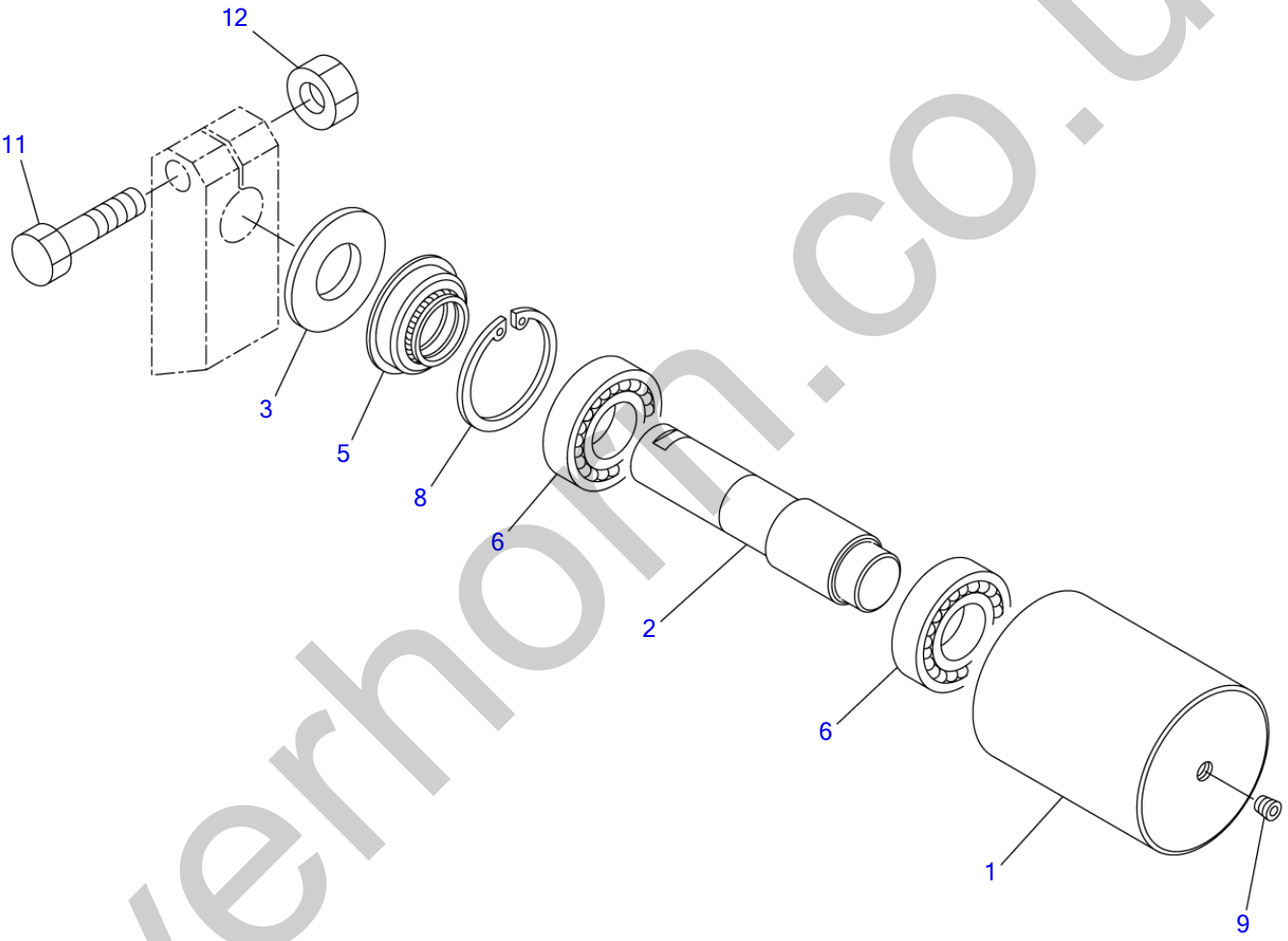

L3A030

S=1/4

silverhorn.co.uk

CARRIER ROLLER

Item	Part number	Description	Q'ty	Chan.	Serial No.	Serv.	Remarks
		ROLLER ASSY, carrier					X05612-04000-1
0-1	0561204080	ROLLE SUB ASSY	2				
1	0561202100	・ROLLER	1				
2	0561204100	・SHAFT	1				
3	0561202200	・COVER	1				
5	1431203572	・SEAL	1				
6	1300006207	・BEARING	2				
8	1221000072	・RING, snap	1				
9	1501820001	・PLUG	1				
11	1101041675	BOLT	2				
12	1130540016	NUT	2				
	L3a031						

silverhorn.co.uk

TRACK ROLLER (17830004-17830041)

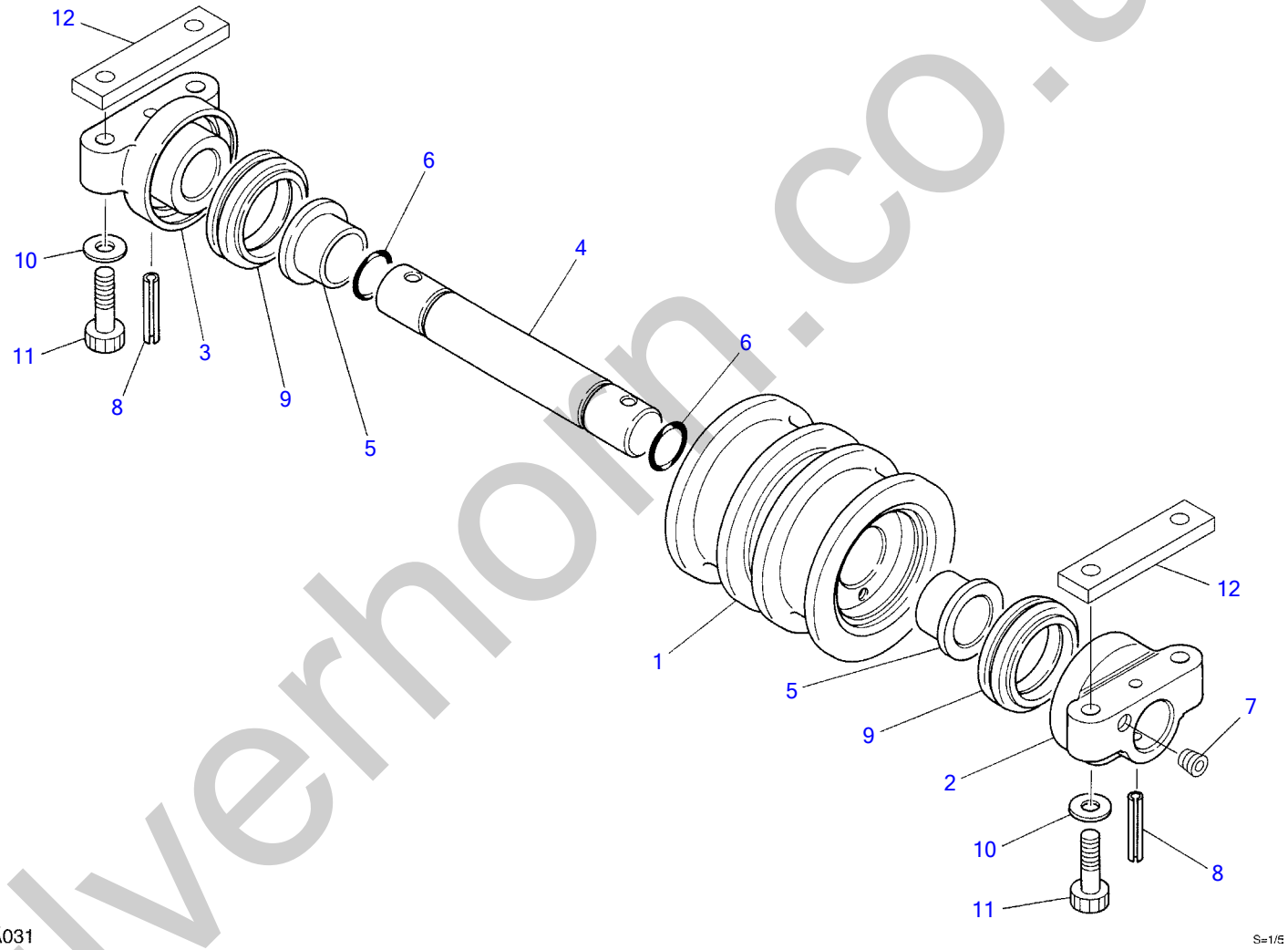

silverholm.co.uk

TRACK ROLLER (17830004-17830041)

Item	Part number	Description	Q'ty	Chan.	Serial No.	Serv.	Remarks
		ROLLER ASSY, track (rubber)					X05613-07300-0
		ROLLER ASSY, track (steel)					X05613-07400-0
0-1	0561307100	ROLLER SUB ASSY, track	10				
1	0561307200	・ROLLER	1				
2	0561307120	・COVER	1				
3	0561304300	・COVER	1				
4	0561304400	・SHAFT	1				
5	0561303500	・BUSHING	2				
6	1420100350	・O-RING	2				
7	1501830001	・PLUG	1				
8	1213001055	・PIN, spring	2				
9	1432500660	・SEAL, floating	2				
10	1141550012	WASHER	40				
11	1111021250	BOLT	40				rubber
	1111021265	BOLT	40				steel
12	0561305100	SPACER	20				steel
	L5a031						

silverhorn.co.uk

TRACK ROLLER (17830042-)

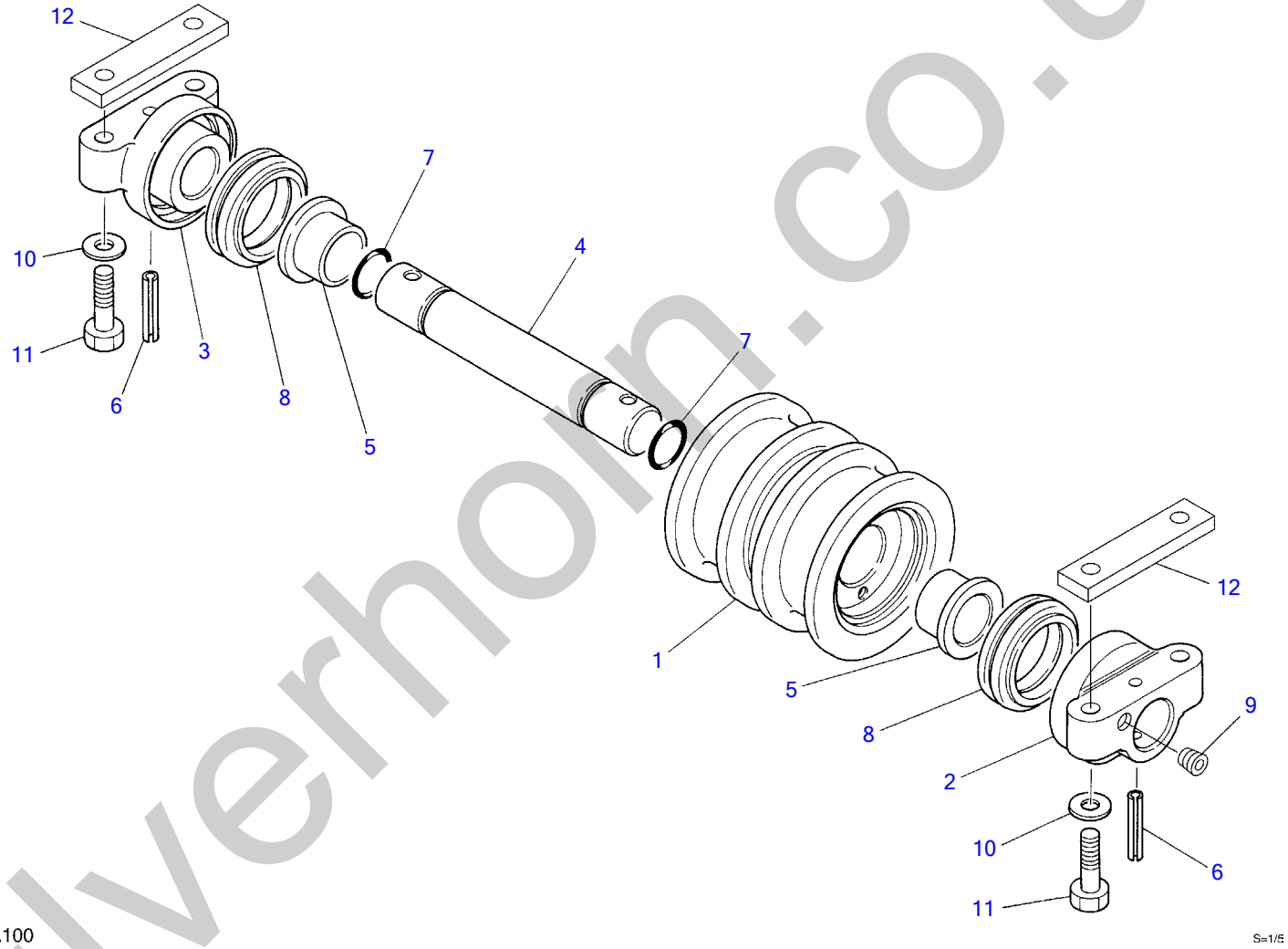

silverhoin.co.uk

TRACK ROLLER (17830042-)

Item	Part number	Description	Q'ty	Chan.	Serial No.	Serv.	Remarks
		ROLLER ASSY, track (rubber)					X05613-08000-0
		ROLLER ASSY, track (steel)					X05613-08200-0
0-1	0561308100	ROLLER SUB ASSY, track	10				
1	0561307200	・ROLLER	1				
2	0561308120	・COVER	1				
3	0561308130	・COVER	1				
4	0561304400	・SHAFT	1				
5	0561303500	・BUSHING	2				
6	1213001055	・PIN, spring	2				
7	1420100350	・O-RING	2				
8	1432500660	・SEAL, floating	2				
9	1501830001	・PLUG	1				
10	1141550014	WASHER	40				
11	1101041455	BOLT	40				rubber
	1101041470	BOLT	40				steel
12	0561305100	SPACER	20				steel
	L5a100						

silverhorn.co.uk

FRONT IDLER

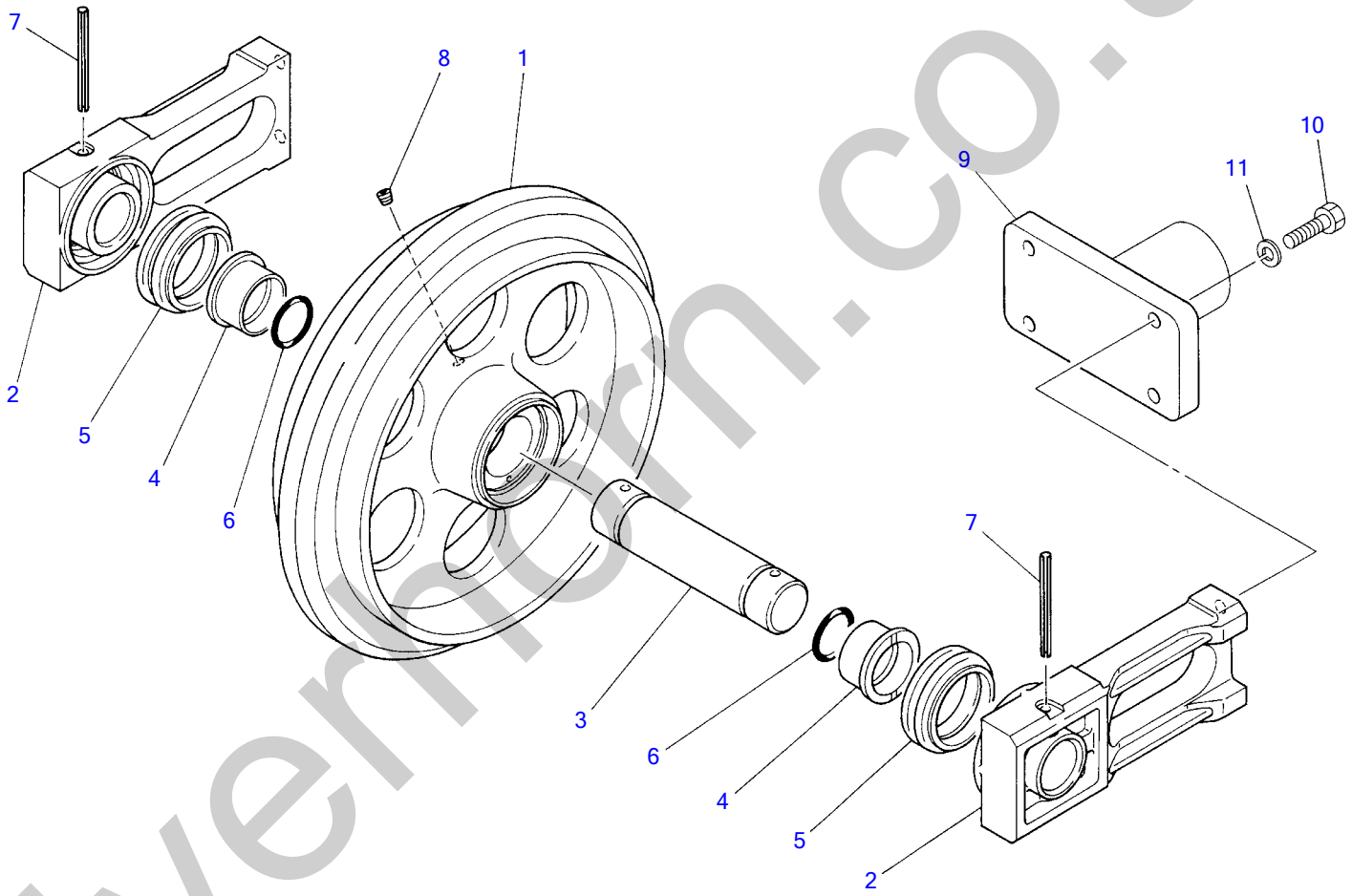

L5A040

S=1/7

silvermorn.co.uk

FRONT IDLER

Item	Part number	Description	Q'ty	Chan.	Serial No.	Serv.	Remarks
		IDLER ASSY, front					X05614-12000-0
0-1	0561400600	DLER SUB ASSY, front	2				
1	0561400100	・IDLER	1				
2	0561400200	・BLOCK	2				
3	0561400300	・SHAFT	1				
4	0561400400	・BUSHING	2				
5	1432500800	・SEAL, floating	2				
6	1420700500	・O-RING	2				
7	1213101020	・PIN, spring	2				
8	1501810001	・PLUG	1				
9	0561412020	PLATE	2				
10	1101041450	BOLT	8				
11	1140020014	WASHER, spring	8				
	L5a040						

silverhorn.co.uk

TRACK ADJUSTER

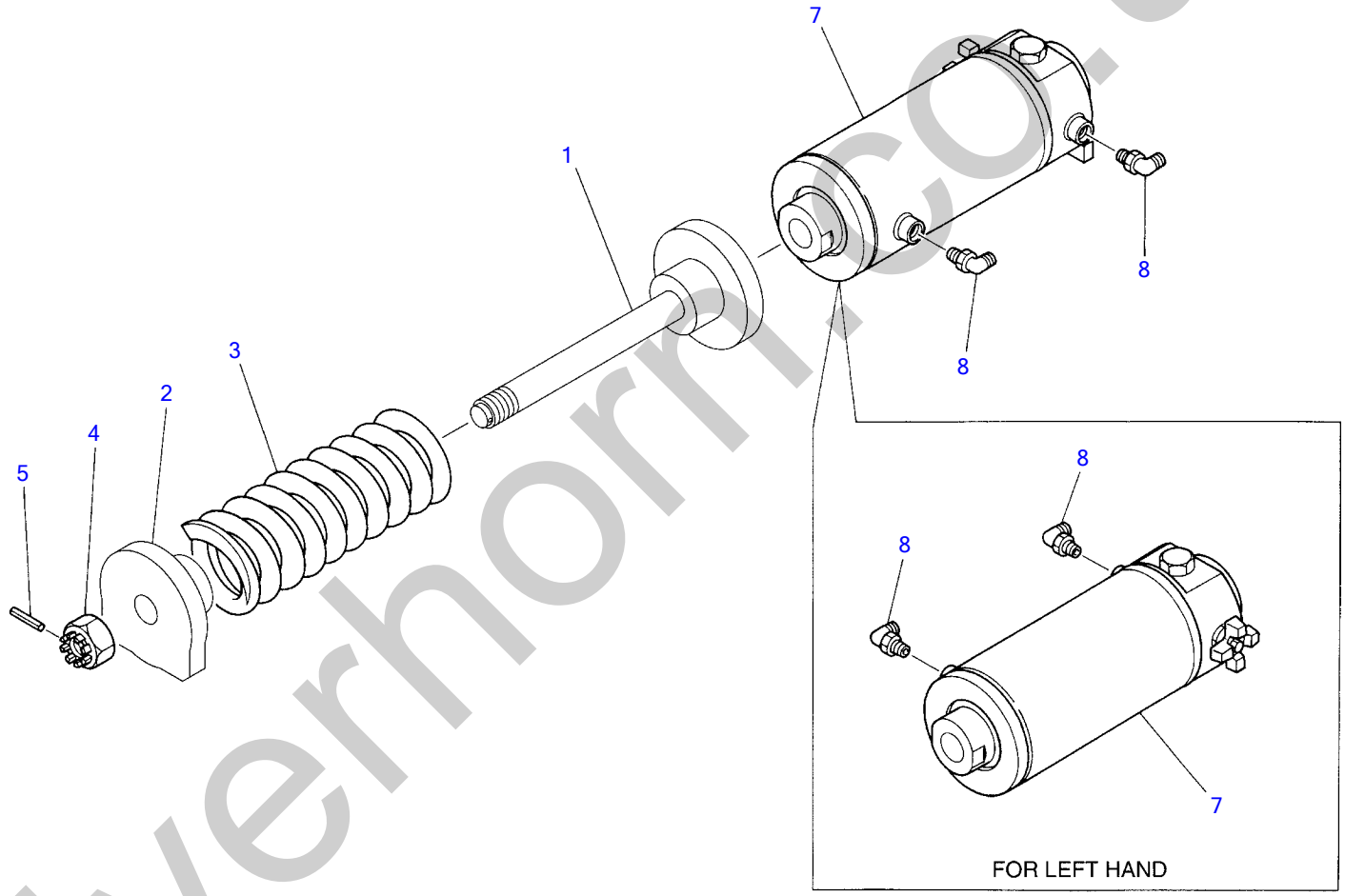

L5A050

S=1/7

silverhorn.co.uk

TRACK ADJUSTER

Item	Part number	Description	Q'ty	Chan.	Serial No.	Serv.	Remarks
		SPRING ASSY (R.H.)					X05615-04000-3
		SPRING ASSY (L.H.)					X05615-04200-3
0-1	0561504100	SPRING ASSY	2				
1	0561504110	・ROD	1				
2	0561504120	・PLATE	1				
3	0007000121	・SPRING	1				
4	1132530033	・NUT	1				
5	1213000650	・PIN, spring	1				
0-2	0561503300	CYLINDER ASSY (R.H.)	1				
	0561503400	CYLINDER ASSY (L.H.)	1				
7	1900081000	・CYLINDER, tensioning (R.H.)	1				
	1900081100	・CYLINDER, tensioning (L.H.)	1				
8	1515012040	・ELBOW	2				
	1420010110	・・O-RING	1				
	L5a051						

silverhorn.co.uk

TRAVEL DEVICE

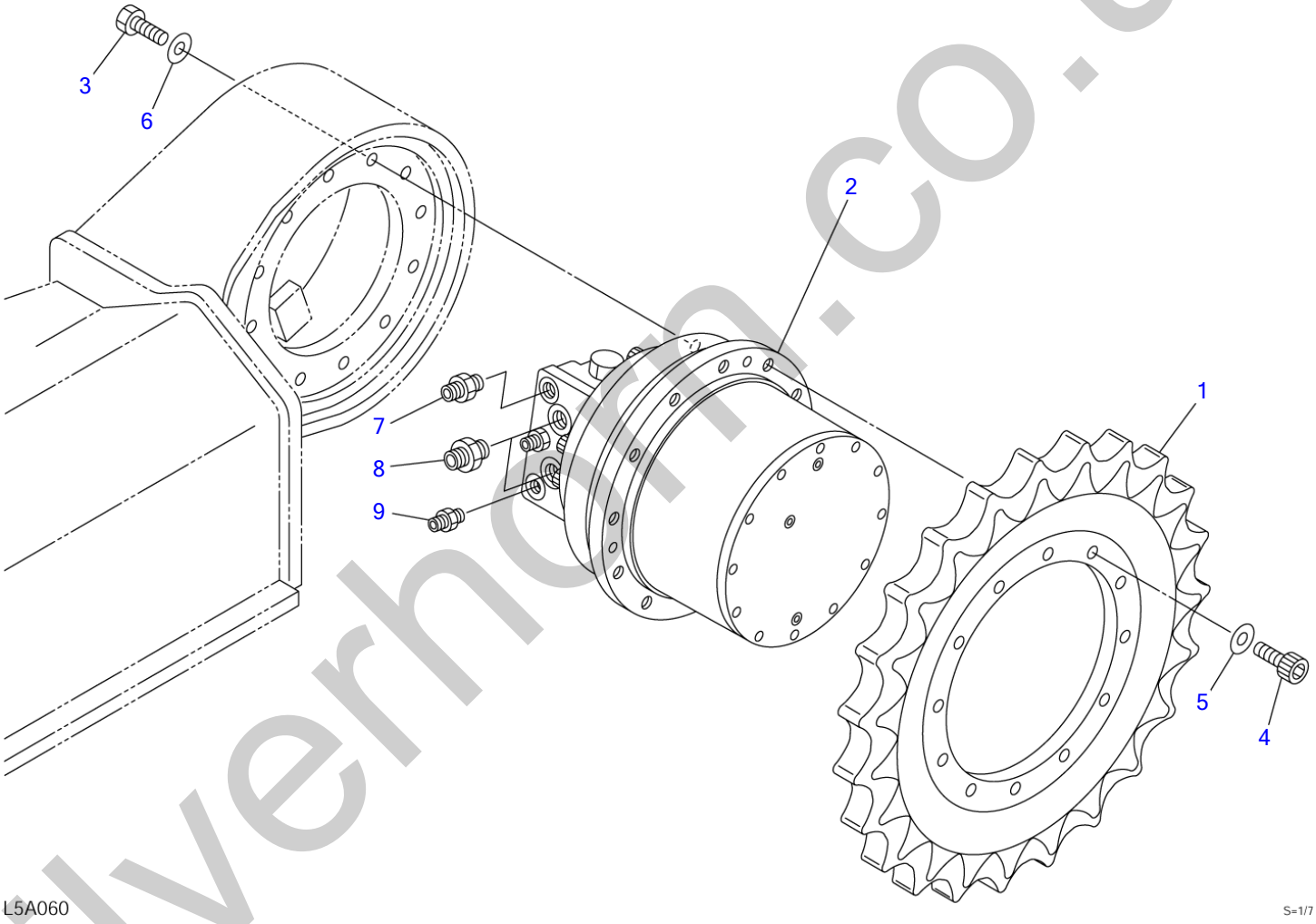

silverham.co.uk

TRAVEL DEVICE

Item	Part number	Description	Q'ty	Chan.	Serial No.	Serv.	Remarks
		MOTOR ASSY, travel					X05616-16500-0
1	0561615100	SPROCKET	2				
2	1903125800	MOTOR, travel	2				
3	1100041640	BOLT	24				
4	1110041440	SCREW, cap	24				
5	1141550014	WASHER	24				
6	1141550016	WASHER	24				
7	1515600201	ADAPTOR	2				
	1420010140	・O-RING	1				
8	1515600202	ADAPTOR	4				
	1420010180	・O-RING	1				
9	1515600576	ADAPTOR	2				
	1420010140	・O-RING	1				
	L5a060						

silverhorn.co.uk

SLEW BEARING

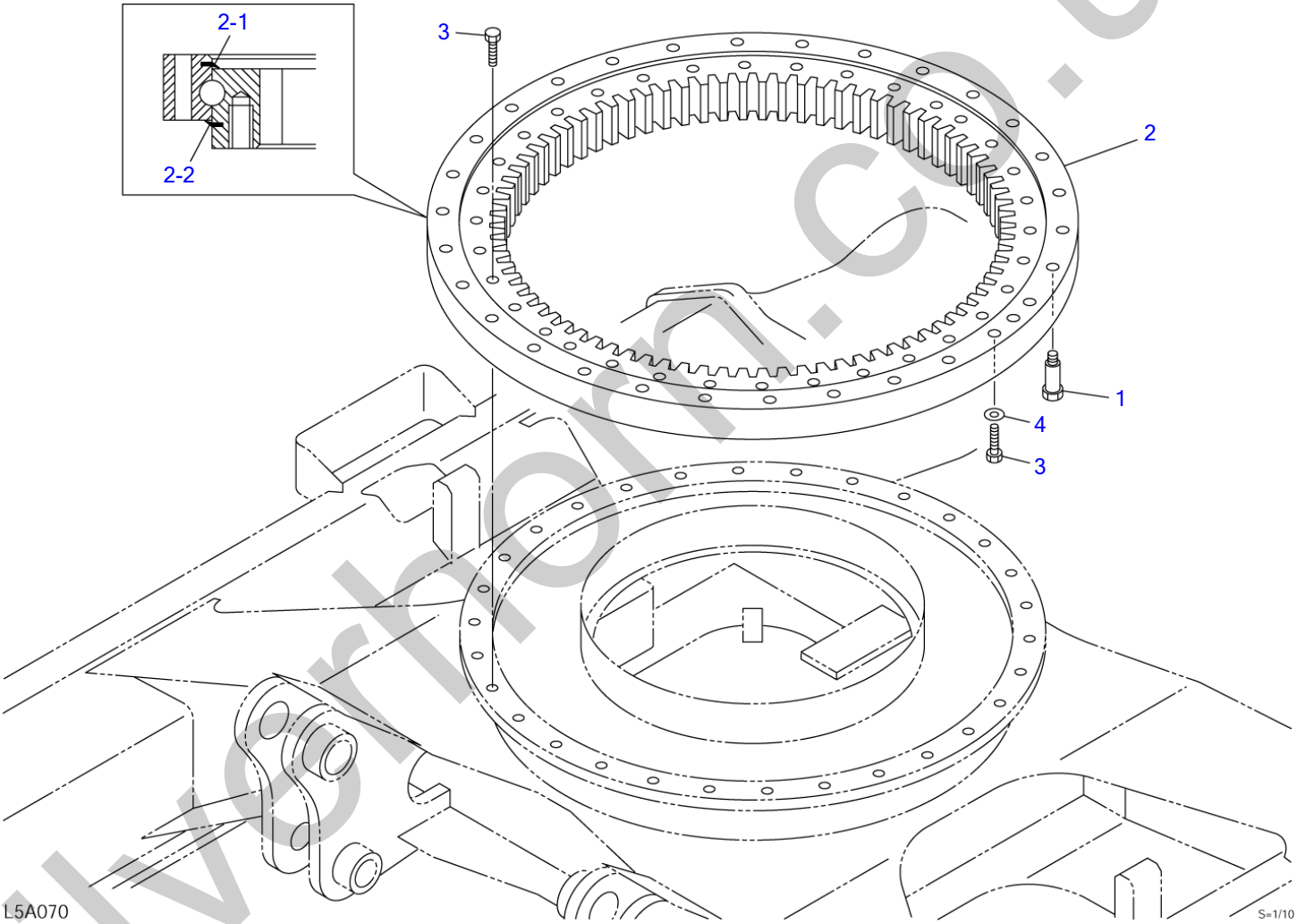

silverhorn.co.uk

SLEW BEARING

Item	Part number	Description	Q'ty	Chan.	Serial No.	Serv.	Remarks
		BEARING ASSY, slew					X05620-17100-0
1	0562016100	BOLT	1				
2	1913004950	BEARING	1				
2-1	1913004958	・SEAL	1				
2-2	1913004959	・SEAL	1				
3	1101041685	BOLT	63				
4	1141550016	WASHER	29				
	L5a070						

silverhorn.co.uk

SWIVEL JOINT & ACCESSORIES

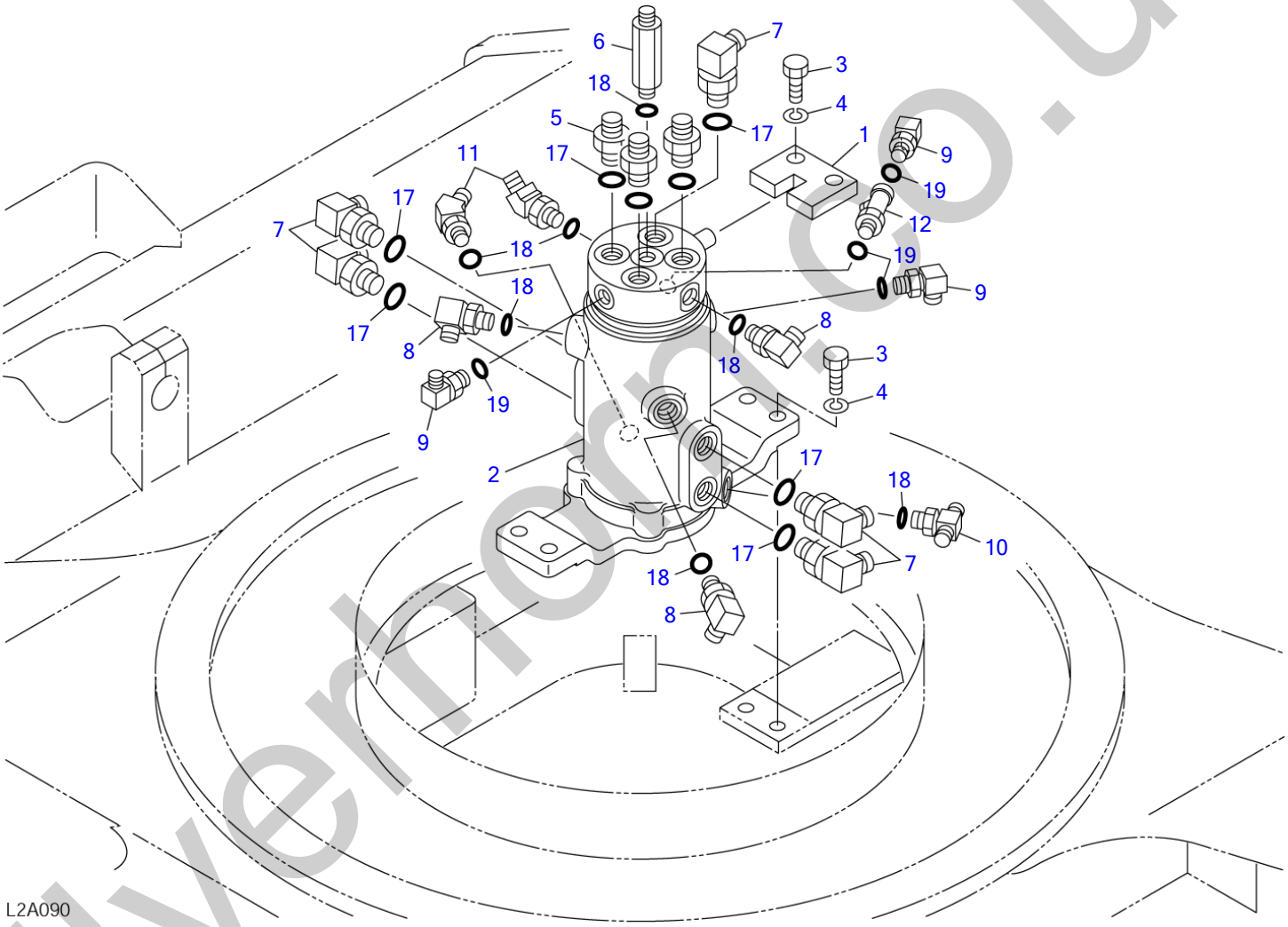

S=1/6

silvermorn.co.uk

SWIVEL JOINT & ACCESSORIES

Item	Part number	Description	Q'ty	Chan.	Serial No.	Serv.	Remarks
		JOINT ASSY, swivel					X05621-06500-2
1	0562100100	STOPPER	1				
2	1904008000	JOINT, swivel	1				
3	1101041440	BOLT	6				
4	1140020014	WASHER, spring	6				
5	1515600202	ADAPTOR	3				
	1420010180	・O-RING	1				
6	0007203027	ADAPTOR	1				
7	1515010042	ELBOW	5				
	1420010180	・O-RING	1				
8	1515010041	ELBOW	3				
	1420010140	・O-RING	1				
9	1515012040	ELBOW	3				
	1420010110	・O-RING	1				
10	1512374003	NIPPLE	1				
	1420010140	・O-RING	1				
11	1515100111	ELBOW	2				
	1420010140	・O-RING	1				
12	1512340001	ELBOW	1				
	1420010110	・O-RING	1				
17	1420010180	O-RING	8				
18	1420010140	O-RING	7				
19	1420010110	O-RING	4				
	L5a080						

silverhorn.co.uk

DOZER BLADE

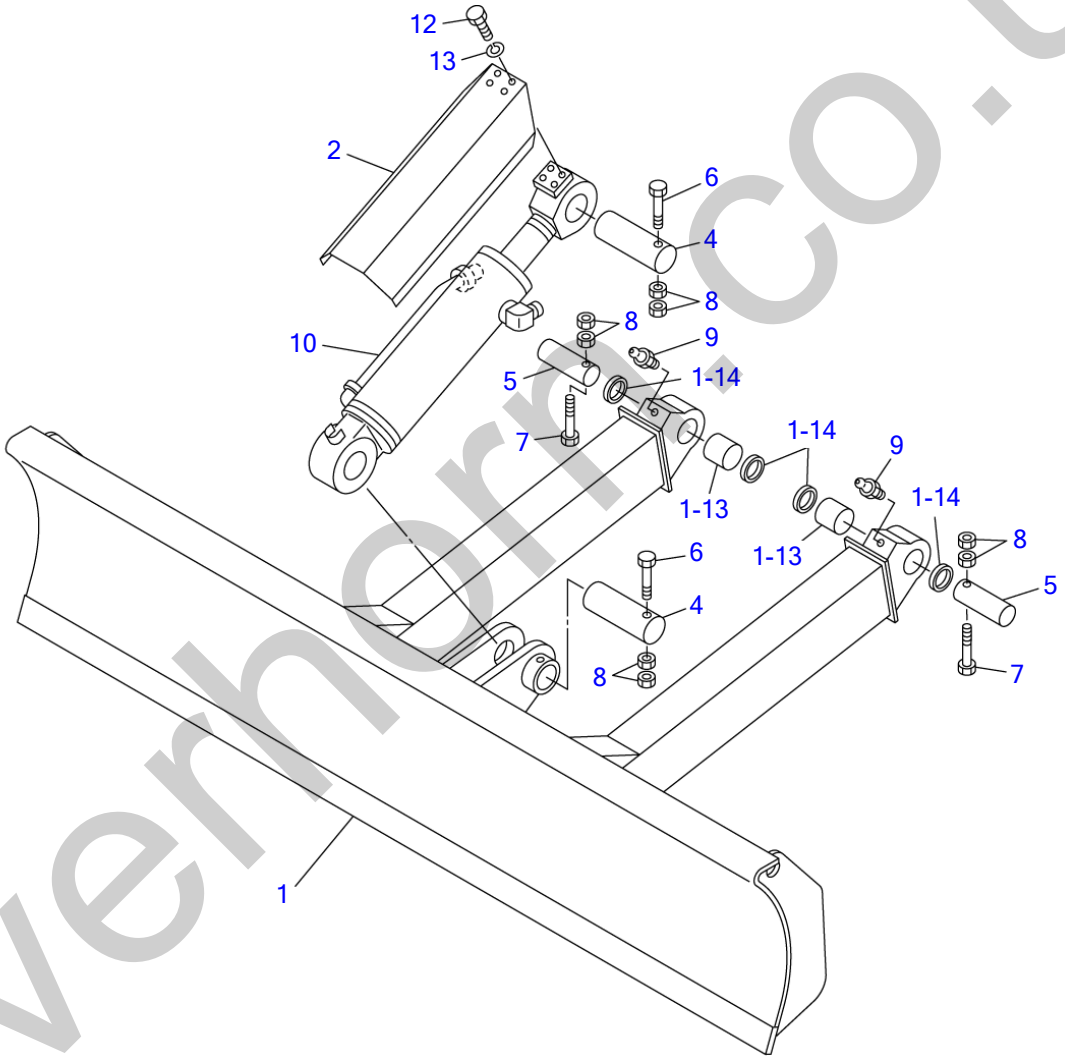

silverhorn.co.uk

DOZER BLADE

Item	Part number	Description	Q'ty	Chan.	Serial No.	Serv.	Remarks
		BLADE ASSY, dozer					X05663-25000-4
		BLADE ASSY, dozer (long)					X05663-22000-3
1	0566317700	BLADE SUB ASSY, dozer	1				
	0566322100	BLADE SUB ASSY, dozer	1				long
1-13	0002200016	・BUSHING	2				
1-14	1432200050	・SEAL, dust	4				
2	0566322300	COVER	1				
4	0001607160	PIN	2				
5	0001605160	PIN	2				
6	1103141205	BOLT	2				
7	1103041295	BOLT	2				
8	1130240012	NUT	8				
9	1560001000	FITTING, grease	2				
10	1900092800	CYLINDER, dozer blade	1		17830004~17830349		
	1900101200	CYLINDER, dozer blade	1	(H)	17830350~	M	
	1900090400	CYLINDER, dozer blade	1		17830004~17830327		long
	1900101300	CYLINDER, dozer blade	1	(H)	17830328~	M	long
12	1100040820	BOLT	4				
13	1140020008	WASHER, spring	4				
	L5a092						

silverhorn.co.uk

PIPING; LOWER

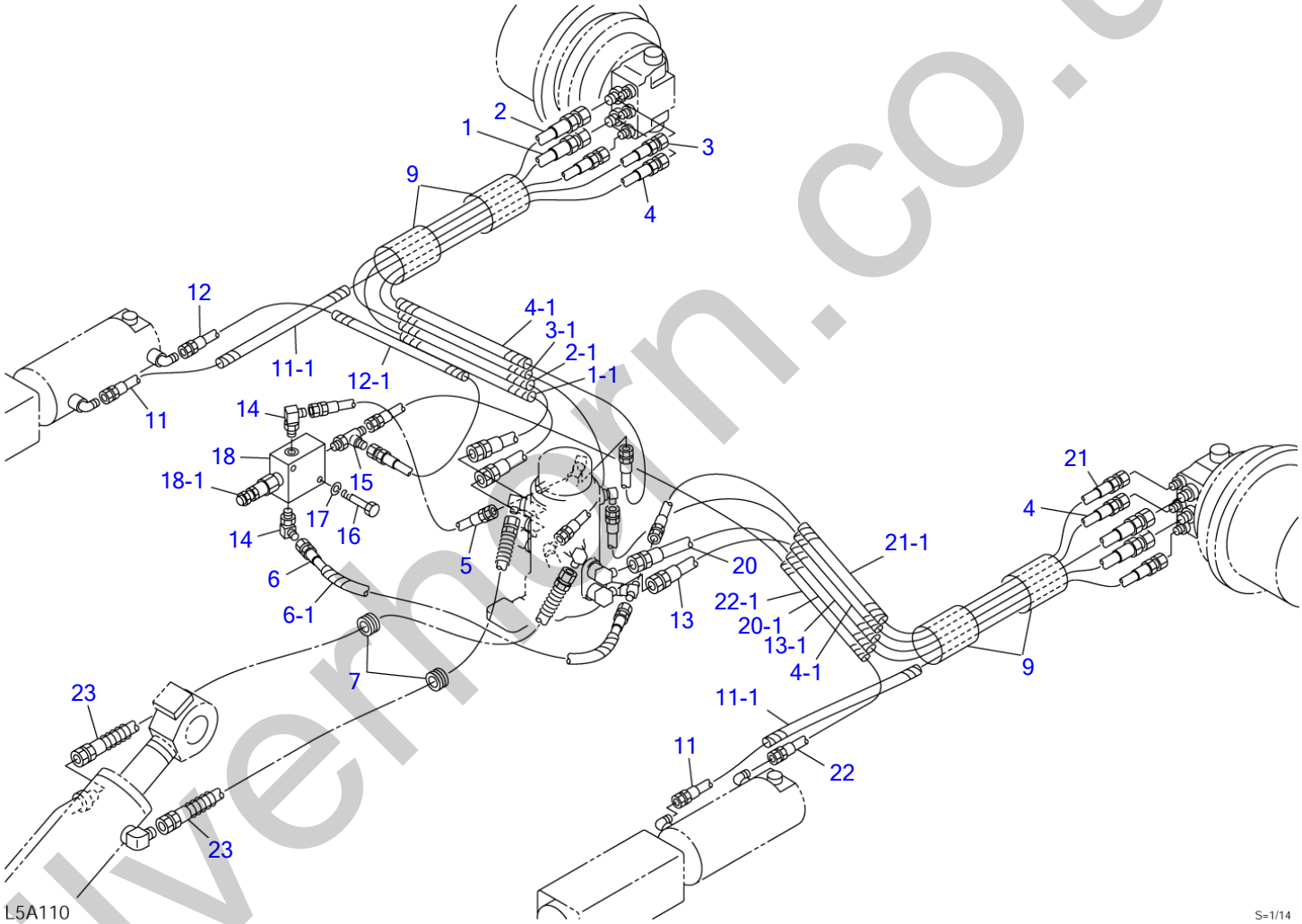

silverhorn.co.uk

PIPING; LOWER

Item	Part number	Description	Q'ty	Chan.	Serial No.	Serv.	Remarks
		PIPING ASSY, lower					X05672-20000-5
1	0567220010	HOSE ASSY	1				
1-1	1532224065	・PROTECTOR	1				sold by the meter
2	0567220020	HOSE ASSY	1				
2-1	1532224065	・PROTECTOR	1				sold by the meter
3	0567220030	HOSE ASSY	1				18010-23145
3-1	1532224000	・PROTECTOR	1				sold by the meter
4	0567220040	HOSE ASSY	2				18010-22155
4-1	1532206060	・PROTECTOR	1				sold by the meter
5	0567220050	HOSE ASSY	1				18010-22042
6	0567220060	HOSE ASSY	1				18010-22057
6-1	1532212041	・PROTECTOR	1				sold by the meter
7	0437200100	GUARD	2				
9	1531350020	PROTECTOR	4				sold by the meter
11	0567220070	HOSE ASSY	2				18010-22135
11-1	1532206050	・PROTECTOR	1				sold by the meter
12	0567220080	HOSE ASSY	1				18010-22155
12-1	1532206095	・PROTECTOR	1				sold by the meter
13	0567220090	HOSE ASSY	1				
13-1	1532224065	・PROTECTOR	1				sold by the meter
14	1515012040	ELBOW	2				
	1420010110	・O-RING	1				
15	1512370011	TEE	1				
	1420010110	・O-RING	1				
16	1100040645	BOLT	2				
17	1140020006	WASHER, spring	2				
18	1901729800	VALVE, reducing	1				
18-1	1901729802	・VALVE, relief	1				
20	0567220100	HOSE ASSY	1				
20-1	1532224065	・PROTECTOR	1				sold by the meter
21	0567220110	HOSE ASSY	1				18010-23165
21-1	1532224070	・PROTECTOR	1				sold by the meter
22	0567220120	HOSE ASSY	1				18010-22170
22-1	1532206095	・PROTECTOR	1				sold by the meter
23	0567220130	HOSE ASSY	2				18045-20112
	L5a111						

silverhorn.co.uk

SLEWING DEVICE

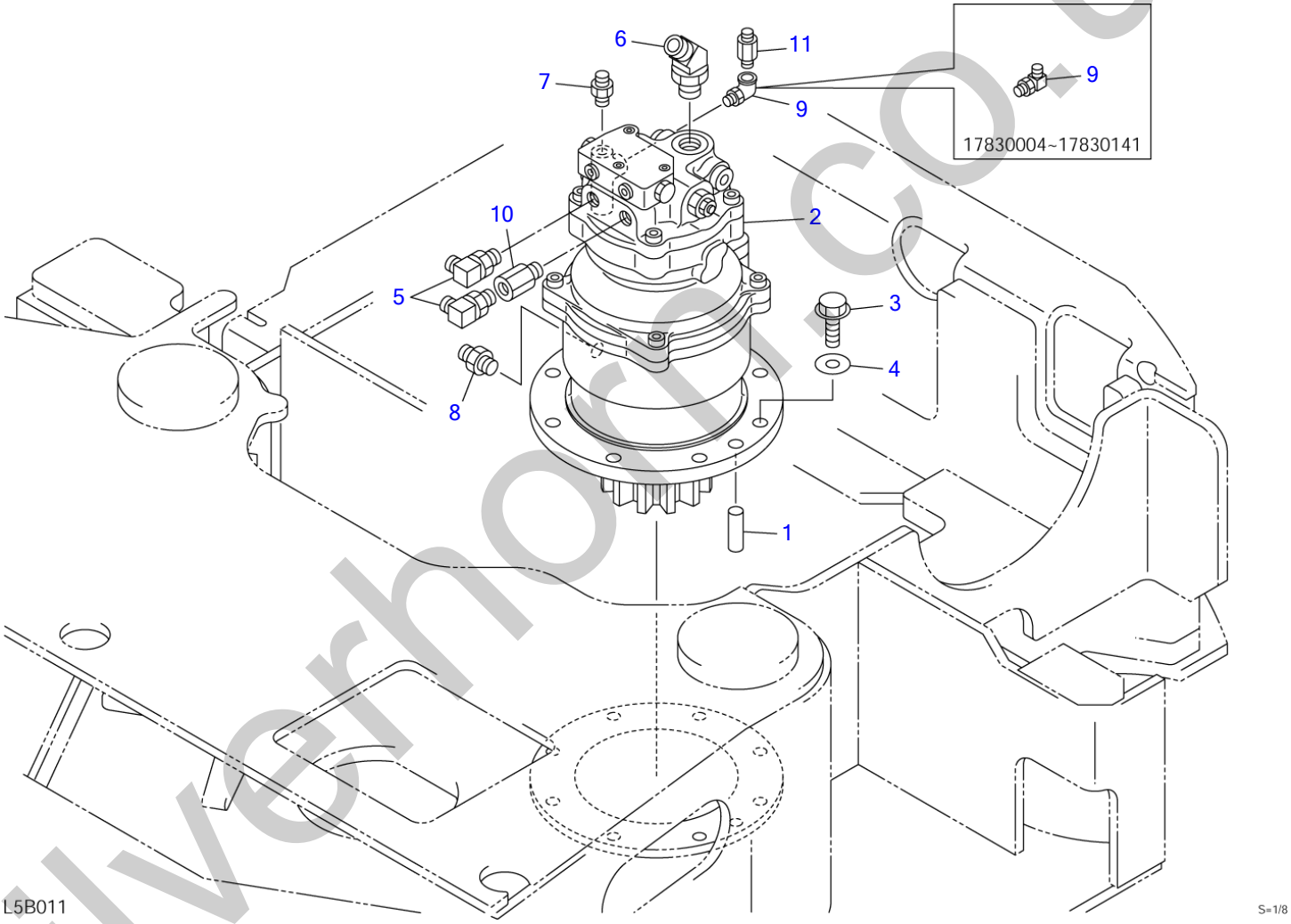

silverhorn.co.uk

SLEWING DEVICE

Item	Part number	Description	Q'ty	Chan.	Serial No.	Serv.	Remarks
		DEVICE ASSY, slewing					X05623-19500-1
1	0562313100	PIN, parallel	1				
2	1903125600	MOTOR, slew	1				
3	1106241650	BOLT	8				
4	1141550016	WASHER	8				
5	1515010042	ELBOW	2				
	1420010180	・O-RING	1				
6	1515100113	ELBOW	1				
	1420010240	・O-RING	1				
7	1515600200	ADAPTOR	1				
	1420010110	・O-RING	1				
8	1515600201	ADAPTOR	1				
	1420010140	・O-RING	1				
9	1515012040	ELBOW	1		17830004~17830141		
	1513300022	ELBOW	1	(H)	17830142~		
	1420010110	・O-RING	1				
10	0007213011	BUSHING	1				
	1420010180	・O-RING	1				
11	0007203034	ADAPTOR	1		17830142~		
	1420010110	・O-RING	1				
	L5b011						

silverhorn.co.uk

TURNTABLE (1/2)

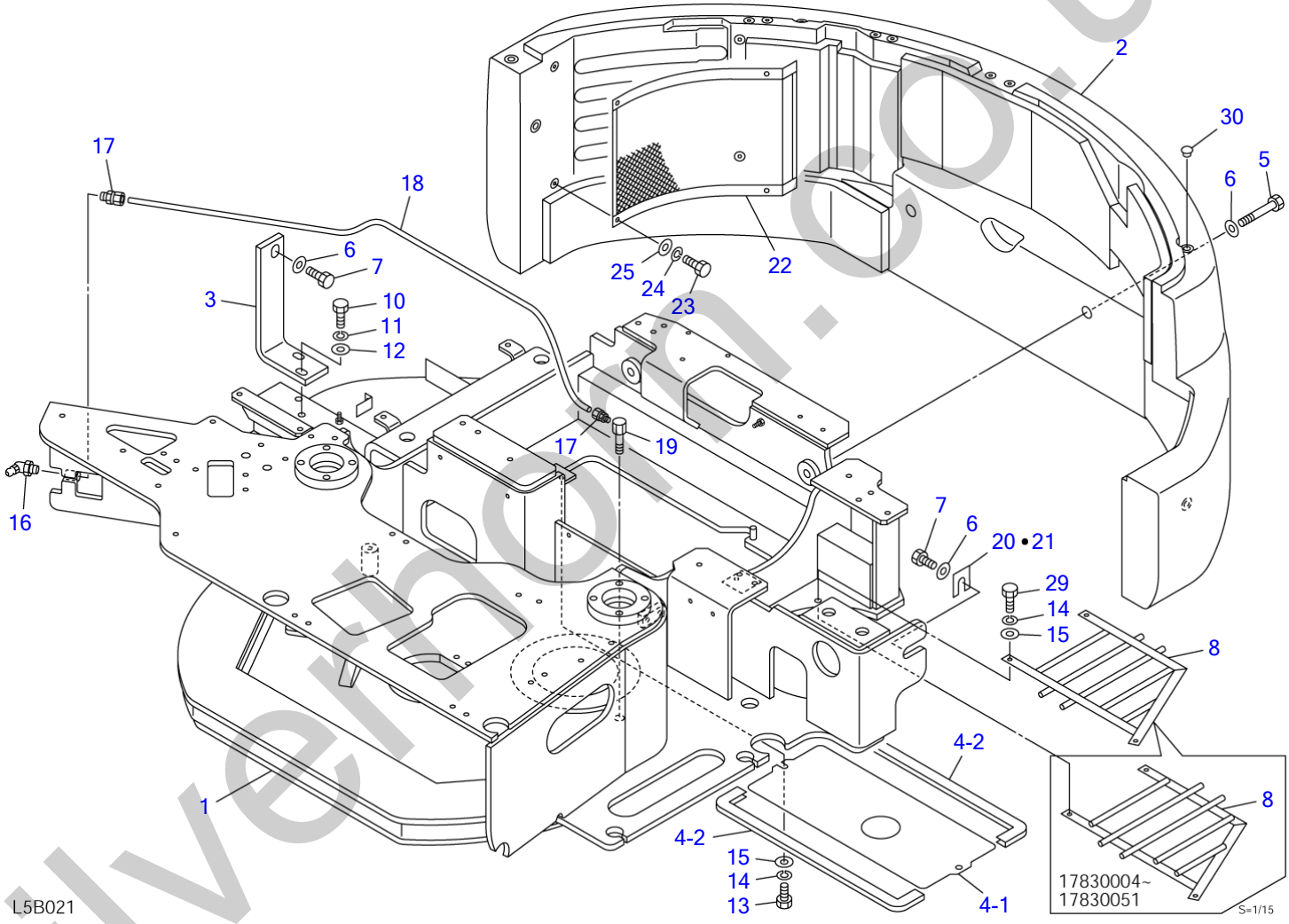

silverhorn.co.uk

TURNTABLE (1/2)

Item	Part number	Description	Q'ty	Chan.	Serial No.	Serv.	Remarks
		TURNTABLE ASSY					X05630-45000-5
1	X **********	TURNTABLE	1				
2	0563045400	COUNTERWEIGHT ASSY	1				see page (2/2)
3	0563045300	ANGLE	1				
4	0563045540	COVER ASSY	1				
4-1	0563045541	・COVER	1				
4-2	1654625076	・TRIM	2				sold by the meter
5	1101442000	BOLT	2				
6	0003600236	WASHER	4				
7	1101042050	BOLT	2				
8	0563045340	GUARD	1		17830004~17830051		
	0563045380	GUARD	1	(H)	17830052~		
10	1101041645	BOLT	2				
11	1140020016	WASHER, spring	2				
12	1141110016	WASHER	2				
13	1100041020	BOLT	2				
14	1140020010	WASHER, spring	5				
15	1141110010	WASHER	5				
16	1560001675	FITTING, grease	1				
17	1532520601	CONNECTOR	2				
18	1532120663	TUBE	1				sold by the meter
19	0007262005	ELBOW	1				
20	0563030600	SHIM	2				t=1.2mm
21	0563030610	SHIM	2				t=2.3mm
22	0563045370	NET	1				
23	1100040820	BOLT	4				
24	1140020008	WASHER, spring	4				
25	1141110008	WASHER	4				
29	1100041030	BOLT	3				
30	1652533001	CAP	3				
	L5b021						

silverhorn.co.uk

TURNTABLE (2/2)

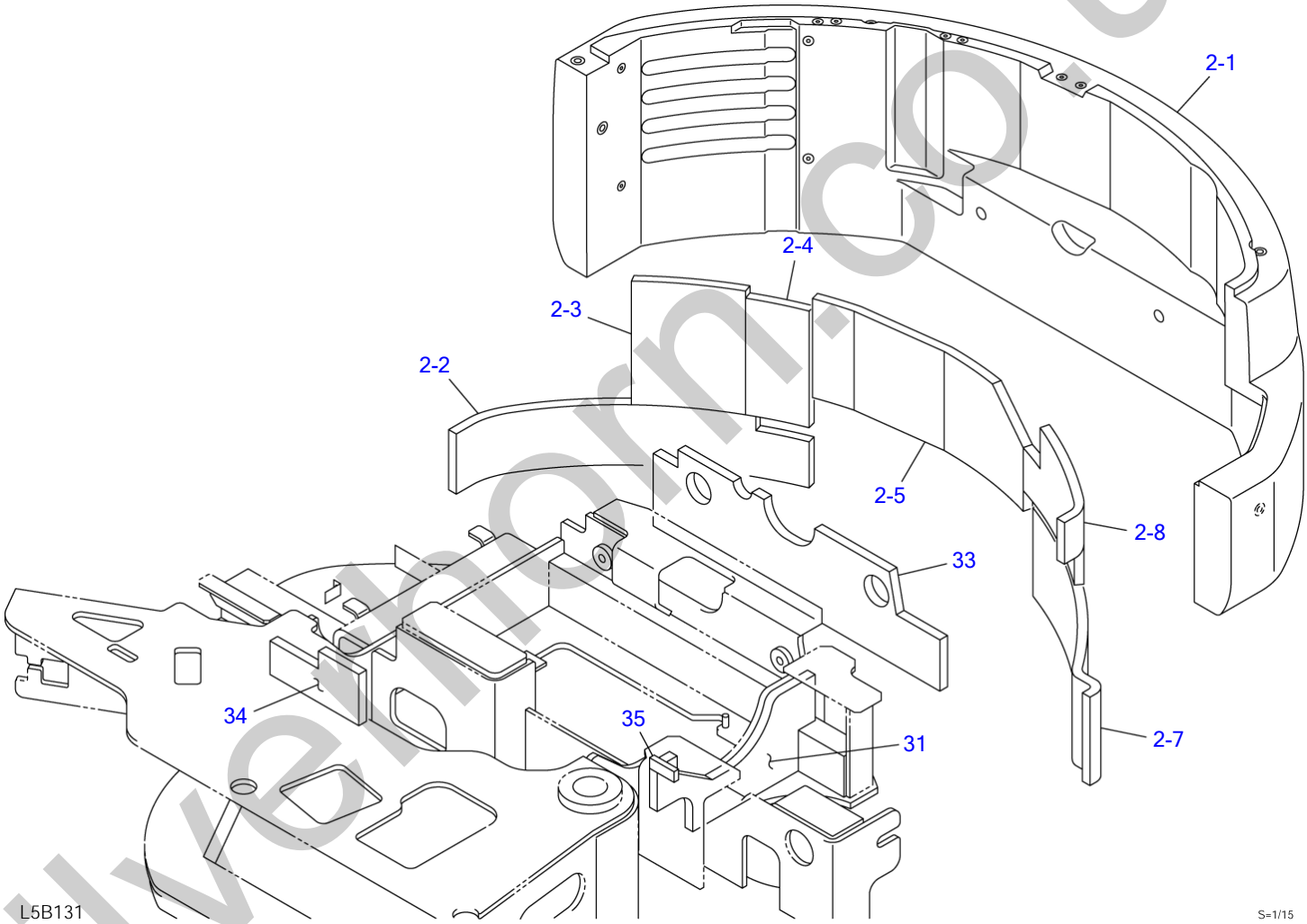

silvermorn.co.uk

TURNTABLE (2/2)

Item	Part number	Description	Q'ty	Chan.	Serial No.	Serv.	Remarks
		TURNTABLE ASSY					X05630-45000-5
2	0563045400	COUNTERWEIGHT ASSY	1				X05630-45400-0
2-1	0563045200	・COUNTERWEIGHT	1				
2-2	0563045420	・ABSORBENT, noise	1				
2-3	0563045430	・ABSORBENT, noise	1				
2-4	0563045440	・ABSORBENT, noise	1				
2-5	0563045450	・ABSORBENT, noise	1				
2-7	0563045470	・ABSORBENT, noise	1				
2-8	0563045480	・ABSORBENT, noise	1				
31	0563045510	ABSORBENT, noise	1				
33	0563045530	ABSORBENT, noise	1				
34	0563045550	ABSORBENT, noise	1				
35	1654308008	SPONGE	1				sold by the meter
	L5b131						

silverhorn.co.uk

BOOM OFFSET (1/2)

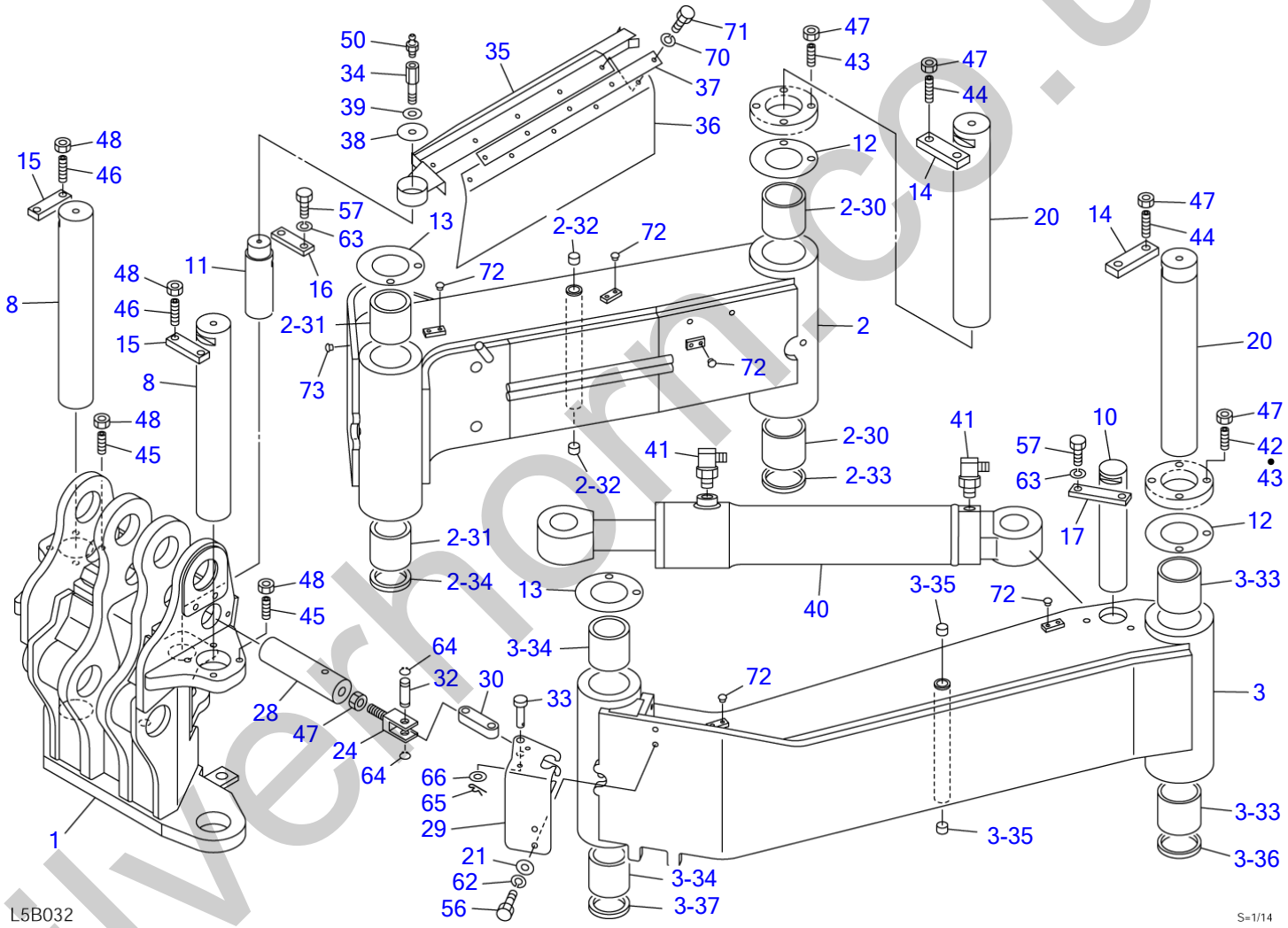

silvernorn.co.uk

BOOM OFFSET (1/2)

Item	Part number	Description	Q'ty	Chan.	Serial No.	Serv.	Remarks
		OFFSET ASSY, boom					X05631-34000-5
1	0563134400	BRACKET	1				
2	0563134200	ARM, offset (R.H)	1				
2-30	0563118330	・BUSHING	2				
2-31	0563118340	・BUSHING	2				
2-32	1333002015	・BUSHING	2				
2-33	1432200080	・SEAL, dust	1				
2-34	1432200075	・SEAL, dust	1				
3	0563134300	ARM, offset (L.H)	1				
3-33	0563118330	・BUSHING	2				
3-34	0563118340	・BUSHING	2				
3-35	1333002015	・BUSHING	2				
3-36	1432200080	・SEAL, dust	1				
3-37	1432200075	・SEAL, dust	1				
8	0563119440	PIN	2				
10	0563118530	PIN	1				
11	0563118540	PIN	1				
12	0563118550	WASHER	2				
13	0563118555	WASHER	2				
14	0563118560	PLATE	2				
15	0563118561	PLATE	2				
16	0563118562	PLATE	1				
17	0563118563	PLATE	1				
20	0563124480	PIN	1	(L)	17830004~17830075		
	0563134600	PIN	2		17830076~		
21	0003600025	WASHER	2				
24	0393109460	YOKE	1				
28	0563124490	PIN	1				
29	0563134710	BRACKET	1				
30	0563119720	LINK	1				
32	0004215032	SHAFT	1				
33	0004015003	SHAFT	1				
34	0007210027	BUSHING	1				
35	0563124350	GUARD	1				
36	0563119810	RUBBER	1				
37	0563119820	PLATE	1				
38	0563119830	WASHER	1				
39	0003600020	WASHER	1				
40	1900092900	CYLINDER, offset	1				
41	1515010051	ELBOW	2				
	1420010180	・O-RING	1				
42	1121041655	SET-SCREW	2				
43	1121041660	SET-SCREW	4				
44	1121041675	SET-SCREW	4				
45	1121041450	SET-SCREW	4				
46	1121041465	SET-SCREW	4				
47	1130040016	NUT	9				
48	1130040014	NUT	8				
50	1560001000	FITTING, grease	1				
56	1100041025	BOLT	3				
57	1101041435	BOLT	4				
62	1140020010	WASHER, spring	3				
63	1140020014	WASHER, spring	4				
64	1220000015	RING, retaining	2				
65	1214000012	PIN, snap	1				
66	1141110016	WASHER	1				
70	1140020006	WASHER, spring	5				
71	1100040616	BOLT	5				
72	1652533016	CAP	8				
73	1652533017	CAP	4				
	L5b032						

silverthorn.co.uk

BOOM OFFSET (2/2)

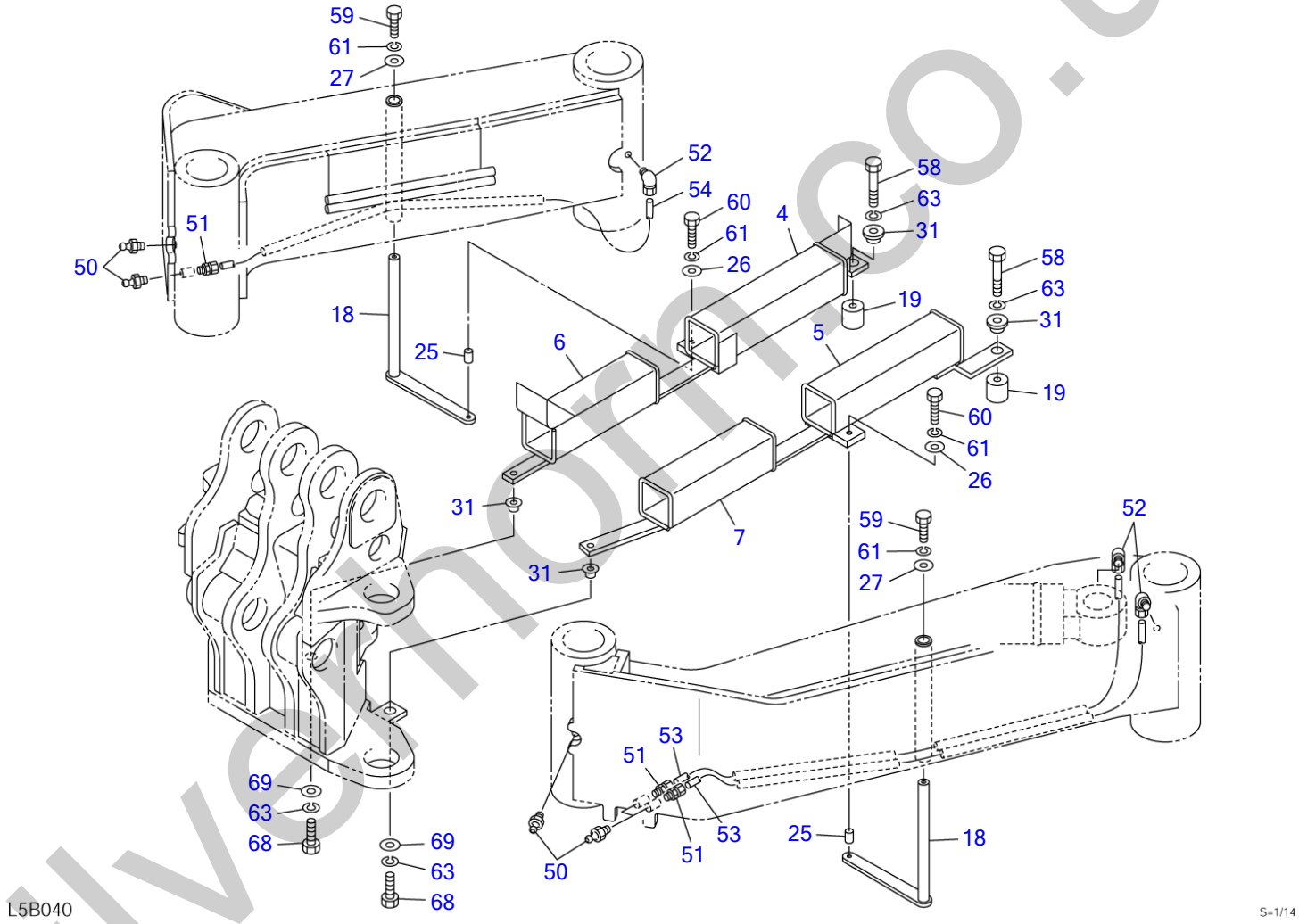

silvermoon.co.uk

BOOM OFFSET (2/2)

Item	Part number	Description	Q'ty	Chan.	Serial No.	Serv.	Remarks
		OFFSET ASSY, boom					X05631-34000-5
4	0563124400	GUIDE	1				
5	0563124410	GUIDE	1				
6	0563124420	GUIDE	1				
7	0563124430	GUIDE	1				
18	0563124460	LEVER	2				
19	0563124470	COLLAR	2				
25	0393108440	COLLAR	2				
26	0003608252	WASHER	2				
27	0003608003	WASHER	2				
31	0563118430	COLLAR	4				
50	1560001000	FITTING, grease	5				
51	1532520601	CONNECTOR	3				
52	1532620601	ELBOW	3				
53	1532120640	TUBE	2				sold by the meter
54	1532120620	TUBE	1				sold by the meter
58	1101041485	BOLT	2				
59	1100040820	BOLT	2				
60	1100040830	BOLT	2				
61	1140020008	WASHER, spring	4				
63	1140020014	WASHER, spring	4				
68	1101041440	BOLT	2				
69	1141110014	WASHER	2				
	L5b042						

silverhorn.co.uk

OFFSET SWITCH

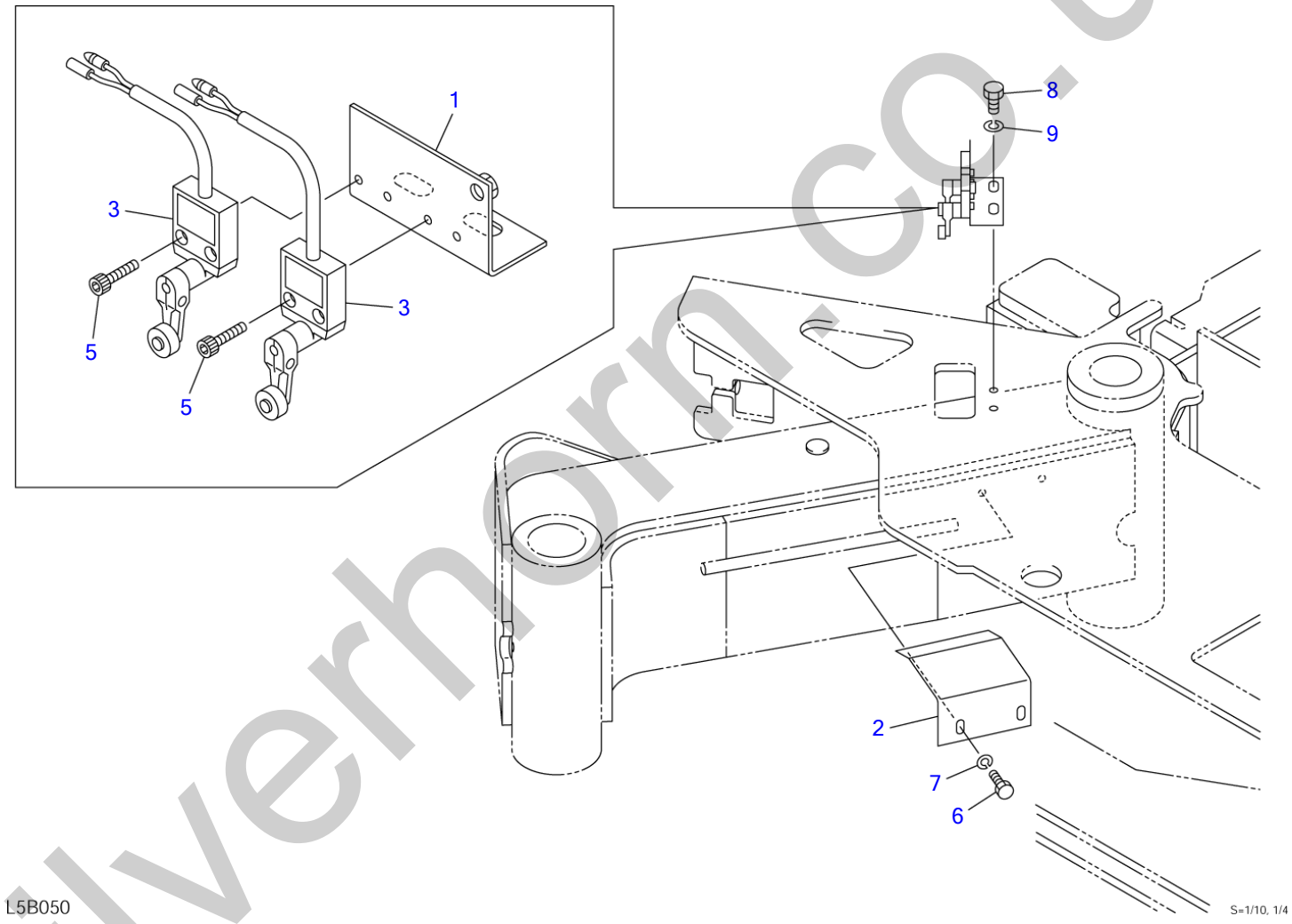

silverhorn.co.uk

OFFSET SWITCH

Item	Part number	Description	Q'ty	Chan.	Serial No.	Serv.	Remarks
		SWITCH ASSY, offset					X05631-34800-0
1	0563124810	BRACKET	1				
2	0563134820	ANGLE	1				
3	0563124830	SWITCH, limit	2				
5	1110040520	SCREW, cap	4				
6	1100041020	BOLT	2				
7	1140020010	WASHER, spring	2				
8	1101041220	BOLT	2				
9	1140020012	WASHER, spring	2				
	L5b050						

silverhorn.co.uk

TRAVEL LEVER

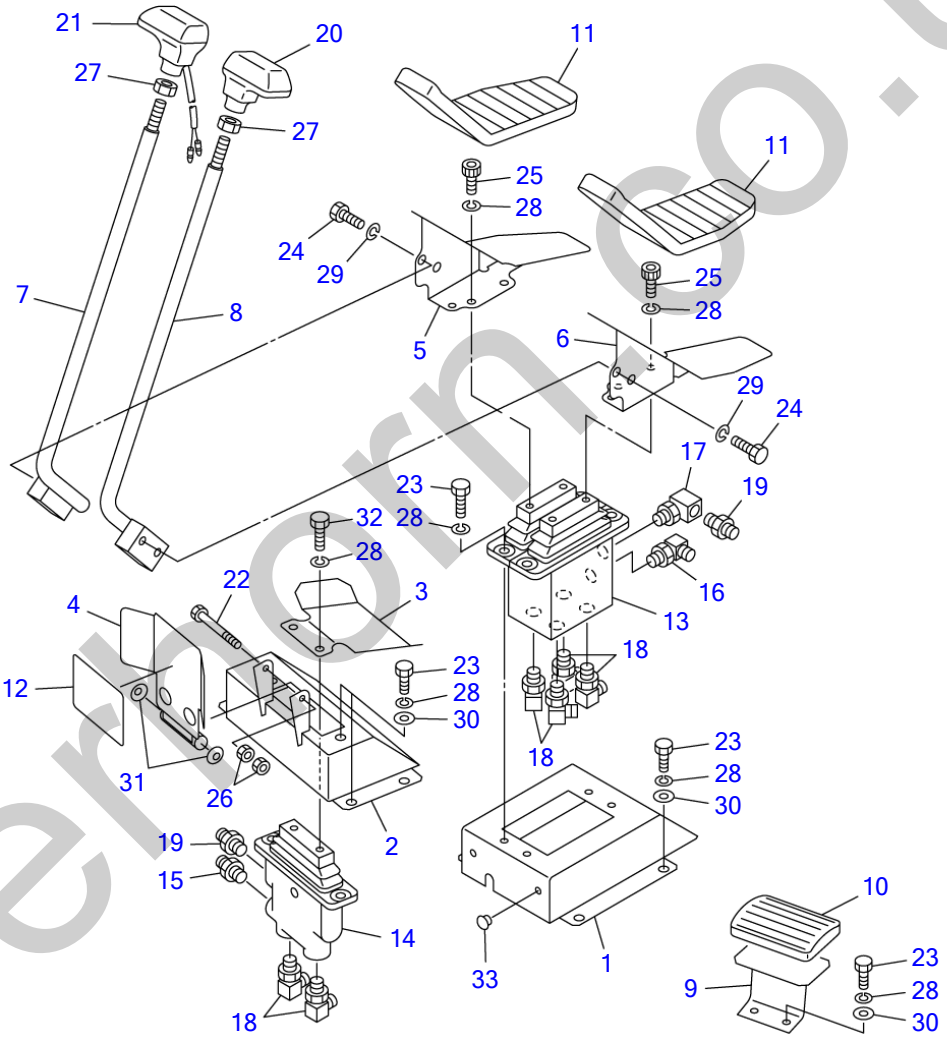

silvermorn.co.uk

TRAVEL LEVER

Item	Part number	Description	Q'ty	Chan.	Serial No.	Serv.	Remarks
		LEVER ASSY, control					X05632-30500-2
1	0563230510	BRACKET	1				
2	0563230520	BRACKET	1				
3	0563230530	PEDAL	1				
4	0563230550	COVER	1				
5	0563230020	PEDAL (R.H.)	1				
6	0563230030	PEDAL (L.H.)	1				
7	0563226400	LEVER (R.H.)	1				
8	0563226300	LEVER (L.H.)	1				
9	0563219700	REST, foot	1				
10	0563218500	COVER	1				
11	0563226200	COVER	2				
12	0333241250	SHEET	1				
13	1901739100	VALVE, pilot	1				
14	1901746300	VALVE, pilot	1				
15	1512370008	ADAPTOR (with filter)	1				
	1420010110	・O-RING	1				
16	1512375004	ELBOW	1				
	1420010110	・O-RING	1				
17	1513300014	ELBOW	1				
	1420010110	・O-RING	1				
18	1515012040	ELBOW	6				
	1420010110	・O-RING	1				
19	1515600200	ADAPTOR	2				
	1420010110	・O-RING	1				
20	1650202610	GRIP	1				
21	1650203210	GRIP (with switch)	1				
22	1100040680	BOLT	1				
23	1100040820	BOLT	16				
24	1100041020	BOLT	4				
25	1110040816	SCREW, cap	4				
26	1130040006	NUT	2				
27	1131040012	NUT	2				
28	1140020008	WASHER, spring	22				
29	1140020010	WASHER, spring	4				
30	1141110008	WASHER	14				
31	1225110006	WASHER, conical	2				
32	1100040816	BOLT	2				
33	1652533016	CAP	2			M	
	L5b061						

silverhorn.co.uk

DOZER BLADE LEVER

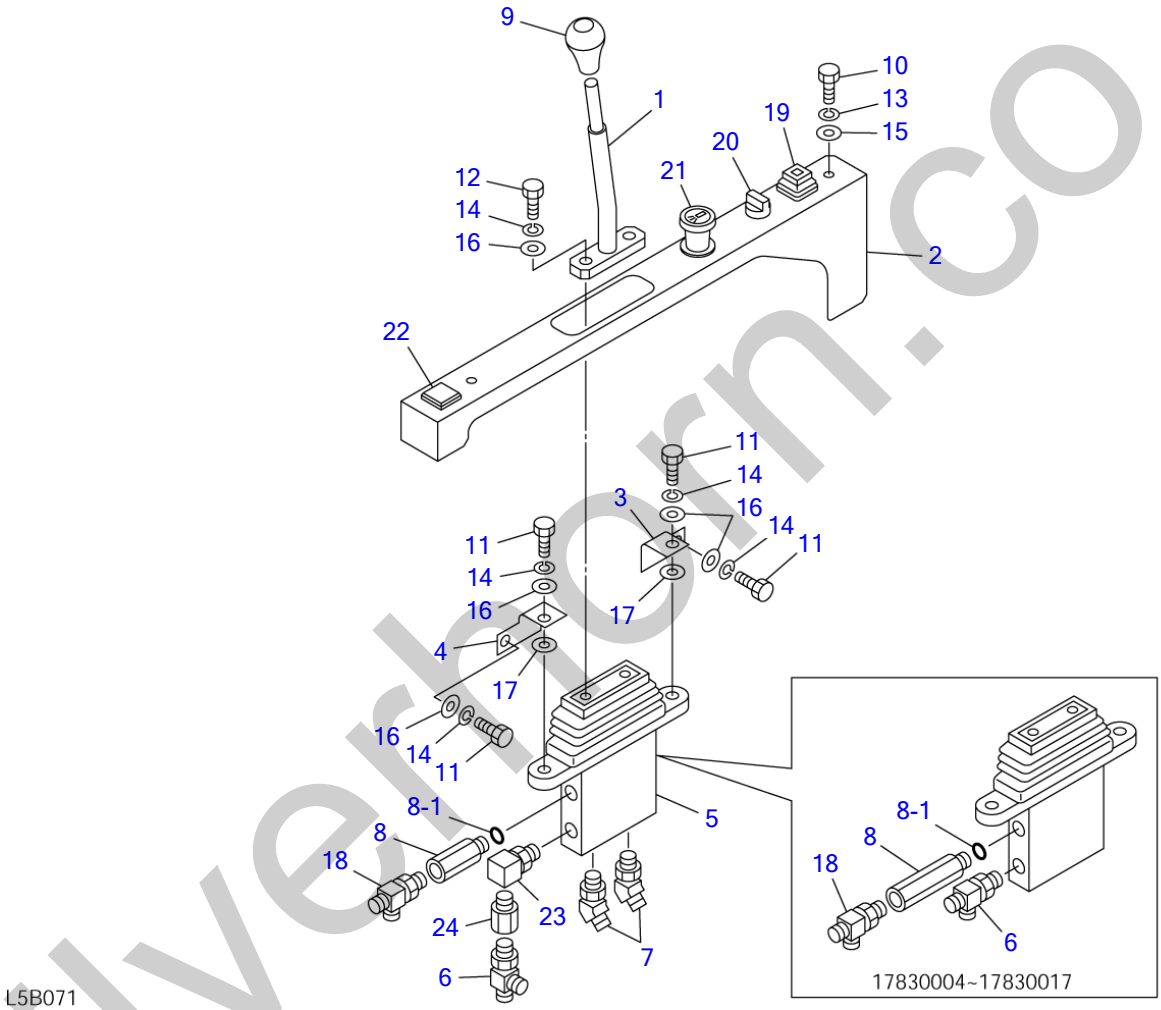

silverthorn.co.uk

DOZER BLADE LEVER

Item	Part number	Description	Q'ty	Chan.	Serial No.	Serv.	Remarks
		LEVER ASSY, blade					X05633-11000-4
1	0563311010	LEVER	1				
2	0563311020	COVER	1				
3	0563311030	BRACKET	1				
4	0563311040	BRACKET	1				
5	1901735000	VALVE, pilot	1				
6	1512370003	TEE (with filter)	1				
	1420010110	・O-RING	1				
7	1515102110	ELBOW	2				
	1420010110	・O-RING	1				
8	0007213058	BUSHING	1		17830004~17830017		
	0007213028	BUSHING	1	(H)	17830018~		
8-1	1420010110	O-RING	1				
9	1650153655	GRIP	1				
10	1100090612	BOLT	2				
11	1100040816	BOLT	4				
12	1100040820	BOLT	2				
13	1140090006	WASHER, spring	2				
14	1140020008	WASHER, spring	6				
15	1141190006	WASHER	2				
16	1141110008	WASHER	6				
17	1141550008	WASHER	2				
18	1512370011	TEE	1				
	1420010110	・O-RING	1				
19	1700000040	SWITCH	1				
20	1700000038	SWITCH	1				
21	1711900059	LIGHTER	1				
22	1700550024	ORNAMENT	1				
23	1513300014	ELBOW	1		17830018~		
	1420010110	・O-RING	1				
24	1513250202	BUSHING	1		17830018~		
	1420010110	・O-RING	1				
	L5b071						

silverhorn.co.uk

OPERATION LEVER & STAND

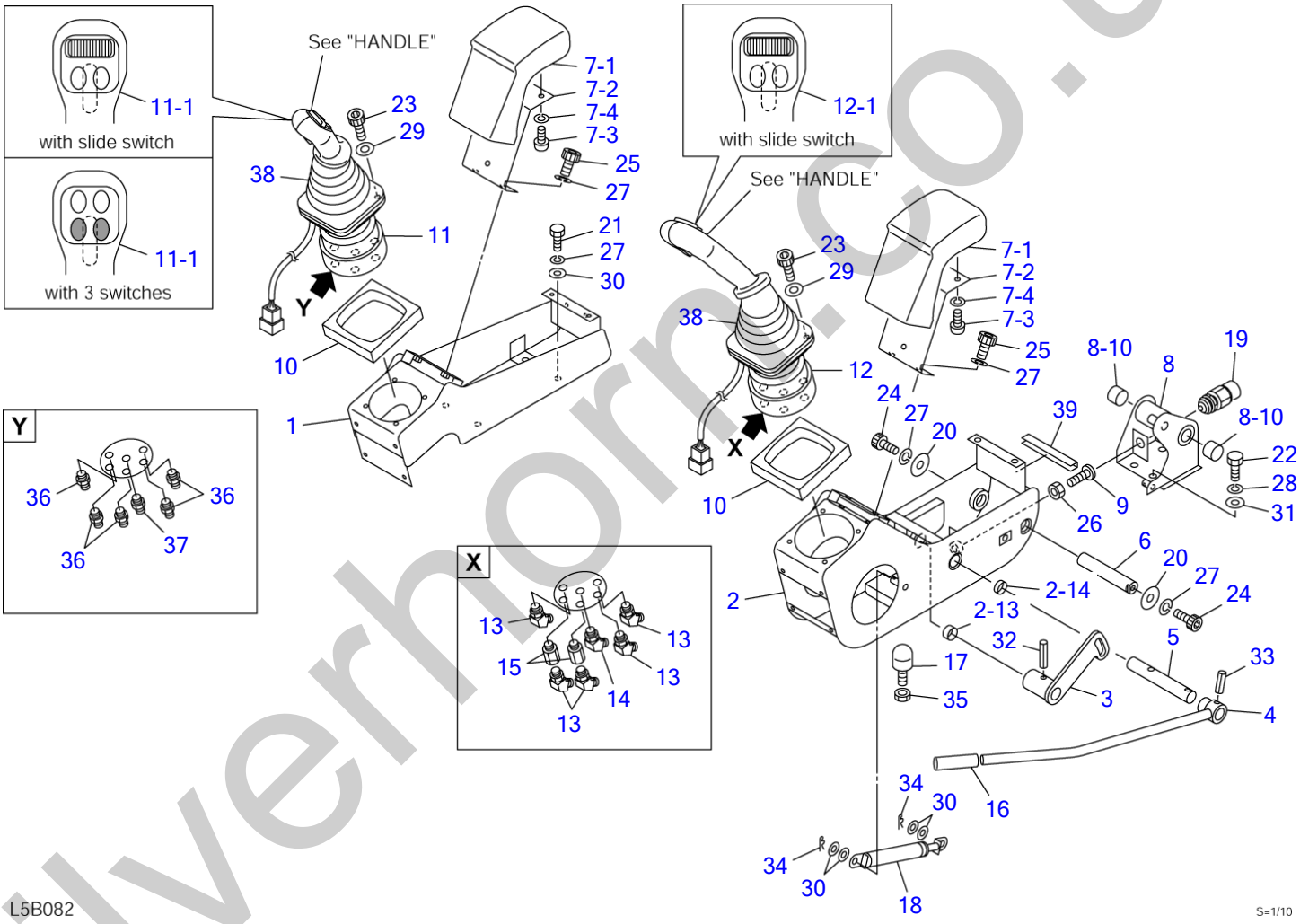

silverhorn.co.uk

OPERATION LEVER & STAND

Item	Part number	Description	Q'ty	Chan.	Serial No.	Serv.	Remarks
		VALVE ASSY	1				X05651-25500-3
		VALVE ASSY(with 2nd aux. lines)	1				X05651-25600-3
1	0345108080	BOX, control (R.H.)	1				
2	0395113700	BOX, control (L.H.)	1				
2-13	1333002010	・BUSHING	1				
2-14	1333002015	・BUSHING	1				
3	0395113450	PLATE (L.H.)	1				
4	0375105400	LEVER (L.H.)	1				
5	0335124700	SHAFT	1				
6	0335124750	SHAFT	1				
7	0375105500	REST, arm	2				
7-1	0375105510	・URETHANE	1				
7-2	0375105520	・PLATE	1				
7-3	1120530812	・SCREW	3				
7-4	1140020008	・WASHER, spring	3				
8	0375104400	BRACKET (L.H.)	1				
8-10	1333002015	・BUSHING	2				
9	0335120970	BOLT	1				
10	0395113046	SPONGE	2				
11	1901745900	VALVE ASSY (R.H.) (3 switch)	1				
	1901745800	VALVE ASSY (R.H.) (slide switch)	1				with 2nd aux. lines
11-1	1901741210	・HANDLE	1				3 switch
	1901740410	・HANDLE	1				slide switch
12	1901745700	VALVE ASSY (L.H.)	1				
12-1	1901740410	・HANDLE	1				slide switch
13	1515100110	ELBOW	5				
	1420010110	・O-RING	1				
14	1512370012	ELBOW (with filter)	1				
	1420010110	・O-RING	1				
15	1513250202	BUSHING	2				
	1420010110	・O-RING	1				
16	1650202300	CAP	1				
17	1651101224	STOPPER	1				
18	1653900057	SPRING, gas	1				
19	1700000033	SWITCH, limit	1				
20	0003600011	WASHER	2				
21	1100040820	BOLT	4				
22	1100041020	BOLT	4				
23	1110040625	SCREW, cap	8				
24	1110040816	SCREW, cap	2				
25	1110040820	SCREW, cap	4				
26	1130040010	NUT	1				
27	1140020008	WASHER, spring	10				
28	1140020010	WASHER, spring	4				
29	1141110006	WASHER	8				
30	1141110008	WASHER	8				
31	1141110010	WASHER	4				
32	1213000832	PIN, spring	1				
33	1213000836	PIN, spring	1				
34	1214000008	PIN, snap	2				
35	1130040012	NUT	1				
36	1515600200	ADAPTOR	5				
	1420010110	・O-RING	1				
37	1512370008	ADAPTOR (with filter)	1				
	1420010110	・O-RING	1				
38	0881510020	BOOT	2				
39	1653917009	TRIM	1			M	sold by the meter
	L5b082						

silverform.co.uk

PIPING; OPERATION LEVER (1/2)

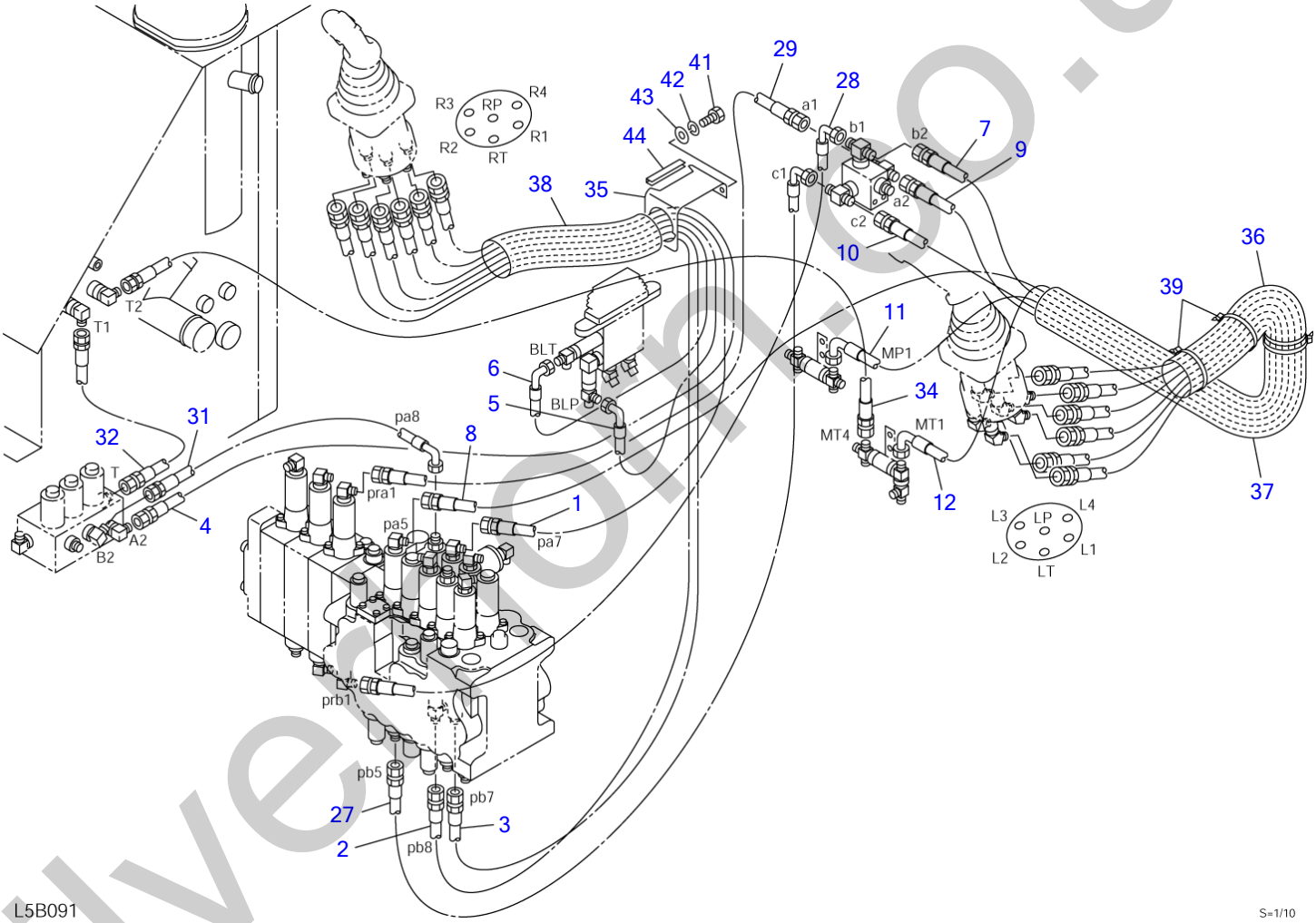

silvermoor.co.uk

PIPING; OPERATION LEVER (1/2)

Item	Part number	Description	Q'ty	Chan.	Serial No.	Serv.	Remarks
		PIPING ASSY					X05671-49500-5
1	0567149510	HOSE ASSY	1				18010-22120
2	0567149520	HOSE ASSY	1				18010-22170
3	0567149530	HOSE ASSY	1				18010-22170
4	0567149540	HOSE ASSY	1				18010-22185
5	0567149550	HOSE ASSY	1				18010-52035
6	0567149560	HOSE ASSY	1				18010-52035
7	0567149570	HOSE ASSY	1				18010-22160
8	0567149580	HOSE ASSY	1				18010-22185
9	0567149590	HOSE ASSY	1				18010-22165
10	0567149600	HOSE ASSY	1				18010-22165
11	0567149610	HOSE ASSY	1				18010-52150
12	0567149620	HOSE ASSY	1				18010-52140
27	0567149770	HOSE ASSY	1				18010-52070
28	0567149780	HOSE ASSY	1				18010-52060
29	0567149790	HOSE ASSY	1				18010-22035
31	0567149810	HOSE ASSY	1				18010-52077
32	0567149820	HOSE ASSY	1				18010-23050
34	0567149840	HOSE ASSY	1				18010-23150
35	0567149850	PLATE	1				
36	1531645030	PROTECTOR	1				sold by the meter
37	1567525080	PROTECTOR	1				sold by the meter
38	1567525070	PROTECTOR	1				sold by the meter
39	1652200007	BAND	3				
41	1100040816	BOLT	2				
42	1140020008	WASHER, spring	2				
43	1141110008	WASHER	2				
44	1654605007	TRIM	1				sold by the meter
	L5b092						

silverhorn.co.uk

PIPING; OPERATION LEVER (2/2)

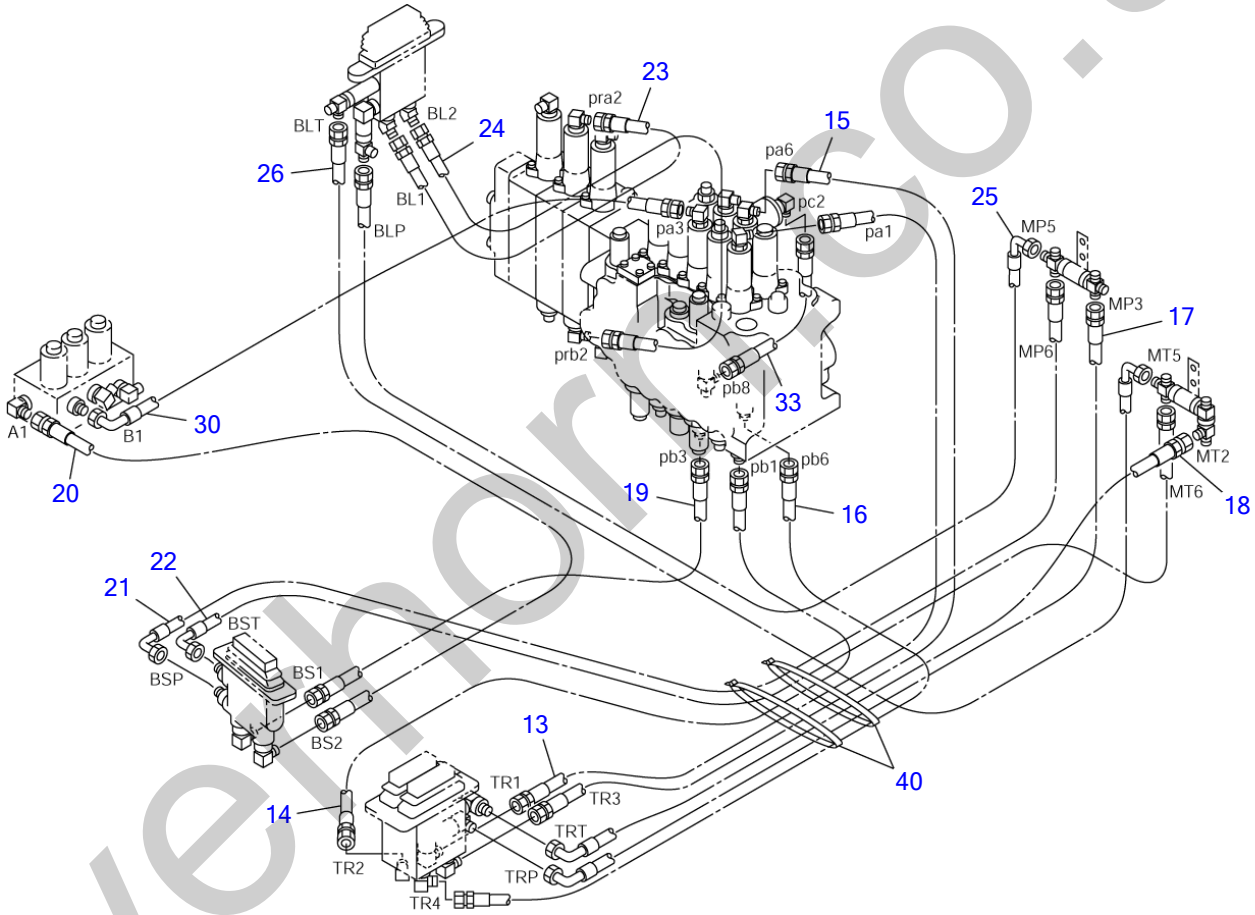

L5B101

S=1/10

silverhorse.co.uk

PIPING; OPERATION LEVER (2/2)

Item	Part number	Description	Q'ty	Chan.	Serial No.	Serv.	Remarks
		PIPING ASSY					X05671-49500-5
13	**0567149630**	HOSE ASSY	1				18010-22110
14	**0567149640**	HOSE ASSY	1				18010-22105
15	**0567149650**	HOSE ASSY	1				18010-22110
16	**0567149660**	HOSE ASSY	1				18010-22115
17	**0567149670**	HOSE ASSY	1				18010-52100
18	**0567149680**	HOSE ASSY	1				18010-52080
19	**0567149690**	HOSE ASSY	1				18010-22110
20	**0567149700**	HOSE ASSY	1				18010-22170
21	**0567149710**	HOSE ASSY	1				18010-52120
22	**0567149720**	HOSE ASSY	1				18010-52120
23	**0567149730**	HOSE ASSY	1				18010-22145
24	**0567149740**	HOSE ASSY	1				18010-22180
25	**0567149750**	HOSE ASSY	1				18010-52130
26	**0567149760**	HOSE ASSY	1				18010-52135
30	**0567149800**	HOSE ASSY	1				18010-52095
33	**0567149830**	HOSE ASSY	1				18010-22050
40	**1652231250**	BAND	2				
	L5b102						

silverhorn.co.uk

PIPING; OPERATION LEVER (1/2) (ISO-JCB pattern)

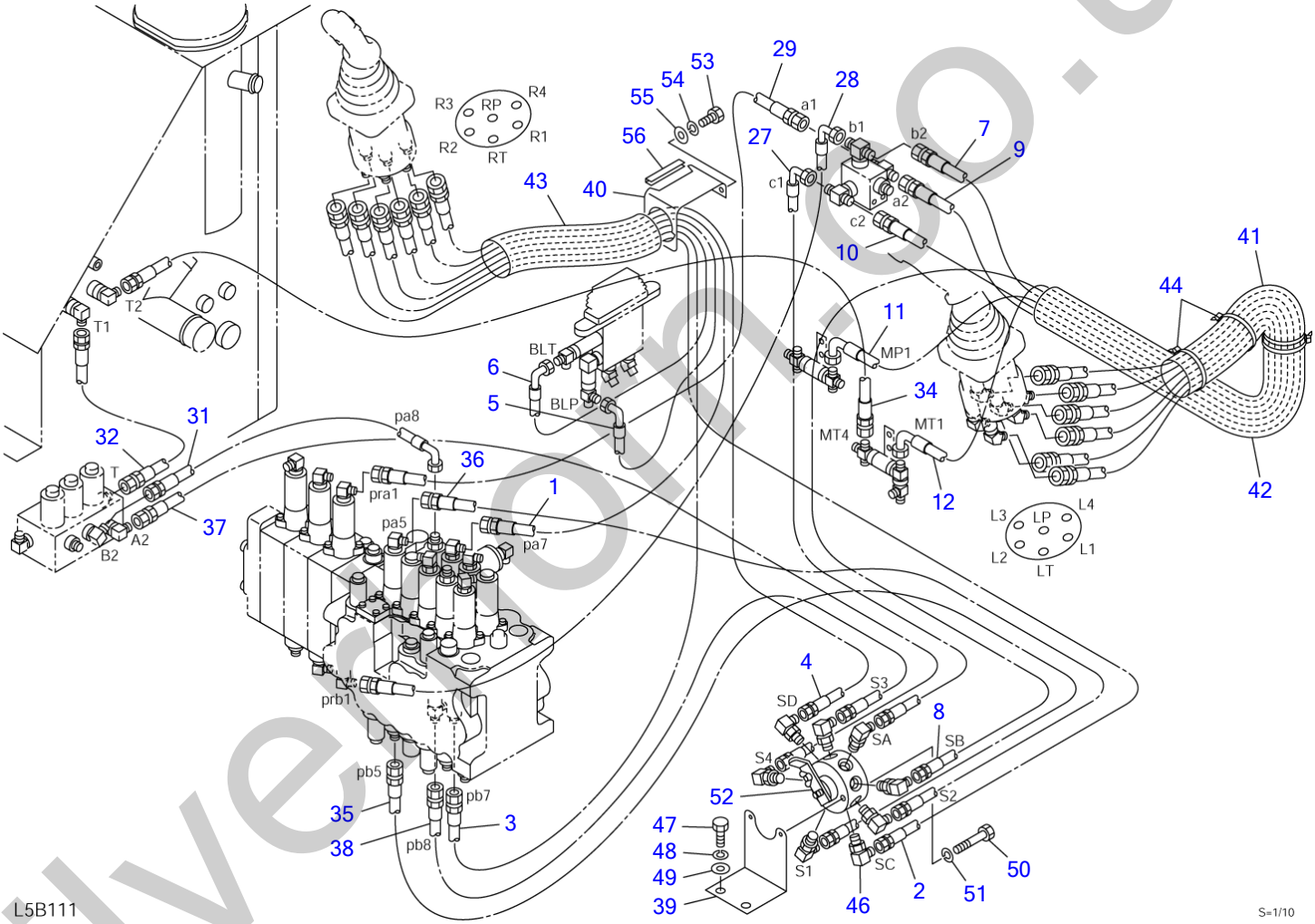

silverton.co.uk

PIPING; OPERATION LEVER (1/2) (ISO-JCB pattern)

Item	Part number	Description	Q'ty	Chan.	Serial No.	Serv.	Remarks
		PIPING ASSY					X05671-49400-5
1	0567149510	HOSE ASSY	1				18010-22120
2	0567149410	HOSE ASSY	1				18010-22120
3	0567149530	HOSE ASSY	1				18010-22170
4	0567149420	HOSE ASSY	1				18010-22130
5	0567149550	HOSE ASSY	1				18010-52035
6	0567149560	HOSE ASSY	1				18010-52035
7	0567149570	HOSE ASSY	1				18010-22160
8	0567149430	HOSE ASSY	1				18010-22155
9	0567149590	HOSE ASSY	1				18010-22165
10	0567149600	HOSE ASSY	1				18010-22165
11	0567149610	HOSE ASSY	1				18010-52150
12	0567149620	HOSE ASSY	1				18010-52140
27	0567149440	HOSE ASSY	1				18010-52080
28	0567149780	HOSE ASSY	1				18010-52060
29	0567149790	HOSE ASSY	1				18010-22035
31	0567149810	HOSE ASSY	1				18010-52077
32	0567149820	HOSE ASSY	1				18010-23050
34	0567149840	HOSE ASSY	1				18010-23150
35	0567149450	HOSE ASSY	1				18010-22110
36	0567149460	HOSE ASSY	1				18010-22100
37	0567149470	HOSE ASSY	1				18010-22140
38	0567149480	HOSE ASSY	1				18010-22095
39	0567149490	PLATE	1				
40	0567149850	PLATE	1				
41	1531645030	PROTECTOR	1				sold by the meter
42	1567525080	PROTECTOR	1				sold by the meter
43	1567525070	PROTECTOR	1				sold by the meter
44	1652200007	BAND	3				
46	1515012040	ELBOW	8				
	1420010110	・O-RING	1				
47	1101041220	BOLT	2				
48	1140020012	WASHER, spring	2				
49	1141110012	WASHER	2				
50	1100040650	BOLT	2				
51	1140020006	WASHER, spring	2				
52	1901730500	VALVE, selector	1				
53	1100040816	BOLT	2				
54	1140020008	WASHER, spring	2				
55	1141110008	WASHER	2				
56	1654605007	TRIM	1				sold by the meter
	L5b112						

silverthorn.co.uk

PIPING; OPERATION LEVER (2/2) (ISO-JCB pattern)

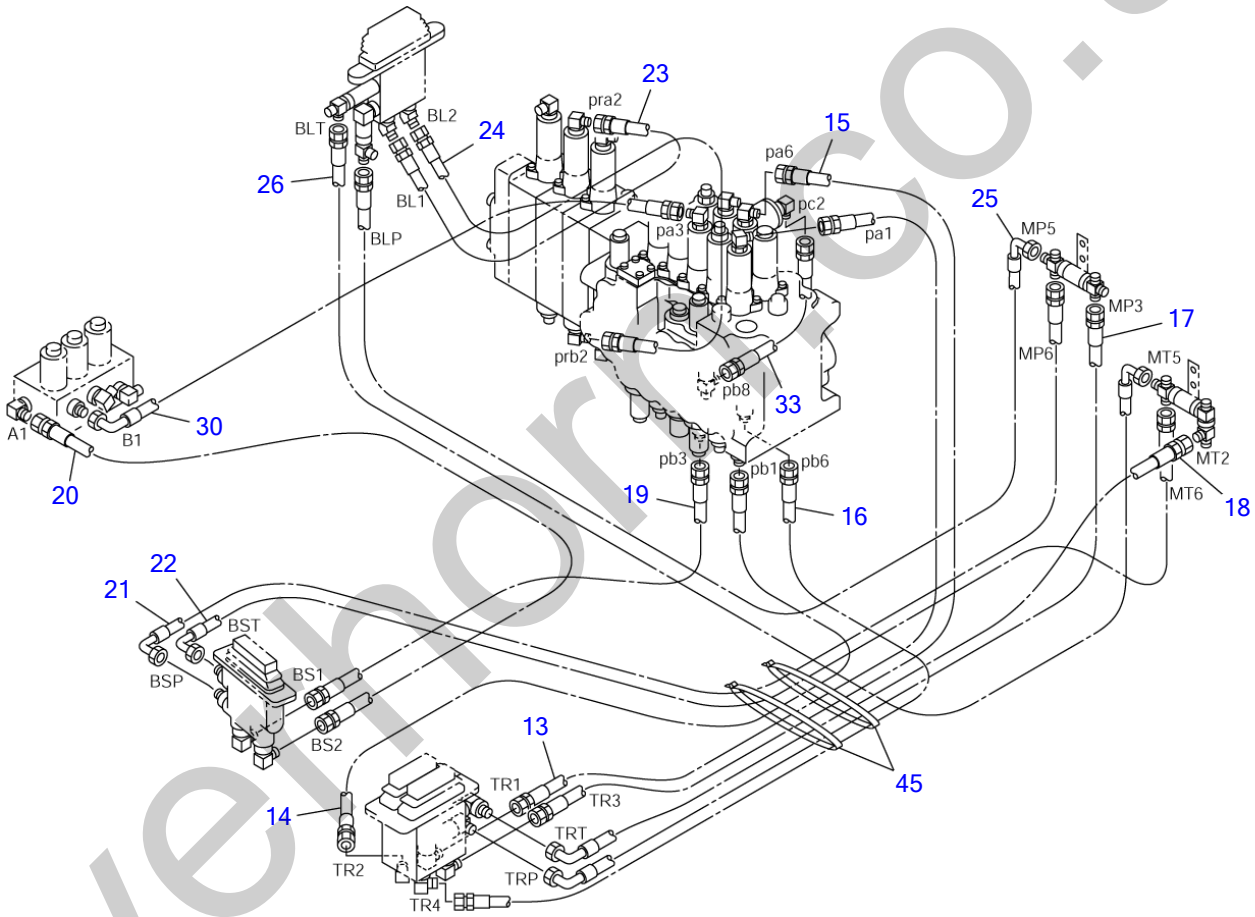

L5B121

S=1/10

silverhorse.co.uk

PIPING; OPERATION LEVER (2/2) (ISO-JCB pattern)

Item	Part number	Description	Q'ty	Chan.	Serial No.	Serv.	Remarks
		PIPING ASSY					X05671-49400-5
13	**0567149630**	HOSE ASSY	1				18010-22110
14	**0567149640**	HOSE ASSY	1				18010-22105
15	**0567149650**	HOSE ASSY	1				18010-22110
16	**0567149660**	HOSE ASSY	1				18010-22115
17	**0567149670**	HOSE ASSY	1				18010-52100
18	**0567149680**	HOSE ASSY	1				18010-52080
19	**0567149690**	HOSE ASSY	1				18010-22110
20	**0567149700**	HOSE ASSY	1				18010-22170
21	**0567149710**	HOSE ASSY	1				18010-52120
22	**0567149720**	HOSE ASSY	1				18010-52120
23	**0567149730**	HOSE ASSY	1				18010-22145
24	**0567149740**	HOSE ASSY	1				18010-22180
25	**0567149750**	HOSE ASSY	1				18010-52130
26	**0567149760**	HOSE ASSY	1				18010-52135
30	**0567149800**	HOSE ASSY	1				18010-52095
33	**0567149830**	HOSE ASSY	1				18010-22050
45	**1652231250**	BAND	2				
	L5b122						

silverhorn.co.uk

ENGINE & ACCESSORIES (1/3)

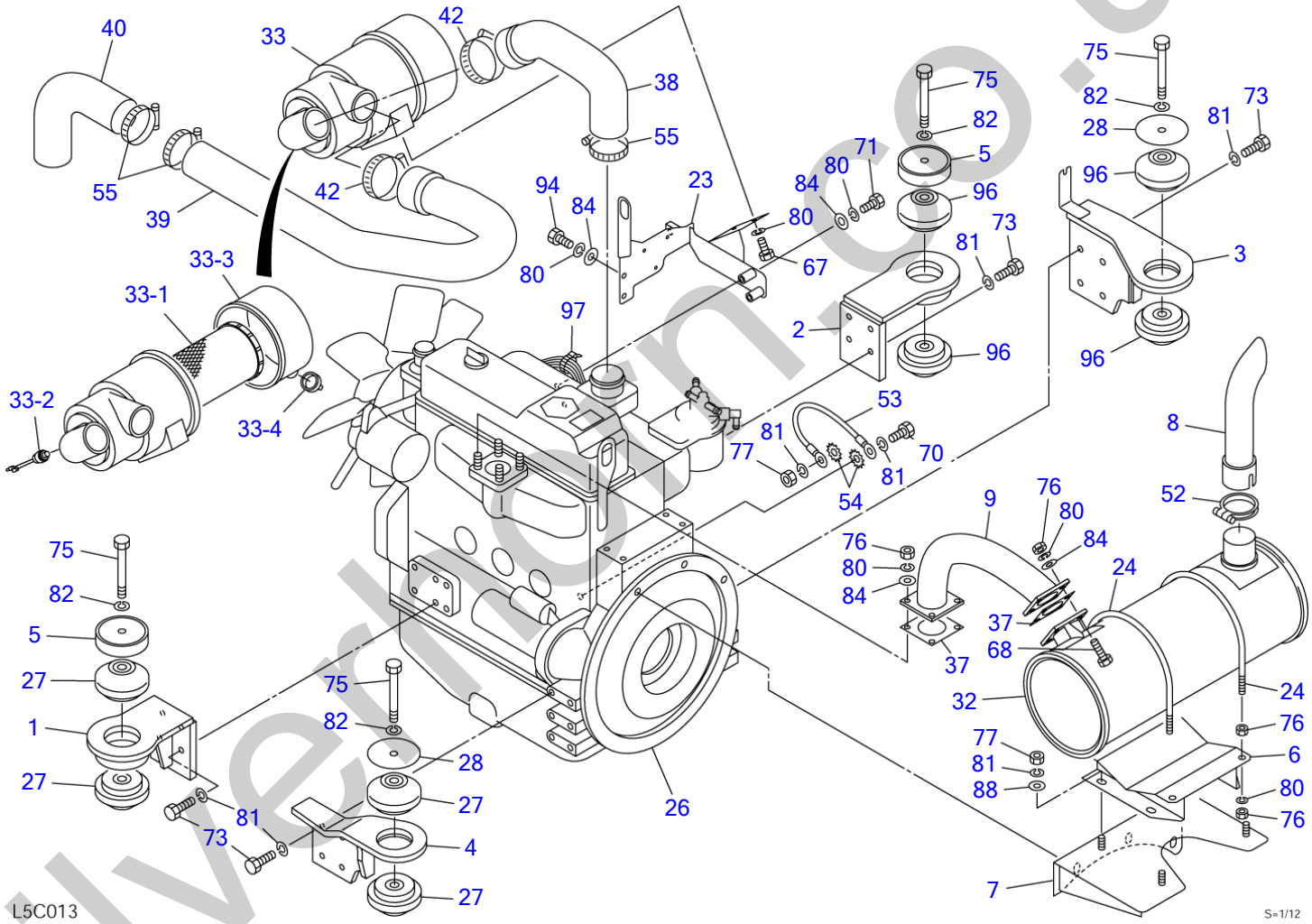

silverhorn.co.uk

ENGINE & ACCESSORIES (1/3)

Item	Part number	Description	Q'ty	Chan.	Serial No.	Serv.	Remarks
		ENGINE ASSY					X05640-36000-9
1	0564036490	FOOT, engine (F.L.)	1				
2	0564036600	FOOT, engine (F.R.)	1				
3	0564036500	FOOT, engine (R.R.)	1				
4	0564036560	FOOT, engine (R.L.)	1				
5	0564036520	STOPPER	2				
6	0564026170	BRACKET	1				
7	0564036160	BRACKET	1				
8	0564036170	PIPE	1				
9	0564036180	PIPE	1				
23	0564036640	BRACKET	1				
24	0564025370	U-BOLT	2				
26	1910215001	ENGINE	1				4TNV98-STB1
27	1651030020	RUBBER, cushion	4				
28	0564036028	WASHER	2				
32	1910197005	SILENCER	1				Y129940-13500
33	0564036033	CLEANER, air	1				
33-1	1911102641	・ELEMENT	1				DONALDSON P822768
33-2	1911218171	・INDICATOR	1			M	DONALDSON REX01-8171
33-3 X	**********	・COVER	1			M	DONALDSON P834707
33-4 X	**********	・VALVE	1			M	DONALDSON P808427
37	1910197023	GASKET	2				Y129930-13201
38	0564036038	PIPE	1				
39	0564036039	PIPE	1				
40	0564036041	HOSE	1		17830004~17830417		
	0564036042	HOSE	1		17830418~	M	
42	1910145047	BAND	2				Y23000-080000
52	1910197027	CLAMP	1				Y129640-13590
53	1702430400	CABLE, earth	1				
54	1140330010	WASHER	2				
55	1533700090	CLAMP	3				
67	1100040820	BOLT	2				
68	1100040830	BOLT	4				
70	1100041016	BOLT	1				
71	1100040850	BOLT	2				
73	1100041030	BOLT	16				
75	1101141420	BOLT	4				
76	1130040008	NUT	16				
77	1130040010	NUT	5				
80	1140020008	WASHER, spring	18				
81	1140020010	WASHER, spring	22				
82	1140020012	WASHER, spring	4				
84	1141110008	WASHER	12				
88	0003600020	WASHER	4				
94	1100040825	BOLT	2				
96	1651030019	RUBBER, cushion	4				
97	1652200003	BAND	1				
	L5c013						

silvermorn.co.uk

ENGINE & ACCESSORIES (2/3)

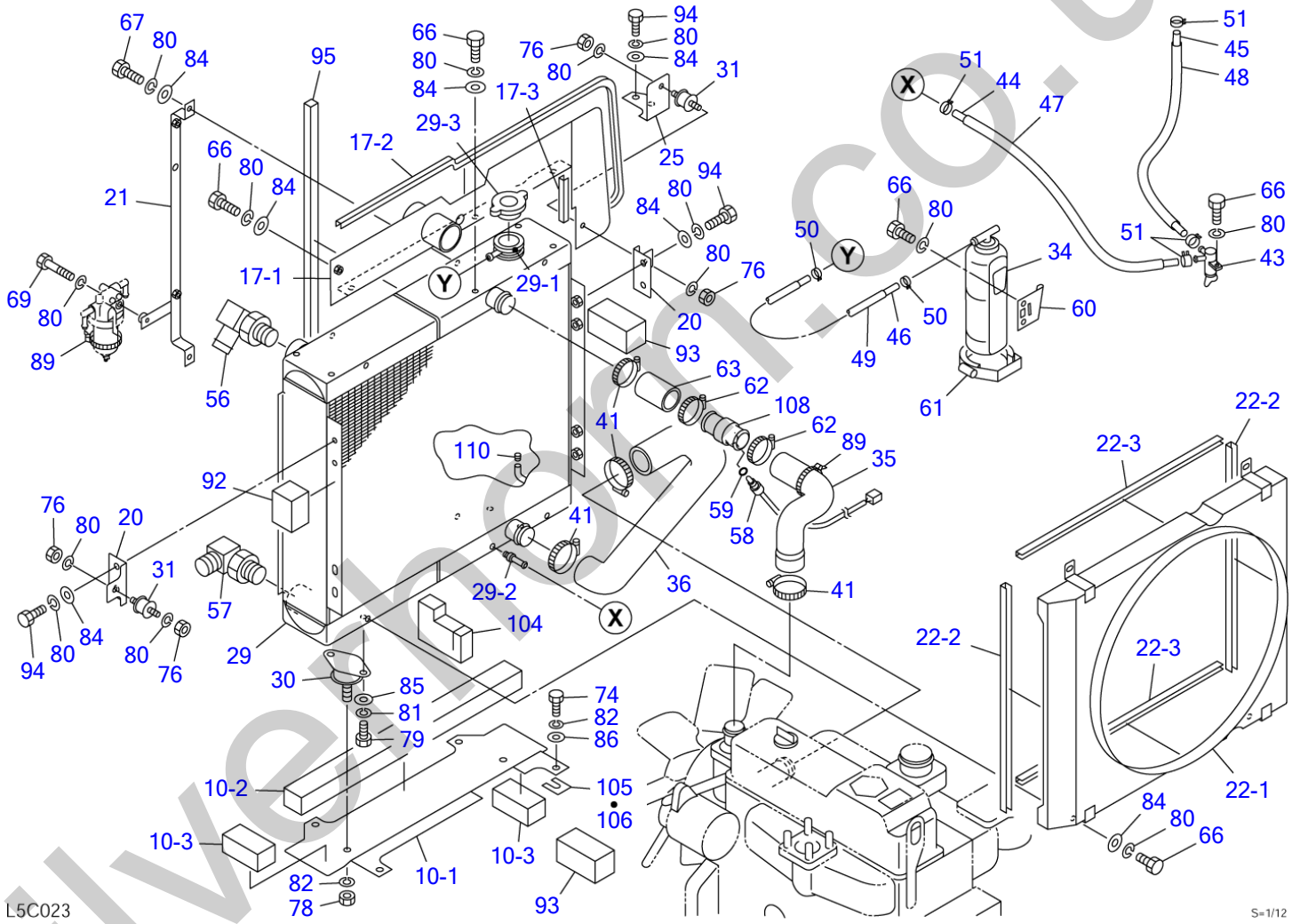

silverhart.co.uk

ENGINE & ACCESSORIES (2/3)

Item	Part number	Description	Q'ty	Chan.	Serial No.	Serv.	Remarks
		ENGINE ASSY					X05640-36000-9
10	0564036190	BRACKET ASSY	1				
10-1	0564036191	・BRACKET	1				
10-2	1654346063	・SPONGE	1				sold by the meter
10-3	1654346010	・SPONGE	2				sold by the meter
17	0564036350	PLATE ASSY	1				
17-1	0564036340	・PLATE	1				
17-2	1654606106	・TRIM	1				sold by the meter
17-3	1654606009	・TRIM	1				sold by the meter
20	0564036020	PLATE	2				
21	0564036310	BRACKET	1				
22	0564036380	SHROUD ASSY	1	(L)	17830004~17830417		
	0564036390	SHROUD ASSY	1	(H)	17830418~	M	
22-1	0564036480	・SHROUD	1		17830004~17830417		
	0564036550	・SHROUD	1		17830418~	M	
22-2	1654605053	・RUBBER	2				sold by the meter
22-3	1654606061	・SEAL	2				sold by the meter
25	0564036025	PLATE	1				
29	1911300220	RADIATOR & OIL COOLER	1				AKG
29-1	1911300076	・FITTING, hose	1				
29-2	1911300077	・NIPPLE	1				
29-3	1911300078	・CAP, radiator	1				
30	1651024009	RUBBER, cushion	2				
31	1651014003	RUBBER, cushion	2				
34	1910146020	TANK, sub	1				Y129466-44510
35	0564036062	HOSE	1				
36	0564036036	HOSE	1				
41	1910116047	BAND	4				Y23000-054000
43	1910078037	VALVE, drain	1				Y129150-49100
44	1530808070	HOSE	1				sold by the meter
45	1530808050	HOSE	1				sold by the meter
46	1531407058	HOSE	1				sold by the meter
47	1531118060	PROTECTOR	1				sold by the meter
48	1531118040	PROTECTOR	1				sold by the meter
49	1531115048	HOSE	1				sold by the meter
50	1533120011	CLAMP	2				
51	1533120012	CLAMP	4				
56	1513350020	ELBOW	1				
	1420010290	・O-RING	1				
57	1515010044	ELBOW	1				
	1420010290	・O-RING	1				
58	1700100046	SENSOR	1				
59	1420000100	O-RING	1				
60	1910047052	BRACKET	1				Y121256-44600
61	1910047047	BAND	1				Y124450-44550
62	1533700057	BAND	2				
63	0564036063	HOSE	1				
66	1100040816	BOLT	10				
67	1100040820	BOLT	2				
69	1100040865	BOLT	1				
74	1100041230	BOLT	4				
76	1130040008	NUT	3				
78	1130040012	NUT	2				
79	1100041020	BOLT	4				
80	1140020008	WASHER, spring	18				
81	1140020010	WASHER, spring	8				
82	1140020012	WASHER, spring	6				
84	1141110008	WASHER	7				
85	1141110010	WASHER	12				
86	1141110012	WASHER	4				
89	1652231250	BAND	2				
92	1654346007	SPONGE	1				sold by the meter
93	0564036076	SPONGE	2				
94	1100040825	BOLT	6				
95	1654349061	SPONGE	1				sold by the meter
104	0564036075	SPONGE	1				
105	0563030600	SHIM	AR				t=1.2mm
106	0563030610	SHIM	AR				t=2.3mm

silverthorn.co.uk

ENGINE & ACCESSORIES (2/3)

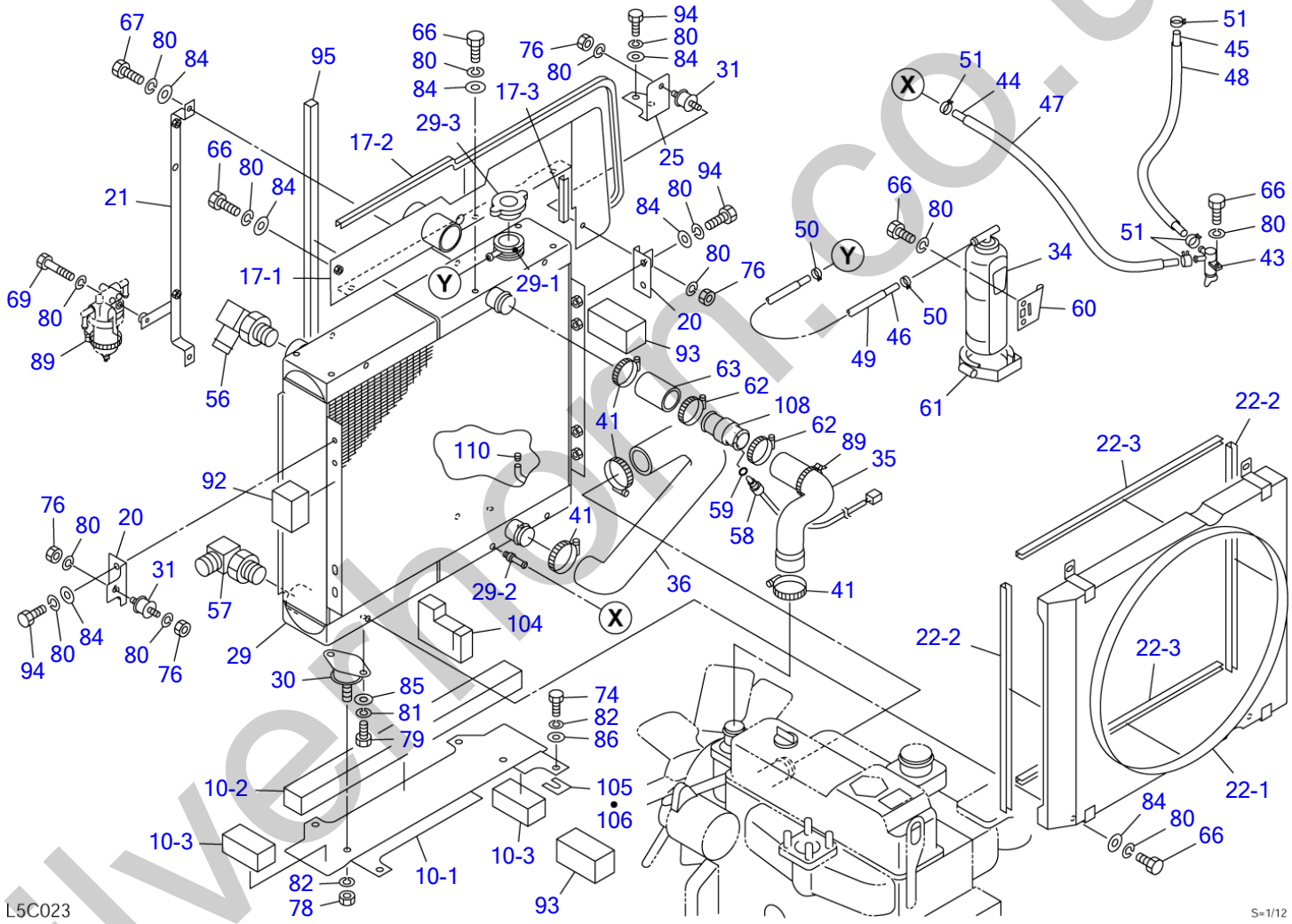

silverhart.co.uk

ENGINE & ACCESSORIES (2/3)

Item	Part number	Description	Q'ty	Chan.	Serial No.	Serv.	Remarks
108	**0881402595**	JOINT	1				
110	**1501820002**	PLUG	2		17830004~1783#		23245
	L5c023						

silverhorn.co.uk

ENGINE & ACCESSORIES (3/3)

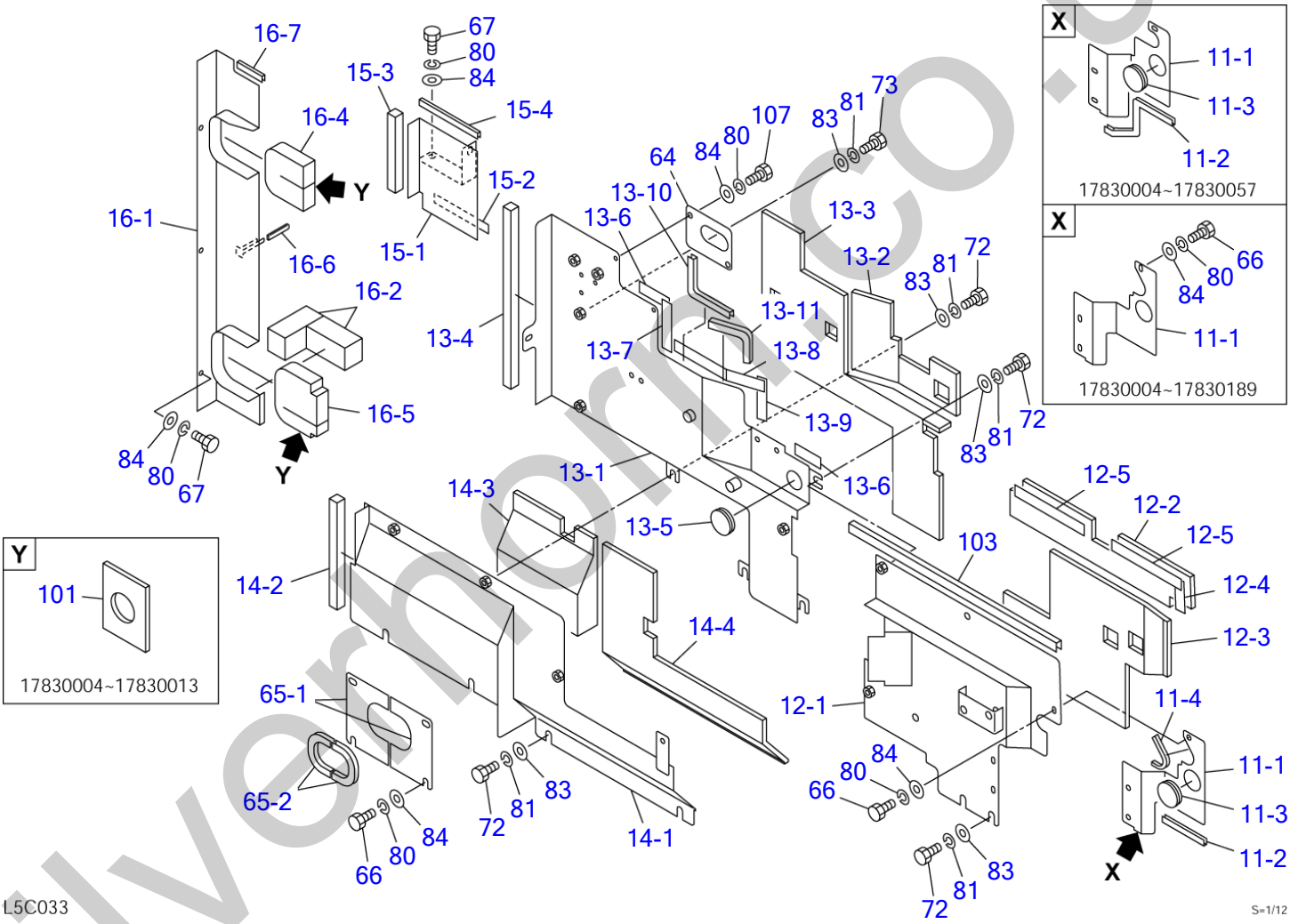

silvermorn.co.uk

ENGINE & ACCESSORIES (3/3)

Item	Part number	Description	Q'ty	Chan.	Serial No.	Serv.	Remarks
		ENGINE ASSY					X05640-36000-9
11	0564036440	PLATE ASSY	1		17830004~17830057		
	0564036690	PLATE ASSY	1		17830058~17830189		
	0564036750	PLATE ASSY	1		17830190~		
11-1	0564036441	・PLATE	1		17830004~17830057		
	0564036691	・PLATE	1		17830058~17830189		
	0564036760	・PLATE	1		17830190~		
11-2	1654606105	・TRIM	1		17830004~17830057		sold by the meter
	1654606012	・TRIM	1		17830058~		sold by the meter
11-3	1652060042	・BUSHING	1				
11-4	1654606007	・TRIM	1			M	sold by the meter
12	0564036460	PLATE ASSY	1		17830004~17830057		
	0564036670	PLATE ASSY	1		17830058~17830189		
	0564036770	PLATE ASSY	1	(L)	17830190~17830417		
	0564036790	PLATE ASSY	1	(H)	17830418~	M	
12-1	0564036430	・PLATE	1		17830004~17830057		
	0564036680	・PLATE	1		17830058~17830189		
	0564036780	・PLATE	1		17830190~17830417		
	0564036800	・PLATE	1	(H)	17830418~	M	
12-2	0564036462	・INSULATOR	1		17830004~17830417		
	0564036792	・INSULATOR	1		17830418~	M	
12-3	0564036463	・INSULATOR	1				
12-4	1654401009	・TAPE	1		17830058~		sold by the meter
12-5	1654401018	・TAPE	2		17830058~		sold by the meter
13	0564036470	PLATE ASSY	1	(L)	17830004~17830417		
	0564036810	PLATE ASSY	1	(H)	17830418~	M	
13-1	0564036420	・PLATE	1		17830004~17830417		
	0564036820	・PLATE	1		17830418~	M	
13-2	0564036472	・INSULATOR	1		17830004~17830417		
	0564036812	・INSULATOR	1		17830418~	M	
13-3	0564036473	・INSULATOR	1				
13-4	1654349040	・SPONGE	1				sold by the meter
13-5	1652060038	・BUSHING	1		17830172~		
13-6	1654401008	・TAPE	1		17830562~	M	sold by the meter
13-7	1654401009	・TAPE	1		17830562~	M	sold by the meter
13-8	1654401021	・TAPE	1		17830562~	M	sold by the meter
13-9	1654401011	・TAPE	1		17830562~	M	sold by the meter
13-10	1654625020	・TRIM	1		17830562~	M	sold by the meter
13-11	1654625015	・TRIM	1		17830562~	M	sold by the meter
14	0564036370	PLATE ASSY	1		17830004~17830057		
	0564036700	PLATE ASSY	1		17830058~		
14-1	0564036240	・PLATE	1		17830004~17830057		
	0564036710	・PLATE	1		17830058~		
14-2	1654349024	・SPONGE	1				sold by the meter
14-3	0564036373	・INSULATOR	1				
14-4	0564036374	・INSULATOR	1				
15	0564036410	PLATE ASSY	1				
15-1	0564036250	・PLATE	1				
15-2	1654313014	・SPONGE	1				sold by the meter
15-3	1654349017	・SPONGE	1				sold by the meter
15-4	1654606015	・TRIM	1				sold by the meter
16	0564036360	PLATE ASSY	1				
16-1	0564036260	・PLATE	1				
16-2	1654346010	・SPONGE	2				sold by the meter
16-4	0564036364	・SPONGE	2				
16-5	0564036365	・SPONGE	1				
16-6	0872433150	・TUBE	2				
16-7	1654606007	・TRIM	1				sold by the meter
64	0564036450	PLATE	1				
65	0564036540	PLATE ASSY	2				
65-1	0564036541	・PLATE	2				
65-2	1654606015	・SEAL	2				sold by the meter
66	1100040816	BOLT	7				
67	1100040820	BOLT	5				
72	1100041025	BOLT	12				
73	1100041030	BOLT	2				
80	1140020008	WASHER, spring	14				
81	1140020010	WASHER, spring	14				

silverthorn.co.uk

ENGINE & ACCESSORIES (3/3)

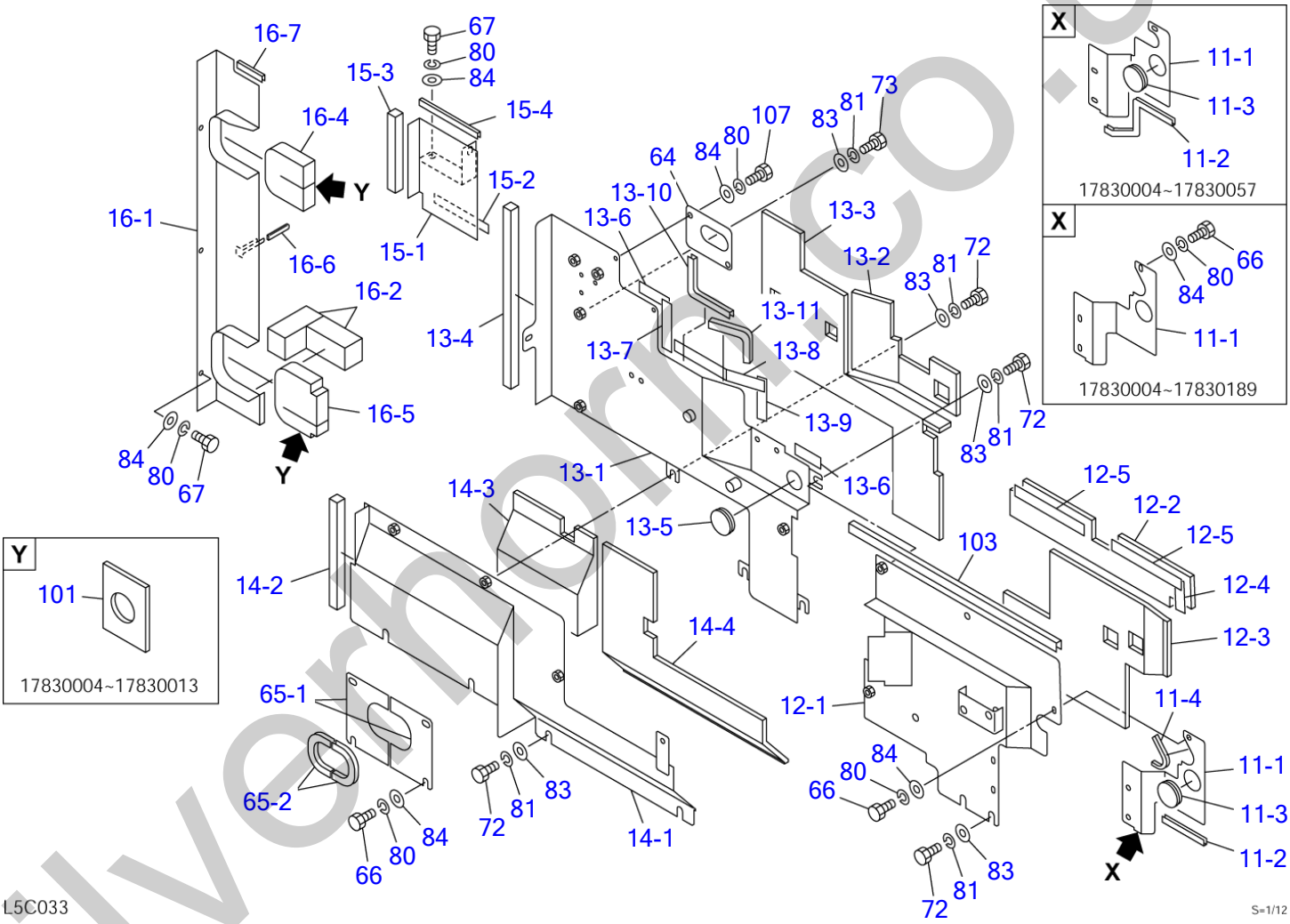

silvermorn.co.uk

ENGINE & ACCESSORIES (3/3)

Item	Part number	Description	Q'ty	Chan.	Serial No.	Serv.	Remarks
83	**1141550010**	WASHER	14				
84	**1141110008**	WASHER	14				
101	**0564036610**	INSULATOR	2		17830004~17830013		
103	**1654625055**	TRIM	1		17830418~	M	sold by the meter
107	**1100040812**	BOLT	2				
	L5c033						

silverhorn.co.uk

AIR CLEANER (for duoble element)

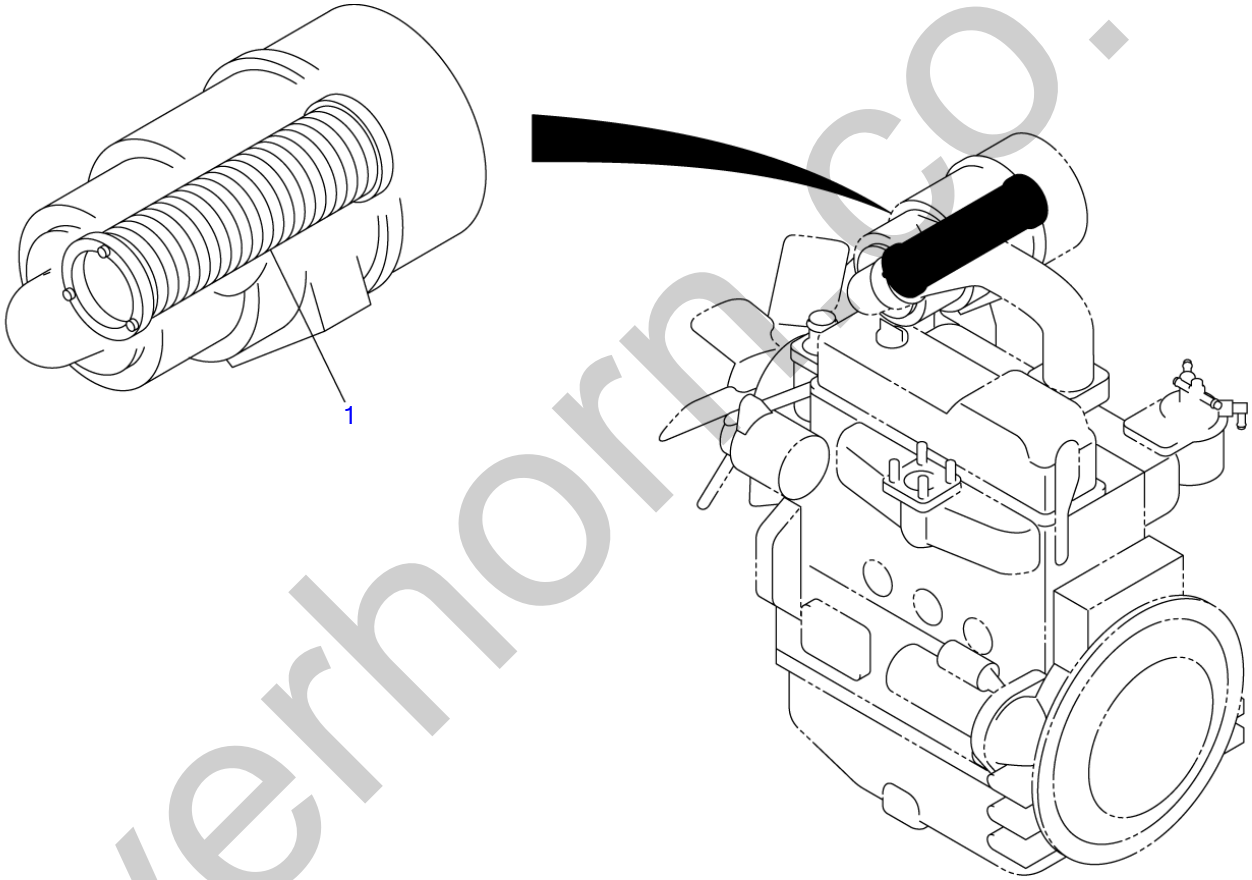

L5C040

S=1/5, 1/10

silverhorn.co.uk

AIR CLEANER (for duoble element)

Item	Part number	Description	Q'ty	Chan.	Serial No.	Serv.	Remarks
		ELEMENT ASSY, 2ndary					X05640-29800-1
1	**1911107692**	ELEMENT, 2ndary	1				DONALDSON P82-2769
	L4c110						

silverhorn.co.uk

DRAIN PLUG

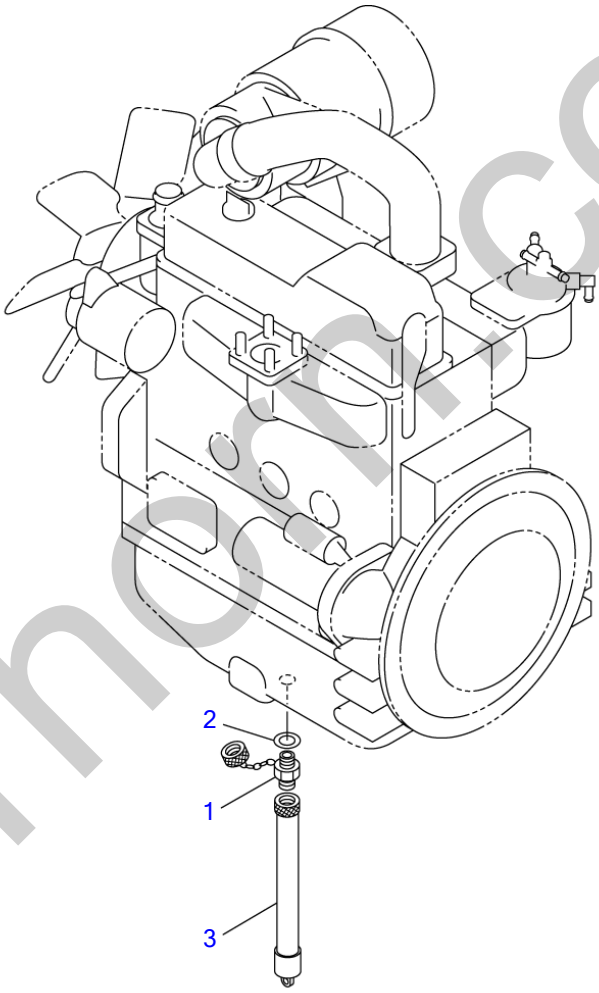

L5C050

S=1/10

silverhomco.uk

DRAIN PLUG

Item	Part number	Description	Q'ty	Chan.	Serial No.	Serv.	Remarks
		PLUG ASSY, drain					X03540-02000-1
1	1554502250	PLUG	1				
2	1541400722	WASHER	1				
3	1554512600	TUBE	1				
	L2c031						

silverhorn.co.uk

CONTROL BOX

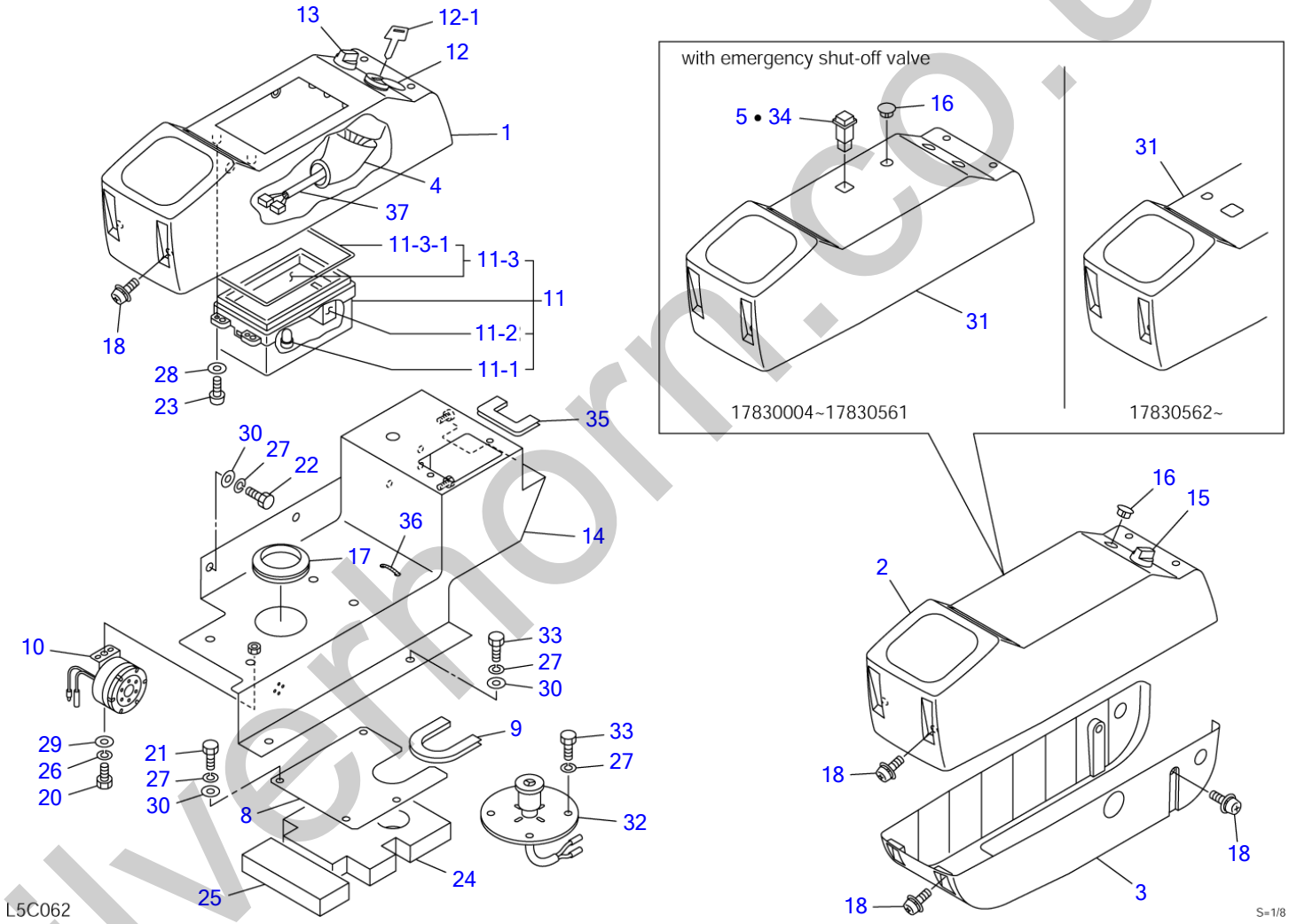

silvermorn.co.uk

CONTROL BOX

Item	Part number	Description	Q'ty	Chan.	Serial No.	Serv.	Remarks
		BOX ASSY, control					X05643-35000-8
		BOX ASSY, control (with shut-off valve & 3rd aux. lines)					X05643-35100-8
		BOX ASSY, control (with shut-off valve, without 3rd aux. lines)					X05643-35200-8
1	0334326150	COVER (R.H.)	1				
2	0334327150	COVER (L.H.)	1				
3	0334327250	COVER (L.H.)	1				
4	0870431821	COVER	1				
5	1700550024	ORNAMENT	1				with shut-off valve, without 3rd aux.
8	0564335050	PLATE	1				
9	1653916011	TRIM	1				sold by the meter
10	1703700010	BUZZER	1				
11	1730141330	GAUGE, cluster	1				
11-1	1730140634	・BULB	10				
11-2	1730140652	・METER, hour	1				
11-3	1730140653	・GLASS	1				
11-3-1	1730140654	・・PACKING	1				
12	1700100023	SWITCH, starter	1		17830004~17830069		
	1700100052	SWITCH, starter	1	(H)	17830070~		
12-1	1700100019	KEY	1				
13	1700000010	SWITCH, lamp	1				
14	0564335060	BOX	1				
15	1704300007	SWITCH, wiper	1				
16	1652533019	CAP	1				
	1652533019	CAP	2				with shut-off valve, without 3rd aux.
17	1652060063	BUSHING	1				
18	1110540614	BOLT, sems	10				
20	1100040616	BOLT	1				
21	1100040816	BOLT	4				
22	1100040814	BOLT	3				
23	1120530416	SCREW	4				
24	0564335001	URETHANE	1				
25	0564335002	URETHANE	1				
26	1140020006	WASHER, spring	1				
27	1140020008	WASHER, spring	9				
	1140020008	WASHER, spring	13				with 3rd aux. lines
28	1141110004	WASHER	4				
29	1141110006	WASHER	1				
30	1141110008	WASHER	9				
31	0397313270	COVER (L.H.)	1		17830004~17830561		with shut-off valve
	0374304100	COVER (L.H.)	1	(H)	17830562~	M	with shut-off valve
32	1700100064	SWITCH, foot	1				with 3rd aux. lines
33	1100040820	BOLT	2				
	1100040820	BOLT	6				with 3rd aux. lines
34	1700550032	LAMP, pilot	1				with 3rd aux. lines
35	1653916010	TRIM	1				sold by the meter
36	1652201005	BAND	1				
37	0564335070	HARNESS, wiring	1				
	L5c062						

silvernorn.co.uk

ENGINE CONTROL

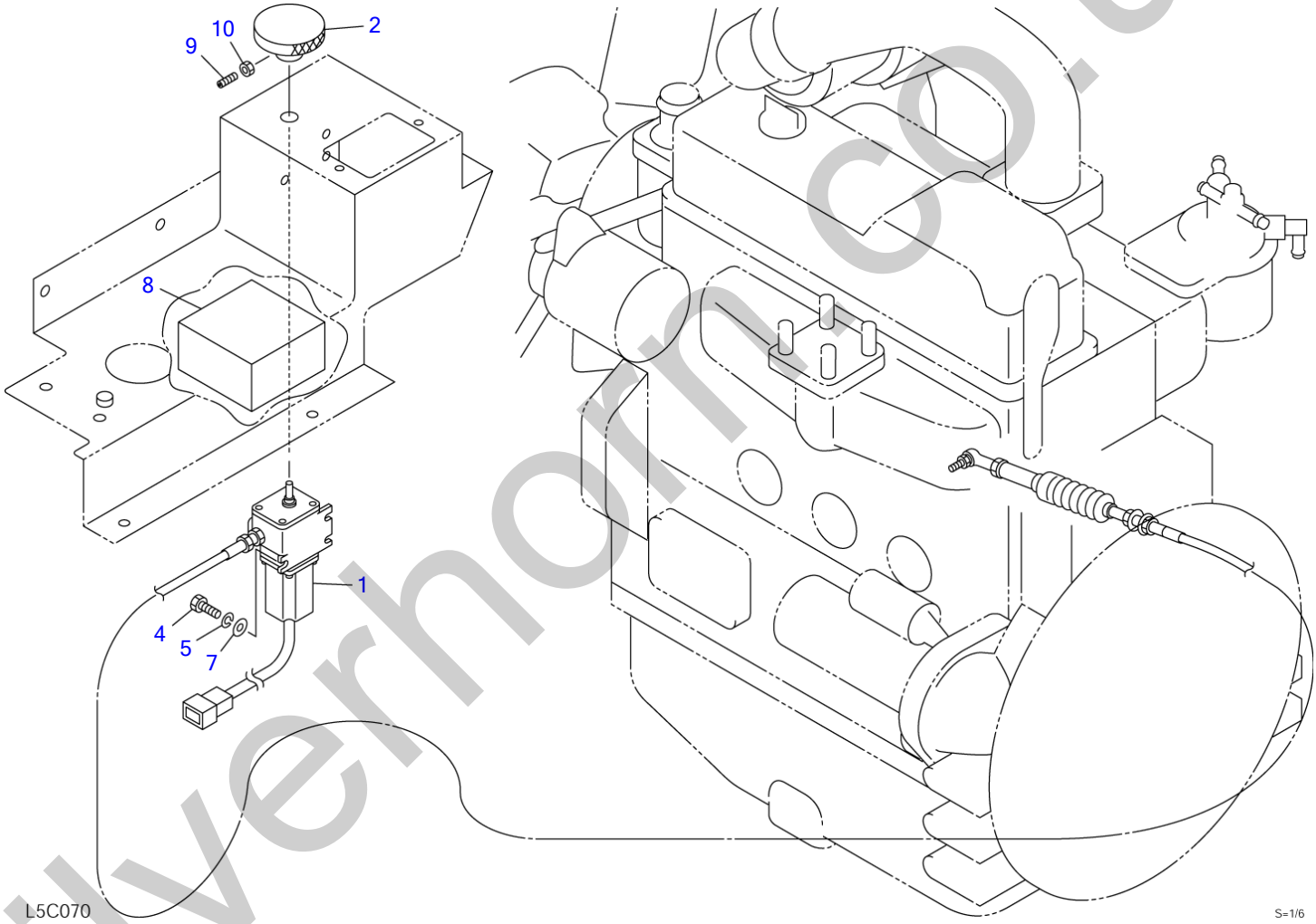

silverhorn.co.uk

ENGINE CONTROL

Item	Part number	Description	Q'ty	Chan.	Serial No.	Serv.	Remarks
		CONTROL ASSY, engine					X05641-25000-5
1	1711910210	ACTUATOR	1				
2	0564125300	KNOB	1				
4	1100040616	BOLT	7				
5	1140020006	WASHER, spring	7				
7	1141110006	WASHER	7				
8	1711910270	CONTROLLER	1				
9	1121040516	SET-SCREW	1				
10	1130040005	NUT	1				
	L5c070						

silverhorn.co.uk

ELECTRICAL (1/2)

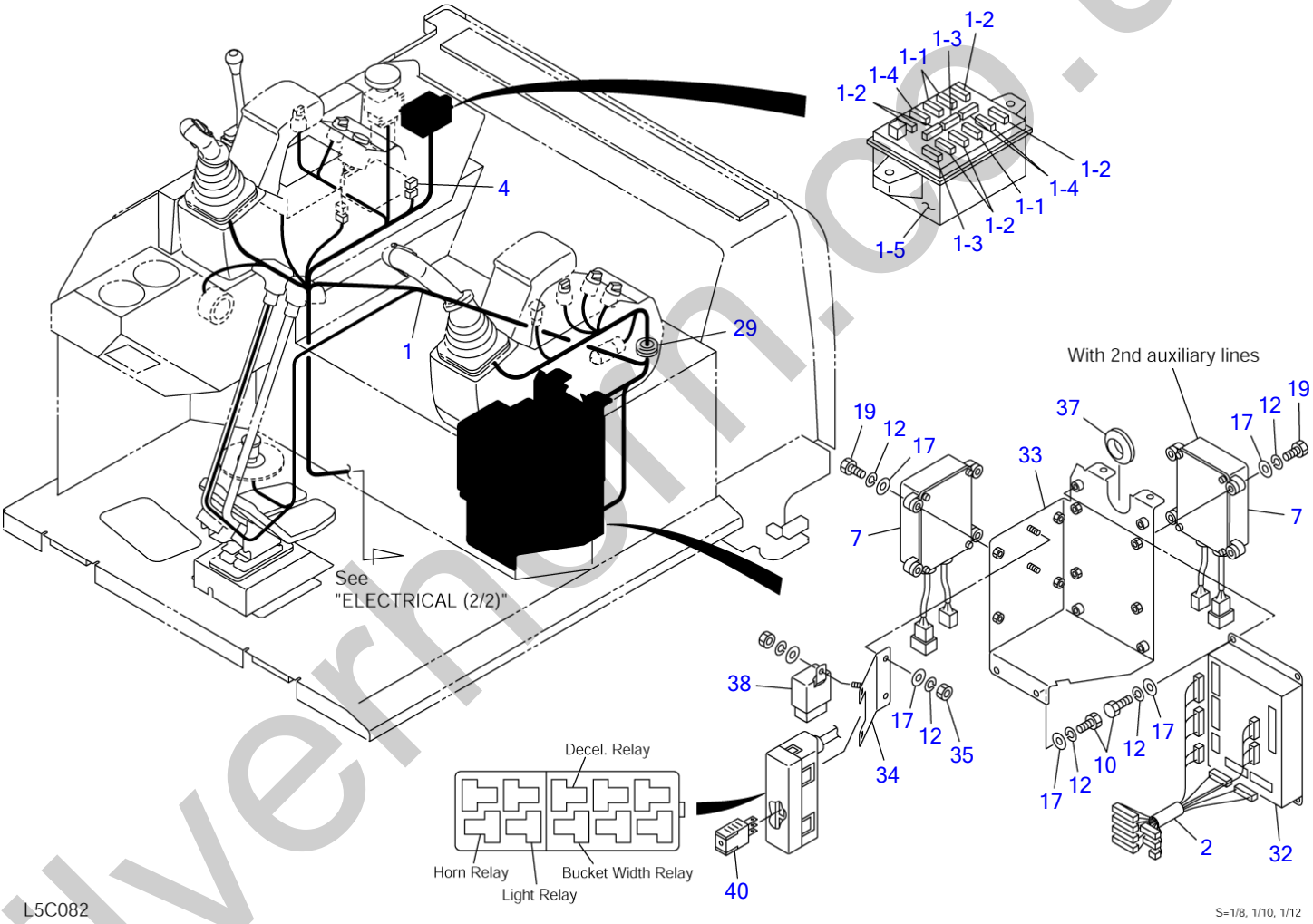

silvermoon.co.uk

ELECTRICAL (1/2)

Item	Part number	Description	Q'ty	Chan.	Serial No.	Serv.	Remarks
		ELECTRICAL ASSY					X05642-43500-8
		ELECTRICAL ASSY (with 2nd aux. lines)					X05642-43600-8
1	0564243570	HARNESS ASSY, wiring	1				
1-1	1701310005	・FUSE	3				5A
1-2	1701310010	・FUSE	6				10A
1-3	1701310020	・FUSE	2				20A
1-4	1701310030	・FUSE	3				30A
1-5	1701200002	・BOX, fuse	1				
2	0564243520	HARNESS, wiring	1				
4	0564243540	HARNESS, wiring	1				
7	1730140730	CONTROLLER	1				
	1730140730	CONTROLLER	2				with 2nd aux. lines
10	1100040816	BOLT	4				
12	1140020008	WASHER, spring	10				
17	1141110008	WASHER	10				
19	1100040835	BOLT	4				
29	1652022506	GROMMET	1				
32	1730141310	CONTROLLER	1				
33	0564243900	BOX	1				
34	0564243910	BRACKET	1				
35	1130040008	NUT	2				
37	1652003601	GROMMET	1				
38	1711900131	DETECTOR	1				
40	1711900132	RELAY	4				12V
	L5c082						

silverhorn.co.uk

ELECTRICAL (2/2)

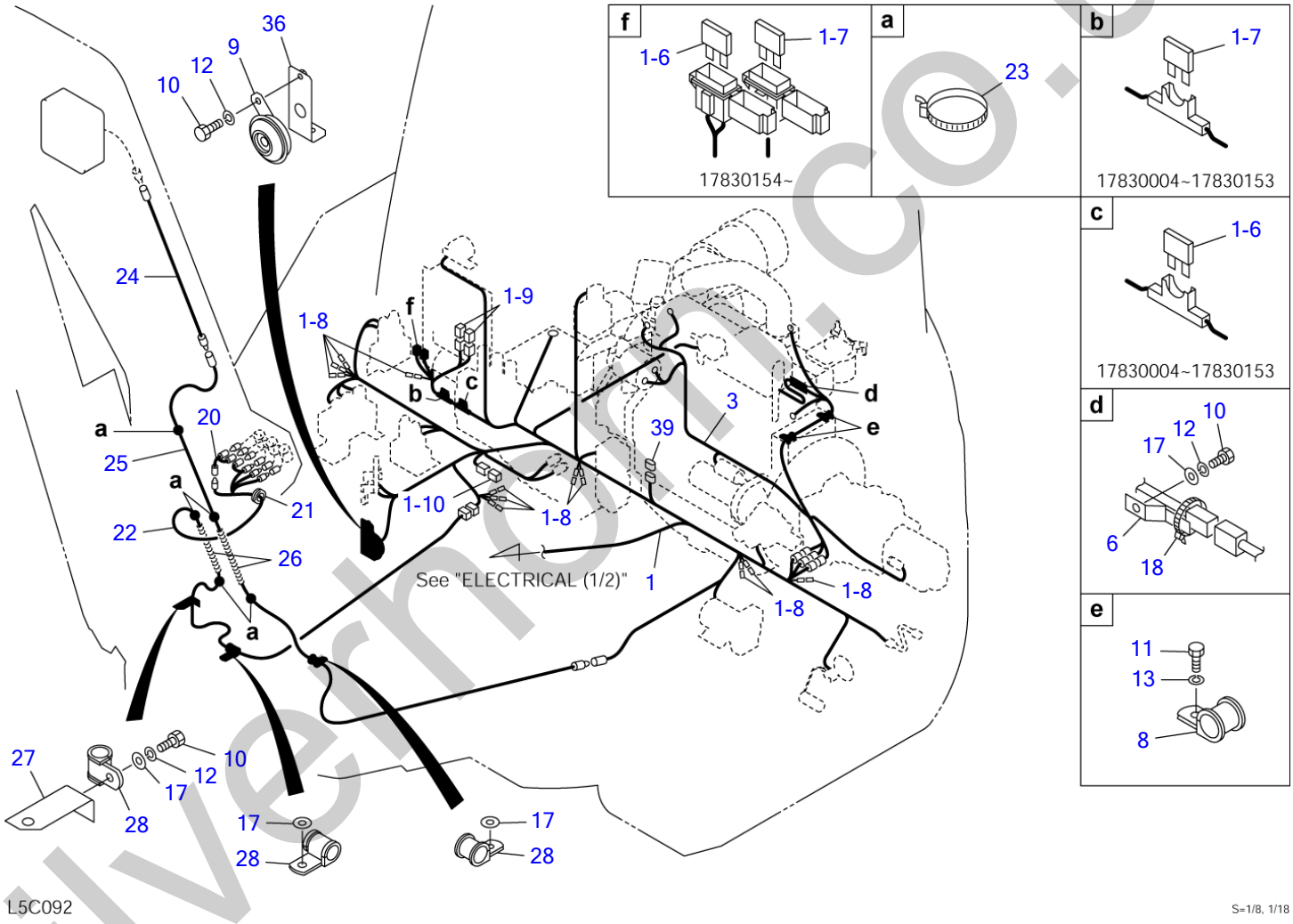

L5C092

S=1/8, 1/18

silvermm.co.uk

ELECTRICAL (2/2)

Item	Part number	Description	Q'ty	Chan.	Serial No.	Serv.	Remarks
		ELECTRICAL ASSY					X05642-43500-8
		ELECTRICAL ASSY (with 2nd aux. lines)					X05642-43600-8
1	0564243570	HARNESS ASSY, wiring	1				
1-6	1701310015	・FUSE	1				15A
1-7	1701310030	・FUSE	1				30A
1-8	1730500023	・DIODE	12				
1-9	1701330045	・LINK, fusible	2				45A
1-10	0564243571	・CONNECTOR, short	1				
3	0564243530	HARNESS, wiring	1				
6	1711900064	CLAMP	1				
8	1711900076	CLAMP	2				
9	1703500712	HORN	1				
10	1100040816	BOLT	3				
11	1100041016	BOLT	2				
12	1140020008	WASHER, spring	3				
13	1140020010	WASHER, spring	2				
17	1141110008	WASHER	4				
18	1652231250	BAND	1				
20	0564243560	HARNESS, wiring	1				
21	1652001002	GROMMET	1				
22	0564243550	HARNESS, wiring	1				
23	1652201008	BAND	3				
24	0564243930	WIRE	1				
25	0394210350	WIRE	1				
26	0394216980	SPRING	2				
27	0394216800	ANGLE	1				
28	1711900076	CLAMP	3				
36	0564243580	BRACKET	1				
39	0564243920	CONNECTOR	1				
	L5c092						

silverhorn.co.uk

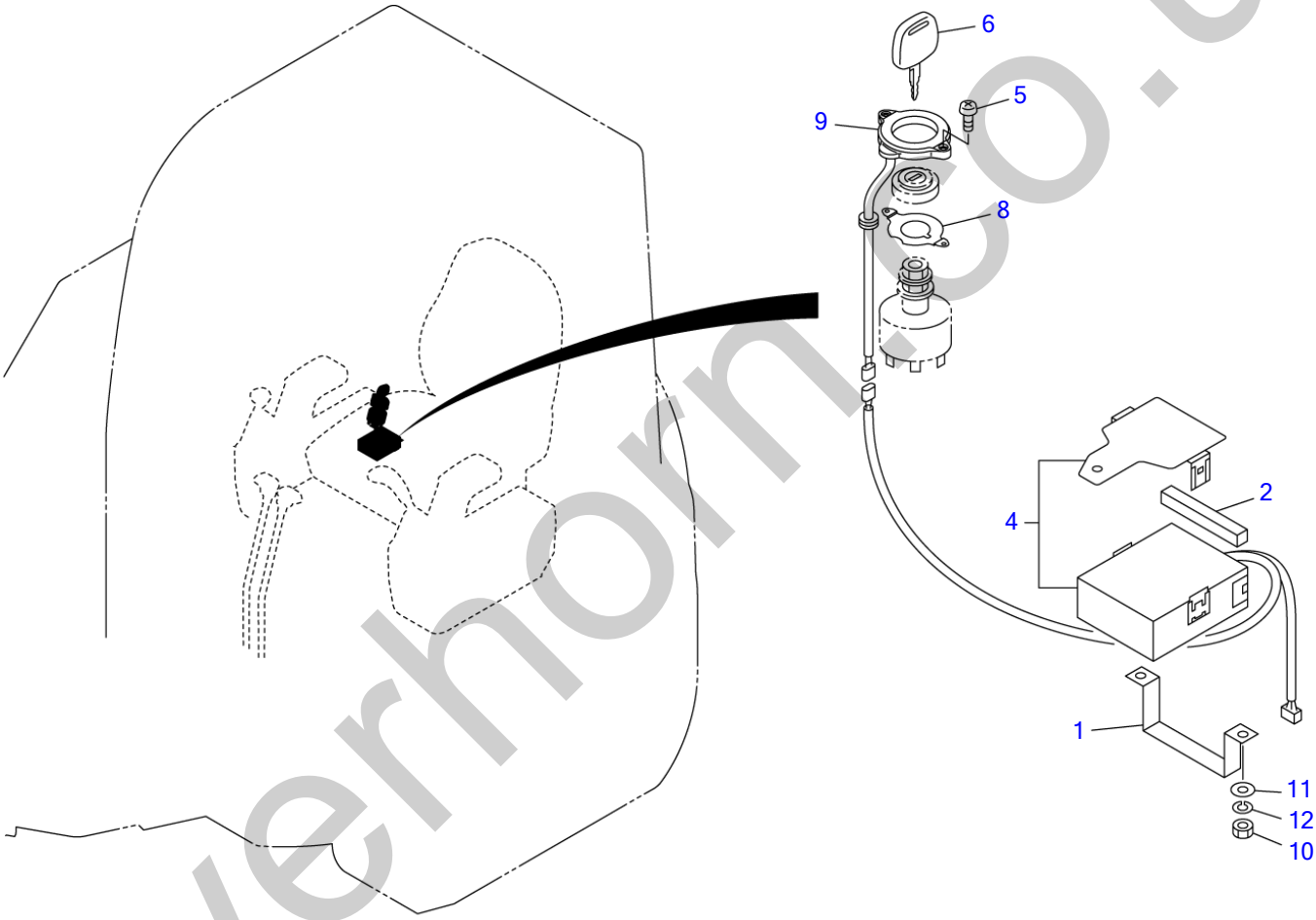

L5C100

S=1/5, 1/20

silverhorn.co.uk

ELECTRICAL (with security system)

Item	Part number	Description	Q'ty	Chan.	Serial No.	Serv.	Remarks
		ELECTRICAL ASSY					X05642-43800-0
1	0564244002	CLAMP	1				
2	0564244007	SPONGE	1				
4	X **********	CONTROLLER	1				
5	1730141151	SCREW	2				
6	1730141120	KEY	2				
8	1730141150	STAY	1				
9	1730141140	COIL, antenna	1				
10	1130040006	NUT	3				
11	1141110006	WASHER	3				
12	1140020006	WASHER, spring	3				
	L5c100						

silverhorn.co.uk

TRAVEL ALARM

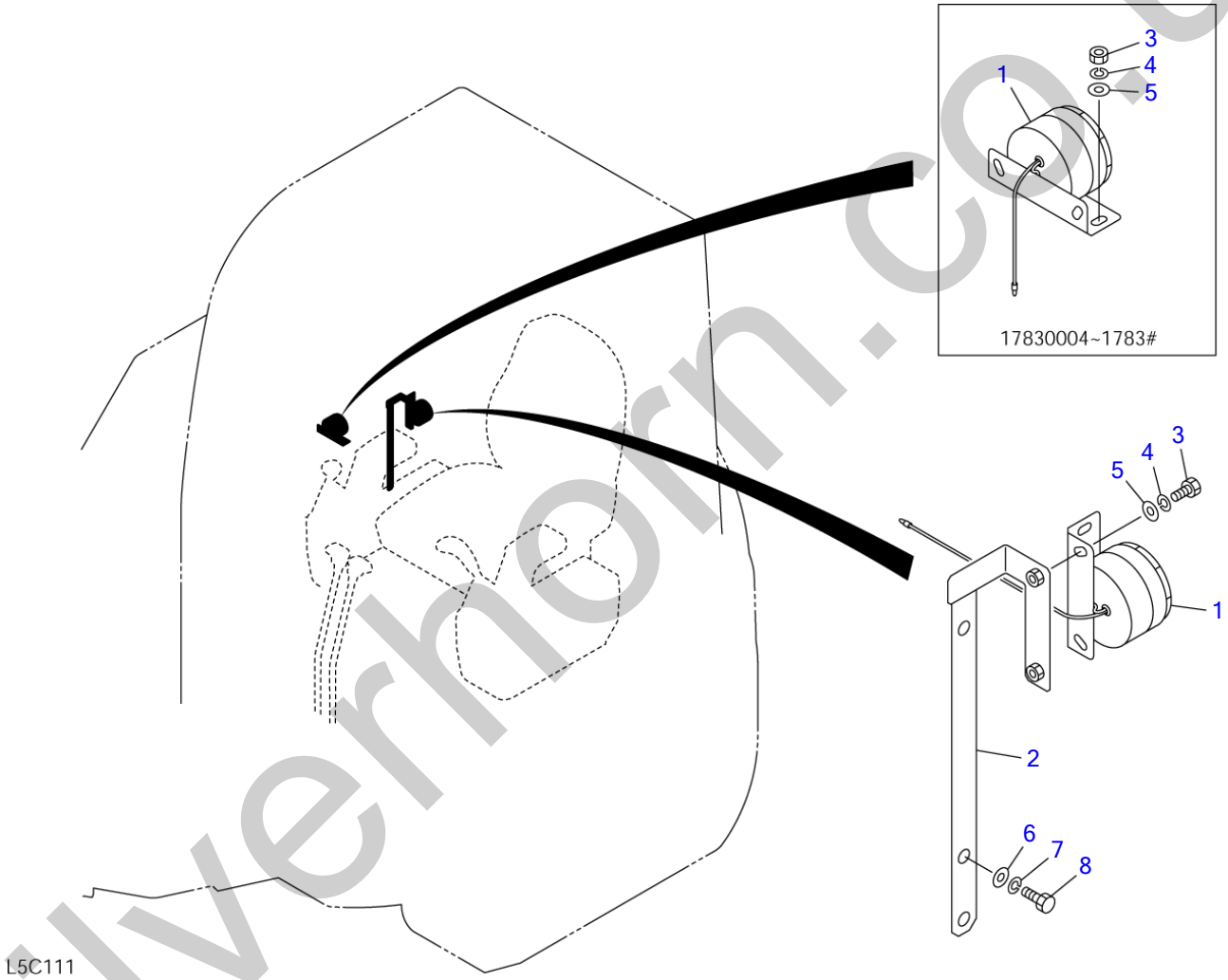

silverhorn.co.uk

TRAVEL ALARM

Item	Part number	Description	Q'ty	Chan.	Serial No.	Serv.	Remarks
		ALAME ASSY, travel					X05642-43700-1
1	**1703700011**	BUZZER	1		17830004~1783#		
	1703700013	BUZZER	1		1783#~		
2	**0564247720**	BRACKET	1		1783#~		
3	**1130040006**	NUT	2		17830004~1783#		
	1100040614	BOLT	2		1783#~		
4	**1140020006**	WASHER, spring	2				
5	**1141110006**	WASHER	2				
6	**1141110008**	WASHER	2		1783#~		
7	**1140020008**	WASHER, spring	2		1783#~		
8	**1100040825**	BOLT	2		1783#~		
	L5c111						

silverhorn.co.uk

BATTERY (17830004-17830309)

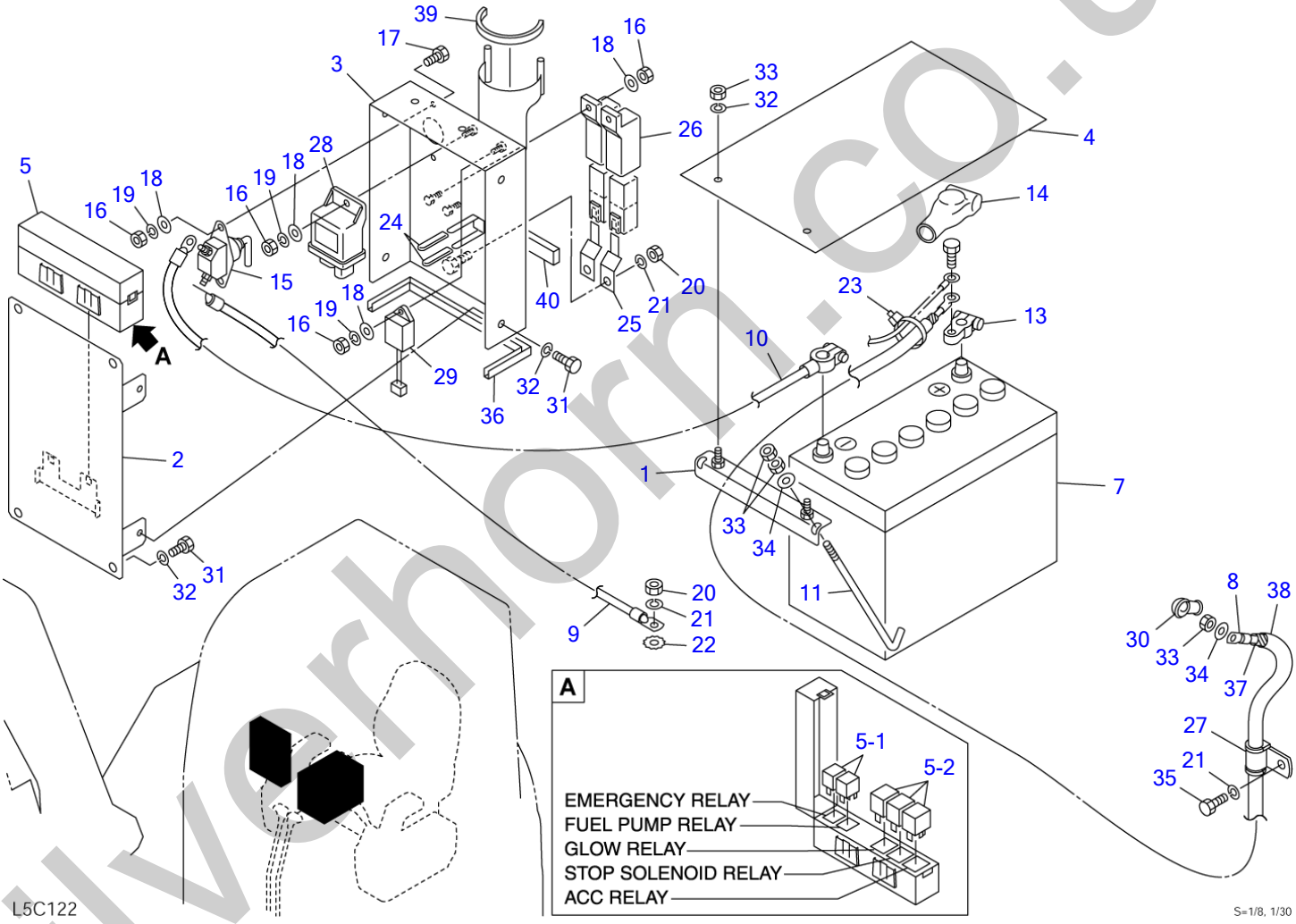

silverhorn.co.uk

BATTERY (17830004-17830309)

Item	Part number	Description	Q'ty	Chan.	Serial No.	Serv.	Remarks
		BATTERY ASSY					X05644-23600-3
1	0564423610	CLAMP	1				
2	0564423620	PLATE	1				
3	0564423630	COVER	1		17830004~17830087		
	0394409130	COVER	1	(H)	17830088~		
4	0564423640	SHEET	1				
5	1730600001	BOX ASSY, relay	1				
5-1	1711900132	・RELAY	2				
5-2	1711900137	・RELAY	3				
7	1702051531	BATTERY	1				
8	1702607160	CABLE, battery	1				
9	0394409150	CABLE, battery	1				
10	1702230050	CABLE, earth	1				
11	1702108245	BOLT	2				
13	1702330000	TERMINAL	1				
14	1702920060	COVER	1				
15	1700100051	SWITCH	1				
16	1130040006	NUT	6				
17	1100040616	BOLT	2				
18	1141110006	WASHER	6				
19	1140020006	WASHER, spring	4				
20	1130040010	NUT	3				
21	1140020010	WASHER, spring	4				
22	1140330010	WASHER	1				
23	1652231140	BAND	5				
24	0872433150	TUBE	4				
25	1711900064	CLAMP	2				
26	1700100038	COVER	2				
27	1711900072	CLAMP	1				
28	1910181106	RELAY, safety	1				Y119802-77200
29	1910150118	UNIT, timer	1				Y129211-77920
30	1910007119	COVER	1				Y124550-77030
31	1100040816	BOLT	8				
32	1140020008	WASHER, spring	10				
33	1130040008	NUT	7				
34	1141110008	WASHER	3				
35	1100041020	BOLT	1				
36	1654601033	TRIM	1				sold by the meter
37	1703221352	PROTECTOR	1				sold by the meter
38	1531325150	PROTECTOR	1				sold by the meter
39	1654601013	TRIM	1				sold by the meter
40	1654302008	SPONGE	1				sold by the meter
	L5c122						

silverthorn.co.uk

BATTERY (17830310-)

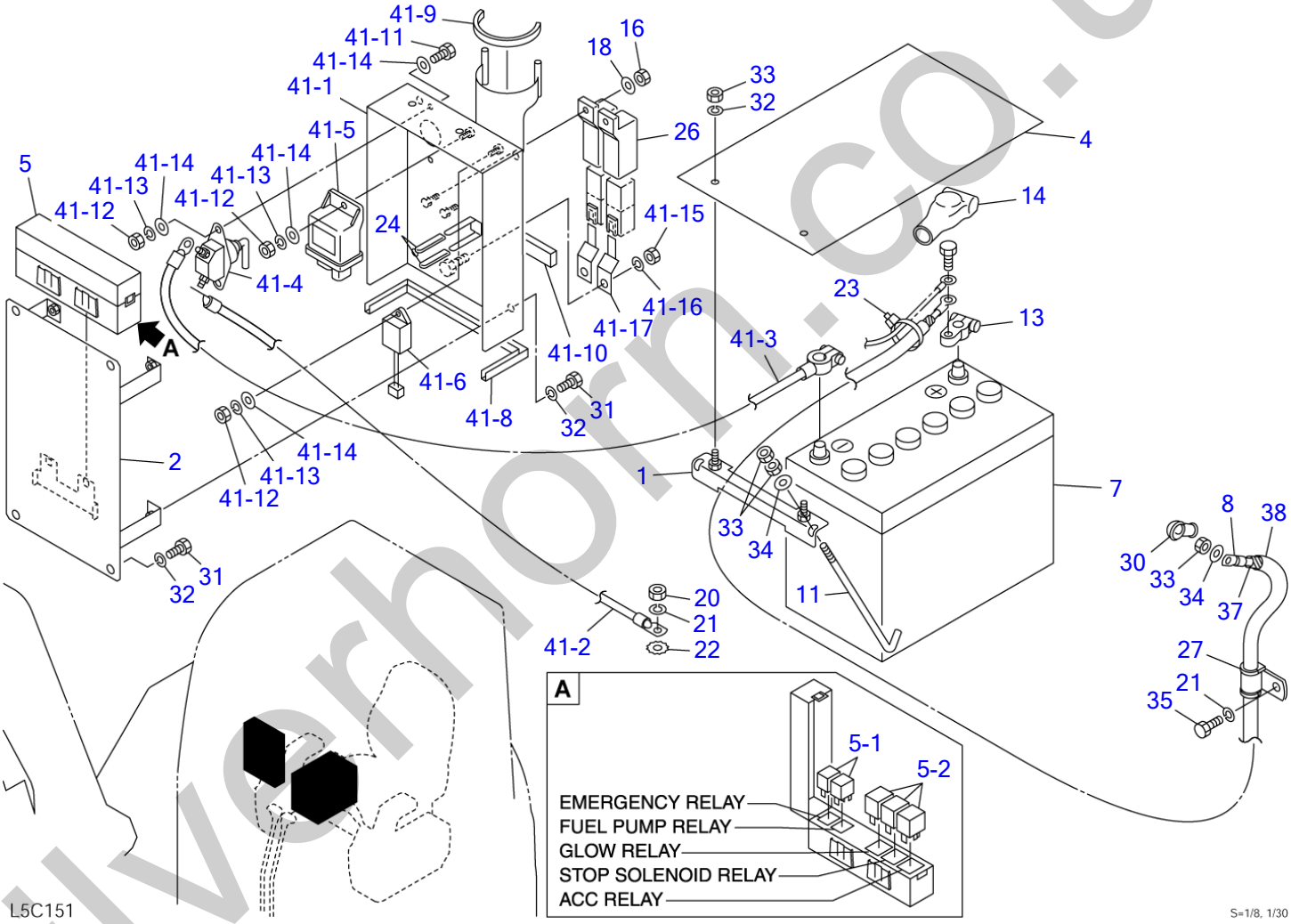

silverhorn.co.uk

BATTERY (17830310-)

Item	Part number	Description	Q'ty	Chan.	Serial No.	Serv.	Remarks
		BATTERY ASSY					X05644-23600-6
1	0564423610	CLAMP	1				
2	0564423650	PLATE	1				
4	0564423640	SHEET	1				
5	1730600001	BOX ASSY, relay	1				
5-1	1711900132	・RELAY	2			M	
5-2	1711900137	・RELAY	3			M	
7	1702051531	BATTERY	1				
8	1702530160	CABLE, battery	1				
11	1702108245	BOLT	2				
13	1702330000	TERMINAL	1				
14	1702920060	COVER	1				
16	1130040006	NUT	2				
18	1141110006	WASHER	2				
20	1130040010	NUT	1				
21	1140020010	WASHER, spring	2				
22	1140330010	WASHER	1				
23	1652231140	BAND	5				
24	0872433150	TUBE	4				
26	1700100038	COVER	2				
27	1711900072	CLAMP	1				
30	1910007119	COVER	1				Y124550-77030
31	1100040816	BOLT	8				
32	1140020008	WASHER, spring	10				
33	1130040008	NUT	7				
34	1141110008	WASHER	3				
35	1100041020	BOLT	1				
37	1703221352	PROTECTOR	1				sold by the meter
38	1531325150	PROTECTOR	1				sold by the meter
41	X **********	RELAY ASSY	1				X05644-25100-0
41-1	0394409170	COVER	1				
41-2	1702531055	CABLE, battery	1				
41-3	1702230050	CABLE, earth	1				
41-4	1700100051	SWITCH	1				
41-5	1910181106	RELAY, safety	1				Y119802-77200
41-6	1910150118	UNIT, timer	1				Y129211-77920
41-7	1711900064	CLAMP	2				
41-8	1654601033	TRIM	1				sold by the meter
41-9	1654601013	TRIM	1				sold by the meter
41-10	1654302008	SPONGE	1				sold by the meter
41-11	1100040616	BOLT	2				
41-12	1130040006	NUT	4				
41-13	1140020006	WASHER, spring	4				
41-14	1141110006	WASHER	6				
41-15	1130040010	NUT	2				
41-16	1140020010	WASHER, spring	2				
	L5c151						

silverthorn.co.uk

RADIO

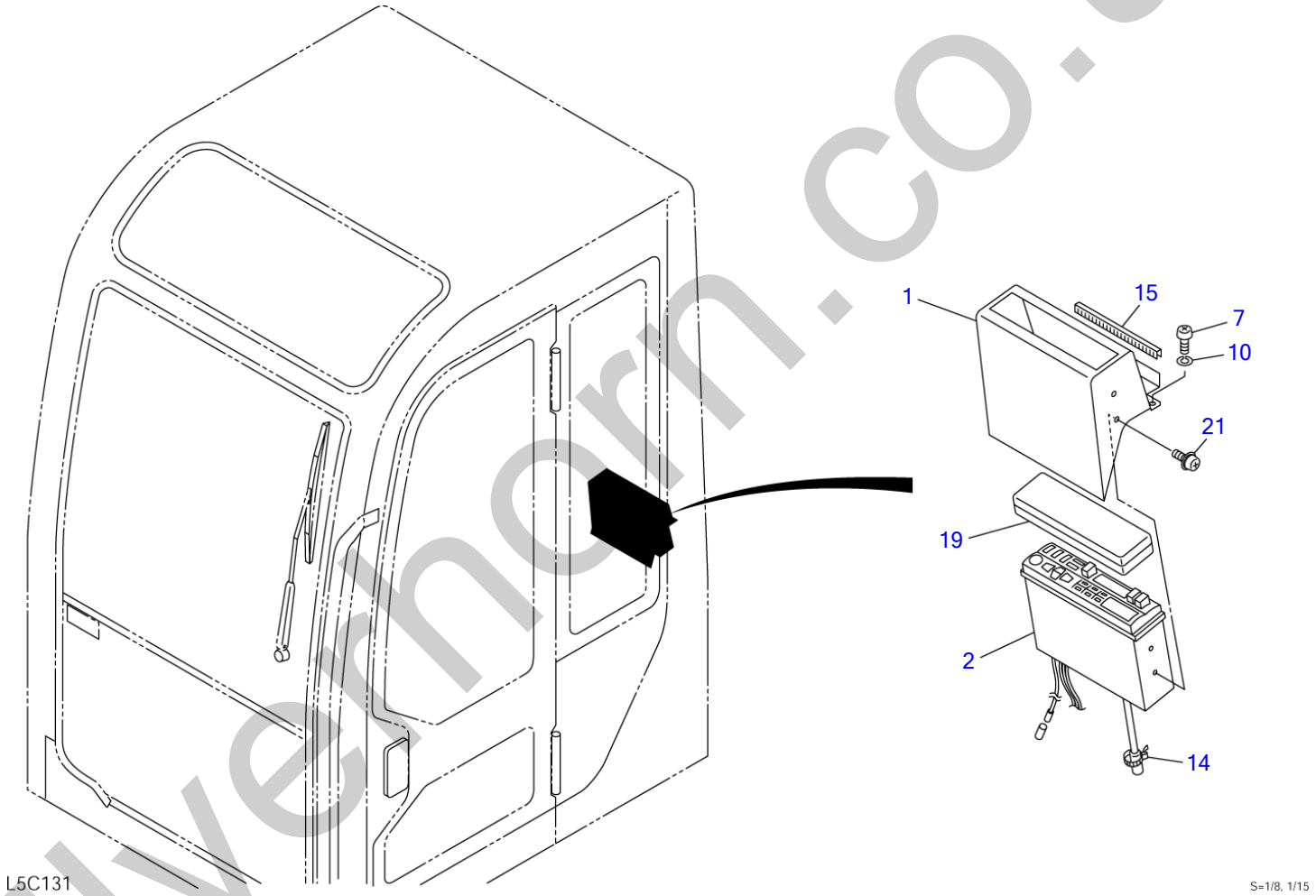

silvernorn.co.uk

RADIO

Item	Part number	Description	Q'ty	Chan.	Serial No.	Serv.	Remarks
		RADIO ASSY (for EC)					X05647-08000-6
		RADIO ASSY (for U.S.A.)					X05647-08500-6
		RADIO ASSY (for JAPAN)					X05647-08600-6
1	0564708100	COVER	1				
2	1705003900	CASSETTE STEREO	1				for EC
	1705004000	CASSETTE STEREO	1				for U.S.A.
	1705004100	CASSETTE STEREO	1				for JAPAN
7	1120590616	SCREW	2				
10	1140090006	WASHER, spring	2				
14	1652231100	BAND	1				
15	1653917005	TRIM	1				sold by the meter
19	1705003650	COVER	1				
21	1150420520	SCREW	4				
	L5c131						

silverhorn.co.uk

MAINTENANCE LIGHT SOCKET

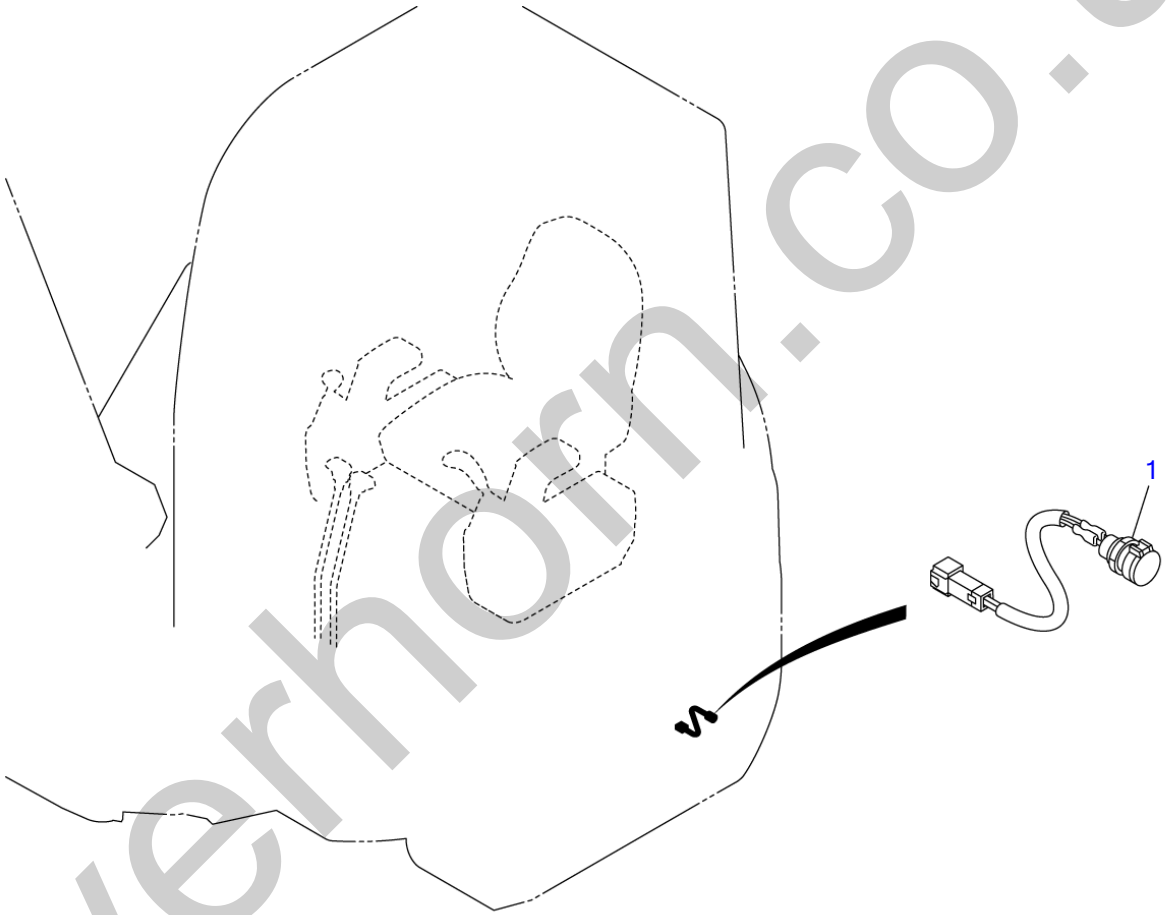

J2C110

S=1/5, 1/20

silverhorn.co.uk

MAINTENANCE LIGHT SOCKET

Item	Part number	Description	Q'ty	Chan.	Serial No.	Serv.	Remarks
		SOCKET ASSY, maintenance light					X03942-03000-0
1	**0394203100 G4c120**	SOCKET ASSY	1				

silverhorn.co.uk

WINDOW WASHER

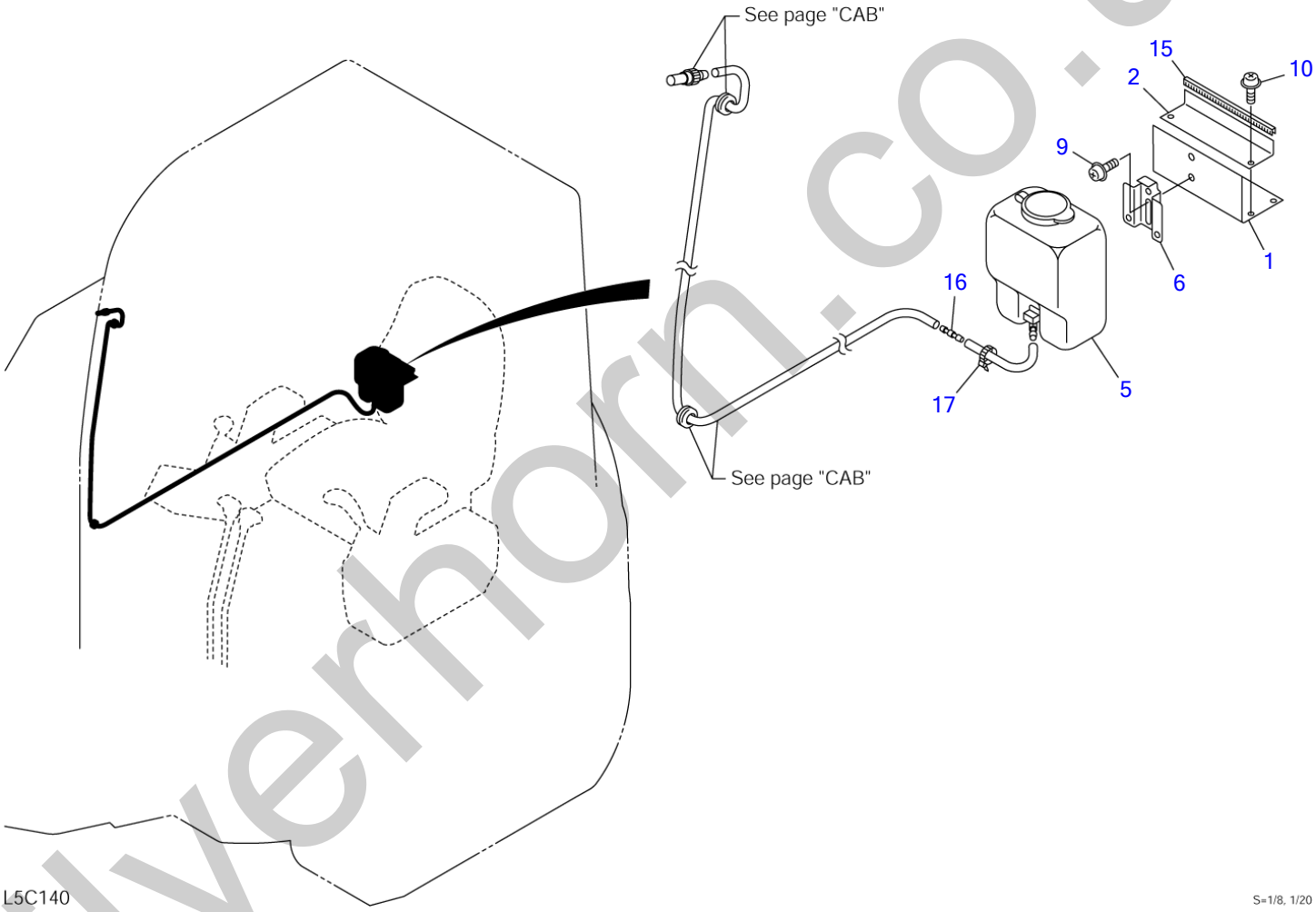

silverhorn.co.uk

WINDOW WASHER

Item	Part number	Description	Q'ty	Chan.	Serial No.	Serv.	Remarks
		WASHER ASSY, window					X05689-03000-2
1	0568903100	PLATE	1				
2	0568903200	PLATE	1				
5	1711910101	TANK	1				
6	1711910062	BRACKET	1				
9	1150410612	SCREW	2				
10	1150120616	SCREW	4				
15	1653917011	TRIM	1				sold by the meter
16	1711910080	VALVE, check	1				
17	1652231250	BAND	1				
	L5c140						

silverhorn.co.uk

VALVE & ACCESSORIES (1/3)

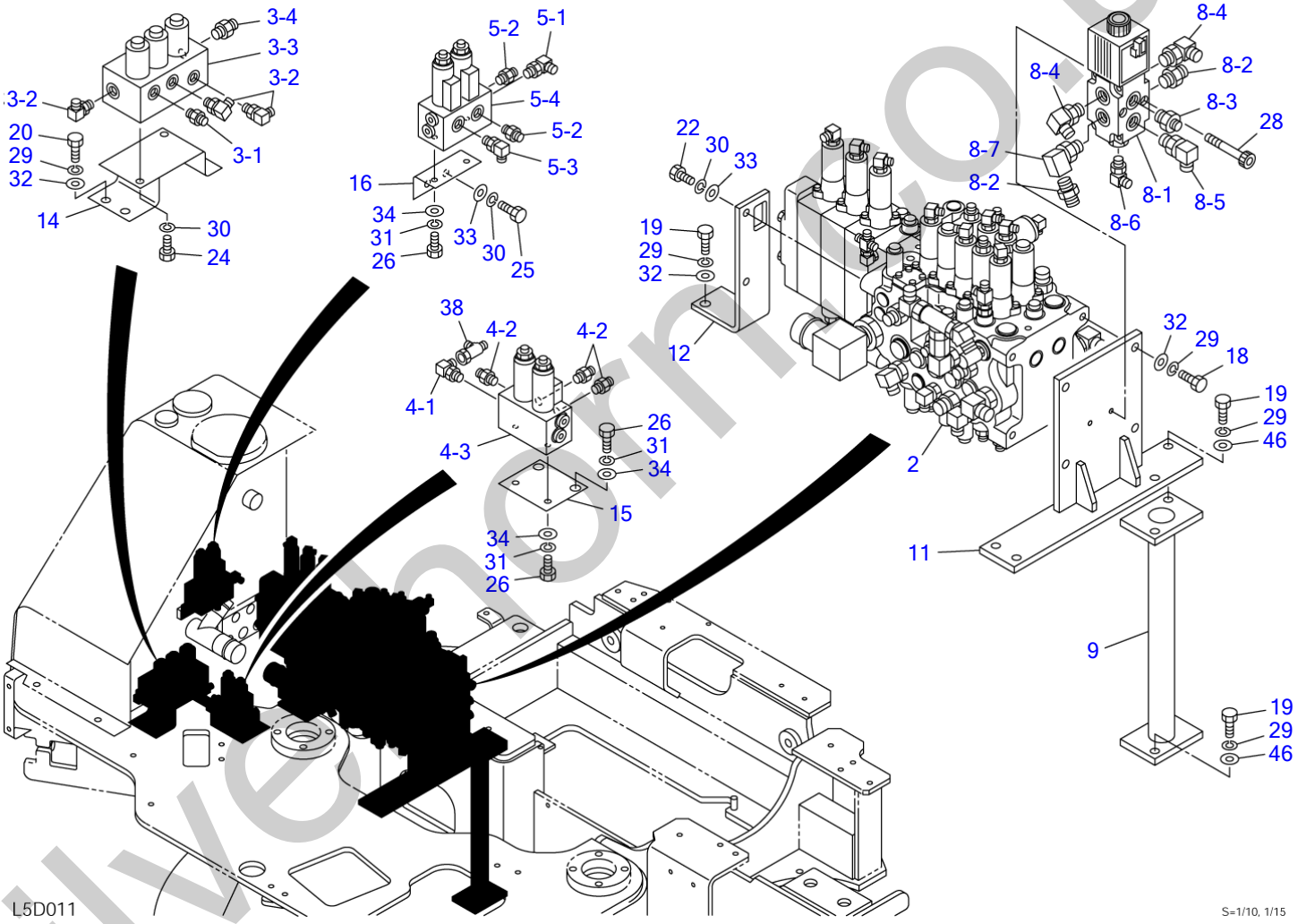

silvermorn.co.uk

VALVE & ACCESSORIES (1/3)

Item	Part number	Description	Q'ty	Chan.	Serial No.	Serv.	Remarks
		VALVE ASSY					X05650-50000-3
		VALVE ASSY (with 2nd aux. lines)					X05650-50100-3
		VALVE ASSY (with 3rd aux. lines)					X05650-50200-3
		VALVE ASSY (with 4th aux. lines)					X05650-50300-3
2	X **********	VALVE ASSY, control	1				X05650-50020-4
	X **********	VALVE ASSY, control (with 2nd aux. lines)	1				X05650-50220-4
	X **********	VALVE ASSY, control (with 3rd aux. lines)	1				X05650-50320-4
3	0565050030	VALVE ASSY, solenoid	1				
3-1	1515600200	・ADAPTOR	1				
	1420010110	・・O-RING	1				
3-2	1515012040	・ELBOW	3				
	1420010110	・・O-RING	1				
3-3	1901748800	・VALVE, solenoid	1				
3-4	1515600577	・ADAPTOR	1				
	1420010180	・・O-RING	1				
4	X **********	VALVE ASSY, solenoid	1				X05650-50040-1
4-1	1512375004	・ELBOW	1				
	1420010110	・・O-RING	1				
4-2	1515600200	・ADAPTOR	3				
	1420010110	・・O-RING	1				
4-3	1901738400	・VALVE, solenoid	1				
5	X **********	VALVE ASSY, solenoid (with 2nd aux. lines)	1				X05650-50050-1
5-1	1512375004	・ELBOW	1				
	1420010110	・・O-RING	1				
5-2	1515600200	・ADAPTOR	3				
	1420010110	・・O-RING	1				
5-3	1515012040	・ELBOW	1				
	1420010110	・・O-RING	1				
5-4	1901738400	・VALVE, solenoid	1				
8	X **********	VALVE ASSY, solenoid (with 4th aux. lines)	1				X05650-50080-3
8-1	1901749100	・VALVE, solenoid	1				
8-2	1515600202	・ADAPTOR	2				
	1420010180	・・O-RING	1				
8-3	1515600577	・ADAPTOR	1				
	1420010180	・・O-RING	1				
8-4	1515010042	・ELBOW	2				
	1420010180	・・O-RING	1				
8-5	1515010051	・ELBOW	1				
	1420010180	・・O-RING	1				
8-6	1515012040	・ELBOW	1				
	1420010110	・・O-RING	1				
8-7	1513300016	・ELBOW	1				
	1420010180	・・O-RING	1				
9	0565050090	POLE	1				
11	0565050110	BRACKET (L.H.)	1				
12	0565050120	BRACKET (R.H.)	1				
14	0565050140	BRACKET	1				
15	0565050150	PLATE	1				
16	0565050160	BRACKET	1				with 2nd aux. lines
18	1100041235	BOLT	4				
19	1101041230	BOLT	8				
20	1101041220	BOLT	3				
22	1100041030	BOLT	2				
24	1100041020	BOLT	2				
25	1100041016	BOLT	2				with 2nd aux. lines
26	1100040816	BOLT	6				
28	1110040865	SCREW, cap	2				with 4th aux. lines
29	1140020012	WASHER, spring	15				
30	1140020010	WASHER, spring	2				
31	1140020008	WASHER, spring	7				
32	1141110012	WASHER	9				
33	1141110010	WASHER	4				
34	1141110008	WASHER	6				
38	1513390015	TEE	1				with 2nd aux. lines

silverthorn.co.uk

VALVE & ACCESSORIES (1/3)

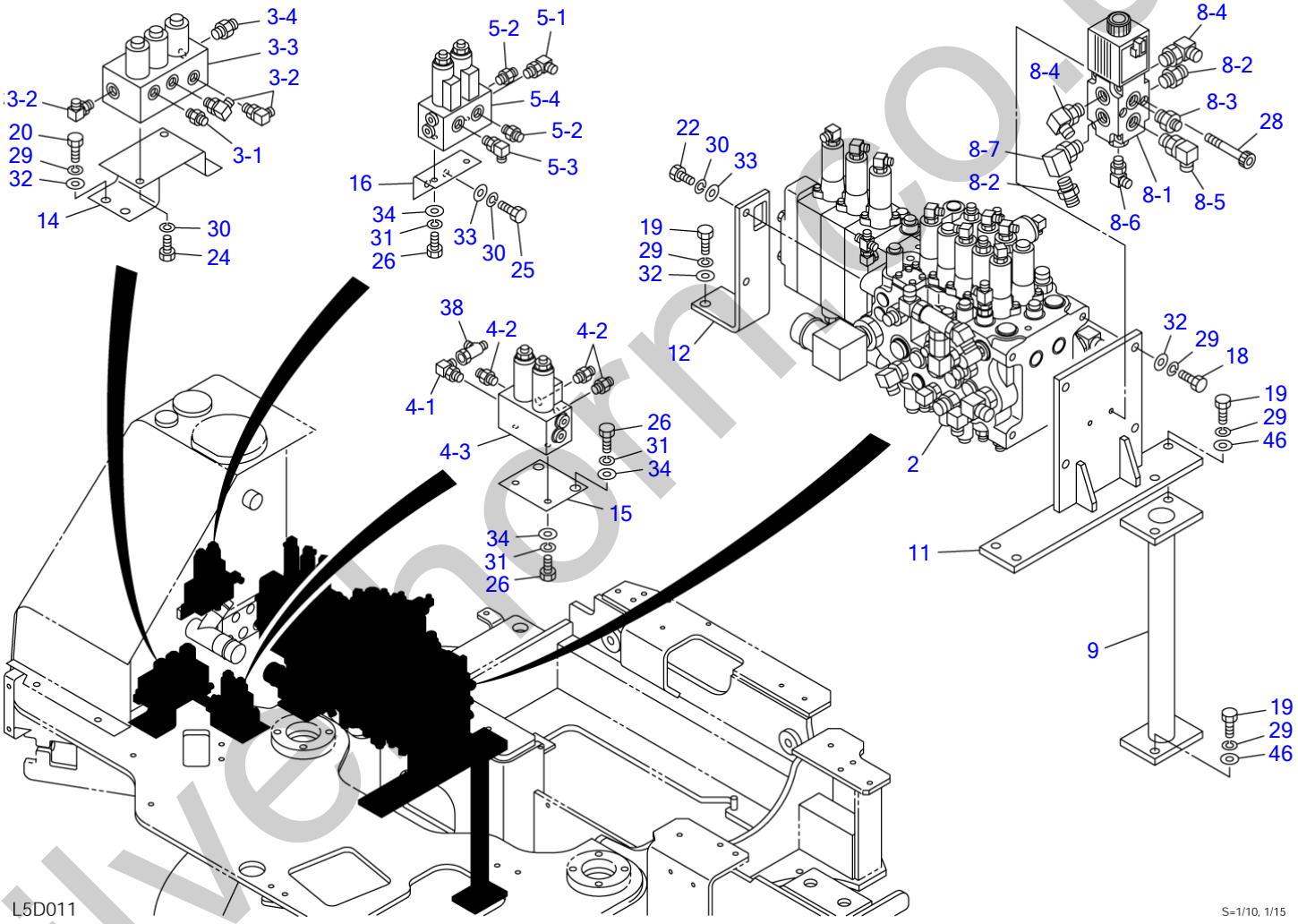

silvermorn.co.uk

Item	Part number	Description	Q'ty	Chan.	Serial No.	Serv.	Remarks
46	**1141550012**	WASHER	6				
	L5d011						

silverhorn.co.uk

VALVE & ACCESSORIES (2/3)

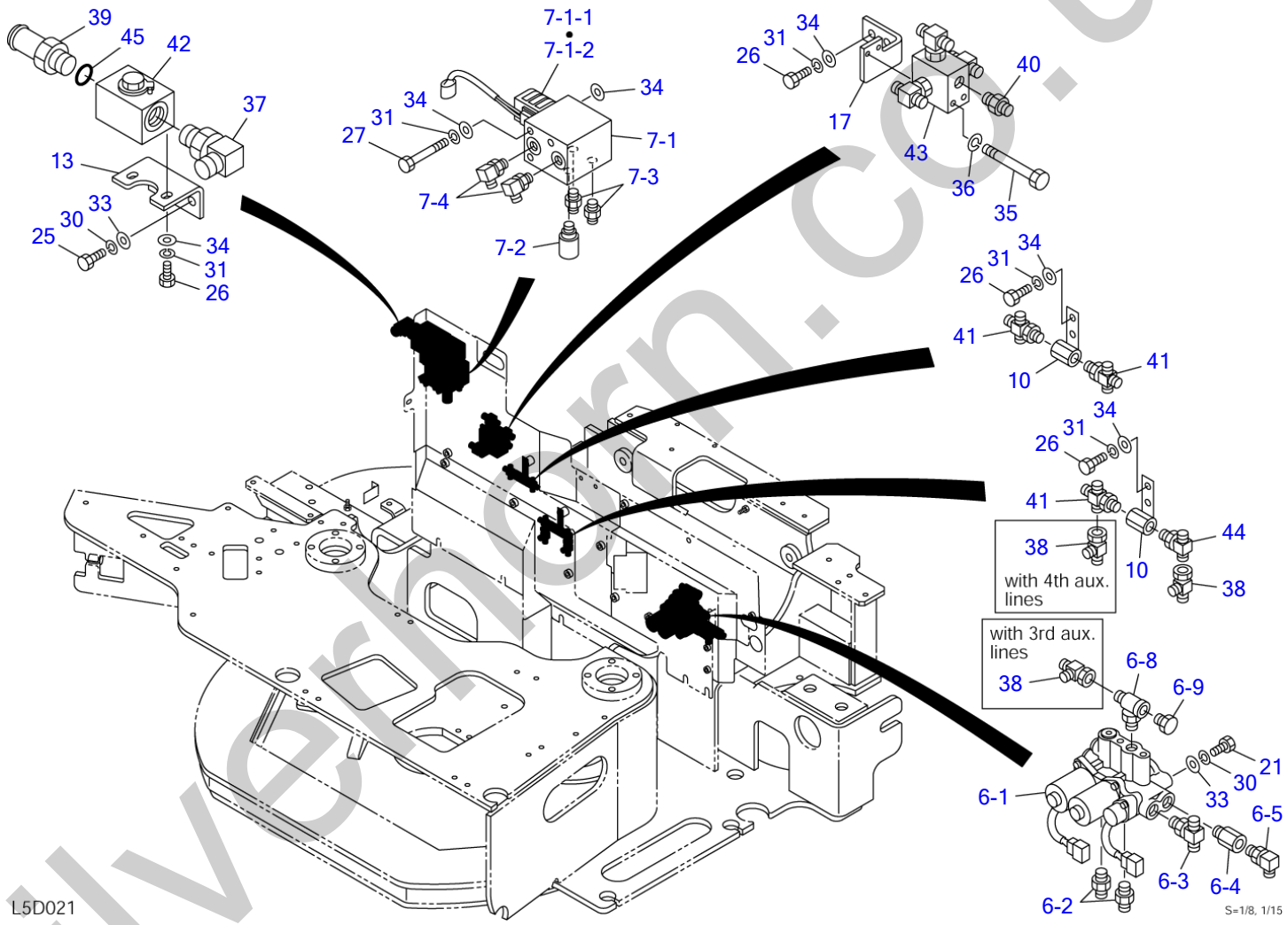

silverthorn.co.uk

VALVE & ACCESSORIES (2/3)

Item	Part number	Description	Q'ty	Chan.	Serial No.	Serv.	Remarks
		VALVE ASSY					X05650-50000-3
		VALVE ASSY (with 2nd aux. lines)					X05650-50100-3
		VALVE ASSY (with 3rd aux. lines)					X05650-50200-3
		VALVE ASSY (with 4th aux. lines)					X05650-50300-3
6	X **********	VALVE ASSY, solenoid	1				X05650-50060-2
6-1	1901748900	・VALVE, solenoid	1				
	1420010140	・・O-RING	1				
6-2	1515600200	・ADAPTOR	2				
	1420010110	・・O-RING	1				
6-3	1512374003	・ADAPTOR	1				
	1420010140	・・O-RING	1				
6-4	1513370046	・ADAPTOR (with filter)	1				
	1420010110	・・O-RING	1				
6-5	1515010130	・ELBOW	1				
	1420010110	・・O-RING	1				
6-8	1513390029	・TEE	1				
	1420010110	・・O-RING	1				
6-9	1501750002	・PLUG	1				
	1420010110	・・O-RING	1				
7	X **********	VALVE ASSY, solenoid (with 3rd aux. lines)	1				X05650-50070-1
7-1	1901747100	・VALVE, solenoid	1				
7-1-1	1901741402	・・SOLENOID	1				
7-1-2	1901741703	・・COIL	1				
7-2	1700100065	・SWITCH, pressure	1				
	1420010110	・・O-RING	1				
7-3	1515600200	・ADAPTOR	2				
	1420010110	・・O-RING	1				
7-4	1515012040	・ELBOW	2				
	1420010110	・・O-RING	1				
10	0565032710	BUSHING	2				
13	0565050130	PLATE	1				
17	0565050170	PLATE	1				
21	1100041040	BOLT	2				
25	1100041016	BOLT	2				
26	1100040816	BOLT	6				
27	1100040885	BOLT	3				with 3rd aux. lines
30	1140020010	WASHER, spring	4				
31	1140020008	WASHER, spring	9				
33	1141110010	WASHER	4				
34	1141110008	WASHER	12				
35	1100040660	BOLT	2				
36	1140020006	WASHER, spring	2				
37	1515010043	ELBOW	1				
	1420010240	・O-RING	1				
38	1513390015	TEE	3				
39	0007223005	ADAPTOR	1				
40	1515600200	ADAPTOR	1				
	1420010110	・O-RING	1				
41	1513390027	CROSS	3				
	1420010110	・O-RING	1				
42	1901723700	VALVE, stop	1				
43	1901721800	VALVE, shuttle	1				
44	1512370010	ADAPTOR	1				
	1420010110	・O-RING	1				
45	1420010240	O-RING	1				
	L5d021						

silverhorn.co.uk

VALVE & ACCESSORIES (3/3)

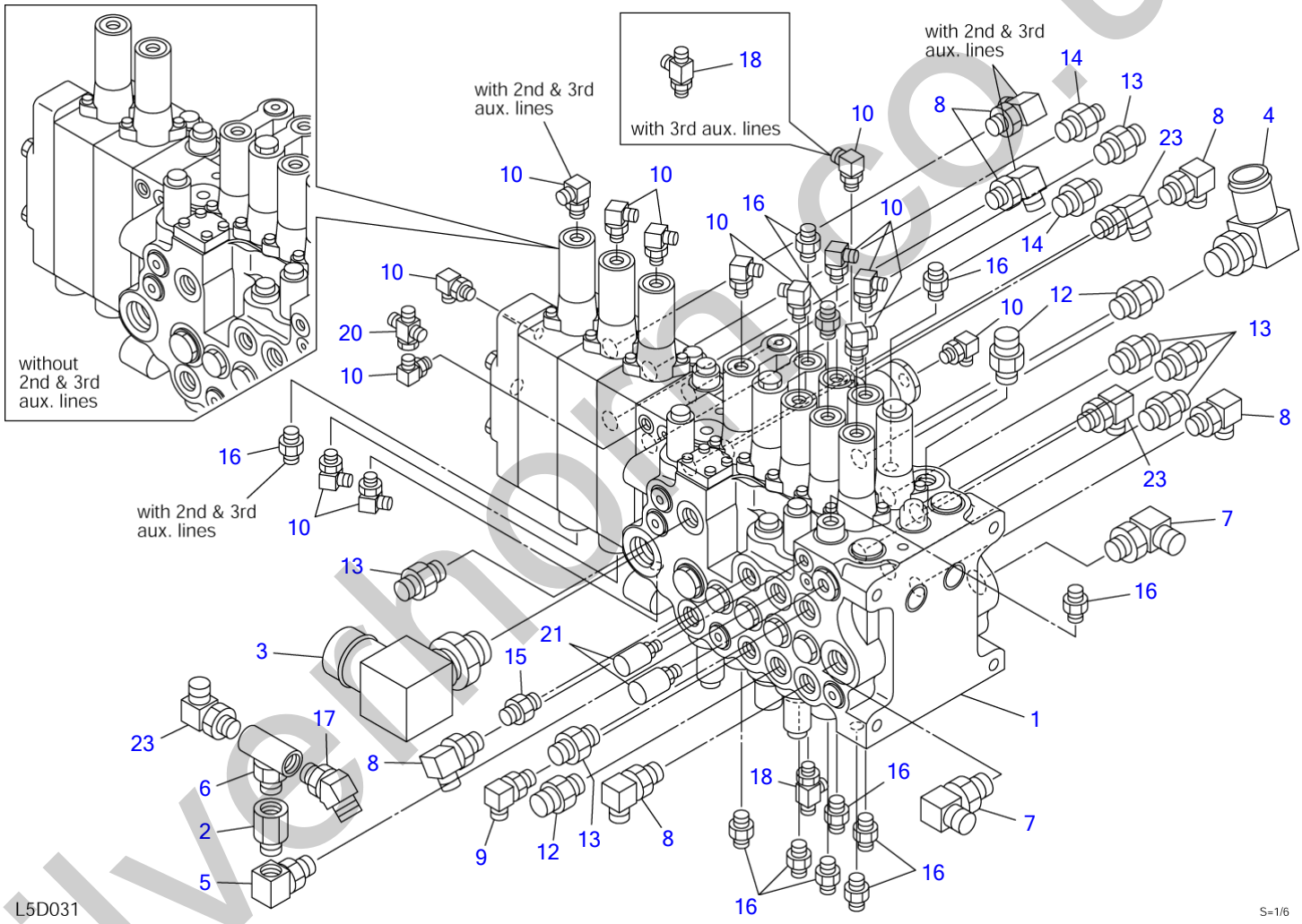

silverhorn.co.uk

VALVE & ACCESSORIES (3/3)

Item	Part number	Description	Q'ty	Chan.	Serial No.	Serv.	Remarks
0	0565050020	VALVE ASSY, control	1				X05650-50020-4
	0565050220	VALVE ASSY, control (with 2nd aux. lines)	1				X05650-50220-4
	0565050320	VALVE ASSY, control (with 3rd aux. lines)	1				X05650-50320-4
1	1901043400	・VALVE, control	1				
	1901043500	・VALVE, control	1				with 2nd aux. lines
2	0007213055	・BUSHING	1				
3	0565050003	・ELBOW	1				
	1420010290	・・O-RING	1				
4	1513350020	・ELBOW	1				
	1420010290	・・O-RING	1				
5	1513300016	・ELBOW	1				
	1420010180	・・O-RING	1				
6	1513390011	・TEE	1				
	1420010180	・・O-RING	1				
7	1515010043	・ELBOW	2				
	1420010240	・・O-RING	1				
8	1515010042	・ELBOW	4				
	1515010042	・ELBOW	6				with 2nd, 3rd aux. lines
	1420010180	・・O-RING	1				
9	1515010041	・ELBOW	1				
	1420010140	・・O-RING	1				
10	1515012040	・ELBOW	13				
	1515012040	・ELBOW	14				with 2nd aux. lines
	1420010110	・・O-RING	1				
12	1515600573	・ADAPTOR	3				
	1420010180	・・O-RING	1				
13	1515600202	・ADAPTOR	6				
	1420010180	・・O-RING	1				
14	1515600577	・ADAPTOR	2				
	1420010180	・・O-RING	1				
15	1515600201	・ADAPTOR	1				
	1420010140	・・O-RING	1				
16	1515600200	・ADAPTOR	10				
	1515600200	・ADAPTOR	11				with 2nd, 3rd aux. lines
	1420010110	・・O-RING	1				
17	1515100138	・ELBOW	1				
	1420010180	・・O-RING	1				
18	1512370011	・TEE	1				
	1512370011	・TEE	2				with 3rd aux. lines
	1420010110	・・O-RING	1				
20	0007263004	・CROSS	1				
	1420010110	・・O-RING	1				
21	1700100069	・SWITCH, pressure	2				
	1420010110	・・O-RING	1				
23	1515010132	・ELBOW	3				
	1420010180	・・O-RING	1				
	L5d031						

silvethorn.co.uk

PIPING; UPPER (1/5)

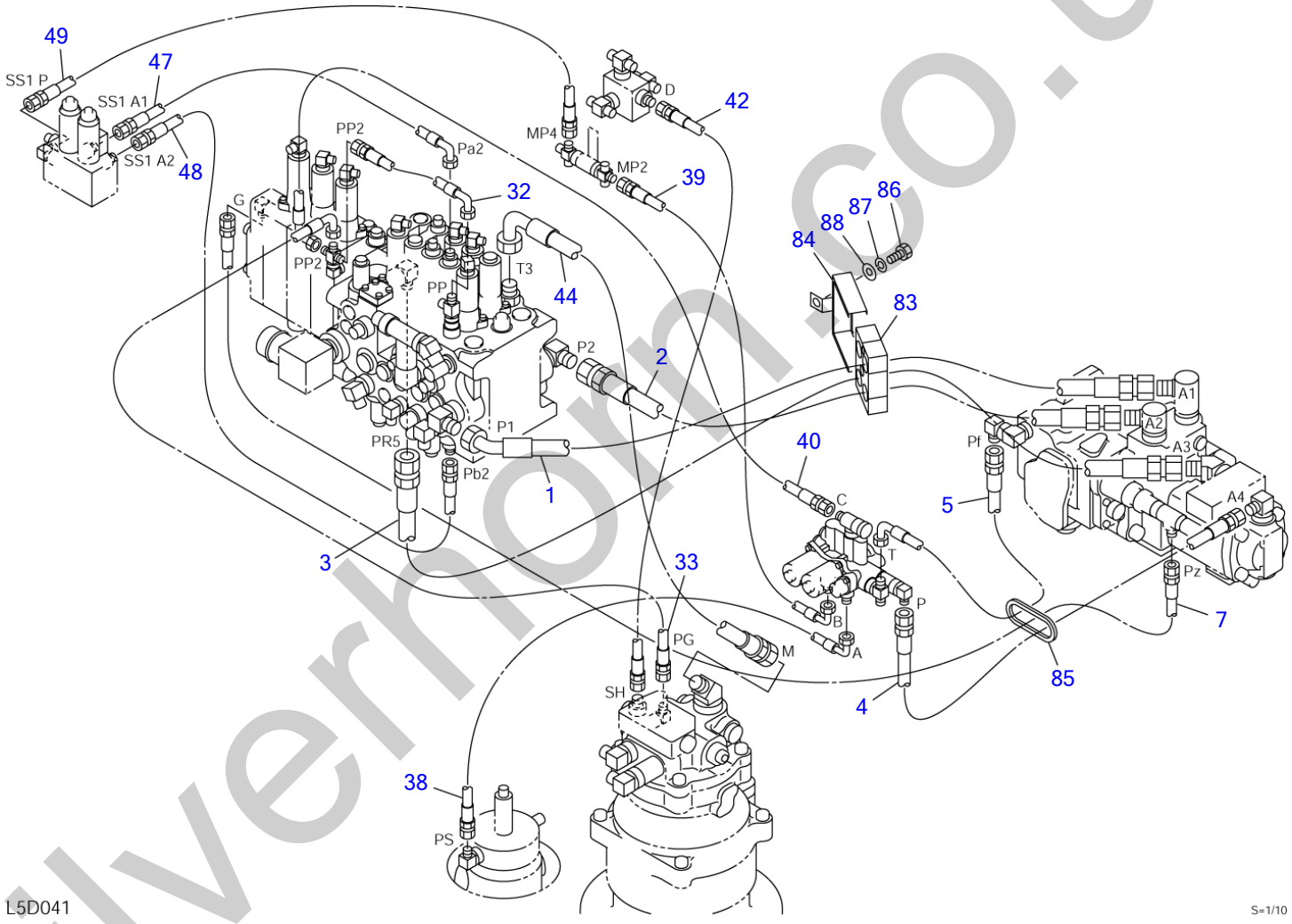

silverhorn.co.uk

PIPING; UPPER (1/5)

Item	Part number	Description	Q'ty	Chan.	Serial No.	Serv.	Remarks
		PIPING ASSY, upper					X05670-37000-8
		PIPING ASSY, upper (with 2nd aux. lines)					X05670-36900-8
		PIPING ASSY, upper (with 3rd aux. lines)					X05670-36800-8
		PIPING ASSY, upper (with 4th aux. lines)					X05670-36700-8
1	0567037710	HOSE ASSY	1				18025-82094
2	0567037720	HOSE ASSY	1				18025-80078
3	0567037730	HOSE ASSY	1				18028-60170
4	0567037740	HOSE ASSY	1				18010-23040
5	0567037750	HOSE ASSY	1				18010-52050
7	0567037070	HOSE ASSY	1				18010-22175
32	0567037320	HOSE ASSY	1				18010-52030
33	0567037330	HOSE ASSY	1				18010-52105
38	0567037380	HOSE ASSY	1				18010-52110
39	0567037390	HOSE ASSY	1				18010-52060
40	0567037400	HOSE ASSY	1				18010-52100
42	0567037420	HOSE ASSY	1				18010-22060
44	0567037440	HOSE ASSY	1				18010-56070
47	0567037470	HOSE ASSY	1				18010-52070
48	0567037480	HOSE ASSY	1				18010-22090
49	0567037490	HOSE ASSY	1				18010-22130
83	0567037830	GUIDE	1				
84	0567037840	HOLDER	1				
85	1654625020	TRIM	1				sold by the meter
86	1100041020	BOLT	1				
87	1140020010	WASHER, spring	1				
88	1141110010	WASHER	1				
	L5d042						

silverhorn.co.uk

PIPING; UPPER (2/5)

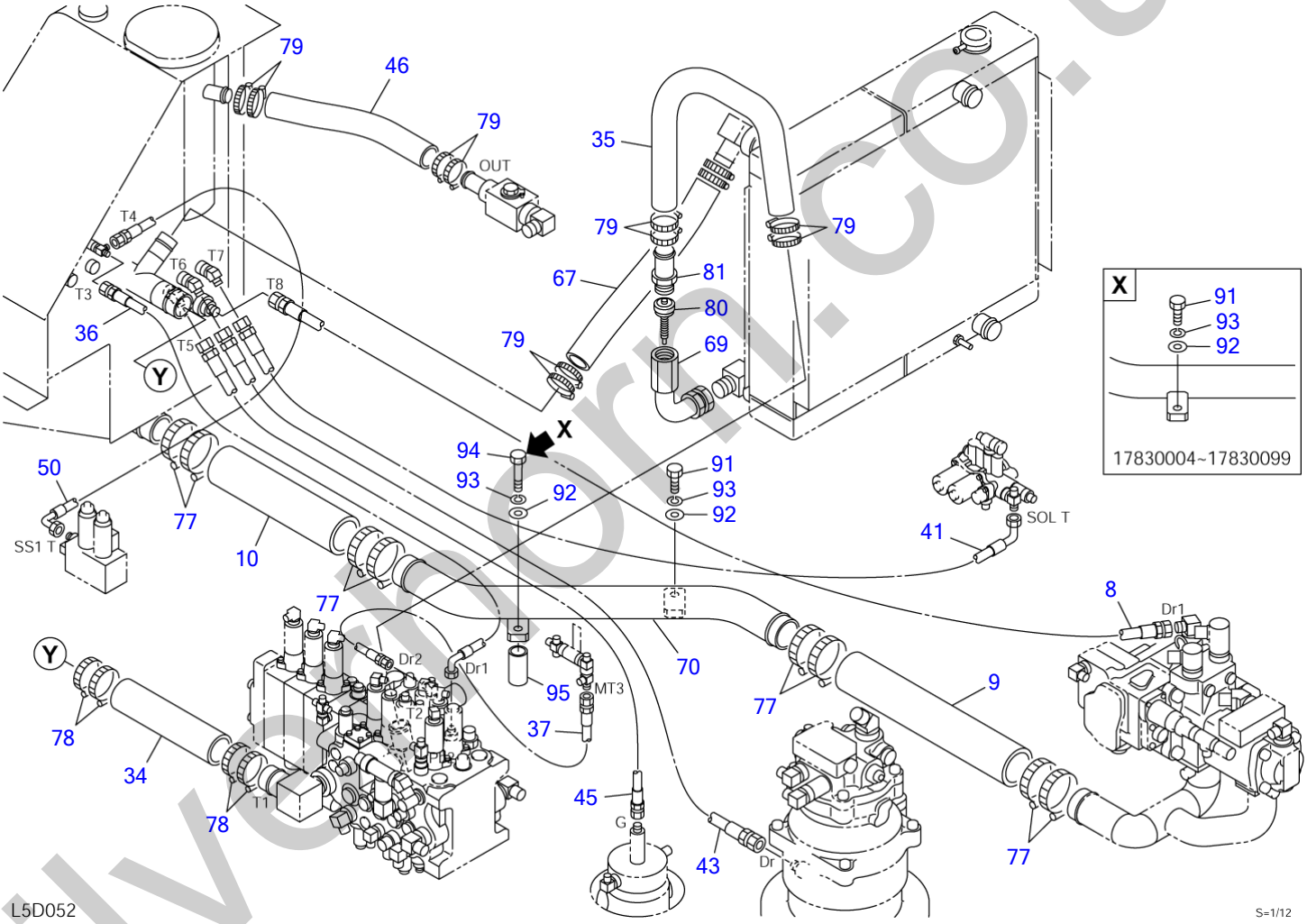

silverpoint.co.uk

PIPING; UPPER (2/5)

Item	Part number	Description	Q'ty	Chan.	Serial No.	Serv.	Remarks
		PIPING ASSY, upper					X05670-37000-8
		PIPING ASSY, upper (with 2nd aux. lines)					X05670-36900-8
		PIPING ASSY, upper (with 3rd aux. lines)					X05670-36800-8
		PIPING ASSY, upper (with 4th aux. lines)					X05670-36700-8
8	0567037080	HOSE ASSY	1				18010-24160
9	1530558052	HOSE	1				sold by the meter
10	1530558032	HOSE	1				sold by the meter
34	1530547020	HOSE	1				sold by the meter
35	0567037682	HOSE	1				
36	0567037360	HOSE ASSY	1				18010-52080
37	0567037370	HOSE ASSY	1				18010-22085
41	0567037410	HOSE ASSY	1				18010-53160
43	0567037430	HOSE ASSY	1				18010-23110
45	0567037450	HOSE ASSY	1				18010-23100
46	1530525032	HOSE	1				sold by the meter
50	0567037500	HOSE ASSY	1				18010-52047
67	1530532040	HOSE	1				sold by the meter
69	0567037690	PIPE	1				
70	0567037700	PIPE	1				
77	1533700080	CLAMP	8				
78	1533700070	CLIP	4				
79	1533700054	CLAMP	12				
80	1540140810	VALVE, check	1				
81	0007224013	ADAPTOR	1				
91	1101041230	BOLT	1				
92	1141550012	WASHER	2				
93	1140020012	WASHER, spring	2				
94	1101141210	BOLT	1		17830100~		
95	0567037850	PIPE	1		17830100~		
	L5d052						

silverhorn.co.uk

PIPING; UPPER (3/5)

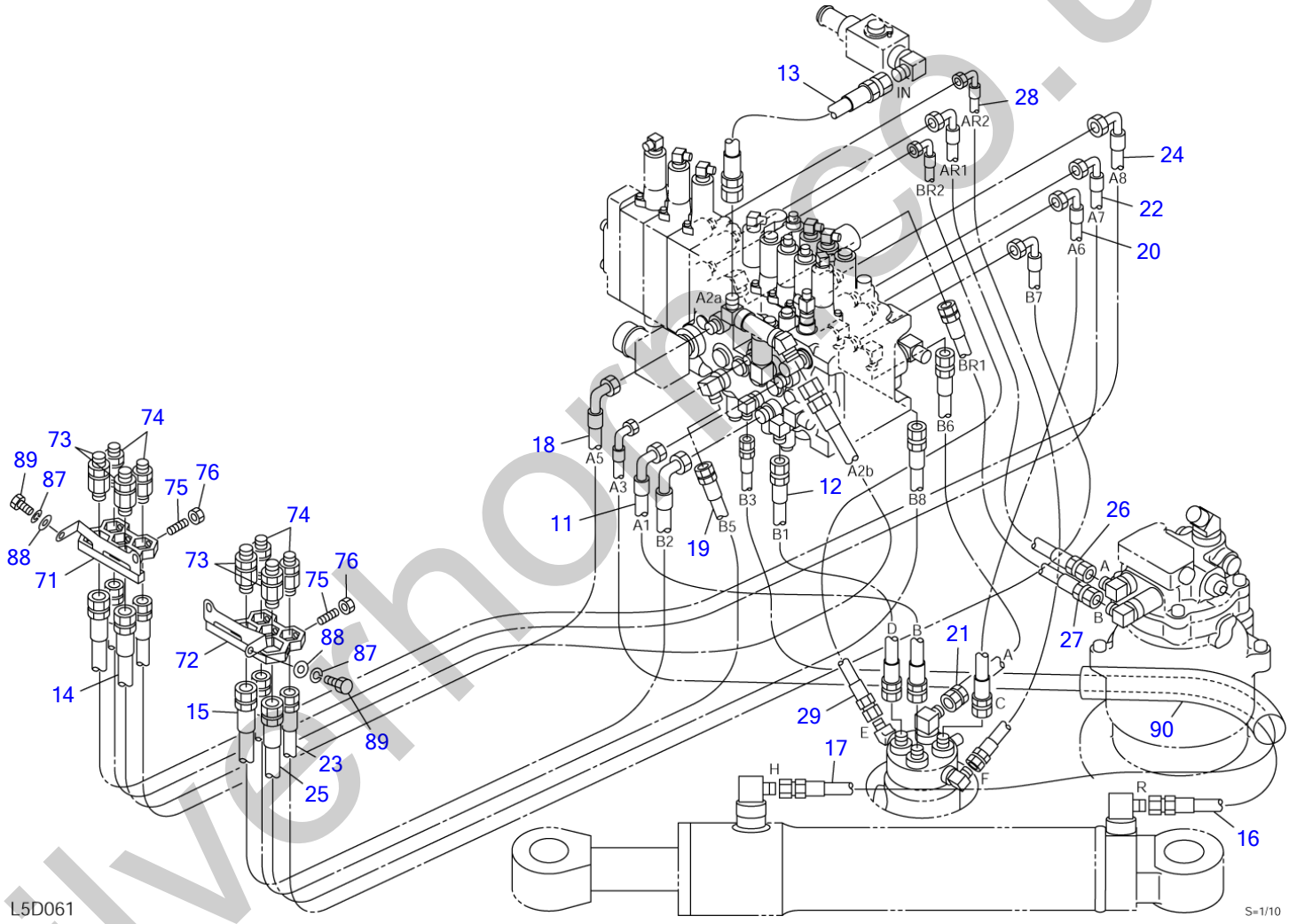

silverhorse.co.uk

PIPING; UPPER (3/5)

Item	Part number	Description	Q'ty	Chan.	Serial No.	Serv.	Remarks
		PIPING ASSY, upper					X05670-37000-8
		PIPING ASSY, upper (with 2nd aux. lines)					X05670-36900-8
		PIPING ASSY, upper (with 3rd aux. lines)					X05670-36800-8
		PIPING ASSY, upper (with 4th aux. lines)					X05670-36700-8
11	0567037110	HOSE ASSY	1				18028-41060
12	0567037120	HOSE ASSY	1				18028-40050
13	0567037130	HOSE ASSY	1				18025-80032
14	0567037140	HOSE ASSY	1				18028-80210
15	0567037150	HOSE ASSY	1				18028-81187
16	0567037160	HOSE ASSY	1				18028-21218
17	0567037170	HOSE ASSY	1				18028-20155
18	0567037180	HOSE ASSY	1				18028-41185
19	0567037190	HOSE ASSY	1				18028-40175
20	0567037200	HOSE ASSY	1				18028-41075
21	0567037210	HOSE ASSY	1				18028-40065
22	0567037220	HOSE ASSY	1				18028-41195
23	0567037230	HOSE ASSY	1				18028-41210
24	0567037240	HOSE ASSY	1				18028-81210
25	0567037250	HOSE ASSY	1				18028-80215
26	0567037260	HOSE ASSY	1				18028-41080
27	0567037270	HOSE ASSY	1				18028-40080
28	0567037280	HOSE ASSY	1				18019-21105
29	0567037290	HOSE ASSY	1				18019-21080
71	0567037760	CLAMP	1				
72	0567037770	CLAMP	1				
73	1514011506	ADAPTOR	4				
74	1514011504	ADAPTOR	4				
75	1121040818	SET-SCREW	8				
76	1130040008	NUT	8				
87	1140020010	WASHER, spring	4				
88	1141110010	WASHER	4				
89	1100041016	BOLT	4				
90	1531335033	PROTECTOR	1				sold by the meter
	L5d062						

silverhorn.co.uk

PIPING; UPPER (4/5) (with 2nd and 3rd auxiliary lines)

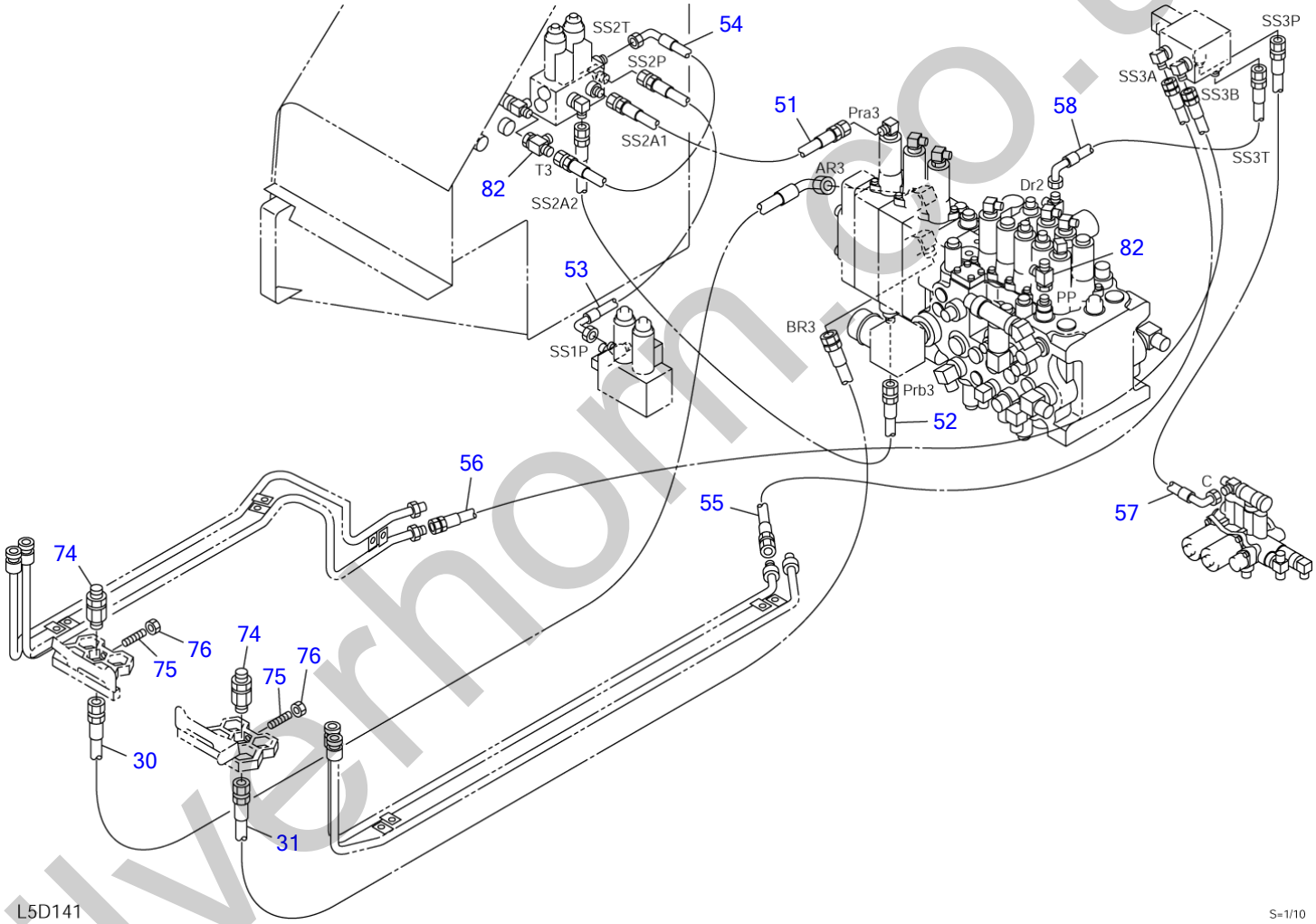

silverhorn.co.uk

PIPING; UPPER (4/5) (with 2nd and 3rd auxiliary lines)

Item	Part number	Description	Q'ty	Chan.	Serial No.	Serv.	Remarks
		PIPING ASSY, upper (with 2nd aux. lines)					X05670-36900-8
		PIPING ASSY, upper (with 3rd aux. lines)					X05670-36800-8
		PIPING ASSY, upper (with 4th aux. lines)					X05670-36700-8
30	0567036910	HOSE ASSY	1				18019-41220
31	0567036920	HOSE ASSY	1				18019-40225
51	0567036930	HOSE ASSY	1				18010-22035
52	0567036940	HOSE ASSY	1				18010-22060
53	0567036950	HOSE ASSY	1				18010-52045
54	0567036960	HOSE ASSY	1				18010-52055
55	0567036810	HOSE ASSY (18010-22120)	1				with 3rd aux. lines
56	0567036820	HOSE ASSY (18010-22120)	1				with 3rd aux. lines
57	0567036830	HOSE ASSY (18010-52130)	1				with 3rd aux. lines
58	0567036840	HOSE ASSY (18010-52035)	1				with 3rd aux. lines
74	1514011504	ADAPTOR	2				
75	1121040818	SET-SCREW	2				
76	1130040008	NUT	2				
82	1513390015	TEE	2				
	L5d142						

silverhorn.co.uk

PIPING; UPPER (5/5) (with 4th auxiliary lines)

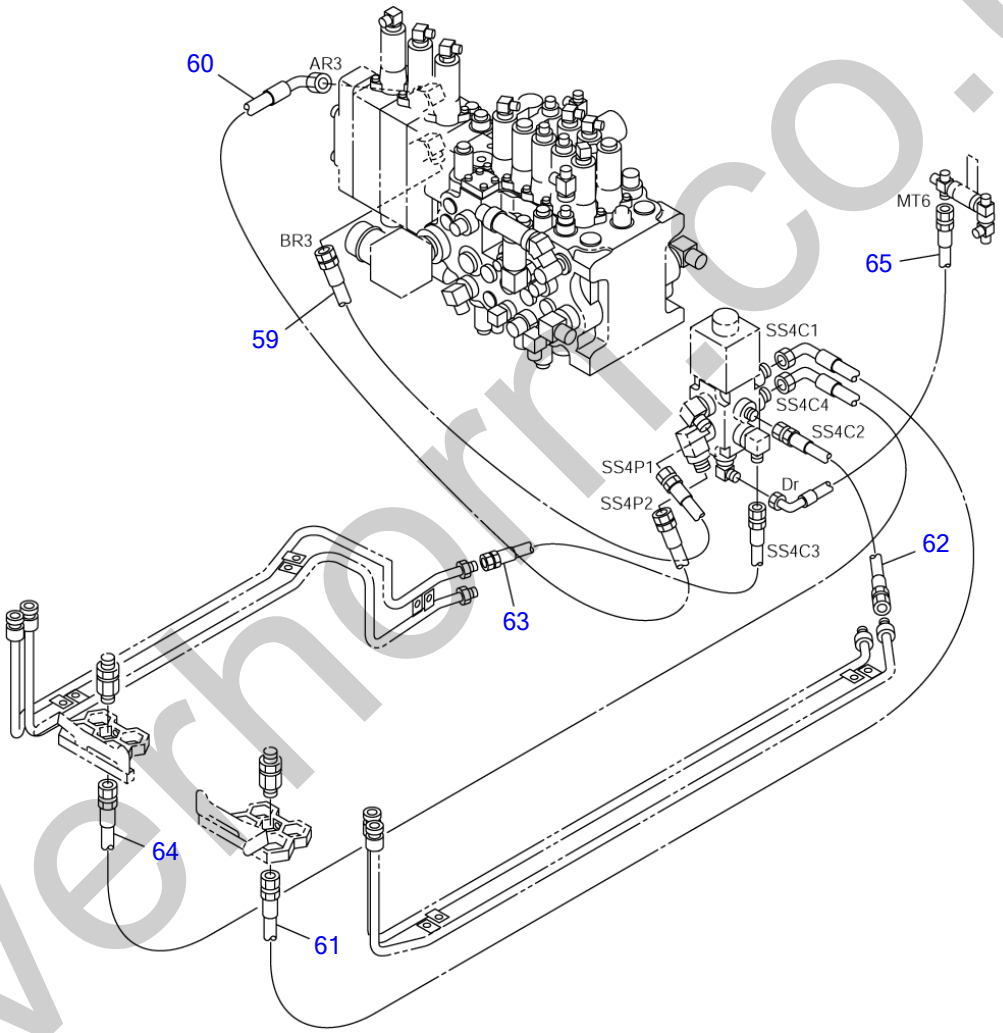

silvermoor.co.uk

PIPING; UPPER (5/5) (with 4th auxiliary lines)

Item	Part number	Description	Q'ty	Chan.	Serial No.	Serv.	Remarks
		PIPING ASSY, upper (with 4th aux. lines)					X05670-36700-8
59	**0567036710**	HOSE ASSY	1				18015-40105
60	**0567036720**	HOSE ASSY	1				18015-41110
61	**0567036730**	HOSE ASSY	1				18019-41190
62	**0567036740**	HOSE ASSY	1				18019-00140
63	**0567036750**	HOSE ASSY	1				18019-00075
64	**0567036760**	HOSE ASSY	1				18019-41185
65	**0567036770**	HOSE ASSY	1				18010-52045
	L5d152						

silverhorn.co.uk

ACCUMLATOR

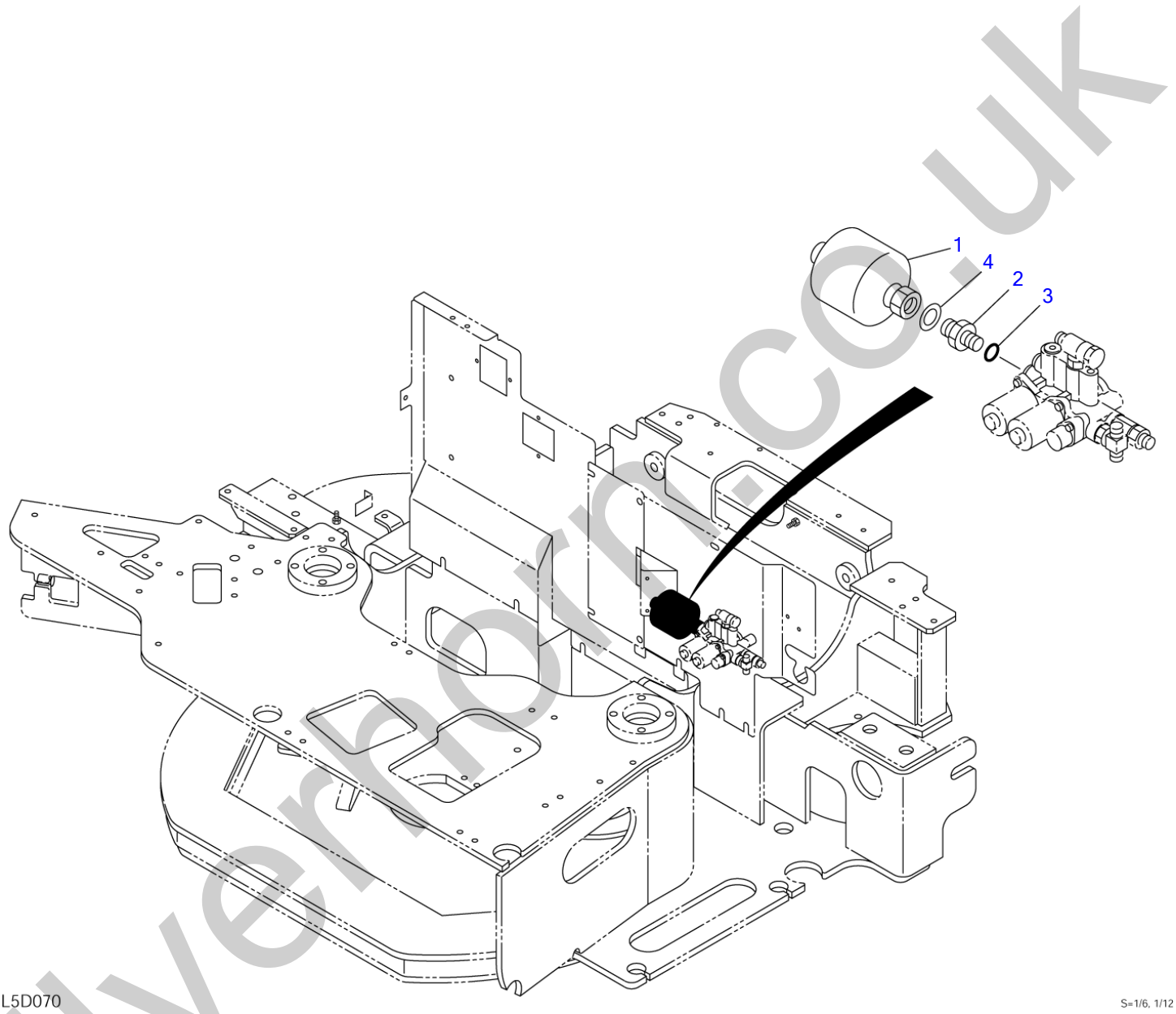

silverhorn.co.uk

ACCUMLATOR

Item	Part number	Description	Q'ty	Chan.	Serial No.	Serv.	Remarks
0	**0565035700**	ACCUMULATOR ASSY	1				X05650-35700-0
1	**1552200020**	・ACCUMULATOR	1				
2	**0007200223**	・ADAPTOR	1				
3	**1420010140**	・O-RING	1				
4	**1432160004**	・WASHER	1				
	L5d070						

silverhorn.co.uk

BOOM EMERGENCY SHUT-OFF VALVE (pilot pressure type)

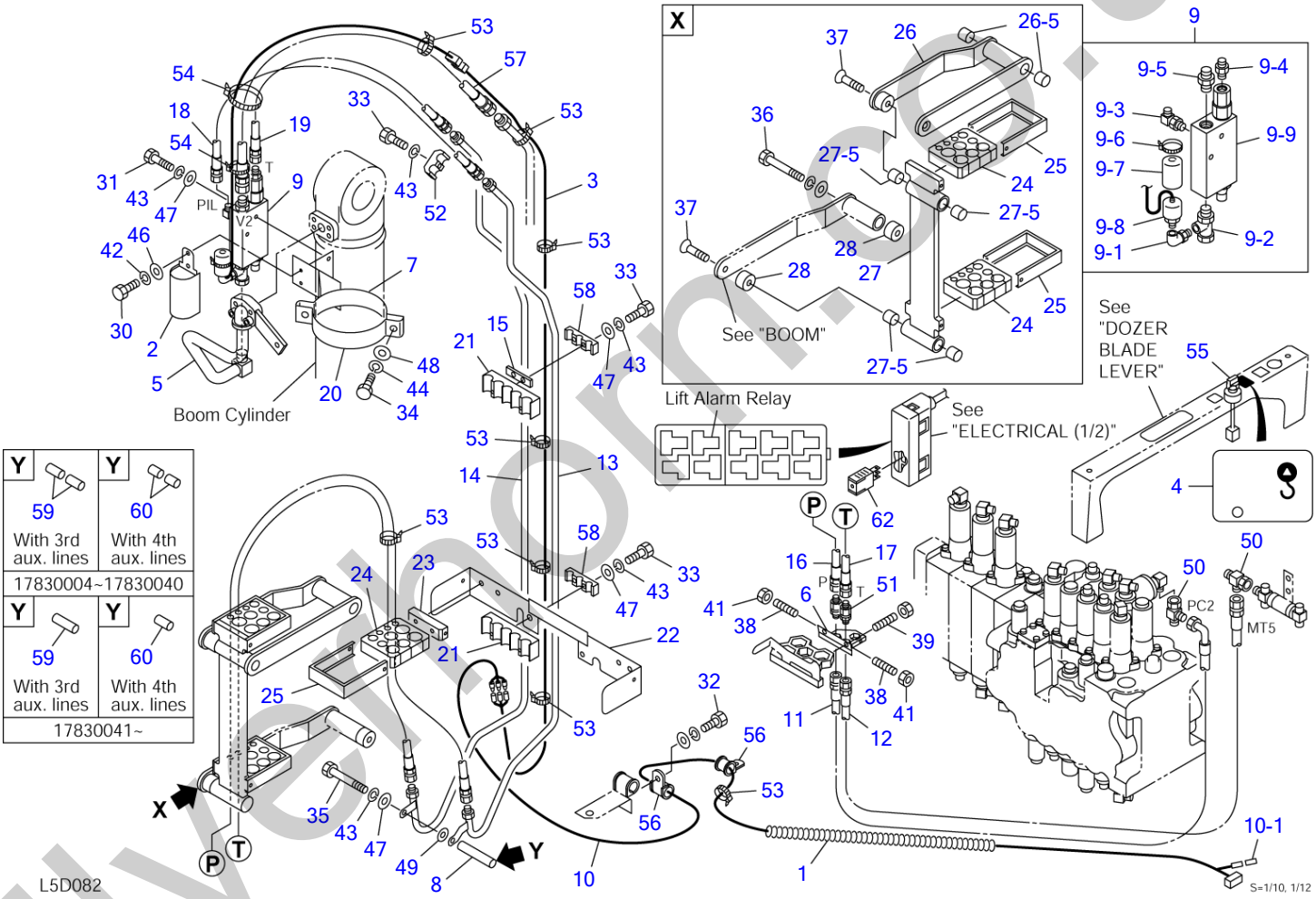

silverthorn.co.uk

BOOM EMERGENCY SHUT-OFF VALVE (pilot pressure type)

Item	Part number	Description	Q'ty	Chan.	Serial No.	Serv.	Remarks
0	0565050400	VALVE ASSY	1				X05650-50400-4
	0565050500	VALVE ASSY (with arm shut-off valve)	1				X05650-50500-4
	0565055000	VALVE ASSY (with 3rd aux. lines)	1				X05650-55000-4
	0565055100	VALVE ASSY (with 3rd aux. lines & arm shut-off valve)	1				X05650-55100-4
	0565055200	VALVE ASSY (with 4th aux. lines)	1				X05650-55200-4
	0565055300	VALVE ASSY (with 4th aux. lines & arm shut-off valve)	1				X05650-55300-4
1	0394216980	・SPRING	1				
2	0395009620	・COVER	1				
3	0395022070	・HARNESS, wiring	1				
4	0565017400	・DECAL	1				
5	0565048010	・PIPE	1				
6	0565050440	・CLAMP	1				
7	0565048030	・CLAMP	1				
8	0565048040	・PIPE	1				
9	0565050430	・VALVE ASSY, shut-off	1				
9-1	1513300022	・・ELBOW	1				
	1420010110	・・・O-RING	1				
9-2	1513390042	・・ADAPTOR	1				
	1420010240	・・・O-RING	1				
9-3	1515012040	・・ELBOW	1				
	1420010110	・・・O-RING	1				
9-4	1515600200	・・ADAPTOR	1				
	1420010110	・・・O-RING	1				
9-5	1515600203	・・ADAPTOR	1				
	1420010240	・・・O-RING	1				
9-6	1652231250	・・BAND	1				
9-7	1700100061	・・COVER	1				
9-8	1700100084	・・SWITCH, pressure	1				
	1420010110	・・・O-RING	1				
9-9	1901747500	・・VALVE, shut-off	1				
10	0565048060	・HARNESS, wiring	1				
10-1	1730500008	・・DIODE (3A yellow)	1				
11	0565050410	・HOSE ASSY	1				18010-52230
12	0565050420	・HOSE ASSY	1				18010-22200
13	0565050460	・PIPE	1				
14	0565050470	・PIPE	1				without arm shut-off valve
15	0565048130	・PLATE	1				
16	0565048140	・HOSE ASSY	1				18010-22250
17	0565048150	・HOSE ASSY	1				18010-22245
18	0565048160	・HOSE ASSY	1				18010-22068
19	0565048170	・HOSE ASSY	1				18010-22060
20	0566021980	・CLAMP	1				
21	0566045110	・CLAMP	2				
22	0566045120	・PLATE	1				
23	0566045130	・PLATE	1				
24	0566050450	・RUBBER	3				
25	0566045155	・HOLDER	3				
26	0566045160	・ARM	1				
26-5	1333002015	・・BUSHING	2				
27	0566045170	・LINK, hose	1				
27-5	1333002015	・・BUSHING	4				
28	0566045180	・SPACER	2				
30	1100040616	・BOLT	2				
31	1100040850	・BOLT	2				
32	1100040820	・BOLT	1				
33	1100040835	・BOLT	5				
34	1100041035	・BOLT	2				
35	1100140810	・BOLT	1				
36	1101141240	・BOLT	1				
37	1120801035	・SCREW	2				

silverthorn.co.uk

BOOM EMERGENCY SHUT-OFF VALVE (pilot pressure type)

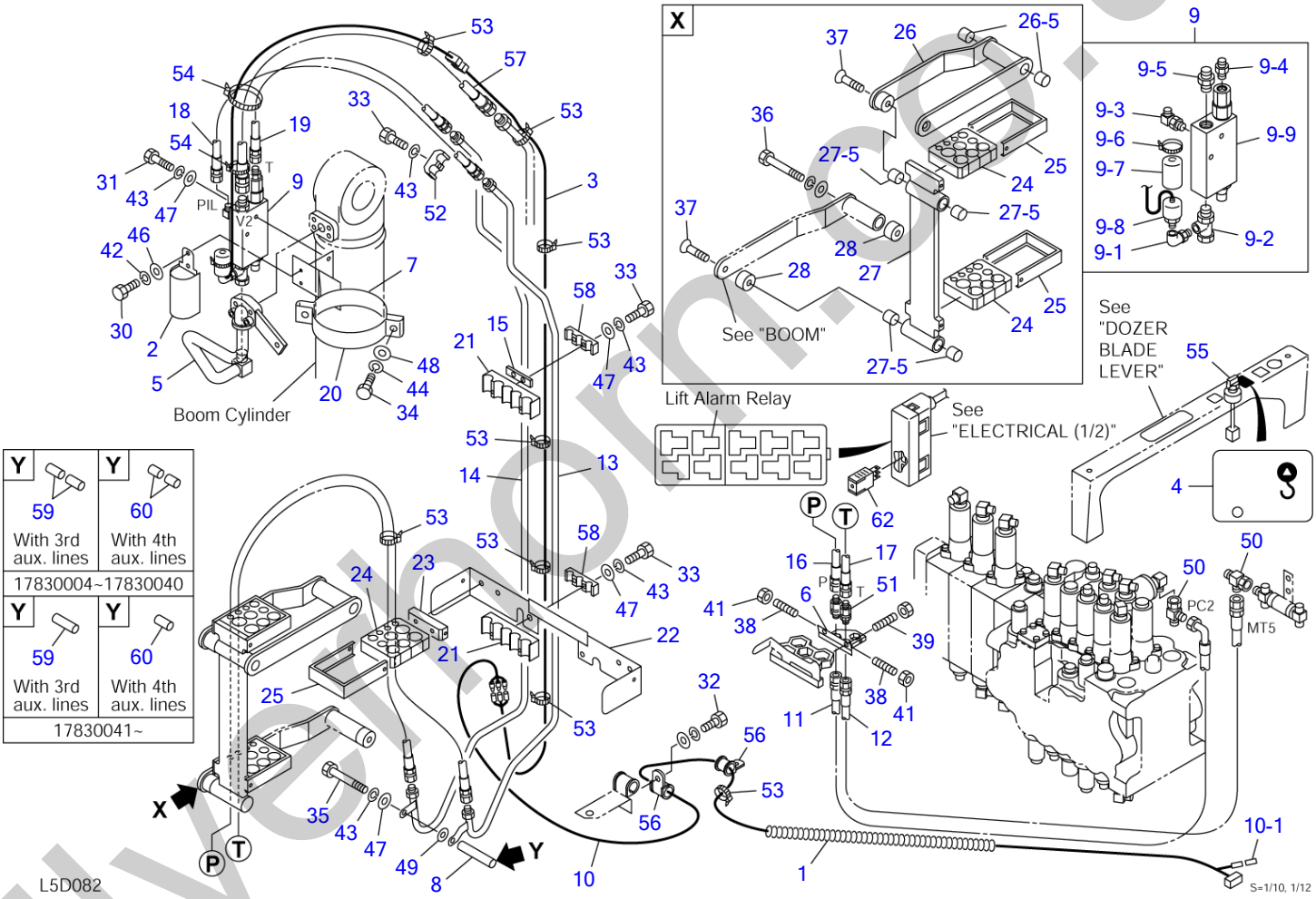

silverthorn.co.uk

BOOM EMERGENCY SHUT-OFF VALVE (pilot pressure type)

Item	Part number	Description	Q'ty	Chan.	Serial No.	Serv.	Remarks
38	1121040616	・SET-SCREW	2				
39	1121040820	・SET-SCREW	2				
41	1130040006	・NUT	2				
42	1140020006	・WASHER, spring	2				
43	1140020008	・WASHER, spring	8				
44	1140020010	・WASHER, spring	2				
46	1141110006	・WASHER	2				
47	1141110008	・WASHER	7				
48	1141110010	・WASHER	2				
49	1141550008	・WASHER	1				without arm shut-off valve
50	1513390015	・TEE	2				
51	1514011102	・ADAPTOR	2				
52	1534000012	・CLAMP	1				
53	1652201005	・BAND	7				
54	1652201007	・BAND	3				
55	1700000019	・SWITCH, rotary	1				
56	1711900076	・CLAMP	2				
57	1802760072	・HOSE ASSY	1				
58	0395012950	・CLAMP	2				
59	0567345440	・PIPE	2		17830004~17830040		with 3rd aux. lines
59	0565050480	・PIPE	1		17830041~		with 3rd aux. lines
60	0567345640	・PIPE	2		17830004~17830040		with 4th aux. lines
60	0567345440	・PIPE	1		17830041~		with 4th aux. lines
62	1711900132	・RELAY	1				12V
	L5d082						

silverhorn.co.uk

ARM EMERGENCY SHUT-OFF VALVE

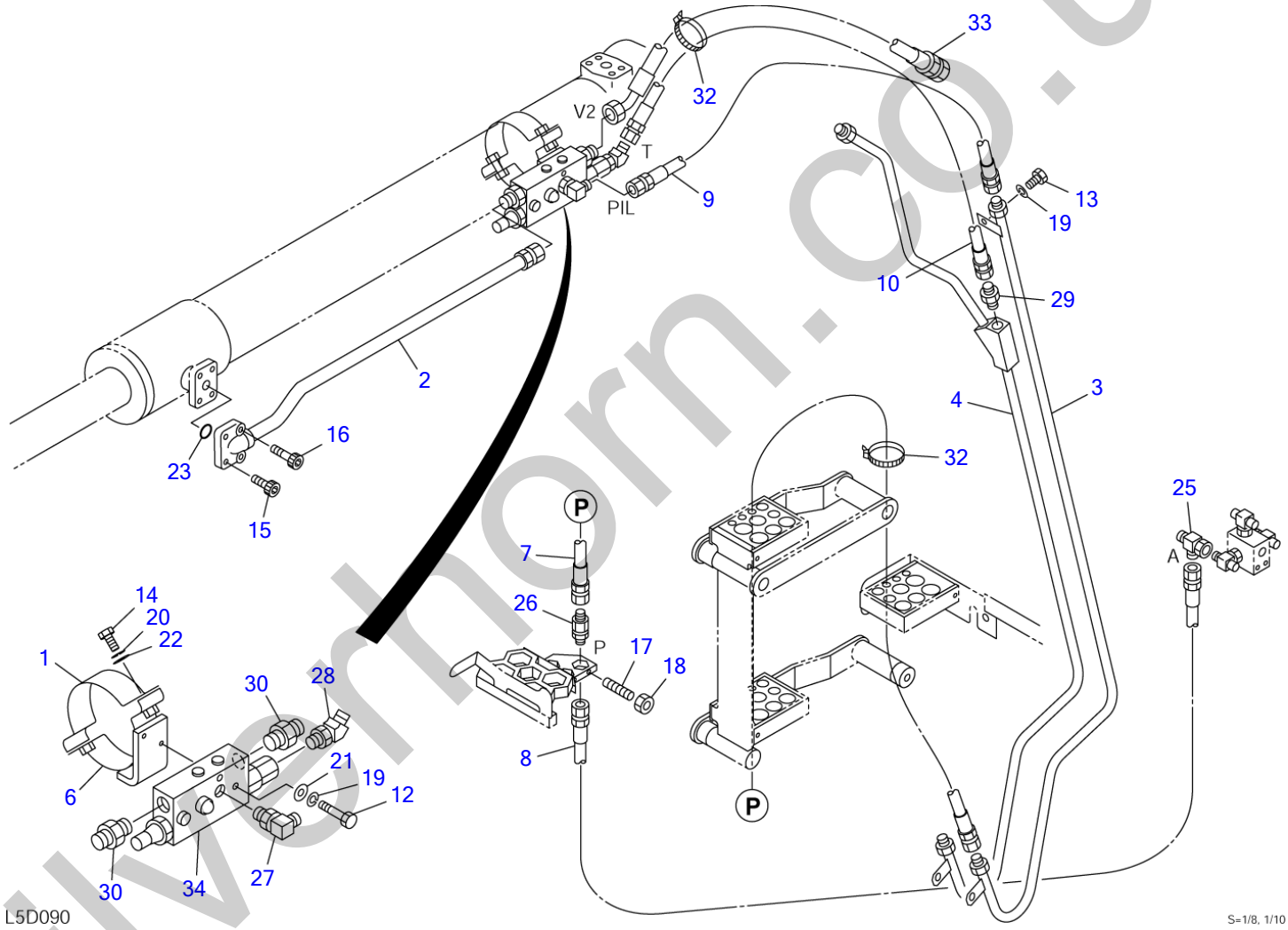

silverthorn.co.uk

ARM EMERGENCY SHUT-OFF VALVE

Item	Part number	Description	Q'ty	Chan.	Serial No.	Serv.	Remarks
0	0565050600	VALVE ASSY, shut-off	1				X05650-50600-0
1	0565041030	・BAND	1				
2	0565048510	・PIPE	1				
3	0565050610	・PIPE	1				
4	0565050620	・PIPE	1				
6	0565048550	・BAND	1				
7	0565048560	・HOSE ASSY	1				18010-22225
8	0565048570	・HOSE ASSY	1				18010-22200
9	0565048580	・HOSE ASSY	1				18010-22120
10	0565048590	・HOSE ASSY	1				18010-22130
12	1100040645	・BOLT	2				
13	1100040650	・BOLT	1				
14	1100041035	・BOLT	2				
15	1110040840	・SCREW, cap	2				
16	1110040845	・BOLT	2				
17	1121040616	・SET-SCREW	1				
18	1130040006	・NUT	1				
19	1140020006	・WASHER, spring	3				
20	1140020010	・WASHER, spring	2				
21	1141110006	・WASHER	2				
22	1141110010	・WASHER	2				
23	1420010240	・O-RING	1				
25	1513390015	・TEE	1				
26	1514011102	・ADAPTOR	1				
27	1515012040	・ELBOW	1				
	1420010110	・・O-RING	1				
28	1515100110	・ELBOW	1				
	1420010110	・・O-RING	1				
29	1515600200	・ADAPTOR	1				
	1420010110	・・O-RING	1				
30	1515600202	・ADAPTOR	2				
	1420010180	・・O-RING	1				
32	1652201005	・BAND	2				
33	1802742068	・HOSE ASSY	1				
34	1901743100	・VALVE, shut-off	1				
	L5d090						

silverhorn.co.uk

PUMP DRIVE

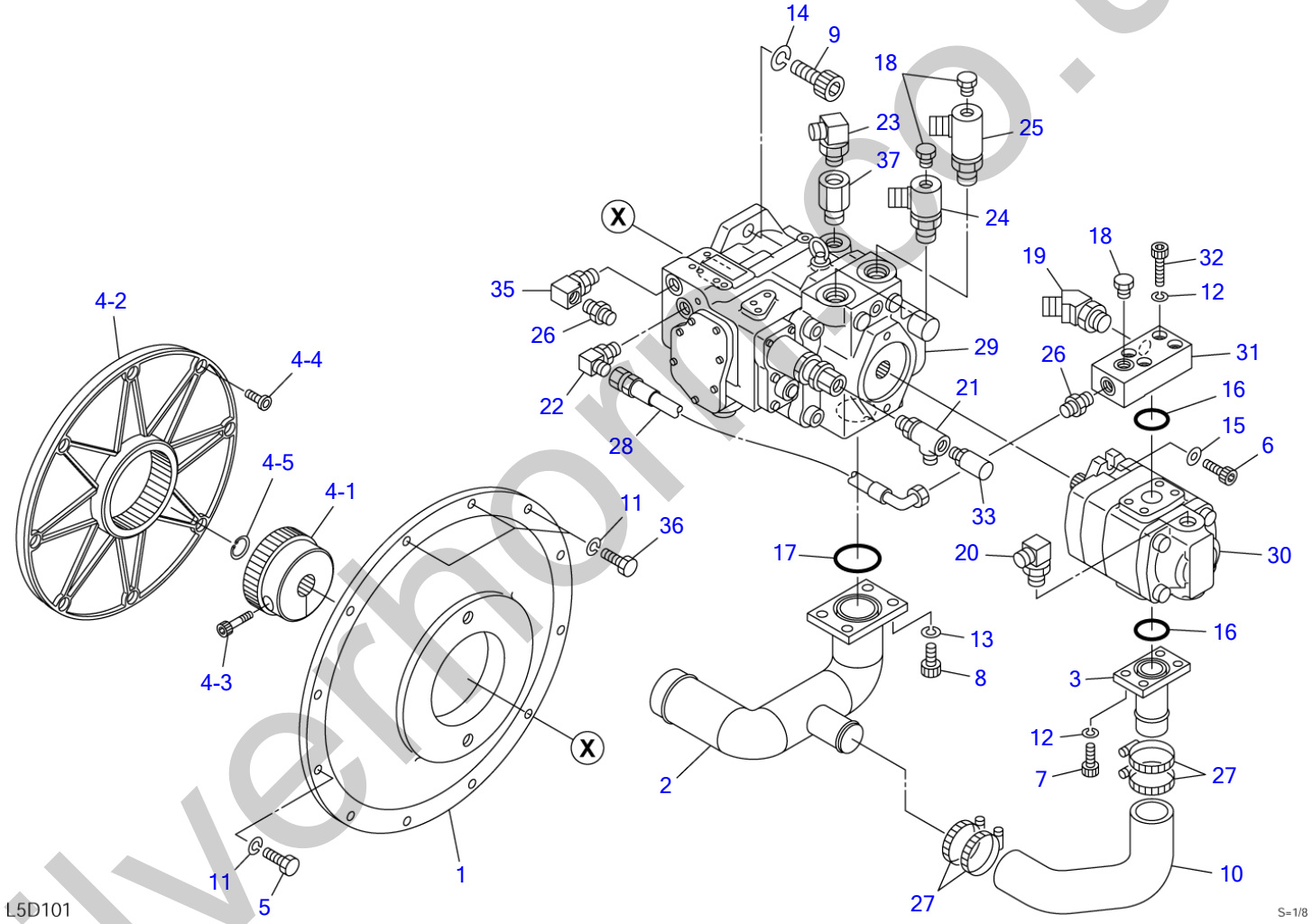

silverhorse.co.uk

PUMP DRIVE

Item	Part number	Description	Q'ty	Chan.	Serial No.	Serv.	Remarks
		PUMP ASSY, drive					X05652-23500-6
1	0565223550	HOUSING	1				
2	0565223510	FLANGE	1				
3	0565223540	FLANGE	1				
4	1607000030	COUPLING ASSY	1				
4-1	1607000031	・HUB	1				
4-2	1607000032	・FLANGE	1				
4-3	1110021235	・SCREW, cap	1				
4-4	1110021025	・BOLT	8				
4-5	1221000022	・RING, snap	1				
5	1100041030	BOLT	9				
6	1110041025	SCREW, cap	2				
7	1110041030	SCREW, cap	4				
8	1110041230	SCREW, cap	4				
9	1111041640	SCREW, cap	2				
10	0565223520	HOSE	1				
11	1140020010	WASHER, spring	12				
12	1140420010	WASHER, spring	8				
13	1140420012	WASHER, spring	4				
14	1140420016	WASHER, spring	2				
15	1141550010	WASHER	2				
16	1420110350	O-RING	2				
17	1420110500	O-RING	1				
18	1501750002	PLUG	3				
	1420010110	・O-RING	1				
19	1515100138	ELBOW	1				
	1420010180	・O-RING	1				
20	1515010051	ELBOW	1				
	1420010180	・O-RING	1				
21	1512340018	ELBOW	1				
	1420010140	・O-RING	1				
22	1515012040	ELBOW	1				
	1420010110	・O-RING	1				
23	1515010042	ELBOW	1				
	1420010180	・O-RING	1				
24	1512340015	ELBOW	1				
	1420010240	・O-RING	1				
25	1512340014	ELBOW	1				
	1420010240	・O-RING	1				
26	1515600200	ADAPTOR	2				
	1420010110	・O-RING	1				
27	1533700054	BAND	4				
28	1802501031	HOSE ASSY	1				
29	1902022100	PUMP, hydraulic	1				
30	1902017600	PUMP, gear	1				
31	0565223530	FLANGE	1				
32	1110041040	SCREW, cap	4				
33	1700100069	SWITCH, pressure	1				
	1420010110	・O-RING	1				
35	1513300014	ELBOW	1				
	1420010110	・O-RING	1				
36	1100041035	BOLT	3				
37	0007213010	BUSHING	1				
	L5d101						

silverthorn.co.uk

HYDRAULIC TANK

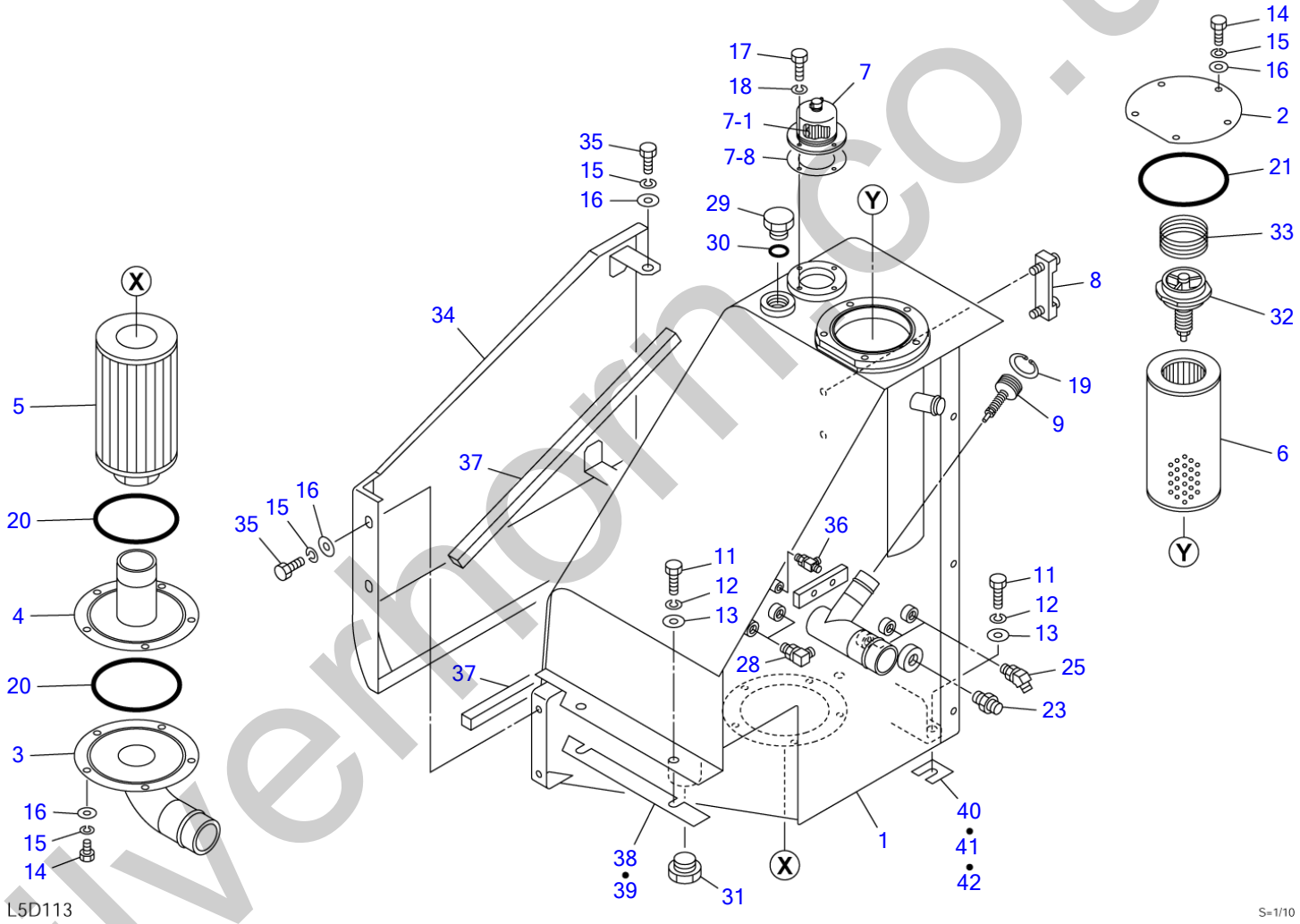

silvermoorco.uk

HYDRAULIC TANK

Item	Part number	Description	Q'ty	Chan.	Serial No.	Serv.	Remarks
		TANK ASSY, hydraulic					X05680-35100-5
1	0568035300	TANK	1				
2	0568035102	COVER	1				
3	0568035160	COVER	1				
4	0568035170	PLATE	1				
5	1550000116	FILTER	1				
6	1551102600	FILTER	1				
7	1552000900	BREATHER, air	1				
7-1	1552000902	・ELEMENT	1				
7-8	1552000908	・PACKING	1				
8	1553020685	GAUGE	1				
9	1540141025	VALVE, check	1				
11	1101041225	BOLT	4				
12	1140020012	WASHER, spring	4				
13	1141550012	WASHER	4				
14	1100041020	BOLT	10				
15	1140020010	WASHER, spring	14				
16	1141110010	WASHER	14				
17	1100040614	BOLT	4				
18	1140020006	WASHER, spring	4				
19	1221000042	RING, retaining	1				
20	1420101450	O-RING	2				
21	1420101250	O-RING	1				
23	1515600202	ADAPTOR	1				
	1420010180	・O-RING	1				
25	1515100111	ELBOW	3				
	1420010140	・O-RING	1				
28	1515010041	ELBOW	2				
	1420010140	・O-RING	1				
29	0007256006	PLUG	1				
30	1420010290	O-RING	1				
31	1501750010	PLUG	1				
	1420010290	・O-RING	1				
32	1551100300	VALVE ASSY	1				
33	0007000031	SPRING	1				
34	0568035190	COVER	1				
35	1100041025	BOLT	4				
36	1512370011	TEE	1				
	1420010110	・O-RING	1				
37	1654306056	SPONGE	2				sold by the meter
38	0568035138	SHIM	AR				t=1.6mm
39	0568035139	SHIM	AR				t=2.3mm
40	0323054001	SHIM	AR			M	t=1.0mm
41	0323054002	SHIM	AR			M	t=2.3mm
42	0323054003	SHIM	AR			M	t=3.2mm
	L5d113						

silverthorn.co.uk

FUEL TANK & FUEL PIPING

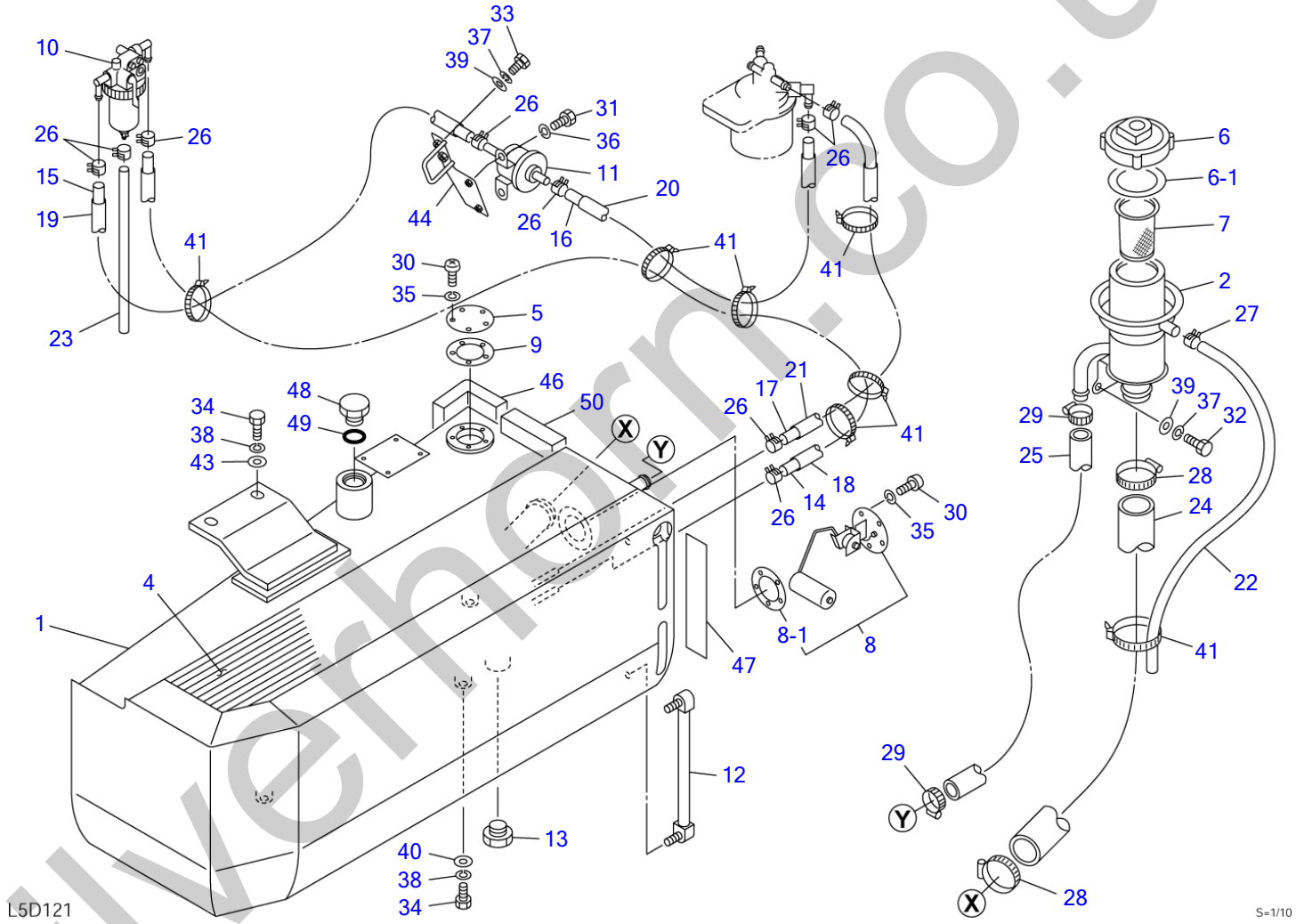

silverhorn.co.uk

FUEL TANK & FUEL PIPING

Item	Part number	Description	Q'ty	Chan.	Serial No.	Serv.	Remarks
		TANK ASSY, fuel					X05681-27500-6
1	0568127600	TANK	1				
2	0568116200	PORT, supply	1		17830004~17830069		
	0568127510	PORT, supply	1	(H)	17830070~		
4	0568127503	SHEET	1				
5	0568122560	COVER	1				
6	1552100500	CAP	1				
6-1	1552100507	・PACKING	1				
7	1552100320	STRAINER	1				
8	1553202000	UNIT, gauge	1				
8-1	1553200800	・PACKING	1				
9	1553200800	PACKING	1				
10	1910186033	SEPARATOR, water	1				Y129906-55700
11	1910199034	PUMP, feed	1				Y129612-52100
12	1553001250	GAUGE, level	1				
13	1501750006	PLUG	1				
	1420010240	・O-RING	1				
14	1531207230	HOSE	1				sold by the meter
15	1531207075	HOSE	1				sold by the meter
16	1531207092	HOSE	1				sold by the meter
17	1531207130	HOSE	1				sold by the meter
18	1531115220	PROTECTOR	1				sold by the meter
19	1531115065	PROTECTOR	1				sold by the meter
20	1531115087	PROTECTOR	1				sold by the meter
21	1531115120	PROTECTOR	1				sold by the meter
22	1531110080	HOSE	1				sold by the meter
23	1531007017	HOSE	1				sold by the meter
24	1530541090	HOSE	1				sold by the meter
25	1530519090	HOSE	1				sold by the meter
26	1533120511	BAND	9				
27	1533700016	BAND	1				
28	1533700060	BAND	2				
29	1533700028	BAND	2				
30	1120530510	SCREW	10				
31	1100040616	BOLT	2				
32	1100040825	BOLT	2				
33	1100040825	BOLT	2				
34	1101041225	BOLT	5				
35	1140020005	WASHER, spring	10				
36	1140020006	WASHER, spring	2				
37	1140020008	WASHER, spring	4				
38	1140020012	WASHER, spring	5				
39	1141110008	WASHER	4				
40	0003600023	WASHER	3				
41	1652201005	BAND	8				
43	1141550012	WASHER	2				
44	0568127520	BRACKET	1				
46	0568127546	SPONGE	1				
47	0339330900	DECAL	1				
48	0007256006	PLUG	1				
49	1420010290	O-RING	1				
50	1654341011	SPONGE	1				sold by the meter
	L5d121						

silverhorn.co.uk

FUEL SUPPLY PUMP

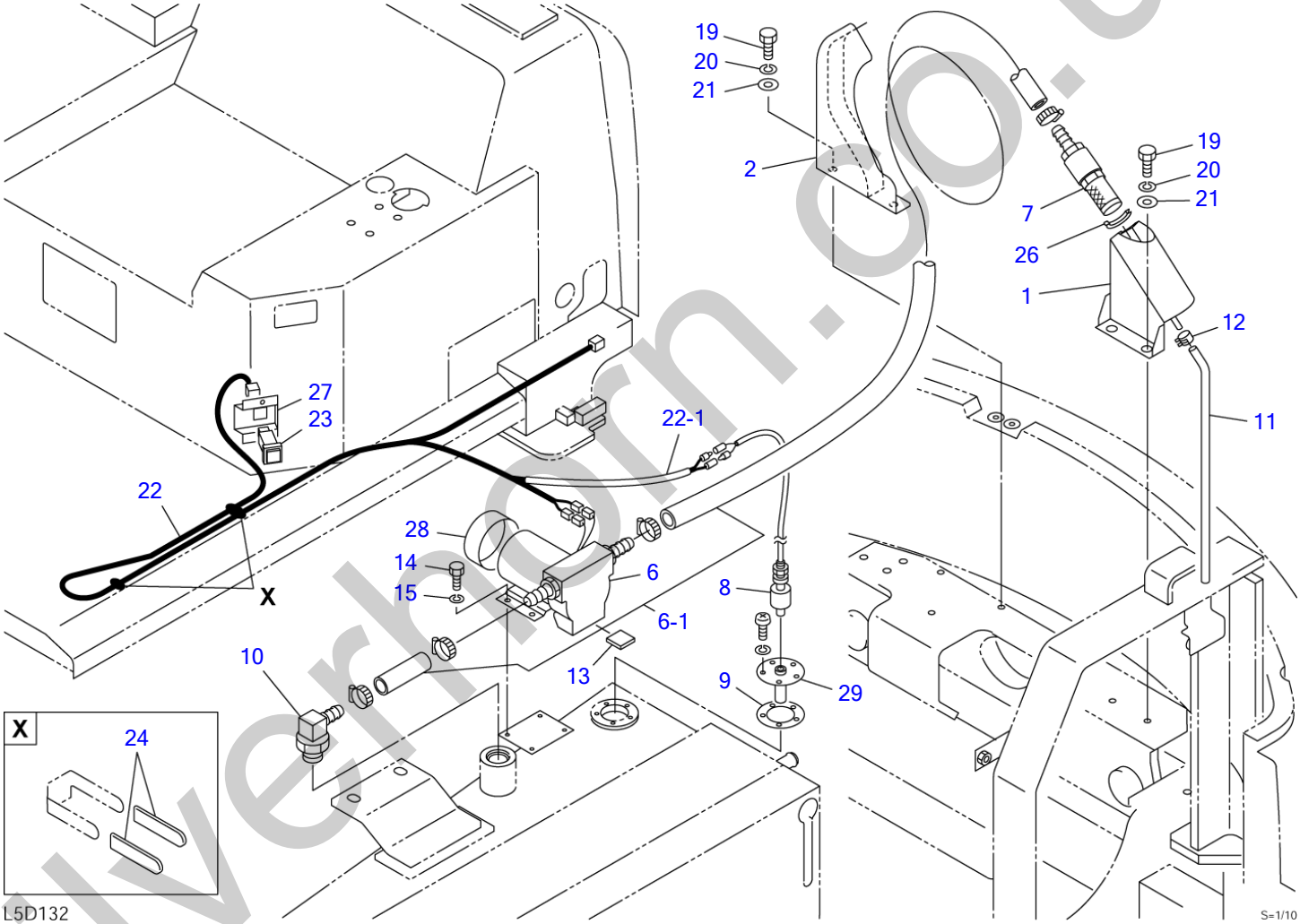

silverhorn.co.uk

FUEL SUPPLY PUMP

Item	Part number	Description	Q'ty	Chan.	Serial No.	Serv.	Remarks
0	0568127400	PUMP ASSY, fuel supply	1				X05681-27400-7
1	0568127410	・BRACKET	1				
2	0568127420	・GUIDE	1				
6	1711910230	・PUMP	1				
6-1	1919901730	・・HOSE	1			M	
7	1552001100	・STRAINER	1				
8	0568127490	・SWITCH, level	1				
9	1553200800	・PACKING	1				
10	1513350018	・ELBOW	1				
	1420010290	・・O-RING	1				
11	1531207050	・HOSE	1				sold by the meter
12	1533120012	・BAND	1				
13	0568121020	・RUBBER	1				
14	1100040512	・BOLT	4				
15	1140020005	・WASHER, spring	4				
19	1100041020	・BOLT	4				
20	1140020010	・WASHER, spring	4				
21	1141110010	・WASHER	4				
22	0568127480	・HARNESS, wiring	1				
22-1	1531007020	・・PROTECTOR	1				sold by the meter
23	1700000039	・SWITCH	1				
24	0872433150	・TUBE	6				
26	1653916008	・TRIM	1				sold by the meter
27	0568127470	・BRACKET	1				
28	1711910208	・COVER	1				
29	0568122590	・COVER	1				
	L5d133						

silverhorn.co.uk

COVER (1/4) (17830004-17830057)

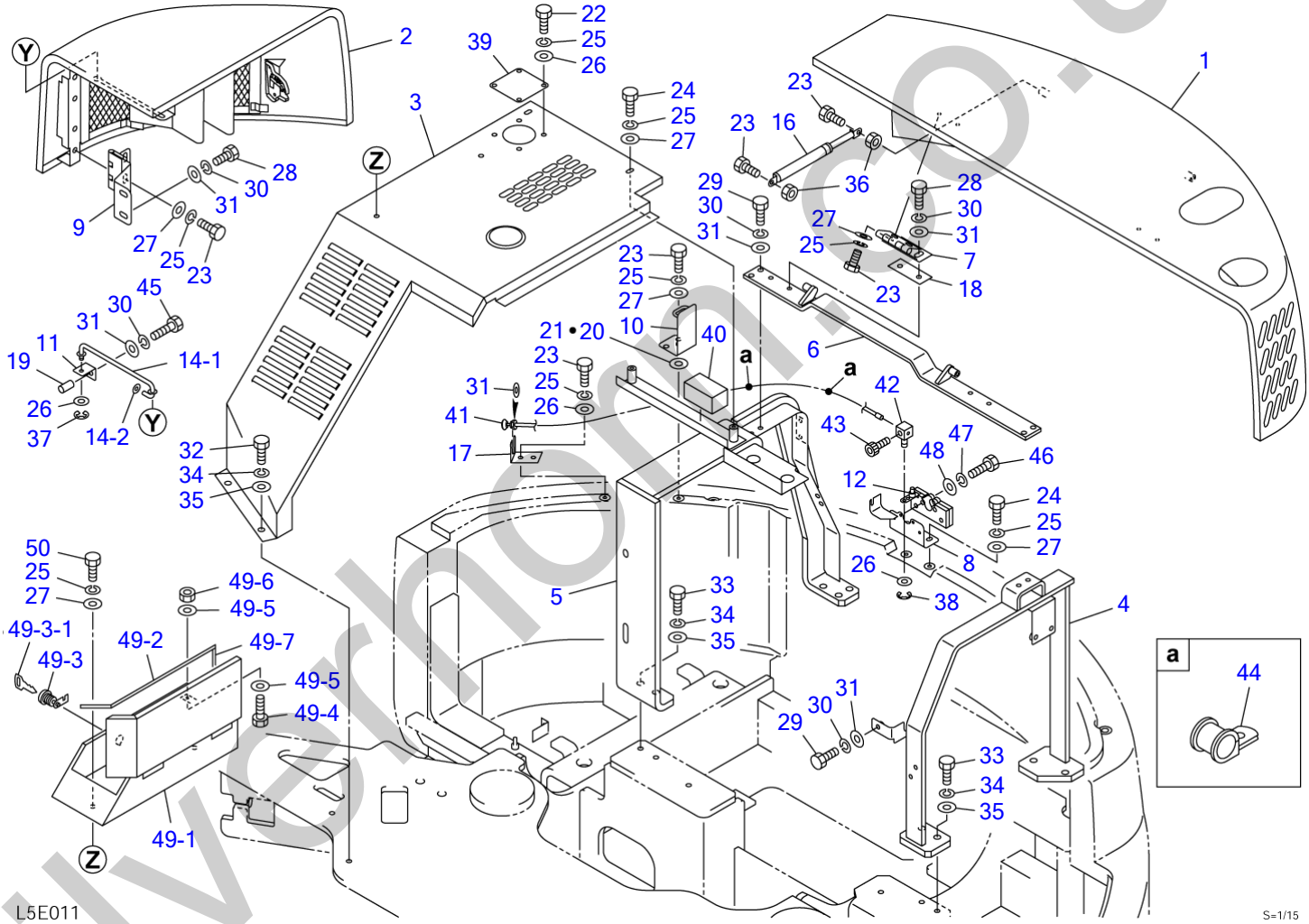

silverhorn.co.uk

COVER (1/4) (17830004-17830057)

Item	Part number	Description	Q'ty	Chan.	Serial No.	Serv.	Remarks
		COVER ASSY	1				X05682-57000-3
1	0568257100	HOOD, engine (FRP)	1				see page (2/4)
2	0568257300	COVER, side (FRP)	1				see page (3/4)
3	0568256400	COVER ASSY, center	1				see page (4/4)
4	0568256500	BRACKET (L.H.)	1				
5	0568256520	BRACKET (R.H.)	1				
6	0568253460	BRACKET	1				
7	0568253470	HINGE	2				
8	0568256550	BRACKET	1				
9	0568256560	HINGE	2				
10	0568256570	BRACKET	1				
11	0568253510	PLATE	1				
12	1654011300	LOCK	1				
14	0348204680	ROD ASSY	1				
14-1	0348204540	・ROD	1				
14-2	0348204682	・WASHER	1				
16	1653900057	DAMPER	1				
17	0568256580	BRACKET	1				
18	0568239520	PLATE	1				
19	0568256640	PIPE	1				
20	0003900049	SHIM	AR				
21	0003900050	SHIM	AR				
22	1100040816	BOLT	6				
23	1100040820	BOLT	14				
24	1100040825	BOLT	2				
25	1140020008	WASHER, spring	22				
26	1141110008	WASHER	8				
27	0003608252	WASHER	16				
28	1100041020	BOLT	8				
29	1100041025	BOLT	5				
30	1140020010	WASHER, spring	14				
31	1141110010	WASHER	15				
32	1101041225	BOLT	2				
33	1101041235	BOLT	9				
34	1140020012	WASHER, spring	11				
35	1141110012	WASHER	11				
36	1130040008	NUT	2				
37	1224010008	RING, retaining	1				
38	1224010006	RING, retaining	1				
39	0568253550	PLATE	1				
40	1654346009	SPONGE	1				sold by the meter
41	0568225380	ROPE, wire	1				
42	000790023	PIN	1				
43	1110040510	SCREW, cap	1				
44	1711900076	CLAMP	2				
45	1100041055	BOLT	1				
46	1100040630	BOLT	4				
47	1140020006	WASHER, spring	4				
48	1141110006	WASHER	4				
49	0398218300	BOX ASSY, tool	1				
49-1	0398218310	・BOX, tool	1				
49-2	0398218320	・RUBBER	1				
49-3	1653612836	・LOCK	1				
49-3-1	1700100019	・KEY	1				
49-4	1100040620	・BOLT	1				
49-5	1141110006	・WASHER	2				
49-6	1130040006	・NUT	1				
49-7	0398218330	・RUBBER	1				
50	1100040830	BOLT	2				
	L5e011						

silverthorn.co.uk

COVER (1/4) (17830058-)

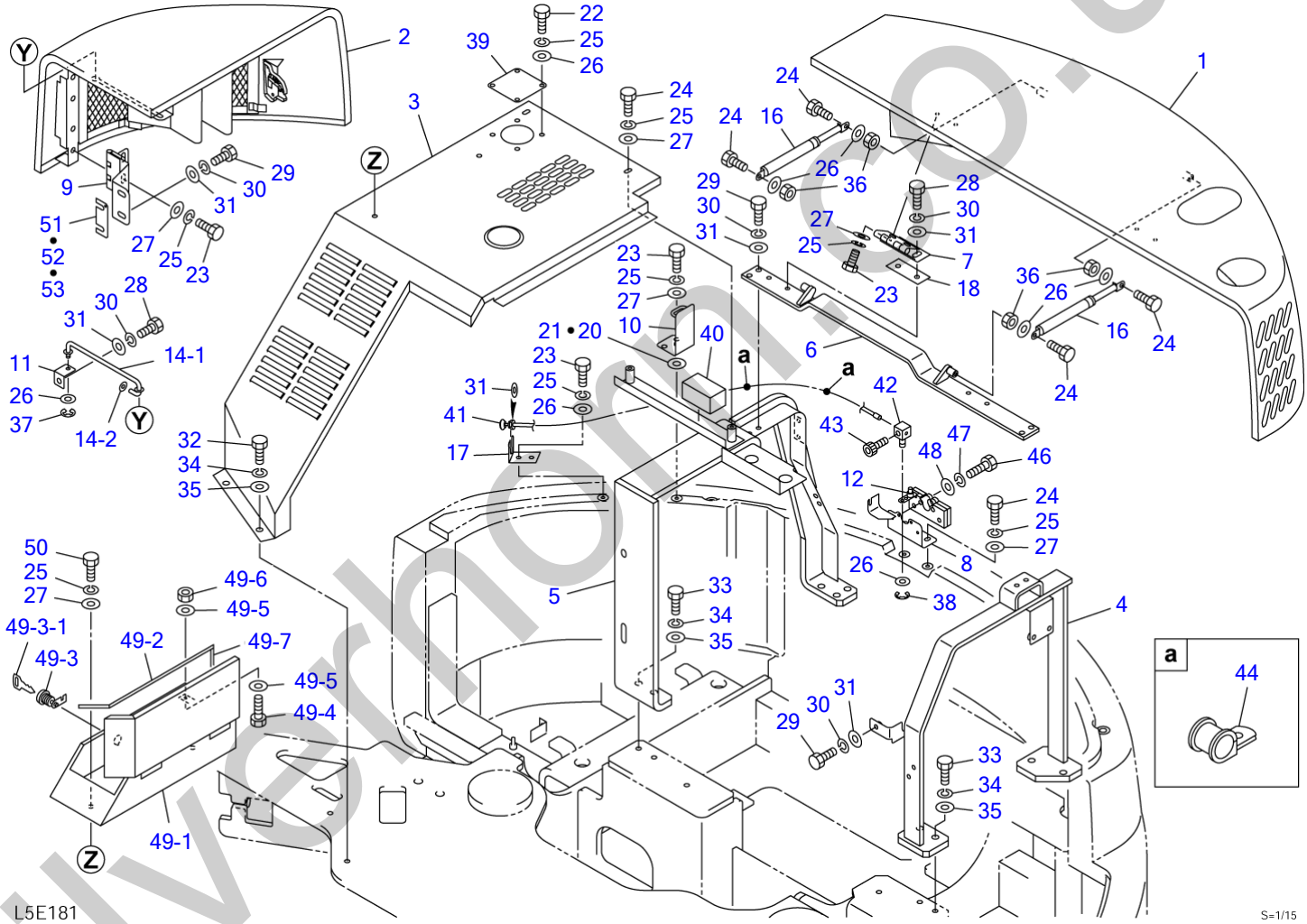

silverhorn.co.uk

COVER (1/4) (17830058-)

Item	Part number	Description	Q'ty	Chan.	Serial No.	Serv.	Remarks
		COVER ASSY	1				X05682-58000-3
1	0568256100	HOOD, engine (steel)	1				see page (2/4)
2	0568256300	COVER, side (steel)	1				see page (3/4)
3	0568256400	COVER ASSY, center	1				see page (4/4)
4	0568256500	BRACKET (L.H.)	1		17830058~17830417		
	0568258100	BRACKET (L.H.)	1		17830418~	M	
5	0568256520	BRACKET (R.H.)	1				
6	0568253460	BRACKET	1				
7	0568253470	HINGE	2				
8	0568256660	BRACKET	1				
9	0568256560	HINGE	2				
10	0568256570	BRACKET	1				
11	0568253510	PLATE	1				
12	1654011300	LOCK	1				
14	0398218010	ROD ASSY	1				
14-1	0398218011	・ROD	1				
14-2	0348204682	・WASHER	1				
16	1653900057	DAMPER	2				
17	0568256580	BRACKET	1				
18	0568239520	PLATE	1				
20	0003900049	SHIM	AR				
21	0003900050	SHIM	AR				
22	1100040816	BOLT	4				
23	1100040820	BOLT	12				
24	1100040825	BOLT	8				
25	1140020008	WASHER, spring	22				
26	1141110008	WASHER	16				
27	0003608252	WASHER	16				
28	1100041020	BOLT	5				
29	1100041025	BOLT	9				
30	1140020010	WASHER, spring	14				
31	1141110010	WASHER	15				
32	1101041225	BOLT	2				
33	1101041235	BOLT	9				
34	1140020012	WASHER, spring	11				
35	1141110012	WASHER	11				
36	1130040008	NUT	4				
37	1224010008	RING, retaining	1				
38	1224010006	RING, retaining	1				
39	0568253550	PLATE	1				
40	1654346009	SPONGE	1				sold by the meter
41	0568225380	ROPE, wire	1				
42	000790023	PIN	1				
43	1110040510	SCREW, cap	1				
44	1711900076	CLAMP	2				
46	1100040630	BOLT	4				
47	1140020006	WASHER, spring	4				
48	1141110006	WASHER	4				
49	0398218300	BOX ASSY, tool	1				
49-1	0398218310	・BOX, tool	1				
49-2	0398218320	・RUBBER	1				
49-3	1653612836	・LOCK	1				
49-3-1	1700100019	・KEY	1				
49-4	1100040620	・BOLT	1				
49-5	1141110006	・WASHER	2				
49-6	1130040006	・NUT	1				
49-7	0398218330	・RUBBER	1				
50	1100040830	BOLT	2				
51	0003900054	SHIM	AR				t=4.5mm
52	0003900055	SHIM	AR				t=2.3mm
53	0003900056	SHIM	AR				t=1.6mm
	L5e182						

silverthorn.co.uk

COVER (2/4) (engine hood; 17830004-17830123)

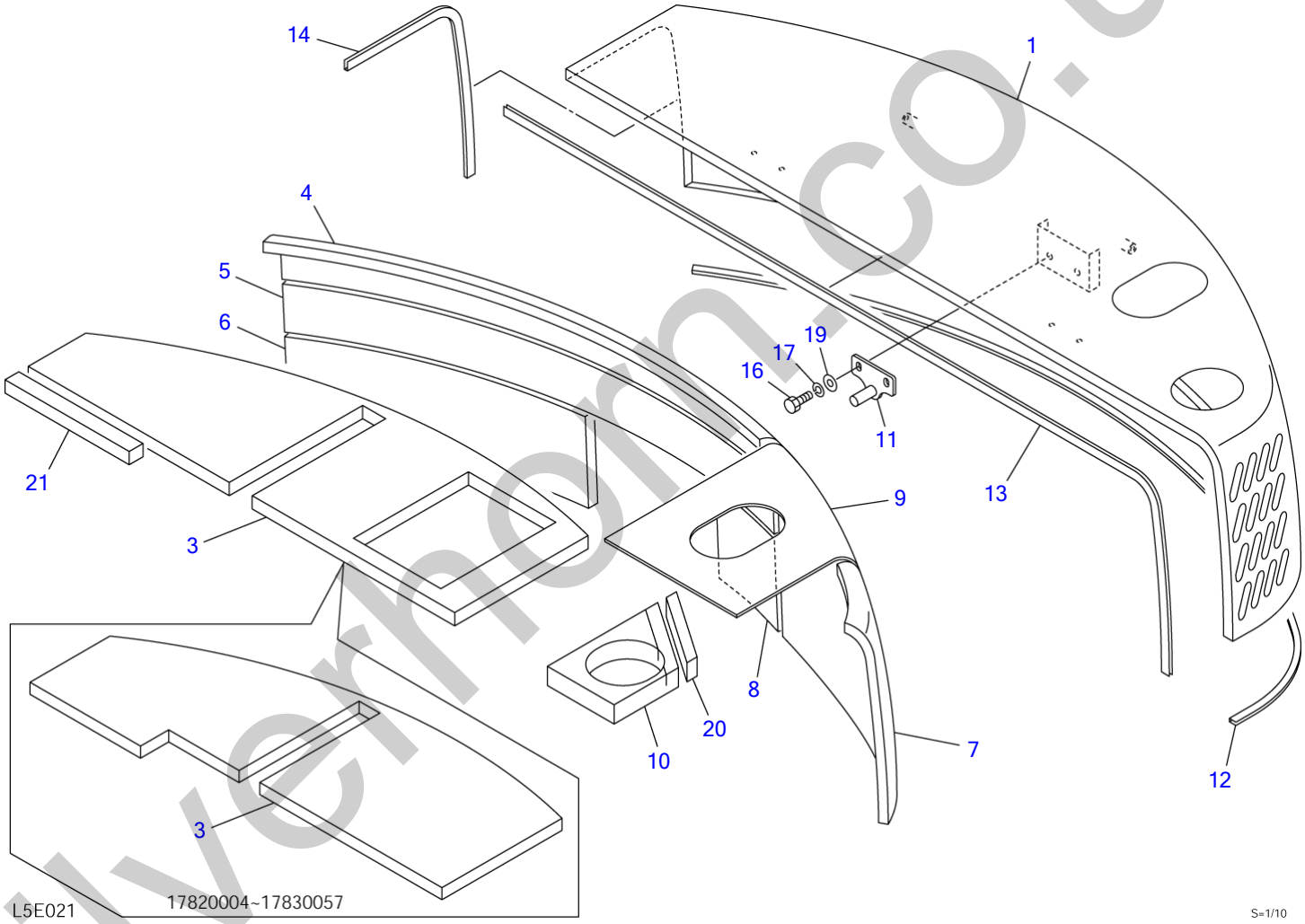

silverhorn.co.uk

COVER (2/4) (engine hood; 17830004-17830123)

Item	Part number	Description	Q'ty	Chan.	Serial No.	Serv.	Remarks
0-1	0568257100	HOOD, engine (FRP)	1	A	17830004~17830057		X05682-57100-2
	0568256100	HOOD, engine (steel)	1	a (H)	17830058~		X05682-56100-1
1	0568257110	・COVER (FRP)	1		17830004~17830057		
	0568256110	・COVER (steel)	1		17830058~		
3	0568253280	・ABSORBENT, noise	1		17830004~17830057		
	0568256203	・ABSORBENT, noise	1		17830058~		
4	0568253281	・ABSORBENT, noise	1				
5	0568253282	・ABSORBENT, noise	1				
6	0568253283	・ABSORBENT, noise	1				
7	0568256207	・ABSORBENT, noise	1				
8	0568253285	・ABSORBENT, noise	1				
9	0568256209	・INSULATOR	1				
10	0568256210	・SPONGE	1				
11	0568256220	・PLATE	1				
12	1654605172	・RUBBER	1				sold by the meter
13	1654605175	・RUBBER	1				sold by the meter
14	1654605060	・RUBBER	1				sold by the meter
16	1100040820	・BOLT	2				
17	1140020008	・WASHER, spring	2				
19	1141110008	・WASHER	2				
20	0568256211	・SPONGE	1		17830058~		
21	0568256212	・ABSORBENT, noise	1		17830058~		
22	1653900057	DAMPER	2	a			
		<<NOTE>> "A" is interchangeable with SET "a".					
	L5e021						

silverhorn.co.uk

COVER (2/4) (engine hood; 17830124-)

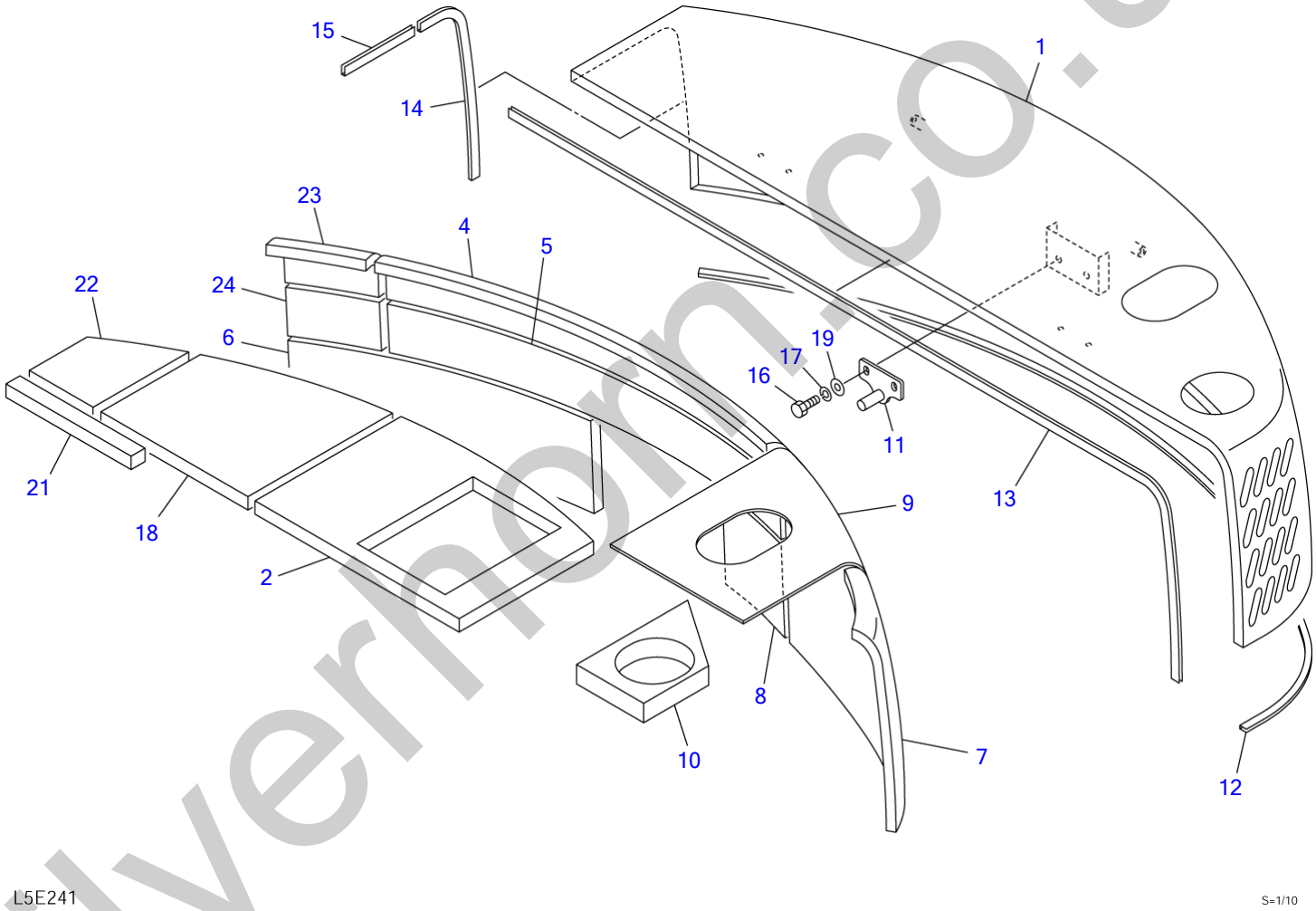

silverhorn.co.uk

COVER (2/4) (engine hood; 17830124-)

Item	Part number	Description	Q'ty	Chan.	Serial No.	Serv.	Remarks
0-1	0568256100	HOOD, engine (steel)	1				X05682-56100-5
1	0568256110	・COVER (steel)	1				
2	0568256204	・ABSORBENT, noise	1				
4	0568253281	・ABSORBENT, noise	1				
5	0568253282	・ABSORBENT, noise	1				
6	0568253283	・ABSORBENT, noise	1				
7	0568256207	・ABSORBENT, noise	1				
8	0568253285	・ABSORBENT, noise	1				
9	0568256209	・INSULATOR	1				
10	0568256230	・SPONGE	1				
11	0568256220	・PLATE	1				
12	1654605172	・RUBBER	1				sold by the meter
13	1654605175	・RUBBER	1				sold by the meter
14	1654605045	・RUBBER	1				sold by the meter
15	1654605015	・RUBBER	1				sold by the meter
16	1100040825	・BOLT	2				
17	1140020008	・WASHER, spring	2				
18	0568256205	・ABSORBENT, noise	1				
19	1141110008	・WASHER	2				
21	0568256212	・ABSORBENT, noise	1				
22	0568256213	・ABSORBENT, noise	1		17830418~	M	
23	0568256214	・ABSORBENT, noise	1		17830418~	M	
24	0568256215	・ABSORBENT, noise	1		17830418~	M	
	L5e241						

silverhorn.co.uk

COVER (3/4) (side cover)

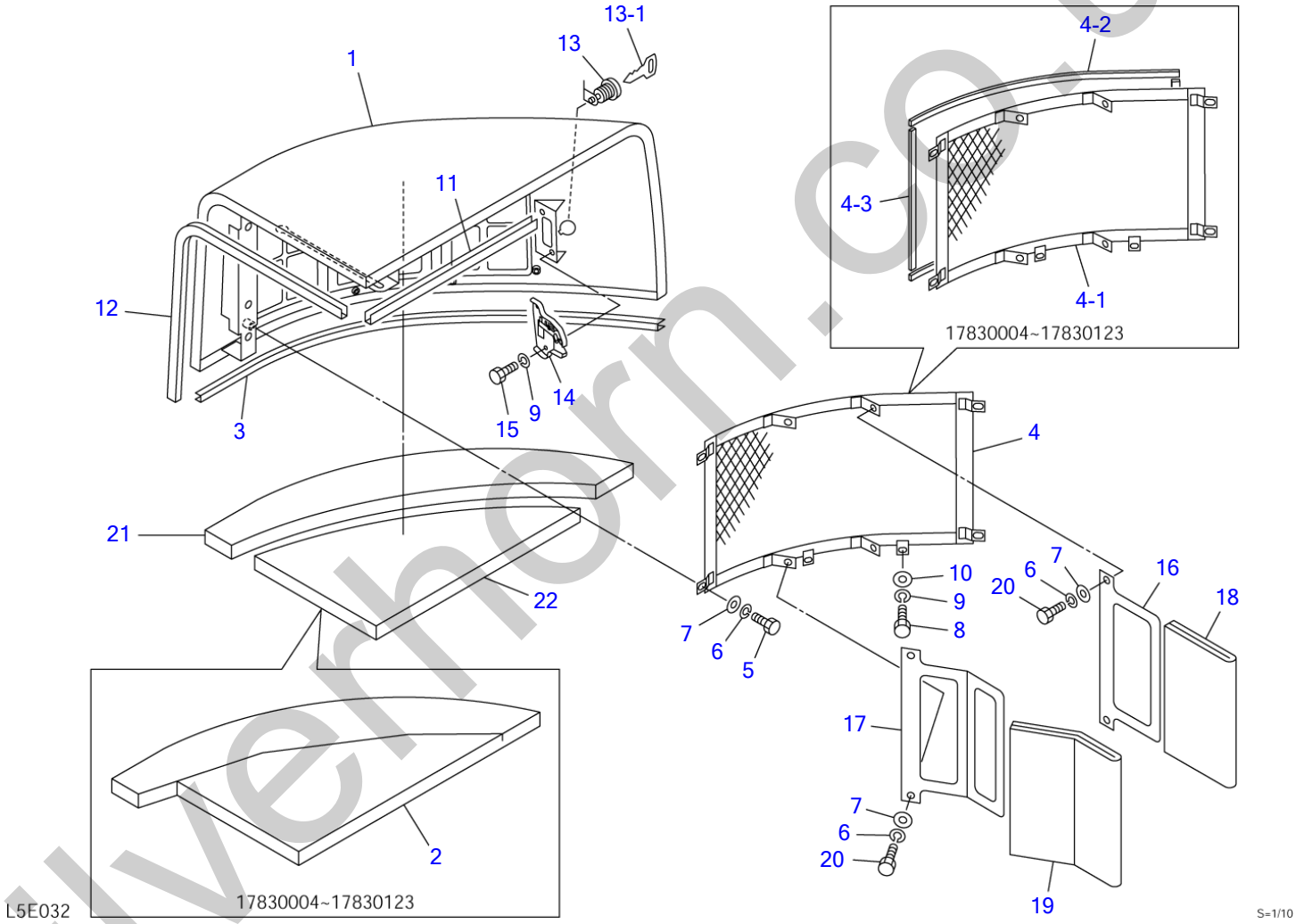

silverhorn.co.uk

COVER (3/4) (side cover)

Item	Part number	Description	Q'ty	Chan.	Serial No.	Serv.	Remarks
0-2	0568257300	COVER, side (FRP)	1		17830004~17830057		X05682-57300-2
	0568256300	COVER, side (steel)	1	(H)	17830058~		X05682-56300-2
1	0568257310	・COVER (FRP)	1		17830004~17830057		
	0568256310	・COVER (steel)	1		17830058~		
2	0568256380	・ABSORBENT, noise	1		17830004~17830123		
3	1653916077	・TRIM	1		17830004~17830057		sold by the meter
	1654605077	・RUBBER	1		17830058~		sold by the meter
4	0568256350	・NET ASSY	1		17830004~17830123		
	0568256360	・NET	1		17830124~17830141		
	0568256390	・NET	1	(H)	17830142~		
4-1	0568256360	・・NET	1		17830004~17830123		
4-2	1654307048	・・SPONGE	2		17830004~17830123		sold by the meter
4-3	1654307026	・・SPONGE	2		17830004~17830123		sold by the meter
5	1100040814	・BOLT	4				
6	1140020008	・WASHER, spring	8				
7	1141110008	・WASHER	8				
8	1100040614	・BOLT	2				
9	1140020006	・WASHER, spring	4				
10	1141110006	・WASHER	2				
11	1654606034	・RUBBER	1				sold by the meter
12	1654605063	・RUBBER	1		17830058~17830123		sold by the meter
13	0568221700	・LOCK	1				
13-1	1700100019	・KEY	1				
14	1653900024	・CATCH	1				
15	1100040612	・BOLT	2				
16	0568256590	・BLADE	1				
17	0568256610	・BLADE	1				
18	0568256621	・ABSORBENT, noise	1				
19	0568256622	・ABSORBENT, noise	1				
20	1100040816	・BOLT	4				
21	0568256381	・ABSORBENT, noise	1		17830124~		
22	0568256382	・ABSORBENT, noise	1		17830124~		
	L5e032						

silverhorn.co.uk

COVER (4/4) (center cover)

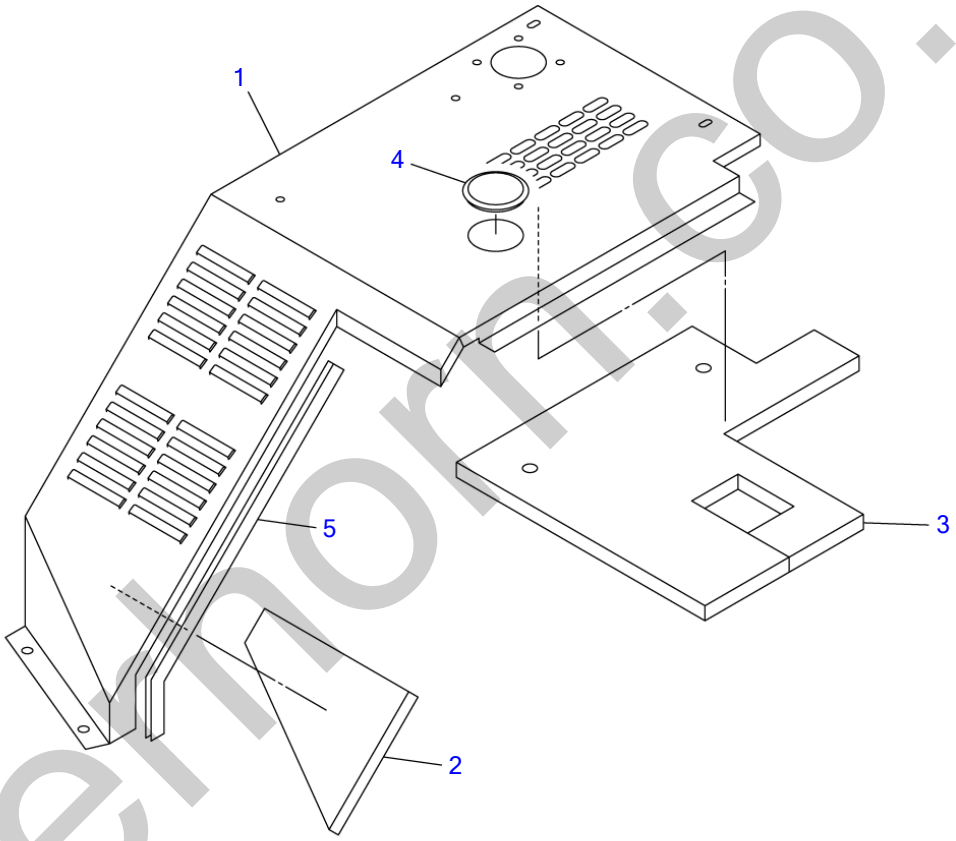

L5E041

S=1/10

silverhorn.co.uk

COVER (4/4) (center cover)

Item	Part number	Description	Q'ty	Chan.	Serial No.	Serv.	Remarks
0-3	**0568256400**	COVER ASSY, center	1				X05682-56400-1
1	**0568256410**	・COVER	1				
2	**0568256420**	・ABSORBENT, noise	1				
3	**0568256430**	・ABSORBENT, noise	1				
4	**1652060075**	・BUSHING	1				
5	**1654623063**	・TRIM	1				sold by the meter
	L5e041						

silverhorn.co.uk

FLOOR FRAME (1/3)

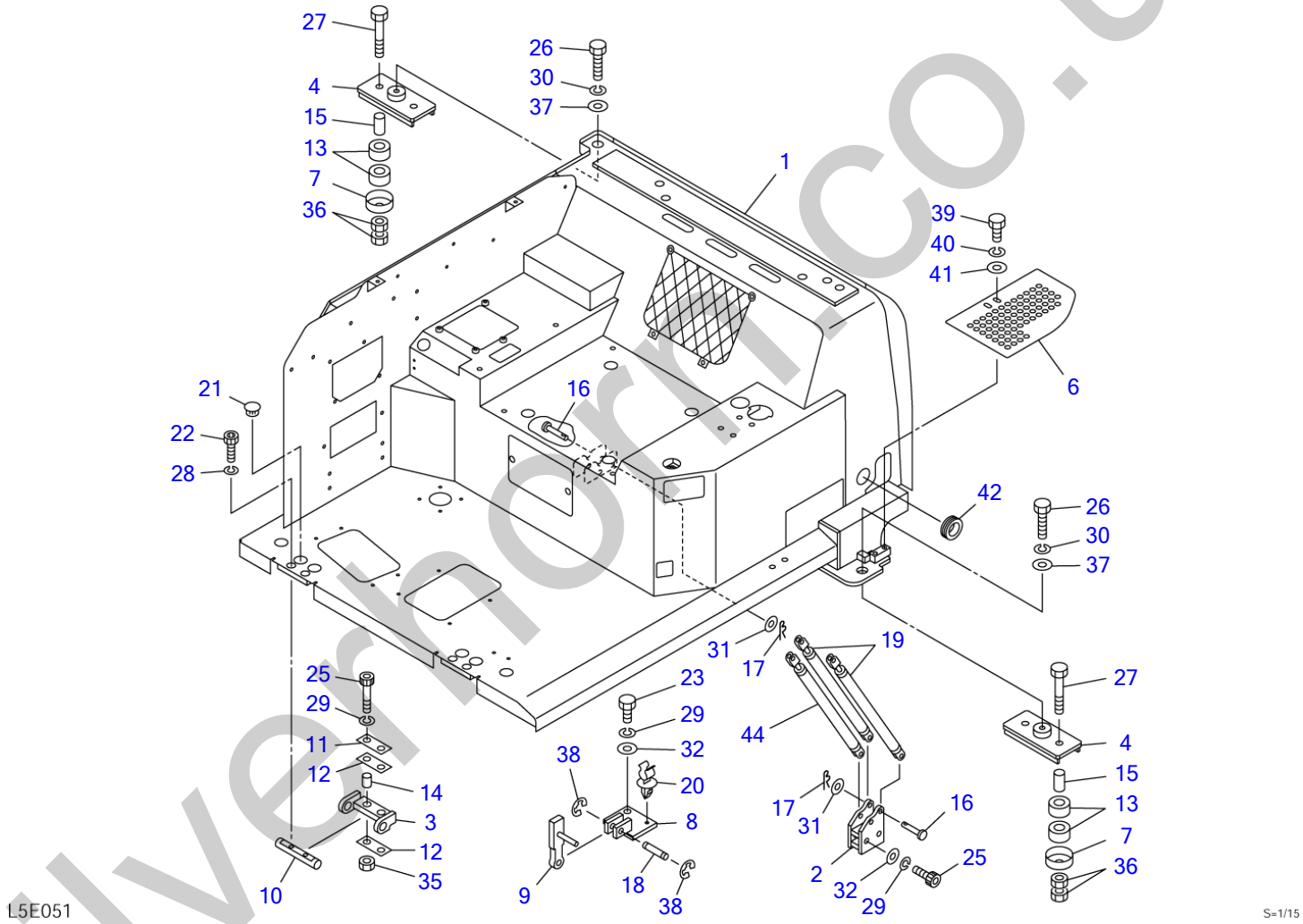

silverhorn.co.uk

FLOOR FRAME (1/3)

Item	Part number	Description	Q'ty	Chan.	Serial No.	Serv.	Remarks
		FRAME ASSY, floor					X05635-32200-2
1	X **********	FRAME ASSY	1				see page (2/3, 3/3)
2	0563531300	BRACKET	1				
3	0563531310	BRACKET	2				
4	0563531320	MOUNT, floor	2				
6	0563532206	COVER	1				
7	0433503200	COVER	4				
8	0563511500	BRACKET	1				
9	0563511510	LEVER	1				
10	0343507070	SHAFT	2				
11	0343508102	PLATE	2				
12	0373502995	CUSHION	4				
13	0433503100	RUBBER	8				
14	0343515086	SPACER	4				
15	0393517250	PIPE	4				
16	0004010038	PIN	4				
17	1214000008	PIN, snap	4				
18	0004212040	SHAFT	1				
19	1653900043	SPRING, gas	2				
20	1652702023	HOLDER	1				
21	1652533008	CAP	4				
22	1110041035	SCREW, cap	4				
23	1101041225	BOLT	2				
25	1111041260	SCREW, cap	6				
26	1101041440	BOLT	2				
27	1101041480	BOLT	4				
28	1140020010	WASHER, spring	4				
29	1140020012	WASHER, spring	8				
30	1140020014	WASHER, spring	2				
31	1141110010	WASHER	4				
32	1141110012	WASHER	4				
35	1130540012	NUT	4				
36	1130540014	NUT	8				
37	0003600013	WASHER	2				
38	1224000010	RING, retaining	2				
39	1100040820	BOLT	2				
40	1140020008	WASHER, spring	2				
41	0003608252	WASHER	2				
42	1652060038	BUSHING	1				
44	1653900047	SPRING, gas	1				
	L5e051						

silverhorn.co.uk

FLOOR FRAME (2/3)

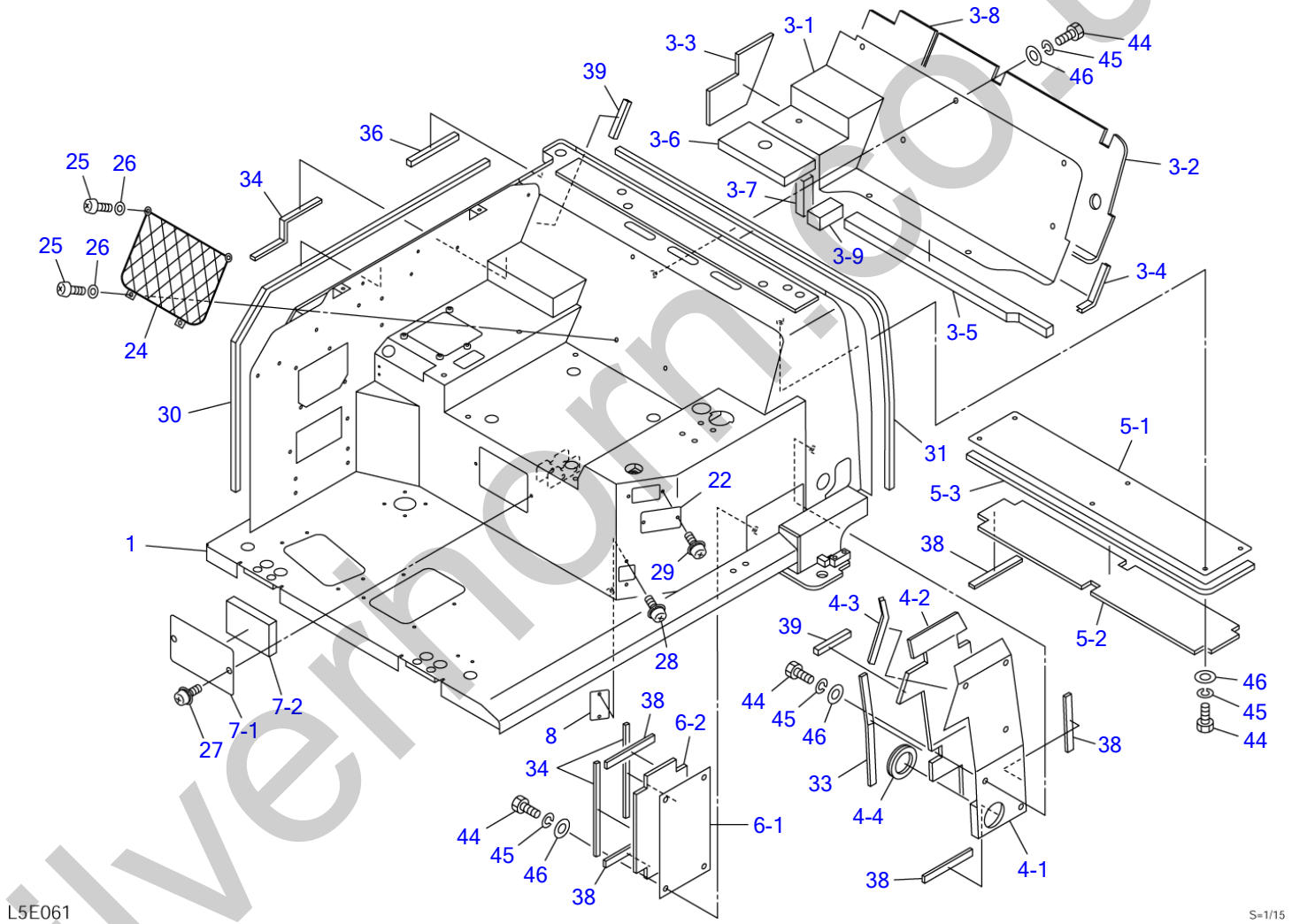

silvernorn.co.uk

FLOOR FRAME (2/3)

Item	Part number	Description	Q'ty	Chan.	Serial No.	Serv.	Remarks
0	0563532300	FRAME ASSY	1				X05635-32300-1
1	0563532400	・FRAME	1				
3	0563532330	・PLATE ASSY	1				X05635-32330-2
3-1	0563532331	・・BRACKET	1				
3-2	0563532336	・・INSULATOR	1				
3-3	0563532333	・・INSULATOR	1				
3-4	1654606012	・・SEAL	1				sold by the meter
3-5	0563532334	・・ABSORBENT, noise	1				
3-6	0563532339	・・ABSORBENT, noise	1				
3-7	0563532337	・・ABSORBENT, noise	1				
3-8	0563532338	・・INSULATOR	1				
3-9	0563532325	・・ABSORBENT, noise	1				
4	0563532340	・PLATE ASSY	1				
4-1	0563532390	・・BRACKET	1				
4-2	0563532343	・・INSULATOR	1				
4-3	1654601016	・・TRIM	1				sold by the meter
4-4	1652060075	・・BUSHING	1				
5	0563532350	・PLATE ASSY	1				
5-1	0563532351	・・PLATE	1				
5-2	0563532352	・・INSULATOR	1				
5-3	1654606087	・・SEAL	1				sold by the meter
6	0563532360	・PLATE ASSY	1				
6-1	0563532361	・・PLATE	1				
6-2	0563532362	・・INSULATOR	1				
7	0563532370	・PLATE ASSY	1				
7-1	0563532371	・・PLATE	1				
7-2	0563532372	・・ABSORBENT, noise	1				
8	0563532380	・PLATE	1				
22	0338230850	・COVER	1				
24	1654010600	・POCKET	1				
25	1120530416	・SCREW	4				
26	1141190004	・WASHER	4				
27	1150420816	・SCREW	2				
28	1150420616	・SCREW	2				
29	1150420612	・SCREW	2				
30	1654352067	・SPONGE	1				sold by the meter
31	1654356100	・SPONGE	1				sold by the meter
33	1654356030	・SPONGE	1				sold by the meter
34	1654356028	・SPONGE	3				sold by the meter
36	1654352023	・SPONGE	1				sold by the meter
38	1654356017	・SPONGE	5				sold by the meter
39	1654356011	・SPONGE	2				sold by the meter
44	1100040816	・BOLT	23				
45	1140020008	・WASHER, spring	23				
46	0003608252	・WASHER	23				
	L5e061						

silverform.co.uk

FLOOR FRAME (3/3)

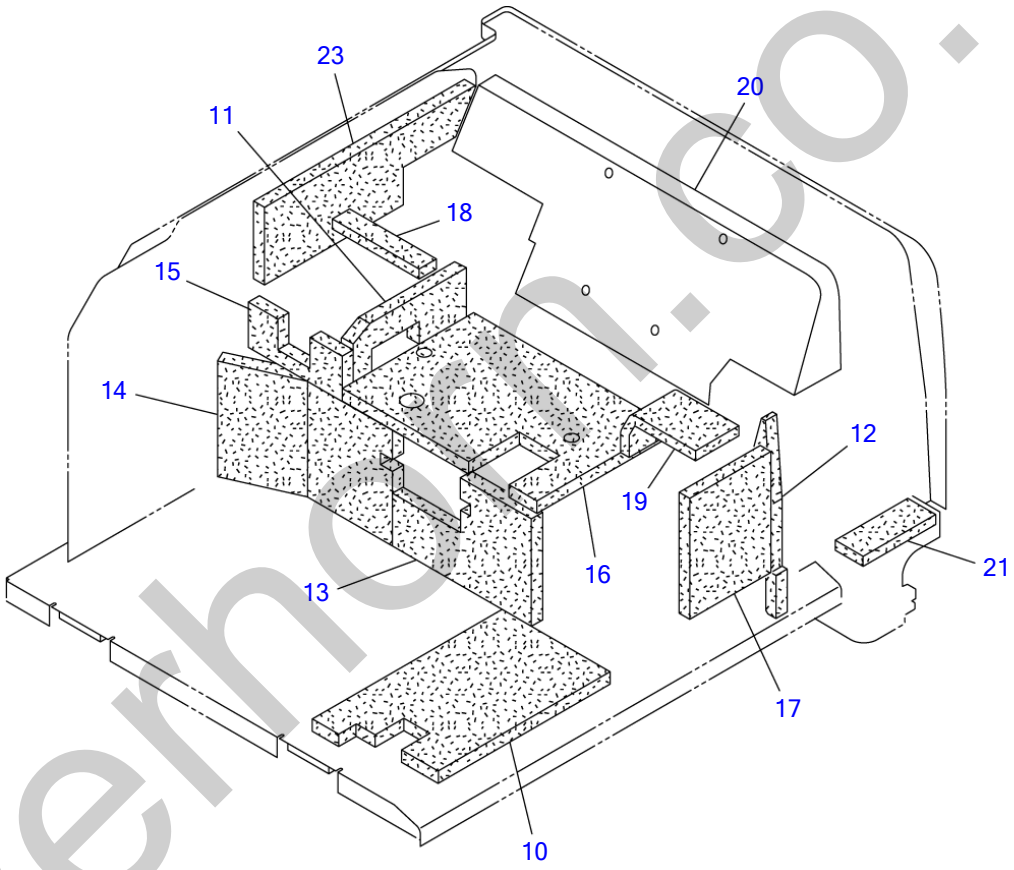

L5E171

S=1/12

silverhorn.co.uk

FLOOR FRAME (3/3)

Item	Part number	Description	Q'ty	Chan.	Serial No.	Serv.	Remarks
0	X **********	FRAME ASSY	1				X05635-32300-1
10	0563532310	・INSULATOR	1				
11	0563532311	・ABSORBENT, noise	1				
12	0563532312	・ABSORBENT, noise	1				
13	0563532313	・ABSORBENT, noise	1				
14	0563532314	・ABSORBENT, noise	1				
15	0563532315	・ABSORBENT, noise	1				
16	0563532316	・ABSORBENT, noise	1				
17	0563532317	・ABSORBENT, noise	1				
18	0563532318	・ABSORBENT, noise	1				
19	0563532319	・ABSORBENT, noise	1				
20	0563532320	・SHEET	1				
21	0378206720	・ABSORBENT, noise	1				
23	0563531123	・ABSORBENT, noise	1				
	L5e171						

silverhorn.co.uk

FLOOR MAT

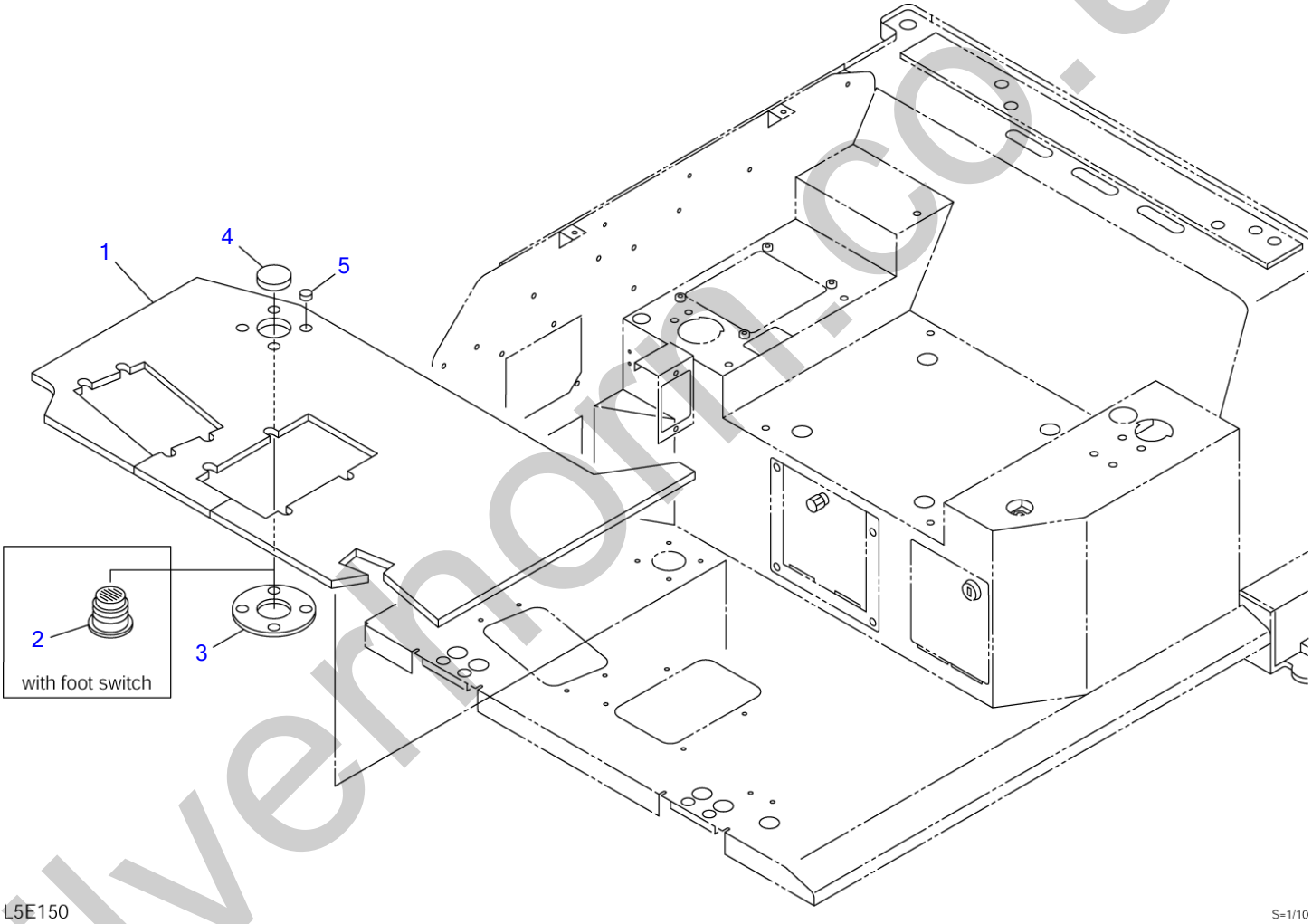

silverhorn.co.uk

FLOOR MAT

Item	Part number	Description	Q'ty	Chan.	Serial No.	Serv.	Remarks
		MAT ASSY, floor (without foot switch)					X05635-32600-0
		MAT ASSY, floor (with foot switch)					X05635-32700-0
1	0563532610	MAT, floor	1				
2	0573500240	BOOT	1				with foot switch
3	0573500225	SPONGE	1				without foot switch
4	1652533013	CAP	1				without foot switch
5	1652533002	CAP	4				
	L5e150						

silverhorn.co.uk

SEAT (1/2)

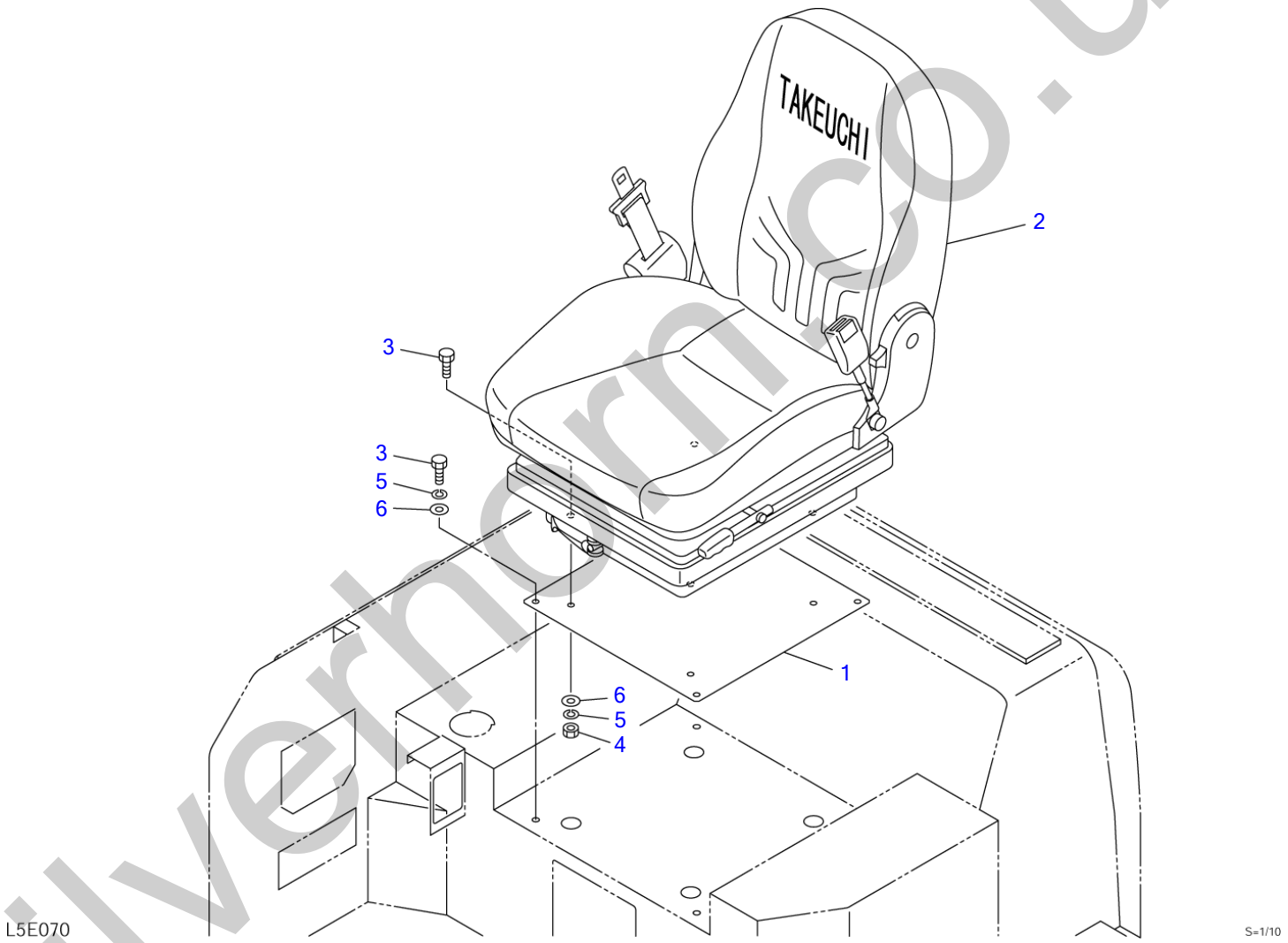

silverhorm.co.uk

SEAT (1/2)

Item	Part number	Description	Q'ty	Chan.	Serial No.	Serv.	Remarks
		SEAT ASSY					X05634-16500-1
1	0563416510	PLATE	1				
2	1914100071	SEAT	1				see page (2/2)
3	1100040820	BOLT	8				
4	1130040008	NUT	4				
5	1140020008	WASHER, spring	8				
6	1141110008	WASHER	8				
	L5e070						

silverhorn.co.uk

SEAT (2/2)

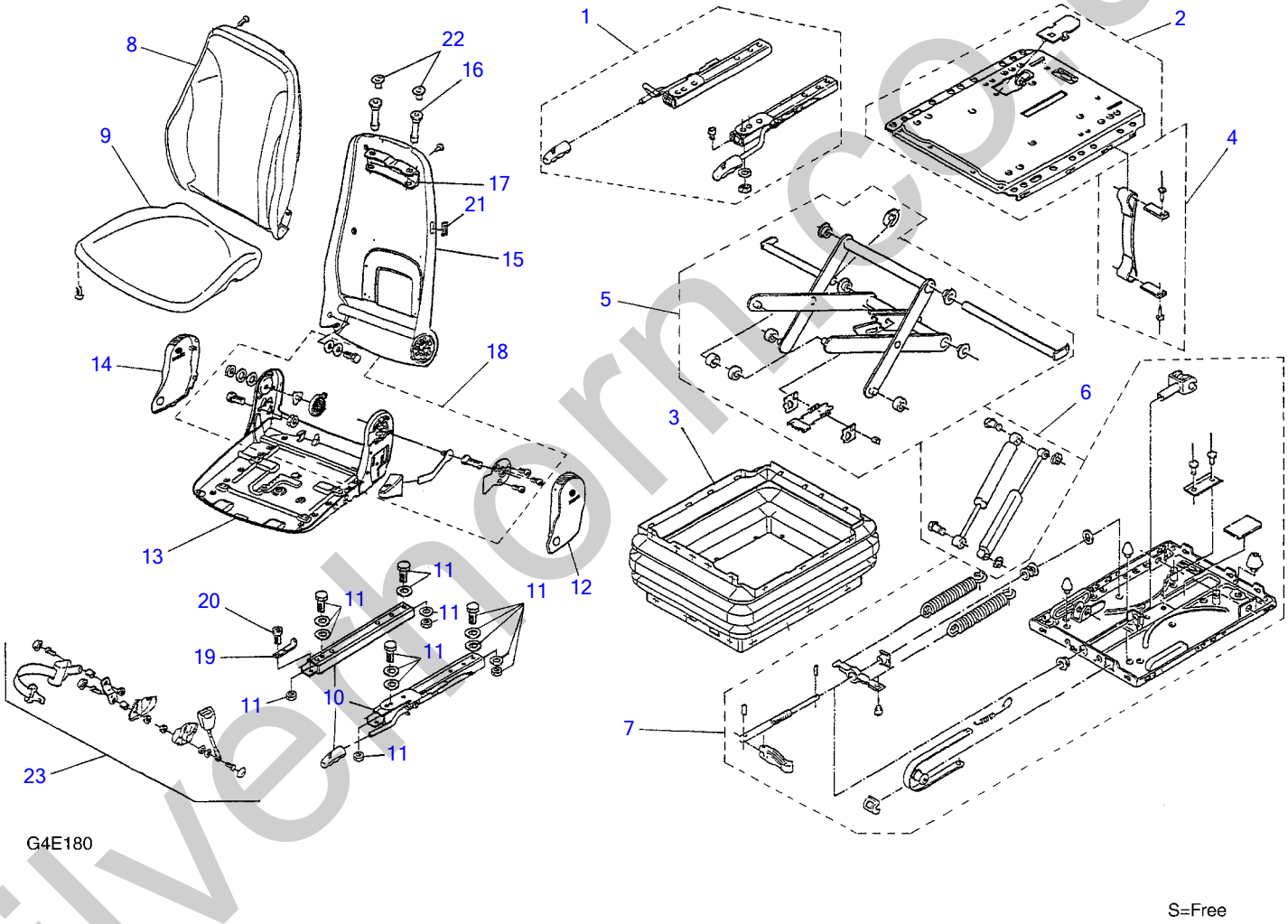

silverthorn.co.uk

SEAT (2/2)

Item	Part number	Description	Q'ty	Chan.	Serial No.	Serv.	Remarks
0	1914100071	SEAT	1				
1	1914101072	・RAIL ASSY	1				
2	1914102072	・PLATE ASSY	1				
3	1914103071	・BOOT	1				
4	1914104072	・ANGLE ASSY	1				
5	1914105072	・LINK ASSY	1				
6	1914106072	・DAMPER ASSY	1				
7	1914107072	・SPRING ASSY	1				
8	1914108072	・TRIM	1				
9	1914109072	・TRIM	1				
10	1914110072	・RAIL ASSY	1				
11	1914111072	・BOLT ASSY	1				
12	1914112072	・COVER (L.H.)	1				
13	1914113072	・FRAME	1				
14	1914114072	・COVER (R.H.)	1				
15	1914115072	・FRAME	1				
16	1914116072	・GUIDE	2				
17	1914117072	・BRACKET	1				
18	1914118072	・JOINT ASSY	1				
19	1914119072	・PLATE	1				
20	1914120072	・SCREW, cap	1				
21	1914121072	・PLATE	1				
22	1914122072	・PLUG	2				
23	1914123072	・BELT ASSY, seat	1				
	L4e081						

silverhorn.co.uk

CAB MOUNT

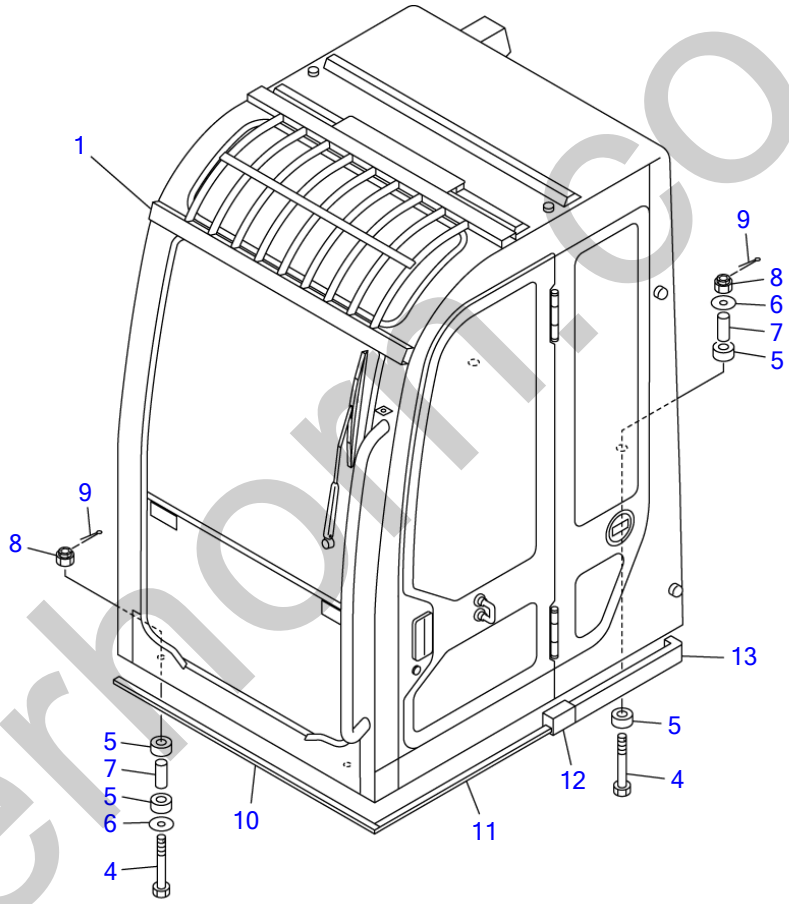

L5E081

S=1/20

silverhorn.co.uk

CAB MOUNT

Item	Part number	Description	Q'ty	Chan.	Serial No.	Serv.	Remarks
0	X **********	CAB MOUNT	1				X05686-52200-1
1	0568652300	・CAB ASSY	1				see page (1/7)
4	0568640900	・BOLT	4				
5	0433503100	・RUBBER	8				
6	0003000010	・WASHER	4				
7	0563500600	・TUBE	4				
8	1132080016	・NUT	4				
9	1210010430	・PIN, split	4				
10	1654312100	・SPONGE	1				sold by the meter
11	1654302090	・SPONGE	1				sold by the meter
12	0568652210	・SPONGE	1				
13	0568652220	・SPONGE	1				
	L5e081						

silverhorn.co.uk

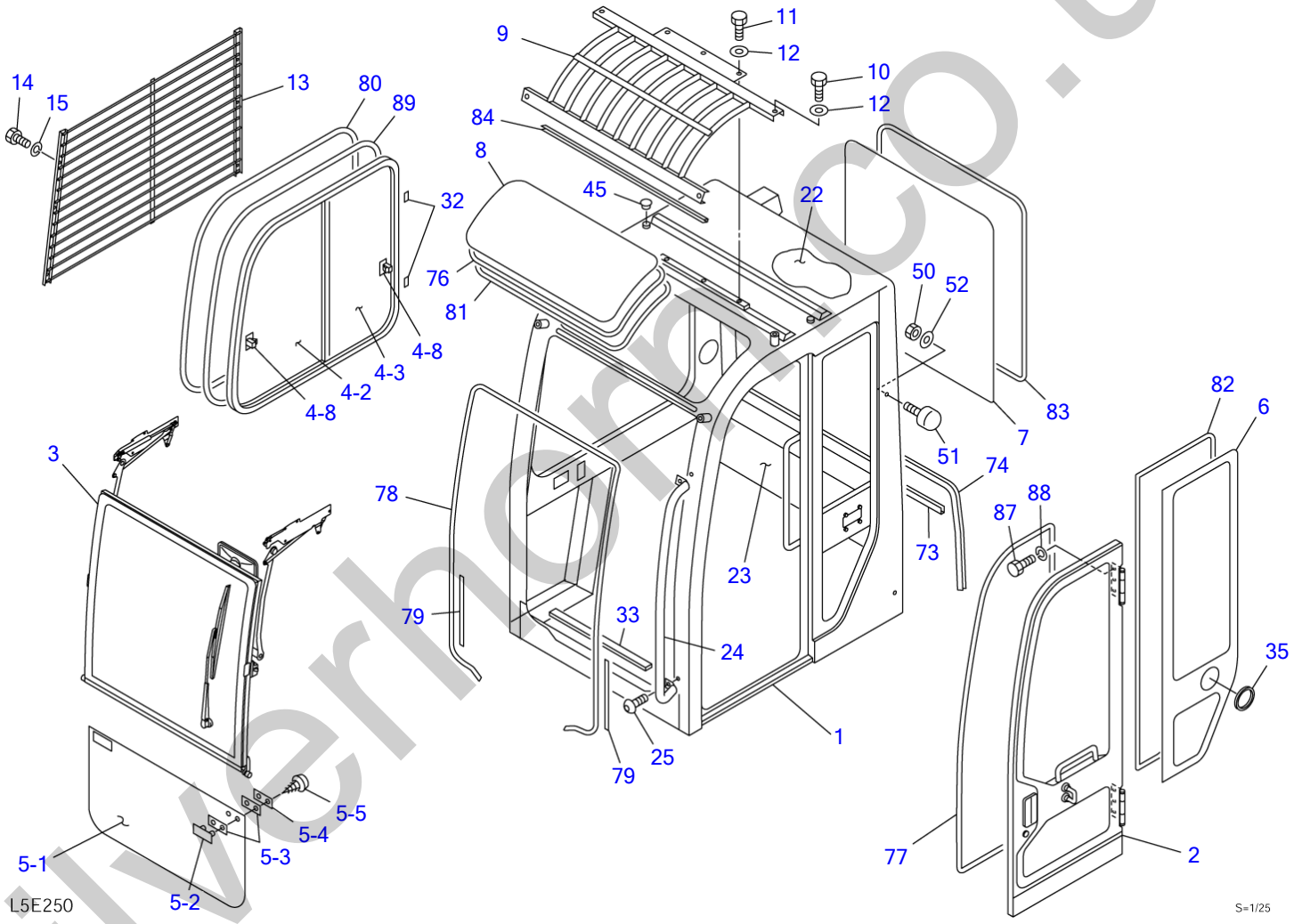

silverhomes.co.uk

CAB (1/7)

Item	Part number	Description	Q'ty	Chan.	Serial No.	Serv.	Remarks
0	0568652300	CAB ASSY	1				X05686-52300-1
1	X **********	・CAB	1				
2	0568652800	・DOOR ASSY	1				see page (4/7)
3	0568652500	・ASSIST ASSY, front sash	1				see page (5/7)
4	0378601300	・SASH ASSY, side	1				
4-2	0378601320	・・GLASS	1				
4-3	0378601330	・・GLASS	1				
4-8	0338630650	・・LOCK ASSY	2				
5	0378601600	・GLASS ASSY, front	1				
5-1	0378601610	・・GLASS	1				
5-2	1654010900	・・RETAINER	2				
5-3	1654011100	・・PACKING	4				
5-4	1654011000	・・PLATE	2				
5-5	1122410412	・・SCREW	4				
6	0568652306	・GLASS	1				
7	0378601900	・GLASS	1				
8	0358605300	・GLASS	1				
9	0568652850	・GUARD	1				
10	1100041020	・BOLT	4				
11	1100041016	・BOLT	3				
12	1141110010	・WASHER	7				
13	0398619500	・GUARD	1				
14	1100040825	・BOLT	6				
15	1141110008	・WASHER	6				
22	0568652900	・SPONGE	1				
23	0568640710	・SPONGE	1				
24	0568625500	・HANDRAIL	1				
25	1120991205	・BOLT	2				
32	0438601770	・SPACER	7				
33	0568634100	・SEAL	1				
35	0568626600	・GROMMET	1				
45	1653303010	・CAP	2				
50	1130090010	・NUT	6				
51	1651101042	・RUBBER	4				
52	1654011706	・WASHER	4				
73	1654636140	・TRIM	1				sold by the meter
74	1654636260	・TRIM	1				sold by the meter
76	1653916222	・TRIM	1				sold by the meter
77	1654605326	・RUBBER	1				sold by the meter
78	1654605374	・RUBBER	1				sold by the meter
79	1654605033	・RUBBER	2				sold by the meter
80	1653930355	・TRIM	1				sold by the meter
81	1654615216	・DAM	1				
82	1654615278	・DAM	1				
83	1654231295	・H-RUBBER	1				sold by the meter
84	1654606085	・TRIM	1				sold by the meter
87	1100040814	・BOLT	6				
88	1140090008	・WASHER, spring	6				
89	1654620350	・TAPE	1				sold by the meter
	L5e250						

silverform.co.uk

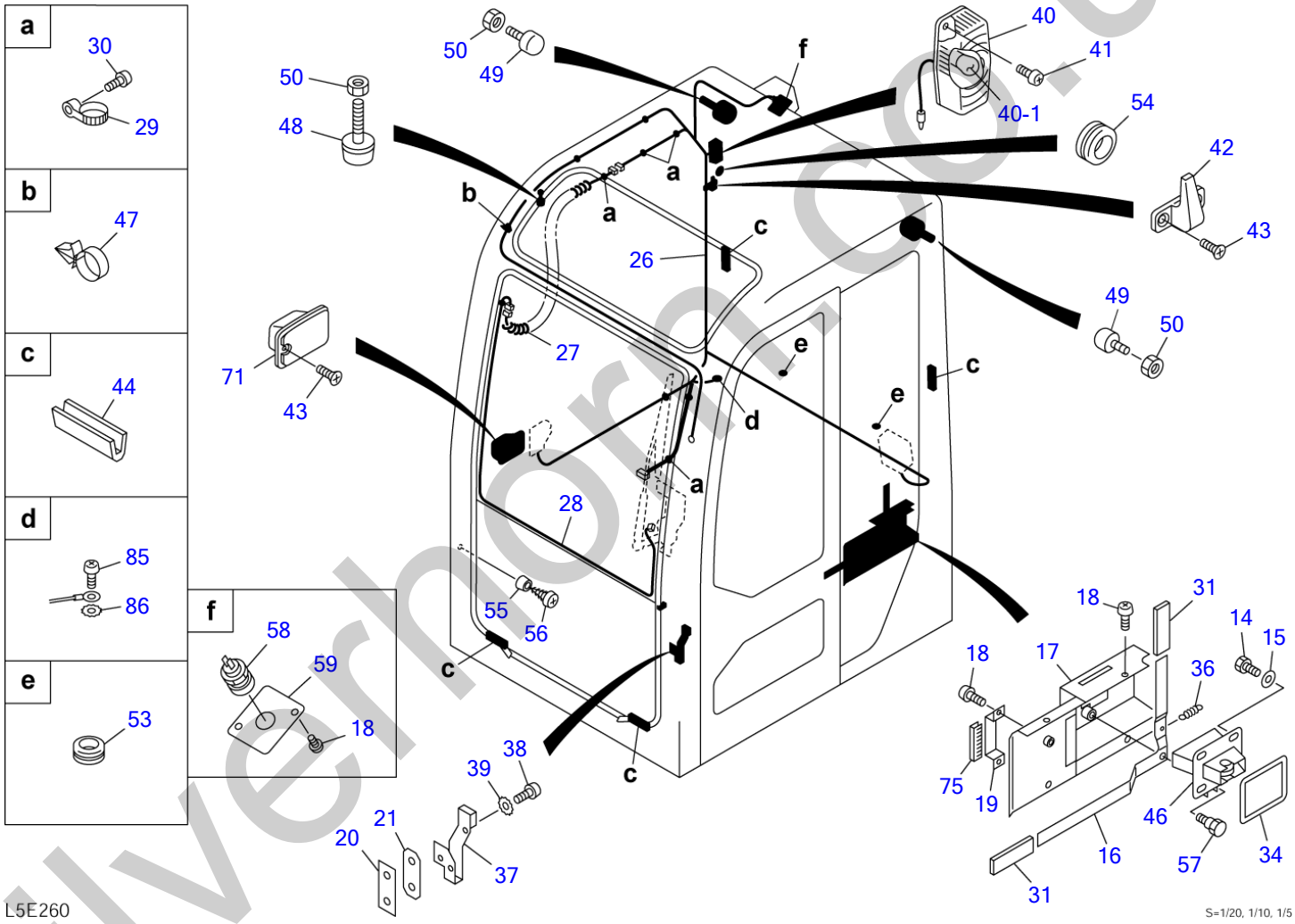

silverhorn.co.uk

CAB (2/7)

Item	Part number	Description	Q'ty	Chan.	Serial No.	Serv.	Remarks
0	0568652300	CAB ASSY	1				X05686-52300-1
14	1100040825	・BOLT	4				
15	1141110008	・WASHER	4				
16	0378601420	・PLATE	1				
17	0568652310	・COVER	1				
18	1150420512	・SCREW	8				
19	0338630870	・PLATE	1				
20	0338630880	・PLATE	1				
21	0338630930	・PACKING	1				
26	0568652910	・HARNESS, wiring	1				
27	0398802200	・HARNESS, wiring	1				
28	0338631010	・HARNESS, wiring	1				
29	1652221050	・BAND	3				
30	1120590512	・SCREW	3				
31	0438601760	・COVER	2				
34	0568634400	・SEAL	1				
36	0007000096	・SPRING	1				
37	0068620500	・STRIKER	1				
38	1120891025	・BOLT	2				
39	1140330010	・WASHER	2				
40	1703001700	・LAMP, room	1				
40-1	1703001701	・・BULB	1				
41	1150410420	・SCREW	2				
42	1654004800	・HANGER	1				
43	1120690412	・SCREW	4				
44	1654004900	・STOPPER	4				
46	1654005100	・LOCK ASSY	1				
47	1652351054	・CLAMP	3				
48	1651101028	・STOPPER	2				
49	1651101045	・STOPPER	2				
50	1130090010	・NUT	6				
53	1652060016	・GROMMET	2				
54	1652060031	・BUSHING	1				
55	1652102320	・RUBBER	2				
56	1122400416	・SCREW	2				
57	0378601510	・PIN	1				
58	1711900066	・SOCKET	1				
59	0578600143	・COVER	1				
71	1654010500	・ASHTRAY	1				
75	1653916007	・TRIM	1				sold by the meter
85	1150420516	・SCREW	1				
86	1140330005	・WASHER	1				
	L5e260						

silverthorn.co.uk

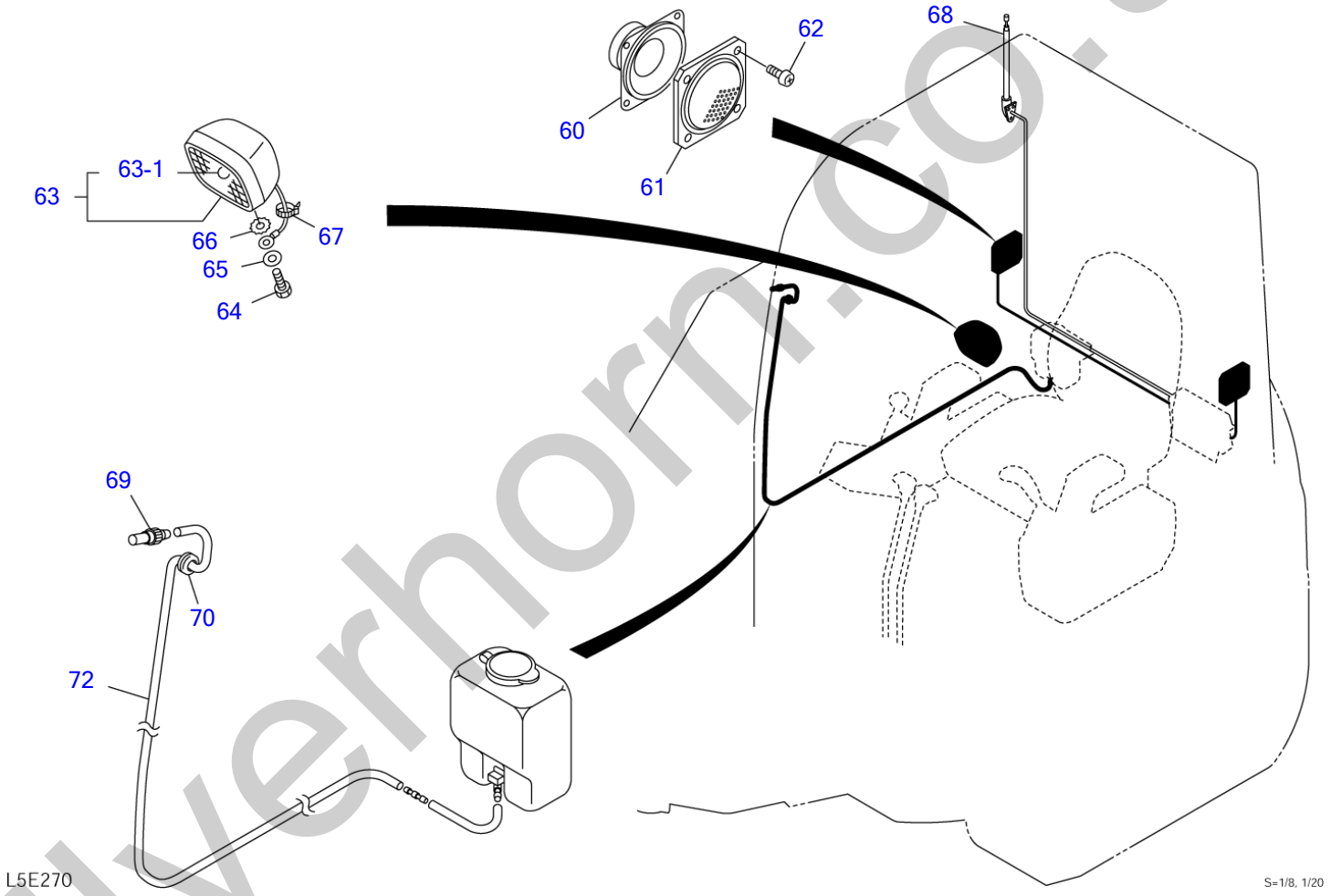

silverhorn.co.uk

CAB (3/7)

Item	Part number	Description	Q'ty	Chan.	Serial No.	Serv.	Remarks
0	0568652300	CAB ASSY	1				X05686-52300-1
60	1705003500	・SPEAKER	2				
61	1705003550	・GRILLE	2				
62	1120590412	・SCREW	8				
63	1703007600	・LAMP ASSY	1				
63-1	1703007605	・・BULB	1				12V, 55W
64	1100040816	・BOLT	1				
65	1141110008	・WASHER	1				
66	1140330008	・WASHER	1				
67	1652231250	・BAND	1				
68	1705004650	・ANTENNA	1				
69	1711910040	・NOZZLE	1				
70	1652001002	・GROMMET	1				
72	1711919180	・HOSE	1				
	L5e270						

silverhorn.co.uk

CAB (4/7) (door)

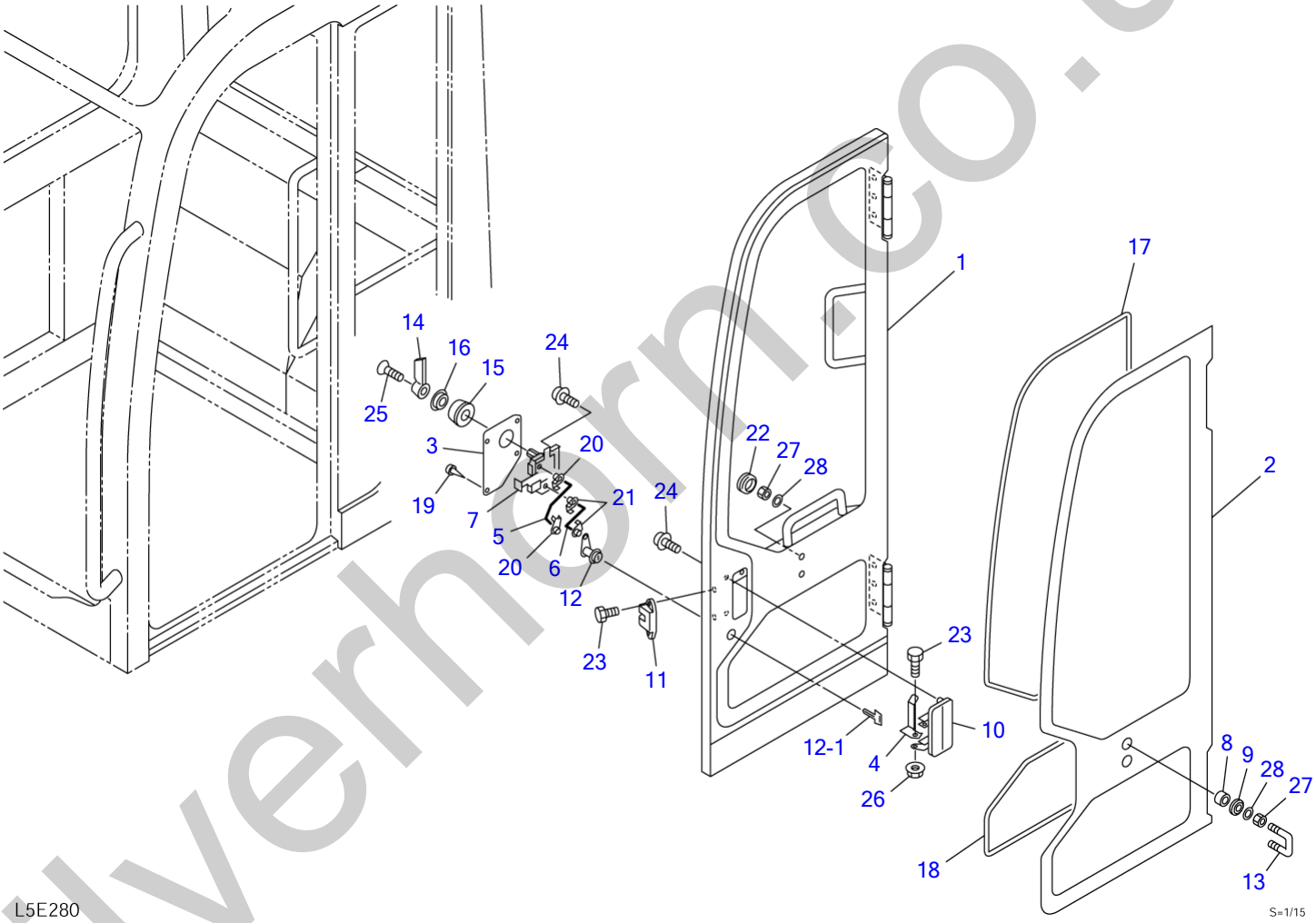

silverhorn.co.uk

CAB (4/7) (door)

Item	Part number	Description	Q'ty	Chan.	Serial No.	Serv.	Remarks
0-1	0568652800	DOOR ASSY	1				X05686-52800-0
1	0568652810	・DOOR	1				
2	0568652802	・GLASS	1				
3	0568623300	・COVER	1				
4	0568630900	・PLATE	1				
5	0568630800	・ROD	1				
6	0568630600	・ROD	1				
7	0568623400	・CONTROL ASSY	1				
8	0568623500	・COLLAR	2				
9	0568623600	・SEAL	2				
10	1654005600	・HANDLE	1				
11	0068620400	・LOCK ASSY	1				
12	1653611527	・LOCK	1				
12-1	1700100019	・KEY	1				
13	1654005900	・STRIKER	1				
14	1654005500	・HANDLE	1				
15	1654005800	・BASE	1				
16	1654005700	・ESCUTCHEON	1				
17	1654615260	・DAM	1				sold by the meter
18	1654615145	・DAM	1				sold by the meter
19	1652711432	・CLIP	4				
20	0068621500	・SNAP	2				
21	0398610900	・SNAP	2				
22	1652053200	・GROMMET	2				
23	1100090612	・BOLT	3				
24	1150410612	・SCREW	4				
25	1120790516	・SCREW	1				
26	1131283006	・NUT	1				
27	1130090010	・NUT	4				
28	1654011706	・WASHER	4				
	L5e280						

silverhorn.co.uk

CAB (5/7) (front sash assist)

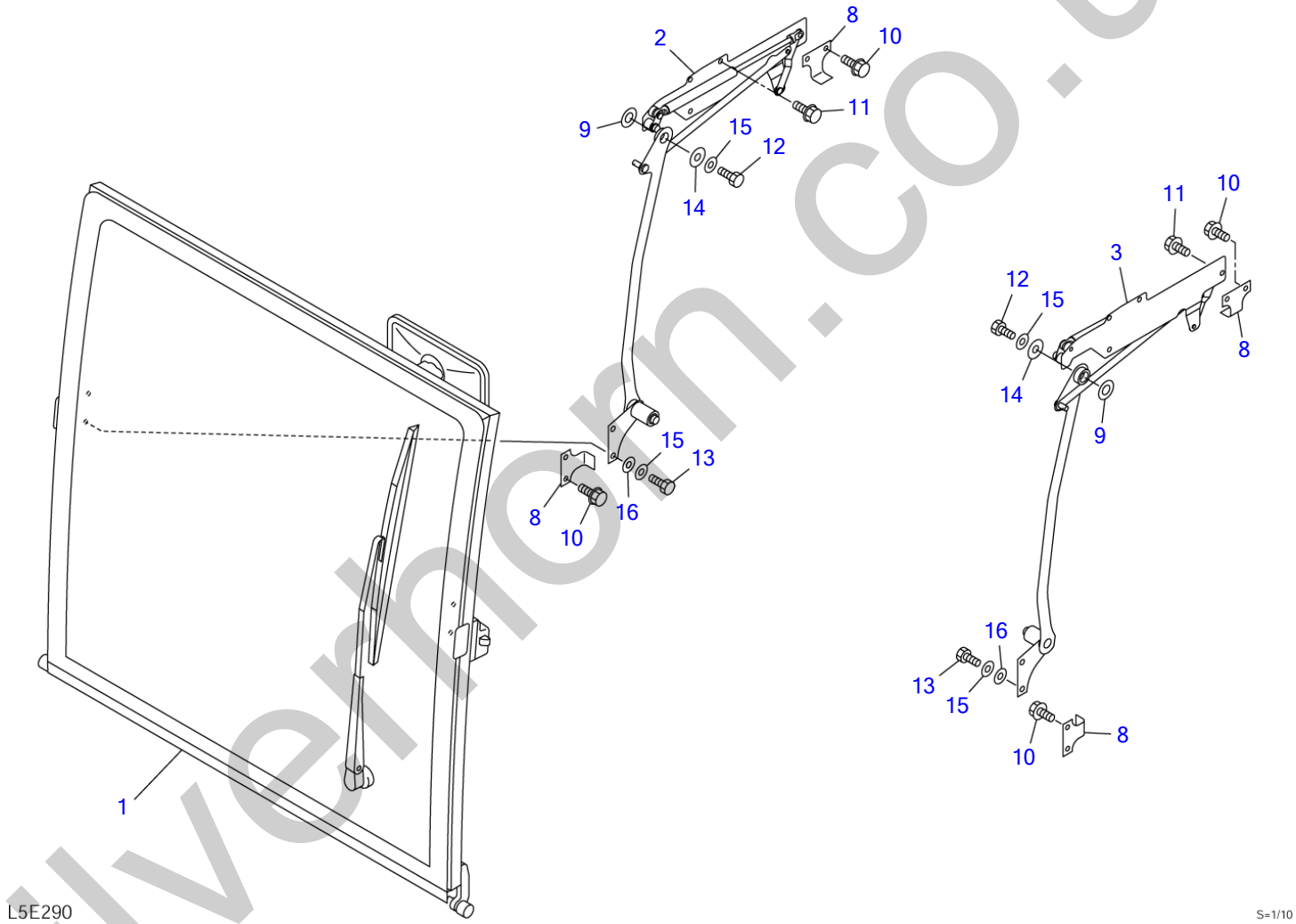

silverhorn.co.uk

CAB (5/7) (front sash assist)

Item	Part number	Description	Q'ty	Chan.	Serial No.	Serv.	Remarks
0-2	0568652500	ASSIST ASSY, front sash	1				
1	0568652600	・SASH ASSY, front	1				see page (7/7)
2	0568652700	・ASSIST ASSY (R.H.)	1				see page (6/7)
3	0568652750	・ASSIST ASSY (L.H.)	1				see page (6/7)
8	0378603710	・PLATE	4				
9	0083252100	・WASHER	2				
10	1106690616	・BOLT	8				
11	1106690620	・BOLT	8				
12	1100090820	・BOLT	2				
13	1100090816	・BOLT	4				
14	0578600401	・WASHER	2				
15	1654011705	・WASHER	6				
16	1141190008	・WASHER	4				
	L5e290						

silverhorn.co.uk

CAB (6/7) (assist)

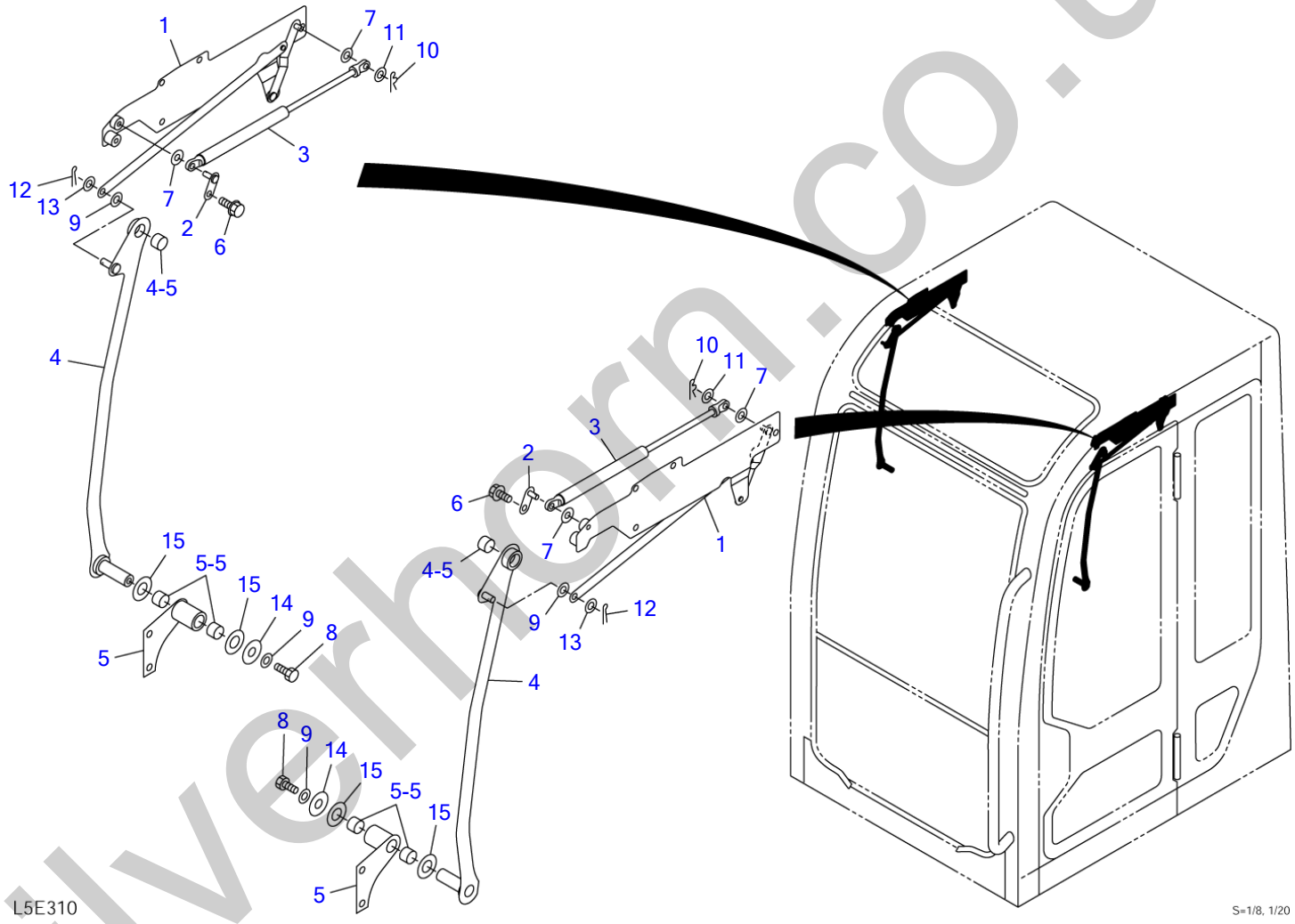

silverhorn.co.uk

CAB (6/7) (assist)

Item	Part number	Description	Q'ty	Chan.	Serial No.	Serv.	Remarks
0-3	0568652700	ASSIST ASSY (R.H.)	1				
	0568652750	ASSIST ASSY (L.H.)	1				
1	0568652720	・LINK ASSY (R.H.)	1				
	0568652770	・LINK ASSY (L.H.)	1				
2	0358601840	・PLATE	1				
3	1653900063	・SPRING, gas	1				
4	0378603720	・ARM ASSY (R.H.)	1				
	0378603740	・ARM ASSY (L.H.)	1				
4-5	1333001512	・・BUSHING	1				
5	0378603760	・PLATE ASSY (R.H.)	1				
	0378603780	・PLATE ASSY (L.H.)	1				
5-5	1333001515	・・BUSHING	2				
6	1106690616	・BOLT	1				
7	1654011756	・WASHER	2				
8	1100090820	・BOLT	1				
9	1654011705	・WASHER	2				
10	1214000006	・PIN, snap	1				
11	1654011712	・WASHER	1				
12	1210002015	・PIN, split	1				
13	1141190008	・WASHER	1				
14	0578600401	・WASHER	1				
15	0083252100	・WASHER	2				
	L5e310						

silverhorn.co.uk

CAB (7/7) (front sash)

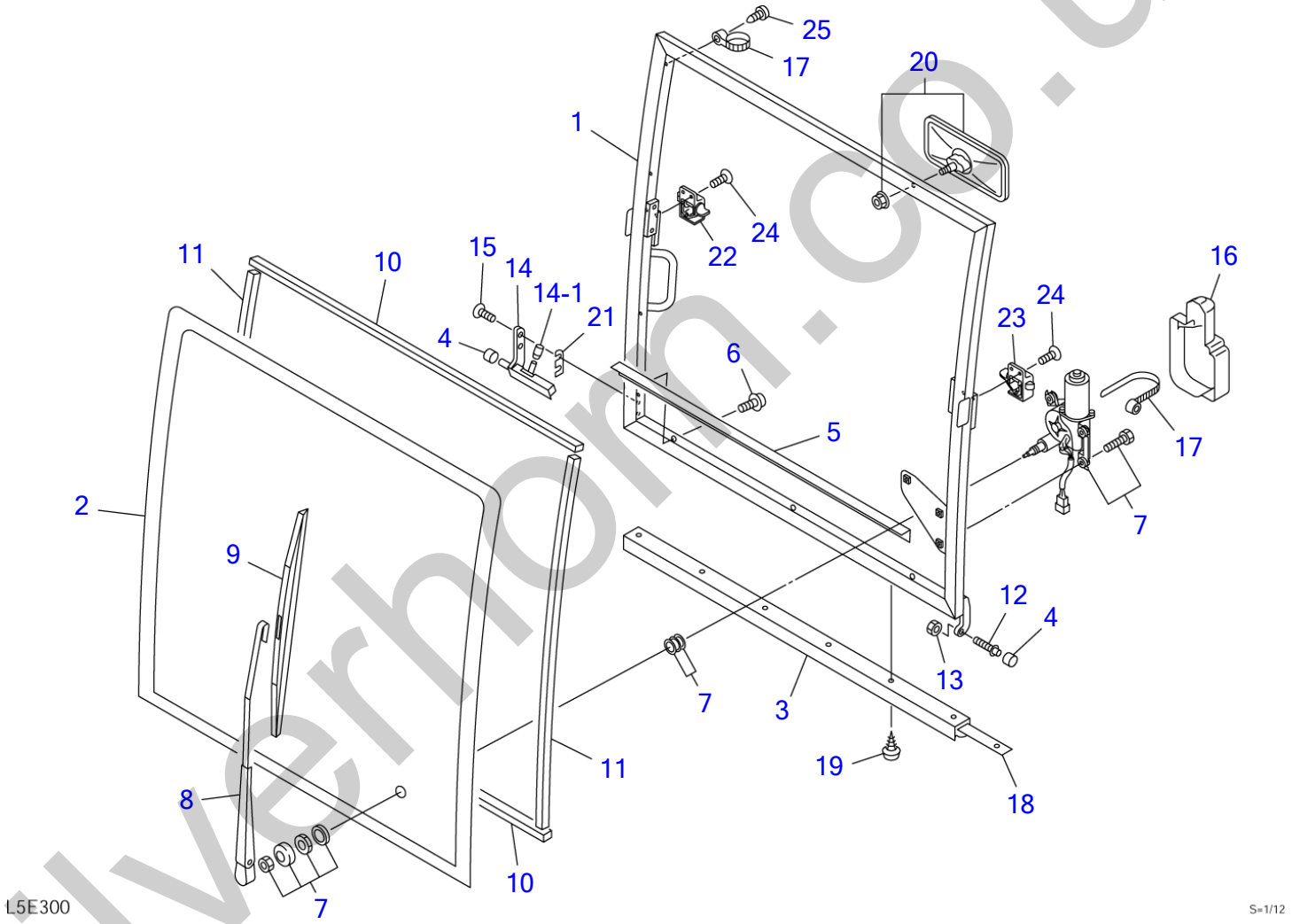

silverhorn.co.uk

CAB (7/7) (front sash)

Item	Part number	Description	Q'ty	Chan.	Serial No.	Serv.	Remarks
0-4	0568652600	SASH ASSY, front	1				
1	0568652610	・SASH, front	1				
2	0568652630	・GLASS	1				
3	0568621800	・SEAL	1				
4	0568622200	・ROLLER	2				
5	0338630440	・PLATE	1				
6	1150420512	・SCREW	3				
7	1704051212	・MOTOR, wiper	1				
8	1704100530	・ARM, wiper	1				
9	1704200530	・BLADE	1				
10	1654615080	・DAM	2				sold by the meter
11	1654616080	・DAM	2				sold by the meter
12	0578600406	・SHAFT	1				
13	1130090010	・NUT	1				
14	0568652640	・LATCH	1				
14-1	0568652647	・・CAP	1				
15	1120890820	・BOLT	2				
16	1704400001	・COVER	1				
17	1652221050	・BAND	5				
18	0568621900	・PLATE	1				
19	1122500412	・SCREW	6				
20	1654005460	・MIRROR	1				
21	0568652650	・PLATE	2				
22	0578600490	・HANDLE (R.H.)	1				
23	0578600480	・HANDLE (L.H.)	1				
24	1120840612	・SCREW	4				
25	1122400510	・SCREW	4				
	L5e300						

silverhorn.co.uk

HEATER (1/3) (17830004-17830417)

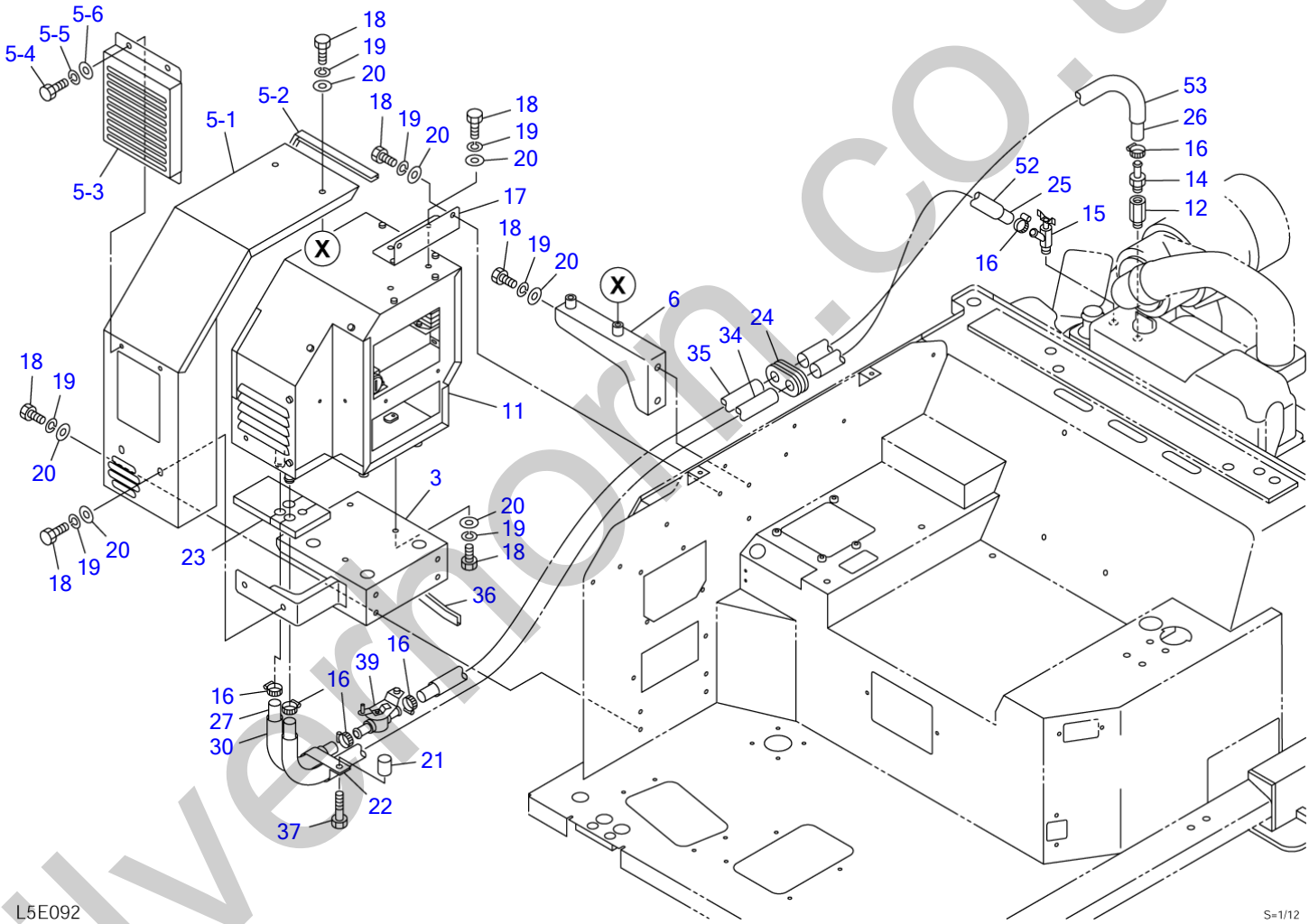

silvermorn.co.uk

HEATER (1/3) (17830004-17830417)

Item	Part number	Description	Q'ty	Chan.	Serial No.	Serv.	Remarks
		HEATER ASSY					X05645-31700-5
3	0564531730	BRACKET	1				
5	0564531840	COVER ASSY	1				
5-1	0564531830	・COVER	1				
5-2	1654606027	・RUBBER	1				sold by the meter
5-3	0564531820	・COVER	1				
5-4	1100040816	・BOLT	2				
5-5	1140020008	・WASHER, spring	2				
5-6	1141110008	・WASHER	2				
6	0564630860	BRACKET	1				
11	1911509410	HEATER UNIT	1				see page (3/3)
12	0007200016	CONNECTOR	1				
14	1911502200	ADAPTOR	1				
15	1911502300	VALVE	1				
16	1911500500	CLAMP	6				
17	0564631230	BRACKET	1		17830100~		
18	1100040816	BOLT	17				
19	1140020008	WASHER, spring	18				
20	1141110008	WASHER	18				
21	0394211020	COLLAR	1				
22	0007300018	CLAMP	1				
23	0564631220	URETHANE	1				
24	0097210300	GUARD	1				
25	1911511860	HOSE	1				sold by the meter
26	1911515165	HOSE	1				sold by the meter
27	1911501820	HOSE	1				sold by the meter
30	1531325012	PROTECTOR	1				sold by the meter
34	1531325100	PROTECTOR	1				sold by the meter
35	1531325090	PROTECTOR	1				sold by the meter
36	1653916022	TRIM	1				sold by the meter
37	1100040850	BOLT	1				
39	1911506008	VALVE, water	1				
52	1531325050	PROTECTOR	1				sold by the meter
53	1531325070	PROTECTOR	1				sold by the meter
	L5e092						

silverhorn.co.uk

HEATER (2/3) (17830004-17830417)

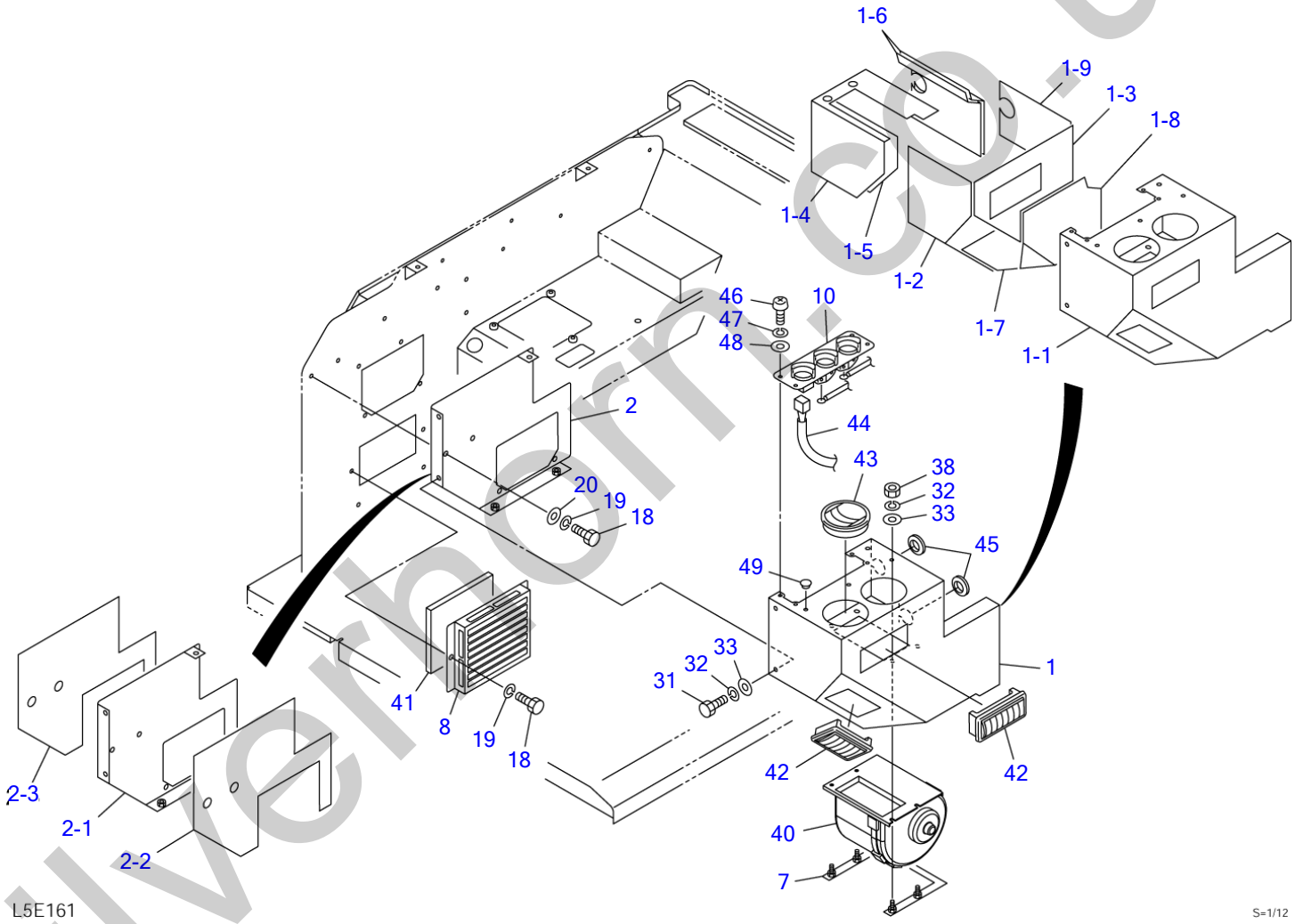

silvernorm.co.uk

HEATER (2/3) (17830004-17830417)

Item	Part number	Description	Q'ty	Chan.	Serial No.	Serv.	Remarks
		HEATER ASSY					X05645-31700-5
1	0564531710	BOX ASSY	1				
1-1	0564531711	・BOX	1				
1-2	0564531712	・URETHANE	1				
1-3	0564531713	・URETHANE	1				
1-4	0564531714	・URETHANE	1				
1-5	0564531715	・URETHANE	1				
1-6	0564531716	・URETHANE	2				
1-7	0564531717	・URETHANE	1				
1-8	0564531718	・URETHANE	1				
1-9	0564531719	・URETHANE	1				
2	0564531720	PLATE ASSY	1				
2-1	0564531721	・PLATE	1				
2-2	0564531722	・URETHANE	1				
2-3	0564531723	・RUBBER	1				
7	0564531770	BRACKET	1				
8	0564631180	COVER	1				
10	1911509426	PANEL ASSY, control	1				
18	1100040816	BOLT	4				
19	1140020008	WASHER, spring	4				
20	1141110008	WASHER	2				
31	1100040612	BOLT	5				
32	1140020006	WASHER, spring	9				
33	1141110006	WASHER	9				
38	1130040016	NUT	4				
40	1911509206	MOTOR, blower	1				
41	0564631190	FILTER	1				
42	1911505723	LOUVER	2				
43	1911505722	LOUVER	2				
44	1911509425	HARNESS, wiring	1				
45	1652053200	GROMMET	2				
46	1120590510	SCREW	4				
47	1140090005	WASHER, spring	4				
48	1141190005	WASHER	4				
49	1652533016	CAP	3				
	L5e162						

silverhorn.co.uk

HEATER (3/3) (17830004-17830417)

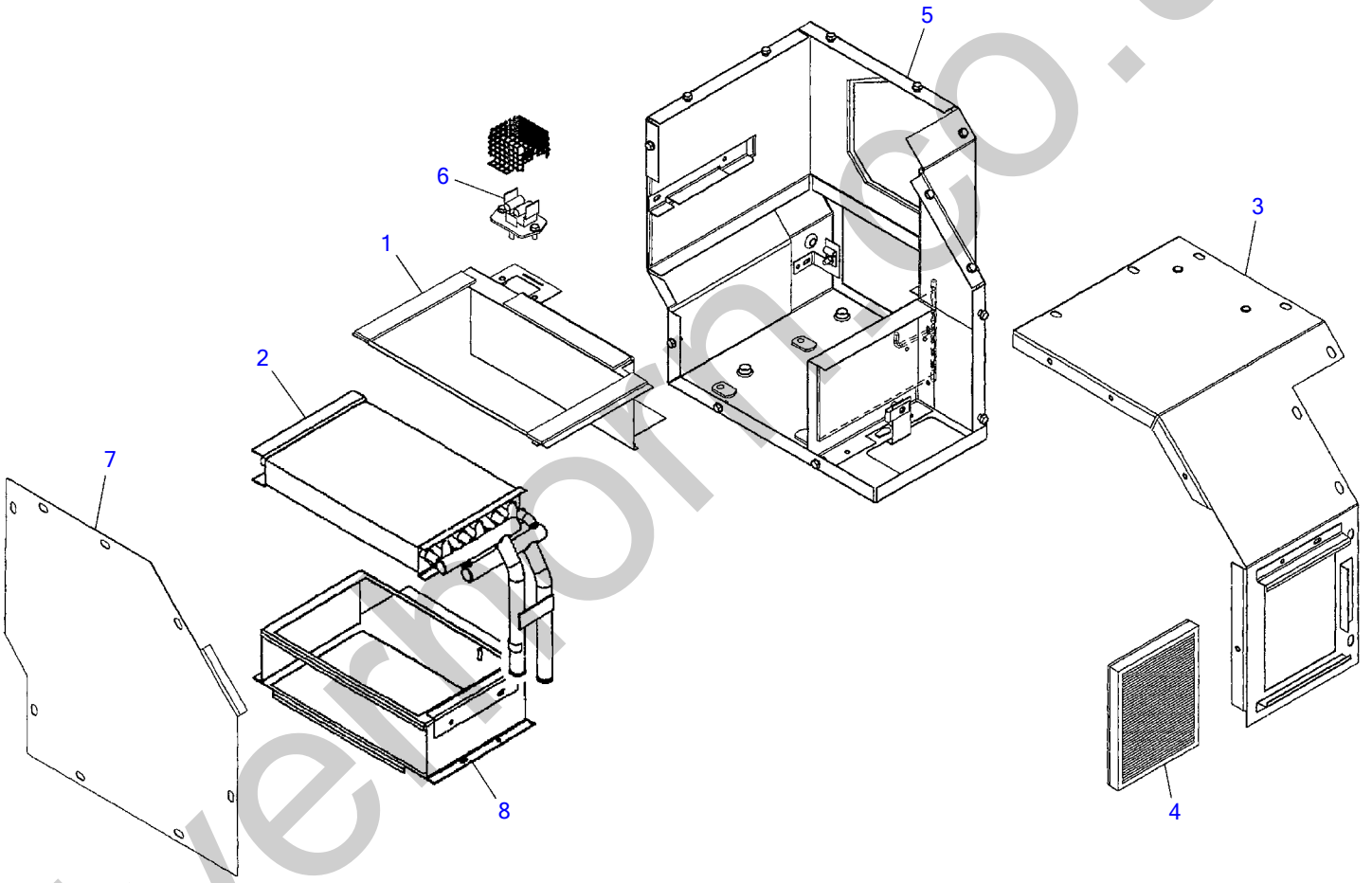

L5E220

S=free

silvermorn.co.uk

HEATER (3/3) (17830004-17830417)

Item	Part number	Description	Q'ty	Chan.	Serial No.	Serv.	Remarks
0	1911509410	HEATER UNIT	1				
1	1911509232	・COVER	1				
2	1911509234	・CORE, heater	1				
3	1911509235	・COVER	1				
4	1911509413	・FILTER	1				
5	1911509236	・HOUSING	1				
6	1911506343	・RESISTOR	1			M	
7	1911509411	・COVER	1				
8	1911509412	・COVER	1				
	L5e221						

silverhorn.co.uk

HEATER (1/2) (17830418-)

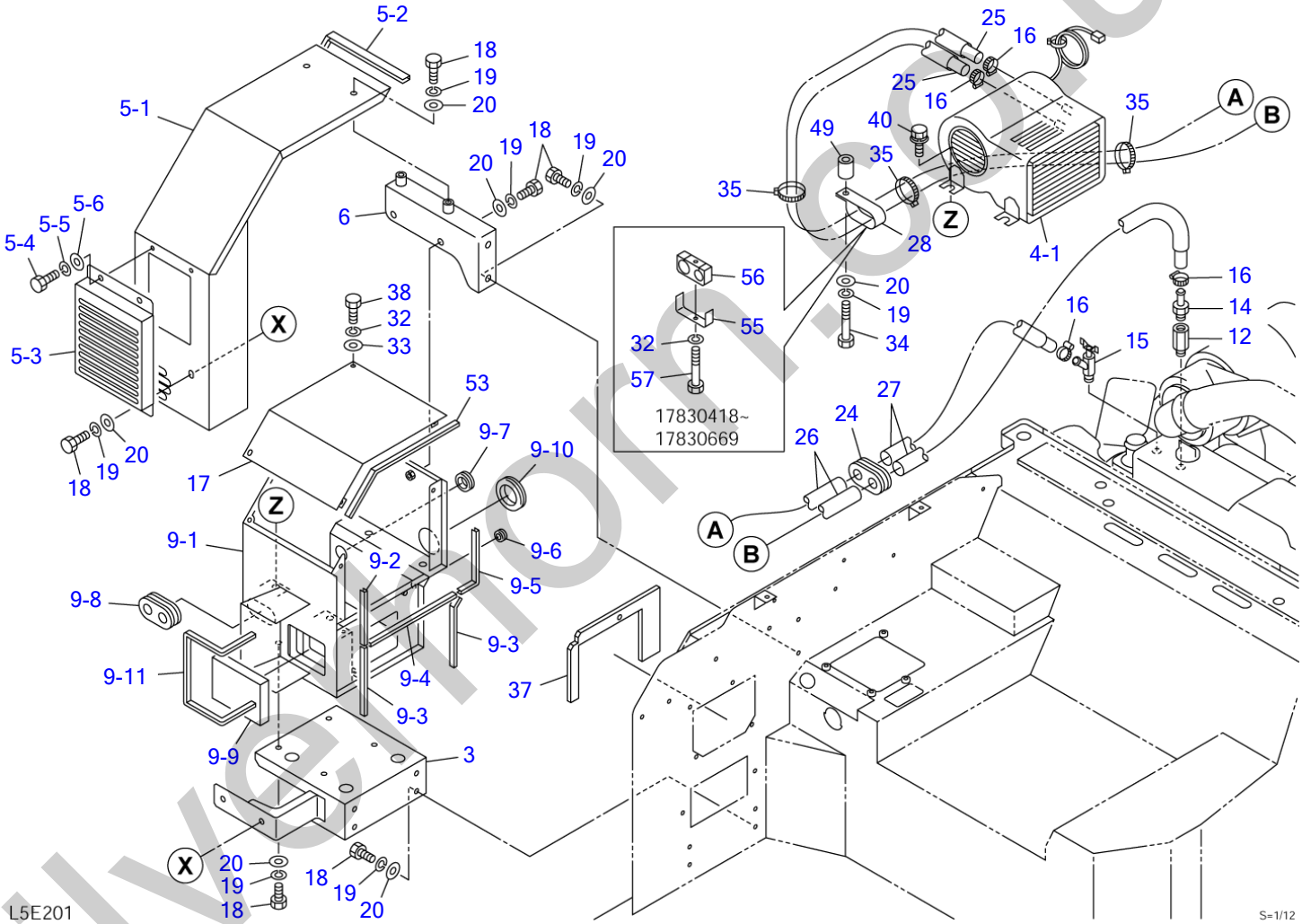

silvermorn.co.uk

HEATER (1/2) (17830418-)

Item	Part number	Description	Q'ty	Chan.	Serial No.	Serv.	Remarks
		HEATER ASSY					X05645-31900-3
3	0564531730	BRACKET	1				
4	0564531910	HEATER UNIT ASSY	1				X05645-31910-0
4-1	1911508100	・HEATER UNIT	1				
5	0394513420	COVER ASSY	1				
5-1	0394617660	・COVER	1				
5-2	1654606036	・RUBBER	1				sold by the meter
5-3	0564531820	・COVER	1				
5-4	1100040816	・BOLT	2				
5-5	1140020008	・WASHER, spring	2				
5-6	1141110008	・WASHER	2				
6	0394513510	BRACKET	1				
9	0564531920	BOX ASSY, heater	1				
9-1	0564531930	・BOX	1				
9-2	1654606012	・TRIM	1				sold by the meter
9-3	1654606015	・TRIM	2				sold by the meter
9-4	1654606022	・TRIM	1				sold by the meter
9-5	1654606014	・TRIM	1				sold by the meter
9-6	1652051200	・GROMMET	1				
9-7	1652060028	・GROMMET	1				
9-8	0337017300	・GUARD	1				
9-9	0564519550	・FILTER	1				
9-10	1652060051	・GROMMET	1				
9-11	1654606048	・TRIM	1			M	sold by the meter
12	1501910303	CONNECTOR	1				
14	1911502200	ADAPTOR	1				
15	1911502100	VALVE	1				
16	1911500500	BAND	4				
17	0564531940	COVER	1				
18	1100040816	BOLT	16				
19	1140020008	WASHER, spring	17				
20	1141110008	WASHER	21				
24	0097210300	GUARD	1				
25	1911521815	HOSE	2				sold by the meter
26	1531325107	PROTECTOR	2			M	sold by the meter
27	1531325050	PROTECTOR	2				sold by the meter
28	0007300018	CLAMP	1		17830670~	M	
32	1140020006	WASHER, spring	4				
33	1141110006	WASHER	4				
34	1100040850	BOLT	1		17830670~		
35	1652231250	BAND	3				
37	0564531937	SPONGE	1				
38	1100040616	BOLT	4				
40	1110561016	SCREW	3				
49	0394211020	COLLAR	1		17830670~	M	
53	1654606030	TRIM	1				sold by the meter
55	0564631200	CLAMP	1		17830418~17830669		
56	0564631210	RUBBER	1		17830418~17830669		
57	1100040650	BOLT	1		17830418~17830669		
	L5e201						

silverform.co.uk

HEATER (2/2) (17830418-)

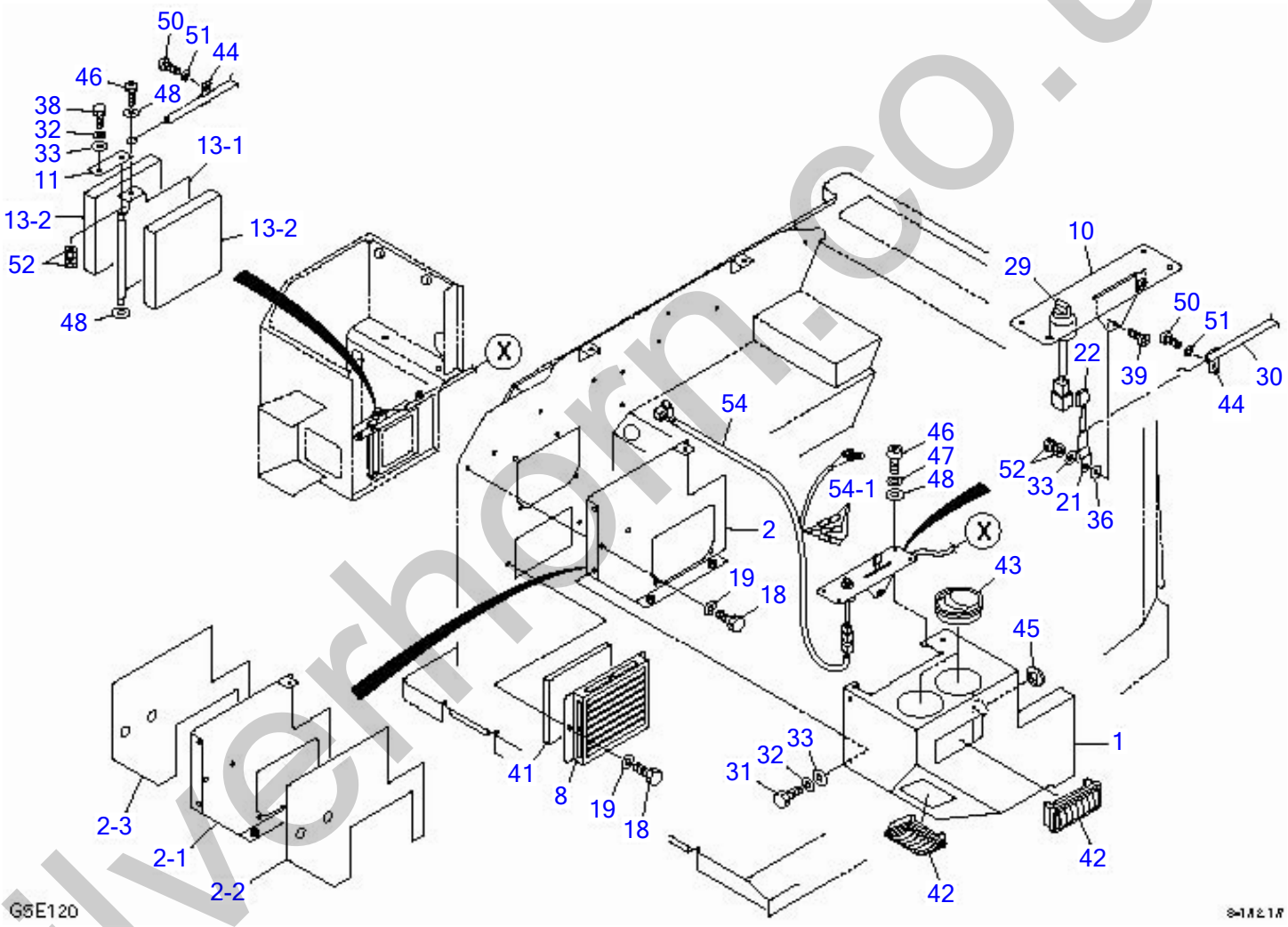

silverhorn.co.uk

HEATER (2/2) (17830418-)

Item	Part number	Description	Q'ty	Chan.	Serial No.	Serv.	Remarks
		HEATER ASSY					X05645-31900-3
1	0564531960	BOX	1				
2	0564531720	PLATE ASSY	1				
2-1	0564531721	・PLATE	1				
2-2	0564531722	・URETHANE	1				
2-3	0564531723	・RUBBER	1				
8	0564631180	COVER	1				
10	0394513550	PANEL, control	1				
11	0394513501	PLATE	1				
13	0394513560	DAMPER ASSY	1				X03945-13560-0
13-1	0394513570	・DAMPER	1				
13-2	0394513562	・SPONGE	2				
18	1100040816	BOLT	8				
19	1140020008	WASHER, spring	8				
21	0564525300	LEVER	1				
22	0564612550	KNOB	1				
29	1700000011	SWITCH, heater	1				
30	0564525460	WIRE	1			M	
31	1100040612	BOLT	5				
32	1140020006	WASHER, spring	6				
33	1141110006	WASHER	7				
36	1652540014	SPACER	1				
38	1100040616	BOLT	1				
39	1120590516	SCREW	1				
41	0564631190	FILTER	1				
42	1911505723	LOUVER	2				
43	1911505722	LOUVER	2				
44	0564612530	CLAMP	2				
45	1652053200	GROMMET	1				
46	1120590510	SCREW	5				
47	1140090005	WASHER, spring	4				
48	1141190005	WASHER	6				
50	1120530408	SCREW	2				
51	1141110004	WASHER	2				
52	1130040005	NUT	4				
54	0564531950	HARNESS ASSY, wiring	1				
54-1	1730500008	・DIODE (3A yellow)	3				
	L5e211						

silverhorn.co.uk

AIR CONDITIONER (1/7) (compressor)

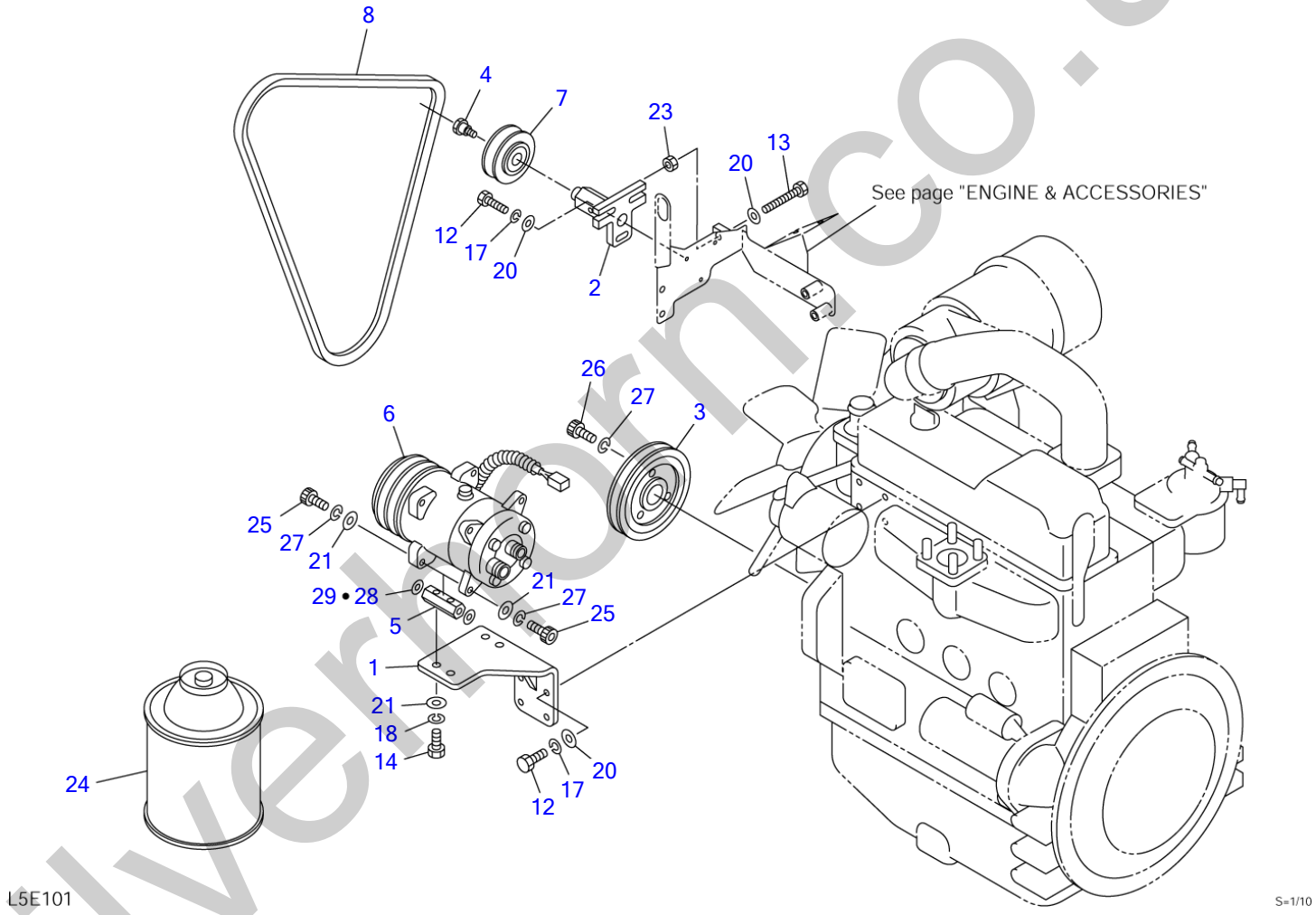

silverhorn.co.uk

AIR CONDITIONER (1/7) (compressor)

Item	Part number	Description	Q'ty	Chan.	Serial No.	Serv.	Remarks
		CONDITIONER ASSY, air					X05646-30500-1
0-1	X **********	COMPRESSOR ASSY	1				X05646-30600-4
1	0564630610	・BRACKET	1				
2	0564630650	・BOSS	1	A	17830004~17830077		M10
	0564630670	・BOSS	1	a	17830078~		M12
3	0564630630	・PULLEY	1				
4	0564630640	・SHAFT	1	A	17830004~17830077		M10
	0564630660	・SHAFT	1	a	17830078~		M12
5	0564620110	・BOSS	2				
6	1911506010	・COMPRESSOR	1				
7	1911505700	・PULLEY	1				
8	1621071062	・V-BELT	1				
12	1100040825	・BOLT	7				
13	1100240885	・BOLT	1				
14	1100041030	・BOLT	4				
17	1140020008	・WASHER, spring	7				
18	1140020010	・WASHER, spring	4				
20	1141110008	・WASHER	8				
21	1141110010	・WASHER	8				
23	1130040008	・NUT	1				
24	1919055000	・GAS	8				100g
25	1110041025	・SCREW, cap	4				
26	1110041020	・SCREW, cap	3				
27	1140420010	・WASHER, spring	7				
28	0003600222	・SHIM	AR				t=0.2mm
29	0003600223	・SHIM	AR				t=0.3mm
		<<NOTE>>					
		SET "A" is interchangeable with SET "a".					
	L5e101						

silverhorn.co.uk

AIR CONDITIONER (2/7) (condenser)

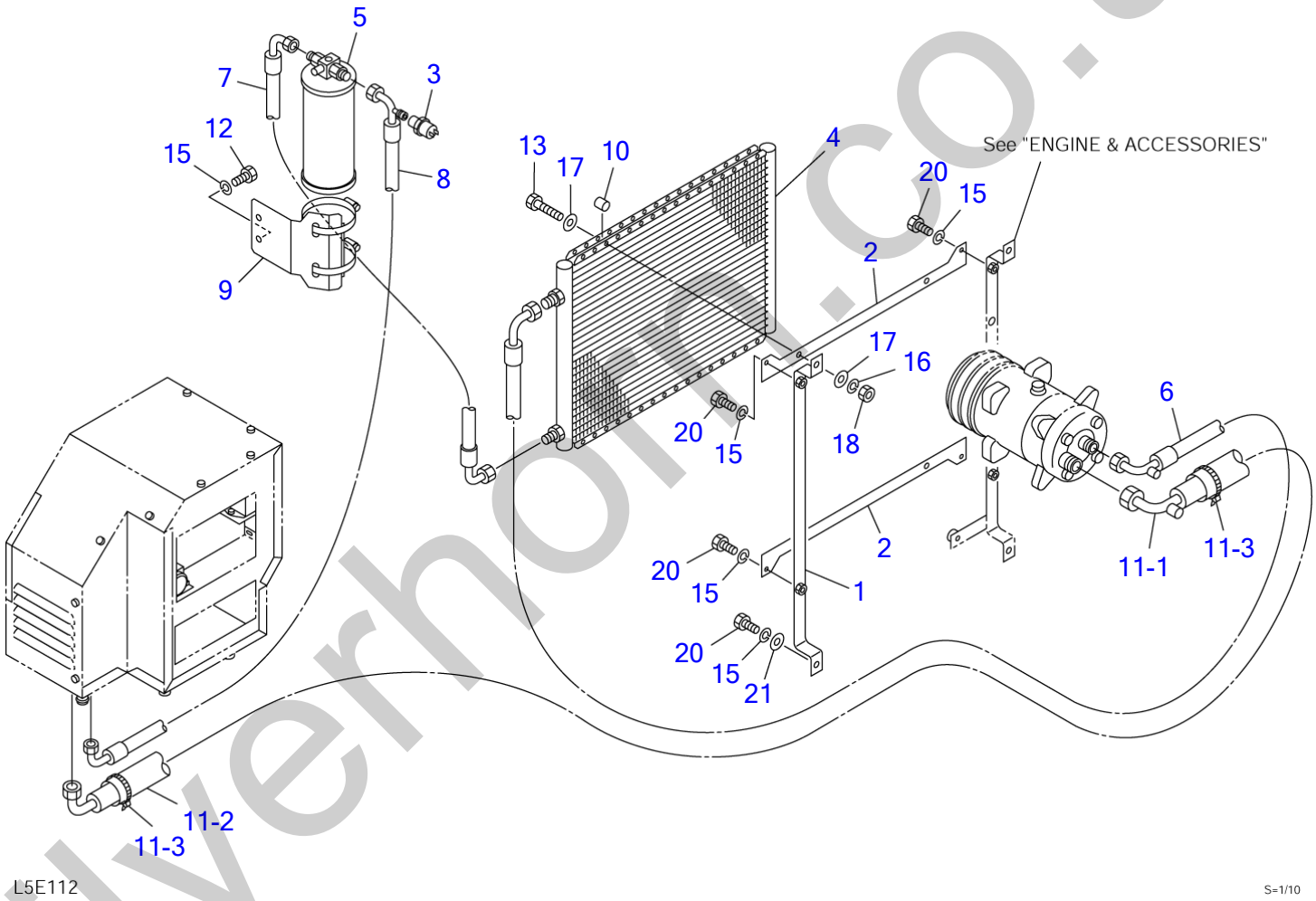

silverhorn.co.uk

AIR CONDITIONER (2/7) (condenser)

Item	Part number	Description	Q'ty	Chan.	Serial No.	Serv.	Remarks
		CONDITIONER ASSY, air					X05646-30500-1
0-2	X **********	CONDENSER ASSY	1				X05646-30700-3
1	0564630730	・BRACKET	1				
2	0564630740	・BRACKET	2				
3	1911505514	・SWITCH, pressure	1				
4	1911506620	・CONDENSER	1				
5	1911505511	・DRIER	1				
6	1911509203	・HOSE	1				
	1911505602	・・O-RING	2				
7	1911509201	・HOSE	1				
	1911505601	・・O-RING	2				
8	1911509202	・HOSE	1				
	1911505601	・・O-RING	2				
9	1911506301	・BRACKET	1				
10	0574600250	・COLLAR	4				
11	0564631130	・HOSE ASSY	1				
11-1	1911509204	・・HOSE	1				
	1911505603	・・・O-RING	2				
11-2	0394615141	・・INSULATOR	1				
11-3	1652241150	・・BAND	2				
12	1100040816	・BOLT	2				
13	1100040640	・BOLT	4				
15	1140020008	・WASHER, spring	8				
16	1140020006	・WASHER, spring	4				
17	1141110006	・WASHER	12				
18	1130040006	・NUT	4				
20	1100040820	・BOLT	6				
21	1141110008	・WASHER	2				
	L5e112						

silverhorn.co.uk

AIR CONDITIONER (3/7) (air conditioner unit)

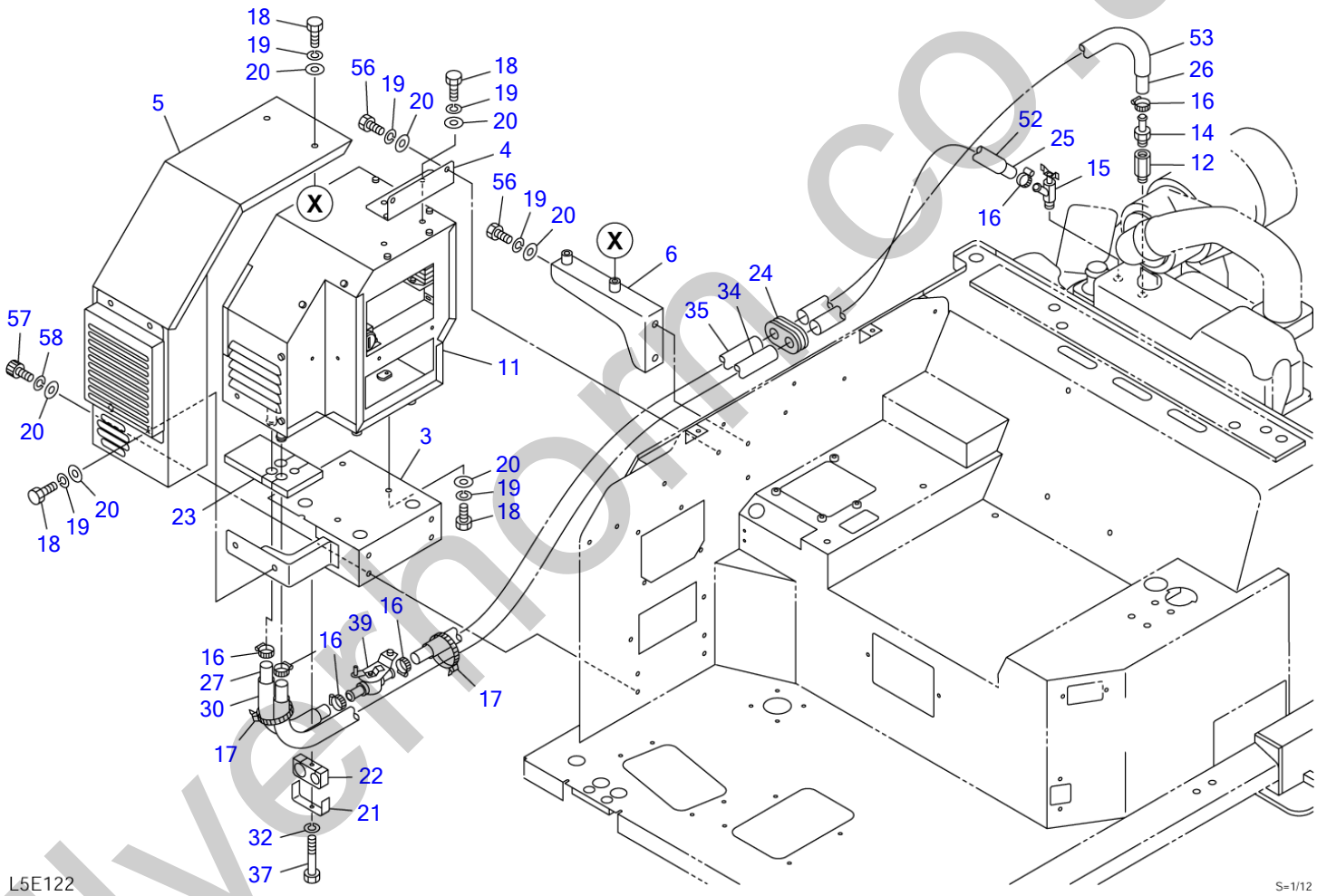

silvermoon.co.uk

AIR CONDITIONER (3/7) (air conditioner unit)

Item	Part number	Description	Q'ty	Chan.	Serial No.	Serv.	Remarks
0-3	X **********	CONDITIONER ASSY, air UNIT ASSY	1				X05646-30500-1 X05646-31000-7
3	0564531730	・BRACKET	1				
4	0564631230	・BRACKET	1				
5	0564631120	・COVER ASSY	1				see page (5/7)
6	0564630860	・BRACKET	1				
11	0564631100	・UNIT ASSY, air conditioner	1		17830004~17830099		see page (5/7)
	0564631240	・UNIT ASSY, air conditioner	1		17830100~		see page (5/7)
12	0007200016	・CONNECTOR	1				
14	1911502200	・ADAPTOR	1				
15	1911502300	・VALVE	1				
16	1911500500	・CLAMP	6				
17	1652241300	・BAND	2				
18	1100040816	・BOLT	10				
19	1140020008	・WASHER, spring	14				
20	1141110008	・WASHER	18				
21	0564631200	・CLAMP	1				
22	0564631210	・RUBBER	1				
23	0564631220	・URETHANE	1				
24	0097210300	・GUARD	1				
25	1911511860	・HOSE	1				sold by the meter
26	1911515165	・HOSE	1				sold by the meter
27	1911501820	・HOSE	1				sold by the meter
30	1531325012	・PROTECTOR	1				sold by the meter
32	1140020006	・WASHER, spring	1				
34	1531325100	・PROTECTOR	1				sold by the meter
35	1531325090	・PROTECTOR	1				sold by the meter
37	1100040650	・BOLT	1				
39	1911506008	・VALVE, water	1				
52	1531325050	・PROTECTOR	1				sold by the meter
53	1531325070	・PROTECTOR	1				sold by the meter
56	1100040814	・BOLT	4				
57	1110040814	・SCREW, cap	4				
58	1140420008	・WASHER, spring	4				
	L5e123						

silverhorn.co.uk

AIR CONDITIONER (4/7) (air conditioner unit; 17830004-17830417)

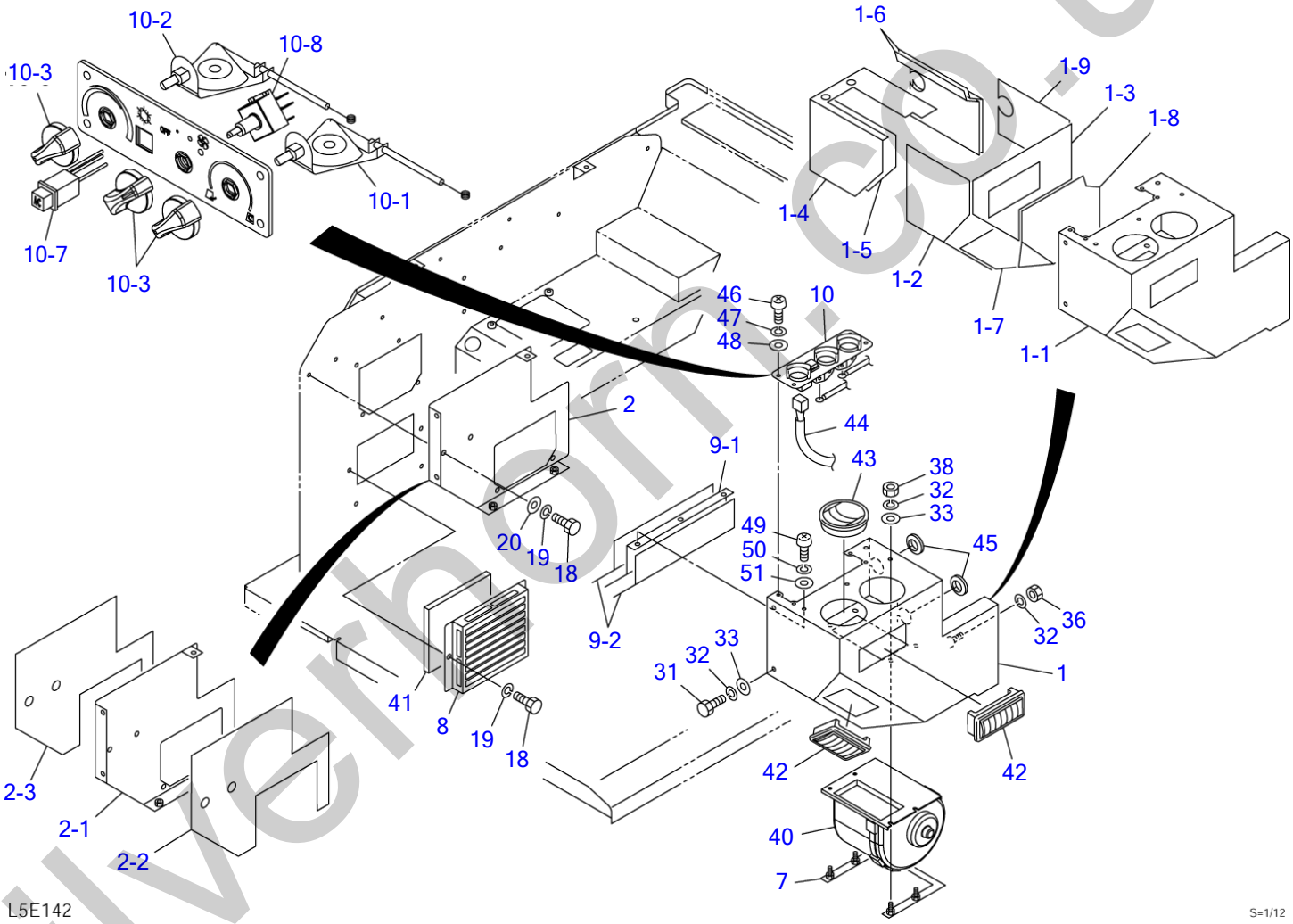

silvermoni.co.uk

AIR CONDITIONER (4/7) (air conditioner unit; 17830004-17830417)

Item	Part number	Description	Q'ty	Chan.	Serial No.	Serv.	Remarks
0-3	X **********	CONDITIONER ASSY, air UNIT ASSY	1				X05646-30500-1 X05646-31000-5
1	0564531710	・BOX ASSY	1				
1-1	0564531711	・・BOX	1				
1-2	0564531712	・・URETHANE	1				
1-3	0564531713	・・URETHANE	1				
1-4	0564531714	・・URETHANE	1				
1-5	0564531715	・・URETHANE	1				
1-6	0564531716	・・URETHANE	2				
1-7	0564531717	・・URETHANE	1				
1-8	0564531718	・・URETHANE	1				
1-9	0564531719	・・URETHANE	1				
2	0564531720	・PLATE ASSY	1				
2-1	0564531721	・・PLATE	1				
2-2	0564531722	・・URETHANE	1				
2-3	0564531723	・・RUBBER	1				
7	0564531770	・BRACKET	1				
8	0564631180	・COVER	1				
9	0564531780	・PLATE ASSY	1				
9-1	0564531781	・・PLATE	1				
9-2	0564531782	・・URETHANE	2				
10	1911509208	・PANEL ASSY, control	1				
10-1	1911509210	・・CONVERTER, cable control	1			M	
10-2	1911509220	・・CONVERTER, cable control	1			M	
10-3	1911505763	・・KNOB	3			M	
10-7	1911505767	・・SWTCH, air con.	1			M	
10-8	1911509280	・・ROTARY SWITCH, 3-speed	1			M	
18	1100040816	・BOLT	4				
19	1140020008	・WASHER, spring	4				
20	1141110008	・WASHER	2				
31	1100040612	・BOLT	5				
32	1140020006	・WASHER, spring	10				
33	1141110006	・WASHER	9				
36	1130040006	・NUT	1				
38	1130040016	・NUT	4				
40	1911509206	・MOTOR, blower	1				
41	0564631190	・FILTER	1				
42	1911505723	・LOUVER	2				
43	1911505722	・LOUVER	2				
44	1911509205	・HARNESS, wiring	1				
45	1652053200	・GROMMET	2				
46	1120590510	・SCREW	4				
47	1140090005	・WASHER, spring	4				
48	1141190005	・WASHER	4				
49	1120590610	・SCREW	3				
50	1140090006	・WASHER, spring	3				
51	1141190006	・WASHER	3				
	L5e143						

silverhorn.co.uk

AIR CONDITIONER (4/7) (air conditioner unit; 17830418-)

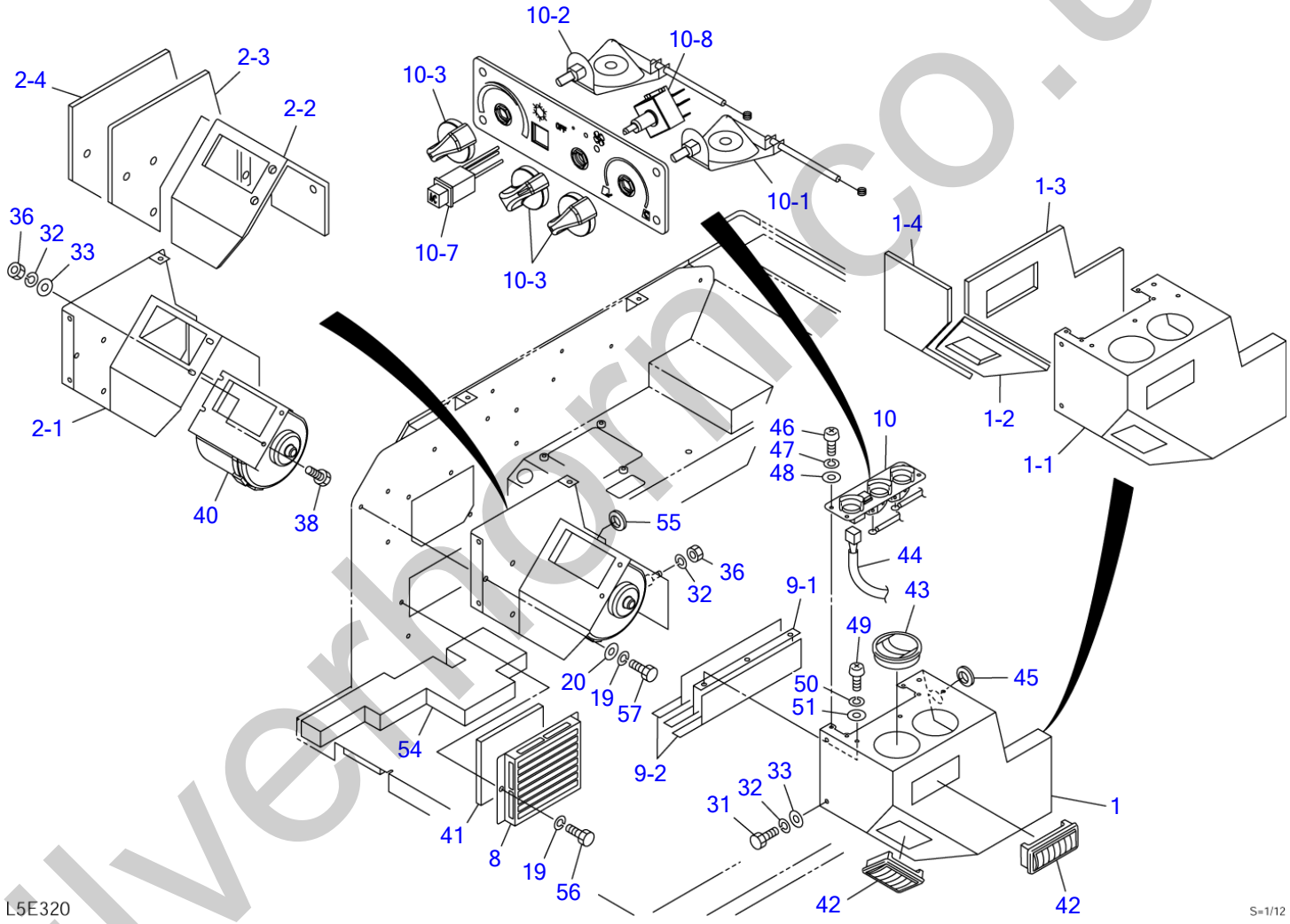

silverthorn.co.uk

AIR CONDITIONER (4/7) (air conditioner unit; 17830418-)

Item	Part number	Description	Q'ty	Chan.	Serial No.	Serv.	Remarks
0	X **********	CONDITIONER ASSY, air UNIT ASSY	1				X05646-30500-1 X05646-31000-7
1	0564532200	・BOX ASSY	1			M	
1-1	0564531870	・・BOX	1			M	
1-2	0564532210	・・INSULATOR	1			M	
1-3	0564532220	・・INSULATOR	1			M	
1-4	0564532230	・・INSULATOR	1			M	
2	0564532300	・PLATE ASSY	1			M	
2-1	0564532310	・・PLATE	1			M	
2-2	0564532320	・・INSULATOR	1			M	
2-3	0564532330	・・INSULATOR	1			M	
2-4	0564532340	・・INSULATOR	1			M	
8	0564631180	・COVER	1				
9	0564631300	・PLATE ASSY	1			M	
9-1	0564631310	・・PLATE	1			M	
9-2	0564631320	・・URETHANE	2			M	
10	1911509208	・PANEL ASSY, control	1				
10-1	1911509210	・・CONVERTER, cable control	1			M	
10-2	1911509220	・・CONVERTER, cable control	1			M	
10-3	1911505763	・・KNOB	3			M	
10-7	1911505767	・・SWTCH, air con.	1			M	
10-8	1911509280	・・ROTARY SWITCH, 3-speed	1			M	
19	1140020008	・WASHER, spring	6				
20	1141110008	・WASHER	4				
31	1100040612	・BOLT	5				
32	1140020006	・WASHER, spring	8				
33	1141110006	・WASHER	7				
36	1130040006	・NUT	3				
38	1100040616	・BOLT	2				
40	1911509206	・MOTOR, blower	1				
41	0564631190	・FILTER	1				
42	1911505723	・LOUVER	2				
43	1911505722	・LOUVER	2				
44	1911509205	・HARNESS, wiring	1				
45	1652053200	・GROMMET	1				
46	1120590510	・SCREW	4				
47	1140090005	・WASHER, spring	4				
48	1141190005	・WASHER	4				
49	1120590610	・SCREW	3				
50	1140090006	・WASHER, spring	3				
51	1141190006	・WASHER	3				
54	0564631256	・INSULATOR	1			M	
55	1652053600	・GROMMET	1			M	
56	1100040814	・BOLT	6				
	L5e320						

silverthorn.co.uk

AIR CONDITIONER (5/7) (air conditioner unit)

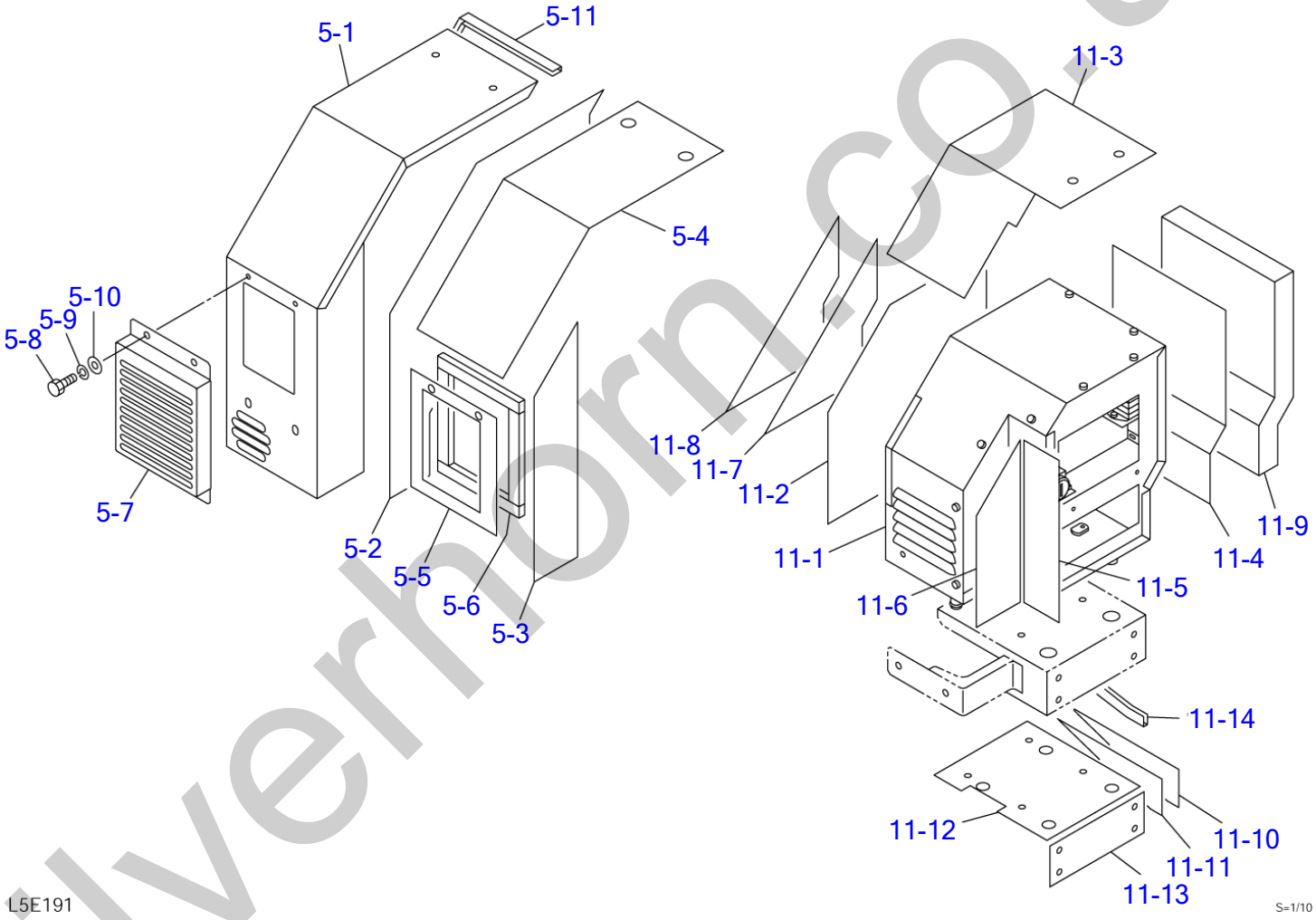

silverhorn.co.uk

AIR CONDITIONER (5/7) (air conditioner unit)

Item	Part number	Description	Q'ty	Chan.	Serial No.	Serv.	Remarks
		CONDITIONER ASSY, air					X05646-30500-1
0-3	X **********	UNIT ASSY	1				X05646-31000-7
5	0564631120	・COVER ASSY	1				
5-1	0564531830	・・COVER	1				
5-2	0564631121	・・INSULATOR	1				
5-3	0564631122	・・INSULATOR	1				
5-4	0564631123	・・INSULATOR	1				
5-5	0564631124	・・INSULATOR	1				
5-6	1654304017	・・SPONGE	4				
5-7	0564531820	・・COVER	1				
5-8	1100040816	・・BOLT	2				
5-9	1140020008	・・WASHER, spring	2				
5-10	1141110008	・・WASHER	2				
5-11	1654606027	・・RUBBER	1				sold by the meter
11	0564631100	・UNIT ASSY, air conditioner	1		17830004~17830099		
	0564631240	・UNIT ASSY, air conditioner	1		17830100~		
11-1	1911509230	・UNIT, air conditioner	1				see page (7/7)
11-2	0564631101	・・INSULATOR	1		17830004~17830099		
	0564631113	・・INSULATOR	1		17830100~		
11-3	0564631102	・・INSULATOR	1				
11-4	0564631103	・・INSULATOR	1		17830004~17830099		
	0564631115	・・INSULATOR	1		17830100~		
11-5	0564631104	・・INSULATOR	1		17830004~17830099		
	0564631116	・・INSULATOR	1		17830100~		
11-6	0564631105	・・INSULATOR	1		17830004~17830099		
	0564631117	・・INSULATOR	1		17830100~		
11-7	0564631106	・・INSULATOR	1				
11-8	0564631107	・・URETHANE	1				
11-9	0564631108	・・URETHANE	1		17830004~17830099		
	0564631114	・・URETHANE	1		17830100~		
11-10	0564631109	・・INSULATOR	1				
11-11	0564631110	・・INSULATOR	1				
11-12	0564631111	・・INSULATOR	1				
11-13	0564631112	・・INSULATOR	1				
11-14	1653916022	・・TRIM	1				sold by the meter
	L5e192						

silverhorn.co.uk

AIR CONDITIONER (6/7) (air conditiner solenoid)

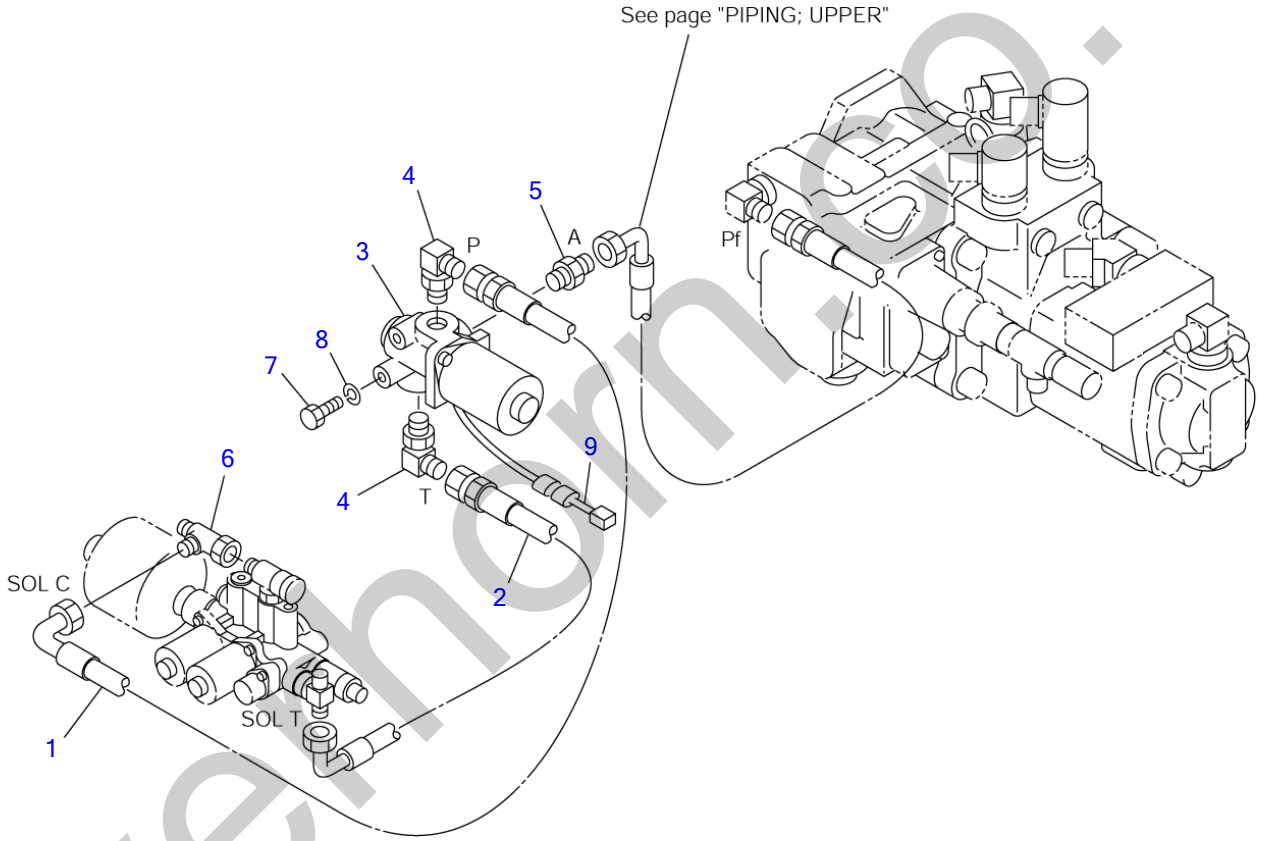

L5E131

S=1/6

silverhorn.co.uk

AIR CONDITIONER (6/7) (air conditiner solenoid)

Item	Part number	Description	Q'ty	Chan.	Serial No.	Serv.	Remarks
		CONDITIONER ASSY, air					X05646-30500-1
0-4	X **********	SOLENOID ASSY, air conditioner	1				X05646-30900-2
1	0564630910	・HOSE ASSY	1				18010-52055
2	0564630920	・HOSE ASSY	1				18010-52035
3	1901746600	・VALVE, solenoid	1				
4	1515012040	・ELBOW	2				
	1420010110	・・O-RING	1				
5	1515600200	・ADAPTOR	1				
	1420010110	・・O-RING	1				
6	1513390015	・TEE	1				
7	1100040625	・BOLT	2				
8	1140020006	・WASHER, spring	2				
9	0564630901	・CONNECTOR	1				
	L5e131						

silverhorn.co.uk

AIR CONDITIONER (7/7)

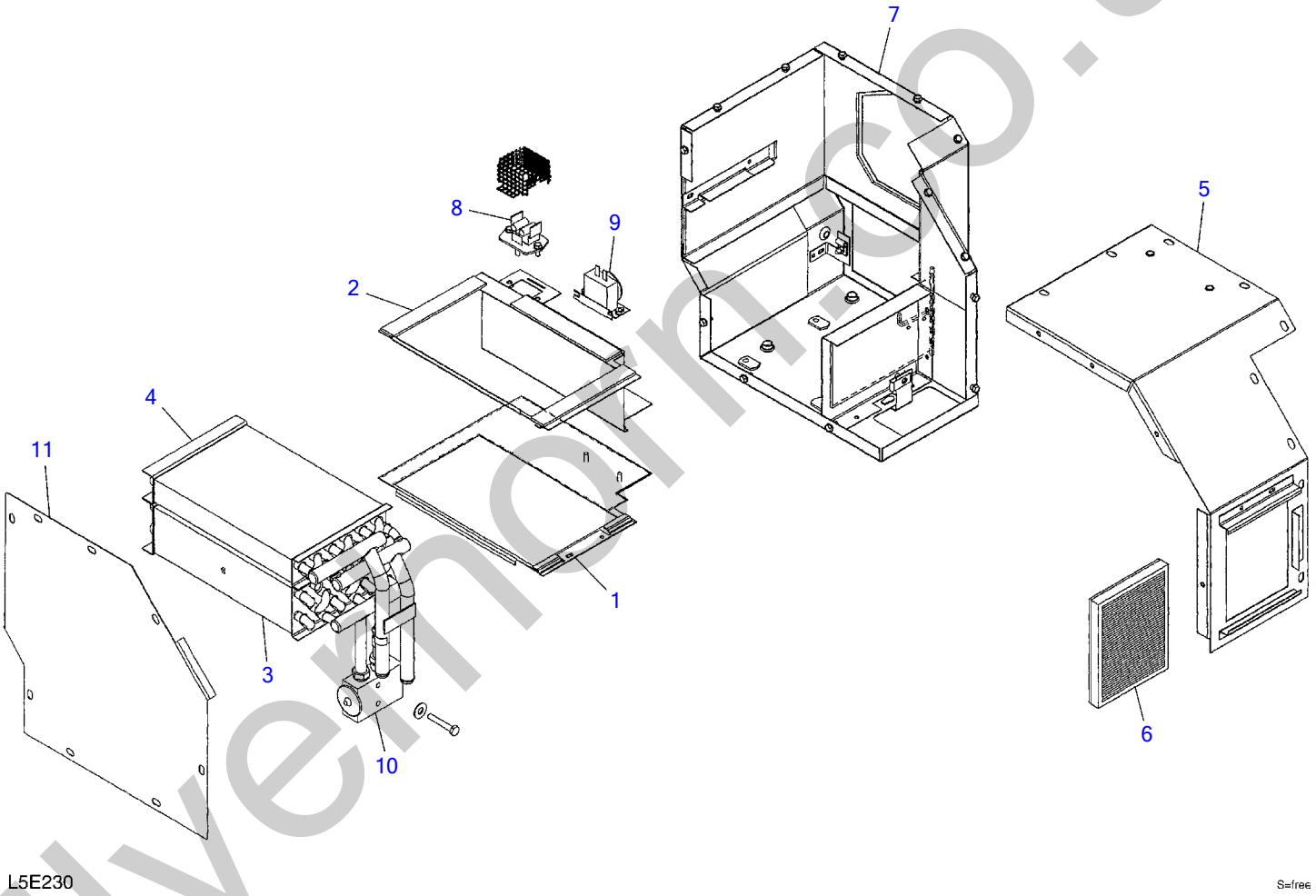

silvermorn.co.uk

AIR CONDITIONER (7/7)

Item	Part number	Description	Q'ty	Chan.	Serial No.	Serv.	Remarks
0	1911509230	UNIT, air conditioner	1				
1	1911509231	・COVER	1				
2	1911509232	・COVER	1				
3	1911509233	・CORE, evaporator	1				
4	1911509234	・CORE, heater	1				
5	1911509235	・COVER	1				
6	1911509413	・FILTER	1				
7	1911509236	・HOUSING	1				
8	1911506343	・RESISTOR	1			M	
9	1911505421	・THERMOSTAT	1			M	
10	1911505422	・VALVE, expansion	1			M	
11	1911509411	・COVER	1				
	L5e231						

silverhorn.co.uk

BOOM (1/2)

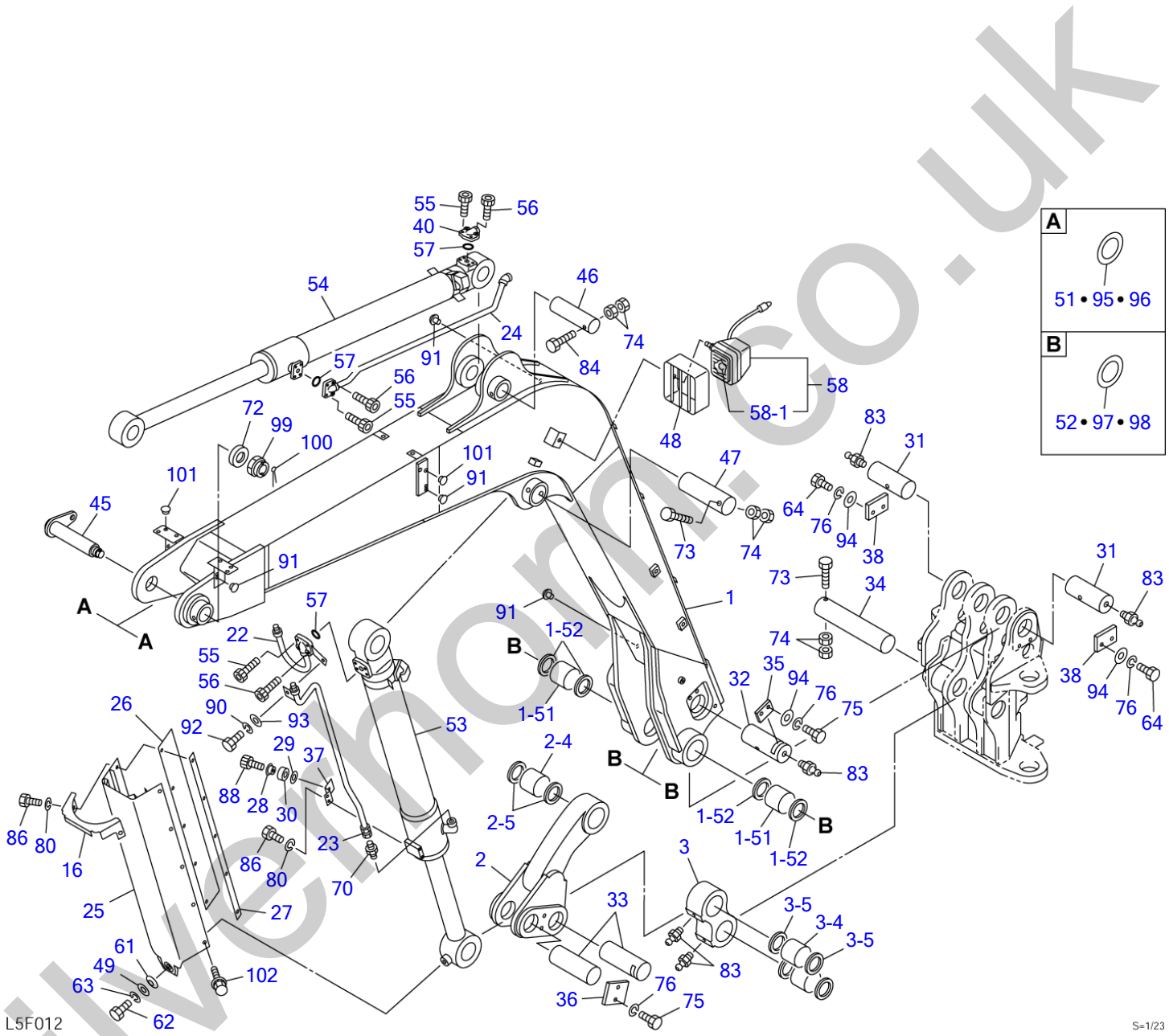

silvermoon.co.uk

BOOM (1/2)

Item	Part number	Description	Q'ty	Chan.	Serial No.	Serv.	Remarks
		BOOM ASSY					X05660-49000-1
1	0566045550	BOOM	1		17830004~17830279		
	0566045650	BOOM	1		17830280~		
1-51	0566022250	・BUSHING	2				
1-52	1432200075	・SEAL, dust	4				
2	0566045900	LINK ASSY, boom	1		17830004~17830561		
	0566045520	LINK ASSY, boom	1		17830562~	M	
2-4	0566022250	・BUSHING	1				
2-5	1432200075	・SEAL, dust	2				
3	0566022400	LINK	1		17830004~17830561		
	0566045640	LINK	1	(H)	17830562~	M	
3-4	0566022250	・BUSHING	2				
3-5	1432200075	・SEAL, dust	4				
3-6	1560001000	・FITTING, grease	2				
16	0566030470	COVER	1				
22	0566022620	PIPE	1				
23	0566030480	PIPE	1				
24	0566030490	PIPE	1				
25	0566045580	PROTECTOR	1				
26	0566022655	RUBBER	2				
27	0566022656	PLATE	2				
28	0566024620	COLLAR	2				
29	0003608003	WASHER	2				
30	1300206005	BEARING	2				
31	0566023720	PIN	2				
32	0566022700	PIN	1				
33	0566022710	PIN	2				
34	0566030500	PIN	1				
35	0566022730	PLATE	1				
36	0566022735	PLATE	1				
37	0566024610	PLATE	2				
38	0566023730	PLATE	2				
40	0566017380	ELBOW	1				
45	0011907007	PIN	1				
46	0001607200	PIN	1				
47	0566021600	PIN	1				
48	0056031510	PROTECTOR	1				
49	0003600057	WASHER	1				
51	0003600099	SHIM	AR				t=1.0mm
52	0003600102	SHIM	AR				t=0.5mm
53	1900092500	CYLINDER, boom	1				
54	1900092600	CYLINDER, arm	1				
55	1110040830	SCREW, cap	6				
56	1110040840	SCREW, cap	6				
57	1420010220	O-RING	3				
58	1703006100	LAMP ASSY	1				
58-1	1703006106	・BULB	1				
61	1225120022	WASHER, conical	1				
62	1101041220	BOLT	1				
63	1140020012	WASHER, spring	1				
64	1100041445	BOLT	4				
70	1515600203	ADAPTOR	1				
	1420010240	・O-RING	1				
72	0566040880	WASHER	1				
73	1103141220	BOLT	2				
74	1130040012	NUT	6				
75	1101041435	BOLT	4				
76	1140020014	WASHER, spring	8				
80	1140020006	WASHER, spring	6				
83	1560001000	FITTING, grease	6				
84	1103141205	BOLT	1				
86	1100040620	BOLT	6				
88	1110040816	SCREW, cap	2				
90	1140020010	WASHER, spring	1				
91	1652533016	CAP	11				
92	1100041020	BOLT	1				
93	0003600025	WASHER	1				
94	1141110014	WASHER	8				

silverthorn.co.uk

BOOM (1/2)

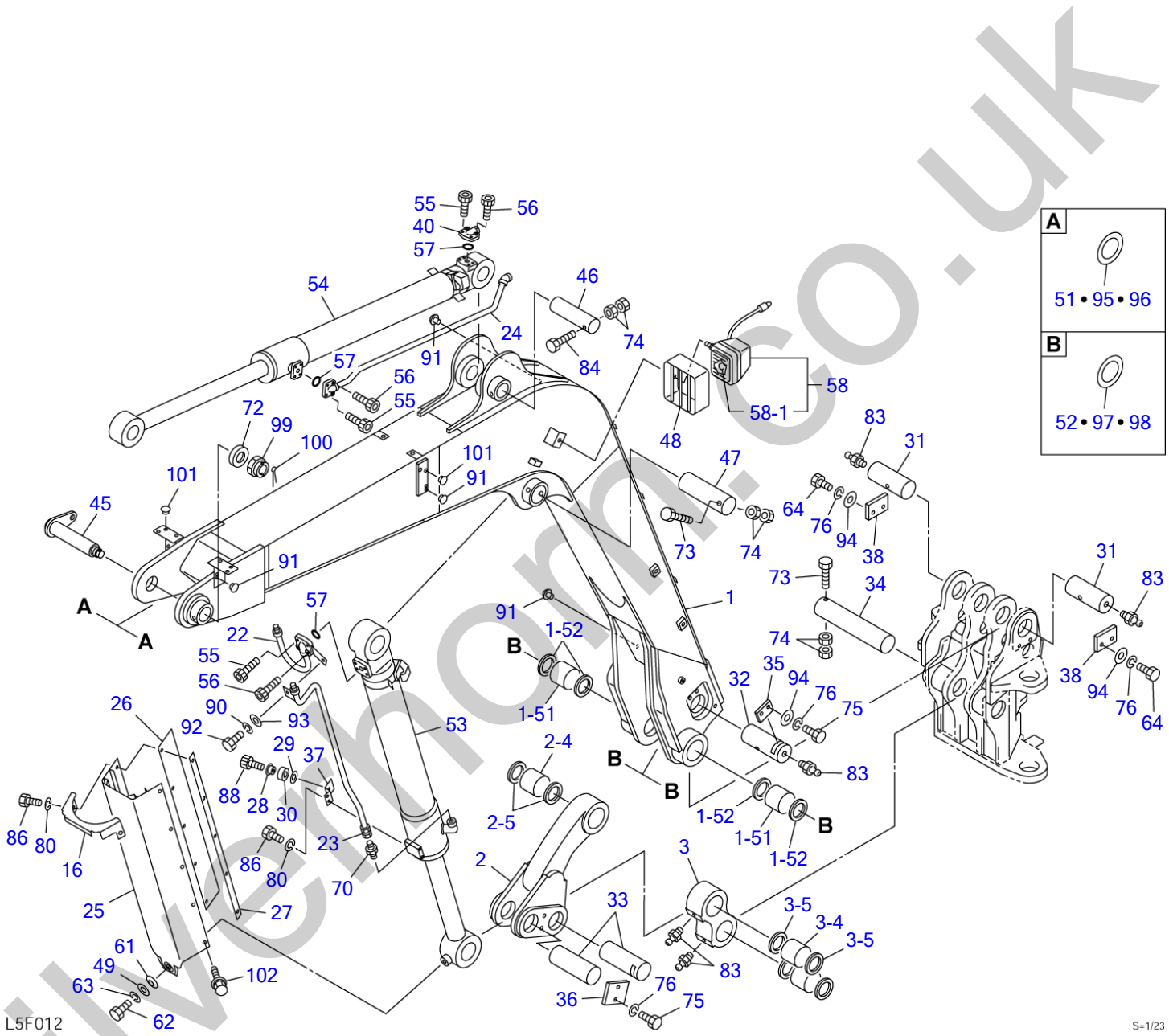

silvermoon.co.uk

BOOM (1/2)

Item	Part number	Description	Q'ty	Chan.	Serial No.	Serv.	Remarks
95	0003600094	SHIM	AR				t=0.2mm
96	0003600095	SHIM	AR				t=0.5mm
97	0003600101	SHIM	AR				t=0.2mm
98	0003600170	SHIM	AR				t=1.0mm
99	1132130042	NUT	1				
100	1210010890	PIN, split	1				
101	1652533017	CAP	8				
102	1100560616	BOLT	8				
102		<<NOTE>>					
102		item 2 & item 1 (INTERFERENCE SENSOR)					
102		has interchangeability in a set.					
	L5f013						

silverhorn.co.uk

BOOM (2/2)

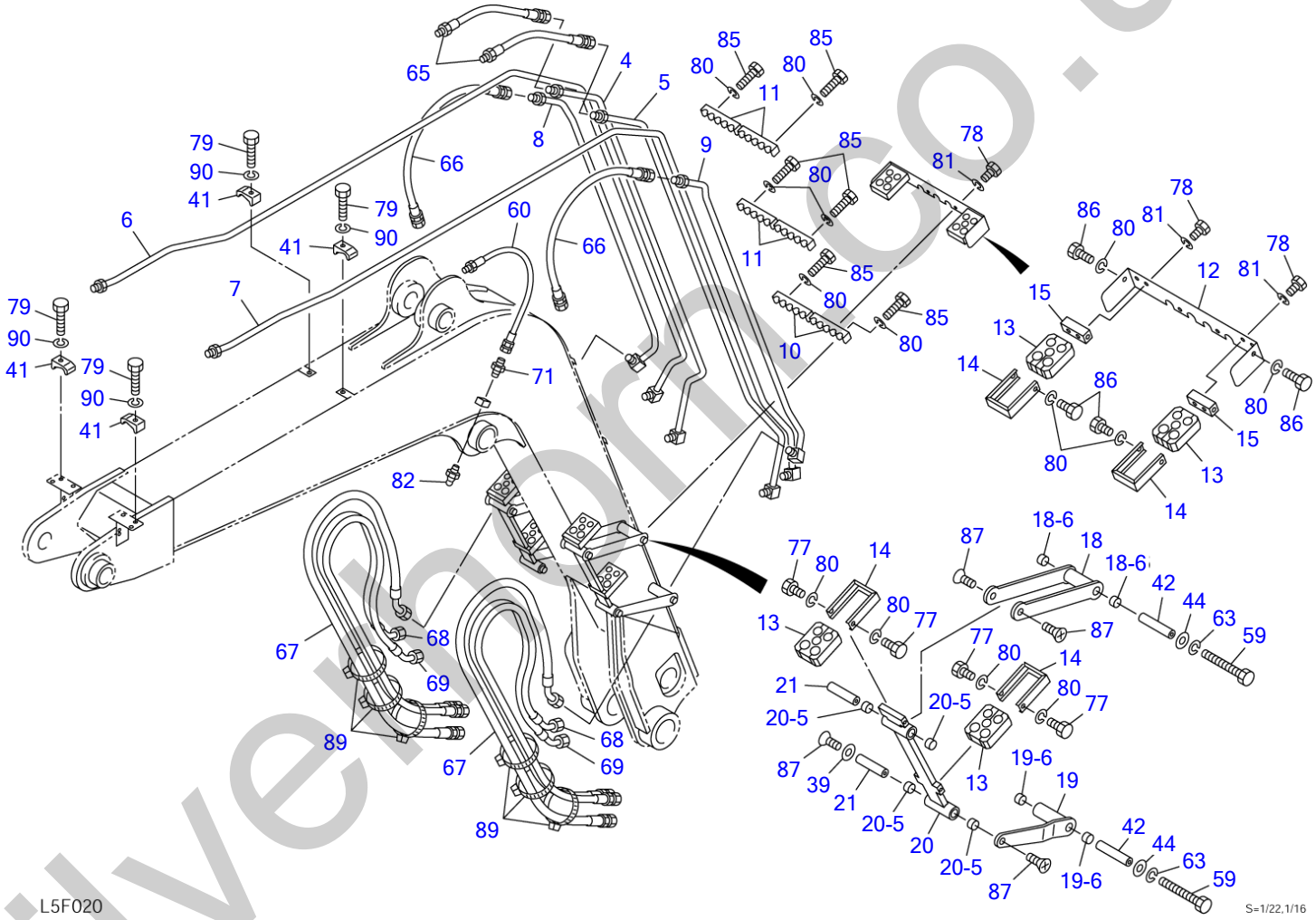

silvermorn.co.uk

BOOM (2/2)

Item	Part number	Description	Q'ty	Chan.	Serial No.	Serv.	Remarks
		BOOM ASSY					X05660-49000-1
4	0566030310	PIPE (R.H.)	1				
5	0566030320	PIPE (L.H.)	1				
6	0566045530	PIPE (R.H.)	1				
7	0566045540	PIPE (L.H.)	1				
8	0566030350	PIPE (R.H.)	1				
9	0566030360	PIPE (L.H.)	1				
10	0566030370	CLAMP	2				
11	0566030380	CLAMP	4				
12	0566030390	PLATE	1				
13	0566030391	RUBBER	6				
14	0566030392	HOLDER	6				
15	0566023581	PLATE	2				
18	0566023940	ARM, hose	2				
18-6	1333002015	・BUSHING	2				
19	0567333980	ARM, hose	2				
19-6	1333002015	・BUSHING	2				
20	0567333960	LINK, hose	2				
20-5	1333002015	・BUSHING	4				
21	0566023870	SHAFT	4				
39	0566023885	WASHER	2				
41	1534100218	CLAMP	4				
42	0566023875	SHAFT	4				
44	0003600026	WASHER	4				
59	1101141220	BOLT	4				
60	1934802070	HOSE ASSY	1				
63	1140020012	WASHER, spring	4				
65	1802743049	HOSE ASSY	2				
66	1802760085	HOSE ASSY	2				
67	0566030420	HOSE ASSY	2				18025-62230
68	0566030440	HOSE ASSY	2				18025-42226
69	0566030450	HOSE ASSY	2				18025-42230
71	1511050002	ADAPTOR	1				
77	1100040616	BOLT	8				
78	1100040816	BOLT	6				
79	1100041045	BOLT	4				
80	1140020006	WASHER, spring	24				
81	1140020008	WASHER, spring	6				
82	1560001675	FITTING, grease	1				
85	1100040645	BOLT	12				
86	1100040620	BOLT	4				
87	1120801020	SCREW	8				
89	1652201008	BAND	6				
90	1140020010	WASHER, spring	4				
	L5f023						

silverthorn.co.uk

BOOM (1/2) (with emergency shut-off valve)

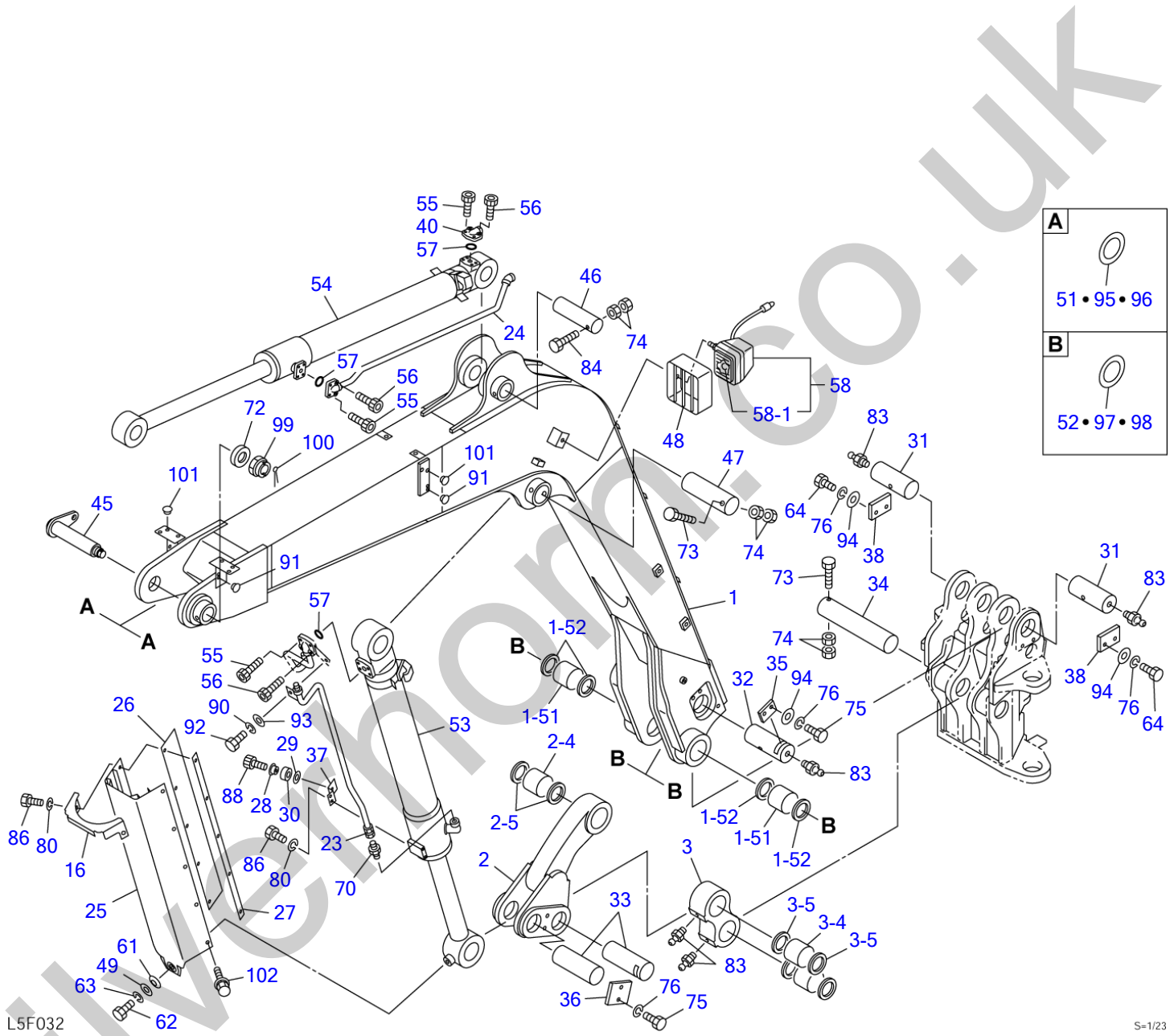

silvermoon.co.uk

BOOM (1/2) (with emergency shut-off valve)

Item	Part number	Description	Q'ty	Chan.	Serial No.	Serv.	Remarks
		BOOM ASSY (with boom shut-off valve)					X05660-49100-1
		BOOM ASSY (with boom & arm shut-off valve)					X05660-49200-1
1	0566045550	BOOM	1		17830004~17830279		
	0566045650	BOOM	1		17830280~		
1-51	0566022250	・BUSHING	2				
1-52	1432200075	・SEAL, dust	4				
2	0566045900	LINK ASSY, boom	1		17830004~17830561		
	0566045520	LINK ASSY, boom	1		17830562~		
2-4	0566022250	・BUSHING	1				
2-5	1432200075	・SEAL, dust	2				
3	0566022400	LINK	1		17830004~17830561		
	0566045640	LINK	1	(H)	17830562~		
3-4	0566022250	・BUSHING	2				
3-5	1432200075	・SEAL, dust	4				
3-6	1560001000	・FITTING, grease	2				
16	0566030470	COVER	1				
23	0566030480	PIPE	1				
24	0566030490	PIPE	1				with boom shut-off valve
25	0566045580	PROTECTOR	1				
26	0566022655	RUBBER	2				
27	0566022656	PLATE	2				
28	0566024620	COLLAR	2				
29	0003608003	WASHER	2				
30	1300206005	BEARING	2				
31	0566023720	PIN	2				
32	0566022700	PIN	1				
33	0566022710	PIN	2				
34	0566030500	PIN	1				
35	0566022730	PLATE	1				
36	0566022735	PLATE	1				
37	0566024610	PLATE	2				
38	0566023730	PLATE	2				
40	0566017380	ELBOW	1				
45	0011907007	PIN	1				
46	0001607200	PIN	1				
47	0566021600	PIN	1				
48	0056031510	PROTECTOR	1				
49	0003600057	WASHER	1				
51	0003600099	SHIM	AR				t=1.0mm
52	0003600102	SHIM	AR				t=0.5mm
53	1900092500	CYLINDER, boom	1				
54	1900092600	CYLINDER, arm	1				
55	1110040830	SCREW, cap	6				with boom shut-off valve
	1110040830	SCREW, cap	4				with boom & arm shut-off valve
56	1110040840	SCREW, cap	6				with boom shut-off valve
	1110040840	SCREW, cap	4				with boom & arm shut-off valve
57	1420010220	O-RING	3				with boom shut-off valve
	1420010220	O-RING	2				with boom & arm shut-off valve
58	1703006100	LAMP ASSY	1				
58-1	1703006106	・BULB	1				
61	1225120022	WASHER, conical	1				
62	1101041220	BOLT	1				
63	1140020012	WASHER, spring	1				
64	1100041445	BOLT	4				
70	1515600203	ADAPTOR	1				
	1420010240	・O-RING	1				
72	0566040880	WASHER	1				
73	1103141220	BOLT	2				
74	1130040012	NUT	6				
75	1101041435	BOLT	4				
76	1140020014	WASHER, spring	8				
80	1140020006	WASHER, spring	6				
83	1560001000	FITTING, grease	6				
84	1103141205	BOLT	1				

silverthorn.co.uk

BOOM (1/2) (with emergency shut-off valve)

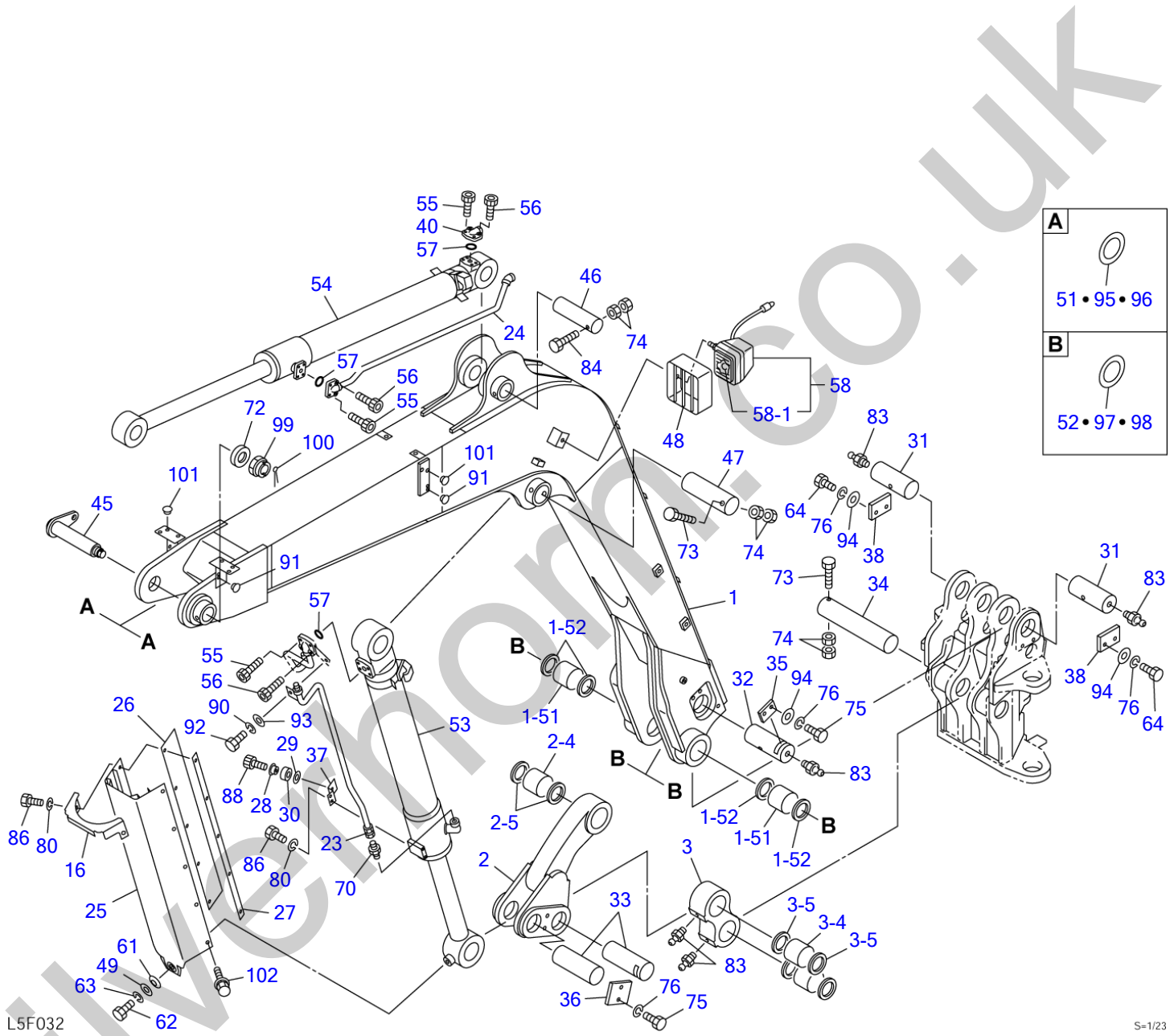

silvermoon.co.uk

BOOM (1/2) (with emergency shut-off valve)

Item	Part number	Description	Q'ty	Chan.	Serial No.	Serv.	Remarks
86	1100040620	BOLT	6				
88	1110040816	SCREW, cap	2				
90	1140020010	WASHER, spring	1				
91	1652533016	CAP	9				
92	1100041020	BOLT	1				
93	0003600025	WASHER	1				
94	1141110014	WASHER	8				
95	0003600094	SHIM	AR				t=0.2mm
96	0003600095	SHIM	AR				t=0.5mm
97	0003600101	SHIM	AR				t=0.2mm
98	0003600170	SHIM	AR				t=1.0mm
99	1132130042	NUT	1				
100	1210010890	PIN, split	1				
101	1652533017	CAP	8				
102	1100560616	BOLT	8				
102		<<NOTE>>					
102		item 2 & item 1 (INTERFERENCE SENSOR)					
102		has interchangeability in a set.					
	L5f033						

silverhorn.co.uk

BOOM (2/2) (with emergency shut-off valve)

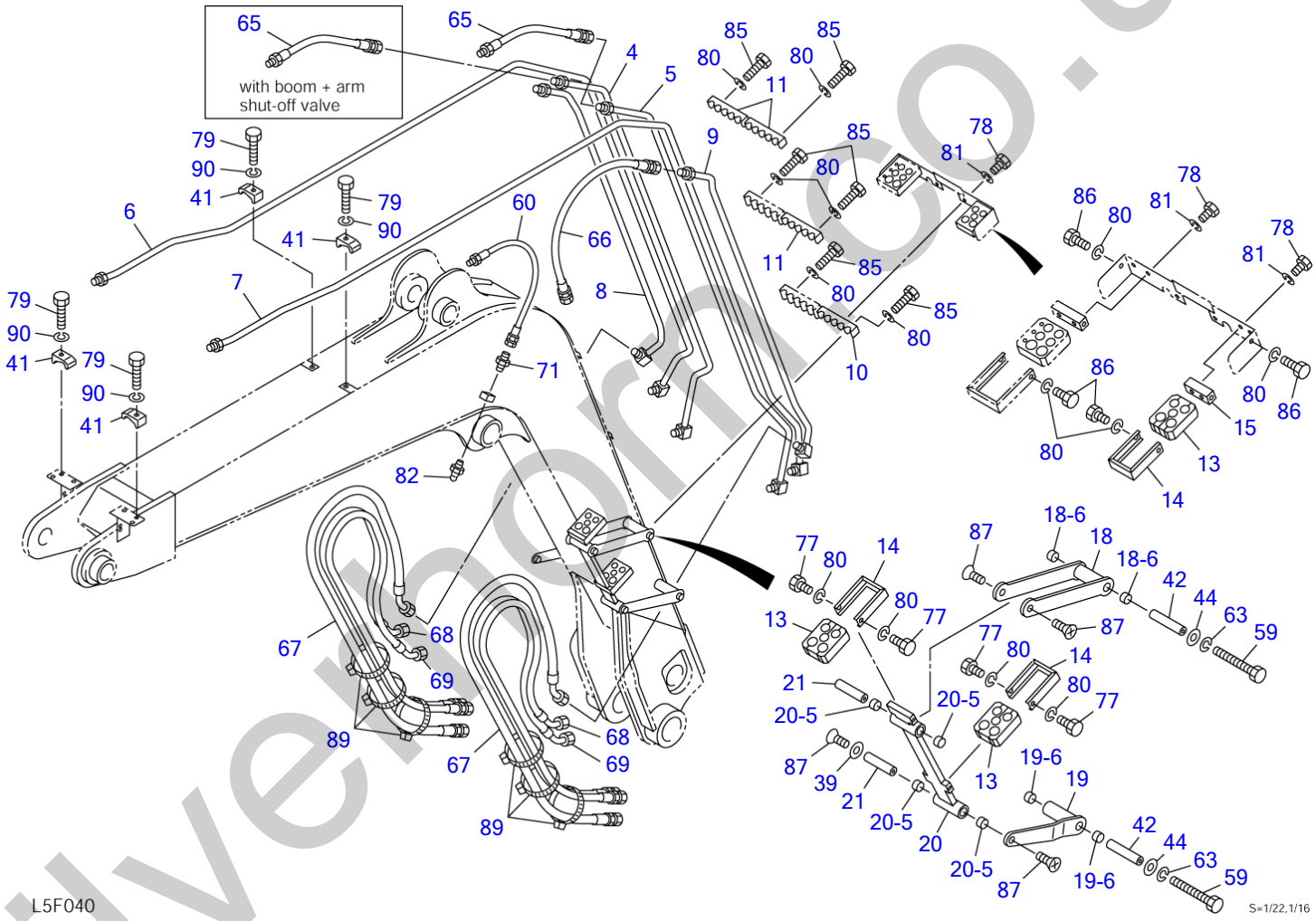

silverhorn.co.uk

BOOM (2/2) (with emergency shut-off valve)

Item	Part number	Description	Q'ty	Chan.	Serial No.	Serv.	Remarks
		BOOM ASSY (with boom shut-off valve)					X05660-49100-1
		BOOM ASSY (with boom & arm shut-off valve)					X05660-49200-1
4	0566030310	PIPE (R.H.)	1				
5	0566030320	PIPE (L.H.)	1				
6	0566045530	PIPE (R.H.)	1				
7	0566045540	PIPE (L.H.)	1				
8	0566030350	PIPE (R.H.)	1				
9	0566030360	PIPE (L.H.)	1				
10	0566030370	CLAMP	1				
11	0566030380	CLAMP	3				
13	0566030391	RUBBER	3				
14	0566030392	HOLDER	3				
15	0566023581	PLATE	1				
18	0566023940	ARM, hose	1				
18-6	1333002015	・BUSHING	2				
19	0567333980	ARM, hose	2				
19-6	1333002015	・BUSHING	2				
20	0567333960	LINK, hose	1				
20-5	1333002015	・BUSHING	4				
21	0566023870	SHAFT	4				
39	0566023885	WASHER	2				
41	1534100218	CLAMP	4				
42	0566023875	SHAFT	4				
44	0003600026	WASHER	4				
59	1101141220	BOLT	3				
60	1934802070	HOSE ASSY	1				
63	1140020012	WASHER, spring	4				
65	1802743049	HOSE ASSY	2				with boom shut-off valve
	1802743049	HOSE ASSY	1				with boom+arm shut-off valve
66	1802760085	HOSE ASSY	1				
67	0566030420	HOSE ASSY	2				18025-62230
68	0566030440	HOSE ASSY	2				18025-42226
69	0566030450	HOSE ASSY	2				18025-42230
71	1511050002	ADAPTOR	1				
77	1100040616	BOLT	8				
78	1100040816	BOLT	6				
79	1100041045	BOLT	4				
80	1140020006	WASHER, spring	24				
81	1140020008	WASHER, spring	6				
82	1560001675	FITTING, grease	1				
85	1100040645	BOLT	12				
86	1100040620	BOLT	4				
87	1120801020	SCREW	6				
89	1652201008	BAND	6				
90	1140020010	WASHER, spring	4				
	L5f043						

silvermorn.co.uk

INTERFERENCE SENSOR

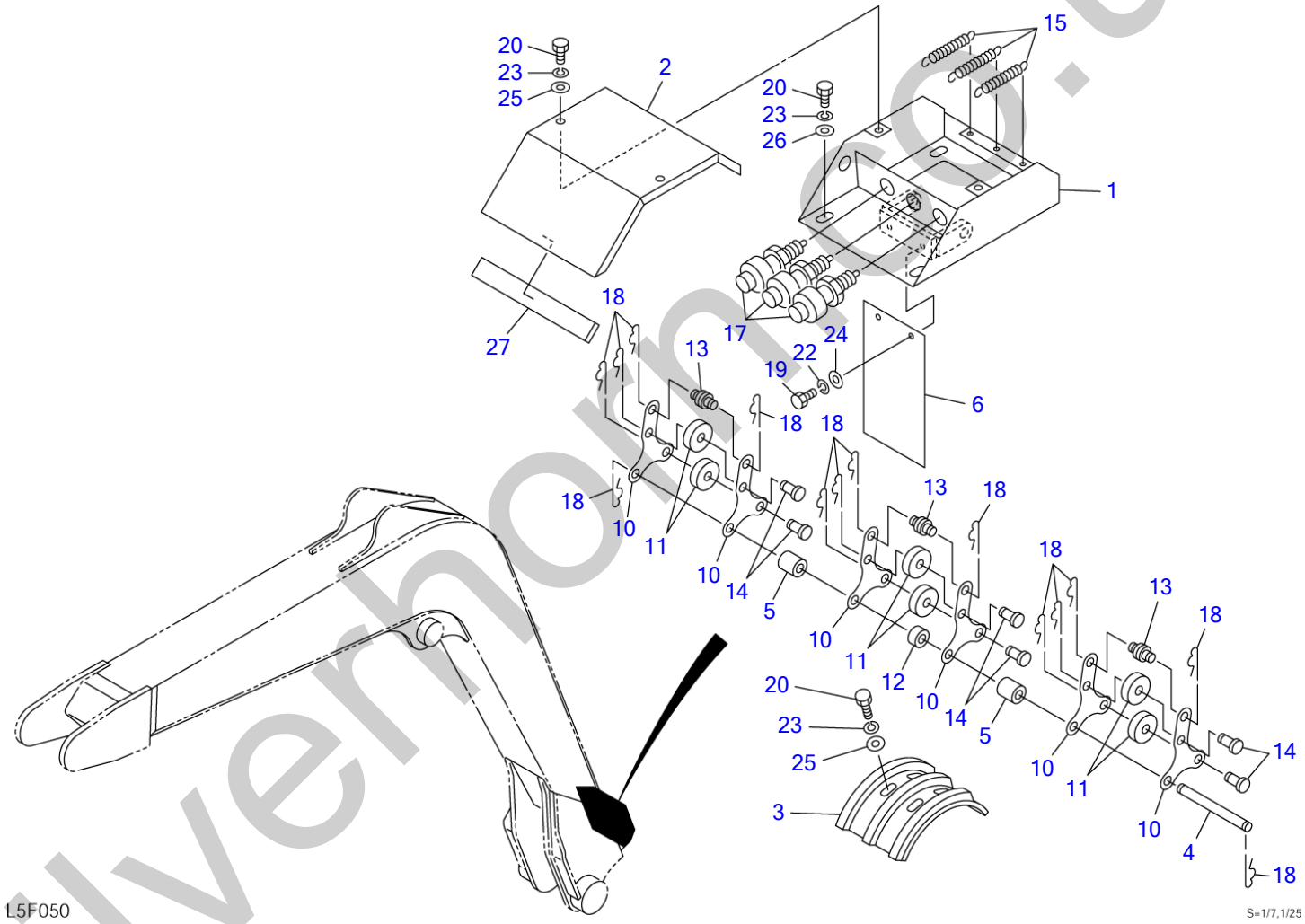

silverhorn.co.uk

INTERFERENCE SENSOR

Item	Part number	Description	Q'ty	Chan.	Serial No.	Serv.	Remarks
		SWITCH ASSY, boom					X05660-49300-0
1	0566023810	BOX, switch	1		17830004~17830561		
	0566049310	BOX, switch	1		17830562~	M	
2	0566023820	COVER	1				
3	0566045810	PLATE	1				
4	0566023840	PIN	1				
5	0566023850	COLLAR	2				
6	0566023860	RUBBER	1				
10	0396007840	PLATE	6				
11	0356012550	COLLAR	6				
12	0396007870	COLLAR	1				
13	0396007850	PIN	3				
14	0356012590	PIN	6				
15	0007000074	SPRING	3				
17	1700000014	SWITCH	3				
18	1214000008	PIN, snap	14				
19	1100040616	BOLT	2				
20	1100040816	BOLT	10				
22	1140020006	WASHER, spring	2				
23	1140020008	WASHER, spring	10				
24	1141110006	WASHER	2				
25	1141110008	WASHER	6				
26	0003600011	WASHER	4				
27	1654319015	SPONGE	1				sold by the meter
		<<NOTE>> item 1 & item 2 (BOOM) has interchangeability in a set.					
	L5f051						

silverhorn.co.uk

ARM

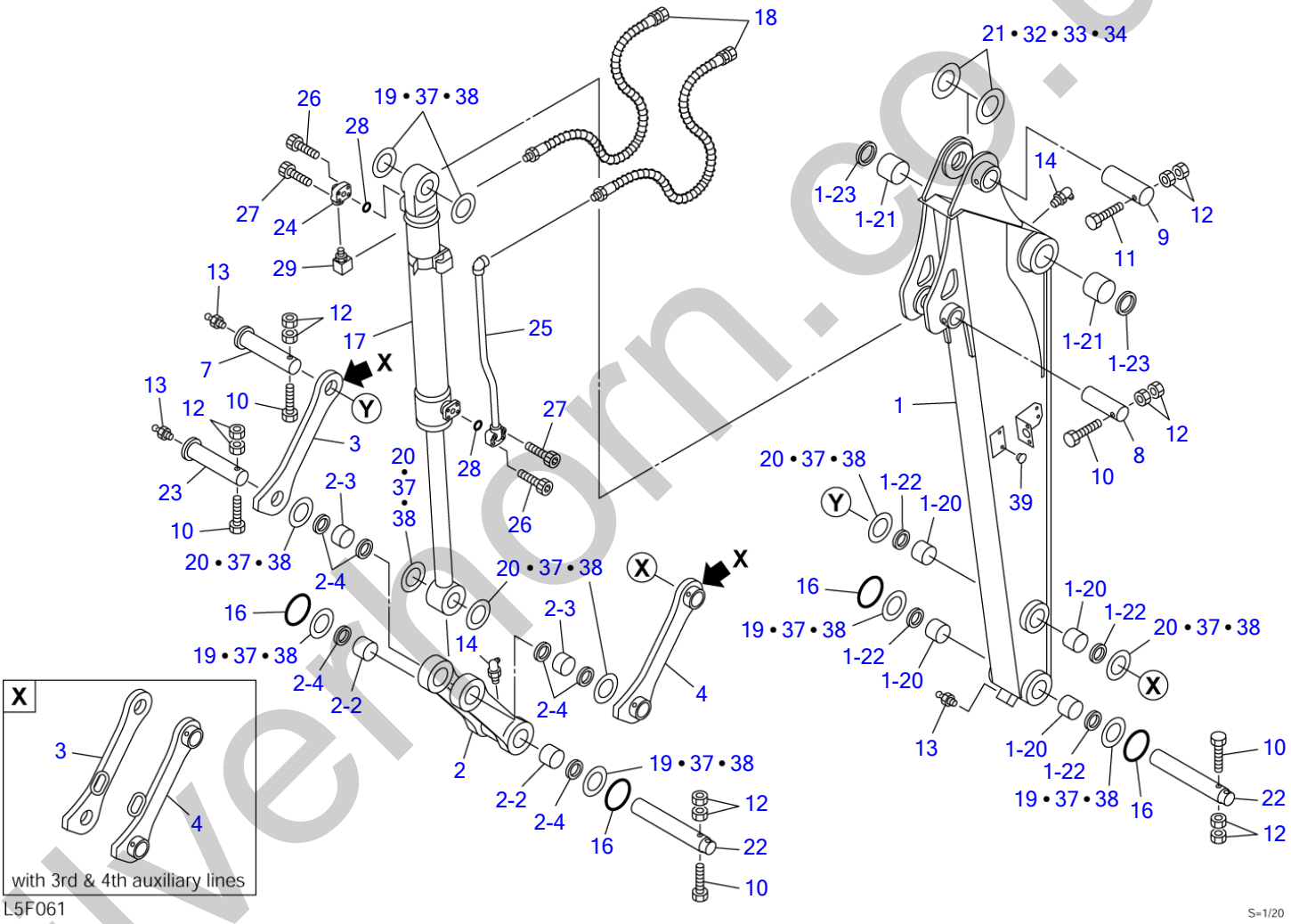

silverthorn.co.uk

ARM

Item	Part number	Description	Q'ty	Chan.	Serial No.	Serv.	Remarks
		ARM ASSY					X05661-42500-3
		ARM ASSY (with 3rd & 4th aux. lines)					X05661-42700-3
		ARM ASSY (long arm)					X05661-42600-3
		ARM ASSY (long arm, with 3rd & 4th aux. lines)					X05661-42900-3
1	0566142550	ARM SUB ASSY	1				
	0566142650	ARM SUB ASSY	1				long arm
1-20	0002400025	・BUSHING	4				
1-21	0002400036	・BUSHING	2				
1-22	1432200050	・SEAL, dust	4				
1-23	1432200060	・SEAL, dust	2				
2	0566103900	LINK ASSY, bucket	1				
2-2	0002400025	・BUSHING	2				
2-3	0002100028	・BUSHING	2				
2-4	1432200050	・SEAL, dust	6				
3	0566117500	LINK, guide (R.H.)	1				
	0566142710	LINK, guide (R.H.)	1				with 3rd & 4th aux. lines
4	0566117600	LINK, guide (L.H.)	1				
	0566142720	LINK, guide (L.H.)	1				
7	0001735001	PIN	1				
8	0001605150	PIN	1				
9	0001607160	PIN	1				
10	1100041295	BOLT	7				
11	1100141220	BOLT	1				
12	1130040012	NUT	16				
13	1560001000	FITTING, grease	3				
14	1560001675	FITTING, grease	2				
16	1432900048	O-RING	4				
17	1900092700	CYLINDER, bucket	1		17830004~17830324		
	1900101100	CYLINDER, bucket	1	(H)	17830325~	M	
18	1802643075	HOSE ASSY	2				
	1802643109	HOSE ASSY	2				long arm
19	0003600096	SHIM	AR				t=1.0mm
20	0003600097	SHIM	AR				t=1.0mm
21	0003600157	SHIM	AR			M	t=1.0mm
22	0011595001	PIN	2				
23	0011025001	PIN	1				
24	0566017380	ELBOW	1				
25	0566017600	TUBE	1				
26	1110040830	SCREW, cap	4				
27	1110040840	SCREW, cap	4				
28	1420010220	O-RING	2				
29	1513300015	ELBOW	1				
	1420010180	・O-RING	1				
32	0003600099	SHIM	AR				t=1.0mm
33	0003600095	SHIM	AR				t=0.5mm
34	0003600094	SHIM	AR				t=0.2mm
37	0003600061	SHIM	AR				t=0.5mm
38	0003600060	SHIM	AR				t=0.2mm
39	1652533016	CAP	12				without 3rd & 4th aux. lines
	L5f062						

silvermorn.co.uk

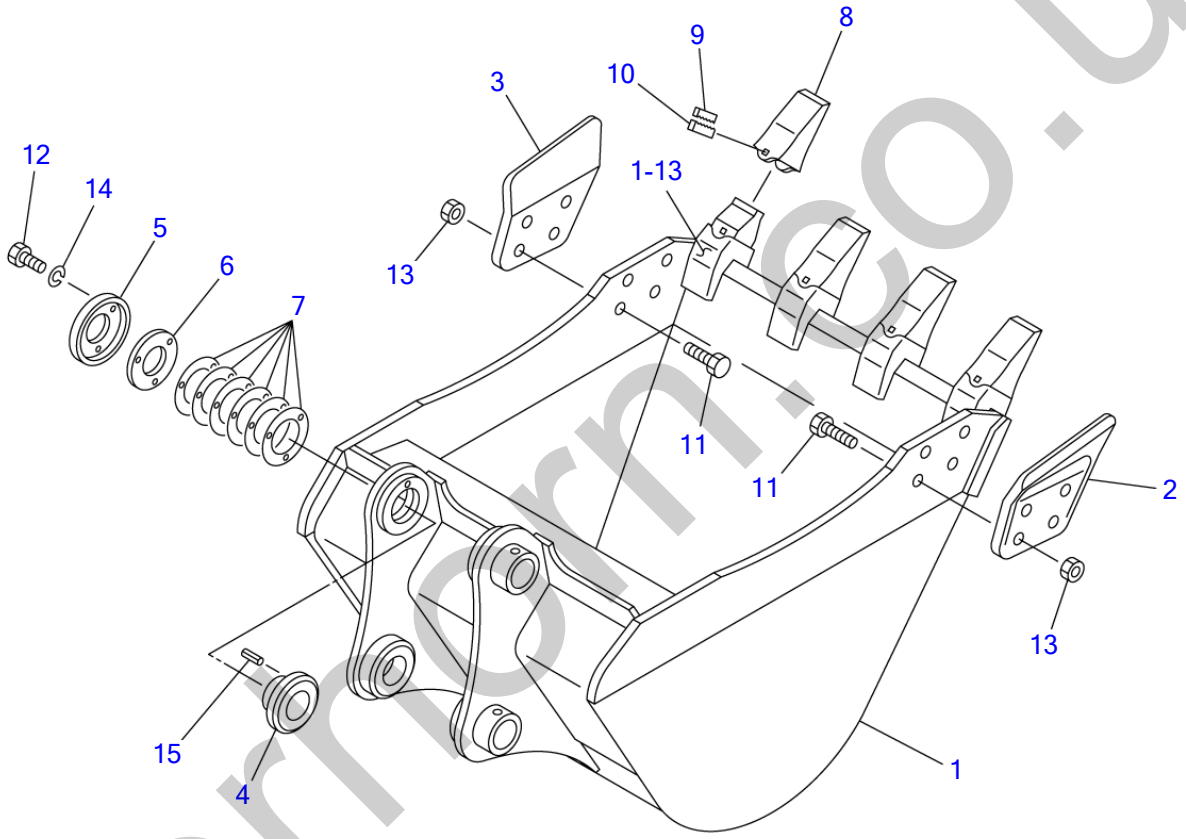

750mm WIDE / STANDARD

L2F050

S=1/12

silvernorm.co.uk

BUCKET

Item	Part number	Description	Q'ty	Chan.	Serial No.	Serv.	Remarks
0	0566216000	BUCKET ASSY	1				750mm wide
1	X **********	・BUCKET	1				
1-13	1914201101	・・ADAPTOR, tooth	4				
2	0546200200	・CUTTER (L.H.)	1				
3	0546200300	・CUTTER (R.H.)	1				
4	0566211400	・BUSHING	1				
5	0566211500	・PLATE	1				
6	0566211600	・FLANGE	1				
7	0566211700	・SHIM	AR				
8	1914201102	・POINT, tooth	4				
9	1914201103	・PIN	4				
10	1914201104	・PIN, lock	4				
11	1101051640	・BOLT	8				
12	1100051230	・BOLT	3				
13	1130550016	・NUT	8				
14	1140020012	・WASHER, spring	3				
15	1213000836	・PIN, spring	1				
	L2f050						

silverhorn.co.uk

AUXILIARY LINES

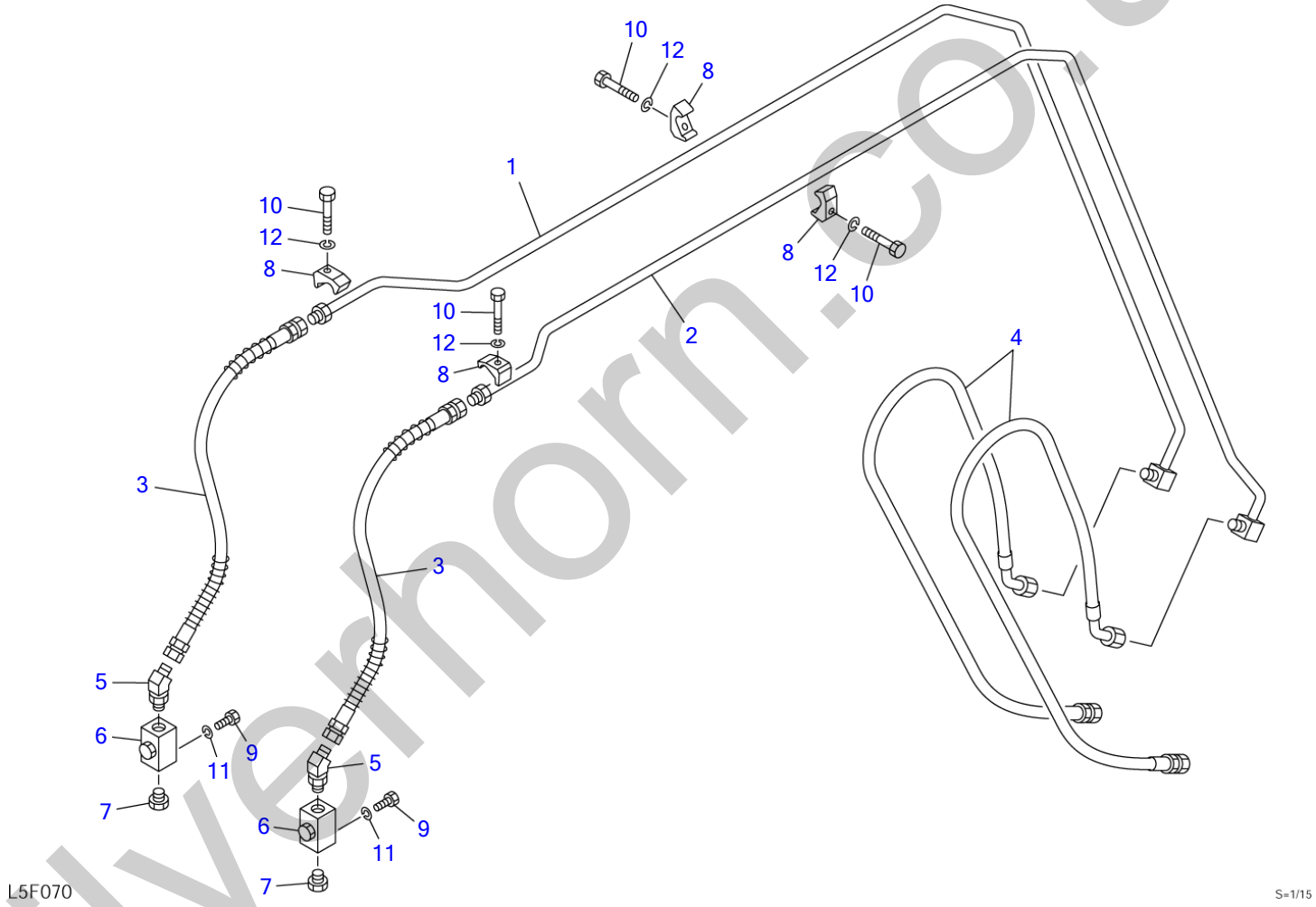

silverhorn.co.uk

AUXILIARY LINES

Item	Part number	Description	Q'ty	Chan.	Serial No.	Serv.	Remarks
0	0567345000	AUXILIARY LINE ASSY	1				X05673-45000-0
	0567345100	AUXILIARY LINE ASSY (long arm)	1				X05673-45100-0
1	0567345015	・PIPE (R.H.)	1				
2	0567345020	・PIPE (L.H.)	1				
3	1801630115	・HOSE ASSY	2				
	1801630146	・HOSE ASSY	2				long arm
4	0566030430	・HOSE ASSY	2				18025-62240
5	1515100113	・ELBOW	2				
	1420010240	・・O-RING	1				
6	1901723700	・VALVE , stop	2				
7	1515600503	・PLUG	2				
	1420010240	・・O-RING	1				
8	1534100218	・CLAMP	4				
9	1100040816	・BOLT	4				
10	1100041045	・BOLT	4				
11	1140020008	・WASHER, spring	4				
12	1140020010	・WASHER, spring	4				
	L5f070						

silverhorn.co.uk

2ND AUXILIARY LINES

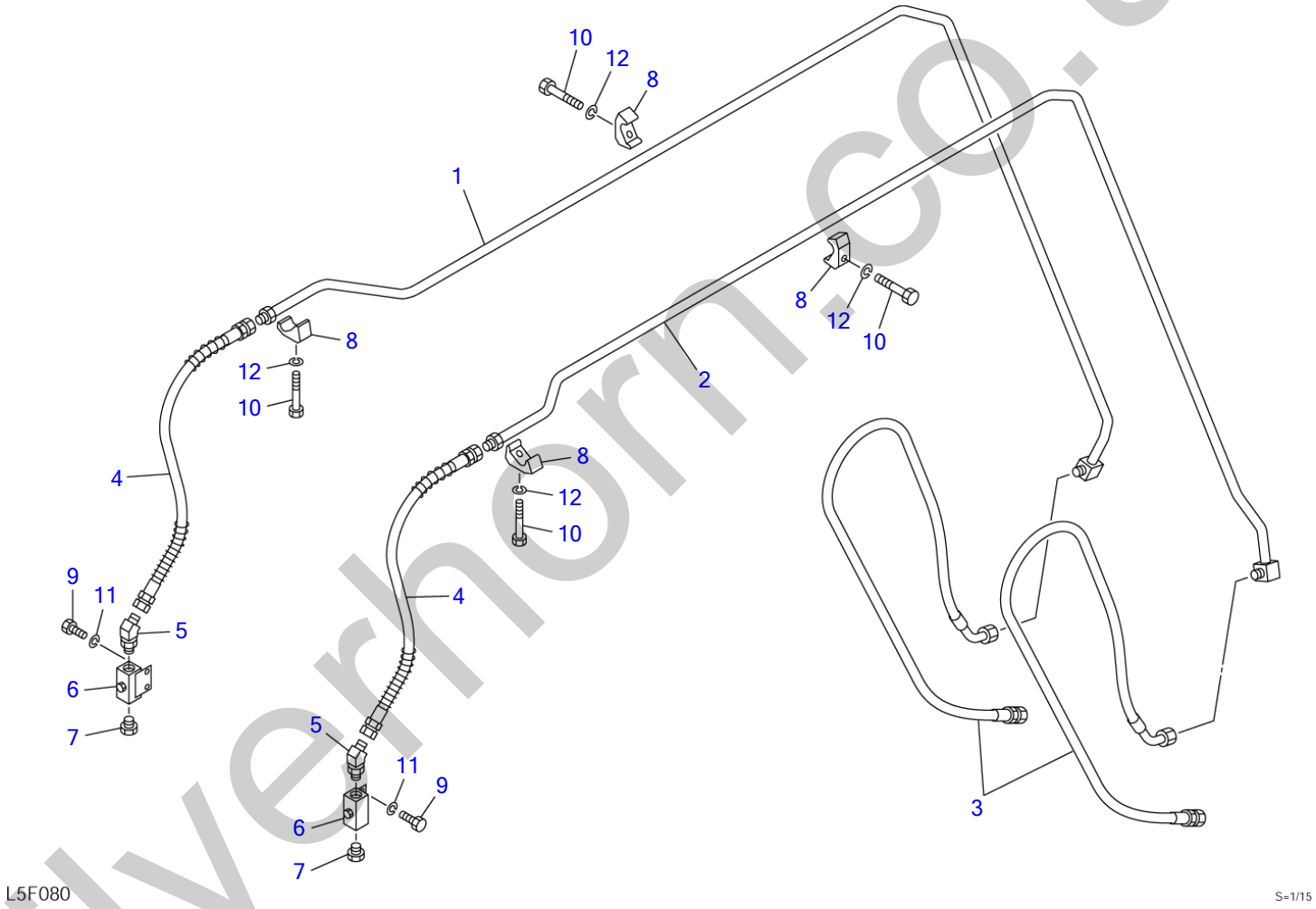

silverhorn.co.uk

2ND AUXILIARY LINES

Item	Part number	Description	Q'ty	Chan.	Serial No.	Serv.	Remarks
0	0567345200	LINE ASSY, 2nd aux.	1				X05673-45200-0
	0567345300	LINE ASSY, 2nd aux. (long arm)	1				X05673-45300-0
1	0567345210	・PIPE (R.H.)	1				
2	0567345220	・PIPE (L.H.)	1				
3	0566030460	・HOSE ASSY	2				18025-42230
4	1801640101	・HOSE ASSY	2				
	1801640134	・HOSE ASSY	2				long arm
5	1515100112	・ELBOW	2				
	1420010180	・・O-RING	1				
6	1901719800	・VALVE , stop	2				
7	1501750004	・PLUG	2				
	1420010180	・・O-RING	1				
8	1534100218	・CLAMP	4				
9	1100040816	・BOLT	4				
10	1100041045	・BOLT	4				
11	1140020008	・WASHER, spring	4				
12	1140020010	・WASHER, spring	4				
	L5f080						

silverhorn.co.uk

3RD AUXILIARY LINES (1/2) (available only with 2nd aux. lines)

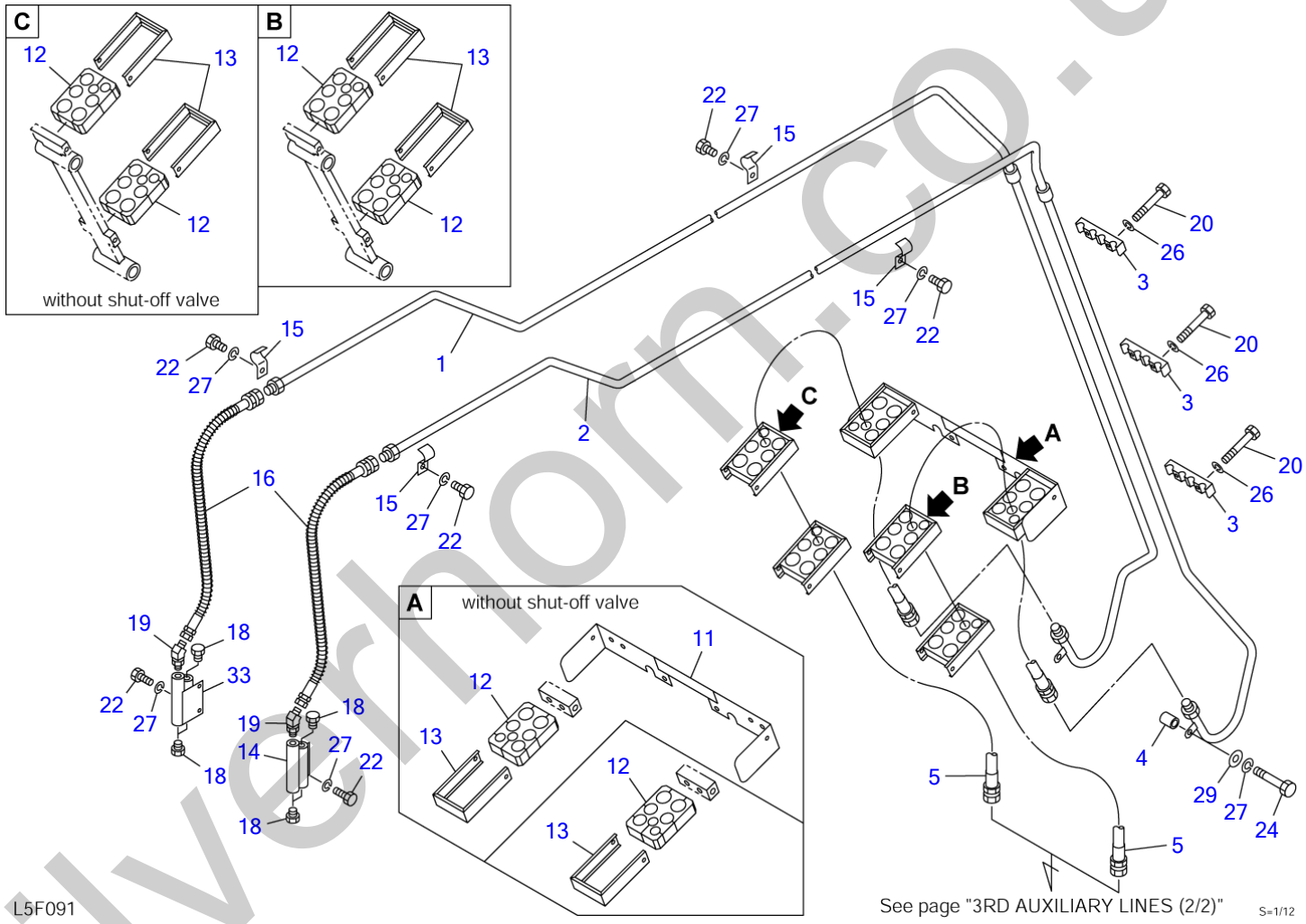

silverhorn.co.uk

3RD AUXILIARY LINES (1/2) (available only with 2nd aux. lines)

Item	Part number	Description	Q'ty	Chan.	Serial No.	Serv.	Remarks
0	0567345400	LINE ASSY, 3rd aux.	1				X05673-45400-4
	0567348100	LINE ASSY, 3rd aux. (with shut-off valve)	1				X05673-48100-4
	0567345500	LINE ASSY, 3rd aux. (long arm)	1				X05673-45500-4
	0567348200	LINE ASSY, 3rd aux. (long arm, with shut-off valve)	1				X05673-48200-4
1	0567345410	・PIPE (R.H.)	1				
2	0567345420	・PIPE (L.H.)	1				
3	0567345430	・CLAMP	3				
4	0567345440	・PIPE	2		17830004~17830044		
	0567345460	・PIPE	2	(H)	17830045~		
5	0567345450	・HOSE ASSY	2				18015-00205
11	0567333880	・PLATE	1				without shut-off valve
12	0567345630	・RUBBER	6				without shut-off valve
	0567345630	・RUBBER	3				
13	0567333895	・HOLDER	6				without shut-off valve
	0567333895	・HOLDER	3				
14	0567346440	・ADAPTOR	1				
15	0567339570	・CLAMP	4				
16	1801600088	・HOSE ASSY	2				
	1801600123	・HOSE ASSY	2				long arm
18	1501750002	・PLUG	6				
	1420010110	・・O-RING	1				
19	1515100110	・ELBOW	2				
	1420010110	・・O-RING	1				
20	1100040670	・BOLT	6				
22	1100040816	・BOLT	8				
24	1100040845	・BOLT	2		17830004~17830044		without shut-off valve
	1100040855	・BOLT	2		17830045~		without shut-off valve
	1100040855	・BOLT	1		17830045~		with shut-off valve
26	1140020006	・WASHER, spring	6				
27	1140020008	・WASHER, spring	10				without shut-off valve
	1140020008	・WASHER, spring	9				with shut-off valve
29	1141110008	・WASHER	2				without shut-off valve
	1141110008	・WASHER	1				with shut-off valve
33	0567346430	・ADAPTOR	1				
	L5f091						

silverhorn.co.uk

3RD AUXILIARY LINES (2/2) (available only with 2nd aux. lines)

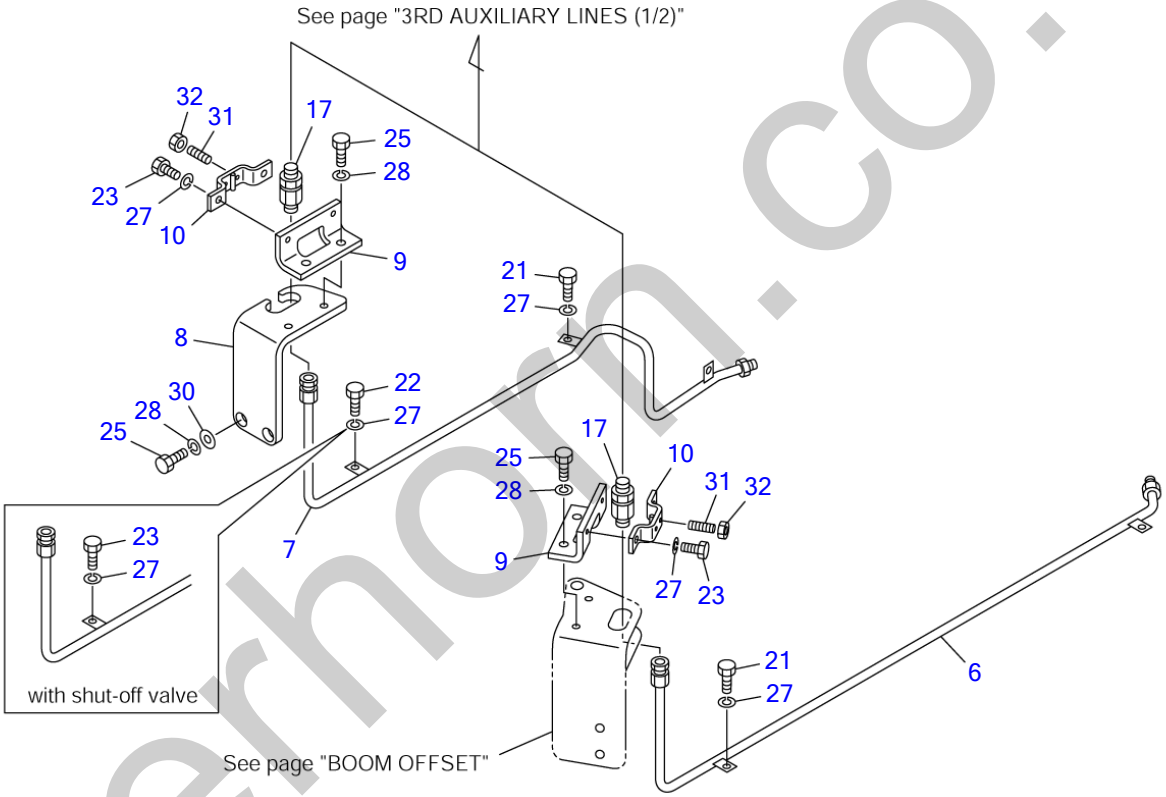

L5F101

S=1/10

silverhorn.co.uk

3RD AUXILIARY LINES (2/2) (available only with 2nd aux. lines)

Item	Part number	Description	Q'ty	Chan.	Serial No.	Serv.	Remarks
0	**0567345400**	LINE ASSY, 3rd aux.	1				X05673-45400-4
	0567348100	LINE ASSY, 3rd aux. (with shut-off valve)	1				X05673-48100-4
	0567345500	LINE ASSY, 3rd aux. (long arm)	1				X05673-45500-4
	0567348200	LINE ASSY, 3rd aux. (long arm, with shut-off valve)	1				X05673-48200-4
6	**0567345510**	・PIPE (L.H.)	1				
7	**0567345520**	・PIPE (R.H.)	1				
8	**0567345530**	・BRACKET	1				
9	**0567345540**	・BRACKET	2				
10	**0567345550**	・BRACKET	2				
17	**1514011102**	・ADAPTOR	2				
21	**1100040814**	・BOLT	4				
22	**1100040816**	・BOLT	1				without shut-off valve
23	**1100040820**	・BOLT	4				without shut-off valve
	1100040820	・BOLT	4				with shut-off valve
25	**1100041025**	・BOLT	8				
27	**1140020008**	・WASHER, spring	9				
28	**1140020010**	・WASHER, spring	8				
30	**0003600025**	・WASHER	2				
31	**1121040616**	・SET-SCREW	2				
32	**1130040006**	・NUT	2				
	L5f101						

silverhorn.co.uk

4TH AUXILIARY LINES (available only with 3rd aux. lines)

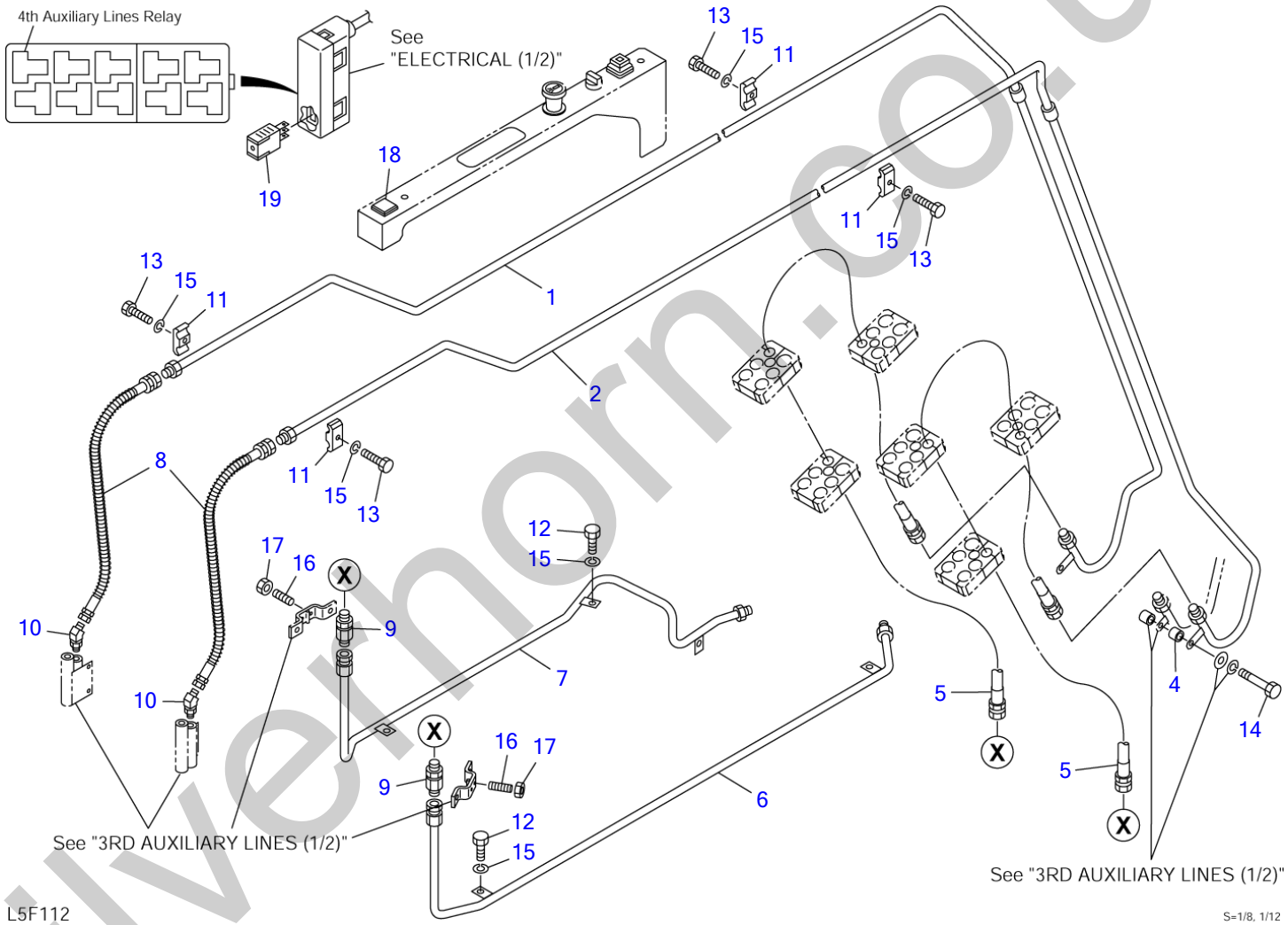

silverthorn.co.uk

4TH AUXILIARY LINES (available only with 3rd aux. lines)

Item	Part number	Description	Q'ty	Chan.	Serial No.	Serv.	Remarks
0	0567345600	LINE ASSY, 4th aux.	1				X05673-45600-4
	0567345700	LINE ASSY, 4th aux. (long arm)	1				X05673-45700-4
1	0567345610	・PIPE (R.H.)	1				
2	0567345620	・PIPE (L.H.)	1				
4	0567345640	・PIPE	2				
5	0567345650	・HOSE ASSY	2				18015-00200
6	0567345710	・PIPE (L.H.)	1				
7	0567345720	・PIPE (R.H.)	1				
8	1801600088	・HOSE ASSY	2				
	1801600123	・HOSE ASSY	2				long arm
9	1514011102	・ADAPTOR	2				
10	1515100110	・ELBOW	2				
	1420010110	・・O-RING	1				
11	1534000015	・CLAMP	4				
12	1100040814	・BOLT	5				
13	1100040835	・BOLT	4				
14	1100040870	・BOLT	2				
15	1140020008	・WASHER, spring	9				
16	1121040616	・SET-SCREW	2				
17	1130040006	・NUT	2				
18	1700550035	・LAMP, pilot	1				
19	1711900132	・RELAY	1				
	L5f112						

silverhorn.co.uk

DECAL

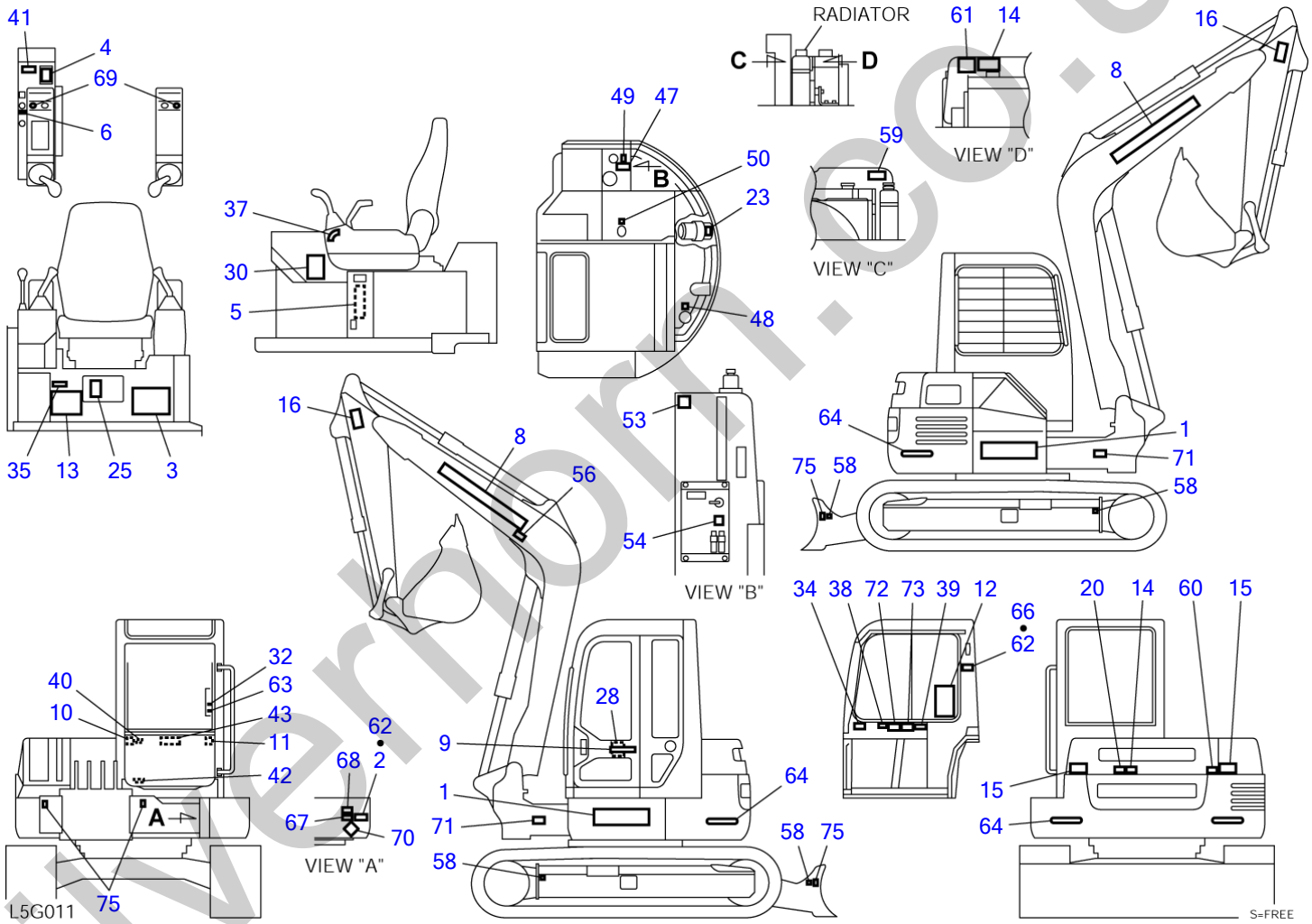

silverhorn.co.uk

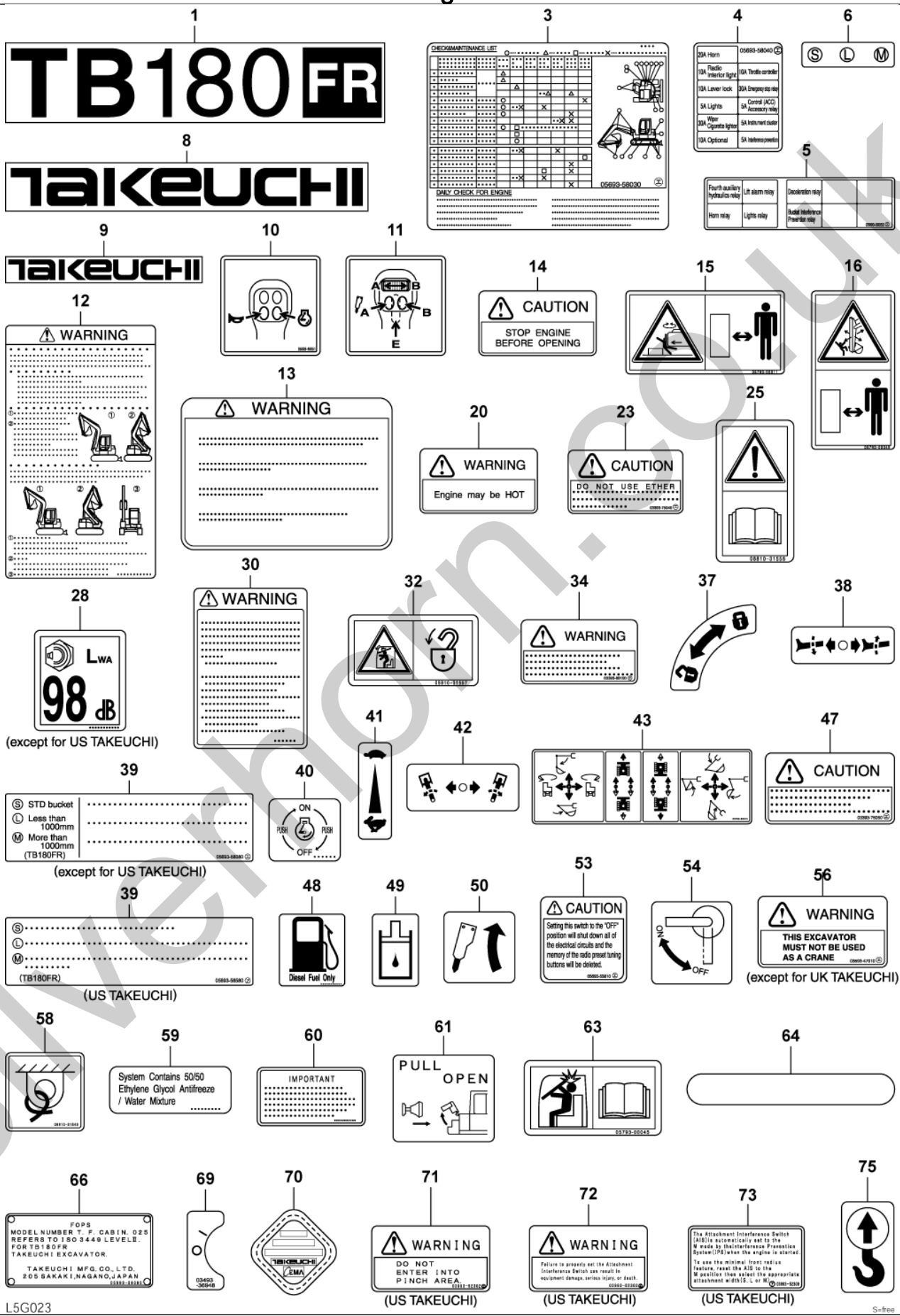

silverhorn.co.uk

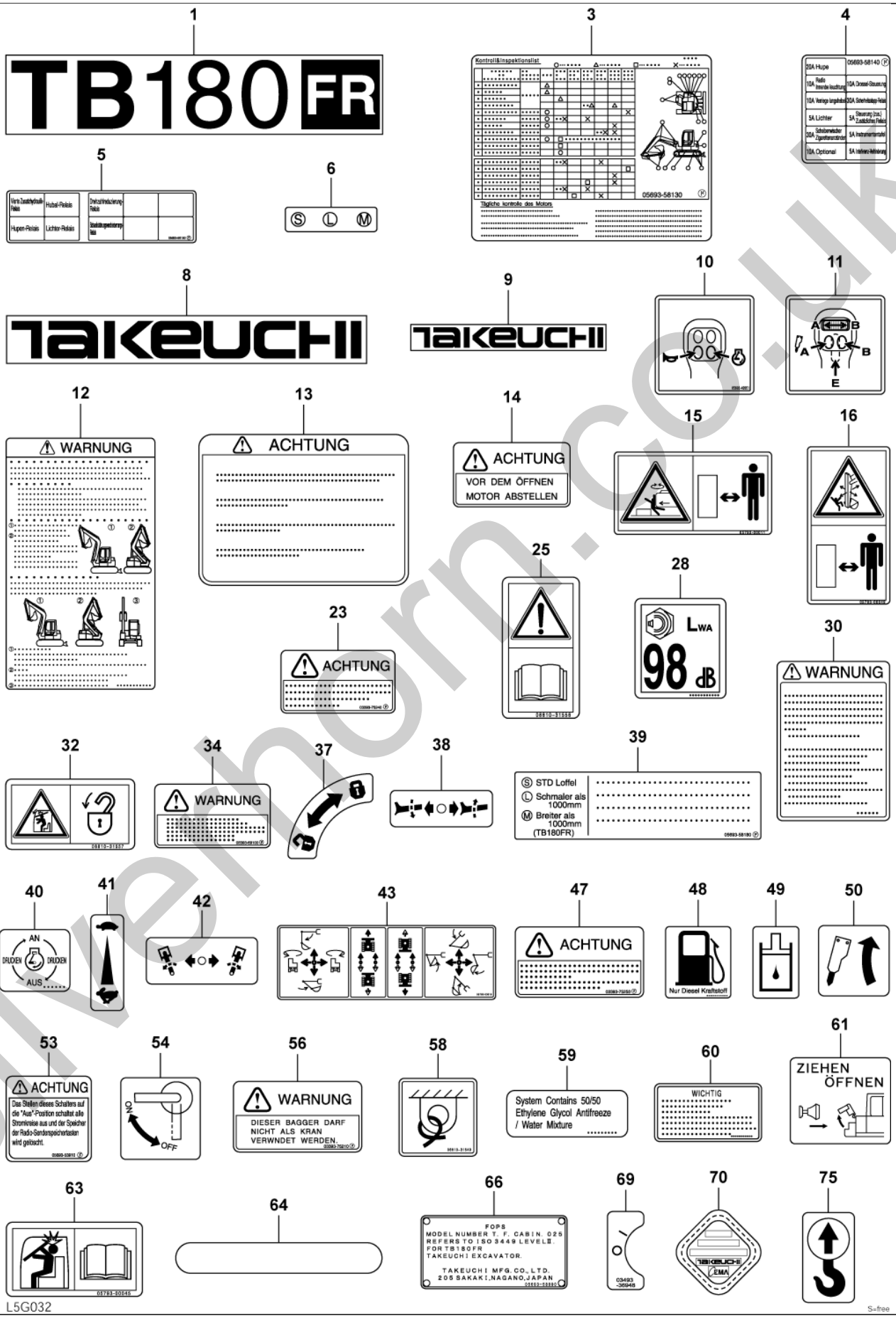

silverhorn.co.uk

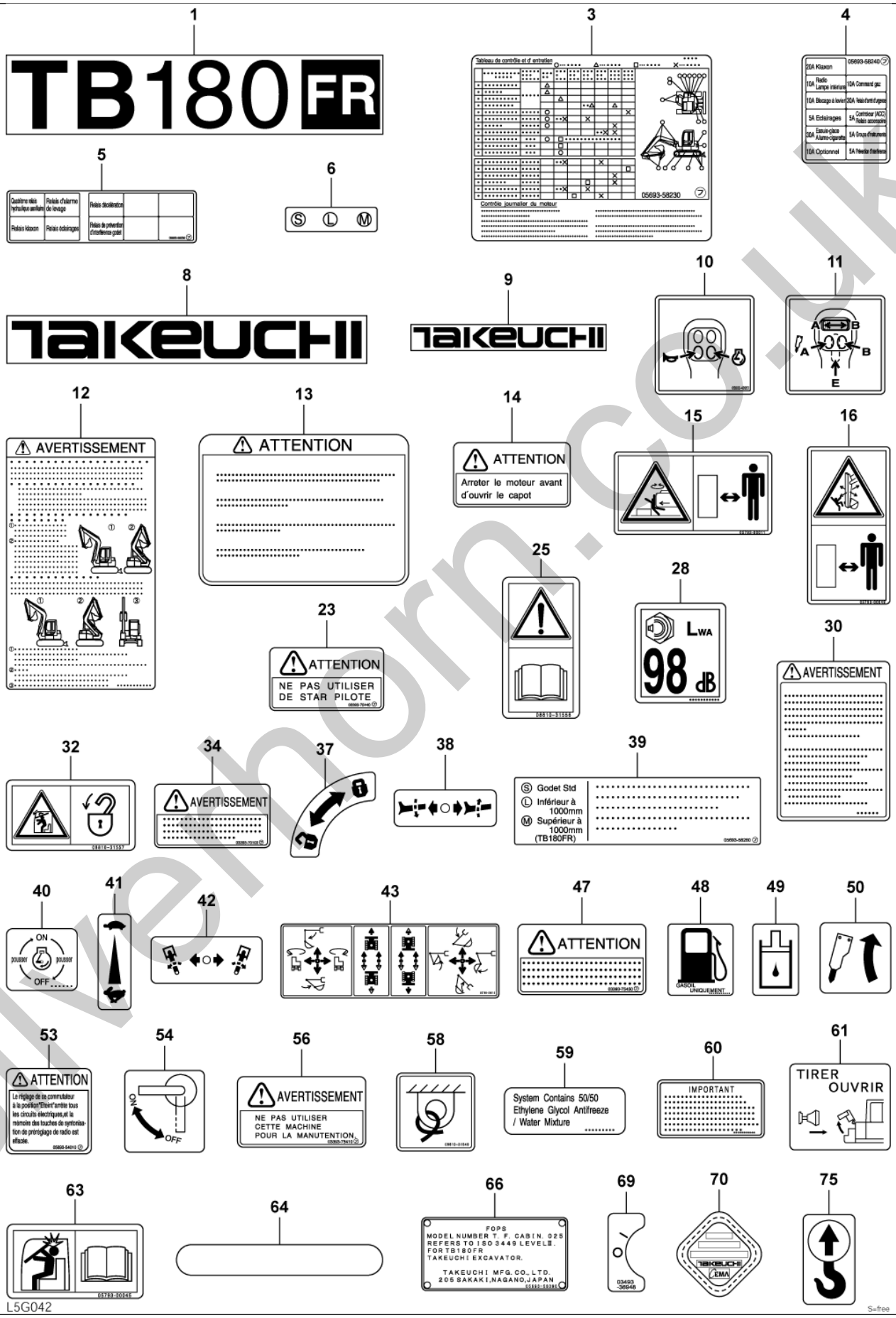

silverhorn.co.uk

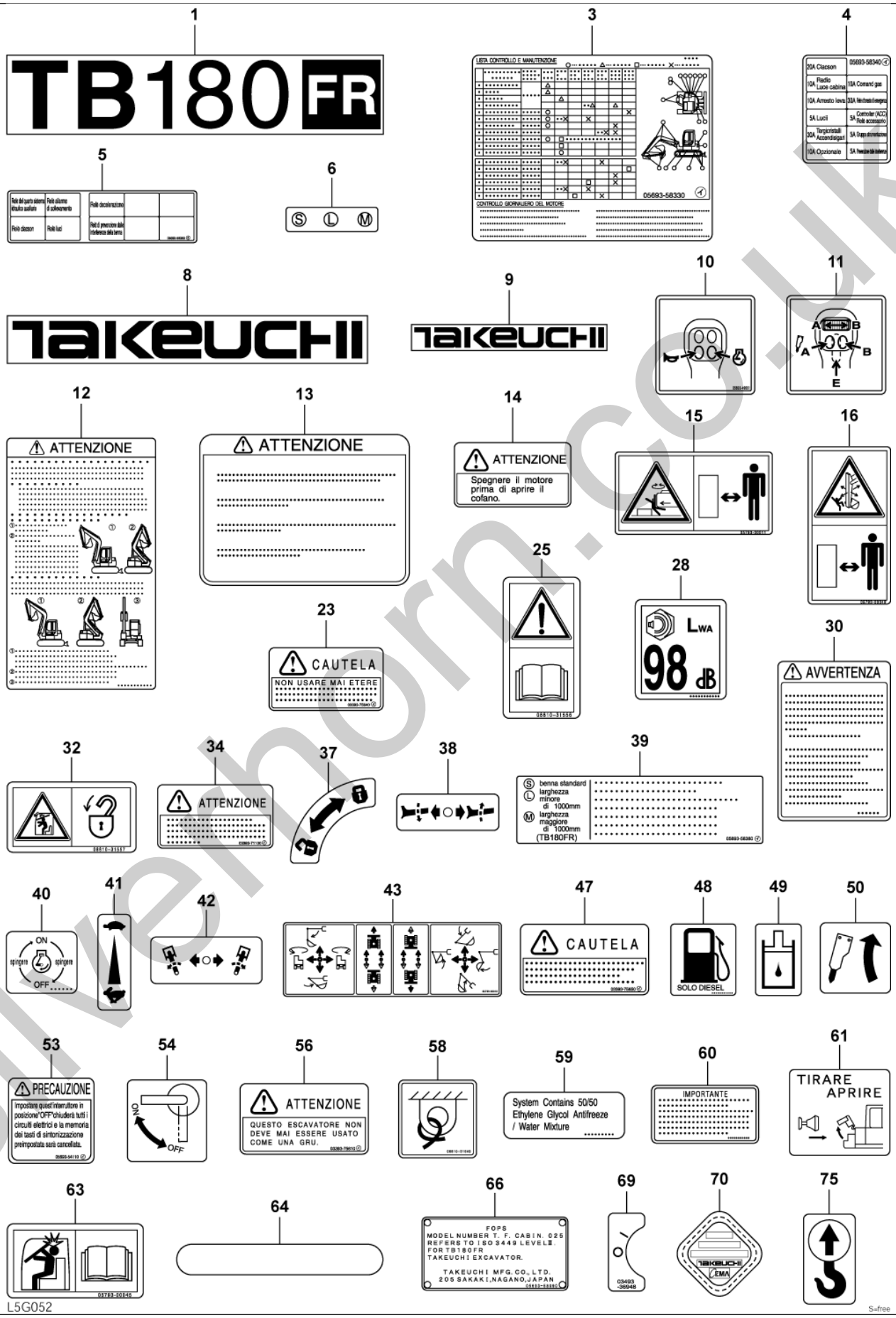

silverhorn.co.uk

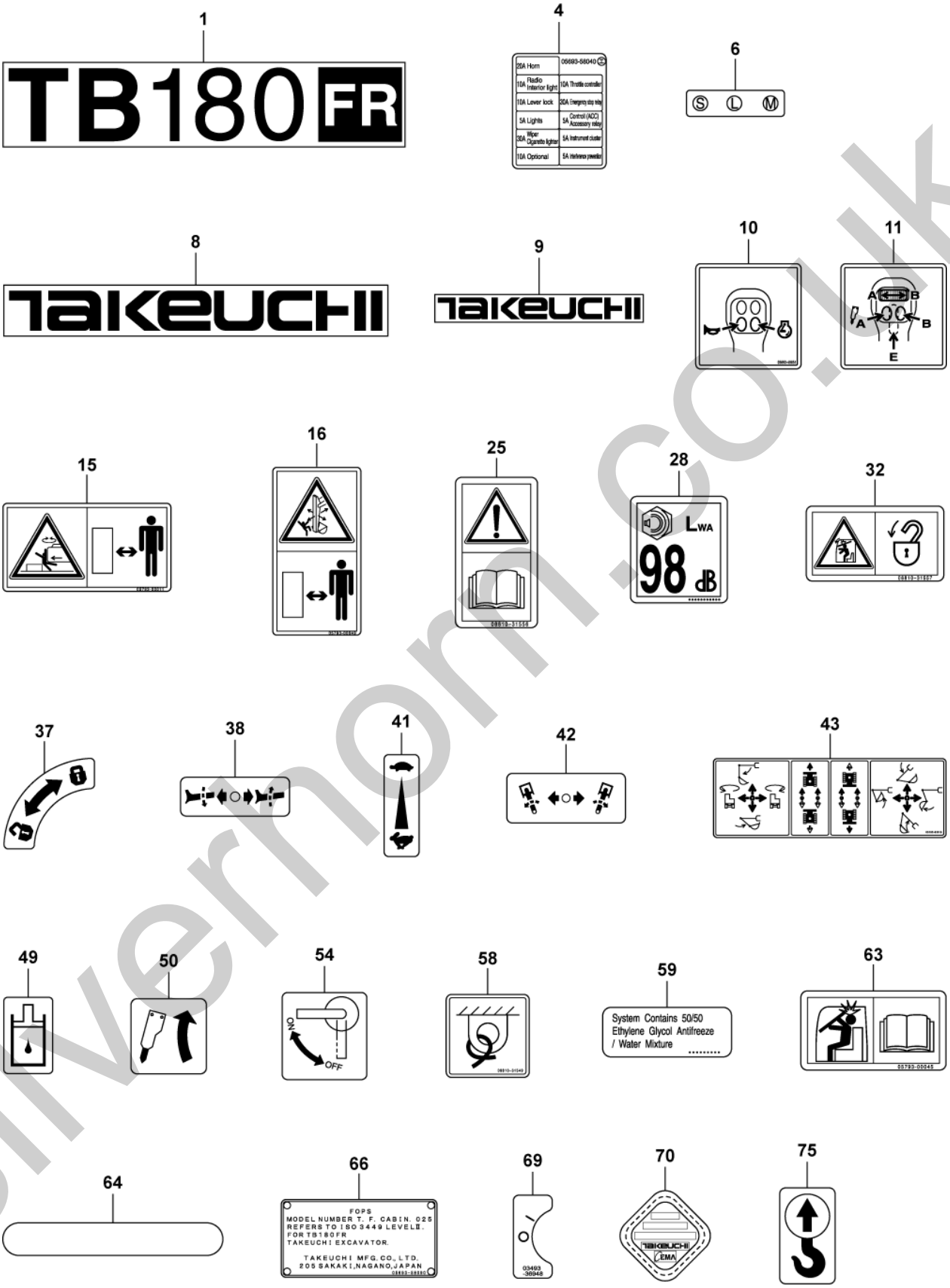

silvernorm.co.uk

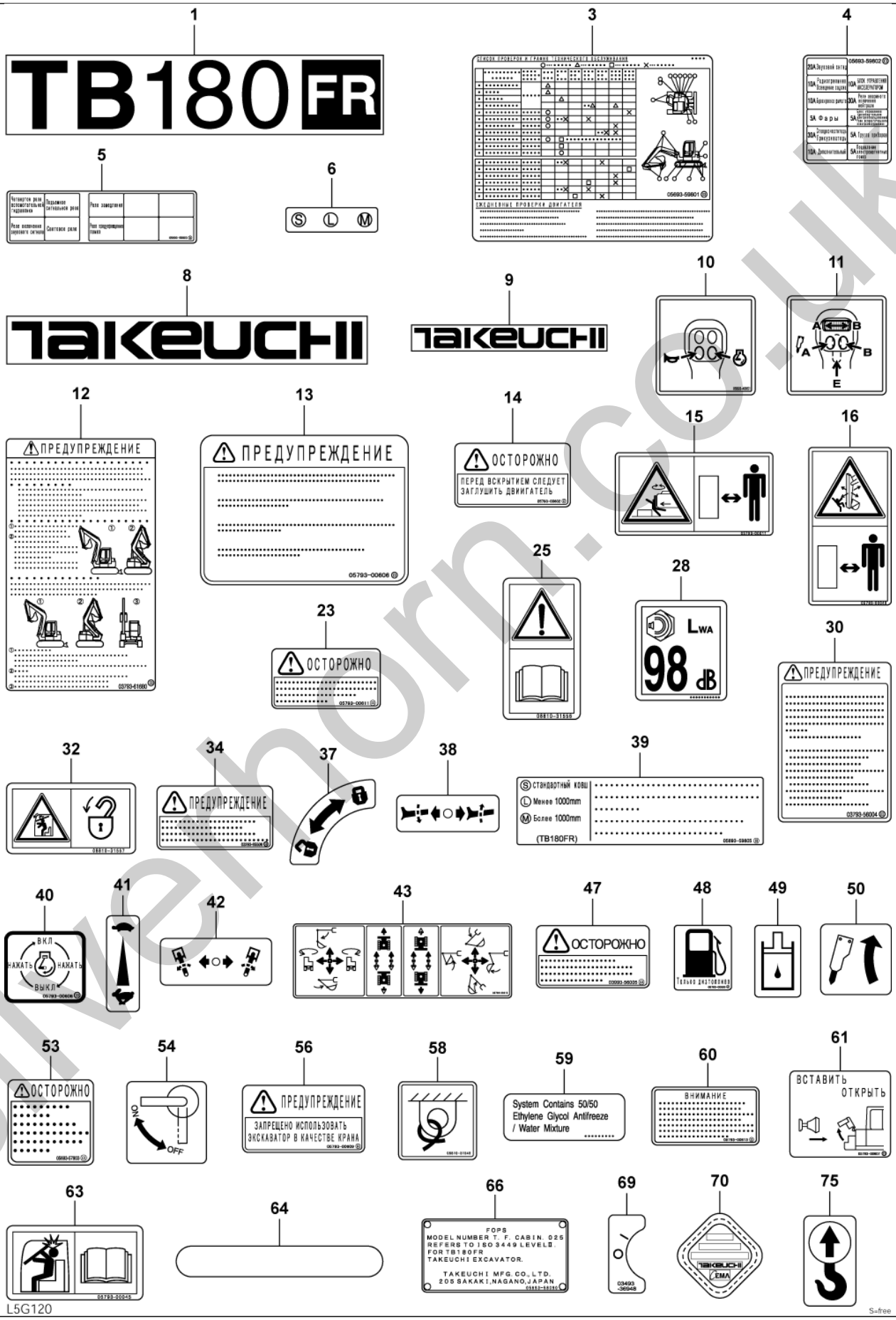

L5G120

S=free

silverhorn.co.uk

silverhorn.co.uk

DECAL

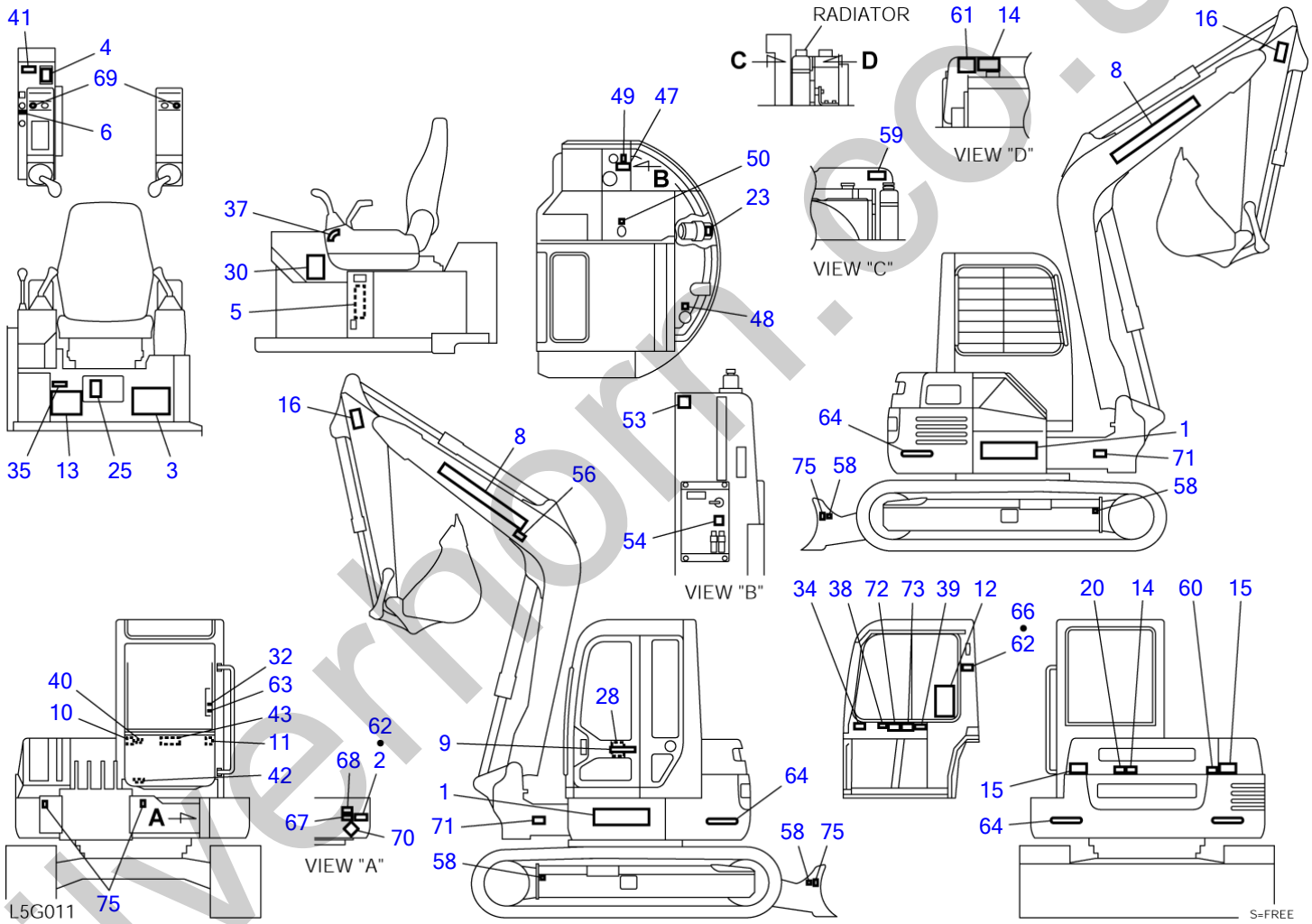

silverhorn.co.uk

DECAL

Item	Part number	Description	Q'ty	Chan.	Serial No.	Serv.	Remarks
0	0569358000	DECAL SET (English)	1				X05693-58000-5
	0569358100	DECAL SET (German)	1				X05693-58100-5
	0569358200	DECAL SET (French)	1				X05693-58200-5
	0569358300	DECAL SET (Italian)	1				X05693-58300-5
	0569358500	DECAL SET (U.S. TAKEUCHI)	1				X05693-58500-5
	0569359700	DECAL SET (Dutch)	1				X05693-59700-5
	0569359800	DECAL SET (Russian)	1				X05693-59800-5
	0569359900	DECAL SET (U.K. TAKEUCHI)	1				X05693-59900-5
1	0569358010	・DECAL	2				
2	X **********	・DECAL	1				
3	0569358030	・DECAL (English)	1				
	0569358130	・DECAL (German)	1				
	0569358230	・DECAL (French)	1				
	0569358330	・DECAL (Italian)	1				
	0569359801	・DECAL (Russian)	1				
4	0569358040	・DECAL (English, Dutch)	1				
	0569358140	・DECAL (German)	1				
	0569358240	・DECAL (French)	1				
	0569358340	・DECAL (Italian)	1				
	0569359802	・DECAL (Russian)	1				
5	0569358050	・DECAL (English)	1				
	0569358150	・DECAL (German)	1				
	0569358250	・DECAL (French)	1				
	0569358350	・DECAL (Italian)	1				
	0569359803	・DECAL (Russian)	1				
6	0569358060	・DECAL	1				
8	0399305100	・DECAL	2				
9	0569321400	・DECAL	1				
10	0569349951	・DECAL	1				
11	0569353036	・DECAL	1				
12	0569352506	・DECAL (English)	1				
	0569352206	・DECAL (German)	1				
	0569352306	・DECAL (French)	1				
	0569352406	・DECAL (Italian)	1				
	0379361680	・DECAL (Russian)	1				
13	0359313700	・DECAL (English)	1				
	0359314700	・DECAL (German)	1				
	0359315700	・DECAL (French)	1				
	0359316700	・DECAL (Italian)	1				
	0579300606	・DECAL (Russian)	1				
14	0359307400	・DECAL (English)	2				
	0359314400	・DECAL (German)	2				
	0359315400	・DECAL (French)	2				
	0359316400	・DECAL (Italian)	2				
	0579300602	・DECAL (Russian)	2				
15	0579300011	・DECAL	2				
16	0579300049	・DECAL	2				
20	0569321980	・DECAL (English)	1				
23	0339375040	・DECAL (English)	1				
	0339375240	・DECAL (German)	1				
	0339375440	・DECAL (French)	1				
	0339375640	・DECAL (Italian)	1				
	0579300611	・DECAL (Russian)	1				
25	0881031556	・DECAL	1				
28	X **********	・DECAL	1				except for U.S. TAKEUCHI
30	0379337300	・DECAL (English)	1				
	0379338300	・DECAL (German)	1				
	0379339300	・DECAL (French)	1				
	0379340300	・DECAL (Italian)	1				
	0399356004	・DECAL (Russian)	1				
32	0881031557	・DECAL	1				
34	0339368100	・DECAL (English)	1				
	0339369100	・DECAL (German)	1				
	0339370100	・DECAL (French)	1				
	0339371100	・DECAL (Italian)	1				
	0329365506	・DECAL (Russian)	1				
35	X **********	・DECAL	1				
37	0329360100	・DECAL	1				

silverthorn.co.uk

DECAL

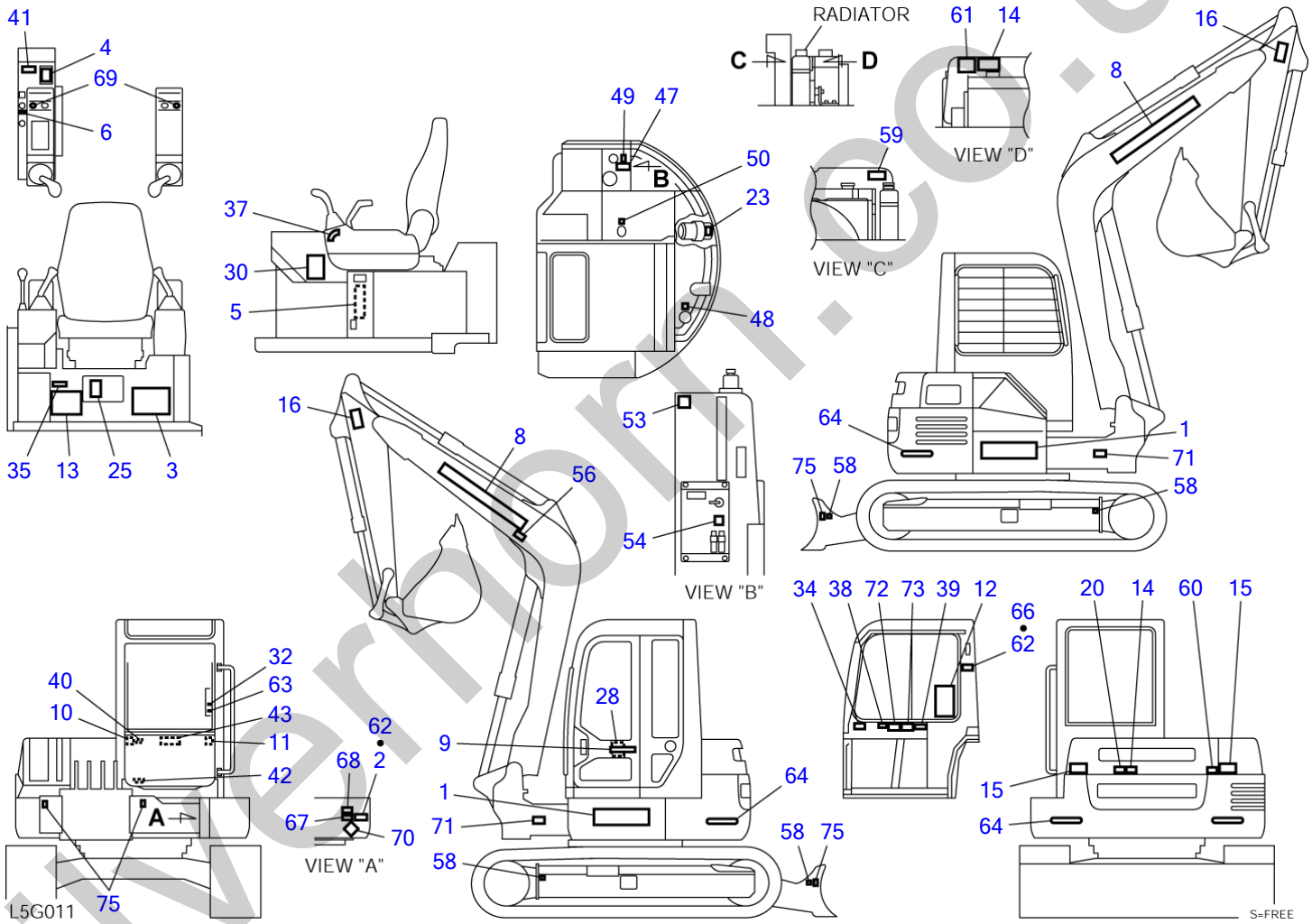

silverhorn.co.uk

DECAL

Item	Part number	Description	Q'ty	Chan.	Serial No.	Serv.	Remarks
38	0359325190	・DECAL	1				
39	0569358080	・DECAL (English)	1				
39	0569358180	・DECAL (German)	1				
39	0569358280	・DECAL (French)	1				
39	0569358380	・DECAL (Italian)	1				
39	0569359805	・DECAL (Russian)	1				
39	0569358580	・DECAL (U.S. TAKEUCHI)	1			M	
40	0569335060	・DECAL	1				
40	0569327800	・DECAL (German)	1				
40	0569328800	・DECAL (French)	1				
40	0569329800	・DECAL (Italian)	1				
40	0579300608	・DECAL (Russian)	1				
41	0359317200	・DECAL	1				
42	0329360060	・DECAL	1				
43	0579300015	・DECAL	1				
47	0339375050	・DECAL (English)	1				
47	0339375250	・DECAL (German)	1				
47	0339375450	・DECAL (French)	1				
47	0339375650	・DECAL (Italian)	1				
47	0399356005	・DECAL (Russian)	1				
48	0359306600	・DECAL (English)	1				
48	0339375260	・DECAL (German)	1				
48	0339375460	・DECAL (French)	1				
48	0339375660	・DECAL (Italian)	1				
48	0579300603	・DECAL (Russian)	1				
49	0359306700	・DECAL	1				
50	0359325220	・DECAL	1				
53	0569353810	・DECAL (English)	1				
53	0569353910	・DECAL (German)	1				
53	0569354010	・DECAL (French)	1				
53	0569354110	・DECAL (Italian)	1				
53	0569357903	・DECAL (Russian)	1				
54	0399351210	・DECAL	1				
56	0359347010	・DECAL (English)	1				except for U.K. TAKEUCHI
56	0339375210	・DECAL (German)	1				
56	0339375410	・DECAL (French)	1				
56	0339375610	・DECAL (Italian)	1				
56	0579300609	・DECAL (Russian)	1				
58	0881031549	・ÃÞ¶Ù	4				
59	0359313900	・DECAL	1				
60	0339376240	・DECAL (English)	1				
60	0339376340	・DECAL (German)	1				
60	0339379440	・DECAL (French)	1				
60	0339379540	・DECAL (Italian)	1				
60	0579300613	・DECAL (Russian)	1				
61	0569326400	・DECAL (English)	1				
61	0569327400	・DECAL (German)	1				
61	0569328400	・DECAL (French)	1				
61	0569329400	・DECAL (Italian)	1				
61	0579300607	・DECAL (Russian)	1				
62	X **********	・SCREW	8				
63	0579300045	・DECAL	1				
64	0569358070	・DECAL	2				
66	X **********	・DECAL	1				
67	X **********	・DECAL	1				
68	X **********	・DECAL	1				
69	0349336948	・DECAL	2				
70	X **********	・DECAL	1				
71	0399352302	・DECAL (U.S. TAKEUCHI)	2				
72	0399352303	・DECAL (U.S. TAKEUCHI)	1				
73	0399352309	・DECAL (U.S. TAKEUCHI)	1				
75	0399300500	・DECAL	4				
	L5g013						

silvermorn.co.uk

DECAL (selecter valve)

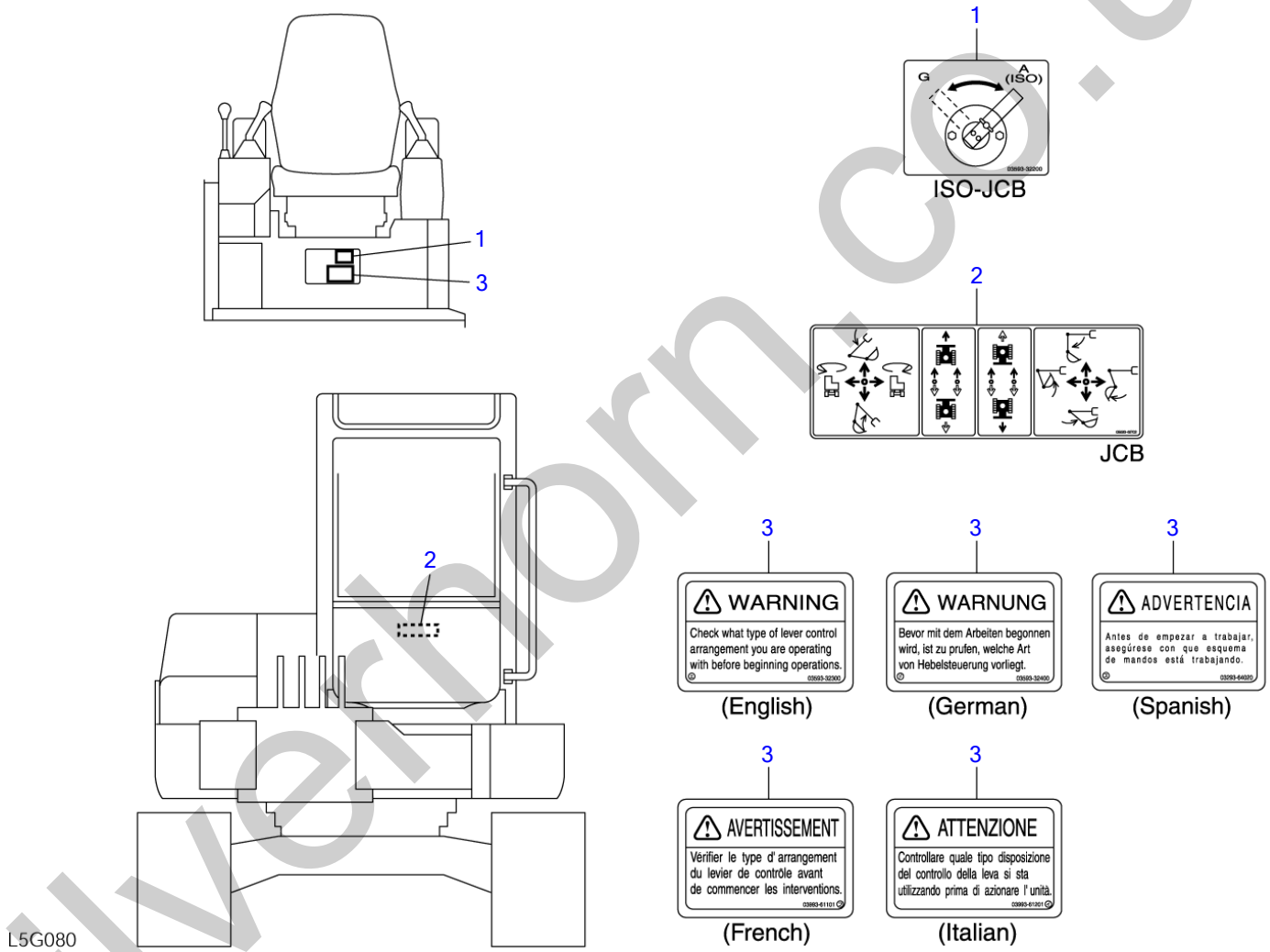

silverhorn.co.uk

DECAL (selecter valve)

Item	Part number	Description	Q'ty	Chan.	Serial No.	Serv.	Remarks
0	0569360000	DECAL SET (English)	1				X05693-60000-1
	0569360100	DECAL SET (German)	1				X05693-60100-1
	0569360200	DECAL SET (Spanish)	1				X05693-60200-1
	0569361000	DECAL SET (French)	1				X05693-61000-1
	0569361100	DECAL SET (Italian)	1				X05693-61100-1
1	0359332200	・DECAL	1				ISO-JCB
2	0569349702	・DECAL	1				JCB
3	0359332300	・DECAL	1				English
	0359332400	・DECAL	1				German
	0329364020	・DECAL	1				Spanish
	0399361101	・DECAL	1				French
	0399361201	・DECAL	1				Italian
	L5g081						

silverhorn.co.uk

DECAL (operation lever)

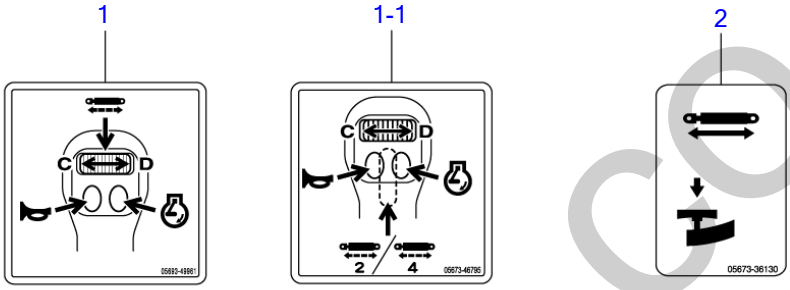

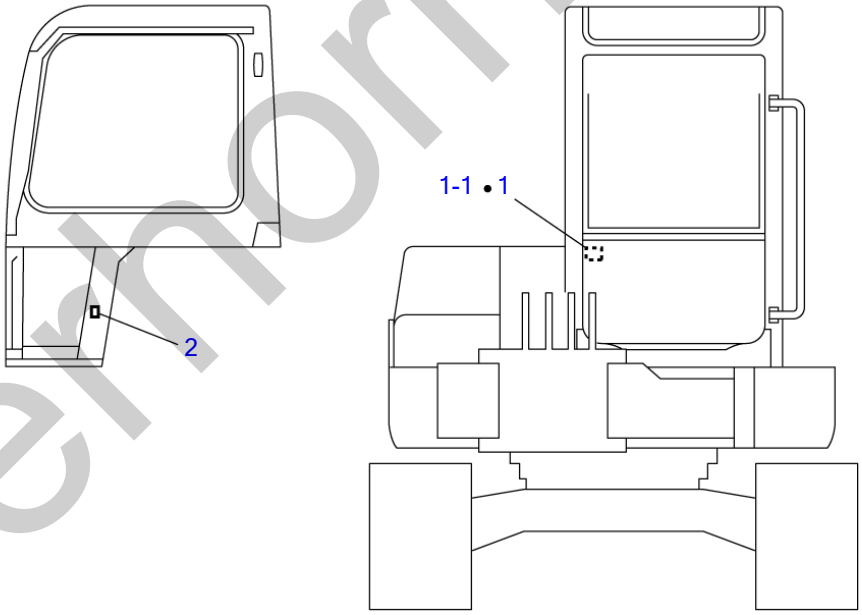

L5G090

S=FREE

silverhorn.co.uk

DECAL (operation lever)

Item	Part number	Description	Q'ty	Chan.	Serial No.	Serv.	Remarks
0	0569360300	DECAL SET (with 2nd aux. lines)	1				X05693-60300-1
	0569360400	DECAL SET (with 3rd aux. lines)	1				X05693-60400-1
	0569360500	DECAL SET (with 4th aux. lines)	1				X05693-60500-1
1	0569349961	・DECAL	1				with 2nd & 3rd aux. lines
1-1	0567346795	・DECAL	1				with 3rd aux. lines
2	0567336130	・DECAL	1				with 3rd & 4th aux. lines
	L5g090						

silverhorn.co.uk

TOOL & ACCESSORIES

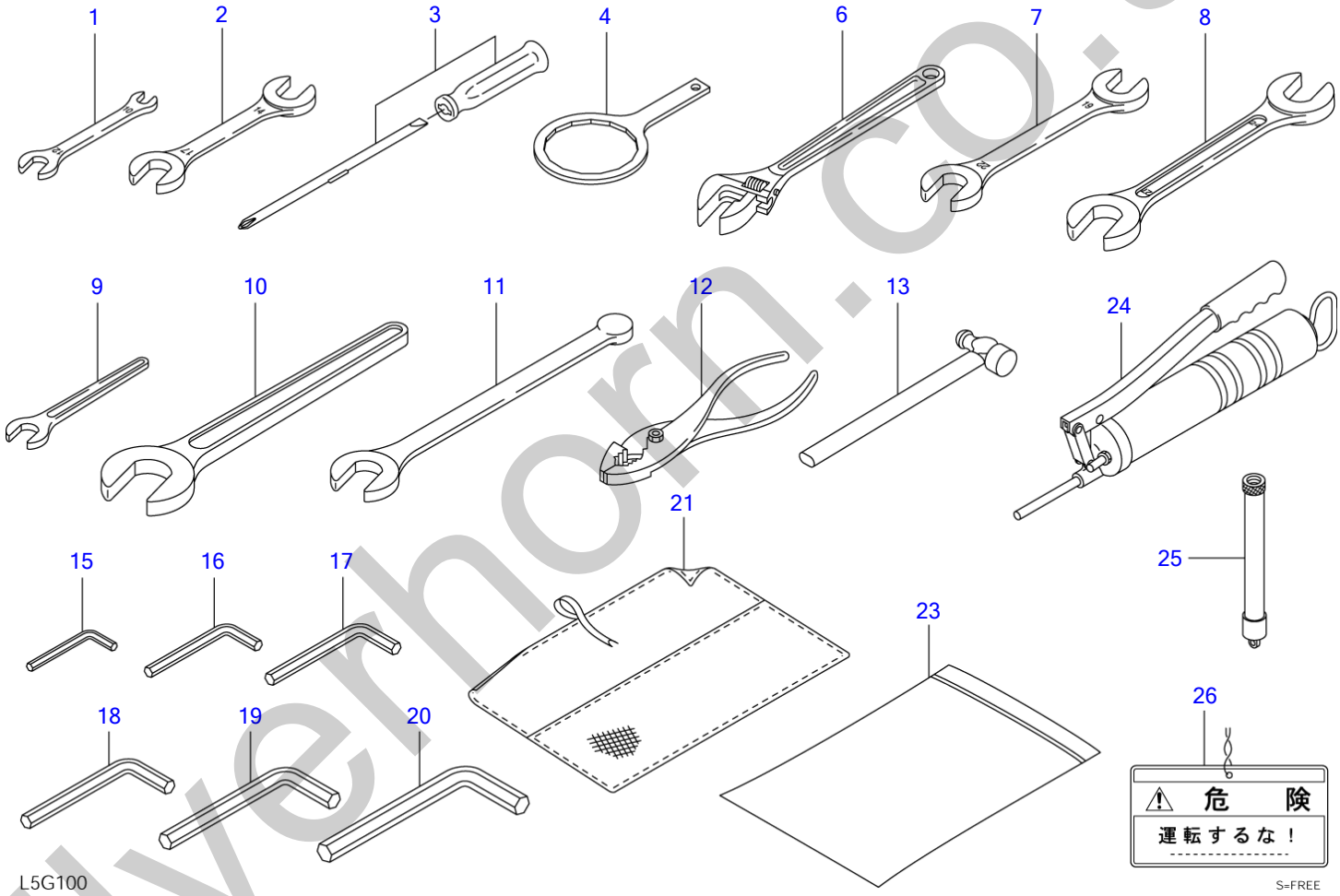

silverhorn.co.uk

TOOL & ACCESSORIES

Item	Part number	Description	Q'ty	Chan.	Serial No.	Serv.	Remarks
		TOOL ASSY (for Japan)					X05692-21500-0
		TOOL ASSY					X05692-21600-0
0	0379207010	TOOL ASSY	1				
1	1910047081	・SPANNER	1				Y28110-100120
2	1910047082	・SPANNER	1				Y28110-140170
3	1910006112	・SCREWDRIVER	1				Y104200-92350
4	1910065081	・WRENCH, filter	1				Y119640-92750
6	1690400250	・WRENCH, monkey	1				
7	1690001922	・SPANNER	1				
8	1690002427	・SPANNER	1				
9	1690100013	・SPANNER	1				
10	1690100041	・SPANNER	1				
11	1690900026	・SPANNER	1				
12	1690500200	・PLIER	1				
13	1690300330	・HAMMER	1				
15	1690600400	・WRENCH, hex.	1				
16	1690600500	・WRENCH, hex.	1				
17	1690600600	・WRENCH, hex.	1				
18	1690600800	・WRENCH, hex.	1				
19	1690601000	・WRENCH, hex.	1				
20	1690601400	・WRENCH, hex.	1				
21	1691400001	・CASE, tool	1				
23	1691900001	・CASE	1				
24	1691060600	GUN, grease	1				
	1691010800	GUN, grease	1				for Japan
25	1554512600	TUBE	1				for EU
26	0359325160	PLATE	1				for Japan
	L5g100						

silverhorn.co.uk

PAINTED COLOR

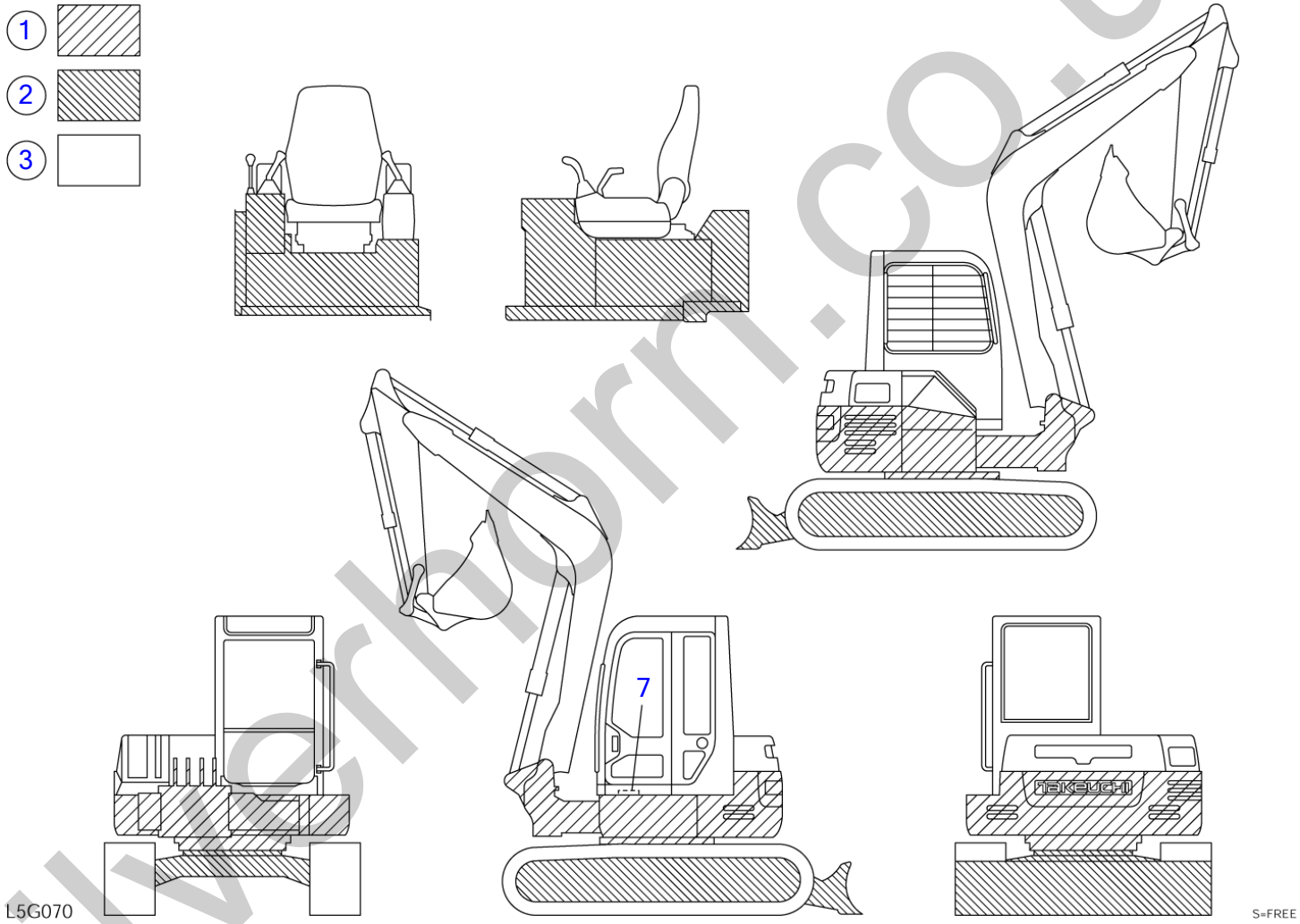

silverhorn.co.uk

PAINTED COLOR

Item	Part number	Description	Q'ty	Chan.	Serial No.	Serv.	Remarks
		PAINTED COLOR (rubber crawler)					X05691-24400-0
		PAINTED COLOR (steel crawler)					X05691-24300-0
1	1919060105	RED	1				
	1919069105	RED	1				spray
2	1919060144	GRAY	1				
	1919069144	GRAY	1				spray
3	1919060142	LIGHT GRAY	1				
	1919069142	LIGHT GRAY	1				spray
		<<NOTE>>					
		The part of the steel carawler uses item 2.					
	L5g070						

silverhorn.co.uk

SWIVEL JOINT

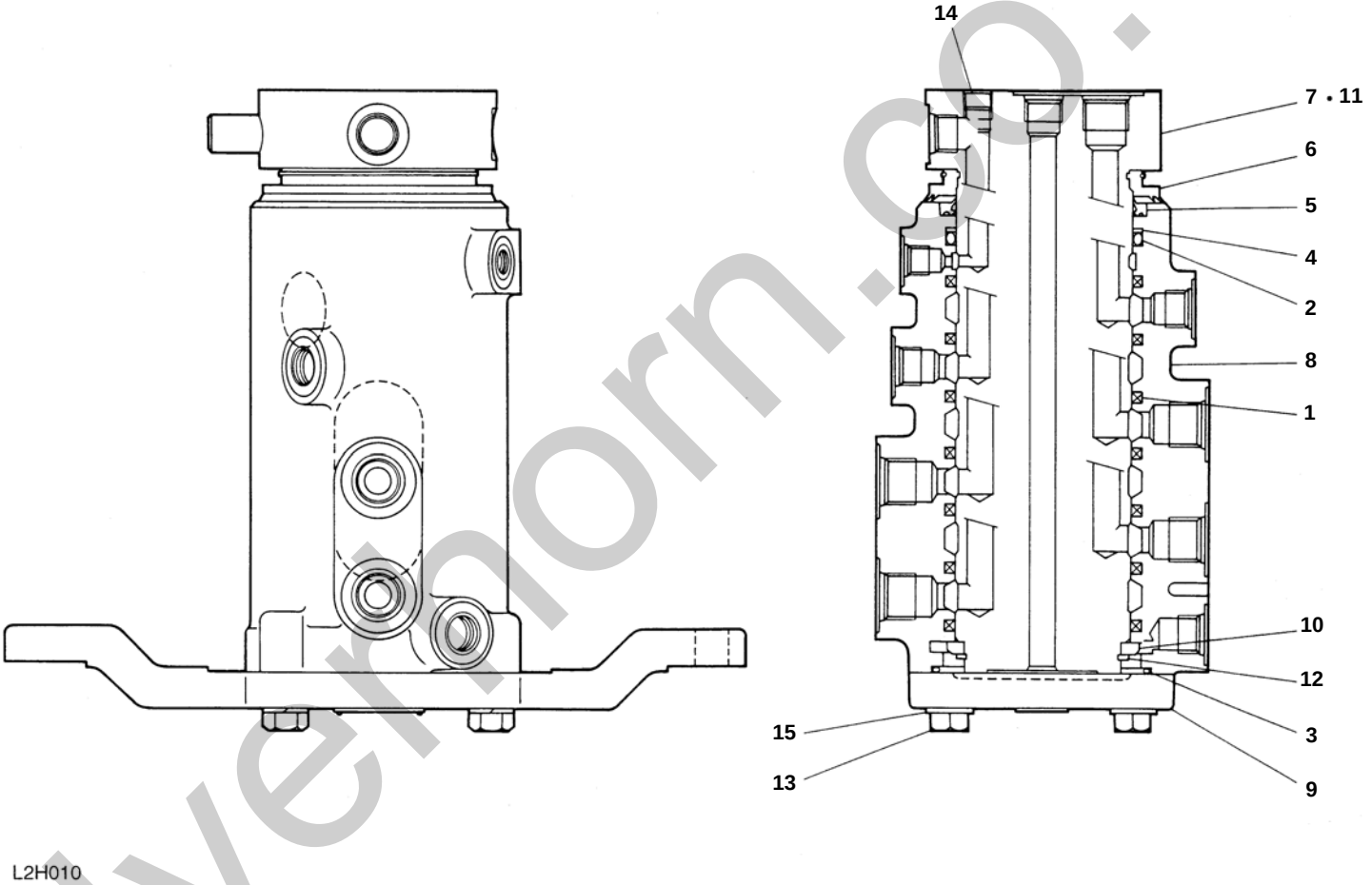

silverthorn.co.uk

SWIVEL JOINT

Item	Part number	Description	Q'ty	Chan.	Serial No.	Serv.	Remarks
0	1904008000	JOINT, swivel	1				
0-1	1904008099	・KIT, seal	1				
1	X 1904008006	・・SEAL	7				
2	X 1420010800	・・O-RING	1				
3	X 1420110950	・・O-RING	1				
4	X 1421030800	・・RING, back-up	1				
5	X 1904000494	・・SEAL, dust	1				
6	X 1904002391	・・SEAL, dust	1				
7	1904007401	・SHAFT	1				
8	1904007402	・HUBE	1				
9	1904003621	・FRANGE	1				
10	1904003691	・SPACER	1				
11	1904007405	・PIN	1				
12	1220000072	・RING, snap	1				
13	1100051030	・BOLT	4				
14	1501810002	・PLUG	3				
15	1140010010	・WASHER, spring	4				
	L2h010						

silverhorn.co.uk

CONTROL VALVE (1/6)

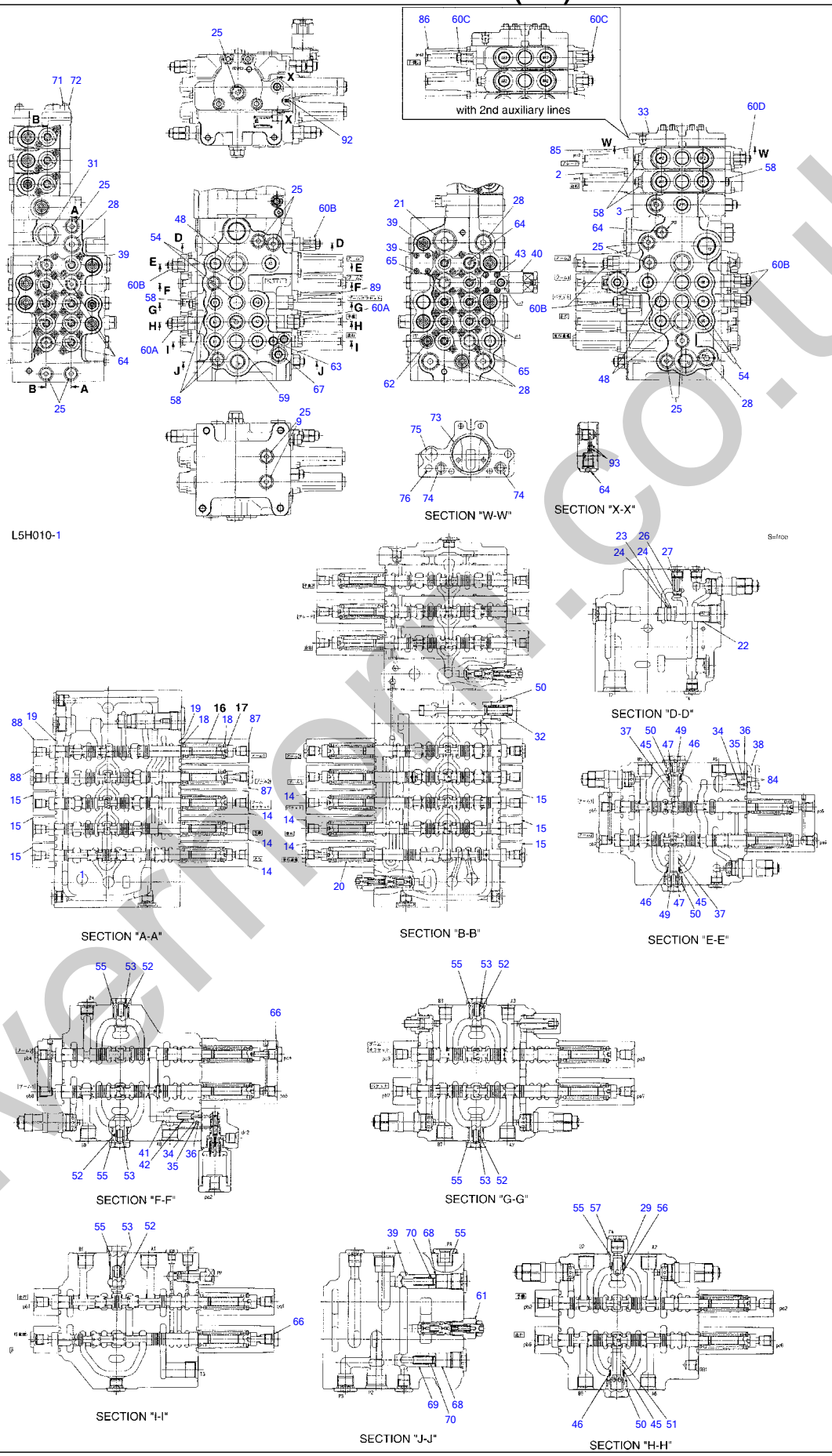

silverfox.co.uk

CONTROL VALVE (1/6)

Item	Part number	Description	Q'ty	Chan.	Serial No.	Serv.	Remarks
0	1901043400	VALVE ASSY, control	1				
	1901043500	VALVE ASSY, control	1				with 2nd aux. lines
2	1901043414	・BLOCK ASSY (slew)	1				see page (2/6)
3	1901043401	・HOUSING, inlet	1				see page (3/6)
14	1901043466	・CAP	6				
15	1901043467	・CAP	6				
16	1901031857	・SPRING	9				
17	1901036631	・END, spool	10				
18	1901029754	・HOLDER, spring	20				
19	X 1420000260	・O-RING	20				see note
20	1901043456	・SPRING	1				
21	1901042279	・PLUG ASSY	1				
	1420010240	・・O-RING	1				
22	1901043471	・SLEEVE	1				
23	X 1420010160	・O-RING	1				see note
24	X 1421020610	・RING, back-up	2				see note
25	1901036678	・PLUG ASSY	15				
	1420010140	・・O-RING	15				
26	1901043426	・POPPET	1				
27	1901031860	・SPRING	1				
28	1901036572	・PLUG	5				
	1420010180	・・O-RING	5				
29	1901040757	・SPRING	1				
31	1901036671	・PLUG	1				
	1420010240	・・O-RING	1				
32	1901031858	・SPRING	1				
33	1901043404	・HOUSING, outlet	1				
34	1901036641	・SPACER	2				
35	X 1420000125	・O-RING	2				see note
36	X 1421020125	・RING, back-up	2				see note
37	1901043472	・SLEEVE	2				
38	1901043480	・PLATE	1				
39	1110020620	・SCREW, cap	44				
40	1901043421	・VALVE, anti-drift	1				see page (6/6)
41	1901037827	・POPPET	1				
42	1901037857	・SPRING	1				
43	1110020640	・SCREW, cap	4				
45	1901031866	・POPPET	3				
46	1901031859	・SPRING	3				
47	1901025467	・POPPET	2				
48	1901036674	・PLUG	3				
	1420010240	・・O-RING	1				
49	1901034239	・SPRING	2				
50	X 1420010240	・O-RING	4				see note
51	1901043473	・SLEEVE	1				
52	1901036626	・POPPET	5				
53	1901031853	・SPRING	5				
54	1901036675	・PLUG	4				
	1420010180	・・O-RING	1				
55	X 1420010180	・O-RING	7				see note
56	1901040727	・POPPET	1				
57	1901040772	・PLUG	1				
58	1901042626	・VALVE, shut-off	4				
	1420310910	・・O-RING	1				
59	1901043475	・PLUG	1				
60A	1901043422	・VALVE, overload	2				
60B	1901043423	・VALVE, overload	6				
60C	1901043424	・VALVE, overload	2				with 2nd aux. lines
60D	1901043425	・VALVE, overload	1				
	1420310910	・・O-RING	1				
61	1901036621	・VALVE, relief	1				
	1420310908	・・O-RING	1				
62	1901042272	・PLUG ASSY	1				
	1420010140	・・O-RING	1				
63	1901036677	・PLUG ASSY	1				
	1420010080	・・O-RING	1				
64	1901036573	・PLUG	6				
	1420010110	・・O-RING	1				

silverthorn.co.uk

CONTROL VALVE (1/6)

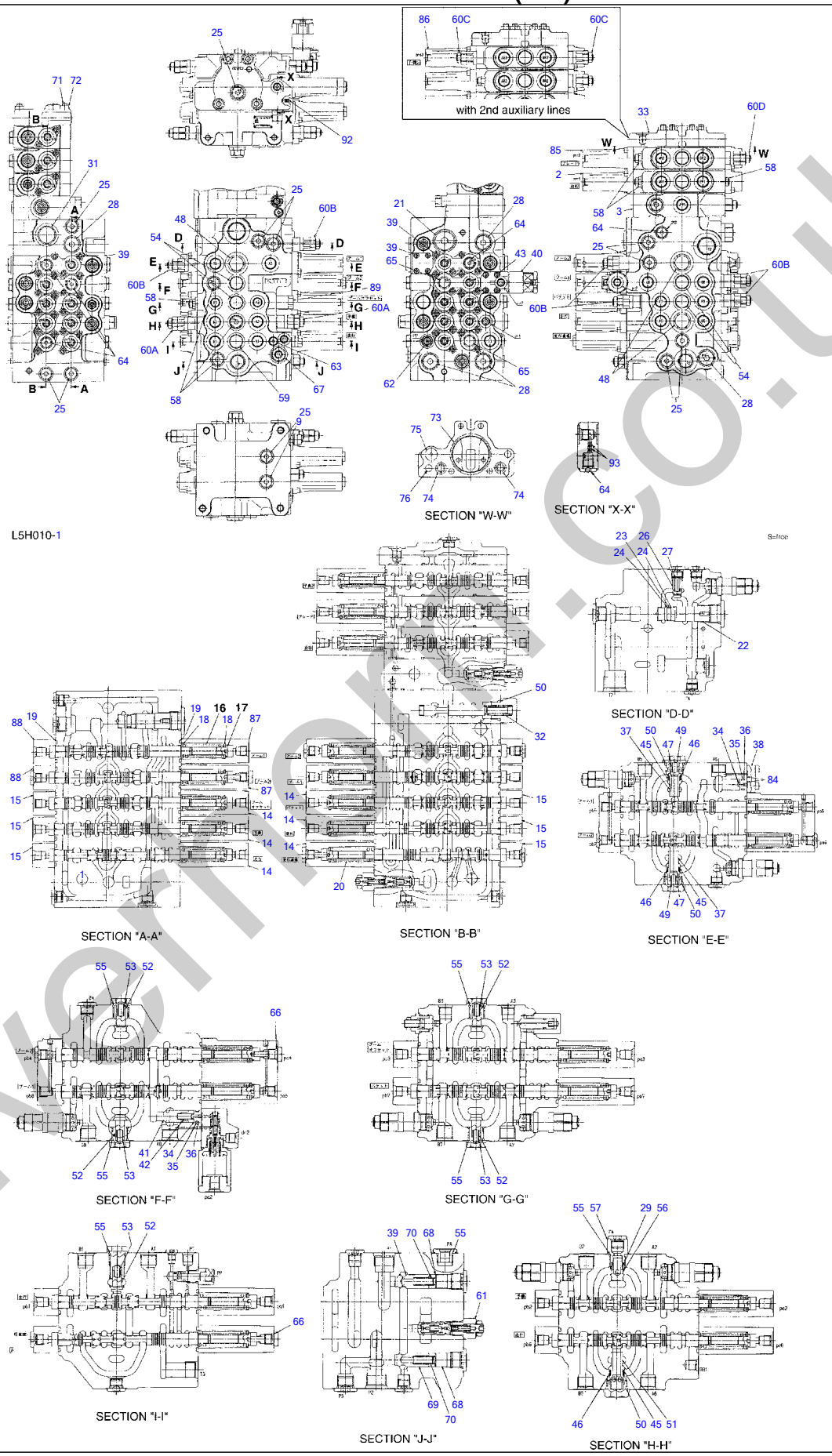

silverfox.co.uk

CONTROL VALVE (1/6)

Item	Part number	Description	Q'ty	Chan.	Serial No.	Serv.	Remarks
65	1901043476	・PLUG	2				
65	1420010110	・・O-RING	1				
66	X 1420010110	・O-RING	2				see note
67	1901032590	・PLUG	1				
67	1420010180	・・O-RING	1				
68	1901043481	・SPACER	2				
69	1901043427	・POPPET	2				
70	1901043457	・SPRING	2				
71	1901043407	・ROD, tie	4				
71	1901043507	・ROD, tie	4				with 2nd aux. lines
72	1130050010	・NUT	4				
73	X 1420100750	・O-RING	1				see note
74	X 1901043482	・O-RING	2				see note
75	X 1420010200	・O-RING	1				see note
76	X 1420010100	・O-RING	1				see note
84	X 1420010070	・O-RING	2				see note
85	1901043417	・BLOCK ASSY (dozer blade)	1				see page (4/6)
86	1901043519	・BLOCK ASSY (with 2nd aux. lines)	1				see page (5/6)
87	1901043468	・CAP	2				
88	1901043469	・CAP	2				
89	1901042625	・VALVE, antivoid	1				
92	1901043477	・PLUG	1				
93	1901043458	・PLUG	2				
93		<<NOTE>>					
0-1	1901043499	・KIT, seal	1				
0-1		incl. item 19, 23, 24, 35, 36, 50, 55, 66, 73-76, 84.					
	L5h011						

silverhorn.co.uk

CONTROL VALVE (2/6) (slew)

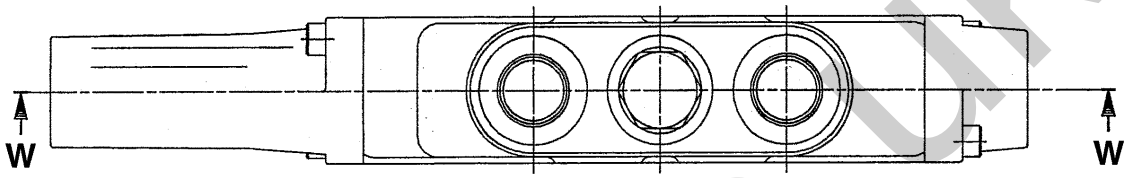

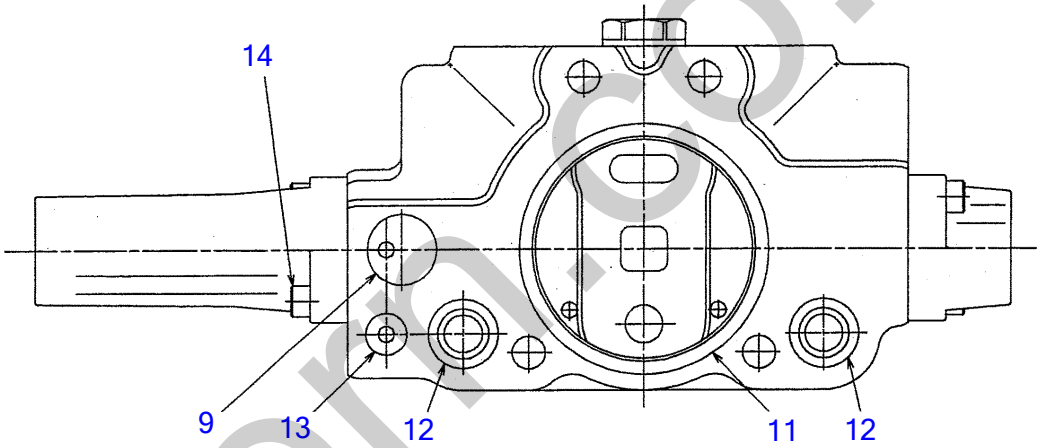

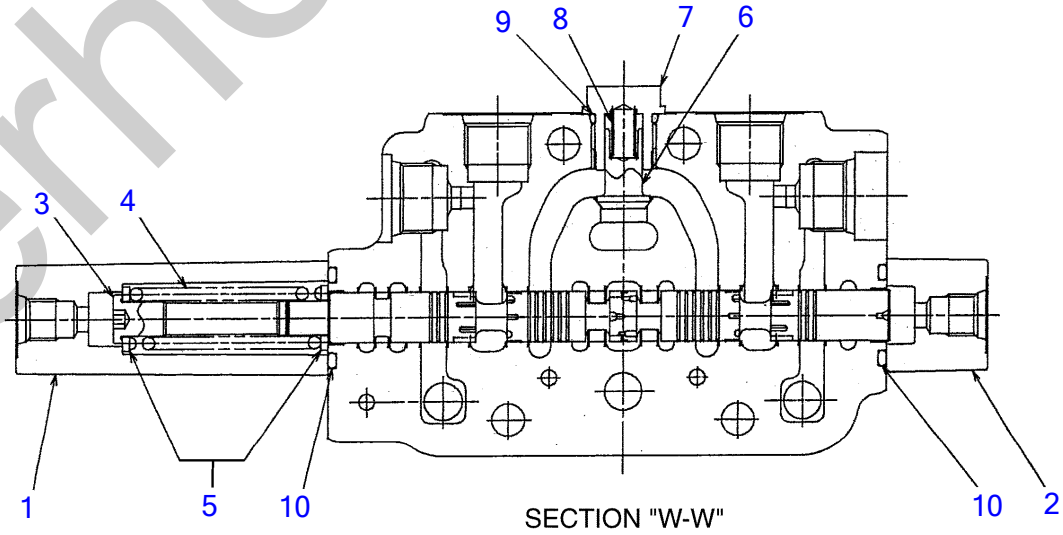

L5H150

silverhorn.co.uk

CONTROL VALVE (2/6) (slew)

Item	Part number	Description	Q'ty	Chan.	Serial No.	Serv.	Remarks
0	1901043414	BLOCK ASSY (slew)	1				
1	1901043466	・CAP	1				
2	1901043467	・CAP	1				
3	1901036631	・END, spool	1				
4	1901031857	・SLEEVE	1				
5	1901029754	・HOLDER, spring	2				
6	1901036626	・POPPET	1				
7	1901036675	・PLUG	1				
8	1901031853	・SPRING	1				
9	1420010180	・O-RING	2				
10	1420000260	・O-RING	2				
11	1420100750	・O-RING	1				
12	1901043482	・O-RING	2				
13	1420010100	・O-RING	1				
14	1110020620	・SCREW, cap	4				
	L5h151						

silverhorn.co.uk

CONTROL VALVE (3/6) (inlet)

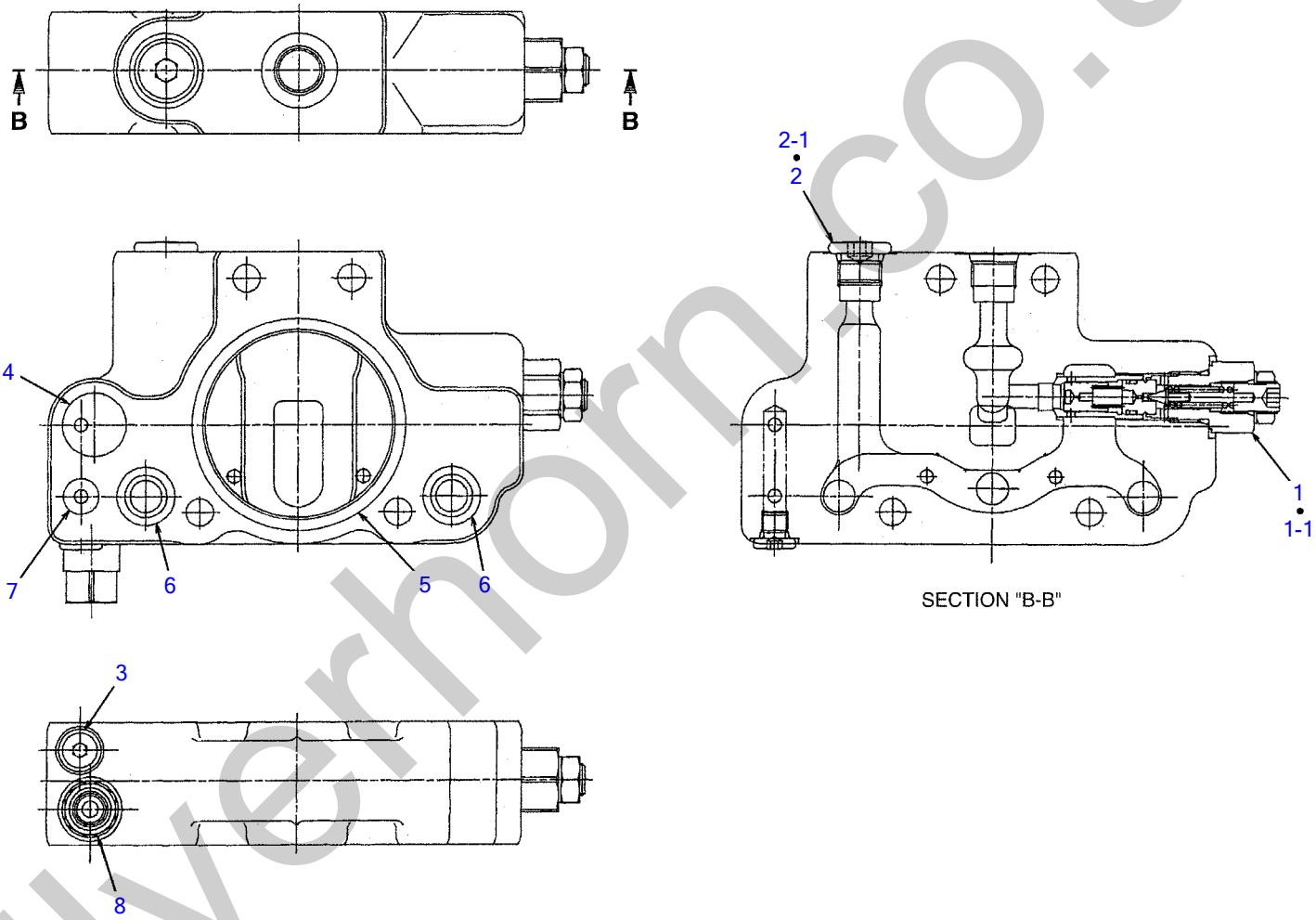

silverhorn.co.uk

CONTROL VALVE (3/6) (inlet)

Item	Part number	Description	Q'ty	Chan.	Serial No.	Serv.	Remarks
0	1901043401	HOUSING, inlet	1				
1	1901043483	・VALVE, relief	1				
1-1	1420310903	・・O-RING	1				
2	1901036678	・PLUG ASSY	1				
2-1	1420010140	・・O-RING	1				
3	1901036677	・PLUG ASSY	1				
4	1420010200	・O-RING	1				
5	1420100750	・O-RING	1				
6	1901043482	・O-RING	2				
7	1420010100	・O-RING	1				
8	1901043474	・PLUG	1				
	L5h161						

silverhorn.co.uk

CONTROL VALVE (4/6) (dozer blade)

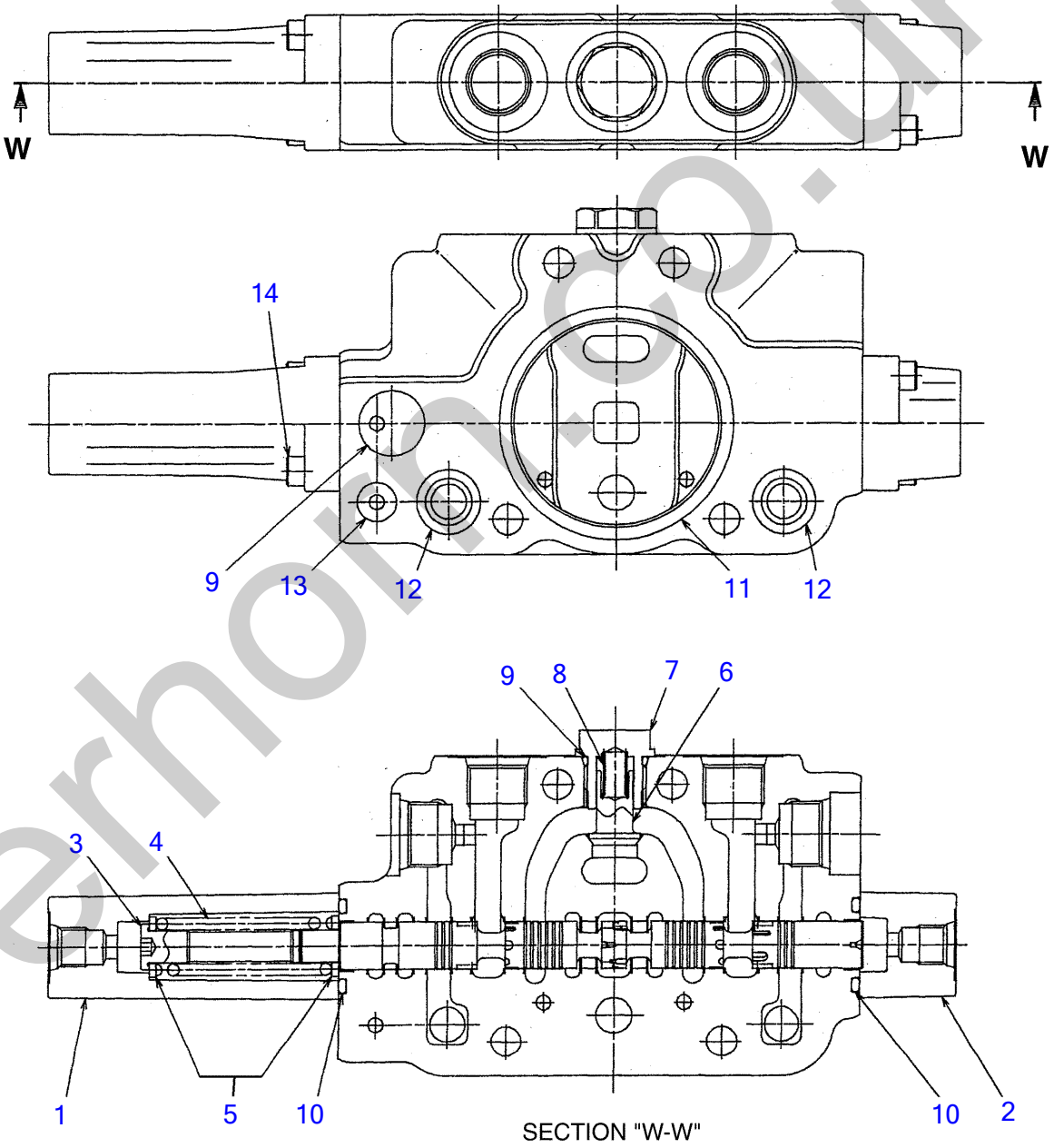

L5H170

silverhorn.co.uk

CONTROL VALVE (4/6) (dozer blade)

Item	Part number	Description	Q'ty	Chan.	Serial No.	Serv.	Remarks
0	1901043417	BLOCK ASSY (dozer blade)	1				
1	1901043466	・CAP	1				
2	1901043467	・CAP	1				
3	1901036631	・END, spool	1				
4	1901031857	・SPRING	1				
5	1901029754	・HOLDER, spring	2				
6	1901036626	・POPPET	1				
7	1901036675	・PLUG	1				
8	1901031853	・SPRING	1				
9	1420010180	・O-RING	2				
10	1420000260	・O-RING	2				
11	1420100750	・O-RING	1				
12	1901043482	・O-RING	2				
13	1420010100	・O-RING	1				
14	1110020620	・SCREW, cap	4				
	L5h170						

silverhorn.co.uk

CONTROL VALVE (5/6) (with 2nd aux. lines)

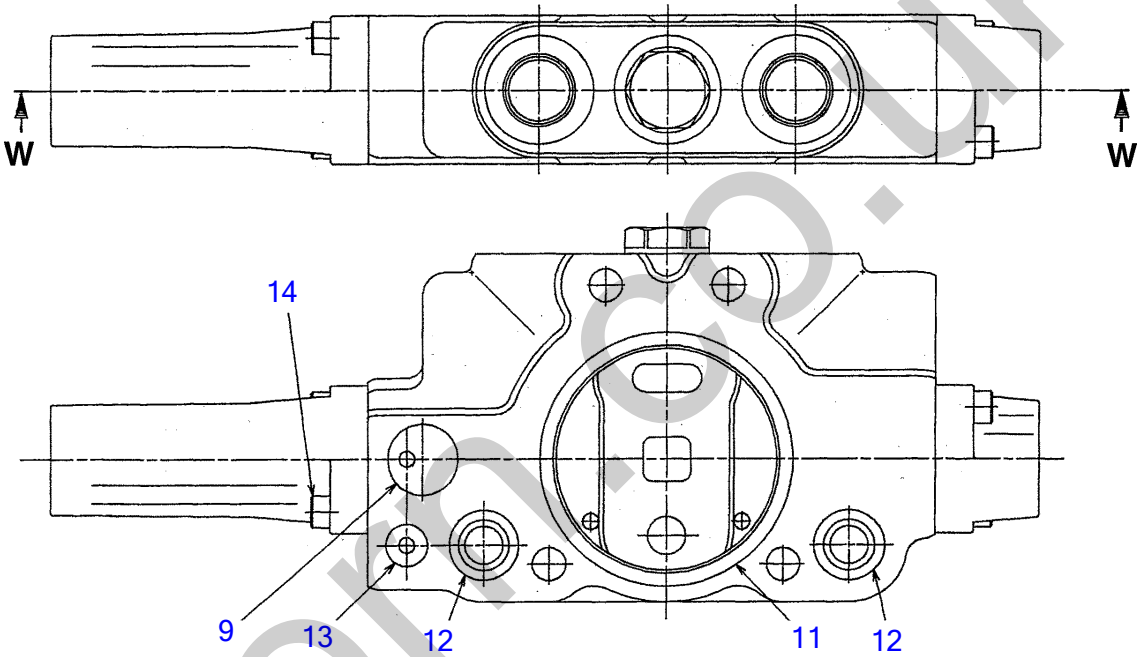

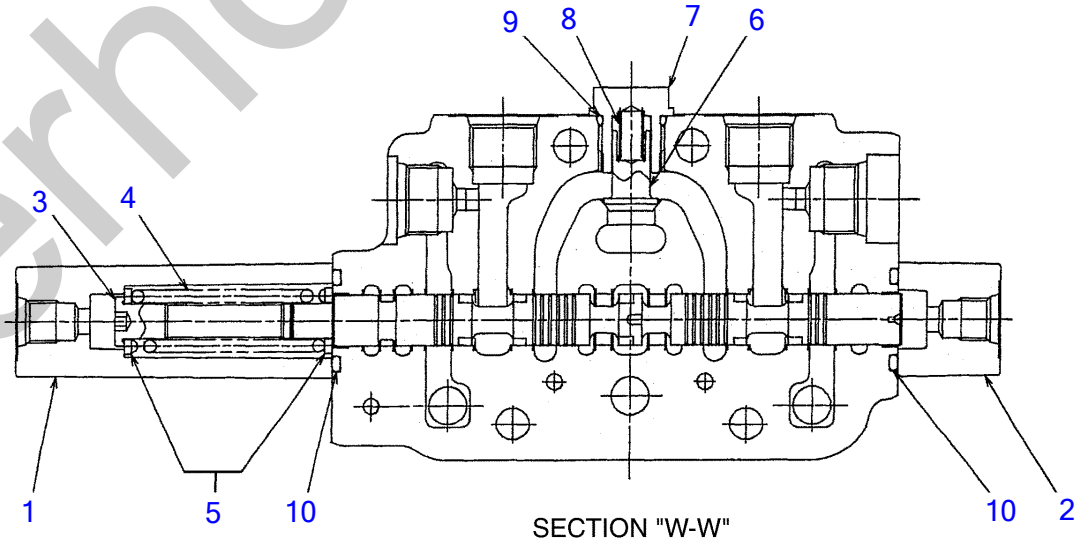

L5H180

SECTION "W-W"

silverhorn.co.uk

CONTROL VALVE (5/6) (with 2nd aux. lines)

Item	Part number	Description	Q'ty	Chan.	Serial No.	Serv.	Remarks
0	1901043519	BLOCK ASSY (with 2nd aux. lines)	1				
1	1901043466	・CAP	1				
2	1901043467	・CAP	1				
3	1901036631	・END, spool	1				
4	1901031857	・SPRING	1				
5	1901029754	・HOLDER, spring	2				
6	1901036626	・POPPET	1				
7	1901036675	・PLUG	1				
8	1901031853	・SPRING	1				
9	1420010180	・O-RING	2				
10	1420000260	・O-RING	2				
11	1420100750	・O-RING	1				
12	1901043482	・O-RING	2				
13	1420010100	・O-RING	1				
14	1110020620	・SCREW, cap	4				
	L5h180						

silverhorn.co.uk

CONTROL VALVE (6/6) (anti-drift valve)

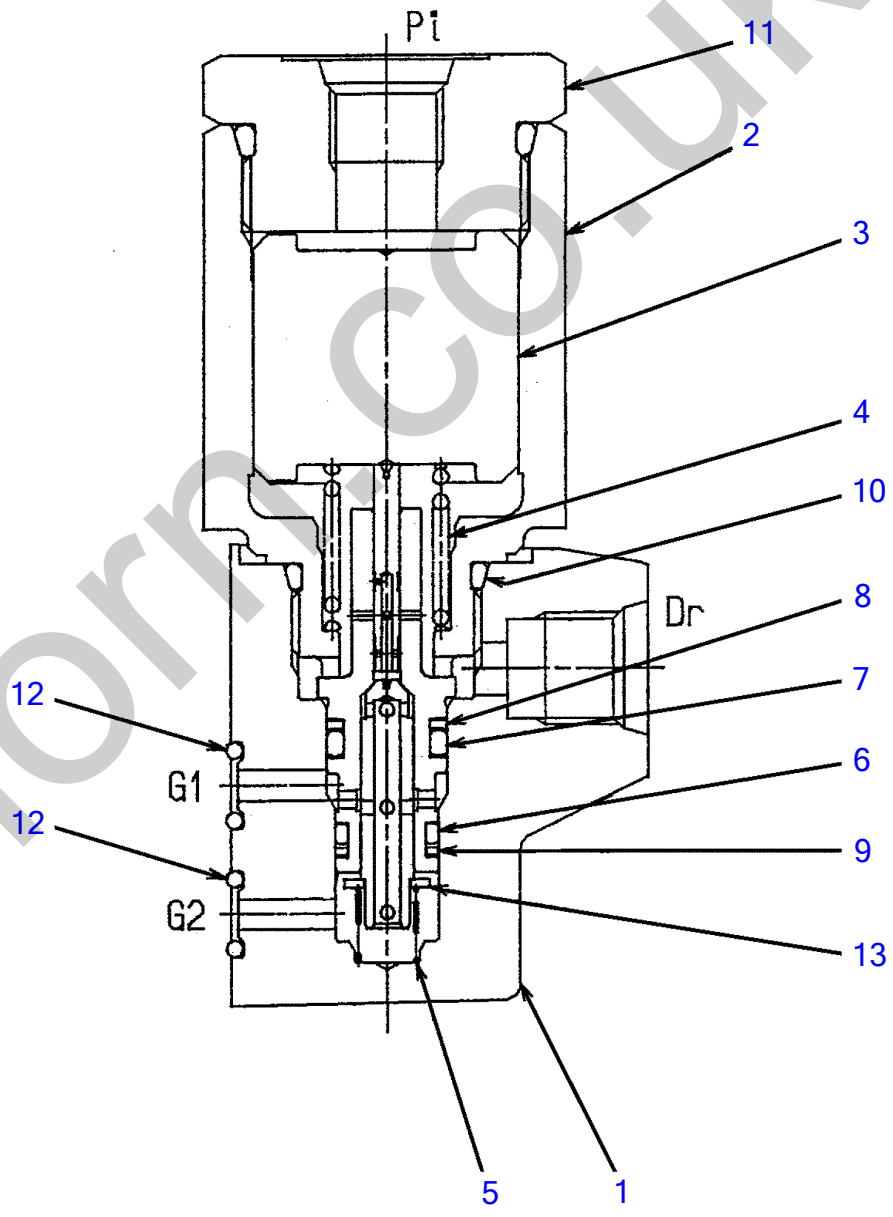

L5H190

silverhorn.co.uk

CONTROL VALVE (6/6) (anti-drift valve)

Item	Part number	Description	Q'ty	Chan.	Serial No.	Serv.	Remarks
0	1901043421	VALVE ASSY, anti-drift	1				
1	1901043479	・BODY	1				
2	1901043478	・PLUG	1				
3	1901043446	・PISTON	1				
4	1901043445	・SPRING	1				
5	1901042245	・SPRING	1				
6	1420000090	・O-RING	1				
7	1420000101	・O-RING	1				
8	1421020101	・RING, back-up	1				
9	1421020090	・RING, back-up	1				
10	1420310910	・O-RING	1				
11	1901042243	・PLUG ASSY	1				
12	1420010070	・O-RING	2				
13	1901042242	・SEAT, spring	1				
	L5h190						

silverhorn.co.uk

SOLENOID VALVE; 3 BLOCKS

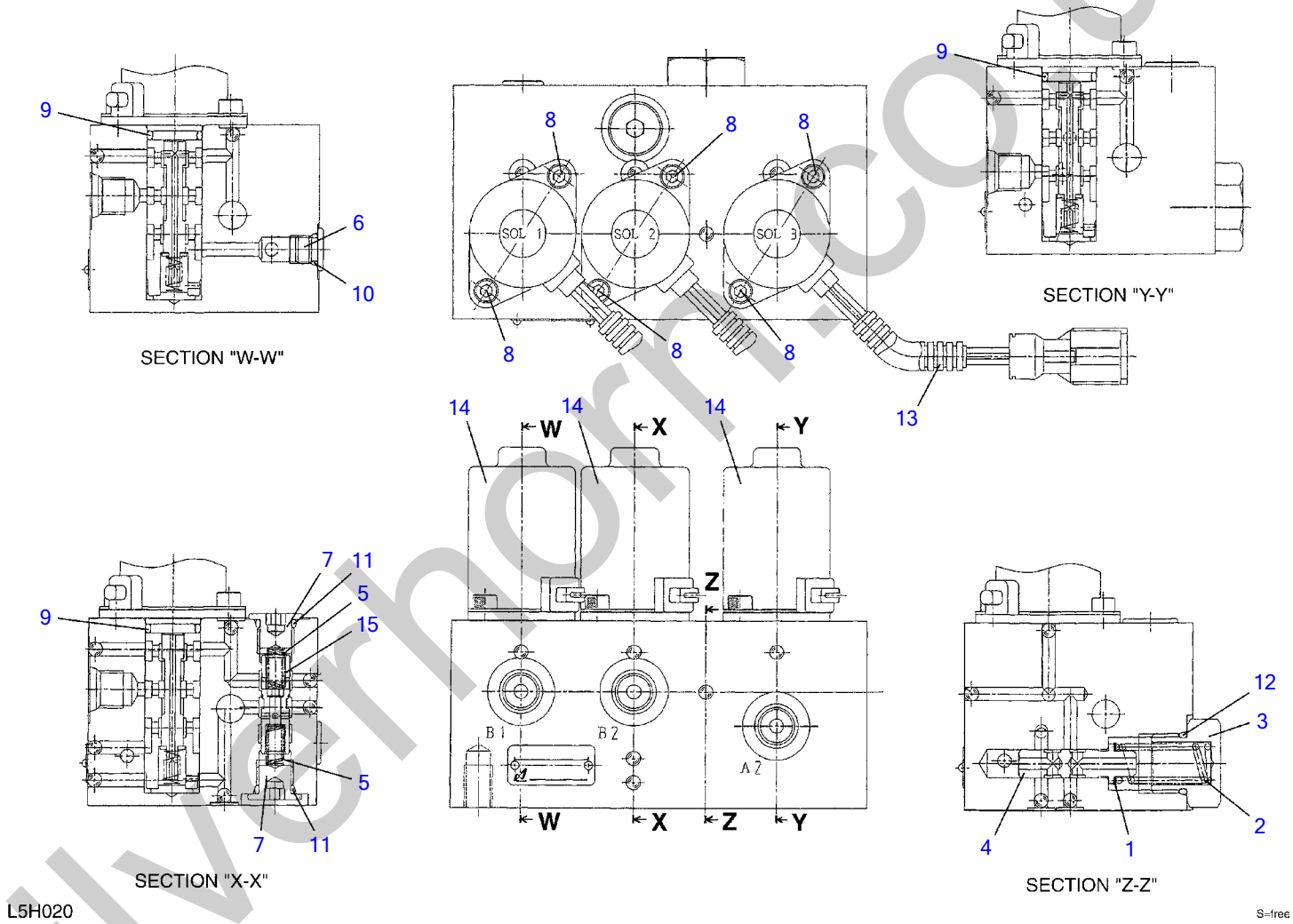

L5H020

S=free

silverhorn.co.uk

SOLENOID VALVE; 3 BLOCKS

Item	Part number	Description	Q'ty	Chan.	Serial No.	Serv.	Remarks
0	1901748800	VALVE ASSY, solenoid	1				
1	1901732003	・SHIM	4				
2	1901732502	・SPRING	1				
3	1901732004	・PLUG	1				
4	1901748805	・SPOOL	1				
5	1901729605	・SPRING	2				
6	1901729618	・PLUG	1				
7	1901720720	・PLUG	2				
8	1110050510	・SCREW, cap	6				
9	1420010160	・O-RING	3				
10	1420010080	・O-RING	1				
11	1420010110	・O-RING	2				
12	1420010180	・O-RING	1				
13	1901748828	・TUBE	3				
14	1901748816	・SOLENOID	3				
15	1901737727	・PLUNGER	1				
	L5h020						

silverhorn.co.uk

SOLENOID VALVE; 2 BLOCKS

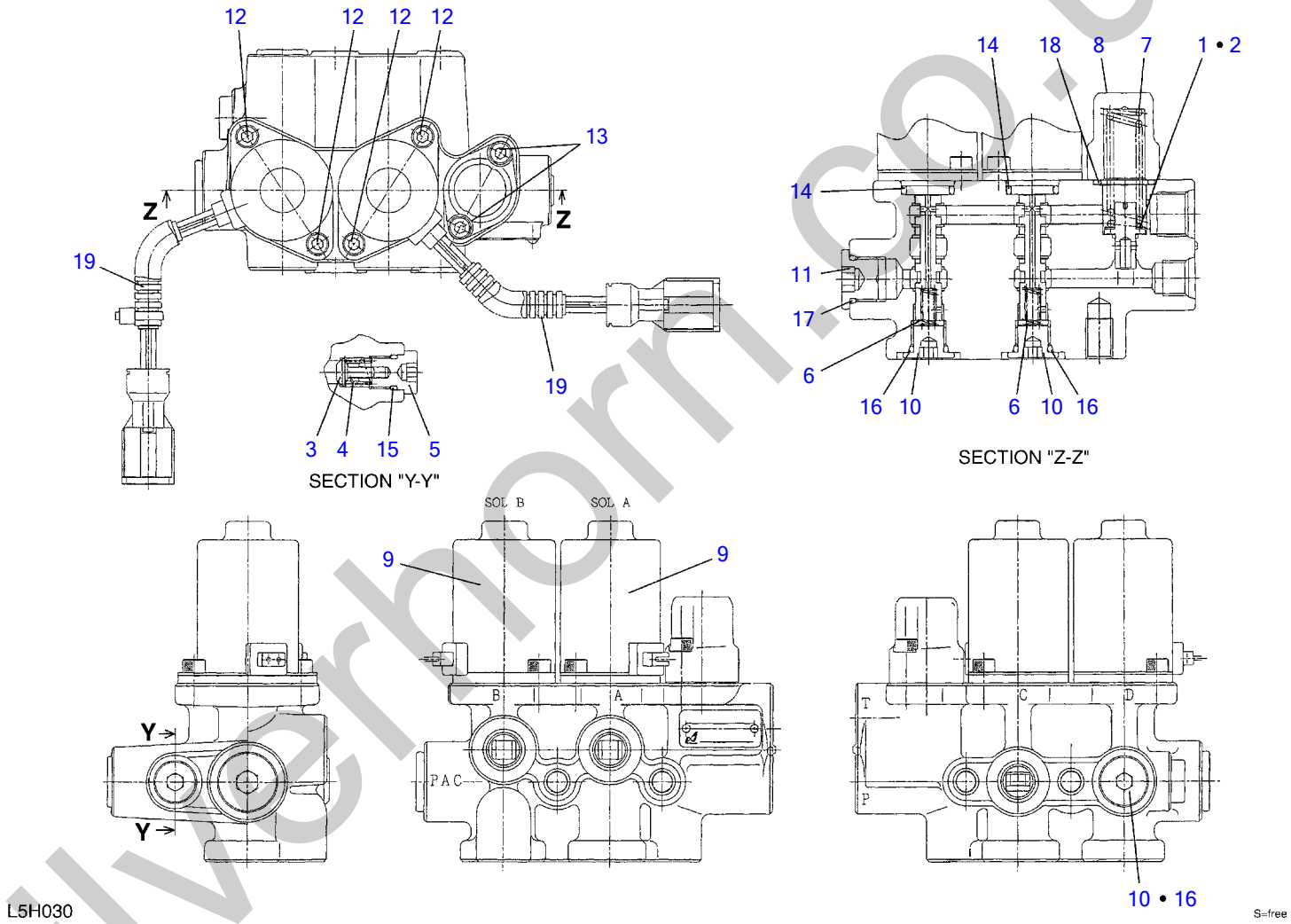

silverhorn.co.uk

SOLENOID VALVE; 2 BLOCKS

Item	Part number	Description	Q'ty	Chan.	Serial No.	Serv.	Remarks
0	1901748900	VALVE ASSY, solenoid	1				
1	1901729601	・SHIM	1				
2	1901728701	・SHIM	1				
3	1901035426	・PLUNGER	1				
4	1901004357	・SPRING	1				
5	1901035471	・PLUG	1				
6	1901735511	・SPRING	2				
7	1901738304	・SPRING	1				
8	1901742409	・COVER	1				
9	1901748816	・SOLENOID	2				
10	1501810002	・PLUG	3				
11	1501710003	・PLUG	1				
12	1110040512	・SCREW, cap	4				
13	1110040520	・SCREW, cap	2				
14	1420010160	・O-RING	2				
15	1420010100	・O-RING	1				
16	1420010110	・O-RING	3				
17	1420010140	・O-RING	1				
18	1420010200	・O-RING	1				
19	1901748828	・TUBE	2				
	L5h030						

silverhorn.co.uk

SOLENOID VALVE (for air conditioner)

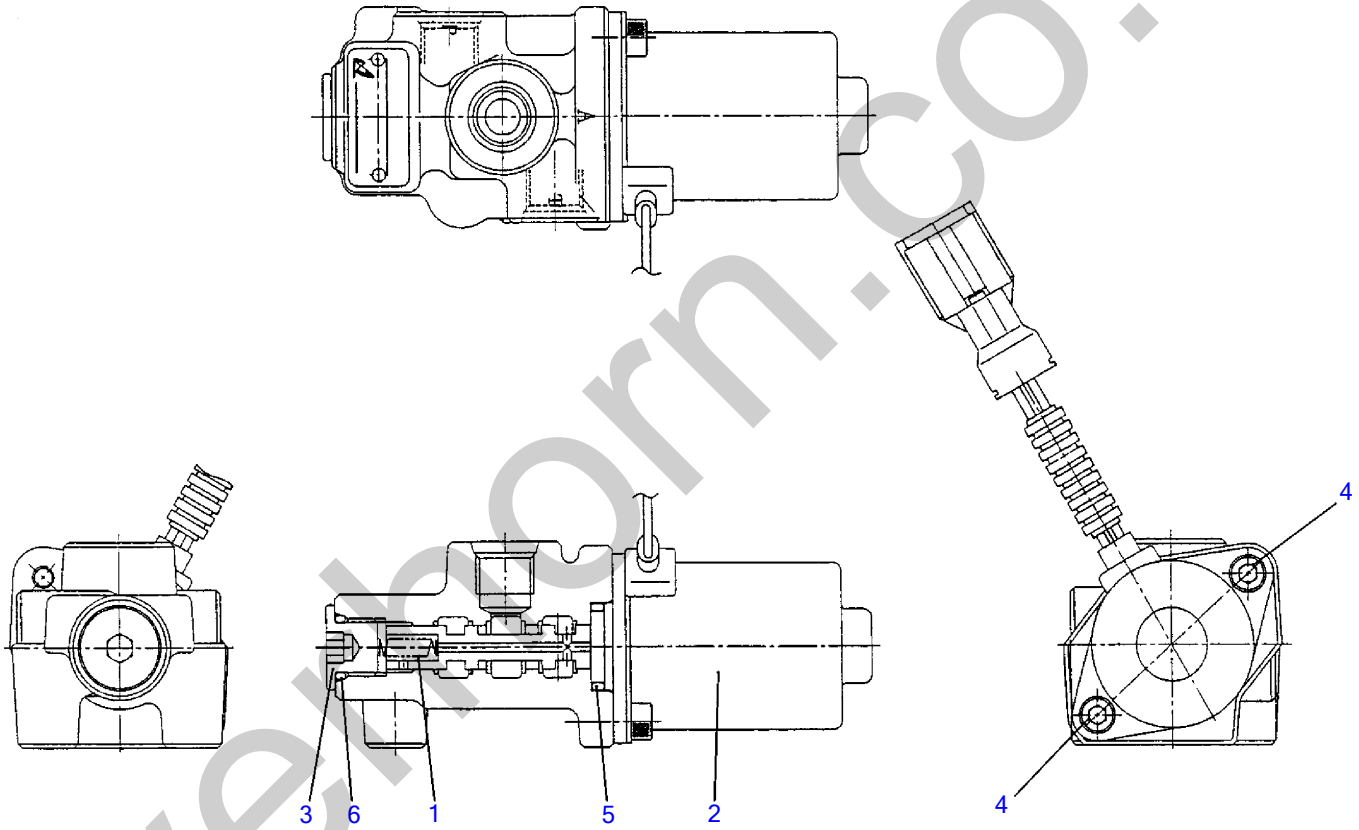

G4H310

S=FREE

silverthorn.co.uk

SOLENOID VALVE (for air conditioner)

Item	Part number	Description	Q'ty	Chan.	Serial No.	Serv.	Remarks
0	1901746600	VALVE ASSY, solenoid	1				
1	1901734404	・SPRING	1				
2	1901746604	・SOLENOID	1				
3	1901738312	・PLUG	1				
4	1110050512	・SCREW, cap	2				
5	1420000160	・O-RING	1				
6	1420010110	・O-RING	1				
	G4h310						

silverhorn.co.uk

SOLENOID VALVE (for proportional control)

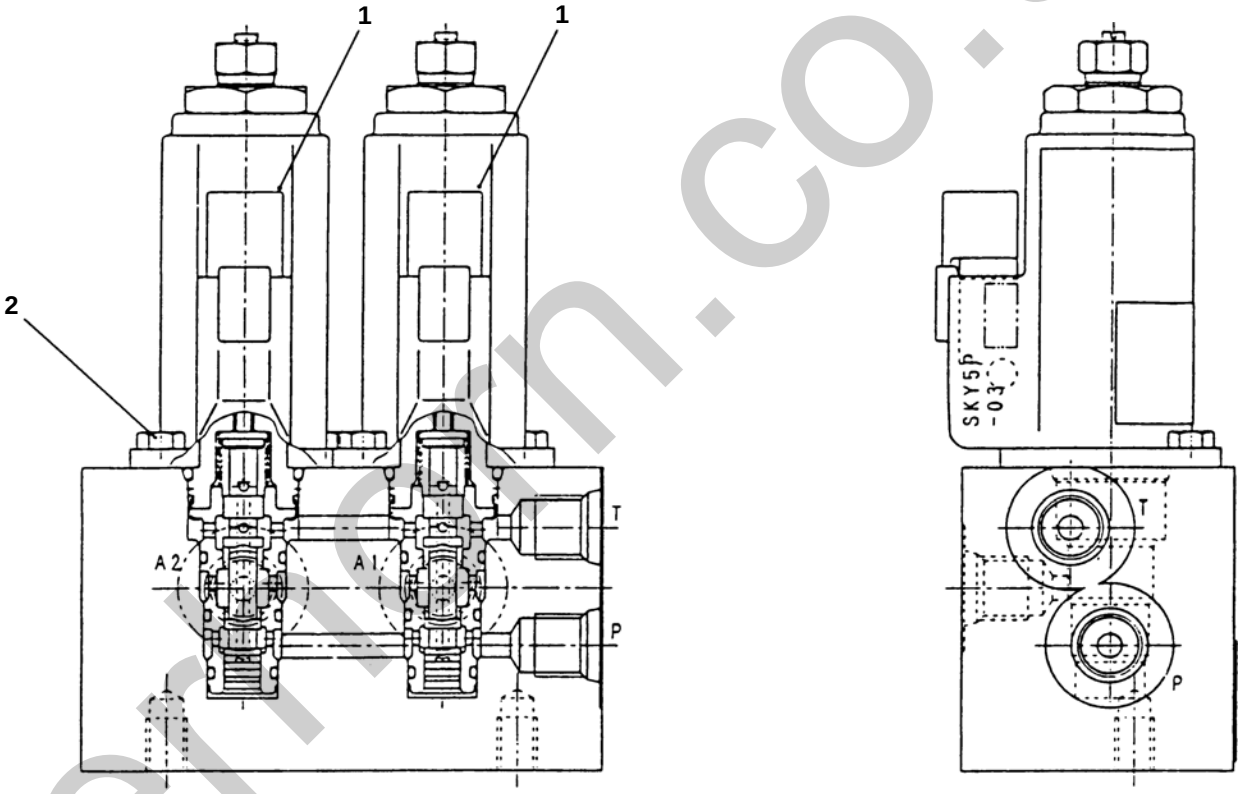

W2H140

silverfern.co.uk

SOLENOID VALVE (for proportional control)

Item	Part number	Description	Q'ty	Chan.	Serial No.	Serv.	Remarks
0	**1901738400**	VALVE, proportional	1				
1	**1901738460**	・VALVE ASSY, proportional	2				
2	**1100050512**	・BOLT	4				
	K3h370						

silverhorn.co.uk

SOLENOID VALVE (for the 4th auxiliary lines)

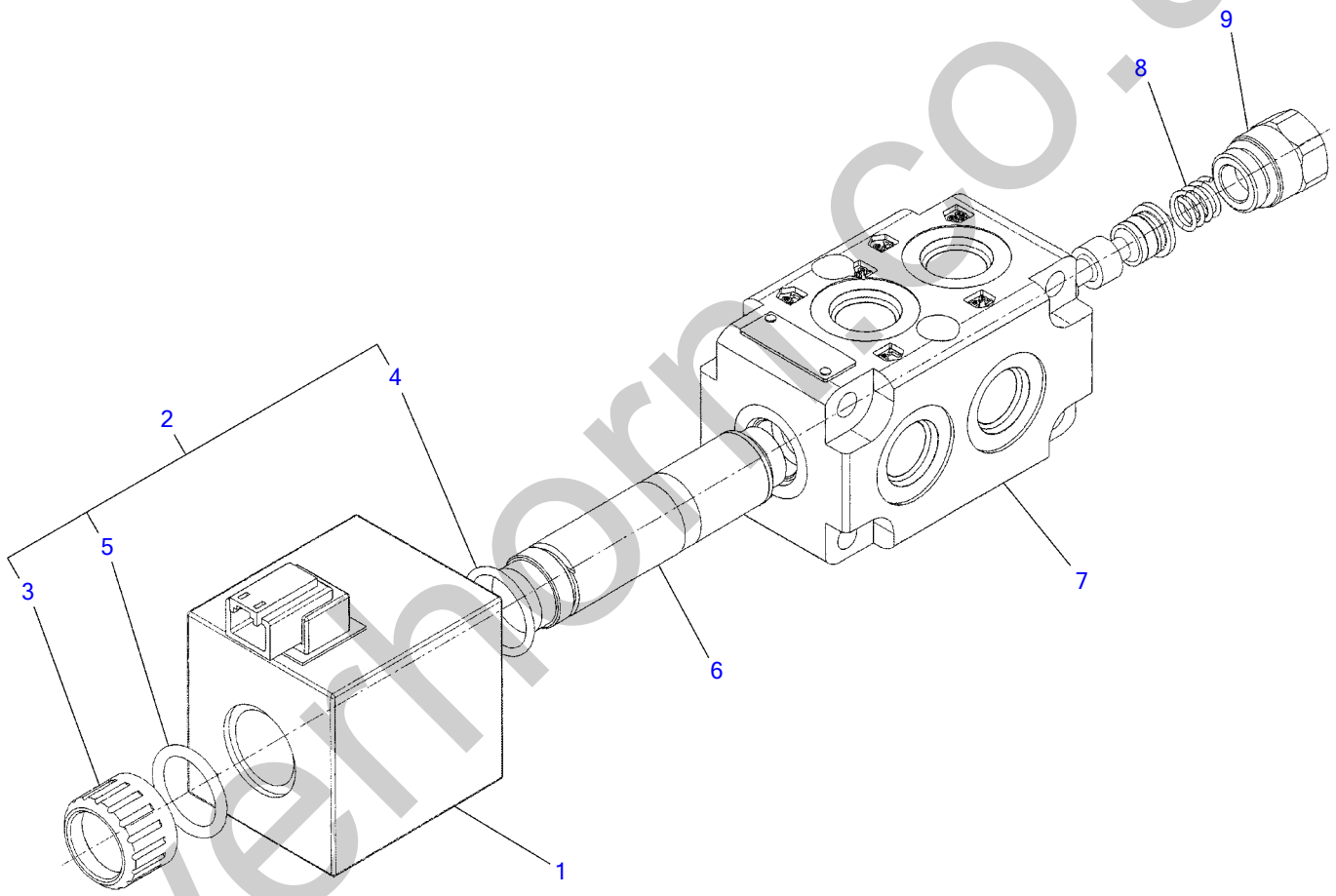

L5H040

S=free

silverhorn.co.uk

SOLENOID VALVE (for the 4th auxiliary lines)

Item	Part number	Description	Q'ty	Chan.	Serial No.	Serv.	Remarks
0	1901749100	VALVE ASSY, solenoid	1				
1	1901749101	・COIL	1				
2	1901748320	・NUT ASSY	1				
3	1901748321	・・NUT	1				
4	1901748322	・・O-RING	1				
5	1901748323	・・O-RING	1				
6	1901748306	・TUBE KIT	1				
7	1901748307	・BODY	1				
8	1901748309	・SPRING	1				
9	1901748310	・PLUG	1				
	L5h040						

silverhorn.co.uk

PILOT VALVE (R.H.)

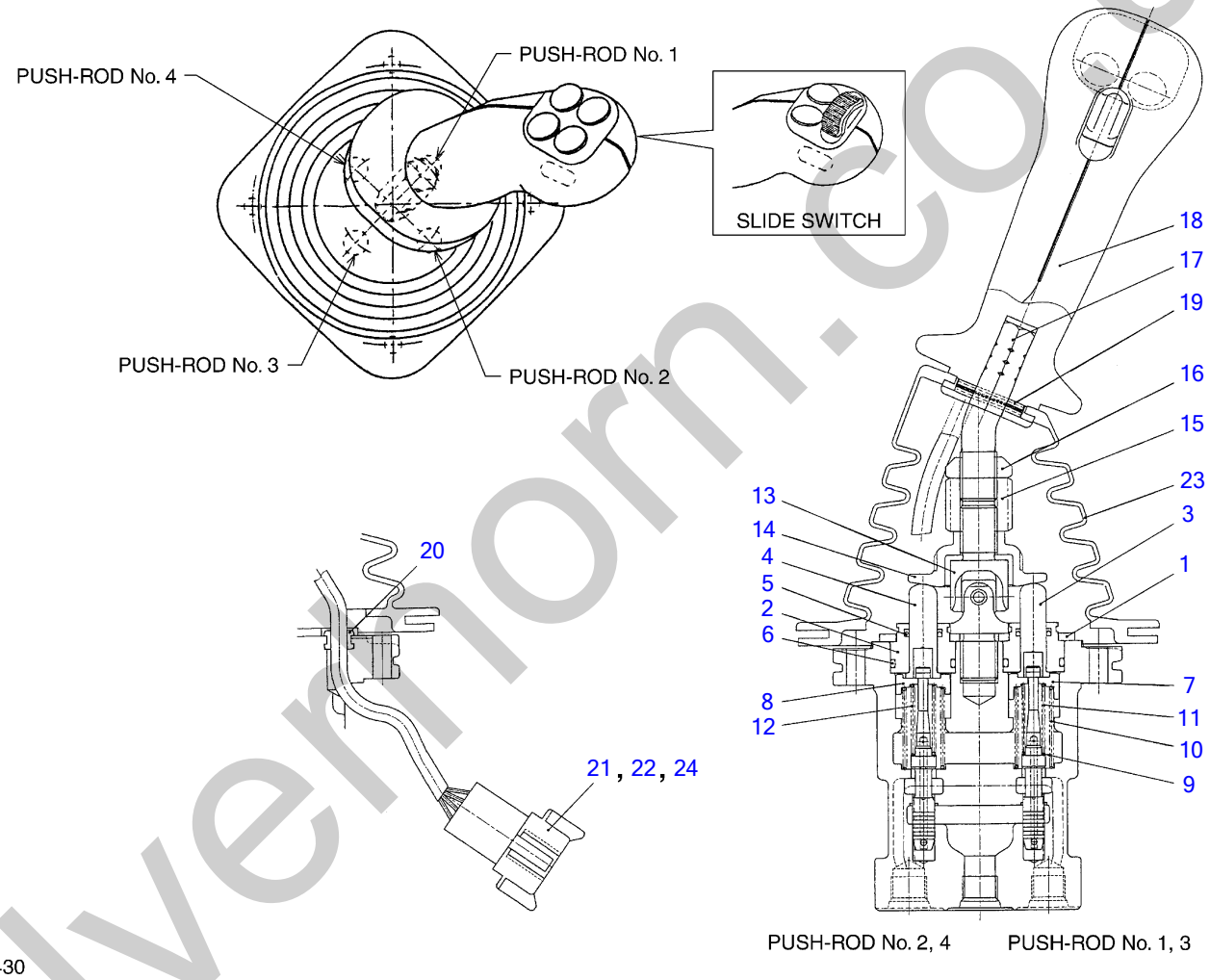

L3H430

S=free

silvernorm.co.uk

PILOT VALVE (R.H.)

Item	Part number	Description	Q'ty	Chan.	Serial No.	Serv.	Remarks
0	1901745800	VALVE, pilot (slide switch)	1				RIGHT
	1901745900	VALVE, pilot (3 switch)	1				
1	1901745702	・PLATE	1				
2	1901710912	・PLUG	4				
3	1901719011	・ROD	2				
4	1901719012	・ROD	2				
5	1901710914	・SEAL	4				
6	1420010200	・O-RING	4				
7	1901745709	・HOLDER	2				
8	1901745710	・HOLDER	2				
9	1901710917	・WASHER	4				
10	1901745712	・SPRING	4				
11	1901745713	・SPRING	2				
12	1901745714	・SPRING	2				
13	1901720232	・JOINT	1				
14	1901743620	・PLATE	1				
15	1901735625	・NUT	1				
16	1901735626	・NUT	1				
17	1901740432	・LEVER	1				
18	1901740410	・HANDLE	1				slide switch
	1901741210	・HANDLE	1				3 switch
19	1213000528	・PIN, spring	1				
20	1901735630	・BUSHING	1				
21	1901740446	・RECEPTACLE	1				
22	1901740447	・WEDGE	1				
23	1901735632	・BOOT	1				
24	1901741263	・PLUG	3				3 switch
	L3h430						

silverhorn.co.uk

PILOT VALVE (L.H.)

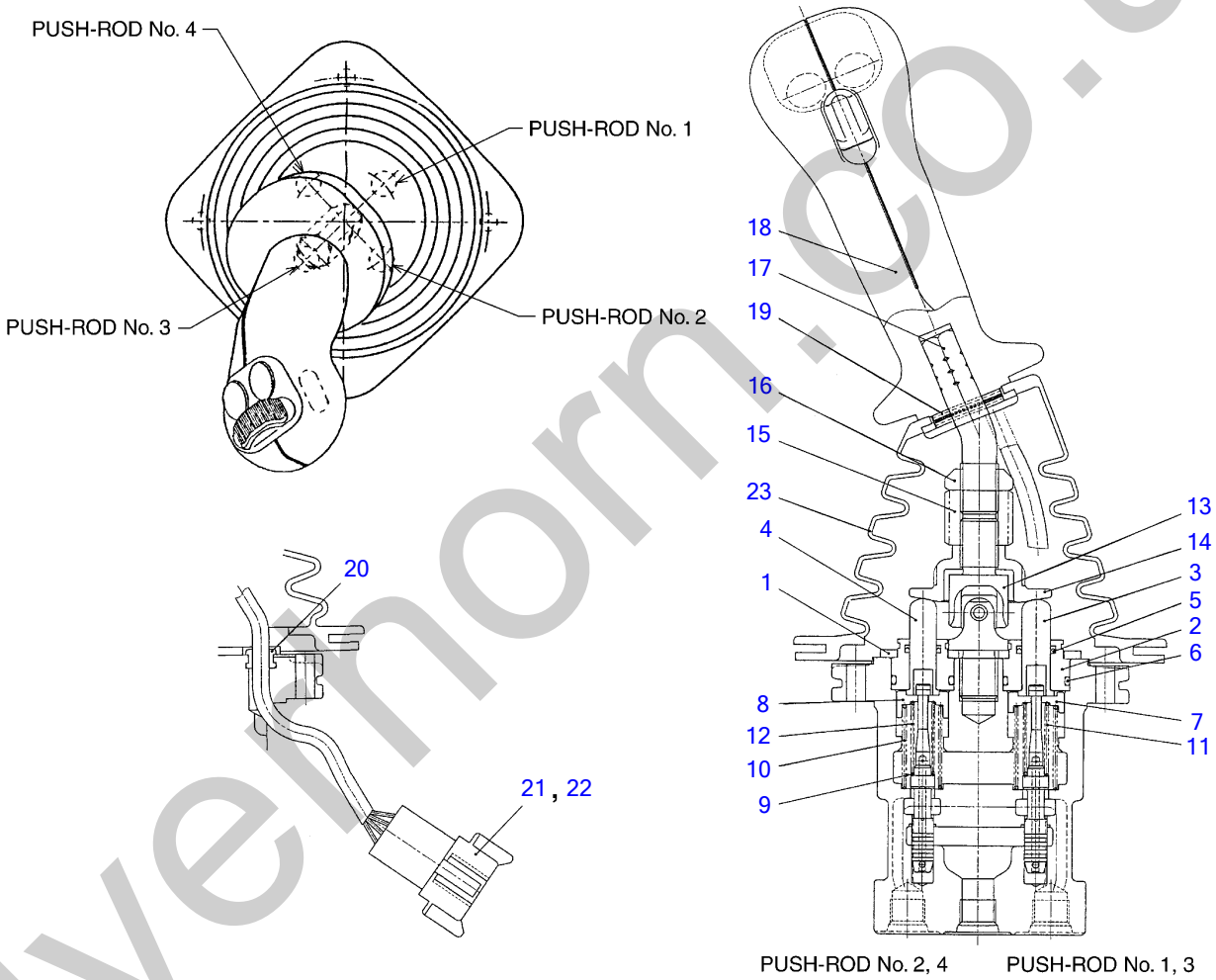

L3H440

S=free

silvethorn.co.uk

PILOT VALVE (L.H.)

Item	Part number	Description	Q'ty	Chan.	Serial No.	Serv.	Remarks
0	1901745700	VALVE ASSY, pilot	1				LEFT
1	1901745702	・PLATE	1				
2	1901710912	・PLUG	4				
3	1901719011	・ROD	2				
4	1901719012	・ROD	2				
5	1901710914	・SEAL	4				
6	1420010200	・O-RING	4				
7	1901745709	・HOLDER	2				
8	1901745710	・HOLDER	2				
9	1901710917	・WASHER	4				
10	1901745712	・SPRING	4				
11	1901745713	・SPRING	2				
12	1901745714	・SPRING	2				
13	1901720232	・JOINT	1				
14	1901743620	・PLATE	1				
15	1901735625	・NUT	1				
16	1901735626	・NUT	1				
17	1901740432	・LEVER	1				
18	1901740410	・HANDLE	1				
19	1213000528	・PIN, spring	1				
20	1901735630	・BUSHING	1				
21	1901740446	・RECEPTACLE	1				
22	1901740447	・WEDGE	1				
23	1901735632	・BOOT	1				
	L3h440						

silverhorn.co.uk

HANDLE (with 3 switchs)

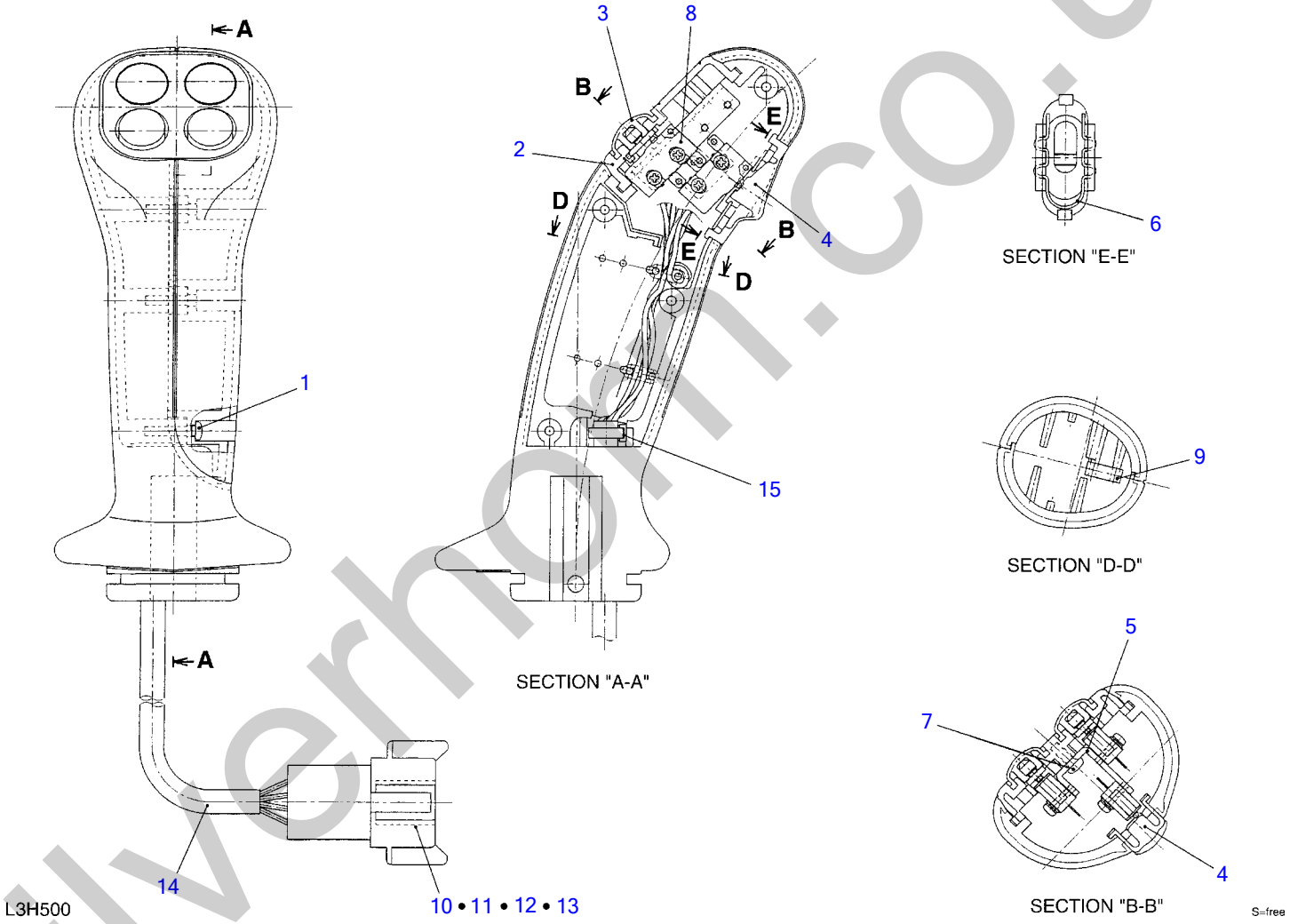

silverhorn.co.uk

HANDLE (with 3 switchs)

Item	Part number	Description	Q'ty	Chan.	Serial No.	Serv.	Remarks
0	1901741210	HANDLE ASSY	1				
1	1122400312	・SCREW	4				
2	1901741211	・CASE	1				
3	1901741216	・BUTTON	2				
4	1901740402	・BUTTON	1				
5	1901741218	・BRACKET	1				
6	1901740404	・CLIP	1				
7	1122400306	・SCREW	2				
8	1901740408	・SWITCH	3				
9	1901740412	・CAP	2				
10	1901740446	・RECEPTACLE	1				
11	1901740447	・WEDGE	1				
12	1901740413	・PIN	5				
13	1901741263	・PIN, BLANKING	3				
14	1901740414	・PROTECTOR	1				
15	1901740415	・BAND	1				
	L3h500						

silverhorn.co.uk

HANDLE (with slide switch)

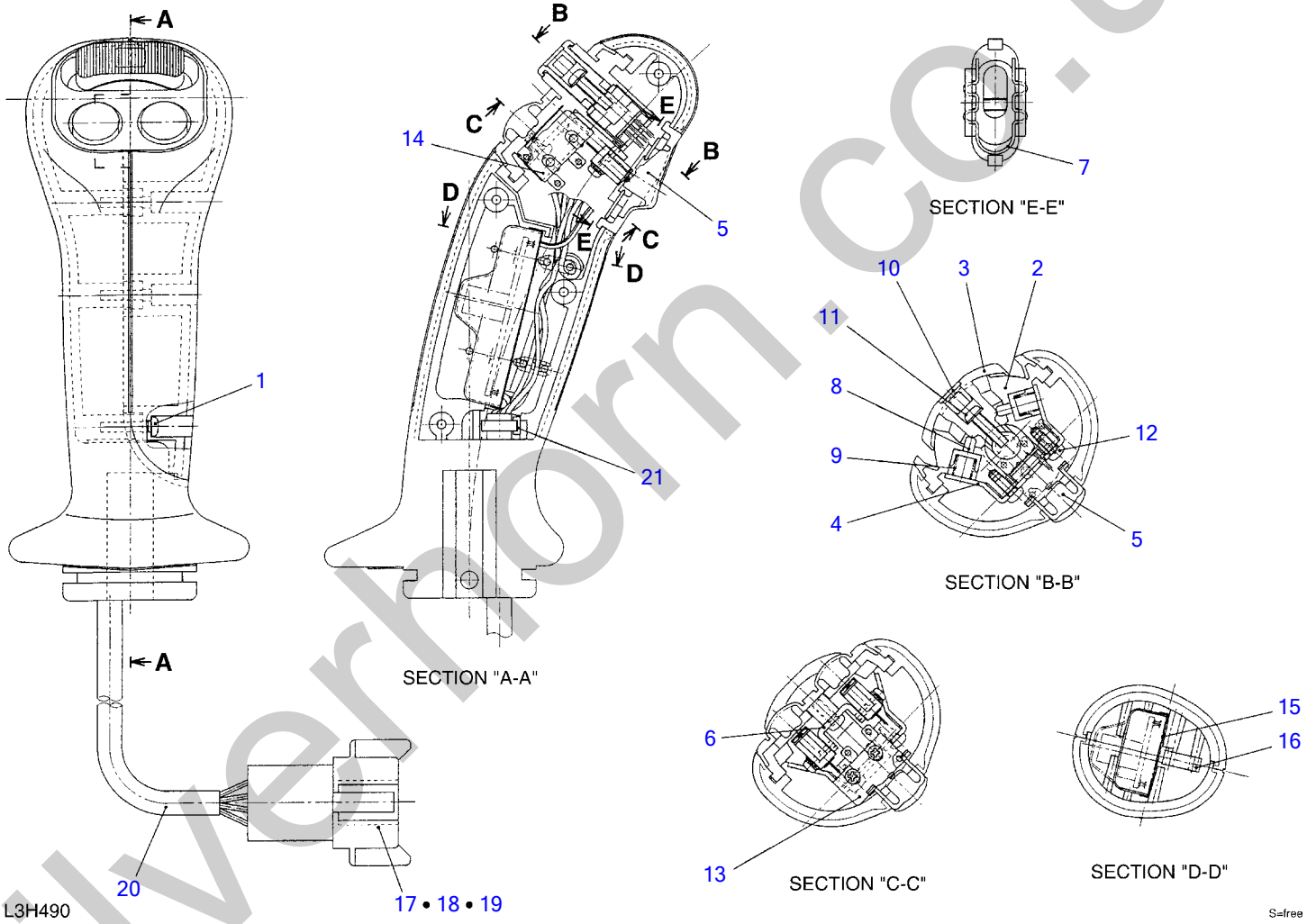

silverhorn.co.uk

HANDLE (with slide switch)

Item	Part number	Description	Q'ty	Chan.	Serial No.	Serv.	Remarks
0	1901740410	HANDLE ASSY	1				
1	1122400312	・SCREW	4				
2	1901740417	・CASE	1				
3	1901740418	・CAM	1				
4	1901740401	・PLATE	1				
5	1901740402	・BUTTON	1				
6	1901740403	・BRACKET	1				
7	1901740404	・CLIP	1				
8	1901740405	・PISTON	2				
9	1901740406	・SPRING	2				
10	1901740407	・CAP	1				
11	1150010312	・SCREW	1				
12	1122400306	・SCREW	3				
13	1901740408	・SWITCH	1				
14	1901740409	・SWITCH	2				
15	1901740411	・COVER	1				
16	1901740412	・CAP	2				
17	1901740446	・RECEPTACLE	1				
18	1901740447	・WEDGE	1				
19	1901740413	・PIN	8				
20	1901740414	・PROTECTOR	1				
21	1901740415	・BAND	1				
	L3h490						

silverhorn.co.uk

REMOTE CONTROL VALVE (for travel)

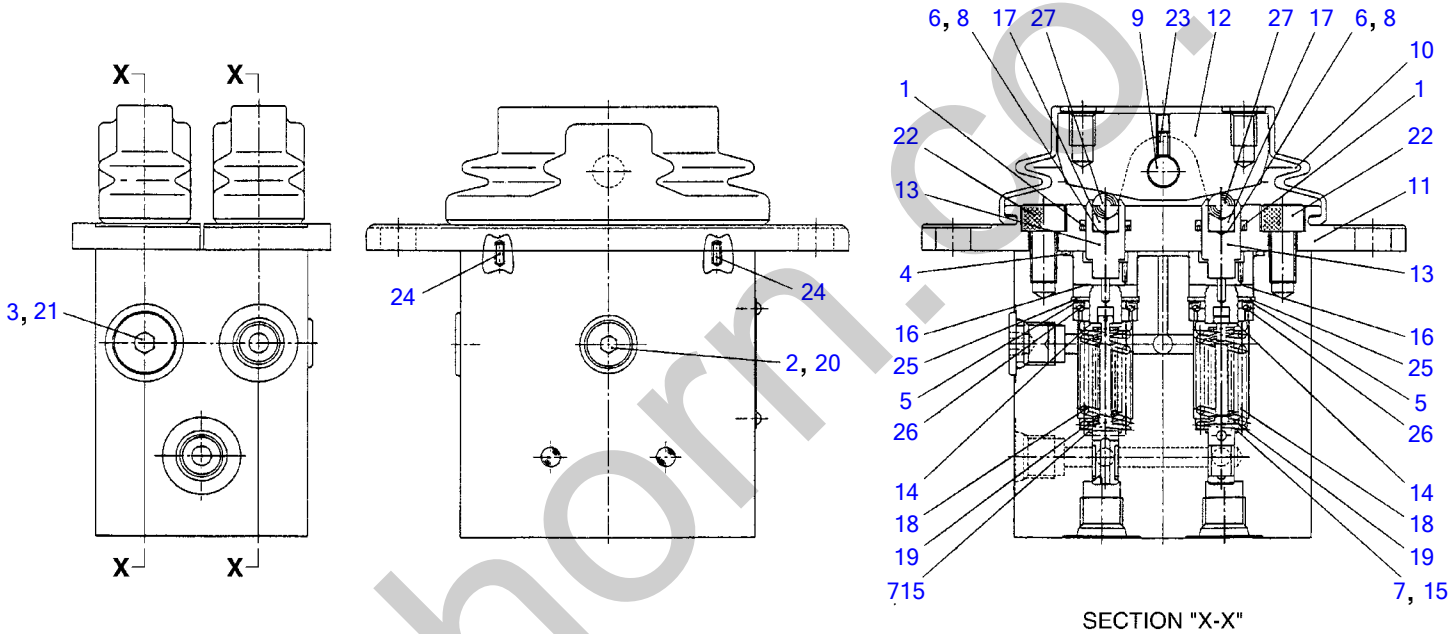

L4H110

S=FREE

silverhorn.co.uk

REMOTE CONTROL VALVE (for travel)

Item	Part number	Description	Q'ty	Chan.	Serial No.	Serv.	Remarks
0	1901739100	VALVE ASSY, remote control	1				travel
0-1	1901739199	・KIT, seal	1				
1	X 1901728523	・・U-PACKING	4				
2	X 1420010080	・・O-RING	1				
3	X 1420010110	・・O-RING	1				
4	X 1420510460	・・O-RING	2				
5	1901739101	・SHIM	4				
6	1901739102	・ORIFICE	4				
7	1901739103	・SHIM	4				
8	1901739104	・ORIFICE	4				
9	1901729706	・PIN	2				
10	1901729708	・BOOT	2				
11	1901739108	・COVER	2				
12	1901739129	・CAM	2				
13	1901739113	・PUSHER	4				
14	1901739114	・RETAINER	4				
15	1901739115	・SHIM	4				
16	1901739116	・WASHER	4				
17	1901739118	・HOLDER	4				
18	1901739119	・SPRING	4				
19	1901739120	・SPRING	4				
20	1901729618	・PLUG	1				
21	1901720720	・PLUG	1				
22	1110050816	・SCREW, cap	4				
23	1121040606	・SET-SCREW	2				
24	1213040306	・PIN, spring	4				
25	1221000020	・RING, snap	4				
26	1390020020	・BALL, steel	8				
27	1390020500	・BALL, steel	4				
	L5h050						

silverhorn.co.uk

REMOTE CONTROL VALVE (offset)

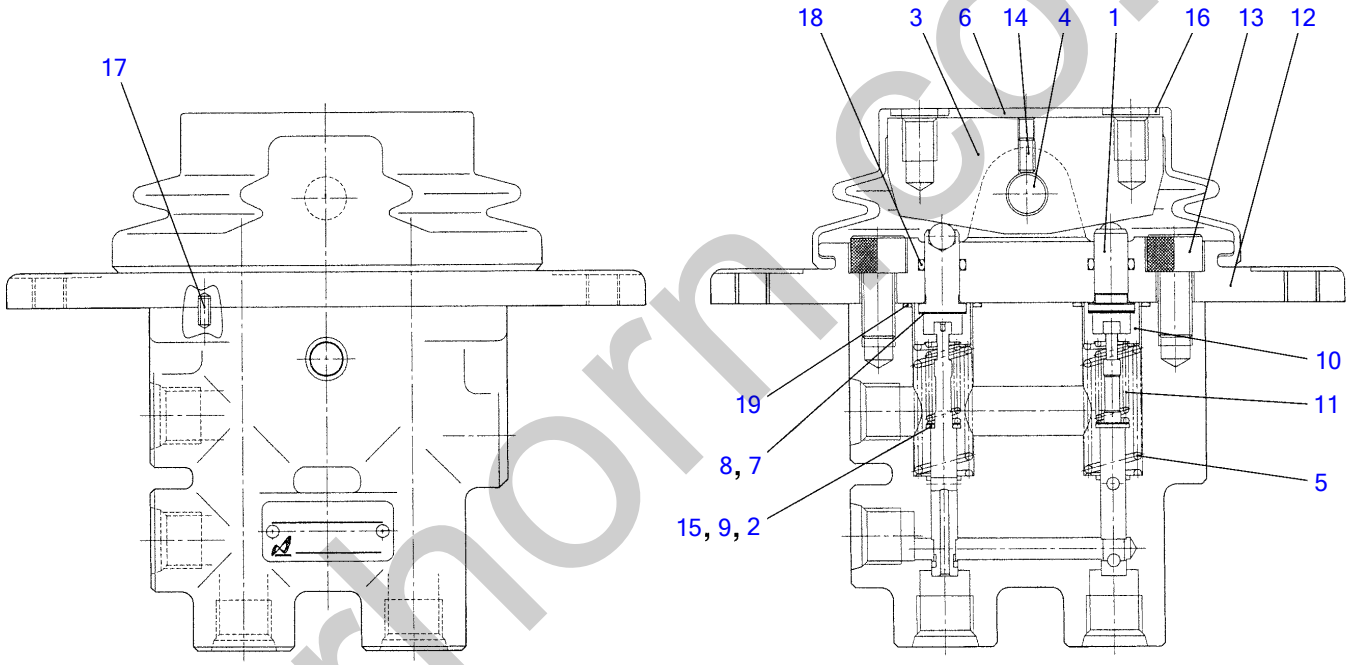

J1H160

S=free

silvermorn.co.uk

REMOTE CONTROL VALVE (offset)

Item	Part number	Description	Q'ty	Chan.	Serial No.	Serv.	Remarks
0	1901746300	VALVE ASSY, pilot	1				offset
1	1901746301	・PUSHER	2				
2	1901729704	・SHIM t=0.1	2				
3	1901729705	・CAM	1				
4	1901729706	・PIN	1				
5	1901729707	・SPRING	2				
6	1901729708	・BOOT	1				
7	1901729709	・SHIM t=0.1	2				
8	1901729710	・SHIM t=0.2	2				
9	1901729711	・SHIM t=0.2	2				
10	1901729713	・HOLDER, spring	2				
11	1901729714	・SPRING	2				
12	1901746315	・COVER	1				
13	1100040816	・SCREW, cap	2				
14	1121340408	・SET-SCREW	1				
15	1141100004	・WASHER	2				
16	1141100008	・WASHER	2				
17	1213000306	・PIN, spring	2				
18	1420000080	・O-RING	2				
19	1420310016	・O-RING	2				
	J1h160						

silverhorn.co.uk

REMOTE CONTROL VALVE (dozer blade)

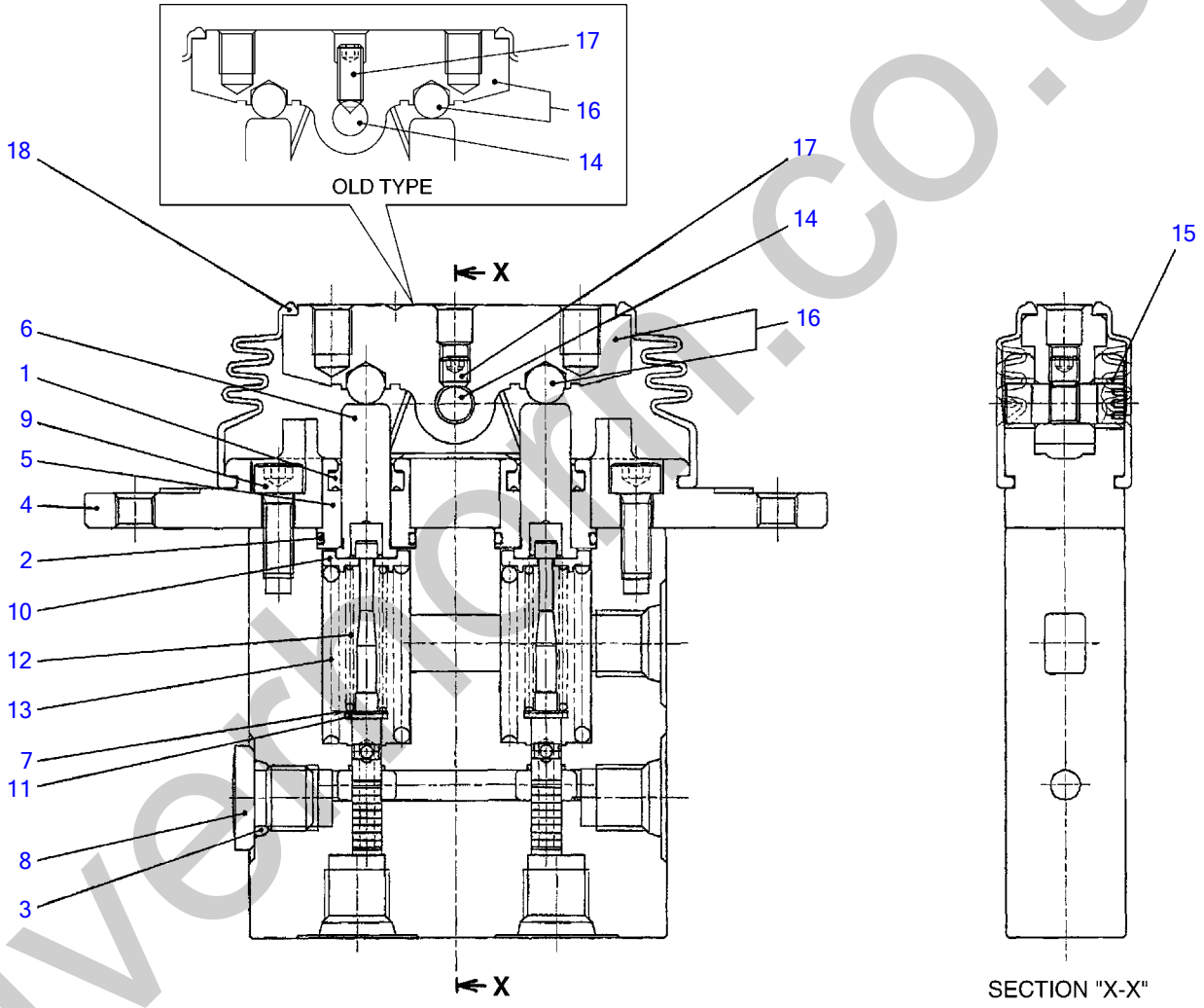

L3H151

silverham.co.uk

REMOTE CONTROL VALVE (dozer blade)

Item	Part number	Description	Q'ty	Chan.	Serial No.	Serv.	Remarks
0	1901735000	VALVE ASSY, remote-control	1				dozer blade
0-1	1901745499	・KIT, seal	1				
1	X 1901745404	・・PACKING	2				
2	X 1420300017	・・O-RING	2				
3	X 1420010110	・・O-RING	1				
4	1901745402	・COVER	1				
5	1901745403	・PLUG	2				
6	1901745406	・ROD	2				
7	1901745407	・SHIM	2				
8	1501750002	・PLUG	1				
	1420010110	・・O-RING	1				
9	1110020616	・SCREW, cap	2				
10	1901745412	・HOLDER	2				
11	1901745413	・WASHER	2				
12	1901745414	・SPRING	2				
13	1901735015	・SPRING	2				
14	1901745416	・SHAFT	1	A	old type		
	1901735016	・SHAFT	1	a(H)	new type		No. 23759
15	1901745417	・BUSHING	2				
16	1901745418	・CAM ASSY	1	A	old type		
	1901735018	・CAM ASSY	1	a(H)	new type		No. 23759
17	1901745420	・SET-SCREW	1	A	old type		
	1121040606	・SET-SCREW	1	a(H)	new type		No. 23759
18	1901735001	・BOOT	1				
		<<NOTE>>					
		SET "A" is interchangeable with SET "a".					
	L3h151						

silverhorn.co.uk

SELECTOR VALVE (ISO-JCB pattern)

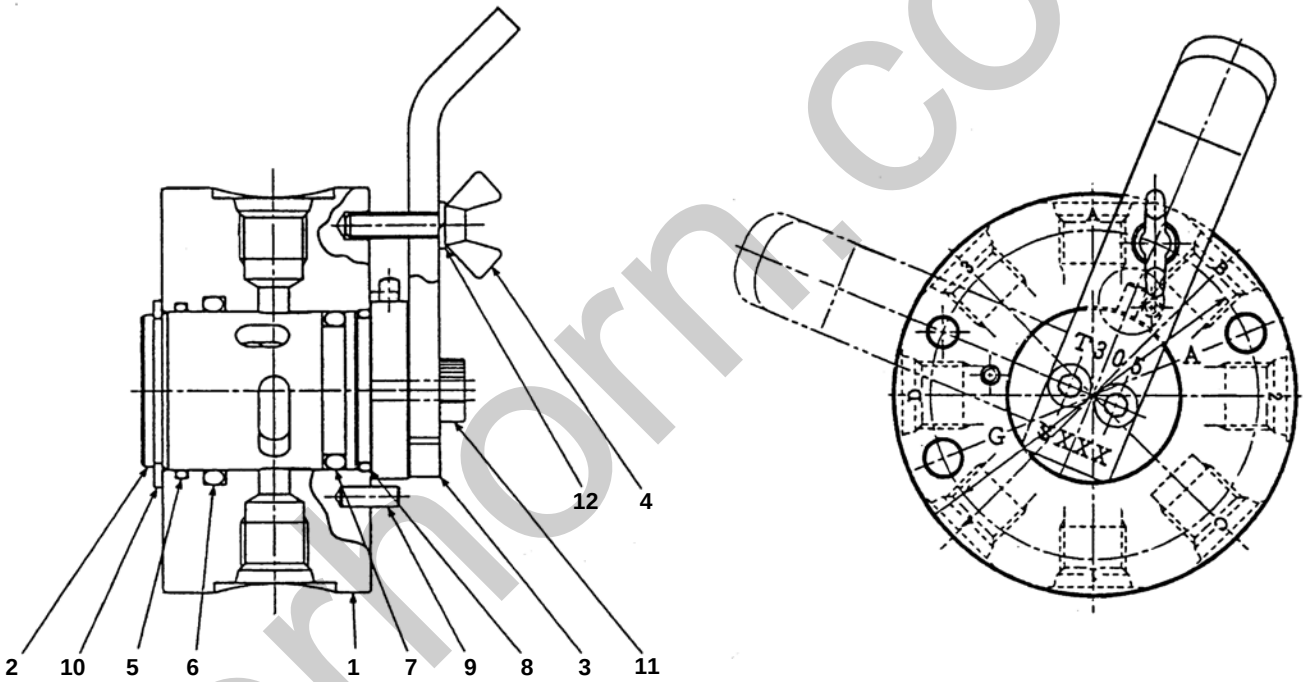

C4H180

silvermorn.co.uk

SELECTOR VALVE (ISO-JCB pattern)

Item	Part number	Description	Q'ty	Chan.	Serial No.	Serv.	Remarks
0	1901730500	VALVE ASSY, selector	1				
1	1901730501	・BODY	1				
2	1901730502	・ROTOR	1				
3	1901730503	・LEVER	1				
4	1901730504	・BOLT	1				
5	1901730505	・O-RING	1				
6	1901730506	・O-RING	1				
7	1901730507	・O-RING	1				
8	1901730508	・O-RING	1				
9	1213000412	・PIN, spring	3				
10	1220000030	・RING, snap	1				
11	1110050514	・SCREW, cap	2				
12	1140010005	・WASHER, spring	1				
	C4h180						

silverhorn.co.uk

SHUT-OFF VALVE (boom)

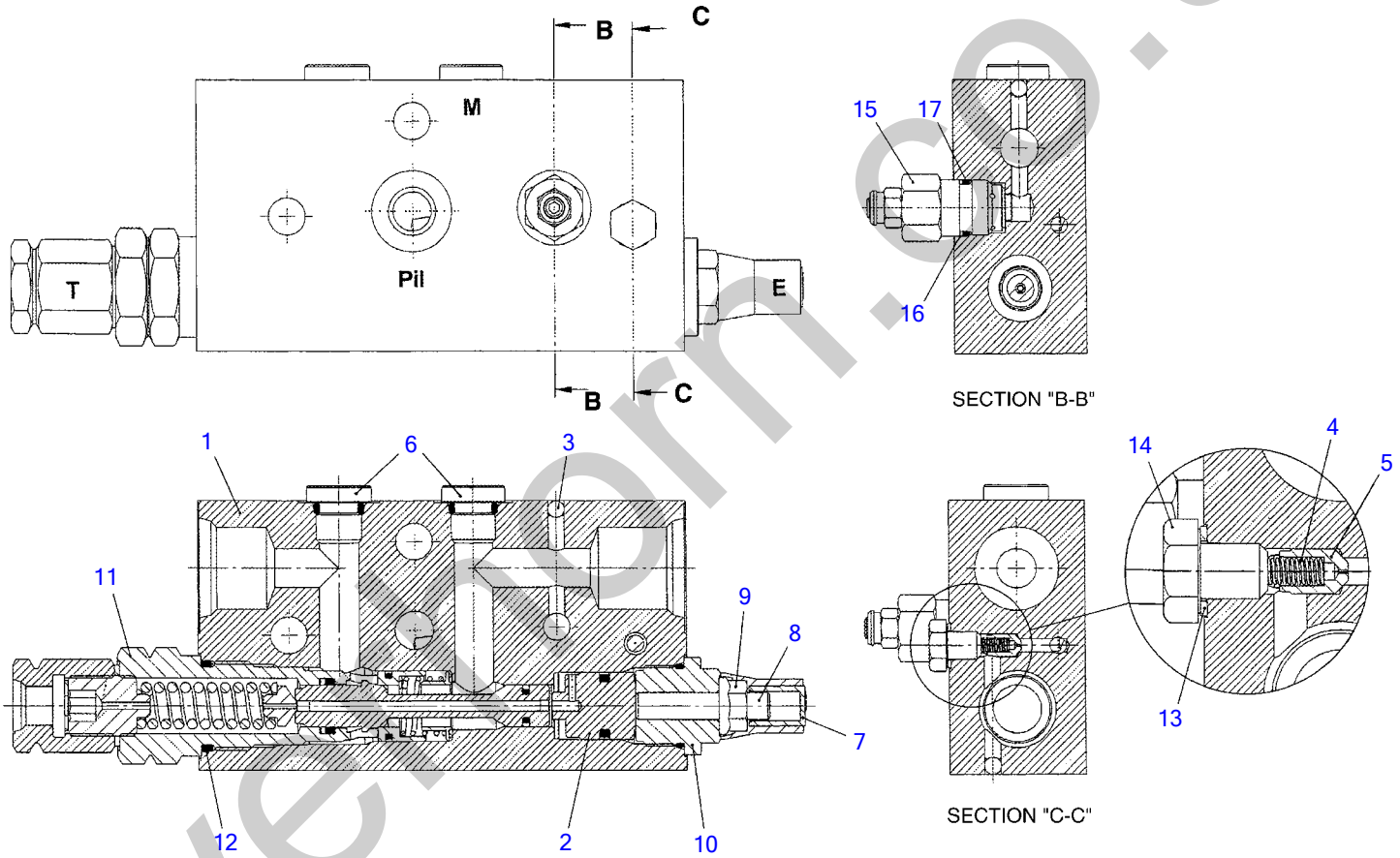

L4H270

S=free

silverthorn.co.uk

SHUT-OFF VALVE (boom)

Item	Part number	Description	Q'ty	Chan.	Serial No.	Serv.	Remarks
0	1901747500	VALVE ASSY, load holding	1				boom
1	1901747501	・BODY	1				
2	1901747502	・SLEEVE	1				
3	1901747503	・BALL, steel	4				
4	1901747504	・SPRING	1				
5	1901747505	・PIVOT	1				
6	1901744305	・PLUG ASSY	2				
7	1901742901	・CAP	1				
8	1901747508	・SET-SCREW	1				
9	1901747509	・NUT	1				
10	1901747510	・PLUG	1				
11	1901747511	・VALVE, check	1				
12	1901747512	・・O-RING	1				
13	1901742906	・SEAL	1				
14	1901742907	・SCREW	1				
15	1901747514	・VLVE, relief	1				
16	1901742911	・・RING, back-up	1				
17	1901742708	・・O-RING	1				
	L4h270						

silverhorn.co.uk

SHUT-OFF VALVE (arm)

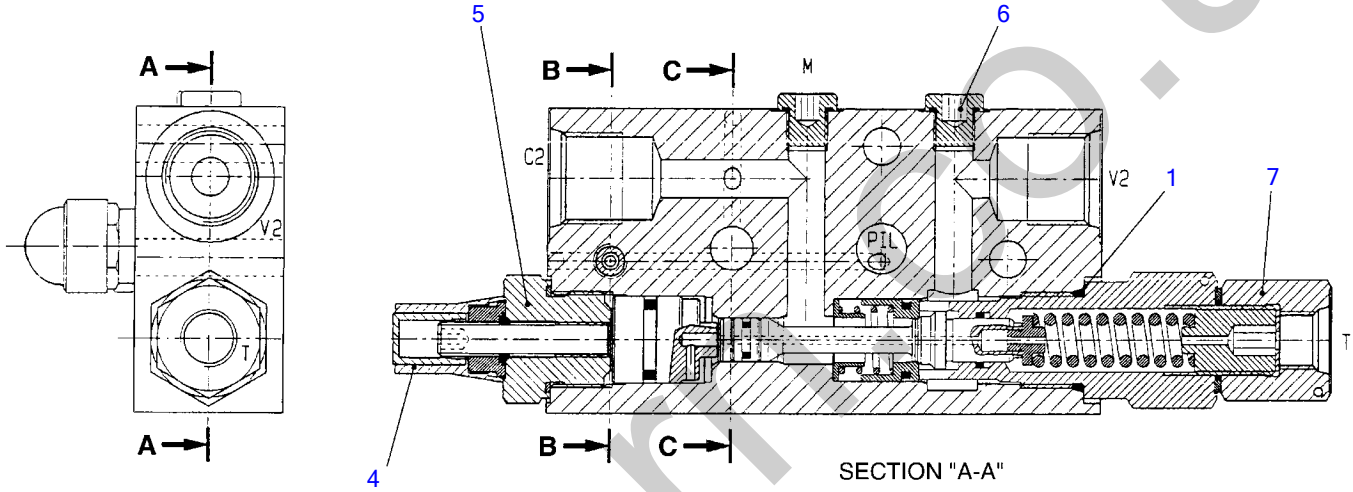

SECTION "A-A"

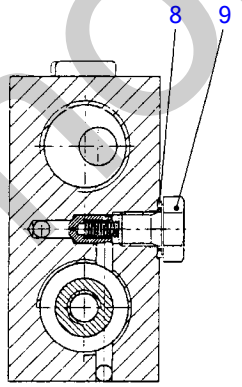

SECTION "B-B"

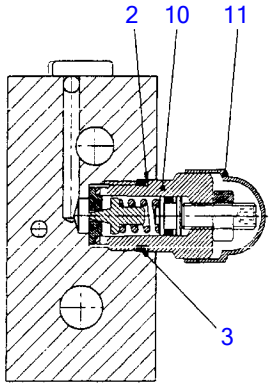

SECTION "C-C"

L3H400

S=free

silverhorn.co.uk

SHUT-OFF VALVE (arm)

Item	Part number	Description	Q'ty	Chan.	Serial No.	Serv.	Remarks
0	1901743100	VALVE ASSY, load holding	1				arm
0-1	1901742999	・KIT, seal	1				
1	1901742904	・・O-RING	1				
2	1901742908	・・RING, back-up	1				
3	1901742911	・・O-RING	1				
4	1901742901	・CAP	1				
5	1901742902	・PLUG	1				
6	1901742903	・PLUG	2				
7	1901742905	・SOCKET	1				
8	1901742906	・SEAL	1				
9	1901742907	・BOLT	1				
10	1901742909	・PLUG	1				
11	1901742910	・CAP	1				
	L4h280						

silverhorn.co.uk

BOOM CYLINDER

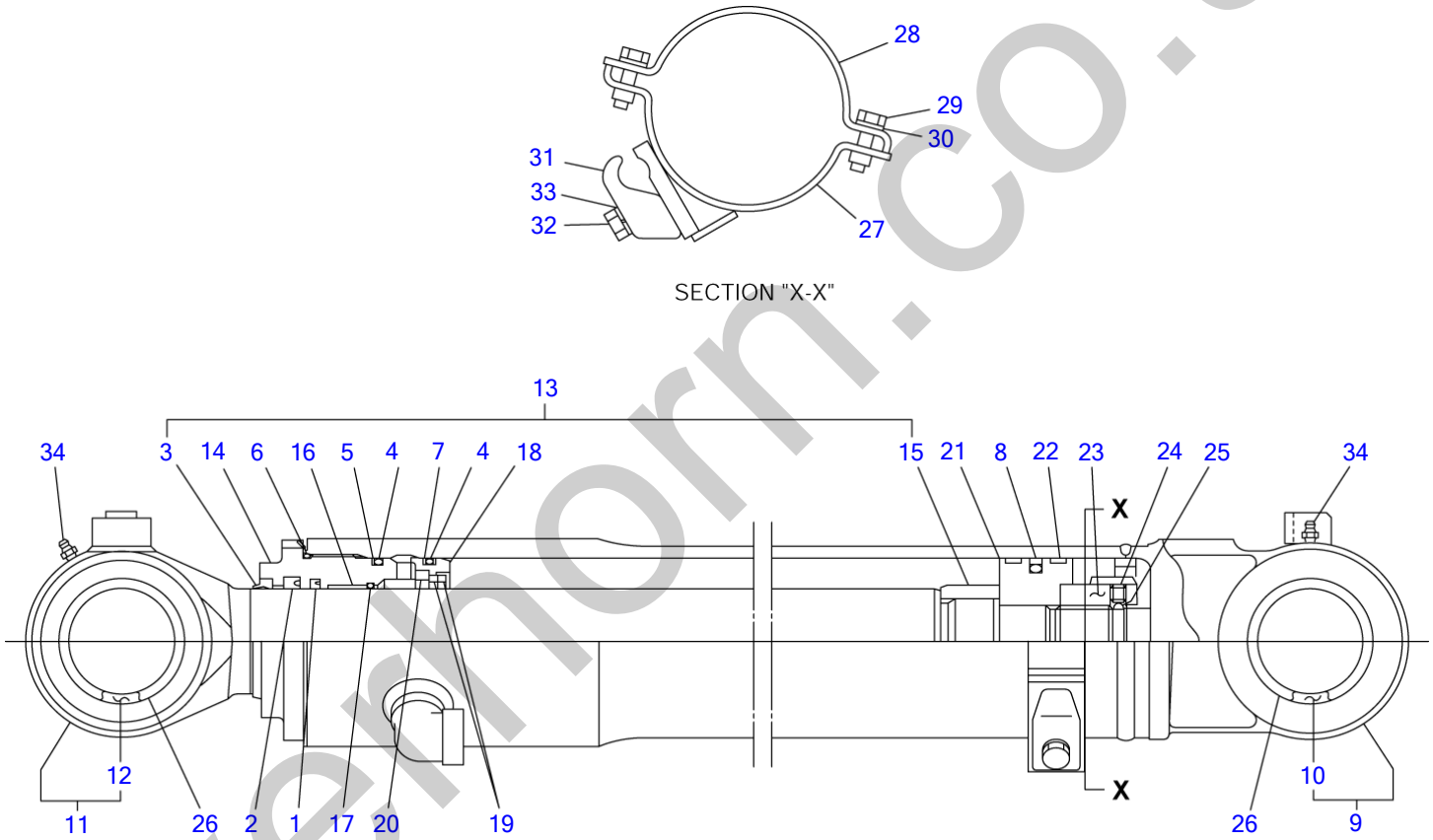

silverhorn.co.uk

BOOM CYLINDER

Item	Part number	Description	Q'ty	Chan.	Serial No.	Serv.	Remarks
0	1900092500	CYLINDER ASSY	1				boom
0-1	1900092599	・KIT, seal	1				
1	X 1900086827	・・RING, buffer	1				
2	X 1900063631	・・PACKING, rod	1				
3	X 1900071031	・・SEAL, dust	1				
4	X 1420111150	・・O-RING	2				
5	X 1900086828	・・RING, back-up	1				
6	X 1420101200	・・O-RING	1				
7	X 1900063628	・・RING, back-up	2				
8	X 1900063633	・・PACKING, piston	1				
9	1900092528	・TUBE KIT	1				
10	1900063602	・・BUSHING	1				
11	1900092597	・ROD KIT, piston	1				
12	1900092502	・・BUSHING	1				
13	1900092596	・COVER KIT	1				
14	1900091103	・・COVER, rod	1				
15	1900092505	・・RING, cushion	1				
16	1900091813	・BUSHING	1				
17	1900063614	・RING, snap	1				
18	1900086808	・HOLDER	1				
19	1900086816	・CUSHION, rod	2				
20	1900086819	・COLLAR	1				
21	1900086806	・PISTON	1				
22	1900086829	・RING, wear	2				
23	1900086809	・NUT	1				
24	1121051212	・SET-SCREW	1				
25	1390020450	・BALL, steel	1				
26	1900063642	・SEAL, dust	4				
27	1900076219	・BAND	1				
28	1900065521	・BAND	1				
29	1900065528	・BOLT	2				
30	1900065529	・WASHER	2				
31	1900070917	・HOLDER	1				
32	1100041250	・BOLT	1				
33	1140020012	・WASHER, spring	1				
34	1560001000	・FITTING, grease	2				
	L4h181						

silverhorn.co.uk

ARM CYLINDER

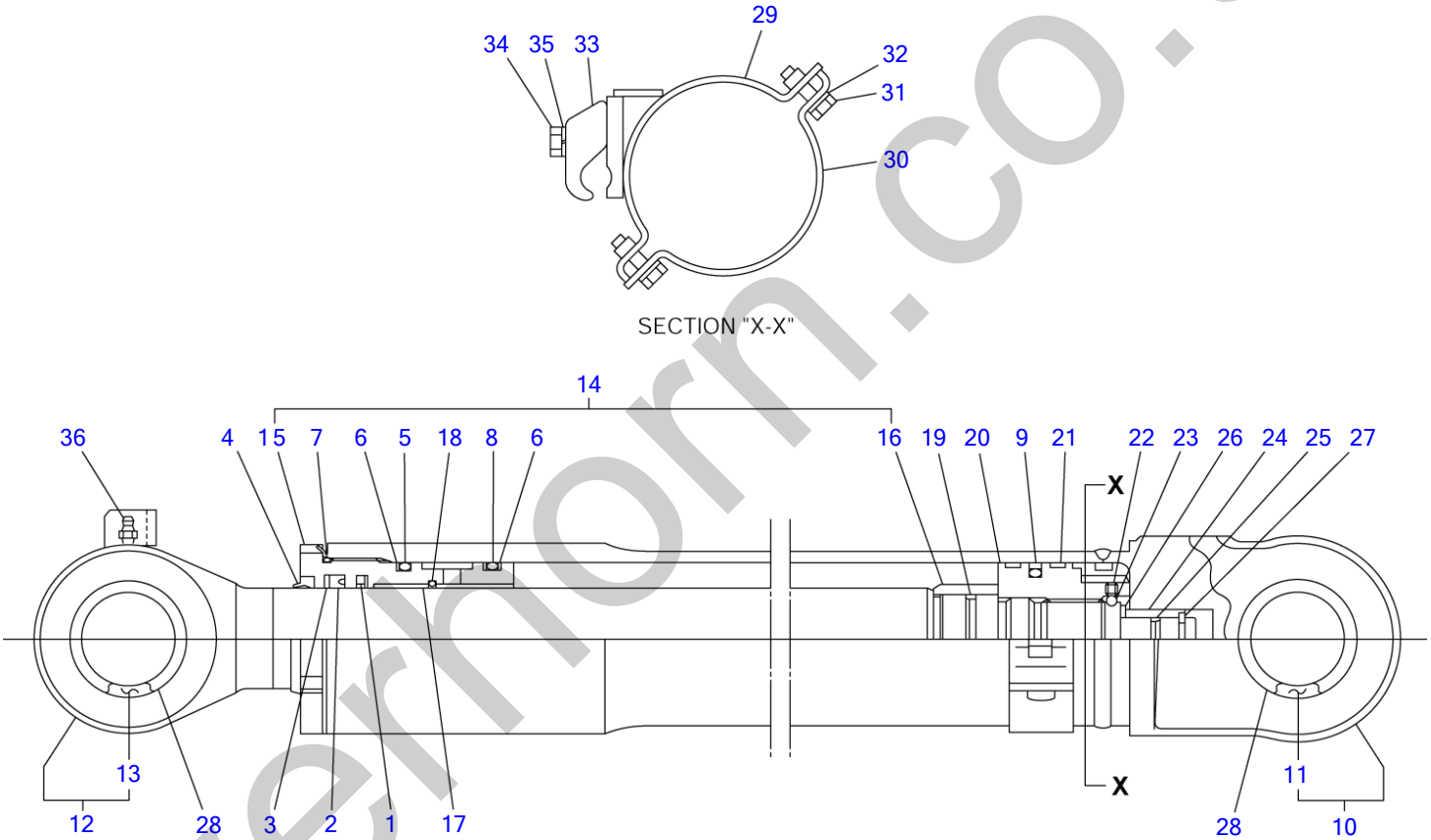

silvernorn.co.uk

ARM CYLINDER

Item	Part number	Description	Q'ty	Chan.	Serial No.	Serv.	Remarks
0	1900092600	CYLINDER ASSY	1				arm
0-1	1900092699	・KIT, seal	1				
1	X 1900063426	・・RING, buffer	1				
2	X 1900063431	・・PACKING, rod	1				
3	X 1900063427	・・RING, back-up	1				
4	X 1900069633	・・SEAL, dust	1				
5	X 1420110900	・・O-RING	1				
6	X 1900063428	・・RING, back-up	3				
7	X 1420100950	・・O-RING	1				
8	X 1420100850	・・O-RING	1				
9	X 1900050633	・・PACKING, piston	1				
10	1900092698	・TUBE KIT	1				
11	1900063402	・・BUSHING	1				
12	1900092697	・ROD KIT, piston	1				
13	1900063402	・・BUSHING	1				
14	1900063496	・COVER KIT	1		17830004~17830189		
	1900092696	・COVER KIT	1	(H)	17830190~		
15	1900063403	・・COVER, rod	1				
16	1900068405	・・RING, cushion	1		17830004~17830189		
	1900092605	・・RING, cushion	1	(H)	17830190~		
17	1900063413	・BUSHING	1				
18	1900063414	・RING, snap	1				
19	1900076316	・SEAL, cushion	1		17830004~17830189		
	1900092616	・SEAL, cushion	1	(H)	17830190~		
20	1900092607	・PISTON	1				
21	1900090926	・RING, slide	2				
22	1121051010	・SET-SCREW	1				
23	1390020400	・BALL, steel	1				
24	1900063425	・BEARING, cushion	1				
25	1900076335	・SEAL, cushion	1				
26	1900063429	・RING, snap	1				
27	1900047122	・STOPPER	2				
28	1900083533	・SEAL, dust	4				
29	1900063435	・BAND	1				
30	1900063436	・BAND	1				
31	1900065528	・BOLT	2				
32	1900065529	・WASHER	2				
33	1900070917	・HOLDER	1				
34	1100041245	・BOLT	1				
35	1140020012	・WASHER, spring	1				
36	1560001000	・FITTING, grease	1				
	L5h200						

silverhorn.co.uk

OFFSET CYLINDER

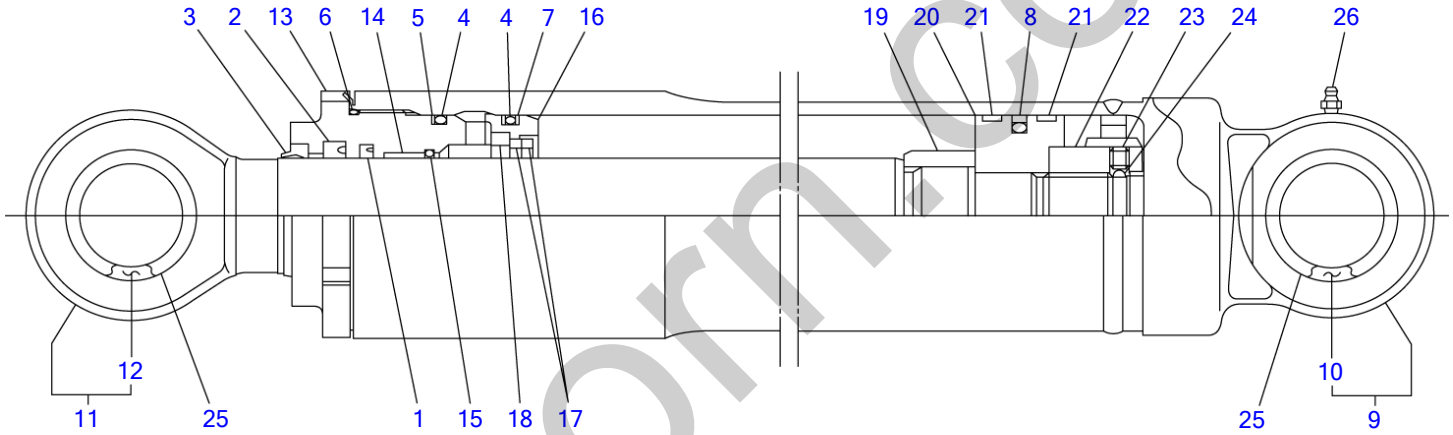

L4H200

S=FREE

silverhorn.co.uk

OFFSET CYLINDER

Item		Part number	Description	Q'ty	Chan.	Serial No.	Serv.	Remarks
0		1900092900	CYLINDER ASSY	1				offset
0-1		1900092999	・KIT, seal	1				
1	X	1900089519	・・RING, buffer	1				
2	X	1900083436	・・PACKING, rod	1				
3	X	1900071832	・・SEAL, dust	1				
4	X	1420111100	・・O-RING	2				
5	X	1900090037	・・RING, back-up	1				
6	X	1420101150	・・O-RING	1				
7	X	1900067333	・・RING, back-up	2				
8	X	1900067331	・・PACKING, piston	1				
9		1900092998	・TUBE KIT	1				
10		1900063402	・・BUSHING	1				
11		1900092997	・ROD KIT, piston	1				
12		1900063702	・・BUSHING	1				
13		1900090003	・COVER, rod	1				
14		1900089513	・BUSHING	1				
15		1900083431	・RING, snap	1				
16		1900092908	・HOLDER	1				
17		1900092916	・SEAL, cushion	2				
18		1900092928	・COLLAR	1				
19		1900092905	・RING, cushion	1				
20		1900092906	・PISTON	1				
21		1900090026	・RING, wear	2				
22		1900090409	・NUT	1				
23		1121051212	・SET-SCREW	1				
24		1390020450	・BALL, steel	1				
25		1900063433	・SEAL, dust	4				
26		1560001000	・FITTING, grease	1				
		L4h201						

silverhorn.co.uk

BUCKET CYLINDER (17830004-17830324)

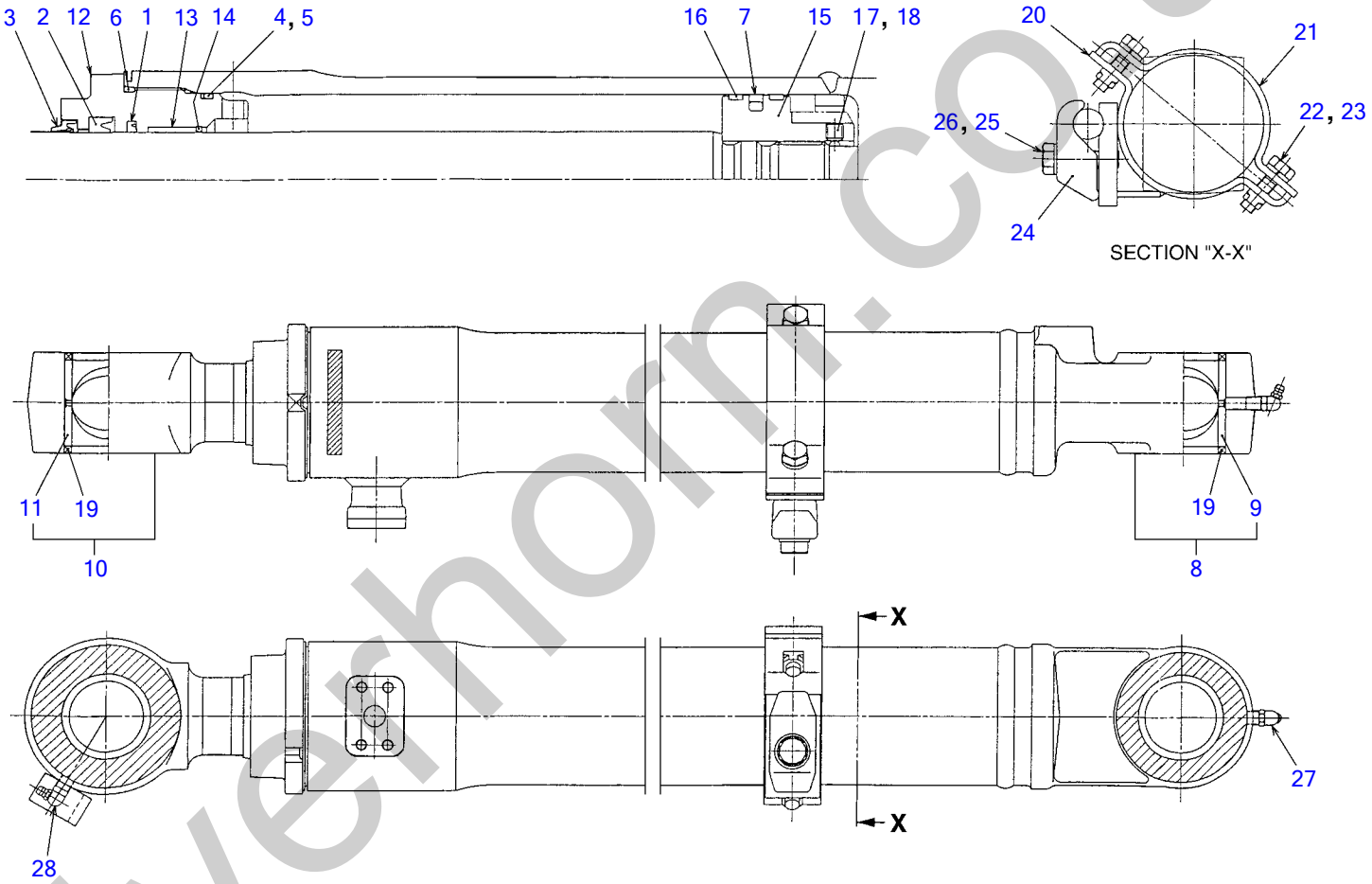

L4H210

S=free

silverhorn.co.uk

BUCKET CYLINDER (17830004-17830324)

Item	Part number		Description	Q'ty	Chan.	Serial No.	Serv.	Remarks
0		1900092700	CYLINDER ASSY	1				bucket
0-1		1900092799	・KIT, seal	1				
1	X	1900087027	・・RING, seal	1				
2	X	1900050631	・・PACKING, rod	1				
3	X	1900070831	・・SEAL, dust	1				
4	X	1420110800	・・O-RING	1				
5	X	1900091027	・・RING, back-up	1				
6	X	1420100850	・・O-RING	1				
7	X	1900050932	・・PACKING, piston	1				
8		1900092798	・TUBE ASSY	1				
9		1900047002	・・BUSHING	1				
10		1900092797	・ROD ASSY, piston	1				
11		1900047002	・・BUSHING	1				
12		1900091003	・COVER, rod	1				
13		1900087013	・BUSHING	1				
14		1900063214	・RING, snap	1				
15		1900091006	・PISTON	1				
16		1900091026	・RING, wear	2				
17		1121051010	・SET-SCREW	1				
18		1390020400	・BALL, steel	1				
19		1900047023	・SEAL, dust	4				
20		1900063527	・BAND	1				
21		1900063528	・BAND	1				
22		1900065528	・BOLT	2				
23		1900065529	・WASHER	2				
24		1900070917	・HOLDER	1				
25		1100041245	・BOLT	1				
26		1140020012	・WASHER, spring	1				
27		1560001675	・FITTING, grease	1				
28		1560001900	・FITTING, grease	1				
		L4h210						

silverhorn.co.uk

BUCKET CYLINDER (17830325-)

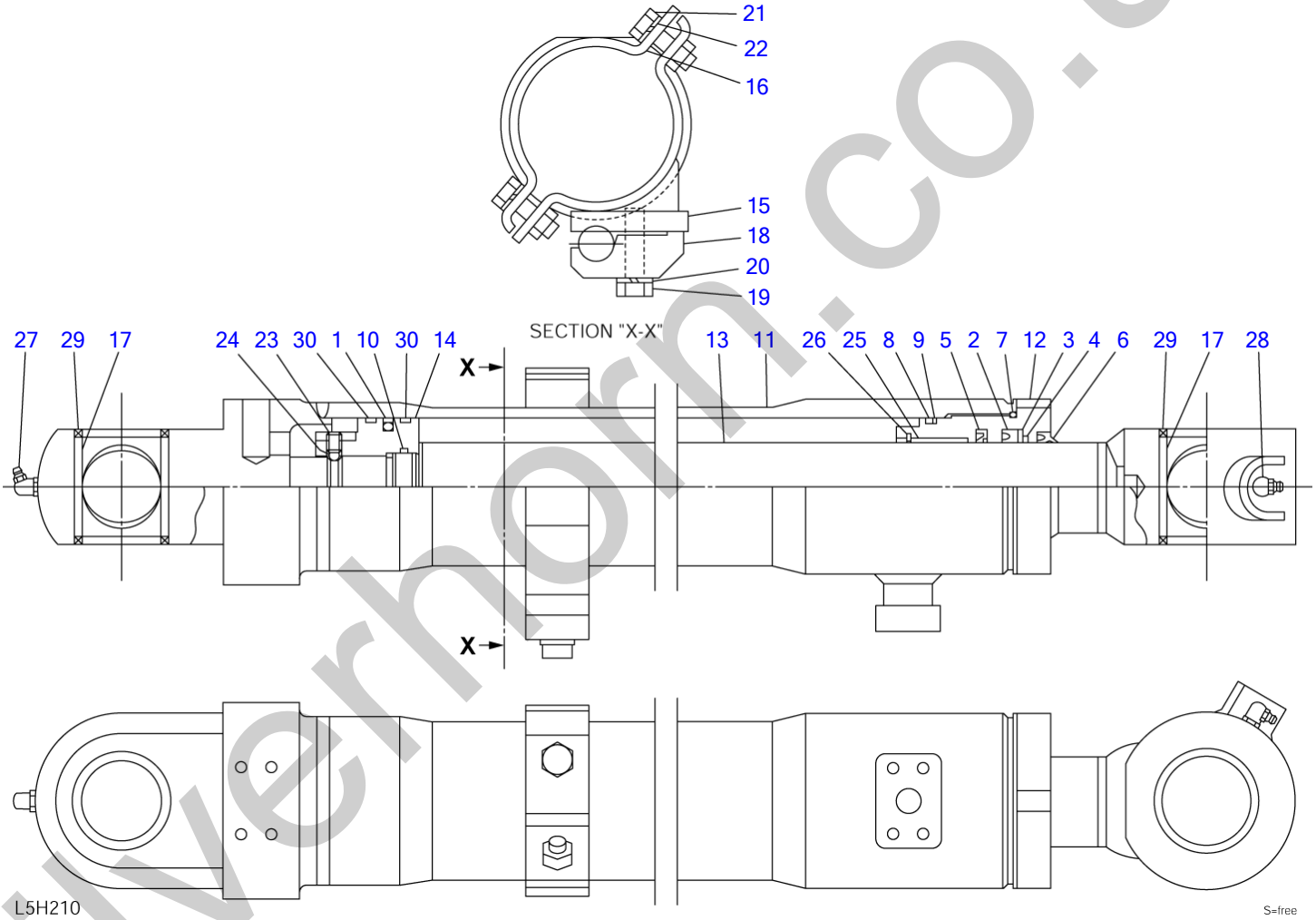

silverhorn.co.uk

BUCKET CYLINDER (17830325-)

Item		Part number	Description	Q'ty	Chan.	Serial No.	Serv.	Remarks
0		1900101100	CYLINDER, bucket	1			M	bucket
0-1		1900101199	・KIT, seal	1			M	
1	X	1900050932	・・PACKING, piston	1				
2	X	1900050631	・・PACKING, rod	1				
3	X	1411270553	・・RING, back-up	1			M	
4	X	1900100835	・・RING, back-up	1			M	
5	X	1900087027	・・RING, seal	1				
6	X	1900070831	・・SEAL, dust	1				
7	X	1420110850	・・O-RING	1				
8	X	1420110800	・・O-RING	1				
9	X	1421130800	・・RING, back-up	1			M	
10	X	1420010420	・・O-RING	1			M	
11		1900101107	・TUBE ASSY	1			M	
12		1900100803	・COVER, rod	1			M	
13		1900101101	・ROD ASSY, piston	1			M	
14		1900100806	・PISTON	1			M	
15		1900101118	・CLAMP ASSY	1			M	
16		1900101119	・CLAMP	1			M	
17		1900100802	・BUSHING	2			M	
18		1900101117	・HOLDER	1			M	
19		1100051245	・BOLT	1				
20		1140020012	・WASHER, spring	1				
21		1100051035	・BOLT	2				
22		1140020010	・WASHER, spring	2				
23		1121050810	・SET-SCREW	1				
24		1390010070	・BALL, steel	1			M	
25		1333005535	・BUSHING	1			M	
26		1221000060	・RING, retaining	1			M	
27		1560001675	・FITTING, grease	1				
28		1560001900	・FITTING, grease	1				
29		1900047023	・SEAL, dust	4				
30		1900091026	・RING, wear	2				
		L5h210						

silverhorn.co.uk

DOZER BLADE CYLINDER (17830004-17830349)

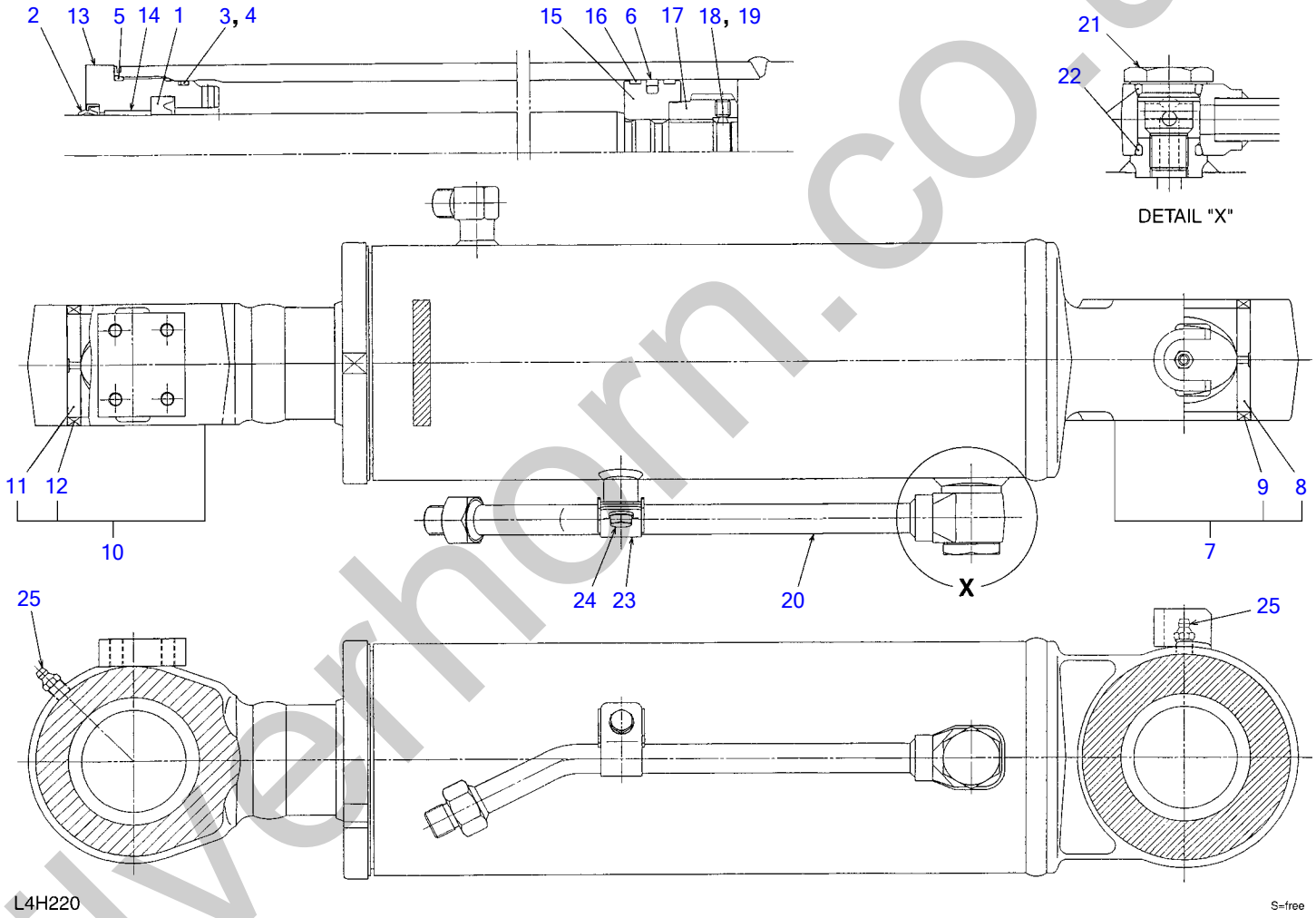

silverhorn.co.uk

DOZER BLADE CYLINDER (17830004-17830349)

Item		Part number	Description	Q'ty	Chan.	Serial No.	Serv.	Remarks
0		1900092800	CYLINDER ASSY	1				dozer blade
0-1		1900092899	・KIT, seal	1				
1	X	1900067332	・・PACKING, rod	1				
2	X	1900069633	・・SEAL, dust	1				
3	X	1420111100	・・O-RING	1				
4	X	1900090037	・・RING, back-up	1				
5	X	1420101150	・・O-RING	1				
6	X	1900067331	・・PACKING, piston	1				
7		1900092897	・TUBE ASSY	1				
8		1900063402	・・BUSHING	1				
9		1900083533	・・SEAL, dust	2				
10		1900092896	・ROD ASSY, piston	1				
11		1900063402	・・BUSHING	1				
12		1900083533	・・SEAL, dust	2				
13		1900092803	・COVER, rod	1				
14		1900090402	・BUSHING	1				
15		1900092906	・PISTON	1				
16		1900090026	・RING, slide	2				
17		1900090409	・NUT	1				
18		1121051212	・SET-SCREW	1				
19		1390020450	・BALL, steel	1				
20		1900092810	・PIPE ASSY	1				
21		1900090029	・PLUG	1				
22		1420010221	・O-RING	2				
23		1900090017	・HOLDER	1				
24		1900087819	・BOLT	1				
25		1560001000	・FITTING, grease	2				
		L4h220						

silverhorn.co.uk

DOZER BLADE CYLINDER (17830350-)

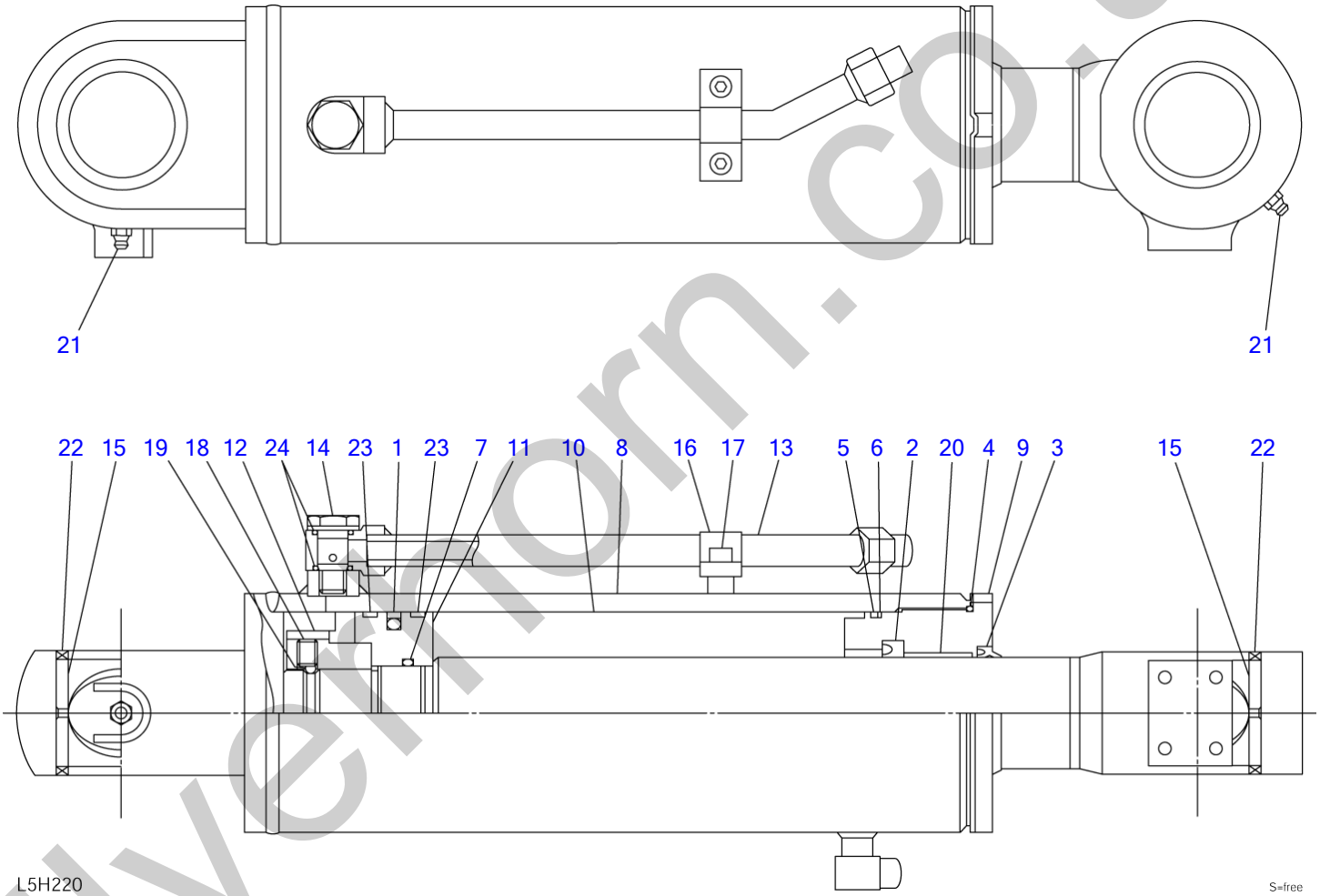

silverthorn.co.uk

DOZER BLADE CYLINDER (17830350-)

Item		Part number	Description	Q'ty	Chan.	Serial No.	Serv.	Remarks
0		1900101200	CYLINDER ASSY	1			M	dozer blade
0-1		1900101299	・KIT, seal	1			M	
1	X	1900067331	・・PACKING, piston	1				
2	X	1900067332	・・PACKING, rod	1				
3	X	1900069633	・・SEAL, dust	1				
4	X	1420111150	・・O-RING	1			M	
5	X	1420111100	・・O-RING	1				
6	X	1421131100	・・RING, back-up	1			M	
7	X	1420010520	・・O-RING	1			M	
8		1900101207	・TUBE ASSY	1			M	
9		1900101203	・COVER, rod	1			M	
10		1900101201	・ROD ASSY, piston	1			M	
11		1900101206	・PISTON	1			M	
12		1900101209	・NUT	1			M	
13		1900101210	・PIPE	1			M	
14		1900101219	・PLUG	1			M	
15		1900101208	・BUSHING	2			M	
16		1900101217	・HOLDER	1			M	
17		1110040812	・SCREW, cap	2				
18		1121051212	・SET-SCREW	1				
19		1390010500	・BALL, steel	1			M	
20		1333006540	・BUSHING	1			M	
21		1560001000	・FITTING, grease	2				
22		1900063433	・SEAL, dust	4			M	
23		1900090026	・RING, wear	2				
24		1420010200	・O-RING	2			M	
		L5h220						

silverhorn.co.uk

LONG DOZER BLADE CYLINDER (17830004-17830327)

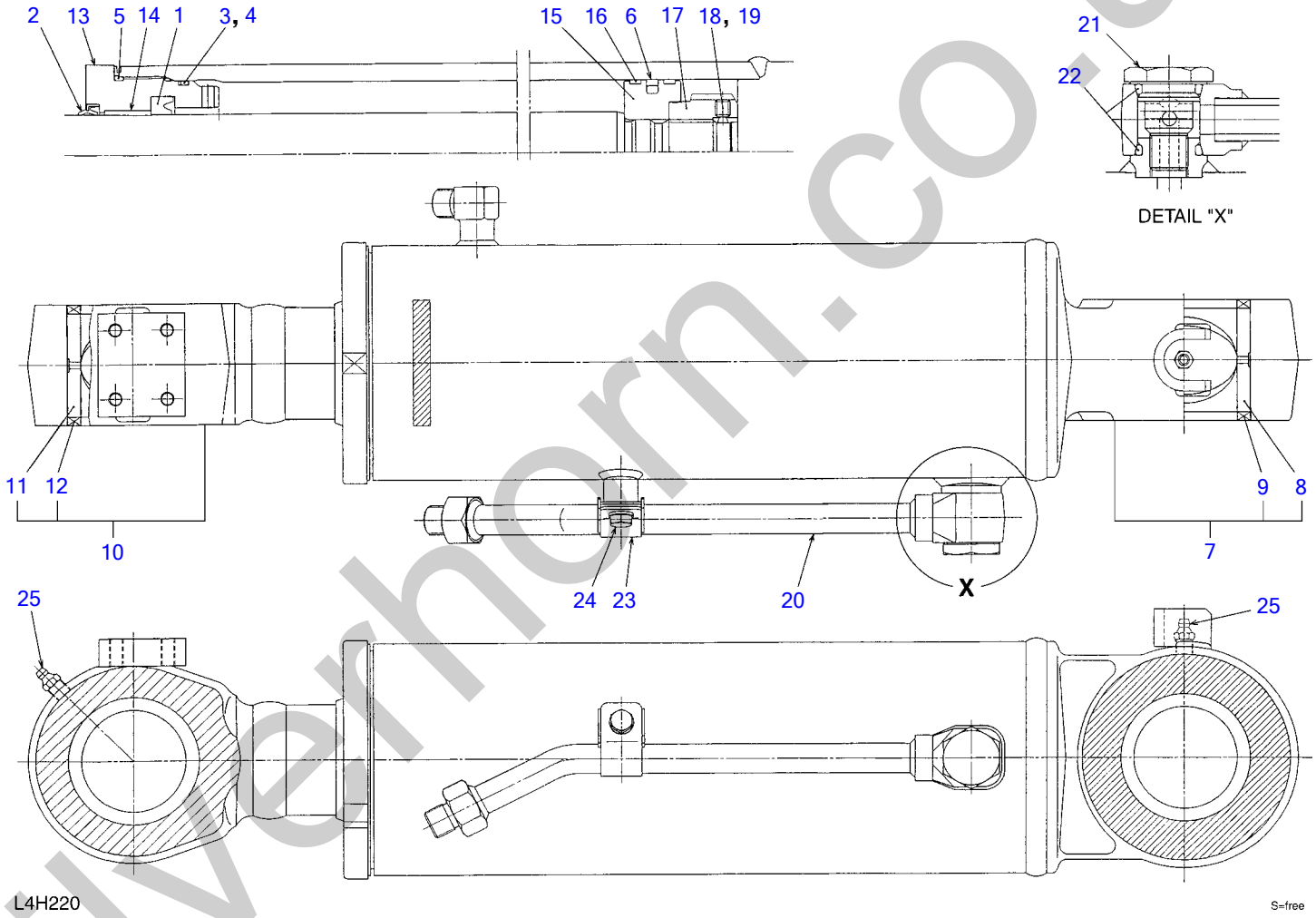

silverhorn.co.uk

LONG DOZER BLADE CYLINDER (17830004-17830327)

Item		Part number	Description	Q'ty	Chan.	Serial No.	Serv.	Remarks
0		1900090400	CYLINDER ASSY	1				long dozer blade
0-1		1900090499	・KIT, seal	1				
1	X	1900067332	・・PACKING, rod	1				
2	X	1900069633	・・SEAL, dust	1				
3	X	1420111150	・・O-RING	1				
4	X	1900086828	・・RING, back-up	1				
5	X	1420101200	・・O-RING	1				
6	X	1900063633	・・PACKING, piston	1				
7		1900090498	・TUBE ASSY	1				
8		1900063402	・・BUSHING	1				
9		1900083533	・・SEAL, dust	2				
10		1900090497	・ROD ASSY, piston	1				
11		1900063402	・・BUSHING	1				
12		1900083533	・・SEAL, dust	2				
13		1900090403	・COVER, rod	1				
14		1900090402	・BUSHING	1				
15		1900090406	・PISTON	1				
16		1900086829	・RING, slide	2				
17		1900090409	・NUT	1				
18		1121051212	・SET-SCREW	1				
19		1390020450	・BALL, steel	1				
20		1900090410	・PIPE ASSY	1				
21		1900090029	・PLUG	1				
22		1420010221	・O-RING	2				
23		1900090017	・HOLDER	1				
24		1900087819	・BOLT	1				
25		1560001000	・FITTING, grease	2				
		L4h231						

silverhorn.co.uk

LONG DOZER BLADE CYLINDER (17830328-)

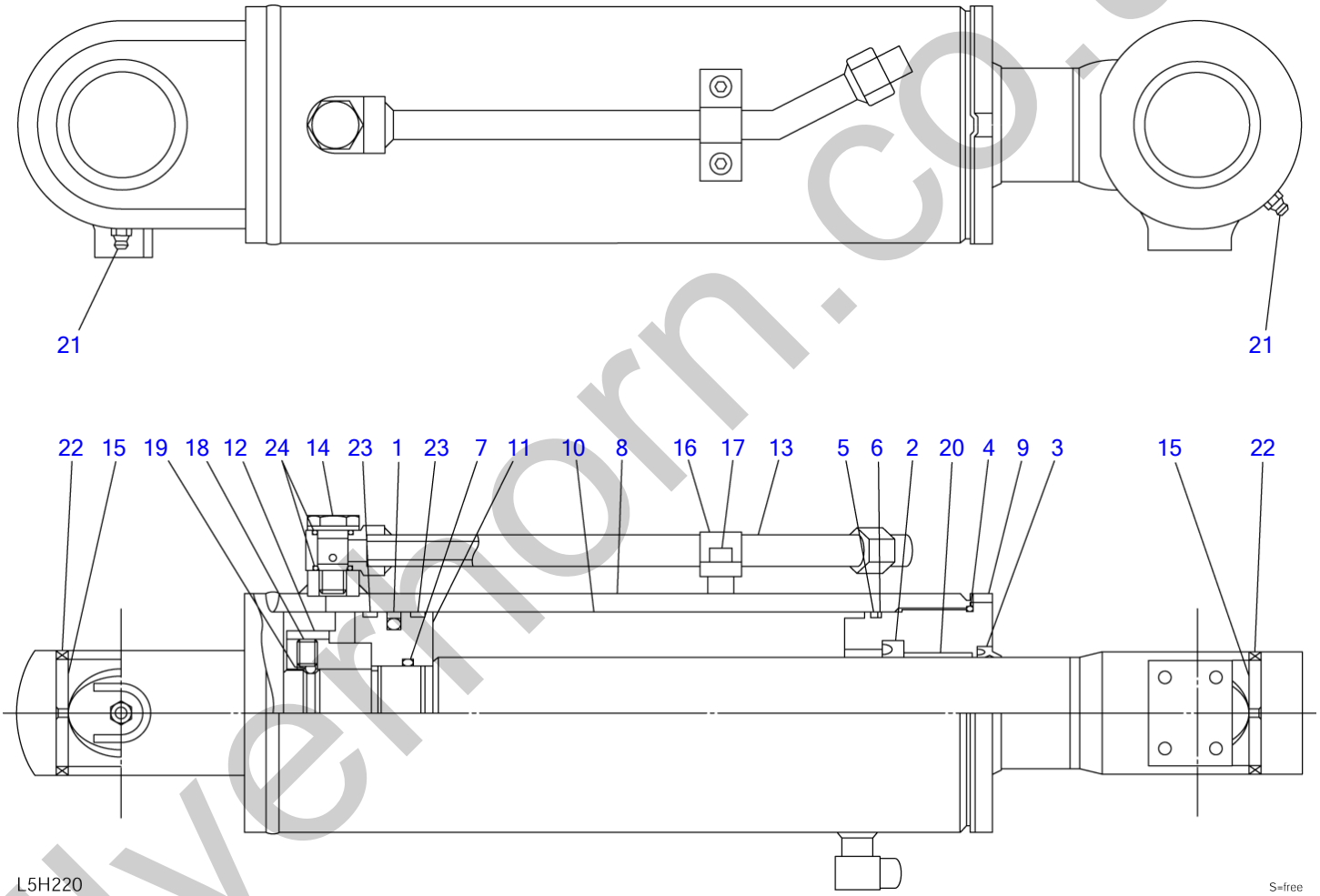

silverthorn.co.uk

LONG DOZER BLADE CYLINDER (17830328-)

Item		Part number	Description	Q'ty	Chan.	Serial No.	Serv.	Remarks
0		1900101300	CYLINDER ASSY	1			M	long dozer blade
0-1		1900101399	・KIT, seal	1			M	
1	X	1900063633	・・PACKING, piston	1				
2	X	1900067332	・・PACKING, rod	1				
3	X	1900069633	・・SEAL, dust	1				
4	X	1420111200	・・O-RING	1			M	
5	X	1420111150	・・O-RING	1				
6	X	1421131150	・・RING, back-up	1			M	
7	X	1420010520	・・O-RING	1			M	
8		1900101307	・TUBE ASSY	1			M	
9		1900101303	・COVER, rod	1			M	
10		1900101301	・ROD ASSY, piston	1			M	
11		1900101306	・PISTON	1			M	
12		1900101209	・NUT	1			M	
13		1900101310	・PIPE	1			M	
14		1900101219	・PLUG	1			M	
15		1900101208	・BUSHING	2			M	
16		1900101317	・HOLDER	1			M	
17		1110040812	・SCREW, cap	2			M	
18		1121051212	・SET-SCREW	1				
19		1390010500	・BALL, steel	1			M	
20		1333006540	・BUSHING	1			M	
21		1560001000	・FITTING, grease	2				
22		1900063433	・SEAL, dust	4			M	
23		1900086829	・RING, wear	2				
24		1420010200	・O-RING	2			M	
		L5h230						

silverhorn.co.uk

TENSION CYLINDER R.H.

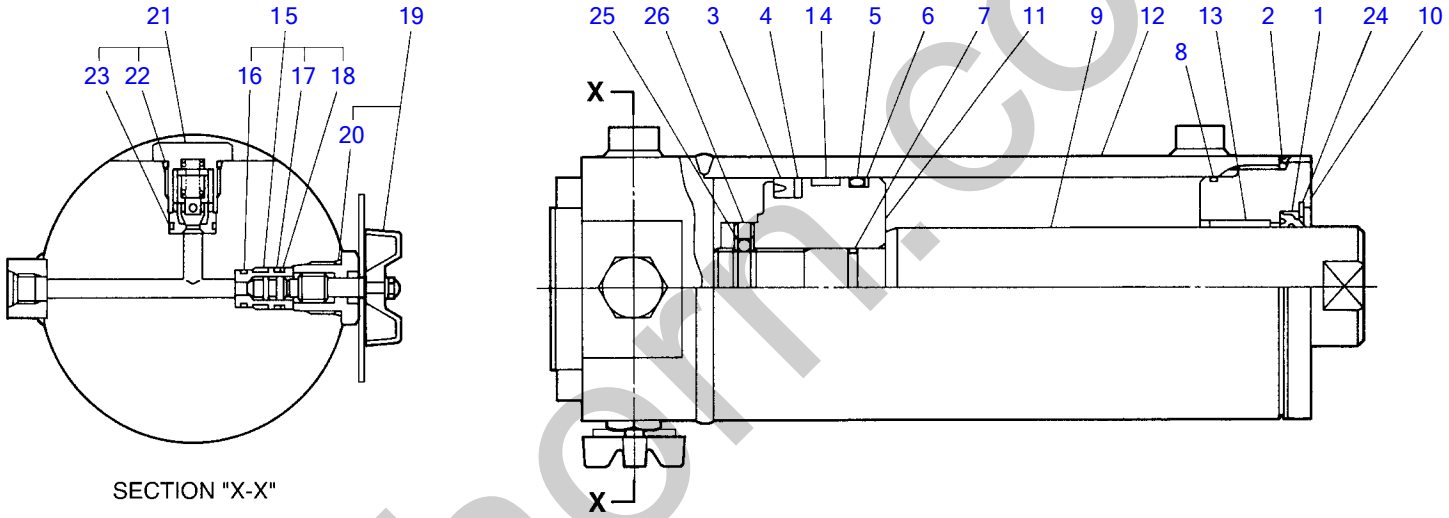

L2H181

S=FREE

silverhorn.co.uk

TENSION CYLINDER R.H.

Item	Part number		Description	Q'ty	Chan.	Serial No.	Serv.	Remarks
0		1900081000	CYLINDER ASSY	1				tension (R.H.)
0-1		1900063999	・KIT, seal	1				
1	X	1411100060	・・SEAL, dust	1				
2	X	1420111150	・・O-RING	1				
3	X	1411131100	・・PACKING, piston	1				
4	X	1411310903	・・RING, back-up	1				
5	X	1420011000	・・O-RING	1				
6	X	1421021000	・・RING, back-up	1				
7	X	1420010320	・・O-RING	1				
8	X	1420501050	・・O-RING	1				
9		1900081001	・ROD, piston	1				
10		1900063903	・COVER, rod	1				
11		1900063906	・PISTON	1				
12		1900081007	・TUBE	1				
13		1333006030	・BUSHING	1				
14		1900063926	・RING, wear	1				
15		1900063928	・VALVE ASSY, seat	1				
16		1420010120	・・O-RING	1				
17		1420010140	・・O-RING	1				
18		1421020140	・・RING, back-up	1				
19		1900063929	・HANDLE ASSY	1				
20		1420500200	・・O-RING	1				
21		1900063933	・VALVE ASSY, check	1				
22		1420010220	・・O-RING	1				
23		1420010160	・・O-RING	1				
24		1221000082	・RING, snap	1				
25		1390010350	・BALL, steel	1				
26		1121040810	・SET-SCREW	1				
		L5h060						

silverhorn.co.uk

TENSION CYLINDER L.H.

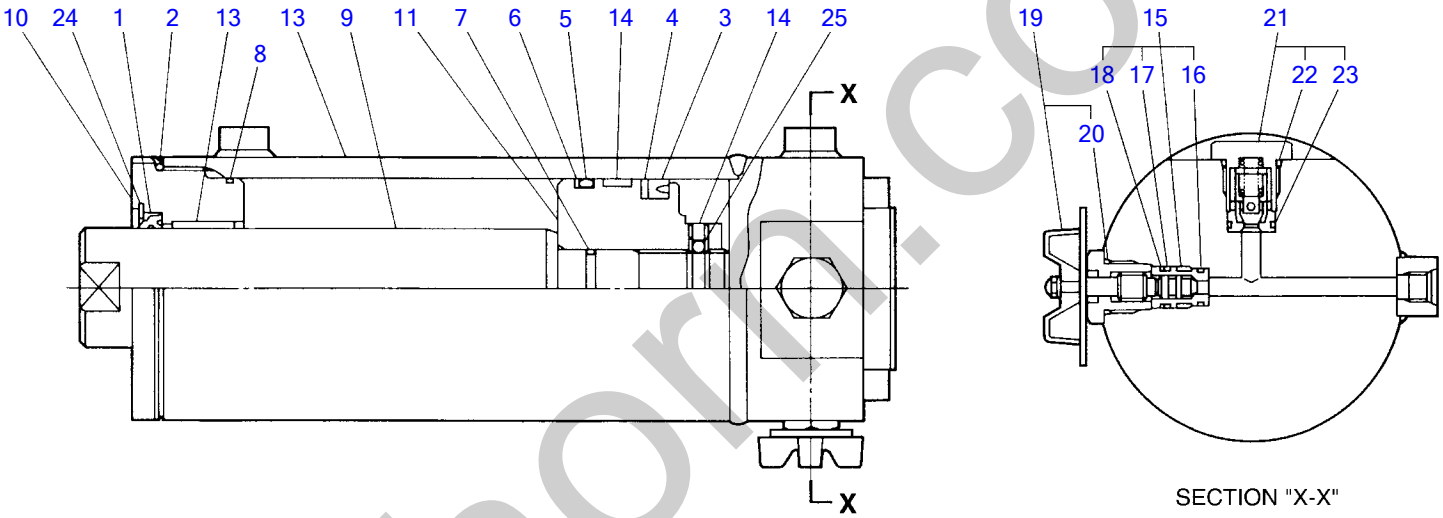

L2H191

S=FREE

silverhorn.co.uk

TENSION CYLINDER L.H.

Item	Part number		Description	Q'ty	Chan.	Serial No.	Serv.	Remarks
0		1900081100	CYLINDER ASSY	1				tension (L.H.)
0-1		1900063999	・KIT, seal	1				
1	X	1411100060	・・SEAL, dust	1				
2	X	1420111150	・・O-RING	1				
3	X	1411131100	・・PACKING, piston	1				
4	X	1411310903	・・RING, back-up	1				
5	X	1420011000	・・O-RING	1				
6	X	1421021000	・・RING, back-up	1				
7	X	1420010320	・・O-RING	1				
8	X	1420501050	・・O-RING	1				
9		1900081001	・ROD, piston	1				
10		1900063903	・COVER, rod	1				
11		1900063906	・PISTON	1				
12		1900081007	・TUBE	1				
13		1333006030	・BUSHING	1				
14		1900063926	・RING, wear	1				
15		1900063928	・VALVE ASSY, seat	1				
16		1420010120	・・O-RING	1				
17		1420010140	・・O-RING	1				
18		1421020140	・・RING, back-up	1				
19		1900063929	・HANDLE ASSY	1				
20		1420500200	・・O-RING	1				
21		1900063933	・VALVE ASSY, check	1				
22		1420010220	・・O-RING	1				
23		1420010160	・・O-RING	1				
24		1221000082	・RING, snap	1				
25		1390010350	・BALL, steel	1				
26		1121040810	・SET-SCREW	1				
		L5h070						

silverhorn.co.uk

TRAVEL MOTOR (1/2) (reduction sec.)

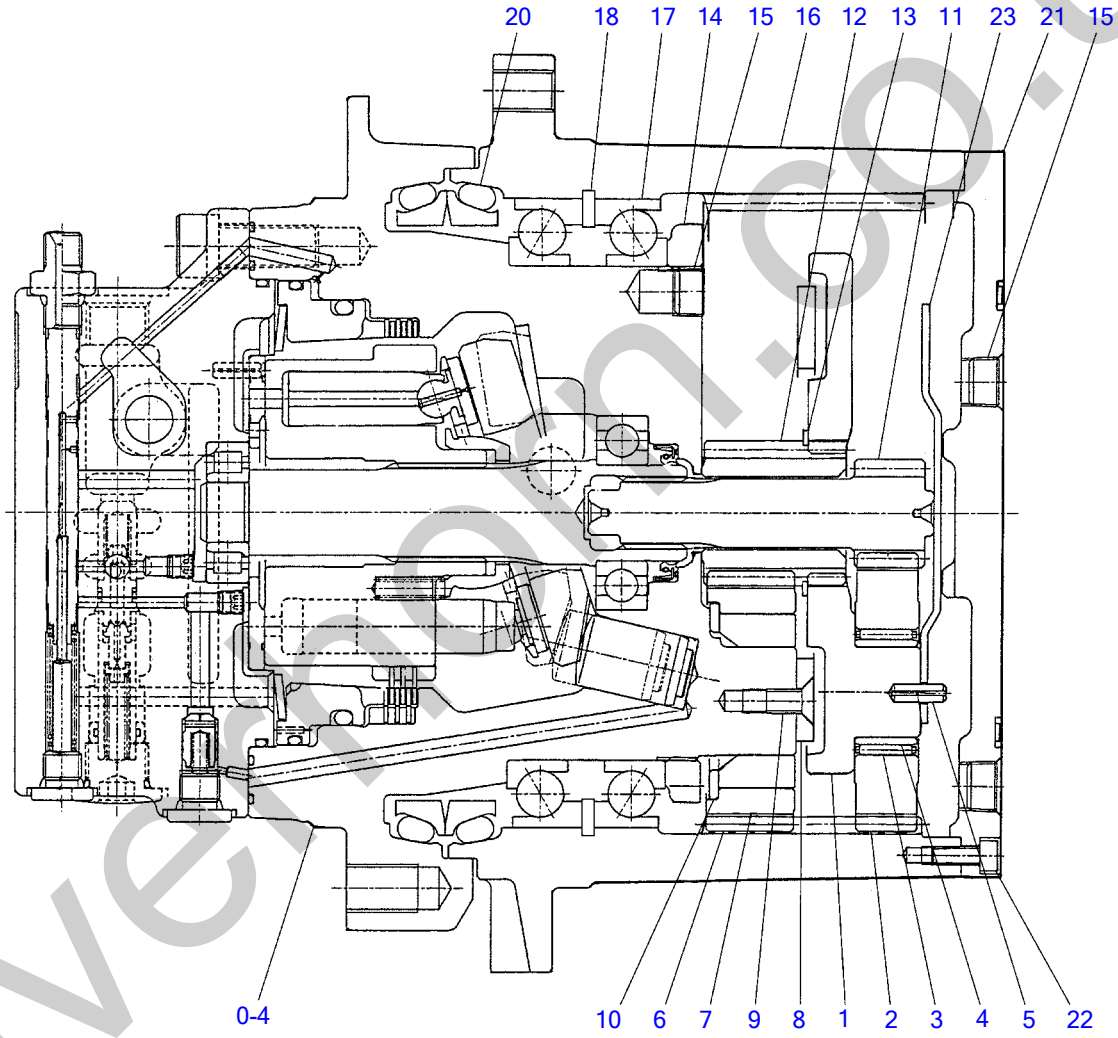

silvermoon.co.uk

TRAVEL MOTOR (1/2) (reduction sec.)

Item	Part number	Description	Q'ty	Chan.	Serial No.	Serv.	Remarks
0	1903125800	MOTOR ASSY, travel	2				
0-1	X **********	・GEAR ASSY, reduction	1				X19129-08100
0-2	1912906298	・・CARRIER (A) ASSY	1				
1	1912906201	・・・CARRIER (A)	1				
2	1912906202	・・・GEAR	3				
3	1912906203	・・・BEARING	3				
4	1912906204	・・・RACE, inner	3				
5	1213000618	・・・PIN, spring	3				
0-3	1912908107	・・CARRIER (B) ASSY	1				
0-4	1903907400	・・・MOTOR ASSY	1				see page (2/2)
6	1912906206	・・・GEAR	4				
7	1912906207	・・・RACE, inner	4				
8	1912906208	・・・PLATE	1				
9	1912906209	・・・SCREW, cap	4				
10	1912906210	・・・WASHER	4				
11	1912906211	・・GEAR	1				
12	1912906212	・・GEAR	1				
13	1220000048	・・RING, snap	1				
14	1912906213	・・NUT	1				
15	1501810003	・・PLUG	7				
16	1912906231	・・CASE	1				
17	1912906232	・・BEARING	2				
18	1912906216	・・RING, snap	1				
20	1912906218	・・SEAL, floating	1				
21	1912906220	・・COVER	1				
22	1110050616	・・SCREW, cap	12				
23	1912908126	・・PLATE KIT, thrust	1				
	1912908127	・・・PLATE, thrust t=6.0	1				
	1912908128	・・・PLATE, thrust t=6.2	1				
	1912908129	・・・PLATE, thrust t=6.4	1				
	1912908130	・・・PLATE, thrust t=6.6	1				
	1912908131	・・・PLATE, thrust t=6.8	1				
	1912908132	・・・PLATE, thrust t=7.0	1				
	1912908133	・・・PLATE, thrust t=7.2	1				
	1912908134	・・・PLATE, thrust t=7.4	1				
	1912908135	・・・PLATE, thrust t=7.6	1				
	L5h080						

silverhorn.co.uk

TRAVEL MOTOR (2/2) (motor sec.)

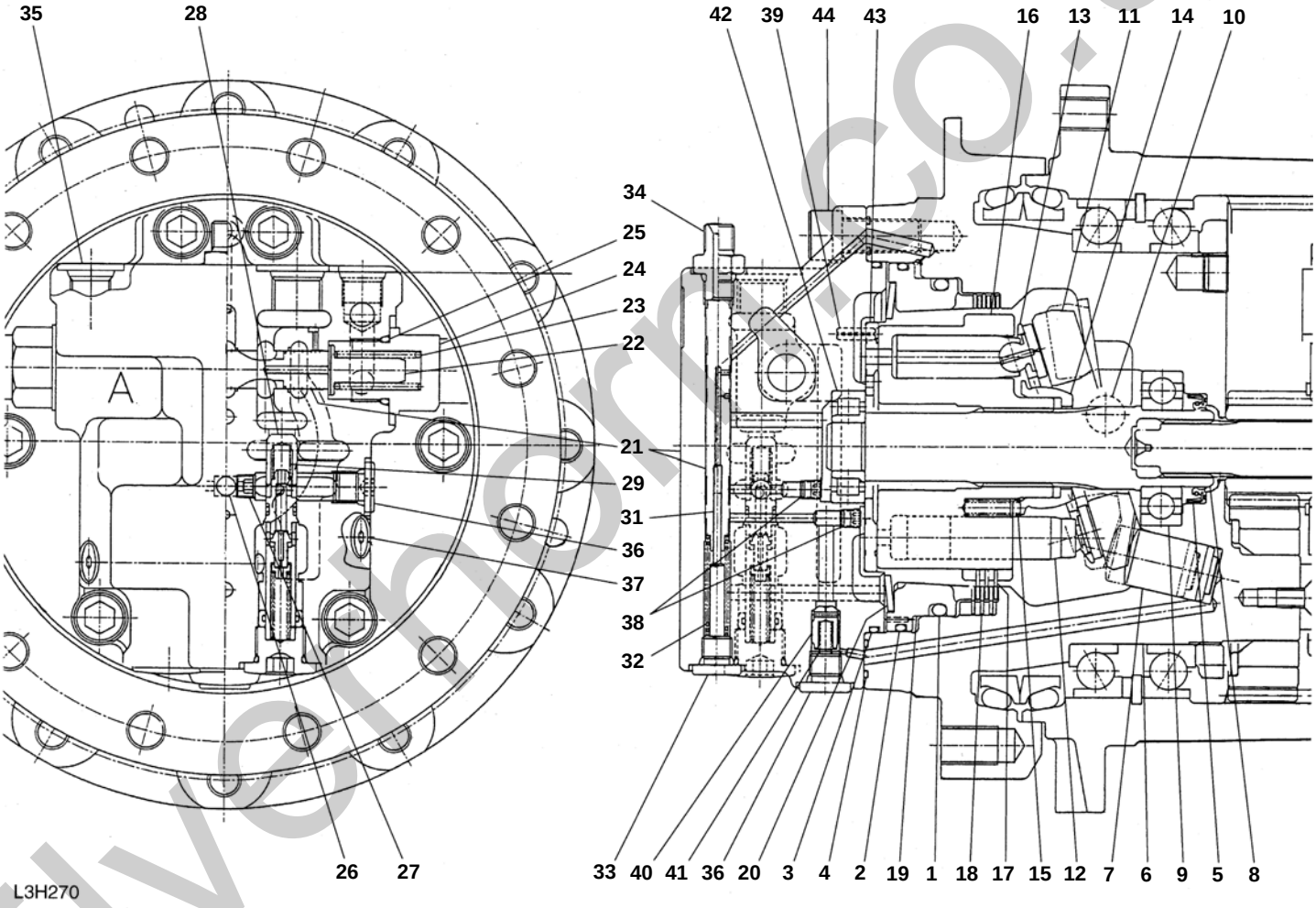

silvermorr.co.uk

TRAVEL MOTOR (2/2) (motor sec.)

Item		Part number	Description	Q'ty	Chan.	Serial No.	Serv.	Remarks
0		1903125800	MOTOR ASSY, travel	2				
0-4	X	**********	・MOTOR ASSY	1				X19039-07400
0-5		1903905499	・・KIT, seal	1				
1	X	1903905416	・・・O-RING	1				
2	X	1903905417	・・・O-RING	1				
3	X	1903905419	・・・O-RING	1				
4	X	1420010120	・・・O-RING	2				
5	X	1903905402	・・・SEAL, oil	1				
6		1903907401	・・HOUSING	1				
7		1903907403	・・PISTON	1				
8		1903905404	・・SHAFT	1				
9		1903905405	・・BEARING	1				
10		1903907409	・・BALL	2				
11		1903905407	・・PLATE	1				
12		1903905408	・・PISTON ASSY	9				
13		1903905409	・・RETAINER	1				
14		1903905410	・・BUSHING	1				
15		1903905411	・・SPRING	6				
16		1903905412	・・ROTOR	1				
17		1903905413	・・PLATE	3				
18		1903905414	・・PLATE	3				
19		1903905415	・・PISTON	1				
20		1903905418	・・DISK	1				
0-6		1901809500	・・VALVE, brake	1				
21		1901809501	・・・CASE	1				
22		1901809503	・・・SPOOL	2				
23		1901809504	・・・SPRING	2				
24		1901809505	・・・PLUG	2				
25		1420110240	・・・O-RING	2				
26		1901809506	・・・BALL	1				
27		1901809507	・・・PLUG	1				
28		1901809508	・・・PLUNGER	2				
29		1901809509	・・・SPRING	2				
31		1901809511	・・・NEEDLE	1				
32		1901809512	・・・SPRING	1				
33		1901809513	・・・PLUG	1				
34		1901809514	・・・ADAPTOR	1				
35		1501810003	・・・PLUG	1				
36		1501810002	・・・PLUG	2				
37		1501810001	・・・PLUG	2				
38		1901809515	・・・PLUG	2				
39		1901809516	・・・PIN, spring	1				
40		1901809517	・・・PLUNGER	1				
41		1901809518	・・・SPRING	1				
42		1903905421	・・BEARING	1				
43		1903905422	・・PLATE	1				
44		1110021432	・・SCREW, cap	6				
		L5h090						

silverthorn.co.uk

SLEW MOTOR (1/2) (reduction sec.)

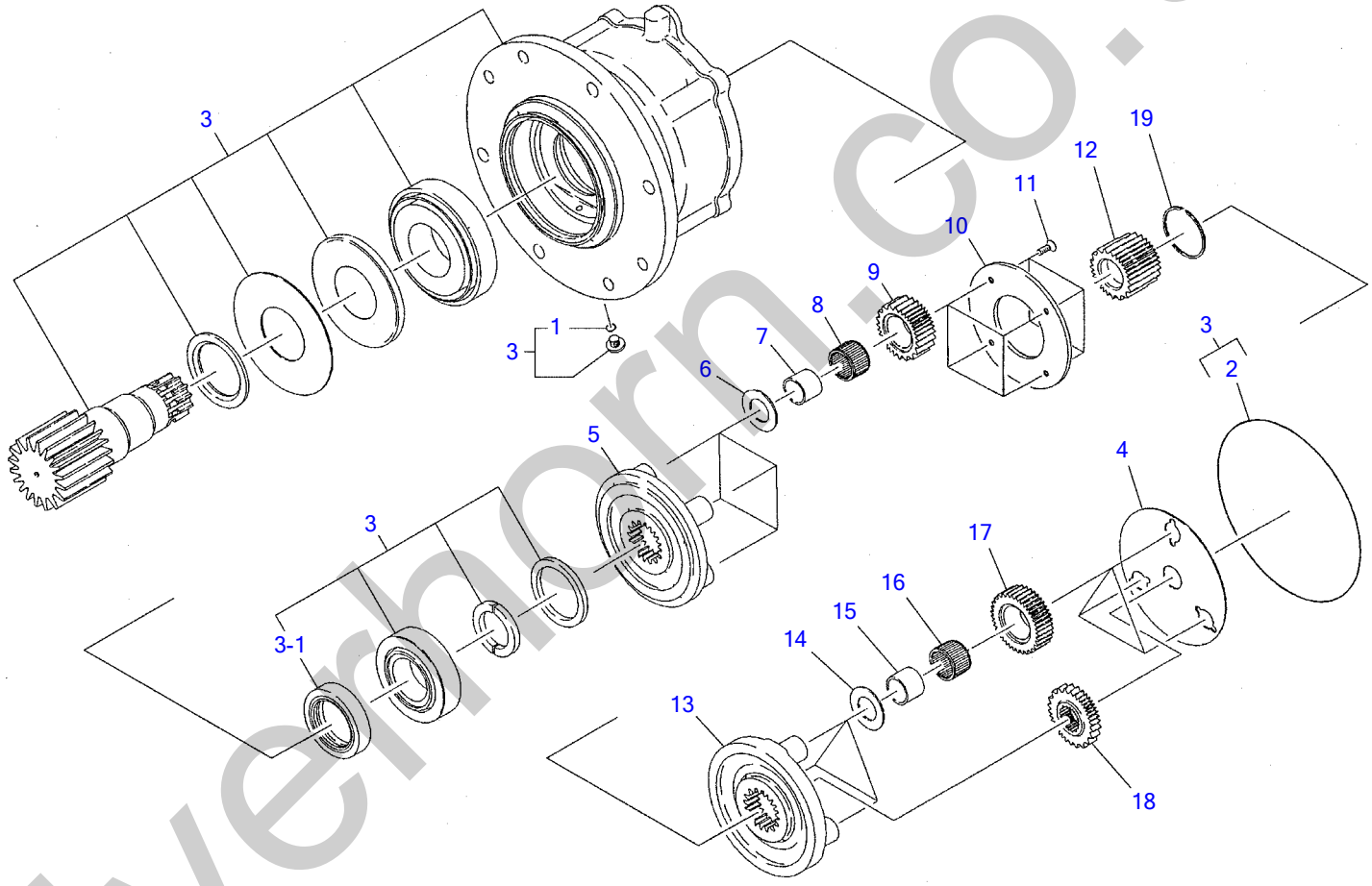

silverhorn.co.uk

SLEW MOTOR (1/2) (reduction sec.)

Item	Part number		Description	Q'ty	Chan.	Serial No.	Serv.	Remarks
0		1903125600	MOTOR ASSY, slew	1				
0-1	X	**********	・GEAR ASSY, reduction	1				
0-2		1912906399	・・KIT, seal	1				
1	X	1420010080	・・・O-RING	1				
2	X	1420310267	・・・O-RING	1				
3		1912906398	・・HOUSING ASSY	1				
3-1		1912906307	・・・SEAL, oil	1				
4		1912906397	・・PLATE KIT, thrust	1				
5		1912906311	・・HOLDER	1				
6		1912906008	・・PLATE, thrust	4				
7		1912906340	・・RACE, inner	4	(H)	17820019~		
8		1912906341	・・BEARING	4	(H)	17820019~		
9		1912906315	・・GEAR	4				
10		1912904213	・・PLATE, thrust	1				
11		1120640816	・・SCREW	4				
12		1912906318	・・GEAR	1				
13		1912906319	・・HOLDER	1				
14		1912905612	・・WASHER, thrust	3				
15		1912905611	・・RACE, inner	3				
16		1912905610	・・BEARING	3				
17		1912906323	・・GEAR	3				
18		1912906325	・・GEAR	1				
19		1912906326	・・RING, snap	1				
		L5h100						

silverhorn.co.uk

SLEW MOTOR (2/2) (motor sec.)

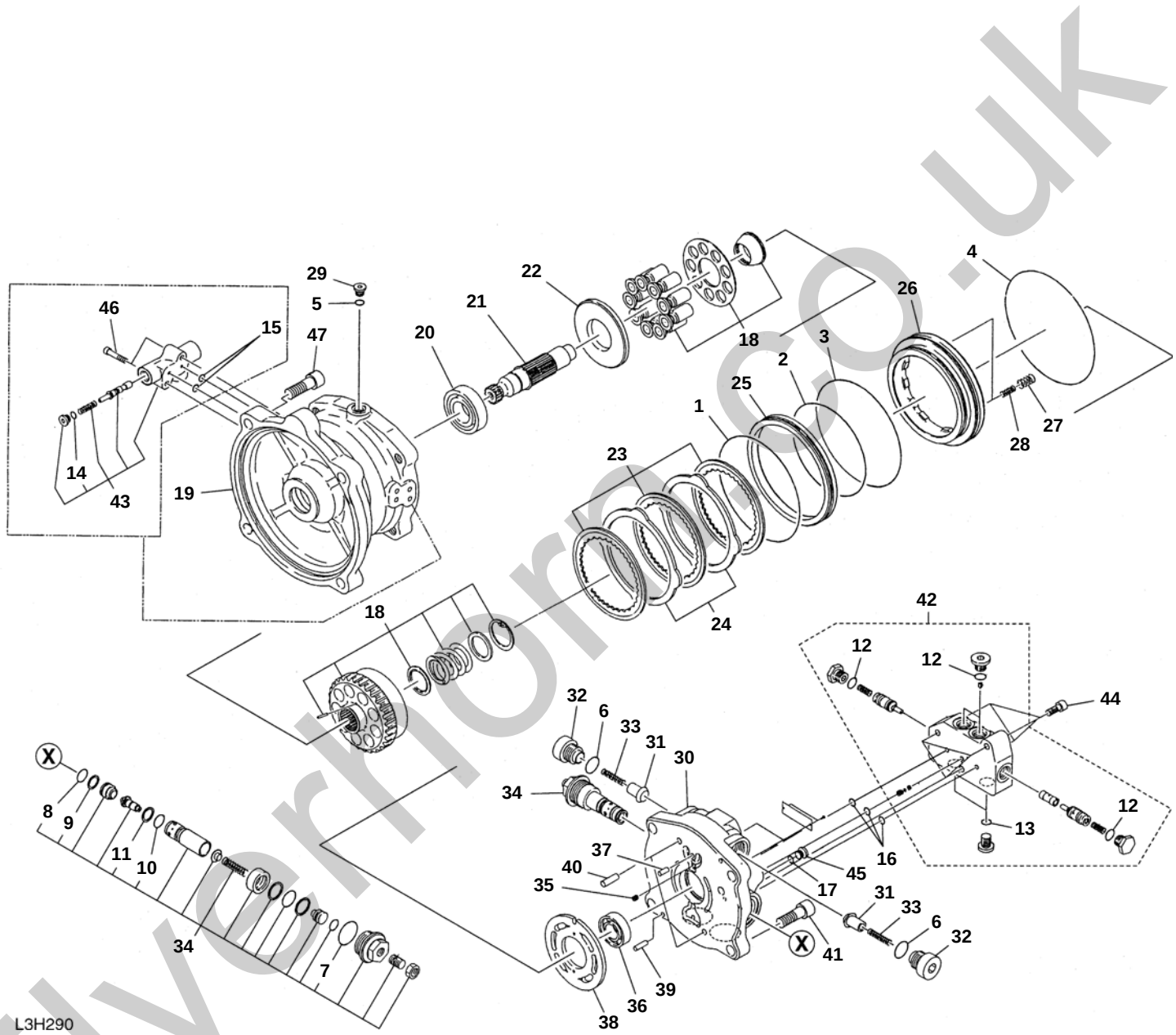

silverthorn.co.uk

SLEW MOTOR (2/2) (motor sec.)

Item		Part number	Description	Q'ty	Chan.	Serial No.	Serv.	Remarks
0		1903125600	MOTOR ASSY, slew	1				
0-3	X	**********	・MOTOR ASSY	1				
0-4		1903905599	・・KIT, seal	1				
1	X	1420111450	・・・O-RING	1				
2	X	1420111300	・・・O-RING	1				
3	X	1420300257	・・・O-RING	1				
4	X	1420300259	・・・O-RING	1				
5	X	1420010110	・・・O-RING	1				
6	X	1420010210	・・・O-RING	2				
7	X	1420310916	・・・O-RING	1				
8	X	1420010150	・・・O-RING	1				
9	X	1421020150	・・・RING, back-up	1				
10	X	1420010160	・・・O-RING	1				
11	X	1421020160	・・・RING, back-up	1				
12	X	1420010140	・・・O-RING	4				
13	X	1420010110	・・・O-RING	2				
14	X	1420010110	・・・O-RING	1				
15	X	1420010070	・・・O-RING	2				
16	X	1420010100	・・・O-RING	3				
17	X	1420010080	・・・O-RING	1				
18		1903905598	・・BLOCK ASSY, cylinder	1				
19		1903907501	・・CASE	1				
20		1903102003	・・BEARING	1				
21		1903905504	・・SHAFT	1				
22		1903905505	・・PLATE, thrust	1				
23		1903905515	・・DISK	3				
24		1903905516	・・PLATE	2				
25		1903905517	・・COLLAR	1				
26		1903905519	・・PISTON, brake	1				
27		1903905522	・・SPRING	12				
28		1903905523	・・SPRING	8				
29		1501750002	・・PLUG	1				
		1420010110	・・・O-RING	1				
30		1903905527	・・COVER	1				
31		1903904722	・・POPPET	2				
32		1903904723	・・PLUG	2				
33		1903904725	・・SPRING	2				
34		1903907528	・・VALVE, relief	2				
35		1901802713	・・ORIFICE	1				
36		1903115927	・・BEARING	1				
37		1212000610	・・PIN	1				
38		1903115925	・・PLATE	1				
39		1903120119	・・PIN	2				
40		1212000820	・・PIN	2				
41		1110021440	・・SCREW, cap	4				
42		1903905529	・・VALVE ASSY	1				
43		1903905532	・・VALVE ASSY	1				
44		1110020820	・・SCREW, cap	3				
45		1501750003	・・PLUG	1				
		1420010140	・・・O-RING	1				
46		1110020630	・・SCREW, cap	2				
47		1110021440	・SCREW, cap	4				
		L5h110						

silverthorn.co.uk

HYDRAULIC PUMP

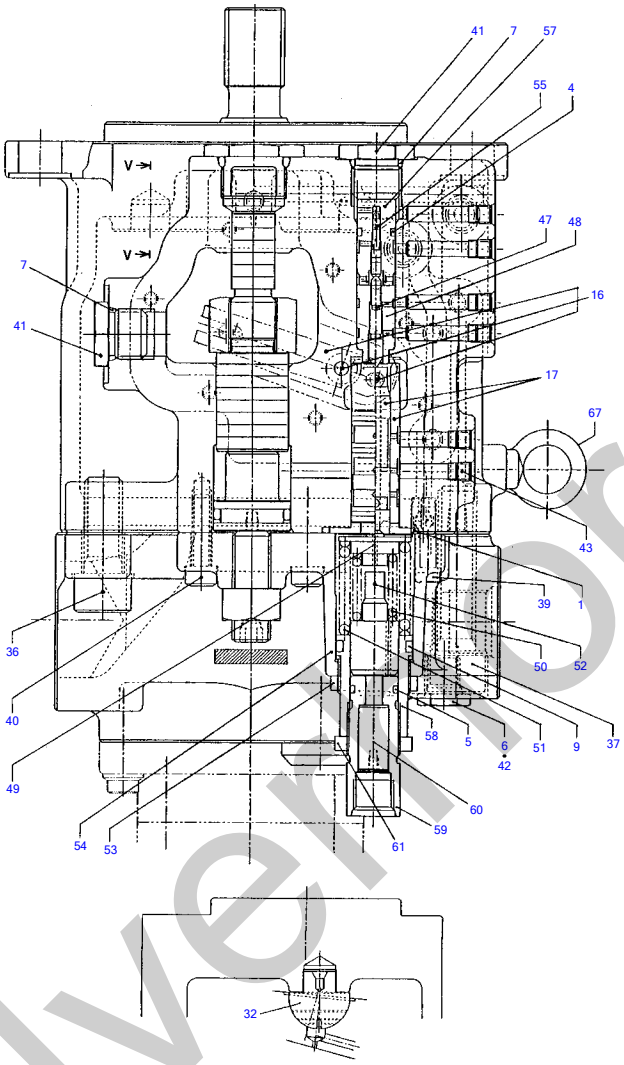

L3H320-1

SECTION "V-V"

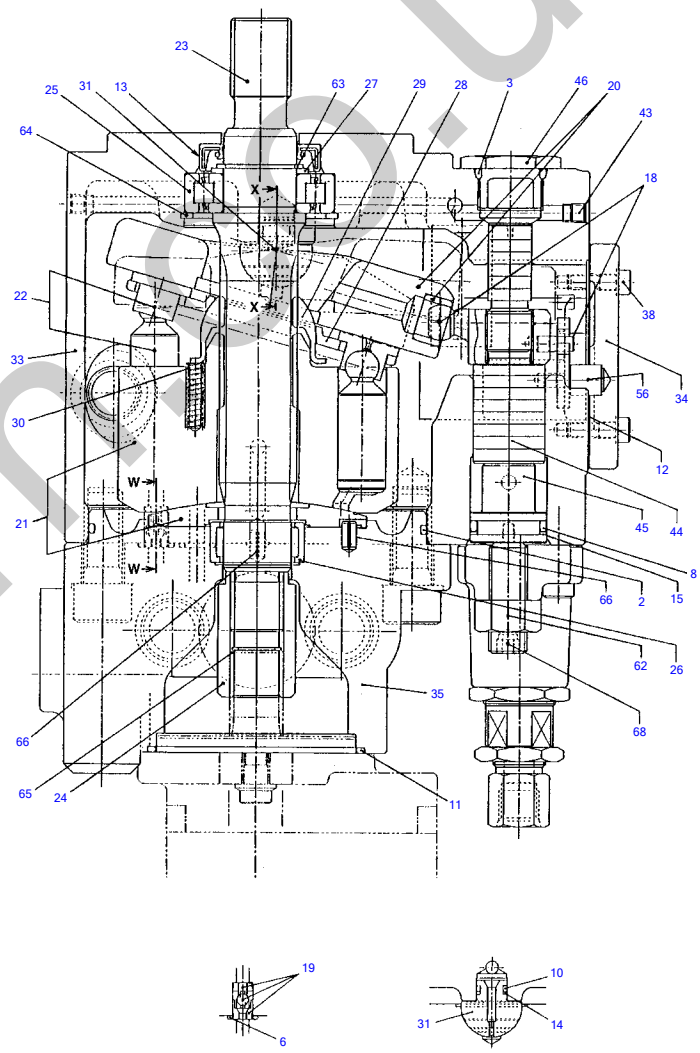

L3H320-2

SECTION "W-W"

SECTION "X-X"

silverthorn.co.uk

HYDRAULIC PUMP

Item	Part number	Description	Q'ty	Chan.	Serial No.	Serv.	Remarks
0	1902022100	PUMP, hydraulic	1				
0-1	1902017599	・KIT, seal	1				
1	X 1420110350	・・O-RING	1				
2	X 1420111350	・・O-RING	1				
3	X 1420010240	・・O-RING	1				
4	X 1420010120	・・O-RING	1				
5	X 1420010160	・・O-RING	1				
6	X 1420010110	・・O-RING	6				
7	X 1420010180	・・O-RING	1				
8	X 1902017555	・・O-RING	1				
9	X 1420010260	・・O-RING	1				
10	X 1902017556	・・O-RING	1				
11	X 1420110850	・・O-RING	1				
12	X 1902017557	・・GASKET	1				
13	X 1902017558	・・SEAL, oil	1				
14	X 1902017559	・・RING, back-up	1				
15	X 1421020260	・・RING, back-up	1				
16	1902017598	・LEVER ASSY	1				
17	1902017597	・SPOOL ASSY	1				
18	1902017596	・PIN ASSY	1				
19	1902017595	・VALVE ASSY, check	1				
20	1902017594	・PLATE ASSY	1				
21	1902017593	・CYLINDER ASSY	1				
22	1902017592	・PISTON ASSY	1				
23	1902017501	・SHAFT	1				
24	1902017502	・COUPLING	1				
25	1902017503	・BEARING	1				
26	1902017504	・BEARING	1				
27	1902017505	・SPACER	1				
28	1902017509	・PLATE	1				
29	1902017510	・BUSHING	1				
30	1902017511	・SPRING	10				
31	1902017514	・BALL	1				
32	1902017515	・BALL	1				
33	1902017516	・CASE	1				
34	1902017517	・COVER	1				
35	1902017518	・COVER	1				
36	1110021640	・SCREW, cap	4				
37	1110021670	・SCREW, cap	1				
38	1110020620	・SCREW, cap	7				
39	1110020625	・SCREW, cap	2				
40	1110020830	・SCREW, cap	4				
41	1501750004	・PLUG	1				
	1420010180	・・O-RING	1				
42	1501750002	・PLUG	2				
	1420010110	・・O-RING	1				
43	1501810000	・PLUG	16				
44	1902017529	・PISTON	1				
45	1902018530	・STOPPER	1			M	
46	1902017531	・PLUG	1				
47	1902017537	・PISTON	1				
48	1902017538	・CASE	1				
49	1902017539	・WASHER, spring	1				
50	1902017540	・SPRING	1				
51	1902017541	・SPRING	1				
52	1902017562	・RING	1				
53	1902017543	・NUT	1				
54	1902017544	・COVER	1				
55	1902022149	・PISTON	1				
56	1902017550	・PIN	1				
57	1902022151	・CASE	1				
58	1902017552	・SCREW	1				
59	1902017553	・RING	1				
60	1902017554	・PISTON	1				
61	1902017560	・NUT	1				
62	1130050016	・NUT	1				
63	1220000030	・RING, snap	1				
64	1221000062	・RING, snap	1				

silverthorn.co.uk

HYDRAULIC PUMP

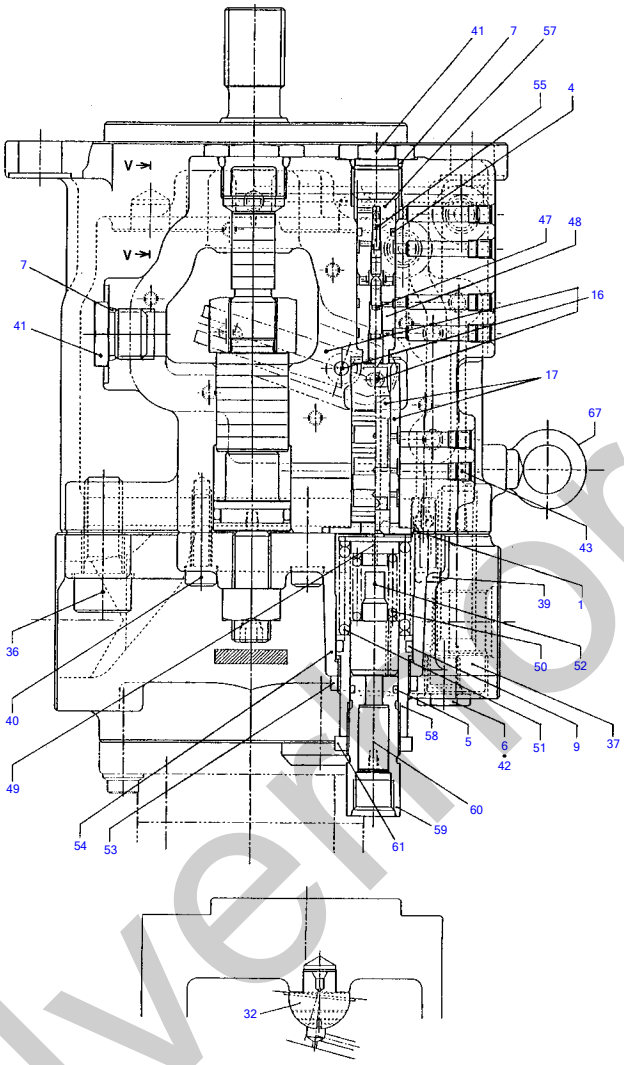

L3H320-1

SECTION "V-V"

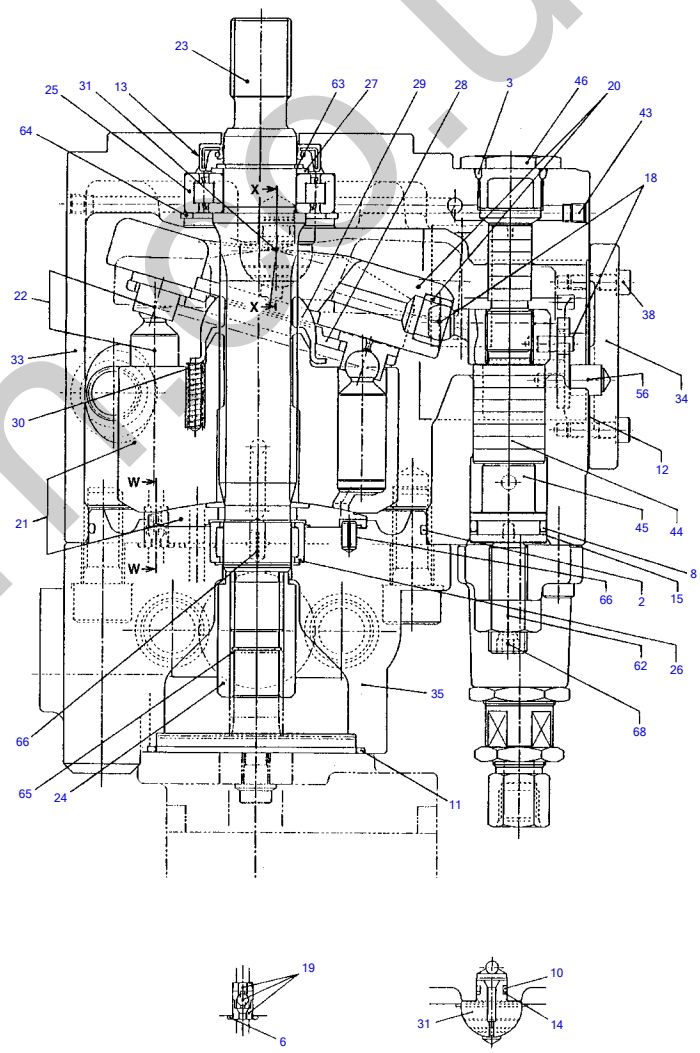

L3H320-2

SECTION "W-W"

SECTION "X-X"

silverthorn.co.uk

HYDRAULIC PUMP

Item	Part number	Description	Q'ty	Chan.	Serial No.	Serv.	Remarks
65	1221000019	・RING, snap	1				
66	1213000612	・PIN, spring	2				
67	1121600008	・BOLT	1				
68	1121051645	・SET-SCREW	1				
	L5h121						

silverhorn.co.uk

GEAR PUMP

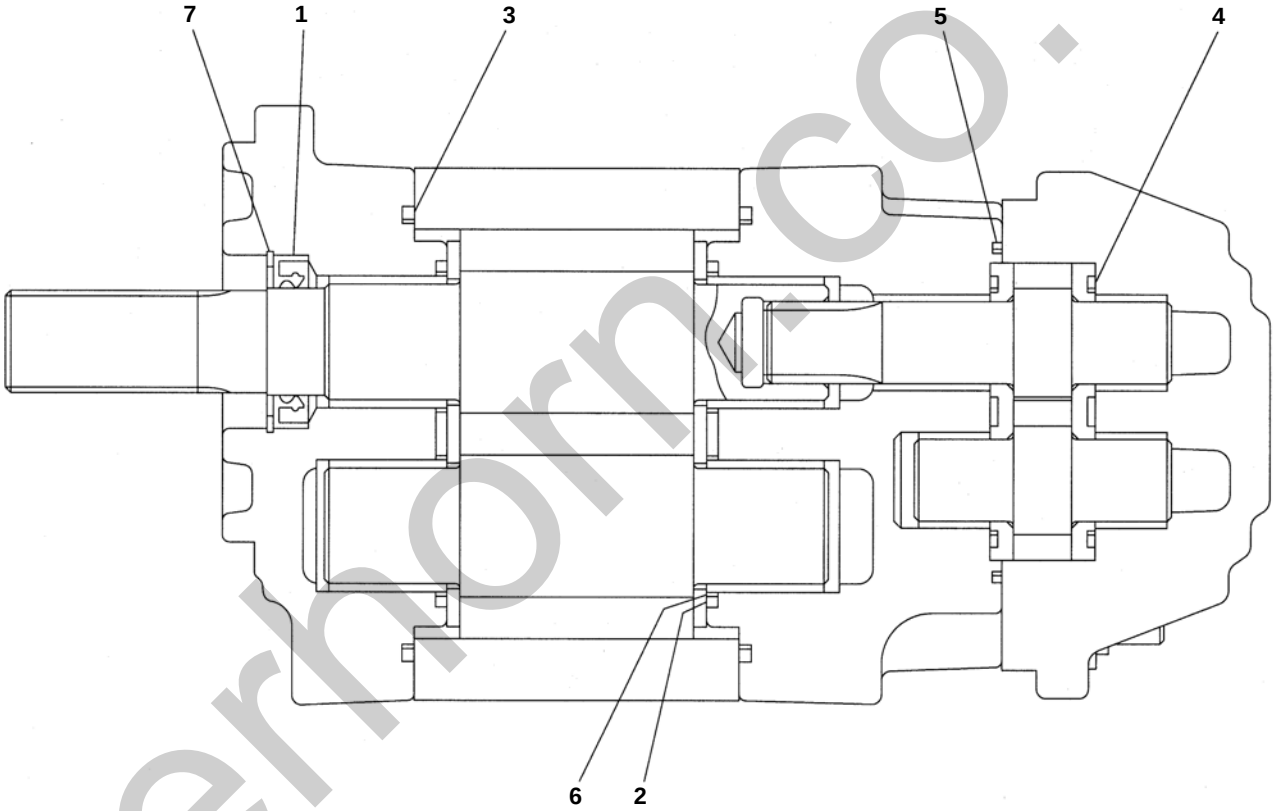

L3H300

silverhorn.co.uk

GEAR PUMP

Item	Part number	Description	Q'ty	Chan.	Serial No.	Serv.	Remarks
0	1902017600	PUMP ASSY, gear	1				
0-1	1902017699	・KIT, seal	1				
1	X 1902017618	・・SEAL, oil	1				
2	X 1902017616	・・GASKET	2				
3	X 1902017613	・・GASKET	2				
4	X 1902011050	・・GASKET	2				
5	X 1902011151	・・GASKET	1				
6	X 1902017615	・・RING, back-up	2				
7	X 1221000036	・・RING, snap	1				
	L3h301						

silverhorn.co.uk

How to read this Parts Catalog.

1. Parts mentioned in this Parts Catalog may not necessarily be standard equipping parts.
2. Parts change may be made without prior notice.
3. Form of this Parts Catalog.

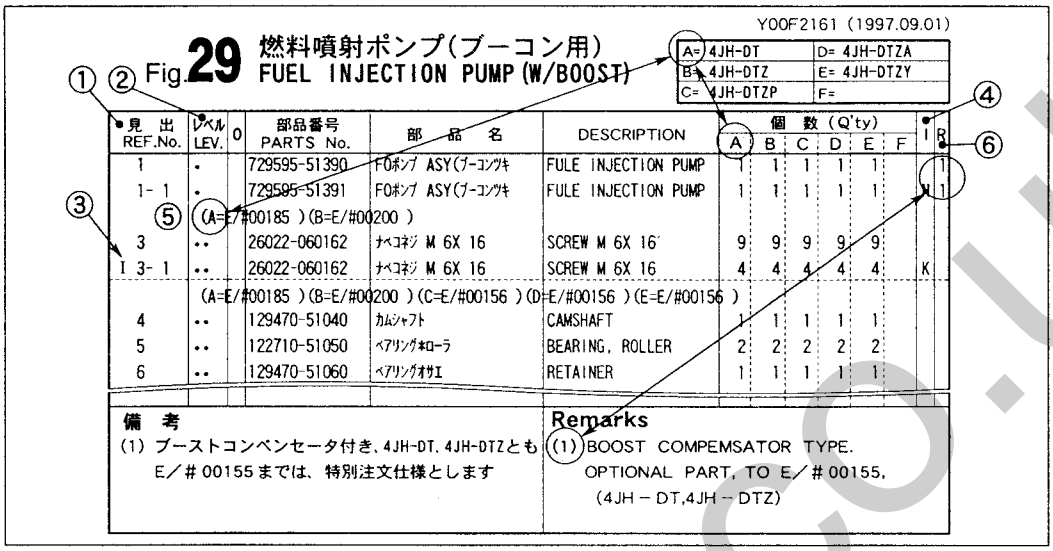

Y00F2161 (1997.09.01)

A=	4JH-DT	D=	4JH-DTZA
B=	4JH-DTZ	E=	4JH-DTZY
C=	4JH-DTZP	F=	

Fig. 29 燃料噴射ポンプ(ブーコン用)
FUEL INJECTION PUMP (W/BOOST)

●見出 REF.No.	レベル LEV.	O	部品番号 PARTS No.	部品名	DESCRIPTION	個数 (Q'ty) A	B	C	D	E	F	I	R
1	•		729595-51390	FOポンプ ASY(ブーコンツキ	FULE INJECTION PUMP	1	1	1	1	1			1
1- 1	•		729595-51391	FOポンプ ASY(ブーコンツキ	FULE INJECTION PUMP	1	1	1	1	1			1
	(A=E/#00185)(B=E/#00200)												
3	••		26022-060162	ナベコネジ M 6X 16	SCREW M 6X 16	9	9	9	9	9			
I 3- 1	••		26022-060162	ナベコネジ M 6X 16	SCREW M 6X 16	4	4	4	4	4		K	
	(A=E/#00185)(B=E/#00200)(C=E/#00156)(D=E/#00156)(E=E/#00156)												
4	••		129470-51040	カムシャフト	CAMSHAFT	1	1	1	1	1			
5	••		122710-51050	ベアリングキローラ	BEARING, ROLLER	2	2	2	2	2			
6	••		129470-51060	ベアリングオサエ	RETAINER	1	1	1	1	1			

備考
(1) ブーストコンペンセータ付き、4JH-DT, 4JH-DTZとも E／#00155までは、特別注文仕様とします

Remarks
(1) BOOST COMPEMSATOR TYPE. OPTIONAL PART, TO E／#00155. (4JH－DT,4JH－DTZ)

① Ref. No.

The Ref. No. in the list may not be accord with the Ref. No. on illustration.

(Ex.) Illustration No. 1 — List head No. 1 (Befor change) ⟶ 1 [－1] (After change)

When interchangeable symbol N, R, and K, illustrations for new parts are sometimes omitted.

② Lev.(Level)

Indication and Meaning of Level

Level : Hereunder is given the relation among the number of dots(•),the level and the nominal parent- child relationship.

- • ……Parent parts(Assembly parts)
- •• ……Child parts included in "•" (Semi- Assembly parts,component parts of Assembly parts.)
- ••• ……Child parts included in "••", Grand- child parts in terms of "•". (Compornent parts of Semi- Assembly parts.)

Note) A parts of non- sale parts are illustlated but not listed.

③ Change Mark

Change Mark "I" is given to the part for which a desigh change was made at this time.
The design change was not shown in the last published Parts Catalog.

④ Interchangeability Mark

In the case where a part change took place,one of the following interchangeability marks is indicated for that part.

Symbol	interchangeability	Contents note
N	Old ←○ ×→ New	New Part is interchangeable for Old Part but not interchangeable conversely.
Q	Old ←× ○→ New	New Part is not interchangeable for Old Part but interchangeable conversely.
R	Old ←○ ○→ New	New Part is interchangeable for Old Part and vice versa.
S	Old ←× ×→ New	New Part is not interchangeable for Old Part and vice versa.
W		Part newly added.
Z		Part discontinued.
F		Not interchangeable single part but interchangeable by set of the related parts.
K		Changed only in quantity used.

⑤ Effective Machine No.

When a part is changed,Effective Machine No. of a Model for which the part is applicable is indication in each column of (A)- (F).

Product Symbol	Product No.	Product Symbol	Product No.
C	Clutch No. Compressor No.	M	Machine No.
D	Drive No.	T	Tractor No.
E	Engine No.	Note1) ※	Date

Note1) Date may follow the symbol in some cases. (Ex.) ※ 1996.01
Note2) As far as engine models shown by "XXX" are concerned, the modification of the parts could not be predicted or the engine models themselves could not be identified.
Note3) (A=E/#00185) means that the design change on the part has been effective for the model at the column (A)(in this case, for 4JH- DT) on and from E/#(Engine Serial Number) 00185.

⑥ Remarks Mark

Figures or alphabets (Symbols) are entered in the remark column.
The comments(remarks)on the pertinent parts are indicated in the lower part of the list by the same symbols as those stated above.

silverform.co.uk

silverhorn.co.uk

CYLINDER BLOCK

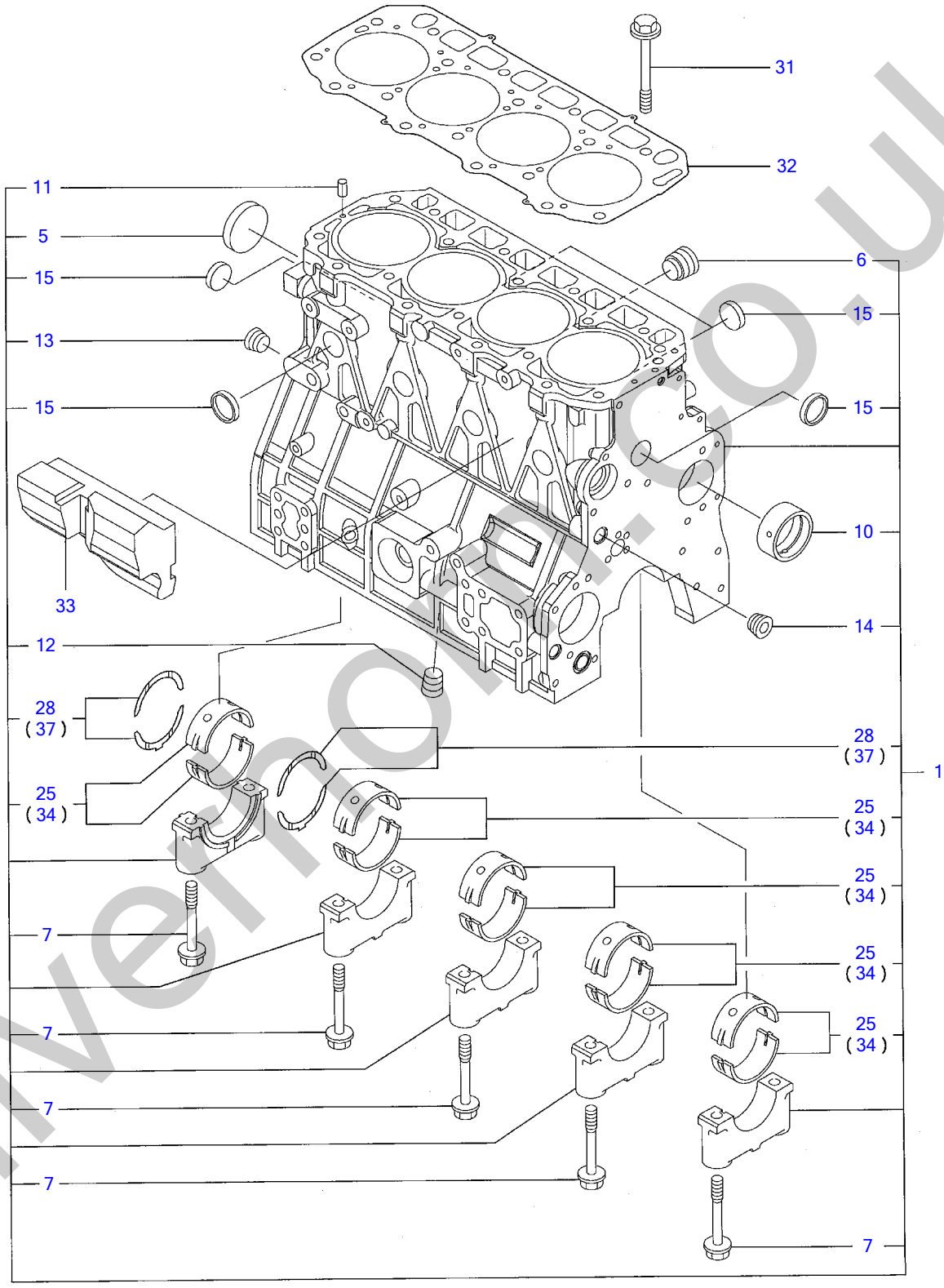

Y00D8880	1. シリンダブロック				
4TNV98-STB1		1, 06. 02			PLUS

silvermoor.co.uk

¼ØÝÀÞÌÞÛ¯¸ CYLINDER BLOCK

Œ©lo REF NO.	•"•i"Ôl† PARTS NO.	•"•i-¼	Description	l"–Ê Q'ty	ŒÝŠ·l« I	R	"õll
1	**Y729907-01560**	¼ØÝÀÞÌÞÛÂ¸ CMP	BLOCK ASSY, CYLINDER	1			
5	**Y129900-01250**	• »×¶ÞÀÌß×¸Þ 55	• PLUG 55	1			
6	**Y171051-01921**	• Ìß×¸Þ NPTF1	• PLUG	1			
7	**Y129900-02020**	• ÎÞÙÄ(ÒÀÙ·ÔÂÌß	• BOLT, METAL CAP	10			
10	**Y129900-02410**	• ¶Ñ¼Þ¸ÌÞÂ¼Õ	• BUSH, CAMSHAFT	1			
11	**Y22351-060012**	• ½ÌßØÝ¸ÞËßÝ 6.0AX 12	• SPRING PIN 6X12	2			
12	**Y23876-030000**	• È¼ÞÌß×¸ÞPT 3/8	• PLUG PT3/8,SCREW	1			
13	**Y23876-030000**	• È¼ÞÌß×¸ÞPT 3/8	• PLUG PT3/8,SCREW	1			
14	**Y23876-030000**	• È¼ÞÌß×¸ÞPT 3/8	• PLUG PT3/8,SCREW	1			
15	**Y27241-300000**	• ÜÝ¶ÞÀÌß×¸Þ 30	• PLUG 30	8			
25	**Y729900-02800**	• Ò²ÝÍÞ±ØÝ¸Þ(STDÎÖ³ËÝ	• MAIN BEARING SET	5		(3)	ÎÖ³ÌÞËÝÃÞ½
28	**Y129900-02930**	• ½×½ÄÍÞ±ØÝ¸Þ	• BEARING ASSY, THRUST	2			
31	**Y129900-01200**	ÍÂÄÞÎÞÙÄ	BOLT, HEAD	18			
32	**Y129907-01331**	ÍÂÄÞ¶Þ½¹ÂÄ	GASKET,CYLINDER HEAD	1			
33	**Y129907-01190**	Ã²»Þ²Ê½Íß-»	SPACER	1			
34	**Y129900-02340**	Ò²ÝÍÞ±ØÝ¸Þ U.S=0.25	MAIN BEARING US=0.25	5		(1)	±ÝÀÞ°»²½Þ(U.S=0.25)ÌÞËÝ
37	**Y129900-02940**	½×½ÄÒÀÙ O.S=0.25	BEARING,THRUST .25OS	2		(2)	µ°ÊÞ°»²½Þ(O.S=0.25)ÌÞËÝÃ

silverhorn.co.uk

GEAR HOUSING

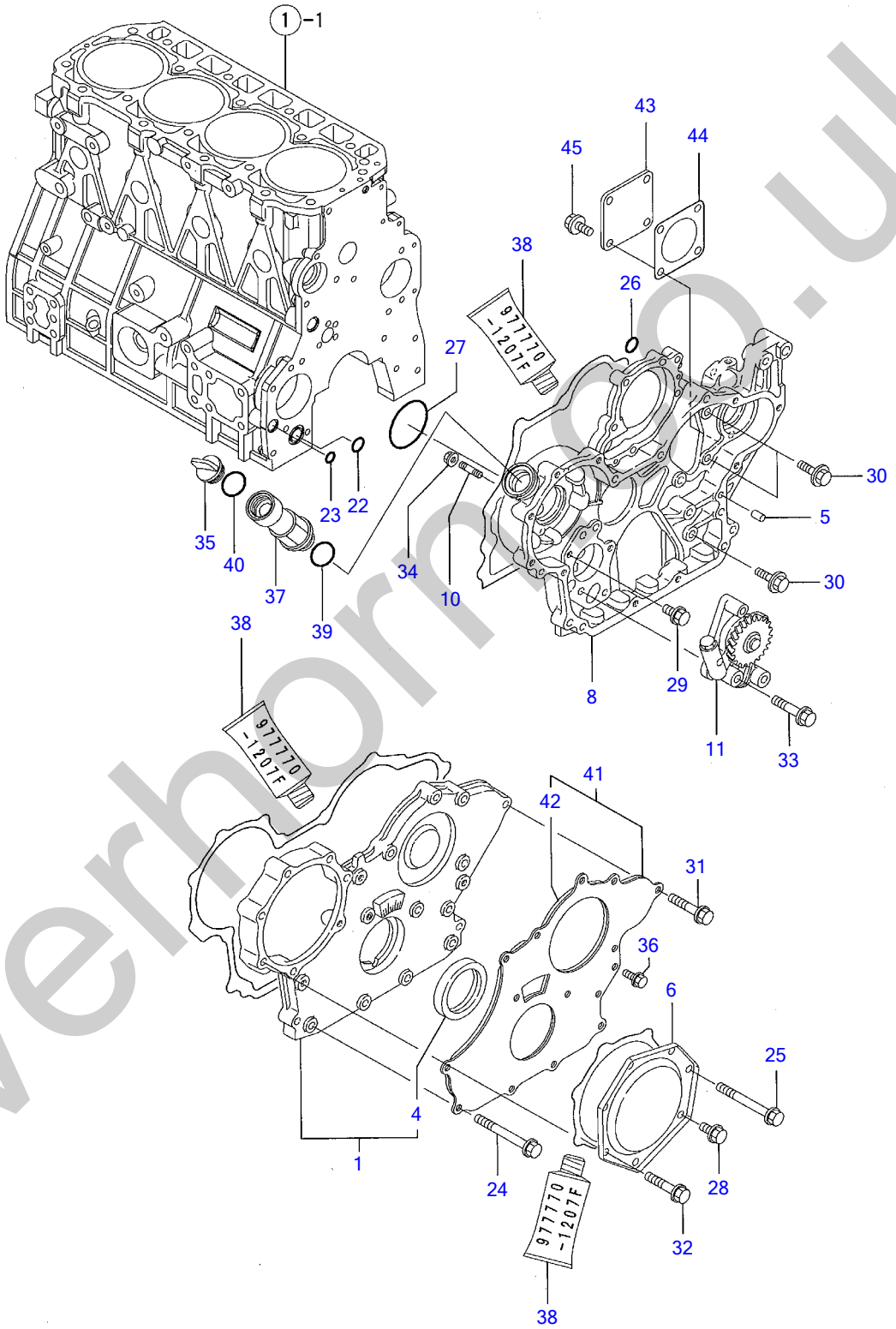

Y00D8880	2. ギヤケース				
4TNV98-STB1		1:06.02			PLUS

silverhorn.co.uk

·ÞÔ¹-½ GEAR HOUSING

Œ©lo REF NO.	•"•i"Ôl† PARTS NO.	•"•i-¼	Description	l"–Ê Q'ty	ŒÝŠ·l« I	R	"õll
1	Y729906-01550	·ÞÔ¹-½ÌÀ CMP	HOUSING ASSY,COVER,G	1			
4	Y129916-01800	▪ µ²Ù¼-Ù(ÀÞÌÞÙÀÞ½ÄØÂÌß	▪ SEAL, OIL	1			
5	Y129100-01580	Í²º³ËßÝ 8X16	PARALLEL PIN 8X16	4			
6	Y129900-01740	ÌÀ(FI-PÀ²ÐÝ¸Þ	COVER, F.I. PUMP	1			
8	Y129907-01500	·ÞÔ¹-½	HOUSING,GEARS	1			
10	Y26216-100302	³´ºÐÎÞÙÄ 10X 30	STUD BOLT	4			
11	Y129900-32001	LOÎßÝÌß CMP	PUMP ASSY, LUB.OIL	1			
22	Y129900-32030	OØÝ¸Þ P20	O-RING P20	1			
23	Y129900-32040	OØÝ¸Þ P14	O-RING P14	1			
24	Y129001-91810	ÂÊÞÎÞÙÄM8X70(¼ÞÄÞ³¸Ð	BOLT M 8X 70 PLATED	6			
25	Y129001-91810	ÂÊÞÎÞÙÄM8X70(¼ÞÄÞ³¸Ð	BOLT M 8X 70 PLATED	1			
26	Y24311-000070	OØÝ¸Þ 1A P 7.0	O-RING 1A P-7.0	1			
27	Y24351-030750	OØÝ¸Þ 1A 3075	PACKING, 3075	1			
28	Y26106-080162	ÂÊÞÎÞÙÄ 8X 16	BOLT M 8X 16 PLATED	1			
29	Y26106-080162	ÂÊÞÎÞÙÄ 8X 16	BOLT M 8X 16 PLATED	1			
30	Y26106-080202	ÂÊÞÎÞÙÄ 8X 20	BOLT M 8X 20 PLATED	3			
31	Y26106-080402	ÂÊÞÎÞÙÄ 8X 40	BOLT M 8X 40 PLATED	5			
32	Y26106-080402	ÂÊÞÎÞÙÄ 8X 40	BOLT M 8X 40 PLATED	5			
33	Y26106-080452	ÂÊÞÎÞÙÄ 8X 45	BOLT M 8X 45 PLATED	3			
34	Y26306-100002	ÂÊÞÂ·ÅÂÄ(UBS 10	NUT	4			
35	Y124160-01751	ÌÀ(ÎÕº³)	COVER,FILLER	1			
36	Y26106-080162	ÂÊÞÎÞÙÄ 8X 16	BOLT M 8X 16 PLATED	3			
37	Y171031-11741	ÎÕº³Êß²Ìß	PIPE	1			
38	Y977770-1207F	¼Øº-Ý¹² ´·¼ÞÖ³¶Þ½¹ÂÄ	GASKET.LIQUID	1		(1)	µÌß¼®Ý ÌÞËÝÃÞ½
39	Y24311-000320	OØÝ¸Þ 1A P 32.0	O-RING 1A P-32.0	1			
40	Y24311-000320	OØÝ¸Þ 1A P 32.0	O-RING 1A P-32.0	1			
41	Y129900-01850	·ÞÔ¹-½¼ÔÍ²¶ÊÞ- CMP	COVER ASSY	1			
42	Y129900-01870	▪ ¼ÔÍ²¶ÊÞ-½ÎßÝ¼Þ	▪ SPONGE	1			
43	Y124240-01871	ÌÀ(HO-P	COVER, HO-P	1			
44	Y124240-01883	ÊßÂ·Ý(HO-P)(ÉÝ±½)	GASKET, (NON-ASB.)	1			
45	Y26106-080162	ÂÊÞÎÞÙÄ 8X 16	BOLT M 8X 16 PLATED	4			

silverhorn.co.uk

FLYWHEEL HOUSING & OIL SUMP

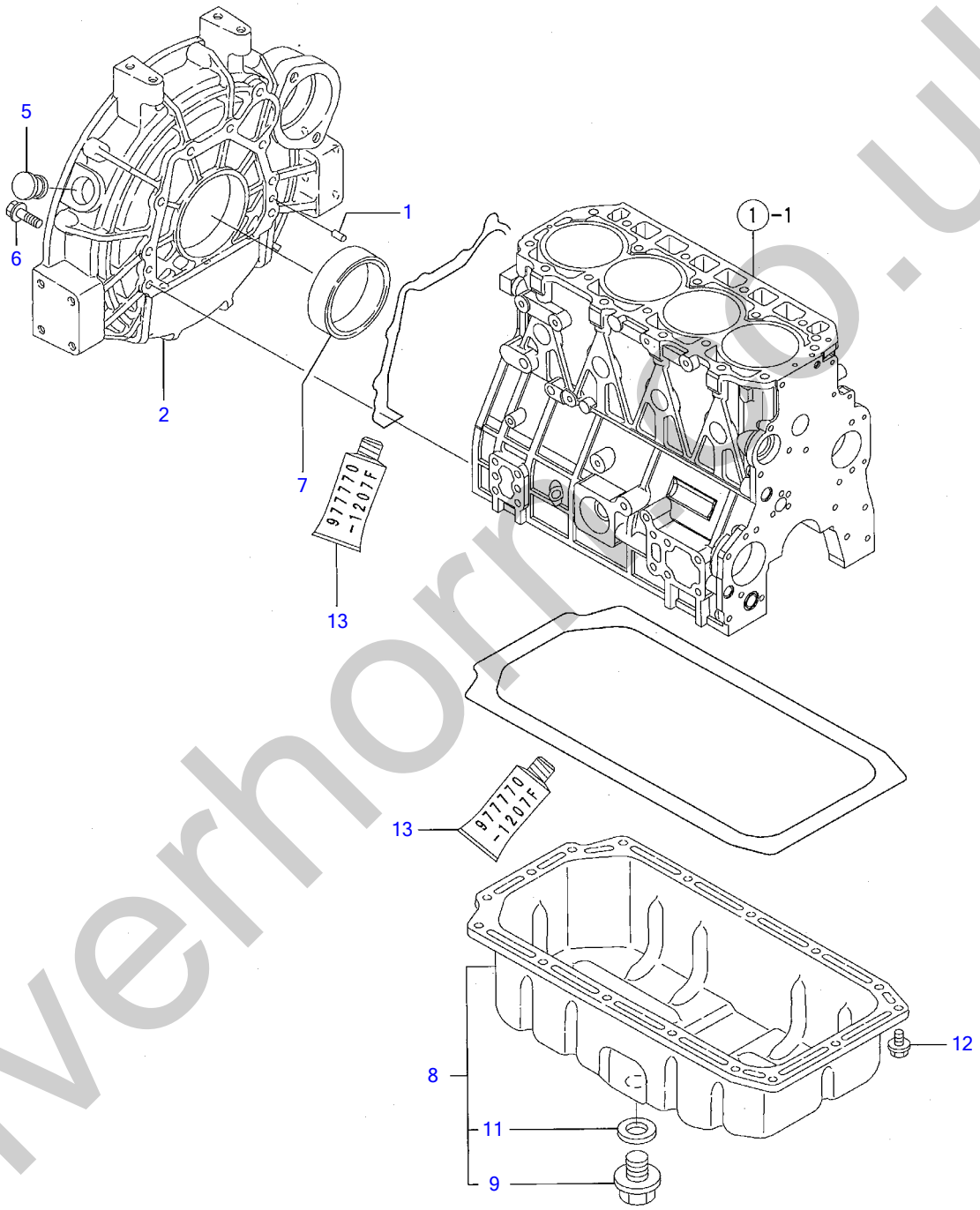

Y00D8880	3. フライホイルハウジング & オイルパン				
4TNV98-STB1		1:06.02			PLUS

silverhorse.co.uk

Ì×²Î²ÙÊ³¼ÞÝ¸Þ & µ²ÙÊßÝ FLYWHEEL HOUSING & OIL SUMP

Œ©lo REF NO.	•"•i"Ôl† PARTS NO.	•"•i-¼	Description	l"–Ê Q'ty	ŒÝŠ·l« I	R	"õl
1	Y129100-01580	Í²º³ËßÝ 8X16	PARALLEL PIN 8X16	2			
2	Y129951-01620	Ì×²Î²ÙÊ³¼ÞÝ¸Þ CMP	HOUSING, FLYWHEEL	1			
5	Y119000-01840	ºÞÑÌß×¸Þ25	PLUG 25,RUBBER	1			
6	Y26206-100352	ÎÞÙÄ 10X 35	BOLT M10X 35 PLATED	9			
7	Y124411-01780	µ²Ù¼-Ù HTC95,115,12	SEAL HTC95,115,12	1			
8	Y129953-01710	µ²ÙÊßÝ CMP	SUMP ASSY, OIL	1			
9	Y119640-01640	▪ ÄÞÚÝÌß×¸Þ M22	▪ DRAIN PLUG M22	1			
11	Y22190-220002	▪ ¼-ÙÜÂ¼Ô(ºÏÙ.ÆÄØÙ)22	▪ SEAL WASHER 22S	1			
12	Y26106-080122	ÂÊÞÎÞÙÄ 8X 12	BOLT M 8X 12 PLATED	16			
13	Y977770-1207F	¼Øº-Ý¹² ´·¼ÞÖ³¶Þ½¹ÂÄ	GASKET.LIQUID	1		(1)	µÌß¼®Ý ÌÞËÝÃÞ½

silverhorn.co.uk

CYLINDER HEAD & BONNET

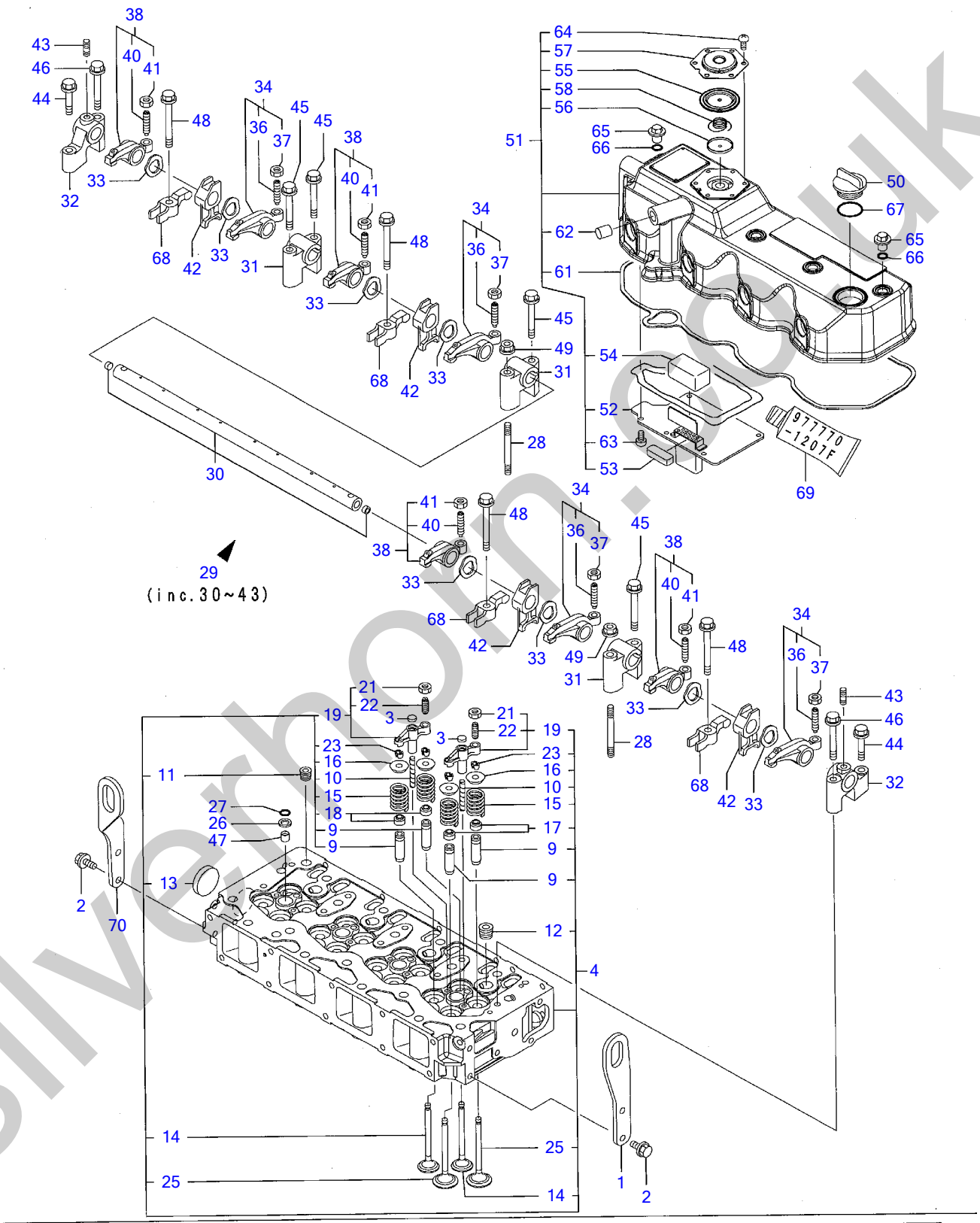

Y00D8880	4. シリンダヘッド & ボンネット			
4TNV98-STB1	1, 06. 02			PLUS

silverhorn.co.uk

¼ØÝÀÞÍÂÄÞ & ÎÞÝÈÂÄ CYLINDER HEAD & BONNET

Œ©lo REF NO.	•"•i"Ô†† PARTS NO.	•"•i-¼	Description	"–Ê Q'ty	ŒÝŠ·« I	R	"õl
1	Y129907-07900	ÂØ±¹Þ¶Å¸Þ	LIFTER, ENGINE	1			
2	Y26106-080162	ÂÊÞÎÞÙÄ 8X 16	BOLT M 8X 16 PLATED	4			
3	Y123907-11550	¼-Ä(ÊÞÙÌÞÌÞØÂ¼Þ	SEAT A,VALVE BRIDGE	8			
4	Y129907-11700	¼ØÝÀÞÍÂÄÞ CMP	HEAD ASSY, CYLINDER	1			
9	Y129907-11800	· ÊÞÙÌÞ¶Þ²ÄÞ(ÎÖ³ËÝ	· GUIDE, VALVE	16		(1)	ÎÖ³ÌÞËÝÃÞ½
10	Y123907-11820	· ÌÞØÂ¼Þ¶Þ²ÄÞ	· GUIDE,VALVE BRIDGE	8			
11	Y23876-020000	· È¼ÞÌß×¸ÞPT1/4	· PLUG PT1/4,SCREW	1			
12	Y23876-030000	· È¼ÞÌß×¸ÞPT 3/8	· PLUG PT3/8,SCREW	4			
13	Y27241-400000	· ÜÝ¶ÞÀÌß×¸Þ 40	· PLUG 40	1			
14	Y129907-11110	· ÊÞÙÌÞ(EXH	· VALVE(EXH	8			
15	Y129907-11120	· ÍÞÝÊÞÈ	· VALVE SPRING	16			
16	Y119620-11180	· ÍÞÝÊÞÈµ»´	· RETAINER, SPRING	16			
17	Y124160-11340	· ÊÞÙÌÞ½ÃÑ¼-Ù	· SEAL, VALVE STEM	8			
18	Y124950-11340	· ÊÞÙÌÞ½ÃÑ¼-Ù	· SEAL, VALVE STEM	8			
19	Y129907-11510	· ÊÞÙÌÞÌÞØÂ¼Þ CMP	· BRIDGE ASSY,VALVE	8			
21	Y129150-11750	· · ÅÂÄ M8XP1.0	· · NUT M8XP1.0	8			
22	Y123907-11830	· · ±¼ÞÒ½À(ÊÞÙÌÞÌÞØÂ¼Þ	· · SCRWE,VALVE BRIDGE	8			
23	Y27310-070001	· ºÂÀ-(½ÃÑ)7 2¹=1SET	· COTTER ASSY	16			
25	Y129907-11100	· ÊÞÙÌÞ¶Þ²ÄÞ(SUC	· VALVE(INT	8			
26	Y119625-11880	É½ÞÙ¼-Ä	SEAT, NOZZLE	4			
27	Y24311-000120	OØÝ¸Þ 1A P 12.0	O-RING 1A P 12.0	4			
28	Y119593-11301	³´ºÐÎÞÙÄ 8X80	BOLT 8X80	2			
29	Y129907-11341	ÍÞÝÜÝ»Îß-Ä CMP	SUPPORT CMP	1			
30	Y129907-11250	· ÍÞÝÜÝ¼Þ¸	· SHAFT,ROCKER ARM	1			
31	Y129907-11260	· ÍÞÝÜÝ»Îß-Ä(A	· SUPPORT A	3			
32	Y129907-11270	· ÍÞÝÜÝ»Îß-Ä(B	· SUPPORT B	2			
33	Y123907-11280	· ÅÐÜÂ¼Ô-(ÍÞÝÜÝ¼Þ¸	· WAVE WASHER	8			
34	Y129907-11650	· ÍÞÝÜÝ(SUC KIT	· ARM ASSY, ROCKER	4			
36	Y129150-11230	· · ±¼ÞÒ½À (ÍÞÝ½·Ï	· · SCREW, VALVE	4			
37	Y129150-11750	· · ÅÂÄ M8XP1.0	· · NUT M8XP1.0	4			
38	Y129907-11660	· ÍÞÝÜÝ(EXH KIT	· ARM ASSY, ROCKER	4			
40	Y129150-11230	· · ±¼ÞÒ½À (ÍÞÝ½·Ï	· · SCREW, VALVE	4			
41	Y129150-11750	· · ÅÂÄ M8XP1.0	· · NUT M8XP1.0	4			
42	Y129907-11920	· ÀÞ²»Þ(É½ÞÙµ»´	· PEDESTAL,RETAINER	4			
43	Y26226-080222	· ³´ºÐÎÞÙÄ(2D 8X 22	· STUD M 8X 22 PLATED	2			
44	Y26106-080402	ÂÊÞÎÞÙÄ 8X 40	BOLT M 8X 40 PLATED	2			
45	Y26106-080602	ÂÊÞÎÞÙÄ 8X 60	BOLT M 8X 60 PLATED	4			
46	Y26106-080602	ÂÊÞÎÞÙÄ 8X 60	BOLT M 8X 60 PLATED	2			
47	Y119802-11870	ÌßÛÃ¸À(É½ÞÙ	PROTECTOR, NOZZLE	4			
48	Y129907-11950	ÂÊÞÎÞÙÄ(É½ÞÙµ»´ 8X75	FLANGE BOLT,RETAINER	4			
49	Y26306-080002	ÂÊÞÂ·ÅÂÄ(UBS 8	NUT	2			
50	Y124160-01751	ÌÀ(ÎÕº³)	COVER,FILLER	1			
51	Y129907-11320	ÎÞÝÈÂÄ CMP	BONNET ASSY	1			
52	Y129907-03011	· ÊÞÂÌÙÌßÚ-Ä	· BAFFLE PLATE	1			
53	Y129907-03061	· ÊÞÂÌÙ(ÌÞØ-»Þ	· BAFFLE	1			
54	Y129907-03070	· ÊÞÂÌÙ(ÌÞØ-»Þ	· BAFFLE	1			
55	Y123907-03100	· ÀÞ²ÔÌ×Ñ(ÌÞØ-»Þ	· DIAPHRAGM,BREATHER	1			
56	Y123907-03110	· ¾ÝÀ-ÌßÚ-Ä	· CENTER PLATE	1			
57	Y123907-03120	· ÌÀ(ÌÞØ-»Þ	· PLATE,BREATHER	1			
58	Y123907-03140	· ÊÞÈ(ÀÞ²ÔÌ×Ñ	· SPRING, DIAPHRAGM	1			
61	Y129907-11310	· PK(ÎÞÝÈÂÄ	· PACKING,BONNET	1			
62	Y119640-61400	· Ìß×¸Þ	· PLUG	1			
63	Y22857-500100	· ÀÂËßÝÈ¼Þ 5.0X10	· SCREW 5X10,TAPPING	6			
64	Y22857-500100	· ÀÂËßÝÈ¼Þ 5.0X10	· SCREW 5X10,TAPPING	6			
65	Y124160-11360	ÄÂÃ	KNOB	4			
66	Y24311-000120	OØÝ¸Þ 1A P 12.0	O-RING 1A P 12.0	4			
67	Y24311-000320	OØÝ¸Þ 1A P 32.0	O-RING 1A P-32.0	1			
68	Y129907-11910	É½ÞÙµ»´	RETAINER,F.I.VALVE	4			
69	Y977770-1207F	¼Øº-Ý¹² ´·¼ÞÖ³¶Þ½¹ÂÄ	GASKET.LIQUID	1		(2)	µÌß¼®Ý ÌÞËÝÃÞ½
70	Y129910-07900	ÂØ±¹Þ¶Å¸Þ	LIFTER, ENGINE	1			

silencerr.co.uk

SUCTION MANIFOLD

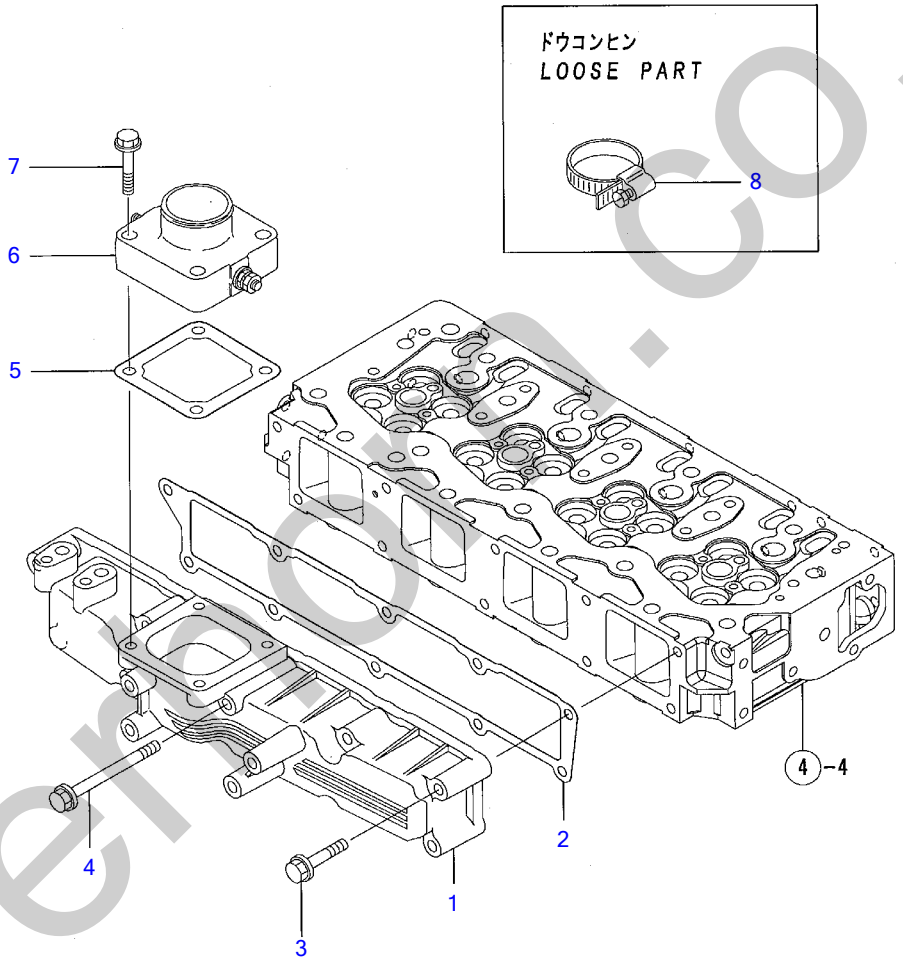

Y00D8880	5. キュウキマニホールド				
4TNV98-STB1		1, 06, 02			PLUS

silverpoint.co.uk

·Õ³·ÏÆÎ-ÙÄÞ SUCTION MANIFOLD

Œ©lo REF NO.	•"•i"Ôl† PARTS NO.	•"•i-¼	Description	l"–Ê Q'ty	ŒÝŠ·l« I	R	"õll
1	**Y129907-12100**	ÏÆÎ-ÙÄÞ(INT	MANIFOLD,AIR INTAKE	1			
2	**Y129907-12110**	PK(SUCÏÆÎ-ÙÄÞ	PACKING(INT.MANIFOLD	1			
3	**Y26106-080552**	ÂÊÞÎÞÙÄ 8X 55	BOLT M 8X 55 PLATED	9			
4	**Y26106-080852**	ÂÊÞÎÞÙÄ 8X 85	BOLT M 8X 85 PLATED	1			
5	**Y121850-77021**	PK(´±Ë-À)(ÉÝ±½)	GASKET, (NON-ASB.)	1			
6	**Y129915-77050**	´ÔË-À	AIR HEATER	1			
7	**Y26106-080352**	ÂÊÞÎÞÙÄ 8X 35	BOLT M 8X 35 PLATED	4			
8	**Y23000-080000**	Î-½¸ØÂÌß 80	CLAMP 80	3			

silverhorn.co.uk

EXHAUST MANIFOLD & SILENCER

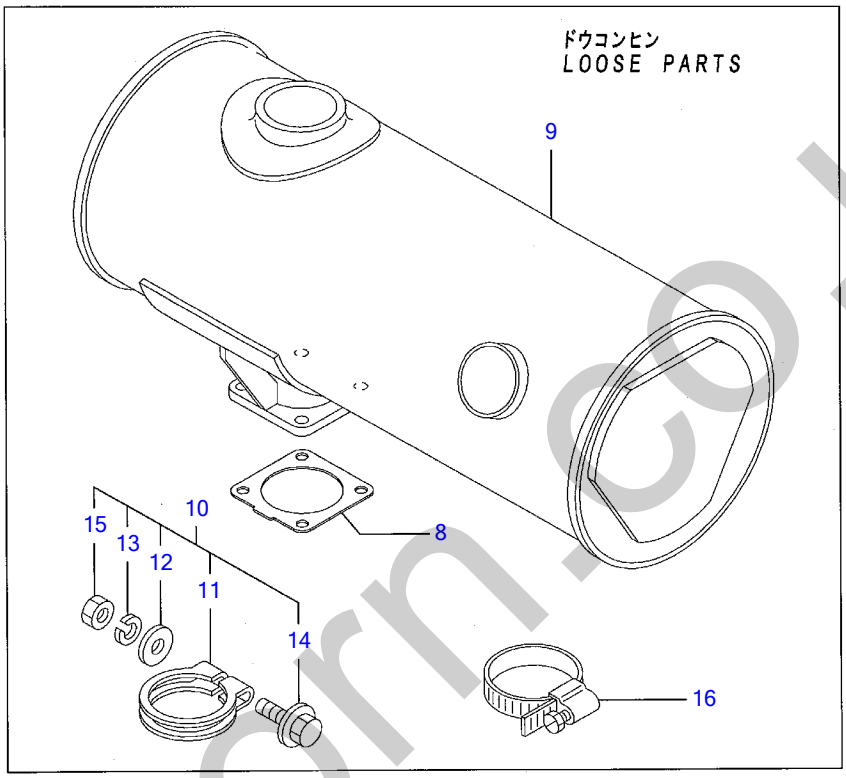

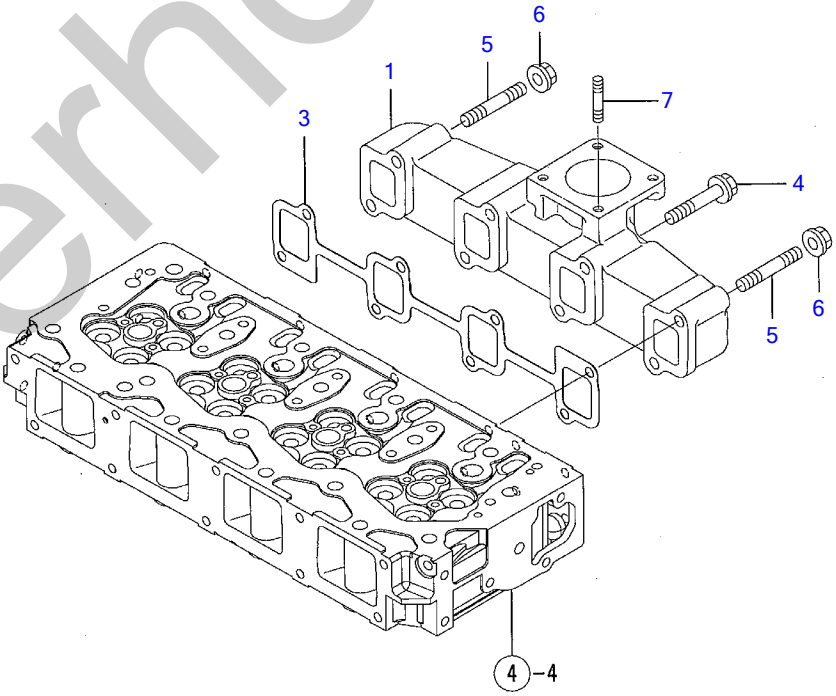

Y00D8880	6. ハイキマニホールド & サイレンサ				
4TNV98-STB1	1, 06, 02				PLUS

silverhorn.co.uk

Ê²·ÏÆÎ-ÙÄÞ & »²ÚÝ» EXHAUST MANIFOLD & SILENCER

Œ©lo REF NO.	•"•i"Ôl† PARTS NO.	•"•i-¼	Description	l"–Ê Q'ty	ŒÝŠ·l« l	R	"õll
1	**Y129900-13200**	ÏÆÎ-ÙÄÞ(EXH ³´ÀÞ¼	MANIFOLD, EXHAUST	1			
3	**Y129900-13251**	PK(EXHÏÆÎ-ÙÄÞ	GASKET	1			
4	**Y123900-13630**	ÂÊÞÎÞÙÄ 80	BOLT 8X80	6			
5	**Y123900-13610**	³´ºÐÎÞÙÄ 8X80	STUD BOLT M 8X 80	2			
6	**Y26306-080002**	ÂÊÞÂ·ÅÂÄ(UBS 8	NUT	2			
7	**Y119131-18320**	³´ºÐÎÞÙÄ M8X22	BOLT M 8X 22	4			
8	**Y129930-13201**	¶Þ½¹ÂÄ(»²ÚÝ»	GASKET, SILENCER	1			
9	**Y129940-13500**	»²ÚÝ»	SILENCER	1			
10	**Y129640-13590**	¸×ÝÌß(»²ÚÝ»)CMP	CLAMP ASSY, SILENCER	1			
11	**Y129640-13580**	・¸×ÝÌß	・CLAMP	1			
12	**Y22117-100000**	・»Þ¶ÞÈ(ºÏÙ 10	・WASHER 10	1			
13	**Y22217-100000**	・ÊÞÈ»Þ¶ÞÈ 10	・SPRING WASHER 10	1			
14	**Y26106-100652**	・ÂÊÞÎÞÙÄ M10X65	・BOLT M10X 65 PLATED	1			
15	**Y26706-100002**	・ÅÂÄ 10	・NUT M10	1			
16	**Y23000-080000**	Î-½¸ØÂÌß 80	CLAMP 80	2			

silverhorn.co.uk

CAMSHAFT & DRIVING GEAR

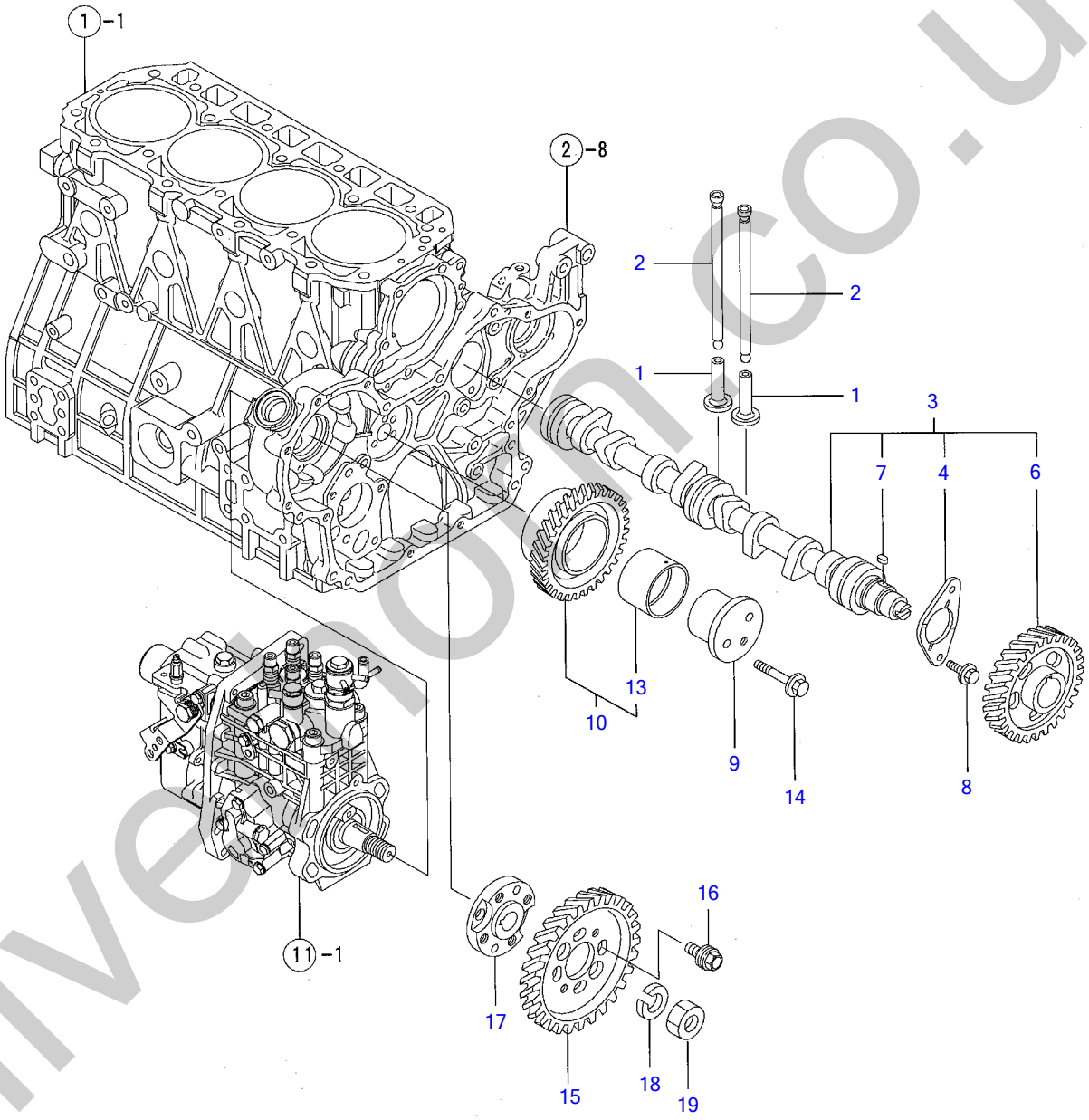

Y00D8880	7. カムシャフト & クドウギャ				
4TNV98-STB1		1, 06. 02			PLUS

silvertom.co.uk

¶Ñ¼ÔÌÄ & ¸ÄÞ³·ÞÔ CAMSHAFT & DRIVING GEAR

Œ©▯o REF NO.	•"•i"Ô▯† PARTS NO.	•"•i-¼	Description	▯"–Ê Q'ty	ŒÝŠ·▯« I	R	"õ▯l
1	**Y129150-14200**	ÀÍßÂÄ	TAPPET	8			
2	**Y129907-14400**	ÌßÂ¼ÕÛÂÄÞ	PUSH ROD	8			
3	**Y129907-14581**	¶Ñ¼ÔÌÄ CMP	CAMSHFT ASSY	1			
4	**Y129150-02450**	▪ ½×½ÄÒÀÙ(¶Ñ	▪ METAL,THRUST(CAM	1			
6	**Y129900-14100**	▪ ¶Ñ·ÞÔ(ÊÝÖ³	▪ GEAR, CAMSHAFT	1			
7	**Y22512-070140**	▪ Ì´»Þ-·- 7X14	▪ KEY 7X 14	1			
8	**Y26106-080162**	ÂÊÞÎÞÙÄ 8X 16	BOLT M 8X 16 PLATED	2			
9	**Y123900-25060**	¼ÔÌÄ(±²ÄÞÙ·ÞÔ	SHAFT(GEAR,IDLE	1			
10	**Y129900-25100**	±²ÄÞÙ·ÞÔ CMP	GEAR ASSY, IDLE	1			
13	**Y129150-25920**	▪ ÌÞÂ¼Õ(ÎÖ³ËÝ	▪ BUSH, IDLE GEAR	1		(1)	ÎÖ³ÌÞËÝÃÞ½
14	**Y26106-080552**	ÂÊÞÎÞÙÄ 8X 55	BOLT M 8X 55 PLATED	3			
15	**Y129907-25900**	·ÞÔ(FI-P	GEAR,F.I.PUMP	1			
16	**Y129953-25300**	ÎÞÙÄ(FI-P·ÞÔ	BOLT	4			
17	**Y158563-51150**	Ì×Ý¼Þ(FICºÃ²	FLANGE	1			
18	**Y22217-180000**	ÊÞÈ»Þ¶ÞÈ 18	SPRING WASHER 18	1			
19	**Y26776-180002**	ÄÒÅÂÄ(Î¿ 18	NUT M18,LOCK	1			

silverhorn.co.uk

CRANKSHAFT & PISTON

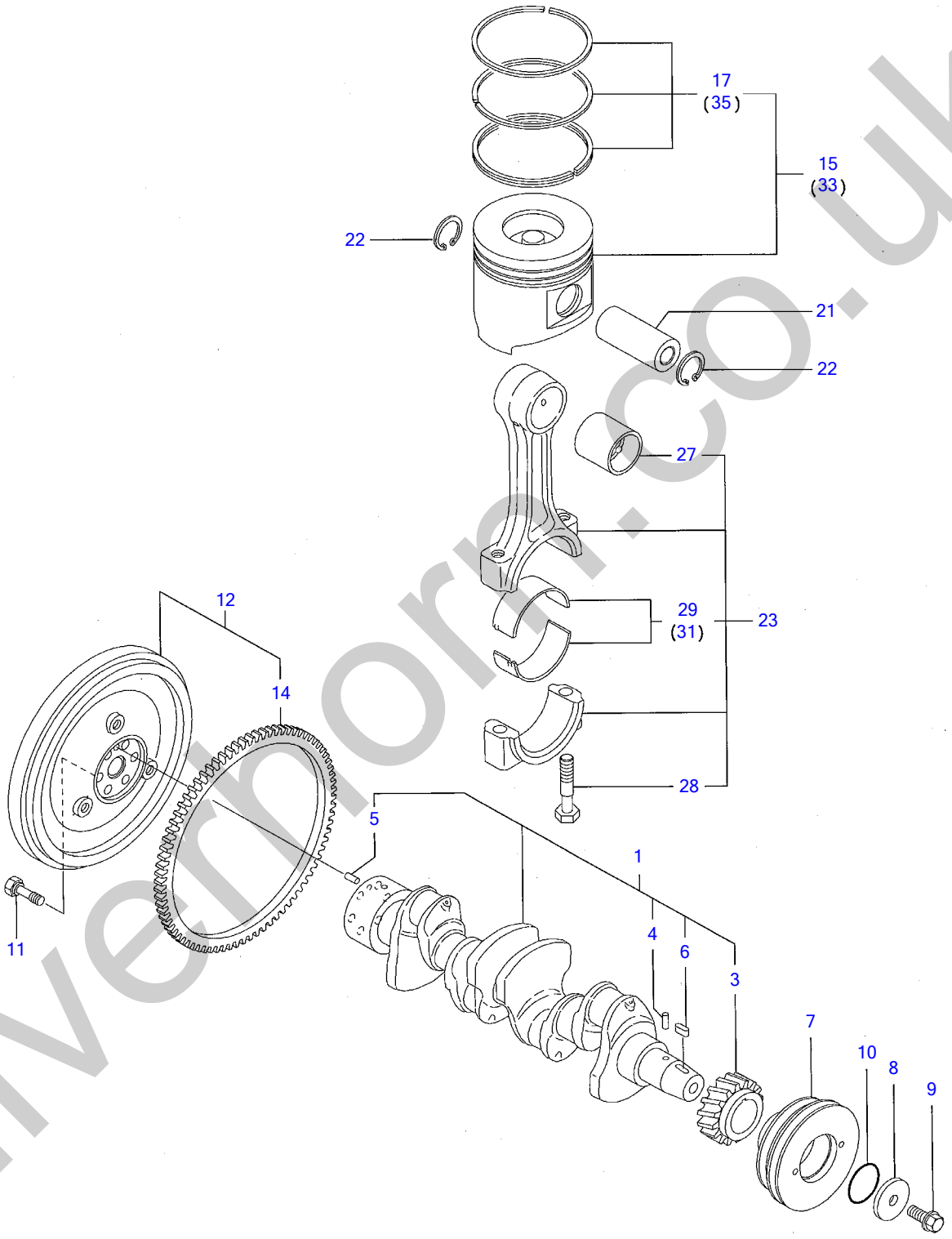

Y00D8880	8. クランクシャフト & ピストン				
4TNV98-STB1		1, 06. 02			PLUS

silvermorr.co.uk

¸×Ý¸¼ÔÌÄ & Ëß½ÄÝ CRANKSHAFT & PISTON

Œ©lo REF NO.	•"•i"Ôl† PARTS NO.	•"•i-¼	Description	l"–Ê Q'ty	ŒÝŠ·l« I	R	"õl
1	**Y129902-21000**	¸×Ý¸¼ÔÌÄ CMP	CRANKSHAFT COMP	1			
3	**Y129900-21200**	• ¸×Ý¸·ÞÔ	• GEAR, CRANKSHAFT	1			
4	**Y121850-21290**	• PP(¸×Ý¸·ÞÔ)	• PARALLEL PIN	1			
5	**Y121850-21920**	• Í²º³ËßÝ 10X22	• PARALLEL PIN 10X22	1			
6	**Y22512-070140**	• Ì´»Þ-·- 7X14	• KEY 7X 14	1			
7	**Y129916-21680**	VÌß-Ø(¸×Ý¸ 130/145	V-PULLEY, CRANKSHAFT	1			
8	**Y129960-21640**	»Þ¶ÞÈ	WASHER	1			
9	**Y129916-21610**	HB(VÌß-Ø	BOLT, V-PULLEY	1			
10	**Y24341-000530**	OØÝ¸Þ 1A S 53.0	O-RING 1A S-53.0	1			
11	**Y121850-21130**	ÎÞÙÄ(Ì×²Î²Ù)	BOLT, FLYWHEEL	6			
12	**Y129902-21580**	Ì×²Î²Ù CMP	FLYWHEEL ASSY	1			
14	**Y127410-21480**	• ØÝ¸Þ·ÞÔ Z=129	• RING GEAR Z=129	1			
15	**Y129907-22090**	Ëß½ÄÝ(18.5 CMP	PISTON W/RING	4			
17	**Y129907-22050**	• Ëß½ÄÝØÝ¸ÞSET	• RING SET, PISTON	4			
21	**Y120130-22301**	Ëß½ÄÝËßÝ	PIN, PISTON	4			
22	**Y22252-000300**	ÄÒÜC(±Å 30	CIRCLIP 30	8			
23	**Y129900-23001**	ºÈ¸Ã²Ý¸ÞÛÂÄÞ CMP	ROD ASSY, CONNECTING	4			
27	**Y129900-23911**	• Ëß½ÄÝËßÝÒÀÙ	• BUSH, PISTON PIN	4		(1)	ÎÖ³ÌÞËÝÃÞ½
28	**Y129900-23200**	• ÛÂÄÞÎÞÙÄ	• BOLT, ROD	8			
29	**Y129900-23600**	• ÍÞ±ØÝ¸Þ(¸×Ý¸ËßÝ	• METAL ASSY, CRANKPIN	4			
31	**Y129900-23610**	¸×Ý¸ËßÝÒÀÙ(U.S=0.25	BEARING,PIN U.S=0.25	4		(2)	µ°ÊÞ°»²½Þ(O.S=0.25)ÌÞËÝÃ
33	**Y729907-22910**	Ëß½ÄÝ(DI CMP 0.25(OS	PISTON W/RING O.S=25	4		(3)	±ÝÀÞ°»²½Þ(U.S=0.25)ÌÞËÝÃ
35	**Y729907-22950**	• Ëß½ÄÝØÝ¸ÞSET(OS=0.25	• RING SET O.S=0.25	4		(3)	±ÝÀÞ°»²½Þ(U.S=0.25)ÌÞËÝÃ

silverhorn.co.uk

LUB.OIL SYSTEM

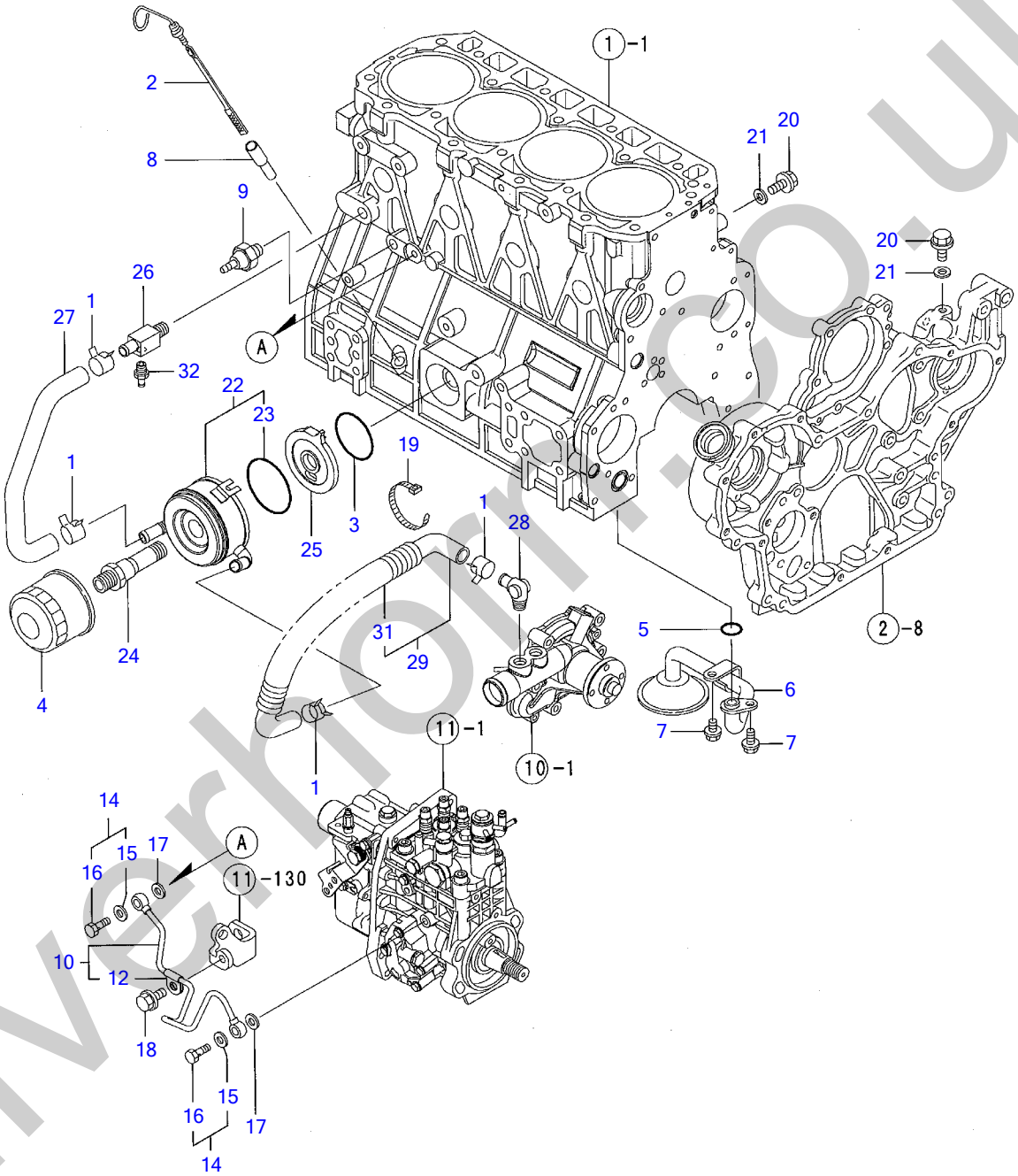

Y00D8880	9. LOシステム				
4TNV98-STB1		1:06.02			PLUS

silverhorn.co.uk

LO¼½ÃÑ LUB.OIL SYSTEM

Œ©lo REF NO.	•"•i"Ô†PARTS NO.	•"•i-¼	Description	"–Ê Q'ty	ŒÝŠ·« I	R	"õl
1	Y23000-025000	Î-½¸ØÂÌß 25	CLAMP 25	4			
2	Y129953-34800	¹ÝÕÎÞ³	DIPSTICK	1			
3	Y24321-000600	OØÝ¸Þ 1A G 60.0	O-RING 1A G-60.0	1			
4	Y129150-35152	Ì²ÙÀ°	FILTER 80X80L	1			
5	Y129900-32030	OØÝ¸Þ P20	O-RING P20	1			
6	Y129900-35000	LO·Õ³ÆÕ³¶Ý CMP	PIPE ASSY, LUB. OIL	1			
7	Y26106-080122	ÂÊÞÎÞÙÄ 8X 12	BOLT M 8X 12 PLATED	2			
8	Y121520-34810	¶Þ²ÄÞ(¹ÝÕÎÞ³	GUIDE, DIPSTICK	1			
9	Y114250-39450	Õ±Â½²ÂÁ 0.5KG ·ÞÎÞ¼	SWITCH,(0.5KG)L.O.	1			
10	Y129907-39061	LO-T(MP4 CMP	PIPE ASSY, LUB. OIL	1			
12	Y123907-39500	・¶ÝÄÒ¶Å¸Þ(4.8X8	・SUPPORT,PIPE	1			
14	Y129005-59830	¶ÝÂ·ÞÃÎÞÙÄCMP 8	BOLT ASSY, JOINT	2			
15	Y22190-080002	・¼-ÙÜÂ¼Ô(ºÏÙ.ÆÄØÙ) 8	・SEAL WASHER 8S	2			
16	Y23857-030000	・¶ÝÂ·ÞÃÎÞÙÄ 3	・JOINT BOLT 3	2			
17	Y22190-080002	¼-ÙÜÂ¼Ô(ºÏÙ.ÆÄØÙ) 8	SEAL WASHER 8S	2			
18	Y26106-080122	ÂÊÞÎÞÙÄ 8X 12	BOLT M 8X 12 PLATED	1			
19	Y121750-59890	Å²ÛÝÊÞÝÄÞ 140	CLAMP 140	1			
20	Y26106-080122	ÂÊÞÎÞÙÄ 8X 12	BOLT M 8X 12 PLATED	2			
21	Y22190-080002	¼-ÙÜÂ¼Ô(ºÏÙ.ÆÄØÙ) 8	SEAL WASHER 8S	2			
22	Y129908-33010	LO¸-× CMP	COOLER ASSY, OIL	1			
23	Y123912-33050	・O-ØÝ¸Þ	・O-RING	1			
24	Y123912-33100	¾ÝÀÎÞÙÄ(LO¸-×	BOLT, L.O.COOLER	1			
25	Y129908-33101	ÌÞ×¹ÂÄ(µ²Ù¸-×	BRACKET,OIL COOLER	1			
26	Y129006-44480	¼ÞÖ²ÝÄ R02	JOINT	1			
27	Y129908-49060	CW-T(ÌÞÛÂ¸-¸-×	PIPE, COOLING WATER	1			
28	Y129466-49300	´ÙÎÞ PT3/8	ELBOW PT3/8	1			
29	Y123910-49600	CW-T CMP	PIPE, C.W.	1			
31	Y123910-49610	・ºÙ¹Þ-ÄÁÕ-ÌÞ	・PROTECTER,CW-T	1			
32	Y121550-49111	¼ÞÖ²ÝÄ PT1/4	JOINT PT1/4	1			

silverhorn.co.uk

COOLING WATER SYSTEM

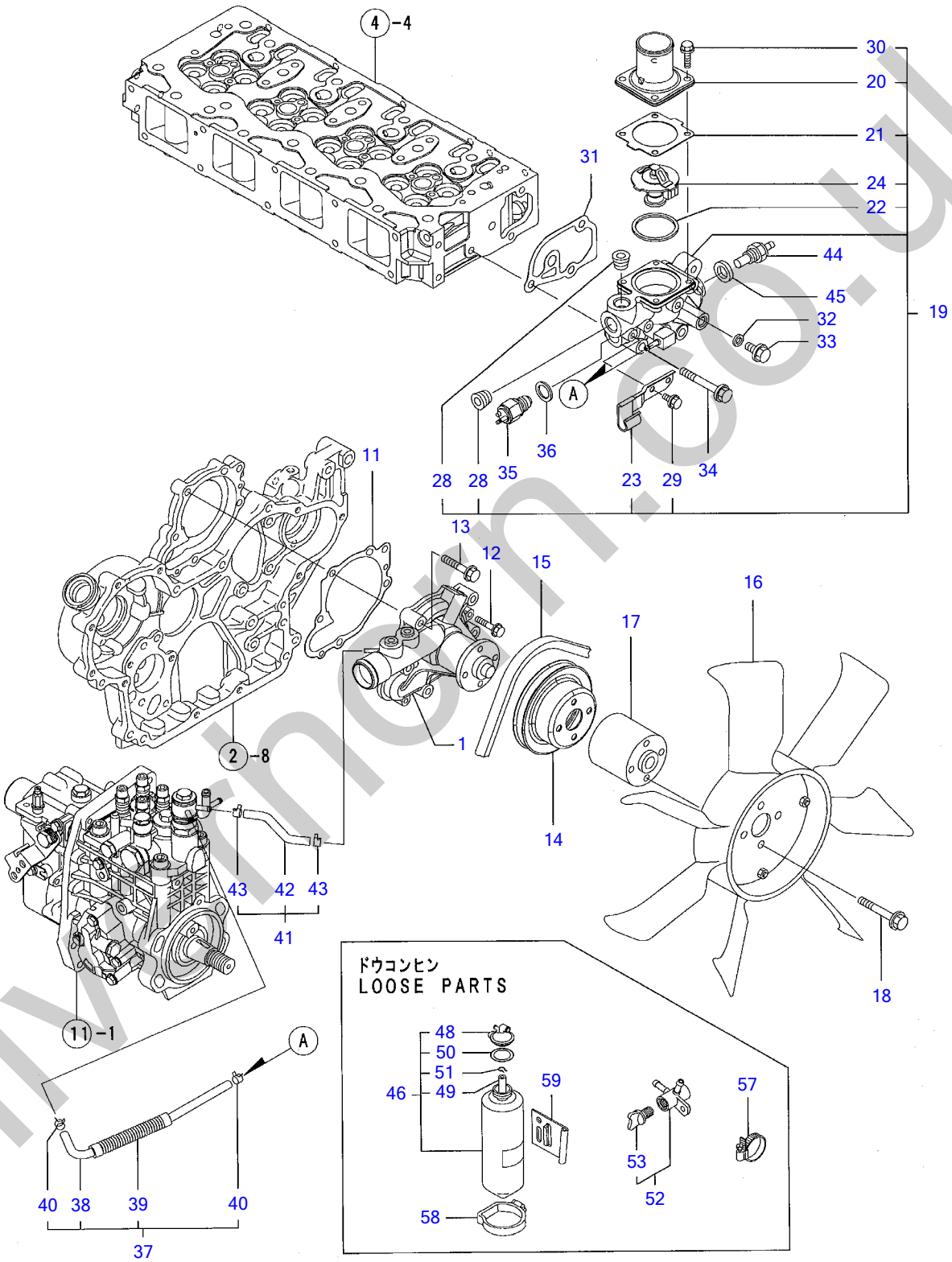

Y00D8880	10. CWシステム				
4TNV98-STB1		1, 06, 02			PLUS

silvermoon.co.uk

CW¼½ÃÑ COOLING WATER SYSTEM

Œ©lo REF NO.	•"•i"Ôl† PARTS NO.	•"•i-¼	Description	l"–Ê Q'ty	ŒÝŠ·l« I	R	"õll
1	Y129907-42000	CWÎßÝÌß CMP(LOW	PUMP ASSY, WATER	1			
11	Y129900-42020	PK(CWP	GASKET, CW-P	1			
12	Y26106-060302	ÂÊÞÎÞÙÄ 6X 30	BOLT M 6X 30 PLATED	2			
13	Y26106-080552	ÂÊÞÎÞÙÄ 8X 55	BOLT M 8X 55 PLATED	5			
14	Y129900-42450	VÌß-Ø(CW-P	PULLEY	1			
15	Y25152-004200	VÍÞÙÄ(º¸Þ A42	V-BELT A42	1			
16	Y129981-44740	Ì±Ý(D=450	FAN, COOLING	1			
17	Y119117-44760	¶Ý»Þ(Ì±Ý	SPACER	1			
18	Y26106-080802	ÂÊÞÎÞÙÄ 8X 80	BOLT M 8X 80 PLATED	4			
19	Y129946-49810	»-Ó½ÀÂÄ¹-½(82 CMP	CASE ASSY,THERMOSTAT	1			
20	Y129916-49530	・¶ÊÞ-(»-Ó½ÀÂÄ	・COVER, THERMOSTAT	1			
21	Y121850-49540	・»-ÓÖ³ ÊßÂ·Ý	・GASKET, THERMOSTAT	1			
22	Y121850-49550	・ÊßÂ·Ý (»-Ó½ÀÂÄ)	・GASKET, THERMOSTAT	1			
23	Y129907-49730	・ÌÚÄÞÒ(CW-T	・PIPE ASSY, INJECTION	1			
24	Y121850-49800	・»-Ó½ÀÂÄ	・THERMOSTAT	1			
28	Y23875-030000	・È¼ÞÌß×¸ÞPT3/8(ÅÝº³)	・PLUG PT3/8,STEEL	2			
29	Y26106-060122	・ÂÊÞÎÞÙÄ M 6X 12	・BOLT M 6X 12 PLATED	1			
30	Y26106-060202	・ÂÊÞÎÞÙÄ 6X 20	・BOLT M 6X 20 PLATED	4			
31	Y129900-49870	PK(»-Ó½ÀÂÄ¹-½	GASKET, CASE	1			
32	Y23414-080000	ÊßÂ·Ý(ÏÙ 8	GASKET 8, ROUND	1			
33	Y26106-080122	ÂÊÞÎÞÙÄ 8X 12	BOLT M 8X 12 PLATED	1			
34	Y26106-080602	ÂÊÞÎÞÙÄ 8X 60	BOLT M 8X 60 PLATED	3			
35	Y121250-44901	»-Ó½²ÂÁ(110ßC 1¾Ý¼·	SWITCH, THERMO(110ßC	1			
36	Y124465-44950	ÊßÂ·Ý16	GASKET 16	1			
37	Y129907-49610	CW-T A(MP4 CMP	HOSE A ASSY,WATER	1			
38	Y129907-49710	・CW-T A(MP4	・PIPE A,COOLING WATER	1			
39	Y129907-49750	・ºÙ¹Þ-ÄÁÕ-ÌÞ(10.7	・PROTECTOR, PIPE 10.7	1			
40	Y124722-59050	・Î-½¸ØÂÌß(ÏÙ 9	・CLAMP 9	2			
41	Y129907-49620	CW-T B(MP4 CMP	HOSE B ASSY,WATER	1			
42	Y129907-49720	・CW-T B(MP4	・PIPE B,COOLING WATER	1			
43	Y124722-59050	・Î-½¸ØÂÌß(ÏÙ 9	・CLAMP 9	2			
44	Y119266-49350	»-Ó¾Ý»-	SENSOR, THERMO.	1			
45	Y129150-49360	PK 10	GASKET 10	1			
46	Y171064-44510	»ÌÞÀÝ¸ CMP	SUB-TANK ASSY	1			
48	Y121450-44531	・·ÔÂÌß	・CAP	1			
49	Y124450-44560	・µ»´(µ-ÊÞ-ÌÛ-Êß²Ìß	・CLAMP	1			
50	Y121470-44581	・ÊßÂ·Ý	・GASKET	1			
51	Y23065-070225	・ËÞÆÊß²ÌßºÞÑ 7X 9X225	・HOSE 7X 225	1			
52	Y129150-49100	»ÝÎß³ºÂ¸ CMP	COCK ASSY, 3-WAY	1			
53	Y129150-49080	・ÄÞÚÝºÂ¸	・COCK, DRAIN	1			
57	Y23000-054000	Î-½¸ØÂÌß 54	CLAMP 54	4			
58	Y124450-44550	ÊÞÝÄÞ(»ÌÞÀÝ¸	CLAMP, SUB-TANK	1			
59	Y121256-44600	ÌÞ×¹ÂÄ (ÌÞ×Â¸:12)	BRACKET, SUB-TANK	1			

silverfrom.co.uk

FUEL INJECTION PUMP

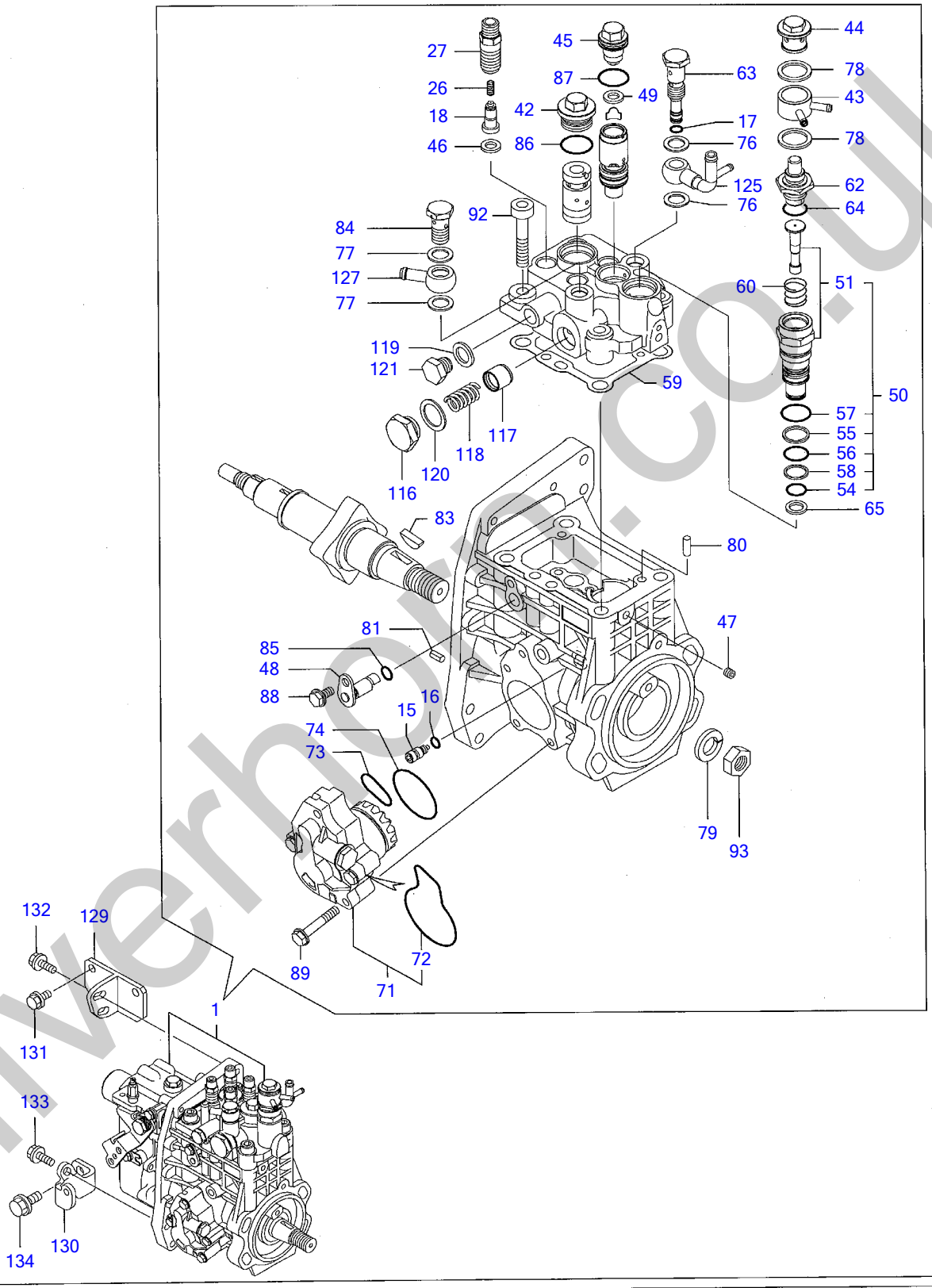

Y00D8880.	11. FOフンシヤポンプ				
4TNV98-STB1	1, 06, 02				PLUS

silverhoe.co.uk

FOÌÝ¼ÔÎßÝÌß FUEL INJECTION PUMP

Œ©lo REF NO.	•"•i"Ôl† PARTS NO.	•"•i-¼	Description	l"–Ê Q'ty	ŒÝŠ·l« I	R	"õll
1	Y729940-51410	FOÌÝ¼ÔÎßÝÌßASSY	PUMP ASSY, F.INJECT	1		(1)	ÐÀÞ¼NO.1 FOÌÝ¼ÔÎßÝÌß ASSY ÆÊº³Ó¸NO.12 ¶ÞÊÞÅ µ Ì¸Ñ.
15	Y158600-51270	· ÏÜØÄÞÒ(ÀÍßÂÄ	· STOPPER	1			
16	Y158563-51281	· OØÝ¸Þ 4D S6	· O-RING	1			
17	Y158563-51281	· OØÝ¸Þ 4D S6	· O-RING	1			
18	Y158560-51300	· ÃÞØÍÞØÊÞÙÌÞ CMP	· VALVE ASSY, DILEVERY	4			
26	Y158563-51330	· SP(ÃÞØÍÞØÊÞÙÌÞ	· SPRING	4			
27	Y129907-51340	· ÎÙÀÞ(ÃÞØÍÞØ	· HOLDER	4			
42	Y158601-51550	· Ìß×¸Þ(ÌÞÝÊß²¼Þ¸	· PLUG	1			
43	Y158553-51551	· ¼ÞÖ²ÝÄ(Ú²·Ô¸½²	· JOINT, COOLING WATER	1			
44	Y158601-51570	· Ìß×¸Þ(Ú²·Ô¸½²	· PLUG,WATER PUMP	1			
45	Y129907-51560	· Ìß×¸Þ(ÊÞÚÙ	· PLUG	1			
46	Y158552-51570	· PK(ÊÞÚÙÌß×¸Þ	· PK(BARREL PLUG	4			
47	Y158557-51570	· Ìß×¸Þ(×Â¸	· PLUG	1			
48	Y158552-51580	· ØÝ¸ØÌÀ-	· LIFTER	1			
49	Y129906-51580	· PK(ÊÞÚÙÌß×¸Þ	· PACKING, PLUG	1			
50	Y119802-51590	· À²Ï-¾ÂÄ	· TIMER SET	1			
51	Y119802-51600	· · À²Ï-CMP(»-Ó´ÚÒÝÄ	· · TIMER CMP	1			
54	Y158553-51670	· · OØÝ¸Þ 1011	· · O-RING, 1011	1			
55	Y119802-51680	· · ÊÞÂ¸±ÂÌßØÝ¸Þ	· · BACKUP RING	1			
56	Y119802-51690	· · OØÝ¸Þ	· · O RING	1			
57	Y24356-010200	· · OØÝ¸Þ 4D 1020	· · PACKING, 1020	1			
58	Y24372-000150	· · ÊÞÂ¸±ÂÌßØÝ¸Þ	· · RING, BACKUP T2 P 15	1			
59	Y158560-51600	· PK(HÍÂÄÞ	· PACKING, HEAD	1			
60	Y158553-51630	· SP(À²Ï-	· SPRING,TIMER	1			
62	Y158553-51640	· »-Ó´ÚÒÝÄ	· ELEMENT, THERMO	1			
63	Y158601-51650	· µ-ÊÞÌÛ-Â·ÞÃ	· JOINT	1			
64	Y158553-51660	· OØÝ¸Þ P14	· O-RING,P14	1			
65	Y158553-51680	· PK(À²Ï-	· PACKING,TIMER	1			
71	Y158552-52100	· · Ì²-ÄÞÎßÝÌßCMP	· PUMP ASSY,FEED	1			
72	Y158552-52500	· · O ØÝ¸Þ(Ì²°ÄÞP²ÝÅ°	· · O-RING(FEED P INNER	1			
73	Y158552-52310	· OØÝ¸Þ(Ì²-ÄÞÎßÝÌß	· O-RING	1			
74	Y158552-52400	· O ØÝ¸Þ 4E S42	· O-RING 4E S42	1			
76	Y22190-120002	· ¼-ÙÜÂ¼Ô(ºÏÙ 12	· SEAL WASHER 12	2			
77	Y22190-120002	· ¼-ÙÜÂ¼Ô(ºÏÙ 12	· SEAL WASHER 12	2			
78	Y22190-180002	· ¼-ÙÜÂ¼Ô(ºÏÙ 18	· SEAL WASHER 18	2			
79	Y22217-180000	· ÊÞÈ»Þ¶ÞÈ 18	· SPRING WASHER 18	1			
80	Y22312-050140	· Í²º³ËßÝ 5X14	· PARALLEL PIN 5X14	2			
81	Y22351-050010	· ½ÌßØÝ¸ÞËßÝ 5.0AX 10	· SPRING PIN 5X10	2			
83	Y144626-51090	· ÊÝ¹ÞÂ·-	· KEY 5X19	1			
84	Y23857-060000	· ¶ÝÂ·ÞÃÎÞÙÄ 6	· JOINT BOLT 6,PIPE	1			
85	Y24311-000070	· OØÝ¸Þ 1A P 7.0	· O-RING 1A P-7.0	1			
86	Y24356-010200	· OØÝ¸Þ 4D 1020	· PACKING, 1020	1			
87	Y24356-020210	· OØÝ¸Þ 4D 2021	· O RING	1			
88	Y26106-060102	· ÂÊÞÎÞÙÄ 6X 10	· BOLT 6X 10 PLATED	1			
89	Y26106-060352	· ÂÊÞÎÞÙÄ 6X 35	· BOLT M 6X 35 PLATED	4			
92	Y26450-100452	· 6¶¸±ÅÎÞÙÄ 10X 45	· BOLT M10X 45	4			
93	Y26776-180002	· ÄÖÅÂÄ(Î¿ 18	· NUT M18,LOCK	1			
116	Y158601-51790	· ±·ÕÑÚ-ÀÌß×¸Þ	· PLUG	1			
117	Y158601-51770	· ±·ÕÑÚ-ÀËß½ÄÝ	· PISTON	1			
118	Y158552-51780	· ±·ÕÑÚ-ÀSP	· DAMPER ASSY	1			
119	Y22190-120002	· ¼-ÙÜÂ¼Ô(ºÏÙ 12	· SEAL WASHER 12	1			
120	Y22190-180002	· ¼-ÙÜÂ¼Ô(ºÏÙ 18	· SEAL WASHER 18	1			
121	Y23887-120002	· 6¶¸Ìß×¸Þ M12	· PLUG M12,HEX.	1			

silverhorn.co.uk

FUEL INJECTION PUMP

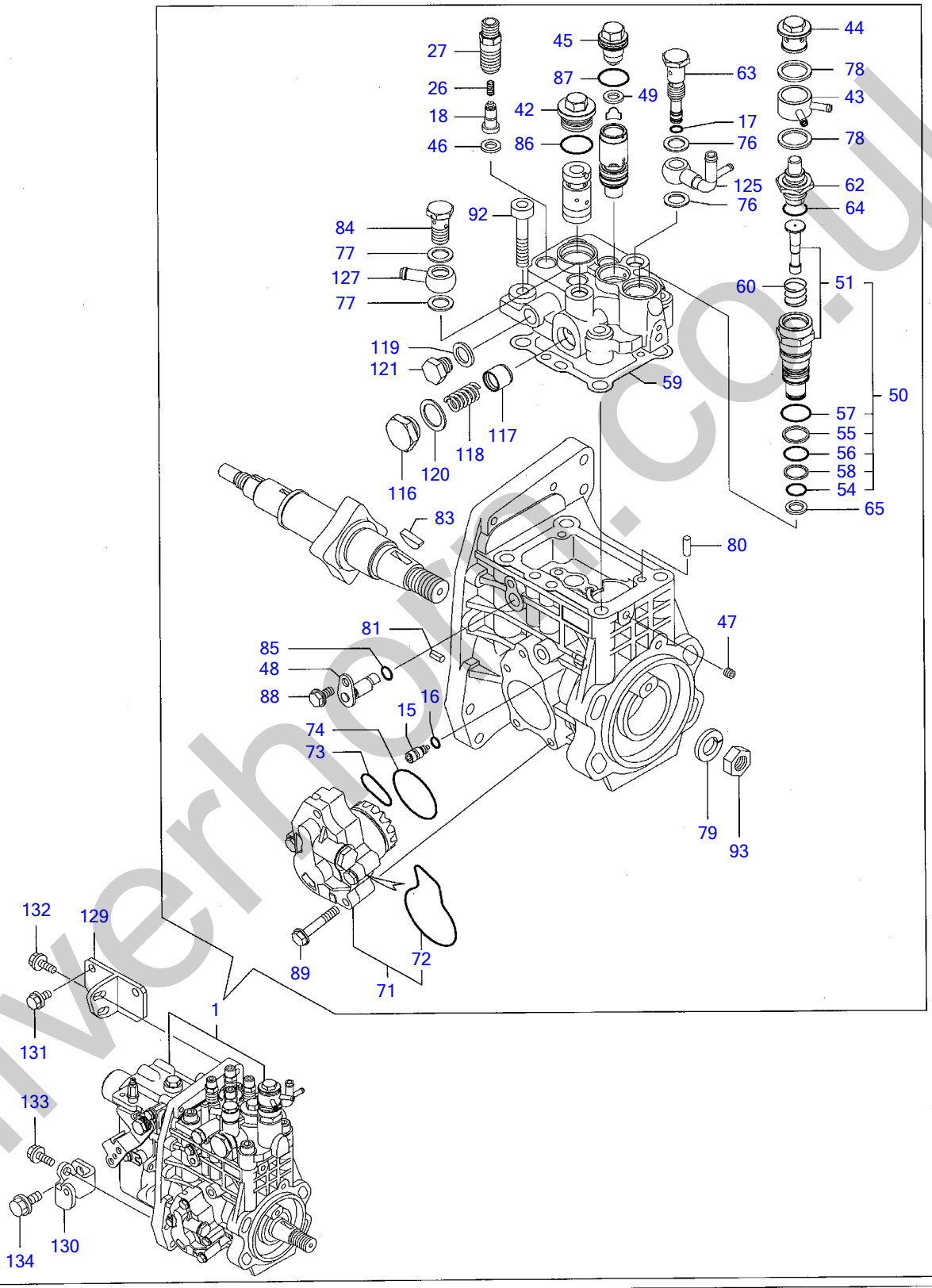

Y00D8880.	11. FOフンシヤポンプ				
4TNV98-STB1	1, 06, 02				PLUS

silverhoe.co.uk

FOÌÝ¼ÔÎßÝÌß FUEL INJECTION PUMP

Œ©lo REF NO.	•"•i"Ô† PARTS NO.	•"•i-¼	Description	”–Ê Q'ty	ŒÝŠ·« I	R	”õl
125	**Y158552-51670**	• ¼ÞÖ²ÝÄ(µ-ÊÞ-ÌÛ-	• JOINT	1			
127	**Y129916-59020**	• ¶ÝÂ·ÞÃ(¶À,Á 12	• JOINT 12, PIPE	1			
129	**Y129907-01950**	ÌÚÄÞÒ(MP4,³´	RETAINER,MP4	1			
130	**Y129907-01960**	ÌÚÄÞÒ(MP4,¼À	RETAINER,MP4	1			
131	**Y26106-080162**	ÂÊÞÎÞÙÄ 8X 16	BOLT M 8X 16 PLATED	2			
132	**Y26106-080222**	ÂÊÞÎÞÙÄ 8X 22	BOLT M 8X 22 PLATED	2			
133	**Y26106-080222**	ÂÊÞÎÞÙÄ 8X 22	BOLT M 8X 22 PLATED	1			
134	**Y26106-100202**	ÂÊÞÎÞÙÄ 10X 20	BOLT M10X 20 PLATED	1			

silverhorn.co.uk

GOVERNOR

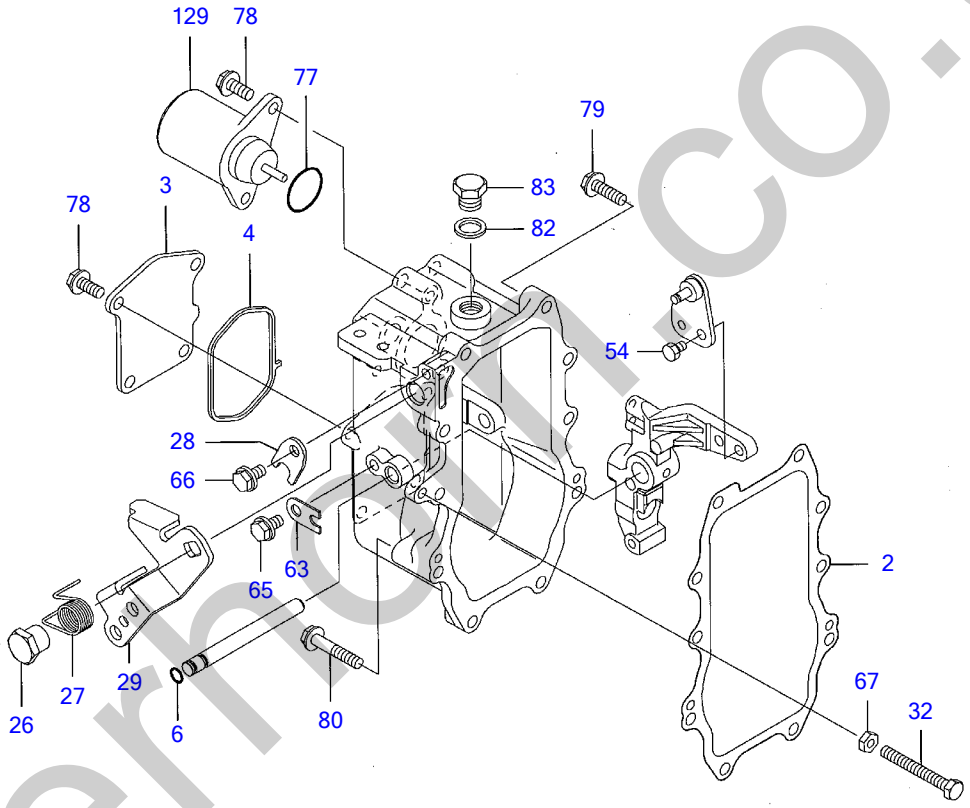

Y00D8880	12. ガバナ				
4TNV98-STB1		1, 06, 02			PLUS

silverhill.co.uk

¶ÞÊÞÅ GOVERNOR

Œ©⍰o REF NO.	•"•i"Ô⍰† PARTS NO.	•"•i-¼	Description	⍰"–Ê Q'ty	ŒÝŠ·⍰« I	R	"õ⍰l
2	Y158560-61050	• PK(¶ÞÊÞÅ¹-½	• PACKING, CASE	1			
3	Y158560-61061	• ÌÀ(A(¶ÞÊÞÅ¹-½	• COVER, CASE	1			
4	Y158560-61071	• PK(¶ÞÊÞÅ¹-½ÌÀA	• PACKING	1			
6	Y129155-51280	• OØÝ¸Þ(S6	• O-RING S6	1			
26	Y129255-61410	• ÄÒÅÂÄ(ºÝÄÛ-ÙÚÊÞ-	• NUT	1			
27	Y119807-61420	• ÓÄÞ¼SP(ºÝÄÛ-ÙÚÊÞ-	• SPRING	1			
28	Y158560-61430	• Ç¹ÄÞÒ(ºÝÄÛ-Ù¼Þ¸	• RETAINER	1			
29	Y158560-61442	• ÚÊÞ-(Ú·ÞÕÚ-À	• LEVER, REGULATOR	1			
32	Y129155-61460	• ±²ÄÞÙ¾²¹ÞÝÎÞÙÄ	• BOLT, IDLE LIMIT	1			
54	Y26116-060102	• ÎÞÙÄ 6X 10	• BOLT M 6X 10 PLATED	1			
63	Y119660-61901	• Ç¹ÄÞÒ	• RETAINER, SHAFT	1			
65	Y26106-060102	• ÂÊÞÎÞÙÄ 6X 10	• BOLT 6X 10 PLATED	1			
66	Y26106-060102	• ÂÊÞÎÞÙÄ 6X 10	• BOLT 6X 10 PLATED	1			
67	Y26756-060002	• ÄÒÅÂÄ 6	• LOCK NUT 6	1			
77	Y24341-000280	• OØÝ¸Þ 1A S 28.0	• O-RING 1A S-28.0	1			
78	Y26106-060142	• ÂÊÞÎÞÙÄ 6X 14	• BOLT M 6X 14 PLATED	6			
79	Y26106-060252	• ÂÊÞÎÞÙÄ 6X 25	• BOLT M 6X 25 PLATED	8			
80	Y26106-060402	• ÂÊÞÎÞÙÄ 6X 40	• BOLT M 6X 40 PLATED	2			
82	Y22190-160002	• ¼-ÙÜÂ¼Ô(ºÏÙ.ÆÄØÙ)16	• SEAL WASHER 16S	1			
83	Y23887-160002	• 6¶¸Ìß×¸Þ 16	• PLUG 16,HEX.	1			
129	Y119233-77932	• ½ÄÂÌß¿ÚÉ²ÄÞ	• SOLENOID, STOP	1			

(1) ÐÀÞ¼NO.1 FOÌÝ¼ÔÎßÝÌß ASSY ÆÊ
º³Ó¸NO.12 ¶ÞÊÞÅ µ Ì¸Ñ.

silverhorn.co.uk

FUEL INJECTION VALVE

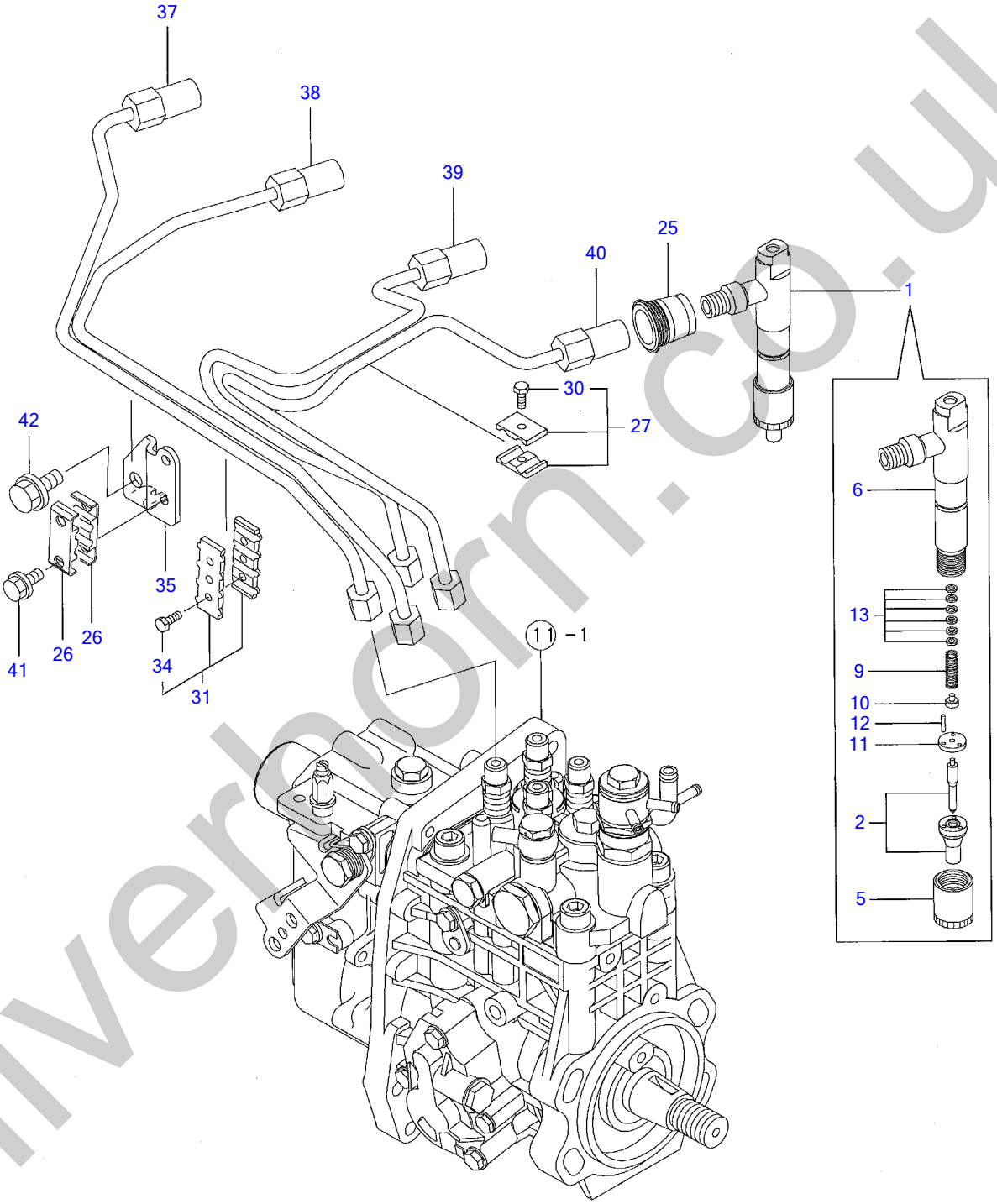

Y00D8880	13. FOフンシャベン				
4TNV98-STB1		1, 06. 02			PLUS

silverhorn.co.uk

FOÌÝ¼¬ÍÞÝ FUEL INJECTION VALVE

Œ©lo REF NO.	•"•i"Ôl† PARTS NO.	•"•i-¼	Description	l"–Ê Q'ty	ŒÝŠ·l« I	R	"õl
1	Y729907-53100	FOÌÝ¼ÔÍÞÝ ASSY	VALVE ASSY, F.INJECT	4			
2	Y129907-53000	· É½ÞÙ CMP	· NOZZLE ASSY	4			
5	Y114250-53080	· ¹-½ÅÂÄ(D16.95)	· NUT, NOZZLE CASE	4			
6	Y129907-53100	· É½ÞÙÎÙÀÞ CMP	· HOLDER ASSY, NOZZLE	4			
9	Y114250-53120	· ½ÌßØÝ¸Þ(É½ÞÙ	· SPRING, NOZZLE	4			
10	Y114250-53130	· ¼-Ä(É½ÞÙ½ÌßØÝ¸Þ	· SEAT, NOZZLE SPRING	4			
11	Y114250-53140	· ½ÄÂÌßÌßÚ-Ä	· PLATE, STOP	4			
12	Y114250-53210	· ËßÝ(É½ÞÙ²Á·ÞÒ	· PIN	8			
13	Y114250-53400	· ¼Ñ CMP	· SHIM PACK	4			
25	Y123907-11601	Êß²Ìß¼-Ù	PIPE SEAL	4			
26	Y122780-59100	ÌÚÄÞÒ	RETAINER	2			
27	Y119305-59120	ÌÚÄÞÒ(ÌÝ¼Ô¶ÝCMP	RETAINER	1			
30	Y129150-59131	· HB4X14	· BOLT M4X14,HEX.SCKT.	1			
31	Y129550-59120	ÌÚÄÞÒ(ÌÝ¼Ô¶ÝCMP	RETAINER	1			
34	Y129150-59131	· HB4X14	· BOLT M4X14,HEX.SCKT.	2			
35	Y129907-59710	»Îß-Ä(ÌÝ¼Ô¶ÝÌÚÄÞÒ	PIPE ASSY, INJECTION	1			
37	Y129907-59810	FO-TÌÝ¼Ô(NO.1 CMP	PIPE ASSY, INJECTION	1			
38	Y129907-59820	FO-TÌÝ¼Ô(NO.2 CMP	PIPE ASSY, INJECTION	1			
39	Y129907-59830	FO-TÌÝ¼Ô(NO.3 CMP	PIPE ASSY, INJECTION	1			
40	Y129907-59840	FO-TÌÝ¼Ô(NO.4 CMP	PIPE ASSY, INJECTION	1			
41	Y26106-060162	ÂÊÞÎÞÙÄ 6X 16	BOLT M 6X 16 PLATED	2			
42	Y26106-080182	ÂÊÞÎÞÙÄ 8X 18	BOLT M 8X 18 PLATED	1			

silverhorn.co.uk

FUEL LINE

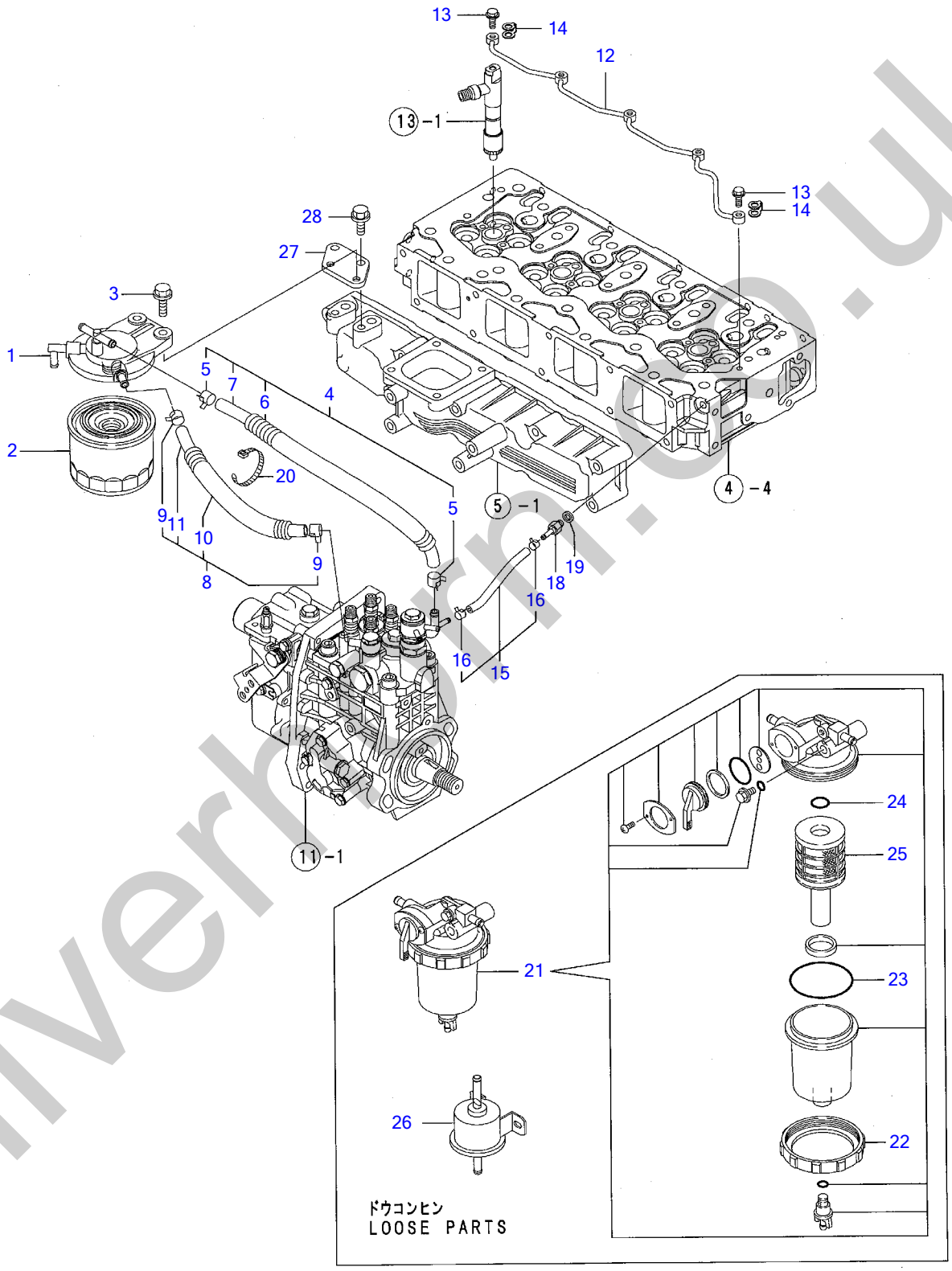

Y00D8880	14. FOパイプ				
4TNV98-STB1		1, 06. 02			PLUS

silverhorn.co.uk

FOÊß²Ìß FUEL LINE

Œ©▯o REF NO.	•”•i”Ô▯† PARTS NO.	•”•i-¼	Description	▯”–Ê Q'ty	ŒÝŠ·▯« I	R	”õ▯l
1	**Y129004-55611**	ÄØÂ¹ÀÞ²(FOÌ²ÙÀ	BRACKET, FILTER	1			
2	**Y119802-55800**	FOÌ²ÙÀ	FILTER, FUEL	1			
3	**Y26106-080302**	ÂÊÞÎÞÙÄ 8X 30	BOLT M 8X 30 PLATED	2			
4	**Y129457-59010**	FO-T CMP	PIPE ASSY, FUEL	1			
5	**Y124766-59050**	· Î-½¸ØÂÌß(ÏÙ 12	· CLAMP 12	2			
6	**Y129957-59120**	· ºÙ¹ÞÝÄÁÕ-ÌÞ 15	· PROTECTOR, FUEL PIPE	1			
7	**Y105025-59750**	· FO-T(F0º¼·-F0ÎßÝÌß	· PIPE, FUEL OIL	1			
8	**Y129981-59010**	FO-T CMP	PIPE ASSY, FUEL	1			
9	**Y124766-59050**	· Î-½¸ØÂÌß(ÏÙ 12	· CLAMP 12	2			
10	**Y129950-59221**	· ºÙ¹Þ-ÄÁÕ-ÌÞ15	· TUBE	1			
11	**Y129980-59510**	· FO-T	· PIPE, FUEL OIL	1			
12	**Y129907-59140**	FO-T(ÓÄÞ¼ CMP	PIPE ASSY,F.O.RETURN	1			
13	**Y123907-59540**	¶ÝÂ·ÞÃÎÞÙÄ M6	JOINT BOLT M6	5			
14	**Y123907-59550**	PK(FOÓÄÞ¼ 6	PACKING,FUEL RETURN	5			
15	**Y129486-59551**	FO-T(ÓÄÞ¼ CMP	PIPE, FUEL RETURN	1			
16	**Y124722-59050**	· Î-½¸ØÂÌß(ÏÙ 9	· CLAMP 9	2			
18	**Y123907-59560**	Î-½Â·ÞÃ 4	HOSE JOINT 4	1			
19	**Y22190-080002**	¼-ÙÜÂ¼Ô(ºÏÙ.ÆÄØÙ) 8	SEAL WASHER 8S	1			
20	**Y121750-59890**	Å²ÛÝÊÞÝÄÞ 140	CLAMP 140	1			
21	**Y129906-55700**	º½²ÌÞÝØ· CMP	SEPARATOR ASSY	1			
22	**Y129100-55690**	· ØÃ-ÆÝ¸ÞØÝ¸Þ	· RING, RETAINING	1			
23	**Y24321-000650**	· OØÝ¸Þ 1A G 65.0	· O-RING 1A G-65.0	1			
24	**Y24311-000160**	· OØÝ¸Þ 1A P 16.0	· O-RING 1A P-16.0	1			
25	**Y119802-55710**	· ´ÚÒÝÄ(Õ½²ÌÞÝØ·	· ELEMENT	1			
26	**Y129612-52100**	FOÌ²-ÄÞÎßÝÌß	FUEL PUMP	1			
27	**Y129940-55650**	ÌÞ×¹ÂÄ(FOÌ²ÙÀ	BRACKET, FILTER	1			
28	**Y26106-080222**	ÂÊÞÎÞÙÄ 8X 22	BOLT M 8X 22 PLATED	2			

silverhorn.co.uk

STARTING MOTOR

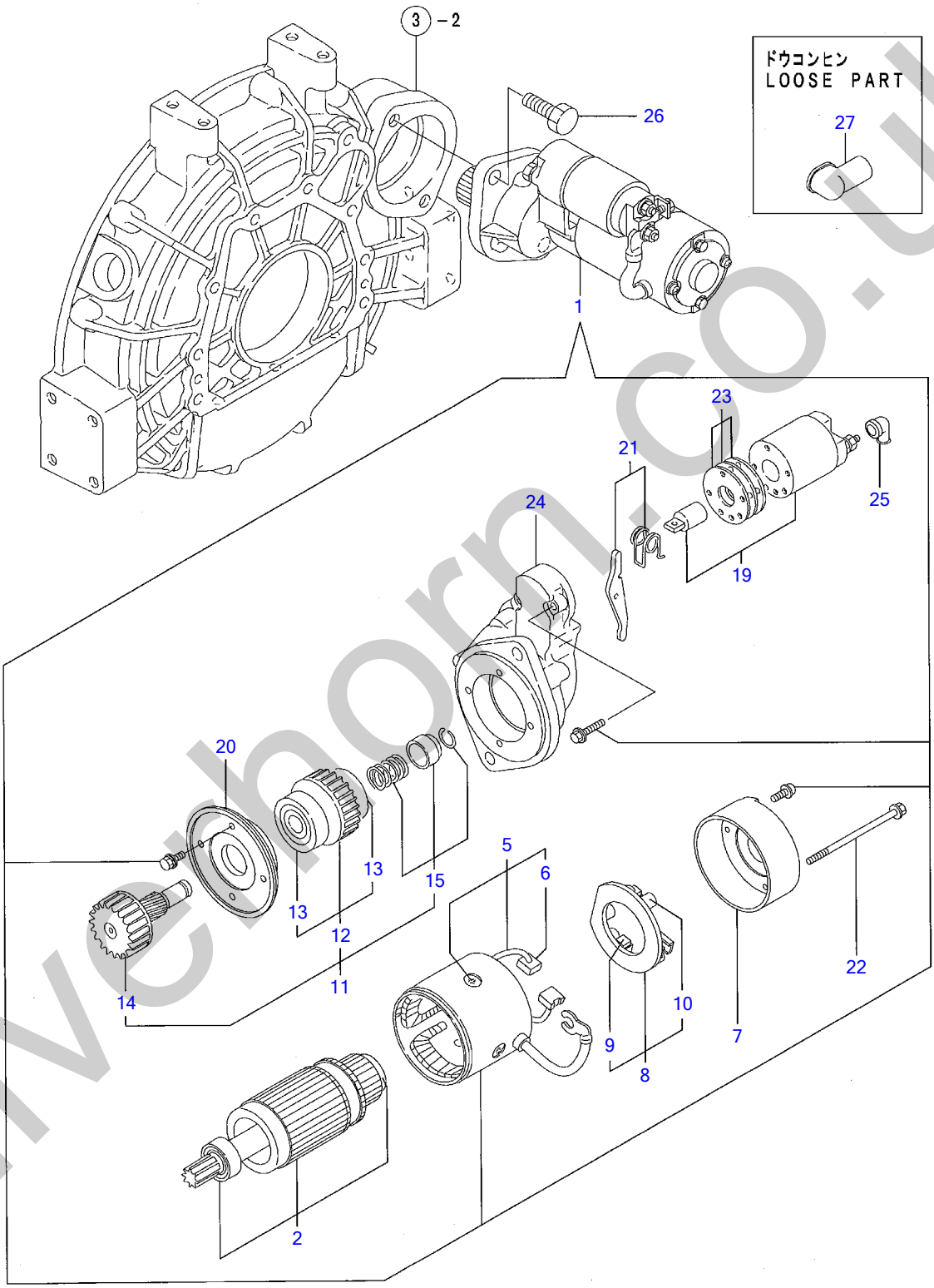

Y00D8880	15. スターティング モータ				
4TNV98-STB1		1, 06, 02			PLUS

silverthorn.co.uk

½À-Ã²Ý¸ÞÓ-À STARTING MOTOR

Œ©▯o REF NO.	•"•i"Ô▯† PARTS NO.	•"•i-¼	Description	▯"–Ê Q'ty	ŒÝŠ·▯« I	R	"õ▯l
1	**Y123900-77010**	½À-À	STARTER	1			
2	**Y123900-77400**	· ±Ï-ÁÔ ASY	· ARMATURE ASSY	1			
5	**Y123900-77440**	· Ì²-ÙÄÞº²Ù ASY	· COIL ASSY, FIELD	1			
6	**Y123900-77450**	· · ÌÞ×¼(+	· · BRUSH (+)	2			
7	**Y123900-77460**	· ØÔ¶ÊÞ-	· COVER, REAR	1			
8	**Y123900-77480**	· ÌÞ×¼ÎÙÀÞ ASY	· HOLDER, BRUSH	1			
9	**Y123900-77450**	· · ÌÞ×¼(+	· · BRUSH (+)	2			
10	**Y121254-77590**	· · ½ÌßØÝ¸Þ(ÌÞ×¼	· · SPRING, BRUSH	4			
11	**Y123900-77510**	· ËßÆµÝ¸×ÂÁ ASY	· PINION ASSY	1			
12	**Y123900-77520**	· · ¸×ÂÁ ASY	· · CLUTCH ASSY	1			
13	**YX2240610100**	· · · ÎÞ-ÙÍÞ±ØÝ¸Þ(3	· · · BALL BEARING (3	2			
14	**Y123900-77540**	· · ËßÆµÝ¼ÔÌÄ	· · SHAFT, PINION	1			
15	**Y119131-77550**	· · ½ÄÂÊß-SET(ËßÆµÝ	· · STOPPER KIT, PINION	1			
19	**Y129900-77591**	· Ï¸ÞÈÁÂ¸½²ÂÁ CMP	· SWITCH ASSY,MAGNETIC	1			
20	**Y123900-77610**	· ÍÞ±ØÝ¸ÞØÃ-Å	· RETAINER, BEARING	1			
21	**Y129900-77620**	· ¼ÌÄÚÊÞ-¾ÂÄ	· SHIFT LEVER SET	1			
22	**Y123900-77640**	· ½Ù-ÎÞÙÄ	· THROUGHT BOLT	2			
23	**Y123900-77650**	· ÀÞ½Ä¶ÊÞ- KIT	· COVER ASSY, DUST	1			
24	**Y123900-77710**	· ·ÞÔ¹-½	· HOUSING, GEARS	1			
25	**Y171008-77750**	· ¶ÊÞ-(À-ÐÅÙ	· COVER, M TERMINAL	1			
26	**Y26116-120252**	ÎÞÙÄ 12X 25	BOLT M12X 25 PLATED	2			
27	**Y124550-77030**	¶ÊÞ-(ST:BÀ-ÐÅÙ	COVER, TERMINAL	1			

silverhorn.co.uk

GENERATOR

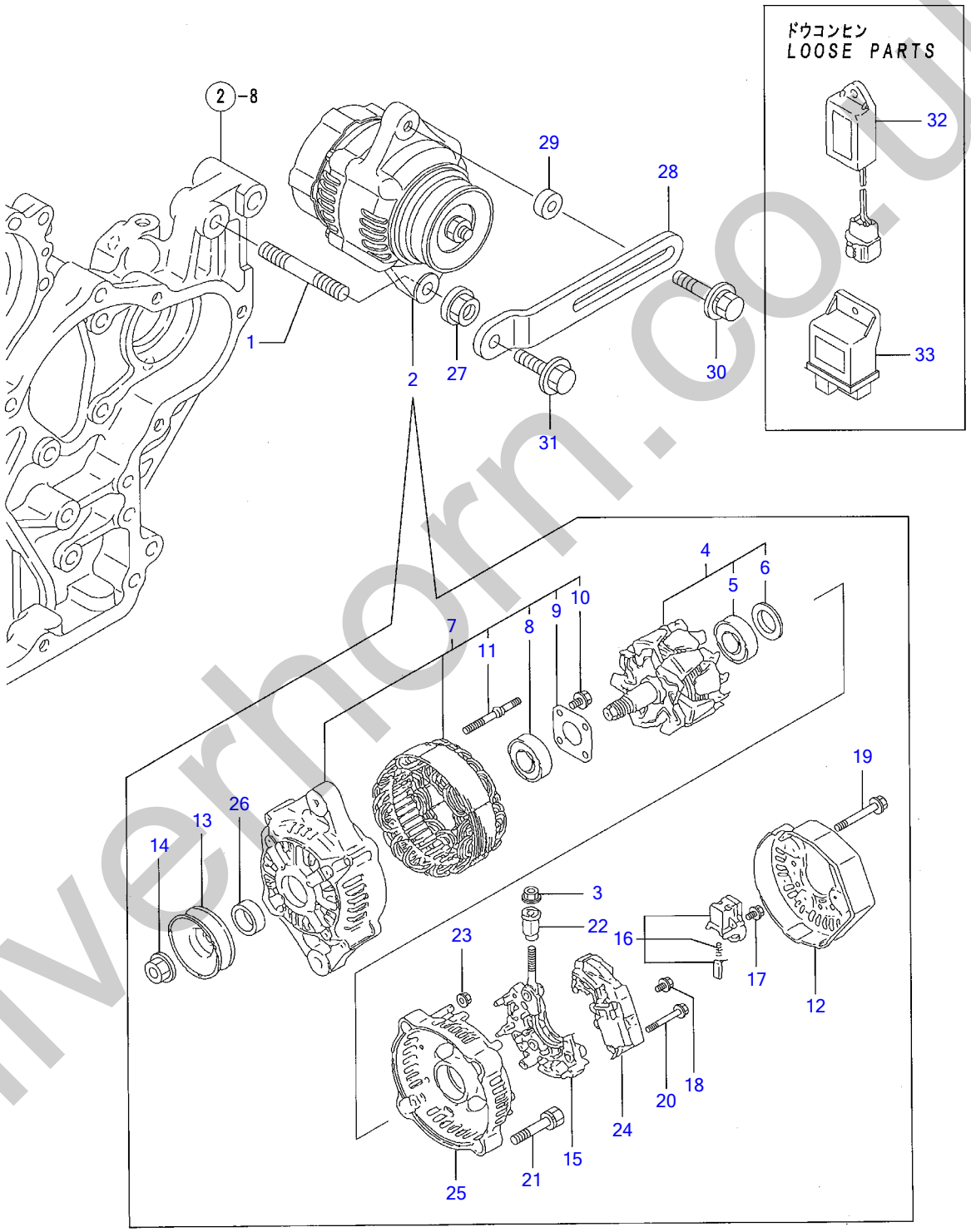

Y00D8880	16. GENERATOR				
4TNV98-STB1		1. 06. 02			PLUS

silverhorn.co.uk

¼Þ´ÈÚ-À GENERATOR

Œ©▯o REF NO.	•"•i"Ô▯† PARTS NO.	•"•i-¼	Description	▯"–Ê Q'ty	ŒÝŠ·▯« I	R	"õ▯l
1	**Y129795-01900**	³´ºÐ ÎÞÙÄ	STUD	1			
2	**Y119626-77210**	µÙÀÈ-À(12V-55A	ALTERNATOR ASSY	1			
3	**YX9490561001**	▪ ÅÂÄ	▪ NUT	1			
4	**Y129052-77380**	▪ Û-À ASSY	▪ ROTATOR ASSY	1			
5	**Y123501-79240**	▪ ▪ ÎÞ-ÙÍÞ±ØÝ¸Þ	▪ ▪ BEARING, BALL	1			
6	**Y119620-79250**	▪ ▪ ÍÞ±ØÝ¸Þ¶ÊÞ-	▪ ▪ COVER, BEARING	1			
7	**Y129052-77422**	▪ ÌÚ-Ñ ¼¸Ð	▪ FRAME ASSY	1			
8	**Y119620-79200**	▪ ▪ ÎÞ-ÙÍÞ±ØÝ¸Þ	▪ ▪ BALL BEARING	1			
9	**Y119620-79210**	▪ ▪ ÌßÚ-Ä,ØÃ-Å	▪ ▪ PLATE	1			
10	**Y119620-79220**	▪ ▪ ½¸ØÕ-	▪ ▪ SCREW	4			
11	**Y119620-79230**	▪ ▪ ÎÞÙÄ,½ÀÂÄÞ	▪ ▪ BOLT, STUD	2			
12	**Y128401-77440**	▪ ÌÚ-Ñ,ØÔ´ÝÄÞ	▪ FLAME	1			
13	**Y119620-77461**	▪ Ìß-Ø	▪ PULLEY	1			
14	**Y119620-77471**	▪ ÅÂÄ	▪ NUT	1			
15	**Y129052-79260**	▪ ÎÙÀÞ-	▪ HOLDER,SUB,RECTIFIER	1			
16	**Y129052-79270**	▪ ÌÞ×¼ÎÙÀÞ-	▪ HOLDER, BRUSH	1			
17	**Y119620-79290**	▪ ½¸ØÕ³	▪ SCREW	6			
18	**Y119620-79300**	▪ ½¸ØÕ³	▪ SCREW	1			
19	**Y119620-79310**	▪ ÎÞÙÄ	▪ BOLT	3			
20	**Y119620-79320**	▪ ½¸ØÕ³,W/ÜÂ¼Ô	▪ SCREW W/WASHER	2			
21	**Y119620-79330**	▪ ÎÞÙÄ	▪ BOLT	2			
22	**Y119620-79340**	▪ ²Ý¼ÕÚ-¼ÖÝÌÞÂ¼Õ	▪ INSULATION BUSH	1			
23	**Y119620-79350**	▪ ÅÂÄ	▪ NUT	2			
24	**Y129423-77710**	▪ Ú·ÞÕÚ-À CMP	▪ REGULATOR ASSY	1			
25	**Y119626-79410**	▪ ´ÝÄÞ¶ÊÞ-	▪ COVER, END, RR	1			
26	**Y119620-77490**	▪ ¶×-	▪ COLLAR	1			
27	**Y26306-100002**	ÂÊÞÂ·ÅÂÄ(UBS 10	NUT	1			
28	**Y129940-77320**	±¼ÞÔ½À(ÍÞÙÄ	ADJUSTER, BELT	1			
29	**Y119940-77270**	¶Ý»Þ(GEN	ADJUSTER, BELT	1			
30	**Y129972-77341**	ÎÞÙÄ(±¼ÞÔ½À,L=50	BOLT, ADJUSTING	1			
31	**Y26106-080222**	ÂÊÞÎÞÙÄ 8X 22	BOLT M 8X 22 PLATED	1			
32	**Y129211-77920**	À²Ï-(1 SEC.	TIMER	1			
33	**Y119802-77200**	¾-ÌÃ²ØÚ-	RELAY, SAFETY	1			

silverhorn.co.uk

GASKET SET & TOOLS

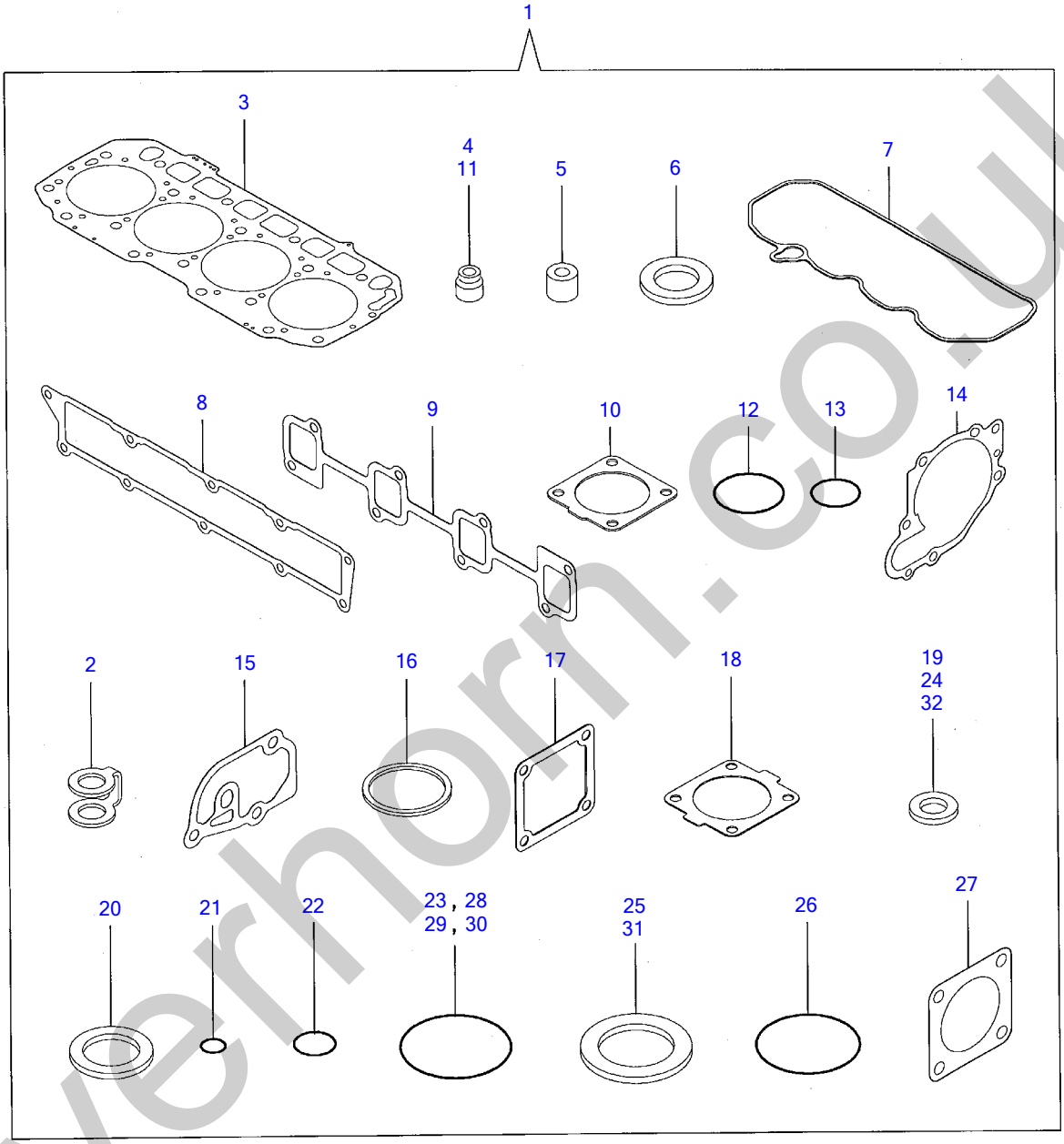

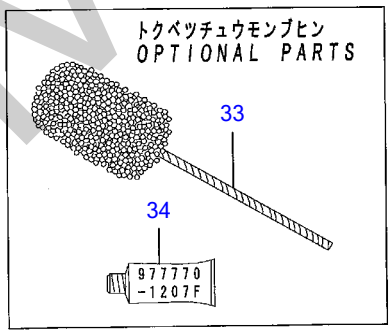

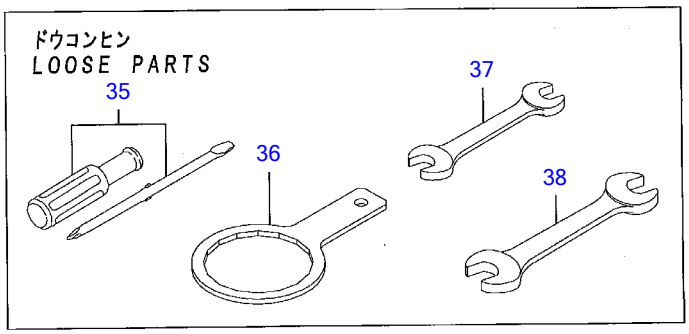

Y00D8880	17. パッキンセット			
4TNV98-STB1	1, 06, 02			PLUS

silverhorn.co.uk

ÊßÂ·Ý¾ÂÄ & º³¸Þ GASKET SET & TOOLS

Œ©lo REF NO.	•"•i"Ôl† PARTS NO.	•"•i-¼	Description	l"–Ê Q'ty	ŒÝŠ·l« I	R	"õll
1	Y729907-92930	ÊßÂ·Ý ¾ÂÄ(ÉÝ±½)	GASKET SET(NON-ASB.)	1		(1)	µÌß¼®Ý ÌÞËÝÃÞ½
2	Y123907-59550	• PK(FOÓÄÞ¼ 6	• PACKING,FUEL RETURN	5			
3	Y129907-01331	• ÍÂÄÞ¶Þ½¹ÂÄ	• GASKET,CYLINDER HEAD	1			
4	Y124160-11340	• ÊÞÙÌÞ½ÃÑ¼-Ù	• SEAL, VALVE STEM	8			
5	Y119802-11870	• ÌßÛÃ¸À(É½ÞÙ	• PROTECTOR, NOZZLE	4			
6	Y119625-11880	• É½ÞÙ¼-Ä	• SEAT, NOZZLE	4			
7	Y129907-11310	• PK(ÎÞÝÈÂÄ	• PACKING,BONNET	1			
8	Y129907-12110	• PK(SUCÏÆÎ-ÙÄÞ	• PACKING(INT.MANIFOLD	1			
9	Y129900-13251	• PK(EXHÏÆÎ-ÙÄÞ	• GASKET	1			
10	Y129930-13201	• ¶Þ½¹ÂÄ(»²ÚÝ»	• GASKET, SILENCER	1			
11	Y124950-11340	• ÊÞÙÌÞ½ÃÑ¼-Ù	• SEAL, VALVE STEM	8			
12	Y129900-32030	• OØÝ¸Þ P20	• O-RING P20	2			
13	Y129900-32040	• OØÝ¸Þ P14	• O-RING P14	1			
14	Y129900-42020	• PK(CWP	• GASKET, CW-P	1			
15	Y129900-49870	• PK(»-Ó½ÀÂÄ¹-½	• GASKET, CASE	1			
16	Y121850-49550	• ÊßÂ·Ý (»-Ó½ÀÂÄ)	• GASKET, THERMOSTAT	1			
17	Y121850-77021	• PK(´±Ë-À)(ÉÝ±½)	• GASKET, (NON-ASB.)	1			
18	Y121850-49540	• »-ÓÖ³ ÊßÂ·Ý	• GASKET, THERMOSTAT	1			
19	Y23414-080000	• ÊßÂ·Ý(ÏÙ 8	• GASKET 8, ROUND	1			
20	Y124465-44950	• ÊßÂ·Ý16	• GASKET 16	1			
21	Y24311-000070	• OØÝ¸Þ 1A P 7.0	• O-RING 1A P-7.0	1			
22	Y24311-000120	• OØÝ¸Þ 1A P 12.0	• O-RING 1A P 12.0	8			
23	Y24311-000320	• OØÝ¸Þ 1A P 32.0	• O-RING 1A P-32.0	3			
24	Y22190-080002	• ¼-ÙÜÂ¼Ô(ºÏÙ.ÆÄØÙ) 8	• SEAL WASHER 8S	7			
25	Y22190-220002	• ¼-ÙÜÂ¼Ô(ºÏÙ.ÆÄØÙ)22	• SEAL WASHER 22S	1			
26	Y24351-030750	• OØÝ¸Þ 1A 3075	• PACKING, 3075	1			
27	Y124240-01883	• ÊßÂ·Ý(HO-P)(ÉÝ±½)	• GASKET, (NON-ASB.)	1			
28	Y24341-000530	• OØÝ¸Þ 1A S 53.0	• O-RING 1A S-53.0	1			
29	Y24311-000300	• OØÝ¸Þ 1A P 30.0	• O-RING 1A P-30.0	1			
30	Y24321-000600	• OØÝ¸Þ 1A G 60.0	• O-RING 1A G-60.0	1			
31	Y22190-300002	• ¼-ÙÜÂ¼Ô(ºÏÙ.ÆÄØÙ)30	• SEAL WASHER 30S	1			
32	y129150-49360	• PK 10	• GASKET 10	1			
33	Y129400-92450	ÌÚÂ¸½Î-Ý	FLEX HONE	1		(1)	µÌß¼®Ý ÌÞËÝÃÞ½
34	Y977770-1207F	¼Øº-Ý¹² ´·¼ÞÖ³¶Þ½¹ÂÄ	GASKET.LIQUID	1		(1)	µÌß¼®Ý ÌÞËÝÃÞ½
35	Y104200-92350	ÄÞ×²ÊÞ-(»¼¶´¼·	DRIVER, SCREW	1			
36	Y119640-92750	Ì²ÙÀÚÝÁ 80	WRENCH, FILTER	1			
37	Y28110-100120	½ÊßÅ 10X12	WRENCH 10X12	1			
38	Y28110-140170	½ÊßÅ 14X17	WRENCH 14X17	1			

silvermoriz.co.uk