TB250 (P-TB250BAC) BK7Z001 S/N 125000001-
Index

PARTS MANUAL

TB250

Serial No. 125000001~

Book No. BK7Z001

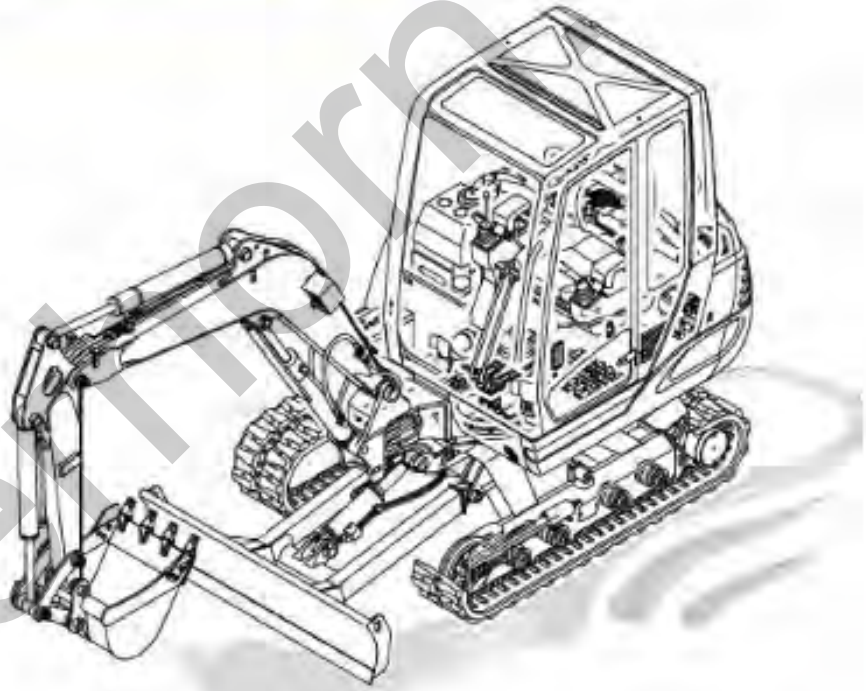

MINI EXCAVATOR

TAKEUCHI

silverthorn.co.uk

silverhorn.co.uk

INDEX

Item	Part number	Description	Q'ty	Chan.	Serial No.	Serv.	Remarks
1		UNDERCARRIAGE					
2		TURNTABLE & CONTROL LEVER					
3		ENGINE & ELECTRICAL SYSTEM					
4		HYDRAULIC PIPNG & TANK					
5		COVER & CAB					
6		HOE ATTACHMENT					
7		DECAL & TOOL					
8		HYDRAULIC DEVICE					
10		ENGINE 3TNV88-BPTB2,1					
		2008.7.21					
99		Kits, Attachments and Quick Reference					

silverhorn.co.uk

LOWER FRAME

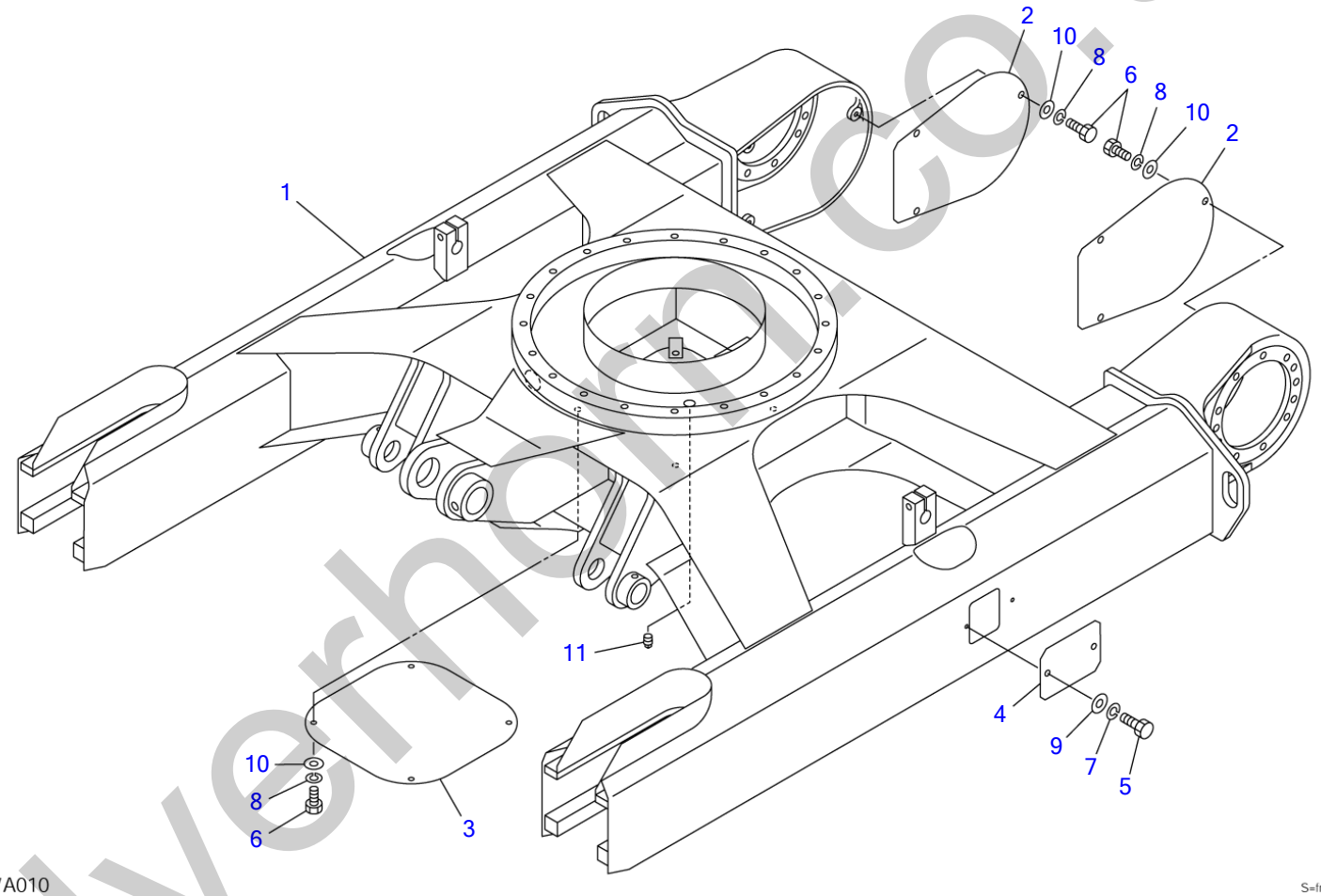

K7A010

S=free

silverhorn.co.uk

LOWER FRAME

Item	Part number	Description	Q'ty	Chan.	Serial No.	Serv.	Remarks
Item	Part number	•” •i -¼ ▯Ì	?	Chan.	Serial No.	Mod.	Remarks
		FRAME ASSY, lower					
1	X **********	FRAME	1				
2	0391013002	COVER	2				
3	0391004003	COVER	1				
4	0561017400	COVER	2				
5	1100040816	BOLT	4				
6	1100041020	BOLT	10				
7	1140020008	WASHER, spring	4				
8	1140020010	WASHER, spring	10				
9	1141110008	WASHER	4				
10	1141110010	WASHER	10				
11	1508710010	PLUG	1				
	K7a010						

silverhorn.co.uk

SHOE GUIDE

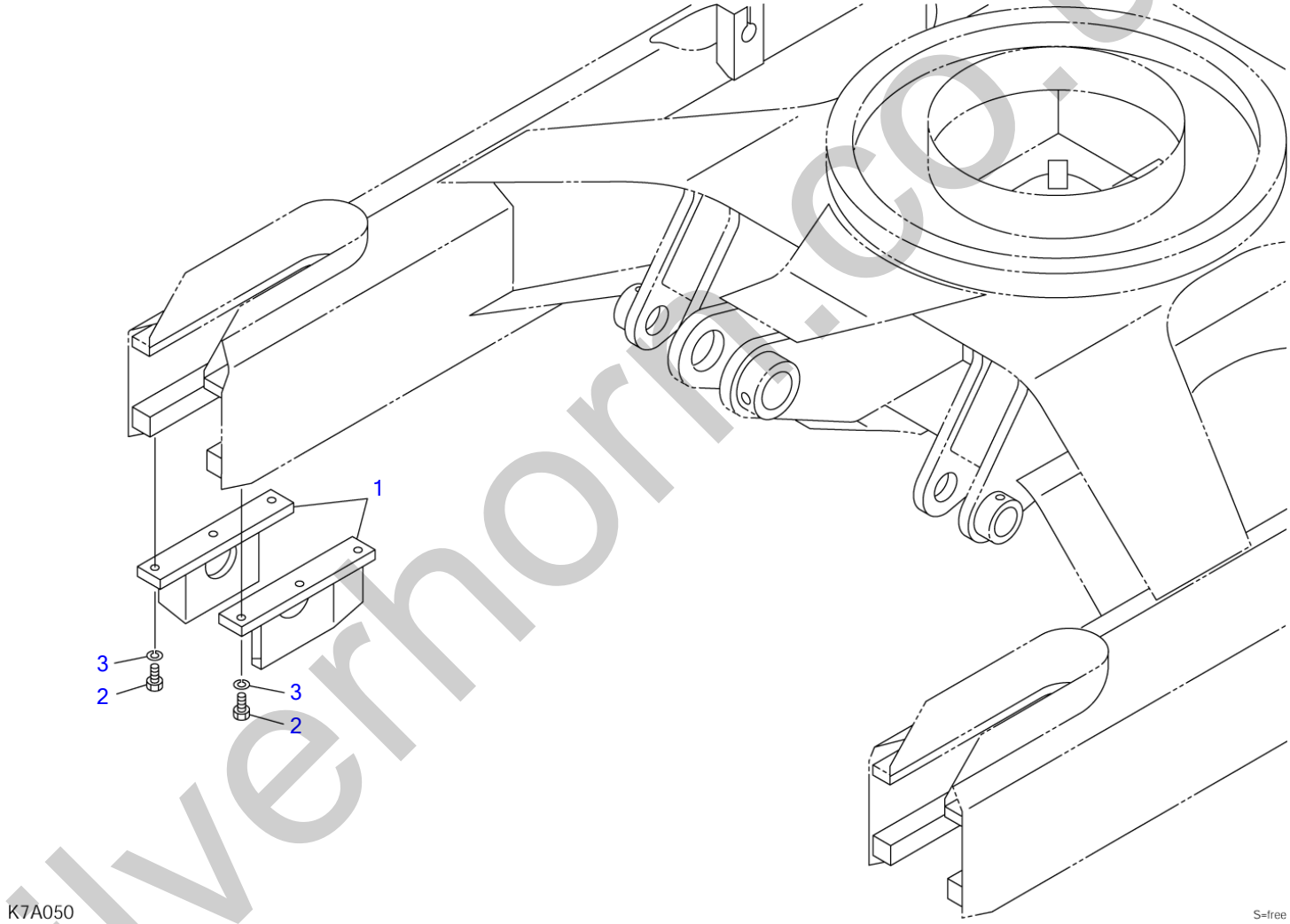

silverhorn.co.uk

SHOE GUIDE

Item	Part number	Description	Q'ty	Chan.	Serial No.	Serv.	Remarks
		SHOE GUIDE ASSY					
1	0461000700	GUIDE, shoe	4				
2	1101041230	BOLT	12				
3	1140020012	WASHER, spring	12				
	K7a050						

silverhorn.co.uk

CRAWLER BELT

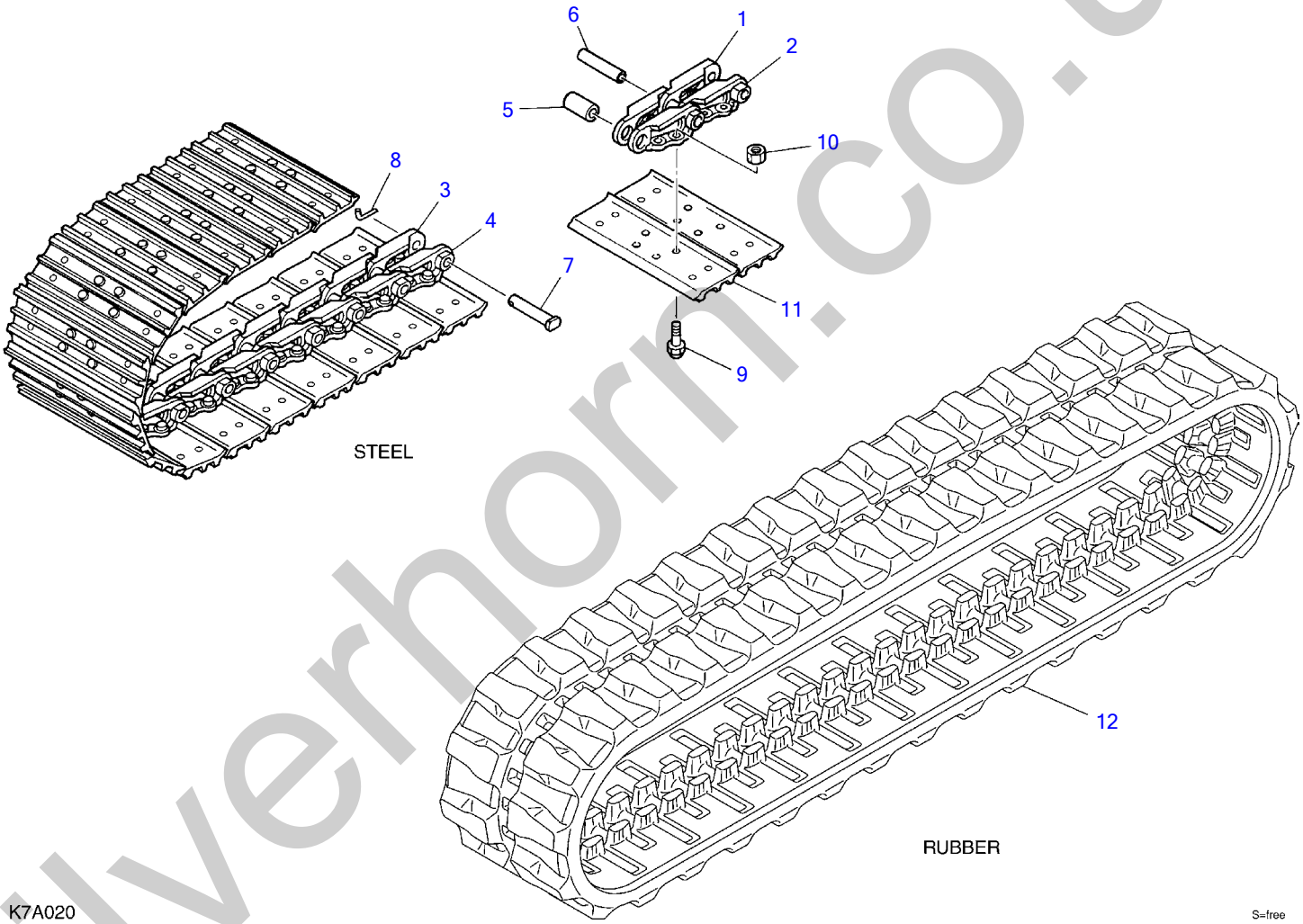

silverhorn.co.uk

CRAWLER BELT

Item	Part number	Description	Q'ty	Chan.	Serial No.	Serv.	Remarks
0	1914051600	BELT, steel crawler (400wide)	2				X19140-51600-0
	1914051400	BELT, steel crawler (460wide)	2				X19140-51400-0
1	1914039001	・LINK (R.H.)	37				
2	1914039002	・LINK (L.H.)	37				
3	1914039003	・LINK, master (R.H.)	1				
4	1914039004	・LINK, master (L.H.)	1				
5	1914039012	・BUSHING	38				
6	1914039006	・PIN, track	37				
7	1914039007	・PIN, master	1				
8	1914039008	・PIN	1				
9	1914039009	・BOLT	152				
10	1914033010	・NUT	152				
11	1914051611	・PLATE, shoe	38				400wide
	1914051411	・PLATE, shoe	38				460wide
12	1914065610	BELT, rubber crawler	2				
	K7a020						

silverhorn.co.uk

CRAWLER BELT (with rubber pads)

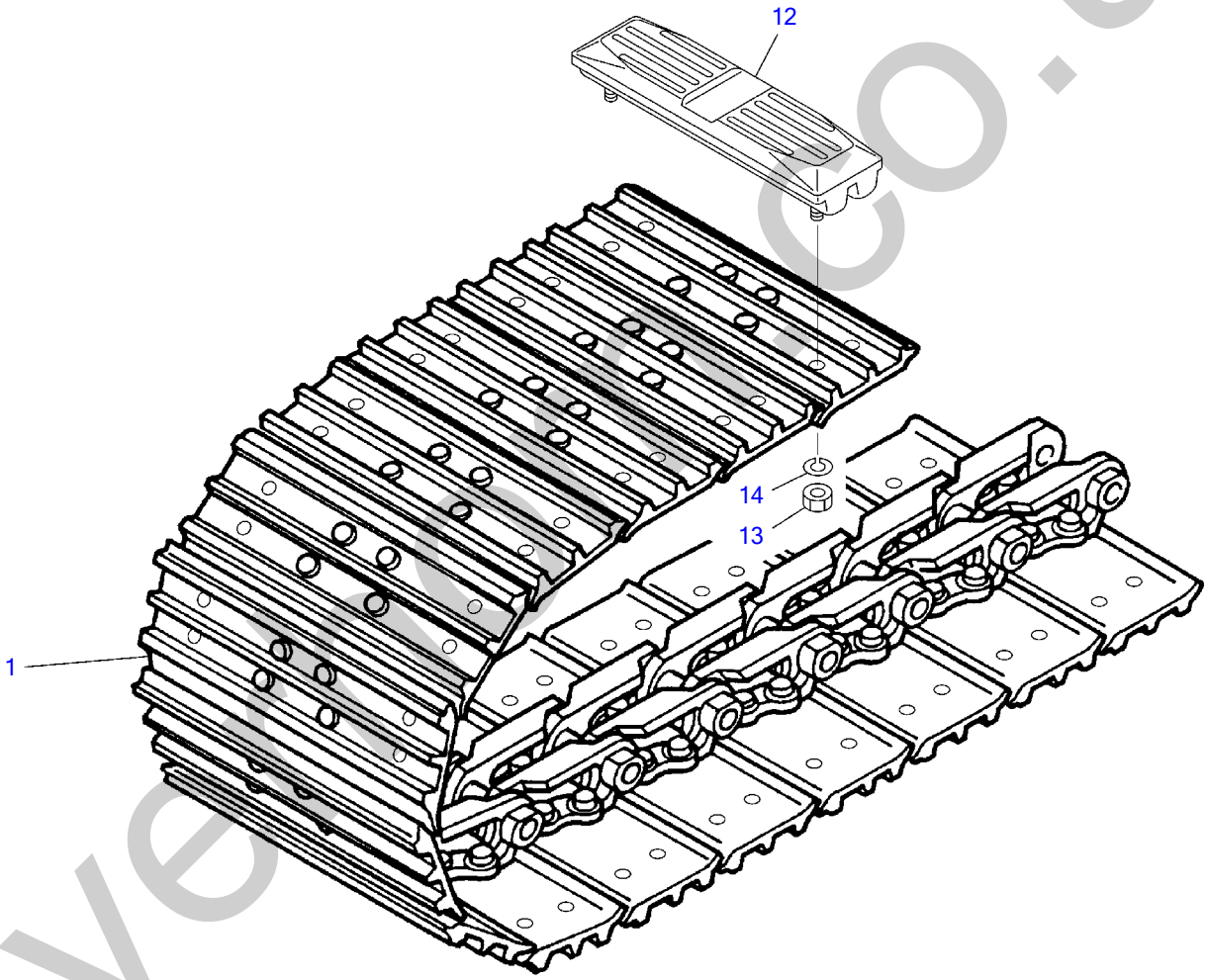

K3A152

S=free

silverdale co.uk

CRAWLER BELT (with rubber pads)

Item	Part number	Description	Q'ty	Chan.	Serial No.	Serv.	Remarks
0	1914051700	BELT ASSY, steel crawler (with rubber pads)	2				
1	1914051600	・BELT, steel crawler	1				
12	1914400500	・PAD, rubber	38				
13	1130050012	・・NUT	4				
14	1140020012	・・WASHER, spring	4				
	K3a153						

silverhorn.co.uk

CARRIER ROLLER

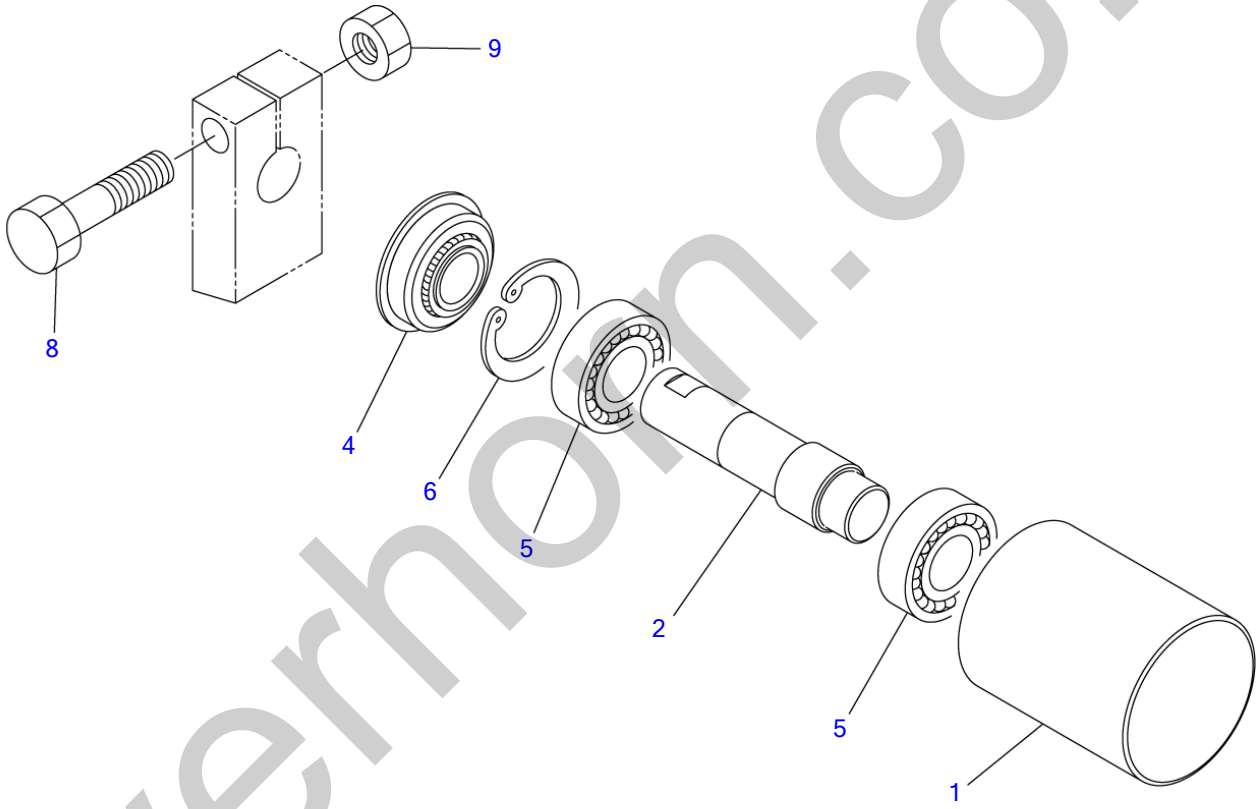

K7A030

S=1/3

silverhorn.co.uk

CARRIER ROLLER

Item	Part number	Description	Q'ty	Chan.	Serial No.	Serv.	Remarks
		ROLLER ASSY, carrier					
0-1	0391201100	ROLLER SUB ASSY	2				
1	0391201110	・ROLLER	1				
2	0391201120	・SHAFT	1				
4	1431203062	・SEAL	1				
5	1300006206	・BEARING	2				
6	1221000062	・RING, snap	1				
8	1101041670	BOLT	2				
9	1130540016	NUT	2				
	K7a030						

silverhorn.co.uk

TRACK ROLLER

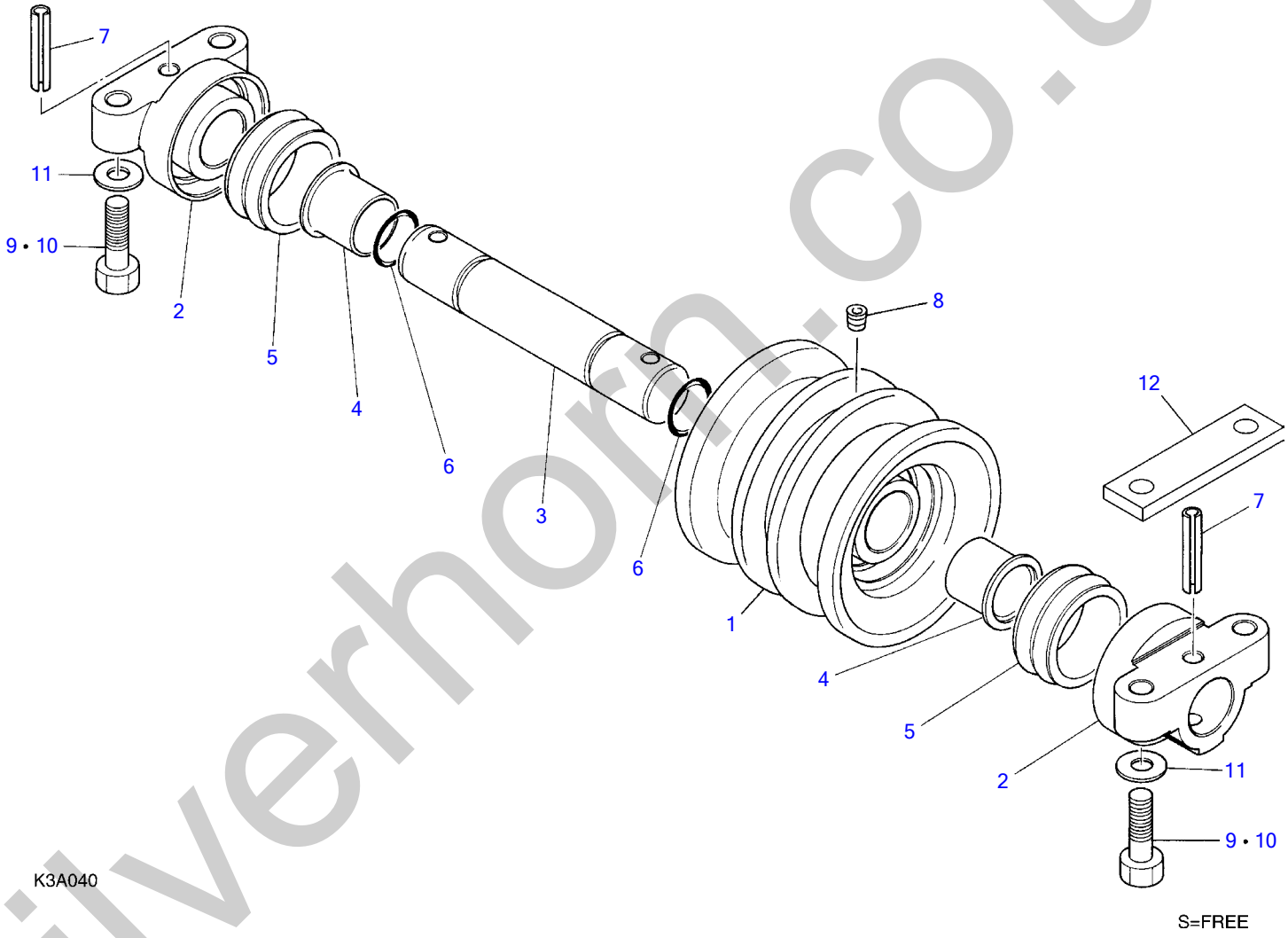

silverhorn.co.uk

TRACK ROLLER

Item	Part number	Description	Q'ty	Chan.	Serial No.	Serv.	Remarks
		ROLLER ASSY, track (rubber)					
		ROLLER ASSY, track (steel)					
0-1	0391302100	ROLLER SUB ASSY, track	10				
1	0391302300	・ROLLER	1				
2	0461300300	・COVER	2				
3	0461300400	・SHAFT	1				
4	1333073535	・BUSHING	2				
5	1432500560	・SEAL, floating	2				
6	1420100300	・O-RING	2				
7	1213001055	・PIN, spring	2				
8	1501810001	・PLUG	2				
9	1101041245	BOLT	40				
10	1101041255	BOLT	40				steel
11	1141550012	WASHER	40				
12	0391300400	PLATE	20				steel
	J3a030						

silverhorn.co.uk

FRONT IDLER

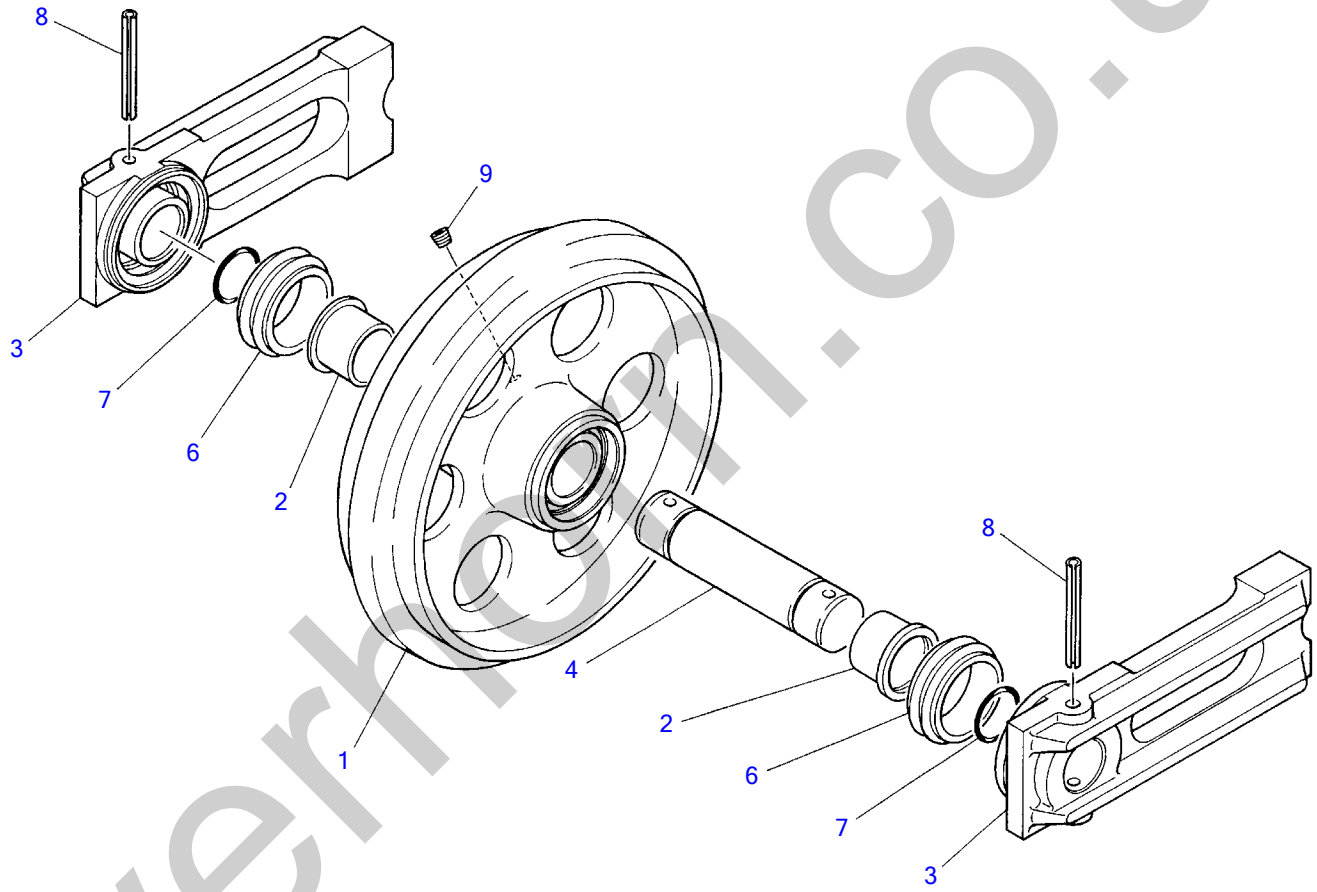

K3A050

S=FREE

silverhorn.co.uk

FRONT IDLER

Item	Part number	Description	Q'ty	Chan.	Serial No.	Serv.	Remarks
		IDLER ASSY, front					
0-1	0461490010	IDLER ASSY, sub	2				
1	0461401100	・IDLER	1				
2	1333064540	・BUSHING	2				
3	0461400300	・BLOCK	2				
4	0461400400	・SHAFT	1				
6	1432500640	・SEAL, floating	2				
7	1420100400	・O-RING	2				
8	1213101000	・PIN, spring	2				
9	1501810001	・PLUG	2				
	K7A090						

silverhorn.co.uk

TRACK ADJUSTER

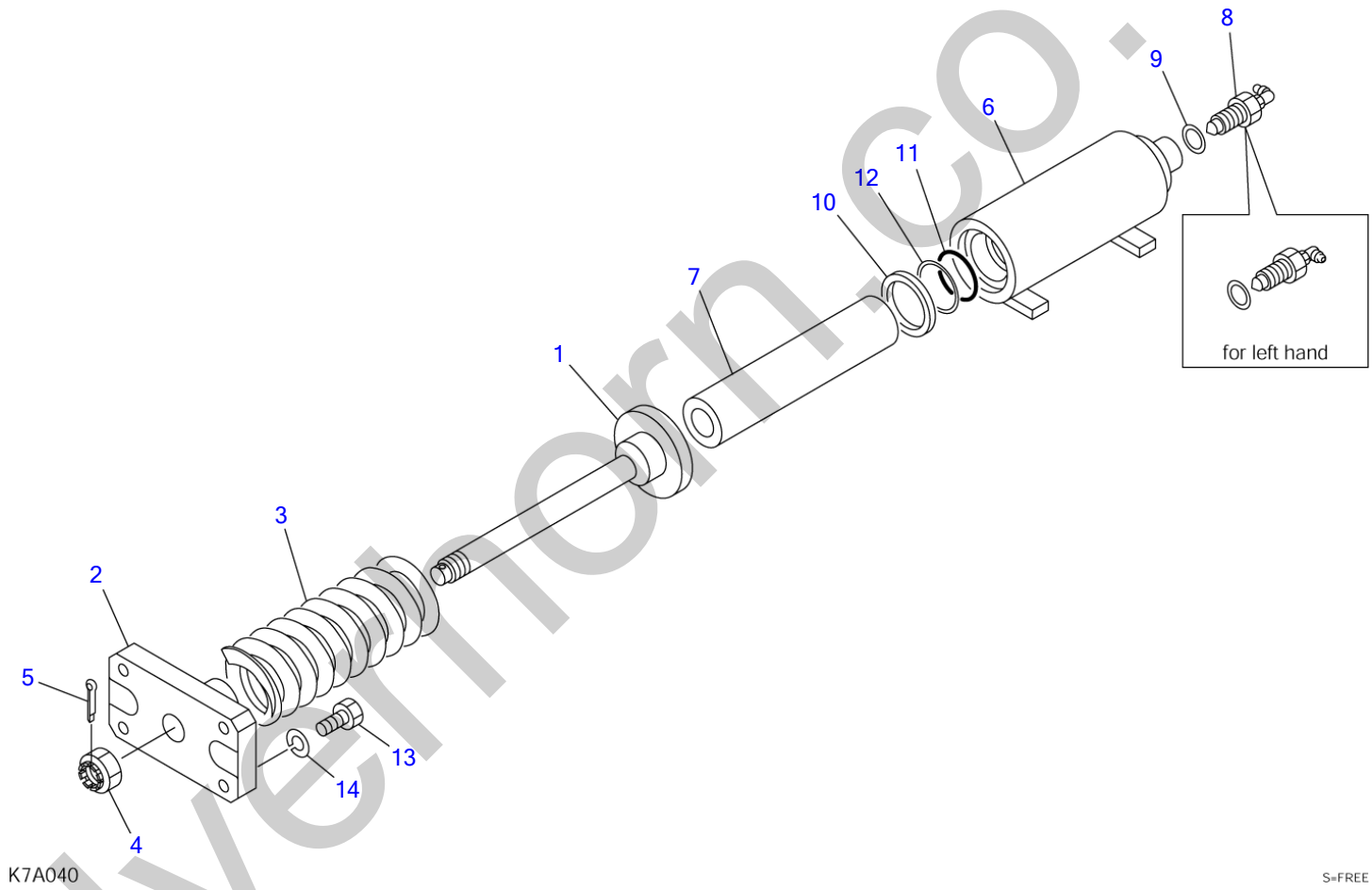

silvermorn.co.uk

TRACK ADJUSTER

Item	Part number	Description	Q'ty	Chan.	Serial No.	Serv.	Remarks
		SPRING ASSY (R.H)					
		SPRING ASSY (L.H.)					
0-1	0391509100	SPRING SUB ASSY	2				
1	0881151200	・ROD	1				
2	0391509120	・PLATE	1				
3	0007000002	・SPRING	1				
4	1132530027	・NUT	1				
5	1210000545	・PIN, split	1				
0-2	0391508200	CYLINDER ASSY, grease	2				
6	0391508210	・CYLINDER, grease	1				
7	0391508220	・PISTON	1				
8	1541301602	・VALVE ASSY, check	1				
9	1541201616	・WASHER	1				
10	1400403038	・SEAL	1				
11	1422010550	・O-RING	1				
12	1421020550	・RING, back-up	1				
13	1101041245	BOLT	8				
14	1140020012	WASHER, spring	8				
	K7a041						

silverhorn.co.uk

TRAVEL DEVICE

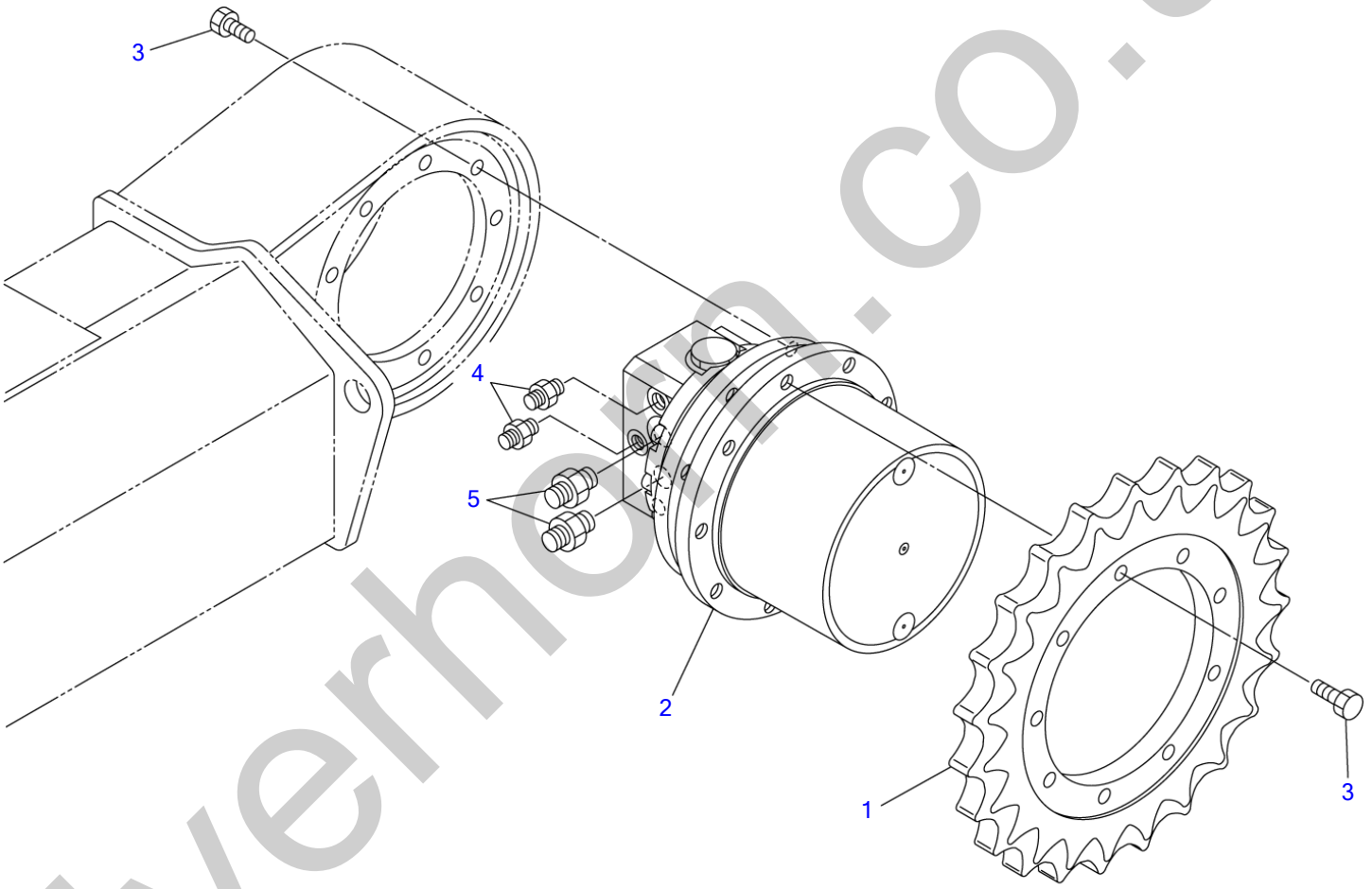

J3A010

S=FREE

silverhorn.co.uk

TRAVEL DEVICE

Item	Part number	Description	Q'ty	Chan.	Serial No.	Serv.	Remarks
		MOTOR ASSY, travel					
1	0261603100	SPROCKET	2				
2	1903127400	MOTOR, travel	2				
3	1100041435	BOLT	42				
4	1515600200	ADAPTOR	4				
	1420010110	・O-RING	1				
5	1515600202	ADAPTOR	4				
	1420010180	・O-RING	1				
	K7A100						

silverhorn.co.uk

SLEW BEARING

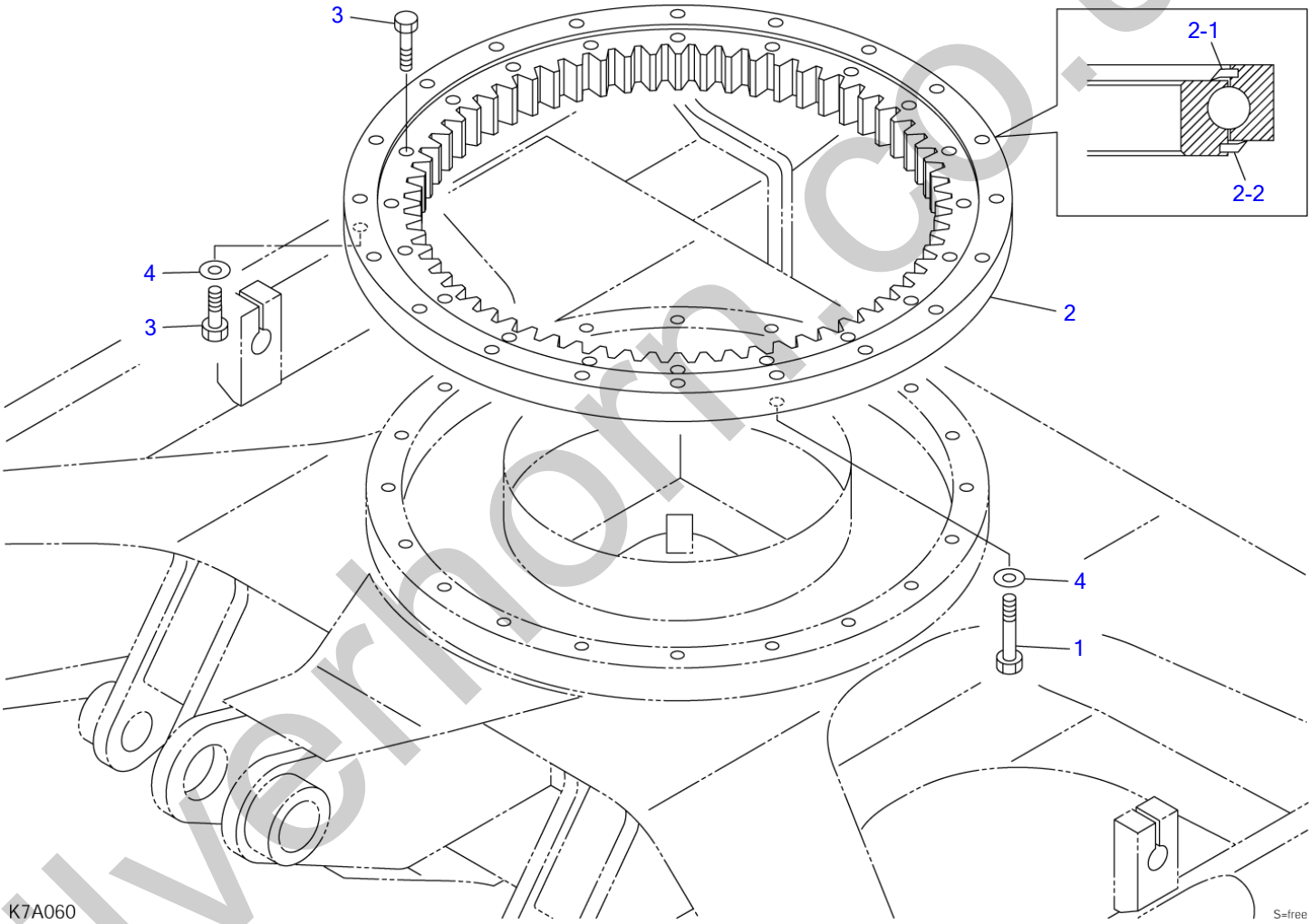

silvernorm.co.uk

SLEW BEARING

Item	Part number	Description	Q'ty	Chan.	Serial No.	Serv.	Remarks
		BEARING ASSY, slew					
1	0392000100	BOLT	1				
2	1913003550	BEARING	1				
2-1	1913003508	・SEAL	1				
2-2	1913003509	・SEAL	1				
3	1101051680	BOLT	39				
4	1141550016	WASHER	20				
	K7a061						

silverhorn.co.uk

SWIVEL JOINT & ACCESSORIES

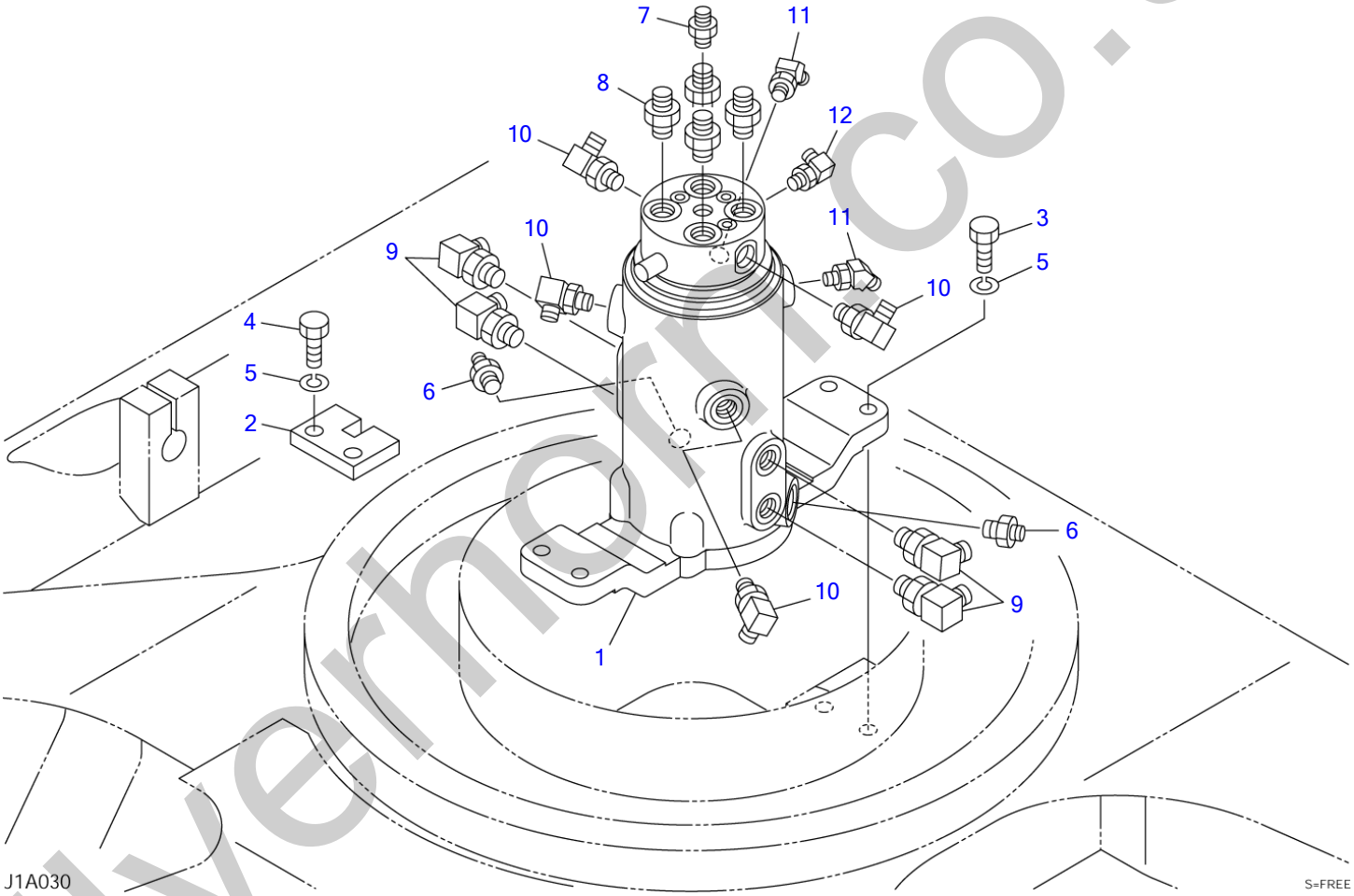

silverhorn.co.uk

SWIVEL JOINT & ACCESSORIES

Item	Part number	Description	Q'ty	Chan.	Serial No.	Serv.	Remarks
		JOINT ASSY, swivel					
1	1904006300	JOINT, swivel	1				
2	0442100100	STOPPER	1				
3	1101041245	BOLT	4				
4	1101041240	BOLT	2				
5	1140020012	WASHER, spring	6				
6	0007203057	NIPPLE	2				
7	1511050003	ADAPTOR	1				
8	1515600202	ADAPTOR	4				
	1420010180	・O-RING	1				
9	1515010042	ELBOW	4				
	1420010180	・O-RING	1				
10	1515010041	ELBOW	4				
	1420010140	・O-RING	1				
11	1515100110	ELBOW	2				
	1420010110	・O-RING	1				
12	1515012040	ELBOW	1				
	1420010110	・O-RING	1				
	K7A110						

silverhorn.co.uk

DOZER BLADE

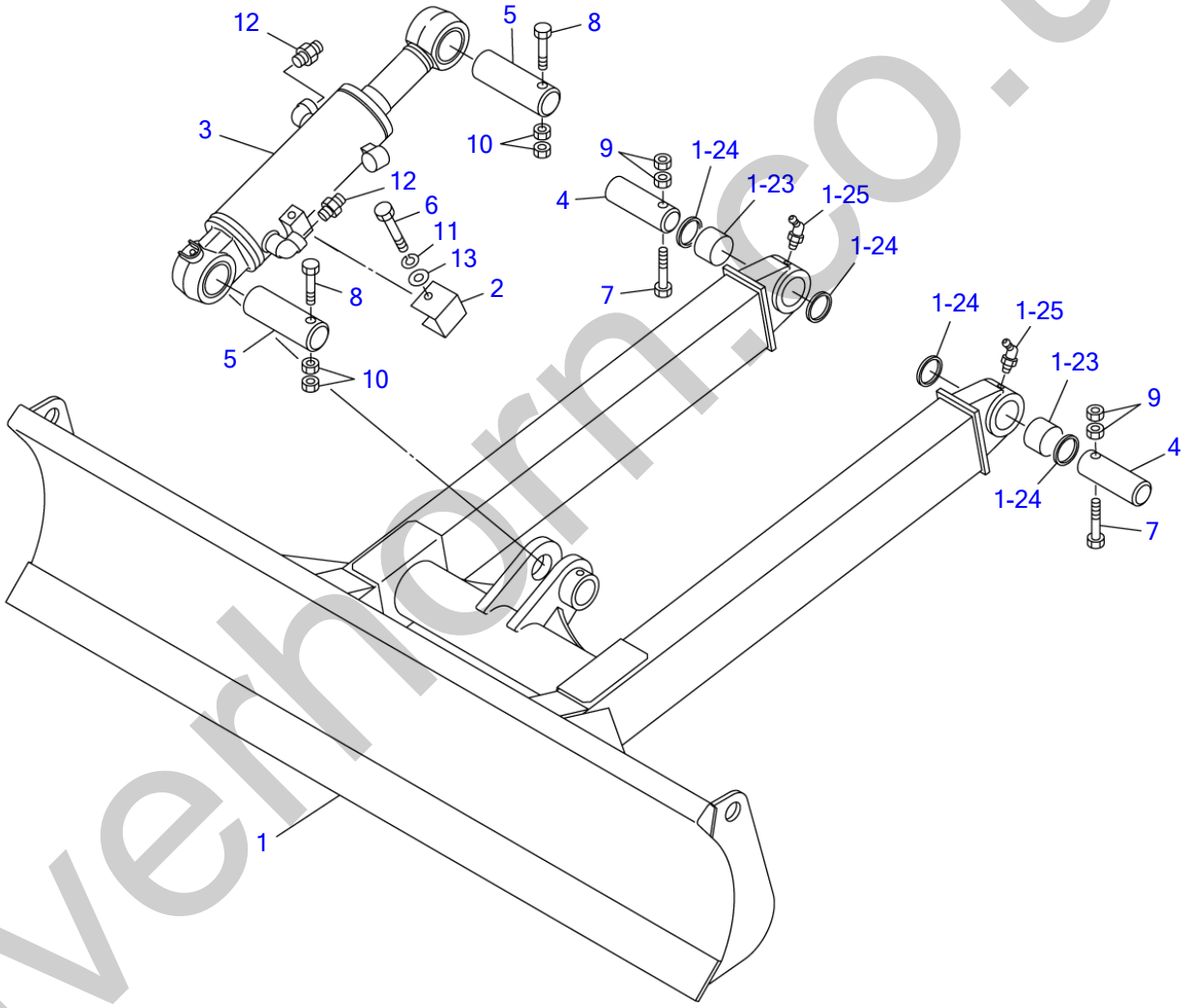

K7A070

S=free

silverhorn.co.uk

DOZER BLADE

Item	Part number	Description	Q'ty	Chan.	Serial No.	Serv.	Remarks
		BLADE ASSY, dozer					
		BLADE ASSY, wide dozer					
1	0396313100	BLADE SUB ASSY	1				1840wide
	0396313600	BLADE SUB ASSY, wide dozer	1				1900wide
1-23	0002200014	・BUSHING	2				
1-24	1432200045	・SEAL, dust	4				
1-25	1560001675	・FITTING, grease	2				
2	0426300400	COVER	1				
3	1900077100	CYLINDER, dozer blade	1				
4	0001614009	PIN	2				
5	0001616001	PIN	2				
6	1100040860	BOLT	1				
7	1103041085	BOLT	2				
8	1103141200	BOLT	2				
9	1130240010	NUT	4				
10	1130240012	NUT	4				
11	1140020008	WASHER, spring	1				
12	1515600201	ADAPTOR	2				
	1420010140	・O-RING	1				
13	1141110008	WASHER	1				
	K7a070						

silverhorn.co.uk

PIPING; LOWER

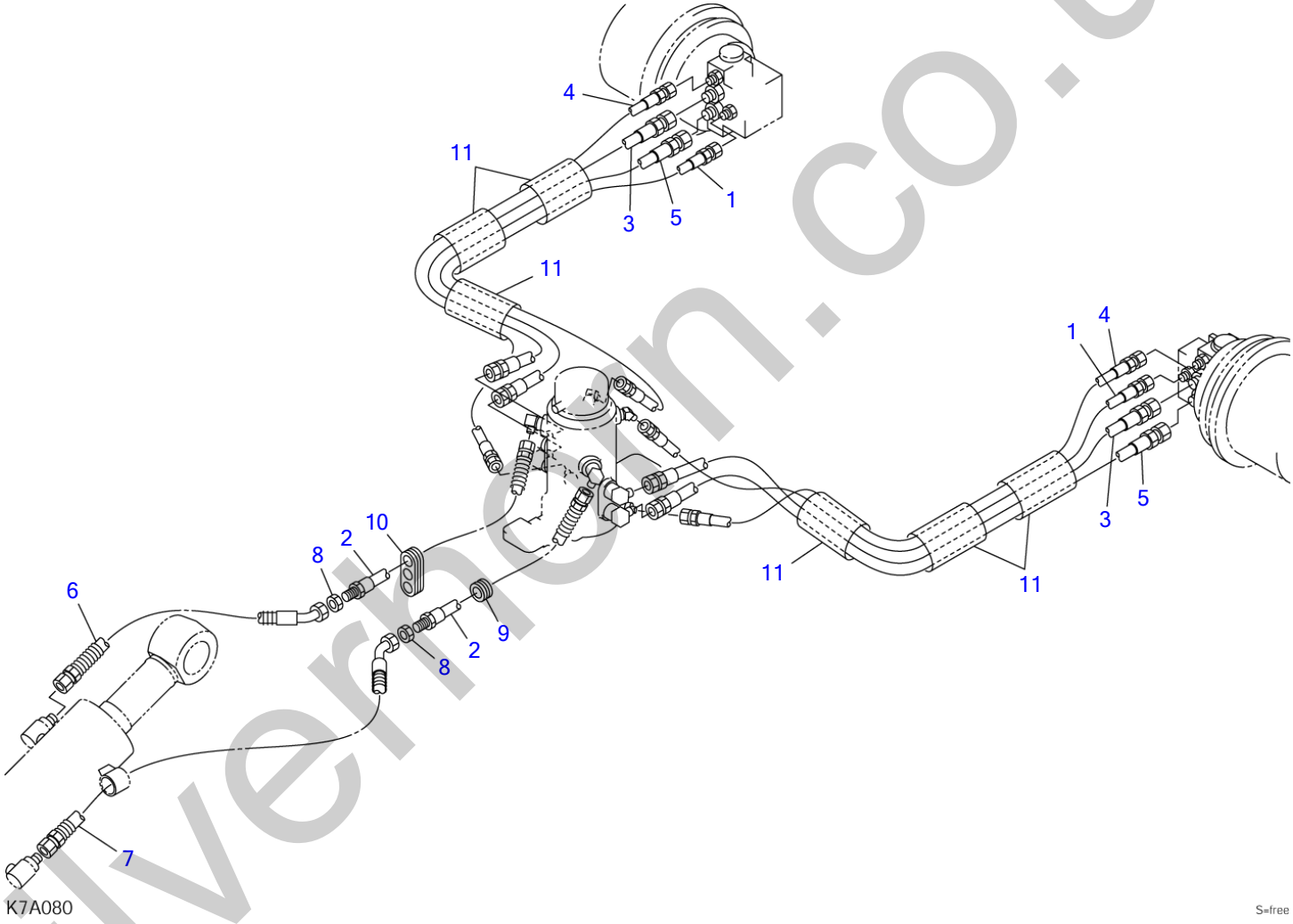

silverhorn.co.uk

PIPING; LOWER

Item	Part number	Description	Q'ty	Chan.	Serial No.	Serv.	Remarks
		PIPING ASSY, lower					
1	0397201200	HOSE ASSY	2				18010-22132
2	0397204320	HOSE ASSY	2				
3	0397201100	HOSE ASSY	2				18015-40124
4	1801022124	HOSE ASSY	2				
5	1801540124	HOSE ASSY	2				
6	1801627062	HOSE ASSY	1				
7	1801627088	HOSE ASSY	1				
8	0007200154	NUT	2				
9	0437200100	GUARD	1				
10	0097022400	GUARD	1				
11	1531350020	PROTECTOR	6				sold by the meter
	K7a081						

silverhorn.co.uk

SLEWING DEVICE

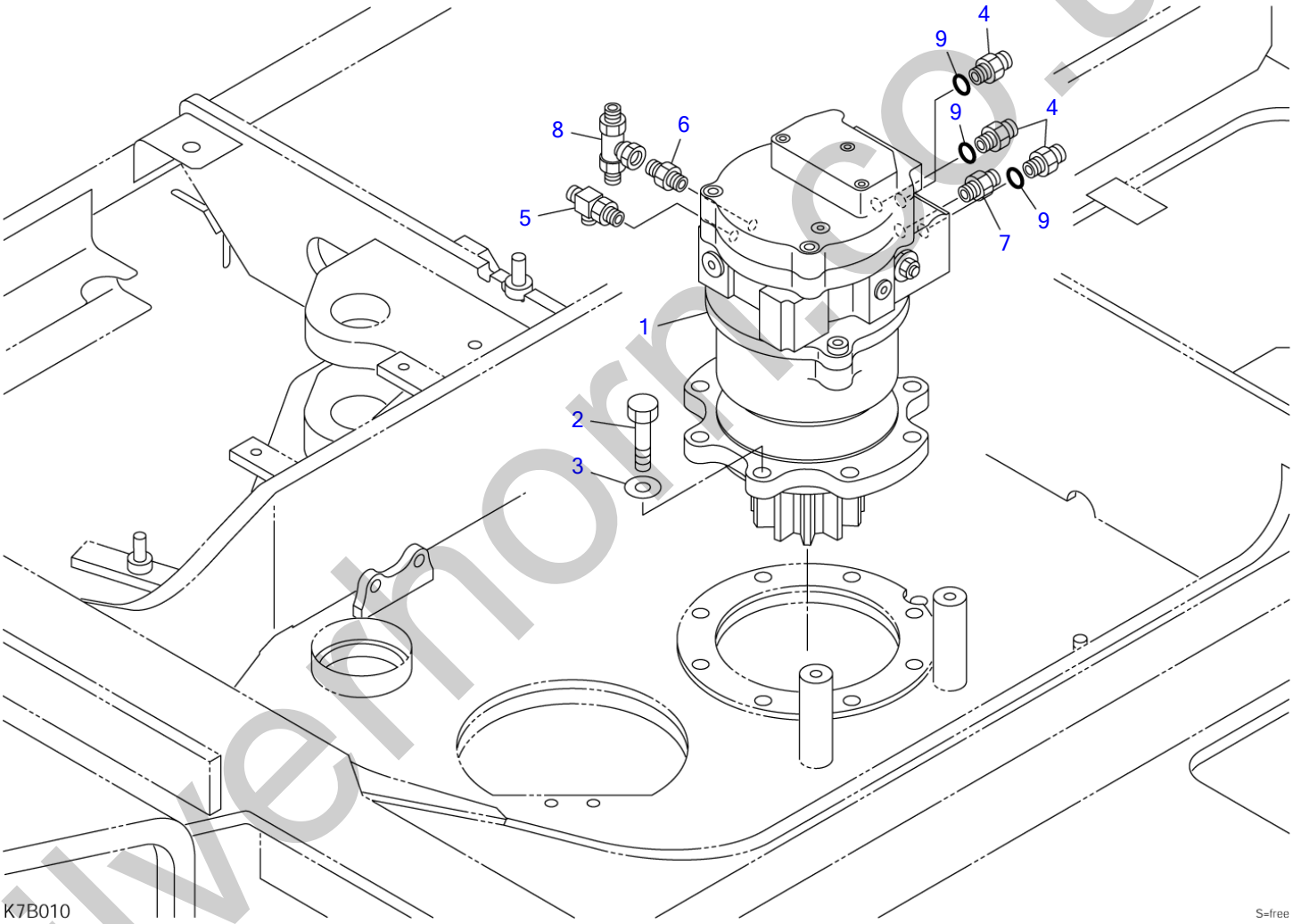

silvermorn.co.uk

SLEWING DEVICE

Item	Part number	Description	Q'ty	Chan.	Serial No.	Serv.	Remarks
		DEVICE ASSY, slewing					
1	1903127500	MOTOR, slew	1				
2	1101041640	BOLT	8				
3	1141550016	WASHER	8				
4	0007203063	ADAPTOR	3				
5	1512370011	TEE	1				
	1420010110	・O-RING	1				
6	1515600200	ADAPTOR	1				
	1420010110	・O-RING	1				
7	1515600201	ADAPTOR	1				
	1420010140	・O-RING	1				
8	1901754100	VALVE, shuttle	1				
9	1420010140	O-RING	3				
	K7b011						

silverhorn.co.uk

TURNTABLE

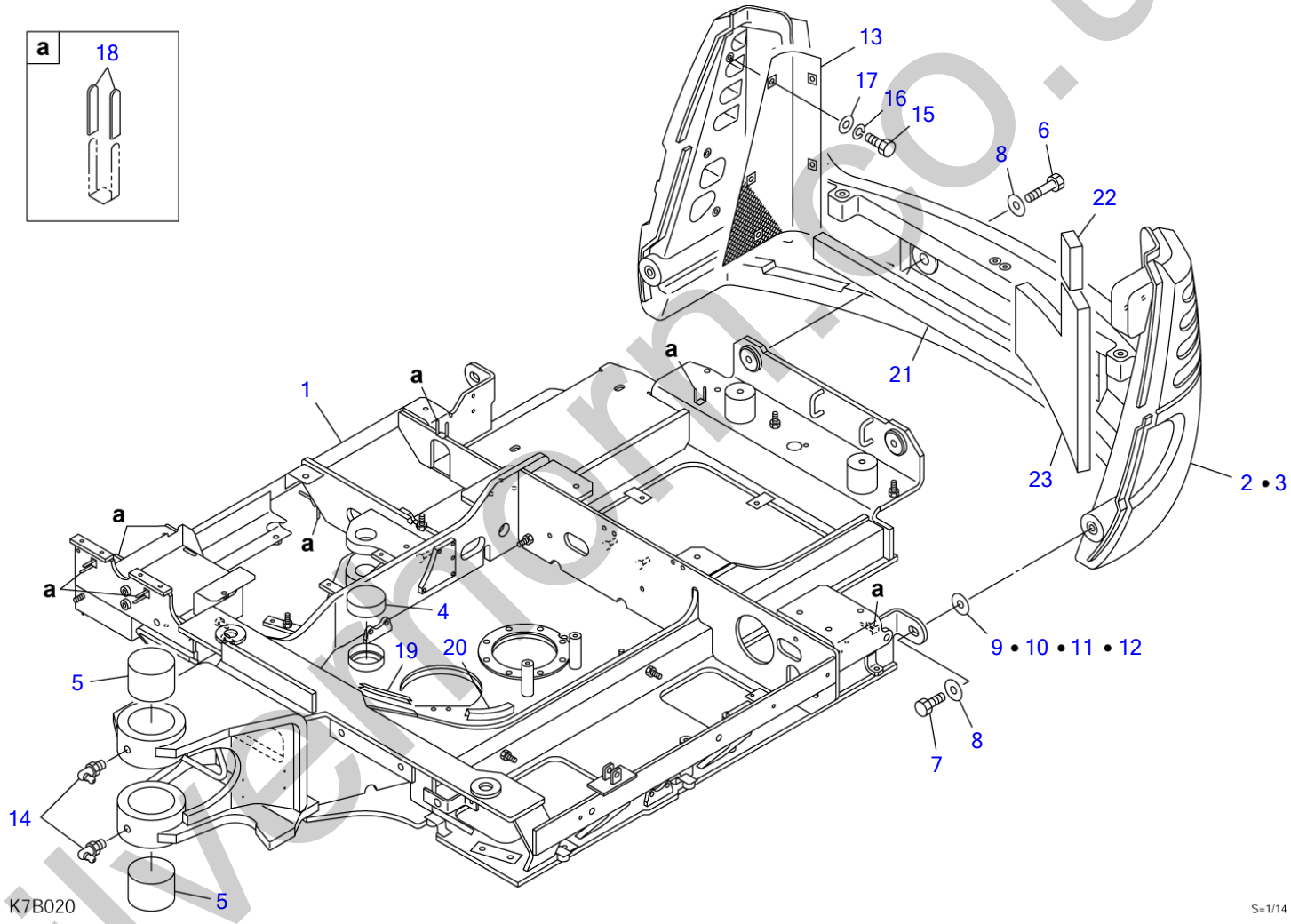

silverfrom.co.uk

TURNTABLE

Item	Part number	Description	Q'ty	Chan.	Serial No.	Serv.	Remarks
		TURNTABLE ASSY (cab)					
		TURNTABLE ASSY (canopy)					
1	X **********	TURNTABLE	1				
2	0393025400	COUNTERWEIGHT	1				cab
3	0393025600	COUNTERWEIGHT	1				canopy
4	0173216600	COVER	1				
5	0393020005	BUSHING	2				
6	1101042090	BOLT	2				
7	1101042055	BOLT	2				
8	0393025080	WASHER	4				
9	0563030600	SHIM	AR				t=1.2
10	0563030610	SHIM	AR				t=2.3
11	0393027011	SHIM	AR				t=1.6
12	0393027012	SHIM	AR				t=3.2
13	0393025030	NET	1				
14	1560001675	FITTING, grease	2				
15	1100040820	BOLT	5				
16	1140020008	WASHER, spring	5				
17	0003608252	WASHER	5				
18	0872433150	TUBE	20				sold by the meter
19	1654640017	TRIM	1				sold by the meter
20	1654641015	TRIM	1				
21	0393027020	ABSORBENT, noise	1				
22	0393027021	ABSORBENT, noise	1				
23	0393027022	ABSORBENT, noise	1				
	K7b021						

silverhorn.co.uk

BOOM SWING

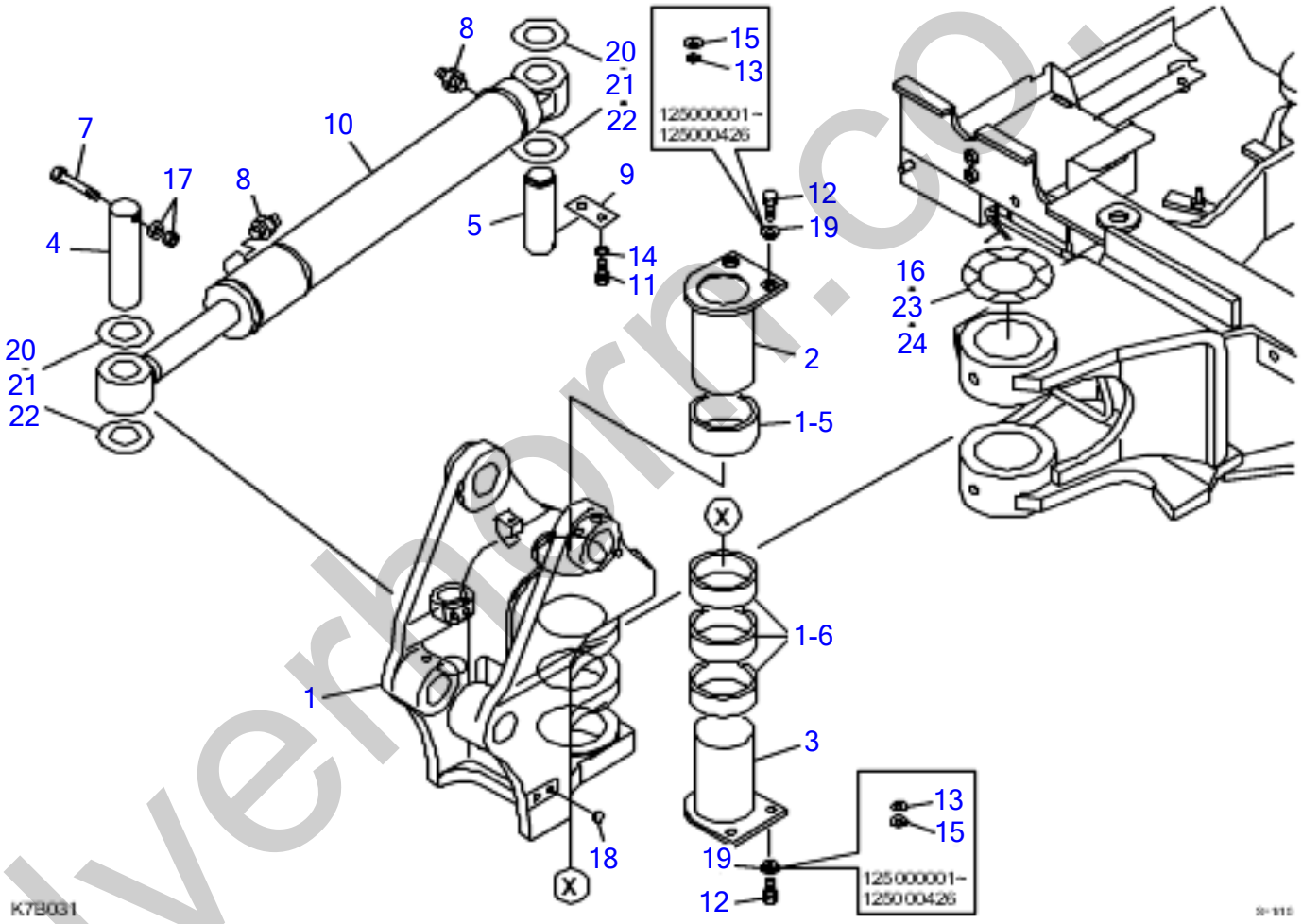

silverhorn.co.uk

BOOM SWING

Item	Part number	Description	Q'ty	Chan.	Serial No.	Serv.	Remarks
		SWING ASSY, boom					
1	0393113100	BRACKET	1				
1-5	0393113155	・BUSHING	1				
1-6	0393113156	・BUSHING	3				
2	0393113510	PIN	1				
	0393114510	PIN	1				
3	0393113520	PIN	1				
	0393114520	PIN	1				
4	0001614002	PIN	1				
5	0001694010	PIN	1				
7	1103041085	BOLT	1				
8	1515600201	ADAPTOR	2				
	1420010140	・O-RING	1				
9	0433105700	PLATE	1				
10	1900104600	CYLINDER, swing	1				
	1900105700	SWING CYLINDER	1				
11	1101041220	BOLT	2				
12	1101041225	BOLT	4				
13	0003600245	COLLAR	4				
14	1140020012	WASHER, spring	2				
15	0003900077	WASHER	4				
16	0393114021	WASHER	AR				t=4.5mm
17	1130240010	NUT	2				
18	1652533018	CAP	4				
19	0003900080	WASHER	4				
	0003900081	WASHER	4				
20	0456008600	SHIM	AR				t=1.0mm
21	0003600056	SHIM	AR				t=0.5mm
22	0003600055	SHIM	AR				t=0.2mm
23	0393114022	WASHER	AR				t=5.0mm
24	0393114023	WASHER	AR				t=5.5mm
	K7b031						

silverhorn.co.uk

SWING STOPPER

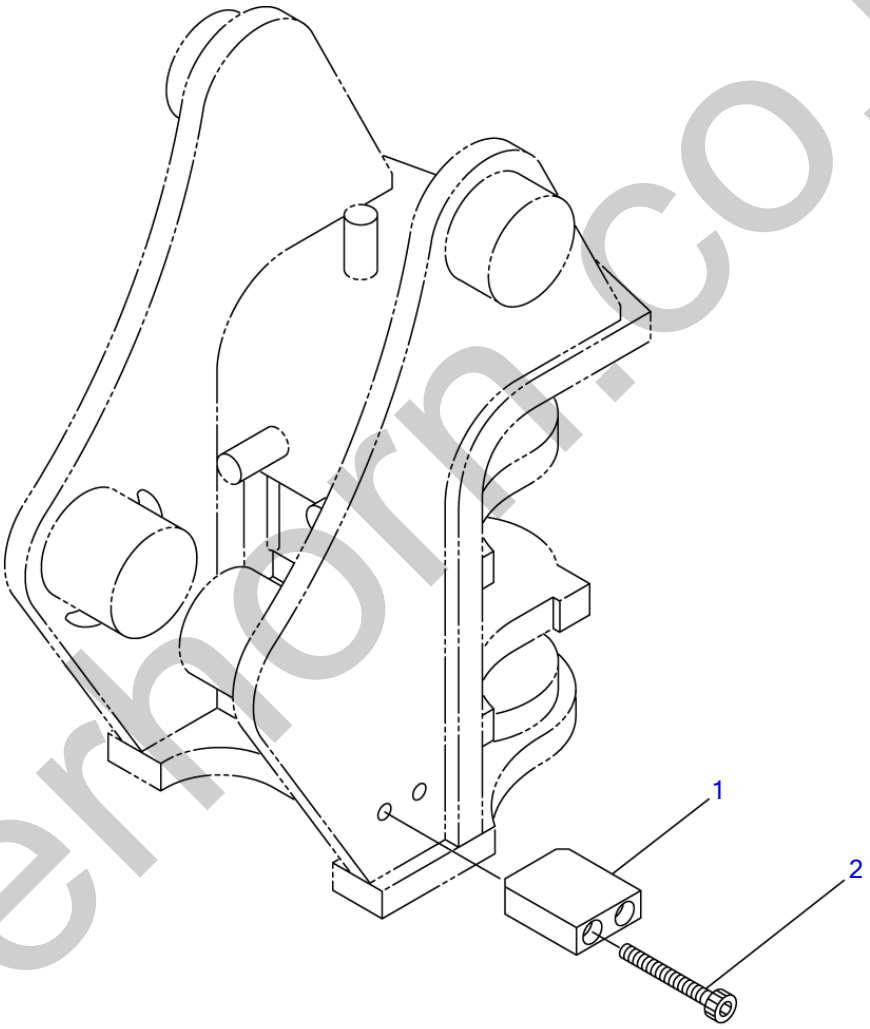

G4B040

S=1/5

silverhorn.co.uk

SWING STOPPER

Item	Part number	Description	Q'ty	Chan.	Serial No.	Serv.	Remarks
		STOPPER ASSY, swing					
1	0393901100	PLATE	1				
2	1111041270 K7b120	SCREW, cap	2				

silverhorn.co.uk

CONTROL LEVER & PEDAL

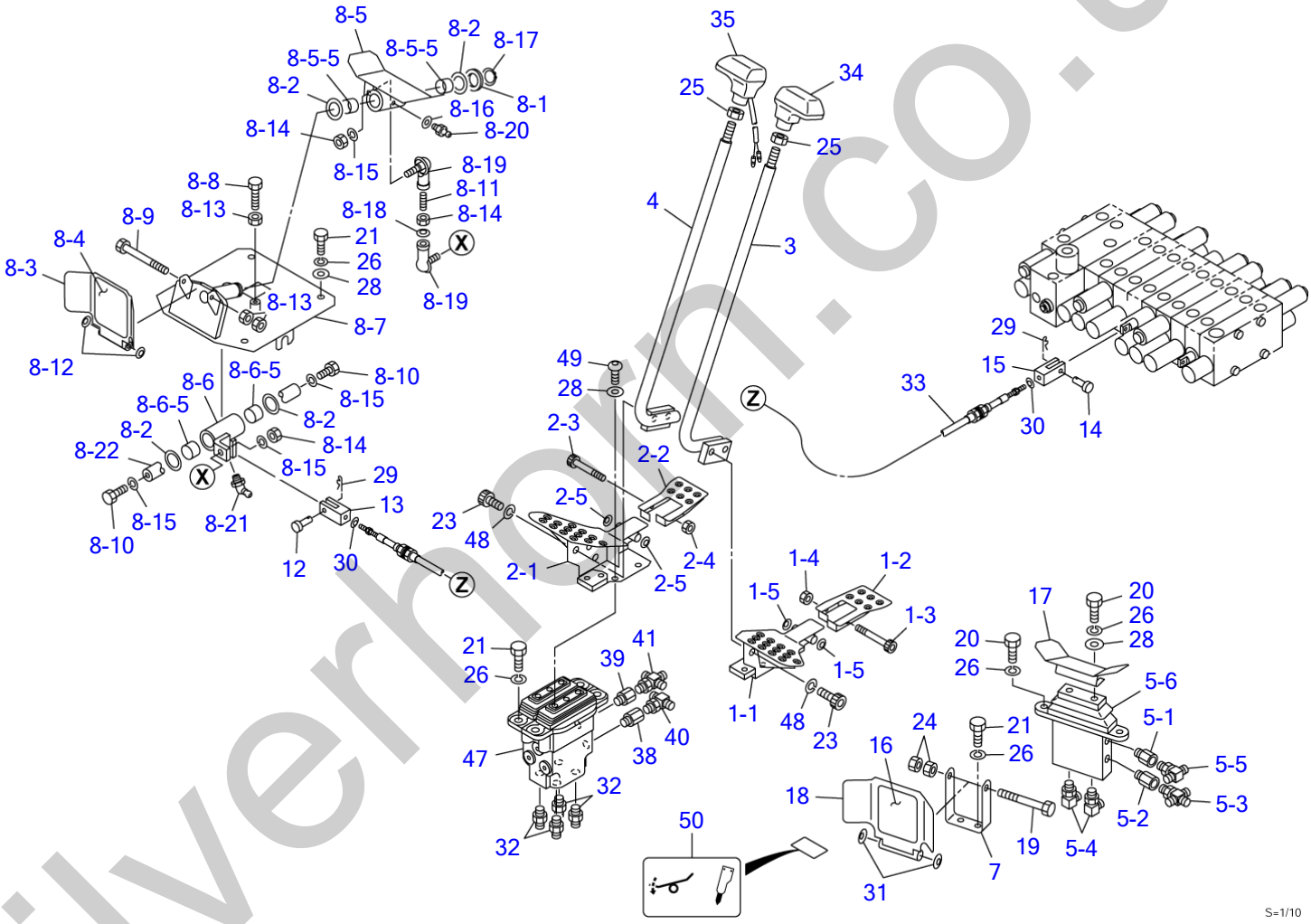

silverhorn.co.uk

CONTROL LEVER & PEDAL

Item	Part number	Description	Q'ty	Chan.	Serial No.	Serv.	Remarks
		LEVER ASSY, control					
1	0373208610	PEDAL ASSY (L.H.)	1				
1-1	0373208620	・PEDAL (L.H.)	1		125000001~125000012		
	0373208720	・PEDAL (L.H.)	1	(H)	125000013~		
1-2	0373208630	・PEDAL (L.H.)	1				
1-3	1110040655	・SCREW, cap	1				
1-4	1130040006	・NUT	1				
1-5	1225110006	・WASHER, conical	2				
2	0373208640	PEDAL ASSY (R.H.)	1				
2-1	0373208650	・PEDAL (R.H.)	1		125000001~125000012		
	0373208750	・PEDAL (R.H.)	1	(H)	125000013~		
2-2	0373208660	・PEDAL (R.H.)	1				
2-3	1110040655	・SCREW, cap	1				
2-4	1130040006	・NUT	1				
2-5	1225110006	・WASHER, conical	2				
3	0373208670	LEVER (L.H.)	1				
4	0373208680	LEVER (R.H.)	1				
5	0373208050	VALVE ASSY	1				
5-1	1513250202	・BUSHING	1				
	1420010110	・・O-RING	1				
5-2	1513370046	・ADAPTOR (with filter)	1				
	1420010110	・・O-RING	1				
5-3	1513390027	・CROSS	1				
	1420010110	・・O-RING	1				
5-4	1515012040	・ELBOW	2				
	1420010110	・・O-RING	1				
5-5	1512370010	・ADAPTOR	1				
	1420010110	・・O-RING	1				
5-6	1901735000	・VALVE, remote control	1				
7	0373208070	PLATE	1				
8	0373208690	PEDAL ASSY, swing	1				
8-1	0003600034	・WASHER	1				
8-2	0093208300	・WASHER	2				
8-3	0333234260	・COVER	1				
8-4	0333241250	・SHEET	1				
8-5	0373200550	・PEDAL ASSY	1				
8-5-5	1333002020	・・BUSHING	2				
8-6	0373201650	・LEVER ASSY	1				
8-6-5	1333002015	・・BUSHING	2				
8-7	0373208090	・BRACKET	1				
8-8	1100040625	・BOLT	2				
8-9	1100040680	・BOLT	1				
8-10	1100040820	・BOLT	2				
8-11	1121040832	・SET-SCREW	1				
8-12	1225110006	・WASHER, conical	2				
8-13	1130040006	・NUT	4				
8-14	1130040008	・NUT	3				
8-15	1140020008	・WASHER, spring	4				
8-16	1141110006	・WASHER	1				
8-17	1220000020	・RING, retaining	1				
8-18	1225000008	・WASHER	1				
8-19	1340010080	・END, rod	2				
8-20	1560011006	・FITTING, grease	1				
8-21	1560012006	・FITTING, grease	1				
8-22	0373201730	・SHAFT	1				
12	0004005117	PIN	1				
13	0005500007	YOKE	1				
14	0004006017	PIN	1				
15	0005506024	YOKE	1				
16	0333241250	SHEET	1				
17	0373208140	PEDAL	1				
18	0333234260	COVER	1				
19	1100040680	BOLT	1				
20	1100040816	BOLT	4				
21	1100040820	BOLT	10				
23	1110041016	BOLT	4				
24	1130040006	NUT	2				
25	1131040012	NUT	2				

silverthorn.co.uk

CONTROL LEVER & PEDAL

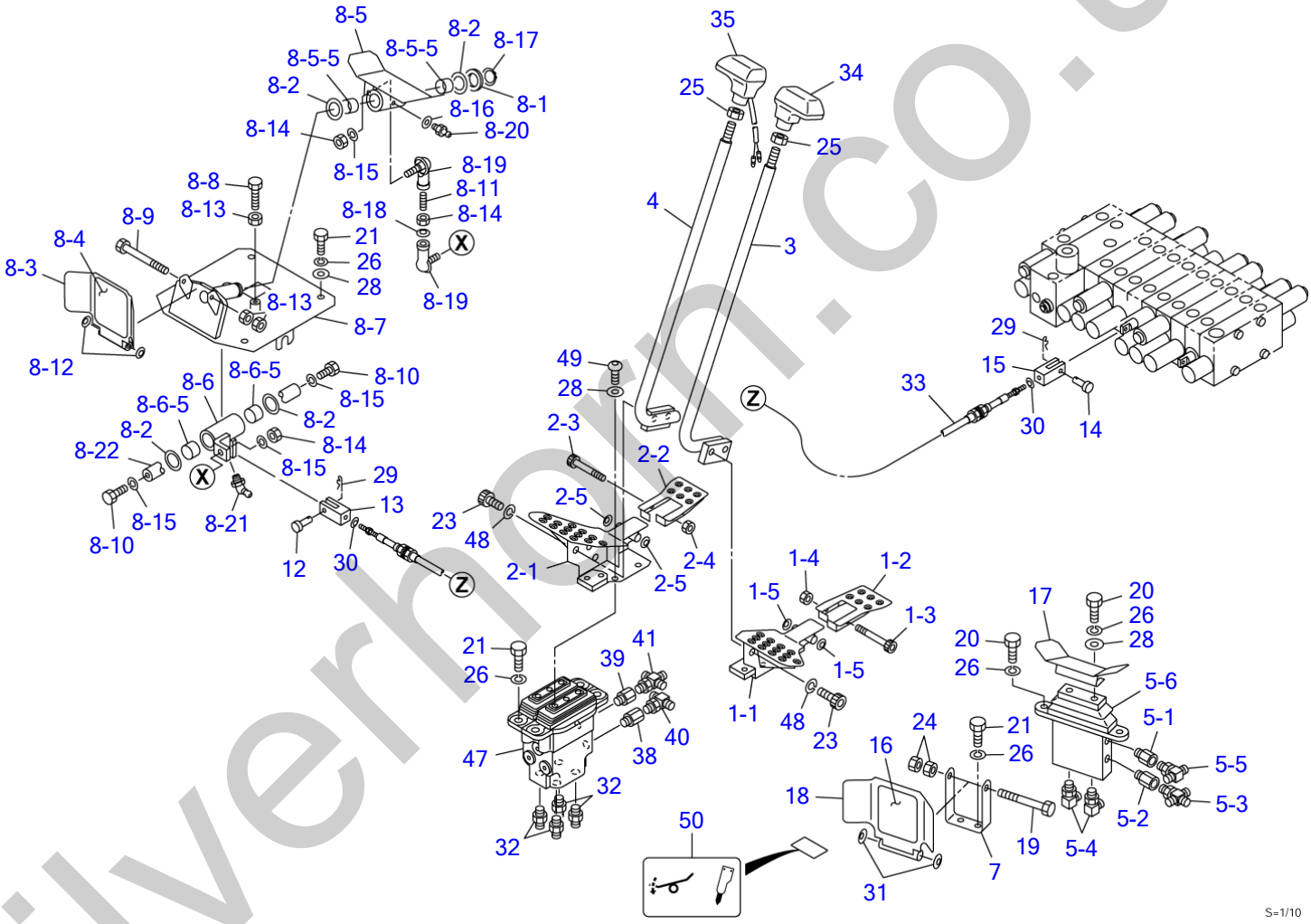

silverhorn.co.uk

CONTROL LEVER & PEDAL

Item	Part number	Description	Q'ty	Chan.	Serial No.	Serv.	Remarks
26	1140020008	WASHER, spring	18				
28	1141110008	WASHER	10				
29	1214000005	PIN, snap	2				
30	1225000005	WASHER	2				
31	1225110006	WASHER, conical	2				
32	1515600200	ADAPTOR	4				
32	1420010110	・O-RING	1				
33	1630771095	CABLE, control	1				
34	1650202610	GRIP	1				
35	1650203210	GRIP	1				
38	1513370046	ADAPTOR (with filter)	1				
38	1420010110	・O-RING	1				
39	1513250202	BUSHING	1				
39	1420010110	・O-RING	1				
40	1512370010	TEE	1				
40	1420010110	・O-RING	1				
41	1513390027	CROSS	1				
41	1420010110	・O-RING	1				
47	1901750500	VALVE, remote control	1				
48	1140420010	WASHER, spring	4				
49	1120990814	SCREW	4				
50	0339330800	DECAL	1				
	K7b041						

silverhorn.co.uk

CONTROL LEVER & PEDAL (1st aux. ON-OFF type)

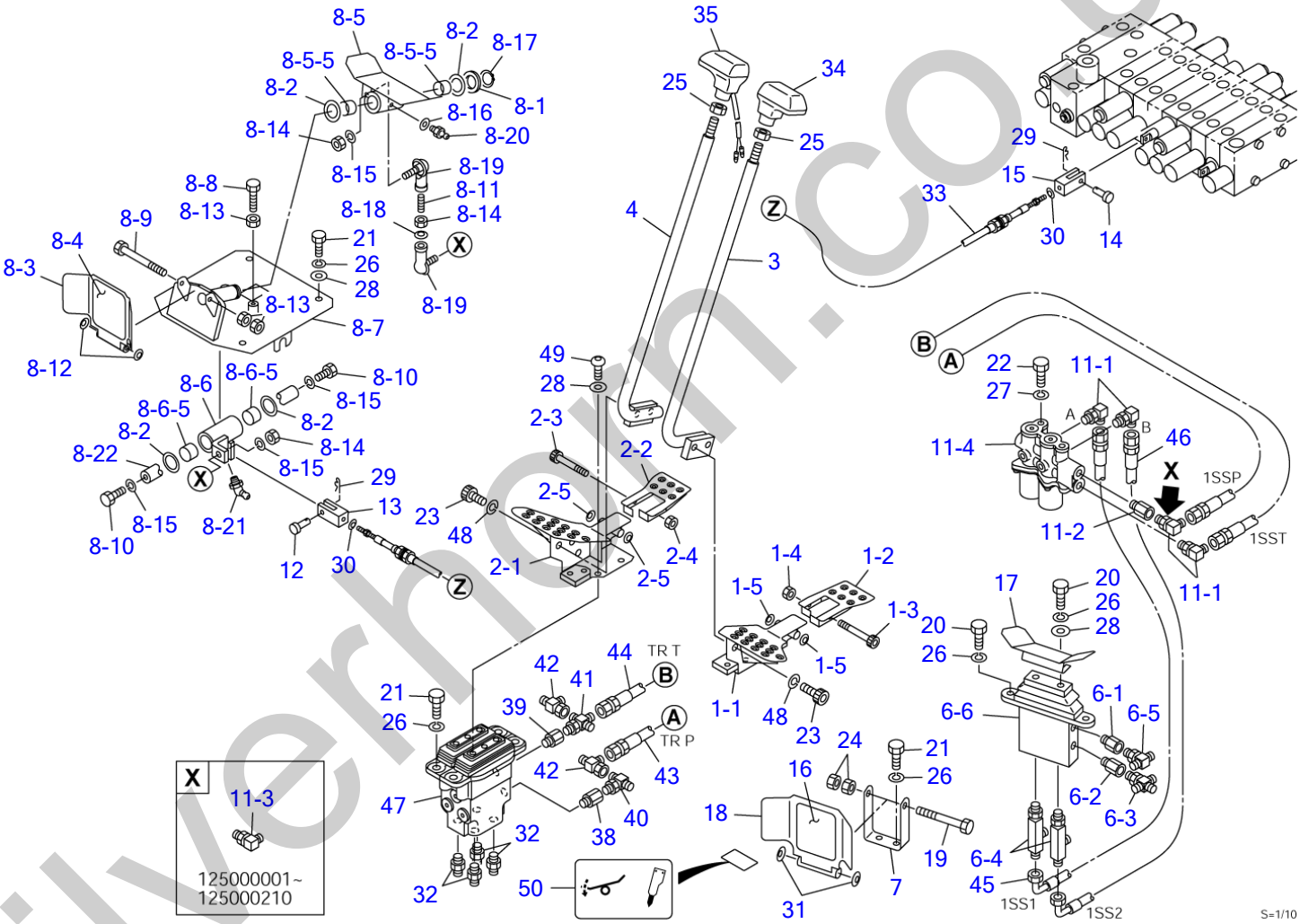

silverhorn.co.uk

CONTROL LEVER & PEDAL (1st aux. ON-OFF type)

Item	Part number	Description	Q'ty	Chan.	Serial No.	Serv.	Remarks
		LEVER ASSY, control					
1	0373208610	PEDAL ASSY (L.H.)	1				
1-1	0373208620	・PEDAL (L.H.)	1		125000001~125000012		
	0373208720	・PEDAL (L.H.)	1	(H)	125000013~		
1-2	0373208630	・PEDAL (L.H.)	1				
1-3	1110040655	・SCREW, cap	1				
1-4	1130040006	・NUT	1				
1-5	1225110006	・WASHER, conical	2				
2	0373208640	PEDAL ASSY (R.H.)	1				
2-1	0373208650	・PEDAL (R.H.)	1		125000001~125000012		
	0373208750	・PEDAL (R.H.)	1	(H)	125000013~		
2-2	0373208660	・PEDAL (R.H.)	1				
2-3	1110040655	・SCREW, cap	1				
2-4	1130040006	・NUT	1				
2-5	1225110006	・WASHER, conical	2				
3	0373208670	LEVER (L.H.)	1				
4	0373208680	LEVER (R.H.)	1				
6	0373208060	VALVE ASSY	1				
6-1	1513250202	・BUSHING	1				
	1420010110	・・O-RING	1				
6-2	1513370046	・ADAPTOR (with filter)	1				
	1420010110	・・O-RING	1				
6-3	1513390027	・CROSS	1				
	1420010110	・・O-RING	1				
6-4	1901735300	・VALVE, shuttle	2				
	1420010110	・・O-RING	1				
6-5	1512370010	・TEE	1				
	1420010110	・・O-RING	1				
6-6	1901735000	・VALVE, remote control	1				
7	0373208070	PLATE	1				
8	0373208690	PEDAL ASSY, swing	1				
8-1	0003600034	・WASHER	1				
8-2	0093208300	・WASHER	2				
8-3	0333234260	・COVER	1				
8-4	0333241250	・SHEET	1				
8-5	0373200550	・PEDAL ASSY	1				
8-5-5	1333002020	・・BUSHING	2				
8-6	0373201650	・LEVER ASSY	1				
8-6-5	1333002015	・・BUSHING	2				
8-7	0373208090	・BRACKET	1				
8-8	1100040625	・BOLT	2				
8-9	1100040680	・BOLT	1				
8-10	1100040820	・BOLT	2				
8-11	1121040832	・SET-SCREW	1				
8-12	1225110006	・WASHER, conical	2				
8-13	1130040006	・NUT	4				
8-14	1130040008	・NUT	3				
8-15	1140020008	・WASHER, spring	4				
8-16	1141110006	・WASHER	1				
8-17	1220000020	・RING, retaining	1				
8-18	1225000008	・WASHER	1				
8-19	1340010080	・END, rod	2				
8-20	1560011006	・FITTING, grease	1				
8-21	1560012006	・FITTING, grease	1				
8-22	0373201730	・SHAFT	1				
11	0373208130	VALVE ASSY, solenoid	1		125000001~125000210		
	0373208150	VALVE ASSY, solenoid	1	(H)	125000211~		
11-1	1515012040	・ELBOW	3		125000001~125000210		
	1515012040	・ELBOW	4		125000211~		
	1420010140	・・O-RING	1				
11-2	1513370046	・ADAPTOR (with filter)	1		125000001~125000210		
	0373208922	・ADAPTOR (with filter)	1		125000211~		
	1420010110	・・O-RING	1				
11-3	0881710311	・ELBOW (with orifice)	1		125000001~125000210		
	1420010110	・・O-RING	1				
11-4	1901751000	・VALVE, solenoid	1				
12	0004005117	PIN	1				
13	0005500007	YOKE	1				

silverhorn.co.uk

CONTROL LEVER & PEDAL (1st aux. ON-OFF type)

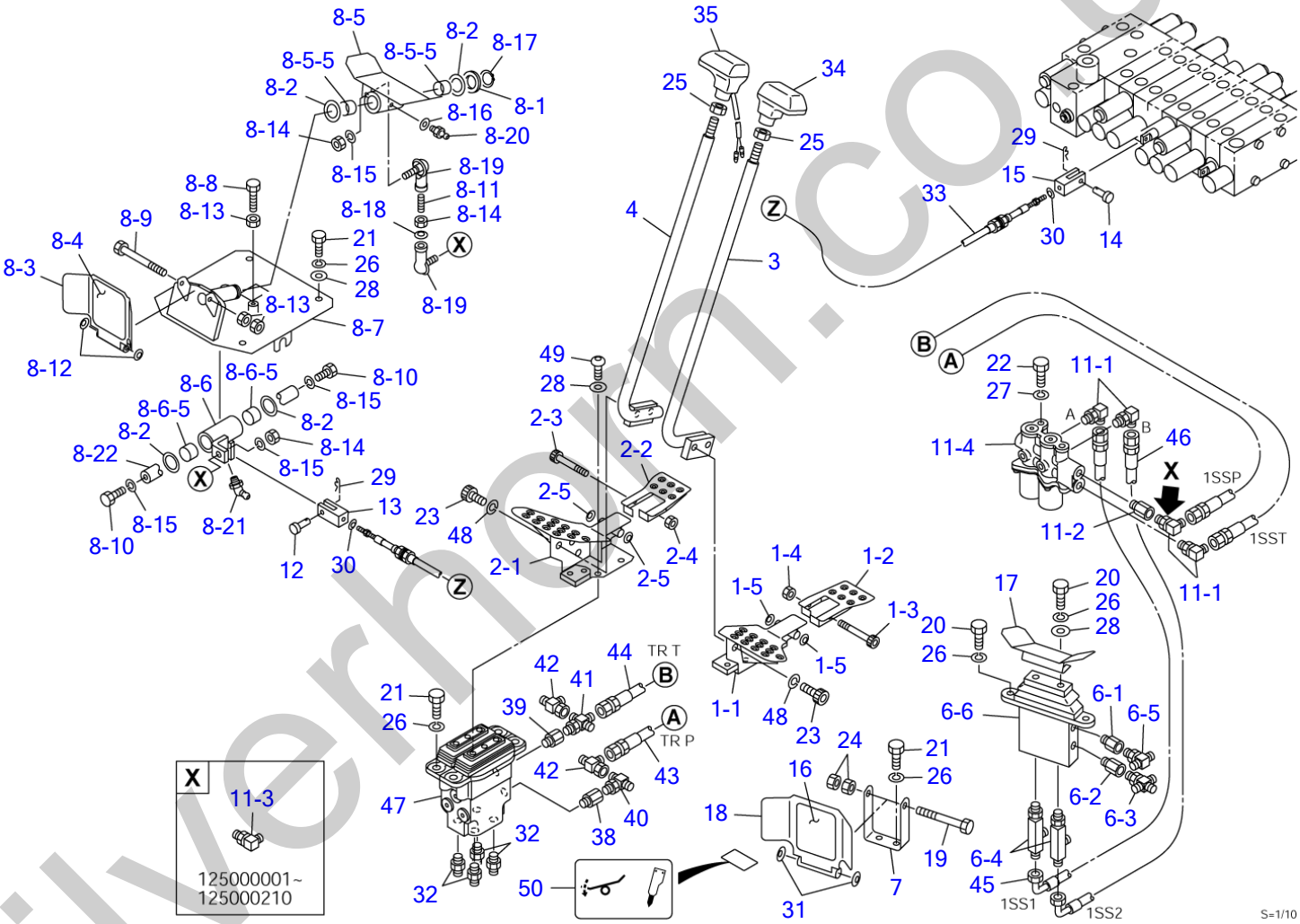

silverhorn.co.uk

CONTROL LEVER & PEDAL (1st aux. ON-OFF type)

Item	Part number	Description	Q'ty	Chan.	Serial No.	Serv.	Remarks
14	0004006017	PIN	1				
15	0005506024	YOKE	1				
16	0333241250	SHEET	1				
17	0373208140	PEDAL	1				
18	0333234260	COVER	1				
19	1100040680	BOLT	1				
20	1100040816	BOLT	4				
21	1100040820	BOLT	10				
22	1100041016	BOLT	2				
23	1110041016	BOLT	4				
24	1130040006	NUT	2				
25	1131040012	NUT	2				
26	1140020008	WASHER, spring	18				
27	1140020010	WASHER, spring	2				
28	1141110008	WASHER	10				
29	1214000005	PIN, snap	2				
30	1225000005	WASHER	2				
31	1225110006	WASHER, conical	2				
32	1515600200	ADAPTOR	4				
32	1420010110	・O-RING	1				
33	1630771095	CABLE, control	1				
34	1650202610	GRIP	1				
35	1650203210	GRIP	1				
38	1513370046	ADAPTOR (with filter)	1				
38	1420010110	・O-RING	1				
39	1513250202	BUSHING	1				
39	1420010110	・O-RING	1				
40	1512370010	TEE	1				
40	1420010110	・O-RING	1				
41	1513390027	CROSS	1				
41	1420010110	・O-RING	1				
42	1513390015	TEE	2				
43	0373208810	HOSE ASSY	1				19347-22060
44	0373208820	HOSE ASSY	1				19347-22060
45	0373208830	HOSE ASSY	1				19347-52025
46	0373208840	HOSE ASSY	1				19347-52025
47	1901750500	VALVE, remote control	1				
48	1140420010	WASHER, spring	4				
49	1120990814	SCREW	4				
50	0339330800	DECAL	1				
	K7b061						

silverhorn.co.uk

CONTROL LEVER & PEDAL (1st aux. only ON-OFF type)

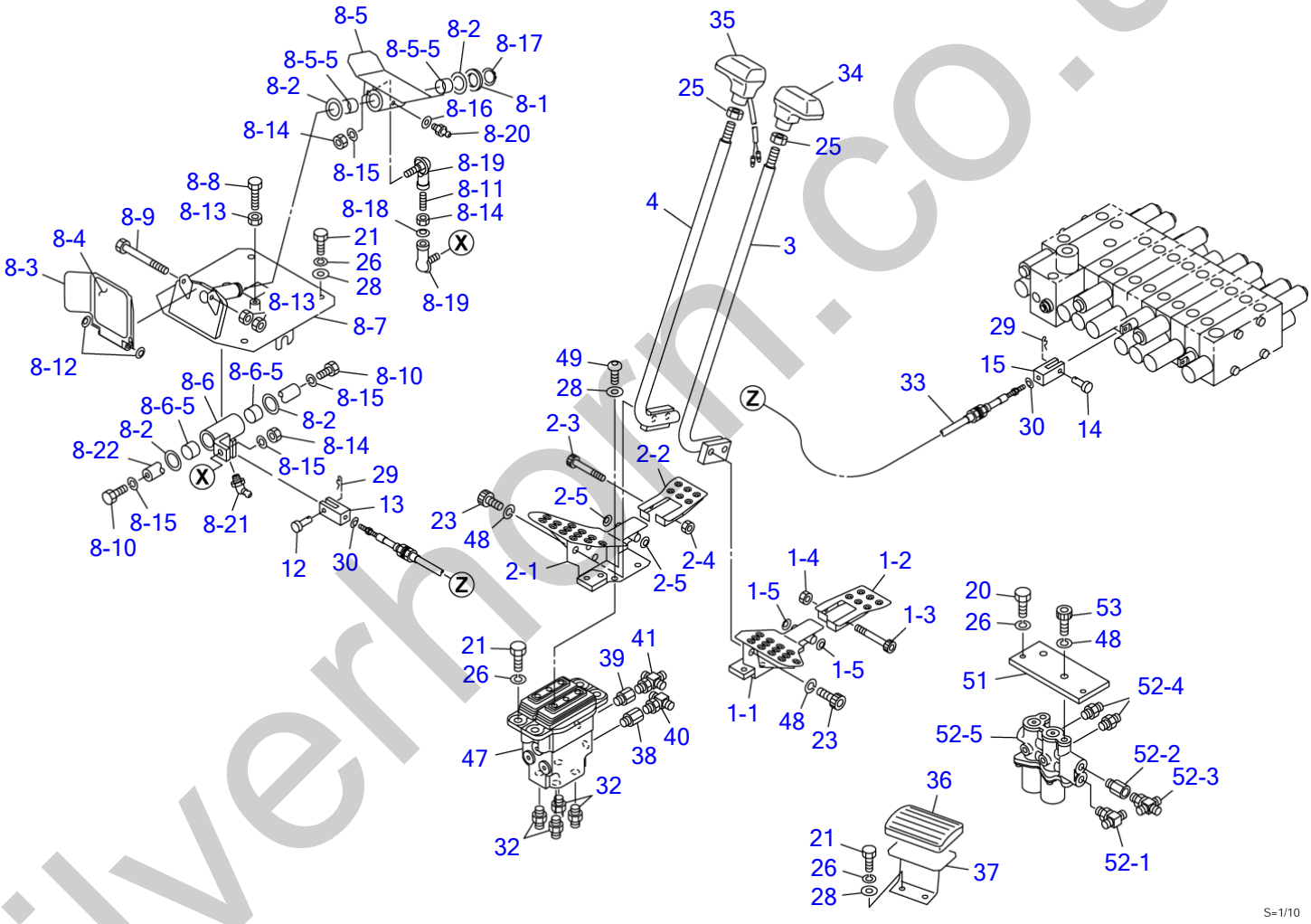

silverhorn.co.uk

CONTROL LEVER & PEDAL (1st aux. only ON-OFF type)

Item	Part number	Description	Q'ty	Chan.	Serial No.	Serv.	Remarks
		LEVER ASSY, control					
1	0373208610	PEDAL ASSY (L.H.)	1				
1-1	0373208720	・PEDAL (L.H.)	1				
1-2	0373208630	・PEDAL (L.H.)	1				
1-3	1110040655	・SCREW, cap	1				
1-4	1130040006	・NUT	1				
1-5	1225110006	・WASHER, conical	2				
2	0373208640	PEDAL ASSY (R.H.)	1				
2-1	0373208750	・PEDAL (R.H.)	1				
2-2	0373208660	・PEDAL (R.H.)	1				
2-3	1110040655	・SCREW, cap	1				
2-4	1130040006	・NUT	1				
2-5	1225110006	・WASHER, conical	2				
3	0373208670	LEVER (L.H.)	1				
4	0373208680	LEVER (R.H.)	1				
8	0373208690	PEDAL ASSY, swing	1				
8-1	0003600034	・WASHER	1				
8-2	0093208300	・WASHER	2				
8-3	0333234260	・COVER	1				
8-4	0333241250	・SHEET	1				
8-5	0373200550	・PEDAL ASSY	1				
8-5-5	1333002020	・・BUSHING	2				
8-6	0373201650	・LEVER ASSY	1				
8-6-5	1333002015	・・BUSHING	2				
8-7	0373208090	・BRACKET	1				
8-8	1100040625	・BOLT	2				
8-9	1100040680	・BOLT	1				
8-10	1100040820	・BOLT	2				
8-11	1121040832	・SET-SCREW	1				
8-12	1225110006	・WASHER, conical	2				
8-13	1130040006	・NUT	4				
8-14	1130040008	・NUT	3				
8-15	1140020008	・WASHER, spring	4				
8-16	1141110006	・WASHER	1				
8-17	1220000020	・RING, retaining	1				
8-18	1225000008	・WASHER	1				
8-19	1340010080	・END, rod	2				
8-20	1560011006	・FITTING, grease	1				
8-21	1560012006	・FITTING, grease	1				
8-22	0373201730	・SHAFT	1				
12	0004005117	PIN	1				
13	0005500007	YOKE	1				
14	0004006017	PIN	1				
15	0005506024	YOKE	1				
20	1100040816	BOLT	2				
21	1100040820	BOLT	8				
23	1110041016	BOLT	4				
25	1131040012	NUT	2				
26	1140020008	WASHER, spring	16				
28	1141110008	WASHER	10				
29	1214000005	PIN, snap	2				
30	1225000005	WASHER	2				
32	1515600200	ADAPTOR	4				
	1420010110	・O-RING	1				
33	1630771095	CABLE, control	1				
34	1650202610	GRIP	1				
35	1650203210	GRIP	1				
36	0563218500	COVER	1				
37	0563219700	REST, foot	1				
38	1513370046	ADAPTOR (with filter)	1				
	1420010110	・O-RING	1				
39	1513250202	BUSHING	1				
	1420010110	・O-RING	1				
40	1512370010	TEE	1				
	1420010110	・O-RING	1				
41	1513390027	CROSS	1				
	1420010110	・O-RING	1				
47	1901750500	VALVE, remote control	1				

silverthorn.co.uk

CONTROL LEVER & PEDAL (1st aux. only ON-OFF type)

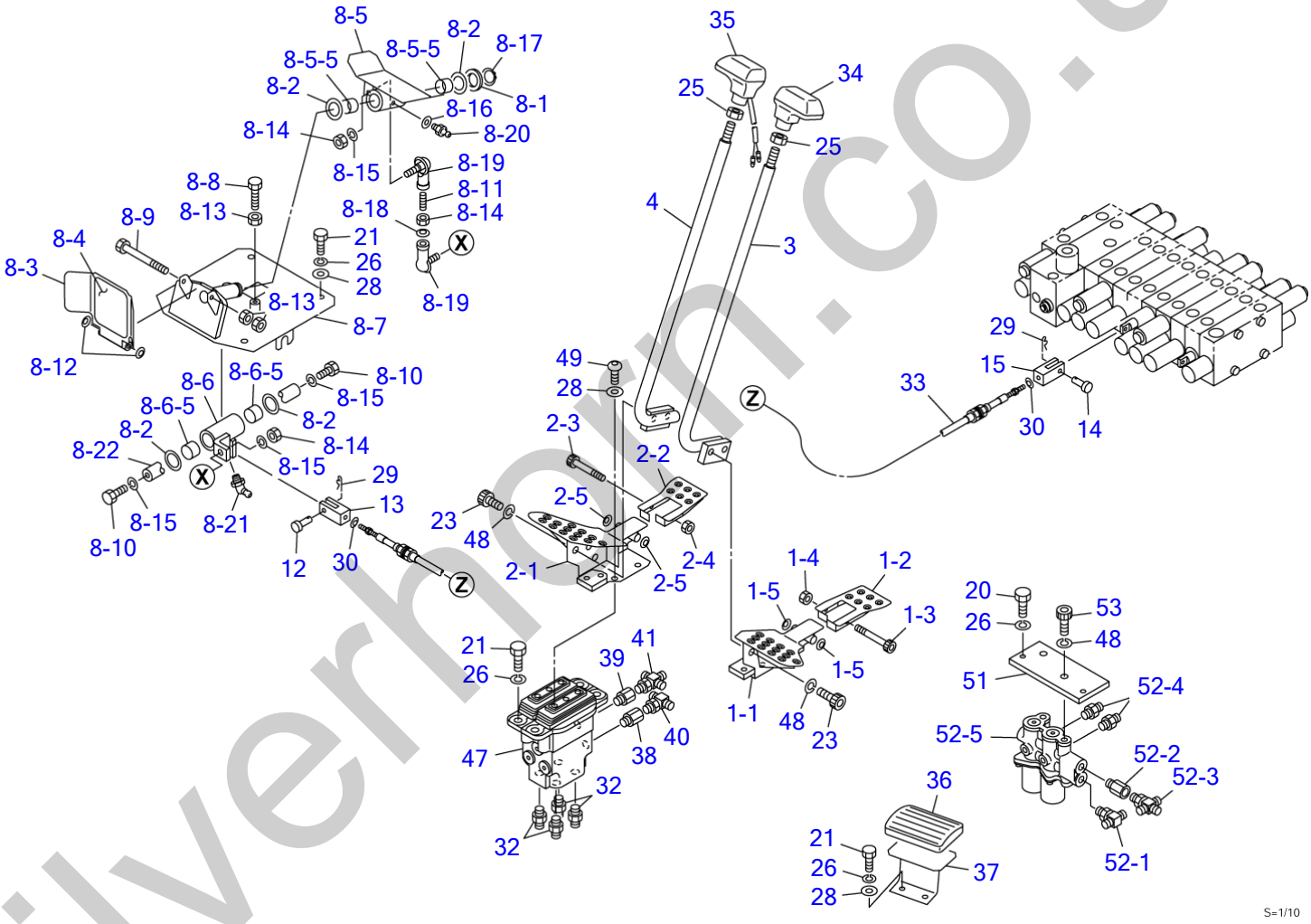

silverhorn.co.uk

CONTROL LEVER & PEDAL (1st aux. only ON-OFF type)

Item	Part number	Description	Q'ty	Chan.	Serial No.	Serv.	Remarks
48	1140420010	WASHER, spring	6				
49	1120990814	SCREW	4				
51	0373208910	PLATE	1				
52	0373208920	VALVE ASSY, solenoid	1				
52-1	1512370010	・TEE	1				
52-1	1420010110	・・O-RING	1				
52-2	0373208922	・BUSHING (with filter)	1				
52-2	1420010110	・・O-RING	1				
52-3	1513390027	・CROSS	1				
52-3	1420010110	・・O-RING	1				
52-4	1515600200	・ADAPTOR	2				
52-4	1420010110	・・O-RING	1				
52-5	1901751000	・VALVE, solenoid	1				
53	1110041025	SCREW, cap	2				
	G7B160						

silverhorn.co.uk

CONTROL LEVER & PEDAL (1st aux. only ON-OFF type)

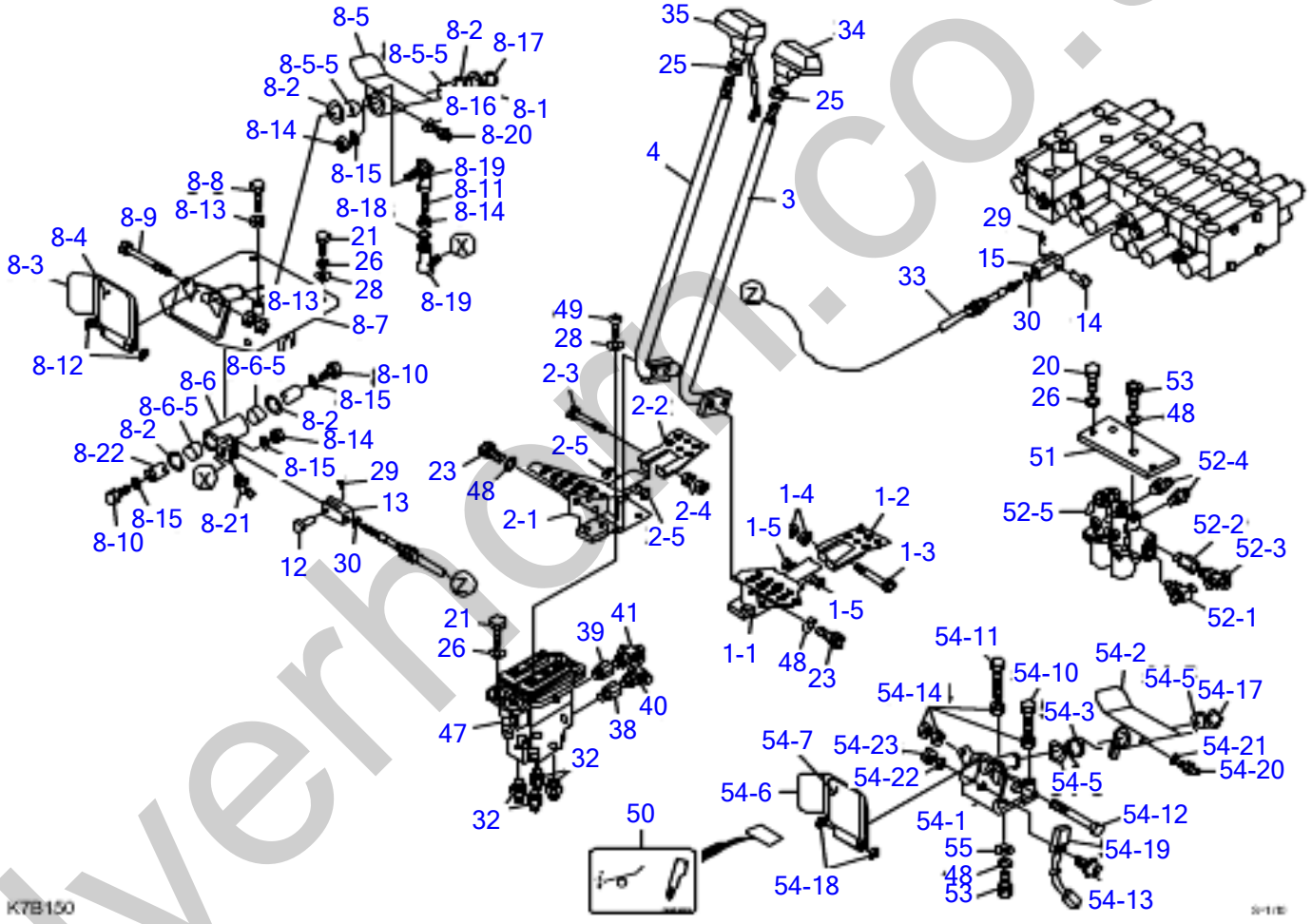

silverhorn.co.uk

CONTROL LEVER & PEDAL (1st aux. only ON-OFF type)

Item	Part number	Description	Q'ty	Chan.	Serial No.	Serv.	Remarks
		LEVER ASSY, control					
1	0373208610	PEDAL ASSY (L.H.)	1				
1-1	0373208720	・PEDAL (L.H.)	1				
1-2	0373208630	・PEDAL (L.H.)	1				
1-3	1110040655	・SCREW, cap	1				
1-4	1130040006	・NUT	2				
1-5	1225110006	・WASHER, conical	2				
2	0373208640	PEDAL ASSY (R.H.)	1				
2-1	0373208750	・PEDAL (R.H.)	1				
2-2	0373208660	・PEDAL (R.H.)	1				
2-3	1110040655	・SCREW, cap	1				
2-4	1130040006	・NUT	2				
2-5	1225110006	・WASHER, conical	2				
3	0373208670	LEVER (L.H.)	1				
4	0373208680	LEVER (R.H.)	1				
8	0373208690	PEDAL ASSY, swing	1				
8-1	0003600034	・WASHER	1				
8-2	0093208300	・WASHER	2				
8-3	0333234260	・COVER	1				
8-4	0333241250	・SHEET	1				
8-5	0373200550	・PEDAL ASSY	1				
8-5-5	1333002020	・・BUSHING	2				
8-6	0373201650	・LEVER ASSY	1				
8-6-5	1333002015	・・BUSHING	2				
8-7	0373208090	・BRACKET	1				
8-8	1100040625	・BOLT	2				
8-9	1100040680	・BOLT	1				
8-10	1100040820	・BOLT	2				
8-11	1121040832	・SET-SCREW	1				
8-12	1225110006	・WASHER, conical	2				
8-13	1130040006	・NUT	4				
8-14	1130040008	・NUT	3				
8-15	1140020008	・WASHER, spring	4				
8-16	1141110006	・WASHER	1				
8-17	1220000020	・RING, retaining	1				
8-18	1225000008	・WASHER	1				
8-19	1340010080	・END, rod	2				
8-20	1560011006	・FITTING, grease	1				
8-21	1560012006	・FITTING, grease	1				
8-22	0373201730	・SHAFT	1				
12	0004005117	PIN	1				
13	0005500007	YOKE	1				
14	0004006017	PIN	1				
15	0005506024	YOKE	1				
20	1100040816	BOLT	2				
21	1100040820	BOLT	8				
23	1110041016	BOLT	4				
25	1131040012	NUT	2				
26	1140020008	WASHER, spring	14				
28	1141110008	WASHER	4				
29	1214000005	PIN, snap	2				
30	1225000005	WASHER	2				
32	1515600200	ADAPTOR	4				
	1420010110	・O-RING	1				
33	1630771095	CABLE, control	1				
34	1650202610	GRIP	1				
35	1650203210	GRIP	1				
38	1513370046	ADAPTOR (with filter)	1				
	1420010110	・O-RING	1				
39	1513250202	BUSHING	1				
	1420010110	・O-RING	1				
40	1512370010	TEE	1				
	1420010110	・O-RING	1				
41	1513390027	CROSS	1				
	1420010110	・O-RING	1				
47	1901750500	VALVE, remote control	1				
48	1140420010	WASHER, spring	8				
49	1120990814	SCREW	4				

silverthorn.co.uk

CONTROL LEVER & PEDAL (1st aux. only ON-OFF type)

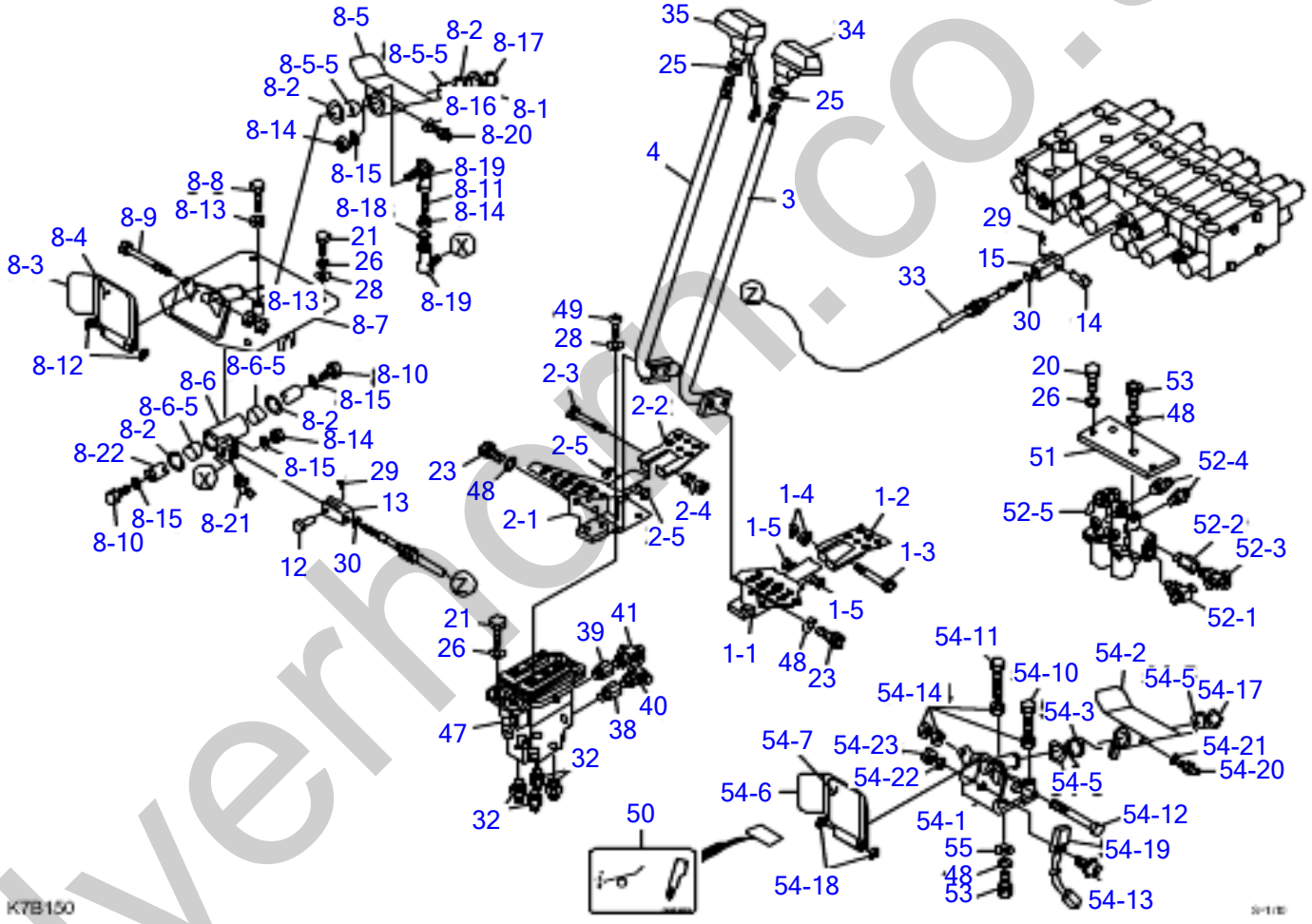

silverhorn.co.uk

CONTROL LEVER & PEDAL (1st aux. only ON-OFF type)

Item	Part number	Description	Q'ty	Chan.	Serial No.	Serv.	Remarks
50	349336913	DECAL	1				
51	0373208910	PLATE	1				
52	0373208920	VALVE ASSY, solenoid	1				
52-1	1512370010	・TEE	1				
52-1	1420010110	・・O-RING	1				
52-2	0373208922	・BUSHING (with filter)	1				
52-2	1420010110	・・O-RING	1				
52-3	1513390027	・CROSS	1				
52-3	1420010110	・・O-RING	1				
52-4	1515600200	・ADAPTOR	2				
52-4	1420010110	・・O-RING	1				
52-5	1901751000	・VALVE, solenoid	1				
53	1110041025	SCREW, cap	2				
54	0373209010	SERVICE PEDAL ASSY	1				
54-1	0373209020	* BRACKET	1				
54-2	0373209030	* PEDAL ASSY	1				
54-3	0373209050	* TORSION SPRING	1				
54-5	0003600034	* WASHER	2				
54-6	0333234260	* COVER	1				
54-7	0333241250	* SHEET	1				
54-10	1100040620	* BOLT	1				
54-11	1100040635	* BOLT	1				
54-12	1100040680	* BOLT	1				
54-13	1150410316	* SCREW	2				
54-14	1130040006	* NUT	4				
54-17	1220000020	* SNAP RING	1				
54-18	1225110006	* CONICAL WASHER	2				
54-19	1700009010	* SWITCH	1				
54-20	1560011006	* GREASE FITTING	1				
54-21	1141110006	* WASHER	1				
54-22	1141110003	* WASHER	2				
54-23	1130030003	* NUT	2				
55	1141110010	WASHER	2				
	G7B130						

silverhorn.co.uk

CONTROL LEVER & PEDAL (1st aux. proportional cont. type)

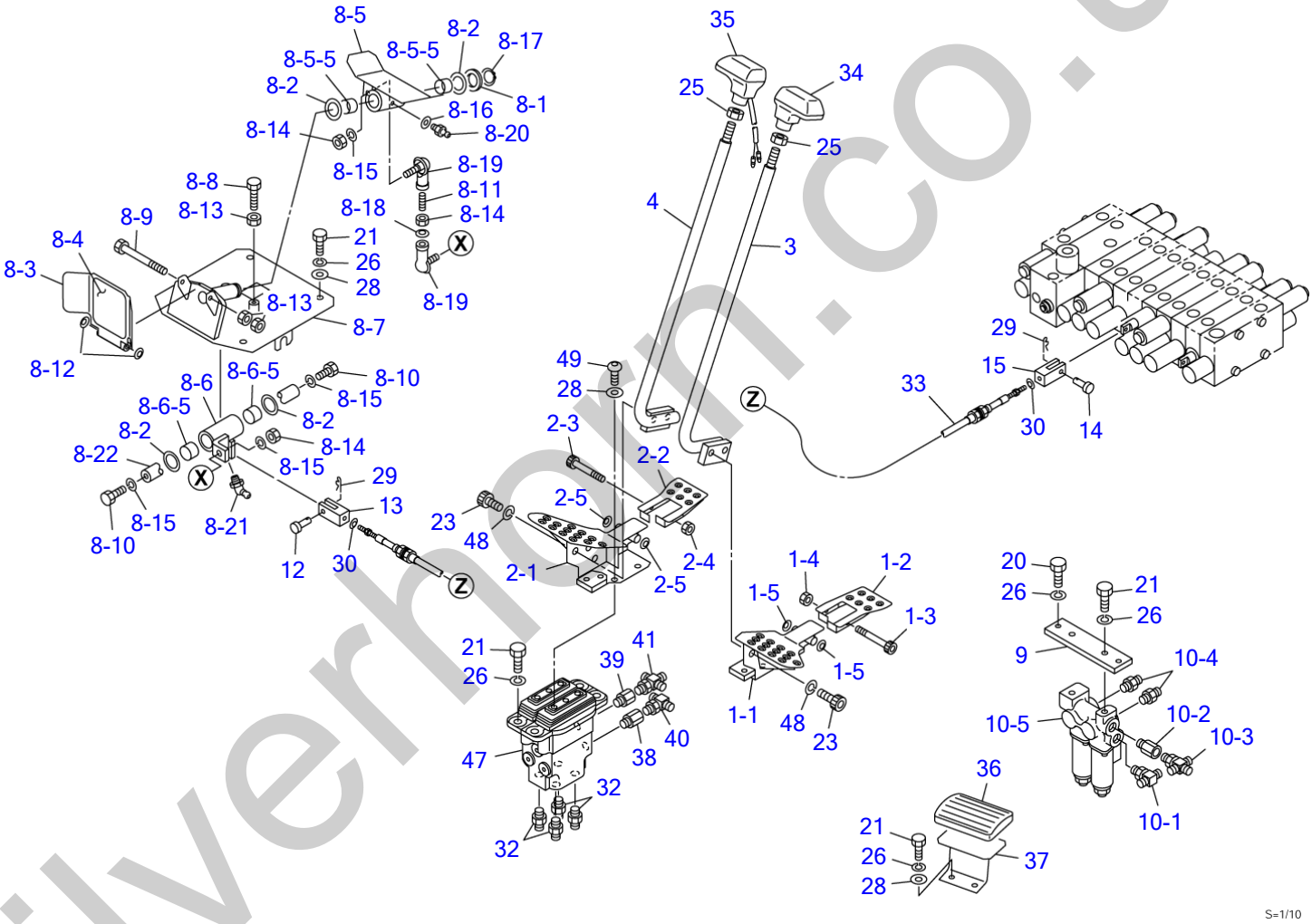

silverhorn.co.uk

CONTROL LEVER & PEDAL (1st aux. proportional cont. type)

Item	Part number	Description	Q'ty	Chan.	Serial No.	Serv.	Remarks
		LEVER ASSY, control					
1	0373208610	PEDAL ASSY (L.H.)	1				
1-1	0373208620	・PEDAL (L.H.)	1		125000001~125000012		
	0373208720	・PEDAL (L.H.)	1	(H)	125000013~		
1-2	0373208630	・PEDAL (L.H.)	1				
1-3	1110040655	・SCREW, cap	1				
1-4	1130040006	・NUT	1				
1-5	1225110006	・WASHER, conical	2				
2	0373208640	PEDAL ASSY (R.H.)	1				
2-1	0373208650	・PEDAL (R.H.)	1		125000001~125000012		
	0373208750	・PEDAL (R.H.)	1	(H)	125000013~		
2-2	0373208660	・PEDAL (R.H.)	1				
2-3	1110040655	・SCREW, cap	1				
2-4	1130040006	・NUT	1				
2-5	1225110006	・WASHER, conical	2				
3	0373208670	LEVER (L.H.)	1				
4	0373208680	LEVER (R.H.)	1				
8	0373208690	PEDAL ASSY, swing	1				
8-1	0003600034	・WASHER	1				
8-2	0093208300	・WASHER	2				
8-3	0333234260	・COVER	1				
8-4	0333241250	・SHEET	1				
8-5	0373200550	・PEDAL ASSY	1				
8-5-5	1333002020	・・BUSHING	2				
8-6	0373201650	・LEVER ASSY	1				
8-6-5	1333002015	・・BUSHING	2				
8-7	0373208090	・BRACKET	1				
8-8	1100040625	・BOLT	2				
8-9	1100040680	・BOLT	1				
8-10	1100040820	・BOLT	2				
8-11	1121040832	・SET-SCREW	1				
8-12	1225110006	・WASHER, conical	2				
8-13	1130040006	・NUT	4				
8-14	1130040008	・NUT	3				
8-15	1140020008	・WASHER, spring	4				
8-16	1141110006	・WASHER	1				
8-17	1220000020	・RING, retaining	1				
8-18	1225000008	・WASHER	1				
8-19	1340010080	・END, rod	2				
8-20	1560011006	・FITTING, grease	1				
8-21	1560012006	・FITTING, grease	1				
8-22	0373201730	・SHAFT	1				
9	0373208110	PLATE	1				
10	0373208120	VALVE ASSY, solenoid	1				
10-1	1512370010	・TEE	1				
	1420010110	・・O-RING	1				
10-2	1513370046	・ADAPTOR (with filter)	1				
	1420010110	・・O-RING	1				
10-3	1513390027	・CROSS	1				
	1420010110	・・O-RING	1				
10-4	1515600200	・ADAPTOR	2				
	1420010110	・・O-RING	1				
10-5	1901752100	・VALVE, solenoid	1				
12	0004005117	PIN	1				
13	0005500007	YOKE	1				
14	0004006017	PIN	1				
15	0005506024	YOKE	1				
20	1100040816	BOLT	2				
21	1100040820	BOLT	10				
23	1110041016	BOLT	4				
25	1131040012	NUT	2				
26	1140020008	WASHER, spring	18				
28	1141110008	WASHER	10				
29	1214000005	PIN, snap	2				
30	1225000005	WASHER	2				
32	1515600200	ADAPTOR	4				
	1420010110	・O-RING	1				
33	1630771095	CABLE, control	1				

silverthorn.co.uk

CONTROL LEVER & PEDAL (1st aux. proportional cont. type)

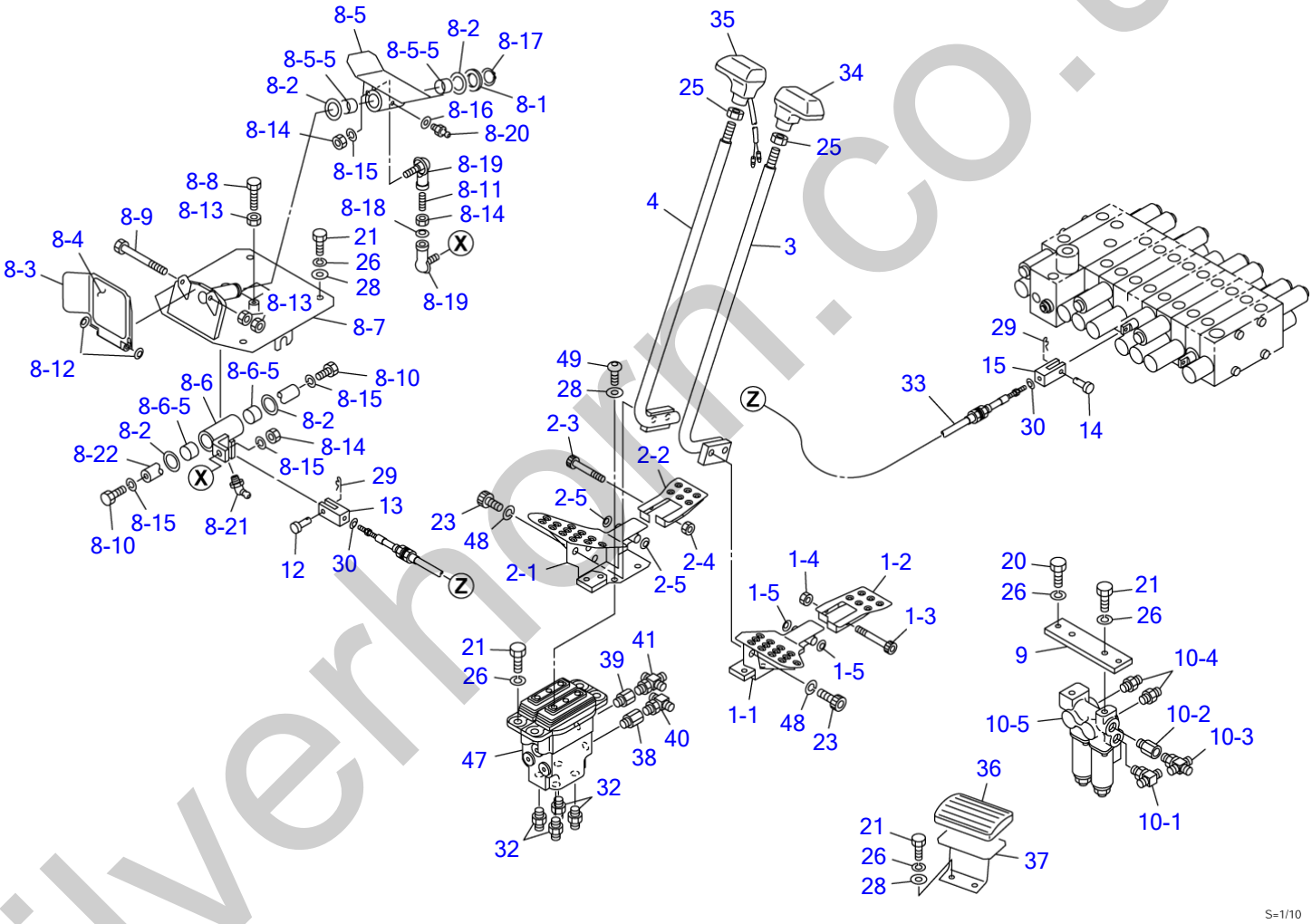

silverhorn.co.uk

CONTROL LEVER & PEDAL (1st aux. proportional cont. type)

Item	Part number	Description	Q'ty	Chan.	Serial No.	Serv.	Remarks
34	1650202610	GRIP	1				
35	1650203210	GRIP	1				
36	0563218500	COVER	1				
37	0563219700	REST, foot	1				
38	1513370046	ADAPTOR (with filter)	1				
38	1420010110	・O-RING	1				
39	1513250202	BUSHING	1				
39	1420010110	・O-RING	1				
40	1512370010	TEE	1				
40	1420010110	・O-RING	1				
41	1513390027	CROSS	1				
41	1420010110	・O-RING	1				
47	1901750500	VALVE, remote control	1				
48	1140420010	WASHER, spring	4				
49	1120990814	SCREW	4				
	K7b051						

silverhorn.co.uk

CONTROL LEVER & PEDAL (1st aux. only ON-OFF type)

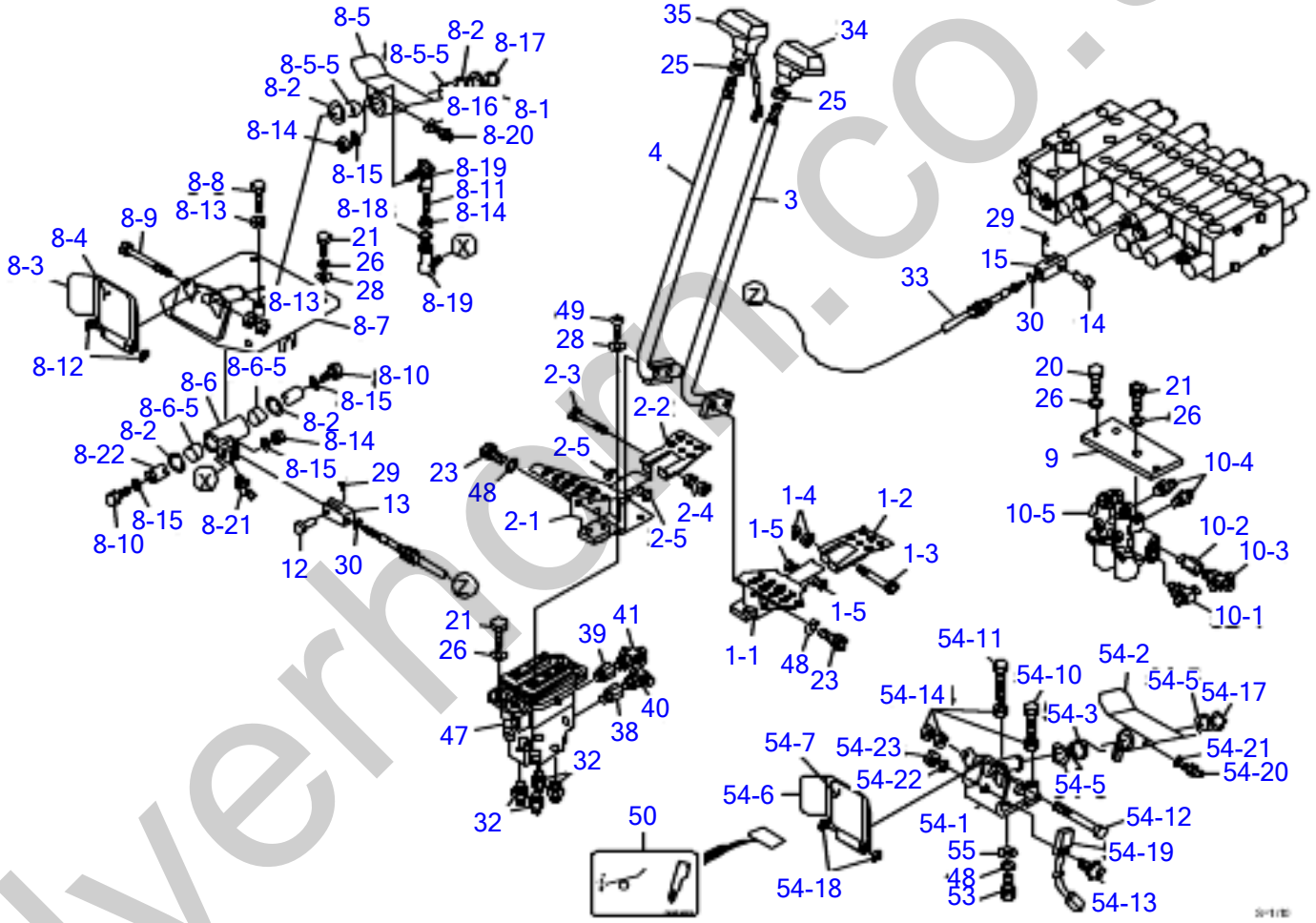

silverhorn.co.uk

CONTROL LEVER & PEDAL (1st aux. only ON-OFF type)

Item	Part number	Description	Q'ty	Chan.	Serial No.	Serv.	Remarks
		LEVER ASSY, control					
1	0373208610	PEDAL ASSY (L.H.)	1				
1-1	0373208720	・PEDAL (L.H.)	1				
1-2	0373208630	・PEDAL (L.H.)	1				
1-3	1110040655	・SCREW, cap	1				
1-4	1130040006	・NUT	2				
1-5	1225110006	・WASHER, conical	2				
2	0373208640	PEDAL ASSY (R.H.)	1				
2-1	0373208750	・PEDAL (R.H.)	1				
2-2	0373208660	・PEDAL (R.H.)	1				
2-3	1110040655	・SCREW, cap	1				
2-4	1130040006	・NUT	2				
2-5	1225110006	・WASHER, conical	2				
3	0373208670	LEVER (L.H.)	1				
4	0373208680	LEVER (R.H.)	1				
8	0373208690	PEDAL ASSY, swing	1				
8-1	0003600034	・WASHER	1				
8-2	0093208300	・WASHER	2				
8-3	0333234260	・COVER	1				
8-4	0333241250	・SHEET	1				
8-5	0373200550	・PEDAL ASSY	1				
8-5-5	1333002020	・・BUSHING	2				
8-6	0373201650	・LEVER ASSY	1				
8-6-5	1333002015	・・BUSHING	2				
8-7	0373208090	・BRACKET	1				
8-8	1100040625	・BOLT	2				
8-9	1100040680	・BOLT	1				
8-10	1100040820	・BOLT	2				
8-11	1121040832	・SET-SCREW	1				
8-12	1225110006	・WASHER, conical	2				
8-13	1130040006	・NUT	4				
8-14	1130040008	・NUT	3				
8-15	1140020008	・WASHER, spring	4				
8-16	1141110006	・WASHER	1				
8-17	1220000020	・RING, retaining	1				
8-18	1225000008	・WASHER	1				
8-19	1340010080	・END, rod	2				
8-20	1560011006	・FITTING, grease	1				
8-21	1560012006	・FITTING, grease	1				
8-22	0373201730	・SHAFT	1				
9	0373208110	PLATE	1				
10	0373208120	VALVE ASSY, solenoid	1				
10-1	1512370010	・TEE	1				
	1420010110	・・O-RING	1				
10-2	1513370046	・BUSHING (with filter)	1				
	1420010110	・・O-RING	1				
10-3	1513390027	・CROSS	1				
	1420010110	・・O-RING	1				
10-4	1515600200	・ADAPTOR	2				
	1420010110	・・O-RING	1				
10-5	1901752100	・VALVE, solenoid	1				
12	0004005117	PIN	1				
13	0005500007	YOKE	1				
14	0004006017	PIN	1				
15	0005506024	YOKE	1				
20	1100040816	BOLT	2				
21	1100040820	BOLT	8				
23	1110041016	BOLT	4				
25	1131040012	NUT	2				
26	1140020008	WASHER, spring	14				
28	1141110008	WASHER	4				
29	1214000005	PIN, snap	2				
30	1225000005	WASHER	2				
32	1515600200	ADAPTOR	4				
	1420010110	・O-RING	1				
33	1630771095	CABLE, control	1				
34	1650202610	GRIP	1				
35	1650203210	GRIP	1				

silverthorn.co.uk

CONTROL LEVER & PEDAL (1st aux. only ON-OFF type)

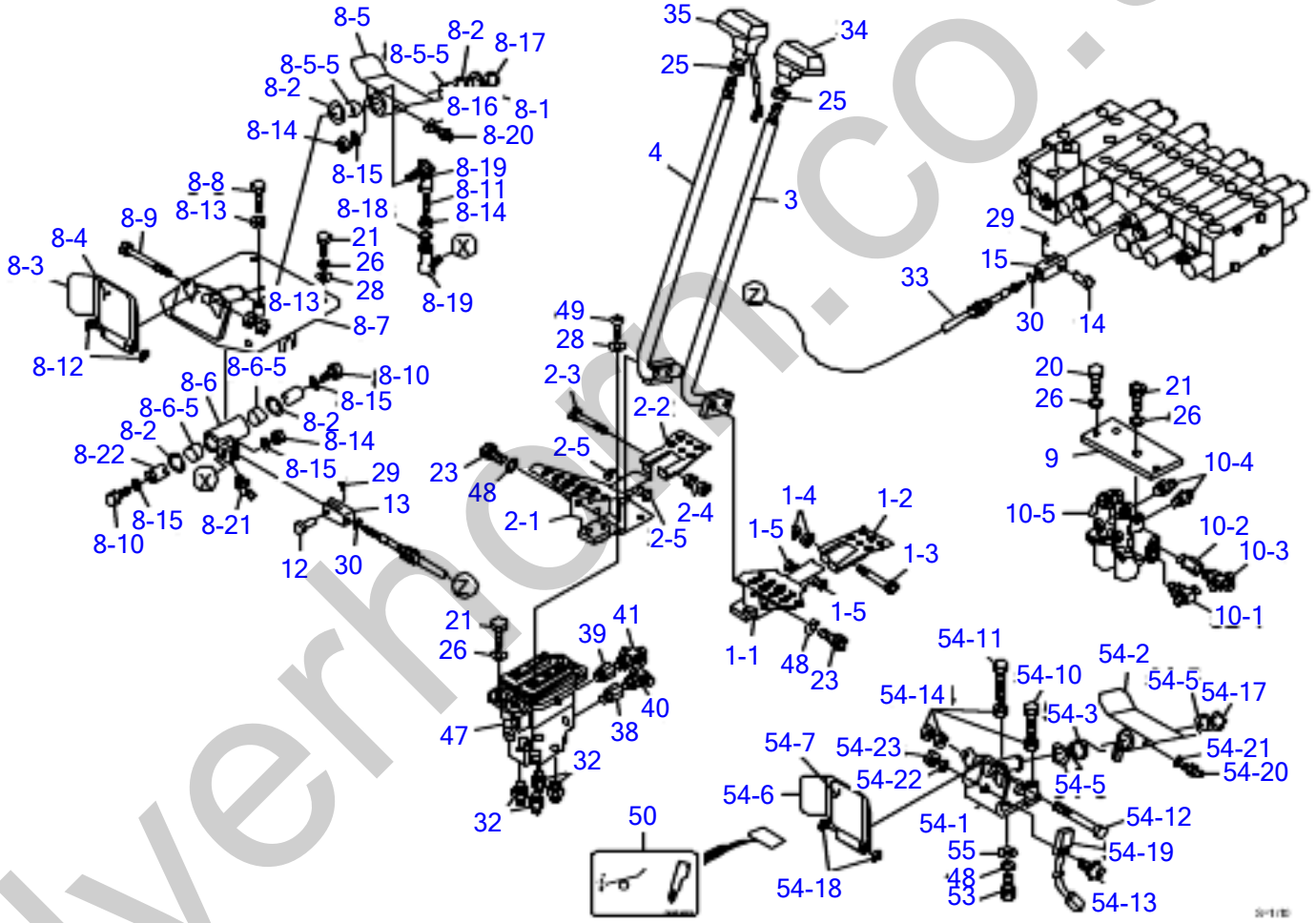

silverhorn.co.uk

CONTROL LEVER & PEDAL (1st aux. only ON-OFF type)

Item	Part number	Description	Q'ty	Chan.	Serial No.	Serv.	Remarks
38	1513370046	ADAPTOR (with filter)	1				
38	1420010110	▪ O-RING	1				
39	1513250202	BUSHING	1				
39	1420010110	▪ O-RING	1				
40	1512370010	TEE	1				
40	1420010110	▪ O-RING	1				
41	1513390027	CROSS	1				
41	1420010110	▪ O-RING	1				
47	1901750500	VALVE, remote control	1				
48	1140420010	WASHER, spring	8				
49	1120990814	SCREW	4				
50	349336913	DECAL	1				
53	1110041025	SCREW, cap	2				
54	0373209010	SERVICE PEDAL ASSY	1				
54-1	0373209020	* BRACKET	1				
54-2	0373209030	* PEDAL ASSY	1				
54-3	0373209050	* TORSION SPRING	1				
54-5	0003600034	* WASHER	2				
54-6	0333234260	* COVER	1				
54-7	0333241250	* SHEET	1				
54-10	1100040620	* BOLT	1				
54-11	1100040635	* BOLT	1				
54-12	1100040680	* BOLT	1				
54-13	1150410316	* SCREW	2				
54-14	1130040006	* NUT	4				
54-17	1220000020	* SNAP RING	1				
54-18	1225110006	* CONICAL WASHER	2				
54-19	1700009010	* SWITCH	1				
54-20	1560011006	* GREASE FITTING	1				
54-21	1141110006	* WASHER	1				
54-22	1141110003	* WASHER	2				
54-23	1130030003	* NUT	2				
55	1141110010	WASHER	2				
	G7B120						

silverhorn.co.uk

DOZER BLADE LEVER

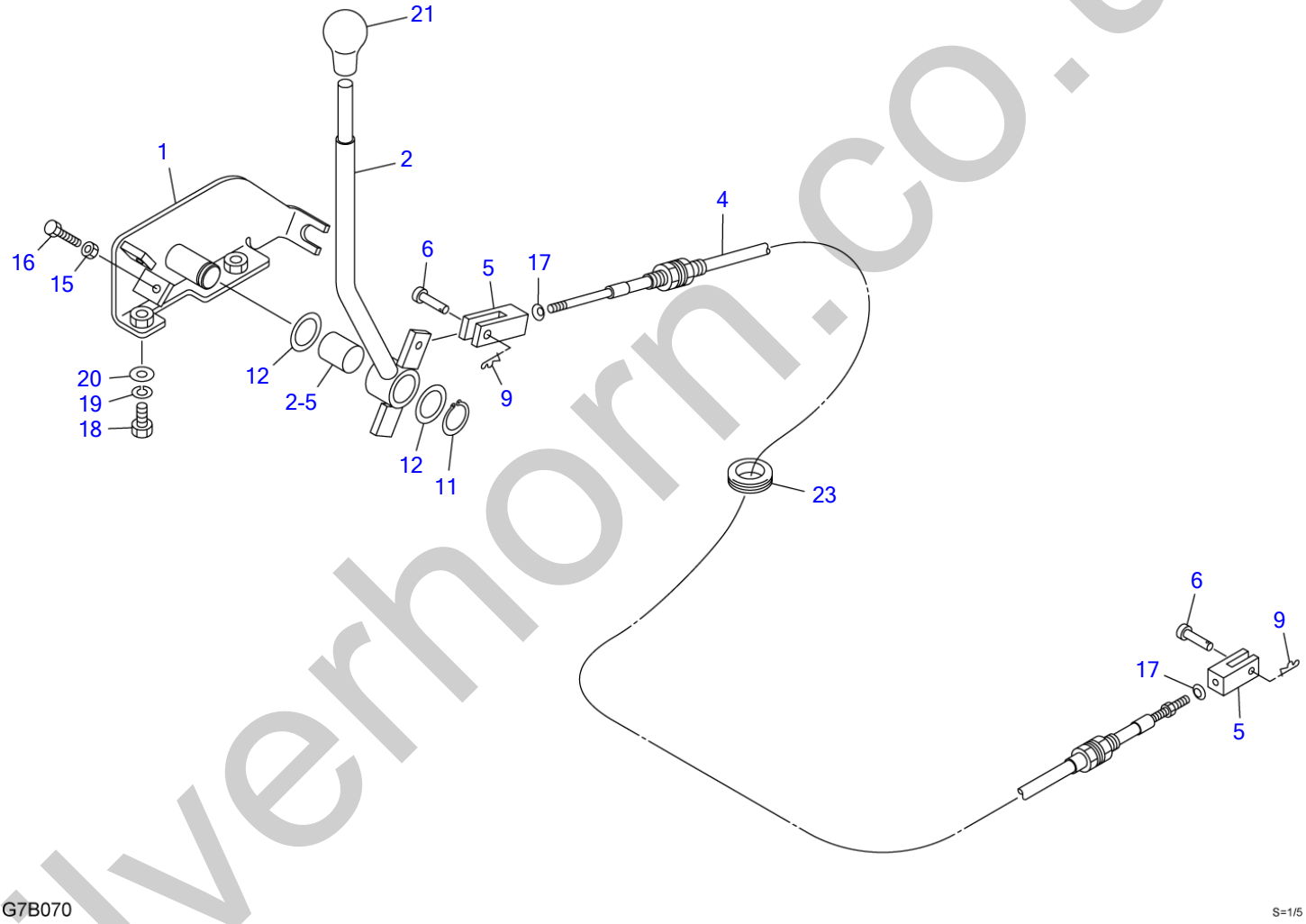

silverhorn.co.uk

DOZER BLADE LEVER

Item	Part number	Description	Q'ty	Chan.	Serial No.	Serv.	Remarks
		LEVER ASSY, blade					
1	0373302300	PLATE	1				
2	0373302200	LEVER	1				
2-5	1333002025	▪ BUSHING	2				
4	1630771230	CABLE, control	1		125000001~123500078		
	1630777215	CABLE, control	1	(H)	125000079~		
5	0005506024	YOKE	2				
6	0004006017	PIN	2				
9	1214010006	PIN, snap	2				
11	1220000020	RING, retaining	1				
12	0093208300	WASHER	2				
15	1130040006	NUT	2				
16	1100040625	BOLT	2				
17	1225000005	WASHER	2				
18	1100041020	BOLT	2				
19	1140020010	WASHER, spring	2				
20	1141110010	WASHER	2				
21	1650153655	GRIP	1				
23	1652060035	BUSHING	1				
	K7b070						

silverhorn.co.uk

OPERATION LEVER & STAND

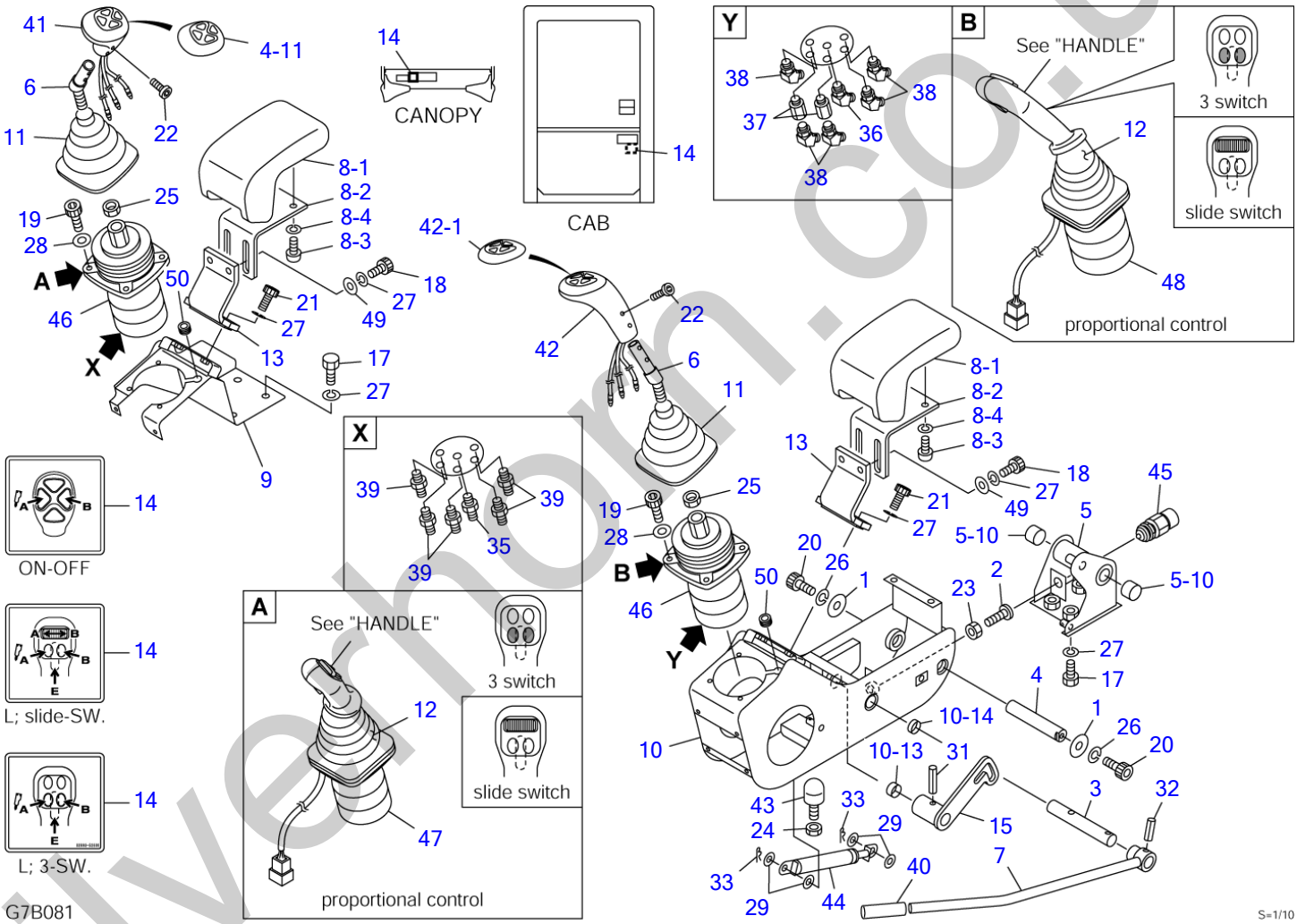

silvernorn.co.uk

OPERATION LEVER & STAND

Item	Part number	Description	Q'ty	Chan.	Serial No.	Serv.	Remarks
		VALVE ASSY (standard)					
		VALVE ASSY (ON-OFF)					
		VALVE ASSY (L; slide-SW) (R; 3-SW)					
		VALVE ASSY (L; 3-SW) (R; slide-SW)					
		VALVE ASSY (L; slide-SW) (R; slide-SW)					
		VALVE ASSY (L; 3-SW) (L; 3-SW)					
1	0003609003	WASHER	2				
2	0335120970	BOLT	1				
3	0335124700	SHAFT	1				
4	0335124750	SHAFT	1				
5	0375109160	BRACKET (L.H.)	1				
5-10	1333002015	・BUSHING	2				
6	0375105100	LEVER	2				standard, ON-OFF
7	0375109180	LEVER (L.H.)	1				
8	0375109120	REST ASSY, arm	2				
8-1	0375109130	・URETHANE	1				
8-2	0375109140	・PLATE	1				
8-3	1120530812	・SCREW	4				
8-4	1140020008	・WASHER, spring	4				
9	0375109190	BRACKET	1				
10	0375109020	BOX ASSY, control (L.H.)	1				
10-13	1333002010	・BUSHING	1				
10-14	1333002015	・BUSHING	1				
11	0375109030	BOOT	2				standard, ON-OFF
12	0375109110	BOOT	2				proportional cont.
13	0375109150	BRACKET	2				
14	0379366090	DECAL	1				ON-OFF
	0569353036	DECAL	1				L; slide-SW
	0399352600	DECAL	1				L; 3-SW
15	0395113450	PLATE (L.H.)	1				
17	1100041020	BOLT	8				
18	1110041020	SCREW, cap	4				
19	1110040625	SCREW, cap	6				
20	1110040816	SCREW, cap	2				
21	1110041030	SCREW, cap	4				
22	1111850610	SCREW, cap	4				standard, ON-OFF
23	1130040010	NUT	1				
24	1130040012	NUT	1				
25	1130140014	NUT	2				standard, ON-OFF
26	1140020008	WASHER, spring	2				
27	1140020010	WASHER, spring	16				
28	1141110006	WASHER	6				
29	1141110008	WASHER	4				
31	1213000832	PIN, spring	1				
32	1213000836	PIN, spring	1				
33	1214000008	PIN, snap	2				
35	1512370008	ADAPTOR (with filter)	1				
	1420010110	・O-RING	1				
36	1512370012	ADAPTOR (with filter)	1				
	1420010110	・O-RING	1				
37	1513250202	BUSHING	2				
	1420010110	・O-RING	1				
38	1515100110	ELBOW	5				
	1420010110	・O-RING	1				
39	1515600200	ADAPTOR	5				
	1420010110	・O-RING	1				
40	1650202300	CAP	1				
41	1650204600	GRIP (R.H.)	1				standard, ON-OFF
41-1	1650204601	・COVER	1				horn, decel.
42	1650204700	GRIP (L.H.)	1				ON-OFF
42-1	1650204701	・COVER	1				A-B
42	1650205800	GRIP (L.H.)	1				standard, ON-OFF
42-1	1650205801	・COVER	1				no printing
43	1651101224	STOPPER	1				
44	1653900057	SPRING, gas	1				
45	1700000033	SWITCH, limit	1				
46	1901751100	VALVE, pilot	2				standard, ON-OFF

silverthorn.co.uk

OPERATION LEVER & STAND

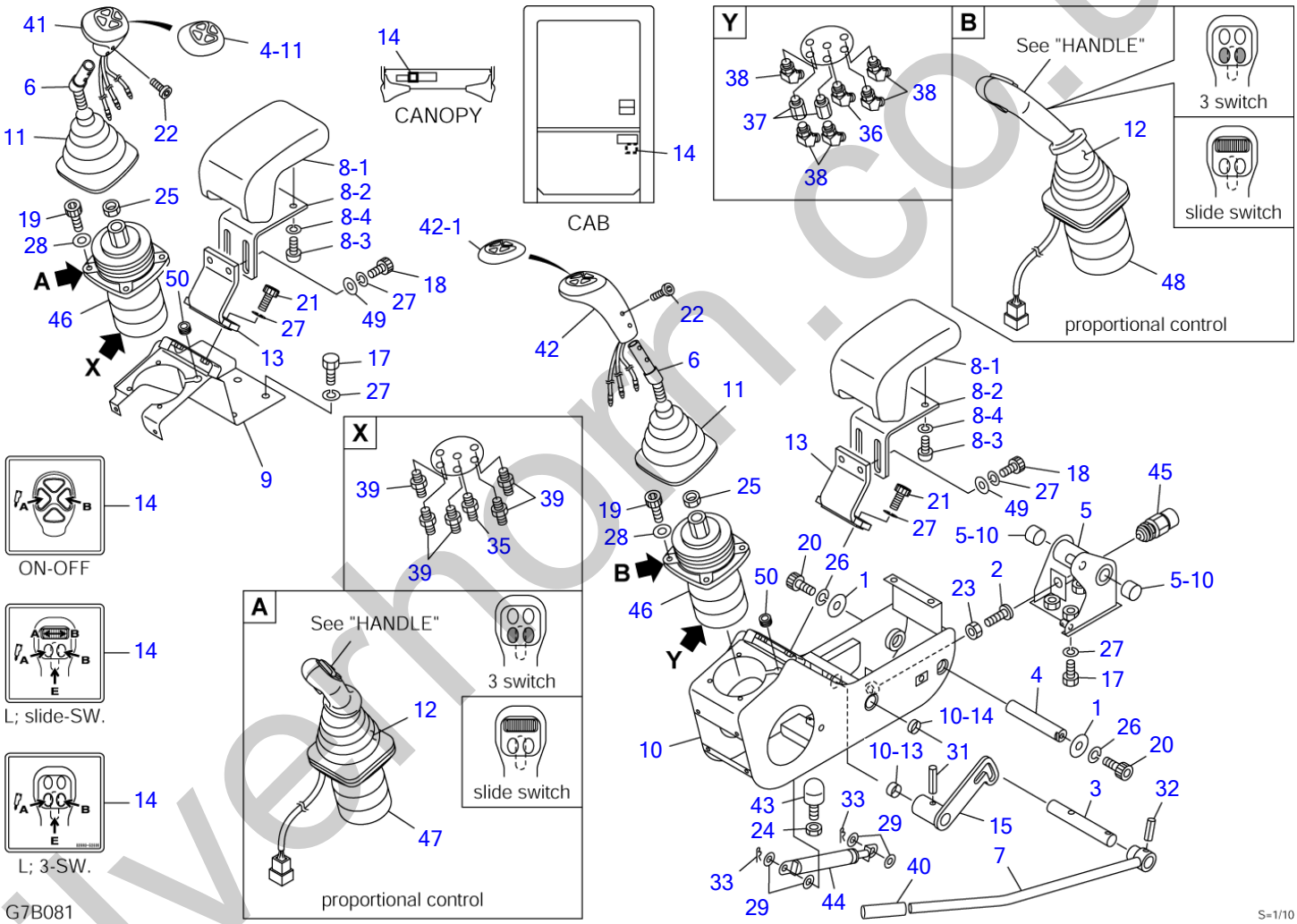

silvernorn.co.uk

OPERATION LEVER & STAND

Item	Part number	Description	Q'ty	Chan.	Serial No.	Serv.	Remarks
47	**1901751200**	VALVE ASSY (R.H.) (3 switch)	1				3-SW
47	**1901751400**	VALVE ASSY (R.H.) (slide switch)	1				slide-SW
48	**1901751300**	VALVE ASSY (L.H.) (3 switch)	1				3-SW
48	**1901751500**	VALVE ASSY (L.H.) (slide switch)	1				slide-SW
49	**0003600025**	WASHER	4				
50	**1700100092**	GROMMET	2				
	K7b080						

silverhorn.co.uk

PIPING; OPERATION LEVER

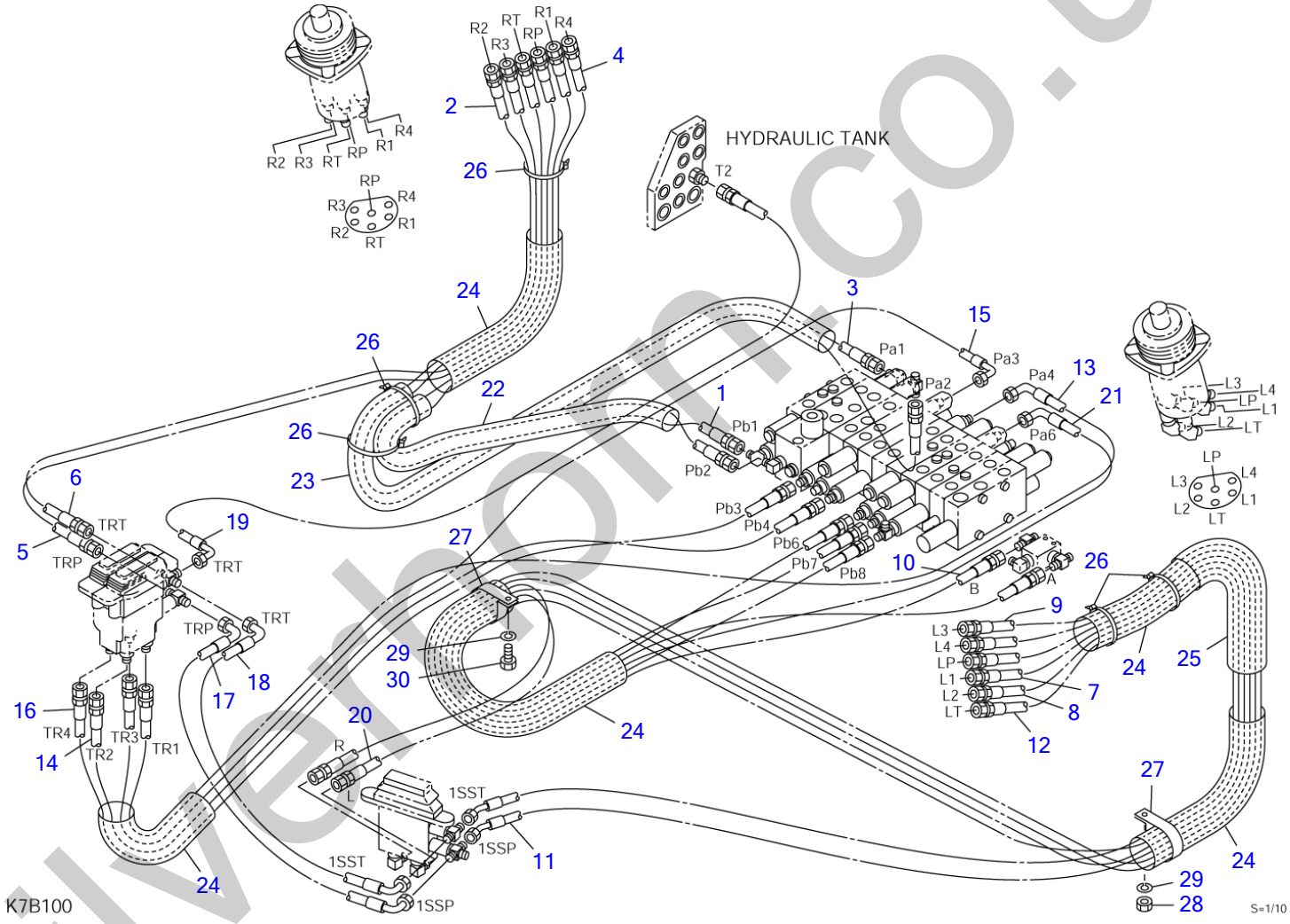

silverhom.co.uk

PIPING; OPERATION LEVER

Item	Part number	Description	Q'ty	Chan.	Serial No.	Serv.	Remarks
		PIPING ASSY					
1	0397117010	HOSE ASSY	1				19348-22149
2	0397117020	HOSE ASSY	1				19348-22200
3	0397117030	HOSE ASSY	1				19348-22197
4	0397117040	HOSE ASSY	1				19348-22150
5	0377121050	HOSE ASSY	1				19348-22106
6	0377121060	HOSE ASSY	1				19348-22102
7	0397117070	HOSE ASSY	1				19348-22222
8	0397117080	HOSE ASSY	1				19348-22220
9	0397117090	HOSE ASSY	1				19348-22220
10	0397117100	HOSE ASSY	1				19348-22215
11	0377121110	HOSE ASSY	1				19348-72160
12	0377121120	HOSE ASSY	1				19348-72160
13	0397117130	HOSE ASSY	1				19347-52102
14	0397117140	HOSE ASSY	1				19347-22050
15	0397117150	HOSE ASSY	1				19347-52094
16	0397117160	HOSE ASSY	1				19347-22050
17	0377121170	HOSE ASSY	1				
18	0377121180	HOSE ASSY	1				
19	0397117190	HOSE ASSY	1				
20	0397117200	HOSE ASSY	1				19347-22095
21	0397117210	HOSE ASSY	1				19347-52145
22	1531625050	PROTECTOR	1				sold by the meter
23	1531625085	PROTECTOR	1				sold by the meter
24	1531645030	PROTECTOR	5				sold by the meter
25	1567315030	PROTECTOR	1				sold by the meter
26	1652201007	BAND	5				
27	0007300030	CLAMP	2				
28	1130040008	NUT	1				
29	1140020008	WASHER, spring	2				
30	1100040816	BOLT	1				
	K7b100						

silverhorn.co.uk

PIPING; OPERATION LEVER (ISO-JCB pattern)

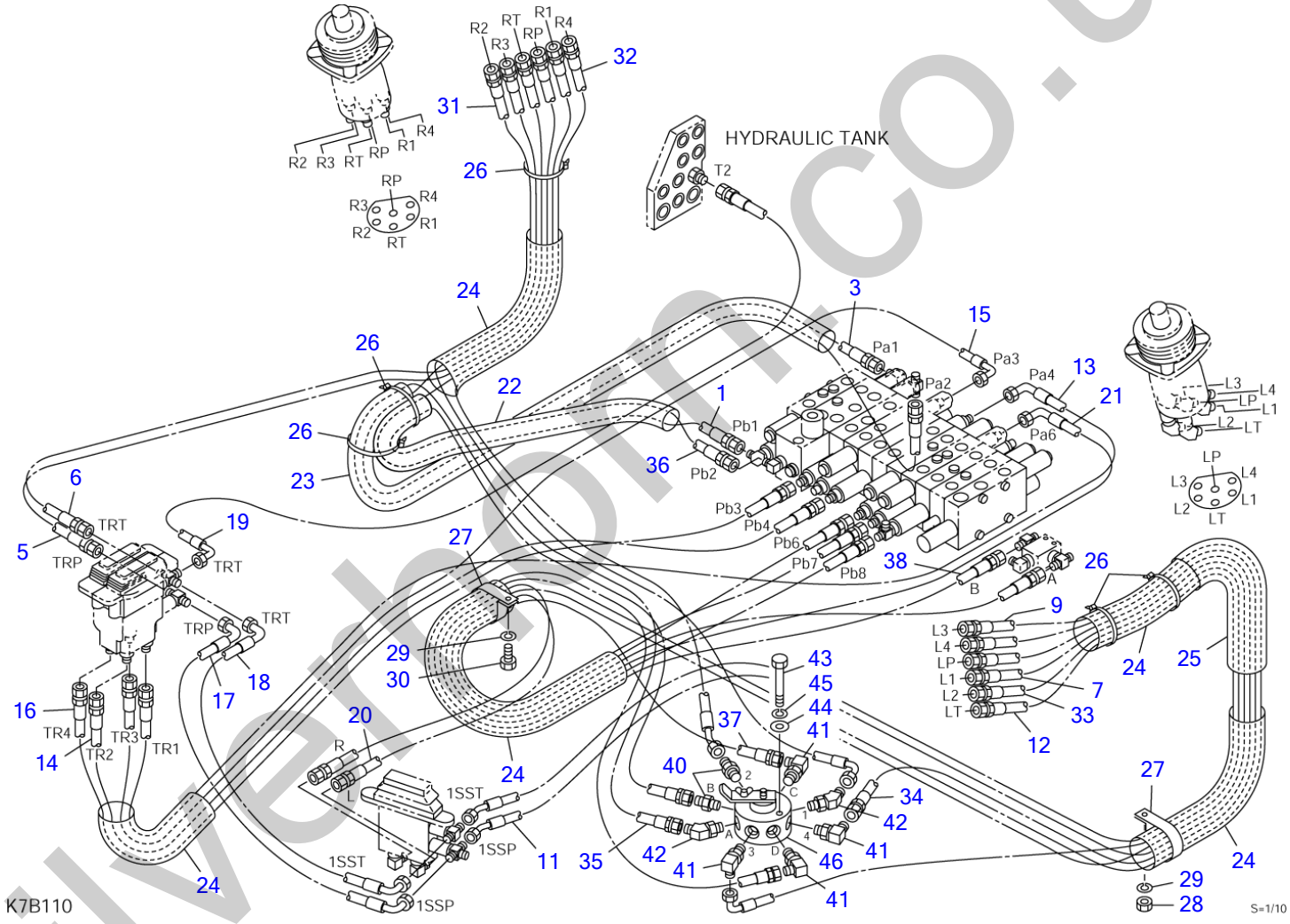

silverhorn.co.uk

PIPING; OPERATION LEVER (ISO-JCB pattern)

Item	Part number	Description	Q'ty	Chan.	Serial No.	Serv.	Remarks
		PIPING ASSY					
1	0397117010	HOSE ASSY	1				19348-22149
3	0397117030	HOSE ASSY	1				19348-22197
5	0377121050	HOSE ASSY	1				19348-22106
6	0377121060	HOSE ASSY	1				19348-22102
7	0397117070	HOSE ASSY	1				19348-22222
9	0397117090	HOSE ASSY	1				19348-22220
11	0377121110	HOSE ASSY	1				19348-72160
12	0377121120	HOSE ASSY	1				19348-72160
13	0397117130	HOSE ASSY	1				19347-52102
14	0397117140	HOSE ASSY	1				19347-22050
15	0397117150	HOSE ASSY	1				19347-52094
16	0397117160	HOSE ASSY	1				19347-22050
17	0377121170	HOSE ASSY	1				
18	0377121180	HOSE ASSY	1				
19	0397117190	HOSE ASSY	1				
20	0397117200	HOSE ASSY	1				19347-22095
21	0397117210	HOSE ASSY	1				19347-52145
22	1531625050	PROTECTOR	1				sold by the meter
23	1531625085	PROTECTOR	1				sold by the meter
24	1531645030	PROTECTOR	5				sold by the meter
25	1567315030	PROTECTOR	1				sold by the meter
26	1652201007	BAND	5				
27	0007300030	CLAMP	2				
28	1130040008	NUT	1				
29	1140020008	WASHER, spring	2				
30	1100040816	BOLT	1				
31	0377122310	HOSE ASSY	1				19348-52135
32	0377122320	HOSE ASSY	1				19348-22133
33	0377122330	HOSE ASSY	1				19348-52145
34	0377122340	HOSE ASSY	1				19348-22135
35	0397117350	HOSE ASSY	1				19348-22197
36	0397117360	HOSE ASSY	1				19348-22162
37	0397117370	HOSE ASSY	1				19348-22092
38	0397117380	HOSE ASSY	1				19348-22101
40	1515600200	ADAPTOR	2				
	1420010110	・O-RING	1				
41	1515012040	ELBOW	4				
	1420010110	・O-RING	1				
42	1515100110	ELBOW	2				
	1420010110	・O-RING	1				
43	1100040650	BOLT	2				
44	1141110006	WASHER	2				
45	1140020006	WASHER, spring	2				
46	1901730500	VALVE, selector	1				
	K7b110						

silverthorn.co.uk

PIPING; OPERATION LEVER (A-B pattern)

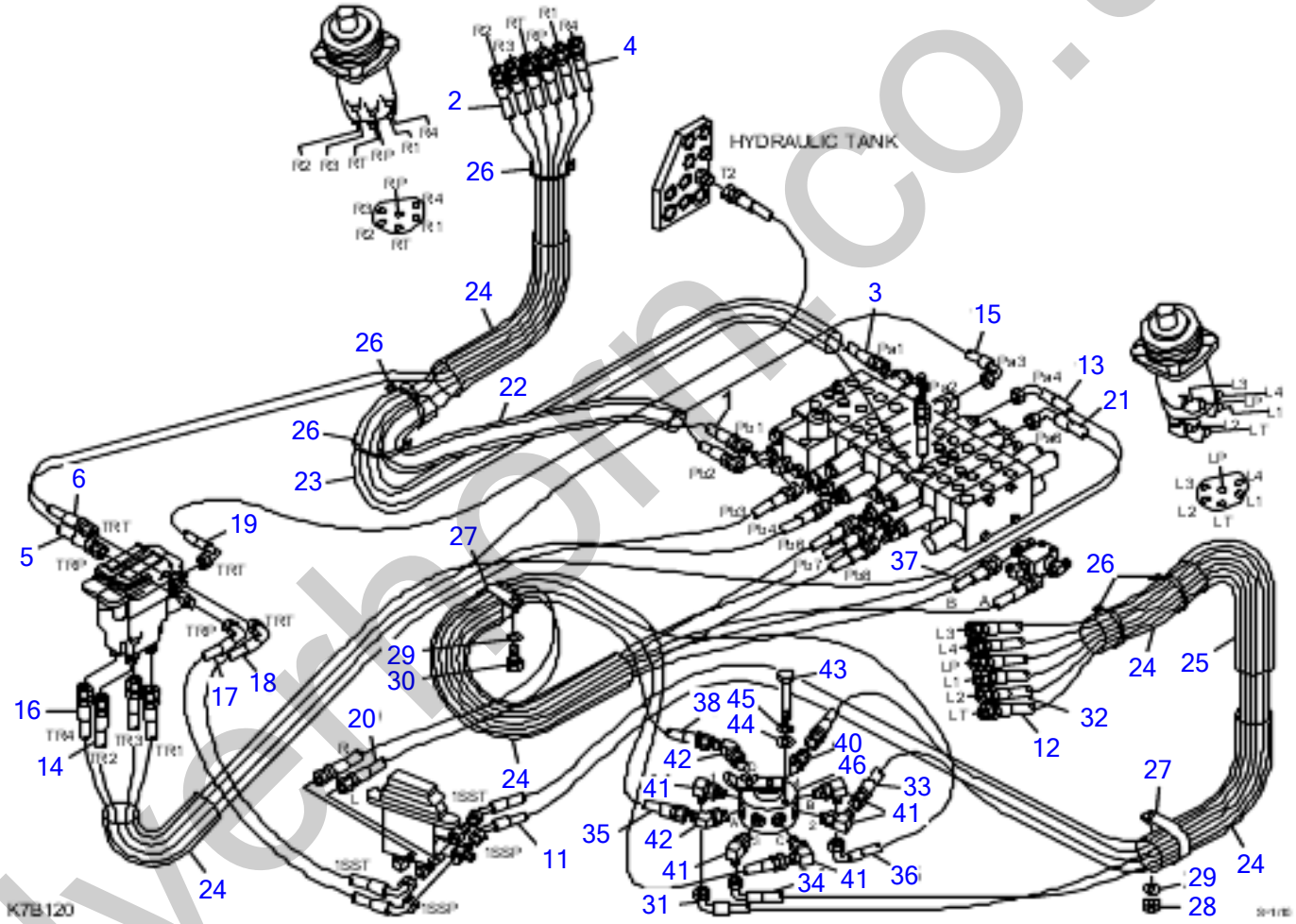

silverhorn.co.uk

PIPING; OPERATION LEVER (A-B pattern)

Item	Part number	Description	Q'ty	Chan.	Serial No.	Serv.	Remarks
		PIPING ASSY					
1	0397117010	HOSE ASSY	1				19348-22149
2	0397117020	HOSE ASSY	1				
3	0397117030	HOSE ASSY	1				19348-22197
4	0397117040	HOSE ASSY	1				
5	0377121050	HOSE ASSY	1				19348-22106
6	0377121060	HOSE ASSY	1				19348-22102
7	0397117070	HOSE ASSY	1				19348-22222
11	0377121110	HOSE ASSY	1				19348-72160
12	0377121120	HOSE ASSY	1				19348-72160
13	0397117130	HOSE ASSY	1				19347-52102
14	0397117140	HOSE ASSY	1				19347-22050
15	0397117150	HOSE ASSY	1				19347-52094
16	0397117160	HOSE ASSY	1				19347-22050
17	0377121170	HOSE ASSY	1				
18	0377121180	HOSE ASSY	1				
19	0397117190	HOSE ASSY	1				
20	0397117200	HOSE ASSY	1				19347-22095
21	0397117210	HOSE ASSY	1				19347-52145
22	1531625050	PROTECTOR	1				sold by the meter
23	1531625085	PROTECTOR	1				sold by the meter
24	1531645030	PROTECTOR	5				sold by the meter
25	1567315030	PROTECTOR	1				sold by the meter
26	1652201007	BAND	5				
27	0007300030	CLAMP	2				
28	1130040008	NUT	1				
29	1140020008	WASHER, spring	2				
30	1100040816	BOLT	1				
31	0377123610	HOSE ASSY	1				19348-52135
32	0377123620	HOSE ASSY	1				19348-22133
33	0377123630	HOSE ASSY	1				19348-52145
34	0377123640	HOSE ASSY	1				19348-22135
35	0397117610	HOSE ASSY	1				19348-22197
36	0397117620	HOSE ASSY	1				19348-22162
37	0397117630	HOSE ASSY	1				19348-22092
38	0397117640	HOSE ASSY	1				19348-22101
40	1515600200	ADAPTOR	2				
	1420010110	・O-RING	1				
41	1515012040	ELBOW	4				
	1420010110	・O-RING	1				
42	1515100110	ELBOW	2				
	1420010110	・O-RING	1				
43	1100040650	BOLT	2				
44	1141110006	WASHER	2				
45	1140020006	WASHER, spring	2				
46	1901730500	VALVE, selector	1				
	K7b140						

silverthorn.co.uk

OPERATION LEVER PIPING change 2 aux bucket

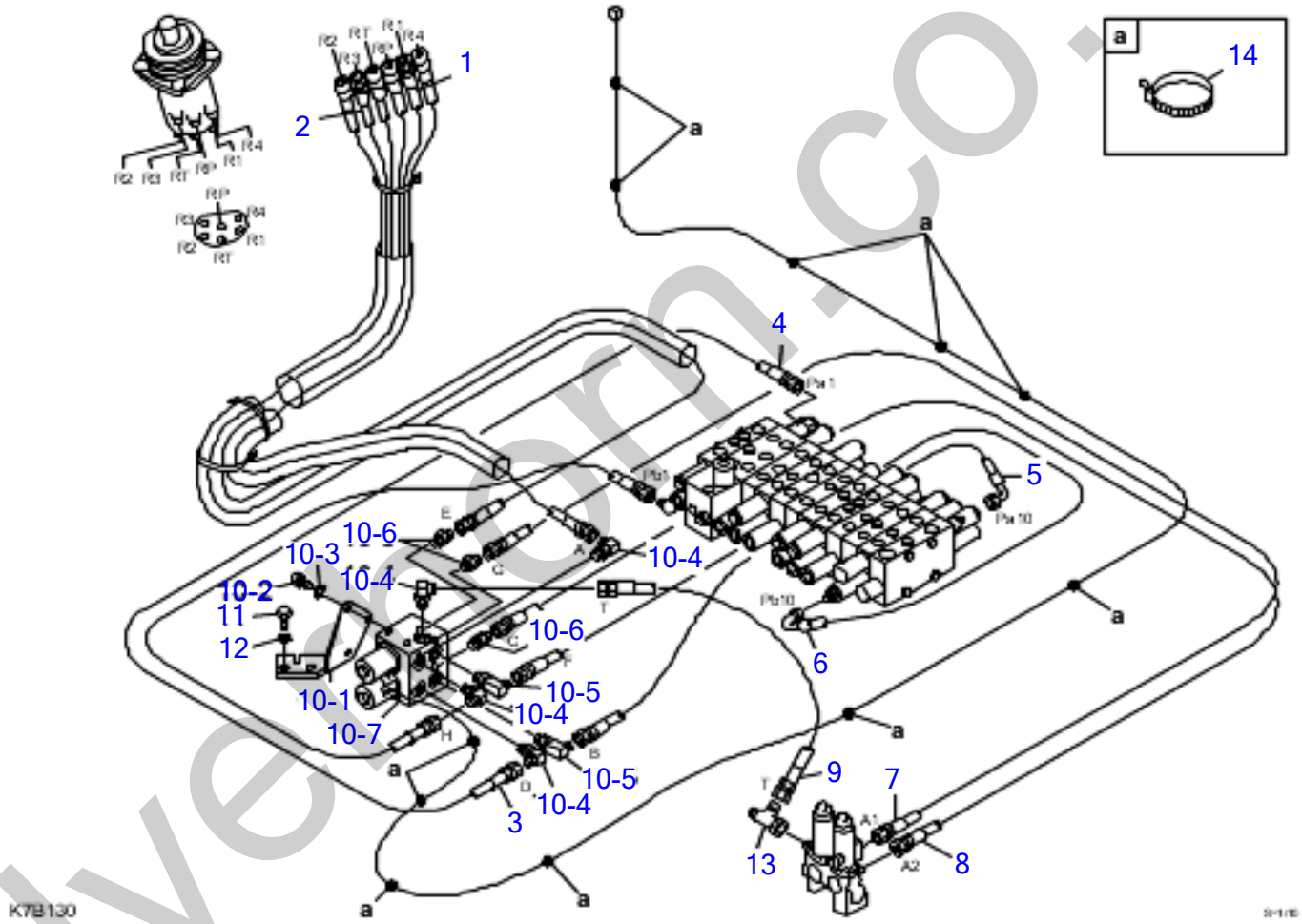

silvercorn.co.uk

OPERATION LEVER PIPING change 2nd aux. bucket)

Item	Part number	Description	Q'ty	Chan.	Serial No.	Serv.	Remarks
		PIPING ASSY					
1	0397117410	HOSE ASSY	1				
2	0397117420	HOSE ASSY	1				
3	0397117430	HOSE ASSY	1				
4	0397117440	HOSE ASSY	1				
5	0397117450	HOSE ASSY	1				
6	0397117460	HOSE ASSY	1				
7	0397117470	HOSE ASSY	1				
8	0397117480	HOSE ASSY	1				
9	0397117490	HOSE ASSY	1				
10	039717500	SOLENOID VALVE ASSY	1				
10-1	0397117510	* STOPPER	1				
10-2	1100040816	* BOLT	3				
10-3	1140020008	* SPRING WASHER	3				
10-4	1515012040	* ELBOW	4				
	1420010110	* * O-RING	1				
10-5	1515012510	* ADAPTOR	2				
	1420010110	* * O-RING	1				
10-6	1515600200	* ADAPTOR	3				
	1420010110	* * O-RING	1				
11	1101041240	BOLT	2				
12	1140020012	SPRING WASHER	2				
13	1513390015	TEE	1				
14	1652231250	BAND	11				
	K7B130						

silverhorn.co.uk

ENGINE & ACCESSORIES (1/3)

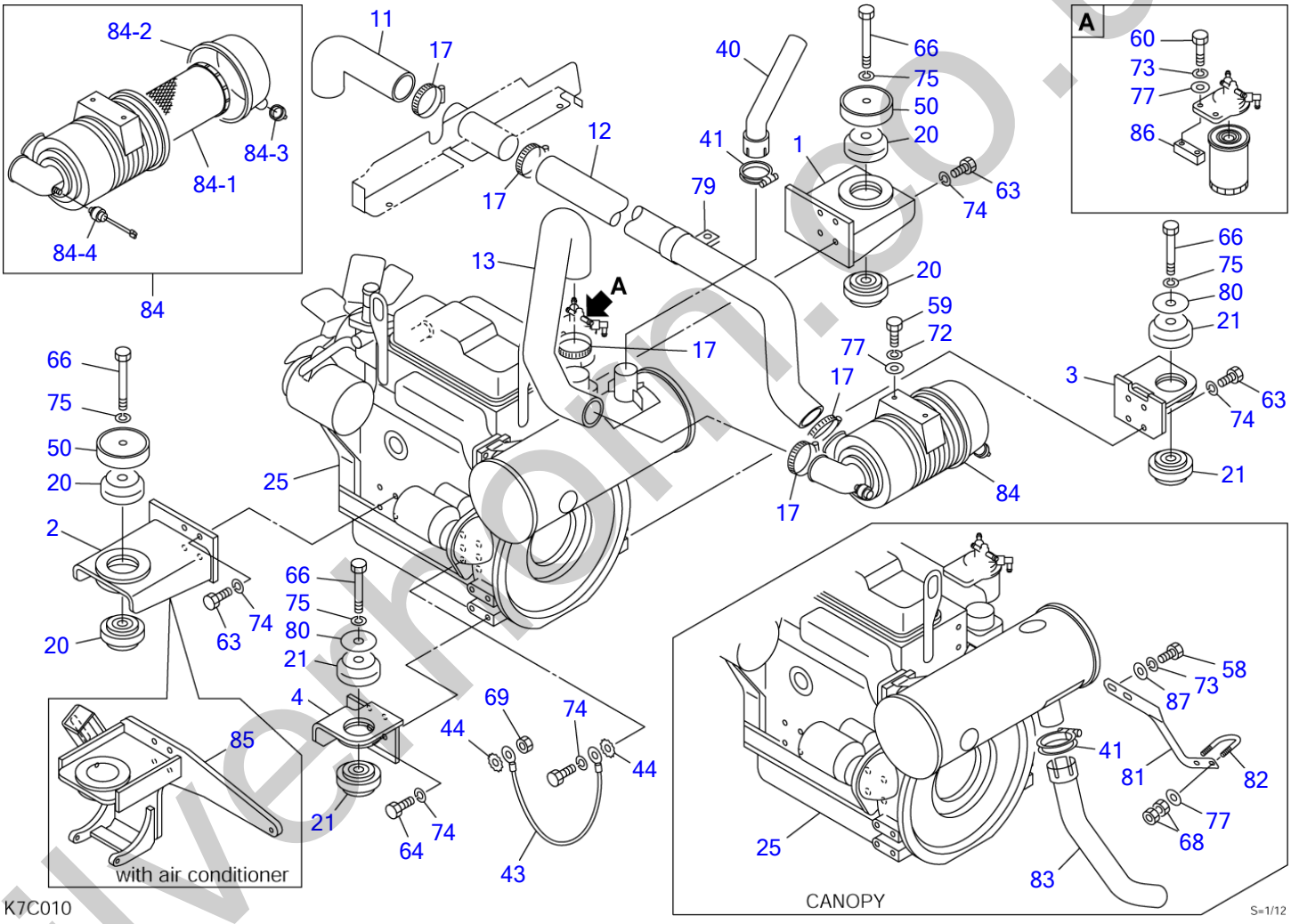

silverthorn.co.uk

ENGINE & ACCESSORIES (1/3)

Item	Part number	Description	Q'ty	Chan.	Serial No.	Serv.	Remarks
		ENGINE ASSY (cab)					
		ENGINE ASSY (canopy)					
		ENGINE ASSY (with air conditioner)					
1	0394035100	FOOT, engine (F.R.)	1				
2	0394035150	FOOT, engine (F.L.)	1				without air conditioner
3	0394032200	FOOT, engine (R.R.)	1				
4	0394032250	FOOT, engine (R.L.)	1				
11	0394035001	HOSE	1				
12	0394035002	HOSE	1				
13	0394035003	HOSE	1				
17	1533700066	BAND	5				
20	1651030016	RUBBER, cushion	4				
21	1651030015	RUBBER, cushion	4				
25	1910269001	ENGINE (cab, with air conditioner)	1				4TNV88-BPTB
	1910270001	ENGINE (canopy)	1				4TNV88-BPTB1
40	0394035900	PIPE	1				except for canopy
41	1910120023	CLAMP	1				Y121120-13590
43	1702430300	CABLE, earth	1				
44	1140330010	WASHER	2				
50	0394021050	STOPPER	2				
58	1100040820	BOLT	2				canopy
59	1100040825	BOLT	2				
60	1100040850	BOLT	2				
63	1100041025	BOLT	16				
64	1100041035	BOLT	4				
66	1101141210	BOLT	4				
68	1130040008	NUT	4				canopy
69	1130040010	NUT	1				
72	1140020006	WASHER, spring	2				
73	1140020008	WASHER, spring	2				except for canopy
	1140020008	WASHER, spring	4				canopy
74	1140020010	WASHER, spring	17				
75	1140020012	WASHER, spring	4				
77	1141110008	WASHER	4				except for canopy
	1141110008	WASHER	6				canopy
79	0007300068	CLAMP	1				
80	0394021028	WASHER	2				
81	0394032670	SUPPORT	1				canopy
82	1533201012	U-BOLT	1				canopy
83	0394032660	PIPE	1				canopy
84	1910269007	CLEANER, air	1				Y129236-12510
84-1	X **********	・ELEMENT	1				Y129004-12520
84-2	X **********	・COVER	1				Y119866-12541
84-3	X **********	・VALVE	1				Y119808-12540
84-4	X **********	・INDICATOR	1				Y129259-12570
85	0394037100	FOOT, engine (F.L.)	1				with air conditioner
86	0394017010	SPACER	1				
87	0003608252	WASHER	2				canopy
	K7c010						

silvermorn.co.uk

ENGINE & ACCESSORIES (2/3)

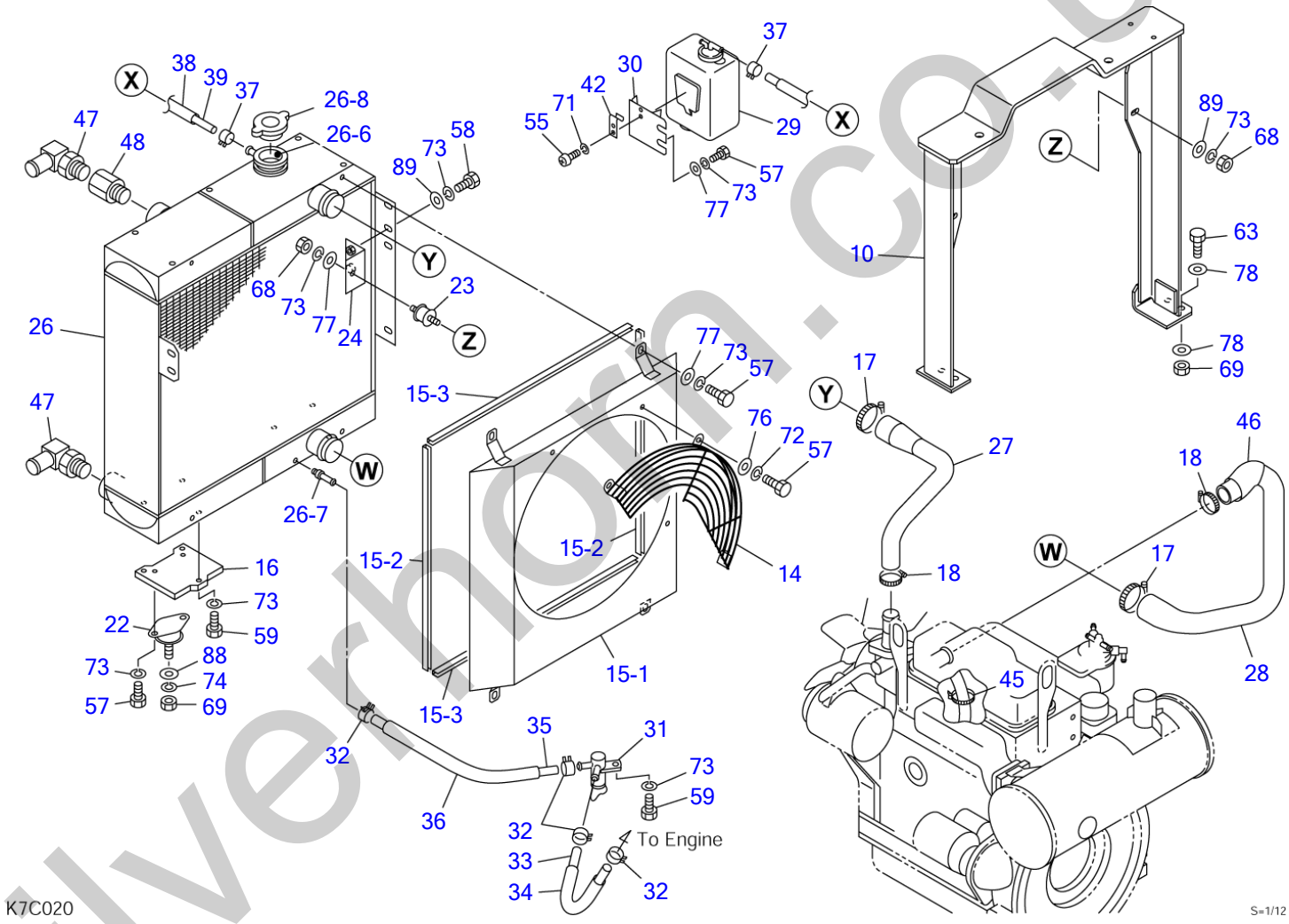

silverhorn.co.uk

ENGINE & ACCESSORIES (2/3)

Item	Part number	Description	Q'ty	Chan.	Serial No.	Serv.	Remarks
		ENGINE ASSY (cab)					
		ENGINE ASSY (canopy)					
		ENGINE ASSY (with air conditioner)					
10	0394035400	BRACKET	1				
14	0394019006	GUARD	1				
15	0394035500	SHROUD ASSY	1				
15-1	0394035510	・SHROUD	1				
15-2	1654606048	・SEAL	2				sold by the meter
15-3	1654606052	・SEAL	2				sold by the meter
16	0394026070	PLATE	2				
17	1533700066	BAND	2				
18	1533700045	BAND	2				
22	1651024007	RUBBER, cushion	2				
23	1651014003	RUBBER, cushion	2				
24	0394032630	BRACKET	2				
26	1911300420	RADIATOR & OIL COOLER	1				
26-6	1911300076	・FITTING, hose	1				
26-7	1911300077	・NIPPLE	1				
26-8	1911300078	・CAP, radiator	1				
27	0394035004	HOSE	1				
28	0394035005	HOSE	1				
29	1910146020	TANK, sub	1				Y129466-44510
30	0564025260	BRACKET	1				
31	1910078037	VALVE	1				Y129150-49100
32	1533120512	BAND	4				
33	1530808035	HOSE	1				sold by the meter
34	1531115030	PROTECTOR	1				sold by the meter
35	1530808047	HOSE	1				sold by the meter
36	1531115042	PROTECTOR	1				sold by the meter
37	1533120012	BAND	2				
38	1531115070	PROTECTOR	1				sold by the meter
39	1531407075	HOSE	1				sold by the meter
42	0564026340	PLATE	1				
45	1652231250	BAND	1				
46	1531345010	PROTECTOR	1				sold by the meter
47	1513350027	ELBOW	2				
	1420010290	・O-RING	1				
48	0007213051	BUSHING	1				
55	1120530406	SCREW	2				
57	1100040816	BOLT	13				
58	1100040820	BOLT	4				
59	1100040825	BOLT	7				
63	1100041025	BOLT	4				
68	1130040008	NUT	2				
69	1130040010	NUT	6				
71	1140020004	WASHER, spring	2				
72	1140020006	WASHER, spring	3				
73	1140020008	WASHER, spring	25				
74	1140020010	WASHER, spring	2				
76	1141110006	WASHER	3				
77	1141110008	WASHER	8				
78	1141110010	WASHER	8				
88	0003600020	WASHER	2				
89	0003600079	WASHER	6				
	K7c020						

silvermorn.co.uk

ENGINE & ACCESSORIES (3/3)

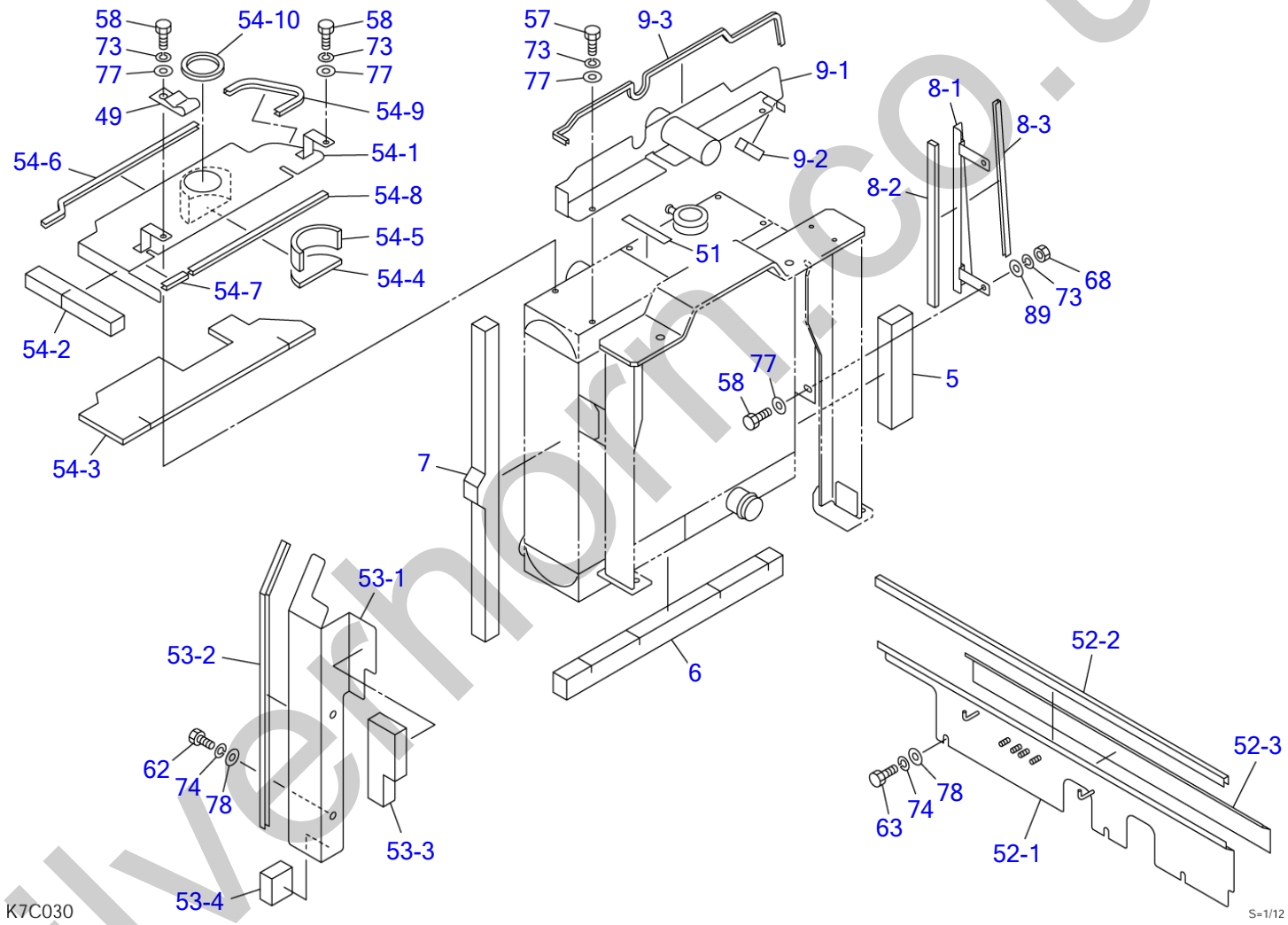

silverthorn.co.uk

ENGINE & ACCESSORIES (3/3)

Item	Part number	Description	Q'ty	Chan.	Serial No.	Serv.	Remarks
		ENGINE ASSY (cab)					
		ENGINE ASSY (canopy)					
		ENGINE ASSY (with air conditioner)					
5	0394032690	SPONGE	1				
6	0394032691	SPONGE	1				
7	0394035010	SPONGE	1				
8	0394032500	PLATE ASSY	1				
8-1	0394032520	・PLATE	1				
8-2	1654351037	・SPONGE	1				sold by the meter
8-3	1653916037	・TRIM	1				sold by the meter
9	0394035300	PLATE ASSY	1				
9-1	0394032420	・PLATE	1				
9-2	1654349006	・SPONGE	1				sold by the meter
9-3	1653916066	・TRIM	1				sold by the meter
49	0007300004	CLAMP	1				
51	1654354011	SPONGE	1				sold by the meter
52	0394035600	PLATE ASSY	1				
52-1	0394035610	・PLATE	1				
52-2	1654606090	・SEAL	1				sold by the meter
52-3	0394035620	・INSULATOR	1				
53	0394035700	PLATE ASSY	1				
53-1	0394035710	・PLATE	1				
53-2	1654606054	・TRIM	1				sold by the meter
53-3	0394035720	・SPONGE	1				
53-4	0394035721	・SPONGE	1				
54	0394035800	PLATE ASSY	1				
54-1	0394035810	・PLATE	1				
54-2	0394035820	・SPONGE	1				
54-3	0394035821	・ABSORBENT, noise	1				
54-4	0394035822	・ABSORBENT, noise	1				
54-5	0394035823	・ABSORBENT, noise	1				
54-6	1653916044	・TRIM	1				sold by the meter
54-7	1654606007	・SEAL	1				sold by the meter
54-8	1654606035	・SEAL	1				sold by the meter
54-9	1654606021	・SEAL	1				sold by the meter
54-10	1654613021	・TRIM	1				sold by the meter
57	1100040816	BOLT	2				
58	1100040820	BOLT	4				
62	1100041020	BOLT	2				
63	1100041025	BOLT	3				
68	1130040008	NUT	2				
73	1140020008	WASHER, spring	6				
74	1140020010	WASHER, spring	5				
77	1141110008	WASHER	6				
78	1141110010	WASHER	5				
89	0003600079	WASHER	2				
	K7c030						

silverthorn.co.uk

AIR CLEANER (for double element)

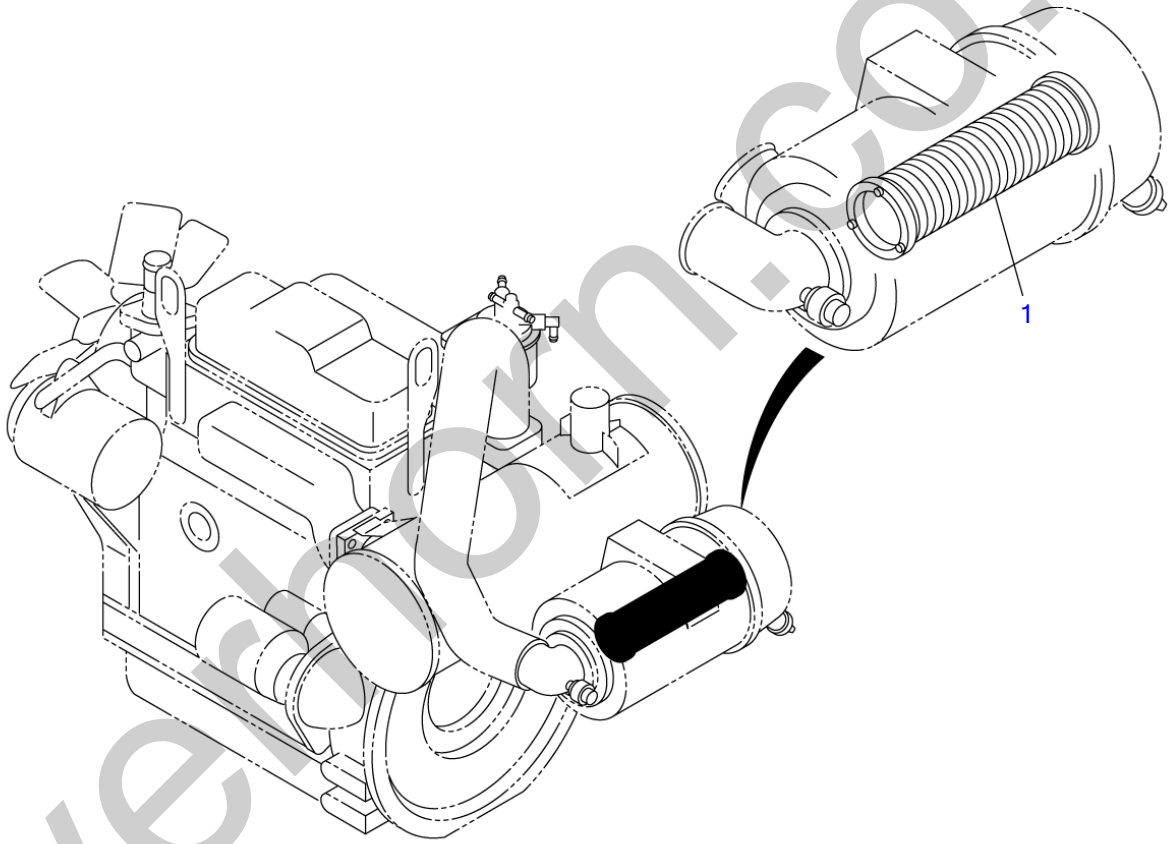

K7C040

S=1/5, 1/8

silverthorn.co.uk

AIR CLEANER (for double element)

Item	Part number	Description	Q'ty	Chan.	Serial No.	Serv.	Remarks
1	**1911102772 G4c150**	CLEANER ASSY, air ELEMENT	1				ƒhƒiƒ‹ƒhƒ\ƒ“ P82-2858

silverhorn.co.uk

DRAIN PLUG

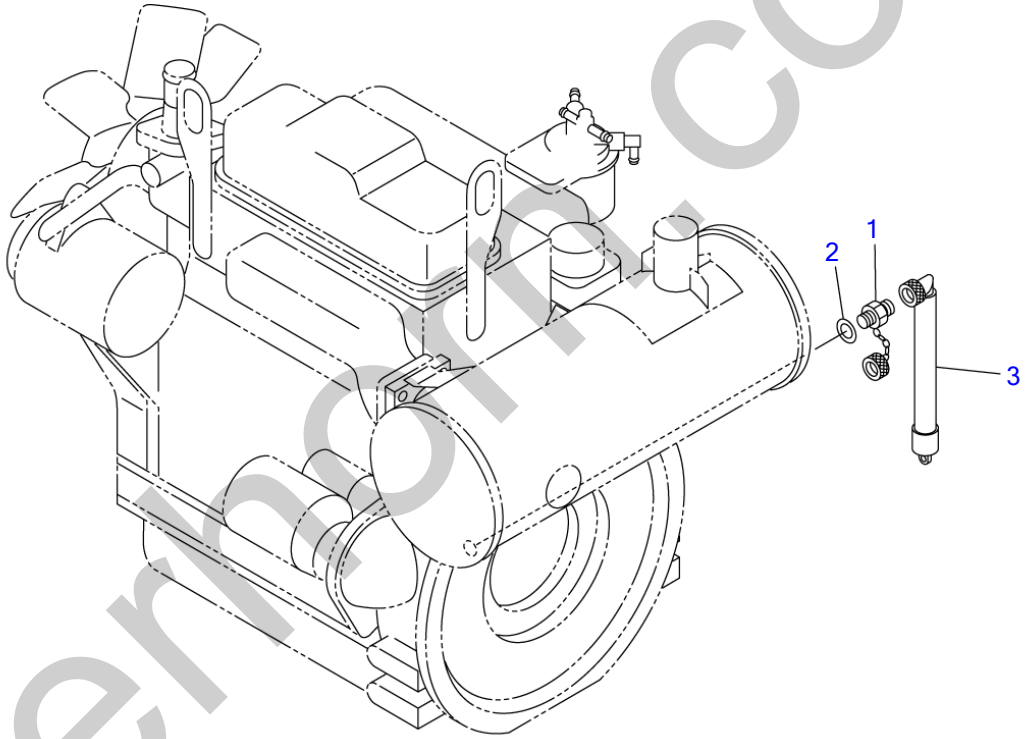

K7C050

S=1/8

silverhorn.co.uk

DRAIN PLUG

Item	Part number	Description	Q'ty	Chan.	Serial No.	Serv.	Remarks
		PLUG ASSY, drain					
1	1554502250	PLUG	1				
2	1432122302	WASHER	1				
3	1554512601	TUBE	1				
	K3c031						

silverhorn.co.uk

CONTROL BOX; R.H. (cab)

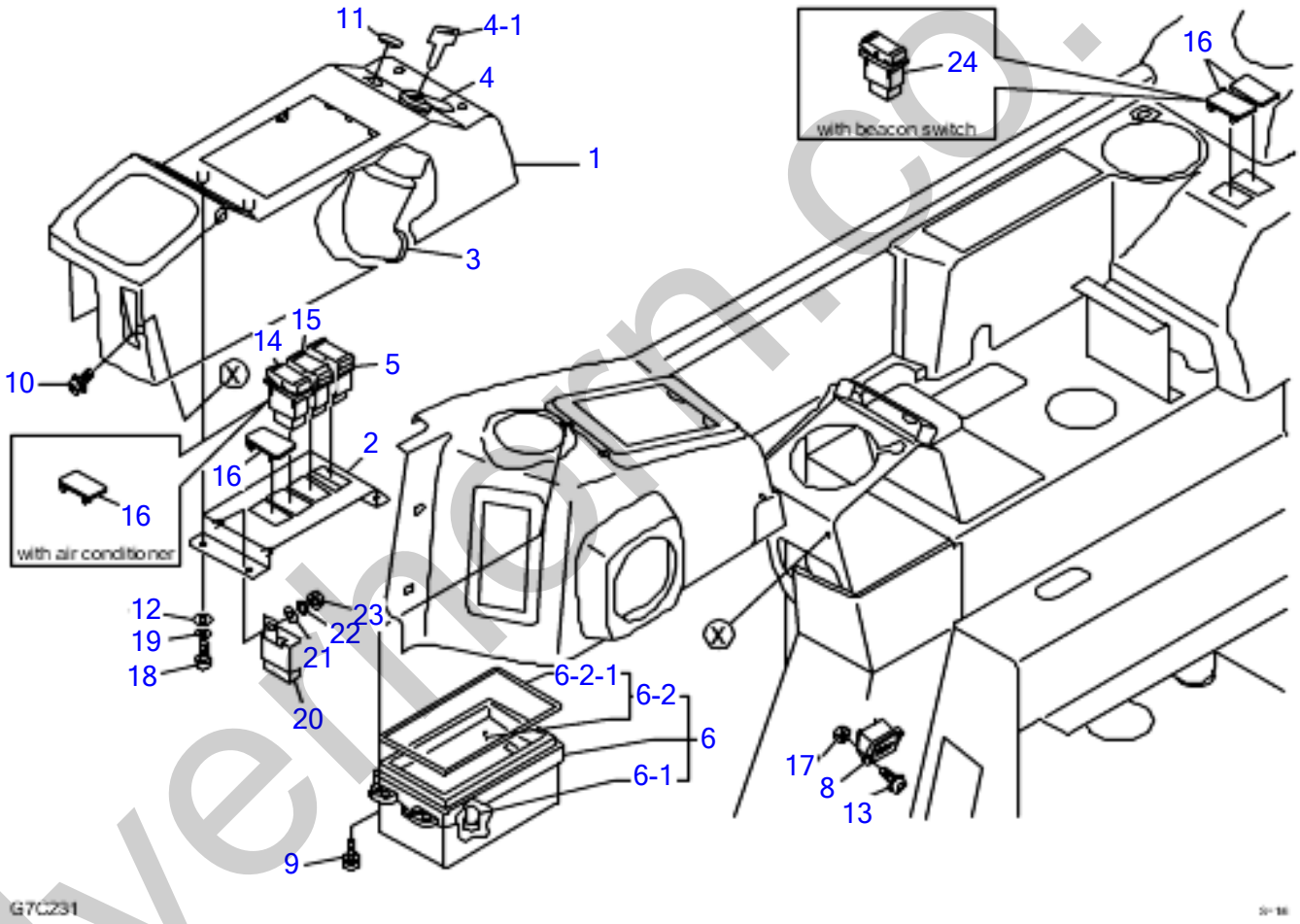

silvermorn.co.uk

CONTROL BOX; R.H. (cab)

Item	Part number	Description	Q'ty	Chan.	Serial No.	Serv.	Remarks
		BOX ASSY (R.H.)					
		BOX ASSY (R.H.) (with air conditioner)					
1	0374308499	COVER (R.H.)	1				
2	0374308410	PLATE	1				
3	0870431821	COVER	1				
4	1700100023	SWITCH, starter	1				
4-1	1700100019	KEY	1				
5	1700008030	SWITCH, lamp	1				
6	1730141550	GAUGE, cluster	1				
6-1	1730140634	・BULB (14V, 1.4W)	8				
6-2	1730140653	・GLASS ASSY	1				
6-2-1	1730140654	・・PACKING	1				
8	1730000700	METER, hour	1				
9	1120530416	SCREW	4				
10	1150410614	BOLT, sems	3				
11	1652533019	CAP	1				
12	1141110004	WASHER	8				
13	1150110312	SCREW, sems	2				
14	1700008040	SWITCH, heater	1				standard
15	1700008050	SWITCH, wiper	1				
16	1700008035	ORNAMENT	3				
	1700008035	ORNAMENT	4				with air conditioner
	1700008035	ORNAMENT	2				
17	1130030003	NUT	2				
18	1120530408	SCREW	4				
19	1140020004	WASHER, spring	8				
20	1711900042	RELAY (wiper)	1				
21	1141110006	WASHER	1				
22	1140020006	WASHER, spring	1				
23	1130040006	NUT	1				
24	1700008031	BEACON SWITCH	1				
	K7c061						

silverhorn.co.uk

CONTROL BOX; R.H. (cab) 2ND AUX - BUCKET

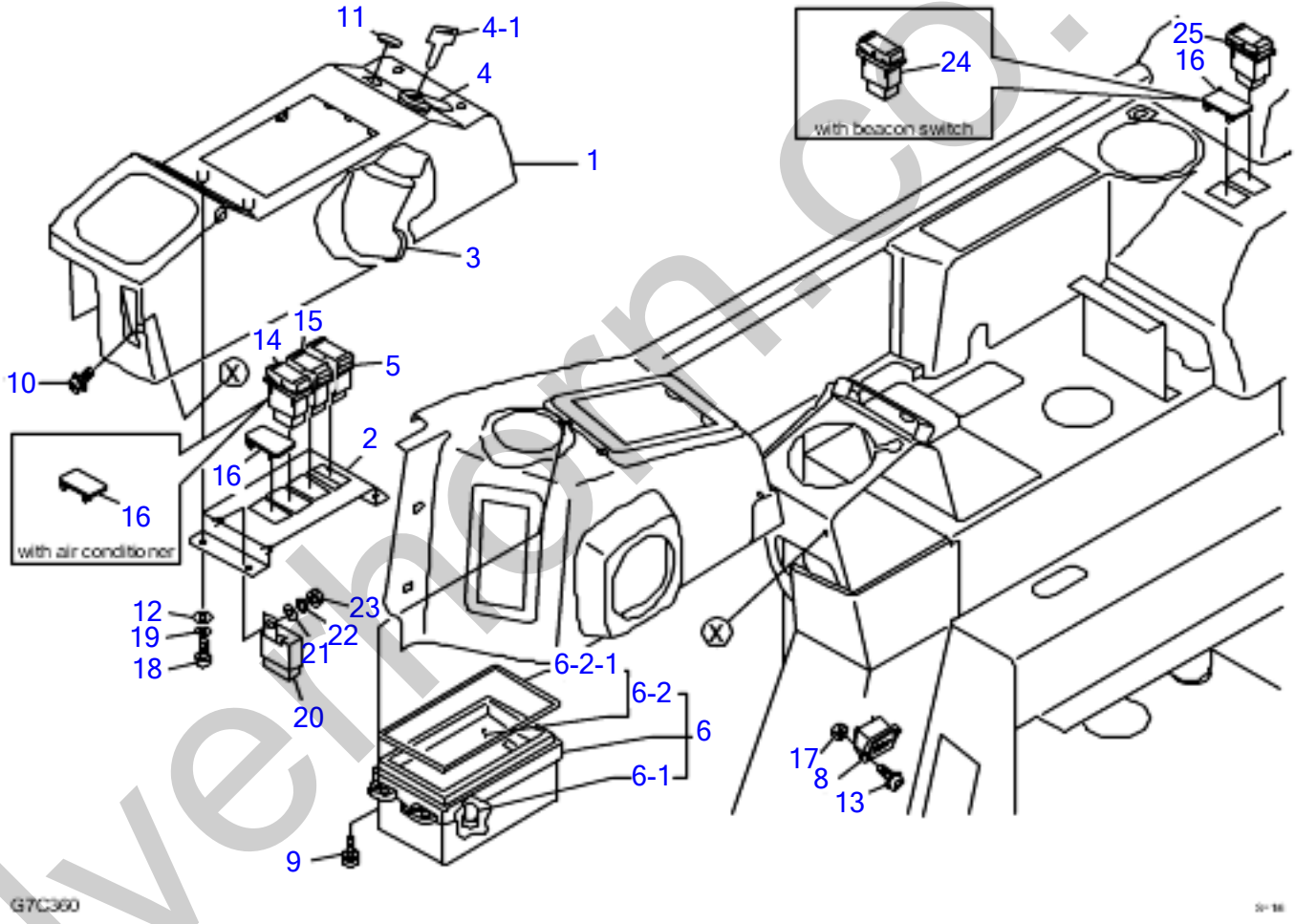

silverthorn.co.uk

CONTROL BOX; R.H. (cab) 2ND AUX - BUCKET

Item	Part number	Description	Q'ty	Chan.	Serial No.	Serv.	Remarks
		BOX ASSY (R.H.)					
		BOX ASSY (R.H.) (with air conditioner)					
1	0374308499	COVER (R.H.)	1				
2	0374308410	PLATE	1				
3	0870431821	COVER	1				
4	1700100023	SWITCH, starter	1				
4-1	1700100019	KEY	1				
5	1700008030	SWITCH, lamp	1				
6	1730141550	GAUGE, cluster	1				
6-1	1730140634	・BULB (14V, 1.4W)	8				
6-2	1730140653	・GLASS ASSY	1				
6-2-1	1730140654	・・PACKING	1				
8	1730000700	METER, hour	1				
9	1120530416	SCREW	4				
10	1150410614	BOLT, sems	3				
11	1652533019	CAP	1				
12	1141110004	WASHER	8				
13	1150110312	SCREW, sems	2				
14	1700008040	SWITCH, heater	1				standard
15	1700008050	SWITCH, wiper	1				
16	1700008035	ORNAMENT	3				
	1700008035	ORNAMENT	4				with air conditioner
	1700008035	ORNAMENT	2				
17	1130030003	NUT	2				
18	1120530408	SCREW	4				
19	1140020004	WASHER, spring	8				
20	1711900042	RELAY (wiper)	1				
21	1141110006	WASHER	1				
22	1140020006	WASHER, spring	1				
23	1130040006	NUT	1				
24	1700008031	BEACON SWITCH	1				
25	1700008032	SWITCH	1				
	K7C220						

silverhorn.co.uk

CONTROL BOX; R.H. (canopy)

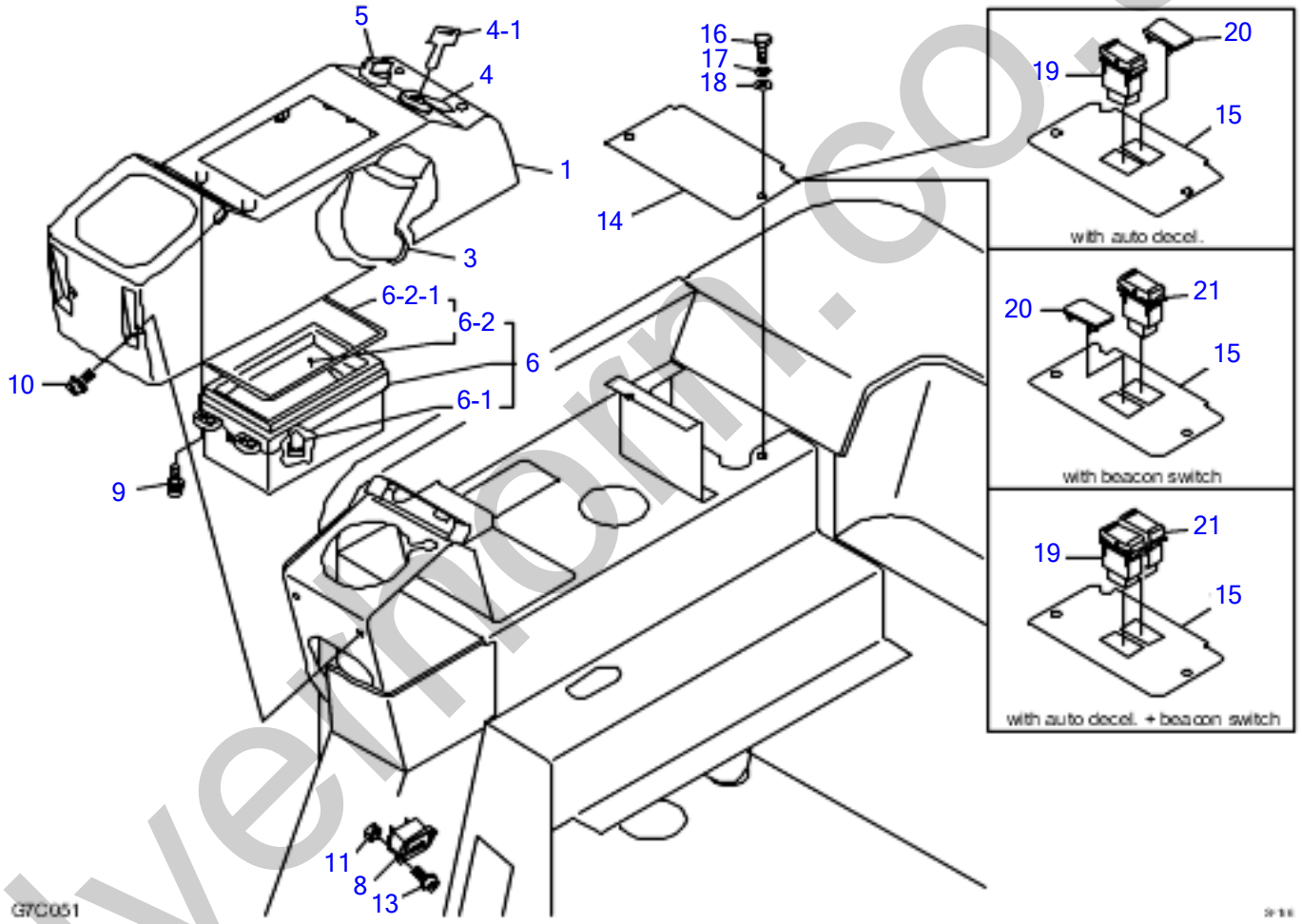

silvermoon.co.uk

CONTROL BOX; R.H. (canopy)

Item	Part number	Description	Q'ty	Chan.	Serial No.	Serv.	Remarks
		BOX ASSY (R.H.)					
1	0334326150	COVER (R.H.)	1				
3	0870431821	COVER	1				
4	1700100072	SWITCH, starter	1				
4-1	1700100019	KEY	1				
5	1700000010	SWITCH, lamp	1				
6	1730141550	GAUGE, cluster	1				
6-1	1730140634	・BULB (14V, 1.4W)	8				
6-2	1730140653	・GLASS ASSY	1				
6-2-1	1730140654	・・PACKING	1				
8	1730000700	METER, hour	1				
9	1150410416	SCREW	4				
10	1150410614	BOLT, sems	4				
11	1130030003	NUT	2				
13	1150110312	SCREW	2				
14	0378406008	COVER	1				
15	0374309410	COVER	1				
16	1100040612	BOLT	2				
17	1140020006	SPRING WASHER	2				
18	1141110006	WASHER	2				
19	1700008110	AUTO DECEL. SWITCH	1				
20	1700008035	ORNAMENT	1				
	1700008035	ORNAMENT	1				
21	1700008031	BEACON SWITCH	1				
	G7c052						

silverhorn.co.uk

CONTROL BOX; L.H. (canopy)

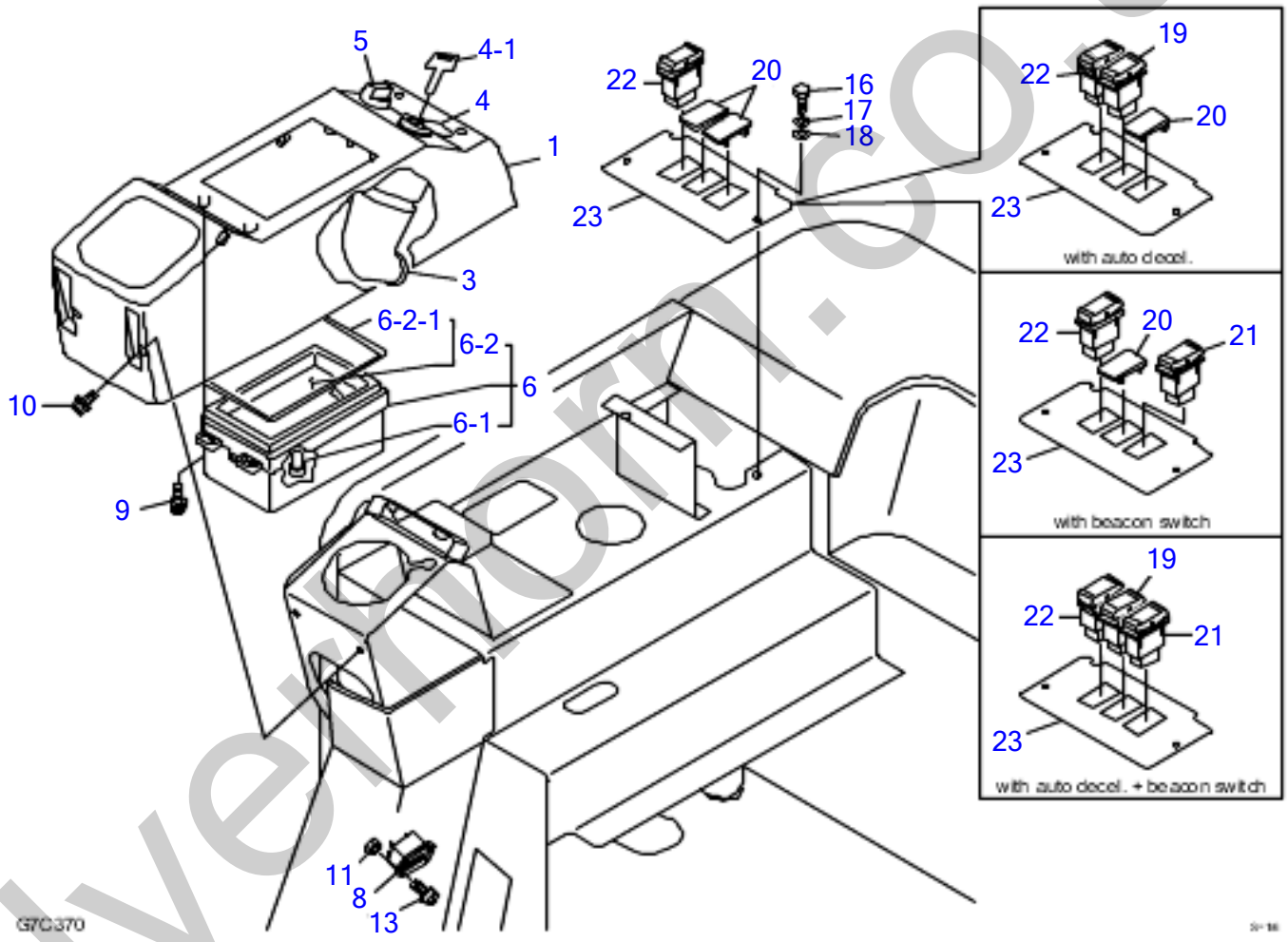

silvermoor.co.uk

CONTROL BOX; L.H. (canopy)

Item	Part number	Description	Q'ty	Chan.	Serial No.	Serv.	Remarks
		BOX ASSY (R.H.)					
1	0334326150	COVER (R.H.)	1				
3	0870431821	COVER	1				
4	1700100072	SWITCH, starter	1				
4-1	1700100019	KEY	1				
5	1700000010	SWITCH, lamp	1				
6	1730141550	GAUGE, cluster	1				
6-1	1730140634	・BULB (14V, 1.4W)	8				
6-2	1730140653	・GLASS ASSY	1				
6-2-1	1730140654	・・PACKING	1				
8	1730000700	METER, hour	1				
9	1150410416	SCREW	4				
10	1150410614	BOLT, sems	4				
11	1130030003	NUT	2				
13	1150110312	SCREW	2				
16	1100040612	BOLT	2				
17	1140020006	SPRING WASHER	2				
18	1141110006	WASHER	2				
19	1700008110	AUTO DECEL. SWITCH	1				
20	1700008035	ORNAMENT	2				
	1700008035	ORNAMENT	1				
	1700008035	ORNAMENT	1				
21	1700008031	BEACON SWITCH	1				
22	1700008032	SWITCH	1				
23	0374309420	PLATE	1				
	G7C370						

silverhorn.co.uk

CONTROL BOX; L.H.

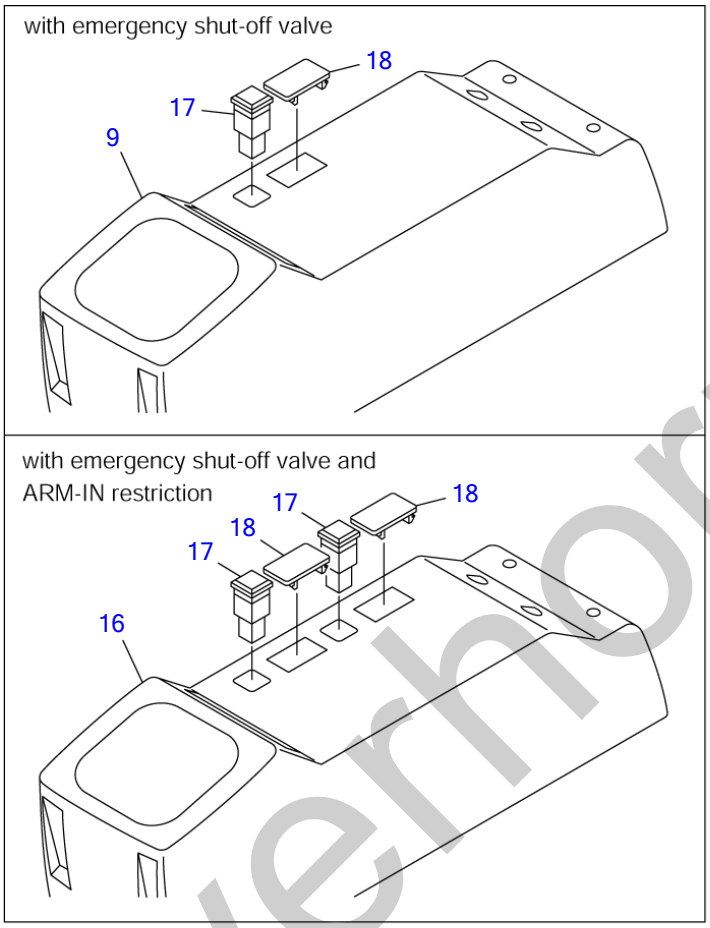

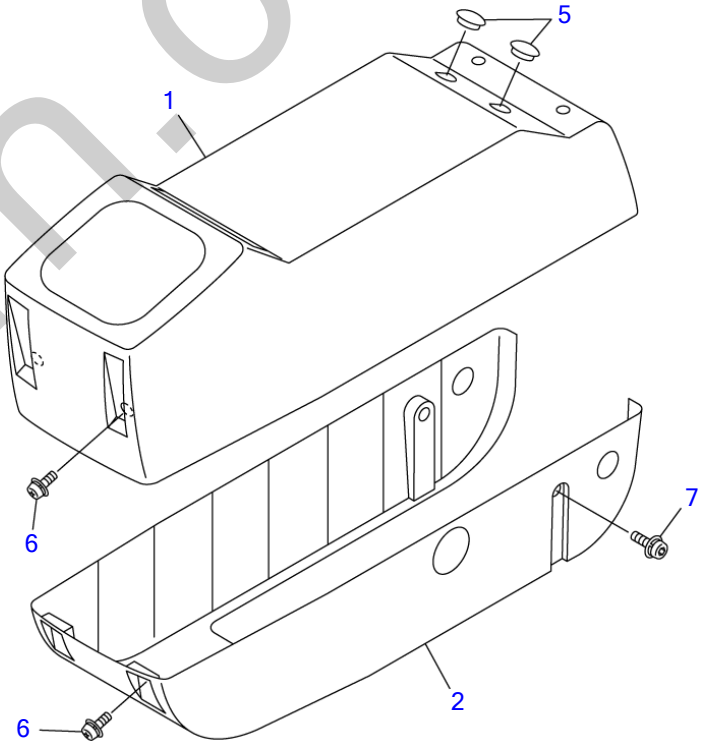

G7C061

S=1/5

silverhorn.co.uk

CONTROL BOX; L.H.

Item	Part number	Description	Q'ty	Chan.	Serial No.	Serv.	Remarks
		BOX ASSY (L.H.) BOX ASSY (L.H.) (with shut-off valve) BOX ASSY (L.H.) (with ARM-IN restriction)					
1	0334327150	COVER (L.H.)	1				standard
2	0334327250	COVER (L.H.)	1				
5	1652533019	CAP	2				
6	1150410614	BOLT, sems	6				
7	1110540614	BOLT, sems	2				
9	0374308020	COVER (L.H.)	1				with shut-off valve
16	0376015496	COVER (L.H.)	1				with ARM-IN restriction
17	1700550024	ORNAMENT	1				with shut-off valve
	1700550024	ORNAMENT	2				with ARM-IN restriction
18	1700008035	ORNAMENT	1				with shut-off valve
	1700008035	ORNAMENT	2				with ARM-IN restriction
	G7c062						

silverhorn.co.uk

CONTROL BOX; L.H. (with air con. & cold latitudes heater)

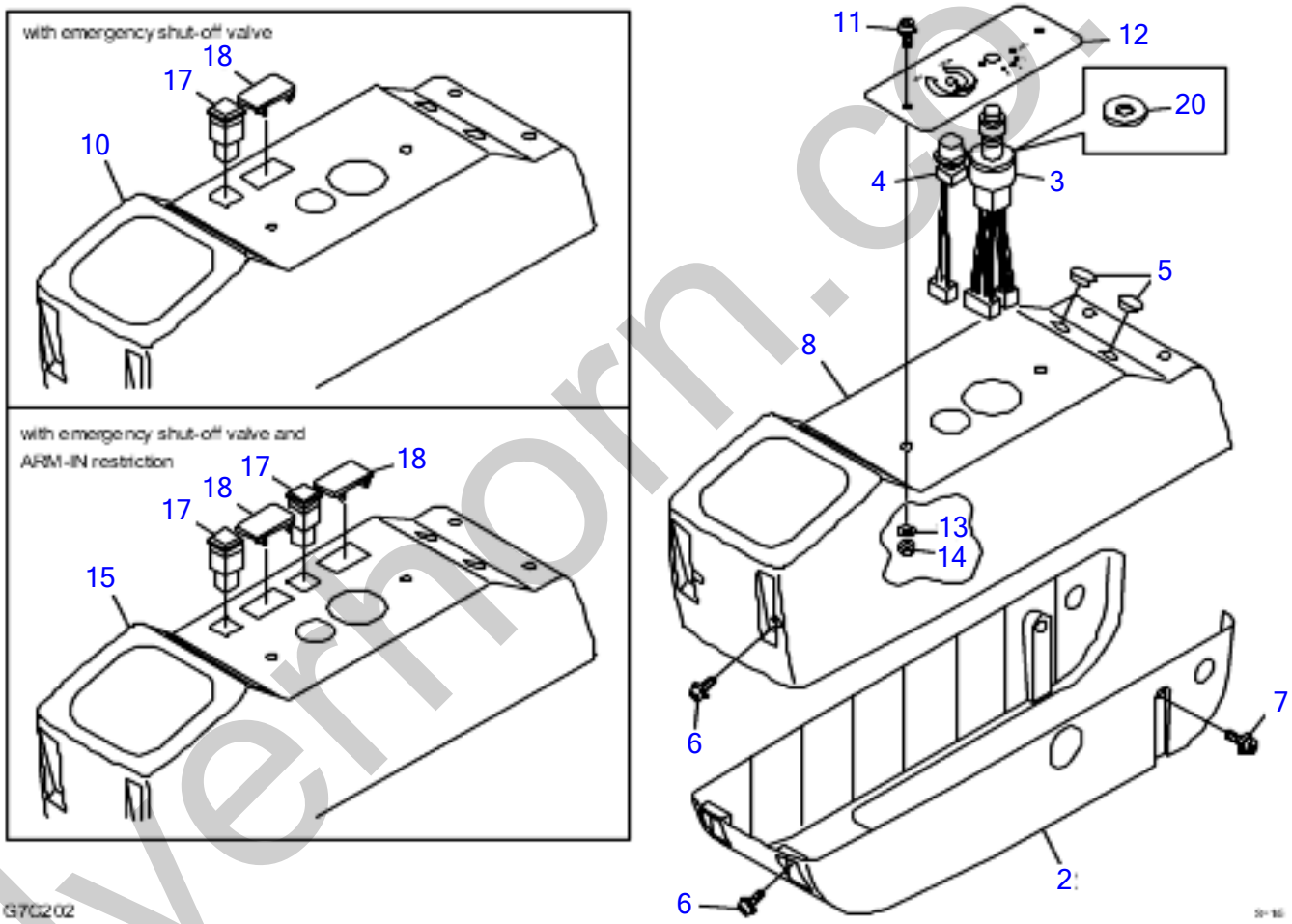

silvermorn.co.uk

CONTROL BOX; L.H. (with air con. & cold latitudes heater)

Item	Part number	Description	Q'ty	Chan.	Serial No.	Serv.	Remarks
		BOX ASSY (L.H.) BOX ASSY (L.H.) (with shut-off valve) BOX ASSY (L.H.) (with ARM-IN restriction)					
2	0334327250	COVER (L.H.)	1				
3	1911511054	BLOWER SWITCH, air conditioner	1				
4	1911511055	VOLUME, thermo	1				
5	1652533019	CAP	2				
6	1150410614	BOLT, sems	6				
7	1110540614	BOLT, sems	2				
8	0374308010	COVER (L.H.)	1				standard
10	0374308030	COVER (L.H.)	1				with shut-off valve
11	1150420614	BOLT, sems	2				
12	1911511045	PANEL	1				
13	1141110006	WASHER	2				
14	1130040006	NUT	2				
15	0376015495	COVER (L.H.)	1				with ARM-IN restriction
17	1700550024	ORNAMENT	1				with shut-off valve
	1700550024	ORNAMENT	2				with ARM-IN restriction
18	1700008035	ORNAMENT	1				with shut-off valve
	1700008035	ORNAMENT	2				with ARM-IN restriction
20	0003612004	WASHER	1				
	G7c202						

silverhorn.co.uk

ENGINE CONTROL

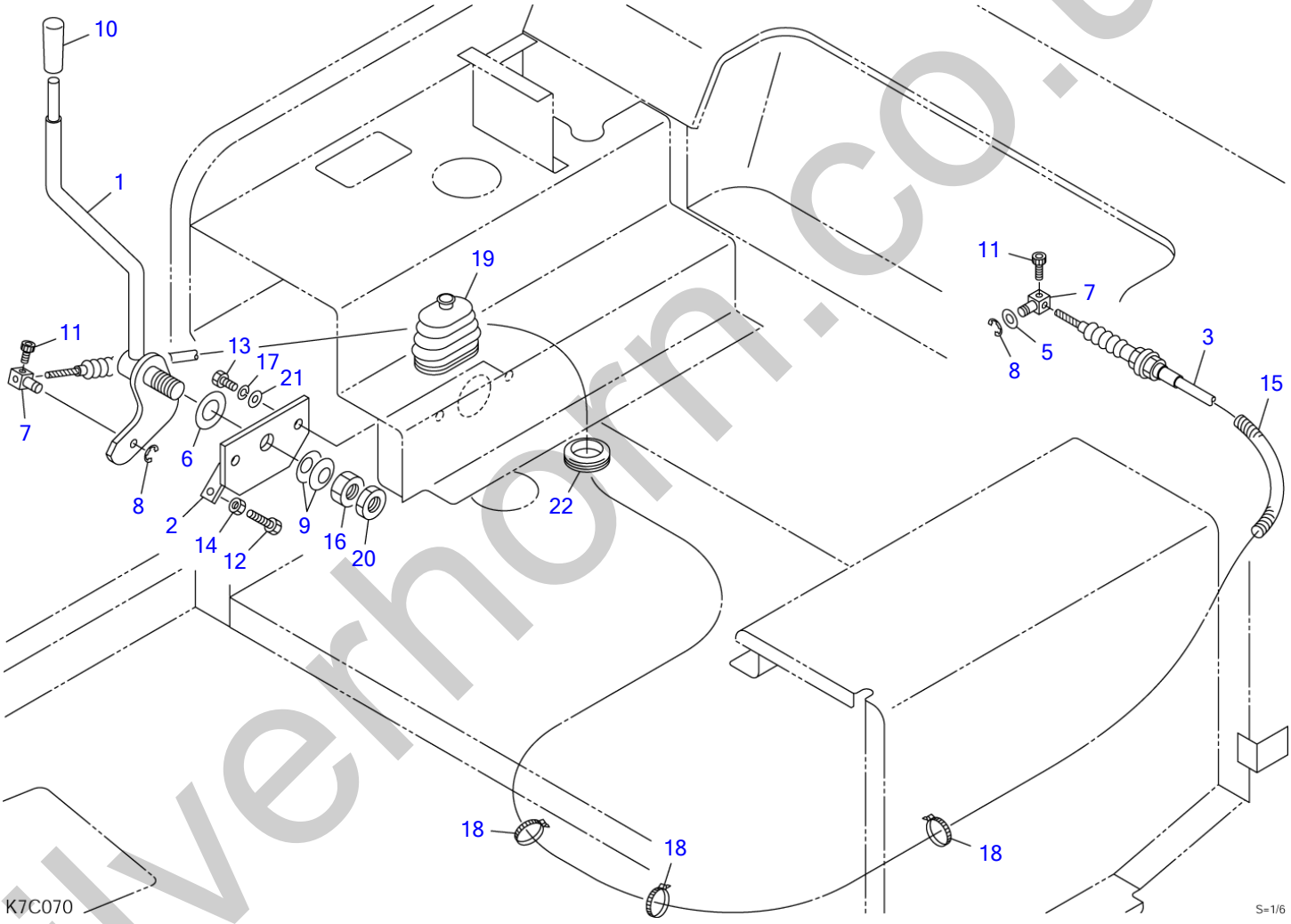

silverhorn.co.uk

ENGINE CONTROL

Item	Part number	Description	Q'ty	Chan.	Serial No.	Serv.	Remarks
		CONTROL ASSY, engine					
1	0374106010	LEVER	1				
2	0374106020	PLATE	1				
3	0394111410	WIRE	1				
5	1141110008	WASHER	1				
6	1141550018	WASHER	1				
7	0007900020	PIN	2				
8	1224010006	RING, retaining	2				
9	1225120018	WASHER, conical	2				
10	1650132050	GRIP	1				
11	1110040510	SCREW, cap	2				
12	1100040820	BOLT	1				
13	1100041020	BOLT	2				
14	1130040008	NUT	1				
15	1532208015	PROTECTOR	1				sold by the meter
16	1130640018	NUT	1				
17	1140020010	WASHER, spring	2				
18	1652231140	BAND	3				
19	0334120100	BOOT	1				
20	0064111700	NUT	1				
21	1141110010	WASHER	2				
22	1652060035	BUSHING	1				
	K7c070						

silverhorn.co.uk

DECEL. UNIT

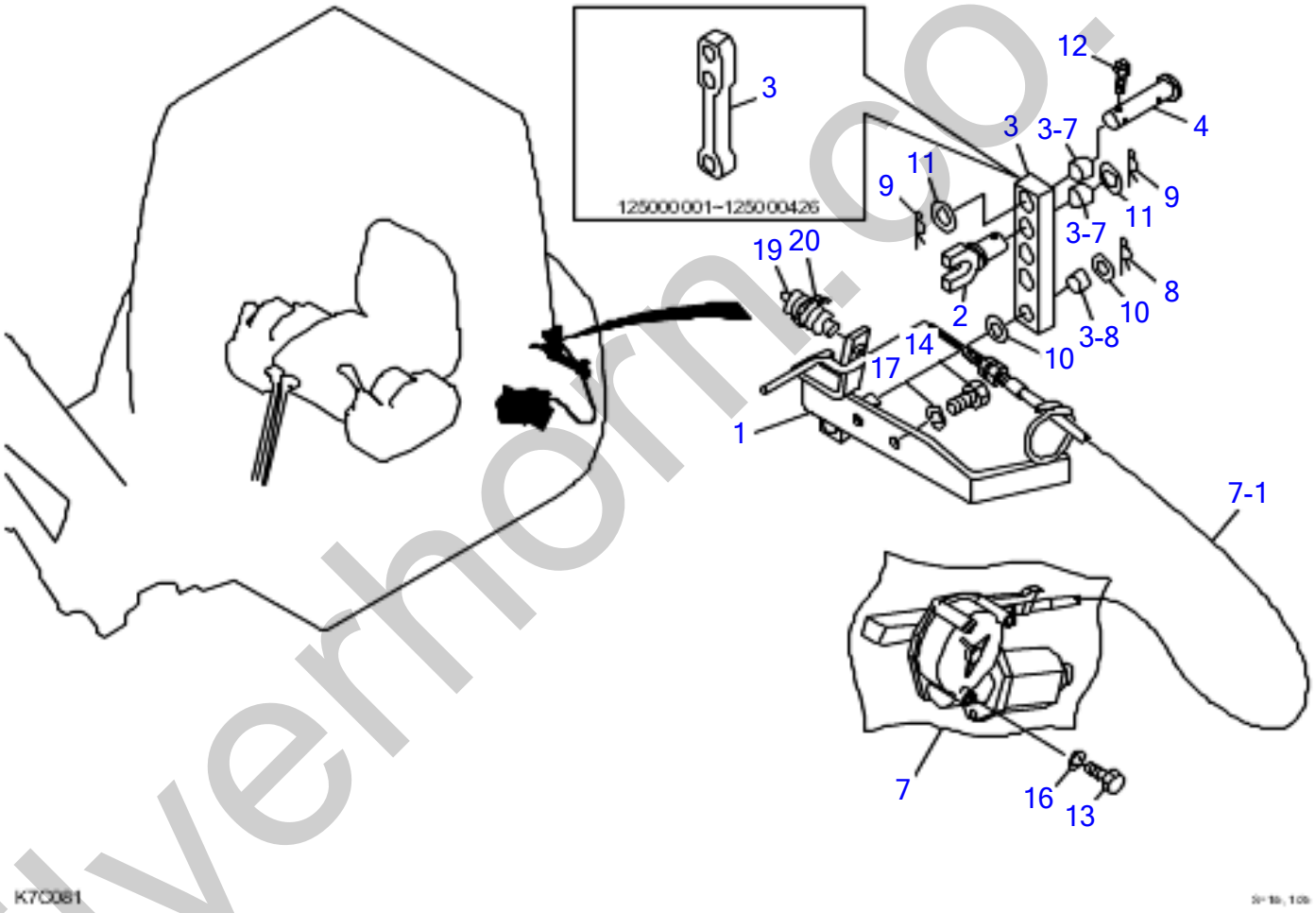

silverhorn.co.uk

DECEL. UNIT

Item	Part number	Description	Q'ty	Chan.	Serial No.	Serv.	Remarks
		UNIT ASSY, decel.					
1	0394111510	BRACKET	1				
2	0434107200	BRACKET	1				
3	0354112120	LEVER	1				
	0434107300	LEVER	1				
3-7	1333001415	・BUSHING	2				
3-8	1333001215	・BUSHING	1				
4	0374103020	PIN	1				
7	1910087166	MOTOR, decel.	1				Y119032-77910
7-1	1910087167	・WIRE	1				
8	1214000012	PIN, snap	1				
9	1214000014	PIN, snap	2				
10	1141210012	WASHER	2				
11	1141210014	WASHER	2				
12	1105090510	BOLT	1				
13	1100040616	BOLT	3				
14	1100040820	BOLT	2				
16	1140020006	WASHER, spring	3				
17	1140020008	WASHER, spring	2				
19	0007900014	BOOT	1				
20	1652201004	BAND	1				
	K7c081						

silverhorn.co.uk

AUTO DECEL.

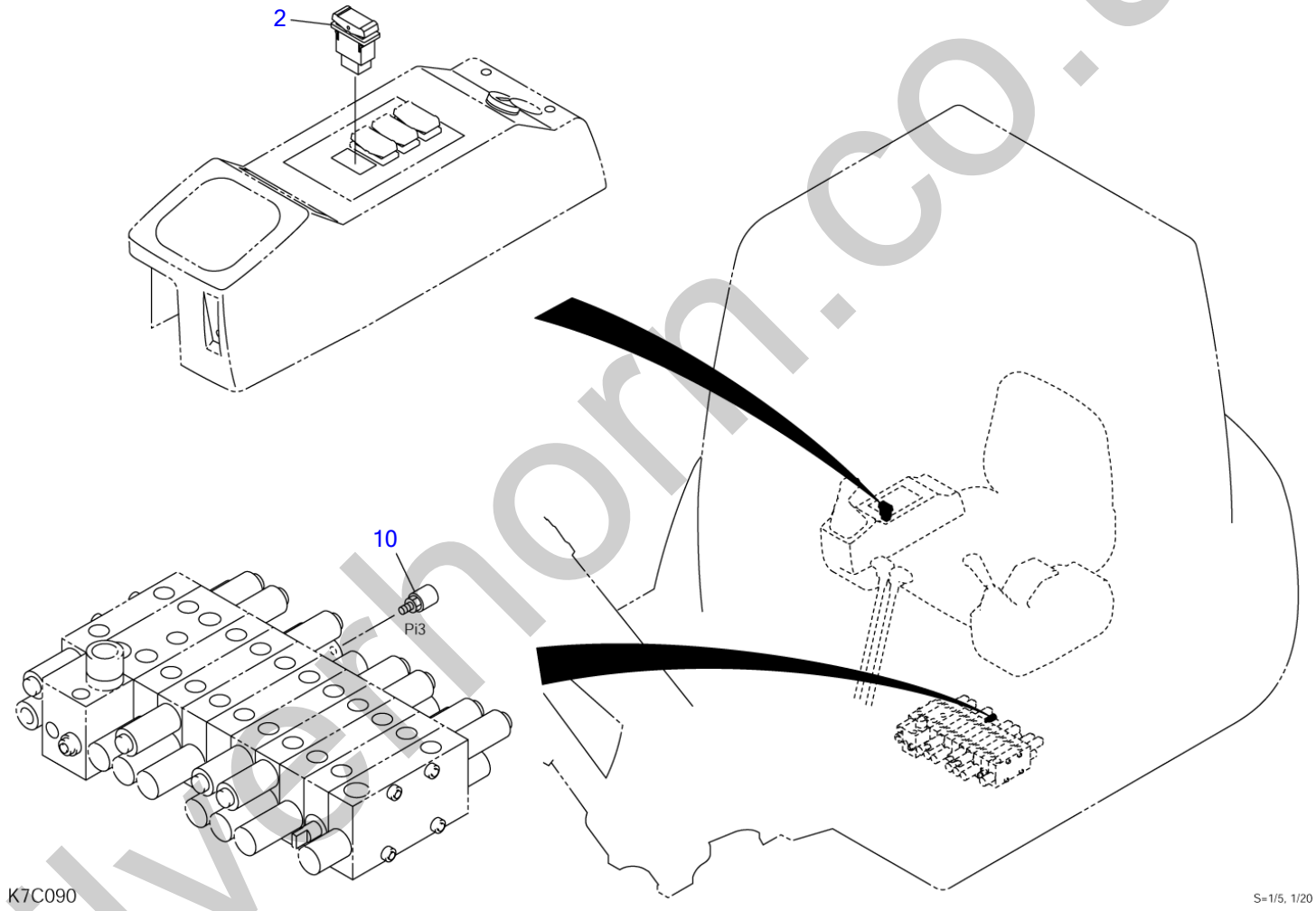

silverthorn.co.uk

AUTO DECEL.

Item	Part number	Description	Q'ty	Chan.	Serial No.	Serv.	Remarks
		AUTO-DECEL. ASSY					
2	1700008110	SWITCH, auto-decel.	1				
10	1700100069	SWITCH, pressure	1				
	1420010110	・O-RING	1				
	G7c240						

silverhorn.co.uk

AUTO DECEL. (CANOPY)

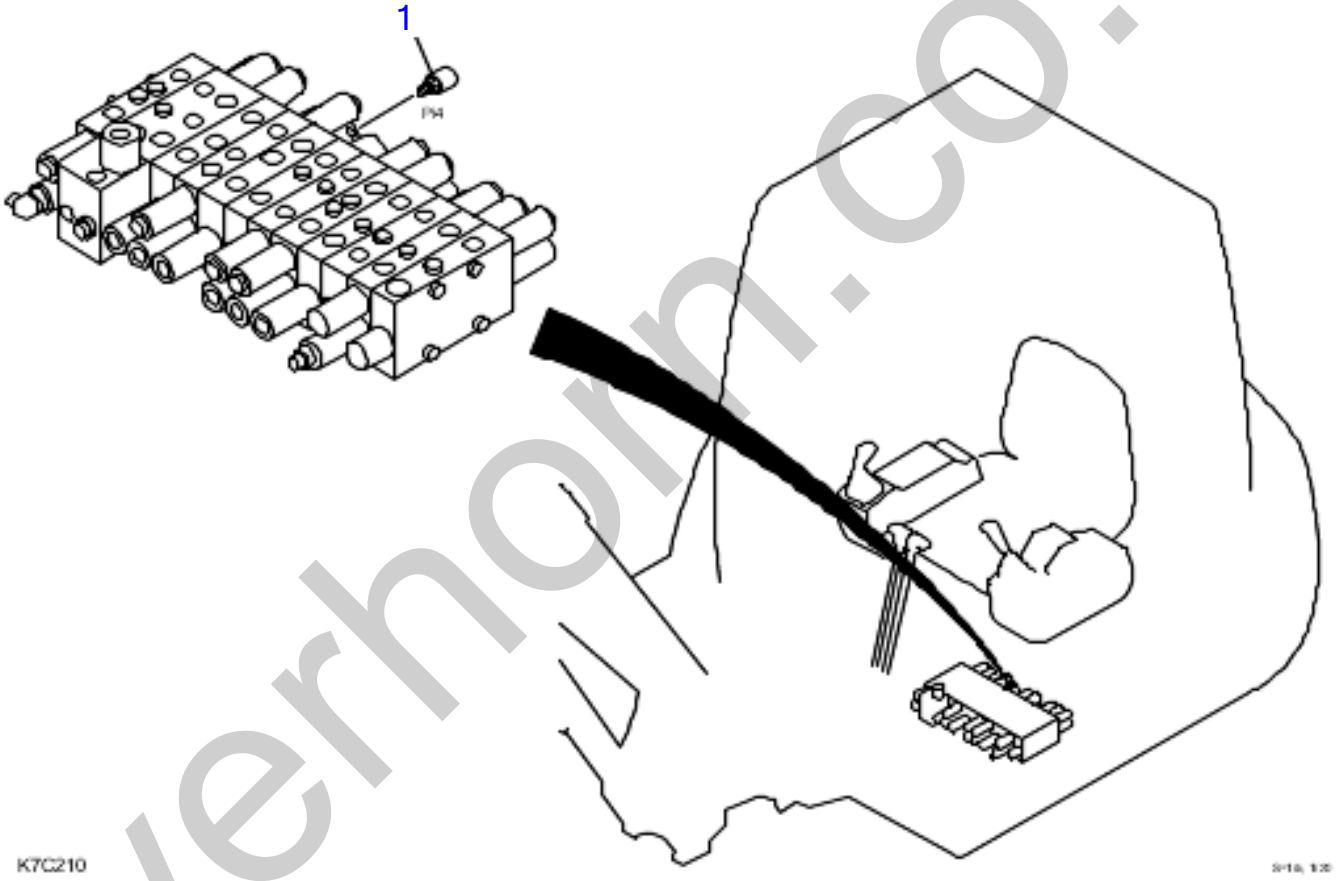

silverhorn.co.uk

AUTO DECEL. (CANOPY)

Item	Part number	Description	Q'ty	Chan.	Serial No.	Serv.	Remarks
		AUTO DECEL. (CANOPY)					
1	1700100069	PRESSURE SWITCH	1				
	1420010110	* O-RING	1				
		G7C380					

silverhorn.co.uk

ELECTRICAL (1/2)

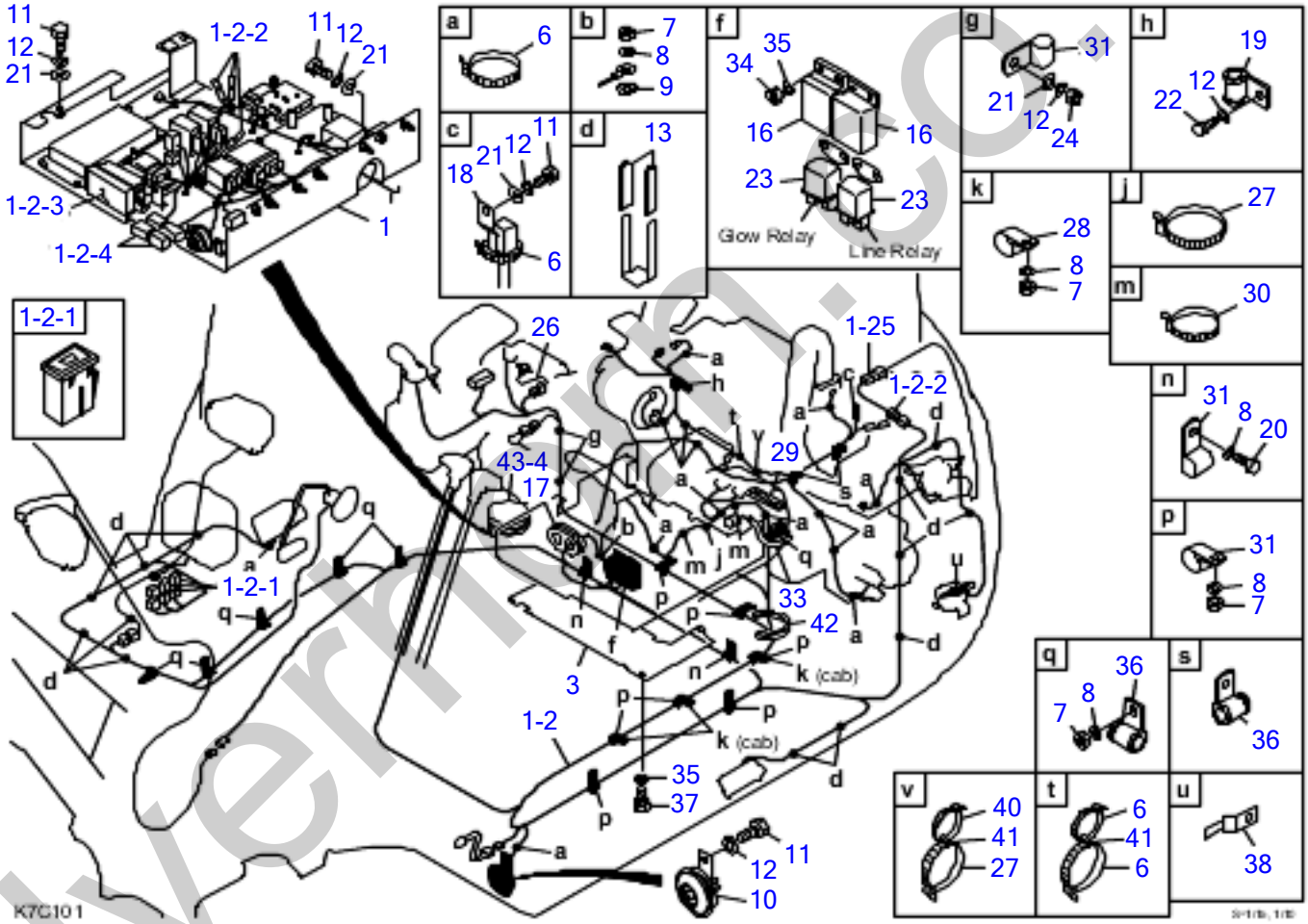

silvermill.co.uk

ELECTRICAL (1/2)

Item	Part number	Description	Q'ty	Chan.	Serial No.	Serv.	Remarks
		ELECTRICAL ASSY (cab)					
		ELECTRICAL ASSY (canopy)					
1	0394226610	UNIT ASSY, control	1				see page (2/2)
1-2	0394226630	・HARNESS ASSY, wiring	1				
1-2-1	1701330045	・・LINK, fusible	3				45A
1-2-2	1730500008	・・DIODE (3A, yellow)	4				
1-2-3	1701204921	・・BOX, fuse	1				V716801-H100
1-2-4	0374604929	・・CONNECTOR, short	2				
1-25	0374217070	・HARNESS, wiring	1				
3	0394224740	PLATE	1				
4	0334230400	CONNECTOR, short	1				cab
6	1652231250	BAND	18				
7	1130040010	NUT	14				
8	1140020010	WASHER, spring	14				
9	1140330010	WASHER	1				
10	1703500712	HORN	1				
11	1100040816	BOLT	7				
12	1140020008	WASHER, spring	8				
13	0872433150	TUBE	28				
16	1700100039	COVER	2				
17	0097210300	GUARD	1				
18	1711900064	CLAMP	1				
19	1652900005	CLAMP	1				
20	1100041016	BOLT	2				
21	1141110008	WASHER	7				
22	1100040812	BOLT	1				
23	1910161119	RELAY	2				Y119646-77900
24	1130040008	NUT	2				
26	0374205600	HARNESS, wiring	1				
27	1652241400	BAND	1				
28	0007300044	CLAMP	3				cab
29	1653917009	TRIM	1				sold by the meter
30	1652201005	BAND	2				
31	1711900097	CLAMP	9				
33	1703211018	PROTECTOR	1				sold by the meter
34	1130040006	NUT	4				
35	1140020006	WASHER, spring	9				
36	1711900076	CLAMP	8				
37	1100040610	BOLT	5				
38	1711900145	CLIP	1				
40	1652231140	BAND	1				
41	1652200010	BAND	2				
42	1654601026	SEAL	1				
43	1652060085		1				
	K7c101						

silvermorn.co.uk

ELECTRICAL (2/2)

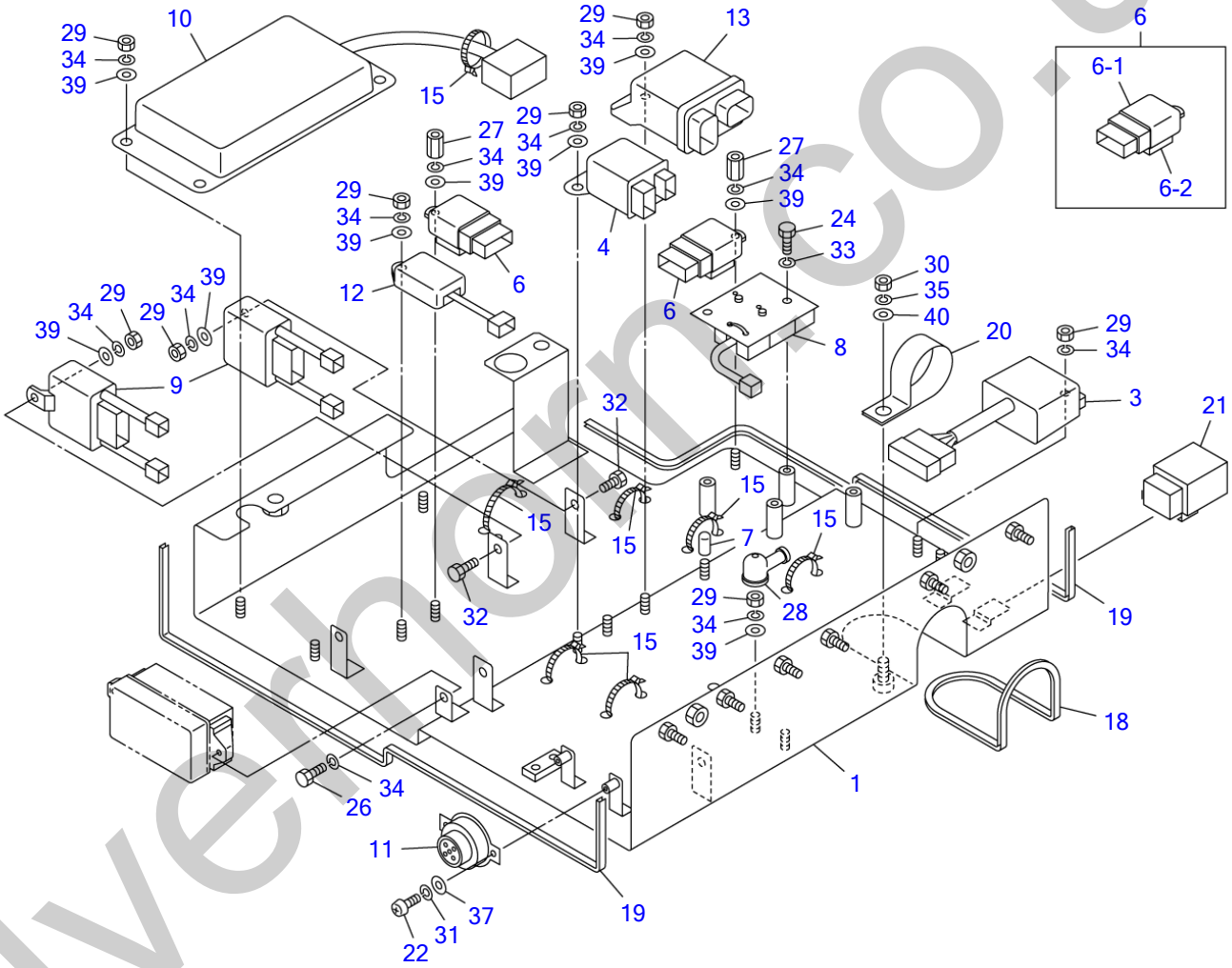

silverhorn.co.uk

ELECTRICAL (2/2)

Item	Part number	Description	Q'ty	Chan.	Serial No.	Serv.	Remarks
0-1	0394226610	UNIT ASSY, control	1				
1	0354222920	・PLATE	1				
3	1711900138	・FLIP FLOP UNIT	1				
4	1910161119	・RELAY	1				Y119646-77900
6	0334242540	・RELAY ASSY	2				
6-1	1711900042	・・RELAY	1				
6-2	1654301003	・・SPONGE	1				
7	1650205700	・CAP	1				
8	0374203120	・RESISTOR	1				
9	1711900062	・RELAY	2				
10	1730140910	・CONTROLLER	1				
11	1730140680	・BUZZER	1				
12	1910150118	・UNIT, timer	1				,x129211-77920
13	1910181106	・RELAY, safety	1				Y119802-77200
15	1652231250	・BAND	9				
18	1653916035	・TRIM	1				sold by the meter
19	1653916057	・TRIM	2				sold by the meter
20	0007300030	・CLAMP	1				
21	1730500010	・UNIT, diode	1				
22	1120530310	・SCREW	2				
24	1100040510	・BOLT	2				
26	1100040610	・BOLT	2				
27	1134830625	・NUT	2				
28	1702901279	・CAP	1				
29	1130040006	・NUT	12				
30	1130040008	・NUT	1				
31	1140020003	・WASHER, spring	2				
32	1100040620	・BOLT	2				
33	1140020005	・WASHER, spring	2				
34	1140020006	・WASHER, spring	14				
35	1140020008	・WASHER, spring	1				
37	1141110003	・WASHER	2				
39	1141110006	・WASHER	15				
40	1141110008	・WASHER	1				
	K7c110						

silverhorn.co.uk

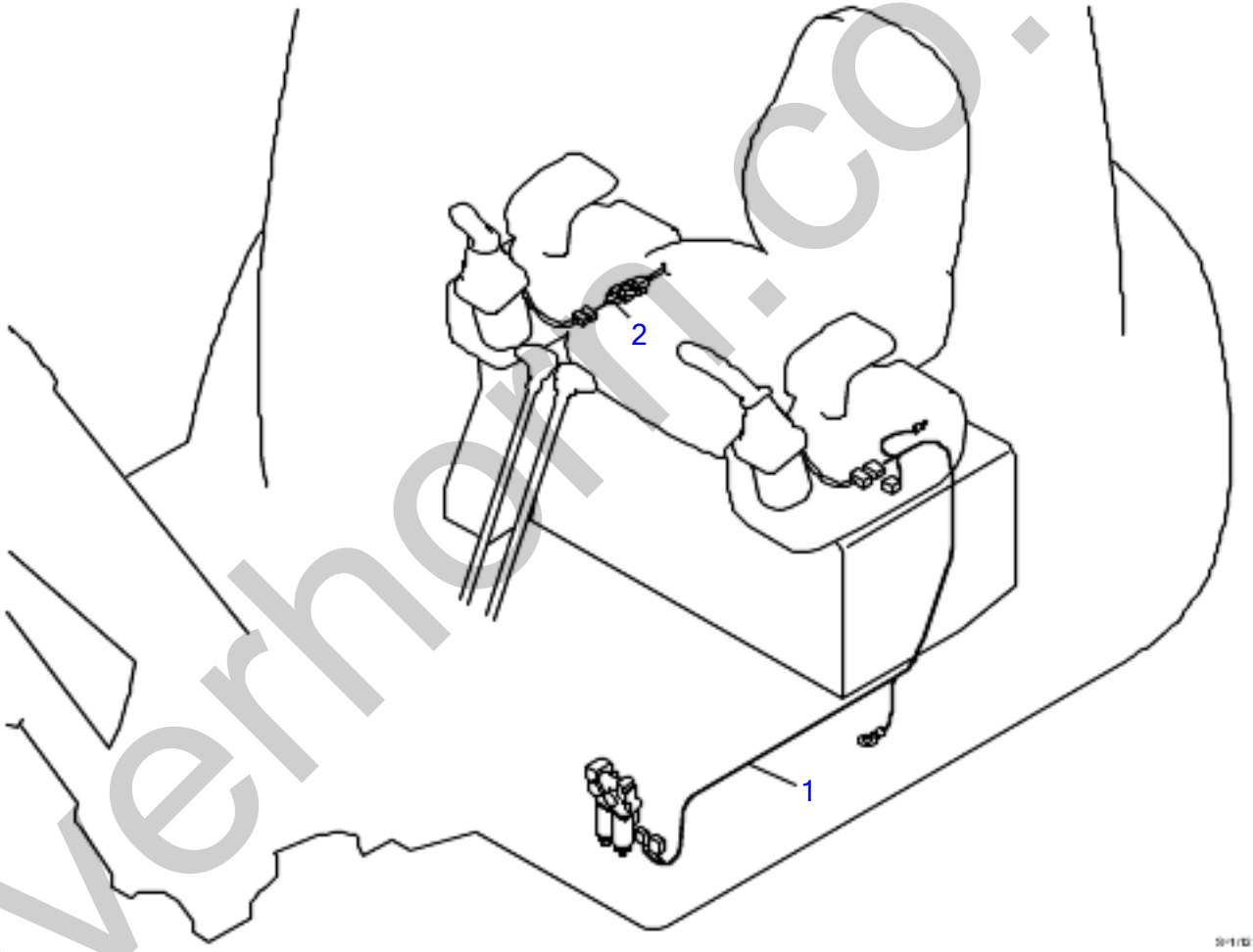

silverhorn.co.uk

ELECTRICAL (1st aux. proportional cont. type)

Item	Part number	Description	Q'ty	Chan.	Serial No.	Serv.	Remarks
		ELECTRICAL ASSY					
		ELECTRICAL ASSY (with 2nd aux. line)					
1	0394226910	HARNESS ASSY, wiring	1				
2	0394223040	HARNESS ASSY, wiring	1				without 2nd aux. line
	0374217510	HARNESS ASSY, WIRING	1				
	K7c121						

silverhorn.co.uk

ELECTRICAL (1ST AUX WITH FOOT SWITCH)

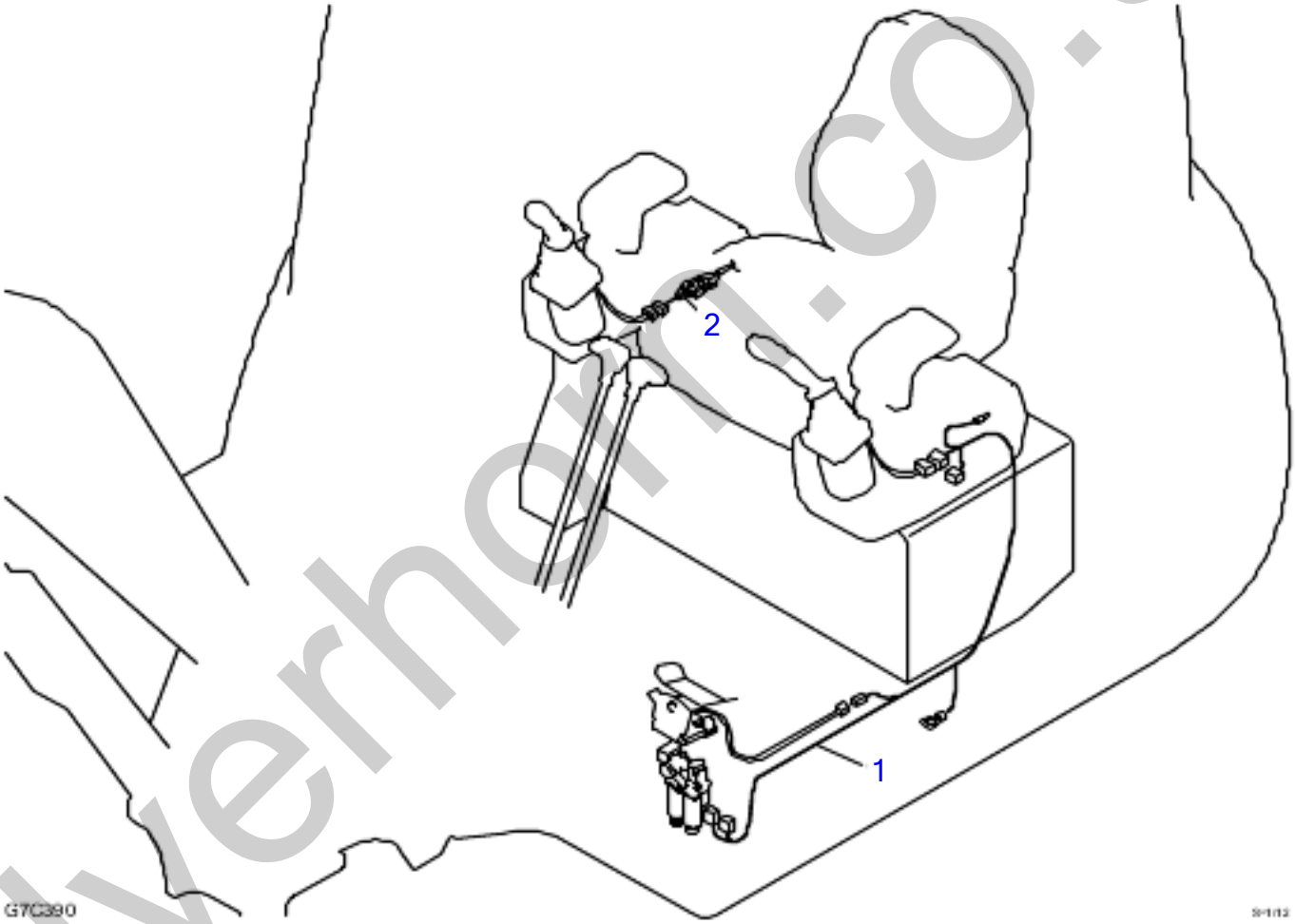

silverhorn.co.uk

ELECTRICAL (1ST AUX WITH FOOT SWITCH)

Item	Part number	Description	Q'ty	Chan.	Serial No.	Serv.	Remarks
		ELECTRICAL (1ST AUX PROPORTIONAL W FOOT SWITCH)					
1	0374219410	WIRING HARNESS ASSY	1				
2	0374217510	WIRING HARNESS ASSY	1				
	G7C390						

silverhorn.co.uk

ELECTRICAL (1ST AUX ON-OFF WITH FOOT SWITCH)

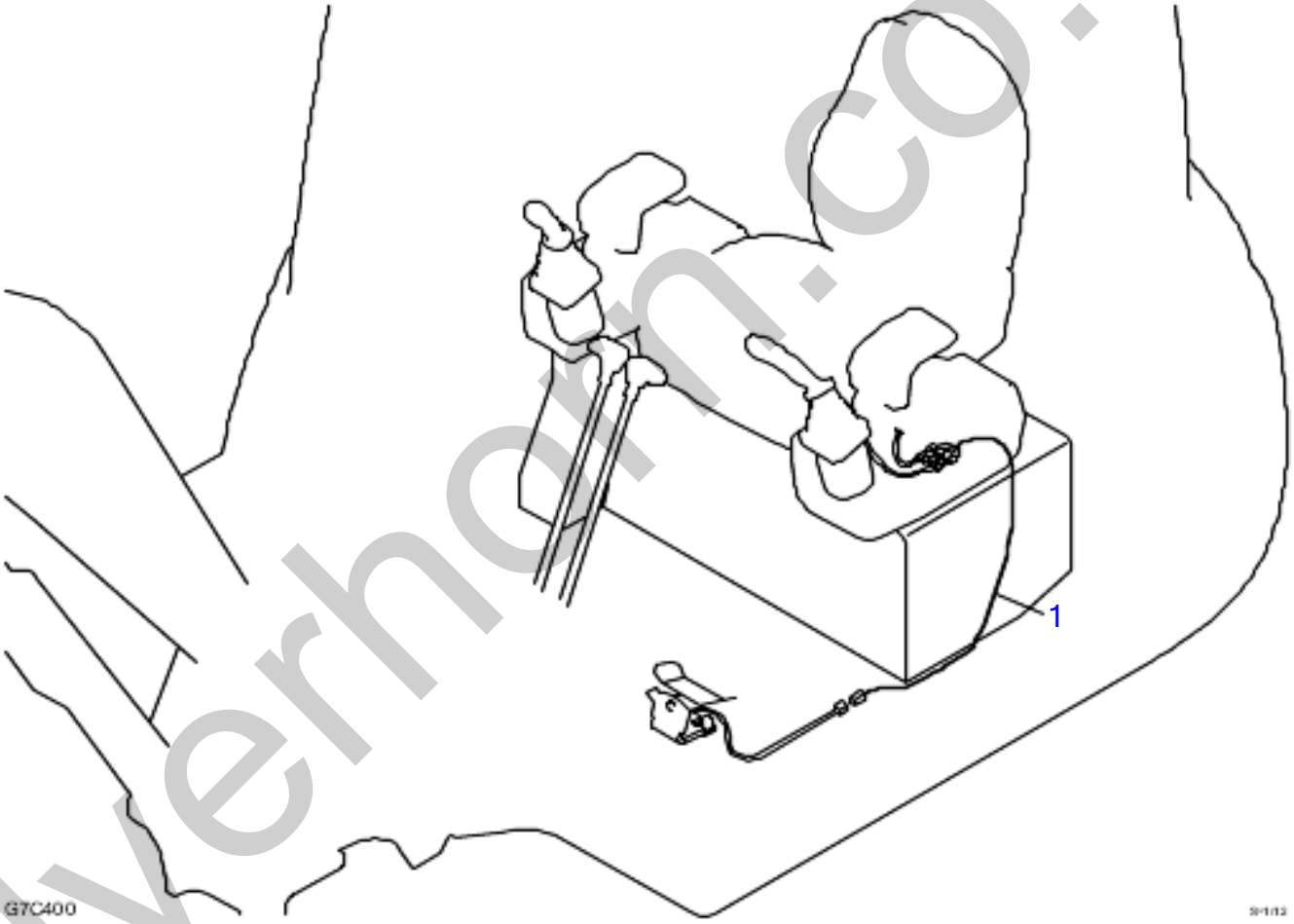

silverhorn.co.uk

ELECTRICAL (1ST AUX ON-OFF WITH FOOT SWITCH)

Item	Part number	Description	Q'ty	Chan.	Serial No.	Serv.	Remarks
		ELECTRICAL (1ST AUX ON-OFF WITH FOOT SWITCH)					
1	**0374219310 G7C400**	WIRING HARNESS ASSY	1				

silverhorn.co.uk

CONTROL UNIT (CHANGE 2ND AUX BUCKET)

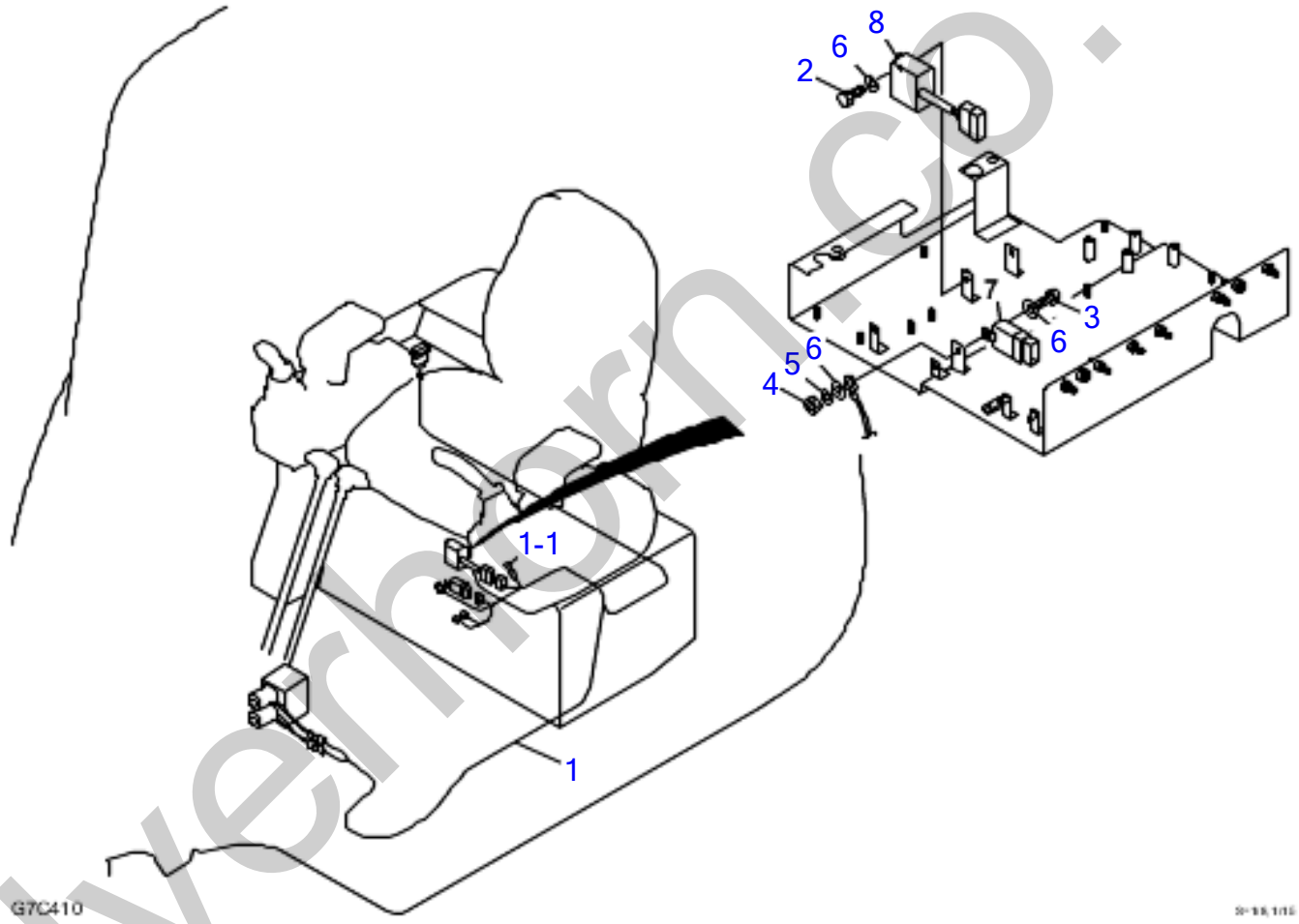

silverhorn.co.uk

CONTROL UNIT (CHANGE 2ND AUX BUCKET)

Item	Part number	Description	Q'ty	Chan.	Serial No.	Serv.	Remarks
0	0374219600	CONTROL UNIT ASSY					
1	0357015570	* WIRING HARNESS ASSY	1				
1-1	1730500008	* * DIODE (3A, YELLOW)	1				
2	1100040630	* BOLT	1				
3	1100040616	* BOLT	1				
4	1130040006	* NUT	1				
5	1140020006	* SPRING WASHER	1				
6	1141110006	* WASHER	3				
7	1711900042	* RELAY	1				
8	1711900172	* FLIP FLOP UNIT	1				
	G7C410						

silverhorn.co.uk

CONTROL UNIT (1st aux. ON-OFF)

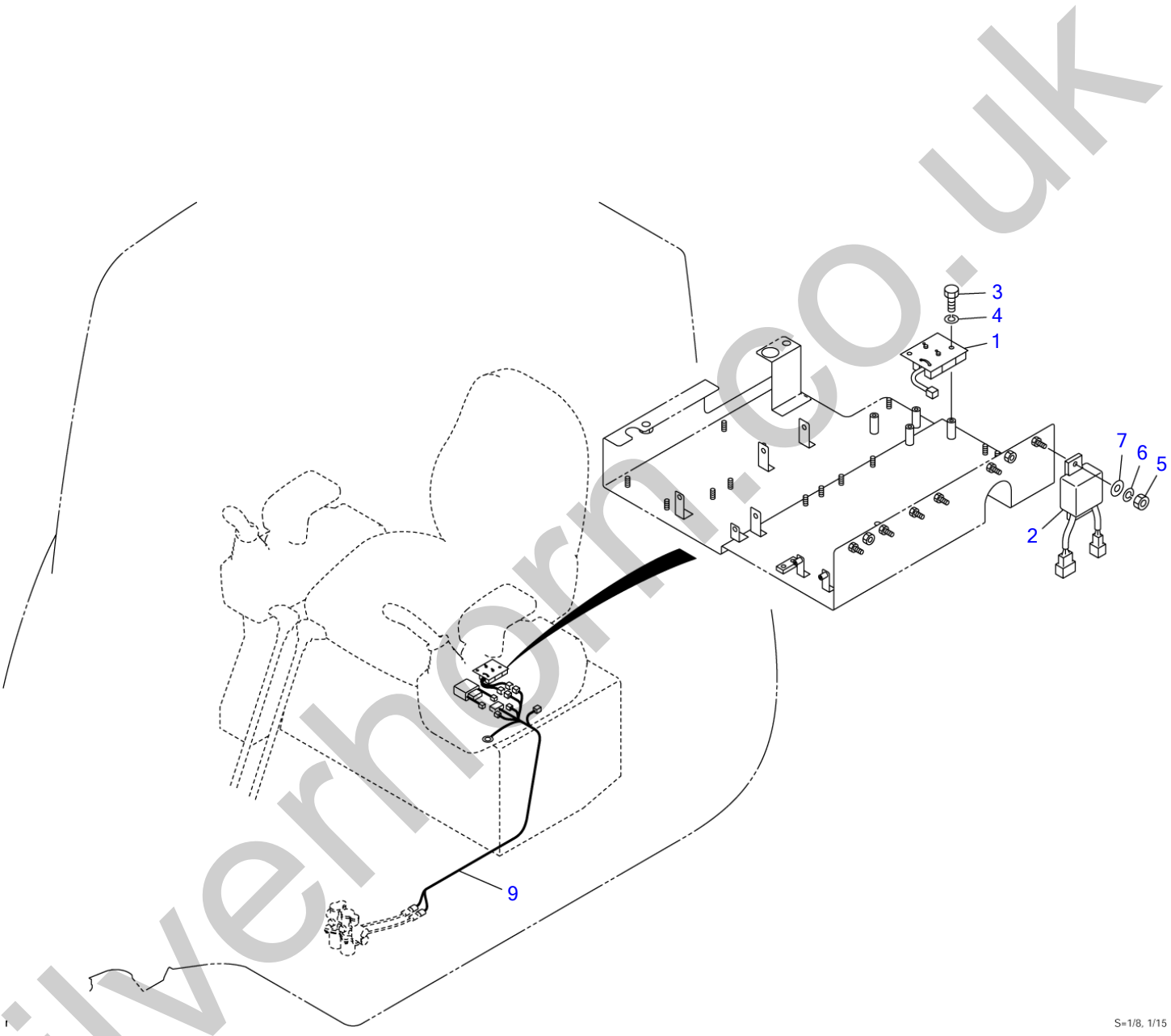

silverhorn.co.uk

CONTROL UNIT (1st aux. ON-OFF)

Item	Part number	Description	Q'ty	Chan.	Serial No.	Serv.	Remarks
0	0394228600	CONTROL UNIT ASSY	1				
1	0374203120	・RESISTOR	1				
2	1711900162	・RELAY	1				
3	1100040510	・BOLT	2				
4	1140020005	・WASHER, spring	2				
5	1130040006	・NUT	1				
6	1140020006	・WASHER, spring	1				
7	1141110006	・WASHER	1				
9	0394226810	・HARNESS ASSY, wiring	1				
	K7c131						

silverhorn.co.uk

CONTROL UNIT (air conditioner)

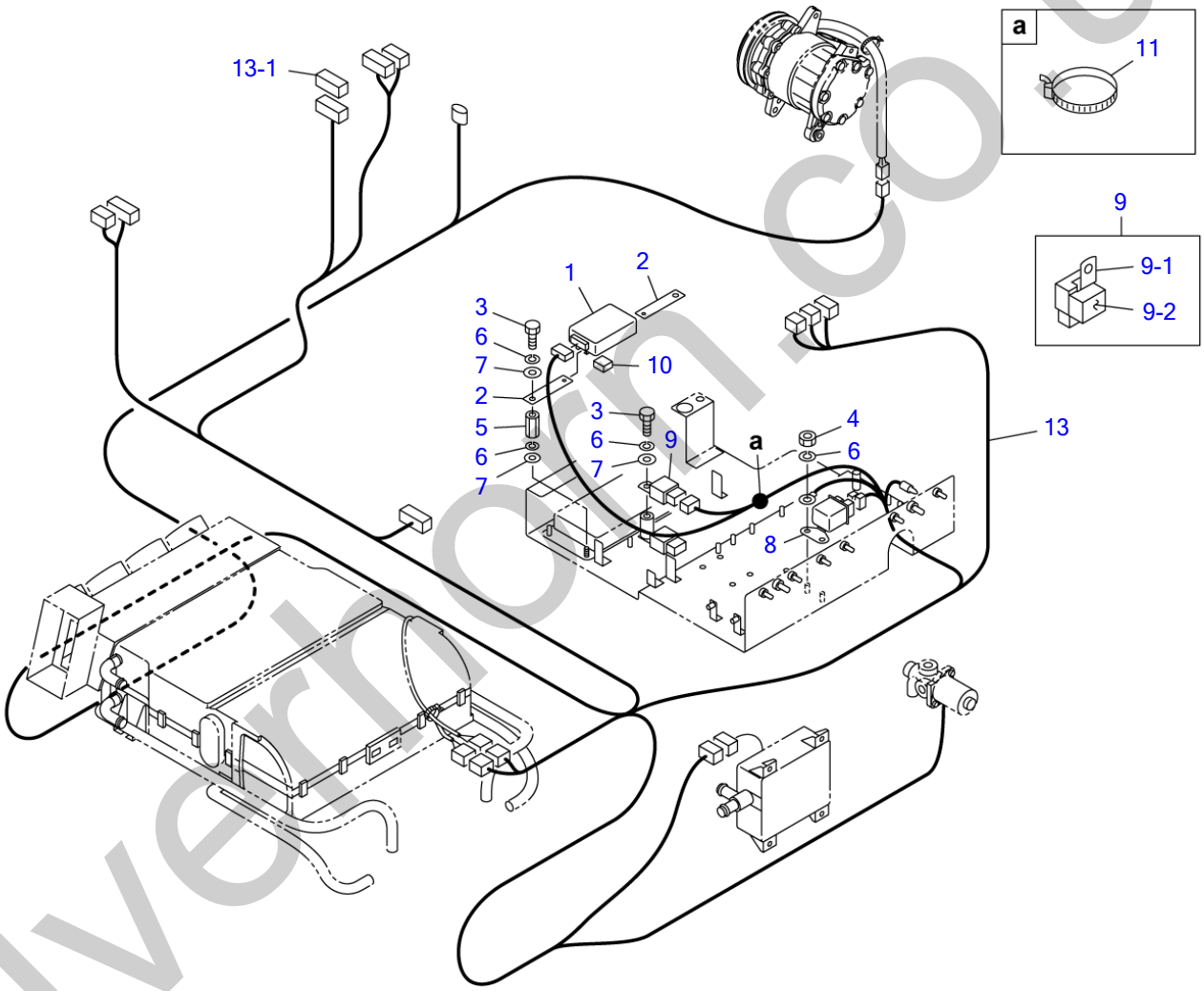

silverhorn.co.uk

CONTROL UNIT (air conditioner)

Item	Part number	Description	Q'ty	Chan.	Serial No.	Serv.	Remarks
0	0394228700	CONTROL UNIT ASSY	1				X03942-28700
1	1911511052	・AMP, control	1				
2	0374604370	・STAY	2				
3	1100040610	・BOLT	3				
4	1130040006	・NUT	2				
5	1134830635	・NUT	2				
6	1140020006	・WASHER, spring	7				
7	1141110006	・WASHER	5				
8	1711900099	・RELAY	1				
9	0334230130	・RELAY ASSY	1				
9-1	1711900042	・・RELAY	1				
9-2	1654302003	・・SPONGE	1				sold by the meter
10	1654351015	・SPONGE	1				sold by the meter
11	1652231250	・BAND	1				
13	0394621310	・HARNESS ASSY, wiring	1				
13-1	0374604929	・・CONNECTOR, short	1				
	K7c140						

silverhorn.co.uk

CONTROL UNIT (travel alarm)

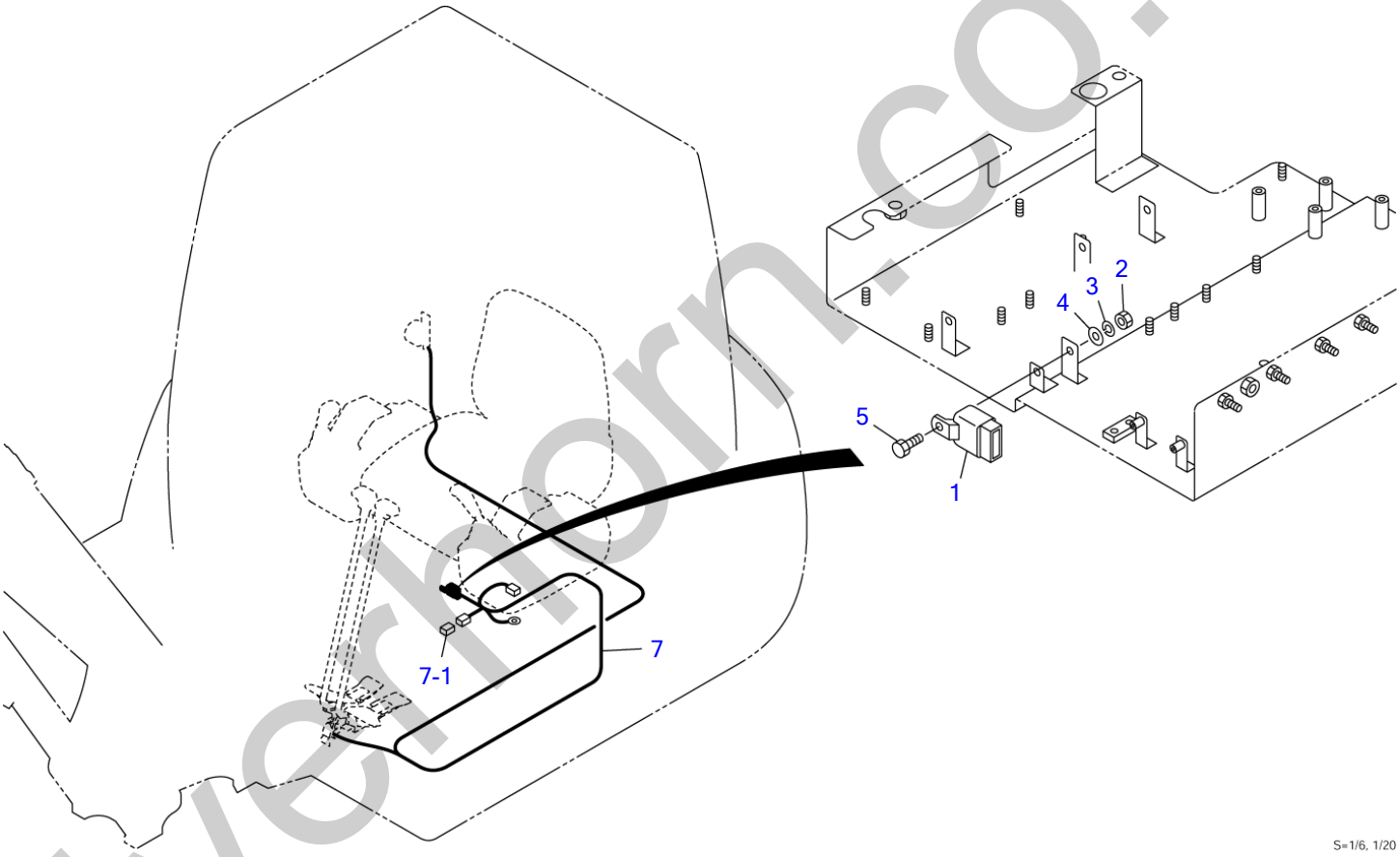

silverhorn.co.uk

CONTROL UNIT (travel alarm)

Item	Part number	Description	Q'ty	Chan.	Serial No.	Serv.	Remarks
0	0394228800	CONTROL UNIT ASSY	1				
1	1711900042	・RELAY	1				
2	1130040006	・NUT	1				
3	1140020006	・WASHER, spring	1				
4	1141110006	・WASHER	1				
5	1100040616	・BOLT	1				
7	0394227110	・HARNESS ASSY, wiring	1				X03942-27110-1
7-1	1730500008	・・DIODE (3A, yellow)	1				
	K7c150						

silverhorn.co.uk

CONTROL UNIT (arm-in restriction)

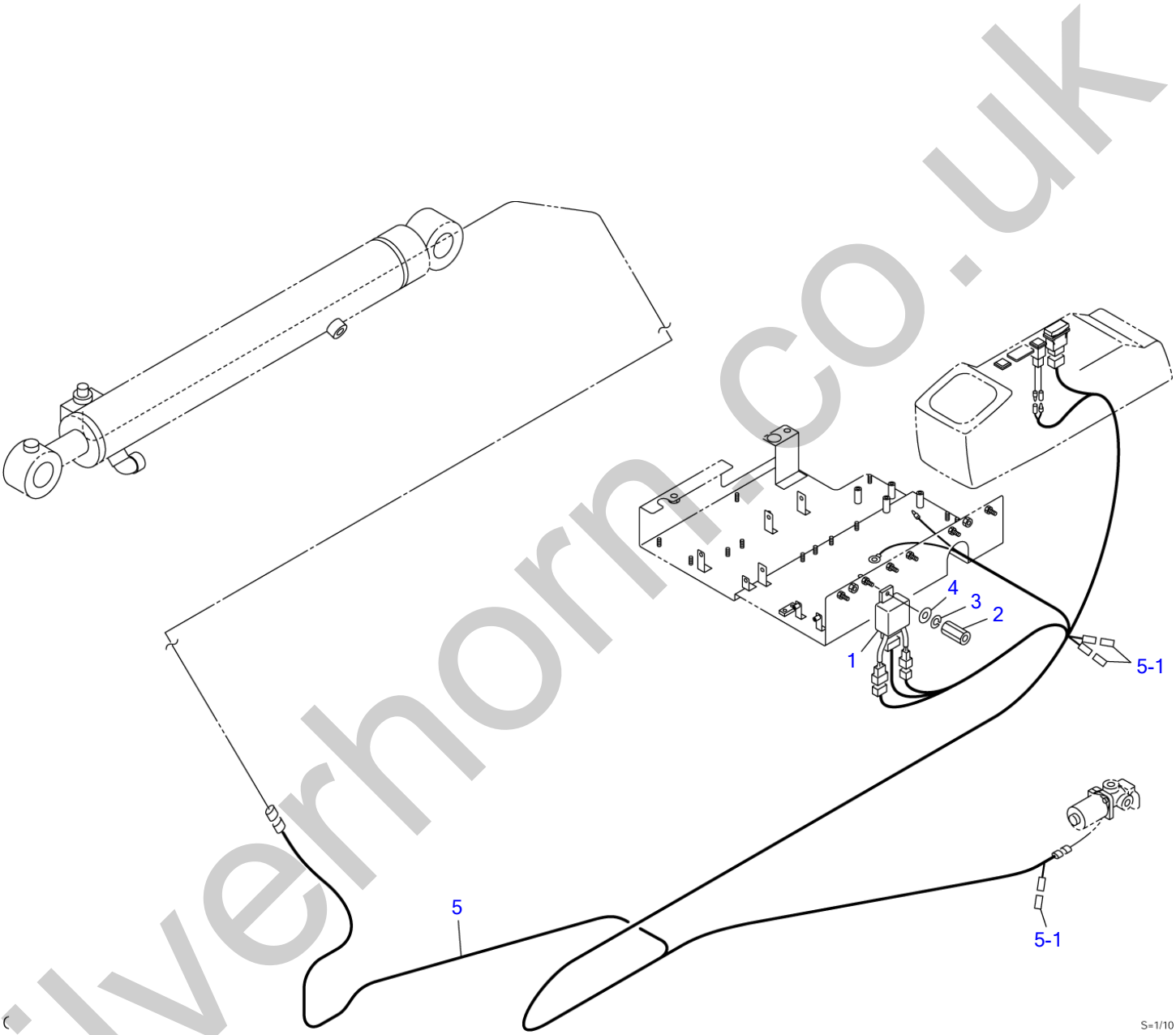

silverhorn.co.uk

CONTROL UNIT (arm-in restriction)

Item	Part number	Description	Q'ty	Chan.	Serial No.	Serv.	Remarks
0	0374219000	CONTROL UNIT ASSY	1				
1	1711900162	・RELAY	1				
2	1134830625	・NUT	1				
3	1140020006	・WASHER, spring	3				
4	1141110006	・WASHER	1				
5	0376015590	・HARNESS ASSY, wiring	1				
5-1	1730500008	・・DIODE (3A, yellow)	3				
	G7c311						

silverhorn.co.uk

CONTROL UNIT (auto decel.)

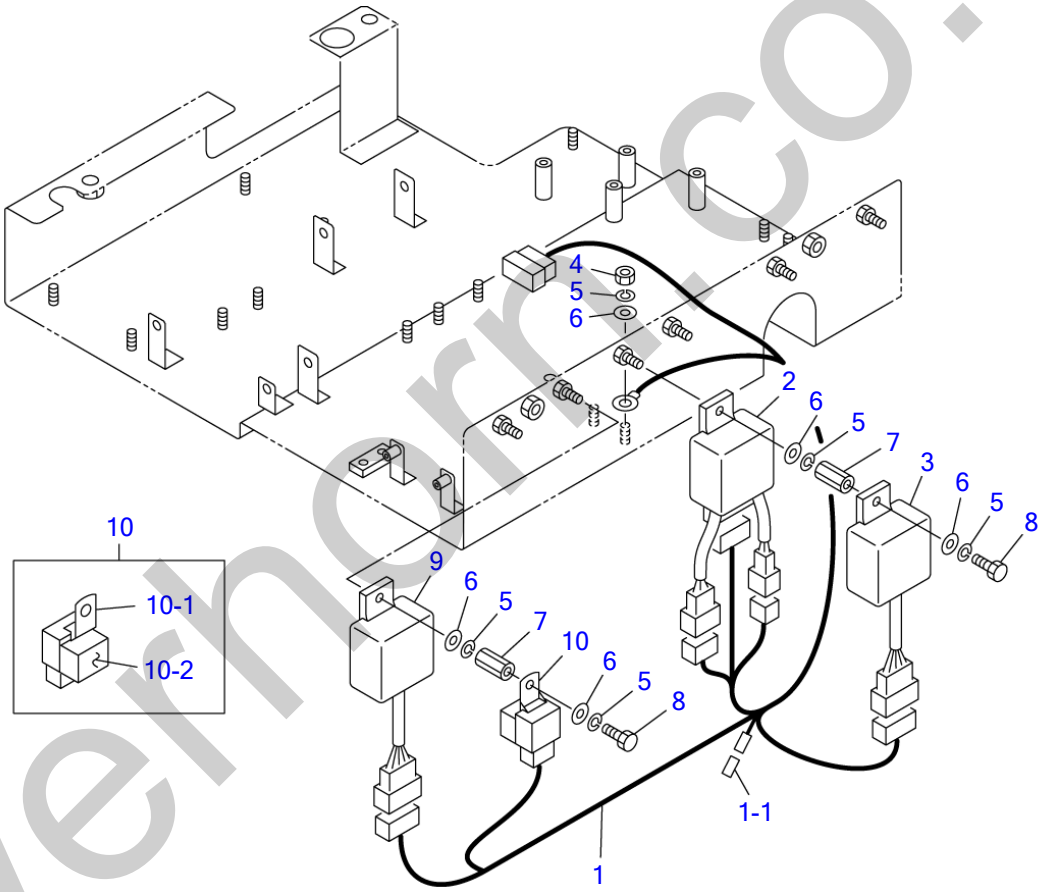

silverhorn.co.uk

CONTROL UNIT (auto decel.)

Item	Part number	Description	Q'ty	Chan.	Serial No.	Serv.	Remarks
0	0374219100	CONTROL UNIT ASSY	1				
1	0374217710	・HARNESS ASSY, wiring	1				
1-1	1730500008	・・DIODE (3A, yellow)	2				
2	1711900162	・RELAY ASSY	1				
3	1711900139	・TIMER UNIT	1				
4	1130040006	・NUT	1				
5	1140020006	・WASHER, spring	5				
6	1141110006	・WASHER	5				
7	1134830625	・NUT	2				
8	1100040616	・BOLT	2				
9	1711900138	・FLIP FLOP UNIT	1				
10	0334242540	・RELAY ASSY	1				
10-1	1711900042	・・RELAY	1				
10-2	1654301003	・・SPONGE	1				
	G7c321						

silverhorn.co.uk

CONTROL UNIT (cold latitudes heater)

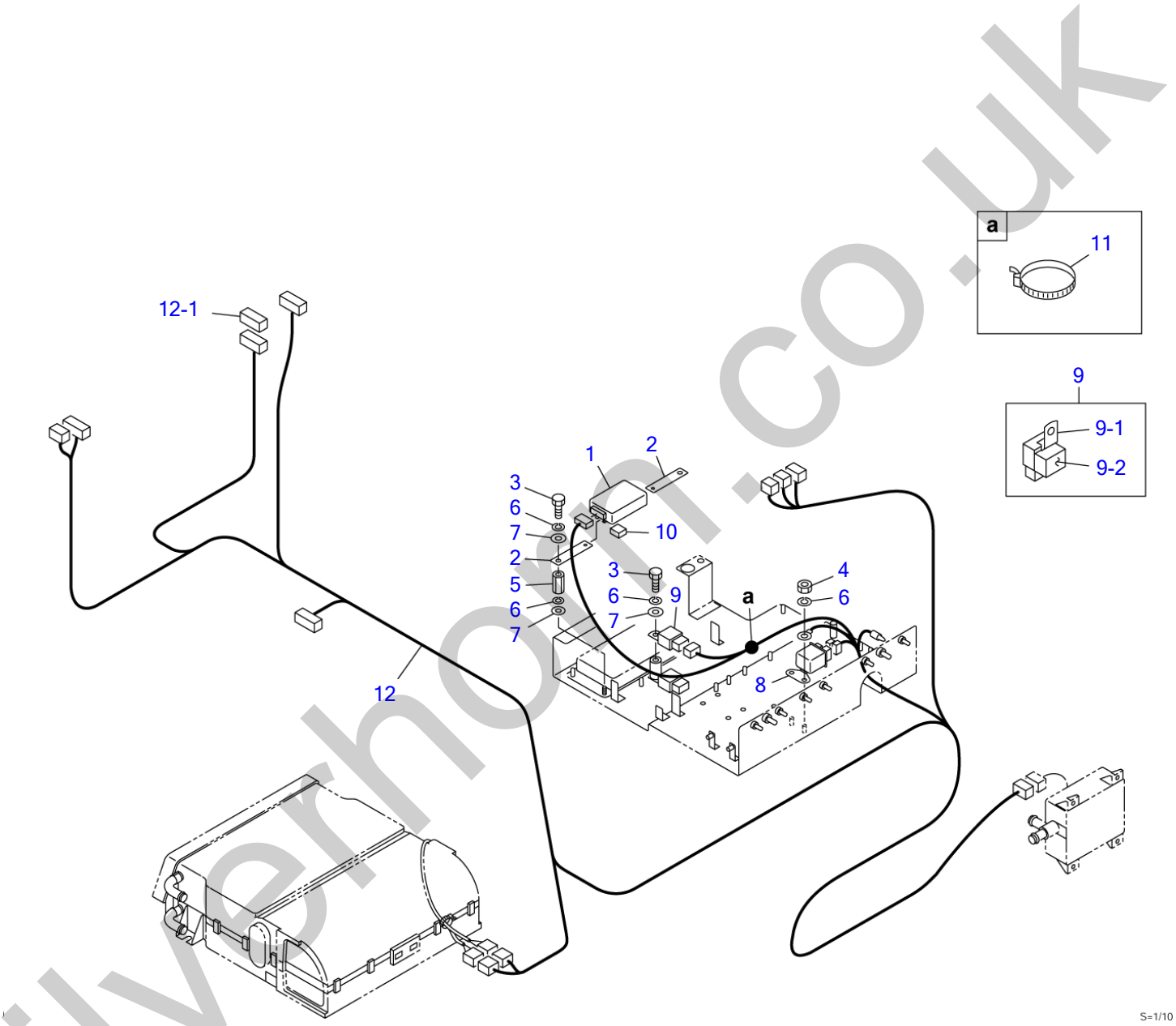

silverhorn.co.uk

CONTROL UNIT (cold latitudes heater)

Item	Part number	Description	Q'ty	Chan.	Serial No.	Serv.	Remarks
0	0374218800	CONTROL UNIT ASSY	1				
1	1911511052	・AMP, control	1				
2	0374604370	・STAY	2				
3	1100040610	・BOLT	3				
4	1130040006	・NUT	2				
5	1134830635	・NUT	2				
6	1140020006	・WASHER, spring	7				
7	1141110006	・WASHER	5				
8	1711900099	・RELAY	1				
9	0334230130	・RELAY ASSY	1				
9-1	1711900042	・・RELAY	1				
9-2	1654302003	・・SPONGE	1				sold by the meter
10	1654351015	・SPONGE	1				sold by the meter
11	1652231250	・BAND	1				
12	0374508250	・HARNESS, wiring	1				
12-1	0374604929	・・CONNECTOR, short	1				
	G7c330						

silverhorn.co.uk

SECURITY SYSTEM

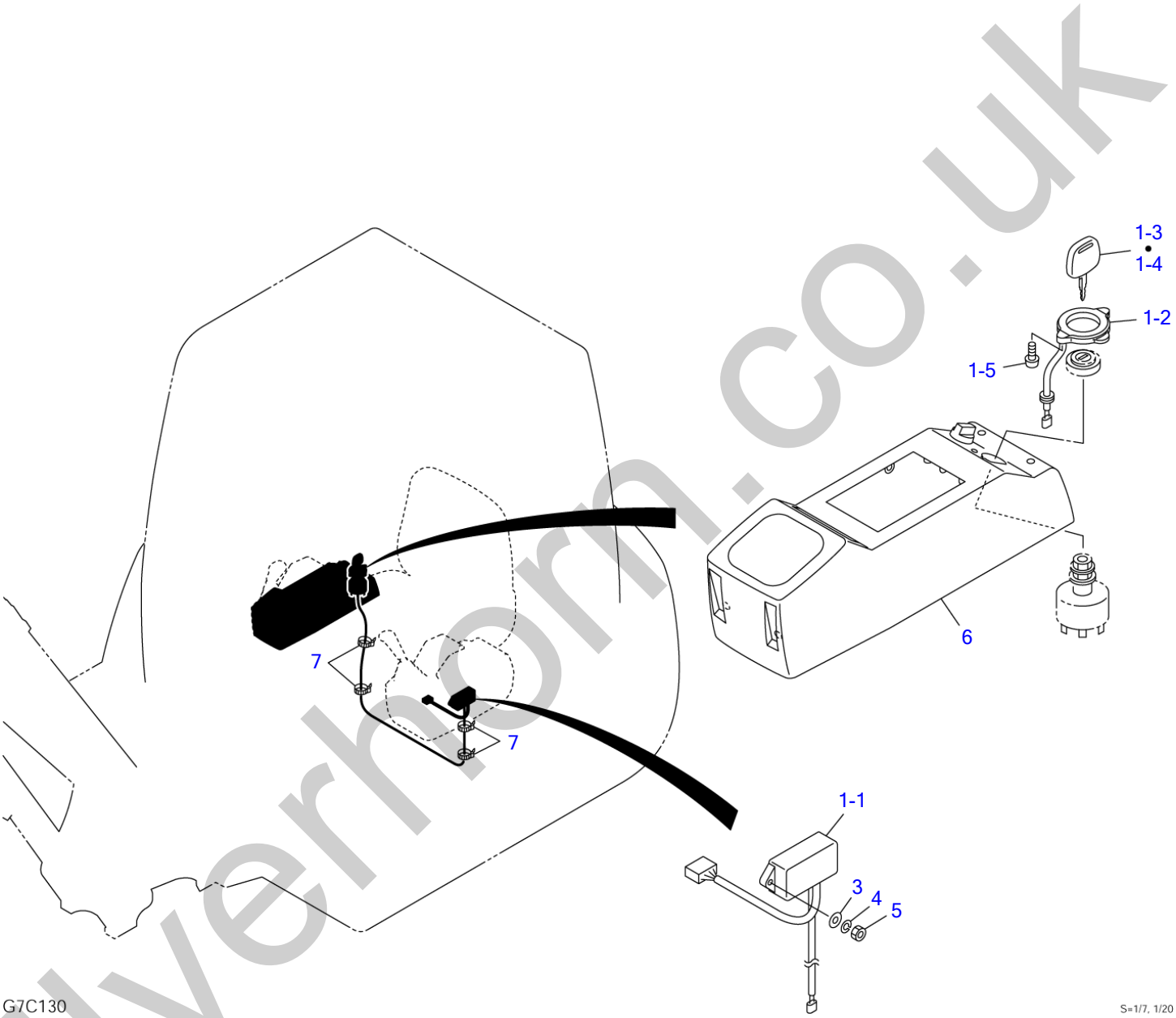

silverhorn.co.uk

SECURITY SYSTEM

Item	Part number		Description	Q'ty	Chan.	Serial No.	Serv.	Remarks
			SYSTEM ASSY, security					
1		1730147800	SYSTEM KIT, security	1				
1-1	X	**********	・CONTROLLER	1				
1-2	X	**********	・COIL, antenna	1				
1-3	X	**********	・KEY	2				black
1-4	X	**********	・KEY	1				gray
1-5	X	**********	・SCREW	2				
3		1141110006	WASHER	2				
4		1140020006	WASHER, spring	2				
5		1130040006	NUT	2				
6		0374216830	COVER (R.H.)	1				
7		1652231250	BAND	4				
		G7c130						

silverhorn.co.uk

TRAVEL ALARM

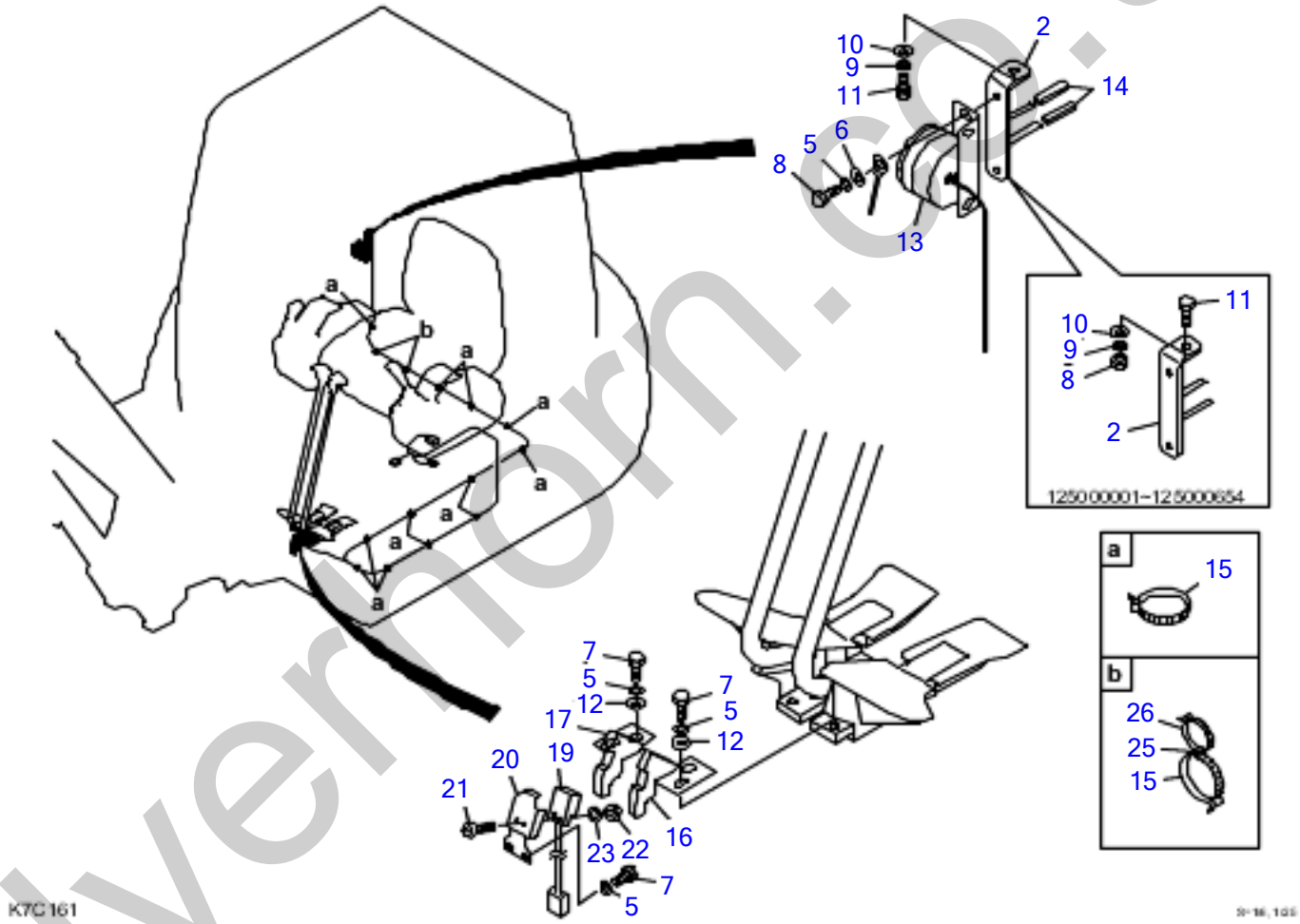

silvermorn.co.uk

TRAVEL ALARM

Item	Part number	Description	Q'ty	Chan.	Serial No.	Serv.	Remarks
		TRAVEL ALARM ASSY					
2	0374216920	BRACKET	1				
5	1140020006	WASHER, spring	8				
6	1141110006	WASHER	2				
7	1100040616	BOLT	7				
8	1130040008	NUT	1				
	1100040610	BOLT	2				
9	1140020008	WASHER, spring	1				
10	1141110008	WASHER	1				
11	1100240835	BOLT	1				
	1100040816	BOLT	1				
12	0003606202	WASHER	4				
13	1703700013	BUZZER	1				
14	0872433150	TUBE	2				
15	1652231250	BAND	14				
16	0374217940	PLATE (L.H.)	1				
17	0374217930	PLATE (R.H.)	1				
19	1700009010	SWITCH, proximity	1				
20	0374217920	COVER	1				
21	1120530314	SCREW	2				
22	1130030003	NUT	2				
23	1140020003	WASHER, spring	2				
25	1652200010	BAND	2				
26	1652231140	BAND	2				
	K7c161						

silverhorn.co.uk

BATTERY

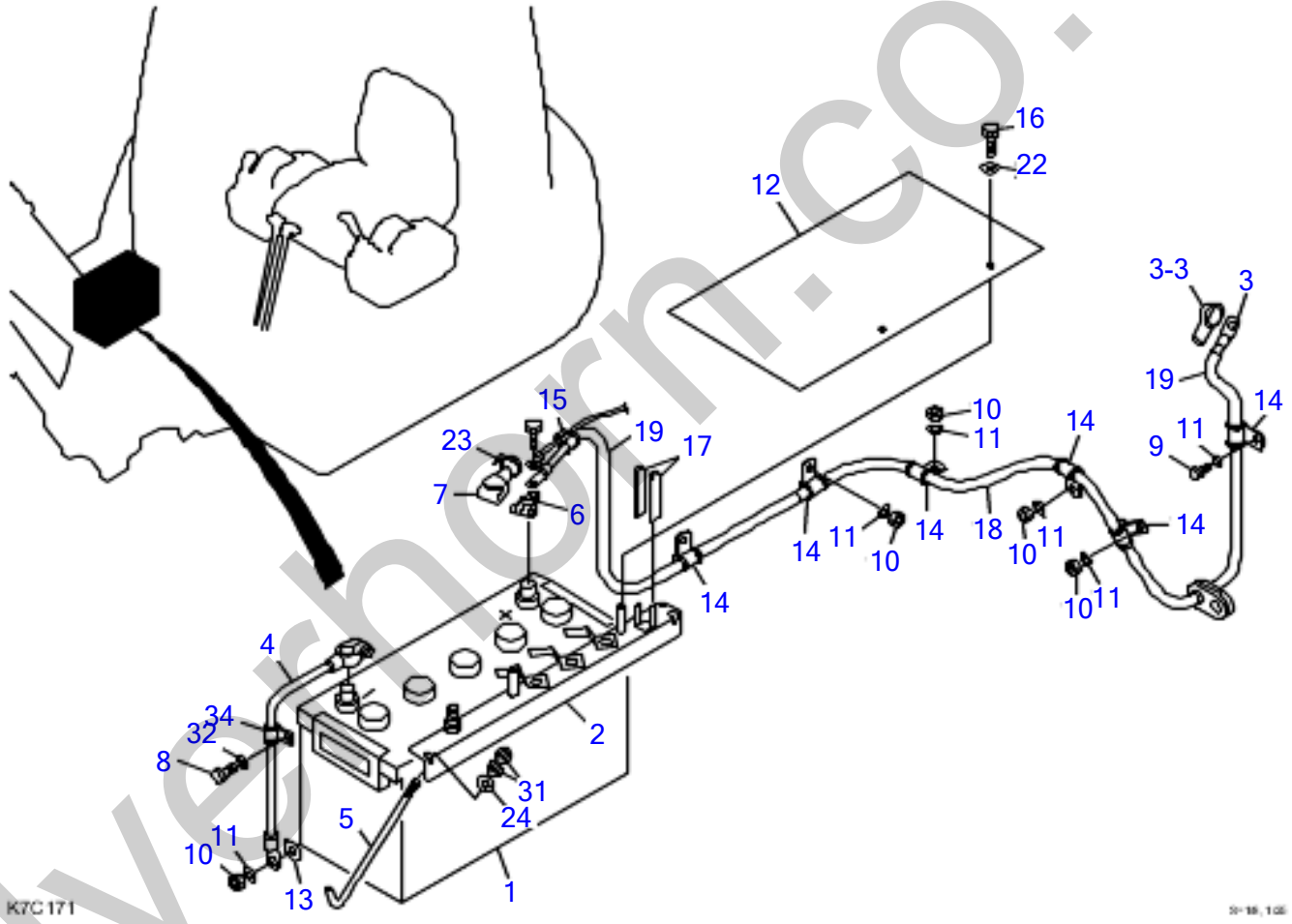

silverhorn.co.uk

BATTERY

Item	Part number	Description	Q'ty	Chan.	Serial No.	Serv.	Remarks
		BATTERY ASSY					
1	1702053041	BATTERY	1				
2	0394409710	CLAMP	1				
3	0394409720	CABLE, battery	1				
3-3	1910007119	▪ COVER	1				
4	1702230025	CABLE, earth	1				
5	1702108285	BOLT	2				
6	1702330000	TERMINAL	1				
7	1702920060	COVER	1				
8	1100040816	BOLT	1				
9	1100041016	BOLT	1				
10	1130040010	NUT	6				
11	1140020010	WASHER, spring	6				
12	0394409730	SHEET	1				
13	1140330010	WASHER	1				
14	1711900072	CLAMP	6				
15	1652231140	BAND	1				
16	1100040610	BOLT	2				
17	0872433150	TUBE	2				
18	1531325100	PROTECTOR	1				sold by the meter
19	1531325045	PROTECTOR	2				sold by the meter
22	1141110006	WASHER	2				
23	1652201005	BAND	1				
24	1141110008	WASHER	2				
31	1130040008	NUT	4				
32	1140020008	WASHER, spring	1				
34	1652900006	CLAMP	1				
	K7c171						

silverhorn.co.uk

BATTERY (with battery switch)

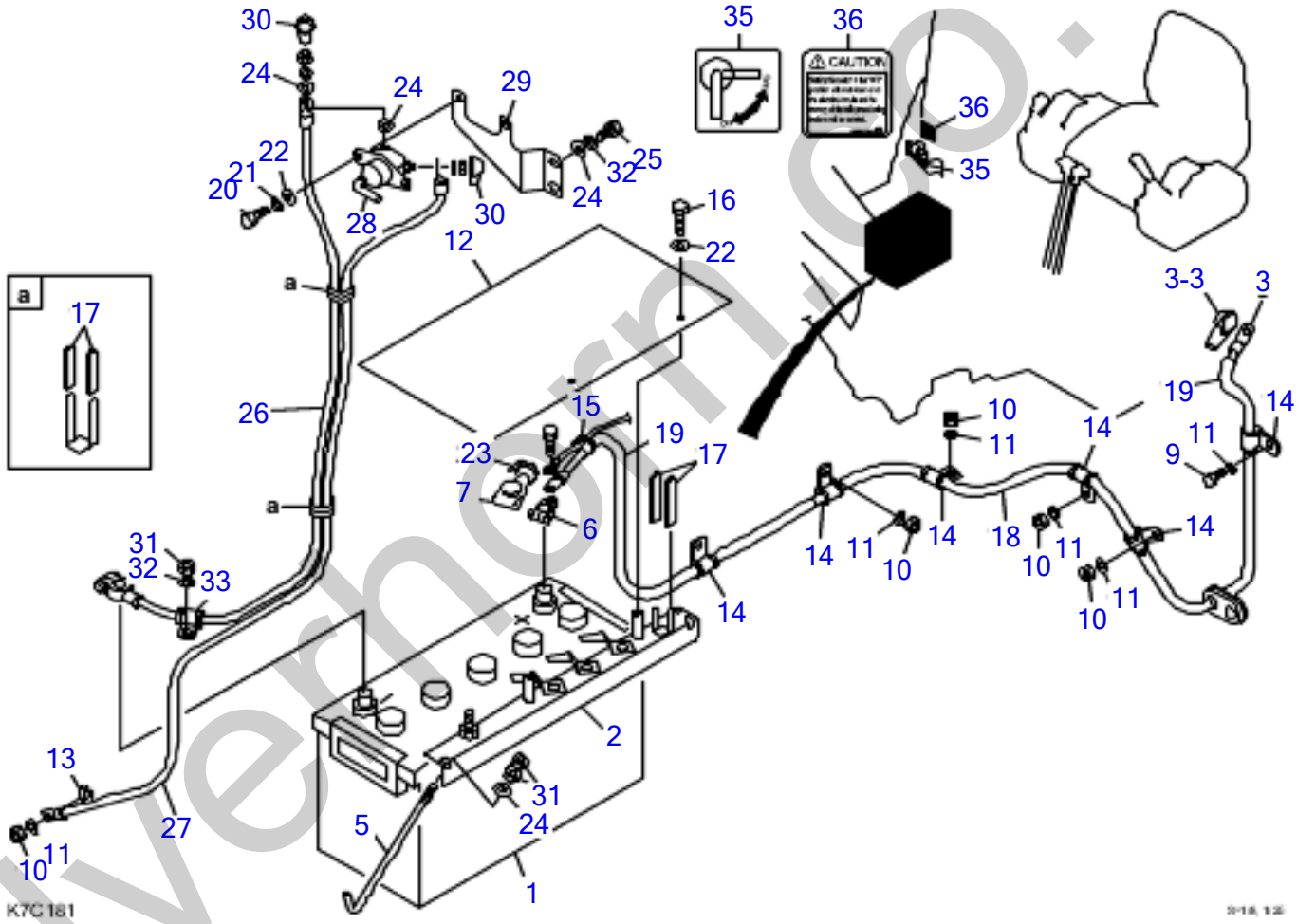

silvernorn.co.uk

BATTERY (with battery switch)

Item	Part number	Description	Q'ty	Chan.	Serial No.	Serv.	Remarks
		BATTERY ASSY					
1	1702053041	BATTERY	1				
2	0394409710	CLAMP	1				
3	0394409720	CABLE, battery	1				
3-3	1910007119	▪ COVER	1				
5	1702108285	BOLT	2				
6	1702330000	TERMINAL	1				
7	1702920060	COVER	1				
9	1100041016	BOLT	1				
10	1130040010	NUT	6				
11	1140020010	WASHER, spring	7				
12	0394409730	SHEET	1				
13	1140330010	WASHER	1				
14	1711900072	CLAMP	6				
15	1652231140	BAND	1				
16	1100040610	BOLT	2				
17	0872433150	TUBE	6				
18	1531325100	PROTECTOR	1				sold by the meter
19	1531325045	PROTECTOR	2				sold by the meter
20	1100040616	BOLT	2				
21	1140020006	WASHER, spring	2				
22	1141110006	WASHER	4				
23	1652201005	BAND	1				
24	1141110008	WASHER	6				
25	1100040820	BOLT	2				
26	0374407620	CABLE, battery	1				
27	0374407630	CABLE, earth	1				
28	1700100051	SWITCH	1				
29	0374407610	BRACKET	1				
30	1702901281	CAP	2				
31	1130040008	NUT	5				
32	1140020008	WASHER, spring	3				
33	1652900008	CLAMP	1				
35	0399351210	DECAL	1				
36	0569353810	DECAL	1				
	K7c181						

silverhorn.co.uk

CANOPY LIGHT & SOCKET

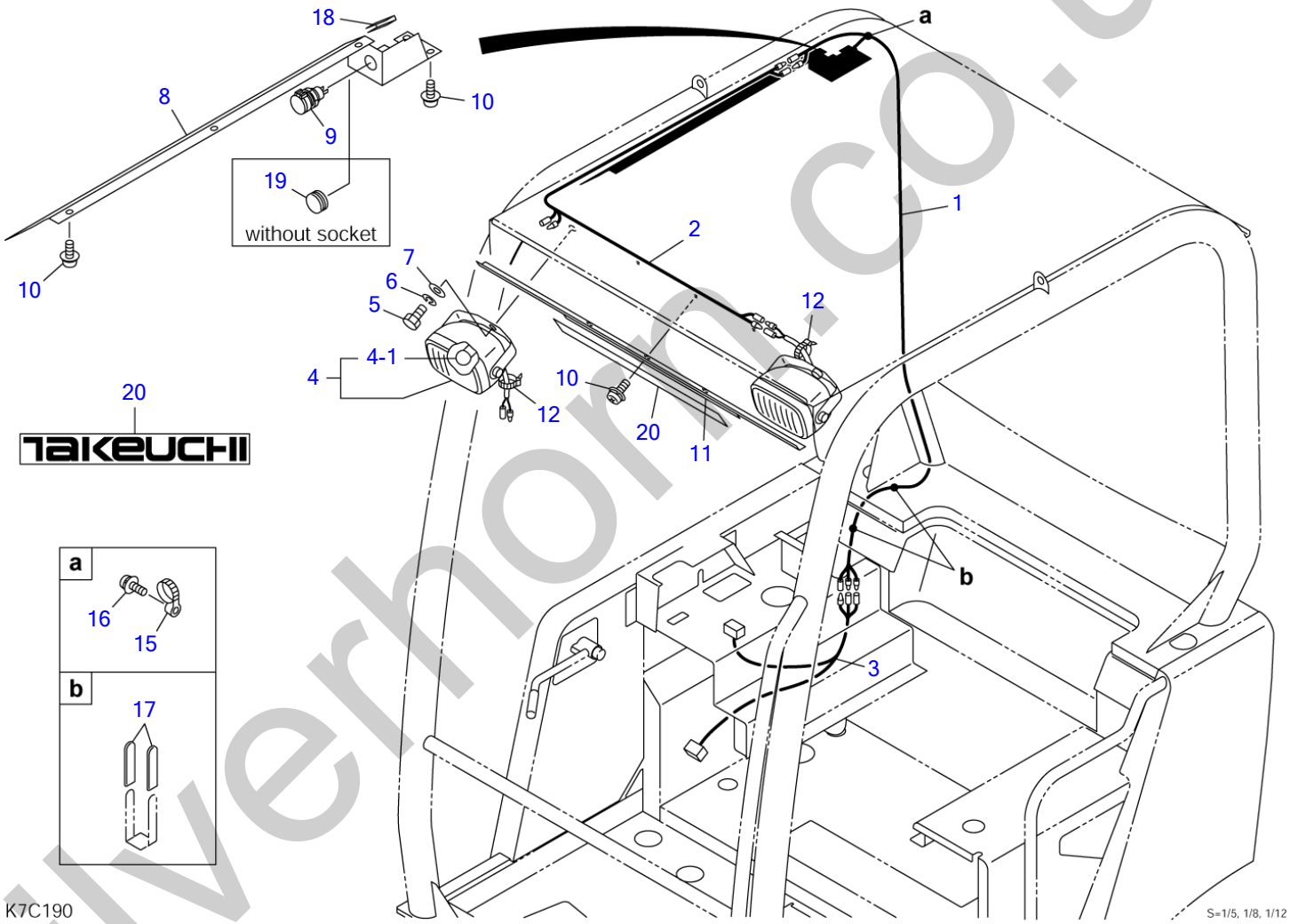

silverhorn.co.uk

CANOPY LIGHT & SOCKET

Item	Part number	Description	Q'ty	Chan.	Serial No.	Serv.	Remarks
		LIGHT & SOCKET ASSY, canopy					
		LIGHT ASSY, canopy					
		SOCKET ASSY, canopy					
1	0378407080	HARNESS, wiring	1				
2	0378407020	HARNESS, wiring	1				with light
3	0378407090	HARNESS, wiring	1				
4	1703006600	LAMP ASSY	2				with light
4-1	1703006605	･ BULB	1				
5	1100041020	BOLT	2				with light
6	1140020010	WASHER, spring	2				with light
7	1141110010	WASHER	2				with light
8	0378407110	BRACKET	1				
9	1711900066	SOCKET	1				ƒ\ƒPƒbƒg•twith socket
10	1150410512	SCREW	8				
11	0378407060	COVER	1				with light
12	1652241200	BAND	2				with light
15	1652261410	BAND	1				
16	1150410520	SCREW	1				
17	0872433150	TUBE	4				
18	1653916003	TRIM	1				sold by the meter
19	1652060019	BUSHING	1				ƒ\ƒPƒbƒg•twith socket
20	0008500038	DECAL	1				with light
	K7c190						

silverhorn.co.uk

CAB LIGHT

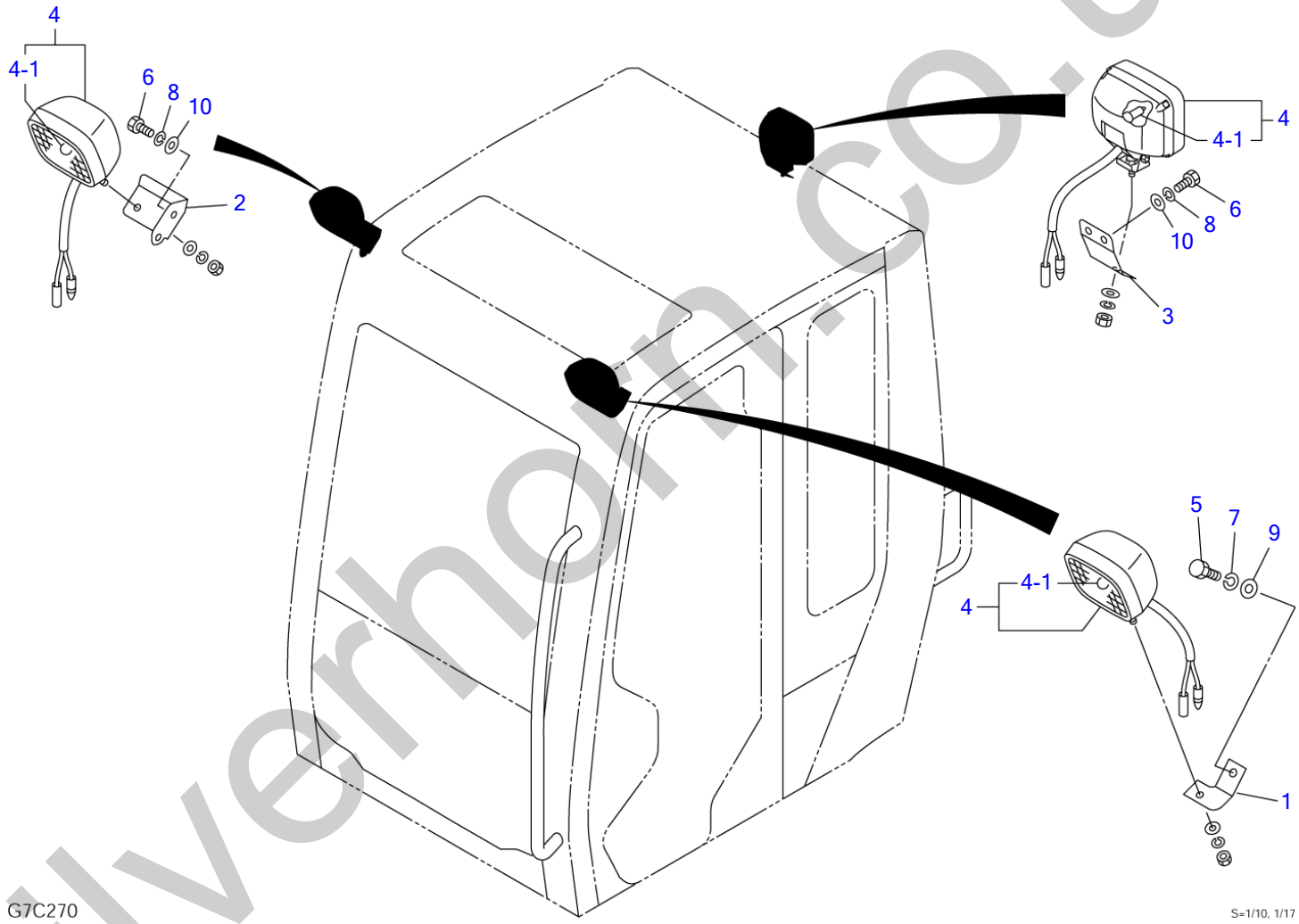

silverhorn.co.uk

CAB LIGHT

Item	Part number	Description	Q'ty	Chan.	Serial No.	Serv.	Remarks
		LIGHT ASSY, cab					
		LIGHT ASSY, cab					
		LIGHT ASSY, cab					
1	0378608010	BRACKET	1				
2	0378608110	BRACKET	1				
3	0378608210	BRACKET	1				
4	1703006600	LAMP ASSY	1				
4-1	1703006605	▪ BULB	1				
5	1100031020	BOLT	1				
6	1100030820	BOLT	2				
7	1140020010	WASHER, spring	1				
8	1140020008	WASHER, spring	2				
9	1141110010	WASHER	1				
10	1141110008	WASHER	2				
	G7c270						

silverhorn.co.uk

SIDE LIGHT

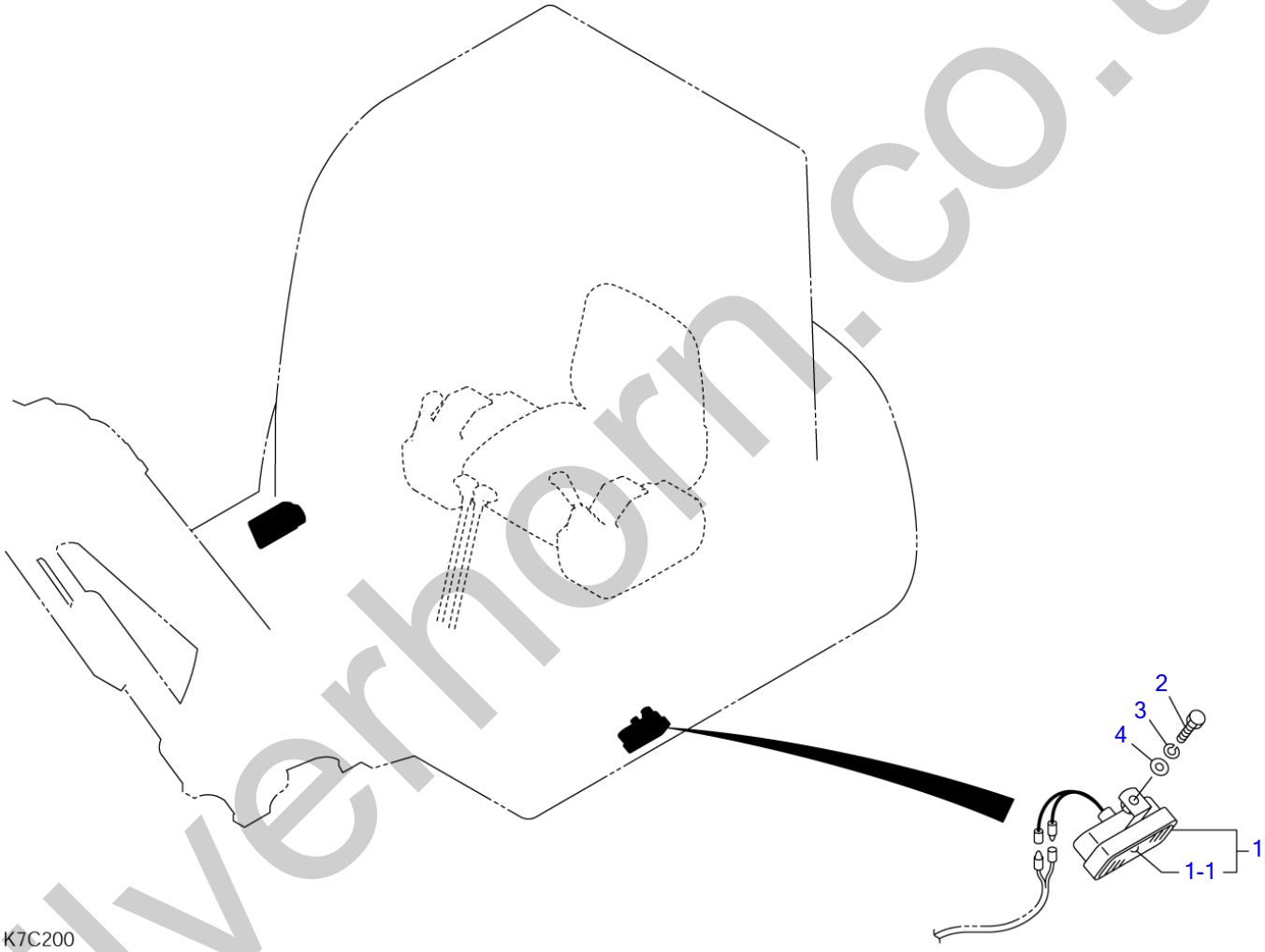

silverhorn.co.uk

SIDE LIGHT

Item	Part number	Description	Q'ty	Chan.	Serial No.	Serv.	Remarks
		LIGHT ASSY, side					
1	1703006800	LAMP ASSY	2				
1-1	1703006801	・BULB	1				
2	1100040820	BOLT	2				
3	1140020008	WASHER, spring	2				
4	0003608252	WASHER	2				
	K7c200						

silverhorn.co.uk

RADIO

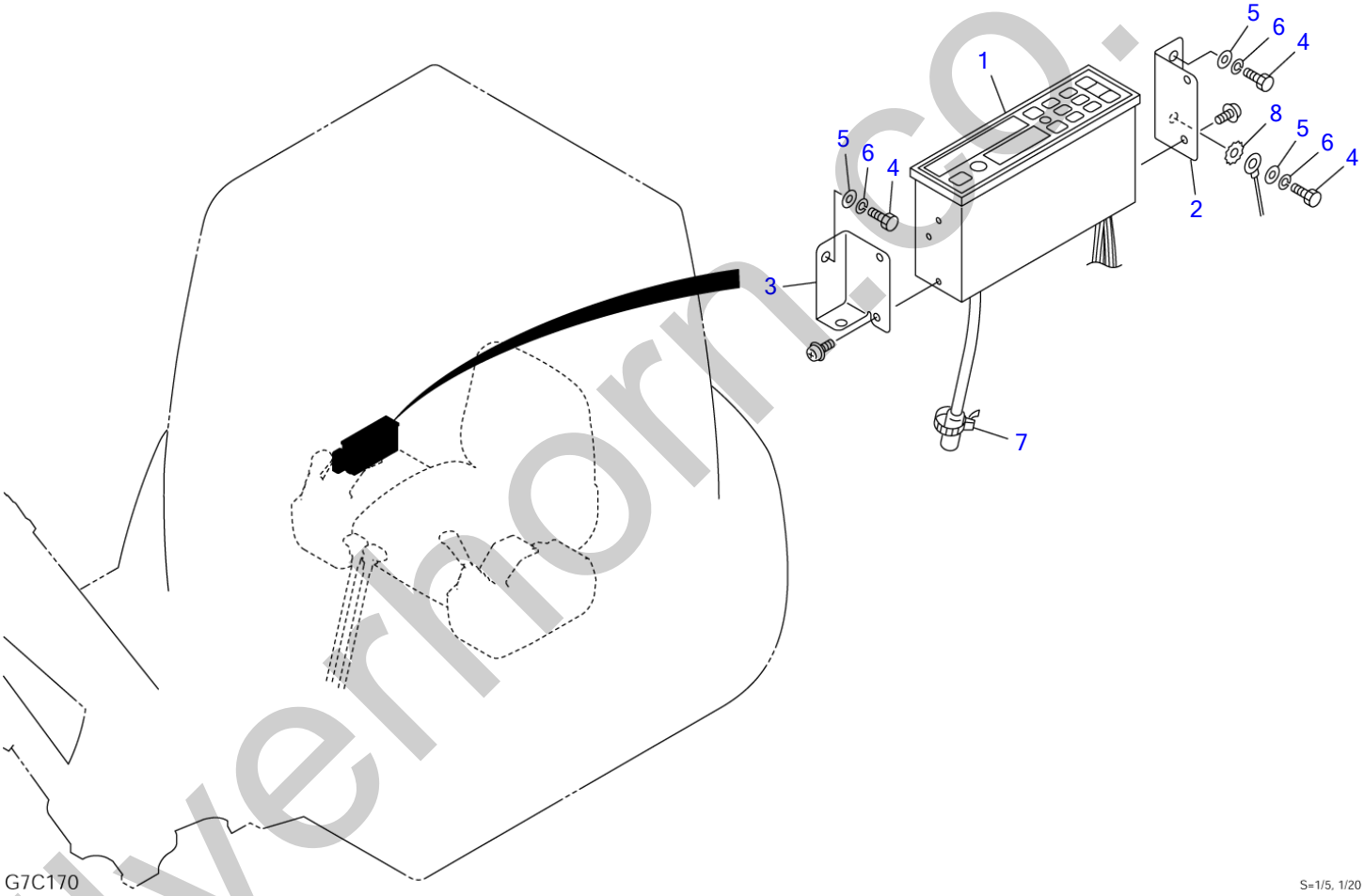

silvermorn.co.uk

RADIO

Item	Part number	Description	Q'ty	Chan.	Serial No.	Serv.	Remarks
		RADIO ASSY (for Europe, Asia, Oceania)					
		RADIO ASSY (for America)					
		RADIO ASSY (for JAPAN)					
1	1705004660	RADIO (for Europe, Asia, Oceania)	1				
	1705004670	RADIO (for America)	1				
	1705004680	RADIO (for Japan)	1				
2	0374706010	BRACKET (R.H.)	1				
3	0374706020	BRACKET (L.H.)	1				
4	1100040612	BOLT	4				
5	1141110006	WASHER	4				
6	1140020006	WASHER, spring	4				
7	1652231100	BAND	1				
8	1140330006	WASHER	1				
	E7C170						

silverhorn.co.uk

MAINTENANCE LIGHT SOCKET

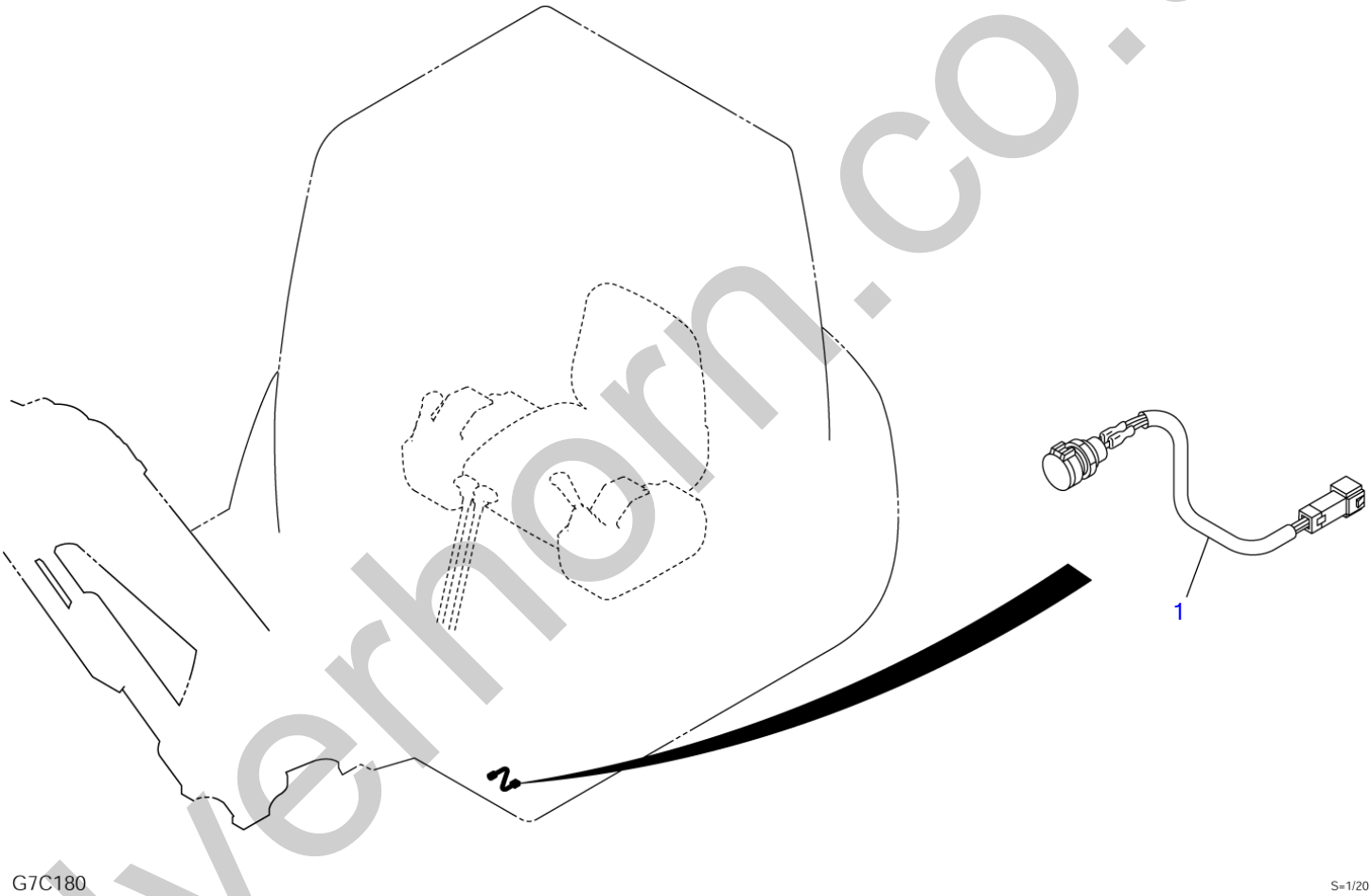

silverhorn.co.uk

MAINTENANCE LIGHT SOCKET

Item	Part number	Description	Q'ty	Chan.	Serial No.	Serv.	Remarks
		SOCKET ASSY, maintenance light					
1	**0394203100 G4c120**	SOCKET ASSY	1				

silverhorn.co.uk

WINDOW WASHER

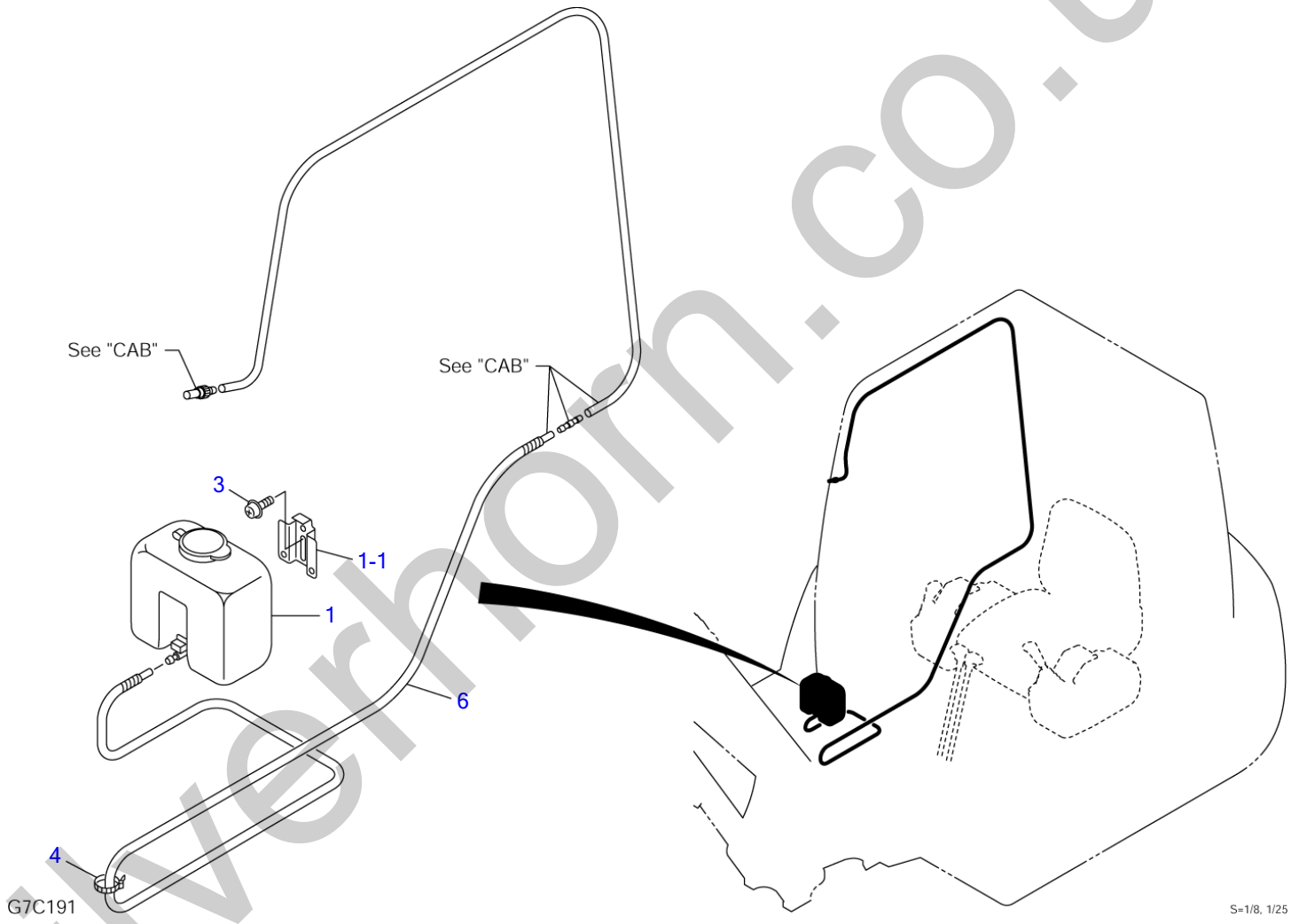

silverhorn.co.uk

WINDOW WASHER

Item	Part number	Description	Q'ty	Chan.	Serial No.	Serv.	Remarks
		WASHER ASSY, window					
1	1711910290	TANK	1				
1-1	1711910291	・BRACKET	1				
3	1150410612	BOLT, sems	2				
4	1652231140	BAND	1				
6	1703230700	PROTECTOR	1				sold by the meter
	G7c191						

silverhorn.co.uk

GREASE PIPING

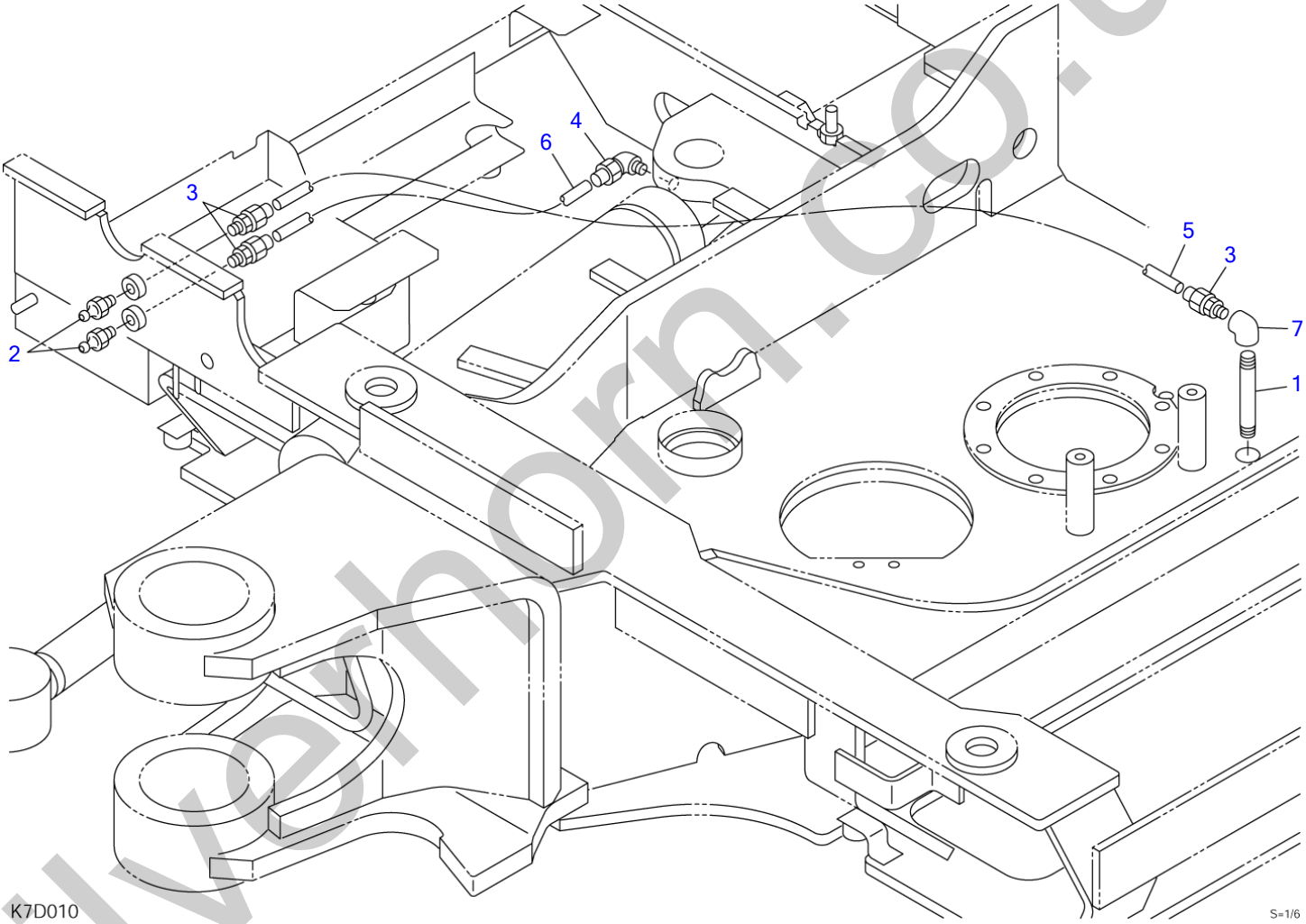

silverhorn.co.uk

GREASE PIPING

Item	Part number	Description	Q'ty	Chan.	Serial No.	Serv.	Remarks
		PIPING ASSY, grease					
1	0009101060	NIPPLE	1				
2	1560001000	FITTING, grease	2				
3	1532520601	CONNECTOR	3				
4	1532620601	ELBOW	1				
5	1532120660	TUBE	1				sold by the meter
6	1532020685	TUBE	1				sold by the meter
7	1508010001	ELBOW	1				
	K7d010						

silverhorn.co.uk

VALVE & ACCESSORIES

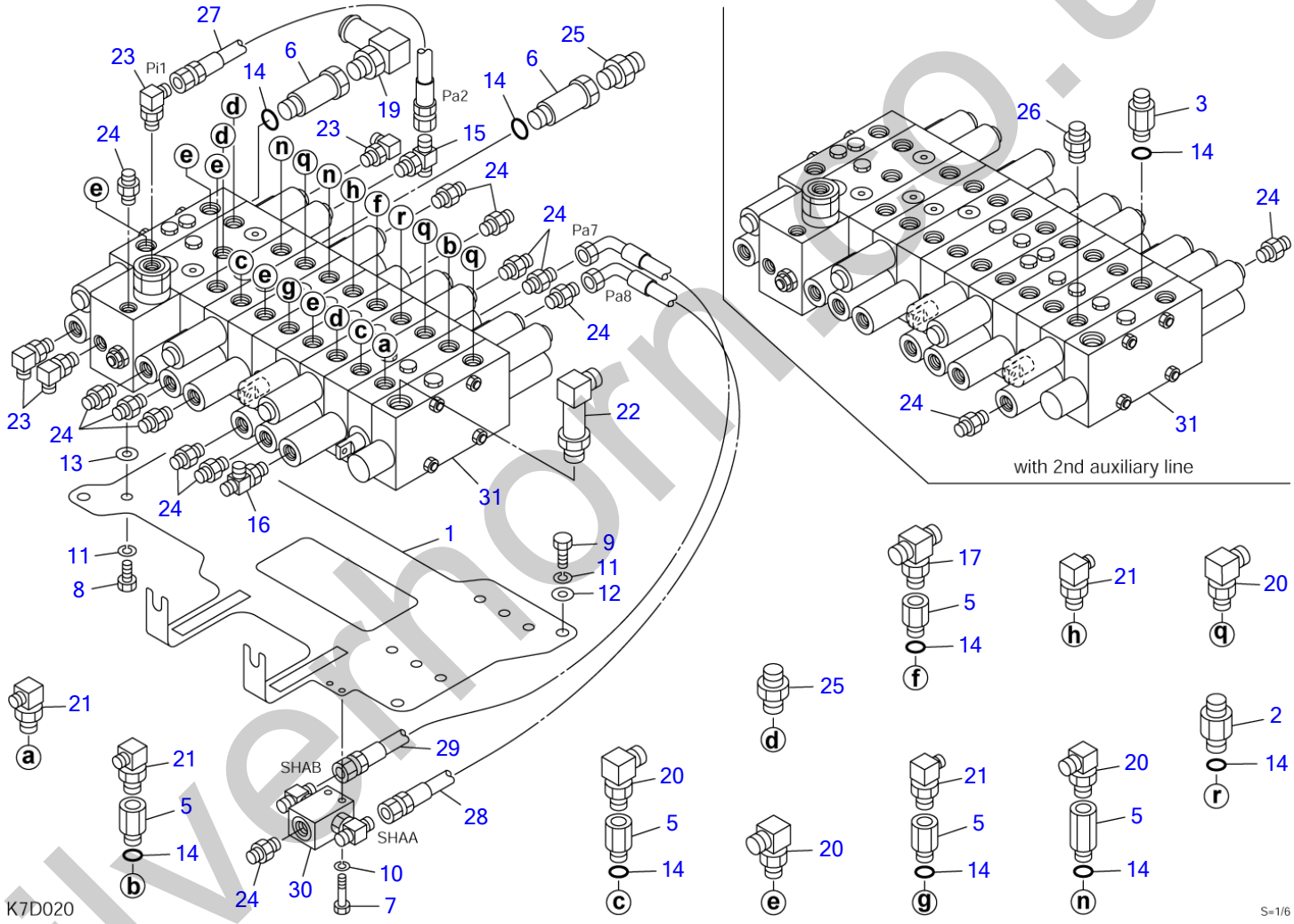

silverhorn.co.uk

VALVE & ACCESSORIES

Item	Part number	Description	Q'ty	Chan.	Serial No.	Serv.	Remarks
		VALVE ASSY, control					
		VALVE ASSY, control (with 2nd aux. line)					
1	0395016410	BRACKET	1				
2	0007203033	CONNECTOR	1				
3	0007203086	CONNECTOR	1				with 2nd aux. line
5	0007213011	BUSHING	7				
	1420010180	・O-RING	1				
6	0007213073	BUSHING	2				
7	1100040640	BOLT	2				
8	1100041020	BOLT	3				
9	1100041025	BOLT	4				
10	1140020006	WASHER, spring	2				
11	1140020010	WASHER, spring	7				
12	1141110010	WASHER	4				
13	1141550010	WASHER	3				
14	1420010180	O-RING	10				
	1420010180	O-RING	11				with 2nd aux. line
15	1512370010	TEE	1				
	1420010110	・O-RING	1				
16	1512370011	TEE	1				
	1420010110	・O-RING	1				
17	1512374002	TEE	1				
	1420010180	・O-RING	1				
19	1513350006	ADAPTOR	1				
	1420010180	・O-RING	1				
20	1515010042	ELBOW	12				
	1420010180	・O-RING	1				
21	1515010051	ELBOW	4				
	1420010180	・O-RING	1				
22	1515010513	ELBOW	1				
	1420010240	・O-RING	1				
23	1515012040	ELBOW	4				
	1420010110	・O-RING	1				
24	1515600200	ADAPTOR	12				
	1515600200	ADAPTOR	14				with 2nd aux. line
	1420010110	・O-RING	1				
25	1515600202	ADAPTOR	4				
	1420010180	・O-RING	1				
26	1515600577	ADAPTOR	1				with 2nd aux. line
	1420010180	・O-RING	1				
27	0395016420	HOSE ASSY	1				19347-22034
28	0395016430	HOSE ASSY	1				19348-52044
29	0395016440	HOSE ASSY	1				19348-52044
30	1901754200	VALVE, shuttle	1				
31	1901046200	VALVE, control	1				
	1901046300	VALVE, control	1				with 2nd aux. line
	K7d020						

silverthorn.co.uk

VALVE & ACCESSORIES (high flow)

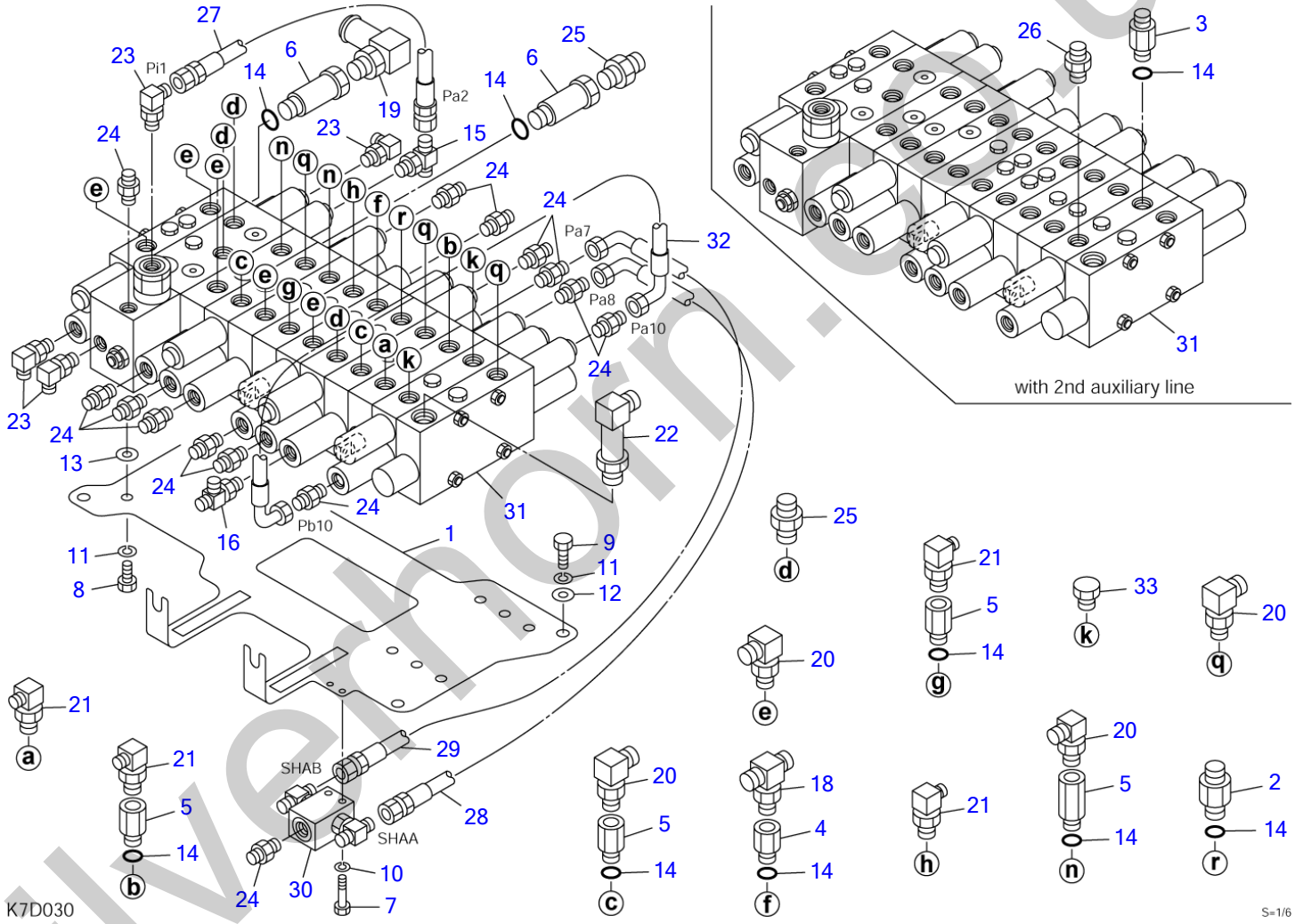

silverthorn.co.uk

VALVE & ACCESSORIES (high flow)

Item	Part number	Description	Q'ty	Chan.	Serial No.	Serv.	Remarks
		VALVE ASSY, control					
		VALVE ASSY, control (with 2nd aux. line)					
1	0395016410	BRACKET	1				
2	0007203033	CONNECTOR	1				
3	0007203086	CONNECTOR	1				with 2nd aux. line
4	0007213010	BUSHING	1				
	1420010180	・O-RING	1				
5	0007213011	BUSHING	6				
	1420010180	・O-RING	1				
6	0007213073	BUSHING	2				
7	1100040640	BOLT	2				
8	1100041020	BOLT	3				
9	1100041025	BOLT	4				
10	1140020006	WASHER, spring	2				
11	1140020010	WASHER, spring	7				
12	1141110010	WASHER	4				
13	1141550010	WASHER	3				
14	1420010180	O-RING	10				
	1420010180	O-RING	11				with 2nd aux. line
15	1512370010	TEE	1				
	1420010110	・O-RING	1				
16	1512370011	TEE	1				
	1420010110	・O-RING	1				
18	1512374016	TEE	1				
	1420010180	・O-RING	1				
19	1513350006	ADAPTOR	1				
	1420010180	・O-RING	1				
20	1515010042	ELBOW	12				
	1420010180	・O-RING	1				
21	1515010051	ELBOW	4				
	1420010180	・O-RING	1				
22	1515010513	ELBOW	1				
	1420010240	・O-RING	1				
23	1515012040	ELBOW	4				
	1420010110	・O-RING	1				
24	1515600200	ADAPTOR	14				
	1420010110	・O-RING	1				
25	1515600202	ADAPTOR	4				
	1420010180	・O-RING	1				
26	1515600577	ADAPTOR	1				with 2nd aux. line
	1420010180	・O-RING	1				
27	0395016420	HOSE ASSY	1				19347-22034
28	0395016430	HOSE ASSY	1				19348-52044
29	0395016440	HOSE ASSY	1				19348-52044
30	1901754200	VALVE, shuttle	1				
31	1901046900	VALVE, control	1				
32	0395016610	HOSE ASSY	1				without 2nd aux. line
33	1501750004	PLUG	2				without 2nd aux. line
	K7d030						

silverthorn.co.uk

PIPING; UPPER (1/3)

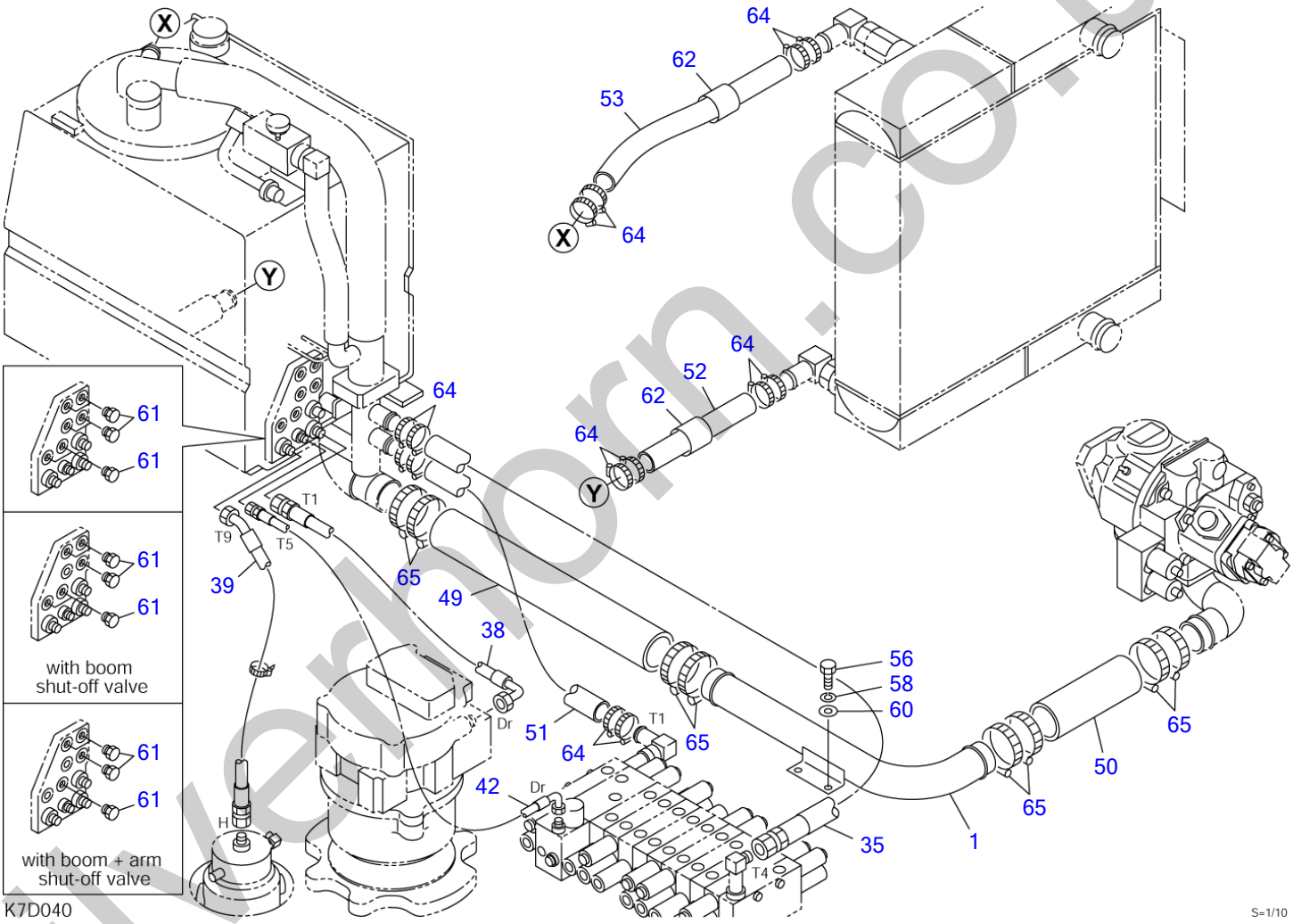

silverthorn.co.uk

PIPING; UPPER (1/3)

Item	Part number	Description	Q'ty	Chan.	Serial No.	Serv.	Remarks
		PIPING ASSY, upper PIPING ASSY, upper (with boom shut-off valve) PIPING ASSY, upper (with boom+arm shut-off valve)					
1	0397018010	PIPE	1				
35	0397018350	HOSE ASSY	1				
38	0397018380	HOSE ASSY	1				18010-53040
39	0397018390	HOSE ASSY	1				18010-89058
42	0397018420	HOSE ASSY	1				18010-52110
49	0397018490	HOSE	1				
50	0397007400	HOSE	1				
51	1530525040	HOSE	1				sold by the meter
52	1530525022	HOSE	1				sold by the meter
53	1530525040	HOSE	1				sold by the meter
56	1100041020	BOLT	2				
58	1140020010	WASHER, spring	2				
60	1141110010	WASHER	2				
61	1501750002	PLUG	6				
	1501750002	PLUG	5				with boom shut-off valve
	1501750002	PLUG	4				with boom+arm shut-off valve
	1420010110	・O-RING	1				
62	1531345005	PROTECTOR	2				sold by the meter
64	1533700041	BAND	14				
65	1533700070	BAND	8				
	K7d040						

silverhorn.co.uk

PIPING; UPPER (2/3)

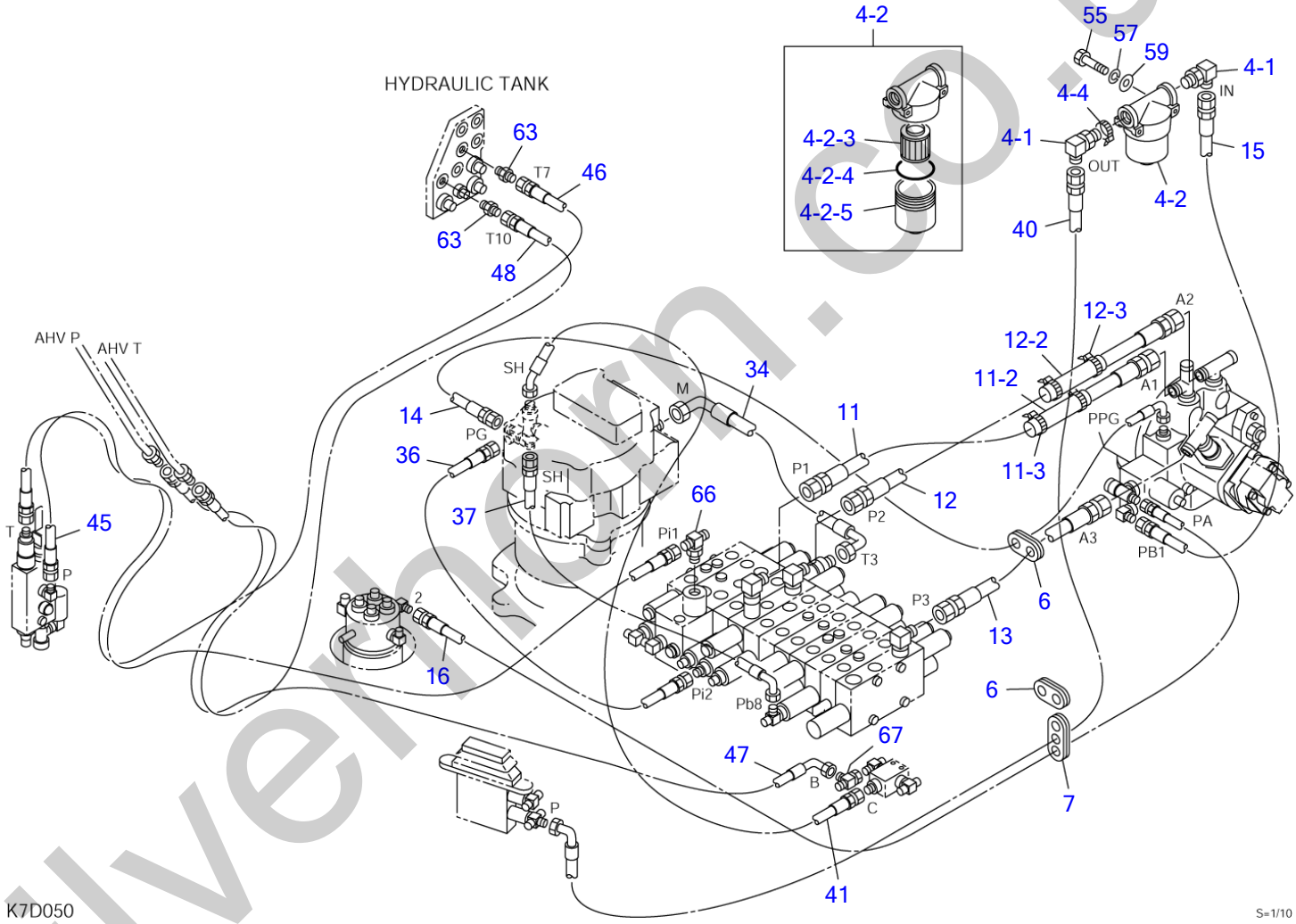

silverhorn.co.uk

PIPING; UPPER (2/3)

Item	Part number	Description	Q'ty	Chan.	Serial No.	Serv.	Remarks
		PIPING ASSY, upper					
		PIPING ASSY, upper (with boom shut-off valve)					
		PIPING ASSY, upper (with boom+arm shut-off valve)					
4	0377018050	FILTER ASSY	1				
4-1	1515010051	・ELBOW	2				
	1420010180	・・O-RING	1				
4-2	1551200700	・FILTER	1				
4-2-3	1551200703	・・ELEMENT	1				
4-2-4	1551200704	・・O-RING	1				
4-2-5	1551200705	・・CASE	1				
4-4	1652201004	・BAND	1				
6	0097210300	GUARD	2				
7	0097022400	GUARD	1				
11	0397018110	HOSE ASSY	1				18015-40063
11-2	1530525012	・PROTECTOR	1				sold by the meter
11-3	1652201005	・BAND	2				
12	0397018120	HOSE ASSY	1				18015-40078
12-2	1530525012	・PROTECTOR	1				sold by the meter
12-3	1652201005	・BAND	2				
13	0397018130	HOSE ASSY	1				18015-40054
14	0397018140	HOSE ASSY	1				18010-52145
15	0397018150	HOSE ASSY	1				18010-23050
16	0397018160	HOSE ASSY	1				18010-22150
34	0397018340	HOSE ASSY	1				
36	0397018360	HOSE ASSY	1				18010-52060
37	0397018370	HOSE ASSY	1				18010-52082
40	0397018400	HOSE ASSY	1				
41	0397018410	HOSE ASSY	1				18010-79120
45	0397018450	HOSE ASSY (with shut-off valve)	1				18010-22344
46	0397018460	HOSE ASSY (with shut-off valve)	1				18010-22378
47	0397018470	HOSE ASSY (with boom+arm shut-off valve)	1				18010-52266
48	0397018480	HOSE ASSY (with boom+arm shut-off valve)	1				18010-22289
55	1100040660	BOLT	2				
57	1140020006	WASHER, spring	2				
59	1141110006	WASHER	2				
63	1515600200	ADAPTOR (with boom shut-off valve)	1				
	1515600200	ADAPTOR (with boom+arm shut-off valve)	2				
	1420010110	・O-RING	1				
66	1512370010	TEE (with shut-off valve)	1				
67	1513390015	TEE (with boom+arm shut-off valve)	1				
	K7d050						

silverton.co.uk

PIPING; UPPER (3/3)

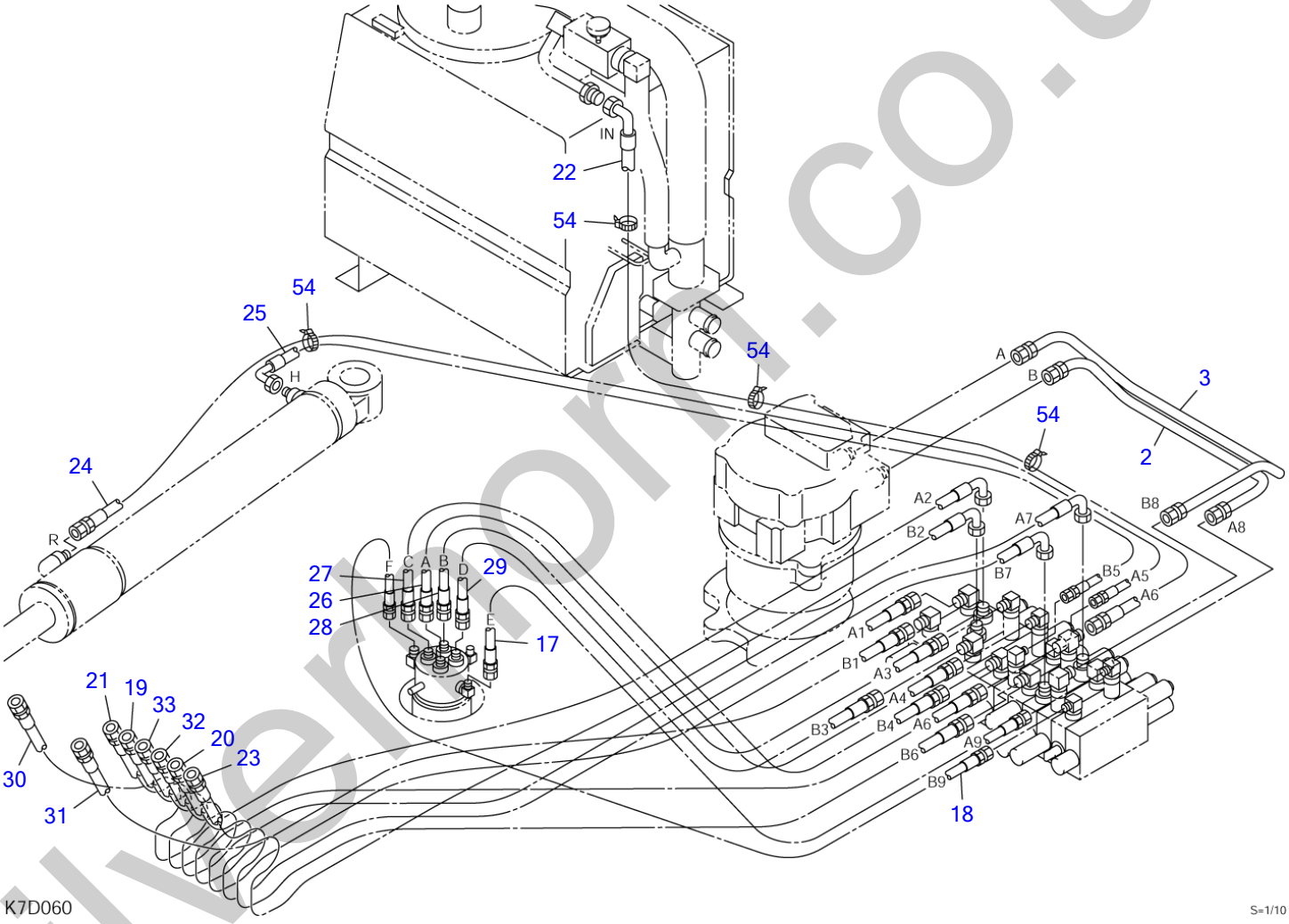

silverlight.co.uk

PIPING; UPPER (3/3)

Item	Part number	Description	Q'ty	Chan.	Serial No.	Serv.	Remarks
		PIPING ASSY, upper PIPING ASSY, upper (with boom shut-off valve) PIPING ASSY, upper (with boom+arm shut-off valve)					
2	0397018020	PIPE	1				
3	0397018030	PIPE	1				
17	0397018170	HOSE ASSY	1				18015-20087
18	0397018180	HOSE ASSY	1				18015-20082
19	0397018190	HOSE ASSY	1				18019-41242
20	0397018200	HOSE ASSY	1				18019-41235
21	0397018210	HOSE ASSY	1				18019-40243
22	0397018220	HOSE ASSY	1				
23	0397018230	HOSE ASSY	1				18019-40230
24	0397018240	HOSE ASSY	1				18015-20220
25	0397018250	HOSE ASSY	1				18015-21161
26	0397018260	HOSE ASSY	1				18015-40068
27	0397018270	HOSE ASSY	1				18015-40065
28	0397018280	HOSE ASSY	1				18015-40068
29	0397018290	HOSE ASSY	1				18015-40055
30	0397018300	HOSE ASSY	1				18019-41234
31	0397018310	HOSE ASSY	1				18019-41231
32	0397018320	HOSE ASSY	1				18019-40227
33	0397018330	HOSE ASSY	1				18019-40219
54	1652231140	BAND	4				
	K7d060						

silverhorn.co.uk

ACCUMULATOR

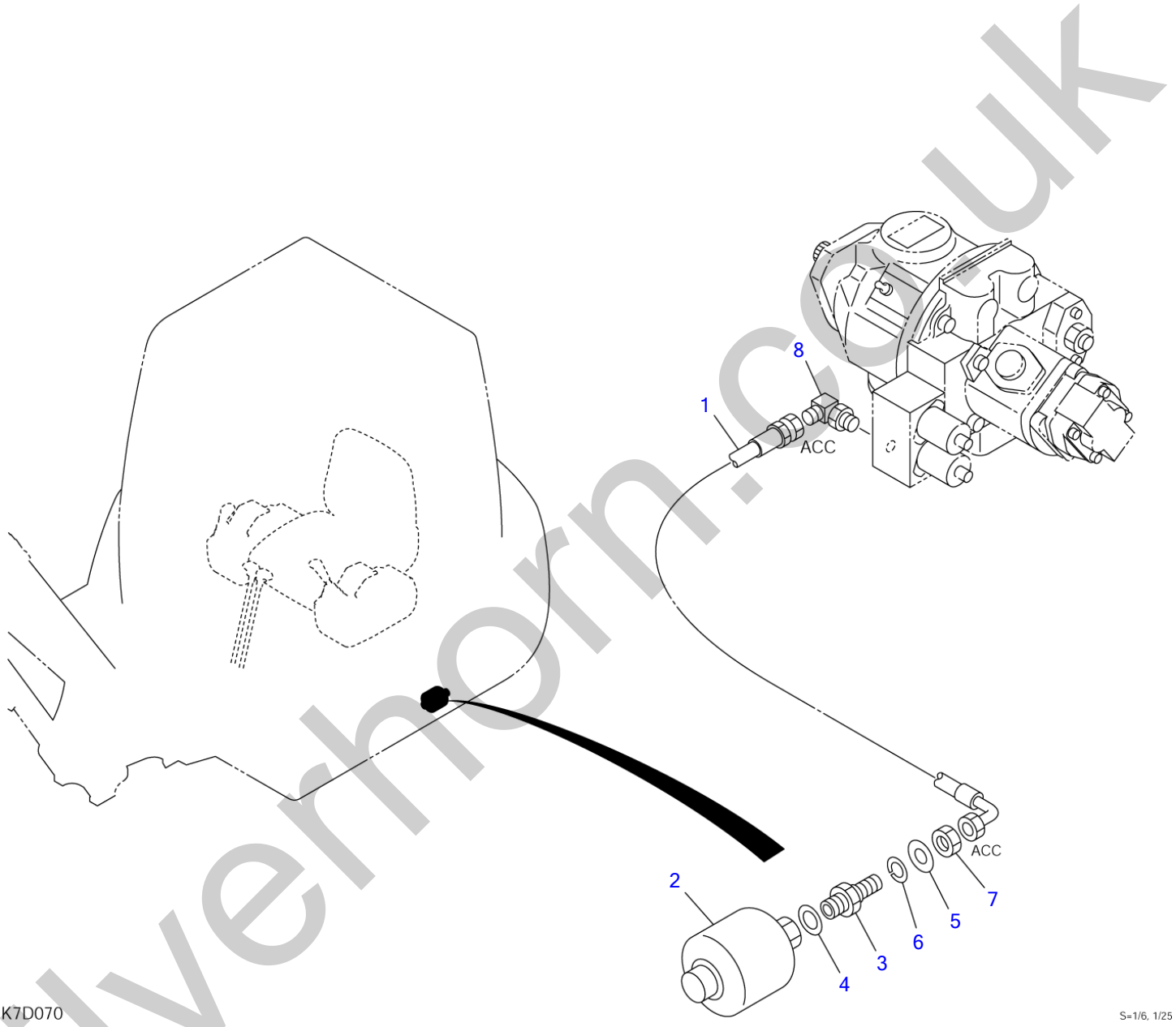

silverhorn.co.uk

ACCUMULATOR

Item	Part number	Description	Q'ty	Chan.	Serial No.	Serv.	Remarks
		ACCUMULATOR ASSY					
1	0395016310	HOSE ASSY	1				18010-53040
2	1552200020	ACCUMULATOR	1				
3	0007200222	ADAPTOR	1				
4	1432160004	WASHER	1				
5	1141110016	WASHER	1				
6	1140020020	WASHER, spring	1				
7	0007200154	NUT	1				
8	1515010130	ELBOW	1				
	1420010110	・O-RING	1				
	K7d070						

silverhorn.co.uk

PUMP DRIVE

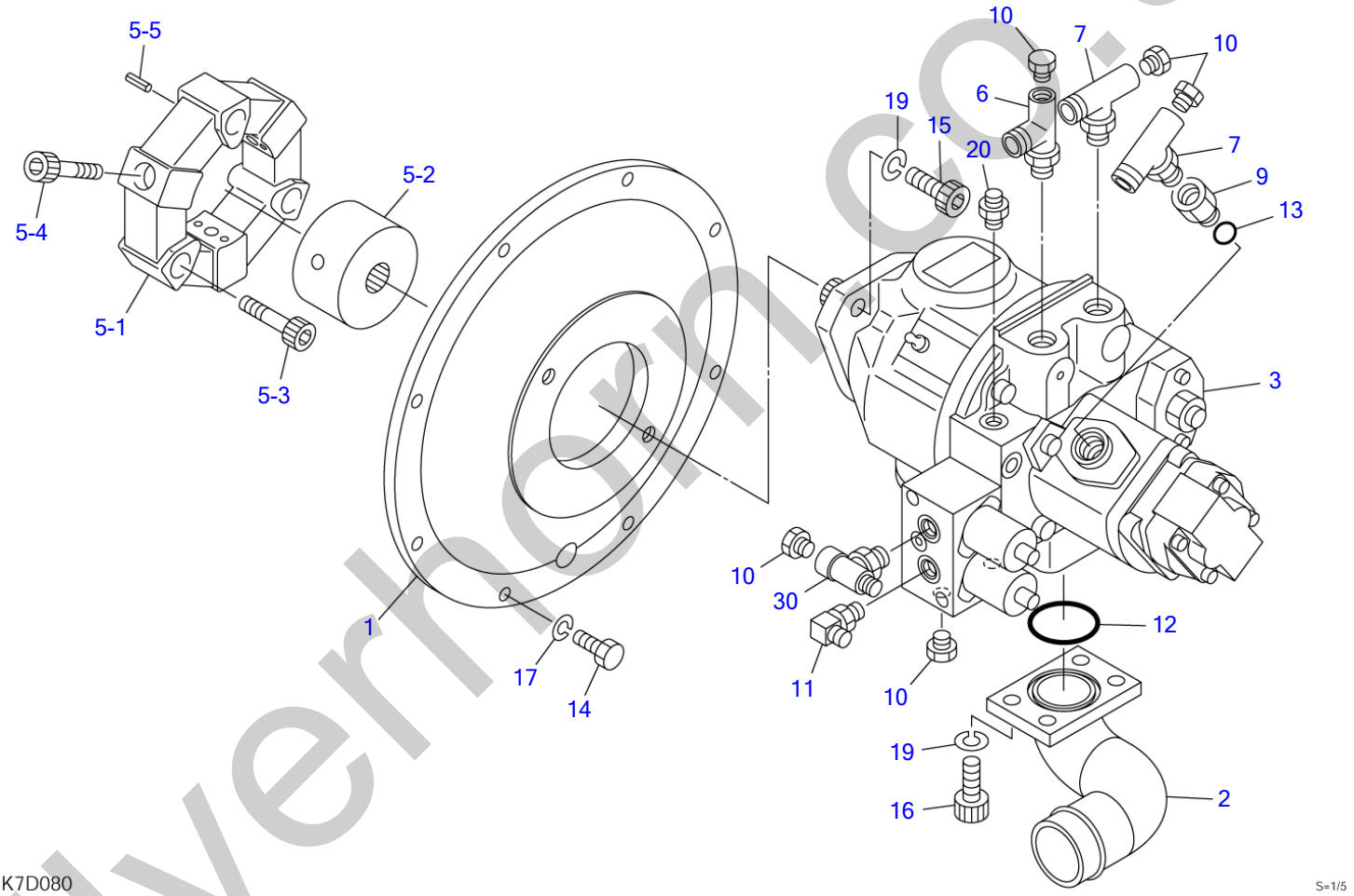

silverhorn.co.uk

PUMP DRIVE

Item	Part number	Description	Q'ty	Chan.	Serial No.	Serv.	Remarks
		PUMP ASSY, drive	1				
1	0395206100	HOUSING	1				
2	0395209920	FLANGE	1				
3	1902024800	PUMP, hydraulic	1				
5	0395209710	COUPLING ASSY	1				
5-1	1602000250	・COUPLING	1				
5-2	0395209712	・BOSS	1				
5-3	1602031440	・SCREW, cap	3				
5-4	1602031450	・SCREW, cap	3				
5-5	1213000510	・PIN, spring	9				
6	1512340004	ELBOW	1				
	1420010180	・O-RING	1				
7	1513390014	TEE	2				
	1420010180	・O-RING	1				
9	0007213010	BUSHING	1				
	1420010180	・O-RING	1				
10	1501750002	PLUG	5				
	1420010110	・O-RING	1				
11	1515010130	ELBOW	1				
	1420010110	・O-RING	1				
12	1420100450	O-RING	1				
13	1420010180	O-RING	1				
14	1100041025	BOLT	8				
15	1111041230	SCREW, cap	2				
16	1110041230	SCREW, cap	4				
17	1140020010	WASHER, spring	8				
19	1140420012	WASHER, spring	6				
20	1512370017	NIPPLE	1				
	1420010080	・O-RING	1				
30	1513390029	TEE	1				
	1420010110	・O-RING	1				
	K7d081						

silverhorn.co.uk

PUMP DRIVE (with air conditioner)

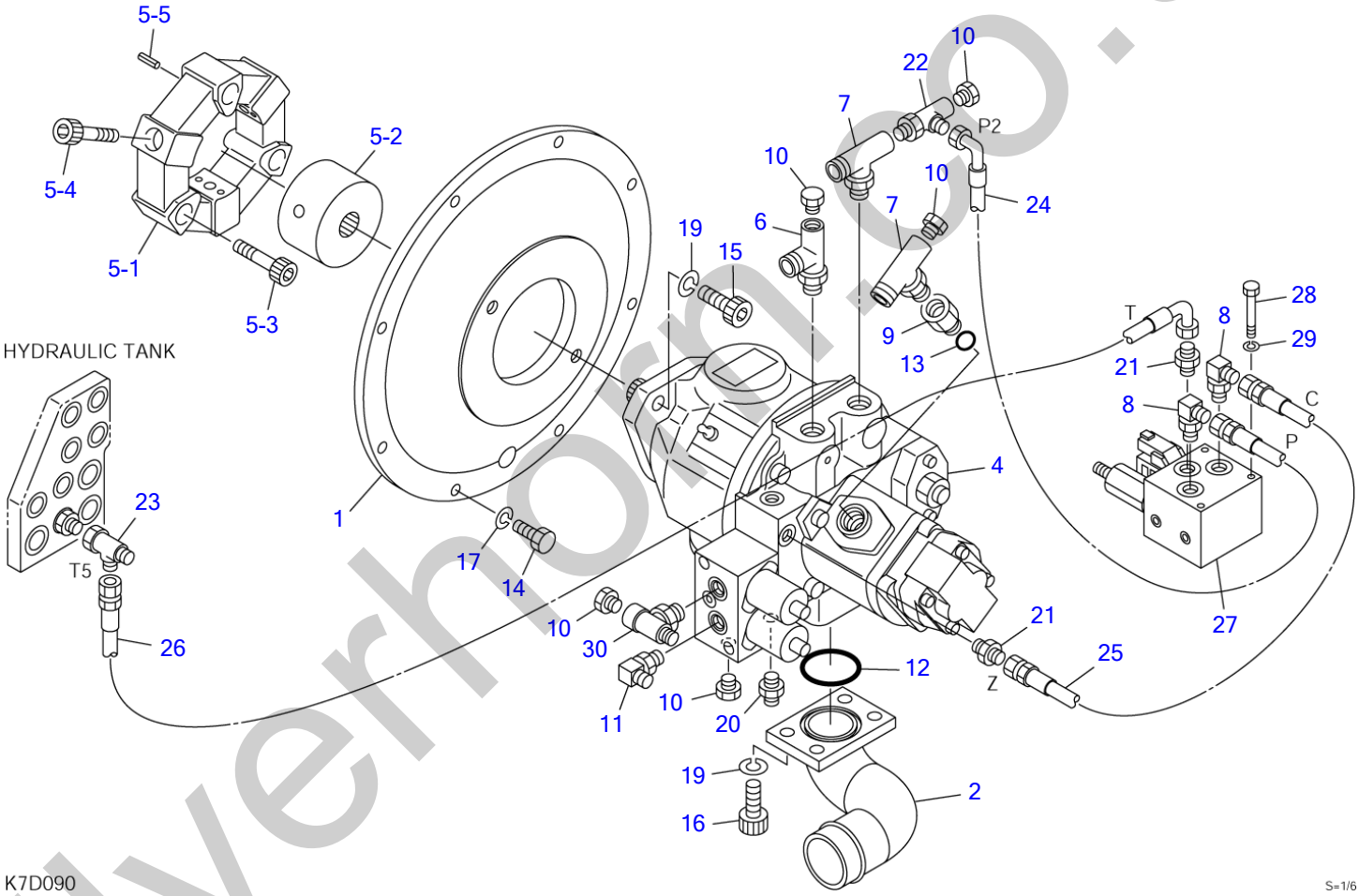

silverhorn.co.uk

PUMP DRIVE (with air conditioner)

Item	Part number	Description	Q'ty	Chan.	Serial No.	Serv.	Remarks
		PUMP ASSY, drive	1				
1	0395206100	HOUSING	1				
2	0395209920	FLANGE	1				
4	1902025800	PUMP, hydraulic	1				
5	0395209710	COUPLING ASSY	1				
5-1	1602000250	・COUPLING	1				
5-2	0395209712	・BOSS	1				
5-3	1602031440	・SCREW, cap	3				
5-4	1602031450	・SCREW, cap	3				
5-5	1213000510	・PIN, spring	9				
6	1512340004	ELBOW	1				
	1420010180	・O-RING	1				
7	1513390014	TEE	2				
	1420010180	・O-RING	1				
8	1515012040	ELBOW	2				
	1420010110	・O-RING	1				
9	0007213010	BUSHING	1				
	1420010180	・O-RING	1				
10	1501750002	PLUG	5				
	1420010110	・O-RING	1				
11	1515010130	ELBOW	1				
	1420010110	・O-RING	1				
12	1420100450	O-RING	1				
13	1420010180	O-RING	1				
14	1100041025	BOLT	8				
15	1111041230	SCREW, cap	2				
16	1110041230	SCREW, cap	4				
17	1140020010	WASHER, spring	8				
19	1140420012	WASHER, spring	6				
20	1512370017	NIPPLE	1				
	1420010080	・O-RING	1				
21	1515600200	ADAPTOR	2				
	1420010110	・O-RING	1				
22	1512340001	ELBOW	1				
	1420010110	・O-RING	1				
23	1513390015	TEE	1				
24	0395210010	HOSE ASSY	1				18015-01034
25	0395210020	HOSE ASSY	1				18010-22053
26	0395210030	HOSE ASSY	1				18010-52190
27	1901754500	VALVE, solenoid	1				
28	1100040670	BOLT	2				
29	1140020006	WASHER, spring	2				
30	1513390029	TEE	1				
	1420010110	・O-RING	1				
	K7d091						

silverthorn.co.uk

HYDRAULIC TANK

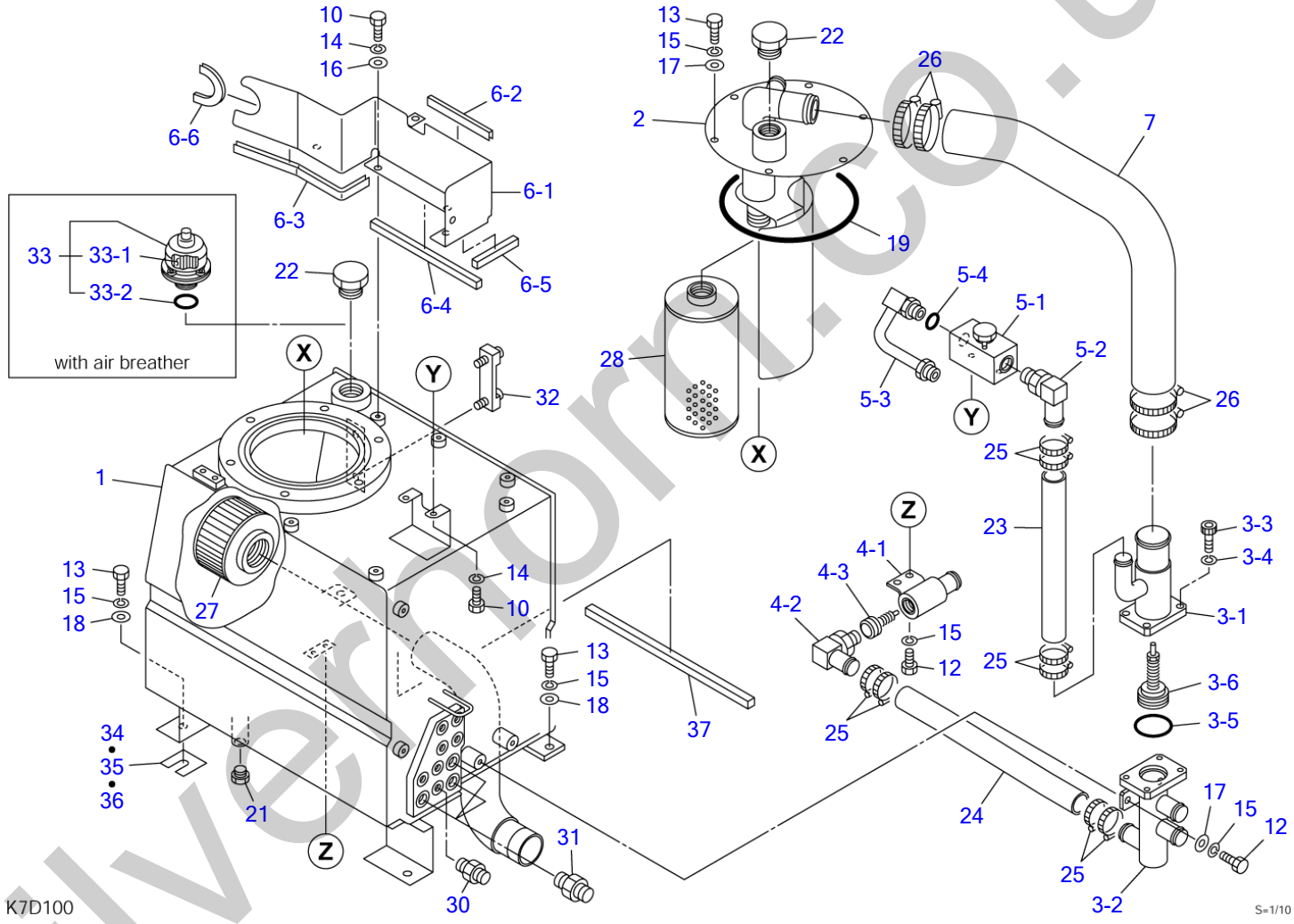

silvernorm.co.uk

HYDRAULIC TANK

Item	Part number	Description	Q'ty	Chan.	Serial No.	Serv.	Remarks
		TANK ASSY, hydraulic					
		TANK ASSY, hydraulic (with air breather)					
1	0398012100	TANK, hydraulic	1				
2	0398012200	PIPE	1				
3	0398012300	PIPE ASSY	1				
3-1	0398012310	・PIPE	1				
3-2	0398012320	・PIPE	1				
3-3	1110041025	・SCREW, cap	4				
3-4	1140420010	・WASHER, spring	4				
3-5	1420110550	・O-RING	1				
3-6	1540141245	・VALVE, check	1				
4	0398010400	PIPE ASSY	1				
4-1	0398010410	・PIPE	1				
4-2	1513350027	・ELBOW	1				
	1420010290	・・O-RING	1				
4-3	1540140815	・VALVE, check	1				
5	0398012500	VALVE ASSY, stop	1				
5-1	1901723700	・VALVE, stop	1				
5-2	1513350005	・ELBOW	1				
	1420010240	・・O-RING	1				
5-3	0398012510	・ELBOW	1				
5-4	1420010240	・O-RING	1				
6	0398012600	PLATE ASSY	1				
6-1	0398012610	・PLATE	1				
6-2	1654606014	・SEAL	1				sold by the meter
6-3	1654606028	・TRIM	1				sold by the meter
6-4	1654315023	・SPONGE	1				sold by the meter
6-5	1654315009	・SPONGE	1				sold by the meter
6-6	1654606011	・TRIM	1				sold by the meter
7	0398010480	HOSE	1				
10	1100040816	BOLT	5				
12	1100041016	BOLT	4				
13	1100041025	BOLT	10				
14	1140020008	WASHER, spring	5				
15	1140020010	WASHER, spring	14				
16	1141110008	WASHER	3				
17	1141110010	WASHER	8				
18	1141550010	WASHER	4				
19	1420102000	O-RING	1				
21	1501750003	PLUG	1				
	1420010140	・O-RING	1				
22	1501750010	PLUG	2				
	1501750010	PLUG	1				with air breather
	1420010290	・O-RING	1				
23	1530525031	HOSE	1				sold by the meter
24	1530525038	HOSE	1				sold by the meter
25	1533700041	BAND	8				
26	1533700070	BAND	4				
27	1550020150	FILTER	1				
28	1551103700	ELEMENT	1				
30	1515600200	ADAPTOR	1				
	1420010110	・O-RING	1				
31	1515600201	ADAPTOR	3				
	1420010140	・O-RING	1				
32	1553020685	GAUGE	1				
33	1552002700	BREATHER, air	1				with air breather
33-1	1552002715	・ELEMENT	1				
33-2	1420010300	・O-RING	1				
34	0378011001	SPACER	AR				t=1.2mm
35	0378011002	SPACER	AR				t=2.0mm
36	0378011003	SPACER	AR				t=3.2mm
37	1654306035	SPONGE	1				sold by the meter
	K7d101						

silverthorn.co.uk

FUEL TANK & FUEL PIPING

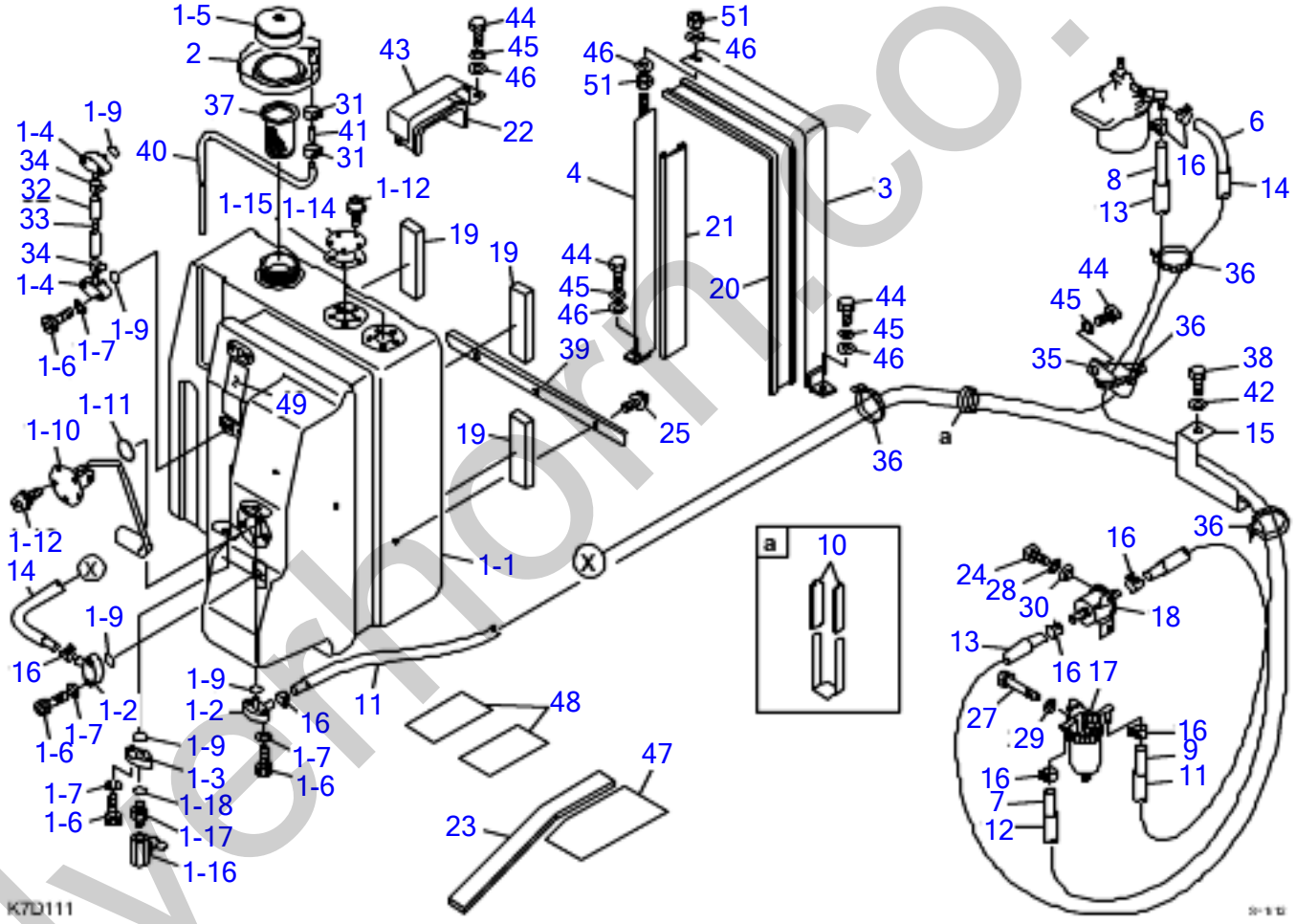

silverhorn.co.uk

FUEL TANK & FUEL PIPING

Item	Part number	Description	Q'ty	Chan.	Serial No.	Serv.	Remarks
		TANK ASSY, fuel					
1	0398121100	TANK ASSY	1				
1-1	0398120110	・TANK	1				
1-2	0881811100	・FLANGE	2				
1-3	0881811110	・VALVE, drain	1				
1-4	0348103490	・FLANGE	2				
1-5	1552101000	・CAP	1				
1-6	1110040616	・SCREW, cap	10				
1-7	1140420006	・WASHER, spring	10				
1-9	1420010180	・O-RING	5				
1-10	1553202700	・SENDER, fuel	1				
1-11	1420010450	・O-RING	1				
1-12	1150110510	・SCREW	15				
1-14	0378109260	・COVER	2				
1-15	1553200800	・PACKING	2				
1-16	1521500002	・VALVE, ball	1				
1-17	0007204009	・ADAPTOR	1				
1-18	1420010110	・O-RING	1				
2	0348103047	PLATE	1				
	0348103051	PLATE	1				
3	0398121200	BAND	1				
4	0398121210	BAND	1				
6	1531207276	HOSE	1				sold by the meter
7	1531207060	HOSE	1				sold by the meter
8	1531207150	HOSE	1				sold by the meter
9	1531207250	HOSE	1				sold by the meter
10	0872433150	TUBE	2				
11	1531115090	PROTECTOR	3				sold by the meter
12	1531115055	PROTECTOR	1				sold by the meter
13	1531115072	PROTECTOR	2				sold by the meter
14	1531115081	PROTECTOR	3				sold by the meter
15	0378111270	PLATE	1				
	0398121270	PLATE	1				
16	1533120012	BAND	8				
17	1910030033	SEPARATOR, water	1				
18	1910181034	PUMP, feed	1				
19	0398120240	RUBBER	4				
20	0398121252	RUBBER	1				
21	0398121251	RUBBER	1				
22	0398121250	RUBBER	1				
23	0398120244	RUBBER	1				
24	1100040612	BOLT	2				
25	1110540612	BOLT, sems	3				
27	1100040870	BOLT	1				
28	1140020006	WASHER, spring	2				
29	1140020008	WASHER, SPRING	1				
30	1141110006	WASHER	2				
31	1533120015	BAND	2				
32	1531010014	HOSE	1				sold by the meter
33	1553000001	FLOAT	1				
34	1533700015	BAND	2				
35	0007300055	CLAMP	1				
36	1652231140	BAND	4				
37	1552100320	STRAINER	1				
38	1101041425	BOLT	1				
39	0398121260	PLATE	1				
40	1531007075	HOSE	1				sold by the meter
	1531010075	HOSE	1				
41	0348103050	PIPE	1				
	0348103052	PIPE	1				
42	1141110014	WASHER	1				
43	0398120200	PLATE	1				
44	1100041020	BOLT	5				
45	1140020010	WASHER, spring	5				
46	1141110010	WASHER	6				
47	0398121253	RUBBER	1				
48	0398121254	RUBBER	2				
49	0378111280	DECAL	1				

silverthorn.co.uk

FUEL TANK & FUEL PIPING

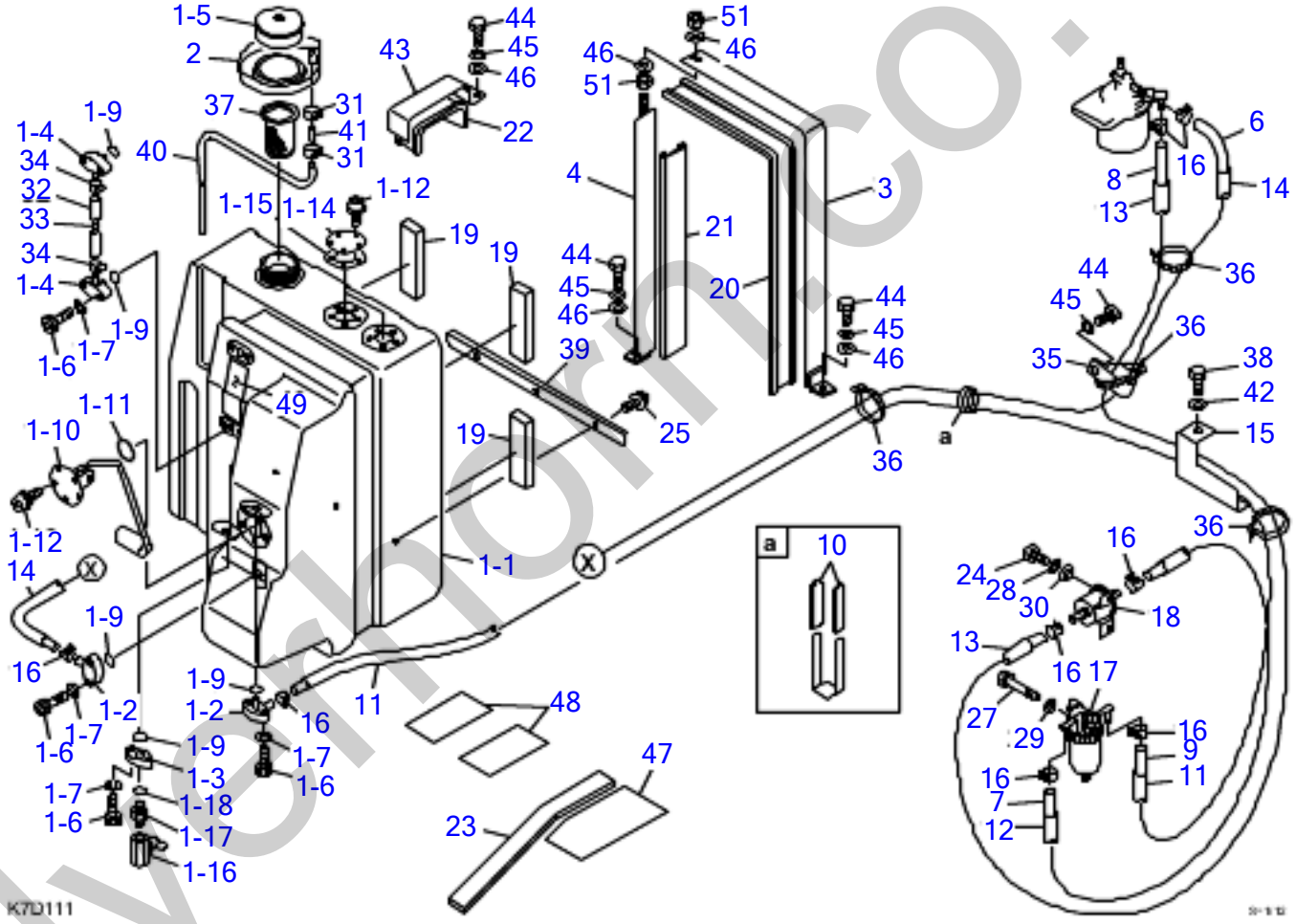

silverhorn.co.uk

Item	Part number	Description	Q'ty	Chan.	Serial No.	Serv.	Remarks
51	**1130040010 K7d111**	NUT	2				

silverhorn.co.uk

COVER (1/8)

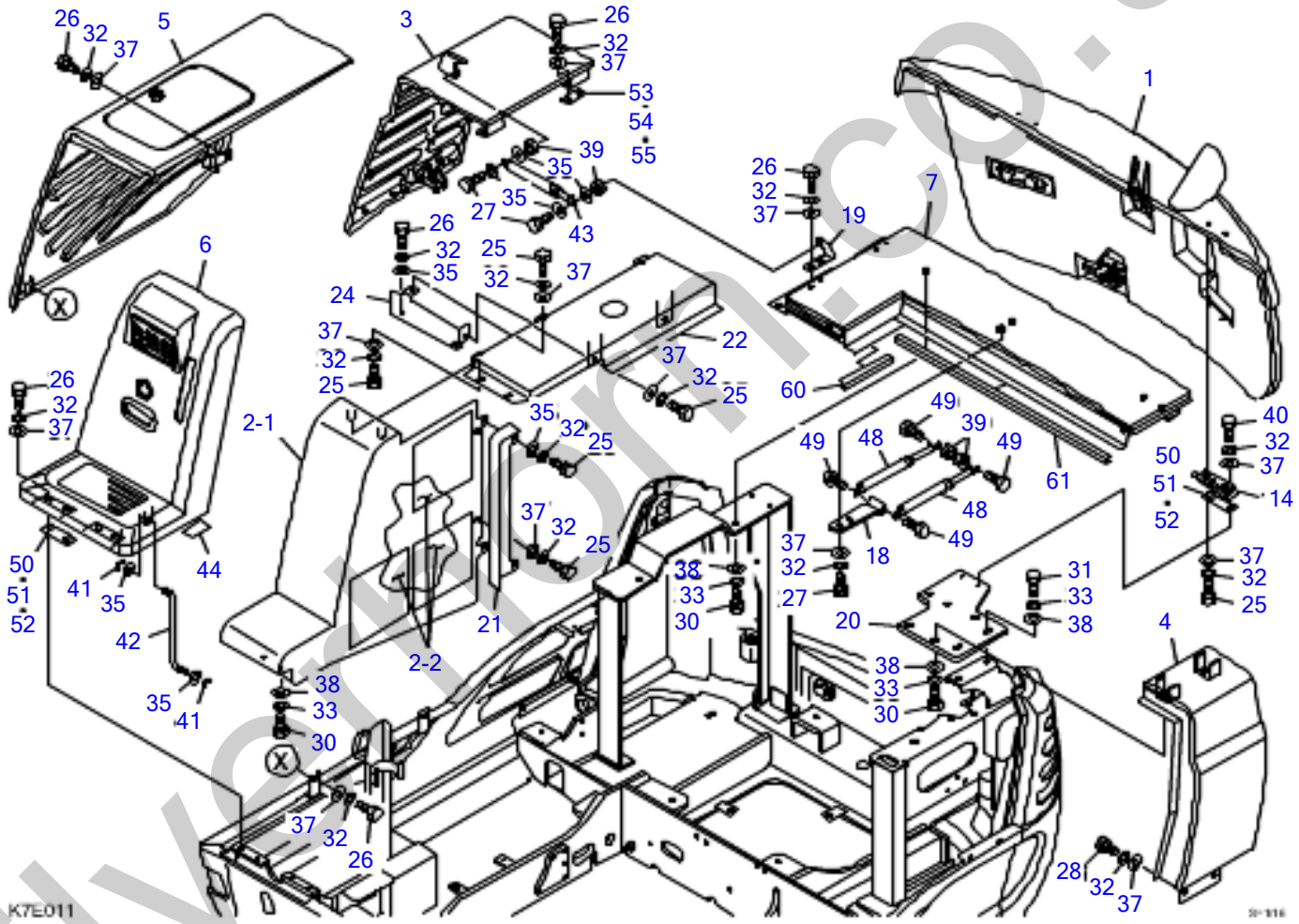

silverfordm.co.uk

COVER (1/8)

Item	Part number	Description	Q'ty	Chan.	Serial No.	Serv.	Remarks
		COVER ASSY (cab)					
		COVER ASSY (canopy)					
1	0398225100	HOOD, engine (cab)	1				see page (3/8)
	0398226100	HOOD, engine (canopy)	1				see page (3/8)
2	0398225200	COVER ASSY, front (L.H.)	1				
2-1	0398225210	・COVER, front (L.H.)	1				
2-2	0378222420	・SHEET	3				
3	0398225300	COVER ASSY, side (R.H.)	1				see page (4/8)
4	0398225400	COVER ASSY, side (L.H.)	1				see page (5/8)
5	0378222100	COVER ASSY, tank	1				see page (6/8)
6	0378219600	COVER ASSY, front	1				see page (7/8)
	0378224600	COVER ASSY, FRONT	1				
7	0398225600	COVER ASSY, center	1				see page (8/8)
14	0378222090	HINGE	2				
18	0398225020	BRACKET	1				
19	0378219014	BRACKET	1				
20	0398225050	BRACKET	1				
21	0398225040	PLATE	1				
22	0398225500	COVER	1				
24	0398225060	BRACKET	1				
25	1100040816	BOLT	16				
26	1100040820	BOLT	17				
27	1100040825	BOLT	4				
28	1100041020	BOLT	2				
30	1100041030	BOLT	9				
31	1100041035	BOLT	2				
32	1140020008	WASHER, spring	40				
33	1140020010	WASHER, spring	11				
35	1141110008	WASHER	12				
37	0003608252	WASHER	35				
38	0003600025	WASHER	12				
39	1130040008	NUT	4				
40	1100040830	BOLT	4				
41	1224010006	RING, retaining	1				
42	0333420300	ROD	1				
43	1653900057	SPRING, gas	1				
44	0358212034	RUBBER	2				
48	1653900070	SPRING, gas	2				
49	0138255300	BOLT	4				
50	0003900064	SPACER	AR				t=3.2mm
51	0003900065	SPACER	AR				t=2.3mm
52	0003900066	SPACER	AR				t=1.6mm
53	0003900067	SPACER	AR				t=3.2mm
54	0003900068	SPACER	AR				t=2.3mm
55	0003900069	SPACER	AR				t=1.6mm
60	1654520018	TRIM (CANOPY)	1				
61	1654520089	TRIM (CANOPY)	1				
	K7e011						

silverthorn.co.uk

COVER (2/8)

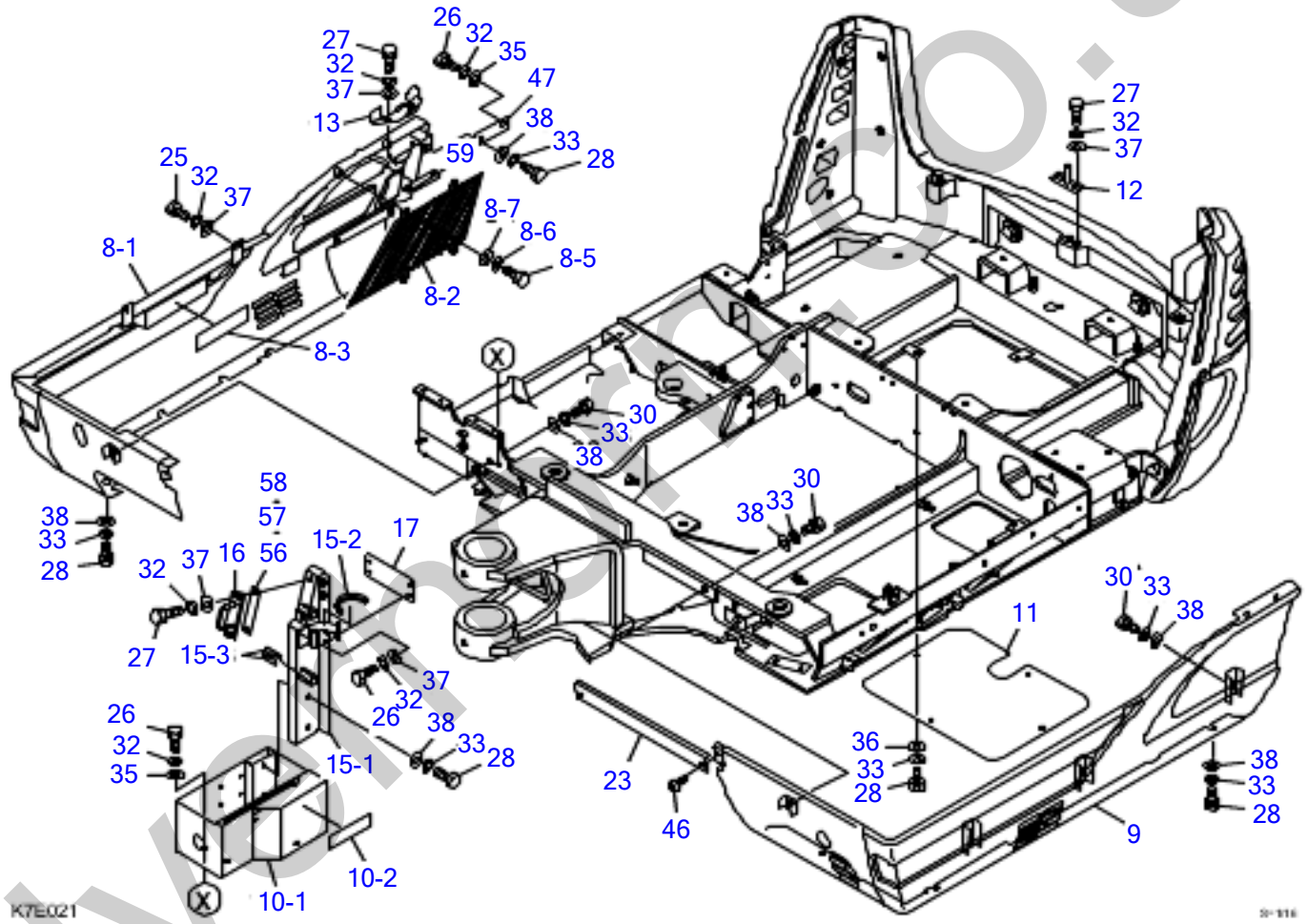

silvermerlin.co.uk

COVER (2/8)

Item	Part number	Description	Q'ty	Chan.	Serial No.	Serv.	Remarks
		COVER ASSY (cab)					
		COVER ASSY (canopy)					
8	0398225700	FRAME ASSY, side (R.H.)	1				
	0398226700	FRAME ASSY, SIDE RH	1				
8-1	0398225710	・FRAME, side (R.H.)	1				
	0398226710	* FRAME, SIDE RH	1				
8-2	0398223780	・NET	1				
8-3	0398225703	・SHEET	1				
8-5	1140020008	・BOLT	4				
8-6	1141110008	・WASHER, spring	4				
8-7	1141110008	・WASHER	4				
9	0398225800	FRAME, side (L.H.)	1				
10	0398225900	BOX ASSY, tool	1				
10-1	0398225910	・BOX, tool	1				
10-2	0398225703	・SHEET	1				
11	0398225950	COVER	1				
12	0378222040	PLATE	1				
13	0378219070	BRACKET	1				
	0398225070	BRACKET	1				
15	0398226080	BRACKET ASSY	1				
15-1	0398225080	・BRACKET	1				
15-2	1654601013	・TRIM	1				sold by the meter
15-3	0872433150	・TUBE	4				
16	0398225090	PLATE	1				
17	0398225095	BRACKET	1				
23	0398225030	COVER	1				
25	1100040816	BOLT	1				
26	1100040820	BOLT	8				
27	1100040825	BOLT	4				
28	1100041020	BOLT	14				
30	1100041030	BOLT	5				
32	1140020008	WASHER, spring	14				
33	1140020010	WASHER, spring	19				
35	1141110008	WASHER	4				
36	1141110010	WASHER	4				
37	0003608252	WASHER	9				
38	0003600025	WASHER	15				
46	1150410620	SCREW	2				
47	0378219046	PLATE	1				
56	0003900072	SPACER	AR				t=3.2mm
57	0003900073	SPACER	AR				t=2.3mm
58	0003900074	SPACER	AR				t=1.6mm
59	0378224075	PLATE	1				
	K7e021						

silvermorn.co.uk

COVER (3/8) (engine hood)

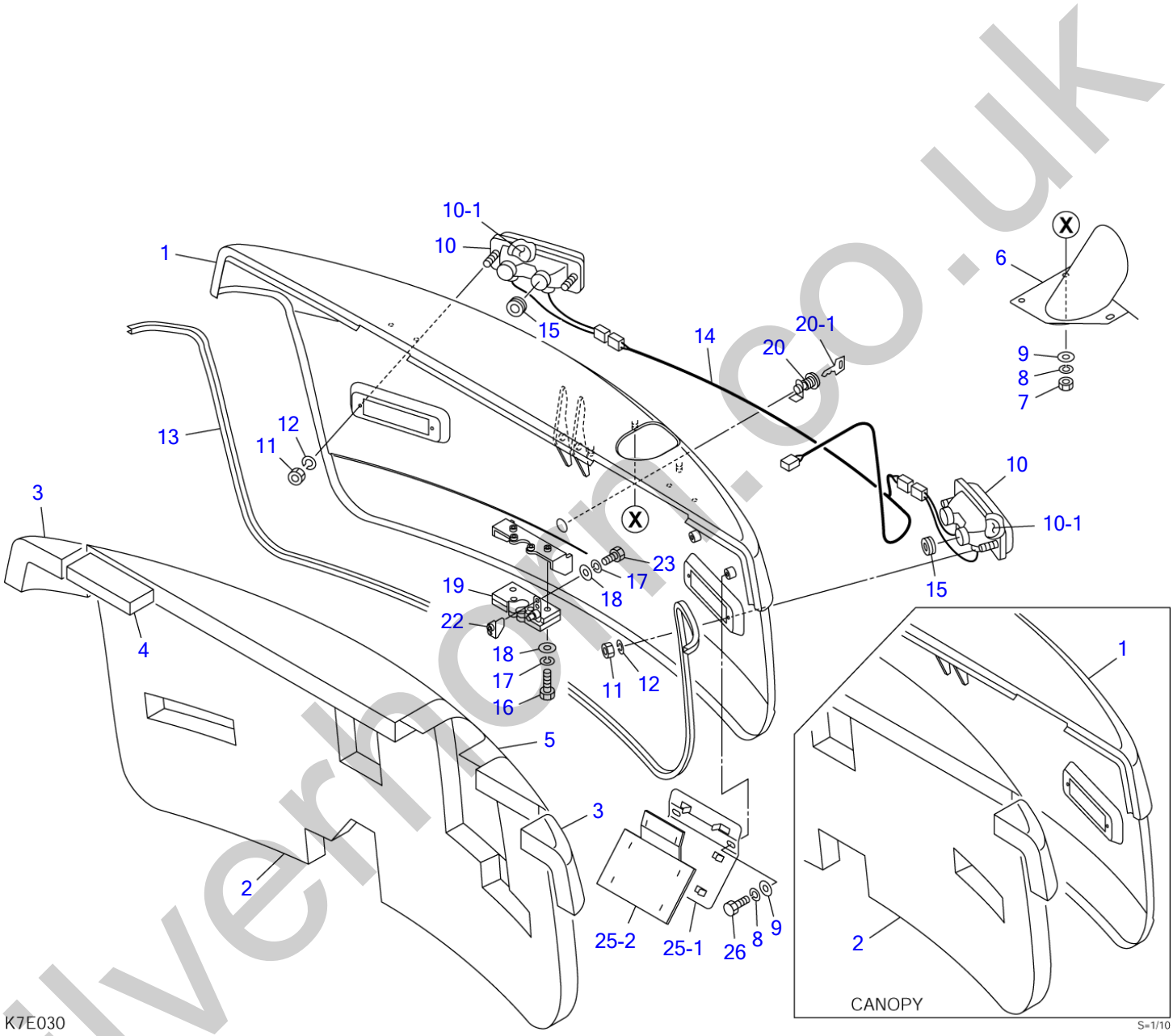

silverhorn.co.uk

COVER (3/8) (engine hood)

Item	Part number	Description	Q'ty	Chan.	Serial No.	Serv.	Remarks
0-1	0398225100	HOOD, engine (cab)	1				
	0398226100	HOOD, engine (canopy)	1				
1	0398225110	・HOOD, engine	1				cab
	0398226110	・HOOD, engine	1				canopy
2	0398225102	・ABSORBENT, noise	1				cab
	0398226102	・ABSORBENT, noise	1				canopy
3	0398225103	・ABSORBENT, noise	2				
4	0378219142	・ABSORBENT, noise	1				
5	0398225105	・INSULATOR	1				cab
6	0398225180	・PIPE	1				cab
7	1130040008	・NUT	3				cab
8	1140020008	・WASHER, spring	5				cab
9	0003608252	・WASHER	5				cab
10	1703007800	・LAMP, tail	2				
10-1	1703007003	・・BULB	2				12V
11	1130030004	・NUT	4				
12	1140020004	・WASHER, spring	4				
13	1654606230	・SEAL	1				sold by the meter
14	0378219150	・HARNESS, wiring	1				
15	1652051400	・GROMMET	4				
16	1100040635	・BOLT	4				
17	1140020006	・WASHER, spring	5				
18	1141110006	・WASHER	5				
19	1654011300	・LOCK	1				
20	0378219160	・LOCK ASSY	1				
20-1	1700100019	・KEY	1				
22	0378219120	・BRACKET	1				
23	1100040616	・BOLT	1				
25	0398225190	・COVER ASSY	1				cab
25-1	0398225106	・・PLATE	1				cab
25-2	0398225108	・・INSULATOR	1				cab
26	1100040816	・BOLT	1				cab
	K7e030						

silverhorn.co.uk

COVER (4/8) (side cover; R.H.)

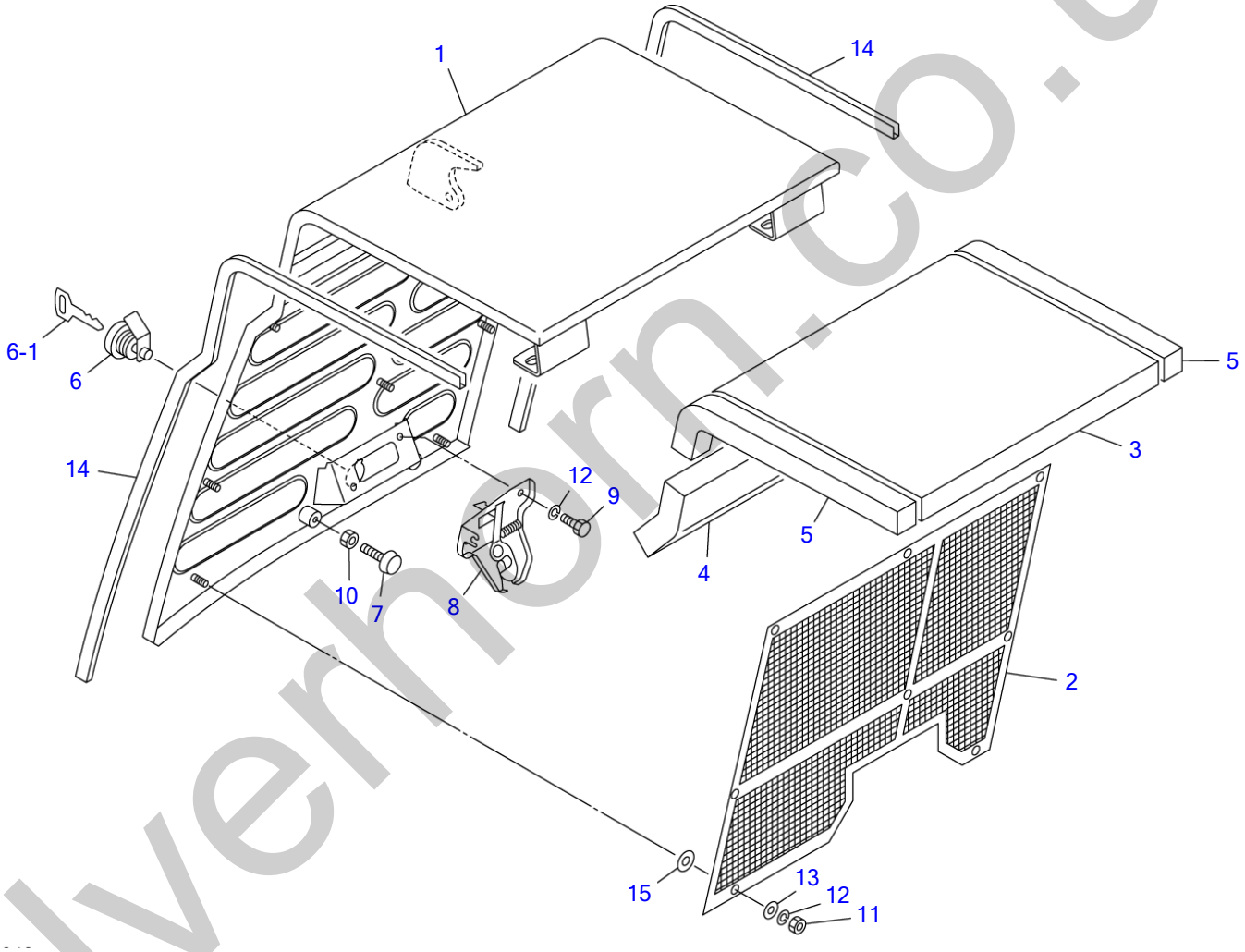

silverhorn.co.uk

COVER (4/8) (side cover; R.H.)

Item	Part number	Description	Q'ty	Chan.	Serial No.	Serv.	Remarks
0-2	0398225300	COVER ASSY, side (R.H.)	1				
1	0398225310	・COVER, side (R.H.)	1				
2	0398223320	・NET	1				
3	0398223330	・ABSORBENT, noise	1				
4	0398225331	・ABSORBENT, noise	1				
5	0398223332	・ABSORBENT, noise	2				
6	0378219330	・LOCK	1				
6-1	1700100019	・KEY	1				
7	1652515100	・RUBBER, cushion	2				
8	1653900024	・CATCH	1				
9	1100040612	・BOLT	2				
10	1130040005	・NUT	2				
11	1130040006	・NUT	8				
12	1140020006	・WASHER, spring	10				
13	1141110006	・WASHER	8				
14	1654606046	・SEAL	2				sold by the meter
15	0003600090	・WASHER	8				
	K7e041						

silverhorn.co.uk

COVER (5/8) (side cover; L.H.)

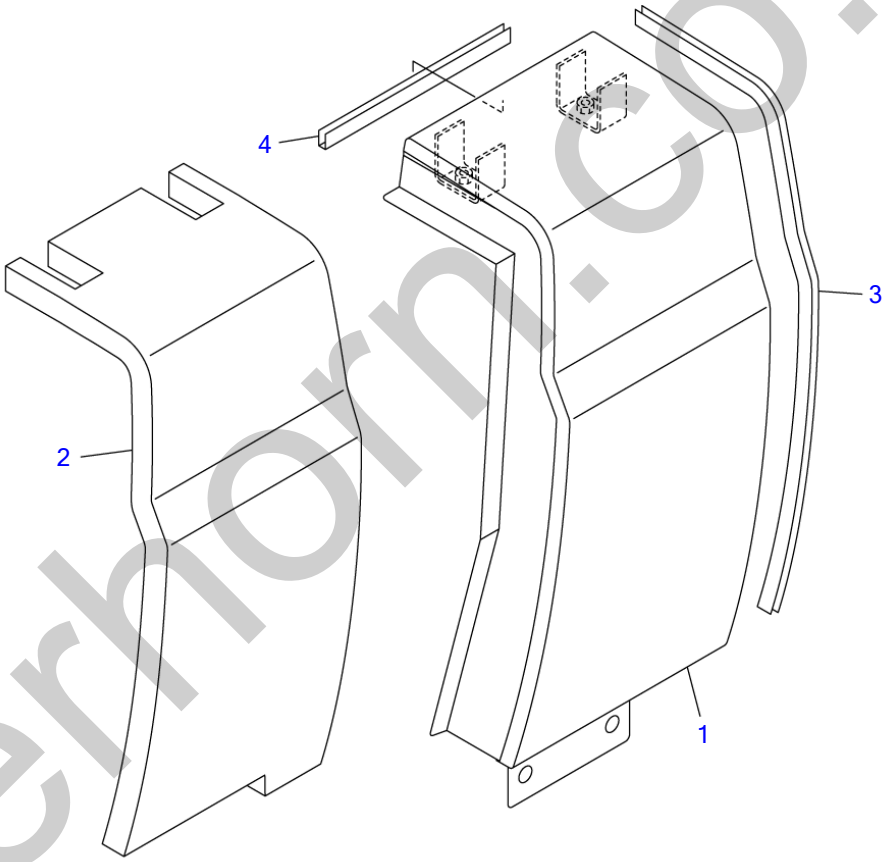

K7E050

S=1/6

silverhorn.co.uk

COVER (5/8) (side cover; L.H.)

Item	Part number	Description	Q'ty	Chan.	Serial No.	Serv.	Remarks
0-3	**0398225400**	COVER ASSY, side (L.H.)	1				
1	**0398225410**	・COVER, side (L.H.)	1				
2	**0398225402**	・ABSORBENT, noise	1				
3	**1654606062**	・SEAL	1				sold by the meter
4	**1654606020**	・SEAL	1				sold by the meter
	K7e050						

silverhorn.co.uk

COVER (6/8) (tank cover)

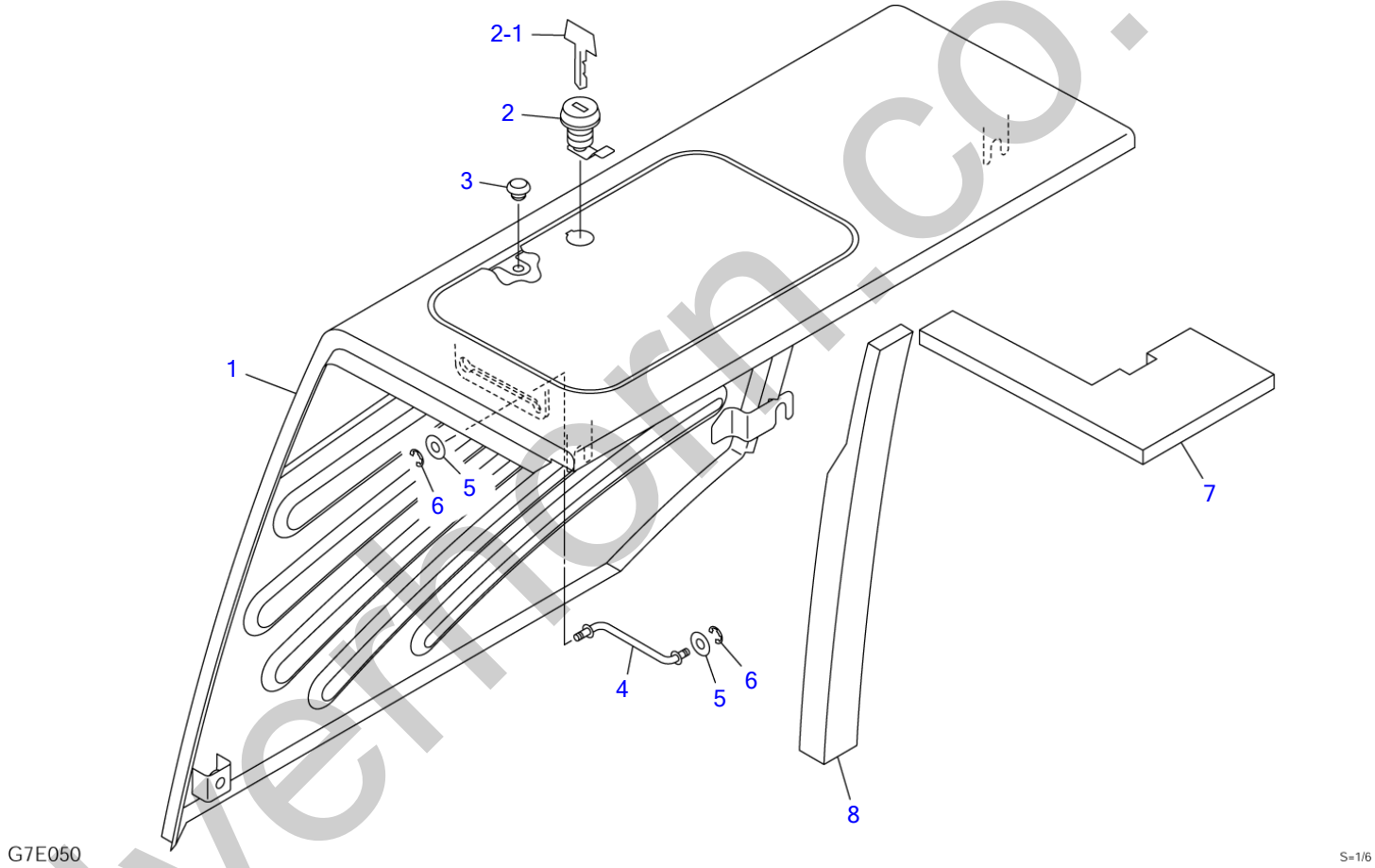

silverthorn.co.uk

COVER (6/8) (tank cover)

Item	Part number	Description	Q'ty	Chan.	Serial No.	Serv.	Remarks
0-4	0378222100	COVER ASSY, tank	1				
1	0378222110	・COVER	1				
2	0378219510	・LOCK	1				
2-1	1700100019	・KEY	1				
3	1652511001	・RUBBER, cushion	2				
4	0378219520	・ROD	1				
5	1141110006	・WASHER	2				
6	1224010004	・RING, retaining	2				
7	0378222120	・SPONGE	1				
8	0378222121	・SPONGE	1				
	G7e050						

silverhorn.co.uk

COVER (7/8) (front cover)

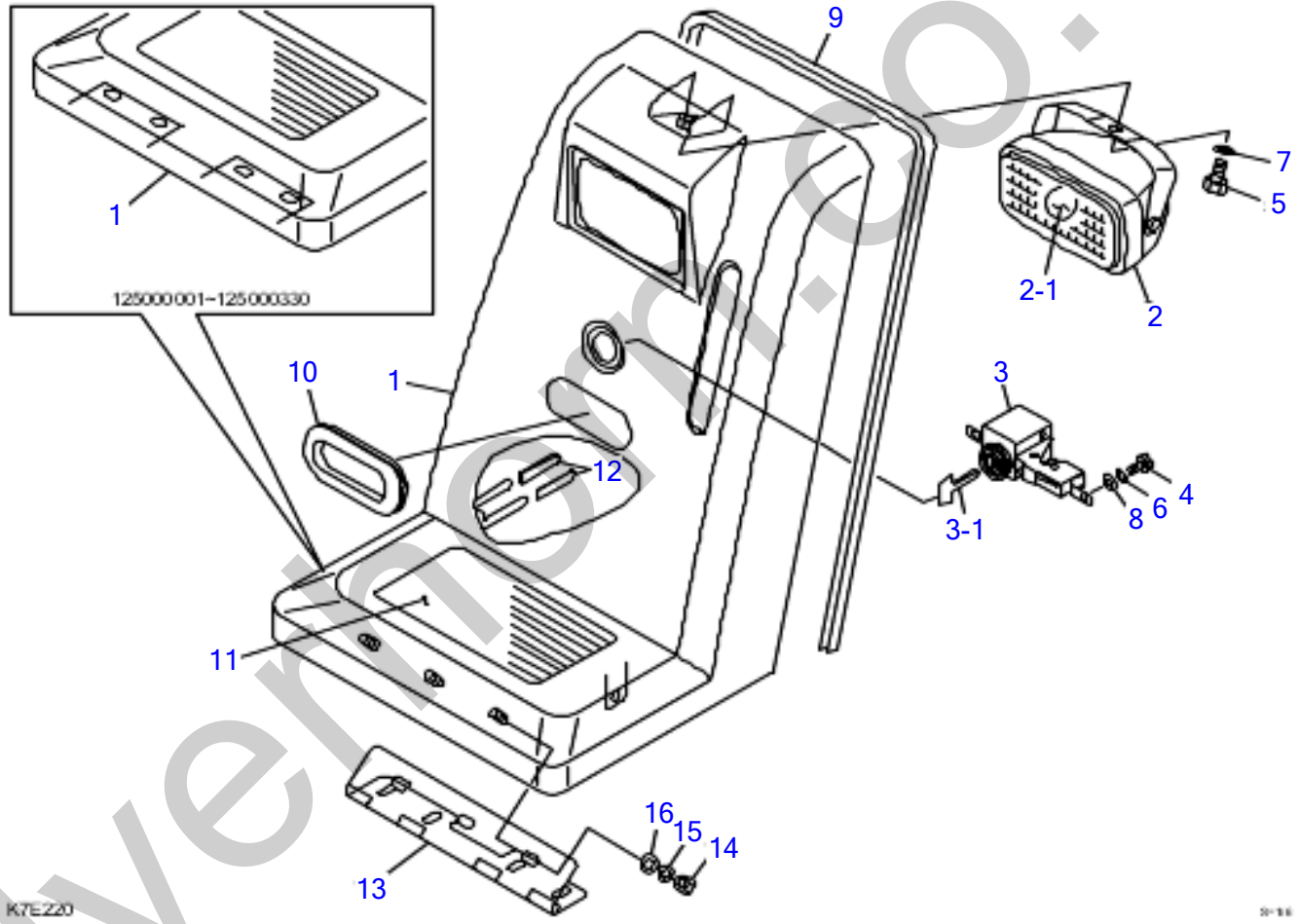

silvermoor.co.uk

COVER (7/8) (front cover)

Item	Part number	Description	Q'ty	Chan.	Serial No.	Serv.	Remarks
0-5	0378219600	COVER ASSY, front	1				
	0378224600	COVER ASSY, FRONT	1				
1	0378219650	・COVER, front	1				
	0378224650	* COVER, FRONT	1				
2	1703006600	・LAMP ASSY	1				
2-1	1703006605	・・BULB	1				
3	1653611799	・LOCK	1				
3-1	1700100019	・KEY	1				
4	1100040816	・BOLT	2				
5	1100041020	・BOLT	1				
6	1140020008	・WASHER, spring	2				
7	1140020010	・WASHER, spring	1				
8	1141110008	・WASHER	2				
9	1654605130	・RUBBER	1				sold by the meter
10	1652743851	・GRIP	1				
11	0358202400	・SHEET	1				
12	0872433150	・TUBE	6				
13	0378224690	* HINGE	1				
14	1130040008	* NUT	3				
15	1140020008	* SPRING WASHER	3				
16	0003608252	* WASHER	3				
	K7E220						

silverhorn.co.uk

COVER (8/8) (center cover)

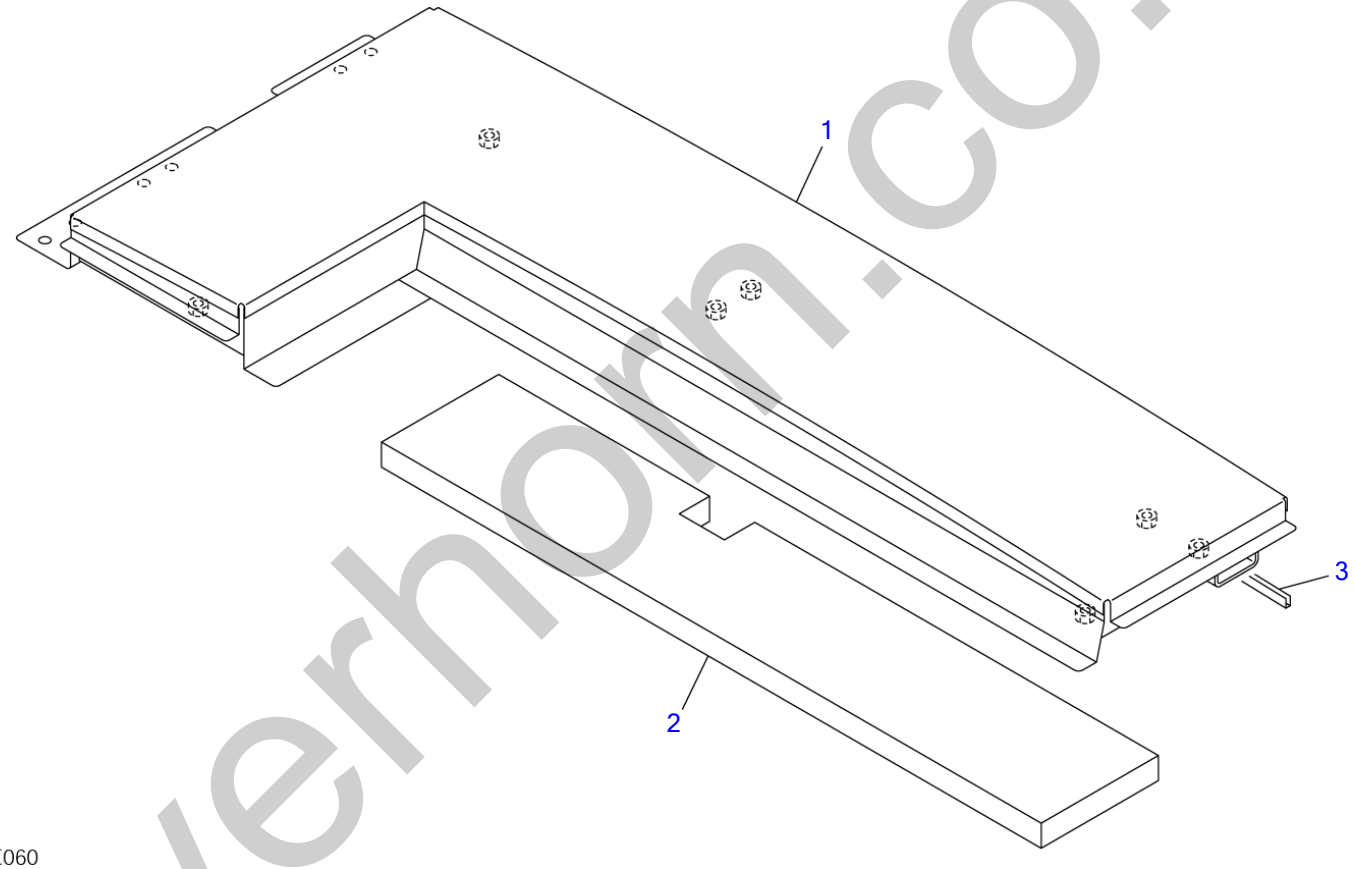

K7E060

S=1/6

silverhorn.co.uk

COVER (8/8) (center cover)

Item	Part number	Description	Q'ty	Chan.	Serial No.	Serv.	Remarks
0-6	0398225600	COVER ASSY, center	1				
1	0398225610	・COVER	1				
2	0398225602	・ABSORBENT, noise	1				
3	1654606098	・SEAL	1				sold by the meter
	K7e060						

silverhorn.co.uk

FLOOR FRAME (1/2)

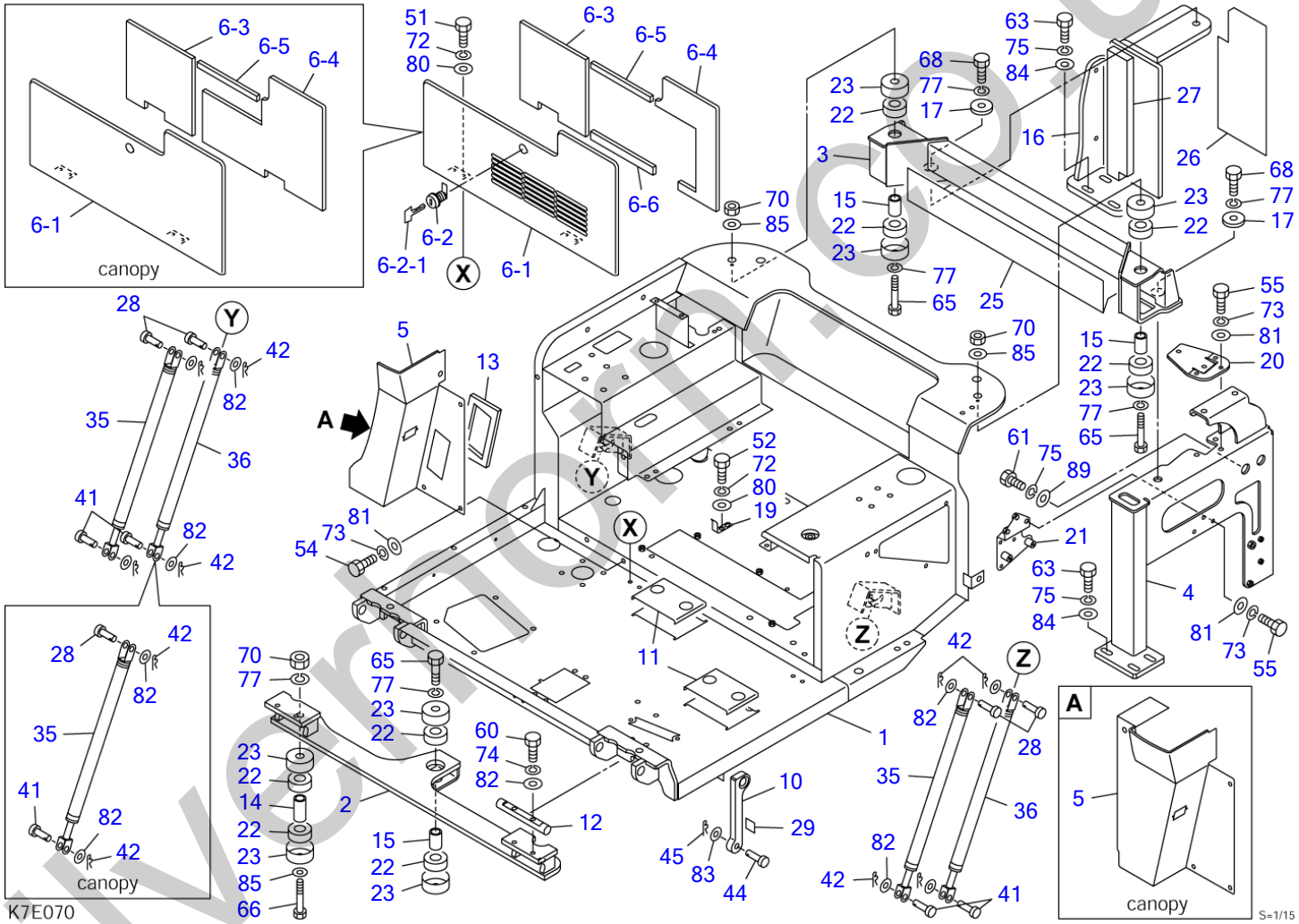

silvermoor.co.uk

FLOOR FRAME (1/2)

Item	Part number	Description	Q'ty	Chan.	Serial No.	Serv.	Remarks
		FLOOR ASSY (cab)					
		FLOOR ASSY (canopy)					
1	0373514100	FRAME ASSY (cab)	1				see page (2/2)
	0373514150	FRAME ASSY (canopy)	1				see page (2/2)
2	0393525210	PLATE	1				
3	0353518730	BRACKET	1				
4	0393525220	BRACKET	1				
5	0373514570	COVER	1				cab
	0373514560	COVER	1				canopy
6	0373514810	COVER ASSY (cab)	1				
	0373514870	COVER ASSY (canopy)	1				
6-1	0373514820	・COVER (cab)	1				
	0373514890	・COVER (canopy)	1				
6-2	1653611836	・LOCK	1				
6-2-1	1700100019	・KEY	1				
6-3	0373514813	・SPONGE	1				
6-4	0373514814	・SPONGE	1				cab
	0373514874	・SPONGE	1				canopy
6-5	0373514815	・SPONGE	1				
6-6	0373514816	・SPONGE	1				cab
10	0373514613	STOPPER	1				
11	0373514614	COVER	2				
12	0373514620	SHAFT	2				
13	0373514615	SPONGE	1				cab
14	0373514670	SPACER	2				
15	0373514680	SPACER	3				
16	0393525240	BRACKET	1				
17	0373514730	PLATE	2				
19	0373514830	PLATE	1				
20	0393525250	BRACKET	1				
21	0393525260	BRACKET	1				
22	0433503100	RUBBER	10				
23	0433503200	COVER	10				
25	0393525270	INSULATOR	1				
26	0393525273	INSULATOR	1				
27	0393525276	SPONGE	1				
28	0343503200	PIN	4				cab
	0343503200	PIN	3				canopy
29	0373506020	RUBBER	1				
35	1653900043	SPRING, gas	2				
36	1653900047	SPRING, gas	2				cab
	1653900047	SPRING, gas	1				canopy
41	0004010025	PIN	4				cab
	0004010025	PIN	3				canopy
42	1214000008	PIN, snap	8				cab
	1214000008	PIN, snap	6				canopy
44	0004012035	PIN	1				
45	1214010010	PIN, snap	1				
51	1100040625	BOLT	4				
52	1100040616	BOLT	2				
54	1100040820	BOLT	4				
55	1100040825	BOLT	6				
60	1100041035	BOLT	4				
61	1101041230	BOLT	2				
63	1101041240	BOLT	7				
65	1100041680	BOLT	3				
66	1100141600	BOLT	2				
68	1101041650	BOLT	2				
70	1130040016	NUT	4				
72	1140020006	WASHER, spring	6				
73	1140020008	WASHER, spring	10				
74	1140020010	WASHER, spring	4				
75	1140020012	WASHER, spring	9				
77	1140020016	WASHER, spring	7				
80	1141110006	WASHER	6				
81	1141110008	WASHER	10				
82	1141110010	WASHER	12				cab
	1141110010	WASHER	10				canopy

silverthorn.co.uk

FLOOR FRAME (1/2)

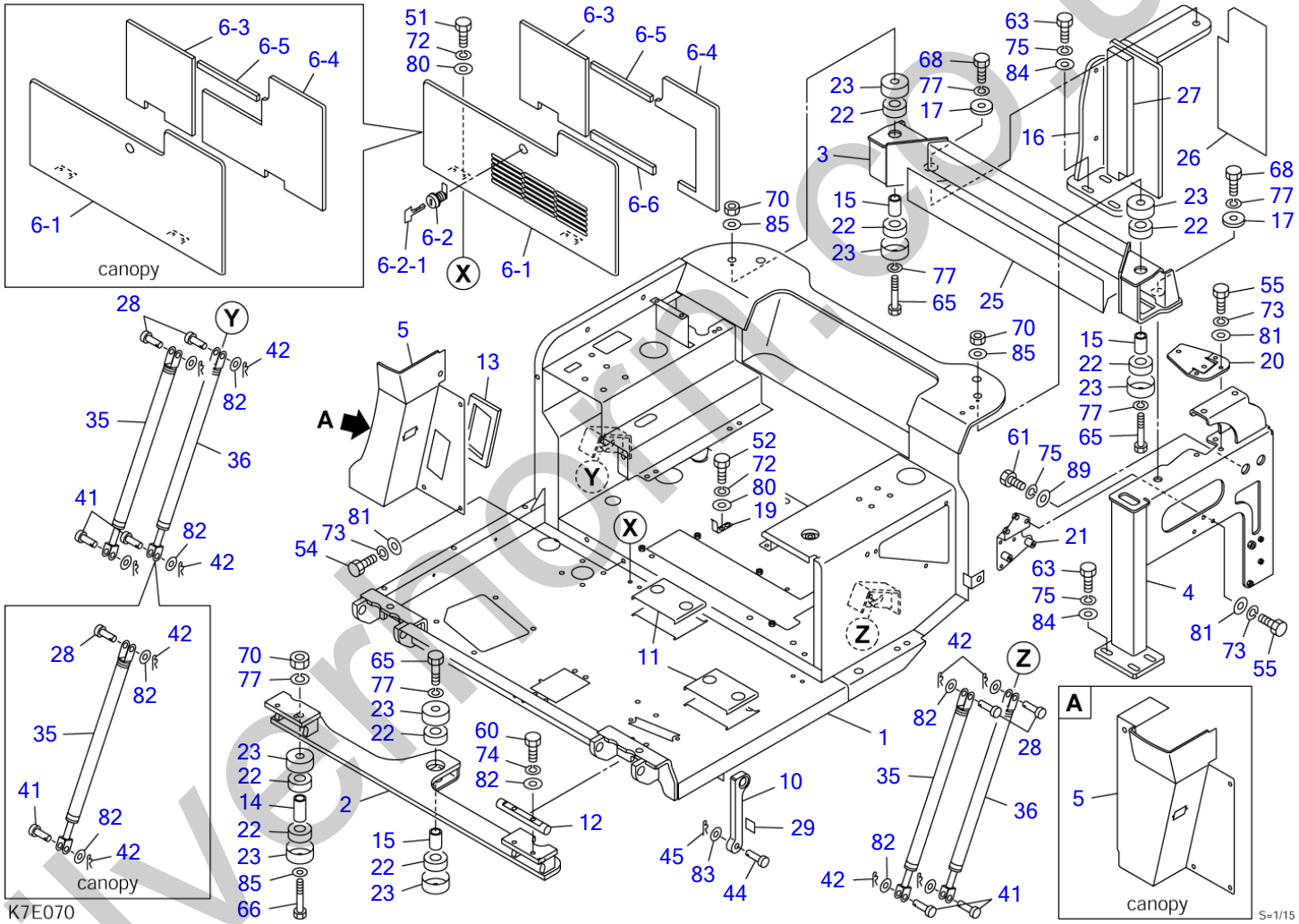

silvermoor.co.uk

FLOOR FRAME (1/2)

Item	Part number	Description	Q'ty	Chan.	Serial No.	Serv.	Remarks
83	**1141110012**	WASHER	1				
84	**1141550012**	WASHER	7				
85	**1141110016**	WASHER	4				
89	**0003600120**	WASHER	2				
	K7e070						

silverhorn.co.uk

FLOOR FRAME (1/2)

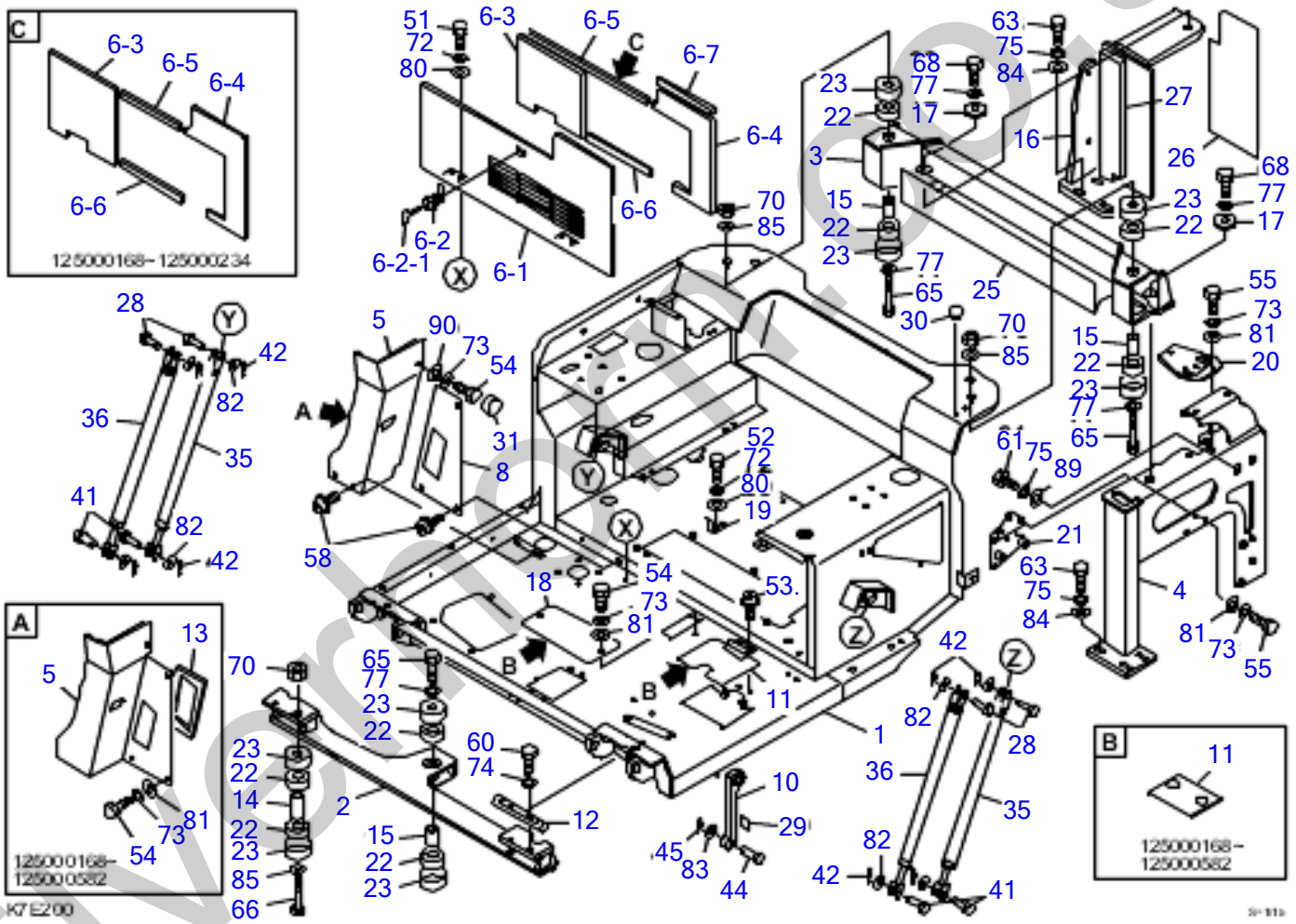

silverhorn.co.uk

FLOOR FRAME (1/2)

Item	Part number	Description	Q'ty	Chan.	Serial No.	Serv.	Remarks
		FLOOR ASSY (cab)					
		FLOOR ASSY (canopy)					
1	0373514100	FRAME ASSY (cab)	1				see page (2/2)
2	0393525210	PLATE	1				
3	0353518730	BRACKET	1				
4	0393525220	BRACKET	1				
5	0373514570	COVER	1				cab
	0373517180	COVER	1				canopy
	0373517200	COVER	1				
6	0373514810	COVER ASSY (cab)	1				
6-1	0373514820	* COVER (cab)	1				
6-2	1653611836	* LOCK	1				
6-2-1	1700100019	* KEY	1				
6-3	0373514813	* SPONGE	1				
	0373514833	* SPONGE	1				
6-4	0373514814	* SPONGE	1				cab
	0373514834	* SPONGE	1				canopy
6-5	0373514815	* SPONGE	1				
	0373514835	* RUBBER	1				
6-6	0373514816	* SPONGE	1				cab
6-7	0373514817	* RUBBER	1				
8	0373517220	COVER	1				
10	0373514613	STOPPER	1				
11	0373514614	COVER	2				
	0373517250	COVER	1				
12	0373514620	SHAFT	2				
13	0373514615	SPONGE	1				cab
14	0373514670	SPACER	2				
15	0373514680	SPACER	3				
16	0393525240	BRACKET	1				
17	0373514730	PLATE	2				
18	0373504470	PLATE	1				
19	0373514830	PLATE	1				
20	0393525250	BRACKET	1				
21	0393525260	BRACKET	1				
22	0433503100	RUBBER	10				
23	0433503200	COVER	10				
25	0393525270	INSULATOR	1				
26	0393525273	INSULATOR	1				
27	0393525276	SPONGE	1				
28	0343503200	PIN	4				cab
29	0373506020	RUBBER	1				
30	1652533017	CAP	1				
31	1652532001	CAP	1				
35	1653900043	SPRING, gas	2				
36	1653900047	SPRING, gas	2				cab
41	0004010025	PIN	4				cab
42	1214000008	PIN, snap	8				cab
44	0004012035	PIN	1				
45	1214010010	PIN, snap	1				
51	1100040625	BOLT	4				
52	1100040616	BOLT	2				
53	1150410616	SCREW	2				
54	1100040820	BOLT	4				
55	1100040825	BOLT	6				
58	1150420816	BOLT	5				
60	1100041035	BOLT	4				
61	1101041230	BOLT	2				
63	1101041240	BOLT	7				
65	1100041680	BOLT	3				
66	1100141600	BOLT	2				
68	1101041650	BOLT	2				
70	1130040016	NUT	4				
72	1140020006	WASHER, spring	6				
73	1140020008	WASHER, spring	9				
74	1140020010	WASHER, spring	4				
75	1140020012	WASHER, spring	9				
77	1140020016	WASHER, spring	5				

silverthorn.co.uk

FLOOR FRAME (1/2)

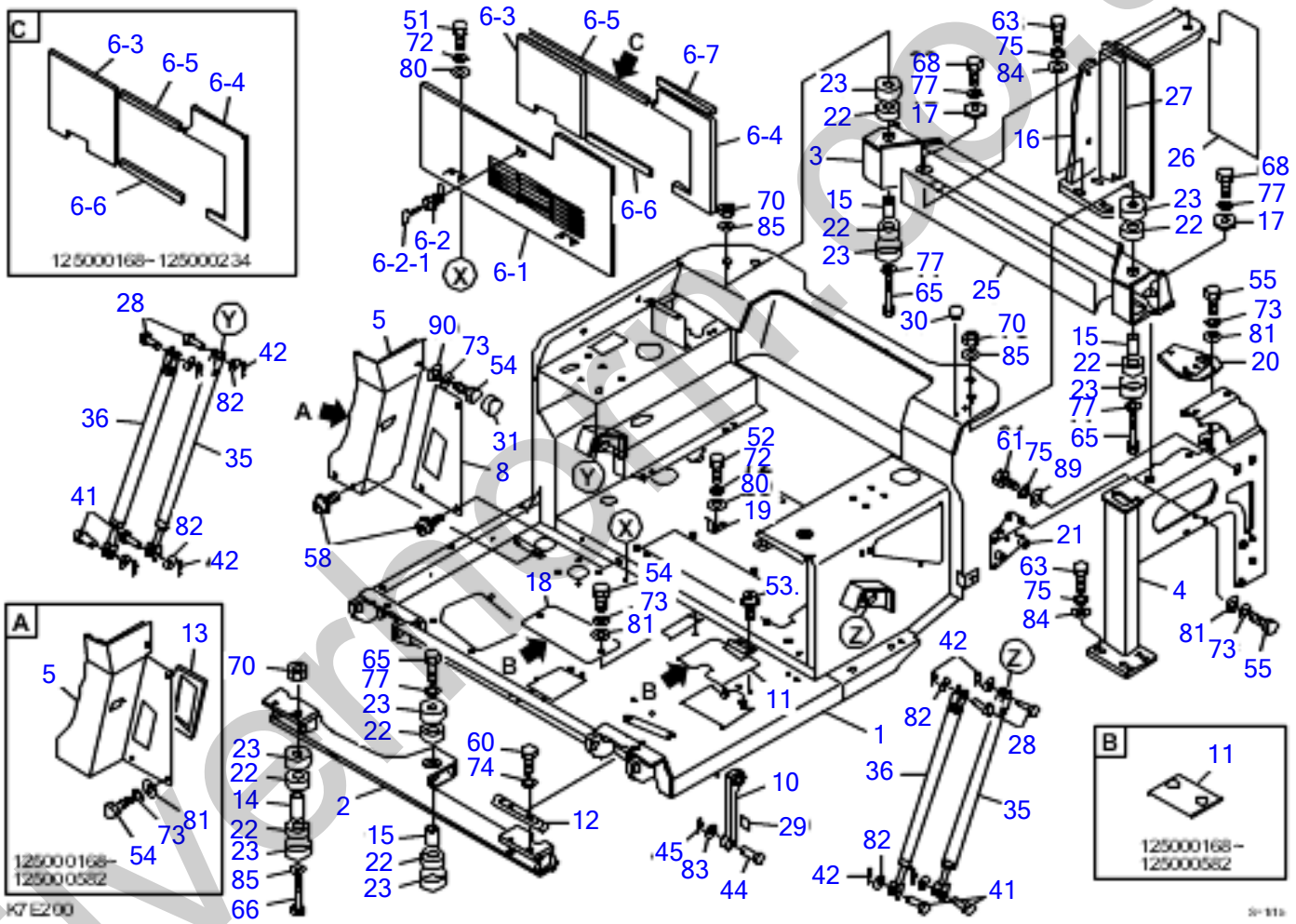

silverhorn.co.uk

FLOOR FRAME (1/2)

Item	Part number	Description	Q'ty	Chan.	Serial No.	Serv.	Remarks
80	**1141110006**	WASHER	6				
81	**1141110008**	WASHER	8				
82	**1141110010**	WASHER	8				cab
83	**1141110012**	WASHER	1				
84	**0003600026**	WASHER	7				
85	**1141110016**	WASHER	4				
89	**0003600120**	WASHER	2				
90	**0003608252**	WASHER	1				
	K7E200						

silverhorn.co.uk

FLOOR FRAME (1/2)

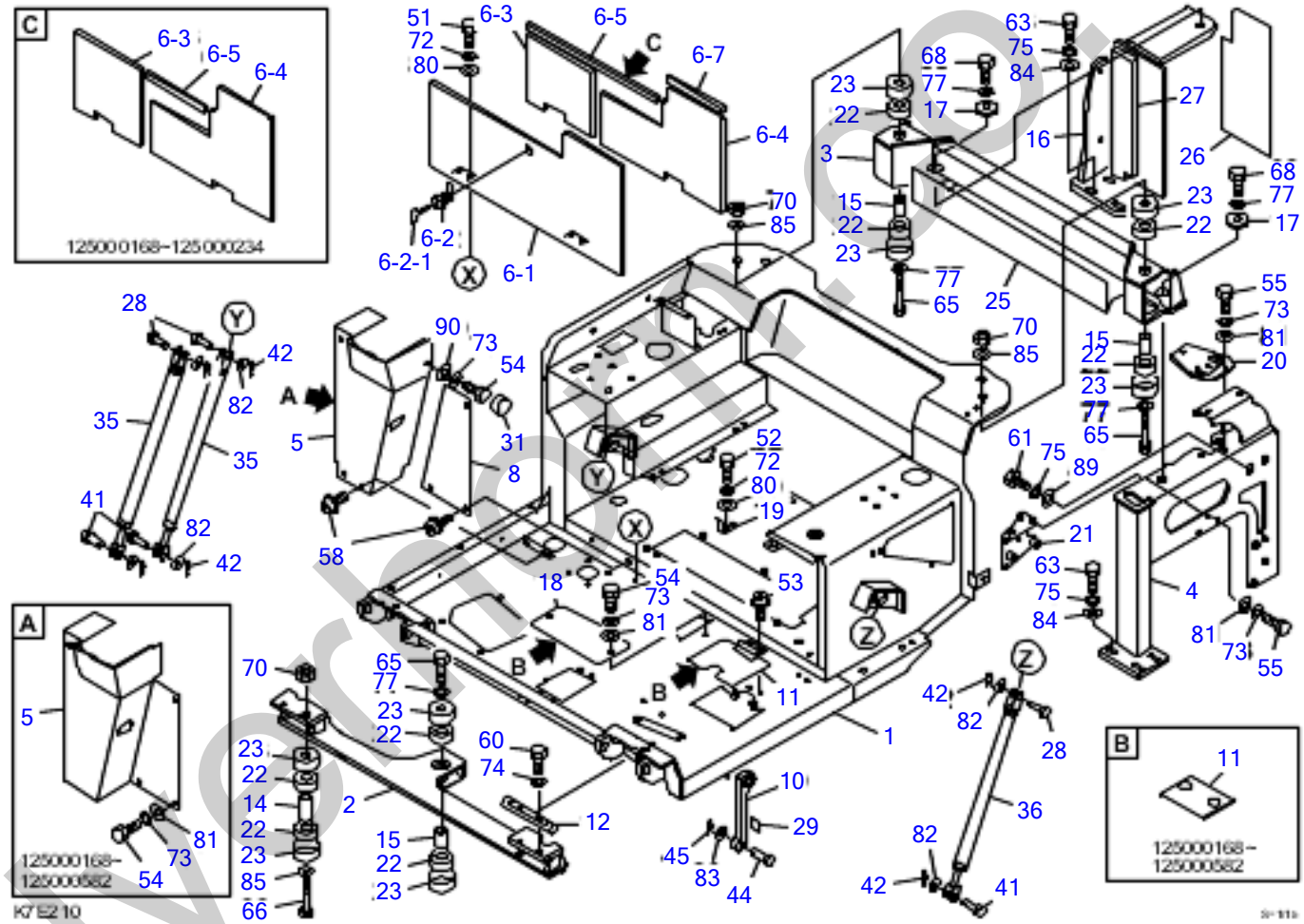

silverhorn.co.uk

FLOOR FRAME (1/2)

Item	Part number	Description	Q'ty	Chan.	Serial No.	Serv.	Remarks
		FLOOR ASSY (cab)					
		FLOOR ASSY (canopy)					
1	373514150	FRAME ASSY (cab)	1				see page (2/2)
2	0393525210	PLATE	1				
3	0353518730	BRACKET	1				
4	0393525220	BRACKET	1				
5	0373514560	COVER	1				cab
	0373517190	COVER	1				canopy
6	0373514870	COVER ASSY (cab)	1				
6-1	0373514890	* COVER (cab)	1				
6-2	1653611836	* LOCK	1				
6-2-1	1700100019	* KEY	1				
6-3	0373514813	* SPONGE	1				
	0373514833	* SPONGE	1				
6-4	0373514874	* SPONGE	1				cab
	0373514844	* SPONGE	1				canopy
6-5	0373514815	* SPONGE	1				
	0373514835	* RUBBER	1				
6-7	0373514817	* RUBBER	1				
8	0373517210	COVER	1				
10	0373514613	STOPPER	1				
11	0373514614	COVER	2				
	0373517250	COVER	1				
12	0373514620	SHAFT	2				
14	0373514670	SPACER	2				
15	0373514680	SPACER	3				
16	0393525240	BRACKET	1				
17	0373514730	PLATE	2				
18	0373504470	PLATE	1				
19	0373514830	PLATE	1				
20	0393525250	BRACKET	1				
21	0393525260	BRACKET	1				
22	0433503100	RUBBER	10				
23	0433503200	COVER	10				
25	0393525270	INSULATOR	1				
26	0393525273	INSULATOR	1				
27	0393525276	SPONGE	1				
28	0343503200	PIN	3				cab
29	0373506020	RUBBER	1				
31	1652532001	CAP	1				
35	1653900043	SPRING, gas	2				
36	1653900047	SPRING, gas	1				cab
41	0004010025	PIN	3				cab
42	1214000008	PIN, snap	6				cab
44	0004012035	PIN	1				
45	1214010010	PIN, snap	1				
51	1100040625	BOLT	4				
52	1100040616	BOLT	2				
53	1150410616	SCREW	2				
54	1100040820	BOLT	3				
55	1100040825	BOLT	6				
58	1150420816	BOLT	6				
60	1100041035	BOLT	4				
61	1101041230	BOLT	2				
63	1101041240	BOLT	7				
65	1100041680	BOLT	3				
66	1100141600	BOLT	2				
68	1101041650	BOLT	2				
70	1130040016	NUT	4				
72	1140020006	WASHER, spring	6				
73	1140020008	WASHER, spring	9				
74	1140020010	WASHER, spring	4				
75	1140020012	WASHER, spring	9				
77	1140020016	WASHER, spring	5				
80	1141110006	WASHER	6				
81	1141110008	WASHER	8				
82	1141110010	WASHER	6				cab
83	1141110012	WASHER	1				

silvermorn.co.uk

FLOOR FRAME (1/2)

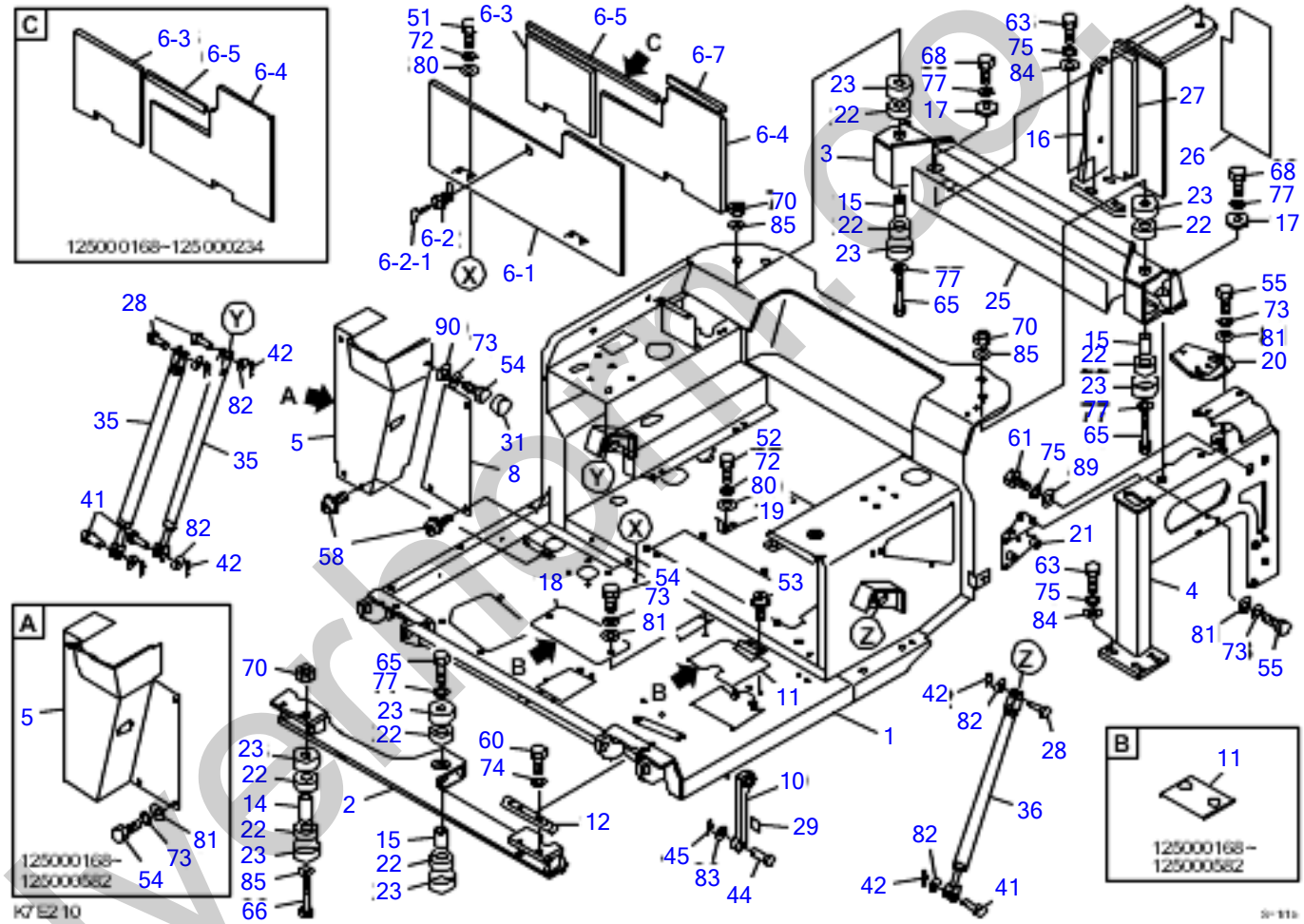

silverhorn.co.uk

FLOOR FRAME (1/2)

Item	Part number	Description	Q'ty	Chan.	Serial No.	Serv.	Remarks
84	**0003600026**	WASHER	7				
85	**1141110016**	WASHER	4				
89	**0003600120**	WASHER	2				
90	**0003608252**	WASHER	1				
	K7E210						

silverhorn.co.uk

FLOOR FRAME (2/2)

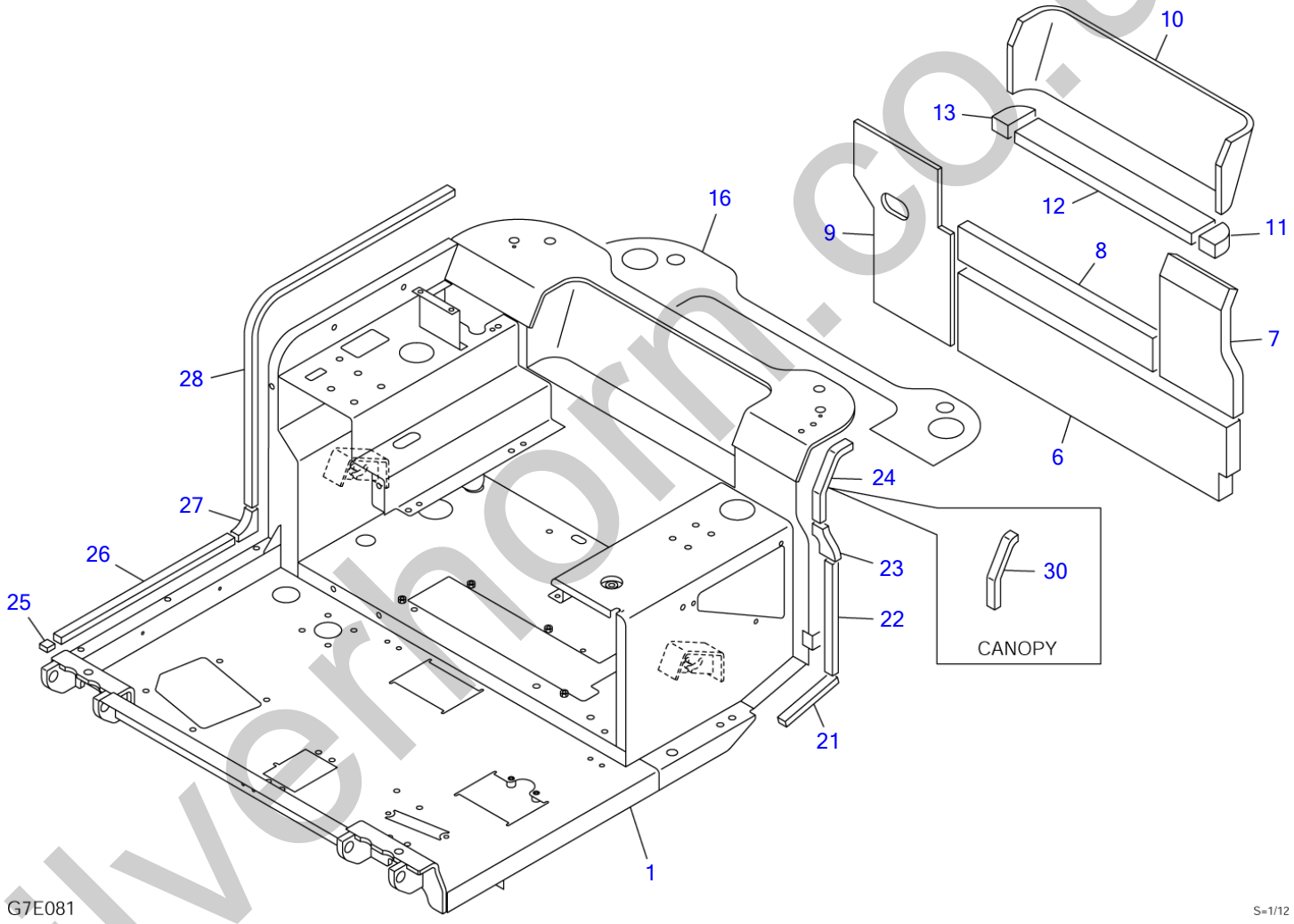

silverhorn.co.uk

FLOOR FRAME (2/2)

Item	Part number	Description	Q'ty	Chan.	Serial No.	Serv.	Remarks
0	0373514100	FRAME ASSY (cab)	1				
	0373514150	FRAME ASSY (canopy)	1				
1	0373514200	・FRAME	1				
6	0373514106	・ABSORBENT, noise	1				
7	0373514107	・ABSORBENT, noise	1				
8	0373514108	・ABSORBENT, noise	1				
9	0373514109	・ABSORBENT, noise	1				
10	0373514110	・ABSORBENT, noise	1				
11	0373514111	・ABSORBENT, noise	1				
12	0373514112	・ABSORBENT, noise	1				
13	0373514113	・ABSORBENT, noise	1				
16	0393525275	・INSULATOR	1				
21	1654304014	・SPONGE	1				sold by the meter
22	1654304025	・SPONGE	1				sold by the meter
23	0373514123	・SPONGE	1				
24	1654304019	・SPONGE (sold by the meter)	1				cab
25	0373514125	・RUBBER	1				cab
26	1654304045	・SPONGE (sold by the meter)	1				cab
27	0373514127	・SPONGE	1				cab
28	1654304088	・SPONGE (sold by the meter)	1				cab
30	1654304016	・SPONGE (sold by the meter)	1				canopy
	G7e081						

silverhorn.co.uk

FLOOR MAT

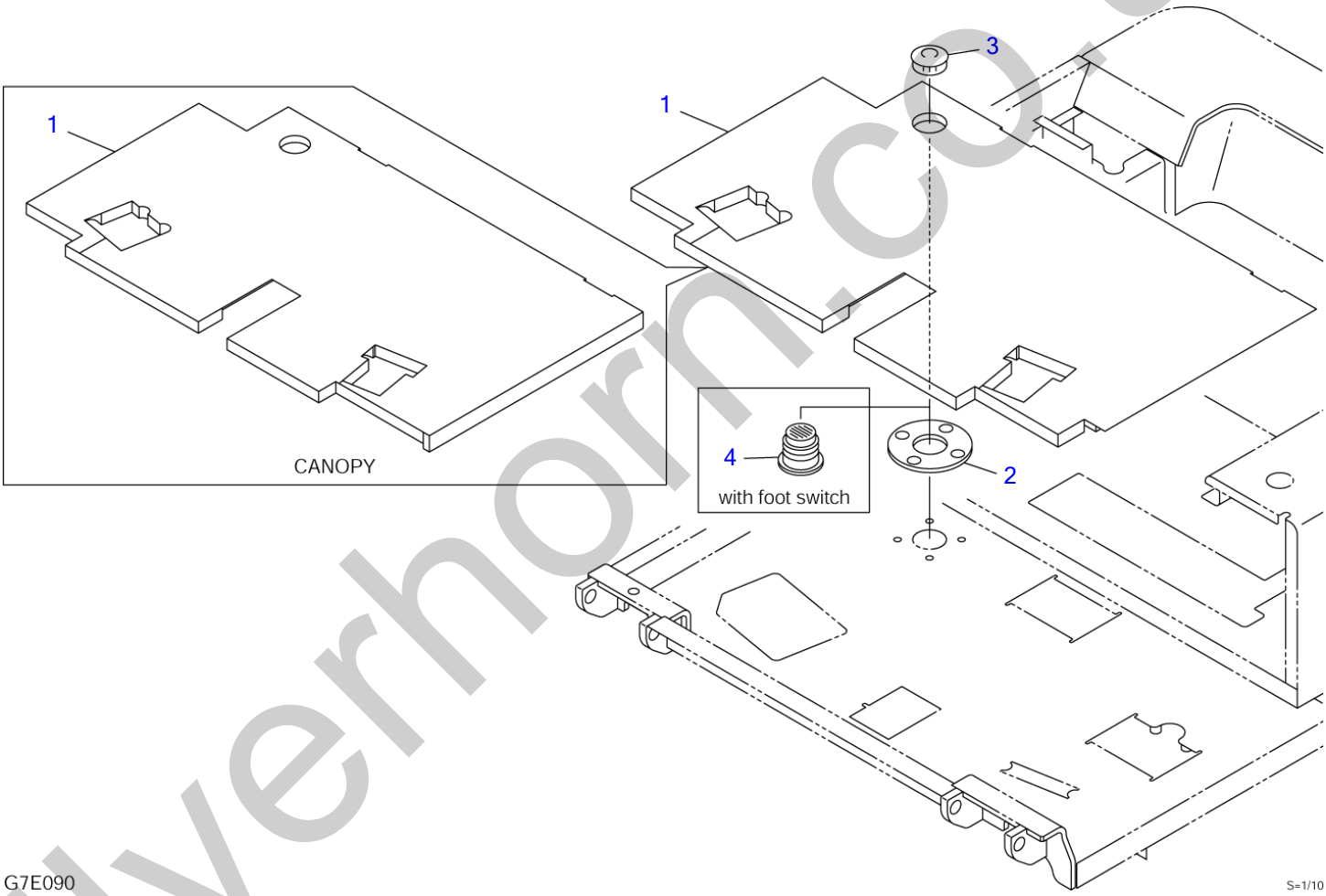

silverhorn.co.uk

FLOOR MAT

Item	Part number	Description	Q'ty	Chan.	Serial No.	Serv.	Remarks
		MAT ASSY, floor (cab) MAT ASSY, floor (cab) (with foot switch) MAT ASSY, floor (canopy) MAT ASSY, floor (canopy) (with foot switch)					
1	0373515050	MAT, floor	1				cab
	0373515060	MAT, FLOOR	1				
	0373515250	MAT, floor	1				canopy
	0373515260	MAT, FLOOR	1				
2	0573500225	SPONGE	1				without foot switch
3	1652533013	CAP	1				without foot switch
4	0573500240	BOOT	1				with foot switch
	K7E230						

silverhorn.co.uk

SEAT (1/2)

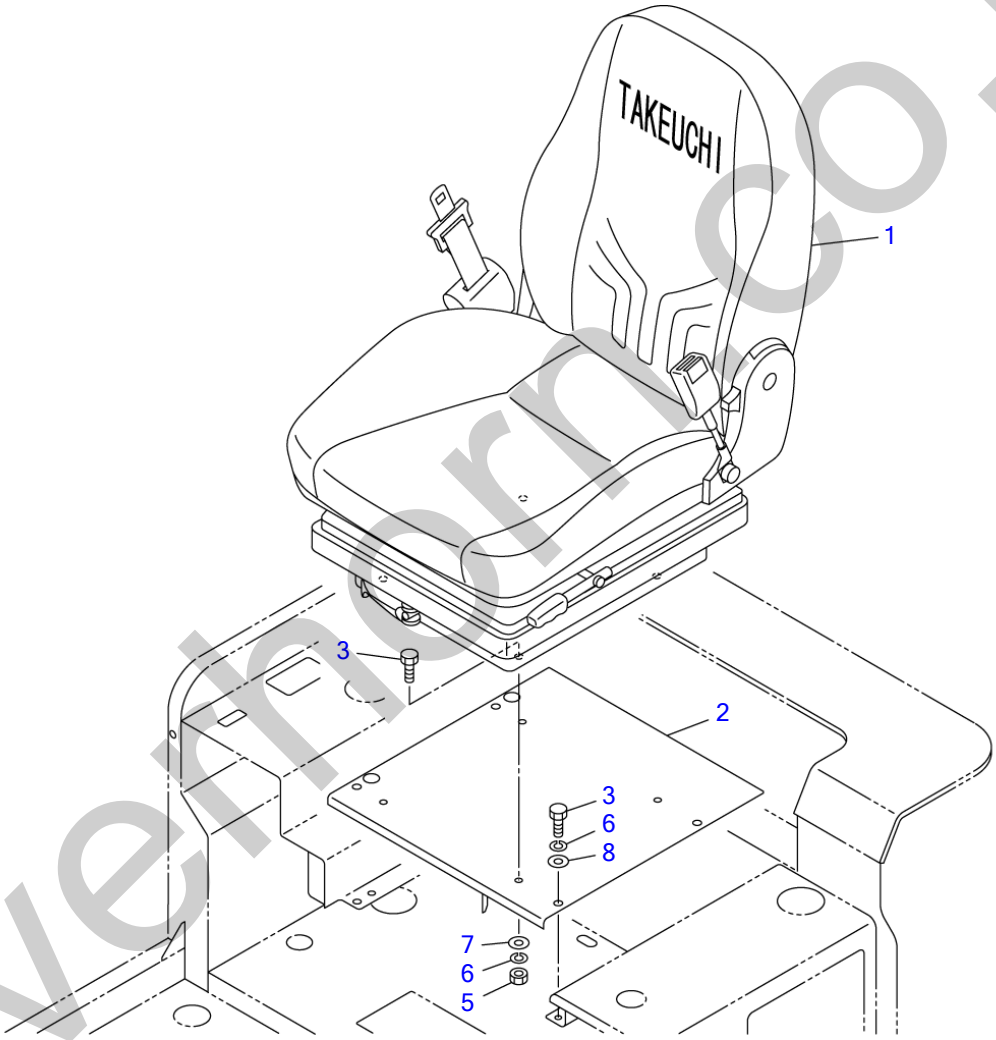

silvernorn.co.uk

SEAT (1/2)

Item	Part number	Description	Q'ty	Chan.	Serial No.	Serv.	Remarks
		SEAT ASSY (fabric)					
		SEAT ASSY (PVC)					
1	1914100071	SEAT (fabric)	1				see page (2/2)
	1914100072	SEAT (PVC)	1				see page (2/2)
2	0373413020	PLATE	1				
3	1100040820	BOLT	8				
5	1130040008	NUT	4				
6	1140020008	WASHER, spring	8				
7	1141110008	WASHER	4				
8	0003608252	WASHER	4				
	G7e100						

silverhorn.co.uk

SEAT (2/2)

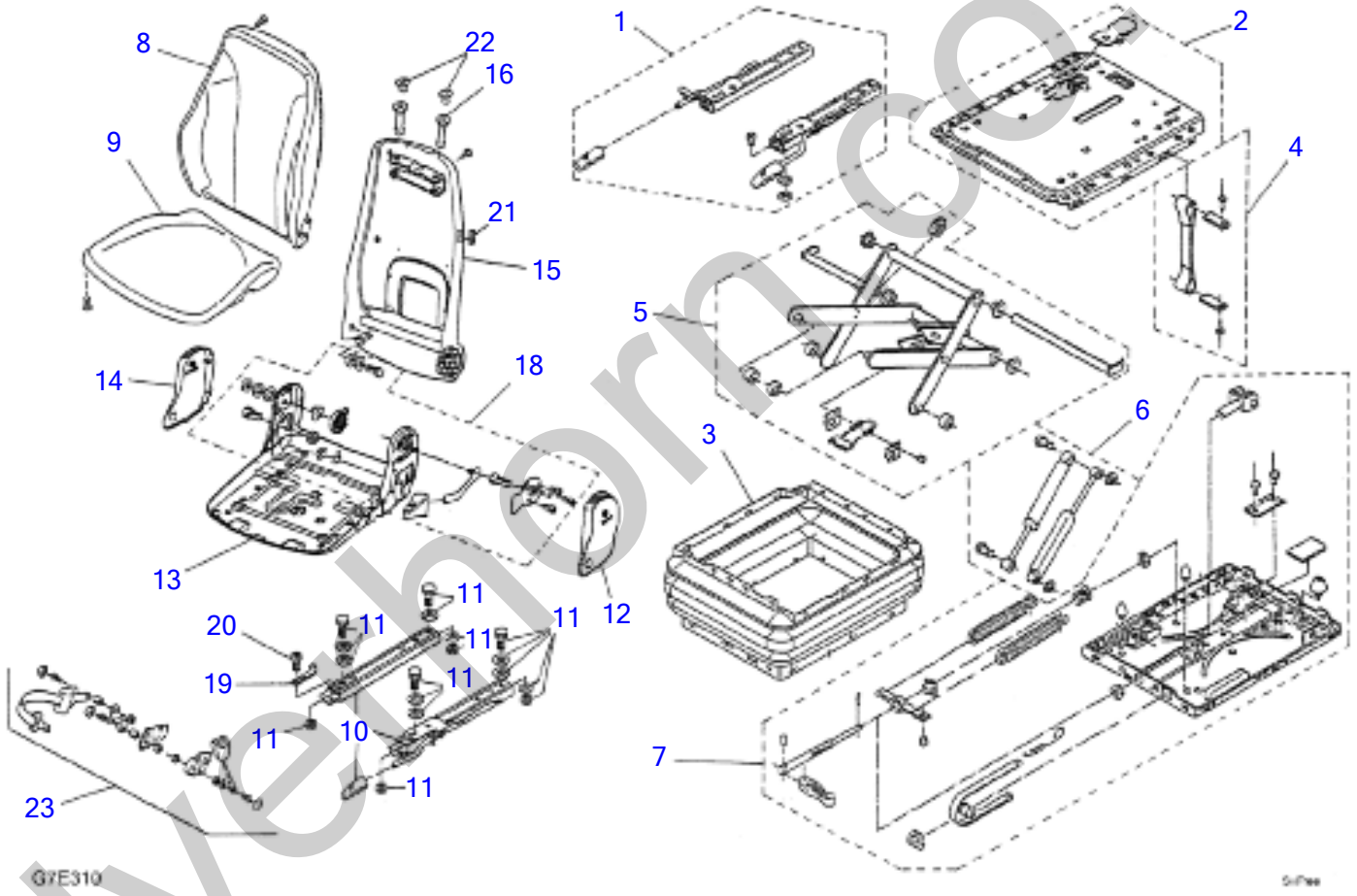

silverthorn.co.uk

SEAT (2/2)

Item	Part number	Description	Q'ty	Chan.	Serial No.	Serv.	Remarks
0	1914100071	SEAT (fabric)	1				
	1914100072	SEAT (PVC)	1				
1	1914101072	・RAIL ASSY	1				
2	1914102072	・PLATE ASSY	1				
3	1914103071	・BOOT	1				fabric
	1914103072	・BOOT	1				PVC
4	1914104072	・ANGLE ASSY	1				
5	1914105072	・LINK ASSY	1				
6	1914106072	・DAMPER ASSY	1				
7	1914107072	・SPRING ASSY	1				
8	1914108072	・TRIM	1				PVC
	1914101071	・TRIM	1				fabric
9	1914109072	・TRIM	1				PVC
	1914102071	・TRIM	1				fabric
10	1914110072	・RAIL ASSY	1				
11	1914111072	・BOLT ASSY	1				
12	1914112072	・COVER (L.H.)	1				
13	1914113072	・FRAME	1				
14	1914114072	・COVER (R.H.)	1				
15	1914115072	・FRAME	1				
16	1914116072	・GUIDE	2				for USA,Canada,EC
18	1914118072	・JOINT ASSY	1				
19	1914119072	・PLATE	1				
20	1914120072	・SCREW, cap	1				
21	1914121072	・PLATE	1				
22	1914122072	・PLUG	2				for USA,Canada,EC
23	1914123072	・BELT ASSY, seat	1				
	G7E310						

silverhorn.co.uk

HEAD REST

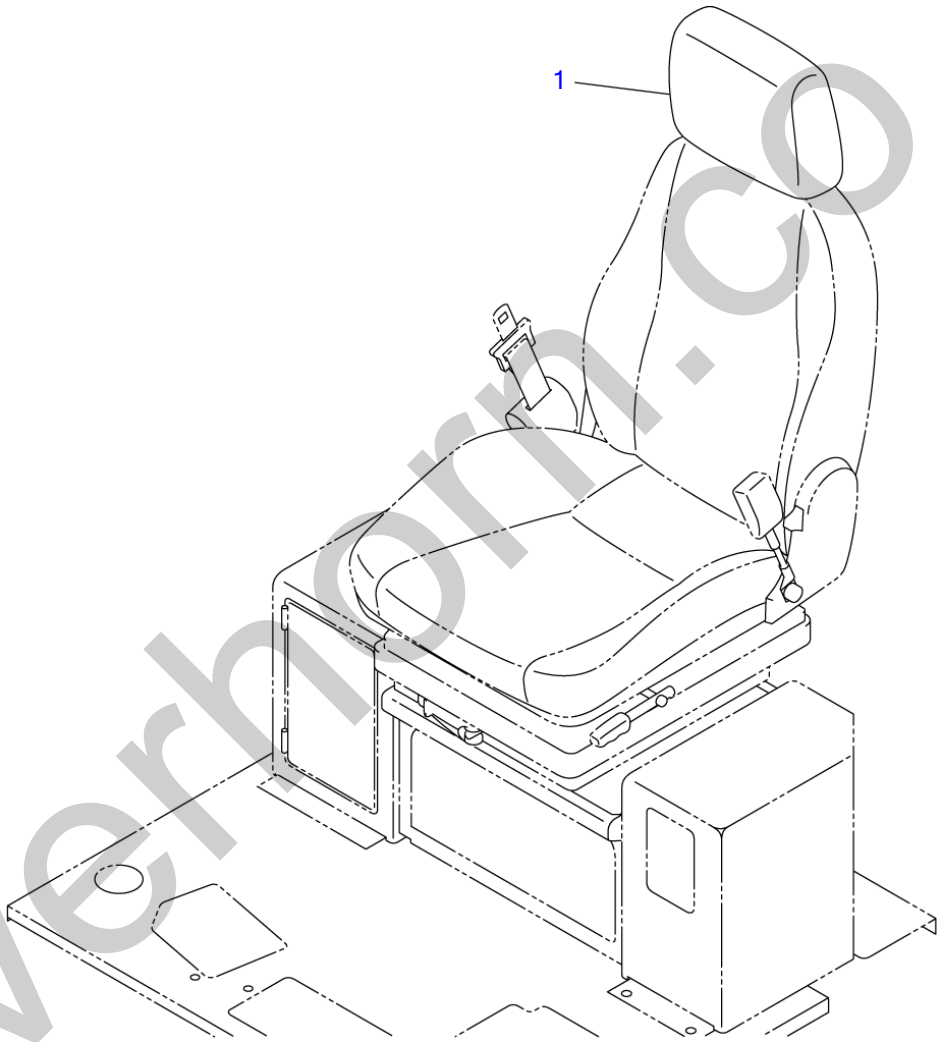

G4E070

S=1/10

silverhorn.co.uk

HEAD REST

Item	Part number	Description	Q'ty	Chan.	Serial No.	Serv.	Remarks
		REST ASSY, head (fabric)					
		REST ASSY, head (PVC)					
1	1914100111	REST, head (fabric)	1				
	1914100112	REST, head (PVC)	1				
	K7e080						

silverhorn.co.uk

CAB MOUNT

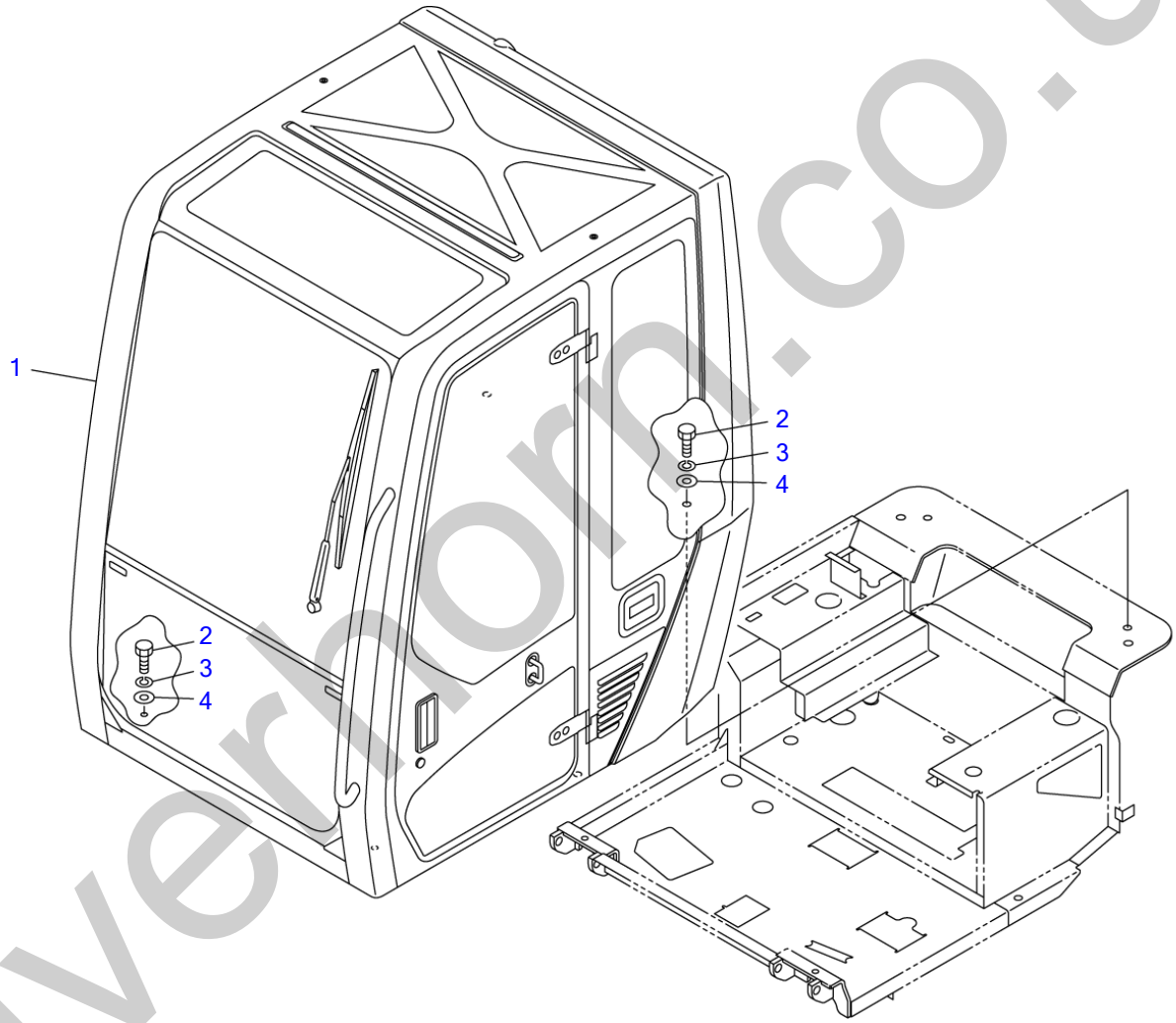

silverhorn.co.uk

CAB MOUNT

Item	Part number	Description	Q'ty	Chan.	Serial No.	Serv.	Remarks
		CAB MOUNT ASSY					
1	0398625100	CAB ASSY	1				
	0398626100	CAB ASSY	1				
2	1101041640	BOLT	5				
3	1140020016	WASHER, spring	5				
4	1141110016	WASHER	5				
	K7e091						

silverhorn.co.uk

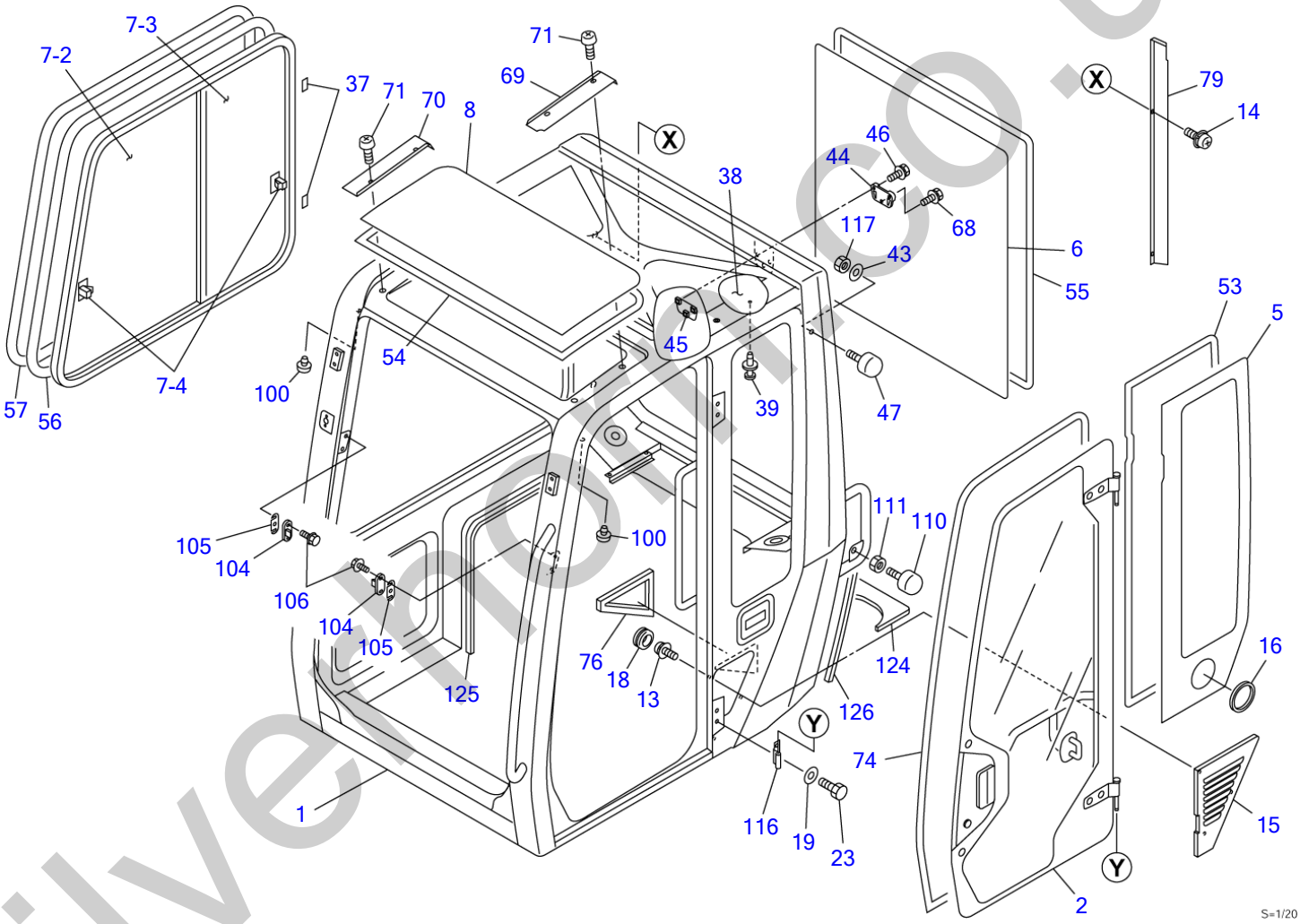

silverpoint.co.uk

CAB (1/5)

Item		Part number	Description	Q'ty	Chan.	Serial No.	Serv.	Remarks
0		0398625100	CAB ASSY	1				
		0398626100	CAB ASSY	1				
1	X	**********	・CAB	1				
		**********	* CAB	1				
2		0378607400	・DOOR ASSY	1				see page (4/5)
		0378610400	* DORR ASSY	1				
5		0378607105	・GLASS	1				
6		0378607106	・GLASS	1				
7		0378607810	・SASH ASSY	1				
7-2		0378607812	・・GLASS	1				
7-3		0378607813	・・GLASS	1				
7-4		0378607814	・・LOCK ASSY	2				
8		0378607108	・GLASS	1				
13		1150410612	・BOLT, sems	3				
14		1150420612	・BOLT, sems	2				
15		0378607830	・COVER	1				
16		0568626600	・GROMMET	1				
18		1654011710	・CAP	3				
19		1654011942	・WASHER	4				
23		1100040820	・BOLT	4				
37		0378607137	・SPACER	7				
38		0378607860	・PLATE	1				
39		1652900014	・RIVET	9				
43		1654011900	・WASHER	1				
44		1654011930	・HOLDER	1				
45		0378607920	・PLATE	1				
46		1150420625	・SCREW	2				
47		1651101042	・STOPPER	1				
53		1654615118	・DAM	1				sold by the meter
54		1654615230	・DAM	1				sold by the meter
55		1654615180	・DAM	1				sold by the meter
56		1654620360	・TAPE	1				sold by the meter
57		1654642355	・TRIM	1				sold by the meter
68		1150420616	・BOLT, sems	1				
69		0378607169	・COVER (L.H.)	1				
70		0378607170	・COVER (R.H.)	1				
71		1150420512	・SCREW	4				
74		1653930350	・TRIM	1				sold by the meter
76		0378607176	・SPONGE	1				
79		0378607179	・COVER	1				
100		1652516003	・CUSHION	2				
104		0378607980	・STRIKER	2				
105		0378607205	・SHIM	2				
106		1100040612	・BOLT	4				
110		1654011932	・STOPPER	1				
111		1130030012	・NUT	1				
116		0378607216	・PLATE	2				
117		1130040010	・NUT	1				
124		0398625224	・ABSORBENT, noise	1				
125		1654636200	・TRIM	1				sold by the meter
126		1654630048	・SEAL	1				sold by the meter
		K7e101						

silverthorn.co.uk

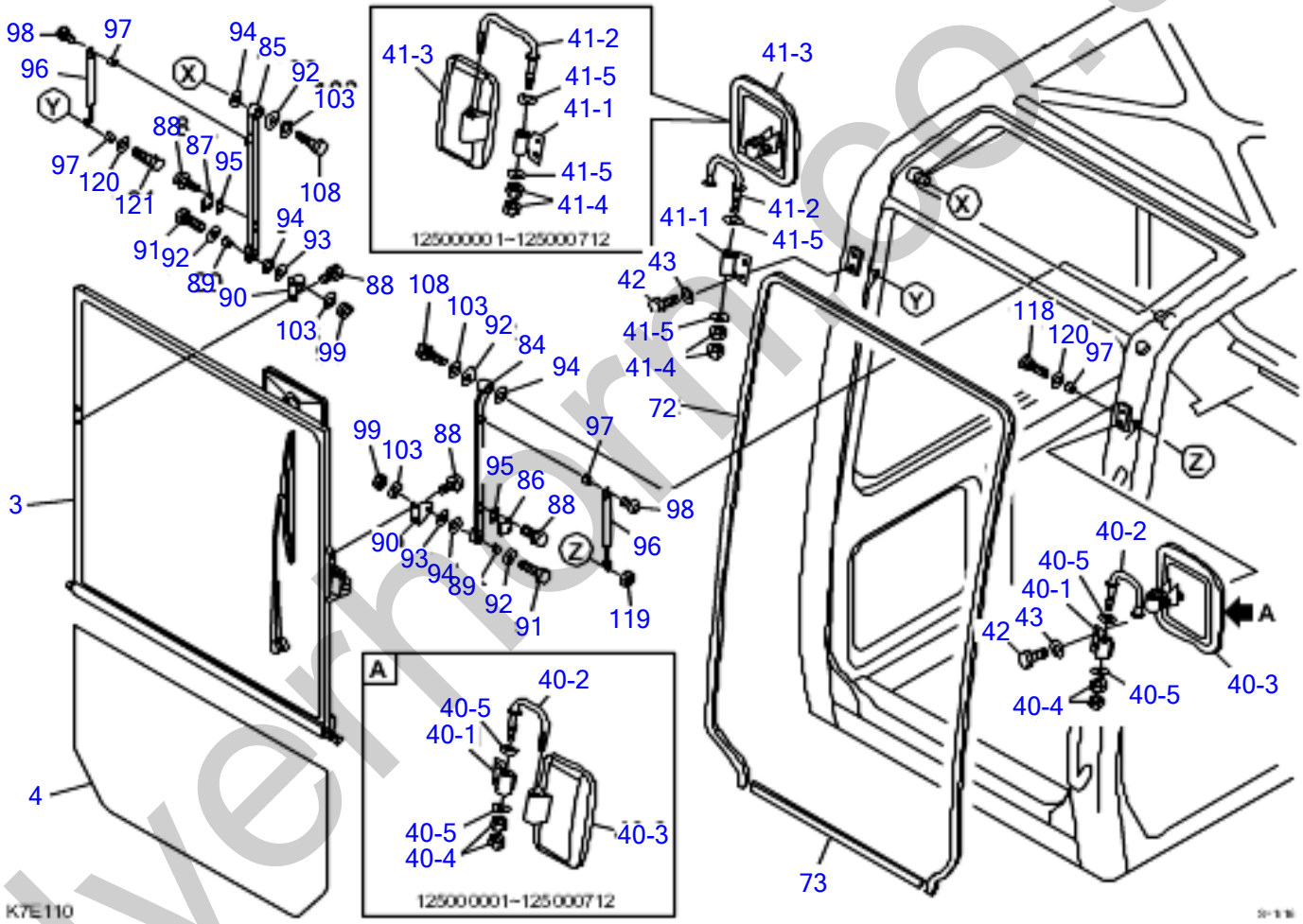

silvermorris.co.uk

CAB (2/5)

Item	Part number	Description	Q'ty	Chan.	Serial No.	Serv.	Remarks
0	0398625100	CAB ASSY	1				
	0398626100	CAB ASSY	1				
3	0378607700	・SASH ASSY, front	1				see page (5/5)
4	0378607104	・GLASS	1				
40	0378607870	・MIRROR ASSY (L.H.)	1				
	0378608400	* MIRROR ASSY (LH)	1				
40-1	0378607880	・・HOLDER	1				
40-2	0378607890	・・STAY	1				
	0378608410	* * STAY	1				
40-3	1656500010	・・MIRROR	1				
	1656500140	* * MIRROR	1				
40-4	1130040016	・・NUT	2				
40-5	1225111016	・・WASHER, conical	2				
	1225110016	* * washer conical	2				
41	0378607900	・MIRROR ASSY (R.H.)	1				
	0378608500	* MIRROR ASSY (RH)	1				
41-1	0378607880	・・HOLDER	1				
41-2	0378607910	・・STAY	1				
	0378608510	* * STAY	1				
41-3	1656500010	・・MIRROR	1				
	1656500140	* * MIRROR	1				
41-4	1130040016	・・NUT	2				
41-5	1225111016	・・WASHER, conical	2				
	1225110016	* * WASHER, CONICAL	2				
42	1100041020	・BOLT	4				
43	1654011900	・WASHER	4				
72	1654631400	・SEAL	1				sold by the meter
73	1654631165	・SEAL	1				sold by the meter
84	0378607960	・ARM (L.H.)	1				
85	0378607970	・ARM (R.H.)	1				
86	0378607186	・BRACKET (L.H.)	1				
87	0378607187	・BRACKET (R.H.)	1				
88	1106690616	・BOLT	8				
89	0378607189	・COLLAR	2				
90	0378607190	・BRACKET	2				
91	1100090830	・BOLT	2				
92	0578600401	・WASHER	4				
93	0378607193	・WASHER	2				
94	0083252100	・WASHER	4				
95	0378607195	・SHIM	2				
96	1653900066	・SPRING, gas	2				
97	1333000606	・BUSHING	4				
98	1120990612	・SCREW	2				
99	1130090008	・NUT	2				
103	1654011705	・WASHER	4				
108	1100090820	・BOLT	2				
118	1110090620	・BOLT	1				
119	1131213006	・NUT	1				
120	1654011712	・WASHER	2				
121	1100090616	・BOLT	1				
	K7e111						

silverthorn.co.uk

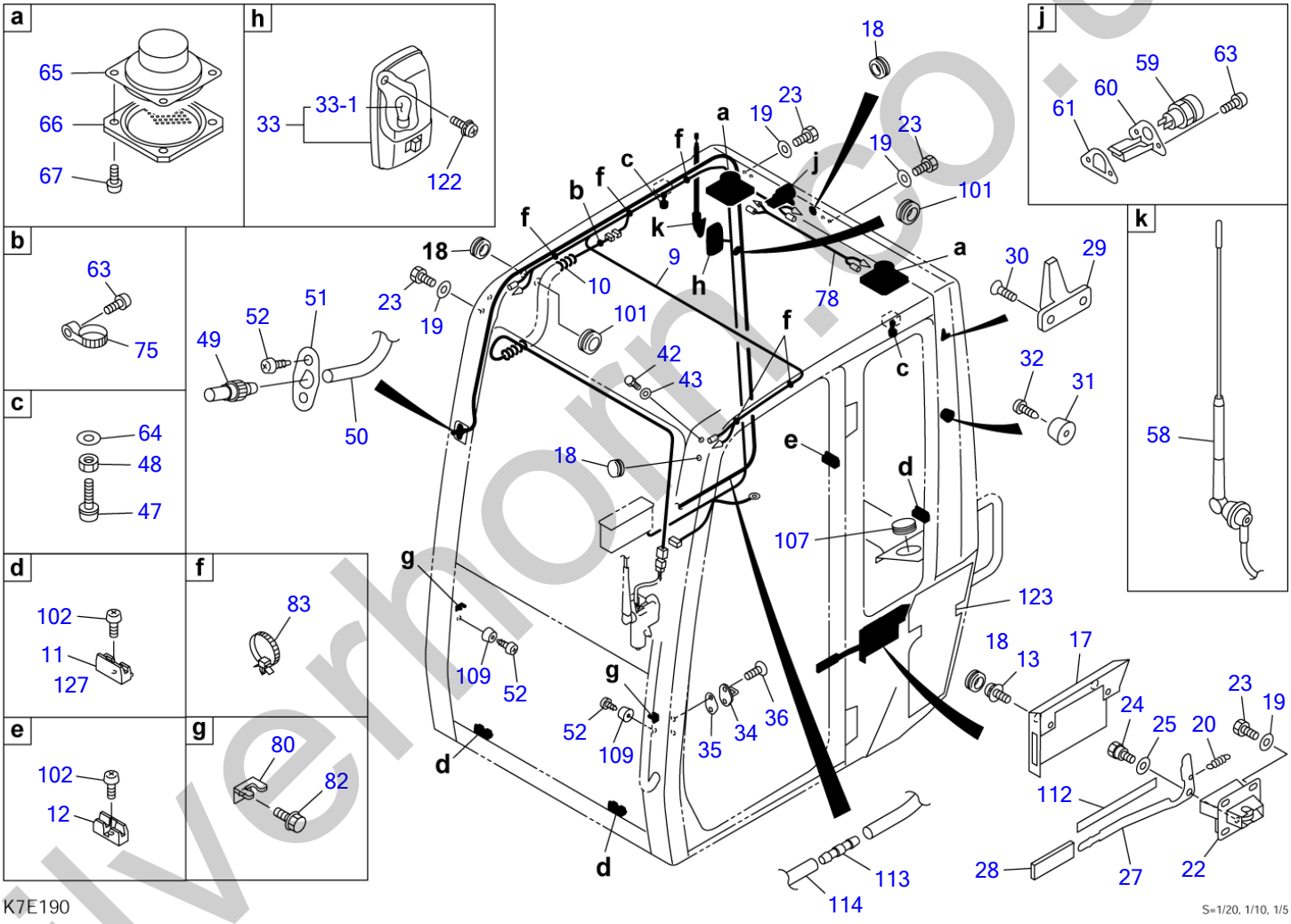

silverhorn.co.uk

CAB (3/5)

Item	Part number	Description	Q'ty	Chan.	Serial No.	Serv.	Remarks
0	0398625100	CAB ASSY	1				
	0398626100	CAB ASSY	1				
9	0378607600	・HARNESS, wire	1				
10	0378607820	・HARNESS	1				
11	0378607111	・HOLDER	3				
12	0378607112	・HOLDER	1				
13	1150410612	・BOLT, sems	2				
17	0378607840	・COVER	1				
18	1654011710	・CAP	5				
19	1654011942	・WASHER	10				
20	0007000096	・SPRING	1				
22	0378607850	・LOCK	1				
23	1100040820	・BOLT	10				
24	1654010800	・PIN	1				
25	0578602196	・WASHER	1				
27	0378607127	・LEVER	1				
28	1650100415	・COVER	1				
29	1654004800	・HANGER	1				
30	1122400412	・SCREW	2				
31	1652103824	・RUBBER	1				
32	1122400520	・SCREW	1				
33	1703007300	・LAMP, room	1				
33-1	1703007301	・・BULB	1				
34	1654011708	・STRIKER	1				
35	0578600126	・SHIM	1				
36	1120890818	・SCREW	2				
42	1100041020	・BOLT	1				
43	1654011900	・WASHER	1				
47	1651101042	・STOPPER	2				
48	1130090010	・NUT	2				
49	1711910040	・NOZZLE	1				
50	1711919300	・HOSE	1				sold by the meter
51	0378607151	・PLATE	1				
52	1122500412	・SCREW	4				
58	1705003460	・ANTENNA	1				
59	1711900066	・SOCKET	1				
60	0378607930	・BRACKET	1				
61	0378607161	・PACKING	1				
63	1150410512	・SCREW	3				
64	0378607164	・WASHER	2				
65	1705003500	・SPEAKER	2				
66	1705003550	・GRILLE	2				
67	1150120412	・SCREW	8				
75	1652221050	・BAND	1				
78	0378607940	・HARNESS	1				
80	0378607950	・BRACKET	2				
82	1106640616	・BOLT	2				
83	1654011931	・CLAMP	5				
101	1654011701	・GROMMET	3				
102	1150410616	・SCREW	4				
107	1654011970	・CAP	1				
109	1652102012	・RUBBER	2				
112	0378607212	・SEAL	1				
113	1711910014	・JOINT	1				
114	1711919225	・HOSE	1				sold by the meter
122	1122500414	・SCREW	1				
123	0398625223	・INSULATOR	1				
127	0378607223	* SHIM					
	K7e191						

silverhorn.co.uk

CAB (4/5) (door)

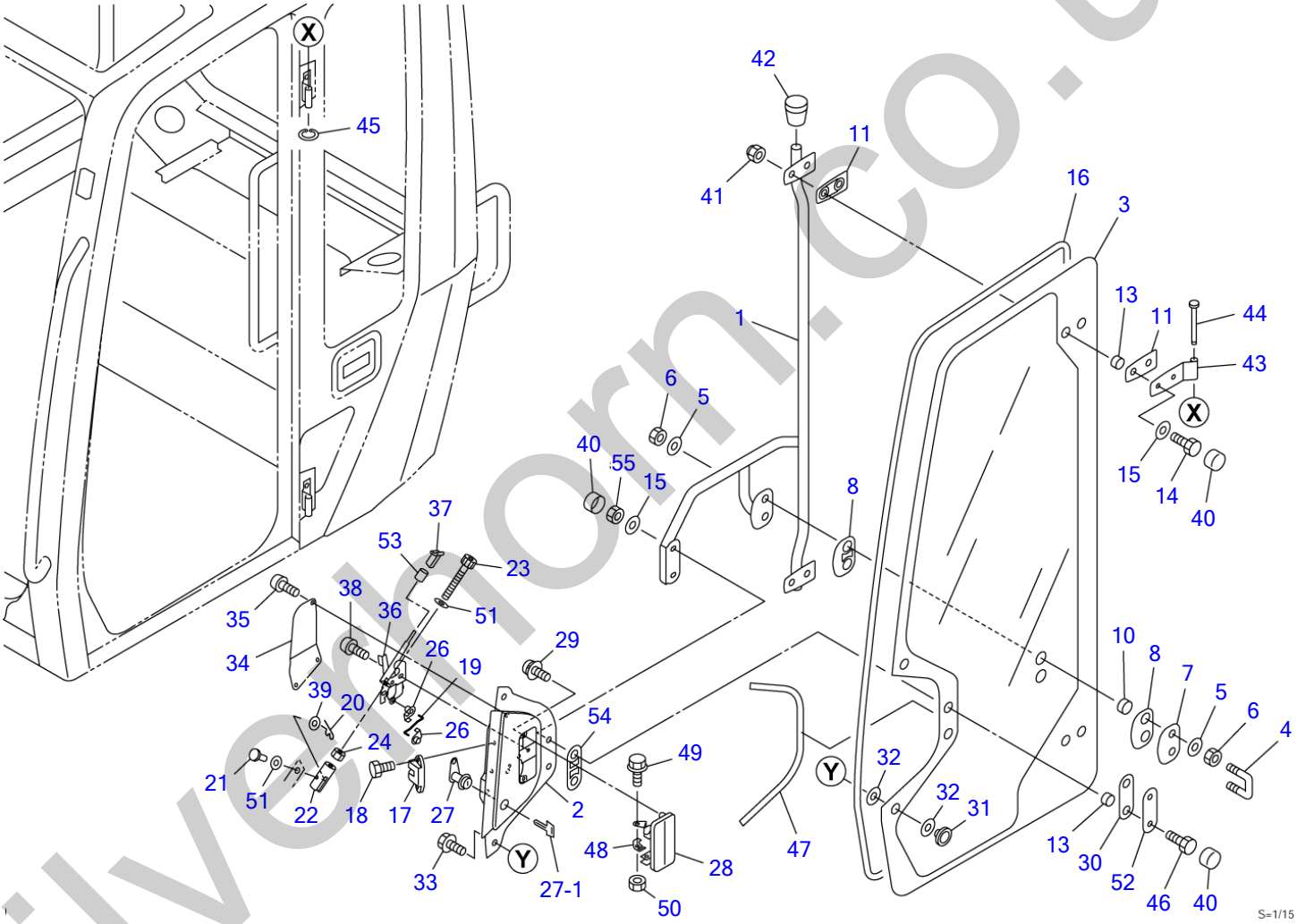

silverthorn.co.uk

CAB (4/5) (door)

Item	Part number	Description	Q'ty	Chan.	Serial No.	Serv.	Remarks
0-1	0378607400	DOOR ASSY	1				
1	0378607470	・PIPE	1				
2	0378607480	・BOX	1				
3	0378607403	・GLASS, door	1				
4	1654005900	・STRIKER	1				
5	1654011706	・WASHER	4				
6	1130090010	・NUT	4				
7	0378607407	・PLATE	1				
8	0378607408	・PACKING	2				
10	0378607410	・COLLAR	2				
11	0378607411	・PACKING	4				
13	0378607413	・COLLAR	6				
14	1100040835	・BOLT	4				
15	1654011942	・WASHER	8				
16	1654637415	・SEAL	1				sold by the meter
17	0068620400	・LOCK ASSY	1				
18	1106690612	・BOLT	2				
19	0378607419	・ROD	1				
20	1214000004	・PIN, snap	1				
21	1654011933	・PIN	1				
22	1654011934	・YOKE	1				
23	1110040430	・SCREW, cap	1				
24	1131242004	・NUT	1				
26	0398610900	・SNAP	2				
27	1653611527	・LOCK ASSY	1				
27-1	1700100019	・・KEY	1				
28	1654008600	・HANDLE	1				
29	1150410612	・BOLT, sems	2				
30	0378607430	・PACKING	2				
31	0880865313	・RETAINER	2				
32	0880865314	・PACKING	4				
33	1106690616	・BOLT	2				
34	0378607434	・COVER	1				
35	1150420512	・SCREW	3				
36	0378607490	・CONTROL ASSY	1				
37	1654008800	・KNOB	1				
38	1150410616	・SCREW	2				
39	1654011711	・WASHER	1				
40	1654011935	・CAP	8				
41	1134790008	・NUT	4				
42	1654011936	・FOOT, pipe	1				
43	0378607443	・PLATE	2				
44	0378607444	・PIN	2				
45	1220000010	・RING, retaining	2				
46	1100040830	・BOLT	2				
47	0378607447	・SEAL	1				
48	0378607448	・STRIKER	1				
49	1106640616	・BOLT	1				
50	1131212605	・NUT	1				
51	1654012004	・WASHER	2				
52	0378607452	・PLATE	1				
53	0378607453	・TUBE	1				
54	0378607454	* PACKING	1				
55	1130040006	・NUT	2				
	G7e281						

silverthorn.co.uk

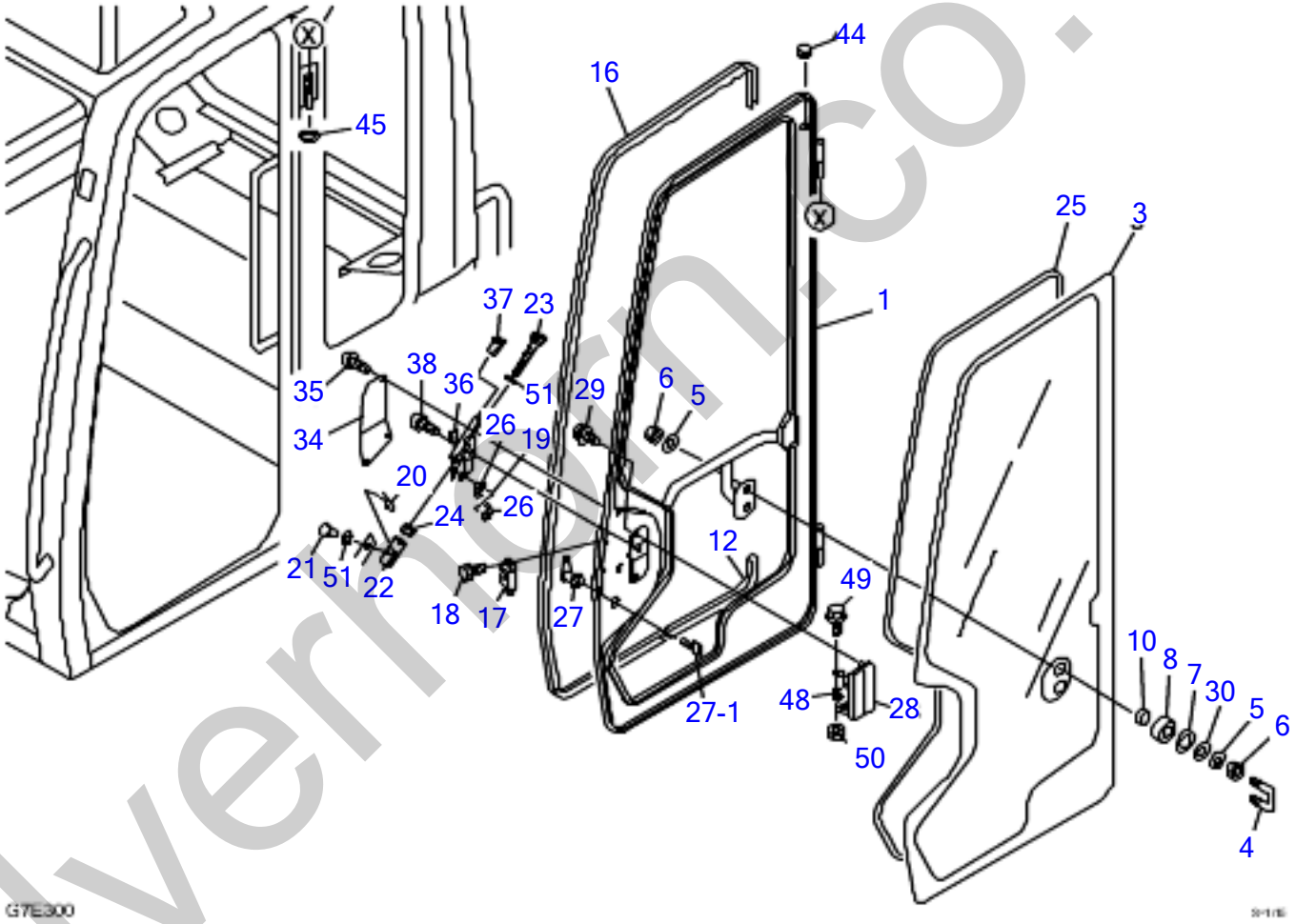

silverhorn.co.uk

CAB (4/5) DOOR 125000561~

Item	Part number	Description	Q'ty	Chan.	Serial No.	Serv.	Remarks
0-1	0378610400	DOOR ASSY	1				
1	0378610470	* DOOR	1				
3	0378610403	* DOOR GLASS	1				
4	1654005900	* STRIKER	1				
5	1654011706	* WASHER	4				
6	1130090010	* NUT	4				
7	0378607164	* WASHER	2				
8	0378610408	* SEAL	2				
10	0378610410	* COLLAR	2				
12	1654606037	* SEAL	1				
16	1654606234	* SEAL	1				
17	0068620400	* LOCK ASSY	1				
18	1106690612	* BOLT	2				
19	0378610419	* ROD	1				
20	1214000004	* SNAP PIN	1				
21	1654011933	* PIN	1				
22	1654011934	* YOKE	1				
23	1110040430	* CAP SCREW	1				
24	1131242004	* NUT	1				
25	1654643390	* DAM	1				
26	0398610900	* SNAP	2				
27	1653611527	* LOCK ASSY	1				
27-1	1700100019	* * KEY	1				
28	1654008600	* HANDLE	1				
29	1150410612	* SEMS BOLT	2				
30	1654011812	* WASHER	2				
34	0378610434	* COVER	1				
35	1150420512	* SCREW	3				
36	0378607490	* CONTROL ASSY	1				
37	1654008800	* KNOB	1				
38	1150410616	* SCREW	2				
44	1652050900	* GROMMET	1				
45	1220000010	* RETAINING RING	2				
48	0378607448	* STRIKER	1				
49	1106640616	* BOLT	1				
50	1131212605	* NUT	1				
51	1654012004	* WASHER	2				
	G7E300						

silverhorn.co.uk

CAB (5/5) (front sash)

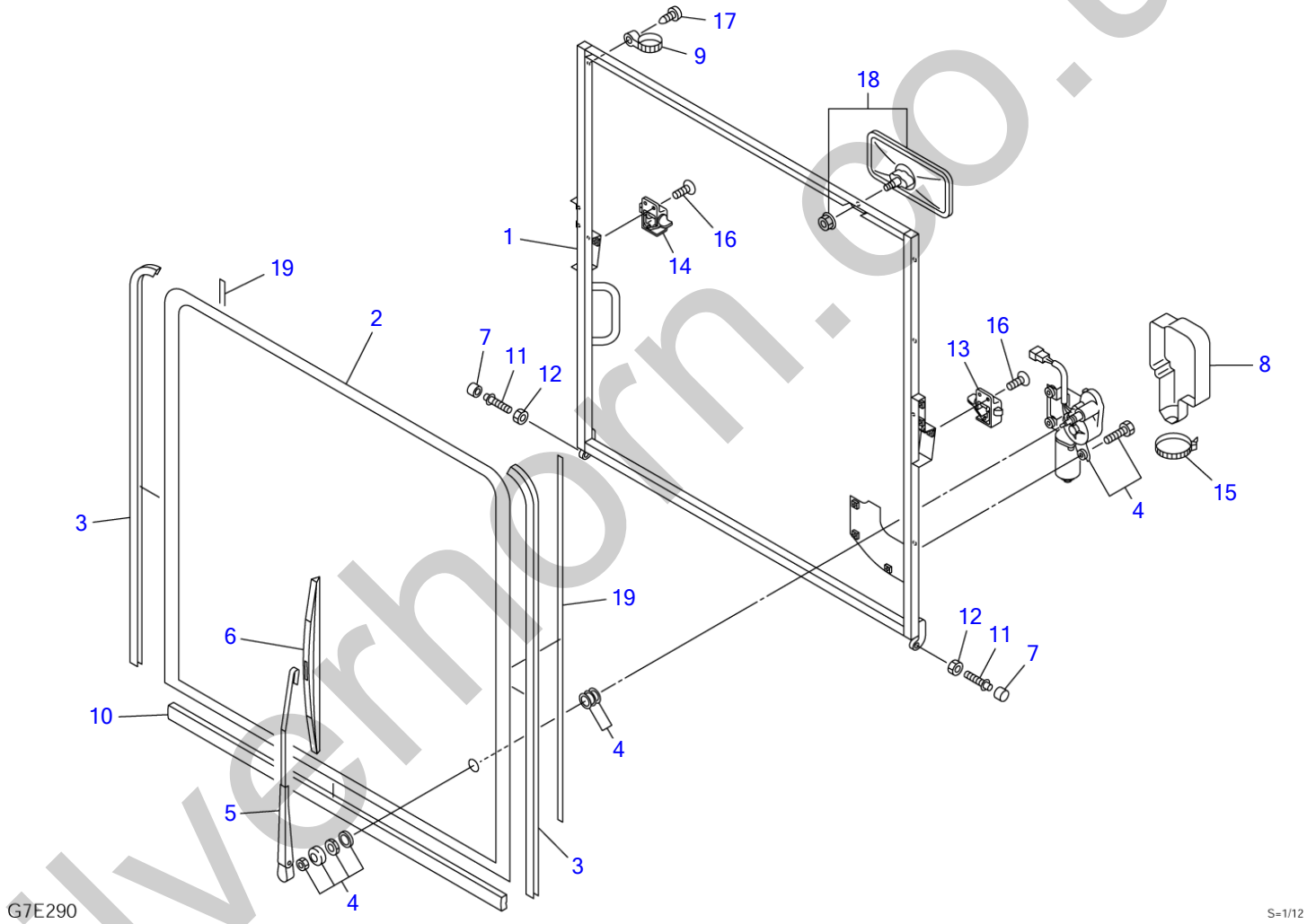

silverhorn.co.uk

CAB (5/5) (front sash)

Item	Part number	Description	Q'ty	Chan.	Serial No.	Serv.	Remarks
0-2	0378607700	SASH ASSY, front	1				
1	0378607730	・FRAME	1				
2	0378607702	・GLASS	1				
3	1654631094	・SEAL	2				sold by the meter
4	1704044424	・MOTOR, wiper	1				
5	1704000100	・ARM, wiper	1				
6	1704200530	・BLADE	1				
7	0578600470	・ROLLER	2				
8	1704400002	・COVER	1				
9	1652221050	・BAND	4				
10	0378607710	・SEAL	1				
11	0578600406	・BOLT	2				
12	1130090010	・NUT	2				
13	0578600480	・LOCK ASSY (L.H.)	1				
14	0578600490	・LOCK ASSY (R.H.)	1				
15	1652200005	・BAND	5				
16	1120890616	・SCREW	4				
17	1122400512	・SCREW	4				
18	1654005460	・MIRROR	1				
19	1654615083	・DAM	2				sold by the meter
	G7e290						

silverhorn.co.uk

CAB INTERIOR

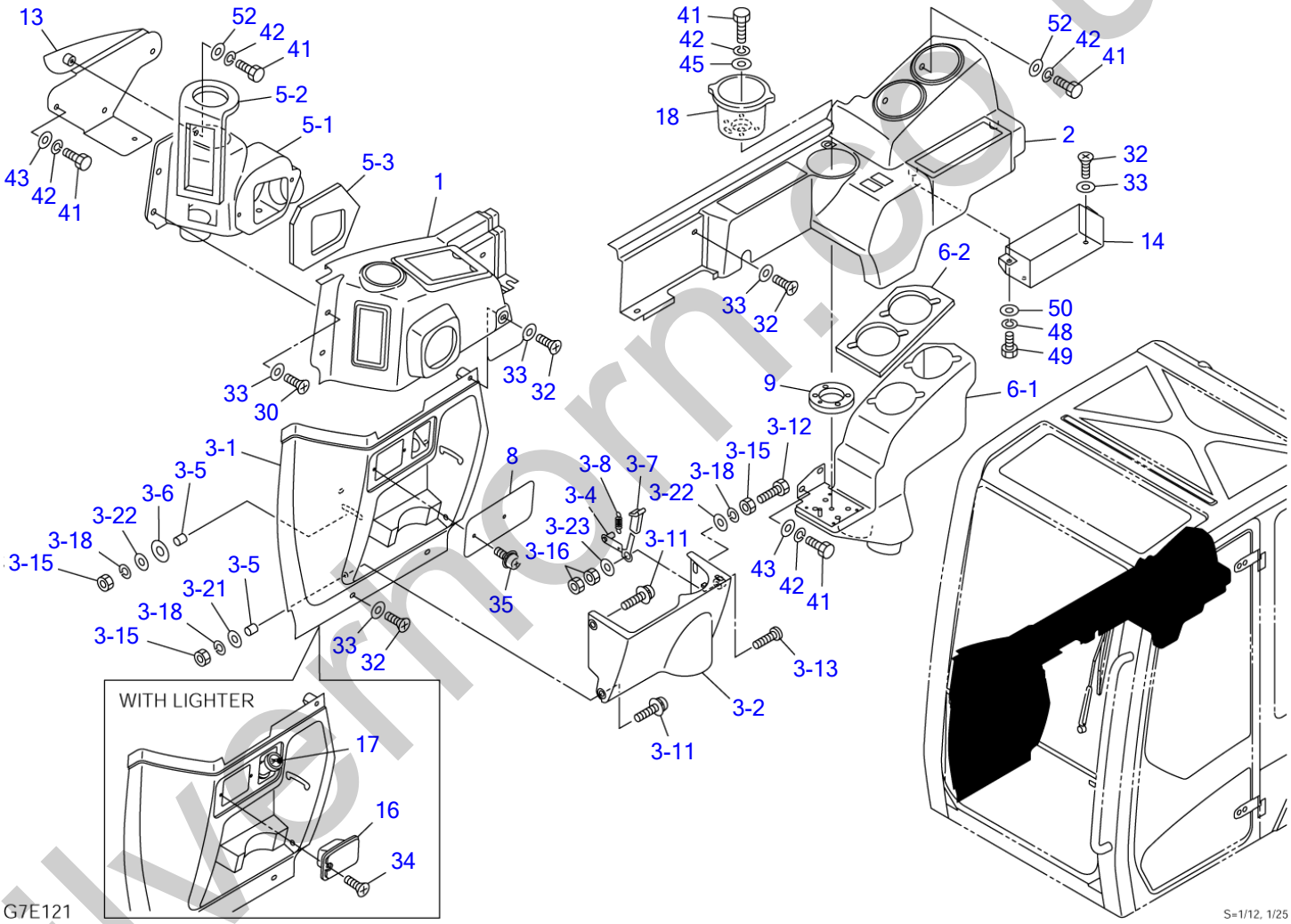

silvermern.co.uk

CAB INTERIOR

Item	Part number	Description	Q'ty	Chan.	Serial No.	Serv.	Remarks
		CAB INTERIOR ASSY					
		CAB INTERIOR ASSY (with lighter)					
1	0378606010	PANEL	1				
2	0378606030	PANEL	1				
3	0378606310	PANEL ASSY	1				
3-1	0378606050	・PANEL	1				
3-2	0378606060	・POCKET	1				
3-4	0378606250	・LEVER	1				
3-5	0378606134	・COLLAR	3				
3-6	0378606280	・SPACER	2				
3-7	1654008800	・KNOB	1				
3-8	0007000123	・SPRING	1				
3-11	1150020635	・SCREW	3				
3-12	1100040630	・BOLT	1				
3-13	1111820830	・BOLT	1				
3-15	1130040006	・NUT	4				
3-16	1130190008	・NUT	2				
3-18	1140020006	・WASHER, spring	4				
3-21	0003600110	・WASHER	2				
3-22	0003600043	・WASHER	2				
3-23	0003608252	・WASHER	1				
5	0378606160	DUCT ASSY	1				
5-1	0378606170	・DUCT	1				
5-2	0378606165	・SPONGE	1				
5-3	0378606166	・SPONGE	1				
6	0378606180	DUCT ASSY	1				
6-1	0378606190	・DUCT	1				
6-2	0378606183	・SPONGE	1				
8	0378606130	COVER	1				without lighter
9	0378606131	SPONGE	1				
13	0378606290	BRACKET	1				
14	0378606240	POCKET	1				
16	1654010500	ASHTRAY	1				with lighter
17	1711900059	LIGHTER	1				with lighter
18	0578601010	HOLDER	1				
30	1120790630	SCREW	2				
32	1120790620	SCREW	11				
33	1652900016	WASHER	13				
34	1120630412	SCREW	2				with lighter
35	1150420412	SCREW	2				without lighter
41	1100040816	BOLT	10				
42	1140020008	WASHER, spring	10				
43	1141110008	WASHER	5				
45	0003608003	WASHER	1				
48	1140020006	WASHER, spring	2				
49	1100040616	BOLT	2				
50	1141110006	WASHER	2				
52	0003608252	WASHER	4				
	G7e121						

silverthorn.co.uk

CANOPY

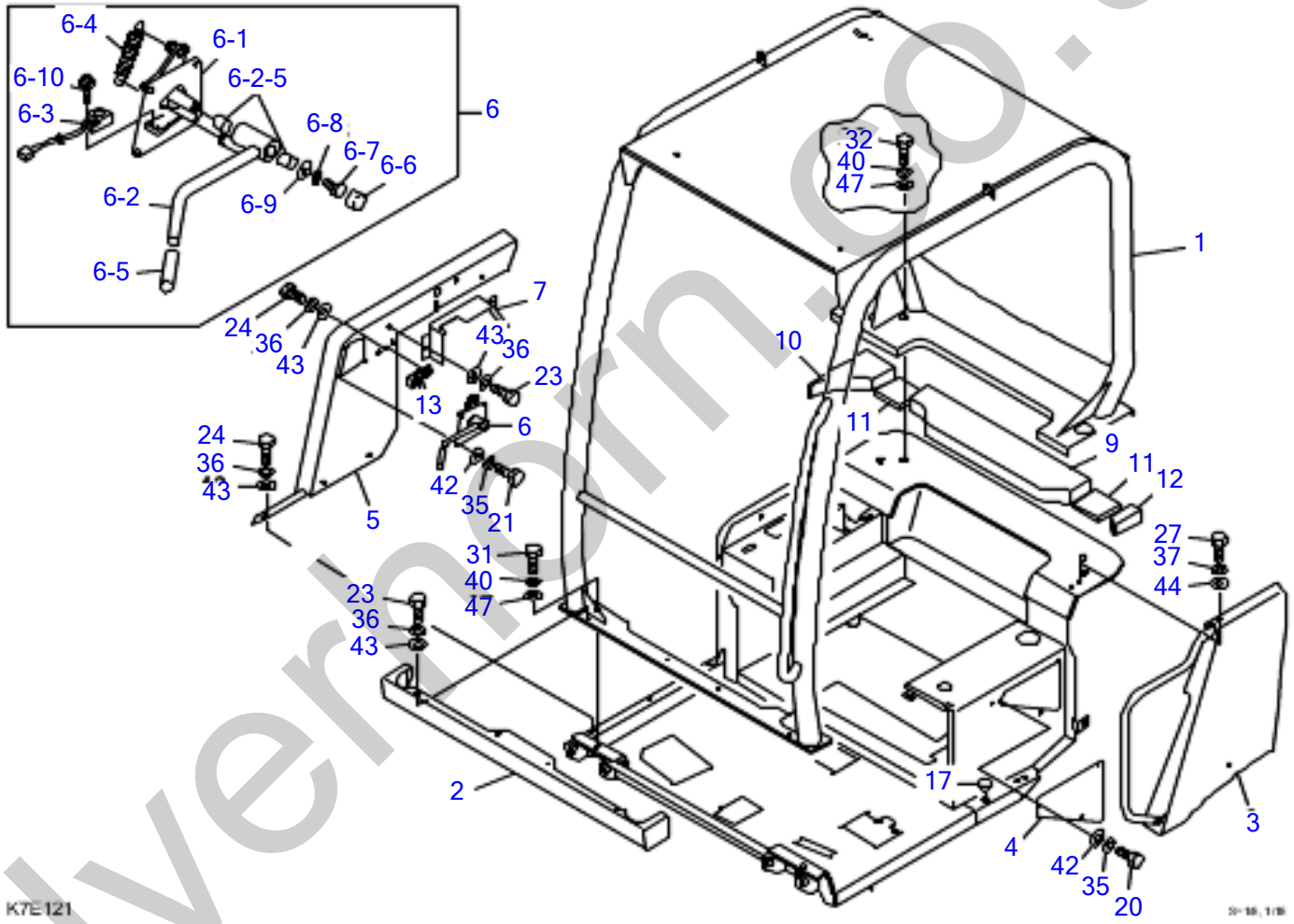

silverhorn.co.uk

CANOPY

Item	Part number	Description	Q'ty	Chan.	Serial No.	Serv.	Remarks
		CANOPY ASSY					
1	0378406260	CANOPY	1				
2	0378406350	COVER	1				
3	0378406310	COVER	1				
4	0378406204	COVER	1				
5	0378406330	PATE	1				
6	0378406160	LEVER ASSY, lock	1				
6-1	0378406170	・BRACKET	1				
6-2	0343301230	・LEVER	1				
6-3	1700009010	・SWITCH, proximity	1				
6-4	0007000070	・SPRING	1				
6-5	1650202300	・CAP	1				
6-6	1652532001	・CAP	1				
6-7	1100040816	・BOLT	1				
6-8	1140020008	・WASHER, spring	1				
6-9	0003608252	・WASHER	1				
6-10	1150410312	・SCREW	2				
7	0378406207	COVER	1				
9	0378406365	ABSORBENT, noise	1				
10	0378406366	ABSORBENT, noise	1				
11	0378406367	ABSORBENT NOISE	2				
12	0378406368	RUBBER	1				
13	0378406420	STAY	1				
17	1652533021	CAP	1				
20	1100040612	BOLT	5				
21	1100040616	BOLT	4				
23	1100040814	BOLT	6				
24	1100040820	BOLT	6				
27	1100041025	BOLT	5				
31	1101041645	BOLT	2				
32	1101041665	BOLT	2				
35	1140020006	WASHER, spring	9				
36	1140020008	WASHER, spring	12				
37	1140020010	WASHER, spring	5				
40	1140020016	WASHER, spring	4				
42	1141110006	WASHER	9				
43	1141110008	WASHER	12				
44	1141110010	WASHER	5				
47	1141110016	WASHER	4				
	K7e121						

silverhorn.co.uk

HEATER

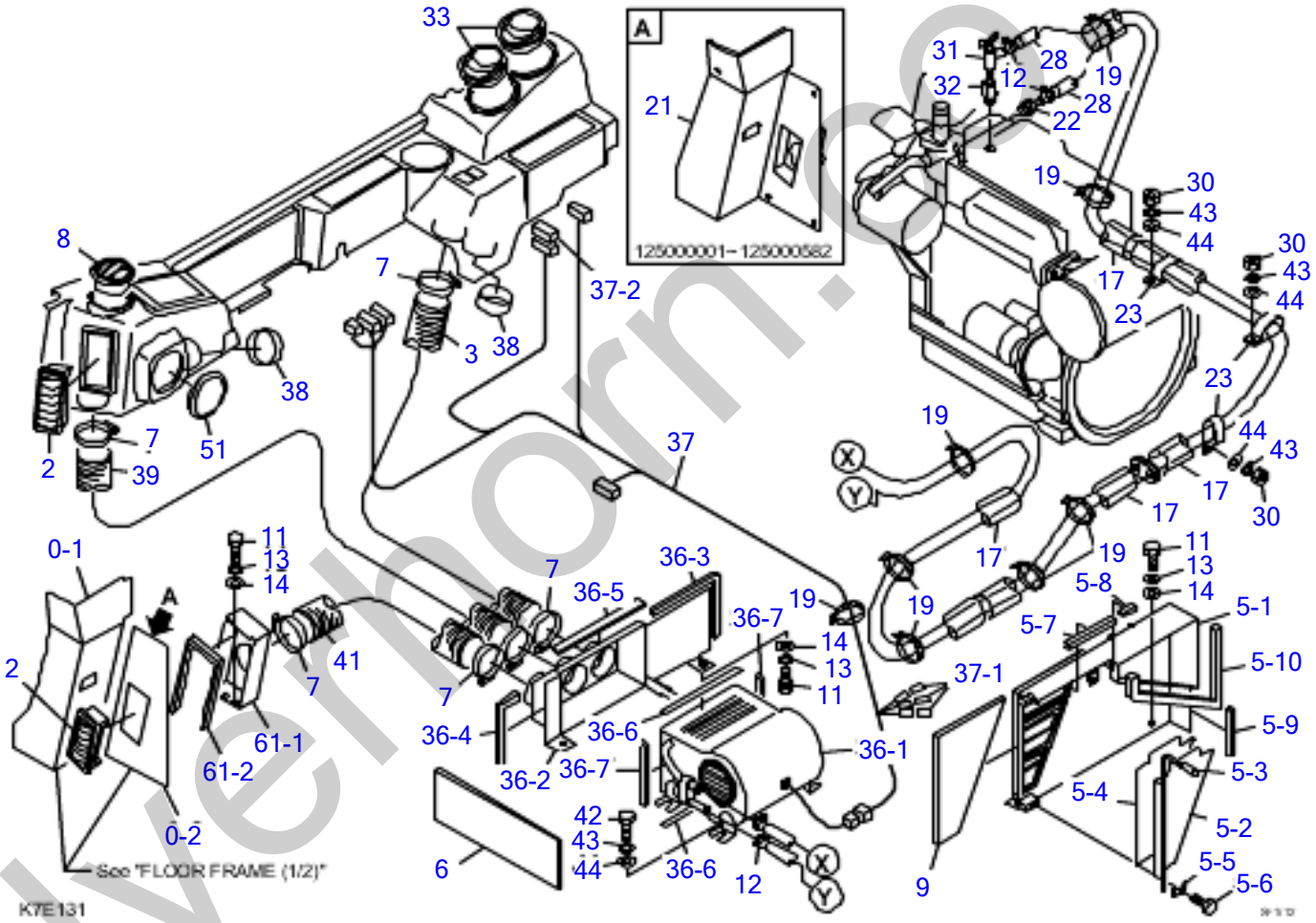

silverhorn.co.uk

HEATER

Item	Part number	Description	Q'ty	Chan.	Serial No.	Serv.	Remarks
		HEATER ASSY					
2	1911505723	LOUVER	2				
3	1566165090	HOSE	1				sold by the meter
5	0374508150	BOX ASSY	1				
5-1	0374508170	・BOX	1				
5-2	0374508180	・LEVER	1				
5-3	0374508140	・GRIP	1				
5-4	0374507964	・SPONGE	1				
5-5	0374508155	・PLATE	2				
5-6	1100240416	・BOLT	2				
5-7	1654606013	・SEAL	1				sold by the meter
5-8	1654606003	・SEAL	1				sold by the meter
5-9	1654606010	・SEAL	1				sold by the meter
5-10	0374508160	・SPONGE	1				
6	0374507935	FILTER	1				
7	1533001065	BAND	6				
8	1911506675	LOUVER	1				
9	0374507945	FILTER	1				
11	1100040820	BOLT	6				
12	1911500500	BAND	4				
13	1140020008	WASHER, spring	6				
14	1141110008	WASHER	6				
17	1531645087	PROTECTOR	4				sold by the meter
19	1652231250	BAND	8				
21	0374508050	COVER	1		125000001-125000582		
22	1911502200	ADAPTOR	1				
23	1711900097	CLAMP	3				
28	1911551820	HOSE	2				sold by the meter
30	1130040010	NUT	3				
31	1911502100	VALVE	1				
32	0007210029	BUSHING	1				
33	1911505722	LOUVER	2				
36	0374508310	HEATER ASSY	1				
36-1	1911508100	・HEATER	1				
36-2	0374508320	・PLATE	1				
36-3	1654613030	・PACKING	1				sold by the meter
36-4	1654613017	・PACKING	1				sold by the meter
36-5	0374508011	・INSULATOR	1				
36-6	0374508012	・INSULATOR	2				
36-7	0374508013	・INSULATOR	2				
37	0374508330	HARNESS, wiring	1				
37-1	1730500008	・DIODE (3A, yellow)	3				
37-2	0374604929	・CONNECTOR, short	1				
38	1911503000	COVER	2				
39	1566165130	HOSE	1				sold by the meter
41	1566165050	HOSE	1				sold by the meter
42	1100041025	BOLT	2				
43	1140020010	WASHER, spring	5				
44	1141110010	WASHER	5				
51	1652060085	BUSHING	1				
61	0374508350	PLATE ASSY	1				
61-1	0374508360	* PLATE	1				
61-2	1654606043	* SEAL	1				
0-1	0373517200	COVER	1				
0-2	0373517220	COVER	1				
	K7e131						

silverthorn.co.uk

HEATER (for cold latitudes)

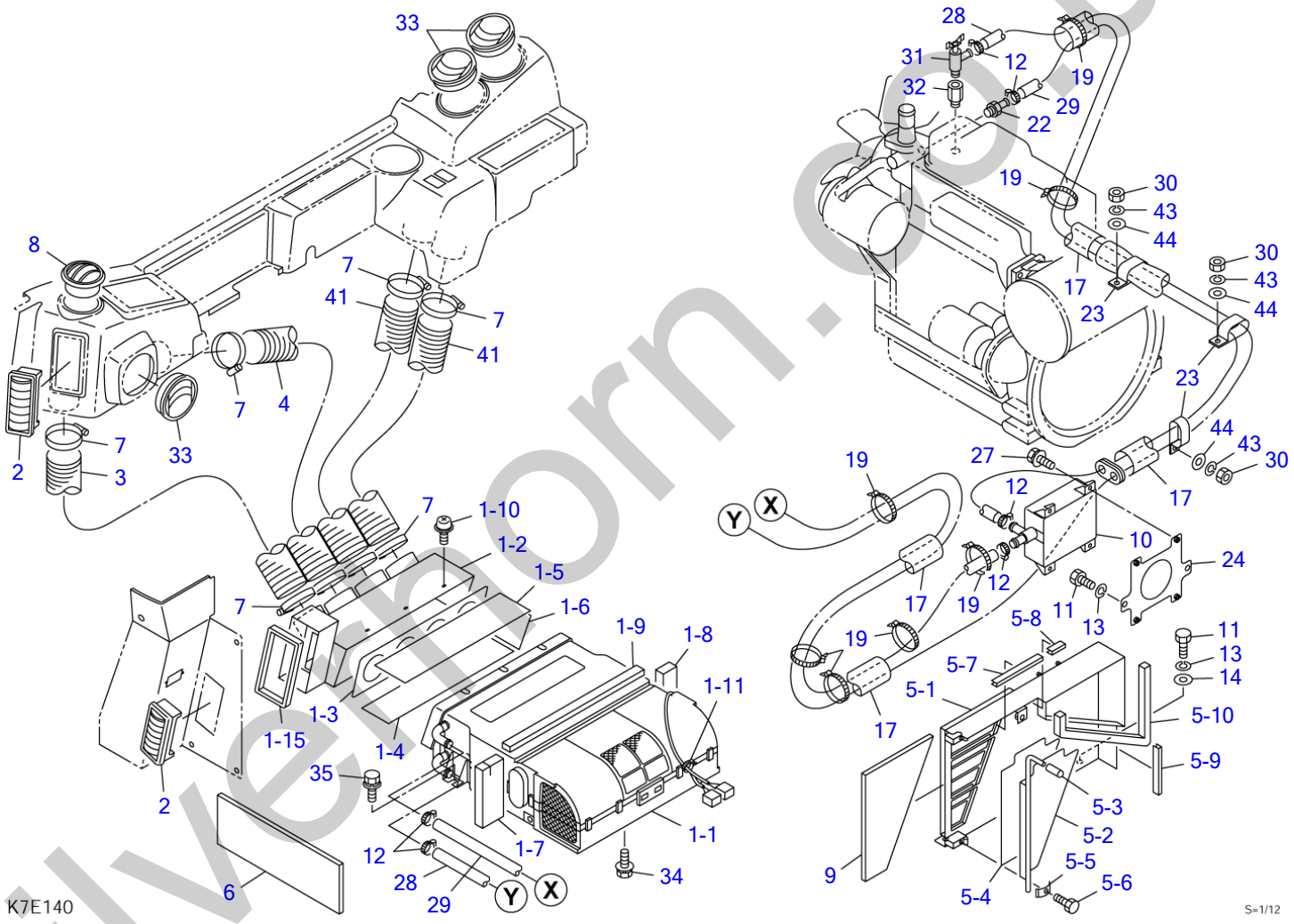

silvermorn.co.uk

HEATER (for cold latitudes)

Item	Part number	Description	Q'ty	Chan.	Serial No.	Serv.	Remarks
		HEATER ASSY					
1	0374508210	UNIT ASSY, heater	1				
1-1	1911511210	・UNIT, heater	1				
1-2	0374604400	・BOX	1				
1-3	0374604311	・INSULATOR	1				
1-4	0374604312	・INSULATOR	1				
1-5	0374604313	・INSULATOR	1				
1-6	0374604314	・INSULATOR	1				
1-7	0374604315	・INSULATOR	1				
1-8	0374604316	・INSULATOR	1				
1-9	1654351035	・SPONGE	1				sold by the meter
1-10	1122410412	・SCREW	6				
1-11	1652231140	・BAND	1				
1-15	1654613046	・PACKING	1				sold by the meter
2	1911505723	LOUVER	2				
3	1566165090	HOSE	1				sold by the meter
4	1566165070	HOSE	1				sold by the meter
5	0374508150	BOX ASSY	1				
5-1	0374508170	・BOX	1				
5-2	0374508180	・LEVER	1				
5-3	0374508140	・GRIP	1				
5-4	0374507964	・SPONGE	1				
5-5	0374508155	・PLATE	2				
5-6	1100230416	・BOLT	2				
5-7	1654606013	・SEAL	1				sold by the meter
5-8	1654606003	・SEAL	1				sold by the meter
5-9	1654606010	・SEAL	1				sold by the meter
5-10	0374508160	・SPONGE	1				
6	0374507935	FILTER	1				
7	1533001065	BAND	8				
8	1911506675	LOUVER	1				
9	0374507945	FILTER	1				
10	1911511051	BOX, control	1				
11	1100040820	BOLT	5				
12	1911500500	BAND	6				
13	1140020008	WASHER, spring	5				
14	1141110008	WASHER	3				
17	1531645087	PROTECTOR	4				sold by the meter
19	1652231250	BAND	9				
22	1911502200	ADAPTOR	1				
23	1711900097	CLAMP	3				
24	0354511010	BRACKET	1				
27	1100560616	BOLT, sems	4				
28	1911551820	HOSE	1				sold by the meter
29	1911525160	HOSE	2				sold by the meter
30	1130040010	NUT	3				
31	1911502100	VALVE	1				
32	0007210029	BUSHING	1				
33	1911505722	LOUVER	3				
34	1100560620	BOLT	2				
35	1100560820	BOLT, sems	2				
41	1566165050	HOSE	2				sold by the meter
43	1140020010	WASHER, spring	3				
44	1141110010	WASHER	3				
	K7e141						

silverthorn.co.uk

HEATER (with air conditioner)

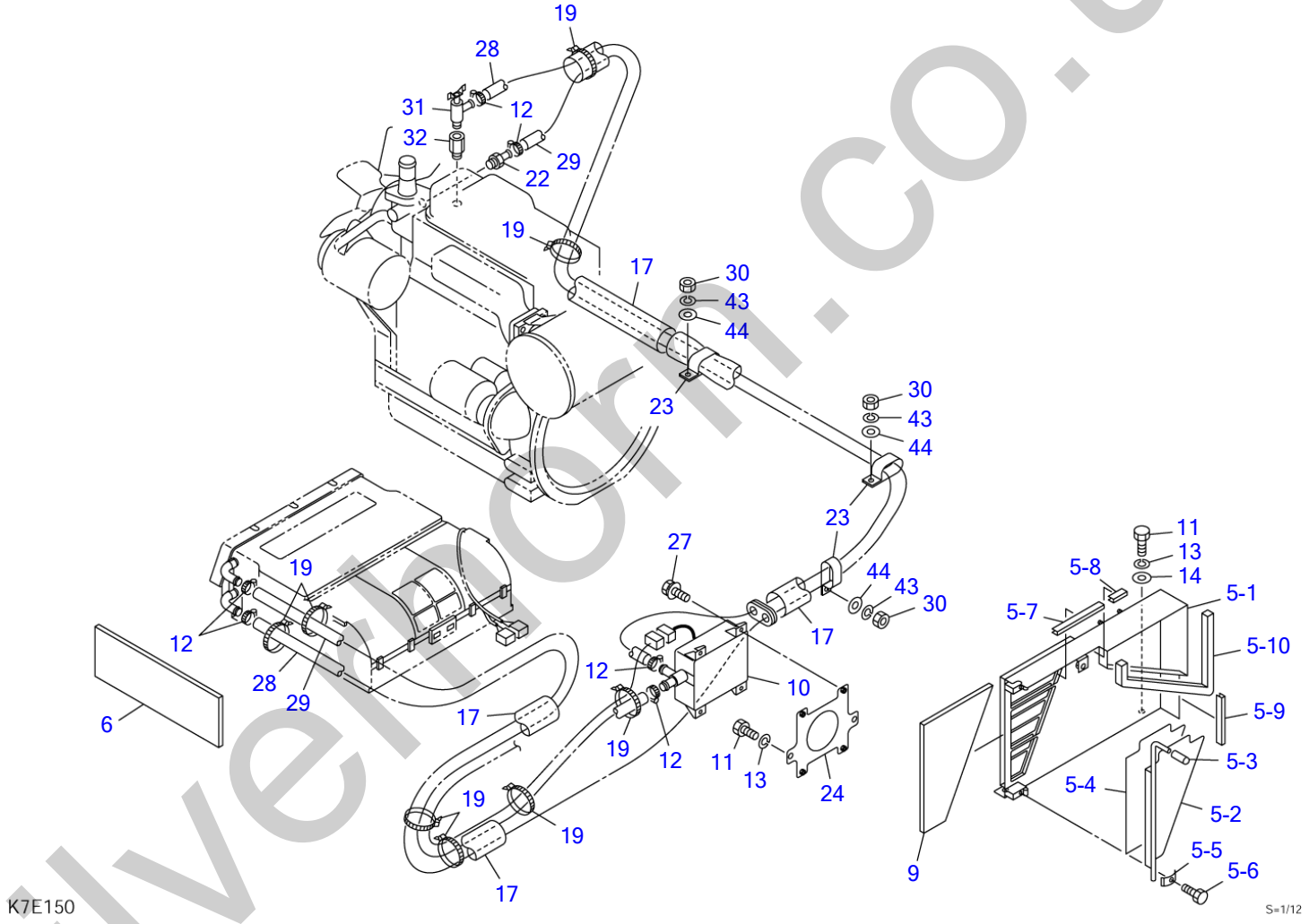

silvermorn.co.uk

HEATER (with air conditioner)

Item	Part number	Description	Q'ty	Chan.	Serial No.	Serv.	Remarks
		HEATER ASSY					
5	0374508150	BOX ASSY	1				
5-1	0374508170	・BOX	1				
5-2	0374508180	・LEVER	1				
5-3	0374508140	・GRIP	1				
5-4	0374507964	・SPONGE	1				
5-5	0374508155	・PLATE	2				
5-6	1100240416	・BOLT	2				
5-7	1654606013	・SEAL	1				sold by the meter
5-8	1654606003	・SEAL	1				sold by the meter
5-9	1654606010	・SEAL	1				sold by the meter
5-10	0374508160	・SPONGE	1				
6	0374507935	FILTER	1				
9	0374507945	FILTER	1				
10	1911511051	BOX, control	1				
11	1100040820	BOLT	5				
12	1911500500	BAND	6				
13	1140020008	WASHER, spring	5				
14	1141110008	WASHER	3				
17	1531645087	PROTECTOR	4				sold by the meter
19	1652231250	BAND	8				
22	1911502200	ADAPTOR	1				
23	1711900097	CLAMP	3				
24	0354511010	BRACKET	1				
27	1100560616	BOLT	4				
28	1911551820	HOSE	1				sold by the meter
29	1911525160	HOSE	2				sold by the meter
30	1130040010	NUT	3				
31	1911502100	VALVE	1				
32	0007210029	BUSHING	1				
43	1140020010	WASHER, spring	3				
44	1141110010	WASHER	3				
	K7e151						

silverhorn.co.uk

AIR CONDITIONER (1/5) (compressor)

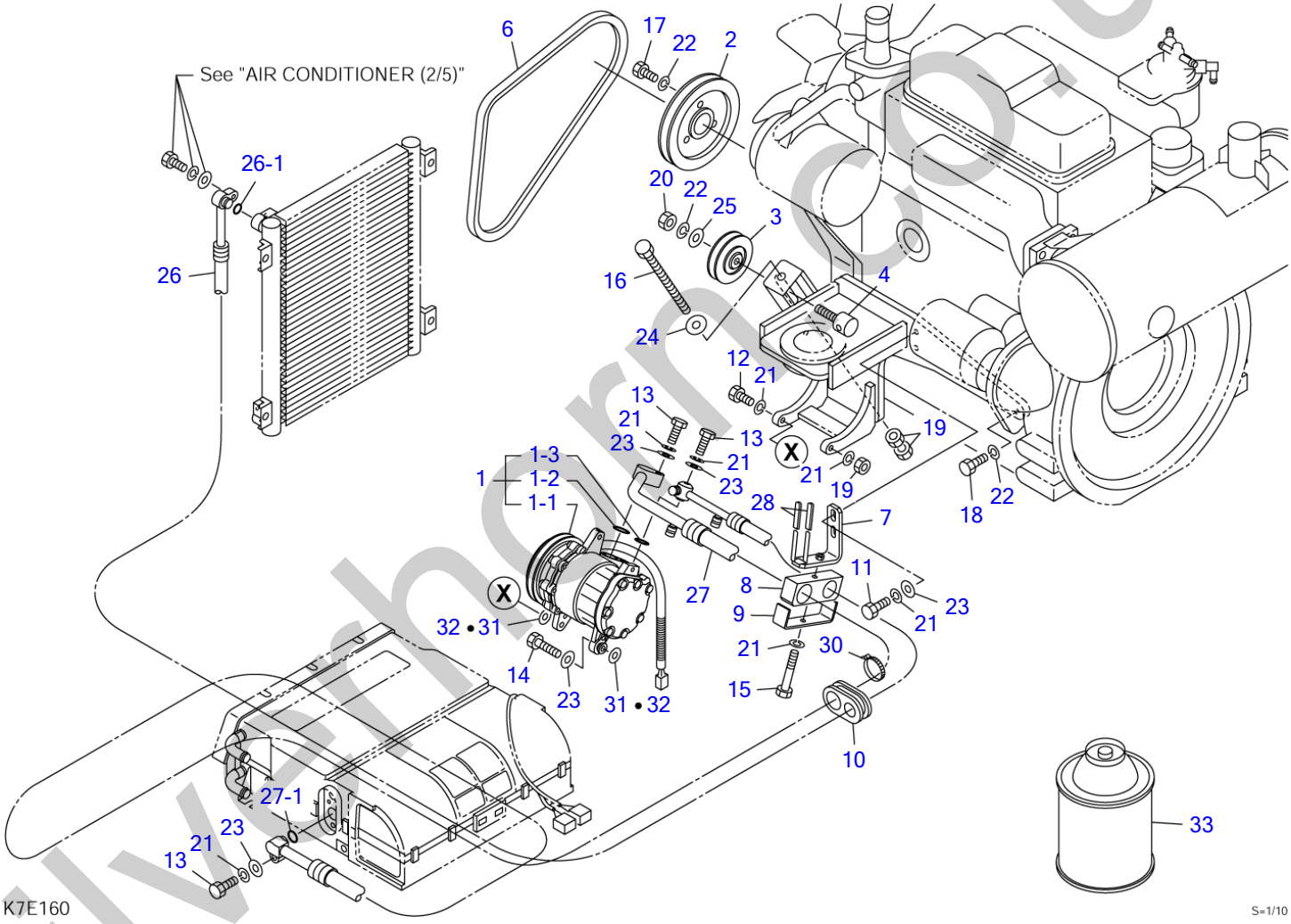

silverthorn.co.uk

AIR CONDITIONER (1/5) (compressor)

Item	Part number	Description	Q'ty	Chan.	Serial No.	Serv.	Remarks
0	0394621100	COMPRESSOR ASSY					
1	1911511010	・COMPRESSOR	1				
1-1	1911511011	・・CLUTCH ASSY	1				
1-2	1911511012	・・O-RING	1				
1-3	1911511013	・・O-RING	1				
2	0394621110	・PULLEY	1				
3	1911511040	・PULLEY	1				
4	0374604130	・SHAFT	1				
6	1621071038	・V-BELT	1				
7	0394621120	・BRACKET	1				
8	0394612120	・RUBBER	1				
9	0394612130	・PLATE	1				
10	0394621130	・GUARD	1				
11	1100040820	・BOLT	2				
12	1100040825	・BOLT	2				
13	1100040835	・BOLT	3				
14	1100040845	・BOLT	1				
15	1100040860	・BOLT	1				
16	0394602010	・BOLT	1				
17	1100041020	・BOLT	3				
18	1100041030	・BOLT	1				
19	1130040008	・NUT	3				
20	1130040010	・NUT	1				
21	1140020008	・WASHER, spring	9				
22	1140020010	・WASHER, spring	5				
23	1141110008	・WASHER	6				
24	1141550008	・WASHER	1				
25	1141550010	・WASHER	1				
26	1911511110	・HOSE ASSY	1				
26-1	1911511913	・・O-RING	1				
27	1911511140	・HOSE ASSY	1				
27-1	1911511943	・・O-RING	1				
28	0872433150	・PROTECTOR	2				
30	1652231250	・BAND	1				
31	0003600222	・SHIM	AR				t=0.2mm
32	0003600223	・SHIM	AR				t=0.3mm
33	1919055000	・GAS	8				100g
	K7e161						

silverhorn.co.uk

AIR CONDITIONER (2/5) (condenser)

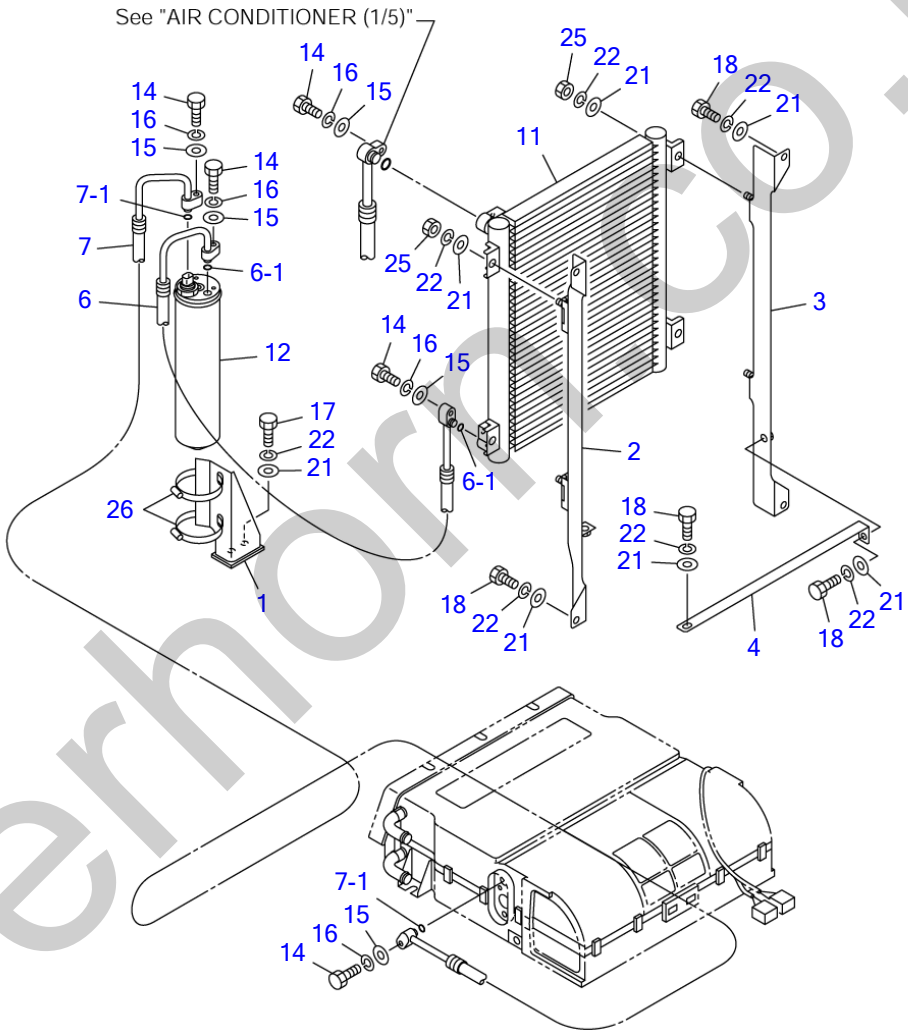

silverhorn.co.uk

AIR CONDITIONER (2/5) (condenser)

Item	Part number	Description	Q'ty	Chan.	Serial No.	Serv.	Remarks
0	0394621200	CONDENSER ASSY	1				
1	0394621210	・BRACKET	1				
2	0394621220	・BRACKET	1				
3	0394621230	・BRACKET	1				
4	0394620130	・BRACKET	1				
6	1911511120	・HOSE ASSY	1				
6-1	1911511921	・・O-RING	2				
7	1911511130	・HOSE ASSY	1				
7-1	1911511921	・・O-RING	2				
11	1911511020	・CONDENSER	1				
12	1911512190	・DRYER	1				
14	1100040625	・BOLT	4				
15	1141110006	・WASHER	4				
16	1140020006	・WASHER, spring	4				
17	1100040816	・BOLT	2				
18	1100040820	・BOLT	6				
21	1141110008	・WASHER	12				
22	1140020008	・WASHER, spring	12				
25	1130040008	・NUT	4				
26	1533700060	・CLAMP	2				
	K7e170						

silverhorn.co.uk

AIR CONDITIONER (3/5) (air conditioner unit)

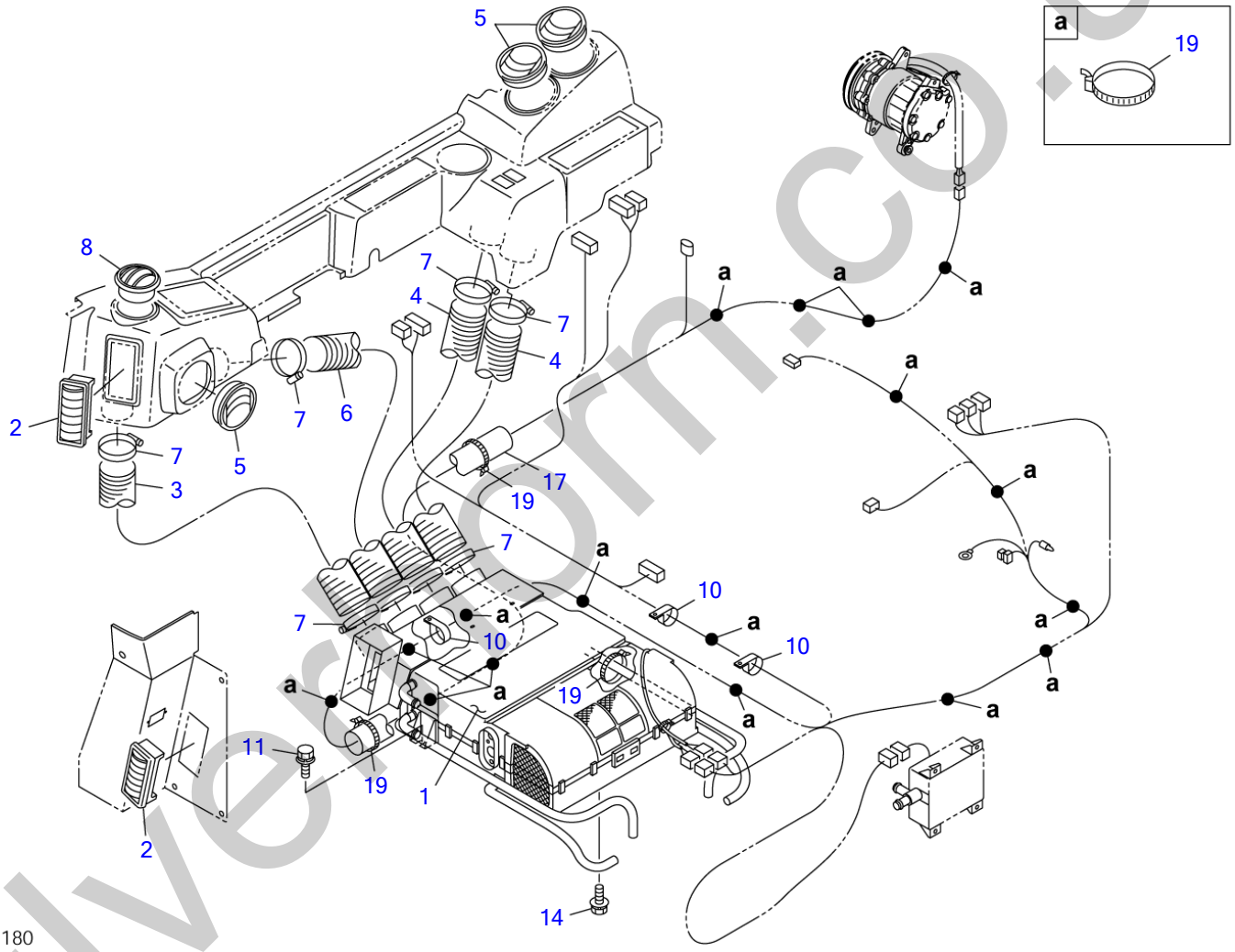

silverthorn.co.uk

AIR CONDITIONER (3/5) (air conditioner unit)

Item	Part number	Description	Q'ty	Chan.	Serial No.	Serv.	Remarks
0	**0394621300**	UNIT ASSY, air conditioner	1				
1	**0374604910**	・UNIT ASSY, air conditioner	1				see page (4/5)
2	**1911505723**	・LOUVER	2				
3	**1566165090**	・HOSE	1			M	sold by the meter
4	**1566165050**	・HOSE	2			M	sold by the meter
5	**1911505722**	・LOUVER	3				
6	**1566165070**	・HOSE	1			M	sold by the meter
7	**1533001065**	・BAND	8				
8	**1911506675**	・LOUVER	1				
10	**0007300003**	・CLAMP	3				
11	**1100560820**	・BOLT	2				
14	**1100560620**	・BOLT	2				
17	**1531345070**	・PROTECTOR	1				sold by the meter
19	**1652231250**	・BAND	26				
	K7e180						

silverhorn.co.uk

AIR CONDITIONER (4/5) (air conditioner unit)

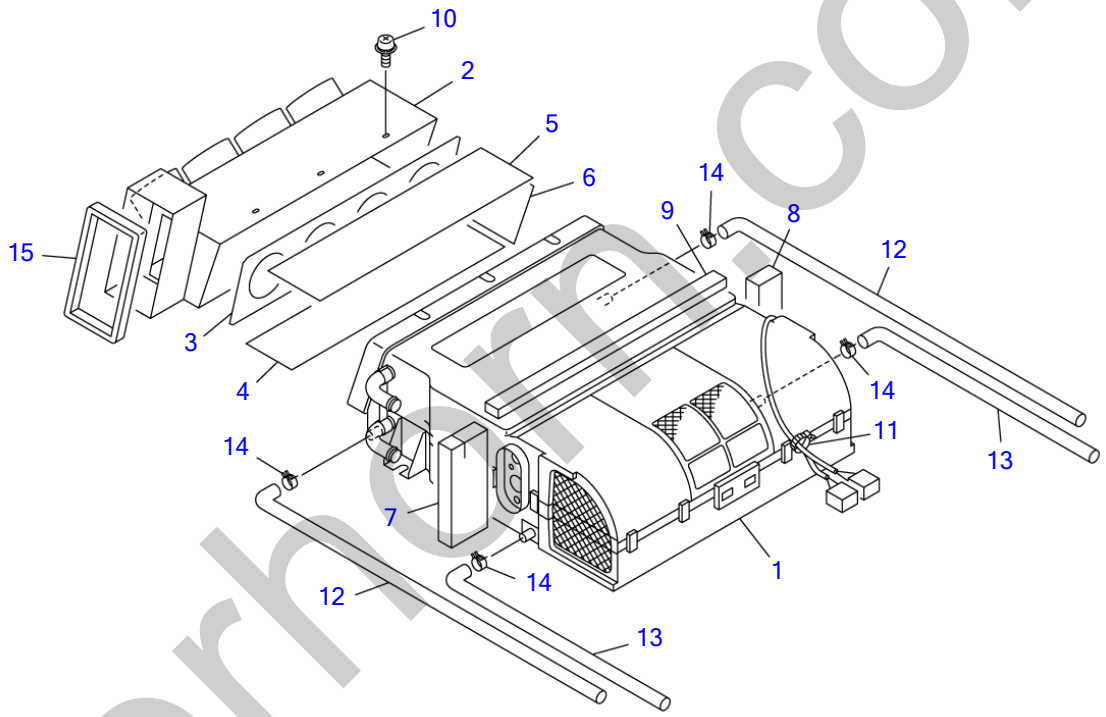

G7E200

S=1/8

silverhorn.co.uk

AIR CONDITIONER (4/5) (air conditioner unit)

Item	Part number	Description	Q'ty	Chan.	Serial No.	Serv.	Remarks
0	0374604910	UNIT ASSY, air conditioner	1				
1	1911511030	・UNIT, air conditioner	1			M	see page (5/5)
2	0374604400	・BOX	1				
3	0374604311	・INSULATOR	1				
4	0374604312	・INSULATOR	1				
5	0374604313	・INSULATOR	1				
6	0374604314	・INSULATOR	1				
7	0374604315	・INSULATOR	1				
8	0374604316	・INSULATOR	1				
9	1654351035	・SPONGE	1				
10	1122410412	・SCREW	6				
11	1652231140	・BAND	1				
12	1911511057	・HOSE	2				
13	1911511058	・HOSE	2				
14	1911511056	・BAND	4				
15	1654613046	・PACKING	1				sold by the meter
	G7e201						

silverhorn.co.uk

AIR CONDITIONER (5/5) (air conditioner unit)

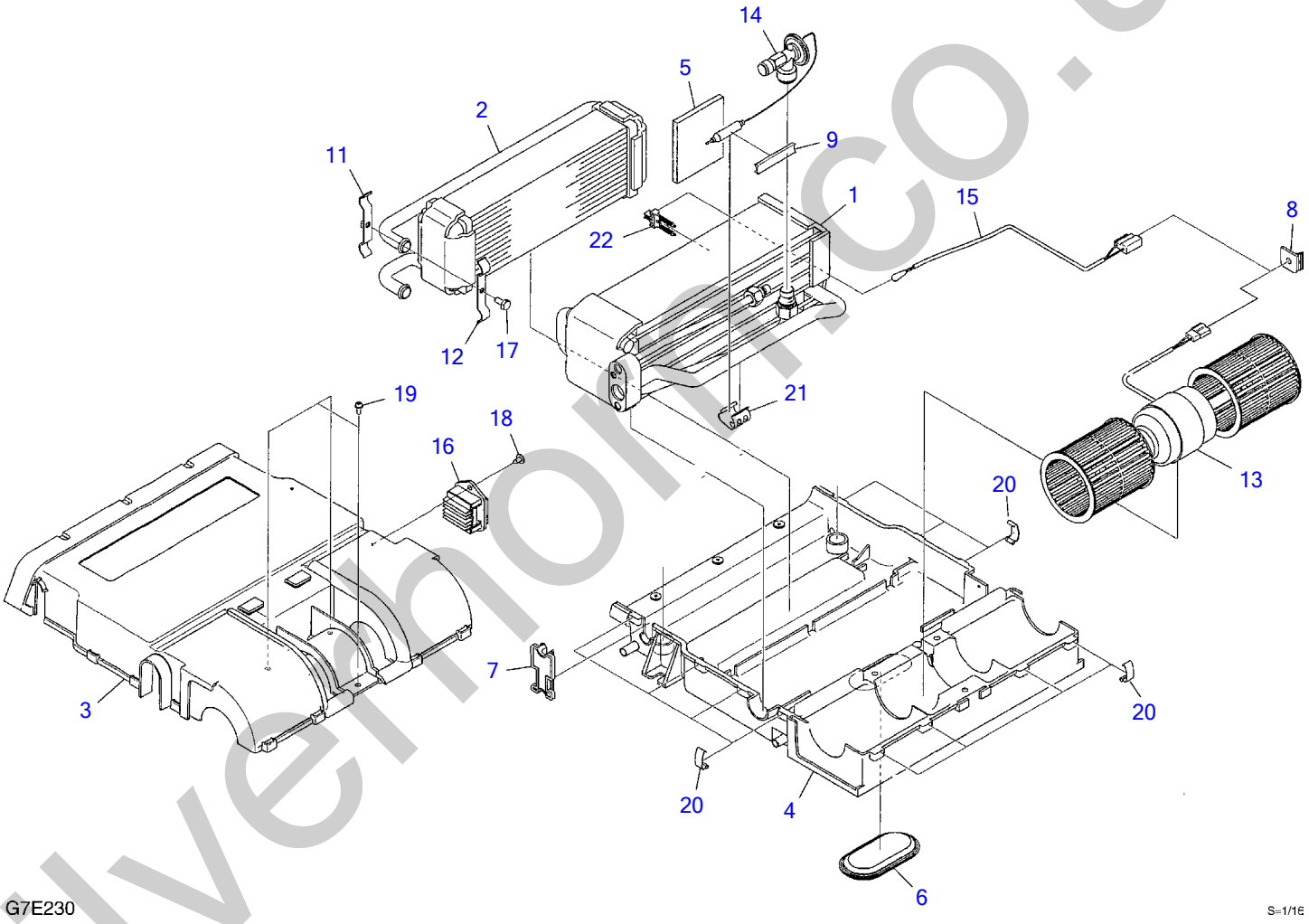

silvermoor.co.uk

AIR CONDITIONER (5/5) (air conditioner unit)

Item	Part number	Description	Q'ty	Chan.	Serial No.	Serv.	Remarks
0	1911511030	UNIT, air conditioner	1				
1	1911512101	・EVAPORATOR	1				
2	1911512102	・CORE, heater	1				
3	1911512103	・COVER	1				
4	1911512104	・COVER	1				
5	1911512105	・INSULATOR	1				
6	1911512106	・GROMMET	1				
7	1911512107	・GROMMET	1				
8	1911512108	・GROMMET	1				
9	1911512109	・PLATE	1				
11	1911512111	・STAY	1				
12	1911512112	・STAY	1				
13	1911512113	・MOTOR, blower	1				
14	1911512114	・VALVE, expansion	1				
15	1911512115	・THERMISTER	1				
16	1911512116	・RESISTOR	1				
17	1911512117	・SCREW	1				
18	1911512118	・SCREW	2				
19	1911512119	・SCREW	3				
20	1911512120	・CLAMP	11				
21	1911512121	・STAY	1				
22	1911512122	・HOLDER	1				
	G7e232						

silverhorn.co.uk

BOOM (1/4)

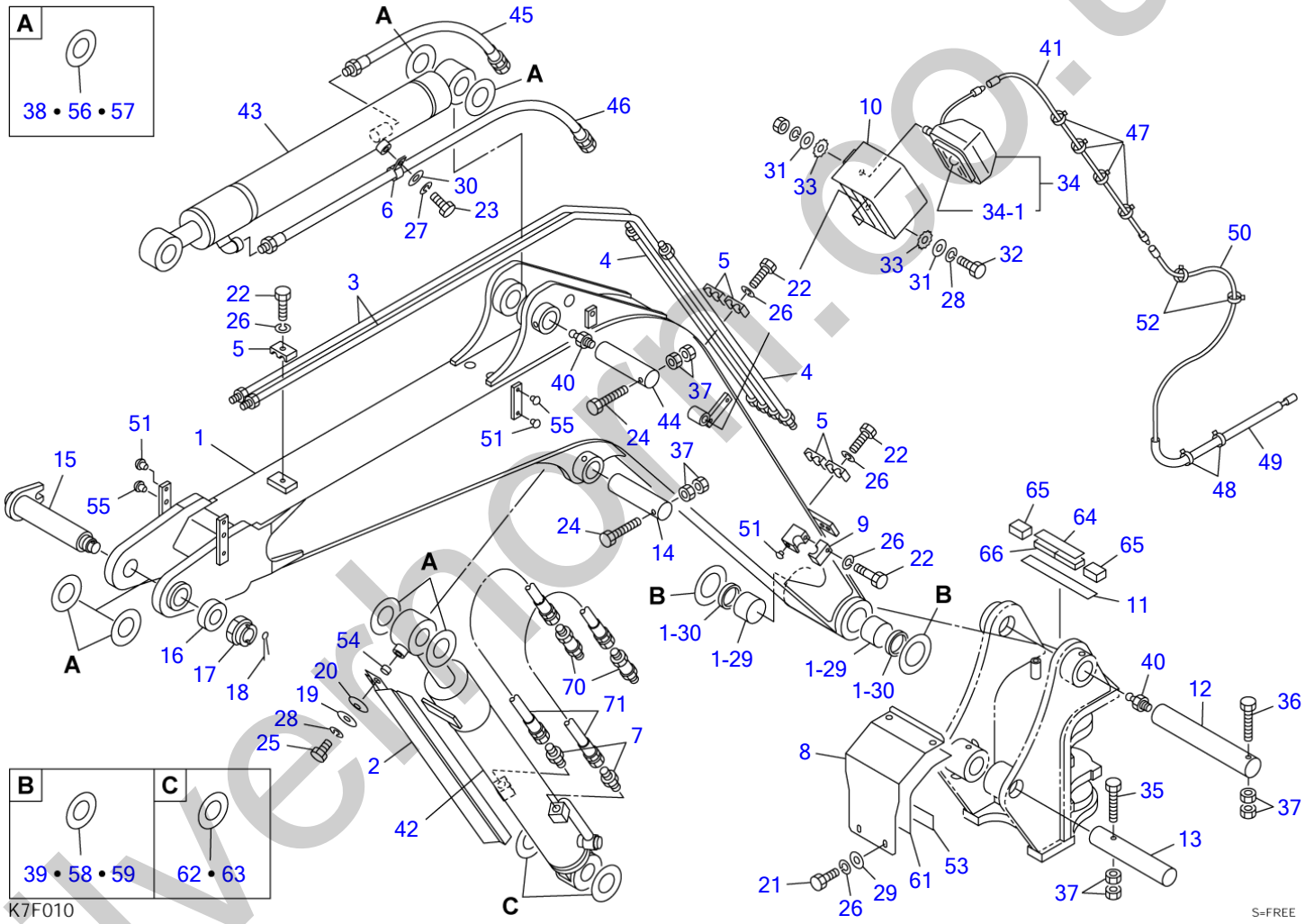

silverhorn.co.uk

BOOM (1/4)

Item	Part number	Description	Q'ty	Chan.	Serial No.	Serv.	Remarks
		BOOM ASSY					
1	0396018100	BOOM SUB ASSY	1				
1-29	0002400078	・BUSHING	2				
1-30	1432200060	・SEAL, dust	2				
2	0396017020	COVER, rod	1				
3	0396005300	PIPE	2				
4	0396002500	PIPE	2				
5	1534000018	CLAMP	5				
6	0007300058	CLAMP	1				
7	1515600202	ADAPTOR	2				
	1420010180	・O-RING	1				
8	0396018080	COVER	1				
9	0376006282	CLAMP	2				
10	0376007500	GUARD	1				
11	0396017011	RUBBER	1				
12	0011577002	PIN	1				
13	0011517006	PIN	1				
14	0001615004	PIN	1				
15	0011905003	PIN	1				
16	0003900019	WASHER	1				
17	1132630039	NUT	1				
18	1210010670	PIN, split	1				
19	0003600057	WASHER	1				
20	1225120022	WASHER, conical	1				
21	1100040820	BOLT	4				
22	1100040840	BOLT	7				
23	1100041016	BOLT	1				
24	1103041295	BOLT	2				
25	1101041220	BOLT	1				
26	1140020008	WASHER, spring	11				
27	1140020010	WASHER, spring	1				
28	1140020012	WASHER, spring	2				
29	1141110008	WASHER	4				
30	1141110010	WASHER	1				
31	1141110012	WASHER	2				
32	1100041230	BOLT	1				
33	1140330012	WASHER	2				
34	1703002700	LAMP ASSY	1				
34-1	1703002706	・BULB	1				
35	1103141225	BOLT	1				
36	1100141240	BOLT	1				
37	1130240012	NUT	8				
38	0003600096	SHIM	AR				t=1.0
39	0003600099	SHIM	AR				t=1.0
40	1560001000	FITTING, grease	2				
41	0434200600	WIRE	1				
42	1900093800	CYLINDER, boom	1				
43	1900102800	CYLINDER, arm	1				
44	0001675002	PIN	1				
45	0396008700	HOSE ASSY	1				18015-42080
46	0396008800	HOSE ASSY	1				18015-42154
47	1652200004	BAND	4				
48	1652201005	BAND	2				
49	1531312050	PROTECTOR	1				sold by the meter
50	0434200500	WIRE	1				
51	1652533016	CAP	13				
52	1652201004	BAND	2				
53	0396008900	RUBBER	1				
54	0003600246	COLLAR	1				
55	1652533017	CAP	12				
56	0003600060	SHIM	AR				t=0.2
57	0003600061	SHIM	AR				t=0.5
58	0003600094	SHIM	AR				t=0.2
59	0003600095	SHIM	AR				t=0.5
61	0396010061	PLATE, rubber	1				
62	0003600219	SHIM	AR				t=0.2
63	0003600220	SHIM	AR				t=0.5
64	0396017064	RUBBER	1				

silverthorn.co.uk

BOOM (1/4)

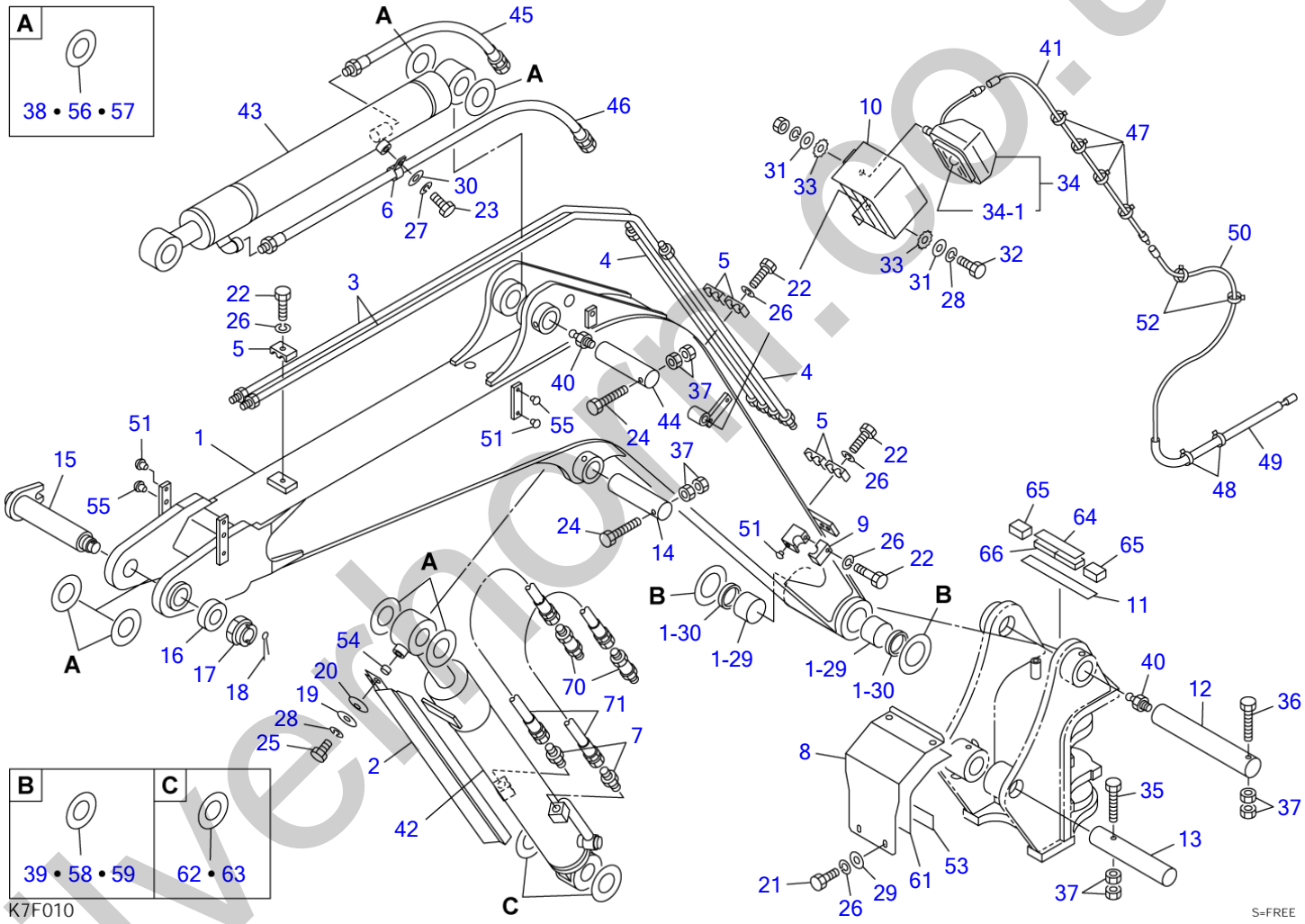

silverhorn.co.uk

BOOM (1/4)

Item	Part number	Description	Q'ty	Chan.	Serial No.	Serv.	Remarks
65	**0396017065**	RUBBER	2				
66	**0396017066**	RUBBER	2				
70	**0396017090**	ADAPTOR	2				
71	**0396017160**	HOSE ASSY	2				18015-20075
	K7f010						

silverhorn.co.uk

BOOM (1/4) (with boom shut-off valve)

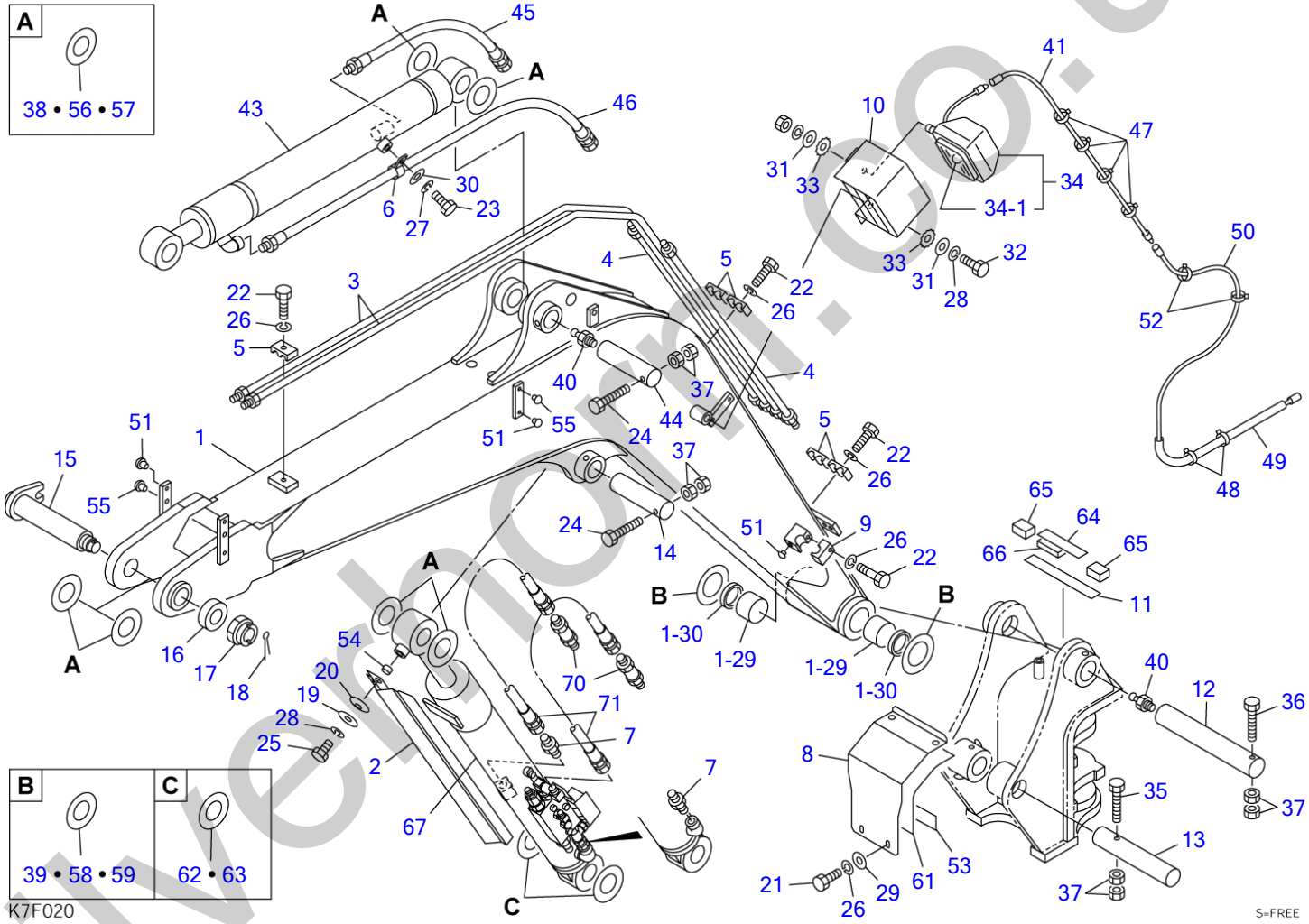

silverhorn.co.uk

BOOM (1/4) (with boom shut-off valve)

Item	Part number	Description	Q'ty	Chan.	Serial No.	Serv.	Remarks
		BOOM ASSY					
1	0396018100	BOOM SUB ASSY	1				
1-29	0002400078	・BUSHING	2				
1-30	1432200060	・SEAL, dust	2				
2	0396017020	COVER, rod	1				
3	0396005300	PIPE	2				
4	0396002500	PIPE	2				
5	1534000018	CLAMP	5				
6	0007300058	CLAMP	1				
7	1515600202	ADAPTOR	2				
	1420010180	・O-RING	1				
8	0396018080	COVER	1				
9	0376006282	CLAMP	2				
10	0376007500	GUARD	1				
11	0396017011	RUBBER	1				
12	0011577002	PIN	1				
13	0011517006	PIN	1				
14	0001615004	PIN	1				
15	0011905003	PIN	1				
16	0003900019	WASHER	1				
17	1132630039	NUT	1				
18	1210010670	PIN, split	1				
19	0003600057	WASHER	1				
20	1225120022	WASHER, conical	1				
21	1100040820	BOLT	4				
22	1100040840	BOLT	7				
23	1100041016	BOLT	1				
24	1103041295	BOLT	2				
25	1101041220	BOLT	1				
26	1140020008	WASHER, spring	11				
27	1140020010	WASHER, spring	1				
28	1140020012	WASHER, spring	2				
29	1141110008	WASHER	4				
30	1141110010	WASHER	1				
31	1141110012	WASHER	2				
32	1100041230	BOLT	1				
33	1140330012	WASHER	2				
34	1703002700	LAMP ASSY	1				
34-1	1703002706	・BULB	1				
35	1103141225	BOLT	1				
36	1100141240	BOLT	1				
37	1130240012	NUT	8				
38	0003600096	SHIM	AR				t=1.0
39	0003600099	SHIM	AR				t=1.0
40	1560001000	FITTING, grease	2				
41	0434200600	WIRE	1				
43	1900102800	CYLINDER, arm	1				
44	0001675002	PIN	1				
45	0396008700	HOSE ASSY	1				18015-42080
46	0396008800	HOSE ASSY	1				18015-42154
47	1652200004	BAND	4				
48	1652201005	BAND	2				
49	1531312050	PROTECTOR	1				sold by the meter
50	0434200500	WIRE	1				
51	1652533016	CAP	13				
52	1652201004	BAND	2				
53	0396008900	RUBBER	1				
54	0003600246	COLLAR	1				
55	1652533017	CAP	12				
56	0003600060	SHIM	AR				t=0.2
57	0003600061	SHIM	AR				t=0.5
58	0003600094	SHIM	AR				t=0.2
59	0003600095	SHIM	AR				t=0.5
61	0396010061	PLATE, rubber	1				
62	0003600219	SHIM	AR				t=0.2
63	0003600220	SHIM	AR				t=0.5
64	0396017064	RUBBER	1				
65	0396017065	RUBBER	2				

silverthorn.co.uk

BOOM (1/4) (with boom shut-off valve)

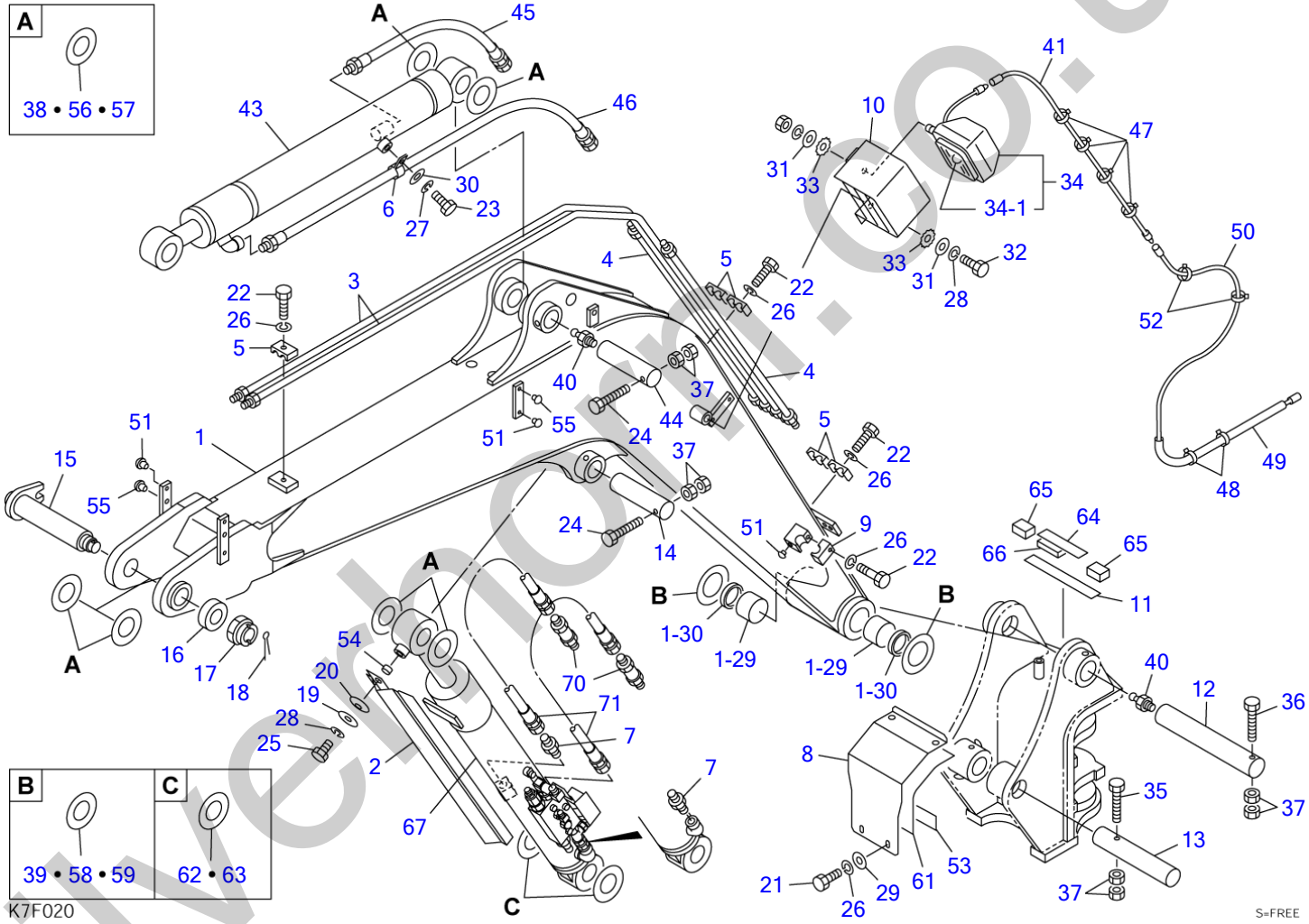

silverhorn.co.uk

BOOM (1/4) (with boom shut-off valve)

Item	Part number	Description	Q'ty	Chan.	Serial No.	Serv.	Remarks
66	**0396017066**	RUBBER	1				
67	**0396018200**	EMERGENCY SHUT-OFF VALVE ASSY, boom	1				see page (2/4)
70	**0396017090**	ADAPTOR	2				
71	**0396017160**	HOSE ASSY	2				18015-20075
	K7f020						

silverhorn.co.uk

BOOM (1/4) (with boom, arm shut-off valve)

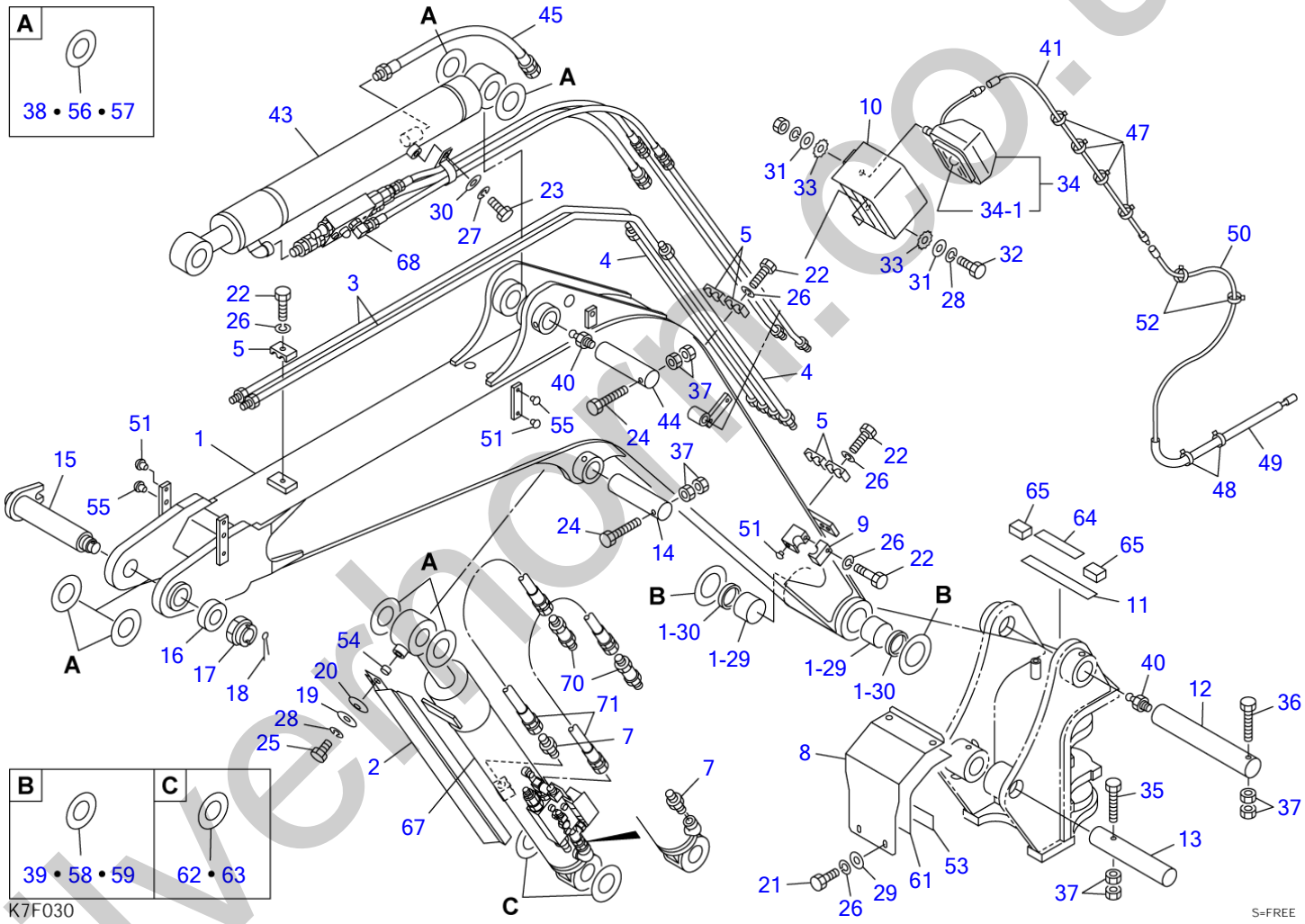

silverhorn.co.uk

BOOM (1/4) (with boom, arm shut-off valve)

Item	Part number	Description	Q'ty	Chan.	Serial No.	Serv.	Remarks
		BOOM ASSY					
1	0396018100	BOOM SUB ASSY	1				
1-29	0002400078	・BUSHING	2				
1-30	1432200060	・SEAL, dust	2				
2	0396017020	COVER, rod	1				
3	0396005300	PIPE	2				
4	0396002500	PIPE	2				
5	1534000018	CLAMP	5				
7	1515600202	ADAPTOR	2				
	1420010180	・O-RING	1				
8	0396018080	COVER	1				
9	0376006282	CLAMP	2				
10	0376007500	GUARD	1				
11	0396017011	RUBBER	1				
12	0011577002	PIN	1				
13	0011517006	PIN	1				
14	0001615004	PIN	1				
15	0011905003	PIN	1				
16	0003900019	WASHER	1				
17	1132630039	NUT	1				
18	1210010670	PIN, split	1				
19	0003600057	WASHER	1				
20	1225120022	WASHER, conical	1				
21	1100040820	BOLT	4				
22	1100040840	BOLT	7				
23	1100041016	BOLT	1				
24	1103041295	BOLT	2				
25	1101041220	BOLT	1				
26	1140020008	WASHER, spring	11				
27	1140020010	WASHER, spring	1				
28	1140020012	WASHER, spring	2				
29	1141110008	WASHER	4				
30	1141110010	WASHER	1				
31	1141110012	WASHER	2				
32	1100041230	BOLT	1				
33	1140330012	WASHER	2				
34	1703002700	LAMP ASSY	1				
34-1	1703002706	・BULB	1				
35	1103141225	BOLT	1				
36	1100141240	BOLT	1				
37	1130240012	NUT	8				
38	0003600096	SHIM	AR				t=1.0
39	0003600099	SHIM	AR				t=1.0
40	1560001000	FITTING, grease	2				
41	0434200600	WIRE	1				
43	1900102800	CYLINDER, arm	1				
44	0001675002	PIN	1				
45	0396008700	HOSE ASSY	1				18015-42080
47	1652200004	BAND	4				
48	1652201005	BAND	2				
49	1531312050	PROTECTOR	1				sold by the meter
50	0434200500	WIRE	1				
51	1652533016	CAP	13				
52	1652201004	BAND	2				
53	0396008900	RUBBER	1				
54	0003600246	COLLAR	1				
55	1652533017	CAP	12				
56	0003600060	SHIM	AR				t=0.2
57	0003600061	SHIM	AR				t=0.5
58	0003600094	SHIM	AR				t=0.2
59	0003600095	SHIM	AR				t=0.5
61	0396010061	PLATE, rubber	1				
62	0003600219	SHIM	AR				t=0.2
63	0003600220	SHIM	AR				t=0.5
64	0396017064	RUBBER	1				
65	0396017065	RUBBER	2				
67	0396018200	EMERGENCY SHUT-OFF VALVE ASSY, boom	1				see page (2/4)

silvermorn.co.uk

BOOM (1/4) (with boom, arm shut-off valve)

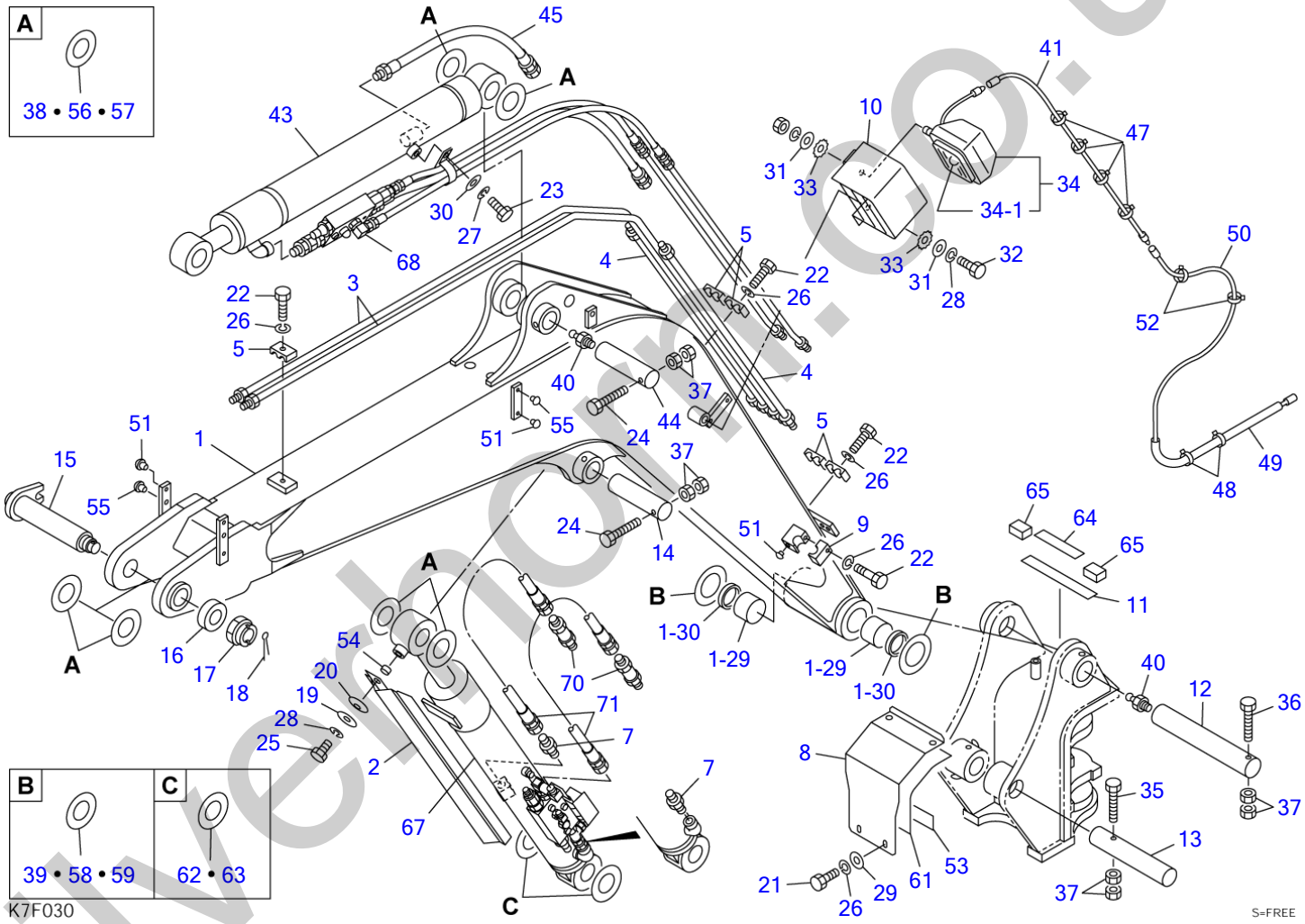

silverhorn.co.uk

BOOM (1/4) (with boom, arm shut-off valve)

Item	Part number	Description	Q'ty	Chan.	Serial No.	Serv.	Remarks
68	**0396018300**	EMERGENCY SHUT-OFF VALVE ASSY, arm	1				see page (3/4)
70	**0396017090**	ADAPTOR	2				
71	**0396017160**	HOSE ASSY	2				18015-20075
	K7f030						

silverhorn.co.uk

BOOM (1/4) (with arm-in restriction)

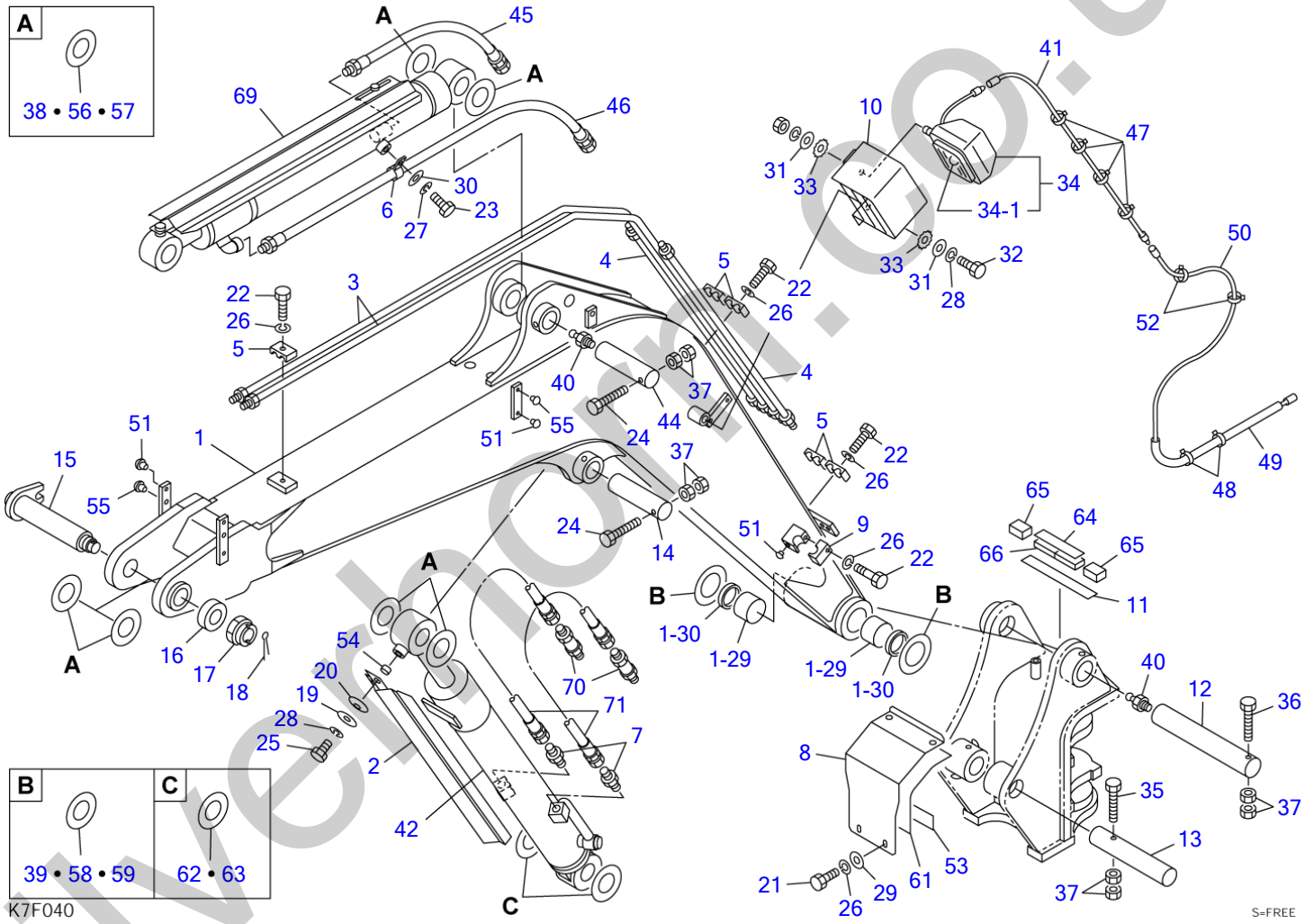

silverhorn.co.uk

BOOM (1/4) (with arm-in restriction)

Item	Part number	Description	Q'ty	Chan.	Serial No.	Serv.	Remarks
		BOOM ASSY					
1	0396018100	BOOM SUB ASSY	1				
1-29	0002400078	・BUSHING	2				
1-30	1432200060	・SEAL, dust	2				
2	0396017020	COVER, rod	1				
3	0396005300	PIPE	2				
4	0396002500	PIPE	2				
5	1534000018	CLAMP	5				
6	0007300058	CLAMP	1				
7	1515600202	ADAPTOR	2				
	1420010180	・O-RING	1				
8	0396018080	COVER	1				
9	0376006282	CLAMP	2				
10	0376007500	GUARD	1				
11	0396017011	RUBBER	1				
12	0011577002	PIN	1				
13	0011517006	PIN	1				
14	0001615004	PIN	1				
15	0011905003	PIN	1				
16	0003900019	WASHER	1				
17	1132630039	NUT	1				
18	1210010670	PIN, split	1				
19	0003600057	WASHER	1				
20	1225120022	WASHER, conical	1				
21	1100040820	BOLT	4				
22	1100040840	BOLT	7				
23	1100041016	BOLT	1				
24	1103041295	BOLT	2				
25	1101041220	BOLT	1				
26	1140020008	WASHER, spring	11				
27	1140020010	WASHER, spring	1				
28	1140020012	WASHER, spring	2				
29	1141110008	WASHER	4				
30	1141110010	WASHER	1				
31	1141110012	WASHER	2				
32	1100041230	BOLT	1				
33	1140330012	WASHER	2				
34	1703002700	LAMP ASSY	1				
34-1	1703002706	・BULB	1				
35	1103141225	BOLT	1				
36	1100141240	BOLT	1				
37	1130240012	NUT	8				
38	0003600096	SHIM	AR				t=1.0
39	0003600099	SHIM	AR				t=1.0
40	1560001000	FITTING, grease	2				
41	0434200600	WIRE	1				
42	1900093800	CYLINDER, boom	1				
44	0001675002	PIN	1				
45	0396008700	HOSE ASSY	1				18015-42080
46	0396008800	HOSE ASSY	1				18015-42154
47	1652200004	BAND	4				
48	1652201005	BAND	2				
49	1531312050	PROTECTOR	1				sold by the meter
50	0434200500	WIRE	1				
51	1652533016	CAP	13				
52	1652201004	BAND	2				
53	0396008900	RUBBER	1				
54	0003600246	COLLAR	1				
55	1652533017	CAP	12				
56	0003600060	SHIM	AR				t=0.2
57	0003600061	SHIM	AR				t=0.5
58	0003600094	SHIM	AR				t=0.2
59	0003600095	SHIM	AR				t=0.5
61	0396010061	PLATE, rubber	1				
62	0003600219	SHIM	AR				t=0.2
63	0003600220	SHIM	AR				t=0.5
64	0396017064	RUBBER	1				
65	0396017065	RUBBER	2				

silvermorn.co.uk

BOOM (1/4) (with arm-in restriction)

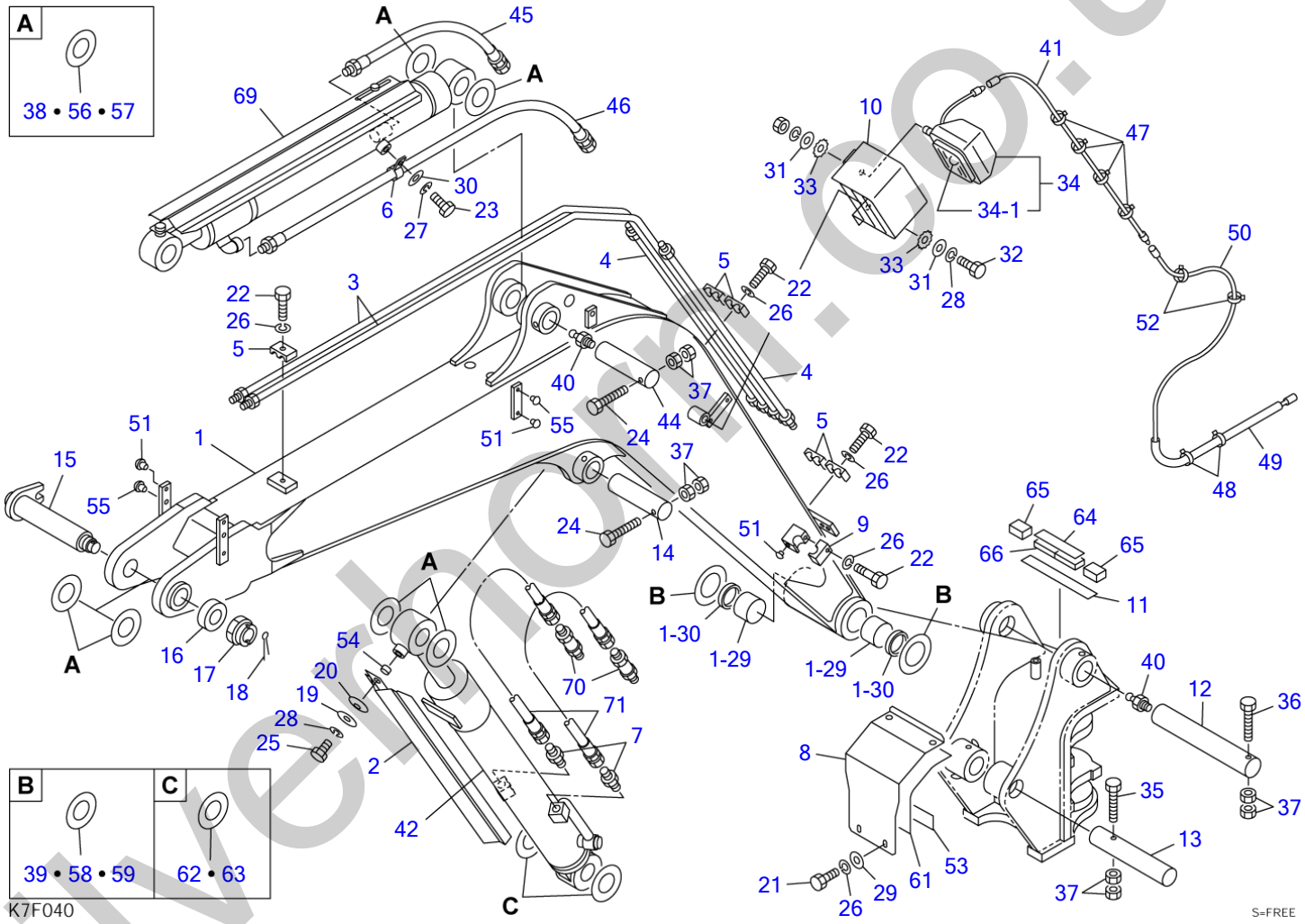

silverhorn.co.uk

BOOM (1/4) (with arm-in restriction)

Item	Part number	Description	Q'ty	Chan.	Serial No.	Serv.	Remarks
66	**0396017066**	RUBBER	2				
69	**0396018400**	ARM-IN RESTRICTION ASSY	1				see page (4/4)
70	**0396017090**	ADAPTOR	2				
71	**0396017160**	HOSE ASSY	2				18015-20075
	K7f040						

silverhorn.co.uk

BOOM (1/4) (with boom shut-off valve, arm-in restriction)

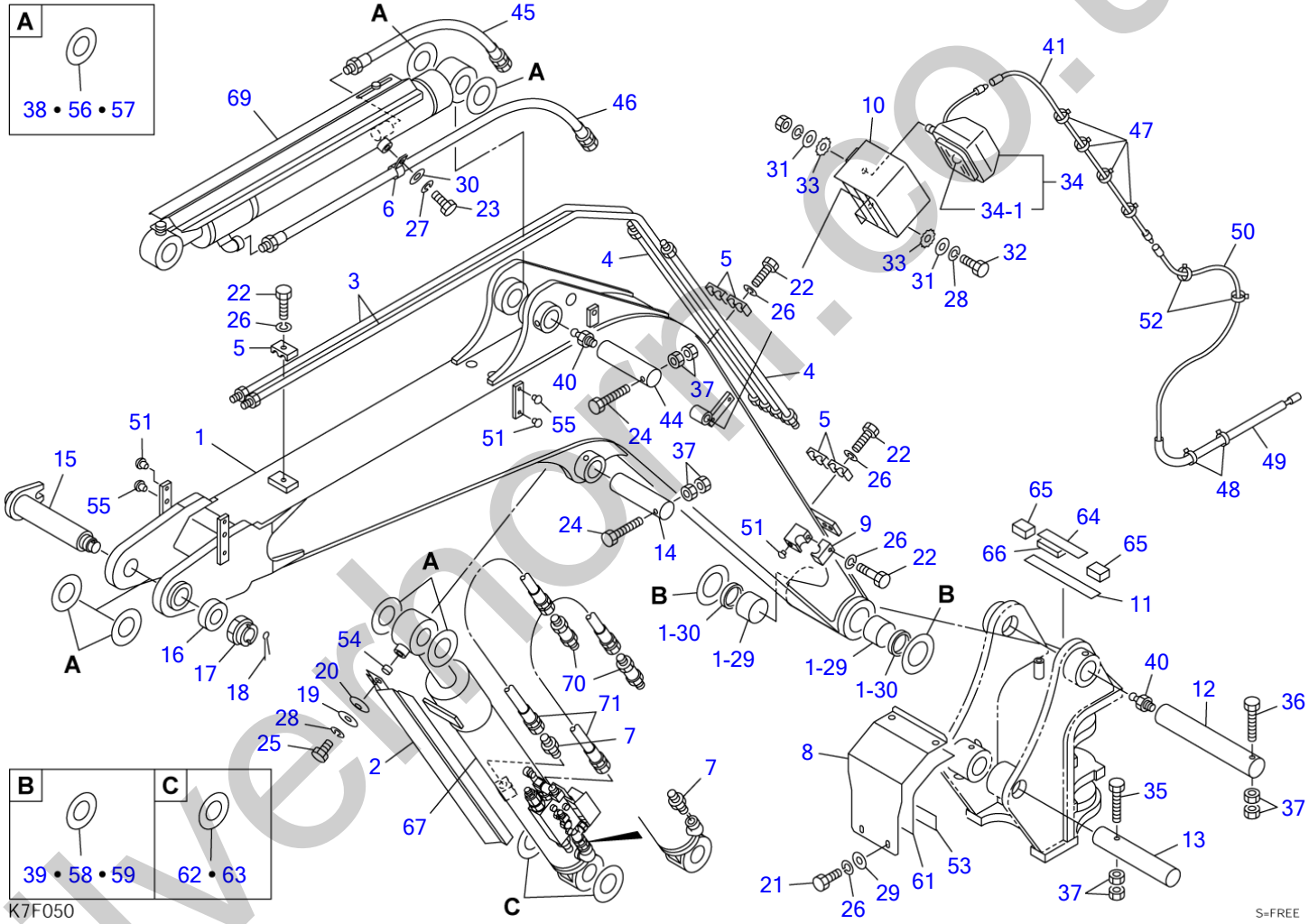

silverhorn.co.uk

BOOM (1/4) (with boom shut-off valve, arm-in restriction)

Item	Part number	Description	Q'ty	Chan.	Serial No.	Serv.	Remarks
		BOOM ASSY					
1	0396018100	BOOM SUB ASSY	1				
1-29	0002400078	・BUSHING	2				
1-30	1432200060	・SEAL, dust	2				
2	0396017020	COVER, rod	1				
3	0396005300	PIPE	2				
4	0396002500	PIPE	2				
5	1534000018	CLAMP	5				
6	0007300058	CLAMP	1				
7	1515600202	ADAPTOR	2				
	1420010180	・O-RING	1				
8	0396018080	COVER	1				
9	0376006282	CLAMP	2				
10	0376007500	GUARD	1				
11	0396017011	RUBBER	1				
12	0011577002	PIN	1				
13	0011517006	PIN	1				
14	0001615004	PIN	1				
15	0011905003	PIN	1				
16	0003900019	WASHER	1				
17	1132630039	NUT	1				
18	1210010670	PIN, split	1				
19	0003600057	WASHER	1				
20	1225120022	WASHER, conical	1				
21	1100040820	BOLT	4				
22	1100040840	BOLT	7				
23	1100041016	BOLT	1				
24	1103041295	BOLT	2				
25	1101041220	BOLT	1				
26	1140020008	WASHER, spring	11				
27	1140020010	WASHER, spring	1				
28	1140020012	WASHER, spring	2				
29	1141110008	WASHER	4				
30	1141110010	WASHER	1				
31	1141110012	WASHER	2				
32	1100041230	BOLT	1				
33	1140330012	WASHER	2				
34	1703002700	LAMP ASSY	1				
34-1	1703002706	・BULB	1				
35	1103141225	BOLT	1				
36	1100141240	BOLT	1				
37	1130240012	NUT	8				
38	0003600096	SHIM	AR				t=1.0
39	0003600099	SHIM	AR				t=1.0
40	1560001000	FITTING, grease	2				
41	0434200600	WIRE	1				
44	0001675002	PIN	1				
45	0396008700	HOSE ASSY	1				18015-42080
46	0396008800	HOSE ASSY	1				18015-42154
47	1652200004	BAND	4				
48	1652201005	BAND	2				
49	1531312050	PROTECTOR	1				sold by the meter
50	0434200500	WIRE	1				
51	1652533016	CAP	13				
52	1652201004	BAND	2				
53	0396008900	RUBBER	1				
54	0003600246	COLLAR	1				
55	1652533017	CAP	12				
56	0003600060	SHIM	AR				t=0.2
57	0003600061	SHIM	AR				t=0.5
58	0003600094	SHIM	AR				t=0.2
59	0003600095	SHIM	AR				t=0.5
61	0396010061	PLATE, rubber	1				
62	0003600219	SHIM	AR				t=0.2
63	0003600220	SHIM	AR				t=0.5
64	0396017064	RUBBER	1				
65	0396017065	RUBBER	2				
66	0396017066	RUBBER	1				

silverthorn.co.uk

BOOM (1/4) (with boom shut-off valve, arm-in restriction)

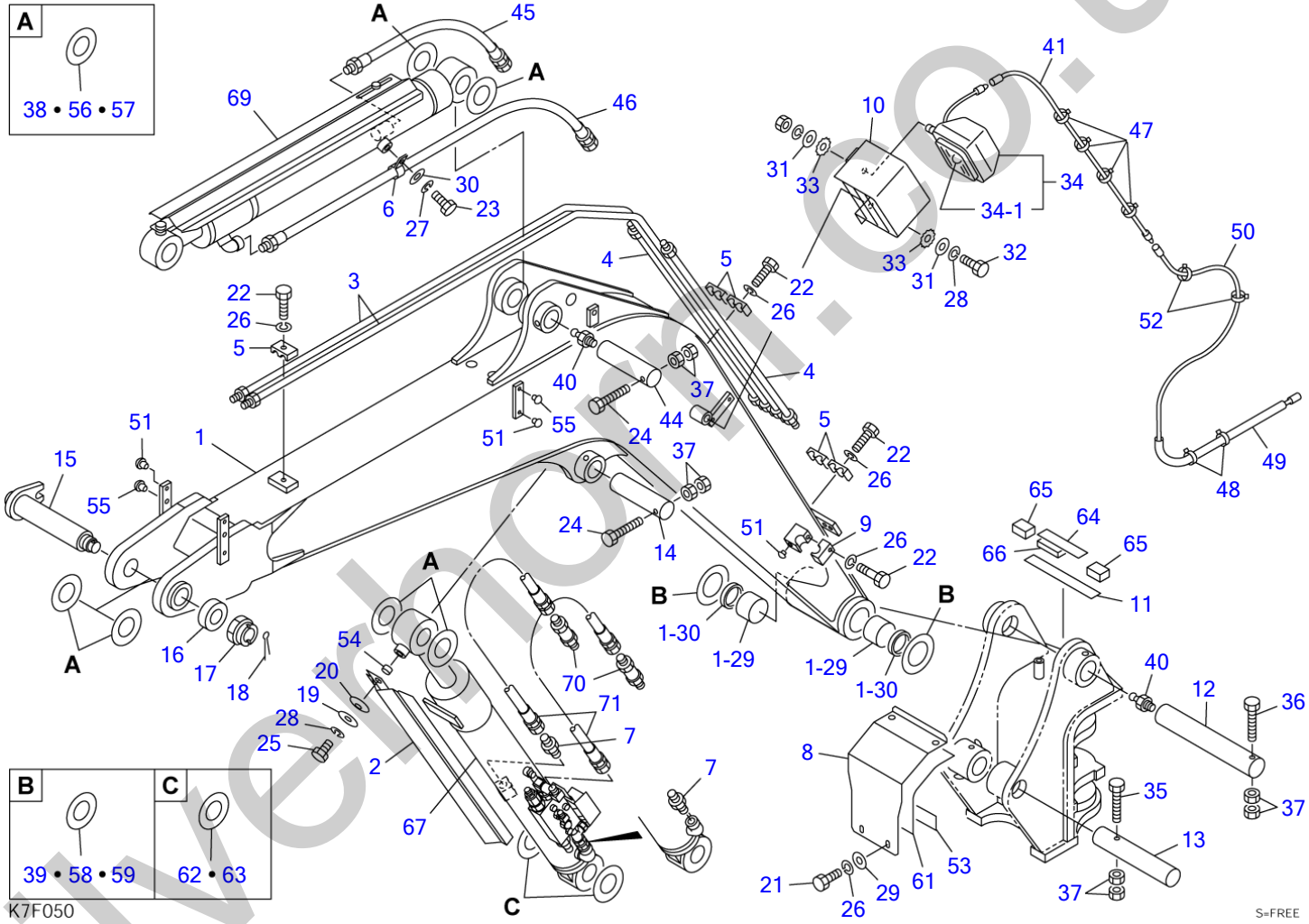

silverhorn.co.uk

BOOM (1/4) (with boom shut-off valve, arm-in restriction)

Item	Part number	Description	Q'ty	Chan.	Serial No.	Serv.	Remarks
67	**0396018200**	EMERGENCY SHUT-OFF VALVE ASSY, boom	1				see page (2/4)
69	**0396018400**	ARM-IN RESTRICTION ASSY	1				see page (4/4)
70	**0396017090**	ADAPTOR	2				
71	**0396017160**	HOSE ASSY	2				18015-20075
	K7f050						

silverhorn.co.uk

BOOM (1/4) (with boom, arm shut-off valve, arm-in restriction)

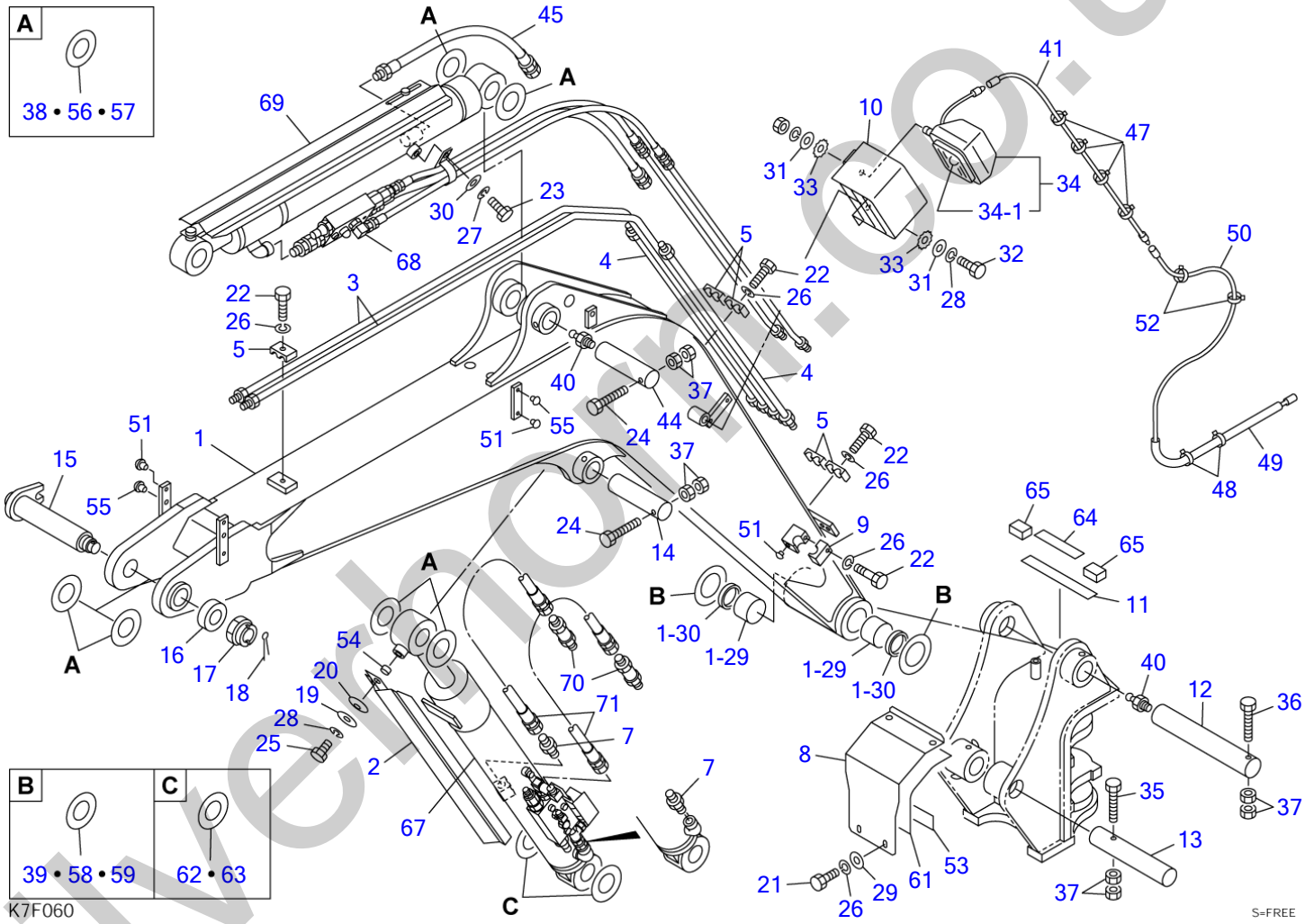

silverhorn.co.uk

BOOM (1/4) (with boom, arm shut-off valve, arm-in restriction)

Item	Part number	Description	Q'ty	Chan.	Serial No.	Serv.	Remarks
		BOOM ASSY					
1	0396018100	BOOM SUB ASSY	1				
1-29	0002400078	・BUSHING	2				
1-30	1432200060	・SEAL, dust	2				
2	0396017020	COVER, rod	1				
3	0396005300	PIPE	2				
4	0396002500	PIPE	2				
5	1534000018	CLAMP	5				
7	1515600202	ADAPTOR	2				
	1420010180	・O-RING	1				
8	0396018080	COVER	1				
9	0376006282	CLAMP	2				
10	0376007500	GUARD	1				
11	0396017011	RUBBER	1				
12	0011577002	PIN	1				
13	0011517006	PIN	1				
14	0001615004	PIN	1				
15	0011905003	PIN	1				
16	0003900019	WASHER	1				
17	1132630039	NUT	1				
18	1210010670	PIN, split	1				
19	0003600057	WASHER	1				
20	1225120022	WASHER, conical	1				
21	1100040820	BOLT	4				
22	1100040840	BOLT	7				
23	1100041016	BOLT	1				
24	1103041295	BOLT	2				
25	1101041220	BOLT	1				
26	1140020008	WASHER, spring	11				
27	1140020010	WASHER, spring	1				
28	1140020012	WASHER, spring	2				
29	1141110008	WASHER	4				
30	1141110010	WASHER	1				
31	1141110012	WASHER	2				
32	1100041230	BOLT	1				
33	1140330012	WASHER	2				
34	1703002700	LAMP ASSY	1				
34-1	1703002706	・BULB	1				
35	1103141225	BOLT	1				
36	1100141240	BOLT	1				
37	1130240012	NUT	8				
38	0003600096	SHIM	AR				t=1.0
39	0003600099	SHIM	AR				t=1.0
40	1560001000	FITTING, grease	2				
41	0434200600	WIRE	1				
44	0001675002	PIN	1				
45	0396008700	HOSE ASSY	1				18015-42080
47	1652200004	BAND	4				
48	1652201005	BAND	2				
49	1531312050	PROTECTOR	1				sold by the meter
50	0434200500	WIRE	1				
51	1652533016	CAP	13				
52	1652201004	BAND	2				
53	0396008900	RUBBER	1				
54	0003600246	COLLAR	1				
55	1652533017	CAP	12				
56	0003600060	SHIM	AR				t=0.2
57	0003600061	SHIM	AR				t=0.5
58	0003600094	SHIM	AR				t=0.2
59	0003600095	SHIM	AR				t=0.5
61	0396010061	PLATE, rubber	1				
62	0003600219	SHIM	AR				t=0.2
63	0003600220	SHIM	AR				t=0.5
64	0396017064	RUBBER	1				
65	0396017065	RUBBER	2				
67	0396018200	EMERGENCY SHUT-OFF VALVE ASSY, boom	1				see page (2/4)

silvermorn.co.uk

BOOM (1/4) (with boom, arm shut-off valve, arm-in restriction)

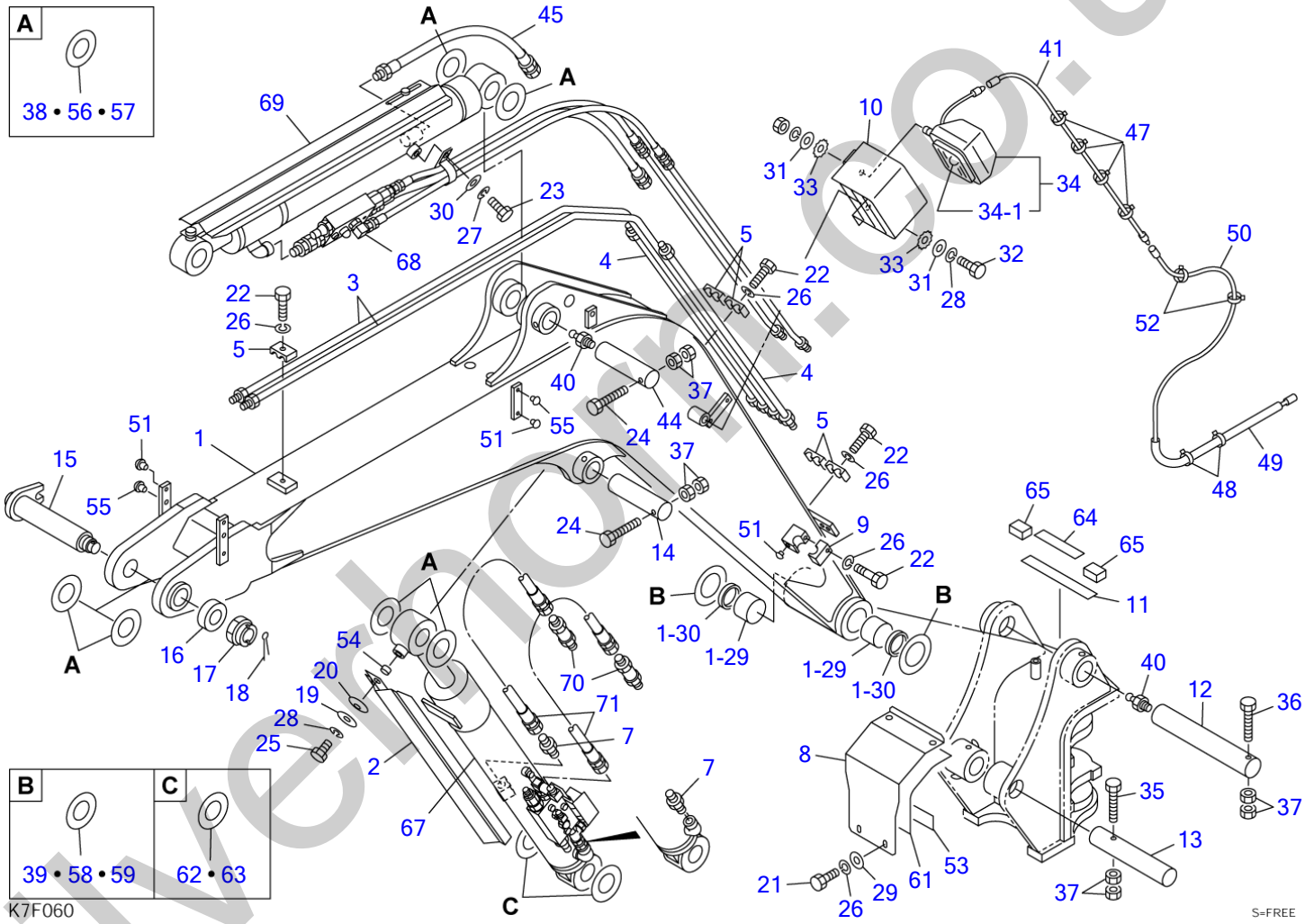

silverhorn.co.uk

BOOM (1/4) (with boom, arm shut-off valve, arm-in restriction)

Item	Part number	Description	Q'ty	Chan.	Serial No.	Serv.	Remarks
68	**0396018300**	EMERGENCY SHUT-OFF VALVE ASSY, arm	1				see page (3/4)
69	**0396018400**	ARM-IN RESTRICTION ASSY	1				see page (4/4)
70	**0396017090**	ADAPTOR	2				
71	**0396017160**	HOSE ASSY	2				18015-20075
	K7f060						

silverhorn.co.uk

BOOM (2/4) (boom shut-off valve)

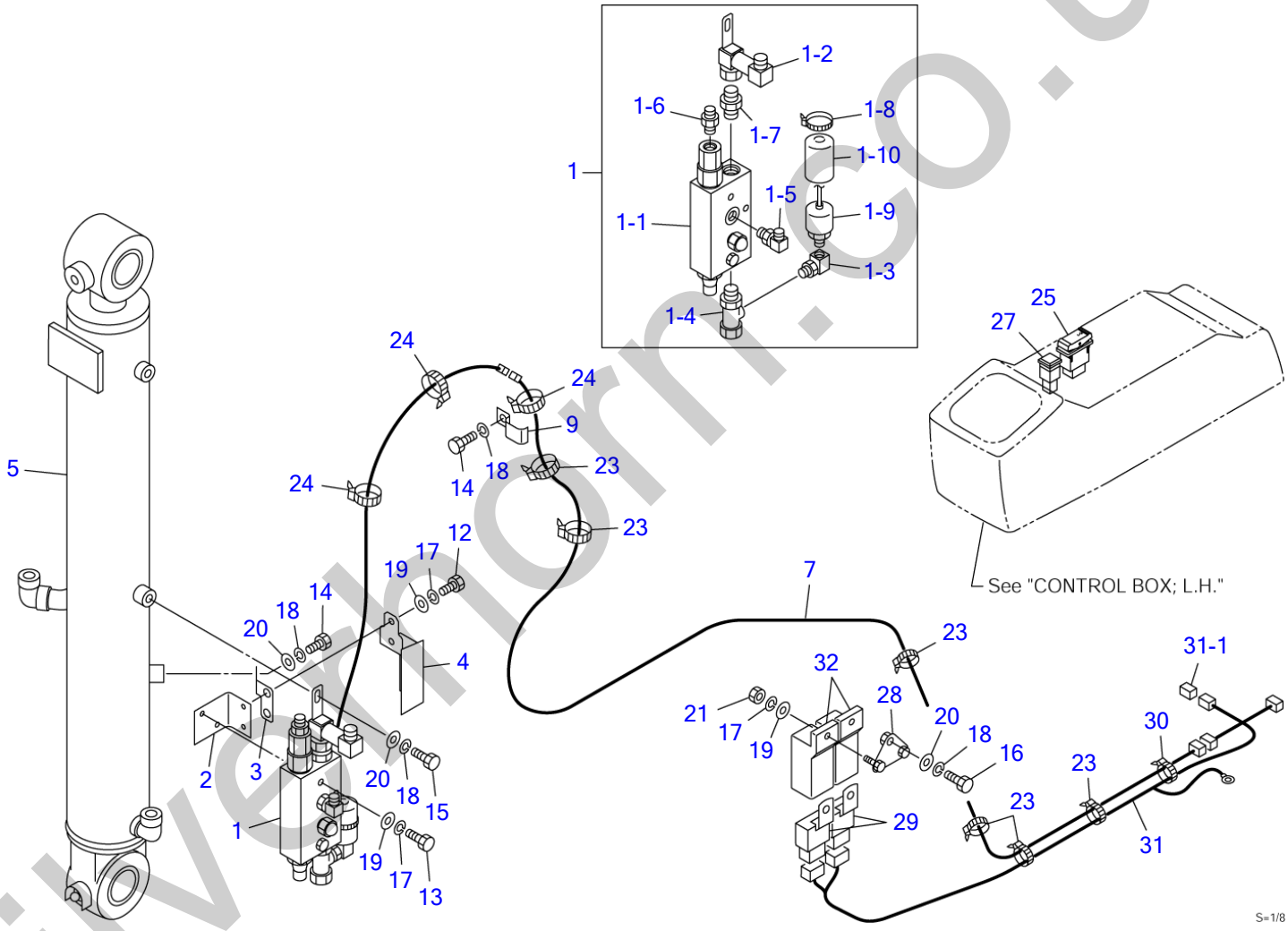

silverthorn.co.uk

BOOM (2/4) (boom shut-off valve)

Item	Part number	Description	Q'ty	Chan.	Serial No.	Serv.	Remarks
0	0396018200	EMERGENCY SHUT-OFF VALVE ASSY, boom	1				
1	0396017210	・VALVE ASSY, emergency shut-off	1				
1-1	1901742700	・・VALVE, emergency shut-off	1				
1-2	0396017220	・・ADAPTOR	1				
1-3	1513300022	・・ELBOW	1				
	1420010110	・・・O-RING	1				
1-4	1513390039	・・ADAPTOR	1				
	1420010180	・・・O-RING	1				
1-5	1515012040	・・ELBOW	1				
	1420010110	・・・O-RING	1				
1-6	1515600200	・・ADAPTOR	1				
	1420010110	・・・O-RING	1				
1-7	1515600202	・・ADAPTOR	1				
	1420010180	・・・O-RING	1				
1-8	1652231250	・・BAND	1				
1-9	1700100081	・・SWITCH, pressure	1				
1-10	1700100061	・・COVER	1				
2	0395009600	・BRACKET	1				
3	0396018230	・BRACKET	1				
4	0396017240	・COVER	1				
5	1900102700	・CYLINDER, boom	1				
7	0395012130	・HARNESS, wiring	1				
9	0395012150	・CLAMP	1				
12	1100040616	・BOLT	2				
13	1100040645	・BOLT	2				
14	1100040816	・BOLT	2				
15	1100040820	・BOLT	1				
16	1100040825	・BOLT	1				
17	1140020006	・WASHER, spring	6				
18	1140020008	・WASHER, spring	4				
19	1141110006	・WASHER	6				
20	1141110008	・WASHER	3				
21	1130040006	・NUT	2				
23	1652201005	・BAND	5				
24	1652201008	・BAND	3				
25	1700008070	・SWITCH, lift alarm	1				
27	1700550024	・ORNAMENT	1				
28	0396018250	・BRACKET	1				
29	1711900042	・RELAY	2				
30	1652231250	・BAND	1				
31	0376015270	・HARNESS, wiring	1				
31-1	1730500008	・・DIODE (3A, yellow)	1				
32	1700100038	・COVER	2				
	K7f070						

silverhorn.co.uk

BOOM (3/4) (arm shut-off valve)

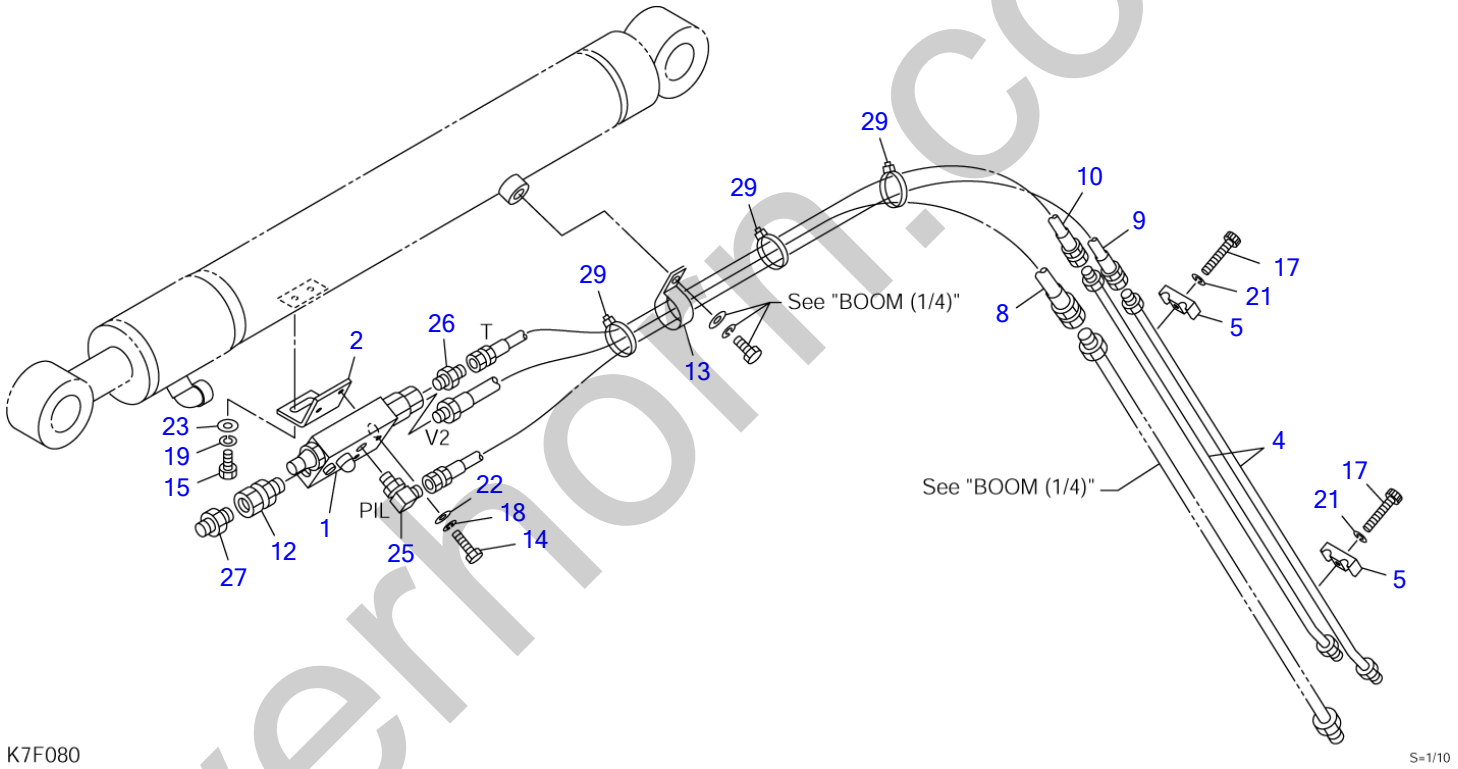

silverthorn.co.uk

BOOM (3/4) (arm shut-off valve)

Item	Part number	Description	Q'ty	Chan.	Serial No.	Serv.	Remarks
0	0396018300	EMERGENCY SHUT-OFF VALVE ASSY, arm	1				
1	1901742800	・VALVE, emergency shut-off	1				
2	0396018320	・BRACKET	1				
4	0395013120	・PIPE	2				
5	0395013130	・CLAMP	2				
8	0395013160	・HOSE ASSY	1				18015-42137
9	0395013170	・HOSE ASSY	1				18010-22139
10	0395013180	・HOSE ASSY	1				18010-22130
12	0007236041	・ADAPTOR	1				
	1420010180	・・O-RING	1				
13	0007300030	・CLAMP	1				
14	1100040645	・BOLT	2				
15	1100040816	・BOLT	1				
17	1110040845	・BOLT	2				
18	1140020006	・WASHER, spring	2				
19	1140020008	・WASHER, spring	2				
21	1140420008	・WASHER, spring	2				
22	1141110006	・WASHER	2				
23	1141110008	・WASHER	2				
25	1515012040	・ELBOW	1				
	1420010110	・・O-RING	1				
26	1515600200	・ADAPTOR	1				
	1420010110	・・O-RING	1				
27	1515600202	・ADAPTOR	1				
	1420010180	・・O-RING	1				
29	1652201008	・BAND	3				
	K7f080						

silverhorn.co.uk

BOOM (4/4) (arm-in restriction)

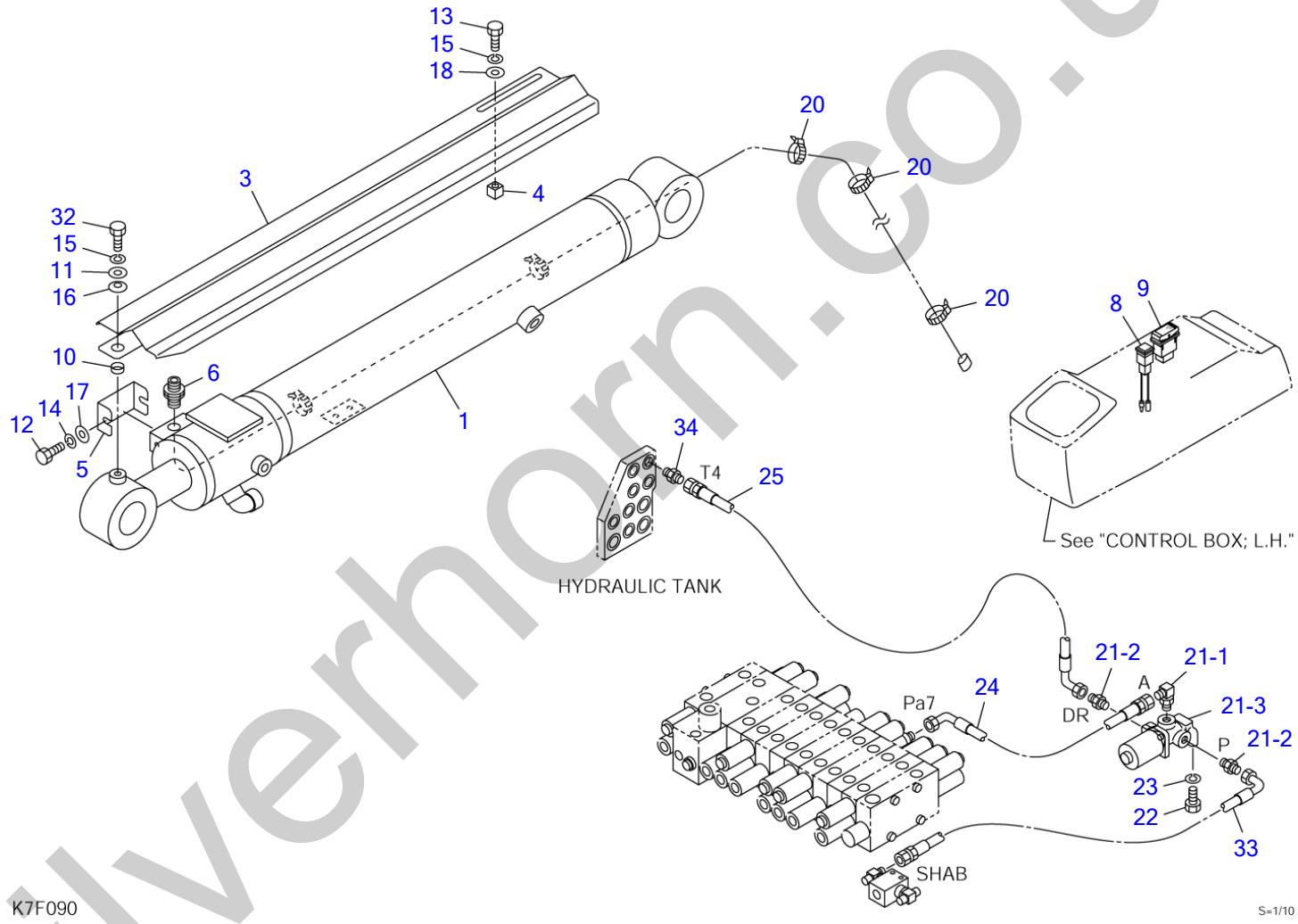

silverhorn.co.uk

BOOM (4/4) (arm-in restriction)

Item	Part number	Description	Q'ty	Chan.	Serial No.	Serv.	Remarks
0	0396018400	ARM-IN RESTRICTION ASSY	1				
1	1900102900	・CYLINDER, arm	1				
3	0396018430	・COVER, rod	1				
4	0376015470	・COLLAR	1				
5	0376015480	・COVER	1				
6	1700009020	・SENSOR	1				
8	1700550036	・LAMP, pilot	1				
9	1700008090	・SWITCH	1				
10	0003600228	・COLLAR	1				
11	0003610002	・WASHER	1				
12	1100040816	・BOLT	2				
13	1100041016	・BOLT	1				
14	1140020008	・WASHER, spring	2				
15	1140020010	・WASHER, spring	2				
16	1225120018	・WASHER, conical	1				
17	1141110008	・WASHER	2				
18	1141110010	・WASHER	1				
20	1652200004	・BAND	7				
21	0376015560	・VALVE ASSY, solenoid	1				
21-1	1515012040	・・ELBOW	1				
	1420010110	・・・O-RING	1				
21-2	1515600200	・・ADAPTOR	2				
	1420010110	・・・O-RING	1				
21-3	1901750800	・・VALVE, solenoid	1				
22	1100040620	・BOLT	2				
23	1140020006	・WASHER, spring	2				
24	0376015570	・HOSE ASSY	1				19347-52030
25	0376015580	・HOSE ASSY	1				19347-52095
32	1100041020	・BOLT	1				
33	0396018440	・HOSE ASSY	1				19348-52049
34	1515600200	・ADAPTOR	1				
	1420010110	・・O-RING	1				
	K7f091						

silverhorn.co.uk

ARM

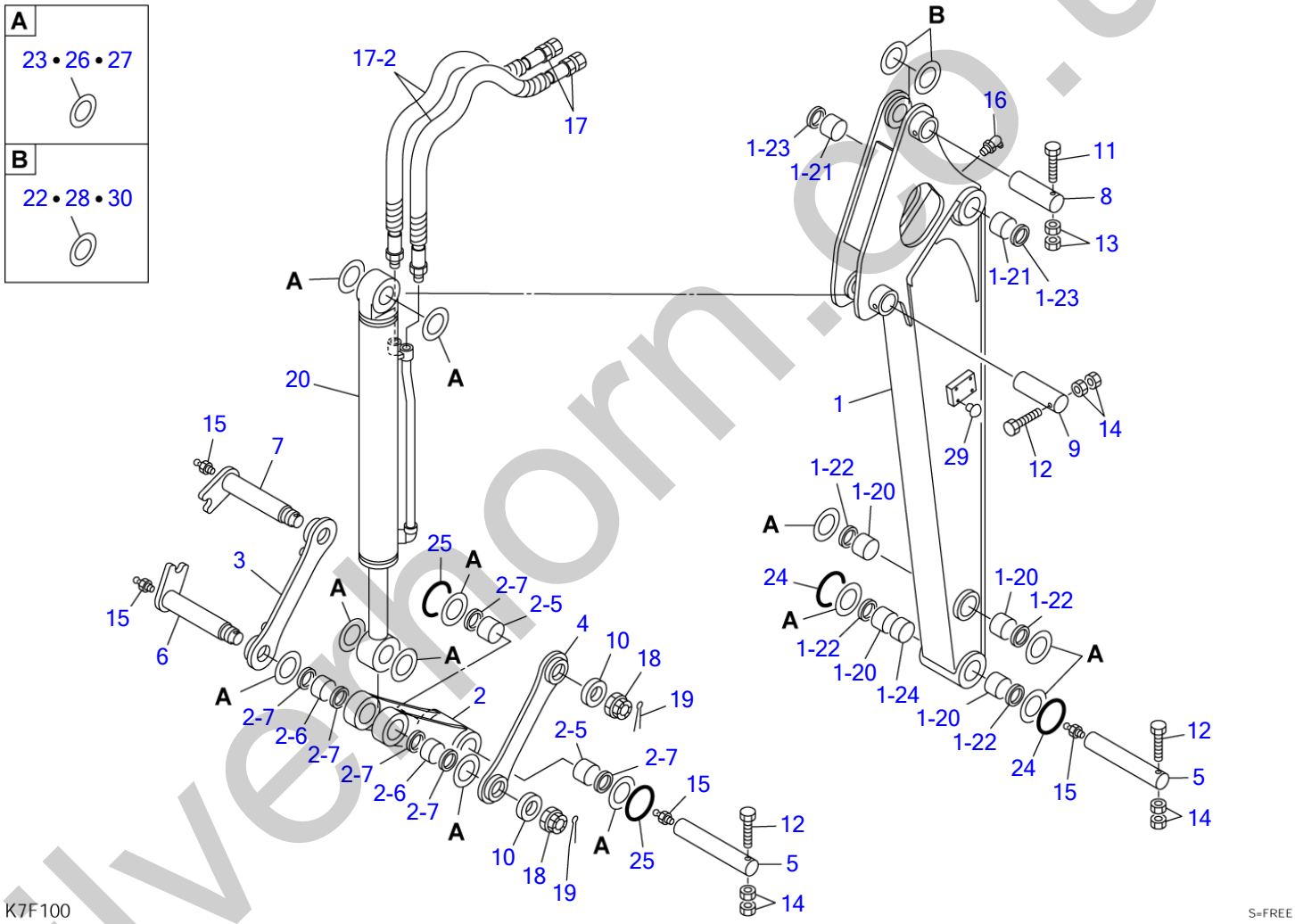

silverthorn.co.uk

ARM

Item	Part number	Description	Q'ty	Chan.	Serial No.	Serv.	Remarks
		ARM ASSY					
1	0396121000	ARM SUB ASSY	1				
1-20	0002400040	・BUSHING	4				
1-21	0002400050	・BUSHING	2				
1-22	1432200045	・SEAL, dust	4				
1-23	1432200050	・SEAL, dust	2				
1-24	0003048001	・COLLAR	1				
2	0396115500	LINK ASSY, bucket	1				
2-5	0002400040	・BUSHING	2				
2-6	0002100027	・BUSHING	2				
2-7	1432200045	・SEAL, dust	6				
3	0396107400	LINK, guide (R.H.)	1				
4	0396107500	LINK, guide (L.H.)	1				
5	0001524502	PIN	2				
6	0001794012	PIN	1				
7	0001794013	PIN	1				
8	0001615003	PIN	1				
9	0001614004	PIN	1				
10	0003900020	WASHER	2				
11	1103041295	BOLT	1				
12	1103041085	BOLT	3				
13	1130240012	NUT	2				
14	1130240010	NUT	6				
15	1560001000	FITTING, grease	4				
16	1560001675	FITTING, grease	1				
17	0396110900	HOSE ASSY	2				18015-42095
17-2	1532224082	・PROTECTOR	1				sold by the meter
18	1132630030	NUT	2				
19	1210010655	PIN, split	2				
20	1900075800	CYLINDER, bucket	1				
22	0003600096	SHIM	AR				t=1.0
23	0456008600	SHIM	AR				t=1.0
24	1432900046	O-RING	2				
25	1432900008	O-RING	2				
26	0003600055	SHIM	AR				t=0.2
27	0003600056	SHIM	AR				t=0.5
28	0003600060	SHIM	AR				t=0.2
29	1652533016	CAP	8				
30	0003600061	SHIM	AR				t=0.5
	K7f101						

silverhorn.co.uk

MIDDLE ARM (for HUPPENKOTHEN)

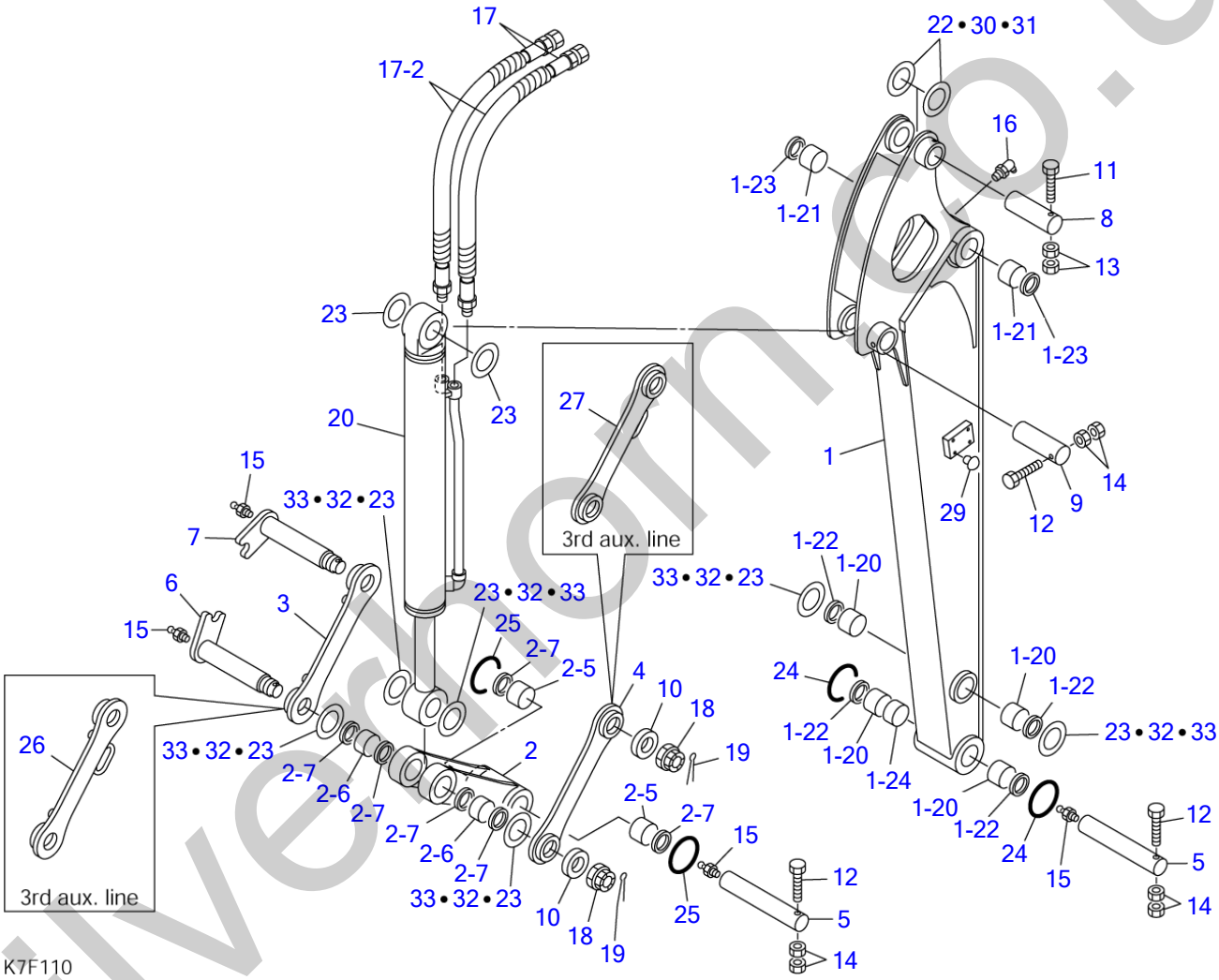

silverhorn.co.uk

MIDDLE ARM (for HUPPENKOTHEN)

Item	Part number	Description	Q'ty	Chan.	Serial No.	Serv.	Remarks
		ARM ASSY, middle					
		ARM ASSY, middle (with 3rd aux. line)					
1	0396121300	ARM SUB ASSY, middle	1				1600mm long
1-20	0002400040	・BUSHING	4				
1-21	0002400050	・BUSHING	2				
1-22	1432200045	・SEAL, dust	4				
1-23	1432200050	・SEAL, dust	2				
1-24	0003048001	・COLLAR	1				
2	0396115500	LINK ASSY, bucket	1				
2-5	0002400040	・BUSHING	2				
2-6	0002100027	・BUSHING	2				
2-7	1432200045	・SEAL, dust	6				
3	0396107400	LINK, guide (R.H.)	1				
4	0396107500	LINK, guide (L.H.)	1				
5	0001524502	PIN	2				
6	0001794012	PIN	1				
7	0001794013	PIN	1				
8	0001615003	PIN	1				
9	0001614004	PIN	1				
10	0003900020	WASHER	2				
11	1103041295	BOLT	1				
12	1103041085	BOLT	3				
13	1130240012	NUT	2				
14	1130240010	NUT	6				
15	1560001000	FITTING, grease	4				
16	1560001675	FITTING, grease	1				
17	0396117900	HOSE ASSY	2				18015-42110
17-2	1532224082	・PROTECTOR	1				sold by the meter
18	1132630030	NUT	2				
19	1210010655	PIN, split	2				
20	1900075800	CYLINDER, bucket	1				
22	0003600096	SHIM	AR				t=1.0
23	0456008600	SHIM	AR				t=1.0
24	1432900046	O-RING	2				
25	1432900008	O-RING	2				
26	0396118560	PLATE	1				with 3rd aux. line
27	0396118570	PLATE	1				with 3rd aux. line
29	1652533016	CAP	8				
30	0003600061	SHIM	AR				t=0.5
31	0003600060	SHIM	AR				t=0.2
32	0003600056	SHIM	AR				t=0.5
33	0003600055	SHIM	AR				t=0.2
	K7f111						

silverhorn.co.uk

ARM (long arm)

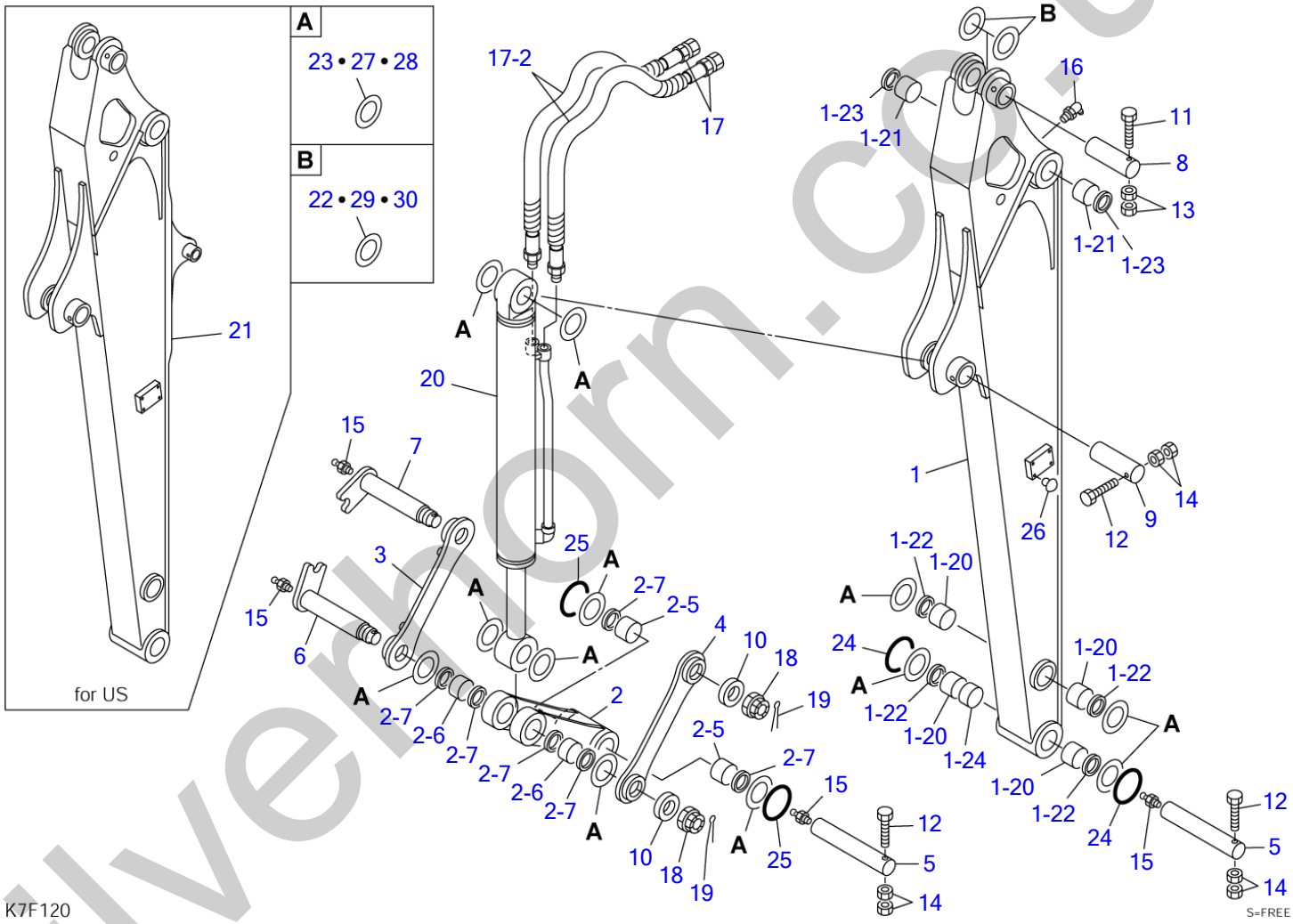

silverthorn.co.uk

ARM (long arm)

Item	Part number	Description	Q'ty	Chan.	Serial No.	Serv.	Remarks
		LONG ARM ASSY					
		LONG ARM ASSY (for US)					
1	0396121500	LONG ARM SUB ASSY	1				
1-20	0002400040	・BUSHING	4				
1-21	0002400050	・BUSHING	2				
1-22	1432200045	・SEAL, dust	4				
1-23	1432200050	・SEAL, dust	2				
1-24	0003048001	・COLLAR	1				
2	0396115500	LINK ASSY, bucket	1				
2-5	0002400040	・BUSHING	2				
2-6	0002100027	・BUSHING	2				
2-7	1432200045	・SEAL, dust	6				
3	0396107400	LINK, guide (R.H.)	1				
4	0396107500	LINK, guide (L.H.)	1				
5	0001524502	PIN	2				
6	0001794012	PIN	1				
7	0001794013	PIN	1				
8	0001615003	PIN	1				
9	0001614004	PIN	1				
10	0003900020	WASHER	2				
11	1103041295	BOLT	1				
12	1103041085	BOLT	3				
13	1130240012	NUT	2				
14	1130240010	NUT	6				
15	1560001000	FITTING, grease	4				
16	1560001675	FITTING, grease	1				
17	0396112300	HOSE ASSY	2				18015-42116
17-2	1532224103	・PROTECTOR	1				sold by the meter
18	1132630030	NUT	2				
19	1210010655	PIN, split	2				
20	1900075800	CYLINDER, bucket	1				
21	0396121700	LONG ARM SUB ASSY (for US)	1				
22	0003600096	SHIM	AR				t=1.0
23	0456008600	SHIM	AR				t=1.0
24	1432900046	O-RING	2				
25	1432900008	O-RING	2				
26	1652533016	CAP	8				
27	0003600055	SHIM	AR				t=0.2
28	0003600056	SHIM	AR				t=0.5
29	0003600060	SHIM	AR				t=0.2
30	0003600061	SHIM	AR				t=0.5
	K7f121						

silverhorn.co.uk

ARM (BREAKER TYPE)

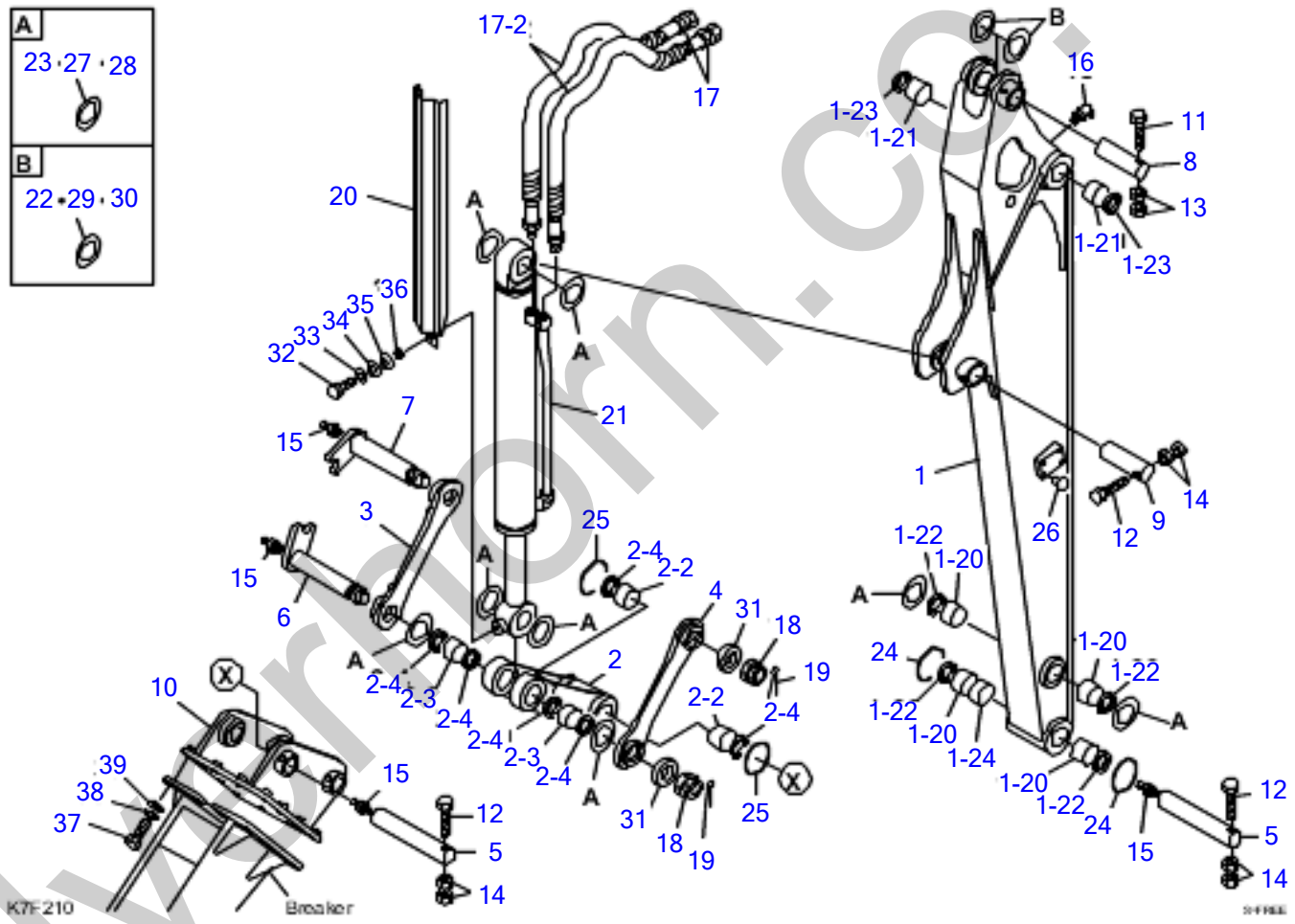

silverthorn.co.uk

ARM (BREAKER TYPE)

Item	Part number	Description	Q'ty	Chan.	Serial No.	Serv.	Remarks
1	0396122100	LONG ARM SUB ASSY	1				
1-20	0002400040	* BUSHING	4				
1-21	0002400050	* BUSHING	2				
1-22	1432200045	* DUST SEAL	4				
1-23	1432200050	* DUST SEAL	2				
1-24	0003048000	* COLLAR	1				
2	0396115500	BUCKET LINK ASSY	1				
2-2	0002400040	* BUSHING	2				
2-3	0002100027	* BUSHING	2				
2-4	1432200045	* DUST SEAL	6				
3	0396107400	LINK GUIDE (RH)	1				
4	0396107500	LINK GUIDE (LH)	1				
5	0001524502	PIN	2				
6	0001794012	PIN	1				
7	0001794013	PIN	1				
8	0001615003	PIN	1				
9	0001614004	PIN	1				
10	0396122210	PLATE	1				
11	1103041295	BOLT	1				
12	1103041085	BOLT	3				
13	1130240012	NUT	2				
14	1130240010	NUT	6				
15	1560001000	GREASE FITTING	4				
16	1560001675	GREASE FITTING	1				
17	0396112300	HOSE ASSY	2				
17-2	1532224103	* PROTECTOR	1				
18	1132630030	NUT	2				
19	1210010655	SPLIT PIN	2				
20	0396122220	COVER	1				
21	1900107600	BUCKET CYLINDER	1				
22	0003600096	SHIM					
23	0456008600	SHIM					
24	1432900046	O-RING	2				
25	1432900008	O-RING	2				
26	1652533016	CAP	8				
27	0003600055	SHIM					
28	0003600056	SHIM					
29	0003600060	SHIM					
30	0003600061	SHIM					
31	0003900020	WASHER	2				
32	1100041020	BOLT	1				
33	1140020010	SPRING WASHER	1				
34	0003610002	WASHER	1				
35	1225120018	CONICAL WASHER	1				
36	0003600237	COLLAR	1				
37	1100091850	BOLT	12				
38	1140190018	SPRING WASHER	12				
39	1141190018	WASHER	12				
	K7F210						

silvethorn.co.uk

BUCKET 1

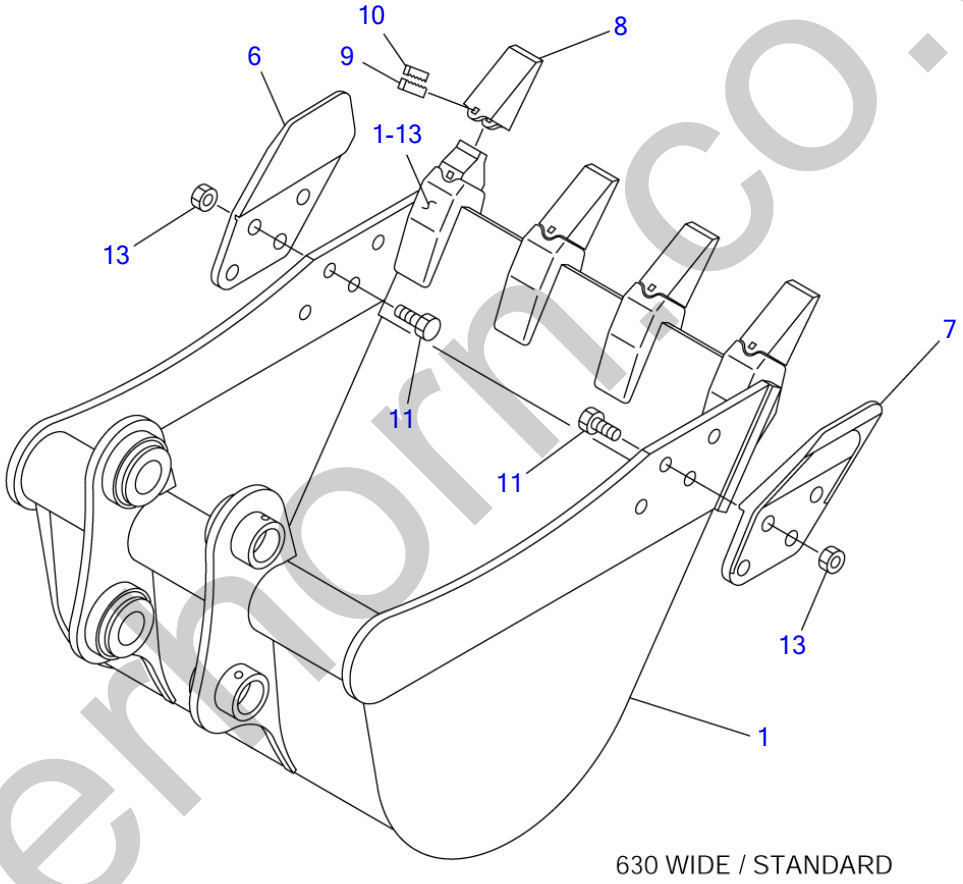

K3F210

S=1/8

silvermorn.co.uk

BUCKET 1

Item	Part number	Description	Q'ty	Chan.	Serial No.	Serv.	Remarks
0	0396217200	BUCKET ASSY	1				630wide
	0396217300	BUCKET ASSY	1				530wide
1	X **********	・BUCKET	1				
1-13	1914200381	・・ADAPTOR, tooth	4				
6	1914210001	・CUTTER (R.H.)	1				
7	1914210002	・CUTTER (L.H.)	1				
8	1914200182	・POINT, tooth	4				
9	1914200183	・PIN, lock	4				
10	1914200184	・PIN	4				
11	1100051635	・BOLT	8				
13	1130050016	・NUT	8				
	K3f210						

silverhorn.co.uk

BUCKET 2

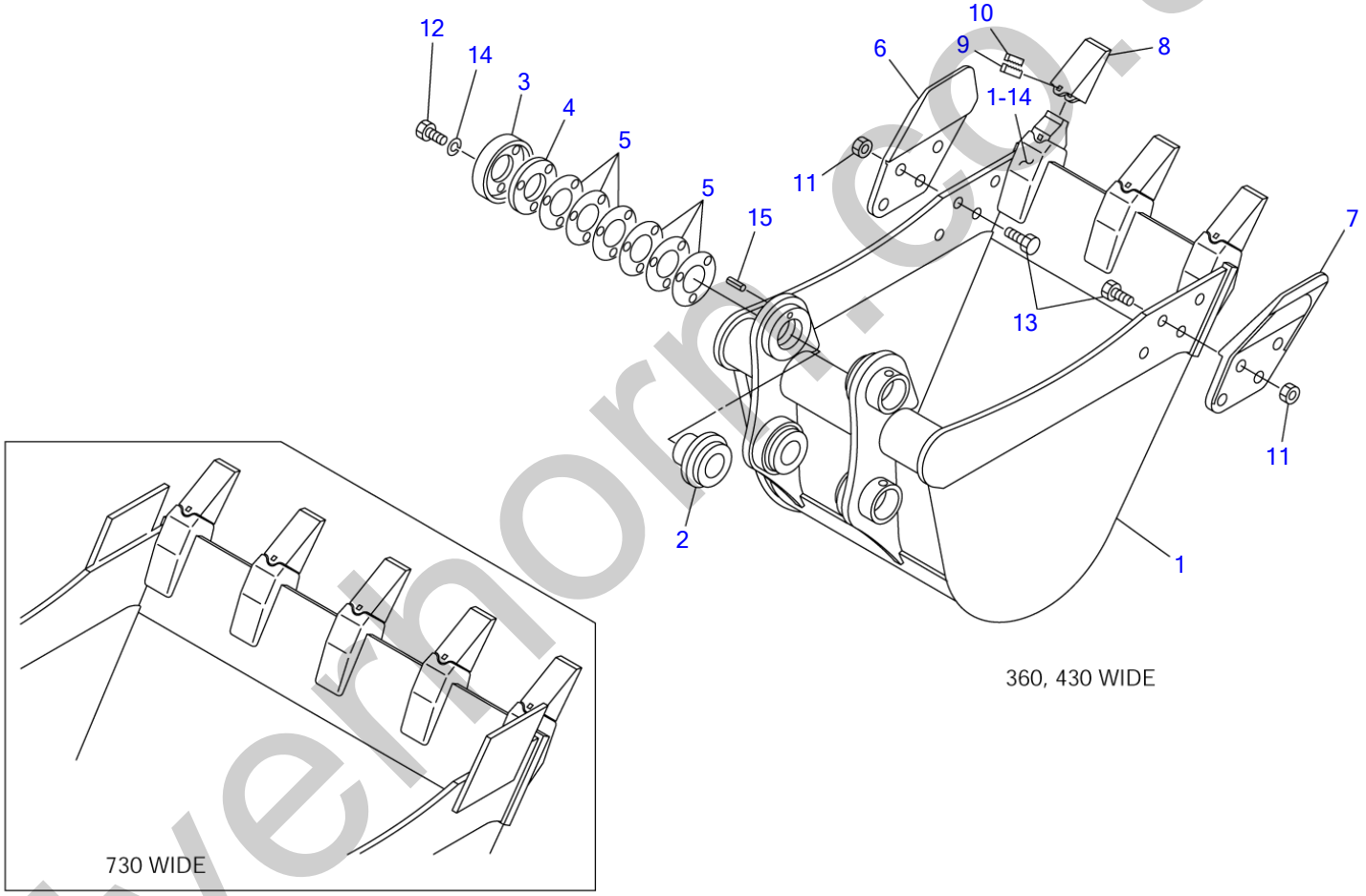

K7F130

S=1/10

silverthorn.co.uk

BUCKET 2

Item	Part number	Description	Q'ty	Chan.	Serial No.	Serv.	Remarks
0	0396202000	BUCKET ASSY	1				430wide
	0396205000	BUCKET ASSY	1				730wide
	0396206000	BUCKET ASSY	1				360wide
1	X **********	・BUCKET	1				
1-14	1914200381	・・ADAPTOR, tooth	3				360W, 430W
	1914200381	・・ADAPTOR, tooth	5				730W
2	0396201200	・BUSHING	1				
3	0396201300	・PLATE, end	1				
4	0396200400	・FLANGE	1				
5	0396200500	・SHIM	6				
6	1914210001	・CUTTER, side (R.H.)					
7	1914210002	・CUTTER, side (L.H.)					
8	1914200182	・POINT, tooth	3				360W, 430W
	1914200182	・POINT, tooth	5				730W
9	1914200183	・PIN, lock	3				360W, 430W
	1914200183	・PIN, lock	5				730W
10	1914200184	・PIN	3				360W, 430W
	1914200184	・PIN	5				730W
11	1101051635	・BOLT	8				
12	1100051025	・BOLT	3				
13	1130550016	・NUT	8				
14	1140010010	・WASHER, spring	3				
15	1213000832	・PIN, sping	1				
	K7f130						

silverhorn.co.uk

BUCKET 3

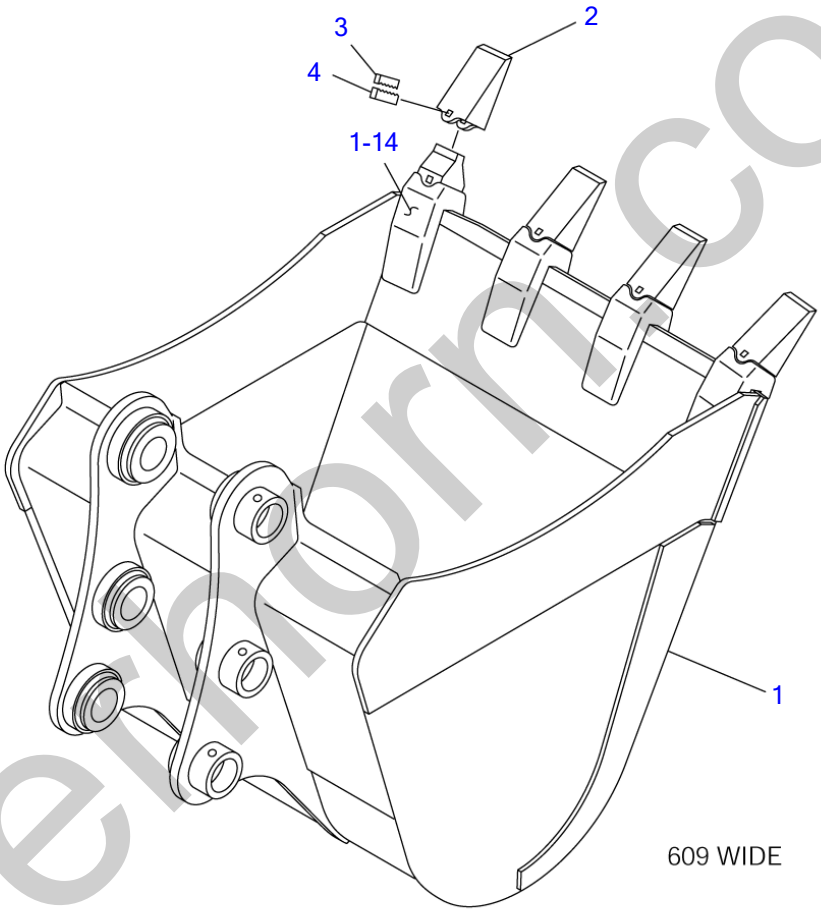

K3F220

S=1/8

silvermorrico.uk

BUCKET 3

Item	Part number	Description	Q'ty	Chan.	Serial No.	Serv.	Remarks
0	0396217400	BUCKET ASSY	1				610wide
1	X **********	・BUCKET	1				
1-14	1914200381	・・ADAPTOR, tooth	4				
2	1914200182	・POINT, tooth	4				
3	1914200184	・PIN	4				
4	1914200183	・PIN	4				
	K3f220						

silverhorn.co.uk

AUXILIARY LINE

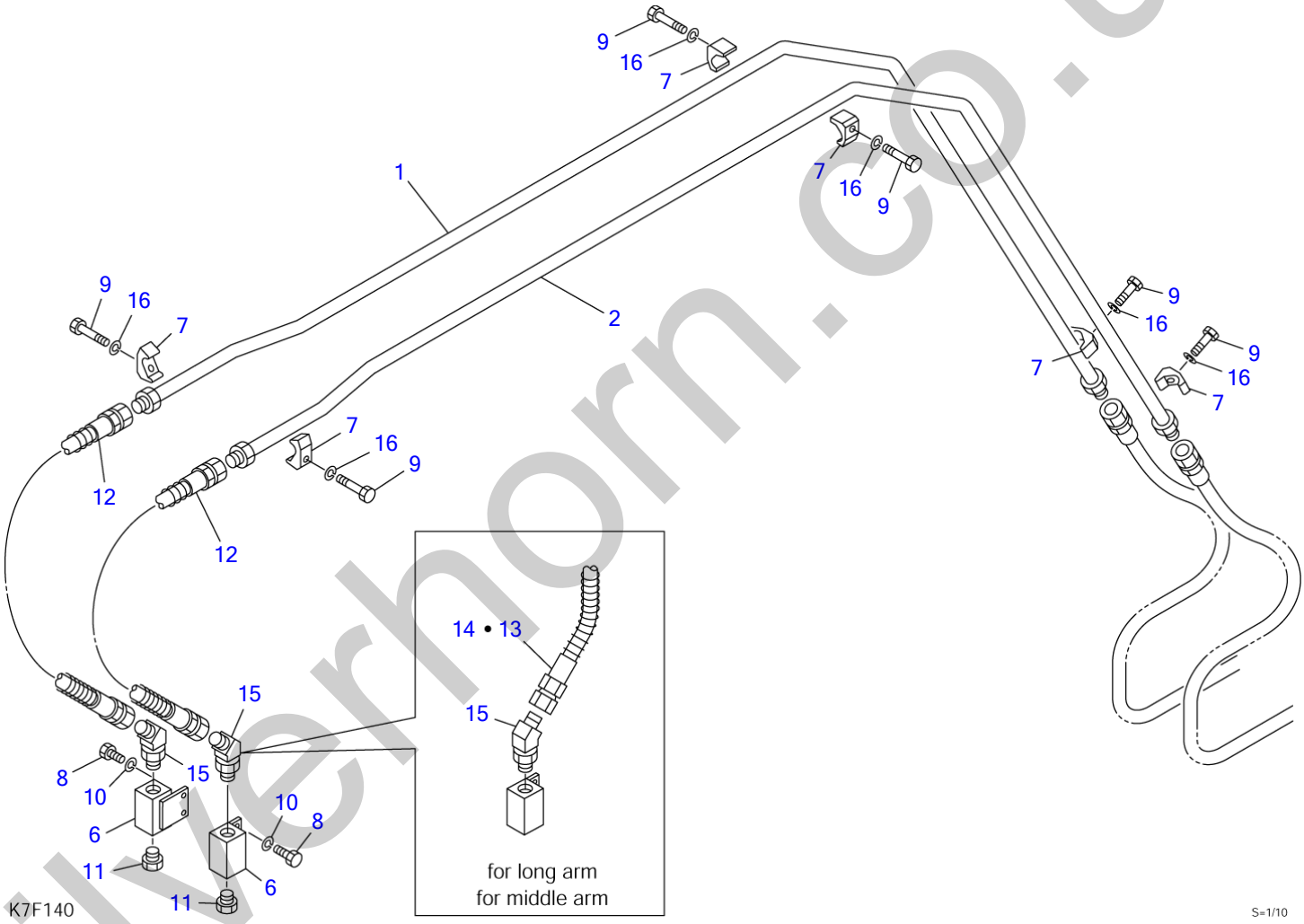

silverhorn.co.uk

AUXILIARY LINE

Item	Part number	Description	Q'ty	Chan.	Serial No.	Serv.	Remarks
0	0397327300	LINE ASSY, auxiliary	1				
	0397327500	LINE ASSY, auxiliary (long arm)	1				
	0397327400	LINE ASSY, auxiliary (middle arm)	1				
1	0397327310	・PIPE (R.H.)	1				
2	0397327320	・PIPE (L.H.)	1				
6	1901719800	・VALVE, stop	2				
7	1534100218	・CLAMP	6				
8	1100040816	・BOLT	4				
9	1100041045	・BOLT	6				
10	1140020008	・WASHER, spring	4				
11	1501750004	・PLUG	2				
	1420010180	・・O-RING	1				
12	1801640092	・HOSE ASSY	2				
13	1801640104	・HOSE ASSY	2				for middle arm
14	1801640120	・HOSE ASSY	2				for long arm
15	1515100112	・ELBOW	2				
	1420010180	・・O-RING	1				
16	1140020010	・WASHER, spring	6				
	K7f140						

silverhorn.co.uk

AUXILIARY LINE (high flow)

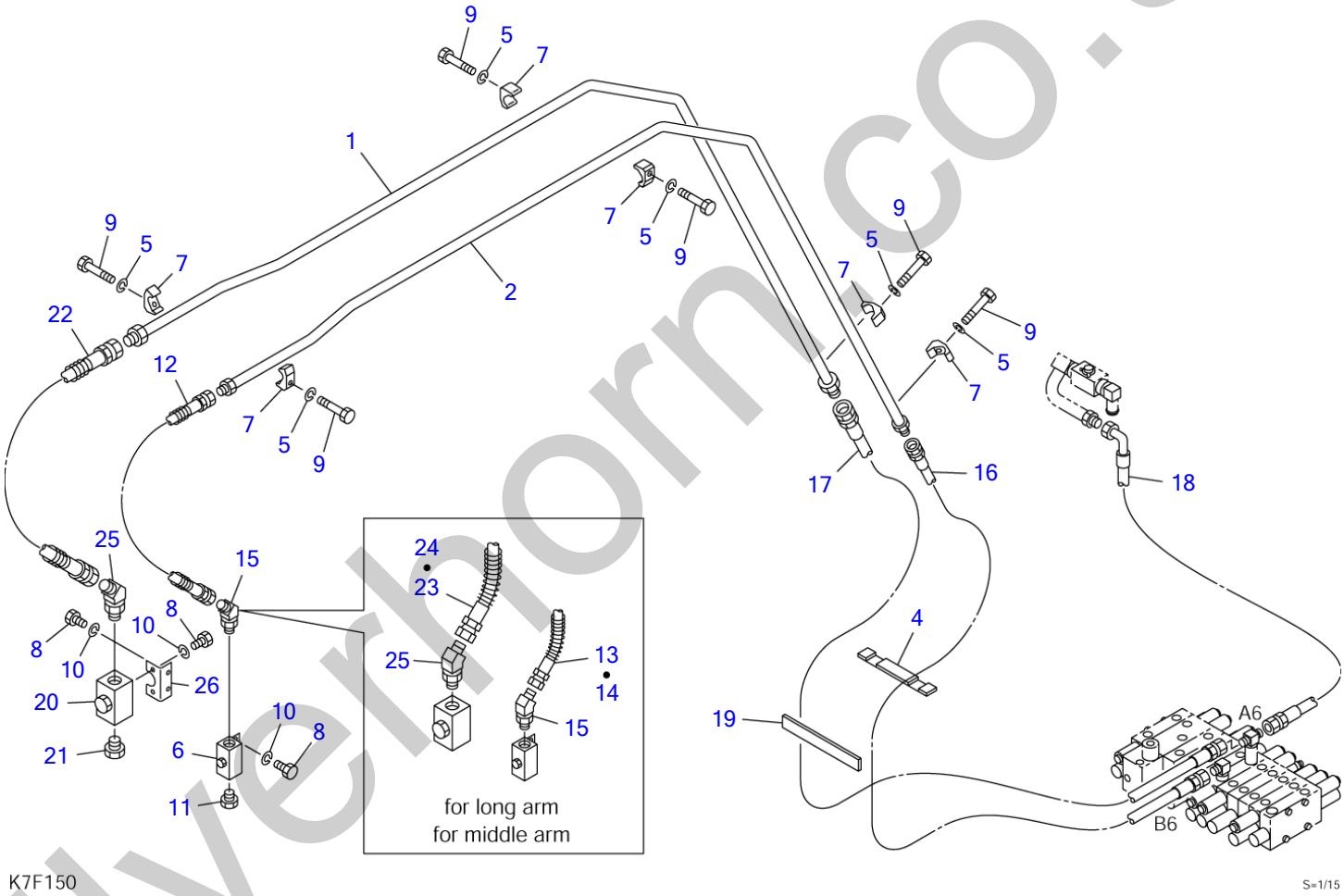

silverhorn.co.uk

AUXILIARY LINE (high flow)

Item	Part number	Description	Q'ty	Chan.	Serial No.	Serv.	Remarks
0	0397327600	LINE ASSY, auxiliary	1				
	0397327800	LINE ASSY, auxiliary (long arm)	1				
	0397327700	LINE ASSY, auxiliary (middle arm)	1				
1	0397327610	・PIPE (R.H.)	1				
2	0397327320	・PIPE (L.H.)	1				
4	0397309340	・RUBBER	1				
5	1140020010	・WASHER, spring	6				
6	1901719800	・VALVE , stop	1				
7	1534100218	・CLAMP	6				
8	1100040816	・BOLT	6				
9	1100041045	・BOLT	6				
10	1140020008	・WASHER, spring	6				
11	1501750004	・PLUG	1				
	1420010180	・・O-RING	1				
12	1801670092	・HOSE ASSY	1				
13	1801670104	・HOSE ASSY	1				for middle arm
14	1801670118	・HOSE ASSY	1				for long arm
15	1515100112	・ELBOW	1				
	1420010180	・・O-RING	1				
16	0397327620	・HOSE ASSY	1				18019-70230
17	0397327630	・HOSE ASSY	1				18019-30245
18	0397327640	・HOSE ASSY	1				
19	0397309350	・RUBBER	1				
20	1901723700	・VALVE , stop	1				
21	1501750006	・PLUG	1				
	1420010240	・・O-RING	1				
22	1801650092	・HOSE ASSY	1				
23	1801650104	・HOSE ASSY	1				for middle arm
24	1801650118	・HOSE ASSY	1				for long arm
25	1515100113	・ELBOW	1				
	1420010240	・・O-RING	1				
26	0397309380	・PLATE	1				
	K7f151						

silverhorn.co.uk

2ND AUXILIARY LINE

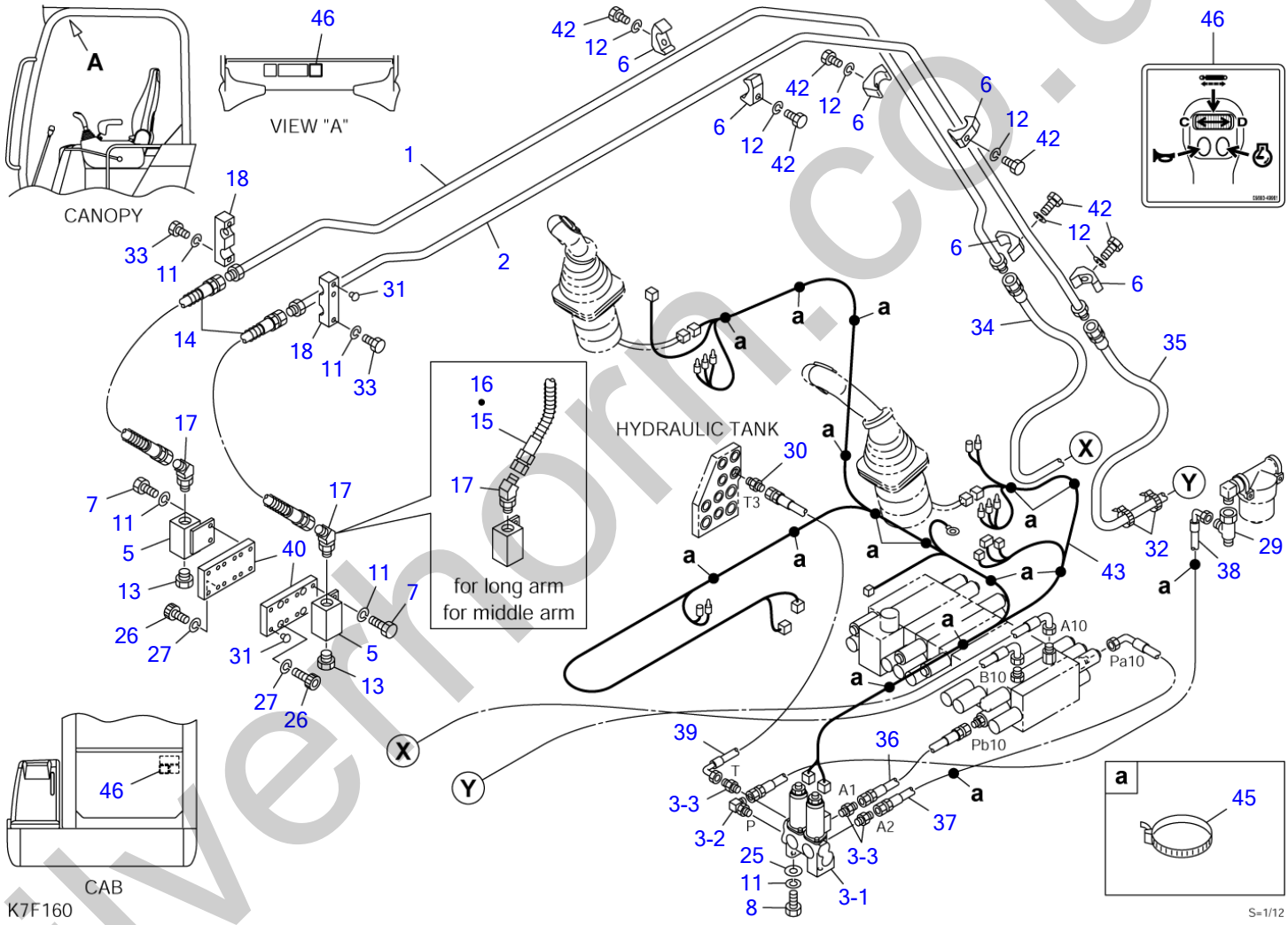

silvermorn.co.uk

2ND AUXILIARY LINE

Item	Part number	Description	Q'ty	Chan.	Serial No.	Serv.	Remarks
0	0397327900	LINE ASSY, 2nd aux.	1				
	0397328000	LINE ASSY, 2nd aux. (middle arm)	1				
	0397328100	LINE ASSY, 2nd aux. (long arm)	1				
	0397328200	LINE ASSY, 2nd aux. (3rd aux. high press. type)	1				
	0397328300	LINE ASSY, 2nd aux. (middle arm) (3rd aux. high press. type)	1				
	0397328400	LINE ASSY, 2nd aux. (long arm) (3rd aux. high press. type)	1				
1	0397327910	・PIPE (R.H.)	1				
2	0397327920	・PIPE (L.H.)	1				
3	0377312540	・VALVE ASSY, solenoid	1				
3-1	1901752100	・・VALVE, solenoid	1				
3-2	1512375004	・・ELBOW	1				
	1420010110	・・・O-RING	1				
3-3	1515600200	・・ADAPTOR	3				
	1420010110	・・・O-RING	1				
5	1901719800	・VALVE, stop	2				
6	1534100218	・CLAMP	6				
7	1100040816	・BOLT	4				
8	1100040825	・BOLT	2				
11	1140020008	・WASHER, spring	10				
12	1140020010	・WASHER, spring	6				
13	1501750004	・PLUG	2				
	1420010180	・・O-RING	1				
14	1801640080	・HOSE ASSY	2				
15	1801640094	・HOSE ASSY	2				middle arm
16	1801640108	・HOSE ASSY	2				for long arm
17	1515100112	・ELBOW	2				
	1420010180	・・O-RING	1				
18	0397326218	・CLAMP	2				
25	1141110008	・WASHER	2				
26	1110040816	・SCREW, cap	8				
27	1140420008	・WASHER, spring	8				
29	1513390043	・TEE	1				
30	1515600200	・ADAPTOR	1				
	1420010110	* * O-RING	1				
31	1652533016	・CAP	6				
32	1652201007	・BAND	2				
33	1100040845	・BOLT	4				
34	0397328340	・HOSE ASSY	1				18019-21250
35	0397328350	・HOSE ASSY (without 3rd aux. high press. type)	1				18019-21258
36	0397328360	・HOSE ASSY	1				19347-22026
37	0397328370	・HOSE ASSY	1				19347-52066
38	0397328380	・HOSE ASSY	1				18010-52122
39	0397328390	・HOSE ASSY	1				18010-52128
40	0377313740	・PLATE	2				
42	1100041045	・BOLT	6				
43	0377313750	・HARNESS, wiring	1				
45	1652231250	・BAND	16				
46	0569349961	・DECAL	1				
	K7f161						

silvershorn.co.uk

3RD AUXILIARY LINE (1/2)

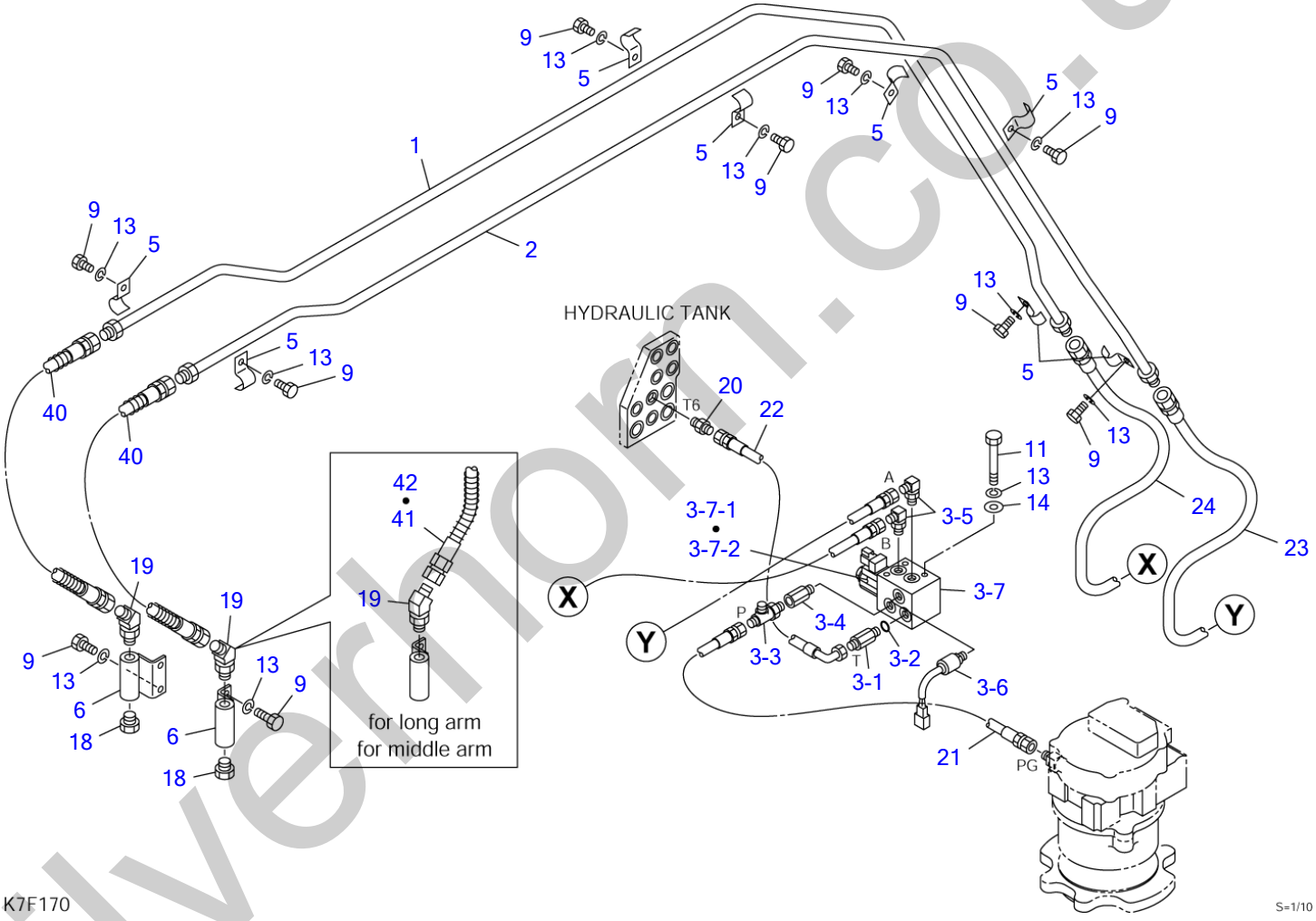

silverhorn.co.uk

3RD AUXILIARY LINE (1/2)

Item	Part number	Description	Q'ty	Chan.	Serial No.	Serv.	Remarks
0	0397328500	LINE ASSY, 3rd aux.	1				
	0397328600	LINE ASSY, 3rd aux. (middle arm)	1				
	0397328700	LINE ASSY, 3rd aux. (long arm)	1				
1	0397328510	・PIPE (R.H.)	1				
2	0397328520	・PIPE (L.H.)	1				
3	0397328530	・VALVE ASSY, solenoid	1				
3-1	0007203034	・・ADAPTOR	1				
3-2	1420010110	・・O-RING	1				
3-3	1512370011	・・TEE	1				
	1420010110	・・・O-RING	1				
3-4	1513370046	・・BUSHING (with filter)	1				
	1420010110	・・・O-RING	1				
3-5	1515012040	・・ELBOW	2				
	1420010110	・・・O-RING	1				
3-6	1700100065	・・SWITCH, pressure	1				
	1420010110	・・・O-RING	1				
3-7	1901750700	・・VALVE, solenoid	1				
3-7-1	1901741402	・・・SOLENOID	1				
3-7-2	1901750703	・・・COIL	1				
5	0567336070	・CLAMP	8				
6	0377312760	・ADAPTOR	2				
9	1100040816	・BOLT	12				
11	1100040875	・BOLT	2				
13	1140020008	・WASHER, spring	14				
14	1141110008	・WASHER	2				
18	1501750002	・PLUG	2				
	1420010110	・・O-RING	1				
19	1515100110	・ELBOW	2				
	1420010110	・・O-RING	1				
20	1515600200	・ADAPTOR	1				
	1420010110	・・O-RING	1				
21	0397328610	・HOSE ASSY	1				18010-22060
22	0397328620	・HOSE ASSY	1				
23	0397328630	・HOSE ASSY	1				18019-00240
24	0397328640	・HOSE ASSY	1				18019-00240
40	1801032072	・HOSE ASSY	2				
41	1801032086	・HOSE ASSY	2				middle arm
42	1801032102	・HOSE ASSY	2				for long arm
	K7f171						

silverhorn.co.uk

3RD AUXILIARY LINE (2/2)

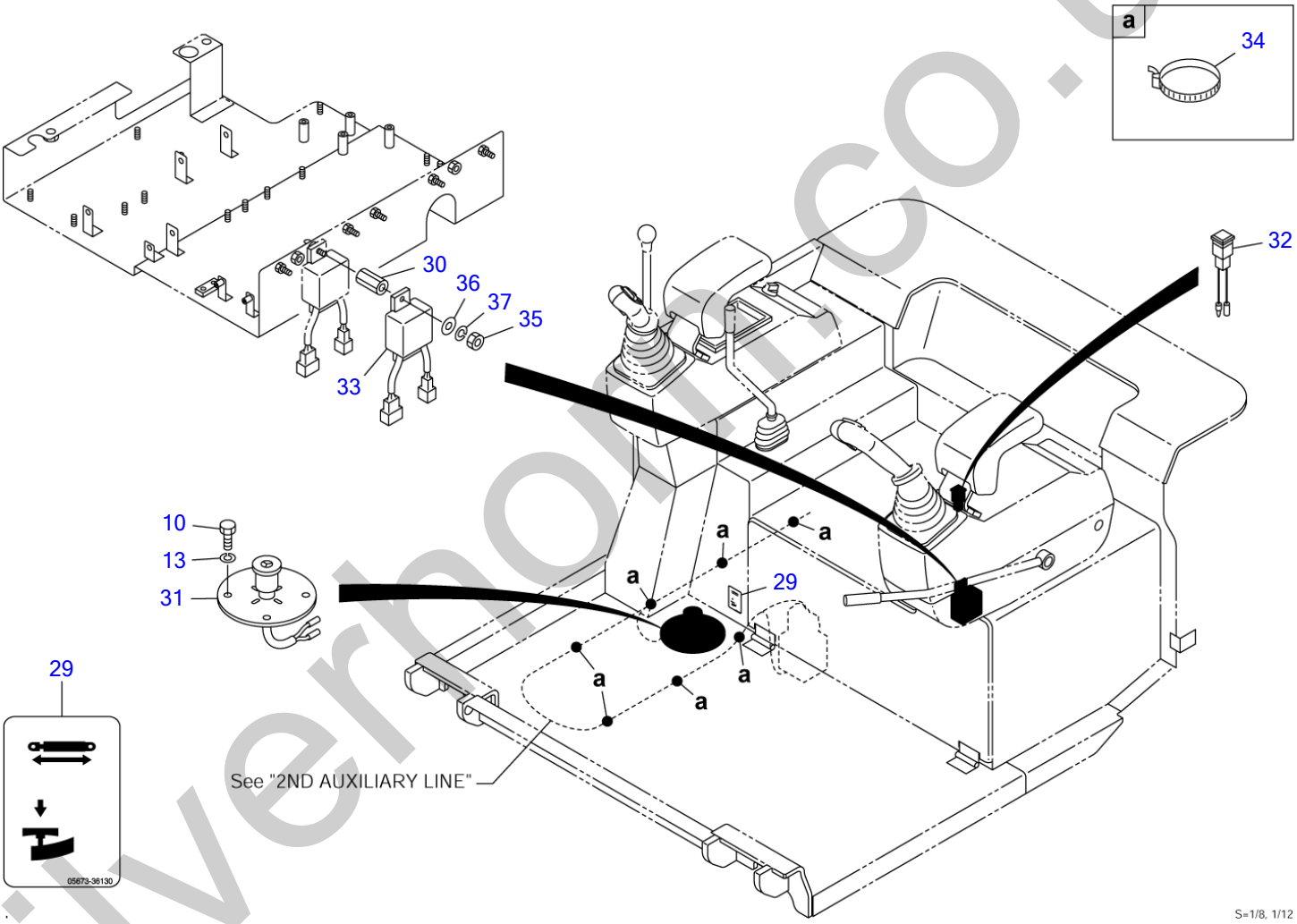

silverhorn.co.uk

3RD AUXILIARY LINE (2/2)

Item	Part number	Description	Q'ty	Chan.	Serial No.	Serv.	Remarks
0	0397328500	LINE ASSY, 3rd aux.	1				
	0397328600	LINE ASSY, 3rd aux. (middle arm)	1				
	0397328700	LINE ASSY, 3rd aux. (long arm)	1				
10	1100040820	・BOLT	4				
13	1140020008	・WASHER, spring	4				
29	0567336130	・DECAL	1				
30	1134830625	・NUT	1				
31	1700100064	・SWITCH, foot	1				
32	1700550032	・LAMP, pilot	1				
33	1711900062	・RELAY	1				
34	1652231250	・BAND	5				
35	1130040006	・NUT	1				
36	1141110006	・WASHER	1				
37	1140020006	・WASHER, spring	1				
	K7f181						

silverhorn.co.uk

3RD AUXILIARY LINE (1/2) (high pressure type)

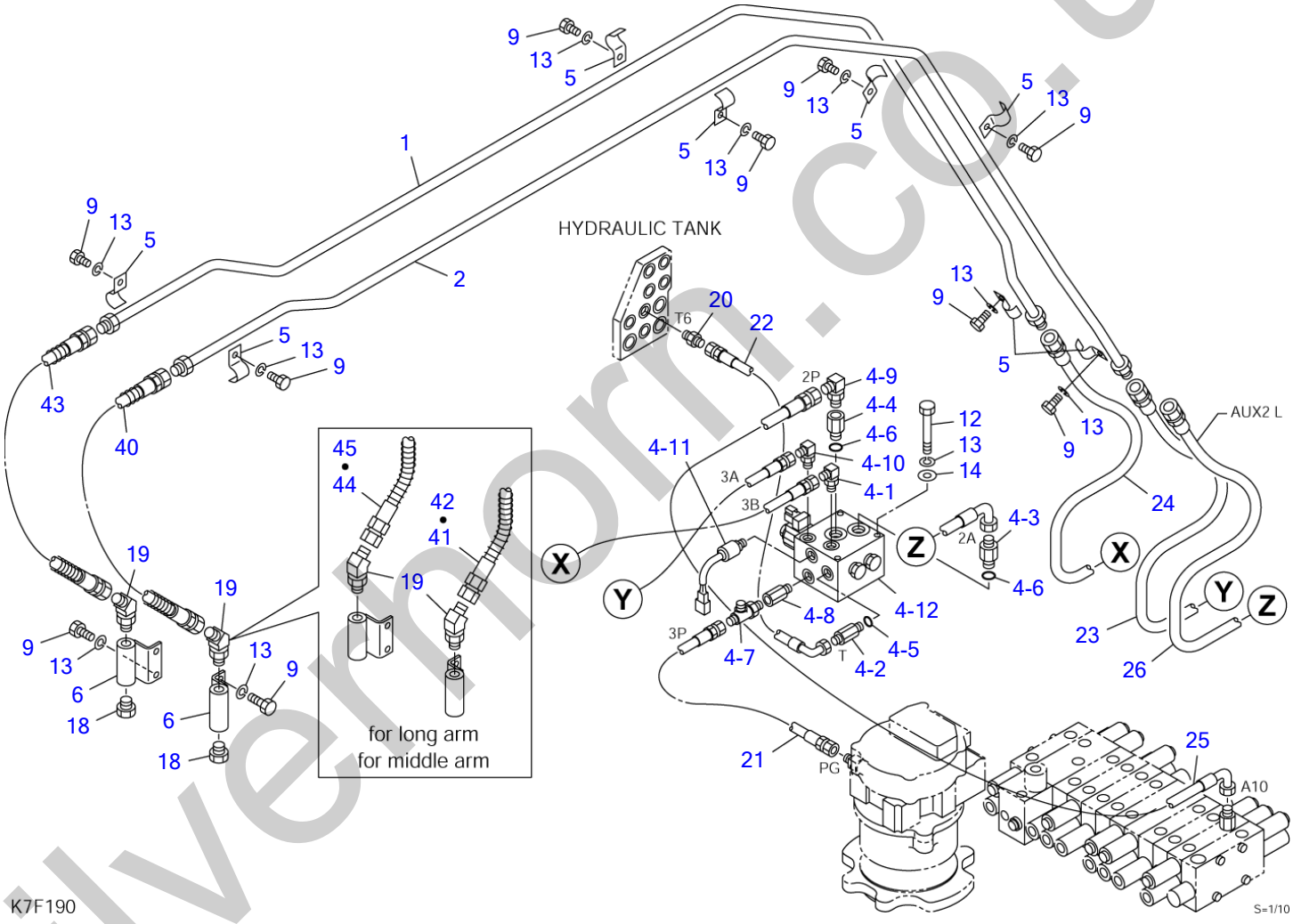

silverhorn.co.uk

3RD AUXILIARY LINE (1/2) (high pressure type)

Item	Part number	Description	Q'ty	Chan.	Serial No.	Serv.	Remarks
0	0397328800	LINE ASSY, 3rd aux.	1				
	0397328900	LINE ASSY, 3rd aux. (middle arm)	1				
	0397329000	LINE ASSY, 3rd aux. (long arm)	1				
1	0397328510	・PIPE (R.H.)	1				
2	0397328520	・PIPE (L.H.)	1				
4	0397328540	・VALVE ASSY, solenoid	1				
4-1	0575003630	・・ELBOW (with orifice)	1				
4-2	0007203034	・・ADAPTOR	1				
4-3	0007203086	・・ADAPTOR	1				
4-4	0007213044	・・BUSHING	1				
4-5	1420010110	・・O-RING	1				
4-6	1420010180	・・O-RING	2				
4-7	1512370011	・・TEE	1				
	1420010110	・・・O-RING	1				
4-8	1513370046	・・BUSHING (with filter)	1				
	1420010110	・・・O-RING	1				
4-9	1515010041	・・ELBOW	1				
	1420010140	・・・O-RING	1				
4-10	1515012040	・・ELBOW	1				
	1420010110	・・・O-RING	1				
4-11	1700100065	・・SWITCH, pressure	1				
	1420010110	・・・O-RING	1				
4-12	1901751600	・・VALVE, solenoid	1				
5	0567336070	・CLAMP	8				
6	0377312760	・ADAPTOR	2				
9	1100040816	・BOLT	12				
12	1100040890	・BOLT	3				
13	1140020008	・WASHER, spring	14				
14	1141110008	・WASHER	3				
18	1501750002	・PLUG	2				
	1420010110	・・O-RING	1				
19	1515100110	・ELBOW	2				
	1420010110	・・O-RING	1				
20	1515600200	・ADAPTOR	1				
	1420010110	・・O-RING	1				
21	0397328610	・HOSE ASSY	1				18010-22060
22	0397328620	・HOSE ASSY	1				
23	0397328630	・HOSE ASSY	1				18019-00240
24	0397328640	・HOSE ASSY	1				18019-00240
25	0397328650	・HOSE ASSY	1				18019-21130
26	0397328660	・HOSE ASSY	1				18019-21245
40	1801032072	・HOSE ASSY	1				
41	1801032086	・HOSE ASSY	1				middle arm
42	1801032102	・HOSE ASSY	1				for long arm
43	1801600072	・HOSE ASSY	1				
44	1801600086	・HOSE ASSY	1				middle arm
45	1801600102	・HOSE ASSY	1				for long arm
	K7f191						

silverhorn.co.uk

3RD AUXILIARY LINE (2/2) (high pressure type)

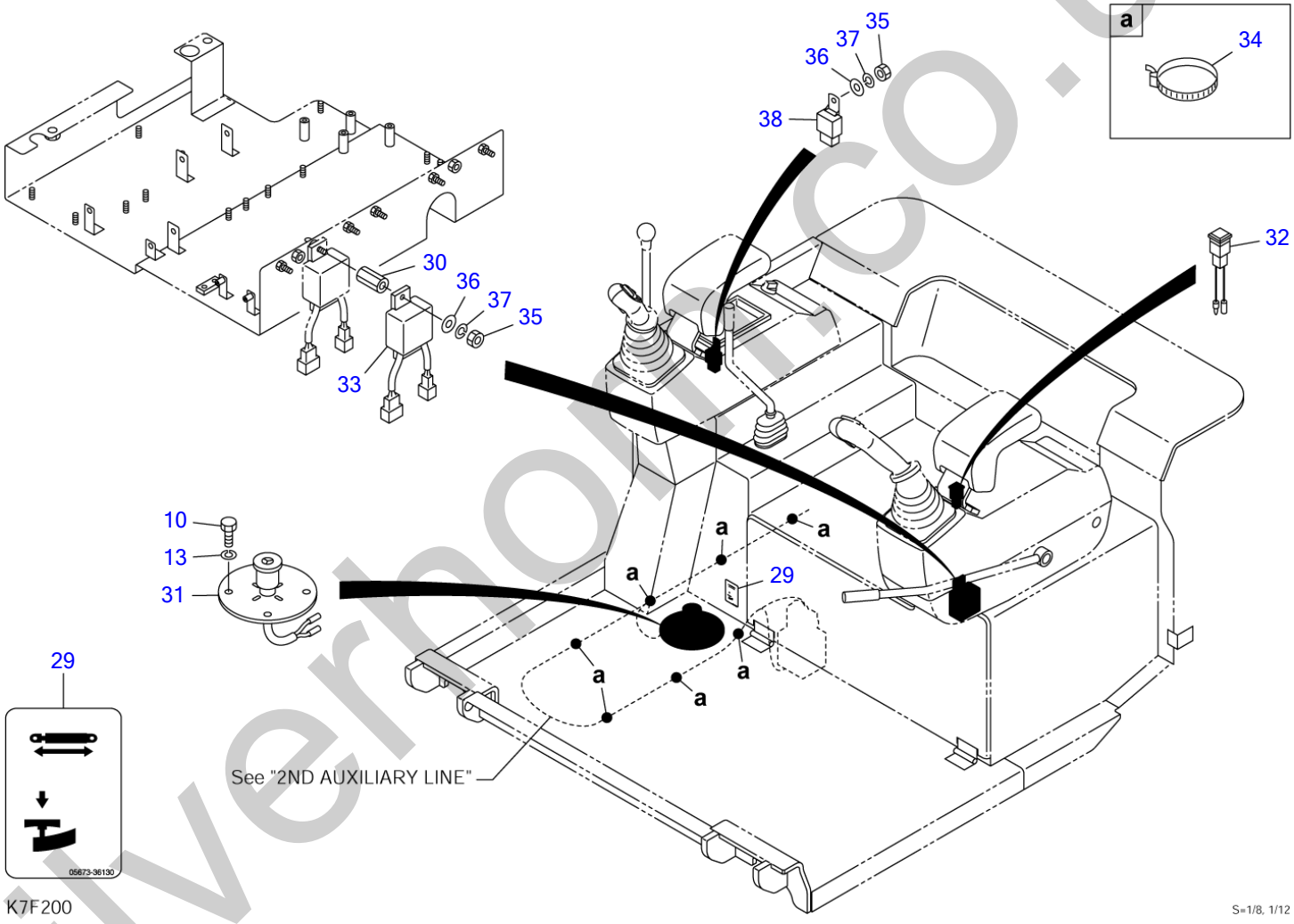

silverhomes.co.uk

3RD AUXILIARY LINE (2/2) (high pressure type)

Item	Part number	Description	Q'ty	Chan.	Serial No.	Serv.	Remarks
0	0397328800	LINE ASSY, 3rd aux.	1				
	0397328900	LINE ASSY, 3rd aux. (middle arm)	1				
	0397329000	LINE ASSY, 3rd aux. (long arm)	1				
10	1100040820	・BOLT	4				
13	1140020008	・WASHER, spring	4				
29	0567336130	・DECAL	1				
30	1134830625	・NUT	1				
31	1700100064	・SWITCH, foot	1				
32	1700550032	・LAMP, pilot	1				
33	1711900062	・RELAY	1				
34	1652231250	・BAND	5				
35	1130040006	・NUT	2				
36	1141110006	・WASHER	2				
37	1140020006	・WASHER, spring	2				
38	1711900042	・RELAY	1				
	K7f201						

silverhorn.co.uk

DECAL (canopy)

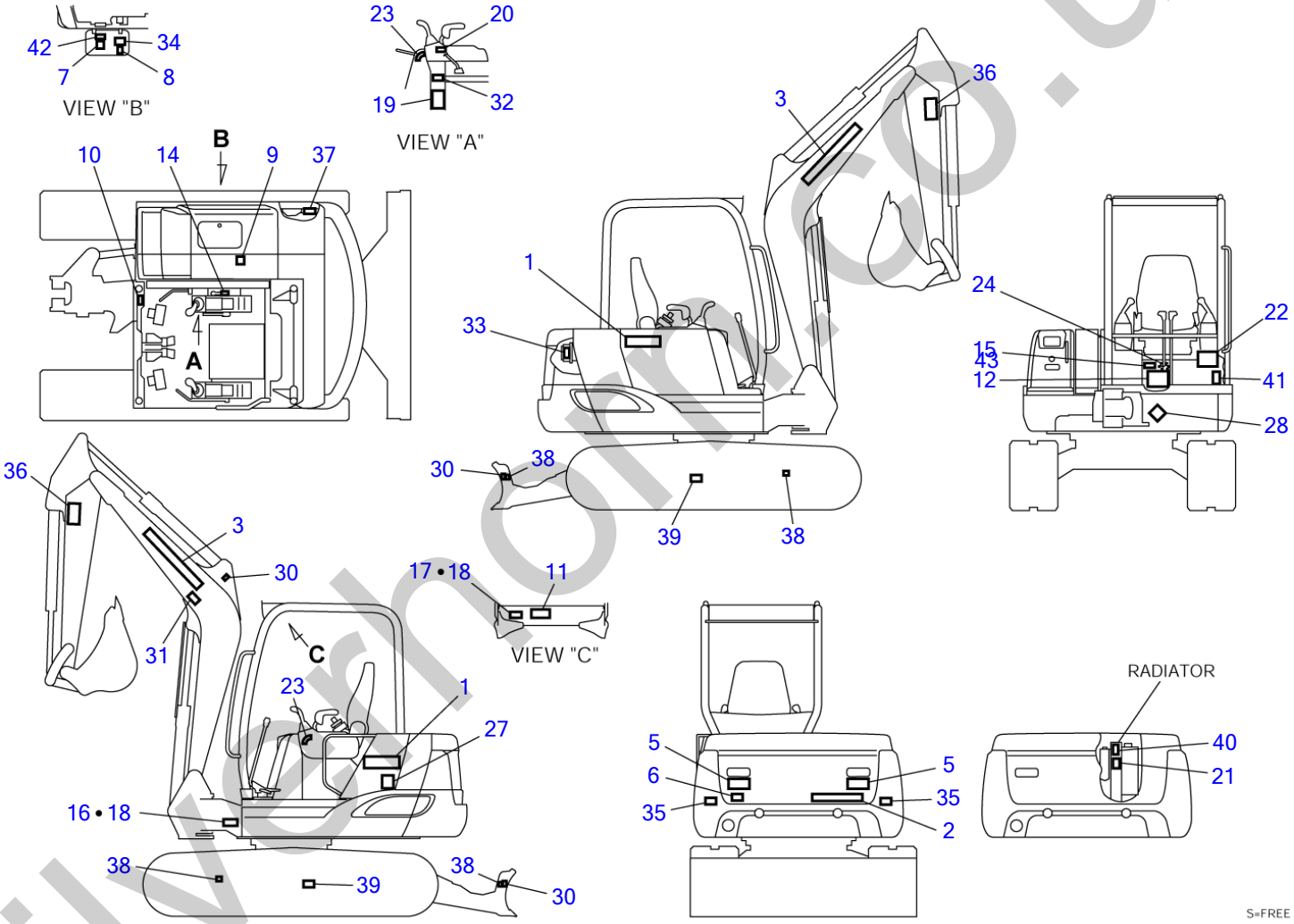

silvernorm.co.uk

1

2

3

5

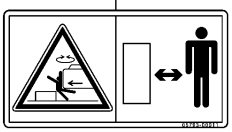

6

7

8

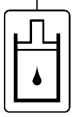

9

10

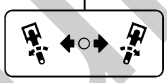

11

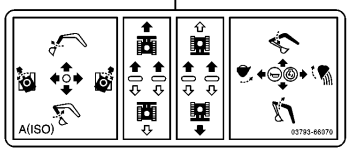

12

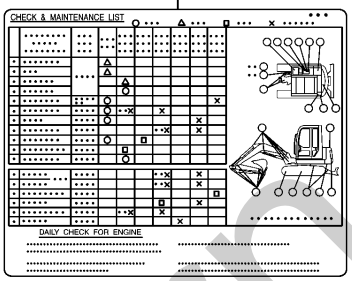

14

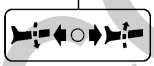

19

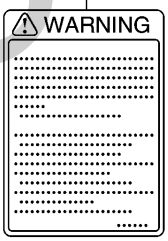

20

21

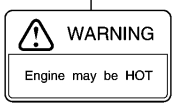

22

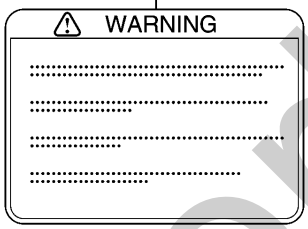

23

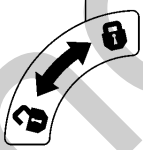

24

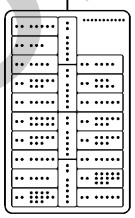

27

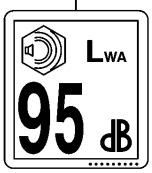

28

30

31

(except for UK TAKEUCHI)

32

33

34

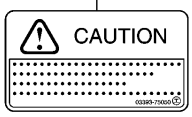

35

36

37

System Contains 50/50
Ethylene Glycol Antifreeze
/ Water Mixture

38

39

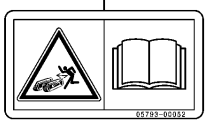

40

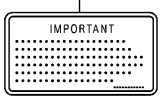

41

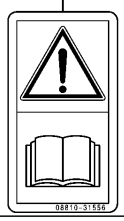

42

Low sulfur fuel or
ultra-low sulfur fuel only.

(for US TAKEUCHI, CANADA)

silverhorn.co.uk

1

2

3

5

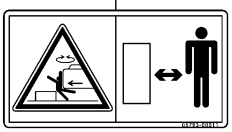

6

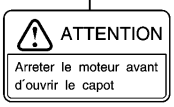

7

8

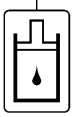

9

10

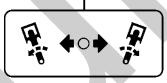

11

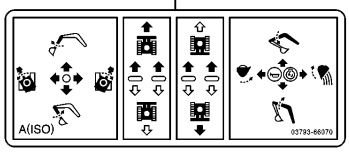

12

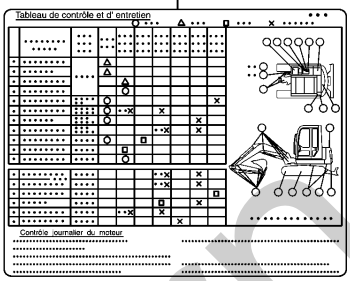

14

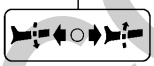

19

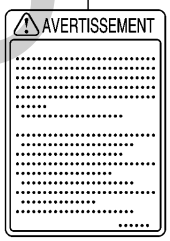

20

22

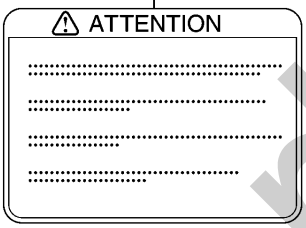

23

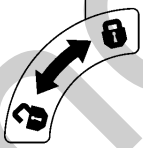

24

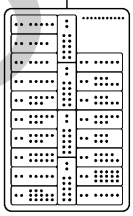

27

28

30

31

32

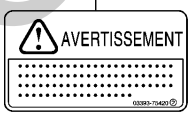

33

34

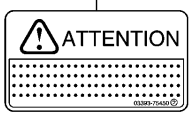

35

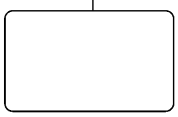

36

37

System Contains 50/50
Ethylene Glycol Antifreeze
/ Water Mixture

38

39

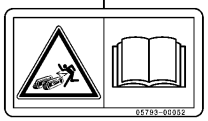

40

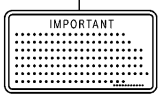

41

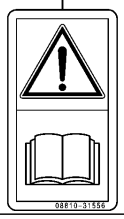

42

Low sulfur fuel or
ultra-low sulfur fuel only.

(for CANADA)

K7G060

S=free

silverhorn.co.uk

1

2

3

5
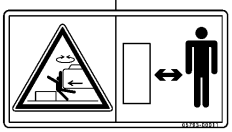

6

7

8
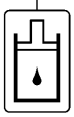

9

10
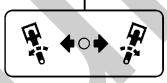

11
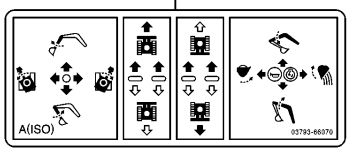

12
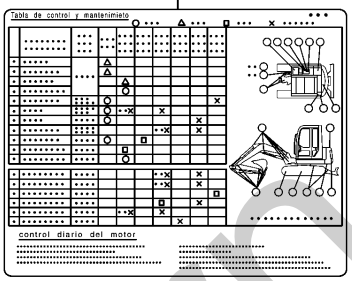

14
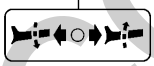

19
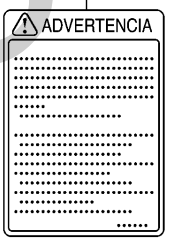

20

22

23
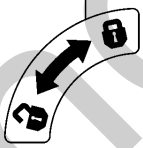

24
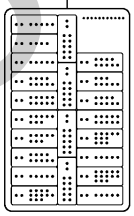

27
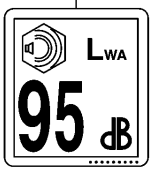

28

30

31

32
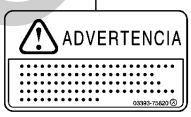

33

34
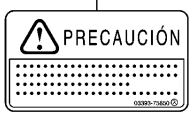

35
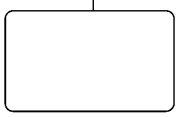

36

37
System Contains 50/50
Ethylene Glycol Antifreeze
/ Water Mixture .....

38

39
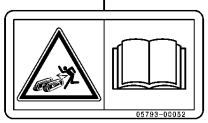

40
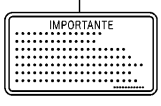

41
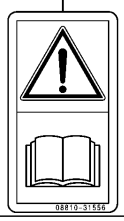

silverhorn.co.uk

DECAL (canopy)

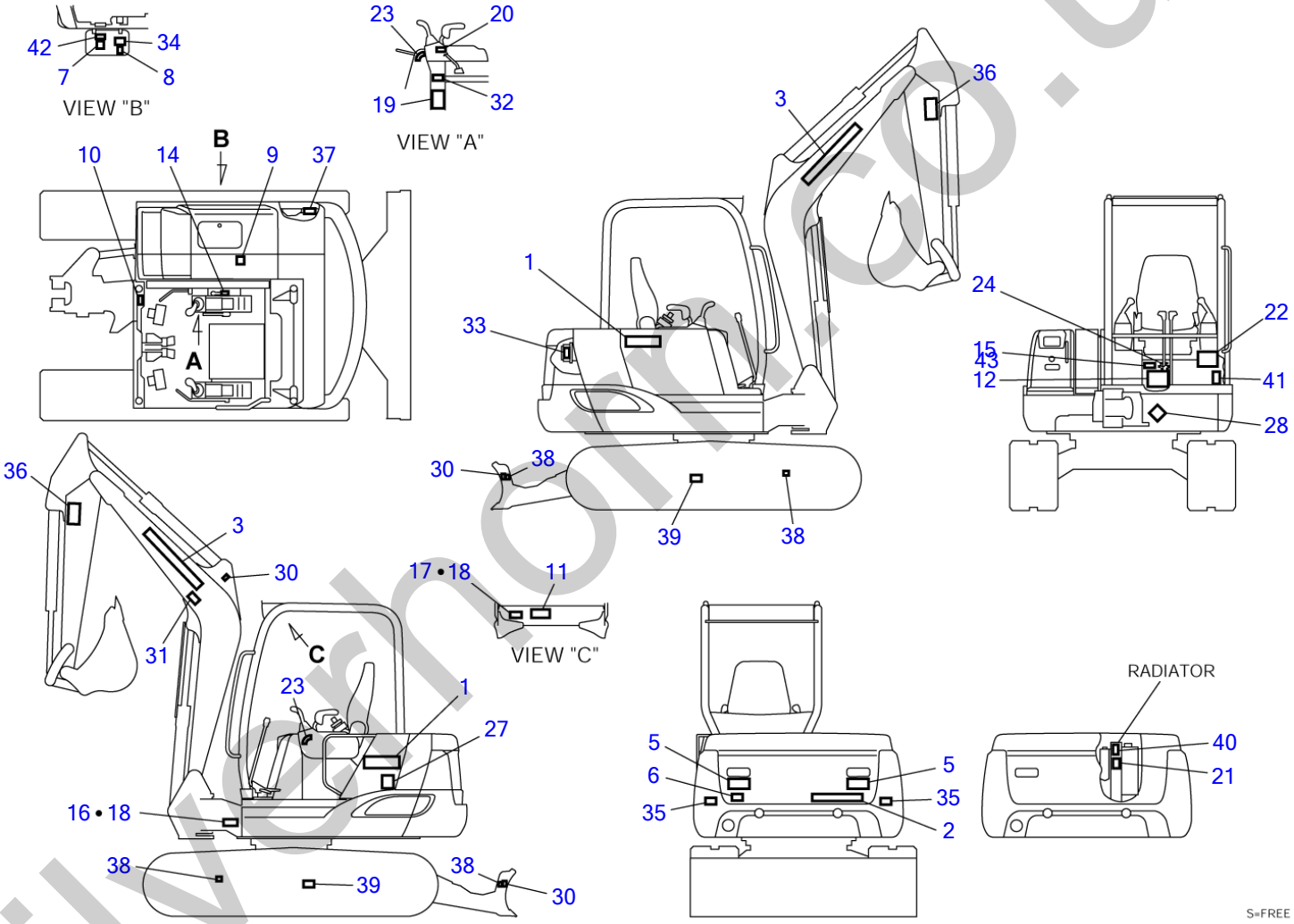

silvernorm.co.uk

DECAL (canopy)

Item	Part number	Description	Q'ty	Chan.	Serial No.	Serv.	Remarks
0	0399365900	DECAL SET (English)	1				
	0399366300	DECAL SET (Spanish)	1				
	0399366500	DECAL SET (U.S. TAKEUCHI)	1				
	0399366600	DECAL SET (U.K. TAKEUCHI)	1				
	0399367000	DECAL SET (CANADA; English)	1				
	0399367100	DECAL SET (CANADA; French)	1				
1	0399365030	・DECAL	2				
2	0008500038	・DECAL	1				
3	0008500060	・DECAL	2				
5	0579300011	・DECAL	2				
6	0359307400	・DECAL (English)	1				
	0339364200	・DECAL (Spanish)	1				
7	0359306600	・DECAL (English)	1				
	0339375460	・DECAL (French)	1				
8	0359306700	・DECAL	1				
9	0359325220	・DECAL	1				
10	0329360060	・DECAL	1				
11	0379366070	・DECAL	1				
12	0379366020	・DECAL (English)	1				
	0379366220	・DECAL (French)	1				
	0379366420	・DECAL (Spanish)	1				
14	0359325190	・DECAL	1				
15	X **********	・DECAL	1				
16	X **********	・DECAL	1				
17	X **********	・DECAL	1				
18	X **********	・SCREW	8				
19	0379337300	・DECAL (English)	1				
	0379339300	・DECAL (French)	1				
	0379354200	・DECAL (Spanish)	1				
20	0359317200	・DECAL	1				
21	0569321980	・DECAL (English)	1				
22	0359313700	・DECAL (English)	1				
	0359315700	・DECAL (French)	1				
	0359365323	・DECAL (Spanish)	1				
23	0329360100	・DECAL	2				
24	0379366010	・DECAL (English, Dutch)	1				
	0379366210	・DECAL (French)	1				
	0379366410	・DECAL (Spanish)	1				
27	X **********	・DECAL	1				except for U.S. TAKEUCHI
28	X **********	・DECAL	1				
30	0399300500	・DECAL	3				
31	0359347010	・DECAL (English)	1				except for U.K. TAKEUCHI
	0339375410	・DECAL (French)	1				
	0339375810	・DECAL (Spanish)	1				
32	0359347020	・DECAL (English)	1				
	0339375420	・DECAL (French)	1				
	0339375820	・DECAL (Spanish)	1				
33	0339375040	・DECAL (English)	1				
	0339375440	・DECAL (French)	1				
	0339375840	・DECAL (Spanish)	1				
34	0339375050	・DECAL (English)	1				
	0339375450	・DECAL (French)	1				
	0339375850	・DECAL (Spanish)	1				
35	0379358560	・SEAL	2				
36	0579300049	・DECAL	2				
37	0359313900	・DECAL	1				
38	0881031549	・DECAL	4				
39	0579300052	・DECAL	2				
40	0339376240	・DECAL (English)	1				
	0339379440	・DECAL (French)	1				
	0339379640	・DECAL (Spanish)	1				
41	0881031556	・DECAL	1				
42	0669300033	・DECAL (U.S. TAKEUCHI, CANADA)	1				
43	0399300400	* DECAL	1				
	K7g031						

silvethorn.co.uk

DECAL (cab)

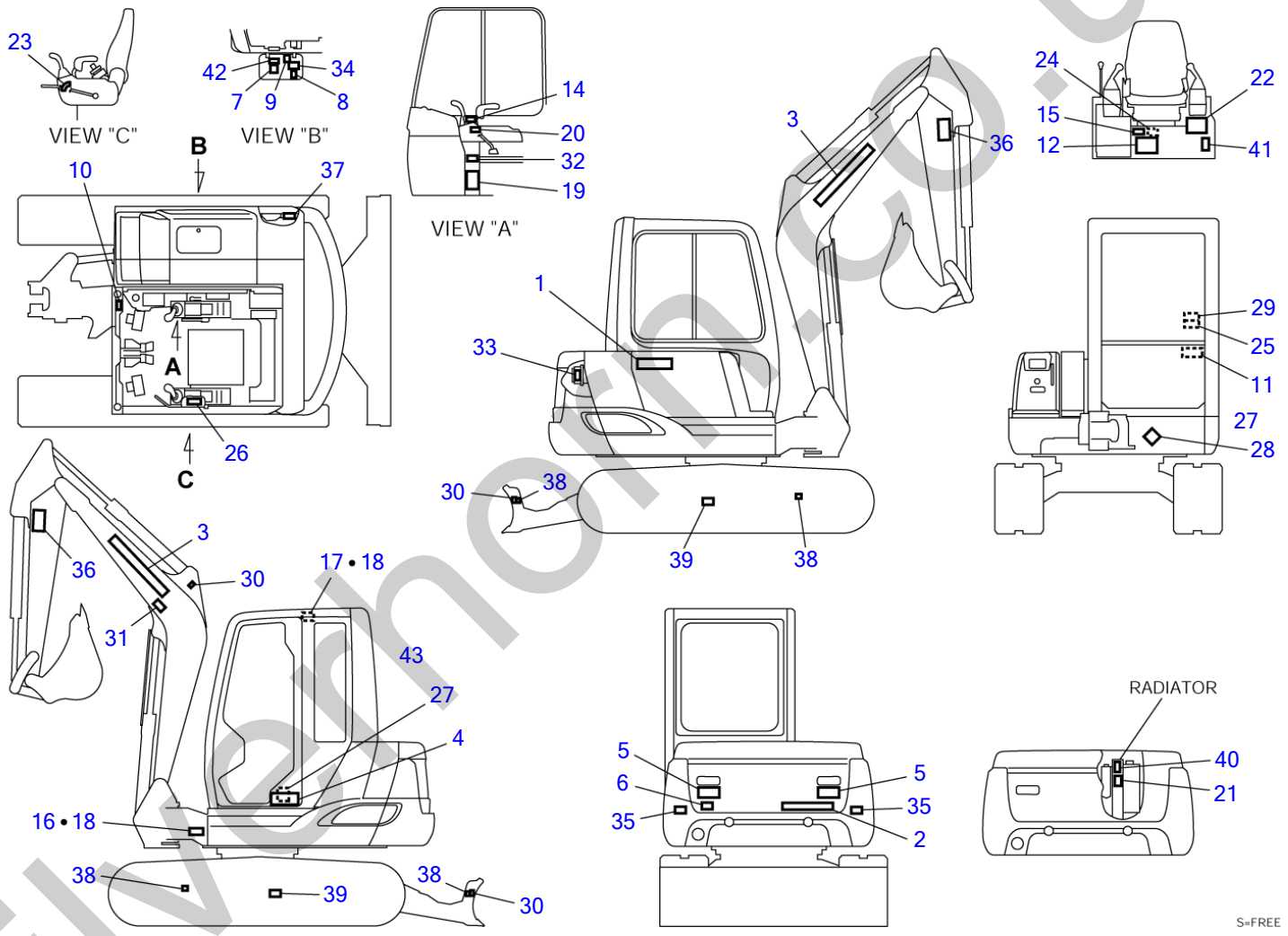

silverhorn.co.uk

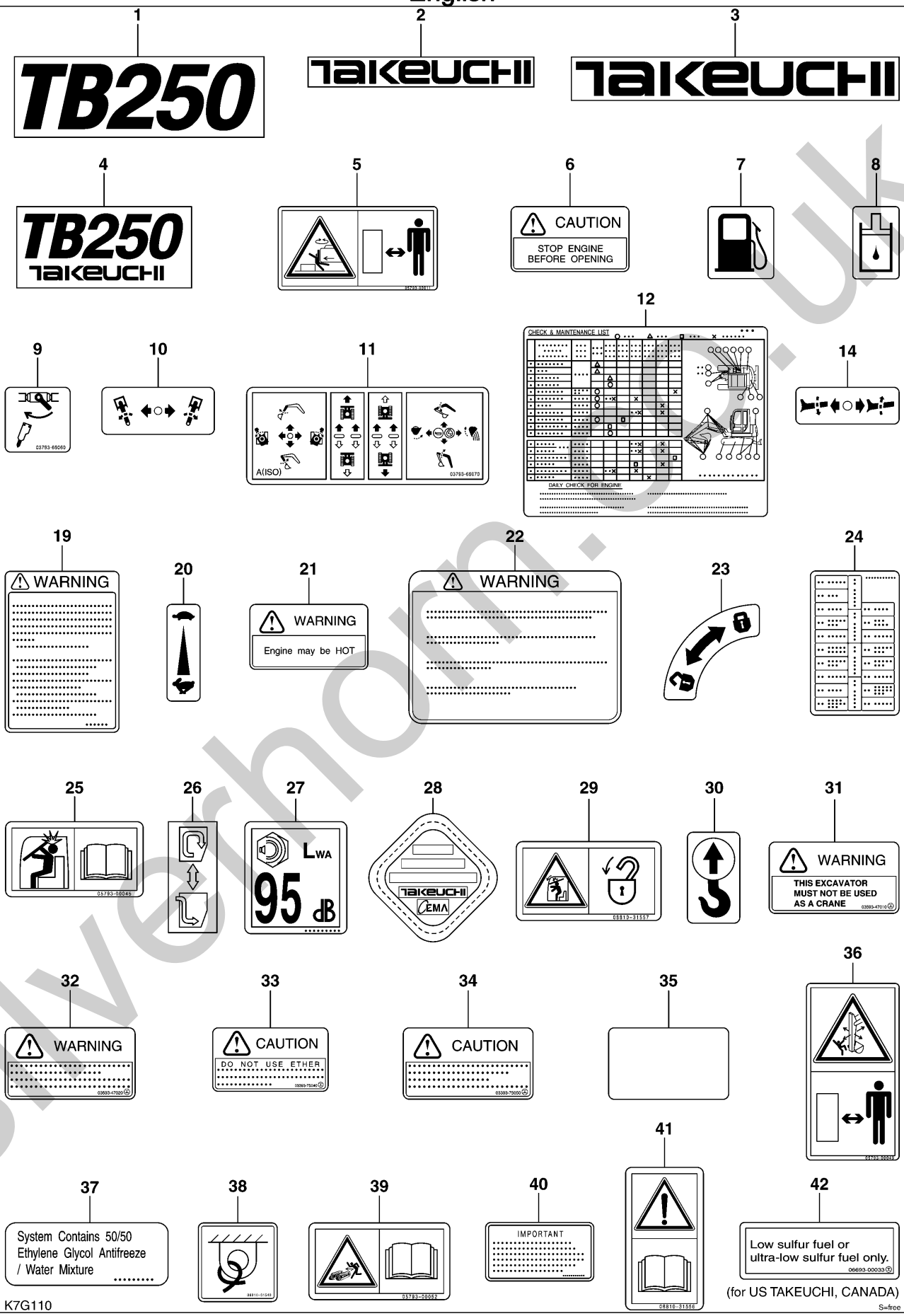

K7G110

silverhorn.co.uk

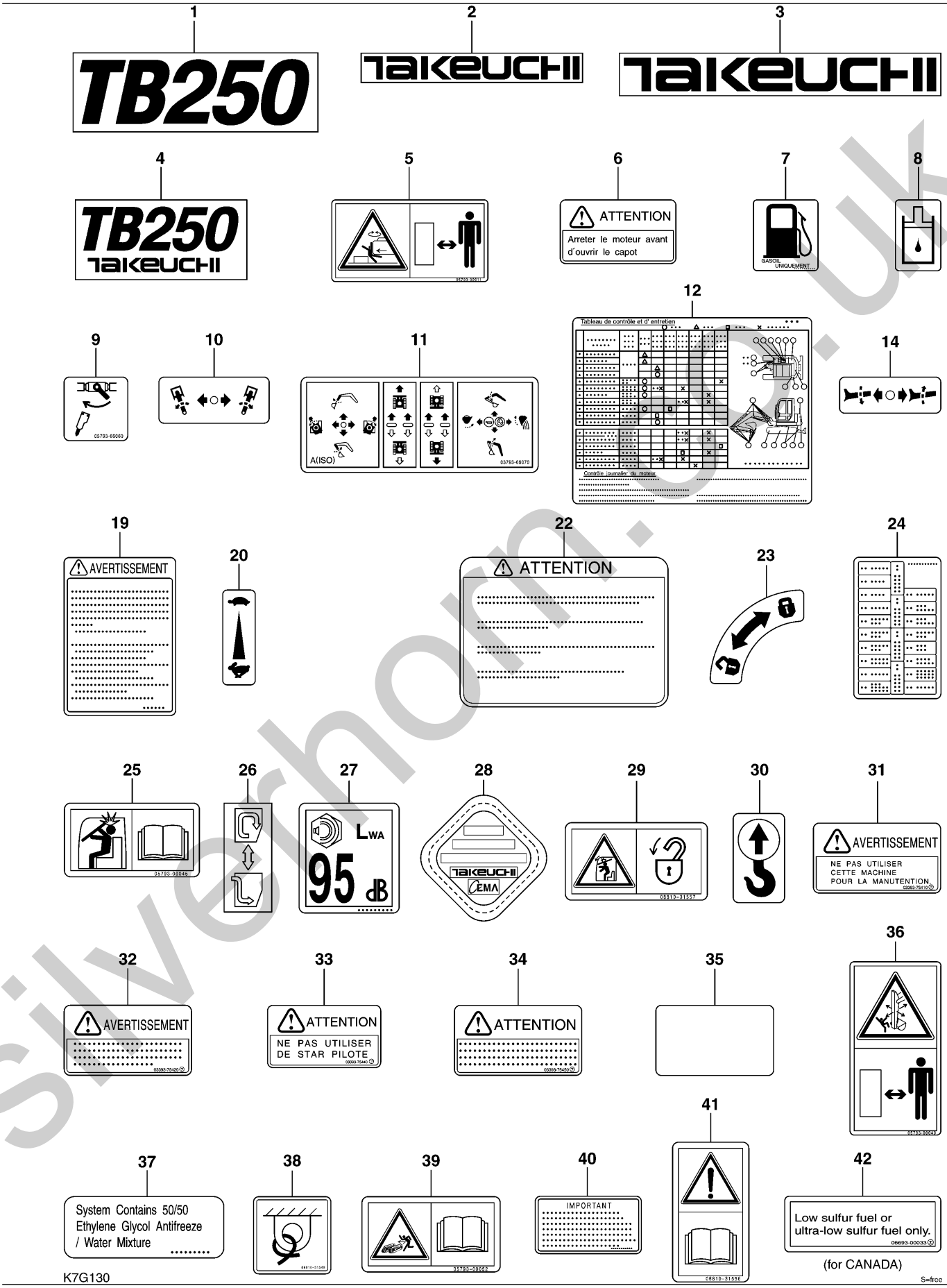

silverhorn.co.uk

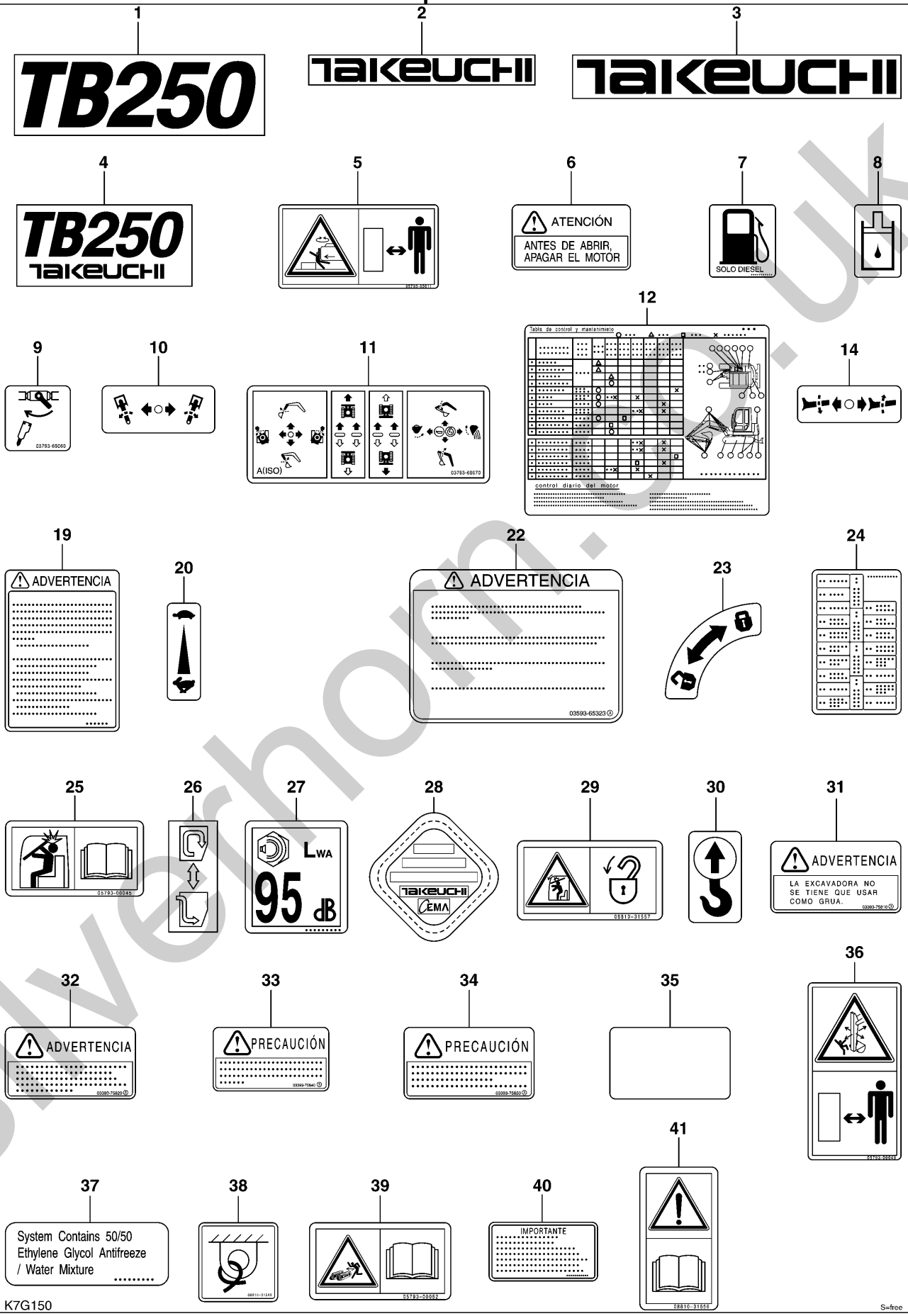

K7G150

S=free

silverhorn.co.uk

DECAL (cab)

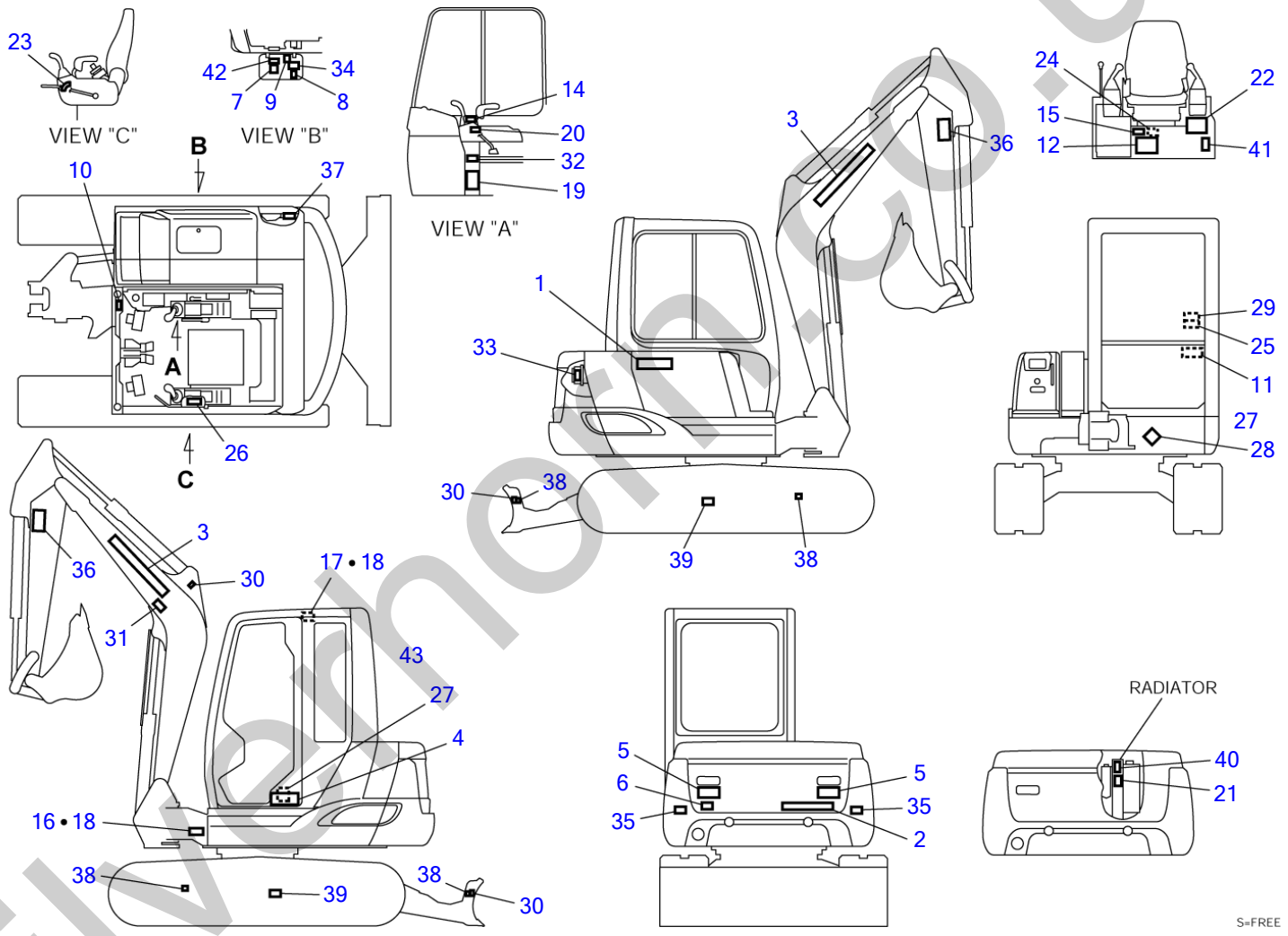

silverhorn.co.uk

DECAL (cab)

Item	Part number	Description	Q'ty	Chan.	Serial No.	Serv.	Remarks
0	0399365000	DECAL SET (English)	1				
	0399365400	DECAL SET (Spanish)	1				
	0399365600	DECAL SET (U.S. TAKEUCHI)	1				
	0399365700	DECAL SET (U.K. TAKEUCHI)	1				
	0399366800	DECAL SET (CANADA; English)	1				
	0399366900	DECAL SET (CANADA; French)	1				
1	0399365030	・DECAL	1				
2	0008500038	・DECAL	1				
3	0008500060	・DECAL	2				
4	0399365040	・DECAL	1				
5	0579300011	・DECAL	2				
6	0359307400	・DECAL (English)	1				
	0359315400	・DECAL (French)	1				
	0339364200	・DECAL (Spanish)	1				
7	0359306600	・DECAL (English)	1				
	0339375460	・DECAL (French)	1				
	0339375660	・DECAL (Italian, Spanish)	1				
8	0359306700	・DECAL	1				
9	0359325220	・DECAL	1				
10	0329360060	・DECAL	1				
11	0379366070	・DECAL	1				
12	0379366020	・DECAL (English)	1				
	0379366220	・DECAL (French)	1				
	0379366420	・DECAL (Spanish)	1				
14	0359325190	・DECAL	1				
15	X **********	・DECAL	1				
16	X **********	・DECAL	1				
17	X **********	・DECAL	1				
18	X **********	・SCREW	8				
19	0379337300	・DECAL (English)	1				
	0379339300	・DECAL (French)	1				
	0379354200	・DECAL (Spanish)	1				
20	0359317200	・DECAL	1				
21	0569321980	・DECAL (English)	1				
22	0359313700	・DECAL (English)	1				
	0359315700	・DECAL (French)	1				
	0359365323	・DECAL (Spanish)	1				
23	0329360100	・DECAL	1				
24	0379366010	・DECAL (English, Dutch)	1				
	0379366210	・DECAL (French)	1				
	0379366410	・DECAL (Spanish)	1				
25	0579300045	・DECAL	1				
26	0189311800	・DECAL	1				
27	X **********	・DECAL	1				except for U.S. TAKEUCHI
28	X **********	・DECAL	1				
29	0881031557	・DECAL	1				
30	0399300500	・DECAL	3				
31	0359347010	・DECAL (English)	1				except for U.K. TAKEUCHI
	0339375410	・DECAL (French)	1				
	0339375810	・DECAL (Spanish)	1				
32	0359347020	・DECAL (English)	1				
	0339375420	・DECAL (French)	1				
	0339375820	・DECAL (Spanish)	1				
33	0339375040	・DECAL (English)	1				
	0339375440	・DECAL (French)	1				
	0339375840	・DECAL (Spanish)	1				
34	0339375050	・DECAL (English)	1				
	0339375450	・DECAL (French)	1				
	0339375850	・DECAL (Spanish)	1				
35	0379358560	・SEAL	2				
36	0579300049	・DECAL	2				
37	0359313900	・DECAL	1				
38	0881031549	・DECAL	4				
39	0579300052	・DECAL	2				
40	0339376240	・DECAL (English)	1				
	0339379440	・DECAL (French)	1				
	0339379640	・DECAL (Spanish)	1				
41	0881031556	・DECAL	1				

silverthorn.co.uk

DECAL (cab)

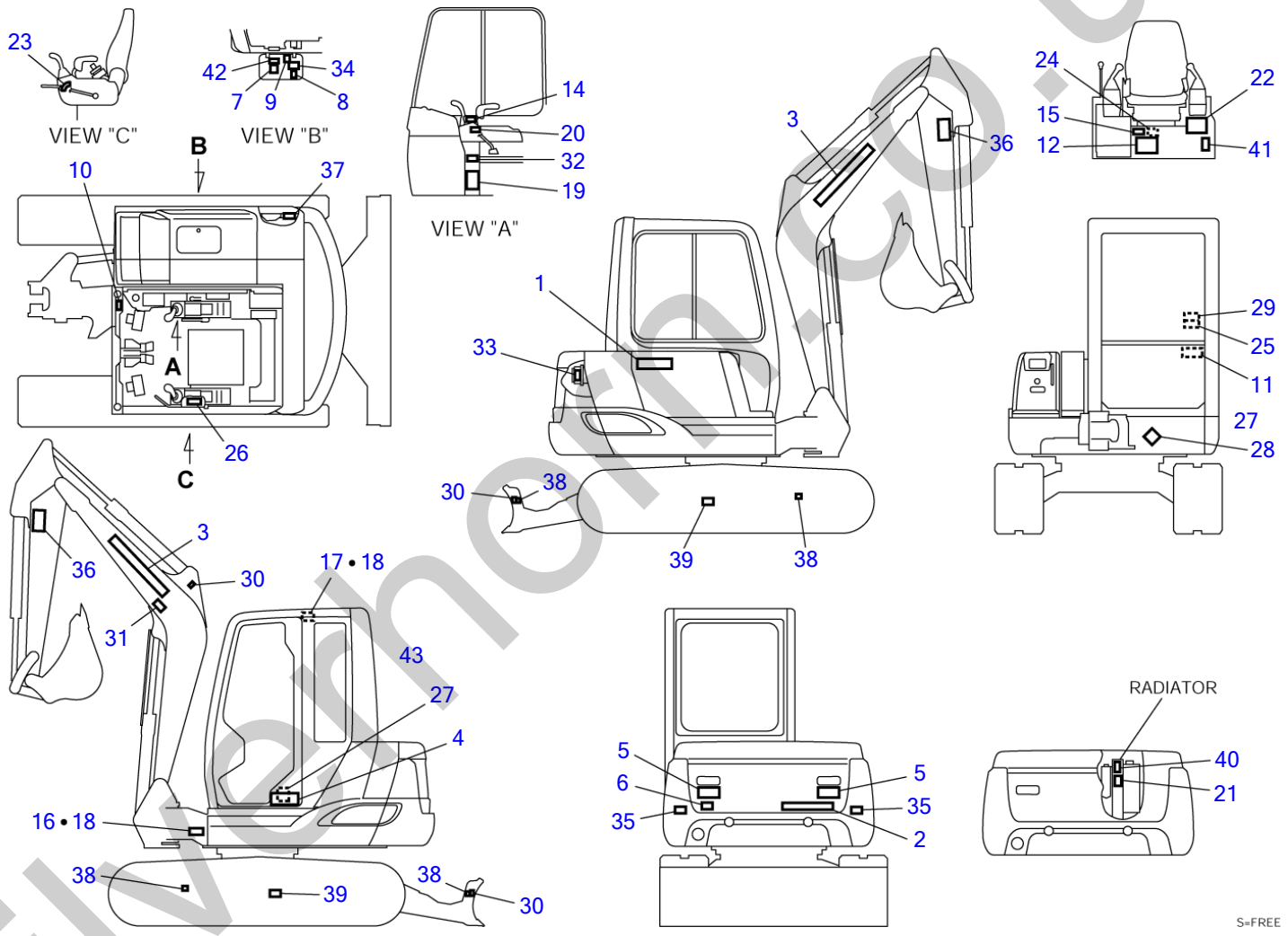

silverhorn.co.uk

DECAL (cab)

Item	Part number	Description	Q'ty	Chan.	Serial No.	Serv.	Remarks
42	**0669300033**	▪ DECAL (U.S. TAKEUCHI, CANADA)	1				
43	**0399300400 K7g101**	* DECAL	1				

silverhorn.co.uk

DECAL (selector valve)

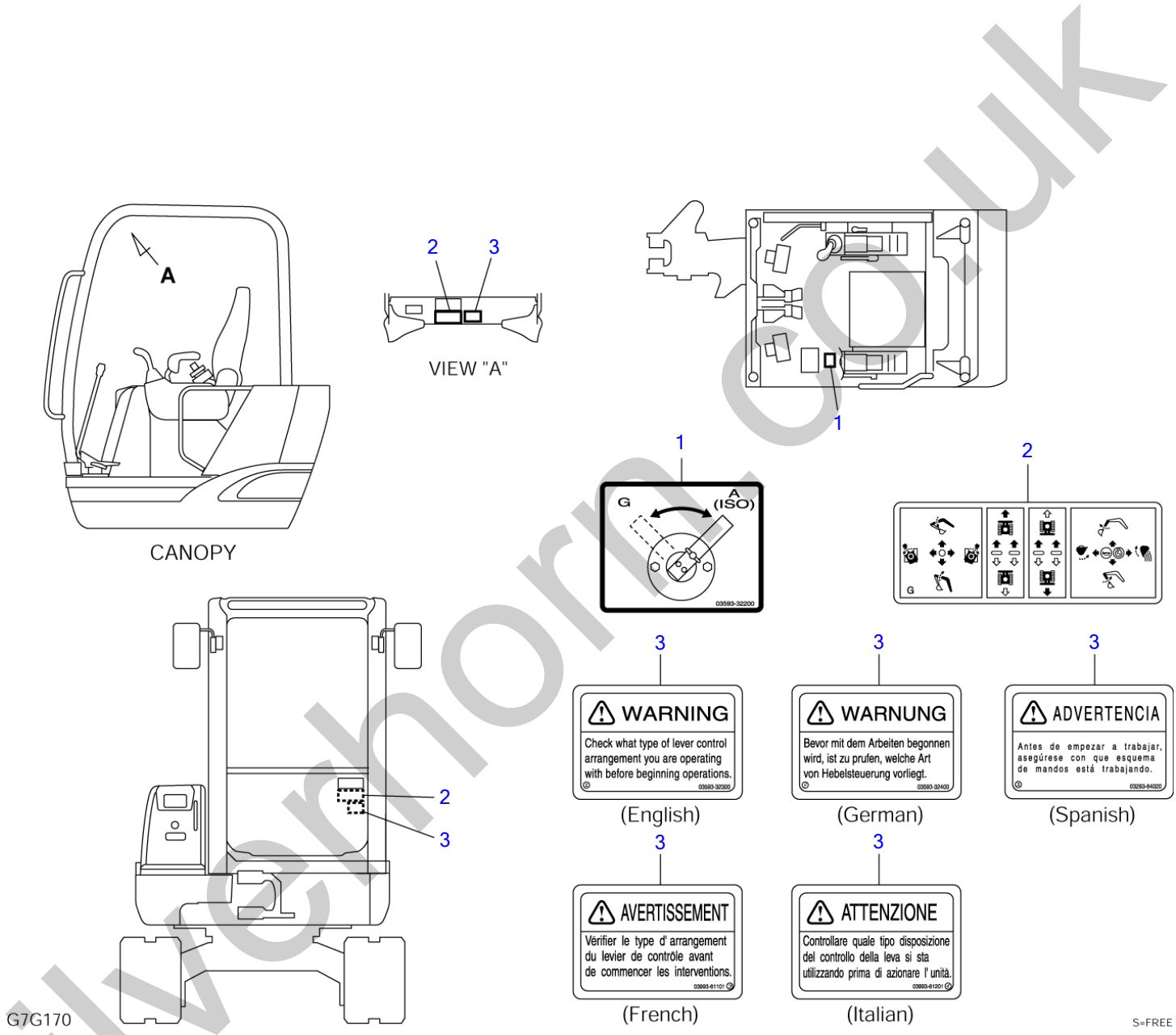

silverhorn.co.uk

DECAL (selector valve)

Item	Part number	Description	Q'ty	Chan.	Serial No.	Serv.	Remarks
0	0379368200	DECAL SET (English)	1				
	0379368300	DECAL SET (German)	1				
	0379368400	DECAL SET (French)	1				
	0379368500	DECAL SET (Italian)	1				
	0379368600	DECAL SET (Spanish)	1				
1	0359332200	・DECAL	1				ISO-JCB
2	0379368202	・DECAL	1				JCB
3	0359332300	・DECAL (English)	1				
	0359332400	・DECAL (German)	1				
	0329364020	・DECAL (Spanish)	1				
	0399361101	・DECAL (French)	1				
	0399361201	・DECAL (Italian)	1				
	G7g170						

silverhorn.co.uk

DECAL (SELECTOR VALVE A-B PATTERN)

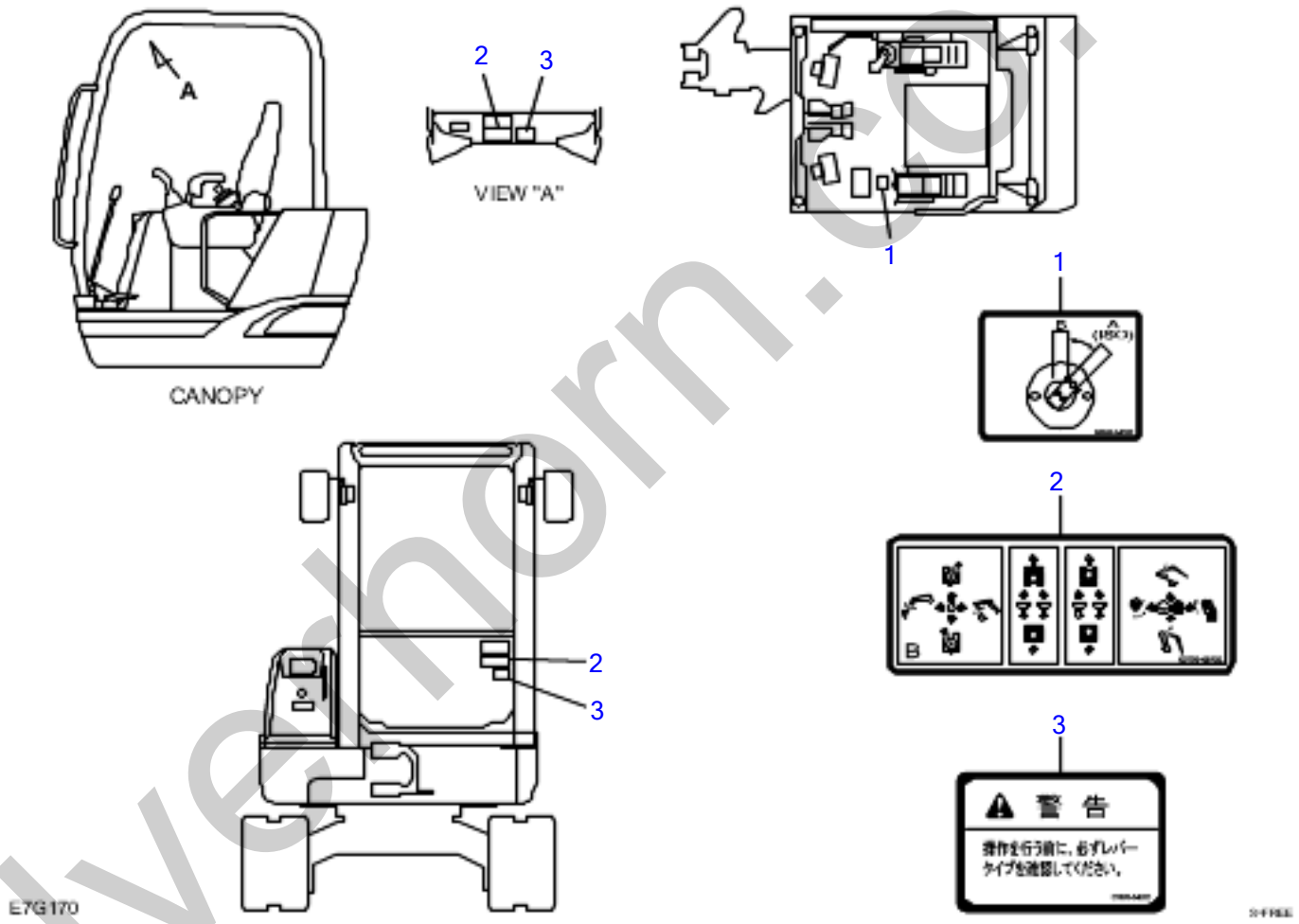

silverhorn.co.uk

DECAL (SELECTOR VALVE A-B PATTERN)

Item	Part number	Description	Q'ty	Chan.	Serial No.	Serv.	Remarks
0	0379368900	DECAL SET	1				
1	0339354100	* DECAL	1				
2	0379368902	* DECAL	1				
3	0339354200	* DECAL	1				
	E7G170						

silverhorn.co.uk

TOOL & ACCESSORIES

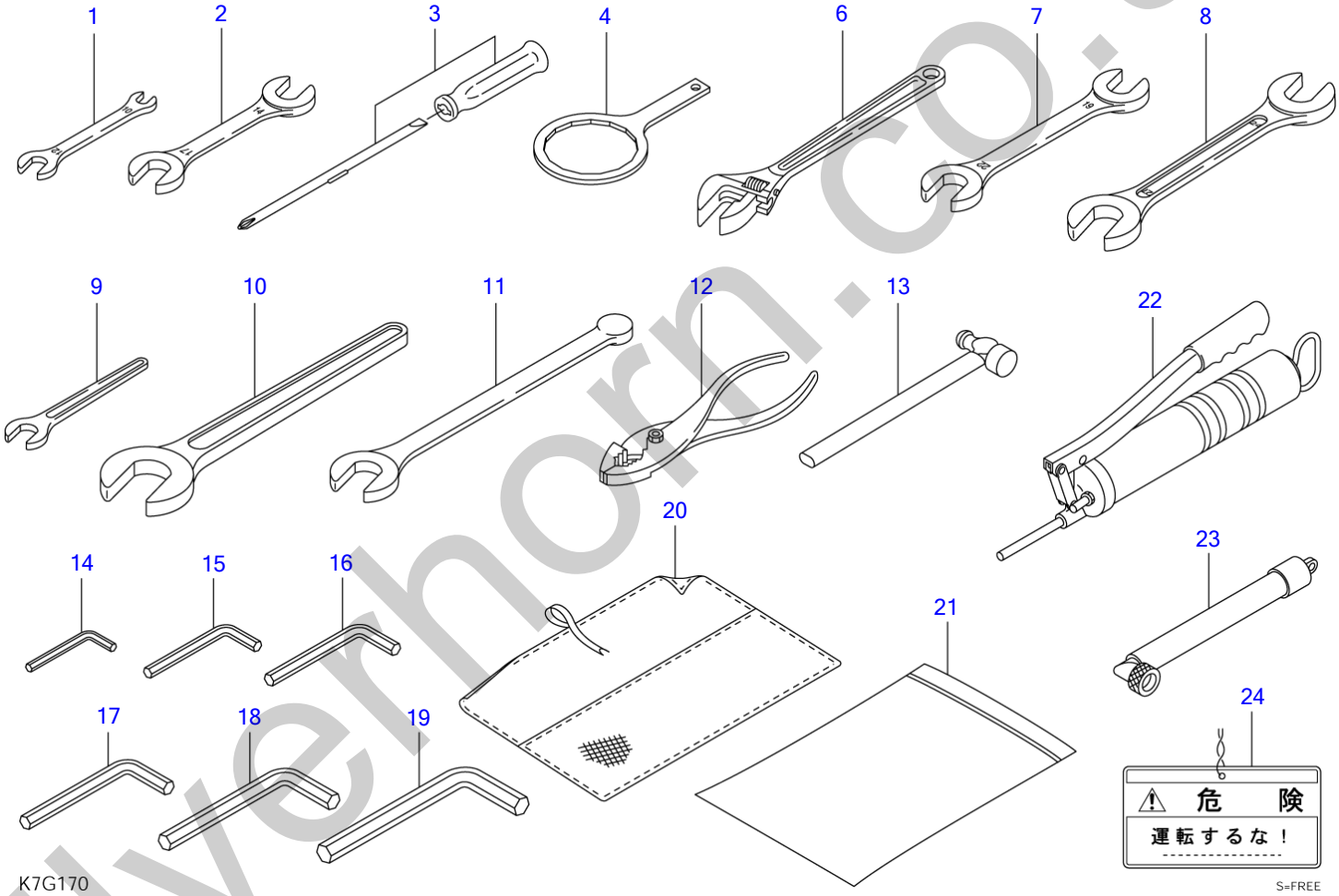

silverhorn.co.uk

TOOL & ACCESSORIES

Item	Part number	Description	Q'ty	Chan.	Serial No.	Serv.	Remarks
		TOOL SET (for Japan)					
		TOOL SET					
0	0379207010	TOOL ASSY	1				
1	1910047081	・SPANNER	1				Y28110-100120
2	1910047082	・SPANNER	1				Y28110-140170
3	1910006112	・DRIVER, screw	1				Y104200-92350
4	1910065081	・WRENCH, filter	1				Y119640-92750
6	1690400250	・WRENCH, monkey	1				
7	1690001922	・SPANNER	1				
8	1690002427	・SPANNER	1				
9	1690100013	・SPANNER	1				
10	1690100041	・SPANNER	1				
11	1690900026	・SPANNER	1				
12	1690500200	・PLIER	1				
13	1690300330	・HAMMER	1				
14	1690600400	・WRENCH, hex	1				
15	1690600500	・WRENCH, hex	1				
16	1690600600	・WRENCH, hex	1				
17	1690600800	・WRENCH, hex	1				
18	1690601000	・WRENCH, hex	1				
19	1690601400	・WRENCH, hex	1				
20	1691400001	・CASE, tool	1				
21	1691900001	・CASE	1				
22	1691010800	GUN ASSY, grease	1				for Japan
	1691060600	GUN ASSY, grease	1				
23	1554512601	TUBE	1				for EU
24	0359325160	PLATE	1				for Japan
	K7g170						

silverhorn.co.uk

PAINTED COLOR

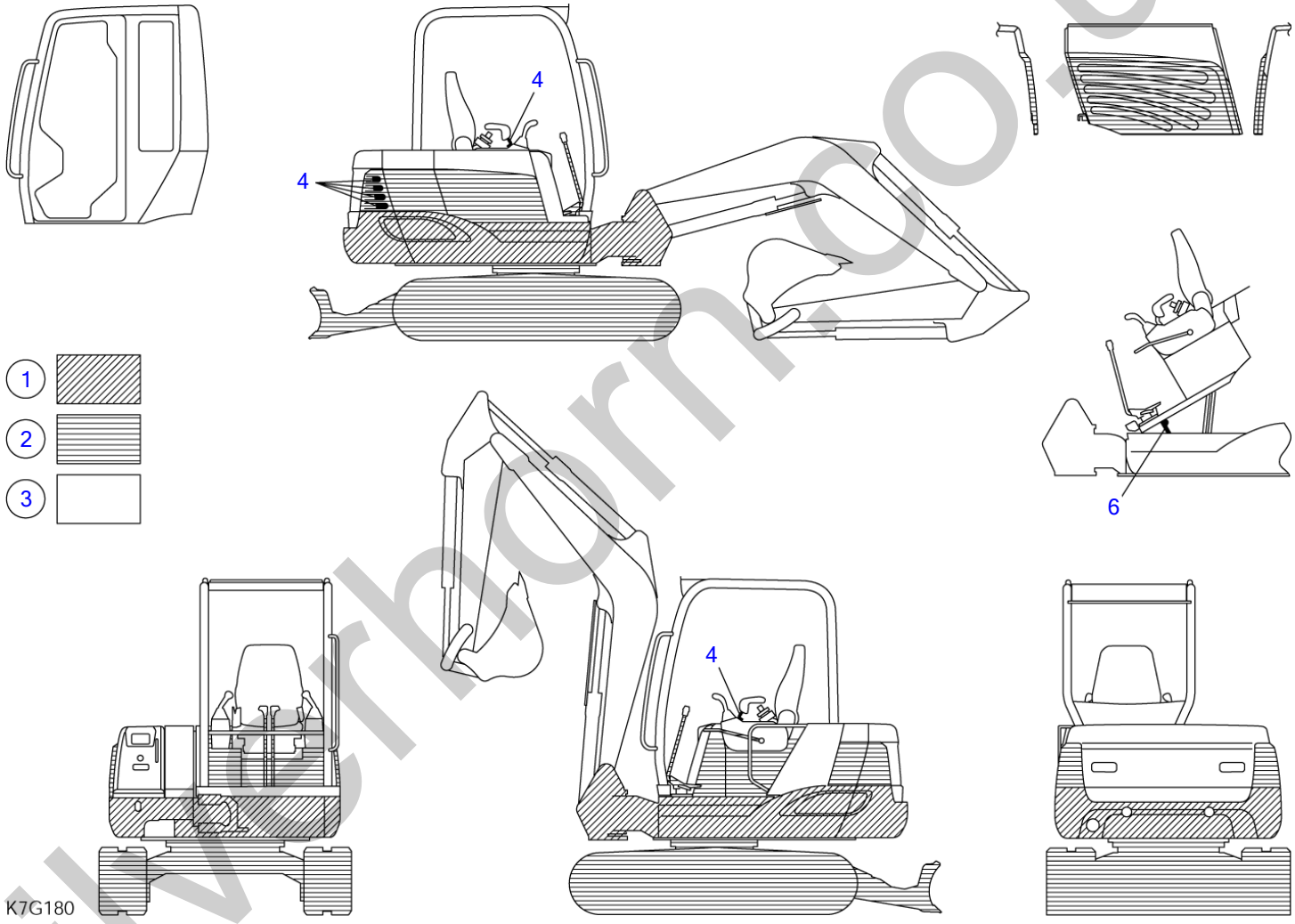

silverhorn.co.uk

PAINTED COLOR

Item	Part number	Description	Q'ty	Chan.	Serial No.	Serv.	Remarks
		PAINTED COLOR (cab, rubber crawler)					
		PAINTED COLOR (cab, steel crawler)					
		PAINTED COLOR (canopy, rubber crawler)					
		PAINTED COLOR (canopy, steel crawler)					
1	1919060105	RED	1				
	1919069105	RED	1				spray
2	1919060144	GRAY	1				
	1919069144	GRAY	1				spray
3	1919060142	LIGHT GRAY	1				
	1919069142	LIGHT GRAY	1				spray
4	1919060005	BLACK	1				
	1919069005	BLACK	1				spray
6	1919060175	YELLOW	1				
	1919069175	YELLOW	1				spray
		<<NOTE>>					
		The part of the steel crawler uses item 2.					
	K7g180						

silverhorn.co.uk

SWIVEL JOINT

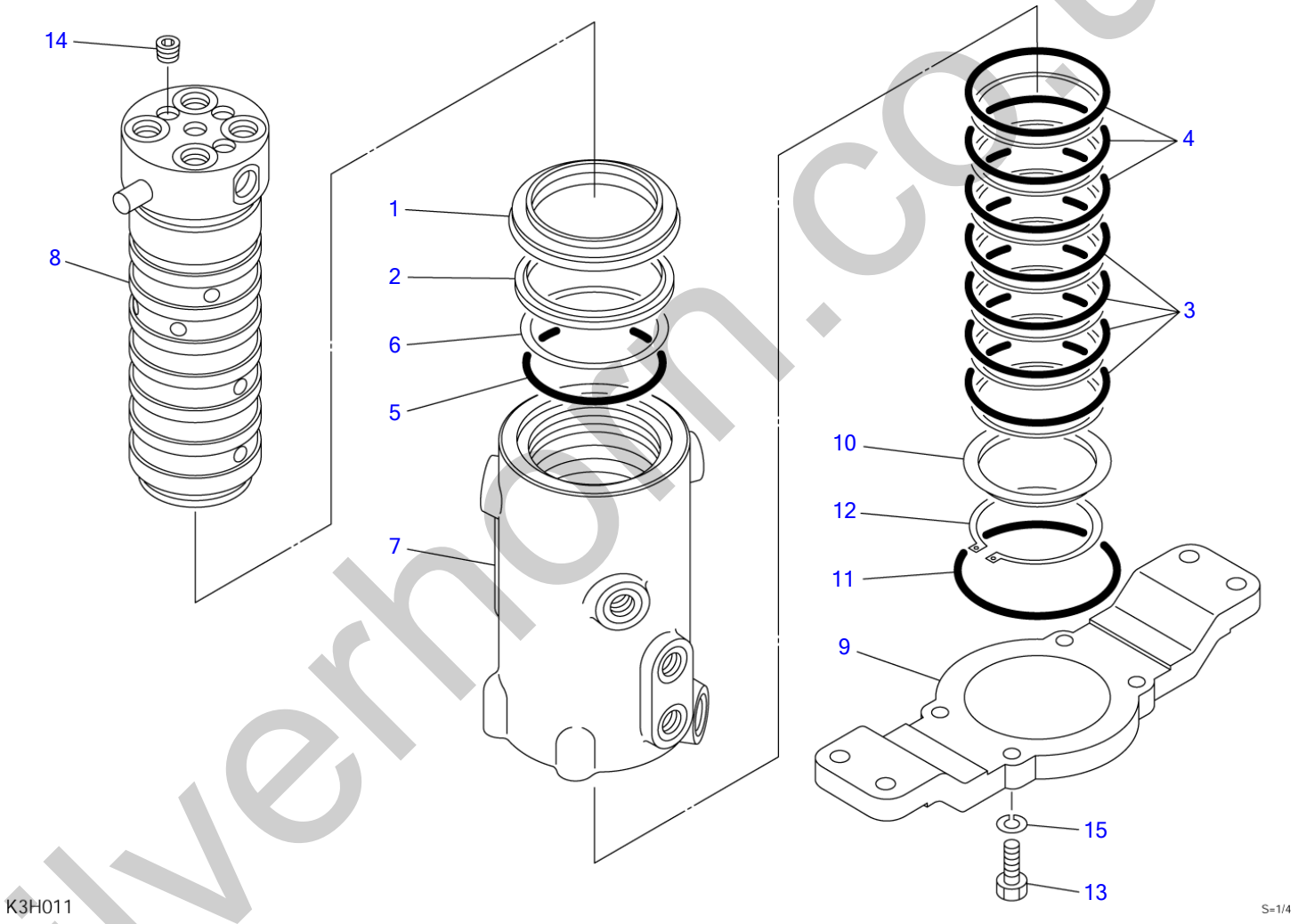

silverhorn.co.uk

SWIVEL JOINT

Item	Part number		Description	Q'ty	Chan.	Serial No.	Serv.	Remarks
0		1904006300	JOINT, swivel	1				
0-1		1904006399	・KIT, seal	1				
1	X	1904002391	・・SEAL, dust	1				
2	X	1904000494	・・SEAL, dust	1				
3	X	1904006316	・・SEAL, slipper	4				
4	X	1904006317	・・SEAL, slipper	3				
5	X	1420010800	・・O-RING	1				
6	X	1421030800	・・RING, back-up	1				
7		1904006301	・HUB	1				
8		1904006311	・SHAFT	1				
9		1904003621	・FLANGE	1				
10		1904003691	・SPACER	1				
11		1420110950	・O-RING	1				
12		1220000072	・RING, snap	1				
13		1100041030	・BOLT	4				
14		1501810002	・PLUG	3				
15		1140010010	・WASHER, spring	4				
		K3h012						

silverhorn.co.uk

CONTROL VALVE

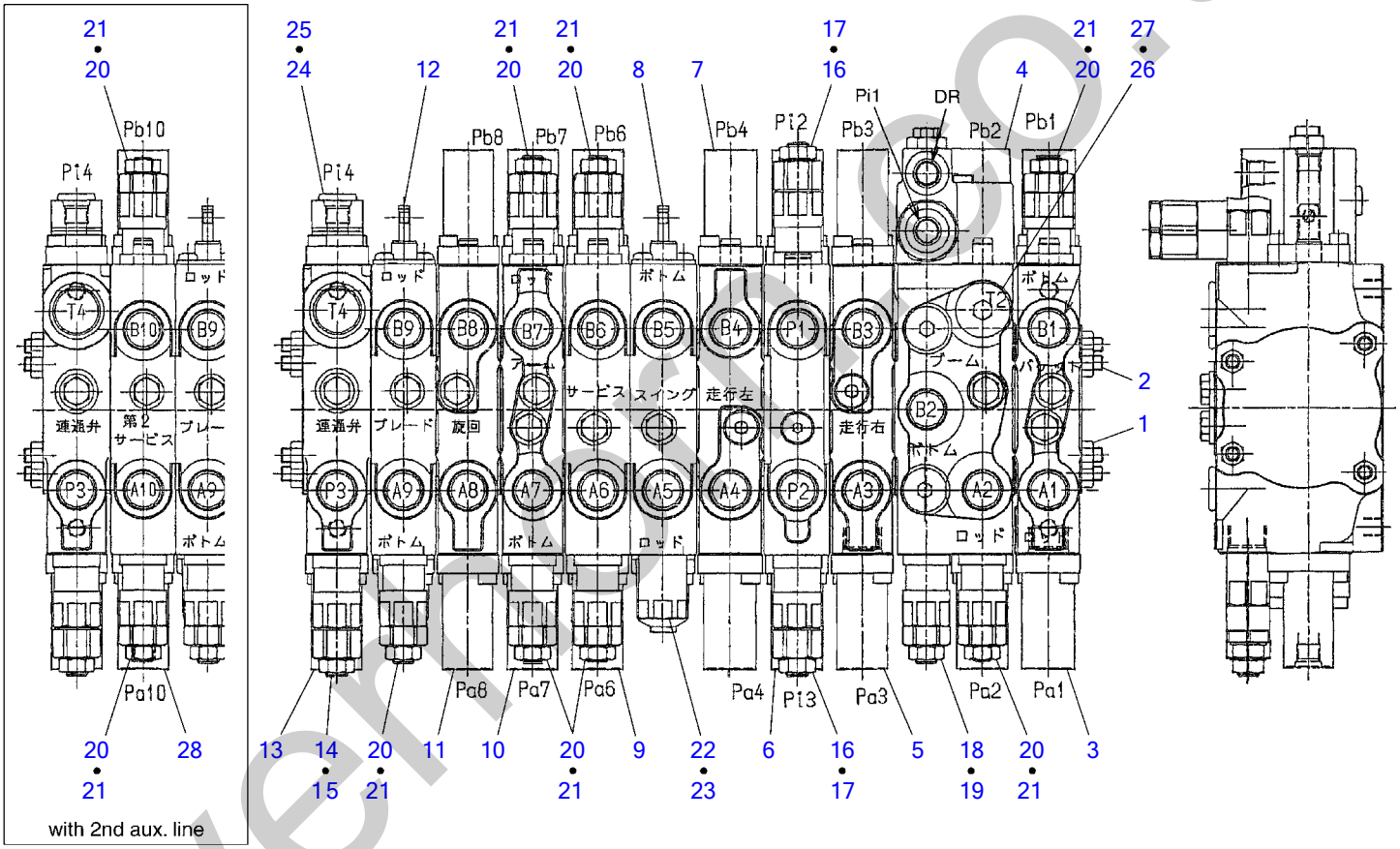

K7H010

S=free

silvermachine.co.uk

CONTROL VALVE

Item	Part number	Description	Q'ty	Chan.	Serial No.	Serv.	Remarks
0	1901046200	VALVE ASSY, control	1				
	1901046300	VALVE ASSY, control	1				with 2nd aux. line
1	1130050008	・NUT	8				
2	1901043207	・ROD, tie	4				
	1901043307	・ROD, tie	4				with 2nd aux. line
3	1901046213	・BLOCK ASSY, No.1	1				bucket
4	1901046211	・BLOCK ASSY, No.2	1				boom
5	1901046215	・BLOCK ASSY, No.3	1				traction R.H.
6	1901046201	・BLOCK ASSY, No.4	1				P1, P2
7	1901046216	・BLOCK ASSY, No.5	1				traction L.H.
8	1901046218	・BLOCK ASSY, No.6	1				swing
9	1901046219	・BLOCK ASSY, No.7	1				auxiliary
10	1901046212	・BLOCK ASSY, No.8	1				arm
11	1901046214	・BLOCK ASSY, No.9	1				slew
12	1901046217	・BLOCK ASSY, No.10	1				blade
	1901046317	・BLOCK ASSY, No.10 (with 2nd aux. line)	1				blade
13	1901043220	・BLOCK ASSY, No.11	1				T4, P3
14	1901046223	・VALVE ASSY	1				relief
15	1901025482	・・O-RING	1				
16	1901046221	・VALVE ASSY	2				relief
17	1901025482	・・O-RING	1				
18	1901043022	・VALVE ASSY	1				over load
19	1901025482	・・O-RING	1				
20	1901043021	・VALVE ASSY	7				over load
	1901043021	・VALVE ASSY (with 2nd aux. line)	9				over load
21	1901025482	・・O-RING	1				
22	1901042625	・VALVE ASSY	1				antivoid
23	1901025482	・・O-RING	1				
24	1901036573	・PLUG ASSY	1				
25	1420010110	・・O-RING	1				
26	1901036572	・PLUG ASSY	1				
27	1420010180	・・O-RING	1				
28	1901046319	・BLOCK ASSY, No.12	1				auxiliary 2
	K7h010						

silverhorn.co.uk

CONTROL VALVE (high flow)

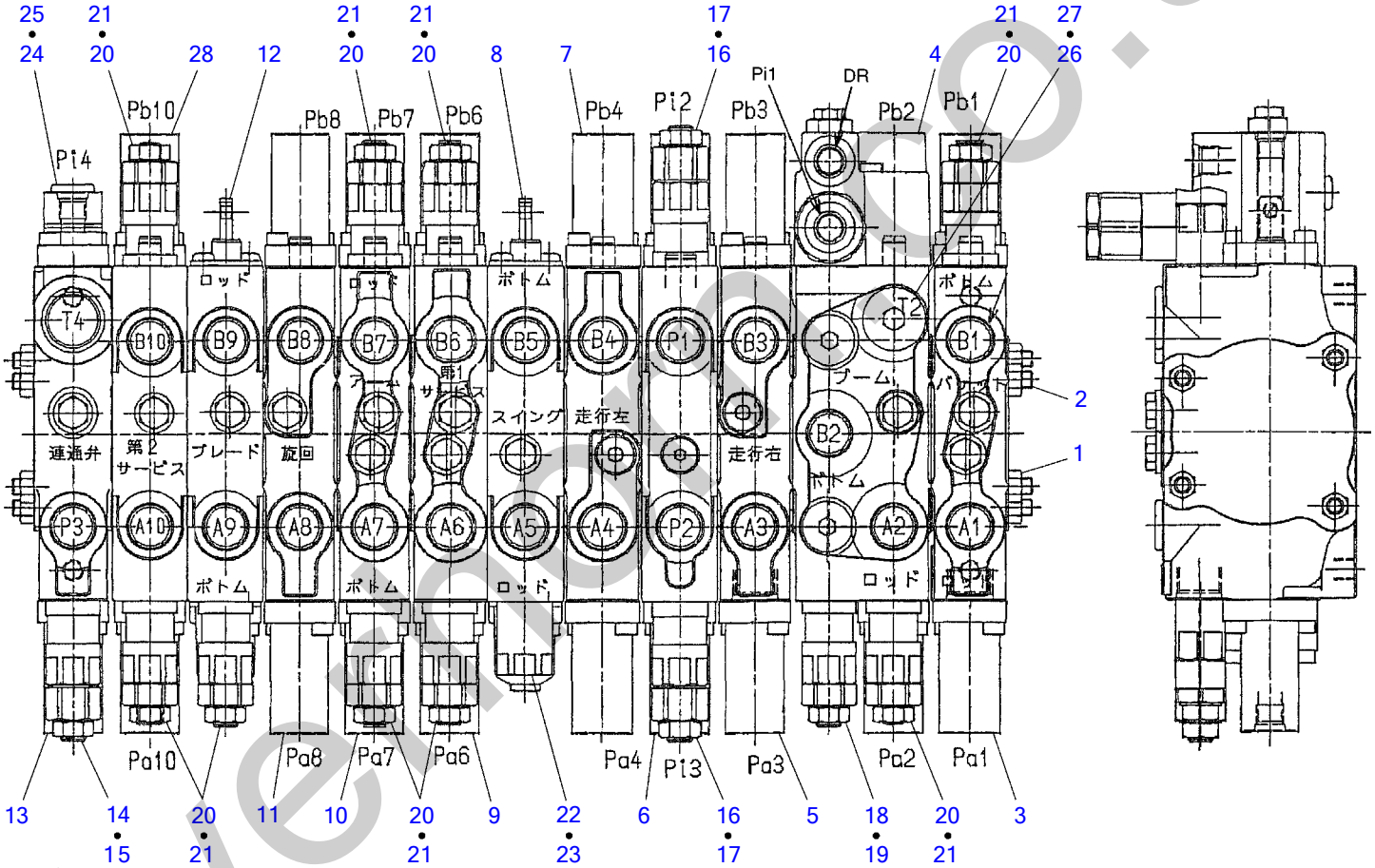

silvermarine.co.uk

CONTROL VALVE (high flow)

Item	Part number	Description	Q'ty	Chan.	Serial No.	Serv.	Remarks
0	1901046900	VALVE ASSY, control	1				
1	1130050008	・NUT	8				
2	1901043307	・ROD, tie	4				
3	1901046213	・BLOCK ASSY, No.1	1				bucket
4	1901046211	・BLOCK ASSY, No.2	1				boom
5	1901046215	・BLOCK ASSY, No.3	1				traction R.H.
6	1901046201	・BLOCK ASSY, No.4	1				P1, P2
7	1901046216	・BLOCK ASSY, No.5	1				traction L.H.
8	1901046218	・BLOCK ASSY, No.6	1				swing
9	1901046919	・BLOCK ASSY, No.7	1				auxiliary
10	1901046912	・BLOCK ASSY, No.8	1				arm
11	1901046214	・BLOCK ASSY, No.9	1				slew
12	1901046317	・BLOCK ASSY, No.10	1				blade
13	1901043220	・BLOCK ASSY, No.11	1				T4, P3
14	1901046223	・VALVE ASSY	1				relief
15	1901025482	・・O-RING	1				
16	1901046221	・VALVE ASSY	2				relief
17	1901025482	・・O-RING	1				
18	1901043022	・VALVE ASSY	1				over load
19	1901025482	・・O-RING	1				
20	1901043021	・VALVE ASSY	9				over load
21	1901025482	・・O-RING	1				
22	1901042625	・VALVE ASSY	1				antivoid
23	1901025482	・・O-RING	1				
24	1901036573	・PLUG ASSY	1				
25	1420010110	・・O-RING	1				
26	1901036572	・PLUG ASSY	1				
27	1420010180	・・O-RING	1				
28	1901046319	・BLOCK ASSY, No.12	1				auxiliary 2
	K7h020						

silverhorn.co.uk

BLOCK ASSY; No. 1

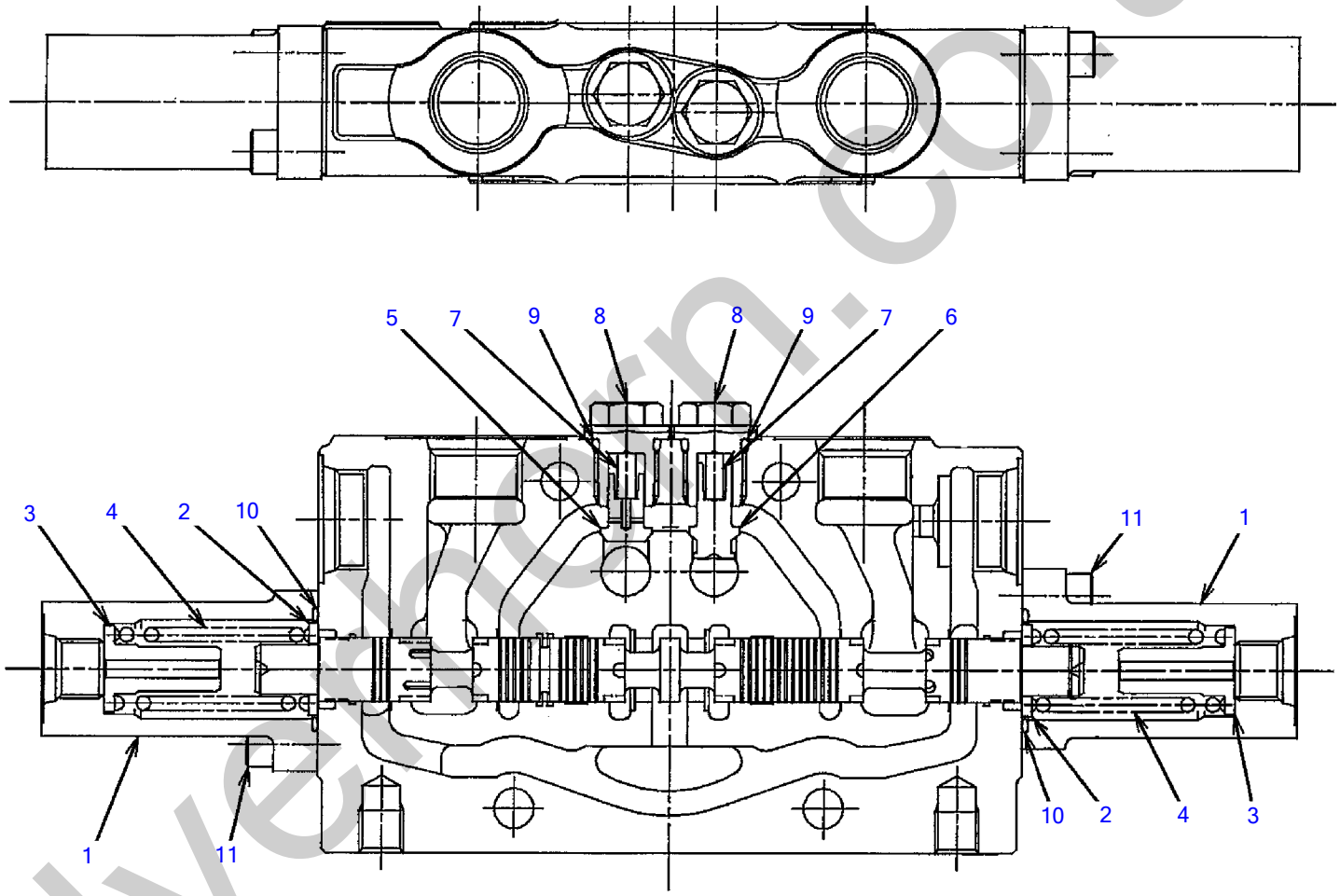

silverthern.co.uk

BLOCK ASSY; No. 1

Item	Part number	Description	Q'ty	Chan.	Serial No.	Serv.	Remarks
0	1901046213	BLOCK ASSY; No.1	1				bucket
1	1901043266	・CAP	2				
2	1901029754	・HOLDER, spring	2				
3	1901043231	・HOLDER, spring	2				
4	1901043256	・SPRING	2				
5	1901043226	・PLUNGER	1				
6	1901043227	・PLUNGER	1				
7	1901043257	・SPRING	2				
8	1901043271	・PLUG	2				
9	1901043282	・O-RING	2				
10	1420500240	・O-RING	2				
11	1110020618	・SCREW, cap	4				
	K7h030						

silverhorn.co.uk

BLOCK ASSY; No. 2

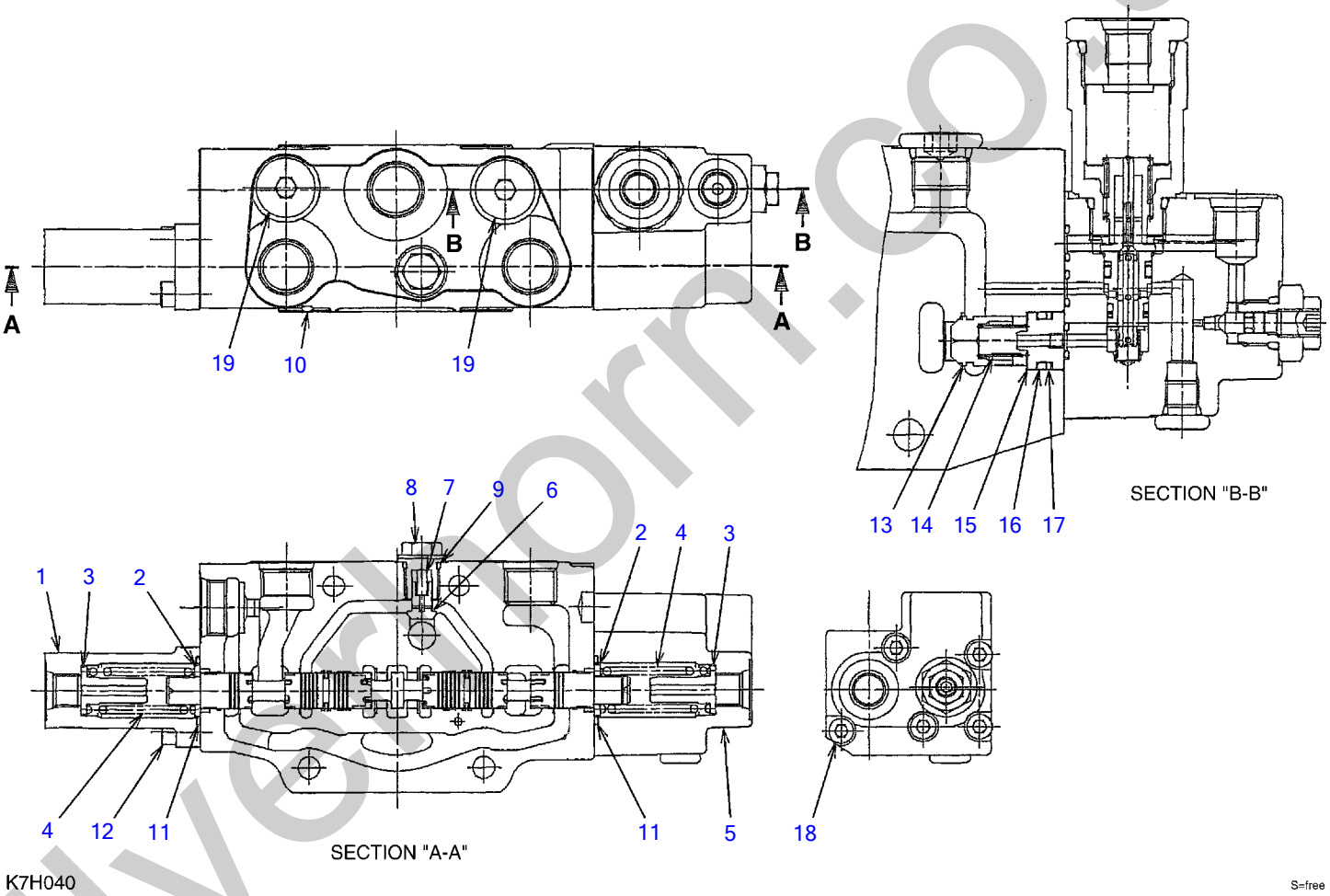

silverthorn.co.uk

BLOCK ASSY; No. 2

Item	Part number	Description	Q'ty	Chan.	Serial No.	Serv.	Remarks
0	1901046211	BLOCK ASSY; No.2	1				boom
1	1901043266	・CAP	1				
2	1901029754	・HOLDER, spring	2				
3	1901043231	・HOLDER, spring	2				
4	1901043256	・SPRING	2				
5	1901046228	・VALVE ASSY	1				
6	1901043226	・PLUNGER	1				
7	1901043257	・SPRING	1				
8	1901043271	・PLUG	1				
9	1901043282	・O-RING	1				
10	1420100700	・O-RING	1				
11	1420500240	・O-RING	2				
12	1110020618	・SCREW, cap	2				
13	1901043229	・PLUNGER	1				
14	1901043258	・SPRING	1				
15	1901036641	・SPACER	1				
16	1420000125	・O-RING	1				
17	1421020125	・RING, back-up	1				
18	1110020650	・SCREW, cap	5				
19	1901036678	・PLUG	2				
	K7h040						

silverhorn.co.uk

BLOCK ASSY; No. 3

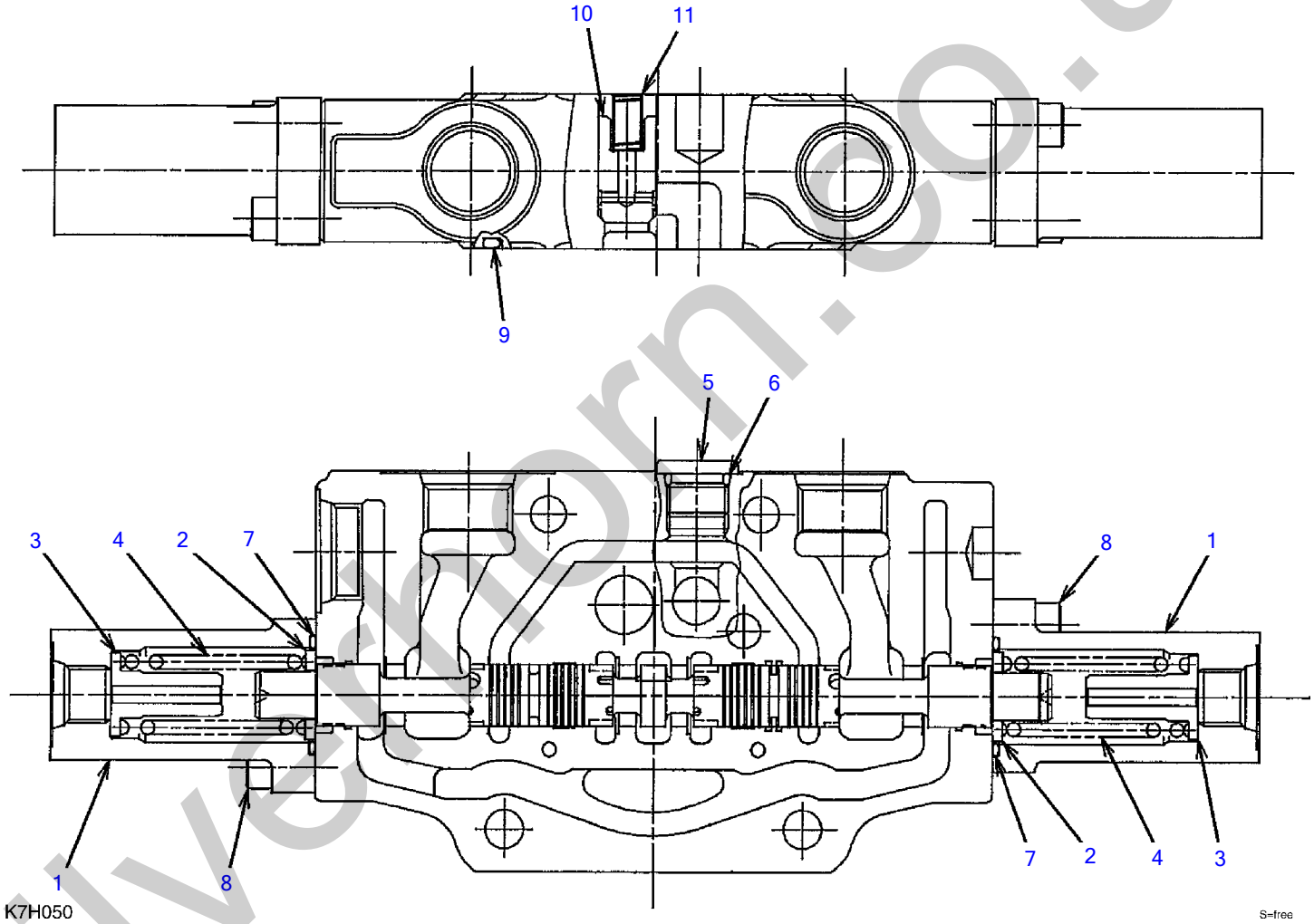

silverthorn.co.uk

BLOCK ASSY; No. 3

Item	Part number	Description	Q'ty	Chan.	Serial No.	Serv.	Remarks
0	1901046215	BLOCK ASSY; No.3	1				traction R.H.
1	1901043266	・CAP	2				
2	1901029754	・HOLDER, spring	2				
3	1901043231	・HOLDER, spring	2				
4	1901043256	・SPRING	2				
5	1901043271	・PLUG	1				
6	1901046271	・O-RING	1				
7	1420500240	・O-RING	2				
8	1110020618	・SCREW, cap	4				
9	1420100700	・O-RING	1				
10	1901036528	・PLUNGER	1				
11	1901034239	・SPRING	1				
	K7h050						

silverhorn.co.uk

BLOCK ASSY; No. 4

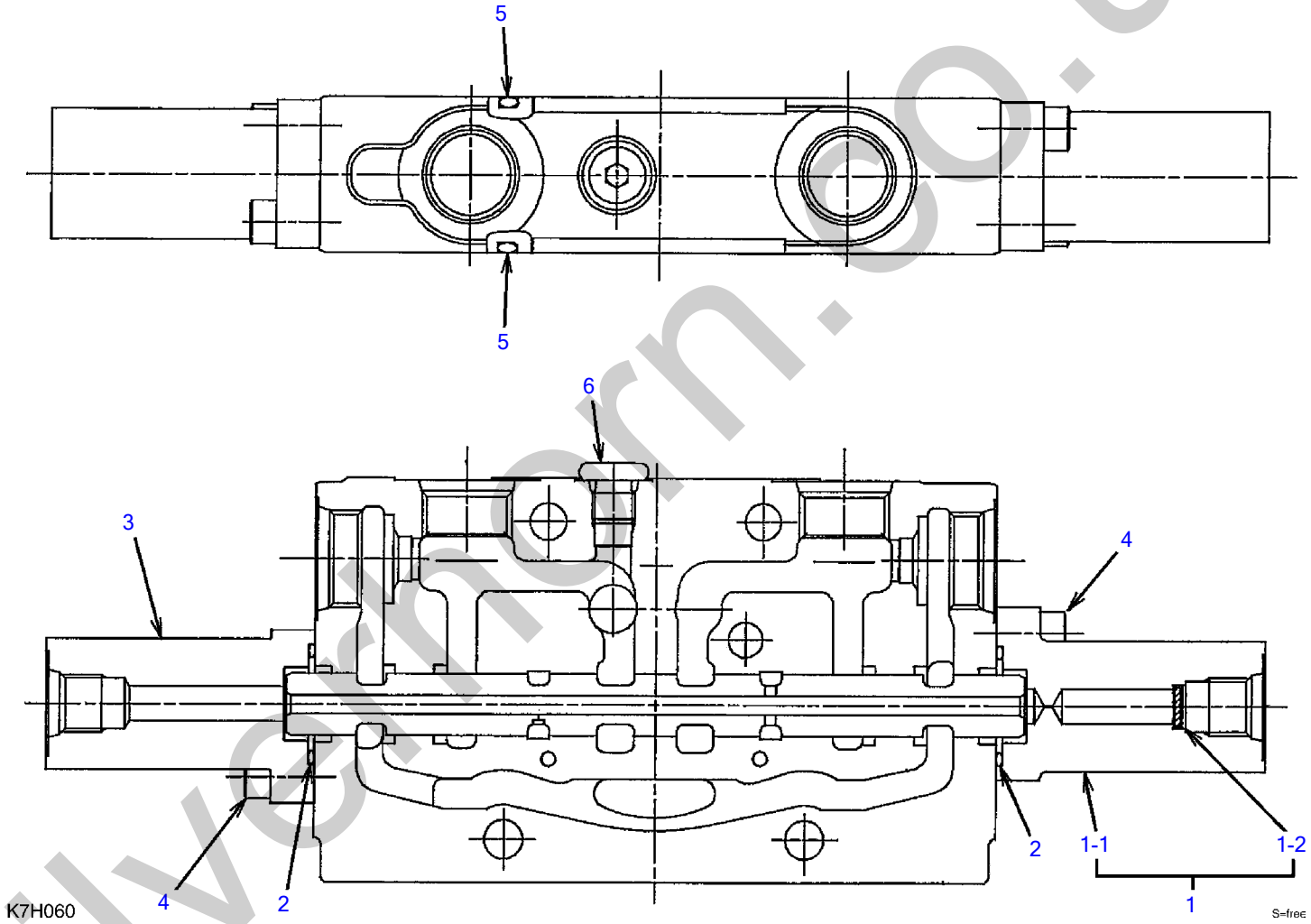

silvermorn.co.uk

BLOCK ASSY; No. 4

Item	Part number		Description	Q'ty	Chan.	Serial No.	Serv.	Remarks
0		1901046201	BLOCK ASSY; No.4	1				P1, P2
1		1901043298	・CAP ASSY	1				
1-1	X	**********	・・CAP	1				X19010-43268
1-2	X	**********	・・FILTER	1				X19010-43283
2		1420500240	・O-RING	2				
3		1901043267	・CAP	1				
4		1110020618	・SCREW, cap	4				
5		1420100700	・O-RING	2				
6		1901036677	・PLUG	1				
		K7h060						

silverhorn.co.uk

BLOCK ASSY; No. 5

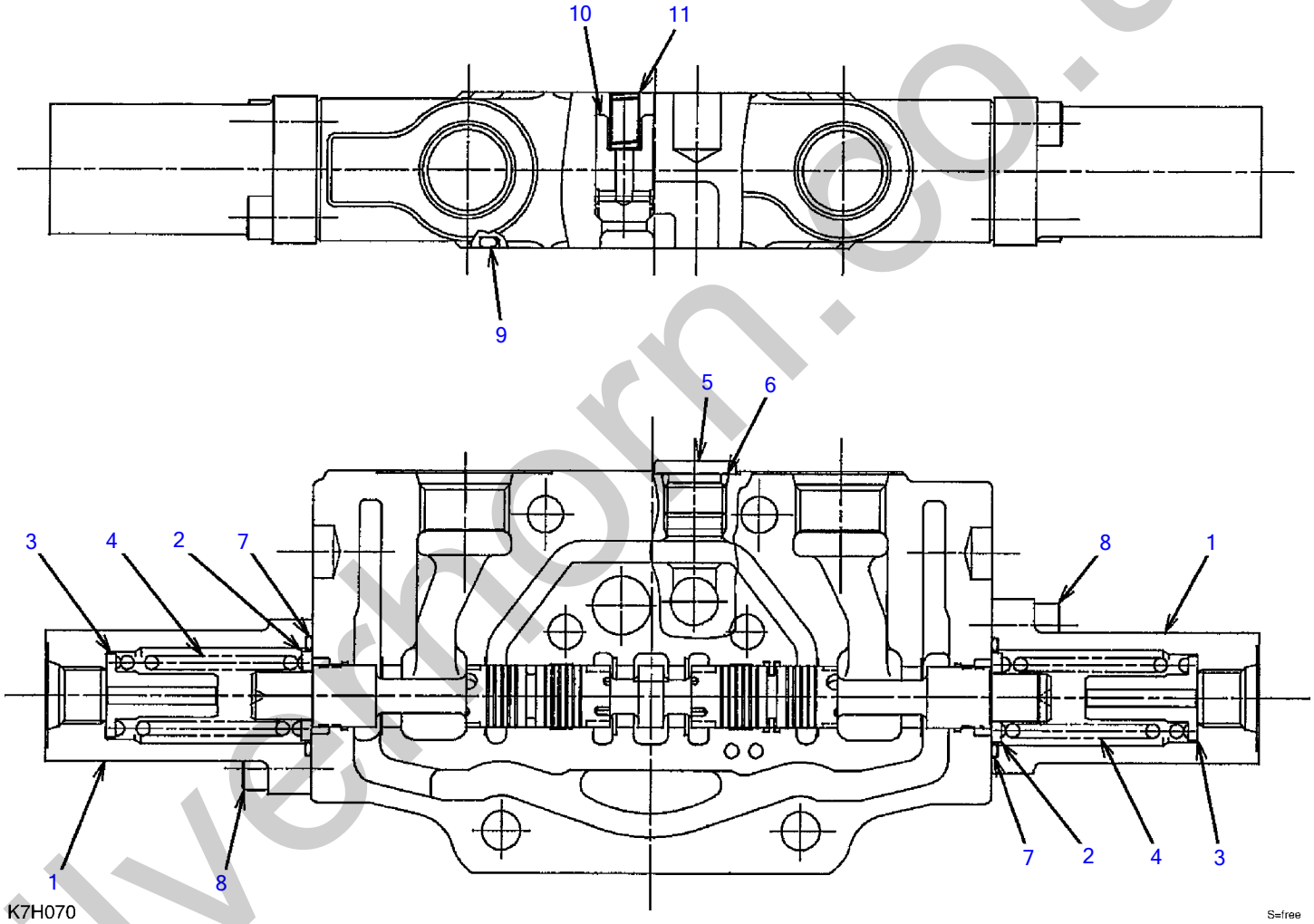

silverhorn.co.uk

BLOCK ASSY; No. 5

Item	Part number	Description	Q'ty	Chan.	Serial No.	Serv.	Remarks
0	1901046216	BLOCK ASSY; No.5	1				traction L.H.
1	1901043266	・CAP	2				
2	1901029754	・HOLDER, spring	2				
3	1901043231	・HOLDER, spring	2				
4	1901043256	・SPRING	2				
5	1901046271	・PLUG	1				
6	1901043282	・O-RING	1				
7	1420500240	・O-RING	2				
8	1110020618	・SCREW, cap	4				
9	1420100700	・O-RING	1				
10	1901036528	・PLUNGER	1				
11	1901034239	・SPRING	1				
	K7h070						

silverhorn.co.uk

BLOCK ASSY; No. 6

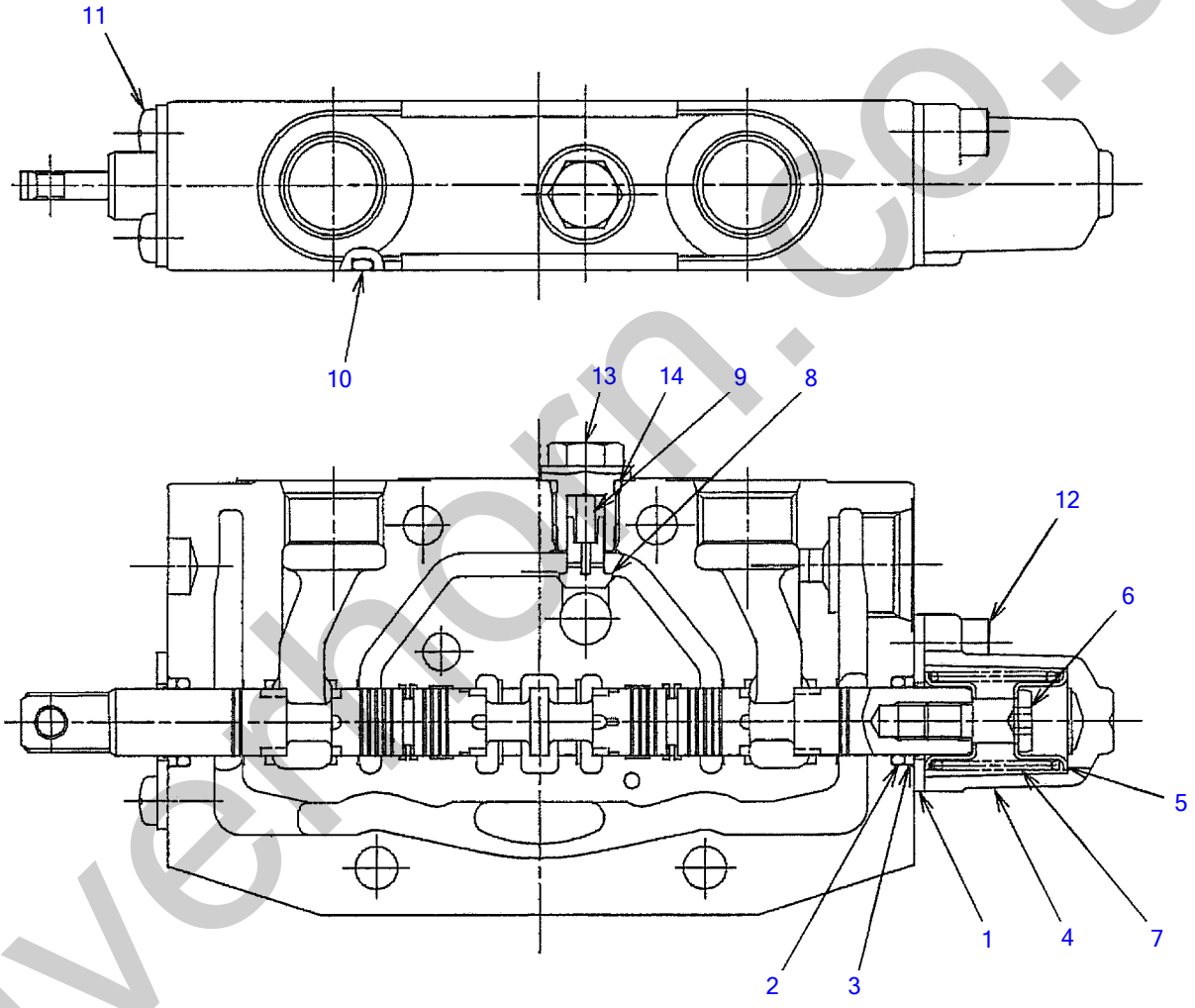

silverthorn.co.uk

BLOCK ASSY; No. 6

Item	Part number	Description	Q'ty	Chan.	Serial No.	Serv.	Remarks
0	1901046218	BLOCK ASSY; No.6	1				swing
1	1901025483	・PLATE, seal	2				
2	1901025484	・O-RING	2				
3	1901025485	・SEAL	2				
4	1901043269	・CAP	1				
5	1901025453	・HOLDER, spring	2				
6	1901043232	・SCREW, cap	1				
7	1901025457	・SPRING	1				
8	1901043226	・PLUNGER	1				
9	1901043257	・SPRING	1				
10	1420100700	・O-RING	1				
11	1120540610	・SCREW	2				
12	1110020618	・SCREW, cap	2				
13	1901043271	・PLUG	1				
14	1901043282	・O-RING	1				
	K7h080						

silverhorn.co.uk

BLOCK ASSY; No. 7

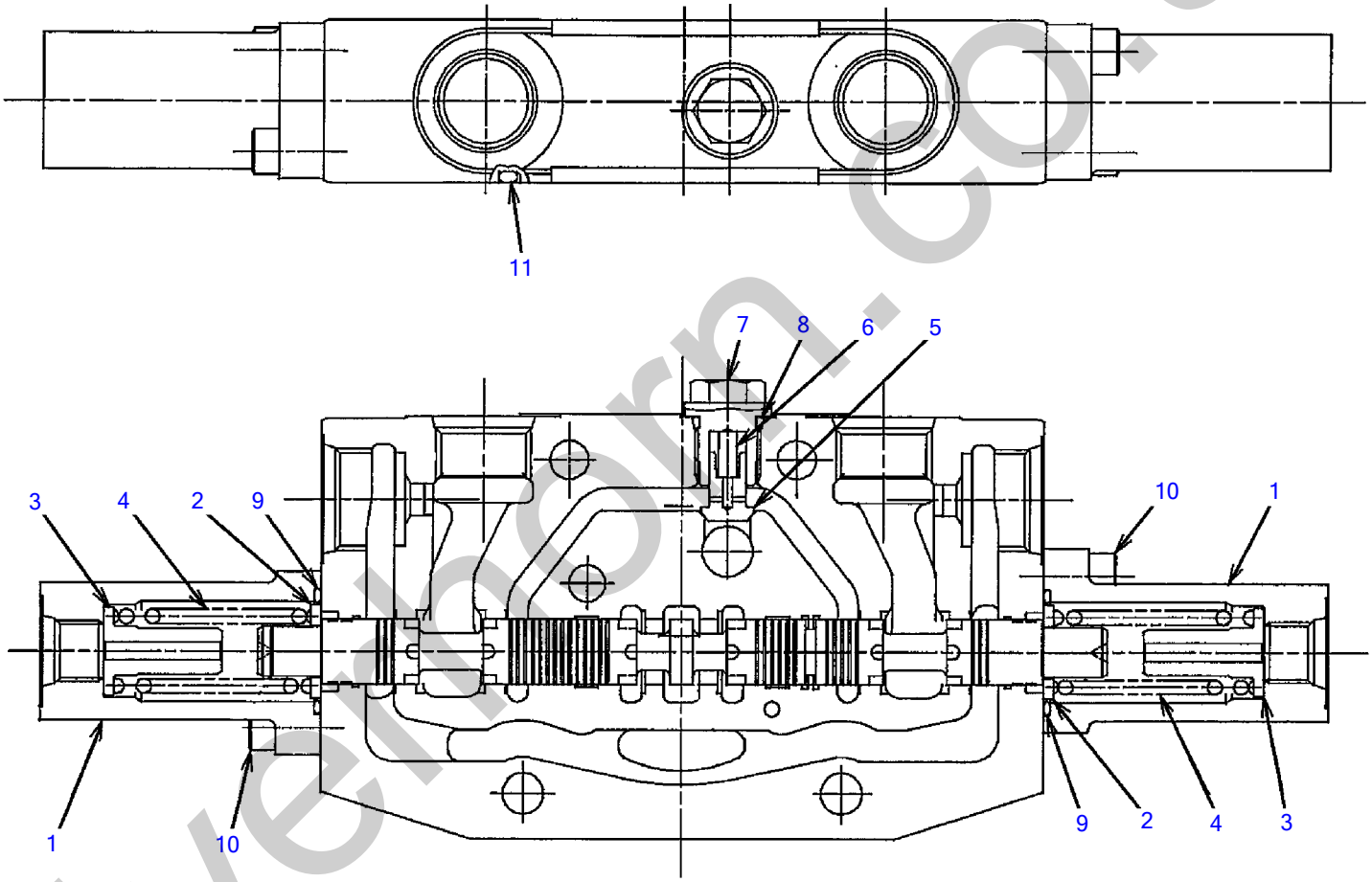

K7H090

S=free

silverthorn.co.uk

BLOCK ASSY; No. 7

Item	Part number	Description	Q'ty	Chan.	Serial No.	Serv.	Remarks
0	1901046219	BLOCK ASSY; No.7	1				auxiliary 1
1	1901043266	・CAP	2				
2	1901029754	・HOLDER, spring	2				
3	1901043231	・HOLDER, spring	2				
4	1901043256	・SPRING	2				
5	1901043226	・PLUNGER	1				
6	1901043257	・SPRING	1				
7	1901043271	・PLUG	1				
8	1901043282	・O-RING	1				
9	1420500240	・O-RING	2				
10	1110020618	・SCREW, cap	4				
11	1420100700	・O-RING	1				
	K7h090						

silverhorn.co.uk

BLOCK ASSY; No. 7 (high flow)

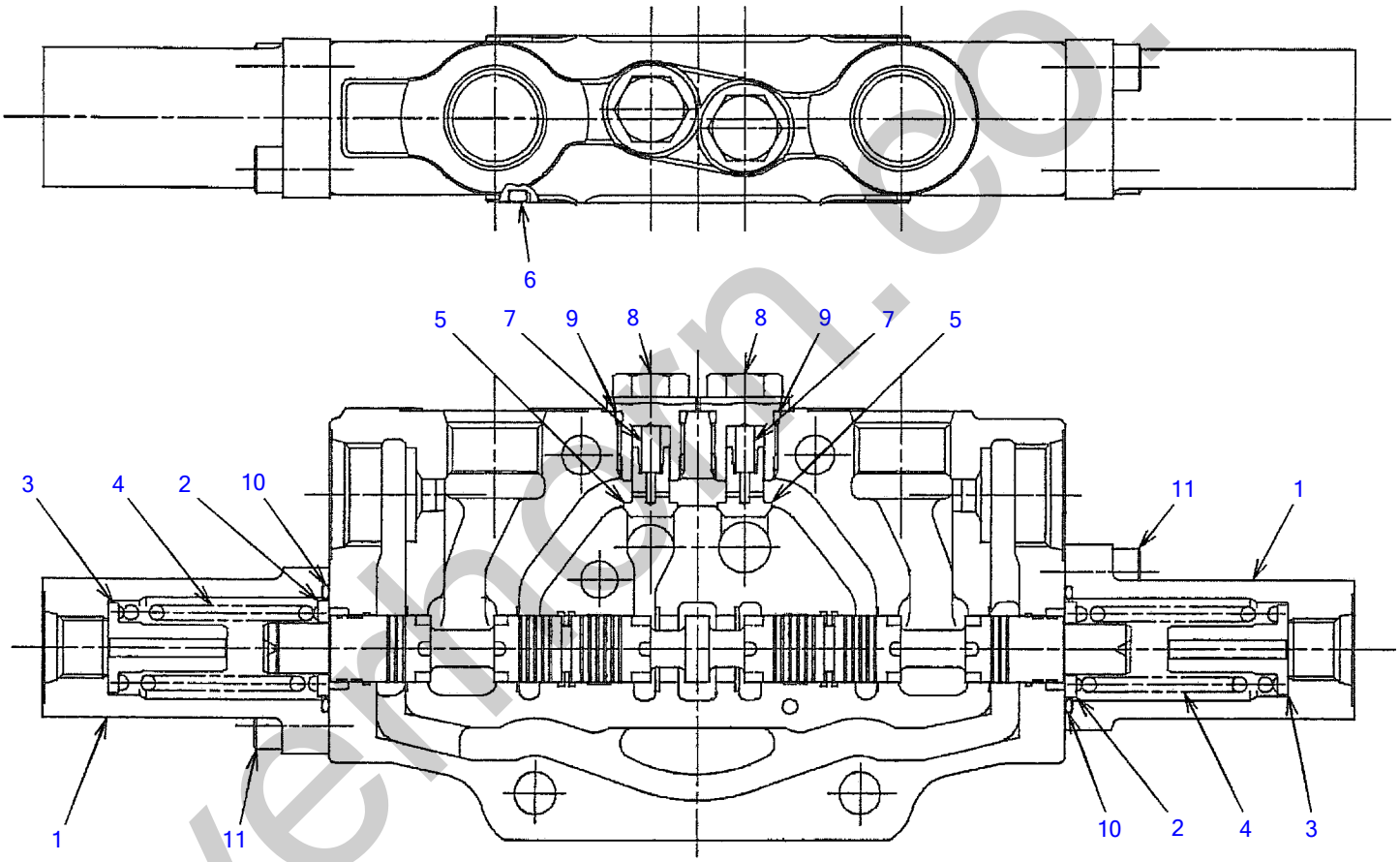

K7H100

S=free

silverhorn.co.uk

BLOCK ASSY; No. 7 (high flow)

Item	Part number	Description	Q'ty	Chan.	Serial No.	Serv.	Remarks
0	1901046919	BLOCK ASSY; No.7	1				high flow
1	1901043266	・CAP	2				
2	1901029754	・HOLDER, spring	2				
3	1901043231	・HOLDER, spring	2				
4	1901043256	・SPRING	2				
5	1901043226	・PLUNGER	2				
6	1420100700	・O-RING	1				
7	1901043257	・SPRING	2				
8	1901043271	・PLUG	2				
9	1901043282	・O-RING	2				
10	1420500240	・O-RING	2				
11	1110020618	・SCREW, cap	4				
	K7h100						

silverhorn.co.uk

BLOCK ASSY; No. 8

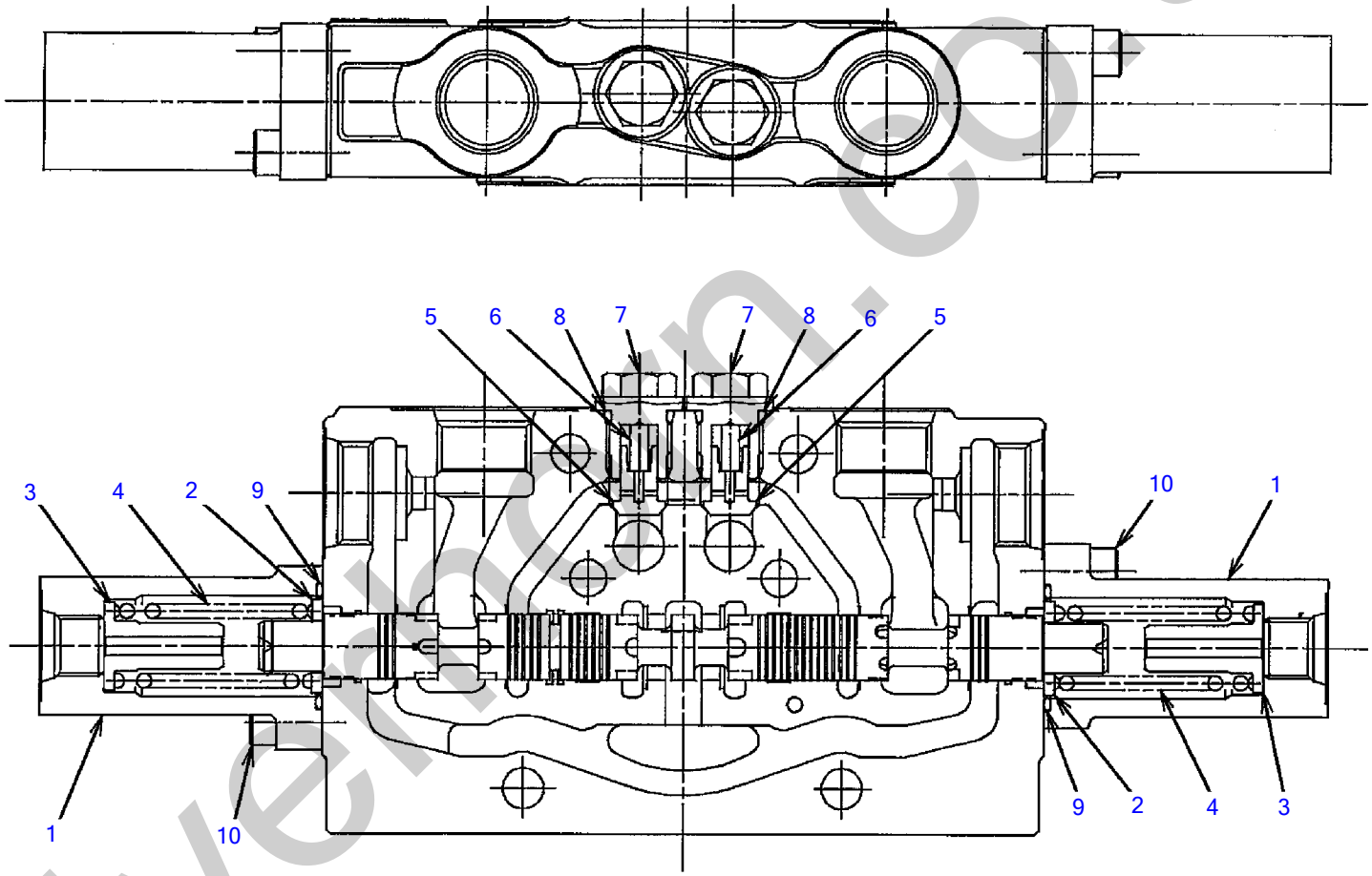

J2H100

S=free

silvermoon.co.uk

BLOCK ASSY; No. 8

Item	Part number	Description	Q'ty	Chan.	Serial No.	Serv.	Remarks
0	1901046212	BLOCK ASSY; No.8	1				arm
	1901046912	BLOCK ASSY; No.8 (high flow)	1				
1	1901043266	・CAP	2				
2	1901029754	・HOLDER, spring	2				
3	1901043231	・HOLDER, spring	2				
4	1901043256	・SPRING	2				
5	1901043226	・PLUNGER	2				
6	1901043257	・SPRING	2				
7	1901043271	・PLUG	2				
8	1901043282	・O-RING	2				
9	1420500240	・O-RING	2				
10	1110020618	・SCREW, cap	4				
	K7h110						

silverhorn.co.uk

BLOCK ASSY; No. 9

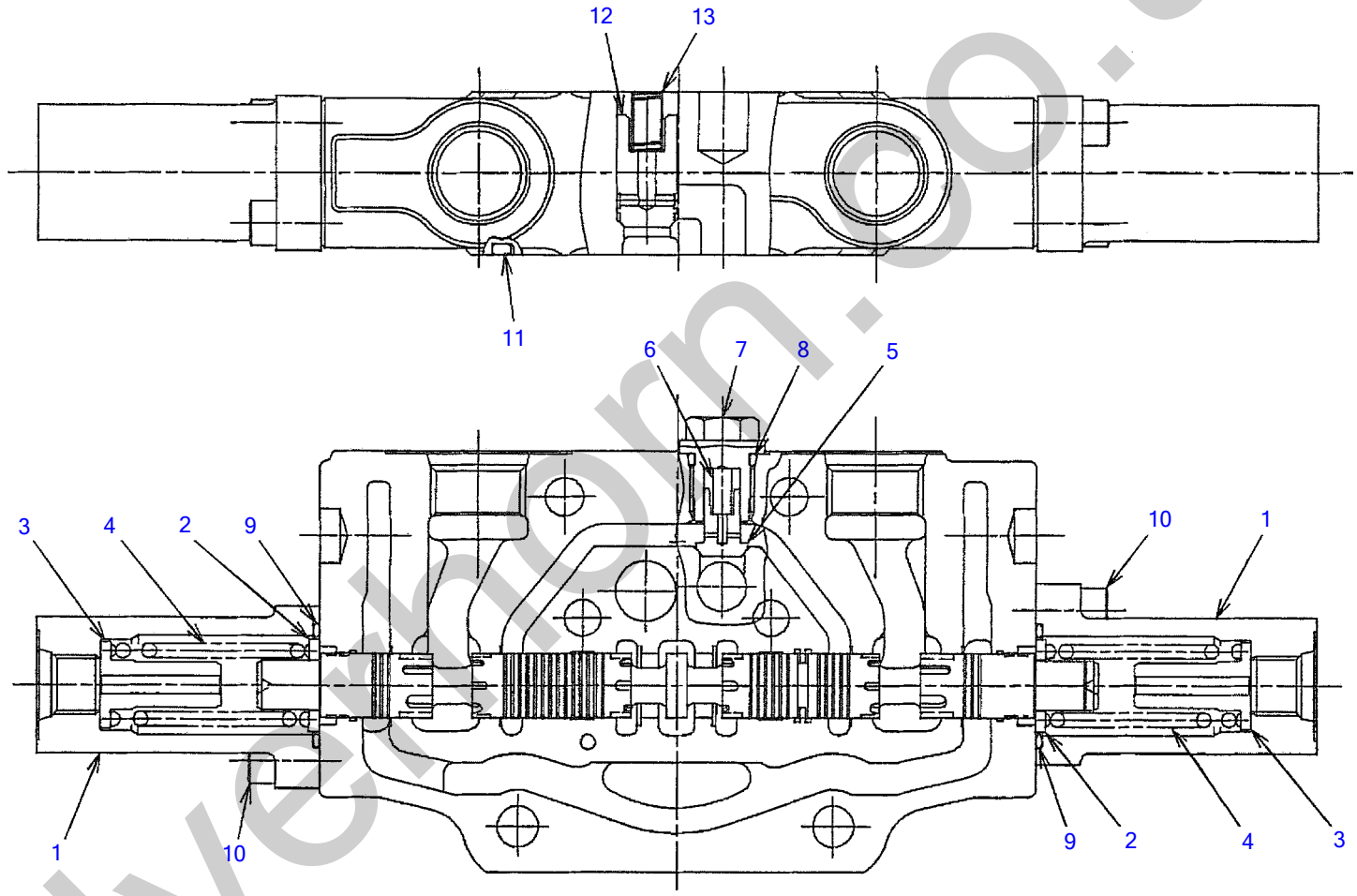

silverthorn.co.uk

BLOCK ASSY; No. 9

Item	Part number	Description	Q'ty	Chan.	Serial No.	Serv.	Remarks
0	1901046214	BLOCK ASSY; No.9	1				slew
1	1901043266	・CAP	2				
2	1901029754	・HOLDER, spring	2				
3	1901043231	・HOLDER, spring	2				
4	1901043256	・SPRING	2				
5	1901043226	・PLUNGER	1				
6	1901043257	・SPRING	1				
7	1901043271	・PLUG	1				
8	1901043282	・O-RING	1				
9	1420500240	・O-RING	2				
10	1110020618	・SCREW, cap	4				
11	1420100700	・O-RING	1				
12	1901036528	・PLUNGER	1				
13	1901034239	・SPRING	1				
	K7h120						

silverhorn.co.uk

BLOCK ASSY; No. 10

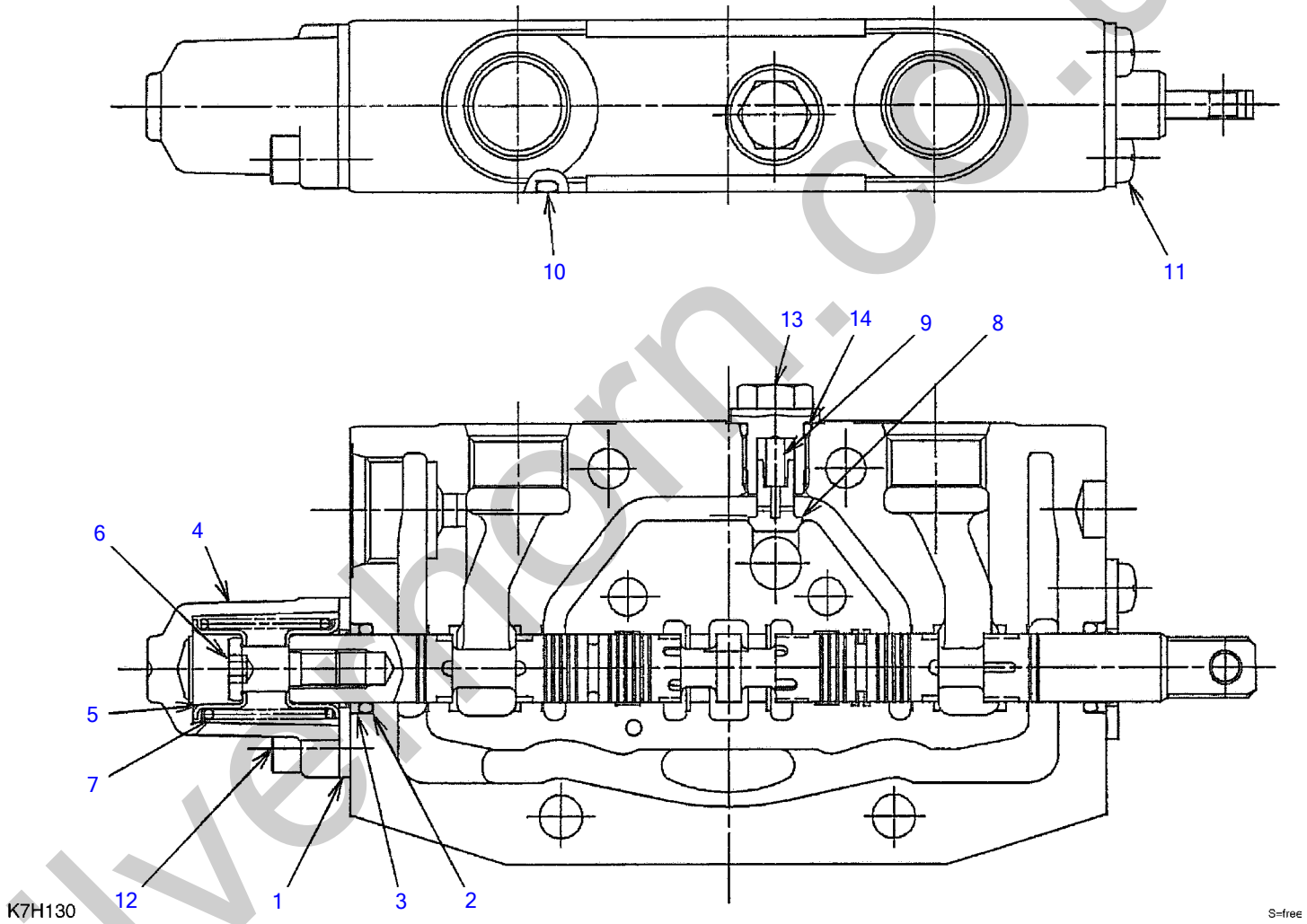

silvermorn.co.uk

BLOCK ASSY; No. 10

Item	Part number	Description	Q'ty	Chan.	Serial No.	Serv.	Remarks
0	1901046217	BLOCK ASSY; No.10	1				blade
	1901046317	BLOCK ASSY; No.10 (with 2nd aux. line)	1				
1	1901025483	・PLATE, seal	2				
2	1901025484	・O-RING	2				
3	1901025485	・SEAL	2				
4	1901043269	・CAP	1				
5	1901025453	・HOLDER, spring	2				
6	1901043232	・SCREW, cap	1				
7	1901025457	・SPRING	1				
8	1901043226	・PLUNGER	1				
9	1901043257	・SPRING	1				
10	1420100700	・O-RING	1				
11	1120540610	・SCREW	2				
12	1110020618	・SCREW, cap	2				
13	1901043271	・PLUG	1				
14	1901043282	・O-RING	1				
	K7h130						

silverhorn.co.uk

BLOCK ASSY; No. 11

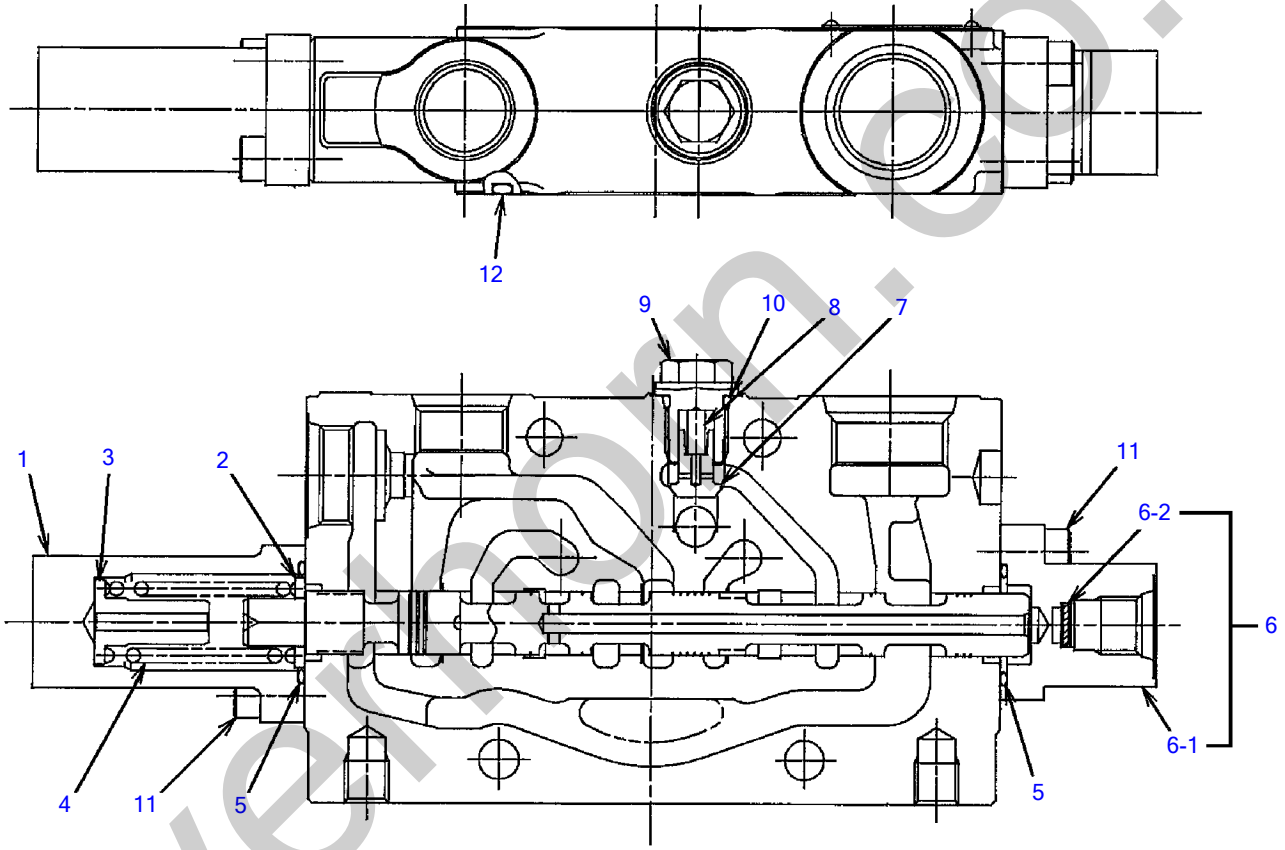

00

J2H140

S=free

silverthorn.co.uk

BLOCK ASSY; No. 11

Item	Part number	Description	Q'ty	Chan.	Serial No.	Serv.	Remarks
0	1901043220	BLOCK ASSY; No.11	1				T4, P3
1	1901043270	・CAP	1				
2	1901029754	・HOLDER, spring	1				
3	1901043231	・HOLDER, spring	1				
4	1901043259	・SPRING	1				
5	1420500240	・O-RING	2				
6	1901043297	・CAP ASSY	1				
6-1	X **********	・・CAP	1				X19010-43265
6-2	X **********	・・FILTER	1				X19010-43283
7	1901043226	・PLUNGER	1				
8	1901043257	・SPRING	1				
9	1901043271	・PLUG	1				
10	1901043282	・O-RING	1				
11	1110020618	・SCREW, cap	4				
12	1420100700	・O-RING	1				
	K7h140						

silverhorn.co.uk

BLOCK ASSY; No. 12 (with 2nd aux. line)

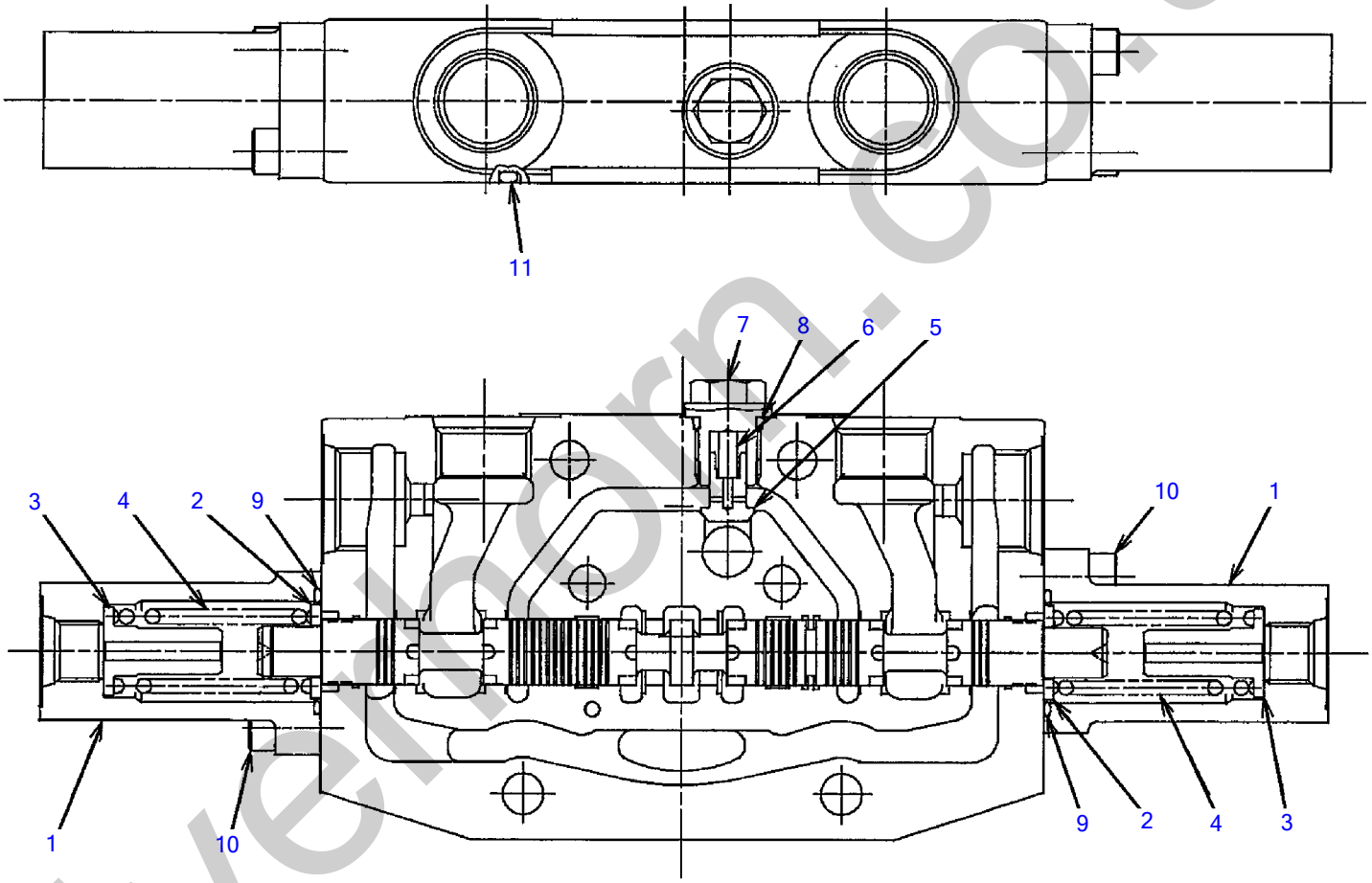

K7H150

S=free

silverthorn.co.uk

BLOCK ASSY; No. 12 (with 2nd aux. line)

Item	Part number	Description	Q'ty	Chan.	Serial No.	Serv.	Remarks
0	**1901046319**	BLOCK ASSY; No.12	1				auxiliary 2
1	**1901043266**	・CAP	2				
2	**1901029754**	・HOLDER, spring	2				
3	**1901043231**	・HOLDER, spring	2				
4	**1901043256**	・SPRING	2				
5	**1901043226**	・PLUNGER	1				
6	**1901043257**	・SPRING	1				
7	**1901043271**	・PLUG	1				
8	**1901043282**	・O-RING	1				
9	**1420500240**	・O-RING	2				
10	**1110020618**	・SCREW, cap	4				
11	**1420100700**	・O-RING	1				
	K7h150						

silverhorn.co.uk

PILOT VALVE

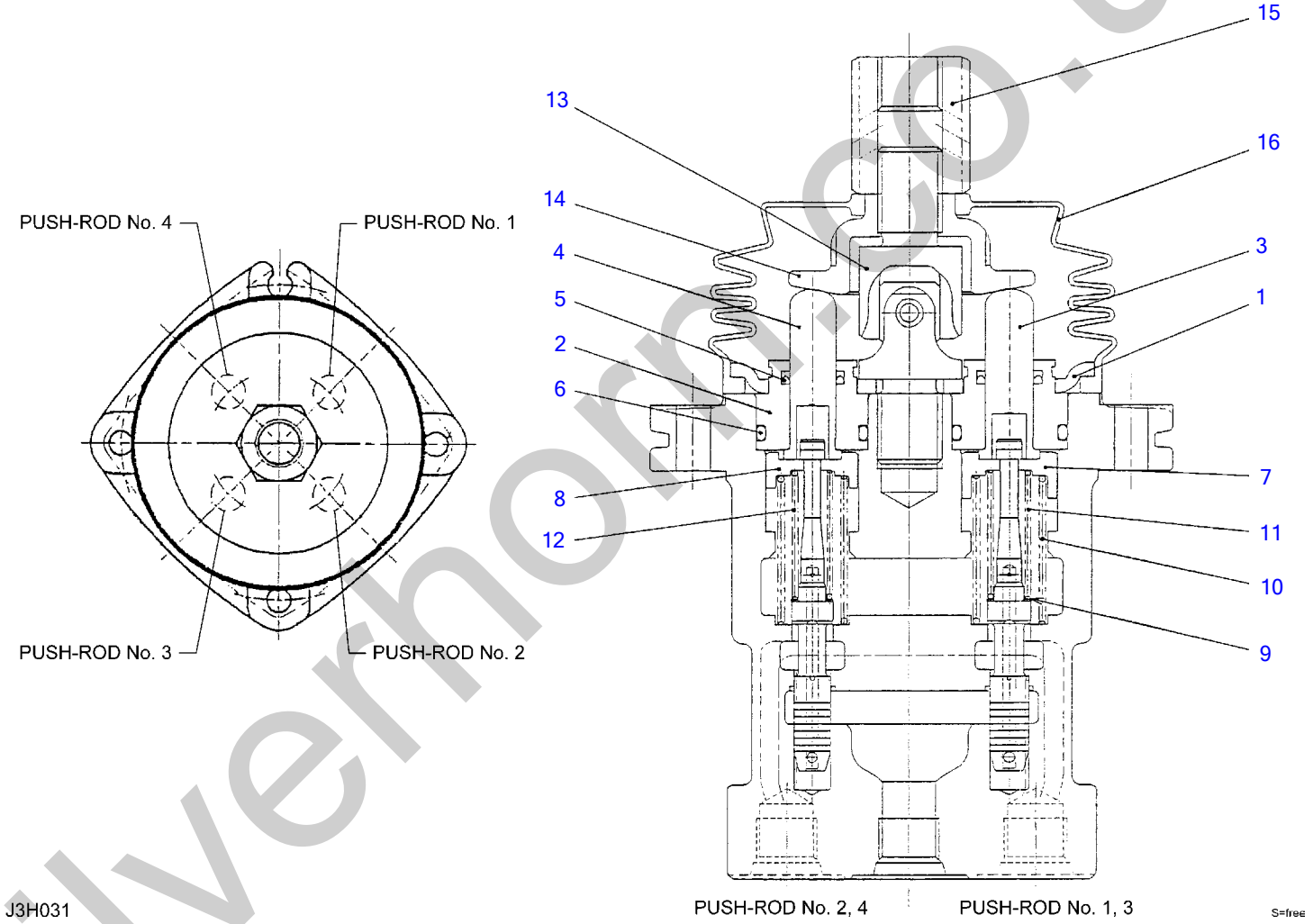

silverhomes.co.uk

PILOT VALVE

Item	Part number	Description	Q'ty	Chan.	Serial No.	Serv.	Remarks
0	1901751100	VALVE ASSY, pilot	1				
1	1901742602	・PLATE	1				
2	1901710912	・PLUG	4				
3	1901719011	・ROD	2				
4	1901719012	・ROD	2				
5	1901710914	・SEAL	4				
6	1420010200	・O-RING	4				
7	1901745709	・HOLDER	2				
8	1901745710	・HOLDER	2				
9	1901710917	・WASHER	4				
10	1901745612	・SPRING	4				
11	1901742614	・SPRING	2				
12	1901742615	・SPRING	2				
13	1901720232	・JOINT	1				
14	1901743620	・PLATE	1				
15	1901703222	・NUT	1				
16	1901742619	・BUSHING	1				
	J3h030						

silverhorn.co.uk

PILOT VALVE (R.H.) (with 3 switch)

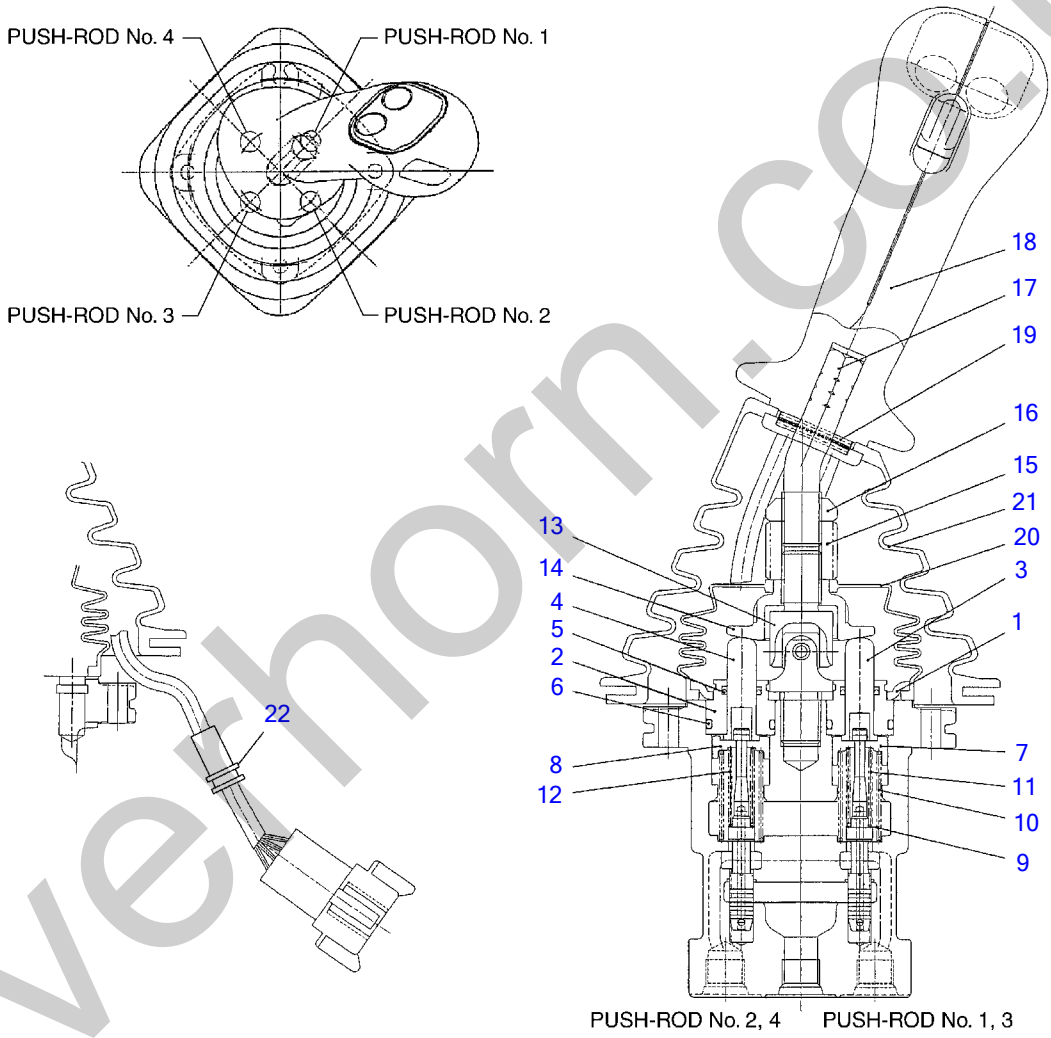

G7H150

S=free

silverhorn.co.uk

PILOT VALVE (R.H.) (with 3 switch)

Item	Part number	Description	Q'ty	Chan.	Serial No.	Serv.	Remarks
0	1901751200	VALVE ASSY, pilot (R.H.)	1				
1	1901742602	・PLATE	1				
2	1901710912	・PLUG	4				
3	1901719011	・ROD	2				
4	1901719012	・ROD	2				
5	1901710914	・SEAL	4				
6	1420010200	・O-RING	4				
7	1901745709	・HOLDER	2				
8	1901745710	・HOLDER	2				
9	1901710917	・WASHER	4				
10	1901745612	・SPRING	4				
11	1901742614	・SPRING	2				
12	1901742615	・SPRING	2				
13	1901720232	・JOINT	1				
14	1901743620	・PLATE	1				
15	1901735625	・NUT	1				
16	1901735626	・NUT	1				
17	1901740432	・LEVER	1				
18	1901741210	・HANDLE	1				
19	1901746521	・PIN, spring	1				
20	1901742619	・BOOT	1				
21	1901735632	・BOOT	1				
22	1700100092	・GROMMET	1				
	G7h150						

silverhorn.co.uk

PILOT VALVE (L.H.) (with 3 switch)

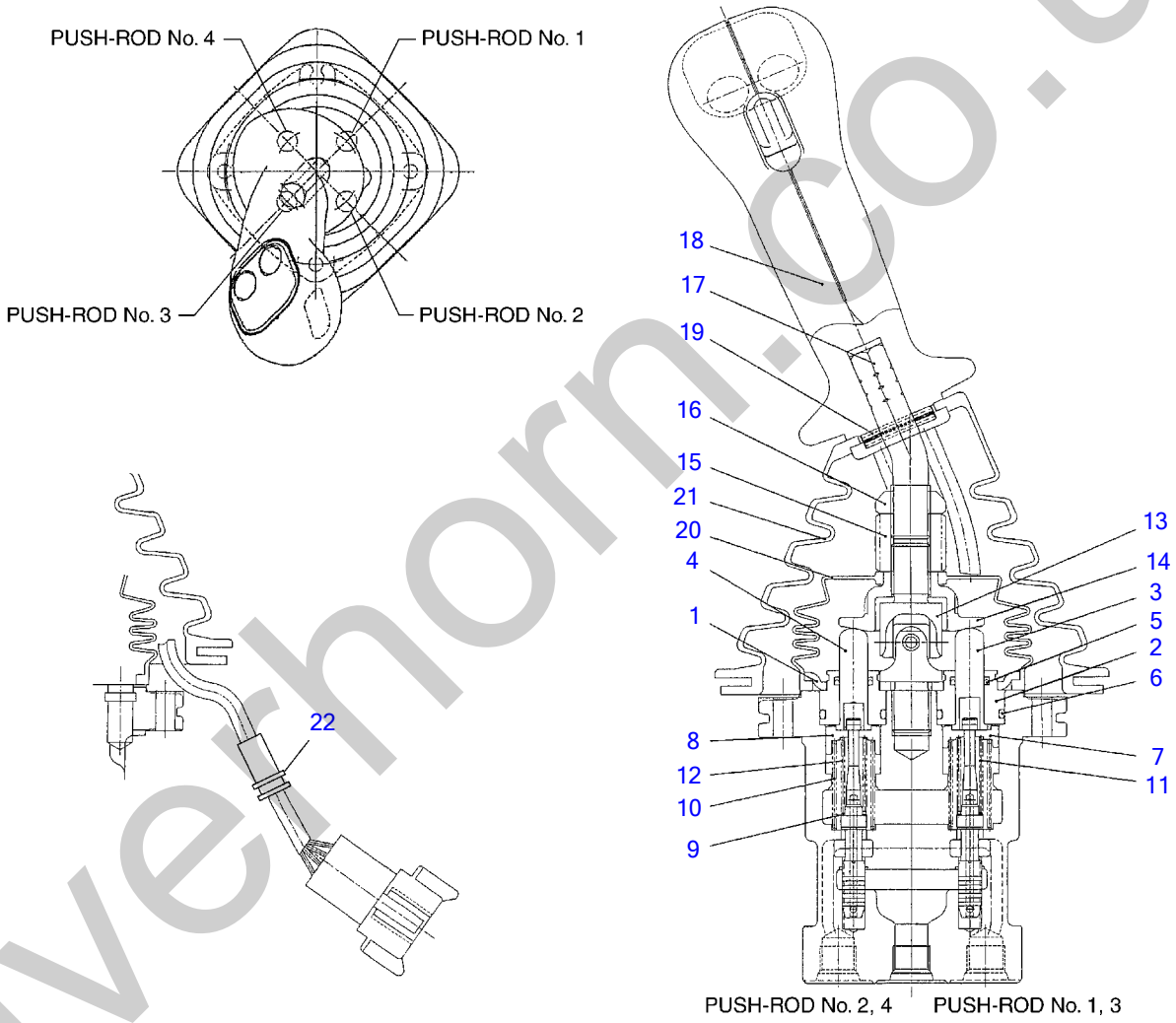

G7H160

S=free

silverhorn.co.uk

PILOT VALVE (L.H.) (with 3 switch)

Item	Part number	Description	Q'ty	Chan.	Serial No.	Serv.	Remarks
0	1901751300	VALVE ASSY, pilot (L.H.)	1				
1	1901742602	・PLATE	1				
2	1901710912	・PLUG	4				
3	1901719011	・ROD	2				
4	1901719012	・ROD	2				
5	1901710914	・SEAL	4				
6	1420010200	・O-RING	4				
7	1901745709	・HOLDER	2				
8	1901745710	・HOLDER	2				
9	1901710917	・WASHER	4				
10	1901745612	・SPRING	4				
11	1901742614	・SPRING	2				
12	1901742615	・SPRING	2				
13	1901720232	・JOINT	1				
14	1901743620	・PLATE	1				
15	1901735625	・NUT	1				
16	1901735626	・NUT	1				
17	1901740432	・LEVER	1				
18	1901741210	・HANDLE	1				
19	1901746521	・PIN, spring	1				
20	1901742619	・BOOT	1				
21	1901735632	・BOOT	1				
22	1700100092	・GROMMET	1				
	G7h160						

silverhorn.co.uk

PILOT VALVE (R.H.) (with slide switch)

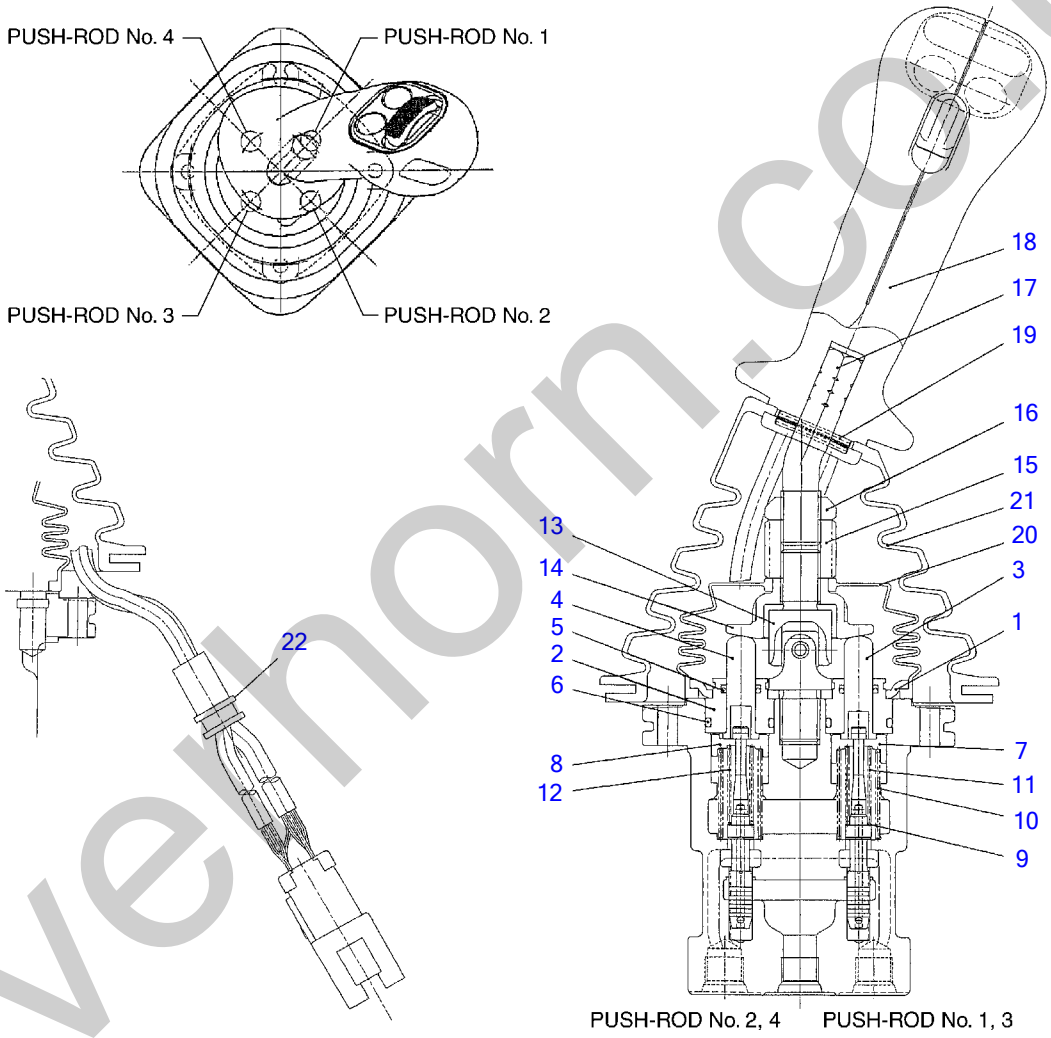

G7H340

S=free

silverthorn.co.uk

PILOT VALVE (R.H.) (with slide switch)

Item	Part number	Description	Q'ty	Chan.	Serial No.	Serv.	Remarks
0	1901751400	VALVE ASSY, pilot (R.H.)	1				
1	1901742602	・PLATE	1				
2	1901710912	・PLUG	4				
3	1901719011	・ROD	2				
4	1901719012	・ROD	2				
5	1901710914	・SEAL	4				
6	1420010200	・O-RING	4				
7	1901745709	・HOLDER	2				
8	1901745710	・HOLDER	2				
9	1901710917	・WASHER	4				
10	1901745612	・SPRING	4				
11	1901742614	・SPRING	2				
12	1901742615	・SPRING	2				
13	1901720232	・JOINT	1				
14	1901743620	・PLATE	1				
15	1901735625	・NUT	1				
16	1901735626	・NUT	1				
17	1901740432	・LEVER	1				
18	1901751410	・HANDLE	1				
19	1901746521	・PIN, spring	1				
20	1901742619	・BOOT	1				
21	1901735632	・BOOT	1				
22	1700100092	・GROMMET	1				
	G7h341						

silverhorn.co.uk

PILOT VALVE (L.H.) (with slide switch)

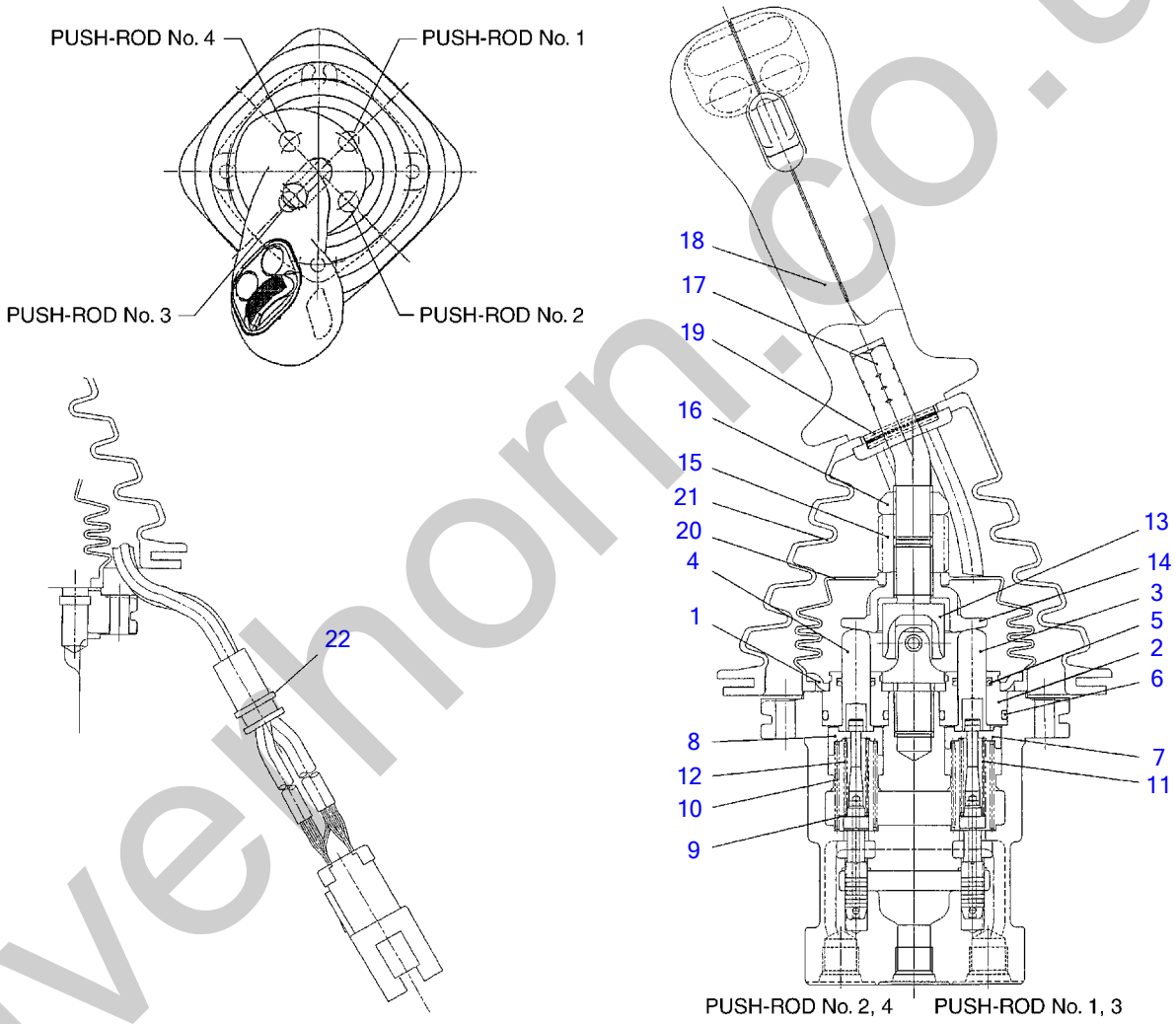

G7H350

S=free

silverthorn.co.uk

PILOT VALVE (L.H.) (with slide switch)

Item	Part number	Description	Q'ty	Chan.	Serial No.	Serv.	Remarks
0	1901751500	VALVE ASSY, pilot (L.H.)	1				
1	1901742602	・PLATE	1				
2	1901710912	・PLUG	4				
3	1901719011	・ROD	2				
4	1901719012	・ROD	2				
5	1901710914	・SEAL	4				
6	1420010200	・O-RING	4				
7	1901745709	・HOLDER	2				
8	1901745710	・HOLDER	2				
9	1901710917	・WASHER	4				
10	1901745612	・SPRING	4				
11	1901742614	・SPRING	2				
12	1901742615	・SPRING	2				
13	1901720232	・JOINT	1				
14	1901743620	・PLATE	1				
15	1901735625	・NUT	1				
16	1901735626	・NUT	1				
17	1901740432	・LEVER	1				
18	1901751410	・HANDLE	1				
19	1901746521	・PIN, spring	1				
20	1901742619	・BOOT	1				
21	1901735632	・BOOT	1				
22	1700100092	・GROMMET	1				
	G7h350						

silverhorn.co.uk

HANDLE (with slide switch)

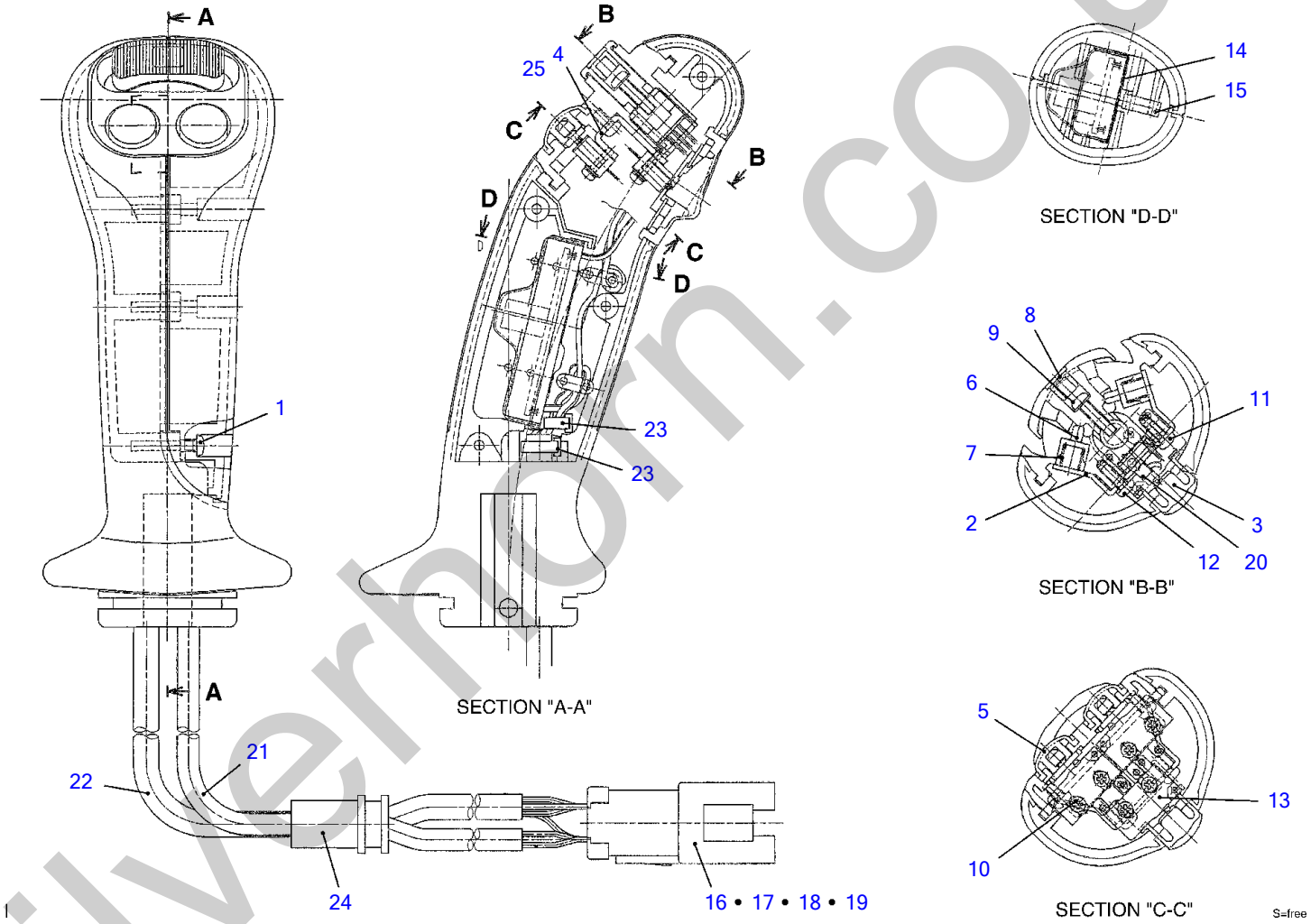

silverhorn.co.uk

HANDLE (with slide switch)

Item	Part number	Description	Q'ty	Chan.	Serial No.	Serv.	Remarks
0	1901751410	HANDLE ASSY	1				
1	1122400316	・SCREW	4				
2	1901740401	・PLATE	1				
3	1901740402	・BUTTON	1				
4	1901751405	・BRACKET	1				
5	1901741216	・BUTTON	2				
6	1901740405	・PISTON	2				
7	1901740406	・SPRING	2				
8	1901740407	・CAP	1				
9	1150010312	・SCREW	1				
10	1901751472	・SCREW	6				
11	1122400306	・SCREW	3				
12	1122400308	・SCREW	1				
13	1901740408	・SWITCH	3				
14	1901751452	・COVER	1				
15	1901740412	・CAP	2				
16	1901751483	・RECEPTACLE	1				
17	1901751484	・WEDGE	1				
18	1901740413	・PIN	11				
19	1901741263	・CAP	1				
20	1901751489	・TERMINAL	1				
21	1901751490	・PROTECTOR	1				
22	1901751491	・PROTECTOR	1				
23	1901751492	・BAND	4				
24	1901751495	・GROMMET	1				
25	1901741312	* retainer	2				
	L7h091						

silverhorn.co.uk

HANDLE (with 3 switch)

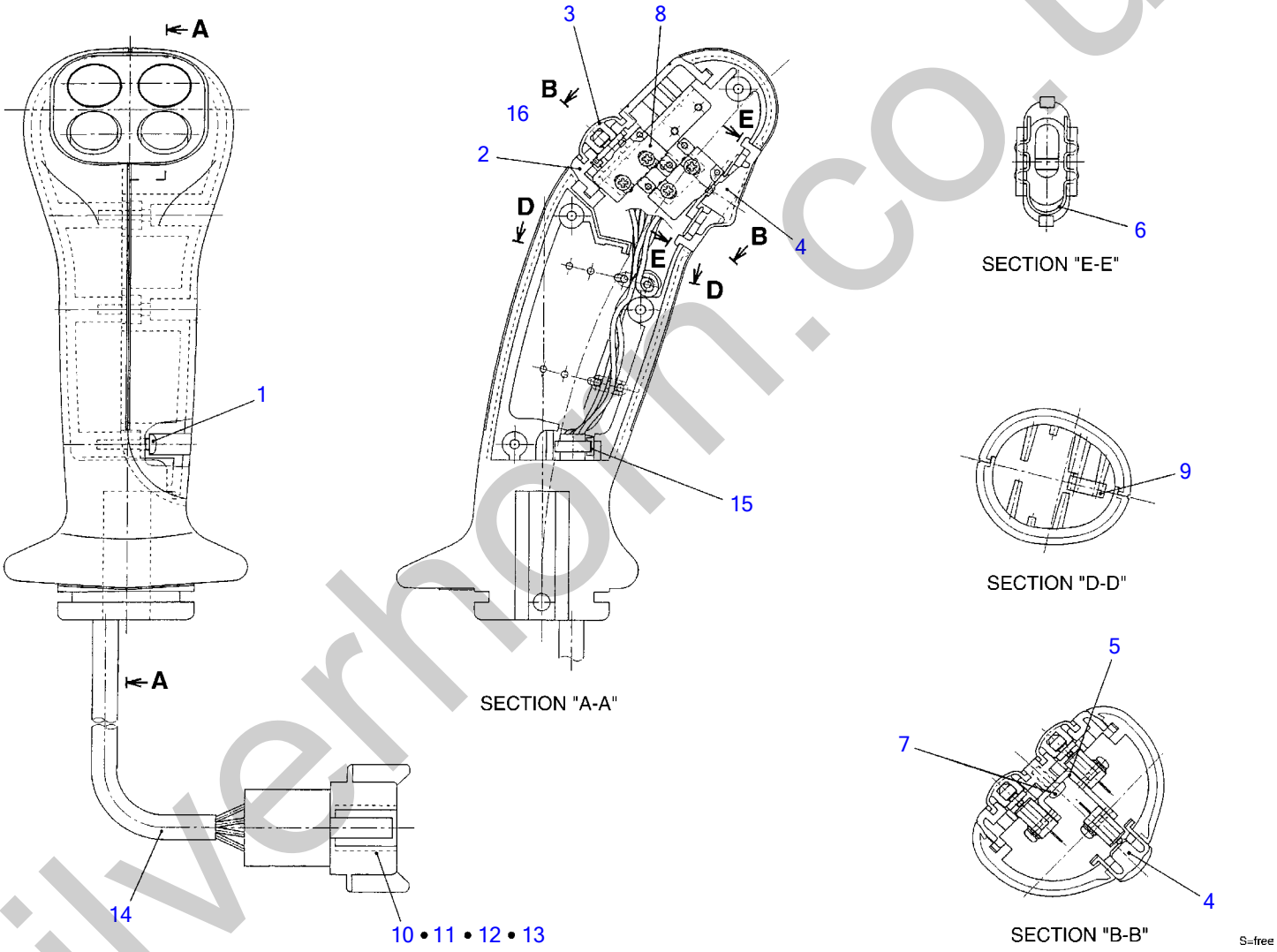

silverhorn.co.uk

HANDLE (with 3 switch)

Item	Part number	Description	Q'ty	Chan.	Serial No.	Serv.	Remarks
0	1901741210	HANDLE ASSY	1				
1	1122400312	・SCREW	4				
2	1901741211	・CASE	1				
3	1901741216	・BUTTON	2				
4	1901740402	・BUTTON	1				
5	1901741218	・BRACKET	1				
6	1901740404	・CLIP	1				
7	1122400306	・SCREW	2				
8	1901740408	・SWITCH	3				
9	1901740412	・CAP	2				
10	1901740446	・RECEPTACLE	1				
11	1901740447	・WEDGE	1				
12	1901740413	・PIN	5				
13	1901741263	・PIN, BLANKING	3				
14	1901740414	・PROTECTOR	1				
15	1901740415	・BAND	1				
16	1901741312	* RETAINER	2				
	L3h501						

silverhorn.co.uk

SELECTOR VALVE (ISO-JCB pattern)

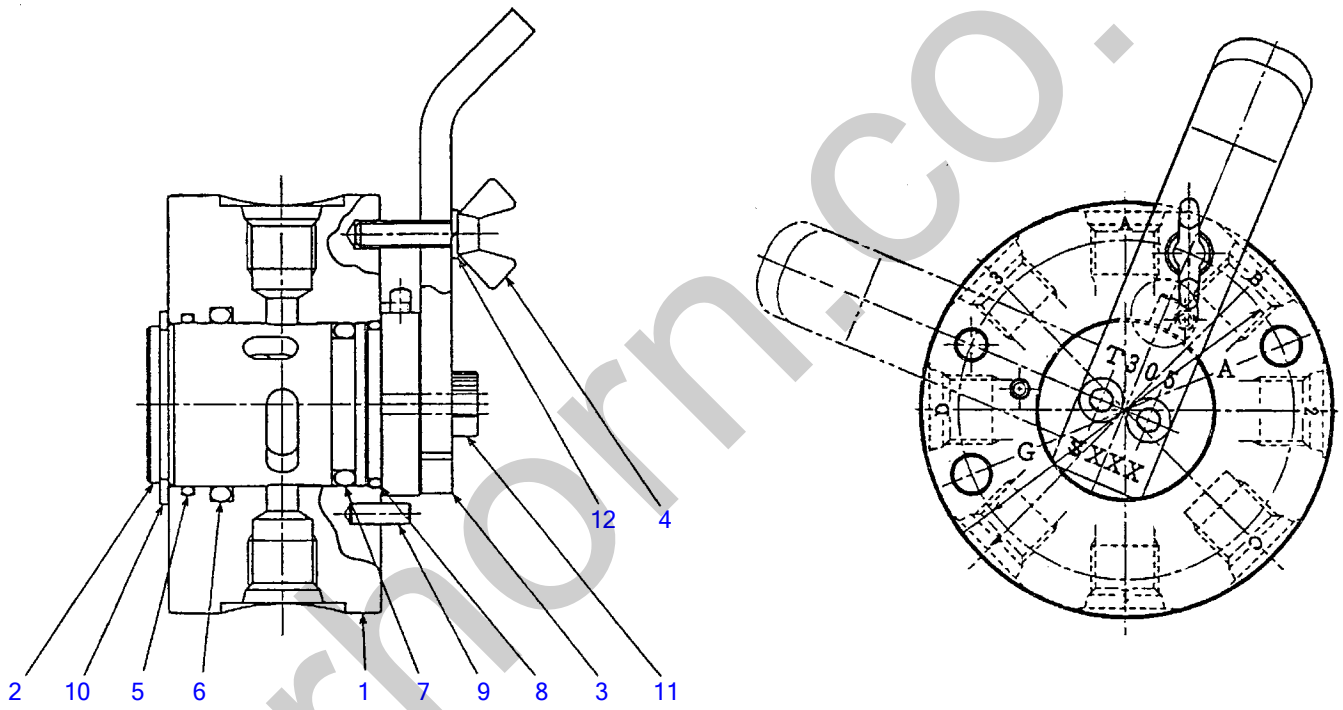

C4H180

S=FREE

silvermorn.co.uk

SELECTOR VALVE (ISO-JCB pattern)

Item	Part number	Description	Q'ty	Chan.	Serial No.	Serv.	Remarks
0	1901730500	VALVE ASSY, selector	1				
1	1901730501	・BODY	1				
2	1901730502	・ROTOR	1				
3	1901730503	・LEVER	1				
4	1901730504	・BOLT	1				
5	1901730505	・O-RING	1				
6	1901730506	・O-RING	1				
7	1901730507	・O-RING	1				
8	1901730508	・O-RING	1				
9	1213000412	・PIN, spring	3				
10	1220000030	・RING, snap	1				
11	1110050514	・SCREW, cap	2				
12	1140010005	・WASHER, spring	1				
	C4h180						

silverhorn.co.uk

SELECTOR VALVE (A-B PATTERN)

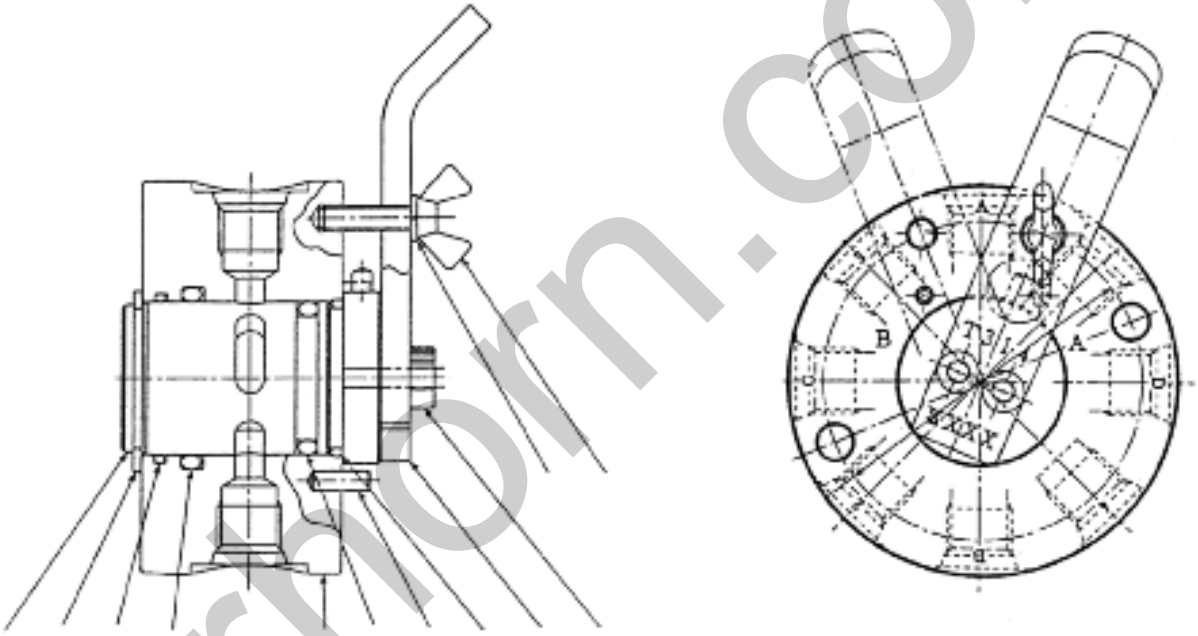

C4H170

silvermorn.co.uk

SELECTOR VALVE (A-B PATTERN)

Item	Part number	Description	Q'ty	Chan.	Serial No.	Serv.	Remarks
0	1901731400	SELECTOR VALVE ASSY	1				
1	1901731401	* BODY	1				
2	1901731402	* ROTOR	1				
3	1901730503	* LEVER	1				
4	1901730504	* BOLT	1				
5	1901730505	* O-RING	1				
6	1901730506	* O-RING	1				
7	1901730507	* O-RING	1				
8	1901730508	* O-RING	1				
9	1213000412	* SPRING PIN	3				
10	1220000030	* SNAP RING	1				
11	1110050514	* CAP SCREW	2				
12	1140010005	* SPRING WASHER	1				
	C4H170						

silverhorn.co.uk

SOLENOID VALVE (1block) (with air conditioner)

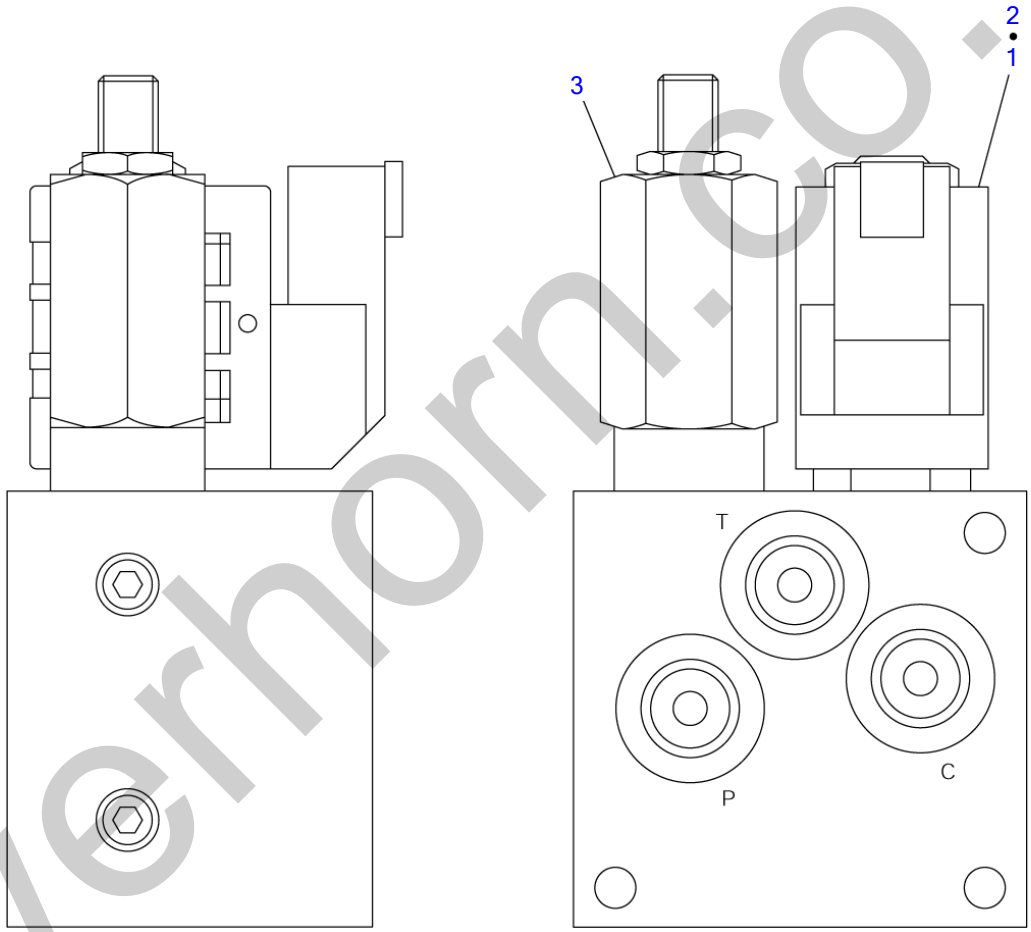

K7H160

S=free

silverhorn.co.uk

SOLENOID VALVE (1block) (with air conditioner)

Item	Part number	Description	Q'ty	Chan.	Serial No.	Serv.	Remarks
0	**1901754500**	VALVE ASSY, solenoid	1				
1	**1901754502**	・SOLENOID	1				
2	**1901754503**	・COIL	1				
3	**1901754504**	・VALVE					
	K7h160						

silverhorn.co.uk

SOLENOID VALVE (1block) (with arm-in restriction)

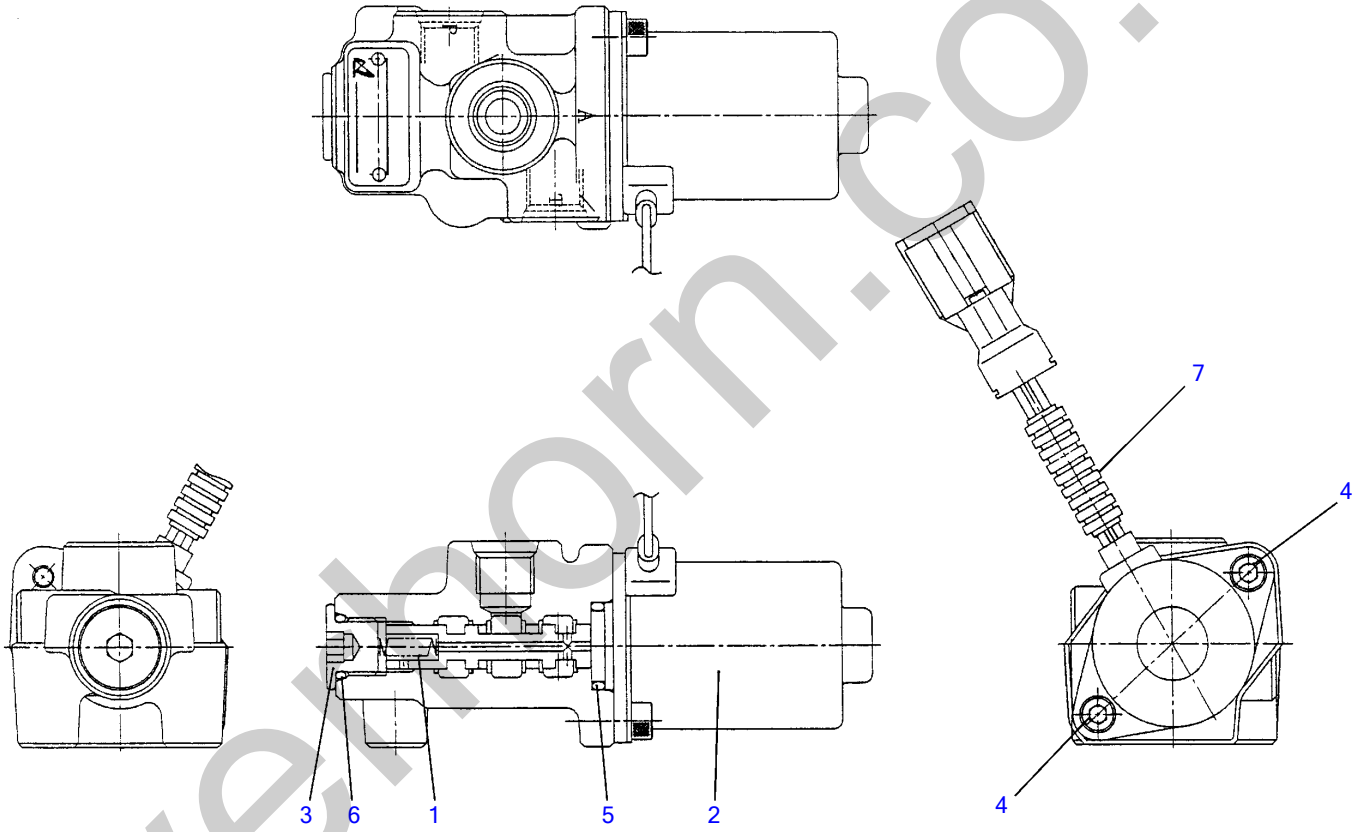

G7H190

S=FREE

silverthorn.co.uk

SOLENOID VALVE (1block) (with arm-in restriction)

Item	Part number	Description	Q'ty	Chan.	Serial No.	Serv.	Remarks
0	1901750800	VALVE ASSY, solenoid					
1	1901735511	・SPRING	1				
2	1901750805	・SOLENOID	1				
3	1901738312	・PLUG	1				
4	1110040512	・SCREW, cap	2				
5	1420010160	・O-RING	1				
6	1420010110	・O-RING	1				
7	1901044619	・PROTECTOR	1				
	G7h190						

silverhorn.co.uk

SOLENOID VALVE (1block) (with 3rd aux. high pressure type)

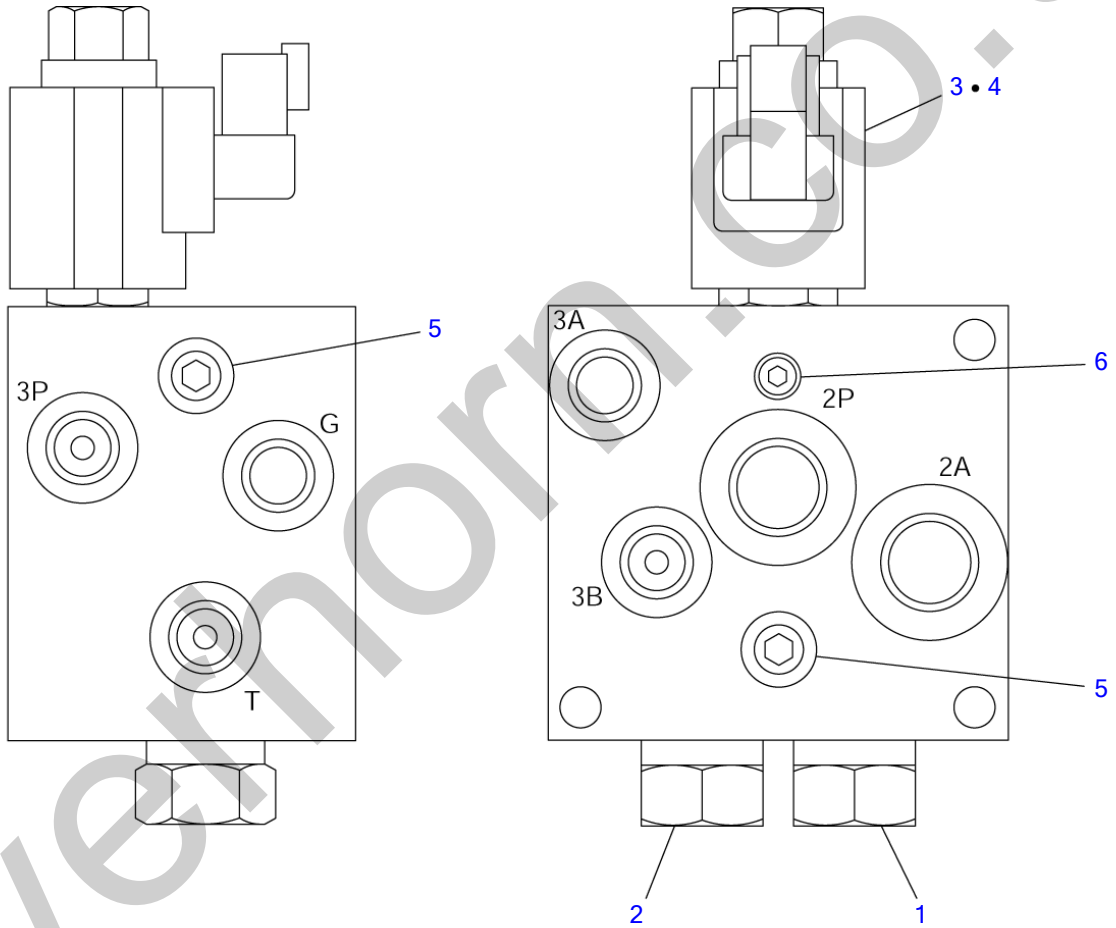

J3H011

S=free

silvermorn.co.uk

SOLENOID VALVE (1block) (with 3rd aux. high pressure type)

Item	Part number	Description	Q'ty	Chan.	Serial No.	Serv.	Remarks
0	1901751600	VALVE ASSY, solenoid	1				
1	1901751602	・VALVE, pilot	1				
2	1901751603	・VALVE, pilot	1				
3	1901741402	・SOLENOID	1				
4	1901750703	・COIL	1				
5	1501810002	・PLUG	2				
6	1501810000	・PLUG	8				
	J3h011						

silverhorn.co.uk

SOLENOID VALVE (2blocks)

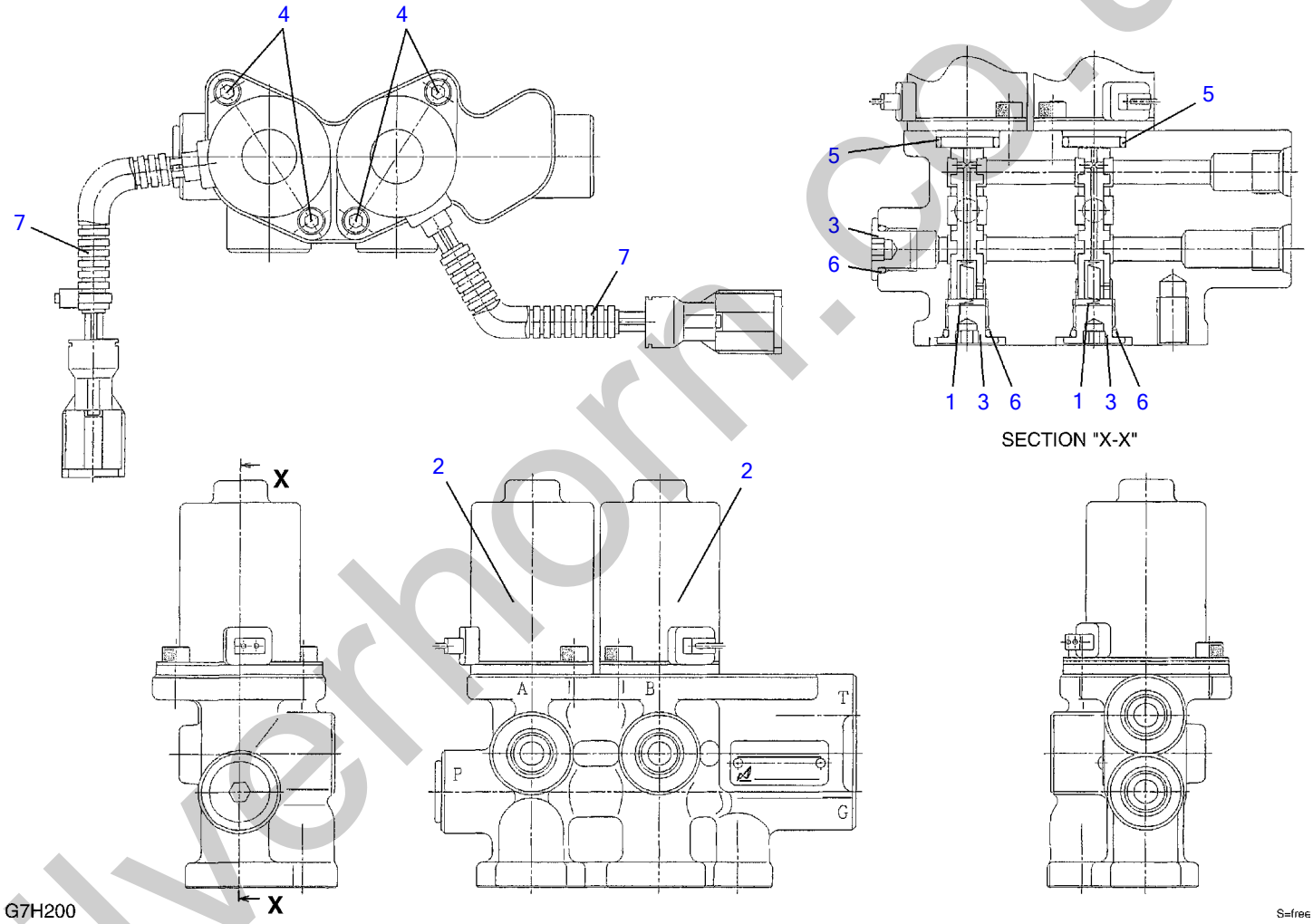

silverhorn.co.uk

SOLENOID VALVE (2blocks)

Item	Part number	Description	Q'ty	Chan.	Serial No.	Serv.	Remarks
0	1901751000	VALVE ASSY, solenoid	1				
1	1901735511	・SPRING	2				
2	1901748816	・SOLENOID	2				
3	1901738312	・PLUG	3				
4	1110040512	・SCREW, cap	4				
5	1420010160	・O-RING	2				
6	1420010110	・O-RING	3				
7	1901044619	・PROTECTOR	2				
	G7h200						

silverhorn.co.uk

REMOTE CONTROL VALVE (travel)

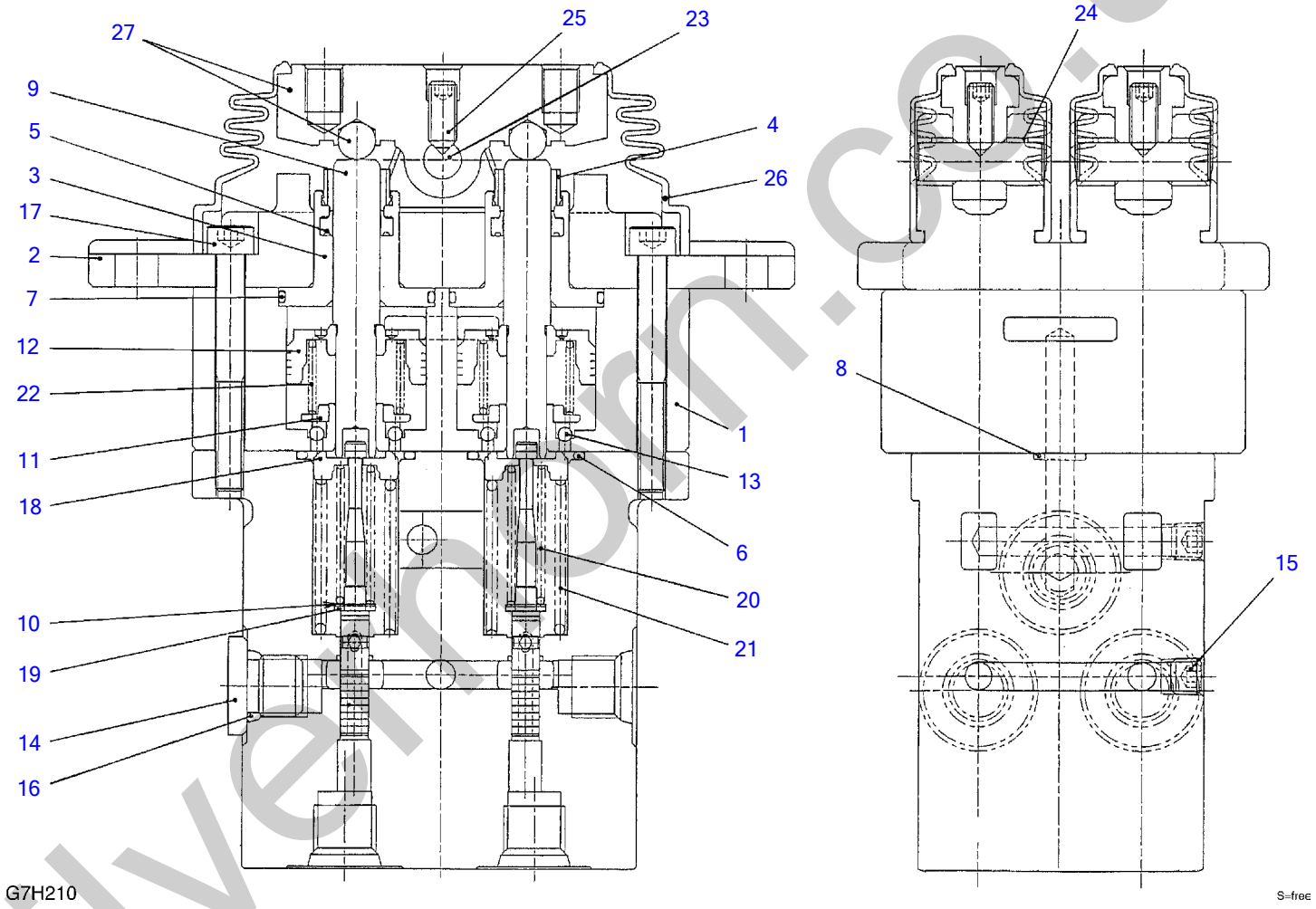

silvermorn.co.uk

REMOTE CONTROL VALVE (travel)

Item	Part number	Description	Q'ty	Chan.	Serial No.	Serv.	Remarks
0	1901750500	VALVE ASSY, remote control					
1	1901750501	・CASING	1				
2	1901750502	・COVER	2				
3	1901750503	・PLUG	4				
4	1901750504	・CAP	4				
5	1901745404	・PACKING	4				
6	1420300020	・O-RING	4				
7	1420300025	・O-RING	4				
8	1420010080	・O-RING	2				
9	1901750509	・ROD	4				
10	1901745407	・SHIM	4				
11	1901750511	・SEAT, spring	4				
12	1901750512	・PISTON	4				
13	1390010030	・BALL, steel	12				
14	1501750002	・PLUG	3				
15	1501810000	・PLUG	2				
16	1420010110	・O-RING	3				
17	1110040650	・SCREW, cap	4				
18	1901750519	・SEAT, spring	4				
19	1901745413	・WASHER	4				
20	1901750521	・SPRING	4				
21	1901750522	・SPRING	4				
22	1901750523	・SPRING	4				
23	1901750524	・SHAFT, cam	2				
24	1901750525	・BUSHING	4				
25	1901750528	・SET-SCREW	2				
26	1901738251	・BOOT	2				
27	1901738298	・CAM ASSY	1				
	G7h210						

silverhorn.co.uk

REMOTE CONTROL VALVE (with 1st aux. line)

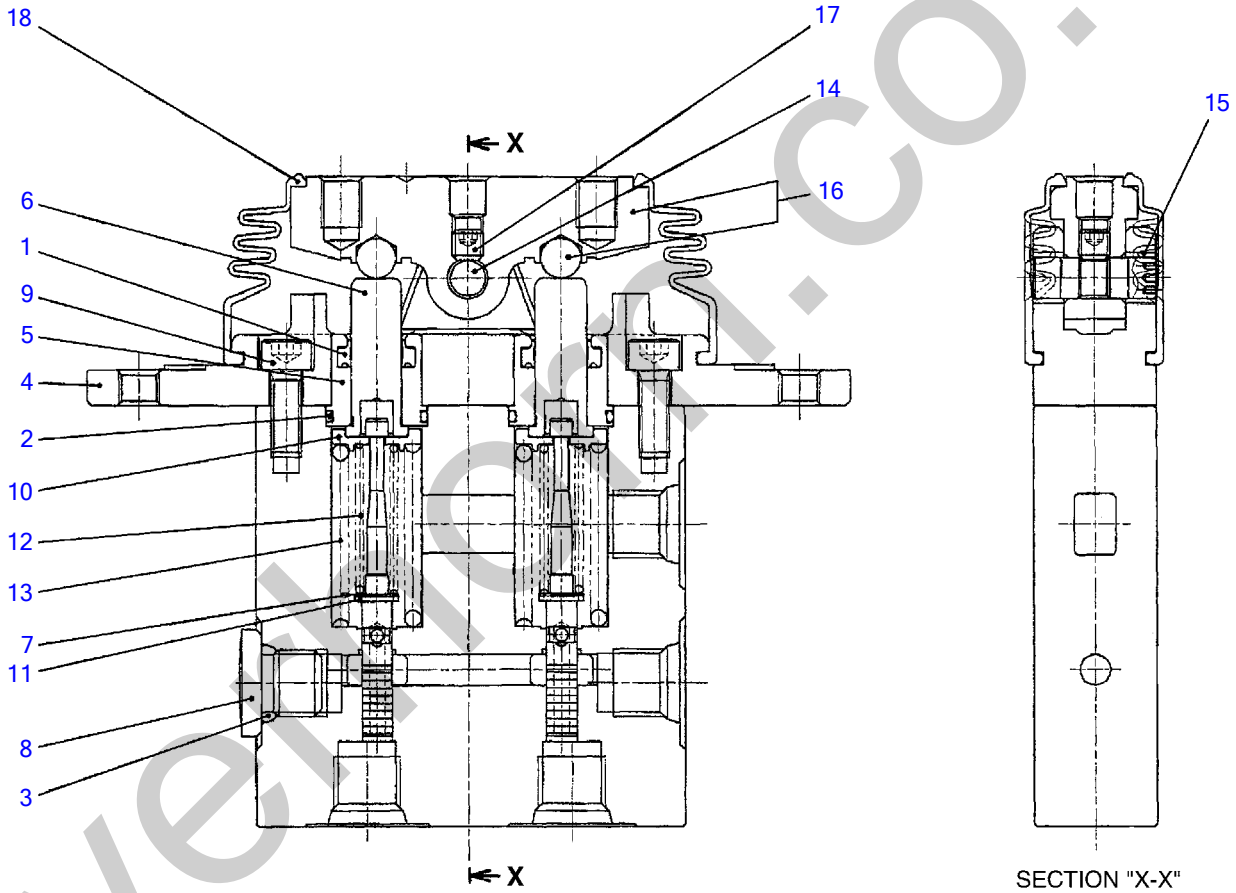

N2H010

S=FREE

silverthorn.co.uk

REMOTE CONTROL VALVE (with 1st aux. line)

Item		Part number	Description	Q'ty	Chan.	Serial No.	Serv.	Remarks
0		1901735000	VALVE ASSY, remote-control	1				
0-1		1901745499	・KIT, seal	1				
1	X	1901745404	・・PACKING	2				
2	X	1420300017	・・O-RING	2				
3	X	1420010110	・・O-RING	1				
4		1901745402	・COVER	1				
5		1901745403	・PLUG	2				
6		1901745406	・ROD	2				
7		1901745407	・SHIM	2				
8		1501750002	・PLUG	1				
		1420010110	・・O-RING	1				
9		1110020616	・SCREW, cap	2				
10		1901745412	・HOLDER	2				
11		1901745413	・WASHER	2				
12		1901745414	・SPRING	2				
13		1901735015	・SPRING	2				
14		1901735016	・SHAFT	1				
15		1901745417	・BUSHING	2				
16		1901735018	・CAM ASSY	1				
17		1121040606	・SET-SCREW	1				
18		1901735001	・BOOT	1				
		N2h010						

silverhorn.co.uk

ELECTRICAL PROPORTION VALVE

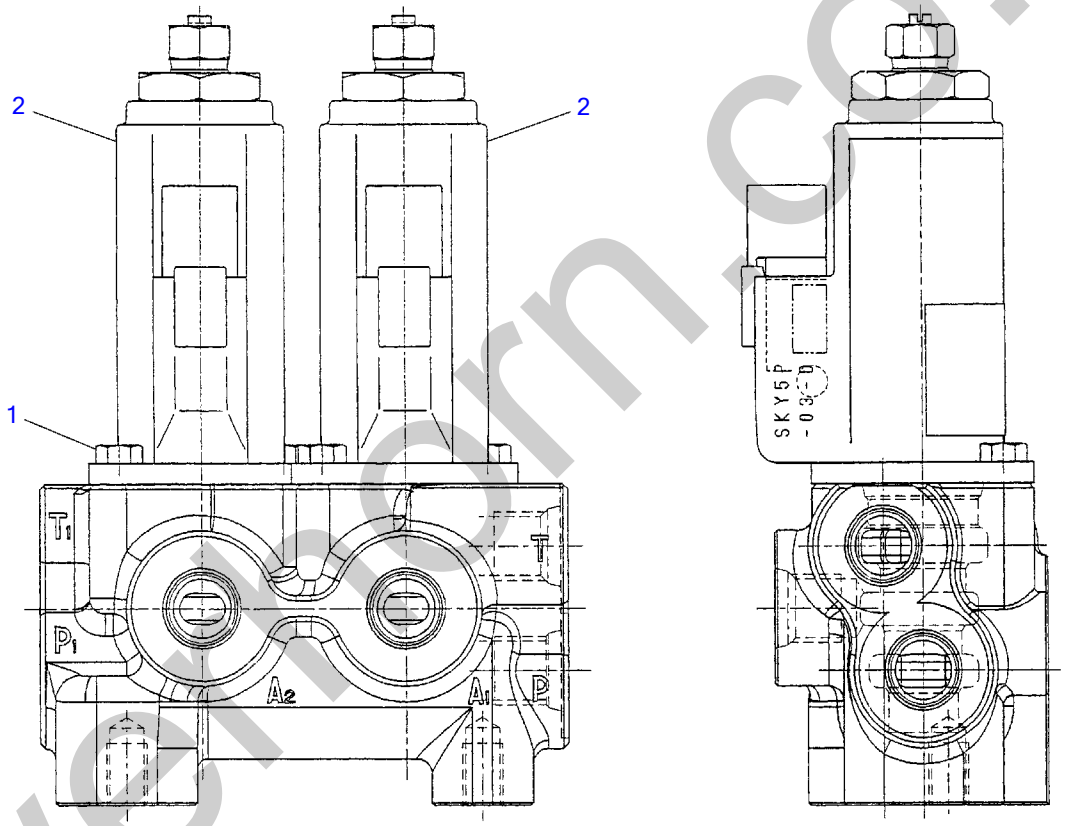

J3H020

S=free

silverthorn.co.uk

ELECTRICAL PROPORTION VALVE

Item	Part number	Description	Q'ty	Chan.	Serial No.	Serv.	Remarks
0	**1901752100**	VALVE ASSY, proportional	1				
1	**1110050512**	・BOLT	4				
2	**1901752103**	・VALVE, proportional	2				
	J3h020						

silverhorn.co.uk

SHUT-OFF VALVE

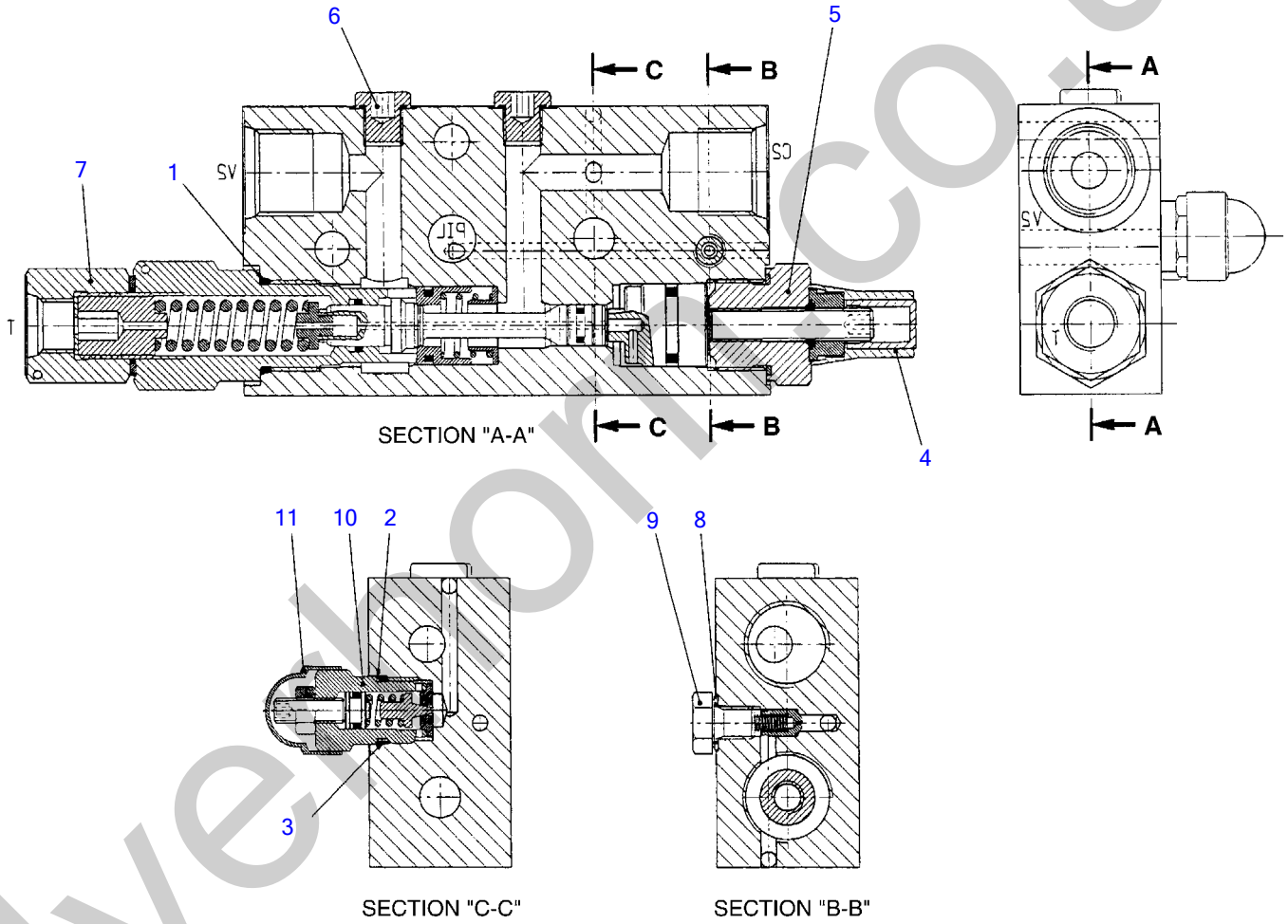

K3H380

S=free

silverborn.co.uk

SHUT-OFF VALVE

Item	Part number	Description	Q'ty	Chan.	Serial No.	Serv.	Remarks
0	1901742700	VALVE ASSY, load holding	1				boom
	1901742800	VALVE ASSY, load holding	1				arm
0-1	1901742799	・KIT, seal	1				
1	1901742904	・・O-RING	1				
2	1901742908	・・RING, back-up	1				
3	1901742708	・・O-RING	1				
4	1901742901	・CAP	1				
5	1901742902	・PLUG	1				
6	1901742903	・PLUG	2				
7	1901742704	・SOCKET	1				
8	1901742906	・SEAL	1				
9	1901742907	・PLUG	1				
10	1901742909	・PLUG	1				
11	1901742711	・CAP	1				
	K3h380						

silverhorn.co.uk

BOOM CYLINDER

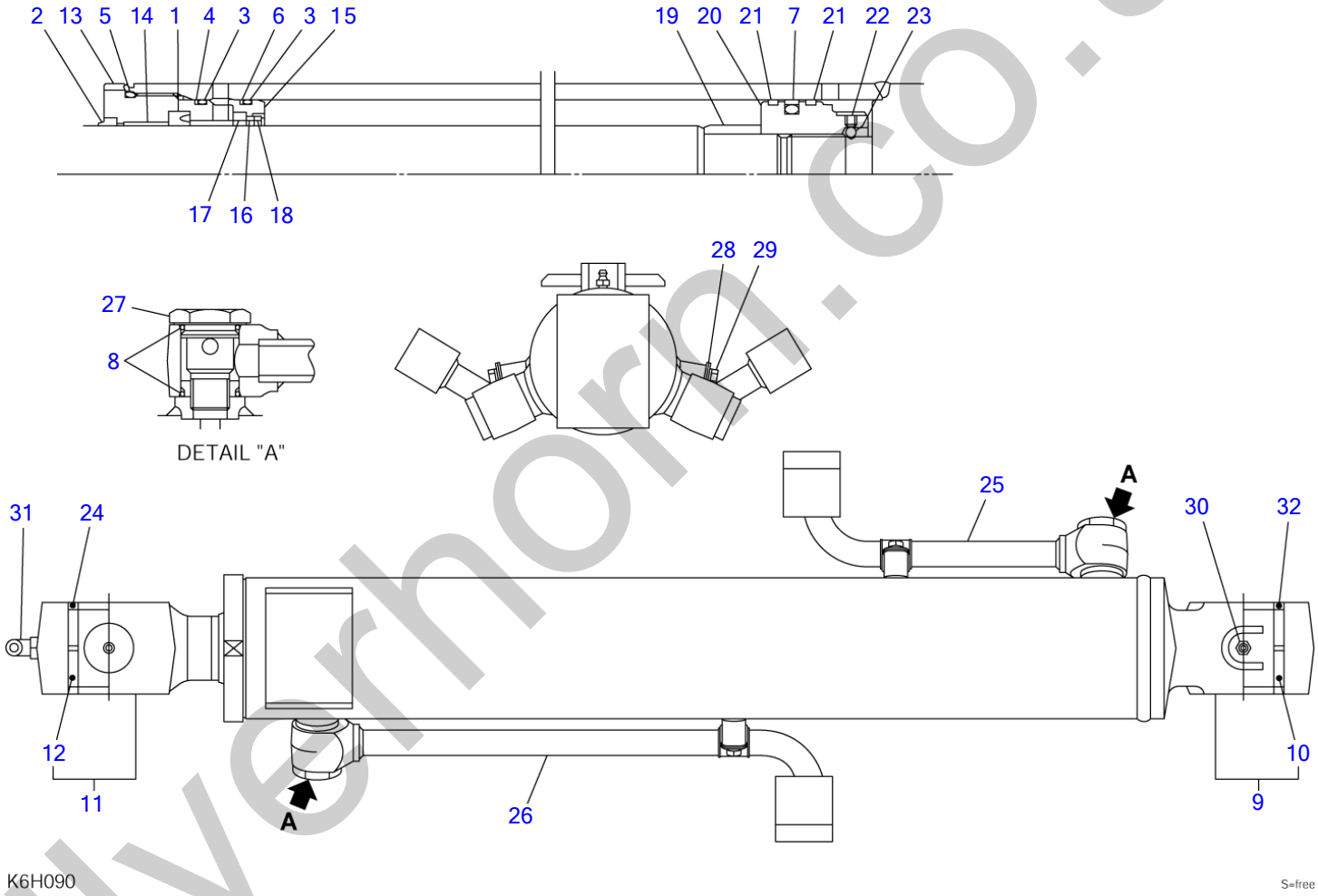

silverhorn.co.uk

BOOM CYLINDER

Item	Part number	Description	Q'ty	Chan.	Serial No.	Serv.	Remarks
0	1900093800	CYLINDER ASSY	1				boom
0-1	1900089099	・KIT, seal	1				
1	X 1900047033	・・PACKING, rod	1				
2	X 1900070831	・・SEAL, dust	1				
3	X 1420110950	・・O-RING	2				
4	X 1900086928	・・RING, back-up	1				
5	X 1420101000	・・O-RING	1				
6	X 1900063728	・・RING, back-up	1				
7	X 1900047031	・・PACKING, piston	1				
8	X 1420010260	・・O-RING	4				
9	1900093898	・TUBE ASSY	1				
10	1900093802	・・BUSHING	1				
11	1900087897	・ROD ASSY, piston	1				
12	1900079902	・・BUSHING	1				
13	1900087803	・COVER, rod	1				
14	1900087813	・BUSHING	1				
15	1900086908	・HOLDER	1				
16	1900086916	・RING, cushion	1				
17	1900086919	・COLLAR	1				
18	1900087815	・SPACER	1				
19	1900087816	・BEARING, cushion	1				
20	1900087806	・PISTON	1				
21	1900089525	・RING, wear	2				
22	1121051010	・SET-SCREW	1				
23	1390020400	・BALL, steel	1				
24	1900079933	・SEAL, dust	2				
25	1900089010	・PIPE ASSY	1				
26	1900087810	・PIPE ASSY	1				
27	1900086958	・PLUG	2				
28	1900086917	・HOLDER	2				
29	1900087819	・BOLT	2				
30	1560001000	・FITTING, grease	1				
31	1560001675	・FITTING, grease	1				
32	1900063433	・SEAL, dust	2				
	K6h090						

silverhorn.co.uk

BOOM CYLINDER (with shut-off valve)

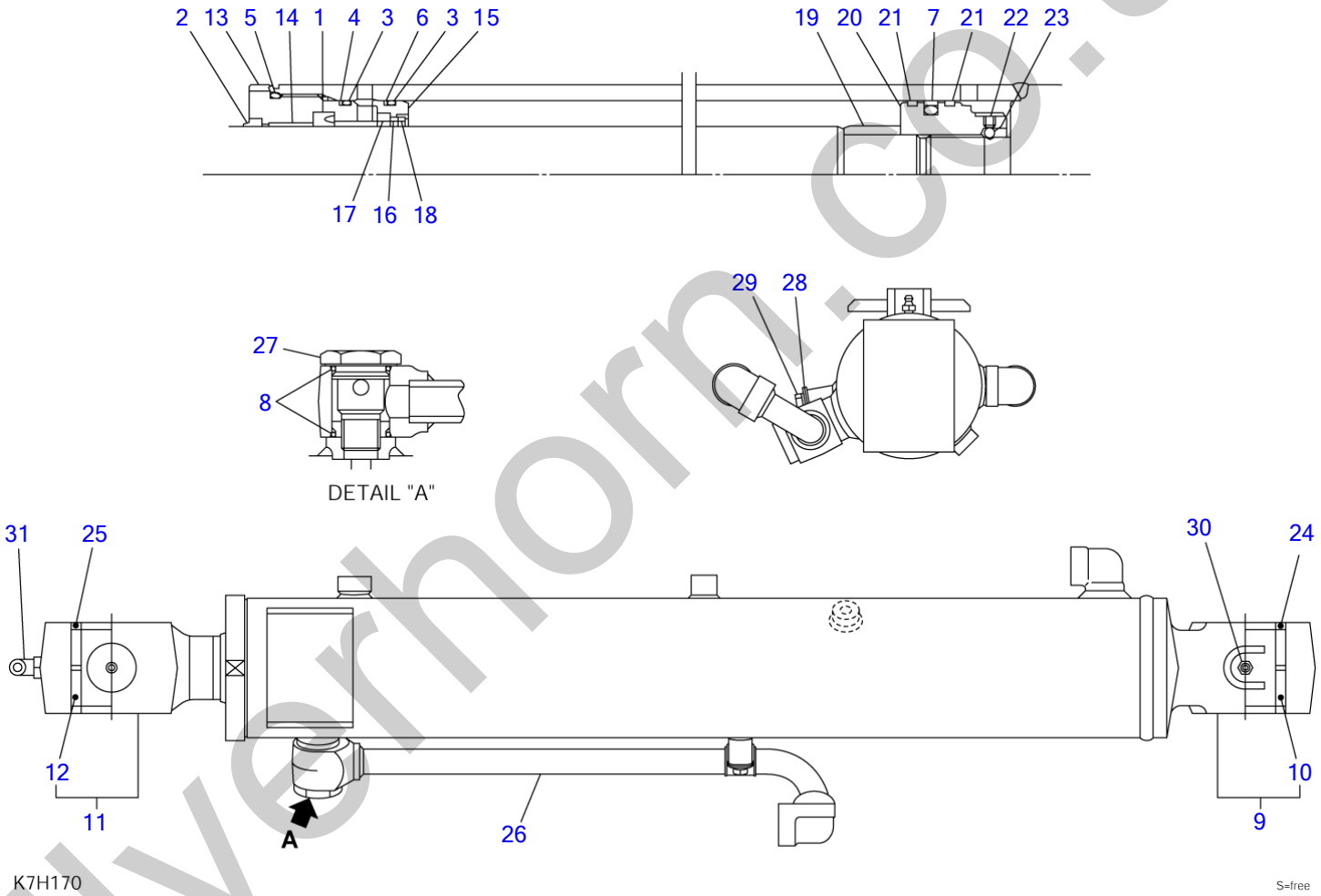

silverhorn.co.uk

BOOM CYLINDER (with shut-off valve)

Item	Part number		Description	Q'ty	Chan.	Serial No.	Serv.	Remarks
0		1900102700	CYLINDER ASSY	1				boom
0-1		1900102799	・KIT, seal	1				
1	X	1900047033	・・PACKING, rod	1				
2	X	1900070831	・・SEAL, dust	1				
3	X	1420110950	・・O-RING	2				
4	X	1900086928	・・RING, back-up	1				
5	X	1420101000	・・O-RING	1				
6	X	1900063728	・・RING, back-up	1				
7	X	1900047031	・・PACKING, piston	1				
8		1420010260	・O-RING	2				
9		1900102798	・TUBE ASSY	1				
10		1900093802	・・BUSHING	1				
11		1900087897	・ROD ASSY, piston	1				
12		1900079902	・・BUSHING	1				
13		1900087803	・COVER, rod	1				
14		1900087813	・BUSHING	1				
15		1900086908	・HOLDER	1				
16		1900086916	・RING, cushion	1				
17		1900086919	・COLLAR	1				
18		1900087815	・SPACER	1				
19		1900087816	・BEARING, cushion	1				
20		1900087806	・PISTON	1				
21		1900089525	・RING, wear	2				
22		1121051010	・SET-SCREW	1				
23		1390020400	・BALL, steel	1				
24		1900063433	・SEAL, dust	2				
25		1900079933	・SEAL, dust	2				
26		1900102710	・PIPE ASSY	1				
27		1900086958	・PLUG	1				
28		1900086917	・HOLDER	1				
29		1900087819	・BOLT	1				
30		1560001000	・FITTING, grease	1				
31		1560001675	・FITTING, grease	1				
		K7h170						

silverhorn.co.uk

ARM CYLINDER

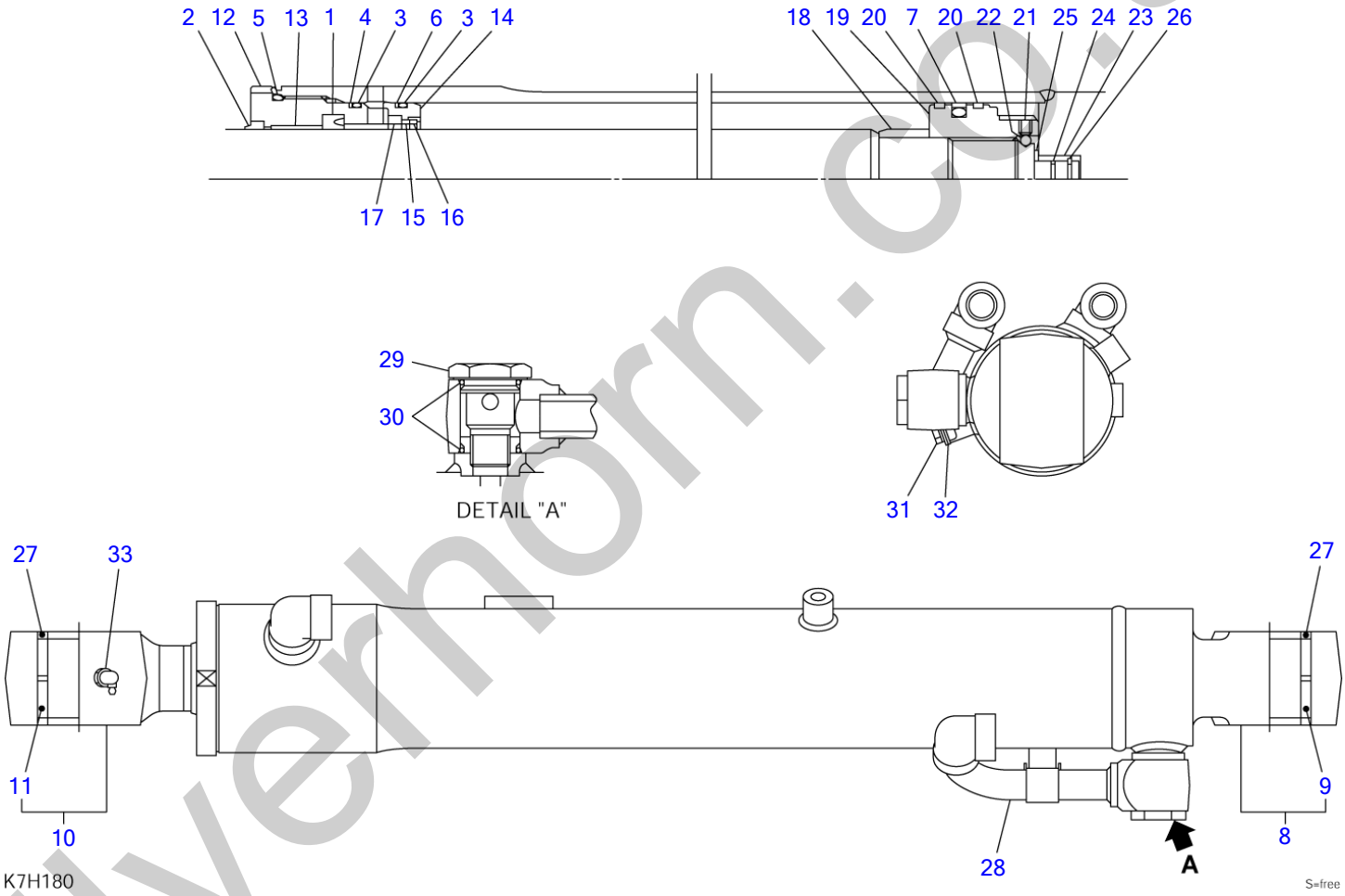

silverhorn.co.uk

ARM CYLINDER

Item	Part number	Description	Q'ty	Chan.	Serial No.	Serv.	Remarks
0	1900102800	CYLINDER ASSY	1				arm
0-1	1900087999	・KIT, seal	1				
1	X 1900005812	・・PACKING, rod	1				
2	X 1900073933	・・SEAL, dust	1				
3	X 1420110850	・・O-RING	2				
4	X 1900087028	・・RING, back-up	1				
5	X 1420100900	・・O-RING	1				
6	X 1900081529	・・RING, back-up	1				
7	X 1900047131	・・PACKING, piston	1				
8	1900102898	・TUBE ASSY	1				
9	1900047102	・・BUSHING	1				
10	1900102897	・ROD ASSY, piston	1				
11	1900081502	・・BUSHING	1				
12	1900087903	・COVER, rod	1				
13	1900087913	・BUSHING	1				
14	1900087908	・HOLDER	1				
15	1900087916	・BEARING, cushion	1				
16	1900087915	・SPACER	1				
17	1900087919	・COLLAR	1				
18	1900087917	・BEARING, cushion	1				
19	1900087906	・PISTON	1				
20	1900087926	・RING, wear	2				
21	1121050808	・SET-SCREW	1				
22	1390020350	・BALL, steel	1				
23	1900081505	・BEARING, cushion	1				
24	1900076335	・SEAL, cushion	1				
25	1900047114	・RING, snap	1				
26	1900047122	・STOPPER	2				
27	1900047023	・SEAL, dust	4				
28	1900102728	・PIPE ASSY	1				
29	1900086958	・PLUG	1				
30	1420010260	・O-RING	2				
31	1900087819	・BOLT	1				
32	1900086917	・HOLDER	1				
33	1560001900	・FITTING, grease	1				
	K7h180						

silverhorn.co.uk

ARM CYLINDER (with arm-in restriction)

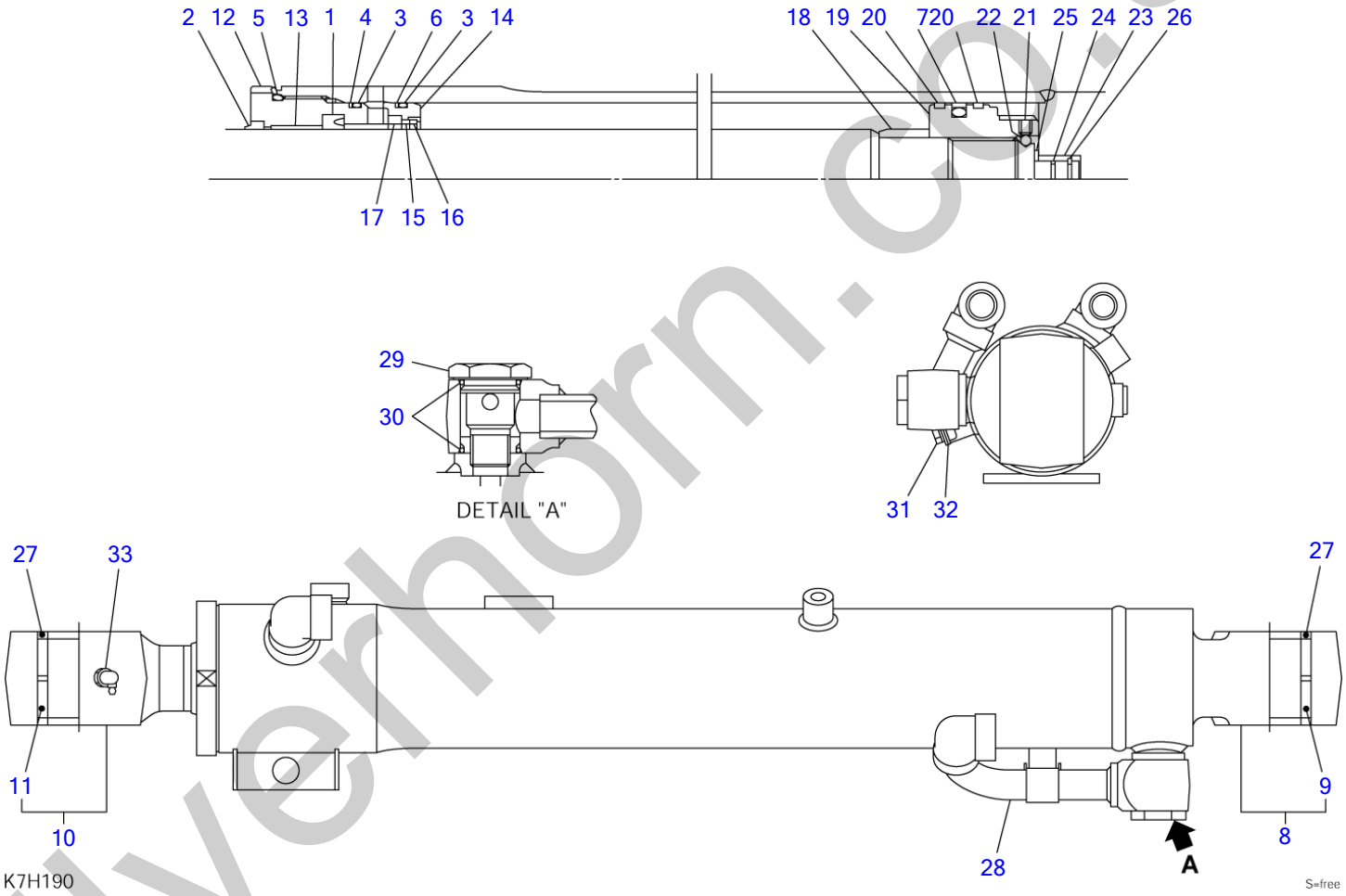

silverhorn.co.uk

ARM CYLINDER (with arm-in restriction)

Item		Part number	Description	Q'ty	Chan.	Serial No.	Serv.	Remarks
0		1900102900	CYLINDER ASSY	1				arm
0-1		1900087999	・KIT, seal	1				
1	X	1900005812	・・PACKING, rod	1				
2	X	1900073933	・・SEAL, dust	1				
3	X	1420110850	・・O-RING	2				
4	X	1900087028	・・RING, back-up	1				
5	X	1420100900	・・O-RING	1				
6	X	1900081529	・・RING, back-up	1				
7	X	1900047131	・・PACKING, piston	1				
8		1900102998	・TUBE ASSY	1				
9		1900047102	・・BUSHING	1				
10		1900102997	・ROD ASSY, piston	1				
11		1900081502	・・BUSHING	1				
12		1900087903	・COVER, rod	1				
13		1900087913	・BUSHING	1				
14		1900087908	・HOLDER	1				
15		1900087916	・BEARING, cushion	1				
16		1900087915	・SPACER	1				
17		1900087919	・COLLAR	1				
18		1900087917	・BEARING, cushion	1				
19		1900087906	・PISTON	1				
20		1900087926	・RING, wear	2				
21		1121050808	・SET-SCREW	1				
22		1390020350	・BALL, steel	1				
23		1900081505	・BEARING, cushion	1				
24		1900076335	・SEAL, cushion	1				
25		1900047114	・RING, snap	1				
26		1900047122	・STOPPER	2				
27		1900047023	・SEAL, dust	4				
28		1900102728	・PIPE ASSY	1				
29		1900086958	・PLUG	1				
30		1420010260	・O-RING	2				
31		1900087819	・BOLT	1				
32		1900086917	・HOLDER	1				
33		1560001900	・FITTING, grease	1				
		K7h190						

silverhorn.co.uk

BUCKET CYLINDER

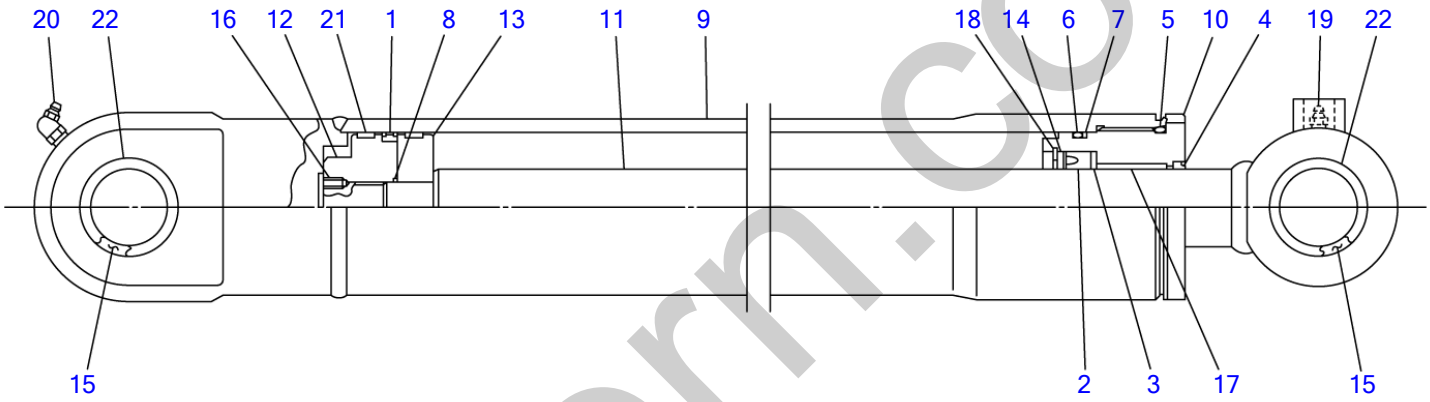

K3H180

S=FREE

silverhorn.co.uk

BUCKET CYLINDER

Item	Part number	Description	Q'ty	Chan.	Serial No.	Serv.	Remarks
0	1900075800	CYLINDER ASSY	1				bucket
0-1	1900075899	KIT, seal	1				
1	X 1410220800	・・PACKING, piston	1				
2	X 1410545612	・・PACKING, rod	1				
3	X 1411261453	・・RING, back-up	1				
4	X 1900075823	・・SEAL, dust	1				
5	X 1420110800	・・O-RING	1				
6	X 1420110750	・・O-RING	1				
7	X 1421130750	・・RING, back-up	1				
8	X 1420110750	・・O-RING	1				
9	1900075807	・TUBE	1				
10	1900075803	・COVER, rod	1				
11	1900075801	・ROD, piston	1				
12	1900059606	・PISTON	1				
13	1900075855	・HOLDER, packing	1				
14	1900075808	・HOLDER, packing rod	1				
15	1900075802	・BUSHING	2				
16	1121050812	・SET-SCREW	1				
17	1333004540	・BUSHING	1				
18	1221000060	・RING, snap	1				
19	1560001000	・FITTING, grease	1				
20	1560001675	・FITTING, grease	1				
21	1410810800	・RING, wear	2				
22	1432200045	・SEAL, dust	4				
	K3h182						

silverhorn.co.uk

BUCKET CYLINDER (breaker type)

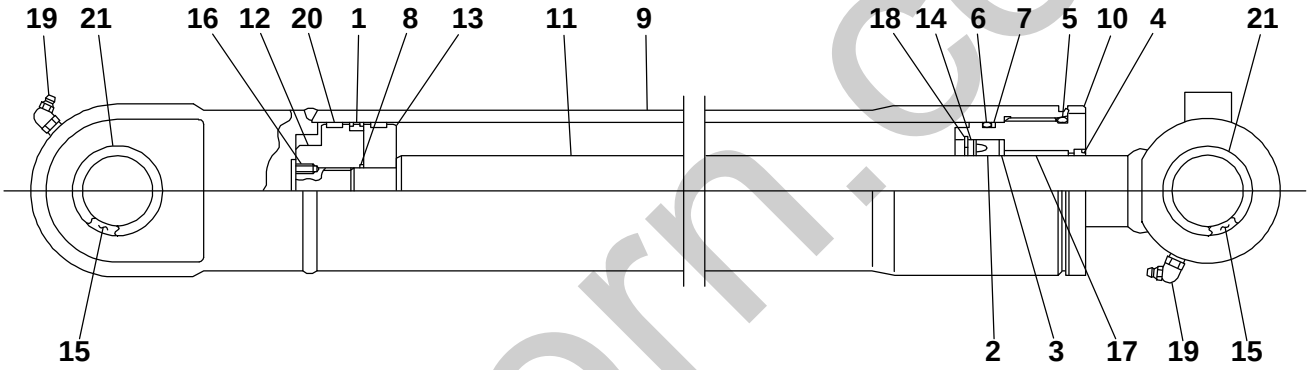

K7H290

S=FREE

silverhorn.co.uk

BUCKET CYLINDER (BREAKER TYPE)

Item	Part number	Description	Q'ty	Chan.	Serial No.	Serv.	Remarks
0	1900107600	CYLINDER ASSY	1				
0-1	1901707699	* SEAL KIT	1				
1	1410220800	* * PISTON PACKING	1				
2	1410545612	* * ROD PACKING	1				
3	1411261453	* * BACKUP RING	1				
4	1411500450	* * DUST SEAL	1				
5	1420110800	* * O-RING	1				
6	1420110750	* * O-RING	1				
7	1421130750	* * BACKUP RING	1				
8	1420110750	* * O-RING	1				
9	1900107698	* TUBE	1				
10	1900075803	* ROD COVER	1				
11	1900107697	* PISTON ROD	1				
12	1900107606	* PISTON	1				
13	1900075855	* PACKING HOLDER	1				
14	1900075808	* PACKING ROD HOLDER	1				
15	1900075802	* BUSHING	2				
16	112150812	* SET SCREW	1				
17	1900107602	* BUSHING	1				
18	1900107619	* SNAP RING	1				
19	1560001675	* GREASE FITTING	2				
20	1900107626	* WEAR RING	2				
21	1432200045	* DUST SEAL	4				
	K7H290						

silverhorn.co.uk

DOZER BLADE CYLINDER

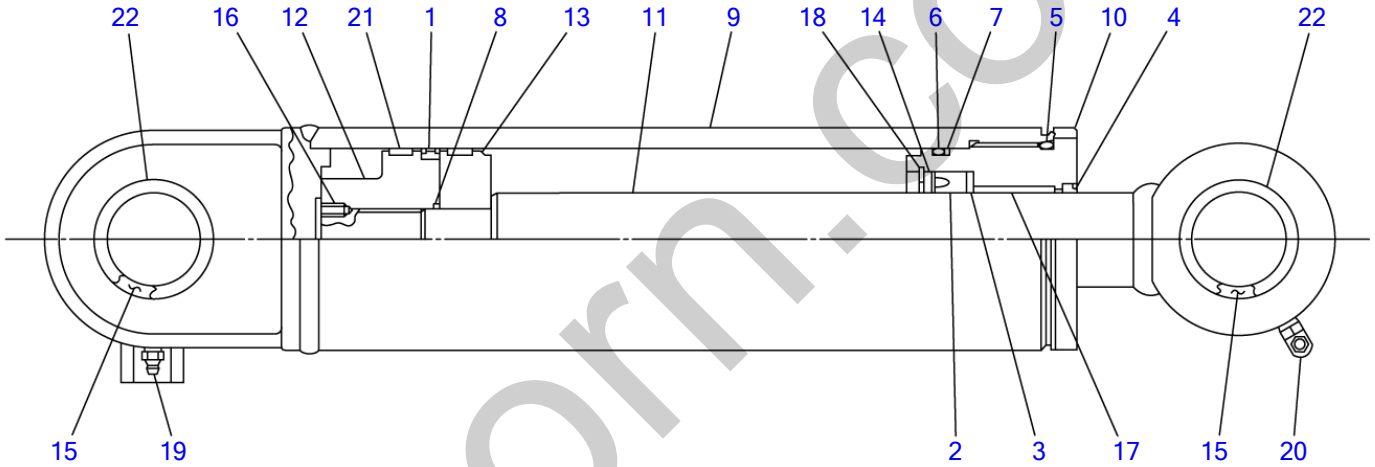

K3H200

S=FREE

silverhorn.co.uk

DOZER BLADE CYLINDER

Item	Part number		Description	Q'ty	Chan.	Serial No.	Serv.	Remarks
0		1900077100	CYLINDER ASSY	1				blade
0-1		1900077199	・KIT, seal	1				
1	X	1410221100	・・PACKING, piston	1				
2	X	1410560762	・・PACKING, rod	1				
3	X	1411276603	・・RING, back-up	1				
4	X	1900077123	・・SEAL, dust	1				
5	X	1420111100	・・O-RING	1				
6	X	1420111050	・・O-RING	1				
7	X	1421131050	・・RING, back-up	1				
8	X	1420110450	・・O-RING	1				
9		1900077107	・TUBE	1				
10		1900077103	・COVER, rod	1				
11		1900077101	・ROD, piston	1				
12		1900077106	・PISTON	1				
13		1900077155	・HOLDER, packing	1				
14		1900077108	・HOLDER, rod packing	1				
15		1900077102	・BUSHING	2				
16		1121050812	・SET-SCREW	1				
17		1333006040	・BUSHING	1				
18		1221000075	・RING, snap	1				
19		1560001000	・FITTING, grease	1				
20		1560001675	・FITTING, grease	1				
21		1410811100	・RING, wear	2				
22		1432200055	・SEAL, dust	4				
		K3h202						

silverhorn.co.uk

SWING CYLINDER

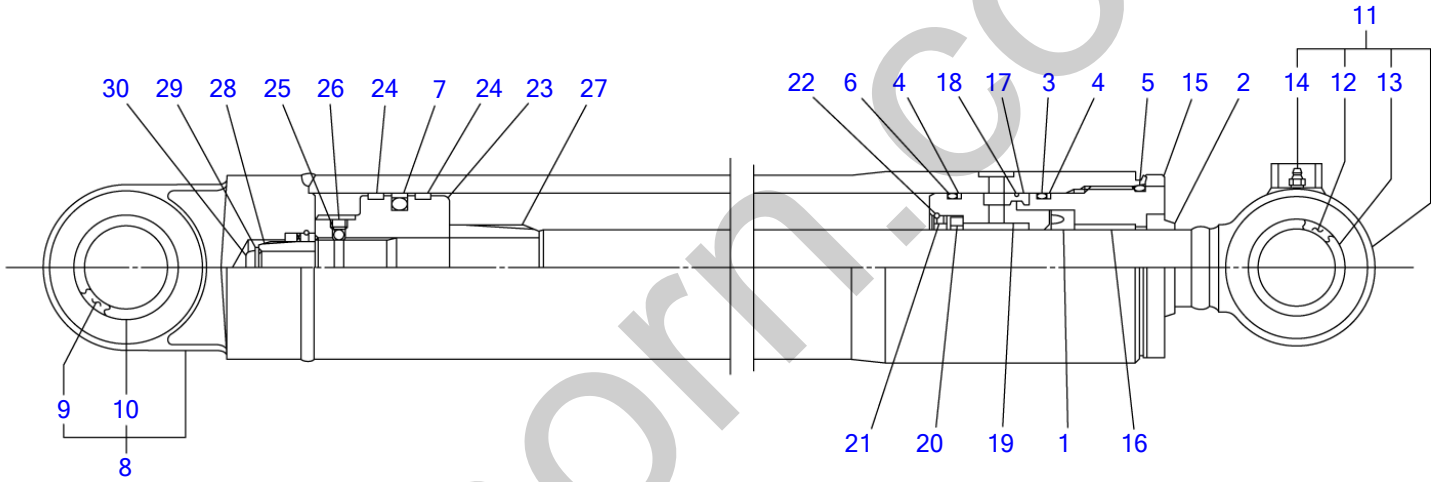

K3H211

S=FREE

silverhorn.co.uk

SWING CYLINDER

Item		Part number	Description	Q'ty	Chan.	Serial No.	Serv.	Remarks
0		1900104600	CYLINDER ASSY	1				swing
0-1		1900083399	・KIT, seal	1				
1	X	1900005812	・・PACKING, rod	1				
2	X	1900073933	・・SEAL, dust	1				
3	X	1420110850	・・O-RING	1				
4	X	1421130850	・・RING, back-up	2				
5	X	1420110900	・・O-RING	1				
6	X	1420110800	・・O-RING	1				
7	X	1900047131	・・PACKING, piston	1				
8		1900104698	・TUBE ASSY	1				
9		1900083320	・・BUSHING	1				
10		1432200045	・・SEAL, dust	2				
11		1900083397	・ROD ASSY, piston	1				
12		1900083320	・・BUSHING	1				
13		1432200045	・・SEAL, dust	2				
14		1560001000	・・FITTING, grease	1				
15		1900060003	・COVER, rod	1				
16		1900102502	・BUSHING	1				
17		1900060026	・CONNECTOR	1				
18		1900060027	・STOPPER	1				
19		1900060004	・RETAINER	1				
20		1900060016	・RING, cushion	1				
21		1900060015	・SPACER	1				
22		1900060028	・STOPPER	1				
23		1900060006	・PISTON	1				
24		1900047132	・RING, wear	2				
25		1390020350	・BALL, steel	1				
26		1121050808	・SET-SCREW	1				
27		1900060005	・CUSHION, rod	1				
28		1900083315	・BEARING, cushion	1				
29		1141110012	・WASHER	1				
30		1900064429	・BOLT	1				
		K7h200						

silverhorn.co.uk

SWING CYLINDER (125000295-)

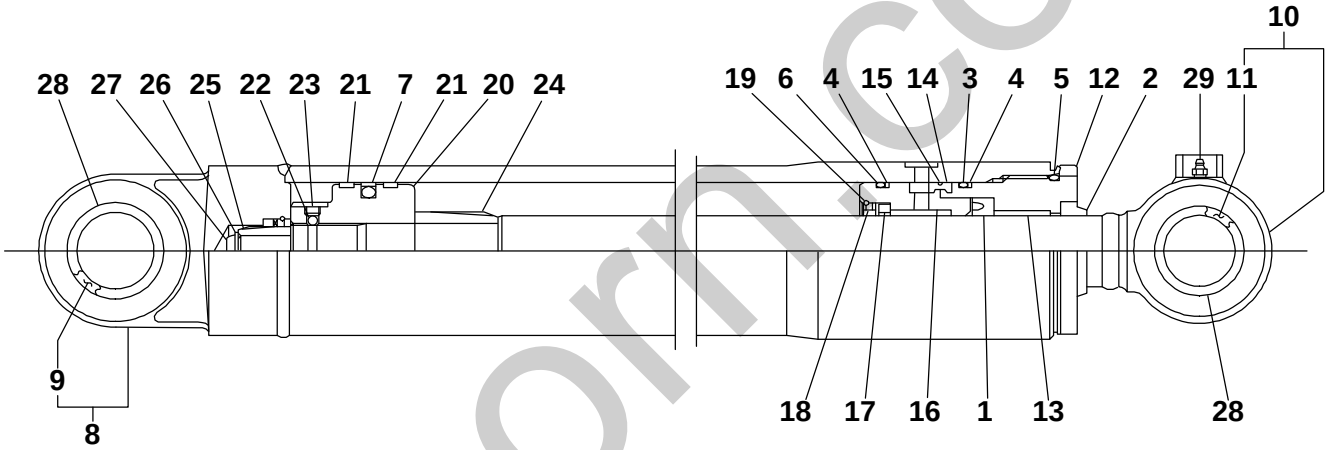

K7H300

S=FREE

silverhorn.co.uk

SWING CYLINDER SN 125000295~

Item	Part number	Description	Q'ty	Chan.	Serial No.	Serv.	Remarks
0	1900105700	CYLINDER ASSY	1				
0-1	1900105799	* SEAL KIT	1				
1	1900005812	* * ROD PACKING	1				
2	1900073933	* * DUST SEAL	1				
3	1420110850	* * O-RING	1				
4	1421130850	* * BACKUP RING	2				
5	1420110900	* * O-RING	1				
6	1420110800	* * O-RING	1				
7	1900047131	* * PISTON PACKING	1				
8	1900105798	* TUBE ASSY	1				
9	1900083320	* * BUSHING	1				
10	1900083397	* PISTON ROD ASSY	1				
11	1900083320	* * BUSHING	1				
12	1900060003	* ROD COVER	1				
13	1900102502	* BUSHING	1				
14	1900060026	* CONNECTOR	1				
15	1900060027	* STOPPER	1				
16	1900060004	* RETAINER	1				
17	1900060016	* CUSHION RING	1				
18	1900060015	* SPACER	1				
19	1900060028	* STOPPER	1				
20	1900060006	* PISTON	1				
21	1900047132	* WEAR RING	2				
22	1390020350	* STEEL BALL	1				
23	1121050808	* SET SCREW	1				
24	1900060005	* ROD CUSHION	1				
25	1900083315	* CUSHION BEARING	1				
26	1900064428	* WASHER	1				
27	1900064429	* BOLT	1				
28	1900091433	* DUST SEAL	4				
29	1900105028	* GREASE FITTING	1				
	K7H300						

silverhorn.co.uk

TRAVEL MOTOR (1/3) (reduction sec.)

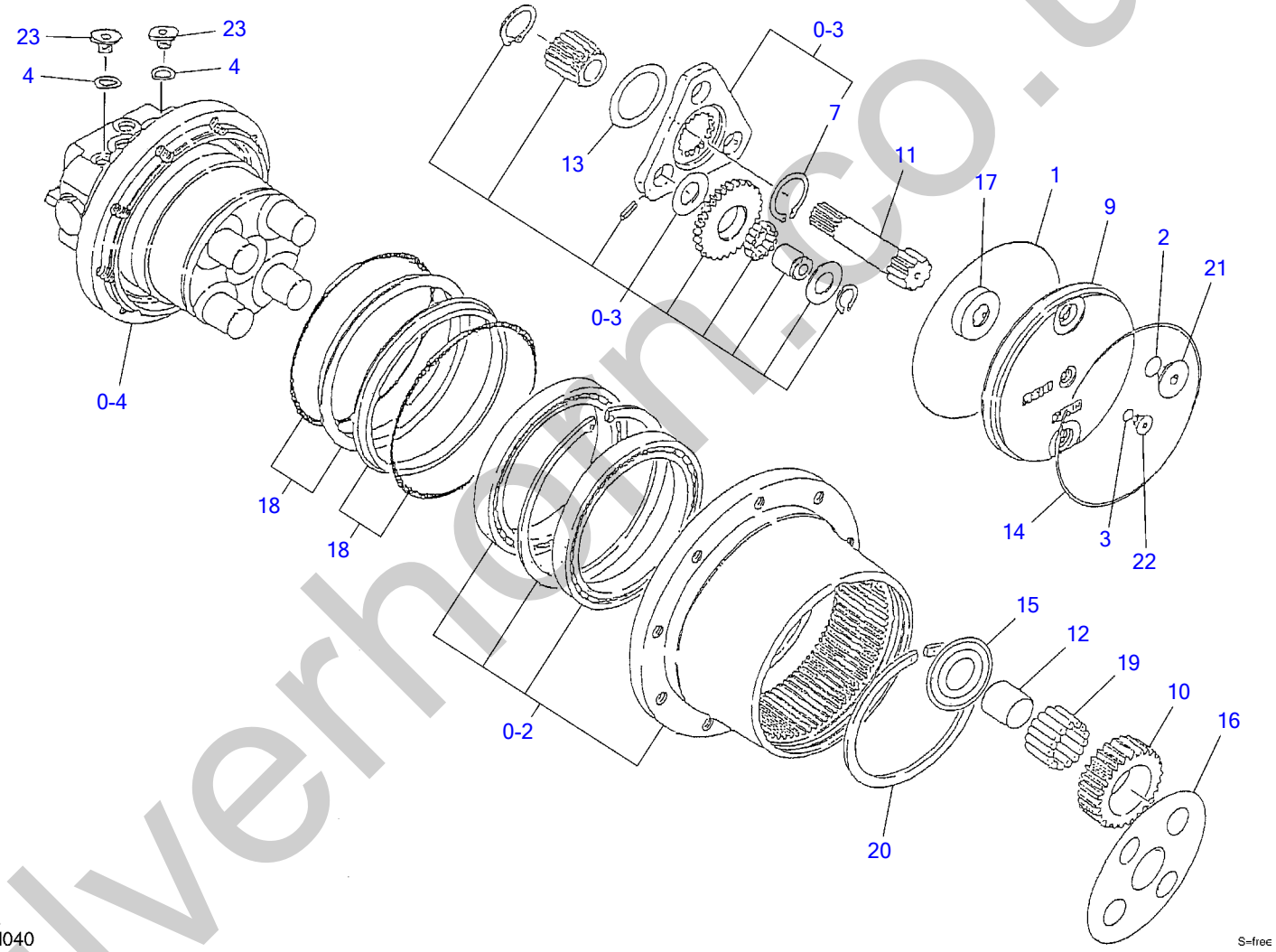

silverhorn.co.uk

TRAVEL MOTOR (1/3) (reduction sec.)

Item	Part number	Description	Q'ty	Chan.	Serial No.	Serv.	Remarks
0	1903127400	MOTOR ASSY, travel	1				
0-1	1903119599	・KIT, seal	1				
1	X 1420300264	・・O-RING	1				
2	X 1420010140	・・O-RING	2				
3	X 1420010080	・・O-RING	1				
4	X 1420010110	・・O-RING	2				
0-2	1903124898	・KIT, body	1				
0-3	1903124897	・KIT, carrier2	1				
7	1220000035	・・RING, snap	4				
9	1903119502	・COVER	1				
10	1903124806	・GEAR	4				
11	1903124809	・GEAR	1				
12	1903124810	・RING	4				
13	1903124812	・WASHER	1				
14	1903119513	・RING, snap	1				
15	1903124814	・PLATE	4				
16	1903124815	・PLATE	1				
17	1903118916	・RING	1				
18	1903124817	・SEAL, floating	2				
19	1903124820	・BEARING	136				
20	1903127423	・RING, snap	1				
21	1903118932	・PLUG	2				
22	1501750001	・PLUG	1				
	1420010080	・・O-RING	1				
23	1501750002	・PLUG	2				
	1420010110	・・O-RING	1				
0-4	1903908700	・MOTOR, hydraulic	1				
	J3h040						

silverhorn.co.uk

TRAVEL MOTOR (2/3) (motor sec.)

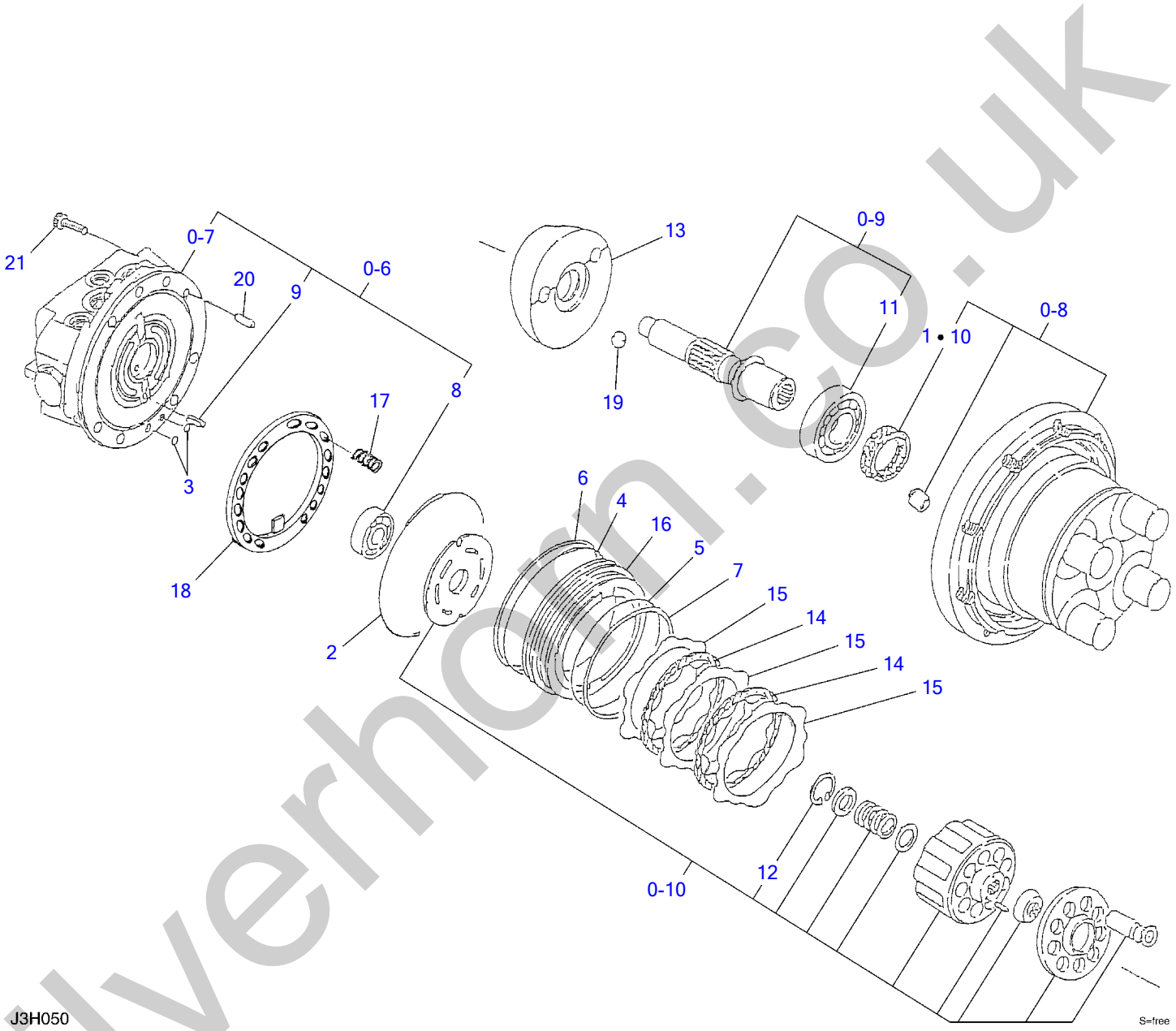

silverhorn.co.uk

TRAVEL MOTOR (2/3) (motor sec.)

Item	Part number	Description	Q'ty	Chan.	Serial No.	Serv.	Remarks
0	1903127400	MOTOR ASSY, travel	1				
0-4	1903908700	・MOTOR, hydraulic	1				
0-5	1903908799	・・KIT, seal	1				
1	X 1903902020	・・・SEAL, oil	1				
2	X 1420111350	・・・O-RING	1				
3	X 1420010070	・・・O-RING	2				
4	X 1420111250	・・・O-RING	1				
5	X 1420111150	・・・O-RING	1				
6	X 1421131250	・・・RING, back-up	1				
7	X 1421131150	・・・RING, back-up	1				
0-6	1903907398	・・KIT, body1	1				
0-7	X **********	・・・BODY ASSY	1				
8	1300006206	・・・BEARNIG	1				
9	1213000616	・・・PIN, spring	1				
0-8	1903908797	・・KIT, body2	1				
10	1903902020	・・・SEAL, oil	1				
0-9	1903907396	・・SHAFT ASSY	1				
11	1300006206	・・・BEARING	1				
0-10	1903908795	・・BARREL KIT, cylinder	1				
12	1221000035	・・・RING, snap	1				
13	1903908710	・・PLATE	1				
14	1903904615	・・PLATE	2				
15	1903907316	・・PLATE	3				
16	1903907317	・・PISTON	1				
17	1903907319	・・SPRING	10				
18	1903908720	・・RETAINER	1				
19	1390021000	・・BALL, steel	2				
20	1212010815	・・PIN	2				
21	1110021025	・・SCREW, cap	7				
	J3h050						

silverhorn.co.uk

TRAVEL MOTOR (3/3) (valve sec.)

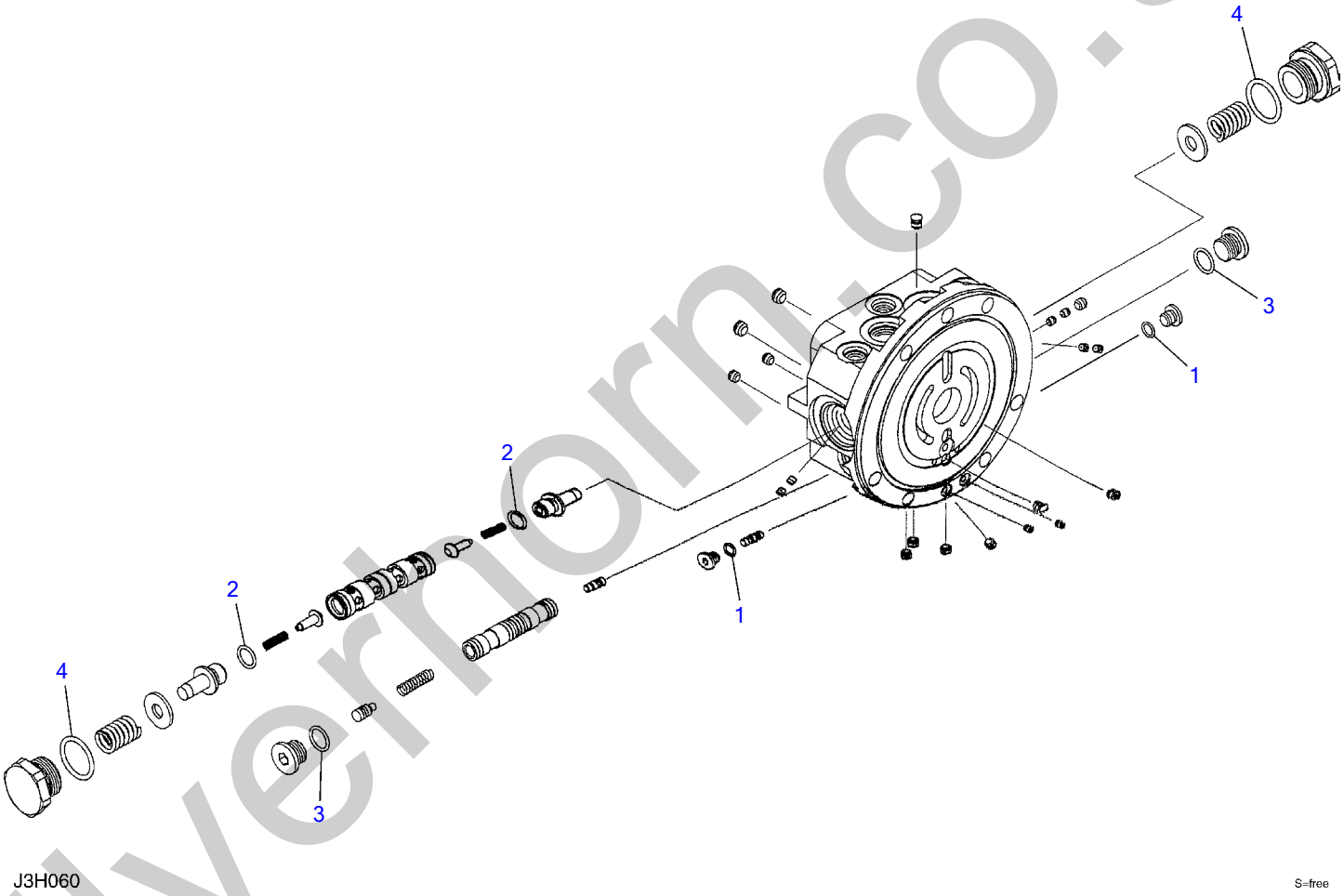

silverhorn.co.uk

TRAVEL MOTOR (3/3) (valve sec.)

Item	Part number	Description	Q'ty	Chan.	Serial No.	Serv.	Remarks
0	1903127400	MOTOR ASSY, travel	1				
0-7	X **********	・BODY ASSY	1				
0-8	1903907393	・・KIT, seal	1				
1	1420010080	・・・O-RING	2				
2	1420000125	・・・O-RING	2				
3	1420010140	・・・O-RING	2				
4	1420010250	・・・O-RING	2				
	J3h060						

silverhorn.co.uk

SLEW MOTOR (1/2) (reduction sec.)

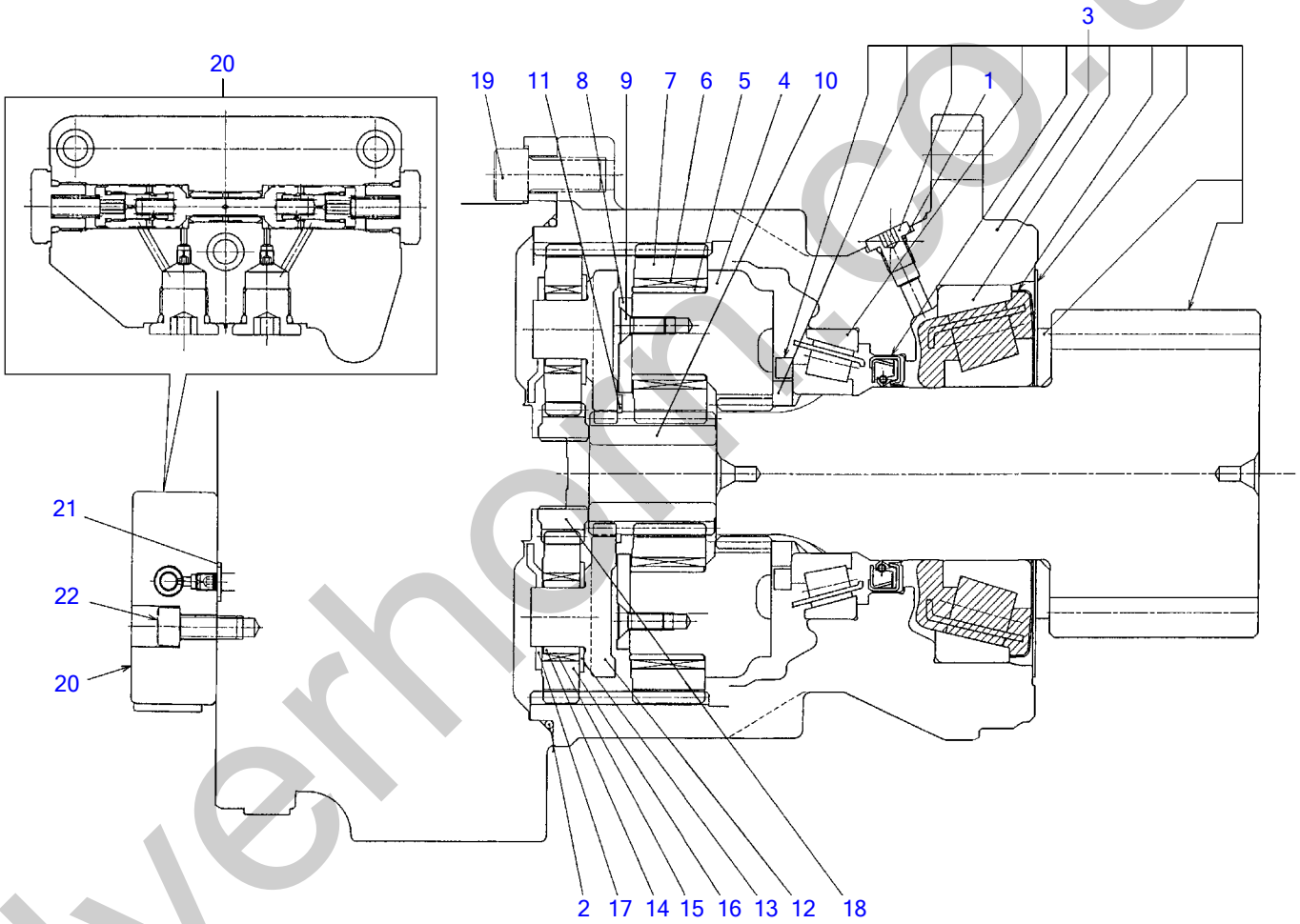

K3H263

S=free

silverhorn.co.uk

SLEW MOTOR (1/2) (reduction sec.)

Item	Part number		Description	Q'ty	Chan.	Serial No.	Serv.	Remarks
0		1903127500	MOTOR ASSY, slew	1				
0-1	X	**********	・GEAR, reduction	1				X19129-07700
0-2		1912907799	・・KIT, seal	1				
1	X	1420010080	・・・O-RING	1				
2	X	1420300260	・・・O-RING	1				
3		1912907798	・・HOUSING ASSY	1				
4		1912907011	・・HOLDER	1				
5		1912905415	・・LACE, inner	4				
6		1912905416	・・BEARING	4				
7		1912904517	・・GEAR	4				
8		1912907015	・・PLATE, thrust	1				
9		1912900714	・・SCREW	4				
10		1912906009	・・GEAR	1				
11		1220000042	・・RING, snap	1				
12		1912907019	・・HOLDER	1				
13		1912907020	・・WASHER, thrust	3				
14		1912900720	・・LACE, inner	3				
15		1912905422	・・CAGE&ROLLER	3				
16		1912907023	・・GEAR	3				
17		1912907097	・・PLATE, thrust	1				
18		1912907025	・・GEAR	1				
19		1110041230	・SCREW, cap	2				
20		1903119920	・VALVE ASSY	1				
21		1420010100	・O-RING	3				
22		1110040820	・SCREW, cap	3				
		K7h210						

silverhorn.co.uk

SLEW MOTOR (2/2) (motor sec.)

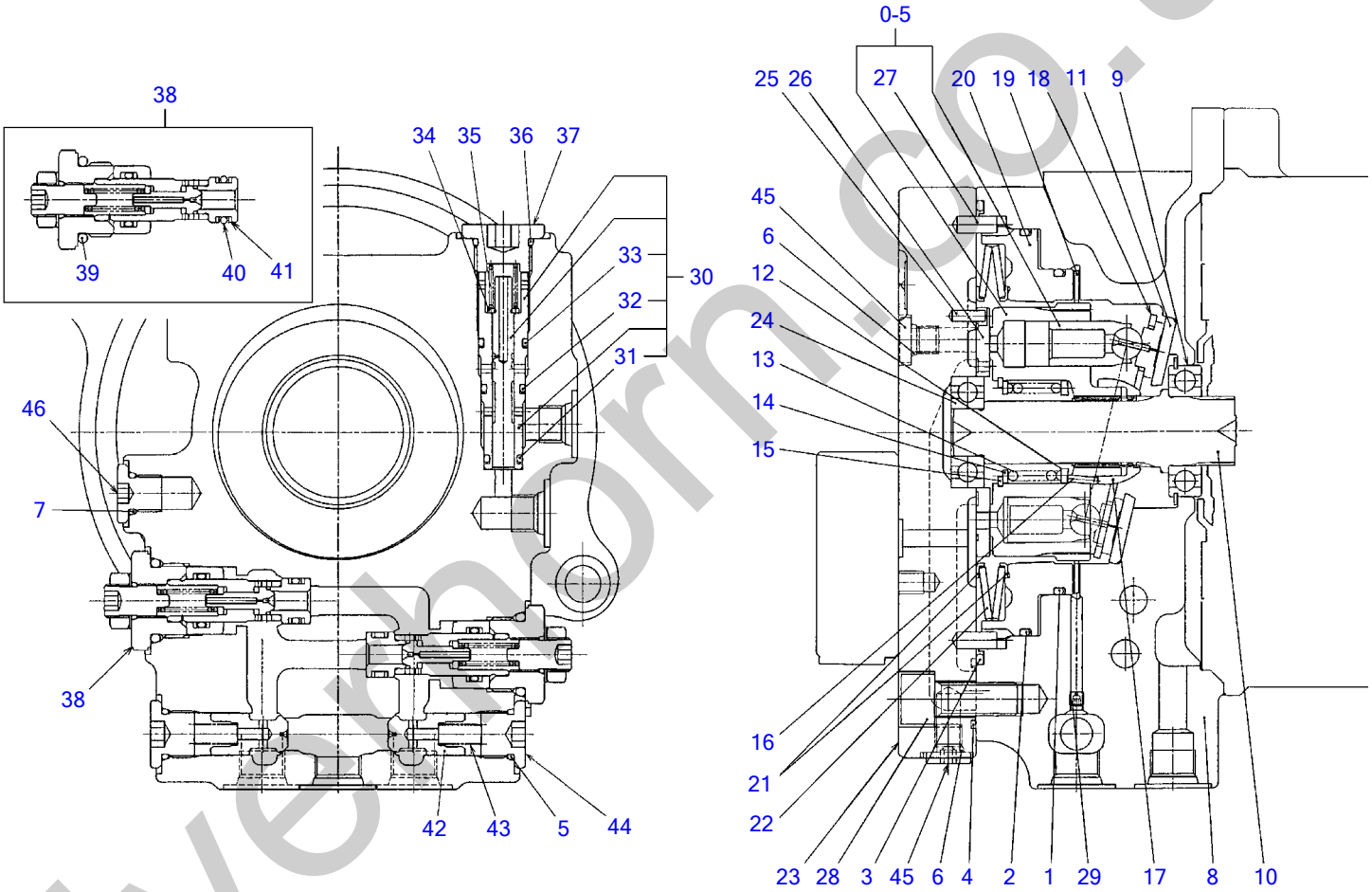

silverhorn.co.uk

SLEW MOTOR (2/2) (motor sec.)

Item		Part number	Description	Q'ty	Chan.	Serial No.	Serv.	Remarks
0		1903127500	MOTOR ASSY, slew	1				
0-3	X	**********	・MOTOR, piston	1				X19039-08900
0-4		1903906799	・・KIT, seal	1				
1	X	1420111100	・・・O-RING	1				
2	X	1420111350	・・・O-RING	1				
3	X	1903007227	・・・O-RING	1				
4	X	1420010210	・・・O-RING	2				
5	X	1420010140	・・・O-RING	2				
6	X	1420010080	・・・O-RING	2				
7	X	1420010110	・・・O-RING	1				
8		1903908901	・・CASE	1				
9		1903904502	・・BEARING, ball	1				
10		1903904503	・・SHAFT	1				
11		1903904504	・・PLATE, thrust	1				
0-5		1903120698	・・KIT, cylinder block	1				
12		1903106808	・・COLLAR	1				
13		1903904507	・・SPRING	1				
14		1903904508	・・WASHER	1				
15		1221000037	・・RING, snap	1				
16		1903904510	・・PIN	3				
17		1903106813	・・HOLDER	1				
18		1903904511	・・PLATE	1				
19		1903904514	・・DISK	1				
20		1903904515	・・PISTON	1				
21		1903904518	・・SHEET, spring	2				
22		1903904519	・・SPRING	1				
23		1903904521	・・COVER	1				
24		1903107927	・・BEARING	1				
25		1903005224	・・PIN	1				
26		1903904524	・・PLATE, valve	1				
27		1903904525	・・PIN	2				
28		1110041230	・・SCREW, cap	5				
29		1901802713	・・ORIFICE	1				
30		1901809200	・・VALVE ASSY	1				
31		1420000101	・・・O-RING	1				
32		1420010120	・・・O-RING	1				
33		1420010140	・・・O-RING	1				
34		1141110008	・・WASHER	1				
35		1903904535	・・SPRING	1				
36		1420010180	・・O-RING	1				
37		1903904537	・・PLUG	1				
38		1903908298	・・VALVE ASSY, relief	2				
39		1420010240	・・・O-RING	1				
40		1420010120	・・・O-RING	1				
41		1421020120	・・・RING, back-up	2				
42		1903904539	・・VALVE, check	2				
43		1903904540	・・SPRING	2				
44		1903106843	・・PLUG	2				
45		1912905325	・・PLUG	2				
46		1903108655	・・PLUG	1				
		K7h220						

silverhorn.co.uk

HYDRAULIC PUMP (1/3)

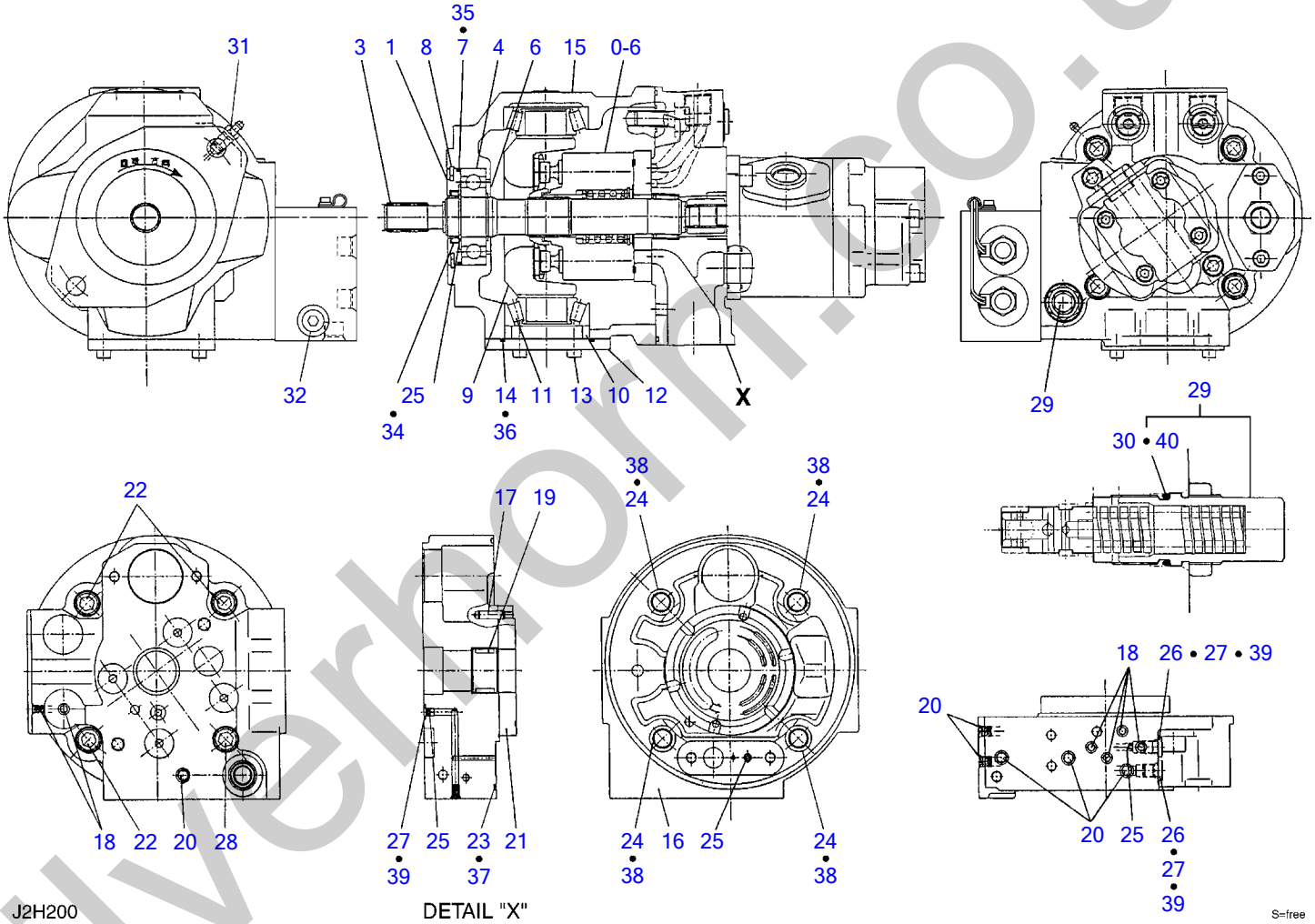

silverhorn.co.uk

HYDRAULIC PUMP (1/3)

Item		Part number	Description	Q'ty	Chan.	Serial No.	Serv.	Remarks
0		1902024800	PUMP, hydraulic	1				
0-1		1902903400	・SHAFT ASSY	1				
0-2		1902903498	・・CASE ASSY, seal	1				
1	X	**********	・・・CASE, seal	1				
2	X	**********	・・・SEAL, dust	1				
3		1902903401	・・SHAFT	1				
4		1902903403	・・BEARING	1				
5		1220000028	・・RING, snap	1				
6		1220000030	・・RING, snap	1				
7		1420300147	・・O-RING	1				
8		1221000072	・・RING, snap	1				
0-3		1902017098	・HANGER ASSY	1				
0-4	X	**********	・・HANGER ASSY	1				
0-5		1902906798	・・・HANGER SUB ASSY	1				
9	X	**********	・・・・HANGER	1				
10	X	**********	・・・・PIECE, distance	1				
11	X	**********	・・・・BEARING	2				
12		1902903501	・・・PLATE	1				
13		1110020616	・・・SCREW, cap	4				
14		1420300144	・・・O-RING	1				
15	X	**********	・・HOUSING	1				
0-6		1902906800	・ROTARY ASSY	1				
0-7		1902906900	・COVER ASSY	1				
0-8		1902906998	・・COVER SUB ASSY	1				
16	X	**********	・・・COVER	1				
17	X	**********	・・・PIN	2				
18	X	**********	・・・PLUG	3				
19	X	**********	・・・BEARING	1				
20	X	**********	・・・PLUG	3				
21		1902906902	・・PLATE	1				
22		1110021230	・・SCREW, cap	3				
23		1420300168	・・O-RING	1				
24		1902903602	・・O-RING	4				
25		1902903603	・・ORIFICE	3				
26		1902900964	・・PLUG	2				
27		1420010080	・・O-RING	3				
28		1110021255	・・SCREW, cap	1				
29		1902017010	・VALVE, relief	1				
30		1902903602	・・O-RING	1				
31		1902017011	・VALVE	1				
32		1901034371	・PLUG					
33		1902017099	・KIT, seal 1	1				
34	X	**********	・・SEAL, dust	1				
35		1420300147	・・O-RING	1				
36		1420300144	・・O-RING	1				
37		1420300168	・・O-RING	1				
38		1902903602	・・O-RING	4				
39		1420010080	・・O-RING	3				
40		1902903602	・・O-RING	1				
		K7h230						

silverthorn.co.uk

HYDRAULIC PUMP (2/3)

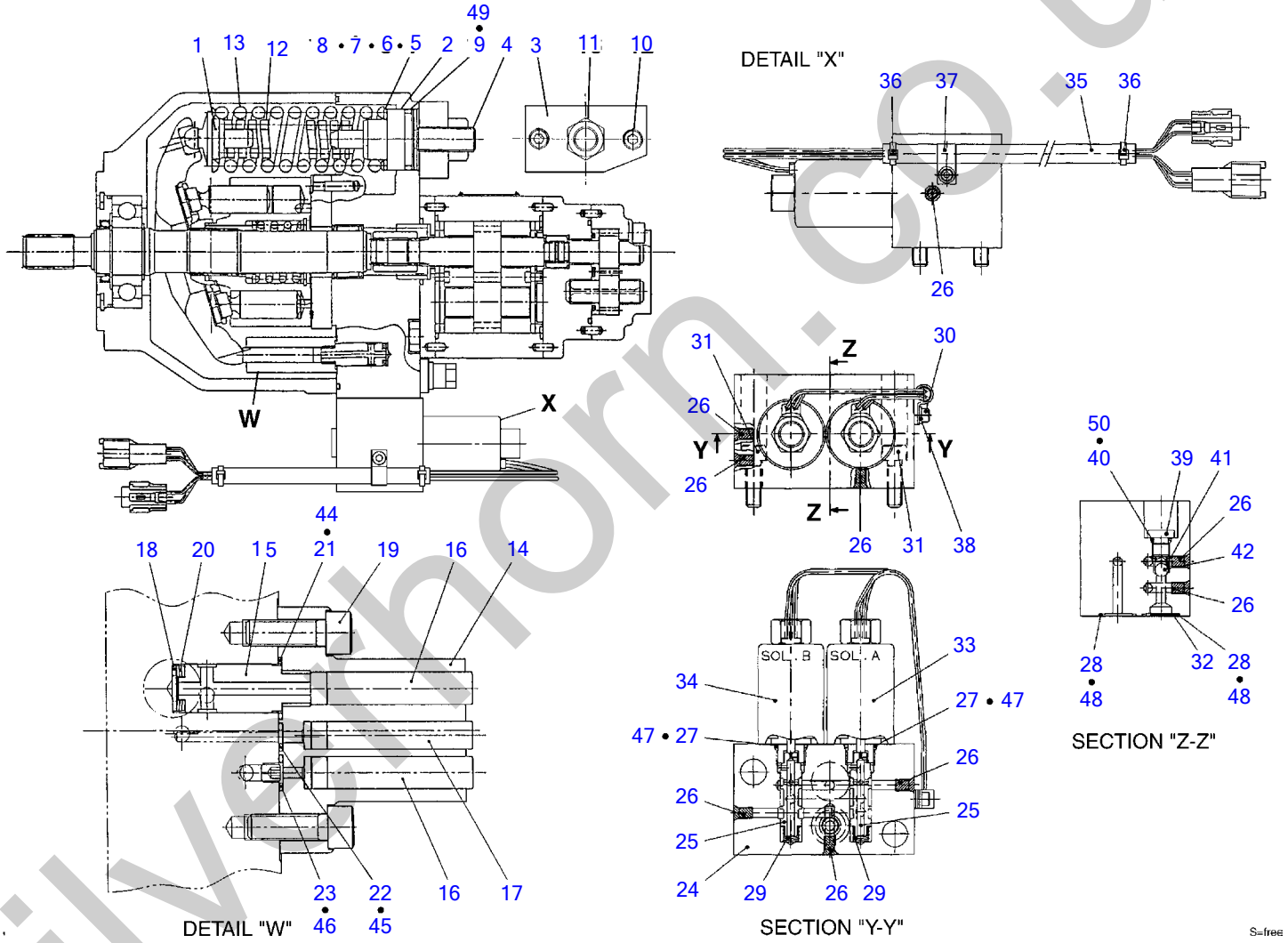

silverthorn.co.uk

HYDRAULIC PUMP (2/3)

Item	Part number	Description	Q'ty	Chan.	Serial No.	Serv.	Remarks
0	1902024800	PUMP, hydraulic	1				
0-9	1902911300	・SPRING ASSY	1				
1	1902903502	・・HOLDER, spring	1				
2	1902907002	・・HOLDER, spring	1				
3	1902909203	・・COVER	1				
0-10	1902911398	・・SCREW ASSY, adjust	1				
4	1902903505	・・・SCREW	1				
5	1902911334	* * * SHIM	2				
6	1902911344	* * * SHIM	2				
7	1902903510	* * * SHIM	2				
8	1902903511	* * * SHIM	2				
9	1420000340	* * O-RING	1				
10	1110020830	* * CAP SCREW	2				
11	1130050016	* * NUT	1				
12	1902903506	* SPRING	1				
13	1902024813	* SPRING	1				
0-11	1902912400	・CONTROL ASSY, piston	1				
14	1902912401	・・CYLINDER	1				
15	1902907102	・・PISTON	1				
16	1902907103	・・PIN	2				
17	1902014308	・・PIN	1				
18	1902907105	・・HOLDER, spring	1				
19	1110020825	・・SCREW, cap	2				
20	1902903608	・・WASHER, conical	3				
21	1420310016	・・O-RING	1				
22	1420310009	・・O-RING	1				
23	1420310011	・・O-RING	1				
0-12	1902912500	・VALVE ASSY	1				
0-13	1902911698	・・BODY SUB ASSY	1				
24	X **********	・・・BODY	1				
25	X **********	・・・SPOOL	2				
26	1902900727	・・PLUG	7				
27	1420010140	・・O-RING	2				
28	1420300017	・・O-RING	2				
29	1902911606	・・SPRING	2				
30	1110020410	・・SCREW, cap	5				
31	1110020825	・・SCREW, cap	2				
32	1902907309	・・ELEMENT, filter	1				
33	1902911610	・・SOLENOID	1				
34	1902911611	・・SOLENOID	1				
35	1902912513	・・COVER	1				
36	1902907314	・・BAND	2				
37	1902907315	・・CLAMP	1				
38	1141110004	・・WASHER	1				
39	1901729103	・・PLUG	1				
40	1420010080	・・O-RING	1				
41	1901729105	・・SPRING	1				
42	1390010450	・・BALL, steel	1				
43	1902017097	・KIT, seal 2	1				
44	1420310016	・・O-RING	1				
45	1420310009	・・O-RING	1				
46	1420310011	・・O-RING	1				
47	1420010140	・・O-RING	2				
48	1420300017	・・O-RING	2				
49	1420000340	・・O-RING	1				
50	1420010080	・・O-RING	1				
	K7h241						

silverthorn.co.uk

HYDRAULIC PUMP (3/3)

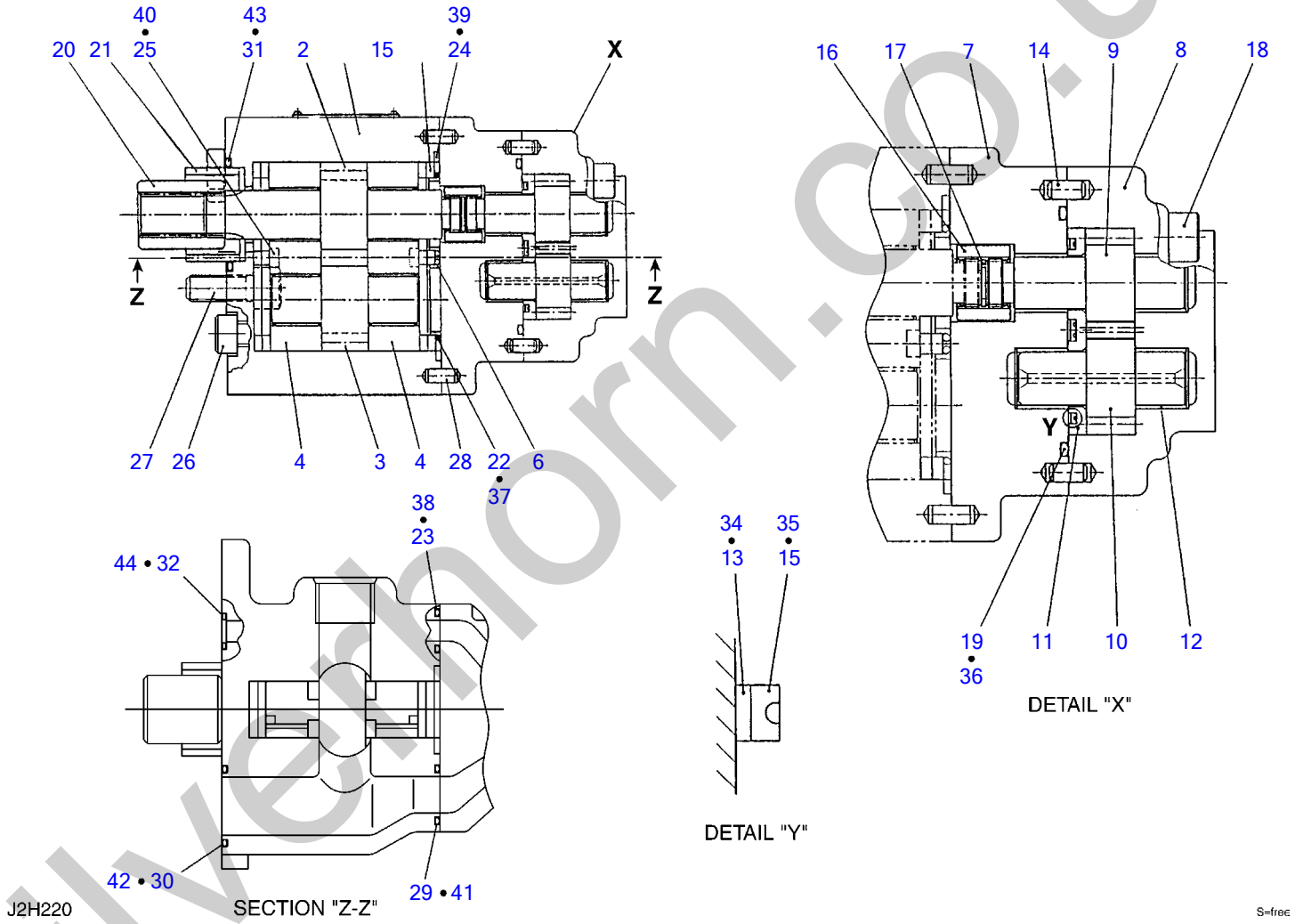

silverthorn.co.uk

HYDRAULIC PUMP (3/3)

Item	Part number	Description	Q'ty	Chan.	Serial No.	Serv.	Remarks
0	1902024800	PUMP, hydraulic	1				
0-14	1902911500	・PUMP ASSY, gear	1				
0-15	1902911598	・・KIT, body	1				
1	X **********	・・・CASE	1				
2	X **********	・・・GEAR	1				
3	X **********	・・・GEAR	1				
4	X **********	・・・PLATE, side	2				
5	1902909310	・・PLATE	2				
6	1902901609	・・GUIDE	2				
0-16	1902907400	・・PUMP ASSY, sub gear	1				
0-17	1902907498	・・・KIT, body	1				
7	X **********	・・・・FRAME	1				
8	X **********	・・・・HOUSING	1				
9	X **********	・・・・GEAR	1				
10	X **********	・・・・GEAR	1				
11	X **********	・・・・PLATE, side	1				
12	X **********	・・・・METAL	4				
13	1902905907	・・・RING, back-up	1				
14	1902900716	・・・PIN	2				
15	1902905908	・・・RING	1				
16	1902905909	・・・RING	1				
17	1221000012	・・・RING, snap	1				
18	1110020840	・・・SCREW, cap	4				
19	1420300138	・・・O-RING	1				
20	1902907212	・・COUPLING	1				
21	1902907213	・・BUSHING	1				
22	1902907214	・・O-RING	2				
23	1420310014	・・O-RING	1				
24	1902901611	・・RING	1				
25	1902903714	・・RING	2				
26	1110021090	・・SCREW, cap	4				
27	1110021025	・・SCREW, cap	2				
28	1902900716	・・PIN	2				
29	1420300018	・・O-RING	1				
30	1420300023	・・O-RING	1				
31	1420300128	・・O-RING	1				
32	1420010100	・・O-RING	1				
33	1902911599	・KIT, seal	1				
34	1902905907	・・RING, back-up	1				
35	1902905908	・・RING	1				
36	1420300138	・・O-RING	1				
37	1902907214	・・O-RING	2				
38	1420310014	・・O-RING	1				
39	1902901611	・・RING	1				
40	1902903714	・・RING	2				
41	1420300018	・・O-RING	1				
42	1420300023	・・O-RING	1				
43	1420300128	・・O-RING	1				
44	1420010100	・・O-RING	1				
	K7h250						

silverthorn.co.uk

HYDRAULIC PUMP (1/3) (for air conditioner)

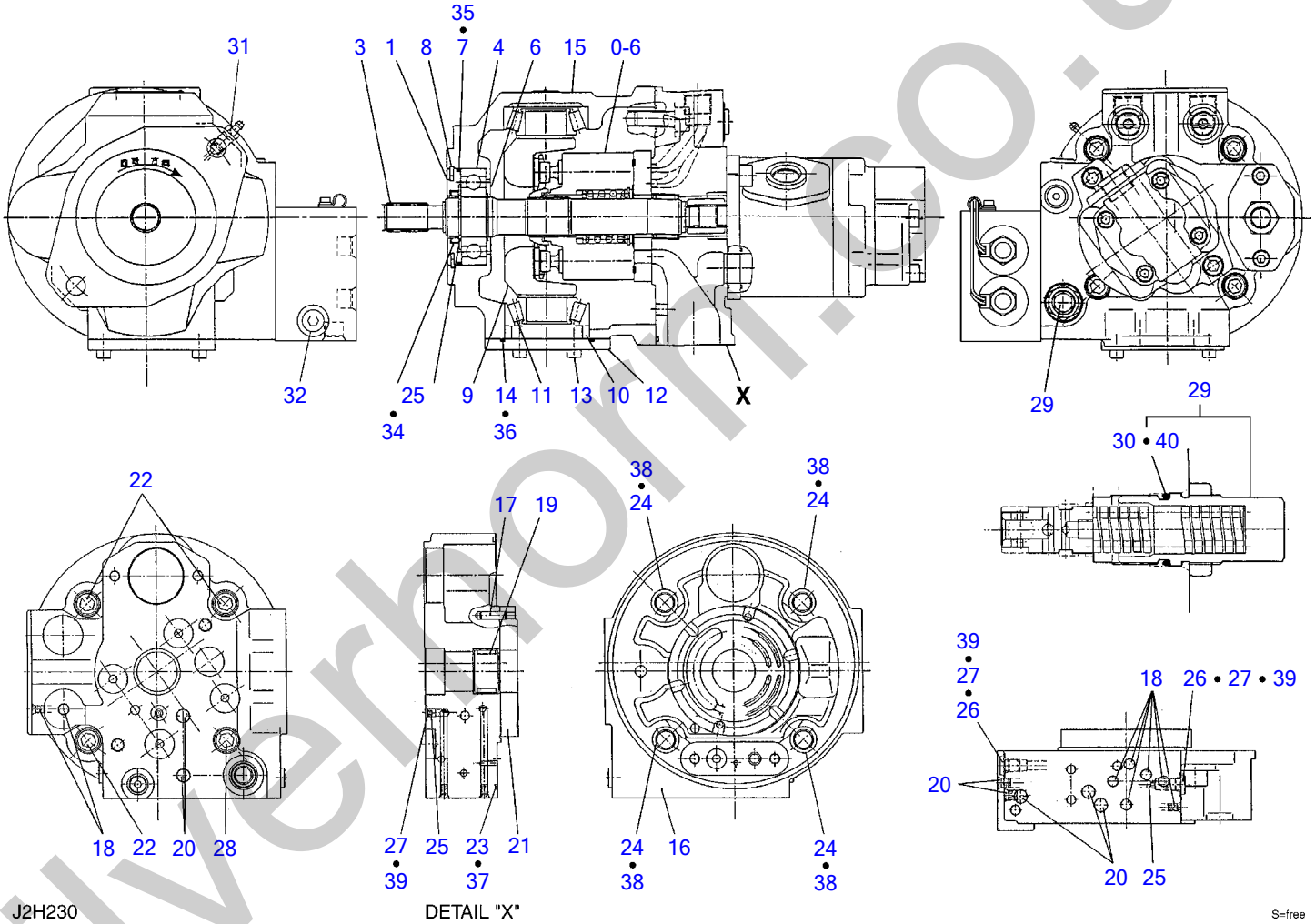

silverhorn.co.uk

HYDRAULIC PUMP (1/3) (for air conditioner)

Item		Part number	Description	Q'ty	Chan.	Serial No.	Serv.	Remarks
0		1902025800	PUMP, hydraulic	1				
0-1		1902903400	・SHAFT ASSY	1				
0-2		1902903498	・・CASE ASSY, seal	1				
1	X	**********	・・・CASE, seal	1				
2	X	**********	・・・SEAL, dust	1				
3		1902903401	・・SHAFT	1				
4		1902903403	・・BEARING	1				
5		1220000028	・・RING, snap	1				
6		1220000030	・・RING, snap	1				
7		1420300147	・・O-RING	1				
8		1221000072	・・RING, snap	1				
0-3		1902017098	・HANGER ASSY	1				
0-4	X	**********	・・HANGER ASSY	1				
0-5		1902906798	・・・HANGER SUB ASSY	1				
9	X	**********	・・・・HANGER	1				
10	X	**********	・・・・PIECE, distance	1				
11	X	**********	・・・・BEARING	2				
12		1902903501	・・・PLATE	1				
13		1110020616	・・・SCREW, cap	4				
14		1420300144	・・・O-RING	1				
15	X	**********	・・HOUSING	1				
0-6		1902906800	・ROTARY ASSY	1				
0-7		1902907500	・COVER ASSY	1				
0-8		1902907598	・・COVER SUB ASSY	1				
16	X	**********	・・・COVER	1				
17	X	**********	・・・PIN	2				
18	X	**********	・・・PLUG	3				
19	X	**********	・・・BEARING	1				
20	X	**********	・・・PLUG	3				
21		1902906902	・・PLATE	1				
22		1110021230	・・SCREW, cap	3				
23		1420300168	・・O-RING	1				
24		1902903602	・・O-RING	4				
25		1902903603	・・ORIFICE	3				
26		1902905703	・・PLUG	2				
27		1420010080	・・O-RING	3				
28		1110021255	・・SCREW, cap	1				
29		1902017010	・VALVE, relief	1				
30		1902903602	・・O-RING	1				
31		1902017011	・VALVE	1				
32		1901034371	・PLUG					
33		1902017099	・KIT, seal 1	1				
34	X	**********	・・SEAL, dust	1				
35		1420300147	・・O-RING	1				
36		1420300144	・・O-RING	1				
37		1420300168	・・O-RING	1				
38		1902903602	・・O-RING	4				
39		1420010080	・・O-RING	3				
40		1902903602	・・O-RING	1				
		K7h260						

silverthorn.co.uk

HYDRAULIC PUMP (2/3) (for air conditioner)

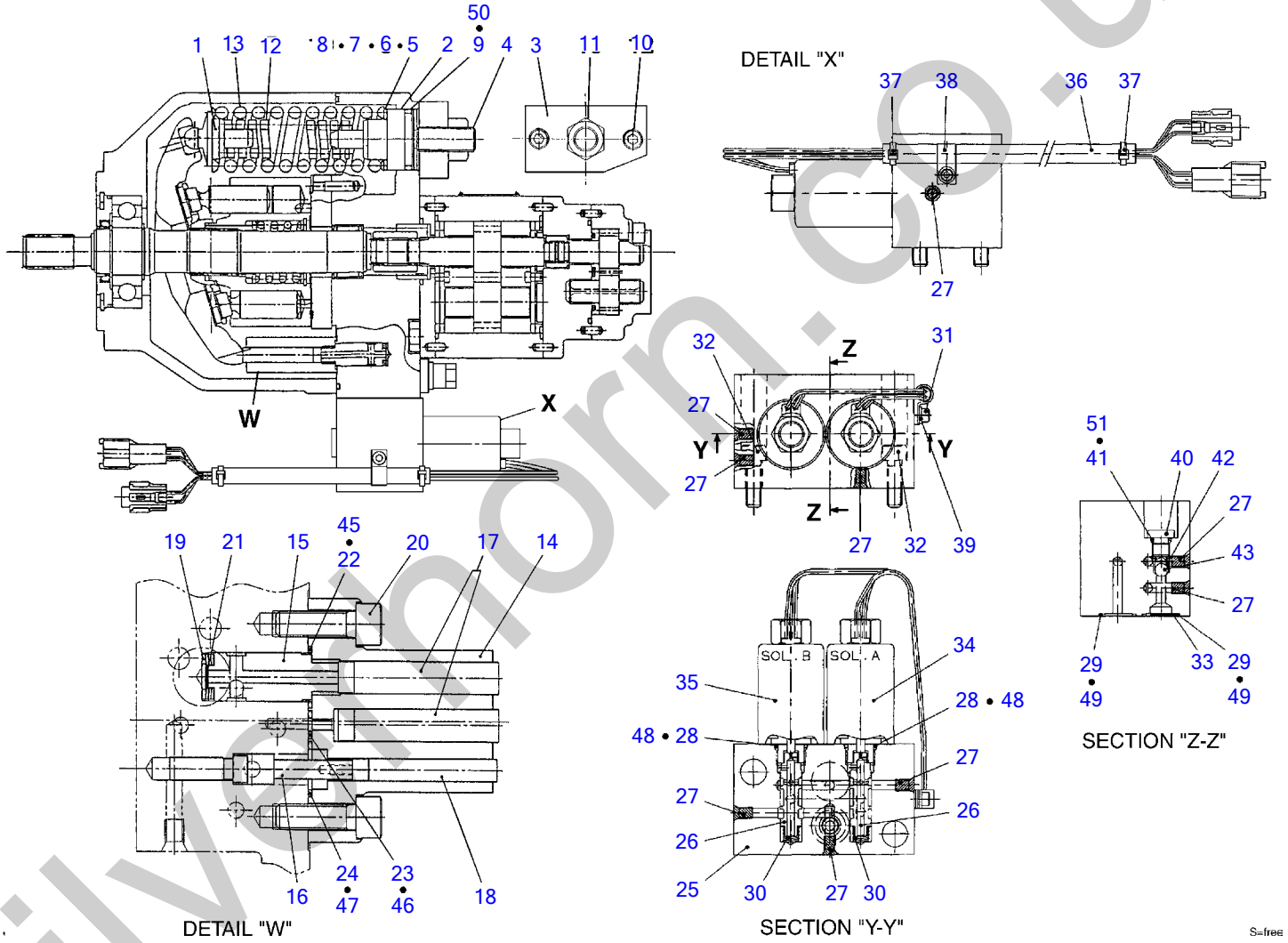

silvernorn.co.uk

HYDRAULIC PUMP (2/3) (for air conditioner)

Item	Part number	Description	Q'ty	Chan.	Serial No.	Serv.	Remarks
0	1902025800	PUMP, hydraulic	1				
0-9	1902912600	・SPRING ASSY	1				
1	1902903502	・・HOLDER, spring	1				
2	1902912602	・・HOLDER, spring	1				
3	1902909203	・・COVER	1				
0-10	1902911398	・・SCREW ASSY, adjust	1				
4	1902903505	・・・SCREW	1				
5	1902911334	* * * SHIM	2				
6	1902911344	* * * SHIM	2				
7	1902903510	* * * SHIM	2				
8	1902903511	* * * SHIM	2				
9	1420000340	* * O-RING	1				
10	1110020830	* * CAP SCREW	2				
11	1130050016	* * NUT	1				
12	1902903506	* SPRING	1				
13	1902022613	* SPRING	1				
0-11	1902907600	・CONTROL ASSY, piston	1				
0-11-1	1902907698	・・CYLINDER ASSY	1				
14	X **********	・・・CYLINDER	1				
15	X **********	・・・PISTON	1				
16	X **********	・・・PISTON	1				
17	1902907103	・・PIN	2				
18	1902907604	・・PIN	1				
19	1902907105	・・HOLDER, spring	1				
20	1110020825	・・SCREW, cap	2				
21	1902903608	・・WASHER, conical	3				
22	1420310016	・・O-RING	1				
23	1420310009	・・O-RING	1				
24	1420310015	・・O-RING	1				
0-12	1902912500	・VALVE ASSY	1				
0-13	1902911698	・・BODY SUB ASSY	1				
25	X **********	・・・BODY	1				
26	X **********	・・・SPOOL	2				
27	1902900727	・・PLUG	7				
28	1420010140	・・O-RING	2				
29	1420300017	・・O-RING	2				
30	1902911606	・・SPRING	2				
31	1110020410	・・SCREW, cap	5				
32	1110020825	・・SCREW, cap	2				
33	1902907309	・・ELEMENT, filter	1				
34	1902911610	・・SOLENOID	1				
35	1902911611	・・SOLENOID	1				
36	1902912513	・・COVER	1				
37	1902907314	・・BAND	2				
38	1902907315	・・CLAMP	1				
39	1141110004	・・WASHER	1				
40	1901729103	・・PLUG	1				
41	1420010080	・・O-RING	1				
42	1901729105	・・SPRING	1				
43	1390010450	・・BALL, steel	1				
44	1902017097	・KIT, seal 2	1				
45	1420310016	・・O-RING	1				
46	1420310009	・・O-RING	1				
47	1420310015	・・O-RING	1				
48	1420010140	・・O-RING	2				
49	1420300017	・・O-RING	2				
50	1420000340	・・O-RING	1				
51	1420010080	・・O-RING	1				
	K7h271						

silverhorn.co.uk

HYDRAULIC PUMP (3/3) (for air conditioner)

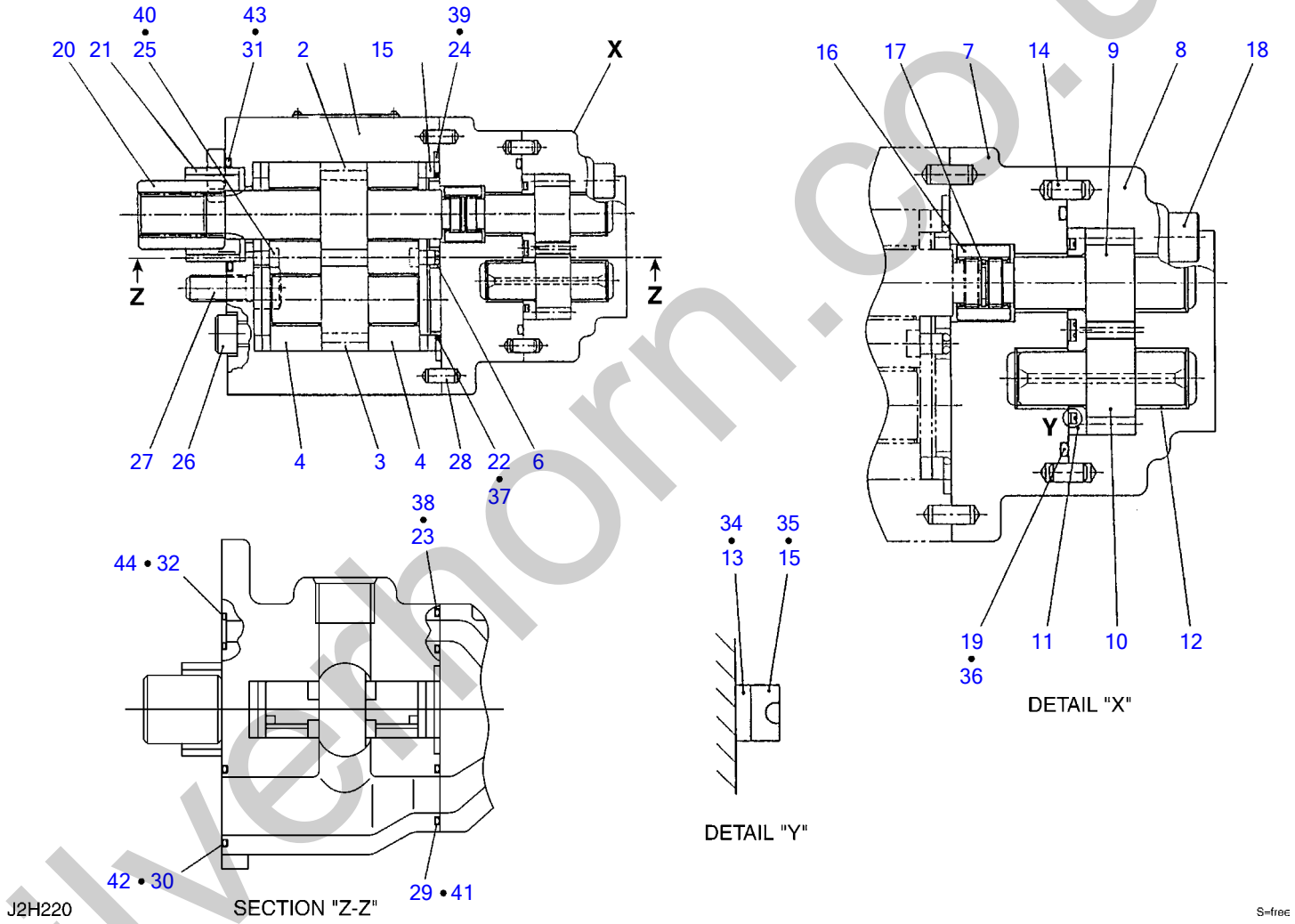

silverthorn.co.uk

HYDRAULIC PUMP (3/3) (for air conditioner)

Item	Part number	Description	Q'ty	Chan.	Serial No.	Serv.	Remarks
0	1902025800	PUMP, hydraulic	1				
0-14	1902911800	・PUMP ASSY, gear	1				
0-15	1902911898	・・KIT, body	1				
1	X **********	・・・CASE	1				
2	X **********	・・・GEAR	1				
3	X **********	・・・GEAR	1				
4	X **********	・・・PLATE, side	2				
5	1902909310	・・PLATE	2				
6	1902901609	・・GUIDE	2				
0-16	1902907400	・・PUMP ASSY, sub gear	1				
0-17	1902907498	・・・KIT, body	1				
7	X **********	・・・・FRAME	1				
8	X **********	・・・・HOUSING	1				
9	X **********	・・・・GEAR	1				
10	X **********	・・・・GEAR	1				
11	X **********	・・・・PLATE, side	1				
12	X **********	・・・・METAL	4				
13	1902905907	・・・RING, back-up	1				
14	1902900716	・・・PIN	2				
15	1902905908	・・・RING	1				
16	1902905909	・・・RING	1				
17	1221000012	・・・RING, snap	1				
18	1110020840	・・・SCREW, cap	4				
19	1420300138	・・・O-RING	1				
20	1902907212	・・COUPLING	1				
21	1902907213	・・BUSHING	1				
22	1902907214	・・O-RING	2				
23	1420310014	・・O-RING	1				
24	1902901611	・・RING	1				
25	1902903714	・・RING	2				
26	1110021090	・・SCREW, cap	4				
27	1110021025	・・SCREW, cap	2				
28	1902900716	・・PIN	2				
29	1420300018	・・O-RING	1				
30	1420300023	・・O-RING	1				
31	1420300128	・・O-RING	1				
32	1420010100	・・O-RING	1				
33	1902911599	・KIT, seal	1				
34	1902905907	・・RING, back-up	1				
35	1902905908	・・RING	1				
36	1420300138	・・O-RING	1				
37	1902907214	・・O-RING	2				
38	1420310014	・・O-RING	1				
39	1902901611	・・RING	1				
40	1902903714	・・RING	2				
41	1420300018	・・O-RING	1				
42	1420300023	・・O-RING	1				
43	1420300128	・・O-RING	1				
44	1420010100	・・O-RING	1				
	K7h280						

silverthorn.co.uk

TB250

Serial No. 125000001~

BK7Z000-2(P-TB250BAB)

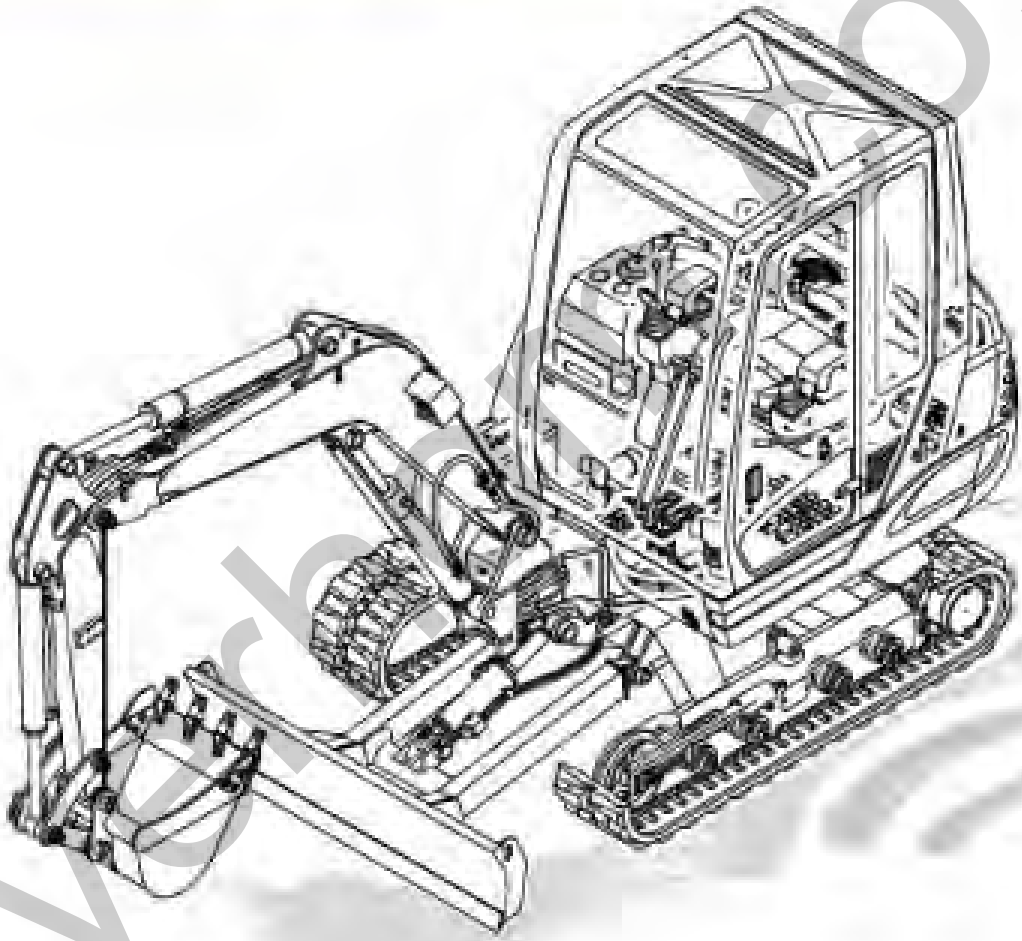

MINI EXCAVATOR

TAKEUCHI

silverhill.co.uk

Recommended Stock List

Item	Part number	Description	Q'ty	Chan.	Serial No.	Serv.	Remarks
		Recommended Stock List					
	1551103700	Hydraulic Filter	3				
	Y119802-55710	Sediment Strainer	2				
	Y129004-12520	Outer Air Filter	6				
	1911102772	Inner Air Filter	6				
	Y129150-35160	Engine Oil Filter	12				
	Y129004-55801	Fuel Filter	6				
	1900083399	Swing Cylinder Seal Kit	1				
	1900077199	Blade Cylinder Seal Kit	1				
	1900075899	Bucket Cylinder Seal Kit	2				
	1900087999	Arm Cylinder Seal Kit	2				
	1900089099	Boom Cylinder Seal Kit	2				
	1914201301	Tooth	12				
	1914201203	Lock	12				
	1432200045	Seal	8				
	1432200050	Seal	12				
	1541301602	Valve Assy	4				
	1400403038	Seal	4				
	1422010550	O-Ring	4				
	1420102000	O-Ring	2				
	1421020550	Backup Ring	4				
	1703002700	Boom Lamp	4				
	1554512601	Oil Drain Tube	1				
	155210100	Fuel Cap	1				
	1919060139	Light Grey Aerosol Paint	6				
	1919060140	Medium Grey Aerosol Paint	6				
	1919060104	Red Aerosol Paint	6				
	1909921906	Male Plug 6 MM 1/4"	4				
	1909921909	Male Plug 9 MM 3/8"	4				
	1501750004	Male Plug 12 MM 1/2"	4				
	1909924906	Female Cap 6 MM 1/4"	4				
	1909924909	Female Cap 9 MM 3/8"	4				
	1909924912	Female Cap 12 MM 1/2"	4				
	0394035004	Upper Radiator Hose	1				
	0394035005	Lower Radiator Hose	1				
	Y129044-42290	Fan Belt	1				
	1560001000	Straight Grease Nipple	10				
	1560001675	Grease Nipple 45 degree	6				
	1560001900	Grease Fitting 90 degree	6				

silverhorn.co.uk

All TB250 Manuals

Item	Part number	Description	Q'ty	Chan.	Serial No.	Serv.	Remarks
		TB250 Manuals					
	LTB2500001	Operators Manual TB228/TB235/TB250 AG7E003 English	1				
	LTB2500001SP	Operator's Manual TB228/TB235/TB250 AG7S000 Spanish	1				
	LTB2500003	Parts Manual TB250 BK7Z000 Interim Tier 4	1				
	LTB2500004	Service Manual TB250 CK7E002	1				

silverhorn.co.uk

silverhorn.co.uk

How to read this Parts Catalog.

Œ©▯o	•”•i”Ô▯†			▯”–Ê	ŒÝŠ·▯«		
REF NO.	PARTS NO.	•”•i-¼	Description	Q'ty	I	R	”õ▯l

ENGINE
4TNV88-BPTB,1
2008.06.11

silverhorn.co.uk

How to read this Parts Catalog.

1. Parts mentioned in this Parts Catalog may not necessarily be standard equipping parts.
2. Parts change may be made without prior notice.
3. Form of this Parts Catalog.

Y00F2161 (1997.09.01)

Fig.29 燃料噴射ポンプ(ブーコン用)
FUEL INJECTION PUMP (W/BOOST)

A= 4JH-DT	D= 4JH-DTZA
B= 4JH-DTZ	E= 4JH-DTZY
C= 4JH-DTZP	F=

•見出 REF.No.	レベル LEV.	O	部品番号 PARTS No.	部品名	DESCRIPTION	個数 (Q'ty) A	B	C	D	E	F	I	R
1	•		729595-51390	FOポンプ ASY(ブーコンツキ	FULE INJECTION PUMP	1	1	1	1	1			1
1- 1	•		729595-51391	FOポンプ ASY(ブーコンツキ	FULE INJECTION PUMP	1	1	1	1	1			1
	(A=E/#00185)(B=E/#00200)												
3	••		26022-060162	ナベコネジ M 6X 16	SCREW M 6X 16	9	9	9	9	9			
I 3- 1	••		26022-060162	ナベコネジ M 6X 16	SCREW M 6X 16	4	4	4	4	4		K	
	(A=E/#00185)(B=E/#00200)(C=E/#00156)(D=E/#00156)(E=E/#00156)												
4	••		129470-51040	カムシャフト	CAMSHAFT	1	1	1	1	1			
5	••		122710-51050	ベアリングキローラ	BEARING, ROLLER	2	2	2	2	2			
6	••		129470-51060	ベアリングオサエ	RETAINER	1	1	1	1	1			

備考	Remarks
(1) ブーストコンペンセータ付き、4JH-DT, 4JH-DTZとも E／#00155までは、特別注文仕様とします	(1) BOOST COMPEMSATOR TYPE. OPTIONAL PART, TO E／#00155. (4JH－DT,4JH－DTZ)

① Ref. No.

The Ref. No. in the list may not be accord with the Ref. No. on illustration.

(Ex.) Illustration No. 1 — List head No. 1 (Befor change) ⟶ 1 [－1] (After change)

When interchangeable symbol N, R, and K, illustrations for new parts are sometimes omitted.

② Lev.(Level)

Indication and Meaning of Level

Level : Hereunder is given the relation among the number of dots(•),the level and the nominal parent- child relationship.

- • ……Parent parts(Assembly parts)
- •• ……Child parts included in "•" (Semi- Assembly parts,component parts of Assembly parts.)
- ••• ……Child parts included in "••", Grand- child parts in terms of "•". (Compornent parts of Semi- Assembly parts.)

Note) A parts of non- sale parts are illustlated but not listed.

③ Change Mark

Change Mark "I" is given to the part for which a desigh change was made at this time.
The design change was not shown in the last published Parts Catalog.

④ Interchangeability Mark

In the case where a part change took place,one of the following interchangeability marks is indicated for that part.

Symbol	interchangeability	Contents note
N	Old ←○ ×→ New	New Part is interchangeable for Old Part but not interchangeable conversely.
Q	Old ←× ○→ New	New Part is not interchangeable for Old Part but interchangeable conversely.
R	Old ←○ ○→ New	New Part is interchangeable for Old Part and vice versa.
S	Old ←× ×→ New	New Part is not interchangeable for Old Part and vice versa.
W		Part newly added.
Z		Part discontinued.
F		Not interchangeable single part but interchangeable by set of the related parts.
K		Changed only in quantity used.

⑤ Effective Machine No.

When a part is changed,Effective Machine No. of a Model for which the part is applicable is indication in each column of (A)- (F).

Product Symbol	Product No.	Product Symbol	Product No.
C	Clutch No. Compressor No.	M	Machine No.
D	Drive No.	T	Tractor No.
E	Engine No.	Note1) ※	Date

Note1) Date may follow the symbol in some cases. (Ex.) ※ 1996.01
Note2) As far as engine models shown by "XXX" are concerned, the modification of the parts could not be predicted or the engine models themselves could not be identified.
Note3) (A=E/#00185) means that the design change on the part has been effective for the model at the column (A)(in this case, for 4JH- DT) on and from E/#(Engine Serial Number) 00185.

⑥ Remarks Mark

Figures or alphabets (Symbols) are entered in the remark column.
The comments(remarks)on the pertinent parts are indicated in the lower part of the list by the same symbols as those stated above.

silverform.co.uk

CYLINDER BLOCK

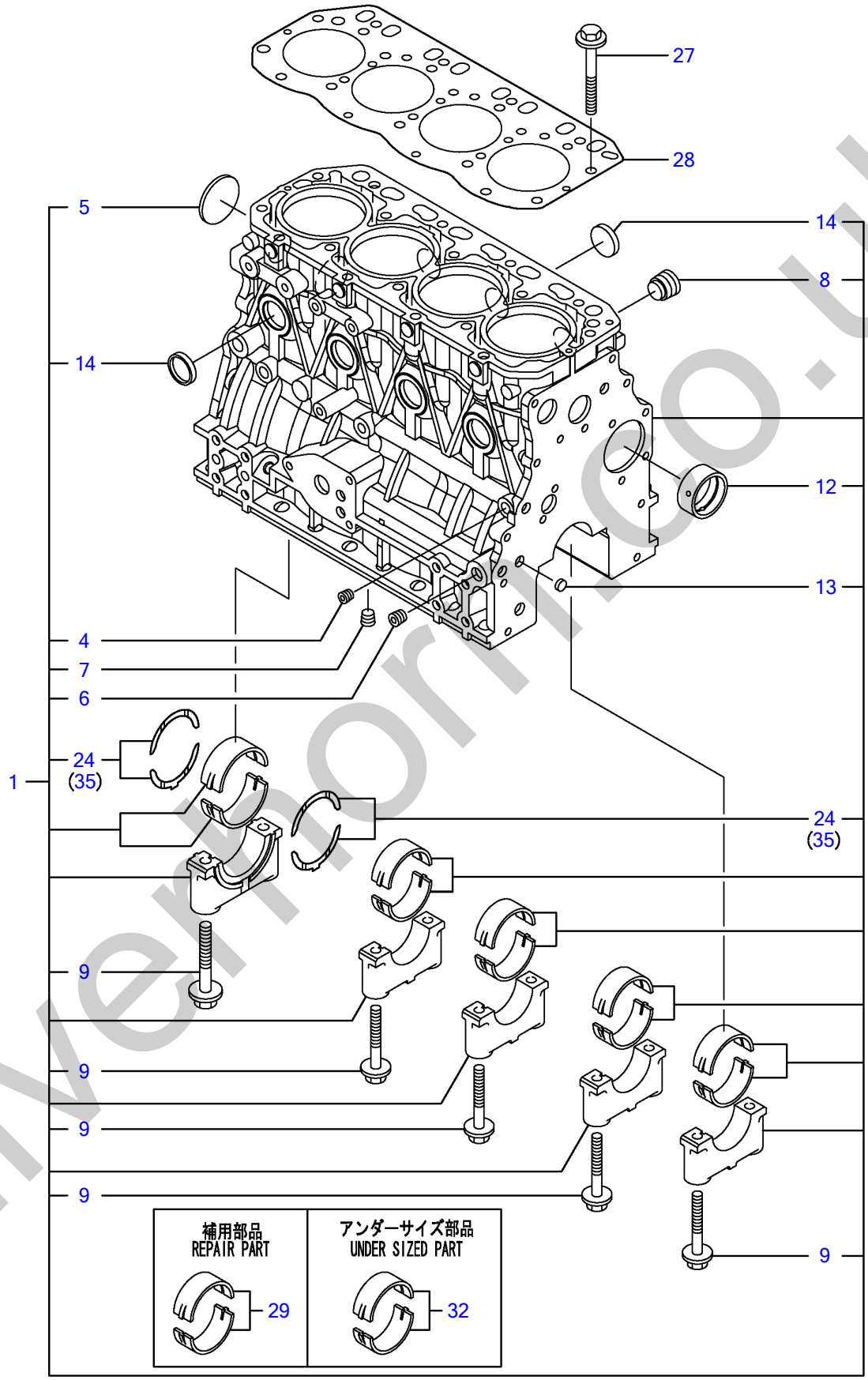

Y00D9970	1, シリンダブロック				
4TNV88-BPTB, BPTB1	1, 08/02	2	3	PLUS	

silverthorn.co.uk

¼ØÝÀÞÌÞÛ¯¸ CYLINDER BLOCK

Œ©lo REF NO.	•"•i"Ô†† PARTS NO.	•"•i-¼	Description	"–Ê Q'ty	ŒÝŠ·« I	R	"õl
1	**Y729602-01560**	¼ØÝÀÞÌÞÛÂ¸ CMP	BLOCK ASSY, CYLINDER	1			
4	**Y124060-01050**	• Ìß×¸Þ(PT1/8	• PLUG PT1/8	1			
5	**Y129001-01250**	• »×¶ÞÀÌß×¸Þ 50	• PLUG 50	1			
6	**Y124160-01910**	• Ìß×¸Þ PT1/4	• PLUG PT1/4	2			
7	**Y124160-01910**	• Ìß×¸Þ PT1/4	• PLUG PT1/4	1			
8	**Y171051-01921**	• Ìß×¸Þ NPTF1	• PLUG	1			
9	**Y129150-02020**	• ÎÞÙÄ(ÒÀÙ·ÔÂÌß	• BOLT, METAL CAP	10			
12	**Y129795-02412**	• ÌÞÂ¼Õ (A	• BUSH, CAMSHAFT	1			
13	**Y27241-120000**	• ÜÝ¶ÞÀÌß×¸Þ 12	• PLUG 12	2			
14	**Y27241-300000**	• ÜÝ¶ÞÀÌß×¸Þ 30	• PLUG 30	8			
24	**Y129150-02931**	• ½×½ÄÒÀÙCMP STDÎÖ³ËÝ	• METAL, THRUST	2			
27	**Y129150-01200**	ÍÂÄÞÎÞÙÄ	STUD, CYL. HEAD	18			
28	**Y129407-01340**	ÍÂÄÞ¶Þ½¹ÂÄ	GASKET,CYL.HEAD	1			
29	**Y129001-02931**	Ò²ÝÒÀÙCMP(STDÎÖ³ËÝ)	MAIN BEARING SET	5		(1)	ÎÖ³ÌÞËÝÃÞ½
32	**Y129150-02871**	Ò²ÝÒÀÙ U.S=0.25	MAIN METAL US=0.25	5		(2)	±ÝÀÞ°»²½Þ(U.S=0.25)Ì
35	**Y129150-02941**	½×½ÄÒÀÙOS=.25(4Ï² ²Ø	METAL,THRUST.25(4PIE	1		(3)	µ°ÊÞ°»²½Þ(O.S=0.25)Ìł

silverhorn.co.uk

GEAR HOUSING

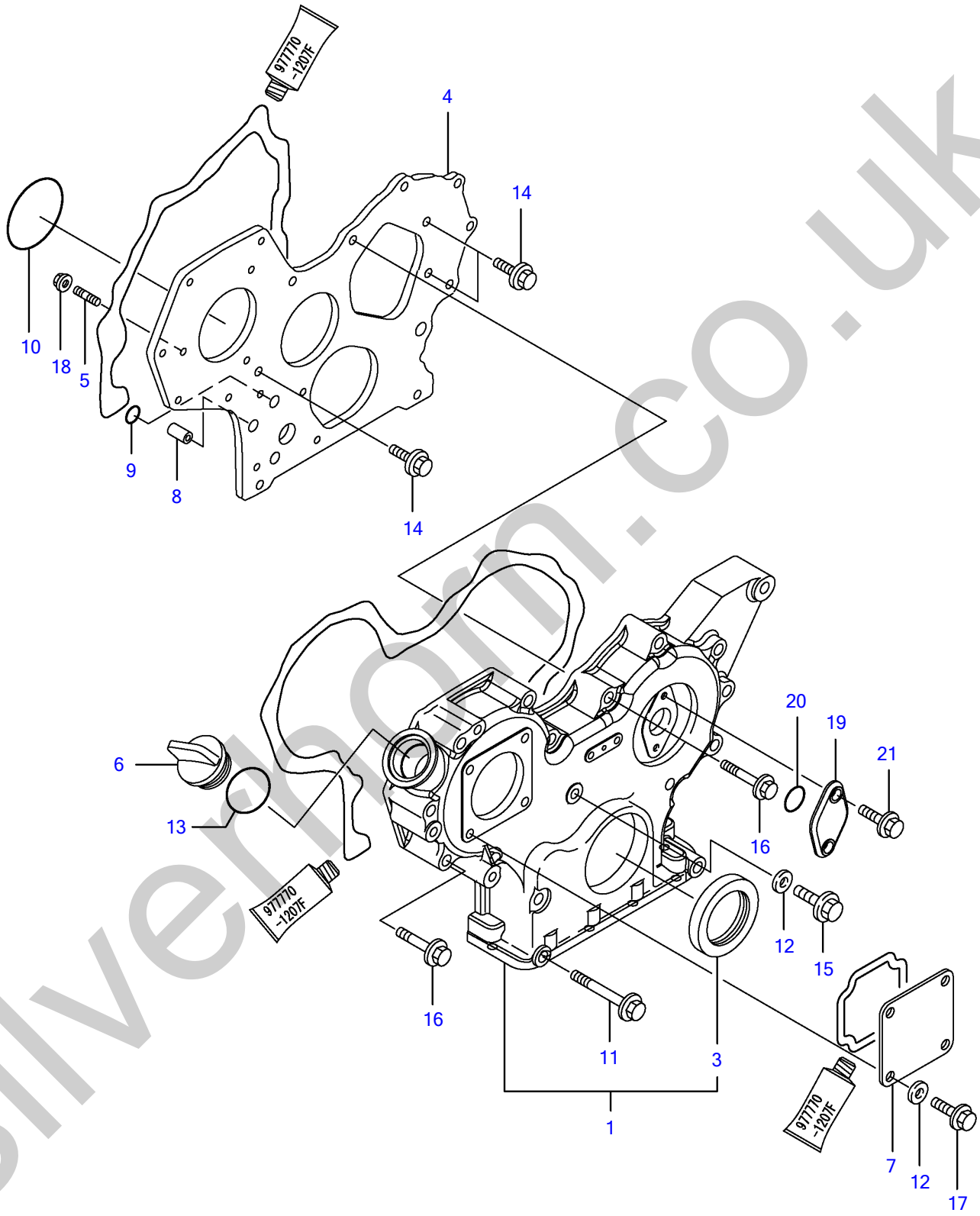

silverhorm.co.uk

Y00D9970	2, ギヤケース			
4TNV88-BPTB, BPTB1	1, 08/02	2	3	PLUS

·ÞÔ¹-½ GEAR HOUSING

Œ©lo REF NO.	•"•i"Ôl† PARTS NO.	•"•i-¼	Description	l"–Ê Q'ty	ŒÝŠ·l« I	R	"õll
1	Y729630-01500	·ÞÔ¹-½CMP	GEAR CASE ASSY	1			
3	Y119934-01800	· µ²Ù¼-Ù	· SEAL, OIL	1			
4	Y119803-01520	Ì×Ý¼Þ (·ÞÔ¹-½	FLANGE, GEAR CASE	1			
5	Y119802-01561	½ÀÂÄÞÎÞÙÄ 8X25	STUD, M8X25	3			
6	Y124160-01751	ÌÀ(ÎÕº³)	COVER,FILLER	1			
7	Y124240-01871	ÌÀ(HO-P	COVER, HO-P	1			
8	Y129795-01950	Êß²ÌßÉÂ¸	PIPE, KNOCK L=18	2			
9	Y119609-32040	OØÝ¸Þ	O-RING P16	2			
10	Y121850-51960	OØÝ¸Þ(FOPÄØÂ¹)	O-RING, F.I.PUMP	1			
11	Y129001-91841	ÂÊÞÎÞÙÄM8X85(¼ÞÄÞ³¸Ð	BOLT M 8X 85 PLATED	3			
12	Y22190-080002	¼-ÙÜÂ¼Ô(ºÎÙ.ÆÄØÙ) 8	SEAL WASHER 8S	5			
13	Y24311-000320	OØÝ¸Þ 1A P 32.0	O-RING 1A P-32.0	1			
14	Y26106-080162	ÂÊÞÎÞÙÄ 8X 16	BOLT M 8X 16 PLATED	3			
15	Y26106-080302	ÂÊÞÎÞÙÄ 8X 30	BOLT M 8X 30 PLATED	1			
16	Y26106-080552	ÂÊÞÎÞÙÄ 8X 55	BOLT M 8X 55 PLATED	12			
17	Y26106-080162	ÂÊÞÎÞÙÄ 8X 16	BOLT M 8X 16 PLATED	4			
18	Y26306-080002	ÂÊÞÂ·ÅÂÄ(UBS 8	NUT	3			
19	Y121023-01551	ÌÀ(ÀºÒ-À	COVER, BLIND	1			
20	Y24341-000240	OØÝ¸Þ 1A S 24.0	O-RING 1A S-24.0	1			
21	Y26106-060162	ÂÊÞÎÞÙÄ 6X 16	BOLT M 6X 16 PLATED	2			

silverhorn.co.uk

FLYWHEEL HOUSING & OIL SUMP

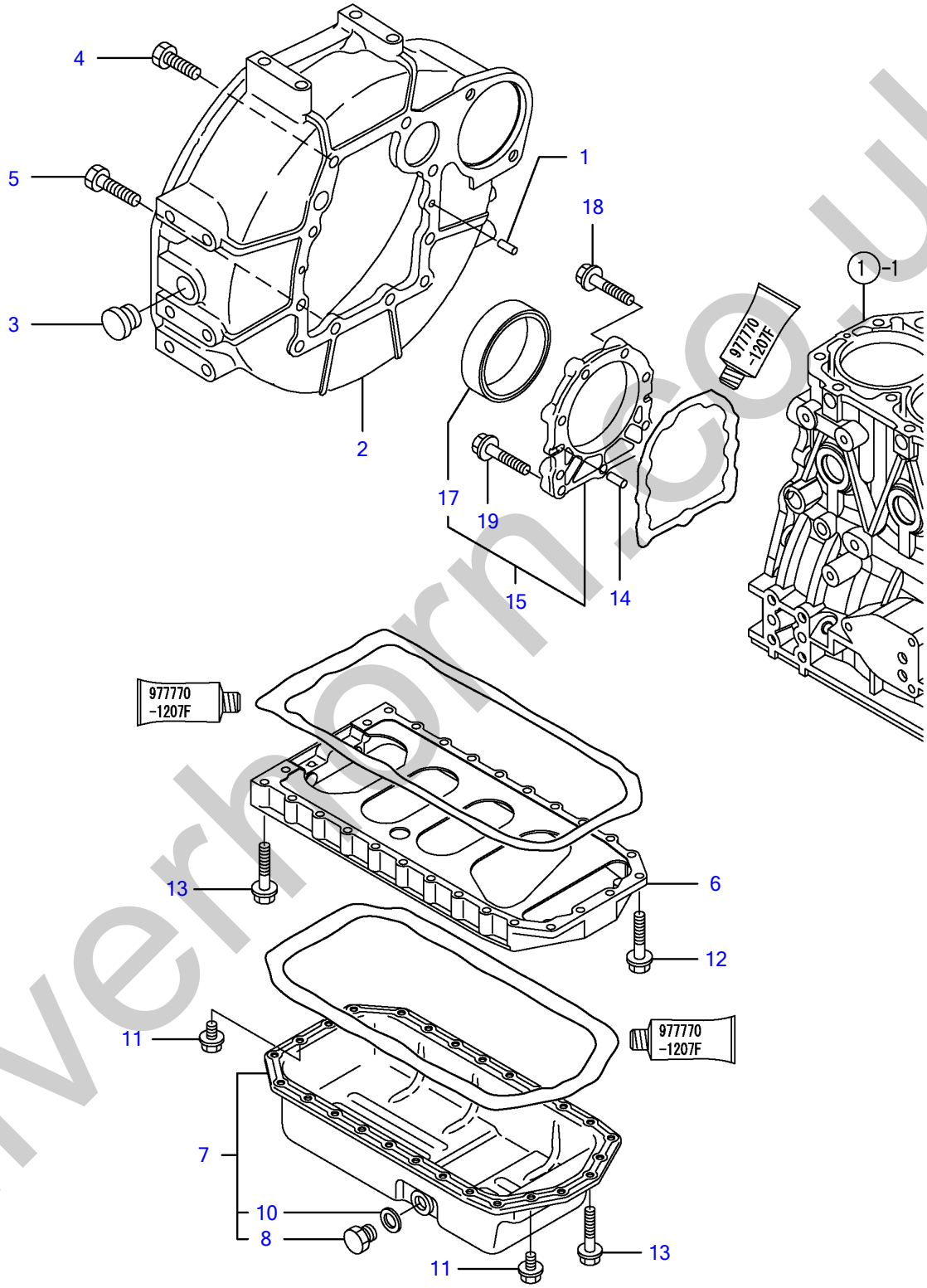

Y00D9970	3, フライホイルハウジング & オイルパン				
4TNV88-BPTB, BPTB1	1, 08/02	2	3	PLUS	

silverhorn.co.uk

Ì×²Î²ÙÊ³¼ÞÝ¸Þ & µ²ÙÊßÝ FLYWHEEL HOUSING & OIL SUMP

Œ©▯o REF NO.	•"•i"Ô▯† PARTS NO.	•"•i-¼	Description	▯"–Ê Q'ty	ŒÝŠ·▯« I	R	"õ▯l
1	**Y129100-01580**	Í²º³ËßÝ 8X16	PARALLEL PIN 8X16	2			
2	**Y129612-01600**	Ì×²Î²ÙÊ³¼ÞÝ¸Þ	HOUSING,FLYWHEEL	1			
3	**Y119620-01750**	·ÔÂÌß (Î²Ù¶ÊÞ-	CAP, FLYWHEEL COVER	1			
4	**Y26206-100252**	ÎÞÙÄ 10X 25	BOLT M10X25	6			
5	**Y26206-100302**	ÎÞÙÄ 10X 30	BOLT M10X30	4			
6	**Y129400-01730**	µ²ÙÊßÝ¶Ý»Þ(ÌÞ×Â¸:12)	SPACER, OIL SUMP	1			
7	**Y129400-01770**	µ²ÙÊßÝ(Ì¶¶ÞÀ CMP	SUMP ASSY, LUB. OIL	1			
8	**Y119640-01640**	▪ ÄÞÚÝÌß×¸Þ M22	▪ DRAIN PLUG M22	1			
10	**Y22190-220002**	▪ ¼-ÙÜÂ¼Ô(ºÏÙ.ÆÄØÙ)22	▪ SEAL WASHER 22S	1			
11	**Y26106-080162**	ÂÊÞÎÞÙÄ 8X 16	BOLT M 8X 16 PLATED	4			
12	**Y26106-080252**	ÂÊÞÎÞÙÄ 8X 25	BOLT M 8X 25 PLATED	2			
13	**Y26106-080452**	ÂÊÞÎÞÙÄ 8X 45	BOLT M 8X 45 PLATED	24			
14	**Y129100-01580**	Í²º³ËßÝ 8X16	PARALLEL PIN 8X16	2			
15	**Y129100-01640**	µ²Ù¼-Ù¹-½ CMP	CASE ASSY, OIL SEAL	1			
17	**Y129795-01780**	▪ µ²Ù¼-Ù	▪ SEAL, OIL	1			
18	**Y129486-01670**	ÂÊÞÎÞÙÄ 8X30	BOLT M8X30,COLLAR HD	6			
19	**Y26106-080352**	ÂÊÞÎÞÙÄ 8X 35	BOLT M 8X 35 PLATED	3			

silverhorn.co.uk

CYLINDER HEAD & BONNET

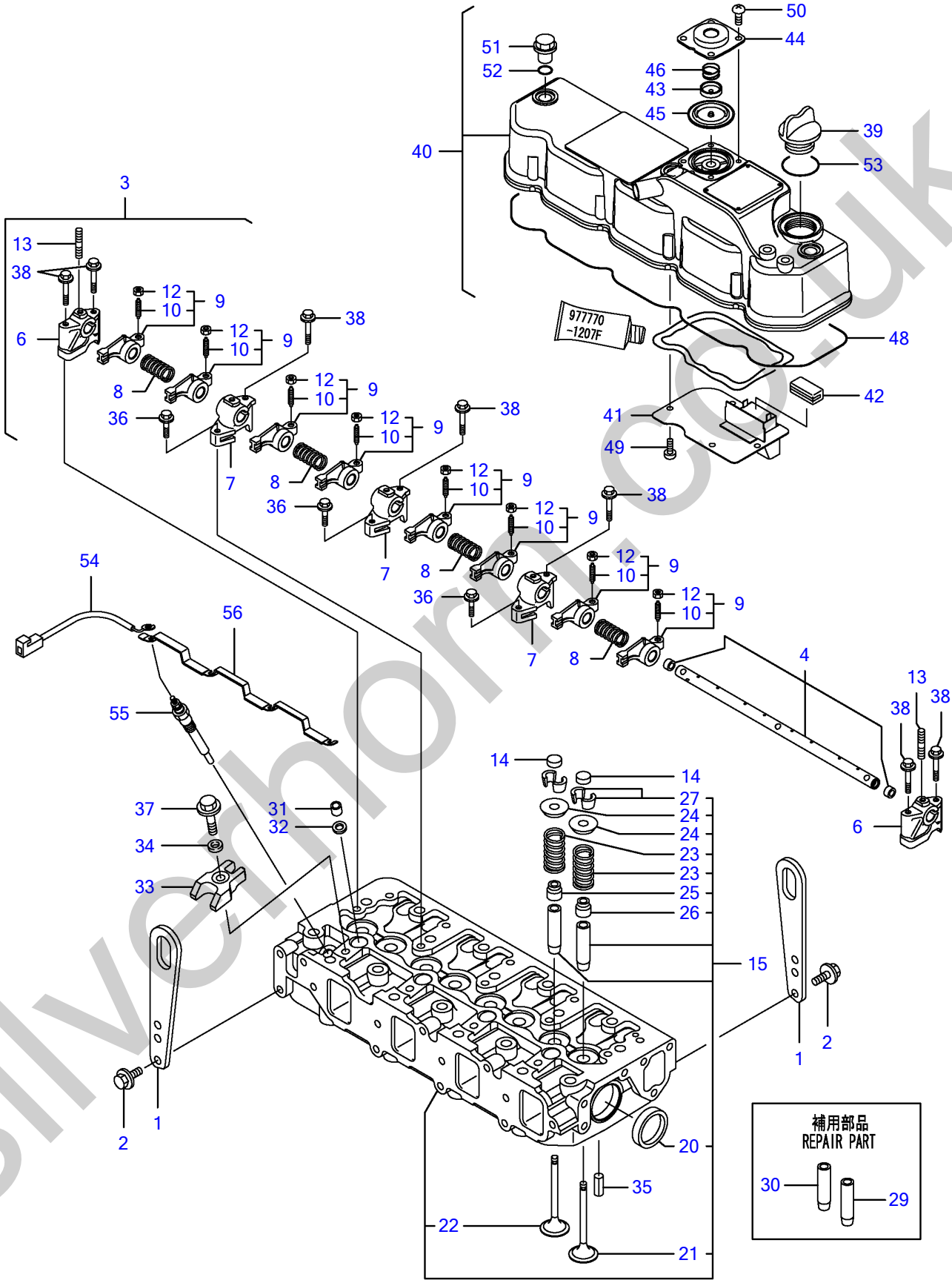

Y00D9970	4, シリンダヘッド & ボンネット				
4TNV88-BPTB, BPTB1	1, 08/02	2	3	PLUS	

silverhorn.co.uk

¼ØÝÀÞÍÂÄÞ & ÎÞÝÈÂÄ CYLINDER HEAD & BONNET

Œ©lo REF NO.	•"•i"Ô† PARTS NO.	•"•i-¼	Description	l"–Ê Q'ty	ŒÝŠ·l« I	R	"õl
1	Y129900-07900	ÂØ±¹Þ¶Å¸Þ	LIFTER, ENGINE	2			
2	Y26106-080162	ÂÊÞÎÞÙÄ 8X 16	BOLT M 8X 16 PLATED	4			
3	Y129601-11241	ÍÞÝÜÝ¼Þ¸ CMP	SHAFT ASSY, ROCKER	1			
4	Y129601-11251	· ÍÞÝÜÝ¼Þ¸	· SHAFT	1			
6	Y119802-11260	· ÍÞÝÜÝ»Îß-Ä (A	· SUPPORT, ROCKER ARM	2			
7	Y119802-11270	· ÍÞÝÜÝ»Îß-Ä (B	· SUPPORT, ROCKER ARM	3			
8	Y129150-11280	· ÍÞÝÜÝ¼Þ¸ÊÞÈ	· SPRING	4			
9	Y129004-11650	· ÍÞÝÜÝ(SUC KIT	· ARM ASSY, ROCKER	8			
10	Y129150-11230	· · ±¼ÞÒ½À (ÍÞÝ½·Ï	· · SCREW, VALVE	8			
12	Y129150-11750	· · ÅÂÄ M8XP1.0	· · NUT M8XP1.0	8			
13	Y26226-080182	· ³´ºÐÎÞÙÄ(2D 8X 18	· STUD M 8X 18 PLATED	3			
14	Y129150-11370	·ÔÂÌß(ÍÞÝ	CAP, VALVE	8			
15	Y129604-11700	¼ØÝÀÞÍÂÄÞ CMP	HEAD ASSY, CYLINDER	1			
20	Y27241-400000	· ÜÝ¶ÞÀÌß×¸Þ 40	· PLUG 40	2			
21	Y129005-11100	· ÊÞÙÌÞ(INT	· VALVE, INTAKE	4			
22	Y129100-11112	· ÊÞÙÌÞ(EXH	· VALVE, EXHAUST	4			
23	Y129795-11120	· ÍÞÝÊÞÈ	· SPRING, VALVE	8			
24	Y129795-11180	· µ»´(ÍÞÝÊÞÈ)	· RETAINER, SPRING	8			
25	Y121400-11340	· ÊÞÙÌÞ½ÃÑ¼-Ù	· SEAL, VALVE STEM	4			
26	Y124460-11340	· ÊÞÙÌÞ½ÃÑ¼-Ù	· SEAL, VALVE STEM	4			
27	Y27310-080001	· ºÂÀ-(½ÃÑ)8 2¹=1SET	· COTTER 8	8			
29	Y120130-11860	ÊÞÙÌÞ¶Þ²ÄÞ(SUC	GUIDE, VALVE	4		(1)	ÎÖ³ÌÞËÝÃÞ½
30	Y129150-11810	ÊÞÙÌÞ¶Þ²ÄÞ(EXH	GUIDE, VALVE	4		(1)	ÎÖ³ÌÞËÝÃÞ½
31	Y119802-11870	ÌßÛÃ¸À(É½ÞÙ	PROTECTOR, NOZZLE	4			
32	Y119625-11880	É½ÞÙ¼-Ä	SEAT, NOZZLE	4			
33	Y129004-11900	É½ÞÙµ»´	RETAINER, NOZZLE	4			
34	Y120270-54410	»Þ¶ÞÈ(²Ý¼Þ´¸À	WASHER	4			
35	Y22351-060012	½ÌßØÝ¸ÞËßÝ 6.0AX 12	SPRING PIN 6X12	2			
36	Y26106-080252	ÂÊÞÎÞÙÄ 8X 25	BOLT M 8X 25 PLATED	3			
37	Y26106-080352	ÂÊÞÎÞÙÄ 8X 35	BOLT M 8X 35 PLATED	4			
38	Y26106-080502	ÂÊÞÎÞÙÄ 8X 50	BOLT M 8X 50 PLATED	7			
39	Y124160-01751	ÌÀ(ÎÕº³)	COVER,FILLER	1			
40	Y129601-11350	ÎÞÝÈÂÄ CMP	BONNET ASSY	1			
41	Y129004-03010	· ÊÞÂÌÙÌßÚ-Ä	· PLATE, BAFFLE	1			
42	Y129150-03070	· ÊÞÂÌÙ(ÌÞØ-»Þ	· BAFFLE, BREATHER	1			
43	Y119802-03110	· ¾ÝÀÌßÚ-Ä	· PLATE, DIAPHRAGM	1			
44	Y119802-03121	· ÌÀ,ÀÞ²ÔÌ×Ñ	· COVER, DIAPHRAGM	1			
45	Y119802-03130	· ÀÞ²ÔÌ×Ñ	· DIAPHRAGM	1			
46	Y119802-03141	· ÊÞÈ,ÀÞ²ÔÌ×Ñ	· SPRING, DIAPHRAGM	1			
48	Y129601-11310	· PK(ÎÞÝÈÂÄ	· GASKET,COVER	1			
49	Y22857-500100	· ÀÂËßÝÈ¼Þ 5.0X10	· SCREW 5X10,TAPPING	4			
50	Y22857-500100	· ÀÂËßÝÈ¼Þ 5.0X10	· SCREW 5X10,TAPPING	4			
51	Y124160-11360	ÄÂÃ	KNOB	3			
52	Y24311-000120	OØÝ¸Þ 1A P 12.0	O-RING 1A P 12.0	3			
53	Y24311-000320	OØÝ¸Þ 1A P 32.0	O-RING 1A P-32.0	1			
54	Y119803-77830	Ê°È½(¸ÞÛ-Ìß×¸Þ	HARNESS,GLOW PLUG	1			
55	Y129008-77800	¸ÞÛ-Ìß×¸Þ	PLUG, GLOW	4			
56	Y129604-77821	ºÈ¸À (¸ÞÛ-Ìß×¸Þ	CONNECTOR, GLOW PLUG	1			

silverform.co.uk

SUCTION MANIFOLD & AIR CLEANER

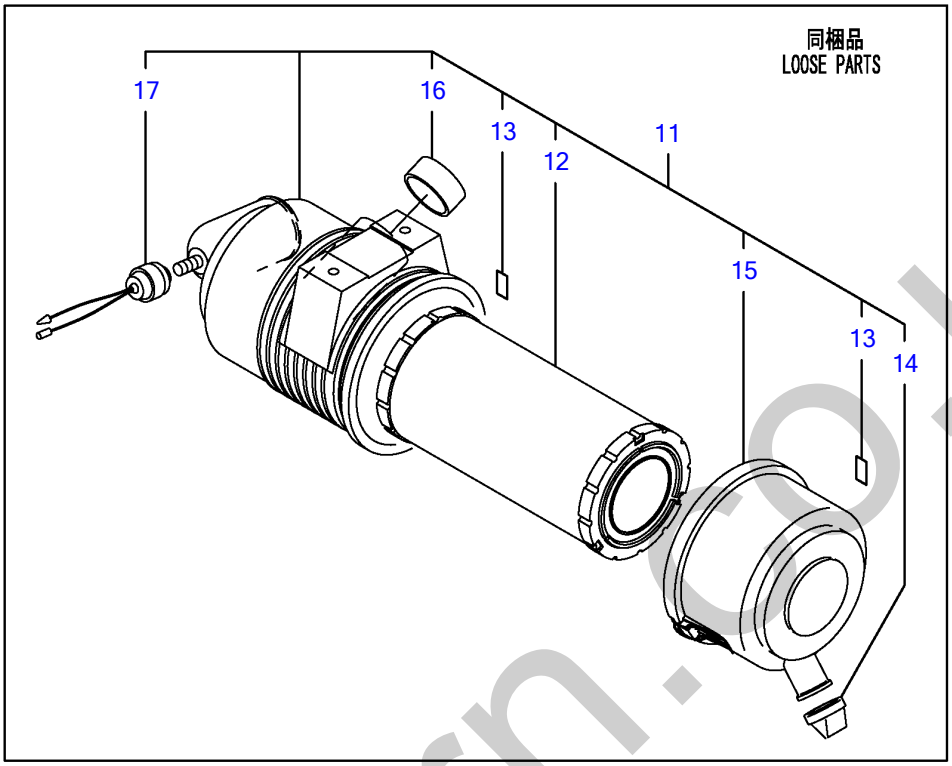

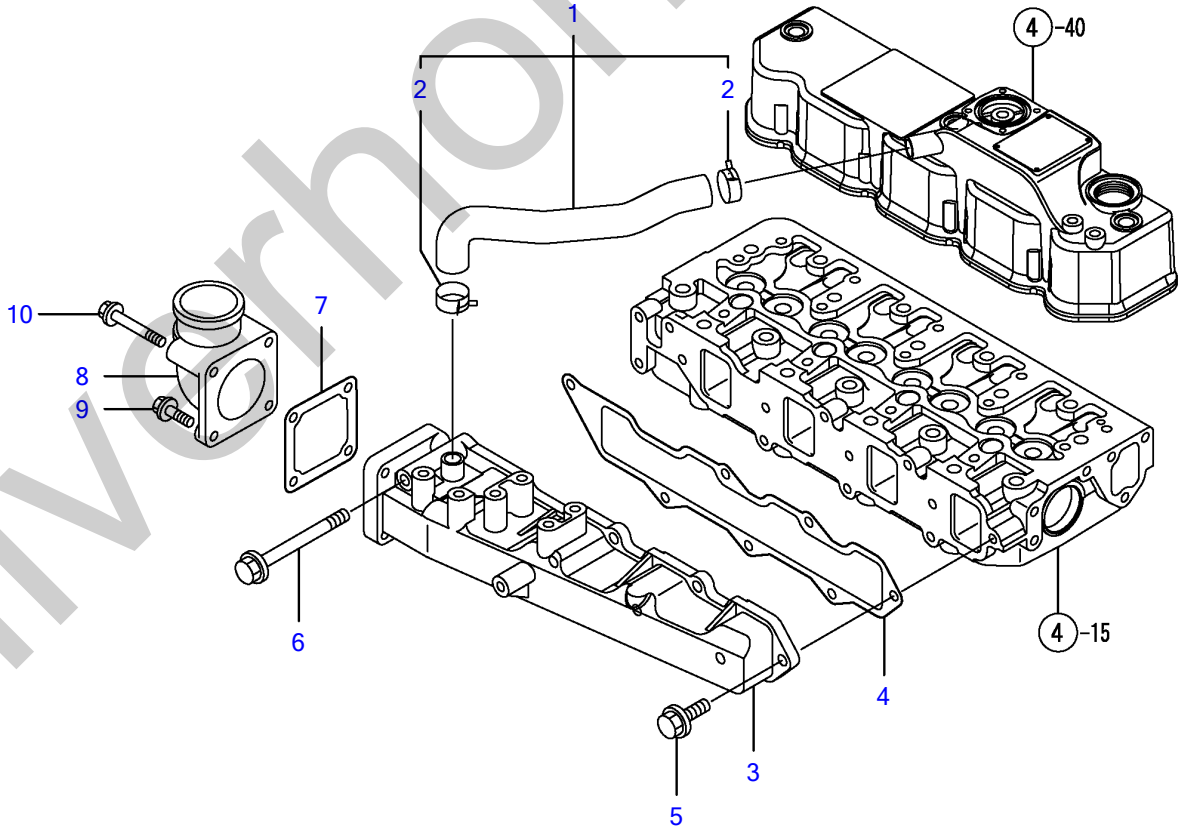

silverhorn.co.uk

Y00D9970	5, キュウキマニホールド & エアクリーナ				
4TNV88-BPTB, BPTB1	1, 08/02	2	3	PLUS	

·Õ³·ÏÆÎ-ÙÄÞ & ´±¸Ø°Å SUCTION MANIFOLD & AIR CLEANER

Œ©▯o REF NO.	•"•i"Ô▯† PARTS NO.	•"•i-¼	Description	▯"–Ê Q'ty	ŒÝŠ·▯« I	R	"õ▯l
1	**Y129601-03080**	ÌÞØ-»ÞÊß²Ìß	PIPE,BREATHER	1			
2	**Y129410-03990**	▪ Î-½¸ØÂÌß 22	▪ CLAMP 22	2			
3	**Y129601-12100**	ÏÆÎ-ÙÄÞ(INT Öº	MANIFOLD,INT	1			
4	**Y129407-12110**	PK(SUCÏÆÎ-ÙÄÞ	GASKET,INT.MANOFOLD	1			
5	**Y26106-080202**	ÂÊÞÎÞÙÄ 8X 20	BOLT M 8X 20 PLATED	6			
6	**Y26106-080802**	ÂÊÞÎÞÙÄ 8X 80	BOLT M 8X 80 PLATED	1			
7	**Y129150-77511**	PK(´±Ë-À)(ÉÝ±½)	GASKET, (NON-ASB.)	1			
8	**Y119803-77520**	ÍÞÝÄÞ(´±Ë-À	BEND	1			
9	**Y26106-080202**	ÂÊÞÎÞÙÄ 8X 20	BOLT M 8X 20 PLATED	2			
10	**Y26106-080802**	ÂÊÞÎÞÙÄ 8X 80	BOLT M 8X 80 PLATED	2			
11	**Y129236-12510**	´±¸Ø°Å	AIR CLEANER	1			
12	**Y129004-12520**	▪ ´ÚÒÝÄ 5²ÝÁ	▪ ELEMENT 5INCH	1			
13	**Y129418-12530**	▪ ±Û-Ï-¸	▪ MARK	2			
14	**Y119808-12540**	▪ ±ÝÛ-ÀÞÊÞÙÌÞ	▪ VALVE, UNLOADER	1			
15	**Y119866-12541**	▪ ¶ÊÞ-ASSY	▪ COVER ASSY	1			
16	**Y119140-12680**	▪ ØÝ¸Þ	▪ RING	1			
17	**Y129259-12570**	▪ ²Ý¼Þ¹-À (ÃÞÝ·¼·	▪ INDICATOR	1			

silverhorn.co.uk

EXHAUST MANIFOLD & SILENCER

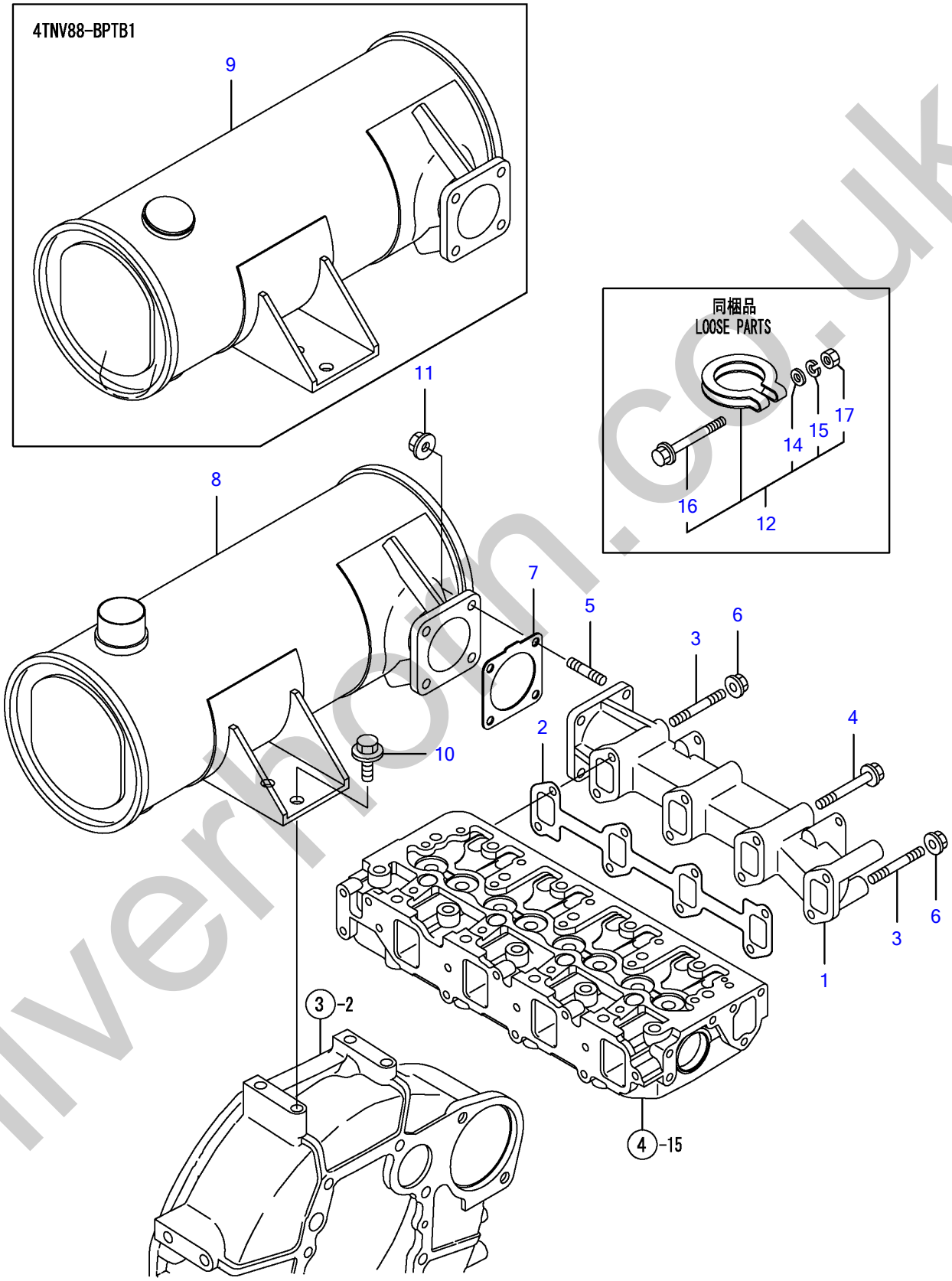

Y00D9970	6, ハイキマニホールド & サイレンサ				
4TNV88-BPTB, BPTB1	1, 08/02	2	3	PLUS	

silverhorn.co.uk

Ê²·ÏÆÎ-ÙÄÞ & »²ÚÝ» EXHAUST MANIFOLD & SILENCER

Œ©lo REF NO.	•"•i"Ôl† PARTS NO.	•"•i-¼	Description	l"–Ê Q'ty	ŒÝŠ·l« I	R	"ól I
1	**Y129640-13109**	ÏÆÎ-ÙÄÞ(EXH »ÞÝÃ²	MANIFOLD, EXHAUST	1			
2	**Y129550-13110**	PK(EXHÏÆÎÙÄÞ	GASKET, EXH.MANIFOLD	1			
3	**Y123900-13610**	³´ºÐÎÞÙÄ 8X80	STUD BOLT M 8X 80	2			
4	**Y123900-13630**	ÂÊÞÎÞÙÄ 80	BOLT 8X80	6			
5	**Y119131-18320**	³´ºÐÎÞÙÄ M8X22	BOLT M 8X 22	4			
6	**Y26306-080002**	ÂÊÞÂ·ÅÂÄ(UBS 8	NUT	2			
7	**Y129930-13201**	¶Þ½¹ÂÄ(»²ÚÝ»	GASKET, SILENCER	1			
8	**Y129642-13520**	»²ÚÝ»	SILENCER(4TNV88-BPTB)	1			
9	**Y129642-13530**	»²ÚÝ»	SILENCER(4TNV88-BPTB1)	1			
10	**Y26106-100202**	ÂÊÞÎÞÙÄ 10X 20	BOLT M10X 20 PLATED	2			
11	**Y26306-080002**	ÂÊÞÂ·ÅÂÄ(UBS 8	NUT	4			
12	**Y129642-13590**	¸×ÝÌß(ÌÝ¼ÕÂº³)CMP	CLAMP	1			
14	**Y22117-100000**	· »Þ¶ÞÈ(ºÏÙ 10	· WASHER 10	1			
15	**Y22217-100000**	· ÊÞÈ»Þ¶ÞÈ 10	· SPRING WASHER 10	1			
16	**Y26106-100652**	· ÂÊÞÎÞÙÄ M10X65	· BOLT M10X 65 PLATED	1			
17	**Y26706-100002**	· ÅÂÄ 10	· NUT M10	1			

silverhorn.co.uk

CAMSHAFT & DRIVING GEAR

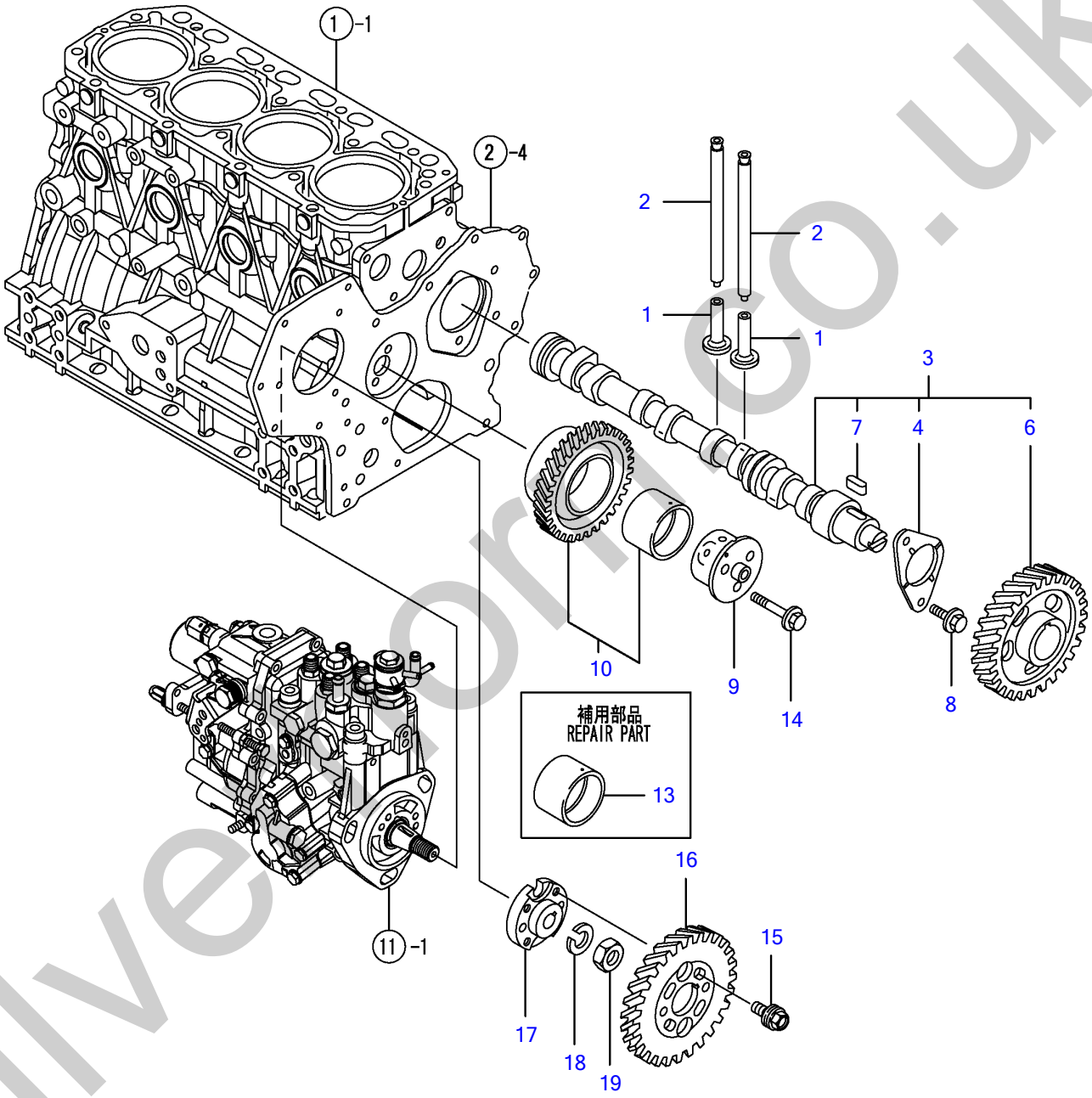

Y00D9970	7, カムシャフト & クドウギヤ			
4TNV88-BPTB, BPTB1	1, 08/02	2	3	PLUS

silverform.co.uk

¶Ñ¼ÔÌÄ & ¸ÄÞ³·ÞÔ CAMSHAFT & DRIVING GEAR

Œ©lo REF NO.	•"•i"Ôl† PARTS NO.	•"•i-¼	Description	l"–Ê Q'ty	ŒÝŠ·l« I	R	"ól I
1	**Y129150-14200**	ÀÍßÂÄ	TAPPET	8			
2	**Y129150-14400**	ÌßÂ¼ÕÛÂÄÞ	ROD, PUSH	8			
3	**Y729402-14580**	¶Ñ¼ÔÌÄ CMP	CAMSHAFT ASSY	1			
4	**Y129150-02450**	· ½×½ÄÒÀÙ(¶Ñ	· METAL,THRUST(CAM	1			
6	**Y129150-14101**	· ¶Ñ·ÞÔ	· GEAR, CAMSHAFT	1			
7	**Y22512-070140**	· Ì´»Þ-·- 7X14	· KEY 7X 14	1			
8	**Y26106-080142**	ÂÊÞÎÞÙÄ 8X 14	BOLT 8X 14 PLATED	2			
9	**Y119803-25050**	¼ÔÌÄ(±²ÄÞ×-	SHAFT, IDLE GEAR	1			
10	**Y119802-25101**	±²ÄÞÙ·ÞÔ CMP	GEAR ASSY, IDLE	1			
13	**Y119802-25071**	ÌÞÂ¼Õ(ÎÖ³ËÝ	BUSH, IDLE GEAR	1		(1)	ÎÖ³ÌÞËÝÃÞ½
14	**Y26106-080402**	ÂÊÞÎÞÙÄ 8X 40	BOLT M 8X 40 PLATED	3			
15	**Y129150-25301**	ÎÞÙÄ(FI-P	BOLT,FI-P	4			
16	**Y119802-25901**	·ÞÔ (FI-P	GEAR, PUMP	1			
17	**Y158552-51151**	Ì×Ý¼Þ(¶Ñ¼Þ¸ºÃ²	FLANGE	1			
18	**Y22217-140000**	ÊÞÈ»Þ¶ÞÈ 14	SPRING WASHER 14	1			
19	**Y26776-140002**	ÄÒÅÂÄ(Î¿ 14	LOCK NUT M14 PLATED	1			

silverhorn.co.uk

CRANKSHAFT & PISTON

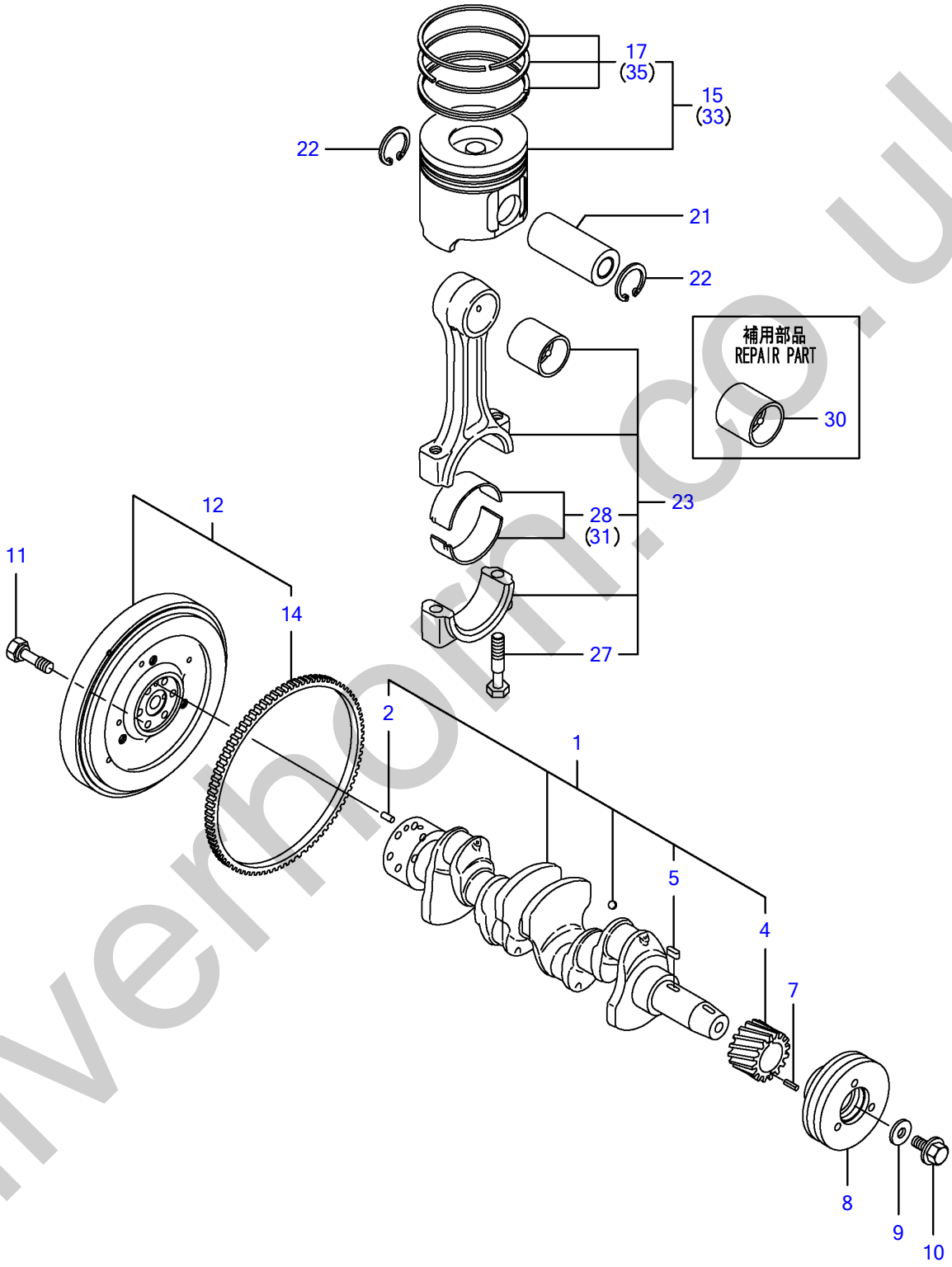

Y00D9970	8, クランクシャフト & ピストン				
4TNV88-BPTB, BPTB1	1, 08/02	2	3	PLUS	

silverthorn.co.uk

¸×Ý¸¼ÔÌÄ & Ëß½ÄÝ CRANKSHAFT & PISTON

Œ©▯o REF NO.	•"•i"Ô▯† PARTS NO.	•"•i-¼	Description	▯"–Ê Q'ty	ŒÝŠ·▯« I	R	"õ▯l
1	**Y129604-21000**	¸×Ý¸¼ÔÌÄ CMP	CRANKSHAFT ASSY	1			
2	**Y129100-01580**	▪ Í²º³ËßÝ 8X16	▪ PARALLEL PIN 8X16	1			
4	**Y119803-21200**	▪ ¸×Ý¸·ÞÔ	▪ GEAR, CRANKSHAFT	1			
5	**Y22512-070140**	▪ Ì´»Þ-·- 7X14	▪ KEY 7X 14	1			
7	**Y22351-030010**	½ÌßØÝ¸ÞËßÝ 3.0AX 10	SPRING PIN 3X10	1			
8	**Y119802-21650**	VÌß-Ø(¸×Ý¸ D110	V-PULLEY, CRANKSHAFT	1			
9	**Y129795-21661**	»Þ¶ÞÈ	WASHER	1			
10	**Y121850-21680**	ÎÞÙÄ(VÌß-Ø)	BOLT, V-PULLEY	1			
11	**Y121111-21501**	ÎÞÙÄ (Ì×²Î²Ù	BOLT, FLYWHEEL	6			
12	**Y129642-21590**	Ì×²Î²Ù CMP	FLYWHEEL ASSY	1			
14	**Y119865-21600**	▪ ØÝ¸Þ·ÞÔ	▪ GEAR, RING	1			
15	**Y129005-22080**	Ëß½ÄÝ CMP	PISTON ASSY	4			
17	**Y129005-22500**	▪ Ëß½ÄÝØÝ¸ÞSET	▪ RING SET, PISTON	4			
21	**Y129202-22300**	Ëß½ÄÝËßÝ(D26,L70)	PIN, PISTON(D26,L70)	4			
22	**Y22252-000260**	ÄÒÜC(±Å 26	CIRCLIP 26	8			
23	**Y729402-23100**	ºÈ¸Ã²Ý¸ÞÛÂÄÞ CMP	ROD ASSY, CONNECTING	4			
27	**Y121550-23200**	▪ ÛÂÄÞÎÞÙÄ	▪ BOLT, CONNECTING ROD	8			
28	**Y129150-23601**	▪ ¸×Ý¸ËßÝÒÀÙCMP STDÎÖ³	▪ METAL, CRANKPIN	4			
30	**Y129100-23910**	Ëß½ÄÝËßÝÒÀÙ	BUSH, PISTON PIN	4		(1)	ÎÖ³ÌÞËÝÃÞ½
31	**Y129150-23611**	¸×Ý¸ËßÝÒÀÙ(U.S=0.25	METAL.PIN US=0.25	4		(2)	±ÝÀÞ°»²½Þ(U.S=0.25)ÌÞËÝÃÞ½
33	**Y129005-22900**	Ëß½ÄÝ CMP(O.S=0.25	PISTON W/RING OS=.25	4		(3)	µ°ÊÞ°»²½Þ(O.S=0.25)ÌÞËÝÃÞ½
35	**Y129005-22950**	▪ Ëß½ÄÝØÝ¸ÞSET OS=0.25	▪ RING SET O.S=0.25	4		(3)	µ°ÊÞ°»²½Þ(O.S=0.25)ÌÞËÝÃÞ½

silverhorn.co.uk

LUB.OIL SYSTEM

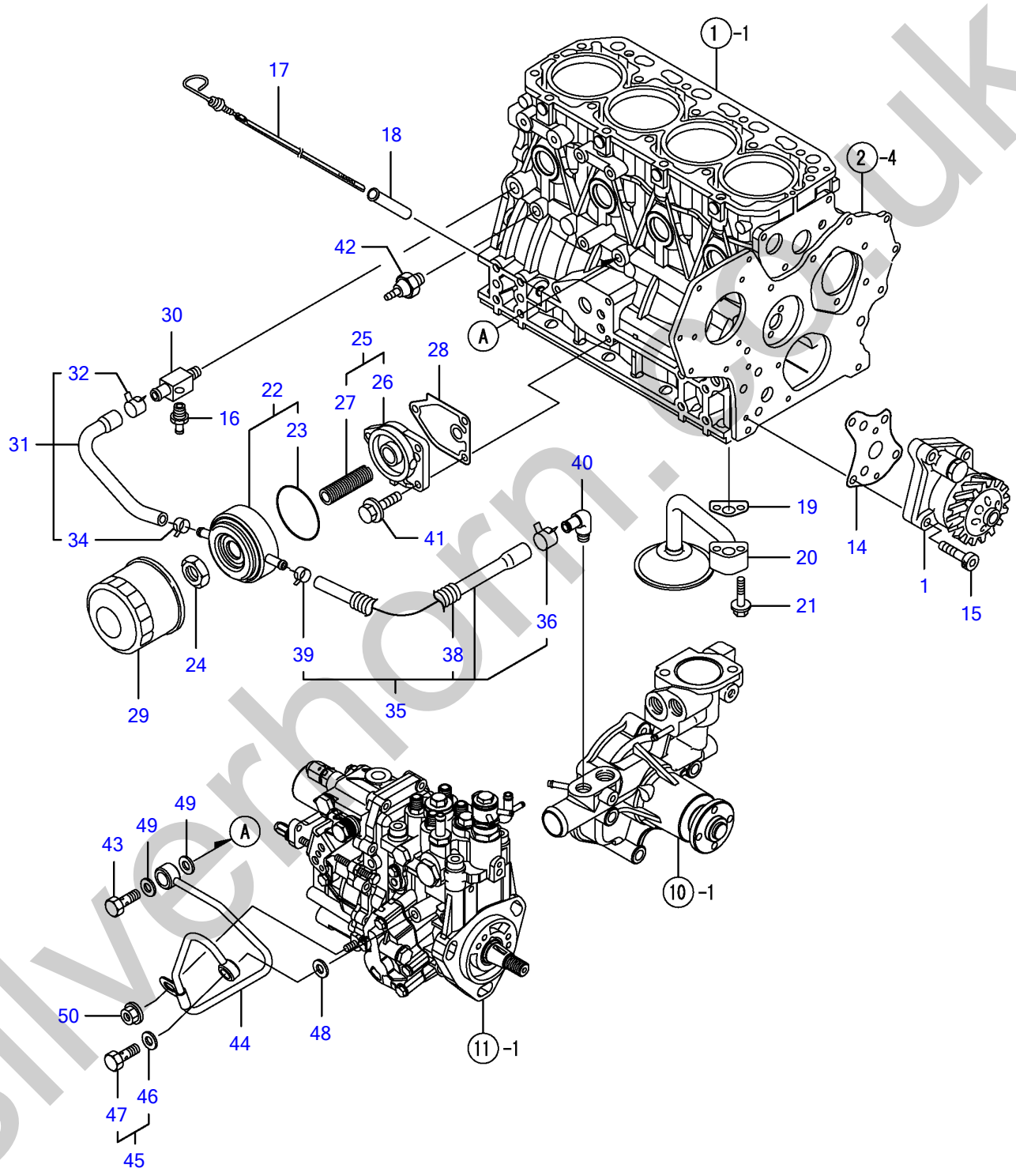

silverhorn.co.uk

Y00D9970	9, LOシステム				
4TNV88-BPTB, BPTB1		1, 08/02	2	3	PLUS

LO¼½ÃÑ LUB.OIL SYSTEM

Œ©▯o REF NO.	•"•i"Ô▯† PARTS NO.	•"•i-¼	Description	▯"–Ê Q'ty	ŒÝŠ·▯« I	R	"õ▯l
1	**Y129407-32000**	LOÎßÝÌß CMP	PUMP ASSY, LUB. OIL	1			
14	**Y129150-32020**	PK(LO-P	GASKET, L.O. PUMP	1			
15	**Y26450-060252**	6¶¸±ÅÎÞÙÄ 6X 25	BOLT M 6X 25	4			
16	**Y121550-49111**	¼ÞÖ²ÝÄ PT1/4	JOINT PT1/4	1			
17	**Y129004-34802**	¹ÝÕÎÞ³(Ì¶¶ÞÀ	DIPSTICK, LUB.OIL	1			
18	**Y121520-34810**	¶Þ²ÄÞ(¹ÝÕÎÞ³	GUIDE, DIPSTICK	1			
19	**Y129150-35042**	PK(·Õ³ÆÕ³¶Ý)(ÉÝ±½)	GASKET, (NON-ASB.)	1			
20	**Y129436-35091**	LO·Õ³ÆÕ³¶Ý CMP	PIPE ASSY, LUB. OIL	1			
21	**Y26106-080352**	ÂÊÞÎÞÙÄ 8X 35	BOLT M 8X 35 PLATED	2			
22	**Y129508-33010**	LO¸-× CMP	COOLER ASSY, OIL	1			
23	**Y129508-33050**	▪ O-ØÝ¸Þ	▪ O-RING	1			
24	**Y129417-33110**	ÅÂÄ(L.O¸-×	NUT OIL COOLER	1			
25	**Y129006-35100**	ÌÞ×¹ÂÄ CMP	BRACKET ASSY, FILTER	1			
26	**Y119802-35110**	▪ ÌÞ×¹ÂÄ(LOÌ²ÙÀ	▪ BRACKET, FILTER	1			
27	**Y129417-35150**	▪ ½ÀÂÄÞ(L=67	▪ STUD	1			
28	**Y129150-35111**	PK(Ì²ÙÀÌÞ×¹ÂÄ)(ÉÝ±½)	GASKET, (NON-ASB.)	1			
29	**Y129150-35160**	Ì²ÙÀ D80XL80	FILTER 80X80L	1			
30	**Y129006-44480**	¼ÞÖ²ÝÄ R02	JOINT	1			
31	**Y129508-49030**	CW-T CMP(¸-×IN	PIPE,COOLER IN	1			
32	**Y171008-03990**	▪ Î-½¸ØÂÌß(18.5)	▪ CLAMP 18.5	1			
34	**Y23080-015000**	▪ Î°½¸×ÝÌß15	▪ CLAMP	1			
35	**Y129508-49040**	CW-T CMP(¸-×OUT	PIPE,COOLER OUT	1			
36	**Y171008-03990**	▪ Î-½¸ØÂÌß(18.5)	▪ CLAMP 18.5	1			
38	**Y119940-59130**	▪ ºÙ¹Þ-ÄÁÕ-ÌÞ19	▪ PROTECTOR, PIPE 19	1			
39	**Y23080-015000**	▪ Î°½¸×ÝÌß15	▪ CLAMP	1			
40	**Y129103-49301**	´ÙÎÞ PT1/4	ELBOW PT 1/4	1			
41	**Y26106-080202**	ÂÊÞÎÞÙÄ 8X 20	BOLT M 8X 20 PLATED	3			
42	**Y114250-39450**	Õ±Â½²ÂÁ 0.5KG ·ÞÎÞ¼	SWITCH,(0.5KG)L.O.	1			
43	**Y124160-39140**	¶ÝÂ·ÞÃÎÞÙÄ 10	BOLT 10, PIPE JOINT	1			
44	**Y119802-39450**	LO-T CMP	PIPE ASSY, LUB. OIL	1			
45	**Y129005-59830**	¶ÝÂ·ÞÃÎÞÙÄCMP 8	BOLT ASSY, JOINT	1			
46	**Y22190-080002**	▪ ¼-ÙÜÂ¼Ô(ºÏÙ.ÆÄØÙ) 8	▪ SEAL WASHER 8S	1			
47	**Y23857-030000**	▪ ¶ÝÂ·ÞÃÎÞÙÄ 3	▪ JOINT BOLT 3	1			
48	**Y22190-080002**	¼-ÙÜÂ¼Ô(ºÏÙ.ÆÄØÙ) 8	SEAL WASHER 8S	1			
49	**Y22190-100002**	¼-ÙÜÂ¼Ô(ºÏÙ.ÆÄØÙ)10	SEAL WASHER 10S	2			
50	**Y26366-060002**	ÂÊÞÂ·ÅÂÄ 6	NUT M 6	1			

silverhorn.co.uk

COOLING WATER SYSTEM

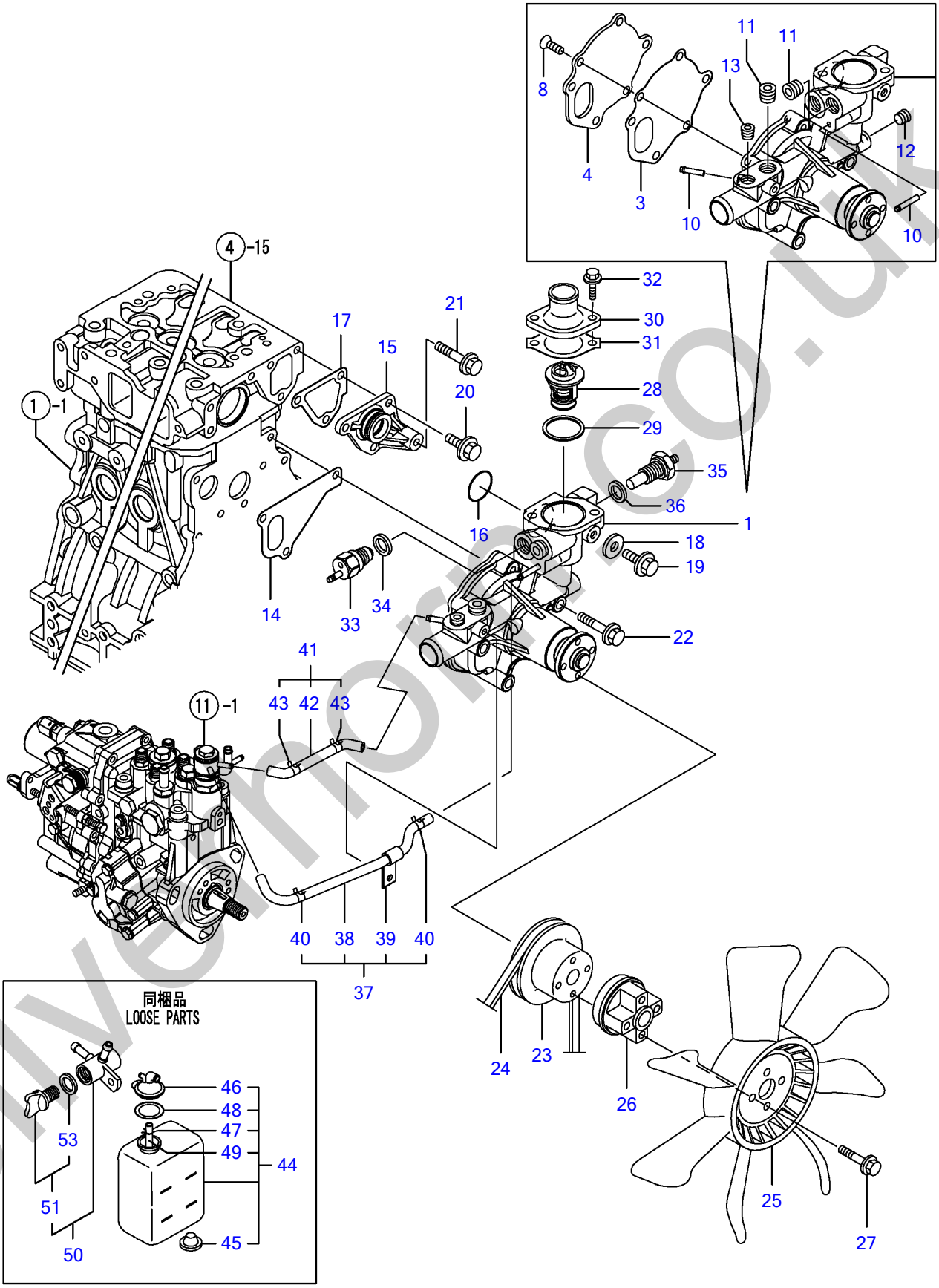

silverhorn.co.uk

Y00D9970	10, CWシステム			
4TNV88-BPTB, BPTB1	1, 08/02	2	3	PLUS

CW¼½ÃÑ COOLING WATER SYSTEM

Œ©lo REF NO.	•"•i"Ôl† PARTS NO.	•"•i-¼	Description	l"–Ê Q'ty	ŒÝŠ·l« I	R	"õll
1	Y129004-42001	CWÎßÝÌß CMP	PUMP ASSY, WATER	1			
3	Y129100-42051	· PK(CW-P)(ÉÝ±½)	· GASKET, (NON-ASB.)	1			
4	Y129100-42121	· ÌßÚ-Ä	· PLATE	1			
8	Y121850-42410	· ½¸ØÕ³	· SCREW	3			
10	Y119802-49113	· CW-T Â·ÞÃ	· JOINT	2			
11	Y129916-49740	· È¼ÞÌß×¸Þ R03	· PLUG, DRAIN R03	2			
12	Y23876-010000	· È¼ÞÌß×¸ÞPT1/8	· PLUG PT1/8,SCREW	1			
13	Y23876-020000	· È¼ÞÌß×¸ÞPT1/4	· PLUG PT1/4,SCREW	1			
14	Y129486-42021	PK(CW-P	GASKET	1			
15	Y129004-42040	¼ÞÖ²ÝÄ(CW-P	JOINT	1			
16	Y129486-42140	OØÝ¸Þ G 30	O-RING,CW-P	1			
17	Y124395-49840	PK(»-Ó½ÀÂÄ¹-½	GASKET, THERMO. CASE	1			
18	Y23414-080000	ÊßÂ·Ý(ÏÙ 8	GASKET 8, ROUND	1			
19	Y26106-080122	ÂÊÞÎÞÙÄ 8X 12	BOLT M 8X 12 PLATED	1			
20	Y26106-080162	ÂÊÞÎÞÙÄ 8X 16	BOLT M 8X 16 PLATED	3			
21	Y26106-080452	ÂÊÞÎÞÙÄ 8X 45	BOLT M 8X 45 PLATED	1			
22	Y26106-080602	ÂÊÞÎÞÙÄ 8X 60	BOLT M 8X 60 PLATED	3			
23	Y129556-42350	VÌß-Ø(96	V-PULLEY	1			
24	Y25152-003800	VÍÞÙÄ º¸ÞA38	V-BELT (A38)	1			
25	Y129655-44740	Ì±Ý(D380	FAN, COOLING	1			
26	Y129030-44760	¶Ý»Þ(Ì±Ý L38.5	SPACER	1			
27	Y26106-060502	ÂÊÞÎÞÙÄ 6X 50	BOLT M 6X 50 PLATED	4			
28	Y129457-49801	»-Ó½ÀÂÄ(82	THERMOSTAT,82	1			
29	Y129150-49811	PK(»-Ó½ÀÂÄ ¼À)(ÉÝ±½)	GASKET, (NON-ASB.)	1			
30	Y129350-49530	»-Ó½ÀÂÄ¶ÊÞ-(ÌÞ×Â¸:12	COVER, THERMOSTAT	1			
31	Y129795-49551	PK(»-Ó½ÀÂÄ¶ÊÞ-)(ÉÝ±½	GASKET, (NON-ASB.)	1			
32	Y26106-080222	ÂÊÞÎÞÙÄ 8X 22	BOLT M 8X 22 PLATED	2			
33	Y121250-44901	»-Ó½²ÂÁ(110	SWITCH, THERMO(110	1			
34	Y124465-44950	ÊßÂ·Ý16	GASKET 16	1			
35	Y119266-49350	»-Ó¾Ý»-	SENSOR, THERMO.	1			
36	Y129150-49360	PK 10	GASKET 10	1			
37	Y129004-49610	CW-T A CMP(MP2	PIPE ASSY, A MP2	1			
38	Y129004-49711	· CW-T A(MP2	· PIPE ASSY, A MP2	1			
39	Y119802-49730	· ÌÚÄÞÒ(CW-T	· CLAMP,CW-T	1			
40	Y124722-59050	· Î-½¸ØÂÌß(ÏÙ 9	· CLAMP 9	2			
41	Y129004-49620	CW-T B CMP(MP2	PIPE ASSY, B MP2	1			
42	Y129004-49721	· CW-T B(MP2	· PIPE, WATER B MP2	1			
43	Y124722-59050	· Î-½¸ØÂÌß(ÏÙ 9	· CLAMP 9	2			
44	Y129466-44510	»ÌÞÀÝ¸ CMP	SUBTANK	1			
45	Y121468-44540	· Ìß×¸Þ(»ÌÞÀÝ¸	· PLUG, SUB-TANK	1			
46	Y121450-44531	· ·ÔÂÌß	· CAP	1			
47	Y124450-44560	· µ»´(µ-ÊÞ-ÌÛ-Êß²Ìß	· CLAMP	1			
48	Y121470-44581	· ÊßÂ·Ý	· GASKET	1			
49	Y121267-44590	· Êß²Ìß	· PIPE	1			
50	Y129150-49100	»ÝÎß³ºÂ¸ CMP	COCK ASSY, 3-WAY	1			
51	Y129150-49080	· ÄÞÚÝºÂ¸	· COCK, DRAIN	1			
53	Y119629-49080	· · ÊßÂ·Ý	· · GASKET	1			

silverfrance.co.uk

FUEL INJECTION PUMP

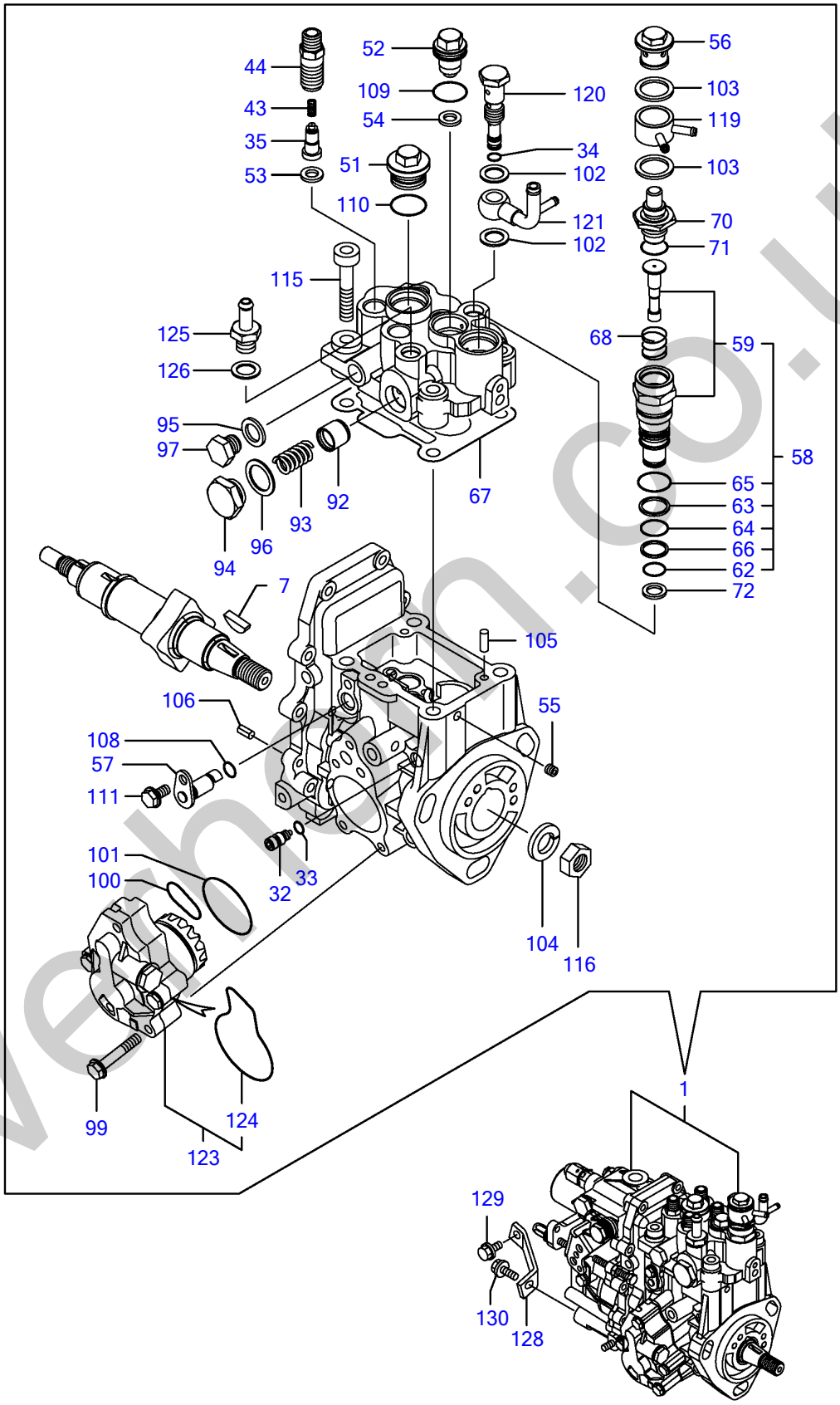

Y00D9970	11, FOフンシャポンプ				
4TNV88-BPTB, BPTB1	1, 08/02	2	3	PLUS	

silverhorn.co.uk

FOÌÝ¼¬ÎßÝÌß FUEL INJECTION PUMP

Œ©lo REF NO.	•"•i"Ôl† PARTS NO.	•"•i-¼	Description	l"–Ê Q'ty	ŒÝŠ·l« I	R	"õl
1	Y729630-51400	ÎßÝÌßCMP(F.I	INJECTION PUMP ASSY	1		(1)	ÐÀÞ¼NO.1 FOÌÝ¼ÔÎßÝÌß ASSY ÆÊ³Ó¸NO.12 ¶ÞÊÞÅ¦Ì¸ÐÏ½¡
7	Y119802-51090	· ÊÝ¹ÞÂ·° 4X16	· KEY,WOODRUFF 4X16	1			
32	Y158600-51270	· ÏÜØÄÞÒ(ÀÍßÂÄ	· STOPPER	1			
33	Y158563-51281	· OØÝ¸Þ 4D S6	· O-RING	1			
34	Y158563-51281	· OØÝ¸Þ 4D S6	· O-RING	1			
35	Y129008-51300	· ÃÞØÍÞØÊÞÙÌÞ CMP	· VALVE ASSY, DILEVERY	4			
43	Y158563-51330	· SP(ÃÞØÍÞØÊÞÙÌÞ	· SPRING	4			
44	Y129008-51340	· ÎÙÀÞ(ÃÞØÍÞØ	· HOLDER, DELIVERY	4			
51	Y158601-51550	· Ìß×¸Þ(ÌÞÝÊß²¼Þ¸	· PLUG	1			
52	Y119802-51560	· ÊÞÚÙÌß×¸Þ	· BARREL PLUG	1			
53	Y158552-51570	· PK(ÊÞÚÙÌß×¸Þ	· PK(BARREL PLUG	3			
54	Y158552-51570	· PK(ÊÞÚÙÌß×¸Þ	· PK(BARREL PLUG	1			
55	Y158557-51570	· Ìß×¸Þ(×Â¸	· PLUG	1			
56	Y158601-51570	· Ìß×¸Þ(Ú²·Ô¸½²	· PLUG,WATER PUMP	1			
57	Y158552-51580	· ØÝ¸ØÌÀ-	· LIFTER	1			
58	Y119802-51590	· À²Ï-¾ÂÄ	· TIMER SET	1			
59	Y119802-51600	· · À²Ï-CMP(»-Ó´ÚÒÝÄ	· · TIMER CMP	1			
62	Y158553-51670	· · OØÝ¸Þ 1011	· · O-RING, 1011	1			
63	Y119802-51680	· · ÊÞÂ¸±ÂÌßØÝ¸Þ	· · BACKUP RING	1			
64	Y119802-51690	· · OØÝ¸Þ	· · O RING	1			
65	Y24356-010200	· · OØÝ¸Þ 4D 1020	· · PACKING, 1020	1			
66	Y24372-000150	· · ÊÞÂ¸±ÂÌßØÝ¸Þ	· · RING, BACKUP T2 P 15	1			
67	Y158552-51600	· PK(HÍÂÄÞ	· PACKING, HEAD	1			
68	Y158553-51630	· SP(À²Ï-	· SPRING,TIMER	1			
70	Y158553-51640	· »-Ó´ÚÒÝÄ	· ELEMENT, THERMO	1			
71	Y158553-51660	· OØÝ¸Þ P14	· O-RING,P14	1			
72	Y158553-51680	· PK(À²Ï-	· PACKING,TIMER	1			
92	Y158601-51770	· ±·ÕÑÚ-ÀËß½ÄÝ	· PISTON	1			
93	Y158552-51781	· ±·ÕÑÚ-ÀSP	· SPRING	1			
94	Y158601-51790	· ±·ÕÑÚ-ÀÌß×¸Þ	· PLUG	1			
95	Y22190-120002	· ¼-ÙÜÂ¼Ô(ºÏÙ 12	· SEAL WASHER 12	1			
96	Y22190-180002	· ¼-ÙÜÂ¼Ô(ºÏÙ 18	· SEAL WASHER 18	1			
97	Y23887-120002	· 6¶¸Ìß×¸Þ M12	· PLUG M12,HEX.	1			
99	Y158553-51770	· ÎÞÙÄ	· BOLT	4			
100	Y158552-52310	· OØÝ¸Þ(Ì²-ÄÞÎßÝÌß	· O-RING	1			
101	Y158552-52400	· O ØÝ¸Þ 4E S42	· O-RING 4E S42	1			
102	Y22190-120002	· ¼-ÙÜÂ¼Ô(ºÏÙ 12	· SEAL WASHER 12	2			
103	Y22190-180002	· ¼-ÙÜÂ¼Ô(ºÏÙ 18	· SEAL WASHER 18	2			
104	Y22217-140000	· ÊÞÈ»Þ¶ÞÈ 14	· SPRING WASHER 14	1			
105	Y22312-050140	· Í²³ËßÝ 5X14	· PARALLEL PIN 5X14	2			
106	Y22351-050010	· ½ÌßØÝ¸ÞËßÝ 5.0AX 10	· SPRING PIN 5X10	2			
108	Y24311-000070	· OØÝ¸Þ 1A P 7.0	· O-RING 1A P-7.0	1			
109	Y24356-010180	· OØÝ¸Þ 4D 1018	· O-RING	1			
110	Y24356-010200	· OØÝ¸Þ 4D 1020	· PACKING, 1020	1			
111	Y26106-060102	· ÂÊÞÎÞÙÄ 6X 10	· BOLT 6X 10 PLATED	1			
115	Y26450-080452	· 6¶¸±ÅÎÞÙÄ 8X 45	· BOLT M 8X 45	4			
116	Y26776-140002	· ÄÒÅÂÄ(Î¿ 14	· LOCK NUT M14 PLATED	1			
119	Y158553-51551	· ¼ÞÖ²ÝÄ(Ú²·Ô¸½²	· JOINT, COOLING WATER	1			
120	Y158601-51650	· µ-ÊÞÌÛ-Â·ÞÃ	· JOINT	1			
121	Y158552-51670	· ¼ÞÖ²ÝÄ(µ-ÊÞ-ÌÛ-	· JOINT	1			
123	Y158552-52100	· Ì²-ÄÞÎßÝÌßCMP	· PUMP ASSY,FEED	1			
124	Y158552-52500	· · O ØÝ¸Þ(Ì²°ÄÞP²ÝÅ°	· · O-RING(FEED P INNER	1			
125	Y119934-59910	· Êß²ÌßÂ·ÞÃ	· JOINT,PIPE	1			
126	Y22190-120002	· ¼-ÙÜÂ¼Ô(ºÏÙ 12	· SEAL WASHER 12	1			
128	Y129601-51250	ÌÚÄÞÒ(FOP	SUPPORT,FIP	1			
129	Y26106-080162	ÂÊÞÎÞÙÄ 8X 16	BOLT M 8X 16 PLATED	1			
130	Y26106-080202	ÂÊÞÎÞÙÄ 8X 20	BOLT M 8X 20 PLATED	1			

silverton.co.uk

GOVERNOR

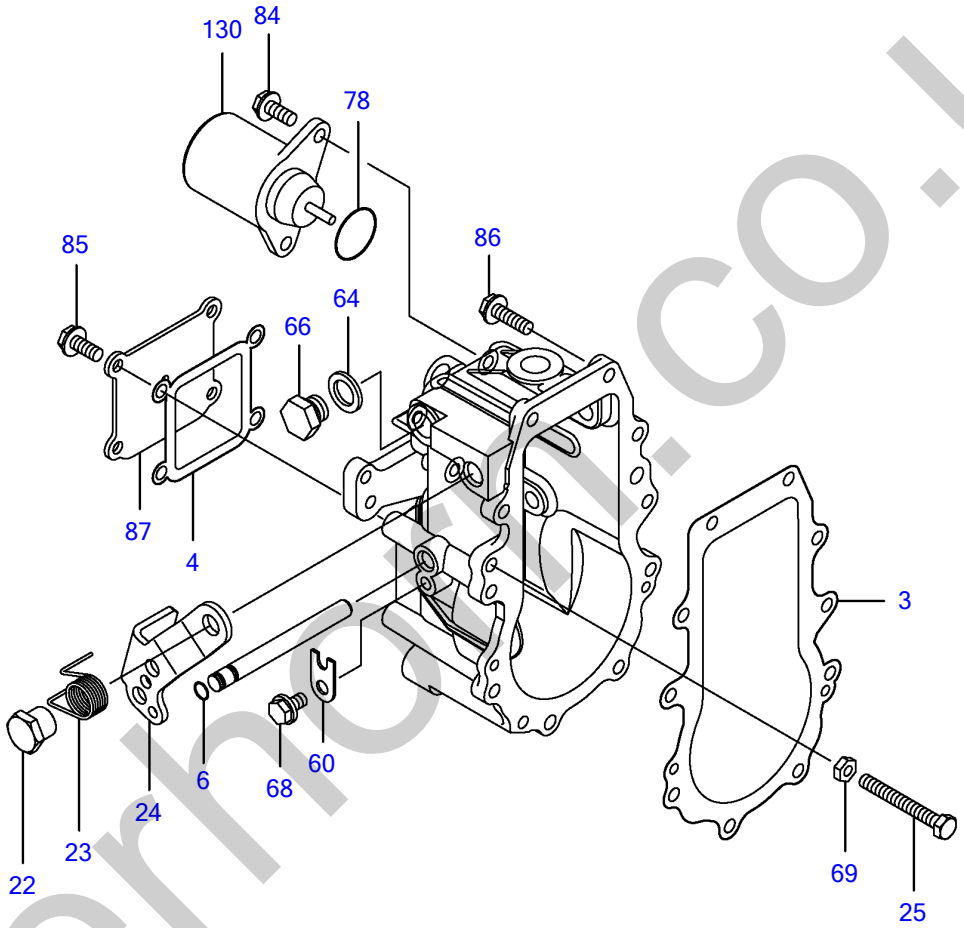

silverhorn.co.uk

Y00D9970	12, ガ バ ナ				
4TNV88-BPTB, BPTB1		1, 08/02	2	3	PLUS

¶ÞÊÞÅ GOVERNOR

Œ©▯o REF NO.	•"•i"Ô▯† PARTS NO.	•"•i-¼	Description	▯"–Ê Q'ty	ŒÝŠ·▯« I	R	"õ▯l
3	**Y158553-61050**	▪ PK(¶ÞÊÞÅ¹-½	▪ PACKING, CASE	1			
4	**Y158553-61070**	▪ PK(¶ÞÊÞÅ¹-½ÌÀ	▪ PACKING	1			
6	**Y129155-51280**	▪ OØÝ¸Þ(S6	▪ O-RING S6	1			
22	**Y129255-61410**	▪ ÄÒÅÂÄ(ºÝÄÛ-ÙÚÊÞ-	▪ NUT	1			
23	**Y119807-61420**	▪ ÓÄÞ¼SP(ºÝÄÛ-ÙÚÊÞ-	▪ SPRING	1			
24	**Y158552-61441**	▪ Ú·ÞÕÚ-ÀÚÊÞ-	▪ LEVER, REGULATOR	1			
25	**Y129155-61460**	▪ ±²ÄÞÙ¾²¹ÞÝÎÞÙÄ	▪ BOLT, IDLE LIMIT	1			
60	**Y119660-61901**	▪ Ç¹ÄÞÒ	▪ RETAINER, SHAFT	1			
64	**Y22190-120000**	▪ ¼-ÙÜÂ¼Ô(ÎÞÙÄÖ³)12	▪ SEAL WASHER 12(BOLT)	1			
66	**Y23887-120002**	▪ 6¶¸Ìß×¸Þ M12	▪ PLUG M12,HEX.	1			
68	**Y26106-060102**	▪ ÂÊÞÎÞÙÄ 6X 10	▪ BOLT 6X 10 PLATED	1			
69	**Y26756-060002**	▪ ÄÒÅÂÄ 6	▪ LOCK NUT 6	1			
78	**Y158552-61900**	▪ OØÝ¸Þ	▪ O-RING	1			
84	**Y26106-060142**	▪ ÂÊÞÎÞÙÄ 6X 14	▪ BOLT M 6X 14 PLATED	2			
85	**Y26106-060142**	▪ ÂÊÞÎÞÙÄ 6X 14	▪ BOLT M 6X 14 PLATED	4			
86	**Y26106-060202**	▪ ÂÊÞÎÞÙÄ 6X 20	▪ BOLT M 6X 20 PLATED	10			
87	**Y129642-61060**	▪ ¶ÞÊÞÅ¹-½ÌÀ	▪ COVER, CASE	1			
130	**Y119233-77932**	▪ ½ÄÂÌß¿ÚÉ²ÄÞ	▪ SOLENOID, STOP	1			

silverhorn.co.uk

FUEL INJECTION VALVE

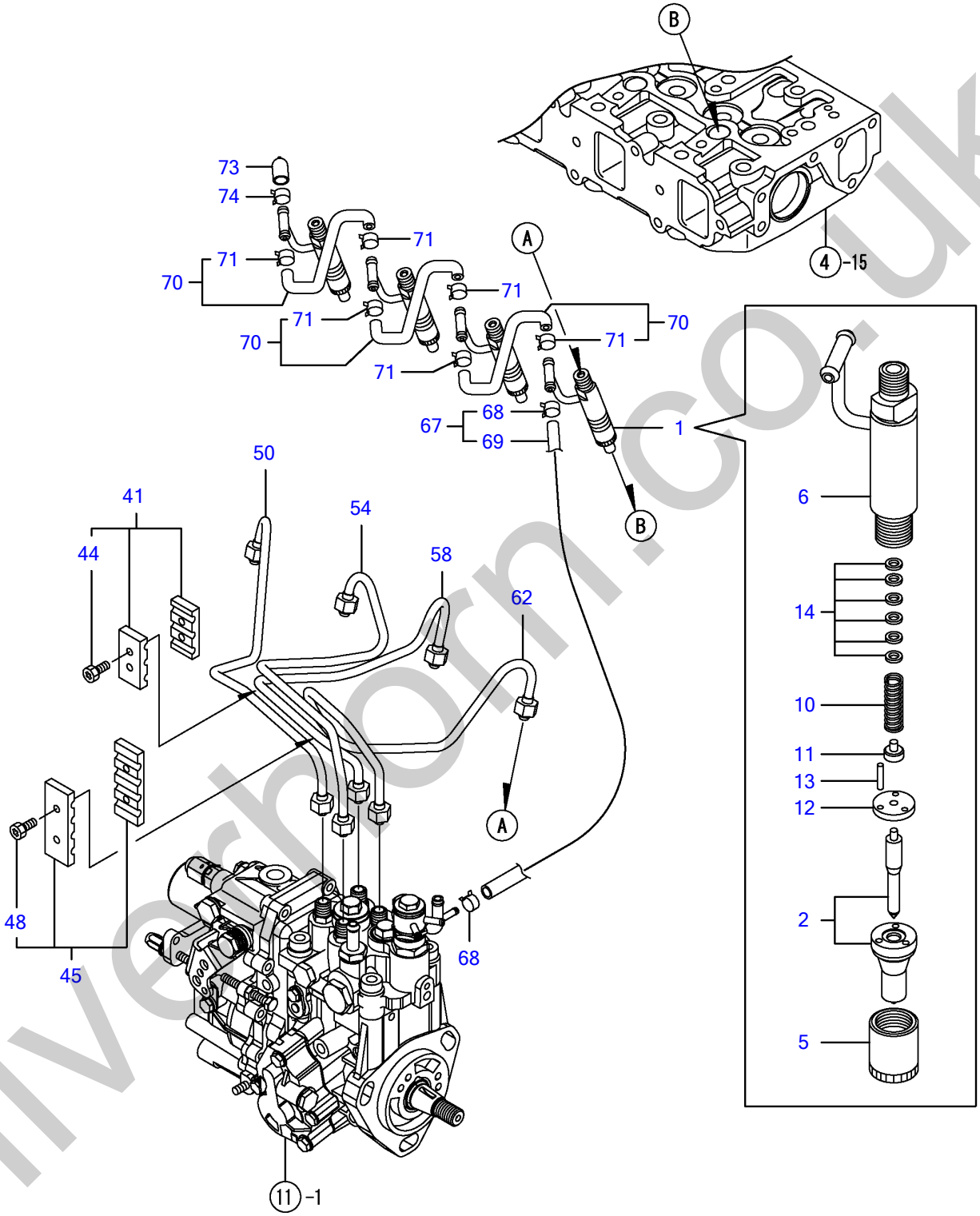

silverthorn.co.uk

Y00D9970	13, FOフンシャベン				
4TNV88-BPTB, BPTB1	1, 08/02	2	3	PLUS	

FOÌÝ¼¬ÍÞÝ FUEL INJECTION VALVE

Œ©lo REF NO.	•"•i"Ôl† PARTS NO.	•"•i-¼	Description	l"–Ê Q'ty	ŒÝŠ·l« I	R	"õlI
1	Y729604-53100	FOÍÞÝ ASSY(SDK	FUEL INJECTOR(SDK	4			
2	Y129604-53000	· É½ÞÙ CMP	· NOZZLE ASSY	4			
5	Y114250-53080	· ¹-½ÅÂÄ(D16.95)	· NUT, NOZZLE CASE	4			
6	Y119802-53100	· É½ÞÙÎÙÀÞ CMP	· HOLDER ASSY, NOZZLE	4			
10	Y114250-53120	· ½ÌßØÝ¸Þ(É½ÞÙ	· SPRING, NOZZLE	4			
11	Y114250-53130	· ¼-Ä(É½ÞÙ½ÌßØÝ¸Þ	· SEAT, NOZZLE SPRING	4			
12	Y114250-53140	· ½ÄÂÌßÌßÚ-Ä	· PLATE, STOP	4			
13	Y114250-53210	· ËßÝ(É½ÞÙ²Á·ÞÒ	· PIN	8			
14	Y119803-53400	· ¼Ñ CMP	· SHIM SET	4			
41	Y129150-59120	ÌÚÄÞÒ(ÌÝ¼Ô¶Ý CMP	RETAINER, INJ. PIPE	1			
44	Y129150-59131	· HB4X14	· BOLT M4X14,HEX.SCKT.	2			
45	Y129550-59120	ÌÚÄÞÒ(ÌÝ¼Ô¶ÝCMP	RETAINER	1			
48	Y129150-59131	· HB4X14	· BOLT M4X14,HEX.SCKT.	2			
50	Y129601-59810	FO-T(ÌÝ¼Ô CMP	PIPE ASSY, INJECTION	1			
54	Y129601-59820	FO-T(ÌÝ¼Ô CMP	PIPE ASSY, INJECTION	1			
58	Y129601-59830	FO-T(ÌÝ¼Ô CMP	PIPE ASSY, INJECTION	1			
62	Y129601-59840	FO-T(ÌÝ¼Ô CMP	PIPE ASSY, INJECTION	1			
67	Y119802-59550	FO-T(ÓÄÞ¼ CMP	PIPE ASSY, RETURN	1			
68	Y124722-59050	· Î-½¸ØÂÌß(ÏÙ 9	· CLAMP 9	2			
69	Y119802-59560	· FO-T(ÓÄÞ¼	· PIPE, FUEL RETURN	1			
70	Y129486-59551	FO-T(ÓÄÞ¼ CMP	PIPE, FUEL RETURN	3			
71	Y124722-59050	· Î-½¸ØÂÌß(ÏÙ 9	· CLAMP 9	6			
73	Y119593-59581	·ÔÂÌß(FO-TÓÄÞ¼	CAP	1			
74	Y124060-77680	Î-½¸ØÀÌß(ÏÙ 10	CLAMP 10	1			

silverhorn.co.uk

FUEL LINE

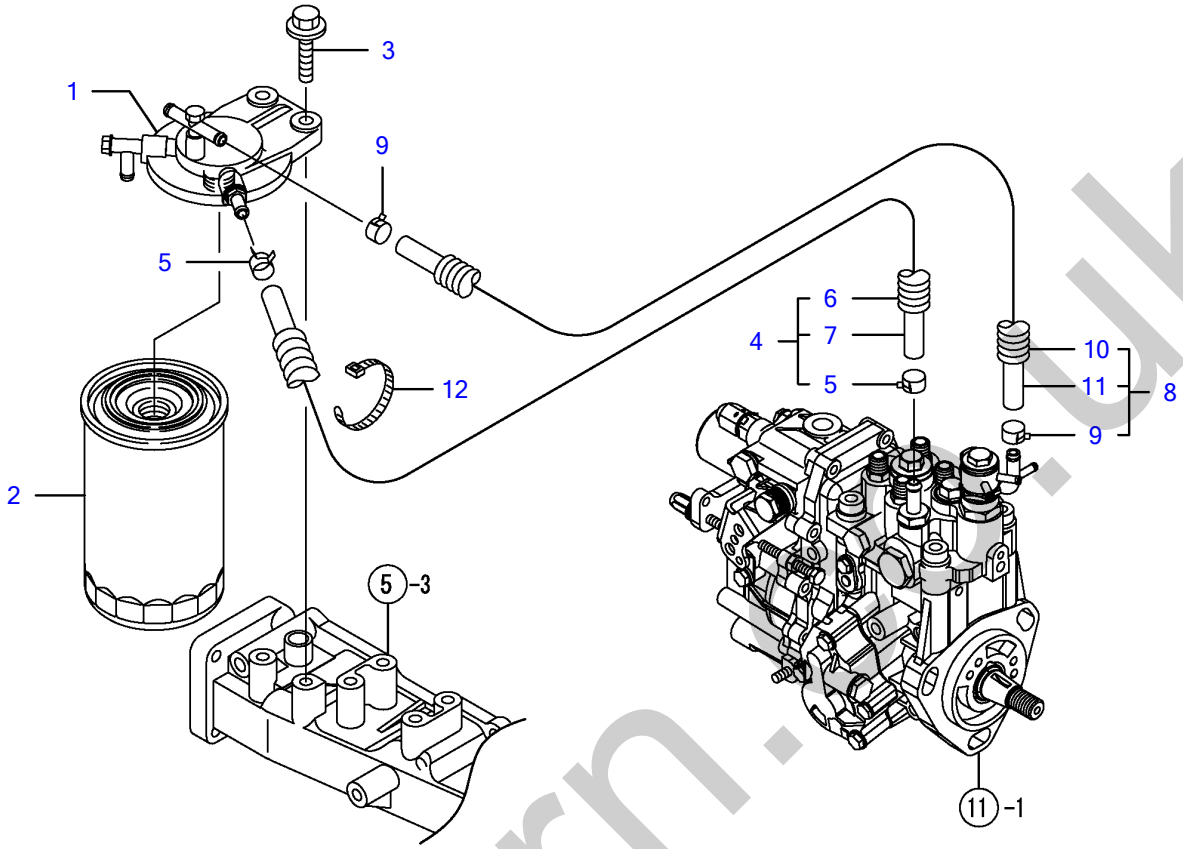

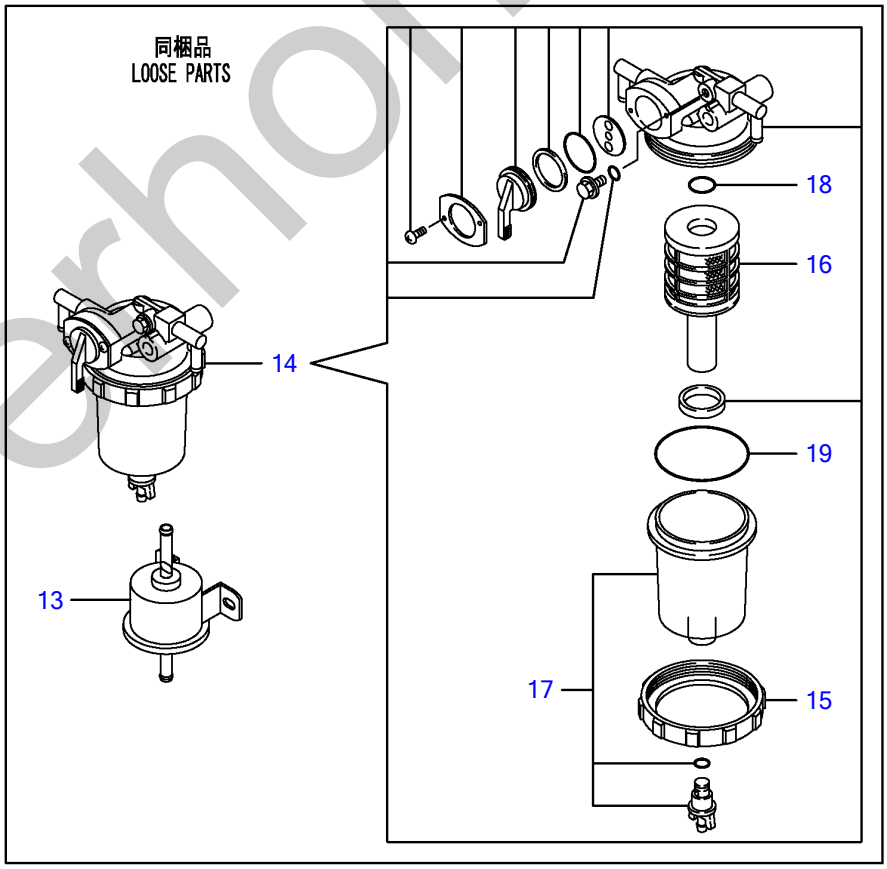

Y00D9970	14, FOパイプ				
4TNV88-BPTB, BPTB1		1, 08/02	2	3	PLUS

silverhorn.co.uk

FOÊß²Ìß FUEL LINE

Œ©lo REF NO.	•"•i"Ôl† PARTS NO.	•"•i-¼	Description	l"–Ê Q'ty	ŒÝŠ·l« I	R	"õlI
1	Y129004-55612	ÄØÂ¹ÀÞ²(FOÌ²ÙÀ	BRACKET,FUEL FILTER	1			
2	Y129907-55801	FOÌ²ÙÀ	FILTER, FUEL OIL	1			
3	Y26106-080302	ÂÊÞÎÞÙÄ 8X 30	BOLT M 8X 30 PLATED	2			
4	Y129630-59010	FO-T CMP	FO-T CMP	1			
5	Y124766-59050	· Î-½¸ØÂÌß(ÏÙ 12	· CLAMP 12	2			
6	Y129961-59110	· ºÙ¹Þ-ÄÁÕ-ÌÞ15	· TUBE	1			
7	Y105025-59560	· FO-T(FOÀÝ¸-FOº¼·)	· PIPE, FUEL OIL	1			
8	Y129956-59010	FO-T CMP	FO-T CMP	1			
9	Y124766-59050	· Î-½¸ØÂÌß(ÏÙ 12	· CLAMP 12	2			
10	Y129957-59101	· ºÙ¹ÞÝÄÁÕ-ÌÞ 15	· PROTECTOR, FUEL PIPE	1			
11	Y105225-59511	· FOÊß²Ìß(º¼·-ÎßÝÌß)	· PIPE, FUEL OIL	1			
12	Y121750-59890	Å²ÛÝÊÞÝÄÞ 140	CLAMP 140	1			
13	Y129612-52100	FOÌ²-ÄÞÎßÝÌß	FUEL PUMP	1			
14	Y129906-55700	º½²ÌÞÝØ· CMP	SEPARATOR ASSY	1			
15	Y129100-55690	· ØÃ-ÆÝ¸ÞØÝ¸Þ	· RING, RETAINING	1			
16	Y119802-55710	· ´ÚÒÝÄ(Õ½²ÌÞÝØ·	· ELEMENT	1			
17	Y119802-55730	· ¶ÂÌßCMP(ÎÖ³	· CUP ASSY(SERVICE PAR	1			
18	Y24311-000160	· OØÝ¸Þ 1A P 16.0	· O-RING 1A P-16.0	1			
19	Y24321-000650	· OØÝ¸Þ 1A G 65.0	· O-RING 1A G-65.0	1			

silverhorn.co.uk

STARTING MOTOR

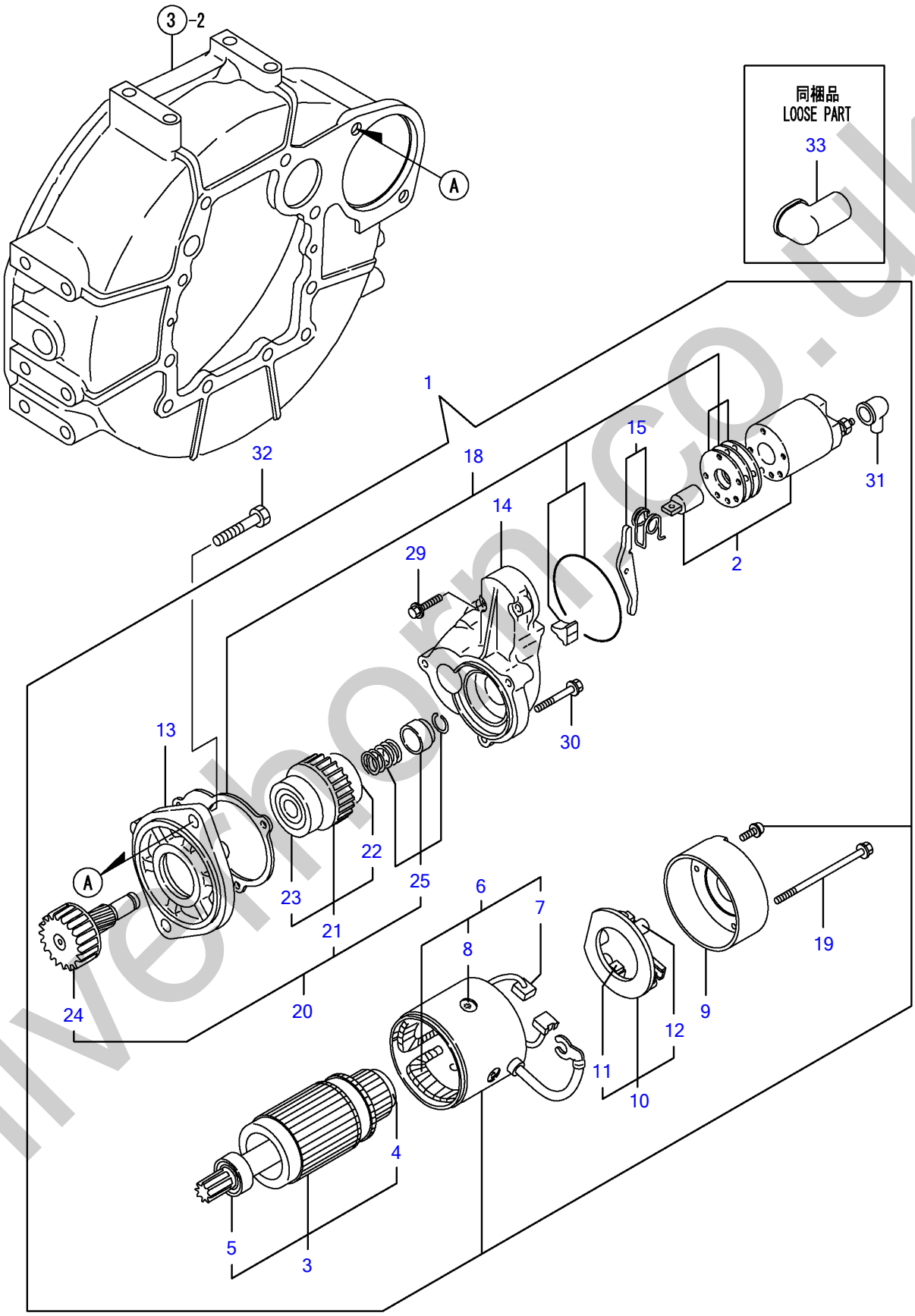

Y00D9970	15, スターティングモータ				
4TNV88-BPTB, BPTB1	1, 08/02	2	3	PLUS	

silverthorn.co.uk

½À°Ã¨Ý¸ÞÓ°À STARTING MOTOR

Œ©lo REF NO.	•"•i"Ôl† PARTS NO.	•"•i-¼	Description	l"–Ê Q'ty	ŒÝŠ·l« I	R	"õll
1	Y129136-77011	½À-À	STARTER	1			
2	Y129136-77310	· Ï¸ÞÈÃ²Â¸½²ÂÁ ASY	· SHAFT, PINION	1			
3	Y129900-77400	· ±-ÏÁÔ ASY	· ARMATURE ASSY	1			
4	YX2130350900	· · ÎÞ-ÙÍÞ±ØÝ¸Þ (1	· · BALL BEARING	1			
5	YX2114255110	· · ÎÞ-ÙÍÞ±ØÝ¸Þ (2	· · BALL BEARING	1			
6	Y129900-77440	· Ì²-ÙÄÞº²Ù ASY	· COIL ASSY, FIELD	1			
7	Y129900-77450	· · ÌÞ×¼(+	· · BRUSH (+)	2			
8	Y171008-77450	· · Îß-Ùº±¾ÂÄ½¸ØÕ³	· · SCREW, POLE CORE SET	4			
9	Y129900-77460	· ØÔ¶ÊÞ-	· COVER, REAR	1			
10	Y129900-77480	· ÌÞ×¼ÎÙÀÞ ASY	· HOLDER ASSY, BRASH	1			
11	Y129900-77450	· · ÌÞ×¼(+	· · BRUSH (+)	2			
12	Y129400-77490	· · ÌÞ×¼½ÌßØÝ¸Þ	· · SPRING, BRUSH	4			
13	Y171008-77510	· ·Þ±¹-½	· HOUSING ASSY, GEAR	1			
14	Y129136-77520	· ¾ÝÀ-Ê³¼ÞÝ¸Þ	· CENTER HOUSING	1			
15	Y171008-77540	· ÚÊÞ- ¾ÂÄ	· LEVER SET, SHIFT	1			
18	Y129400-77571	· ÀÞ½Ä¶ÊÞ-·ÂÄ(ÉÝ±½)	· DUST COVER,(NON-ASB.	1			
19	Y129900-77640	· ½Û-ÄÎÞÙÄ	· BOLT, THROUGHT	2			
20	Y171008-77650	· ËßÆµÝ ¼¸Ð	· PINION ASSY	1			
21	YX2114555500	· · ¸×ÂÁ ASY	· · CLUTCH ASSY	1			
22	YX2114955020	· · · ÎÞ-ÙÍÞ±ØÝ¸Þ(3	· · · BALL BEARING	1			
23	YX2240410100	· · · ÎÞ-ÙÍÞ±ØÝ¸Þ(4	· · · BALL BEARING	1			
24	Y171008-77660	· · ËßÆµÝ¼ÔÌÄ	· · SHAFT, PINION	1			
25	Y171008-77670	· · ½ÄÂÊß-¾ÂÄ	· · STOPPER SET, PINION	1			
29	Y26106-060322	· ÂÊÞÎÞÙÄ 6X 32	· BOLT M 6X 32 PLATED	2			
30	Y26106-060402	· ÂÊÞÎÞÙÄ 6X 40	· BOLT M 6X 40 PLATED	3			
31	Y171008-77750	· ¶ÊÞ-(À-ÐÅÙ	· COVER, M TERMINAL	1			
32	Y26116-120252	ÎÞÙÄ 12X 25	BOLT M12X 25 PLATED	2			
33	Y124550-77030	¶ÊÞ-(ST:BÀ-ÐÅÙ	COVER, TERMINAL	1			

silverhorn.co.uk

GENERATOR

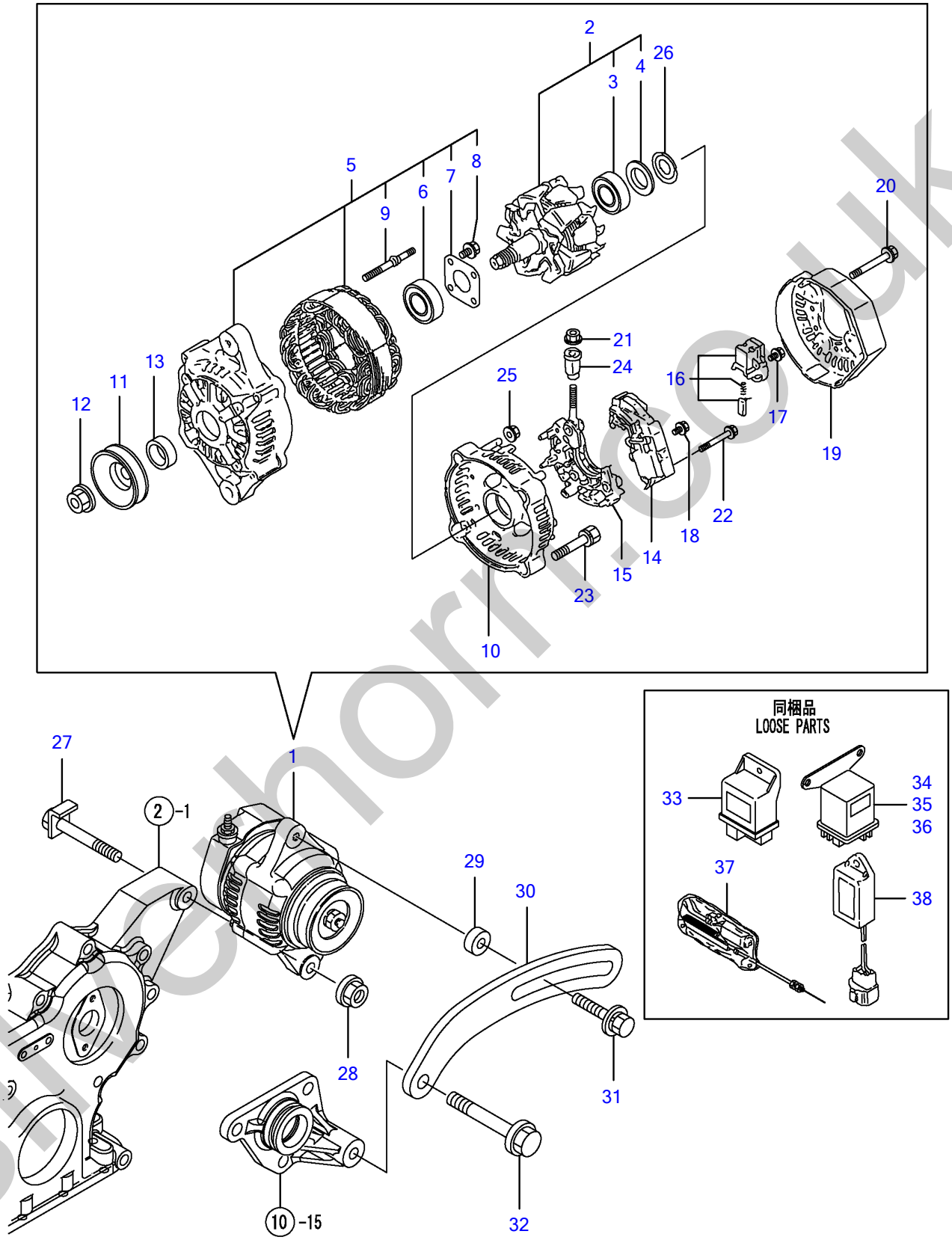

Y00D9970	16, ジェネレータ				
4TNV88-BPTB, BPTB1		1, 08/02	2	3	PLUS

silverhorn.co.uk

¼ÞªÈÚ°À GENERATOR

Œ©lo REF NO.	•"•i"Ôl† PARTS NO.	•"•i-¼	Description	l"–Ê Q'ty	ŒÝŠ·l« I	R	"õlI
1	Y129240-77200	µÙÀÈ°À(40A	ALTERNATOR	1			
2	Y119620-77380	· Û-À ASSY	· ROTOR ASSY	1			
3	Y123501-79240	· · ÎÞ-ÙÍÞ±ØÝ¸Þ	· · BEARING, BALL	1			
4	Y119620-79250	· · ÍÞ±ØÝ¸Þ¶ÊÞ-	· · COVER, BEARING	1			
5	Y119620-77421	· ÌÚ-ÑASSY,DRIVE	· FLAME ASSY, DRIVE	1			
6	Y119620-79200	· · ÎÞ-ÙÍÞ±ØÝ¸Þ	· · BALL BEARING	1			
7	Y119620-79210	· · ÌßÚ-Ä,ØÃ-Å	· · PLATE	1			
8	Y119620-79220	· · ½¸ØÕ-	· · SCREW	4			
9	Y119620-79230	· · ÎÞÙÄ,½ÀÂÄÞ	· · BOLT, STUD	2			
10	Y119620-77440	· ÌÚ-Ñ ASSY,REAR	· FLAME ASSY, REAR	1			
11	Y119620-77461	· Ìß-Ø	· PULLEY	1			
12	Y119620-77471	· ÅÂÄ	· NUT	1			
13	Y119620-77490	· ¶×-	· COLLAR	1			
14	Y129240-77710	· Ú·ÞÕÚ-À ASSY	· REGULATOR ASSY	1			
15	Y119620-79260	· ÎÙÀÞ-	· HOLDER	1			
16	Y129052-79270	· ÌÞ×¼ÎÙÀÞ-	· HOLDER, BRUSH	1			
17	Y119620-79290	· ½¸ØÕ³	· SCREW	6			
18	Y119620-79300	· ½¸ØÕ³	· SCREW	1			
19	Y129240-79300	· ¶ÊÞ-,ØÔ´ÝÄÞ	· COVER	1			
20	Y119620-79310	· ÎÞÙÄ	· BOLT	3			
21	Y129240-79310	· ÅÂÄ	· NUT	1			
22	Y119620-79320	· ½¸ØÕ³,W/ÜÂ¼Ô	· SCREW W/WASHER	2			
23	Y119620-79330	· ÎÞÙÄ	· BOLT	2			
24	Y119620-79340	· ²Ý¼ÕÚ-¼ÖÝÌÞÂ¼Õ	· INSULATION BUSH	1			
25	Y119620-79350	· ÅÂÄ	· NUT	2			
26	Y119620-79360	· ½×½ÄÜÂ¼Ô-	· THRUST WASHER	1			
27	Y119740-77250	ÎÞÙÄ 10X76 (GEN	BOLT, M10X76	1			
28	Y26306-100002	ÂÊÞÂ·ÅÂÄ(UBS 10	NUT	1			
29	Y119940-77270	¶Ý»Þ(GEN	ADJUSTER, BELT	1			
30	Y119802-77330	±¼ÞÔ½À(VÍÞÙÄ	ADJUSTER, BELT	1			
31	Y129972-77341	ÎÞÙÄ(±¼ÞÔ½À,L=50	BOLT, ADJUSTING	1			
32	Y26106-080452	ÂÊÞÎÞÙÄ 8X 45	BOLT M 8X 45 PLATED	1			
33	Y119802-77200	¾-ÌÃ²ØÚ-	RELAY, SAFETY	1			
34	Y119646-77900	ÊßÜ-ØÚ-	RELAY, POWER	1			
35	Y119646-77900	ÊßÜ-ØÚ-	RELAY, POWER	1			
36	Y119646-77900	ÊßÜ-ØÚ-	RELAY, POWER	1			
37	Y119032-77910	±¸¾ÙÓ-À CMP(12V	MOTOR ASSY, ENG.STOP	1			
38	Y129211-77920	À²Ï-(1 SEC.	TIMER	1			

silverhorn.co.uk

GASKET SET

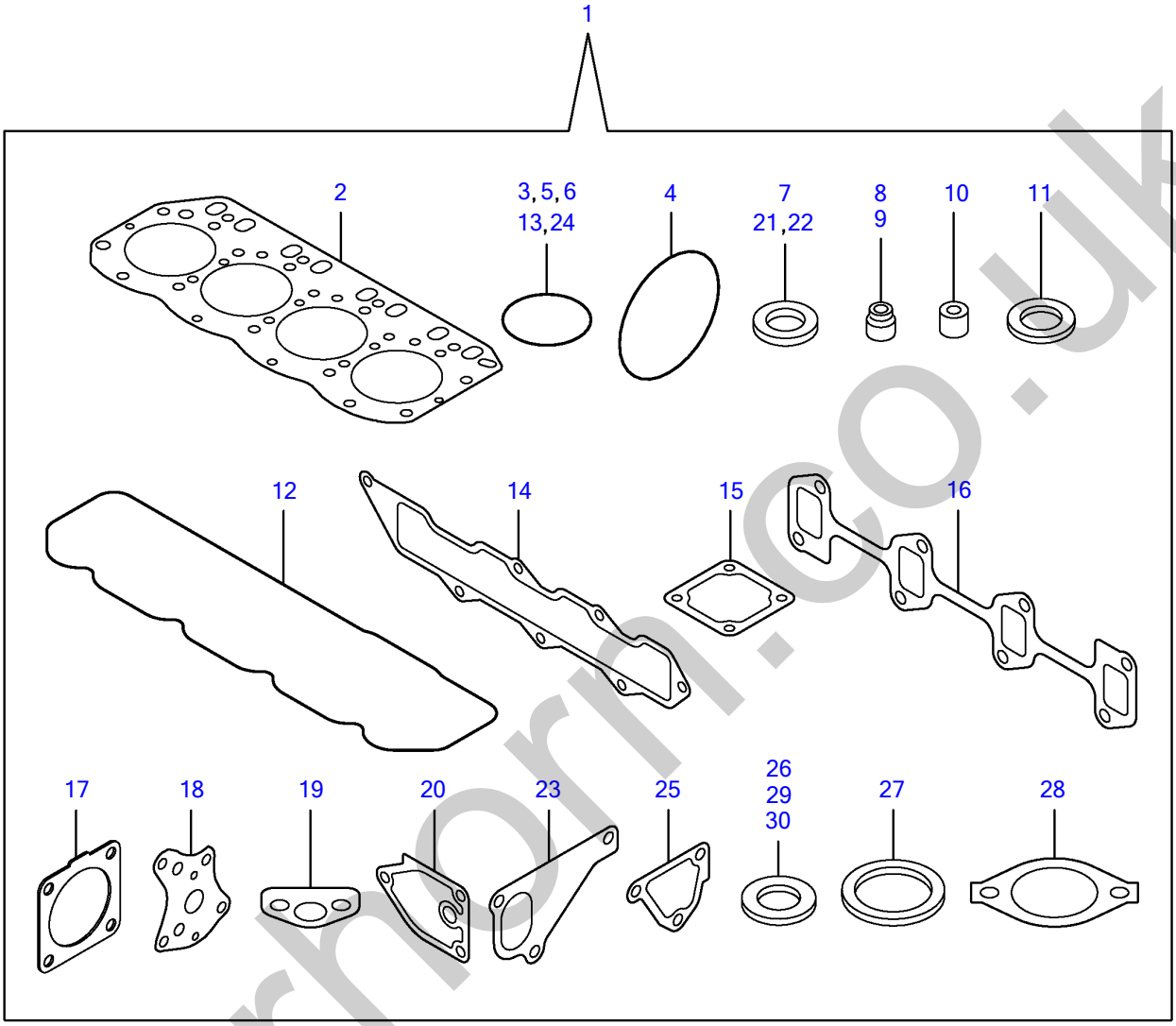

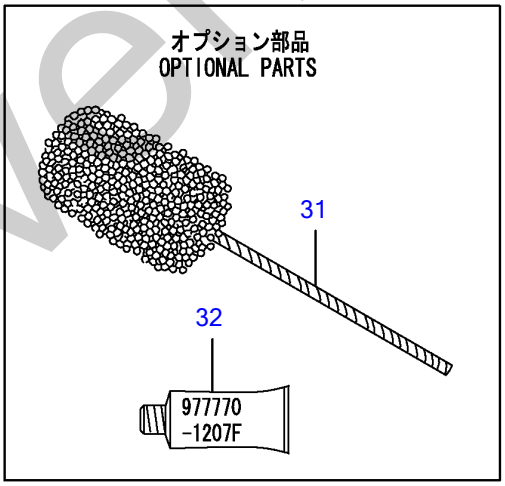

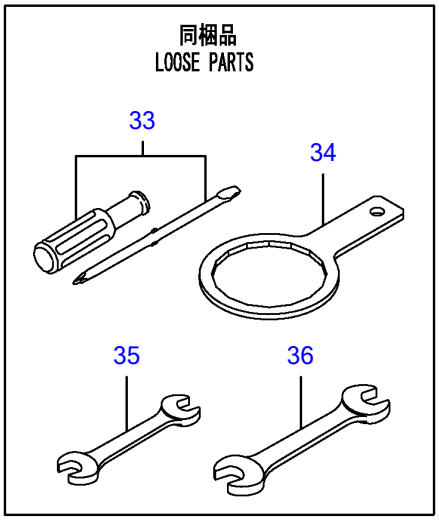

Y00D9970	17, パッキンセット				
4TNV88-BPTB, BPTB1		1, 08/02	2	3	PLUS

silvermorn.co.uk

ÊßÂ·Ý¾ÂÄ GASKET SET

Œ©lo REF NO.	•"•i"Ôl† PARTS NO.	•"•i-¼	Description	l"–Ê Q'ty	ŒÝŠ·l« I	R	"õll
1	Y729602-92640	ÊßÂ·Ý ¾ÂÄ(ÉÝ±½)	GASKET SET(NON-ASB.)	1		(1)	µÌß¼®Ý ÌÞËÝÃÞ½
2	Y129407-01340	· ÍÂÄÞ¶Þ½¹ÂÄ	· GASKET,CYL.HEAD	1			
3	Y119609-32040	· OØÝ¸Þ	· O-RING P16	2			
4	Y121850-51960	· OØÝ¸Þ(FOPÄØÂ¹)	· O-RING, F.I.PUMP	1			
5	Y24311-000320	· OØÝ¸Þ 1A P 32.0	· O-RING 1A P-32.0	2			
6	Y24341-000240	· OØÝ¸Þ 1A S 24.0	· O-RING 1A S-24.0	1			
7	Y22190-220002	· ¼-ÙÜÂ¼Ô(ºÏÙ.ÆÄØÙ)22	· SEAL WASHER 22S	1			
8	Y121400-11340	· ÊÞÙÌÞ½ÃÑ¼-Ù	· SEAL, VALVE STEM	4			
9	Y124460-11340	· ÊÞÙÌÞ½ÃÑ¼-Ù	· SEAL, VALVE STEM	4			
10	Y119802-11870	· ÌßÛÃ¸À(É½ÞÙ	· PROTECTOR, NOZZLE	4			
11	Y119625-11880	· É½ÞÙ¼-Ä	· SEAT, NOZZLE	4			
12	Y129601-11310	· PK(ÎÞÝÈÂÄ	· GASKET,COVER	1			
13	Y24311-000120	· OØÝ¸Þ 1A P 12.0	· O-RING 1A P 12.0	3			
14	Y129407-12110	· PK(SUCÏÆÎ-ÙÄÞ	· GASKET,INT.MANOFOLD	1			
15	Y129150-77511	· PK(´±Ë-À)(ÉÝ±½)	· GASKET, (NON-ASB.)	1			
16	Y129550-13110	· PK(EXHÏÆÎÙÄÞ	· GASKET, EXH.MANIFOLD	1			
17	Y129930-13201	· ¶Þ½¹ÂÄ(»²ÚÝ»	· GASKET, SILENCER	1			
18	Y129150-32020	· PK(LO-P	· GASKET, L.O. PUMP	1			
19	Y129150-35042	· PK(·Õ³ÆÕ³¶Ý)(ÉÝ±½)	· GASKET, (NON-ASB.)	1			
20	Y129150-35111	· PK(Ì²ÙÀÌÞ×¹ÂÄ)(ÉÝ±½)	· GASKET, (NON-ASB.)	1			
21	Y22190-080002	· ¼-ÙÜÂ¼Ô(ºÏÙ.ÆÄØÙ) 8	· SEAL WASHER 8S	2			
22	Y22190-100002	· ¼-ÙÜÂ¼Ô(ºÏÙ.ÆÄØÙ)10	· SEAL WASHER 10S	2			
23	Y129486-42021	· PK(CW-P	· GASKET	1			
24	Y129486-42140	· OØÝ¸Þ G 30	· O-RING,CW-P	1			
25	Y124395-49840	· PK(»-Ó½ÀÂÄ¹-½	· GASKET, THERMO. CASE	1			
26	Y23414-080000	· ÊßÂ·Ý(ÏÙ 8	· GASKET 8, ROUND	1			
27	Y129150-49811	· PK(»-Ó½ÀÂÄ ¼À)(ÉÝ±½)	· GASKET, (NON-ASB.)	1			
28	Y129795-49551	· PK(»-Ó½ÀÂÄ¶ÊÞ-)(ÉÝ±½	· GASKET, (NON-ASB.)	1			
29	Y124465-44950	· ÊßÂ·Ý16	· GASKET 16	1			
30	Y129150-49360	· PK 10	· GASKET 10	1			
31	Y129400-92430	ÌÚÂ¸½Î-Ý	HORN, FLEX	1		(1)	µÌß¼®Ý ÌÞËÝÃÞ½
32	Y977770-1207F	¼Øº-Ý¹² ´·¼ÞÖ³¶Þ½¹ÂÄ	GASKET.LIQUID	1		(1)	µÌß¼®Ý ÌÞËÝÃÞ½
33	Y104200-92350	ÄÞ×²ÊÞ-(»¼¶´¼·	DRIVER, SCREW	1			
34	Y119640-92750	Ì²ÙÀÚÝÁ 80	WRENCH, FILTER	1			
35	Y28110-100120	½ÊßÅ 10X12	WRENCH 10X12	1			
36	Y28110-140170	½ÊßÅ 14X17	WRENCH 14X17	1			

silvermoor.co.uk