TB1140

Book No.BN2Z002-1
Serial No.51420001-

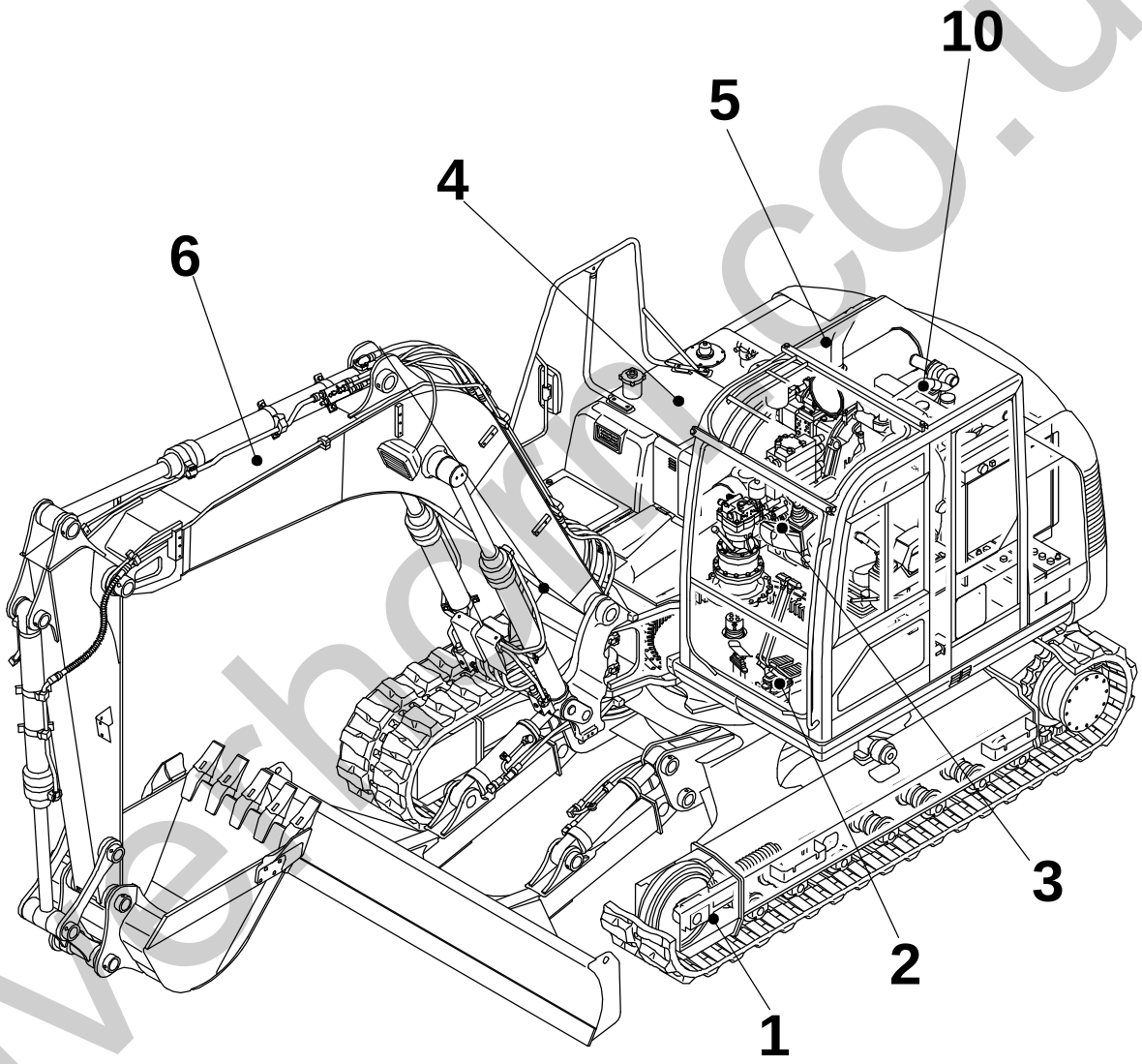

silverhorn.co.uk

silverhorn.co.uk

INDEX

Item	Part number	Description	Q'ty	Chan.	Serial No.	Serv.	Remarks
1		UNDERCARRIAGE					
2		TURNTABLE & CONTROL LEVER					
3		ENGINE & ELECTRICAL SYSTEM					
4		HYDRAULIC PIPNG & TANK					
5		COVER & CAB					
6		HOE ATTACHMENT					
7		DECAL & TOOL					
8		HYDRAULIC DEVICE					
10		ENGINE(ISUZU 4JJ1XYSB01)					
		2007.11.29					
99		KITS, ATTACHMENTS AND QUICK REFERENCE					

silverhorn.co.uk

LOWER FRAME

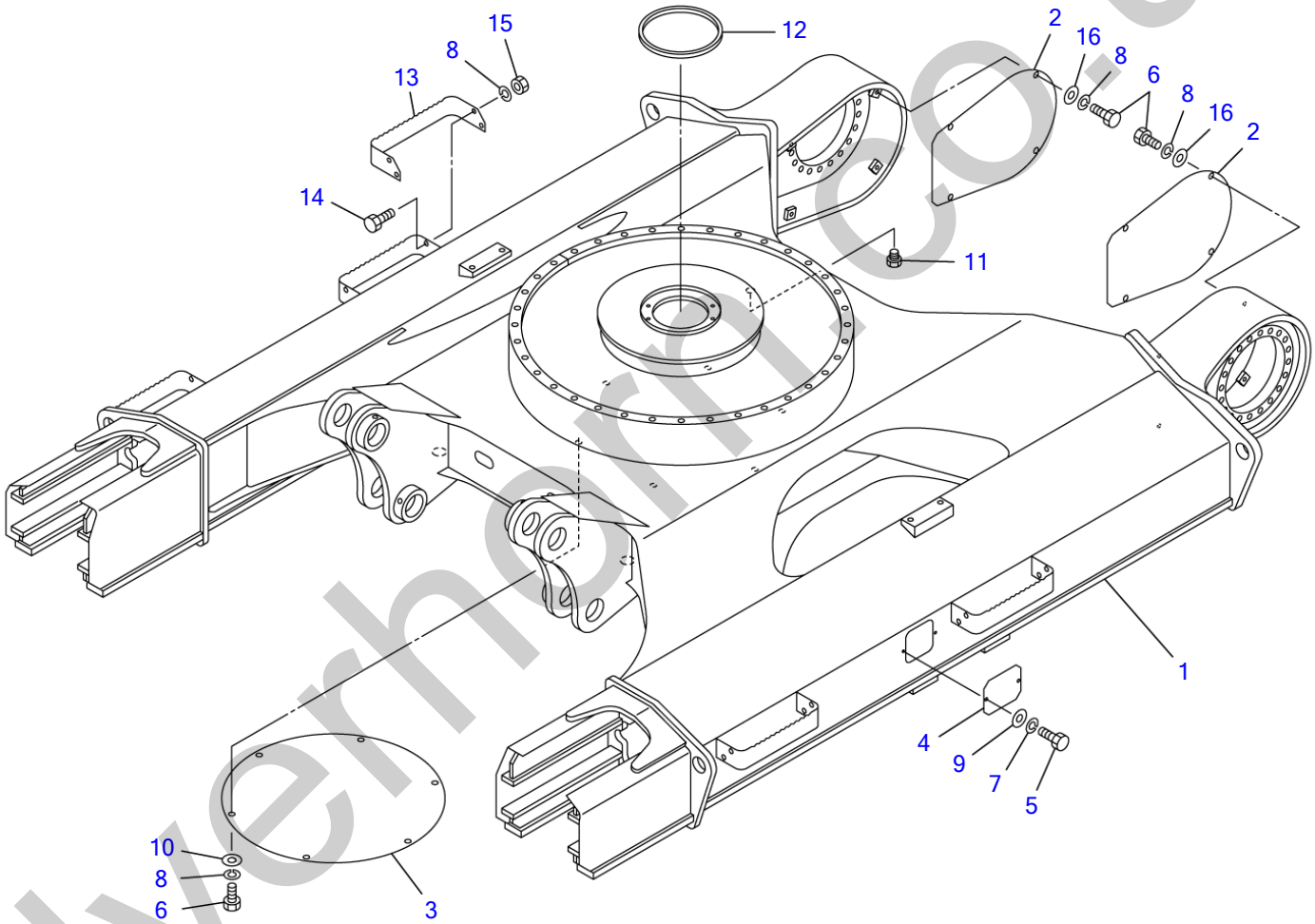

silverhorn.co.uk

LOWER FRAME

Item	Part number	Description	Q'ty	Chan.	Serial No.	Serv.	Remarks
		FRAME ASSY, lower (500 wide)					X05710-01000-5
		FRAME ASSY, lower (600 wide)					X05710-01500-5
		FRAME ASSY, lower (700 wide)					X05710-01600-5
1	X **********	FRAME, lower	1				
2	0571001010	COVER	2				
3	0571000110	COVER	1				
4	0561017400	COVER	2				
5	1100040816	BOLT	4				
6	1100041225	BOLT	14				
7	1140020008	WASHER, spring	4				
8	1140020012	WASHER, spring	30				
9	1141110008	WASHER	4				
10	0003600024	WASHER	6				
11	1501710010	PLUG	1				
12	1654625070	TRIM	1				sold by the meter
13	0571001510	STEP	4				600 wide
	0571001610	STEP	4				700 wide
14	1100041235	BOLT	22				
15	1130040012	NUT	16				
16	1141110012	WASHER	8				
	N1a012						

silverhorn.co.uk

CRAWLER BELT

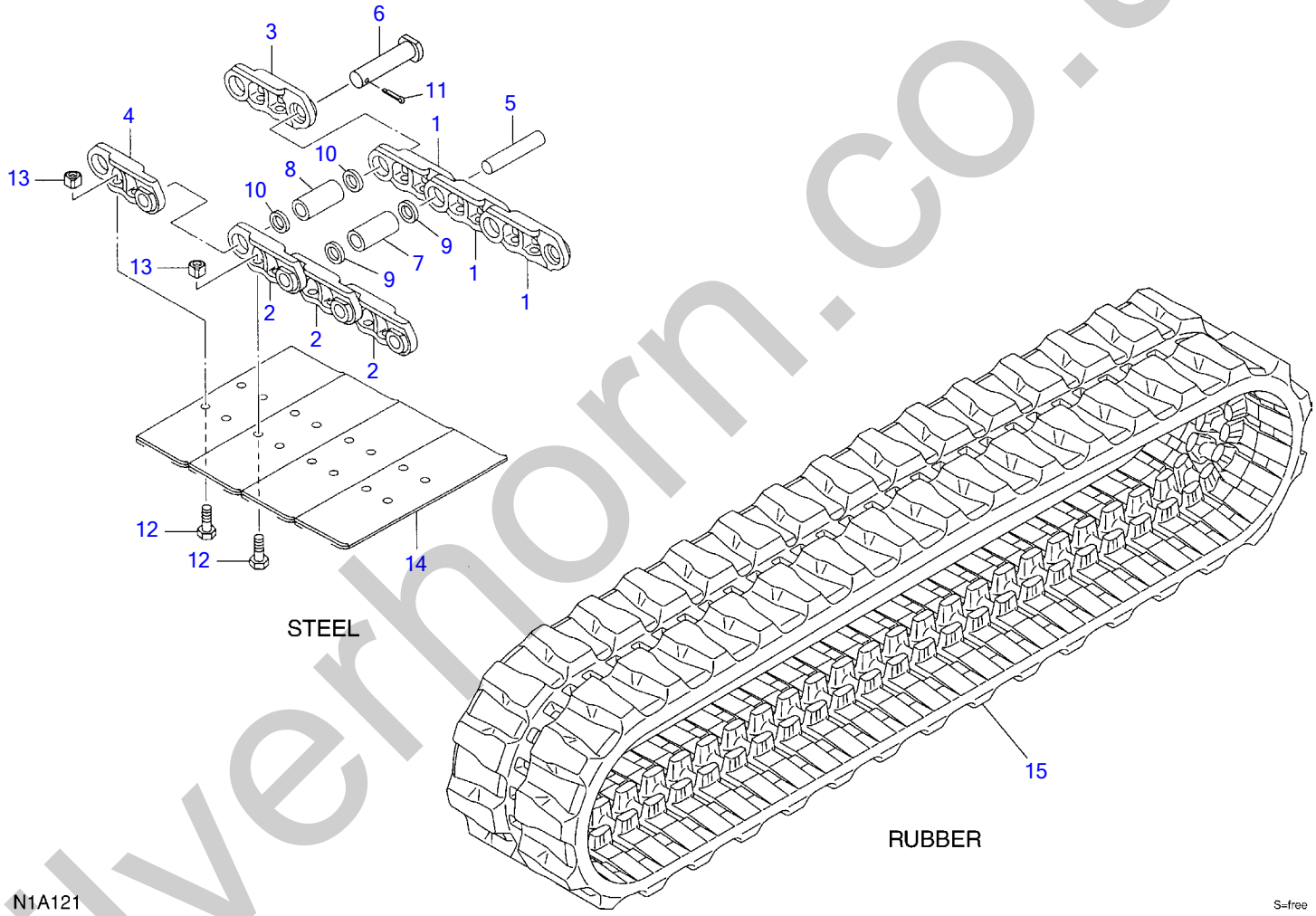

silverhorn.co.uk

CRAWLER BELT

Item	Part number	Description	Q'ty	Chan.	Serial No.	Serv.	Remarks
0	1914303000	BELT, steel crawler (500mm shoe)	2				X19143-03000-1
	1914303100	BELT, steel crawler (600mm shoe)	2				X19143-03100-1
	1914303200	BELT, steel crawler (700mm shoe)	2				X19143-03200-1
1	1914303001	・LINK, track (R.H.)	43				
2	1914303002	・LINK, track (L.H.)	43				
3	1914303003	・LINK, master (R.H.)	1				
4	1914303004	・LINK, master (L.H.)	1				
5	1914303005	・PIN, track	43				
6	1914303006	・PIN, track master	1				
7	1914303007	・BUSH, track	43				
8	1914303008	・BUSH, track master	1				
9	1914303009	・SEAL, dust	86				
10	1914303010	・SPACER	2				
11	1914303011	・PIN, coter	1				
12	1914303012	・BOLT	176				
13	1914303013	・NUT	176				
14	1914303014	・PLATE	44				500mm shoe
	1914303114	・PLATE	44				600mm shoe
	1914303214	・PLATE	44				700mm shoe
15	1914301520	BELT, rubber crawler	2				
	N2a010						

silverhorn.co.uk

CRAWLER BELT (with rubber pads)

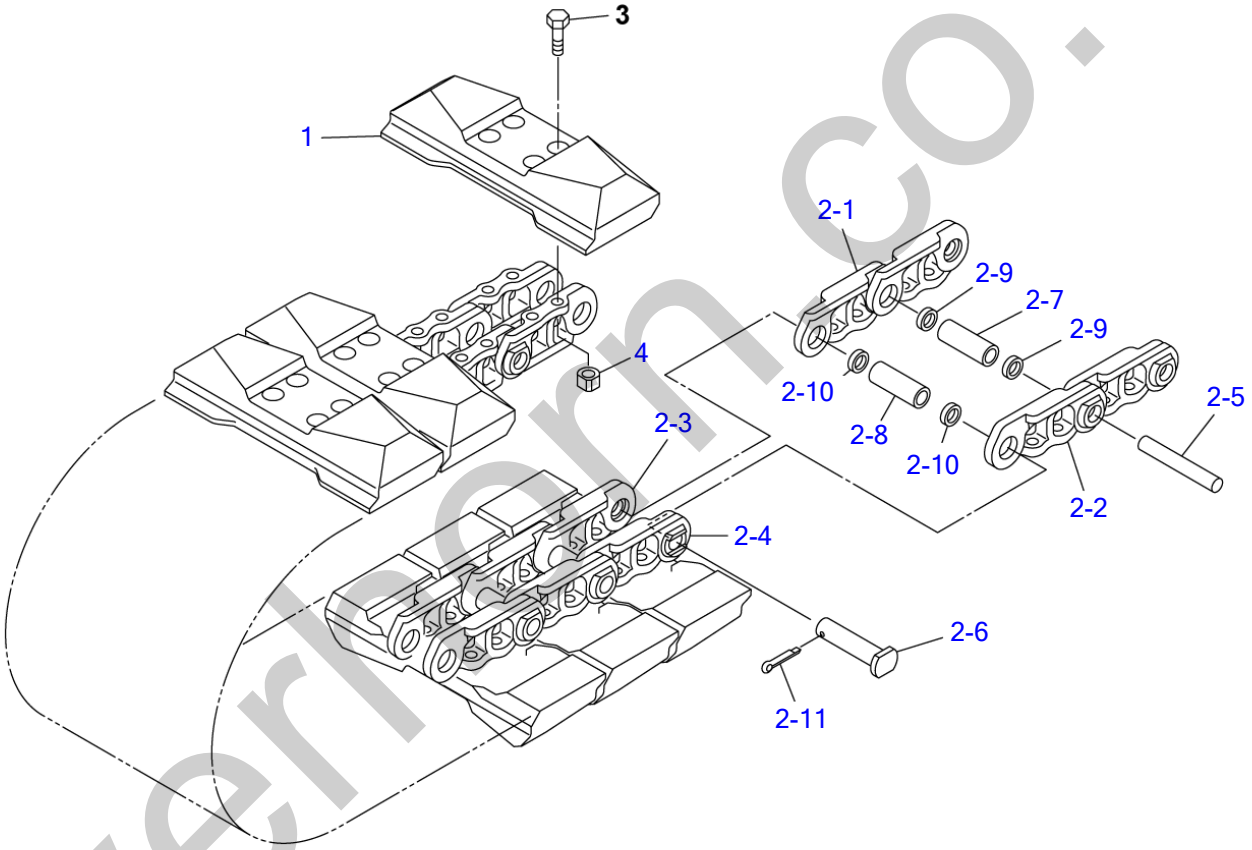

N1A021

S=1/12

silverfarm.co.uk

CRAWLER BELT (with rubber pads)

Item	Part number	Description	Q'ty	Chan.	Serial No.	Serv.	Remarks
0	**0571100000**	BELT, segment rubber crawler	2				X05711-00000-0
1	**1914401000**	・PAD, rubber	44				
2	**1914303020**	・LINK ASSY	1				
2-1	**1914303001**	・・LINK, track (R.H.)	43				
2-2	**1914303002**	・・LINK, track (L.H.)	43				
2-3	**1914303003**	・・LINK, master (R.H.)	1				
2-4	**1914303004**	・・LINK, master (L.H.)	1				
2-5	**1914303005**	・・PIN, track	43				
2-6	**1914303006**	・・PIN, track master	1				
2-7	**1914303007**	・・BUSH, track	43				
2-8	**1914303008**	・・BUSH, track master	1				
2-9	**1914303009**	・・SEAL, dust	86				
2-10	**1914303010**	・・SPACER	2				
2-11	**1914303011**	・・PIN, coter	1				
3	**1914303012**	・BOLT	176				
4	**1914303013**	・NUT	176				
	N1a021						

silverhorn.co.uk

CARRIER ROLLER

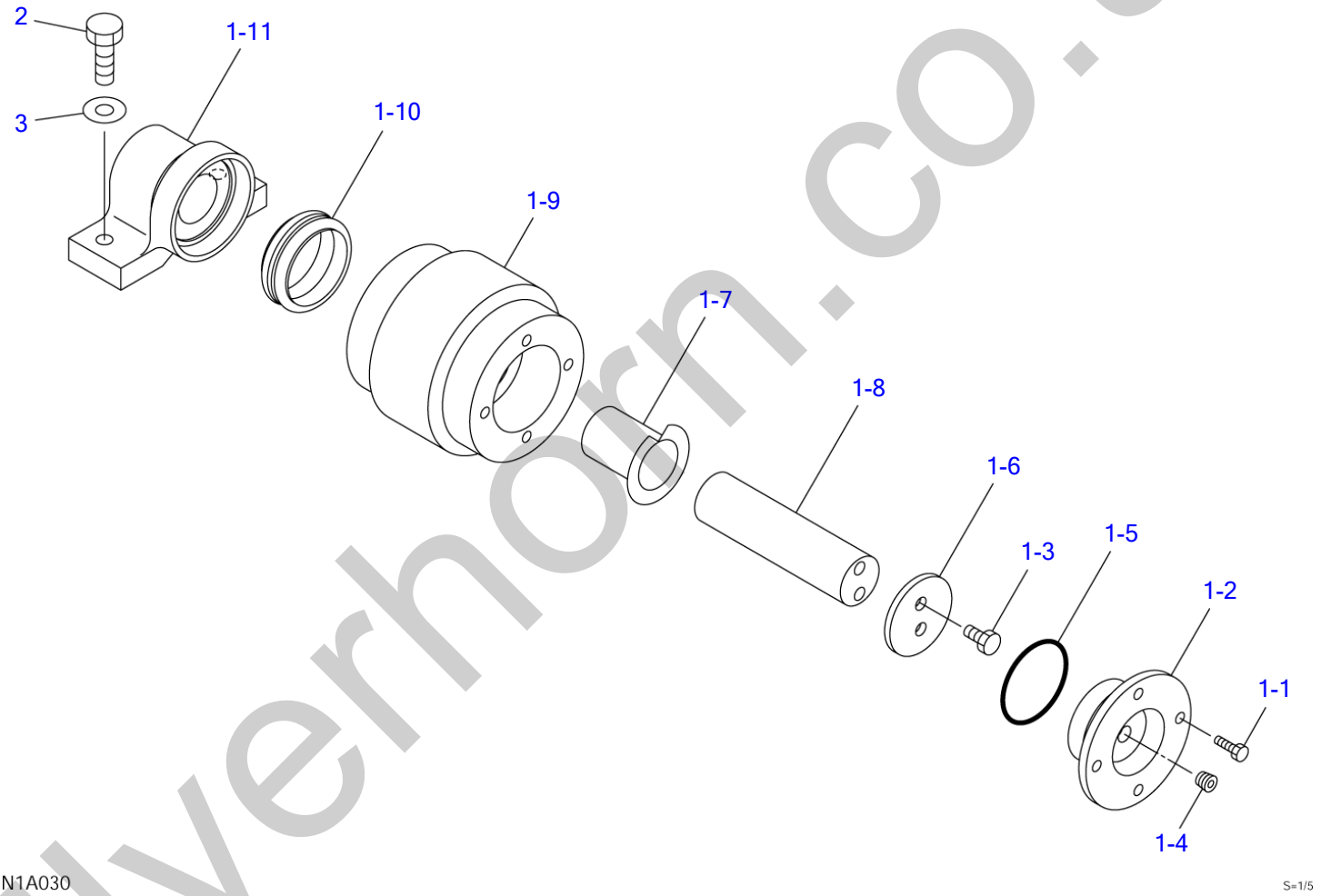

silverhorn.co.uk

CARRIER ROLLER

Item	Part number	Description	Q'ty	Chan.	Serial No.	Serv.	Remarks
		ROLLER ASSY, carrier					X05712-00000-0
1	0571200100	ROLLER ASSY	2				
1-1	1100040820	・BOLT	4				
1-2	0571200102	・COVER	1				
1-3	1100041016	・BOLT	2				
1-4	1501810002	・PLUG	1				
1-5	1420100650	・O-RING	1				
1-6	0571200106	・PLATE	1				
1-7	0571200107	・BUSHING	1				
1-8	0571200108	・SHAFT	1				
1-9	0571200109	・ROLLER	1				
1-10	0571200110	・SEAL, floating	1				
1-11	0571200111	・BRACKET	1				
2	1101041640	BOLT	4				
3	1141550016	WASHER	4				
	N1a031						

silverhorn.co.uk

TRACK ROLLER

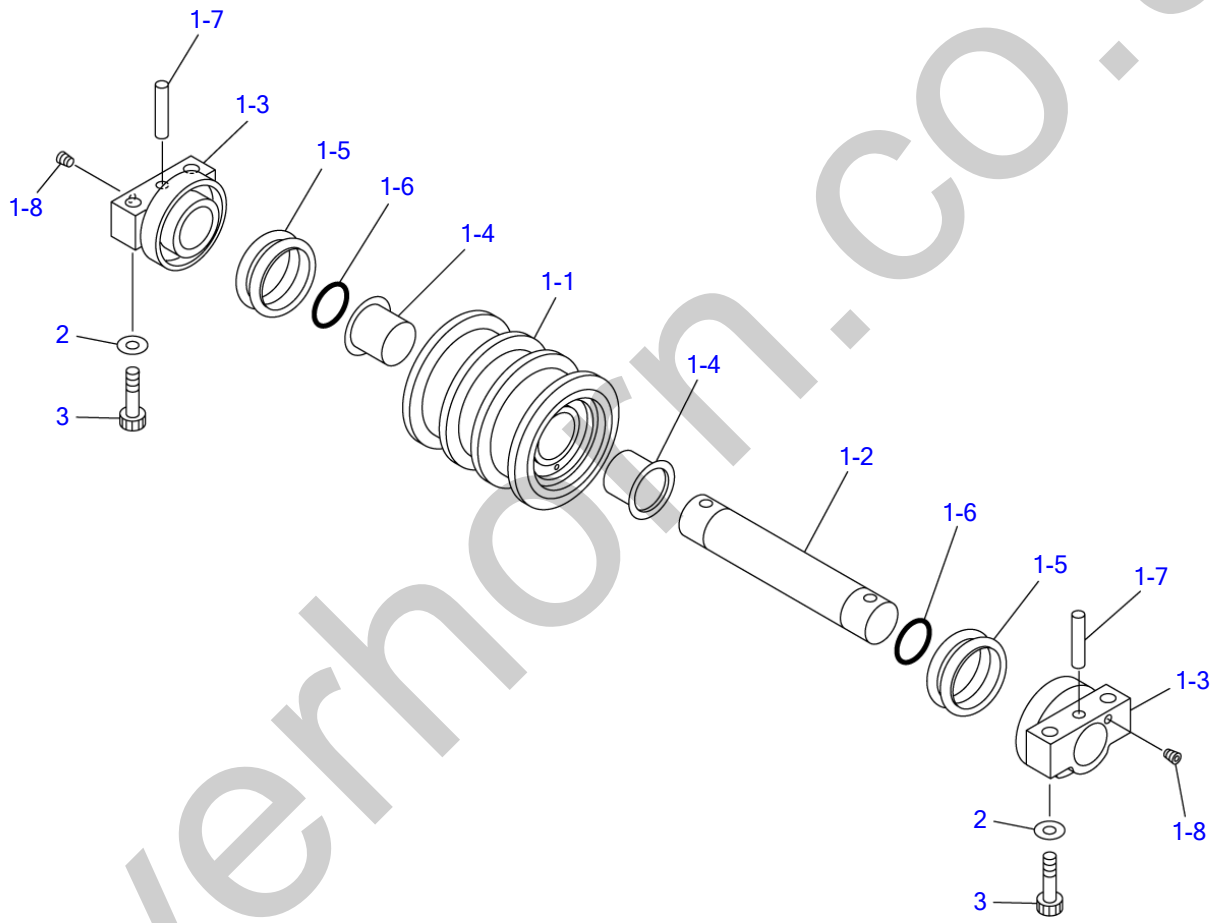

N1A040

S=1/8

silverhorn.co.uk

TRACK ROLLER

Item	Part number	Description	Q'ty	Chan.	Serial No.	Serv.	Remarks
		ROLLER ASSY, track					X05713-00000-2
1	0571300100	ROLLER ASSY	14				
1-1	0571300110	・ROLLER	1				
1-2	0571300120	・SHAFT	1				
1-3	0571300130	・COLLAR	2				
1-4	0571300140	・BUSHING	2				
1-5	1432500730	・SEAL, floating	2				
1-6	1420110450	・O-RING	2				
1-7	0571300170	・PIN	2				
1-8	1501810001	・PLUG	2				
2	1141550016	WASHER	56				
3	1111021670	BOLT	56				
	N1a043						

silverhorn.co.uk

TRACK GUARD

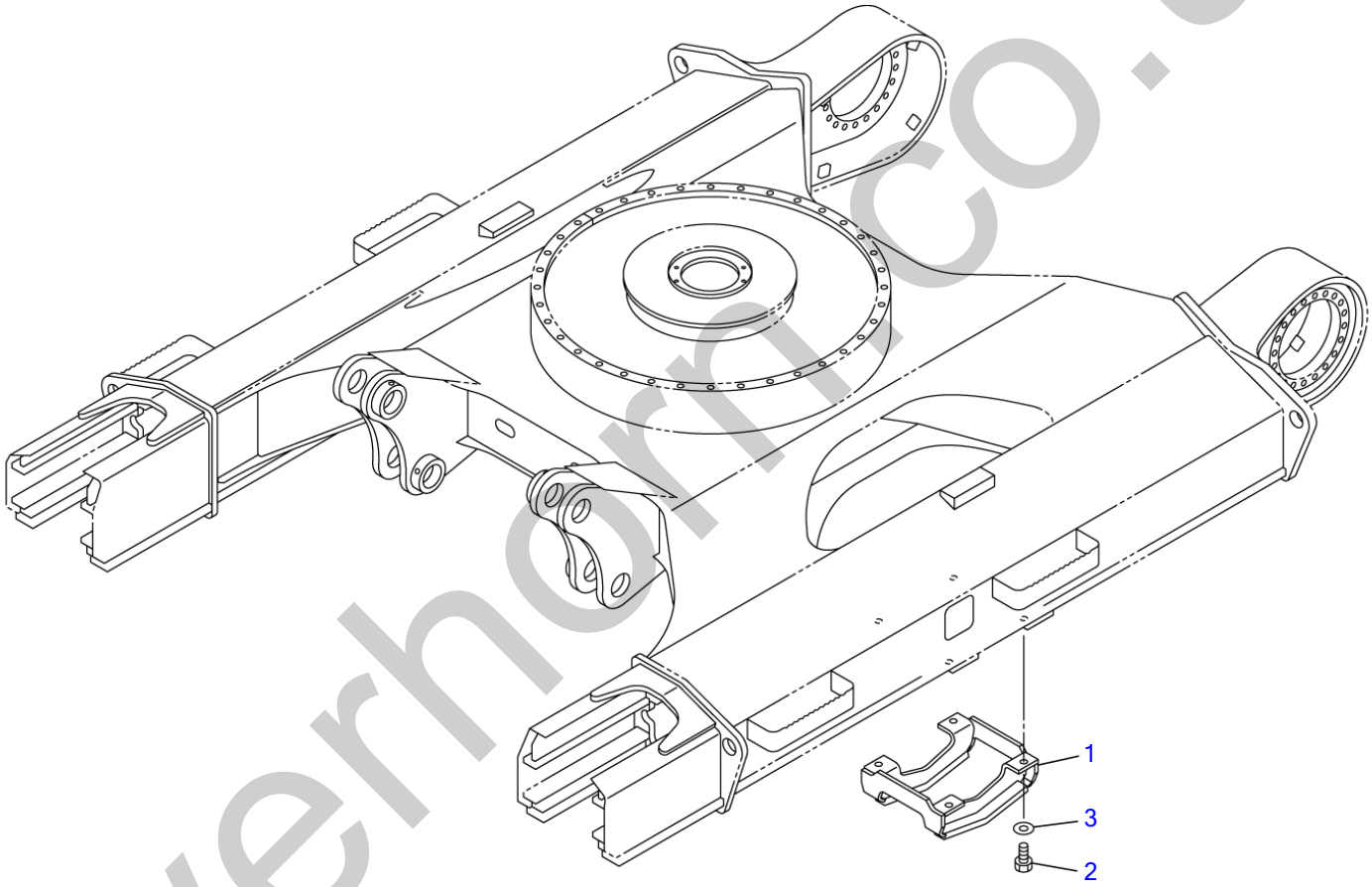

N2A020

S=1/20

silverhorn.co.uk

TRACK GUARD

Item	Part number	Description	Q'ty	Chan.	Serial No.	Serv.	Remarks
		GUARD ASSY, track					X05717-00000-0
1	**0571700010**		2			M	
2	**1101041635**	BOLT	8			M	
3	**1141550016**	WASHER	8				
	N2a020						

silverhorn.co.uk

FRONT IDLER

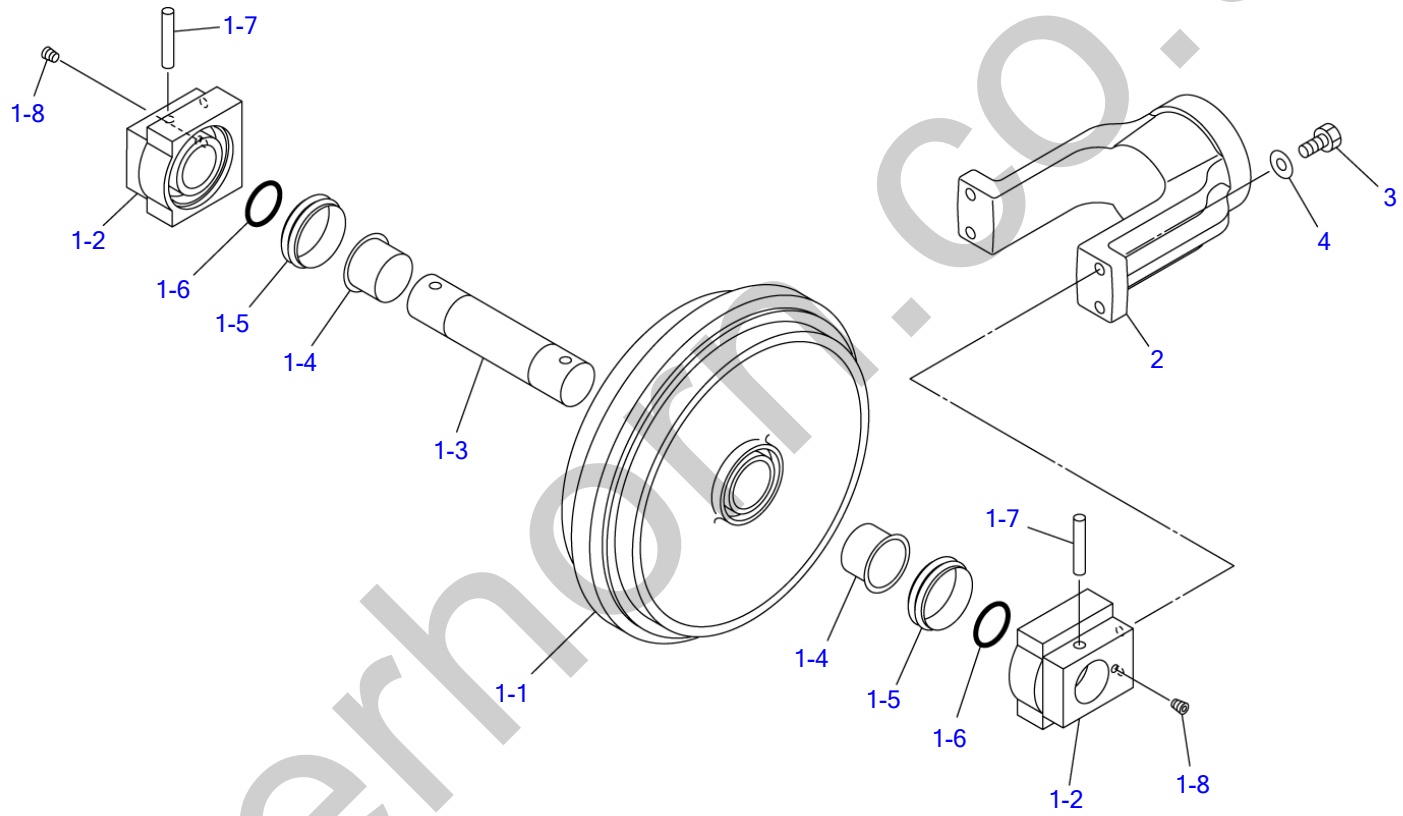

N1A050

S=1/5

silverhorn.co.uk

FRONT IDLER

Item	Part number	Description	Q'ty	Chan.	Serial No.	Serv.	Remarks
		IDLER ASSY, front					X05714-00000-0
1	0571400100	IDLER ASSY	2				
1-1	0571400110	・IDLER	1				
1-2	0571400120	・BRACKET	2				
1-3	0571400130	・SHAFT	1				
1-4	0571400140	・BUSHING	2				
1-5	1432500900	・SEAL, floating	2				
1-6	1420110600	・O-RING	2				
1-7	0571400170	・PIN	2				
1-8	1501810002	・PLUG	2				
2	0571400010	YOKE	2				
3	1100041645	BOLT	8				
4	1141550016	WASHER	8				
	N1a052						

silverhorn.co.uk

TRACK ADJUSTER

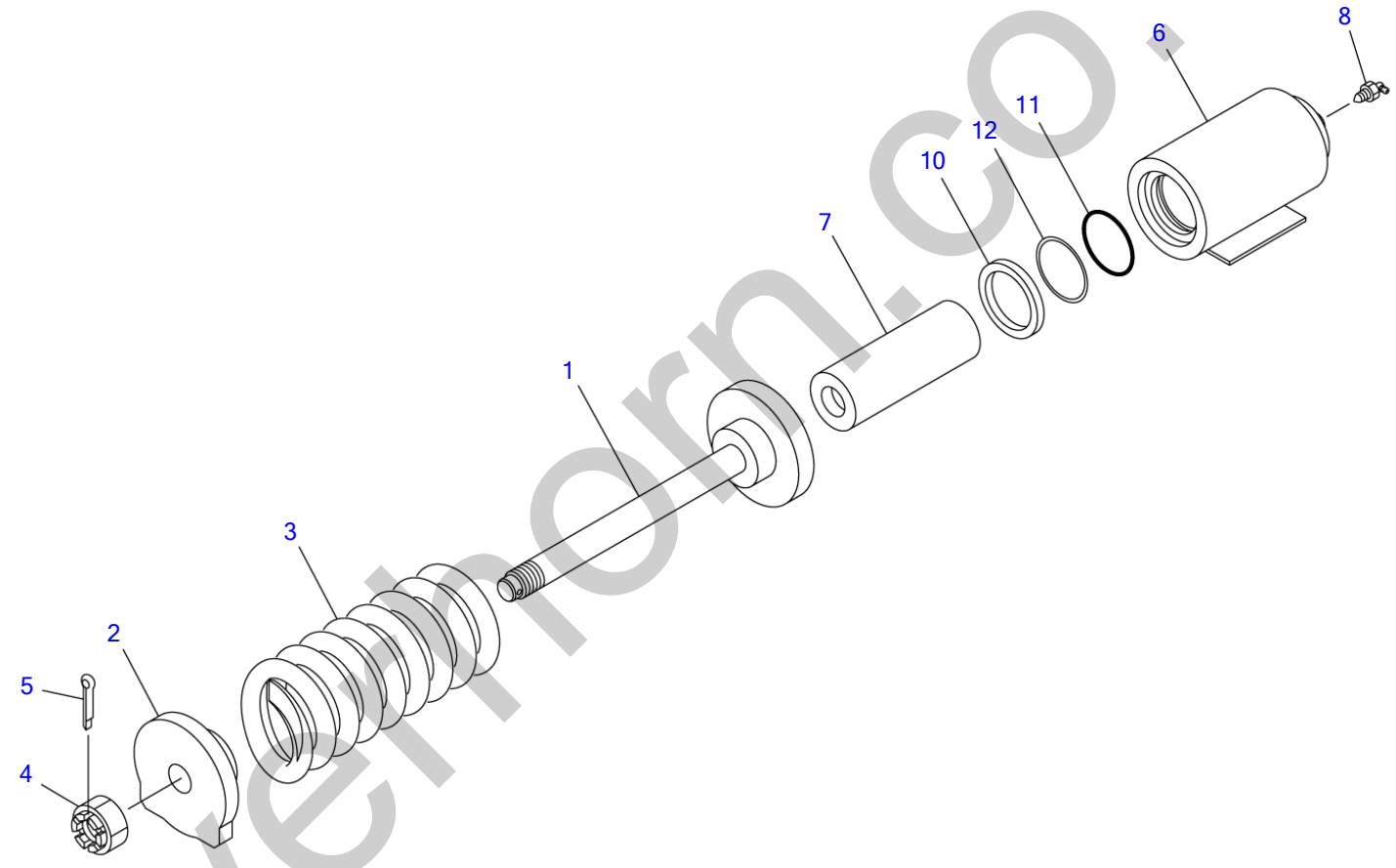

N2A030

S=1/10

silverthorn.co.uk

TRACK ADJUSTER

Item	Part number	Description	Q'ty	Chan.	Serial No.	Serv.	Remarks
		ADJUSTER ASSY, track (R.H.)					X05715-01000-0
		ADJUSTER ASSY, track (L.H.)					X05715-01300-0
0-1	0571500100	SPRING ASSY	2				
1	0571500110	・ROD	1				
2	0571500120	・PLATE	1				
3	0007000082	・SPRING	1				
4	1132030045	・NUT	1				
5	1213000865	・PIN, spring	1				
0-2	0571501200	CYLINDER ASSY	2				
6	0571501210	・CYLINDER, grease	1				
7	0571501220	・PISTON	1				
8	1541301604	・VALVE ASSY, check	1				
10	1400403932	・SEAL, oil	1				
11	1422010900	・O-RING	1				
12	1421020900	・RING, back-up	1				
	N2a030						

silverhorn.co.uk

TRAVEL DEVICE

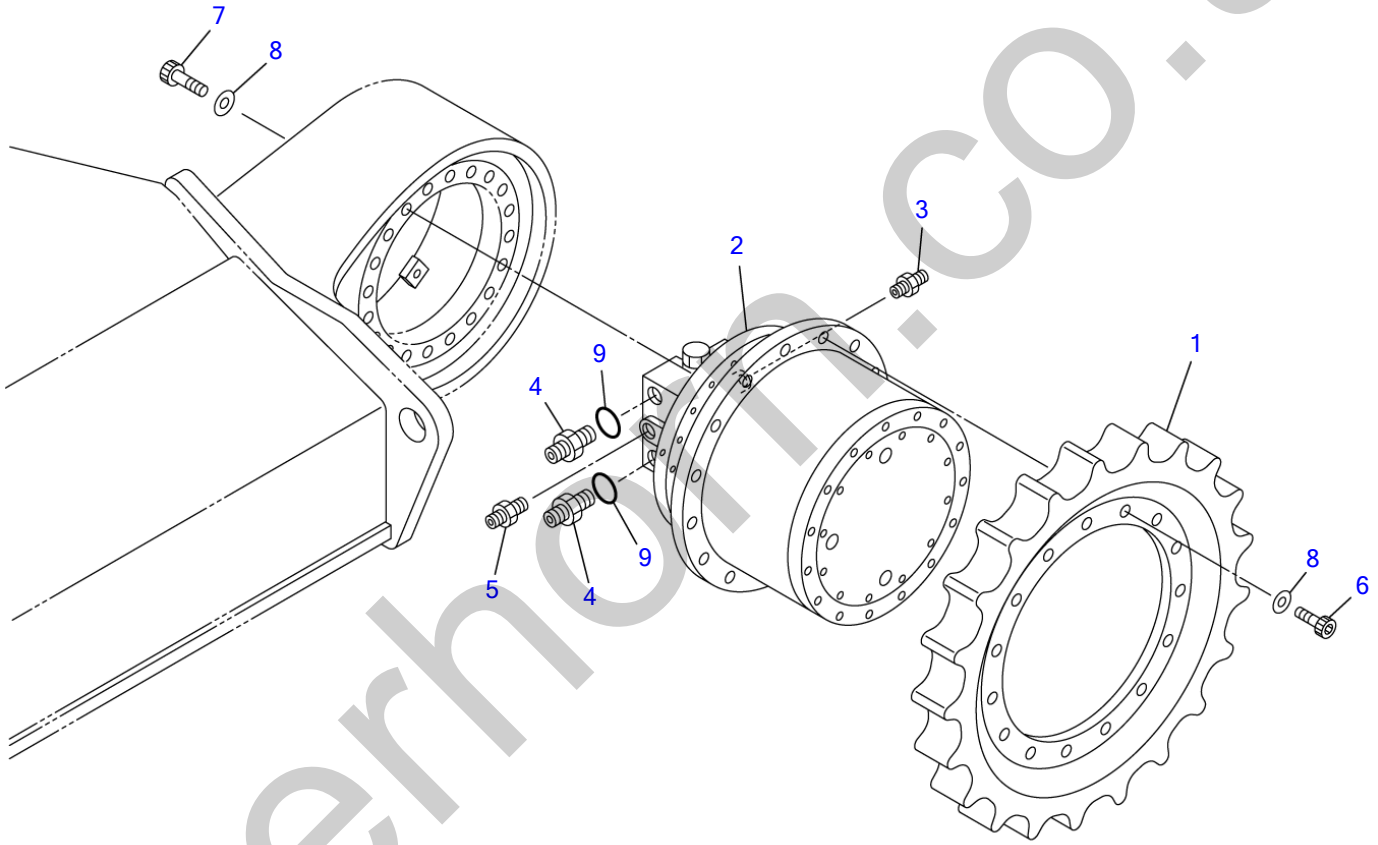

N1A070

S=1/10

silverhorn.co.uk

TRAVEL DEVICE

Item	Part number	Description	Q'ty	Chan.	Serial No.	Serv.	Remarks
		MOTOR ASSY, travel					X05716-00000-3
1	0571600010	SPROCKET	2				
2	1903126000	MOTOR, travel	2				
3	1515600200	ADAPTOR	2				
	1420010110	・O-RING	1				
4	1511061306	ADAPTOR	4				
	1420010240	・O-RING	1				
5	1515600577	ADAPTOR	2				
	1420010180	・O-RING	1				
6	1110021645	SCREW, cap	30				
7	1110021665	SCREW, cap	40				
8	1141550016	WASHER	70				
9	1420310014	O-RING	4				
	N1a071						

silverhorn.co.uk

SLEW BEARING

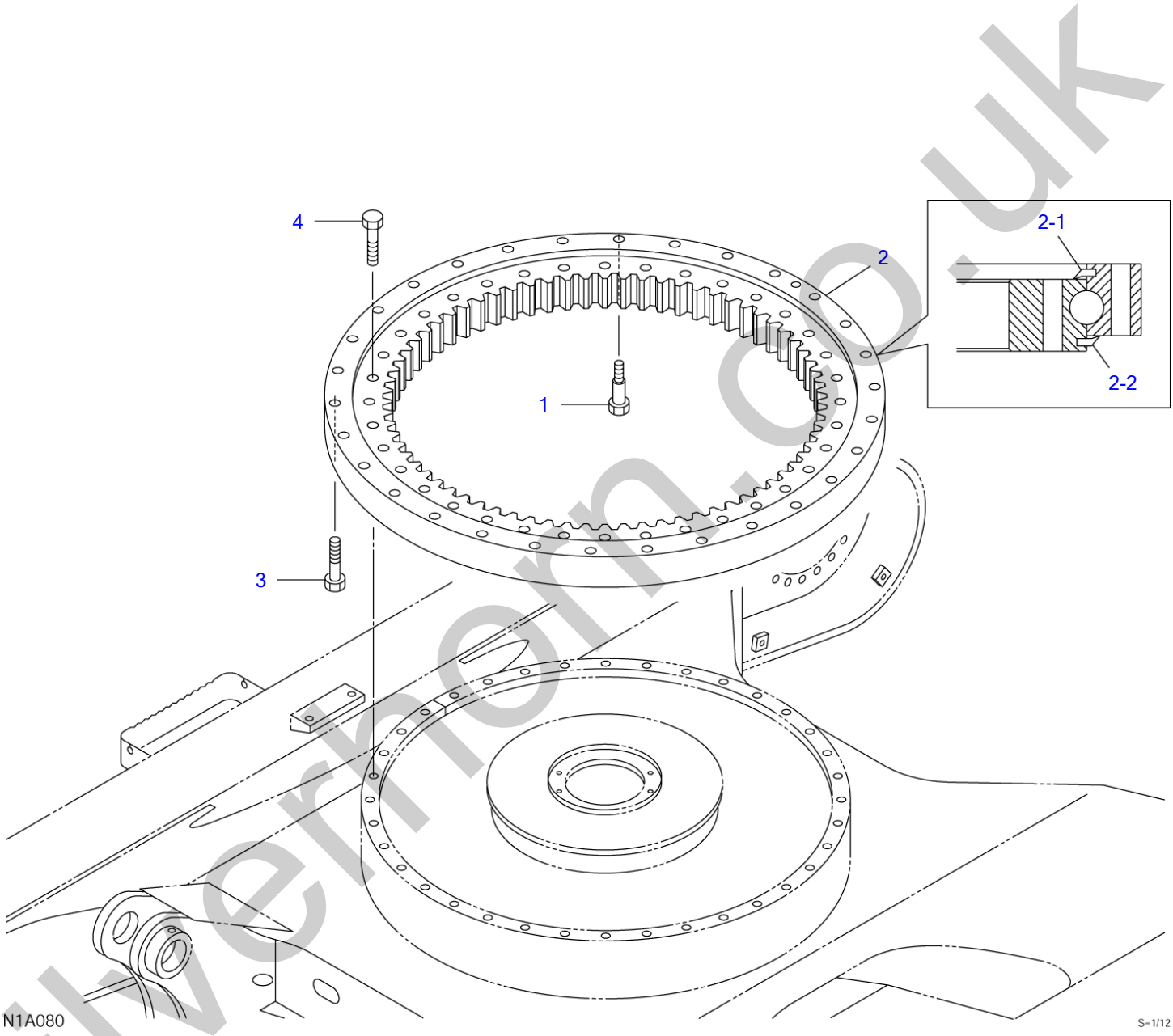

silverhorn.co.uk

SLEW BEARING

Item	Part number	Description	Q'ty	Chan.	Serial No.	Serv.	Remarks
		BEARING ASSY, slew					X05720-00100-2
1	0572000120	BOLT	1				
2	1913005050	BEARING ASSY	1				
2-1	1913005058	・SEAL	1				
2-2	1913005059	・SEAL	1				
3	1100041895	BOLT	29				
4	1100141800	BOLT	36				
	N1a081						

silverhorn.co.uk

SWIVEL JOINT & ACCESSORIES

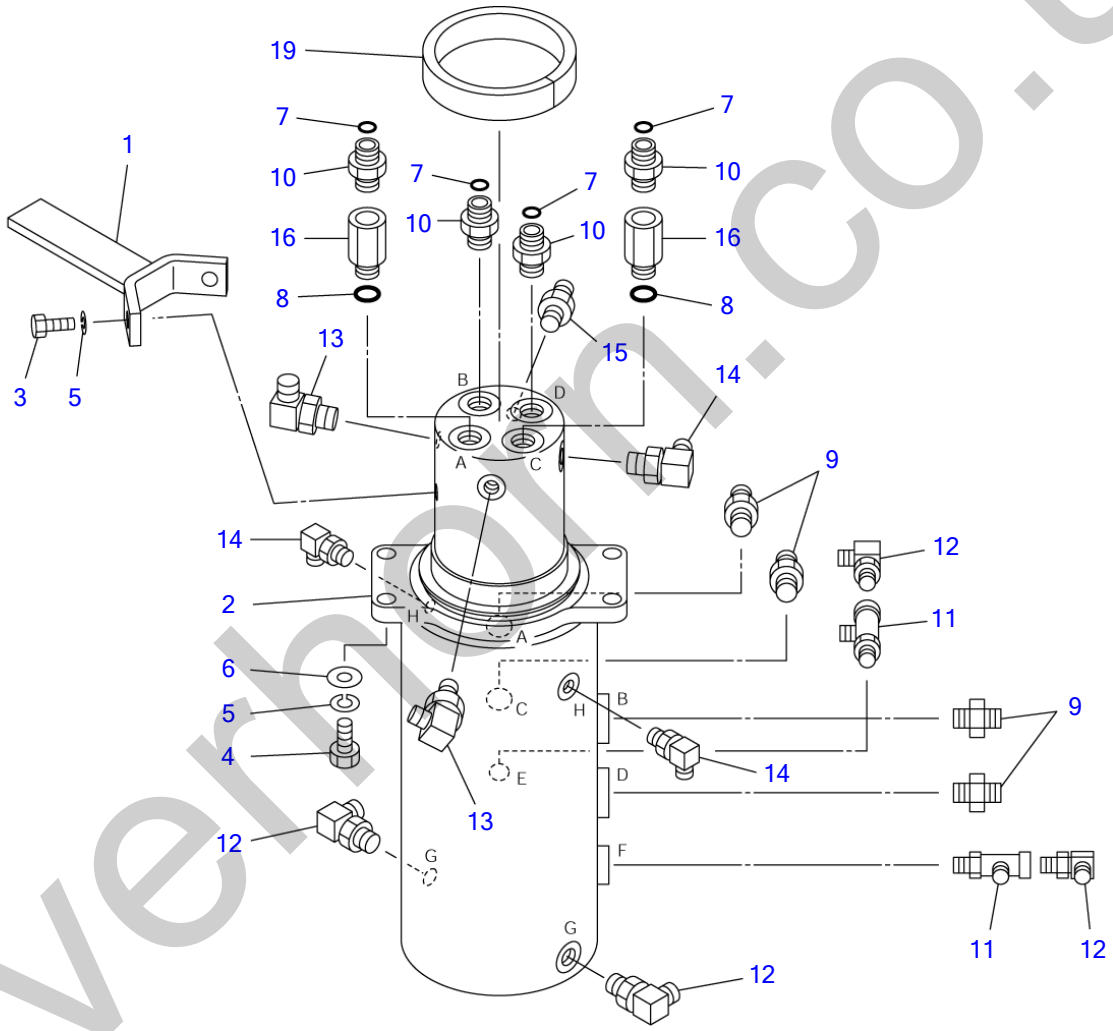

silverhorn.co.uk

SWIVEL JOINT & ACCESSORIES

Item	Part number	Description	Q'ty	Chan.	Serial No.	Serv.	Remarks
		JOINT ASSY, swivel					X05721-00200-2
1	0572100220	COLLAR	1				
2	1904008500	JOINT, swivel	1				
3	1100041225	BOLT	2				
4	1101041235	BOLT	4				
5	1140020012	WASHER, spring	6				
6	1141110012	WASHER	4				
7	1420310016	O-RING	4				
8	1420010180	O-RING	2				
9	1511061304	ADAPTOR	4				
	1420010180	・O-RING	1				
10	1511061604	ADAPTOR	4				
	1420010180	・O-RING	1				
11	1512340011	ELBOW	2				
	1420010140	・O-RING	1				
12	1515010041	ELBOW	4				
	1420010140	・O-RING	1				
13	1515010131	ELBOW	2				
	1420010140	・O-RING	1				
14	1515012040	ELBOW	3				
	1420010110	・O-RING	1				
15	1515600201	ADAPTOR	1				
	1420010140	・O-RING	1				
16	0007213011	BUSHING	2				
	1420010180	* O-RING	1				
19	1654353035	SPONGE	1				sold by the meter
	N1a092						

silverhorn.co.uk

DOZER BLADE

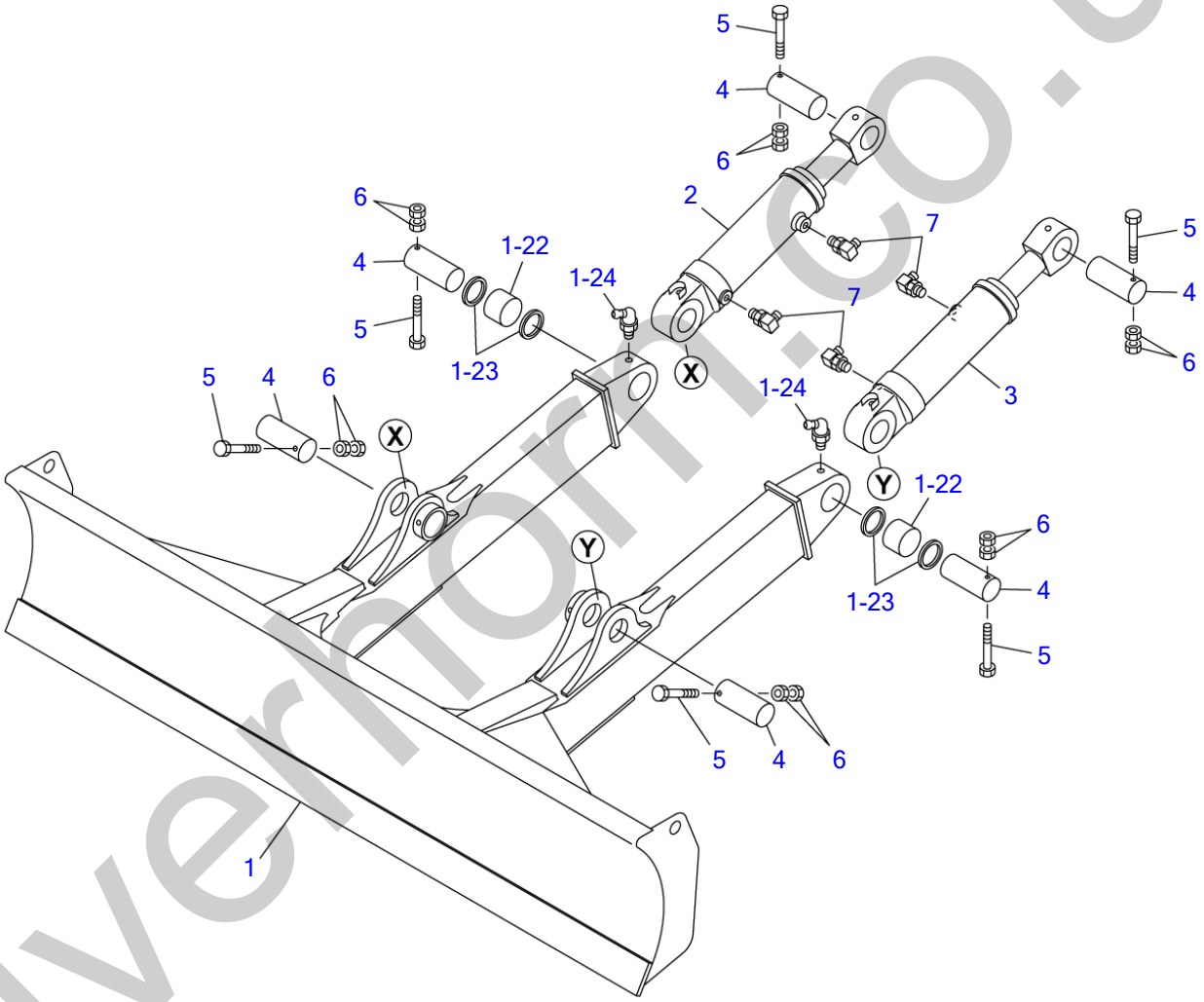

N1A100

S=1/20

silverhorn.co.uk

DOZER BLADE

Item	Part number	Description	Q'ty	Chan.	Serial No.	Serv.	Remarks
		BLADE ASSY, dozer (500W)					X05763-02000-1
		BLADE ASSY, dozer (600W)					X05763-02500-1
		BLADE ASSY, dozer (700W)					X05763-03000-1
1	0576302300	BLADE, dozer (500W)	1				
	0576302600	BLADE, dozer (600W)	1				
	0576303100	BLADE, dozer (700W)	1				
1-22	0002400056	・BUSHING	2				
1-23	1432200070	・SEAL, dust	4				
1-24	1560001900	・FITTING, grease	2				
2	1900098600	CYLINDER, dozer blade (R.H.)	1				
3	1900098700	CYLINDER, dozer blade (L.H.)	1				
4	0001609165	PIN	6				
5	1103141225	BOLT	6				
6	1130240012	NUT	12				
7	1515010041	ELBOW	4				
	1420010140	・O-RING	1				
	N1a100						

silverhorn.co.uk

PIPING; LOWER

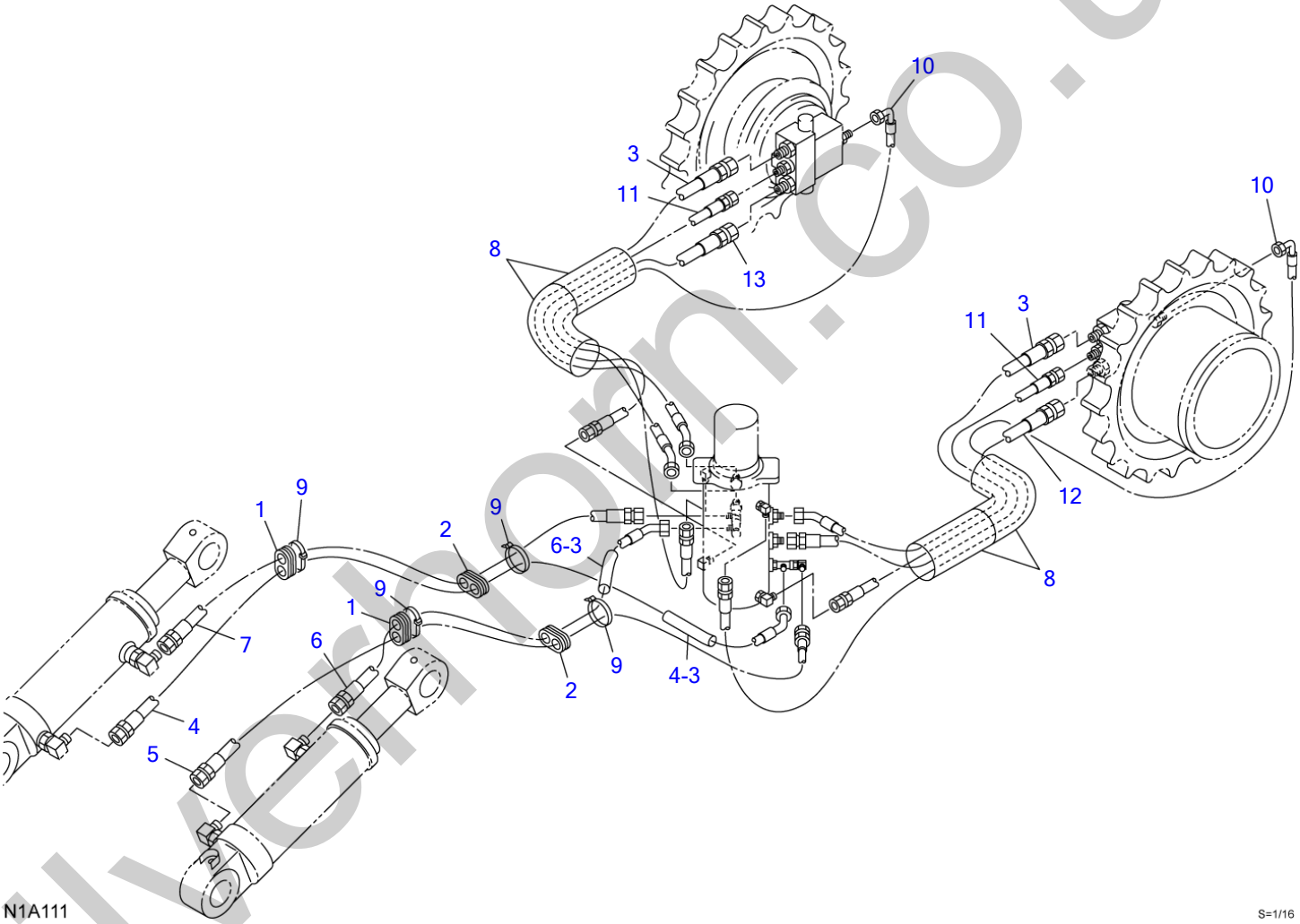

silverhorn.co.uk

PIPING; LOWER

Item	Part number	Description	Q'ty	Chan.	Serial No.	Serv.	Remarks
		PIPING ASSY, lower					X05772-00000-2
1	0097210300	GUARD	2				
2	0567215100	GUARD	2				
3	0577200010	HOSE ASSY	2				18035-24170
4	0577200020	HOSE ASSY	1				18025-22180
4-3	1532215015	・PROTECTOR	1				sold by the meter
5	0577200030	HOSE ASSY	1				
6	0577200040	HOSE ASSY	1				18025-22146
6-3	1532215015	・PROTECTOR	1				sold by the meter
7	0577200050	HOSE ASSY	1				
8	1531360060	PROTECTOR	4				
9	1652200007	BAND	4				
10	1801052210	HOSE ASSY	2				
11	1801023170	HOSE ASSY	2				
12	1803504165	HOSE ASSY	1				
13	1803524165	HOSE ASSY	1				
	N1a111						

silverhorn.co.uk

SLEWING DEVICE

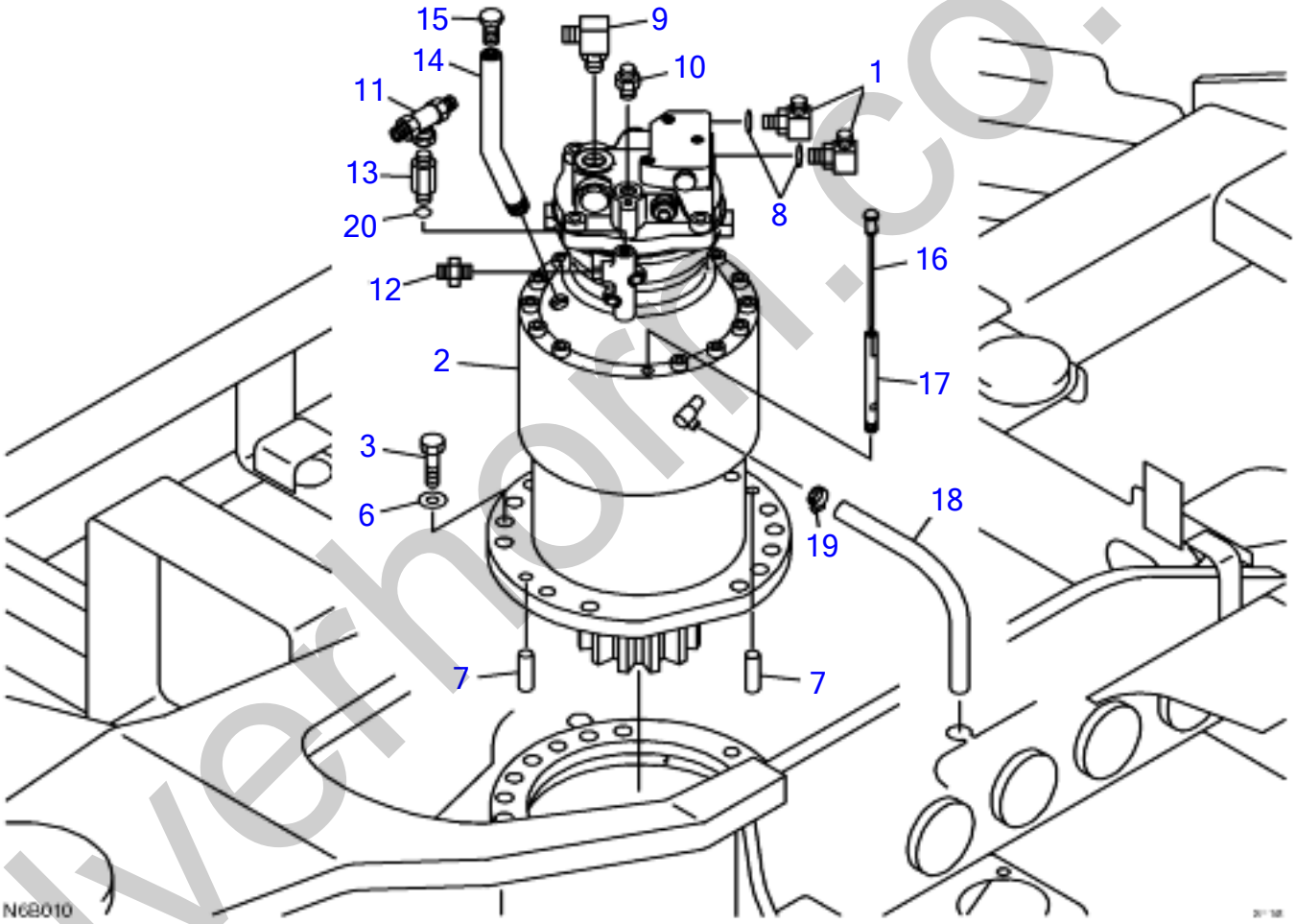

silverhorn.co.uk

SLEWING DEVICE

Item	Part number	Description	Q'ty	Chan.	Serial No.	Serv.	Remarks
		DEVICE ASSY, slewing	1				X05723-00200-1
1	1511161306	ELBOW	2				
	1420010240	・O-RING	1				
2	1903127700	MOTOR, slew	1				
3	1100042060	BOLT	13				
6	1141550020	WASHER	13				
7	1212001656	PIN, parallel	2				
8	1420310014	O-RING	2				
9	1515010043	ELBOW	1				
	1420010240	・O-RING	1				
10	1515600577	ADAPTOR	1				
	1420010180	・O-RING	1				
11	1901754100	SHUTTLE VALVE	1				
12	1515600200	ADAPTOR	1				
	1420010110	・O-RING	1				
13	0007203080	ADAPTOR	1				
14	0572300230	PIPE	1				
15	1554000004	CAP	1				
16	1553100002	GAUGE, level	1				
17	0572300240	PIPE	1				
18	0572300250	HOSE	1				
19	1533700025	BAND	1				
20	1420010110	O-RING	1				
	N6b010						

silverhorn.co.uk

TURNTABLE

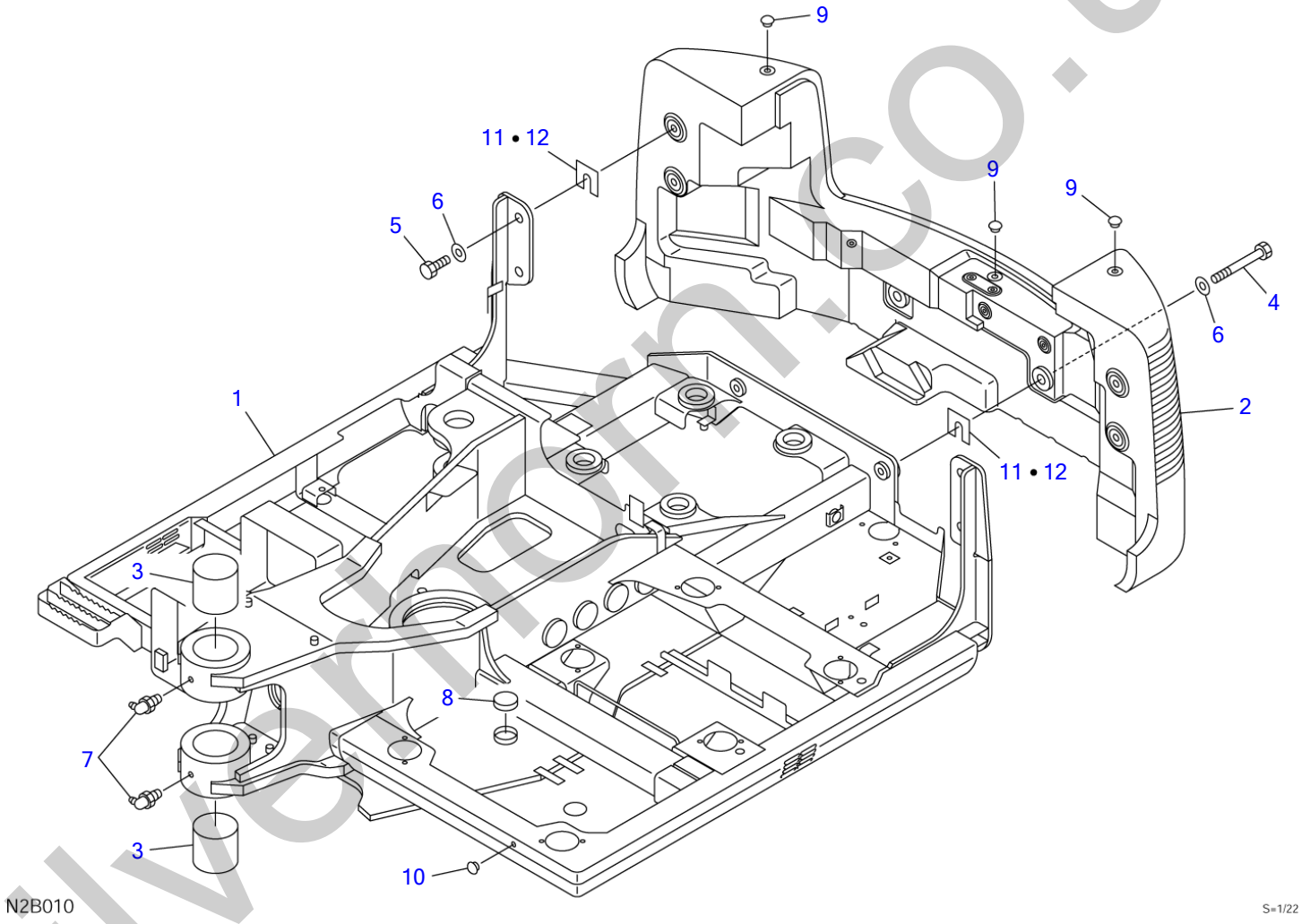

silvermoon.co.uk

TURNTABLE

Item	Part number	Description	Q'ty	Chan.	Serial No.	Serv.	Remarks
		TURNTABLE ASSY					X05730-02500-1
		TURNTABLE ASSY (extra weight)					X05730-02700-1
1	X **********	TURNTABLE	1				
2	0573002600	COUNTERWEIGHT	1			M	
	0573003400	COUNTERWEIGHT	1				extra weight
3	0573000051	BUSHING	2				
4	0573000504	BOLT	2				
	0573003310	BOLT	2				extra weight
5	1101242455	BOLT	4				
6	0003600235	WASHER	6				
7	1560001900	FITTING, grease	2				
8	0173216600	COVER	1				
9	1652533003	CAP	3				
10	1652533023	CAP	1				
11	0573000601	SHIM	AR				t=1.2mm
12	0573000602	SHIM	AR				t=2.3mm
	N2b011						

silverhorn.co.uk

BOOM SWING

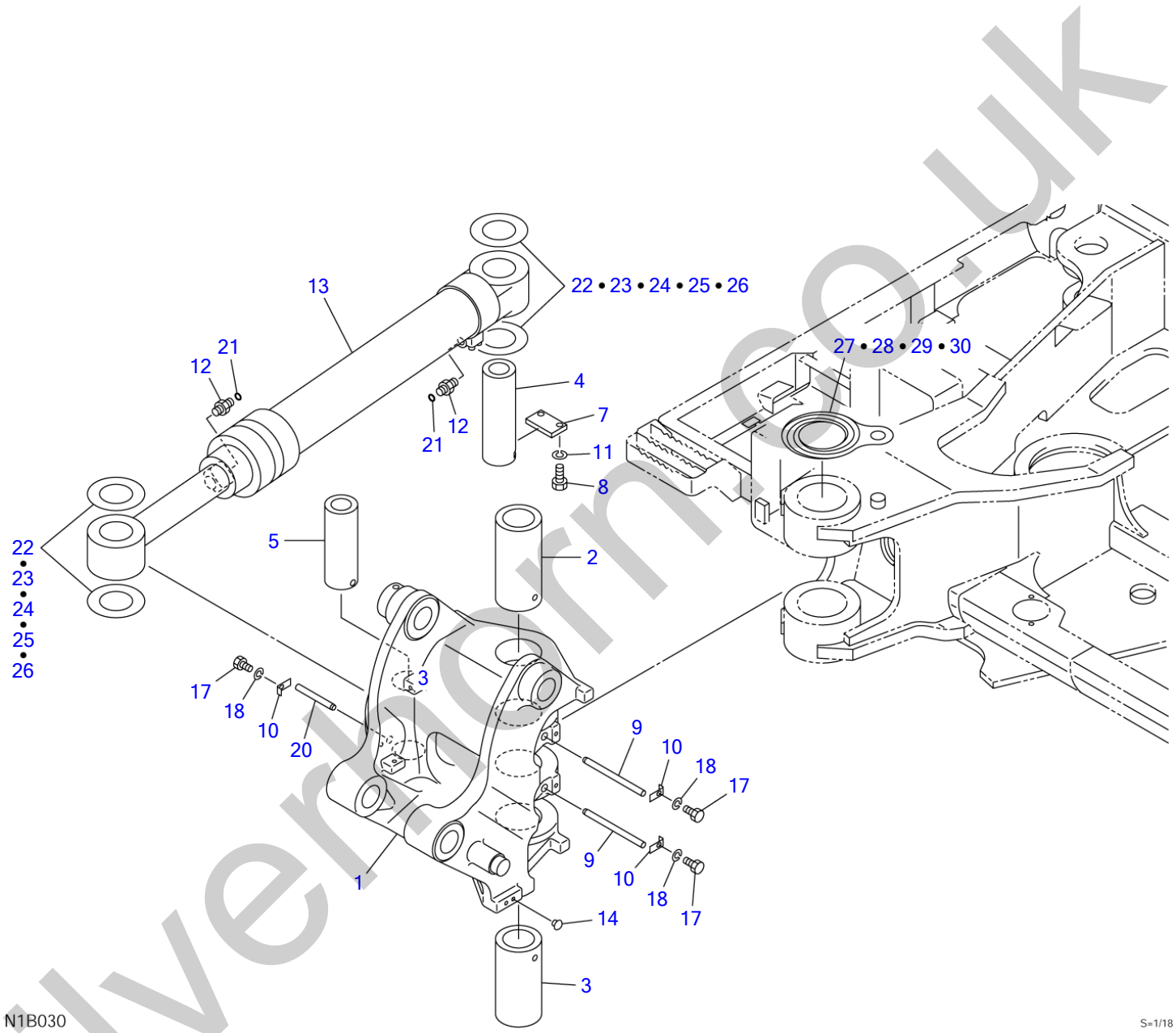

silverhorse.co.uk

BOOM SWING

Item	Part number	Description	Q'ty	Chan.	Serial No.	Serv.	Remarks
		BOOM SWING ASSY					X05731-01000-4
1	0573100100	BRACKET	1				
2	0573100021	PIN	1				
3	0573100031	PIN	1				
4	0573100040	PIN	1				
5	0573100050	PIN	1				
7	0573100070	PLATE	1				
8	1100041845	BOLT	2				
9	0573100080	PIN	2				
10	0573100090	PLATE	3				
11	1140020018	WASHER, spring	2				
12	1511061306	ADAPTOR	2				
	1420010240	・O-RING	1				
13	1900098500	CYLINDER, swing	1				
14	1652533018	CAP	2				
17	1100041220	BOLT	3				
18	1140020012	WASHER, spring	3				
20	0573100110	PIN	1				
21	1420310014	O-RING	2				
22	0003600190	SHIM	AR				t=0.2mm
23	0003600191	SHIM	AR				t=0.5mm
24	0003600192	SHIM	AR				t=1.0mm
25	0003600193	SHIM	AR				t=1.6mm
26	0003600194	SHIM	AR				t=2.9mm
27	0573100751	WASHER (t=4.5mm)	AR				
28	0573100752	WASHER (t=5.0mm)	AR				
29	0573100753	WASHER (t=5.5mm)	AR				
30	0573100754	WASHER (t=4.0mm)	AR				
	N1b031						

silverhorn.co.uk

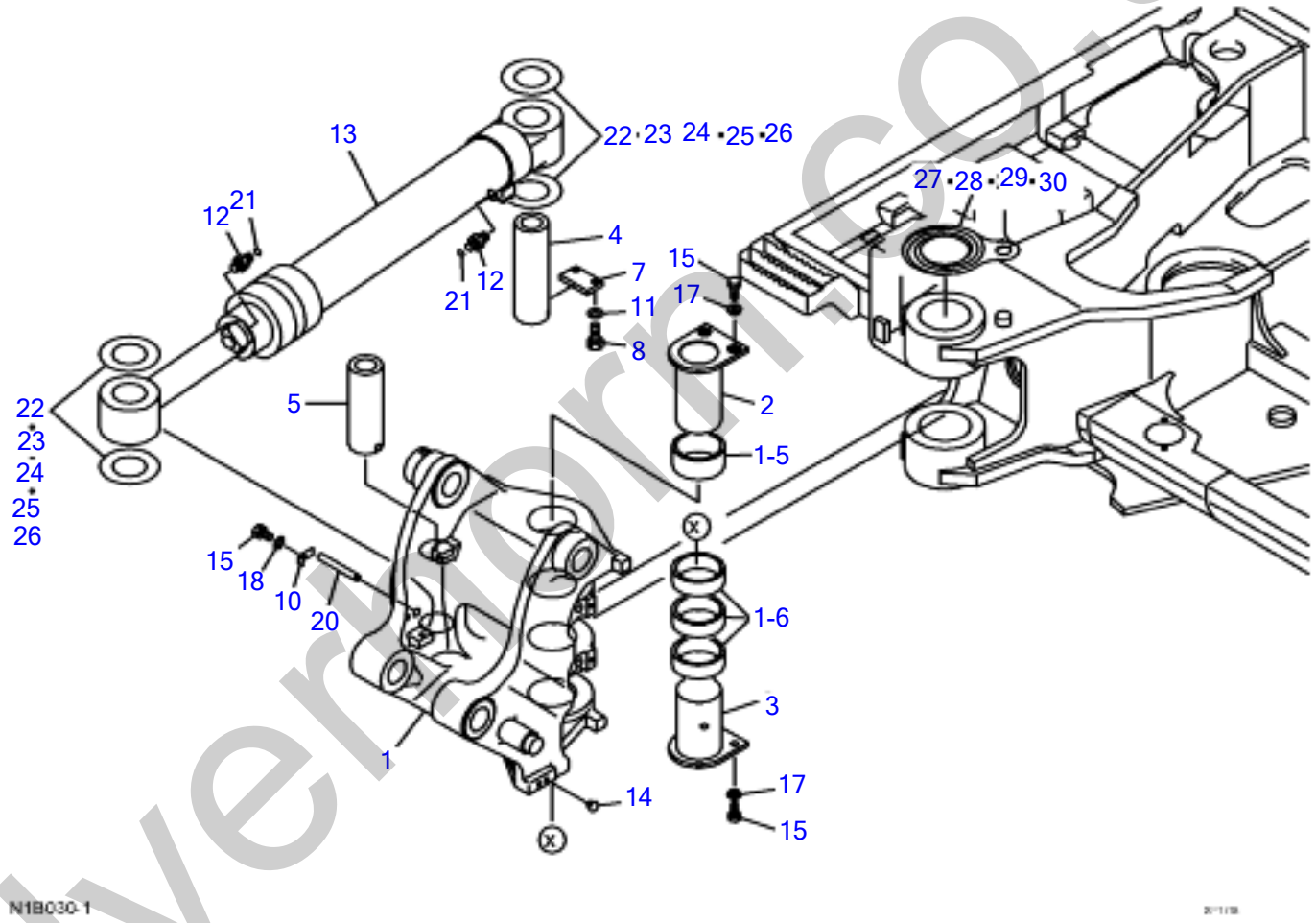

silvermorris.co.uk

BOOM SWING 51420374~

Item	Part number	Description	Q'ty	Chan.	Serial No.	Serv.	Remarks
		BOOM SWING ASSY					
1	0573101800	BRACKET	1				
1-5	0573101855	* BUSHING	1				
1-6	0573101856	* BUSHING	3				
2	0573101820	PIN	1				
3	0573101830	PIN	1				
4	0573100040	PIN	1				
5	0573100050	PIN	1				
7	0573100070	PLATE	1				
8	1100041845	BOLT	2				
10	0573100090	PLATE	1				
11	1140020018	SPRING WASHER	2				
12	1511061306	ADAPTOR	2				
	1420010240	* O-RING	1				
13	1900098500	SWING CYLINDER	1				
14	1652533018	CAP	2				
15	1101041225	BOLT	5				
17	0003900081	WASHER	4				
18	1140020012	SPRING WASHER	1				
20	0573100110	PIN	1				
21	1420310014	O-RING	2				
22	0003600190	SHIM					
23	0003600191	SHIM					
24	0003600192	SHIM					
25	0003600193	SHIM					
26	0003600194	SHIM					
27	0573100751	WASHER					
28	0573100752	WASHER					
29	0573100753	WASHER					
30	0573100754	WASHER					
	N1B031-1						

silverhorn.co.uk

TRAVEL LEVER & SWING PEDAL

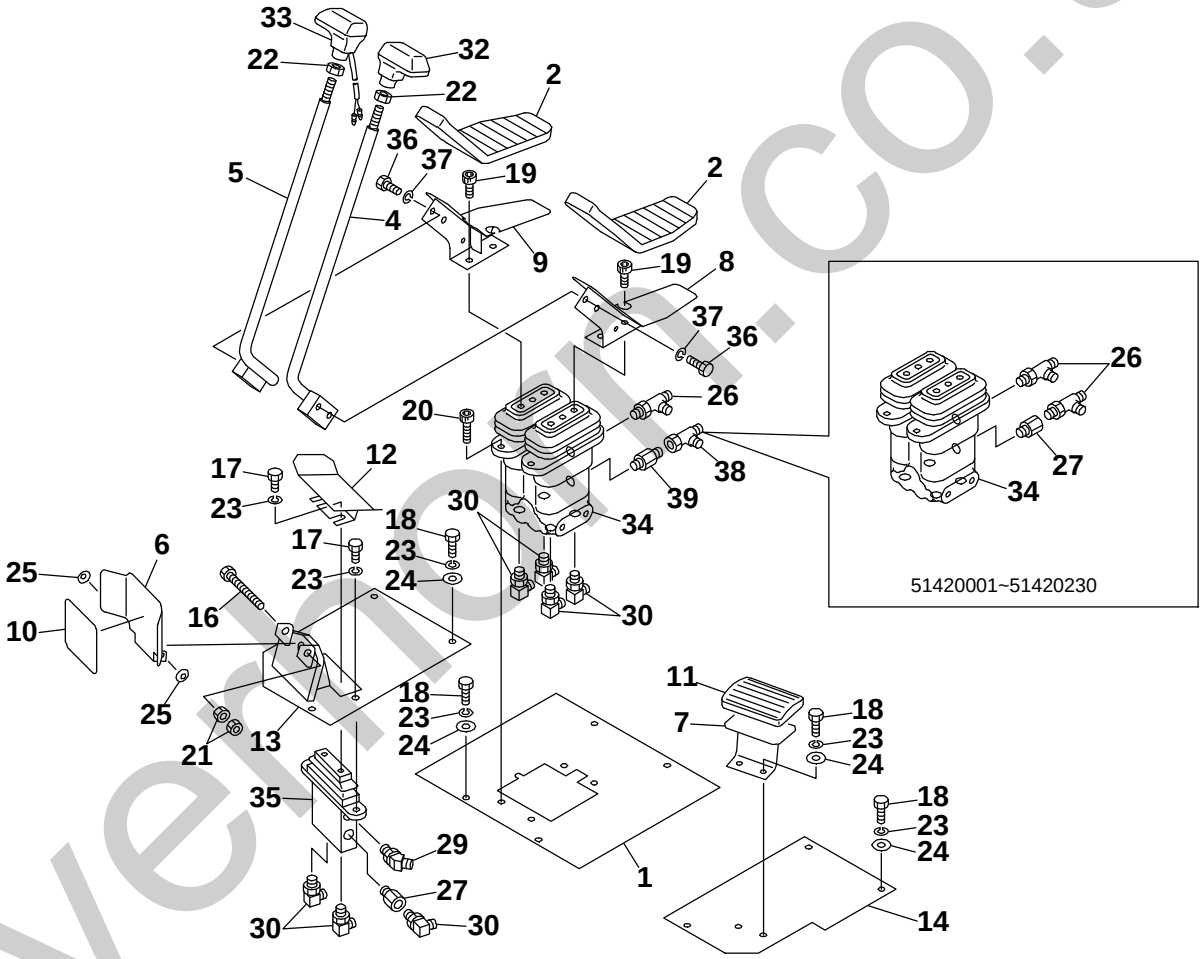

silvermoon.co.uk

TRAVEL LEVER & SWING PEDAL

Item	Part number	Description	Q'ty	Chan.	Serial No.	Serv.	Remarks
		LEVER ASSY, control					X05732-00000-4
1	0563228050	BRACKET	1				
2	0563226200	COVER	2				
4	0563226300	LEVER (L.H.)	1				
5	0563226400	LEVER (R.H.)	1				
6	0573200060	COVER	1				
7	0563219700	REST, foot	1				
8	0563226600	PEDAL (L.H.)	1				
9	0563226700	PEDAL (R.H.)	1				
10	0573200070	SHEET	1				
11	0563218500	COVER	1				
12	0573200050	PEDAL	1				
13	0563228070	BRACKET	1				
14	0573200040	BRACKET	1				
16	1100040680	BOLT	1				
17	1100040814	BOLT	4				
18	1100040820	BOLT	12				
19	1110041016	BOLT	4				
20	1110041025	SCREW, cap	4				
21	1130040006	NUT	2				
22	1131040012	NUT	2				
23	1140020008	WASHER, spring	16				
24	1141110008	WASHER	12				
25	1225110006	WASHER, conical	2				
26	1512373014	TEE	2				
	1420010110	・O-RING	1				
27	1513370046	ADAPTOR (with filter)	2				
	1420010110	・O-RING	1				
29	1515100136	ELBOW	1				
	1420010110	・O-RING	1				
30	1515010130	ELBOW	7				
	1420010110	・O-RING	1				
32	1650202610	GRIP	1				
33	1650203210	GRIP (with switch)	1				
34	1901743800	VALVE, remote control	1				
	1901754700	REMOTE CONTROL VALVE	1				
35	1901735000	VALVE, remote control	1				
36	1100041020	BOLT	4				
37	1140020010	SPRING WASHER	4				
38	1513390035	TEE	1				
39	1512370029	NIPPLE	1				
	1420010110	* O-RING	1				
	N2B030						

silverthorn.co.uk

DOZER BLADE LEVER

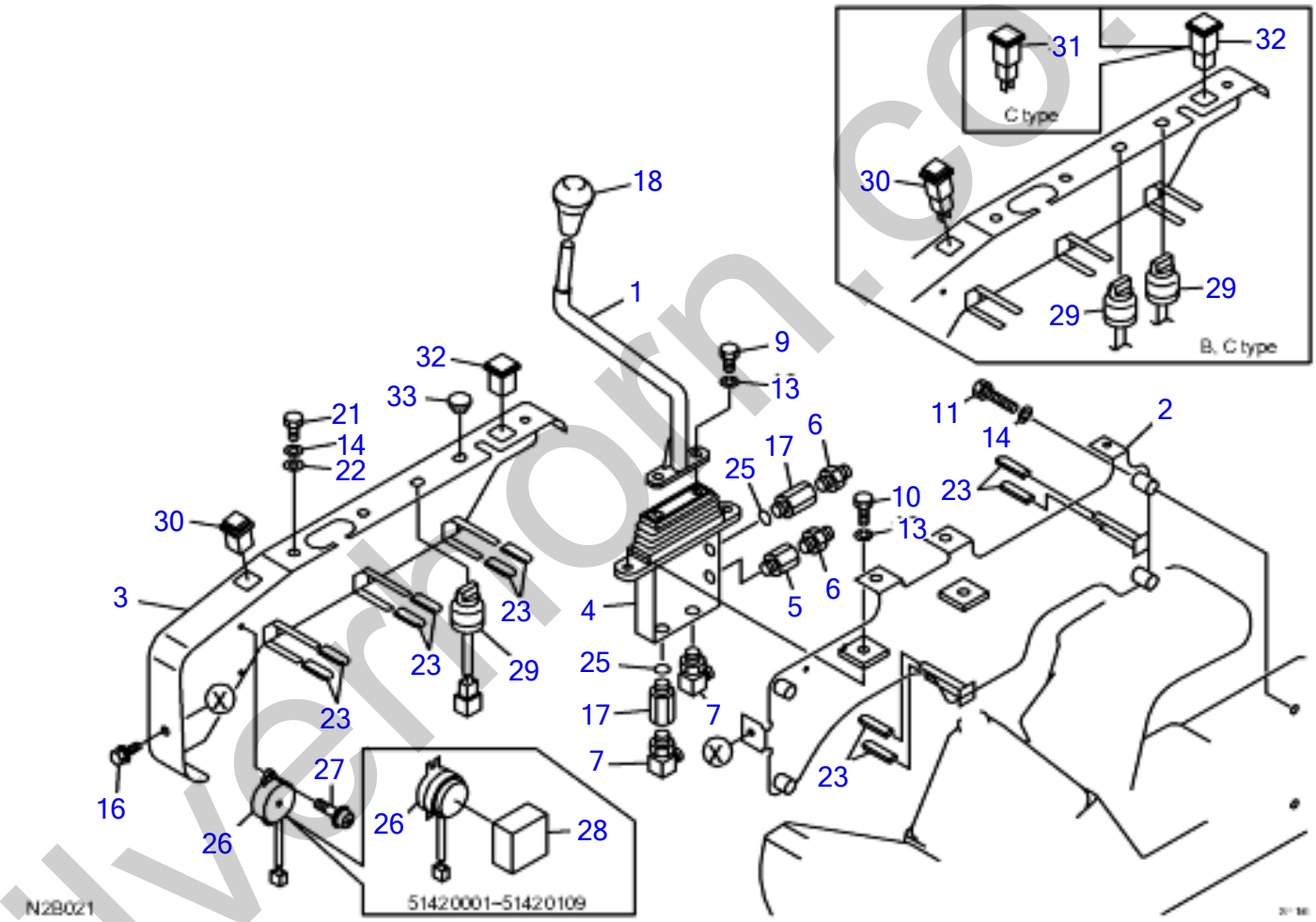

silvermorn.co.uk

DOZER BLADE LEVER

Item	Part number	Description	Q'ty	Chan.	Serial No.	Serv.	Remarks
		LEVER ASSY, blade					X05733-00600-0
1	0573300010	LEVER	1				
2	0573300020	BRACKET	1				
3	0573300040	COVER	1				
4	1901745400	VALVE, remote control	1				
5	1513370046	ADAPTOR (with filter)	1				
	1420010110	・O-RING	1				
6	1515600571	ADAPTOR	2				
	1420010110	・O-RING	1				
7	1515010130	ELBOW	2				
	1420010110	・O-RING	1				
9	1100040814	BOLT	4				
10	1100040820	BOLT	2				
11	1100090835	BOLT	4				
13	1140020008	WASHER, spring	4				
14	1140090008	WASHER, spring	6				
16	1100560612	BOLT	2				
17	0007213028	BUSHING	2				
	1420010110	* O-RING	1				
18	1650153655	GRIP	1				
21	1100090816	BOLT	2				
22	1141190008	WASHER	2				
23	0872433150	TUBE	10				
25	1420010110	O-RING	2				
26	1730140490	BUZZER	1				
	0573300610	BUZZER	1				
27	1150420308	SCREW	2				
28	0564232950	INSULATOR	1				
29	1700000019	SWITCH, rotary	1				
	1700000019	ROTARY SWITCH	2				
30	1700550031	RED PILOT LAMP	1				
31	1700550033	GREEN PILOT LAMP	1				
32	1700550024	ORNAMENT	2				
33	1652533019	CAP	1				
		<<NOTE>>					
		A TYPE					
		STANDARD & WITH 2ND AUX LINE					
		B TYPE					
		WITH SHUT-OFF VALVE & OVERLOAD					
		WARNING DEVICE					
		C TYPE					
		WITH SHUT-OFF VALVE, OVERLOAD					
		WARNING DEVICE,					
		& 2ND, 4TH AUX LINE					
	N2b021						

silverthorn.co.uk

OPERATION LEVER & STAND (R.H.)

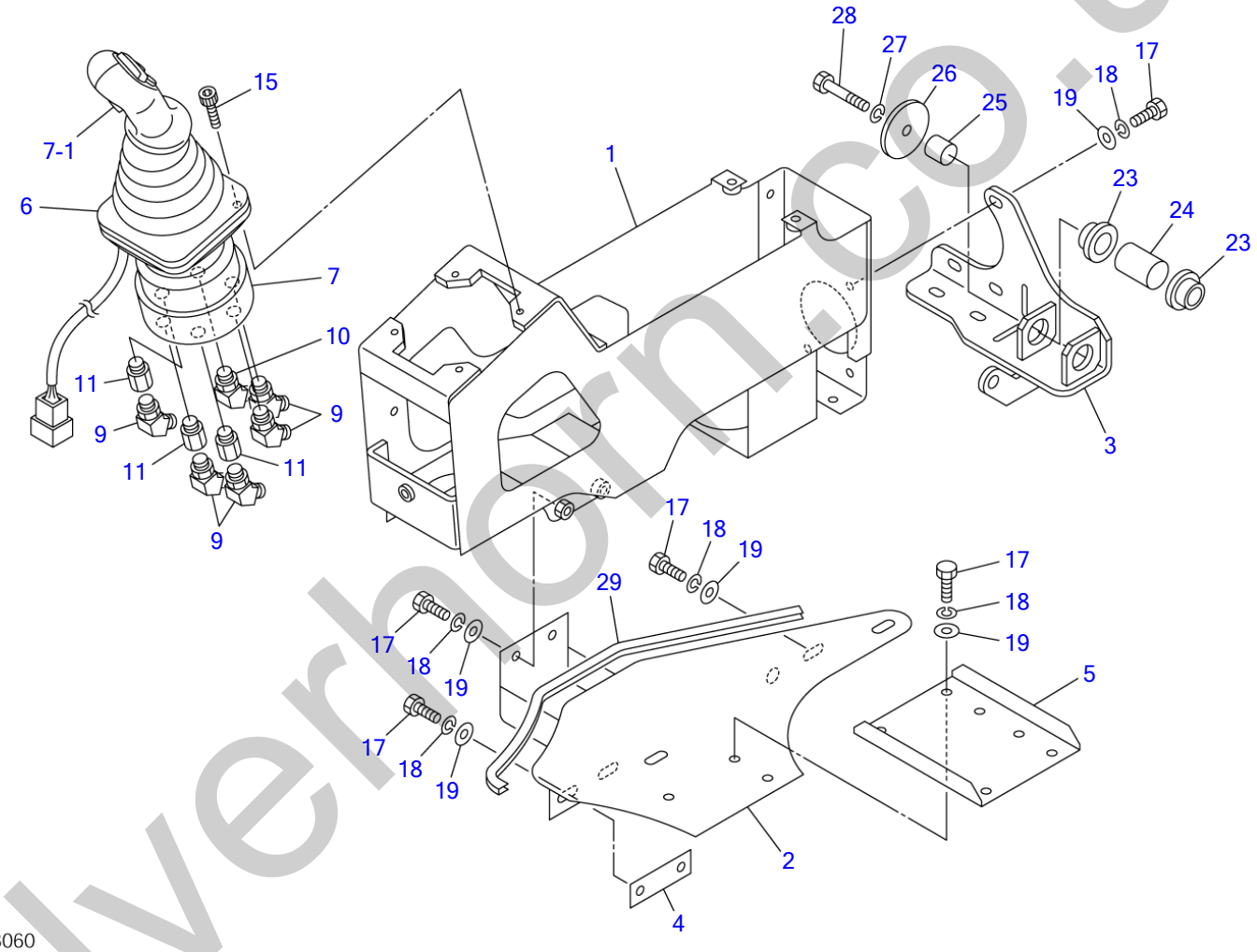

silverhorn.co.uk

OPERATION LEVER & STAND (R.H.)

Item	Part number	Description	Q'ty	Chan.	Serial No.	Serv.	Remarks
		VALVE ASSY (R.H.)					X05751-00000-3
1	0575100200	BOX, console (R.H.)	1				
2	0565104000	BRACKET (R.H.)	1				
3	0565114200	BRACKET (R.H.)	1				
4	0565103800	PLATE	1				
5	0565104200	PLATE	1				
6	0881510020	BOOT	1				
7	1901743700	VALVE, pilot	1				
7-1	1901740402	・SWITCH, button	1				
9	1515100111	ELBOW	5				
	1420010140	・O-RING	1				
10	1512372001	ELBOW (with filter)	1				
	1420010110	・O-RING	1				
11	0007213023	ADAPTOR	3				
	1420010140	・O-RING	1				
15	1110040630	SCREW, cap	4				
17	1100090820	BOLT	13				
18	1140090008	WASHER, spring	13				
19	1141190008	WASHER	13				
23	0565102405	BEARING	2				
24	0565103810	SPACER	1				
25	0565103820	SPACER	1				
26	0565103830	RETAINER	1				
27	0565103840	WASHER, spring	1				
28	0565103850	BOLT	1				
29	1653916038	TRIM	1				sold by the meter
	N0b060						

silverhorn.co.uk

OPERATION LEVER & STAND (R.H.) (with air suspension)

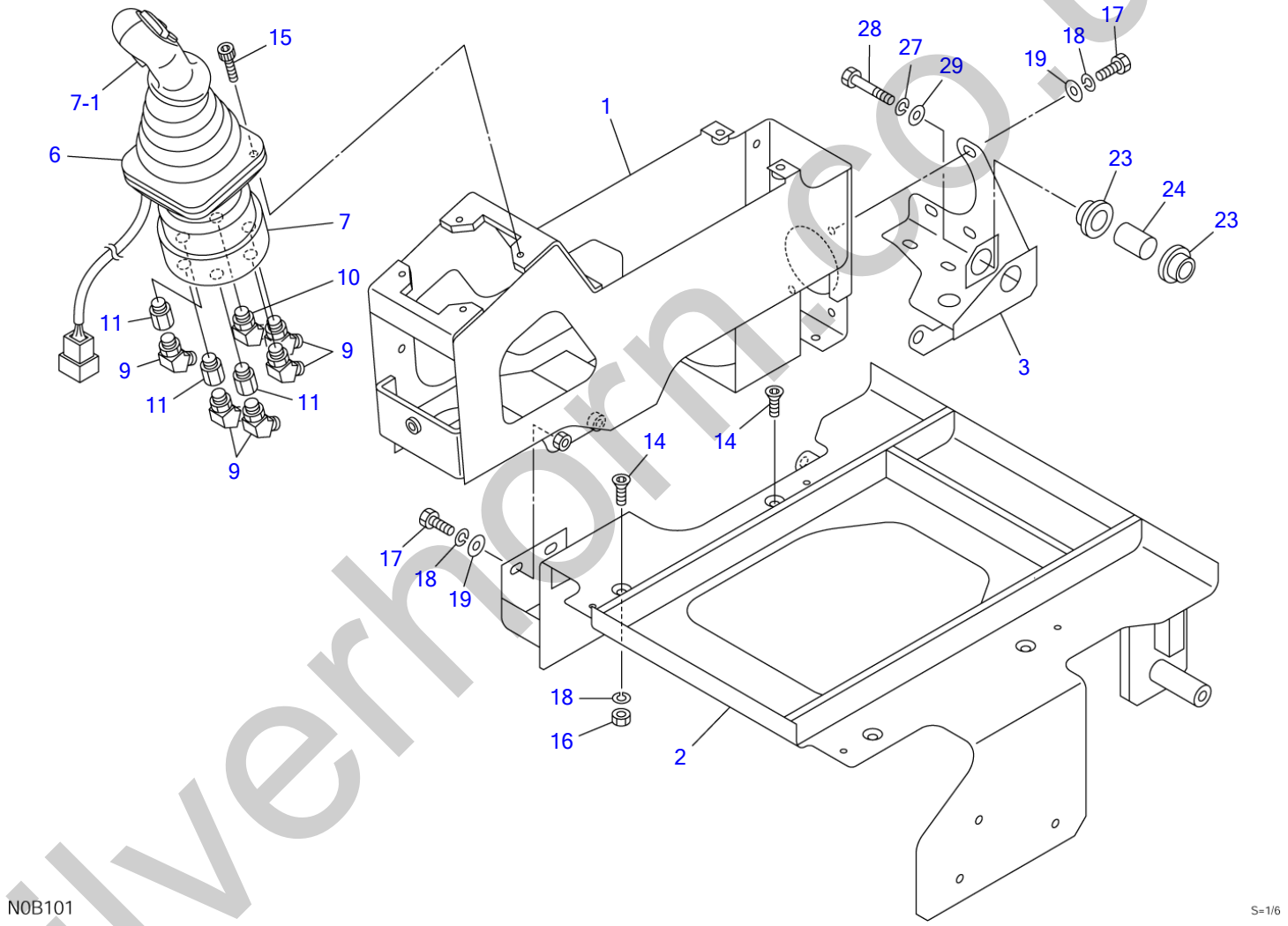

silverhorn.co.uk

OPERATION LEVER & STAND (R.H.) (with air suspension)

Item	Part number	Description	Q'ty	Chan.	Serial No.	Serv.	Remarks
		VALVE ASSY (R.H.)					X05751-00500-3
1	0575100200	BOX, console (R.H.)	1				
2	0575100540	BRACKET (R.H.)	1				
3	0575100530	BRACKET (R.H.)	1				
6	0881510020	BOOT	1				
7	1901743700	VALVE, pilot	1				
7-1	1901740402	・SWITCH, button	1				
9	1515100111	ELBOW	5				
	1420010140	・O-RING	1				
10	1512372001	ELBOW (with filter)	1				
	1420010110	・O-RING	1				
11	0007213023	ADAPTOR	3				
	1420010140	・O-RING	1				
14	1120800816	SCREW, cap	4				
15	1110040630	SCREW, cap	4				
16	1130040008	NUT	2				
17	1100090820	BOLT	8				
18	1140090008	WASHER, spring	10				
19	1141190008	WASHER	8				
23	0565102405	BEARING	2				
24	0575100536	SPACER	1				
27	1140020012	WASHER, spring	1				
28	1101041225	BOLT	1				
29	1141110012	WASHER	1				
	N1b060						

silverhorn.co.uk

OPERATION LEVER & STAND (L.H.)

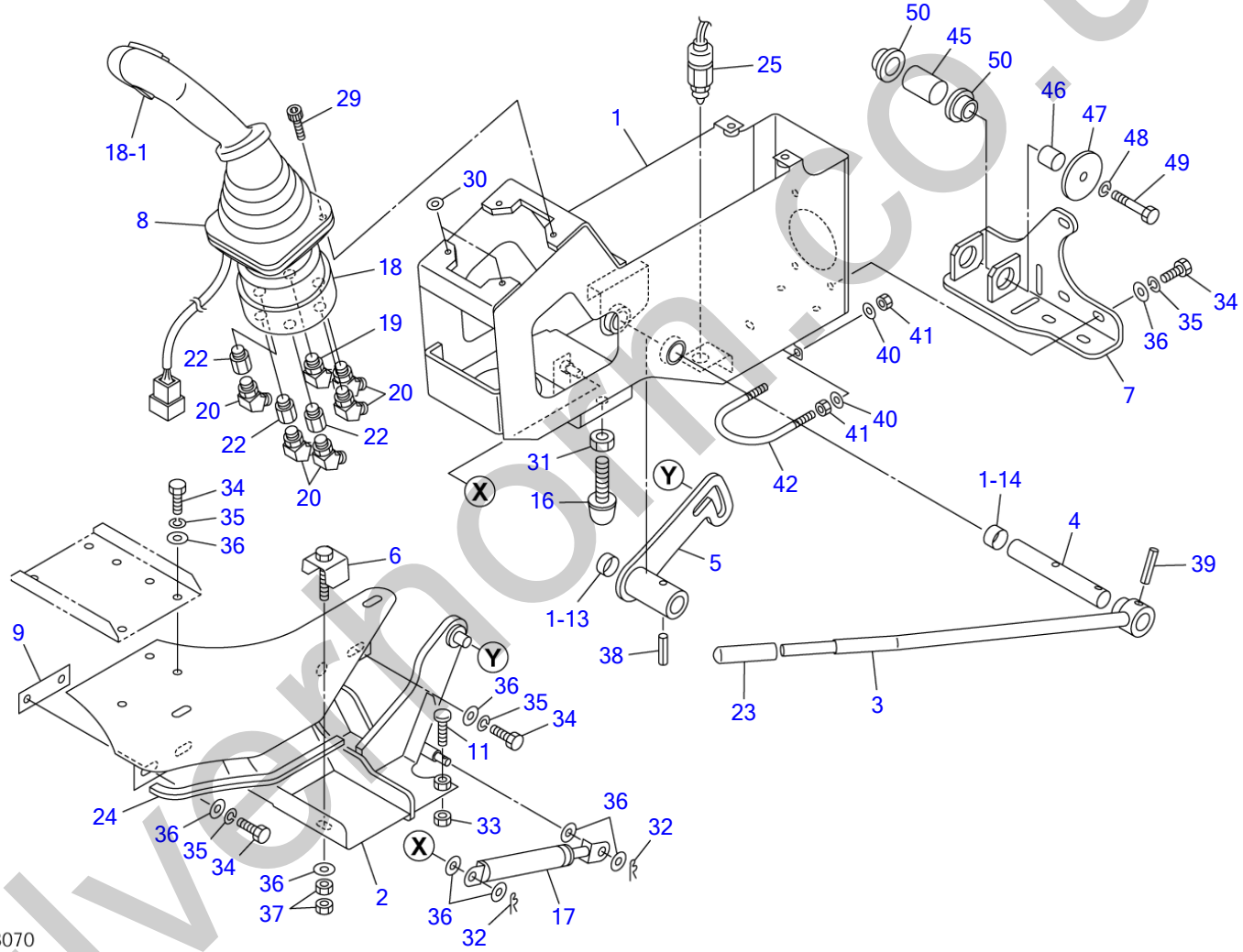

silvermoth.co.uk

OPERATION LEVER & STAND (L.H.)

Item	Part number	Description	Q'ty	Chan.	Serial No.	Serv.	Remarks
		VALVE ASSY (L.H.)					X05751-00100-4
1	0575100700	BOX, console (L.H.)	1				
1-13	1333002010	・BUSHING	1				
1-14	1333002015	・BUSHING	1				
2	0565113250	BRACKET	1				
3	0575100110	LEVER	1				
	0565115300	LEVER	1				
4	0565115310	SHAFT	1				
5	0565125300	PLATE (L.H.)	1				
6	0565115320	GUIDE	1				
7	0565115400	BRACKET	1				
8	0881510020	BOOT	1				
9	0565103800	PLATE	1				
11	0335120970	BOLT	1				
16	1651101225	STOPPER	2				
17	1653900057	SPRING, gas	1				
18	1901743600	VALVE, pilot	1				
18-1	1901740402	・SWITCH, button	1				
19	1512372001	ELBOW (with filter)	1				
	1420010110	・O-RING	1				
20	1515100111	ELBOW	5				
	1420010140	・O-RING	1				
22	0007213023	ADAPTOR	3				
	1420010140	・O-RING	1				
23	1650202300	CAP	1				
24	1653916022	TRIM	1				sold by the meter
25	1700000033	SWITCH, limit	1				
29	1110040630	SCREW, cap	4				
30	0003600090	WASHER	2				
31	1130040012	NUT	2				
32	1214000008	PIN, snap	2				
33	1130040010	NUT	1				
34	1100090820	BOLT	11				
35	1140090008	WASHER, spring	11				
36	1141190008	WASHER	16				
37	1130090008	NUT	2				
38	1213000832	PIN, spring	1				
39	1213000836	PIN, spring	1				
40	1141190006	WASHER	4				
41	1130090006	NUT	4				
42	1533207020	U-BOLT	1				
45	0565103810	SPACER	1				
46	0565115060	SPACER	1				
47	0565103830	RETAINER	1				
48	0565103840	WASHER, spring	1				
49	0565103850	BOLT	1				
50	0565102405	BEARING	2				
	N2B040						

silverthorn.co.uk

OPERATION LEVER & STAND (L.H.) (with air suspension)

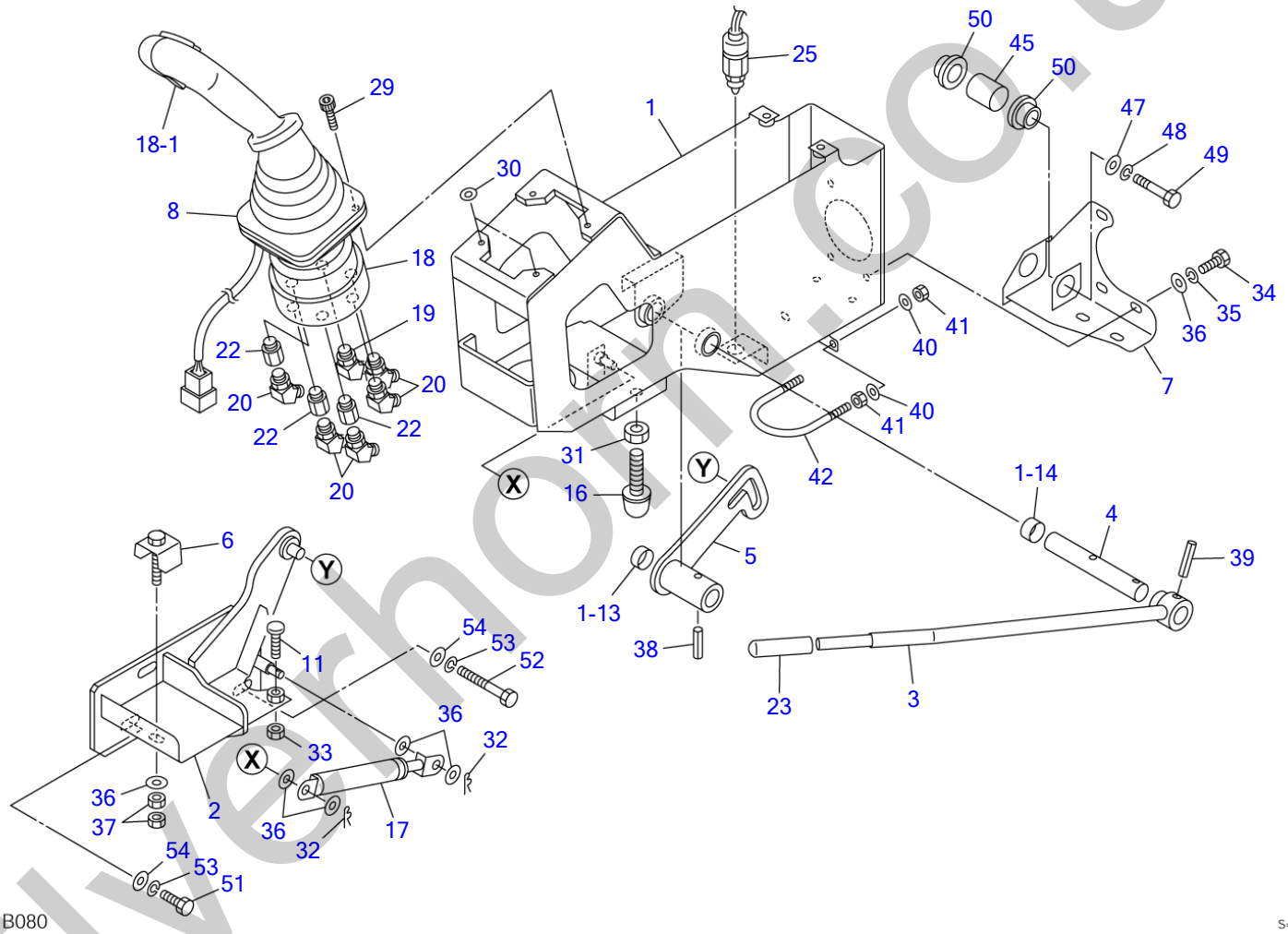

silverhorn.co.uk

OPERATION LEVER & STAND (L.H.) (with air suspension)

Item	Part number	Description	Q'ty	Chan.	Serial No.	Serv.	Remarks
		VALVE ASSY (L.H.)					X05751-00600-3
1	0575100700	BOX, console (L.H.)	1				
1-13	1333002010	・BUSHING	1				
1-14	1333002015	・BUSHING	1				
2	0575100640	BRACKET (L.H.)	1				
3	0575100110	LEVER	1				
	0565115300	LEVER	1				
4	0565115310	SHAFT	1				
5	0565125300	PLATE (L.H.)	1				
6	0565115320	GUIDE	1				
7	0575100630	BRACKET (L.H.)	1				
8	0881510020	BOOT	1				
11	0335120970	BOLT	1				
16	1651101225	STOPPER	2				
17	1653900057	SPRING, gas	1				
18	1901743600	VALVE, pilot	1				
18-1	1901740402	・SWITCH, button	1				
19	1512372001	ELBOW (with filter)	1				
	1420010110	・O-RING	1				
20	1515100111	ELBOW	5				
	1420010140	・O-RING	1				
22	0007213023	ADAPTOR	3				
	1420010140	・O-RING	1				
23	1650202300	CAP	1				
25	1700000033	SWITCH, limit	1				
29	1110040630	SCREW, cap	4				
30	0003600090	WASHER	2				
31	1130040012	NUT	2				
32	1214000008	PIN, snap	2				
33	1130040010	NUT	1				
34	1100090820	BOLT	6				
35	1140090008	WASHER, spring	6				
36	1141190008	WASHER	11				
37	1130090008	NUT	2				
38	1213000832	PIN, spring	1				
39	1213000836	PIN, spring	1				
40	1141190006	WASHER	4				
41	1130090006	NUT	4				
42	1533207020	U-BOLT	1				
45	0575100536	SPACER	1				
47	1141110012	WASHER	1				
48	1140020012	WASHER, spring	1				
49	1101041225	BOLT	1				
50	0565102405	BEARING	2				
51	1100041025	BOLT	2				
52	1100041065	BOLT	1				
53	1140020010	WASHER, spring	3				
54	1141110010	WASHER	3				
	N2B050						

silvermorn.co.uk

ARM REST

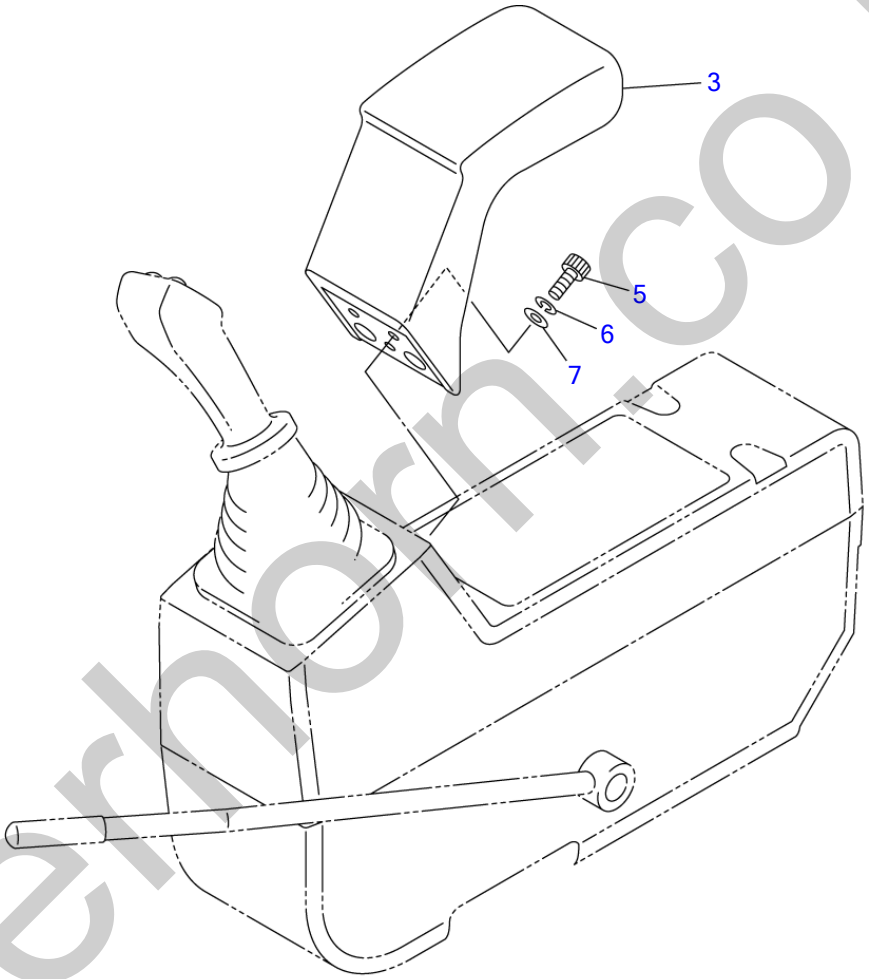

L3B090

S=1/5

silverhorn.co.uk

ARM REST

Item	Part number	Description	Q'ty	Chan.	Serial No.	Serv.	Remarks
		REST ASSY, arm					X05636-00000-2
3	0563600300	REST, arm	1				
5	1110090820	SCREW, cap	3				
6	1140490008	WASHER, spring	3				
7	1141190008	WASHER	3				
	L3b090						

silverhorn.co.uk

PIPING; OPERATION LEVER (1/2) (ISO pattern)

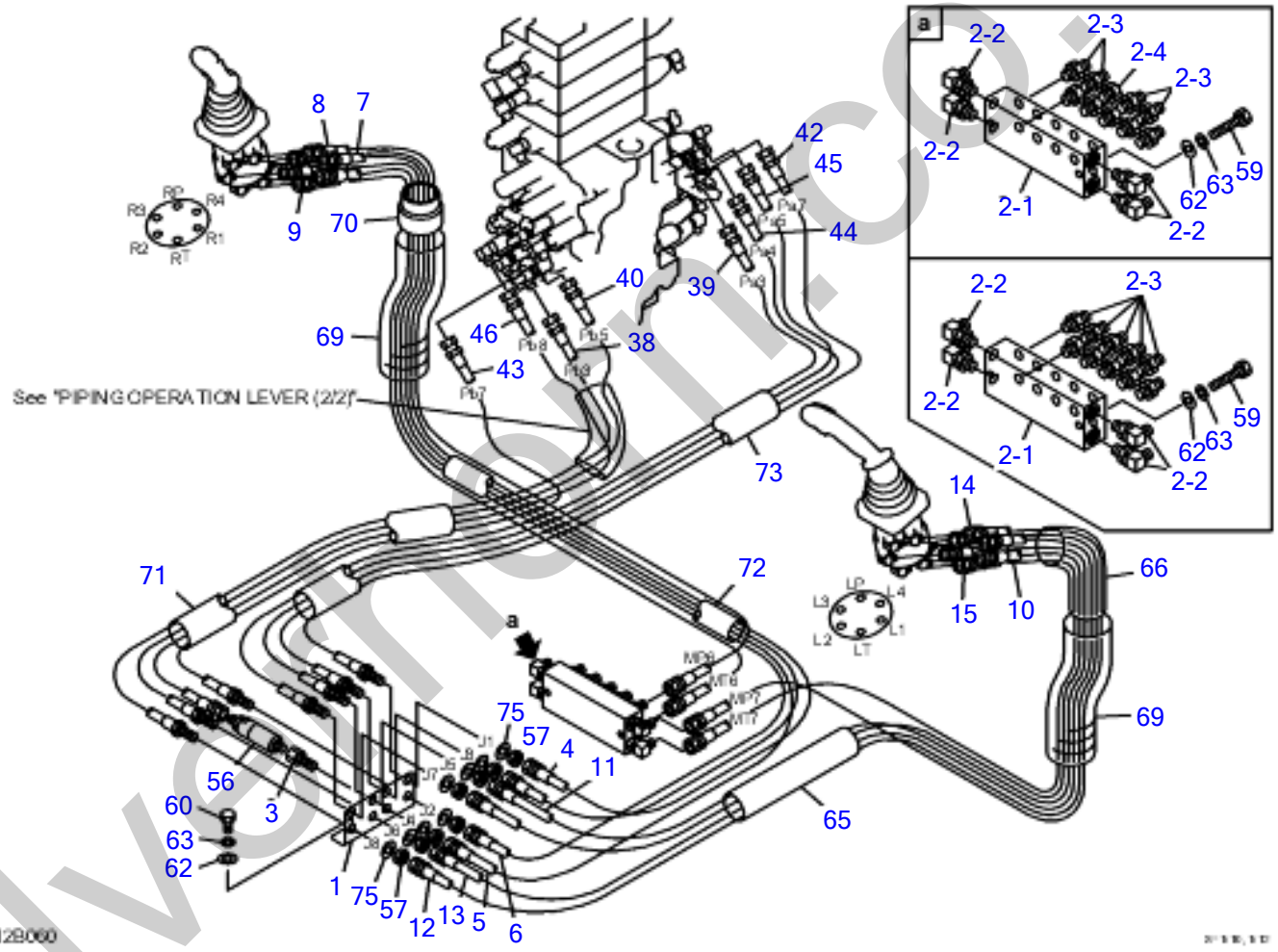

silvermerlin.co.uk

PIPING; OPERATION LEVER (1/2) (ISO pattern)

Item	Part number	Description	Q'ty	Chan.	Serial No.	Serv.	Remarks
		PIPING ASSY					X05771-05000-6
		PIPING ASSY (with 2nd aux. line)					X05771-05500-6
1	0577105010	BRACKET	1				
2	0577102020	MANIFOLD ASSY	1				standerd
	0577101020	MANIFOLD ASSY	1				with 2nd aux. line
2-1	0577101021	・MANIFOLD	1				
2-2	1515010041	・ELBOW	4				
	1420010140	・・O-RING	1				
2-3	1515600201	・ADAPTOR	8				standerd
	1420010140	・・O-RING	1				
	1515600201	・ADAPTOR	10				with 2nd aux. line
	1420010140	・・O-RING	1				
2-4	1501750003	・PLUG	2				standerd
	1420010140	・・O-RING	1				
3	0577101030	ADAPTOR	1				
4	0577105040	HOSE ASSY	1				18010-23175
5	0577101050	HOSE ASSY	1				18010-23185
6	0577105060	HOSE ASSY	1				18010-23175
7	0577101070	HOSE ASSY	1				18010-23185
8	0577101080	HOSE ASSY	1				18010-23132
9	0577101090	HOSE ASSY	1				18010-23134
10	0577101100	HOSE ASSY	1				18010-23165
11	0577101110	HOSE ASSY	1				18010-23155
12	0577101120	HOSE ASSY	1				18010-23165
13	0577101130	HOSE ASSY	1				18010-23165
14	0577101140	HOSE ASSY	1				18010-23112
15	0577101150	HOSE ASSY	1				18010-23114
38	0577101550	HOSE ASSY	1				
39	0577101560	HOSE ASSY	1				
40	0577101570	HOSE ASSY	1				
42	0577101420	HOSE ASSY	1				
43	0577101430	HOSE ASSY	1				
44	0577101440	HOSE ASSY	1				
45	0577101450	HOSE ASSY	1				
46	0577101460	HOSE ASSY	1				18010-23138
56	1901744700	VALVE, shock-less	1				
57	0007200154	NUT	8				
59	1100041060	BOLT	2				
60	1100041020	BOLT	2				
62	1141110010	WASHER	2				
63	1140020010	WASHER, spring	4				
65	1531350030	PROTECTOR	1				sold by the meter
66	1531350050	PROTECTOR	1				sold by the meter
69	1567526545	PROTECTOR	2				sold by the meter
70	1567536500	CUFF	1				
71	1531360080	protector	1				
72	1531350080	PROTECTOR	1				sold by the meter
73	1531360100	PROTECTOR	2				sold by the meter
75	1141110018	WASHER	8				
	N2B060						

silvethorn.co.uk

PIPING; OPERATION LEVER (2/2) (ISO pattern)

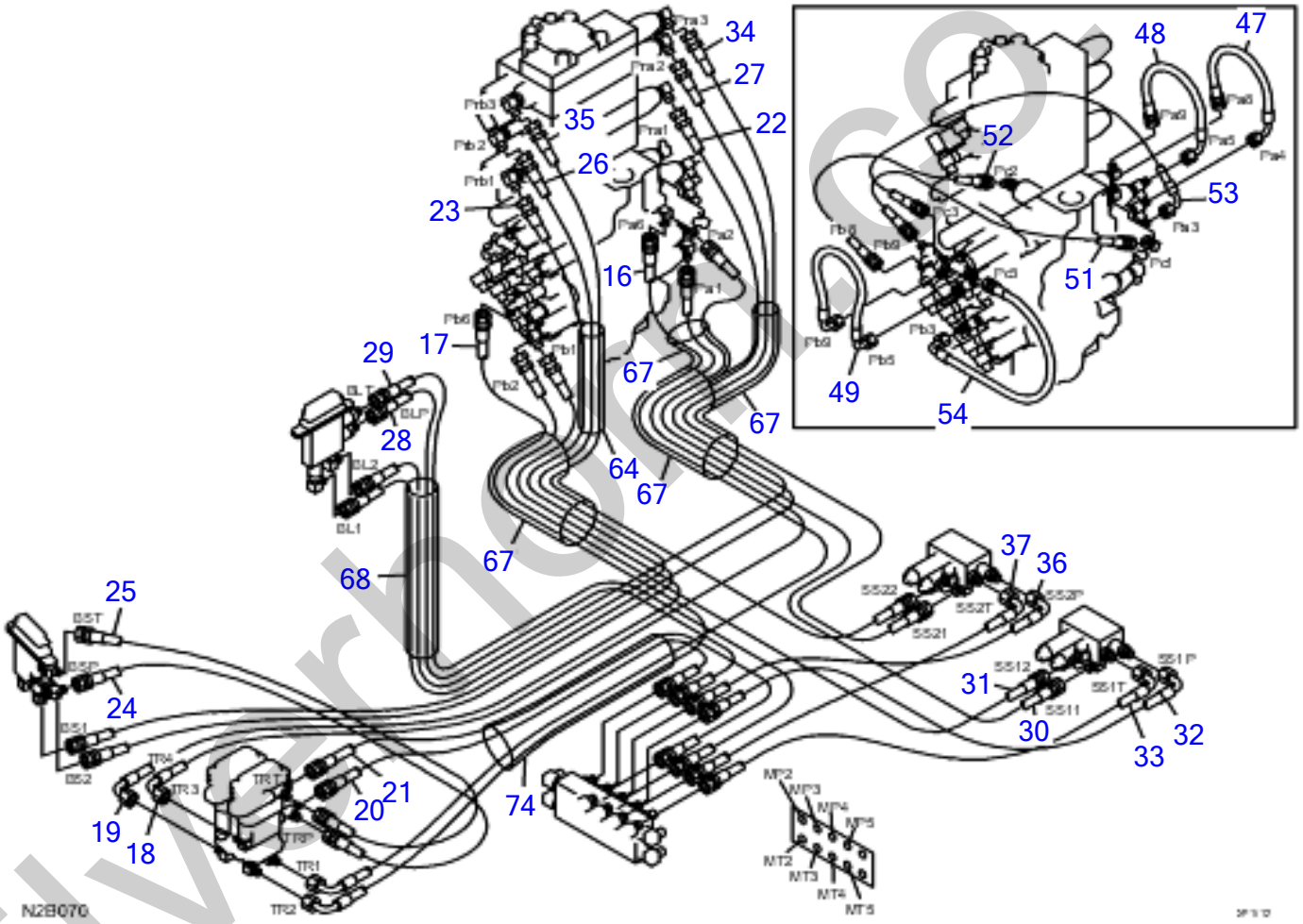

silverhome.co.uk

PIPING; OPERATION LEVER (2/2) (ISO pattern)

Item	Part number	Description	Q'ty	Chan.	Serial No.	Serv.	Remarks
		PIPING ASSY					X05771-05000-6
		PIPING ASSY (with 2nd aux. line)					X05771-05500-6
16	0577101160	HOSE ASSY	1				18010-53195
17	0577101170	HOSE ASSY	1				18010-53175
18	0577101180	HOSE ASSY	1				18010-53185
19	0577101190	HOSE ASSY	1				18010-53170
20	0577101200	HOSE ASSY	1				18010-23088
21	0577101210	HOSE ASSY	1				18010-23090
22	0577101220	HOSE ASSY	1				18010-23205
23	0577101230	HOSE ASSY	1				18010-23175
24	0577101240	HOSE ASSY	1				18010-23065
25	0577101250	HOSE ASSY	1				18010-23065
26	0577101260	HOSE ASSY	1				18010-23155
27	0577101270	HOSE ASSY	1				18010-23175
28	0577101280	HOSE ASSY	1				18010-23114
29	0577101290	HOSE ASSY	1				18010-23122
30	0577101300	HOSE ASSY	1				18010-23160
31	0577101310	HOSE ASSY	1				18010-23126
32	0577101320	HOSE ASSY	1				18010-53058
33	0577101330	HOSE ASSY	1				18010-53056
34	0577101340	HOSE ASSY (18010-23180)	1				with 2nd aux. line
35	0577101350	HOSE ASSY (18010-23150)	1				with 2nd aux. line
36	0577101360	HOSE ASSY (18010-53040)	1				with 2nd aux. line
37	0577101370	HOSE ASSY (18010-53036)	1				with 2nd aux. line
47	0577101470	HOSE ASSY	1				18010-52054
48	0577101480	HOSE ASSY	1				18010-52040
49	0577100020	HOSE ASSY	1				
51	0577101510	HOSE ASSY	1				18010-22076
52	0577101520	HOSE ASSY	1				18010-22048
53	0577101530	HOSE ASSY	1				18010-52090
54	0577101540	HOSE ASSY	1				18010-52036
64	1531360025	PROTECTOR	1				
67	1531360020	PROTECTOR	4				sold by the meter
68	1567525045	PROTECTOR	1				sold by the meter
74	1531360050	PROTECTOR	1				sold by the meter
	N2B070						

silverhorn.co.uk

PIPING; OPERATION LEVER (1/2) (A-G pattern)

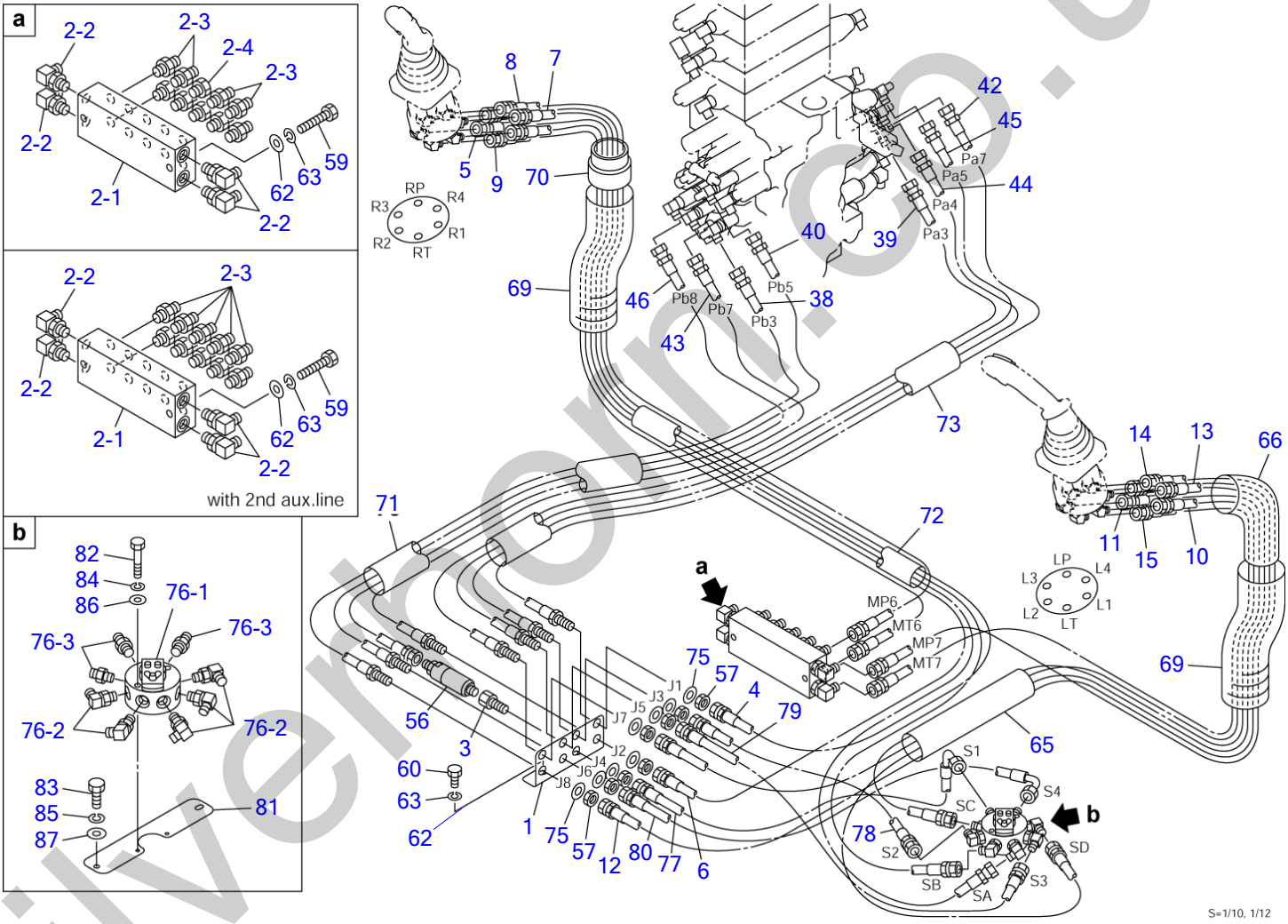

silvermorn.co.uk

PIPING; OPERATION LEVER (1/2) (A-G pattern)

Item	Part number	Description	Q'ty	Chan.	Serial No.	Serv.	Remarks
		PIPING ASSY					X05771-06000-7
		PIPING ASSY (with 2nd aux. line)					X05771-06500-7
1	0577105010	BRACKET	1				
2	0577102020	MANIFOLD ASSY	1				standerd
	0577101020	MANIFOLD ASSY	1				with 2nd aux. line
2-1	0577101021	・MANIFOLD	1				
2-2	1515010041	・ELBOW	4				
	1420010140	・・O-RING	1				
2-3	1515600201	・ADAPTOR	8				standerd
	1420010140	・・O-RING	1				
	1515600201	・ADAPTOR	10				with 2nd aux. line
	1420010140	・・O-RING	1				
2-4	1501750003	・PLUG	2				standerd
	1420010140	・・O-RING	1				
3	0577101030	ADAPTOR	1				
4	0577105040	HOSE ASSY	1				18010-23175
5	0577103050	HOSE ASSY	1				18010-23205
6	0577105060	HOSE ASSY	1				18010-23175
7	0577103070	HOSE ASSY	1				18010-23195
8	0577101080	HOSE ASSY	1				18010-23132
9	0577101090	HOSE ASSY	1				18010-23134
10	0577101100	HOSE ASSY	1				18010-23165
11	0577103110	HOSE ASSY	1				18010-23155
12	0577101120	HOSE ASSY	1				18010-23165
13	0577103130	HOSE ASSY	1				18010-23190
14	0577101140	HOSE ASSY	1				18010-23112
15	0577101150	HOSE ASSY	1				18010-23114
38	0577101550	HOSE ASSY	1				
39	0577101560	HOSE ASSY	1				
40	0577101570	HOSE ASSY	1				
42	0577101420	HOSE ASSY	1				
43	0577101430	HOSE ASSY	1				
44	0577101440	HOSE ASSY	1				
45	0577101450	HOSE ASSY	1				
46	0577101460	HOSE ASSY	1				18010-23138
56	1901744700	VALVE, shock-less	1				
57	0007200154	NUT	8				
59	1100041060	BOLT	2				
60	1100041016	BOLT	2				
62	1141110010	WASHER	2				
63	1140020010	WASHER, spring	4				
65	1531350030	PROTECTOR	1				sold by the meter
66	1531350050	PROTECTOR	1				sold by the meter
69	1567526545	PROTECTOR	2				sold by the meter
70	1567536500	CUFF	1				
71	1531360080	PROTECTOR	1				
72	1531350080	PROTECTOR	1				sold by the meter
73	1531360100	PROTECTOR	2				sold by the meter
75	1141110018	WASHER	8				
76	X **********	VALVE ASSY, selector	1				X05771-03760-0
76-1	1901730500	・VALVE, selector	1				
76-2	1515010130	・ELBOW	5				
	1420010110	・・O-RING	1				
76-3	1515600571	・ADAPTOR	3				
	1420010110	・・O-RING	1				
77	0577103770	HOSE ASSY	1				18010-53032
78	0577103780	HOSE ASSY	1				18010-23031
79	0577103790	HOSE ASSY	1				18010-23054
80	0577103800	HOSE ASSY	1				18010-53034
81	0377103300	PLATE	1				
82	1100040650	BOLT	2				
83	1100040820	BOLT	2				
84	1140020006	WASHER, spring	2				
85	1140020008	WASHER, spring	2				
86	1141110006	WASHER	2				
87	1141110008	WASHER	2				
	N2B080						

silverhorn.co.uk

PIPING; OPERATION LEVER (2/2) (A-G pattern)

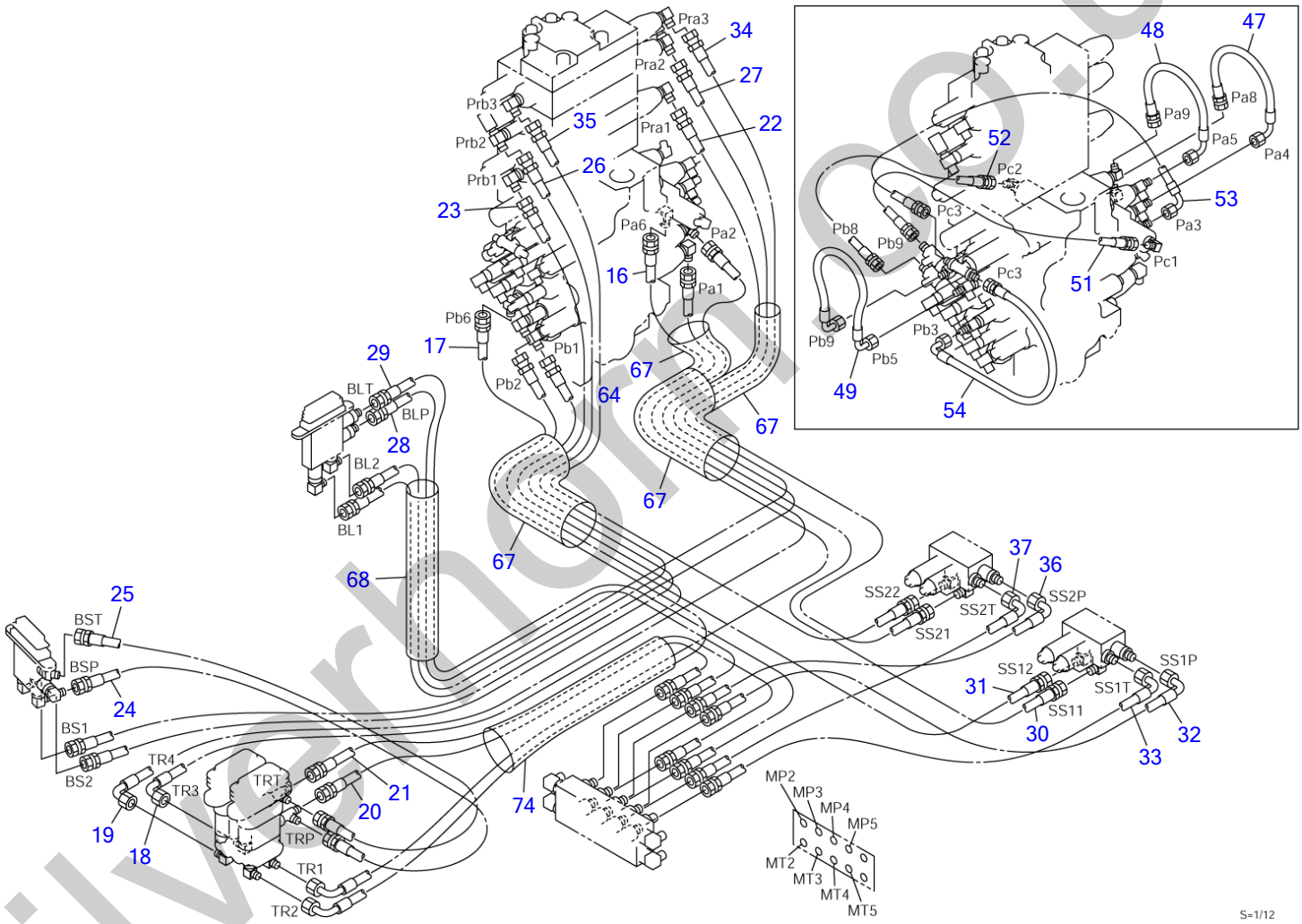

silverhorn.co.uk

PIPING; OPERATION LEVER (2/2) (A-G pattern)

Item	Part number	Description	Q'ty	Chan.	Serial No.	Serv.	Remarks
		PIPING ASSY					X05771-06000-7
		PIPING ASSY (with 2nd aux. line)					X05771-06500-7
16	0577101160	HOSE ASSY	1				18010-53195
17	0577101170	HOSE ASSY	1				18010-53175
18	0577101180	HOSE ASSY	1				18010-53185
19	0577101190	HOSE ASSY	1				18010-53170
20	0577101200	HOSE ASSY	1				18010-23088
21	0577101210	HOSE ASSY	1				18010-23090
22	0577101220	HOSE ASSY	1				18010-23205
23	0577101230	HOSE ASSY	1				18010-23175
24	0577101240	HOSE ASSY	1				18010-23065
25	0577101250	HOSE ASSY	1				18010-23065
26	0577101260	HOSE ASSY	1				18010-23155
27	0577101270	HOSE ASSY	1				18010-23175
28	0577101280	HOSE ASSY	1				18010-23114
29	0577101290	HOSE ASSY	1				18010-23122
30	0577101300	HOSE ASSY	1				18010-23160
31	0577101310	HOSE ASSY	1				18010-23126
32	0577101320	HOSE ASSY	1				18010-53058
33	0577101330	HOSE ASSY	1				18010-53056
34	0577101340	HOSE ASSY (18010-23180)	1				with 2nd aux. line
35	0577101350	HOSE ASSY (18010-23150)	1				with 2nd aux. line
36	0577101360	HOSE ASSY (18010-53040)	1				with 2nd aux. line
37	0577101370	HOSE ASSY (18010-53036)	1				with 2nd aux. line
47	0577101470	HOSE ASSY	1				18010-52054
48	0577101480	HOSE ASSY	1				18010-52040
49	0577100020	HOSE ASSY	1				
51	0577101510	HOSE ASSY	1				18010-22076
52	0577101520	HOSE ASSY	1				18010-22048
53	0577101530	HOSE ASSY	1				18010-52090
54	0577101540	HOSE ASSY	1				18010-52036
64	1531360025	PROTECTOR	1				
67	1531360020	PROTECTOR	4				sold by the meter
68	1567525045	PROTECTOR	1				sold by the meter
74	1531360050	PROTECTOR	1				sold by the meter
	N2B090						

silverhorn.co.uk

ENGINE & ACCESSORIES (1/3)

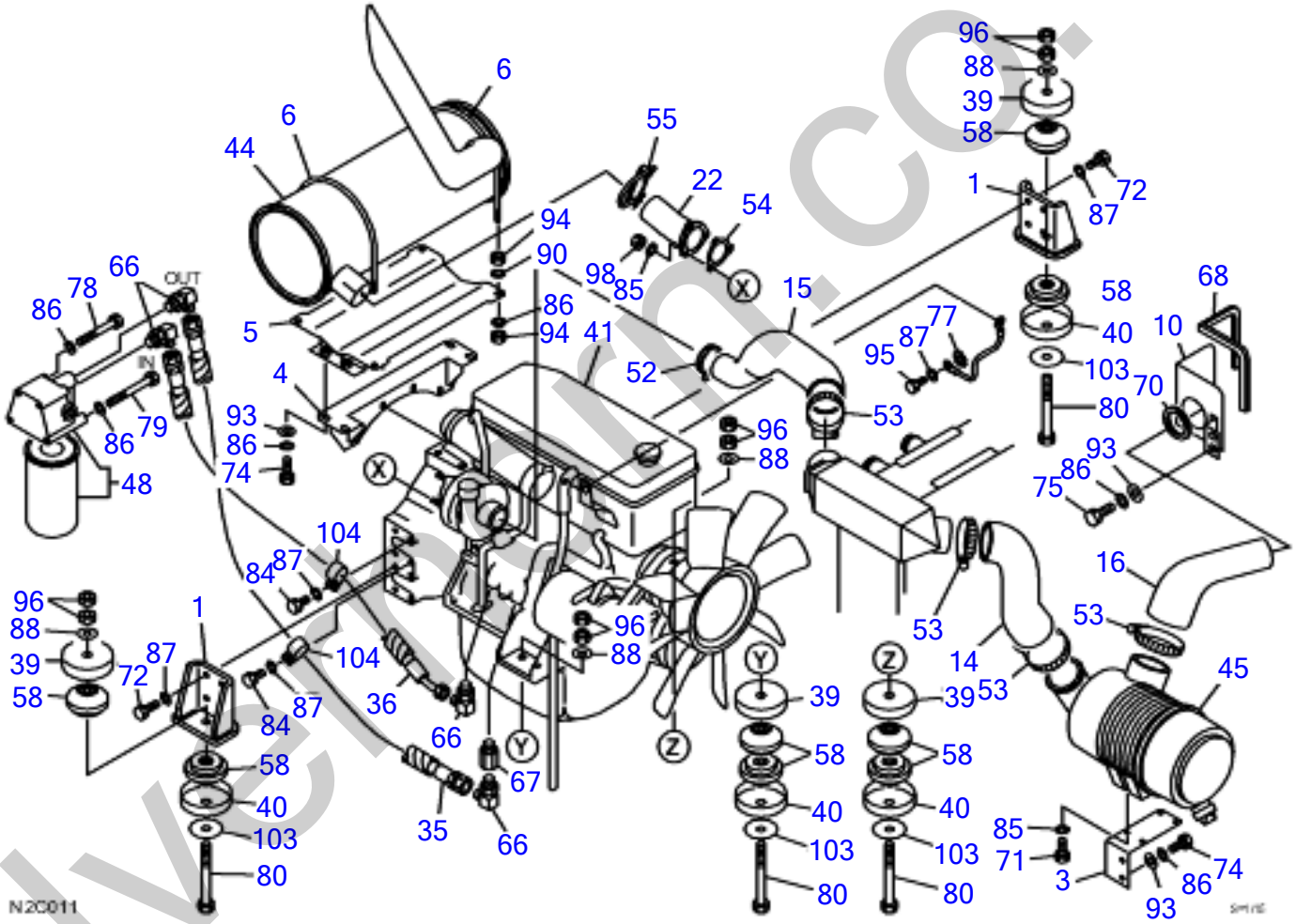

silvermarn.co.uk

ENGINE & ACCESSORIES (1/3)

Item	Part number	Description	Q'ty	Chan.	Serial No.	Serv.	Remarks
		ENGINE ASSY					X05740-02900-0
1	0574002310	FOOT, engine	2			M	
3	0574000120	BRACKET	1				
4	0574002680	BRACKET	1			M	
5	0574002690	BRACKET	1			M	
6	0574000150	U-BOLT	2				
10	0574002980	COVER	1				
14	0574002920	HOSE	1			M	
15	0574002930	HOSE	1			M	
16	0574000250	HOSE	1				
22	0574002350	PIPE	1			M	
35	0574002530	HOSE ASSY	1			M	
36	0574002540	HOSE ASSY	1			M	
39	0564017460	STOPPER	4				
40	0564017470	STOPPER	4				
41	1910257001	ENGINE	1			M	ISUZU BB-4BG1T
44	1910257005	MUFFLER	1			M	ISUZU F-10907001-F
45	1910188007	CLEANER, air	1				ISUZU F-10507005-F
48	1910188032	FILTER, oil	1				ISUZU 897324-3861
52	1533701250	BAND	1			M	
53	1533700113	BAND	4				
54	1910188030	GASKET	1				ISUZU 894369-0210
55	1533300063	CLAMP	1				
58	1651030010	RUBBER, cushion	8				
66	1515010043	ELBOW	4				
	1420010240	▪ O-RING	1				
67	0007213034	BUSHING	1				
68	1654619059	SEAL	1				
70	1654606025	SEAL	1				
71	1100040820	BOLT	4				
72	1100041230	BOLT	8			M	
74	1100041025	BOLT	6				
75	1100041020	BOLT	2				
77	1140330012	WASHER	1			M	
78	1100141010	BOLT	2				
79	1100141040	BOLT	2				
80	1100141660	BOLT	4			M	
84	1100041220	BOLT	8				
85	1140020008	WASHER, spring	7				
86	1140020010	WASHER, spring	12				
87	1140020012	WASHER, spring	11				
88	1140020016	WASHER, spring	4				
90	1141110010	WASHER	4				
93	0003600020	WASHER	6				
94	1130040010	NUT	8				
95	1100041220	BOLT	1				
96	1130040016	NUT	8				
98	1130040008	NUT	3				
103	0882400190	WASHER	4			M	
104	1711900122	CLAMP	2			M	
	N2C011						

silverthorn.co.uk

ENGINE & ACCESSORIES (2/3)

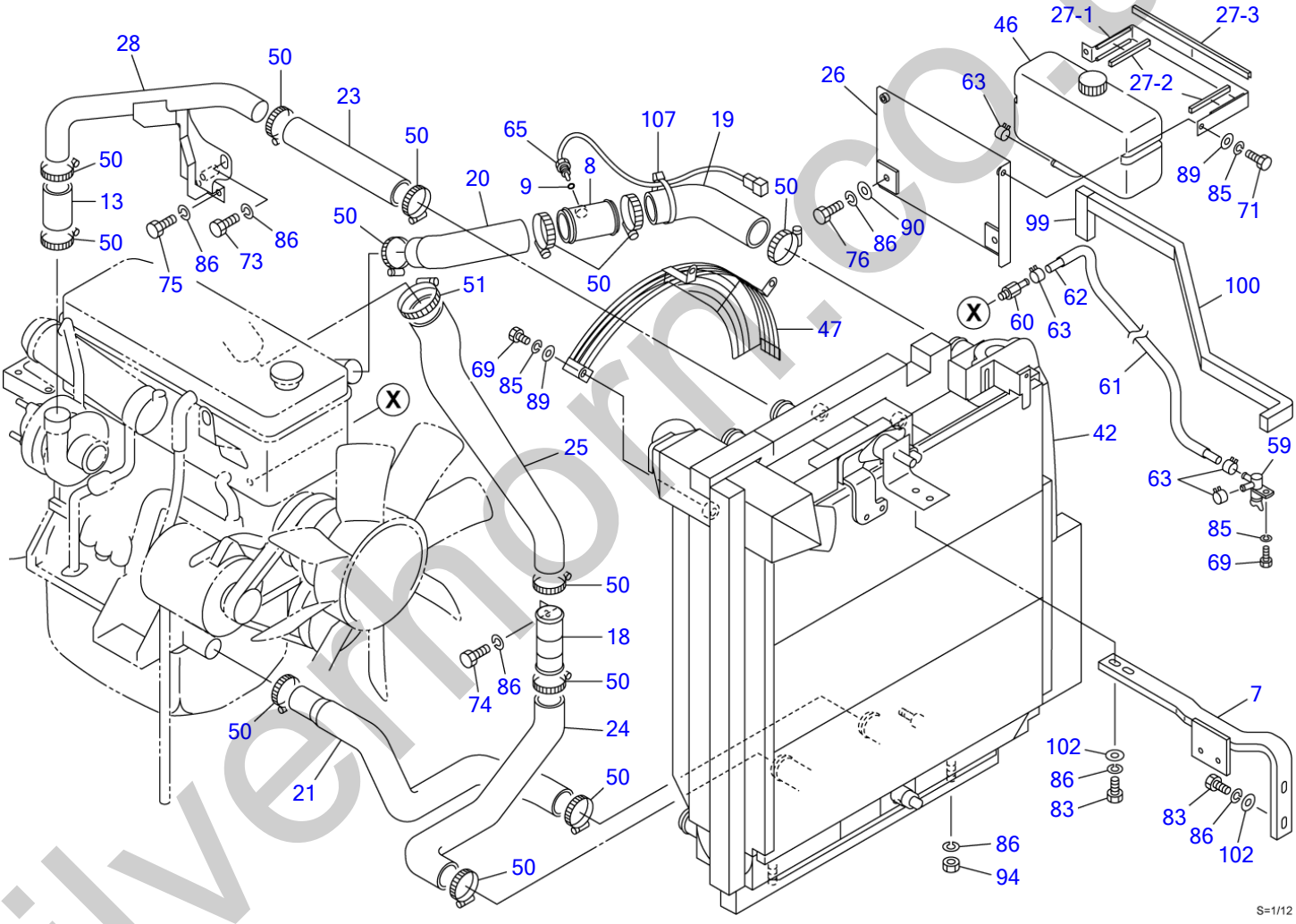

silverthorn.co.uk

ENGINE & ACCESSORIES (2/3)

Item	Part number	Description	Q'ty	Chan.	Serial No.	Serv.	Remarks
		ENGINE ASSY					X05740-02900-0
7	0574002740	BRACKET	1			M	
8	0574002550	JOINT	1			M	
9	1420000100	O-RING	1				
13	0574002430	HOSE	1			M	
18	0574002490	PIPE	1			M	
19	0574002390	HOSE	1			M	
20	0574002400	HOSE	1			M	
21	0574002910	HOSE	1			M	
23	0574002440	HOSE	1			M	
24	0574002450	HOSE	1			M	
25	0574002460	HOSE	1			M	
26	0574002500	BRACKET	1			M	
27	0574000650	HOLDER ASSY	1				
27-1	0574000360	・HOLDER	1				
27-2	1654318010	・SPONGE	2				sold by the meter
27-3	1654601030	・SPONGE	1				sold by the meter
28	0574002480	PIPE	1			M	
42	X **********	RADIATOR ASSY	1				see page (3/3) X05740-02800-0
46	1910188020	TANK, sub	1				ISUZU 1-21480029-1
47	0574002710	GUARD, fun	1			M	
50	1533700061	BAND	13				
51	1533700081	BAND	1				
59	1911900004	VALVE, drain	1			M	
60	0882401210	ADAPTOR	1			M	
61	1531118077	HOSE	1			M	sold by the meter
62	1530808085	HOSE	1			M	sold by the meter
63	1533120512	BAND	3			M	
65	1700100046	SENSOR	1				
69	1100040816	BOLT	4				
71	1100040820	BOLT	2				
73	1100041050	BOLT	1				
74	1100041025	BOLT	1				
75	1100041020	BOLT	2				
76	1100041016	BOLT	1				
83	1100041040	BOLT	4				
85	1140020008	WASHER, spring	6				
86	1140020010	WASHER, spring	12				
89	1141110008	WASHER	4				
90	1141110010	WASHER	2				
94	1130040010	NUT	2				
99	0574002175	SPONGE	1				
100	0574002176	SPONGE	1				
102	0003600025	WASHER	4				
107	1652231250	BAND	1				
	N2C021						

silverthorn.co.uk

ENGINE & ACCESSORIES (3/3)

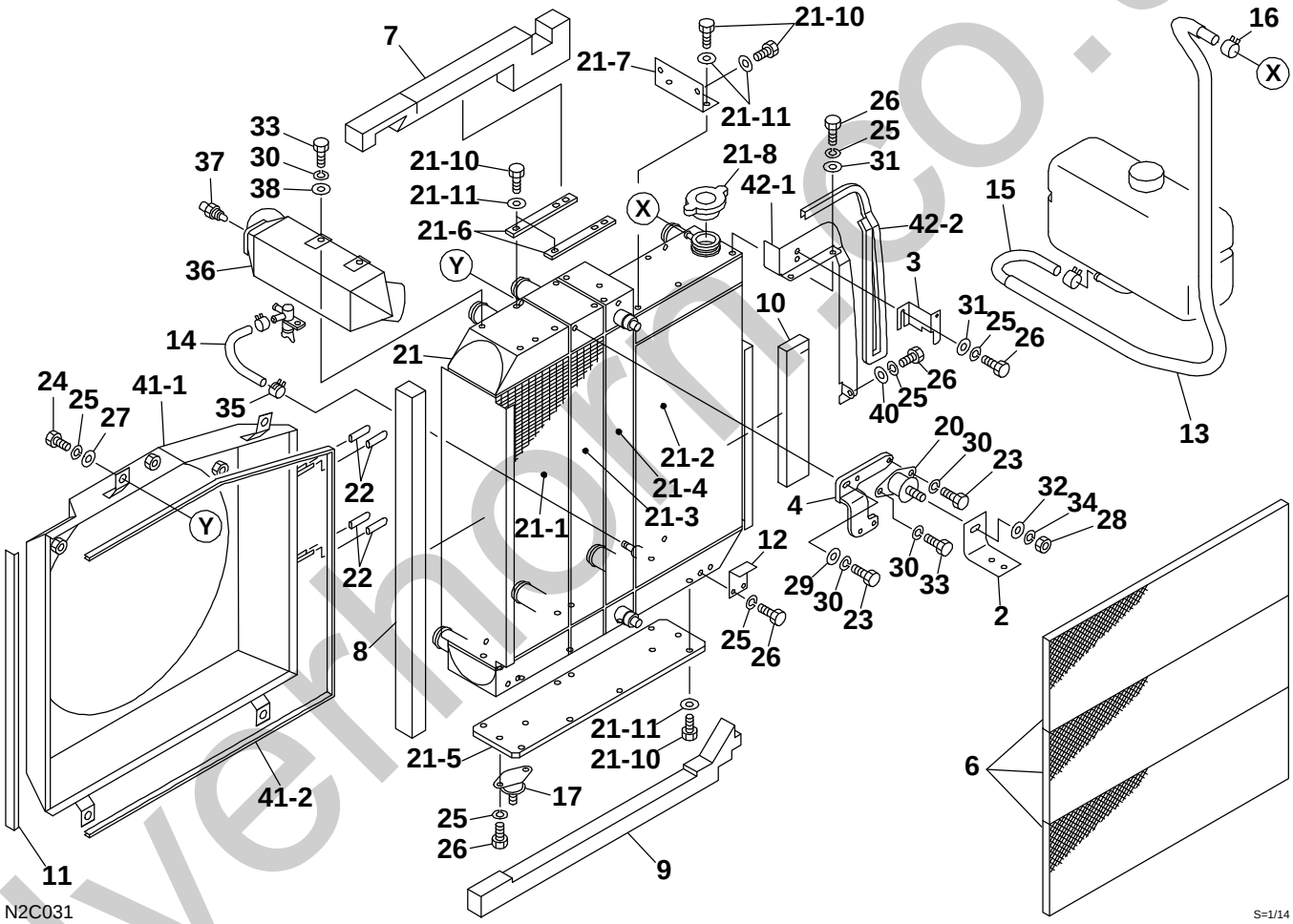

silvermorn.co.uk

ENGINE & ACCESSORIES (3/3)

Item	Part number	Description	Q'ty	Chan.	Serial No.	Serv.	Remarks
0-42	X **********	RADIATOR ASSY	1				X05740-02800-0
2	0574002730	・BRACKET	1			M	
3	0574002640	・STOPPER	1			M	
4	0574002780	・BRACKET	1			M	
6	0574002620	・NET	3			M	
7	0574002720	・SPONGE	1			M	
8	0574002721	・SPONGE	1			M	
9	0574002722	・SPONGE	1			M	
10	0574002523	・SPONGE	1			M	
11	0574002724	・SPONGE	1			M	
12	0574002610	・STOPPER	2			M	
13	1531115070	・PROTECTOR	1			M	sold by the meter
14	1530808017	・HOSE	1			M	sold by the meter
15	1531407090	・HOSE	1			M	sold by the meter
16	1533120011	・BAND	1				
17	1651024007	・RUBBER, cushion	2				
20	1651024009	・RUBBER, cushion	1			M	
21	1911300250	・RADIATOR & OIL COOLER	1			M	
	1911300550	* RADIATOR & OIL COOLER	1				
21-1	1911300251	・・OIL COOLER	1			M	
21-2	1911300252	・・RADIATOR	1			M	
	1911300552	* * RADIATOR	1				
21-3	1911300253	・・INTER COOLER	1			M	
21-4	1911300254	・・CONDENSER	1			M	
21-5	1911300255	・・MOUNTING	1			M	
21-6	1911300256	・・MOUNTING	2			M	
21-7	1911300257	・・MOUNTING	1			M	
21-8	1911300078	・・CAP, radiator	1				
21-10	1110020825	・・BOLT	18				
21-11	1140210005	・・WASHER	18			M	
22	0872433150	・TUBE	2				
23	1100041030	・BOLT	2				
24	1100040820	・BOLT	4				
25	1140020008	・WASHER, spring	17				
26	1100040816	・BOLT	13				
27	0003609003	・WASHER	4				
28	1130040012	・NUT	1				
29	1141550010	・WASHER	1				
30	1140020010	・WASHER, spring	5				
31	1141110008	・WASHER	5				
32	1141550012	・WASHER	1				
33	1100041016	・BOLT	3				
34	1140020012	・WASHER, spring	1				
35	1533120512	・BAND	1			M	
36	0574002700	・PIPE	1			M	
37	1910230055	・SENSOR	1			M	
38	1141110010	・WASHER	2				
40	0003608252	* WASHER	2				
41	0574003050	* SHROUD ASSY	1				
41-1	0574002770	* * SHROUD	1				
41-2	1654606212	* * SEAL	1				
42	0574003040	* PLATE ASSY	1				
42-1	0574002510	* * PLATE	1				
42-2	1654606116	* * SEAL	1				
	N2c031						

silverhorn.co.uk

DRAIN PLUG

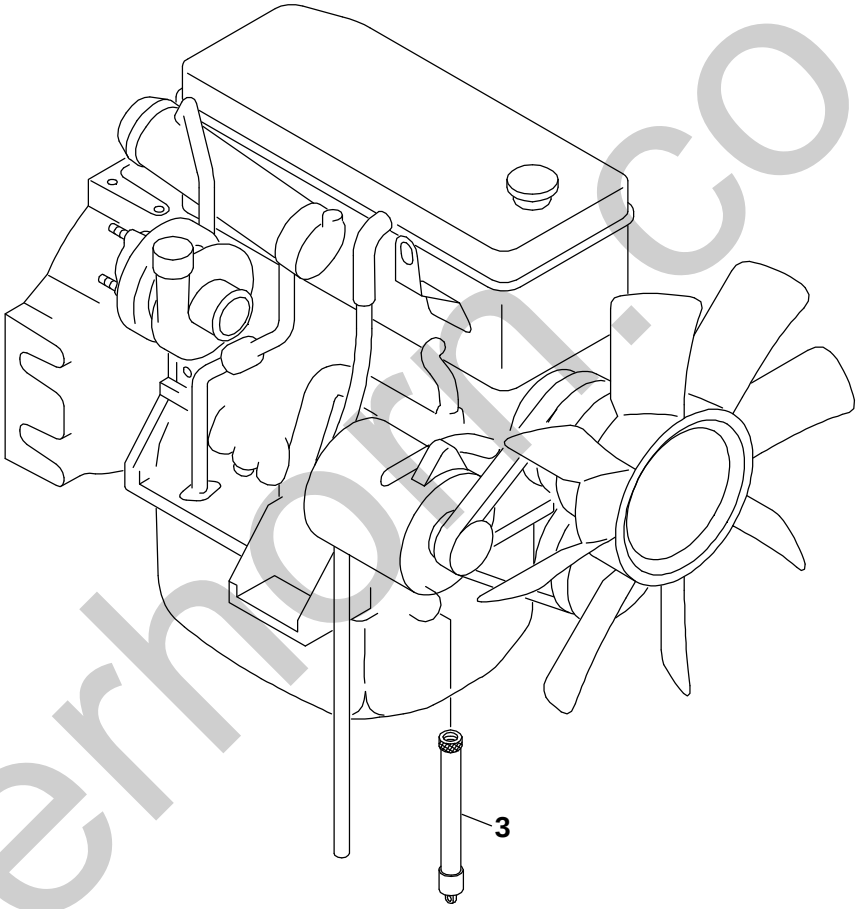

N2C091

S=1/8

silverhorn.co.uk

DRAIN PLUG

Item	Part number	Description	Q'ty	Chan.	Serial No.	Serv.	Remarks
3	1554512600 N2C090	PLUG ASSY, drain TUBE	1				X05740-01000-1

silverhorn.co.uk

CONTROL BOX (R.H.)

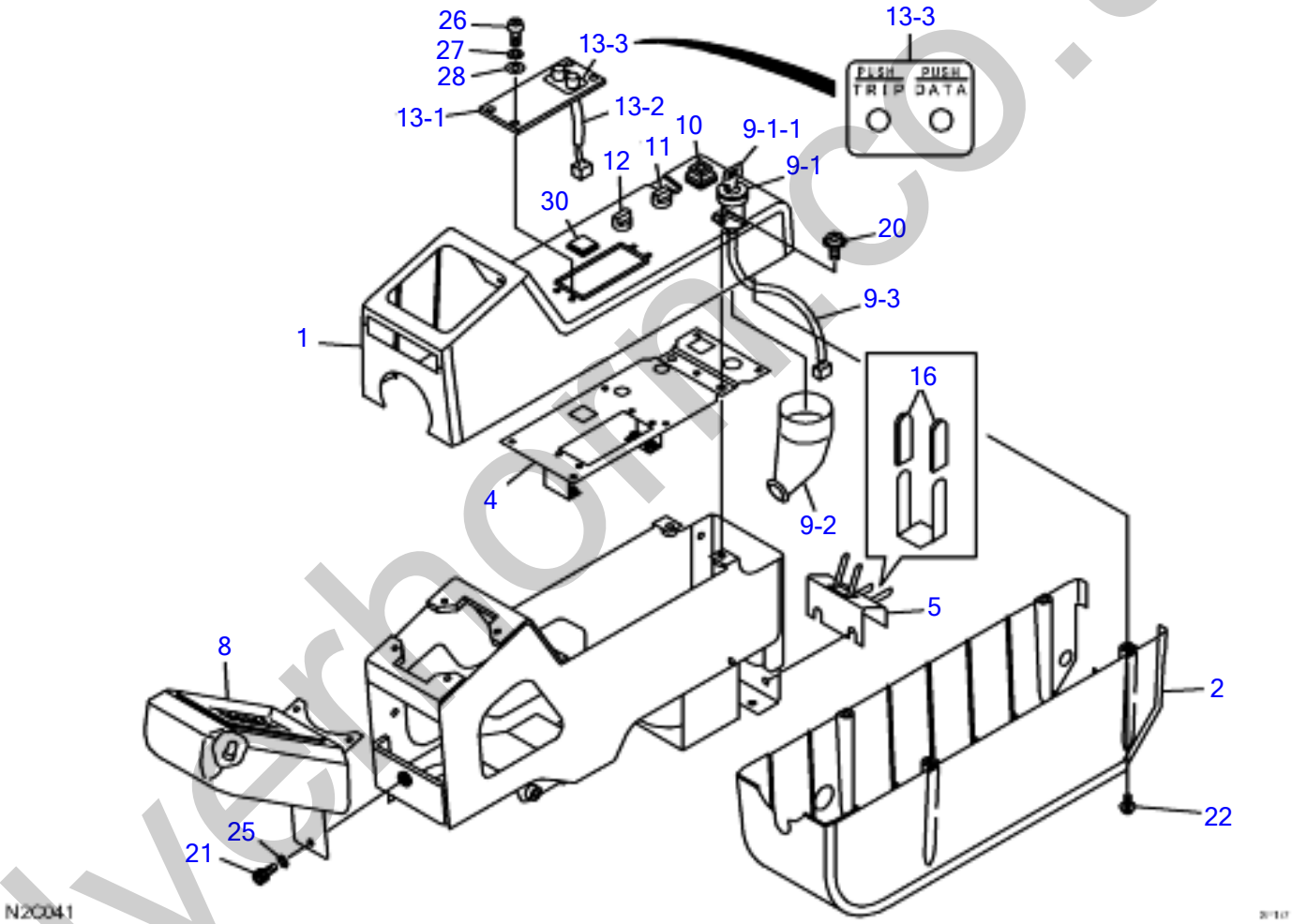

silverhorn.co.uk

CONTROL BOX (R.H.)

Item	Part number	Description	Q'ty	Chan.	Serial No.	Serv.	Remarks
		BOX ASSY, control (R.H.)					X05743-01100-0
1	0574301120	COVER (R.H.)	1			M	
2	0564318200	COVER	1				
4	0574301110	COVER (R.H.)	1			M	
5	0564320200	CLAMP (R.H.)	1				
8	1730141440	GAUGE, cluster	1			M	
9	0574300520	SWITCH ASSY, key	1				
9-1	1700100023	・SWITCH, starter	1				
9-1-1	1700100019	・KEY	1				
9-2	0870431821	・COVER	1				
9-3	0574300530	・HARNESS, wiring	1				
10	1700000041	SWITCH, lamp	1				
11	1700000010	SWITCH, lamp	1				
12	1700000009	SWITCH, wiper	1				
13	0574301130	PANEL ASSY, switch	1			M	
13-1	0574301140	・PLATE	1			M	
13-2	0574301150	・SWITCH ASSY	1			M	
13-3	0574301160	・PLATE	1			M	
16	0872433150	TUBE	4				
20	1150420816	BOLT, sems	4				
21	1110090816	SCREW, cap	1				
22	1150120412	SCREW	4				
25	1140490008	WASHER, spring	1				
26	1120530416	SCREW	4			M	
27	1140020004	SPRING WASHER	4				
28	1141110004	WASHER	4				
30	1700550024	ORNAMENT	1				
	N2c041						

silverhorn.co.uk

CONTROL BOX (L.H.)

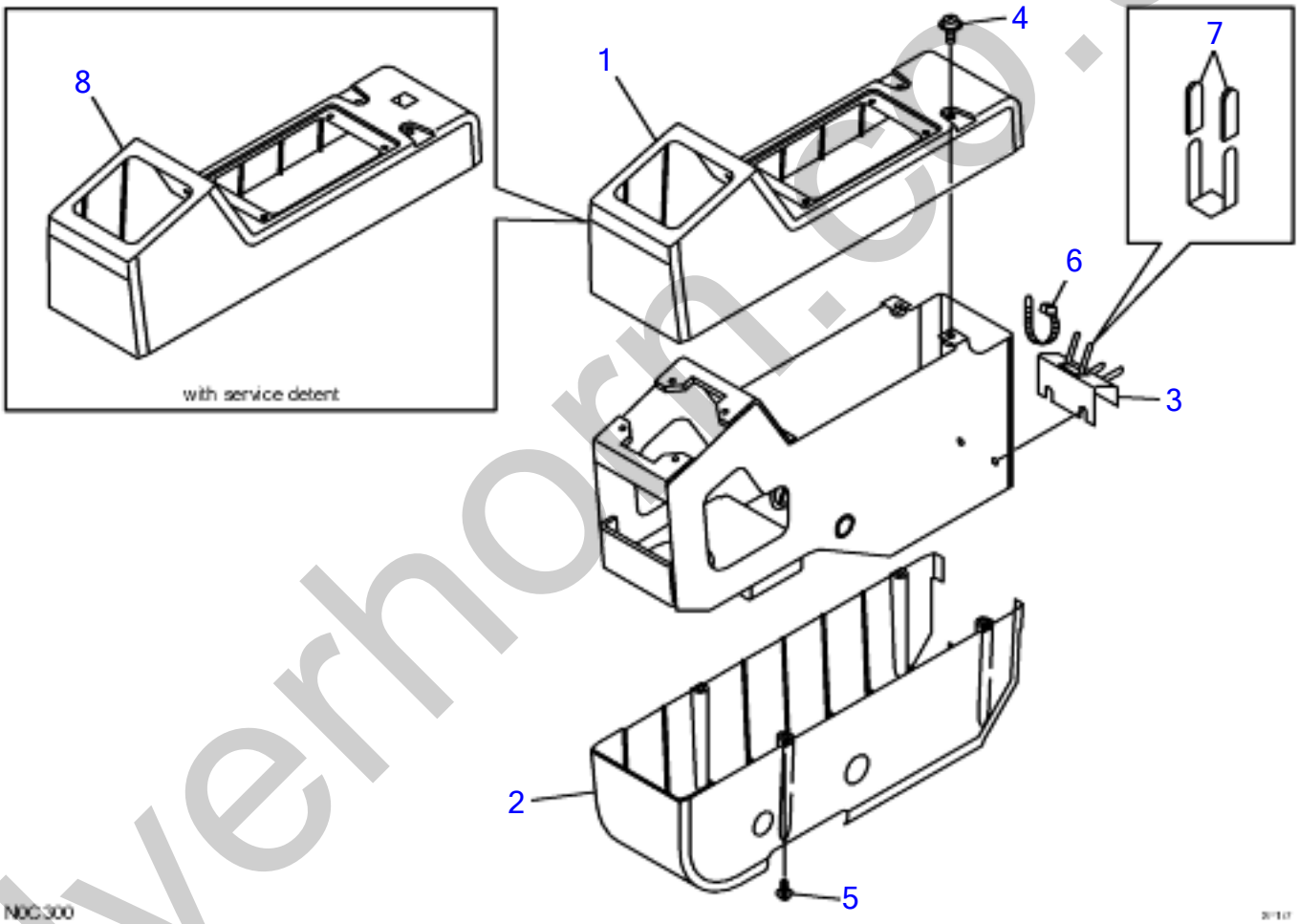

silverhorn.co.uk

CONTROL BOX (L.H.)

Item	Part number	Description	Q'ty	Chan.	Serial No.	Serv.	Remarks
		BOX ASSY, control (L.H.)					X05643-30000-1
1	0564319100	COVER (L.H.)	1				
2	0564328100	COVER	1				
3	0564319300	CLAMP	1				
4	1150420816	BOLT, sems	4				
5	1150120412	SCREW	4				
6	1652231100	BAND	1				
7	0872433150	CLAMP	4				
8	0564257002	LH COVER	1				
	NOC300						

silverhorn.co.uk

ENGINE CONTROL

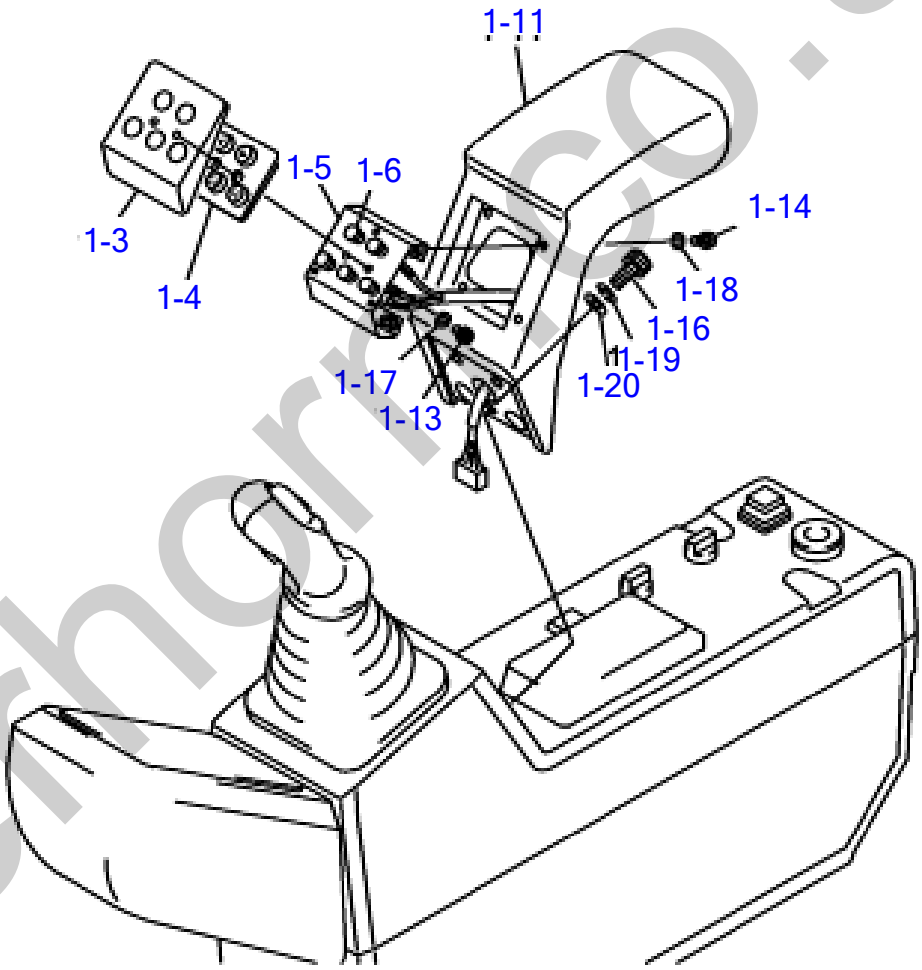

silverhgrp.co.uk

ENGINE CONTROL

Item	Part number	Description	Q'ty	Chan.	Serial No.	Serv.	Remarks
		ENGINE CONTROL ASSY					
1	0574100500	ARM REST ASSY	1				
1-3	0564115300	* COVER	1				
1-4	0564115400	* CAP	1				
1-5	0564115500	* BRACKET	1				
1-6	0574100510	* SWITCH ASSY	1				
1-11	0564116100	* RH ARM REST	1				
1-13	1120590406	* SCREW	2				
1-14	1120590512	* SCREW	4				
1-16	1110090820	* CAP SCREW	3				
1-17	1140090004	* SPRING WASHER	2				
1-18	1140090005	* SPRING WASHER	4				
1-19	1140490008	* SPRING WASHER	3				
1-20	1141190008	* WASHER	3				
	N2C120						

silverhorn.co.uk

ELECTRICAL (1/3)

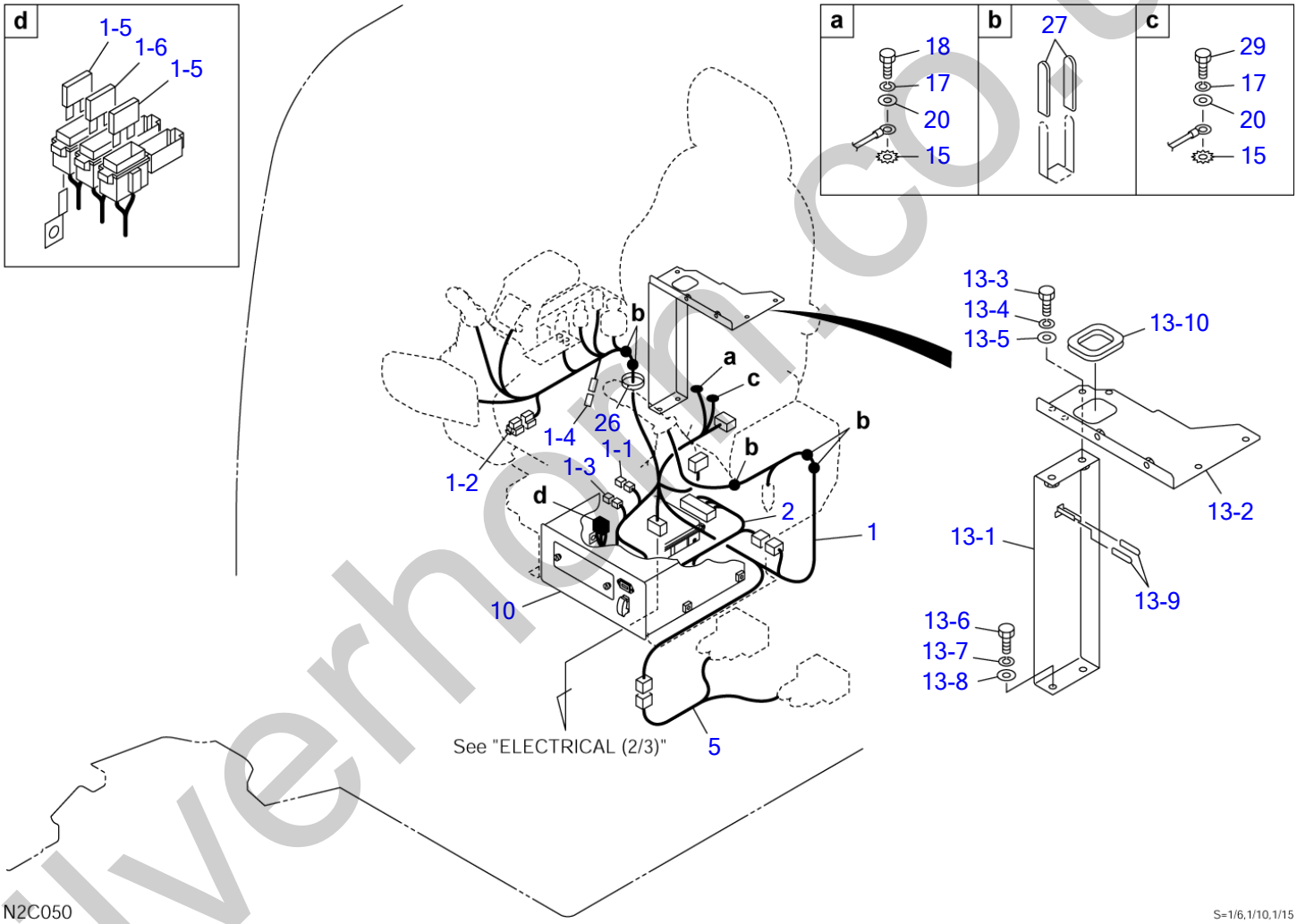

silverhorn.co.uk

ELECTRICAL (1/3)

Item	Part number	Description	Q'ty	Chan.	Serial No.	Serv.	Remarks
		ELECTRICAL ASSY					X05742-02300-1
1	0574202370	HARNESS, wiring	1			M	
1-1	0574202380	・CONNECTOR, short	1			M	
1-2	0574202390	・RESISTER	1			M	
1-3	0574202400	・CONNECTOR, short	1			M	
1-4	1730500008	・DIODE (yellow)	1				3A
1-5	1701310010	・FUSE	2			M	10A
1-6	1701310020	・FUSE	1			M	20A
2	0574202440	HARNESS, wiring	1			M	
5	0574201740	HARNESS, wiring	1				
10	X **********	CONTROLLER ASSY	1				see page (3/3)
13	X **********	BRACKET ASSY	1				X05742-01970
13-1	0574201980	・BRACKET	1				
13-2	0574200140	・BRACKET	1				
13-3	1100040820	・BOLT	2				
13-4	1140020008	・WASHER, spring	2				
13-5	1141110008	・WASHER	2				
13-6	1100041025	・BOLT	2				
13-7	1140020010	・WASHER, spring	2				
13-8	1141110010	・WASHER	2				
13-9	0872433150	・TUBE	2				
13-10	1653917020	・TRIM	1				sold by the meter
15	1140330010	WASHER	2				
17	1140020010	WASHER, spring	2				
18	1100041016	BOLT	1				
20	1141110010	WASHER	2				
26	1652443640	BAND	1				
27	0872433150	TUBE	10				
29	1100041014	BOLT	1				
	N2c051						

silverhorn.co.uk

ELECTRICAL (2/3)

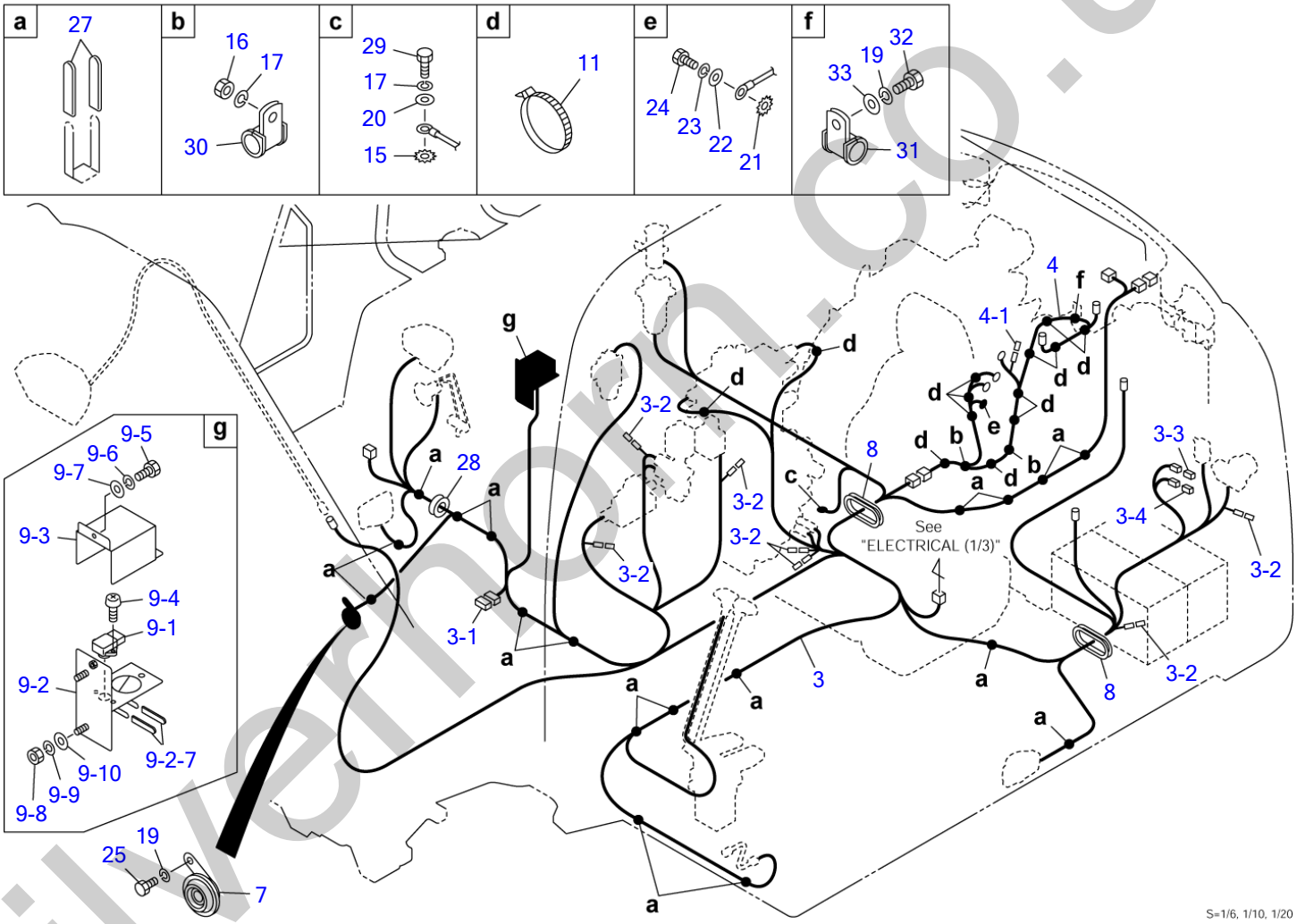

silvernorn.co.uk

ELECTRICAL (2/3)

Item	Part number	Description	Q'ty	Chan.	Serial No.	Serv.	Remarks
		ELECTRICAL ASSY					X05742-02300-1
3	0574202350	HARNESS, wiring	1			M	
3-1	0574202410	・CONNECTOR, short	1			M	
3-2	1730500008	・DIODE (yellow)	7				3A
3-3	1701330045	・LINK, fusible	1				45A
3-4	1701330075	・LINK, fusible	1				75A
4	0574202330	HARNESS, wiring	1			M	
4-1	1730500008	・DIODE (yellow)	1				3A
7	1703500824	HORN	1				
8	0574202420	GROMMET	2			M	
9	0574203100	SENSOR ASSY	1			M	X05742-03100-0
9-1	1910230127	・SENSOR	1			M	ISUZU 897217-7780
9-2	0574202610	・BRACKET	1			M	
9-2-7	0872433150	・・TUBE	2				
9-3	0574203120	・COVER	1			M	
9-4	1150120515	・SCREW	2			M	
9-5	1100040612	・BOLT	2				
9-6	1140020006	・WASHER, spring	2				
9-7	1141110006	・WASHER	2				
9-8	1130040010	・NUT	2				
9-9	1140020010	・WASHER, spring	2				
9-10	1141110010	・WASHER	2				
11	1652231250	BAND	13				
15	1140330010	WASHER	2				
16	1130040010	NUT	2				
17	1140020010	WASHER, spring	3				
19	1140020008	WASHER, spring	2				
20	1141110010	WASHER	1				
21	1140330006	WASHER	1				
22	1141110006	WASHER	1				
23	1140020006	WASHER, spring	1				
24	1100140610	BOLT	1				
25	1100040816	BOLT	1				
27	0872433150	TUBE	40				
28	0437200100	GUARD	1				
29	1100041014	BOLT	1				
30	1711900071	CLAMP	2				
31	1711900127	CLAMP	1				
32	1100040812	BOLT	1			M	
33	1141110008	WASHER	1				
	N2c061						

silverhorn.co.uk

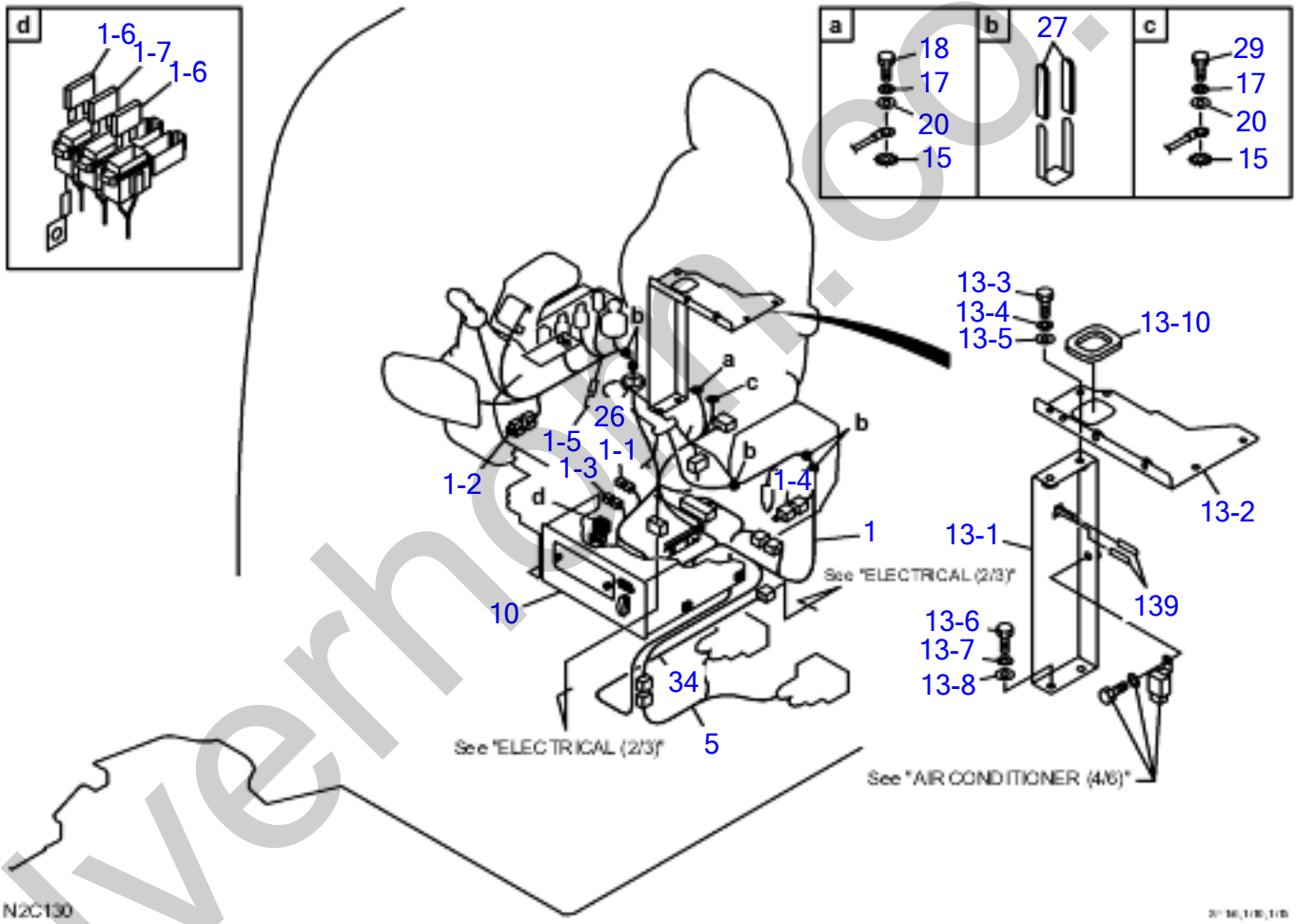

silverhill.co.uk

ELECTRICAL (1/3) 51420164~

Item	Part number	Description	Q'ty	Chan.	Serial No.	Serv.	Remarks
		ELECTRICAL ASSY					
1	0574203560	WIRING HARNESS	1				
1-1	0574202380	* SHORT CONNECTOR	1				
1-2	0574202390	* RESISTER	1				
1-3	0574202400	* SHORT CONNECTOR	1				
1-4	0574202030	* SHORT CONNECTOR	1				
1-5	1730500008	* DIODE YELLOW	1				
1-6	17014310010	* FUSE	2				
1-7	1701310020	* FUSE	1				
5	0574201740	WIRING HARNESS	1				
10	********	CONTROLLER ASSY	1				
13	**********	BRACKET ASSY	1				
13-1	0574201980	* BRACKET	1				
13-2	0574200140	* BRACKET	1				
13-3	1100040820	* BOLT	2				
13-4	1140020008	* SPRING WASHER	2				
13-5	1141110008	* WASHER	2				
13-6	1100041025	* BOLT	2				
13-7	1140020010	* SPRING WASHER	2				
13-8	1141110010	* WASHER	2				
13-9	0872433150	* TUBE	2				
13-10	1653917020	* TRIM	1				
15	1140330010	WASHER	2				
17	1140020010	SPRING WASHER	2				
18	1100041016	BOLT	1				
20	1141110010	WASHER	2				
26	1652443640	BAND	1				
27	0872433150	TUBE	10				
29	1100041014	BOLT	1				
34	0574203530	WIRING HARNESS	1				
	N2C130						

silverhorn.co.uk

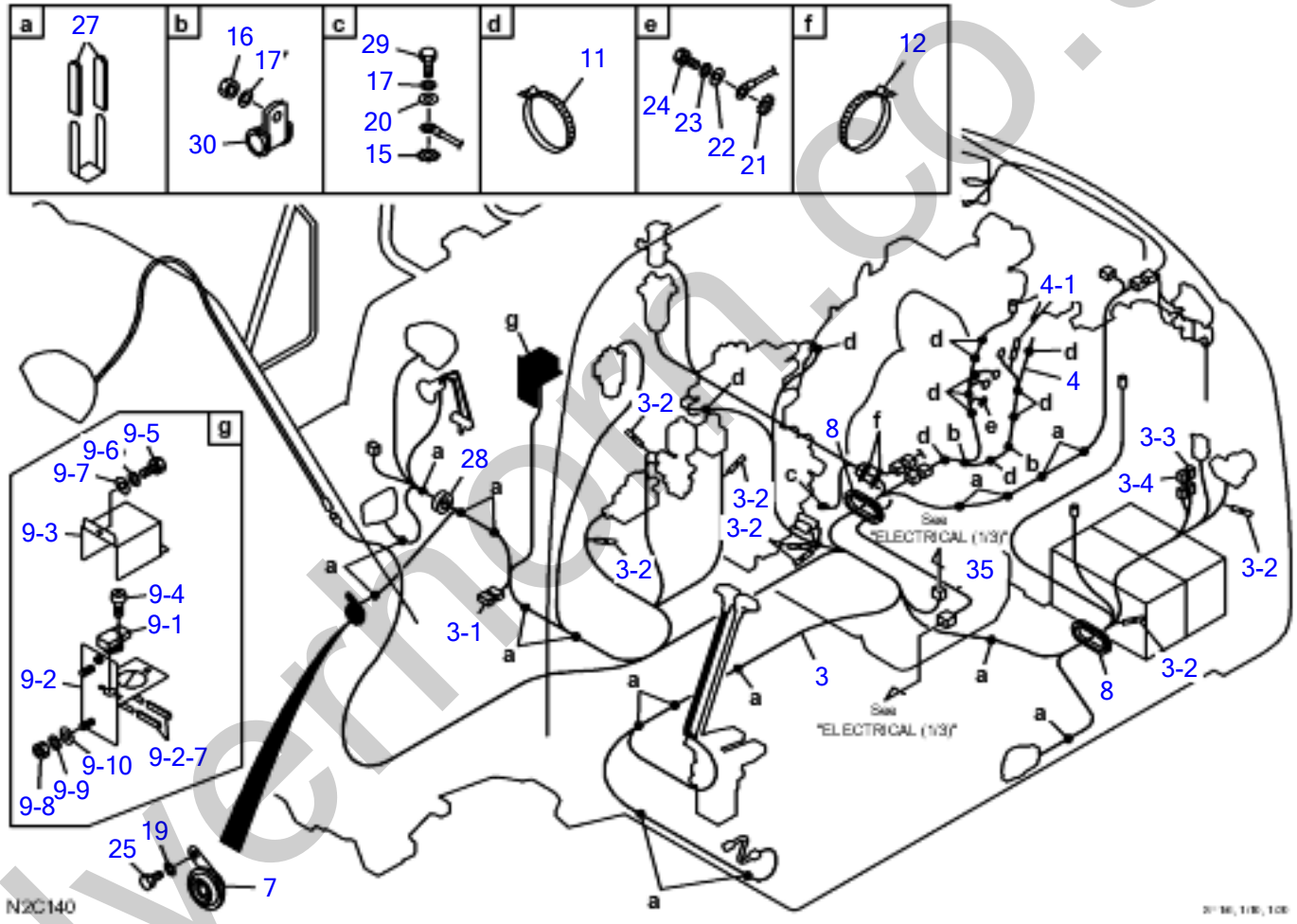

silvernorn.co.uk

ELECTRICAL (2/3) 51420164~

Item	Part number	Description	Q'ty	Chan.	Serial No.	Serv.	Remarks
		ELECTRICAL ASSY					
3	0574202350	WIRING HARNESS	1				
3-1	0574202410	* SHORT CONNECTOR	1				
3-2	1730500008	* DIODE YELLOW	7				
3-3	1701330045	* FUSIBLE LINK	1				
3-4	1701330075	* FUSIBLE LINK	1				
4	0574203550	WIRING HARNESS	1				
4-1	1730500008	* DIODE YELLOW	1				
7	1703500824	HORN	1				
8	0574202420	GROMMET	2				
9	0574203100	SENSOR ASSY	1				
9-1	1910230127	* SENSOR	1				
9-2	0574202610	* BRACKET	1				
9-2-7	0872433150	* * TUBE	2				
9-3	0574203120	* COVER	1				
9-4	1150120515	* SCREW	2				
9-5	1100040612	* BOLT	2				
9-6	1140020006	* SPRING WASHER	2				
9-7	1141110006	* WASHER	2				
9-8	1130040010	* NUT	2				
9-9	1140020010	* SPRING WASHER	2				
9-10	1141110010	* WASHER	2				
11	1652231250	BAND	20				
12	1652261410	BAND	4				
15	1140330010	WASHER	2				
16	1130040010	* NUT	2				
17	1140020010	SPRING WASHER	3				
19	1140020008	SPRING WASHER	1				
20	1141110010	WASHER	1				
21	1140330006	WASHER	1				
22	1141110006	WASHER	1				
23	1140020006	SPRING WASHER	1				
24	1100140610	BOLT	1				
25	1100040816	BOLT	1				
27	0872433150	TUBE	40				
28	0437200100	GUARD	1				
29	1100041014	BOLT	1				
30	1711900071	CLAMP	2				
35	0574203540	WIRING HARNESS	1				
	N2C140						

silverhorn.co.uk

ELECTRICAL (3/3)

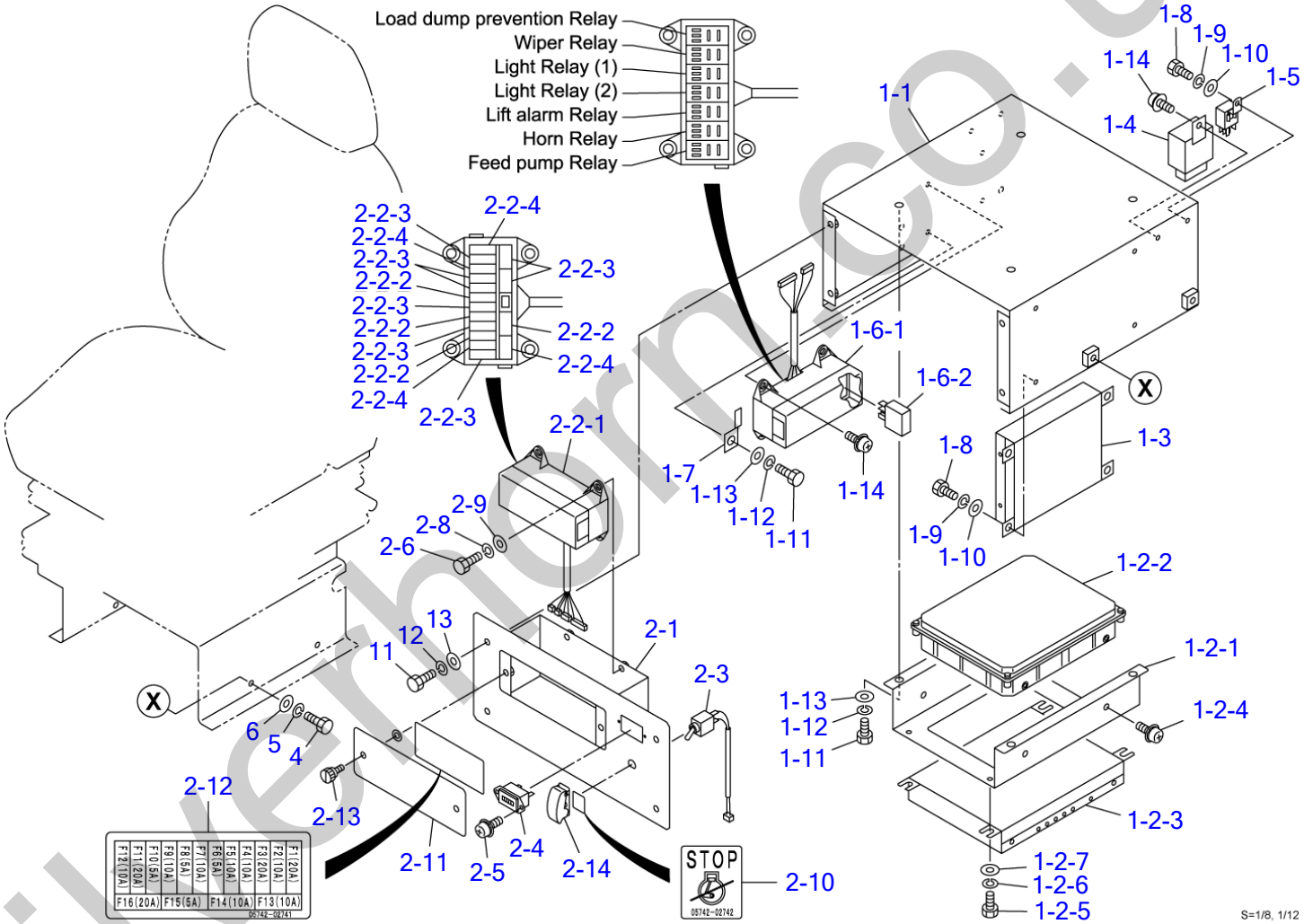

silverthorn.co.uk

ELECTRICAL (3/3)

Item	Part number	Description	Q'ty	Chan.	Serial No.	Serv.	Remarks
0	X **********	CONTROLLER ASSY	1				X05742-02600-0
1	X **********	・BRACKET ASSY, electrical	1				X05742-02800-0
1-1	0574202810	・・BRACKET	1			M	
1-2	0574202480	・・ECM-CPU ASSY	1			M	X05742-02480-1
1-2-1	0574202460	・・・PLATE	1			M	
1-2-2	**********	・・・ECM	1			M	
1-2-3	1730142270	・・・CONTROLLER	1			M	
1-2-4	1150420616	・・・BOLT, sems	4				
1-2-5	1100040610	・・・BOLT	4			M	
1-2-6	1140020006	・・・WASHER, spring	4				
1-2-7	1141110006	・・・WASHER	4				
1-3	1730142080	・・AMP ASSY	1				
1-4	1711900130	・・DETECTOR	1				
1-5	**********	・・RELAY	1			M	ISUZU 898013-7900
1-6	X **********	・・RELAY BOX ASSY	1				X05742-02320-0
1-6-1	0574202321	・・・RELAY BOX	1			M	
1-6-2	0574202322	・・・RELAY	7			M	
1-7	1711900144	・・CLIP	1			M	
1-8	1100040612	・・BOLT	5				
1-9	1140090006	・・WASHER, spring	5				
1-10	1141190006	・・WASHER	5				
1-11	1140040812	・・BOLT	5			M	
1-12	1140090008	・・WASHER, spring	5				
1-13	1141190008	・・WASHER	5				
1-14	1100040616	・・BOLT, sems	4				
2	X **********	・PANEL ASSY, front	1				X05742-02900-0
2-1	0574202640	・・PLATE	1			M	
2-2	0574202310	・・FUSE BOX ASSY	1			M	
2-2-1	0574202311	・・・FUSE BOX	1			M	
2-2-2	1701310005	・・・FUSE	4			M	5A
2-2-3	1701310010	・・・FUSE	8			M	10A
2-2-4	1701310020	・・・FUSE	4			M	20A
2-3	0574202760	・・SWITCH, engine stop	1			M	
2-4	1730000500	・・METER, hour	1				
2-5	1150420412	・・SCREW	2			M	
2-6	1100040616	・・BOLT	4			M	
2-8	1140020006	・・WASHER, spring	4				
2-9	1141110006	・・WASHER	4				
2-10	0574202742	・・DECAL	1			M	
2-11	0574202740	・・PLATE	1			M	
2-12	0574202741	・・DECAL	1			M	
2-13	1652711698	・・SCREW	2				
2-14	1700000045	・・COVER	1			M	
4	1100040816	・BOLT	4				
5	1140020008	・WASHER, spring	4				
6	1141110008	・WASHER	4				
11	1100040616	・BOLT	4				
12	1140020006	・WASHER, spring	4				
13	1141110006	・WASHER	4				
	N2c071						

silverthorn.co.uk

TRAVEL ARAM

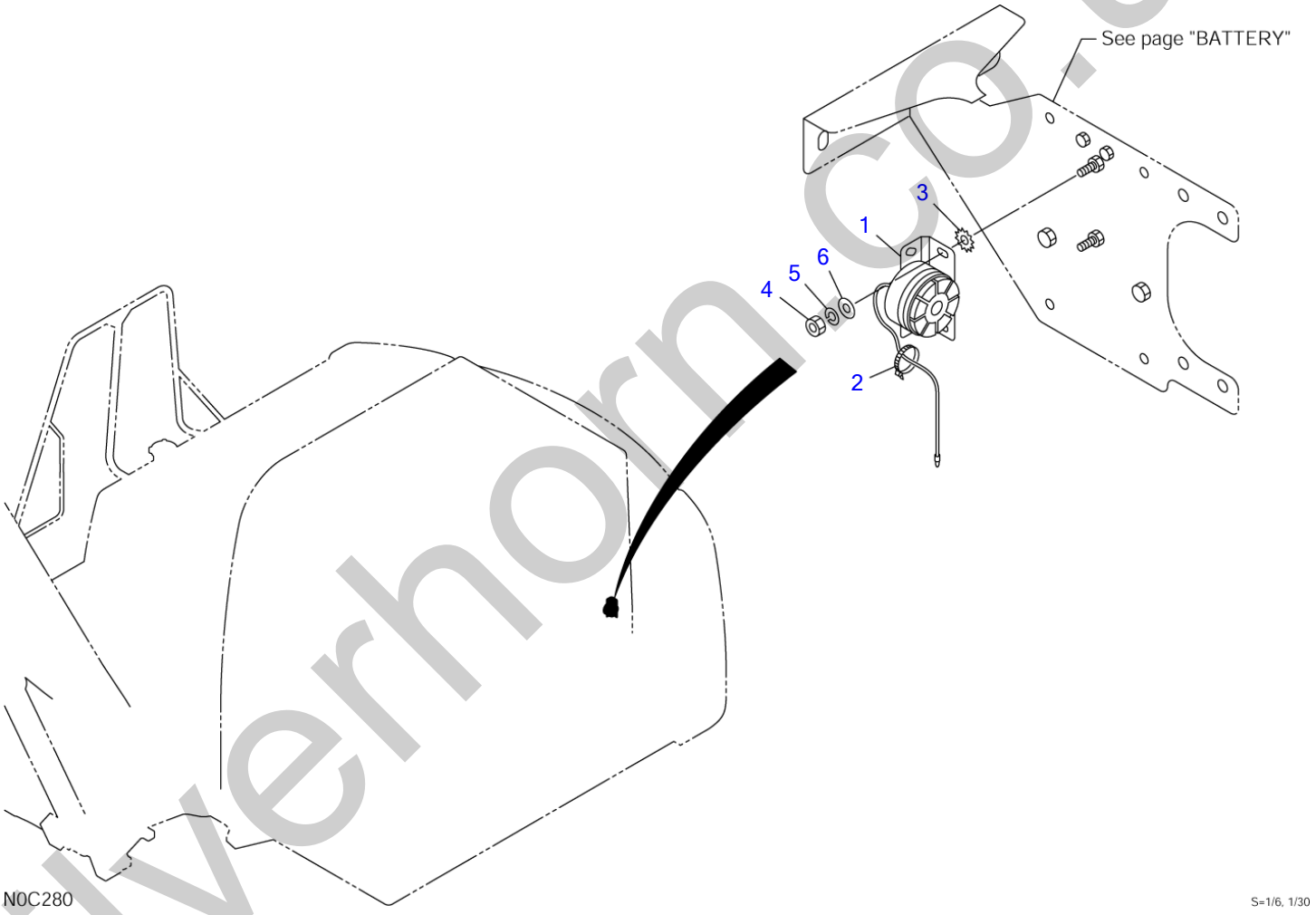

silverhorn.co.uk

TRAVEL ARAM

Item	Part number	Description	Q'ty	Chan.	Serial No.	Serv.	Remarks
		ALARM ASSY, travel					X05742-02200-0
1	1703700014	BUZZER	1				
2	1652231250	BAND	1				
3	1140330006	WASHER	2				
4	1130040006	NUT	2				
5	1140020006	WASHER, spring	2				
6	0003600110	WASHER	2				
	N0c280						

silverhorn.co.uk

BATTERY

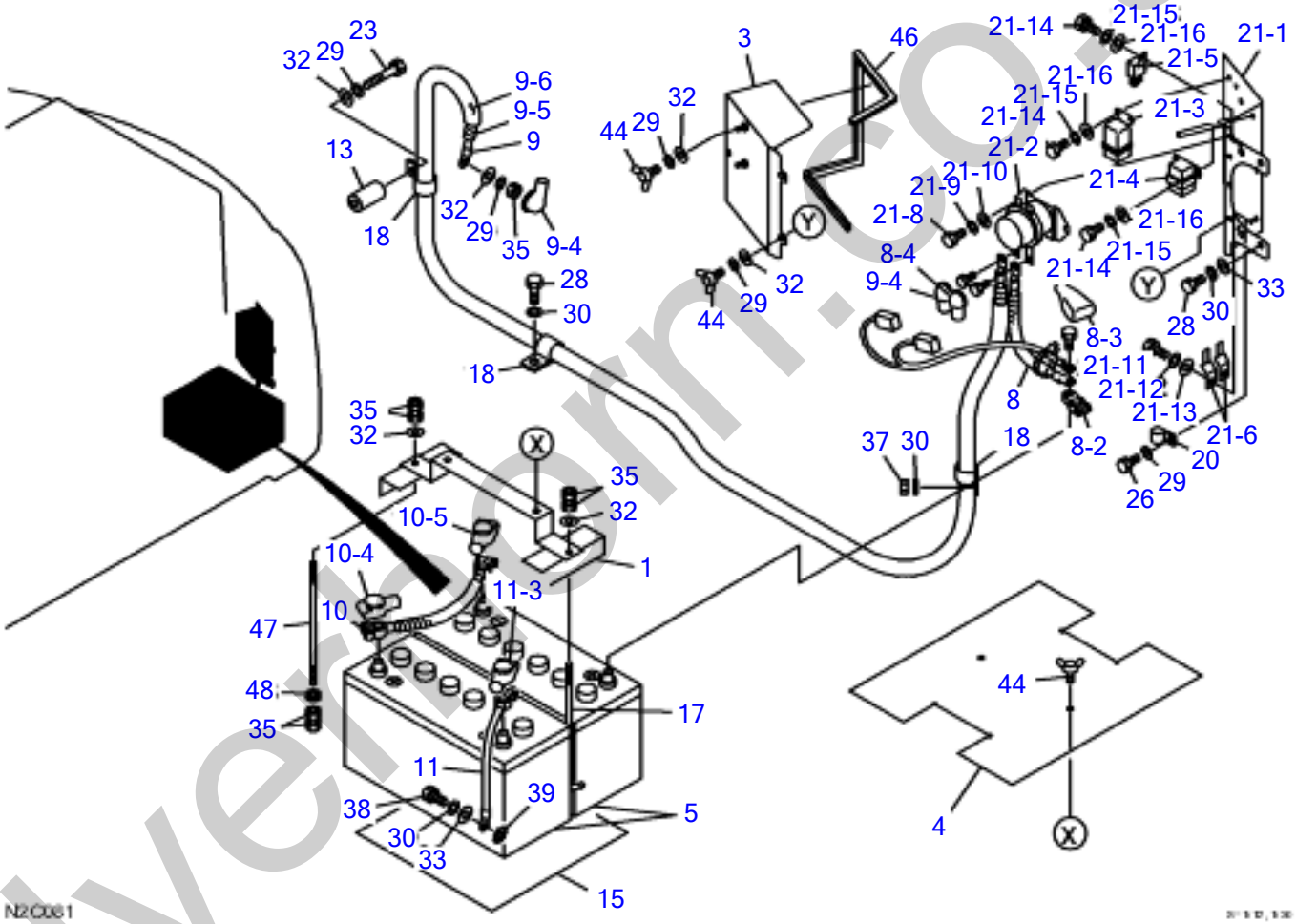

N2C081

silverthorn.co.uk

BATTERY

Item	Part number	Description	Q'ty	Chan.	Serial No.	Serv.	Remarks
		BATTERY ASSY					X05744-00600-0
1	0574400350	CLAMP	1				
3	0574400510	COVER	1			M	
4	0574400550	SHEET	1			M	
5	1702050141	BATTERY	2				
8	0574400340	CABLE, battery	1				
8-4	1702330000	・TERMINAL	1				
8-5	1702920060	・COVER	1				
8-6	1702901283	・CAP	1				
9	0574400530	CABLE, starter	1			M	
9-4	1702901283	・CAP	2				
9-5	1703221520	・PROTECTOR	1			M	sold by the meter
9-6	1531325191	・PROTECTOR	1			M	sold by the meter
10	0574400330	CABLE, battery	1				
10-4	1702920060	・COVER	1				
10-5	1702920002	・COVER	1				
11	0574400320	CABLE, earth	1				
11-3	1702920002	・COVER	1				
13	0354216010	COLLAR	1			M	
15	0574400610	SHEET	1			M	
17	1702108210	BOLT	1				
18	1711900072	CLAMP	3				
20	1711900127	CLAMP	1				
21	0574400630	BATTERY RELAY ASSY	1				
21-1	0574400620	* BRACKET	1				
21-2	1910188125	* BATTERY RELAY	1				
21-3	1910230112	* GLOW RELAY	1				
21-4	1910257125	* STARTER RELAY	1				
21-5	1910230125	* RELAY	1				
21-6	1711900064	* CLIP	2				
21-8	1100040825	* BOLT	2				
21-9	1140020008	* SPRING WASHER	2				
21-10	1141110008	* WASHER	2				
21-11	1100041014	* BOLT	2				
21-12	1140020010	* SPRING WASHER	2				
21-13	1141110010	* WASHER	2				
21-14	1100040612	* BOLT	5				
21-15	1140020006	* SPRING WASHER	5				
21-16	1141110006	* WASHER	5				
23	1100040870	BOLT	1				
26	1100040816	BOLT	5				
28	1100041020	BOLT	5				
29	1140020008	WASHER, spring	6				
30	1140020010	WASHER, spring	7				
32	1141110008	WASHER	7				
33	1141110010	WASHER	5				
35	1130040008	NUT	7				
37	1130040010	NUT	1				
38	1100041016	BOLT	1				
39	1140330010	WASHER	1				
44	1121530816	BOLT, wing	5				
46	1654606076	TRIM	1				sold by the meter
47	0574400080	BOLT	1				
48	1652040730	GROMMET	1				
	N2c081						

silverthorn.co.uk

SIDE LIGHT

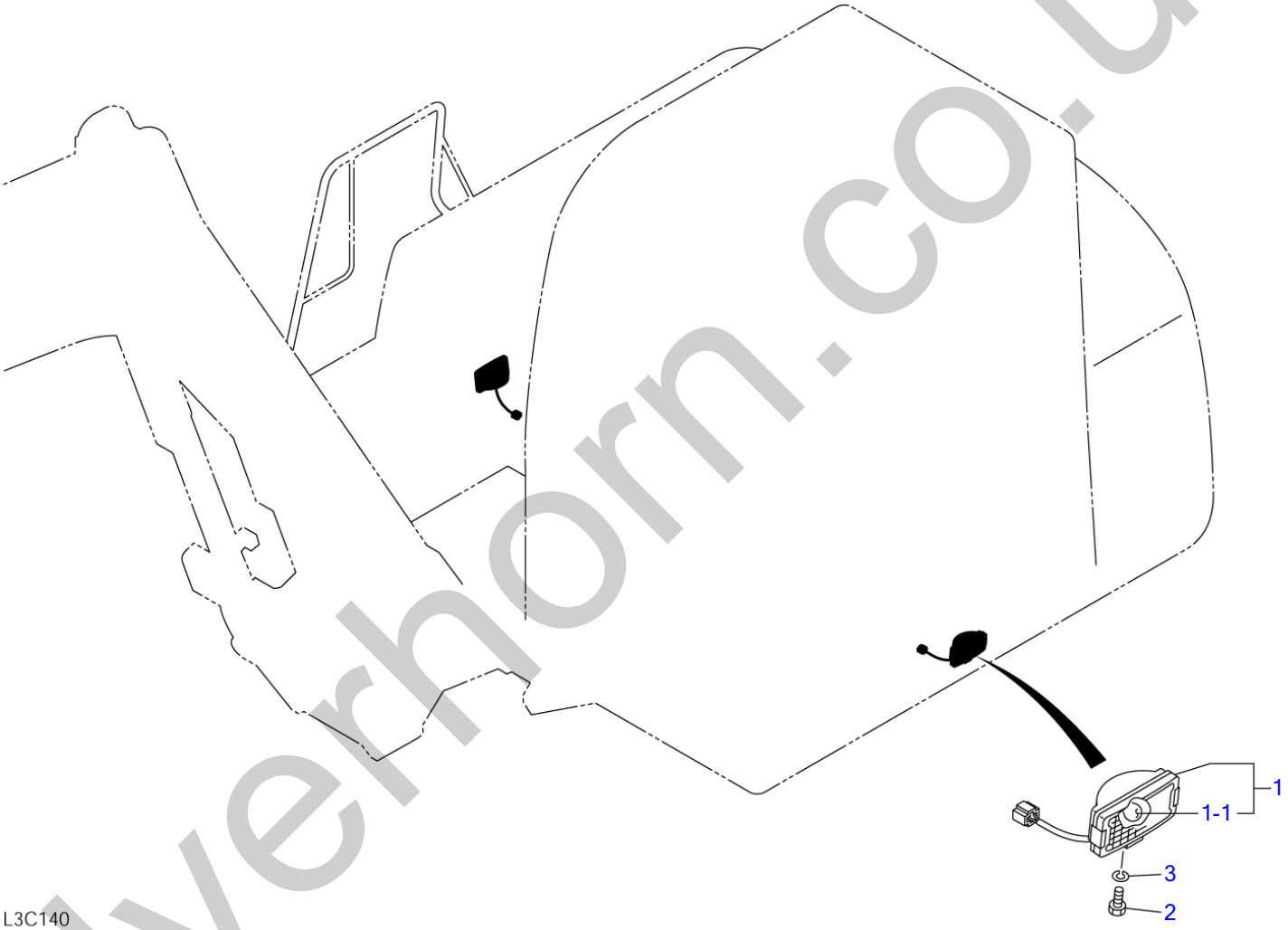

S=1/20, 1/7

silverhorn.co.uk

SIDE LIGHT

Item	Part number	Description	Q'ty	Chan.	Serial No.	Serv.	Remarks
		LIGHT ASSY, side					X05649-01000-1
1	1703004000	LAMP ASSY	2				
1-1	1703004001	・BULB	1				
2	1100040816	BOLT	2				
3	1140020008	WASHER, spring	2				
	N1c130						

silverhorn.co.uk

MAINTENANCE LIGHT SOCKET

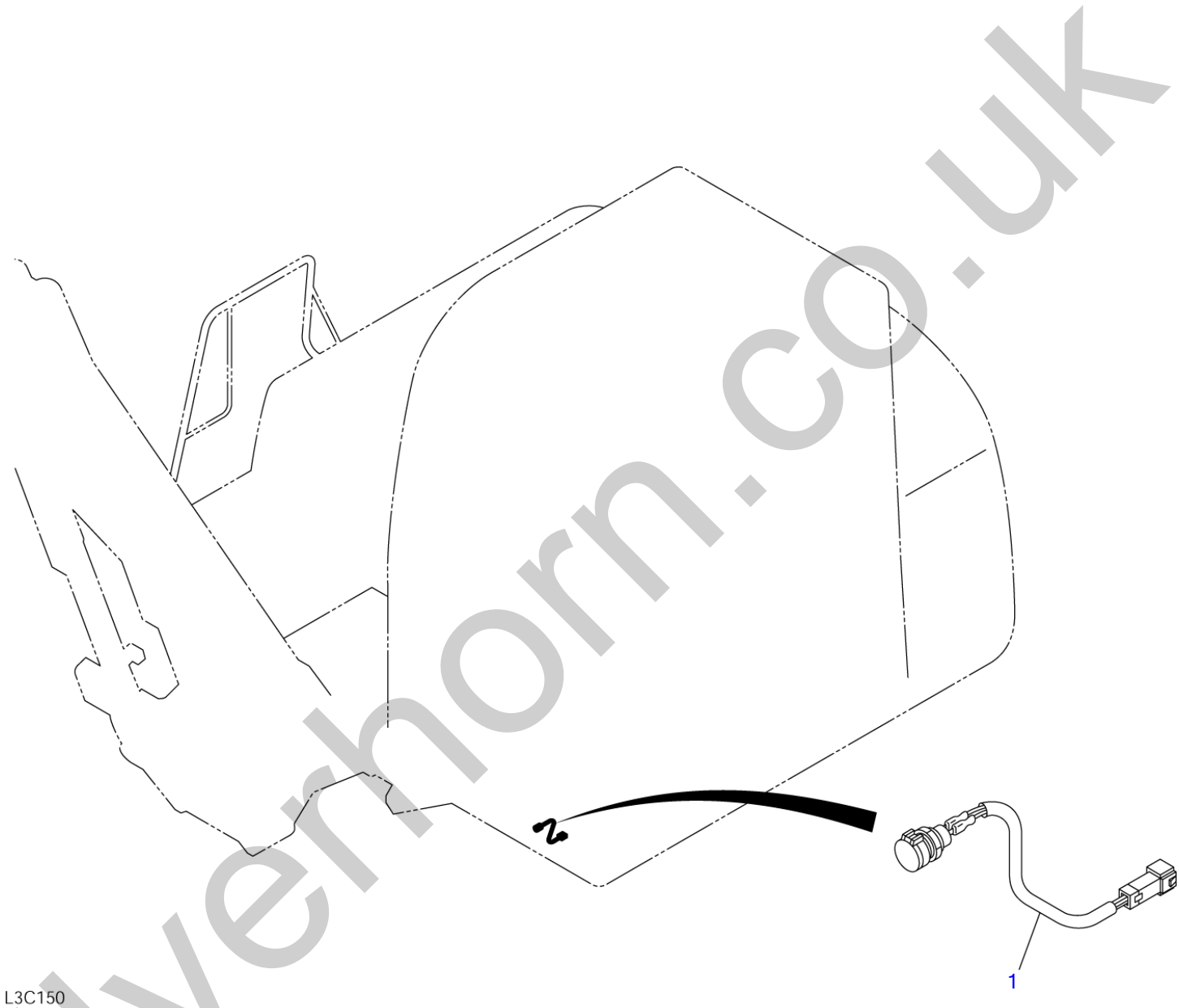

silverhorn.co.uk

MAINTENANCE LIGHT SOCKET

Item	Part number	Description	Q'ty	Chan.	Serial No.	Serv.	Remarks
		SOCKET ASSY, maintenance light					X03942-03000-0
1	**0394203100 L3c150**	SOCKET ASSY	1				

silverhorn.co.uk

WINDOW WASHER

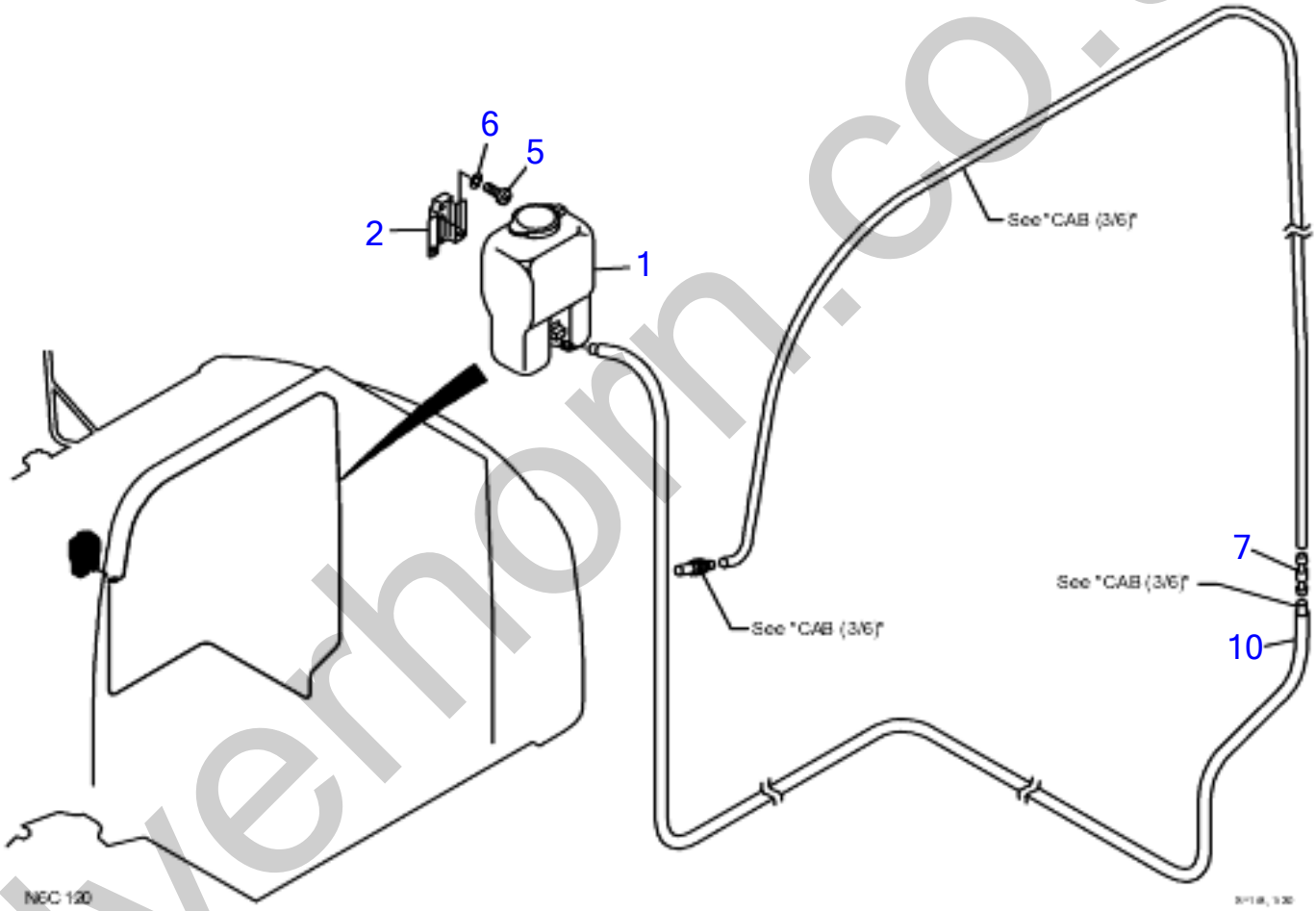

silverhorn.co.uk

WINDOW WASHER

Item	Part number	Description	Q'ty	Chan.	Serial No.	Serv.	Remarks
		WASHER ASSY, window					X05789-00000-2
1	**1711910061**	TANK	1				
2	**1711910062**	BRACKET	1				
5	**1120530616**	SCREW	2				
6	**1140020006**	WASHER, spring	2				
7	**1711910080**	VALVE, check	1				
10	**1703240770**	PROTECTOR	1				sold by the meter
	N6C120						

silverhorn.co.uk

RADIO

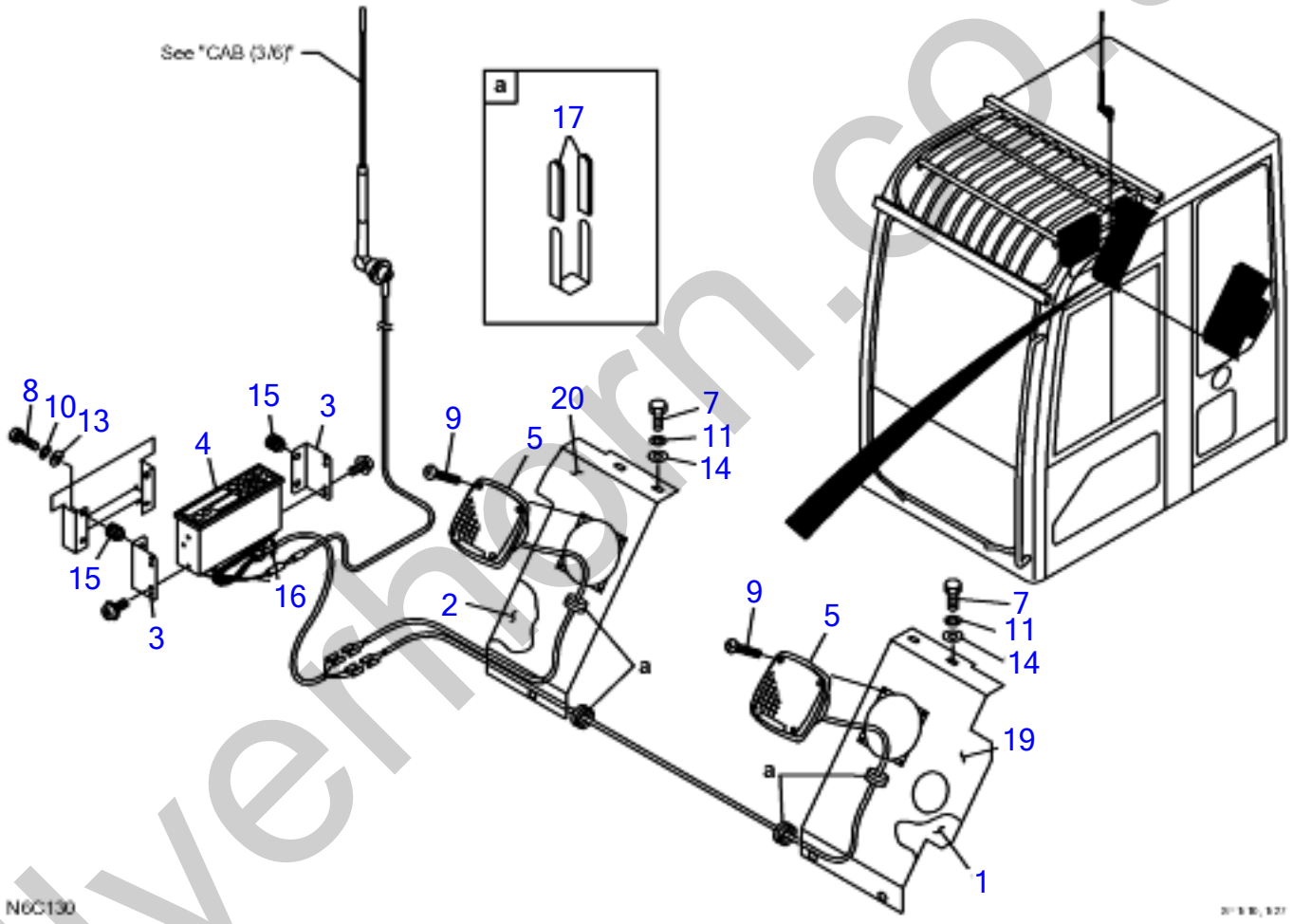

silverhorn.co.uk

RADIO

Item	Part number	Description	Q'ty	Chan.	Serial No.	Serv.	Remarks
		RADIO ASSY (America)					X05747-00400-0
		RADIO ASSY (Europe, Asia, Oceania)					X05747-00300-0
1	0574700330	COVER (L.H.)	1				
2	0574700340	COVER (R.H.)	1				
3	0574700630	BRACKET	2				
4	1705004660	CASSETTE STEREO (Europe, Asia, Oceania)	1				
	1705004670	CASSETTE STEREO (America)	1				
5	1705002150	SPEAKER	2				
7	1100290820	BOLT	7				
8	1120530520	SCREW	4				
9	1120730420	SCREW	8				
10	1140020005	WASHER, spring	4				
11	1140090008	WASHER, spring	7				
13	1141110005	WASHER	4				
14	1141190008	WASHER	7				
15	1652520005	NUT, rubber	4				
16	1652231100	BAND	2				
17	0872433150	TUBE	8				
19	0574700335	CLOTH	1				
20	0574700345	CLOTH	1				
	N2c101						

silverhorn.co.uk

CAB LIGHT

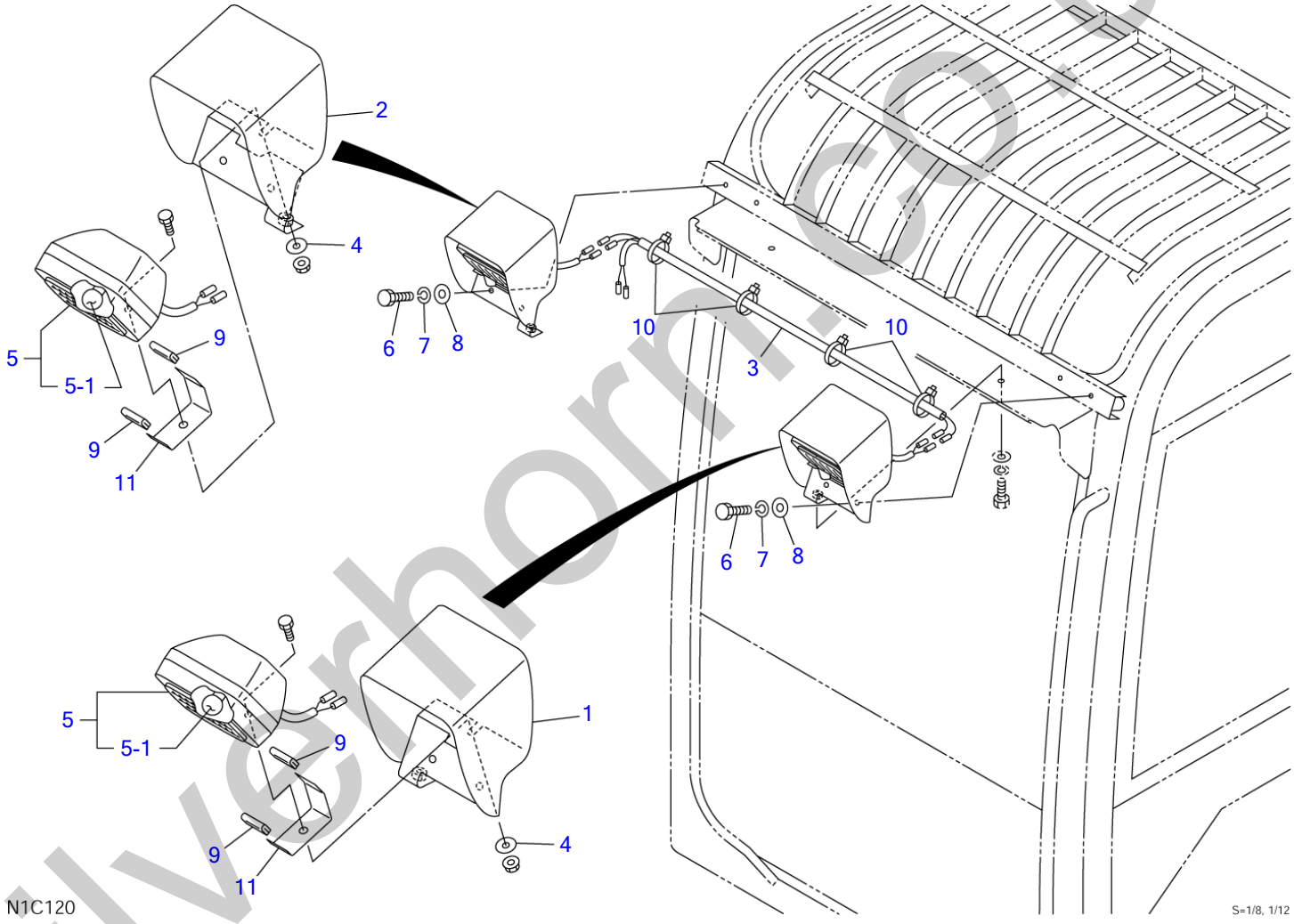

silverhorn.co.uk

CAB LIGHT

Item	Part number	Description	Q'ty	Chan.	Serial No.	Serv.	Remarks
		LIGHT ASSY, cab					X05786-01350-0
1	0578601370	BRACKET (L.H.)	1				
2	0578601380	BRACKET (R.H.)	1				
3	0578600870	HARNESS, wiring	1				
4	0003608252	WASHER	2				
5	1703004800	LAMP ASSY	2				
5-1	1703004806	・BULB	1				
6	1100040825	BOLT	4				
7	1140020008	WASHER, spring	4				
8	1141110008	WASHER	4				
9	1654613035	PACKING	4				sold by the meter
10	1652200003	BAND	4				
11	0578600852	PLATE	2				
	N1c121						

silverhorn.co.uk

REAR LIGHT

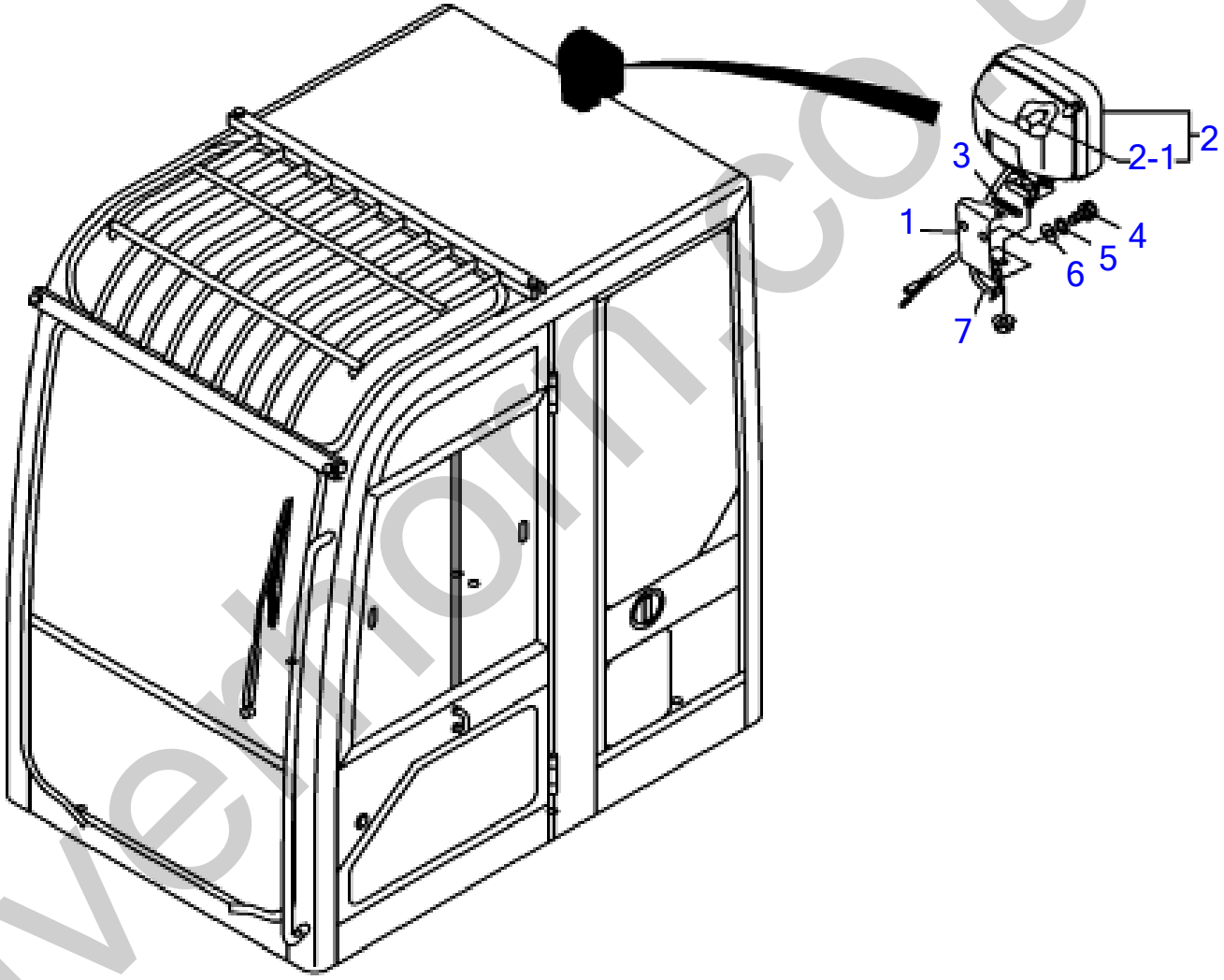

N2C 110

silverthorn.co.uk

REAR LIGHT

Item	Part number	Description	Q'ty	Chan.	Serial No.	Serv.	Remarks
		REAR LIGHT ASSY					
1	0568655110	BRACKET	1				
2	1703004800	LAMP ASSY	1				
2-1	1703004806	* BULB	1				
3	1654628003	TRIM	1				
4	1110040820	CAP SCREW	2				
5	1140420008	SPRING WASHER	2				
6	1141110008	WASHER	2				
7	1652241200	BAND	1				
	N2C110						

silverhorn.co.uk

BOOM LIGHT

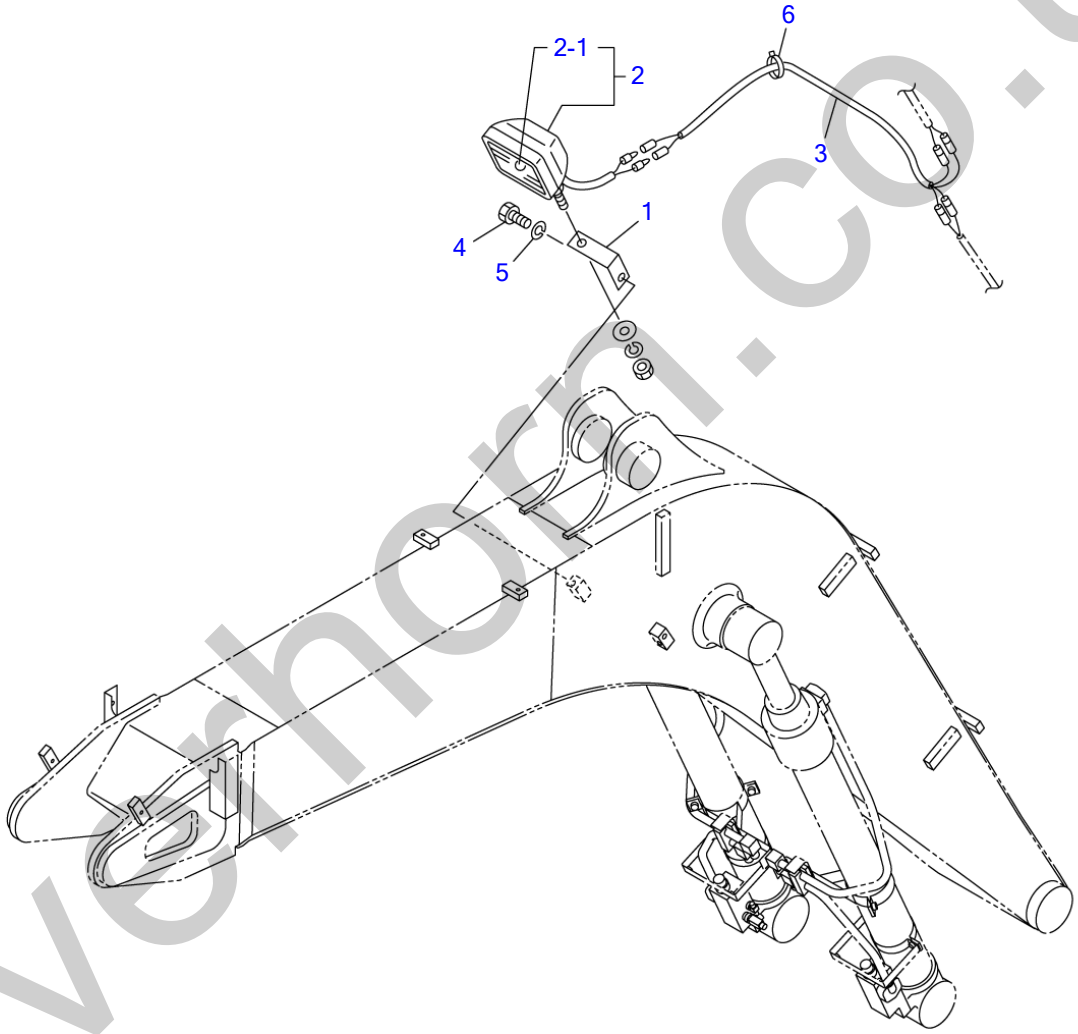

N0C250

S=1/20

silverhorn.co.uk

BOOM LIGHT

Item	Part number	Description	Q'ty	Chan.	Serial No.	Serv.	Remarks
		LIGHT ASSY, boom					X05760-14500-0
1	0566013100	BRACKET	1				
2	1703003900	LAMP ASSY	1				
2-1	1703003901	・BULB	1				
3	0576014510	HARNESS, wiring	1				
4	1100041020	BOLT	1				
5	1140020010	WASHER, spring	1				
6	1652201005	BAND	1				
	N1C220						

silverhorn.co.uk

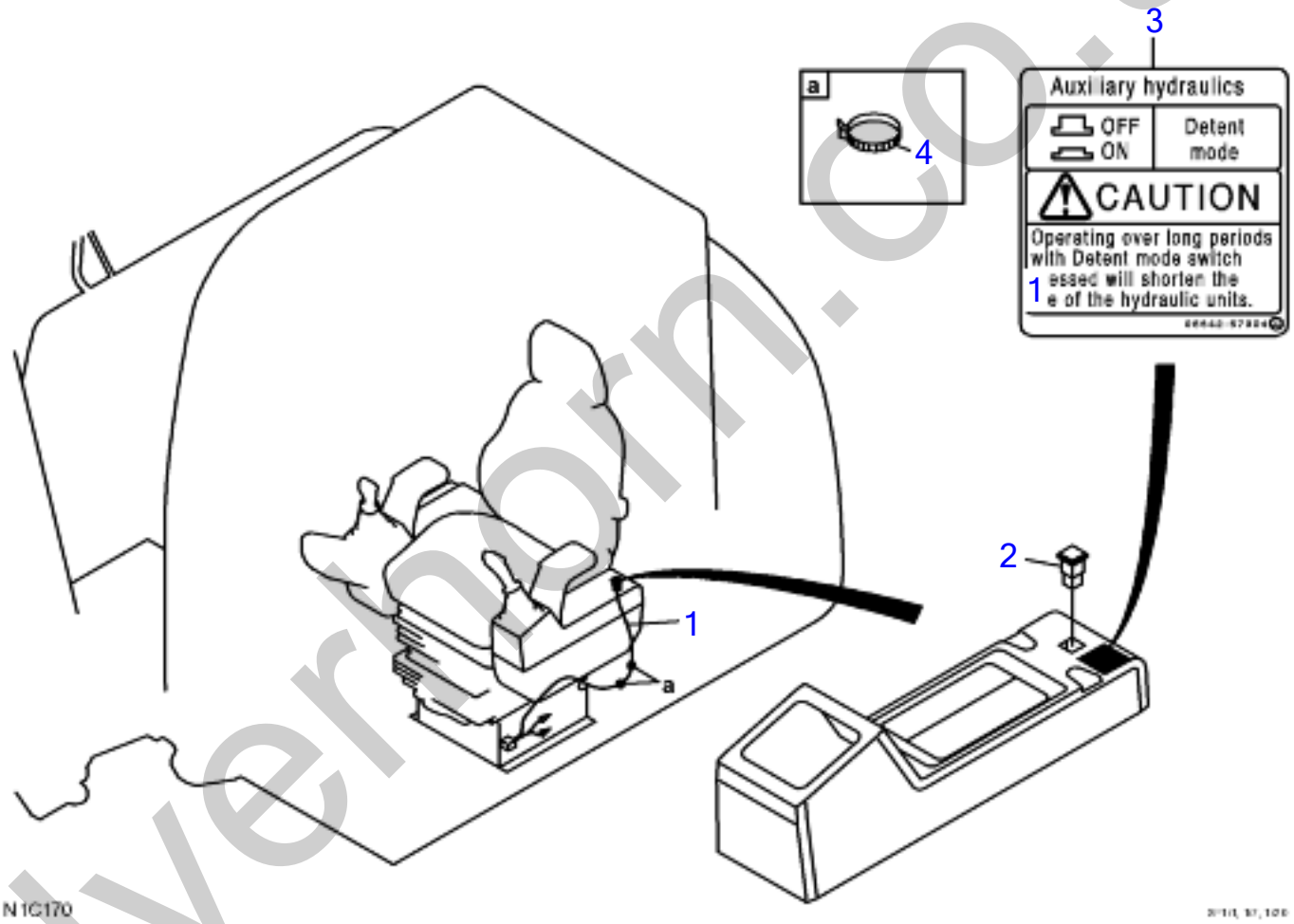

silverhorn.co.uk

SERVICE DETENT

Item	Part number	Description	Q'ty	Chan.	Serial No.	Serv.	Remarks
		SERVICE DETENT ASSY					
1	0574203510	WIRING HARNESS	1				
2	1700000041	LAMP SWITCH	1				
3	0564257004	DECAL	1				
4	1652231250	BAND	2				
	N1C170						

silverhorn.co.uk

GREASE PIPING

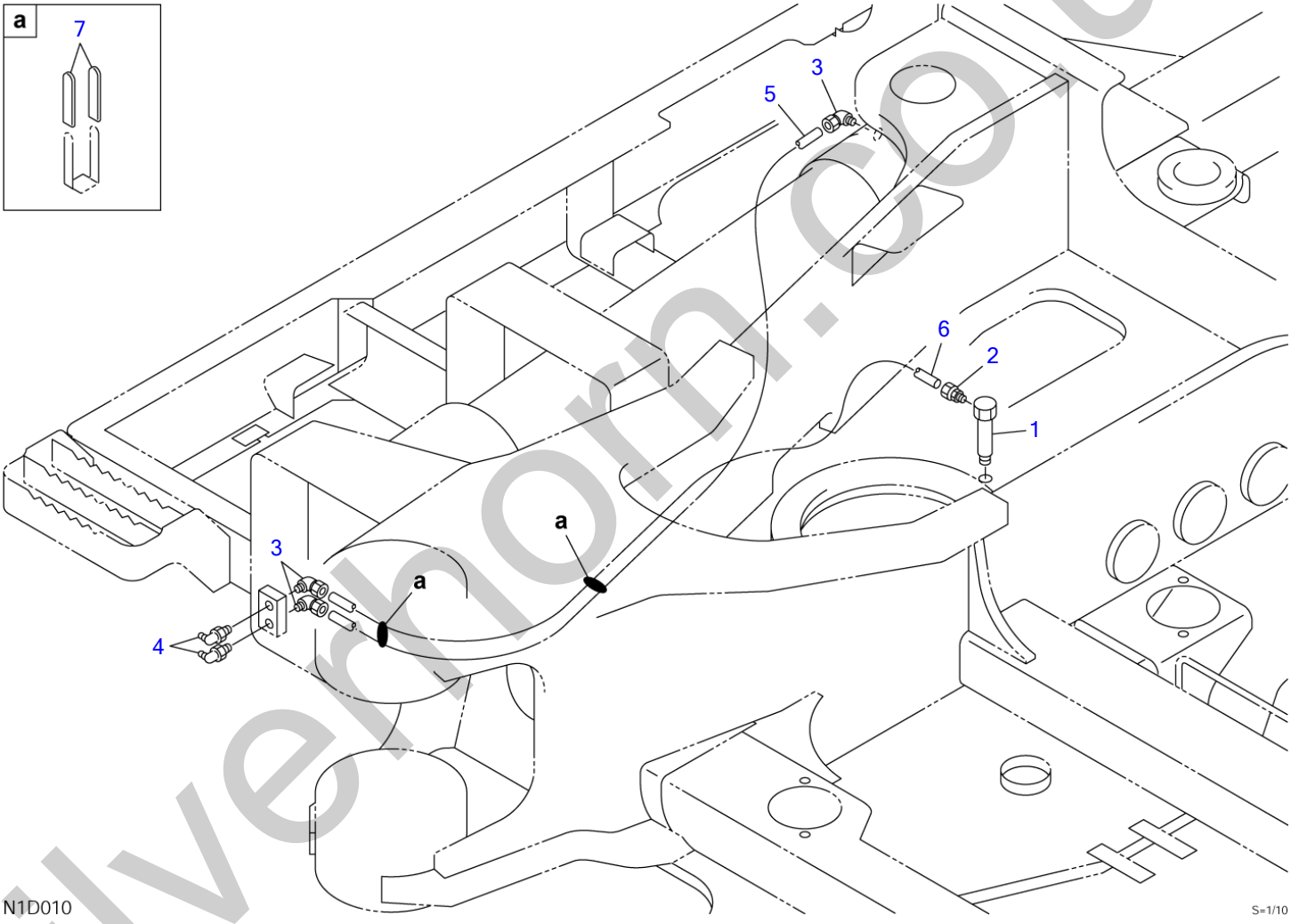

silvermorn.co.uk

GREASE PIPING

Item	Part number	Description	Q'ty	Chan.	Serial No.	Serv.	Remarks
		PIPING ASSY, grease					X05724-00100-0
1	0007262013	ELBOW	1				
2	1532520601	CONNECTOR	1				
3	1532620601	ELBOW	3				
4	1560001675	FITTING, grease	2				
5	1532120670	TUBE	1				sold by the meter
6	1532120660	TUBE	1				sold by the meter
7	0872433150	TUBE	4				
	N1d010						

silverhorn.co.uk

VALVE & ACCESSORIES (1/3)

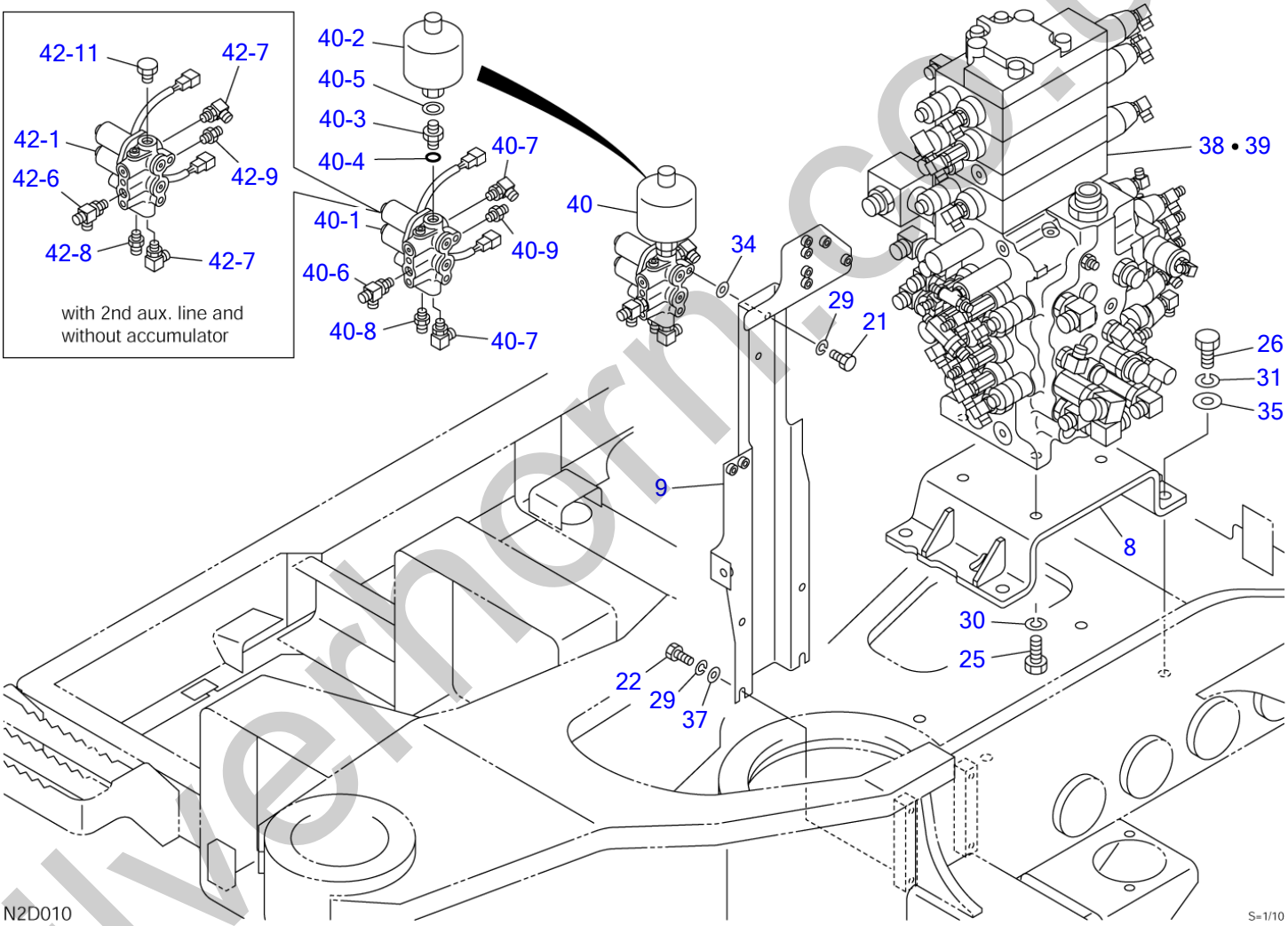

silvernorm.co.uk

VALVE & ACCESSORIES (1/3)

Item	Part number		Description	Q'ty	Chan.	Serial No.	Serv.	Remarks
			VALVE ASSY, control					X05750-04000-0
			VALVE ASSY, control (with 2nd aux. line)					X05750-04100-0
			VALVE ASSY, control (with 2nd aux. line and without accumulator)					X05750-04400-0
8		0575003130	BRACKET	1				
9		0575003510	BRACKET	1				
21		1100041020	BOLT	2				
22		1100041025	BOLT	4				
25		1100041640	BOLT	4				
26		1100041835	BOLT	4				
29		1140020010	WASHER, spring	6				
30		1140020016	WASHER, spring	4				
31		1140020018	WASHER, spring	4				
34		1141110010	WASHER	2				
35		1141110018	WASHER	4				
37		0003600020	WASHER	2				
38	X	**********	VALVE SUB ASSY, control	1				X05750-03110-2
39	X	**********	VALVE SUB ASSY, control	1				X05750-03210-2 with 2nd aux. line
40	X	**********	VALVE ASSY, solenoid	1				X05750-03220-0
40-1		1901744600	・VALVE, solenoid	1				
40-2		1552200020	・ACCUMULATOR	1				
40-3		0007200223	・ADAPTOR	1				
40-4		1420010140	・O-RING	1				
40-5		1432160004	・SEAL	1				
40-6		1512373007	・TEE	1				
		1420010110	・・O-RING	1				
40-7		1515010130	・ELBOW	2				
		1420010110	・・O-RING	1				
40-8		1515600576	・ADAPTOR	1				
		1420010140	・・O-RING	1				
40-9		1515600200	・ADAPTOR	1				
		1420010110	・・O-RING	1				
42	X	**********	VALVE ASSY, solenoid (with 2nd aux. line and without accumulator)	1				X05750-03520-0
42-1		1901744600	・VALVE, solenoid	1				
42-6		1512373007	・TEE	1				
		1420010110	・・O-RING	1				
42-7		1515010130	・ELBOW	2				
		1420010110	・・O-RING	1				
42-8		1515600576	・ADAPTOR	1				
		1420010140	・・O-RING	1				
42-9		1515600200	・ADAPTOR	1				
		1420010110	・・O-RING	1				
42-11		1501750003	・PULG	1				
		1420010140	・・O-RING	1				
		N2d011						

silverthorn.co.uk

VALVE & ACCESSORIES (1/3) (with 3rd & 4th aux. lines)

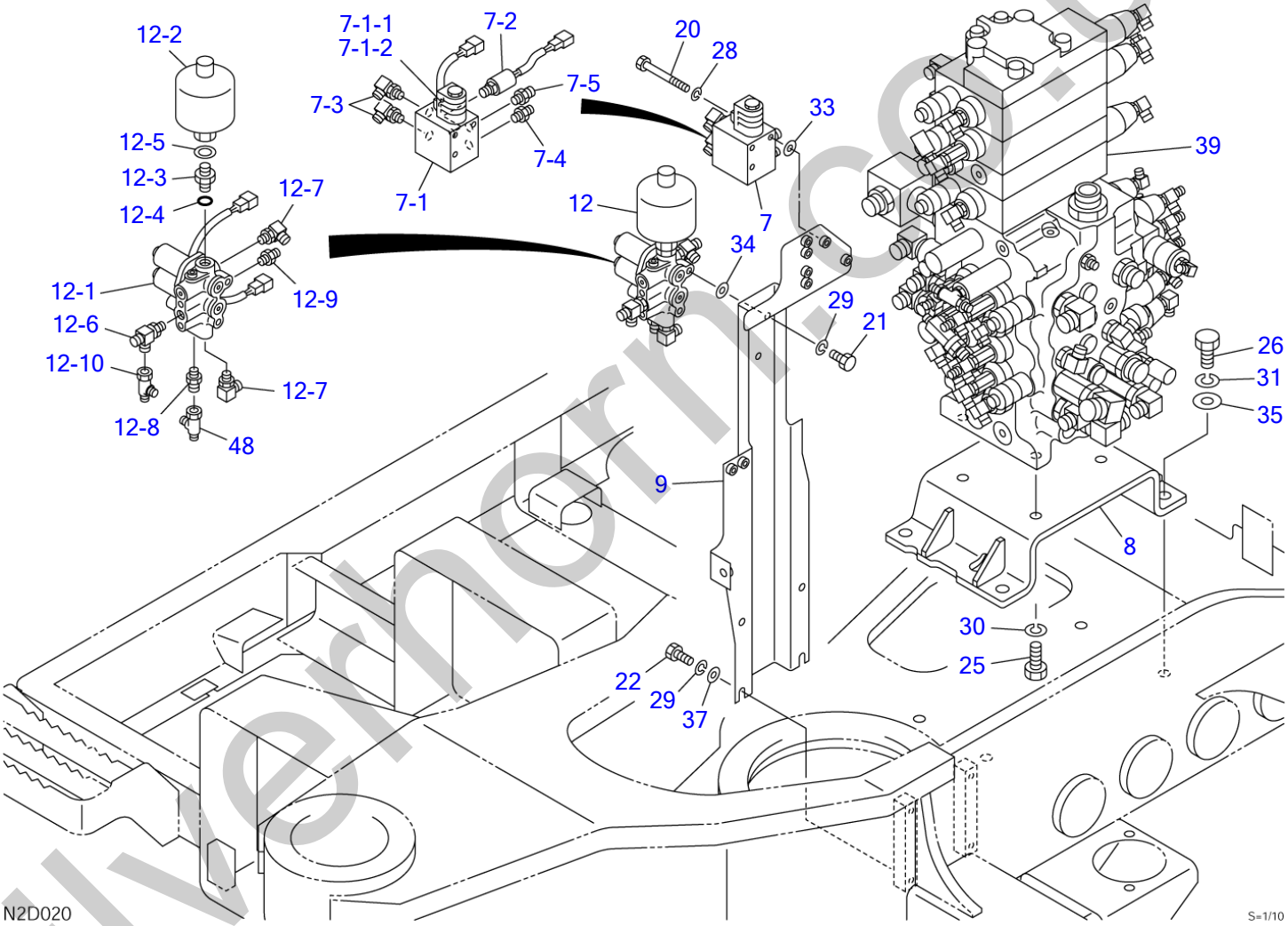

silvernorm.co.uk

VALVE & ACCESSORIES (1/3) (with 3rd & 4th aux. lines)

Item	Part number		Description	Q'ty	Chan.	Serial No.	Serv.	Remarks
			VALVE ASSY, control (with 3rd aux. line)					X05750-04200-0
			VALVE ASSY, control (with 4th aux. line)					X05750-04300-0
7	X	**********	VALVE ASSY, solenoid	1				X05750-00460-2
7-1		1901747200	・VALVE, solenoid	1				24V
7-1-1		1901741402	・・SOLENOID	1				
7-1-2		1901741403	・・COIL	1				
7-2		1700100065	・SWITCH, pressure	1				
		1420010110	・・O-RING	1				
7-3		1515010130	・ELBOW	2				
		1420010110	・・O-RING	1				
7-4		1515600200	・ADAPTOR	1				
		1420010110	・・O-RING	1				
7-5		1515600571	・ADAPTOR	1				
		1420010110	・・O-RING	1				
8		0575003130	BRACKET	1				
9		0575003510	BRACKET	1				
12	X	**********	VALVE ASSY, solenoid	1				X05750-03320-0
12-1		1901744600	・VALVE, solenoid	1				
12-2		1552200020	・ACCUMULATOR	1				
12-3		0007200223	・ADAPTOR	1				
12-4		1420010140	・O-RING	1				
12-5		1432160004	・SEAL	1				
12-6		1512373007	・TEE	1				
		1420010110	・・O-RING	1				
12-7		1515010130	・ELBOW	2				
		1420010110	・・O-RING	1				
12-8		1515600576	・ADAPTOR	1				
		1420010140	・・O-RING	1				
12-9		1515600200	・ADAPTOR	1				
		1420010110	・・O-RING	1				
12-10		1513390035	・TEE	1				
20		1100040895	BOLT	3				
21		1100041020	BOLT	2				
22		1100041025	BOLT	4				
25		1100041640	BOLT	4				
26		1100041835	BOLT	4				
28		1140020008	WASHER, spring	3				
29		1140020010	WASHER, spring	6				
30		1140020016	WASHER, spring	4				
31		1140020018	WASHER, spring	4				
33		1141110008	WASHER	3				
34		1141110010	WASHER	2				
35		1141110018	WASHER	4				
37		0003600020	WASHER	2				
39	X	**********	VALVE SUB ASSY, control	1				X05750-03210-2
48		1513390015	TEE	1				with 4th aux. line
		N2d021						

silverform.co.uk

VALVE & ACCESSORIES (1/3) (with high pressure 3rd, 3rd & 4th aux. lines)

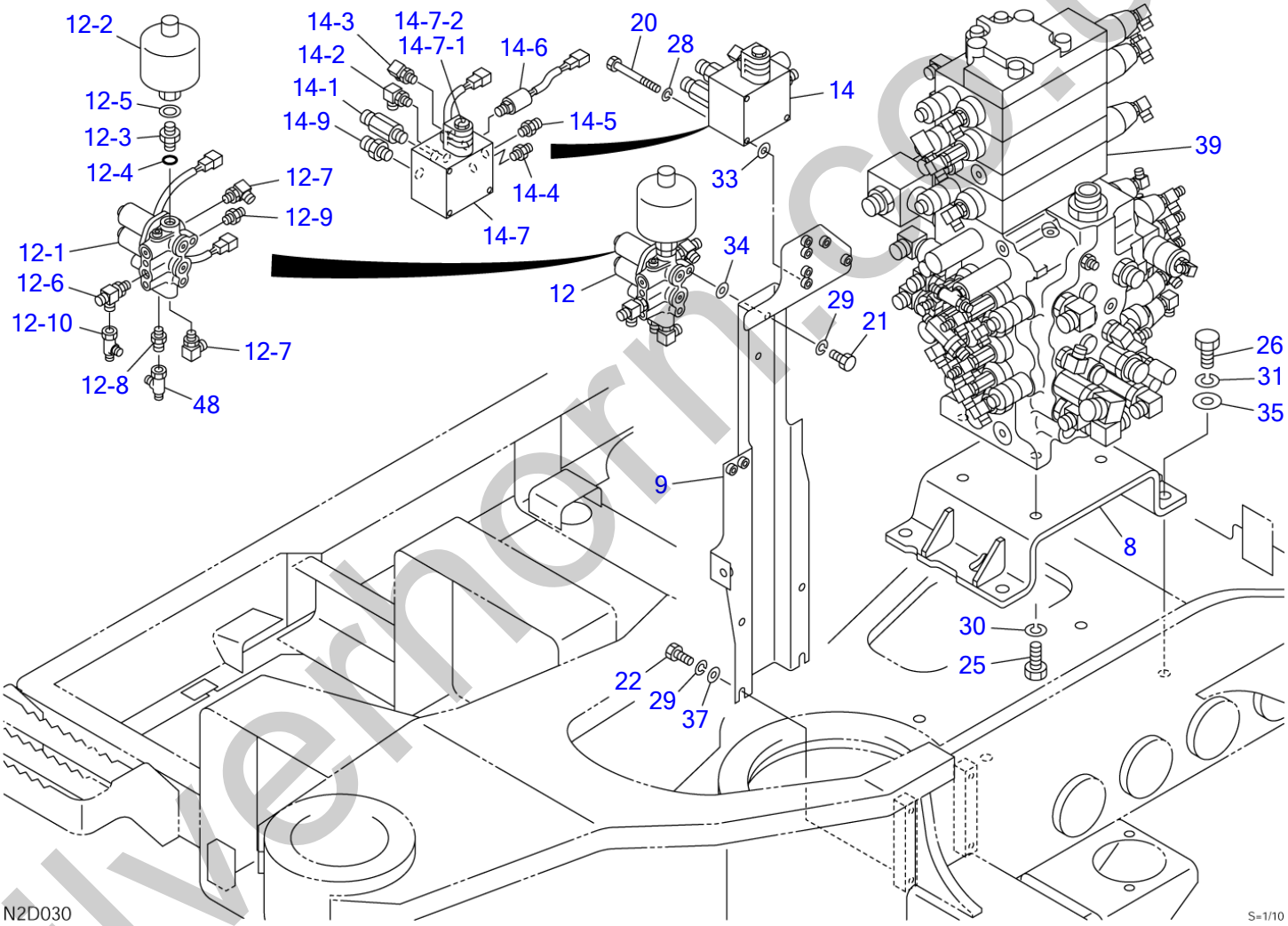

silvernorm.co.uk

VALVE & ACCESSORIES (1/3) (with high pressure 3rd, 3rd & 4th aux. lines)

Item	Part number	Description	Q'ty	Chan.	Serial No.	Serv.	Remarks
		VALVE ASSY, control (with high press. 3rd aux. line)					X05750-04500-0
		VALVE ASSY, control (with high press. 3rd, 4th aux. line)					X05750-04600-0
8	0575003130	BRACKET	1				
9	0575003510	BRACKET	1				
12	X **********	VALVE ASSY, solenoid	1				X05750-03320-0
12-1	1901744600	・VALVE, solenoid	1				
12-2	1552200020	・ACCUMULATOR	1				
12-3	0007200223	・ADAPTOR	1				
12-4	1420010140	・O-RING	1				
12-5	1432160004	・SEAL	1				
12-6	1512373007	・TEE	1				
	1420010110	・・O-RING	1				
12-7	1515010130	・ELBOW	2				
	1420010110	・・O-RING	1				
12-8	1515600576	・ADAPTOR	1				
	1420010140	・・O-RING	1				
12-9	1515600200	・ADAPTOR	1				
	1420010110	・・O-RING	1				
12-10	1513390035	・TEE	1				
14	X **********	VALVE ASSY, solenoid	1				X05750-03720-0
14-1	0007203041	・ADAPTOR	2				
	1420010180	・・O-RING	1				
14-2	0575003630	・ELBOW (with orifice)	1				
	1420010110	・・O-RING	1				
14-3	1515010130	・ELBOW	1				
	1420010110	・・O-RING	1				
14-4	1515600200	・ADAPTOR	1				
	1420010110	・・O-RING	1				
14-5	1515600571	・ADAPTOR	1				
	1420010110	・・O-RING	1				
14-6	1700100065	・SWITCH, pressure	1				
	1420010110	・・O-RING	1				
14-7	1901749400	・VALVE, solenoid	1				
14-7-1	1901741402	・・SOLENOID	1				
14-7-2	1901741403	・・COIL	1				
14-8	1420010180	・O-RING	2				
14-9	1515600202	・ADAPTOR	1				
	1420010180	・・O-RING	1				
20	1100040895	BOLT	3				
21	1100041020	BOLT	2				
22	1100041025	BOLT	4				
25	1100041640	BOLT	4				
26	1100041835	BOLT	4				
28	1140020008	WASHER, spring	3				
29	1140020010	WASHER, spring	6				
30	1140020016	WASHER, spring	4				
31	1140020018	WASHER, spring	4				
33	1141110008	WASHER	3				
34	1141110010	WASHER	2				
35	1141110018	WASHER	4				
37	0003600020	WASHER	2				
39	X **********	VALVE SUB ASSY, control	1				X05750-03210-2
48	1513390015	TEE	1				with 4th aux. line
	N2d031						

silverform.co.uk

VALVE & ACCESSORIES (2/3)

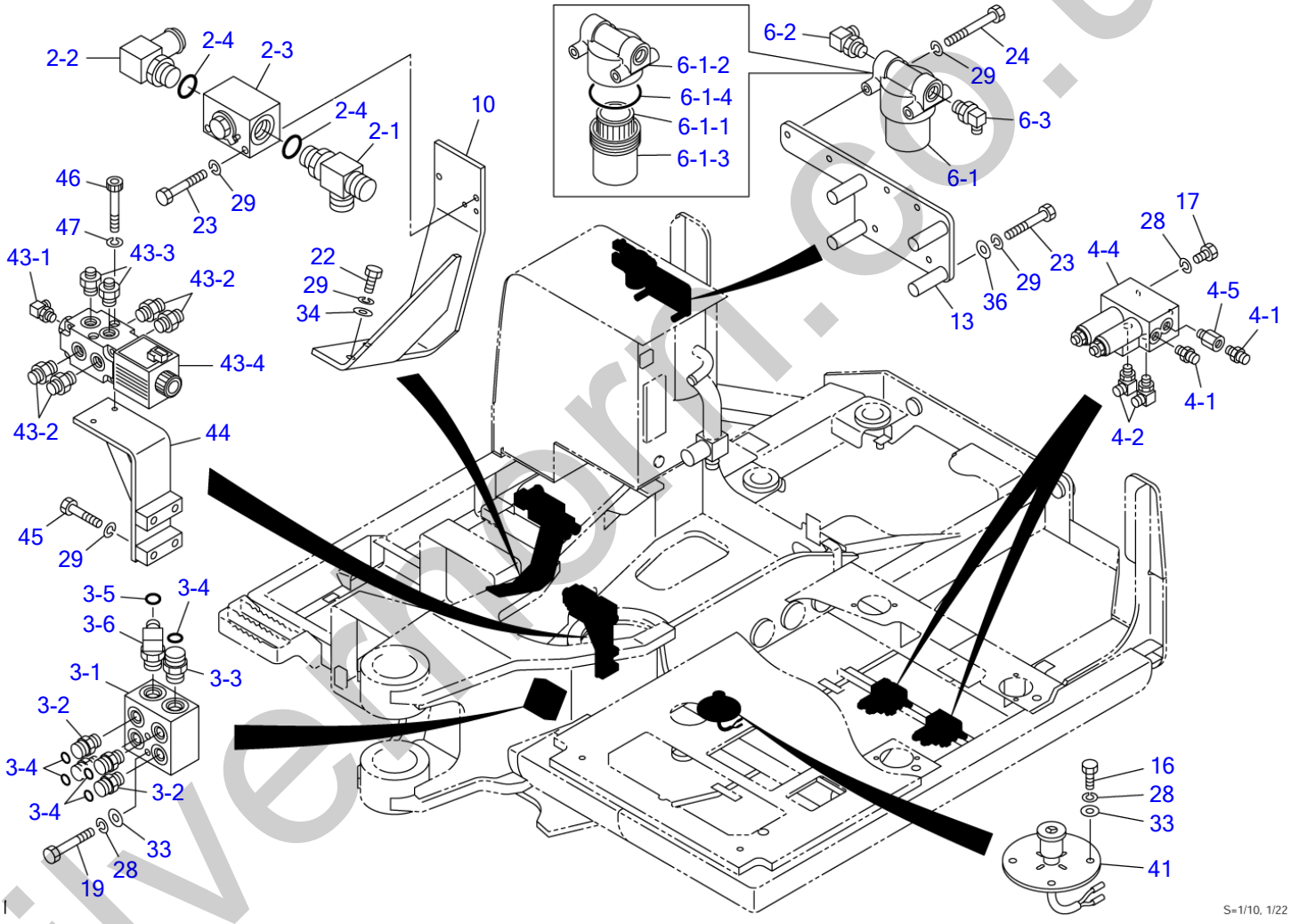

silvermore.co.uk

VALVE & ACCESSORIES (2/3)

Item	Part number	Description	Q'ty	Chan.	Serial No.	Serv.	Remarks
		VALVE ASSY, control					X05750-04000-0
		VALVE ASSY, control (with 2nd aux. line)					X05750-04100-0
		VALVE ASSY, control (with 3rd aux. line)					X05750-04200-0
		VALVE ASSY, control (with 4rd aux. line)					X05750-04300-0
		VALVE ASSY, control (with 2nd aux. line and without accumulator)					X05750-04400-0
		VALVE ASSY, control (with high press. 3rd aux. line)					X05750-04500-0
		VALVE ASSY, control (with high press. 3rd, 4th aux. line)					X05750-04600-0
2	X **********	VALVE ASSY, stop	1				X05750-00250-1
2-1	1512373015	・TEE	1				
	1420010290	・・O-RING	1				
2-2	1513350020	・ELBOW	1				
	1420010290	・・O-RING	1				
2-3	1901744200	・VALVE, stop	1				
2-4	1420310021	・O-RING	2				
3	X **********	MANIFOLD ASSY	1				X05750-03230-1
3-1	0565029610	・MANIFOLD	1				
3-2	1511061604	・ADAPTOR	4				
	1420010180	・・O-RING	1				
3-3	1511061606	・ADAPTOR	1				
	1420010240	・・O-RING	1				
3-4	1420310016	・O-RING	5				
3-5	1420310018	・O-RING	1				
3-6	1511261906	・ELBOW	1				
	1420010240	・O-RING	1				
4	X **********	VALVE ASSY, solenoid	1				X05750-00350-1
	X **********	VALVE ASSY, solenoid	2				with 2nd, 3rd, 4th aux. line
4-1	1515600571	・ADAPTOR	2				
	1420010110	・・O-RING	1				
4-2	1515010130	・ELBOW	2				
	1420010110	・・O-RING	1				
4-4	1901738500	・VALVE, proportional control	1				
4-5	1513370046	・ADAPTOR (with filter)	1				
	1420010110	・・O-RING	1				
6	X **********	FILTER ASSY	1				X05750-00450-0
6-1	1551200600	・FILTER	1				
6-1-1	1551200601	・・ELEMENT	1				
6-1-2	1551200602	・・COVER, head	1				
6-1-3	1551200603	・・CASE	1				
6-1-4	1551200604	・・O-RING	1				
6-2	1515010042	・ELBOW	1				
	1420010180	・・O-RING	1				
6-3	1515010051	・ELBOW	1				
	1420010180	・・O-RING	1				
10	0575000520	BRACKET	1				
13	0575004010	BRACKET	1			M	
16	1100040820	BOLT	2				with 2nd, 3rd, 4th aux. line
	1100040820	BOLT	4				
19	1100040875	BOLT	2				
22	1100041025	BOLT	2				
23	1100041080	BOLT	2			M	
24	1100041095	BOLT	6				
28	1140020008	WASHER, spring	4				
	1140020008	WASHER, spring	6				with 2nd aux. line
	1140020008	WASHER, spring	10				with 2nd, 3rd, 4th aux. line
29	1140020010	WASHER, spring	10				
	1140020010	WASHER, spring	14				with 4th aux. line
33	1141110008	WASHER	2				
	1141110008	WASHER	6				with 2nd, 3rd, 4th aux. line
34	1141110010	WASHER	4				
41	1700100064	SWITCH, foot	1				with 2nd, 3rd, 4th aux. line
43	0575003410	VALVE ASSY, solenoid	1				with 4th aux. line

silverhorn.co.uk

VALVE & ACCESSORIES (2/3)

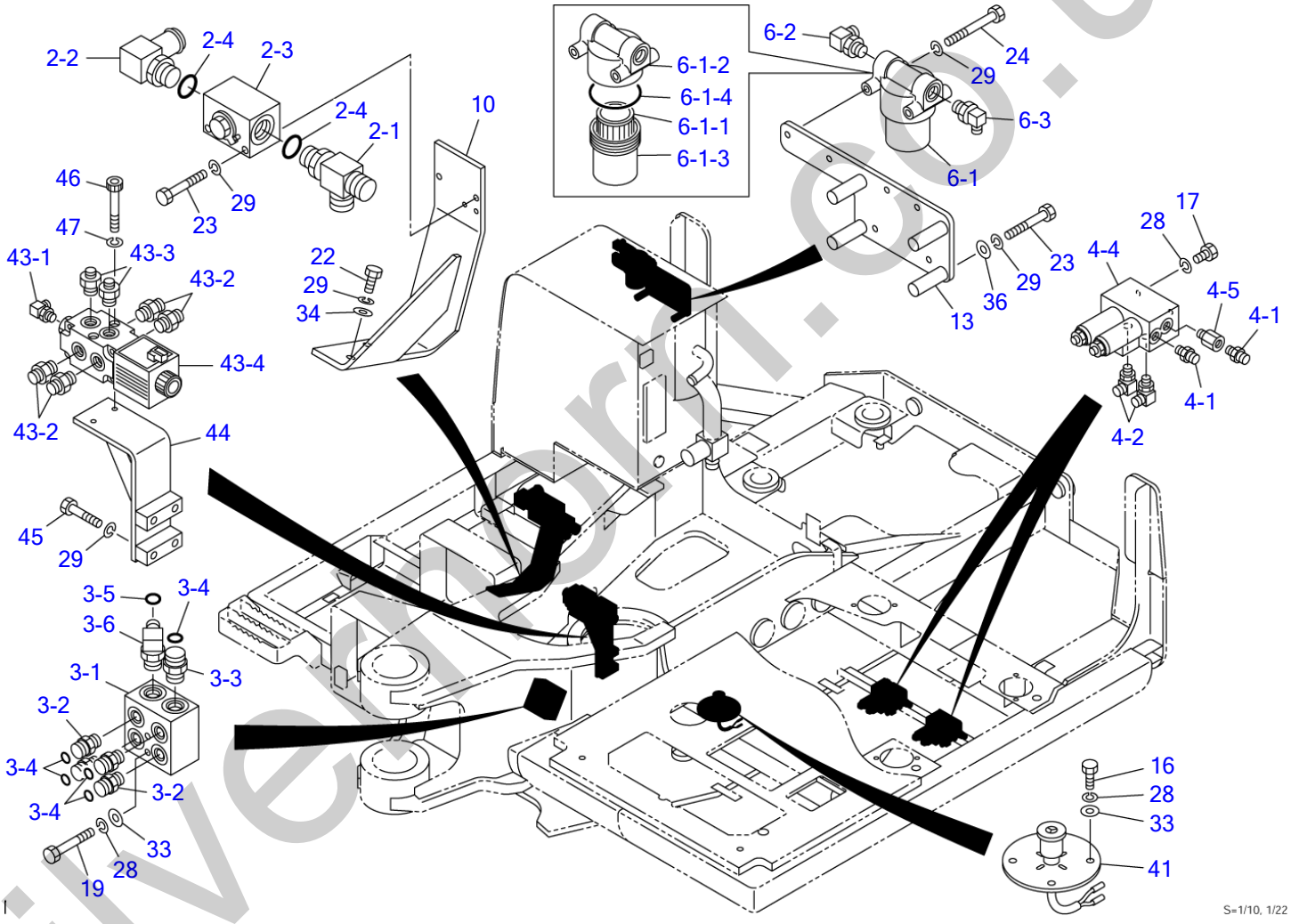

silvermore.co.uk

VALVE & ACCESSORIES (2/3)

Item	Part number	Description	Q'ty	Chan.	Serial No.	Serv.	Remarks
43-1	1515012040	・ELBOW	1				with 4th aux. line
43-1	1420010110	・・O-RING	1				with 4th aux. line
43-2	1515600202	・ADAPTOR	4				with 4th aux. line
43-2	1420010180	・・O-RING	1				with 4th aux. line
43-3	1515600577	・ADAPTOR	2				with 4th aux. line
43-3	1420010180	・・O-RING	1				with 4th aux. line
43-4	1901748300	・VALVE, solenoid	1				with 4th aux. line
44	0577304550	BRACKET	1				with 4th aux. line
45	1100041045	BOLT	4				with 4th aux. line
46	1110040870	SCREW, cap	2				with 4th aux. line
47	1140420008	WASHER, spring	2				with 4th aux. line
	N2d041						

silverhorn.co.uk

VALVE & ACCESSORIES (3/3)

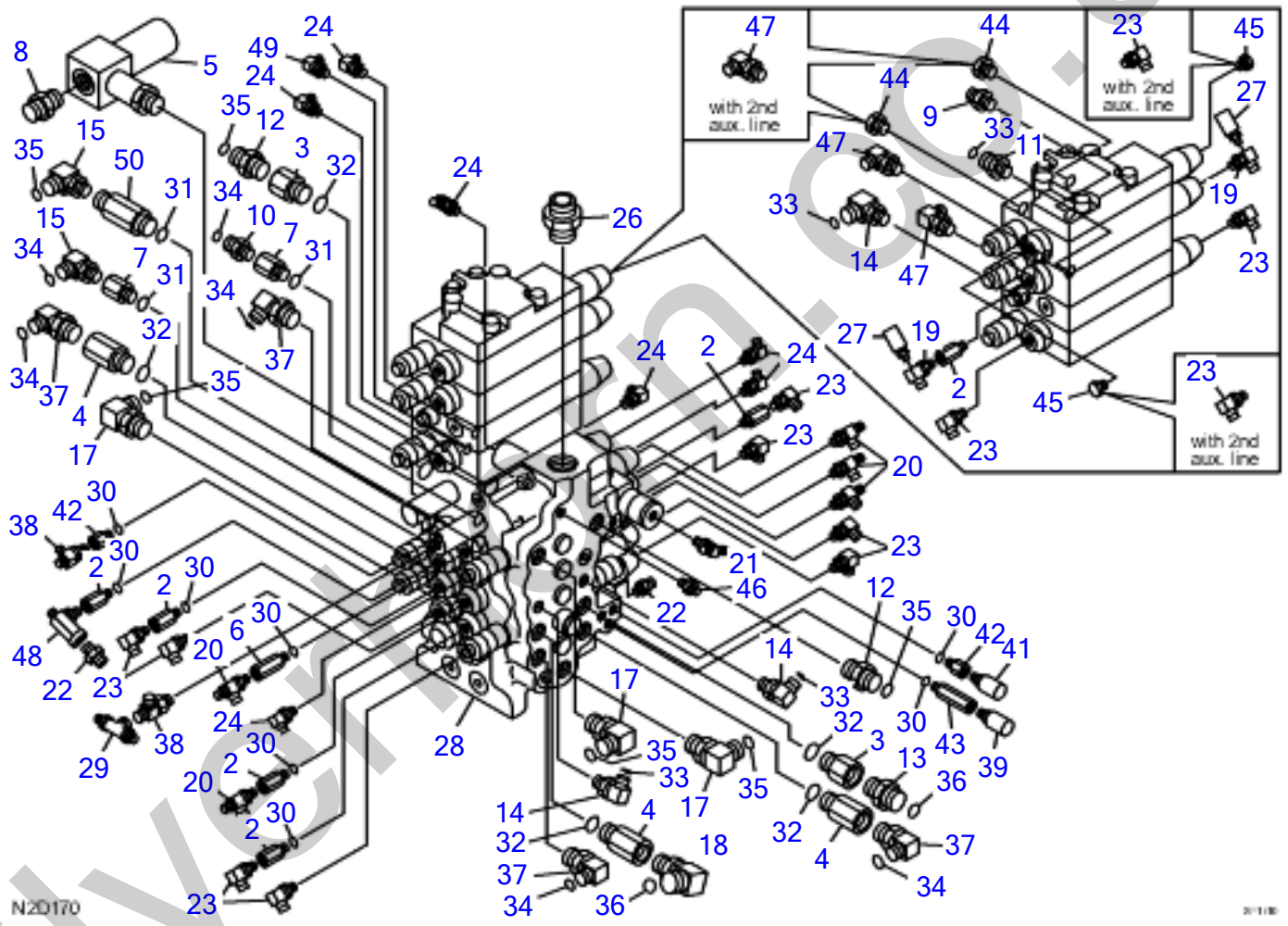

silverhill-n.co.uk

VALVE & ACCESSORIES (3/3)

Item	Part number	Description	Q'ty	Chan.	Serial No.	Serv.	Remarks
0	X **********	VALVE SUB ASSY, control	1				X05750-03110-2
	X **********	VALVE SUB ASSY, control (with 2nd aux. line)	1				X05750-03210-2
2	0007213028	・BUSHING	6				
	1420010110	* * o-ring	1				
3	0007213034	・BUSHING	2				
4	0007213050	・BUSHING	3				
5	0575000550	・ELBOW	1				
	1420010290	・・O-RING	1				
6	0007213061	・BUSHING	1				
7	0007213010	・BUSHING	2				
	1420010180	* * o-ring	1				
8	1515600203	・ADAPTOR	1				
	1420010240	・・O-RING	1				
9	1515600202	・ADAPTOR	1				
	1420010180	・・O-RING	1				
10	1511061604	・ADAPTOR	1				
	1420010180	・・O-RING	1				
11	1511061304	・ADAPTOR	1				
	1420010180	・・O-RING	1				
12	1511061906	・ADAPTOR	2				
	1420010240	・・O-RING	1				
13	1511062306	・ADAPTOR	1				
	1420010240	・・O-RING	1				
14	1511161304	・ELBOW	3				
	1420010180	・・O-RING	1				
15	1511161604	・ELBOW	2				
	1420010180	・・O-RING	1				
17	1511161906	・ELBOW	3				
	1420010240	・・O-RING	1				
18	1511162306	・ELBOW	1				
	1420010240	・・O-RING	1				
19	1512330003	・ELBOW	2				
	1420010110	・・O-RING	1				
20	1512373007	・TEE	5				
	1420010110	・・O-RING	1				
21	1512370010	* TEE	1				
	1420010110	* * O-RING	1				
22	1515600571	・ADAPTOR	2				
	1420010110	・・O-RING	1				
23	1515010130	・ELBOW	11				
	1420010110	・・O-RING	1				
	1515010130	・ELBOW	13				with 2nd aux. line
	1420010110	・・O-RING	1				
24	1515012040	・ELBOW	8				
	1420010110	・・O-RING	1				
26	1515600205	・ADAPTOR	1				
	1420010380	・・O-RING	1				
27	1700100015	・SWITCH, pressure	2				
28	1901046800	・VALVE, control	1				
29	1901754100	・VALVE, shuttle	1				
30	1420010110	・O-RING	6				
31	1420010180	・O-RING	3				
32	1420010240	・O-RING	5				
33	1420310014	・O-RING	4				
34	1420310016	・O-RING	6				
35	1420310018	・O-RING	6				
36	1420310021	・O-RING	2				
37	1511161606	・ELBOW	4				
	1420010240	・・O-RING	1				
38	1512370011	・TEE	1				
	1420010110	・・O-RING	1				
39	1700100069	・SWITCH, pressure	1				
	1420010110	・・O-RING	1				
41	1700100065	・SWITCH, pressure	1				
	1420010110	・・O-RING	1				
42	0007213042	・BUSHING	3				
43	0007213058	* BUSHING	1				

silverform.co.uk

VALVE & ACCESSORIES (3/3)

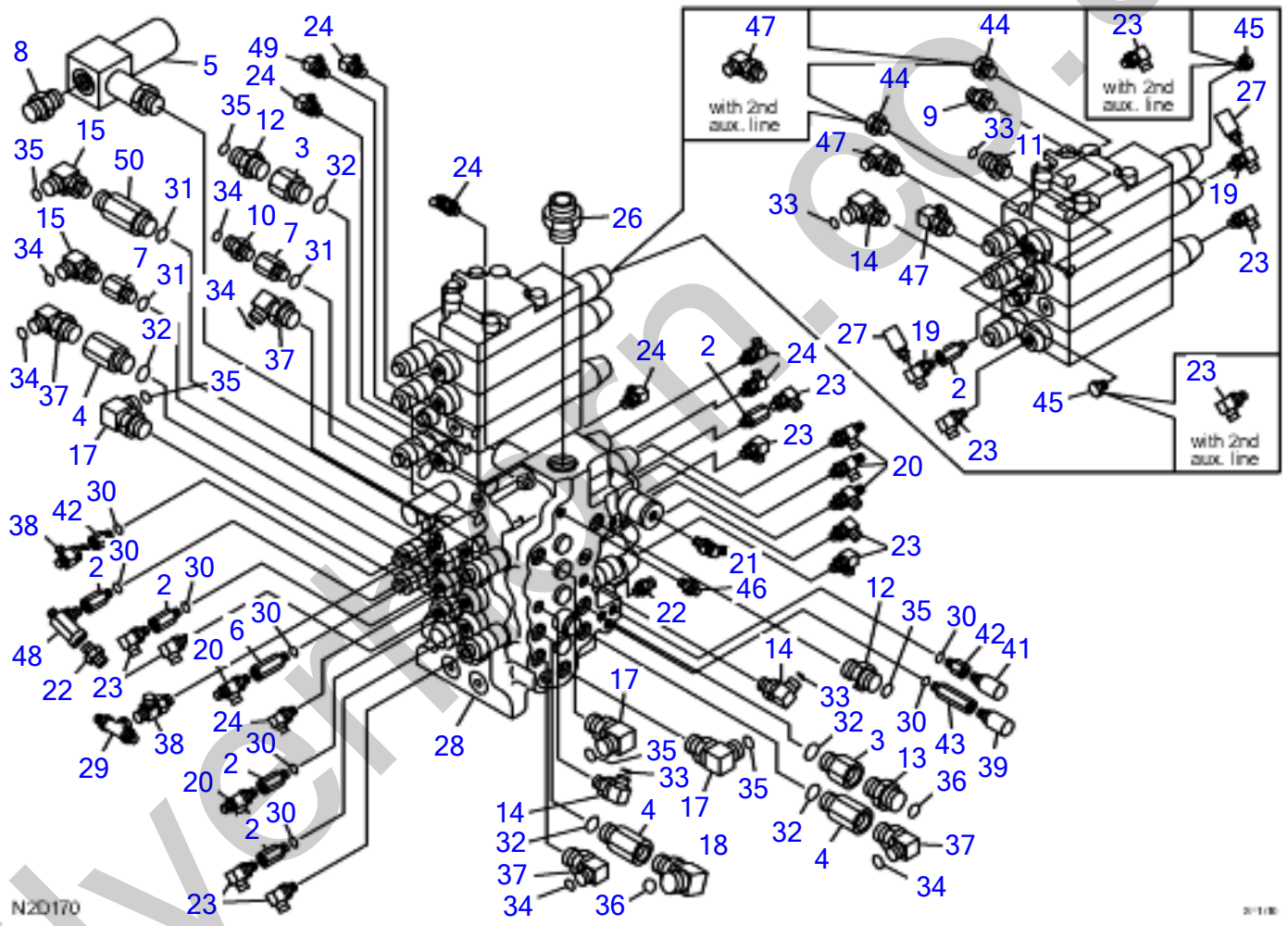

silverhill-n.co.uk

VALVE & ACCESSORIES (3/3)

Item	Part number	Description	Q'ty	Chan.	Serial No.	Serv.	Remarks
44	1501750004	・PLUG	2				without 2nd aux. line
	1420010180	・・O-RING	1				
45	1501750002	・PLUG	2				without 2nd aux. line
	1420010110	・・O-RING	1				
46	0575002020	・ADAPTOR (with orifice)	1				
	1420010110	・・O-RING	1				
47	1515010042	・ELBOW	2				
	1515010042	・ELBOW	4				with 2nd aux. line
	1420010180	・・O-RING	1				
48	1513390029	・TEE	1				
	1420010110	・・O-RING	1				
49	0575002030	・ELBOW	1				
50	0007213038	・BUSHING	1				
	N2D170						

silverhorn.co.uk

PIPING; UPPER (1/5)

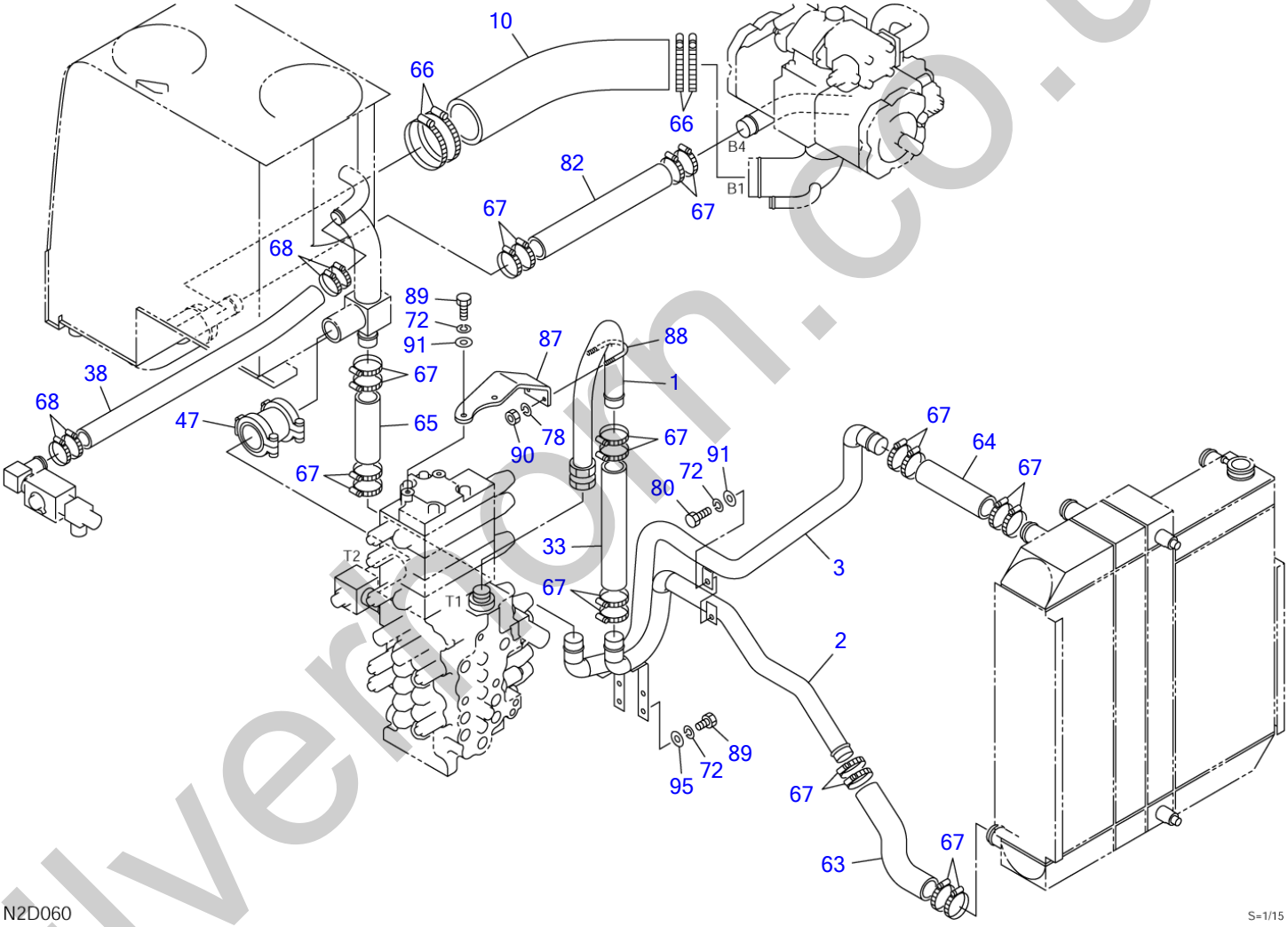

silverton.co.uk

PIPING; UPPER (1/5)

Item	Part number	Description	Q'ty	Chan.	Serial No.	Serv.	Remarks
		PIPING ASSY, upper					X05770-03700-0
		PIPING ASSY, upper (with 2nd aux. line)					X05770-03800-0
		PIPING ASSY, upper (with 3rd aux. line)					X05770-03900-0
		PIPING ASSY, upper (with 4th aux. line)					X05770-04000-0
		PIPING ASSY, upper (with high press. 3rd aux. line)					X05770-04100-0
		PIPING ASSY, upper (with high press. 3rd, 4th aux. line)					X05770-04200-0
1	0577000010	PIPE	1				
2	0577003730	PIPE	1			M	
3	0577003740	PIPE	1			M	
10	0577000100	HOSE	1				sold by the meter
33	1530541033	HOSE	1				sold by the meter
38	1530534075	HOSE	1				sold by the meter
47	1534200032	COUPLING	1				
63	0577003720	HOSE	1			M	
64	1530541025	HOSE	1			M	sold by the meter
65	1530541017	HOSE	1				sold by the meter
66	1533700115	BAND	4				
67	1533700060	BAND	20				
68	1533700048	BAND	4				
72	1140020010	WASHER, spring	7				
78	1140020008	WASHER, spring	2				
80	1100041020	BOLT	1				
82	1530741045	HOSE	1				sold by the meter
87	0577000870	SUPPORT	1				
88	1533201012	U-BOLT	1				
89	1100041025	BOLT	6				
90	1130040008	NUT	2				
91	1141110010	WASHER	3				
95	0003600025	WASHER	4				
	N2d061						

silverhorn.co.uk

PIPING; UPPER (2/5)

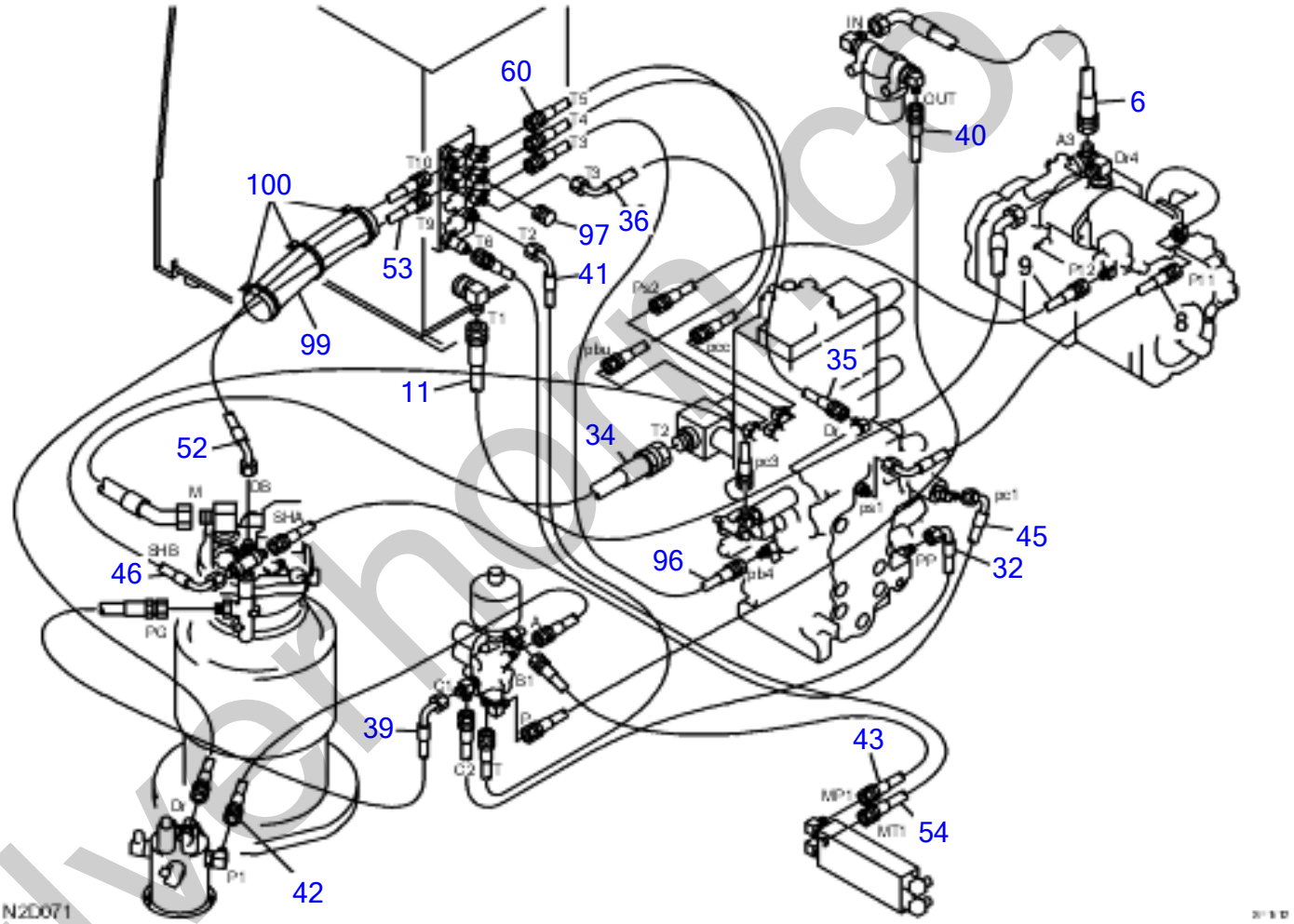

silverhorn.co.uk

PIPING; UPPER (2/5)

Item	Part number	Description	Q'ty	Chan.	Serial No.	Serv.	Remarks
		PIPING ASSY, upper					X05770-03700-0
		PIPING ASSY, upper (with 2nd aux. line)					X05770-03800-0
		PIPING ASSY, upper (with 3rd aux. line)					X05770-03900-0
		PIPING ASSY, upper (with 4th aux. line)					X05770-04000-0
		PIPING ASSY, upper (with high press. 3rd aux. line)					X05770-04100-0
		PIPING ASSY, upper (with high press. 3rd, 4th aux. line)					X05770-04200-0
6	0577003810	HOSE ASSY	1			M	
8	0577000080	HOSE ASSY	1				18010-52124
9	0577002980	HOSE ASSY	1				18010-22110
11	0577003780	HOSE ASSY	1			M	18010-91080
32	0577000320	HOSE ASSY	1				18010-53110
34	0577003090	HOSE ASSY	1				18010-26066
	0577003890	HOSE ASSY	1				
35	0577000350	HOSE ASSY	1				18010-22040
36	0577000360	HOSE ASSY	1				18010-52032
39	0577003110	HOSE ASSY	1				18010-52054
40	0577003790	HOSE ASSY	1			M	18010-23205
41	0577000410	HOSE ASSY	1				18010-52132
42	0577000420	HOSE ASSY	1				18010-22100
43	0577000430	HOSE ASSY	1				18010-23135
45	0577003830	HOSE ASSY	1				18010-52096
46	0577003840	HOSE ASSY	1				
52	0577003520	HOSE ASSY	1				18010-53056
53	0577000535	HOSE ASSY	1				18010-53144
54	0577000540	HOSE ASSY	1				18010-23220
60	0577002990	HOSE ASSY	1				18010-22040
96	0577000960	HOSE ASSY	1				18010-22100
97	1513900002	SOCKET	1				
	1420310908	* O-RING	1				
99	1531350050	PROTECTOR	1				sold by the meter
100	1652201007	BAND	3				
	N2d071						

silverhorn.co.uk

PIPING; UPPER (3/5)

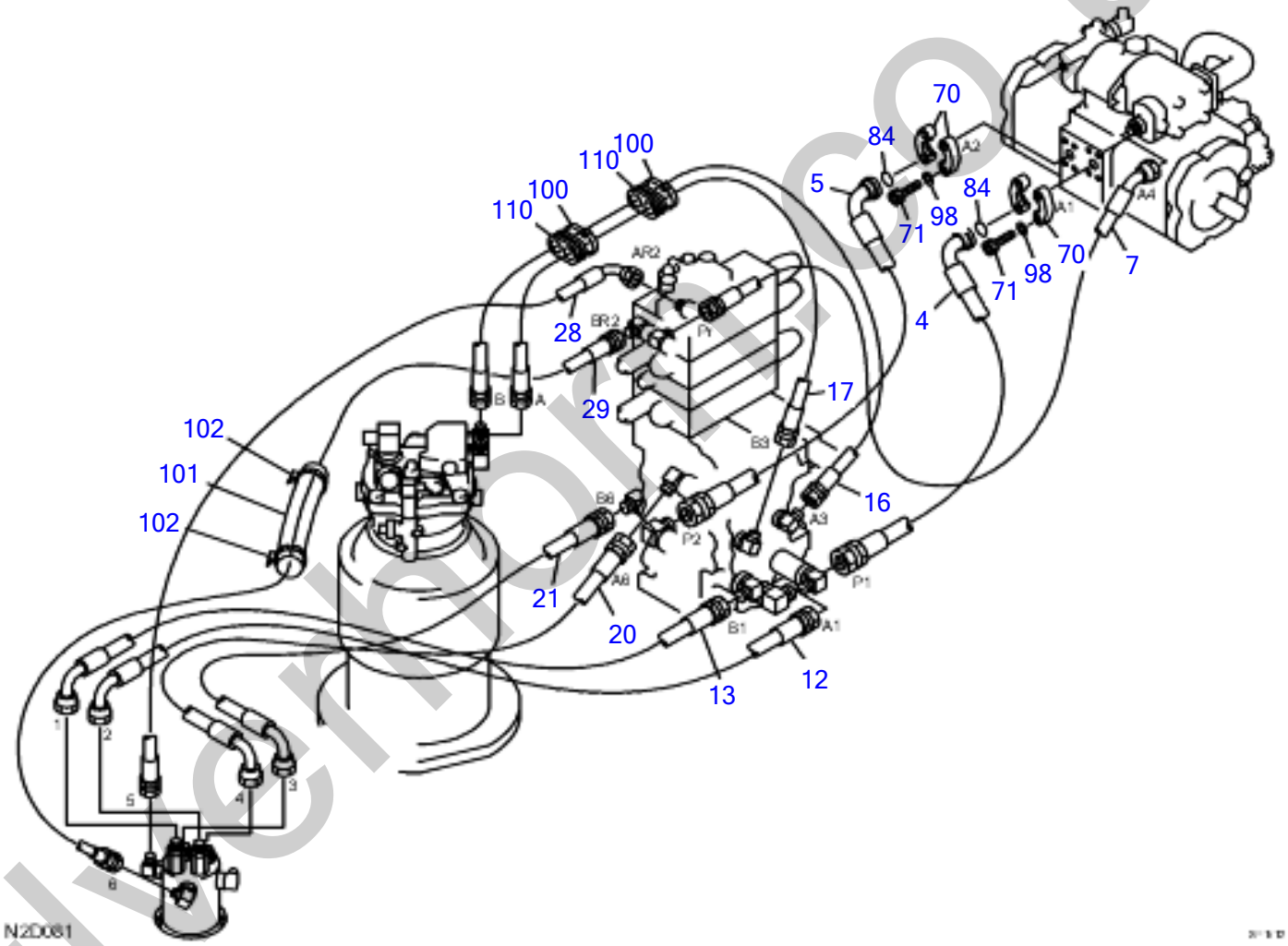

silverhorse.co.uk

PIPING; UPPER (3/5)

Item	Part number	Description	Q'ty	Chan.	Serial No.	Serv.	Remarks
		PIPING ASSY, upper					X05770-03700-0
		PIPING ASSY, upper (with 2nd aux. line)					X05770-03800-0
		PIPING ASSY, upper (with 3rd aux. line)					X05770-03900-0
		PIPING ASSY, upper (with 4th aux. line)					X05770-04000-0
		PIPING ASSY, upper (with high press. 3rd aux. line)					X05770-04100-0
		PIPING ASSY, upper (with high press. 3rd, 4th aux. line)					X05770-04200-0
4	0577000040	HOSE ASSY	1				18037-66108
5	0577000050	HOSE ASSY	1				18037-66090
7	0577003770	HOSE ASSY	1			M	18025-42078
12	0577003020	HOSE ASSY	1				18035-15069
13	0577000130	HOSE ASSY	1				18035-15061
16	0577003030	HOSE ASSY	1				18035-04125
17	0577003040	HOSE ASSY	1				18035-04114
20	0577000200	HOSE ASSY	1				18035-15106
21	0577003210	HOSE ASSY	1				18035-15082
28	0577003280	HOSE ASSY	1				18025-41114
29	0577003290	HOSE ASSY	1				18025-40118
70	1533551006	FLANGE	4				
71	1110041035	SCREW, cap	8				
84	1420310214	O-RING	2				
98	1140420010	WASHER, spring	8				
100	1652201007	BAND	2				
101	1531325030	PROTECTOR	1				sold by the meter
102	1652201005	BAND	2				
110	0097210300	GUARD	2				
	N2d081						

silverhorn.co.uk

PIPING; UPPER (4/5)

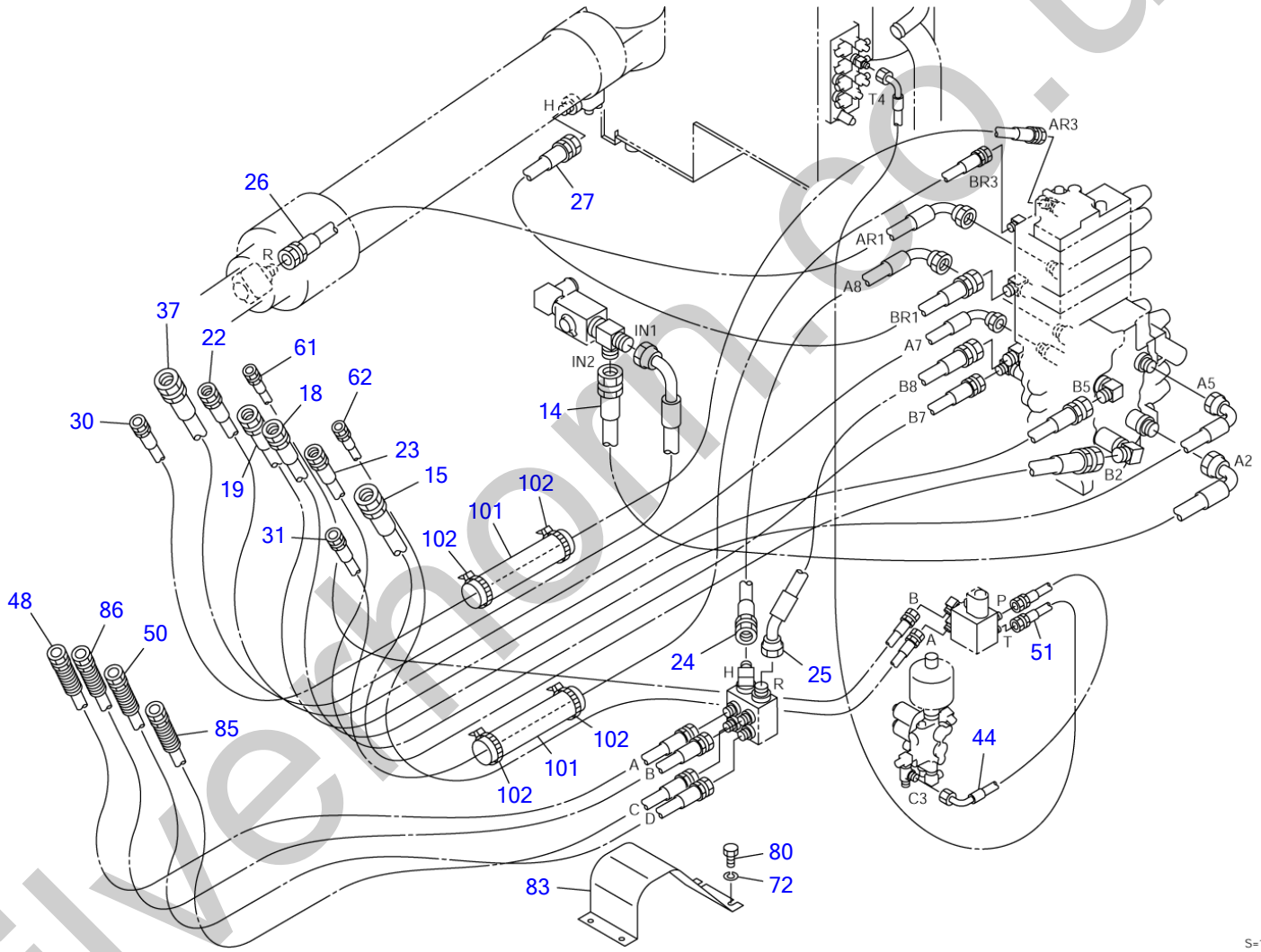

silvermorn.co.uk

PIPING; UPPER (4/5)

Item	Part number	Description	Q'ty	Chan.	Serial No.	Serv.	Remarks
		PIPING ASSY, upper					X05770-03700-0
		PIPING ASSY, upper (with 2nd aux. line)					X05770-03800-0
		PIPING ASSY, upper (with 3rd aux. line)					X05770-03900-0
		PIPING ASSY, upper (with 4th aux. line)					X05770-04000-0
14	0577000140	HOSE ASSY	1				18040-17130
15	0577000150	HOSE ASSY	1				18043-07315
18	0577000180	HOSE ASSY	1				18038-16335
19	0577000190	HOSE ASSY	1				18038-06315
22	0577002220	HOSE ASSY	1				18038-15340
23	0577002230	HOSE ASSY	1				18038-05320
24	0577003240	HOSE ASSY	1				18035-16096
25	0577003250	HOSE ASSY	1				18035-25088
26	0577003260	HOSE ASSY	1				18037-14240
27	0577003270	HOSE ASSY	1				18037-04200
30	0577002710	HOSE ASSY	1				with 2nd, 3rd aux. line
31	0577002720	HOSE ASSY	1				with 2nd, 3rd aux. line
37	0577000370	HOSE ASSY	1				18043-17287
44	0577002440	HOSE ASSY (18010-53066)	1				with 3rd, 4th aux. line
48	0577000480	HOSE ASSY	1				18038-05187
50	0577000500	HOSE ASSY	1				18038-05191
51	0577000510	HOSE ASSY	1				with 3rd, 4th aux. line
61	0577002810	HOSE ASSY (18010-23345)	1				with 3rd, 4th aux. line
62	0577002820	HOSE ASSY (18010-23345)	1				with 3rd, 4th aux. line
72	1140020010	WASHER, spring	4				
80	1100041020	BOLT	4				
83	0577000900	GUIDE	1				
85	0577000850	HOSE ASSY	1				18038-05187
86	0577000860	HOSE ASSY	1				18038-05191
101	1531325030	PROTECTOR (sold by the meter)	2				except for 4th aux. line
102	1652201005	BAND	4				except for 4th aux. line
	N2d091						

silverhorn.co.kr

PIPING; UPPER (4/5) (with high pressure 3rd, 3rd & 4th aux. lines)

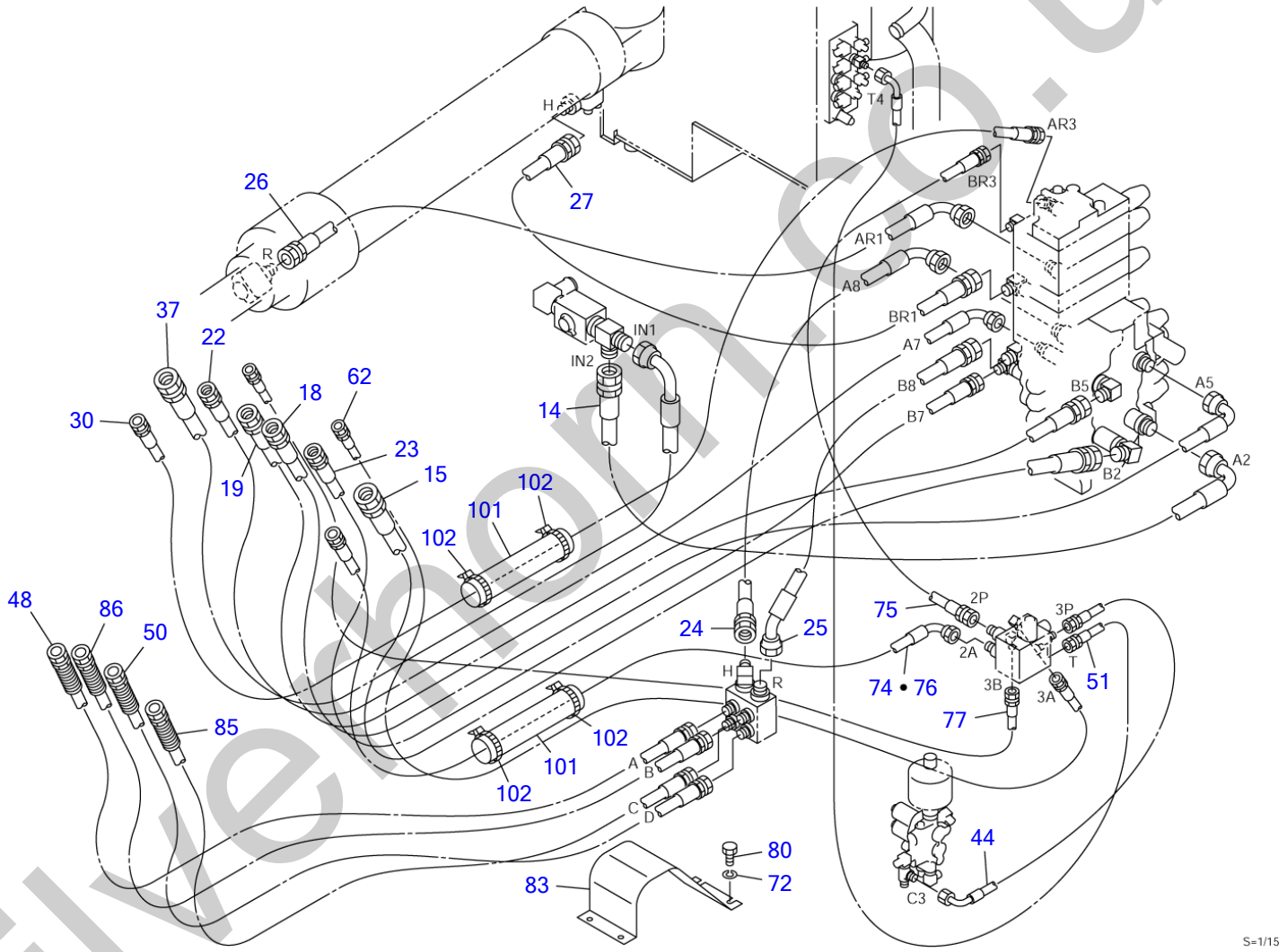

silvermoon.co.uk

PIPING; UPPER (4/5) (with high pressure 3rd, 3rd & 4th aux. lines)

Item	Part number	Description	Q'ty	Chan.	Serial No.	Serv.	Remarks
		PIPING ASSY, upper (with high press. 3rd aux. line)					X05770-04100-0
		PIPING ASSY, upper (with high press. 3rd, 4th aux. line)					X05770-04200-0
14	0577000140	HOSE ASSY	1				18040-17130
15	0577000150	HOSE ASSY	1				18043-07315
18	0577000180	HOSE ASSY	1				18038-16335
19	0577000190	HOSE ASSY	1				18038-06315
22	0577002220	HOSE ASSY	1				18038-15340
23	0577002230	HOSE ASSY	1				18038-05320
24	0577003240	HOSE ASSY	1				18035-16096
25	0577003250	HOSE ASSY	1				18035-25088
26	0577003260	HOSE ASSY	1				18037-14240
27	0577003270	HOSE ASSY	1				18037-04200
30	0577002710	HOSE ASSY	1				with high press. 3rd aux. line
37	0577000370	HOSE ASSY	1				18043-17287
44	0577002440	HOSE ASSY	1				18010-53066
48	0577000480	HOSE ASSY	1				18038-05187
50	0577000500	HOSE ASSY	1				18038-05191
51	0577000510	HOSE ASSY	1				
62	0577002820	HOSE ASSY	1				18010-23345
72	1140020010	WASHER, spring	4				
74	0577003610	HOSE ASSY	1				with high press. 3rd, 4th aux. line
75	0577003410	HOSE ASSY	1				
76	0577003420	HOSE ASSY	1				with high press. 3rd aux. line
77	0577003430	HOSE ASSY	1				
80	1100041020	BOLT	4				
83	0577000900	GUIDE	1				
85	0577000850	HOSE ASSY	1				18038-05187
86	0577000860	HOSE ASSY	1				18038-05191
101	1531325030	PROTECTOR	2				sold by the meter
102	1652201005	BAND	4				
	N2d101						

silverhorn.co.uk

PIPING; UPPER (5/5) (with 4th aux. Lines)

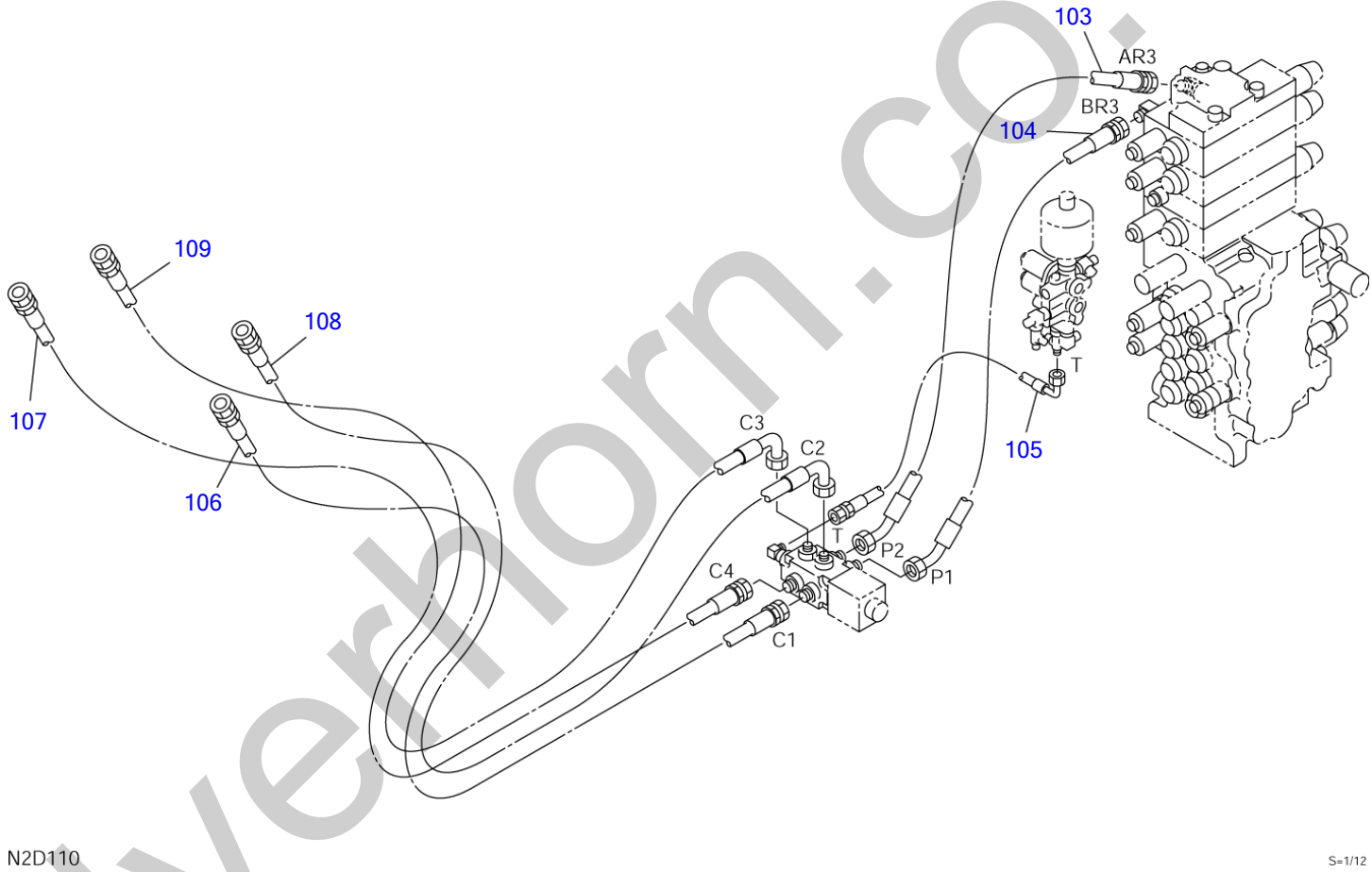

silverhorn.co.uk

PIPING; UPPER (5/5) (with 4th aux. Lines)

Item	Part number	Description	Q'ty	Chan.	Serial No.	Serv.	Remarks
		PIPING ASSY, upper (with 4th aux. line)					X05770-04000-0
		PIPING ASSY, upper (with high press. 3rd, 4th aux. line)					X05770-04200-0
103	**0577003330**	HOSE ASSY	1				18027-42096
104	**0577003320**	HOSE ASSYr (with 4th aux. line)	1				18027-42086
105	**0577003310**	HOSE ASSY	1				18010-52040
106	**0577002940**	HOSE ASSY	1				
107	**0577002950**	HOSE ASSY	1				
108	**0577002960**	HOSE ASSY	1				18025-21265
109	**0577002970**	HOSE ASSY	1				18025-21265
	N2d111						

silverhorn.co.uk

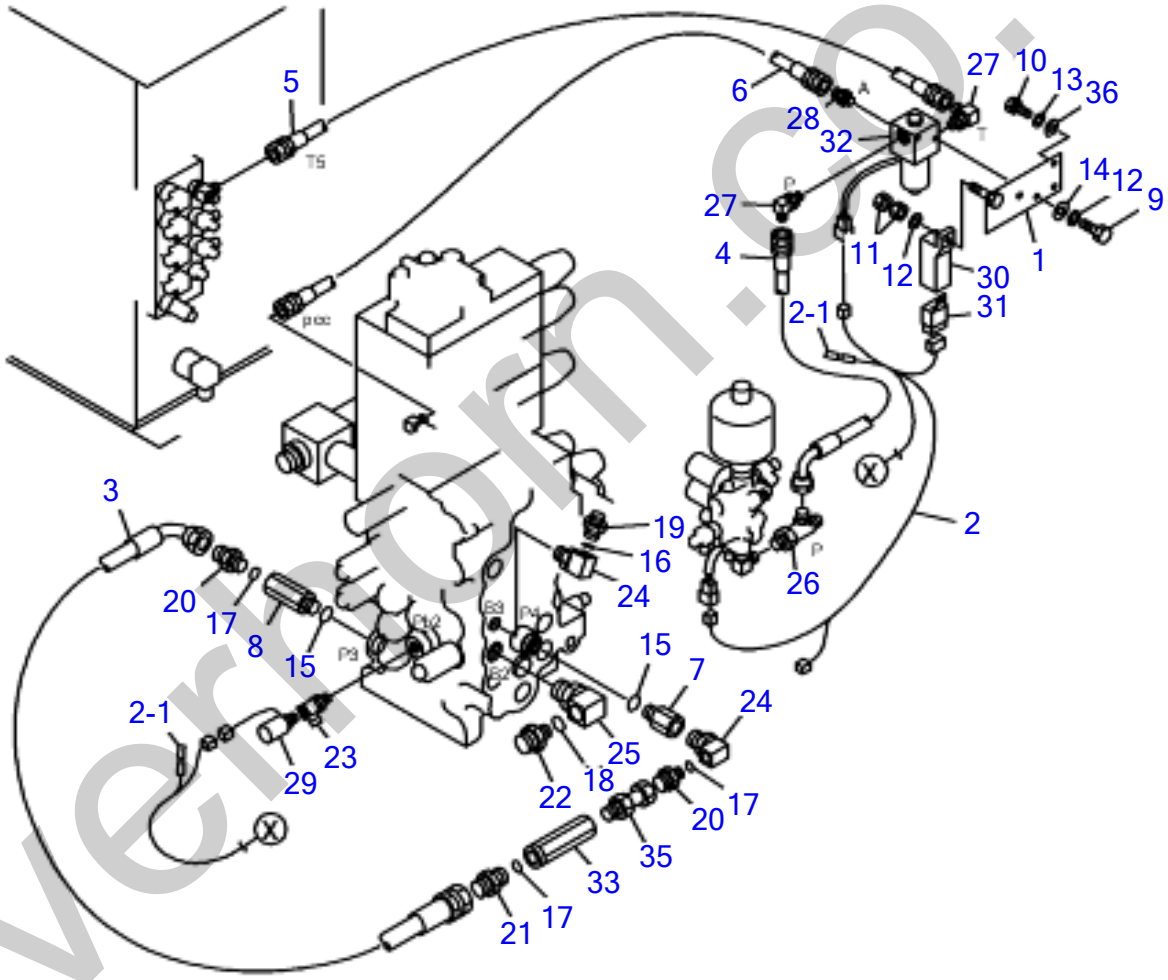

silverhorn.co.uk

SERVICE HIGH FLOW

Item	Part number	Description	Q'ty	Chan.	Serial No.	Serv.	Remarks
		SERVICE HIGH FLOW ASSY					
1	0577305110	PLATE	1				
2	0557305120	WIRING HARNESS ASSY	1				
2-1	1730500008	* DIODE YELLOW	2				
3	0577305130	HOSE ASSY	1				
4	0577305140	HOSE ASSY	1				
5	0577305150	HOSE ASSY	1				
6	0577305160	HOSE ASSY	1				
7	0007213010	BUSHING	1				
	1420010180	* O-RING	1				
8	0007213013	BUSHING	1				
9	1100040620	BOLT	2				
10	1100040820	BOLT	2				
11	1130040006	NUT	2				
12	1140020006	SPRING WASHER	3				
13	1140020008	SPRING WASHER	2				
14	1141110006	WASHER	2				
15	1420010180	O-RING	2				
16	1420310014	O-RING	1				
17	1420310018	O-RING	3				
18	1420310021	O-RING	1				
19	1511061304	ADAPTOR	1				
	1420010180	* O-RING	1				
20	11511061904	ADAPTOR	2				
	1420010180	* O-RING	1				
21	1511061906	ADAPTOR	1				
	1420010240	* O-RING	1				
22	1511062306	ADAPTOR	1				
	1420010240	* O-RING	1				
23	1512330006	ELBOW	1				
24	1513300016	ELBOW	2				
	1420010180	* O-RING	1				
25	1513300029	ELBOW	1				
26	1513390043	TEE	1				
27	1515012040	ELBOW	2				
	1420010110	* O-RING	1				
28	1515600200	ADAPTOR	1				
	1420010110	* O-RING	1				
29	1700100015	PRESSURE SWITCH	1				
30	1700100038	COVER	1				
31	1711900049	RELAY	1				
32	1901739600	SOLENOID VALVE	1				
33	1901754300	CHECK VALVE	1				
35	0576000062	ADAPTOR	1				
	1420010240	* O-RING	1				
36	1141110008	WASHER	2				
	N2D180						

silverthorn.co.uk

PUMP DRIVE

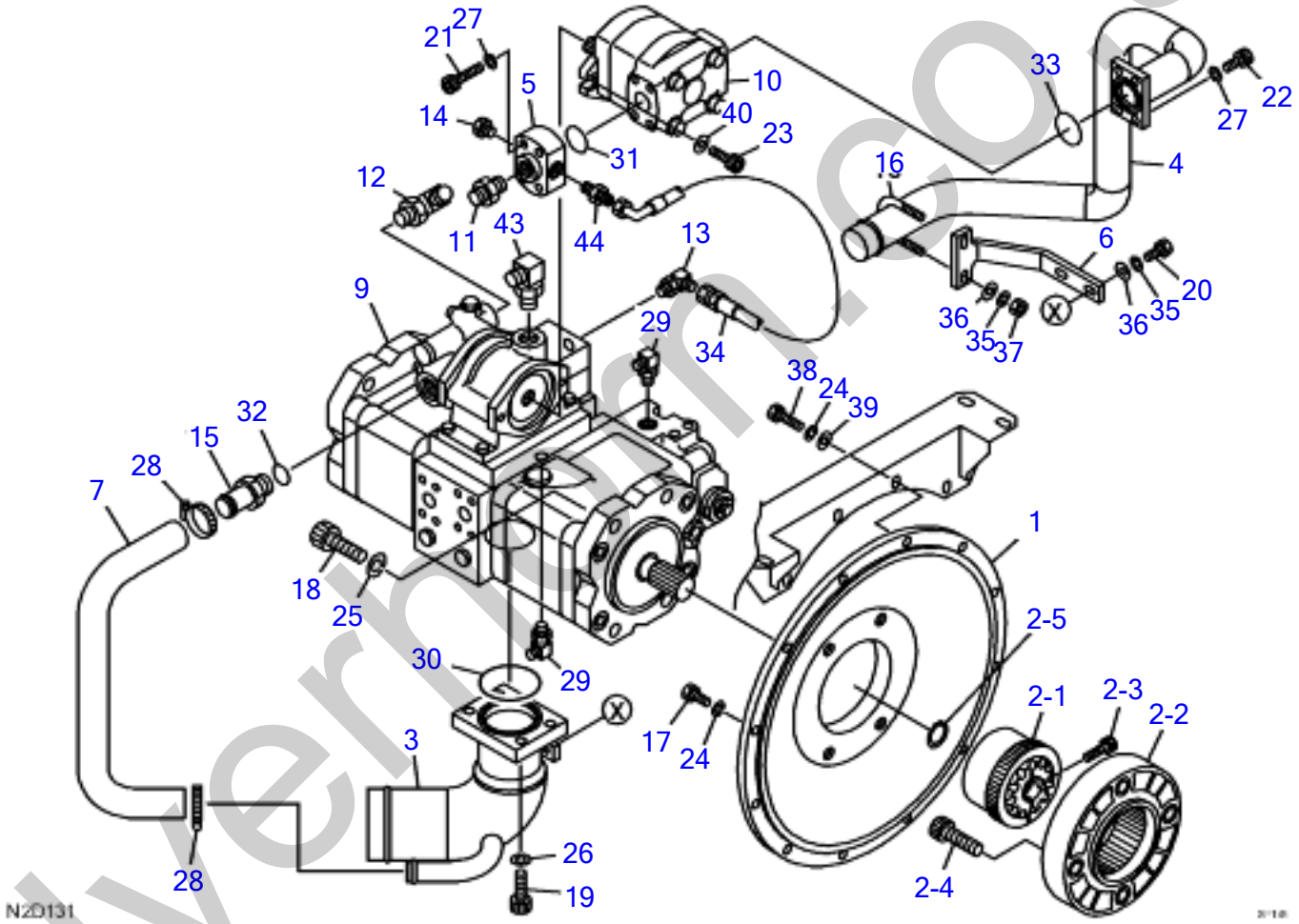

silverhill.co.uk

PUMP DRIVE

Item	Part number	Description	Q'ty	Chan.	Serial No.	Serv.	Remarks
		PUMP ASSY, drive					X05752-01100-0
1	0575201140	HOUSING	1			M	
2	1607000090	COUPLING	1			M	
2-1	1607000091	・BOSS, coupling	1			M	
2-2	1607000092	・COUPLING	1			M	
2-3	1110021235	・SCREW, cap	1			M	
2-4	1110021660	・SCREW, cap	4			M	
2-5	1221000028	・RING, snap	1			M	
3	0575201110	PIPE	1			M	
4	0575201120	PIPE	1			M	
5	0575200320	NIPPLE, flange	1				
6	0575200410	STAY	1				
7	0575200340	HOSE	1				
9	1902022900	PUMP, hydraulic	1			M	
10	1902023000	PUMP, gear	1			M	
11	1515600202	ADAPTOR	1				
	1420010180	・O-RING	1				
12	1515010042	ELBOW	1				
	1420010180	・O-RING	1				
13	1515012040	ELBOW	1				
	1420010110	・O-RING	1				
14	1501750002	PLUG	1				
	1420010110	・O-RING	1				
15	0007223005	ADAPTOR	1				
16	1533201012	U-BOLT	1				
17	1100041025	BOLT	9				
18	1111041655	SCREW, cap	4				
19	1110041240	SCREW, cap	4				
20	1100040825	BOLT	2				
21	1110041045	SCREW, cap	4				
22	1110041025	SCREW, cap	4				
23	1110041030	SCREW, cap	2				
24	1140020010	WASHER, spring	12				
25	1140420016	WASHER, spring	4				
26	1140420012	WASHER, spring	4				
27	1140420010	WASHER, spring	8				
28	1533700041	CLAMP	2				
29	0575002030	ELBOW (with orifice)	2				
30	1420110700	O-RING	1				
31	1420110350	O-RING	1				
32	1420010240	O-RING	1				
33	1420110400	O-RING	1				
34	1802701056	HOSE ASSY	1				
35	1140020008	WASHER, spring	4				
36	0003608252	WASHER	4				
37	1130040008	NUT	2				
38	1100041035	BOLT	3				
39	0003600020	WASHER	3				
40	0003900039	WASHER	2				
43	1515010052	ELBOW	1				
	1420010240	・O-RING	1				
44	1515600200	ADAPTOR	1				
	1420010110	* O-RING	1				
	N2d131						

silvermorn.co.uk

HYDRAULIC TANK

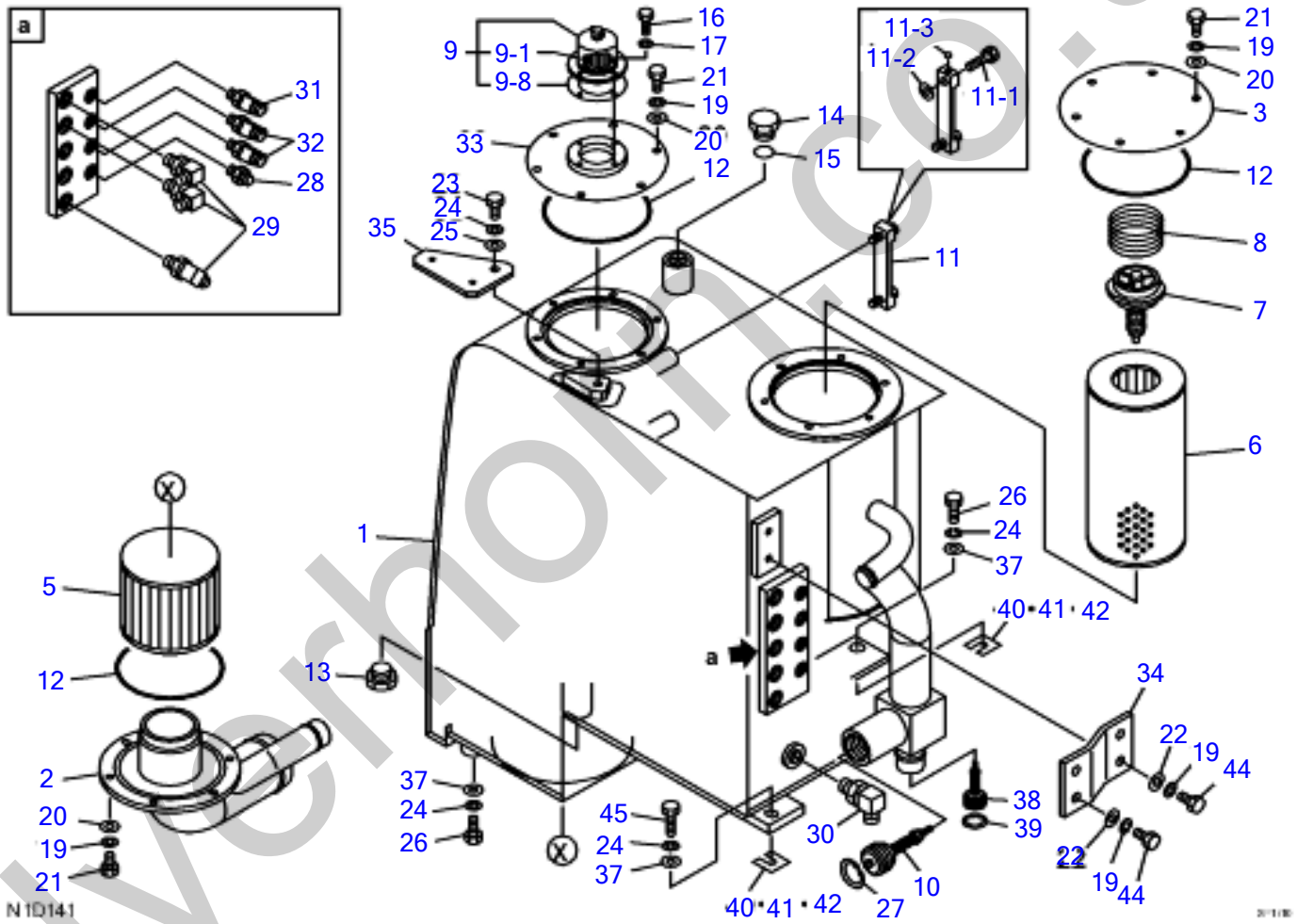

silverhollinc.co.uk

HYDRAULIC TANK

Item	Part number	Description	Q'ty	Chan.	Serial No.	Serv.	Remarks
		TANK ASSY, hydraulic					X05780-01000-1
1	0578000600	TANK, hydraulic	1				
2	0578000220	PIPE	1				
3	0578000300	COVER	1				
5	1550100110	FILTER	1				
6	1551103400	FILTER	1				
7	1551103500	VALVE	1				
8	0007000031	SPRING	1				
9	1552000900	BREATHER, air	1				
9-1	1552000902	・ELEMENT	1				
9-8	1552000908	・PACKING	1				
10	1540141235	VALVE, check	1				
11	1553020612	GAUGE	1				
11-1	1553021650	・BOLT	2				
11-2	1553022650	・PACKING	2				
11-3	1553020603	・FLOAT	1				
12	1420101600	O-RING	3				
13	1501750010	PLUG	1				
	1420010290	・O-RING	1				
14	0007256006	PLUG	1				
15	1420010290	O-RING	1				
16	1100040614	BOLT	4				
17	1140020006	WASHER, spring	4				
19	1140020010	WASHER, spring	22				
20	1141110010	WASHER	18				
21	1100041020	BOLT	18				
22	1141550010	WASHER	4				
23	1101041225	BOLT	2				
24	1140020012	WASHER, spring	5				
25	1141550012	WASHER	1				
26	1101041230	BOLT	2				
27	1221010050	RING, retaining	1				
28	0007203034	ADAPTOR	1				
29	1515012041	ELBOW	3				
	1420010140	・O-RING	1				
30	1515010042	ELBOW	1				
	1420010180	・O-RING	1				
31	1515012040	ELBOW	1				
	1420010110	* O-RING	1				
32	1512370011	TEE	2				
	1420010110	・O-RING	1				
33	0578000330	COVER	1				
34	0578000034	BRACKET	1				
35	0578000035	PLATE	1				
37	0003600026	WASHER	4				
38	1540140810	VALVE, check	1				
39	1221000035	RING, retaining	1				
40	0323054001	SPACER	AR				t=1.0mm
41	0323054002	SPACER	AR				t=2.3mm
42	0323054003	SPACER	AR				t=3.2mm
44	1100041025	BOLT	4				
45	1101041235	BOLT	1				
	N1d142						

silverthorn.co.uk

FUEL TANK & FUEL PIPING

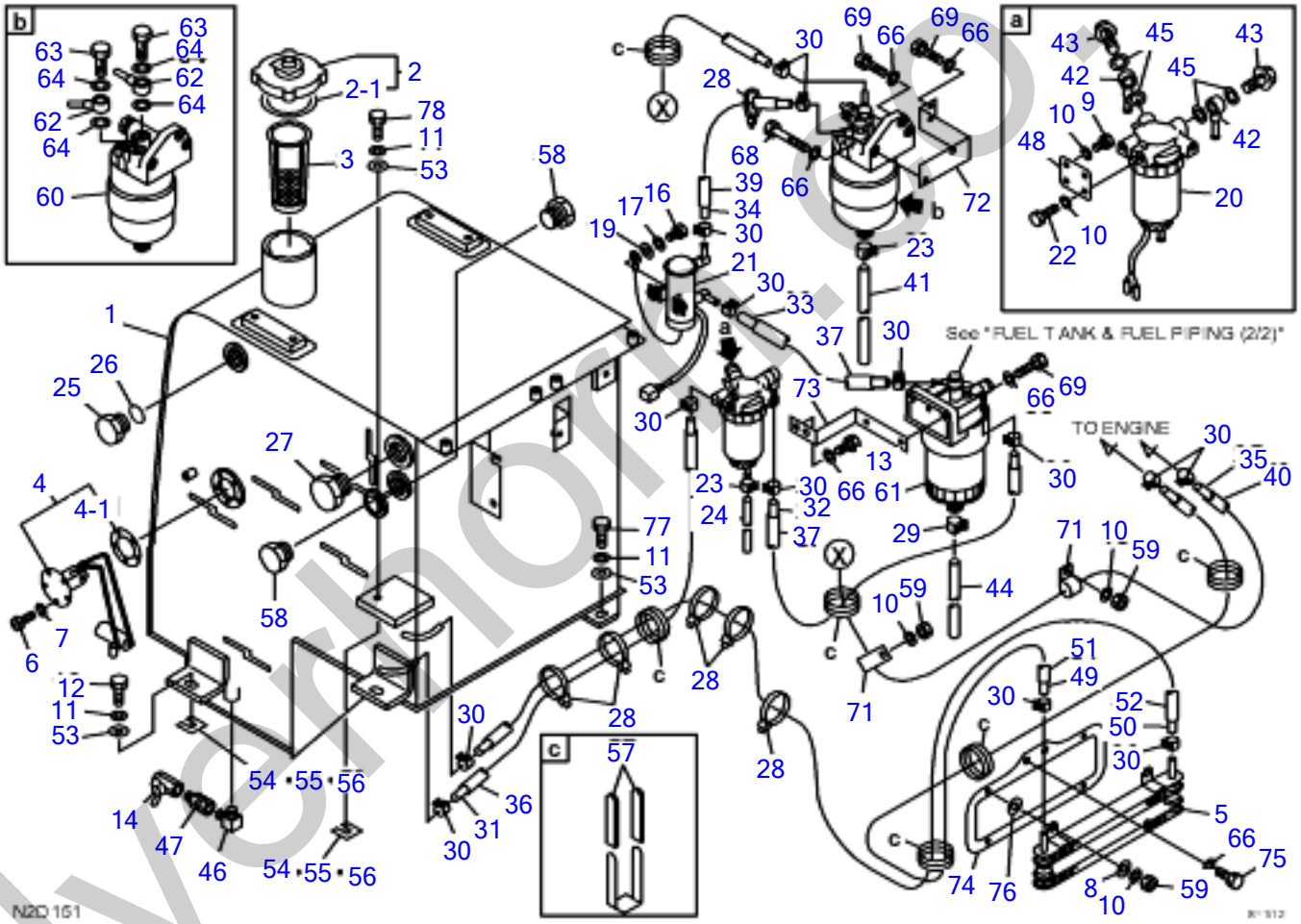

silvermoor.co.uk

FUEL TANK & FUEL PIPING

Item	Part number	Description	Q'ty	Chan.	Serial No.	Serv.	Remarks
		TANK ASSY, fuel					X05781-02100-0
1	0578100200	TANK	1				
2	1552100800	CAP	1				
2-1	1552100809	▪ PACKING	1				
3	1552100720	STRAINER	1				
4	1553202500	SENDER, fuel	1				
4-1	1553202520	PACKING	1				
5	1911300260	COOLER, fuel	1			M	TRAD
6	1120530512	SCREW	5				
7	1140020005	WASHER, spring	5				
8	1141110008	WASHER	4				
9	1100040816	BOLT	2				
10	1140020008	WASHER, spring	10				
11	1140020012	WASHER, spring	4				
12	1101041230	BOLT	3				
13	1100041020	BOLT	2				
14	1521500003	VALVE, ball	1				
16	1100040625	BOLT	2				
17	1140020006	WASHER	2				
19	0003600110	WASHER	2				
20	1910188033	STRAINER	1				ISUZU 894144-9333
21	1910230034	PUMP, fuel	1			M	ISUZU 898009-3970
22	1100040825	BOLT	2				
23	1533120009	CLAMP	2				
24	1531007025	HOSE	1				sold by the meter
25	0007256006	PLUG	1				
26	1420010290	O-RING	1				
27	1501710012	PLUG	1				
28	1652201005	BAND	6				
29	1533120012	CLAMP	1				
30	1533120015	CLAMP	14				
31	1531209110	HOSE	1				sold by the meter
32	1531209060	HOSE	1			M	sold by the meter
33	1531209010	HOSE	1			M	sold by the meter
34	1531209045	HOSE	1			M	sold by the meter
35	1531209270	HOSE	1			M	sold by the meter
36	1531118100	HOSE	1				sold by the meter
37	1531118025	HOSE	2			M	sold by the meter
38	1531118066	HOSE	1				
39	1531118035	HOSE	1			M	sold by the meter
40	1531118260	HOSE	1			M	sold by the meter
41	1531007063	HOSE	1			M	sold by the meter
42	1910188052	PIPE, fuel	2				ISUZU 515411-2231
43	1910182051	BOLT	2			M	ISUZU 909906-3251
44	1531207026	HOSE	1			M	
45	1910172053	PACKING	4				ISUZU 109630-0850
46	1511150003	ELBOW	1				
47	1511420003	ADAPTOR	1				
48	0578100048	PLATE	1				
49	1531214220	HOSE	1			M	sold by the meter
50	1531209340	HOSE	1			M	sold by the meter
51	1531118220	HOSE	1			M	sold by the meter
52	1531118330	HOSE	1			M	sold by the meter
53	0003600026	WASHER	4				
54	0323054001	SPACER	AR				t=1.0mm
55	0323054002	SPACER	AR				t=2.3mm
56	0323054003	SPACER	AR				t=3.2mm
57	0872433150	TUBE	12				
58	1501750010	PLUG	2				
	1420010290	* O-RING	1				
59	1130040008	NUT	4				
60	1910230031	FILTER, fuel	1			M	ISUZU 898013-9861
61	1552002500	FILTER, fuel	1			M	WAKO
62	1910230052	PIPE, fuel	2			M	ISUZU 897383-4270
63	1910230053	BOLT	2			M	ISUZU 109675-0951
64	1910230054	PACKING	4			M	ISUZU 109630-0860
66	1140020010	WASHER, spring	10				
67	1141550010	WASHER	6				

silverthorn.co.uk

FUEL TANK & FUEL PIPING

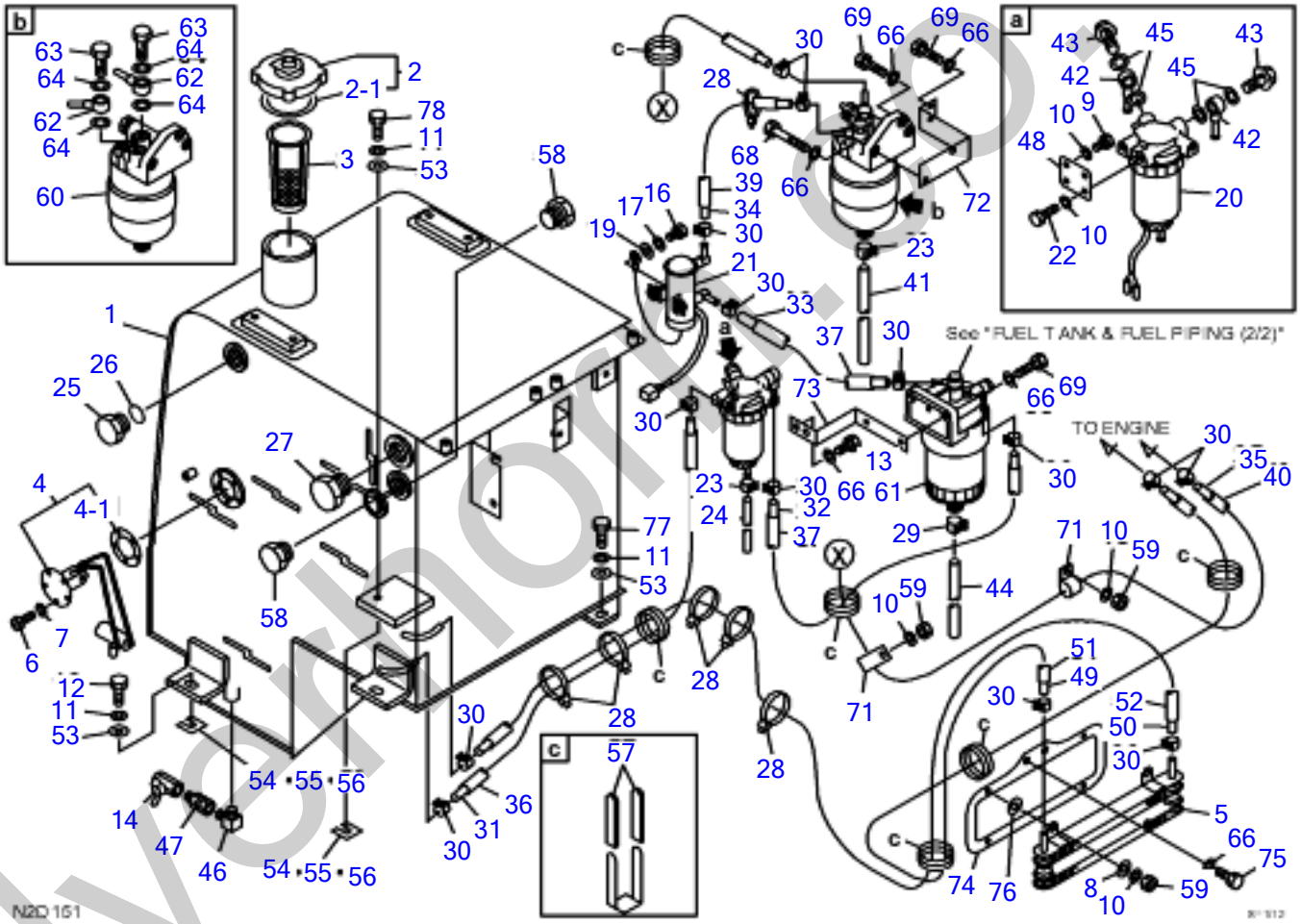

silvermoor.co.uk

FUEL TANK & FUEL PIPING

Item	Part number	Description	Q'ty	Chan.	Serial No.	Serv.	Remarks
68	**1100041075**	BOLT	1			M	
69	**1100041035**	BOLT	5				
71	**0007300050**	CLAMP	2			M	
72	**0578102110**	BRACKET	1			M	
73	**0578102120**	BRACKET	1			M	
74	**0578102130**	BRACKET	1			M	
75	**1100041016**	BOLT	2				
76	**1141550008**	WASHER	4				
77	**1101041235**	BOLT	1				
78	**1101041225**	BOLT	1				
	N2d151						

silverhorn.co.uk

FULE TANK & FUEL PIPING (2/2) (FUEL FILTER)

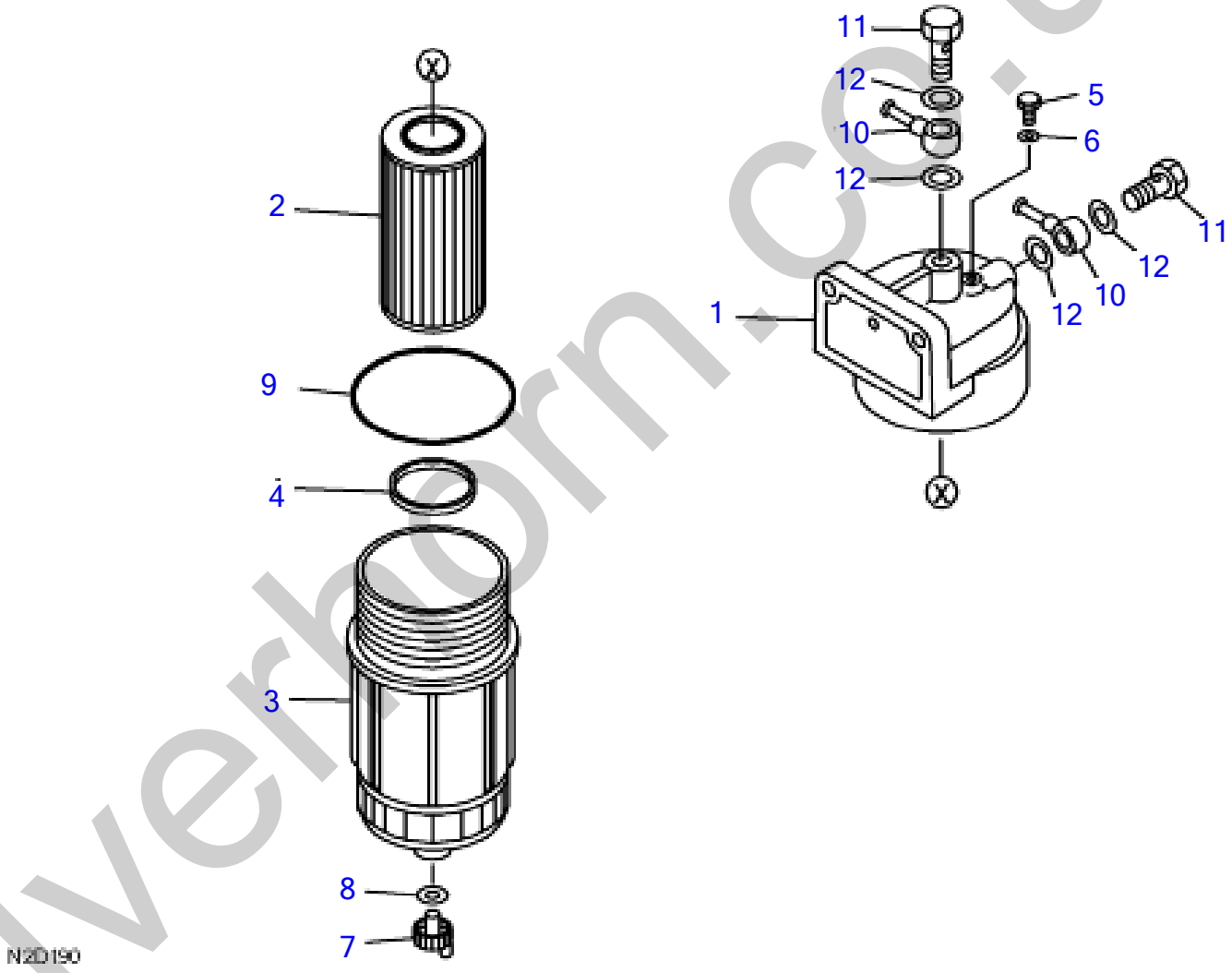

silverhorn.co.uk

FUEL TANK & FUEL PIPING (2/2) (FUEL FILTER)

Item	Part number	Description	Q'ty	Chan.	Serial No.	Serv.	Remarks
0-1	1552002500	FUEL FILTER	1				
1	1552002501	* HEAD ASSY	1				
2	1552002502	* ELEMENT ASSY	1				
3	1552002503	* CASE	1				
4	1552002504	* RING	1				
5	1552002505	* PLUG	1				
6	1552002506	* GASKET	1				
7	1552002507	* PLUG	1				
8	1552002508	* GASKET	1				
9	1552002509	* O-RING	1				
10	1552002510	* JOINT	2				
11	1552002511	* BOLT	2				
12	1552002512	* GASKET	4				
	N2D190						

silverhorn.co.uk

FUEL SUPPLY PUMP

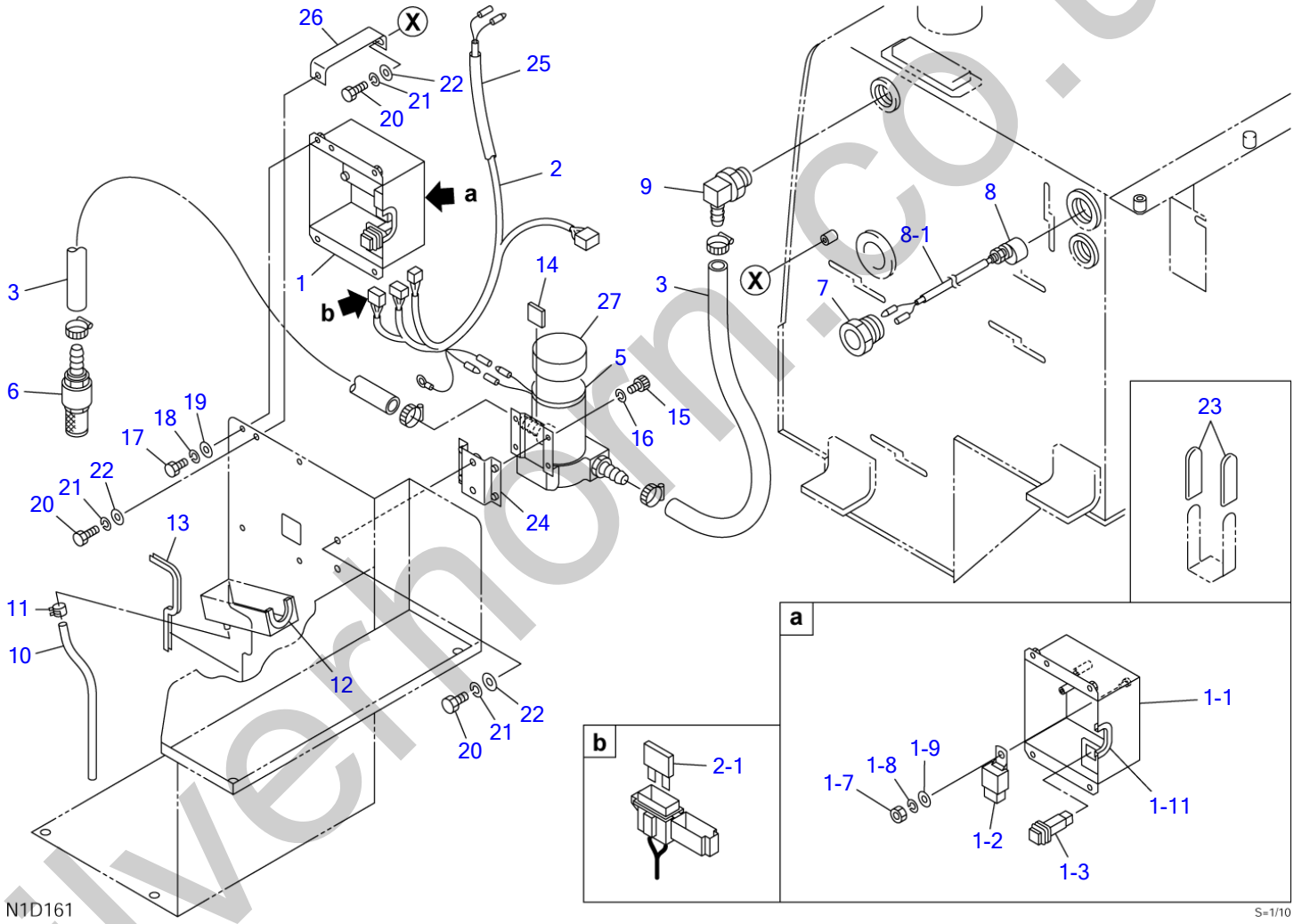

silvernorm.co.uk

FUEL SUPPLY PUMP

Item	Part number	Description	Q'ty	Chan.	Serial No.	Serv.	Remarks
0	0578101710	PUMP ASSY, fuel supply	1				X05781-01710-0
1	0578101820	・BLOCK ASSY, relay	1				X05781-01820-0
1-1	0578101810	・・COVER	1				
1-2	1711900126	・・RELAY	1				
1-3	1700000008	・・SWITCH	1				
1-7	1130040006	・・NUT	1				
1-8	1140020006	・・WASHER, spring	1				
1-9	1141110006	・・WASHER	1				
1-11	1653916007	・・TRIM	1				sold by the meter
2	0578101910	・HARNESS, wiring	1				
2-1	1701310001	・・FUSE	1				1A
3	1919901730	・HOSE	1				
5	1711910200	・PUMP	1				
6	1552001100	・STRAINER	1				
7	0568121400	・PLUG	1				
8	0568120500	・SWITCH, level	1				
8-1	1703210725	・・PROTECTOR	1				sold by the meter
9	1513350018	・ELBOW	1				
	1420010290	・・O-RING	1				
10	1531207030	・HOSE	1				sold by the meter
11	1533120012	・CLAMP	1				
12	1653916008	・TRIM	1				sold by the meter
13	1653916020	・TRIM	1				sold by the meter
14	0568121020	・RUBBER	1				
15	1110040512	・SCREW, cap	4				
16	1140020005	・WASHER, spring	4				
17	1100040816	・BOLT	4				
18	1140020008	・WASHER, spring	4				
19	1141110008	・WASHER	4				
20	1100041020	・BOLT	4				
21	1140020010	・WASHER, spring	4				
22	1141110010	・WASHER	4				
23	0872433150	・TUBE	8				
24	0578101500	・BRACKET	1				
25	1703210730	・BOOT	1				
26	0578101250	・BRACKET	1				
27	1711910208	・COVER	1				
	N2d160						

silverhorn.co.uk

COVER (1/9)

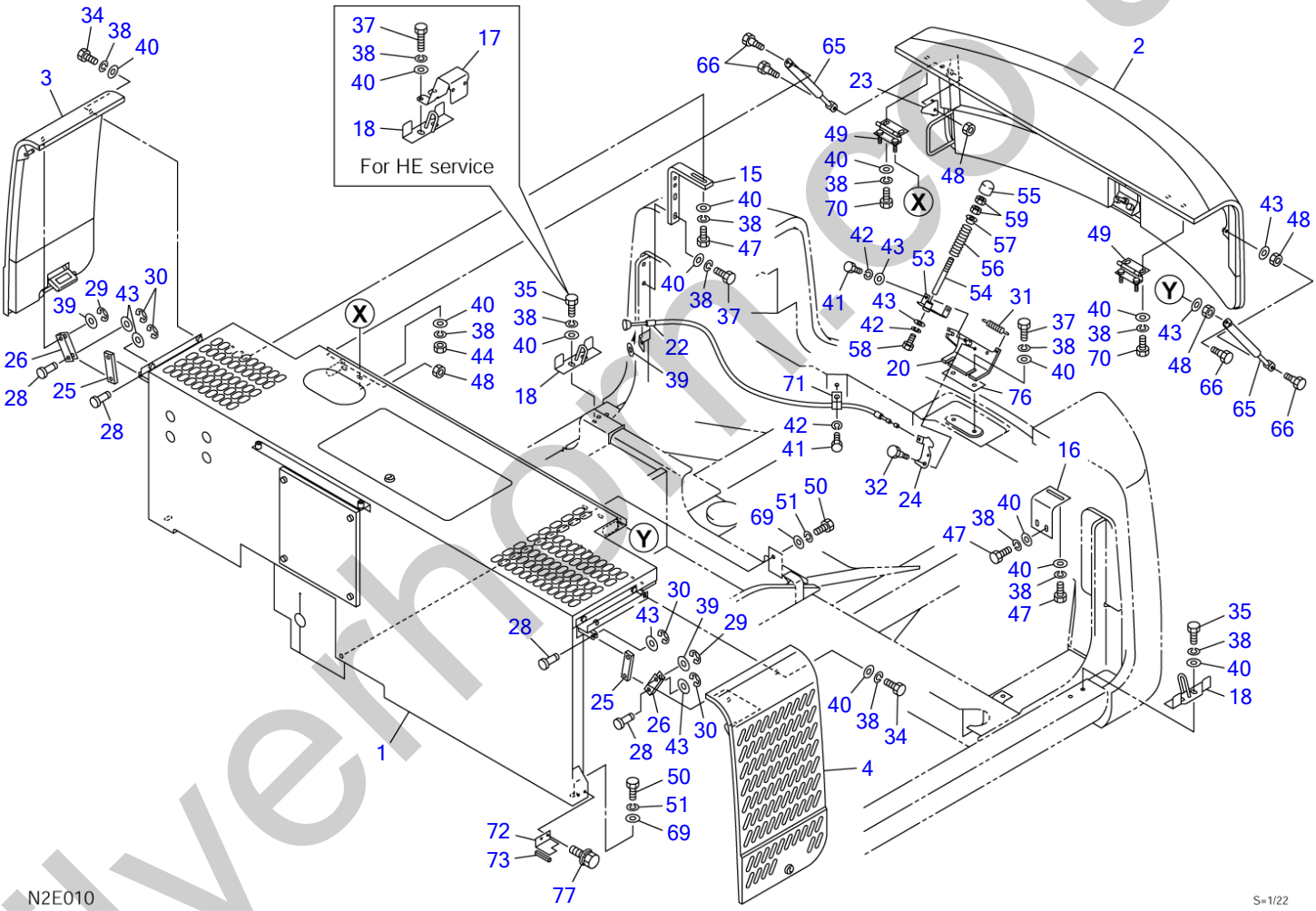

silverhoist.co.uk

COVER (1/9)

Item	Part number	Description	Q'ty	Chan.	Serial No.	Serv.	Remarks
		COVER ASSY					X05782-03700-0
		COVER ASSY (for HE service)					X05782-03600-0
1	0578203500	HOOD ASSY, front engine	1			M	see page (3/9)
2	0578200200	HOOD ASSY, engine	1				see page (4/9)
3	0578200300	COVER ASSY, side (R.H.)	1				see page (5/9)
4	0578203800	COVER ASSY, side (L.H.)	1				see page (6/9)
15	0578203350	STAY	1			M	
	0578200015	STAY	1				
16	0578203620	BRACKET	1			M	
17	0568248016	PLATE	1				for HE service
18	0568242850	HOOK	2				
20	0578203640	BRACKET	1			M	
22	0578200820	WIRE	1				
23	0578200023	PLATE	1				
24	0568245800	PLATE	1				
25	0578200025	LINK	2				
26	0568243498	YOKE	2				
28	0004300013	PIN	4				
29	1224010008	RING, retaining	2				
30	1224010006	RING, retaining	4				
31	0007000105	SPRING	1				
32	0568243840	BOLT	1				
34	1100041016	BOLT	4				
35	1100041025	BOLT	4				
	1100041025	BOLT	3				for HE service
37	1100041035	BOLT	6				for HE service
38	1140020010	WASHER, spring	26				
39	1141110010	WASHER	3				
40	0003600025	WASHER	26				
41	1100040816	BOLT	2				
42	1140020008	WASHER, spring	3				
43	1141110008	WASHER	4				
44	1130040010	NUT	4				
47	1100041030	BOLT	6				
48	1130040008	NUT	4				
49	0568243450	HINGE	2				
50	1101041230	BOLT	3				
51	1140020012	WASHER, spring	3				
53	0578200810	BRACKET	1				
54	0568223100	ROD	1				
55	0568223200	BOSS	1				
56	0007000078	SPRING	1				
57	0871320240	COLLAR	1				
58	1100040820	BOLT	1				
59	1130240012	NUT	2				
65	1653900064	SPRING, gas	2				
66	0138255300	BOLT	4				
69	0003600026	WASHER	3				
70	1100041020	BOLT	4				
71	0007300052	CLAMP	1				
72	0578200072	PLATE	1				
73	0578200073	SPONGE	1				
76	0003900053	SHIM	AR				
77	1100560616	BOLT	2				
	N2e011						

silvermorn.co.uk

COVER (2/9)

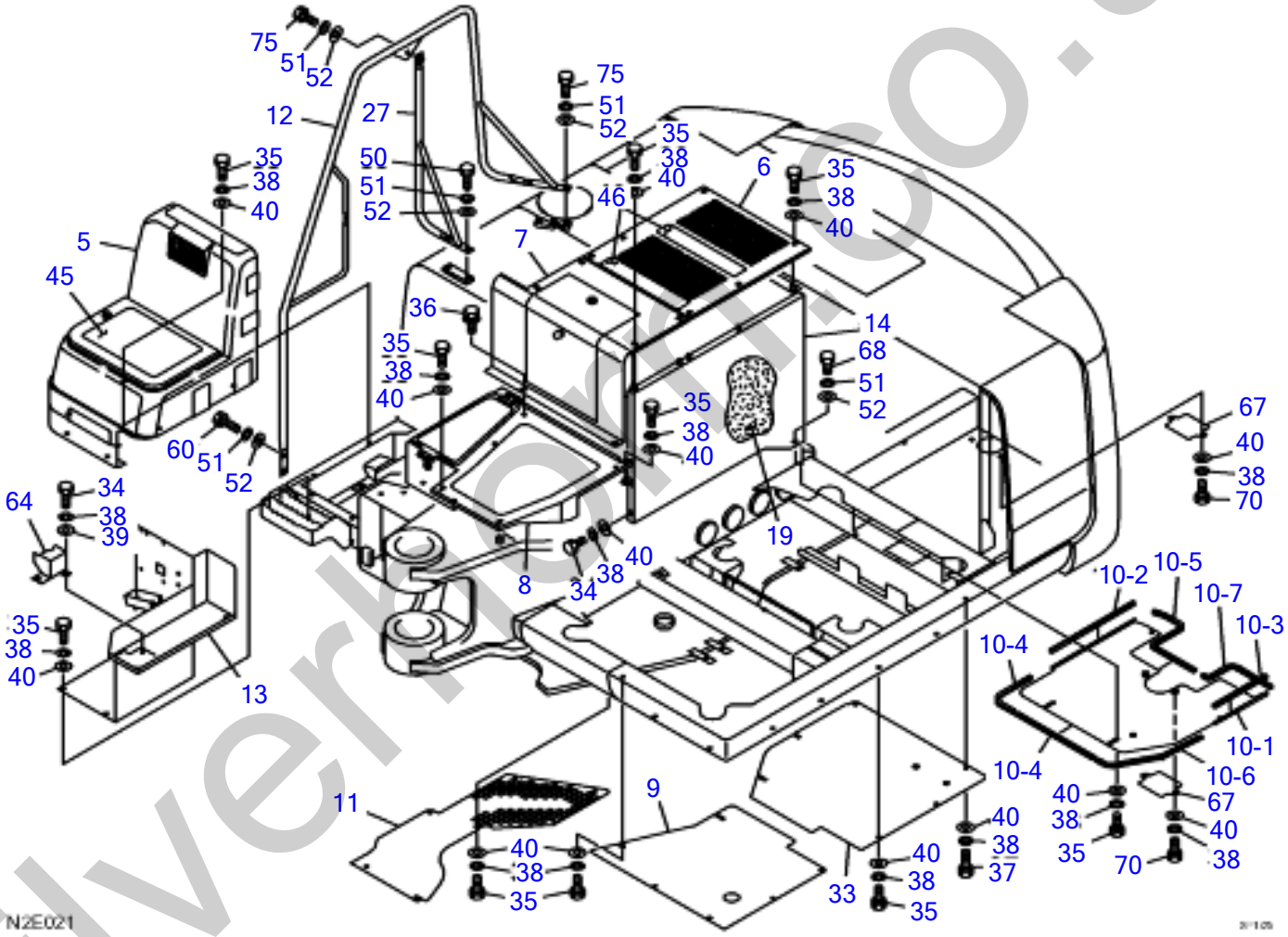

silverhorse.co.uk

COVER (2/9)

Item	Part number	Description	Q'ty	Chan.	Serial No.	Serv.	Remarks
		COVER ASSY					X05782-03700-0
		COVER ASSY (for HE service)					X05782-03600-0
5	0578200500	COVER ASSY, front	1				see page (7/9)
6	0578202580	COVER (T), center	1				
7	0578202590	COVER (F) ASSY, center	1				see page (8/9)
8	0578202630	COVER (F) ASSY, center	1				see page (9/9)
9	0578200730	COVER	1				
10	0578203630	COVER ASSY	1			M	
10-1	0578203610	COVER	1			M	
10-2	1654520046	RUBBER	1				sold by the meter
10-3	1654520029	RUBBER	1				sold by the meter
10-4	1654619033	SEAL	2				sold by the meter
10-5	1654619045	SEAL	1			M	sold by the meter
10-6	1654619048	SEAL	1				sold by the meter
10-7	1654619036	SEAL	1			M	sold by the meter
11	0578202210	COVER	1				
	0578204030	COVER	1				
12	0578200860	HANDRAIL	1				
13	0578200910	BOX, tool	1				
14	0578202660	PLATE	1				
19	0578200019	SEAL	1				
27	0568249040	HANDRAIL	1				
33	0578200033	COVER	1				
34	1100041016	BOLT	2				
35	1100041025	BOLT	46				
36	1100561020	BOLT, sems	4				
37	1100041035	BOLT	2				
38	1140020010	WASHER, spring	52				
39	1141110010	WASHER	1				
40	0003600025	WASHER	44				
45	0568222700	SHEET	1				
46	0568222800	SHEET	2				
50	1101041230	BOLT	2				
51	1140020012	WASHER, spring	9				
52	1141110012	WASHER	9				
60	1101041235	BOLT	2				
64	0578200850	COVER	1				
67	0578203320	COVER	2			M	
68	1101041225	BOLT	1				
70	1100041020	BOLT	4				
75	1101041240	BOLT	3				
	N2e021						

silverhorn.co.uk

COVER (3/9) (front engine hood)

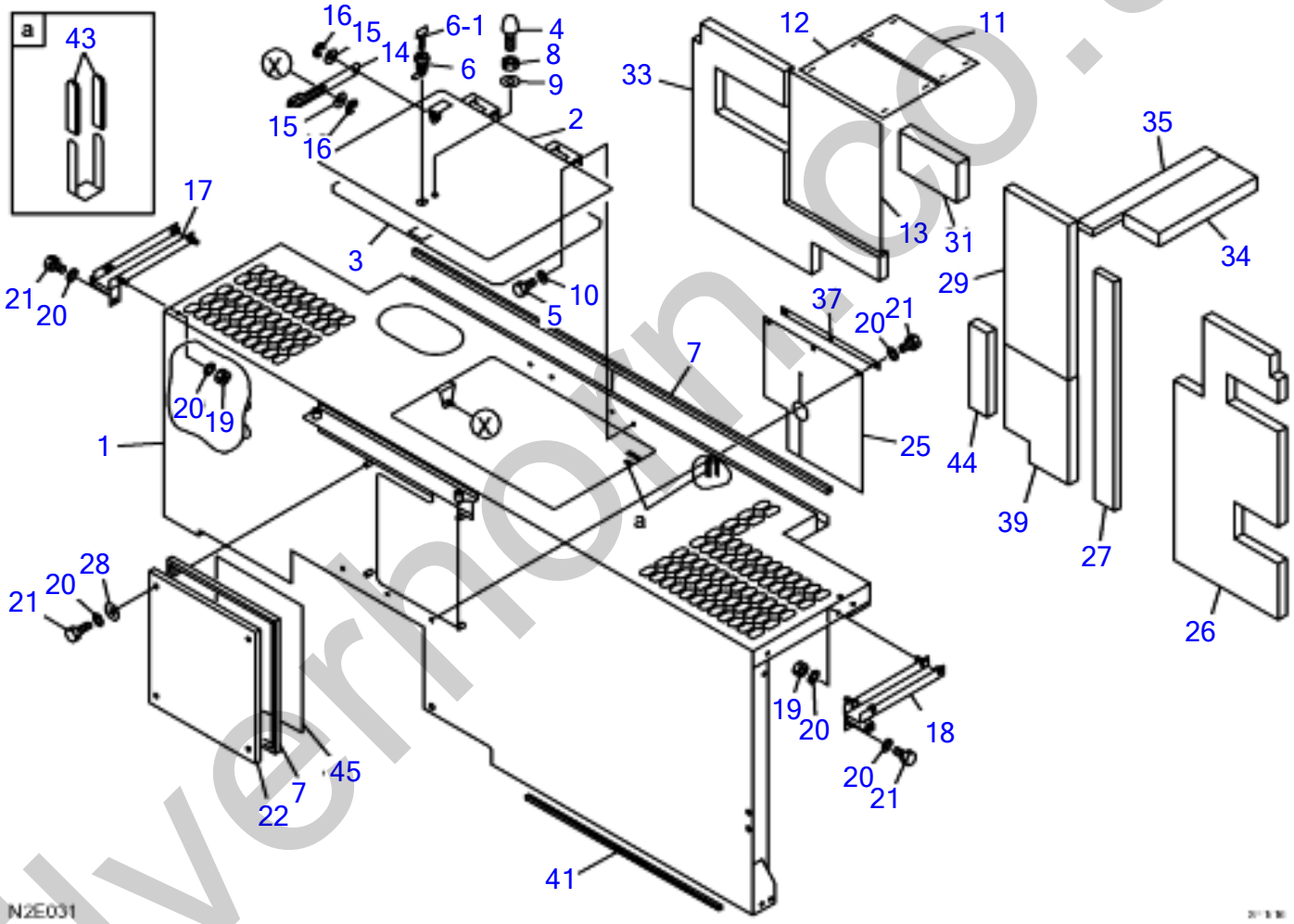

silverhorn.co.uk

COVER (3/9) (front engine hood)

Item	Part number	Description	Q'ty	Chan.	Serial No.	Serv.	Remarks
0-1	0578203500	FRONT HOOD ASSY, engine	1			M	X05782-03500-0
1	0578203400	・COVER, engine	1			M	
2	0578203560	・COVER	1			M	
3	0578203503	・SPONGE	1			M	
4	1651101224	・STOPPER	1				
5	1100040612	・BOLT	4				
6	1653611836	・LOCK	1				
6-1	1700100019	・KYE	1				
7	1654606145	・RUBBER	2				sold by the meter
8	1130040012	・NUT	1				
9	1141110012	・WASHER	1				
10	1140020006	・WASHER, spring	4				
11	0578203511	・ABSORBENT, noise	1			M	
12	0578203512	・ABSORBENT, noise	1			M	
13	0578203513	・ABSORBENT, noise	1			M	
14	0568247131	・PLATE	1				
15	1141110010	・WASHER	2				
16	1224010009	・RING, retaining	2				
17	0568247130	・BRACKET (R.H.)	1				
18	0568247140	・BRACKET (L.H.)	1				
19	1130040008	・NUT	4				
20	1140020008	・WASHER, spring	12				
21	1100040816	・BOLT	9				
22	0578203522	・COVER	1			M	
25	0578203225	・RUBBER	1			M	
26	0578203526	・ABSORBENT, noise	1				
27	0578203527	・ABSORBENT, noise	1			M	
28	1141110008	* WASHER	4				
29	0578203529	・ABSORBENT, noise	1			M	
31	0578203531	・ABSORBENT, noise	1			M	
33	0578203533	・ABSORBENT, noise	1			M	
34	0578203534	・ABSORBENT, noise	1			M	
35	0578200135	・ABSORBENT, noise	1				
37	0578203537	・PLATE	1			M	
39	0578203539	・ABSORBENT, noise	1			M	
41	0578200147	・SPONGE	1				
43	0872433150	・TUBE	6				
44	0578200144	・ABSORBENT, noise	1				
45	0578203545	・ABSORBENT, noise	1			M	
	N2e031						

silverhorn.co.uk

COVER (4/9) (engine hood)

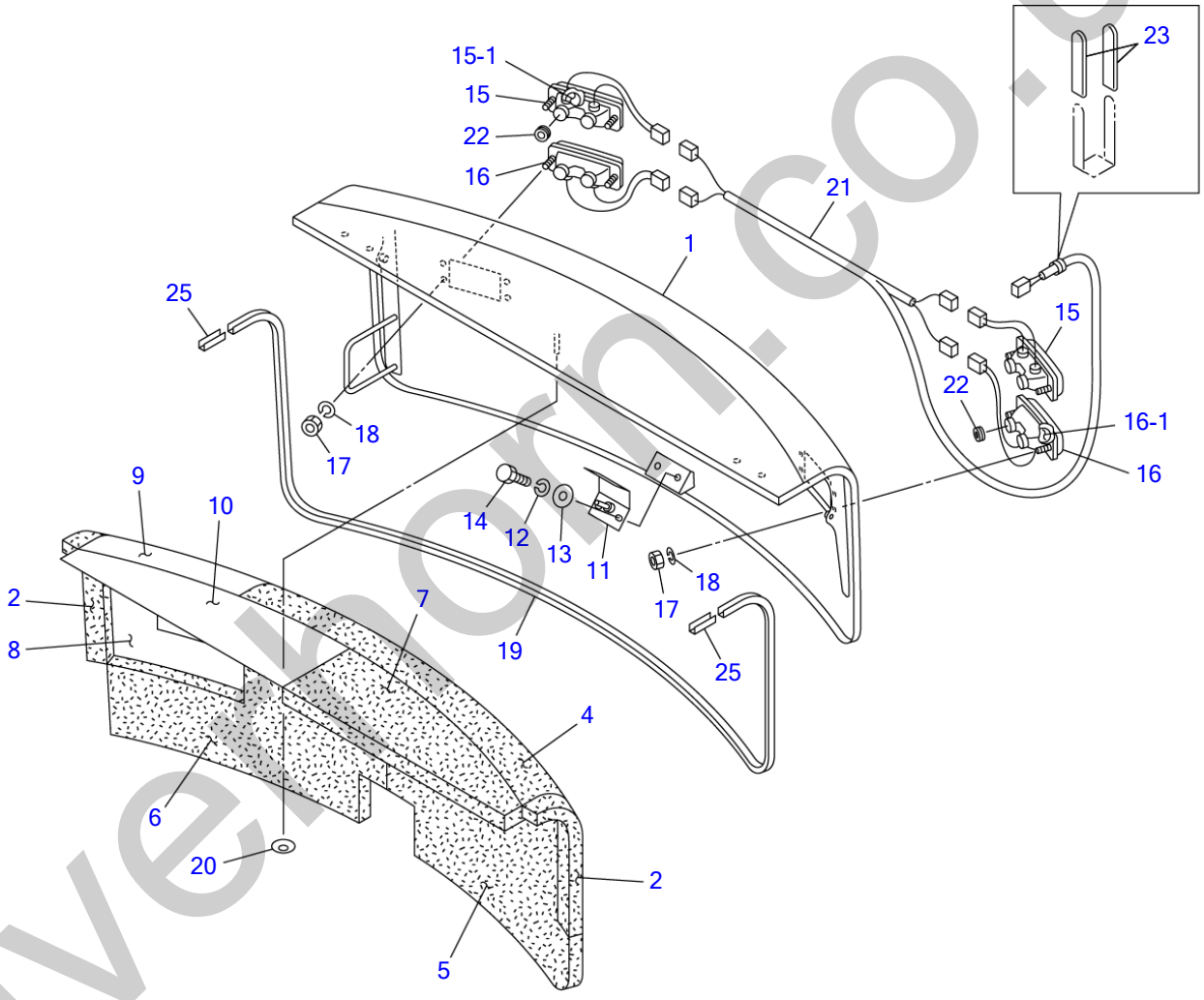

silvermorn.co.uk

COVER (4/9) (engine hood)

Item	Part number	Description	Q'ty	Chan.	Serial No.	Serv.	Remarks
0-2	0578200200	HOOD ASSY, engine	1				X05782-00200-6
1	0578200210	・HOOD, engine	1				
2	0578200202	・ABSORBENT, noise	2				
4	0568243974	・ABSORBENT, noise	1				
5	0568243975	・ABSORBENT, noise	1				
6	0578200206	・ABSORBENT, noise	1				
7	0568243977	・ABSORBENT, noise	1				
8	0578200208	・ABSORBENT, noise	1				
9	0568243979	・ABSORBENT, noise	1				
10	0568243971	・ABSORBENT, noise	1				
11	0568242270	・STRIKER	1				
12	1140020008	・WASHER, spring	2				
13	1141110008	・WASHER	2				
14	1100040820	・BOLT	2				
15	1703006400	・LAMP, tail	2				
15-1	1703006401	・・BULB	2				
16	1703006460	・LAMP, tail	2				
16-1	1703006461	・・BULB	2				
17	1130030004	・NUT	8				
18	1140020004	・WASHER, spring	8				
19	1654606277	・SEAL	1				sold by the meter
20	1652436025	・WASHER	10				
21	0578200209	・HARNESS, wiring	1				
22	1652051400	・GROMMET	8				
23	0872433150	・TUBE	2				
25	1654606006	・SEAL	2				sold by the meter
	N1e040						

silverhorn.co.uk

COVER (5/9) (side cover; R.H.)

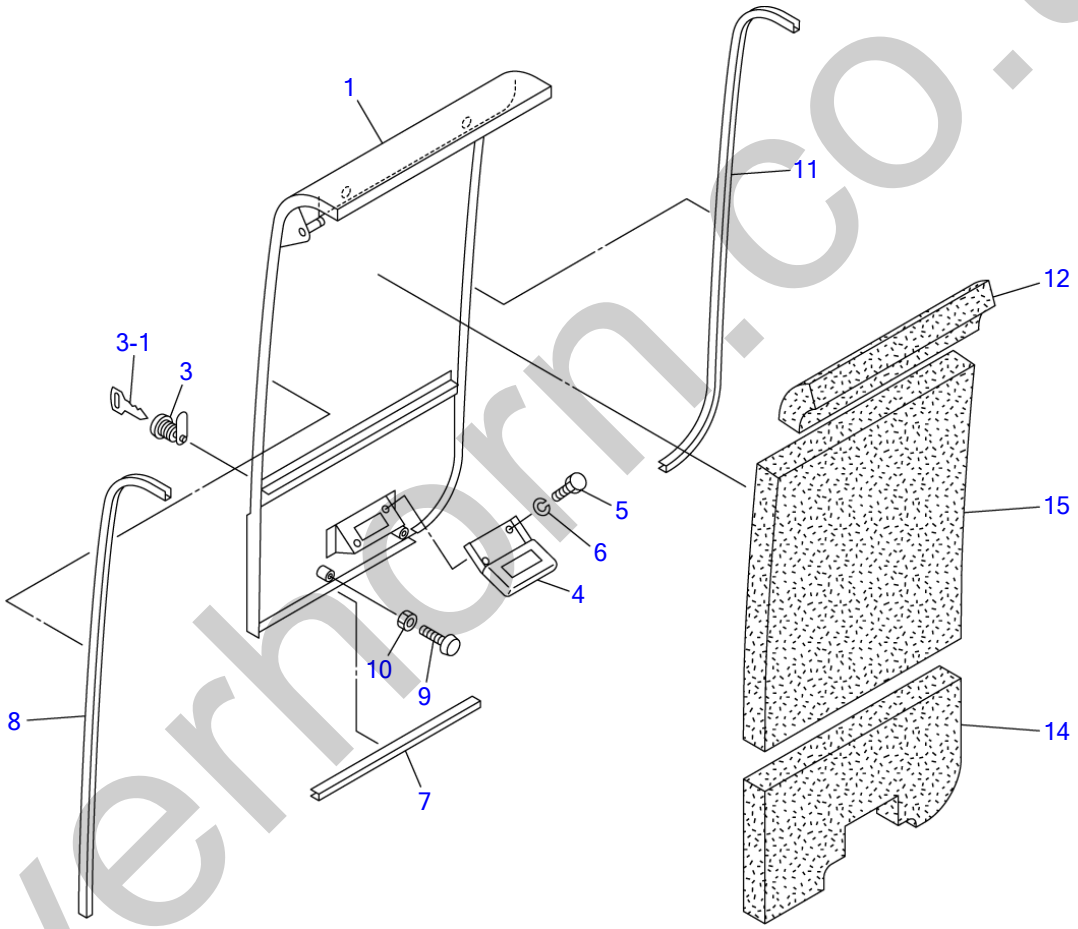

N0E050

S=1/10

silverhorn.co.uk

COVER (5/9) (side cover; R.H.)

Item	Part number	Description	Q'ty	Chan.	Serial No.	Serv.	Remarks
0-3	0578200300	COVER ASSY, side (R.H.)	1				X05782-00300-0
1	0578200310	・COVER, side (R.H.)	1				
3	0568221700	・LOCK	1				
3-1	1700100019	・KYE	1				
4	1653900024	・CATCH	1				
5	1100040612	・BOLT	2				
6	1140020006	・WASHER, spring	2				
7	1654605030	・RUBBER	1				sold by the meter
8	1654606091	・RUBBER	1				sold by the meter
9	1652515100	・RUBBER, cushion	2				
10	1130040005	・NUT	2				
11	1654520081	・RUBBER	1				sold by the meter
12	0568242312	・ABSORBENT, noise	1				
14	0578200314	・ABSORBENT, noise	1				
15	0568242315	・ABSORBENT, noise	1				
	N0e050						

silverhorn.co.uk

COVER (6/9) (side cover; L.H.)

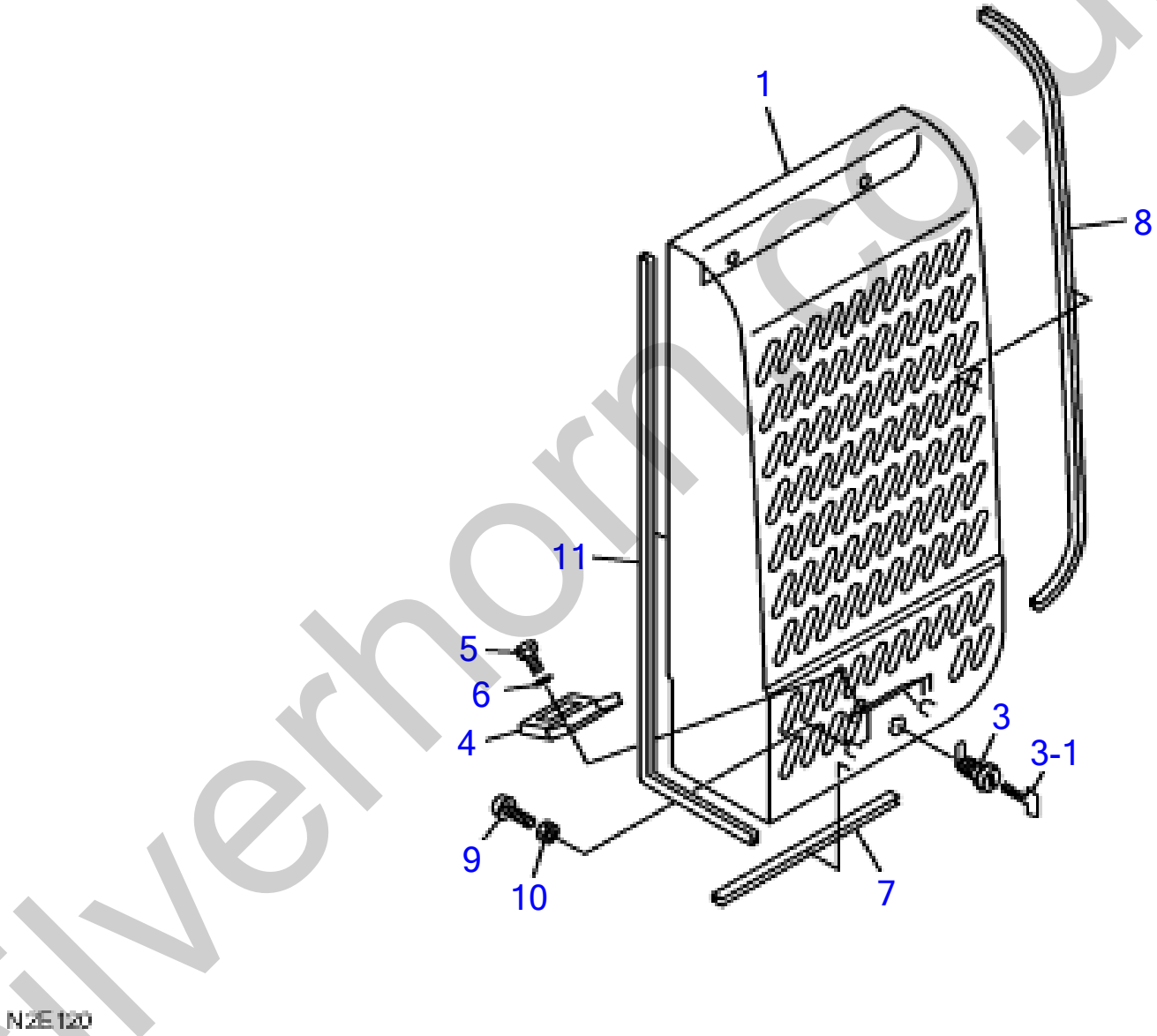

silverhorn.co.uk

COVER (6/9) (side cover; L.H.)

Item	Part number	Description	Q'ty	Chan.	Serial No.	Serv.	Remarks
0-4	**0578203800**	COVER ASSY, side (L.H.)	1				X05782-00400-2
1	**0578203900**	・COVER, side (L.H.)	1				
3	**0568221700**	・LOCK	1				
3-1	**1700100019**	・KYE	1				
4	**1653900024**	・CATCH	1				
5	**1100040612**	・BOLT	2				
6	**1140020006**	・WASHER, spring	2				
7	**1654605030**	・RUBBER	1				sold by the meter
8	**1654520091**	・RUBBER	1				sold by the meter
9	**1652515100**	・RUBBER, cushion	2				
10	**1130040005**	・NUT	2				
11	**1654606090**	・STRIP, weather	1				sold by the meter
	N2E120						

silverhorn.co.uk

COVER (7/9) (front cover)

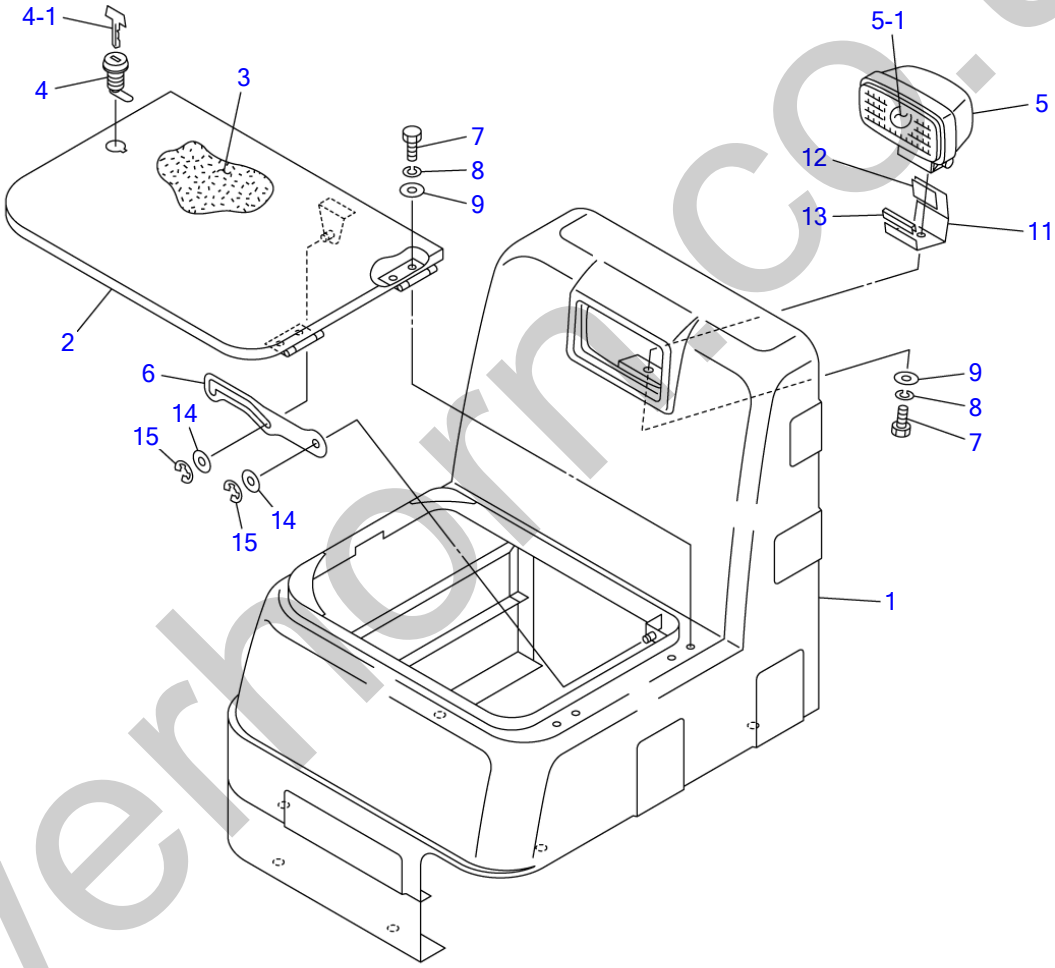

N0E070

S=1/10

silverhorn.co.uk

COVER (7/9) (front cover)

Item	Part number	Description	Q'ty	Chan.	Serial No.	Serv.	Remarks
0-5	0578200500	COVER ASSY, front	1				X05782-00500-0
1	0578200510	・COVER	1				
2	0568243410	・COVER	1				
3	0568243480	・SEAL	1				
4	1653602395	・LOCK	1				
4-1	1700100019	・KEY	1				
5	1703003700	・LAMP	1				
5-1	1703003701	・・BULB	1				
6	0568243505	・PLATE	1				
7	1100040820	・BOLT	5				
8	1140020008	・WASHER, spring	5				
9	1141110008	・WASHER	5				
11	0378206310	・PLATE	1				
12	0880841210	・RUBBER	1				
13	1654613006	・PACKING	1				sold by the meter
14	1141110010	・WASHER	2				
15	1224010009	・RING, snap	2				
	N0e070						

silverhorn.co.uk

COVER (8/9) (center cover)

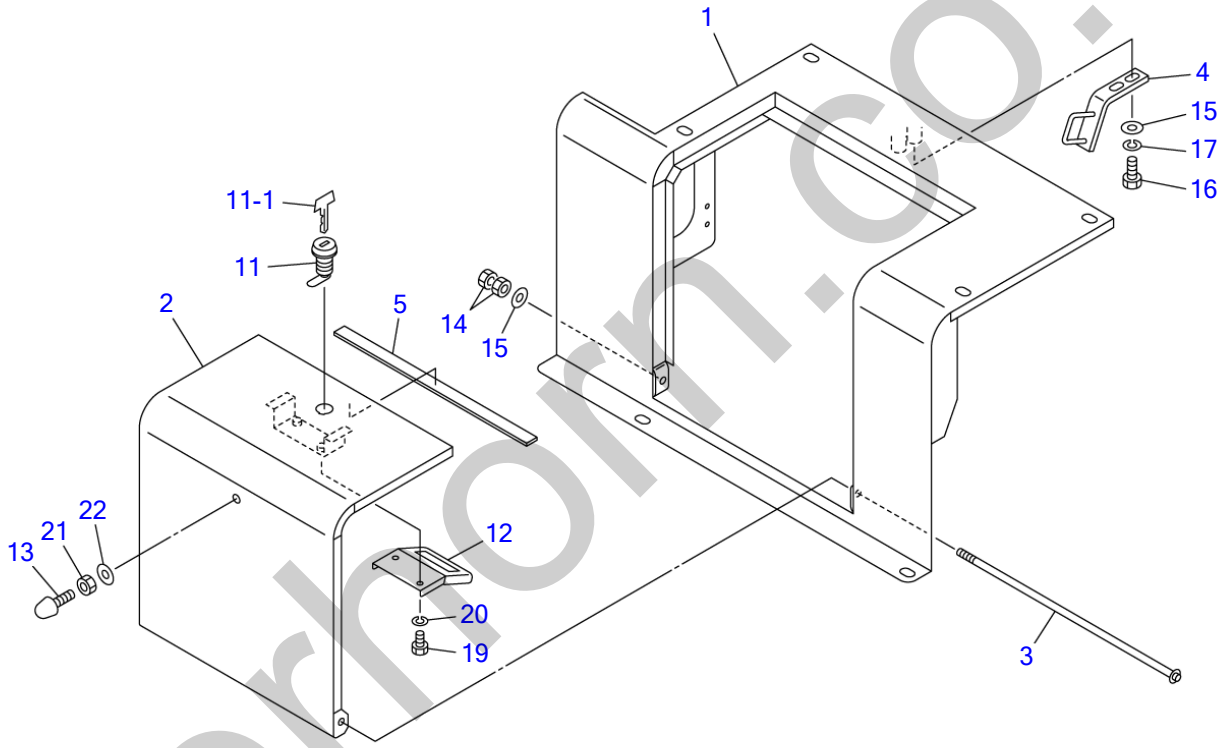

N0E320

S=1/10

silverhorn.co.uk

COVER (8/9) (center cover)

Item	Part number	Description	Q'ty	Chan.	Serial No.	Serv.	Remarks
0-7	0578202590	COVER (F) ASSY, center	1				X05782-02590-0
1	0578202610	・COVER (F), center	1				
2	0578201130	・COVER	1				
3	0578200680	・SHAFT	1				
4	0578200880	・HOOK	1				
5	0578200655	・SHEET	1				
11	1653601395	・LOCK	1				
11-1	1700100019	・KEY	1				
12	1653900024	・CATCH	1				
13	1651101224	・STOPPER	1				
14	1130040010	・NUT	2				
15	1141110010	・WASHER	3				
16	1100041025	・BOLT	2				
17	1140020010	・WASHER, spring	2				
19	1100040612	・BOLT	2				
20	1140020006	・WASHER, spring	2				
21	1130040012	・NUT	1				
22	1141110012	・WASHER	1				
	N1e050						

silverhorn.co.uk

COVER (9/9) (center cover)

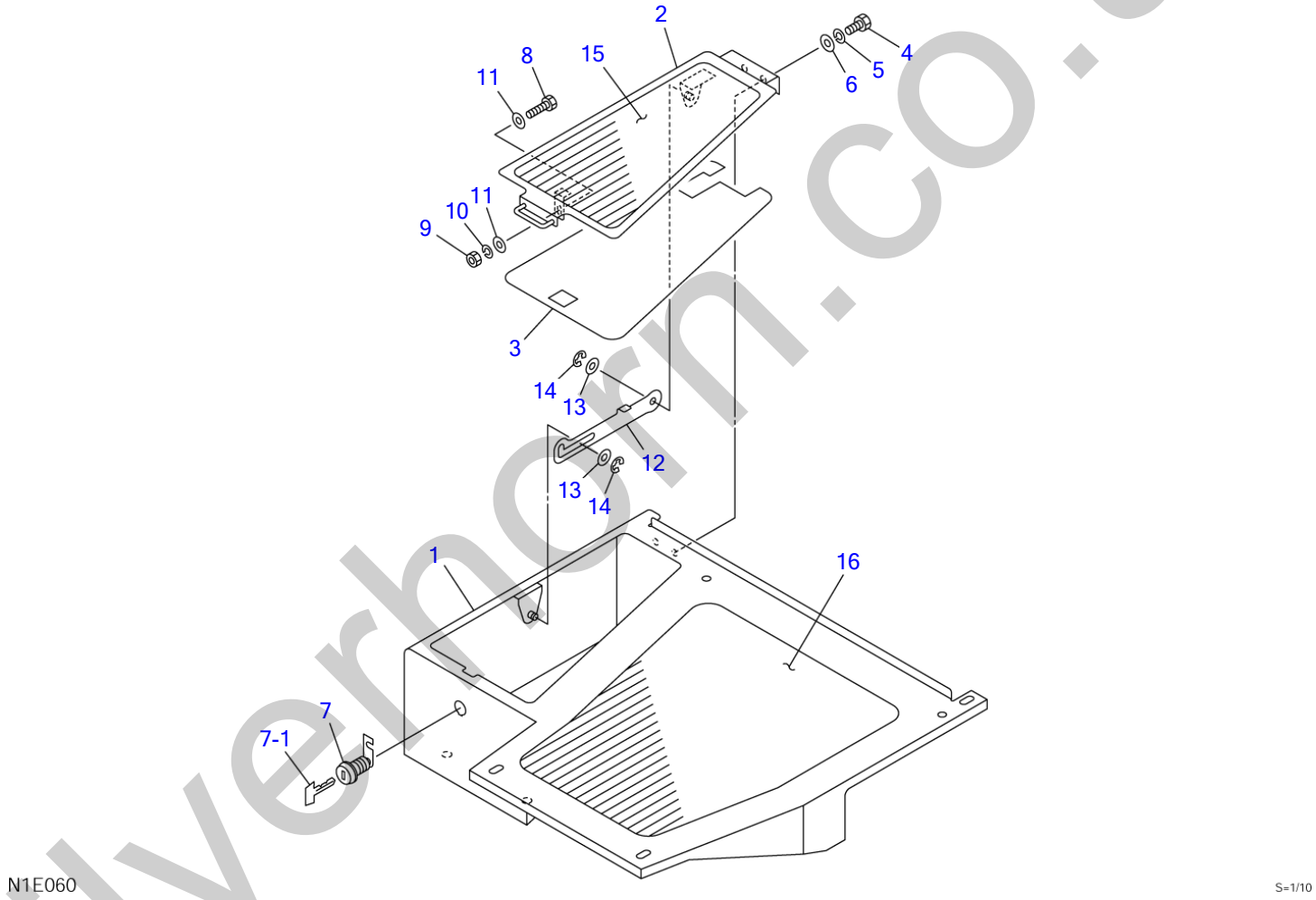

silverhorn.co.uk

COVER (9/9) (center cover)

Item	Part number	Description	Q'ty	Chan.	Serial No.	Serv.	Remarks
0-8	0578202630	COVER (F) ASSY, center	1				X05782-02630-0
1	0578202650	・COVER (F), center	1				
2	0578200620	・COVER	1				
3	0578200625	・SPONGE	1				
4	1100040816	・BOLT	2				
5	1140020008	・WASHER, spring	2				
6	1141110008	・WASHER	2				
7	1653612836	・LOCK	1				
7-1	1700100019	・KEY	1				
8	1100040620	・BOLT	1				
9	1130040006	・NUT	1				
10	1140020006	・WASHER, spring	1				
11	1141110006	・WASHER	2				
12	0578200630	・PLATE	1				
13	1141110010	・WASHER	2				
14	1224010009	・RING, retaining	2				
15	0578200615	・SHEET	1				
16	0578200616	・SHEET	1				
	N1e060						

silverhorn.co.uk

FLOOR PLATE

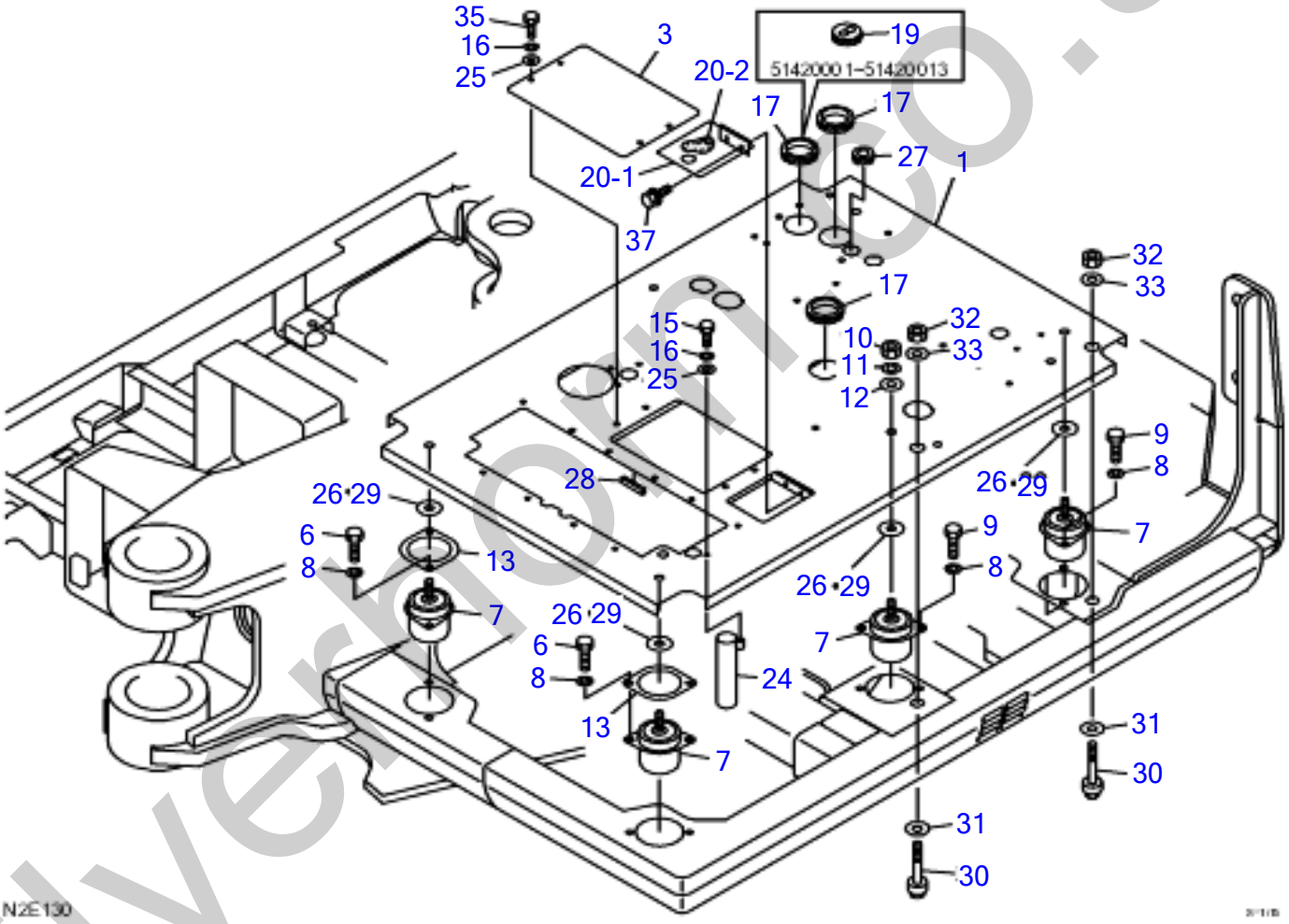

silverhorn.co.uk

FLOOR PLATE

Item	Part number	Description	Q'ty	Chan.	Serial No.	Serv.	Remarks
		PLATE ASSY, floor					X05735-00600-4
1	0573500310	PLATE	1				
3	0573500060	COVER	1				
6	1101041240	BOLT	4				
7	0573500180	MOUNT	6				
	0573500670	MOUNT	6				
8	1140020012	WASHER, spring	12				
9	1101041235	BOLT	8				
10	1130040016	NUT	3				
11	1140020016	WASHER, spring	3				
12	1141110016	WASHER	3				
13	0573500255	STOPPER	2				
	0573500613	STOPPER	2				
15	1100040820	BOLT	1				
16	1140020008	WASHER, spring	5				
17	1652030007	BUSHING	2				
	1654629025	TRIM	3				
19	1652030002	GROMMET	1				
20	0563515300	COVER ASSY	1				
20-1	0563515310	COVER	1				
20-2	0563515320	RUBBER	1				
24	0563517300	PIPE	1				
25	1141110008	WASHER	5				
26	0003600121	WASHER	6				t=1.2mm
27	0437200100	GUARD	1				
28	1654629007	TRIM	1				sold by the meter
29	0003600062	WASHER	6				t=3.2mm
30	0573500090	STOPPER	2				
31	0573500190	SPACER	2				
32	1130540020	NUT	2				
33	1141110020	WASHER	2				
35	1100040816	BOLT	4				
37	1100560612	BOLT	2				
	N2E130						

silverhorn.co.uk

FLOOR MAT

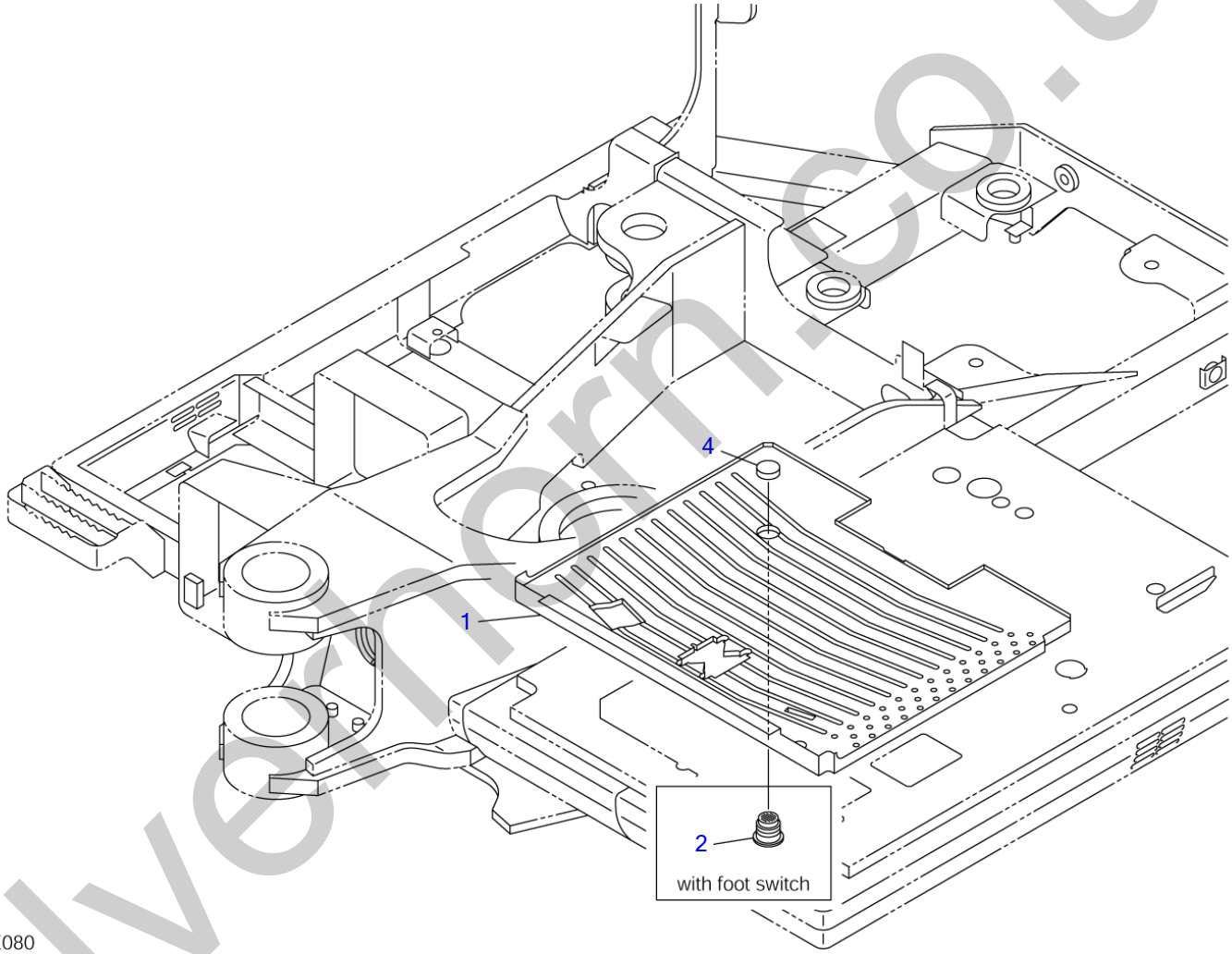

N1E080

S=1/15

silvermorn.co.uk

FLOOR MAT

Item	Part number	Description	Q'ty	Chan.	Serial No.	Serv.	Remarks
		MAT ASSY, floor (with foot switch)					X05735-00400-1
		MAT ASSY, floor (without foot switch)					X05735-00500-1
1	0573500410	MAT, floor	1				
2	0573500240	RUBBER	1				with foot switch
4	1652533013	CAP	1				without foot switch
	N1e080						

silverhorn.co.uk

SEAT (1/2)

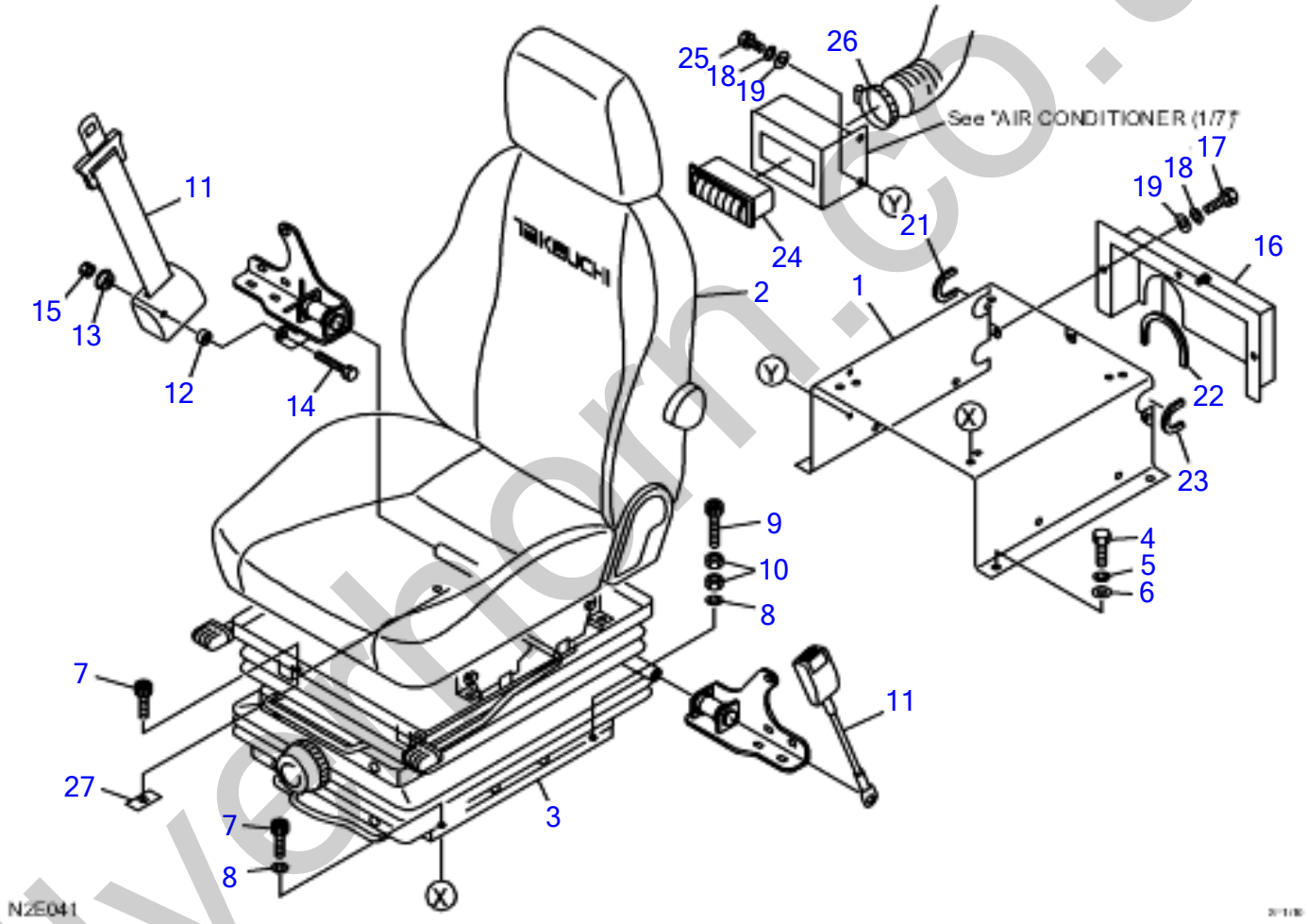

silverthorn.co.uk

SEAT (1/2)

Item	Part number	Description	Q'ty	Chan.	Serial No.	Serv.	Remarks
		SEAT ASSY					X05734-00700-0
1	0573400810	BRACKET	1			M	
2	1914100049	SEAT ASSY	1				see page (2/2)
3	1914100098	SUSPENSION	1				
4	1100041025	BOLT	4				
5	1140020010	WASHER, spring	4				
6	1141110010	WASHER	4				
7	1110020820	SCREW, cap	6				
8	1140420008	WASHER, spring	4				
9	1110040830	SCREW, cap	2				
10	1130020008	NUT	4				
11	1914100078	BELT, seat	1				
12	0563418100	COLLAR	1				
13	0563418200	WASHER	1				
14	1102540738	BOLT	1				
15	1132940719	NUT	1				
16	0573400820	COVER	1			M	
17	1110090820	BOLT	3				
18	1140090008	WASHER, spring	5				
19	1141190008	WASHER	5				
21	1653916011	TRIM	2				sold by the meter
22	1653917020	TRIM	1				
23	1653916009	TRIM	1				
24	1911505723	LOUVER	1				
25	1110090812	BOLT	2				
26	1533700070	BAND	1				
27	0563419019	SPACER	4				
	N2e041						

silverhorn.co.uk

SEAT (2/2)

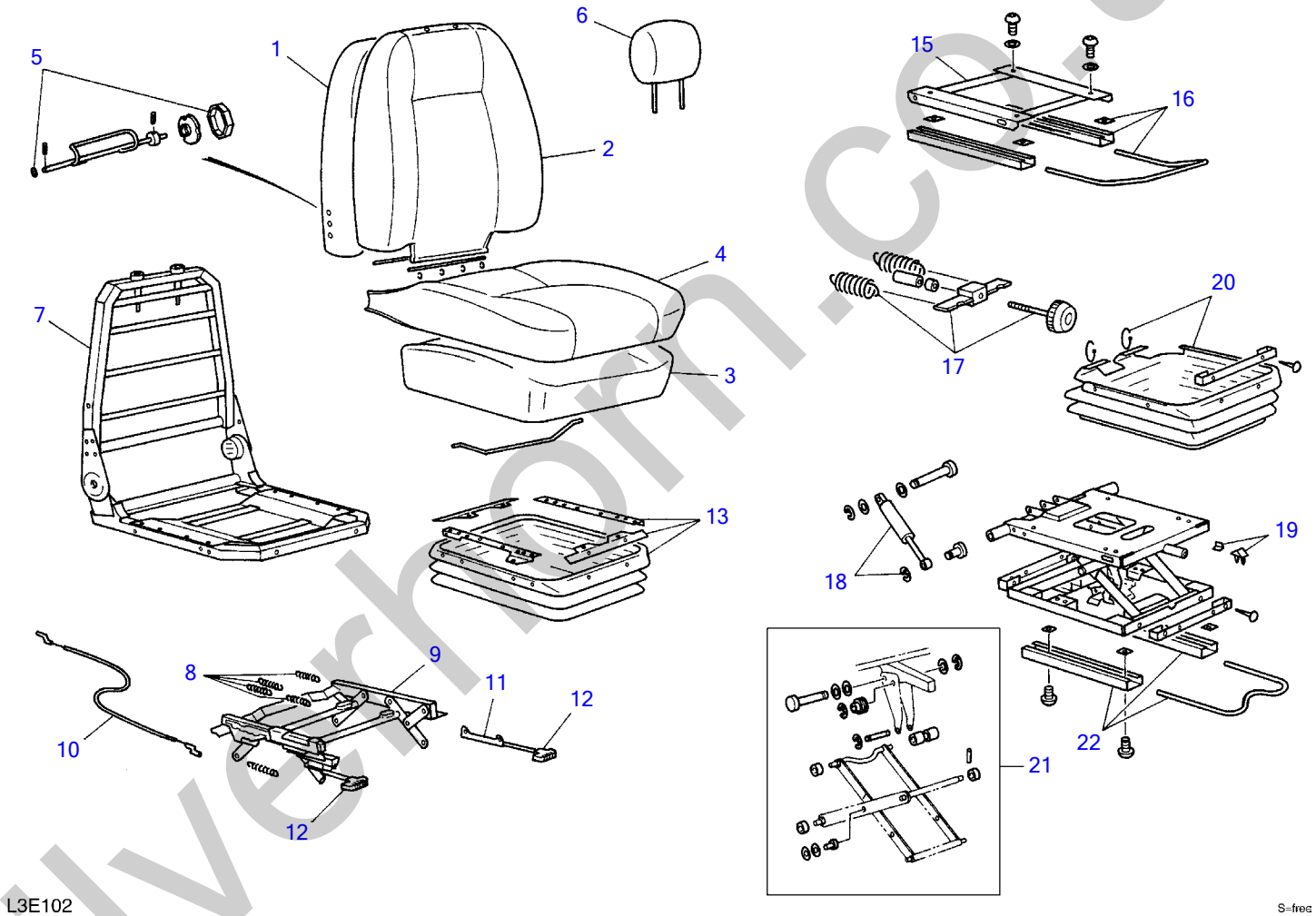

silverhorn.co.uk

SEAT (2/2)

Item	Part number	Description	Q'ty	Chan.	Serial No.	Serv.	Remarks
1	1914102049	FORM	1				
2	1914103049	COVER	1				
3	1914104049	FORM	1				
4	1914124049	COVER	1				
5	1914106049	SUPPORT	1				
6	1914107049	REST ASSY, head	1				
7	1914108049	FORM	1				
8	1914109049	SPRING	1				
9	1914110049	HEIGHT RISER	1				
10	1914111049	CABLE	1				
11	1914112049	LATCH	1				
12	1914113049	KNOB	1				
13	1914114049	COVER	1				
15	1914116049	MOUNTING	1				
16	1914117049	RAIL, slide	1				
17	1914118049	ADJUSTER	1				
18	1914119049	DAMPER	1				
19	1914120049	STOPPER	1				
20	1914122049	COVER	1				
21	1914123049	PIVOT	1				
22	1914115049	RAIL, slide	1				
	N0e262						

silverhorn.co.uk

SEAT (1/3) (with air suspension)

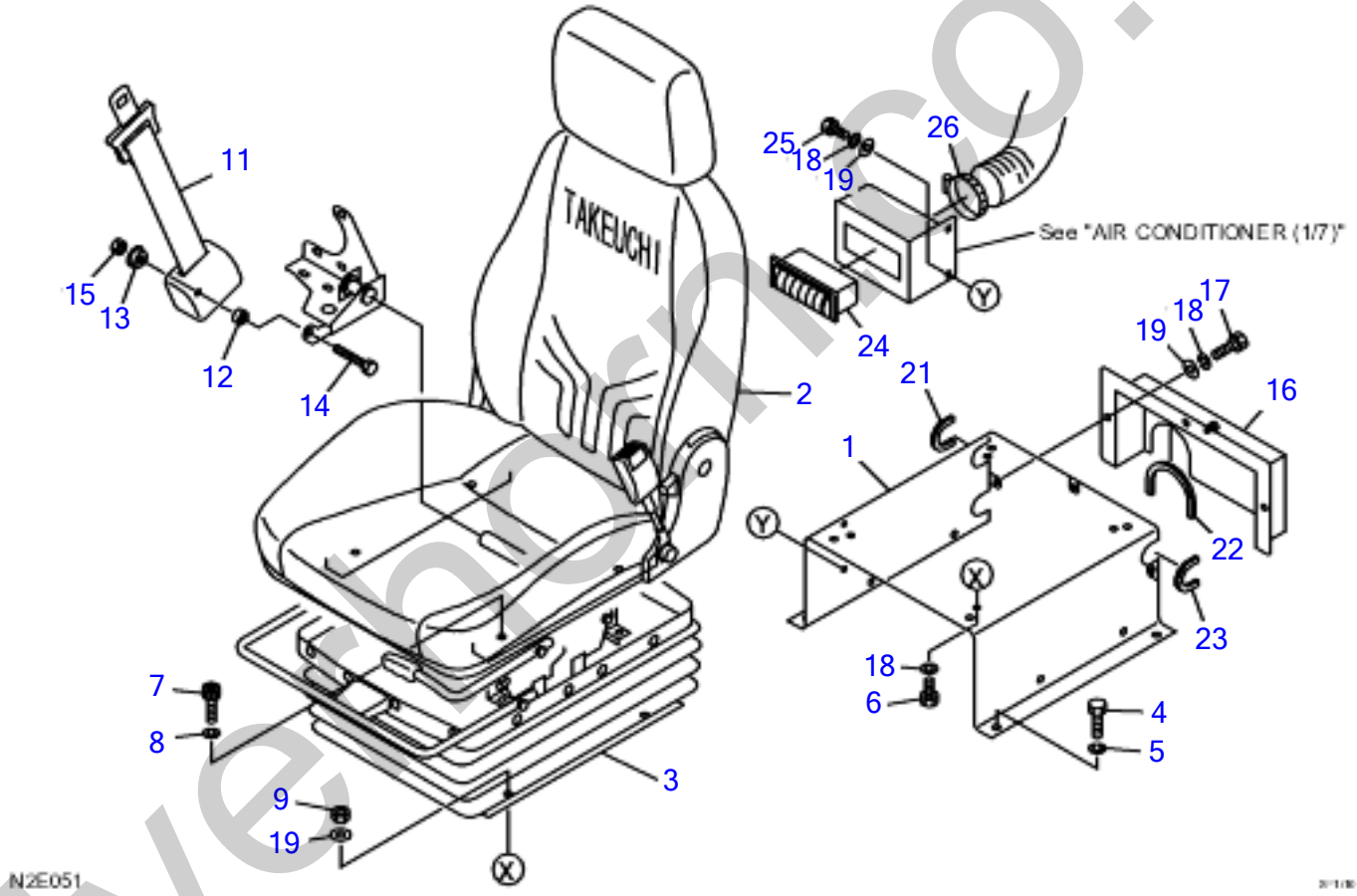

silverhorse.co.uk

SEAT (1/3) (with air suspension)

Item	Part number	Description	Q'ty	Chan.	Serial No.	Serv.	Remarks
		SEAT ASSY	1				X05734-00800-0
1	0573400810	BRACKET	1			M	
2	1914100102	SEAT ASSY	1				see page (2/3)
3	1914100103	SUSPENSION, air	1				see page (3/3)
4	1100041025	BOLT	4				
5	1140020010	WASHER, spring	4				
6	1100090816	BOLT	4				
7	1110020820	SCREW, cap	8				
8	1140420008	WASHER, spring	4				
9	1130090008	NUT	4				
11	1914100078	BELT, seat	1				
12	0563418100	COLLAR	1				
13	0563418200	WASHER	1				
14	1102540738	BOLT	1				
15	1132940719	NUT	1				
16	0573400820	COVER	1			M	
17	1110090820	BOLT	3				
18	1140090008	WASHER, spring	9				
19	1141190008	WASHER	9				
21	1653916011	TRIM	2				sold by the meter
22	1653917020	TRIM	1				
23	1653916009	TRIM	1				
24	1911505723	LOUVER	1				
25	1110090812	BOLT	2				
26	1533700070	BAND	1				
	N2e051						

silverhorn.co.uk

SEAT (2/3) WITH AIR SUSPENSION

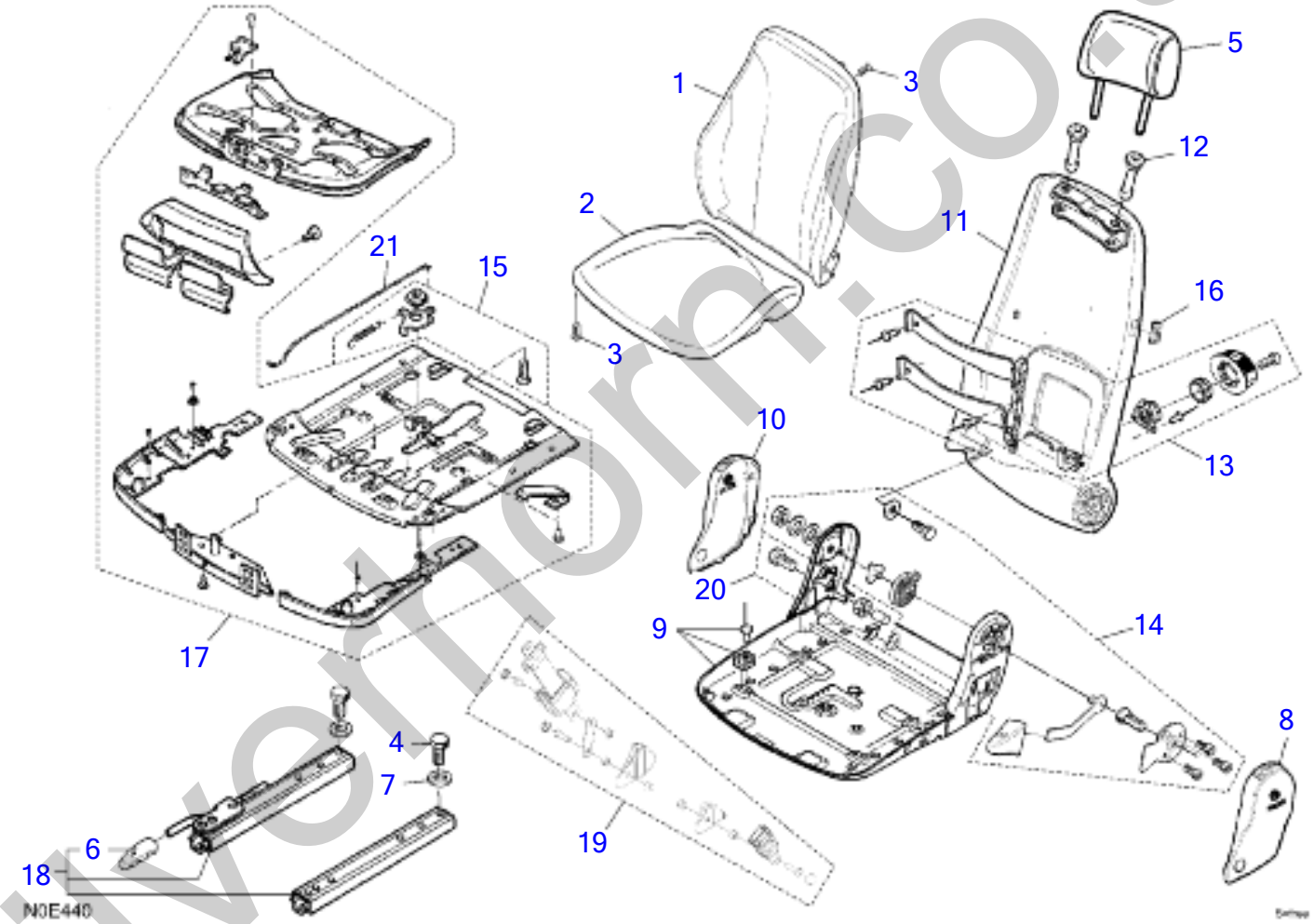

silverthorn.co.uk

SEAT (2/3) WITH AIR SUSPENSION

Item	Part number	Description	Q'ty	Chan.	Serial No.	Serv.	Remarks
		SEAT (2/3) WITH SAIR SUSPENSION					
0-2	1914100102	SEAT ASSY	1				
1	1914101096	* CUSHION	1				
2	1914102102	* CUSHION	1				
3	1914103096	* SCREW	10				
4	1110040816	* CAP SCREW	4				
5	1914103071	* BACKREST	1				
6	1914105096	* HANDLE	1				
7	1141110008	* WASHER	4				
8	1914111096	* COVER	1				
9	1614140102	* SEAT PAN	1				
10	1914118096	* COVER	1				
11	1914115072	* BACKREST	1				
12	1914116072	* BUSHING	2				
13	1914121096	* LUMBAR SUPPORT KIT	1				
14	1914118072	* MOUNTING KIT	1				
15	1914175102	* SWIVEL LEVER	1				
16	1914121072	* PVC COVER	1				
17	1914103102	* TILT ADJUSTMENT	1				
18	1914110103	* SLIDE RAIL KIT	1				
19	1914123072	* SEAT BELT	1				
20	1914117103	* STOP	1				
21	1914171103	* ROD	1				
	N0E440						

silverhorn.co.uk

SEAT (3/3) WITH AIR SUSPENSION

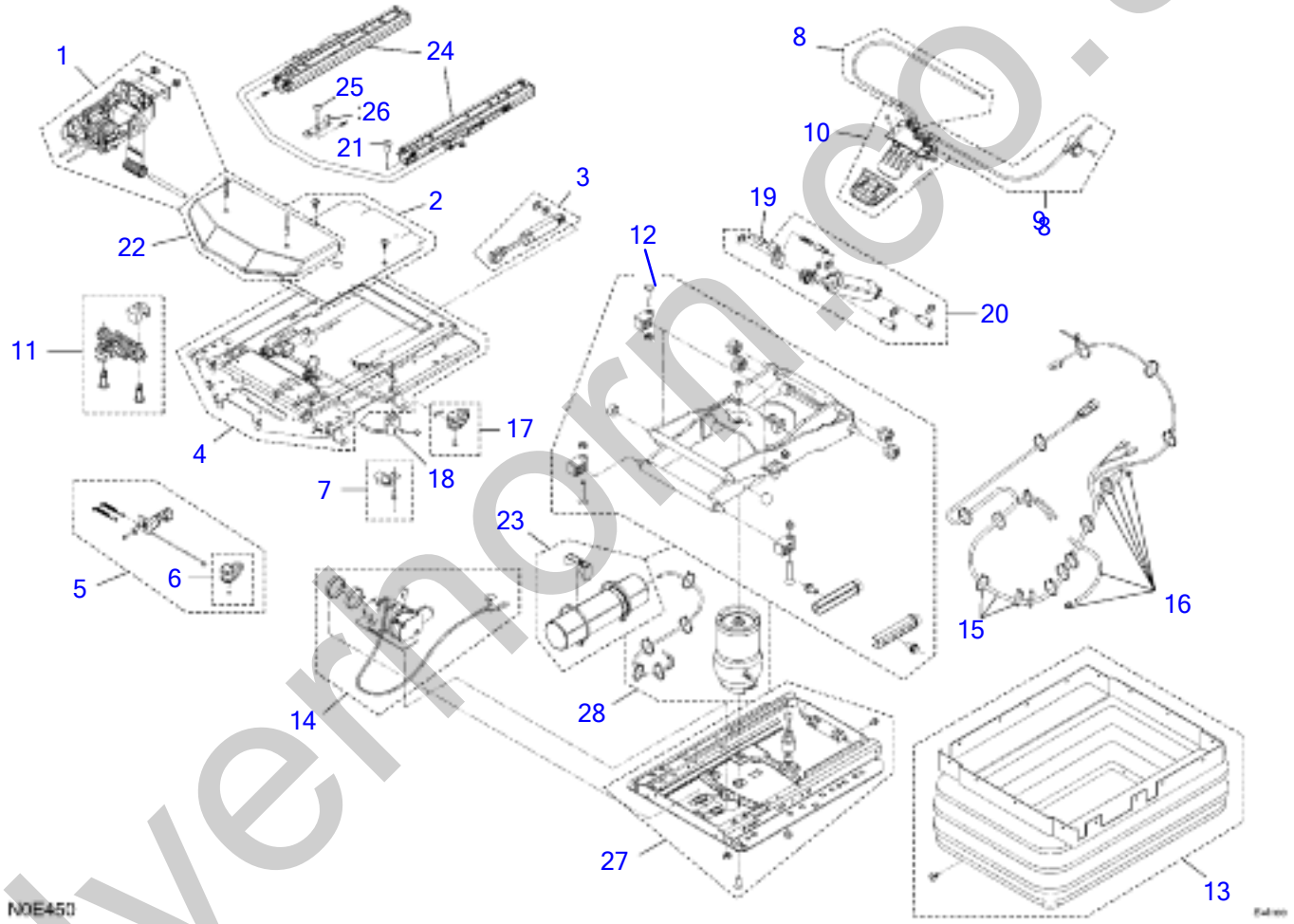

silvernorn.co.uk

SEAT (3/3) WITH AIR SUSPENSION

Item	Part number	Description	Q'ty	Chan.	Serial No.	Serv.	Remarks
		SEAT (3/3) WITH AIR SUSPENSION					
0-3	1914100103	SUSPENSION ASSY	1				
1	1914101097	* CONTROL ASSY	1				
2	1914102097	* COVER KIT	1				
3	1914106103	* SHOCK ABSORBER KIT	1				
4	1914108103	* UPPER SUSPENSION	1				
5	1914112103	* LOCKING LEVER	1				
6	1914114103	* HANDLE KIT	1				
7	1914118103	* STOP	2				
8	1914108097	* CABLE	1				
9	1914109097	* CABLE ASSY	1				
10	1914111097	* CONTROL	1				
11	1914132103	* HORIZONTAL ISOLATOR	1				
12	1914135103	* SWING ARM KIT	1				
13	1914117097	* BELLOWS KIT	1				
14	1914118097	* COMPRESSOR	1				
15	1914119097	* CABLE CONNECTION	1				
16	1914120097	* AIR HOSE KIT	1				
17	1914121097	* HANDLE KIT	1				
18	1914122097	* CABLE HOLDER	1				
19	1914124097	* CABLE	1				
20	1914125097	* SHOCK ABSORBER KIT	1				
21	1110040816	* CAP SCREW	3				
22	1914127097	* COVER KIT	1				
23	1914132097	* AIR RESERVOIR	1				
24	1914184103	* SET OF ADJUSTMENT	1				
25	1110040820	* CAP SCREW	1				
26	1914119072	* PLATE	1				
27	1914135097	* LOWER SUSPENSION	1				
28	1914138097	* AIR SPRING KIT	1				
	N0E450						

silverhorn.co.uk

CAB MOUNT

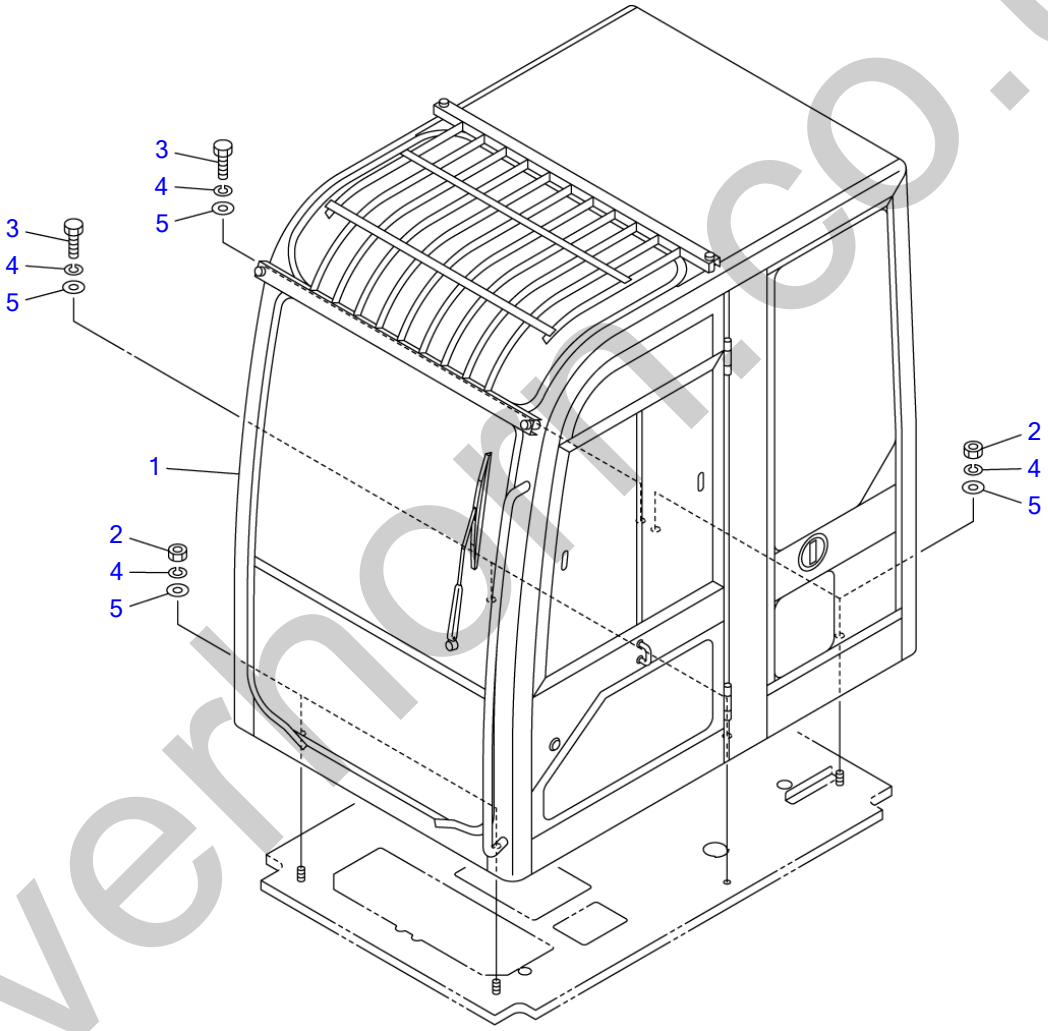

silvernorth.co.uk

CAB MOUNT

Item	Part number	Description	Q'ty	Chan.	Serial No.	Serv.	Remarks
0	X **********	CAB MOUNT	1				X05786-02000-0
1	0578602100	・CAB ASSY	1				
2	1130040016	・NUT	4				
3	1100041645	・BOLT	3				
4	1140020016	・WASHER, spring	7				
5	1141110016	・WASHER	7				
	N1e310						

silverhorn.co.uk

CAB (1/6)

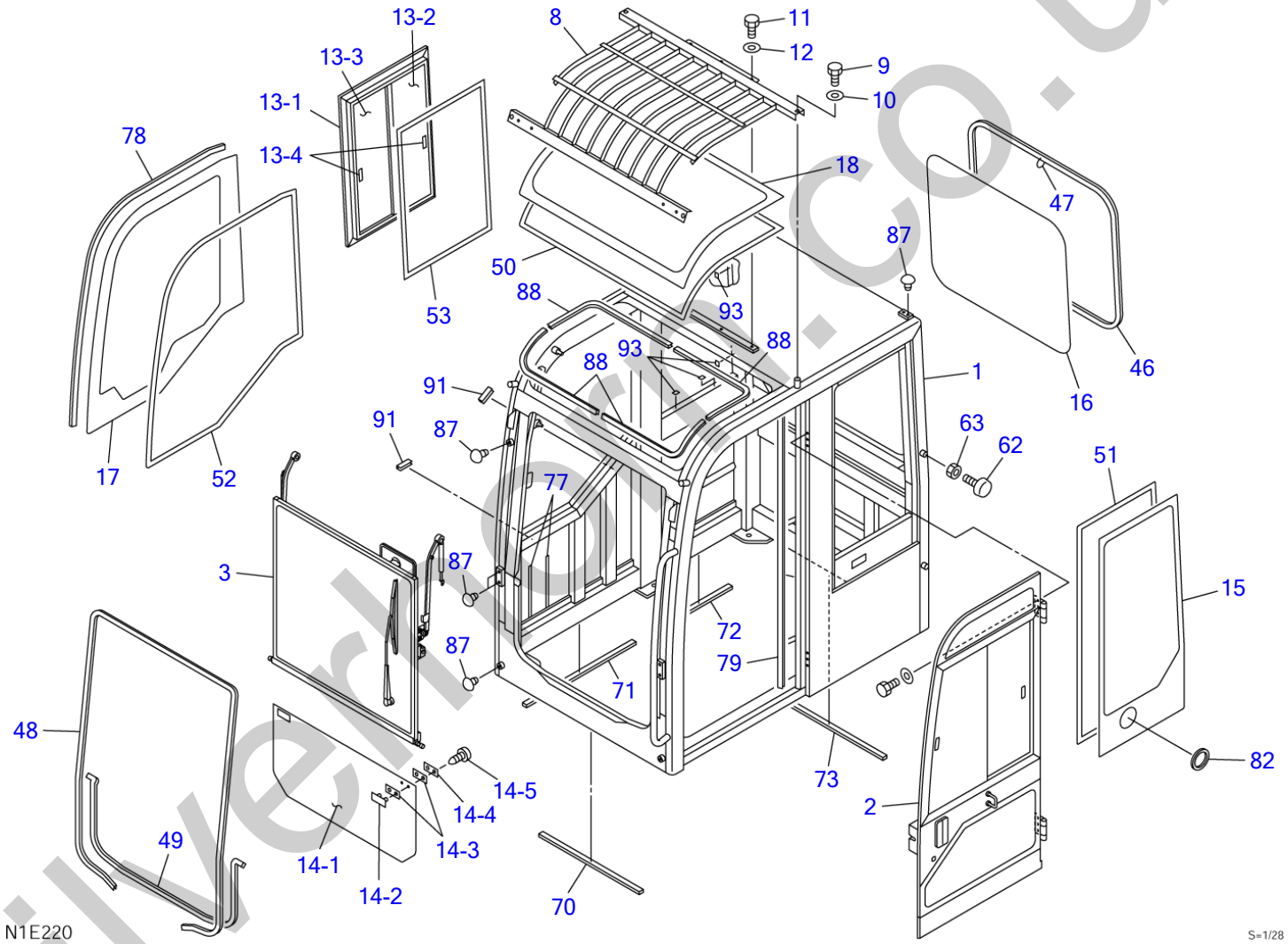

silverhorn.co.uk

CAB (1/6)

Item	Part number	Description	Q'ty	Chan.	Serial No.	Serv.	Remarks
0	0578602100	CAB ASSY	1				X05786-02100-1
1	X **********	・CAB	1				
2	0578602300	・DOOR ASSY	1				see page (4/6)
3	0578602400	・ADJUST ASSY, front sash	1				see page (5/6)
8	0578602520	・GUARD, roof	1				
9	1100041225	・BOLT	4				
10	1141110012	・WASHER	4				
11	1100041016	・BOLT	3				
12	1141110010	・WASHER	3				
13	0578602530	・SASH ASSY, side	1				
13-1	0578602531	・・FRAME	1				
13-2	0578602532	・・GLASS	1				
13-3	0578602533	・・GLASS	1				
13-4	0880865424	・・LOCK ASSY	2				
14	0578600610	・GLASS ASSY, front	1				
14-1	0578600611	・・GLASS	1				
14-2	1654010900	・・RETAINER	2				
14-3	1654011100	・・PACKING	4				
14-4	1654011000	・・PLATE	2				
14-5	1122410412	・・SCREW	4				
15	0578602115	・GLASS	1				
16	0578600116	・GLASS	1				
17	0578602117	・GLASS	1				
18	0578602118	・GLASS	1				
46	1654231295	・H-RUBBER	1				sold by the meter
47	0880865139	・H-RUBBER	1				
48	1654605385	・RUBBER	1				sold by the meter
49	1654605165	・RUBBER	1				sold by the meter
50	1654615335	・DAM	1				sold by the meter
51	1654615350	・DAM	1				sold by the meter
52	1654615320	・DAM	1				sold by the meter
53	1654615265	・DAM	1				sold by the meter
62	1651101042	・STOPPER	2				
63	1130090010	・NUT	2				
70	0578600170	・SEAL	1				
71	0578600171	・SEAL	1				
72	0578600172	・SEAL	1				
73	0578602173	・SEAL	1				
77	0578600177	・PLATE	1				
78	1653916175	・TRIM	1				sold by the meter
79	1654605150	・SEAL	1				sold by the meter
82	0568626600	・GROMMET	1				
87	1653303010	・CAP	11				
88	1653916098	・TRIM	4				sold by the meter
91	1653916004	・TRIM	2				sold by the meter
93	0578600193	・SPACER	4				
	N1e222						

silverthorn.co.uk

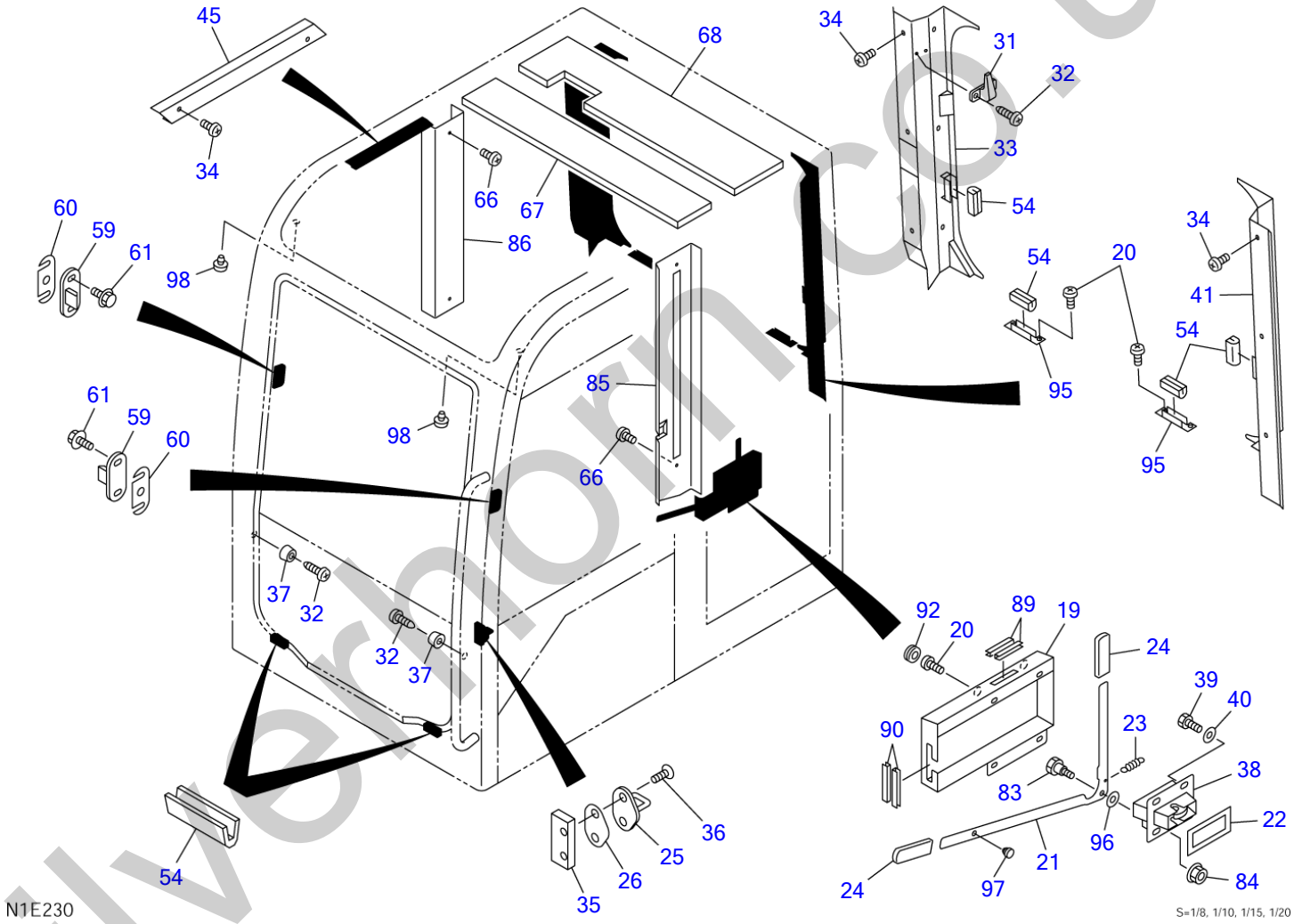

silverhorn.co.uk

CAB (2/6)

Item	Part number	Description	Q'ty	Chan.	Serial No.	Serv.	Remarks
0	0578602100	CAB ASSY	1				X05786-02100-1
19	0578602580	・COVER	1				
20	1150420616	・SCREW	8				
21	0578602121	・LEVER	1				
22	0578600122	・SEAL	2				
23	0007000096	・SPRING	1				
24	0438601760	・COVER	2				
25	1654011708	・STRIKER	1				
26	0578600126	・SHIM	AR				
31	1654004800	・HANGER	1				
32	1122400416	・SCREW	4				
33	0578602550	・COVER	1				
34	1150420510	・SCREW	14				
35	0578600135	・PLATE	1				
36	1110091025	・BOLT	2				
37	1652102320	・RUBBER	2				sold by the meter
38	1654011720	・LOCK	1				
39	1100040820	・BOLT	4				
40	1141110008	・WASHER	4				
41	0578602560	・COVER	1				
45	0578600145	・COVER	1				
54	1654004900	・RUBBER	6				
59	0578602570	・BRACKET	2				
60	0578602160	・SHIM	AR				
61	1100040616	・BOLT	4				
66	1150420612	・SCREW	4				
67	0578602167	・ABSORBENT, noise	1				
68	0578602168	・ABSORBENT, noise	1				
83	1654010800	・PIN	1				
84	1131283006	・NUT	1				
85	0578602590	・COVER	1				
86	0578602600	・COVER	1				
89	1653916005	・TRIM	2				sold by the meter
90	1653916007	・TRIM	2				sold by the meter
92	1654011710	・CAP	2				
95	0578602195	・BRACKET	2				
96	0578602196	・WASHER	1				
97	1652516004	・CUSHION	1				
98	1652516003	・CUSHION	2				
	N1e232						

silverhorn.co.uk

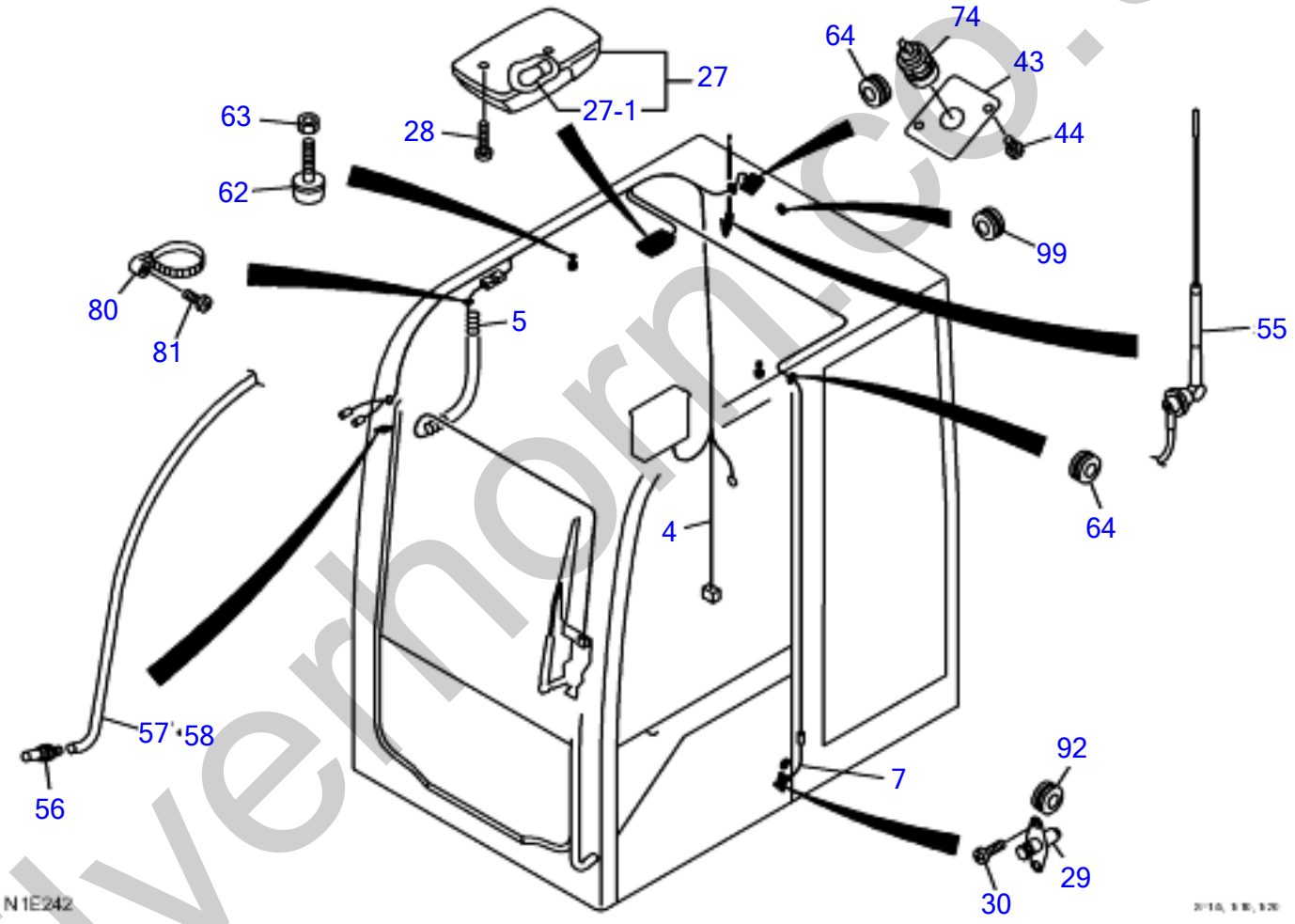

silverhorn.co.uk

CAB (3/6)

Item	Part number	Description	Q'ty	Chan.	Serial No.	Serv.	Remarks
0	0578602100	CAB ASSY	1				X05786-02100-1
4	0578602500	・HARNESS, wire	1				
5	0578602510	・HARNESS, wire	1				
7	0578600510	・HARNESS, wire	2				
27	1703007200	・LAMP, room	1				
27-1	1703007201	・・BULB	1				24V, 5W
28	1150410420	・SCREW	2				
29	1700000015	・SWITCH	1				
30	1150410412	・SCREW	2				
43	0578600143	・COVER	1				
44	1150420512	・SCREW	2				
55	1705003460	・ANTENNA	1				
56	1711910070	・NOZZLE	1				
57	1711910063	・HOSE	1				
58	1711910063	・HOSE	1				
62	1651101042	・STOPPER	2				
63	1130090010	・NUT	2				
64	1654011709	・GROMMET	2				
74	1711900066	・SOCKET	1				
80	1652221050	・CLIP	1				
81	1150420510	・SCREW	1				
92	1654011710	・CAP	1				
99	1652051200	* GROMMET	1				
	N1e242						

silverhorn.co.uk

CAB (4/6) (door)

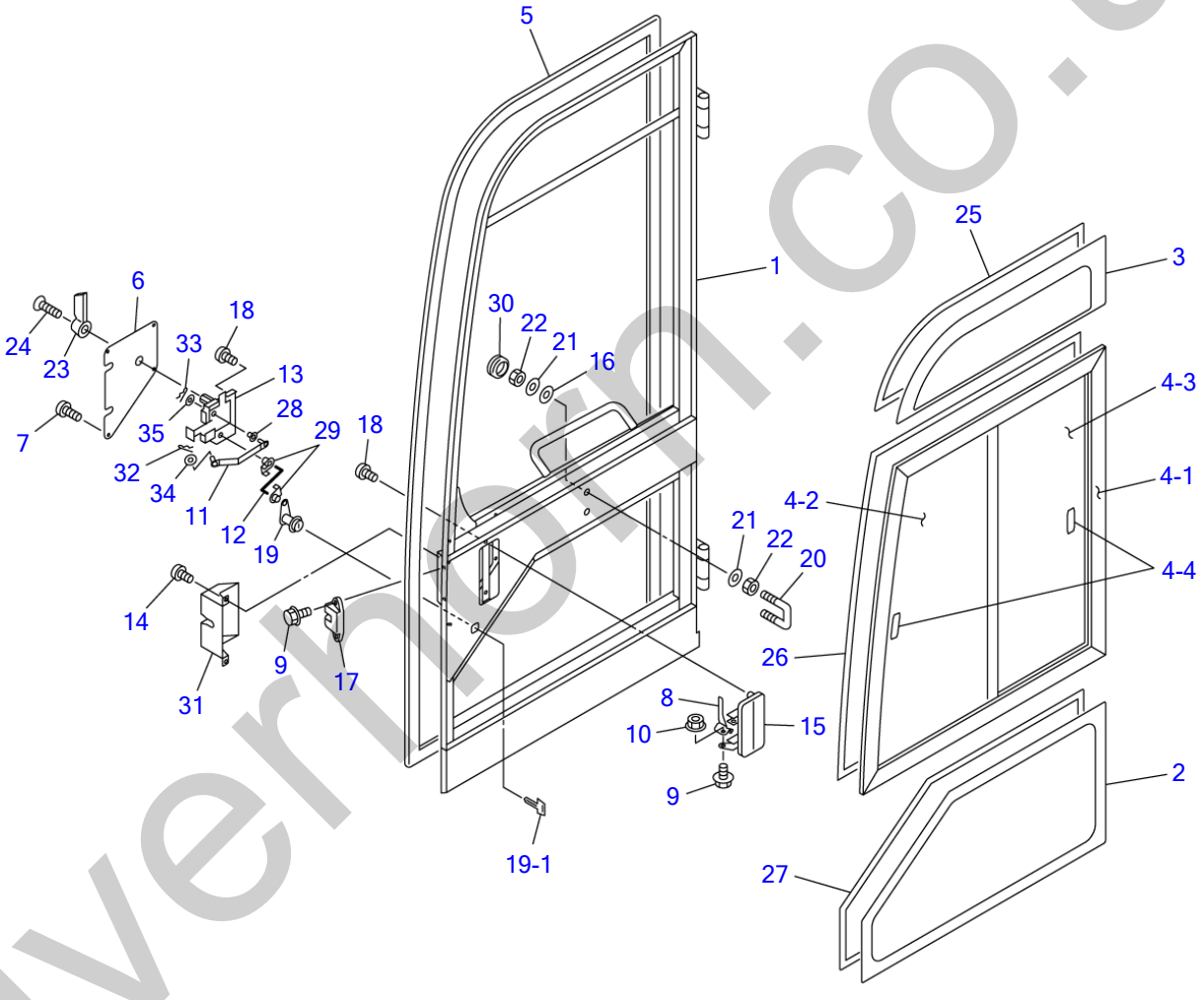

silverhorn.co.uk

CAB (4/6) (door)

Item	Part number	Description	Q'ty	Chan.	Serial No.	Serv.	Remarks
0-2	0578602300	DOOR ASSY	1				X05786-02300-1
1	0578602310	・DOOR	1				
2	0578600301	・GLASS	1				
3	0578600302	・GLASS	1				
4	0578600340	・SASH ASSY	1				
4-1	0578600341	・・FRAME	1				
4-2	0578600342	・・GLASS	1				
4-3	0578600343	・・GLASS	1				
4-4	0880865424	・・LOCK ASSY	2				
5	0578600303	・SEAL	1				
6	0578600304	・PLATE	1				
7	1150420512	・SCREW	4				
8	0578600360	・PLATE	1				
9	1100040612	・BOLT	3				
10	1131283006	・NUT	1				
11	0578600370	・ROD	1				
12	0568630600	・ROD	1				
13	0568623400	・CONTROL ASSY	1				
14	1150420612	・BOLT, sems	2				
15	1654005600	・HANDLE	1				
16	1654011812	・WASHER	2				
17	0068620400	・LOCK ASSY	1				
18	1150410612	・BOLT, sems	4				
19	1653611527	・LOCK ASSY	1				
19-1	1700100019	・KEY	1				
20	1654005900	・STRIKER	1				
21	1654011706	・WASHER	4				
22	1130090010	・NUT	4				
23	1654005500	・HANDLE	1				
24	1120790516	・SCREW	1				
25	1654615147	・DAM	1				sold by the meter
26	1654615286	・DAM	1				sold by the meter
27	1654615201	・DAM	1				sold by the meter
28	0578600380	・BUSHING	1				
29	0398610900	・SNAP	2				
30	1652053200	・GROMMET	2				
31	0578600308	・COVER	1				
32	1214000006	・PIN, snap	1				
33	1214000004	・PIN, snap	1				
34	1654011711	・WASHER	1				
35	1141190006	・WASHER	2				
	N1e250						

silverthorn.co.uk

CAB (5/6) (front sash adjust)

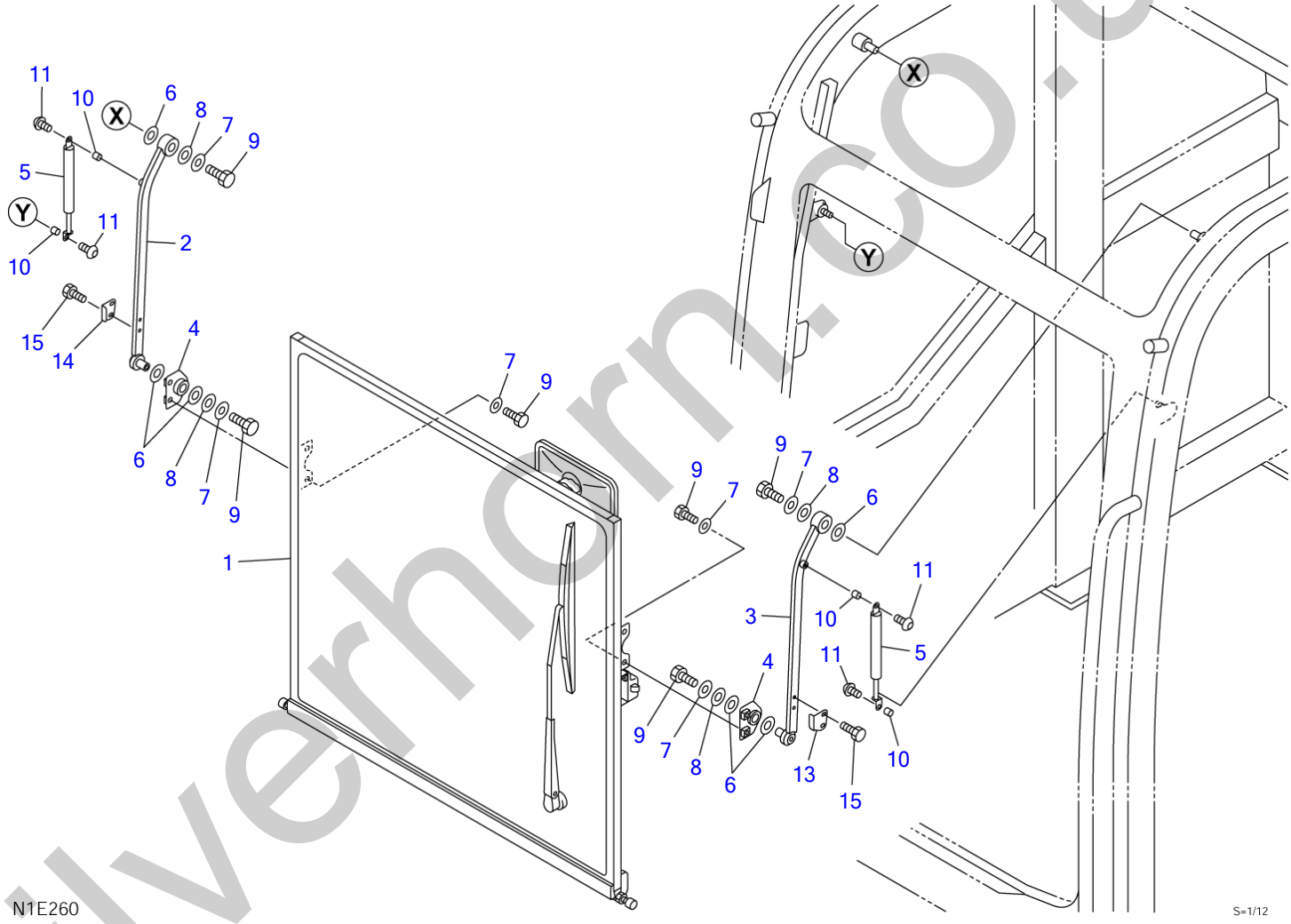

silverhorn.co.uk

CAB (5/6) (front sash adjust)

Item	Part number	Description	Q'ty	Chan.	Serial No.	Serv.	Remarks
0-3	0578602400	ADJUST ASSY, front sash	1				X05786-02400-0
1	0578602410	・SASH ASSY, front	1				see page (6/6)
2	0578602420	・ARM	1				
3	0578602430	・ARM	1				
4	0348603870	・BRACKET	2				
5	0578600407	・SPRING, gas	2				
6	0083252100	・WASHER	6				
7	1654011705	・WASHER	8				
8	0578600401	・WASHER	4				
9	1100090820	・BOLT	8				
10	1333000606	・BUSHING	4				
11	1120990612	・PIN, snap	4				
13	0578602401	・BRACKET	1				
14	0578602402	・BRACKET	1				
15	1100040616	・BOLT	4				
	N1e260						

silverhorn.co.uk

CAB (6/6) (front sash)

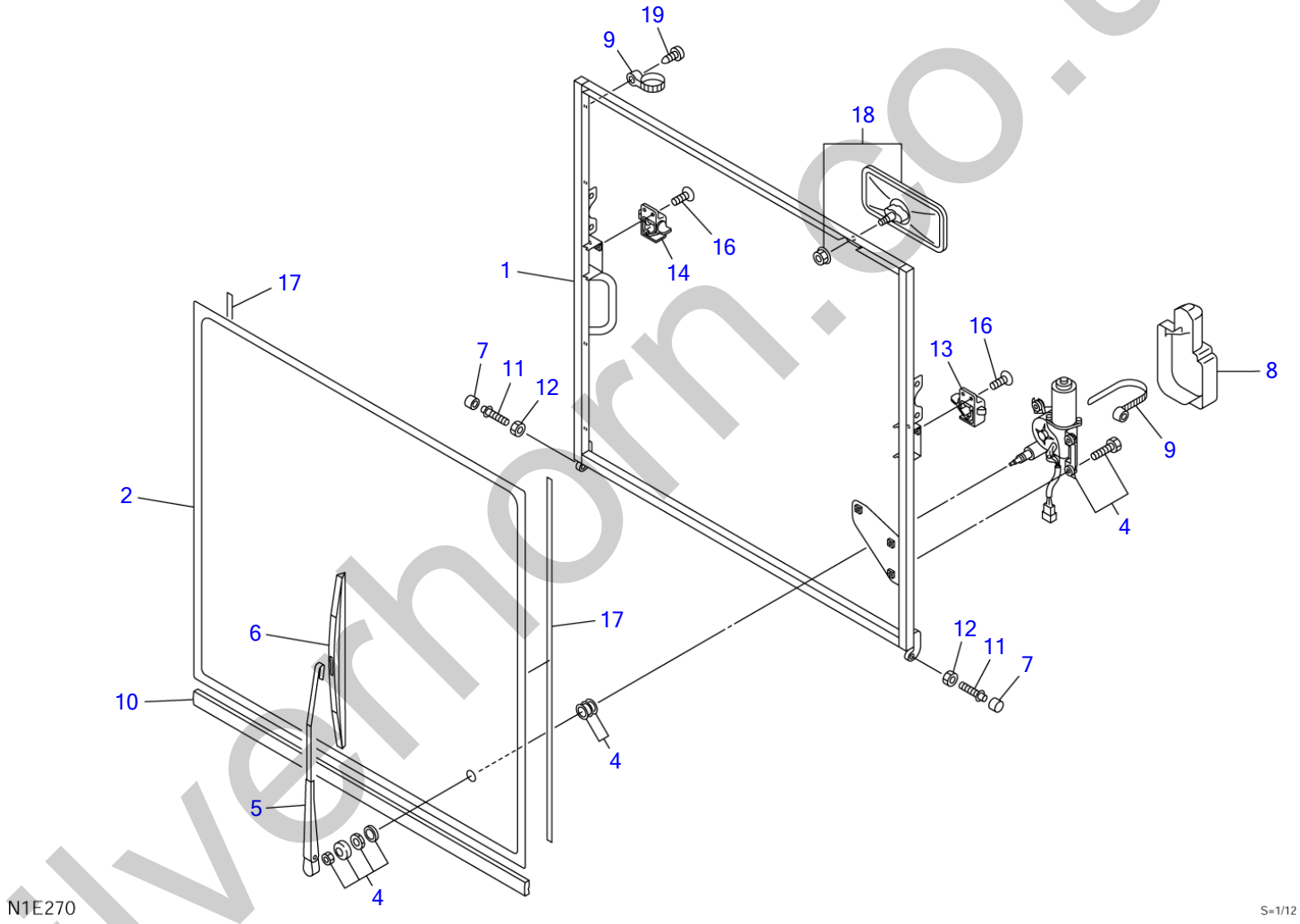

silverhorn.co.uk

CAB (6/6) (front sash)

Item	Part number	Description	Q'ty	Chan.	Serial No.	Serv.	Remarks
0-4	0578602410	SASH ASSY, front	1				X05786-02410-0
1	0578602450	・FRAME	1				
2	0578602403	・GLASS	1				
4	1704044424	・MOTOR, wiper	1				
5	1704100100	・ARM, wiper	1				
6	1704200530	・BLADE	1				
7	0578600470	・ROLLER	2				
8	1704400002	・COVER	1				
9	1652221050	・BAND	8				
10	0578600408	・SEAL	1				
11	0578600406	・BOLT	2				
12	1130090010	・NUT	2				
13	0578600480	・HANDLE	1				
14	0578600490	・HANDLE	1				
16	1120800616	・SCREW	4				
17	1654615081	・DAM	2				sold by the meter
18	1654005460	・MIRROR, room	1				
19	1122400510	・SCREW	4				
	N1e270						

silverhorn.co.uk

CAB INTERIOR (1/2)

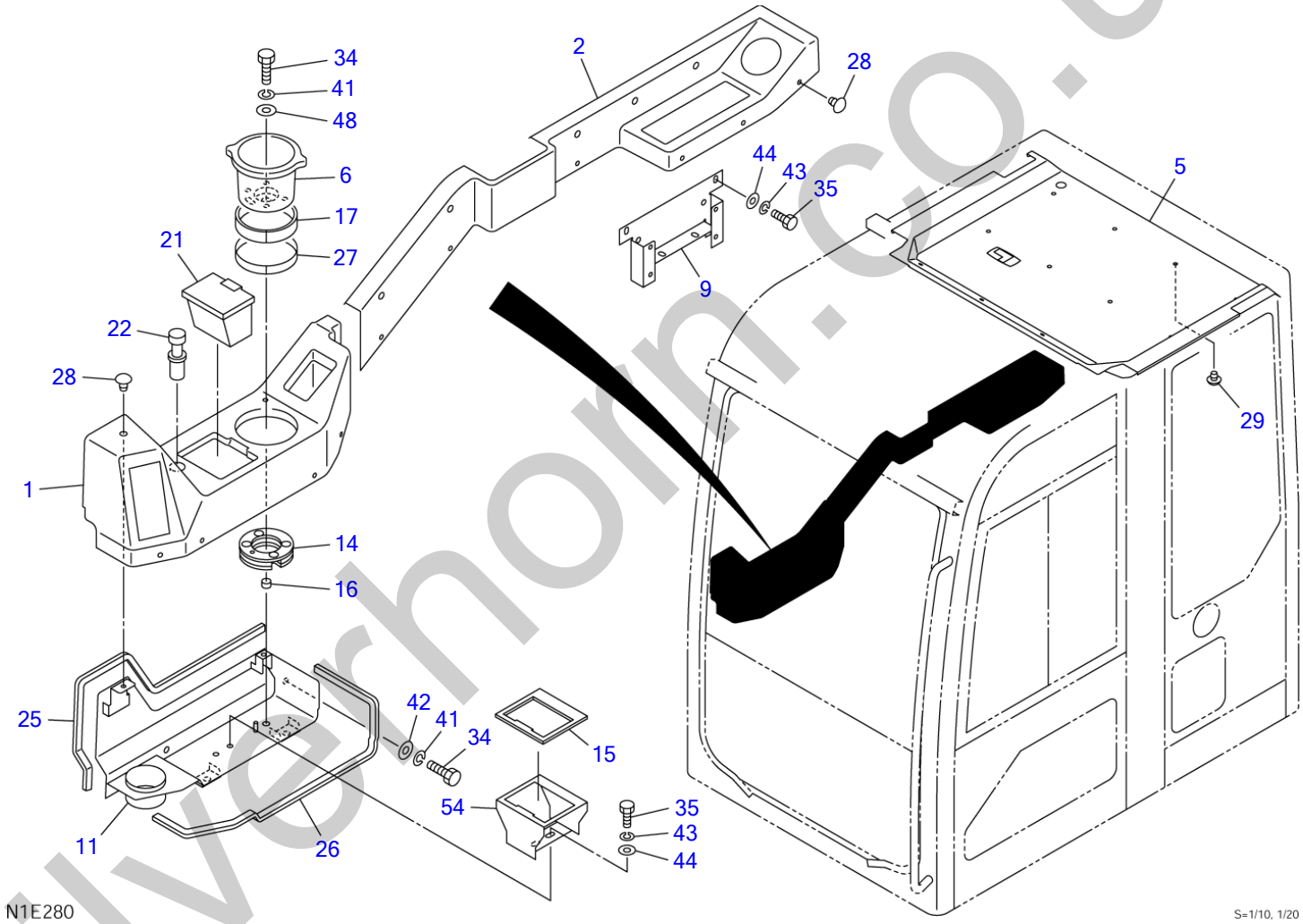

silverhorn.co.uk

CAB INTERIOR (1/2)

Item	Part number	Description	Q'ty	Chan.	Serial No.	Serv.	Remarks
		CAB INTERIOR ASSY					X05786-01400-0
1	0578600900	PANEL, side	1				
2	0578601220	PANEL, side	1				
5	0578601240	PLATE	1				
6	0578601010	HOLDER	1				
9	0578600957	BRACKET	1				
11	0578600970	DUCT	1				
14	0578600995	RUBBER	1				
15	0578600994	RUBBER	1				
16	0578600986	COLLAR	1				
17	0578600987	SPONGE	1				
21	1654011600	ASHTRAY	1				
22	1711900039	LIGHTER	1				
25	1654606055	TRIM	1				sold by the meter
26	1654606060	SEAL	1				sold by the meter
27	0578600993	SHEET	1				
28	1652900015	RIVET	17				
29	1652900014	RIVET	12				
34	1100040825	BOLT	3				
35	1100040616	BOLT	6				
41	1140020008	WASHER, spring	3				
42	1141110008	WASHER	2				
43	1140020006	WASHER, spring	6				
44	1141110006	WASHER	6				
48	0003600020	WASHER	1				
54	0578601040	BRACKET	1				
	N1e280						

silverhorn.co.uk

CAB INTERIOR (2/2)

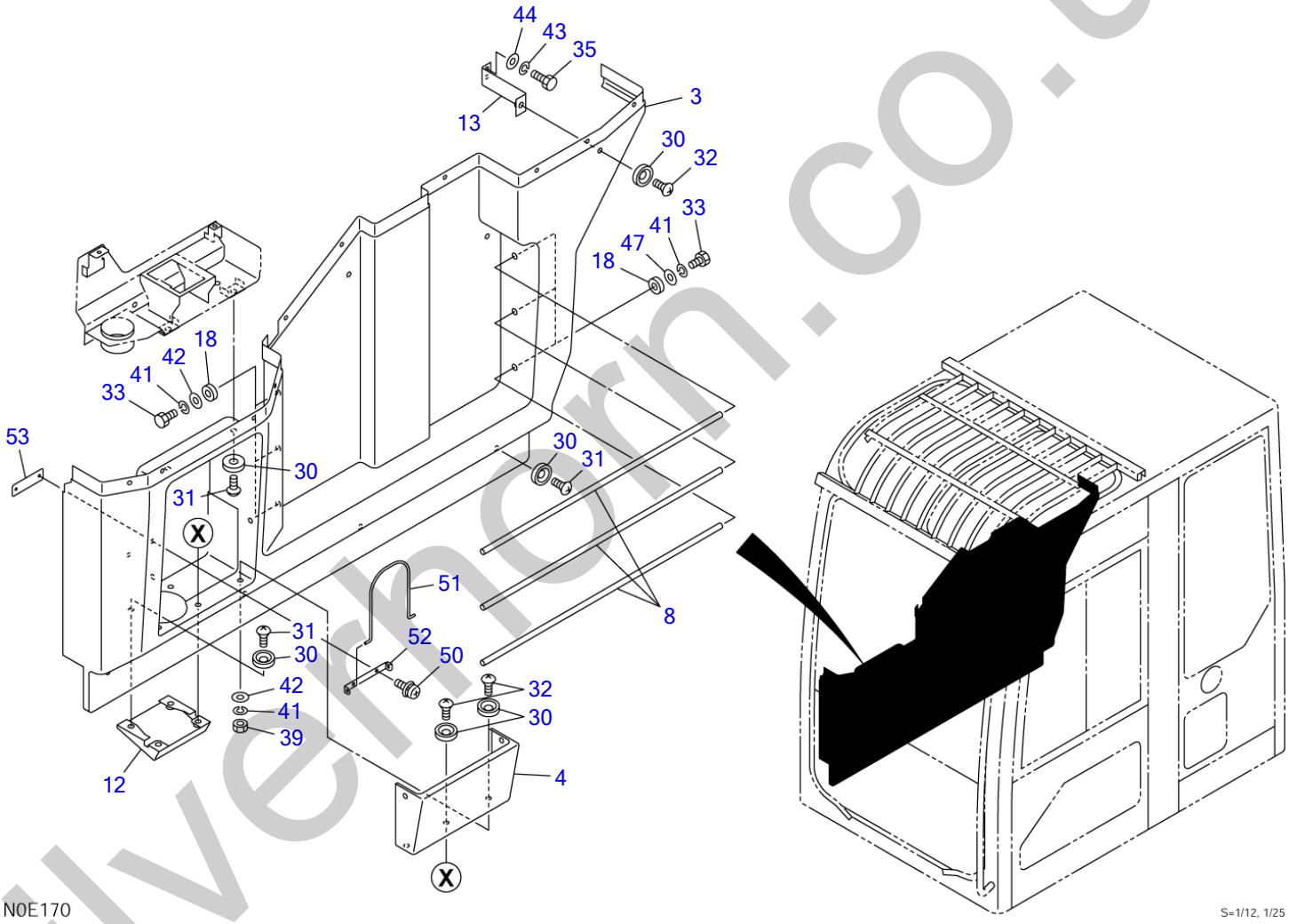

silvernorn.co.uk

CAB INTERIOR (2/2)

Item	Part number	Description	Q'ty	Chan.	Serial No.	Serv.	Remarks
		CAB INTERIOR ASSY					X05786-01400-0
3	0578601230	PANEL, side	1				
4	0578600920	POCKET	1				
8	0578600955	PIPE	3				
12	0578600980	HOLDER	1				
13	0578600990	STAY	1				
18	0578600988	SPACER	6				
30	1652900016	WASHER	16				
31	1120790612	SCREW	6				
32	1120790616	SCREW	10				
33	1100040816	BOLT	6				
35	1100040616	BOLT	2				
39	1130040008	NUT	3				
41	1140020008	WASHER, spring	12				
42	1141110008	WASHER	11				
43	1140020006	WASHER, spring	2				
44	1141110006	WASHER	2				
47	0003600025	WASHER	3				
50	1150420510	SCREW	2				
51	0578600926	SHAFT	1				
52	0578600927	STAY	1				
53	0578600928	PLATE	1				
	N1e320						

silverhorn.co.uk

CONSOLE BOX

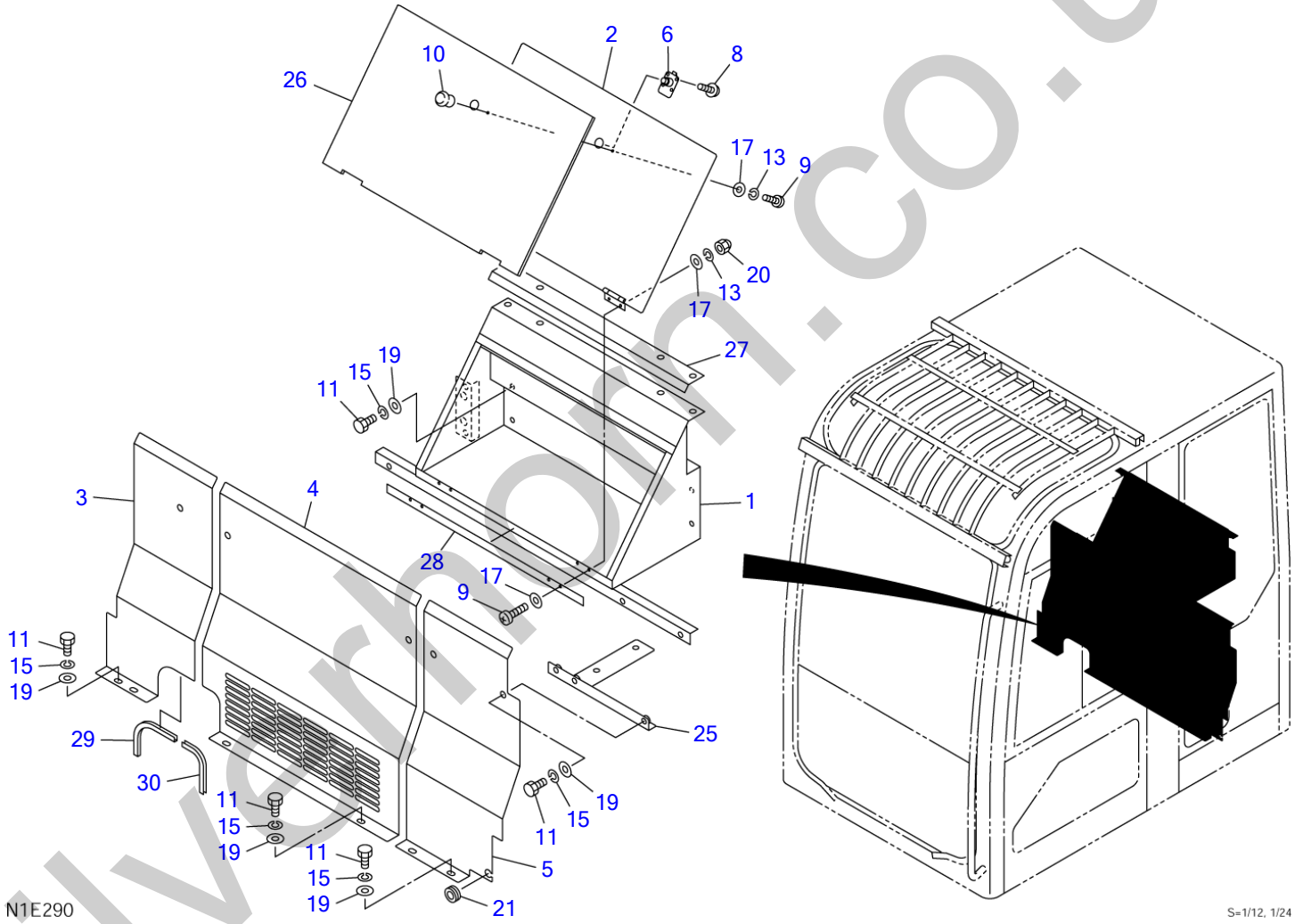

silverhorn.co.uk

CONSOLE BOX

Item	Part number	Description	Q'ty	Chan.	Serial No.	Serv.	Remarks
		BOX ASSY, console					X05748-00100-0
1	0574800140	BOX	1				
2	0574800170	COVER	1				
3	0574800080	COVER (R.H.)	1				
4	0574800070	COVER	1				
5	0574800060	COVER	1				
6	1653321500	LATCH	1				
8	1150420308	SCREW	4				
9	1120590410	SCREW	5				
10	1652760001	KNOB	1				
11	1100040816	BOLT	19				
13	1140090004	WASHER, spring	5				
15	1140020008	WASHER, spring	19				
17	1141190004	WASHER	9				
19	1141110008	WASHER	19				
20	1134230004	NUT	4				
21	1652001002	GROMMET	1				
25	0574800090	BRACKET	1				
26	0574800154	ABSORBENT, noise	1				
27	0574800155	ABSORBENT, noise	1				
28	0574800006	ABSORBENT, noise	1				
29	1653917016	TRIM	1				sold by the meter
30	1653917012	TRIM	1				sold by the meter
	N1e290						

silverhorn.co.uk

RAIN GURD

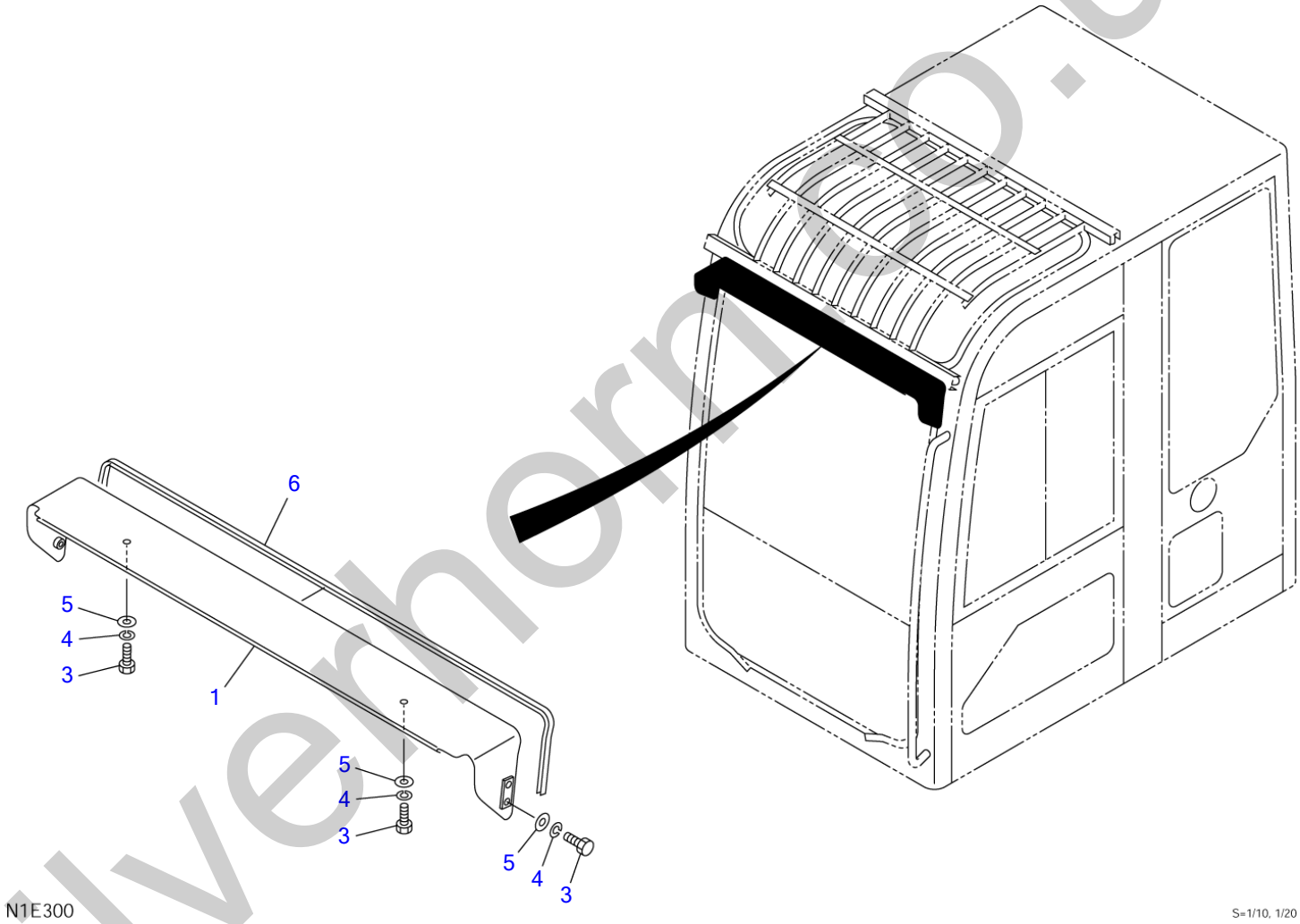

silverhorse.co.uk

RAIN GURD

Item	Part number	Description	Q'ty	Chan.	Serial No.	Serv.	Remarks
		GURD ASSY, rain					X05786-01410-0
1	**0578601320**	GUARD	1				
3	**1100040820**	BOLT	6				
4	**1140020008**	WASHER, spring	6				
5	**1141110008**	WASHER	6				
6	**1654606124**	SEAL	1				sold by the meter
	N1e300						

silverhorn.co.uk

FRONT GUARD

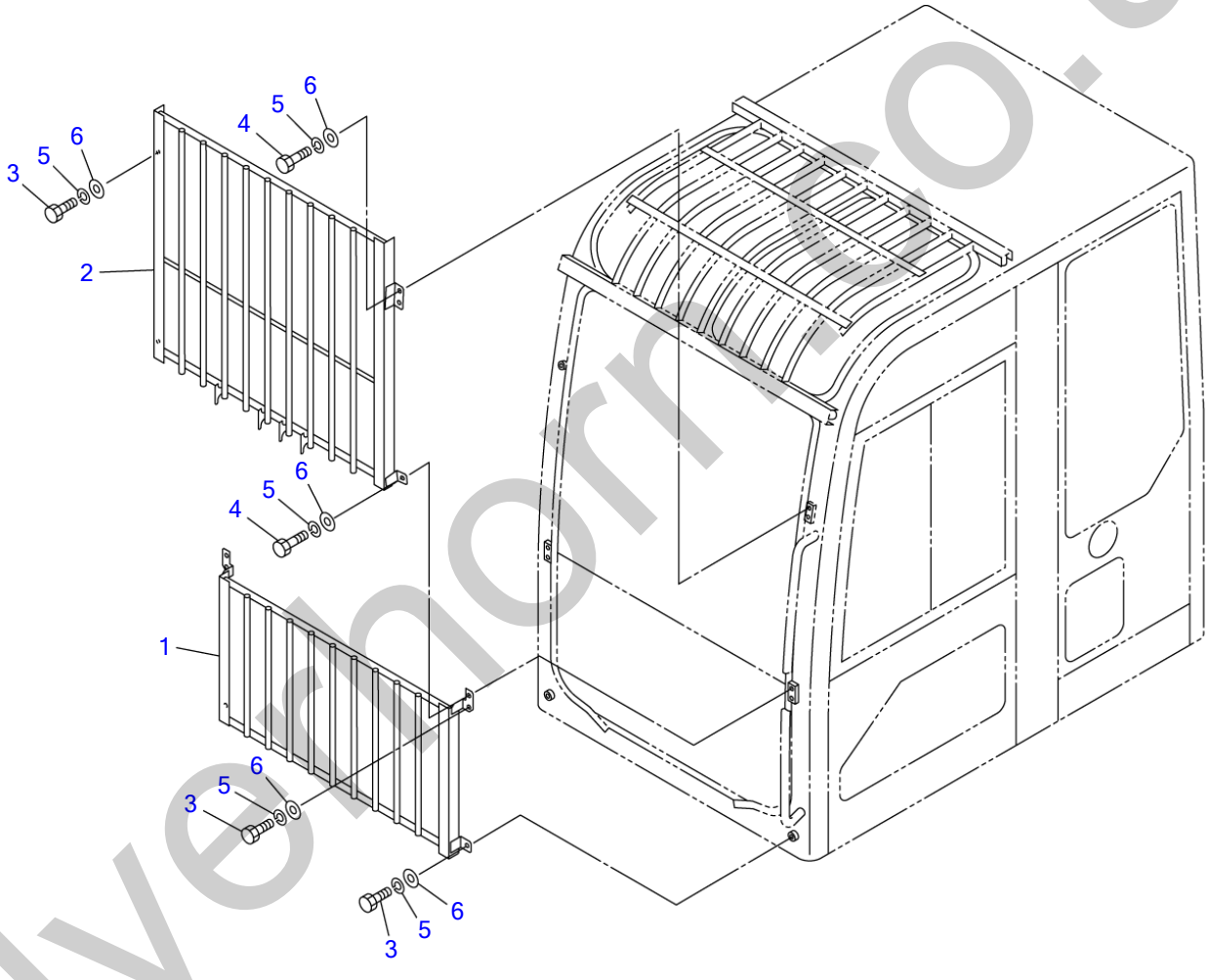

silvernorm.co.uk

FRONT GUARD

Item	Part number	Description	Q'ty	Chan.	Serial No.	Serv.	Remarks
		GUARD ASSY, front					X05786-01100-0
1	**0578601020**	GUARD	1				
2	**0578601030**	GUARD	1				
3	**1100041025**	BOLT	5				
4	**1100041030**	BOLT	4				
5	**1140020010**	WASHER, spring	9				
6	**1141110010**	WASHER	9				
	N1E340						

silverhorn.co.uk

OUT SIDE REARVIEW MIRROR (R.H.)

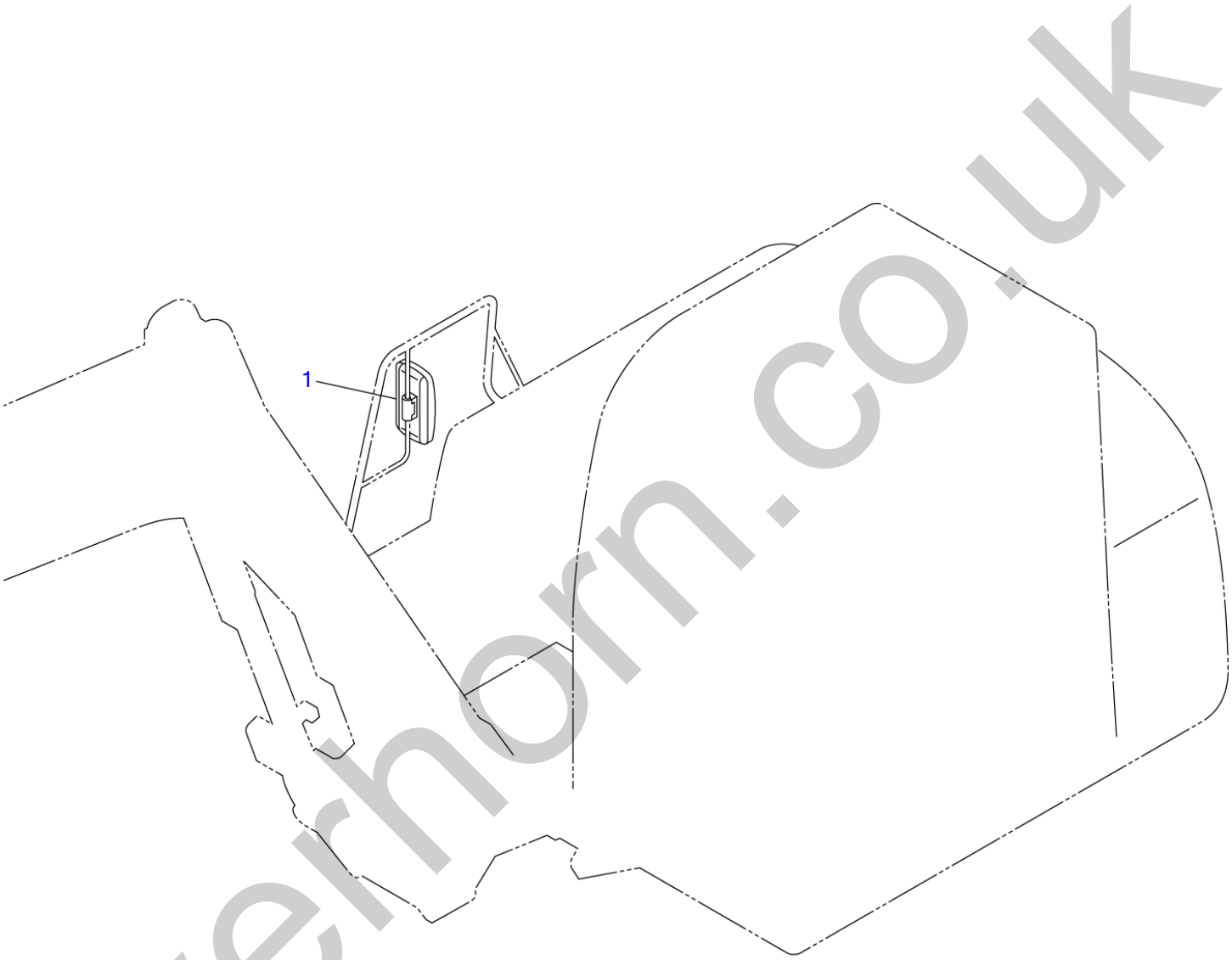

L3E180

S=1/20

silverhorn.co.uk

OUT SIDE REARVIEW MIRROR (R.H.)

Item	Part number	Description	Q'ty	Chan.	Serial No.	Serv.	Remarks
		MIRROR ASSY					X05687-00000-0
1	**1656500010**	MIRROR	1				
	L3e180						

silverhorn.co.uk

OUT SIDE REARVIEW MIRROR (L.H.)

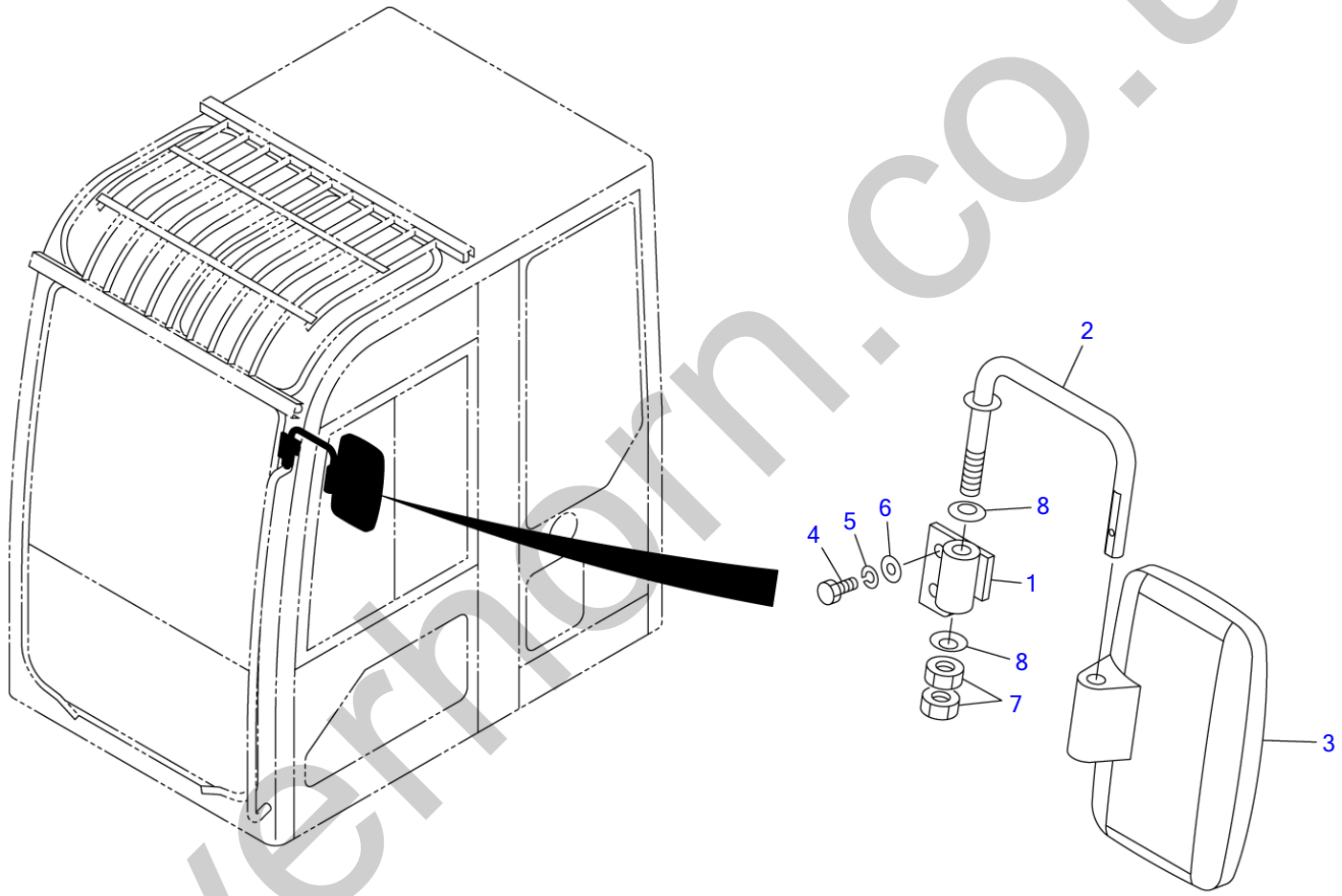

N0E200

S=1/6, 1/20

silverhorn.co.uk

OUT SIDE REARVIEW MIRROR (L.H.)

Item	Part number	Description	Q'ty	Chan.	Serial No.	Serv.	Remarks
		MIRROR ASSY					X05786-00800-1
1	0578600810	HOLDER	1				
2	0578600820	STAY	1				
3	1656500010	MIRROR	1				
4	1100041025	BOLT	2				
5	1140020010	WASHER, spring	2				
6	1141110010	WASHER	2				
7	1130040016	NUT	2				
8	1225110016	WASHER, conical	2				
	N1E350						

silverhorn.co.uk

REAR MIRROR

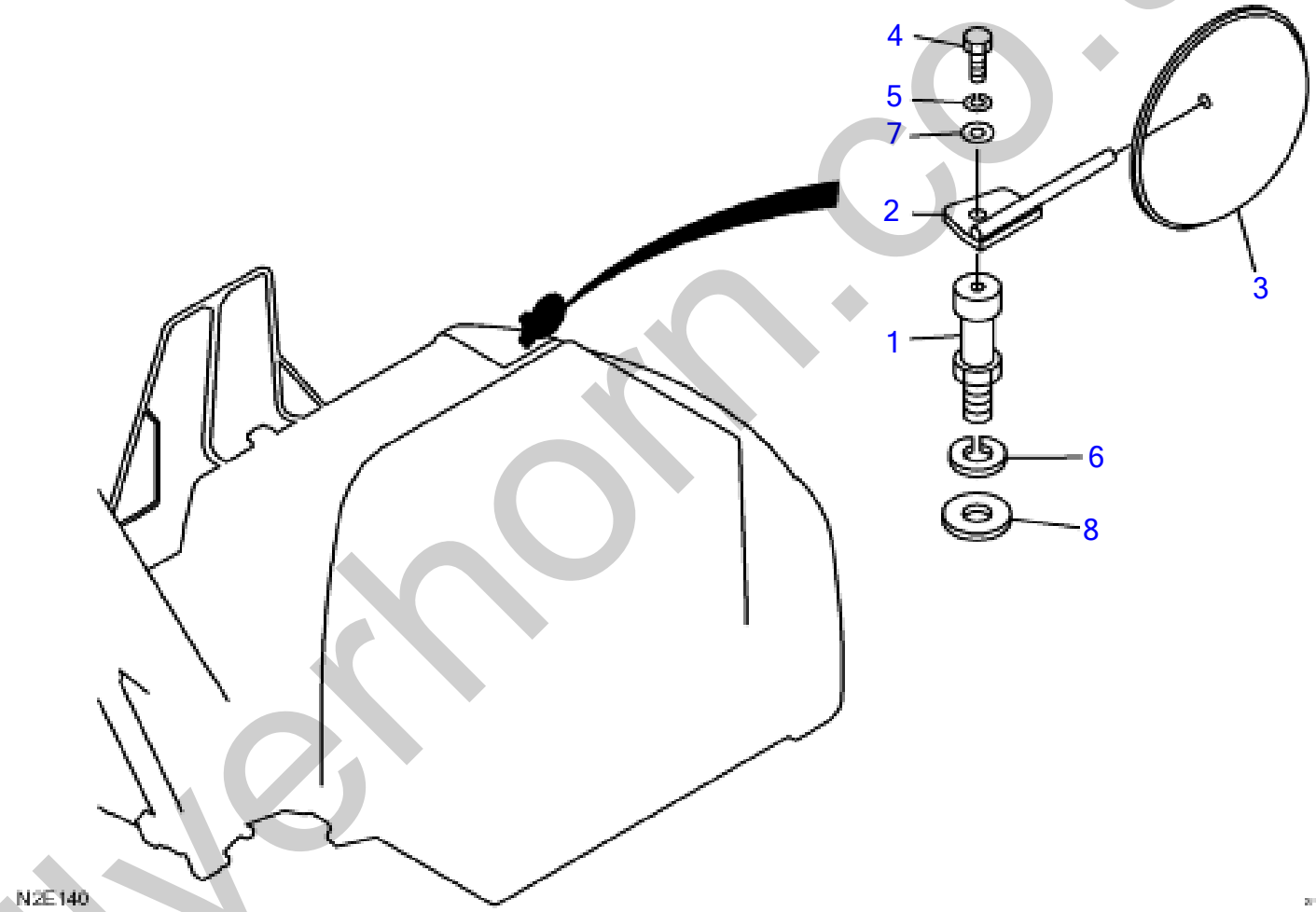

silverhorn.co.uk

REAR MIRROR

Item	Part number	Description	Q'ty	Chan.	Serial No.	Serv.	Remarks
		REAR MIRROR ASSY					
1	0578607010	STAY	1				
2	0578607020	STAY	1				
3	1656500050	MIRROR	1				
4	1101041245	BOLT	1				
5	1140020012	SPRING WASHER	1				
6	1140020024	SPRING WASHER	1				
7	1141110012	WASHER	1				
8	1141110024	WASHER	1				
	N2E140						

silverhorn.co.uk

AIR CONDITIONER (1/6)

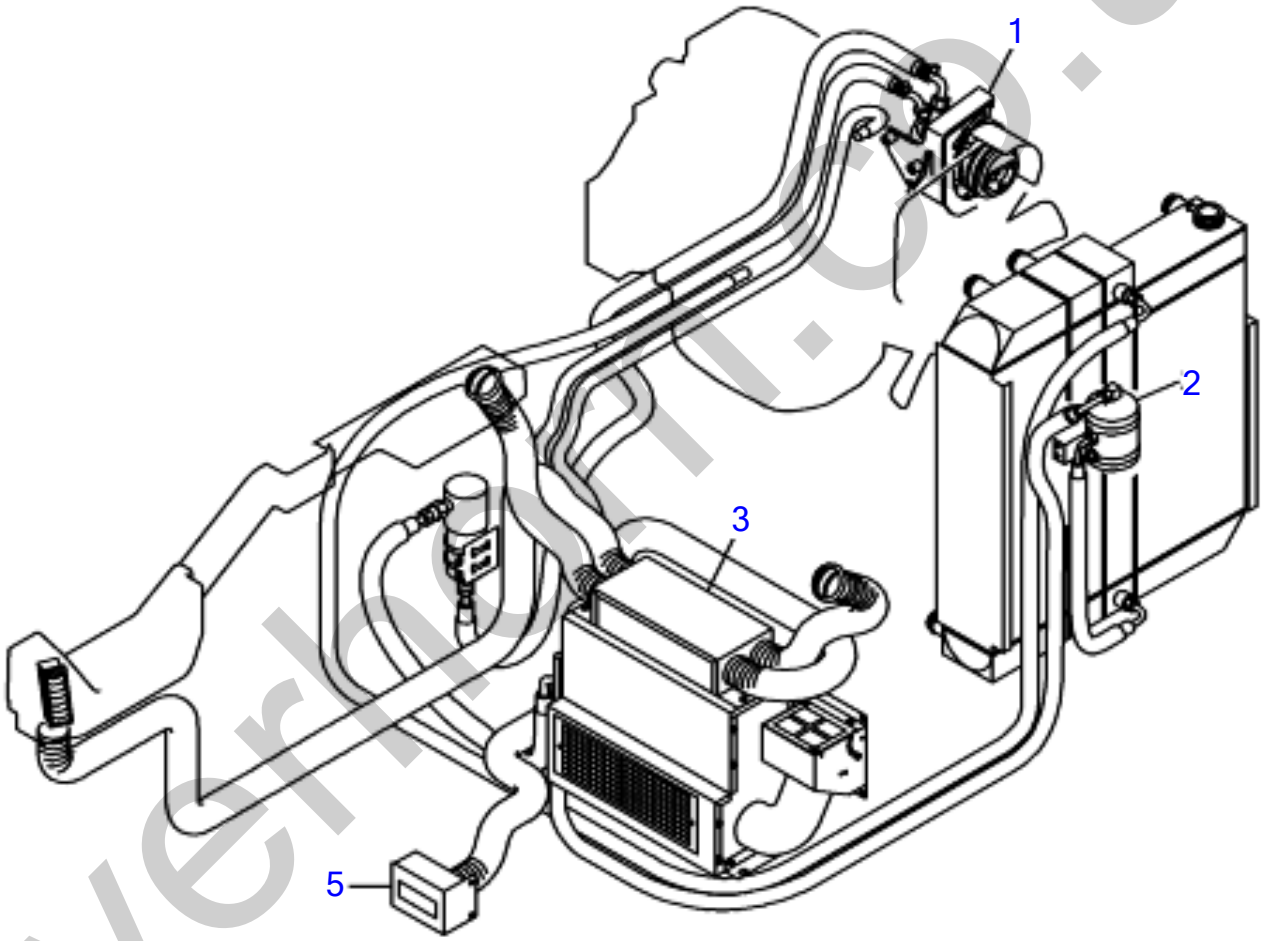

N2E061

silverhorn.co.uk

AIR CONDITIONER (1/6)

Item		Part number	Description	Q'ty	Chan.	Serial No.	Serv.	Remarks
0		0574600700	CONDITIONER ASSY, air	1			M	X05746-00700-1
1	X	**********	・COMPRESSOR ASSY	1				X05746-00900-0
2	X	**********	・CONDENSER ASSY	1				X05746-00800-0
3	X	**********	・UNIT ASSY, air conditioner	1				X05746-01000-1
5		0573400870 N2e061	・BRACKET	1			M	

silverhorn.co.uk

AIR CONDITIONER (2/6) (compressor)

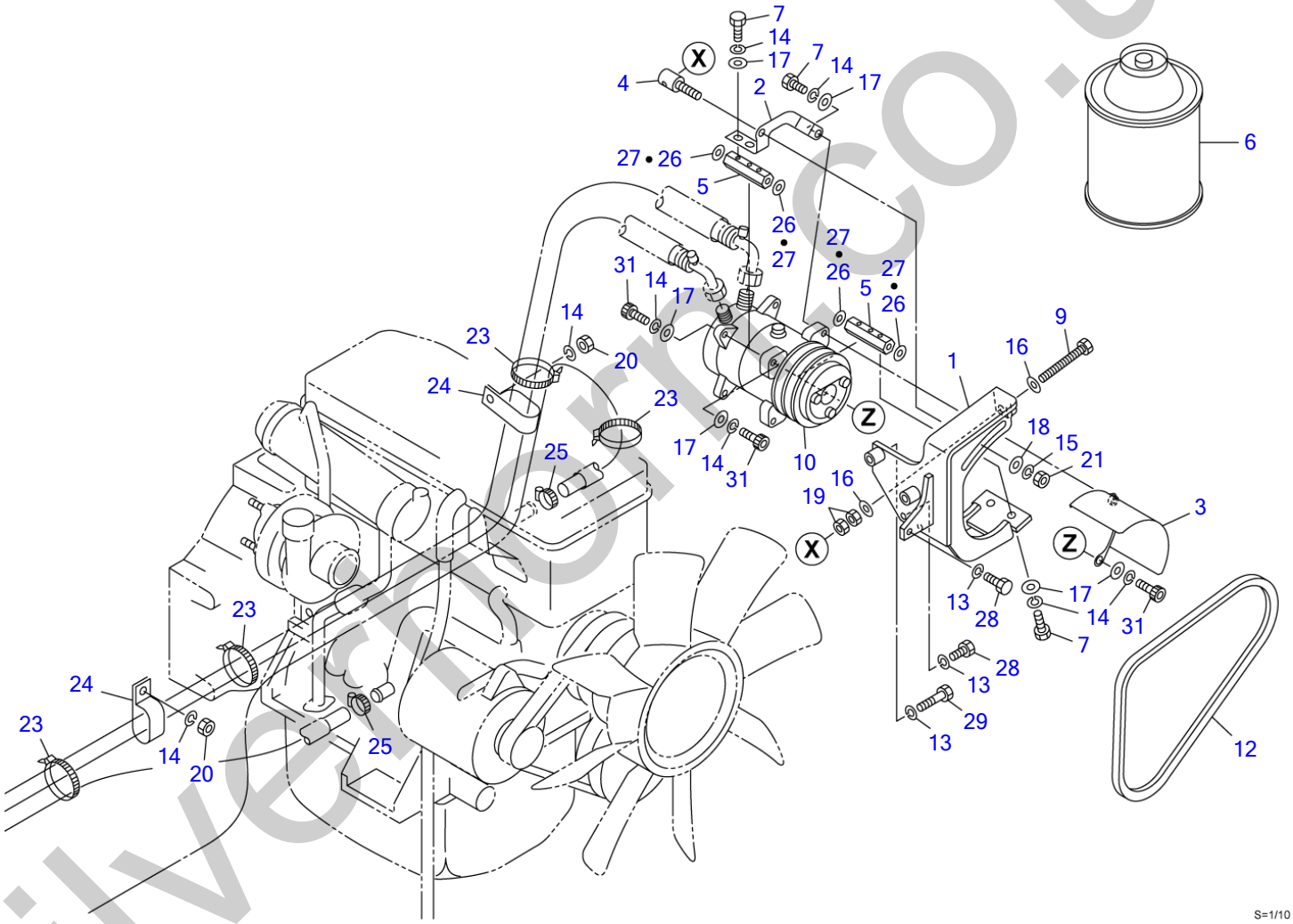

silverfern.co.uk

AIR CONDITIONER (2/6) (compressor)

Item	Part number	Description	Q'ty	Chan.	Serial No.	Serv.	Remarks
0-1	0574600900	COMPRESSOR ASSY	1			M	X05746-00900-0
1	0574600570	・BRACKET	1			M	
2	0574600580	・BRACKET	1			M	
3	0574600590	・GUARD	1			M	
4	0564619210	・SHAFT	1				
5	0574600530	・NUT	2			M	
6	1919055000	・GAS	18				
7	1100041035	・BOLT	5				
9	0394602010	・BOLT	1			M	
10	1911505800	・COMPRESSOR	1			M	
12	1621071055	・V-BELT	1			M	
13	1140020008	・WASHER, spring	5				
14	1140020010	・WASHER, spring	10				
15	1140020012	・WASHER, spring	1				
16	1141110008	・WASHER	2				
17	1141110010	・WASHER	9				
18	1141550012	・WASHER	1				
19	1130040008	・NUT	2				
20	1130040010	・NUT	2				
21	1130040012	・NUT	1				
23	1652231250	・BAND	6				
24	0007300018	・CLAMP	2				
25	1911500500	・BAND	2				
26	0003600222	・SHIM	AR				t=0.2mm
27	0003600223	・SHIM	AR				t=0.3mm
28	1110040825	・SCREW, cap	3			M	
29	1110040845	・BOLT	2				
31	1110041030	・SCREW, cap	4				
	N2e071						

silverhorn.co.uk

AIR CONDITIONER (3/6) (condenser)

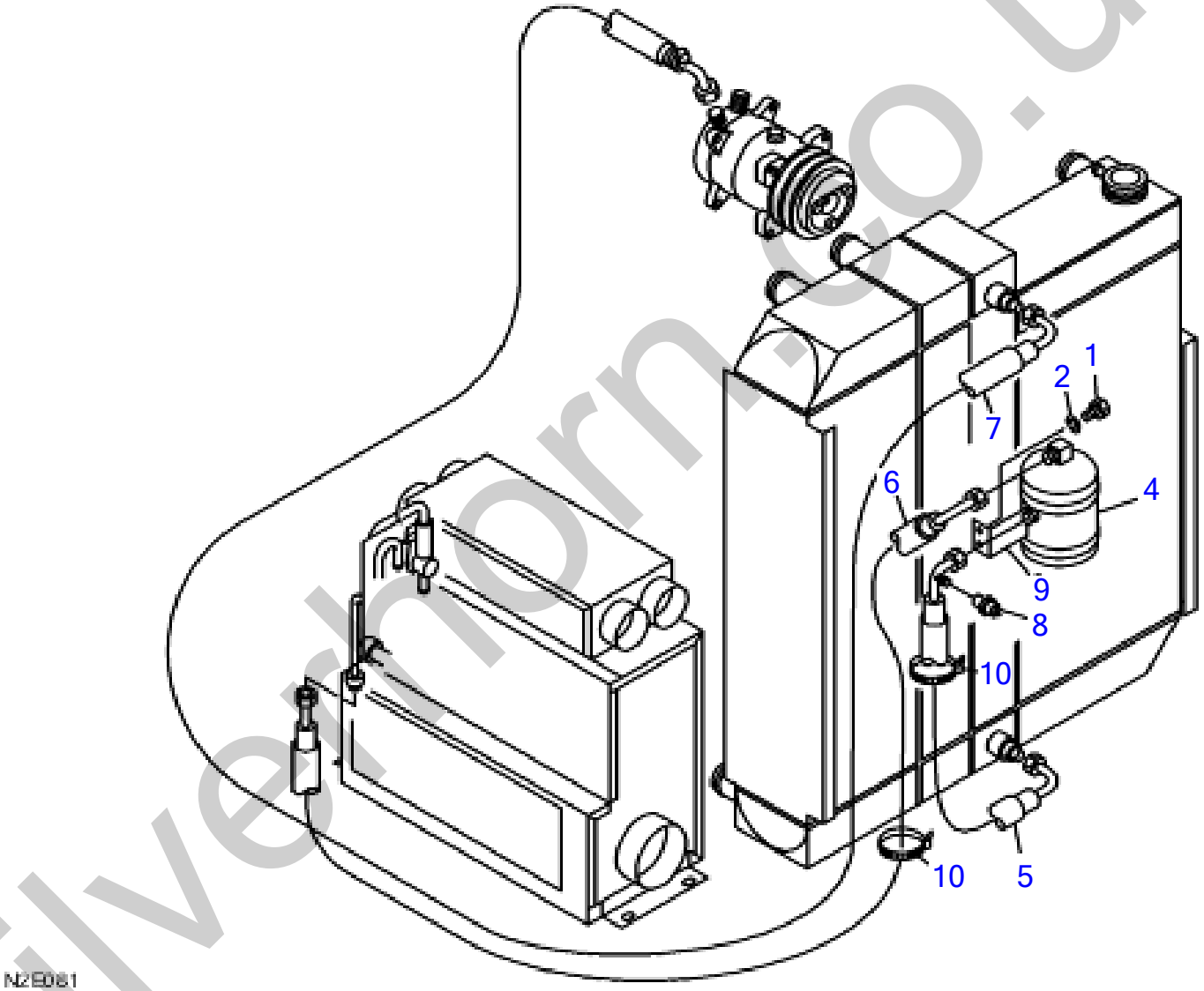

silverthorn.co.uk

AIR CONDITIONER (3/6) (condenser)

Item	Part number	Description	Q'ty	Chan.	Serial No.	Serv.	Remarks
0-2	0574600800	CONDENSER ASSY	1			M	X05746-00800-0
1	1100041020	・BOLT	2				
2	1140020010	・WASHER, spring	2				
4	1911508311	・DRYER	1				
5	1911511420	・HOSE ASSY	1			M	
	1911505601	・・O-RING	2				RD-5-4017-011
6	1911511440	・HOSE ASSY	1				
	1911505601	・・O-RING	2				RD-5-4017-013
	1911505602	* * O-RING	1				
7	1911511430	・HOSE ASSY	1				
	1911505602	・・O-RING	2				RD-5-4017-013
8	1911505514	・SWITCH	1				RD-5-8433-0
9	0574600810	* BRACKET	1				
10	1652231140	* BAND	2				
	N2e081						

silverhorn.co.uk

AIR CONDITIONER (4/6) (air conditioner unit)

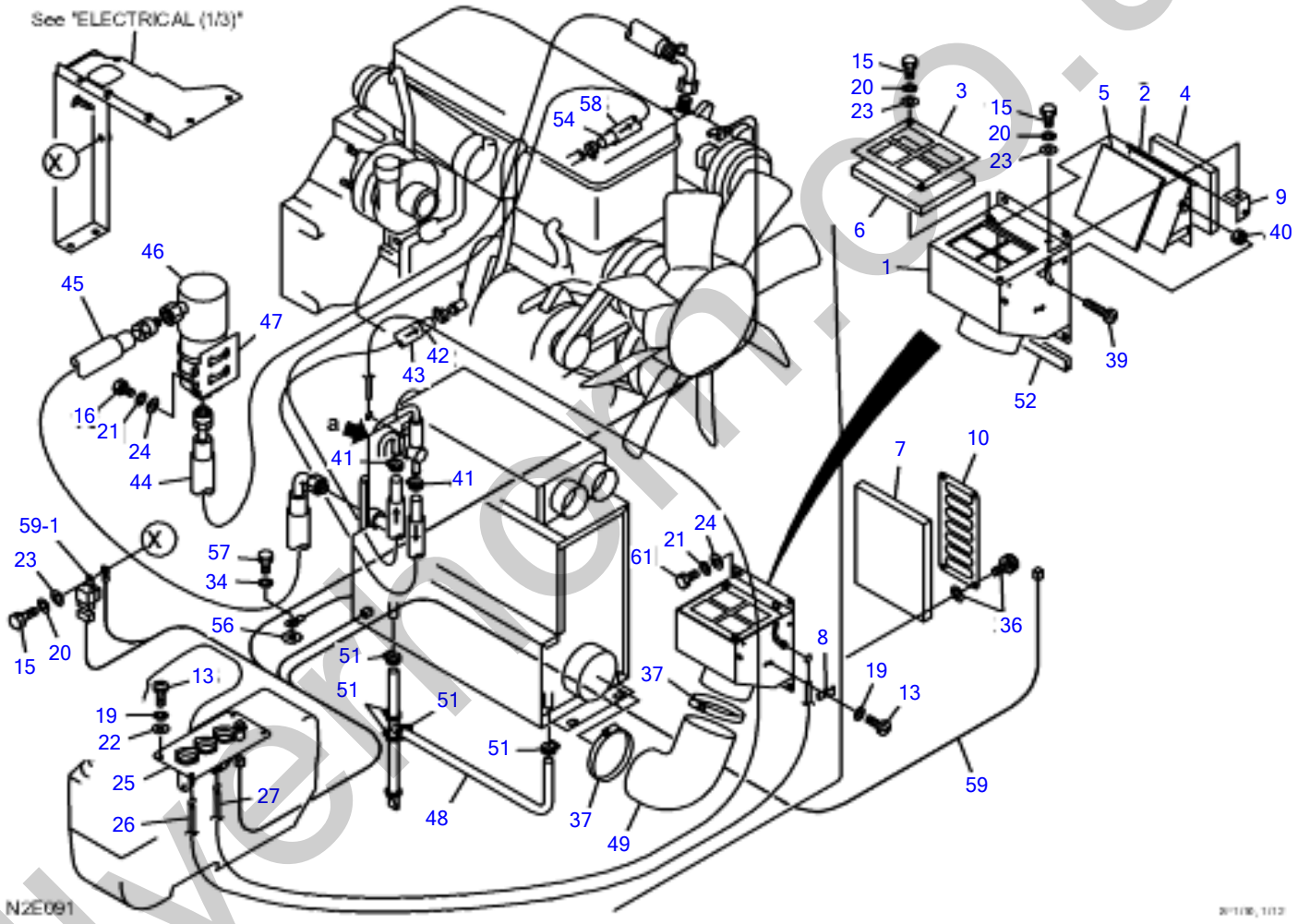

silvermoon.co.uk

AIR CONDITIONER (4/6) (air conditioner unit)

Item	Part number	Description	Q'ty	Chan.	Serial No.	Serv.	Remarks
0-3	0574601000	UNIT ASSY, air conditioner	1			M	X05746-01000-1
1	0574600370	・BOX	1				
2	0574600350	・DAMPER	1				
3	0574600330	・PLATE	1				
4	0574600331	・SPONGE	1				
5	0574600332	・SPONGE	1				
6	0574600333	・FILTER	1				
7	0574600334	・FILTER	1				
8	0574612530	・CLAMP	1				
9	0564525420	・BRACKET	1				
10	0574600360	・COVER	1				
13	1120590510	・SCREW	5				
15	1100040612	・BOLT	4				
16	1100040816	・BOLT	6				
19	1140020005	・WASHER, spring	5				
20	1140020006	・WASHER, spring	6				
21	1140020008	・WASHER, spring	6				
22	1141110005	・WASHER	4				
23	1141110006	・WASHER	4				
24	1141110008	・WASHER	6				
25	1911505760	・PANEL ASSY	1				see page (7/7)
26	1911506670	・WIRE	1				
27	1911506671	・WIRE	1				
34	1140020010	・WASHER, spring	1				
36	1652711698	・SCREW	4				
37	1533700115	・CLAMP	2				
39	1120530525	・SCREW	1				
40	1130040005	・NUT	1				
41	1911500500	・BAND	2				
42	1911521610	・HOSE	1			M	sold by the meter
43	1531335150	・PROTECTOR	1			M	sold by the meter
44	1911511410	・HOSE ASSY	1			M	
	1911505603	・・O-RING	1				RD-5-4017-015
	1911505604	・・O-RING	1				RD-5-4017-017
45	1911511450	・HOSE ASSY	1				
	1911505603	・・O-RING	1				RD-5-4017-015
	1911505604	・・O-RING	1				RD-5-4017-017
46	1911506676	・ACCUMULATOR	1				
47	1911506677	・BRACKET	1				
48	1911506690	・HOSE, drain	1				
49	1911506674	・HOSE	1				
51	1533700017	・BAND	5				
52	1653917015	・TRIM	1				sold by the meter
54	1911531770	・HOSE	1			M	sold by the meter
56	1140330010	・WASHER	1				
57	1100041020	・BOLT	1				
58	1531335290	・PROTECTOR	1			M	sold by the meter
59	1911511460	・HARNESS ASSY, wire	1			M	
59-1	1911505661	・・RELAY	1				
61	1100040820	* BOLT	2				
	N2e091						

silverform.co.uk

AIR CONDITIONER (5/6) (air conditioner unit)

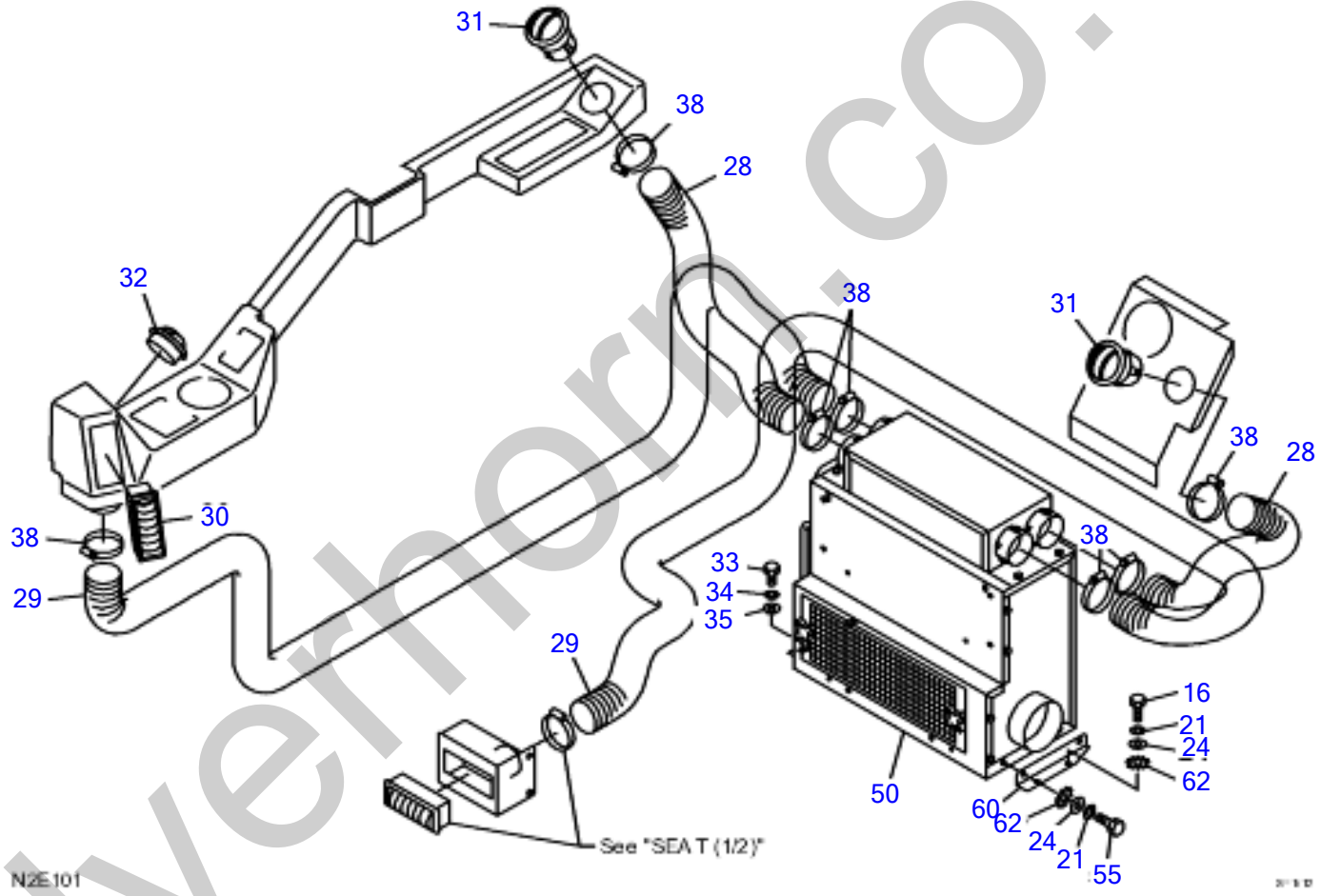

silverhorn.co.uk

AIR CONDITIONER (5/6) (air conditioner unit)

Item	Part number	Description	Q'ty	Chan.	Serial No.	Serv.	Remarks
0-3	0574601000	UNIT ASSY, air conditioner	1			M	X05746-01000-1
16	1100040816	* BOLT	2				
21	1140020008	・WASHER, spring	4				
24	1141110008	・WASHER	4				
28	1911508528	・HOSE	2				
29	1911508591	・HOSE	2				
30	1911505723	・LOUVER	2				
31	1911506060	・LOUVER	2				
32	1911506675	・LOUVER	1				
33	1100041025	・BOLT	2				
34	1140020010	・WASHER, spring	2				
35	1141110010	・WASHER	2				
38	1533700070	・CLIP	8				
50	1911506700	・UNIT, air conditioner	1				see page (7/7)
55	1102440519	・SCREW	2				
60	0573500350	* PLATE	1				
62	1140330008	* WASHER	4				
	N2e101						

silverhorn.co.uk

AIR CONDITIONER (6/6)

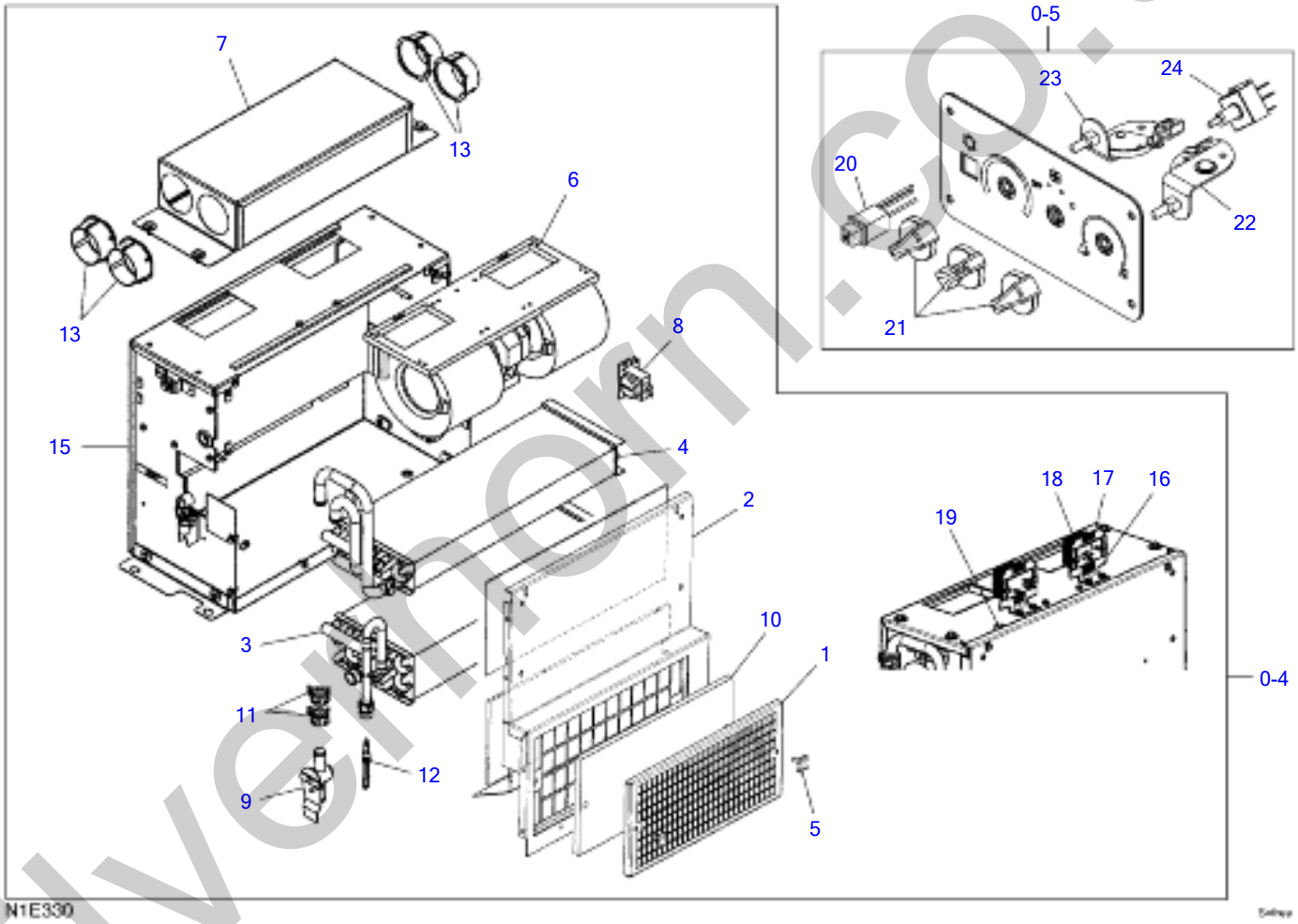

silverthorn.co.uk

AIR CONDITIONER (6/6)

Item	Part number	Description	Q'ty	Chan.	Serial No.	Serv.	Remarks
0-4	1911506700	UNIT, air conditioner	1				
1	1911506705	・COVER	1				
2	1911506706	・COVER	1				
3	1911506708	・EVAPORATOR	1				
4	1911506710	・HEATER	1				
5	1911506713	・KNOB	2				
6	1911506716	・MOTOR	1				
7	1911506733	・BOX	1				
8	1911506727	・THERMOSTAT	1				
9	1911505690	・VALVE	1				
10	1911506736	・FILTER	1				
11	1911506707	・BAND	2				
12	1911506709	・ORIFICE	1				
13	1911506711	・ADAPTOR	4				
14	1911506702	・HARNESS ASSY, wire	1				not shown
15	1911506732	* HOUSING ASSY	1				
16	1911506734	* BRACKET ASSY	2				
17	1911506735	* RESISTOR	2				
18	1911506736	* GUARD	2				
19	1911506737	* GROMMET	1				
0-5	1911505760	PANEL ASSY	1				
20	1911505767	・SWTCH, air con.	1				
21	1911505763	・KNOB	3				
22	1911505761	・CONVERTER, cable control	1				
23	1911505762	・CONVERTER, cable control	1				
24	1911505768	・ROTARY SWITCH, 3-speed	1				
	N1E330						

silverhorn.co.uk

BOOM (1/5)

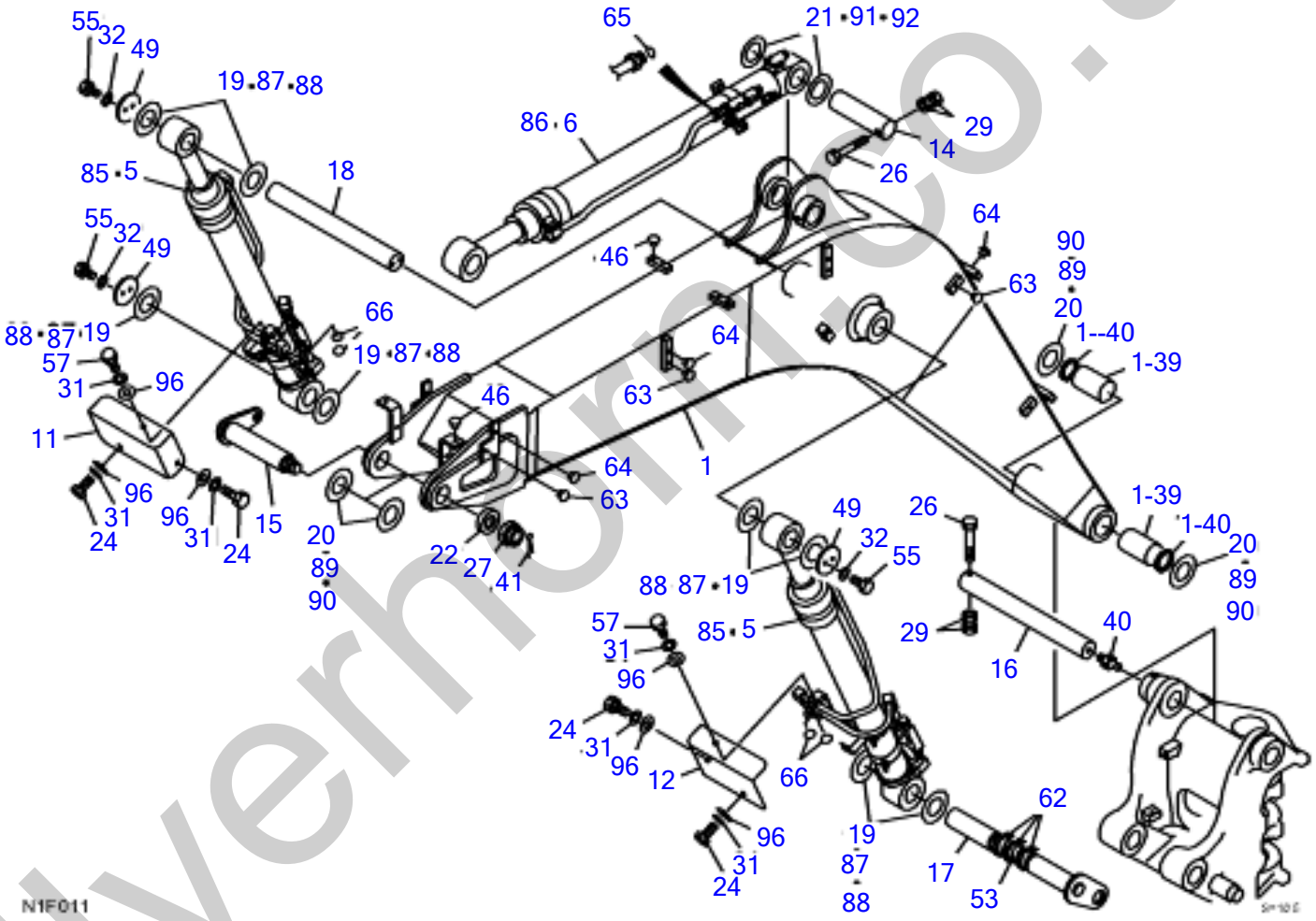

silverhorn.co.uk

BOOM (1/5)

Item	Part number	Description	Q'ty	Chan.	Serial No.	Serv.	Remarks
		BOOM ASSY					X05760-01700-3
		BOOM ASSY (with boom shut-off valve)					X05760-01800-3
		BOOM ASSY (with boom, arm shut-off valve)					X05760-01900-3
1	0576002200	BOOM	1				
1-39	0002400073	・BUSHING	2				
1-40	1432200075	・SEAL, dust	2				
5	X **********	CYLINDER ASSY, boom (with shut-off valve)	1				see page (3/5)
6	X **********	CYLINDER ASSY, arm (with shut-off valve)	1				see page (4/5)
11	0576001200	PROTECTOR (R.H.)	1				
12	0576001210	PROTECTOR (L.H.)	1				
14	0576000014	PIN	1				
15	0576001520	PIN	1				
16	0576000017	PIN	1				
17	0576000091	PIN	1				
18	0576000018	PIN	1				
19	0003600200	SHIM	AR				t=0.2mm
20	0003600203	SHIM	AR				t=0.2mm
21	0003600206	SHIM	AR				t=0.2mm
22	0576000467	WASHER	1				
24	1100041020	BOLT	4				
26	1100141640	BOLT	2				
27	1132130052	NUT	1				
29	1130040016	NUT	4				
31	1140020010	WASHER, spring	6				
32	1140020012	WASHER, spring	6				
40	1560001000	FITTING, grease	1				
41	1210010890	PIN, split	1				
46	1652533016	CAP	4				
49	0576000049	PLATE	3				
53	0576014053	TUBE	1				
55	1100041225	BOLT	6				
57	1100041025	BOLT	2				
62	1652201007	BAND	3				t=0.5mm
63	1652533017	CAP	10				
64	1652533018	CAP	8				
65	1420310018	O-RING	1				
66	1420310016	O-RING	4				
85	X **********	CYLINDER ASSY, boom	1				see page (3/5)
86	X **********	CYLINDER ASSY, arm	1				see page (4/5)
87	0003600201	SHIM	AR				t=0.5mm
88	0003600202	SHIM	AR				t=1.0mm
89	0003600204	SHIM	AR				t=0.5mm
90	0003600205	SHIM	AR				t=1.0mm
91	0003600207	SHIM	AR				t=0.5mm
92	0003600208	SHIM	AR				t=1.0mm
96	0003600020	WASHER	4				
	N1f013						

silvermorn.co.uk

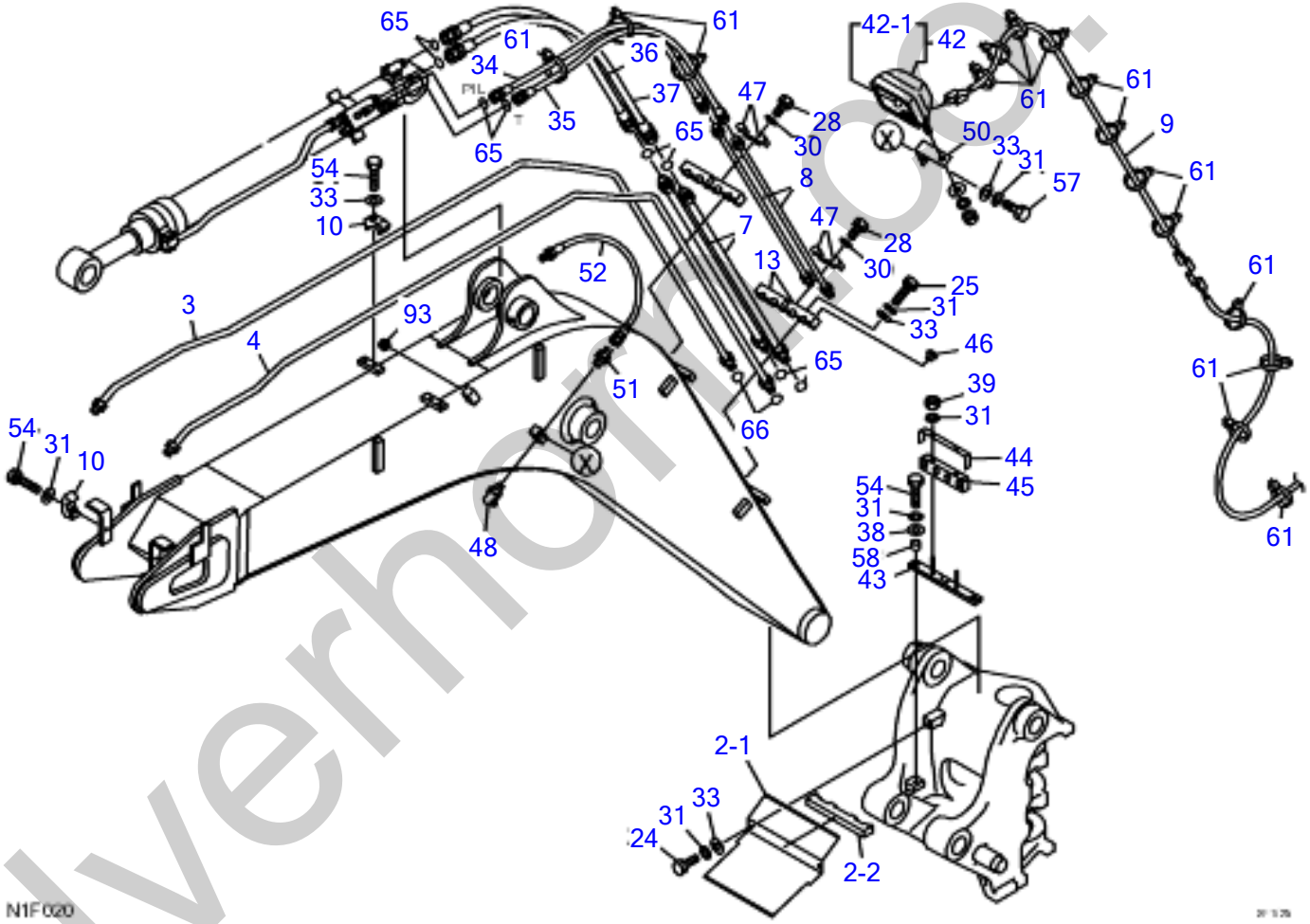

silverhorse.co.uk

BOOM (2/5)

Item	Part number	Description	Q'ty	Chan.	Serial No.	Serv.	Remarks
		BOOM ASSY					X05760-01700-3
		BOOM ASSY (with boom shut-off valve)					X05760-01800-3
		BOOM ASSY (with boom, arm shut-off valve)					X05760-01900-3
2	0576000250	COVER	1				
2-1	0576000225	・PLATE	1				
2-2	0576000252	・RUBBER	1				
3	0576014010	PIPE (R.H.)	1				
4	0576014020	PIPE (L.H.)	1				
7	0576000070	PIPE	2				
8	0576000080	PIPE	2				with boom, arm shut-off valve
9	0576000290	HARNESS, wiring	1				
10	1534100218	CLAMP	4				
13	0576014013	CLAMP	4				
24	1100041020	BOLT	2				
25	1100041060	BOLT	4				
28	1100040816	BOLT	4				with boom, arm shut-off valve
30	1140020008	WASHER, spring	4				with boom, arm shut-off valve
31	1140020010	WASHER, spring	15				
33	1141110010	WASHER	7				
34	0576000270	HOSE ASSY	1				18010-23149
35	0576000280	HOSE ASSY	1				18010-23137
36	1803706102	HOSE ASSY	1				
37	1803706137	HOSE ASSY	1				
38	0003600025	WASHER	2				
39	1130040010	NUT	2				
42	1703003900	LAMP ASSY	1				
42-1	1703003901	・BULB	1				
43	0576001320	PLATE	1				
44	0576001330	CLAMP	1				
45	0576001310	PROTECTOR	1				
46	1652533016	CAP	4				
47	0567336070	CLAMP	4				with boom, arm shut-off valve
48	1560001675	FITTING, grease	1				
50	0566013100	BRACKET	1				
51	1511050002	ADAPTOR	1				
	1420010240	* O-RING	1				
52	1934802090	HOSE ASSY	1				
54	1100041045	BOLT	6				
57	1100041025	BOLT	1				
58	0003000080	PIPE	2				
61	1652201005	BAND	23				
65	1420310018	O-RING	6				
66	1420310016	O-RING	2				
93	1652533017	CAP	1				
	N1f023						

silverthorn.co.uk

BOOM (3/5) (boom cylinder)

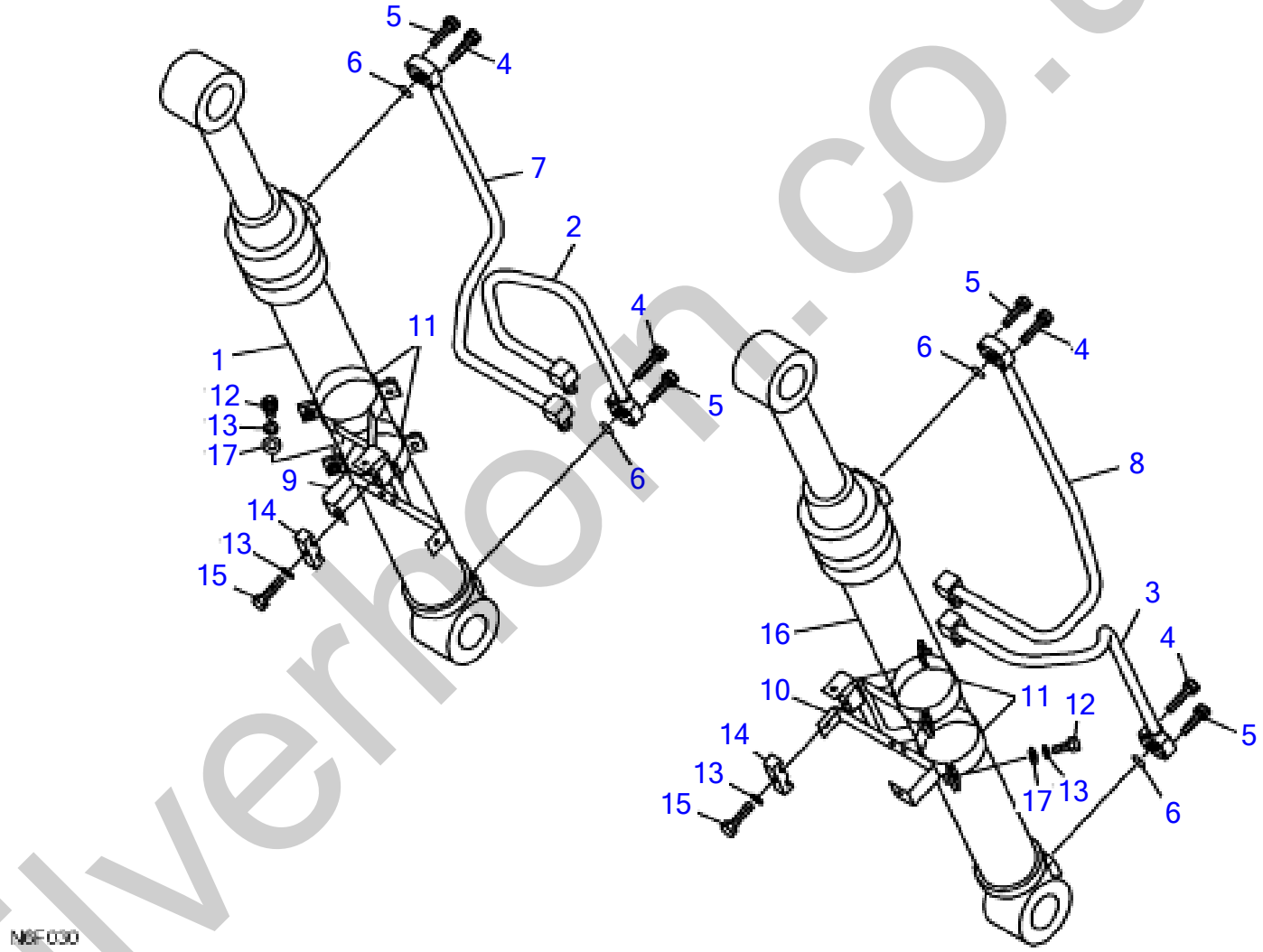

silverhorn.co.uk

BOOM (3/5) (boom cylinder)

Item	Part number	Description	Q'ty	Chan.	Serial No.	Serv.	Remarks
0	X **********	CYLINDER ASSY, boom	1				X05760-03600-1
1	1900098100	・CYLINDER, boom (R.H.)	1				
2	0576001820	・PIPE (R.H.)	1				
3	0576001830	・PIPE (L.H.)	1				
4	1110040845	・SCREW, cap	8				
5	1110040835	・SCREW, cap	8				
6	1420010240	・O-RING	4				
7	0576002550	・PIPE	1				
8	0576002560	・PIPE	1				
9	0576002510	・BAND (R.H.)	1				
10	0576002520	・BAND (L.H.)	1				
11	0576002590	・BAND	4				
12	1100041035	・BOLT	8				
13	1140020010	・WASHER, spring	10				
14	1534000022	・CLAMP	2				
15	1100041050	・BOLT	2				
16	1900098200	・CYLINDER, boom (L.H.)	1				
17	1141110010	* WASHER	8				
	N6F030						

silverhorn.co.uk

BOOM (3/5) (boom cylinder, with emergency shut-off valve)

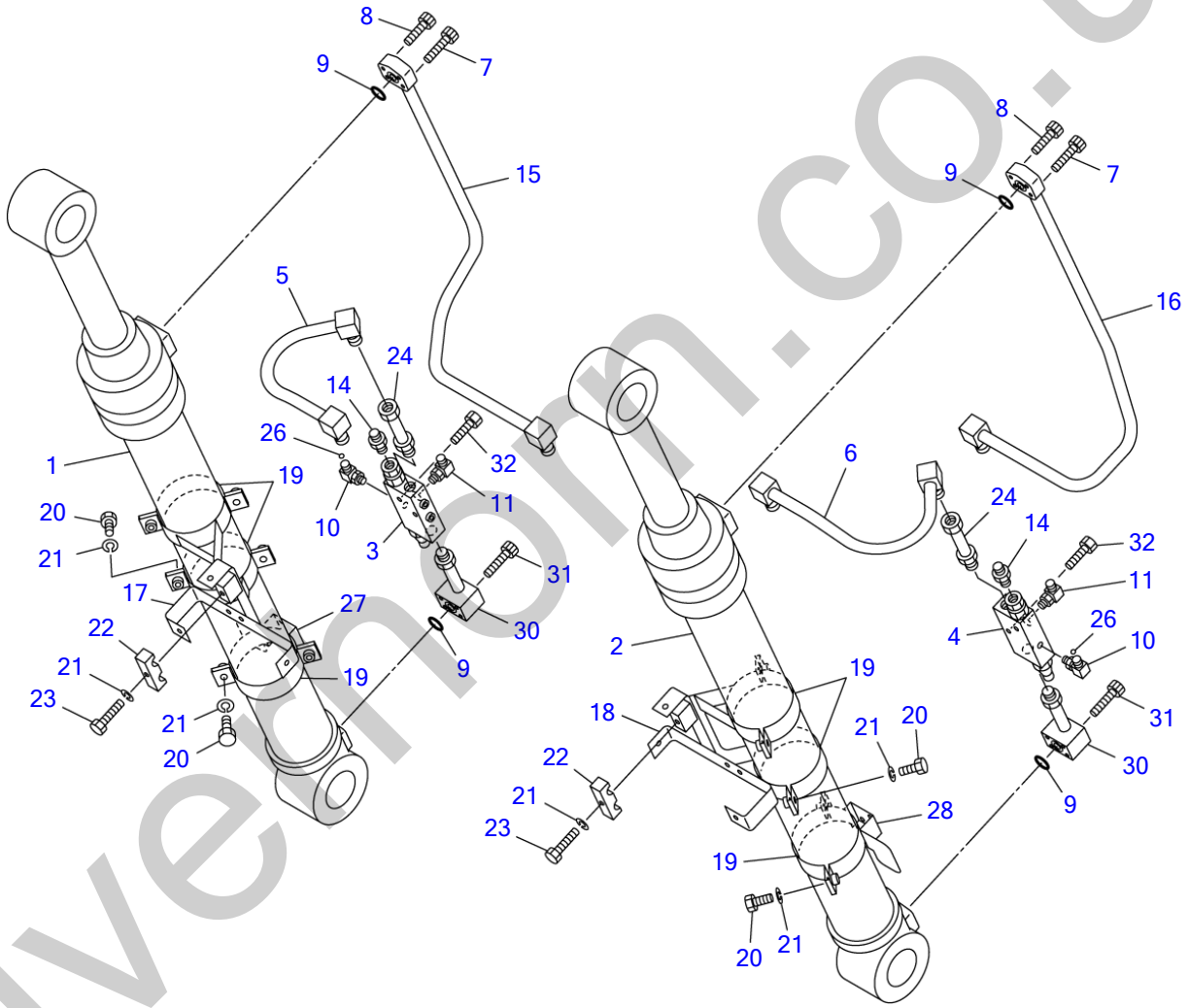

silvermm.co.uk

BOOM (3/5) (boom cylinder, with emergency shut-off valve)

Item	Part number	Description	Q'ty	Chan.	Serial No.	Serv.	Remarks
0	X **********	CYLINDER ASSY, boom	1				X05760-02500-2
1	1900098100	・CYLINDER, boom (R.H.)	1				
2	1900098200	・CYLINDER, boom (L.H.)	1				
3	1901747600	・VALVE, shut-off (R.H.)	1				
4	1901747700	・VALVE, shut-off (L.H.)	1				
5	0576001030	・PIPE	1				
6	0576001040	・PIPE	1				
7	1110040845	・BOLT	4				
8	1110040835	・SCREW, cap	4				
9	1420010240	・O-RING	4				
10	0576001340	・ELBOW (with orifice)	2				
	1420010110	・・O-RING	1				
11	1515010130	・ELBOW	2				
	1420010110	・・O-RING	1				
14	1515600571	・ADAPTOR	2				
	1420010110	・・O-RING	1				
15	0576002550	・PIPE	1				
16	0576002560	・PIPE	1				
17	0576002510	・BAND	1				
18	0576002520	・BAND	1				
19	0576002590	・BAND	6				
20	1100041035	・BOLT	12				
21	1140020010	・WASHER, spring	14				
22	1534000022	・CLAMP	2				
23	1100041050	・BOLT	2				
24	0576001014	・ADAPTOR	2				
	1420010240	・・O-RING	1				
26	1420310011	・O-RING	1				
27	0576002570	・BAND	1				
28	0576002580	・BAND	1				
30	0576001230	・PIPE	2				
	1420010240	・・O-RING	1				
31	1110040860	・SCREW, cap	8				
32	1100040855	・BOLT	4				
	N1f041						

silverhorn.co.uk

BOOM (4/5) (arm cylinder)

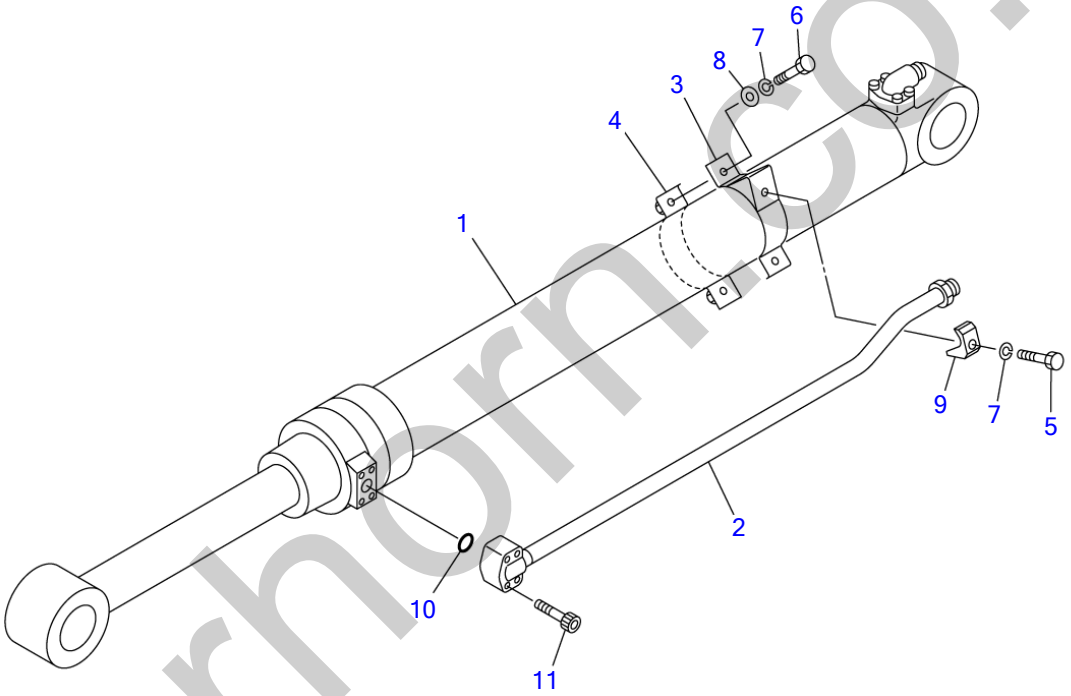

N0F200

S=1/12

silverhorn.co.uk

BOOM (4/5) (arm cylinder)

Item	Part number	Description	Q'ty	Chan.	Serial No.	Serv.	Remarks
0	X **********	CYLINDER ASSY, arm	1				X05760-03700-1
1	1900098300	・CYLINDER, arm	1				
2	0576003720	・PIPE	1				
3	0576003730	・BAND	1				
4	0576003740	・BAND	1				
5	1100041055	・BOLT	1				
6	1100041035	・BOLT	2				
7	1140020010	・WASHER, spring	3				
8	1141110010	・WASHER	2				
9	1534100273	・CLAMP	1				
10	1420010300	・O-RING	1				
11	1110041055	・SCREW, cap	4				
	N6F040						

silverhorn.co.uk

BOOM (4/5) (arm cylinder, with emergency shut-off valve)

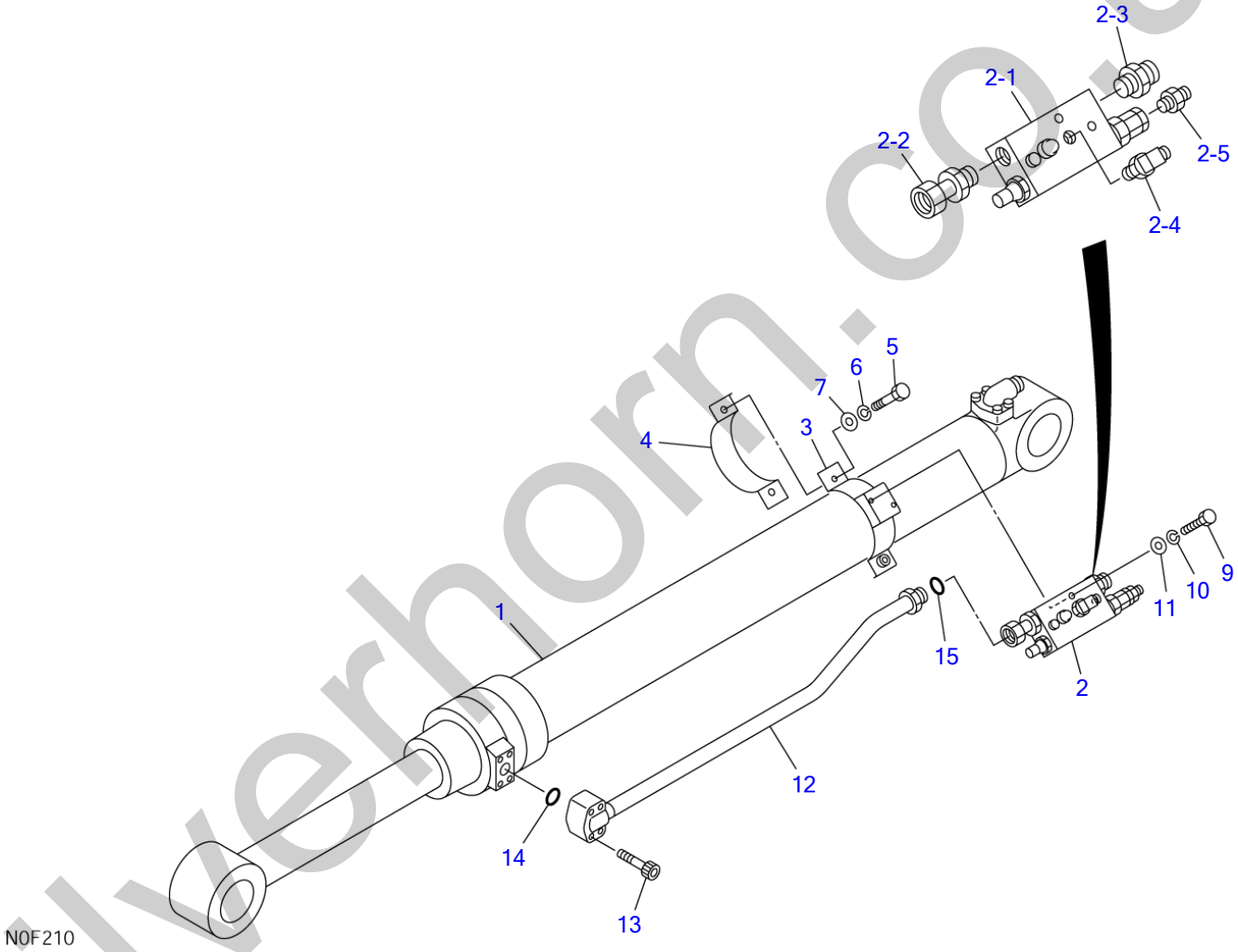

silverhorn.co.uk

BOOM (4/5) (arm cylinder, with emergency shut-off valve)

Item	Part number	Description	Q'ty	Chan.	Serial No.	Serv.	Remarks
0	X **********	CYLINDER ASSY, arm	1				X05760-02700-2
1	1900098300	・CYLINDER, arm	1				
2	X **********	・VALVE ASSY, shut-off	1				X05760-00063-0
2-1	1901744400	・・VALVE, shut-off	1				
2-2	0576000062	・・ADAPTOR	1				
	1420010240	・・・O-RING	1				
2-3	1511061906	・・ADAPTOR	1				
	1420010240	・・・O-RING	1				
2-4	1515012130	・・ELBOW	1				
	1420010110	・・・O-RING	1				
2-5	1515600571	・・ADAPTOR	1				
	1420010110	・・・O-RING	1				
3	0576002770	・BAND	1				
4	0576002740	・BAND	1				
5	1100041035	・BOLT	2				
6	1140020010	・WASHER, spring	2				
7	1141110010	・WASHER	2				
9	1100040855	・BOLT	2				
10	1140020008	・WASHER, spring	2				
11	0003608252	・WASHER	2				
12	0576002750	・PIPE	1				
13	1110041055	・SCREW, cap	4				
14	1420010300	・O-RING	1				
15	1420310018	・O-RING	1				
	N1f061						

silverhorn.co.uk

BOOM (5/5) (with emergency shut-off valve)

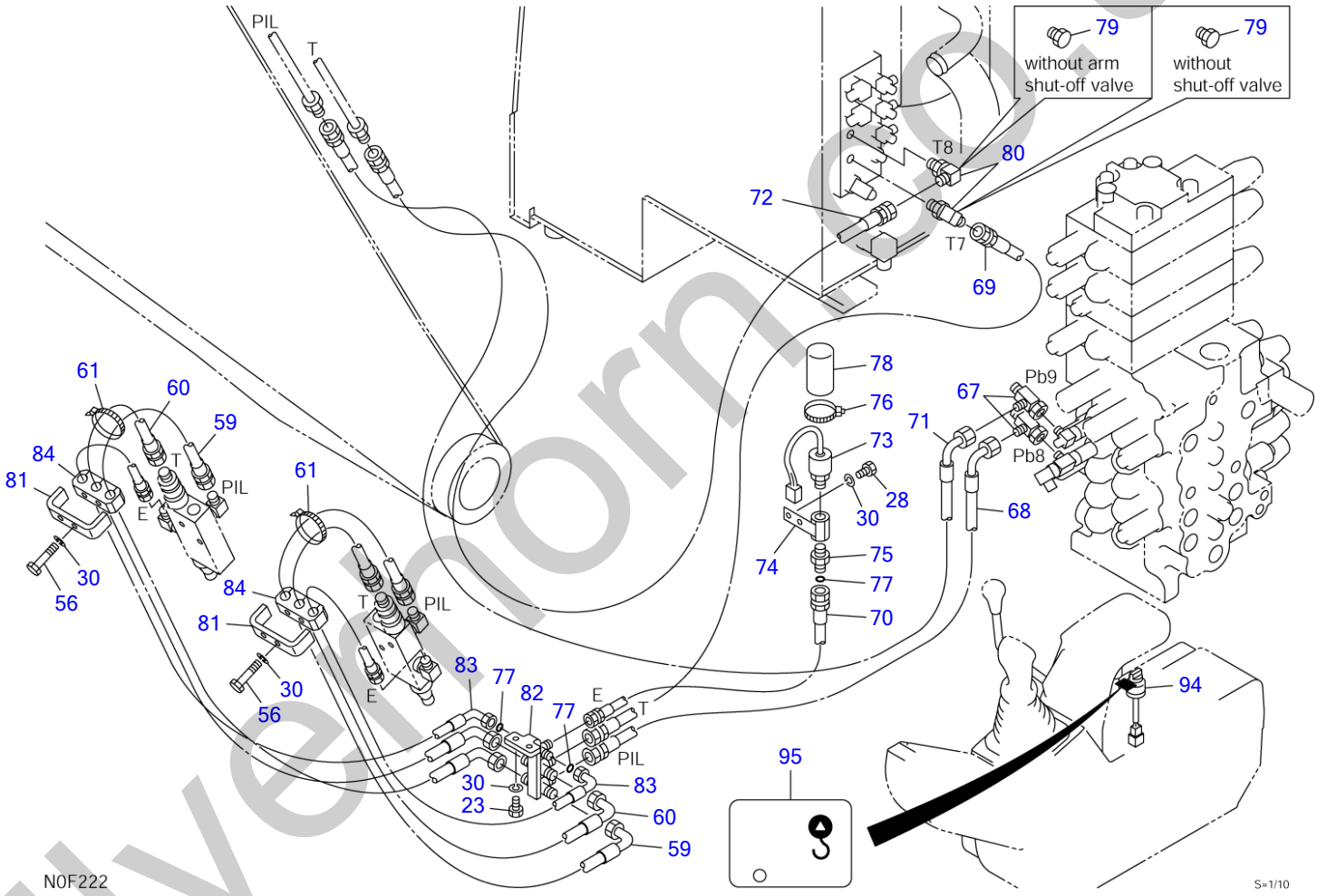

silvermorn.co.uk

BOOM (5/5) (with emergency shut-off valve)

Item	Part number	Description	Q'ty	Chan.	Serial No.	Serv.	Remarks
		BOOM ASSY (with boom shut-off valve)					X05760-01800-3
		BOOM ASSY (with boom, arm shut-off valve)					X05760-01900-3
23	1100040825	BOLT	2				
28	1100040816	BOLT	2				
30	1140020008	WASHER, spring	6				
56	1100040855	BOLT	2				
59	0576001350	HOSE ASSY	2				18010-53128
60	0576001360	HOSE ASSY	2				18010-53120
61	1652201007	BAND	2				
67	1513390018	TEE	1				
	1513390018	TEE	2				with arm shut-off valve
68	0576014030	HOSE ASSY	1				18010-53220
69	0576014040	HOSE ASSY	1				18010-23225
70	0576018050	HOSE ASSY	1				18035-02160
71	0577000580	HOSE ASSY (18010-53330)	1				with arm shut-off valve
72	0577000590	HOSE ASSY (18010-23355)	1				with arm shut-off valve
73	1700100083	SWITCH, pressure	1				
	1420010110	・O-RING	1				
74	0565032710	BUSHING	1				
75	1511061102	ADAPTOR	1				
	1420010110	・O-RING	1				
76	1652231250	BAND	1				
77	1420310011	O-RING	3				
78	1700100061	COVER	1				
79	1501750003	PLUG	1				with shut-off valve
	1501750003	PLUG	2				without shut-off valve
	1420010140	・O-RING	1				
80	1515012041	ELBOW	1				with shut-off valve
	1515012041	ELBOW	2				with arm shut-off valve
	1420010140	・O-RING	1				
81	0576001081	PLATE	2				
82	0576001570	TEE	1				
83	0576001290	HOSE ASSY	2				18035-12133
84	0576001123	CLAMP	2				
94	1700000019	SWITCH, rotary	1				
95	0565017400	DECAL	1				
	N1f073						

silverhorn.co.uk

ARM

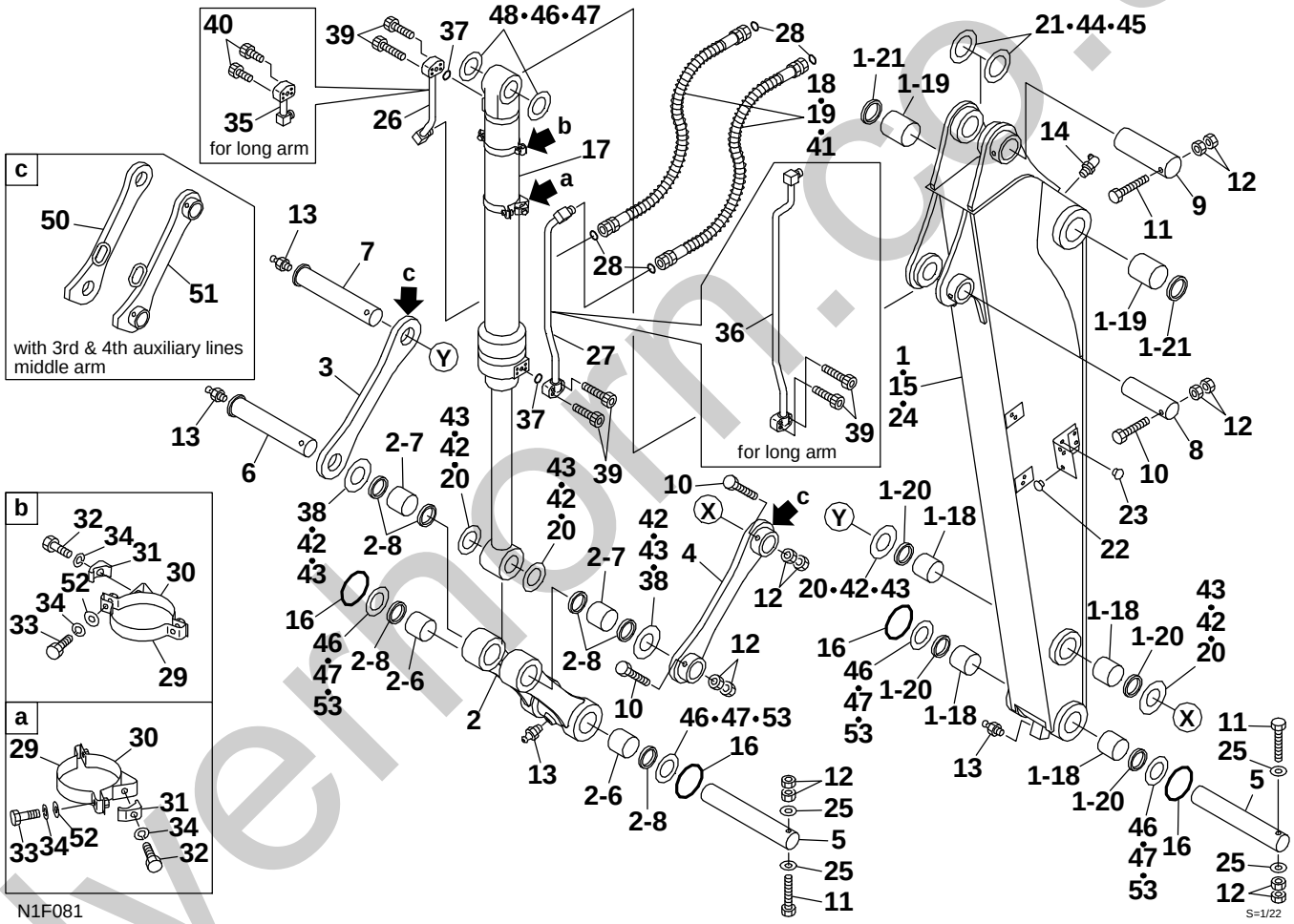

silvermorn.co.uk

ARM

Item	Part number	Description	Q'ty	Chan.	Serial No.	Serv.	Remarks
		ARM ASSY					X05761-05500-2
		ARM ASSY (for U.S.)					X05761-07000-2
		ARM ASSY, middle					X05761-06000-2
		ARM ASSY, middle (with 3rd & 4th aux. line)					X05761-06500-2
		ARM ASSY, long					X05761-04300-2
		ARM ASSY, long (for U.S.)					X05761-07500-2
1	0576103000	ARM	1				
1-18	0576100118	・BUSHING	4				
1-19	0576100119	・BUSHING	2				
1-20	1432200065	・SEAL, dust	4				
1-21	1432200075	・SEAL, dust	2				
2	0576100700	ARM, link	1				
2-6	0576100118	・BUSHING	2				
2-7	0576100207	・BUSHING	2				
2-8	1432200065	・SEAL, dust	6				
3	0576100050	LINK, guide (R.H.)	1				
4	0576100060	LINK, guide (L.H.)	1				
5	0576100080	PIN	2				
6	0576100070	PIN	1				
7	0576100090	PIN	1				
8	0576100008	PIN	1				
9	0576100009	PIN	1				
10	1100141630	BOLT	3				
11	1100141640	BOLT	3				
12	1130040016	NUT	12				
13	1560001000	FITTING, grease	4				
14	1560001675	FITTING, grease	1				
15	0576103400	ARM	1				for long arm
16	1432900049	O-RING	4				except for U.S.
17	1900098400	CYLINDER, bucket	1				
18	1803605092	HOSE ASSY	2				
19	1803605116	HOSE ASSY	2				for long arm
20	0003600211	SHIM	AR				t=1.0mm
21	0003600208	SHIM	AR				t=1.0mm
22	1652533017	CAP	10				
23	1652533016	CAP	2				
24	0576103200	ARM	1				for middle arm
25	1141110016	WASHER	4				
26	0576100310	PIPE	1				except for long arm
27	0576104540	PIPE	1				except for long arm
28	1420310016	O-RING	4				
29	0576104529	BAND	2				
	0576104529	BAND	1				for long arm
30	0576104530	BAND	2				
	0576104530	BAND	1				for long arm
31	1534100218	CLAMP	2				
	1534100218	CLAMP	1				for long arm
32	1100041045	BOLT	2				
	1100041045	BOLT	1				for long arm
33	1100041035	BOLT	4				
	1100041035	BOLT	2				for long arm
34	1140020010	WASHER, spring	5				
	1140020010	WASHER, spring	3				for long arm
35	0576100530	PIPE	1				for long arm
36	0576104960	PIPE	1				for long arm
37	1420010240	O-RING	2				
38	0003600211	SHIM	AR				t=1.0mm
39	1110040845	SCREW, cap	6				
	1110040845	SCREW, cap	2				for long arm
40	1110040835	SCREW, cap	4				for long arm
41	1803605114	HOSE ASSY	2				for middle arm
42	0003600209	SHIM	AR				t=0.2mm
43	0003600210	SHIM	AR				t=0.5mm
44	0003600206	SHIM	AR				t=0.2mm
45	0003600207	SHIM	AR				t=0.5mm
46	0003600214	SHIM	AR				t=0.2mm
47	0003600215	SHIM	AR				t=0.5mm

silverthorn.co.uk

ARM

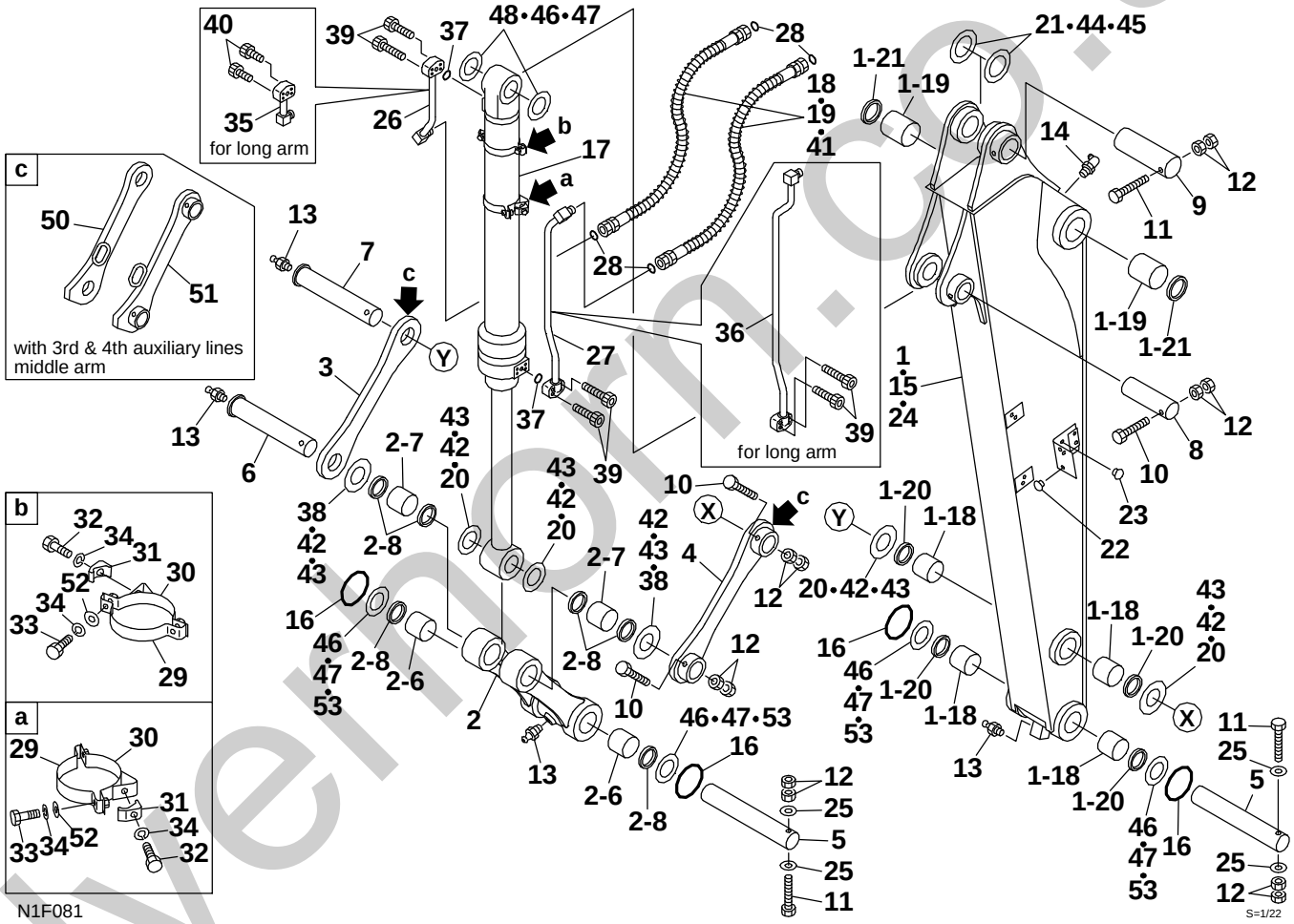

silvermorn.co.uk

ARM

Item	Part number	Description	Q'ty	Chan.	Serial No.	Serv.	Remarks
48	0003600216	SHIM					
50	0576104970	LINK, guide (R.H.) (middle arm)	1				with 3rd, 4th aux. line
51	0576104980	LINK, guide (L.H.) (middle arm)	1				with 3rd, 4th aux. line
52	1141110010	WASHER	4				
	1141110010	WASHER	2				
53	0003600251	SHIM					
	N1f082						

silverhorn.co.uk

BUCKET

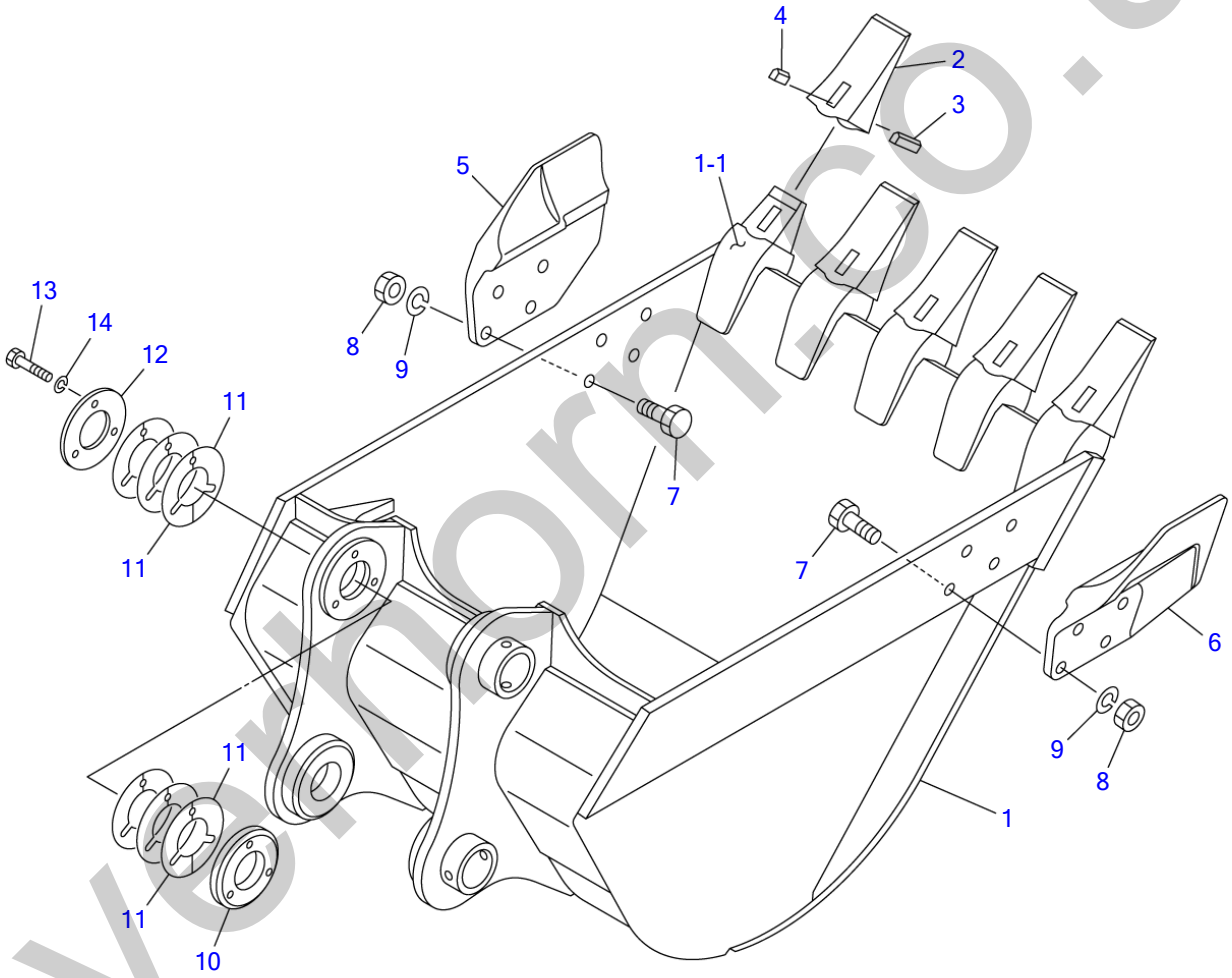

silverthorn.co.uk

BUCKET

Item	Part number	Description	Q'ty	Chan.	Serial No.	Serv.	Remarks
0	HIT9202104	BUCKET ASSY	1				
1	X **********	・BUCKET	1				
1-1	HIT4425500	・・ADAPTOR, tooth	5				WK
2	HIT963228	・POINT, tooth	5				K
3	HIT963229	・PIN, lock	5				K
4	HIT963227	・RUBBER, lock	5				K
5	HIT2015428	・CUTTER, side	1				
6	HIT2015429	・CUTTER, side	1				
7	HITJ932060	・BOLT	8				
8	HITJ951020	・NUT	8				
9	HITA590920	・WASHER, spring	8				
10	HIT4445244	・BOSS	1				
11	HIT4276386	・SHIM (t=1.0mm)	12				R
12	HIT4276385	・PLATE	1				
13	HITJ901275	・BOLT	3				
14	HITA590912	・WASHER, spring	3				
	N0f060						

silverhorn.co.uk

AUXILIARY LINE

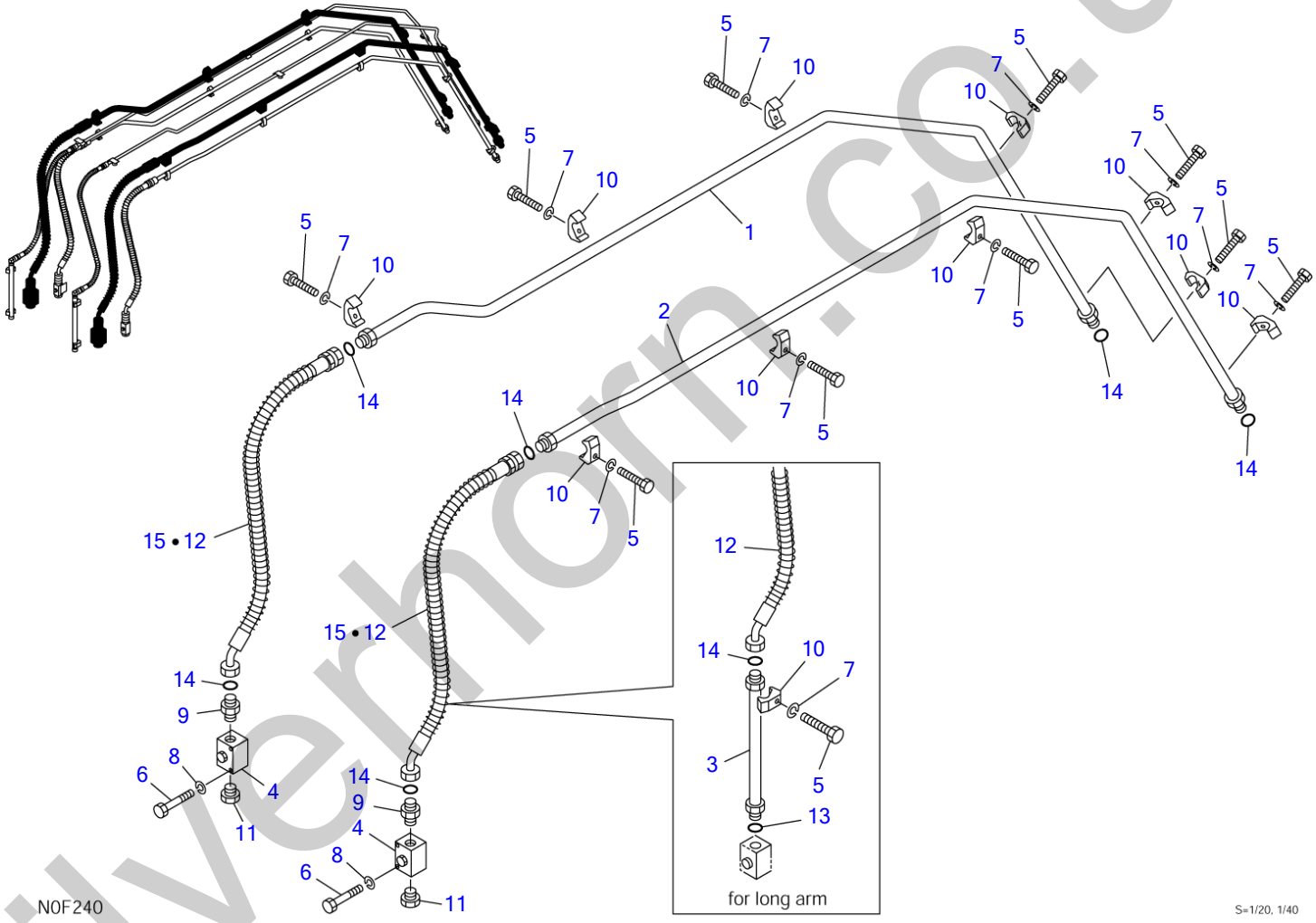

silverhorn.co.uk

AUXILIARY LINE

Item	Part number	Description	Q'ty	Chan.	Serial No.	Serv.	Remarks
0	0577305000	AUXILIARY LINE ASSY	1				X05773-05000-1
	0577305700	AUXILIARY LINE ASSY (for long arm)	1				X05773-05700-1
	0577305300	AUXILIARY LINE ASSY (for middle arm)	1				X05773-05300-1
1	0577305010	・PIPE (R.H.)	1				
2	0577305020	・PIPE (L.H.)	1				
3	0577305030	・PIPE	2				for long arm
4	1901744200	・VALVE, stop	2				
5	1100041265	・BOLT	10				
	1100041265	・BOLT	12				for long arm
6	1100041080	・BOLT	4				
7	1140010012	・WASHER, spring	10				
	1140010012	・WASHER, spring	12				for long arm
8	1140010010	・WASHER, spring	4				
9	1511062310	・ADAPTOR	2				except for long arm
	1420010290	・・O-RING	1				except for long arm
10	1534102063	・CLAMP	10				
	1534102063	・CLAMP	12				for long arm
11	1501750010	・PLUG	2				
	1420010290	・・O-RING	1				
12	1804127142	・HOSE ASSY	2				except for middle arm
13	1420010290	・O-RING	2				for long arm
14	1420310021	・O-RING	6				
15	1804127165	・HOSE ASSY	2				for middle arm
	N0f241						

silverhorn.co.uk

2ND AUXILIARY LINES

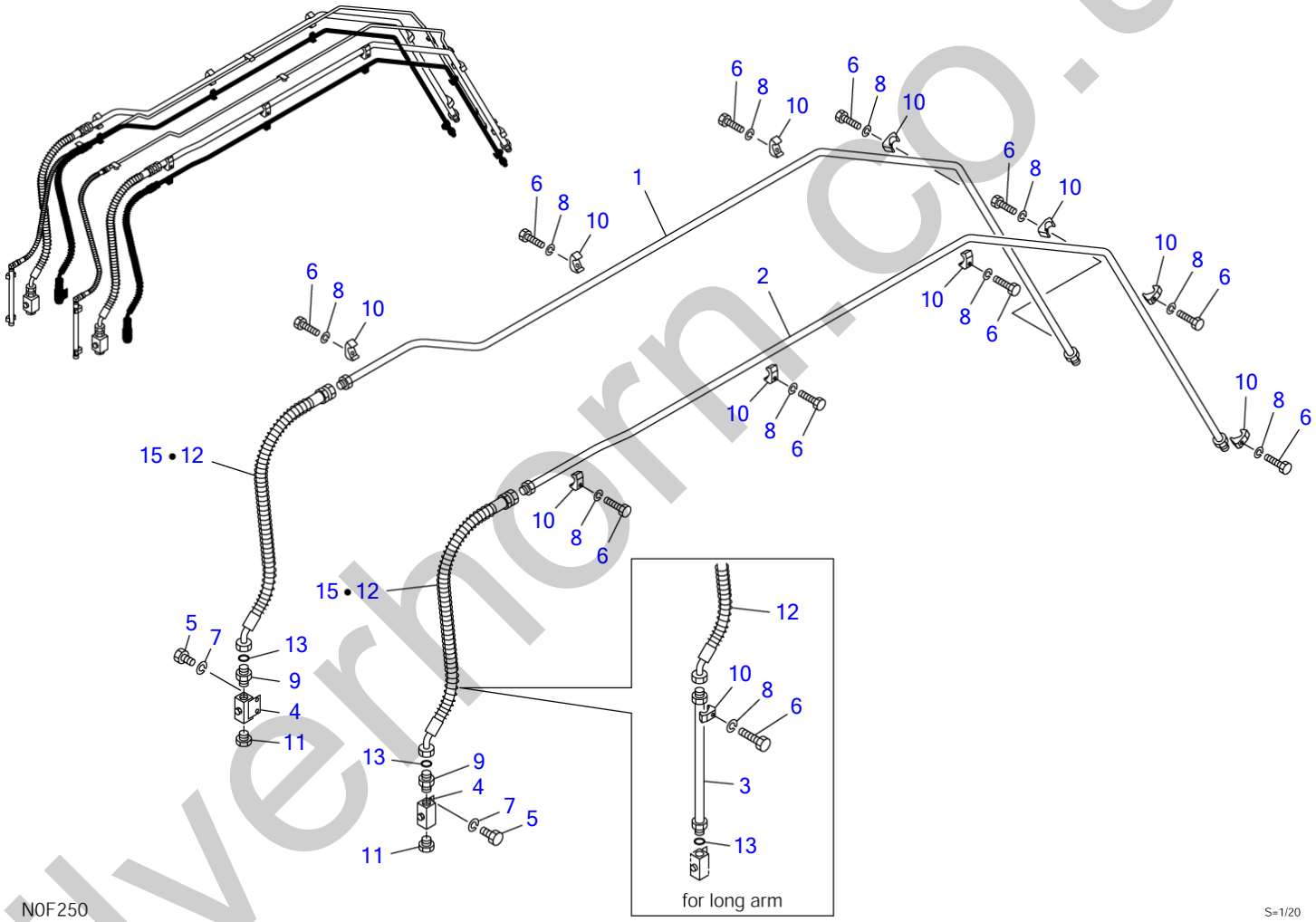

silvernorn.co.uk

2ND AUXILIARY LINES

Item	Part number	Description	Q'ty	Chan.	Serial No.	Serv.	Remarks
0	0577306000	LINE ASSY, 2nd auxiliary	1				X05773-06000-0
	0577306700	LINE ASSY, 2nd auxiliary (for long arm)	1				X05773-06700-0
	0577306300	LINE ASSY, 2nd auxiliary (for middle arm)	1				X05773-06300-0
1	0577306010	・PIPE (R.H.)	1				
2	0577306020	・PIPE (L.H.)	1				
3	0577306030	・PIPE	2				for long arm
4	1901719800	・VALVE, stop	2				
5	1100040816	・BOLT	4				
6	1100041045	・BOLT	10				
	1100041045	・BOLT	12				for long arm
7	1140010008	・WASHER, spring	4				
8	1140010010	・WASHER, spring	10				
	1140010010	・WASHER, spring	12				for long arm
9	1515600202	・ADAPTOR	2				except for long arm
	1420010180	・・O-RING	1				except for long arm
10	1534100218	・CLAMP	10				
	1534100218	・CLAMP	12				for long arm
11	1501750004	・PLUG	2				
	1420010180	・・O-RING	1				
12	0577306040	・HOSE ASSY (18026-42132)	2				except for middle arm
13	1420010180	・O-RING	2				
15	0577306050	・HOSE ASSY (18026-42156)	2				for middle arm
	N0f250						

silverhorn.co.uk

3RD AUXILIARY LINES

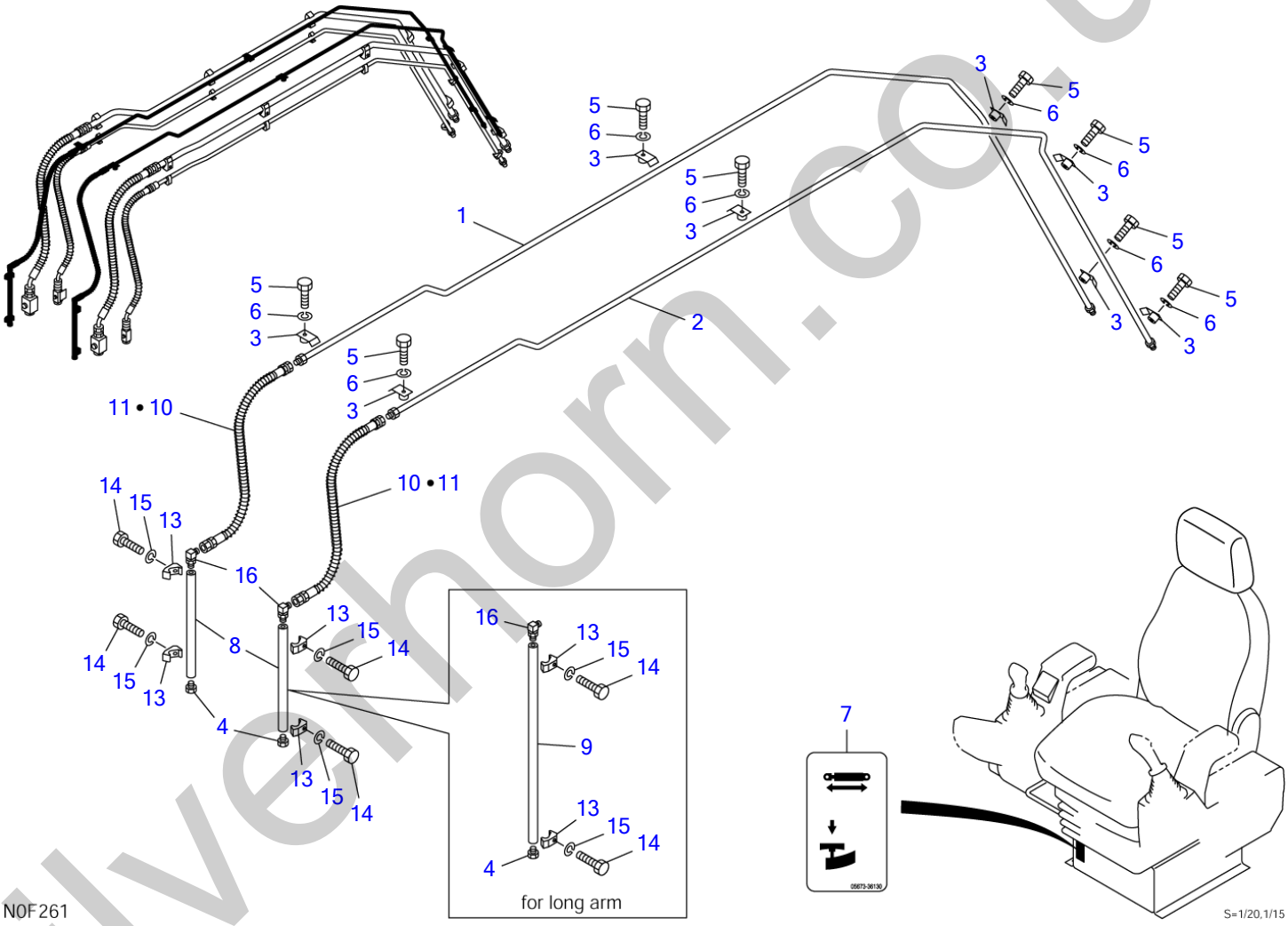

silverhorn.co.uk

3RD AUXILIARY LINES

Item	Part number	Description	Q'ty	Chan.	Serial No.	Serv.	Remarks
0	0577307000	LINE ASSY, 3rd auxiliary	1				X05773-07000-2
	0577307300	LINE ASSY, 3rd auxiliary (for middle arm)	1				X05773-07300-2
	0577307700	LINE ASSY, 3rd auxiliary (for long arm)	1				X05773-07700-2
1	0577307010	・PIPE (R.H.)	1				
2	0577307020	・PIPE (L.H.)	1				
3	0577307100	・CLAMP	8				
4	1501750003	・PLUG	2				
	1420010140	・・O-RING	1				
5	1100040830	・BOLT	8				
6	1140010008	・WASHER, spring	8				
7	0567336130	・DECAL	1				
8	0577307030	・PIPE	2				except for long arm
9	0577307040	・PIPE	2				for long arm
10	1802620125	・HOSE ASSY	2				standerd
11	1802620140	・HOSE ASSY	2				except for standerd
13	1534100273	・CLAMP	4				
14	1100041050	・BOLT	4				
15	1140010010	・WASHER, spring	4				
16	1515012041	・ELBOW	2				
	1420010140	・・O-RING	1				
	N0f261						

silverhorn.co.uk

4TH AUXILIARY LINES

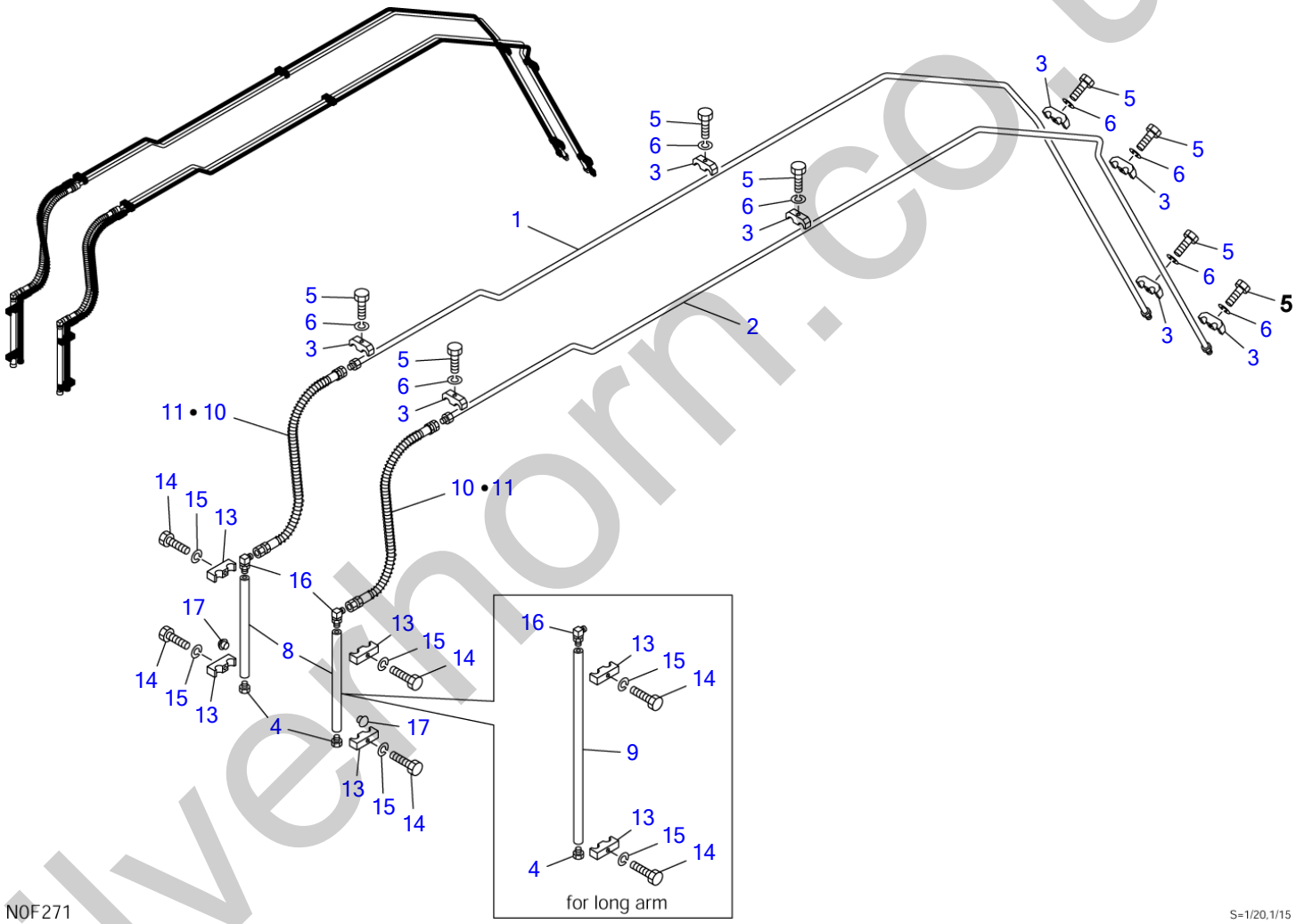

silverthorn.co.uk

4TH AUXILIARY LINES

Item	Part number	Description	Q'ty	Chan.	Serial No.	Serv.	Remarks
0	0577308000	LINE ASSY, 4th auxiliary	1				X05773-08000-2
	0577308300	LINE ASSY, 4th auxiliary (for middle arm)	1				X05773-08300-2
	0577308700	LINE ASSY, 4th auxiliary (for long arm)	1				X05773-08700-2
1	0577307010	・PIPE (R.H.)	1				
2	0577307020	・PIPE (L.H.)	1				
3	1534000015	・CLAMP	8				
4	1501750003	・PLUG	2				
	1420010140	・・O-RING	1				
5	1100040835	・BOLT	8				
6	1140010008	・WASHER, spring	8				
8	0577308030	・PIPE	2				
9	0577308040	・PIPE	2				for long arm
10	1802620129	・HOSE ASSY	2				standerd
11	1802620143	・HOSE ASSY	2				except for standerd
13	0577308013	・CLAMP	4				
14	1100041060	・BOLT	4				
15	1140010010	・WASHER, spring	4				
16	1515012041	・ELBOW	2				
	1420010140	・・O-RING	1				
17	1652533017	・CAP	4				
	N0f271						

silverhorn.co.uk

ARM STOPPER

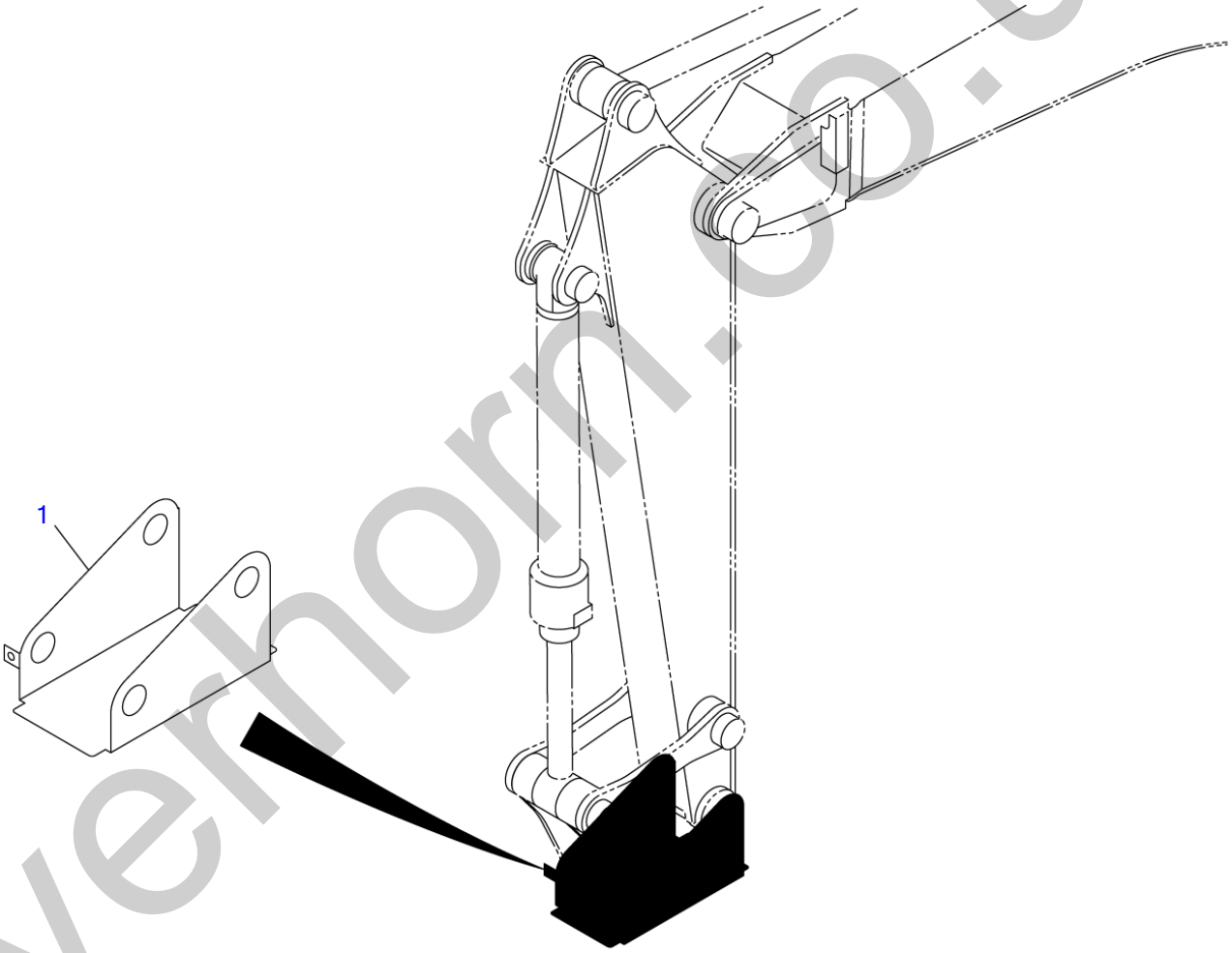

N0F150

S=1/15, 1/20

silverhorn.co.uk

ARM STOPPER

Item	Part number	Description	Q'ty	Chan.	Serial No.	Serv.	Remarks
		ARM STOPPER	1				X05762-00010-0
1	**0576200011**	PLATE	1				
	N0f150						

silverhorn.co.uk

DECAL

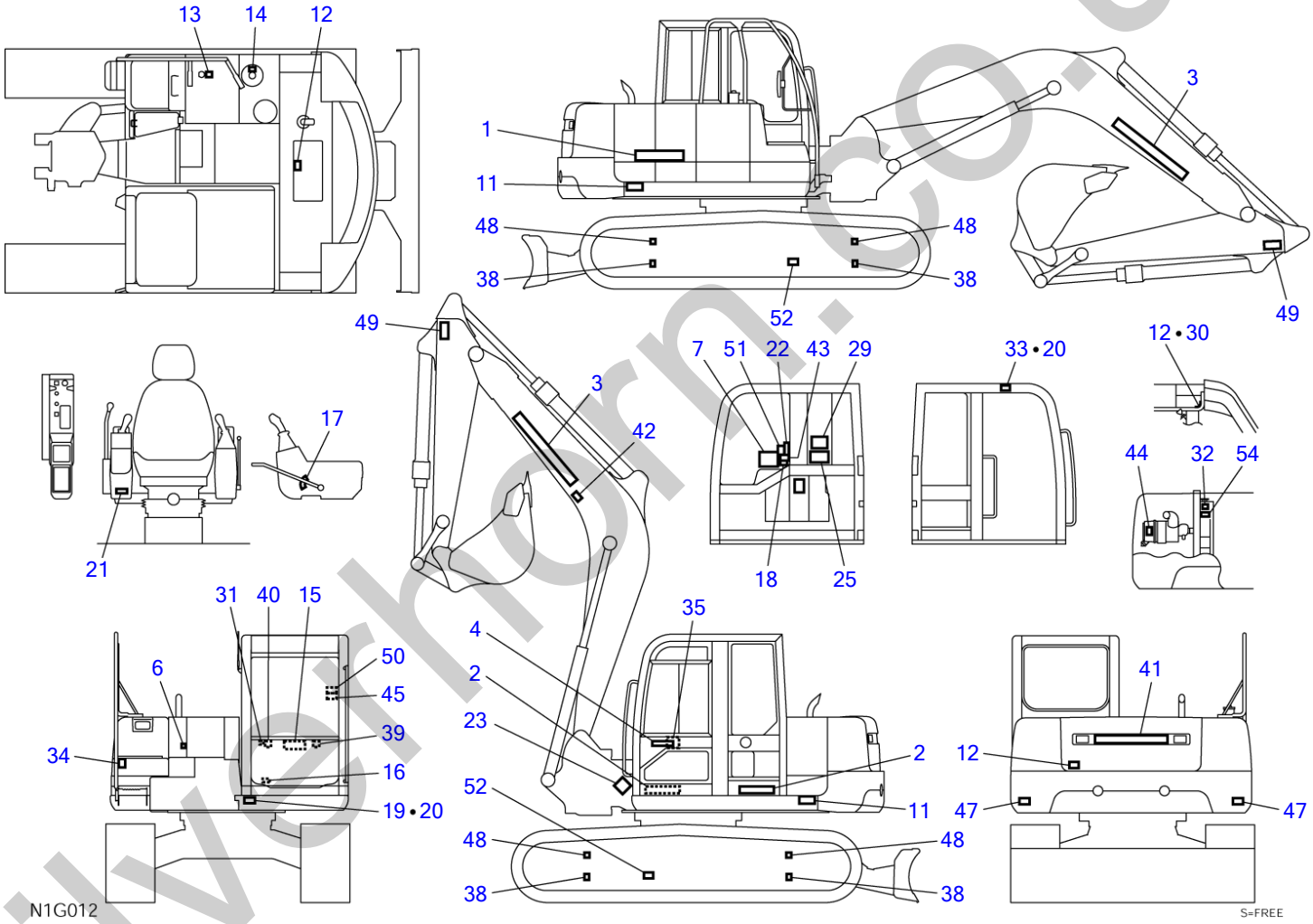

silverhorn.co.uk

TB1140 Book No. BN2Z001 S/N 51420001-
English,UK,US TAKEUCHI

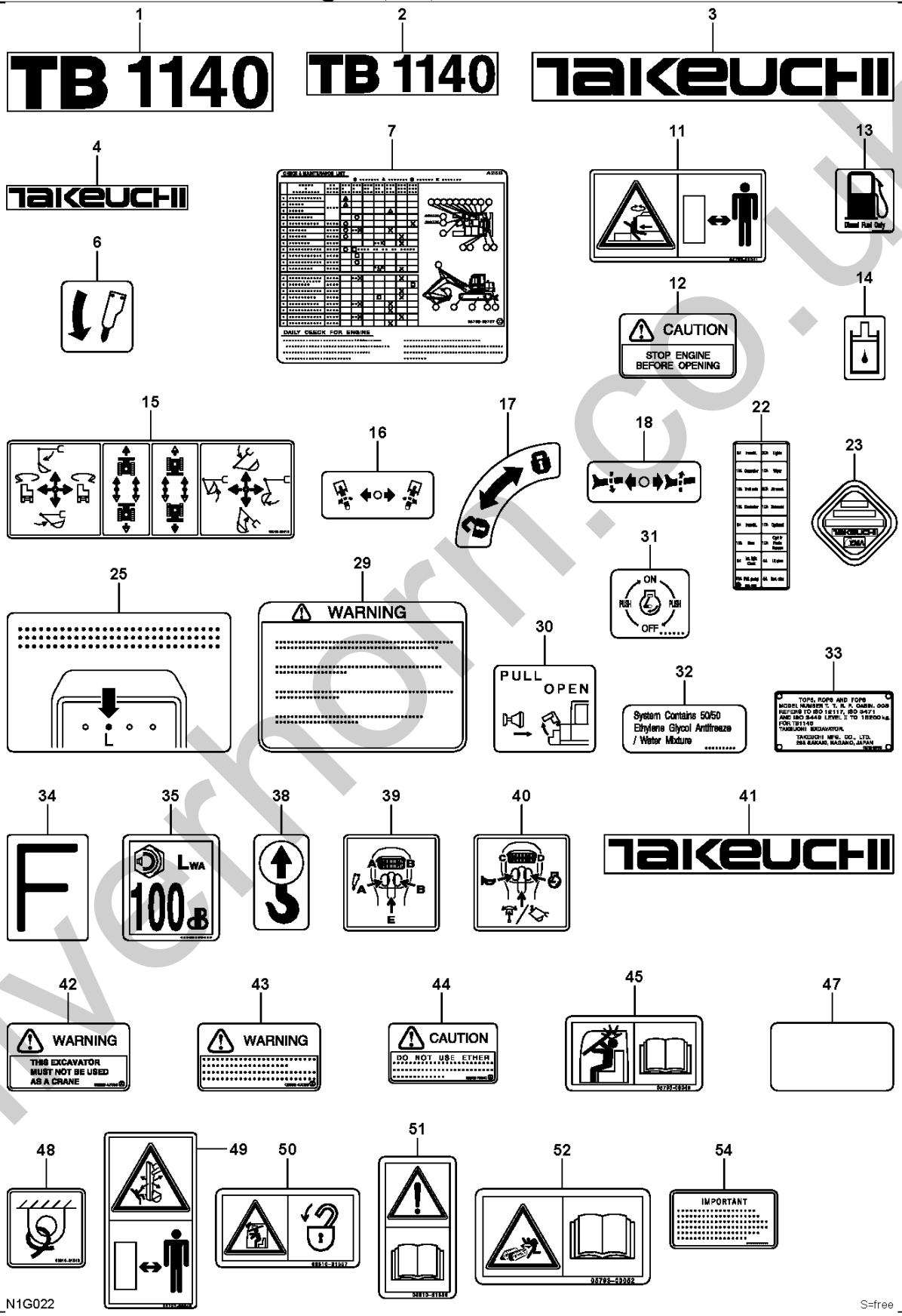

N1G022

S=free

Ref N1G012 Page 7-1

silverhorn.co.uk

TB1140 Book No. BN2Z001 S/N 51420001-
French

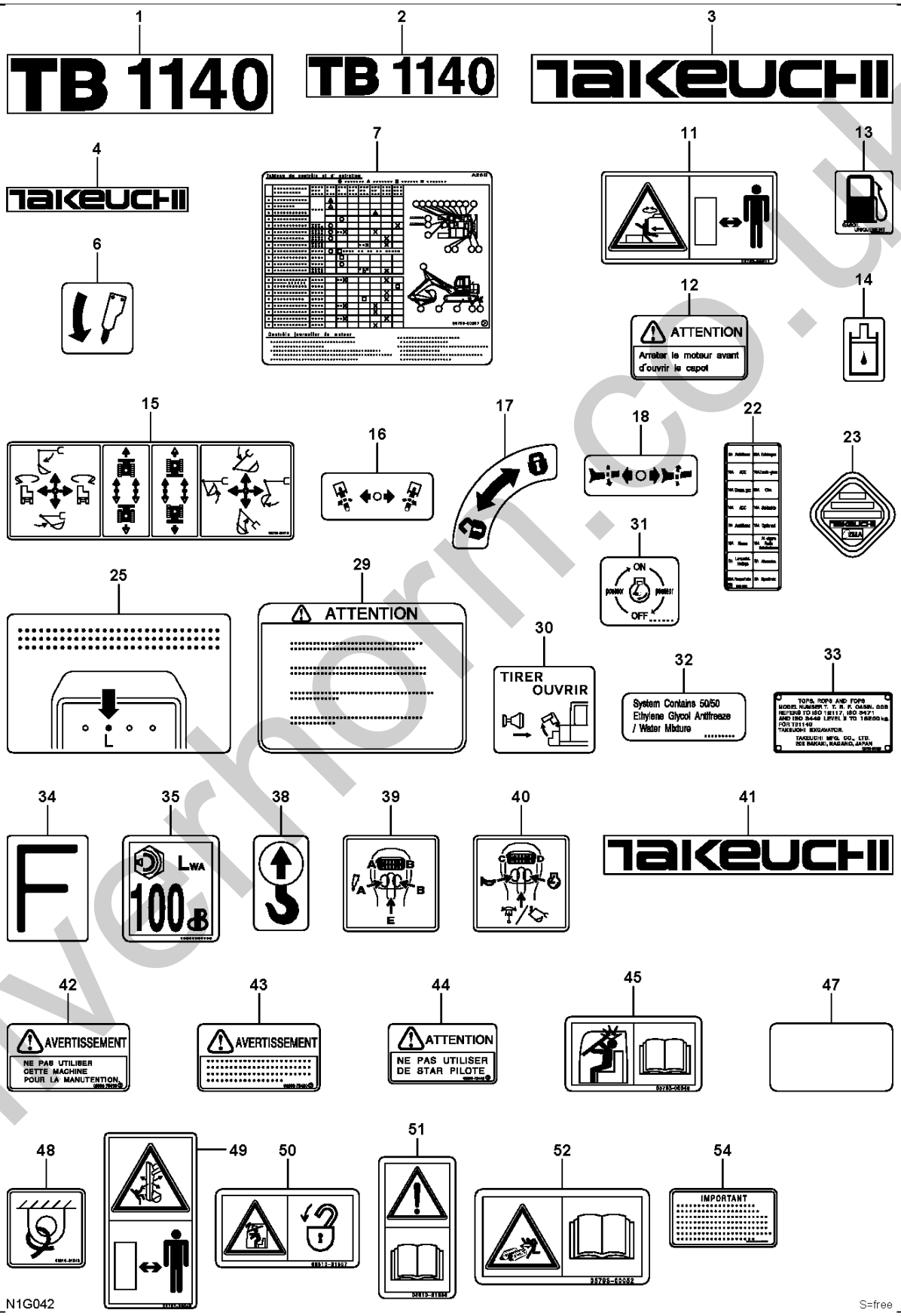

N1G042

S=free

Ref N1G012 Page 7-1

silverhorn.co.uk

TB1140 Book No. BN2Z001 S/N 51420001-
Spanish

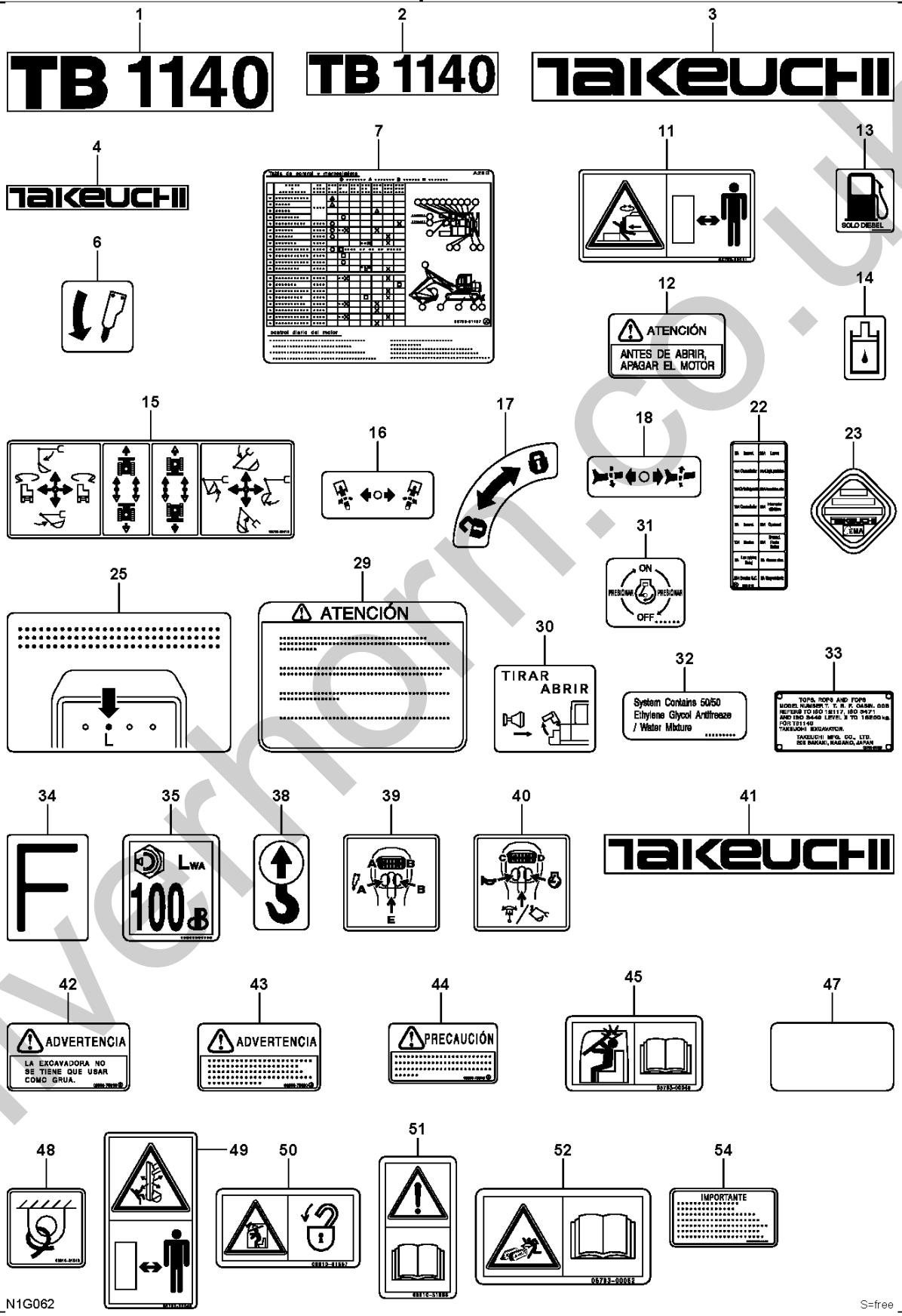

N1G062

S=free

Ref N1G012 Page 7-1

silverhorn.co.uk

DECAL

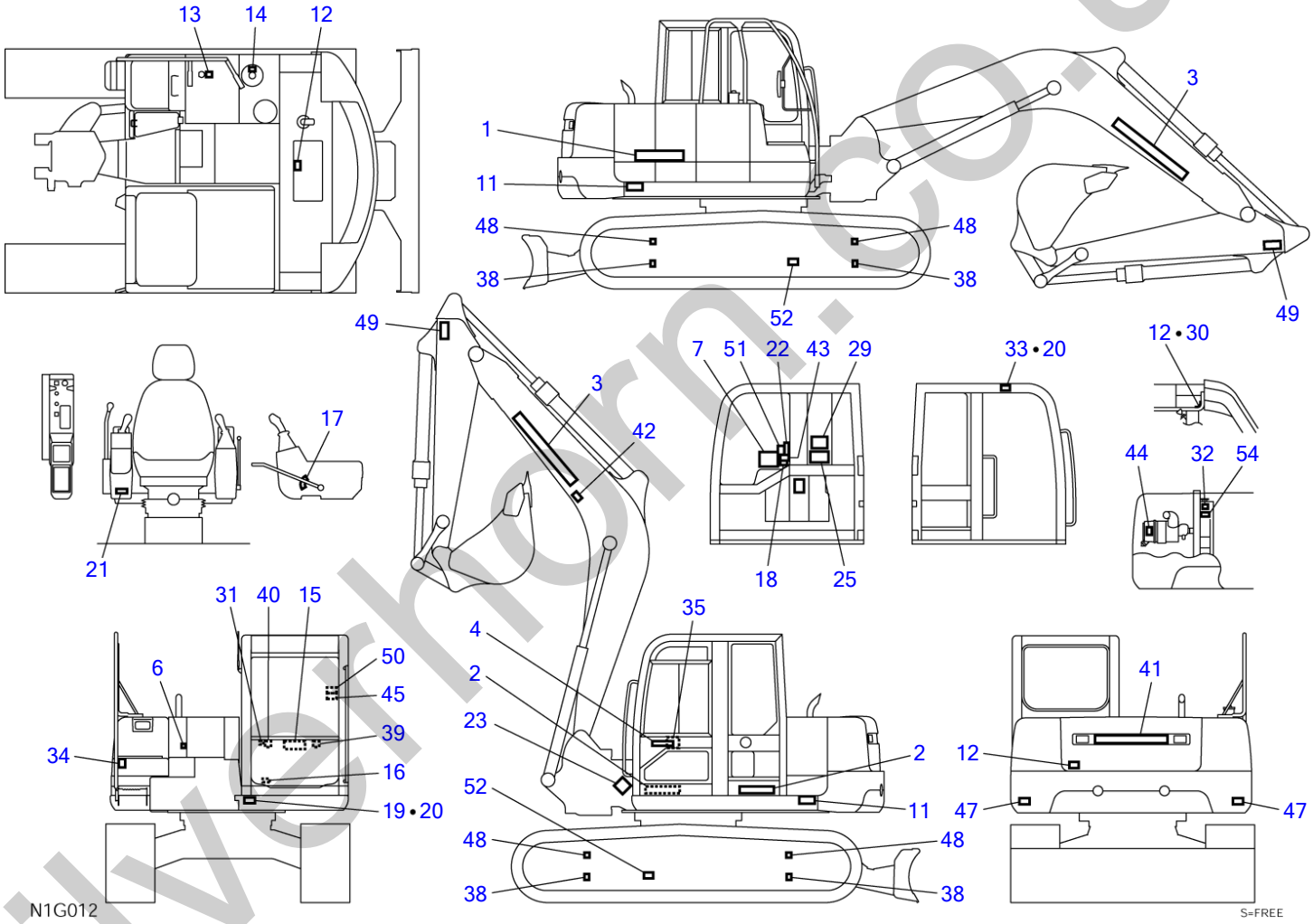

silverhorn.co.uk

DECAL

Item	Part number	Description	Q'ty	Chan.	Serial No.	Serv.	Remarks
0	0579300700	DECAL SET (English)	1				X05793-00700-4
	0579300900	DECAL SET (French)	1				X05793-00900-4
	0579301100	DECAL SET (Spanish)	1				X05793-01100-4
	0579301200	DECAL SET (US TAKEUCHI)	1				X05793-01200-4
	0579301500	DECAL SET (UK TAKEUCHI)	1				X05793-01500-4
1	0579300101	・DECAL	1				
2	0579300102	・DECAL	2				
3	0569321300	・DECAL	2				
4	0569321400	・DECAL	1				
6	0329360070	・DECAL	1				
7	0579300707	・DECAL (English)	1				
	0579300907	・DECAL (French)	1				
	0579301007	・DECAL (Italian)	1				
	0579301107	・DECAL (Spanish)	1				
11	0579300011	・DECAL	2				
12	0359307400	・DECAL (English)	3				
	0359315400	・DECAL (French)	3				
	0339364200	・DECAL (Spanish)	3				
13	0359306600	・DECAL (English)	1				
	0339375460	・DECAL (French)	1				
	0339375660	・DECAL (Italian, Spanish)	1				
14	0359306700	・DECAL	1				
15	0579300015	・DECAL	1				
16	0329360060	・DECAL	1				
17	0329360100	・DECAL	1				
18	0359325190	・DECAL	1				
19	X **********	・DECAL	1				for US TAKEUCHI
	X **********	・DECAL	1				except for US TAKEUCHI
20	X **********	・SCREW	8				
21	X **********	・DECAL	1				
22	0579300722	・DECAL (English, Dutch)	1				
	0579300922	・DECAL (French)	1				
	0579301122	・DECAL (Spanish)	1				
23	X **********	・DECAL	1				
25	0569321940	・DECAL (English)	1				
	0569328940	・DECAL (French)	1				
	0569348200	・DECAL (Spanish)	1				
29	0359313700	・DECAL (English)	1				
	0359315700	・DECAL (French)	1				
	0339364500	・DECAL (Spanish)	1				
30	0569326400	・DECAL (English)	1				
	0569328400	・DECAL (French)	1				
	0569348400	・DECAL (Spanish)	1				
31	0569335060	・DECAL (English)	1				
	0569328800	・DECAL (French)	1				
	0569348500	・DECAL (Spanish)	1				
32	0359313900	・DECAL	1				
33	X **********	・DECAL	1				
34	0399300400	・DECAL	1				
35	X **********	・DECAL	1				except for US TAKEUCHI
38	0399300500	・DECAL	4				
39	0569353036	・DECAL	1				
40	0569353035	・DECAL	1				
41	0399305100	・DECAL	1				
42	0359347010	・DECAL (English, US TAKEUCHI)	1				
	0339375410	・DECAL (French)	1				
	0339375810	・DECAL (Spanish)	1				
43	0359347020	・DECAL (English)	1				
	0339375420	・DECAL (French)	1				
	0339375820	・DECAL (Spanish)	1				
44	0339375040	・DECAL (English)	1				
	0339375440	・DECAL (French)	1				
	0339375840	・DECAL (Spanish)	1				
45	0579300045	・DECAL	1				
47	0379358560	・DECAL	2				
48	0881031549	・DECAL	4				
49	0579300049	・DECAL	2				

silverthorn.co.uk

DECAL

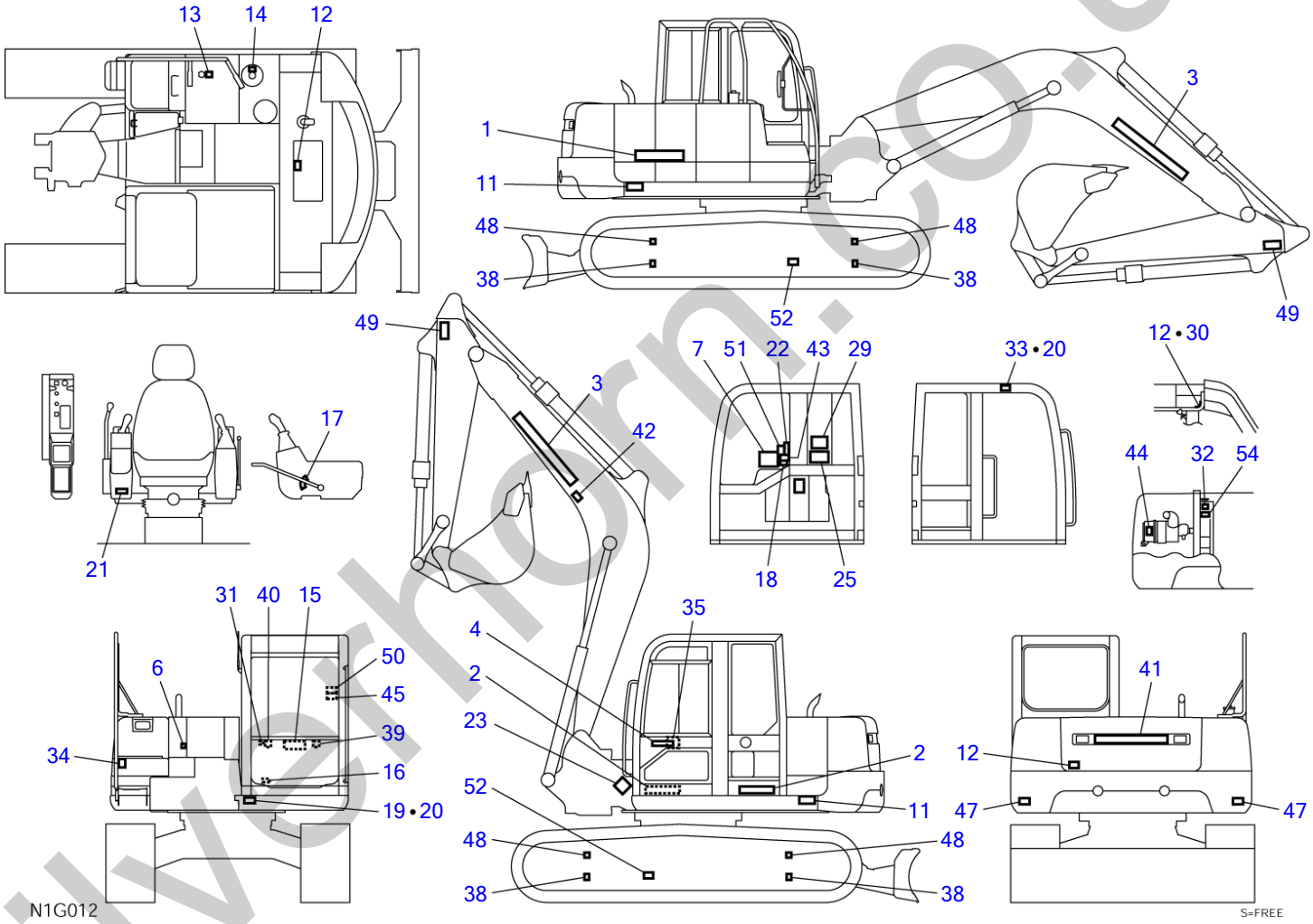

silverhorn.co.uk

DECAL

Item	Part number	Description	Q'ty	Chan.	Serial No.	Serv.	Remarks
50	0881031557	・DECAL	1				
51	0881031556	・DECAL	1				
52	0579300052	・DECAL	2				
54	0339376240	・DECAL (English)	1				
54	0339379440	・DECAL (French)	1				
54	0339379640	・DECAL (Spanish)	1				
	N1g012						

silverhorn.co.uk

DECAL (selector valve)

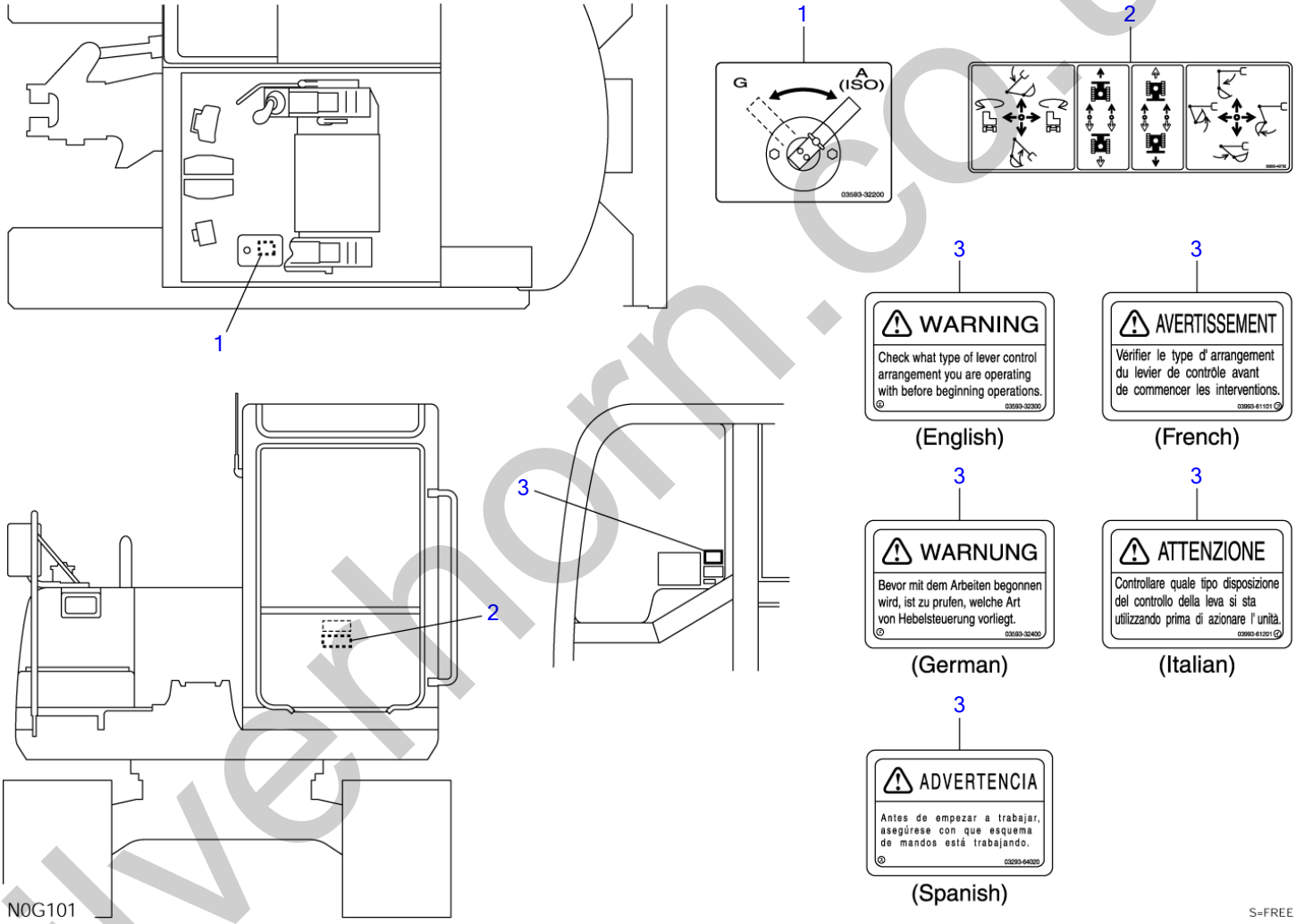

silverhorn.co.uk

DECAL (selector valve)

Item	Part number	Description	Q'ty	Chan.	Serial No.	Serv.	Remarks
0	**0569349700**	DECAL SET (English)	1				X05693-49700-4
	0569305600	DECAL SET (Spanish)	1				X05693-56000-4
	0569361300	DECAL SET (French)	1				X05693-61300-4
1	**0359332200**	DECAL	1				ISO-JCB
2	**0569349702**	DECAL	1				JCB
3	**0359332300**	DECAL (English)	1				
	0329364020	DECAL (Spanish)	1				
	0399361101	DECAL (French)	1				
	N0g101						

silverhorn.co.uk

DECAL (air conditioner)

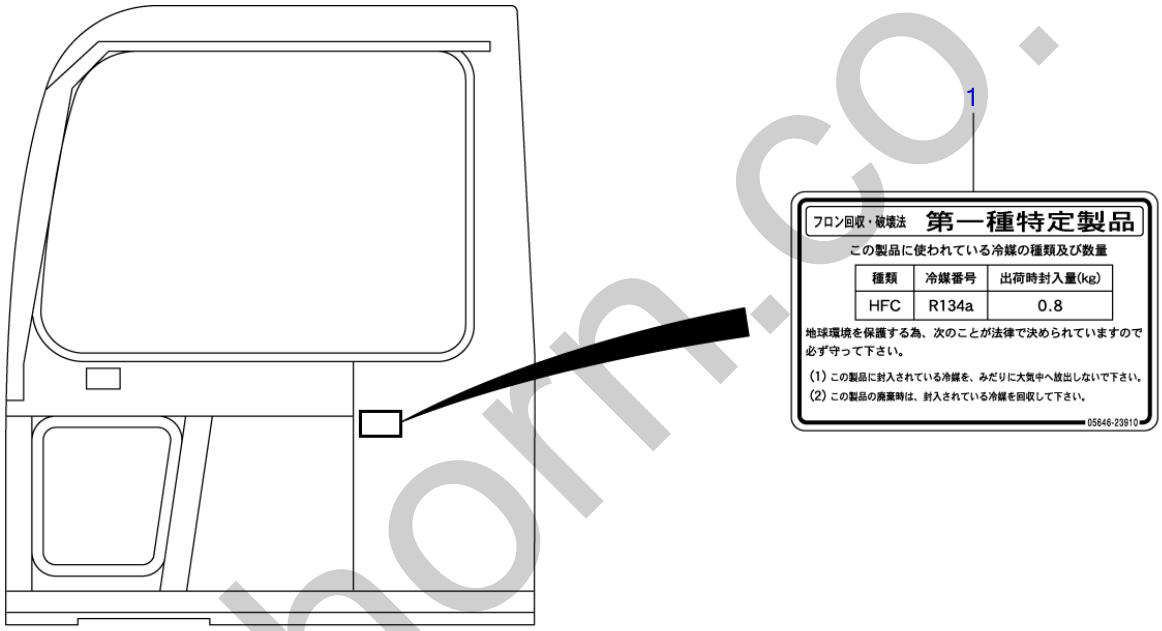

L3G130

S=FREE

silverhorn.co.uk

DECAL (air conditioner)

Item	Part number	Description	Q'ty	Chan.	Serial No.	Serv.	Remarks
	0569348600	DECAL SET	1				X05693-48600-0
1	**0564623910**	・DECAL	1				
	L3g130						

silverhorn.co.uk

TOOL & ACCESSORIES

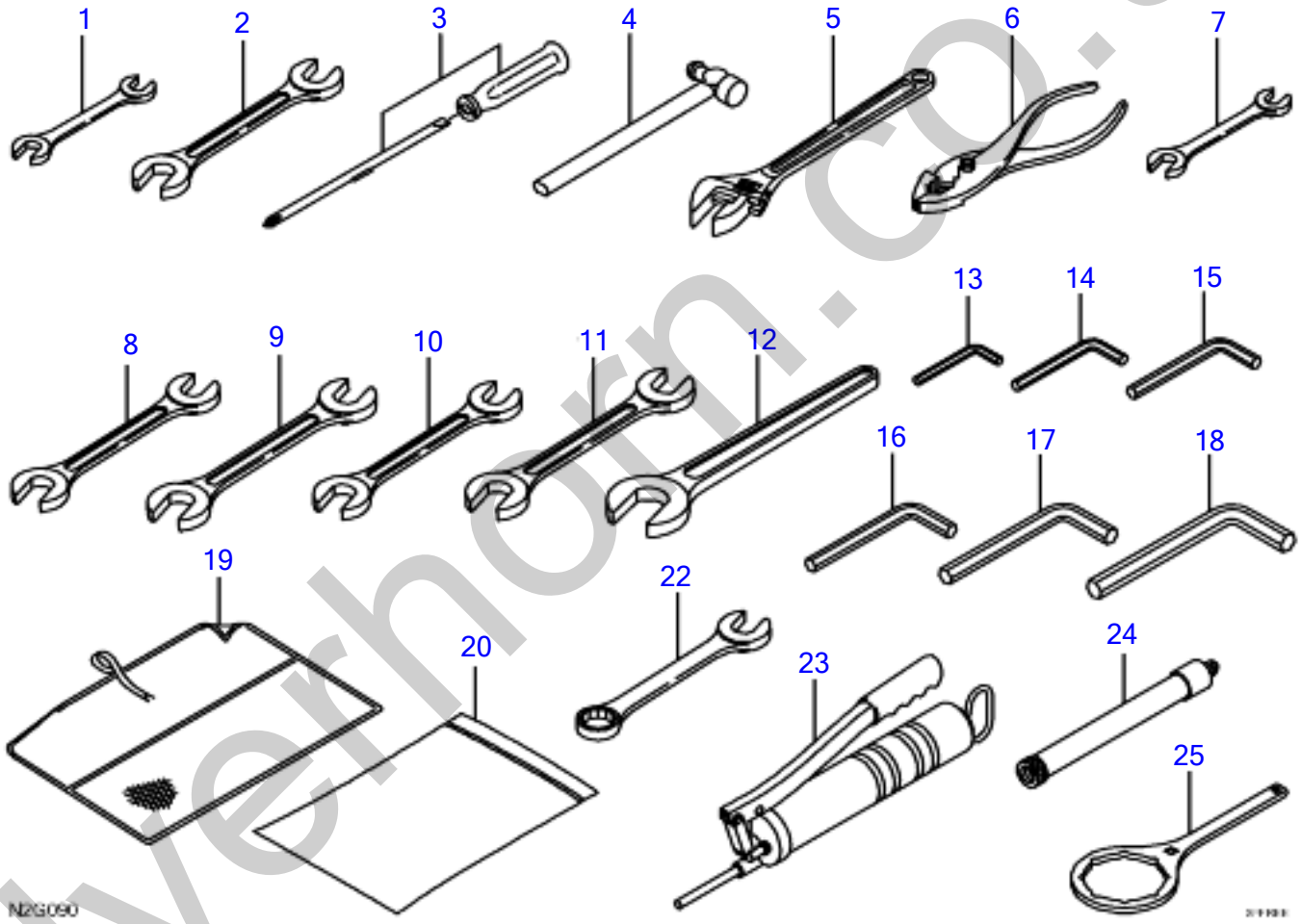

silverhorn.co.uk

TOOL & ACCESSORIES

Item	Part number	Description	Q'ty	Chan.	Serial No.	Serv.	Remarks
		TOOL SET					X05792-00000-2
0-1	0579200050	TOOL ASSY	1				
1	1690001012	・SPANNER	1				
2	1690001417	・SPANNER	1				
3	1690220205	・SCREWDRIVER	1				
4	1690300330	・HAMMER	1				
5	1690400250	・WRENCH, monkey	1				
6	1690500200	・PLIER	1				
7	1690001013	・SPANNER	1				
8	1690001922	・SPANNER	1				
9	1690002427	・SPANNER	1				
10	1690002730	・SPANNER	1				
11	1690003236	・SPANNER	1				
12	1690100041	・SPANNER	1				
13	1690600250	・WRENCH, hex	1				
14	1690600500	・WRENCH, hex	1				
15	1690600600	・WRENCH, hex	1				
16	1690600800	・WRENCH, hex	1				
17	1690601000	・WRENCH, hex	1				
18	1690601200	・WRENCH, hex	1				
19	1691400001	・CASE, tool	1				
20	1691900001	・CASE	1				
22	1690900019	・SPANNER	1				
23	1691060610	GUN, grease	1				
24	1554512600	TUBE	1				
25	1691903560	FILTER WRENCH	1				
	N2G090						

silverhorn.co.uk

PAINTED COLOR

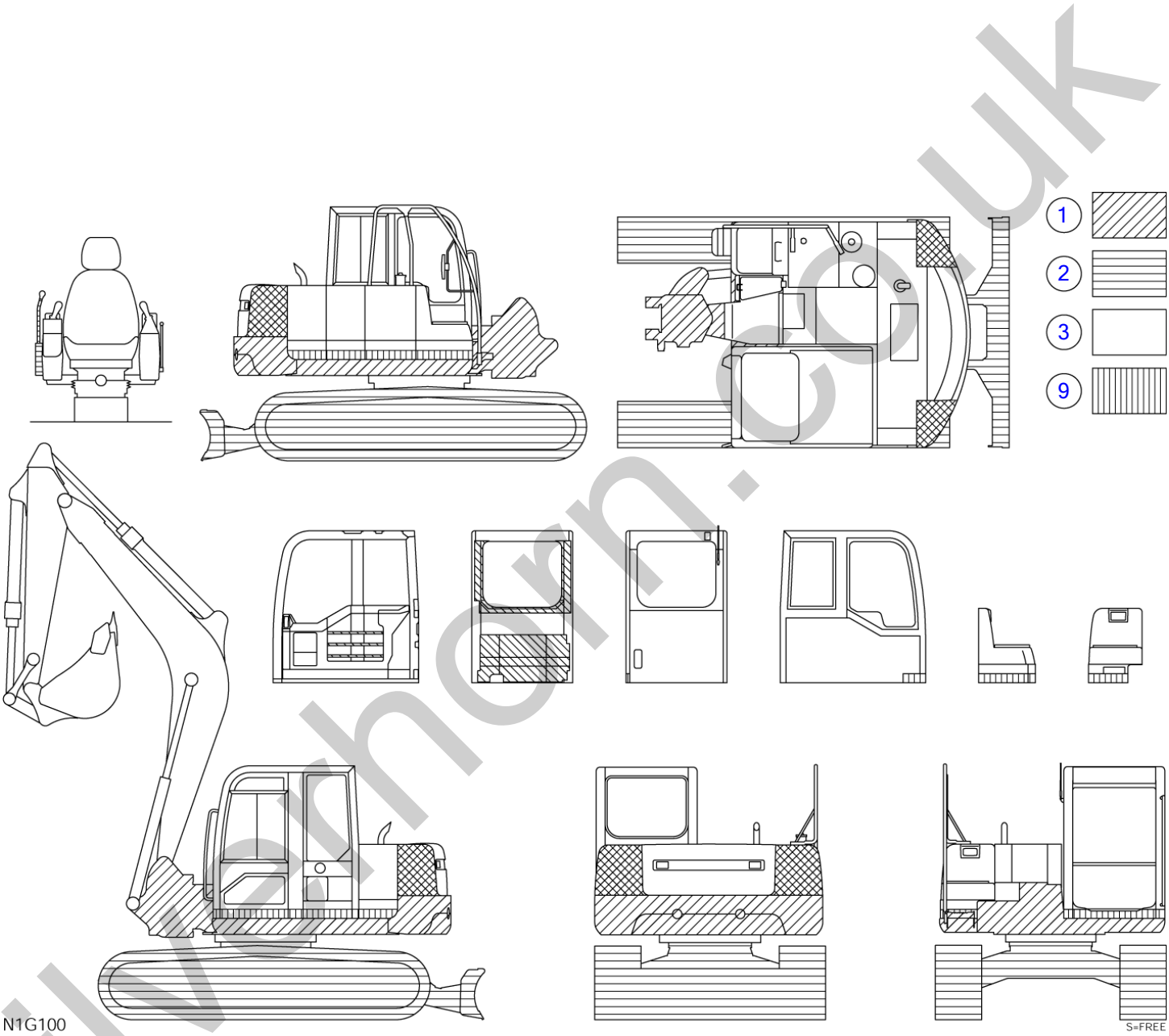

silverhorn.co.uk

PAINTED COLOR

Item	Part number	Description	Q'ty	Chan.	Serial No.	Serv.	Remarks
		PAINTED COLOR(rubber crawler)					X05791-00600-0
		PAINTED COLOR(steel crawler)					X05791-00700-0
1	1919060105	RED	1				
	1919069105	RED	1				spray
2	1919060144	GRAY	1				
	1919069144	GRAY	1				spray
3	1919060142	LIGHT GRAY	1				
	1919069142	LIGHT GRAY	1				spray
9	1919060158	SILVER GRAY	1				
	1919069158	SILVER GRAY	1				spray
	N1g100						

silverhorn.co.uk

SWIVEL JOINT

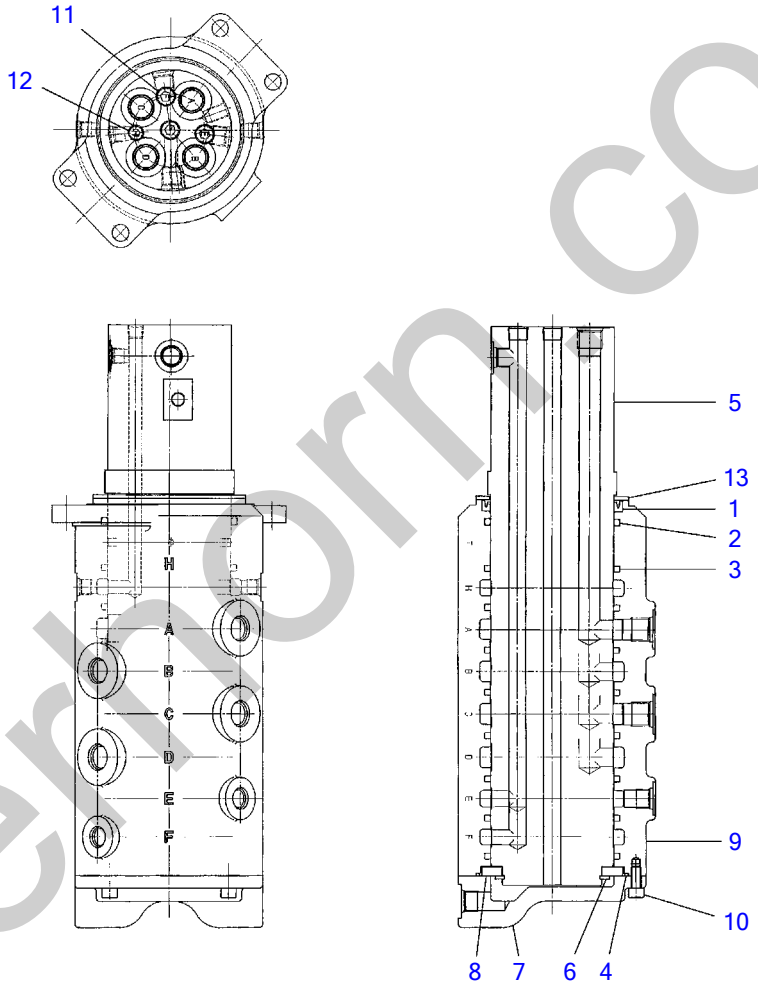

N1H040

S=free

silverthorn.co.uk

SWIVEL JOINT

Item		Part number	Description	Q'ty	Chan.	Serial No.	Serv.	Remarks
0		1904008500	JOINT, swivel	1				
0-1		1904008599	・KIT, seal	1				
1	X	1411161125	・・PACKING	1				
2	X	1420011050	・・O-RING	1				
3	X	1904008504	・・PACKING	8				
4	X	1420111250	・・O-RING	1				
5		1904008511	・SHAFT	1				
6		1221000085	・RING, snap	1				
7		1904008521	・COVER	1				
8		1904008508	・RING, thrust	1				
9		1904008501	・HOUSING	1				
10		1110050820	・SCREW, cap	4				
11		1501810003	・PLUG	3				
12		1501810002	・PLUG	1				
13		1904008513	・COVER	1				
		N1h040						

silverhorn.co.uk

CONTROL VALVE

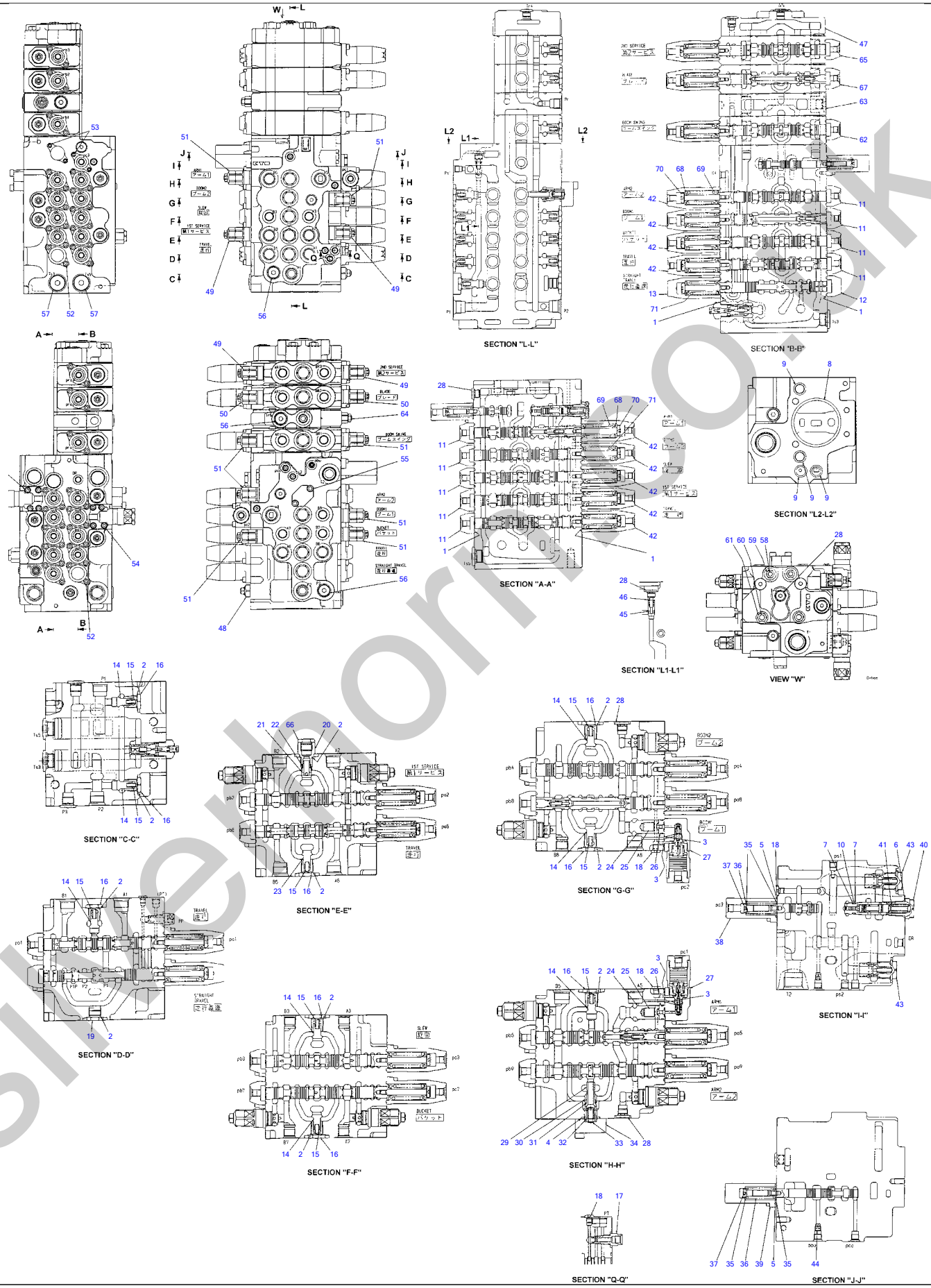

silverhorse.sk

CONTROL VALVE

Item	Part number	Description	Q'ty	Chan.	Serial No.	Serv.	Remarks
0	1901046800	VALVE ASSY, control	1				
0-1	1901042299	・KIT, seal	1				
1	X 1420110350	・・O-RING	20				
2	X 1901025482	・・O-RING	11				
3	X 1420010060	・・O-RING	4				
4	X 1901042282	・・O-RING	1				
5	X 1420000260	・・O-RING	2				
6	X 1420010240	・・O-RING	1				
7	X 1421020160	・・RING, back-up	2				
8	X 1420111000	・・O-RING	1				
9	X 1901042283	・・O-RING	4				
10	X 1420010160	・・O-RING	1				
11	1901042267	・CAP	9				
12	1901042268	・CAP	1				
13	1901042269	・CAP	1				
14	1901042226	・POPPET	8				
15	1901042256	・SPRING	9				
16	1901042271	・PLUG	9				
17	1901042272	・PLUG ASSY	1				
	1420010110	・・O-RING	1				
18	1901036677	・PLUG ASSY	4				
	1420010110	・・O-RING	1				
19	1901025498	・PLUG	1				
20	1901042273	・PLUG	1				
21	1901042227	・POPPET	1				
22	1901042257	・SPRING	1				
23	1901042228	・POPPET	1				
24	1901042229	・POPPET	2				
25	1901042258	・SPRING	2				
26	1901042259	・SPACER ASSY	2				
27	1901042221	・VALVE ASSY, anti-solenoid	2				
28	1901036678	・PLUG ASSY	5				
	1420010140	・・O-RING	1				
29	1901042241	・SLEEVE	1				
30	1901042236	・POPPET	1				
31	1901042237	・SPRING	1				
32	1901042230	・POPPET	1				
33	1901042261	・SPRING	1				
34	1901042274	・FLANGE	1				
35	1901029754	・HOLDER, spring	4				
36	1901042262	・SPRING	2				
37	1901036531	・END, spool	2				
38	1901042270	・CAP	1				
39	1901042275	・CAP	1				
40	1901042276	・PLUG	1				
41	1901042238	・PLUG, orifice	1				
42	1901042266	・CAP	9				
43	1901042222	・VALVE, relief	2				
44	1901042277	・PLUG, orifice	1				
45	1901042231	・POPPET	1				
46	1901042278	・SPRING	1				
47	1901042204	・HOUSING ASSY, outlet	1				
48	1901042223	・VALVE, relief	1				
	1420310912	・・O-RING	1				
49	1901042224	・VALVE, relief	4				
	1420310912	・・O-RING	1				
50	1901042225	・VALVE, relief	2				
	1420310912	・・O-RING	1				
51	1901042234	・VALVE, relief	8				
	1420310912	・・O-RING	1				
52	1110020825	・SCREW, cap	40				
53	1110020620	・SCREW, cap	4				
54	1110020850	・SCREW, cap	8				
55	1110051040	・SCREW, cap	2				
56	1901036572	・PLUG ASSY	3				
	1420010180	・・O-RING	1				
57	1901042279	・PLUG ASSY	2				
	1420010240	・・O-RING	1				

silverhorn.co.uk

CONTROL VALVE

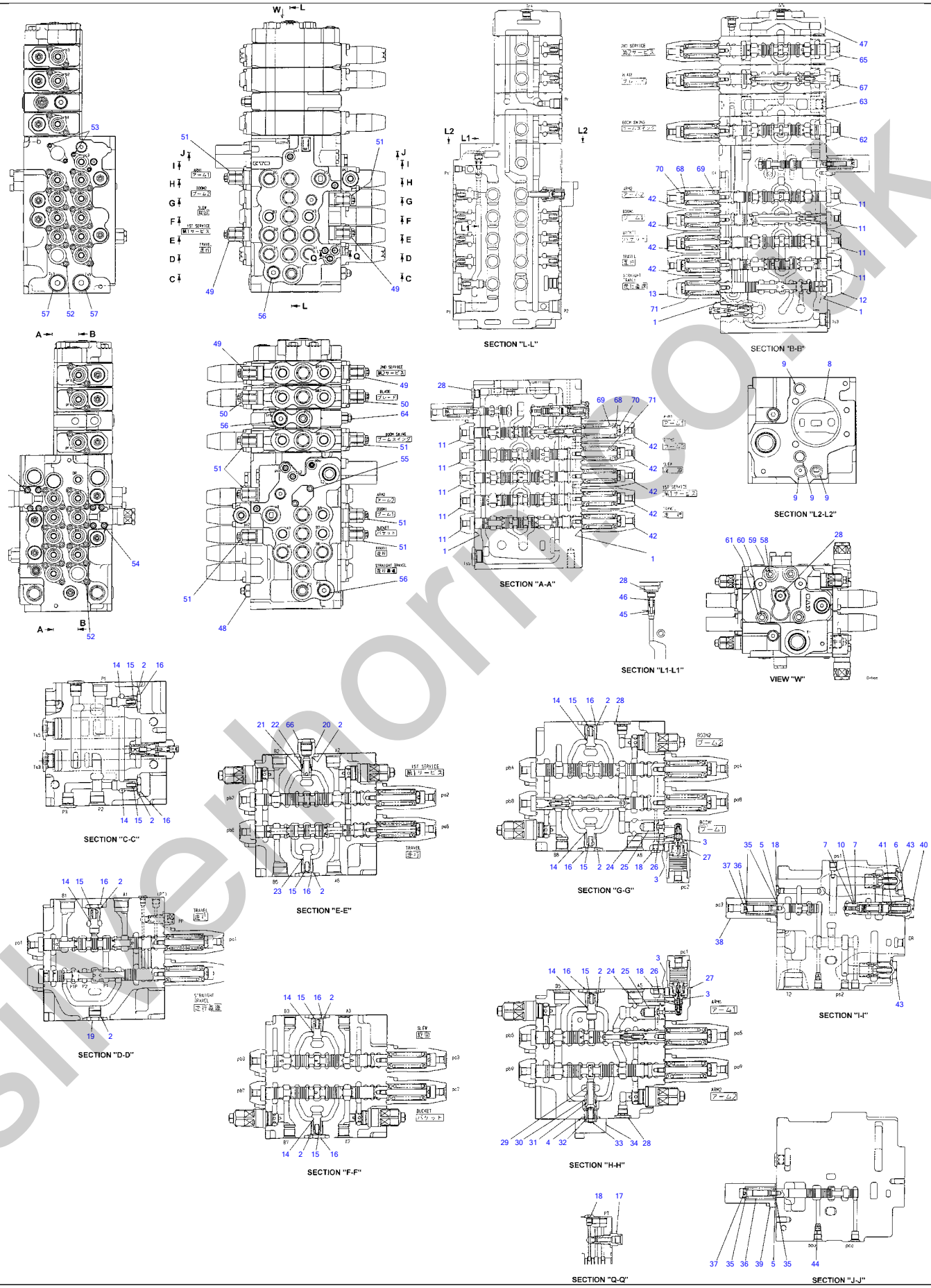

silverhorse.sk

CONTROL VALVE

Item	Part number	Description	Q'ty	Chan.	Serial No.	Serv.	Remarks
58	1901042207	・BOLT	2				
59	1901042232	・NUT	2				
60	1901042208	・BOLT	2				
61	1901042233	・NUT	2				
62	1901042218	・BLOCK ASSY; No.1	1				swing
63	1901042203	・HOUSING ASSY, inlet	1				
64	1901042235	・VALVE, relief	1				
64	1420310912	・・O-RING	1				
65	1901042205	・BLOCK ASSY; No.2	1				2nd. aux.
66	1901025493	・PLUG ASSY	1				
66	1420010180	・・O-RING	1				
67	1901042217	・BLOCK ASSY; No.3	1				blade
68	1901042851	・HOLDER, spring	20				
69	1901042856	・SPRING	8				
70	1901042831	・END, spool	10				
71	1901042857	・SPRING	2				
	N2h010						

silverhorn.co.uk

BLOCK ASSY; No. 1

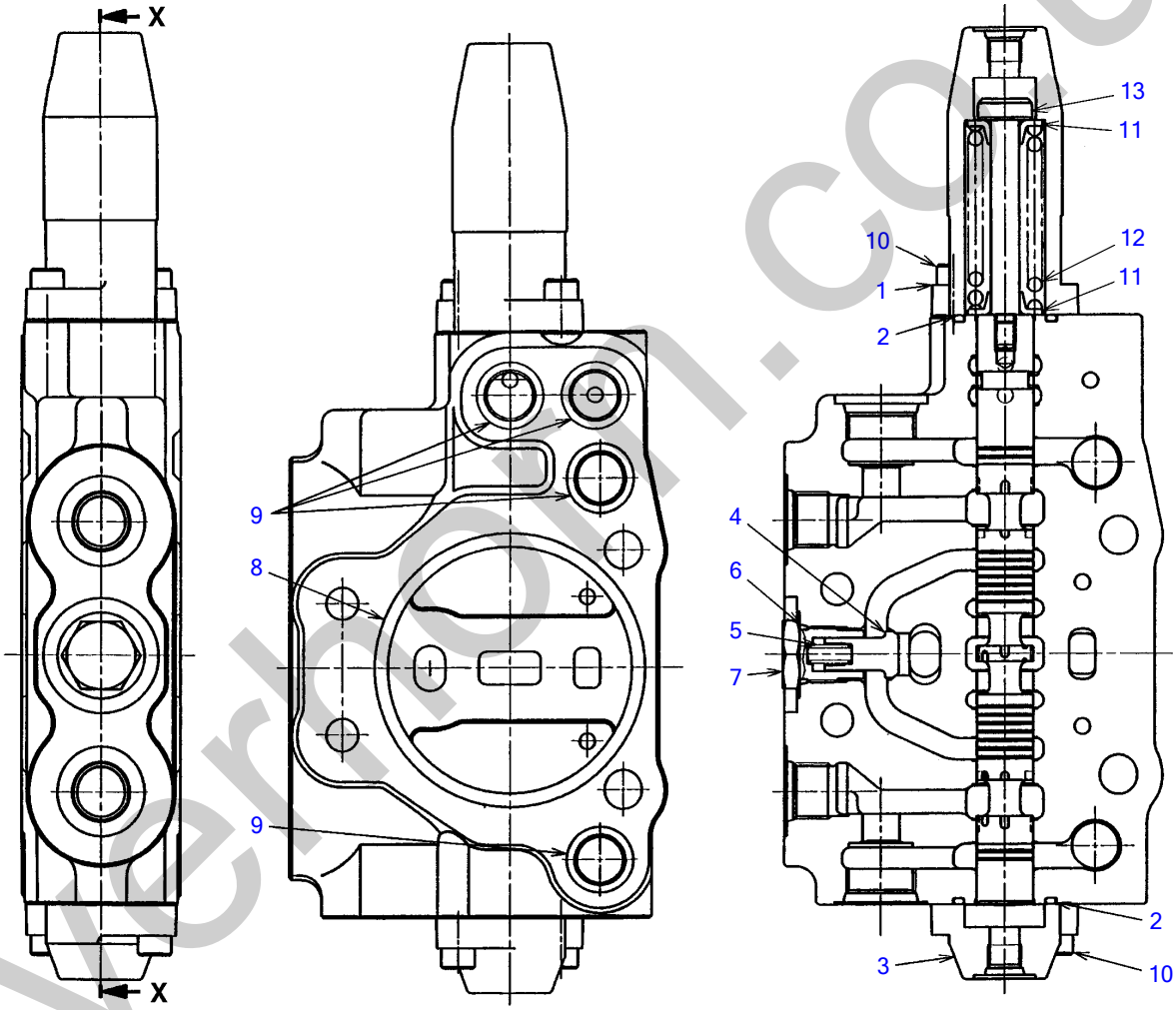

N0H271

SECTION "X-X"

S=FREE

silverhorn.co.uk

BLOCK ASSY; No. 1

Item	Part number	Description	Q'ty	Chan.	Serial No.	Serv.	Remarks
0	1901042218	BLOCK ASSY; No.1	1				swing
1	1901042266	・CAP	1				
2	1420110350	・O-RING	2				
3	1901042267	・CAP	1				
4	1901042226	・POPPET	1				
5	1901042256	・SPRING	1				
6	1901025482	・O-RING	1				
7	1901042271	・PLUG	1				
8	1420111000	・O-RING	1				
9	1901042283	・O-RING	4				
10	1110020825	・SCREW, cap	4				
11	1901042851	・HOLDER, spring	2				
12	1901042856	・SPRING	1				
13	1901042831	・END, spool	1				
	N0h271						

silverhorn.co.uk

BLOCK ASSY; No. 2

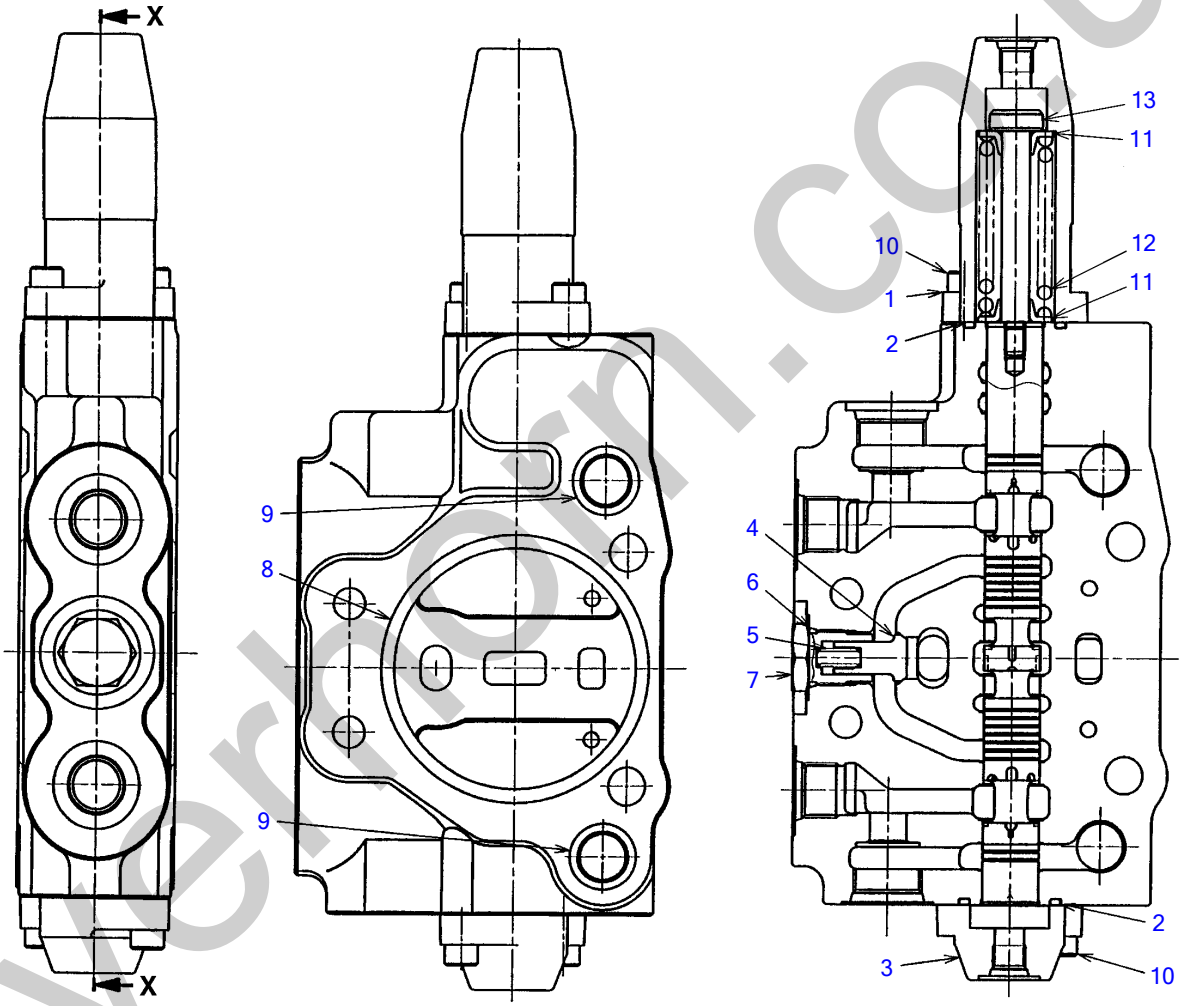

N0H281

SECTION "X-X"

S=FREE

silverhorn.co.uk

BLOCK ASSY; No. 2

Item	Part number	Description	Q'ty	Chan.	Serial No.	Serv.	Remarks
0	1901042205	BLOCK ASSY; No.2	1				auxiliary 2
1	1901042266	・CAP	1				
2	1420110350	・O-RING	2				
3	1901042267	・CAP	1				
4	1901042226	・POPPET	1				
5	1901042256	・SPRING	1				
6	1901025482	・O-RING	1				
7	1901042271	・PLUG	1				
8	1420111000	・O-RING	1				
9	1901042283	・O-RING	2				
10	1110020825	・SCREW, cap	4				
11	1901042851	・HOLDER, spring	2				
12	1901042856	・SPRING	1				
13	1901042831	・END, spool	1				
	N0h281						

silverhorn.co.uk

BLOCK ASSY; No. 3

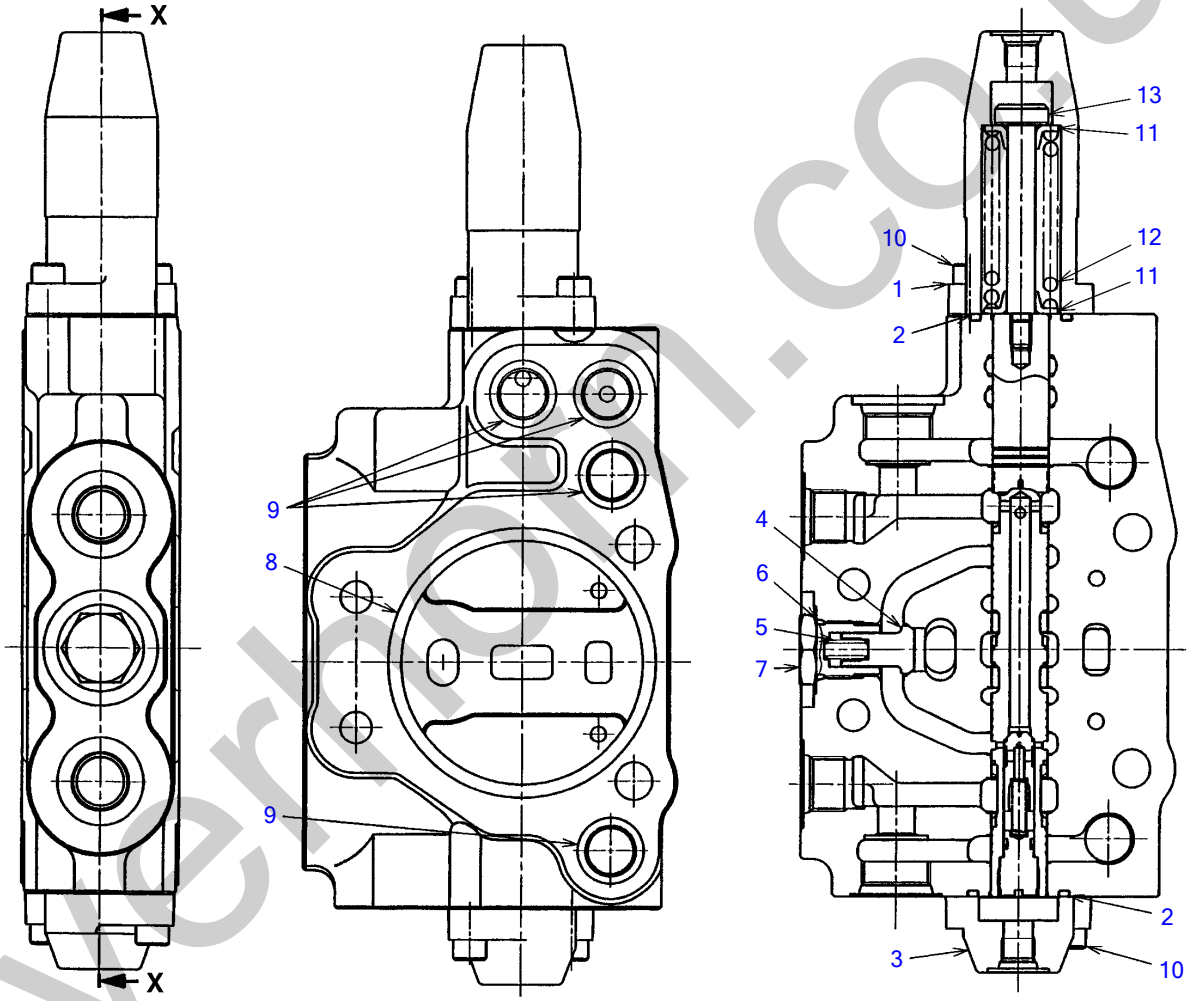

N0H291

SECTION "X-X"

S=FREE

silverhorn.co.uk

BLOCK ASSY; No. 3

Item	Part number	Description	Q'ty	Chan.	Serial No.	Serv.	Remarks
0	1901042217	BLOCK ASSY; No.3	1				blade
1	1901042266	・CAP	1				
2	1420110350	・O-RING	2				
3	1901042267	・CAP	1				
4	1901042226	・POPPET	1				
5	1901042256	・SPRING	1				
6	1901025482	・O-RING	1				
7	1901042271	・PLUG	1				
8	1420111000	・O-RING	1				
9	1901042283	・O-RING	2				
10	1110020825	・SCREW, cap	4				
11	1901042851	・HOLDER, spring	2				
12	1901042856	・SPRING	1				
13	1901042831	・END, spool	1				
	N0h291						

silverhorn.co.uk

INLET HOUSING ASSY

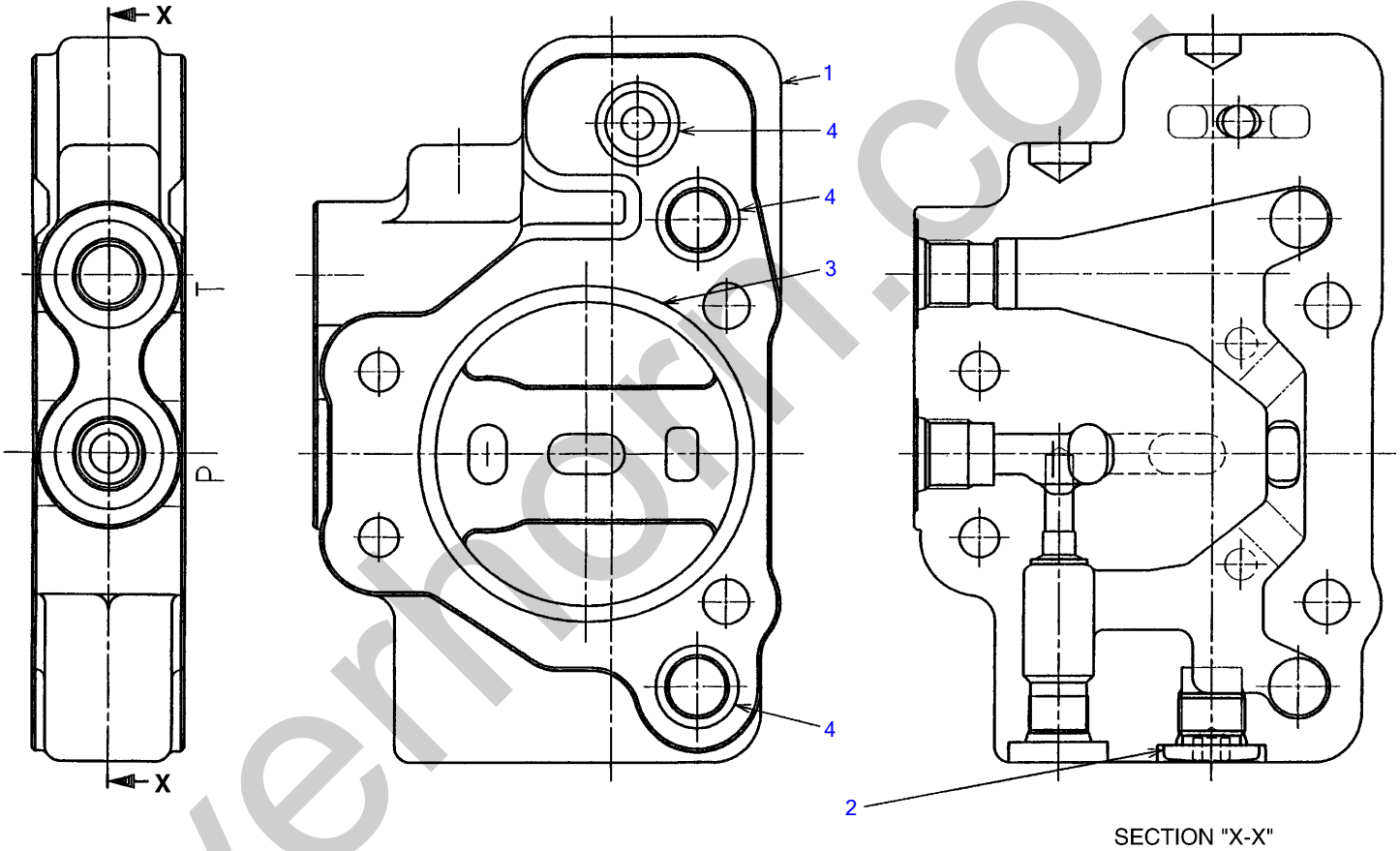

N0H300

S=FREE

silverhorn.co.uk

INLET HOUSING ASSY

Item	Part number	Description	Q'ty	Chan.	Serial No.	Serv.	Remarks
0	1901042203	HOUSING ASSY, inlet	1				
1	1901042281	・HOUSING	1				
2	1901036572	・PLUG ASSY	1				
3	1420111000	・O-RING	1				
4	1901042283	・O-RING	3				
	N0h300						

silverhorn.co.uk

OUTLET HOUSING ASSY

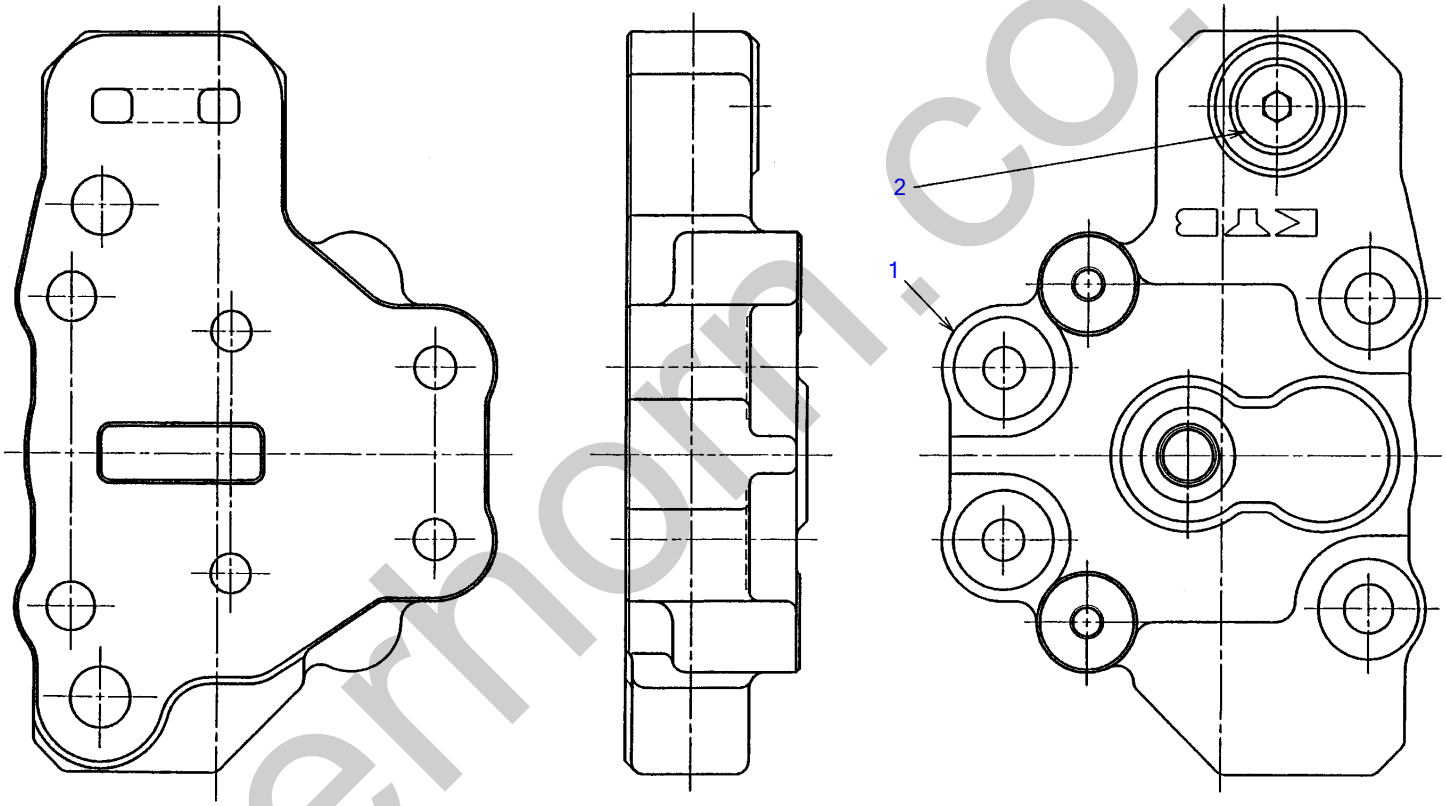

N0H310

S=FREE

silvernorn.co.uk

OUTLET HOUSING ASSY

Item	Part number	Description	Q'ty	Chan.	Serial No.	Serv.	Remarks
0	1901042204	HOUSING ASSY, outlet	1				
1	1901042284	・HOUSING	1				
2	1901036678	・PLUG ASSY	1				
	N0h310						

silverhorn.co.uk

ANTI-SOLENOID VALVE ASSY

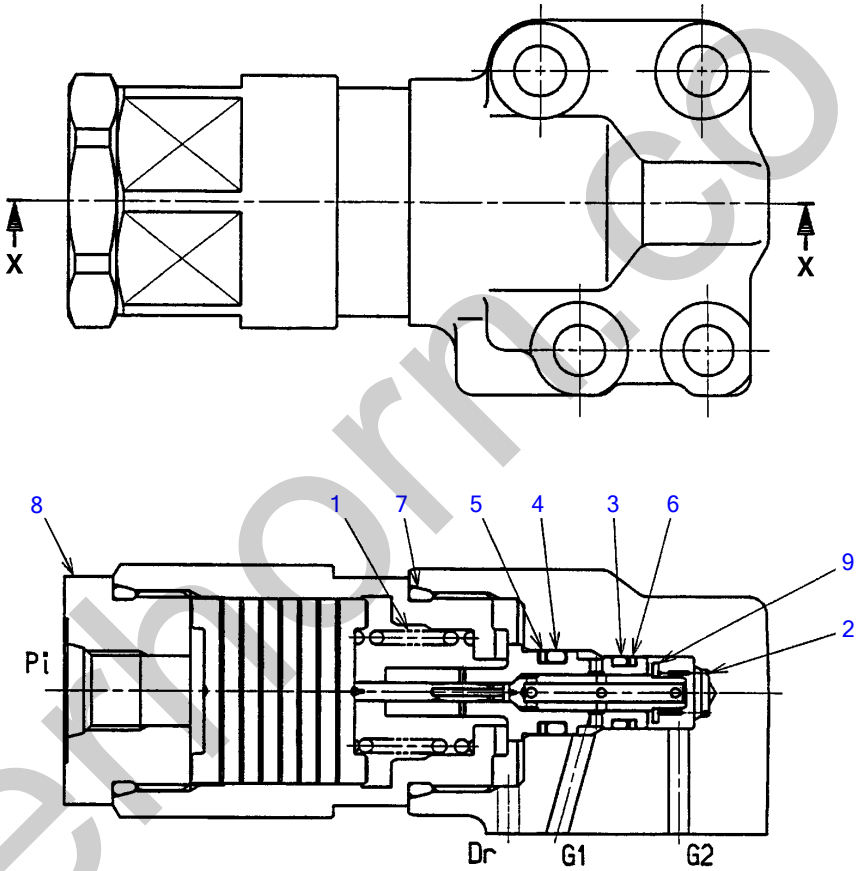

SECTION "X-X"

N0H320

S=FREE

silverthorn.co.uk

ANTI-SOLENOID VALVE ASSY

Item	Part number	Description	Q'ty	Chan.	Serial No.	Serv.	Remarks
0	1901042221	VALVE ASSY, anti-solenoid	1				
1	1901042246	・SPRING	1				
2	1901042245	・SPRING	1				
3	1420000900	・O-RING	1				
4	1420000100	・O-RING	1				
5	1421020100	・RING, back-up	1				
6	1421020090	・RING, back-up	1				
7	1901042244	・O-RING	1				
8	1901042243	・PLUG ASSY	1				
9	1901042242	・SEAT, spring	1				
	N0h320						

silverhorn.co.uk

SOLENOID VALVE; 2 BLOCKS

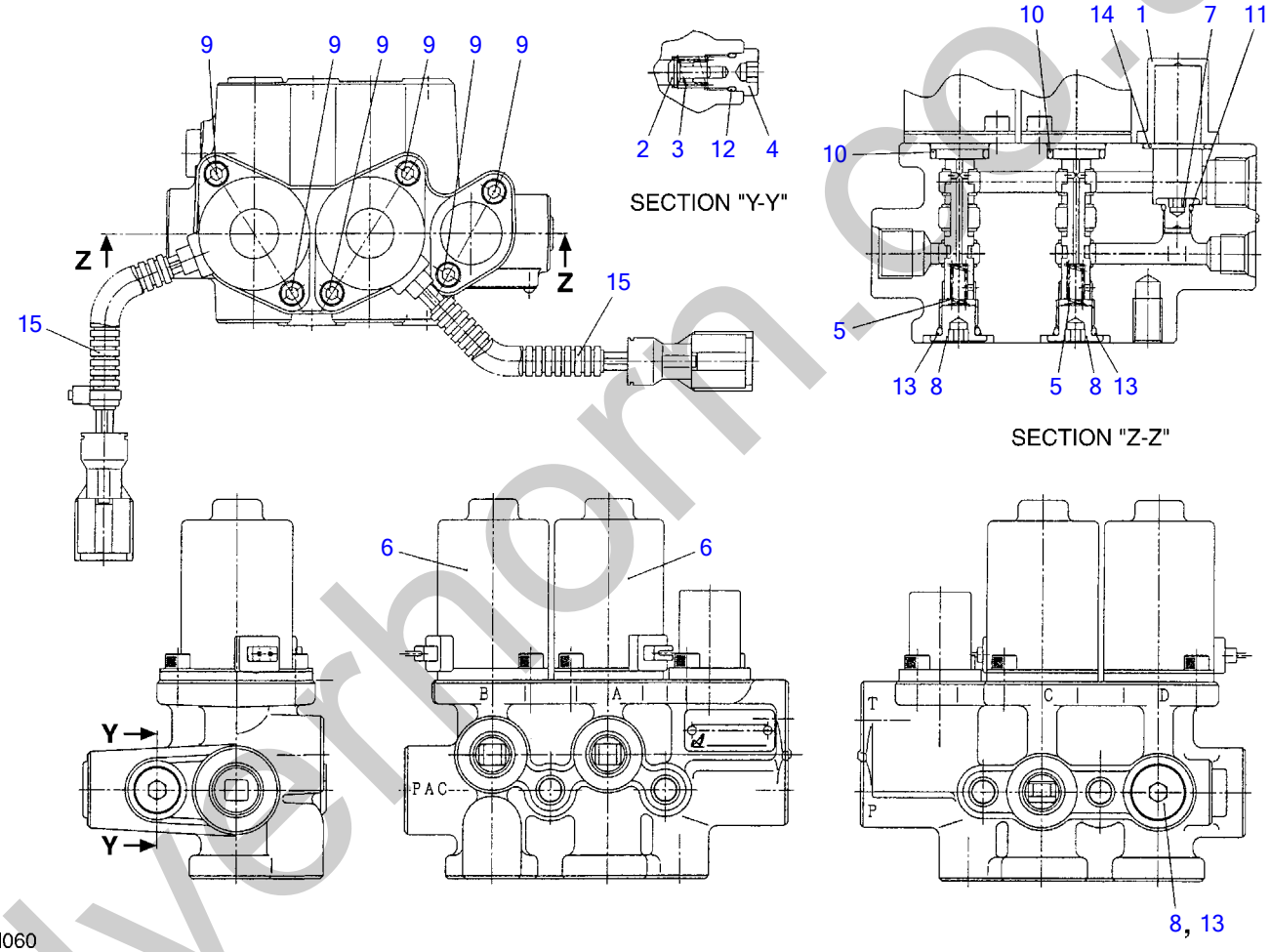

N0H060

S=FREE

silverhorn.co.uk

SOLENOID VALVE; 2 BLOCKS

Item	Part number	Description	Q'ty	Chan.	Serial No.	Serv.	Remarks
0	1901744600	VALVE ASSY, solenoid (2-blocks)	1				
1	1901738303	・COVER	1				
2	1901035426	・PLUNGER	1				
3	1901004357	・SPRING	1				
4	1901035471	・PLUG	1				
5	1901735511	・SPRING	2				
6	1901744609	・SOLENOID	2				
7	1501750001	・PLUG	1				
	1420010080	・・O-RING	1				
8	1501750002	・PLUG	3				
	1420010110	・・O-RING	1				
9	1110020512	・SCREW, cap	6				
10	1420000160	・O-RING	2				
11	1420010080	・O-RING	1				
12	1420010100	・O-RING	1				
13	1420010110	・O-RING	3				
14	1420010200	・O-RING	1				
15	1901044619	・TUBE	2				
	N0h061						

silverhorn.co.uk

SOLENOID VALVE; 1 BLOCKS (with 4th aux. Lines)

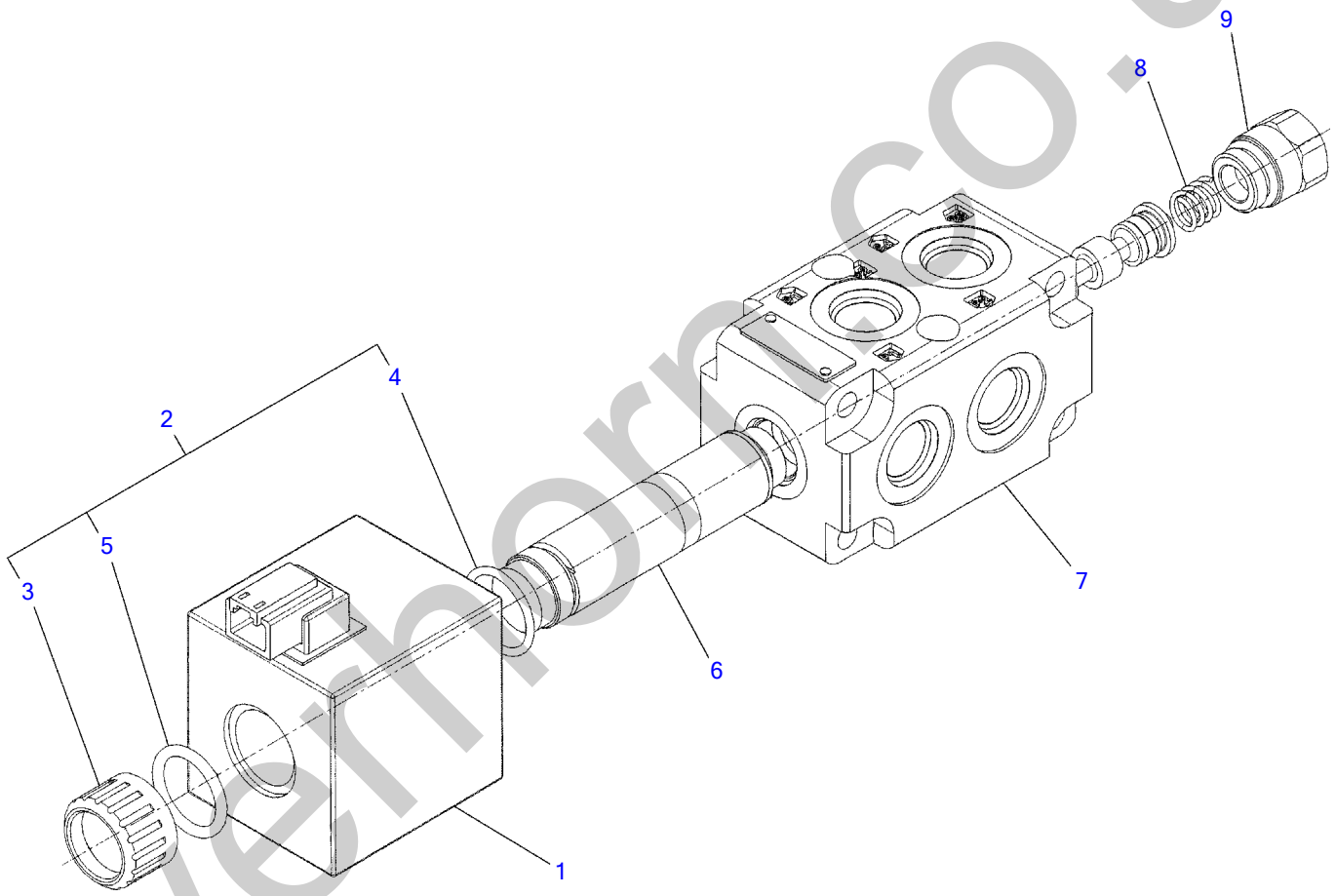

L5H040

S=free

silverhorn.co.uk

SOLENOID VALVE; 1 BLOCKS (with 4th aux. Lines)

Item	Part number	Description	Q'ty	Chan.	Serial No.	Serv.	Remarks
0	1901748300	VALVE ASSY, solenoid (1-blocks)	1				
1	1901748301	・COIL	1				
2	1901748320	・NUT ASSY	1				
3	1901748321	・・NUT	1				
4	1901748322	・・O-RING	1				
5	1901748323	・・O-RING	1				
6	1901748306	・TUBE KIT	1				
7	1901748307	・BODY	1				
8	1901748309	・SPRING	1				
9	1901748310	・PLUG	1				
	L3h541						

silverhorn.co.uk

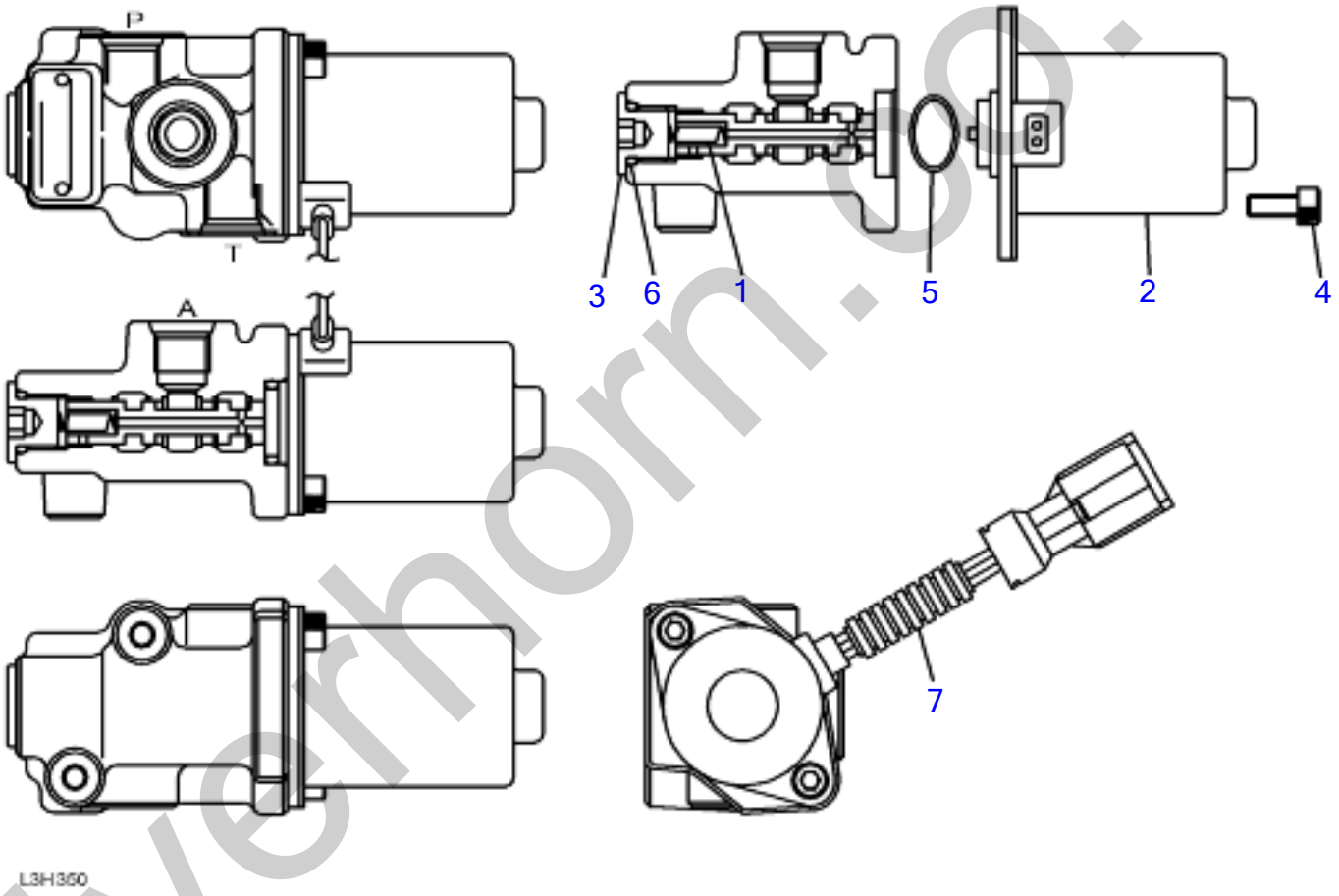

silverhorn.co.uk

SOLENOID VALVE 1 BLOCK (SERVICE HIGH FLOW)

Item	Part number	Description	Q'ty	Chan.	Serial No.	Serv.	Remarks
0	1901739600	SOLENOID VALVE ASST (1 BLOCK)	1				
1	1901734404	* SPRING	1				
2	1901738907	* SOLENOID	1				
3	1901738312	* PLUG	1				
4	1110040512	* CAP SCREW	2				
5	1420000160	* O-RING	1				
6	1420010110	* O-RING	1				
7	1901738919	* TUBE	1				
	L3H350						

silverhorn.co.uk

PILOT VALVE (R.H.)

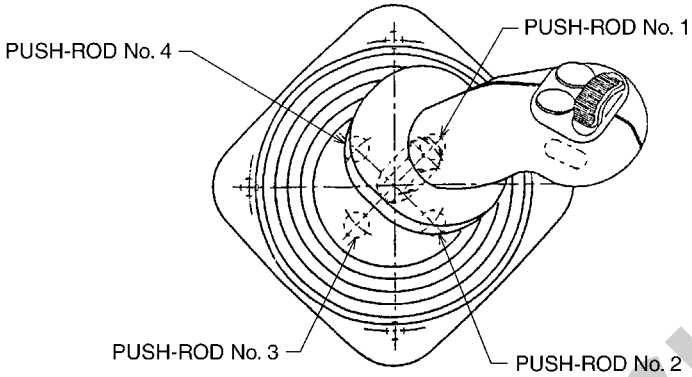

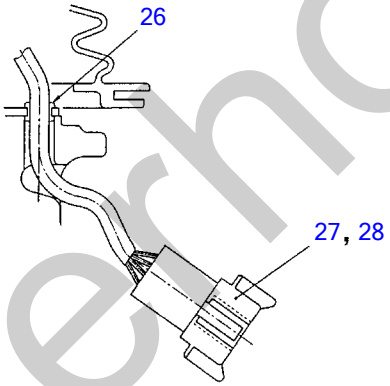

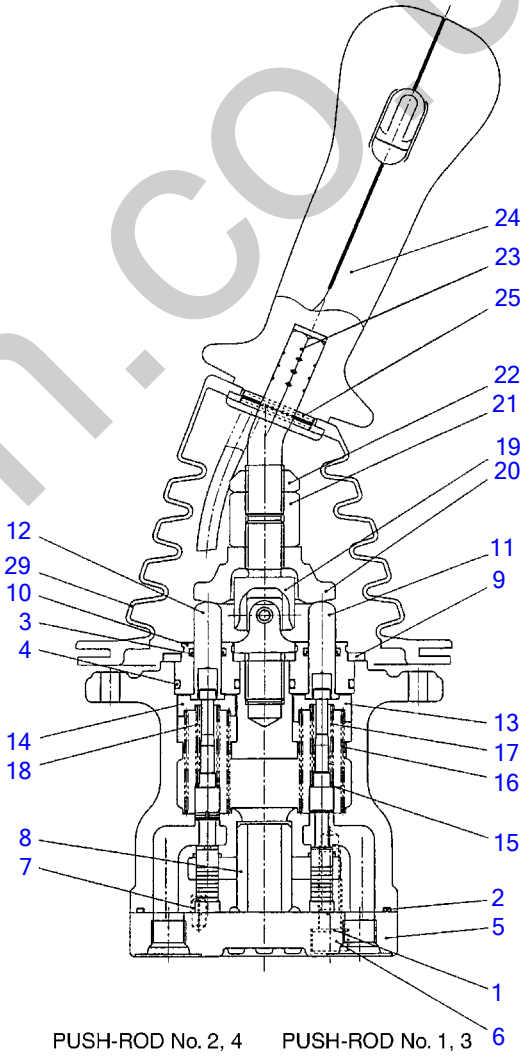

N0H070

S=free

silverhorn.co.uk

PILOT VALVE (R.H.)

Item	Part number	Description	Q'ty	Chan.	Serial No.	Serv.	Remarks
0	1901743700	VALVE ASSY, pilot	1				RIGHT
0-1	1901743699	・KIT, seal	1				
1	X 1901715103	・・WASHER	2				
2	X 1420510850	・・O-RING	1				
3	X 1901710914	・・SEAL	4				
4	X 1420010200	・・O-RING	4				
5	1901743601	・PLATE	1				
6	1110020835	・SCREW, cap	2				
7	1213000510	・PIN, spring	1				
8	1901743606	・BUSHING	1				
9	1901735608	・PLATE	1				
10	1901710912	・PLUG	4				
11	1901719011	・ROD	2				
12	1901719012	・ROD	2				
13	1901743614	・HOLDER	2				
14	1901743615	・HOLDER	2				
15	1901710917	・WASHER	4				
16	1901743617	・SPRING	4				
17	1901743618	・SPRING	2				
18	1901743619	・SPRING	2				
19	1901720232	・JOINT	1				
20	1901743620	・PLATE	1				
21	1901735625	・NUT	1				
22	1901735626	・NUT	1				
23	1901740432	・LEVER	1				
24	1901740410	・HANDLE	1				
25	1213000528	・PIN, spring	1				
26	1901735630	・BUSHING	1				
27	1901740446	・RECEPTACLE	1				
28	1901740447	・WEDGE	1				
29	1901735632	・BOOT	1				
	N0h070						

silverhorn.co.uk

PILOT VALVE (L.H.)

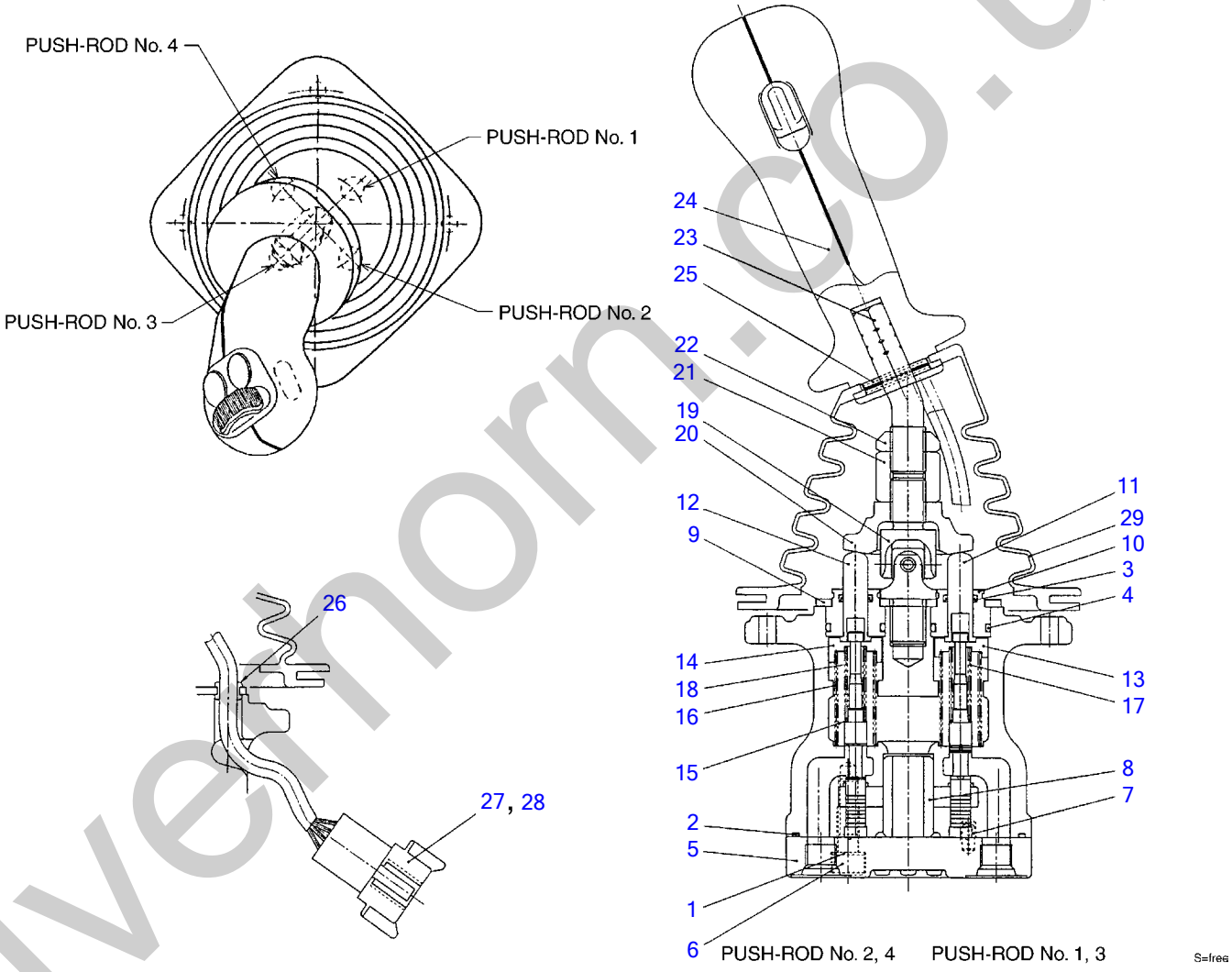

silvermorn.co.uk

PILOT VALVE (L.H.)

Item	Part number	Description	Q'ty	Chan.	Serial No.	Serv.	Remarks
0	1901743600	VALVE ASSY, pilot	1				LEFT
0-1	1901743699	・KIT, seal	1				
1	X 1901715103	・・WASHER	2				
2	X 1420510850	・・O-RING	1				
3	X 1901710914	・・SEAL	4				
4	X 1420010200	・・O-RING	4				
5	1901743601	・PLATE	1				
6	1110020835	・SCREW, cap	2				
7	1213000510	・PIN, spring	1				
8	1901743606	・BUSHING	1				
9	1901735608	・PLATE	1				
10	1901710912	・PLUG	4				
11	1901719011	・ROD	2				
12	1901719012	・ROD	2				
13	1901743614	・HOLDER	2				
14	1901743615	・HOLDER	2				
15	1901710917	・WASHER	4				
16	1901743617	・SPRING	4				
17	1901743618	・SPRING	2				
18	1901743619	・SPRING	2				
19	1901720232	・JOINT	1				
20	1901743620	・PLATE	1				
21	1901735625	・NUT	1				
22	1901735626	・NUT	1				
23	1901740432	・LEVER	1				
24	1901740410	・HANDLE	1				
25	1213000528	・PIN, spring	1				
26	1901735630	・BUSHING	1				
27	1901740446	・RECEPTACLE	1				
28	1901740447	・WEDGE	1				
29	1901735632	・BOOT	1				
	N0h080						

silverhorn.co.uk

HANDLE (with slide switch)

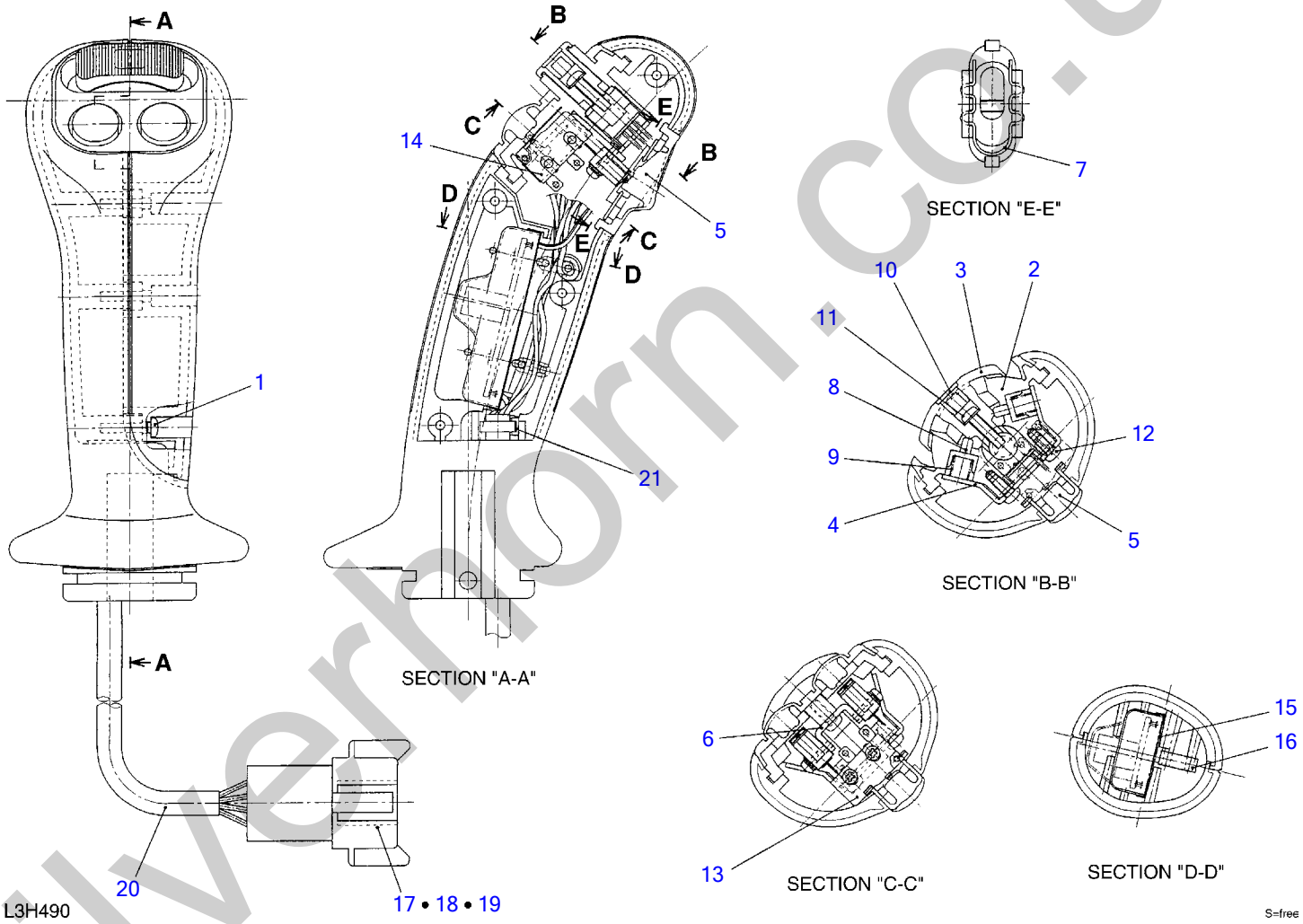

silverhorn.co.uk

HANDLE (with slide switch)

Item	Part number	Description	Q'ty	Chan.	Serial No.	Serv.	Remarks
0	1901740410	HANDLE ASSY	1				
1	1122400312	・SCREW	4				
2	1901740417	・CASE	1				
3	1901740418	・CAM	1				
4	1901740401	・PLATE	1				
5	1901740402	・BUTTON	1				
6	1901740403	・BRACKET	1				
7	1901740404	・CLIP	1				
8	1901740405	・PISTON	2				
9	1901740406	・SPRING	2				
10	1901740407	・CAP	1				
11	1150010312	・SCREW	1				
12	1122400306	・SCREW	3				
13	1901740408	・SWITCH	1				
14	1901740409	・SWITCH	2				
15	1901740411	・COVER	1				
16	1901740412	・CAP	2				
17	1901740446	・RECEPTACLE	1				
18	1901740447	・WEDGE	1				
19	1901740413	・PIN	8				
20	1901740414	・PROTECTOR	1				
21	1901740415	・BAND	1				
	L3h490						

silverhorn.co.uk

REMOTE CONTROL VALVE (travel)

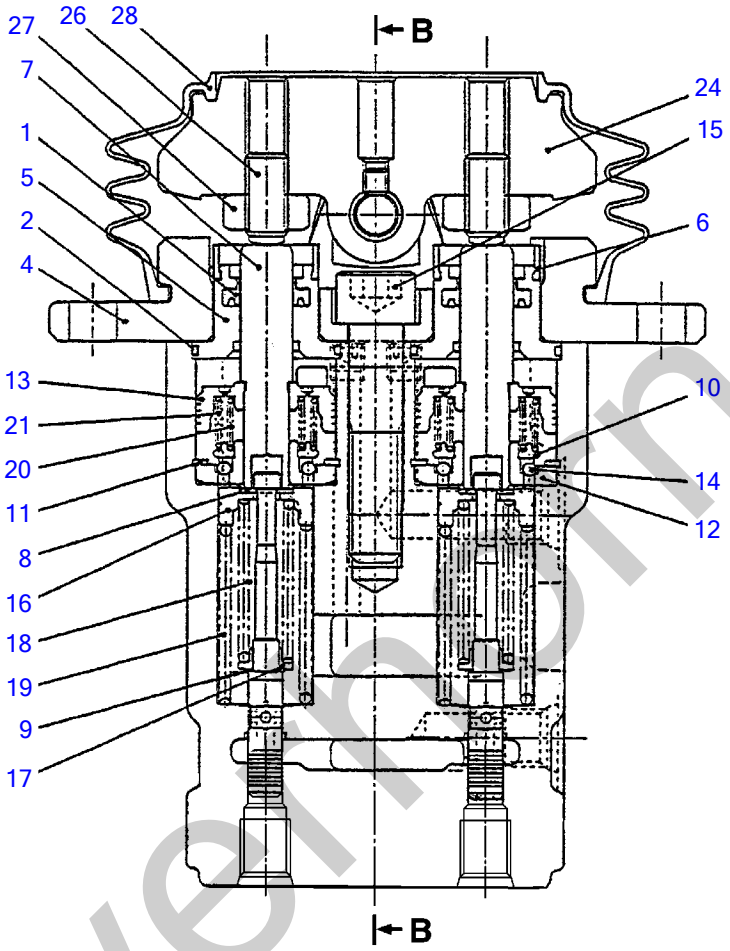

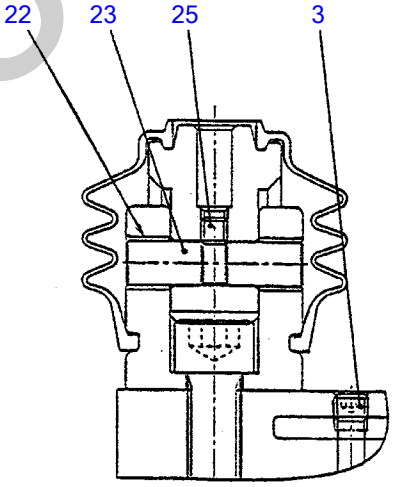

SECTION "B-B"

L3H360

S=free

silvermm.co.uk

REMOTE CONTROL VALVE (travel)

Item	Part number	Description	Q'ty	Chan.	Serial No.	Serv.	Remarks
0	1901743800	VALVE ASSY, remote-control	1				travel
0-1	1901743899	・KIT, seal	1				
1	X 1901733515	・・PACKING	4				
2	X 1420300025	・・O-RING	4				
3	1901738851	・PLUG	2				
4	1901733512	・COVER	2				
5	1901733513	・PLUG	4				
6	1901733514	・CUP	4				
7	1901733517	・ROD	4				
8	1901710915	・WASHER	8				
9	1901710917	・WASHER	4				
10	1901733520	・HOLDER	4				
11	1901733521	・RING	4				
12	1901733522	・BUSHING	4				
13	1901733523	・PISTON	4				
14	1390010030	・BALL, steel	12				
15	1110021255	・SCREW, cap	2				
16	1901733527	・HOLDER	4				
17	1901733528	・WASHER	4				
18	1901743820	・SPRING	4				
19	1901733530	・SPRING	4				
20	1901733531	・SPRING	4				
21	1901733532	・SPRING	4				
22	1333001010	・BUSHING	4				
23	1901725215	・SHAFT	2				
24	1901725216	・CAM	2				
25	1121040606	・SET-SCREW	2				
26	1901725218	・SET-SCREW	4				
27	1130250010	・NUT	4				
28	1901725220	・BOOT	2				
	N0h090						

silverhorn.co.uk

REMOTE CONTROL VALVE (swing)

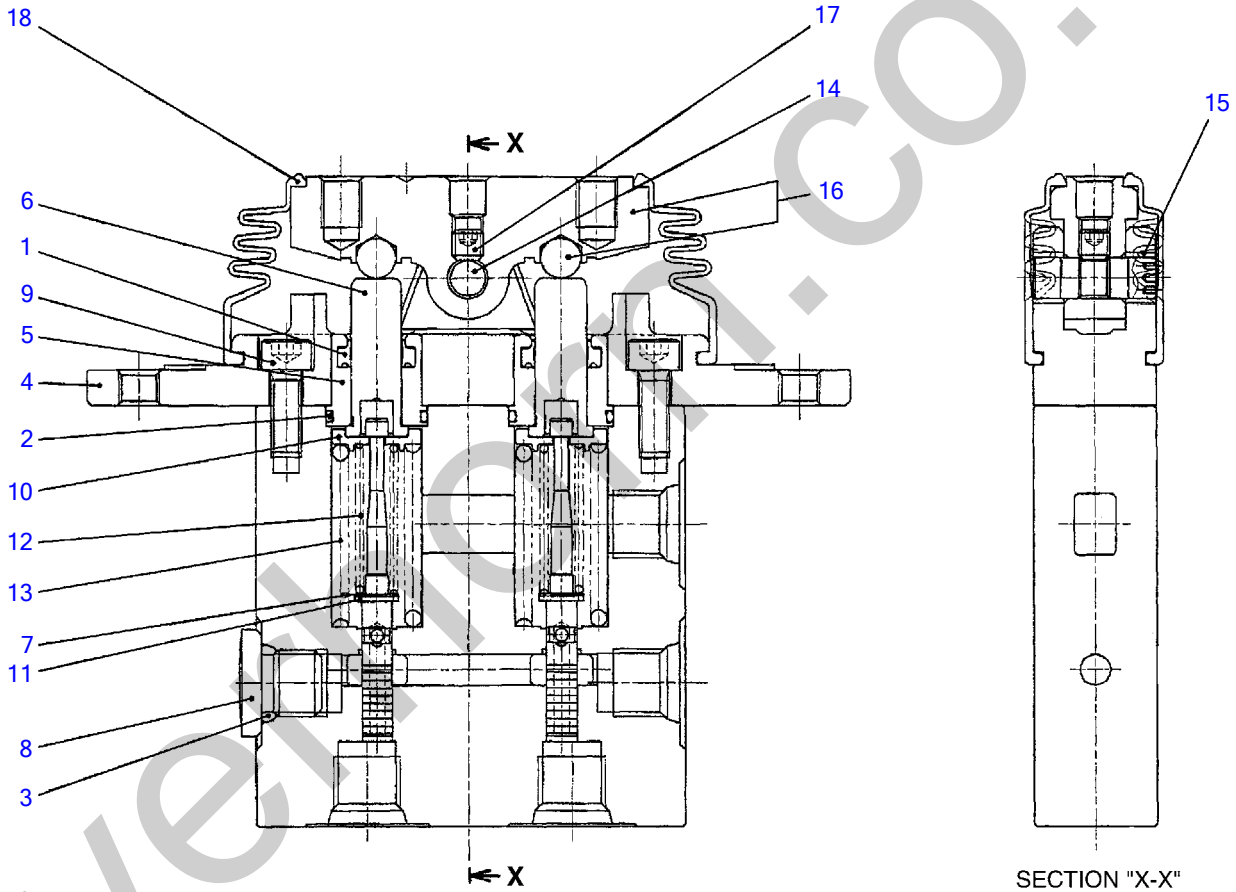

N2H010

S=FREE

silverthorn.co.uk

REMOTE CONTROL VALVE (swing)

Item		Part number	Description	Q'ty	Chan.	Serial No.	Serv.	Remarks
0		1901735000	VALVE ASSY, remote-control	1				swing
0-1		1901745499	・KIT, seal	1				
1	X	1901745404	・・PACKING	2				
2	X	1420300017	・・O-RING	2				
3	X	1420010110	・・O-RING	1				
4		1901745402	・COVER	1				
5		1901745403	・PLUG	2				
6		1901745406	・ROD	2				
7		1901745407	・SHIM	2				
8		1501750002	・PLUG	1				
		1420010110	・・O-RING	1				
9		1110020616	・SCREW, cap	2				
10		1901745412	・HOLDER	2				
11		1901745413	・WASHER	2				
12		1901745414	・SPRING	2				
13		1901735015	・SPRING	2				
14		1901735016	・SHAFT	1				
15		1901745417	・BUSHING	2				
16		1901735018	・CAM ASSY	1				
17		1121040606	・SET-SCREW	1				
18		1901735001	・BOOT	1				
		N2h010						

silverhorn.co.uk

REMOTE CONTROL VALVE (dozer blade)

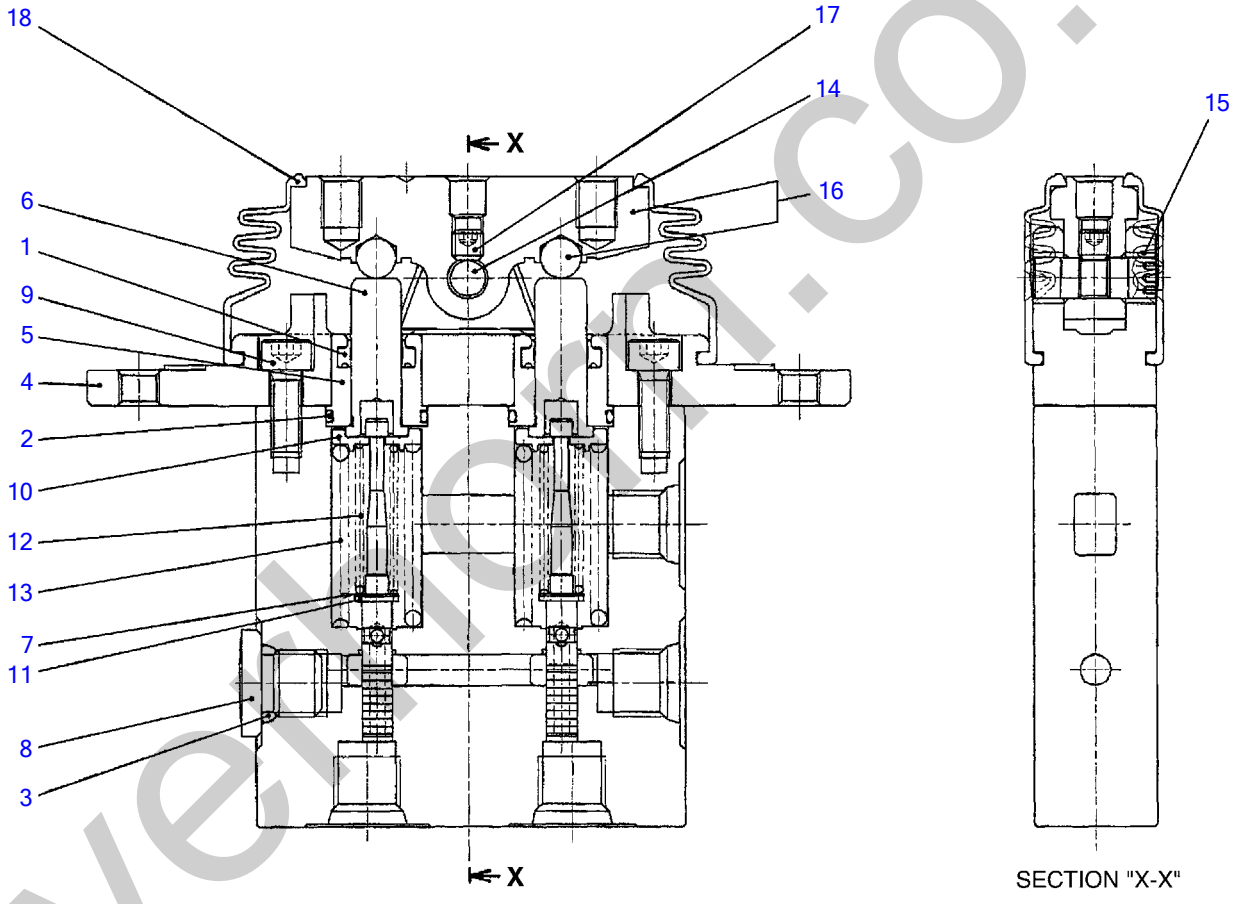

N2H020

silverthorn.co.uk

REMOTE CONTROL VALVE (dozer blade)

Item	Part number		Description	Q'ty	Chan.	Serial No.	Serv.	Remarks
0		1901745400	VALVE ASSY, remote-control	1				blade
0-1		1901745499	・KIT, seal	1				
1	X	1901745404	・・PACKING	2				
2	X	1420300017	・・O-RING	2				
3	X	1420010110	・・O-RING	1				
4		1901745402	・COVER	1				
5		1901745403	・PLUG	2				
6		1901745406	・ROD	2				
7		1901745407	・SHIM	2				
8		1501750002	・PLUG	1				
		1420010110	・・O-RING	1				
9		1110020616	・SCREW, cap	2				
10		1901745412	・HOLDER	2				
11		1901745413	・WASHER	2				
12		1901745414	・SPRING	2				
13		1901745415	・SPRING	2				
14		1901735016	・SHAFT	1				
15		1901745417	・BUSHING	2				
16		1901735018	・CAM ASSY	1				
17		1121040606	・SET-SCREW	1				
18		1901735001	・BOOT	1				
		N2h020						

silverhorn.co.uk

SHUT-OFF VALVE (right boom)

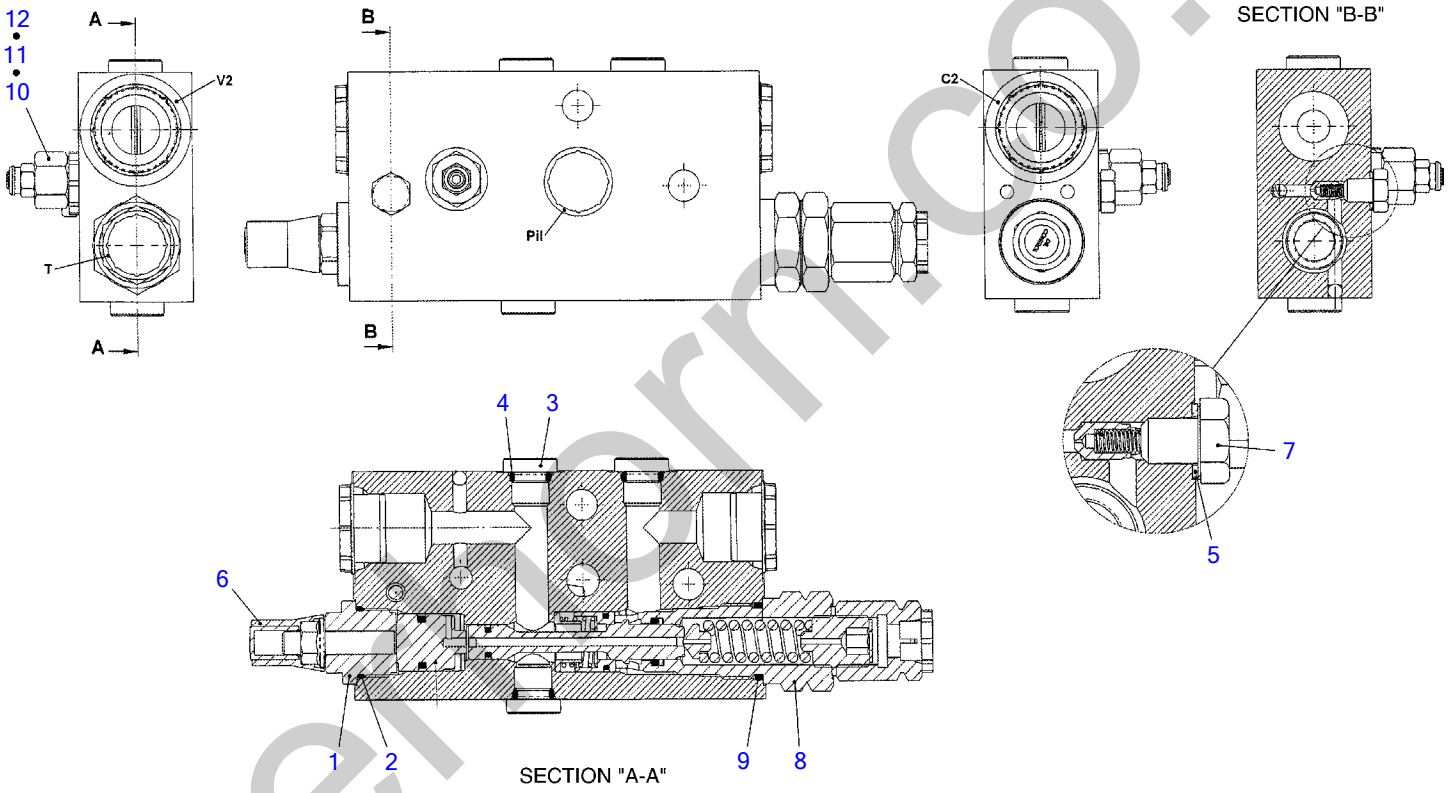

N0H400

S=free

silverthorn.co.uk

SHUT-OFF VALVE (right boom)

Item	Part number	Description	Q'ty	Chan.	Serial No.	Serv.	Remarks
0	1901747600	VALVE ASSY, shut-off	1				right boom
1	1901747510	・PLUG ASSY	1				
2	1901747601	・・O-RING	1				
3	1901744305	・PLUG ASSY	3				
4	1420010110	・・O-RING	1				
5	1901746206	・SEAL	1				
6	1901746201	・CAP	1				
7	1901746207	・BOLT	1				
8	1901747603	・VALVE ASSY, check	1				
9	1901747512	・・O-RING	1				
10	1901747602	・VALVE ASSY, relief	1				
11	1901746208	・・RING, back-up	1				
12	1901746211	・・O-RING	1				
	N0h400						

silverhorn.co.uk

SHUT-OFF VALVE (left boom)

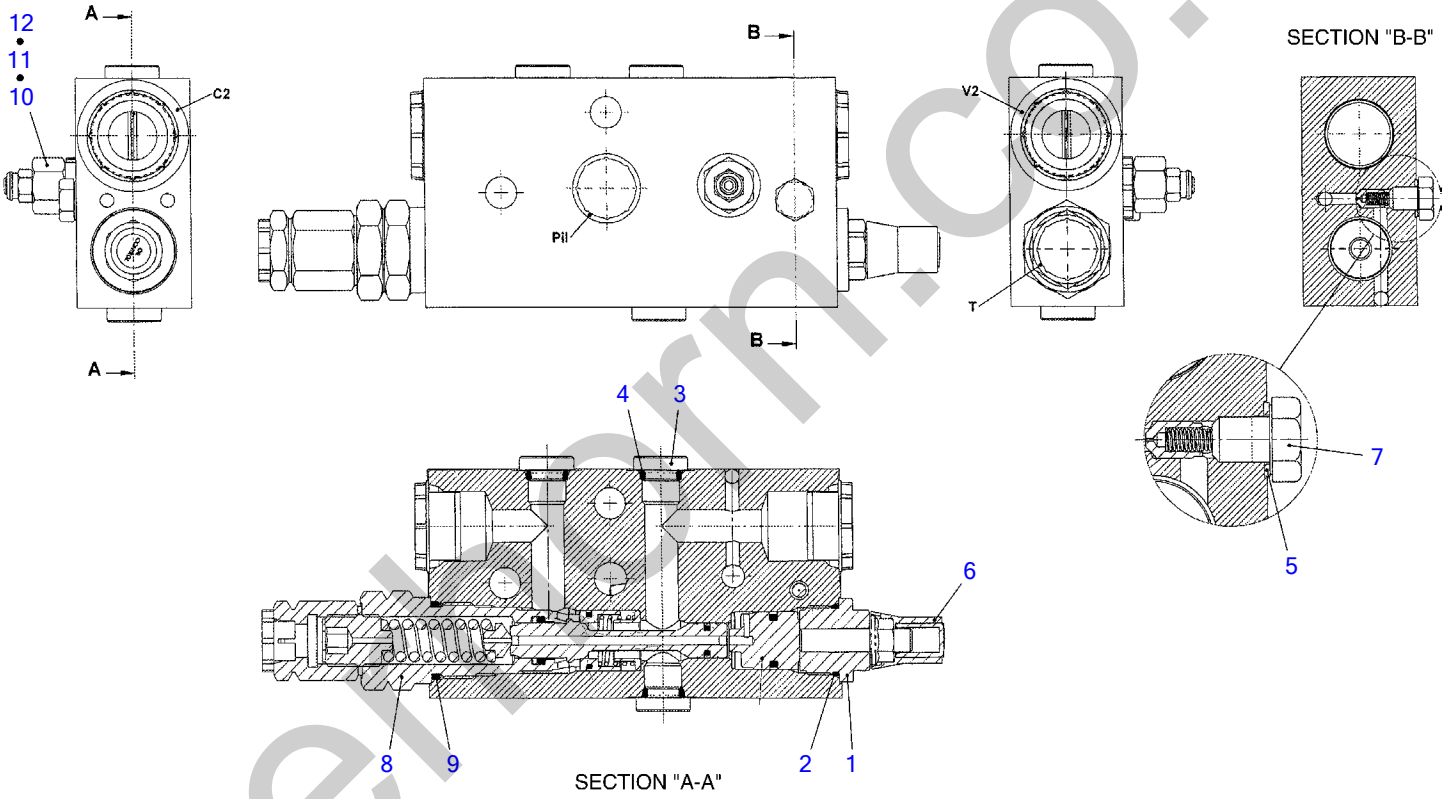

N0H410

S=free

silverburn.co.uk

SHUT-OFF VALVE (left boom)

Item	Part number	Description	Q'ty	Chan.	Serial No.	Serv.	Remarks
	1901747700	VALVE ASSY, shut-off	1				left boom
1	1901747510	・PLUG ASSY	1				
2	1901747601	・・O-RING	1				
3	1901744305	・PLUG ASSY	3				
4	1420010110	・・O-RING	1				
5	1901746206	・SEAL	1				
6	1901746201	・CAP	1				
7	1901746207	・BOLT	1				
8	1901747603	・VALVE ASSY, check	1				
9	1901747512	・・O-RING	1				
10	1901747602	・VALVE ASSY, relief	1				
11	1901746208	・・RING, back-up	1				
12	1901746211	・・O-RING	1				
	N0h410						

silverhorn.co.uk

SHUT-OFF VALVE (arm)

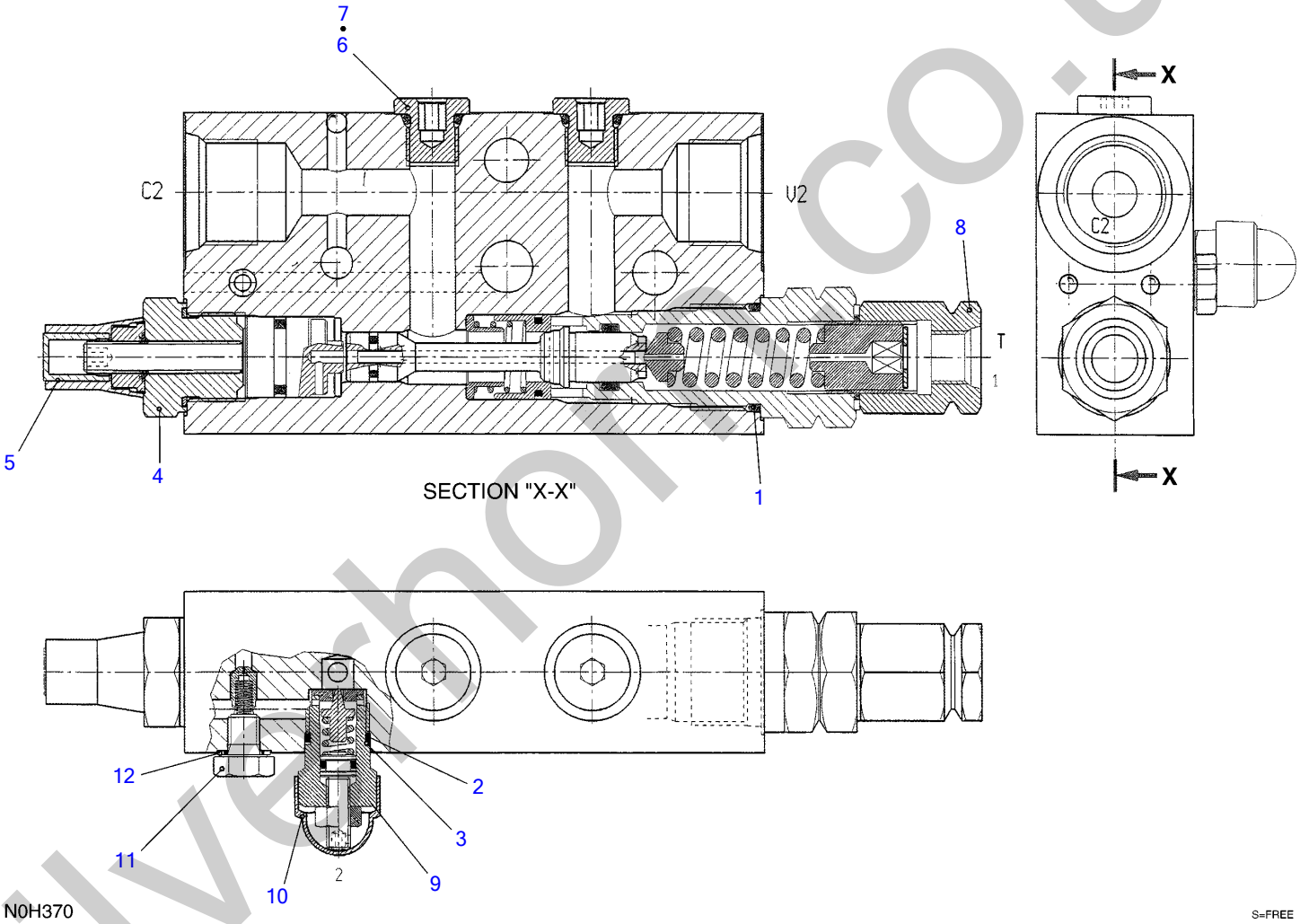

silverhorse.co.uk

SHUT-OFF VALVE (arm)

Item	Part number	Description	Q'ty	Chan.	Serial No.	Serv.	Remarks
0	1901744400	VALVE ASSY, shut-off	1				arm
0-1	1901744499	・KIT, seal	1				
1	1420300118	・・O-RING	1				
2	1420300014	・・O-RING	1				
3	1901742911	・・RING, back-up	1				
4	1901742902	・PLUG KIT	1				
5	1901742901	・CAP	1				
6	1901744305	・PLUG ASSY	2				
7	1420010110	・・O-RING	1				
8	1901744404	・VALVE, relief	1				
9	1901742909	・PLUG	1				
10	1901742910	・CAP	1				
11	1901742907	・SCREW	1				
12	1901742906	・SEAL	1				
	N0h370						

silverhorn.co.uk

SELECTOR VALVE (A-G pattern)

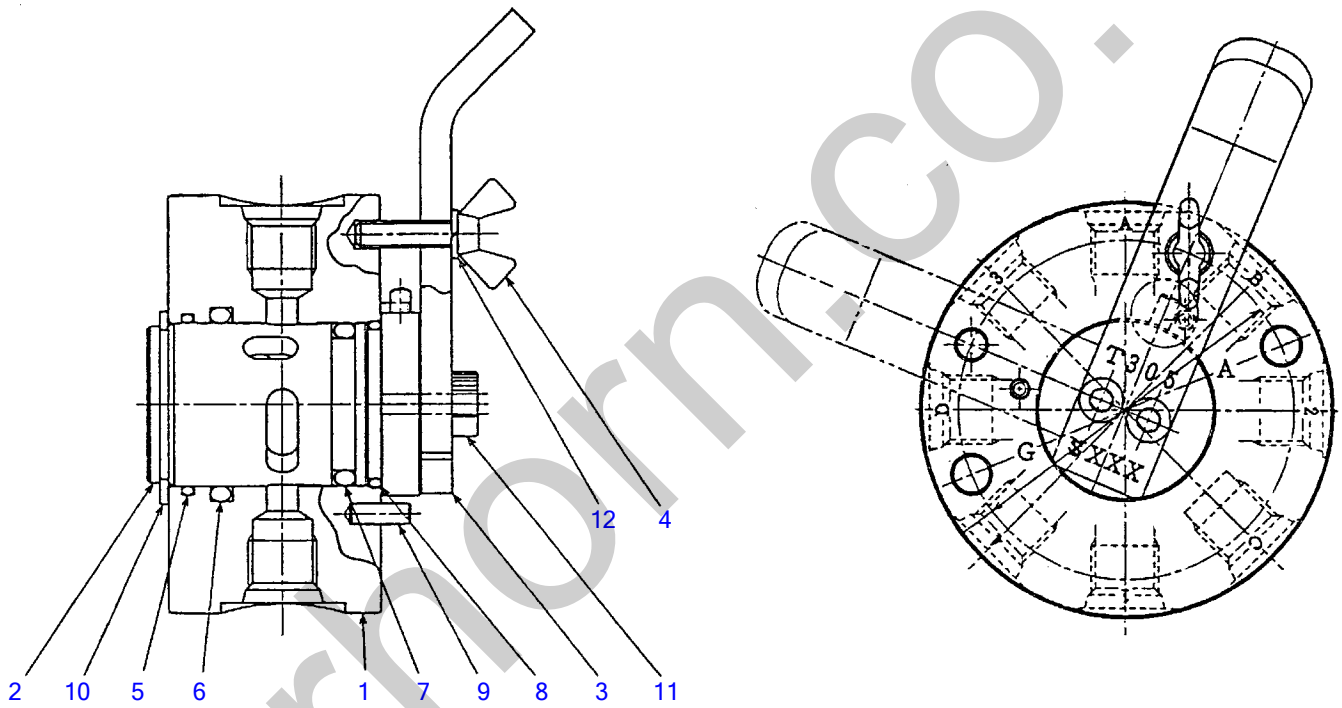

C4H180

S=FREE

silvermorn.co.uk

SELECTOR VALVE (A-G pattern)

Item	Part number	Description	Q'ty	Chan.	Serial No.	Serv.	Remarks
0	1901730500	VALVE ASSY, selector	1				
1	1901730501	・BODY	1				
2	1901730502	・ROTOR	1				
3	1901730503	・LEVER	1				
4	1901730504	・BOLT	1				
5	1901730505	・O-RING	1				
6	1901730506	・O-RING	1				
7	1901730507	・O-RING	1				
8	1901730508	・O-RING	1				
9	1213000412	・PIN, spring	3				
10	1220000030	・RING, snap	1				
11	1110050514	・SCREW, cap	2				
12	1140010005	・WASHER, spring	1				
	C4h180						

silverhorn.co.uk

ELECTRICAL PROPORTION VALVE

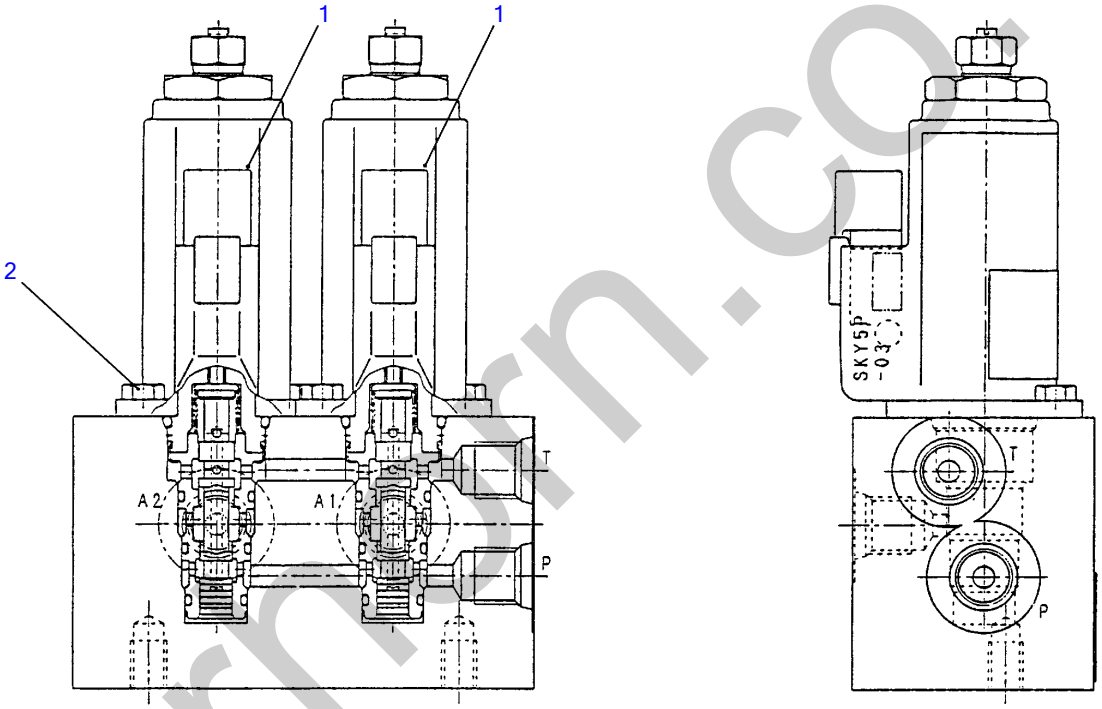

W2H140

S=FREE

silvermarn.co.uk

ELECTRICAL PROPORTION VALVE

Item	Part number	Description	Q'ty	Chan.	Serial No.	Serv.	Remarks
0	**1901738500**	VALVE, proportional	1				
1	**1901738560**	・VALVE ASSY, proportional	2				
2	**1100050512**	・BOLT	4				
	W2h140						

silverhorn.co.uk

SHOCK-LESS VALVE (boom)

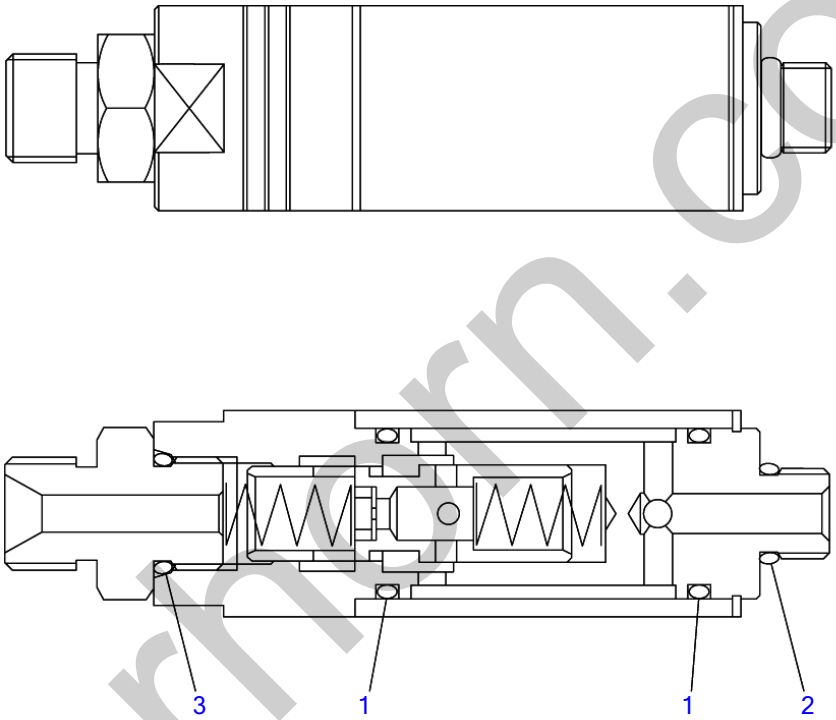

N0H141

S=free

silvermorn.co.uk

SHOCK-LESS VALVE (boom)

Item	Part number	Description	Q'ty	Chan.	Serial No.	Serv.	Remarks
0	1901744700	VALVE ASSY	1				boom
1	1420000210	・O-RING	2				
2	1420010110	・O-RING	1				
3	1420010140	・O-RING	1				
	N0h140						

silverhorn.co.uk

BOOM CYLINDER

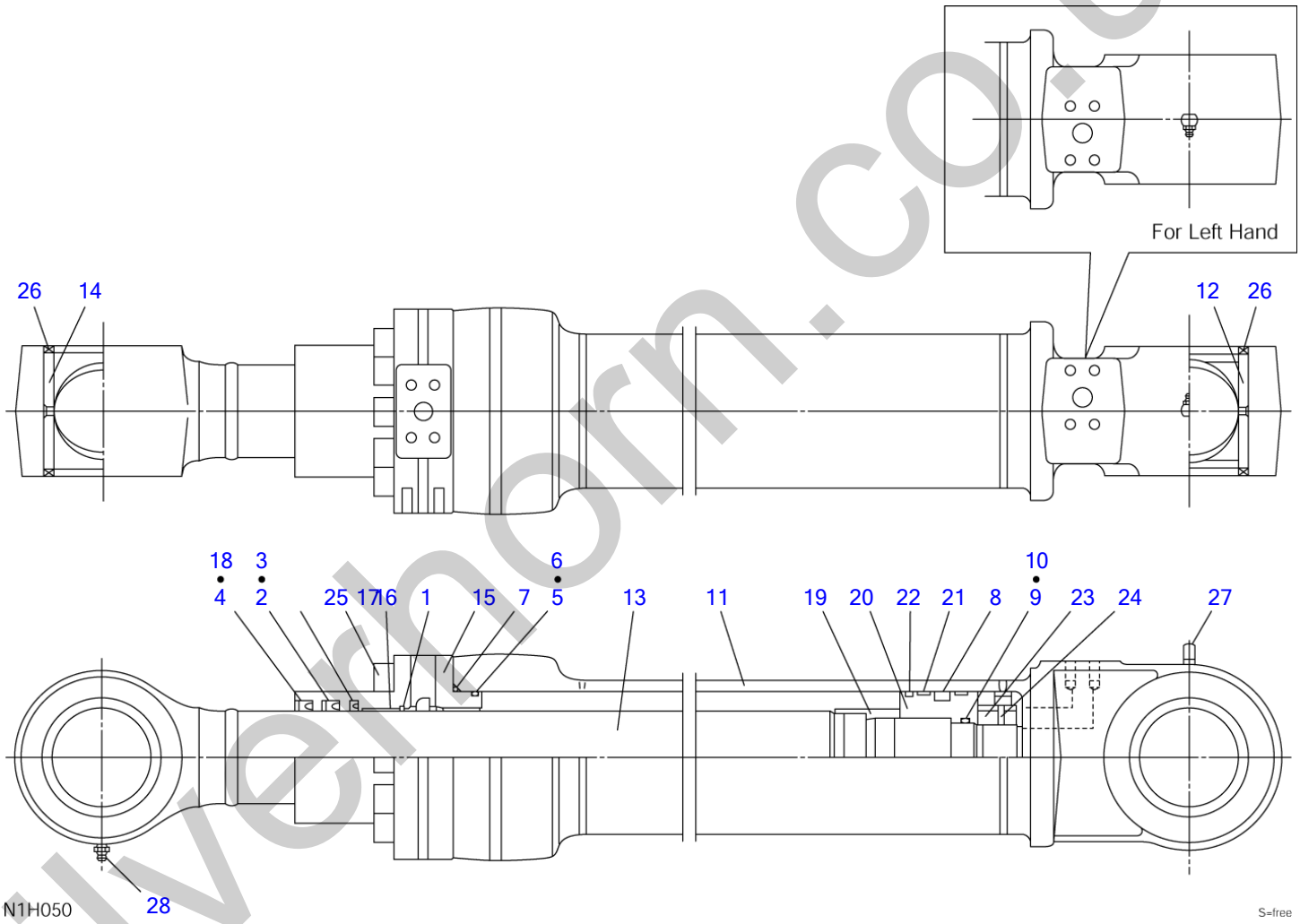

silverhorn.co.uk

BOOM CYLINDER

Item	Part number	Description	Q'ty	Chan.	Serial No.	Serv.	Remarks
0	1900098100	CYLINDER, boom (R.H.)	1				
	1900098200	CYLINDER, boom (L.H.)	1				
0-1	1900098199	・KIT, seal	1				
1	X 1900098135	・・SEAL	1				
2	X 1900098132	・・PACKING	1				
3	X 1900098133	・・RING, back-up	1				
4	X 1900098136	・・SEAL, dust	1				
5	X 1420110950	・・O-RING	1				
6	X 1900098128	・・RING, back-up	1				
7	X 1420111000	・・O-RING	1				
8	X 1900098134	・・PACKING, piston	1				
9	X 1900098137	・・O-RING	1				
10	X 1900098138	・・RING, back-up	2				
11	1900098107	・TUBE ASSY (R.H.)	1				
	1900098207	・TUBE ASSY (L.H.)	1				
12	0002400079	・BUSHING	1				
13	1900098101	・ROD ASSY	1				
14	1900098113	・BUSHING	1				
15	1900098103	・COVER, rod	1				
16	1900098102	・BUSHING	1				
17	1225620078	・RING, retaining	1				
18	1225620086	・RING, retaining	1				
19	1900098116	・BEARING, cushion	1				
20	1900098106	・PISTON	1				
21	1900098126	・RING, wear	2				
22	1900098117	・RING, dust	1				
23	1900098109	・NUT	1				
24	1121050816	・SET-SCREW	1				
25	1110021465	・SCREW, cap	10				
26	1900098140	・SEAL, dust	4				
27	1560001900	・FITTING, grease	1				
28	1560001000	・FITTING, grease	1				
	N1h050						

silverhorn.co.uk

ARM CYLINDER

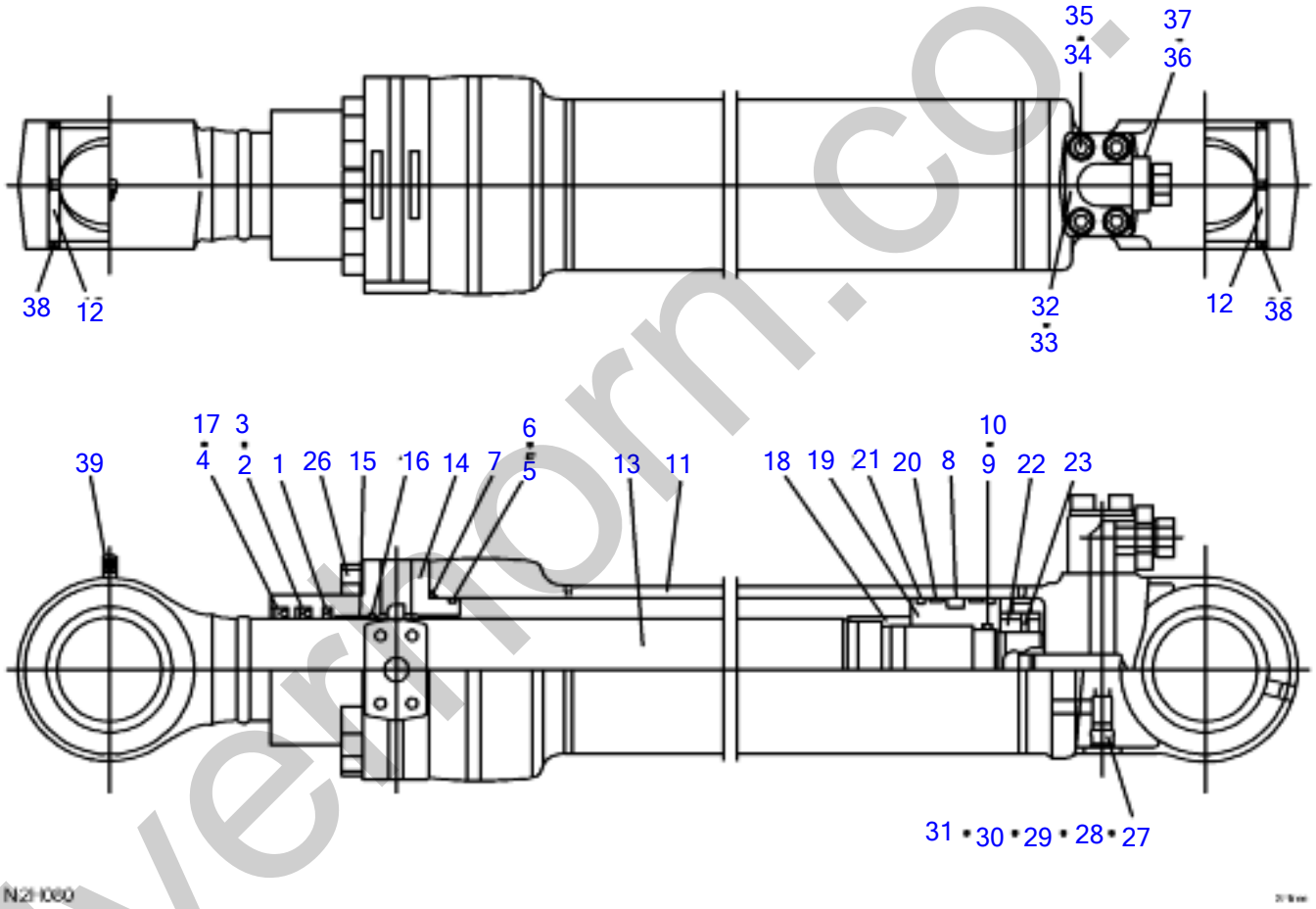

silverthorn.co.uk

ARM CYLINDER

Item	Part number	Description	Q'ty	Chan.	Serial No.	Serv.	Remarks
0	1900098300	CYLINDER, arm	1				
0-1	1900098399	・KIT, seal	1				
1	X 1900098335	・・SEAL	1				
2	X 1900098332	・・PACKING	1				
3	X 1900098327	・・RING, back-up	1				
4	X 1900098336	・・SEAL, dust	1				
5	X 1420111050	・・O-RING	1				
6	X 1421121050	・・RING, back-up	1				
7	X 1420111100	・・O-RING	1				
8	X 1900098334	・・PACKING, piston	1				
9	X 1900098337	・・O-RING	1				
10	X 1900098338	・・RING, back-up	2				
11	1900098307	・TUBE ASSY	1				
12	1900098302	・BUSHING	2				
13	1900098397	・ROD ASSY	1				
14	1900098303	・COVER, rod	1				
15	1900098320	・BUSHING	1				
16	1225620086	・RING, retaining	1				
17	1225620097	・RING, retaining	1				
18	1900098316	・RING, cushion	1				
19	1900098306	・PISTON	1				
20	1900098330	・RING, wear	1				
21	1900098317	・RING, dust	2				
22	1900098309	・NUT	1				
23	1121050816	・SET-SCREW	1				
26	1110041470	・SCREW, cap	14				
27	1900098328	・VALVE, check	1				
28	1900098311	・SPRING	1				
29	1900098312	・SUPPORT	1				
30	1420010140	・O-RING	1				
31	1501810003	・PLUG	1				
32	1900098333	・FLANGE	1				
33	1420010280	・O-RING	1				
34	1140020012	・WASHER, spring	4				
35	1110041265	・SCREW, cap	4				
36	1900098340	・ADAPTOR	1				
37	1420010240	・O-RING	1				
38	1900098339	・SEAL, dust	4				
39	1560001900	・FITTING, grease	1				
	N2H080						

silverhorn.co.uk

BUCKET CYLINDER

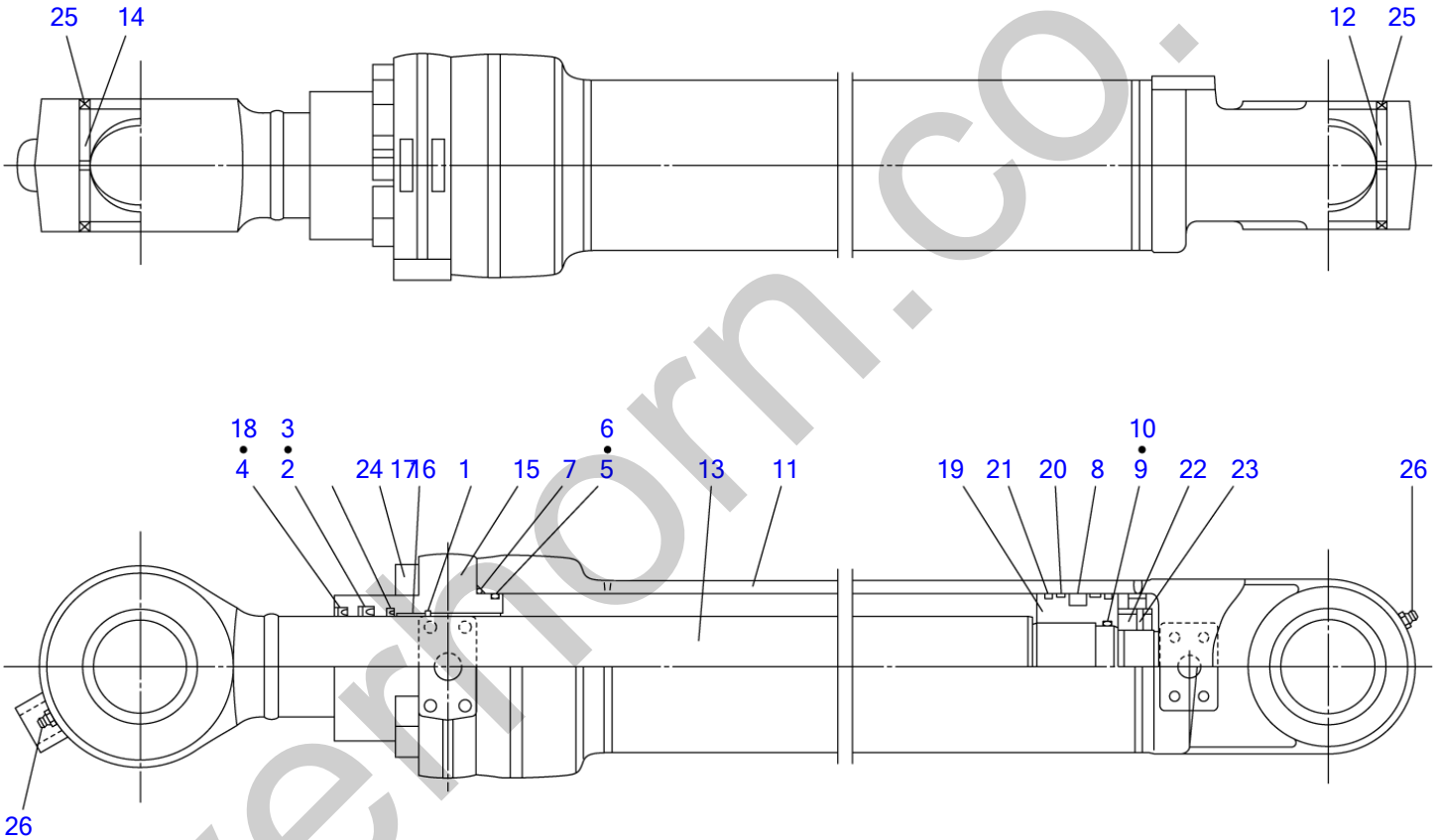

silverthorn.co.uk

BUCKET CYLINDER

Item		Part number	Description	Q'ty	Chan.	Serial No.	Serv.	Remarks
0		1900098400	CYLINDER, bucket	1				
0-1		1900098499	・KIT, seal	1				
1	X	1900098135	・・SEAL	1				
2	X	1900098132	・・PACKING	1				
3	X	1900098127	・・RING, back-up	1				
4	X	1900098136	・・SEAL, dust	1				
5	X	1420110950	・・O-RING	1				
6	X	1900098128	・・RING, back-up	1				
7	X	1420111000	・・O-RING	1				
8	X	1900098134	・・PACKING, piston	1				
9	X	1900098437	・・O-RING	1				
10	X	1900098438	・・RING, back-up	2				
11		1900098407	・TUBE ASSY	1				
12		1900098402	・BUSHING	1				
13		1900098401	・ROD ASSY	1				
14		1900098420	・BUSHING	1				
15		1900098403	・COVER, rod	1				
16		1900098102	・BUSHING	1				
17		1225620078	・RING, retaining	1				
18		1225620086	・RING, retaining	1				
19		1900098406	・PISTON	1				
20		1900098126	・RING, wear	2				
21		1900098117	・RING, dust	2				
22		1900098109	・NUT	1				
23		1121050816	・SET-SCREW	1				
24		1110021465	・SCREW, cap	10				
25		1900098440	・SEAL, dust	4				
26		1560001000	・FITTING, grease	2				
		N1h070						

silverhorn.co.uk

DOZER BLADE CYLINDER

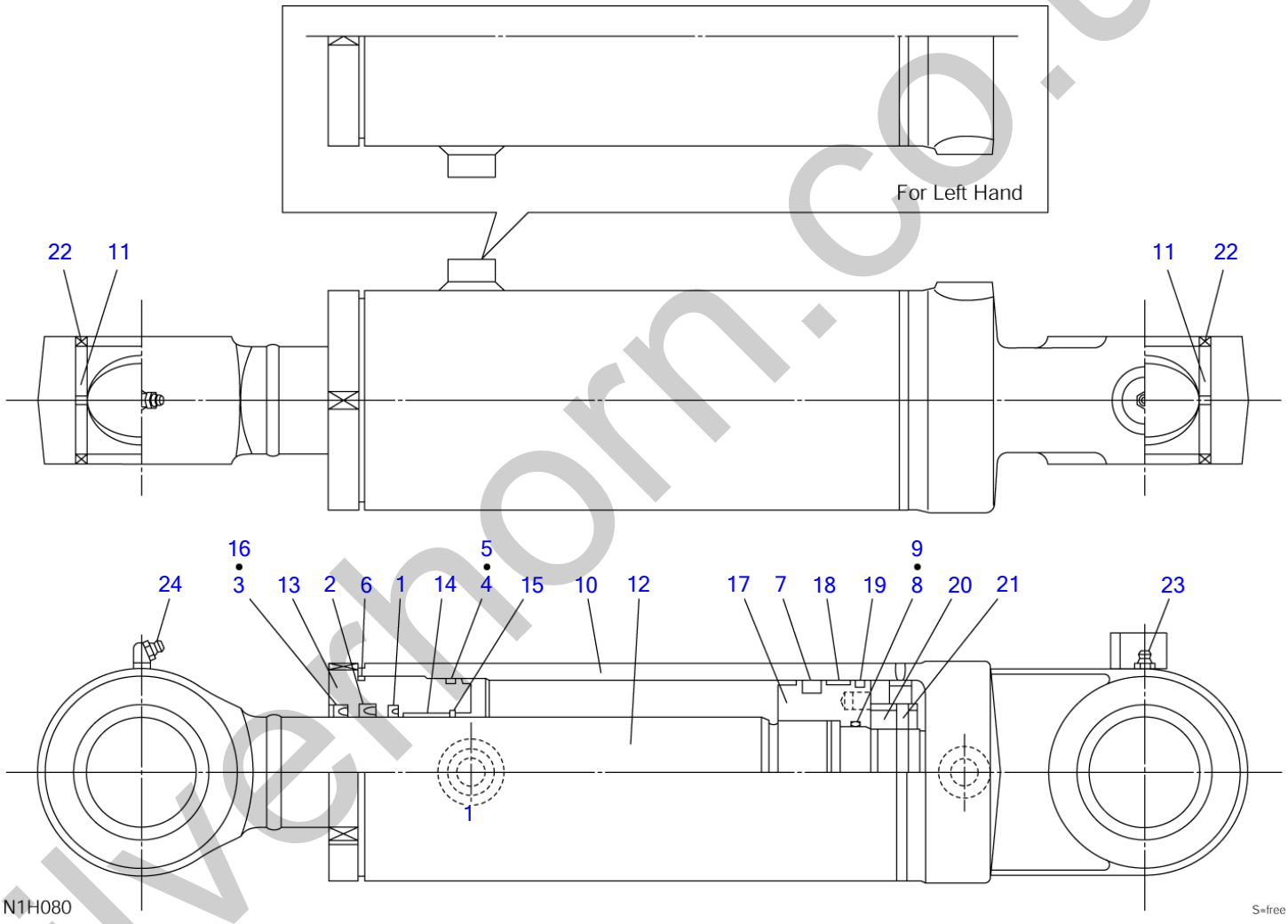

silverhorn.co.uk

DOZER BLADE CYLINDER

Item	Part number	Description	Q'ty	Chan.	Serial No.	Serv.	Remarks
0	1900098600	CYLINDER, dozer blade (R.H.)	1				
	1900098700	CYLINDER, dozer blade (L.H.)	1				
0-1	1900098699	・KIT, seal	1				
1	X 1900098635	・・SEAL	1				
2	X 1900098632	・・PACKING	1				
3	X 1900098136	・・SEAL, dust	1				
4	X 1420111100	・・O-RING	1				
5	X 1900098628	・・RING, back-up	1				
6	X 1420111150	・・O-RING	1				
7	X 1900098634	・・PACKING, piston	1				
8	X 1900098637	・・O-RING	1				
9	X 1900098638	・・RING, back-up	2				
10	1900098607	・TUBE ASSY (R.H.)	1				
	1900098707	・TUBE ASSY (L.H.)	1				
11	1900098602	・BUSHING	2				
12	1900098601	・ROD ASSY	1				
13	1900098603	・COVER, rod	1				
14	1900098102	・BUSHING	1				
15	1225620078	・RING, retaining	1				
16	1225620086	・RING, retaining	1				
17	1900098606	・PISTON	1				
18	1900098626	・RING, wear	1				
19	1900098617	・RING, dust	1				
20	1900098609	・NUT	1				
21	1121050816	・SET-SCREW	1				
22	1900098640	・SEAL, dust	4				
23	1560001000	・FITTING, grease	1				
24	1560001675	・FITTING, grease	1				
	N1h080						

silverhorn.co.uk

SWING CYLINDER

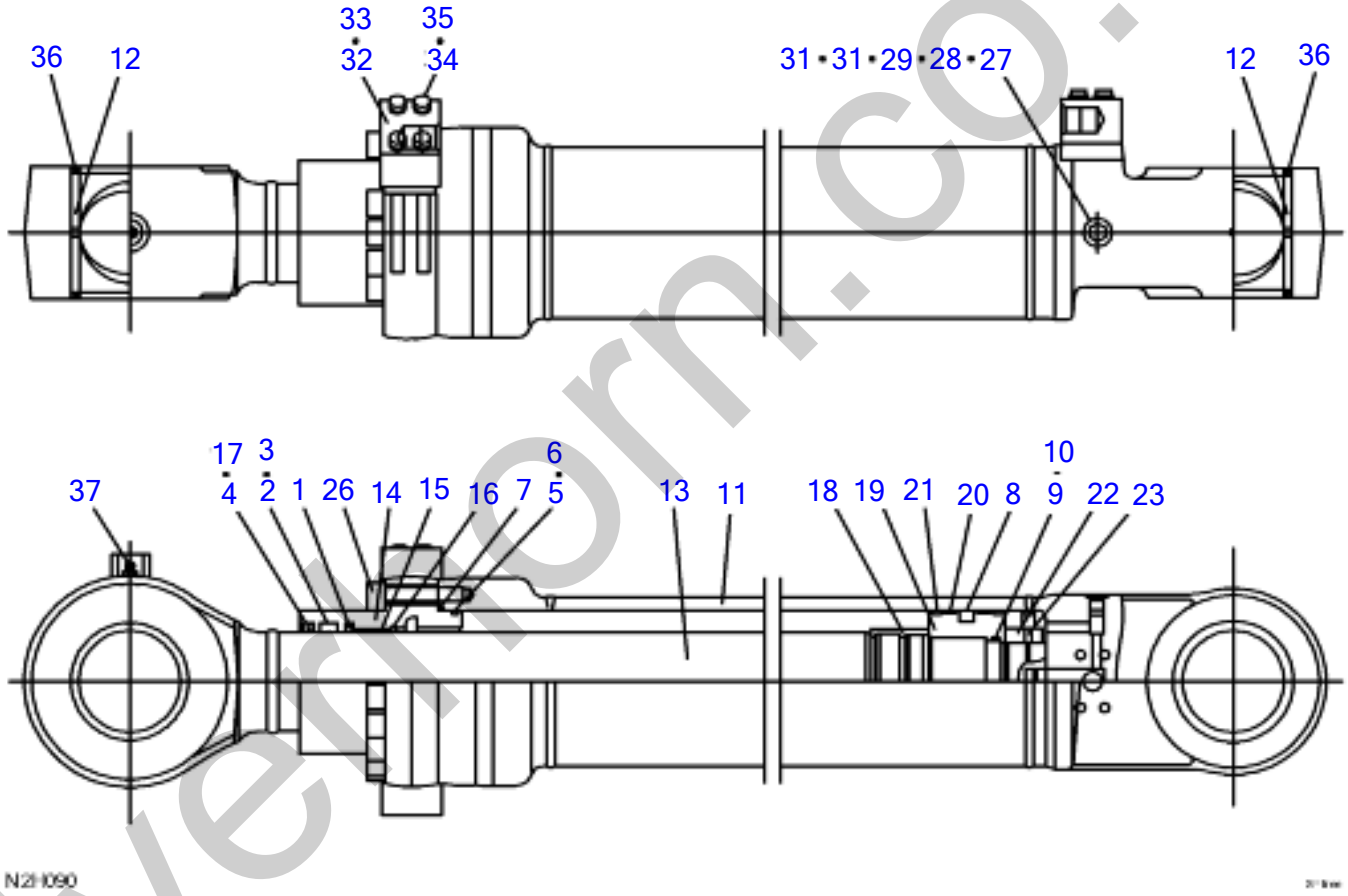

silverform.co.uk

SWING CYLINDER

Item	Part number	Description	Q'ty	Chan.	Serial No.	Serv.	Remarks
0	1900098500	CYLINDER, swing	1				
0-1	1900098599	・KIT, seal	1				
1	X 1900098535	・・SEAL	1				
2	X 1900098532	・・PACKING	1				
3	X 1900098527	・・RING, back-up	1				
4	X 1900098536	・・SEAL, dust	1				
5	X 1420111350	・・O-RING	1				
6	X 1900098528	・・RING, back-up	1				
7	X 1420300160	・・O-RING	1				
8	X 1900098534	・・PACKING, piston	1				
9	X 1420110700	・・O-RING	1				
10	X 1900098538	・・RING, back-up	2				
11	1900098507	・TUBE ASSY	1				
12	1900098502	・BUSHING	2				
13	1900098597	・ROD ASSY	1				
14	1900098503	・COVER, rod	1				
15	1900098520	・BUSHING	1				
16	1225620097	・RING, retaining	1				
17	1225620107	・RING, retaining	1				
18	1900098516	・RING, cushion	1				
19	1900098506	・PISTON	1				
20	1900098526	・RING, wear	2				
21	1900098517	・RING, slide	2				
22	1900098509	・NUT	1				
23	1121050816	・SET-SCREW	1				
26	1110041680	・SCREW, cap	14				
27	1900098328	・VALVE, check	1				
28	1900098311	・SPRING	1				
29	1900098312	・SUPPORT	1				
30	1420010140	・O-RING	1				
31	1501810003	・PLUG	1				
32	1900098533	・BLOCK	2				
33	1420010280	・O-RING	2				
34	1140020010	・WASHER, spring	8				
35	1110021050	・SCREW, cap	8				
36	1900098539	・SEAL, dust	4				
37	1560001000	・FITTING, grease	1				
	N2H090						

silverhorn.co.uk

TRAVEL MOTOR (1/3) (reduction sec.)

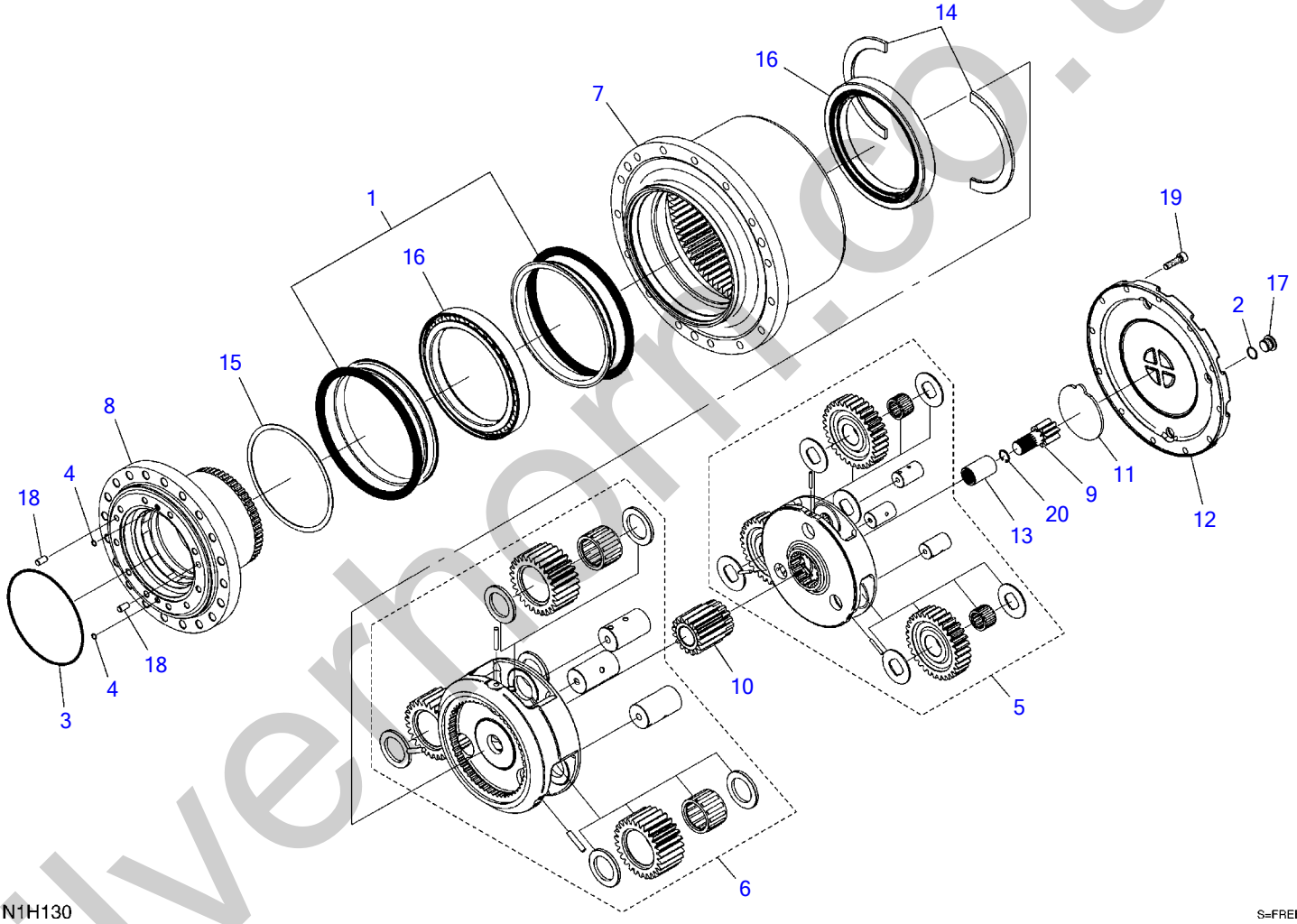

silverhorn.co.uk

TRAVEL MOTOR (1/3) (reduction sec.)

Item		Part number	Description	Q'ty	Chan.	Serial No.	Serv.	Remarks
0		1903126000	MOTOR ASSY, travel	1				
0-1	X	**********	・REDUCTION ASSY	1				X19129-08400
0-2		1912908499	・・KIT, seal	1				
1	X	1912908401	・・・SEAL KIT, floating	1				
2	X	1420010180	・・・O-RING	3				
3	X	1420300261	・・・O-RING	1				
4	X	1420010070	・・・O-RING	2				
5		1912908498	・・CARRIER KIT (1)	1				
6		1912908489	・・CARRIER KIT (2)	1				
7		1912908402	・・HUB	1				
8		1912908403	・・SPINDLE	1				
9		1912908404	・・GEAR, sun	1				
10		1912908405	・・GEAR, sun	1				
11		1912908406	・・PLATE, thrust	1				
12		1912908407	・・COVER	1				
13		1912908408	・・COUPLING	1				
14		1912908409	・・WASHER, lock	2				
15		1912908410	・・SHIM SET	1				
16		1912908411	・・BEARING	2				
17		1912908412	・・PLUG	3				
18		1912908413	・・PIN, parallel	2				
19		1110021035	・・SCREW, cap	12				
20		1221000022	・・RING, retaining	1				
		N1h130						

silverhorn.co.uk

TRAVEL MOTOR (2/3) (motor sec.)

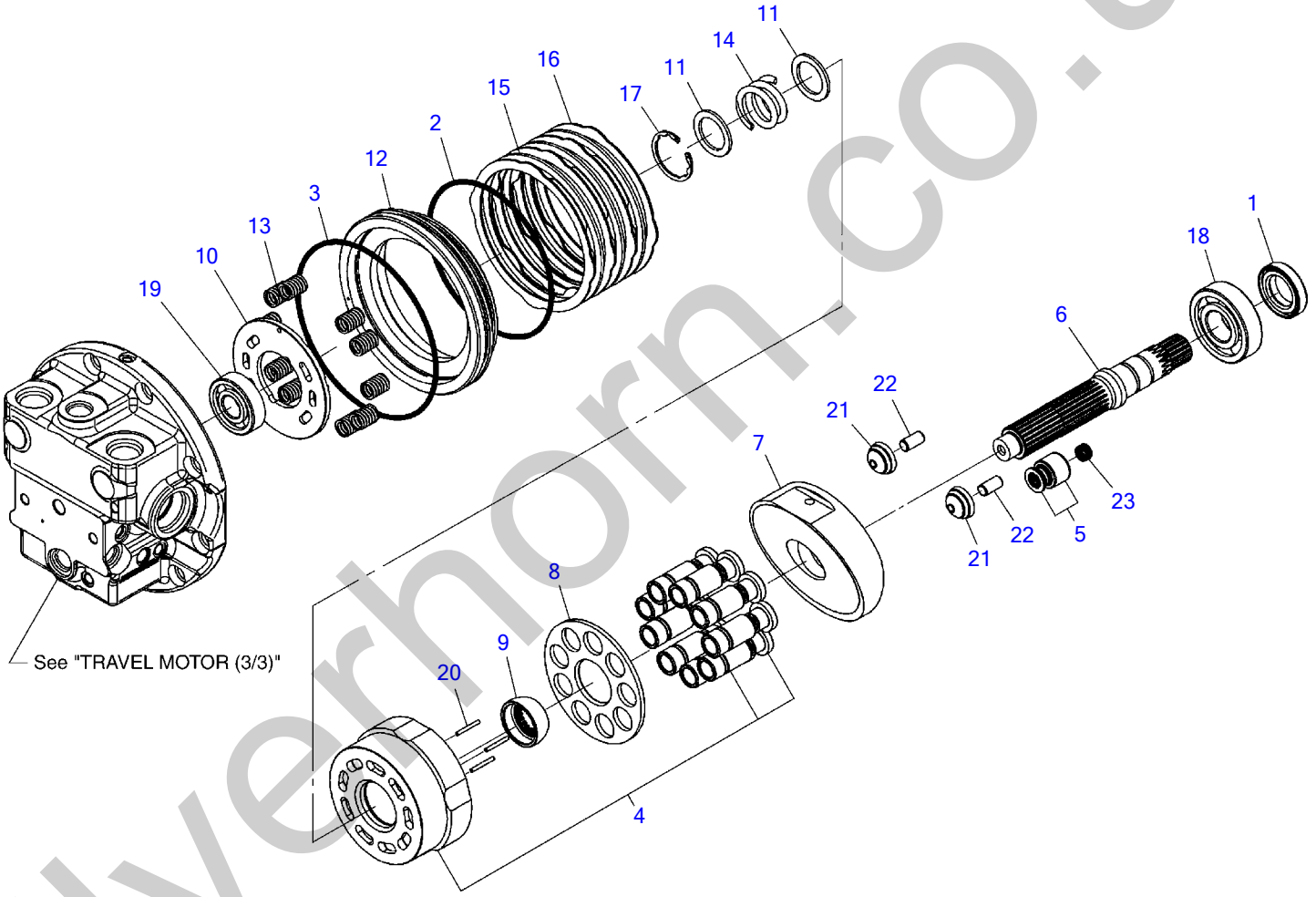

silverhorn.co.uk

TRAVEL MOTOR (2/3) (motor sec.)

Item	Part number		Description	Q'ty	Chan.	Serial No.	Serv.	Remarks
0		1903126000	MOTOR ASSY, travel	1				
0-3	X	**********	・MOTOR ASSY	1				X19039-07900
0-4		1903907999	・・KIT, seal	1				
1	X	1903907912	・・・SEAL, oil	1				
2	X	1903907913	・・・O-RING	1				
3	X	1903907914	・・・O-RING	1				
4		1903907998	・・KIT, sylinder & piston	1				
5		1903907989	・・PISTON ASSY	1				
6		1903907901	・・SHAFT	1				
7		1903907902	・・PLATE, swash	1				
8		1903907903	・・PLATE, retainer	1				
9		1903907904	・・BALL, thrust	1				
10		1903907905	・・PLATE	1				
11		1903907906	・・WASHER	2				
12		1903907907	・・PISTON	1				
13		1903907908	・・SPRING	10				
14		1903907909	・・SPRING	1				
15		1903907910	・・PLATE	3				
16		1903907911	・・PLATE	4				
17		1903907915	・・RING, retaining	1				
18		1300006328	・・BEARING	1				28C3
19		1300006304	・・BEARING	1				JISB1521-6304C3
20		1903907916	・・NEEDLE	3				
21		1903907917	・・PIVOT	2				
22		1912908413	・・PIN, parallel	2				
23		1903907919	・・SPRING	1				
		N1h141						

silverhorn.co.uk

TRAVEL MOTOR (2/3) (valve sec.)

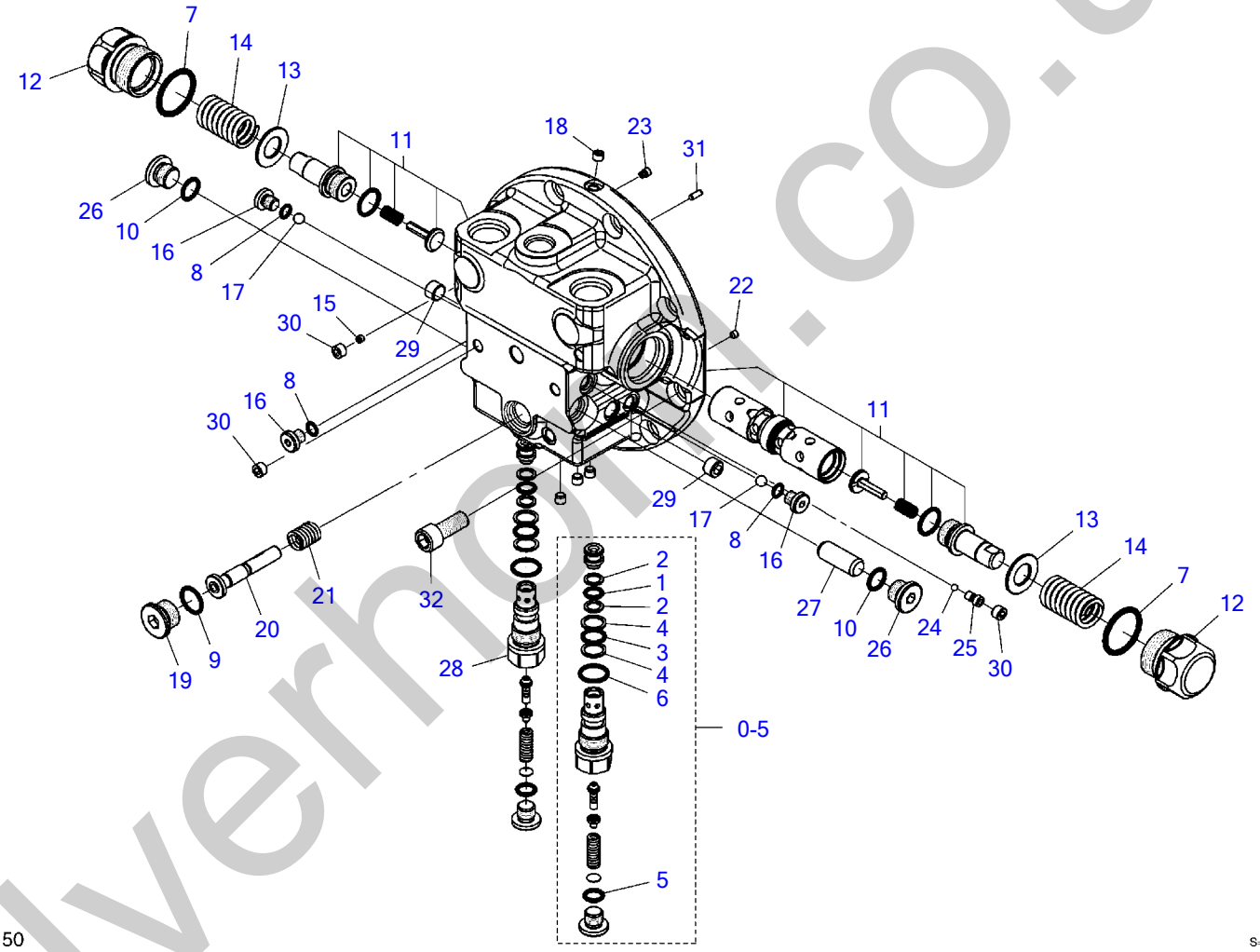

silverhorn.co.uk

TRAVEL MOTOR (2/3) (valve sec.)

Item	Part number		Description	Q'ty	Chan.	Serial No.	Serv.	Remarks
0		1903126000	MOTOR ASSY, travel	1				
0-5		1901810900	・VALVE ASSY, relief	2				
1		1420010101	・・O-RING	1				
2		1421020101	・・RING, back-up	2				
3		1420010140	・・O-RING	1				
4		1421020140	・・RING, back-up	2				
5		1420010110	・・O-RING	1				
6		1420010180	・・O-RING	1				
0-6	X	**********	・VALVE ASSY	1				X19018-11100
0-7		1901811198	・・FLANGE ASSY, rear	1				
0-8		1901811199	・・・KIT, seal	1				
7	X	1420010320	・・・・O-RING	2				
8	X	1420010080	・・・・O-RING	3				
9	X	1420010180	・・・・O-RING	1				
10	X	1420010140	・・・・O-RING	2				
11		1901811197	・・・FLANGE KIT, rear	1				
12		1901811101	・・・PLUG	2				
13		1901811102	・・・WASHER	2				
14		1901811103	・・・SPRING	2				
15		1901811104	・・・ORIFICE	2				
16		1901811105	・・・PLUG	3				
17		1390010500	・・・BALL, steel	2				
18		1901811106	・・・PLUG	5				
19		1912908412	・・・PLUG	1				
20		1901811108	・・・SPOOL	1				
21		1901811109	・・・SPRING	1				
22		1901811110	・・・ORIFICE	1				
23		1901811111	・・・FILTER	1				
24		1390010300	・・・BALL, steel	1				
25		1901811112	・・・PLUG	1				
26		1901811113	・・・PLUG	2				
27		1901811114	・・・PISTON	1				
28		1901811115	・・・ORIFICE	2				
29		1901811116	・・・PLUG	2				
30		1901811117	・・・PLUG	8				
31		1212000410	・・PIN, parallel	1				
32		1110041230	・・SCREW, cap	10				
		N1h150						

silverhorn.co.uk

SLEW MOTOR (1/3) (reduction sec.)

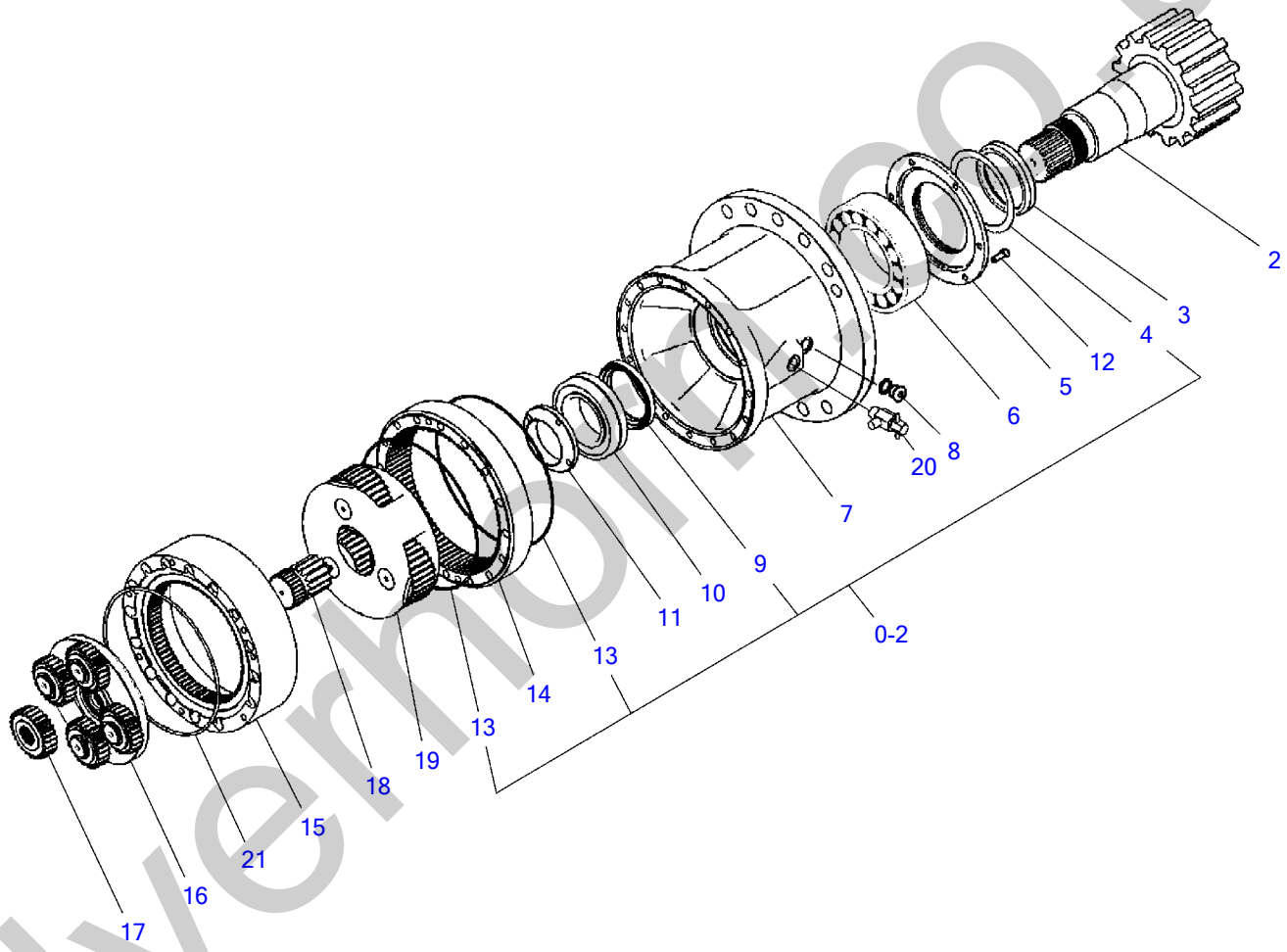

N1H100

S=free

silvermoon.co.uk

SLEW MOTOR (1/3) (reduction sec.)

Item		Part number	Description	Q'ty	Chan.	Serial No.	Serv.	Remarks
0		1903127700	MOTOR ASSY, slew	1				reduction sec.
0-1	X	**********	・REDUCTION ASSY	1				X19129-08300
1		1912908398	・・HOUSING ASSY	1				
2		1912908301	・・・SHAFT	1				
3		1912908302	・・・COLLAR	1				
4	X	1912908303	・・・SEAL	1				
5		1912908304	・・・COVER	1				
6		1912908305	・・・BEARING	1				
7		1912908306	・・・HOUSING	1				
8		1912908307	・・・PLUG	1				
9	X	1912908308	・・・SEAL, oil	1				
10		1912908309	・・・BEARING	1				
11		1912908310	・・・NUT	1				
12		1912908311	・・・SCREW	6				
13	X	1420300177	・・O-RING	2				
14		1912908312	・・GEAR	1				
15		1912908313	・・GEAR	1				
16		1912908397	・・HOLDER KIT (1)	1				
17		1912908314	・・GEAR	1				
18		1912908315	・・GEAR	1				
19		1912908396	・・HOLDER KIT (2)	1				
0-2		1912908399	・・KIT, seal (incl. 4, 9, 13)	1				
20		1903126115	・VALVE ASSY	1				
21		1420300178	・O-RING	1				
		N1h100-1						

silverhorn.co.uk

SLEW MOTOR (2/3) (motor sec.)

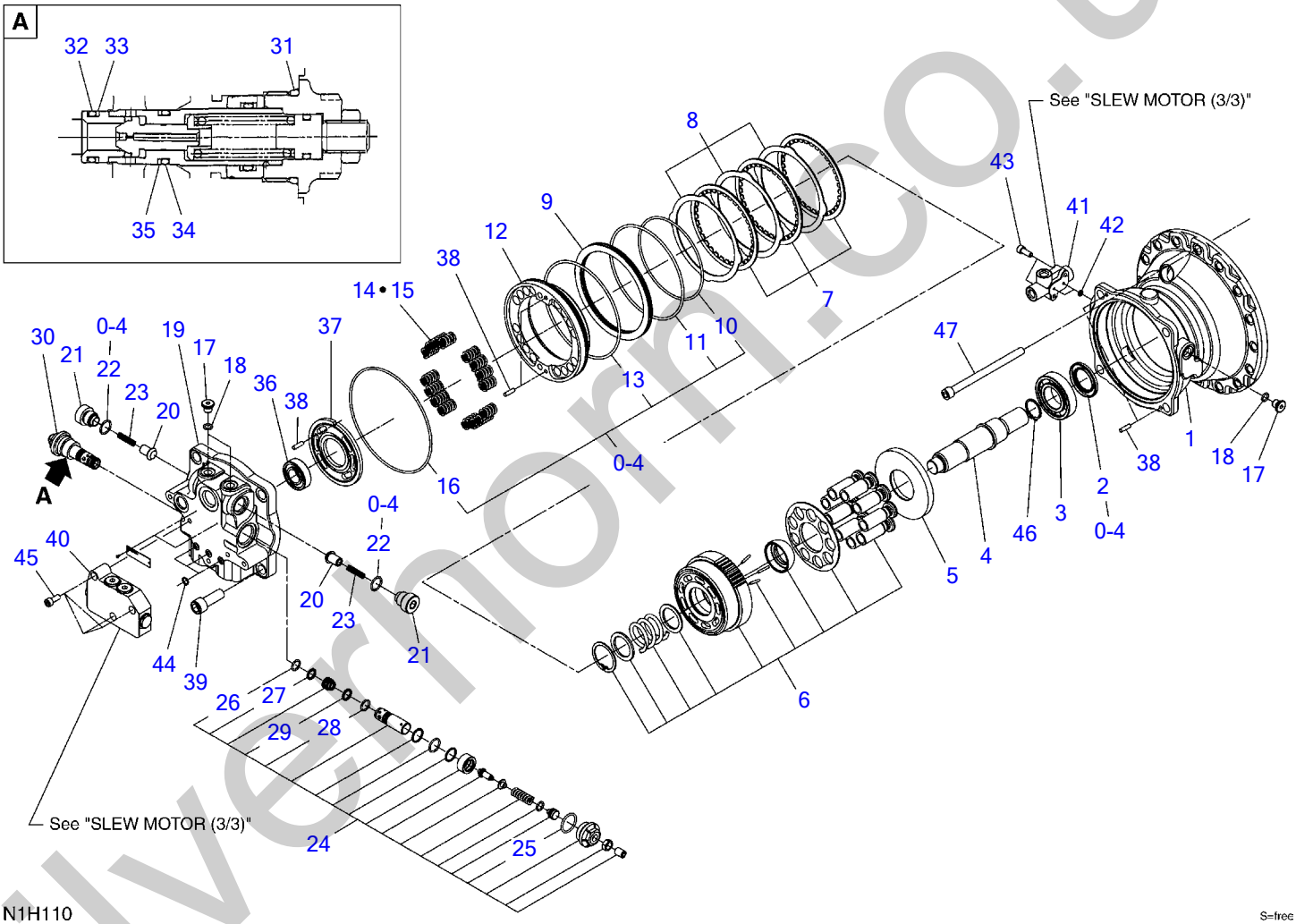

silverhorn.co.uk

SLEW MOTOR (2/3) (motor sec.)

Item	Part number		Description	Q'ty	Chan.	Serial No.	Serv.	Remarks
0		1903127700	MOTOR ASSY, slew	1				motor sec.
0-3	X	**********	・MOTOR ASSY	1				X19039-07800
1		1903907801	・・CASE	1				
2	X	1903907802	・・SEAL, oil	1				
3		1903907803	・・BEARING	1				
4		1903907804	・・SHAFT	1				
5		1903907805	・・PLATE, thrust	1				
6		1903907806	・・BLOCK ASSY, cylinder	1				
7		1903907807	・・PLATE	3				
8		1903907808	・・PLATE	3				
9		1903907816	・・COLLAR	1				
10	X	1420310257	・・O-RING	1				
11	X	1420310260	・・O-RING	1				
12		1903907809	・・PISTON	1				
13	X	1420300261	・・O-RING	1				
14		1903907810	・・SPRING	16				
15		1903907811	・・SPRING	8				
16	X	1420310263	・・O-RING	1				
17		1903108655	・・PLUG	3				
18		1420010110	・・O-RING	3				
19		1903907812	・・COVER	1				
20		1903904722	・・POPPET	2				
21		1903904723	・・PLUG	2				
22	X	1420010210	・・O-RING	2				
23		1903904725	・・SPRING	2				
24		1903907813	・・VALVE ASSY, relief	1				
25		1420310916	・・・O-RING	1				
26		1420010150	・・・O-RING	1				
27		1421020150	・・・RING, back-up	1				
28		1420010160	・・・O-RING	1				
29		1421020160	・・・RING, back-up	1				
30		1903907814	・・VALVE ASSY, relief	1				
31		1420310916	・・・O-RING	1				
32		1420010150	・・・O-RING	1				
33		1421020150	・・・RING, back-up	1				
34		1420010160	・・・O-RING	1				
35		1421020160	・・・RING, back-up	1				
36		1903123328	・・BEARING	1				
37		1903123326	・・PLATE	1				
38		1903120119	・・PIN	5				
39		1110021645	・・SCREW, cap	4				
40		1903905529	・・VALVE ASSY	1				see page (3/3)
41		1901810800	・・VALVE ASSY	1				see page (3/3)
42		1420010070	・・O-RING	2				
43		1110020630	・・SCREW, cap	2				
44		1420010100	・・O-RING	3				
45		1110020820	・・SCREW, cap	3				
0-4		1903907899	・・KIT, seal (incl. 2, 10, 11, 13, 16, 22)	1				
46		1220000032	・RING, retaining	1				
47		1903126122	・BOLT	16				
		N1h110-1						

silverthorn.co.uk

SLEW MOTOR (3/3) (valve sec.)

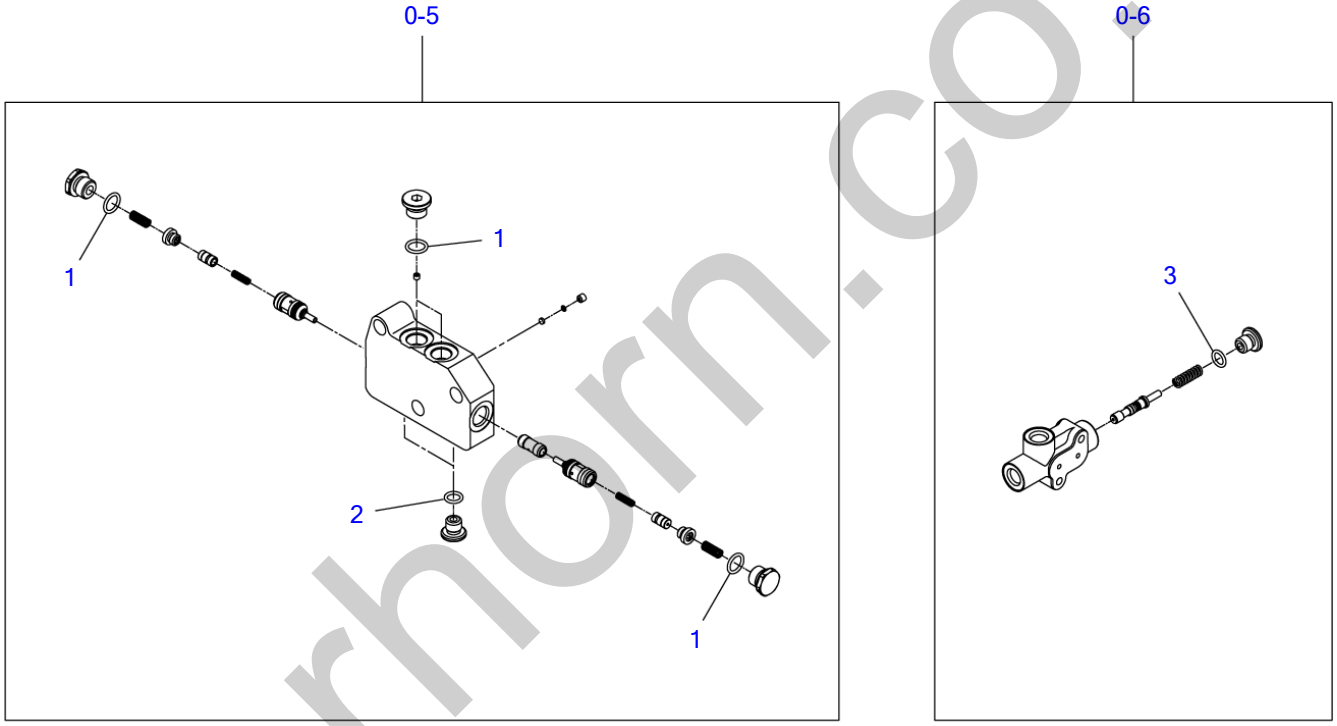

N1H120

S=free

silverhorn.co.uk

SLEW MOTOR (3/3) (valve sec.)

Item	Part number		Description	Q'ty	Chan.	Serial No.	Serv.	Remarks
0		1903127700	MOTOR ASSY, slew	1				valve sec.
0-3	X	**********	・MOTOR ASSY	1				
0-5		1903905529	・・VALVE ASSY	1				
1		1420010140	・・・O-RING	4				
2		1420010110	・・・O-RING	2				
0-6		1903905532	・・VALVE ASSY	1				
3		1420010110	・・・O-RING	1				
		N1h120-1						

silverhorn.co.uk

HYDRAULIC PUMP (1/3)

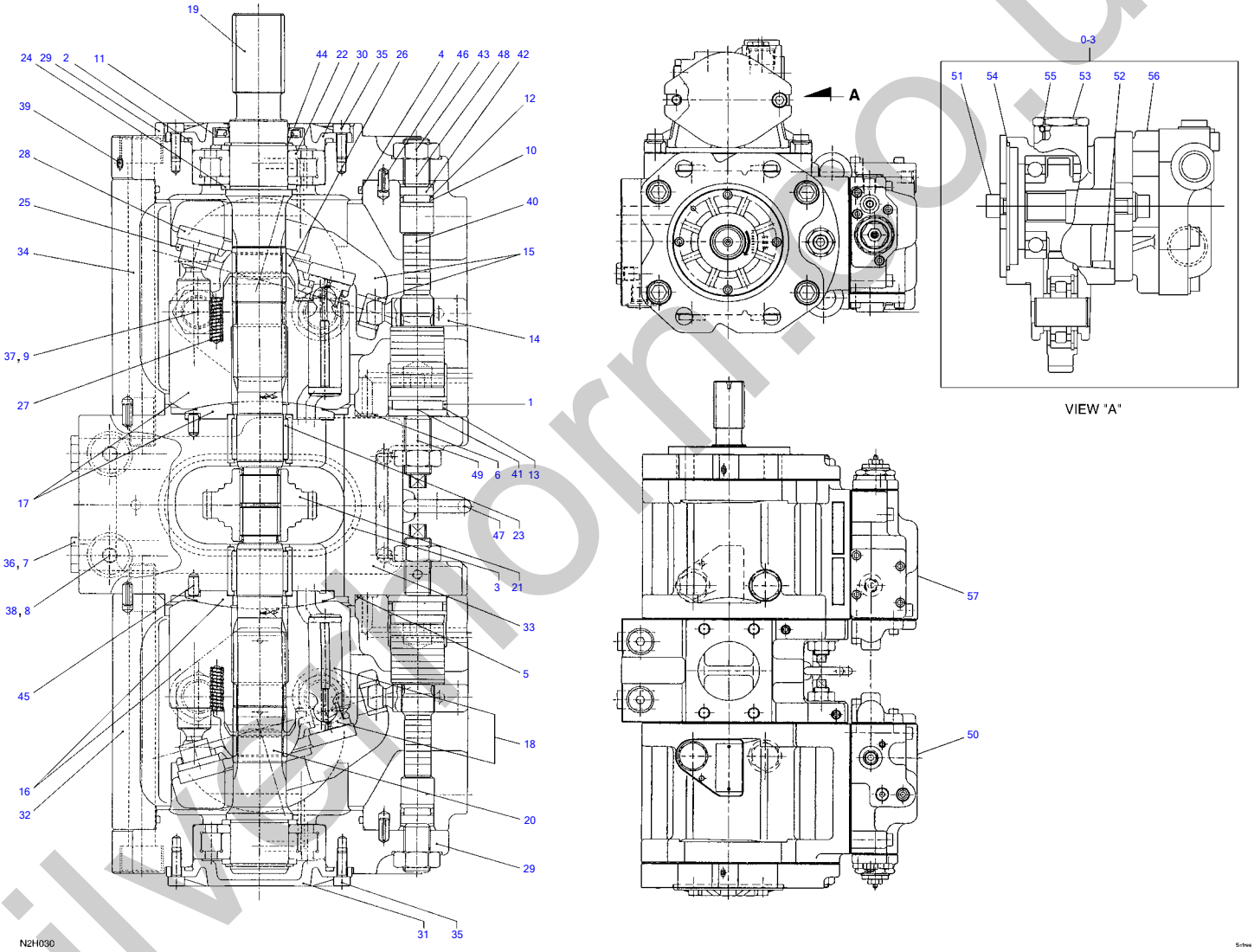

silverthorn.co.uk

HYDRAULIC PUMP (1/3)

Item		Part number	Description	Q'ty	Chan.	Serial No.	Serv.	Remarks
0		1902022900	PUMP ASSY, hydraulic	1			M	
0-1		1902022999	・KIT, seal	1			M	
1	X	1420150300	・・O-RING	2			M	
2	X	1420110850	・・O-RING	2				
3	X	1420110950	・・O-RING	1				
4	X	1420111200	・・O-RING	2				
5	X	1420111150	・・O-RING	2				
6	X	1420010080	・・O-RING	18				
7	X	1420010110	・・O-RING	2				
8	X	1420010140	・・O-RING	2				
9	X	1420010180	・・O-RING	4				
10	X	1420050160	・・O-RING	2			M	
11	X	1902020920	・・SEAL, oil	1				
12	X	1421020160	・・RING, back-up	2				
13	X	1421120300	・・RING, back-up	2				
14		1902020998	・PIN ASSY	2				
15		1902022997	・PLATE ASSY	2			M	
16		1902022996	・CYLINDER ASSY	1			M	
17		1902022995	・CYLINDER ASSY	1			M	
18		1902022994	・PISTON ASSY	2			M	
19		1902020901	・SHAFT	1				
20		1902020902	・SHAFT	1				
21		1902020903	・GEAR	1				
22		1902020904	・BEARING	2				
23		1902020905	・BEARING	2				
24		1902020906	・SPACER	4				
25		1902020907	・PLATE	2				
26		1902017510	・BUSHING	2				
27		1902020908	・SPRING	18				
28		1902020910	・PLATE	2				
29		1902020911	・SUPPORT	2				
30		1902020912	・COVER	1				
31		1902020913	・COVER	1				
32		1902022914	・CASE	2			M	
33		1902020915	・BLOCK, valve	1				
34		1110121675	・SCREW, cap	8				
35		1110020616	・SCREW, cap	8				
36		1501750002	・PLUG	2				
		1420010110	・・O-RING	1				
37		1501750004	・PLUG	4				
		1420010180	・・O-RING	1				
38		1501750003	・PLUG	2				
		1420010140	・・O-RING	1				
39		1901738851	・PLUG	15				
40		1902020917	・PISTON	2				
41		1902020918	・STOPPER	2				
42		1902020919	・STOPPER	2				
43		1130050016	・NUT	4				
44		1220000035	・RING, retaining	2				
45		1902020921	・PIN	2				
46		1213000614	・PIN, spring	4				
47		1121610010	・BOLT	2				
48		1121051630	・SET-SCREW	2				
49		1902020923	・SET-SCREW	2				
50		1902912100	・REGULATOR ASSY (REAR)	1			M	see page (2/3)
0-3		1902022993	・PTO-UNIT	1			M	
51		1110051020	・・SCREW, cap	2				
52		1111551020	・・SCREW, cap	4				
53		1501750006	・・PLUG	1				
		1420010240	・・・O-RING	1				
54		1420110850	・・O-RING	1				
55		1420010240	・・O-RING	1				
56		1902911900	・・PUMP ASSY, SUB	1			M	see page (3/3)
57		1902912000	・REGULATOR ASSY (FRONT)	1			M	see page (2/3)
		N2h030						

silverthorn.co.uk

HYDRAULIC PUMP (2/3)

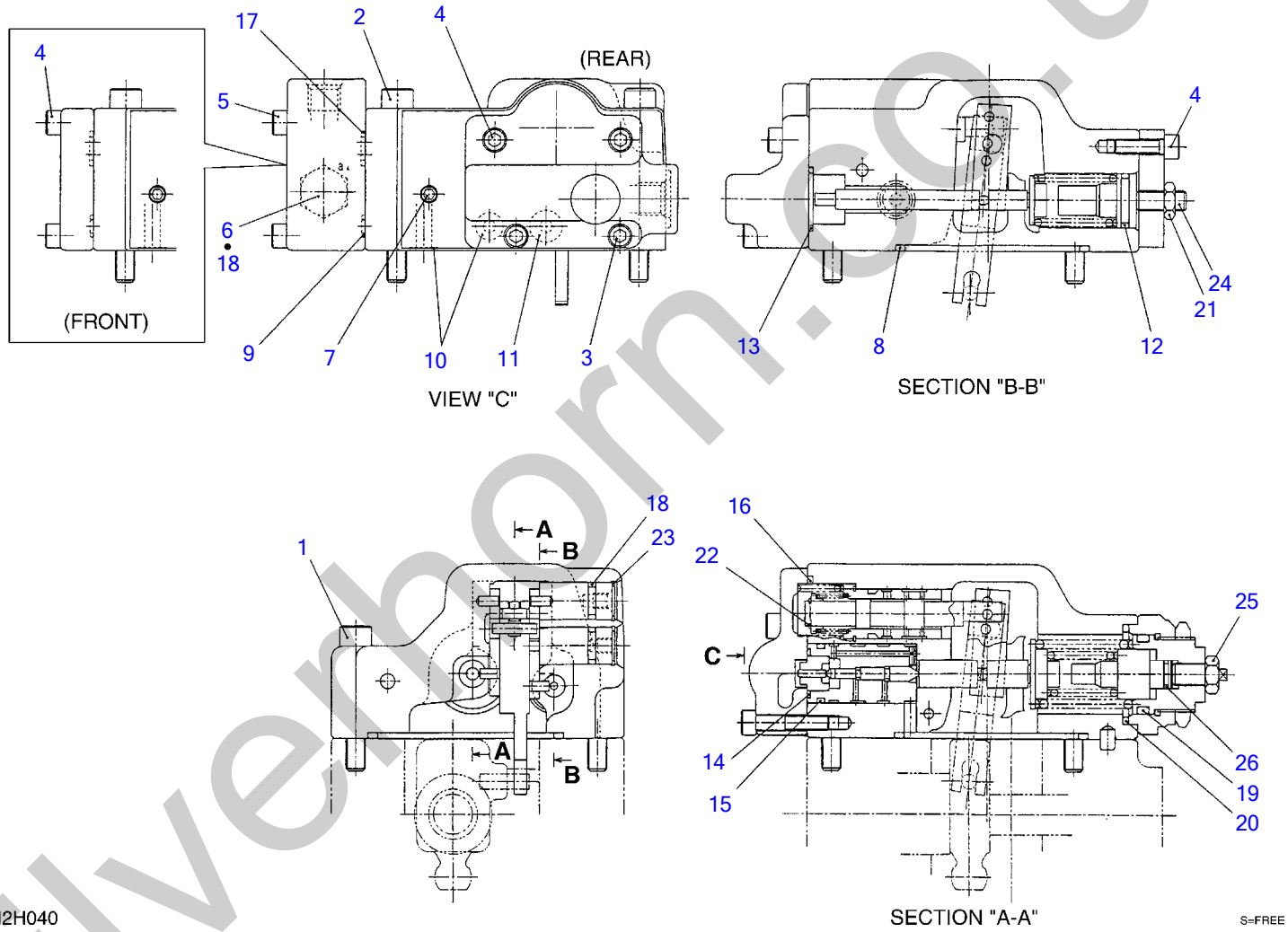

silverhorn.co.uk

HYDRAULIC PUMP (2/3)

Item	Part number	Description	Q'ty	Chan.	Serial No.	Serv.	Remarks
0-2	1902912100	REGULATOR ASSY (REAR)	1			M	
	1902912000	REGULATOR ASSY (FRONT)	1			M	
1	1110020850	・SCREW, cap	2				
2	1110020870	・SCREW, cap	2				
3	1110020630	・SCREW, cap	2				
4	1110020620	・SCREW, cap	6				REAR
	1110020620	・SCREW, cap	10				FRONT
5	1110020640	・SCREW, cap	4				REAR
6	1501750002	・PLUG	1				REAR
	1420010110	・・O-RING	1				
7	1902020925	・PLUG	6				
8	1420110750	・O-RING	1				
9	1420010060	・O-RING	2				REAR
	1420010060	・O-RING	3				FRONT
10	1420010080	・O-RING	10				REAR
	1420010080	・O-RING	9				FRONT
11	1420010100	・O-RING	1				
12	1420010180	・O-RING	1				
13	1420010220	・O-RING	1				
14	1420050160	・O-RING	1			M	
15	1420010200	・O-RING	1				
16	1420110250	・O-RING	1				
17	1420010125	・O-RING	1				
18	1420010110	・O-RING	3				
19	1420010260	・O-RING	1				
20	1420110350	・O-RING	1				
21	1130250008	・NUT	1				
22	1220000010	・RING, retaining	1				
23	1902020926	・RING, retaining	2				
24	1110020820	・SET-SCREW	1				
25	1130250010	・NUT	1				
26	1420050090	・O-RING	1			M	
	N2h040						

silverhorn.co.uk

HYDRAULIC PUMP (3/3)

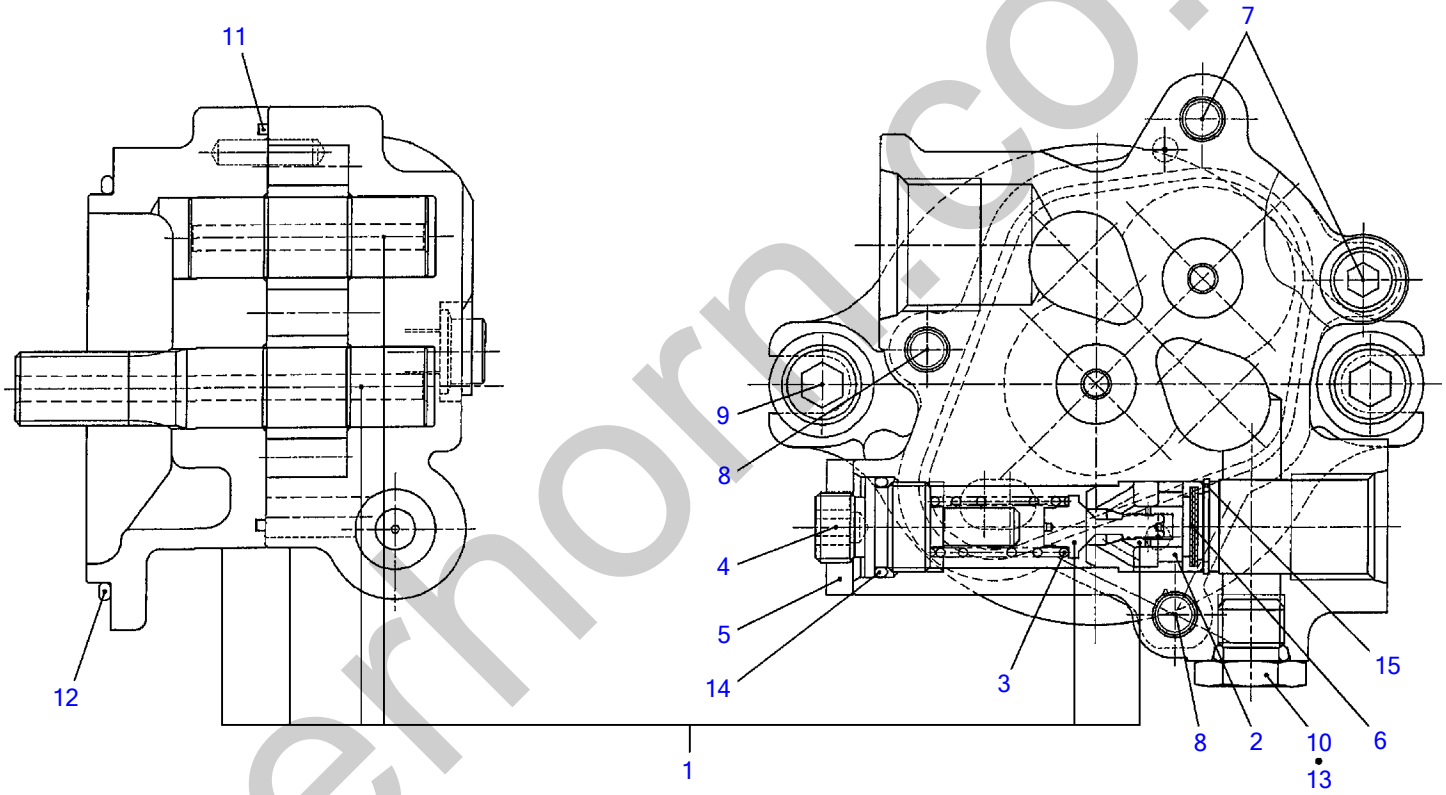

N2H050

S=free

silverhorn.co.uk

HYDRAULIC PUMP (3/3)

Item	Part number	Description	Q'ty	Chan.	Serial No.	Serv.	Remarks
0-4	1902911900	PUMP ASSY, SUB	1			M	
1	1902911998	・CASE ASSY, gear	1			M	
2	1902911903	・RING	1			M	
3	1902911904	・SPRING	1			M	
4	1902911905	・SCREW	1			M	
5	1902910906	・NUT	1				
6	1902910910	・FILTER	1				
7	1111550840	・SCREW, cap	2				
8	1111550855	・SCREW, cap	2				
9	1111551035	・SCREW, cap	2				
10	1501750002	・PLUG	1				
	1420010110	・・O-RING	1				
11	1902910916	・RING	1				
12	1420110800	・O-RING	1				
13	1420010110	・O-RING	1				
14	1420010160	・O-RING	1				
15	1221000018	・RING, snap	1				
	N2h050						

silverhorn.co.uk

GEAR PUMP

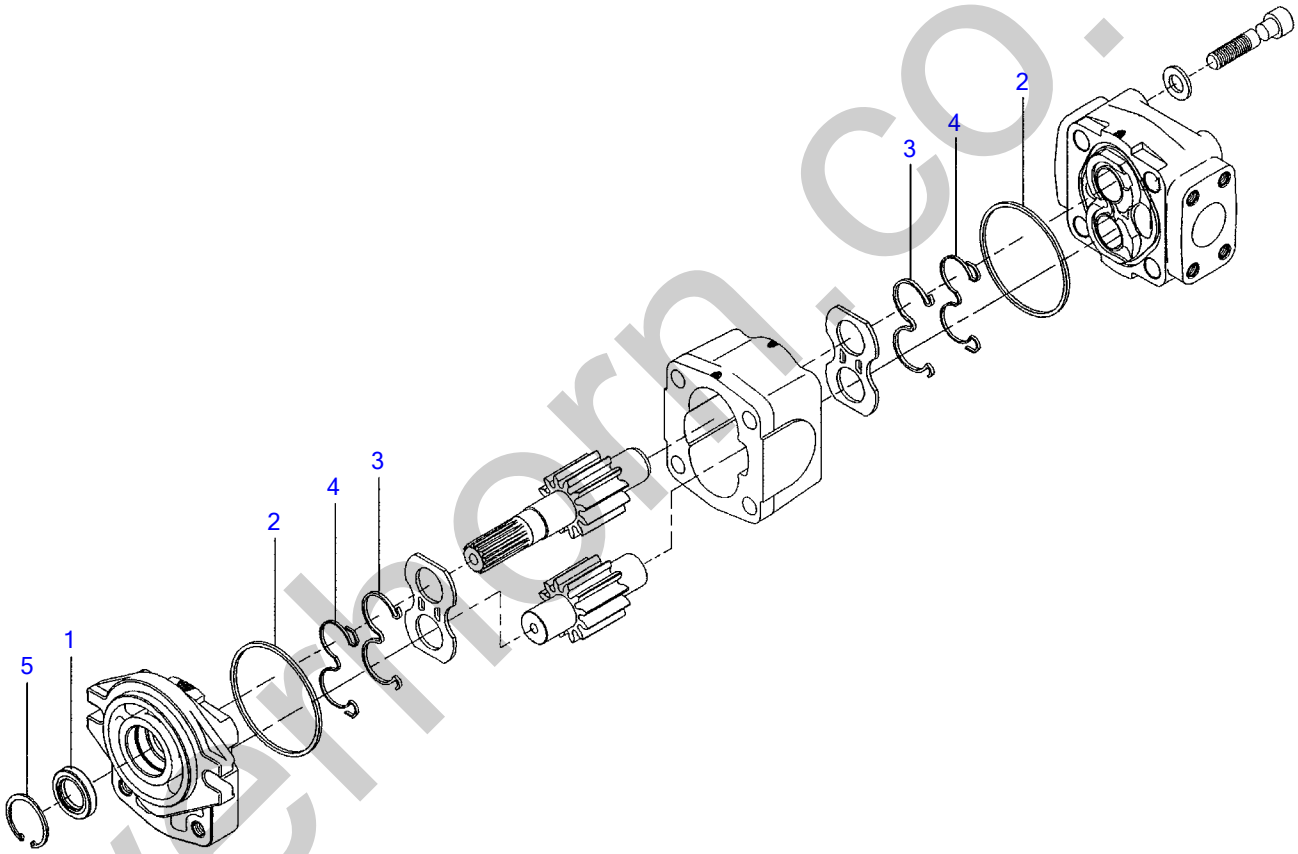

N0H380

S=free

silverhorn.co.uk

GEAR PUMP

Item	Part number	Description	Q'ty	Chan.	Serial No.	Serv.	Remarks
0	1902023000	PUMP ASSY, gear	1			M	
0-1	1902021099	・KIT, seal	1				
1	X 1902017618	・・SEAL, oil	1				
2	X 1902017616	・・GASKET	2				
3	X 1902017613	・・GASKET	2				
4	X 1902017615	・・RING, back-up	2				
5	X 1221000036	・・RING, snap	1				
	N2h060						

silverhorn.co.uk

REMOTE CONTROL VALVE TRAVEL 51420231~

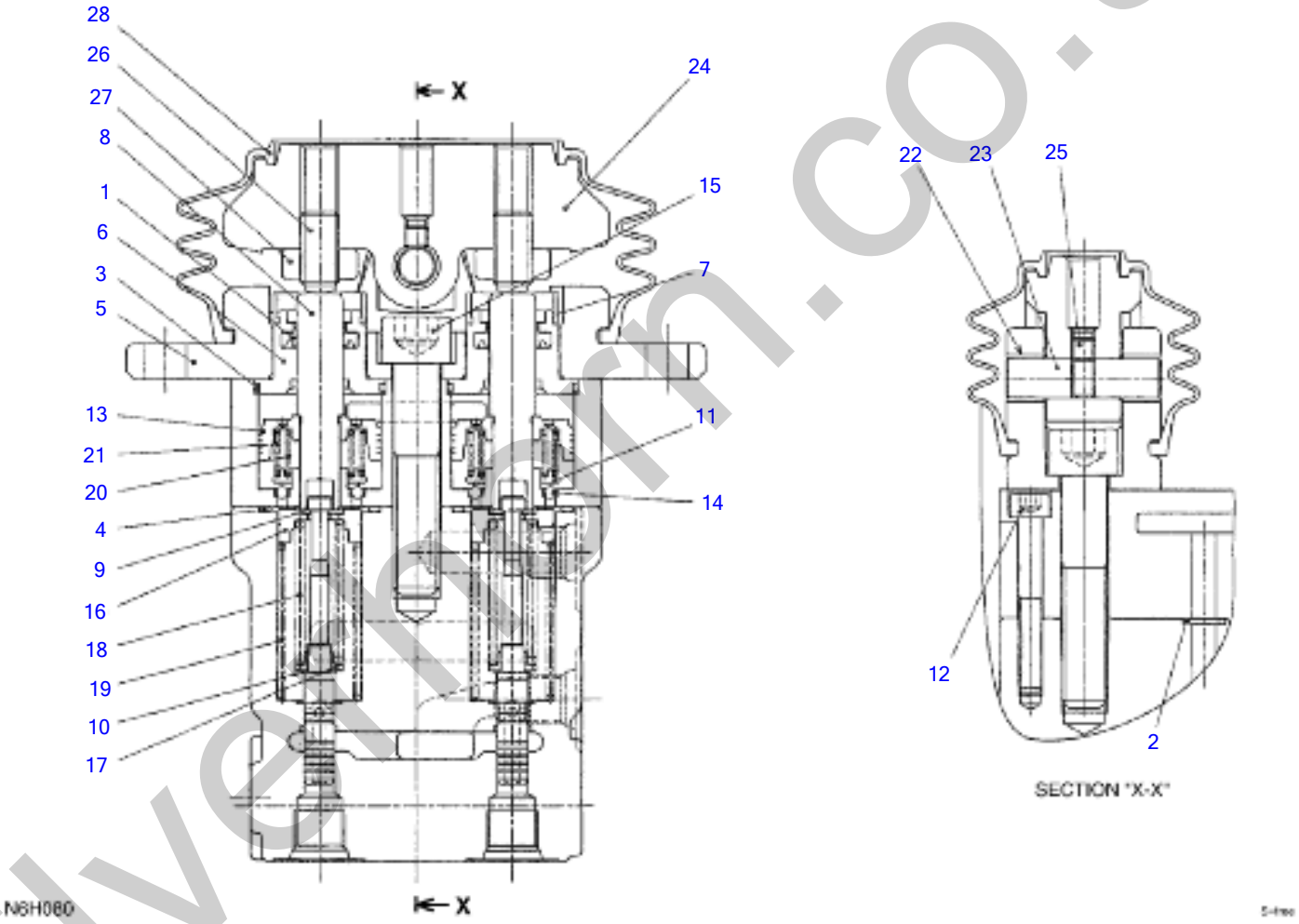

silvermorn.co.uk

REMOTE CONTROL VALVE TRAVEL 51420231~

Item	Part number	Description	Q'ty	Chan.	Serial No.	Serv.	Remarks
0	1901754700	REMOTE-CONTROL VALVE ASSY	1				
0-1	1901754799	* SEAL KIT	1				
1	1901733515	* * PACKING	4				
2	1420010080	* * O-RING	2				
3	1420300025	* * O-RING	4				
4	1420500280	* * O-RING	4				
5	1901733512	* COVER	2				
6	1901733513	* PLUG	4				
7	1901733514	* CUP	4				
8	1901733517	* ROD	4				
9	1901710915	* WASHER	8				
10	1901710917	* WASHER	4				
11	1901733520	* HOLDER	4				
12	1110020645	* CAP SCREW	2				
13	1901733523	* PISTON	4				
14	1390010030	* STEEL BALL	12				
15	1110021260	* CAP SCREW	2				
16	1901733527	* HOLDER	4				
17	1901733528	* WASHER	4				
18	1901743820	* SPRING	4				
19	1901733530	* SPRING	4				
20	1901733531	* SPRING	4				
21	1901733532	* SPRING	4				
22	1333001010	* BUSHING	4				
23	1901725215	* SHAFT	2				
24	1901725216	* CAM	2				
25	1121040606	* SET-SCREW	2				
26	1901725218	* SET-SCREW	4				
27	1130090010	* NUT	4				
28	1901754751	* BOOT	2				
	N6H080						

silverhorn.co.uk

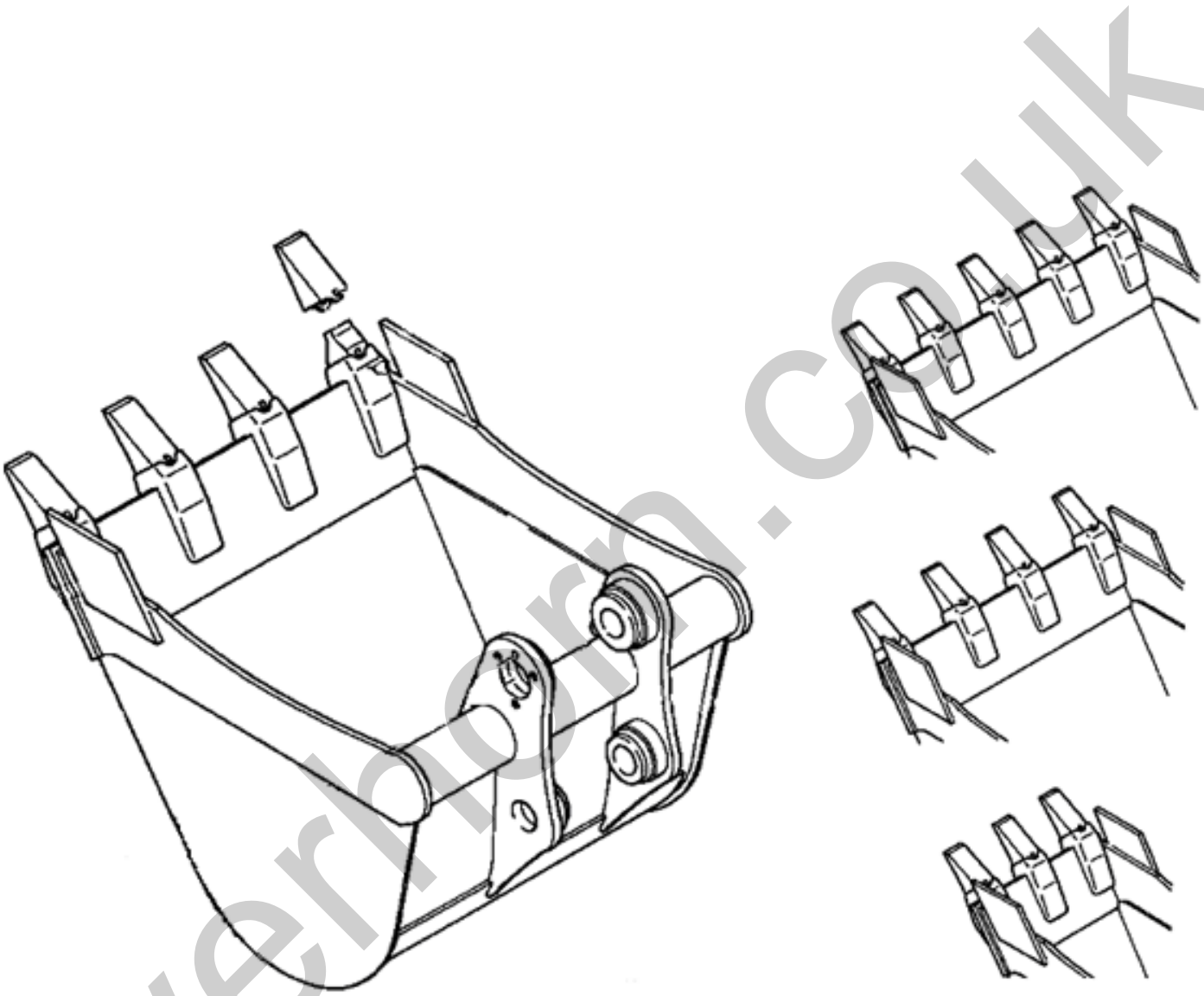

silverhorn.co.uk

Esco Buckets

Item	Part number	Description	Q'ty	Chan.	Serial No.	Serv.	Remarks
		Esco Buckets					
	BTB114018E	18" Pin-on Bucket TB1140 Esco V29 Teeth (cap. 0.41) (875 lbs)	1				
	BTB114024E	24" Pin-on Bucket TB1140 Esco V29 Teeth (cap. 0.57) (1025 lbs)	1				
	BTB114030E	30" Pin-on Bucket TB1140 Esco V29 Teeth (cap. 0.73) (1110 lbs)	1				
	BTB114036E	36" Pin-on Bucket TB1140 Esco V29 Teeth)cap. 0.89) (1295 lbs)	1				
	BTB114042E	42" Pin-on Bucket TB1140 Esco V29 Teeth (cap. 1.0) (1430 lbs)	1				

silverhorn.co.uk

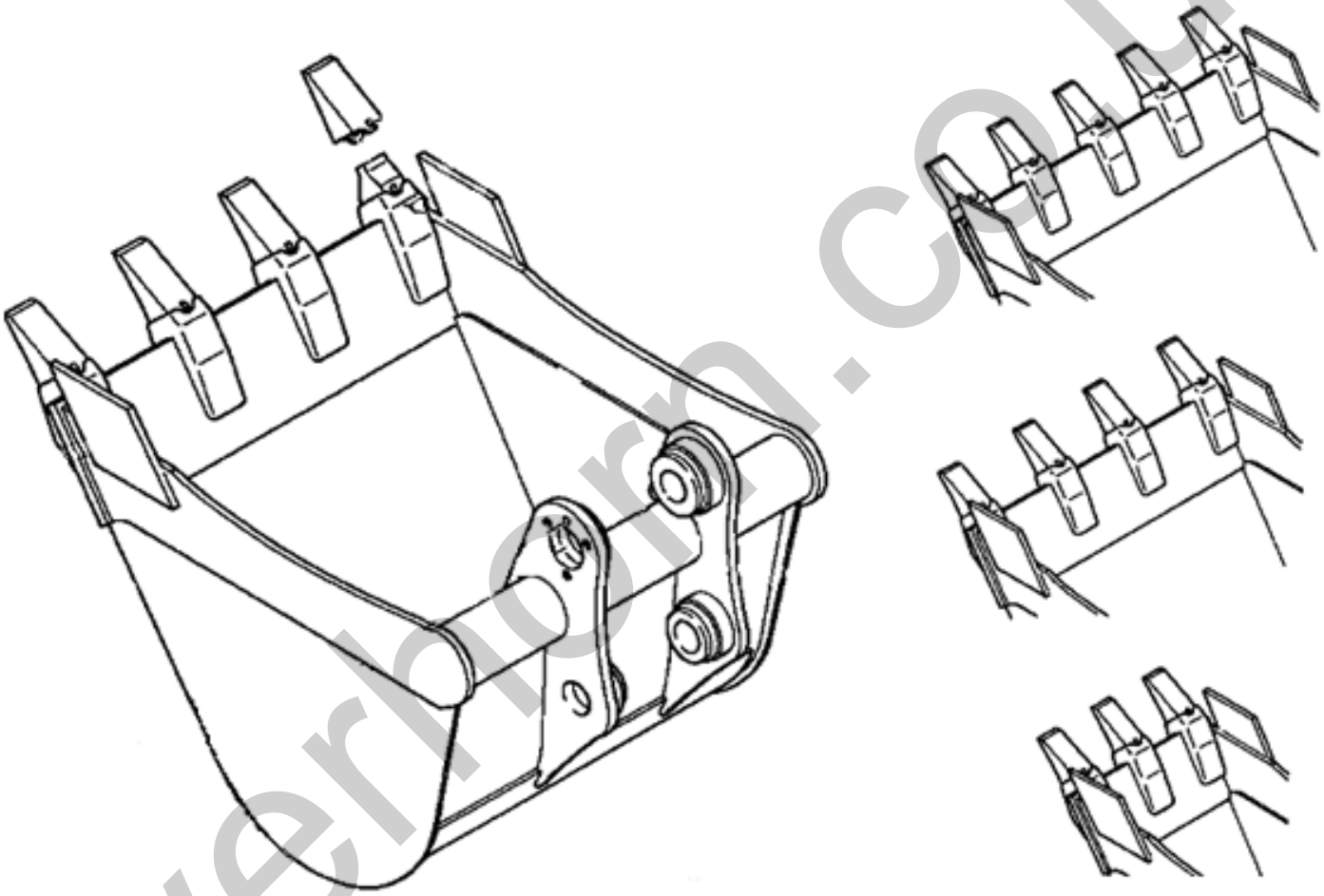

silverhorn.co.uk

Hensley Buckets

Item	Part number	Description	Q'ty	Chan.	Serial No.	Serv.	Remarks
		TB1140 Hensley Buckets					
	BTB114018H	18" Pin-on Bucket Hensley X29 Teeth (cap 0.41)(875 lbs)	1				
	BTB114024H	24" Pin-on Bucket Hensley X29 Teeth (cap. 0.57)(1025 lbs)	1				
	BTB114030H	30" Pin-on Bucket Hensley X29 Teeth (cap. 0.73)(1110 lbs)	1				
	BTB114036H	36" Pin-on Bucket Hensley X29 Teeth (cap. 0.89)(1295 lbs)	1				
	BTB114042H	42" Pin-on Bucket Hensley X29 Teeth (cap. 1.0)(1430 lbs)	1				

silverhorn.co.uk

Esco Teeth

silverhorn.co.uk

Esco Teeth

Item	Part number	Description	Q'ty	Chan.	Serial No.	Serv.	Remarks
		Esco Bucket Teeth					
1	1914200292E	Esco Tooth TB1140	1				
2	1914200291E	Esco Adapotr TB1140	1				
3	1914200293E	Esco Lock Pin TB1140	1				

silverhorn.co.uk

Hensley Teeth

1

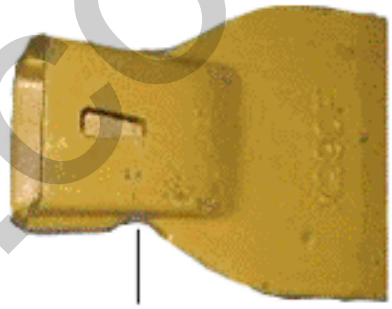

3

6

2

5

4 - not displayed

silverthorn.co.uk

Hensley Teeth

Item	Part number	Description	Q'ty	Chan.	Serial No.	Serv.	Remarks
		TB1140 Hensley Teeth					
1	**1914200291H**	Hensley Adaptor TB1140	1				
2	**1914200292H**	Hensley Tooth TB1140	1				
3	**1914200292HFT**	Hensley Duckbill Flare Tooth TB1140	1				
4	**1914200292HT**	Hensley Tiger Tooth TB1140	1				
5	**1914200292HTT**	Hensley Twin Tiger Tooth TB1140	1				
6	**1914200293H**	Hensley Steel Lock Pin TB1140	1				
	1914200290P	Hensley Flex Rubber Lock Pin TB1140 (optional)	1				

silverhorn.co.uk

250 Hour Filter Kit

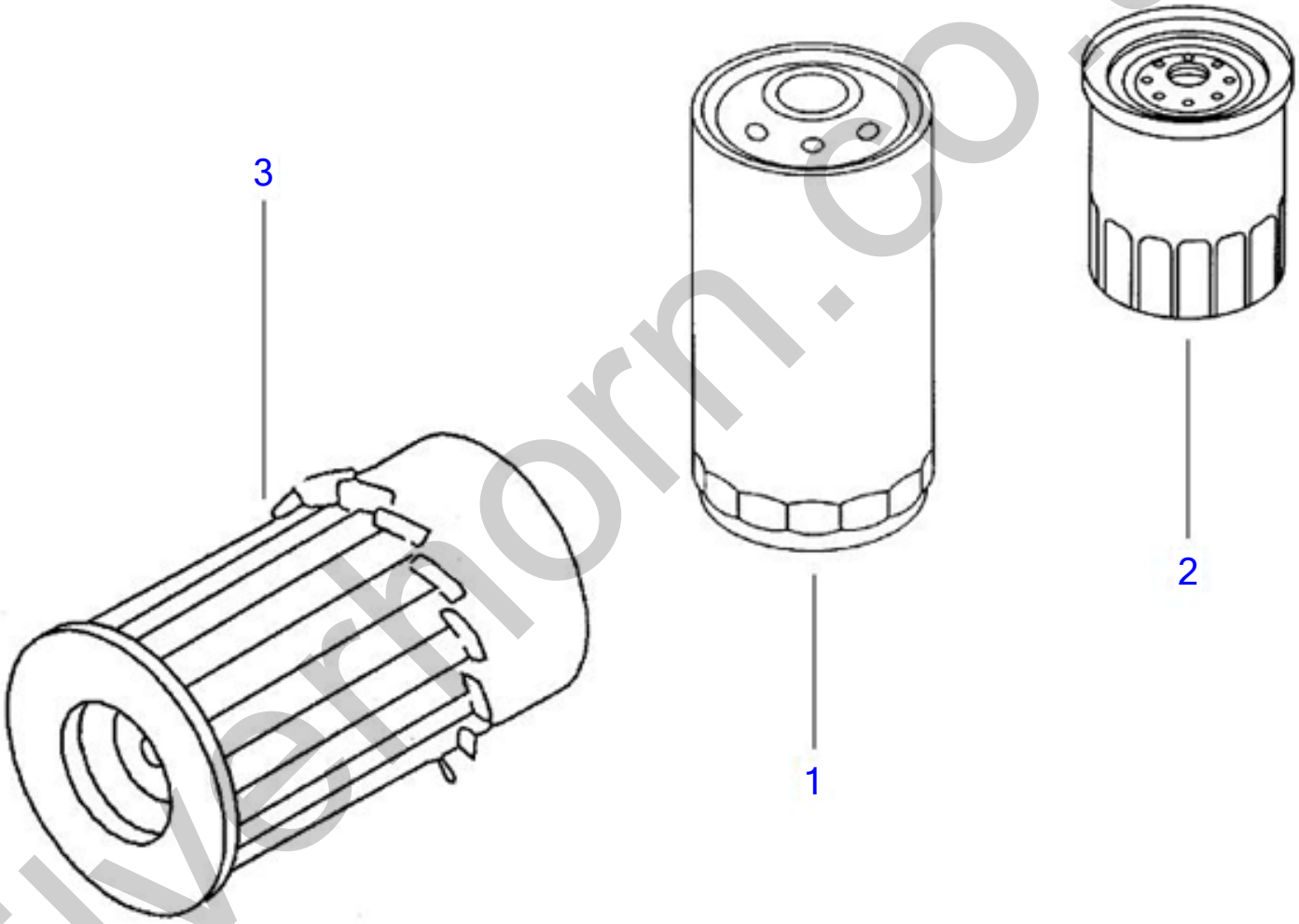

silverhorn.co.uk

250 Hour Filter Kit

Item	Part number	Description	Q'ty	Chan.	Serial No.	Serv.	Remarks
		250 Hour Filter Kit					
1	1132402321	* Element Oil Filter	1				
2	X13240015	* Fuel Filter	1				
3	Y119117-12560	* Outer Air Filter	1				

silverhorn.co.uk

Annual Filter Kit

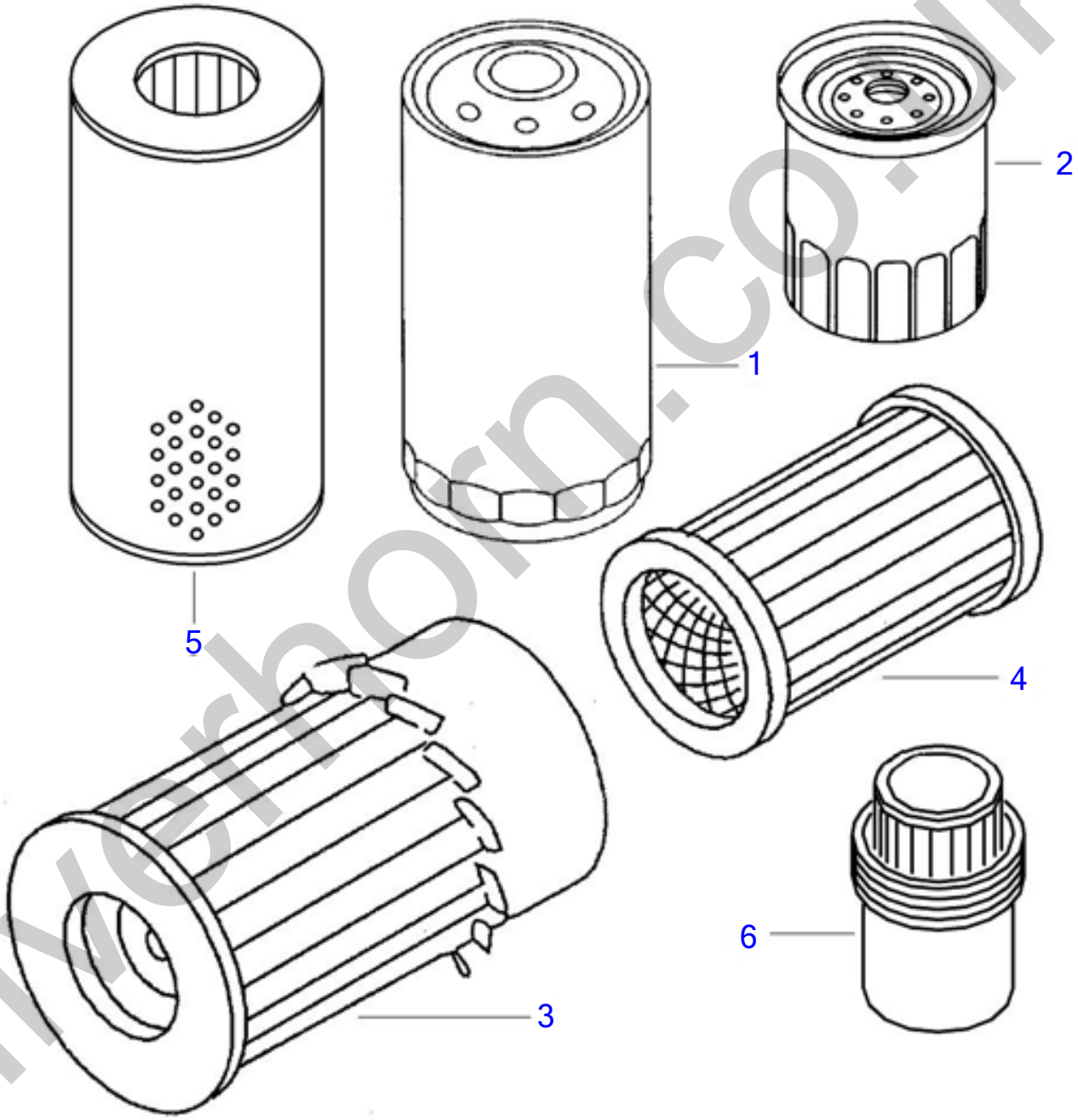

silverhorn.co.uk

Annaul Filter Kit

Item	Part number	Description	Q'ty	Chan.	Serial No.	Serv.	Remarks
		Annual Filter Kit					
1	1132402321	* Element Oil Filter	1				
2	X13240015	* Fuel Filter	1				
3	Y119117-12560	* Outer Air Filter	1				
4	Y119117-12570	* Inner Air Filter	1				
5	1551103400	* Hydraulic Filter	1				
6	1551200601	* Screen check SN for application TNE	1				

silverhorn.co.uk

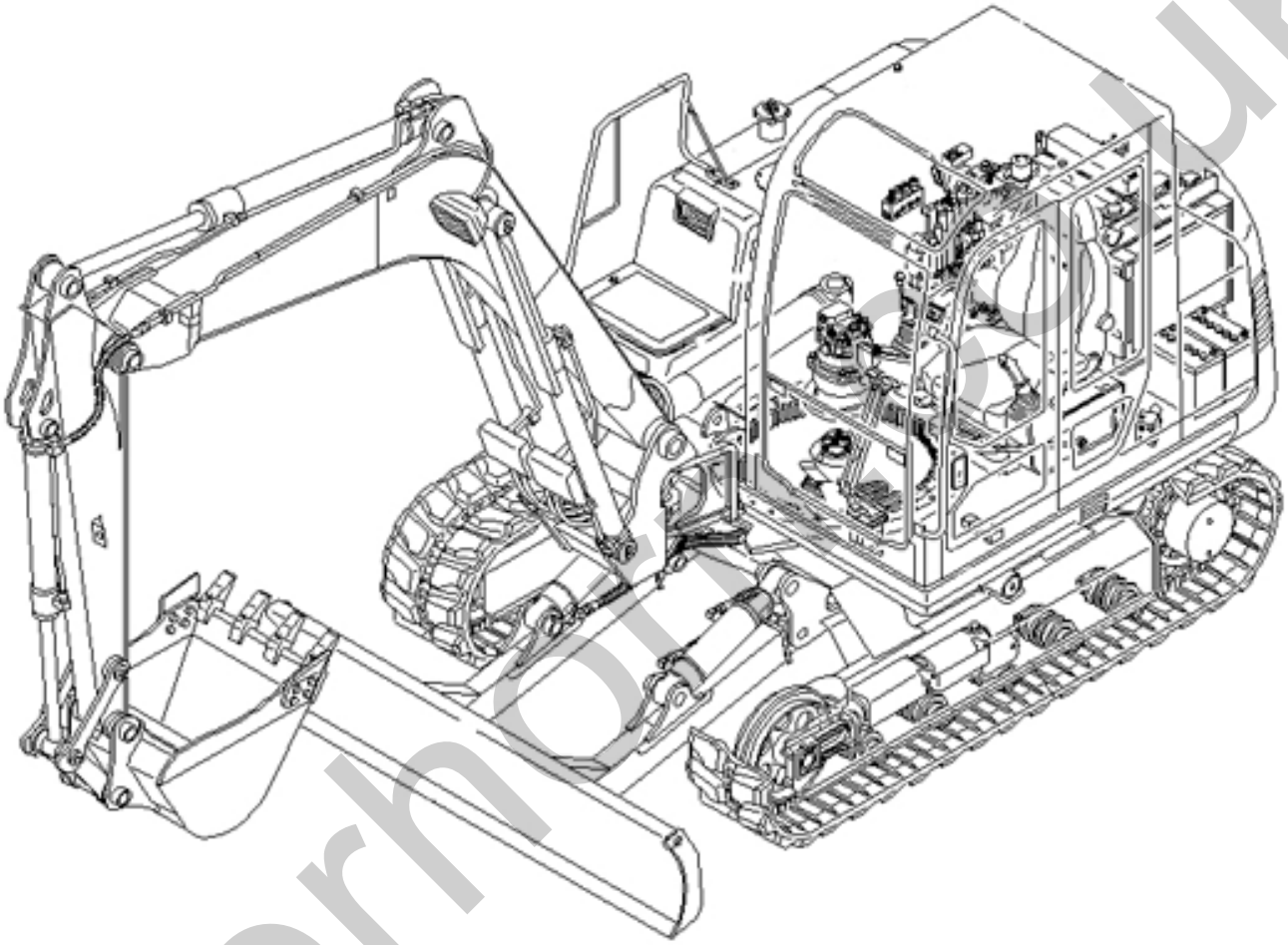

silverhorse.co.uk
TAKEUCHI

Recommended Stock Order List

Item	Part number	Description	Q'ty	Chan.	Serial No.	Serv.	Remarks
		Recommended Stock Order List					
	1551103400	Filter	5				
	Y119117-12570	Inner Air Filter	3				
	Y119117-12560	Outer Air Filter	3				
	1132402321	Element Oil Filter	6				
	X13240015	Fuel Filter	3				
	199099114000	250 Hour Filter Kit TB1140	1				
	19099114010	Annual Filter Kit TB1140	1				
	1900089999	Seal Kit TB1140	1				
	1900090099	Dozer Blade Cylinder Seal Kit	1				
	1900089599	Seal Kit	1				
	1900091895	Arm Cylinder Seal Kit	1				
	1900089599	Seal Kit	1				
	1914200291E	Esco Tooth Adaptor	8				
	1914200292E	Esco Tooth	8				
	1914200293E	Esco Lock Pin	8				
	1914200291H	Henlsey Tooth Adaptor	8				
	1914200292H	Hensley Tooth	8				
	1914200293H	Hensley Lock Pin	8				
	1700100019	Key (qty 1 = 2 keys)	6				
	1554512600	Tube	2				
	1554502050	Plug	2				
	1541400520	Washer	2				
	0566015400	Lamp Assy OEM see K15614202 for lower cost alternative	2				
	I8-97230-2520	Cooling Fan Belt	2				

silverhorn.co.uk

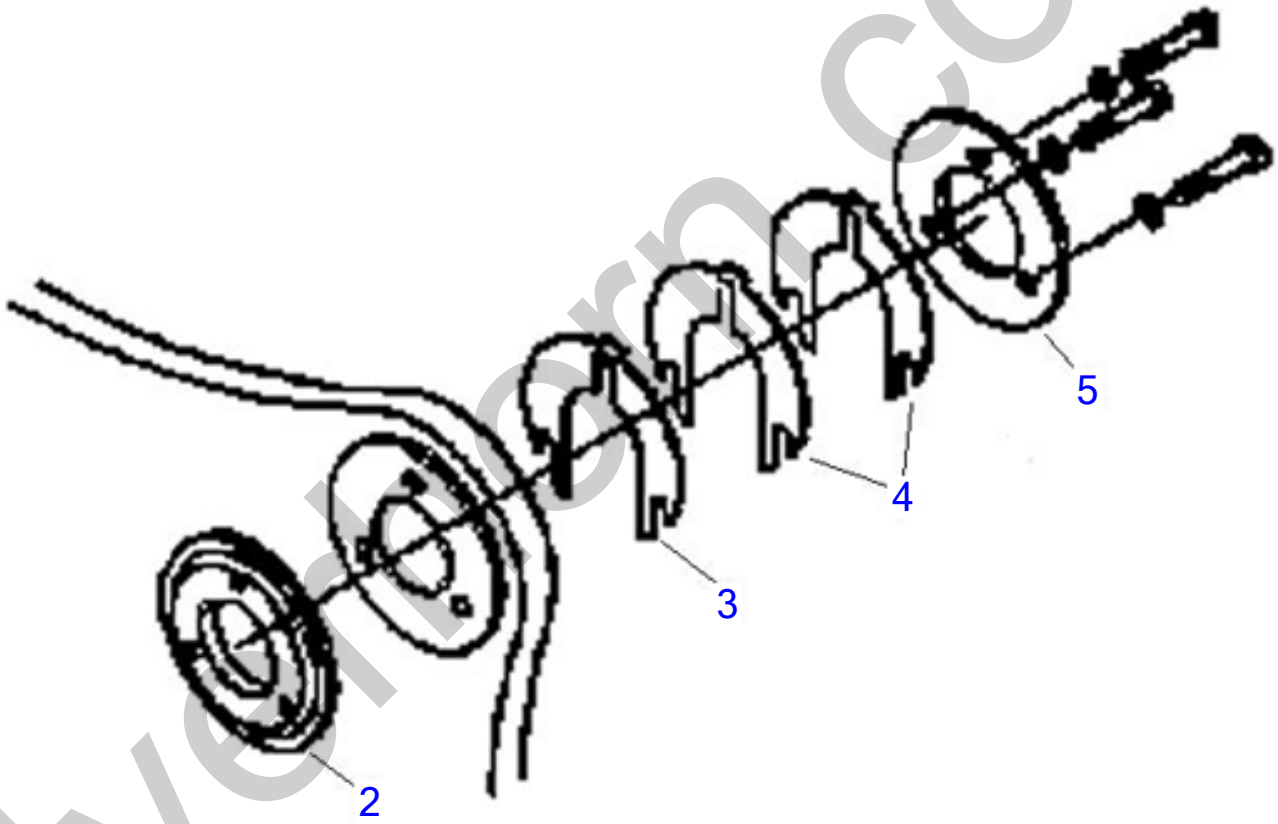

silverthorn.co.uk

Anitclatter Kit

Item	Part number	Description	Q'ty	Chan.	Serial No.	Serv.	Remarks
		Anticlatter Kit					
	TB1140BKTBUSH	TB1140 Anit-clatter Bucket Bushing Kit (must be on bucket)	1				
2	**TB1140BKTSHIMPACK**	TB1140 Anit-clatter Bucket Shim Pack	1				
3	**TB1140BKTSHIM11GA**	TB1140 Anti-clatter Bucket Shim 11 gauge	1				
4	**TB1140BKTSHIM16GA**	TB1140 Anti-clatter Bucket Shim 16 gauge	1				
5	**TB1140BKTCAPPLATE**	TB1140 Anit-clatter Bucket Cap Plate	1				

silverhorn.co.uk

Side Cutter

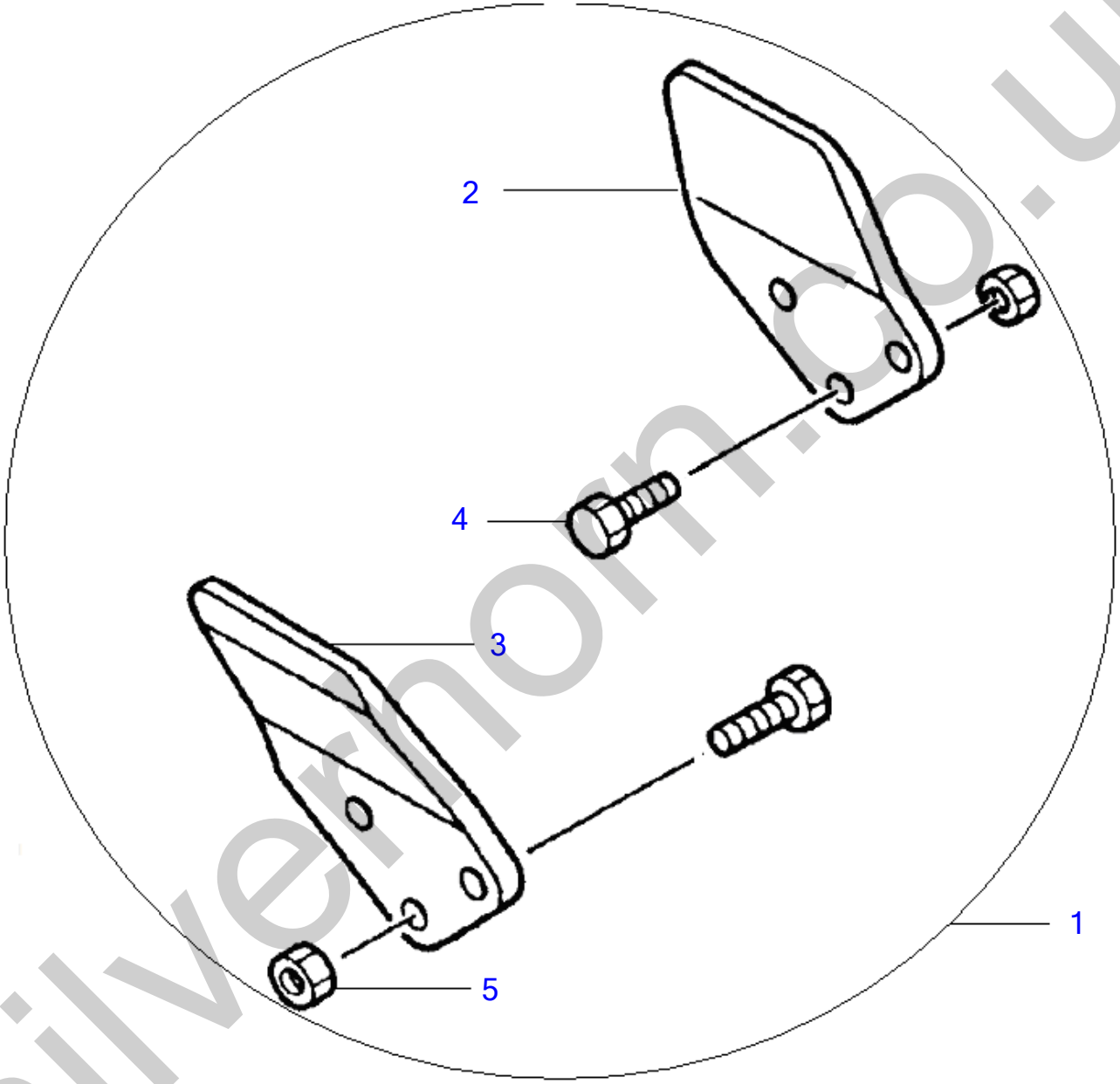

silverhorn.co.uk

Side Cutter

Item	Part number	Description	Q'ty	Chan.	Serial No.	Serv.	Remarks
1	TB1140SIDECUTTERS	Sidecutter Set includes right and left with hardware	1				
2	TB1140SCR	* Right Hand Side cutter with Hardware	1				
3	TB1140SCL	* Left Hand Side cutter with Hardware	1				
4	TB1140SCBOLT	* Side cutter Plow Bolt	1				
5	TB1140SCNUT	* Side cutter Plow Nut	1				

silverhorn.co.uk

Thumbs Old Style

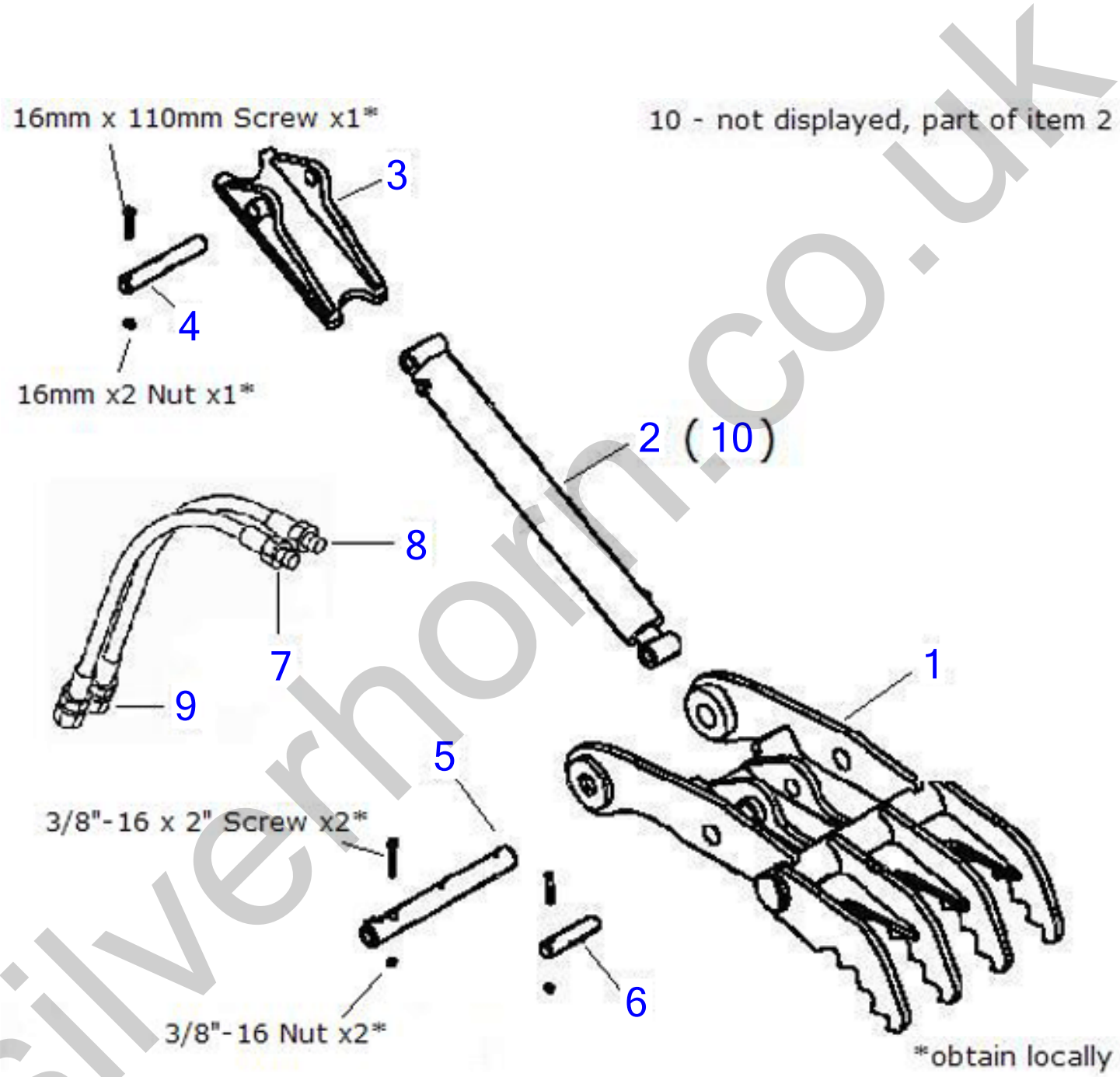

silverhorn.co.uk

Thumbs Old Style

Item	Part number	Description	Q'ty	Chan.	Serial No.	Serv.	Remarks
		Thumbs Old Style					
1	TB1140THBRKT	TB1140 Body Weldment Old Style Thumb	1				
2	TB1140THCYL	TB1140 Thumb Cylinder	1				
3	TB1140THCYLBRKT	TB1140 Thumb Bracket Weldment for machine side	1				
4	TB1140THHPIN	TB1140 Thumb Cylinder Head Pin	1				
5	TB1140THMPINOLD	TB1140 Thumb Main Pivot Pin	1				
6	TB1140THRPIN	TB1140 Thumb Cylinder Rod Pin	1				
7	TB1140SHORTHOSE	Short Hose Assy Kit for Thumb	1				
8	TB1140LONGHOSE	Long Hose Assy Kit for Thumb	1				
9	1513110040	1/2" Jic X 1/2" Bspp adpt New Style Thumb (1513110038-39)	2				
10	TB1140THSEALKIT	TB1140 Thumb Cylinder Seal Kit	1				

silverhorn.co.uk

silverhorn.co.uk

Item	Part number	Description	Q'ty	Chan.	Serial No.	Serv.	Remarks
		TB108 Manuals					
	L108000001	Operators Manual TB108 AB5E006 TNE	1				
	L108000003TNE	Parts Manual TB108 BB5Z004 SN 10810004-10820000 TNE Eng	1				
	L108000004TNE	Service Manual TB108 CB5E001 SN 10810004-10812001 TNE	1				

silverhorn.co.uk

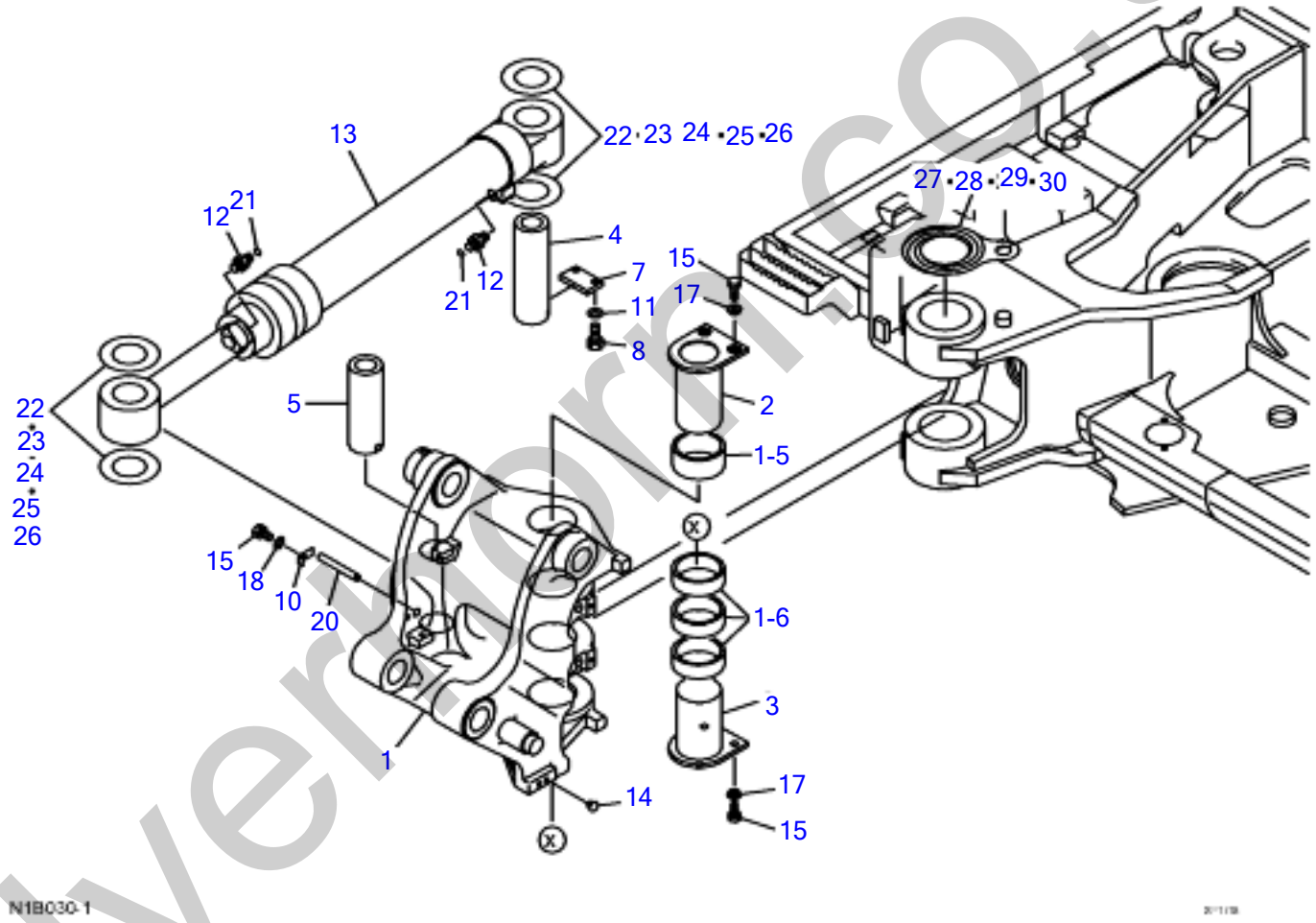

silvermorris.co.uk

BOOM SWING 51420374~

Item	Part number	Description	Q'ty	Chan.	Serial No.	Serv.	Remarks
		BOOM SWING ASSY					
1	0573101800	BRACKET	1				
1-5	0573101855	* BUSHING	1				
1-6	0573101856	* BUSHING	3				
2	0573101820	PIN	1				
3	0573101830	PIN	1				
4	0573100040	PIN	1				
5	0573100050	PIN	1				
7	0573100070	PLATE	1				
8	1100041845	BOLT	2				
10	0573100090	PLATE	1				
11	1140020018	SPRING WASHER	2				
12	1511061306	ADAPTOR	2				
	1420010240	* O-RING	1				
13	1900098500	SWING CYLINDER	1				
14	1652533018	CAP	2				
15	1101041225	BOLT	5				
17	0003900081	WASHER	4				
18	1140020012	SPRING WASHER	1				
20	0573100110	PIN	1				
21	1420310014	O-RING	2				
22	0003600190	SHIM					
23	0003600191	SHIM					
24	0003600192	SHIM					
25	0003600193	SHIM					
26	0003600194	SHIM					
27	0573100751	WASHER					
28	0573100752	WASHER					
29	0573100753	WASHER					
30	0573100754	WASHER					
	N1B031-1						

silverhorn.co.uk

ENGINE GASKET KIT (1/2)

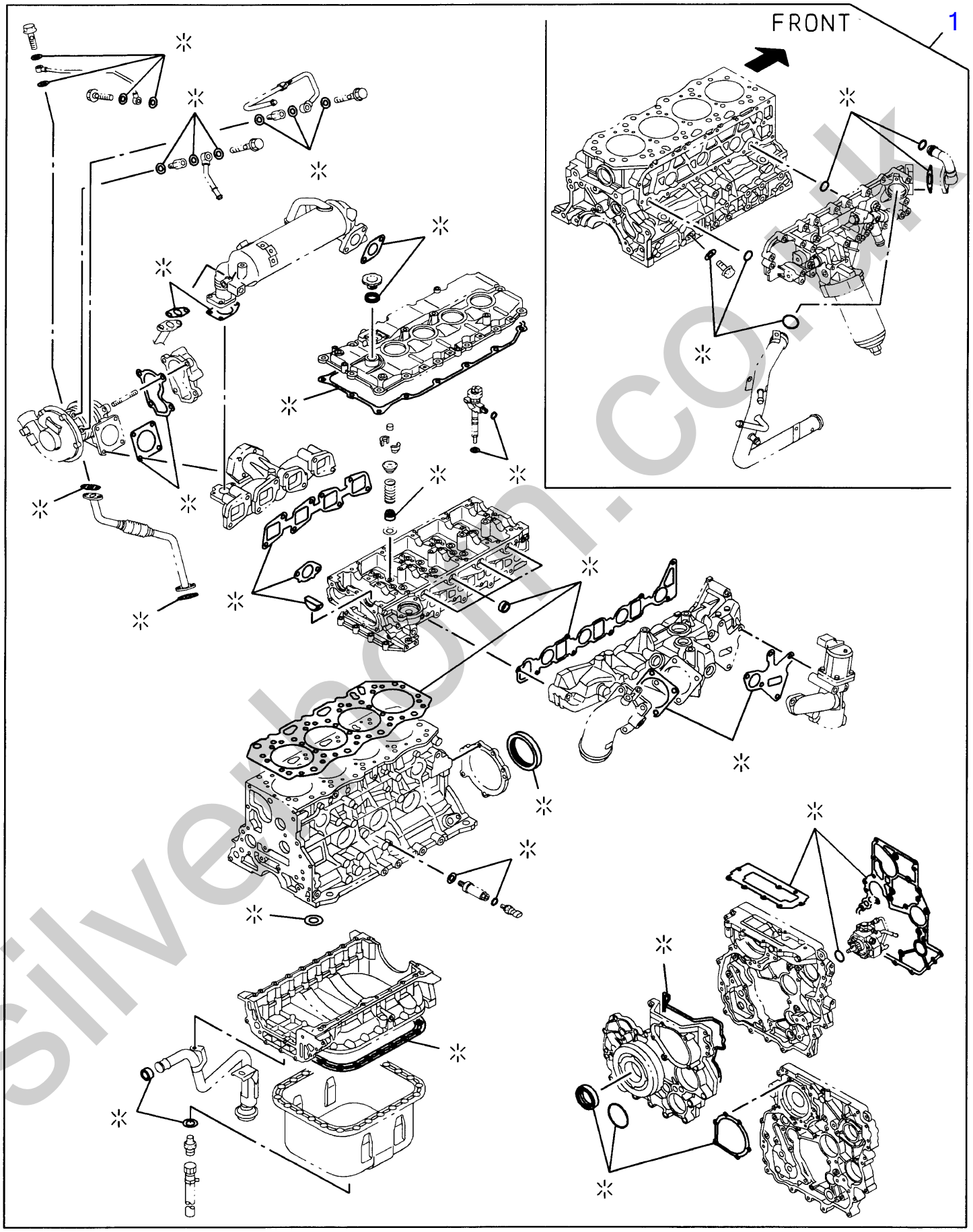

silverboom.co.uk

Engine for TB1140 4JJ1XYSB01 (ISUZU)

ENGINE GASKET KIT (1/2)

Item	Part No	Description	Qty
1	I5-87815-0450	GASKET SET; ENG OVERHAUL (HEAD GASKET T=1.05)	1
	I5-87815-0460	GASKET SET; ENG OVERHAUL (HEAD GASKET T=1.10)	1
	I5-87815-0470	GASKET SET; ENG OVERHAUL (HEAD GASKET T=1.15)	1

silverhorn.co.uk

ENGINE GASKET KIT (2/2)

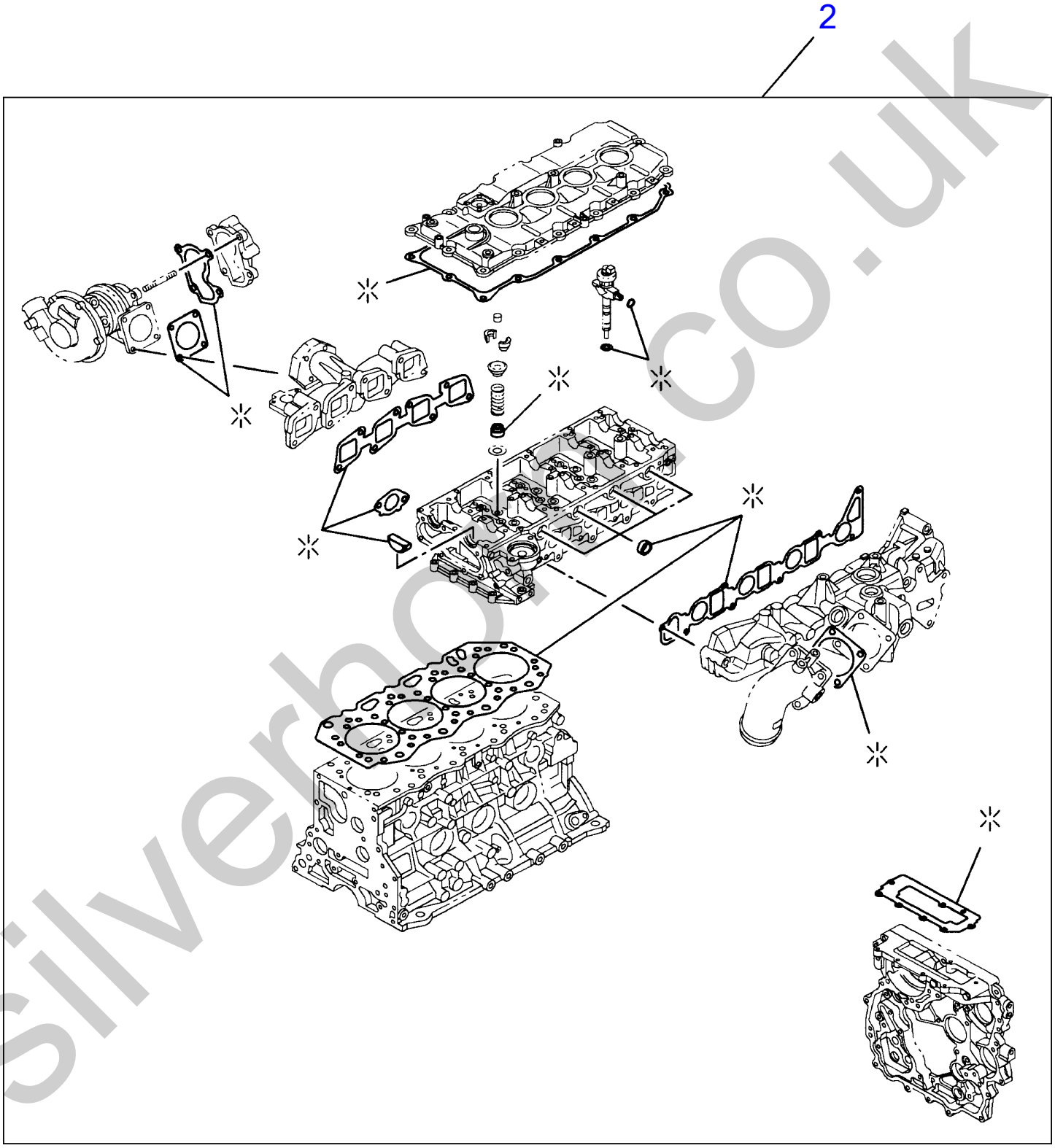

silverhoe.co.uk

ENGINE GASKET KIT (2/2)

Item	Part No	Description	Qty
2	I5-87815-0540	GASKET SET; ENG HD OVERHAUL (HEAD GASKET T=1.05)	1
	I5-87815-0550	GASKET SET; ENG HD OVERHAUL (HEAD GASKET T=1.10)	1
	I5-87815-0560	GASKET SET; ENG HD OVERHAUL (HEAD GASKET T=1.15)	1

silverhorn.co.uk

CYLINDER HEAD COVER

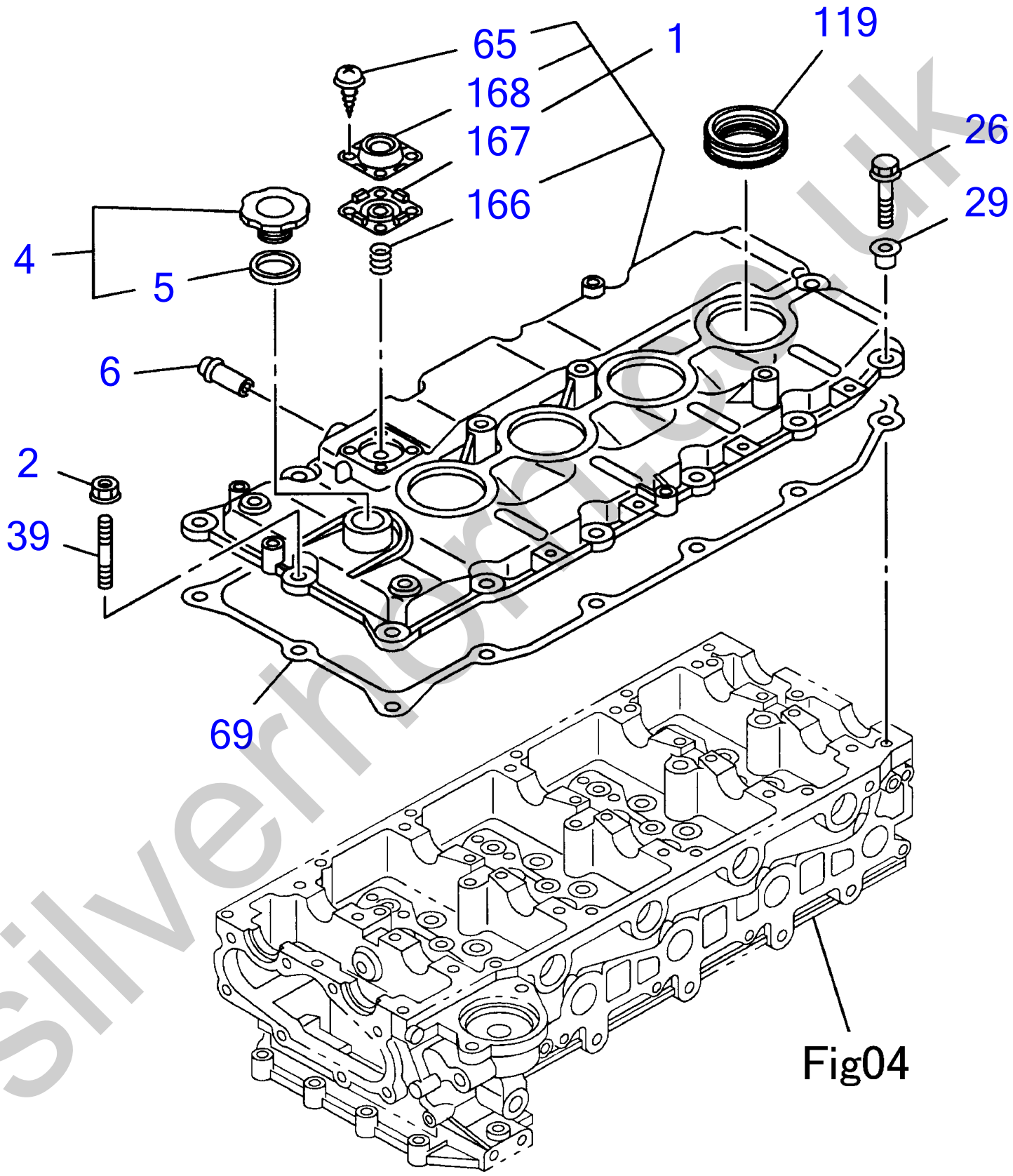

Fig04

silverhomes.co.uk

CYLINDER HEAD COVER

Item	Part No	Description	Qty
1	I8-98052-8300	COVER; CYL HD	1
2	I0-91180-2060	NUT; COVER, HD (M6 FLANGE)	1
4	I8-94133-2075	CAP; OIL FILLER	1
5	I8-94123-6231	GASKET; OIL FILLER (ID=32 OD =40)	1
6	I8-98045-7380	PIPE; PCV HOSE	1
26	I0-28650-6300	BOLT; CYL HD COVER (M6X30 FLANGE)	13
29	I8-97381-5240	RUBBER; MTG, HD COVER	14
39	I8-97372-7950	STUD; COVER, HD (M6X30 L=38)	1
65	I8-97366-5920	SCREW; ADAPTER	4
69	I8-97945-3380	GASKET; HD TO COVER	1
119	I8-98037-5430	COVER; SEAL, NOZZLE	4
166	I8-97365-9980	SPRING; VENTILATOR	1
167	I8-98003-1640	DIAPHRAGM; VENTILATOR	1
168	I8-97365-9920	COVER; VENTILATOR	1

silverhorn.co.uk

CYLINDER HEAD (1/2)

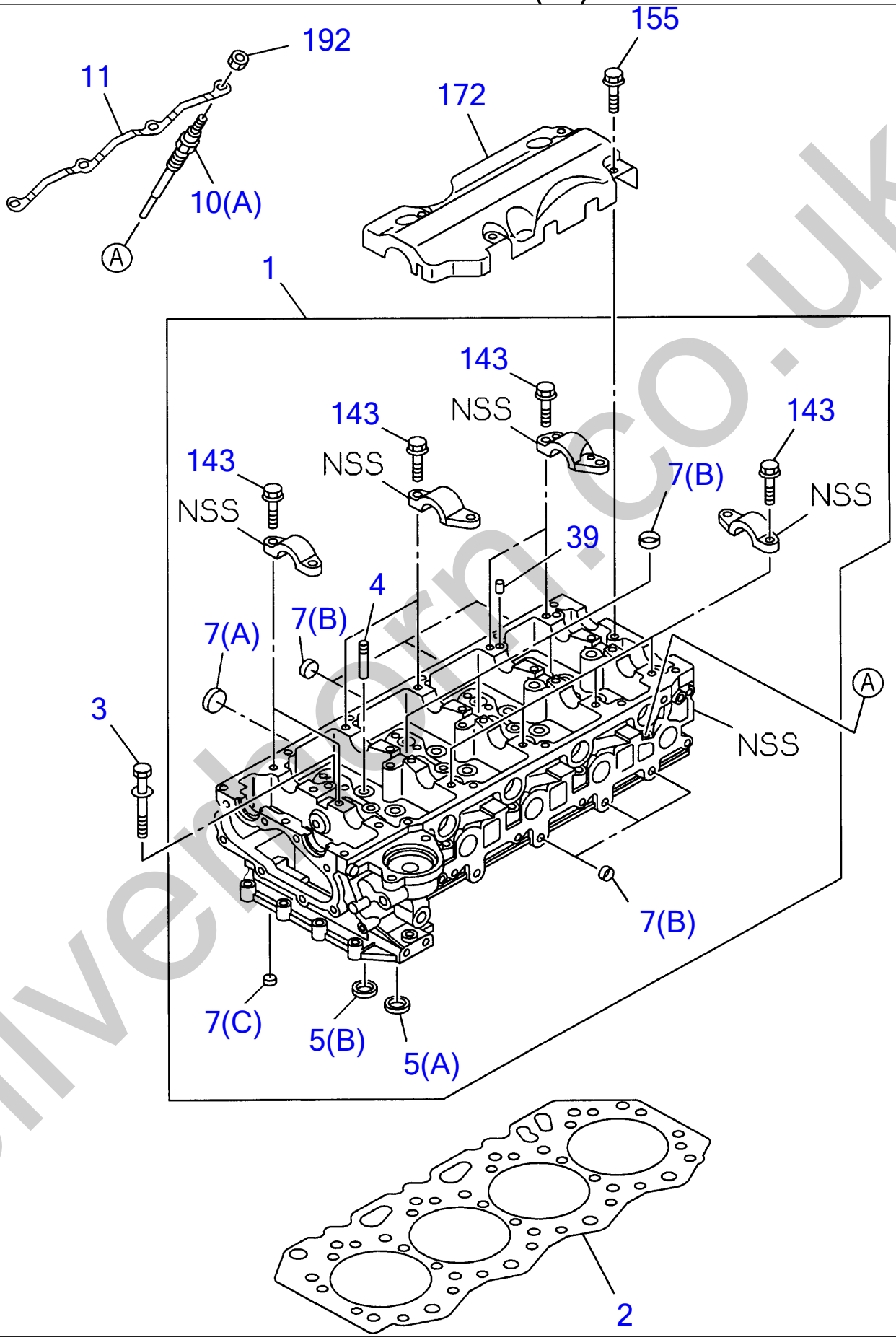

silverhorn.co.uk

CYLINDER HEAD (1/2)

Item	Part No	Description	Qty
1	I8-97355-9708	HEAD ASM; CYL	1
2	I8-97328-8662	GASKET; CYL HD (T=1.05 1-NOTCH)	1
	I8-97328-8672	GASKET; CYL HD (T=1.10 2-NOTCH)	1
	I8-97328-8682	GASKET; CYL HD (T=1.15 3-NOTCH)	1
3	I8-97144-5831	BOLT; CYL HD BLOCK (M11X114)	18
4	I8-94239-4230	GUIDE; VLV	16
5(A)	I8-97311-3780	SEAT; VLV INSERT (INLET)	8
5(B)	I8-97311-3790	SEAT; VLV INSERT (EXH)	8
7(A)	I1-09600-0122	CUP; SEALING, CYL HEAD (OD=32)	2
7(B)	I5-11219-0080	CUP; SEALING, CYL HEAD (OD=18)	13
7(C)	I5-11219-0110	CUP; SEALING, CYL HEAD (OD=14)	7
10(A)	I8-98054-2560	PLUG; GLOW (NGK 24V)	4
11	I8-98014-3350	CONNECTOR; GLOW PLUG	1
39	I8-97329-1291	DOWEL; CAP, CM/SHF	20
143	I0-28650-8400	BOLT; FIX (M8X40 FLANGE)	20
155	I0-58330-6100	BOLT; BAFFLE PLATE (M6X10 HEX SOCKET)	4
172	I8-98016-8650	PLATE; BAFFLE, CYL HD	1
192	I8-97368-8530	NUT; GLOW PLUG (M4 FLANGE)	4

silverhorn.co.uk

CYLINDER HEAD (2/2)

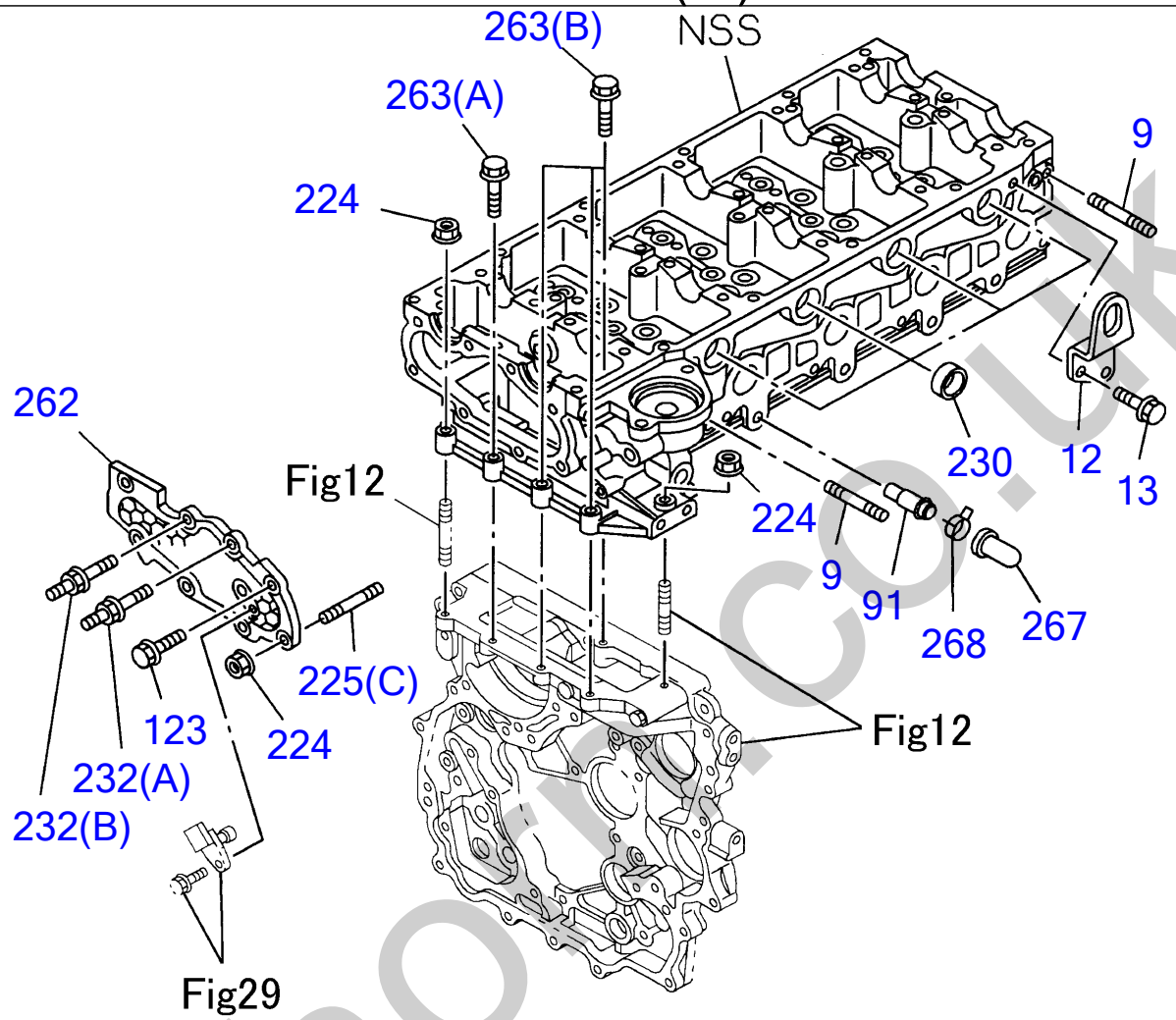

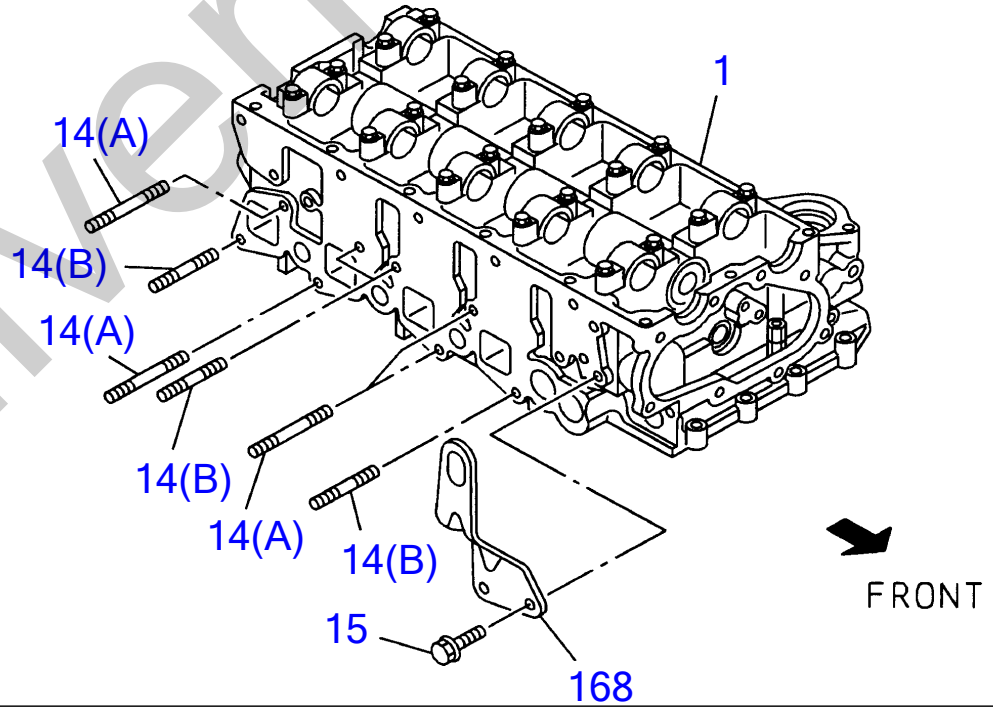

silverhorse.co.uk

CYLINDER HEAD (2/2)

Item	Part No	Description	Qty
1	I8-97355-9708	HEAD ASM; CYL	1
9	I8-98017-0630	STUD; INL MANIF	2
12	I8-98052-0410	HANGER; ENG, RR	1
13	I0-28050-8200	BOLT; HANGER (M8X20 FLANGE)	2
14(A)	I8-98048-4460	STUD; EXH MANIF (M10X70 L=83)	4
14(B)	I8-97307-0752	STUD; EXH MANIF (M10X33 L=48)	4
15	I0-28751-0250	BOLT; HANGER. FRT (M10X25 FLANGE)	2
91	I8-94343-2111	PIPE; HTR	1
123	I8-97366-6320	BOLT; COVER (M8X20 FLANGE)	4
168	I8-98020-1660	HANGER; ENG, FRT	1
224	I0-91180-2080	NUT; COVER (M8 FLANGE)	2
225(C)	I8-98017-0620	STUD; COVER	2
230	I1-09639-0340	GASKET; SLEEVE, INJECTOR	4
232(A)	I8-97366-6330	STUD; CAM, CARRIER (M8X15 M8X17 L=40)	1
232(B)	I8-97375-4600	STUD; CAM, CARRIER (M6X12 M8X17 L=37)	1
262	I8-97355-5164	COVER; CYL HEAD	1
263(A)	I0-28050-8600	BOLT; CYL HD (M8X60 FLANGE)	1
263(B)	I0-28650-8350	BOLT; CYL HD (M8X35 FLANGE)	3
267	I8-94414-6880	CAP; PIPE, HTR	1
268	I8-94125-8621	CLIP; CAP	1

silverhorn.co.uk

CYLINDER BLOCK (1/2)

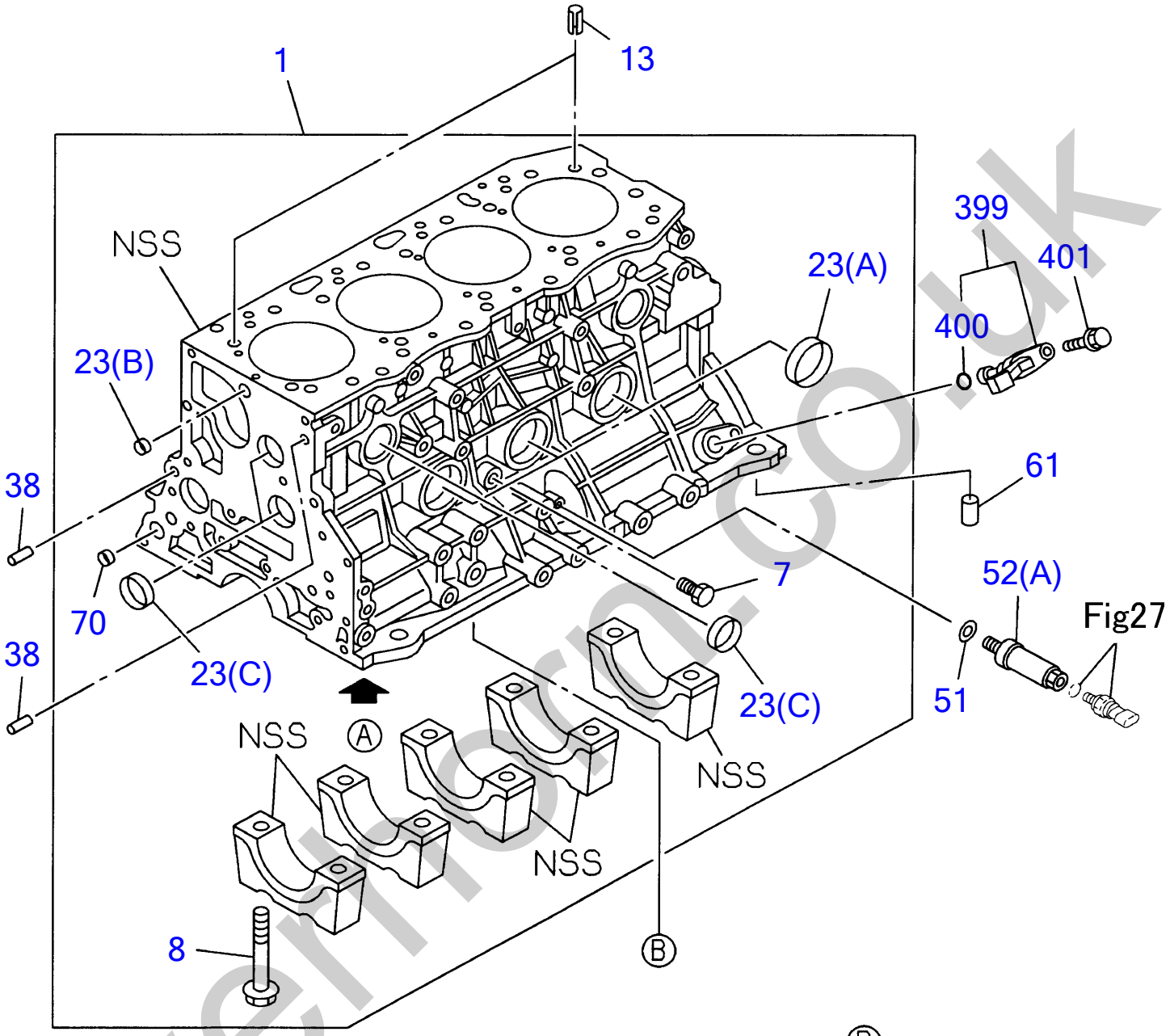

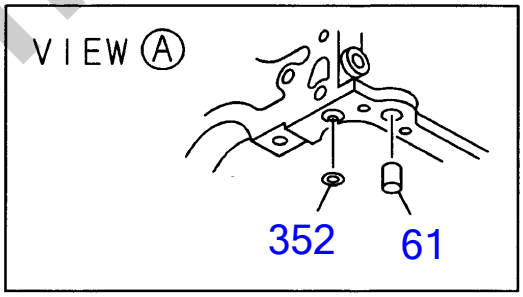

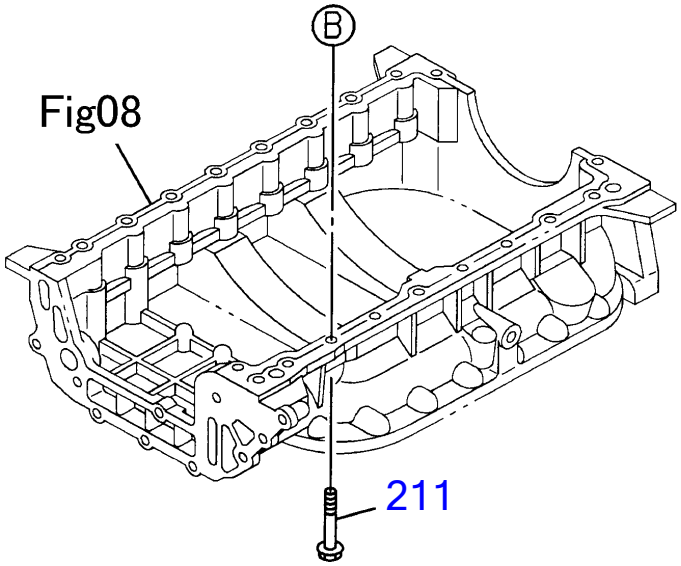

silverthorn.co.uk

CYLINDER BLOCK (1/2)

Item	Part No	Description	Qty
1	I8-98013-8240	BLOCK ASM; CYL	1
7	I9-09664-0010	PLUG; WATER DRAIN (PT1/4)	2
8	I8-94432-6420	BOLT; BRG CAP (M14X89 FLANGE)	10
13	I8-94453-3440	DOWEL; C/BL TO HD	2
23(A)	I8-97036-5501	CUP; SEALING, C/BL FRT & RR (OD=45)	3
23(B)	I5-11219-0080	CUP; SEALING, C/BL FRT & RR (OD=18)	1
23(C)	I5-11219-0150	CUP; SEALING, C/BL FRT & RR (OD=32)	4
38	I8-97135-4230	PIN; TIMING GEAR CASE (L=20 OD=10)	2
51	I8-94336-2920	GASKET; OIL PRESS WARNING SW, C/BL	1
52(A)	I8-98019-4750	NIPPLE; OIL PRESS WARNING SW, C/BL	1
61	I9-09878-5970	PIN; STRAIGHT	2
70	I5-11129-0060	CUP; SEALING, FRT & RR (OD=16)	1
211	I0-28650-8250	BOLT; CRANKCASE (M8X25 FLANGE)	19
352	I8-98059-5080	GASKET; C/BL TO CRANKCASE	1
399	I8-97312-1081	SENSOR; CRANKSHAFT POSITION	1
400	I8-97369-4040	GASKET; CRANKSHAFT POSITION SENSOR	1
401	I0-28050-6160	BOLT; SENSOR (M6X16 FLANGE)	1

silverhorn.co.uk

CYLINDER BLOCK (2/2)

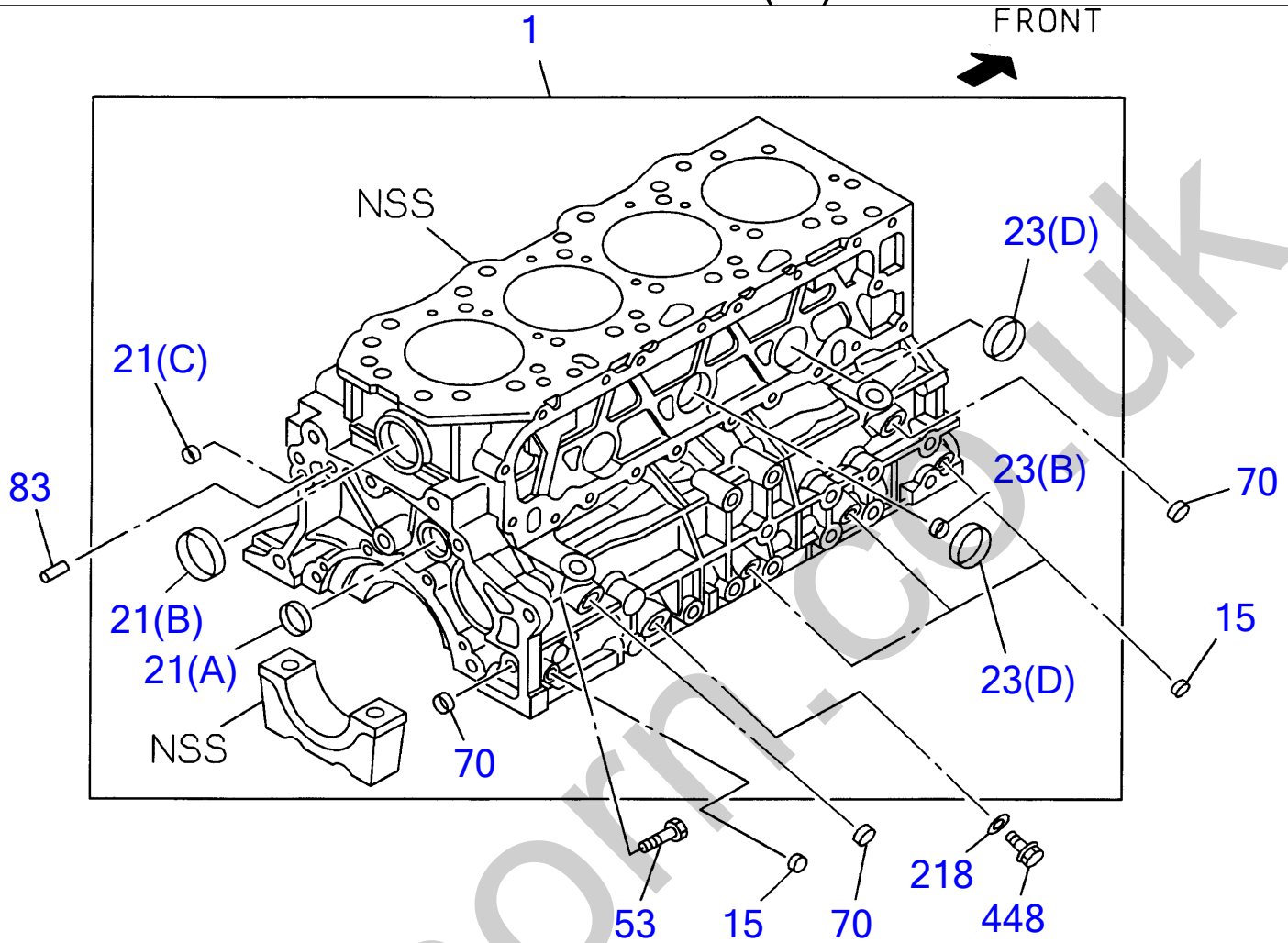

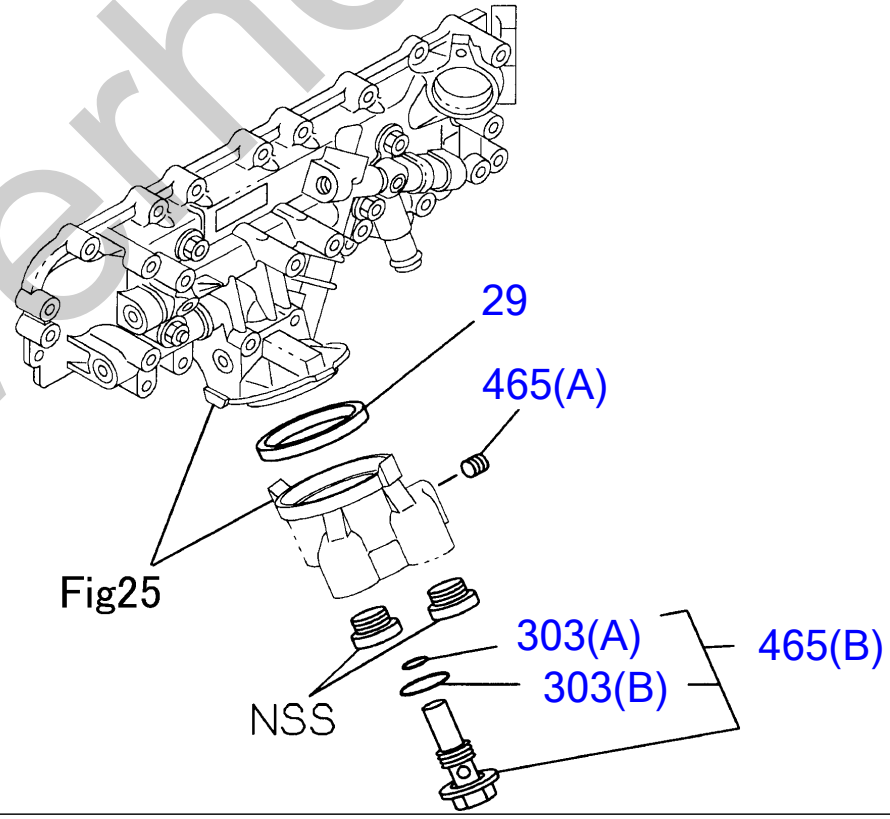

silverhorn.co.uk

CYLINDER BLOCK (2/2)

Item	Part No	Description	Qty
1	I8-98013-8240	BLOCK ASM; CYL	1
15	I1-09605-0500	PLUG; OIL GALLERY (PT1/8)	5
21(A)	I5-11219-0170	CUP; SEALING, RR (OD=38)	1
21(B)	I5-11219-0180	CUP; SEALING, RR (OD=36)	1
21(C)	I5-09600-0130	CUP; SEALING, RR (OD=12.3)	1
23(B)	I5-11219-0080	CUP; SEALING, C/BL FRT & RR (OD=18)	1
23(D)	I5-11219-0180	CUP; SEALING, C/BL FRT & RR (OD=36)	2
29	I9-13213-0350	GASKET; COVER, OIL PORT	1
53	I9-09606-5350	BOLT; REAMER (M10X43)	1
70	I5-11129-0060	CUP; SEALING, FRT & RR (OD=16)	2
83	I9-08151-0300	PIN; FLYWHEEL HSG	1
218	I9-09571-4140	GASKET; PLUG, C/BL SIDE (ID=14.2 OD=20.0)	1
303(A)	I9-09567-2180	GASKET; PLUG	1
303(B)	I9-09567-2300	GASKET; PLUG	1
448	I8-94152-6130	PLUG; C/BL (M14X14)	1
465(A)	I8-97063-6120	PLUG	1
465(B)	I8-98038-8531	PLUG	1

silverhorn.co.uk

OIL PAN AND LEVEL GAUGE

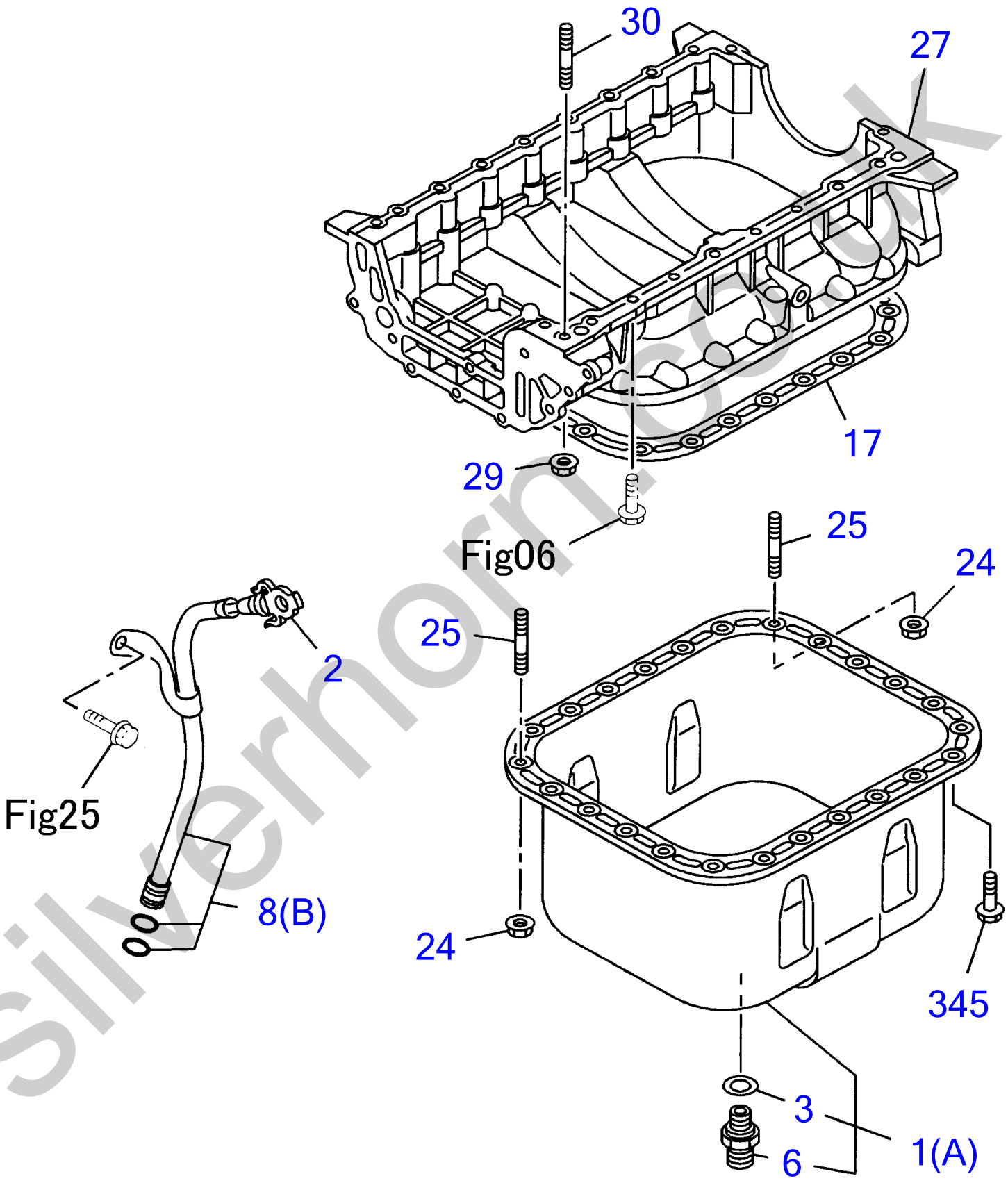

silverhorn.co.uk

OIL PAN AND LEVEL GAUGE

Item	Part No	Description	Qty
1(A)	I8-98038-7651	PAN ASM; OIL	1
2	I8-98084-4780	GAUGE; OIL LEVEL	1
3	I1-09630-0900	GASKET; DRAIN PLUG	1
6	I1-09680-1060	PLUG; OIL DRAIN	1
8(B)	I8-98084-2640	TUBE; GUIDE, OIL LEVEL GAUGE	1
17	I8-98019-5052	GASKET; OIL PAN	1
24	I0-91180-2080	NUT; OIL PAN (M8 FLANGE)	2
25	I0-41010-8160	STUD; OIL PAN (M8X16 L=28)	2
27	I8-98014-8243	CRANKCASE	1
29	I0-91180-2080	NUT; CRANKCASE (M8 FLANGE)	1
30	I0-41010-8400	STUD; CRANKCASE (M8X40 L=52)	1
345	I0-28050-8160	BOLT; SENSOR, OIL LEVEL (M8X16 FLANGE)	22

silverhorn.co.uk

CAMSHAFT AND VALVE (1/2)

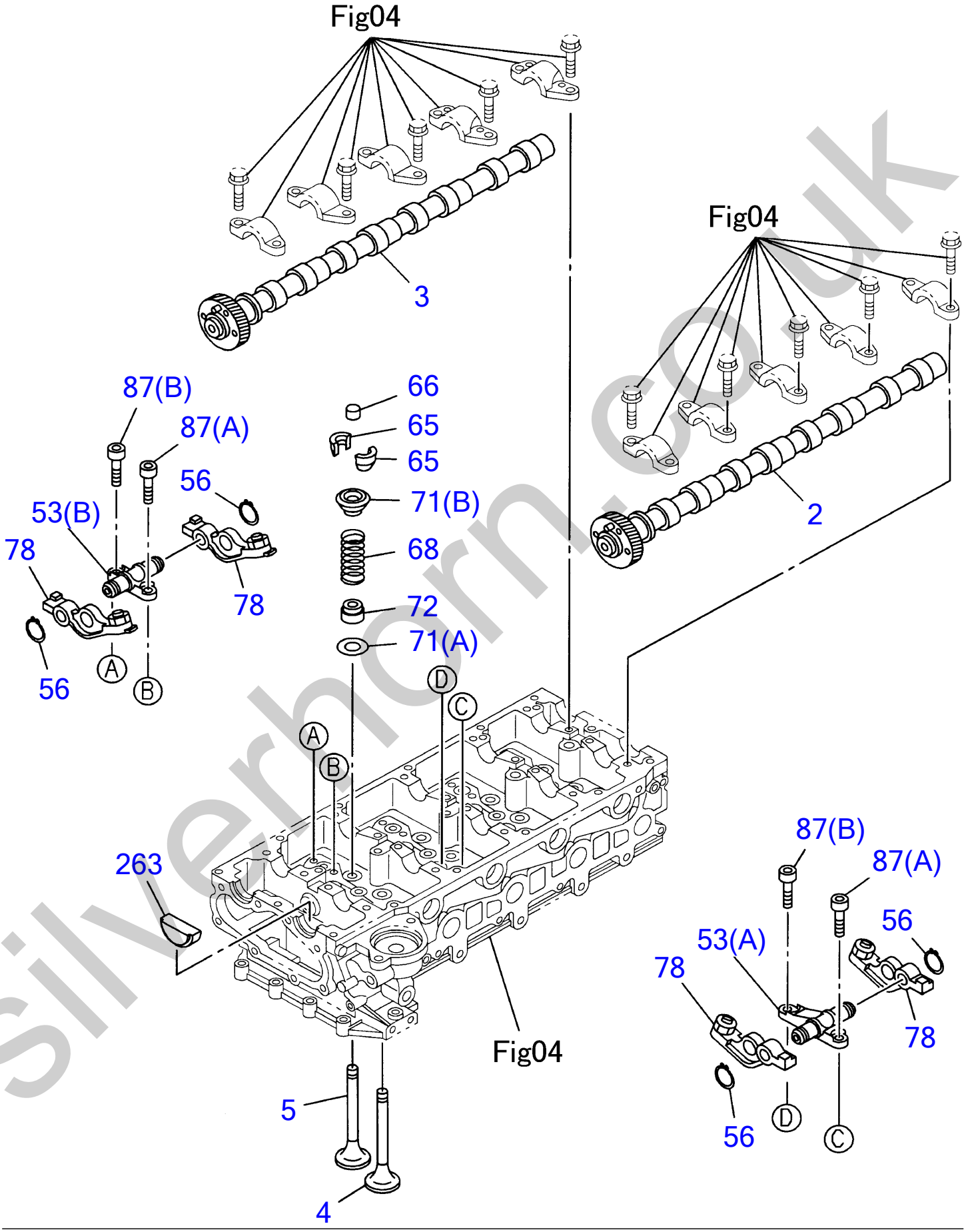

silverhorn.co.uk

CAMSHAFT AND VALVE (1/2)

Item	Part No	Description	Qty
2	I8-98003-1293	CAMSHAFT; INL	1
3	I8-98003-1303	CAMSHAFT; EXH	1
4	I8-98016-9730	VALVE; INL	8
5	I8-98016-9741	VALVE; EXH	8
53(A)	I8-98025-0710	SHAFT; ROCKER ARM (INLET)	4
53(B)	I8-98025-0740	SHAFT; ROCKER ARM (EXH)	4
56	I8-98025-4960	RING; SNAP, ROCKER ARM	16
65	I8-94239-5010	COLLAR; SPLIT	32
66	I8-98029-8701	CAP; VLV STEM END	16
68	I8-98038-8810	SPRING; VLV	16
71(A)	I8-97144-5840	SEAT; SPR (LOWER)	16
71(B)	I8-98017-0670	SEAT; SPR (UPPER)	16
72	I8-97328-6470	SEAL; VLV GUIDE	16
78	I8-98025-0591	ARM; ROCKER (INLET & EXH)	16
87(A)	I0-58330-8250	BOLT; ROCKER SHAFT (M8X25 HEX SOCKET)	8
87(B)	I0-58330-8400	BOLT; ROCKER SHAFT (M8X40 HEX SOCKET)	8
263	I8-97259-9730	GASKET; CAM END	4

silverhorn.co.uk

CAMSHAFT AND VALVE (2/2)

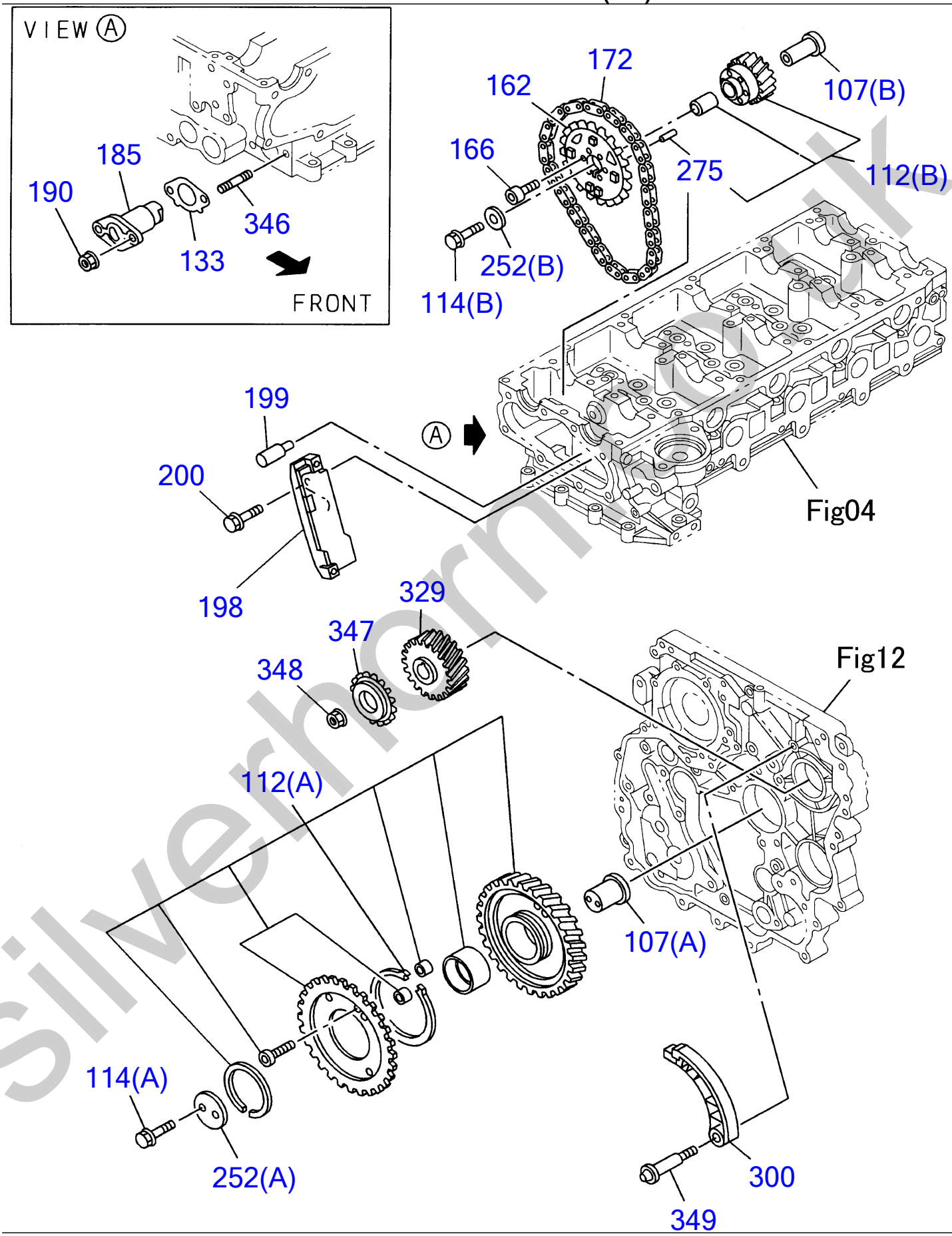

silverhammer.uk

CAMSHAFT AND VALVE (2/2)

Item	Part No	Description	Qty
107(A)	I8-97312-3152	SHAFT; IDLE GEAR	1
107(B)	I8-97312-3221	SHAFT; IDLE GEAR	1
112(A)	I8-97381-5161	GEAR; IDLE (Z=80)	1
112(B)	I8-97381-5201	GEAR; IDLE (Z=35)	1
114(A)	I0-28061-0600	BOLT; IDLE GEAR (M10X60 FLANGE)	2
114(B)	I0-28161-2600	BOLT; IDLE GEAR (M12X60 FLANGE)	1
133	I8-97312-3360	GASKET; CHAIN TENSIONER	1
162	I8-97312-3310	SPROCKET; IDLE	1
166	I0-58330-6160	BOLT; SPROCKET TO LAYSHAFT (M6X16 HEX SOCKET)	6
172	I8-97945-0670	CHAIN; TIMING, CM/SHF	1
185	I8-97945-0681	TENSIONER; CHAIN	1
190	I0-91180-2060	NUT; CHAIN TENSIONER (M6 FLANGE)	2
198	I8-97945-0690	GUIDE; TIMING CHAIN	1
199	I8-97356-0611	JET; OIL, TIMING CHAIN	1
200	I1-09070-1201	BOLT; CHAIN GUIDE, LWR (M8X20)	2
252(A)	I8-98016-8920	FLANGE; IDLE SHAFT	1
252(B)	I8-98016-8930	FLANGE; IDLE SHAFT	1
275	I9-08160-5100	PIN; IDLE GEAR (OD=5 L=10)	1
300	I8-97945-0700	LEVER; TENSION, TIMING CHAIN	1
329	I8-98017-5391	GEAR; INJ PUMP (Z=44)	1
346	I0-41010-6180	STUD; CHAIN (M6X18 L=27)	2
347	I8-97312-3301	SPROCKET; I/PUMP	1

silverhorn.co.uk

CRANKSHAFT, PISTON AND FLYWHEEL

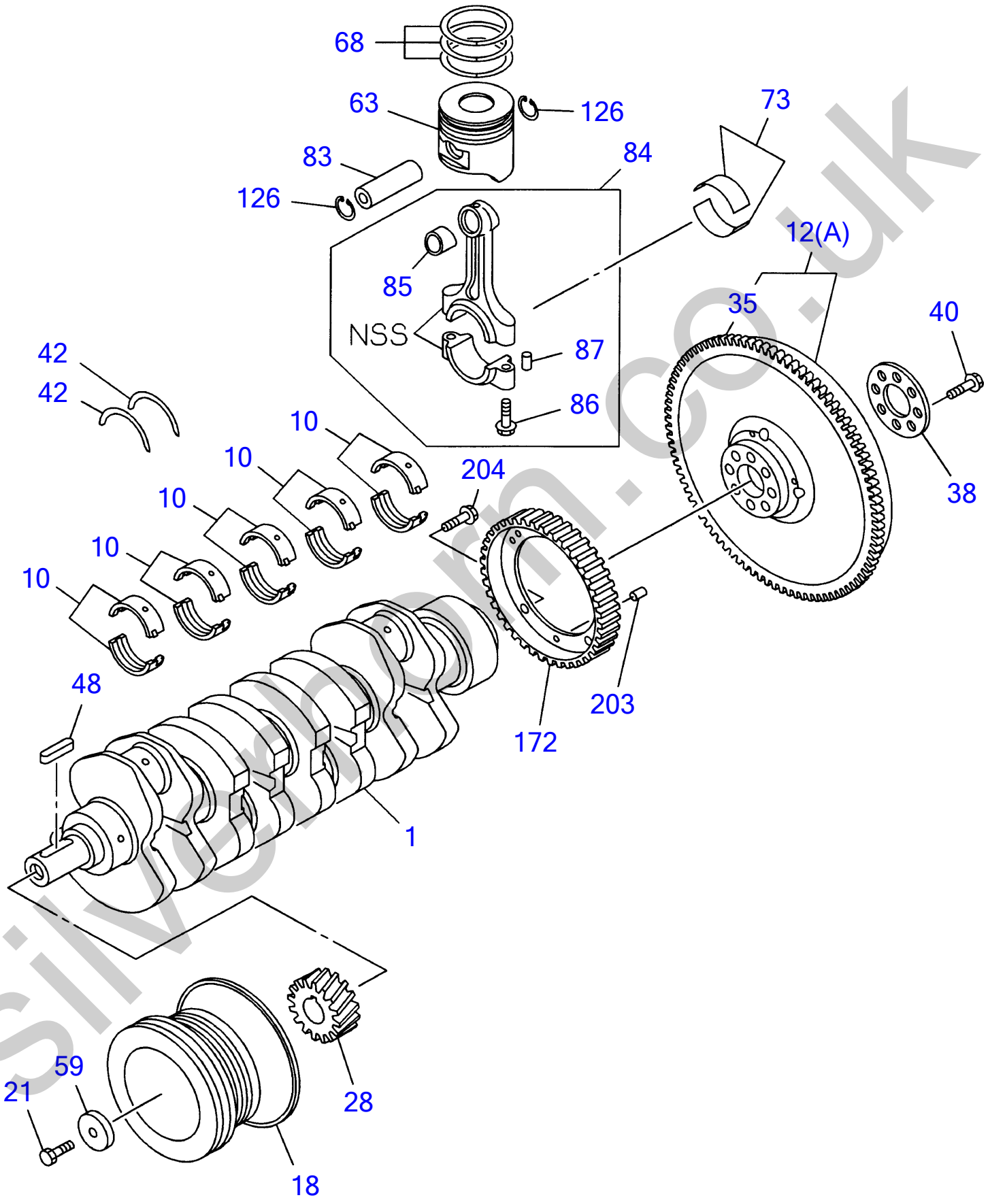

silvermarn.co.uk

CRANKSHAFT, PISTON AND FLYWHEEL

Item	Part No	Description	Qty
1	I8-97388-8281	CRANKSHAFT	1
10	I8-97387-9640	METAL SET; CRANKSHAFT (GRADE=1)	5
	I8-97387-9650	METAL SET; CRANKSHAFT (GRADE=2)	5
	I8-97387-9660	METAL SET; CRANKSHAFT (GRADE=3)	5
	I8-97387-9670	METAL SET; CRANKSHAFT (GRADE=4)	5
	I8-97387-9680	METAL SET; CRANKSHAFT (GRADE=5)	5
12(A)	898051-4470	FLYWHEEL	1
18	I8-98038-8060	PULLEY; CR/SHF	1
21	I5-09000-2732	BOLT; PULLEY FIX (M16X43)	1
28	I8-97386-2321	GEAR; CR/SHF (Z=44)	1
35	I9-12333-6061	GEAR; RING (Z=122)	1
38	I8-94142-1561	WASHER; FLYWHEEL	1
40	I8-94418-0500	BOLT; FLYWHEEL (M13X45)	8
42	I8-97383-7400	WASHER; THRUST, CR/SHF	2
48	I8-94201-6410	KEY; WOODRUFF, CR/SHF	1
59	I5-09503-1271	WASHER; CR/SHF PULLEY (ID=16.5 OD=45)	1
63	I8-98041-6301	PISTON (GRADE=A)	4
	I8-98041-6561	PISTON (GRADE=B)	4
	I8-98041-6591	PISTON (GRADE=C)	4
68	I8-98057-2220	RING SET; PISTON, STANDARD	4
73	I8-97358-2340	METAL SET; CONN ROD, STANDARD	4
83	I8-98015-1931	PIN; PISTON	4
84	I8-97388-9212	ROD ASM; CONN	4
85	I8-97383-0660	BUSHING; CONNROD	4
86	I8-98048-5380	BOLT; CONNROD (M11X44.5)	8
87	I9-08160-5080	PIN; CONNROD BIG END (OD=5 L=8)	8
126	I8-94460-6870	RING; SNAP, PISTON PIN	8
172	I8-97312-3370	ROTOR; CRANK SENSOR	1
203	I9-08160-5080	PIN; ROTOR (OD=5 L=8)	1
204	I8-97213-3330	BOLT; ROTOR	3

silverhorn.co.uk

TIMING GEAR CASE AND FLYWHEEL HOUSING

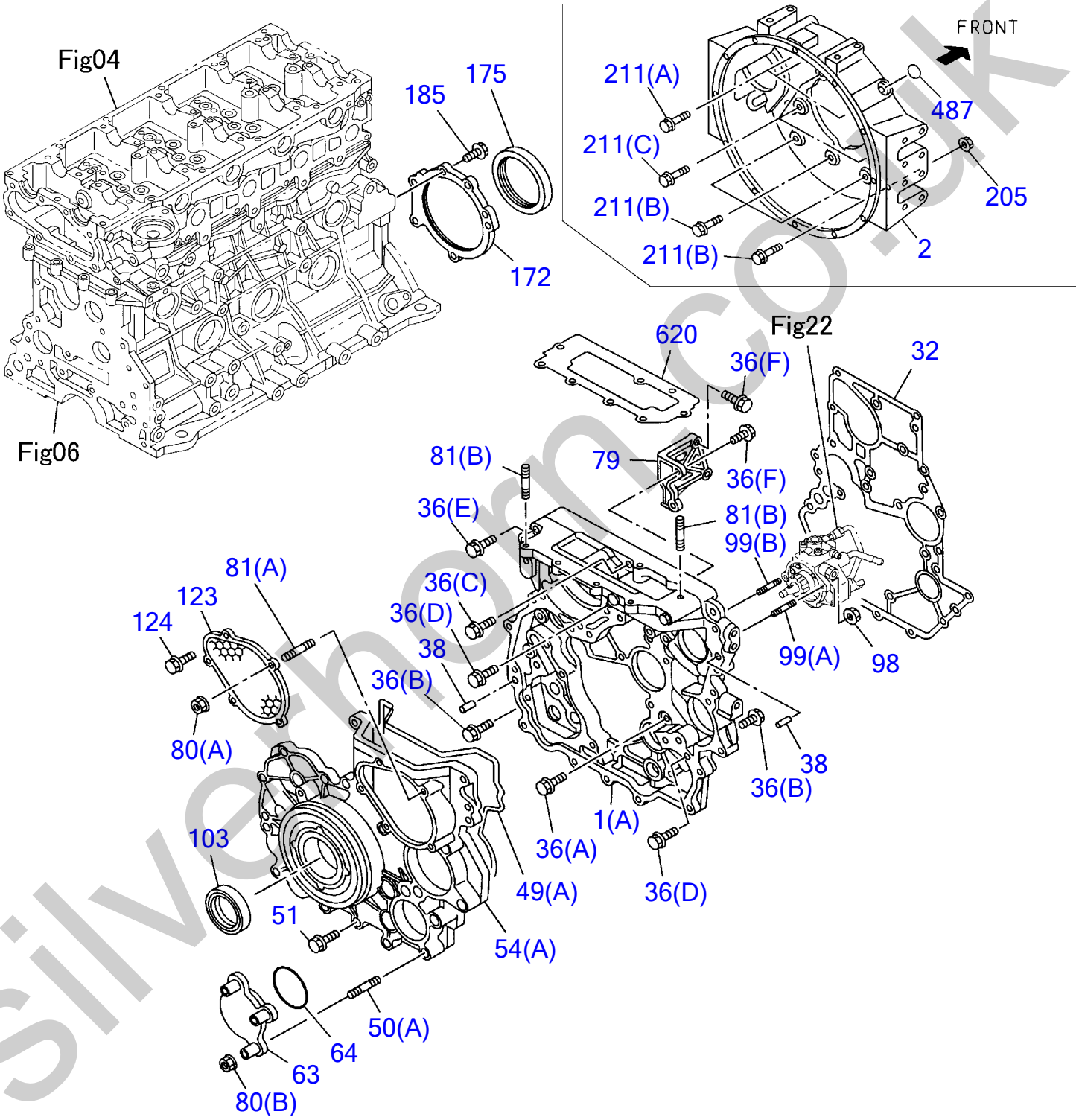

silverhorn.co.uk

TIMING GEAR CASE AND FLYWHEEL HOUSING

Item	Part No	Description	Qty
1(A)	I8-97945-2610	CASE; TIMING GEAR	1
2	I8-98044-6990	HOUSING; FLYWHEEL	1
32	I8-97312-2212	GASKET; GEAR CASE TO C/BL	1
36(A)	I0-28050-8160	BOLT; GEAR CASE (M8X16 FLANGE)	1
36(B)	I0-28050-8200	BOLT; GEAR CASE (M8X20 FLANGE)	16
36(C)	I0-28050-8350	BOLT; GEAR CASE (M8X35 FLANGE)	1
36(D)	I0-28050-8450	BOLT; GEAR CASE (M8X45 FLANGE)	2
36(E)	I0-28050-8600	BOLT; GEAR CASE (M8X60 FLANGE)	1
36(F)	I0-28650-8300	BOLT; GEAR CASE (M8X30 FLANGE)	3
38	I8-97135-4230	PIN; GEAR CASE COVER (L=20 OD=10)	2
49(A)	I8-97945-2980	GASKET; GEAR CASE TO COVER	1
50(A)	I8-97354-8082	STUD (M8X50.5 L=64.5)	6
51	I8-97354-6971	BOLT; GEAR CASE COVER	14
54(A)	I8-98012-9601	COVER; GEAR CASE	1
63	I8-97367-3362	COVER; P/S	1
64	I8-97109-6790	GASKET; COVER, P/S	1
79	I8-97370-3902	BRACKET; GEAR CASE COVER	1
80(A)	I0-91180-2060	NUT; COVER (M6 FLANGE)	2
80(B)	I0-91180-2080	NUT; COVER (M8 FLANGE)	3
81(A)	I0-41010-6160	STUD; GEAR CASE COVER FIX (M6X16 L=25)	2
81(B)	I0-49140-8300	STUD; GEAR CASE COVER FIX (M8X30 L=48)	2
98	I091180-2080	NUT; STUD, INJ PUMP (M8 FLANGE)	2
99(A)	I8-97369-4490	STUD; INJ PUMP (M8X30 L=41)	1
99(B)	I8-97369-4500	STUD; INJ PUMP (M8X45 L=56)	1
103	I8-97351-7040	SEAL; OIL, CR/SHF, FRT	1
123	I8-97371-7201	COVER; TIMING, LWR	1
124	I0-28050-6160	BOLT; TIMING COVER (M6X16 FLANGE)	3
172	I8-97175-9863	RETAINER; CR/SHF	1
175	I8-97071-5611	SEAL; OIL, CR/SHF, RR	1
185	I0-28650-8250	BOLT; RET TO C/BL (M8X25 FLANGE)	5
205	I0-91180-1100	NUT; HSG (M10 FLANGE)	1
211(A)	I0-28651-0300	BOLT; HSG (M10X30 FLANGE)	3
211(B)	I0-28751-2350	BOLT; HSG (M12X35 FLANGE)	4
211(C)	I5-09000-2270	BOLT; HSG (M12X25)	3
487	I8-97220-7400	COVER; HOLE	1
620	I8-97328-8282	GASKET; GEAR CASE (T=1.40 1-NOTCH)	1
	I8-97331-6312	GASKET; GEAR CASE (T=1.45 2-NOTCH)	1
	I8-97331-6322	GASKET; GEAR CASE (T=1.50 3-NOTCH)	1

silverforum.co.uk

ENGINE MOUNTING

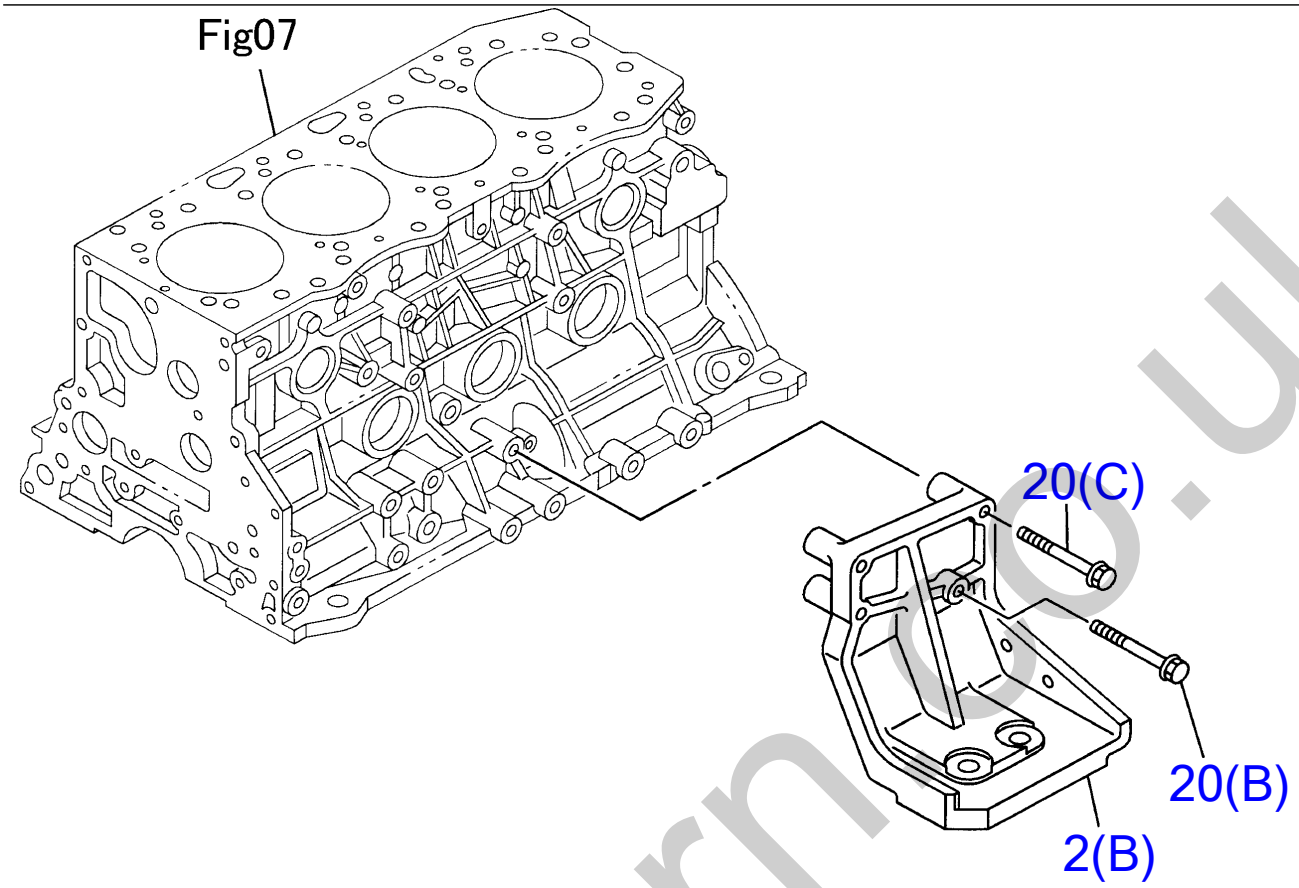

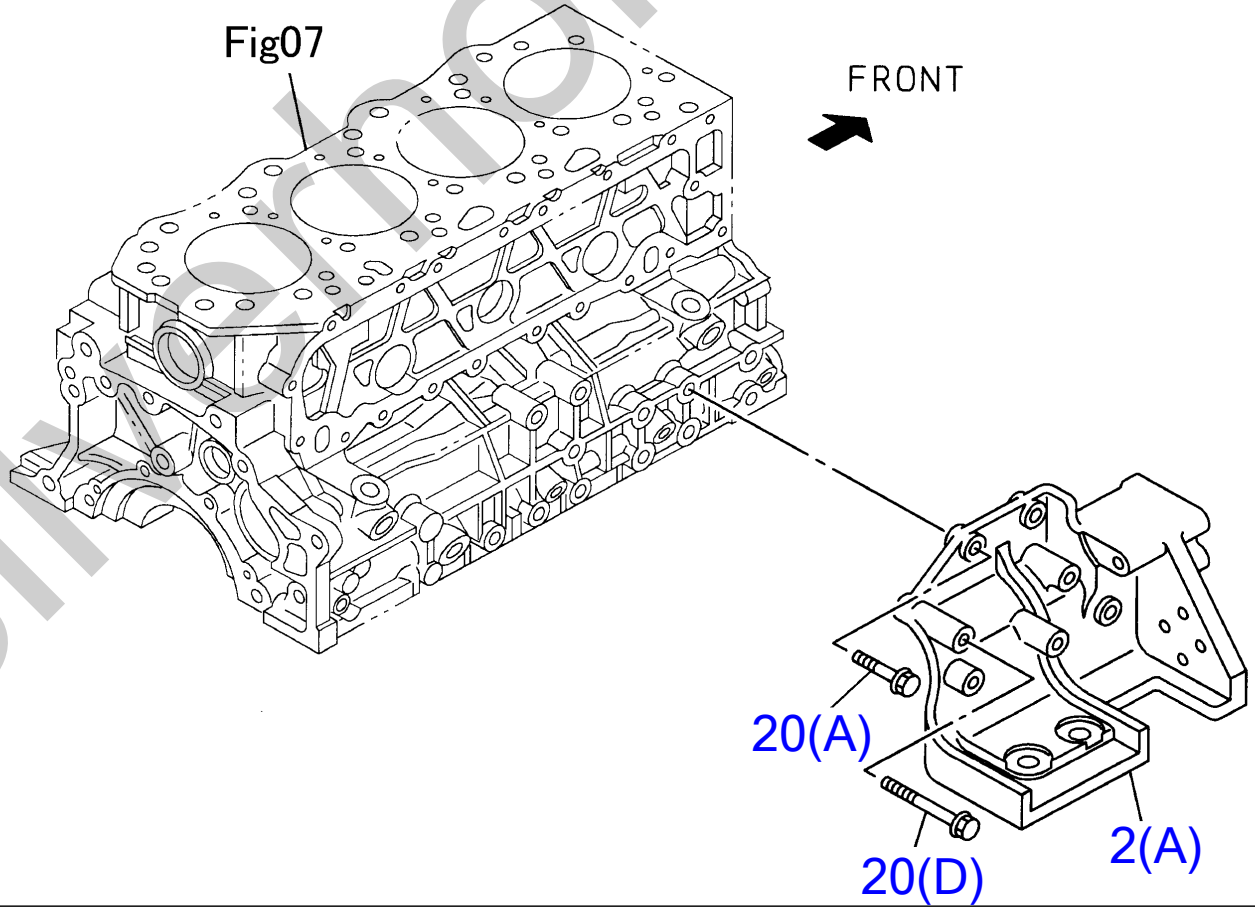

silverhorn.co.uk

ENGINE MOUNTING

Item	Part No	Description	Qty
2(A)	I8-98038-7800	FOOT; ENG (R)	1
2(B)	I8-98038-7820	FOOT; ENG (L)	1
20(A)	I0-28051-0300	BOLT; ENG FOOT (M10X30 FLANGE)	2
20(B)	I0-28051-0450	BOLT; ENG FOOT (M10X45 FLANGE)	1
20(C)	I0-28051-0600	BOLT; ENG FOOT (M10X60 FLANGE)	3
20(D)	I0-28051-0700	BOLT; ENG FOOT (M10X70 FLANGE)	2

silverhorn.co.uk

INLET MANIFOLD

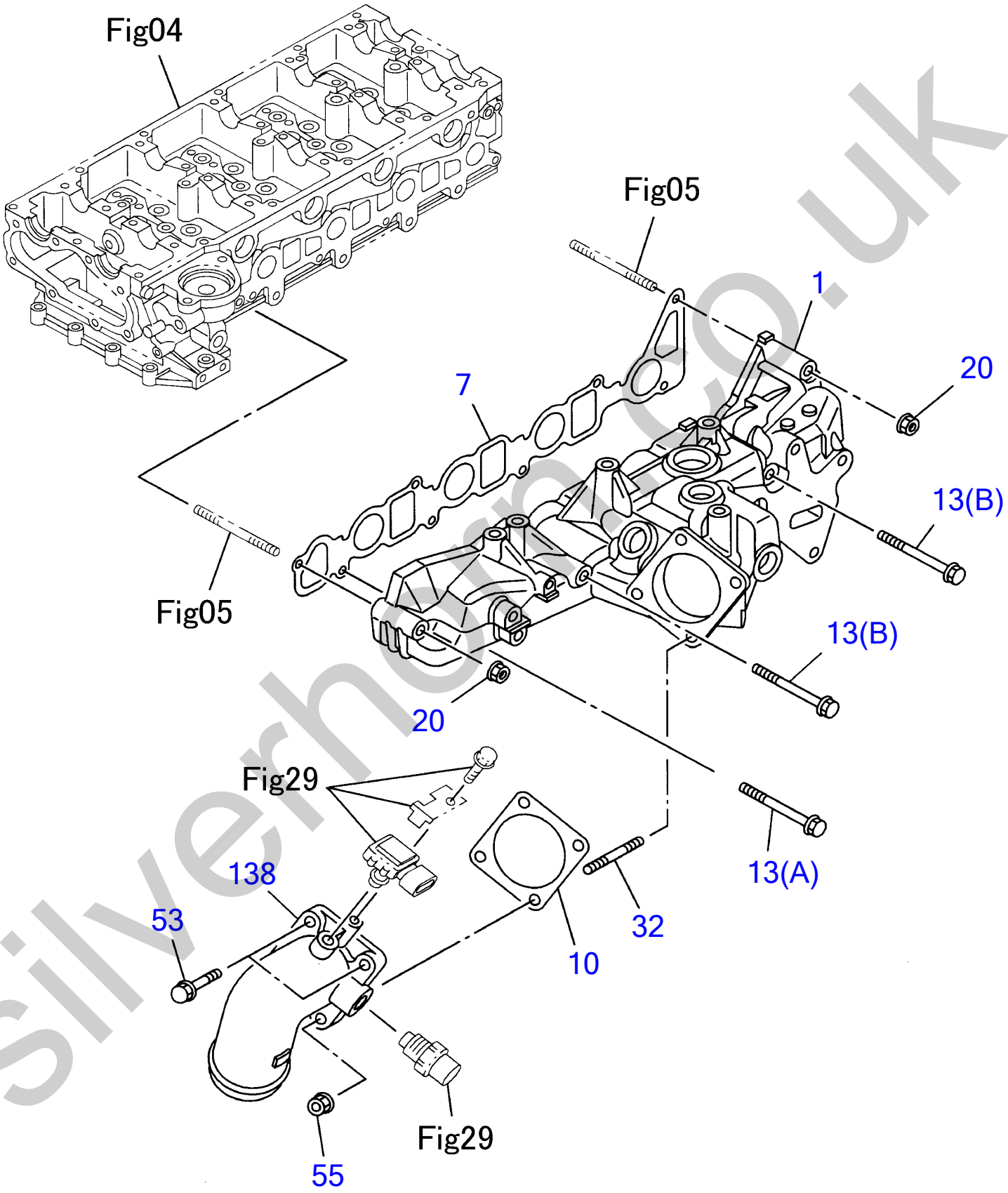

silverhamco.uk

INLET MANIFOLD

Item	Part No	Description	Qty
1	I8-98024-4110	MANIFOLD; INL	1
7	I8-97312-0671	GASKET; INL MANIF TO HD	1
10	I8-97366-7841	GASKET; INL PIPE TO MANIF	1
13(A)	I0-28050-8700	BOLT; INL MANIF (M8X70 FLANGE)	4
13(B)	I0-28055-8110	BOLT; INL MANIF (M8X110 FLANGE)	2
20	I0-91180-2080	NUT; INL MANIF (M8 FLANGE)	2
32	I0-41010-6200	STUD; INL PIPE (M6X20 L=28)	2
53	I0-28650-6300	BOLT; INL PIPE (M6X30 FLANGE)	2
55	I0-91110-5060	NUT; INL PIPE (M6)	2
138	I8-98038-7790	PIPE; INL	1

silverhorn.co.uk

EXHAUST MANIFOLD

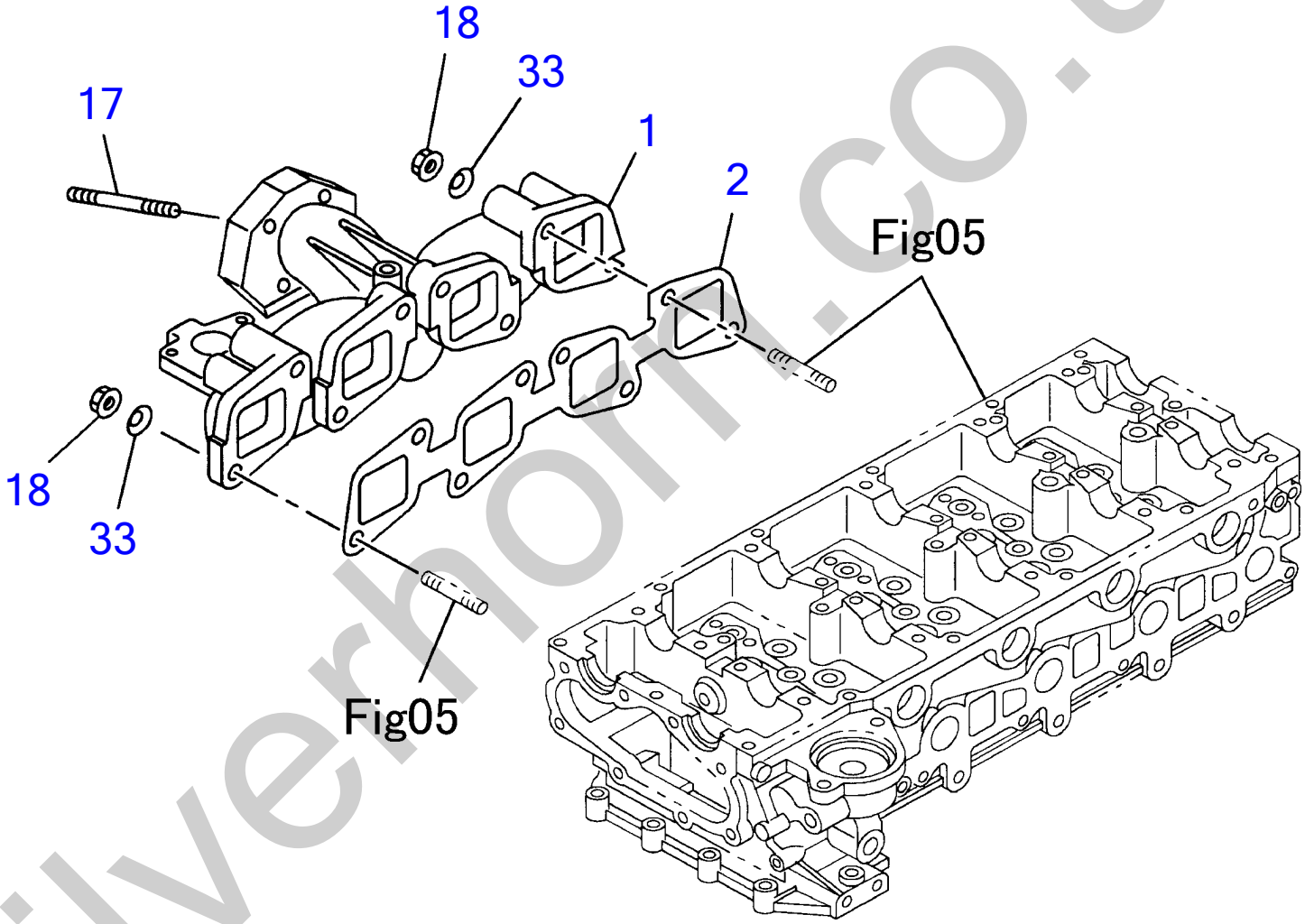

silverhorn.co.uk

EXHAUST MANIFOLD

Item	Part No	Description	Qty
1	I8-98019-7970	MANIFOLD; EXHAUST	1
2	I8-97356-0282	GASKET; EXH MANIF TO HD	1
17	I8-97378-0600	STUD; MANIF TO TURBOCHARGER (M8X20 L=31)	4
18	I8-97381-6170	NUT; EXH MANIF (M10 FLANGE)	8
33	I5-09500-0130	WASHER; EXH MANIF (ID=10.5)	8

silverhorn.co.uk

VENTILATION SYSTEM

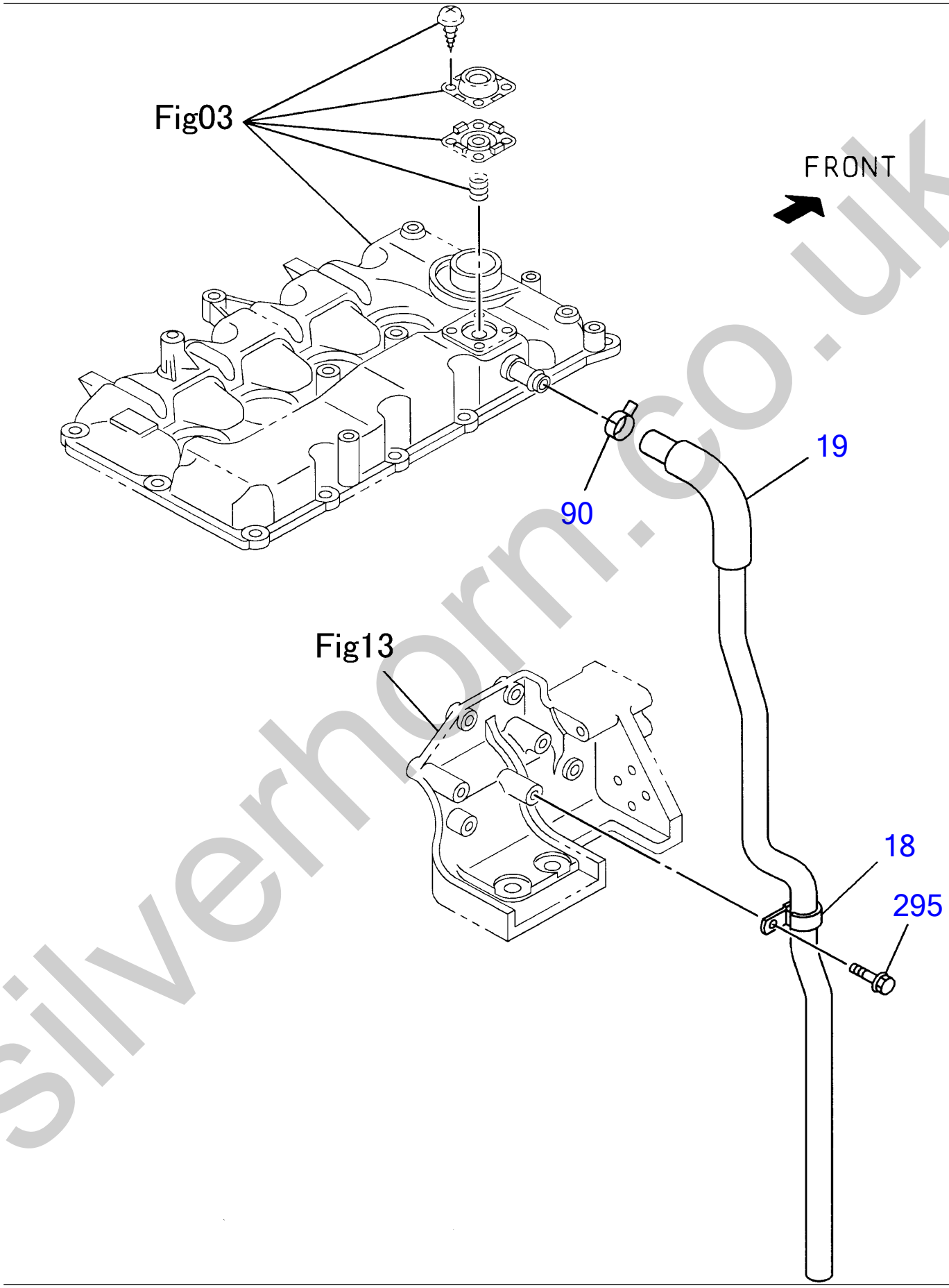

silverhorn.co.uk

VENTILATION SYSTEM

Item	Part No	Description	Qty
18	I1-09700-1261	CLIP; RUBBER HOSE, AIR BREATHER (ID=22 L=32)	1
19	I8-98067-5030	HOSE; RUBBER BREATHER	1
90	I8-94121-1130	CLIP; RUBBER HOSE (ID=20.4)	1
295	I0-28050-8200	BOLT; PCV (M8X20 FLANGE)	1

silverhorn.co.uk

WATER PUMP AND CORROSION RESISTOR

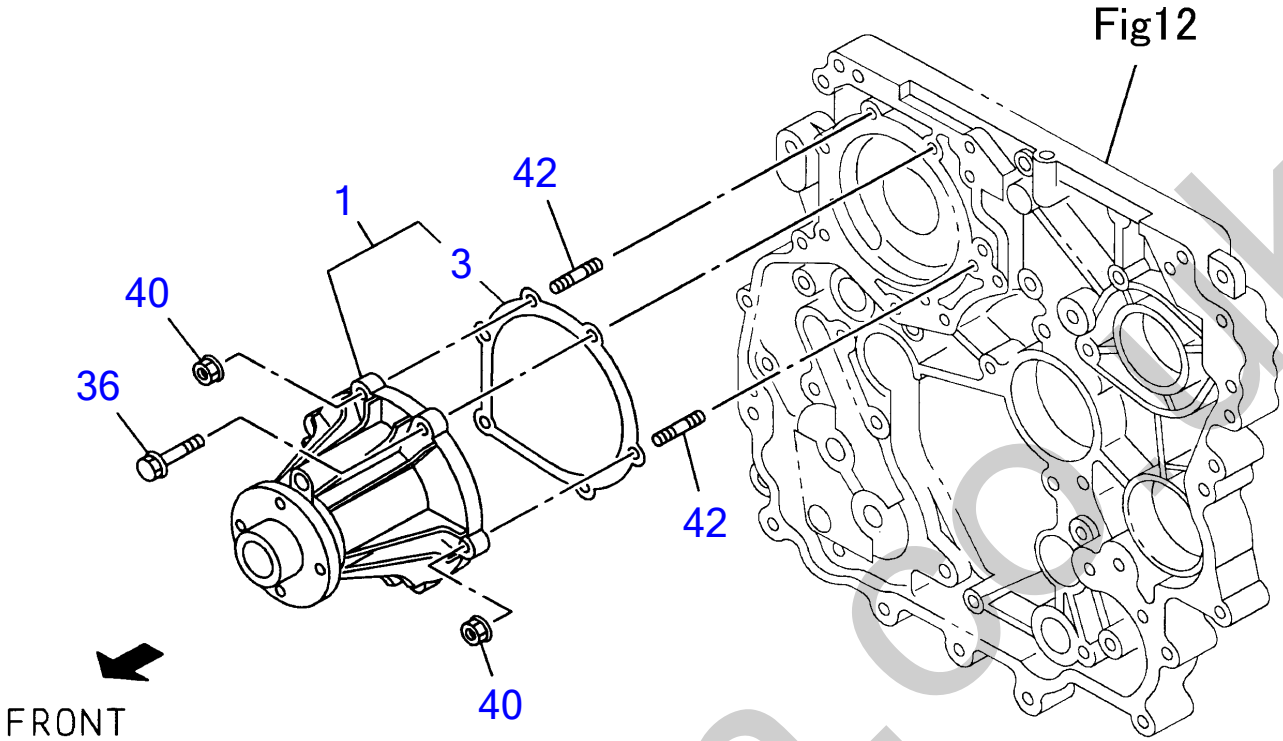

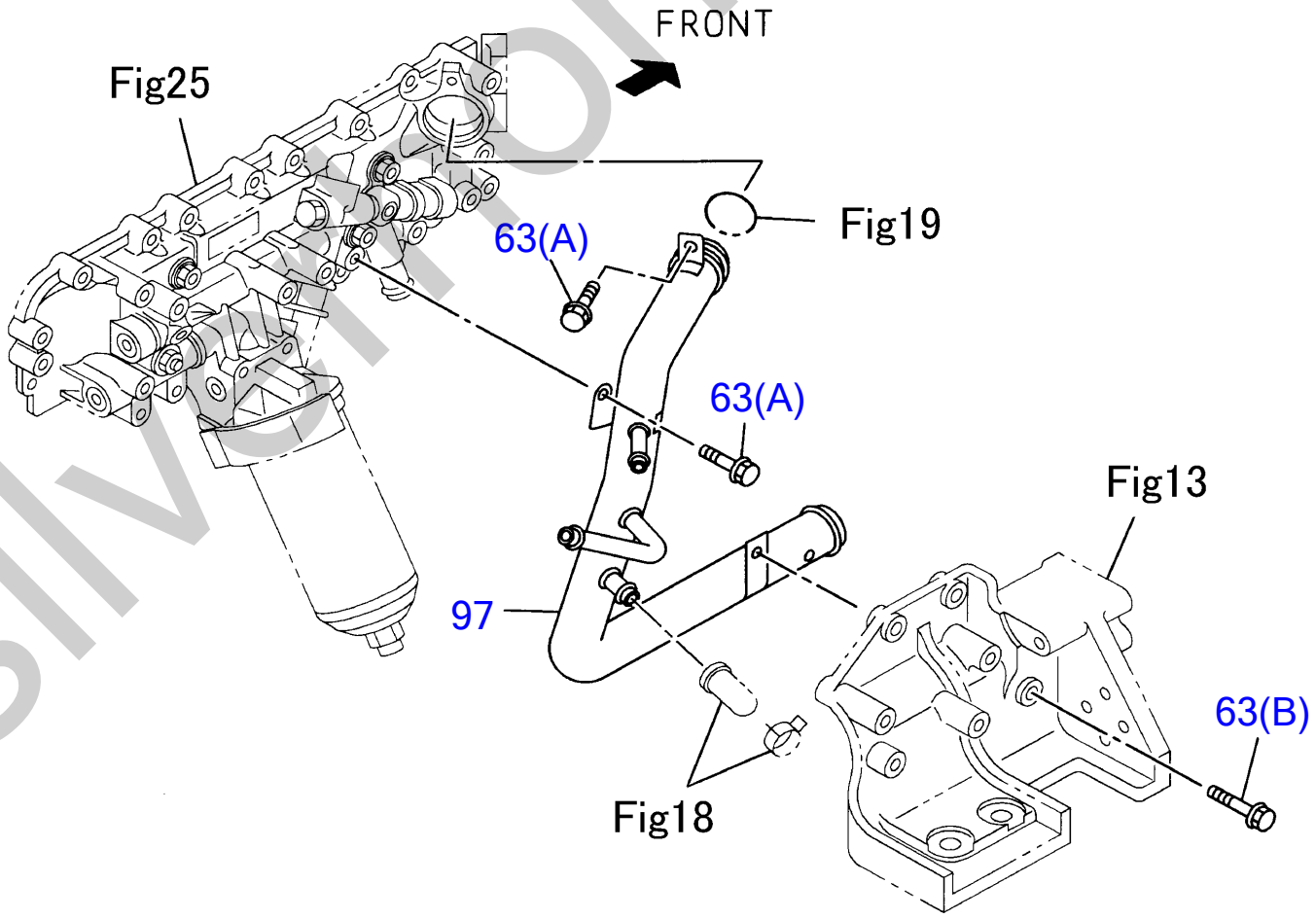

silverhorn.co.uk

WATER PUMP AND CORROSION RESISTOR

Item	Part No	Description	Qty
1	I8-98047-6891	PUMP ASM; WATER, W/GASKET	1
3	I8-97312-1560	GASKET; PUMP TO C/BL	1
36	I0-28050-8600	BOLT; WATER PUMP TO C/BL (M8X60 FLANGE)	4
40	I0-91180-2080	NUT; WATER PUMP (M8 FLANGE)	2
42	I0-41010-8300	STUD; WATER PUMP (M8X30 L=41)	2
63(A)	I0-28050-8160	BOLT; INL PIPE (M8X16 FLANGE)	2
63(B)	I0-28650-8300	BOLT; INL PIPE (M8X30 FLANGE)	1
97	I8-98019-6801	PIPE; WATER	1

silverhorn.co.uk

THERMOSTAT AND HOUSING

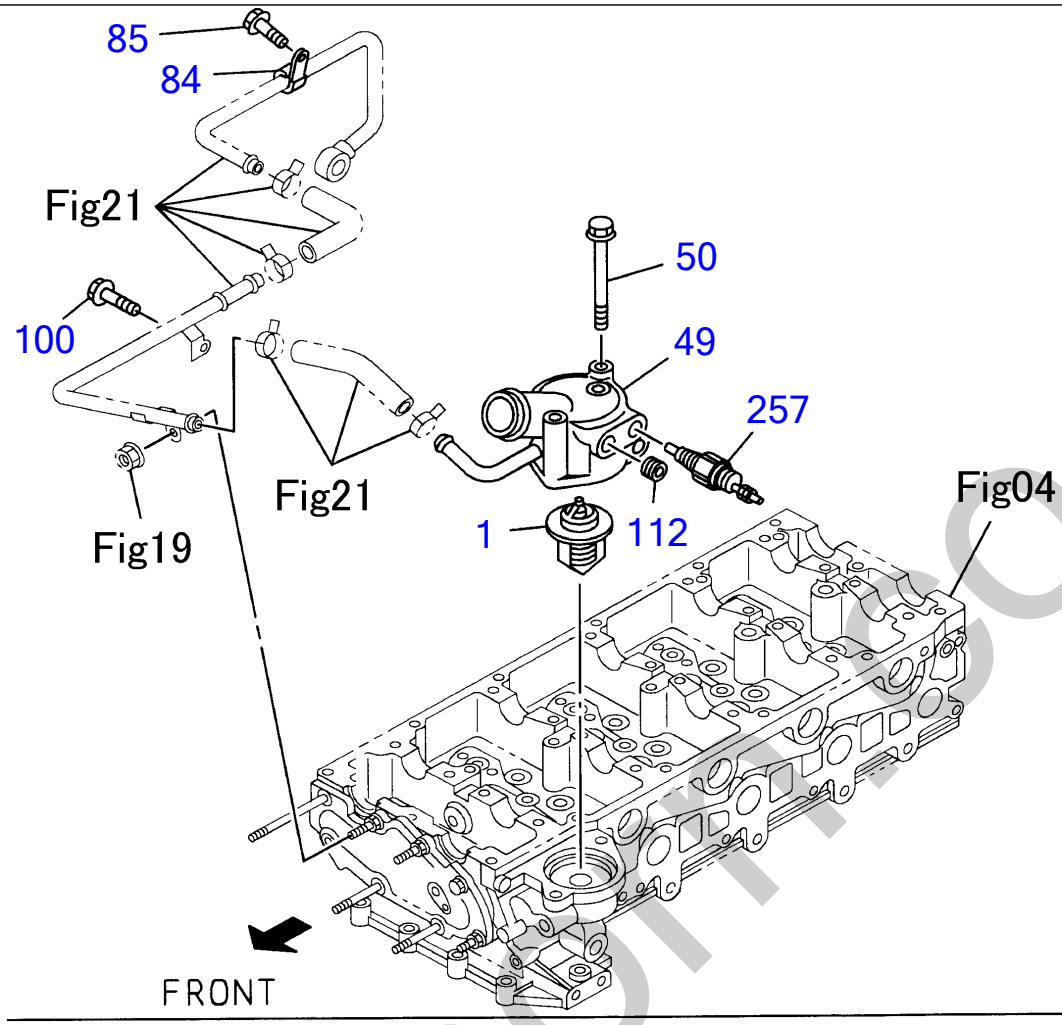

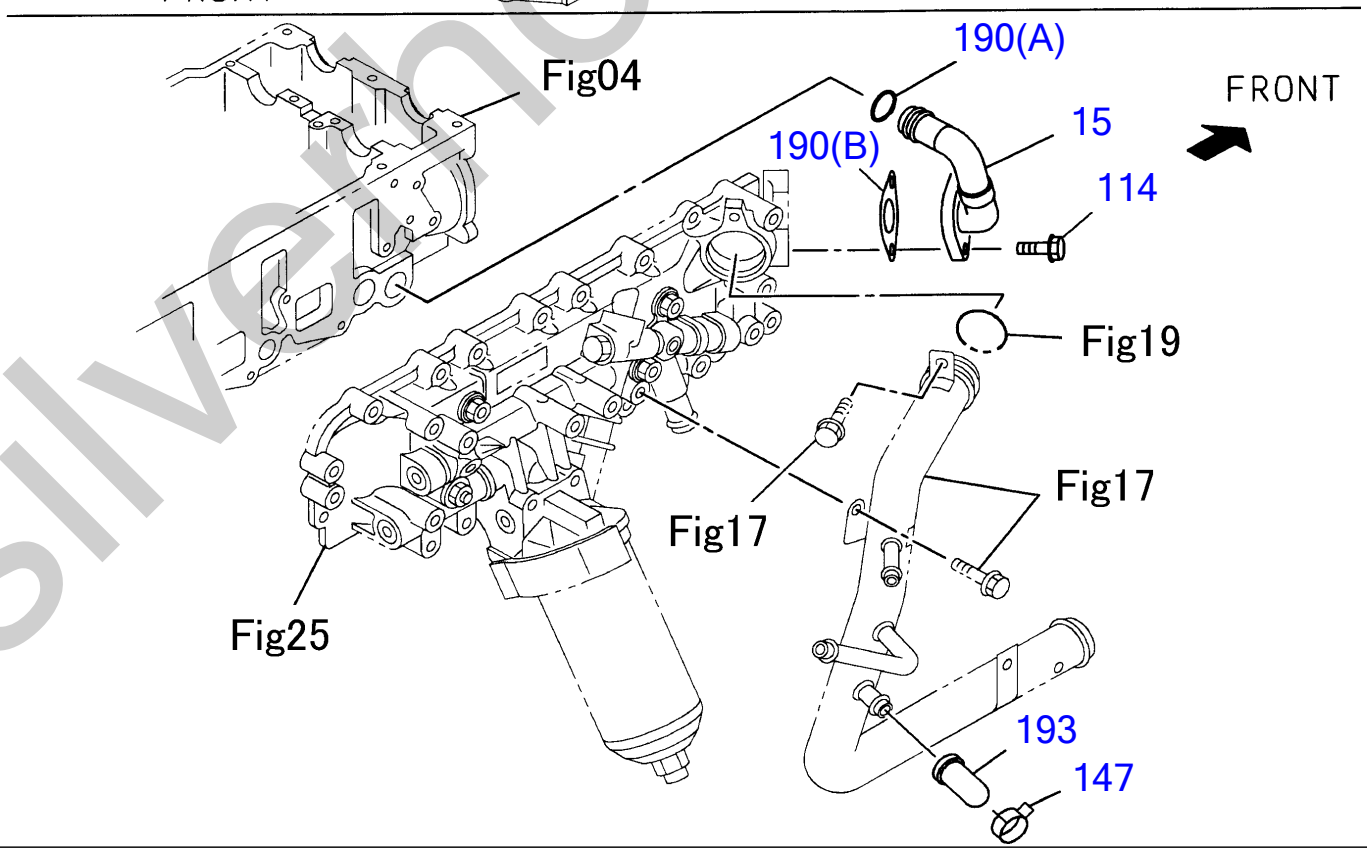

silverthorn.co.uk

THERMOSTAT AND HOUSING

Item	Part No	Description	Qty
1	I8-98017-0270	THERMOSTAT (85Ž)	1
15	I8-97318-7322	PIPE; BYPASS	1
49	I8-98019-6950	PIPE; WATER OUTLET	1
50	I0-28050-8800	BOLT; OUTLET PIPE (M8X80 FLANGE)	2
84	I0-95235-0250	CLIP; WATER PIPE (ID=11 L=16)	1
85	I0-28050-6120	BOLT; CLIP (M6X12 FLANGE)	1
100	I0-28050-6120	BOLT; WATER PIPE (M6X12 FLANGE)	1
112	I5-09605-0050	PLUG (PT3/8)	1
114	I0-28650-8250	BOLT; BYPASS PIPE (M8X25 FLANGE)	2
147	I8-94125-8621	CLIP; RUBBER CAP (ID=20.8)	1
190(A)	I0-95690-2260	GASKET; BYPASS PIPE	1
190(B)	I8-98009-3220	GASKET; BYPASS PIPE	1
193	I8-94414-6880	CAP; RUBBER	1
257	I8-97125-6001	SWITCH; WARNING, OVER HEAT	1

silverhorn.co.uk

WATER PIPING; ENGINE

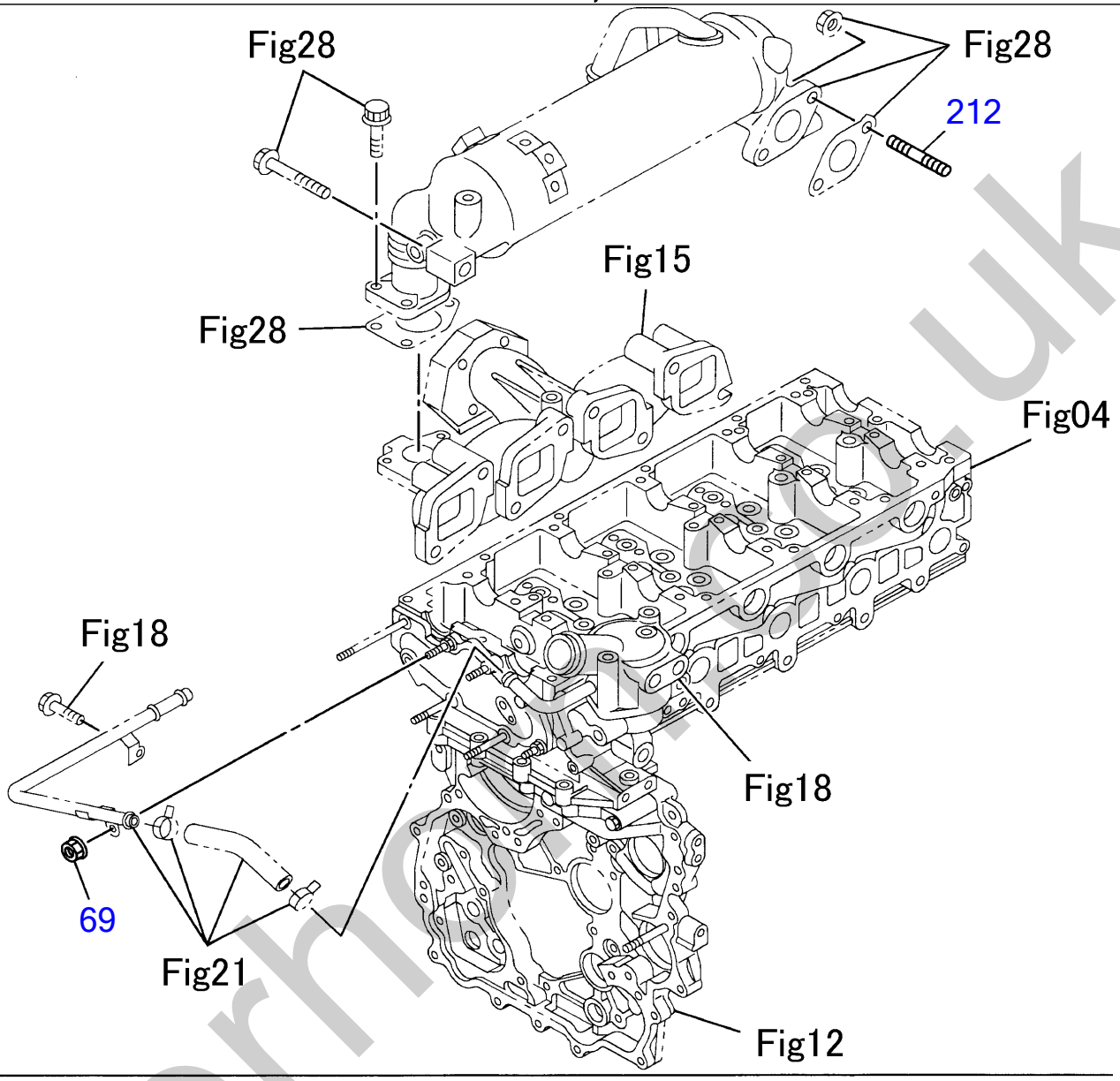

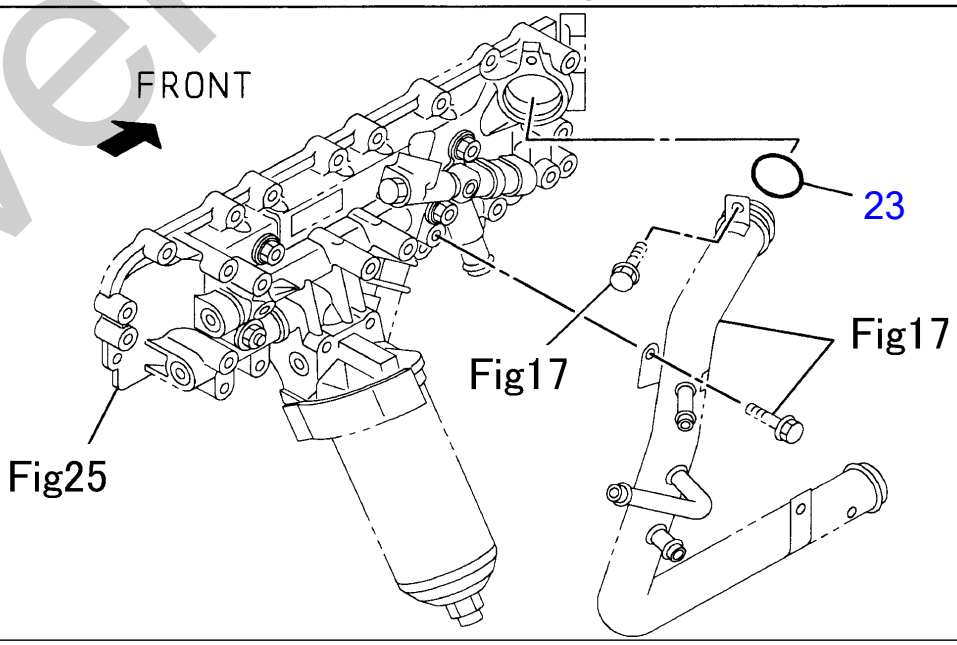

silverhead.co.uk

WATER PIPING; ENGINE

Item	Part No	Description	Qty
23	I0-95690-3380	GASKET; SUCTION PIPE TO BLOCK	1
69	I0-91180-2060	NUT; WATER PIPE (M6 FLANGE)	1
212	I8-97378-0620	STUD; PIPE (M8X25 L=36)	2

silverhorn.co.uk

FAN AND FAN BELT

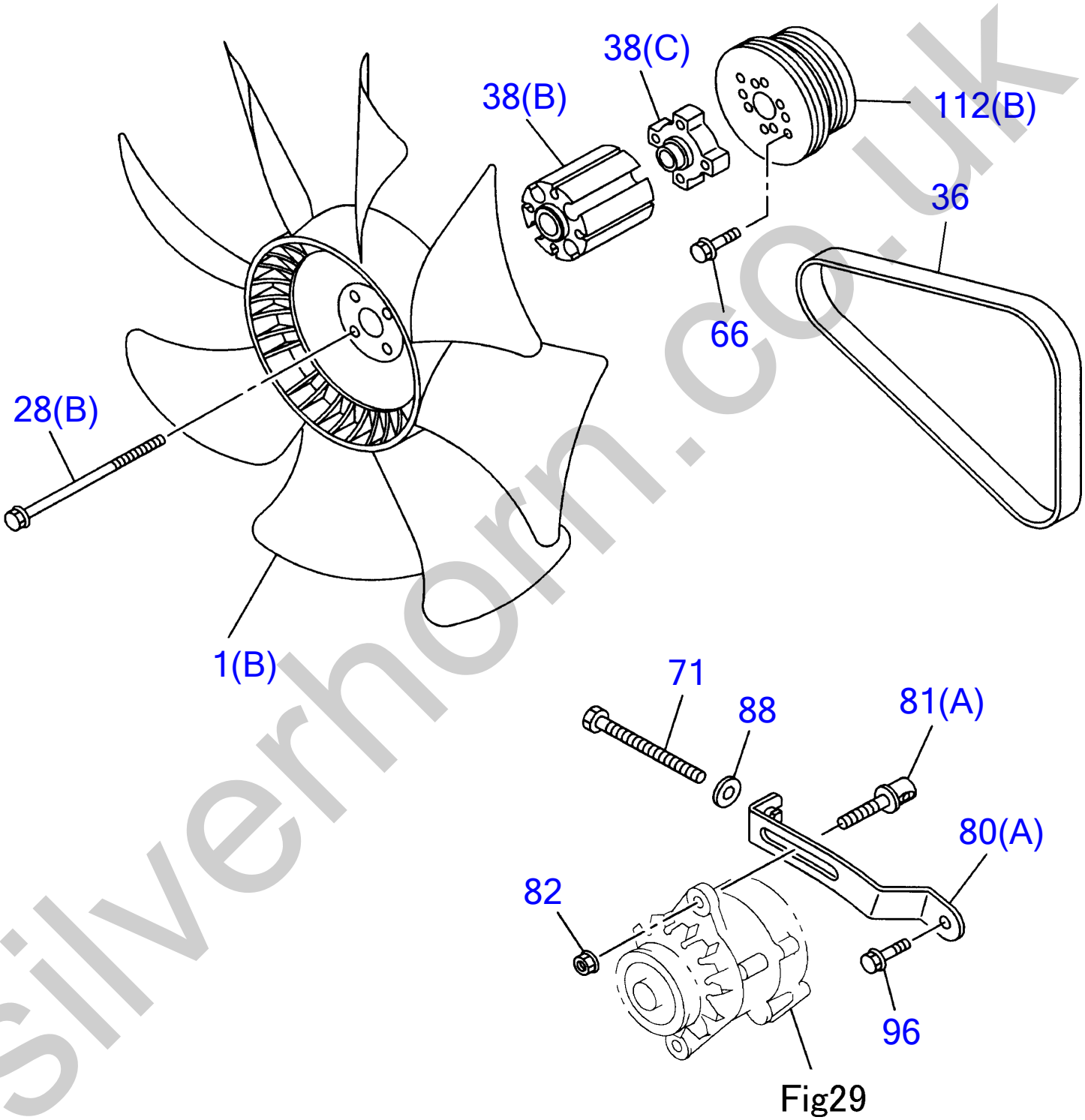

Fig29

silverhorn.co.uk

FAN AND FAN BELT

Item	Part No	Description	Qty
1(B)	I8-97161-5990	FAN; COOLING	1
28(B)	I0-28055-8120	BOLT; COOLING FAN (M8X120 FLANGE)	4
36	I8-97362-9260	BELT; COOLING FAN	1
38(B)	I1-13642-0610	SPACER; FAN	1
38(C)	I8-98038-8830	SPACER; FAN	1
66	I0-20800-6120	BOLT; PULLEY (M6X12)	2
71	I8-94388-1781	BOLT; ADJ PLATE, GEN	1
80(A)	I8-98038-7851	PLATE; ADJ	1
81(A)	I8-97257-2230	PIECE; SLIDING	1
82	I0-91180-2080	NUT; ADJ PLATE (M8 FLANGE)	1
88	I0-91614-7080	WASHER; PL, ADJ PLATE (ID=8.4 OD=22)	1
96	I0-28650-8200	BOLT; ADJ PLATE (M8X20 FLANGE)	1
112(B)	I8-98038-8720	PULLEY; FAN CENTER	1

silverhorn.co.uk

TURBOCHARGER SYSTEM

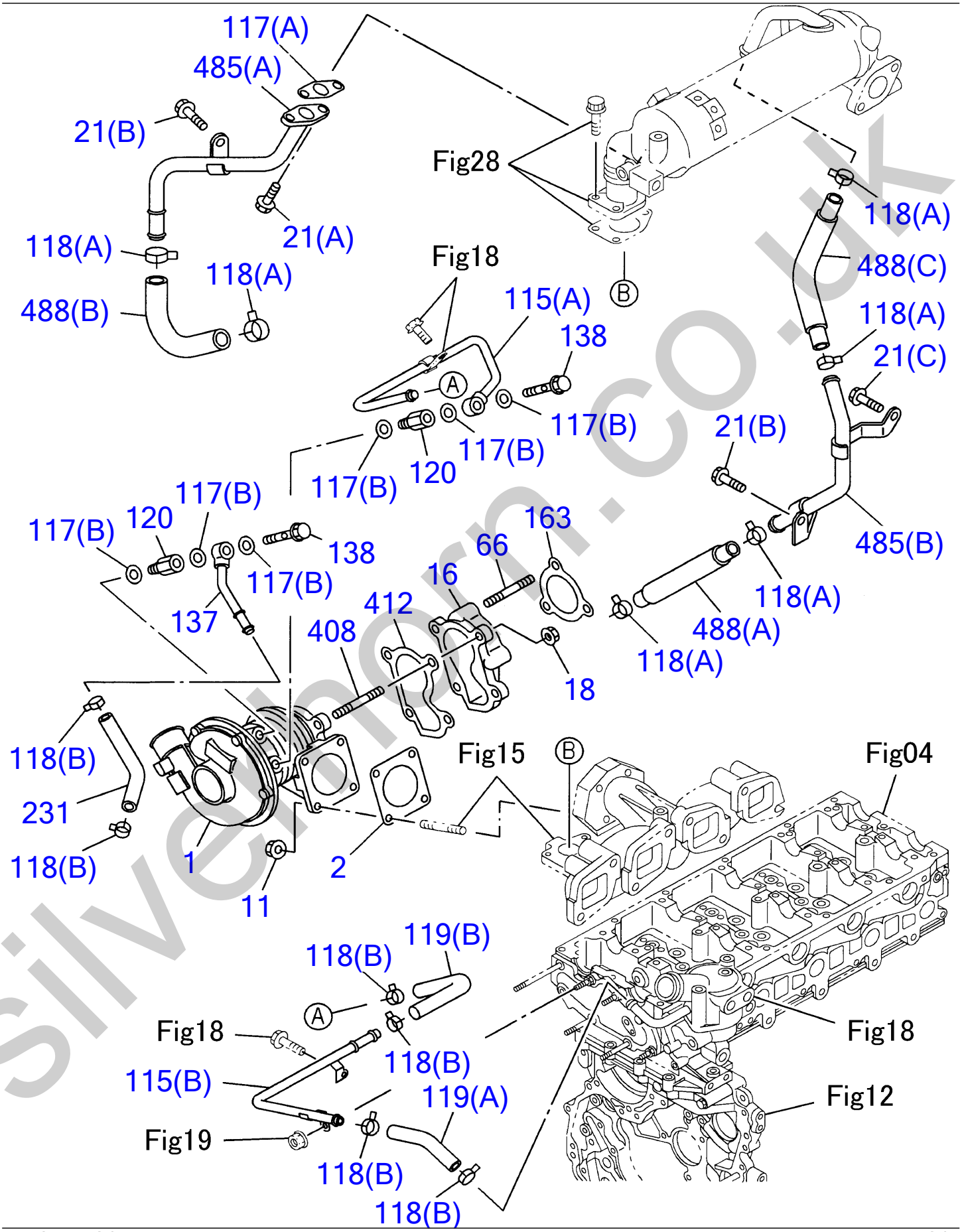

silvethorn.co.uk

TURBOCHARGER SYSTEM

Item	Part No	Description	Qty
1	I8-98068-1970	TURBOCHARGER ASM	1
2	I8-94433-6050	GASKET; TURBOCHARGER TO EXH MANIF	1
11	I8-97161-6070	NUT; TURBOCHARGER (M8 FLANGE)	4
16	I8-98019-9010	ADAPTER; EXH PIPE	1
18	I8-97161-6070	NUT; EXH PIPE (M8 FLANGE)	4
21(A)	I0-28050-6200	BOLT; PIPE (M6X20 FLANGE)	2
21(B)	I0-28050-8120	BOLT; PIPE (M8X12 FLANGE)	2
21(C)	I0-28050-8160	BOLT; PIPE (M8X16 FLANGE)	1
66	I9-04130-8250	STUD; EXH PIPE	3
115(A)	I8-98019-6981	PIPE; WATER, TURBOCHARGER OUT	1
115(B)	I8-98019-6990	PIPE; WATER, TURBOCHARGER OUT	1
117(A)	I8-97262-1170	GASKET; WATER PIPE	1
117(B)	I9-09571-4120	GASKET; WATER PIPE (ID=12.2)	6
118(A)	I8-94125-8621	CLIP; WATER HOSE (ID=20.8)	6
118(B)	I8-94367-9430	CLIP; WATER HOSE (ID=12.8)	6
119(A)	I0-03509-1400	HOSE; WATER, TURBOCHARGER	1
119(B)	I8-98019-7700	HOSE; WATER, TURBOCHARGER	1
120	I8-94472-5830	ADAPTER; WATER	2
137	I8-98019-7000	PIPE; WATER, TURBOCHARGER IN	1
138	I8-98038-7080	BOLT; EYE, WATER PIPE (M12X24 FLANGE)	2
163	I8-94369-0210	GASKET; ADAPTER TO EXH PIPE	1
231	I8-98019-7710	HOSE; RUBBER, TURBOCHARGER OUT	1
408	I8-97378-0600	STUD; TURBOCHARGER TO ADAPTER (M8X20 L=31)	4
412	I8-94433-6040	GASKET; TURBOCHARGER	1
485(A)	I8-98019-7011	PIPE; WATER EGR	1
485(B)	I8-98019-7021	PIPE; WATER EGR	1
488(A)	I0-03566-3000	HOSE; RUBBER (L=100)	1
488(B)	I8-98042-5240	HOSE; RUBBER	1
488(C)	I8-98019-7720	HOSE; RUBBER	1

silverhorn.co.uk

FUEL INJECTION SYSTEM (1/2)

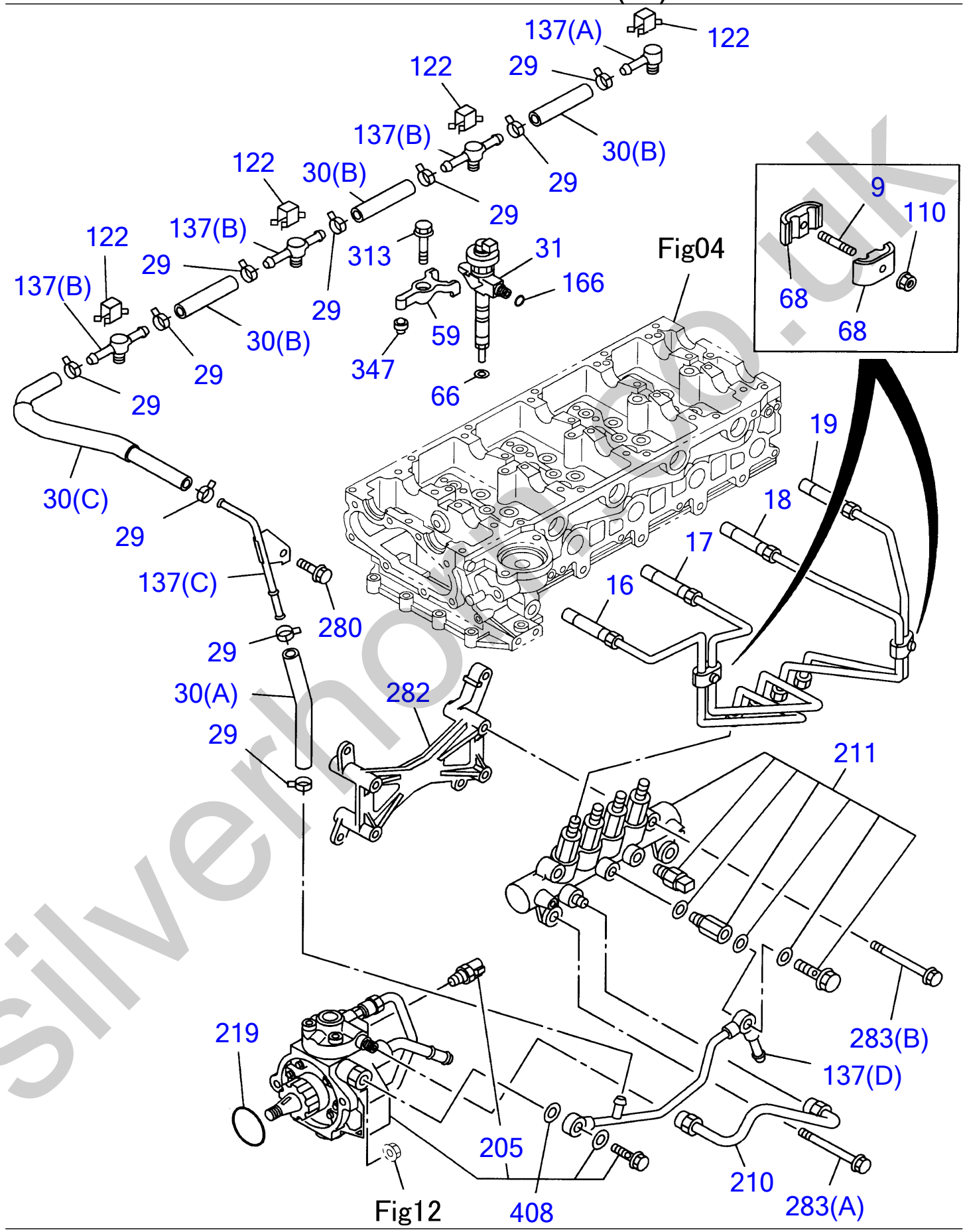

silverhomes.co.uk

FUEL INJECTION SYSTEM (1/2)

Item	Part No	Description	Qty
9	I8-97214-2341	STUD; CLIP	2
16	I8-98011-6060	PIPE; INJ NO.1	1
17	I8-98011-6070	PIPE; INJ NO.2	1
18	I8-98011-6080	PIPE; INJ NO.3	1
19	I8-98011-6090	PIPE; INJ NO.4	1
29	I8-97019-4730	CLIP; HOSE (ID=10.5)	10
30(A)	I0-01804-1300	HOSE; RUBBER, FUEL LEAK	1
30(B)	I8-97354-6520	HOSE; RUBBER, FUEL LEAK	3
30(C)	I8-97362-3062	HOSE; RUBBER, FUEL LEAK	1
31	I8-98011-6041	NOZZLE ASM; INJ	4
59	I8-98011-5282	CLAMP; NOZZLE HOLDER	4
66	I8-98077-1650	GASKET; INJ NOZZLE	4
68	I8-97213-4810	CLIP; INJ PIPE	4
110	I0-91180-1060	NUT; CLIP (M6 FLANGE)	2
122	I8-97315-2860	CLIP; LEAK OFF PIPE	4
137(A)	I8-97315-2301	PIPE ASM; LEAK OFF	1
137(B)	I8-97315-2311	PIPE ASM; LEAK OFF	3
137(C)	I8-98036-5100	PIPE ASM; LEAK OFF	1
137(D)	I8-98038-7750	PIPE ASM; LEAK OFF	1
166	I9-09566-1110	GASKET; FUEL INJECTOR	4
205	I8-98023-5810	SENSOR; FUEL TEMP	1
210	I8-97388-9020	PIPE; INJ, C/R	1
211	I8-98011-8880	RAIL ASM; COMMON	1
219	I1-09623-5410	GASKET (ID=49.7)	1
280	I0-28050-8120	BOLT; CLIP, FUEL HOSE (M8X12 FLANGE)	1
282	I8-98053-9120	BRACKET; COMMON RAIL	1
283(A)	I0-28050-8700	BOLT; COMMON RAIL (M8X70 FLANGE)	2
283(B)	I8-97354-5840	BOLT; COMMON RAIL (M8X81 FLANGE)	2
313	I8-97372-1440	BOLT; BRKT, INJ NOZZLE	4
347	I8-97383-2860	PIN	4
408	I8-97381-5552	PUMP; ASM FUEL, SUPPLY	1

silverhorn.co.uk

FUEL INJECTION SYSTEM (2/2)

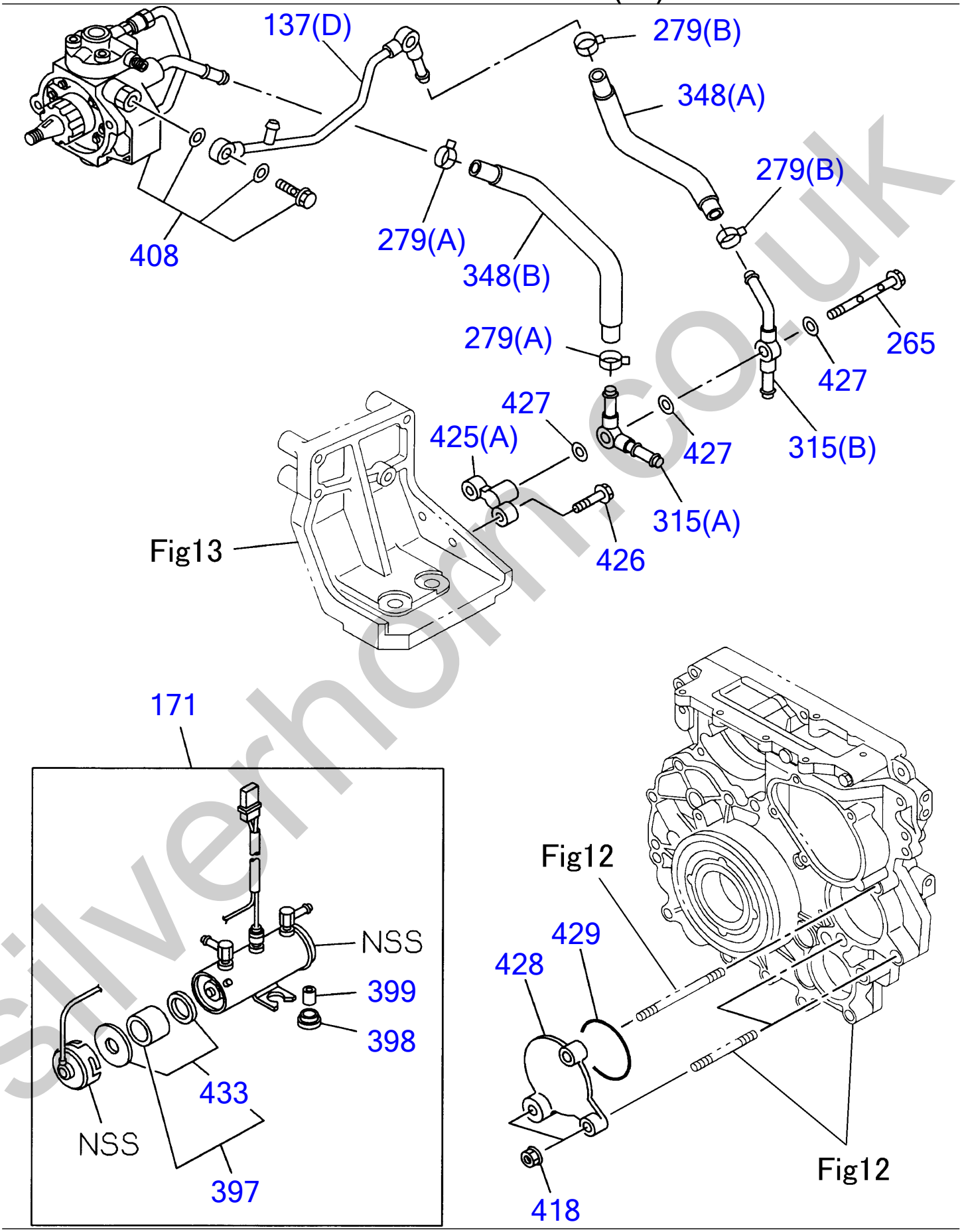

silverhorn.co.uk

FUEL INJECTION SYSTEM (2/2)

Item	Part No	Description	Qty
137(D)	I8-98038-7750	PIPE ASM; LEAK OFF	1
171	I8-98009-3971	PUMP ASM; FUEL FEED	1
265	I8-98074-9550	VALVE; FEED PUMP	1
279(A)	I8-94392-9240	CLIP; FUEL HOSE (ID=16)	2
279(B)	I8-97375-6380	CLIP; FUEL HOSE	2
315(A)	I8-98038-7770	PIPE; FUEL, SUCTION	1
315(B)	I8-98038-7780	PIPE; FUEL, SUCTION	1
348(A)	I8-98038-8890	HOSE; FUEL	1
348(B)	I8-98050-5200	HOSE; FUEL	1
397	I8-98071-4010	REPAIR KIT; FUEL PUMP	1
398	I8-97047-2660	GROMMET; FUEL PUMP	2
399	I8-97047-2650	COLLAR; FUEL PUMP	2
408	I8-97381-5552	PUMP; ASM FUEL, SUPPLY	1
418	I0-91180-2080	NUT; COVER (M8 FLANGE)	3
425(A)	I8-98038-7760	BRACKET; VALVE	1
426	I0-28650-8250	BOLT; BRACKET (M8X25 FLANGE)	2
427	I1-09630-0850	GASKET; FUEL PIPE (ID=14.2 OD=19.2)	3
428	I8-98019-8940	COVER; VACUUM PUMP HOLE	1
429	I0-95690-2710	GASKET; COVER	1
433	I8-98071-4040	GASKET KIT; FUEL PUMP	1

silverhorn.co.uk

FUEL FILTER AND BRACKET

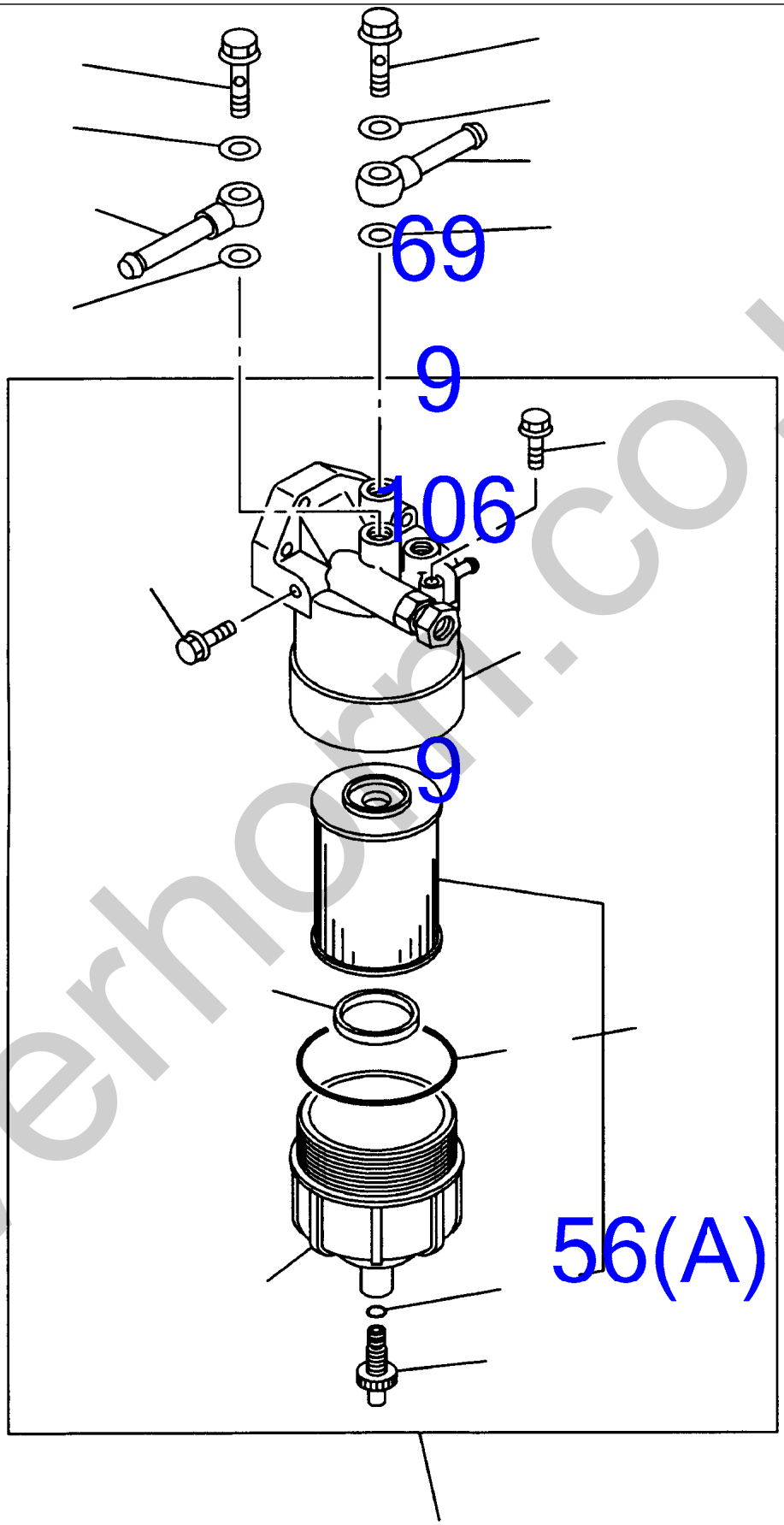

silverhorn.co.uk

FUEL FILTER AND BRACKET

Item	Part No	Description	Qty
1(A)	I8-98013-9861	FILTER ASM; FUEL	1
2(A)	I8-98008-8400	ELEMENT KIT; FUEL FILTER	1
8(A)	I8-98018-5291	COVER; FUEL FILTER	1
9	I1-09630-0860	GASKET; EYE JOINT (ID=16.2)	4
11	I8-98008-8420	GASKET; CASE TO BODY, FUEL FILTER	1
17	I8-98008-8490	FLOAT; FUEL FILTER	1
56(A)	I8-98008-8470	PLUG; FUEL FILTER	1
66	I8-98008-8430	GASKET; PLUG, FUEL FILTER	1
69	I1-09675-0951	BOLT; EYE, FUEL FILTER (M16X30 FLANGE)	2
105	I8-98008-8440	CASE; FUEL FILTER	1
106	I8-97383-4270	PIPE; FUEL	2
119	I8-98008-8480	PLUG; DRAIN, FUEL FILTER	1

silverhorn.co.uk

OIL COOLER AND OIL FILTER

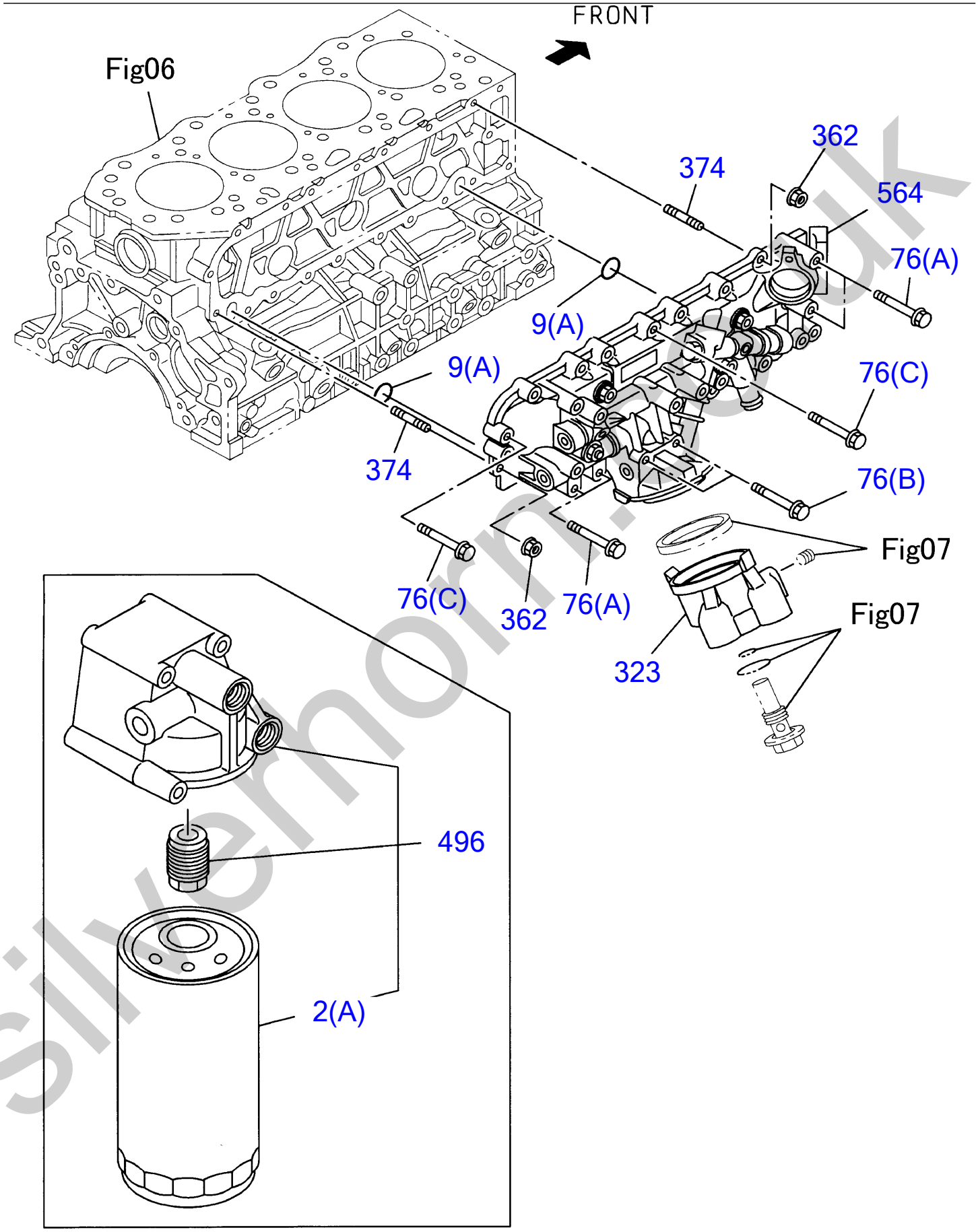

silverhorn.co.uk

OIL COOLER AND OIL FILTER

Item	Part No	Description	Qty
2(A)	I1-13240-2322	ELEMENT; OIL FILTER	2
9(A)	I9-09566-2260	GASKET; CENTER BOLT (ID=26.2)	2
76(A)	I0-28050-8700	BOLT; OIL FILTER (M8X70 FLANGE)	4
76(B)	I0-28050-8900	BOLT; OIL FILTER (M8X90 FLANGE)	2
76(C)	I0-28650-8350	BOLT; OIL FILTER (M8X35 FLANGE)	12
323	I8-98019-9030	COVER; OIL PORT	1
362	I0-91180-2080	NUT; OIL FILTER (M8 FLANGE)	2
374	I0-41010-8180	STUD; OIL FILTER (M8X18 L=30)	2
496	I8-97324-3861	FILTER ASM; OIL	1
564	I8-98019-5140	COOLER ASM; OIL, W/O FILTER	1

silverhorn.co.uk

OIL PUMP AND OIL STRAINER

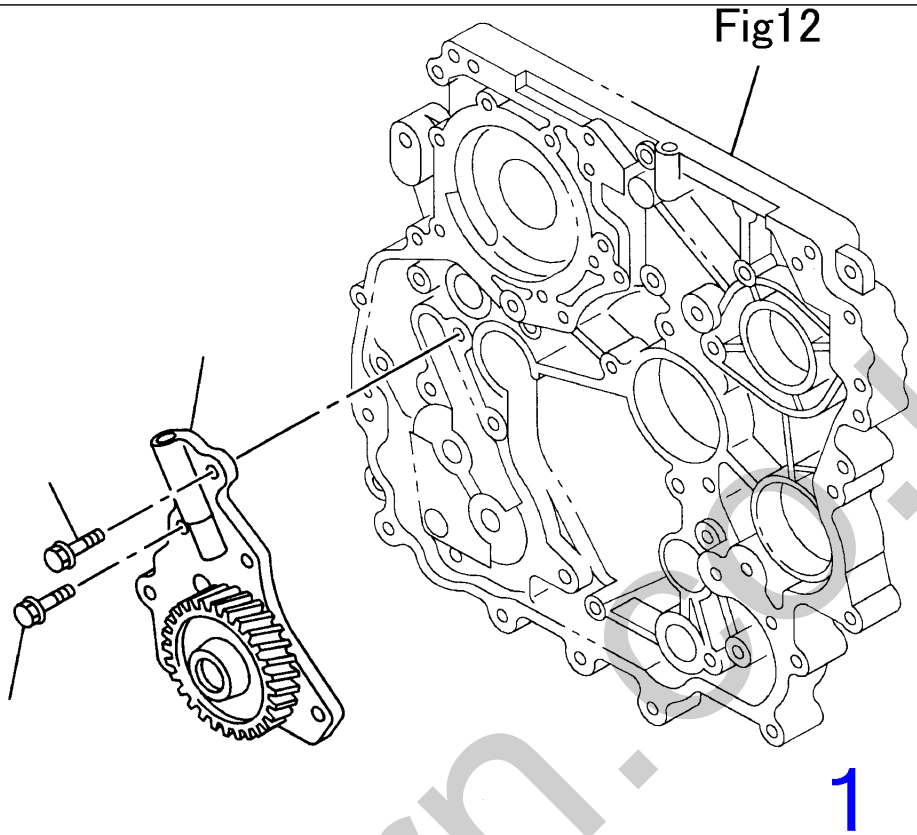

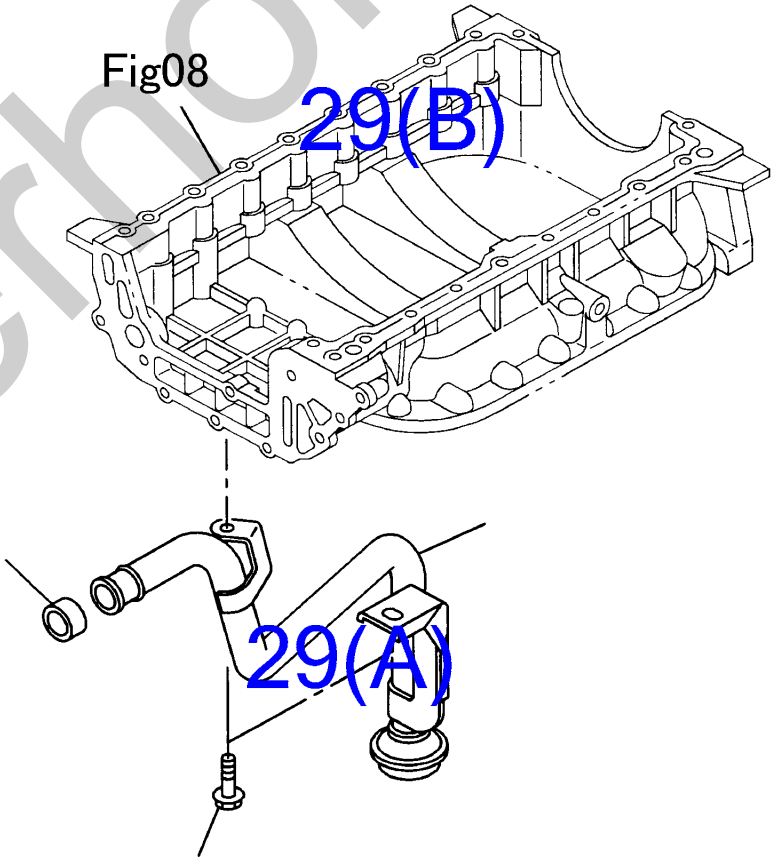

silverhorn.co.uk

OIL PUMP AND OIL STRAINER

Item	Part No	Description	Qty
1	I8-98053-7770	PUMP ASM; OIL	1
29(A)	I0-28050-8300	BOLT; OIL PUMP (M8X30 FLANGE)	4
29(B)	I0-28050-8450	BOLT; OIL PUMP (M8X45 FLANGE)	2
49	I0-28050-8160	BOLT; STRAINER, OIL PUMP (M8X16 FLANGE)	2
139	I8-98019-5101	PIPE; OIL STRAINER	1
140	I8-97356-1500	GASKET; OIL STRAINER	1

silverhorn.co.uk

OIL AND VACUUM PIPING; ENGINE

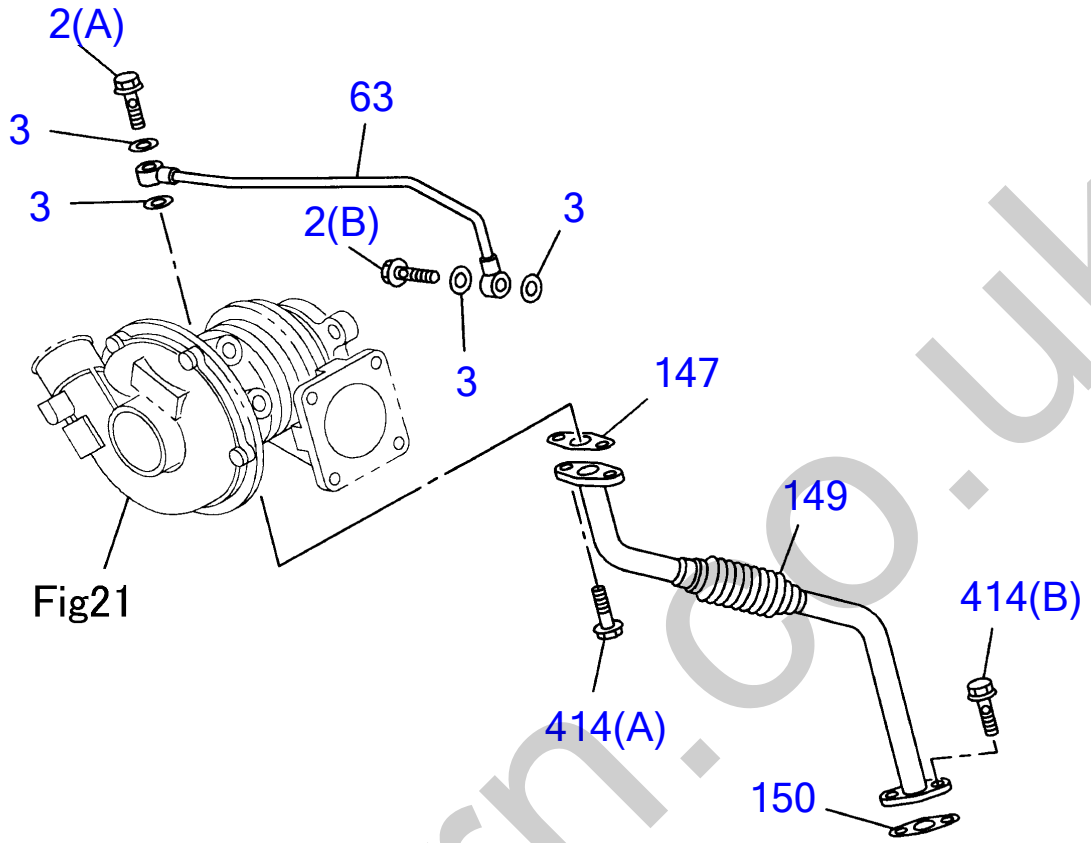

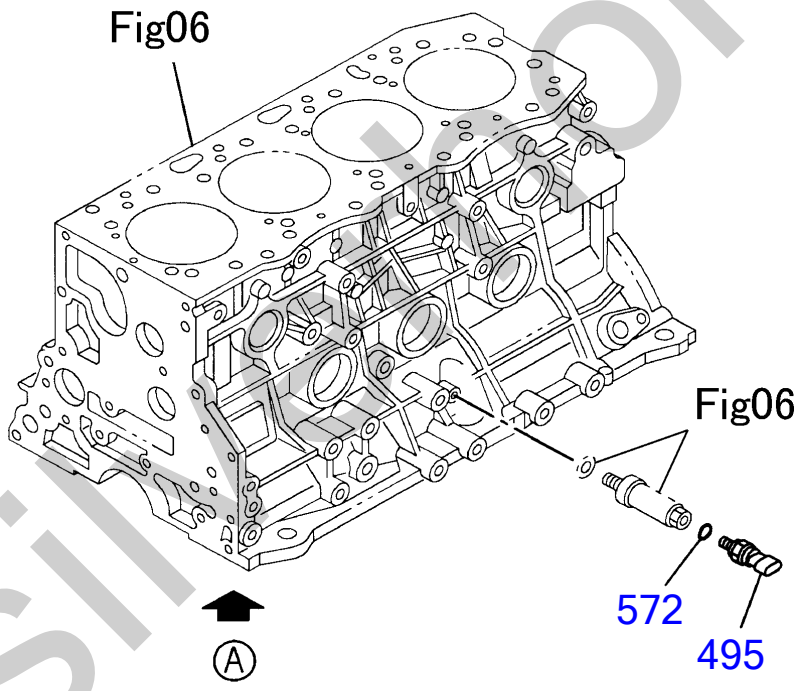

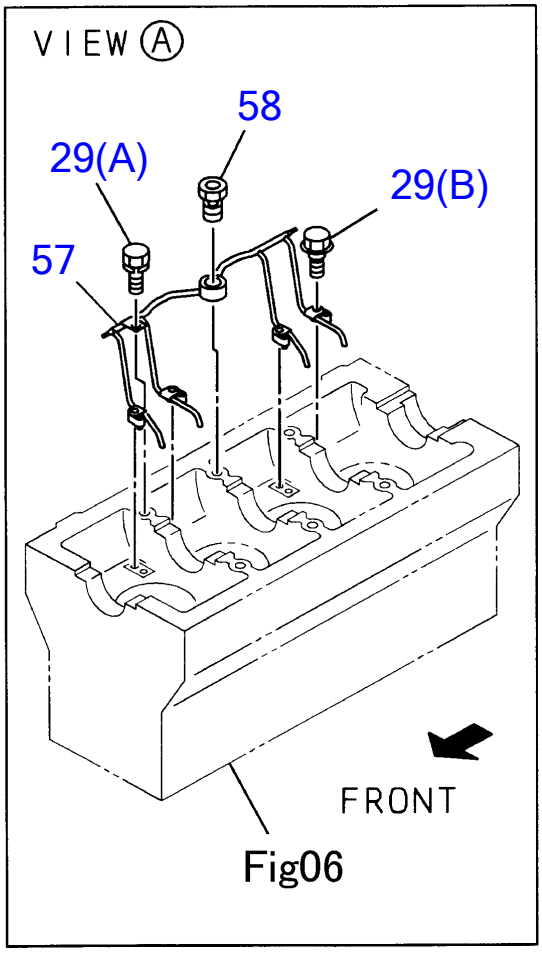

silverthorn.co.uk

OIL AND VACUUM PIPING; ENGINE

Item	Part No	Description	Qty
2(A)	I8-94443-5350	BOLT; EYE, OIL PIPE (M10X27)	1
2(B)	I9-09906-2051	BOLT; EYE, OIL PIPE (M10X24)	1
3	I9-09571-4100	GASKET; EYE BOLT, OIL PIPE (ID=10.2 OD=16.0)	4
29(A)	I0-28050-8100	BOLT; OIL PIPE, OIL JET (M8X10 FLANGE)	1
29(B)	I8-97117-2981	BOLT; OIL PIPE, OIL JET (M6X20)	4
57	I8-97312-1322	PIPE; OIL, OIL JET	1
58	I8-97239-0481	VALVE; RELIEF, OIL JET, PISTON COOLING	1
63	I8-98019-5110	PIPE; OIL, TURBOCHARGER FEED	1
147	I8-98029-4750	GASKET; OIL PIPE TO TURBOCHARGER	1
149	I8-98019-5121	PIPE; OIL RETURN, TURBOCHARGER	1
150	I8-98029-4760	GASKET; OIL PIPE TO C/BL	1
414(A)	I0-28650-6200	BOLT; OIL PIPE (M6X20 FLANGE)	2
414(B)	I0-28650-8200	BOLT; OIL PIPE (M8X20 FLANGE)	2
495	I8-98027-4560	SENSOR; OIL PRESS	1
572	I1-09630-0850	GASKET; SENSOR (ID=14.2 OD=19.2)	1

silverhorn.co.uk

EMISSION PIPING

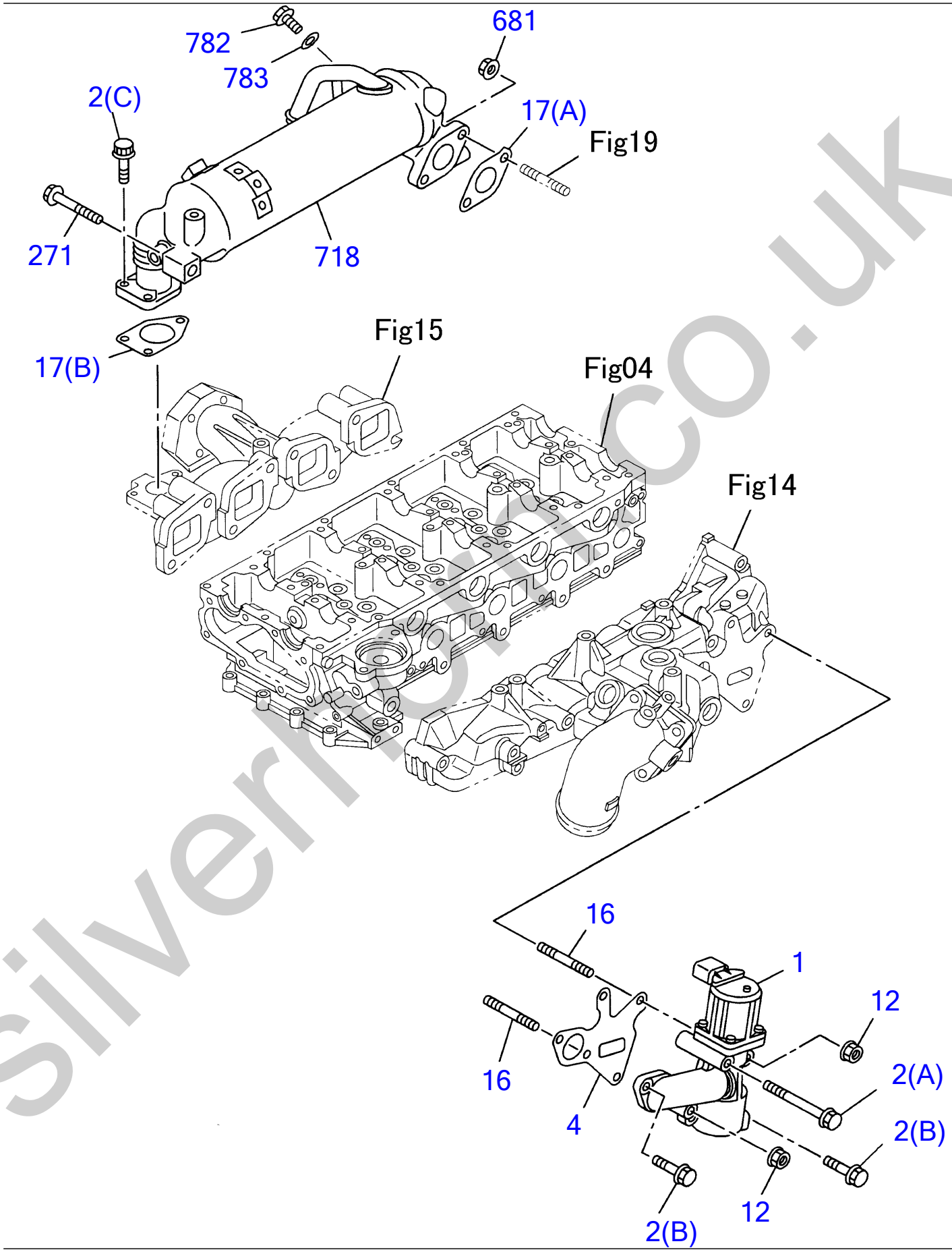

silverhorn.co.uk

EMISSION PIPING

Item	Part No	Description	Qty
1	I8-97381-5602	VALVE; EGR	1
2(A)	I0-28050-8800	BOLT; EGR VLV (M8X80 FLANGE)	1
2(B)	I0-28650-8250	BOLT; EGR VLV (M8X25 FLANGE)	2
2(C)	I8-97131-5971	BOLT; EGR VLV (M8X35 W/PL WASHER)	3
4	I8-97384-1191	GASKET; EGR VLV	1
12	I0-91180-2080	NUT; EGR VLV (M8 FLANGE)	2
16	I0-41010-8500	STUD; EGR VLV (M8X50 L=62)	2
17(A)	I8-97357-6843	GASKET; EGR PIPE	1
17(B)	I8-98017-5510	GASKET; EGR PIPE	1
271	I0-28151-0450	BOLT; BRKT (M10X45 FLANGE)	1
681	I0-91180-2080	NUT; EGR PIPE (M8 FLANGE)	2
718	I8-98068-1640	COOLER; EGR	1
782	I8-98072-7120	PLUG; EGR COLLER	1
783	I9-09571-4100	GASKET; PLUG (ID=10.2 OD=16.0)	1

silverhorn.co.uk

ENGINE ELECTRICAL CONTROL PARTS (1/2)

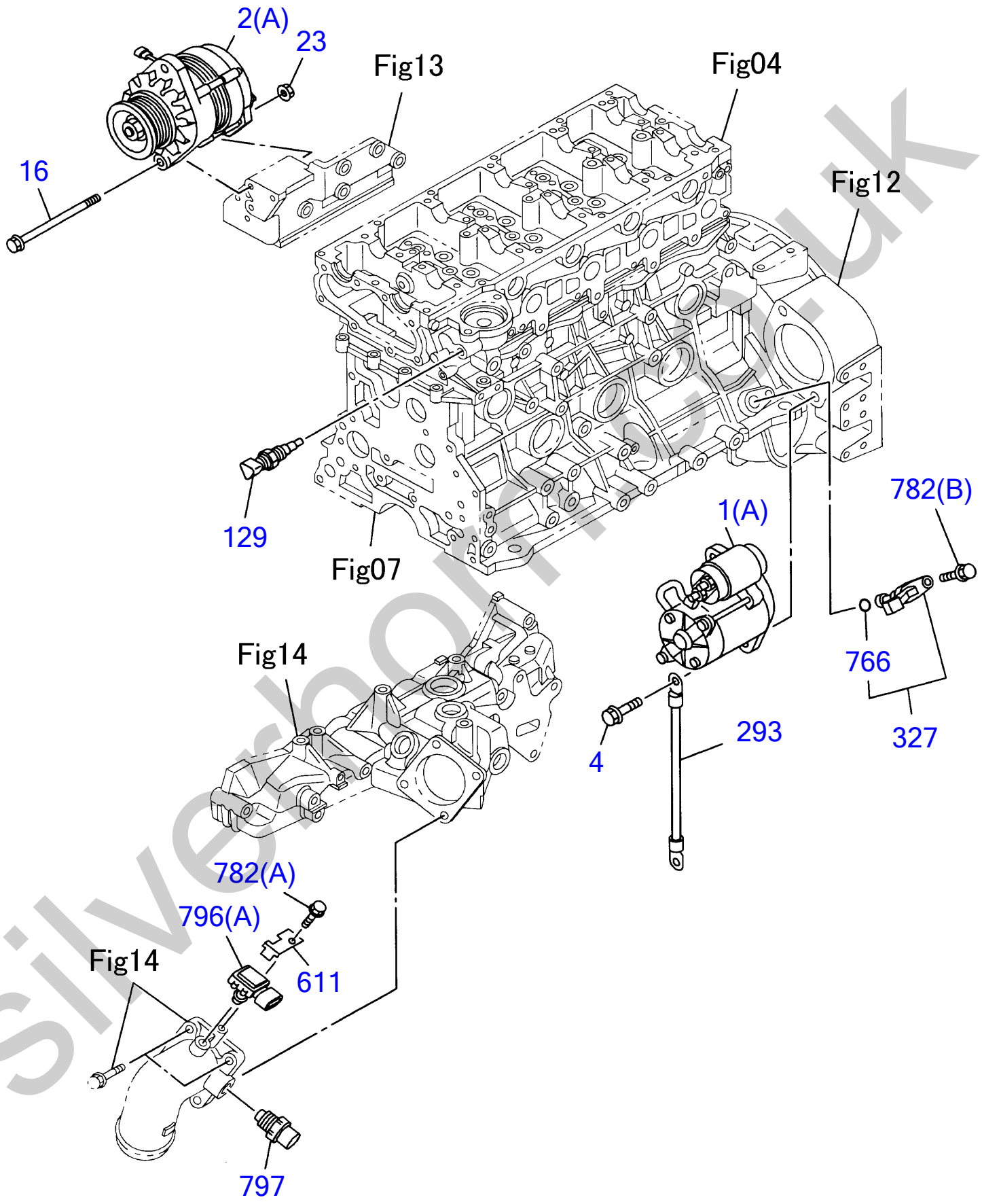

silverhorn.co.uk

ENGINE ELECTRICAL CONTROL PARTS (1/2)

Item	Part No	Description	Qty
1(A)	I8-98045-0271	STARTER ASM (24V 4.0KW)	1
2(A)	I8-98092-1120	GENERATOR ASM (24V 50A)	1
4	I0-28751-2350	BOLT; STARTER (M12X35 FLANGE)	2
16	I0-28056-0130	BOLT; GEN (M10X130 FLANGE)	1
23	I0-91180-2100	NUT; GEN (M10 FLANGE)	1
129	I8-97363-9360	SENSOR; GLOW PLUG, THERMO	1
293	I8-97180-5560	CABLE; STARTER EARTH	1
327	I8-97312-1081	SENSOR; CAMSHAFT POSITION	1
611	I8-97216-2160	BRACKET; SENSOR	1
766	I8-97369-4040	GASKET; SENSOR	1
782(A)	I0-28050-6120	BOLT; SENSOR (M6X12 FLANGE)	1
782(B)	I0-28050-6160	BOLT; SENSOR (M6X16 FLANGE)	1
796(A)	I8-09373-2691	SENSOR; MAP	1
797	I8-12146-8300	SENSOR; MAT	1

silverhorn.co.uk

ENGINE ELECTRICAL CONTROL PARTS (2/2)

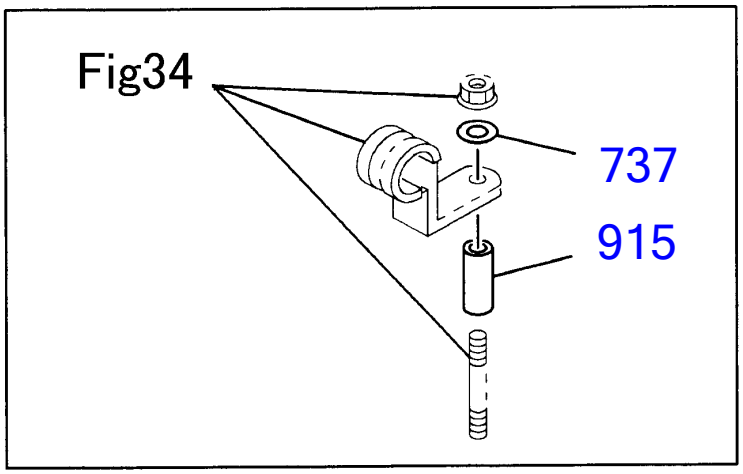

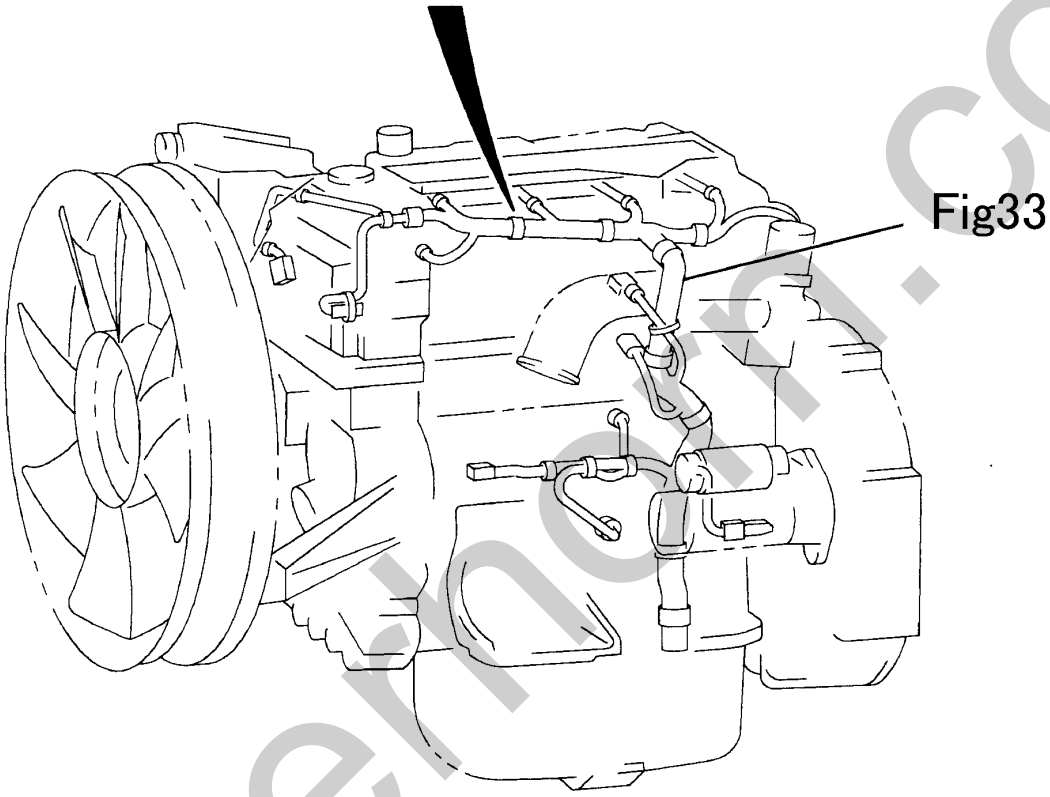

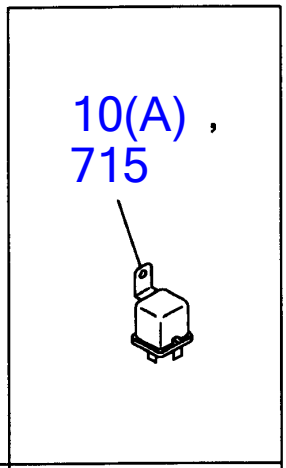

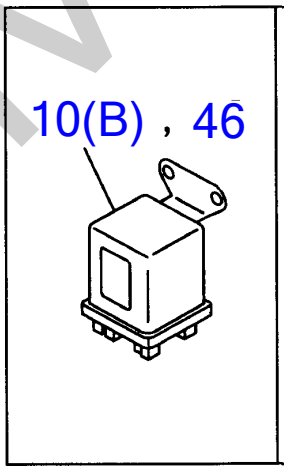

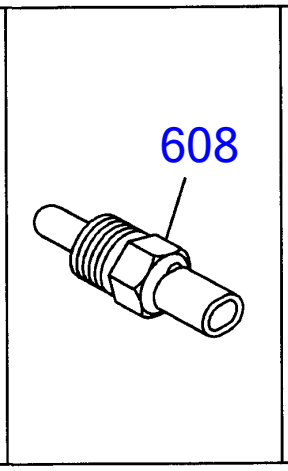

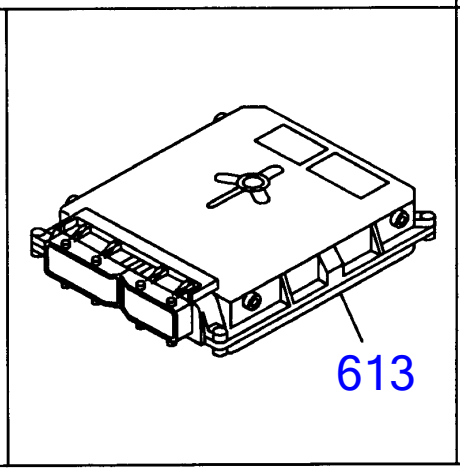

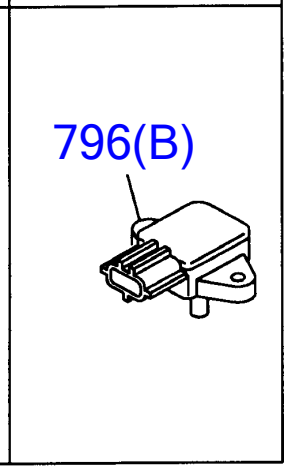

silvernorn.co.uk

ENGINE ELECTRICAL CONTROL PARTS (2/2)

Item	Part No	Description	Qty
10(A)	I8-98013-7900	RELAY; STARTER (24V)	1
10(B)	I8-94258-0140	RELAY; STARTER (24V)	1
46	I8-94460-7060	RELAY; GLOW PLUG (24V)	1
608	I8-12146-8300	SENSOR; TEMP	1
613	I8-98075-0730	CONTROL UNIT; ENG	1
737	I0-91610-7060	WASHER; PL (ID=6.4 OD=18)	1
796(B)	I8-97217-7780	SENSOR; MAP	1
915	I5-15419-0360	SPACER; HARNESS (ID=9 OD=16 L=40)	1

silverhorn.co.uk

STARTER

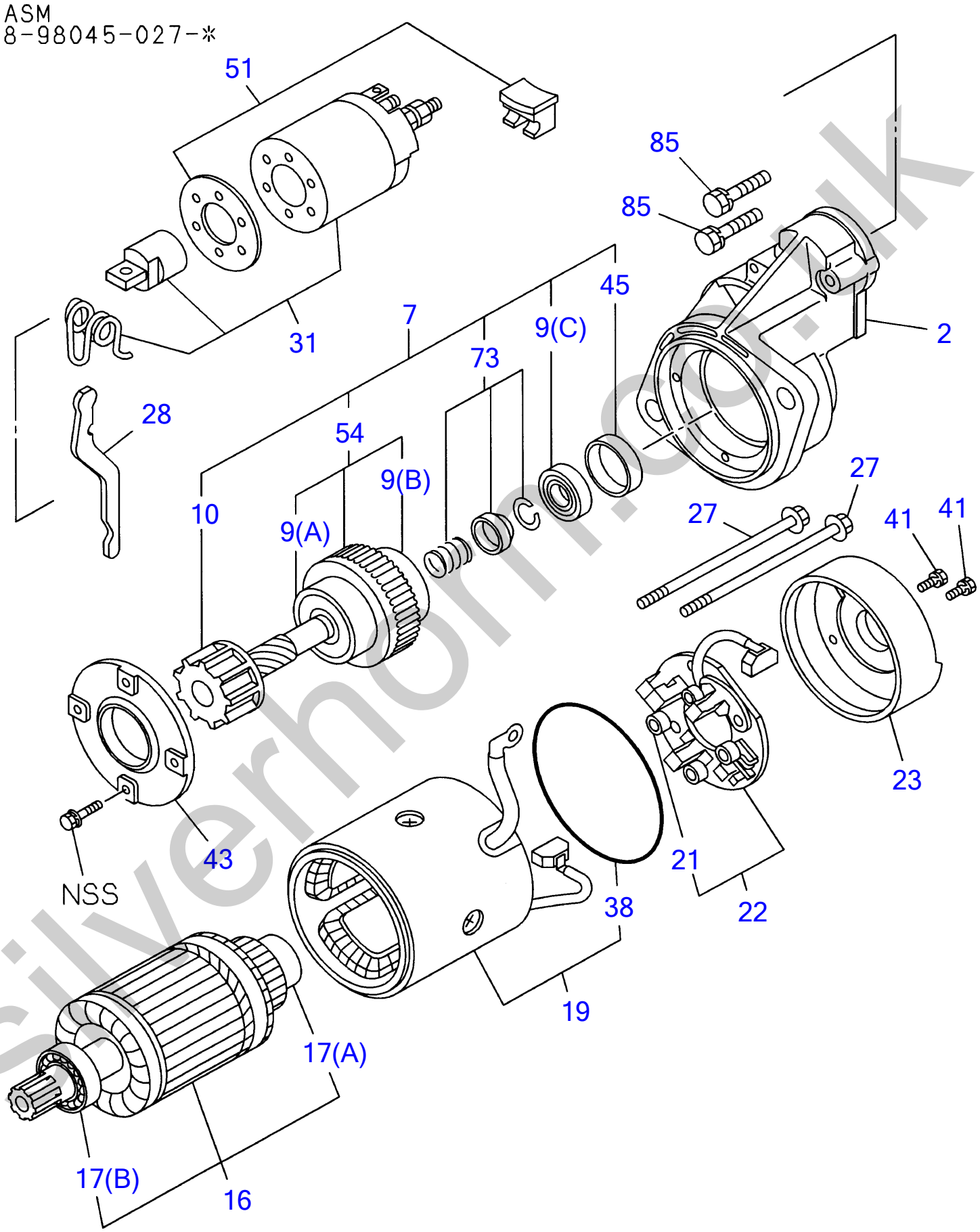

silverhorn.co.uk

STARTER

Item	Part No	Description	Qty
2	I8-98056-6690	CASE; PINION, STARTER	1
7	I8-98056-6640	CLUTCH ASM; PINION, STARTER	1
9(A)	I8-97025-6730	BEARING; GEAR SHAFT STARTER	1
9(B)	I8-97025-6740	BEARING; GEAR SHAFT STARTER	1
9(C)	I8-97025-6760	BEARING; GEAR SHAFT STARTER	1
10	I8-98056-6660	SHAFT; GEAR STARTER	1
16	I8-97192-2990	ARMATURE; STARTER	1
17(A)	I8-94228-4360	BEARING; ARMATURE STARTER	1
17(B)	I8-97030-3870	BEARING; ARMATURE STARTER	1
19	I8-98073-9090	COIL; FIELD, STARTER	1
21	I8-94152-9720	SPRING; BRUSH HOLDER STARTER	4
22	I8-98073-9330	HOLDER; BRUSH STARTER	1
23	I8-97319-4180	COVER; RR COVER STARTER	1
27	I8-97192-4230	BOLT; THROUGH, STARTER	2
28	I8-97179-7760	LEVER; SHIFT, STARTER	1
31	I8-98056-6670	SWITCH; ENGAGE STARTER	1
38	I8-97115-7630	GASKET; RR COVER, STARTER	1
41	I8-97117-1070	SCREW; RR COVER, STARTER	2
43	I8-98056-6680	RETAINER; PINION STARTER	1
45	I8-94435-5670	RETAINER; BEARING, STARTER	1
51	I8-98056-6700	COVER SET; DUST ENGAGE SW STARTER	1
54	I8-98056-6650	CLUTCH ; PINION, STARTER	1
73	I8-94152-9780	STOPPER SET; PINION	1
85	I8-94408-5000	BOLT; ENGAGE SW FIX, STARTER	2

silverhorn.co.uk

GENERATOR

8-98092-112-*

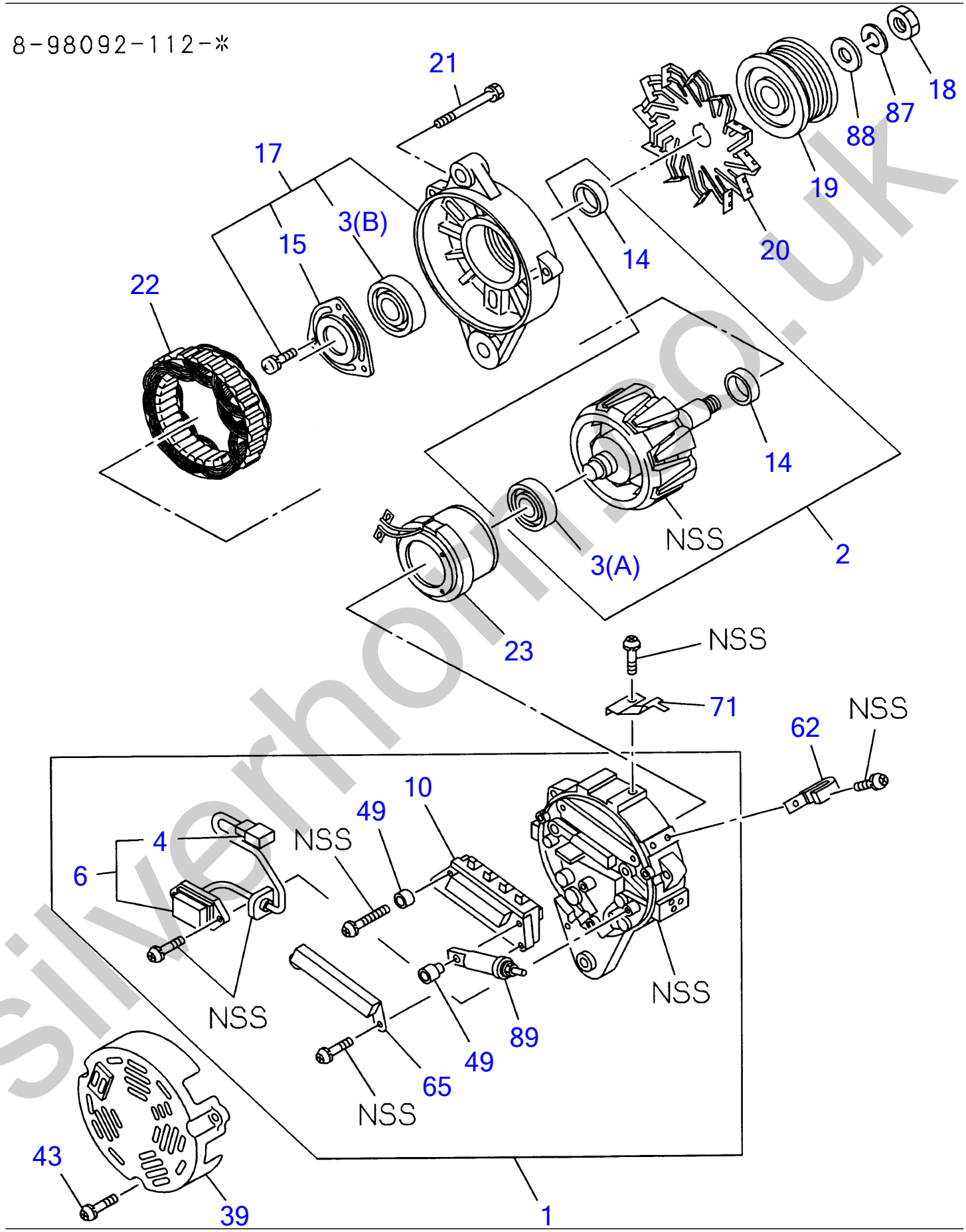

silverhorse.uk

GENERATOR

Item	Part No	Description	Qty
1	I8-98045-7280	COVER ASM; RR, GEN	1
2	I8-97382-8690	ROTOR; GEN	1
3(A)	I1-81229-7230	BEARING; ROTOR, GEN	1
3(B)	I1-81229-7580	BEARING; ROTOR, GEN	1
4	I8-97382-8840	TERMINAL; BRUSH, GEN	1
6	I8-98092-3990	REGULATOR ASM; VOLTAGE, GEN	1
10	I8-97382-8790	RECTIFIER; GEN	1
14	I8-97382-8700	COLLAR; STEEL	2
15	I1-81229-7600	RETAINER; ROTOR, GEN	1
17	I8-98045-6870	COVER ASM; FRT, GEN	1
18	I1-81229-4740	NUT; PULLEY, GEN	1
19	I8-98045-7230	PULLEY; GEN	1
20	I8-97382-8740	FAN; GEN	1
21	I1-81229-3820	BOLT; THROUGH, GEN	3
22	I8-97382-8710	STATOR; GEN	1
23	I8-98036-2950	COIL; ROTOR GEN	1
39	I8-97382-8820	COVER; END, RR COVER, GEN	1
43	I1-81229-7330	SCREW; RR END COVER	3
49	I8-97382-8800	BUSHING; RECTIFIER, GEN	2
62	I1-81118-0110	CLIP; TERMINAL, BRUSH, GEN	1
65	I1-84132-0120	CONDENSER; GEN	1
71	I8-97029-0590	HOLDER; TERMINAL, GEN	1
87	I1-81229-4790	WASHER; PULLEY, GEN	1
88	I1-81229-4780	WASHER; PL, PULLEY GEN	1
89	I8-97382-8810	BOLT; RECTIFIER, GEN	1

silverhorn.co.uk

WIRING HARNESS AND FUSE

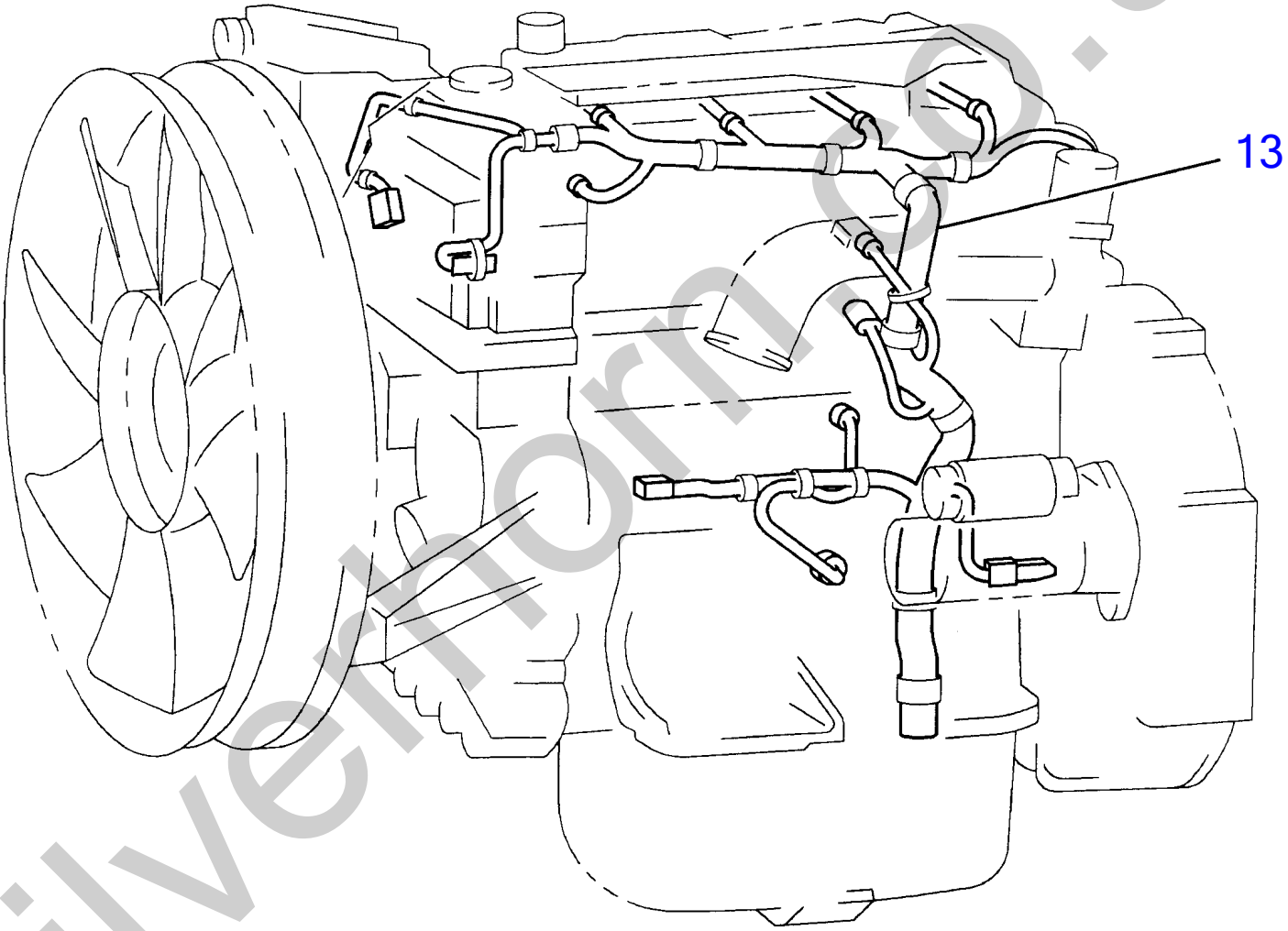

silverthorn.co.uk

WIRING HARNESS AND FUSE

Item	Part No	Description	Qty
13	I8-98035-0542	HARNESS; ENG	1

silverhorn.co.uk

FIXING PARTS; WIRING HARNESS

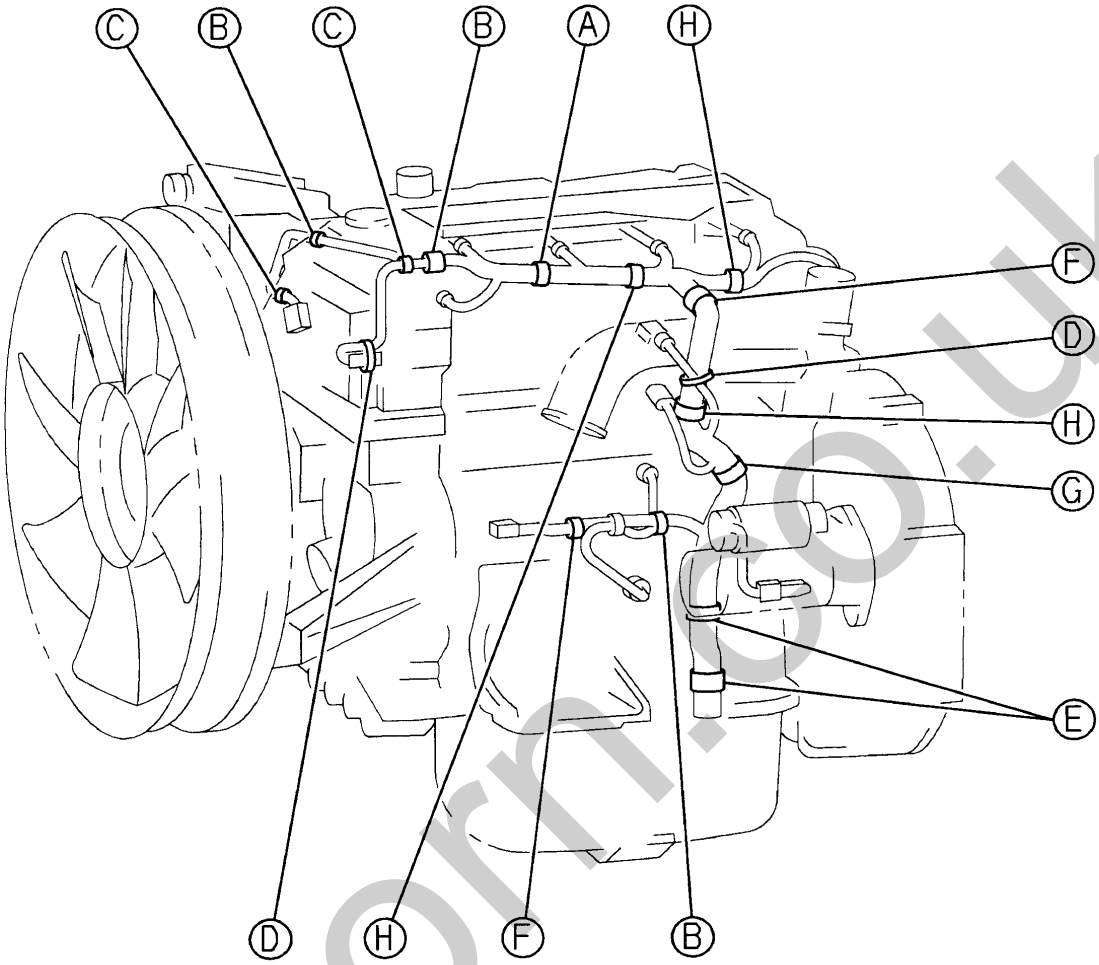

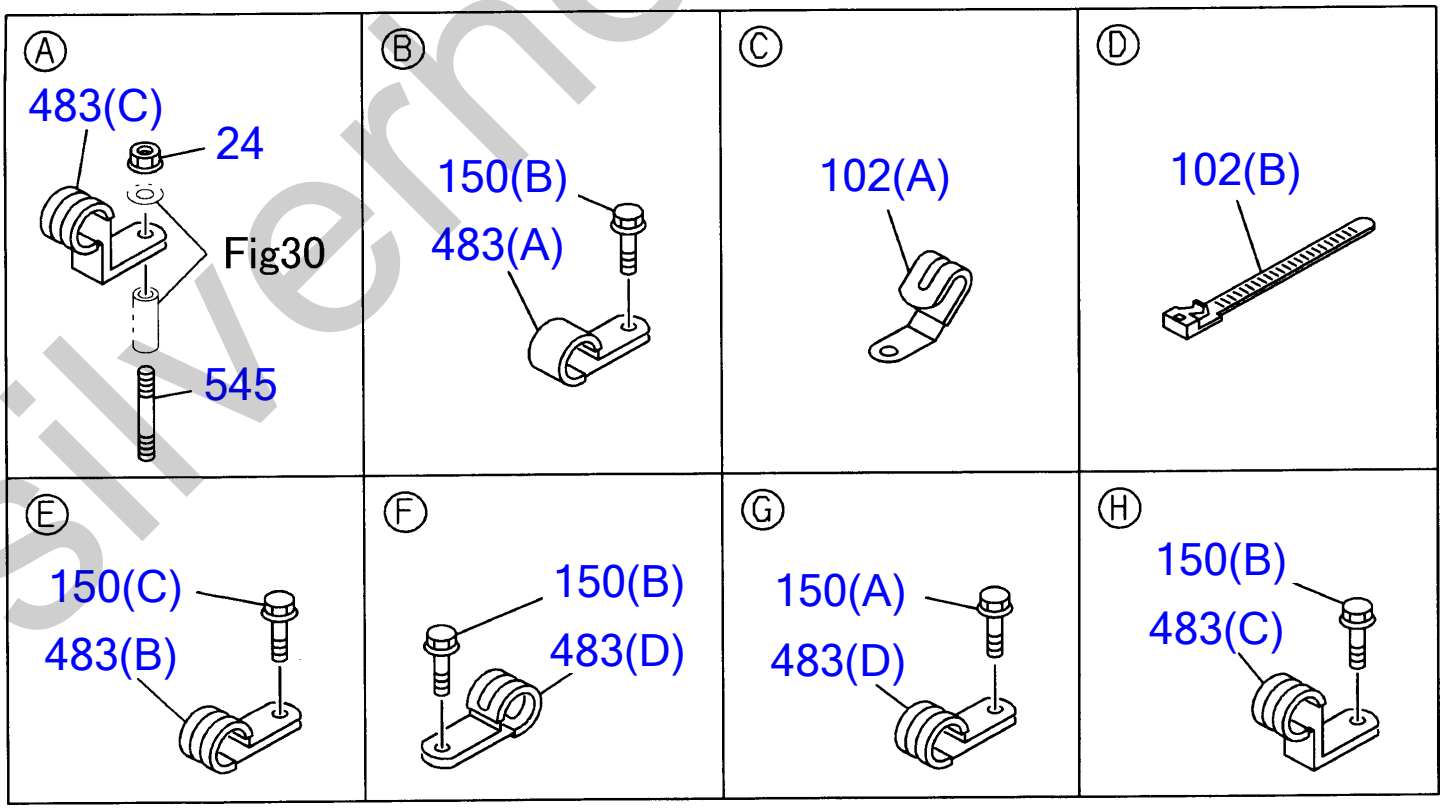

silvernorn.co.uk

FIXING PARTS; WIRING HARNESS

Item	Part No	Description	Qty
24	I0-91180-2080	NUT; HARNESS (M8 FLANGE)	1
102(A)	I5-09700-3500	CLIP; BAND (ID=12)	3
102(B)	I5-09707-0311	CLIP; BAND (L=140)	3
150(A)	I0-28050-6120	BOLT; CLIP (M6X12 FLANGE)	1
150(B)	I0-28050-8120	BOLT; CLIP (M8X12 FLANGE)	7
	I0-28050-8160	BOLT; CLIP (M8X16 FLANGE)	1
150(C)	I0-28051-0160	BOLT; CLIP (M10X16 FLANGE)	2
483(A)	I0-95235-8560	CLIP; ENG HARNESS (ID=19 L=28)	2
483(B)	I1-09700-6071	CLIP; ENG HARNESS (ID=28 L=30)	2
483(C)	I1-09700-8600	CLIP; ENG HARNESS (ID=18 H=23 L=28)	3
	I1-09700-8620	CLIP; ENG HARNESS (ID=24.5 H=23 L=25)	1
483(D)	I1-09701-0011	CLIP; ENG HARNESS (ID=24 L=24)	2
	I1-09701-0130	CLIP; ENG HARNESS (ID=14.5 L=28)	1
545	I0-41010-8550	STUD; HARNESS (M8X55 L=67)	1

silverhorn.co.uk

SWITCH AND RELAY; INSTRUMENT PANEL

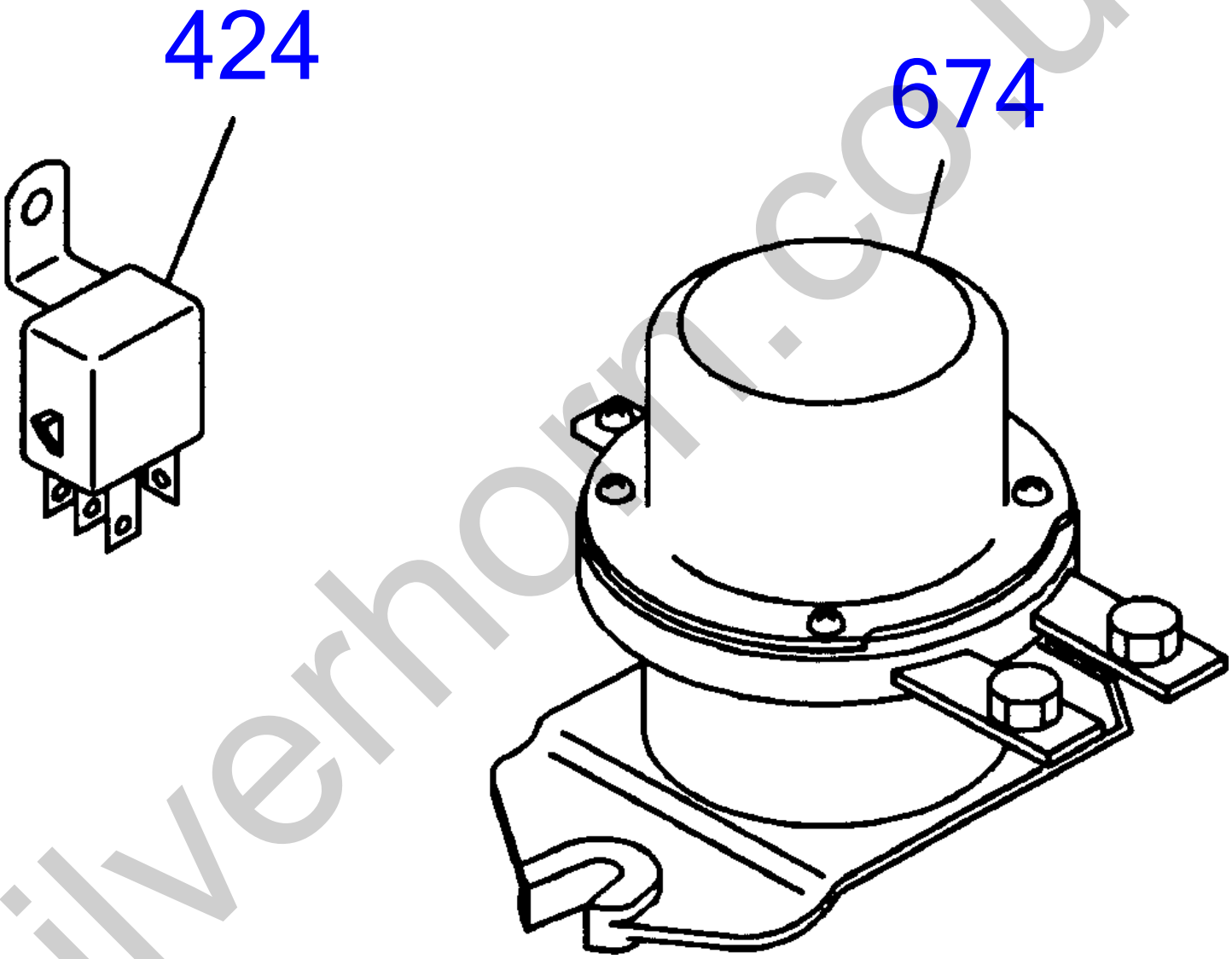

silverhorn.co.uk

SWITCH AND RELAY; INSTRUMENT PANEL

Item	Part No	Description	Qty
424	I8-98013-7900	RELAY	1
674	I8-94379-5431	RELAY; BATTERY	1

silverhorn.co.uk