TW50

Book No. 8016563
Serial No. E104063~

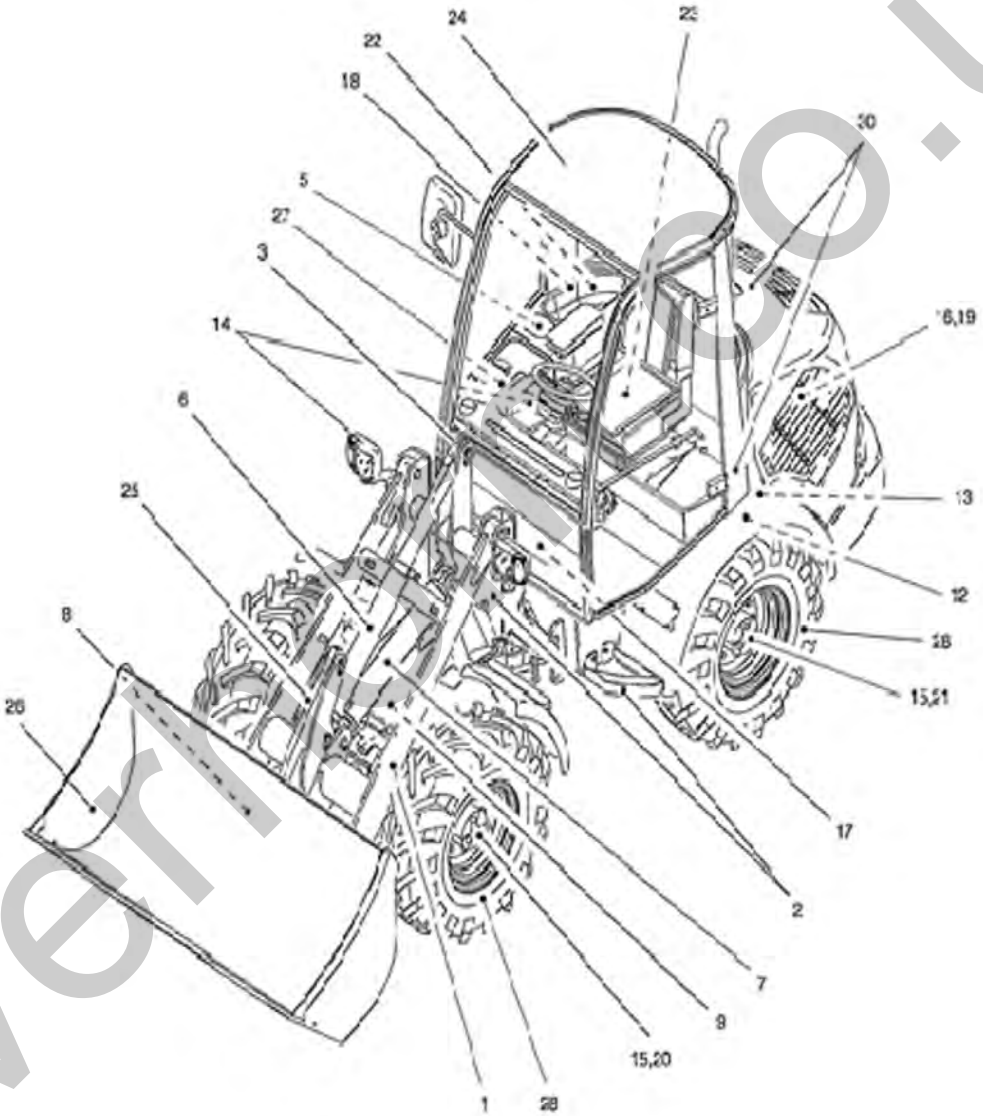

silverhill.co.uk

silverhorn.co.uk

silverhorn.co.uk

Main

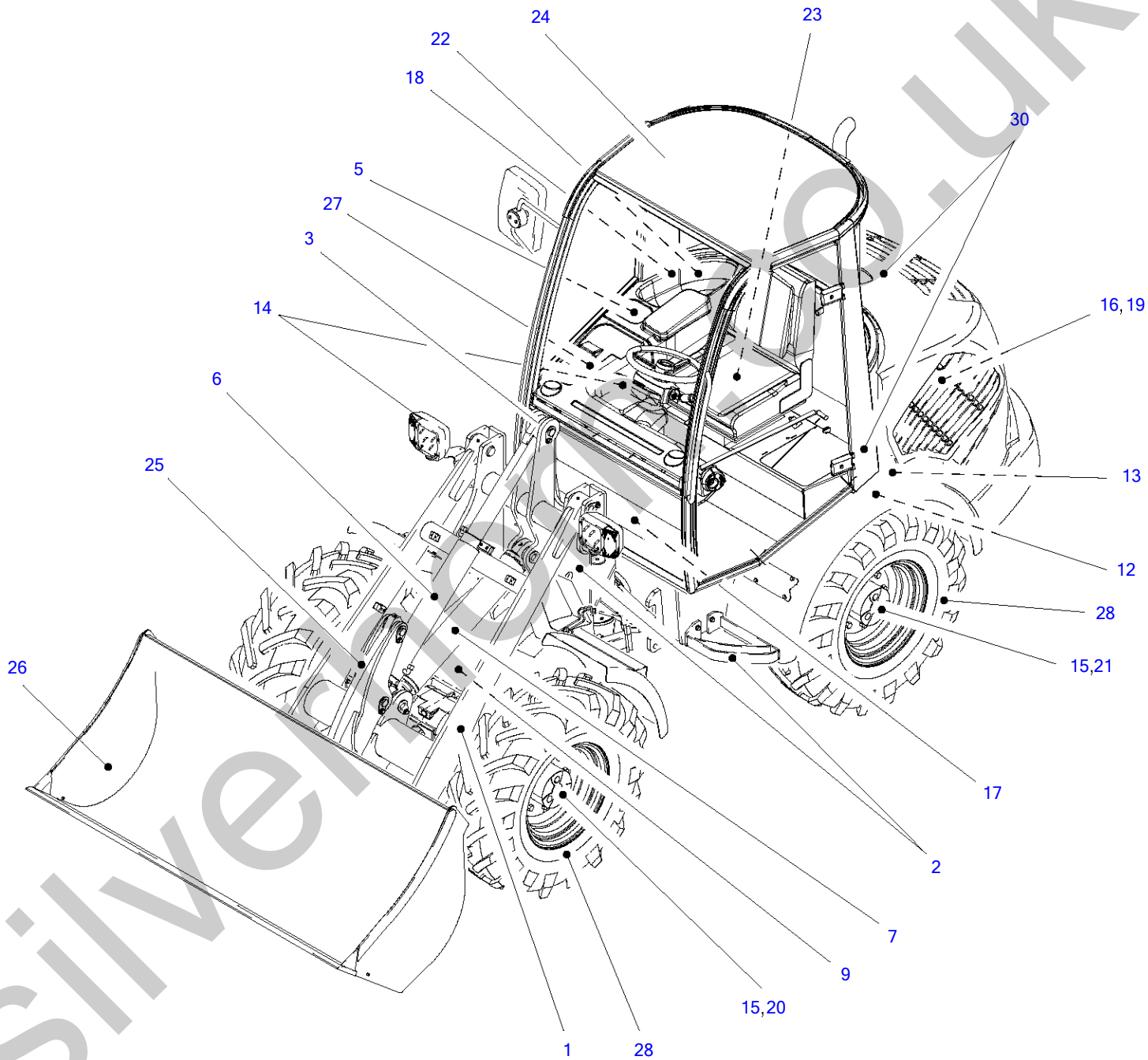

silvermorn.co.uk

Item	Part number	Description	Main Q'ty	Chan.	Serial No.	Serv.	Remarks
1	8017301	Lifting Unit					
2	5820059	Base Frame					
3	5820072	Steering Hydraulics					
	5820069	Working Hydraulics					
	8016949	Return Hydraulics					
	5820070	Driving Hydraulics					
	8016629	Hydraulic System QRC					
	8012416	Locking Device					
5	5820138	Directional Valve					
	8002252	Brake Throttle Valve					
6	3762245	Working Ram					
7	8000638	Lifting Ram					
9	3959515	Steering Ram					
12	5820062	Hydraulic Tank Compl					
13	5820066	Retrun Filter					
14	5820074	Electric System					
	8016811	Electric System (Canopy)					
	8008597	Printed Circuit Compl					
	8012903	Working Headlights					
15	5820056	Drive Set					
16	8016801	Diesel Engine					
	8016950	Exhaust System					
17	8014176	Foot Pedal Mechanism					
18	8016941	Air Filter System					
19	5820115	Oil Pressure Pump Compl					
	8019516	Oil Pressure Pump 12V					
	8019522	Oil Motor					
20	5820057	Front Axle					
	8014145	Front Axle Pipe					
21	5820058	Rear Axle					
	8014145	Rear Axle Pipe					
	8009421	Rear Axle Multiple					
22	8019993	Fuel System					
23	8013032	Driver's Seat Compl					
24	8016507	Cabin Canopy					
	8012821	FOPS-Grating Compl					
	8020364	Window Panes Kit					
	8013842	Cabin Door Compl					
	8015598	Hinged Rear Side Window					
	8014357	Covering Canopy					
	8015046	Protective Canopy					
	8014185	Steering Column Compl					
25	8010455	Hyd Quick Release Eq					
26	3705155	Pallet Fork Compl					
27	8020453	Heating Kit					
28	8016620	Decals & Accessories					
	8016643	Protective Hoses					
	8018800	Filter Set					
30	5820078	Covering Compl					
	8016808	Engine Hood Compl					

silverthorn.co.uk

Lifting Unit

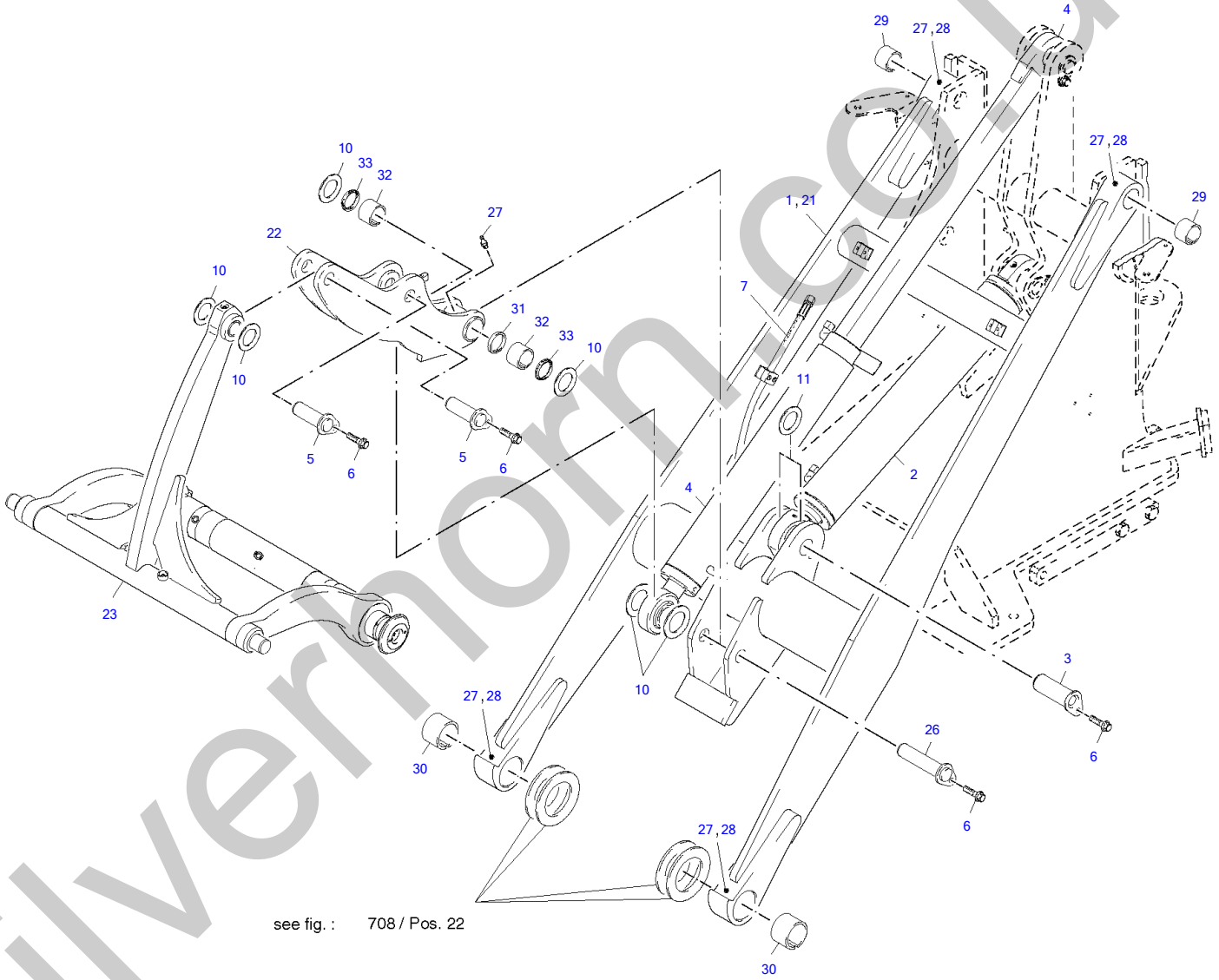

silverthorn.co.uk

Lifting Unit

Item	Part number	Description	Q'ty	Chan.	Serial No.	Serv.	Remarks
	8016628	Lifting Unit	1				
	8016631	Hydraulic Lifting Unit	1				
1	5820015	Lifting Unit	1				
2	8000638	Lifting Ram	1				
3	5820013	Bolt Compl	1				
4	3762245	Working Ram	1				
5	1009385	Bolt Compl	2				
6	1783337	Serrated Hex Head Screw	4				
7	8016629	Hydraulic QRC	1				
10	4674104	Shim 1.0 MM	1				
	8001149	Shim 1.5 MM	1				
	4626253	Shim 2.0 MM	1				
11	8004668	Disk 1.0 MM	1				
	8004669	Disk 1.2 MM	1				
	8004670	Disk 1.5 MM	1				
	8004671	Disk 2.0 MM	1				
21	5820016	Boom Compl	1				
22	5820011	Shift Lever Compl	1				
23	8010455	Hyd Quick Release Eq	1				
26	5820290	Pin Compl	1				
27	0324590	Grease Nipple	5				
28	2985537	Threaded Pin	4				
29	8012304	Split Bush	2				
30	8004389	Split Bush	2				
31	1746752	Split Bush	1				
32	8012367	Split Bush	2				
33	8001980	Wiper Seal	2				

silverhorn.co.uk

Base Frame

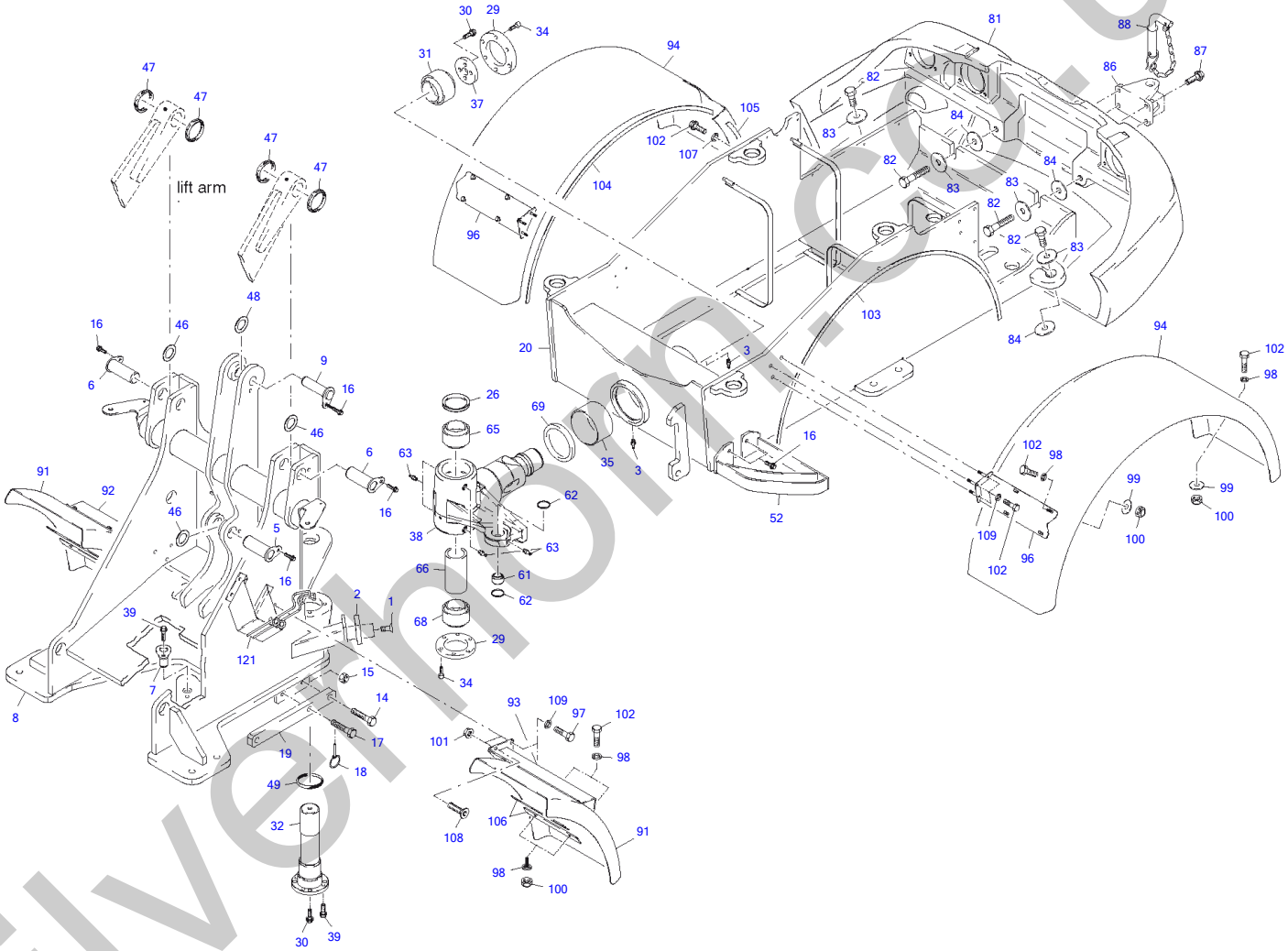

silverhorn.co.uk

Base Frame

Item	Part number	Description	Q'ty	Chan.	Serial No.	Serv.	Remarks
	5820059	Base Frame	1				
1	1307171	Countersunk Screw A3C	4				
2	5820162	Stop Plate	2				
3	0324590	Grease Nipple	2				
5	8017591	Bolt Compl	1				
6	8017590	Bolt Compl	2				
7	8017579	Bolt Compl	1				
8	5820012	Frame Front	1				
9	8017583	Bolt Compl	1				
14	1627236	Hex Head Screw A3C	1				
15	0327322	Nut A3C	1				
16	1783337	Serrated Hex Head Screw	6				
17	1014053	Special Screw	1				
18	1011163	Split Pin	1				
19	5820128	Safety Rod Compl	1				
20	5820000	Rear Frame Perkins	1				
	8016927	Rear Frame Deutz	1				
26	0884177	V-Ring	1				
29	0896740	Disk	2				
30	0884166	Self-Locking Bolt	8				
31	2919388	Spherical Bearing	1				
32	3923820	Pin	1				
34	0321371	Hex Head Cap Screw	12				
35	2441632	Bush	1				
37	0896773	Disk	1				
38	3741477	Artic Pend Joint	1				
39	3762610	Self-Locking Bolt	5				
46	8004668	Disk 1.0 MM	1				
	8004669	Disk 1.2 MM	1				
	8004670	Disk 1.5 MM	1				
	8004671	Disk 2.0 MM	1				
47	1673458	Wiper Seal	4				
48	4674104	Shim 1.0 MM	1				
	8001149	Shim 1.5 MM	1				
	4626253	Shim 2.0 MM	1				
49	2916363	O-Ring	1				
52	8013759	Left Climb Bracket	1				
61	0447032	Spherical Bearing	1				
62	0318069	Circlip Tone 40	2				
63	0300569	Grease Nipple	5				
65	2919399	Spherical Bearing	1				
66	0896751	Spacer	1				
68	2919388	Spherical Bearing	1				
69	0896762	Distance Ring	1				
81	5820061	Counter Weight	1				
82	1618393	Hex Head Screw A3C	4				
83	1781813	Disk	4				
84	3930885	Washer A3C 2.0 MM	1				
	3930896	Washer A3C 3.0 MM	1				
	1781802	Washer A3C 4.0 MM	1				
	3930909	Washer A3C 5.0 MM	1				
86	3944949	Draw Bar Coupling	1				
87	2993151	Serrated Hex Head Screw	4				
88	3944574	Pin	1				
91	5820097	Front Fender	2				
92	8015855	Right Holder Compl	1				
93	8015858	Left Holder Compl	1				
94	5820099	Right Rear Fender	1				
95	5820100	Left Rear Fender	1				
96	5820101	Holder Compl	2				
97	0893189	Hex Head Screw A3C	4				
98	0863138	Washer A3C	32				
99	2481254	Ripp Washer A3C	16				
100	0399760	Nut A3C	24				
101	1722787	Serrated Nut	6				
102	0893214	Hex Head Screw A3C	31				
103	1898686	Packing Strap 1710 MM	1				
104	1898686	Packing Strap 1280 MM	1				

silverthorn.co.uk

Base Frame

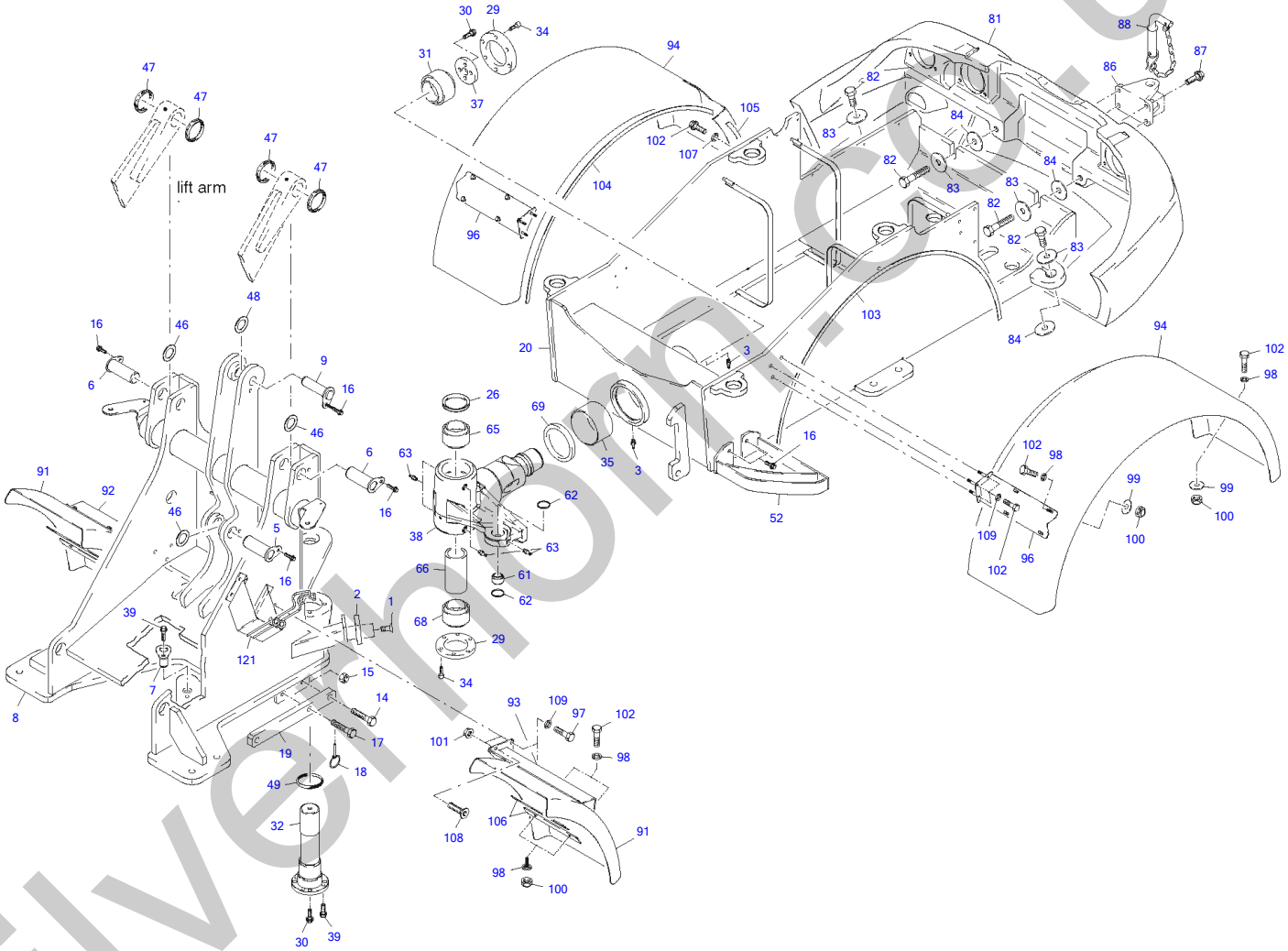

silverhorn.co.uk

Base Frame

Item	Part number	Description	Q'ty	Chan.	Serial No.	Serv.	Remarks
105	**1898686**	Packing Strap 320 MM	1				
106	**5820170**	Plate	4				
107	**2481254**	Ripp Washer A3C	1				
108	**1398385**	Countersunk Screw A3C	2				
109	**3939464**	Ripp Washer A3C	10				
121	**5820078**	Wedge Holder	1				

silverhorn.co.uk

Steering Hydraulics

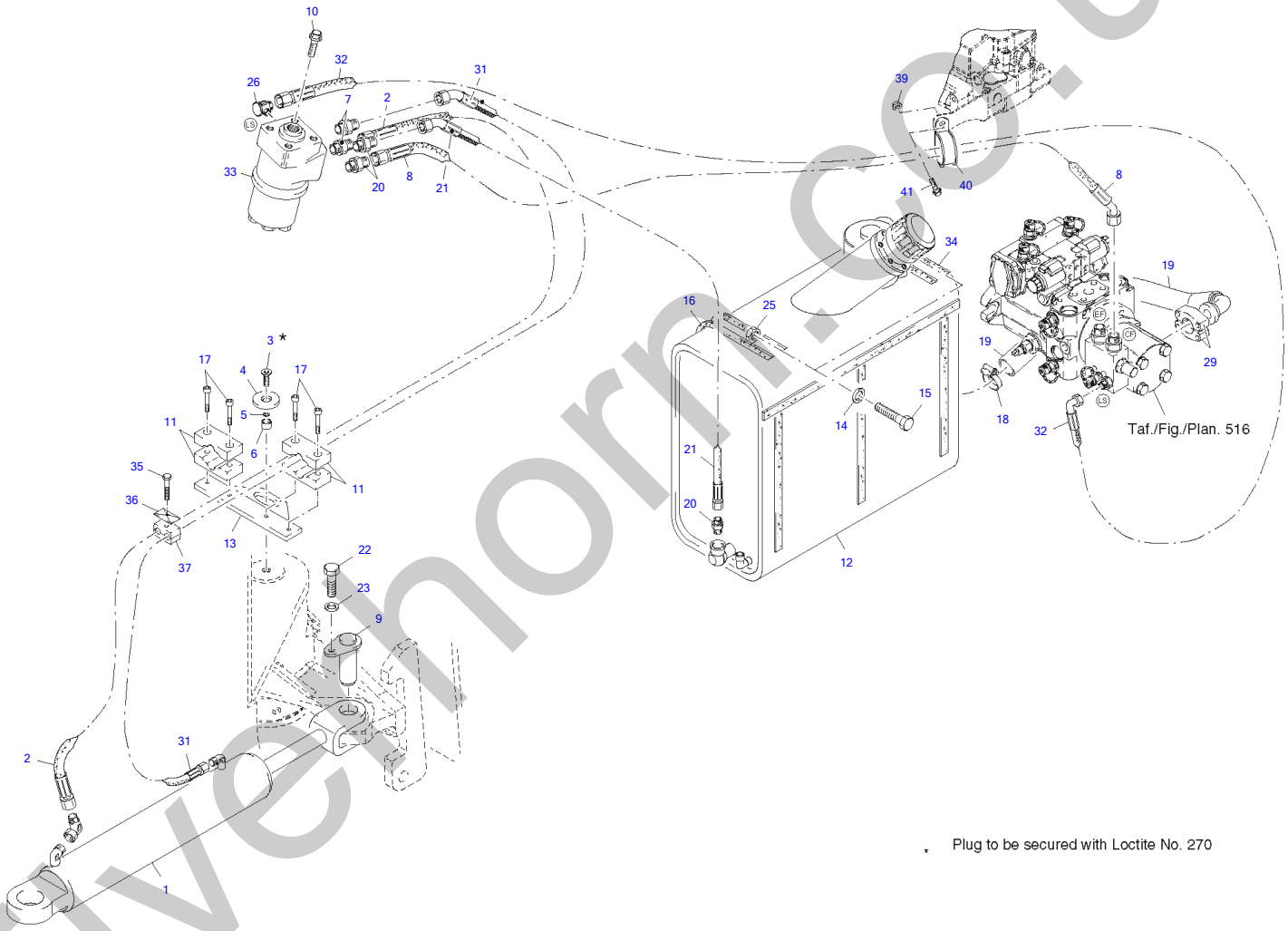

* Plug to be secured with Loctite No. 270

silverhorn.co.uk

Steering Hydraulics

Item	Part number	Description	Q'ty	Chan.	Serial No.	Serv.	Remarks
	5820072	Steering Hydraulics	1				
1	3959515	Steering Ram	1				
2	2912052	HP-Hose 10 X 1550	1				
3	1002184	Countersunk Screw A3C	1				
4	1745591	Disk	1				
5	1388656	Spring Washer A3C	1				
6	0323624	Split Bush	1				
7	1666948	Coupling A3C	2				
8	8007438	HP-Hose 13 X 1975	1				
9	8017579	Bolt Compl	1				
10	2990216	Self-Locking Bolt	4				
11	3757840	Block	4				
12	5820062	Hydraulic Tank Compl	1				
13	5820175	Plate Compl	1				
14	2481254	Ripp Washer A3C	2				
15	0410073	Hex Head Screw A3C	2				
16	0909224	Profile Rubber 800 MM	1				
17	0893418	Hex Head Screw A3C	4				
18	5820274	Clip Norma	1				
19	5820151	Suction Hose 32 X 750	1				
20	2481696	Coupling A3C	3				
21	5820178	LP=Hose 13 X 950	1				
22	1307104	Hex Head Screw A3C	1				
23	2481243	Ripp Washer A3C	1				
25	0399760	Nut A3C	2				
26	2456833	Coupling A3C	1				
29	8013906	Half Flange Compl	1				
31	8012344	HP-Hose 10 X 1600	1				
32	3750412	HP-Hose 8 X 2200	1				
33	8011864	Steering Valve	1				
34	0909224	Profile Rubber 650 MM	1				
35	0893189	Hex Head Screw A3C	1				
36	0874960	Cover Plate Galvinized	1				
37	2912085	Clip Body	1				
39	1722787	Serrated Nut	1				
40	3698917	Clip Norma	1				
41	2449607	Serrated Hex Head Screw	1				

silverhorn.co.uk

Working Hydraulics

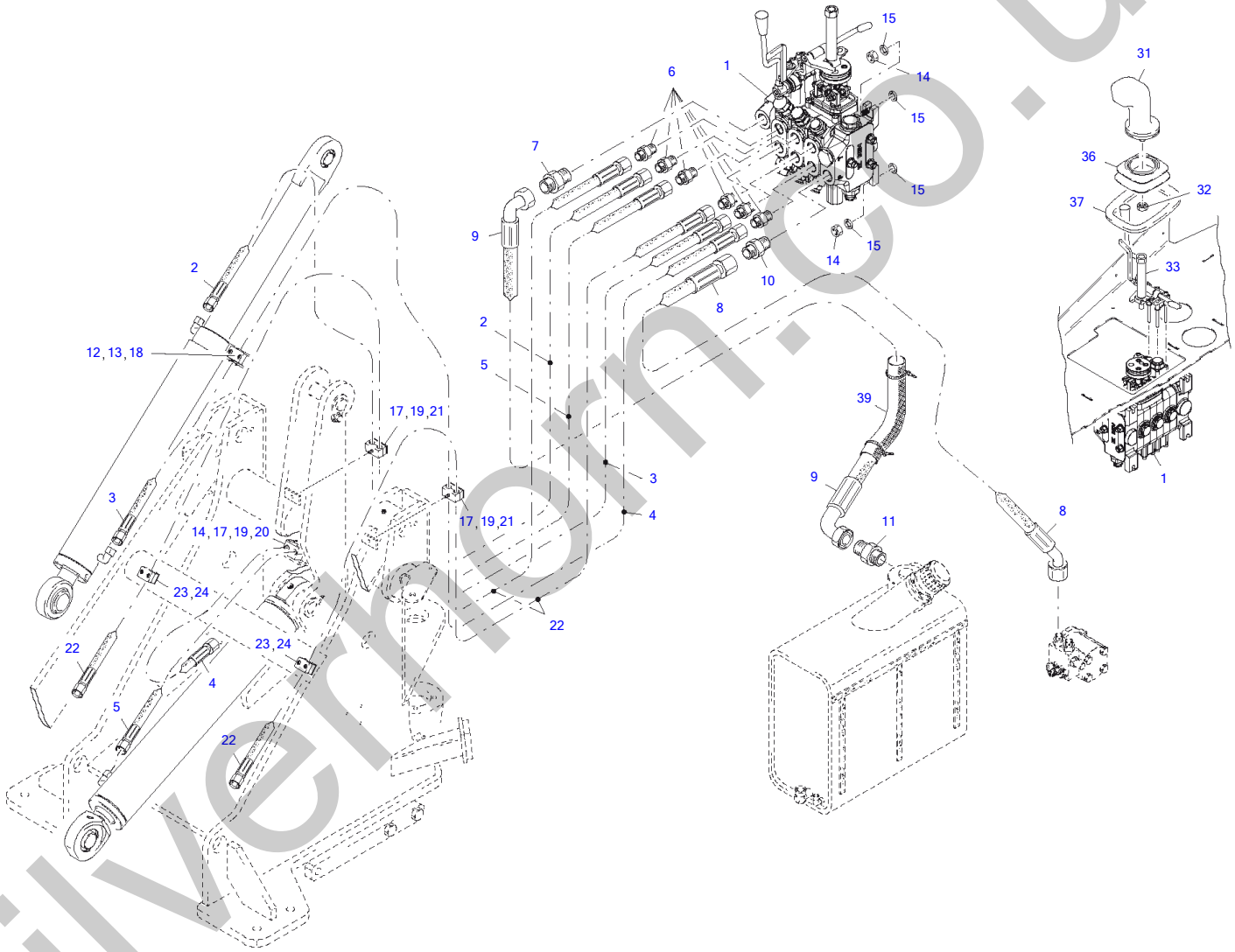

silverhorn.co.uk

Working Hydraulics

Item	Part number	Description	Q'ty	Chan.	Serial No.	Serv.	Remarks
	5820069	Working Hydraulics	1				
	8015021	Rear Working Hydraulics	1				
	8015072	Front Working Hydraulics	1				
1	5820138	Directional Valve	1				
2	5820176	HP-Hose 10 X 3150	1				
3	5820153	HP-Hose 10 X 3750	1				
4	5820177	HP-Hose 10 X 2600	1				
5	5820152	HP-Hose 10 X 2750	1				
6	1666948	Coupling A3C	6				
7	1686395	Coupling A3C	1				
8	8012343	HP-Hose 13 X 2500	1				
9	5820192	LP-Hose 20 X 1700	1				
10	2481696	Coupling A3C	1				
11	1685612	Coupling A3C	1				
12	2997586	Clip Body	1				
13	2640735	Lens Head Screw H A3C	2				
14	0399760	Nut A3C	4				
15	2481254	Ripp Washer A3C	6				
17	2912085	Clip Body	3				
18	2014395	Hose 30 MM	1				
19	0874960	Cover Plate Galvinized	3				
20	1336869	Hex Head Screw A3C	1				
21	0893189	Hex Head Screw A3C	2				
22	3976232	HP-Hose 10 X 3150	4				
23	2912074	Clip Body	2				
24	1780969	Lens Head Screw H A3C	4				
31	8011878	Joystick	1				
32	8011932	Nut A3C	1				
33	8012416	Locking Device	1				
36	8012369	Siphon	1				
37	8012875	Profile Rubber	1				
39	0916665	Hose 130 MM	1				

silverhorn.co.uk

Return Hydraulics

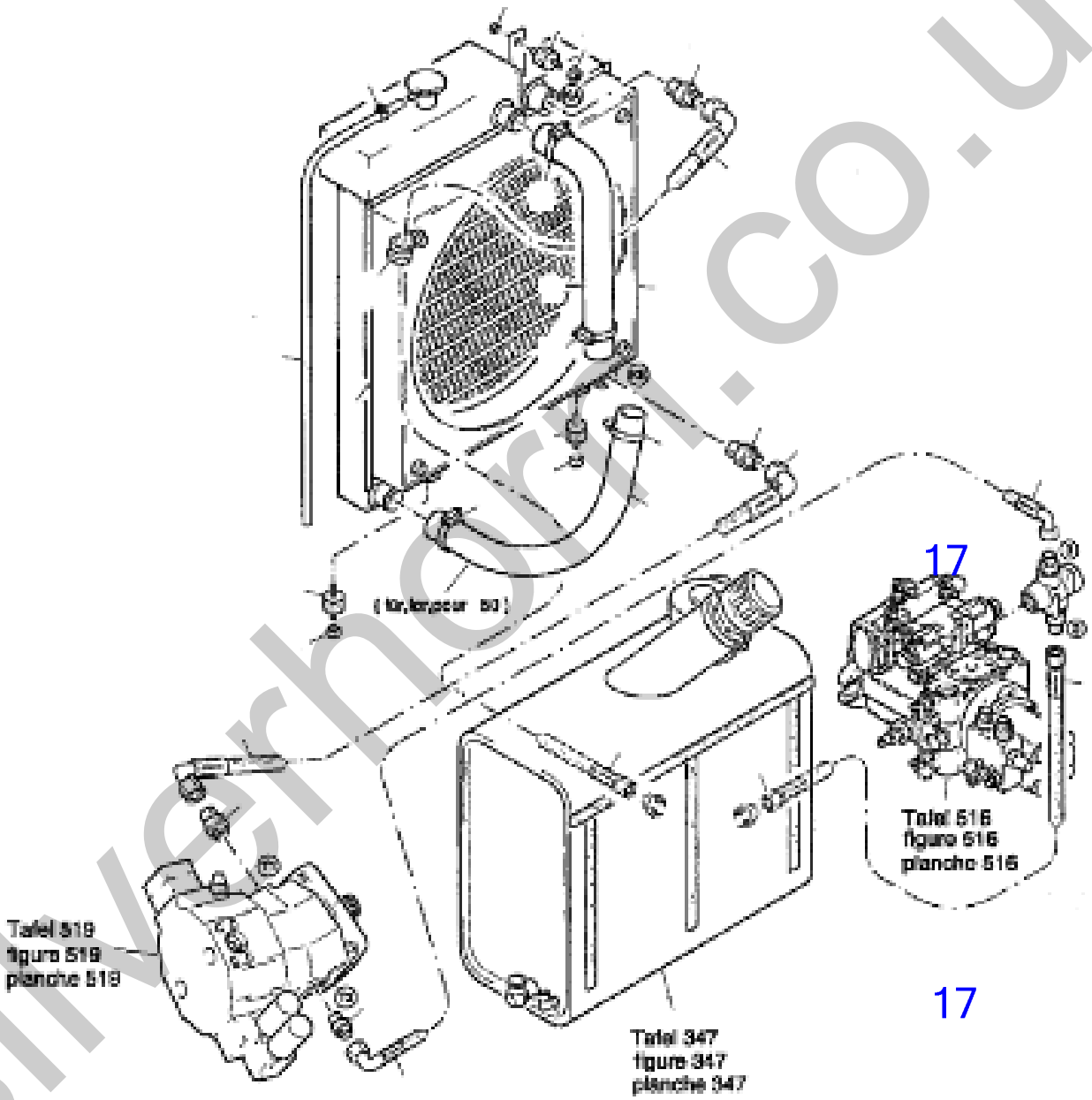

4

17

17

16

7

6

silverhorn.co.uk

Return Hydraulics

Item	Part number	Description	Q'ty	Chan.	Serial No.	Serv.	Remarks
	5820071	Return Hydraulics	1				
1	5820092	Radiator	1				
2	5820095	Radiator Hose	1				
3	5820096	Radiator Hose	1				
4	1722787	Serrated Nut	4				
5	0442106	Rubber Buffer	3				
6	0390158	Clip	4				
7	1898686	Packing Strap 2070 MM	1				
8	8012480	LP-HOSE 16 X 1300mm					
9	5820276	LP-Hose 16 X 1550	1				
10	5820164	LP-Hose 16 X 625	1				
11	8012347	LP-Hose 16 X 1425	1				
12	2904234	Coupling A3C	1				
14	2673234	Coupling A3C	2				
15	2443587	Clip Norma	1				
16	2986947	Heating Hose 820 MM	1				
17	2983137	Clip Norma	1				
30	8015987	Protective Grid Kit	1				

silverhorn.co.uk

Driving Hydraulics

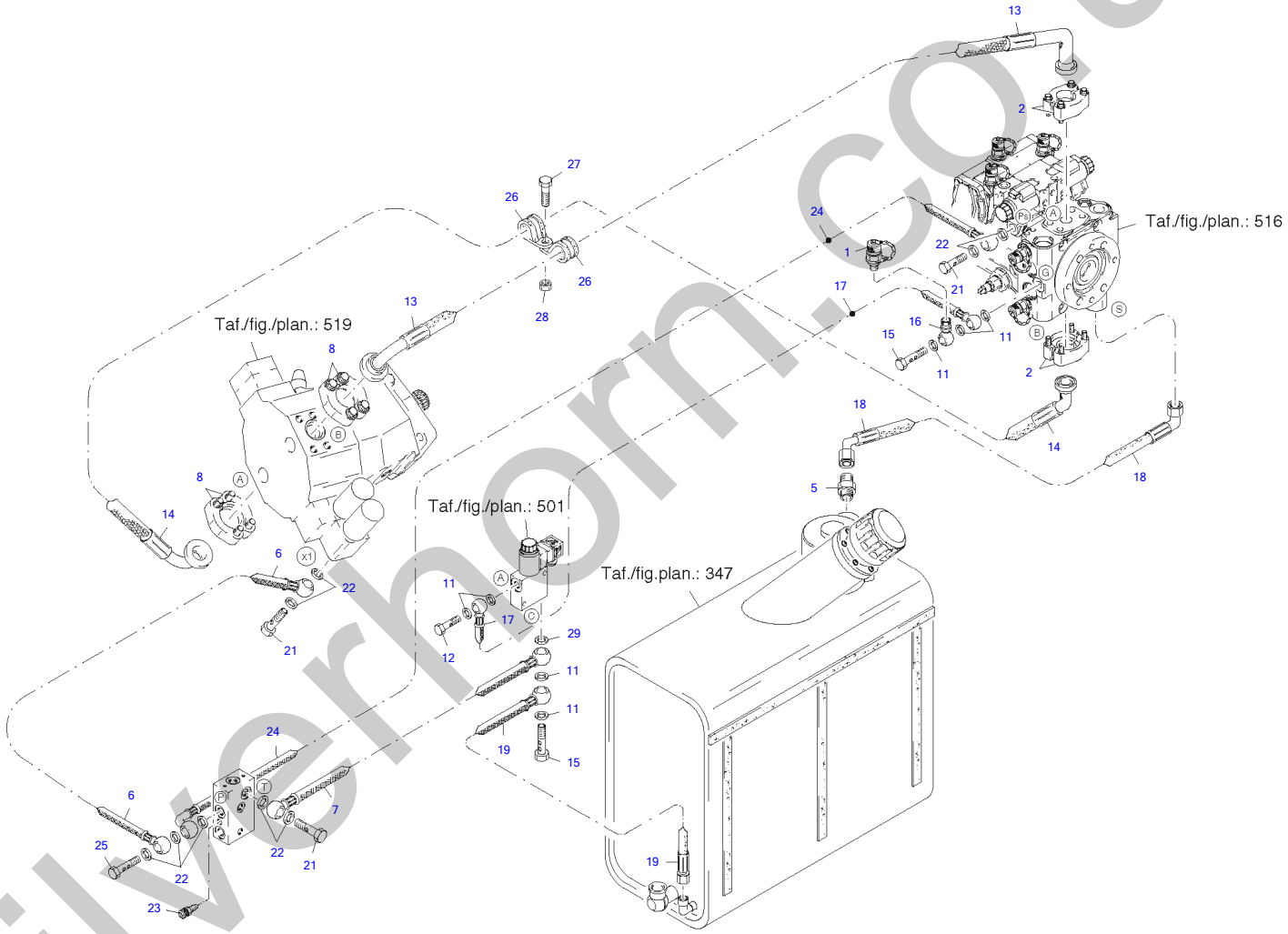

silverhorn.co.uk

Driving Hydraulics

Item	Part number	Description	Q'ty	Chan.	Serial No.	Serv.	Remarks
	5820070	Driving Hydraulics	1				
1	1616551	Screw Coupling	1				
2	8012839	Half Flange Compl	2				
5	1689194	Coupling A3C	1				
6	3763871	Hose Line 6 X 925	1				
7	5820159	Hose Line	1				
8	8011955	Half Flange Compl	2				
11	0350898	Usit Ring U	7				
12	0862944	Female Screw a3C	1				
13	5820156	HP-Hose 20 X 1400	1				
14	5820157	HP-Hose 20 X 1850	1				
15	2980827	Female Screw A3C	2				
16	2970916	Coupling Compl	1				
17	5820158	Hose Line 6 X 1850	1				
18	5820180	Suction Hose 20 X 950	1				
19	3765884	Hose Line 6 X 550	1				
21	0311528	Female Screw A3C	3				
22	0373588	Usit Ring U	9				
23	2960243	Air Vent	1				
24	3747100	Hose Line 8 X 2200	1				
25	2443850	Female Screw S A3C	1				
26	1009352	Clip Norma	2				
27	1615232	Hex Head Screw A3C	1				
28	0399760	Nut A3C	1				
29	3768296	Gasket A3C	1				

silverhorn.co.uk

Locking Device

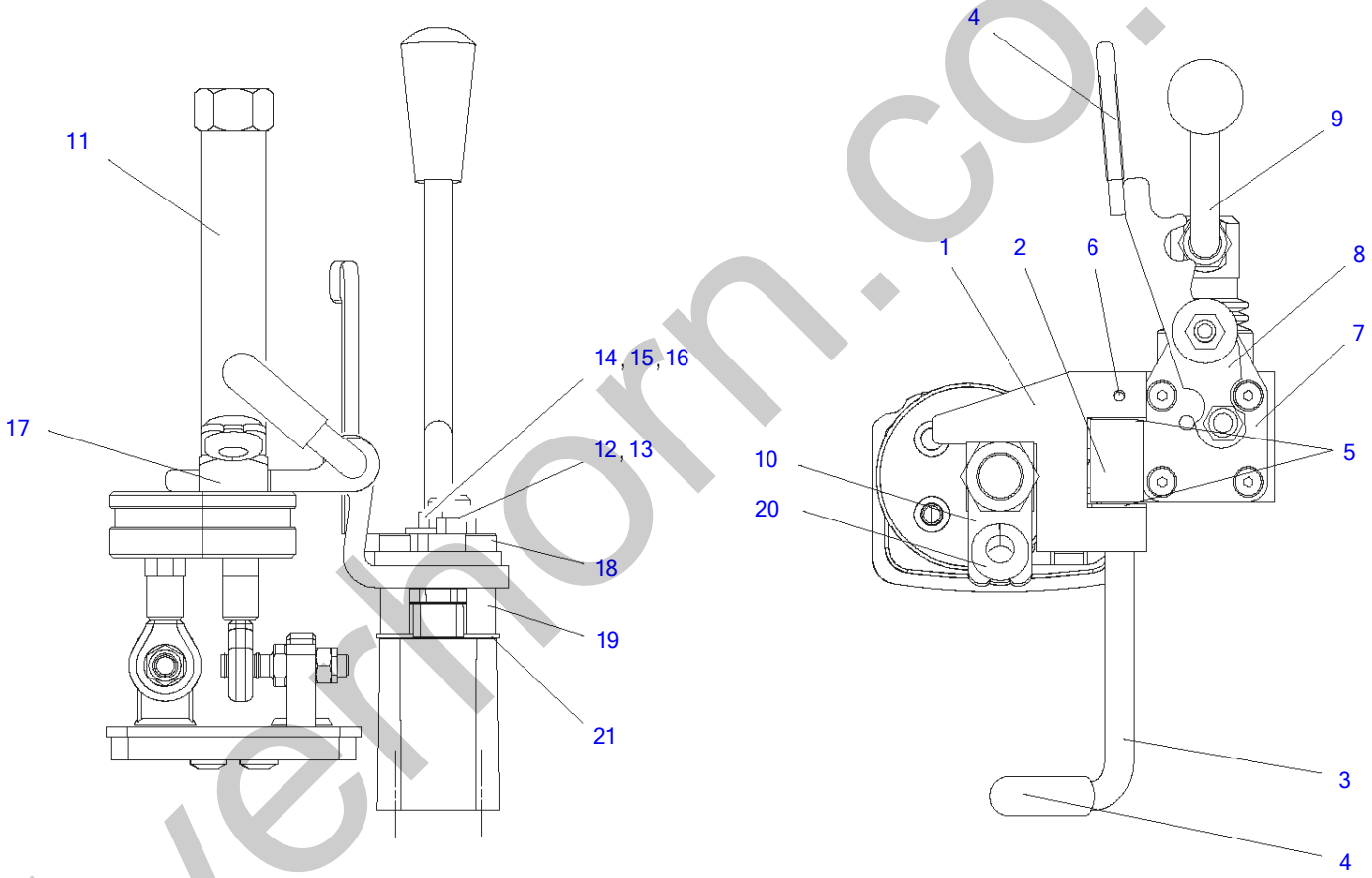

silverhorn.co.uk

Locking Device

Item	Part number	Description	Q'ty	Chan.	Serial No.	Serv.	Remarks
	8012416	Locking Device	1				
1	8012376	Joint Part	1				
2	8012810	Joint Part	1				
3	8012411	Lever	1				
4	1780709	Red Protecting Cap	2				
5	1749733	Bsuh	2				
6	3960063	Adaptor Sleeve	1				
7	8012812	Plate	1				
8	8012827	Lever	1				
9	8012825	Lever	1				
10	8012828	Plate	1				
11	8012412	Pin	1				
12	0845443	Threaded Coupling	1				
13	0893167	Nut A3C	1				
14	0487336	Nut A3C	1				
15	0447985	Washer A3C	1				
16	1059330	Spacer	1				
17	8012838	Nut A3C	1				
18	1389384	Hex Head Cap Screw	4				
19	8012841	Spacer	4				
20	0448760	Duct Socket	1				
21	3754427	Washer A3C	4				

silverhorn.co.uk

Directional Valve

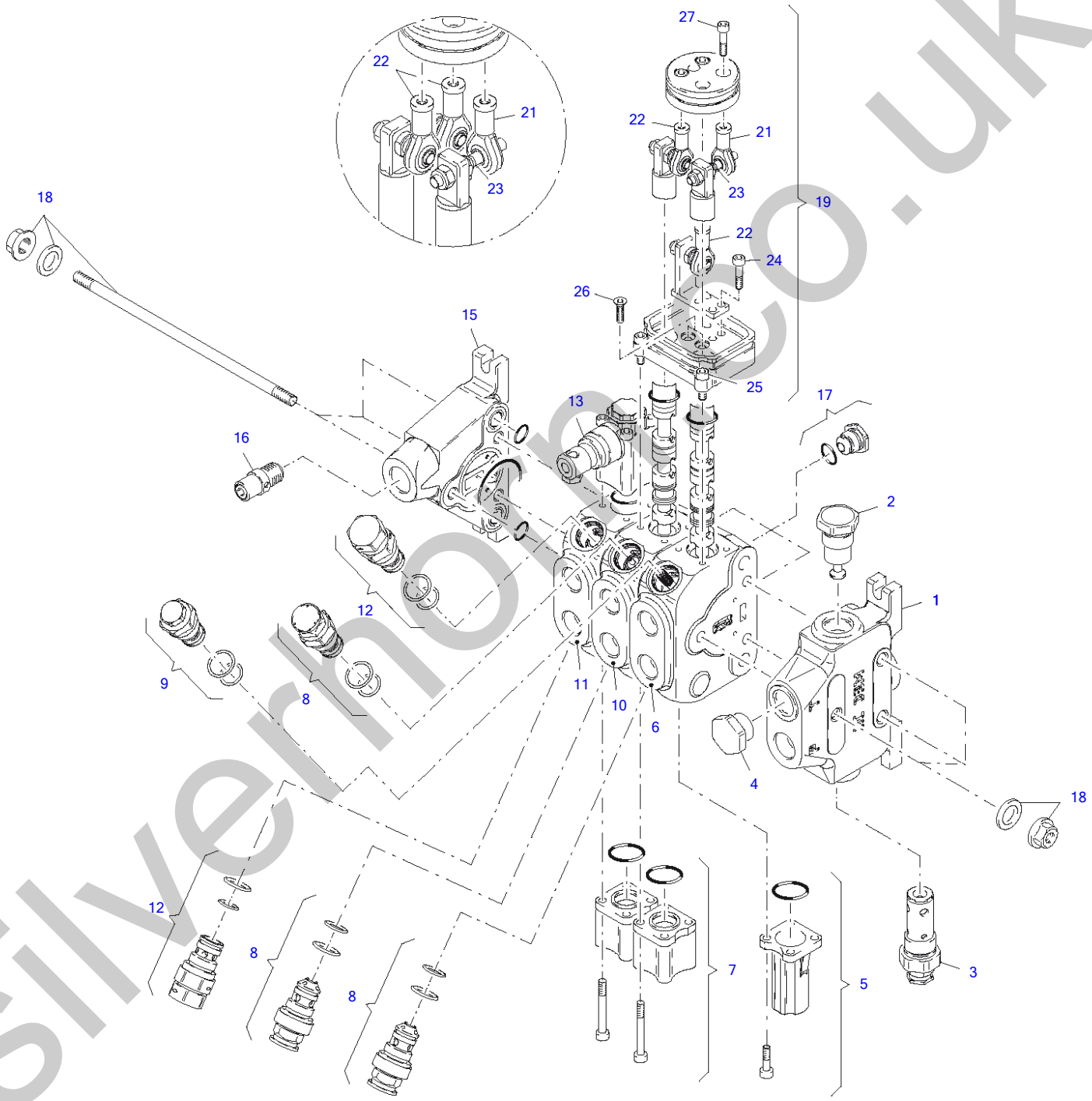

silverhorse.co.uk

Directional Valve

Item	Part number	Description	Q'ty	Chan.	Serial No.	Serv.	Remarks
	5820138	Directional Valve	1				
1	8014241	Inlet Section	1				
2	8014203	Anti-Cavitation Valve	1				
3	8014247	Pressure Limit Valve	1				
4	1309275	Plug A3C	1				
5	8014192	Cap Compl	1				
6	8014242	Valve Section	1				
7	8014193	Cap Compl	2				
8	8014198	Pressure Limit Valve	3				
9	8014199	Anit-Cavitation Valve	1				
10	8014243	Valve Section	1				
11	8014244	Valve Section	1				
12	8014200	Pressure Limit Valve	2				
13	8014205	Hand Level Housing	1				
15	8014245	Outlet Section	1				
16	8014201	Pressurizing Valve	1				
17	8014202	Non Return Valve	3				
18	8014246	Tie Rod Set	3				
19	8014248	Joystick Acuator Compl	1				
21	8014255	Ball Joint Socket	1				
22	8014256	Pin Compl	2				
23	8014257	Pin	1				
24	8014195	Hex Head Cap Screw	4				
25	0474568	Hex Head Cap Screw	2				
26	1319084	Countersunk Screw A3C	2				
27	1309764	Hex Head Cap Screw	3				
	8014249	Packing Set Compl	1				

silverhorn.co.uk

Brake Throttle Valve

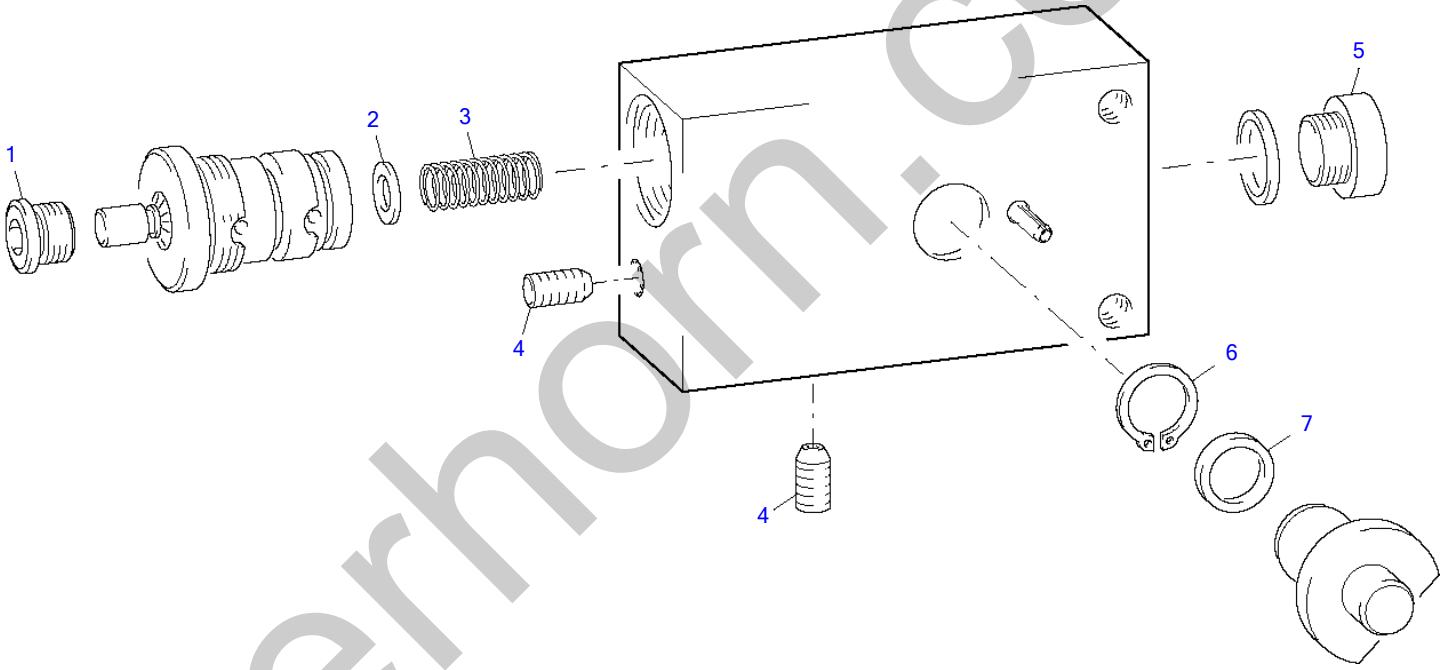

silverhorn.co.uk

Brake Throttle Valve

Item	Part number	Description	Q'ty	Chan.	Serial No.	Serv.	Remarks
	8002252	Brake Throttle Valve	1				
1	1694986	Plug A3C	1				
2	0893043	Washer A3C	1				
3	3960041	Compression Spring	1				
4	0442888	Threaded Pin A3C	2				
5	0357908	Plug A3C	1				
6	0314123	Circlip	1				
7	3960052	Shim	1				
	8011963	Packing Set Compl	1				

silverhorn.co.uk

Working Ram

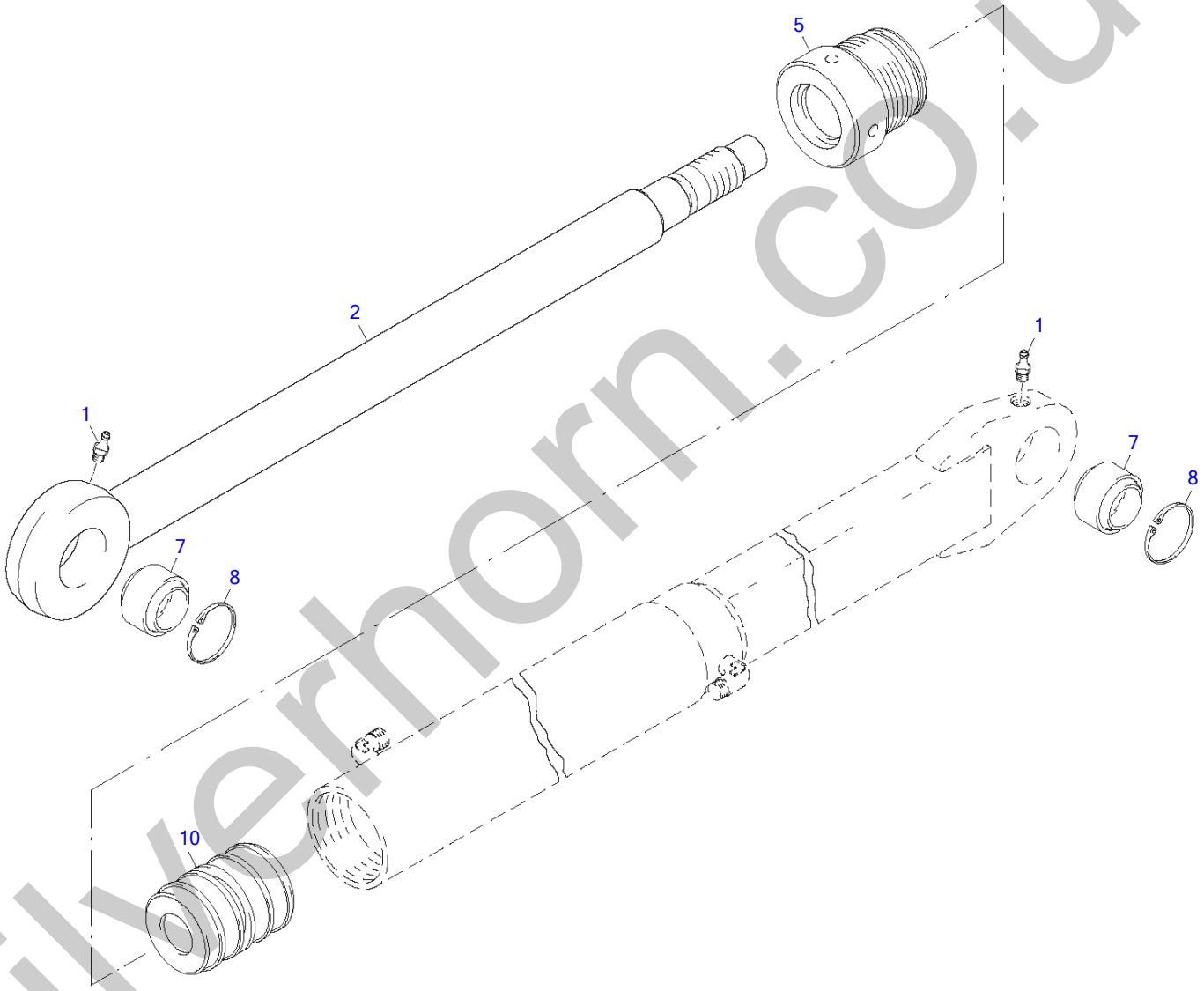

silverhorn.co.uk

Working Ram

Item	Part number	Description	Q'ty	Chan.	Serial No.	Serv.	Remarks
	3762245	Working Ram	1				
1	0300569	Grease Nipple	2				
2	3762143	Piston Rod Compl	1				
5	1010275	Cylinder Nut	1				
7	0465830	Spherical Bearing	2				
8	0318069	Circlip Tone 400	2				
10	0884575	Guide Piston Compl	1				
	1010300	Pack Set 90/50	1				

silverhorn.co.uk

Lifting Ram

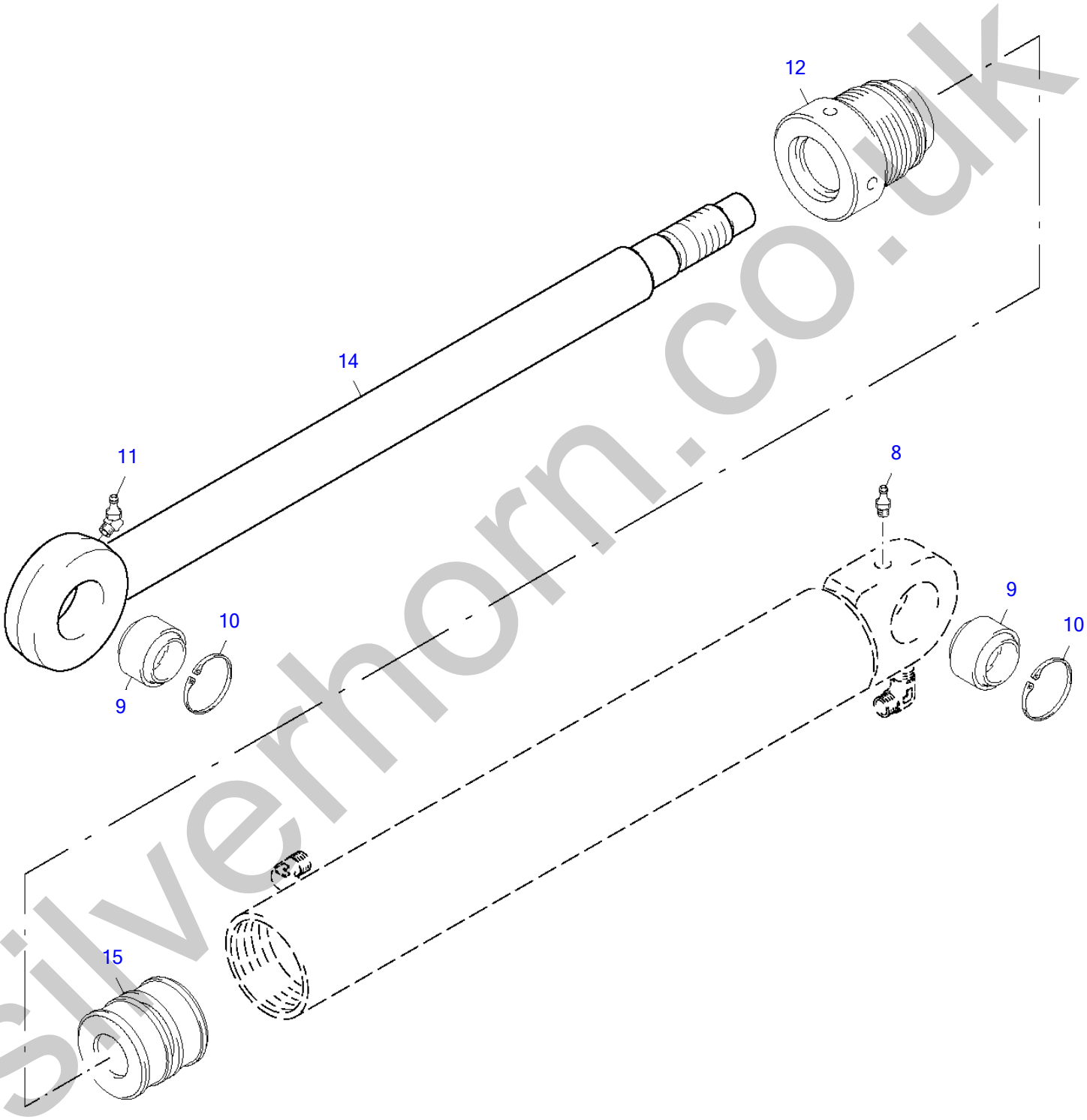

silverhorn.co.uk

Lifting Ram

Item	Part number	Description	Q'ty	Chan.	Serial No.	Serv.	Remarks
	8000638	Lifting Ram	1				
8	0324590	Grease Nipple	1				
9	1050977	Spherical Bearing	2				
10	1627587	Circlip Tone 400	2				
11	0366772	Grease Nipple	1				
12	3932581	Cylinder Nut	1				
14	8000630	Piston Rod Compl	1				
15	3932616	Guide Piston Compl	1				
	3717604	Circlip	1				
	3932627	Packing Set 100/60	1				

silverhorn.co.uk

Steering Ram

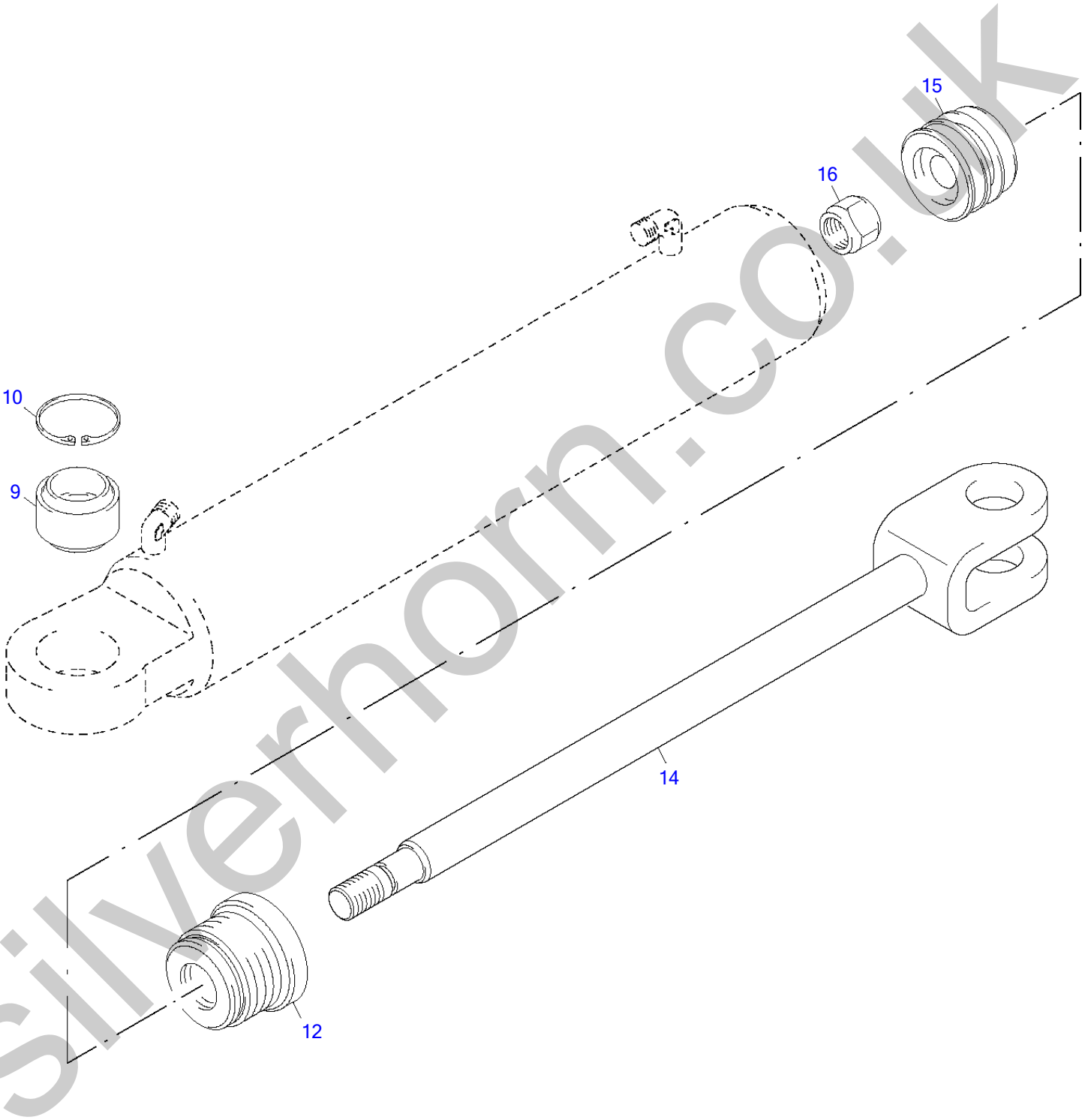

silverhorn.co.uk

Steering Ram

Item	Part number	Description	Q'ty	Chan.	Serial No.	Serv.	Remarks
	3959515	Steering Ram	1				
9	0447032	Spherical Bearing	1				
10	0318069	Circlip Tone 400	1				
12	0897650	Cylinder Nut	1				
14	3925117	Piston Rod Compl	1				
15	0897638	Piston Guide	1				
16	0897627	Nut	1				
	0897672	Pack Set 70/32	1				

silverhorn.co.uk

Hydraulic Tank Compl

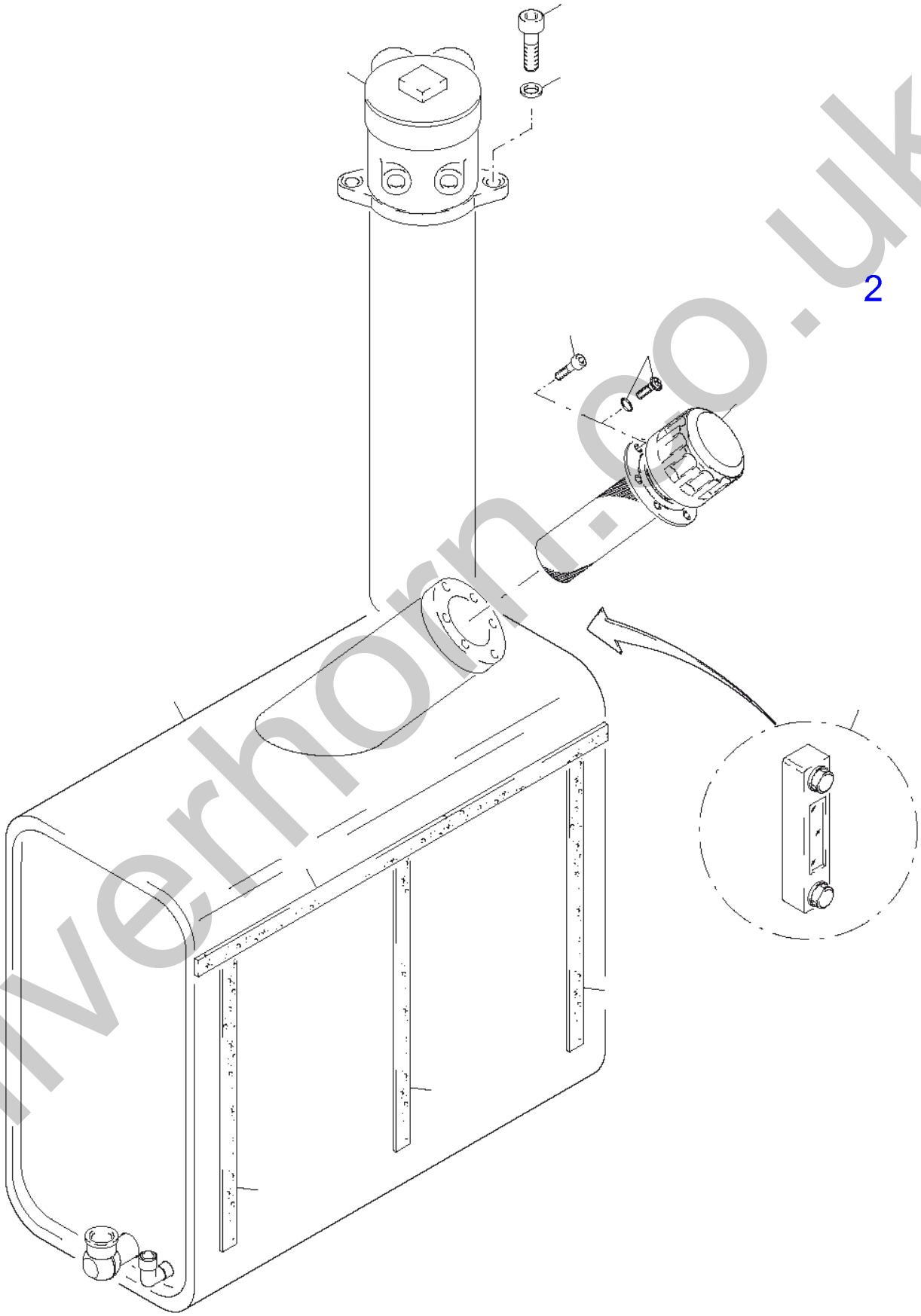

silverhorn.co.uk

Hydraulic Tank Compl

Item	Part number	Description	Q'ty	Chan.	Serial No.	Serv.	Remarks
	5820062	Hydraulic Tank Compl	1				
1	5820063	Hydraulic Tank	1				
2	5820066	Return Filter	1				
3	5820136	Filling Filter	1				
4	3925322	Sight Glass	1				
5	0892984	Hex Head Cap Screw	2				
6	0909304	Profile Rubber	1				
7	0893054	Washer A3C	1				
8	8007607	Flat Head Bolt	6				
	0314952	O-Ring	6				
	1306830	Fill Head Screw A3C	6				

silverhorn.co.uk

Return Filter

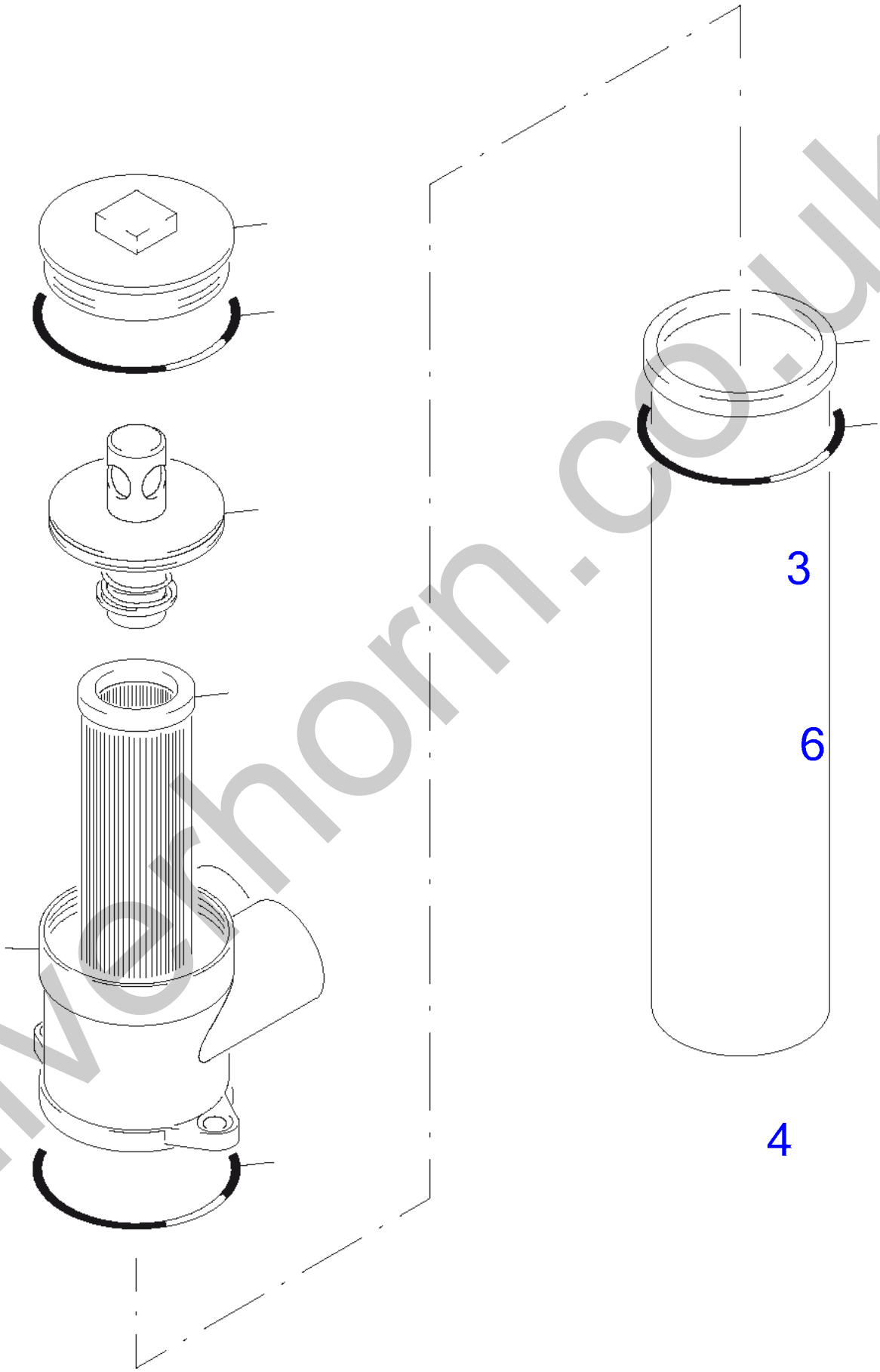

silverthorn.co.uk

Return Filter

Item	Part number	Description	Q'ty	Chan.	Serial No.	Serv.	Remarks
	5820066	Return Filter	1				
1	**8012354**	Filter Element	1				
2	**8013986**	Jacketed Barrel	1				
3	**8013987**	Cover	1				
4	**8013988**	Filter Holder Compl	1				
5	**8013989**	Housing	1				
6	**2917842**	O-Ring	1				
8	**8007687**	O-Ring	1				
9	**0382476**	O-Ring	1				

silverhorn.co.uk

Electric System

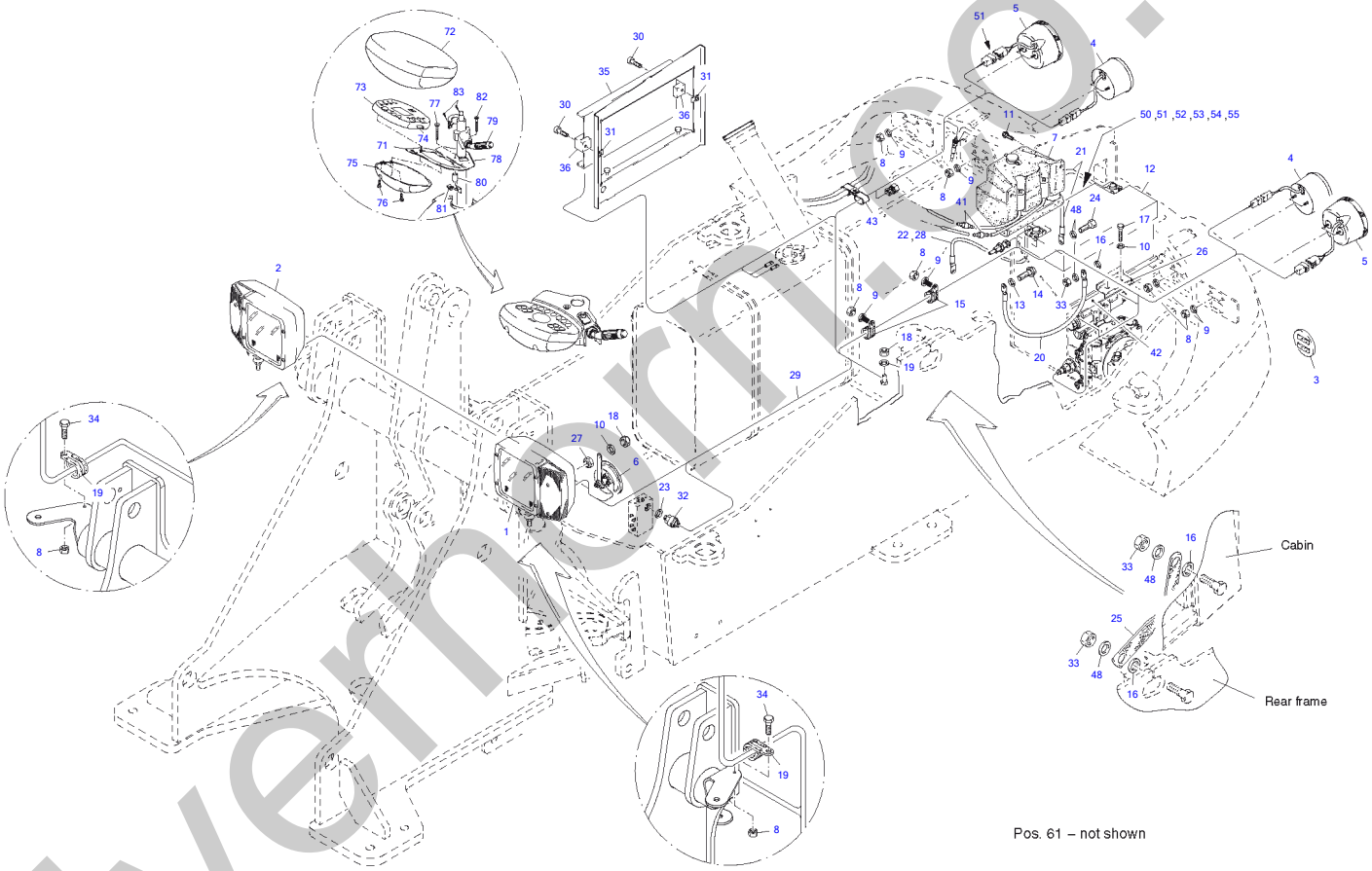

silvermorn.co.uk

Electric System

Item	Part number	Description	Q'ty	Chan.	Serial No.	Serv.	Remarks
	5820074	Electric System	1				
1	3928789	Left Headlight	1				
2	3928790	Right Headlight	1				
3	3931579	Rear Reflector	2				
4	3927197	Rear Light 12V	2				
	3986267	Rear Ligth Glass	2				
	0388450	Incandescent Lamp 12V 21W	2				
5	8012422	Rear Reflector Compl	2				
	8014405	Rear Reflector Glass	2				
	0335311	Incandescent Lamp 12V 5W	2				
	0388450	Incandescent Lamp 12V 21W	2				
6	4666308	Signal Horn 12V	1				
7	2995299	2 Pump Container	1				
	2995813	Pump	2				
	2995824	Cover	1				
	2995835	Socket	2				
8	0487336	Nut A3C	12				
9	2992014	Washer A3C	10				
10	2481254	Ripp Washer A3C	4				
11	8009782	Serrated Hex Head Screw	2				
12	0441752	Battery	1				
13	1316047	Washer A3C	1				
14	8010301	Bolt	1				
15	2443576	Clip Norma	2				
16	0492935	Tooth Lock Washer A3C	2				
17	1307079	Hex Head Screw A3C	2				
18	0399760	Nut A3C	2				
19	1078004	Clip Norma	2				
20	8012324	Ground Strap	1				
21	8012321	Ground Strap	1				
22	8012325	Cable Compl	1				
23	0321779	Usit Ring U	1				
24	8003057	Serrated Hex Head Screw	1				
25	8015870	Ground Strap	1				
26	1787217	Battery Holding	1				
27	0893167	Nut A3C	1				
28	0417069	Starter Protect Cap	1				
29	8012334	Cable Set	2				
30	1658131	Hex Head Cap Screw	2				
31	0478675	Holder Nut	2				
32	3963555	Stop Light Switch	1				
33	0327297	Nut A3C	3				
34	2982534	Serrated Hex Head Screw	2				
35	8008597	Printed Circuit Compl	1				
36	8000924	Holder	2				
41	1366865	Non Return Valve	2				
42	2457425	Plate	1				
43	2443587	Clip Norma	1				
50	3929586	Relay	1				
51	8007601	Lens Head Screw	3				
52	0327286	Nut A3C	3				
53	1719248	Fuse 7.5 amp	1				
54	2980769	Fuse Holder	1				
55	2980781	Plate Fuse	1				
61	8012901	Kit Set	1				
71	8012789	Instrument Panel	1				
72	8012803	Covering	1				
	8000174	Lock	1				
	8001887	Key	1				
	0909304	Profile Rubber 200 MM	1				
73	8008592	Display Compl	1				
	8013964	Incandescent Lamp	1				
	0335366	Incandescent Lamp	1				
	8013963	Incandescent Lamp	1				
74	3956250	Round Cord 655 MM	1				
75	8012786	Instrument Panel	1				
76	3754416	Lens Head Screw A3R	4				
77	3976607	Countersunk Screw A3C	1				

silverthorn.co.uk

Electric System

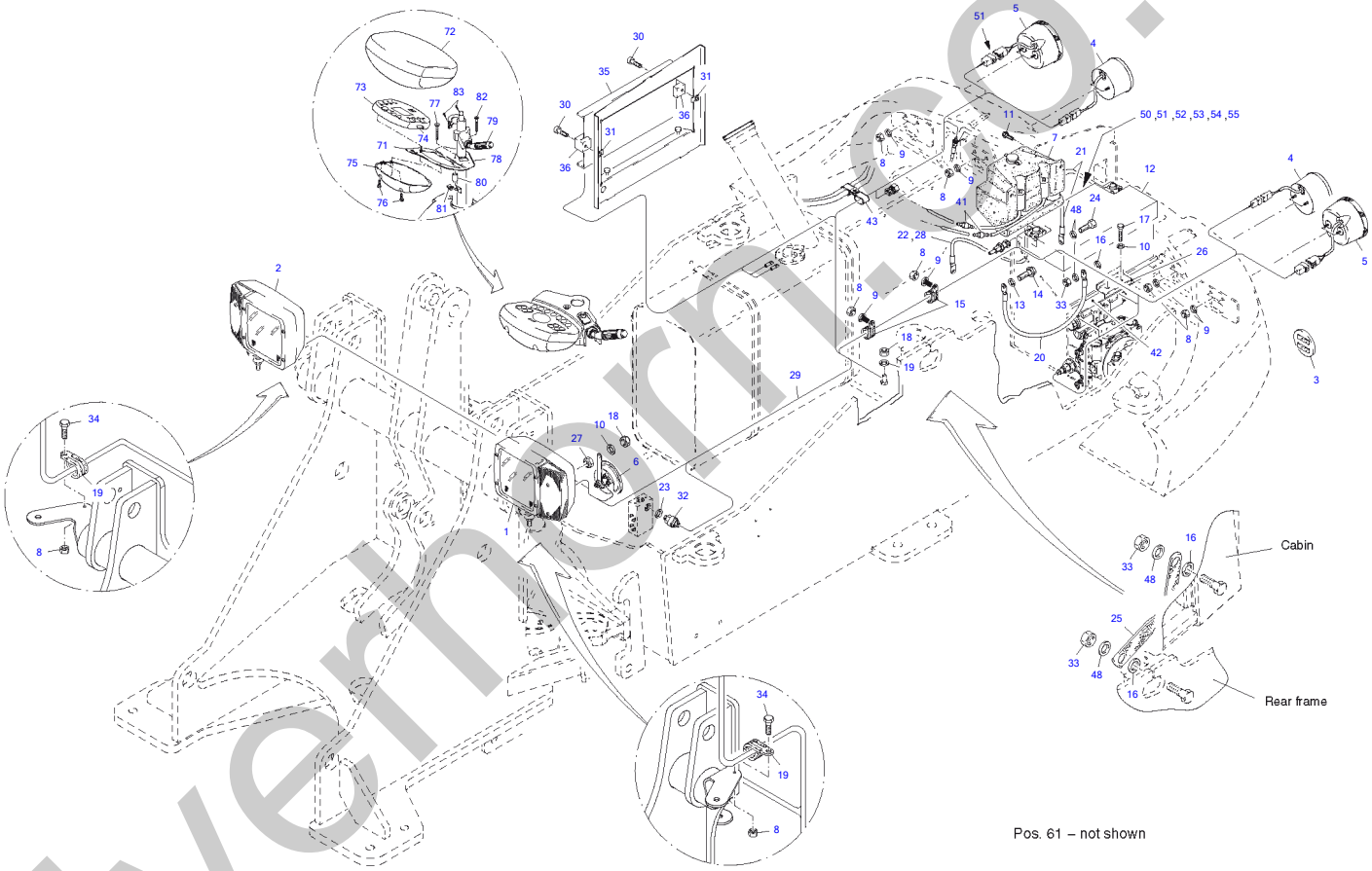

silvermorn.co.uk

Electric System

Item	Part number	Description	Q'ty	Chan.	Serial No.	Serv.	Remarks
78	**0935113**	Profile Rubber 900 MM	1				
79	**3938430**	Switch	1				
	8013648	Electric System	1				
80	**8016817**	Pipe	1				
81	**0478675**	Nut Holder	1				
82	**3952905**	Hex Head Cap Screw	4				
83	**2607358**	Hex Head Cap Screw	2				

silverhorn.co.uk

Electric System Canopy

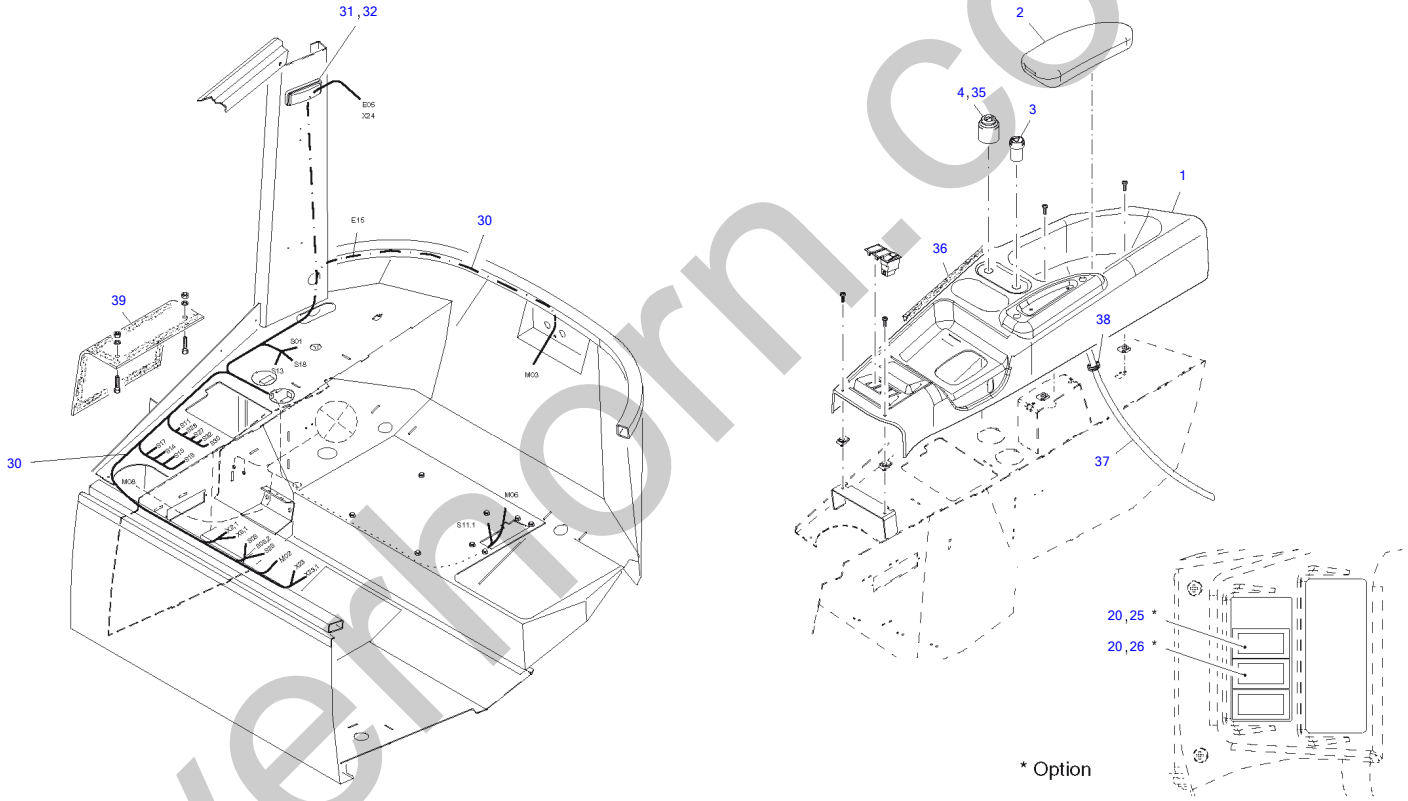

silverthorn.co.uk

Electric System Canopy

Item	Part number	Description	Q'ty	Chan.	Serial No.	Serv.	Remarks
	8016811	Electric System Canopy	1				
1	8016813	Rear Instrument Panel Compl	1				
	8016814	Rear Instrument Panel	1				
2	8013350	Cabin Frame	1				
3	3933128	Switch 12V	1				
4	7500775	Ignition Lock	1				
	7500201	Key	1				
20	4674353	Switch 12V	2				
25	1719000	Decal	1				
26	1718996	Decal	1				
30	8014378	Harness	1				
31	8014379	Inside Light	1				
	0448646	Incandescent Lamp 12V 5W	1				
32	8014371	Lens Head Screw A3R	2				
35	3953268	Ignition Lock Covering	1				
36	0909304	Profile Rubber 600 MM	2				
37	2986947	Heating Hose 750 MM	1				
38	8013589	Duct Socket	1				
39	8015103	Cover Relay	1				

silverhorn.co.uk

Printed Circuit Compl

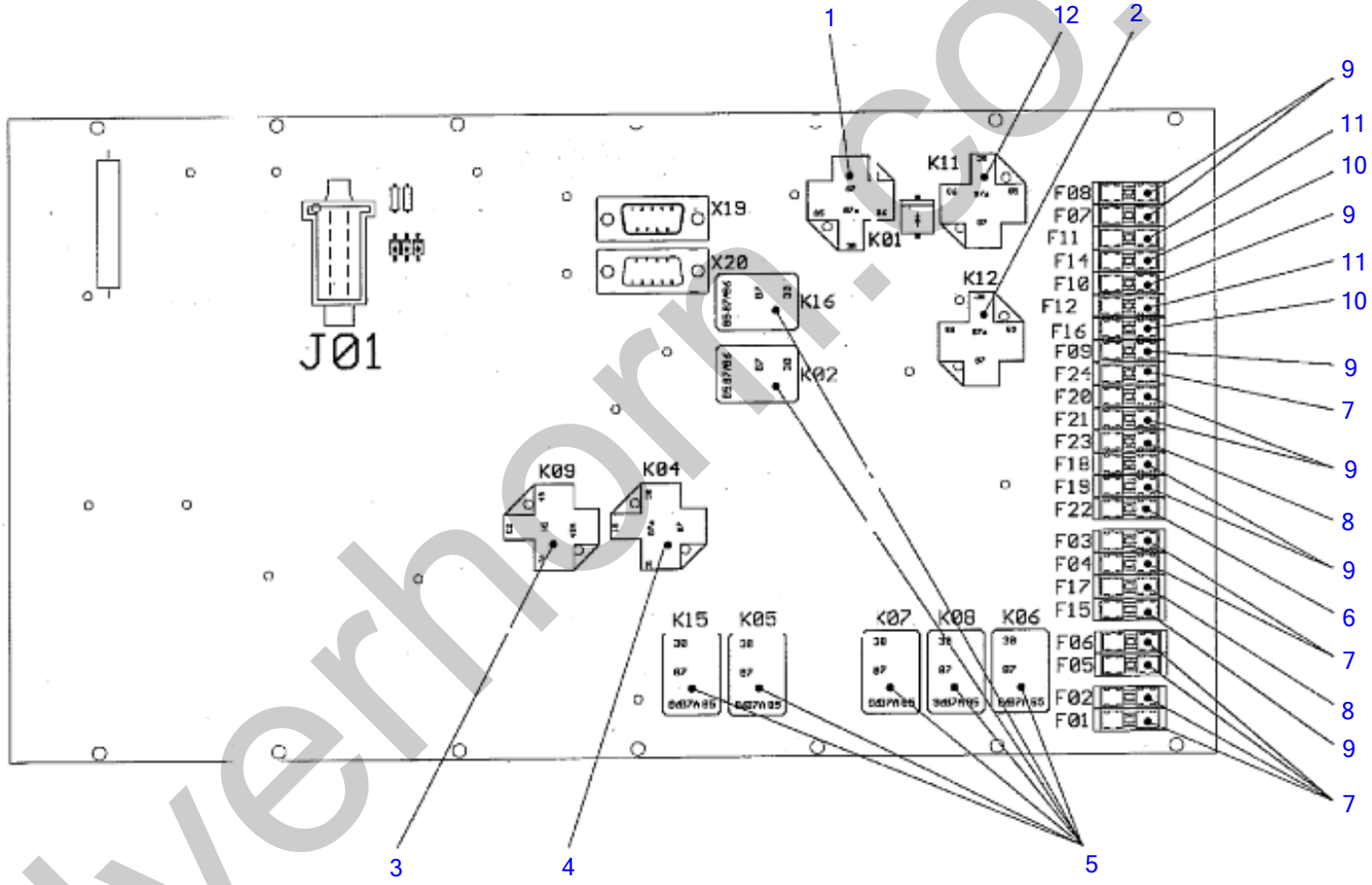

silverhorn.co.uk

Printed Circuit Compl

Item	Part number	Description	Q'ty	Chan.	Serial No.	Serv.	Remarks
	8008597	Printed Circuit Compl	1				
1	**8009370**	Relay	1				
2	**8005320**	Time Control Unit	1				
3	**3935277**	Signal Transmitter	1				
4	**8008996**	Switch Relay 12V 10/15A	1				
5	**1724325**	Relay	7				
6	**1719237**	Fuse 5.0 amp	1				
7	**1719248**	Fuse 7.5 amp	7				
8	**1719259**	Fuse 10.0 amp	2				
9	**1719260**	Fuse 15.0 amp	9				
10	**1719464**	Fuse 25.0 amp	2				
11	**3933117**	Fuse 30.0 amp	2				
12	**8009368**	Relay 12V 20/30 A	1				

silverhorn.co.uk

Workign Headlights

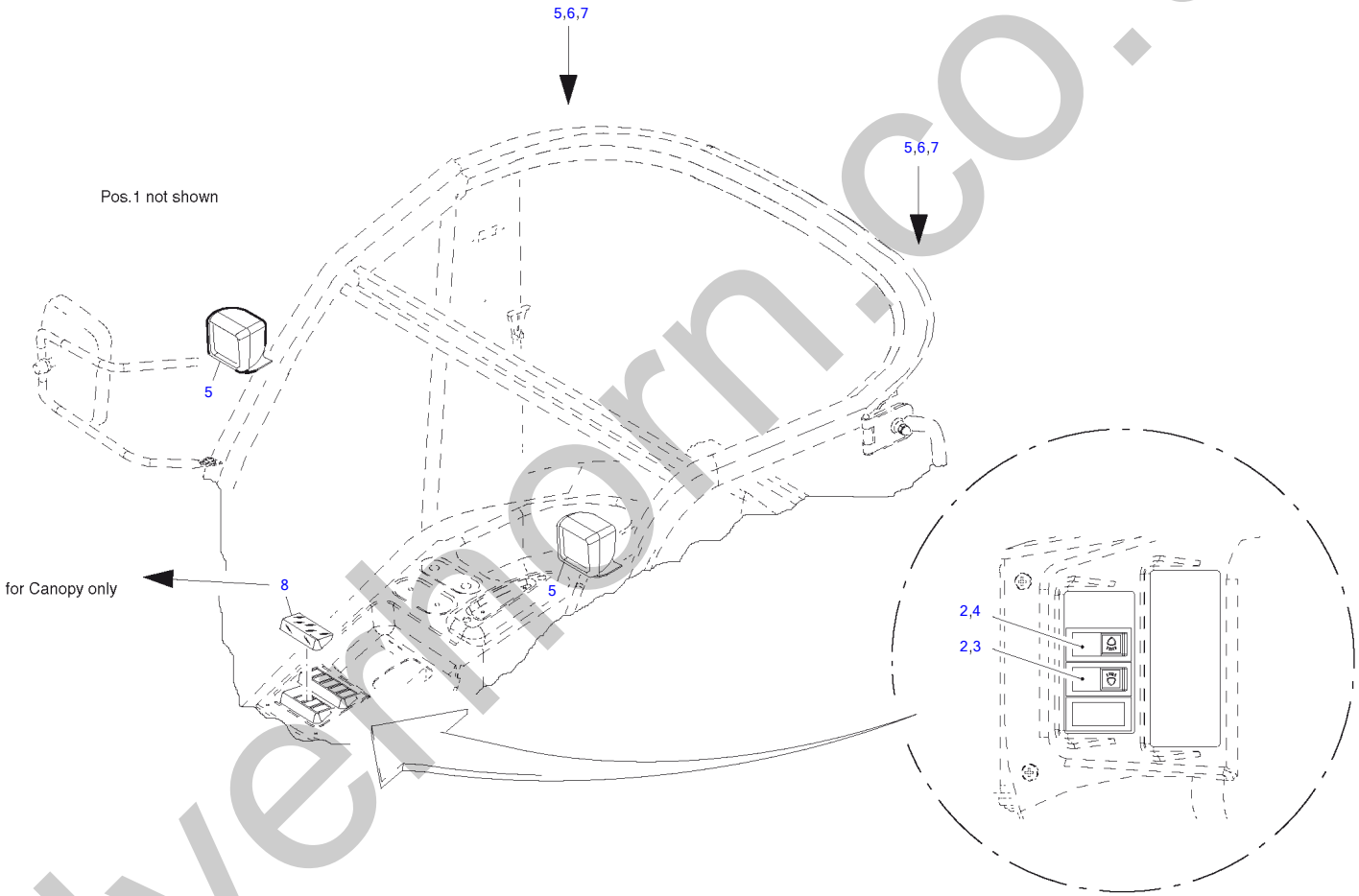

silverthorn.co.uk

Working Headlights

Item	Part number	Description	Q'ty	Chan.	Serial No.	Serv.	Remarks
	8012903	Working Headlights	1				
1	8012894	Cable Set	1				
2	4674353	Switch 12V	2				
3	1718996	Decal	1				
4	1719000	Decal	1				
5	8012513	Working Headlight	4				
6	8012891	Holder	2				
7	0893270	Hex Head Screw A3C	4				
8	8012808	Protecting Cap	1				
	8012816	Working Headlights	1				
1	8012893	Cable Set	1				
2	4674353	Switch !2V	1				
3	1718996	Decal	1				
4	8012513	Working Headlight	2				
8	8012808	Protecting Cap	1				

silverhorn.co.uk

Drive Set

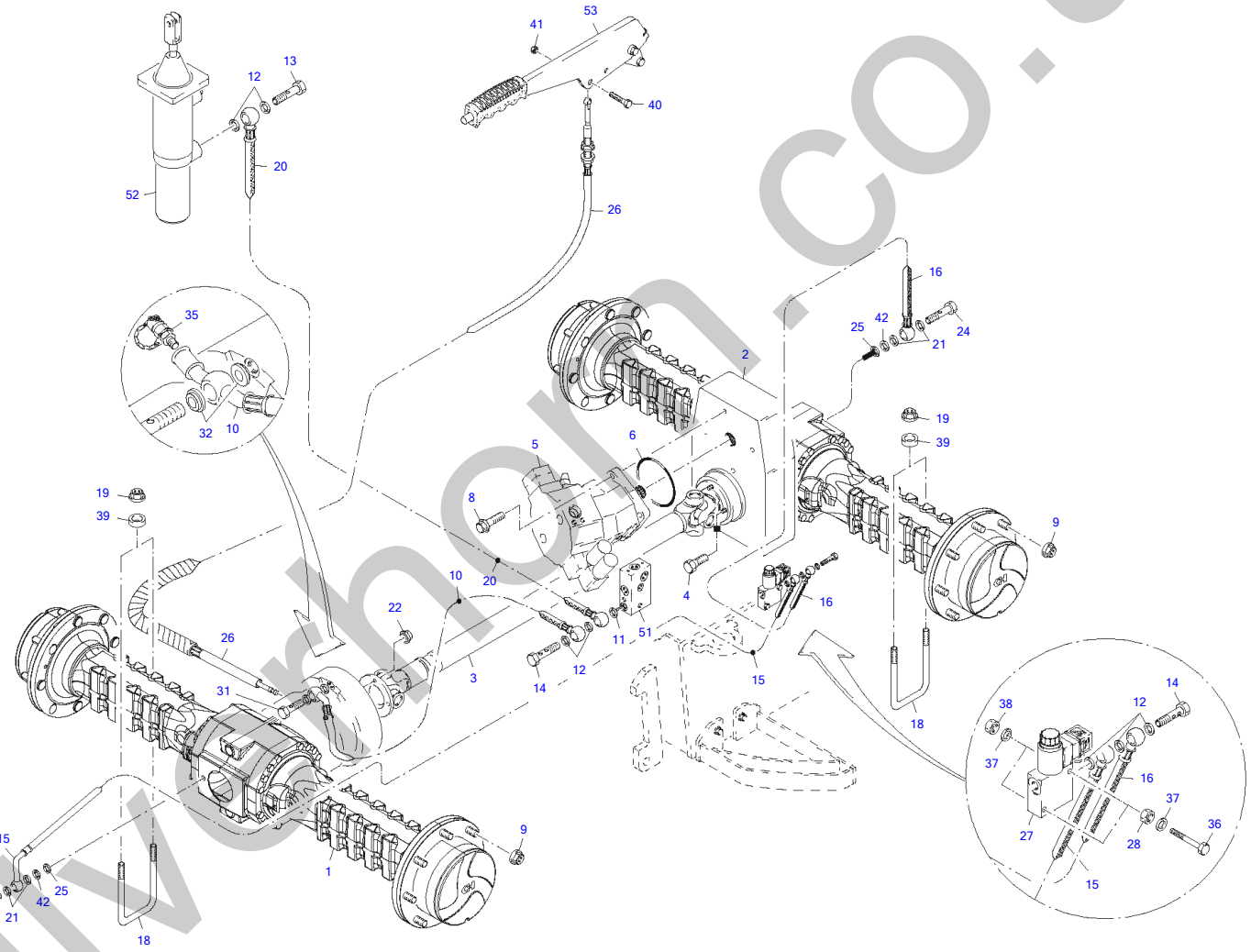

silverhorn.co.uk

Drive Set

Item	Part number	Description	Q'ty	Chan.	Serial No.	Serv.	Remarks
	5820056	Drive Set	1				
1	5820057	Front Axle	1				
2	5820058	Rear Axle	1				
3	8012141	Universal Joint Shaft	1				
4	2997199	Serrated Hex Head Screw	6				
5	8019522	Oil Motor	1				
6	0330270	O-Ring	1				
8	2993151	Serrated Hex Head Screw	4				
9	1705651	Flanged Ball Nut A3C	32				
10	8006383	HP-Hose 6 X 2000	1				
11	3768296	Gasket A3C	1				
12	0350898	Usit Ring U	8				
13	0862944	Female Screw A3C	1				
14	2980827	Female Screw A3C	2				
15	5820150	Hose Line 6 X 2400	1				
16	2973453	Hose LIne 6 X 900	1				
18	8002505	Clamp Strap	4				
19	0459547	Nut	8				
20	5820160	HP-Hose 6 X 500	1				
21	0373588	Usit Ring U	4				
22	2997202	Serrated Nut	6				
24	3929815	Female Screw S A3C	2				
25	0858506	Usit Ring U	2				
26	5820196	Hand Brake Rope	1				
27	3925526	Directional Valve 3/2 12V	1				
	2916625	Magnet	1				
	2983842	Packing Set	1				
28	0893167	Nut A3C	2				
31	8004251	Female Screw A3C	1				
32	8004852	Gasket A3C	2				
35	1722663	Screw Coupling A3C	1				
36	0893327	Hex Head Screw A3C	2				
37	2992014	Ripp Washer A3C	4				
38	0487336	Nut A3C	2				
39	5820171	Spacer	8				
40	0474648	Kardan Bolt	1				
41	0804897	Nut A3C	1				
42	3938849	Washer A3C	2				
51	8002252	Brake Throttle Valve	1				
52	8014176	Main Brake Cylinder	1				
53	8014176	Hand Brake Lever	1				

silverthorn.co.uk

Diesel Engine Compl

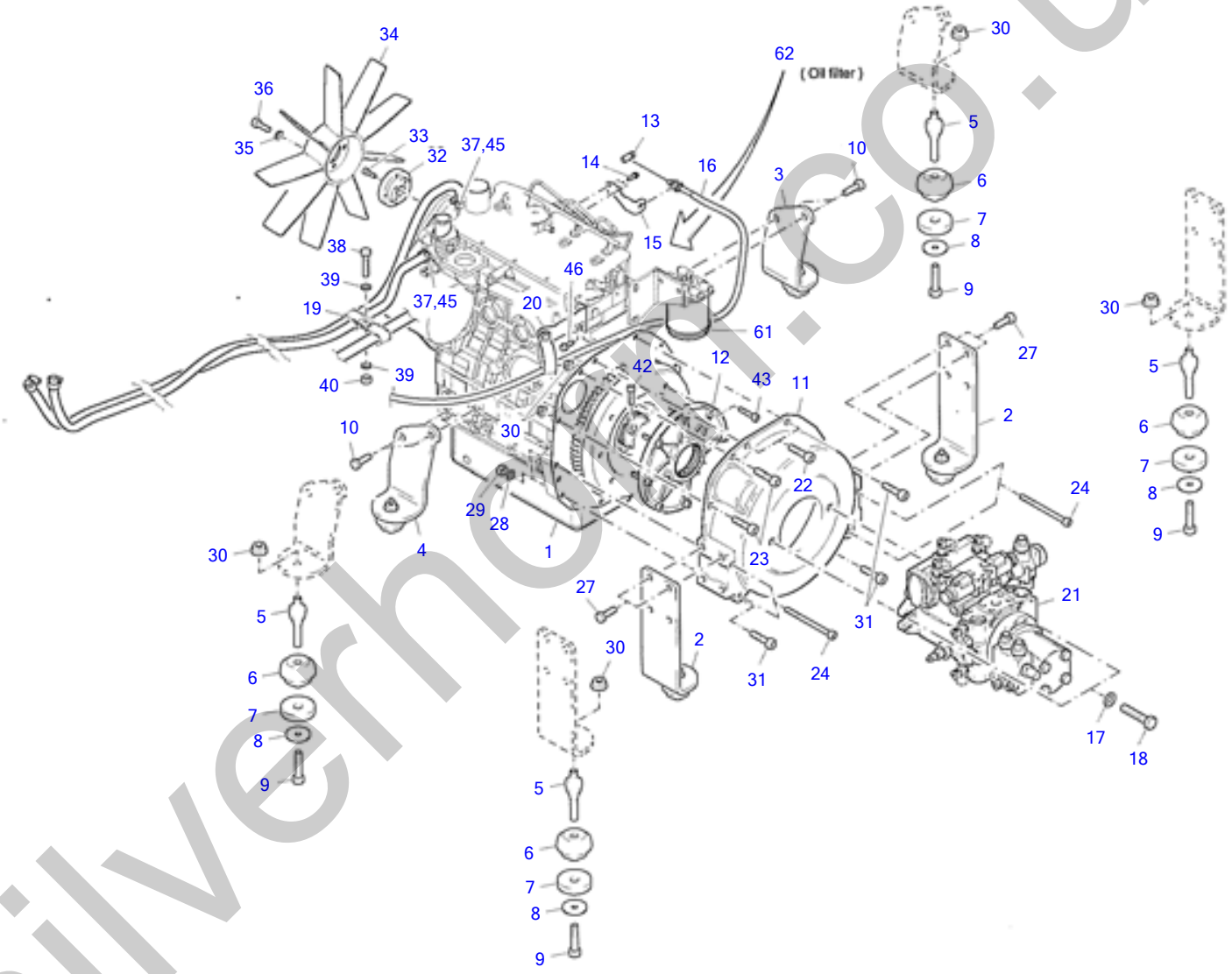

silverhoe.co.uk

Diesel Engine Compl

Item	Part number	Description	Q'ty	Chan.	Serial No.	Serv.	Remarks
	5820020	Diesel Engine Compl	1				
1	5820109	Deutz Engine D 12V	1				
2	5820021	Motor Bearing	1				
3	5820144	Motor Bearing	1				
4	5820145	Motor Bearing	1				
5	8009129	sleeve	4				
6	8012143	Rubber Element	4				
7	3924241	Rubber Washer	4				
8	8012476	Washer A3C	4				
9	0395653	Hex Head Screw	4				
10	0439758	Serrated Nut	4				
11	5820025	Pump Flange	1				
12	5820134	Coupling Bowex	1				
13	8010182	Yoke	1				
14	2440642	Serrated Hex Head Screw	2				
15	5820024	Holder	1				
16	5820179	Pull Cable	1				
17	2905928	Washer RV	2				
18	3962372	V-Plus Bolt	2				
19	8000103	Clip Norma	1				
20	5820191	Holder	1				
21	5820115	Oil Pressure Pump Compl	1				
22	1384232	Serrated Hex Head Screw	2				
23	0892962	Serrated Hex Head Screw	2				
24	1631107	Serrated Hex Head Screw	4				
27	1050604	Self-Locking Bolt	8				
28	2481243	Ripp Washer A3C	7				
29	327297	Nut A3C	7				
30	2481652	Serrated Nut	8				
31	1307273	Hex Head Cap Screw	3				
32	5820161	Adaptor	1				
33	1631765	Hex Head Cap Screw	4				
34	5820172	Ventilator Wheel	1				
35	3939464	Ripp Washer A3C	4				
36	1309195	Hex Head Cap Screw	4				
37	8006226	Clip Norma	2				
38	0893214	Hex Head Screw A3C	1				
39	0863138	Washer A3C	2				
40	0399760	Nut A3C	1				
42	1625405	Allen Screw	1				
43	8009750	Allen Screw	8				
45	5820193	Coupling	2				
46	2449607	Serrated Hex Head Screw	1				
61	8010490	Fuel Filter	1				
62	8010489	Oil Filter	1				

silverthorn.co.uk

Exhaust System

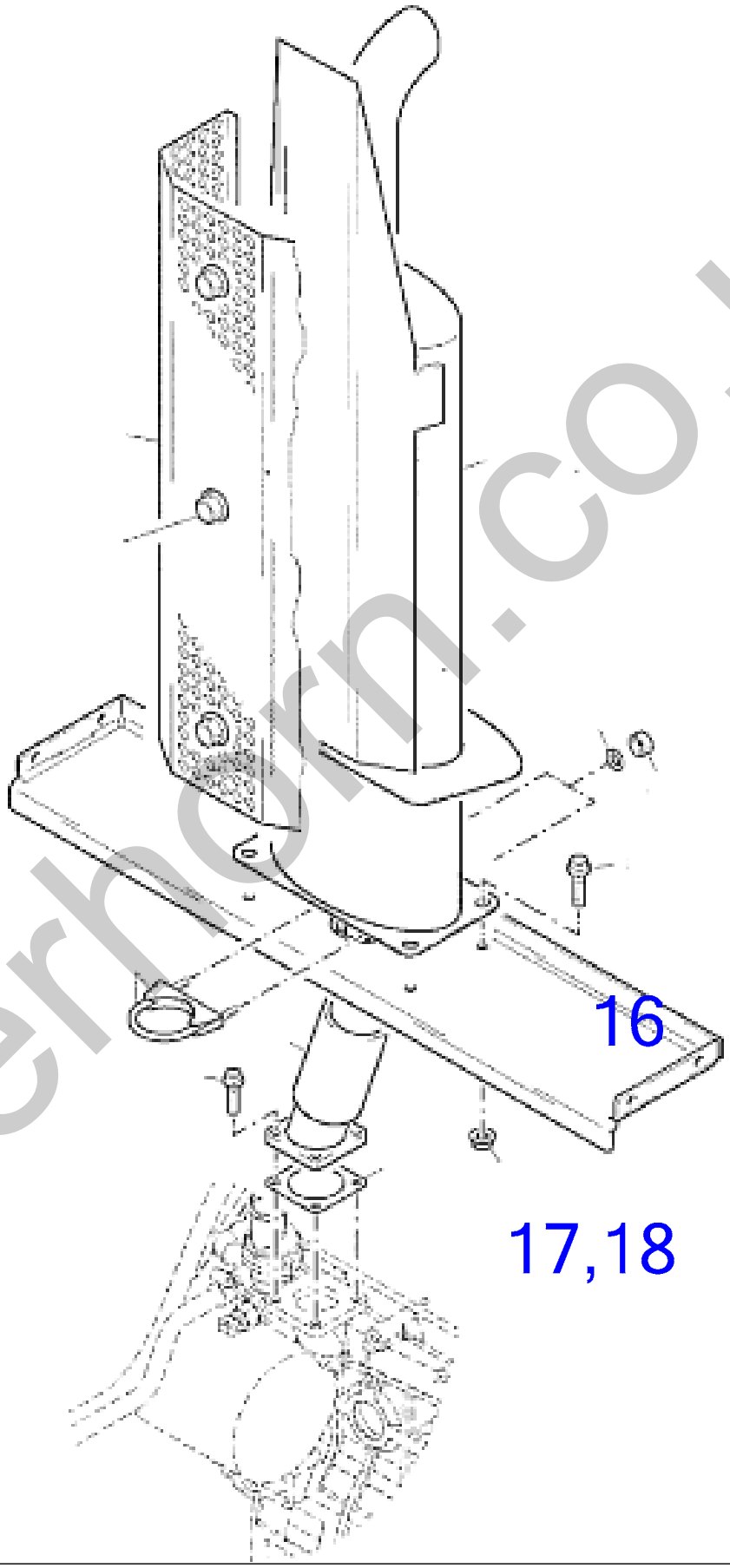

silverhorn.co.uk

Exhaust System

Item	Part number	Description	Q'ty	Chan.	Serial No.	Serv.	Remarks
	5820076	Exhaust Installation	1				
1	8013758	Sound Absorber	1				
2	2981851	Bracket Clip	1				
3	8003057	Serrated Hex Head Screw	4				
4	3960778	Serrated Nut	4				
5	5820130	Exhaust Pipe	1				
6	3939464	Ripp Washer A3C	2				
7	2997199	Serrated Hex Head Screw	4				
10	8012392	Packing	1				
15	0893167	Nut A3C	2				
16	8013833	Protective Plate Compl	1				
	8013753	Protective Plate	1				
17	0893452	Hex Head Screw A3C	12				
18	2992014	Ripp Washer A3C	12				

silverhorn.co.uk

Foot Pedal Mechanism

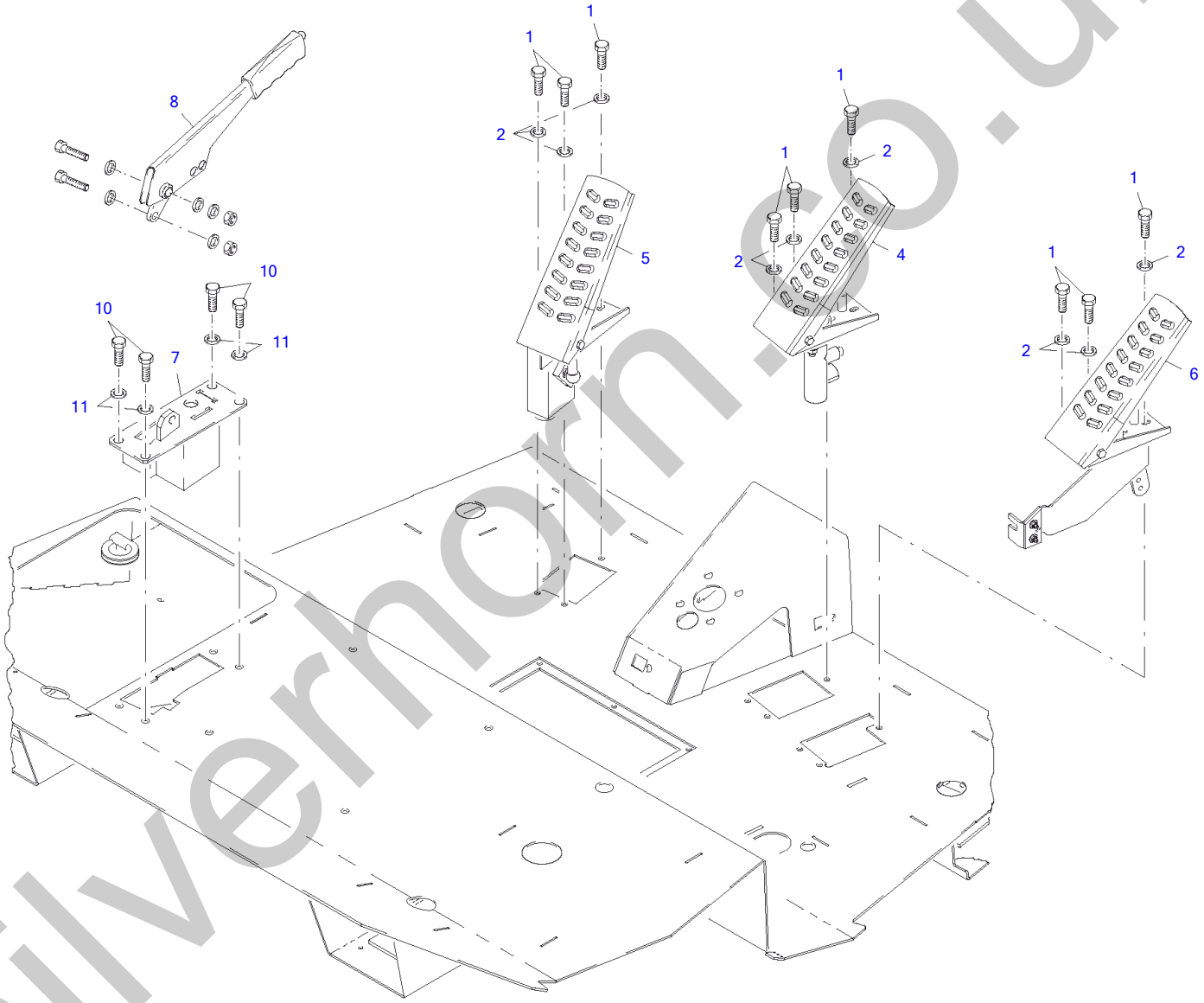

silverhorn.co.uk

Foot Pedal Mechanism

Item	Part number	Description	Q'ty	Chan.	Serial No.	Serv.	Remarks
	8014176	Foot Pedal Mechanism	1				
1	**1368641**	Hex Head Screw A3C	9				
2	**0893043**	Washer A3C	9				
4	**8013450**	Brake Pedal Compl	1				
	8013433	Main Brake Cylinder	1				
5	**8013451**	Inch-Actuator Compl	1				
	8002252	Brake Throttle Valve	1				
6	**8013452**	Foot Pedal Mechanism	1				
7	**8014376**	Front Hand Brake Lever Bracket	1				
8	**3750503**	Hand Brake Lever	1				
	3961622	Switch	1				
10	**0893236**	Hex Head Screw A3C	4				
11	**8013871**	Washer	8				

silverhorn.co.uk

Air Filter System

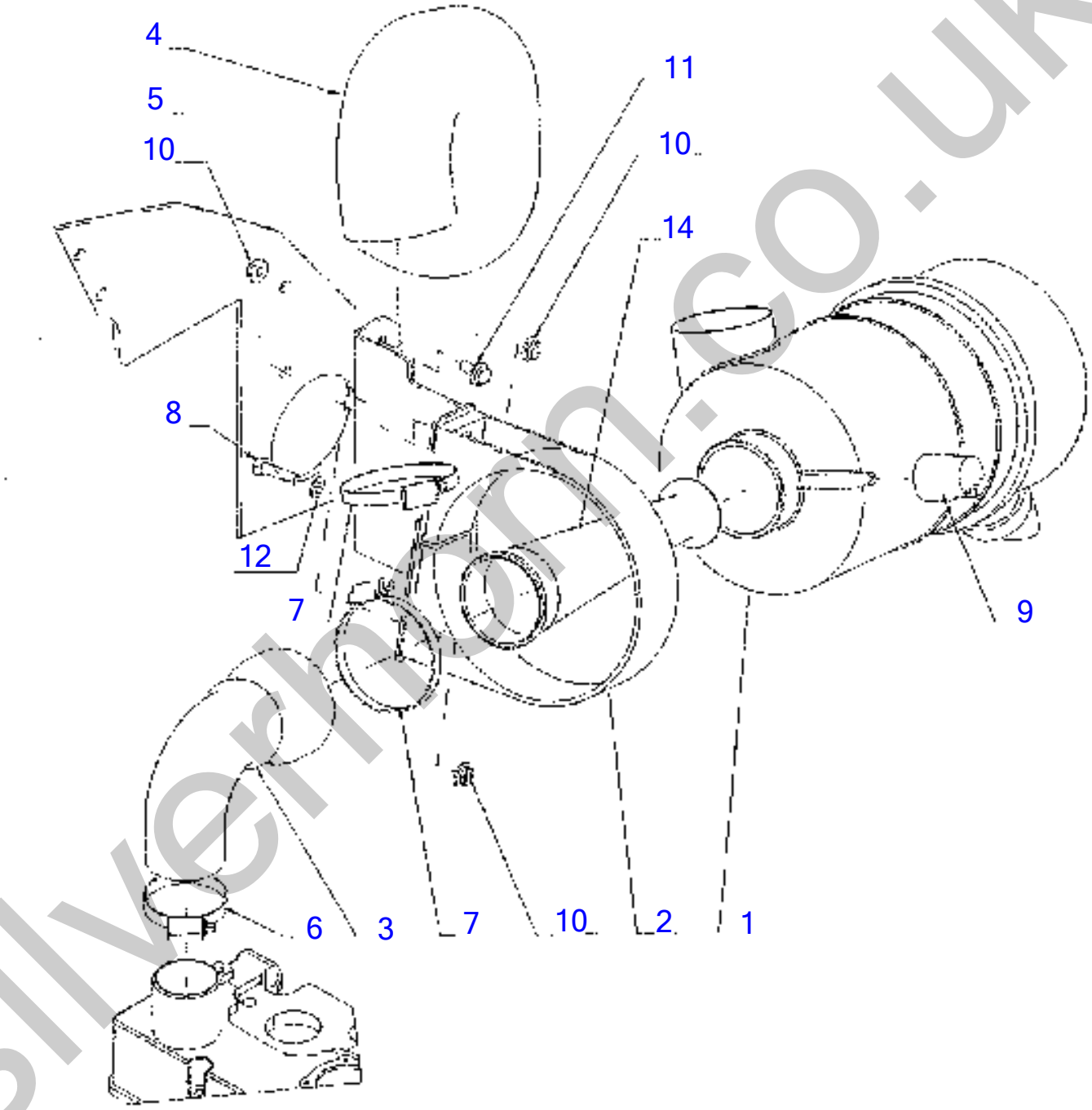

silverhorn.co.uk

Air Filter System

Item	Part number	Description	Q'ty	Chan.	Serial No.	Serv.	Remarks
	5820075	Air Filter System	1				
1	2991524	Air Filter	1				
	2991546	Filter Element	1				
	2991557	Filter Element	1				
	2999726	Housing	1				
	2993208	Cover	1				
	2997326	Repairing Bracket	3				
	2911857	Air Filter Valve	1				
2	8008111	Clip	1				
3	5820112	Hose	1				
4	5820113	Hose	1				
5	5820114	Holder	1				
6	8005376	Clip	1				
7	0459149	Clip	2				
8	1307079	Hex Head Screw A3C	2				
9	2913166	Low Pressure Indicator	1				
10	1722787	Serrated Nut	4				
11	8009782	Serrated Hex Head Screw	2				
12	2481254	Ripp Washer A3C	2				
14	2969651	Pipe	1				

silverhorn.co.uk

Oil Pressure Pump Compl

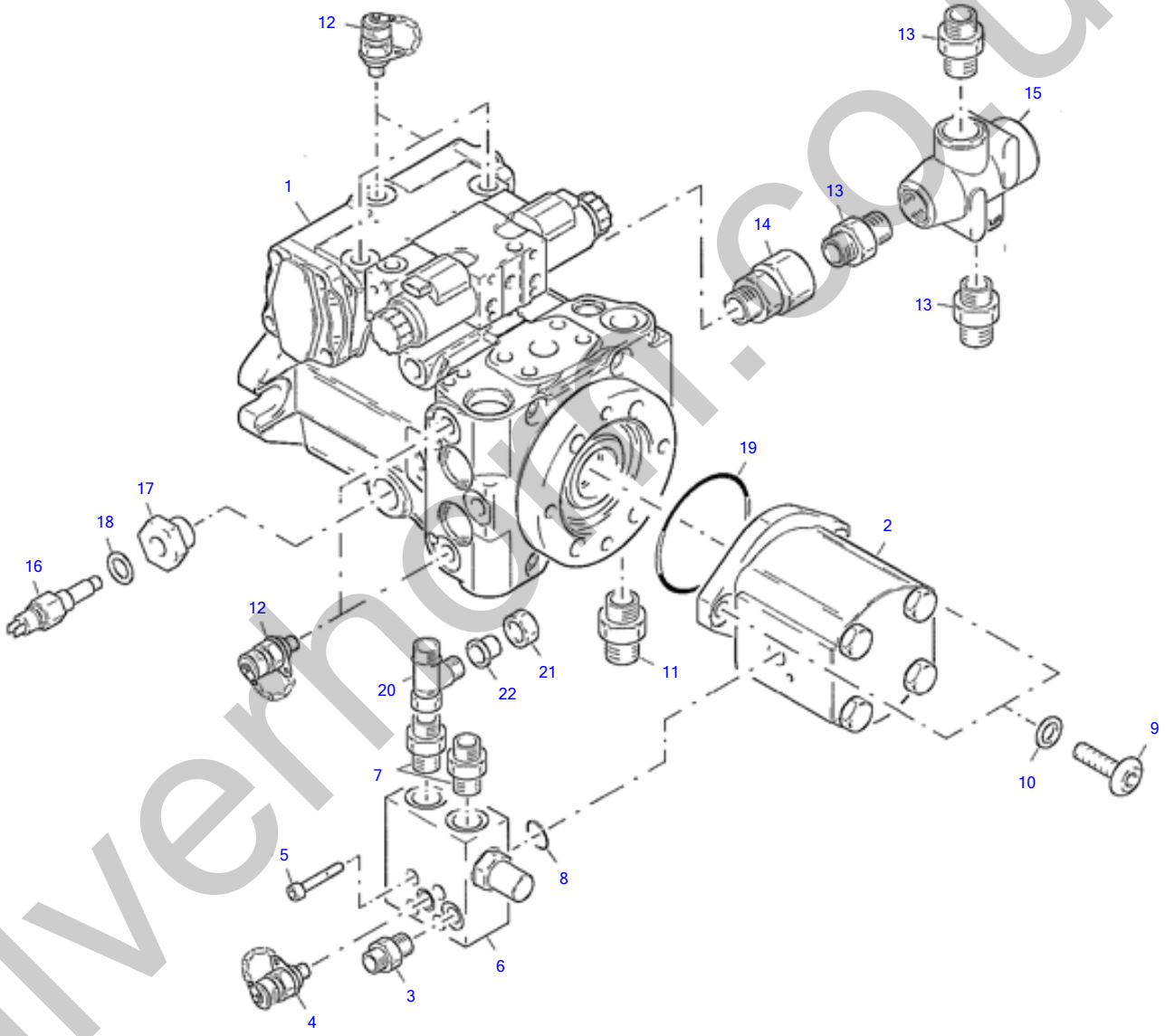

silvermoth.co.uk

Oil Pressure Pump Compl

Item	Part number	Description	Q'ty	Chan.	Serial No.	Serv.	Remarks
	5820115	Oil Pressure Pump Compl	1				
1	**5820116**	Oil Pressure Pump 12V	1				
2	**5820117**	Oil Pressure Pump	1				
3	**2656664**	Coupling A3C	1				
4	**2479669**	Screw Coupling A3C	1				
5	**1389873**	Hex Head Cap Screw	4				
6	**8010564**	Priority Valve	1				
7	**2481696**	Coupling A3C	2				
8	**0351219**	O-Ring	1				
9	**8008054**	Lens Head Screw	2				
10	**2481243**	Ripp Washer A3C	2				
11	**2913213**	Coupling A3C	1				
12	**2906189**	Screw Coupling ED	5				
13	**1686475**	Coupling A3C	3				
14	**3952790**	Coupling A3C	1				
15	**8004537**	Oil Thermocouple Element	1				
16	**1749244**	Temperature Switch	1				
17	**3939248**	Coupling	1				
18	**0373588**	Usit Ring U	1				
19	**2651761**	O-Ring	1				
20	**2967682**	Coupling A3C	1				
21	**1631641**	Cap Nut A3C	1				
22	**2904723**	Locking Bunch A3C	1				

silverhorn.co.uk

Oil Pressure Pump 12V

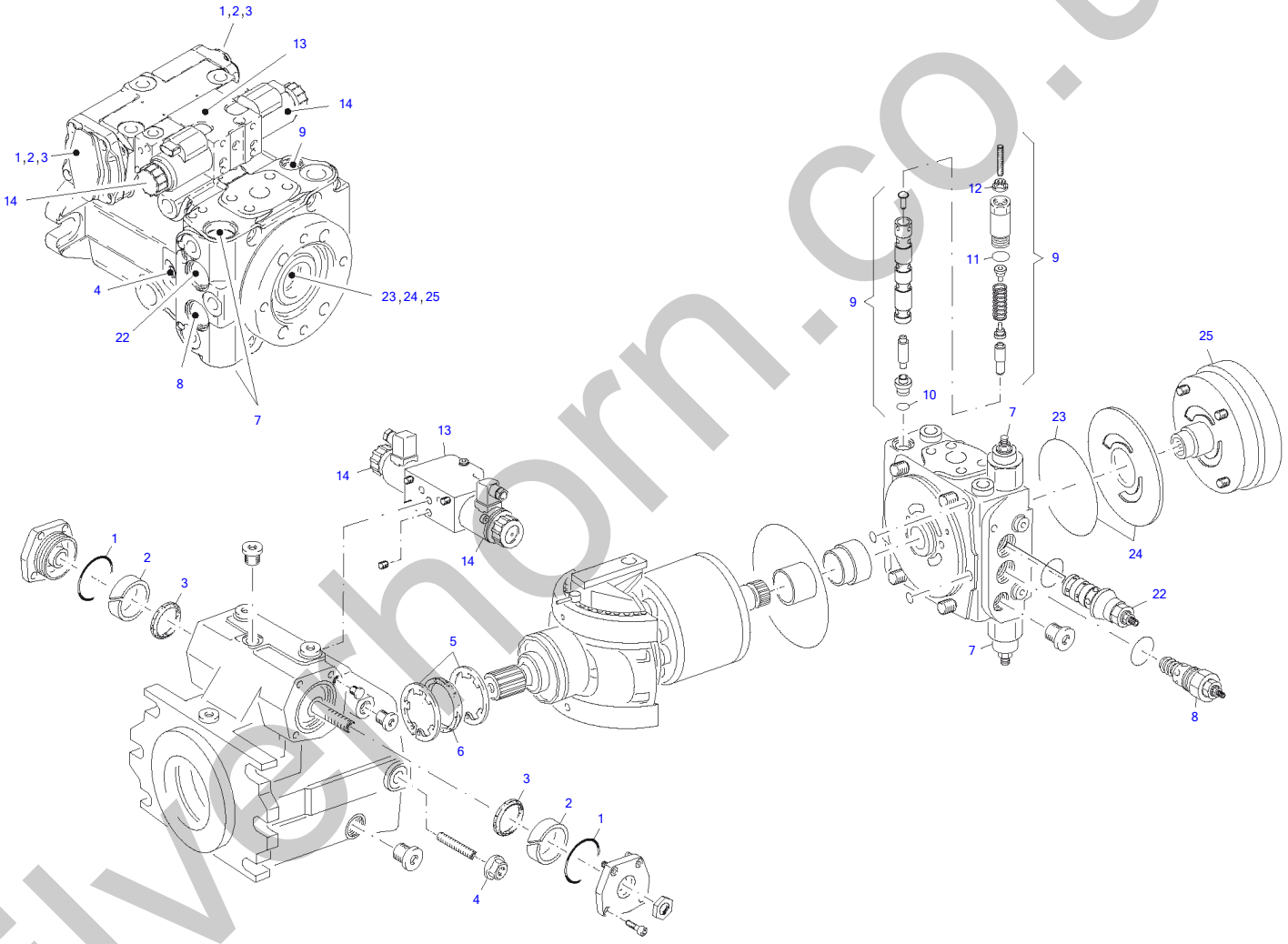

silverhorn.co.uk

Oil Pressure Pump 12V

Item	Part number	Description	Q'ty	Chan.	Serial No.	Serv.	Remarks
	5820116	Oil Pressure Pump 12V	1				
1	1394405	O-Ring	2				
2	8008730	Piston Guide Ring	2				
3	8008731	Turcon Glyd Ring	2				
4	1094219	Nut	1				
5	8014323	Circlip	2				
6	8014324	Oil Seal	1				
7	3985346	Pressure Limit Valve	2				
	8008734	Threaded Pin	2				
	1007269	O-Ring	2				
	0319775	O-Ring	2				
	1332069	Nut	2				
	8008735	Thrust Ring	2				
8	8008733	Pressure Limit Valve	1				
	1007269	O-Ring	1				
9	3961611	Switch-Off Valve	1				
10	0319775	O-Ring	1				
11	1007236	O-Ring	1				
12	1332069	Nut	1				
13	8014281	Magnet Valve 12V	1				
14	8014320	Control Magnet	2				
22	8008718	Governor Cartridge	1				
	1007269	O-Ring	1				
	1354112	Nut	1				
23	8008736	Oil Seal	1				
24	8014284	Wearing Parts Set	1				
25	8014285	Feeding Pump Compl	1				
	0315180	Allen Screw	4				
	8008736	Oil Seal	1				
	1721708	O-Ring	1				
	8014283	Seal Kit Compl	1				

silverhorn.co.uk

Oil Motor

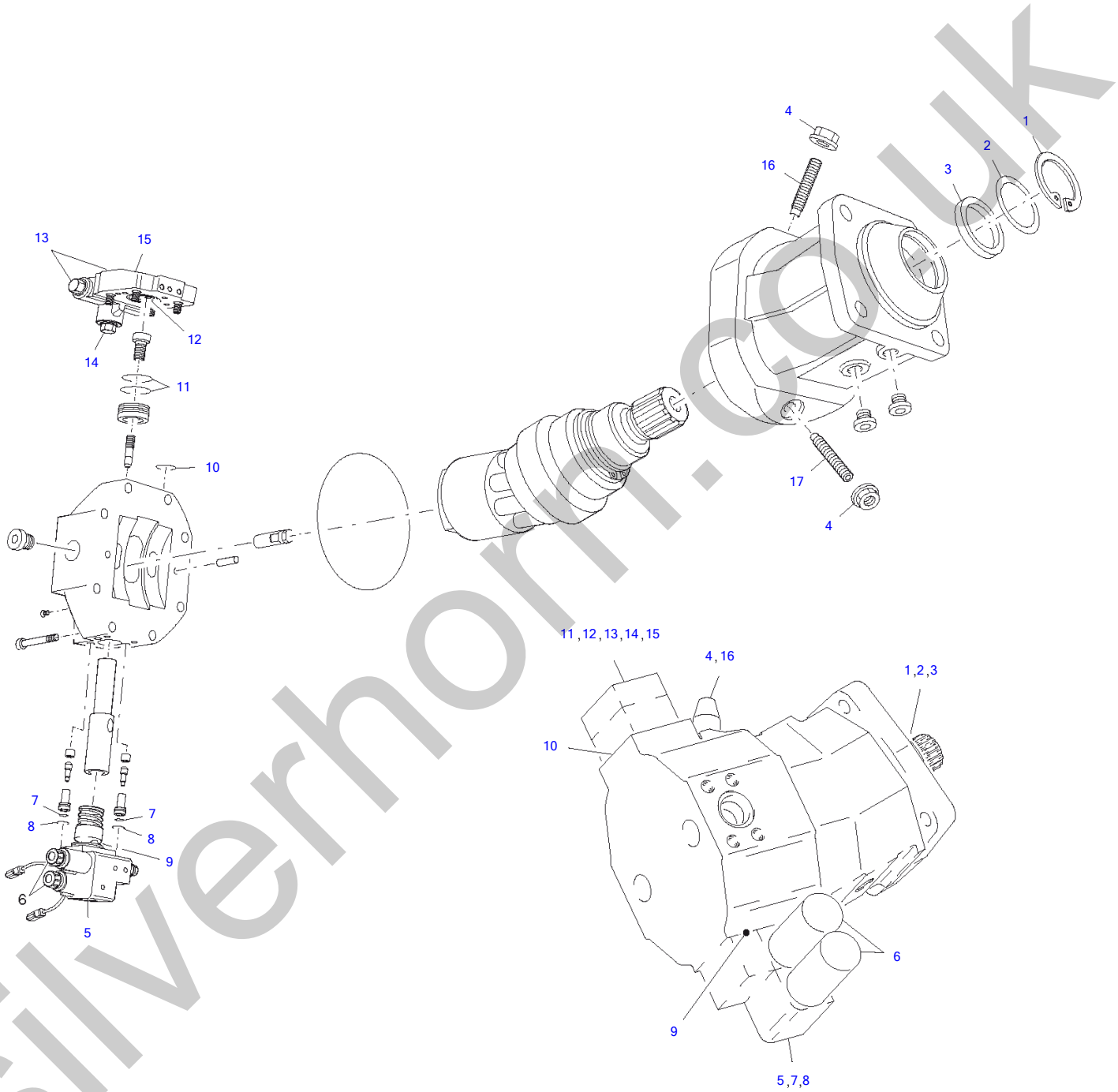

silverhorn.co.uk

Oil Motor

Item	Part number	Description	Q'ty	Chan.	Serial No.	Serv.	Remarks
	5820125	Oil Motor	1				
1	1309377	Circlip Tone 400	1				
2	0831298	Shim 10 MM	1				
	0460197	Shim 50 MM	1				
3	8014316	Oil Seal	1				
4	0480895	Nut	2				
5	8014278	Tax-Part	1				
6	8014320	Control Magnet	2				
7	8006721	O-Ring	2				
8	8006720	O-Ring	2				
9	8014319	O-Ring	1				
10	8006722	O-Ring	6				
11	8014318	Piston Ring	3				
12	8006724	O-Ring	1				
13	8006725	O-Ring	2				
14	8006726	O-Ring	1				
15	8014279	Feeding Press Valve	1				
16	8006570	Threaded Pin	2				
	8014280	Packing Set Compl	1				

silverhorn.co.uk

Front Axle

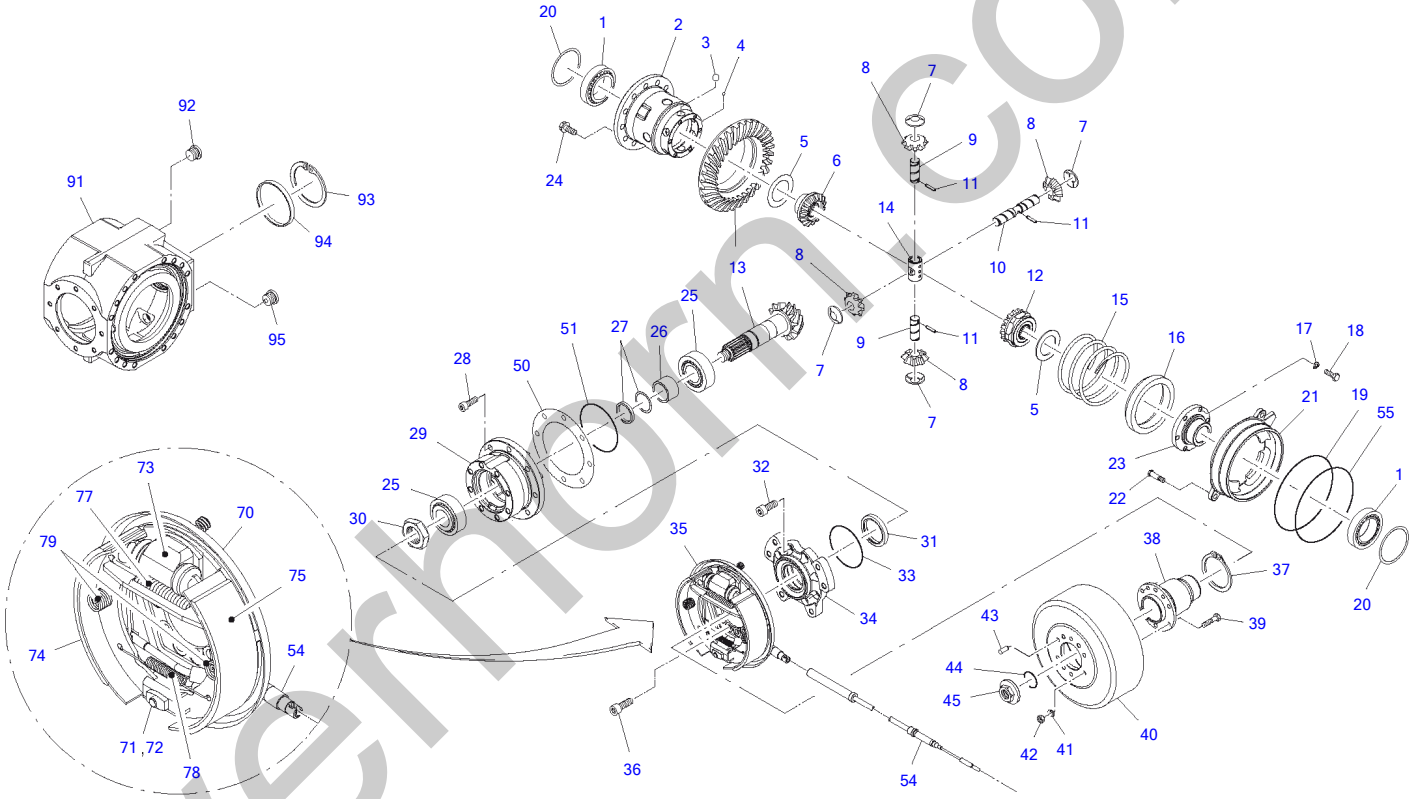

silvernorm.co.uk

Front Axle

Item	Part number	Description	Q'ty	Chan.	Serial No.	Serv.	Remarks
	5820057	Front Axle	1				
1	0358169	Conical Roller Bearing	2				
2	8009243	Differential Housing	1				
3	3984118	Ball	6				
4	8009244	Ball	1				
5	2983273	Disk	2				
6	2983262	Side Shaft Wheel	1				
7	2915464	Disk	4				
8	2915475	Planet Wheel	4				
9	8009245	Pin	2				
10	8009246	Pin	1				
11	0443163	Adaptor Sleeve	3				
12	8009247	Side Shaft Wheel	1				
13	8009248	Spur Bevel Gear	1				
14	8014141	Crossing Part	1				
15	8009250	Spring	1				
16	8009251	Control Sleeve	1				
17	8010316	Disk	6				
18	1092795	Black Bolt	6				
19	8010106	O-Ring	1				
20	8009252	Shim	2				
	8009253	Shim	2				
	8009254	Shim	2				
	8009255	Shim	2				
21	8009256	Piston	1				
22	8010255	Justier Screw	2				
23	8009257	Cover	1				
24	8010239	V-Plus Flanged Bolt	12				
25	2480924	Conical Roller Bearing	2				
26	8014143	Distance Ring	1				
27	8009275	Shim	1				
	8009279	Shim	1				
28	0848684	Bolt	8				
29	8009593	Cover	1				
30	8010003	Wave Nut	1				
31	8010243	Oil Seal	1				
32	8010774	Fillister Head Screw	8				
33	8010109	O-Ring	1				
34	8009595	Cover	1				
35	8009594	Servo Brake	1				
36	8010775	Fillister Head Screw	8				
37	1366810	Circlip Tone 400	1				
38	8009596	Flange	1				
39	0893189	Hex Head Screw A3C	6				
40	8009597	Brake Drum	1				
41	8010373	Spring Washer	6				
42	0300285	Nut	6				
43	3802255	Dowel Pin	6				
44	8010110	O-Ring	1				
45	8010262	Flanged Nut	1				
50	2915748	Shim	1				
	2915737	Shim	1				
	2915726	Shim	1				
	2915317	Shim	1				
51	8010111	O-Ring	1				
54	5820196	Hand Brake Rope	1				
55	8014144	O-Ring	1				
70	8012215	Brake Plate Compl	1				
71	8012216	Adjustment Compl	2				
72	8012217	Regulating Wedge	1				
73	8012219	Wheel Brake Cylinder	1				
74	8012220	Brake Shoe Lining	1				
75	8012221	Brake Shoe Lining	1				
77	8012223	Draw Spring	1				
78	8012225	Draw Spring	1				
79	8012226	Compression Spring	2				
91	8009442	Housing	1				
92	2655505	Plug A3C	1				

silvernorn.co.uk

Front Axle

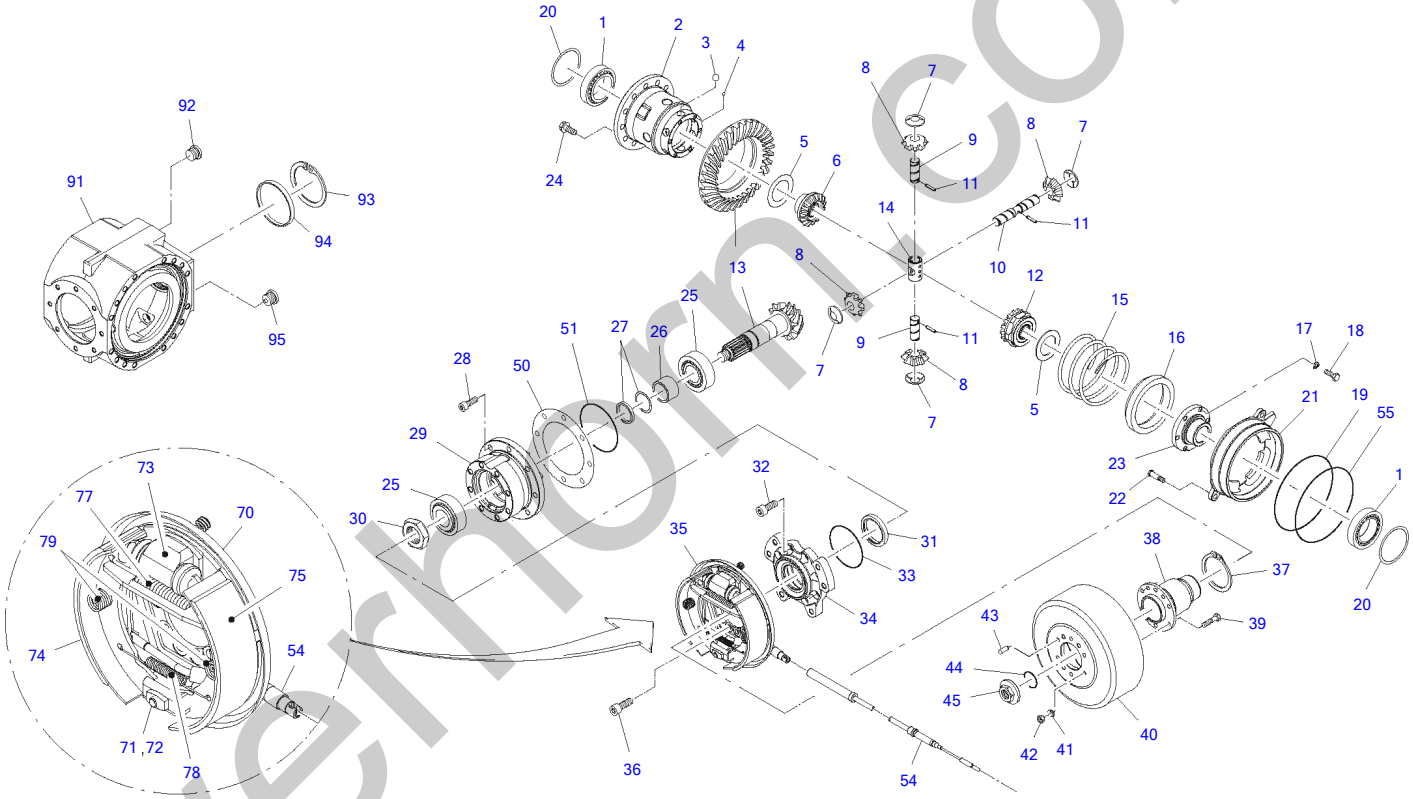

silvernorm.co.uk

Front Axle

Item	Part number	Description	Q'ty	Chan.	Serial No.	Serv.	Remarks
93	**2401407**	Circlip	1				
94	**8009656**	Plug	1				
95	**0356178**	Plug A3C MG	1				

silverhorn.co.uk

Axle Pipe

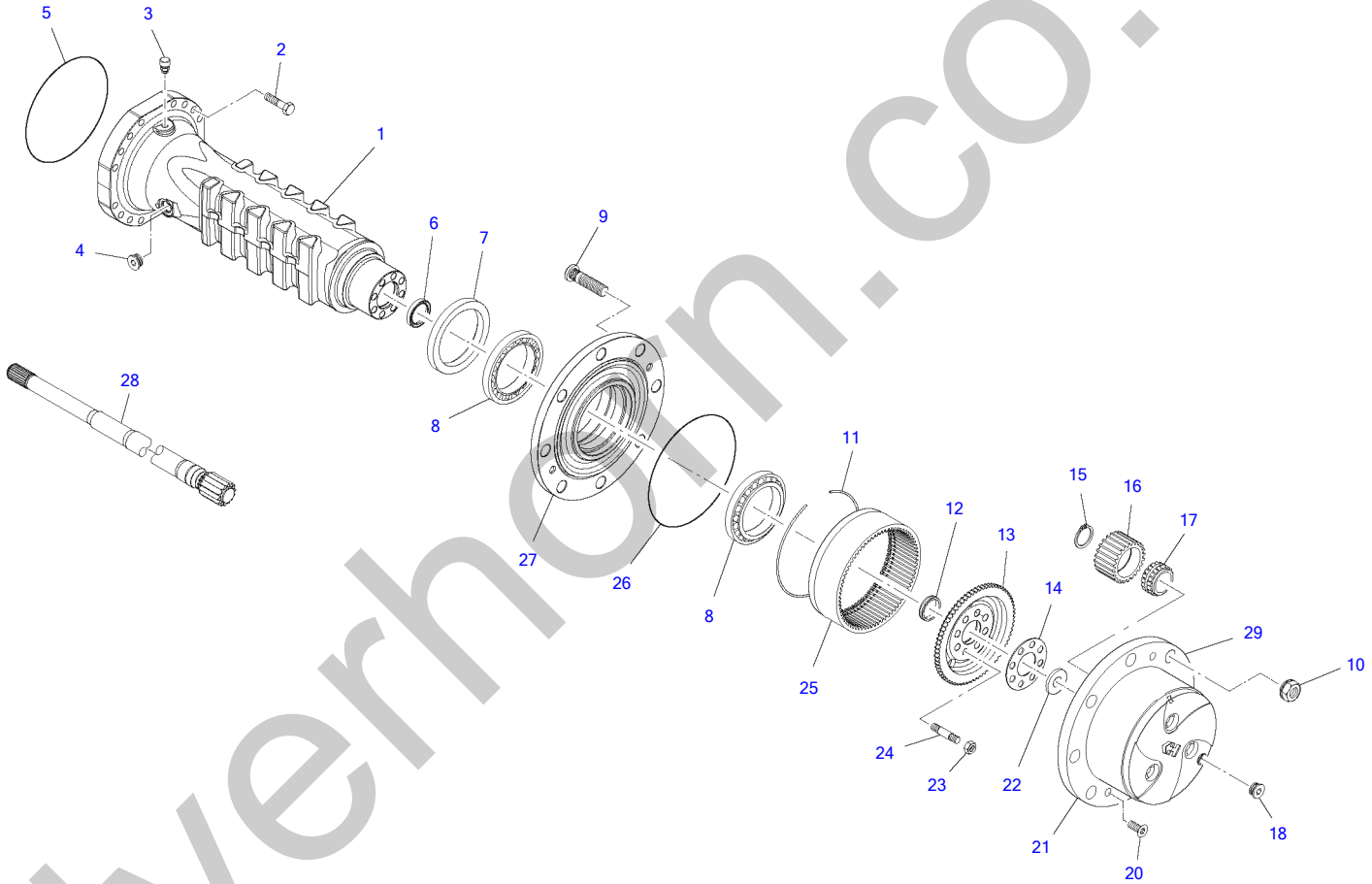

silverhorn.co.uk

Axle Pipe

Item	Part number	Description	Q'ty	Chan.	Serial No.	Serv.	Remarks
1	8014145	Axle Pipe	2				
2	8010322	Bolt	32				
3	3968889	Air Vent	1				
4	2655505	Plug A3C	2				
5	8010108	O-Ring	2				
6	2915782	Oil Seal	2				
7	8010249	Oil Seal	2				
8	8010027	Conical Roller Bearing	4				
	8010028	Conical Roller Bearing	4				
9	8009470	Wheel Pin	16				
10	5820056	Flanged Ball Nut A3C	16				
11	8010257	Snap Ring	2				
12	8009457	Centering Ring	2				
13	8009259	Side Shaft Wheel	2				
14	8009260	Plate	2				
15	8010258	Circlip Tone 400	6				
16	3983742	Planet Wheel	6				
17	8010025	Roller Bearing	6				
18	8010263	Plug A3C	2				
20	0482831	Countersunk Screw A3C	4				
21	8009261	Planetary Housing	2				
22	3983764	Disk	2				
23	8010264	Nut	16				
24	8010303	Stud	16				
25	3983719	Gear Rim	2				
26	2902163	O-Ring	2				
27	8009262	Wheel Hub	2				
28	8014146	Axle Shaft	2				
29	8009264	Housing Compl	2				

silverhorn.co.uk

Rear Axle

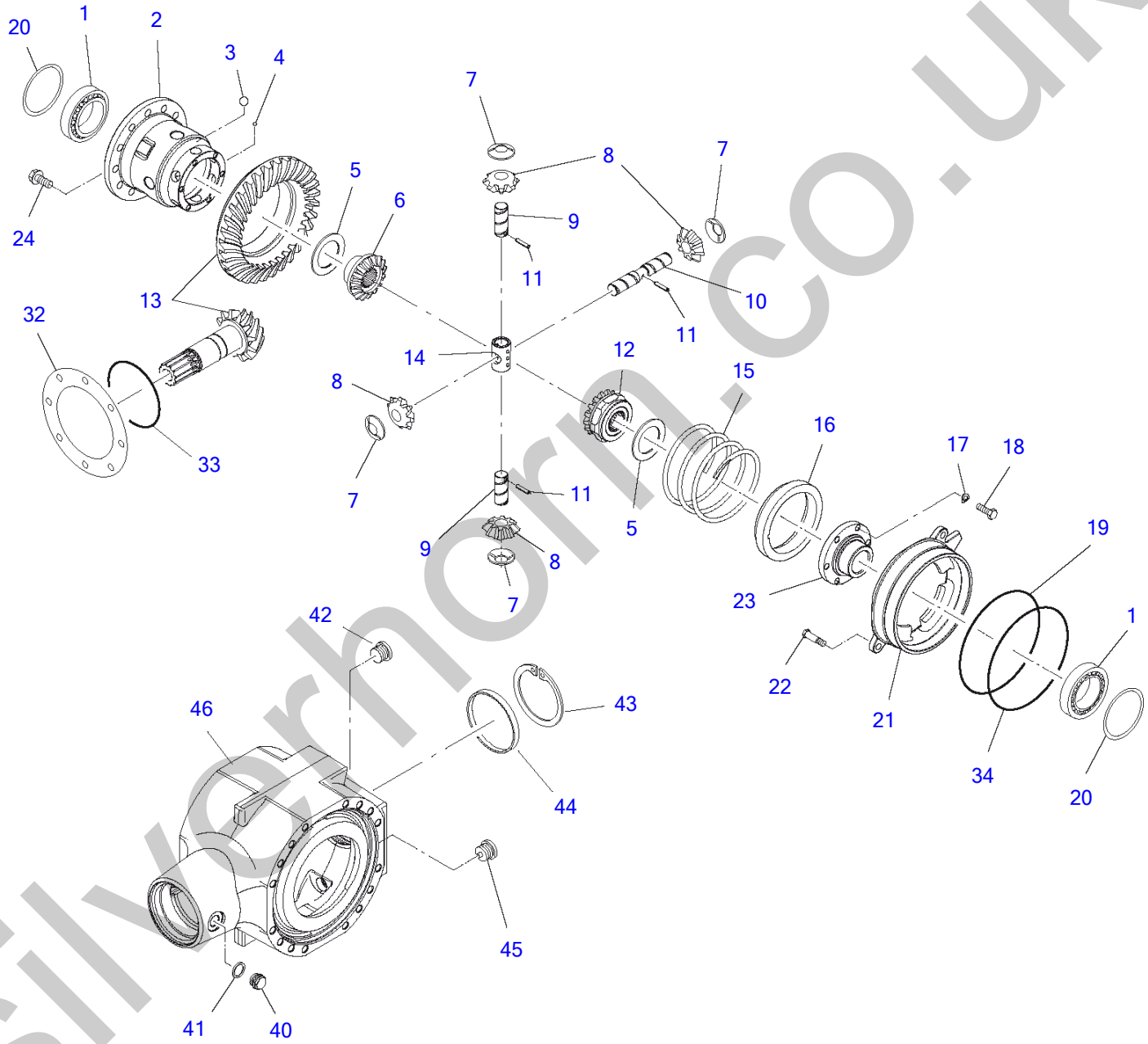

silverhorn.co.uk

Rear Axle

Item	Part number	Description	Q'ty	Chan.	Serial No.	Serv.	Remarks
	5820058	Rear Axle	1				
1	0358169	Conical Roller Bearing	2				
2	8009243	Differential Housing	1				
3	3984118	Ball	6				
4	8009244	Ball	1				
5	2983273	Disk	2				
6	2983262	Side Shaft Wheel	1				
7	2915464	Disk	4				
8	2915475	Planet Wheel	4				
9	8009245	Pin	2				
10	8009246	Pin	1				
11	0443163	Adaptor Sleeve	3				
12	8009247	Side Shaft Wheel	1				
13	8014161	Spur Bevel Gear	1				
14	8014141	Crossing Part	1				
15	8009250	Spring	1				
16	8009251	Control Sleeve	1				
17	8010316	Disk	6				
18	1092795	Black Bolt	6				
19	8010106	O-Ring	1				
20	8009252	Shim	2				
	8009253	Shim	2				
	8009254	Shim	2				
	8009255	Shim	2				
21	8009256	Piston	1				
22	8010255	Justier Screw	2				
23	8009257	Cover	1				
24	8010239	Flanged V-Plus Bolt	12				
32	2915748	Shim	1				
	2915737	Shim	1				
	2915726	Shim	1				
	2915317	Shim	1				
33	8010111	O-Ring	1				
34	8014144	O-Ring	1				
42	2655505	Plug A3C	1				
43	2401407	Circlip	1				
44	8009656	Plug	1				
45	0356178	Plug A3C MG	1				
46	8009442	Housing	1				

silverhorn.co.uk

Axle Pipe

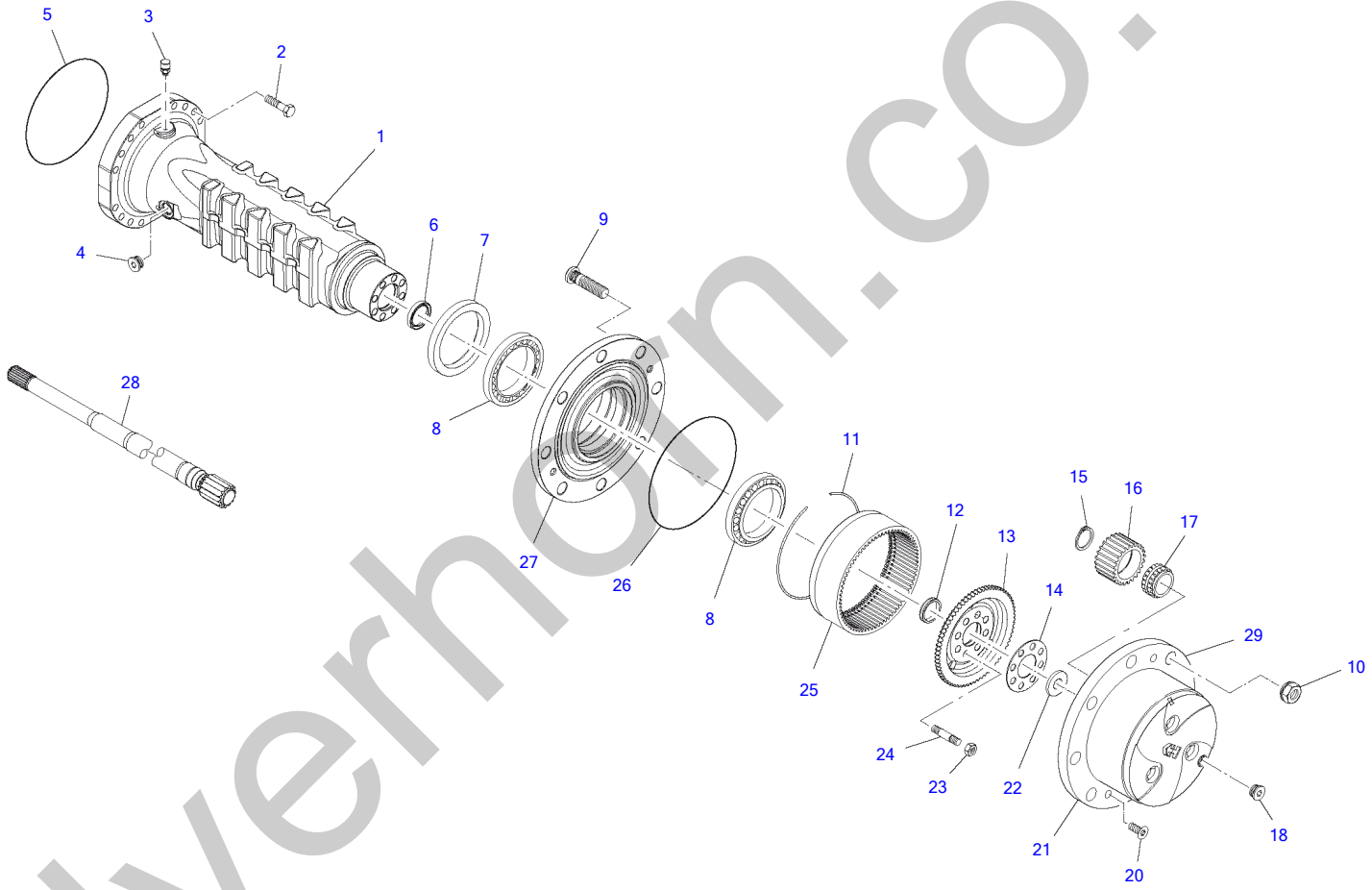

silverhorn.co.uk

Axle Pipe

Item	Part number	Description	Q'ty	Chan.	Serial No.	Serv.	Remarks
1	8014145	Axle Pipe	2				
2	8010322	Bolt	32				
3	3968889	Air Vent	1				
4	2655505	Plug A3C	2				
5	8010108	O-Ring	2				
6	2915782	Oil Seal	2				
7	8010249	Oil Seal	2				
8	8010027	Conical Roller Bearing	4				
	8010028	Conical Roller Bearing	4				
9	8009470	Wheel Pin	16				
10	5820056	Flanged Ball Nut A3C	16				
11	8010257	Snap Ring	2				
12	8009457	Centering Ring	2				
13	8009259	Side Shaft Wheel	2				
14	8009260	Plate	2				
15	8010258	Circlip Tone 400	6				
16	3983742	Planet Wheel	6				
17	8010025	Roller Bearing	6				
18	8010263	Plug A3C	2				
20	0482831	Countersunk Screw A3C	4				
21	8009261	Planetary Housing	2				
22	3983764	Disk	2				
23	8010264	Nut	16				
24	8010303	Stud	16				
25	3983719	Gear Rim	2				
26	2902163	O-Ring	2				
27	8009262	Wheel Hub	2				
28	8014146	Axle Shaft	2				
29	8009264	Housing Compl	2				

silverhorn.co.uk

Rear Axle Multiple

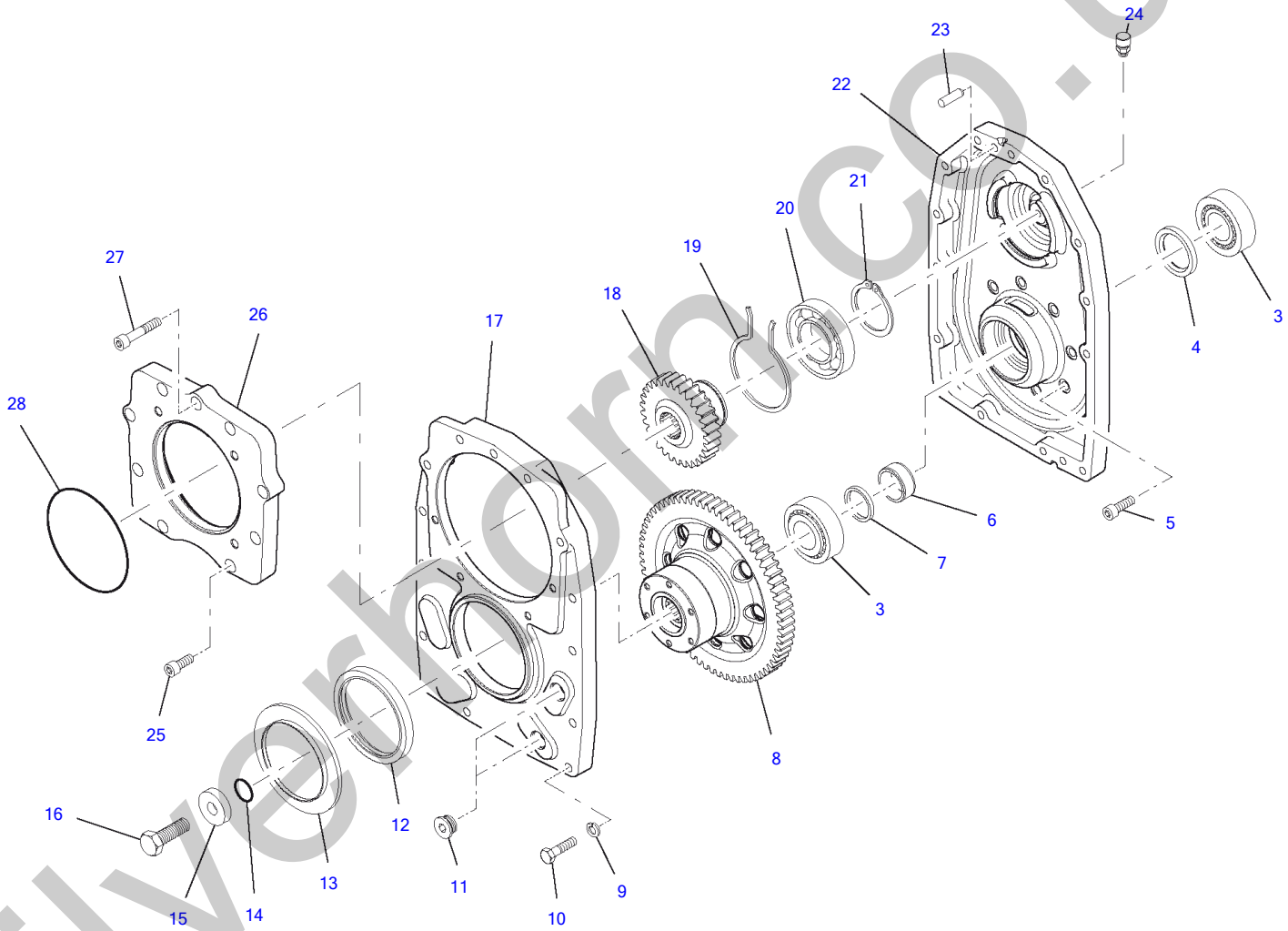

silverhorn.co.uk

Rear Axle Multiple

Item	Part number	Description	Q'ty	Chan.	Serial No.	Serv.	Remarks
3	8009421	Conical Roller Bearing	2				
4	8010305	Oil Seal	1				
5	0395493	Allen Screw	8				
6	8009467	Distance Ring	1				
7	8009275	Shim	1				
	8009279	Shim	1				
8	8014148	Gear Wheel	1				
9	8010374	Spring Washer	10				
10	0893349	Hex Head Screw A3C	10				
11	2655505	Plug A3C	2				
12	8010375	Oil Seal	1				
13	8009468	Plate	1				
14	8010110	O-Ring	1				
15	8006123	Disk	1				
16	0443323	Hex Head Screw A3C	1				
17	8009317	Cover	1				
18	8014149	Gear Wheel	1				
19	8010327	Cirslip	1				
20	8009991	Ball Bearing	1				
21	1630708	Circlip Tone 400	1				
22	8009620	Housing	1				
23	0396245	Dowel Pin	2				
24	3968889	Air Vent	1				
25	0396245	Dowel Pin	4				
26	8014150	Cover	1				
27	1347624	Hex Head Cap Screw	5				
28	8014151	O-Ring	1				

silverhorn.co.uk

Fuel Supply System

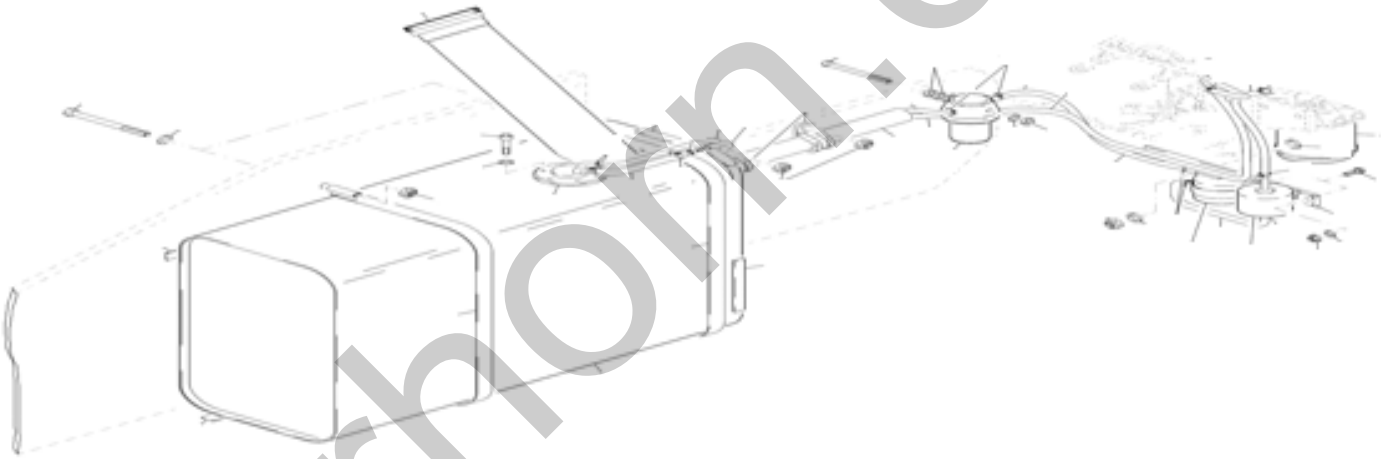

40

4

3

6

14

7

3

8

27

silverhorn.co.uk

Fuel Supply System

Item	Part number	Description	Q'ty	Chan.	Serial No.	Serv.	Remarks
	5820064	Fuel System	1				
1	5820065	Gasoline Tank Compl	1				
2	0909304	Profile Rubber 615 MM	2				
	0909304	Profile Rubber 390 MM	3				
4	0410073	Hex Head Screw A3C	2				
5	0909224	Profile Rubber 820 MM	2				
6	4657589	Lens Head Screw H A3C	6				
7	1386289	Washer A3C	6				
8	0399760	Nut A3C	5				
9	8009224	Hose 1880 MM	1				
10	8008515	Fuel Hose 900 MM	1				
11	1009352	Clip Norma	2				
12	0916665	Hose 350 MM	1				
13	2985617	Clip Norma	1				
14	8012616	Clip Norma	10				
16	2481243	Ripp Washer A3C	2				
17	8008515	Fuel Hose	1				
18	2982534	Serrated Hex Head Screw	2				
19	5820127	Holder	1				
20	2992014	Ripp Washer A3C	2				
21	0487336	Nut A3C	2				
22	8008515	Fuel Hose 350 MM	1				
23	0327297	Nut A3C	1				
24	8008515	Fuel Hose	1				
25	0863138	Washer A3C	2				
26	3750423	Hex Head Screw A3C	1				
27	5820068	Immers Tube Contact	1				
	8012396	Rubber Seal	1				
28	0935113	Profile Rubber 100 MM	1				
29	0935113	Profile Rubber 150 MM	1				
30	8008515	Fuel Hose 120 MM	1				
31	3748974	Reducing Connection	1				
32	0893156	Nut A3C	2				
40	0303744	Tank Cap	1				
41	8011091	Water Seperator	1				
	8014687	Filter Element	1				
42	8010490	Filter	1				
43	8011202	Primary Diesel Filter	1				
44	8011325	Fuel Pump	1				

silverhorn.co.uk

Driver's Seat Compl

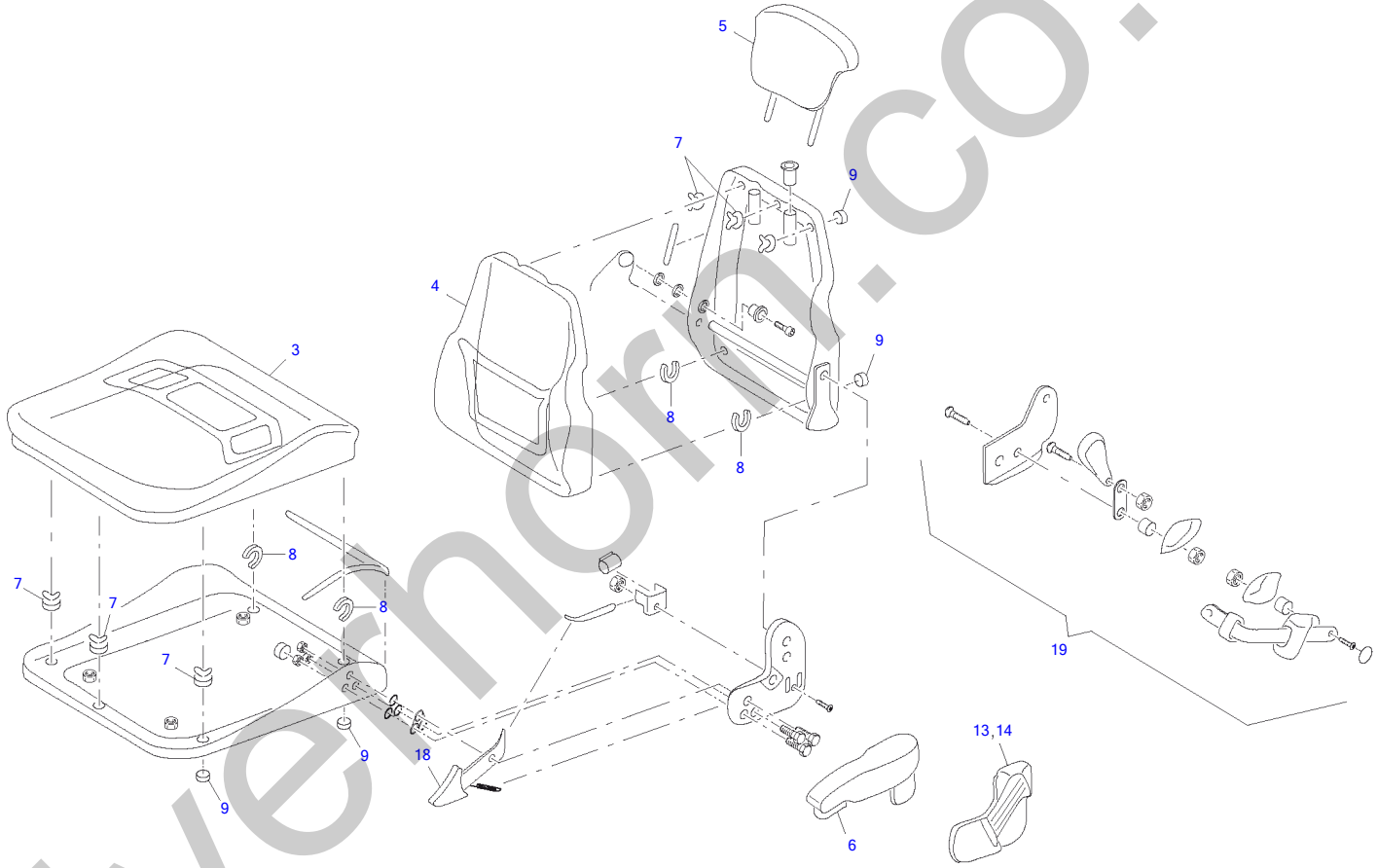

silverhorn.co.uk

Driver's Seat

Item	Part number	Description	Q'ty	Chan.	Serial No.	Serv.	Remarks
	8013032	Driver's Seat	1				
1	8016776	Seat Cushion	1				
2	8016777	Back Pad	1				
3	8016778	Backrest Extension	1				
6	8014466	Left Armrest	1				
	8014467	Hand Wheel	1				
7	8014471	Clips	6				
8	8014472	Hook	4				
9	8014473	Covering	10				
13	8014469	Left Covering	1				
14	8014470	Right Covering	1				
18	8014468	Side Pane Handle	1				
19	8014589	Safety Belt	1				

silverhorn.co.uk

Seat Lower Part Compl

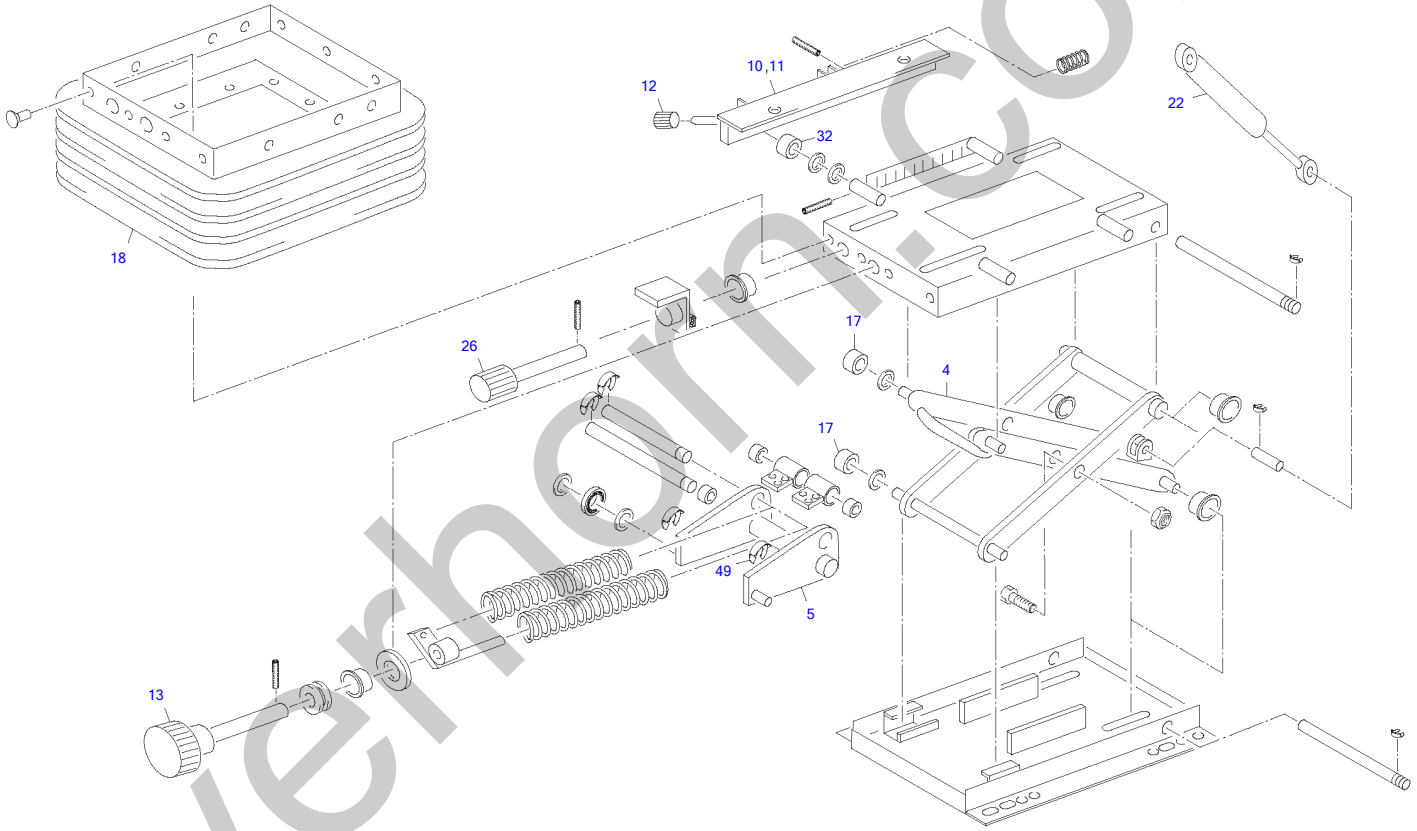

silverhorn.co.uk

Seat Lower Part Compl

Item	Part number	Description	Q'ty	Chan.	Serial No.	Serv.	Remarks
	8014478	Seat Lower Part Compl	1				
4	**8014447**	Rocker Arm Compl	1				
5	**8014448**	Spring Support	1				
10	**8014449**	Right Adjustment	1				
11	**8014451**	Left Adjustment	1				
12	**8014456**	Hand Wheel	1				
13	**8014456**	Hand Wheel	1				
17	**8014458**	Guide Roller	1				
18	**8014460**	Siphon	1				
22	**8014462**	Shock Absorber	2				
26	**8014463**	Slewing Handle	1				
32	**8014464**	Guide Roller	1				

silverhorn.co.uk

Cabin Canopy

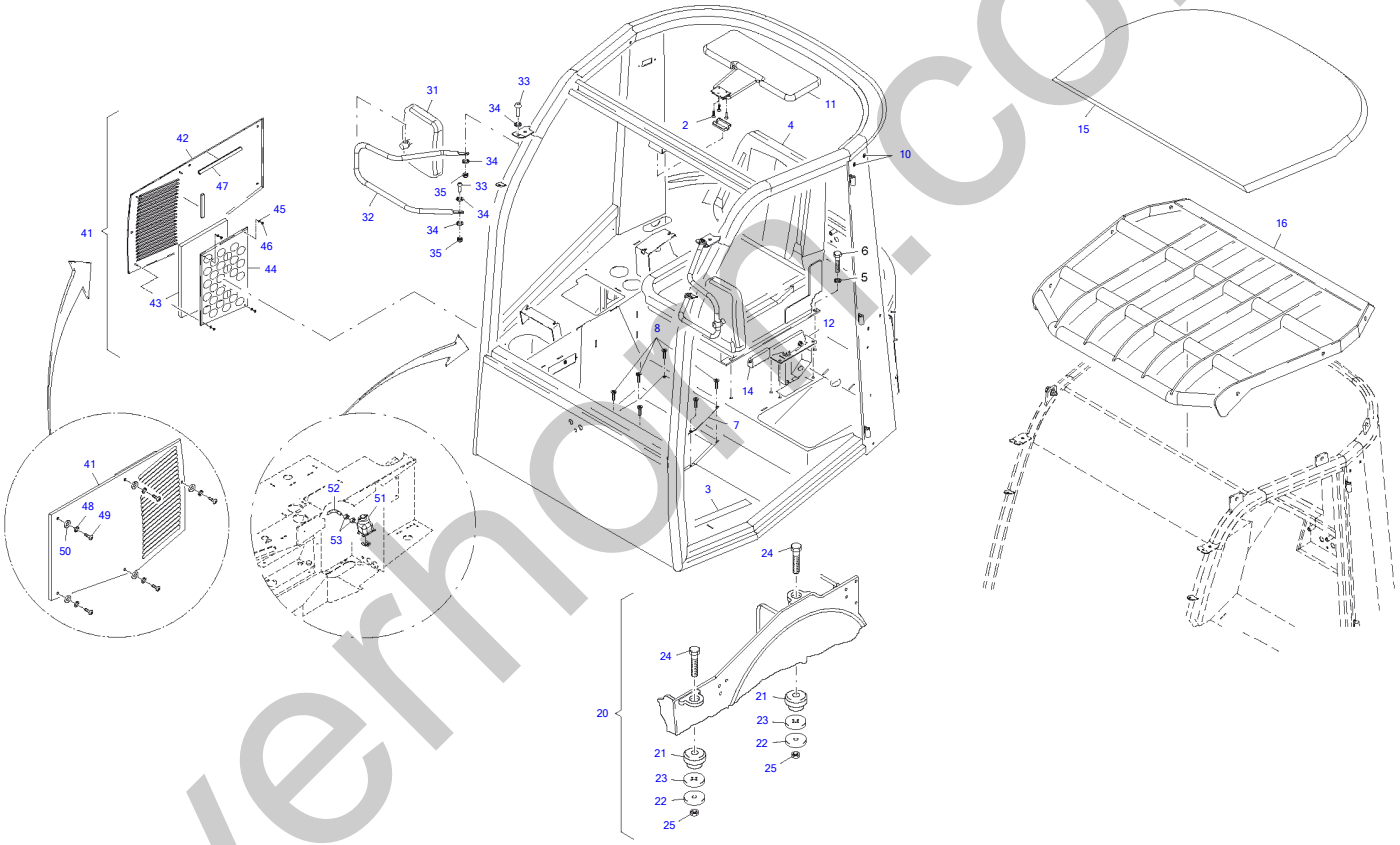

silverhill.co.uk

Cabin Canopy

Item	Part number	Description	Q'ty	Chan.	Serial No.	Serv.	Remarks
	8016507	Cabin Canopy	1				
2	1319084	Countersunk Screw A3C	3				
3	8014364	Nonskid Surfacing	1				
4	8013032	Driver Seat Compl	1				
5	8013871	Disk	5				
6	0893236	Hex Head Screw A3C	5				
7	8013441	Plate Cover	1				
8	1039405	Countersunk Screw Galvinized	8				
10	8005554	Blind Rivet	4				
11	8013428	Sun Shield	1				
12	8014176	Front Hand Brake Lever Bracket	1				
14	8014176	Hand Brake Lever	1				
15	8013355	Cabin Roof	1				
16	8012821	FOPS Grating Compl	1				
20	8013154	Cabin Bearing Compl	1				
21	8012143	Rubber Element	4				
22	2914645	Disk	4				
23	3924241	Rubber Washer	4				
24	3975695	Black Bolt	4				
25	1663967	Nut A3C	4				
31	3949091	Mirror	2				
32	3945575	Mirror Rod	2				
33	0893214	Hex Head Screw A3C	4				
34	0885849	Cup Spring	16				
35	0399760	Nut A3C	8				
41	8016796	Right Side Plate Compl	1				
42	8016797	Right Side Plate	1				
43	8014410	Air Filter	1				
44	8014409	Front Filter Plate	1				
45	0893076	Washer A3C	4				
46	0327286	Nut A3C	4				
47	8014411	Profiled Joint	1				
48	0851554	Washer	5				
49	8014013	Lens Head Screw A3C	5				
50	8016340	Rubber Washer	5				
51	8014421	Compensation Container	1				
52	8014425	Hose	1				
53	8014426	Clip	2				

silverhorn.co.uk

FOPS Grating Compl

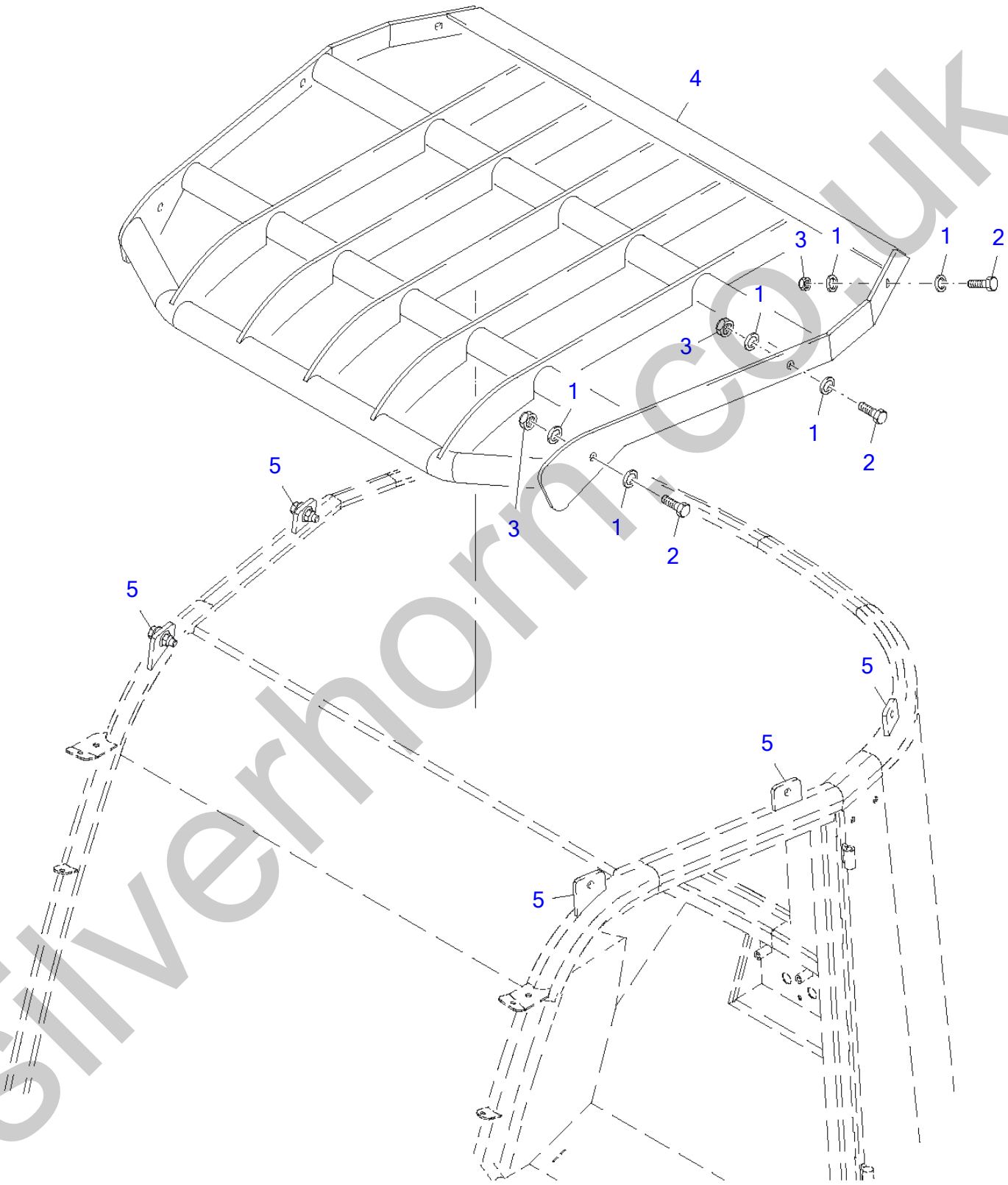

silverhorn.co.uk

FOPS Grating Compl

Item	Part number	Description	Q'ty	Chan.	Serial No.	Serv.	Remarks
	8012821	FOPS Grating Compl	1				
1	**8016790**	Disk	10				
2	**1391275**	Hex Head Screw A3C	6				
3	**0362165**	Nut A3C	5				
4	**8014566**	FOPS grating	1				
5	**8014565**	Parts Set	1				

silverhorn.co.uk

Covering

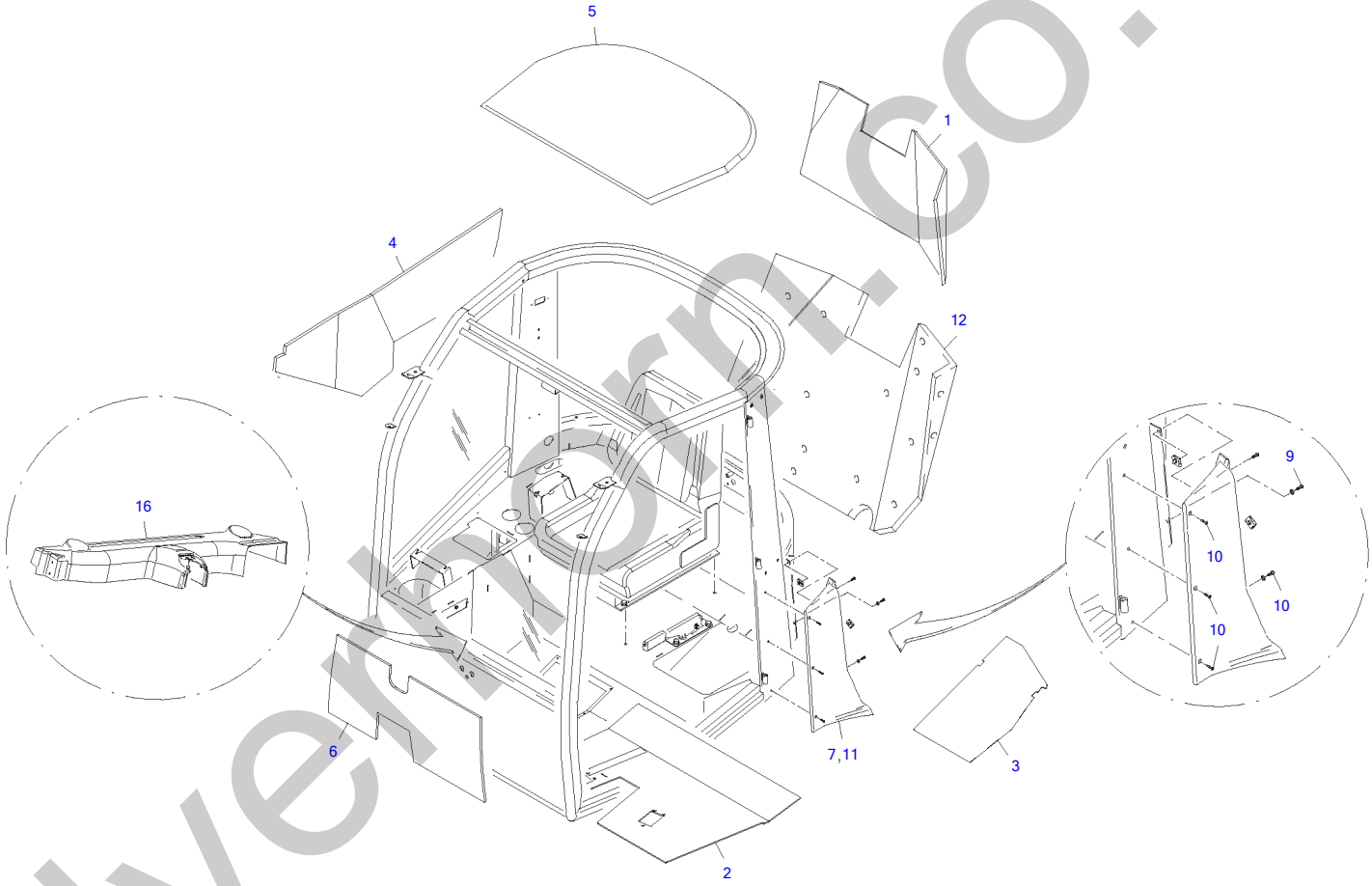

silvermorn.co.uk

Covering

Item	Part number	Description	Q'ty	Chan.	Serial No.	Serv.	Remarks
	8014357	Covering	1				
1	**8016803**	Damping Material	1				
2	**8013339**	Mat	1				
3	**8013340**	Rubber Mat	1				
4	**8016802**	Damping Material	1				
5	**8013341**	Inside Roof Lining	1				
6	**8013426**	Damping Material	1				
7	**5820154**	Left Covering	1				
9	**1356352**	Washer A3C	4				
10	**8007601**	Lens Head Screw	12				
11	**5820155**	Right Covering	1				
12	**8013381**	Damping Material	1				
16	**8016804**	Front Instrument Panel	1				

silverhorn.co.uk

Protective Canopy

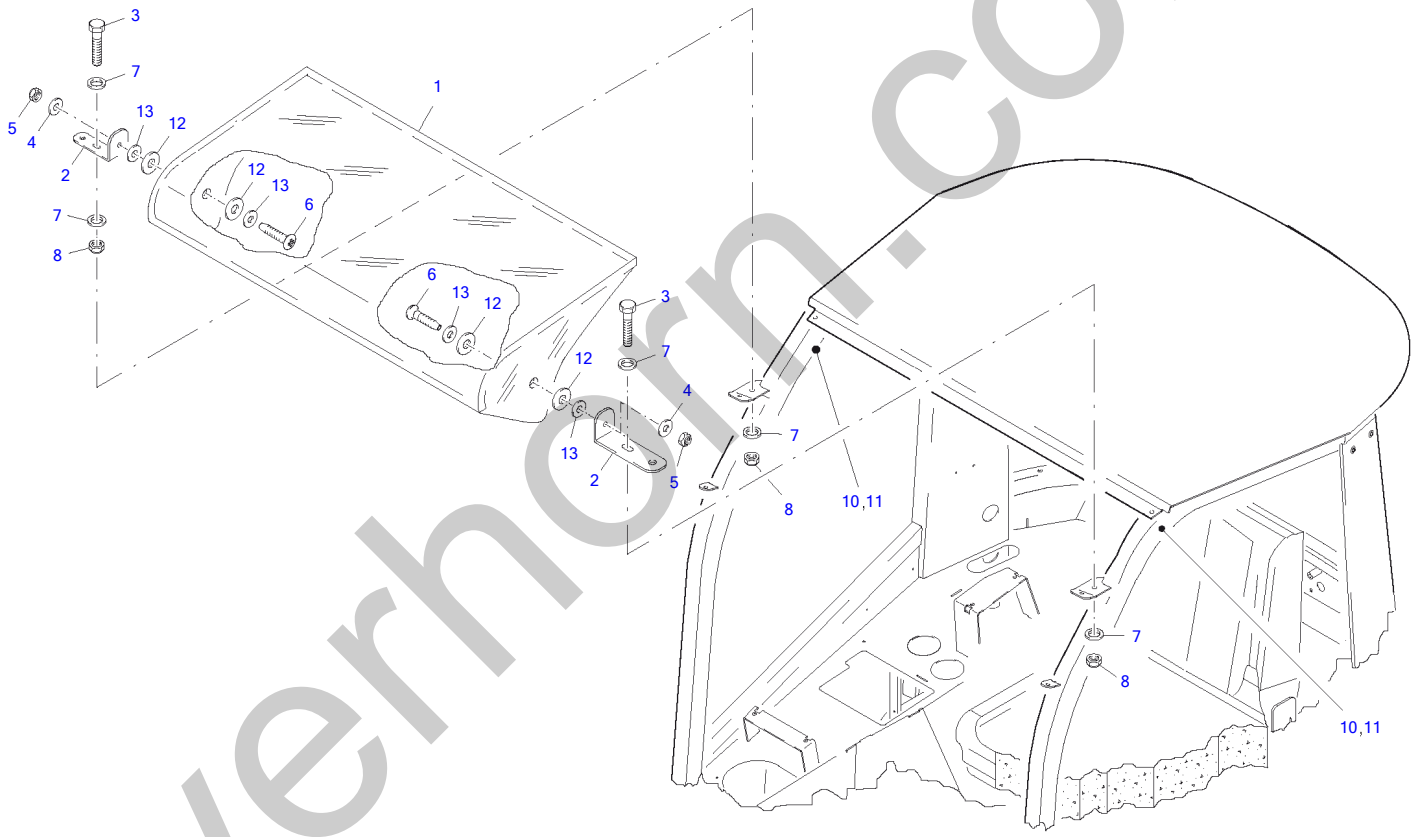

silverhorn.co.uk

Protective Canopy

Item	Part number	Description	Q'ty	Chan.	Serial No.	Serv.	Remarks
	8015046	Protective Covering	1				
1	**8015043**	Protective Canopy	1				
2	**8015045**	Holder	2				
3	**0893214**	Hex Head Screw A3C	2				
4	**0447985**	Washer A3C	4				
5	**0487336**	Nut A3C	2				
6	**0487314**	Oval Head Screw	2				
7	**1356341**	Washer A3C	4				
8	**0399760**	Nut A3C	2				
10	**1749299**	Cleaner and Activator	1				
11	**2907022**	Black Terostate-93	1				

silverhorn.co.uk

Steering Column Compl

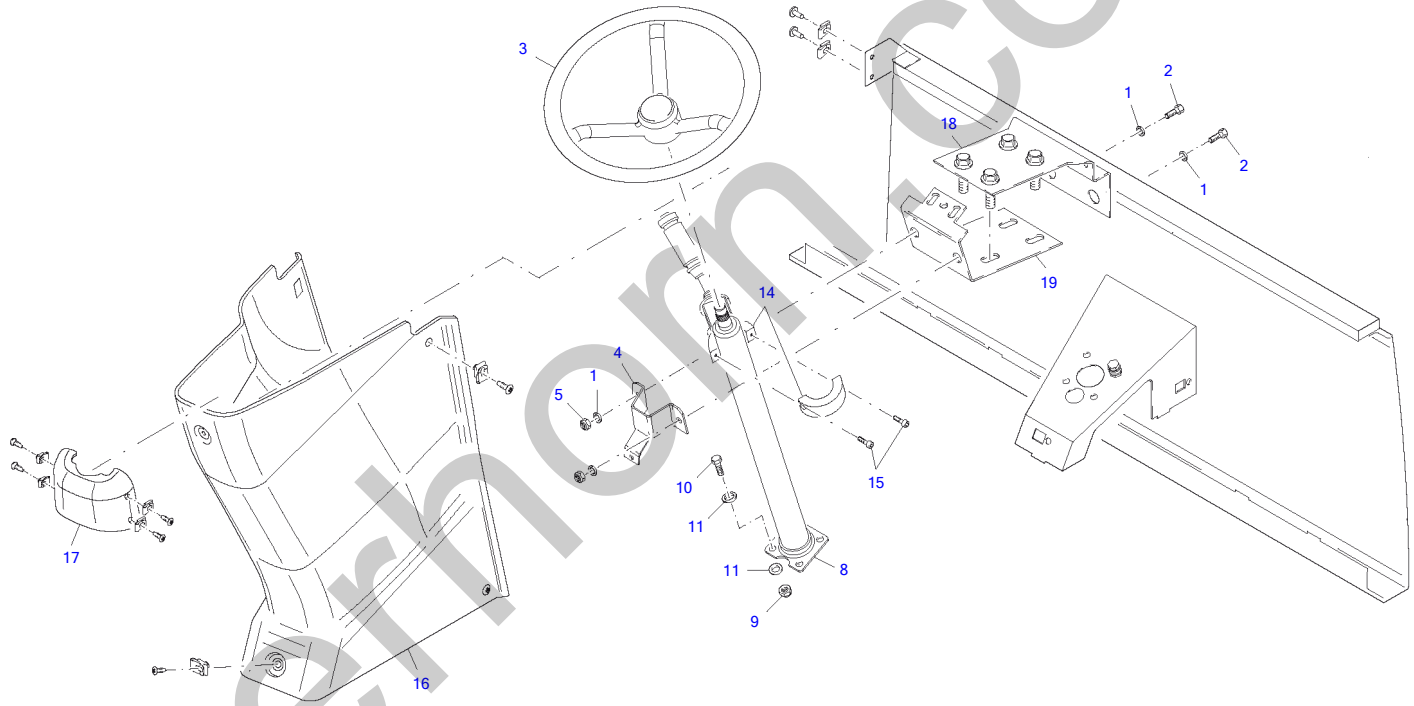

silverhorn.co.uk

Steering Column Compl

Item	Part number	Description	Q'ty	Chan.	Serial No.	Serv.	Remarks
	8014185	Steering Column Compl	1				
1	8013871	Disk	6				
2	0893236	Hex Head Screw A3C	4				
3	8015720	Steering Wheel	1				
	8012032	Slewing Handle Compl	1				
4	8014266	Front Steering Column Holder	1				
5	0876326	Nut	2				
8	8016818	Steering Column Canopy	1				
9	3977379	Nut A3C	4				
10	3983399	Self-Locking Bolt	4				
11	8014268	Disk	4				
14	3926787	Bracket	1				
15	1309184	Hex Head Cap Screw	2				
16	8013470	Steering Column Covering	1				
17	8013471	Steering Column Covering	1				
18	8013384	Front Steering Column Holder	1				

silverhorn.co.uk

Hyd Quick Release Var 1

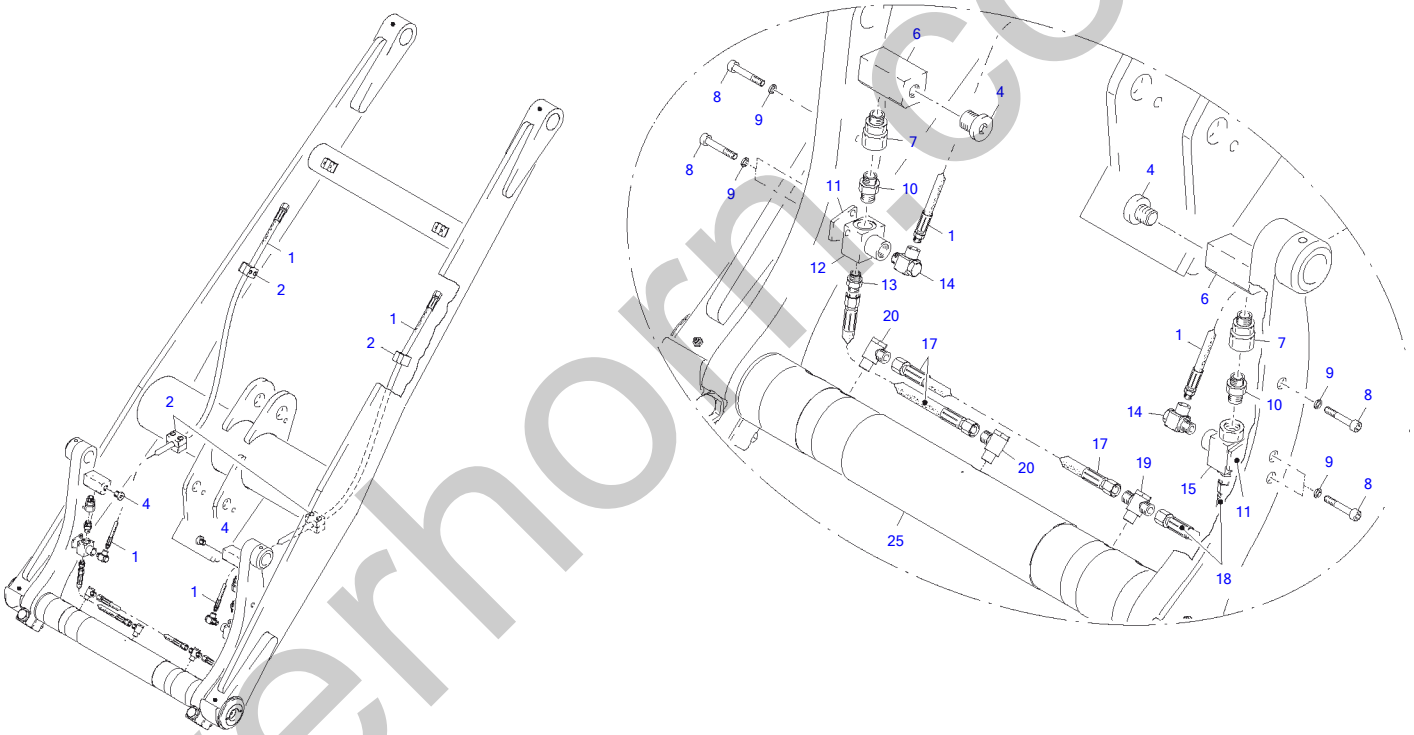

silverhorn.co.uk

Hyd Quick Release Eq Var 1

Item	Part number	Description	Q'ty	Chan.	Serial No.	Serv.	Remarks
	5820149	Hydraulic System QRC	1				
1	8012345	HP-Hose 10 X 1650	2				
2	8012614	Clip Body Compl	4				
4	3977437	Screw Coupling	2				
5	3977459	Red Protecting Cap	2				
6	3766647	Special Coupling	2				
7	2906032	Coupling A3C	2				
8	1389873	Hex Head Cap Screw	6				
9	0893043	Washer A3C	6				
10	2907657	Coupling A3C	2				
11	8010355	Plate	2				
12	2971746	Square Steel Bar	1				
13	2908501	Coupling A3C	1				
14	8013000	Slewing Coupling	2				
	1686179	Slewing Coupling	2				
15	2970905	Shutoff Cock	1				
16	0462780	Usit Ring U	2				
17	8003356	HP-Hose 8 X 425	2				
18	8003357	HP-Hose 8 X 200	1				
19	2456844	Coupling A3C	1				
20	2456822	Coupling A3C	2				
25	8010455	Hyd Quick Release Eq Var2	1				

silverhorn.co.uk

Hyd Quick Release Eq

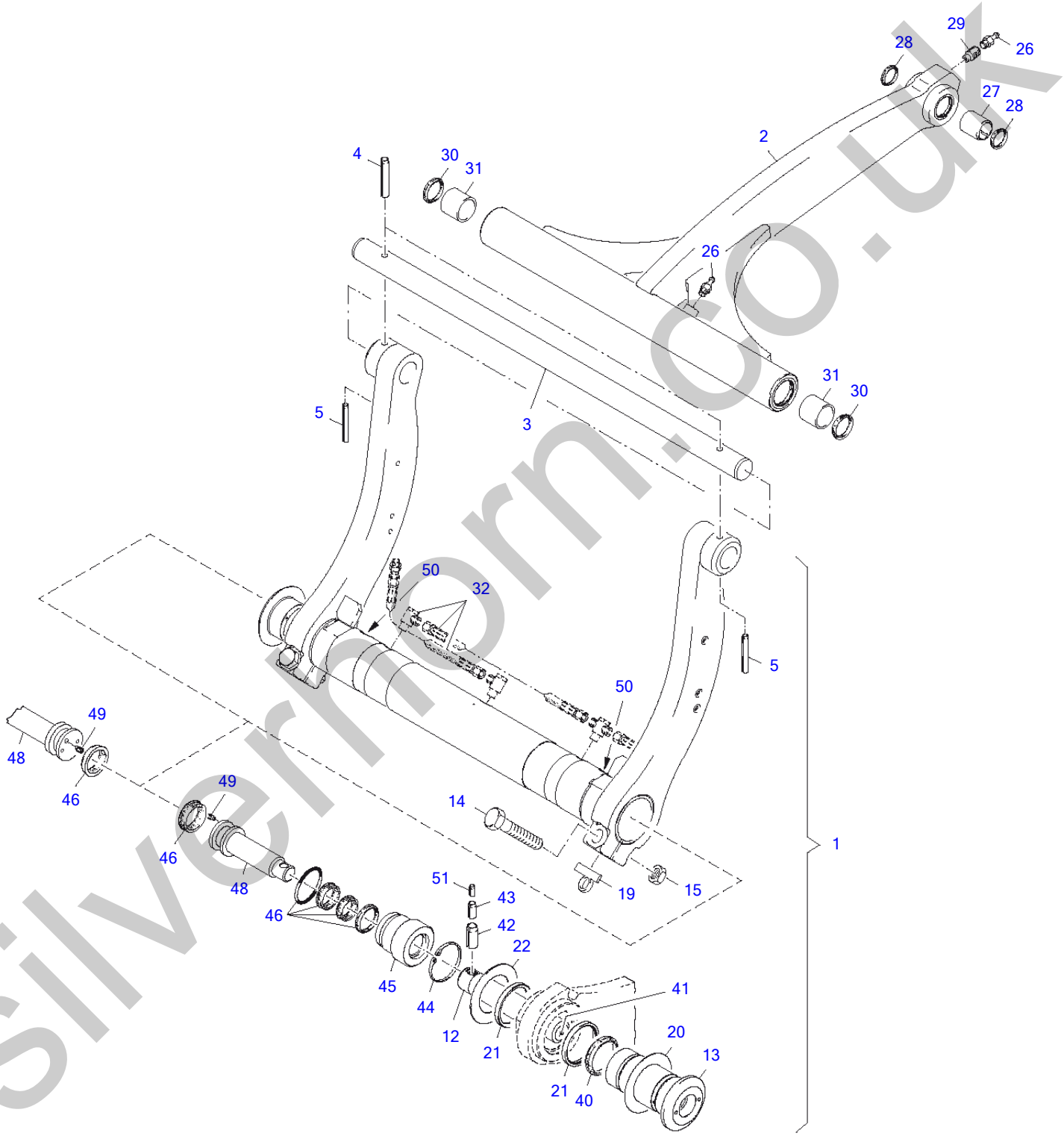

silverhorn.co.uk

Hyd Quick Release Eq

Item	Part number	Description	Q'ty	Chan.	Serial No.	Serv.	Remarks
	8010455	Hyd Quick Release Eq	1				
1	8010456	Hyd Quick Release Eq welded	1				
	8004487	Locking Ram	1				
2	5820237	Lever Compl	1				
3	3763848	Pin	1				
4	0443152	Adaptor Sleeve	2				
5	0440115	Adaptor Sleeve	2				
12	8006971	Locking Pin	2				
13	8003068	Bush	2				
14	0871014	Bolt	2				
18	8002713	Right Holder	1				
19	8003224	Packing	2				
20	2909137	Disk	2				
21	8002033	Wiper Seal	4				
22	2909137	Disk 1.0 MM	1				
	2909126	Disk 1.2 MM	1				
	2909115	Disk 1.5 MM	1				
	2900434	Disk 2.0 MM	1				
26	0324590	Grease Nipple	2				
27	2971042	Split Bush	1				
28	8001980	Wiper Seal	2				
29	2985537	Threaded Pin	1				
30	8002032	Wiper Seal	2				
31	8012303	Split Bush	2				
32	8016629	Hydraulic	1				
40	8007233	U-Ring Zurcon L-Cup	2				
41	1666675	Plug A3C	2				
42	8008026	Clamping Pin	2				
43	8008021	Clamping Pin	2				
44	3976674	Circlip Tone 400	2				
45	8007197	Piston Guide Ring	2				
46	8006428	Packing Set 50/28	1				
48	8007195	Piston Rod Compl	2				
49	8007209	Nozzle	2				
50	1629965	Plug A3C	2				
51	8008020	Clamping Pin	2				

silverhorn.co.uk

Pallet Fork Compl

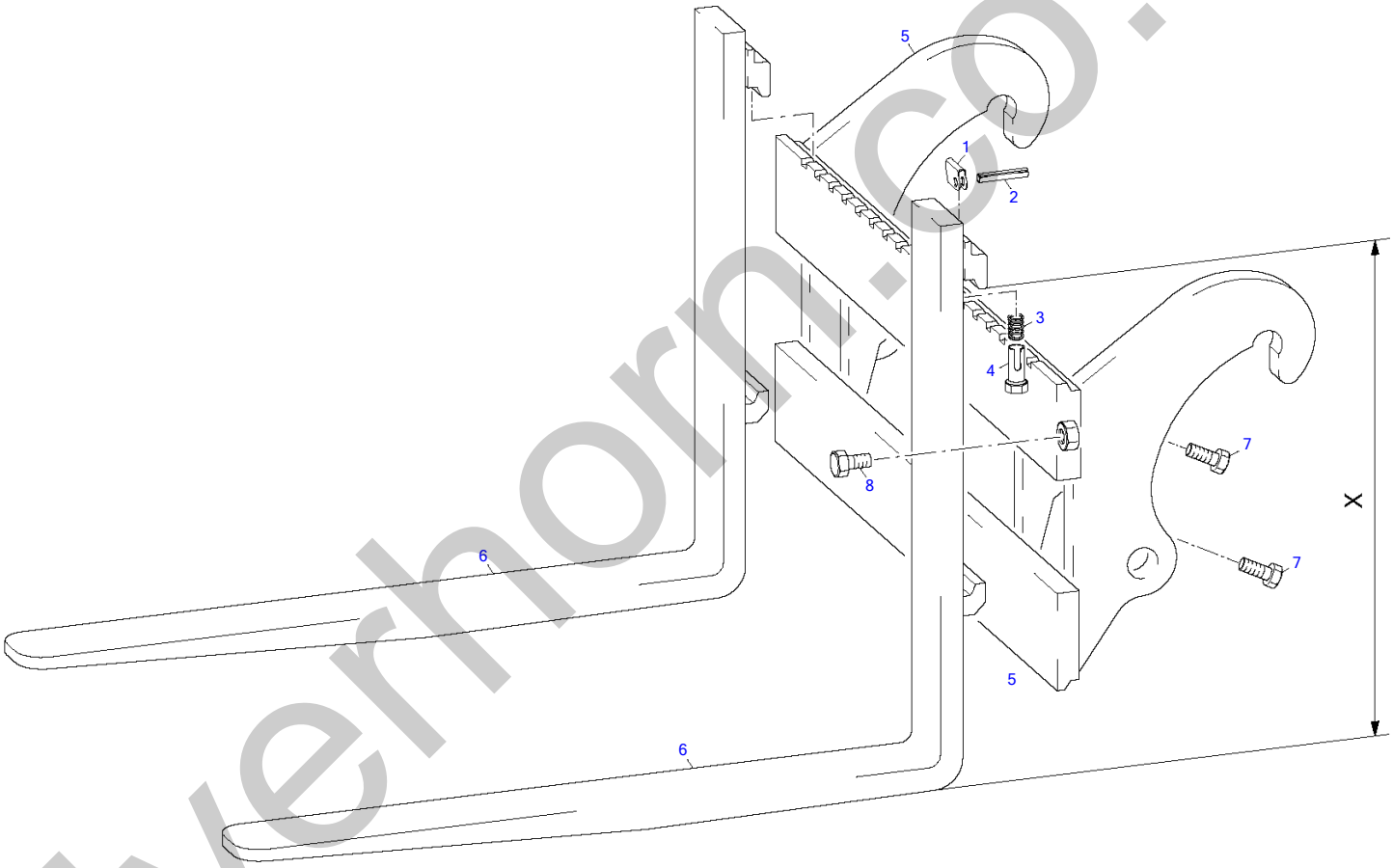

silverhorn.co.uk

Pallet Fork Compl

Item	Part number	Description	Q'ty	Chan.	Serial No.	Serv.	Remarks
	3705791	Pallet Fork Compl	1				
	3705155	Pallet Fork 1000LG 470 MM	1				
	3705804	Pallet Fork 1250LG 470 MM	1				
	3705815	Pallet Fork 1500LG 470 MM	1				
	8000986	Pallet Fork 1000LG 650 MM	1				
	8000987	Pallet Fork 1250LG 650 MM	1				
	8000988	Pallet Fork 1500LG 650 MM	1				
1	1008737	Stop	2				
2	0324056	Adaptor Sleeve	2				
3	0844237	Compression Spring	2				
4	0844226	Pin	2				
5	2976809	Fork Carrier Compl	1				
6	3738438	Forktine 1000LG 470MM 45MM	2				
	3738449	Forktine 1000LG 470MM 50MM	2				
	3738518	Forktine 1250LG 470MM 45MM	2				
	3738450	Forktine 1250LG 470MM 50MM	2				
	3738541	Forktine 1500LG 470MM 45MM	2				
	3738552	Forktine 2000LG 470MM 45MM	2				
	1002399	Forktine 1000LG 650MM 45MM	2				
	1718009	Forktine 1250LG 650MM 45MM	2				
	1718010	Forktine 1500LG 650MM 40MM	2				
7	2986765	V-Plus Bolt	2				
8	0398918	Hex Head Screw A3C	2				

silverhorn.co.uk

Decals & Accessories

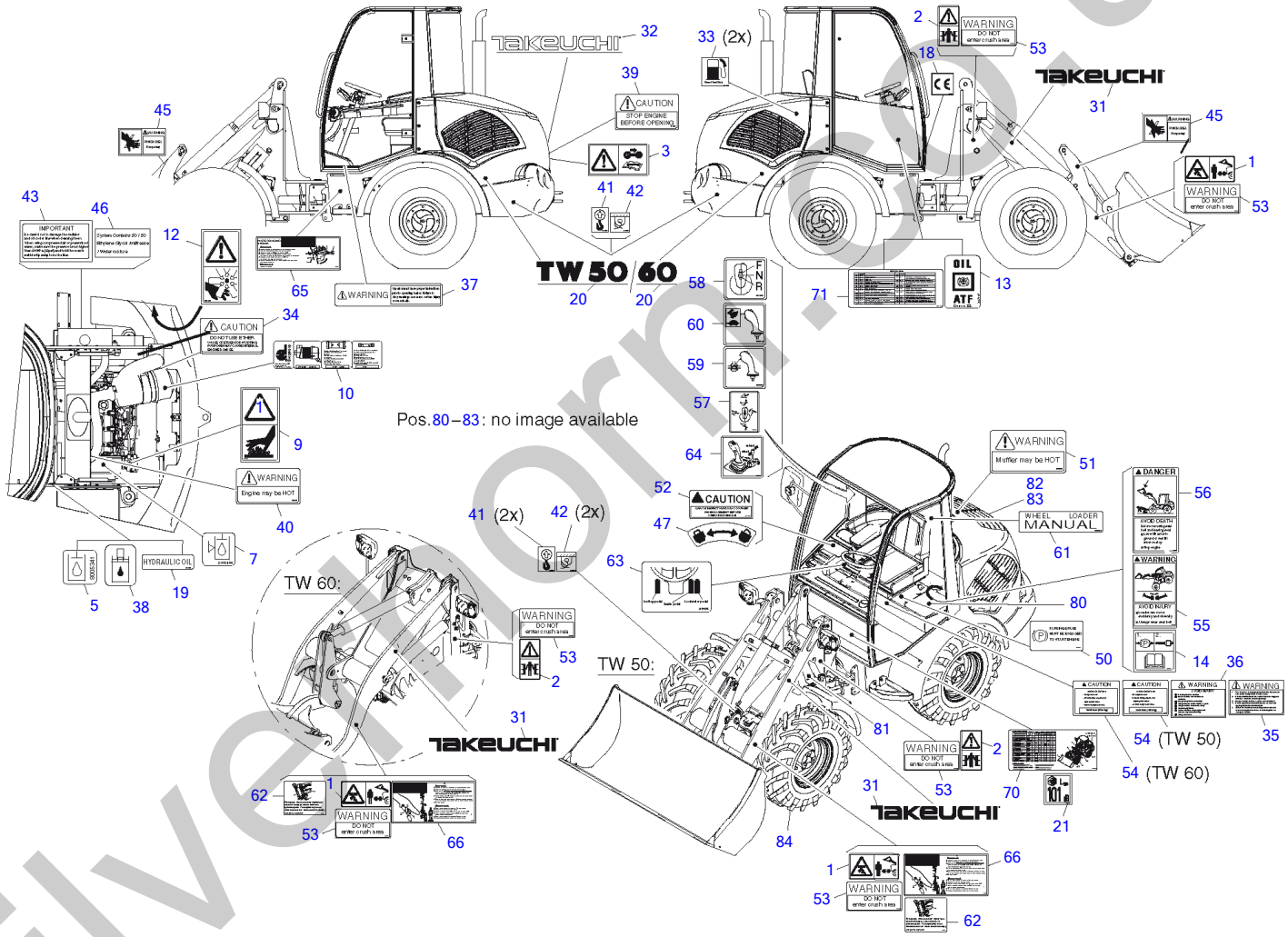

silvermorn.co.uk

Decals & Accessories

Item	Part number	Description	Q'ty	Chan.	Serial No.	Serv.	Remarks
	8016620	Decals & Accessories	1				
1	8006865	Decal	2				
2	8004895	Decal	2				
3	8006864	Decal	1				
5	8005341	Decal	1				
7	8005466	Decal	1				
9	8004896	Decal	1				
10	2993037	Air Filter Maintenance Plate	1				
12	8004894	Decal	1				
13	2447967	Decal	1				
14	8005340	Decal	1				
18	2995200	Decal	1				
19	1746661	Decal	1				
20	8016842	Decal	2				
	8016843	Decal	2				
21	8007833	Acoustic Power Decal	1				
31	8016557	Decal	2				
32	8016556	Decal	1				
33	8016484	Decal	2				
34	8016486	Decal	1				
35	8016487	Decal	1				
36	8016488	Decal	1				
37	8016489	Decal	1				
38	8016547	Decal	1				
39	8016548	Decal	1				
40	8016549	Decal	1				
41	8019506	Decal	4				
42	8019507	Decal	4				
43	8016552	Decal	1				
45	8016554	Decal	2				
46	8016485	Decal	1				
47	8016555	Decal	1				
50	8016490	Decal	1				
51	8016491	Decal	1				
52	8016493	Decal	1				
53	8016494	Decal	4				
54	8016503	Decal	1				
	8016504	Decal	1				
55	8016511	Decal	1				
56	8016512	Decal	1				
57	8016533	Decal	1				
58	8016536	Decal	1				
59	8016538	Decal	1				
60	8016540	Decal	1				
61	8016558	Decal	1				
62	8016559	Decal	1				
63	8016565	Decal	1				
64	8016567	Decal	1				
65	8016616	Decal	1				
66	8016617	Decal	1				
70	8016502	Decal	1				
71	8016569	Decal	1				
80	2983591	Handle	1				
81	0806253	Wedge	1				
82	8005871	Tool Box Compl	1				
83	5820197	Stabilizers	1				
	3766056	Stablizers	1				
84	8012741	Wheel 335/80 R20 Em01	4				
	8012740	Tire 405/70 R20 MT	4				
	3933526	Rim 11.0-20ET+ 10	4				
	0874324	Valve	4				

silverhorn.co.uk

Protective Hoses

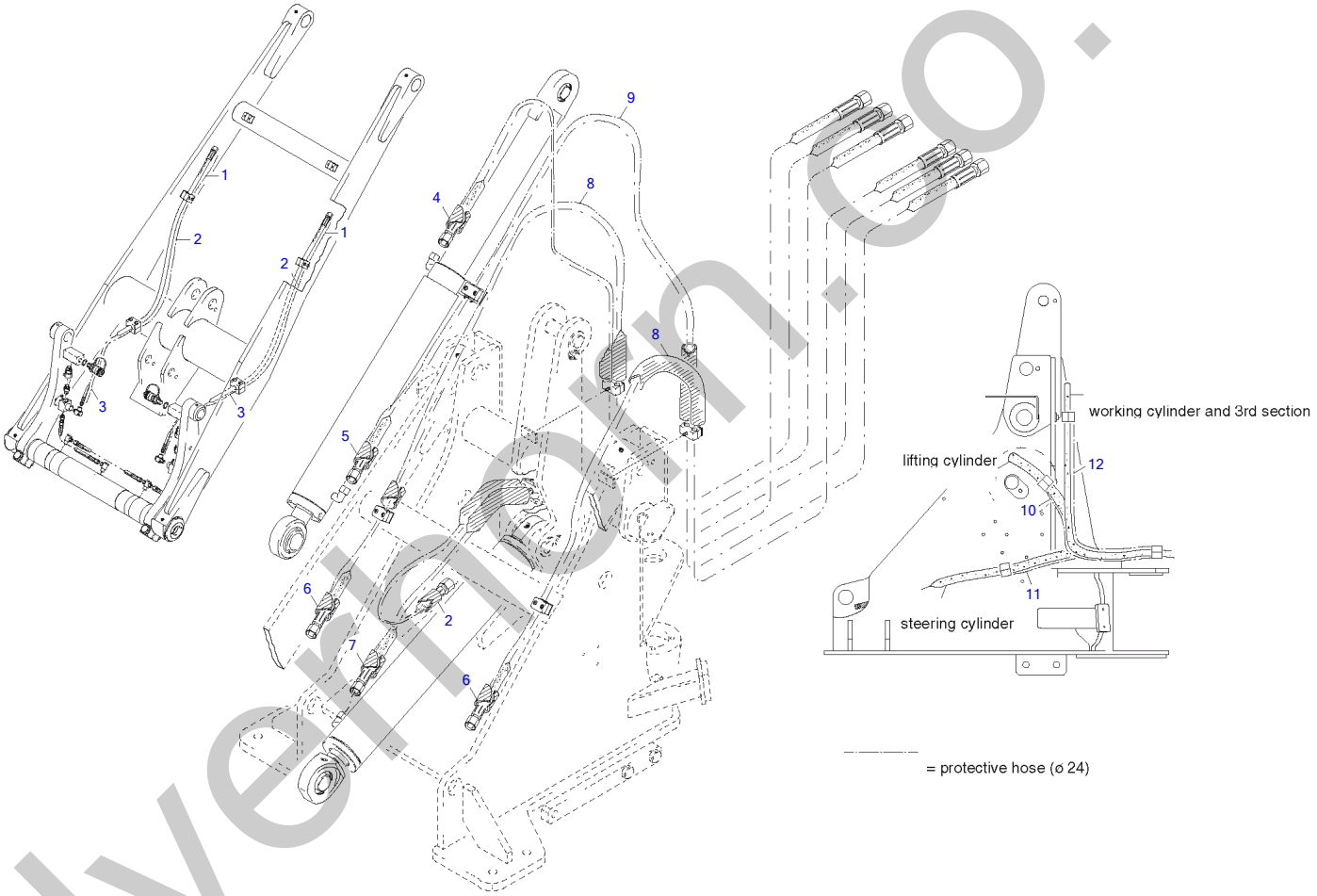

silverthorn.co.uk

Protective Hoses

Item	Part number	Description	Q'ty	Chan.	Serial No.	Serv.	Remarks
	8016643	Protective Hoses	1				
1	**2065716**	Flex Tube 100 MM	2				
2	**2065716**	Flex Tube 550 MM	3				
3	**2065716**	Flex Tube 900 MM	2				
4	**2065716**	Flex Tube 950 MM	1				
5	**2065716**	Flex Tube 650 MM	1				
6	**2065716**	Flex Tube 250 MM	2				
7	**2065716**	Flex Tube 850 MM	1				
8	**2065716**	Flex Tube 750 MM	2				
9	**2065716**	Flex Tube 1000 MM	1				
10	**2065716**	Flex Tube 400 MM	2				
11	**2065716**	Flex Tube 350 MM	2				
12	**2065716**	Flex Tube 500 MM	4				

silverhorn.co.uk

Filter Set

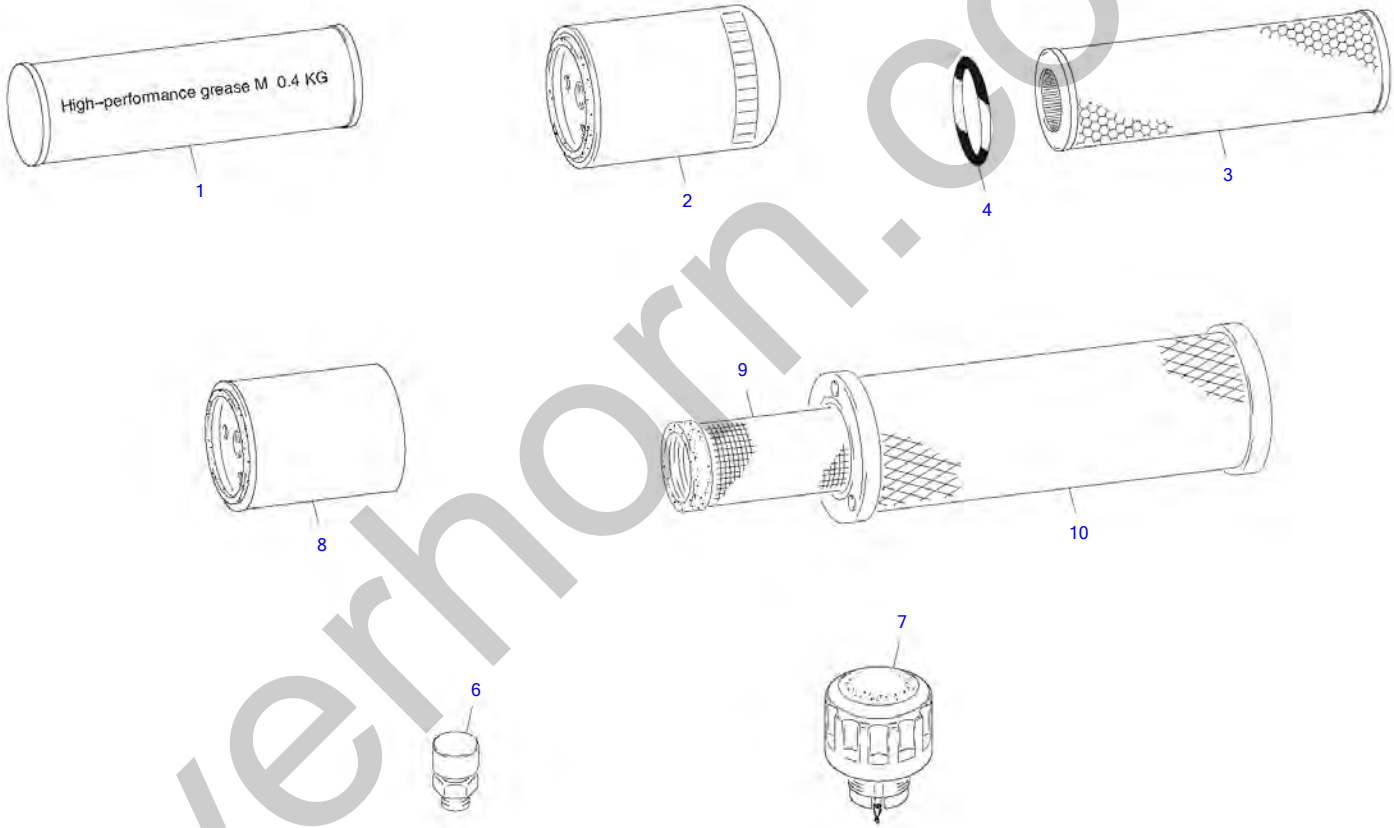

silverhorn.co.uk

Filter Set

Item	Part number	Description	Q'ty	Chan.	Serial No.	Serv.	Remarks
	5820279	Filter Set A/B	1				
	5820280	Filter Set C	1				
1	0346905	Grease Cartrdige	5				
2	8010489	Oil Filter	1				
3	8012354	Filter Element	1				
4	2917842	O-Ring	1				
6	3968889	Air Vent	2				
7	5820136	Filling Filter	1				
8	8010490	Fuel Filter	1				
9	2991557	Filter Element	1				
10	2991546	Filter Element	1				
11	8011202	Diesel Pre-Filters	1				

silverhorn.co.uk

Covering

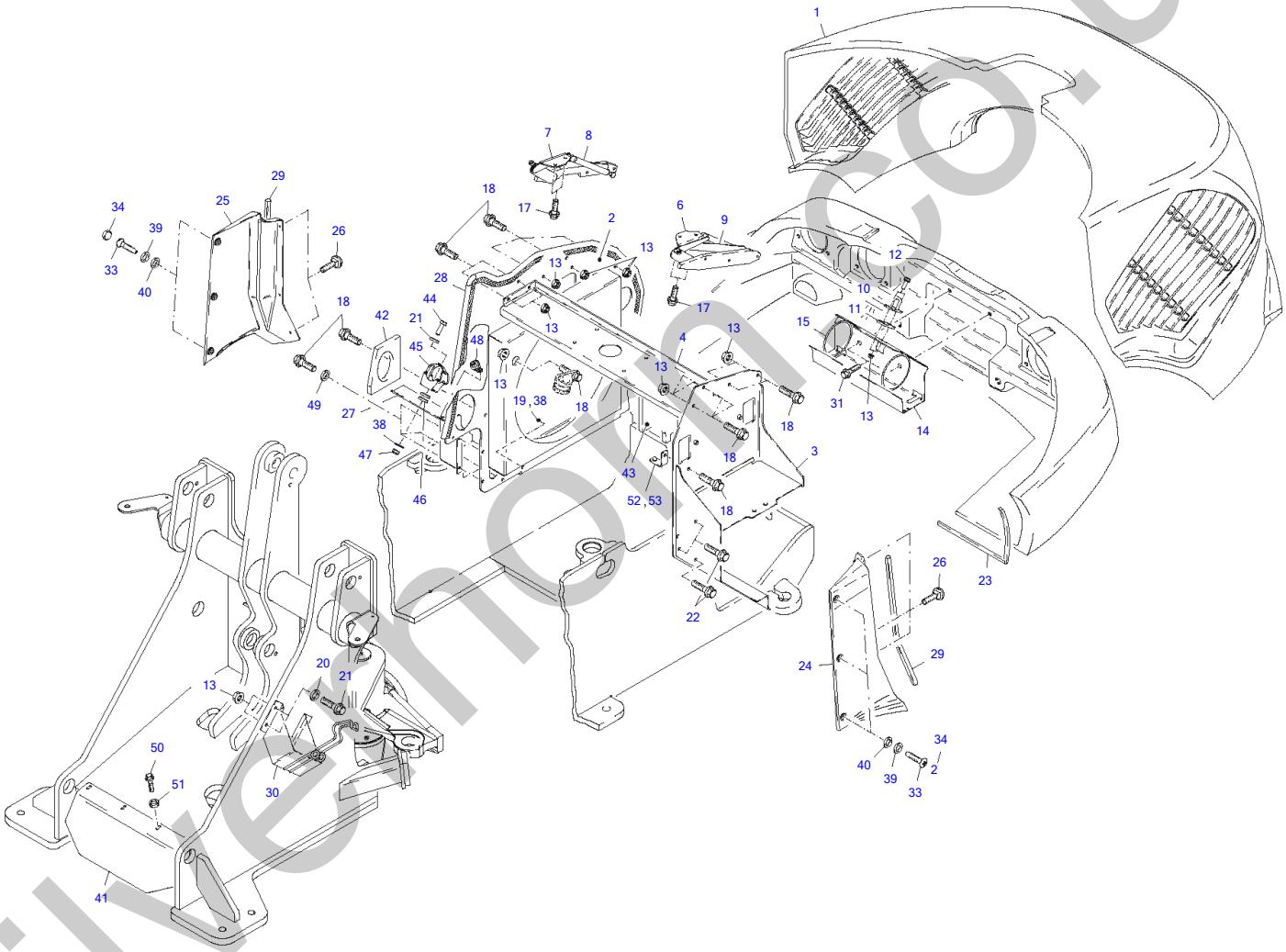

silvermoon.co.uk

Covering

Item	Part number	Description	Q'ty	Chan.	Serial No.	Serv.	Remarks
	5820078	Covering	1				
1	8016808	Engine Hood Compl	1				
2	5820105	Right Side Plate Compl	1				
3	5820119	Left Side Plate Compl	1				
4	5820123	Plate	1				
5	5820118	Plate	1				
6	3930169	Left Joint	1				
7	3930170	Right Joint	1				
8	3946167	Gas Spring	1				
9	3946112	Gas Spring	1				
10	3975811	Clamp Strap	1				
11	3948885	Plate	1				
12	8009775	Serrated Hex Head Screw	2				
13	1722787	Serrated Nut	20				
14	3941173	Plate ZN	1				
15	1784861	Gasket	2				
17	2449607	Serrated Hex Head Screw	7				
18	8009782	Serrated Hex Head Screw	14				
19	1398307	Hex Head Screw A3C	2				
20	0893189	Hex Head Screw A3C	4				
21	0863138	Washer A3C	4				
22	2916794	Self-Locking Bolt	3				
23	0909304	Profile Rubber 600 MM	2				
24	5820154	Left Covering White	1				
	8012503	Left Covering	1				
25	5820155	Right Covering White	1				
	8012504	Right Covering	1				
26	3934378	Oval Head Screw	6				
27	5820163	Holder Compl	1				
28	5820077	Profile Rubber 1700 MM	1				
29	3976754	Profile Rubber 530 MM	2				
30	0806264	Wedge Holder	1				
31	8003057	Serrated Hex Head Screw	2				
33	0493447	Lens Head Screw A3C	6				
34	3976594	Protecting Cap	6				
38	2481254	Ripp Washer A3C	2				
39	3976583	Disk	6				
40	3937224	Disk	6				
41	5820275	Plate	1				
42	5820281	Damping	1				
43	5820282	Damping	1				
44	0893214	Hex Head Screw A3C	1				
45	3955919	Holder	1				
46	1356341	Washer A3C	2				
47	0399760	Nut A3C	1				
48	2443576	Clip Norma	1				
49	3939464	Ripp Washer A3C	3				
50	0893236	Hex Head Screw A3C	4				
51	8016479	Locking Washer A3C	4				

silverhorn.co.uk

Engine Hood Compl

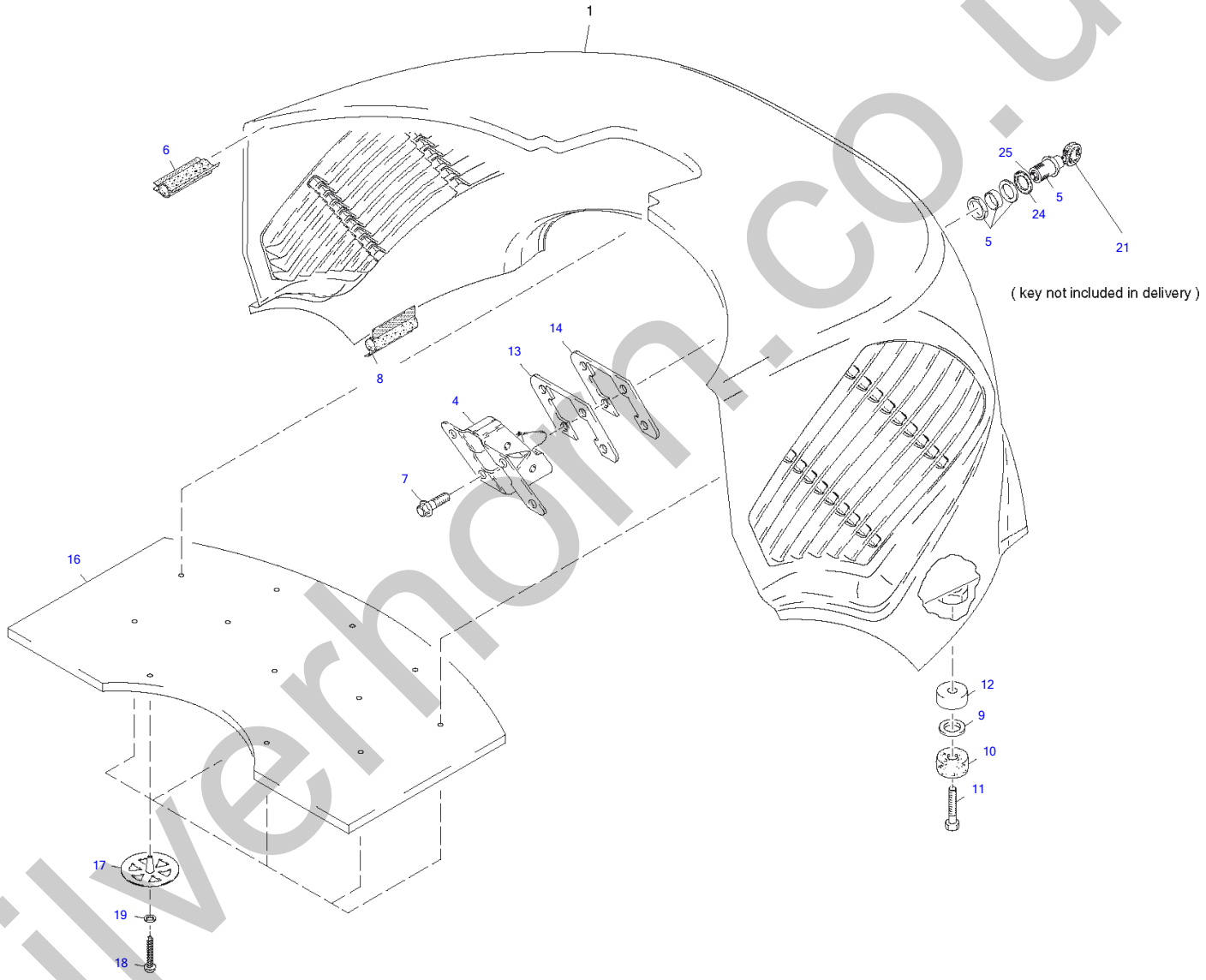

silverhorn.co.uk

Engine Hood Compl

Item	Part number	Description	Q'ty	Chan.	Serial No.	Serv.	Remarks
	8016808	Engine Hood Compl	1				
1	8016798	Engine Hood	1				
4	3975822	Hood Lock	1				
5	5820277	Lock	1				
6	3930614	Profile Rubber 1190 MM	1				
7	8009775	Serrated Hex Head Screw	4				
8	8015919	Profile Rubber 2375 MM	1				
9	1629567	Washer A3C	2				
10	0466364	Round Buffer	2				
11	3934390	Bolt A3B	2				
12	3946123	Spacer	2				
13	3936405	Plate	1				
14	8011935	Plate Compl	1				
16	8014434	Damping	1				
17	1786874	Clip	11				
18	3963340	Lens Head Screw A3R	11				
19	3754427	Washer A3R	11				
21	8008049	Key	1				
24	3945757	Disk	1				
25	2997224	Serrated Hex Head Screw	1				

silverhorn.co.uk

TW5060WHEELHD
TW5060TIREHD

TWWHEELHDFL
TW5060TIREFLOAT

silverhorn.co.uk

Wheels & Tires

Item	Part number	Description	Q'ty	Chan.	Serial No.	Serv.	Remarks
1	**TW5060WHEELHD**	WHEEL 18X9 FOR HD CONSTRUCTION TIRE TW50-60	4				
2	**TW5060TIREHD**	TIRE 12.5/80X18-10 HD CONSTRUCTION TYPE FOR TW50-60	4				
3	**TWWHEELHDFL**	WHEEL 19.5X12.25 FOR TW50-60 FLOAT AND TW65-80 HD	4				
4	**TW5060TIREFLOAT**	TIRE 15X19.5-8 FLOTATION TYPE FOR TW50-60	4				

silverhorn.co.uk