PARTS MANUAL

TL6R

Serial No.406000005~

BR2Z000-1-A [P-TL6R_E-XC]

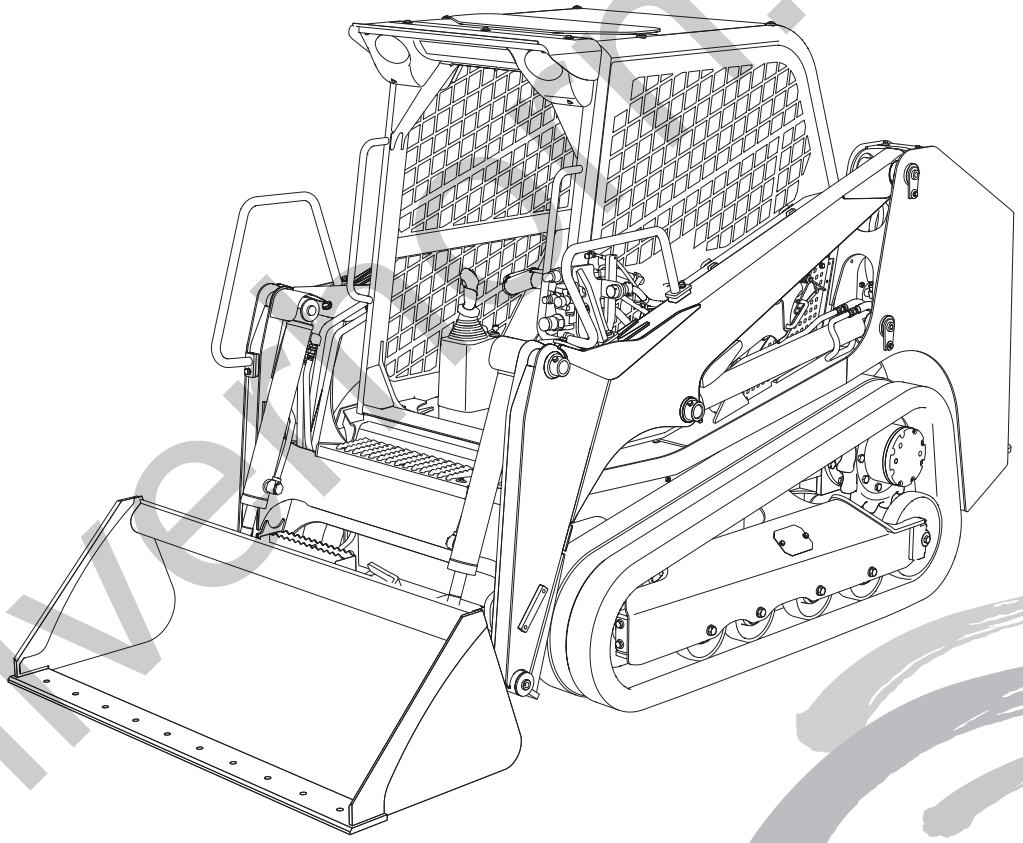

silverhill.co.uk

TRACK LOADER

TAKEUCHI

UNDERCARRIAGE

TRACK ROLLER . . . 1
FRONT IDLER . . . 5
TRACK ADJUSTER . . . 7
TRAVEL DEVICE . . . 9
CRAWLER BELT . . . 11

MAIN FRAME & CONTROL LEVER

FRAME . . . 13
OPERATION LEVER & STAND . . . 15
PIPING; OPERATION LEVER 1 . . . 17
PIPING; OPERATION LEVER 2 . . . 19

ENGINE & ELECTRICAL SYSTEM

ENGINE & ACCESSORIES (1/5) . . . 21
ENGINE & ACCESSORIES (2/5) . . . 25
ENGINE & ACCESSORIES (3/5) . . . 29
ENGINE & ACCESSORIES (4/5) . . . 31
ENGINE & ACCESSOREIS (5/5) . . . 33
FOOT ACCELERATOR . . . 35
ELECTRICAL (1/2) 1 . . . 37
ELECTRICAL (1/2) 2 . . . 39
ELECTRICAL (1/2) 3 . . . 41
ELECTRICAL (2/2) 1 . . . 43
ELECTRICAL (2/2) 2 . . . 49
ELECTRICAL (attachment) . . . 51
GPS DEVICE . . . 53
DISPLAY(with out rear view camera) . . . 55
DISPLAY(with rear view camera) . . . 57
BATTERY . . . 59
WINDOW WASHER . . . 61
RADIO . . . 63
REAR VIEW CAMERA . . . 65

HYDRAULIC PIPING & TANK

VALVE & ACCESSORIES (1/2) 1 . . . 67
VALVE & ACCESSORIES (1/2) 2 . . . 69
VALVE & ACCESSORIES (2/2) . . . 73
PIPING 1 . . . 75
PIPING 2 . . . 77
PUMP DRIVE . . . 79
HYDRAULIC TANK 1 . . . 81
HYDRAULIC TANK 2 . . . 83
FUEL TANK & FUEL PIPING (1/2) 1 . . . 85
FUEL TANK & FUEL PIPING (1/2) 2 . . . 87
FUEL TANK & FUEL PIPING (2/2) . . . 91

COVER & CAB

COVER (1/3) (canopy) . . . 93
COVER (2/3) (engine hood) (cab) . . . 97
COVER (1/3) (cab) . . . 99
COVER (2/3) (engine hood) (canopy) . . . 103
COVER (3/3) (rear door) . . . 105
FLOOR FRAME . . . 109
SEAT (1/2) . . . 111
SAFETY BAR . . . 113
CANOPY MOUNT . . . 115
CANOPY . . . 119
CANOPY INTERIOR . . . 121

silverhorn.co.uk

CAB MOUNT . . . 123
CAB (1/2) 1 . . . 127
CAB (1/2) 2 . . . 129
CAB (1/2) 3 . . . 131
CAB (1/2) 4 . . . 133
CAB (2/2) (front door) . . . 135
CAB (3/3) (side sash) . . . 139
CAB INTERIOR . . . 141
SWITCHES (canopy) (for U.S.) . . . 143
SWITCHES (cab) (for U.S.) . . . 145
AIR CONDITIONER (1/4) (compressor) . . . 147
AIR CONDITIONER (2/4) (condenser) . . . 151
AIR CONDITIONER (3/4) (air conditioner unit) . . . 153
AIR CONDITIONER (4/4) . . . 155

ATTACHMENT
ARM (1/3) . . . 157
ARM (2/3) 1 . . . 161
ARM (2/3) 2 . . . 163
ARM (3/3) . . . 165
QUICK HITCH . . . 167
QUICK HITCH (hydraulic type) 1 . . . 169
QUICK HITCH (hydraulic type) 2 . . . 173
PIPING; ARM . . . 175

DECAL & TOOL
DECAL (canopy) (English) (for U.S.) 1 . . . 177
DECAL (canopy) (English) (for U.S.) 2 . . . 181
DECAL (cab) (English) (for U.S.) 1 . . . 185
DECAL (cab) (English) (for U.S.) 2 . . . 189
DECAL (hydraulic quick hitch type) . . . 193
DECAL (foot accelerator) . . . 195
DECAL (lever operation) . . . 197
PAINTED COLOR . . . 199

HYDRAULIC DEVICE
CONTROL VALVE . . . 201
PILOT VALVE (R.H.) . . . 205
PILOT VALVE (L.H.) . . . 207
HANDLE (with slide switch) . . . 209
HANDLE (with 5 switch) . . . 211
SUB VALVE . . . 213
SOLENOID VALVE; 1 BLOCK . . . 215
SOLENOID VALVE; 1 BLOCK . . . 217
SOLENOID VALVE; 1 BLOCK . . . 219
SOLENOID VALVE; 2 BLOCKS . . . 221
RELIEF VALVE . . . 223
BUCKET CYLINDER (L.H.) . . . 225
BUCKET CYLINDER (R.H.) . . . 227
LIFT ARM CYLINDER . . . 229
QUICK HITCH CYLINDER . . . 231
TRAVEL MOTOR (1/3) . . . 233
TRAVEL MOTOR (2/3) . . . 235
TRAVEL MOTOR (3/3) . . . 237
HYDRAULIC PUMP (1/4) . . . 239
HYDRAULIC PUMP (2/4) . . . 241
HYDRAULIC PUMP (3/4) . . . 243
HYDRAULIC PUMP (4/4) . . . 245
GEAR PUMP . . . 247

silverhorn.co.uk

ENGINE - KUBOTA V2403-CR-TE4B-TLTU-1 S/N 406000005-

Fig.1 CRANK CASE . . . 249
Fig.2 OIL PAN . . . 251
Fig.3 DIPSTICK AND GUIDE . . . 253
Fig. 4 OIL PUMP . . . 255
Fig.5 CYLINDER HEAD . . . 257
Fig.6 INLET VALVE AND EXHAUST VALVE . . . 259
Fig.7 ROCKER ARM SHAFT . . . 261
Fig.8 HEAD COVER . . . 263
Fig.9 GEAR CASE . . . 265
Fig.10 OIL FILTER . . . 267
Fig.11 MAIN BEARING CASE . . . 269
Fig.12 PISTON AND CRANKSHAFT . . . 271
Fig.13 CAMSHAFT AND IDLE GEAR SHAFT . . . 273
Fig.14 FLYWHEEL . . . 275
Fig.15 FUEL PUMP (MECHANICAL) . . . 277
Fig.16 FUEL CAMSHAFT . . . 279
Fig.17 SUPPLY PUMP . . . 281
Fig.18 FUEL FILTER . . . 283
Fig.19 SEPARATOR . . . 285
Fig.20 INJECTOR AND GLOW PLUG . . . 287
Fig.21 INJECTION PIPE . . . 289
Fig.22 FUEL PUMP (ELECTRICAL) . . . 291
Fig.23 COMMON RAIL . . . 293
Fig.24 ALTERNATOR AND PULLEY . . . 295
Fig.25 ALTERNATOR (COMPONENT PARTS) . . . 297
Fig.26 STARTER . . . 299
Fig.27 STARTER (COMPONENT PARTS) . . . 301
Fig.28 OIL SWITCH AND THERMOMETER . . . 303
Fig.29 INJECTOR HARNESS . . . 305
Fig.30 WIRE HARNESS . . . 307
Fig.31 WIRE HARNESS BRACKET . . . 309
Fig.32 WATER FLANGE AND THERMOSTAT . . . 311
Fig.33 WATER HOSE . . . 313
Fig.34 WATER PUMP . . . 315
Fig.35 RESERVE TANK . . . 317
Fig.36 FAN . . . 319
Fig.37 INLET MANIFOLD . . . 321
Fig.38 INLET PIPE . . . 323
Fig.39 EXHAUST MANIFOLD . . . 325
Fig.40 EGR VALVE . . . 327
Fig.41 EGR COOLER . . . 329
Fig.42 TURBO CHARGER . . . 331
Fig.43 DIESEL PARTICULATE FILTER MUFFLER . . . 333
Fig.44 DIESEL PARTICULATE FILTER MUFFLER BRACKET . . . 335
Fig.45 DIESEL PARTICULATE FILTER MUFFLER SENSOR . . . 337
DPF CLEANING PROGRAM REV 021418 . . . 339
DPF CLEANING ORDER FORM - REV 021418 . . . 341
Fig.46 PRESSURE PIPE . . . 342
Fig.47 OIL SEPARATOR . . . 345
Fig.48 OIL SEPARATOR (COMPONENT PARTS) . . . 347
Fig.49 OIL PIPE (TURBO CHARGER) . . . 349
Fig.50 OIL COOLER . . . 351
Fig.51 ECU . . . 353
Fig.52 ACCESSORIES AND SERVICE PARTS . . . 355

KITS, ATTACHMENTS & QUICK REFERENCE

BUCKETS-BLADES-ATTACHMENTS . . . 357
BLOCK HEATERS . . . 359

silverhorn.co.uk

RECOMMENDED STOCK LIST (TL6R) 361
TAKEUCHI FLEET MANAGEMENT COMPONENT GUIDE 363
TFM-FUSE DETAIL 11-18-16 370
Appendix A:Pages Index 376
Appendix B:Parts Index 378

silverhorn.co.uk

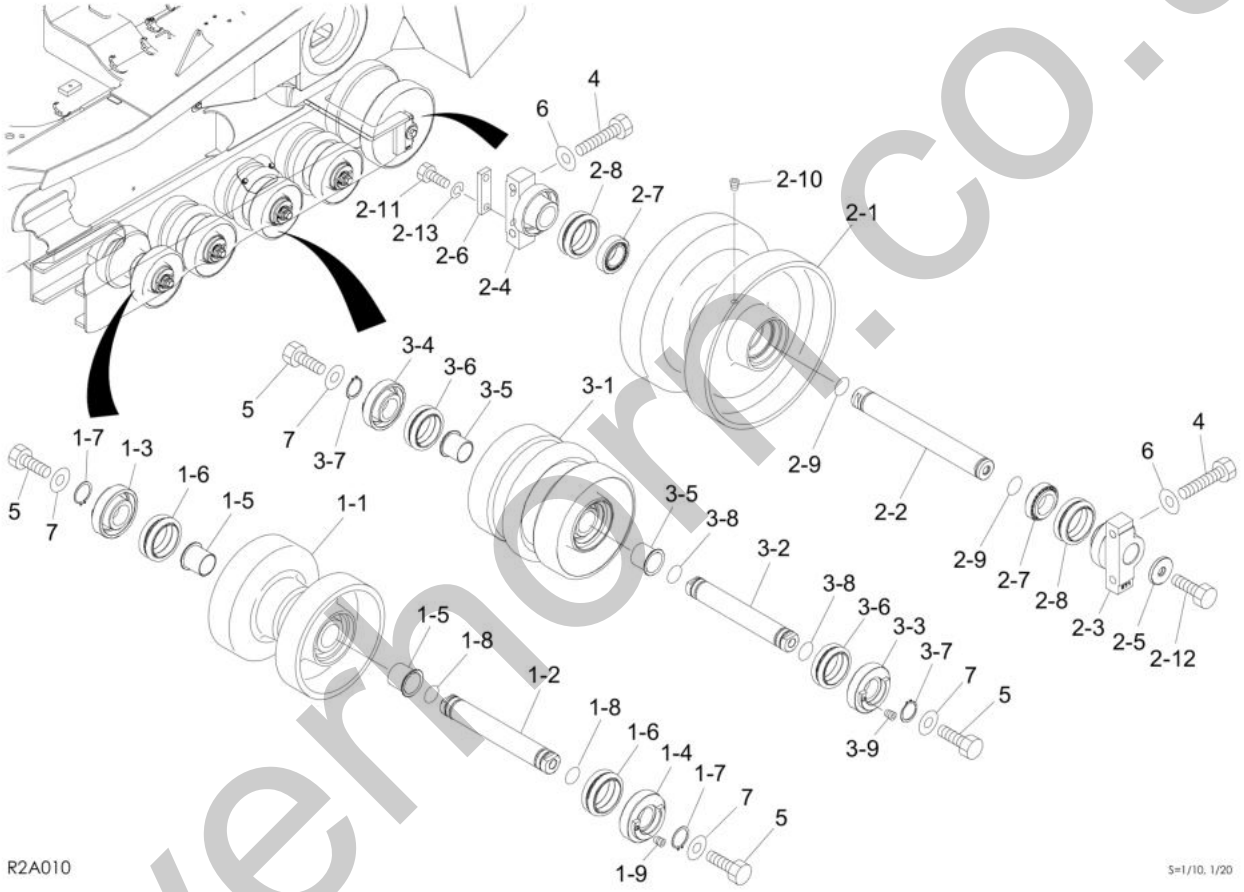

silvermore.co.uk

Item	Part No.	Name	Qty	Uom	Remarks	SERIAL NUMBER
-	PNNA	ROLLER ASSY, track		EA		
0-1	0681300027	ROLLER (A) SUB ASSY, track	2	EA		
1-1	0681300032	ROLLER	1	EA		
1-2	0681300004	SHAFT	1	EA		
1-3	0221240400	COVER	1	EA		
1-4	0651300190	COVER	1	EA		
1-5	1333073535	BUSHING	2	EA		
1-6	1432500561	SEAL, floating	2	EA		
1-7	1220000035	RING, snap (EXTERNAL 35MM)	2	EA		
1-8	1420100300	O-RING	2	EA		
1-9	1501840000	PLUG	1	EA		
0-2	0681300024	ROLLER (B) SUB ASSY, track	2	EA		
2-1	0681300019	ROLLER	1	EA		
2-2	0681300008	SHAFT	1	EA		
2-3	0681300030	COVER	1	EA		
2-4	0681300031	COVER	1	EA		
2-5	0681300012	PLATE	1	EA		
2-6	0681300013	PLATE	1	EA		
2-7	1305000006	BEARING	2	EA		
2-8	1432500561	SEAL, floating	2	EA		
2-9	1420100300	O-RING	2	EA		
2-10	1501820001	PLUG	1	EA		
2-11	1100050825	BOLT (10TM8 X 25 P/1.25)	2	EA		
2-12	1106241440	BOLT	1	EA		
2-13	1140020008	WASHER, spring	2	EA		
0-3	0681300038	ROLLER (C) SUB ASSY, track L8E	6	EA		
3-1	0681300039	ROLLER	1	EA		
3-2	0681300004	SHAFT	1	EA		
3-3	0651300190	COVER	1	EA		
3-4	0221240400	COVER	1	EA		
3-5	1333073535	BUSHING	2	EA		
3-6	1432500561	SEAL, floating	2	EA		
3-7	1220000035	RING, snap (EXTERNAL 35MM)	2	EA		
3-8	1420100300	O-RING	2	EA		
3-9	1501840000	PLUG	1	EA		
4	1101051255	BOLT (12X55) (1.5)	8	EA		
5	1101041645	BOLT	16	EA		

silverhorn.co.uk

This page intentionally left blank

silverhorn.co.uk

Item	Part No.	Name	Qty	Uom	Remarks	SERIAL NUMBER
6	1141550012	WASHER	8	EA		
7	1141550016	WASHER (HEAT M16)	16	EA		

silverhorn.co.uk

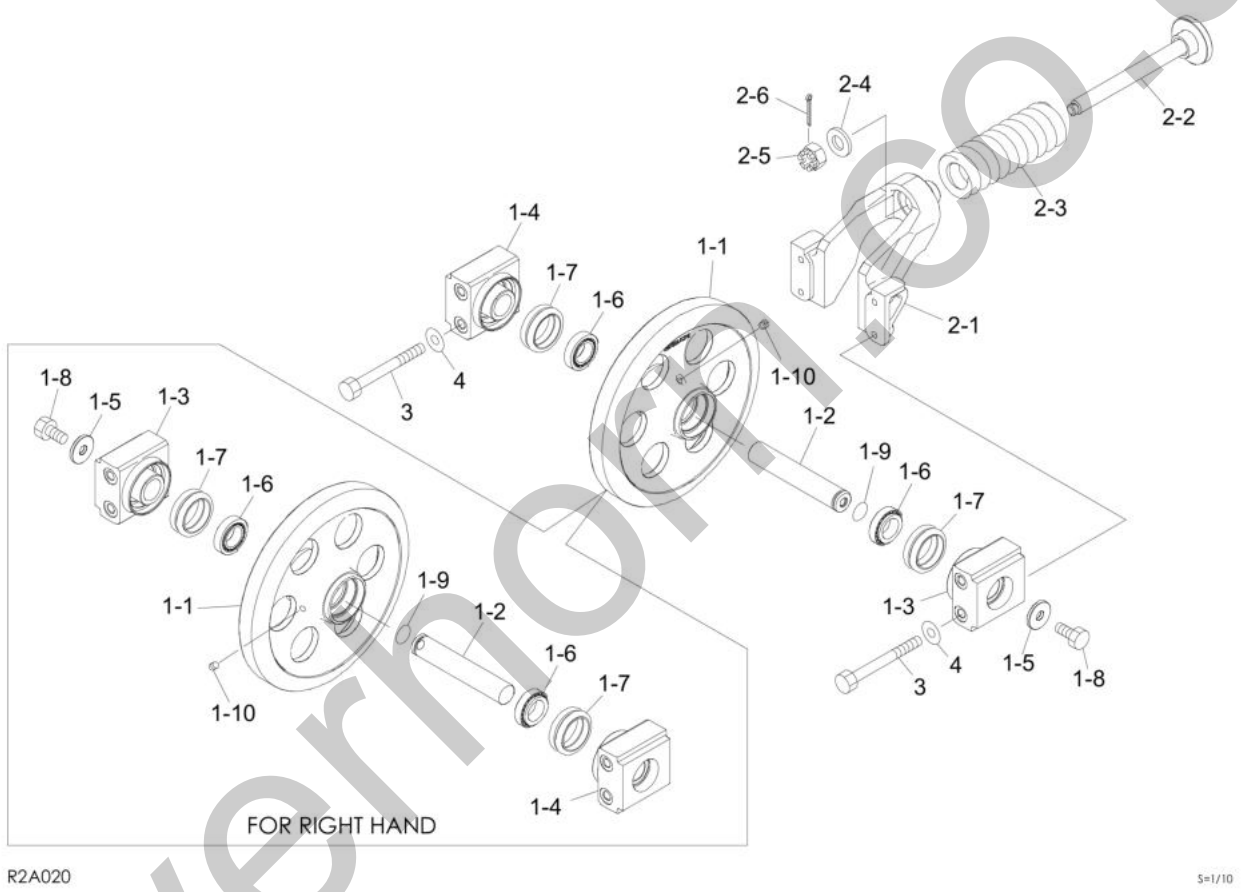

silverhorn.co.uk

Item	Part No.	Name	Qty	Uom	Remarks	SERIAL NUMBER
-	PNNA	IDLER ASSY, front		EA		
0-1	**********	IDLER SUB ASSY, front (L.H.)	1	EA		
0-2	**********	IDLER SUB ASSY, front (R.H.)	1	EA		
1	0651400020	IDLER ASSY (FRONT IDLER)	1	EA		
1-1	0651400005	IDLER	1	EA		
1-2	0651400010	SHAFT	1	EA		
1-3	0651400017	COVER (L.H.)	1	EA		
1-4	0651400019	COVER (R.H.)	1	EA		
1-5	0681300012	PLATE	1	EA		
1-6	1305000006	BEARING	2	EA		
1-7	1432500560	SEAL, floating (2 PIECES = 1 SEAL)	2	EA		
1-8	1106241440	BOLT	1	EA		
1-9	1420100300	O-RING	1	EA		
1-10	1501820001	PLUG	1	EA		
2	0651500014	SPRING ASSY	1	EA		
2-1	0651500015	YOKE	1	EA		
2-2	0651500017	ROD	1	EA		
2-3	0007000004	SPRING	1	EA		
2-4	1141550024	WASHER	1	EA		
2-5	1132030024	NUT (CASTLE) (M24XP3.0)	1	EA		
2-6	1210000545	PIN, cotter (M5 X 45)	1	EA		
3	1101141230	BOLT	4	EA		
4	1141550012	WASHER	4	EA		

silverhorn.co.uk

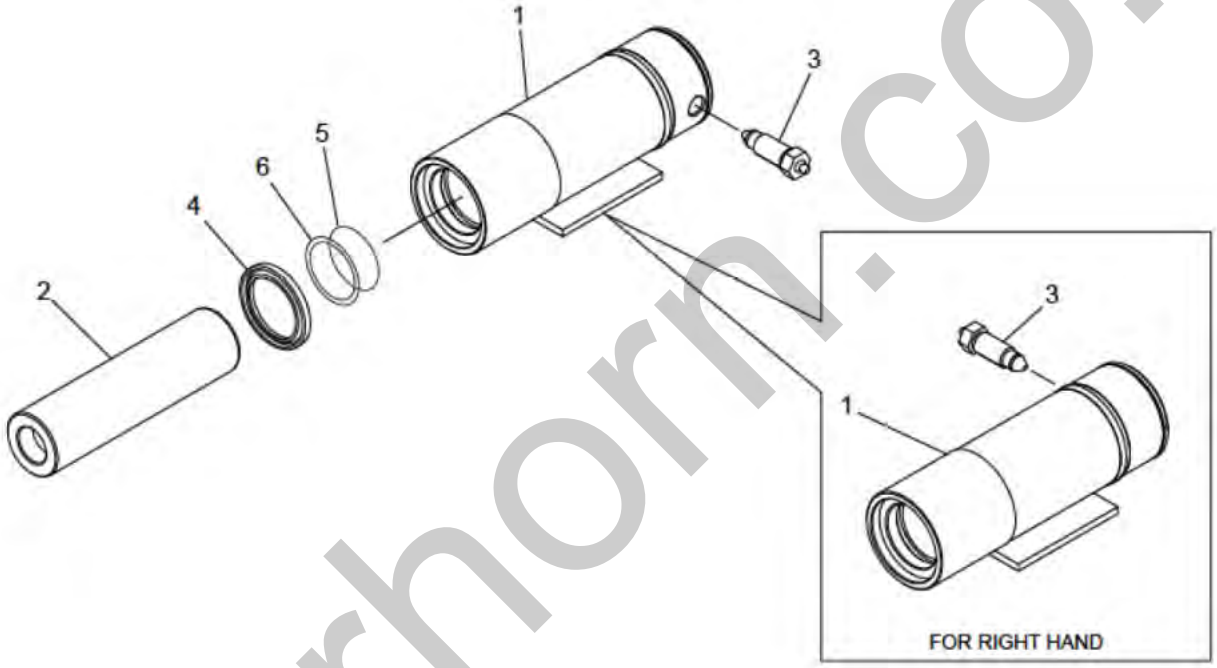

R2A030

silverhorn.co.uk

Item	Part No.	Name	Qty	Uom	Remarks	SERIAL NUMBER
-	PNNA	CYLINDER ASSY, grease		EA		
0-1	0651500007	CYLINDER SUB ASSY (L.H.), grease	1	EA		
0-2	0651500008	CYLINDER SUB ASSY (R.H.), grease	1	EA		
1	0651500009	CYLINDER (L.H.), grease	1	EA		
1	0651500010	CYLINDER (R.H.), grease	1	EA		
2	0880152220	PISTON	1	EA		
3	1541300502	VALVE ASSY, check	1	EA		
4	1400402835	SEAL, oil	1	EA		
5	1420010500	O-RING (P-50 1B)	1	EA		
6	1421020500	RING, back-up (50/56 T/1.25 -+0.1)	1	EA		

silverhorn.co.uk

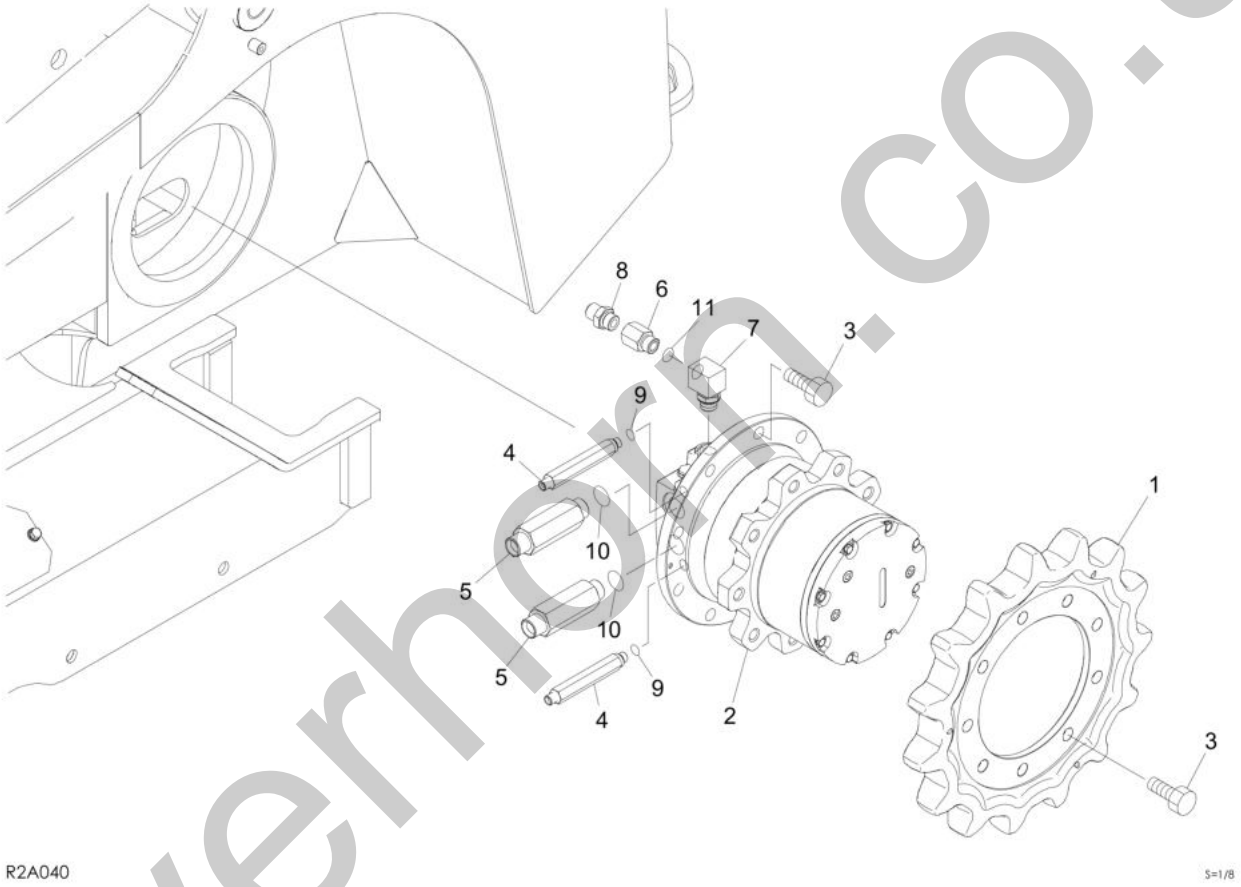

silverhorn.co.uk

Item	Part No.	Name	Qty	Uom	Remarks	SERIAL NUMBER
-	PNNA	MOTOR ASSY, travel		EA		
1	0681600009	SPROCKET	2	EA		
2	1903132500	MOTOR ASSY, travel	2	EA		
3	1100041635	BOLT	36	EA		
4	0007203095	ADAPTOR	4	EA		
5	0007203093	ADAPTOR	4	EA		
6	0007213010	BUSHING (CONNECTOR)	2	EA		
7	1513300016	ELBOW	2	EA		
7	1420010180	O-RING	1	EA		
8	1515600202	ADAPTOR	2	EA		
8	1420010180	O-RING	1	EA		
9	1420010110	O-RING	4	EA		
10	1420010240	O-RING	4	EA		
11	1420010180	O-RING	2	EA		

silverhorn.co.uk

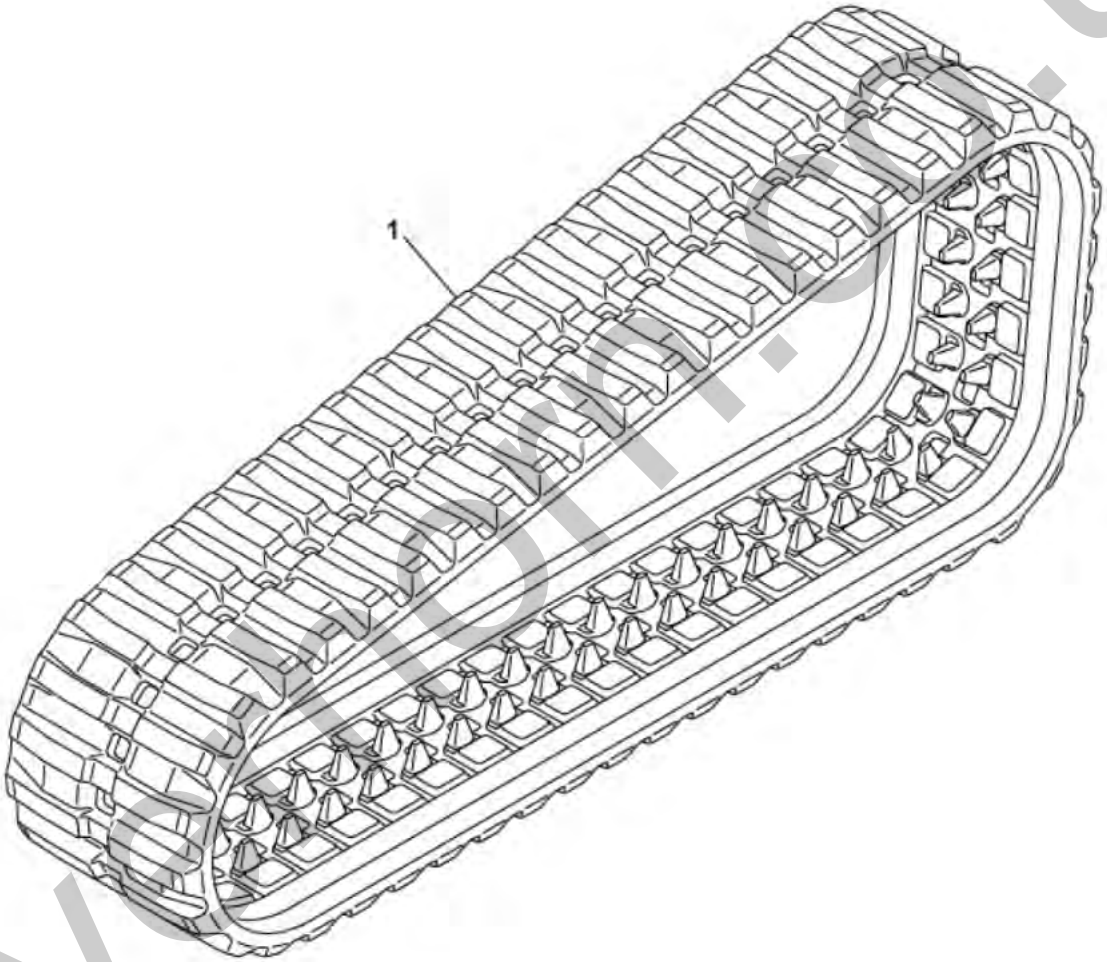

T7A060

3-1/12

silverhorn.co.uk

Item	Part No.	Name	Qty	Uom	Remarks	SERIAL NUMBER
-	PNNA	BELT ASSY, rubber crawler		EA		
1	1914312020	BELT, rubber crawler (320mm)	2	EA		

silverhorn.co.uk

MAIN FRAME & CONTROL LEVER FRAME

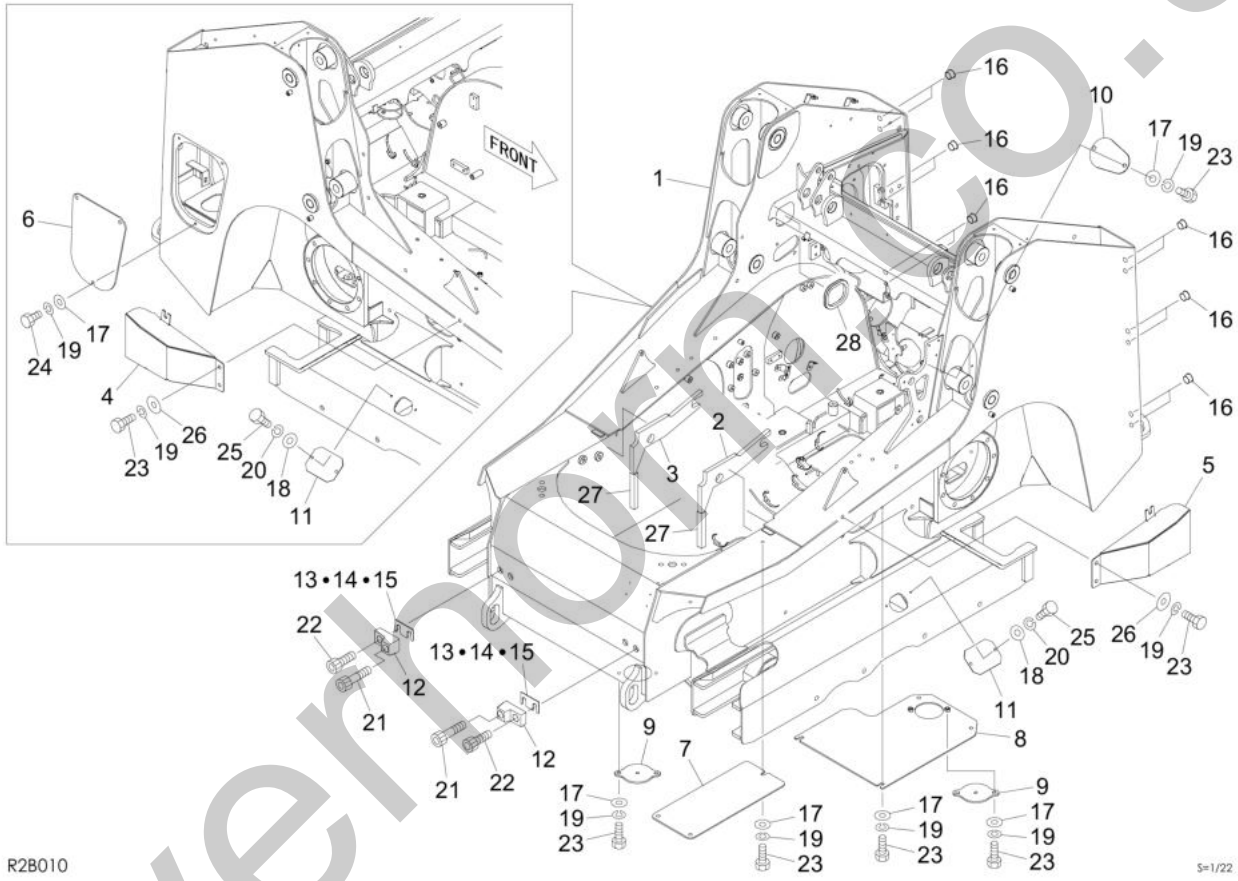

silvernorth.co.uk

Item	Part No.	Name	Qty	Uom	Remarks	SERIAL NUMBER
-	PNNA	FRAME ASSY		EA		
1	**********	FRAME	1	EA		
2	0653000146	SPONGE	1	EA		
3	0653000147	SPONGE	1	EA		
4	0653000157	COVER (R.H.)	1	EA		
5	0653000154	COVER (L.H.)	1	EA		
6	0653000145	COVER	1	EA		
7	0653000109	COVER	1	EA		
8	0653000110	COVER	1	EA		
9	0881302095	COVER	2	EA		
10	0653000139	COVER	1	EA		
11	0331018600	COVER	2	EA		
12	0663000004	STOPPER, arm	2	EA		
13	0663000005	SHIM	1	EA	t=1.0mm	
14	0663000006	SHIM	1	EA	t=0.5mm	
15	0663000123	SHIM	1	EA	t=3.2mm	
16	1652533021	CAP	12	EA		
17	1141110010	WASHER, plain	16	EA		
18	1141110008	WASHER	4	EA		
19	1140020010	WASHER, spring	24	EA		
20	1140020008	WASHER, spring	4	EA		
21	1110041670	SCREW, cap	2	EA		
22	1110041645	SCREW, cap	2	EA		
23	1100051025	BOLT (10TM10 X 25 P/1.5)	21	EA		
24	1100041020	BOLT	3	EA		
25	1100090816	BOLT	4	EA		
26	0003600020	WASHER	8	EA		
27	1656722015	SPONGE	2	EA	sold by the meter	
28	1654629026	TRIM	1	EA	sold by the meter	

silverhorn.co.uk

MAIN FRAME & CONTROL LEVER OPERATION LEVER & STAND

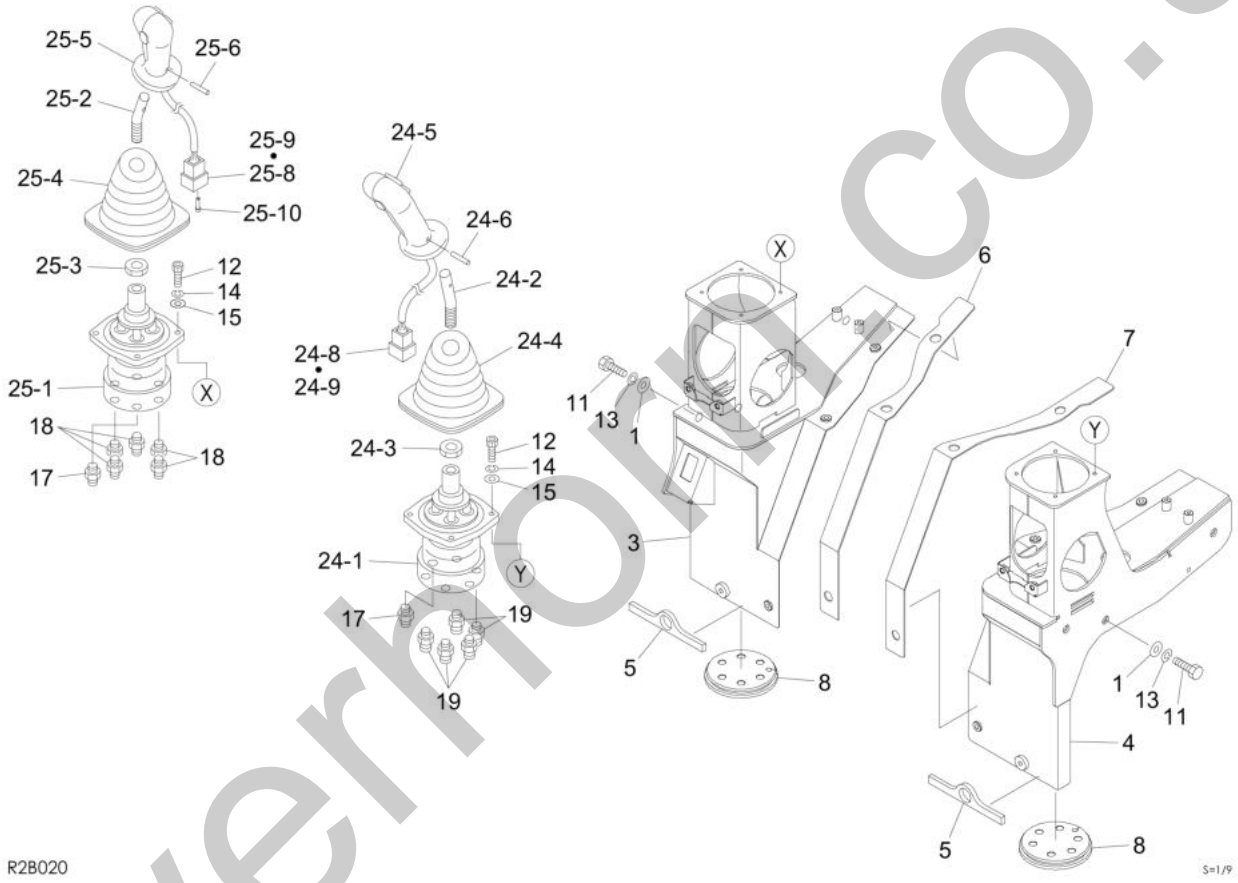

silverhorn.co.uk

Item	Part No.	Name	Qty	Uom	Remarks	SERIAL NUMBER
-	PNNA	VALVE ASSY		EA		
1	1141110010	WASHER, plain	6	EA		
3	0655100028	BRACKET (R.H.)	1	EA		
4	0655100029	BRACKET (L.H.)	1	EA		
5	0655100042	SPONGE	2	EA		
6	0655100043	SPONGE (R.H.)	1	EA		
7	0655100044	SPONGE (L.H.)	1	EA		
8	0655100026	GROMMET	2	EA		
11	1100051035	BOLT (10TM10 X 35 P/1.5)	6	EA		
12	1110050620	BOLT, socket (10TM6 X 20 P/1.0)	8	EA		
13	1140020010	WASHER, spring	6	EA		
14	1140020006	WASHER, spring	8	EA		
15	1141110006	WASHER	8	EA		
17	1512370008	ADAPTOR (with filter)	2	EA		
17	1420010110	O-RING	1	EA		
18	1515600200	ADAPTOR	5	EA		
18	1420010110	O-RING	1	EA		
19	1515600571	ADAPTOR	5	EA		
19	1420010110	O-RING	1	EA		
24	**********	VALVE ASSY (L.H.)	1	EA		
24-1	1901753900	VALVE ASSY, pilot (L.H.)	1	EA		
24-2	0665102120	LEVER	1	EA		
24-3	0665101203	NUT	1	EA		
24-4	0375109110	BOOT	1	EA		
24-5	1650205523	HANDLE ASSY	1	EA		
24-6	1213000540	PIN, spring	1	EA		
24-8	0695000108	RECEPTACLE	1	EA		
24-9	0695000112	WEDGE	1	EA		
25		VALVE ASSY (R.H.)	1	EA		
25-1	1901754000	VALVE ASSY, pilot (R.H.)	1	EA		
25-2	0665102120	LEVER	1	EA		
25-3	0665101203	NUT	1	EA		
25-4	0375109110	BOOT	1	EA		
25-5	1650205611	HANDLE ASSY	1	EA		
25-6	1213000540	PIN, spring	1	EA		
25-8	0695000109	RECEPTACLE	1	EA		
25-9	0695000111	WEDGE	1	EA		
25-10	0695000107	PLUG	3	EA		

silverhorn.co.uk

MAIN FRAME & CONTROL LEVER PIPING; OPERATION LEVER 1

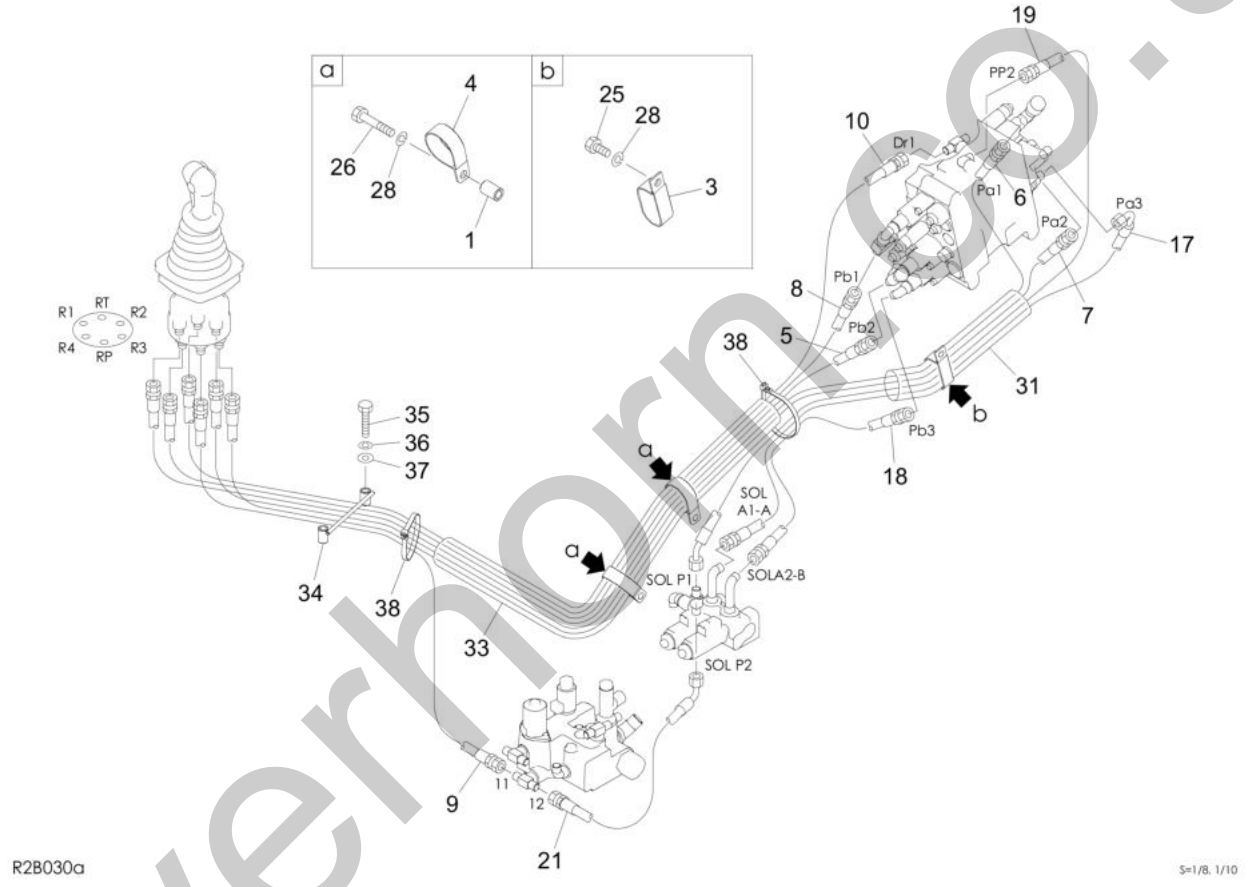

silverhorn.co.uk

Item	Part No.	Name	Qty	Uom	Remarks	SERIAL NUMBER
-	PNNA	PIPING ASSY		EA		
1	0003600274	COLLAR	2	EA		
3	0007300065	CLAMP	1	EA		
4	0007300069	CLAMP	2	EA		
5	0657100002	HOSE ASSY	1	EA	18010-22150	
6	0657100003	HOSE ASSY	1	EA	18010-22189	
7	0657100004	HOSE ASSY	1	EA	18010-22182	
8	0657100005	HOSE ASSY	1	EA	18010-22154	
9	0657100006	HOSE ASSY	1	EA	18010-22078	
10	0657100007	HOSE ASSY	1	EA	18010-22169	
11	0657100008	HOSE ASSY	1	EA	18010-23095	
12	0657100009	HOSE ASSY	1	EA	18010-23077	
17	0657100023	HOSE ASSY	1	EA	18010-52073	
18	0657100024	HOSE ASSY	1	EA	18010-22035	
19	0657100017	HOSE ASSY	1	EA	18010-79084	
21	0657100019	HOSE ASSY	1	EA	18010-52040	
25	1100051016	BOLT	1	EA		
26	1100051050	BOLT (10TM10 X 50 P/1.5)	2	EA		
28	1140020010	WASHER, spring	3	EA		
31	1531645000	PROTECTOR (SOLD BY THE METER)	1	EA	sold by the meter	
33	1531645079	PROTECTOR	1	EA	sold by the meter	
34	0657100025	CLAMP	1	EA		
35	1100050635	BOLT (10TM6 X 35 P/1.0)	2	EA		
36	1140020006	WASHER, spring	2	EA		
37	1141110006	WASHER	2	EA		
38	1652231250	BAND (1st aux. Proportion)	4	EA		

silverhorn.co.uk

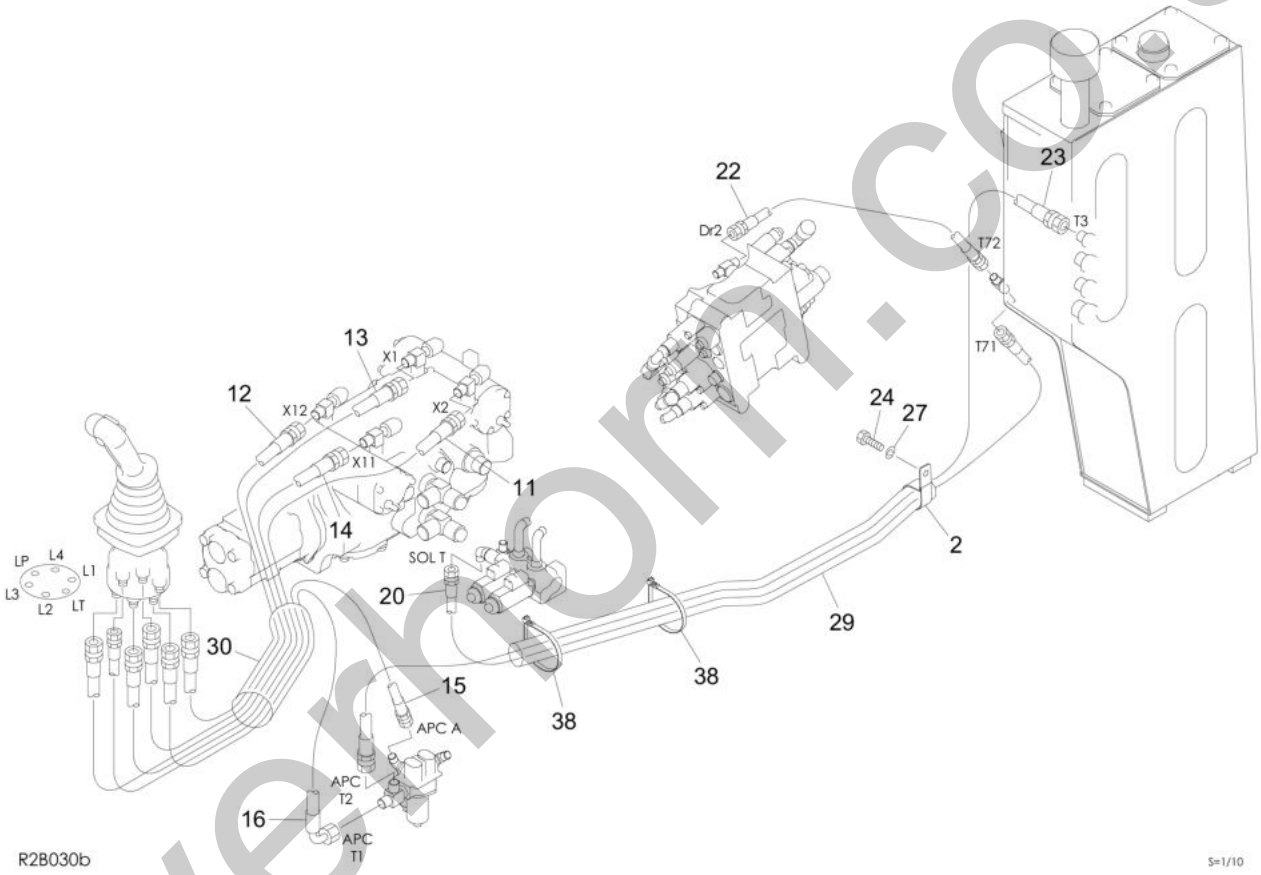

silverhorn.co.uk

Item	Part No.	Name	Qty	Uom	Remarks	SERIAL NUMBER
-	PNNA	PIPING ASSY		EA		
2	0007300039	CLAMP	1	EA		
11	0657100008	HOSE ASSY	1	EA	18010-23095	
12	0657100009	HOSE ASSY	1	EA	18010-23077	
13	0657100011	HOSE ASSY	1	EA	18010-23096	
14	0657100012	HOSE ASSY	1	EA	18010-23075	
15	0657100013	HOSE ASSY	1	EA	18010-22063	
16	0657100031	HOSE ASSY	1	EA	18010-53058	
20	0657100028	HOSE ASSY	1	EA	18010-22133	
22	0657100021	HOSE ASSY	1	EA	18010-22056	
23	0657100029	HOSE ASSY	1	EA	18010-23168	
24	1100050825	BOLT (10TM8 X 25 P/1.25)	1	EA		
27	1140020008	WASHER, spring	1	EA		
29	1531635088	PROTECTOR	1	EA	sold by the meter	
30	1531650024	PROTECTOR	1	EA	sold by the meter	
38	1652231250	BAND (1st aux. Proportion)	4	EA		

silverhorn.co.uk

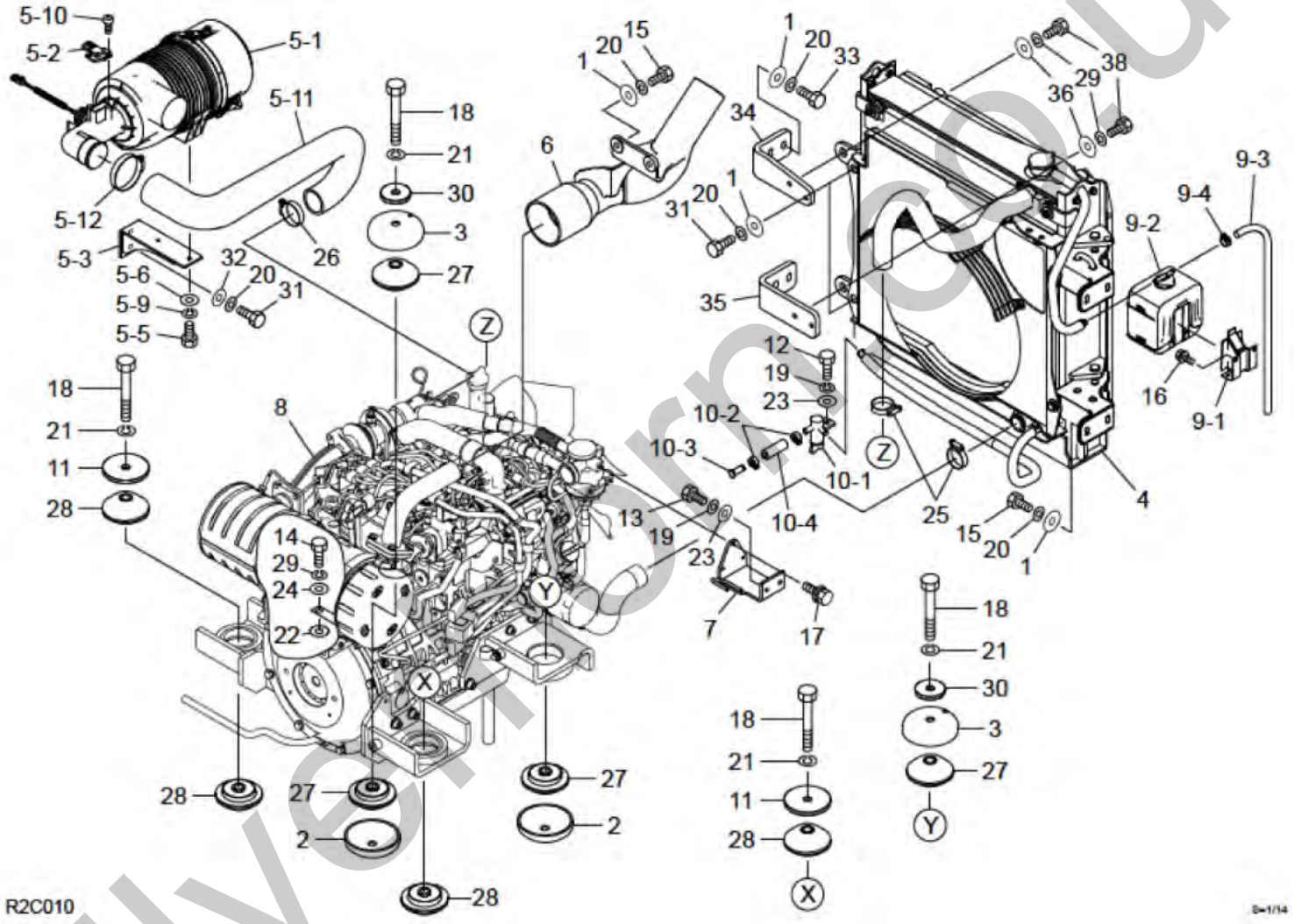

silverthorn.co.uk

Item	Part No.	Name	Qty	Uom	Remarks	SERIAL NUMBER
-	PNNA	ENGINE ASSY		EA		
1	0003600025	WASHER	12	EA		
2	0564017460	STOPPER	2	EA		
3	0654000070	STOPPER	2	EA		
4	**********	RADIATOR ASSY	1	EA	see page (3/5)	
5	**********	CLEANER ASSY, air	1	EA		
5-1	1911262400	CLEANER, air	1	EA	see page (5/5)	
5-2	K1J520-10700	SENSOR	1	EA	19103-91132	
5-3	0654000020	BRACKET	1	EA		
5-5	1100050820	BOLT (10TM8 X 20 P/1.25)	2	EA		
5-6	1141110008	WASHER	2	EA		
5-9	1140020008	WASHER, spring	2	EA		
5-10	K03054-50412	SCREW	2	EA	19104-43300	
5-11	0654000023	HOSE	1	EA		
5-12	1533700080	BAND	1	EA		
6	0654000087	PIPE	1	EA		
7	0654000098	PLATE	1	EA		
8	**********	ENGINE SUB ASSY	1	EA	see page (2/5)	
9	**********	TANK ASSY	1	EA		
9-1	K15527-72460	STAY, reserve tank	1	EA	19102-49051	
9-2	K1G642-72400	TANK ASSY, reserve	1	EA	19104-62020	
9-3	K09661-70650	TUBE, fuel (7.3X12.5X650L)	1	EA	19104-62013	
9-4	1533120012	BAND	1	EA		
10	**********	VALVE ASSY, drain	1	EA		
10-1	1911900004	VALVE, drain	1	EA	Y129150-49100	
10-2	1533120012	BAND	2	EA		
10-3	0004008021	PIN	1	EA		
10-4	1530808004	HOSE	1	EA	sold by the meter	
11	0694000236	WASHER	2	EA		
12	1100090816	BOLT	1	EA		
13	1100050820	BOLT (10TM8 X 20 P/1.25)	2	EA		
14	1100051220	BOLT	1	EA		
15	1100051030	BOLT	6	EA		
16	1100560612	BOLT, sems	2	EA		
17	1100560616	BOLT, sems	3	EA		
18	1101141640	BOLT	4	EA		
19	1140020008	WASHER, spring	3	EA		
20	1140020010	WASHER, spring	14	EA		

silverhorn.co.uk

This page intentionally left blank

silverhorn.co.uk

Item	Part No.	Name	Qty	Uom	Remarks	SERIAL NUMBER
21	1140020016	WASHER, spring	4	EA		
22	1140330012	WASHER	1	EA		
23	1141110008	WASHER	3	EA		
24	1141110012	WASHER	1	EA		
25	1533700048	BAND	2	EA		
26	1533700060	BAND	1	EA		
27	1651030024	RUBBER, cushion	4	EA		
28	1651030025	RUBBER, cushion	4	EA		
29	1140020012	WASHER, spring (12MM)	3	EA		
30	0882400190	WASHER	2	EA		
31	1100041020	BOLT	4	EA		
32	1141110010	WASHER, plain	2	EA		
33	1100051040	BOLT (10TM10 X 40 P/1.5)	4	EA		
34	0654000129	BRACKET	1	EA		
35	0654000034	BRACKET	1	EA		
36	0003600136	WASHER	1	EA	t=4.5mm	
38	1100051230	BOLT (10.9 M12 X 30MM)	2	EA		

silverhorn.co.uk

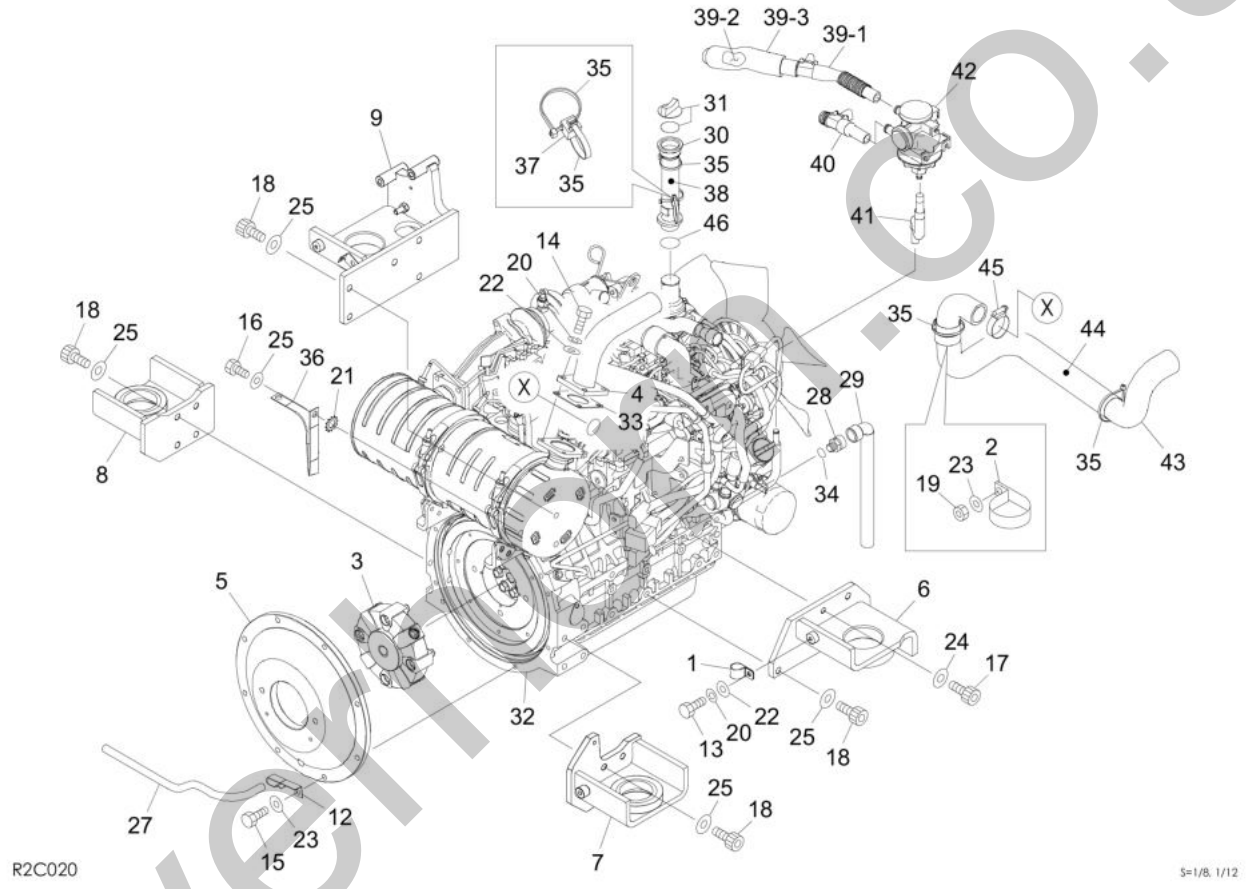

silverfern.co.uk

Item	Part No.	Name	Qty	Uom	Remarks	SERIAL NUMBER
0	**********	ENGINE ASSY	1	EA		
1	0007300050	CLAMP	1	EA		
2	0007300069	CLAMP	1	EA		
3	0654000071	COUPLING ASSY	1	EA	X06540-00071	
4	0654000043	PIPE	1	EA		
5	0654000118	HOUSING	1	EA		
6	0654000048	FOOT, engine (R.L.)	1	EA		
7	0654000052	FOOT, engine (F.L.)	1	EA		
8	0654000056	FOOT, engine (F.R.)	1	EA		
9	0654000057	FOOT, engine (R.R.)	1	EA		
12	0881521010	CLAMP	1	EA		
13	1100090816	BOLT	1	EA		
14	1100050825	BOLT (10TM8 X 25 P/1.25)	4	EA		
15	1100051030	BOLT	8	EA		
16	1102041220	BOLT	1	EA		
17	1111021030	SCREW, cap	1	EA		
18	1112021230	SCREW, cap	17	EA		
19	1130240010	NUT	1	EA		
20	1140020008	WASHER, spring	5	EA		
21	1140330012	WASHER	1	EA		
22	1141110008	WASHER	5	EA		
23	1141110010	WASHER, plain	9	EA		
24	1141550010	WASHER	1	EA		
25	1141550012	WASHER	18	EA		
27	1531010047	HOSE	1	EA	sold by the meter	
28	1554501650	PLUG	1	EA		
29	1554512201	TUBE	1	EA		
30	K15412-33110	PIPE	1	EA	19104-62019	
31	K1G386-33081	CAP	1	EA	19102-87020	
32	1910462001	ENGINE (V2403-CR-TE4B-TLTU-1) (TL6)	1	EA	V2403-CR-TE4B-TLTU-1	
33	KT0070-16420	GASKET	1	EA	19104-57022	
34	1432116221	WASHER	1	EA		
35	1652201005	BAND	5	EA		
36	1702402002	CABLE, earth	1	EA		
37	1652201011	SPACER	1	EA		
38	0654600094	RUBBER	1	EA		
39	**********	TUBE ASSY	1	EA		
39-1	**********	TUBE	1	EA	see engine parts	

silverhorn.co.uk

This page intentionally left blank

silverhorn.co.uk

Item	Part No.	Name	Qty	Uom	Remarks	SERIAL NUMBER
39-2	1534808021	INSULATOR	1	EA		
39-3	1530409029	PROTECTOR	1	EA		
40	**********	TUBE	1	EA	see engine parts	
41	**********	TUBE	1	EA	see engine parts	
42	K1J775-05030	SEPARATOR ASSY	1	EA	19104-62076	
43	0654000033	HOSE, radiator (LOWER)	1	EA		
44	1530409080	PROTECTOR	1	EA		
45	1533700048	BAND	1	EA		
46	K04817-50300	O-RING	1	EA	19104-62068	

silverhorn.co.uk

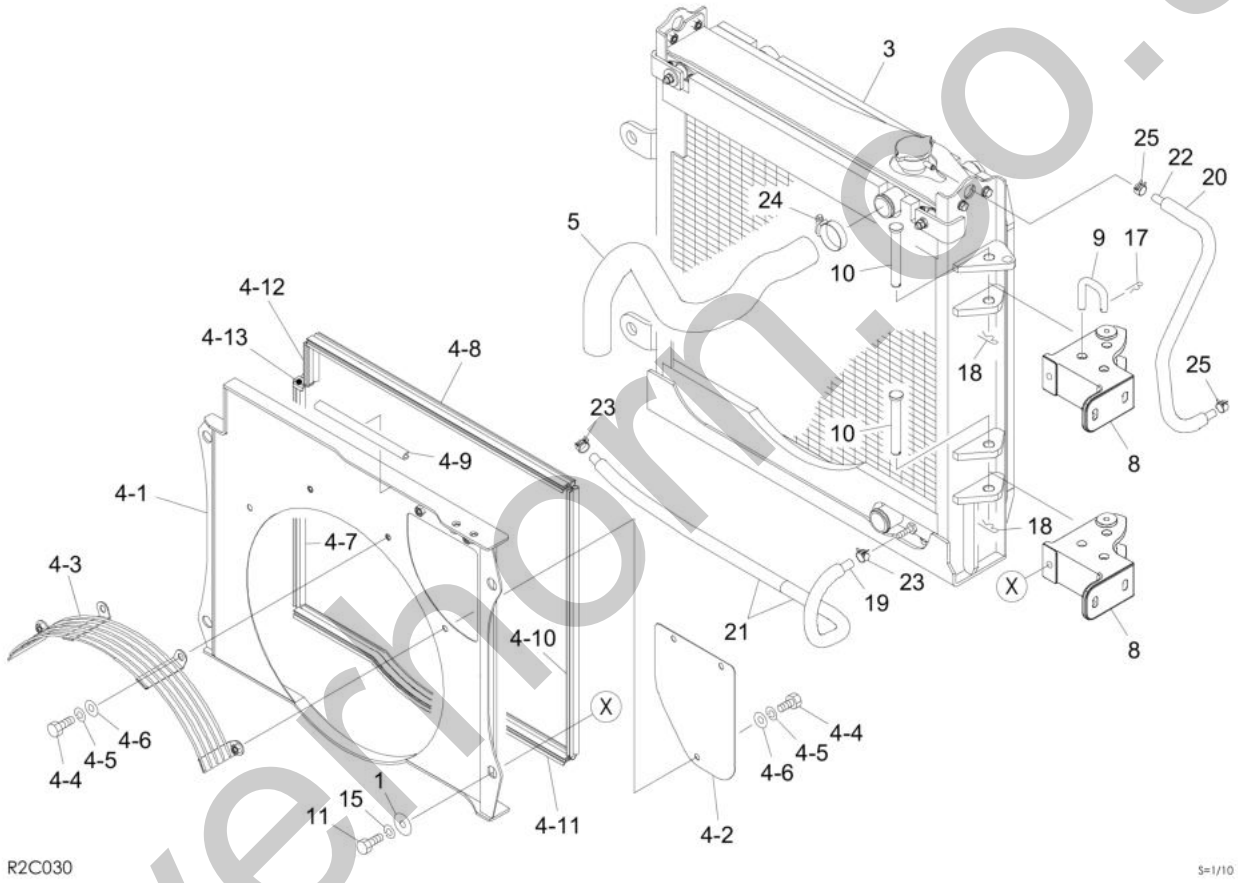

silverhorn.co.uk

Item	Part No.	Name	Qty	Uom	Remarks	SERIAL NUMBER
0	**********	RADIATOR ASSY		EA		
1	0003600025	WASHER	2	EA		
3	**********	RADIATOR SUB ASSY	1	EA	see page (4/5)	
4	**********	SHROUD ASSY	1	EA		
4-1	0654000124	SHROUD	1	EA		
4-2	0654000035	PLATE	1	EA		
4-3	0684000295	GUARD	1	EA		
4-4	1100090816	BOLT	6	EA		
4-5	1140020008	WASHER, spring	6	EA		
4-6	1141110008	WASHER	6	EA		
4-7	1654606000	SEAL (SOLD BY THE METER)	1	EA	sold by the meter	
4-8	1654619058	SEAL	1	EA	sold by the meter	
4-9	1654629020	TRIM	1	EA	sold by the meter	
4-10	1654606000	SEAL (SOLD BY THE METER)	1	EA	sold by the meter	
4-11	1654619061	TRIM	1	EA	sold by the meter	
4-12	1654619008	SEAL	1	EA	sold by the meter	
4-13	1654619002	SEAL	1	EA	sold by the meter	
5	0654000032	HOSE, radiator (UPPER)	1	EA		
8	0654000064	HINGE	2	EA		
9	0684005350	PIN	1	EA		
10	0881402180	PIN	2	EA		
11	1100041020	BOLT	2	EA		
15	1140020010	WASHER, spring	2	EA		
17	1214000012	PIN, snap	1	EA		
18	1214000016	PIN, snap	2	EA		
19	1530808087	HOSE	1	EA	sold by the meter	
20	1531118050	PROTECTOR (SOLD BY THE METER)	1	EA	sold by the meter	
21	1531118041	PROTECTOR	2	EA	sold by the meter	
22	1531407000	HOSE (SOLD BY THE METER)	1	EA	sold by the meter	
23	1533120012	BAND	2	EA		
24	1533700048	BAND	1	EA		
25	1533120011	BAND	2	EA		

silverhorn.co.uk

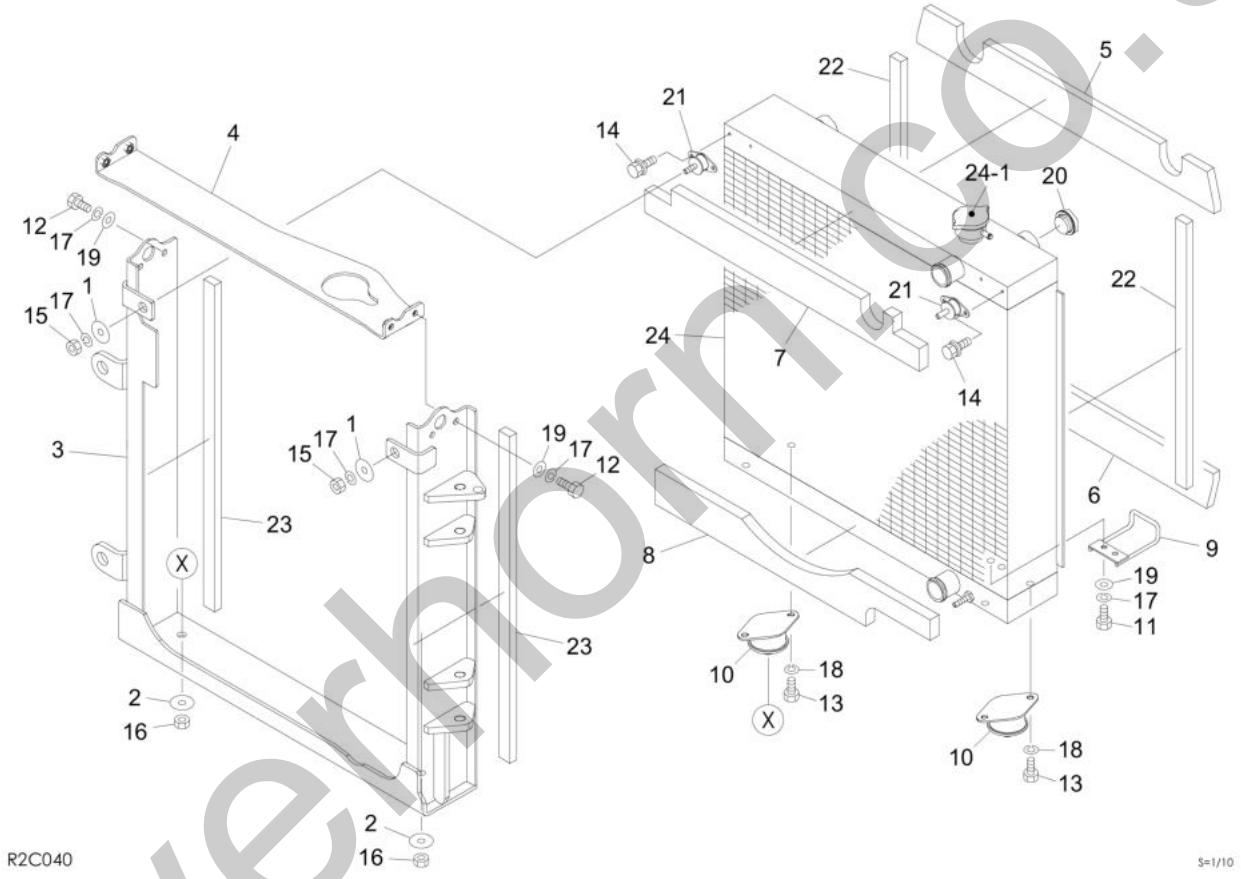

silverhorn.co.uk

Item	Part No.	Name	Qty	Uom	Remarks	SERIAL NUMBER
0	**********	RADIATOR SUB ASSY	1	EA		
1	0003600025	WASHER	2	EA		
2	0003600026	WASHER	2	EA		
3	0654000004	FRAME	1	EA		
4	0654000132	PLATE	1	EA		
5	0654000130	SPONGE	1	EA		
6	0654000016	SPONGE	1	EA		
7	0654000116	SPONGE	1	EA		
8	0654000117	SPONGE	1	EA		
9	0654000065	BRACKET	1	EA		
10	0880408580	RUBBER, cushion	2	EA		
11	1100090816	BOLT	2	EA		
12	1100050820	BOLT (10TM8 X 20 P/1.25)	4	EA		
13	1100051016	BOLT	4	EA		
14	1100560612	BOLT, sems	4	EA		
15	1130050008	NUT	2	EA		
16	1130050012	NUT (8TM12 P/1.75)	2	EA		
17	1140020008	WASHER, spring	8	EA		
18	1140020010	WASHER, spring	4	EA		
19	1141110008	WASHER	6	EA		
20	1553026008	GAUGE, oil	1	EA		
21	1651021030	RUBBER, cushion	2	EA		
22	1654343000	SPONGE (SOLD BY THE METER)	2	EA	sold by the meter	
23	1654343000	SPONGE (SOLD BY THE METER)	2	EA	sold by the meter	
24	1911301050	RAD/HOC	1	EA		
24-1	1911300851	CAP, radiator	1	EA		

silvermorn.co.uk

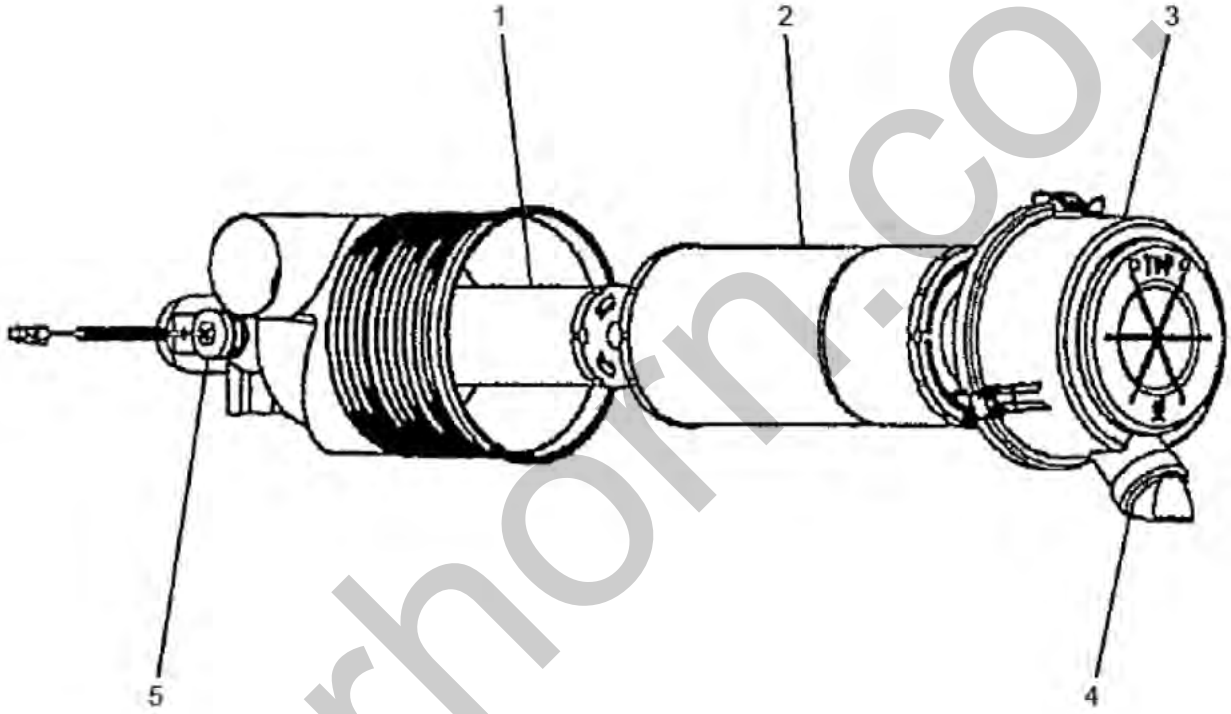

U9C130

silverhorn.co.uk

Item	Part No.	Name	Qty	Uom	Remarks	SERIAL NUMBER
0-3	1911262400	CLEANER, air	1	EA		
1	1911262202	FILTER, air (INNER)	1	EA		
2	1911262203	FILTER, air (OUTER)	1	EA		
3	1912911381	COVER	1	EA		
4	1911102855	VALVE	1	EA		
5	1911262104	INDICATOR	1	EA		

silverhorn.co.uk

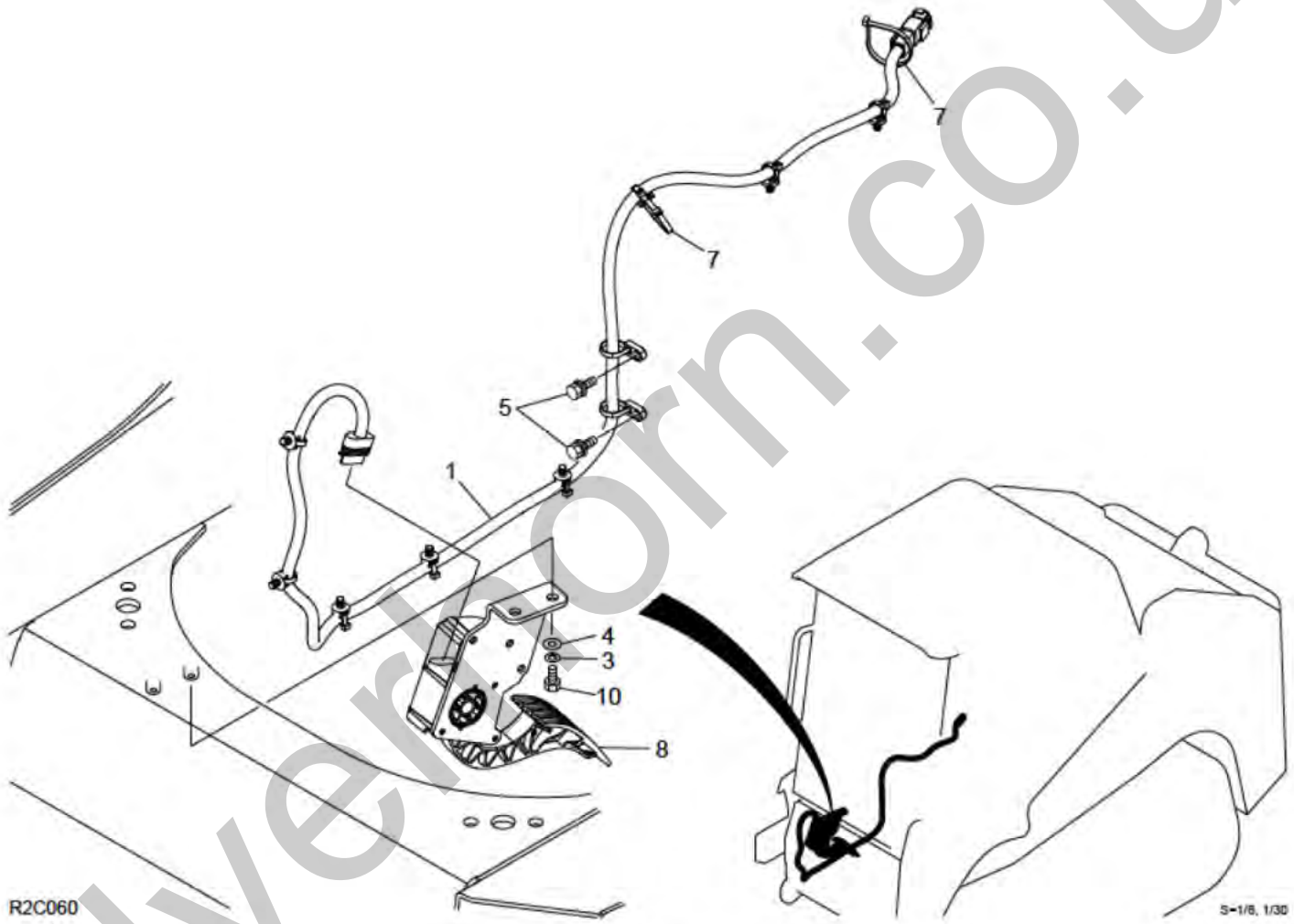

silverhorn.co.uk

Item	Part No.	Name	Qty	Uom	Remarks	SERIAL NUMBER
-	PNNA	ACCELERATOR ASSY, foot		EA		
1	0654200002	HARNESS, wiring	1	EA		
3	1140020008	WASHER, spring	2	EA		
4	1141110008	WASHER	2	EA		
5	1100560616	BOLT, sems	2	EA		
7	1652201005	BAND	2	EA		
8	1700000072	ACCELERATOR, foot	1	EA		
10	1100090816	BOLT	2	EA		

silverhorn.co.uk

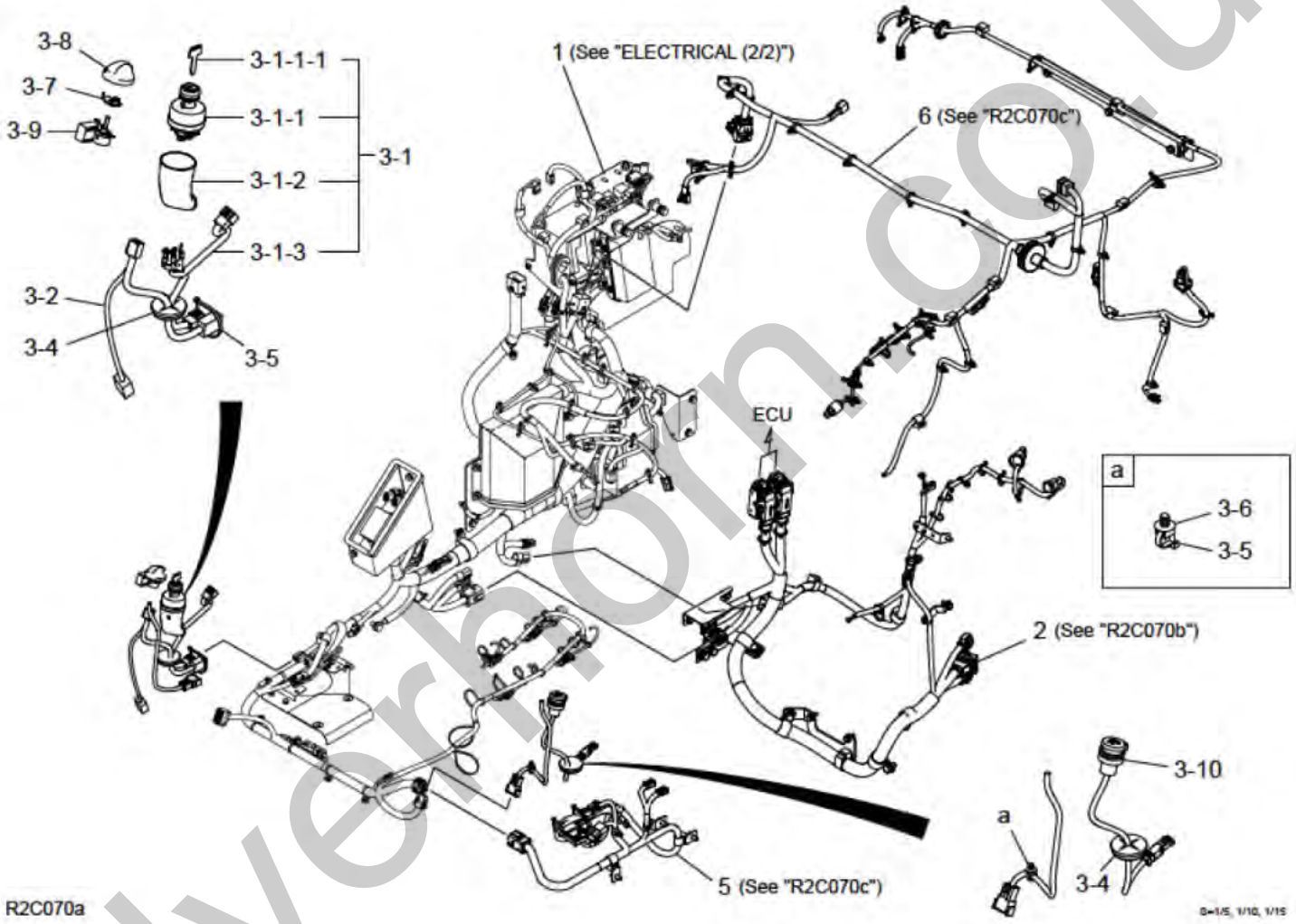

silverhorn.co.uk

Item	Part No.	Name	Qty	Uom	Remarks	SERIAL NUMBER
-	PNNA	ELECTRICAL ASSY		EA		
1	**********	BODY UNIT ASSY	1	EA	see page (2/2)	
2	**********	ENGINE UNIT ASSY	1	EA	SEE ELECTRICAL 2 OF 3	
3	**********	FLOOR UNIT ASSY	1	EA		
3-1	**********	SWITCH ASSY, starter	1	EA		
3-1-1	1700100072	SWITCH, starter (KEY)	1	EA		
3-1-1-1	1700100019	KEY (QTY 2 = 1 KEYS)**KEYS ONLY**	1	EA		
3-1-2	0870431821	COVER	1	EA		
3-1-3	0334340191	HARNESS	1	EA		
3-2	0664300011	HARNESS, wiring	1	EA		
3-4	1652060042	BUSHING	2	EA		
3-5	1652201005	BAND	2	EA		
3-6	1652201010	MOUNT	1	EA		
3-7	0694300270	BRACKET	1	EA		
3-8	1700000059	KNOB	1	EA		
3-9	1700000066	RESISTOR ASSY	1	EA		
3-10	1711900520	SOCKET ASSY	1	EA	12V	
5	**********	CONTROL VALVE UNIT ASSY	1	EA	SEE ELECTRICAL 3 OF 3	
6	**********	CONTROL VALVE UNIT ASSY	1	EA	SEE ELECTRICAL 3 OF 3	

silverhorn.co.uk

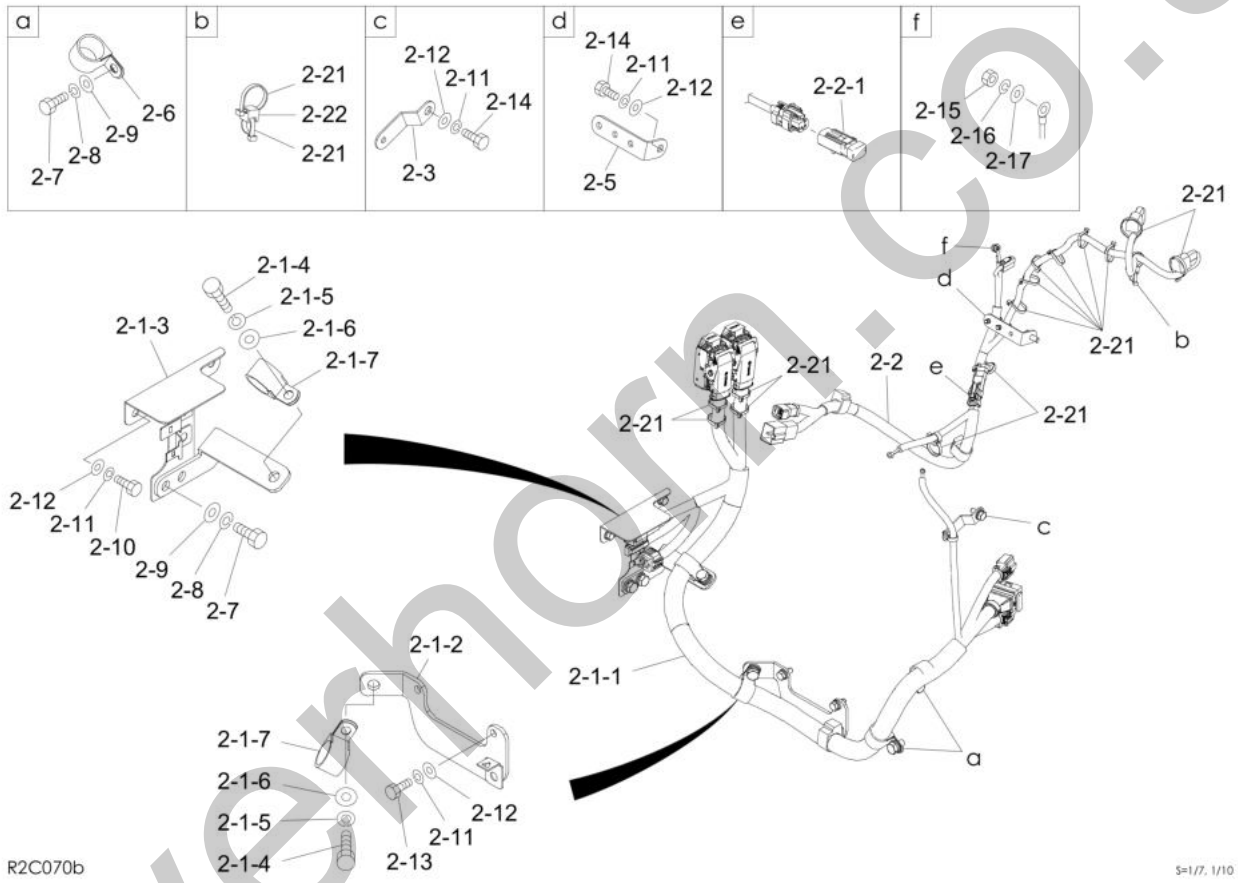

silverhorn.co.uk

Item	Part No.	Name	Qty	Uom	Remarks	SERIAL NUMBER
-	PNNA	ELECTRICAL ASSY		EA		
1	**********	BODY UNIT ASSWY	1	EA		
2	**********	ENGINE UNIT ASSY	1	EA		
2-1	**********	ECU HARNESS ASSY	1	EA		
2-1-1	0654200004	HARNESS, wiring	1	EA		
2-1-2	0654200032	BRACKET	1	EA		
2-1-3	0654200040	BRACKET	1	EA		
2-1-4	1100051025	BOLT (10TM10 X 25 P/1.5)	2	EA		
2-1-5	1140020010	WASHER, spring	2	EA		
2-1-6	1141110010	WASHER, plain	2	EA		
2-1-7	1711900072	CLAMP	2	EA		
2-2	0654200052	HARNESS, wiring	1	EA		
2-2-1	1730500041	DIODE	1	EA		
2-3	1652900812	BRACKET	1	EA		
2-5	1652900821	BRACKET	1	EA		
2-6	1711900072	CLAMP	2	EA		
2-7	1100041020	BOLT	4	EA		
2-8	1140020010	WASHER, spring	4	EA		
2-9	1141110010	WASHER, plain	4	EA		
2-10	1100090816	BOLT	2	EA		
2-11	1140020008	WASHER, spring	6	EA		
2-12	1141110008	WASHER	6	EA		
2-13	1101040820	BOLT (M8X20 P1.0)	2	EA		
2-14	1100050820	BOLT (10TM8 X 20 P/1.25)	2	EA		
2-15	1130040006	NUT	1	EA		
2-16	1140020006	WASHER, spring	1	EA		
2-17	1141110006	WASHER	1	EA		
2-21	1652201005	BAND	16	EA		
2-22	1652201011	SPACER	1	EA		

silverhorn.co.uk

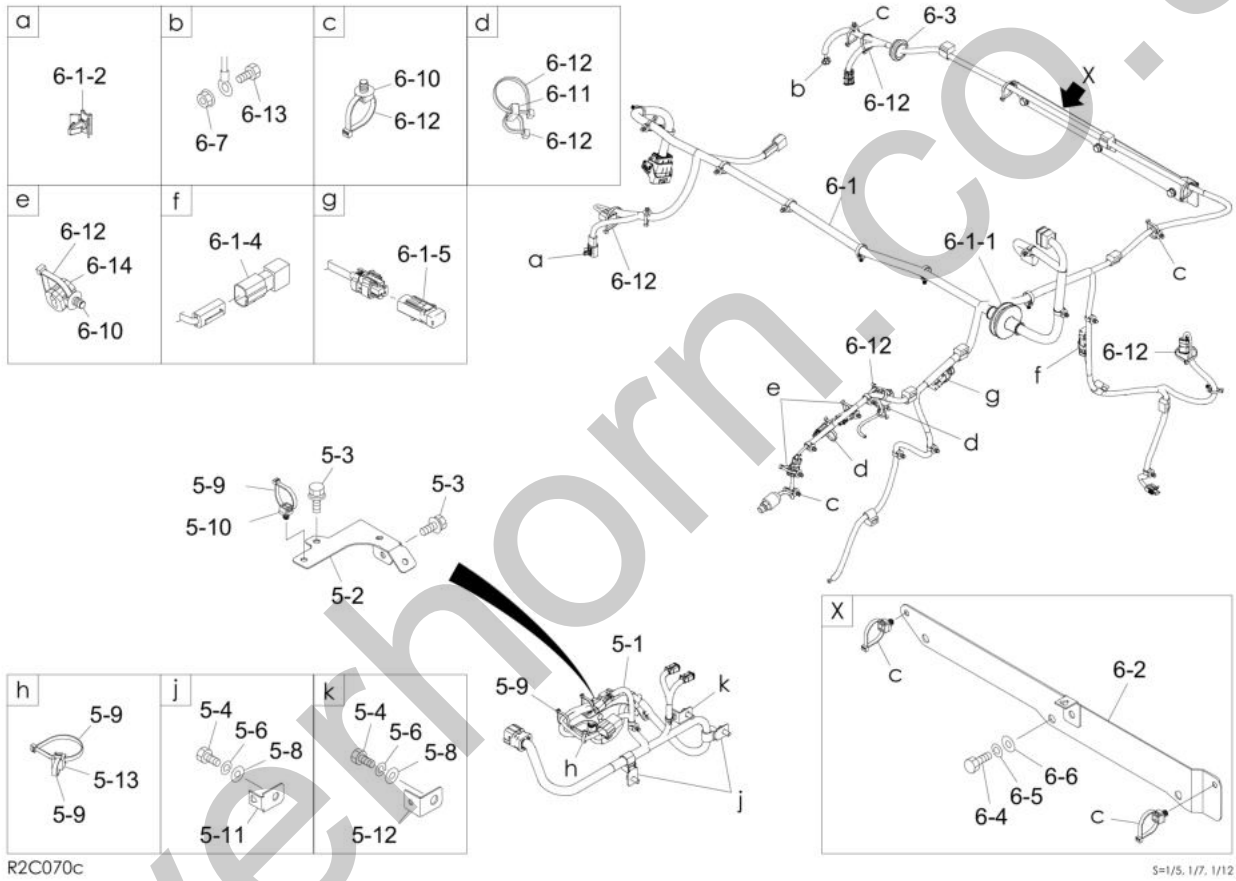

silverhorn.co.uk

Item	Part No.	Name	Qty	Uom	Remarks	SERIAL NUMBER
5	**********	CONTROL VALVE UNIT ASSY	1	EA		
5-1	0654200043	HARNESS, wiring	1	EA		
5-2	0654200045	PLATE	1	EA		
5-3	1100560612	BOLT, sems	2	EA		
5-4	1100050820	BOLT (10TM8 X 20 P/1.25)	3	EA		
5-6	1140020008	WASHER, spring	3	EA		
5-8	1141110008	WASHER	3	EA		
5-9	1652201005	BAND	4	EA		
5-10	1652201010	MOUNT	1	EA		
5-11	1652900207	CLAMP	2	EA		
5-12	1652900802	BRACKET	1	EA		
5-13	1652201011	SPACER	1	EA		
6	**********	CONTROL VALVE UNIT ASSY	1	EA		
6-1	0654200051	HARNESS, wiring	1	EA		
6-1-1	0684200117	GROMMET	1	EA		
6-1-2	1711900202	CLAMP	1	EA		
6-1-4	0694205589	RESISTOR	1	EA		
6-1-5	1730500041	DIODE	1	EA		
6-2	0654200019	BRACKET	1	EA		
6-3	1652053400	GROMMET	1	EA		
6-4	1100090816	BOLT	3	EA		
6-5	1140020008	WASHER, spring	3	EA		
6-6	1141110008	WASHER	3	EA		
6-7	1131242006	NUT	1	EA		
6-10	1652201010	MOUNT	7	EA		
6-11	1652200010	RING	2	EA		
6-12	1652201005	BAND	15	EA		
6-13	1100050612	BOLT (10TM6 X 12 P/1.0)	1	EA		
6-14	0344200022	CLAMP	2	EA		

silverhorn.co.uk

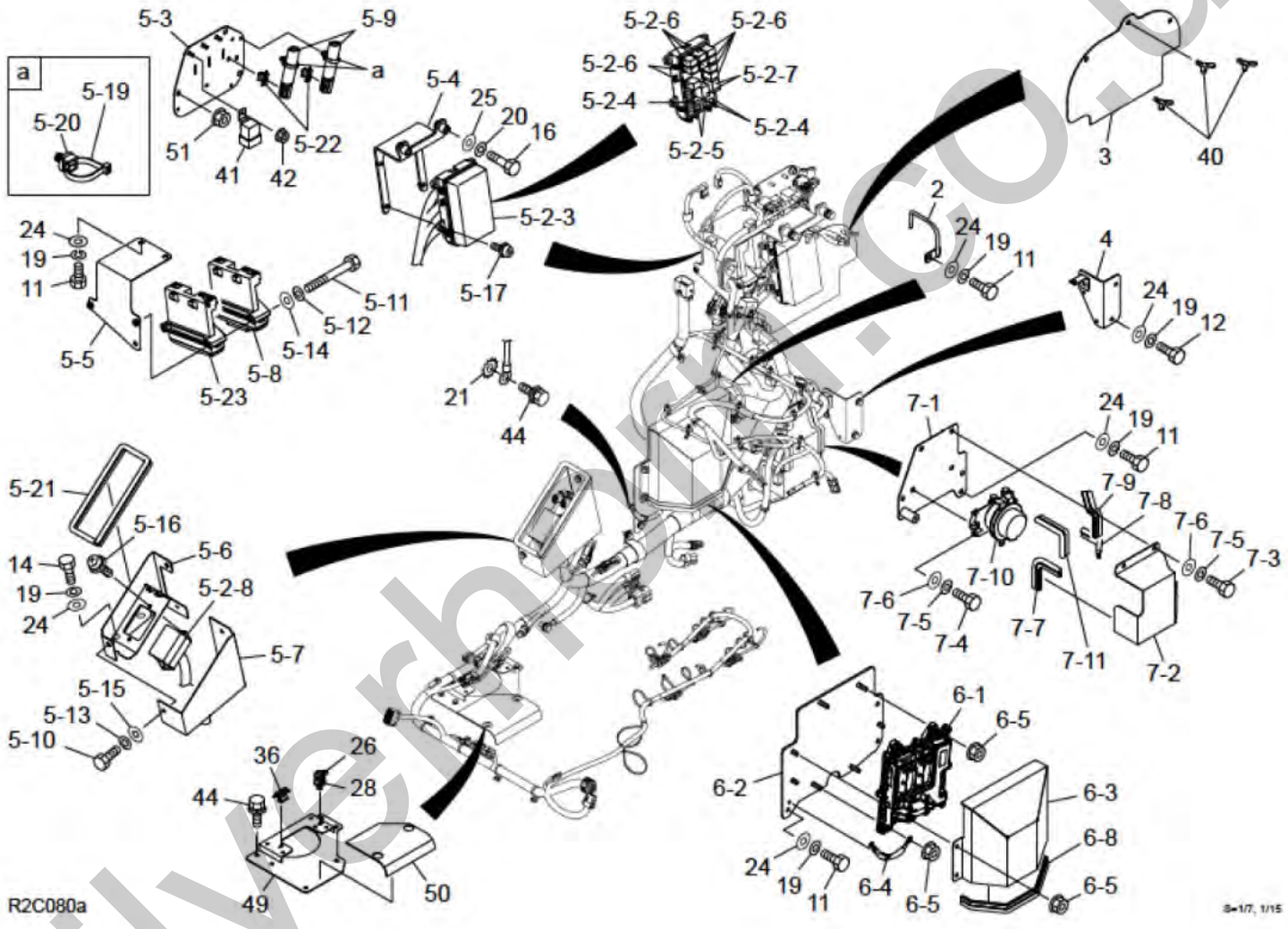

silverhoe.co.uk

Item	Part No.	Name	Qty	Uom	Remarks	SERIAL NUMBER
0-1	**********	BODY UNIT ASSY	1	EA		
2	0654200048	BRACKET	1	EA		
3	0654200054	PLATE	1	EA		
4	0654200068	BRACKET	1	EA		
5	**********	UNIT ASSY	1	EA		
5-2	0654200001	HARNESS ASSY, wiring	1	EA		
5-2-1	1730500041	DIODE	6	EA		
5-2-3	**********	BOX, fuse	1	EA		
5-2-4	1903900251	FUSE, slow blow	3	EA	60A	
5-2-5	1903900250	FUSE, slow blow	2	EA	40A	
5-2-6	1711900153	RELAY	9	EA		
5-2-7	1903900249	RELAY	2	EA		
5-2-7	1701311003	FUSE	2	EA	3A	
5-2-7	1701311005	FUSE	3	EA	5A	
5-2-7	1701311010	FUSE	8	EA	10A	
5-2-7	1701311015	FUSE	2	EA	15A	
5-2-7	1701311025	FUSE	1	EA	25A	
5-2-8	**********	BOX, fuse	1	EA		
5-2-8	1701310020	FUSE (20A)	3	EA	20A	
5-2-8	1701310025	FUSE (25A)	4	EA	25A	
5-2-9	1903900244	RESISTOR	4	EA		
5-3	0654200117	BRACKET	1	EA		
5-4	0654200015	BRACKET	1	EA		
5-5	0654200017	BRACKET	1	EA		
5-6	0654200058	BRACKET	1	EA		
5-7	0654200063	PLATE	1	EA		
5-8	0654200076	CONTROLLER, main	1	EA		
5-9	0694200108	RESISTOR	2	EA		
5-10	1100090816	BOLT	2	EA		
5-11	1100140605	BOLT	2	EA		
5-12	1140020006	WASHER, spring	2	EA		
5-13	1140020008	WASHER, spring	2	EA		
5-14	1141110006	WASHER	2	EA		
5-15	1141110008	WASHER	2	EA		
5-16	1150410516	SCREW	2	EA		
5-17	1150410625	SCREW	4	EA		
5-19	1652201005	BAND	2	EA		
5-20	1652201010	MOUNT	2	EA		

silverhorn.co.uk

This page intentionally left blank

silverhorn.co.uk

Item	Part No.	Name	Qty	Uom	Remarks	SERIAL NUMBER
5-21	1654606000	SEAL (SOLD BY THE METER)	1	EA	sold by the meter	
5-22	1711900194	CLAMP	2	EA		
5-23	1730143341	CONTROLLER, sub	1	EA		
6	**********	ECU ASSY	1	EA		
6-1	K1H044-59090	SUB ASSY, ECU	1	EA	19104-57127	
6-2	0654200005	BRACKET	1	EA		
6-3	0654200008	COVER	1	EA		
6-4	0654200077	HARNESS, wiring	1	EA		
6-5	1130140008	NUT (polycarbonate type)	7	EA		
6-8	1654606000	SEAL (SOLD BY THE METER)	1	EA	sold by the meter	
7	**********	RELAY ASSY, battery	1	EA		
7-1	0654200028	BRACKET	1	EA		
7-2	0654200122	COVER	1	EA		
7-3	1100090816	BOLT	3	EA		
7-4	1100050830	BOLT (10TM8 X 30 P/1.25)	2	EA		
7-5	1140020008	WASHER, spring	5	EA		
7-6	1141110008	WASHER	5	EA		
7-7	1654606000	SEAL (SOLD BY THE METER)	1	EA	sold by the meter	
7-8	1654606000	SEAL (SOLD BY THE METER)	1	EA	sold by the meter	
7-9	1654606000	SEAL (SOLD BY THE METER)	1	EA	sold by the meter	
7-10	1711900201	RELAY, battery	1	EA		
7-11	1654606000	SEAL (SOLD BY THE METER)	1	EA	sold by the meter	
11	1100090816	BOLT	9	EA		
12	1100050814	BOLT (10TM8 X 14 P/1.25)	2	EA		
14	1100050825	BOLT (10TM8 X 25 P/1.25)	2	EA		
16	1100051045	BOLT	2	EA		
19	1140020008	WASHER, spring	18	EA		
20	1140020010	WASHER, spring	4	EA		
21	1140330006	WASHER	1	EA		
24	1141110008	WASHER	18	EA		
25	1141110010	WASHER, plain	4	EA		
26	1652201005	BAND	6	EA		
28	1652201010	MOUNT	1	EA		
36	1711900194	CLAMP	1	EA		
40	1121530816	BOLT, wing	3	EA		
41	KRP421-53730	RELAY, grow	1	EA	19102-99116	
42	1131242006	NUT	1	EA		
44	1100560612	BOLT, sems	5	EA		

silverhorn.co.uk

This page intentionally left blank

silverhorn.co.uk

Item	Part No.	Name	Qty	Uom	Remarks	SERIAL NUMBER
49	0654200064	BRACKET	1	EA		
50	0654200090	RUBBER	1	EA		
51	1131242010	NUT	3	EA		

silverhorn.co.uk

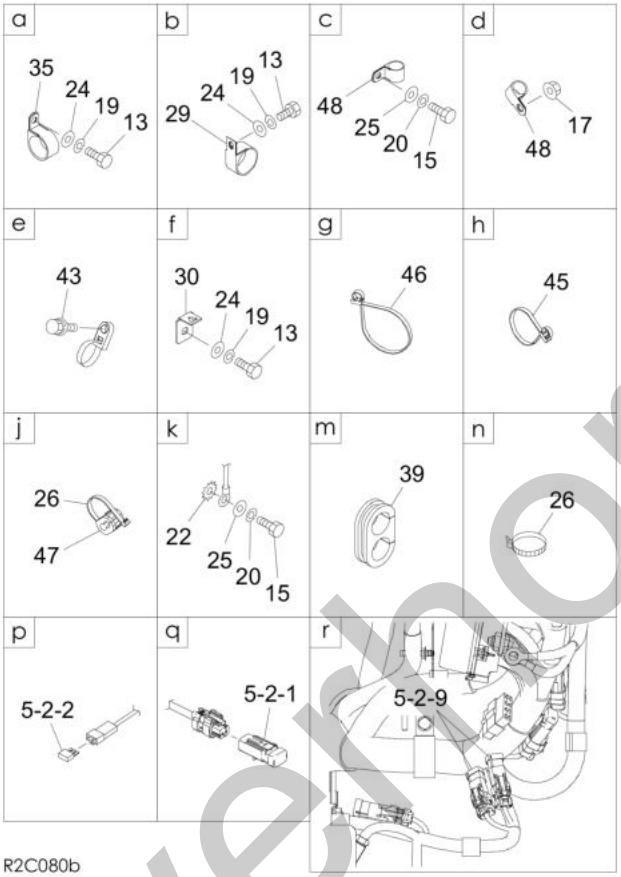

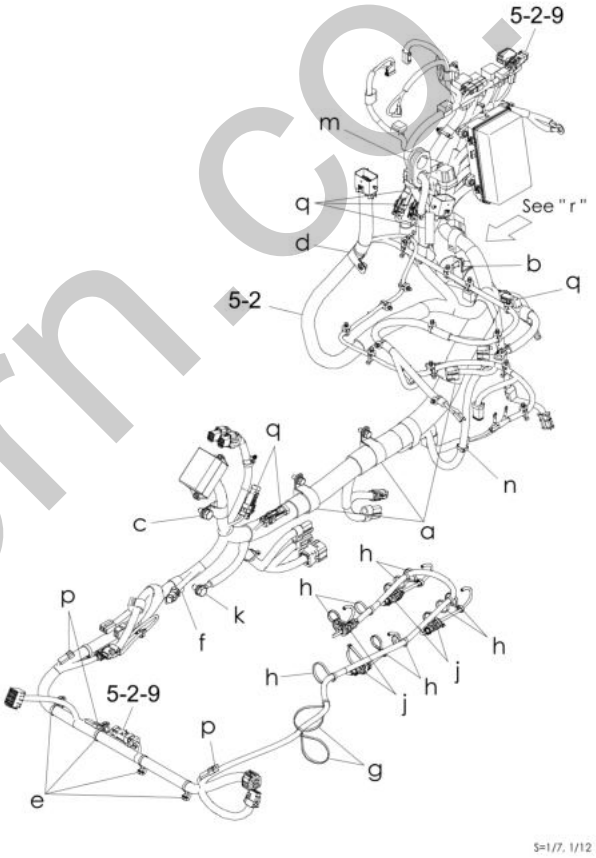

silverhorn.co.uk

Item	Part No.	Name	Qty	Uom	Remarks	SERIAL NUMBER
5	**********	UNIT ASSY	1	EA		
5-2	0654200001	HARNESS ASSY, wiring	1	EA		
5-2-1	1730500041	DIODE	6	EA		
5-2-2	1730500025	DIODE (1.5A 3P)	3	EA		
5-2-9	1903900244	RESISTOR	4	EA		
13	1100050820	BOLT (10TM8 X 20 P/1.25)	5	EA		
15	1100041020	BOLT	2	EA		
17	1130140008	NUT (polycarbonate type)	1	EA		
19	1140020008	WASHER, spring	18	EA		
20	1140020010	WASHER, spring	4	EA		
22	1140330010	WASHER, spring	1	EA		
24	1141110008	WASHER	18	EA		
25	1141110010	WASHER, plain	4	EA		
26	1652201005	BAND	6	EA		
29	1652900019	CLAMP	1	EA		
30	1652900207	CLAMP	1	EA		
35	1711900097	CLAMP	3	EA		
39	0654200112	GUARD	1	EA		
43	1100560616	BOLT, sems	4	EA		
45	1652201026	BAND, double head	9	EA		
46	1652201027	BAND, double head	2	EA		
47	0344200022	CLAMP	4	EA		
48	1711900071	CLAMP	2	EA		

silverhorn.co.uk

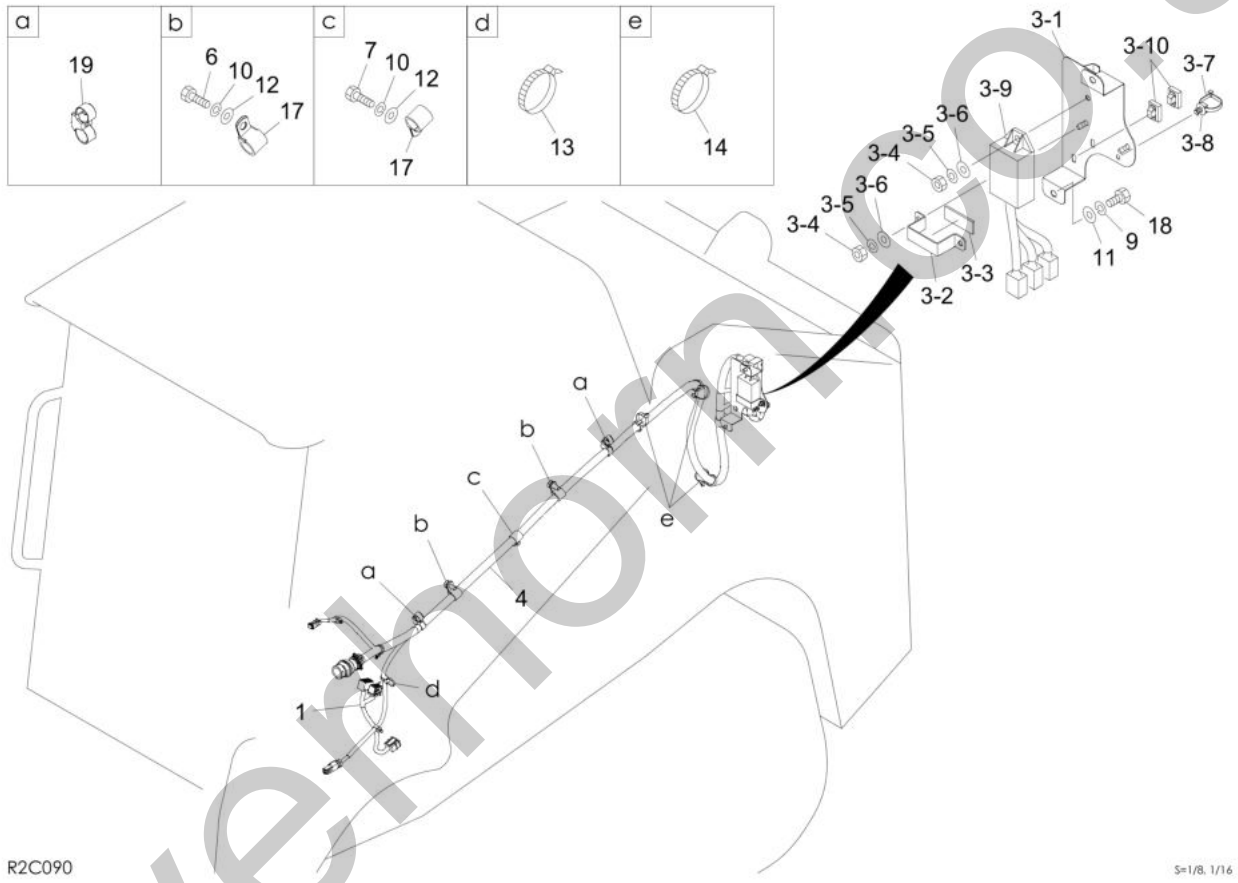

silvermonic.co.uk

Item	Part No.	Name	Qty	Uom	Remarks	SERIAL NUMBER
-	PNNA	ELECTRICAL ASSY		EA		
1	0654200044	HARNESS, wiring	1	EA		
3	**********	RELAY ASSY	1	EA		
3-1	0654200023	BRACKET	1	EA		
3-2	0694205685	BRACKET	1	EA		
3-3	0694205695	INSULATOR	1	EA		
3-4	1130040006	NUT	3	EA		
3-5	1140020006	WASHER, spring	3	EA		
3-6	1141110006	WASHER	3	EA		
3-7	1652201005	BAND	1	EA		
3-8	1652201010	MOUNT	1	EA		
3-9	1711900155	BOX, relay	1	EA		
3-10	1711900198	CLAMP	2	EA		
4	0654200113	HARNESS, wiring	1	EA		
6	1100051025	BOLT (10TM10 X 25 P/1.5)	2	EA		
7	1100041020	BOLT	1	EA		
9	1140020008	WASHER, spring	2	EA		
10	1140020010	WASHER, spring	3	EA		
11	1141110008	WASHER	2	EA		
12	1141110010	WASHER, plain	3	EA		
13	1652201005	BAND	1	EA		
14	1652201008	BAND	3	EA		
17	1711900129	CLAMP	3	EA		
18	1100050812	BOLT (10TM8 X 12 P/1.25)	2	EA		
19	1652201028	BAND, double head	2	EA		

silverhorn.co.uk

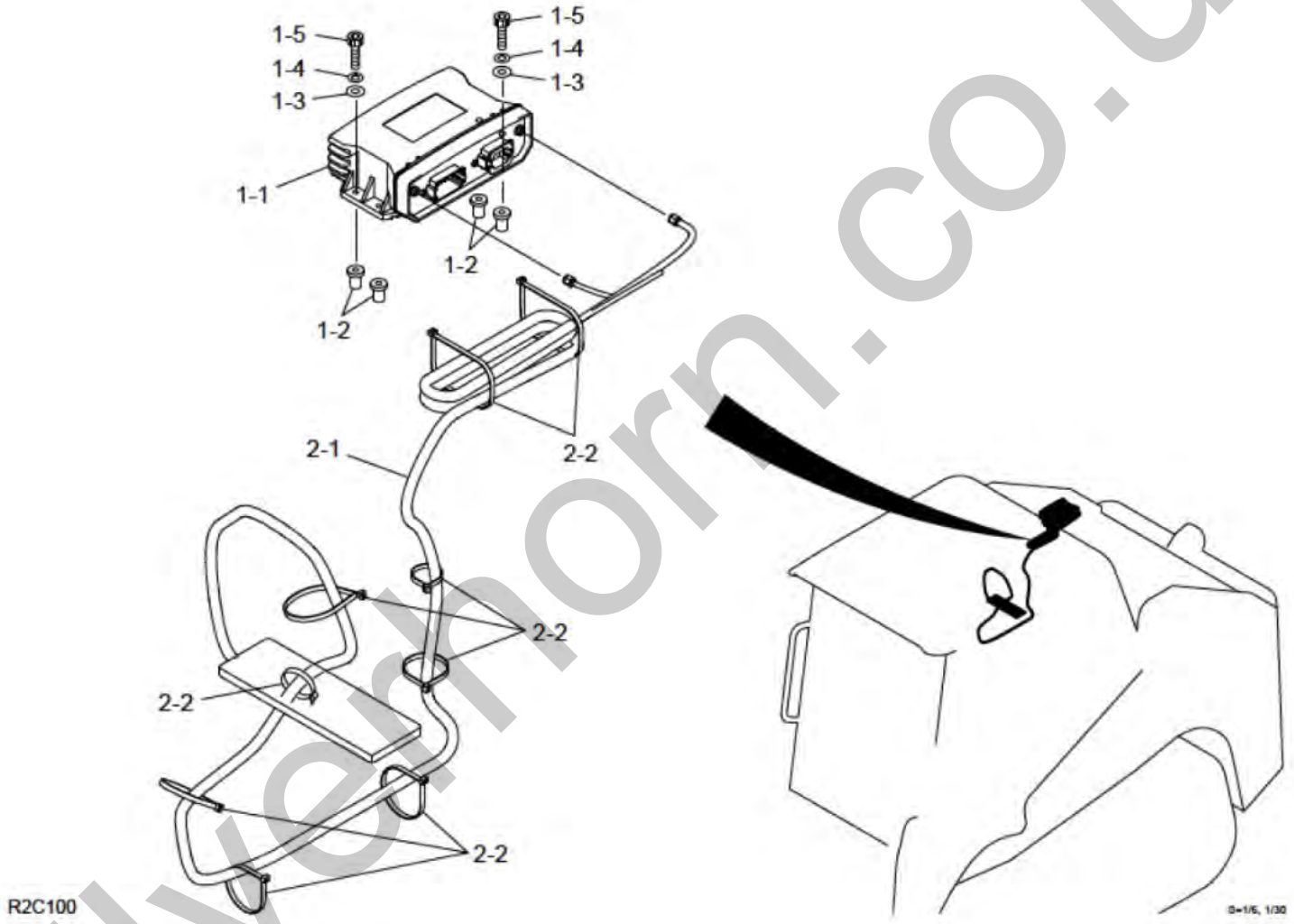

silverhorn.co.uk

Item	Part No.	Name	Qty	Uom	Remarks	SERIAL NUMBER
-	PNNA	GPS ASSY		EA		
1	**********	GPS SUB ASSY	1	EA		
1-1	1730143426	CONTROLLER	1	EA		
1-2	1652520005	NUT	4	EA		
1-3	1141110005	WASHER, flat (ZINC) (5MM)	4	EA		
1-4	1140020005	WASHER, spring	4	EA		
1-5	1110050525	SCREW, cap	4	EA		
2	**********	GPS ANTENNA ASSY	1	EA		
2-1	109345	ANTENNA (CHOCOLATE BAR)	1	EA		
2-2	1652201005	BAND	9	EA		

silverhorn.co.uk

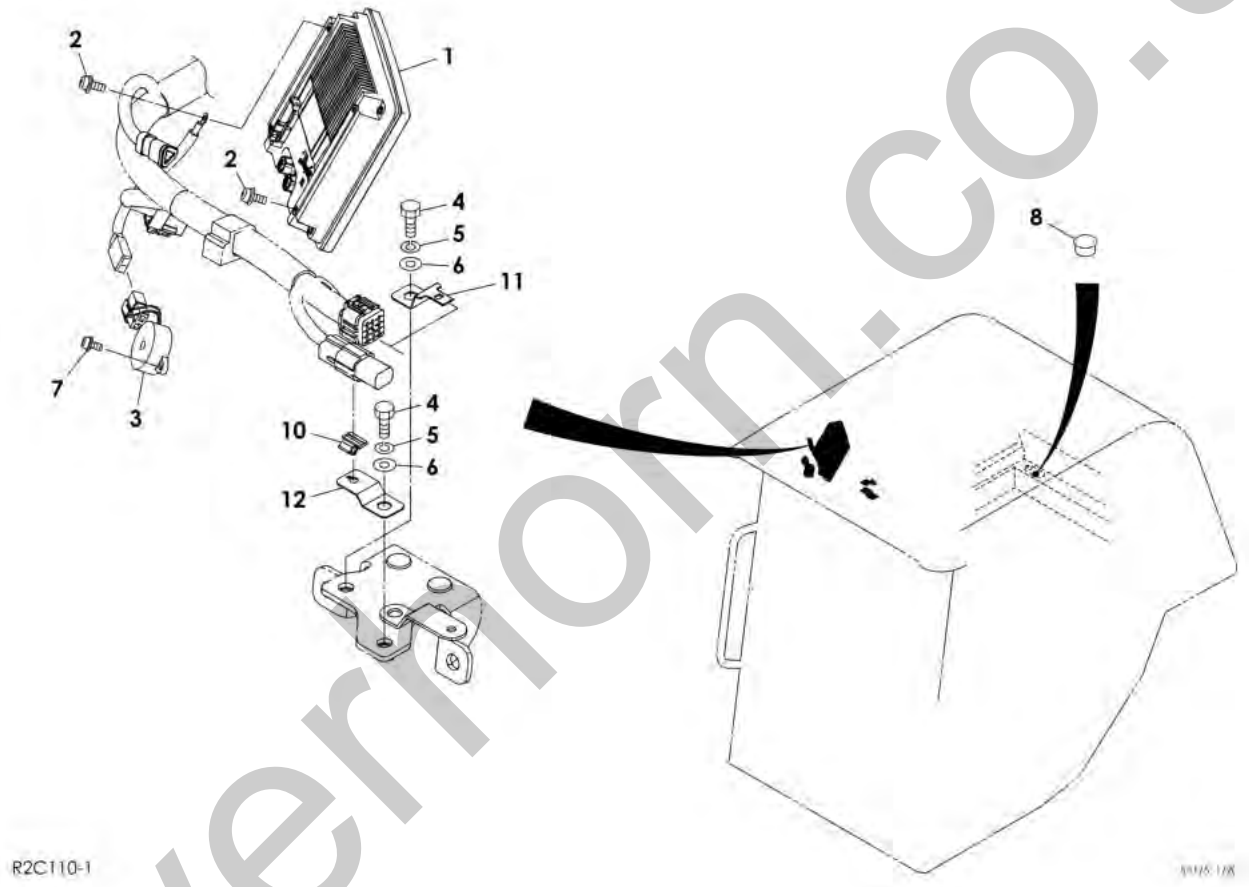

silvermorn.co.uk

Item	Part No.	Name	Qty	Uom	Remarks	SERIAL NUMBER
-	PNNA	DISPLAY ASSY(with out rear view camera)		EA		
1	1730143660	DISPLAY (DOES NOT INCLUDE REAR VIEW CAMERA)	1	EA		
2	1150410410	SCREW, sems	4	EA		
3	0573300610	BUZZER	1	EA		
4	1100050820	BOLT (10TM8 X 20 P/1.25)	2	EA		
5	1140020008	WASHER, spring	2	EA		
6	1141110008	WASHER	2	EA		
7	1150420310	SCREW, sems	2	EA		
8	1652533022	CAP	1	EA		
10	1711900194	CLAMP	1	EA		
11	1711900196	CLAMP	1	EA		
12	1711900219	CLAMP	1	EA		

silverhorn.co.uk

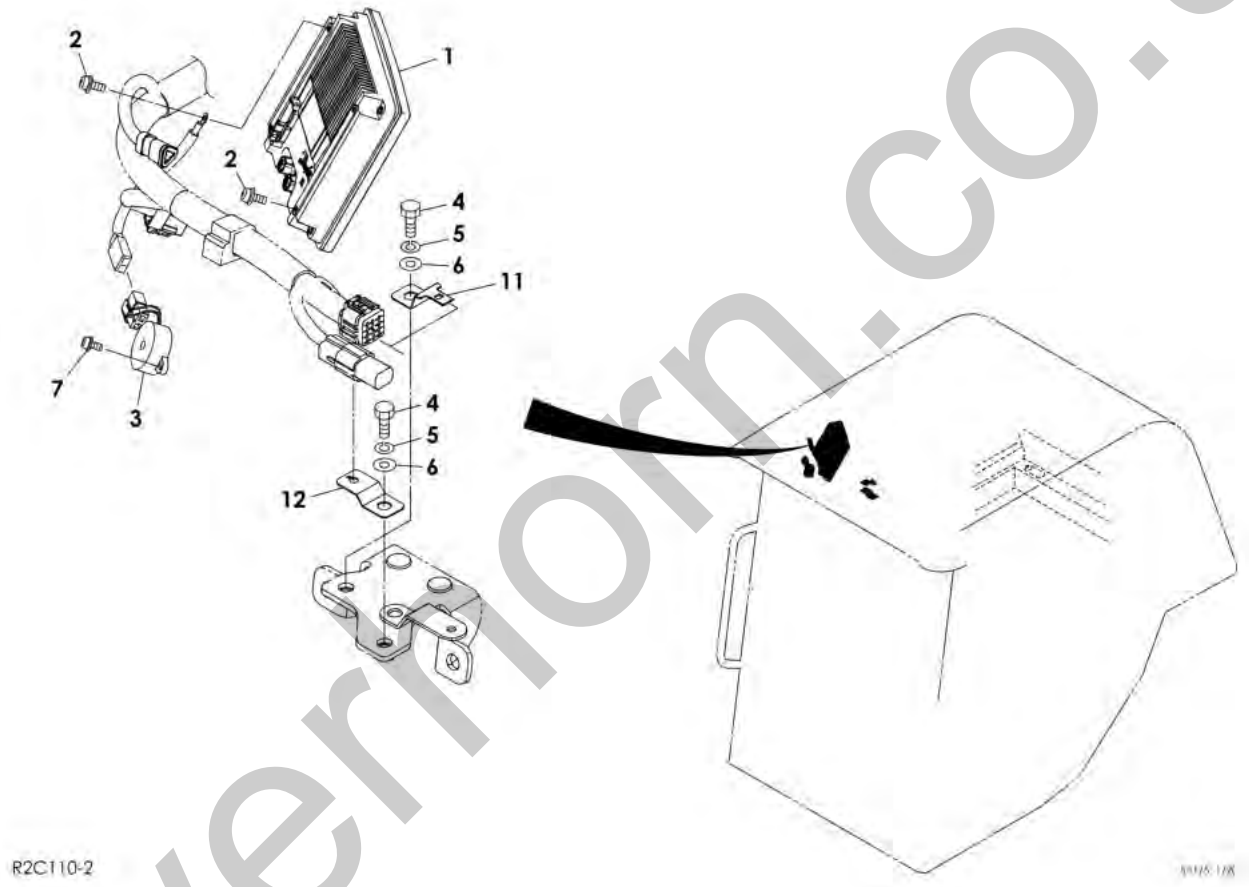

silvermorn.co.uk

Item	Part No.	Name	Qty	Uom	Remarks	SERIAL NUMBER
-	PNNA	DISPLAY ASSY(with rear view camera)		EA		
1	1730143661	DISPLAY (W/ REAR VIEW CAMERA)	1	EA		
2	1150410410	SCREW, sems	4	EA		
3	0573300610	BUZZER	1	EA		
4	1100050820	BOLT (10TM8 X 20 P/1.25)	2	EA		
5	1140020008	WASHER, spring	2	EA		
6	1141110008	WASHER	2	EA		
7	1150420310	SCREW, sems	2	EA		
11	1711900196	CLAMP	1	EA		
12	1711900219	CLAMP	1	EA		

silverhorn.co.uk

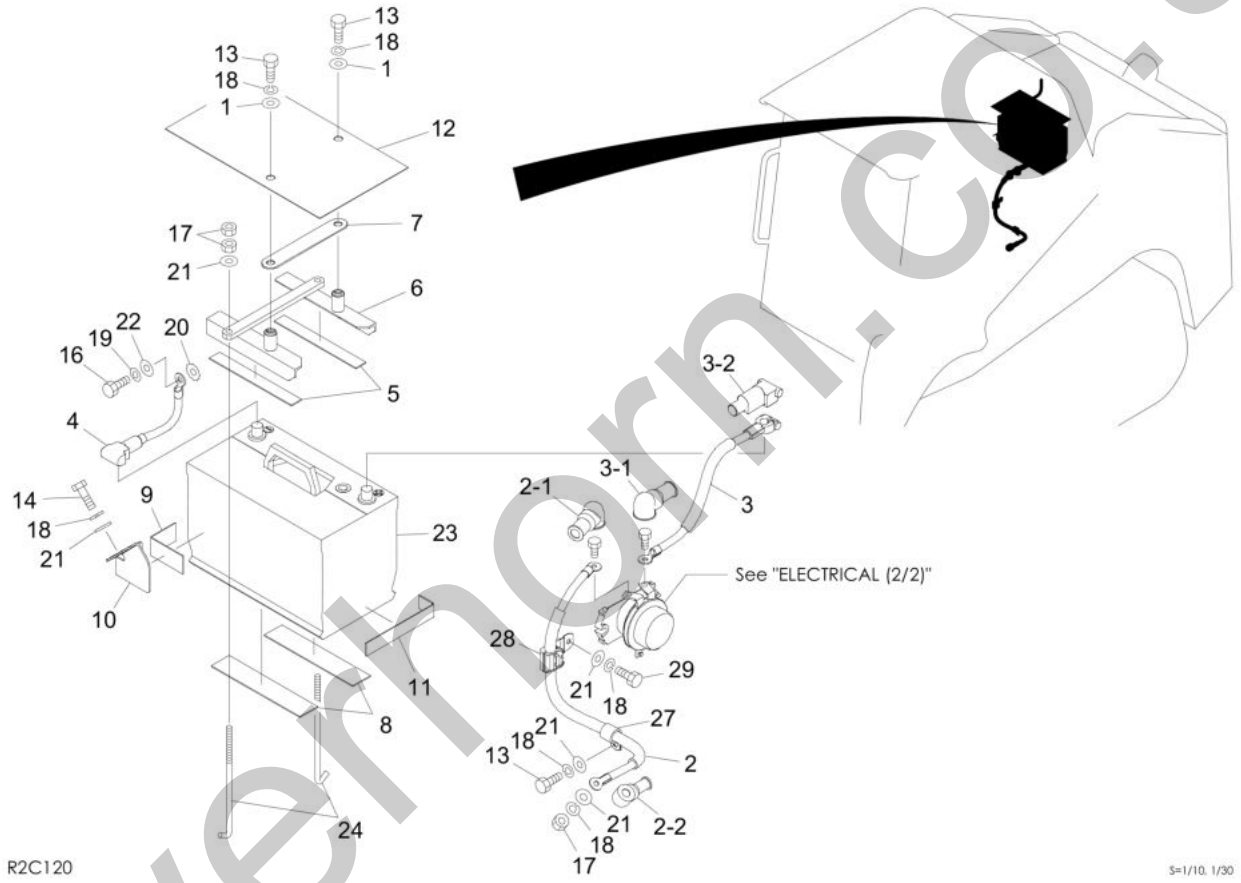

silvernorn.co.uk

Item	Part No.	Name	Qty	Uom	Remarks	SERIAL NUMBER
-	PNNA	BATTERY ASSY		EA		
1	0003608252	WASHER	2	EA		
2	0654400001	CABLE, battery	1	EA		
2-1	1702901283	CAP	1	EA		
2-2	1702901281	CAP (BATTERY)	1	EA		
3	0654400002	CABLE, battery	1	EA		
3-1	1702901283	CAP	1	EA		
3-2	1702920060	COVER (red)	1	EA		
4	0654400003	CABLE ASSY, earth	1	EA		
5	0654401030	RUBBER	2	EA		
6	0654400005	CLAMP	1	EA		
7	0664400010	PLATE	1	EA		
8	0694400019	RUBBER	2	EA		
9	0694400021	RUBBER	1	EA		
10	0694400025	PLATE	1	EA		
11	0694400026	RUBBER	1	EA		
12	0654400006	COVER	1	EA		
13	1100090816	BOLT	3	EA		
14	1100050825	BOLT (10TM8 X 25 P/1.25)	2	EA		
16	1100051025	BOLT (10TM10 X 25 P/1.5)	1	EA		
17	1130050008	NUT	5	EA		
18	1140020008	WASHER, spring	7	EA		
19	1140020010	WASHER, spring	1	EA		
20	1140330010	WASHER, spring	1	EA		
21	1141110008	WASHER	7	EA		
22	1141110010	WASHER, plain	1	EA		
23	1702081531	BATTERY	1	EA		
24	1702108210	BOLT	2	EA		
27	1711900129	CLAMP	1	EA		
28	1652900455	CLAMP	1	EA		
29	1100050820	BOLT (10TM8 X 20 P/1.25)	1	EA		

silverhorn.co.uk

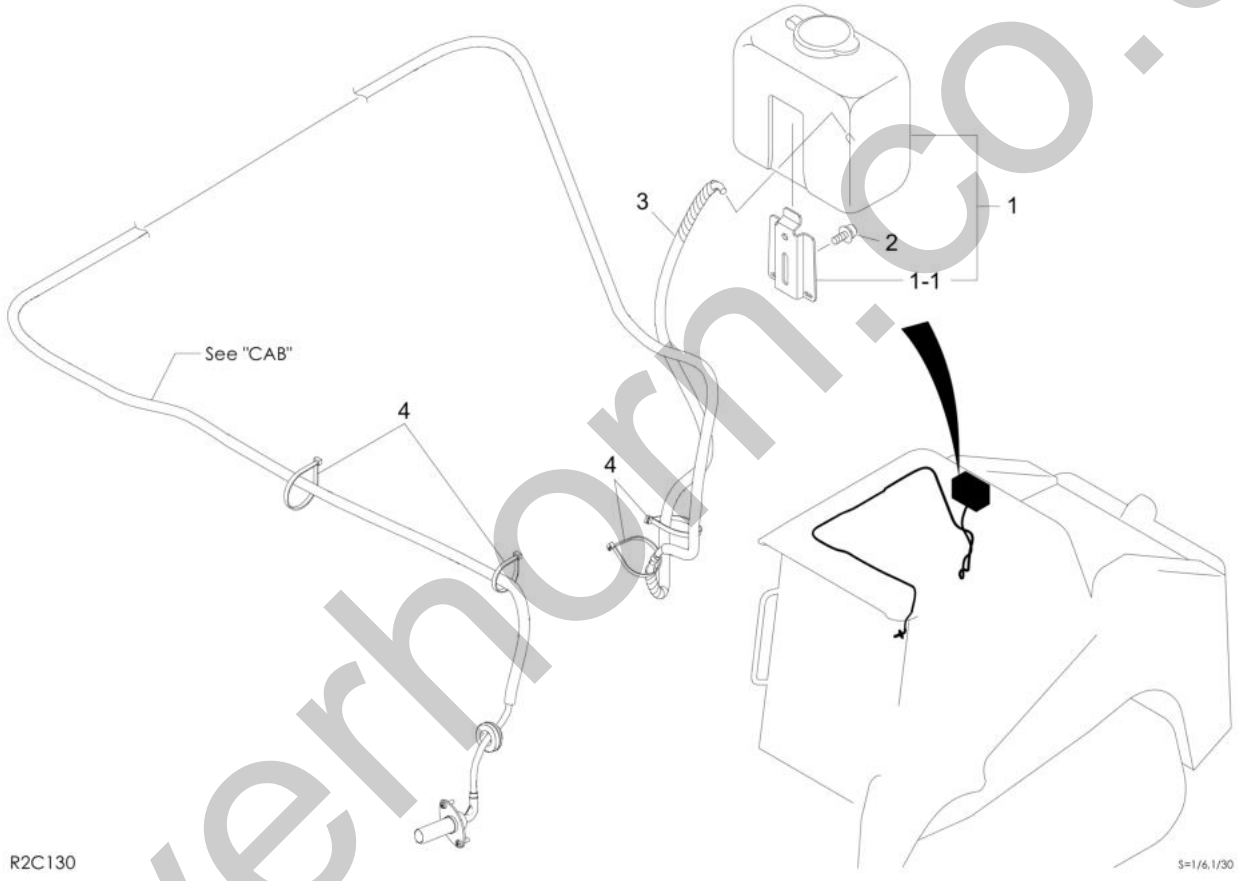

silverhorn.co.uk

Item	Part No.	Name	Qty	Uom	Remarks	SERIAL NUMBER
-	PNNA	WASHER ASSY, window		EA		
1	1711910290	TANK (SEE #1711910290TO FOR REDUCED PRICE)	1	EA		
1-1	1711910291	BRACKET	1	EA		
2	1150410612	BOLT, sems	2	EA		
3	1703210700	TUBE (SOLD BY THE METER)	1	EA		
4	1652201005	BAND	4	EA		

silverhorn.co.uk

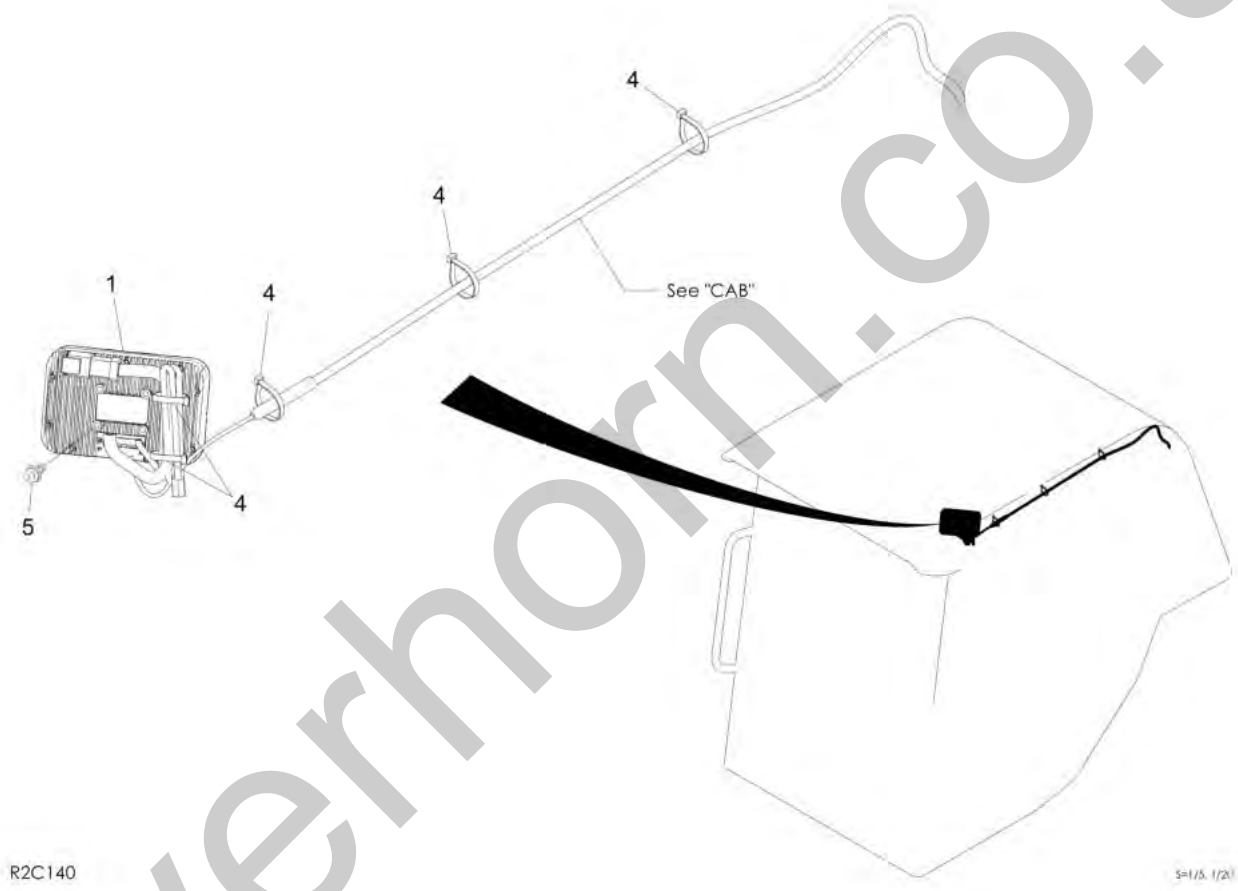

silverhorn.co.uk

Item	Part No.	Name	Qty	Uom	Remarks	SERIAL NUMBER
-		RADIO ASSY (for America)		EA		
1	1705004780	RADIO	1	EA		
4	1652201005	BAND	5	EA		
5	1150420412	SCREW, sems	4	EA		

silverhorn.co.uk

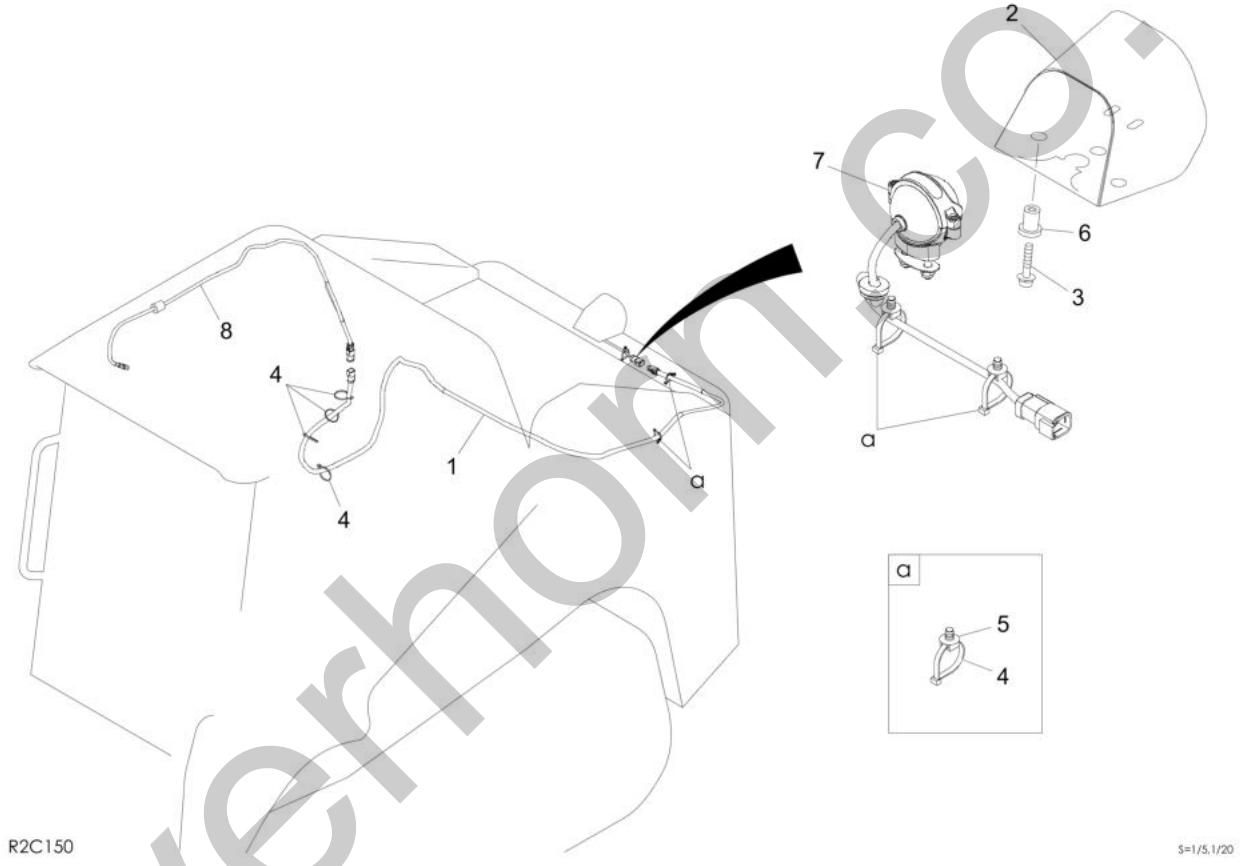

silverhorn.co.uk

Item	Part No.	Name	Qty	Uom	Remarks	SERIAL NUMBER
-	PNNA	CAMERA ASSY, rear view		EA		
1	0564200221	HARNESS, wiring	1	EA		
2	0694200266	COVER	1	EA		
3	1150420625	SCREW, sems	3	EA		
4	1652201005	BAND	8	EA		
5	1652201010	MOUNT	4	EA		
6	1652520006	NUT	3	EA		
7	1711900164	CAMERA, color (REARVIEW)	1	EA		
8	0654200111	CABLE	1	EA		

silverhorn.co.uk

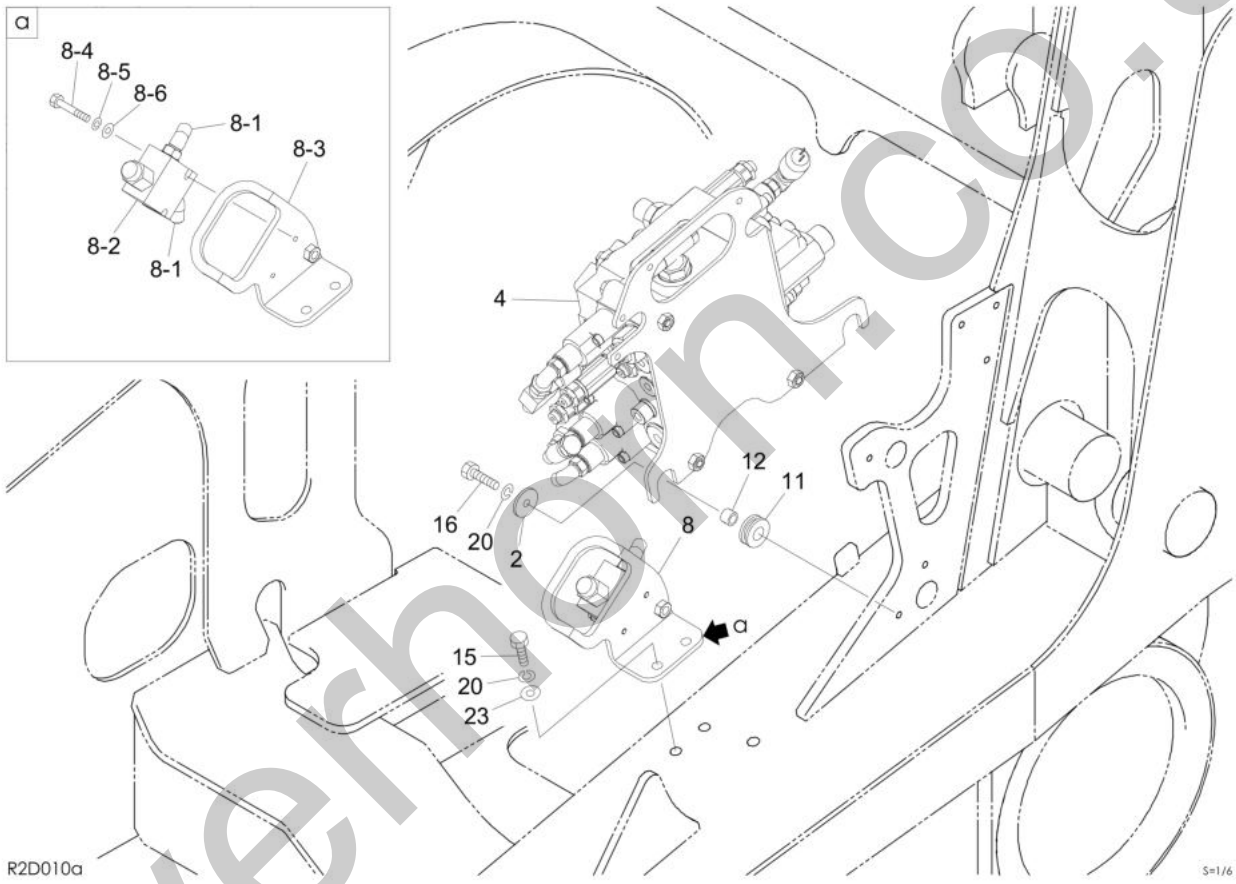

silverhorn.co.uk

Item	Part No.	Name	Qty	Uom	Remarks	SERIAL NUMBER
-	PNNA	VALVE ASSY, control		EA		
2	0003609003	WASHER (9/30 T/3.2)	4	EA		
4	**********	VALVE SUB ASSY, control	1	EA	see page (2/2)	
8	**********	VALVE ASSY, emergency	1	EA		
8-1	1515102110	ELBOW	2	EA		
8-1	1420010110	O-RING	1	EA		
8-2	1901764700	VALVE, emergency	1	EA		
8-3	0655000022	BRACKET	1	EA		
8-4	1100040640	BOLT	2	EA		
8-5	1140020006	WASHER, spring	2	EA		
8-6	1141110006	WASHER	2	EA		
11	0882502130	CUSHION	4	EA		
12	0882502140	PIPE	4	EA		
15	1100050825	BOLT (10TM8 X 25 P/1.25)	4	EA		
16	1100050830	BOLT (10TM8 X 30 P/1.25)	4	EA		
20	1140020008	WASHER, spring	13	EA		
23	1141110008	WASHER	6	EA		

silverhorn.co.uk

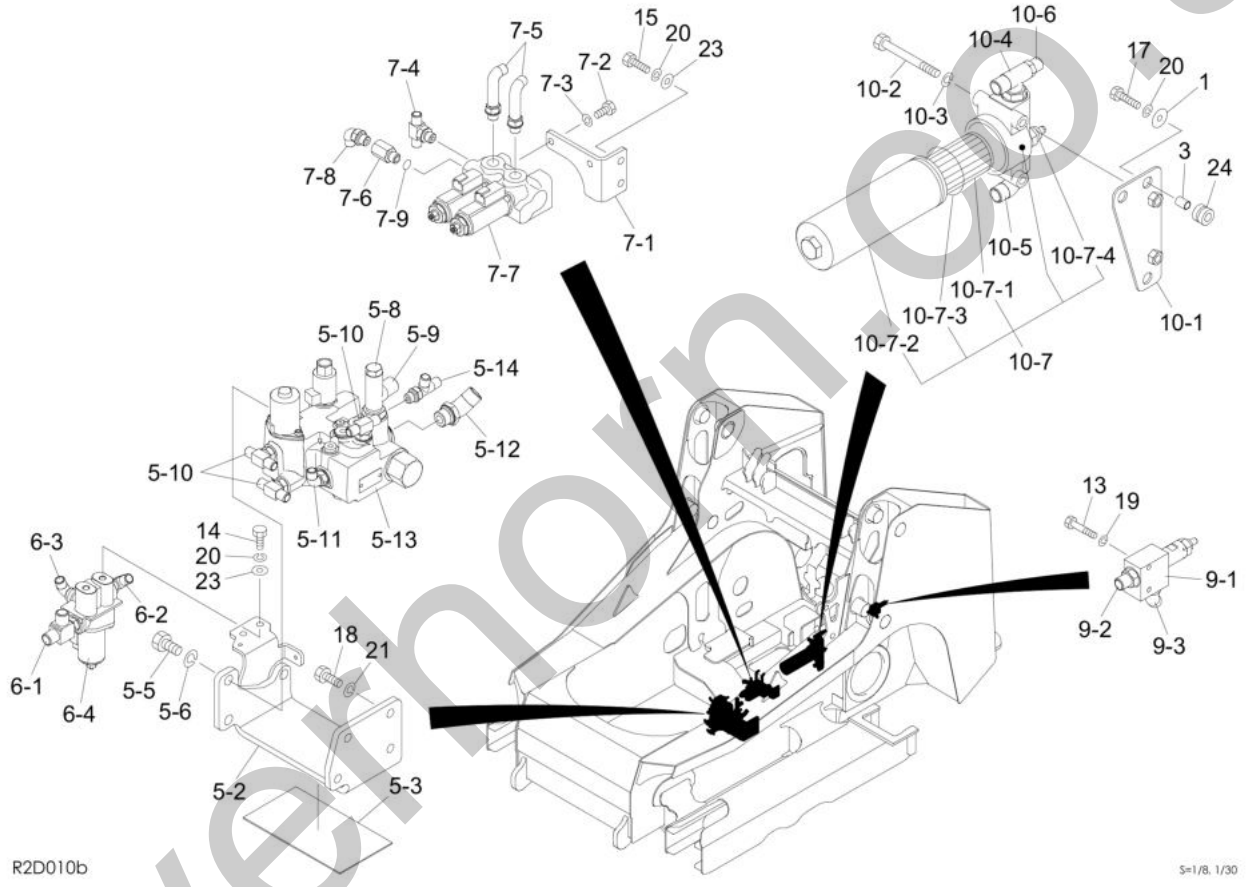

silverhorn.co.uk

Item	Part No.	Name	Qty	Uom	Remarks	SERIAL NUMBER
-	PNNA	VALVE ASSY, control		EA		
1	0003608252	WASHER	3	EA		
3	0573500027	COLLAR	3	EA		
5	**********	VALVE SUB ASSY	1	EA		
5-2	0655000006	BRACKET	1	EA		
5-3	0655000016	RUBBER	1	EA		
5-5	1100051225	BOLT (10TM12 X 25 P/1.75)	3	EA		
5-6	1140020012	WASHER, spring (12MM)	3	EA		
5-8	1501750002	PLUG (FOR O-RING USE # 1420010110)	1	EA		
5-8	1420010110	O-RING	1	EA		
5-9	1512340004	ADAPTOR, elbow	1	EA		
5-9	1420010180	O-RING	1	EA		
5-10	1512370010	ADAPTOR	3	EA		
5-10	1420010110	O-RING	1	EA		
5-11	1515012040	ELBOW	1	EA		
5-11	1420010110	O-RING	1	EA		
5-12	1515102112	ELBOW	1	EA		
5-12	1420010180	O-RING	1	EA		
5-13	1901748100	VALVE, sub	1	EA		
5-14	1512370011	TEE	1	EA		
5-14	1420010110	O-RING	1	EA		
6	**********	VALVE ASSY, solenoid	1	EA		
6-1	1512373014	TEE	1	EA		
6-1	1420010110	O-RING	1	EA		
6-2	1512375004	ELBOW (with filter)	1	EA		
6-2	1420010110	O-RING	1	EA		
6-3	1515012040	ELBOW	1	EA		
6-3	1420010110	O-RING	1	EA		
6-4	1901765600	VALVE ASSY, solenoid (1-block)	1	EA		
7	**********	VALVE ASSY, solenoid	1	EA		
7-1	0655000017	PLATE	1	EA		
7-2	1100090816	BOLT	2	EA		
7-3	1140020008	WASHER, spring	2	EA		
7-4	1512370002	TEE (with filter)	1	EA		
7-4	1420010110	O-RING	1	EA		
7-5	1515012510	ELBOW	2	EA		
7-5	1420010110	O-RING	1	EA		
7-6	0007213042	BUSHING	1	EA		

silverhorn.co.uk

This page intentionally left blank

silverhorn.co.uk

Item	Part No.	Name	Qty	Uom	Remarks	SERIAL NUMBER
7-7	1901766400	VALVE, solenoid	1	EA		
7-8	1515012040	ELBOW	1	EA		
7-8	1420010110	O-RING	1	EA		
7-9	1420010110	O-RING	1	EA		
9	**********	VALVE ASSY, relief	1	EA		
9-1	1901768800	VALVE ASSY, relief	1	EA		
9-2	1515600201	ADAPTOR	1	EA		
9-2	1420010140	O-RING	1	EA		
9-3	1515102111	ELBOW	1	EA		
9-3	1420010140	O-RING	1	EA		
10	**********	null	1	EA		
10-1	0685000032	PLATE	1	EA		
10-2	1100041095	BOLT	2	EA		
10-3	1140020010	WASHER, spring	2	EA		
10-4	1512350001	TEE	1	EA		
10-4	1420010180	O-RING	1	EA		
10-5	1515012042	ELBOW	1	EA		
10-5	1420010180	O-RING	1	EA		
10-6	1515600571	ADAPTOR	1	EA		
10-6	1420010110	O-RING	1	EA		
10-7	1551102500	FILTER	1	EA		
10-7-1	1551101001	FILTER (HYDRAULIC)(USES O-RING PART # 1420110600)	1	EA		
10-7-2	1551101003	CASE	1	EA		
10-7-3	1420100600	O-RING	1	EA		
10-7-4	1551102505	SWITCH, pressure	1	EA		
13	1100040640	BOLT	2	EA		
14	1100090816	BOLT	2	EA		
15	1100050825	BOLT (10TM8 X 25 P/1.25)	4	EA		
17	1100050835	BOLT (10TM8 X 35 P/1.25)	3	EA		
18	1100051025	BOLT (10TM10 X 25 P/1.5)	4	EA		
19	1140020006	WASHER, spring	2	EA		
20	1140020008	WASHER, spring	13	EA		
21	1140020010	WASHER, spring	4	EA		
23	1141110008	WASHER	6	EA		
24	1651057014	GROMMET	3	EA		

silverhorn.co.uk

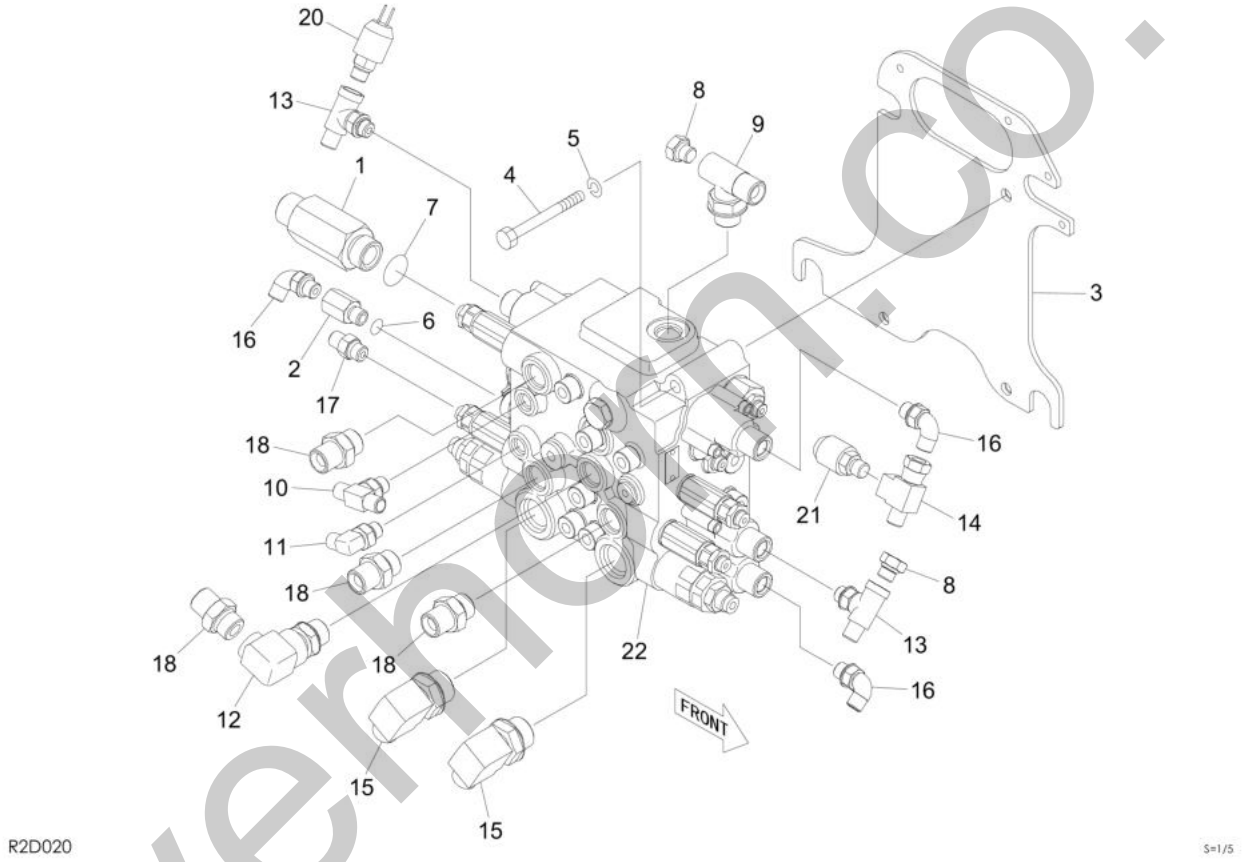

silverhorn.co.uk

Item	Part No.	Name	Qty	Uom	Remarks	SERIAL NUMBER
0-1	**********	VALVE SUB ASSY, control	1	EA		
1	0007203083	ADAPTOR	1	EA		
2	0007213042	BUSHING	1	EA		
3	0655000003	PLATE	1	EA		
4	1100050880	BOLT (10TM8 X 80 P/1.25)	3	EA		
5	1140020008	WASHER, spring	3	EA		
6	1420010110	O-RING	1	EA		
7	1420010240	O-RING	1	EA		
8	1501750002	PLUG (FOR O-RING USE # 1420010110)	2	EA		
8	1420010110	O-RING	1	EA		
9	1512350001	TEE	1	EA		
9	1420010180	O-RING	1	EA		
10	1512370010	ADAPTOR	1	EA		
10	1420010110	O-RING	1	EA		
11	1512375004	ELBOW (with filter)	1	EA		
11	1420010110	O-RING	1	EA		
12	1513300015	ELBOW	1	EA		
12	1420010180	O-RING	1	EA		
13	1513390029	TEE	2	EA		
13	1420010110	O-RING	1	EA		
14	1513390047	TEE	1	EA		
15	1515010052	ELBOW	2	EA		
15	1420010240	O-RING	1	EA		
16	1515012040	ELBOW	3	EA		
16	1420010110	O-RING	1	EA		
17	1515600200	ADAPTOR	1	EA		
17	1420010110	O-RING	1	EA		
18	1515600202	ADAPTOR	4	EA		
18	1420010180	O-RING	1	EA		
20	1700100133	SWITCH, pressure	1	EA		
20	1420010110	O-RING	1	EA		
21	1700100060	SWITCH, pressure	1	EA		
21	1420010110	O-RING	1	EA		
22	1901058400	VALVE, control	1	EA		

silverhorn.co.uk

HYDRAULIC PIPING & TANK PIPING 1

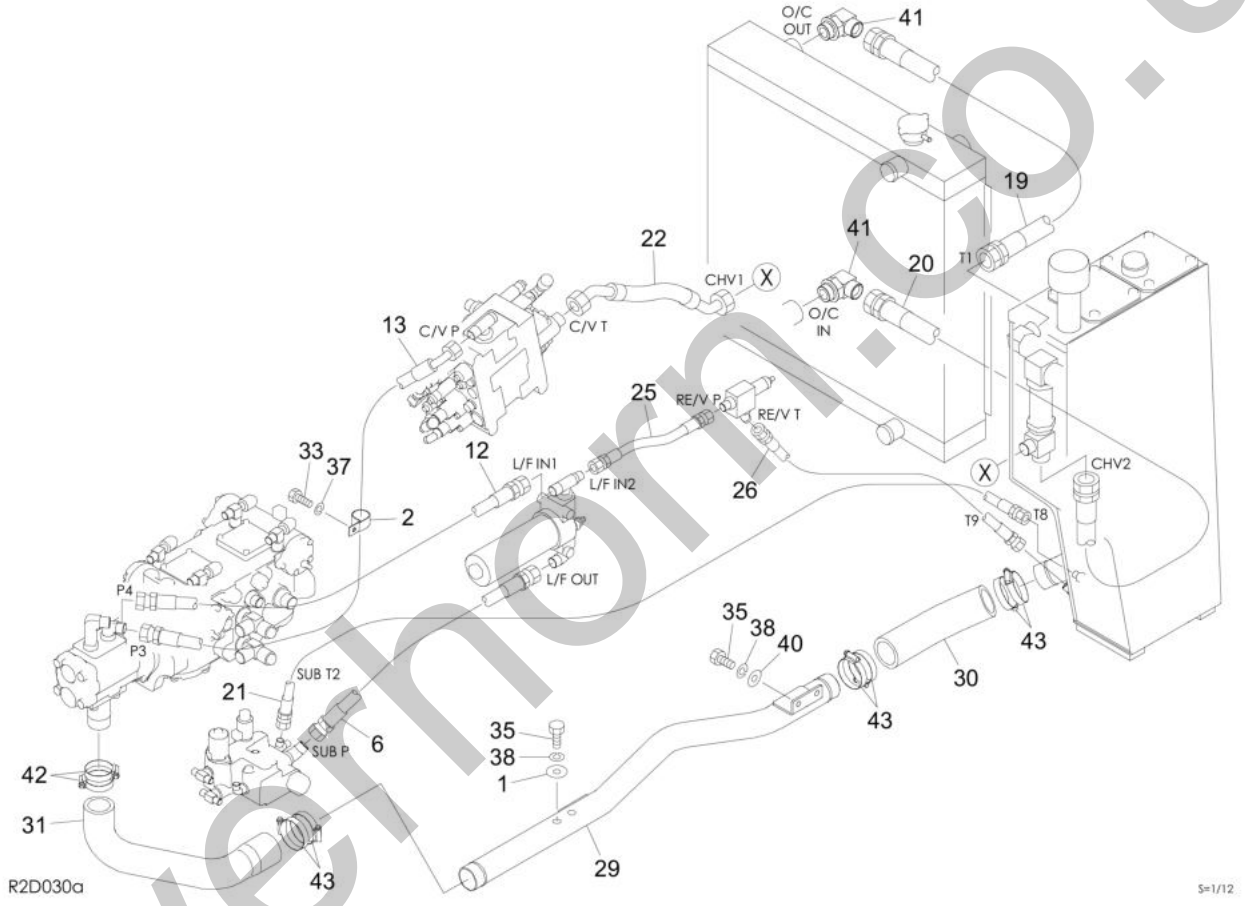

silvernorm.co.uk

Item	Part No.	Name	Qty	Uom	Remarks	SERIAL NUMBER
-	PNNA	PIPING ASSY		EA		
1	0003600025	WASHER	2	EA		
2	0007300013	CLAMP	1	EA		
6	0657000004	HOSE ASSY	1	EA	18010-27046	
12	0657000011	HOSE ASSY	1	EA	18010-27067	
13	0657000012	HOSE ASSY	1	EA	18015-47092	
19	0657000045	HOSE ASSY	1	EA		
20	0657000019	HOSE ASSY	1	EA		
21	0657000049	HOSE ASSY	1	EA	18010-22131	
22	0657000022	HOSE ASSY	1	EA		
25	0657000042	HOSE ASSY	1	EA	18010-23028	
26	0657000043	HOSE ASSY	1	EA	18010-23054	
29	0657000032	PIPE	1	EA		
30	0657000036	HOSE	1	EA		
31	0657000037	HOSE	1	EA		
33	1100050820	BOLT (10TM8 X 20 P/1.25)	1	EA		
35	1100041020	BOLT	4	EA		
37	1140020008	WASHER, spring	1	EA		
38	1140020010	WASHER, spring	5	EA		
40	1141110010	WASHER, plain	2	EA		
41	1515010044	ELBOW	2	EA		
41	1420010290	O-RING	1	EA		
42	1533700060	BAND	2	EA		
43	1533700071	CLAMP	6	EA		

silverhorn.co.uk

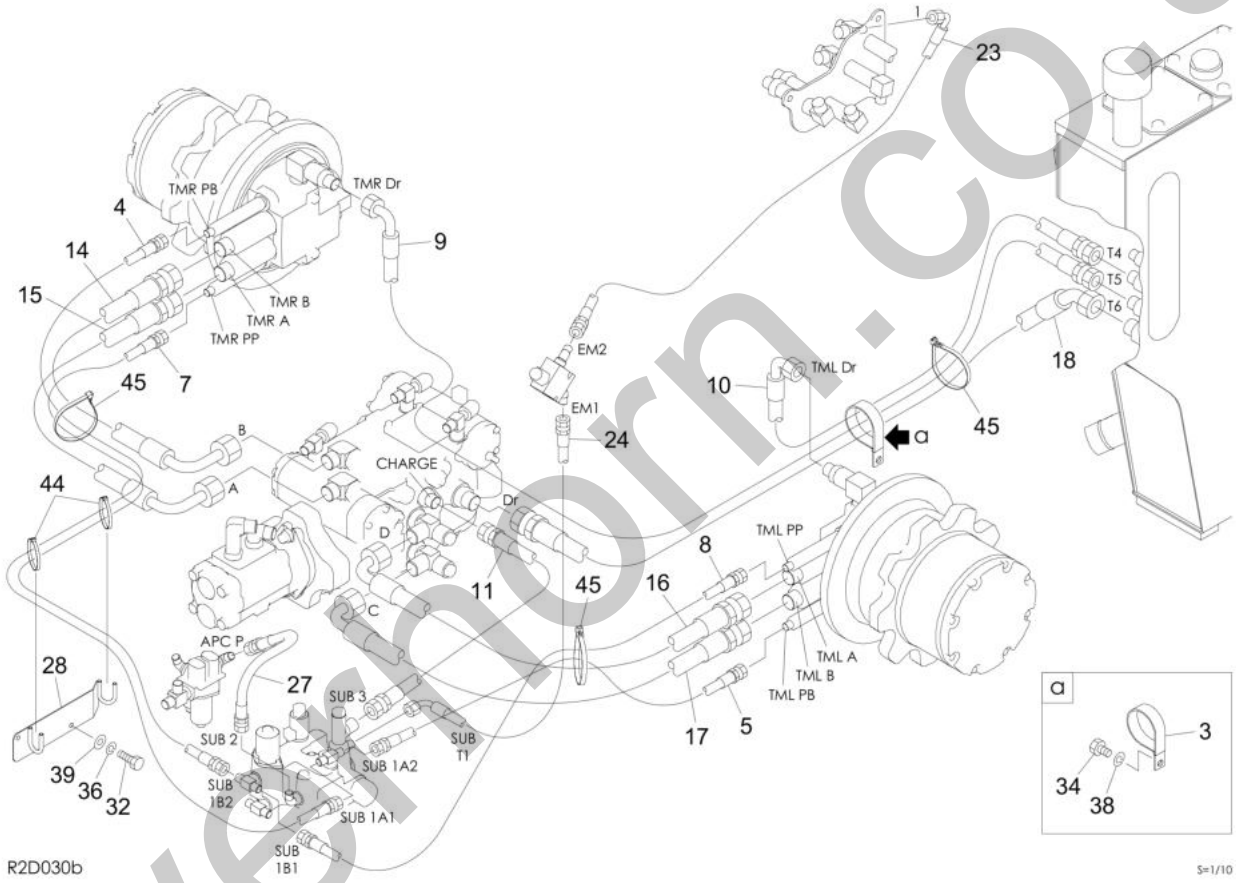

silvernorn.co.uk

Item	Part No.	Name	Qty	Uom	Remarks	SERIAL NUMBER
-	PNNA	PIPING ASSY		EA		
1	0003600025	WASHER	2	EA		
3	0007300060	CLAMP	1	EA		
4	0657000002	HOSE ASSY	1	EA	18010-22133	
5	0657000003	HOSE ASSY	1	EA	18010-22059	
7	0657000005	HOSE ASSY	1	EA	18010-22116	
8	0657000006	HOSE ASSY	1	EA	18010-22077	
9	0657000047	HOSE ASSY	1	EA	18010-57200	
10	0657000048	HOSE ASSY	1	EA	18010-57083	
11	0657000009	HOSE ASSY	1	EA	18010-24039	
14	0657000013	HOSE ASSY	1	EA		
15	0657000014	HOSE ASSY	1	EA		
16	0657000015	HOSE ASSY	1	EA		
17	0657000016	HOSE ASSY	1	EA		
18	0657000017	HOSE ASSY	1	EA		
23	0657000023	HOSE ASSY	1	EA	18015-01088	
24	0657000051	HOSE ASSY	1	EA	18010-52044	
27	0657000027	HOSE ASSY	1	EA	18010-22040	
28	0657000028	GUIDE	1	EA		
32	1100050616	BOLT (10TM6 X 16 P/1.0)	2	EA		
34	1100051016	BOLT	1	EA		
36	1140020006	WASHER, spring	2	EA		
38	1140020010	WASHER, spring	5	EA		
39	1141110006	WASHER	2	EA		
44	1652201007	BAND	2	EA		
45	1652231250	BAND (1st aux. Proportion)	3	EA		

silverhorn.co.uk

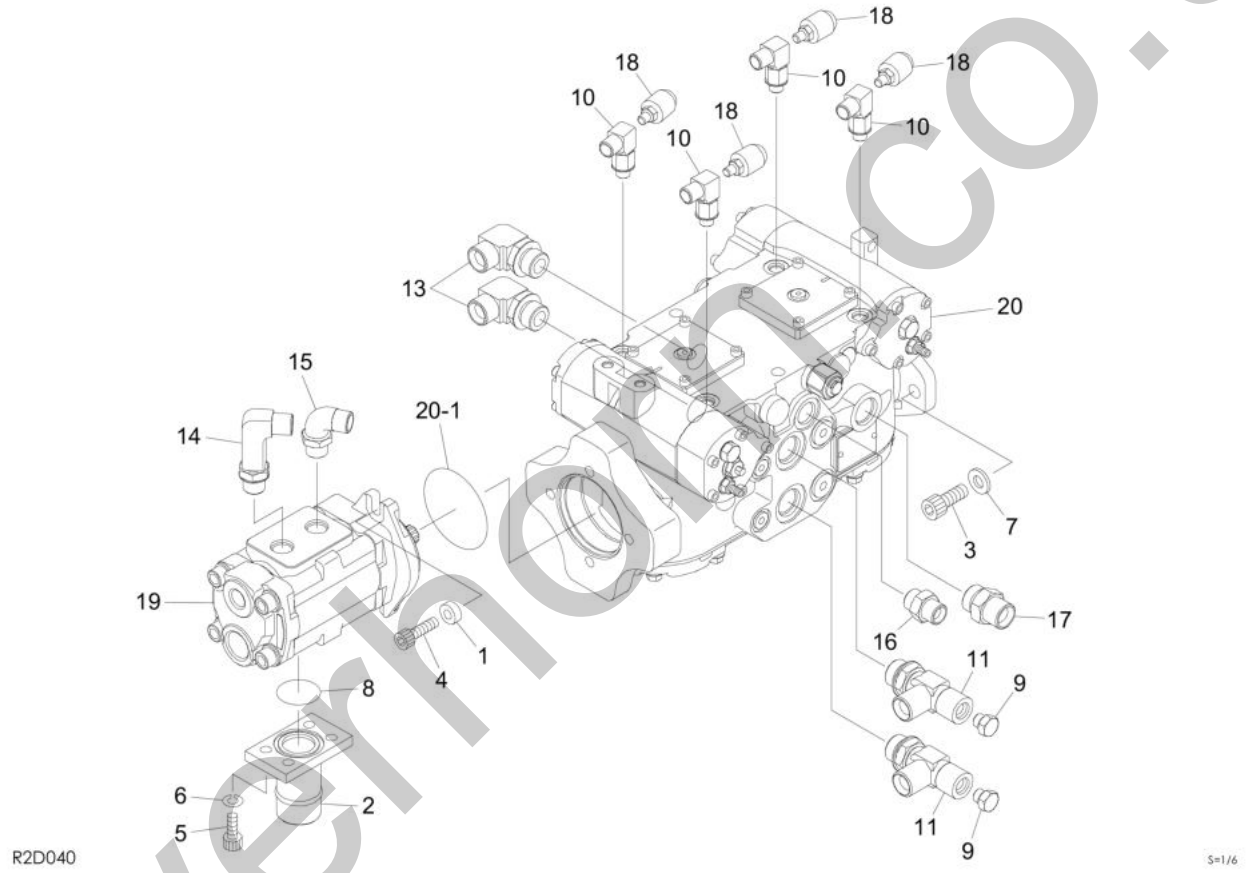

silverhorn.co.uk

Item	Part No.	Name	Qty	Uom	Remarks	SERIAL NUMBER
-	PNNA	PUMP ASSY		EA		
1	0003900039	WASHER	2	EA		
2	0880523200	ADAPTOR	1	EA		
3	1102720832	SCREW, cap	2	EA		
4	1110051035	SCREW, cap	2	EA		
5	1111041025	SCREW, cap	4	EA		
6	1140420010	WASHER, spring	4	EA		
7	1141450008	WASHER	2	EA		
8	1420100400	O-RING	1	EA		
9	1501750002	PLUG (FOR O-RING USE # 1420010110)	2	EA		
9	1420010110	O-RING	1	EA		
10	1512330005	ELBOW	4	EA		
10	1420310906	O-RING (ARP568-906-1B)	1	EA		
11	0881521300	TEE (FOR O-RING USE #1420310912)	2	EA		
11	1420310912	O-RING (ARP568-912-1B)	1	EA		
13	1515200063	ELBOW	2	EA		
13	1420310912	O-RING (ARP568-912-1B)	1	EA		
14	1515010512	FITTING	1	EA		
14	1420010180	O-RING	1	EA		
15	1515012042	ELBOW	1	EA		
15	1420010180	O-RING	1	EA		
16	1515600212	ADAPTOR	1	EA		
16	1420310910	O-RING	1	EA		
17	1515600213	ADAPTOR	1	EA		
17	1420310912	O-RING (ARP568-912-1B)	1	EA		
18	1700100015	SWITCH, pressure	4	EA		
19	1902032400	PUMP, gear	1	EA		
20	1902032500	PUMP, hydraulic	1	EA		
20-1	1420300152	O-RING	1	EA		

silverhorn.co.uk

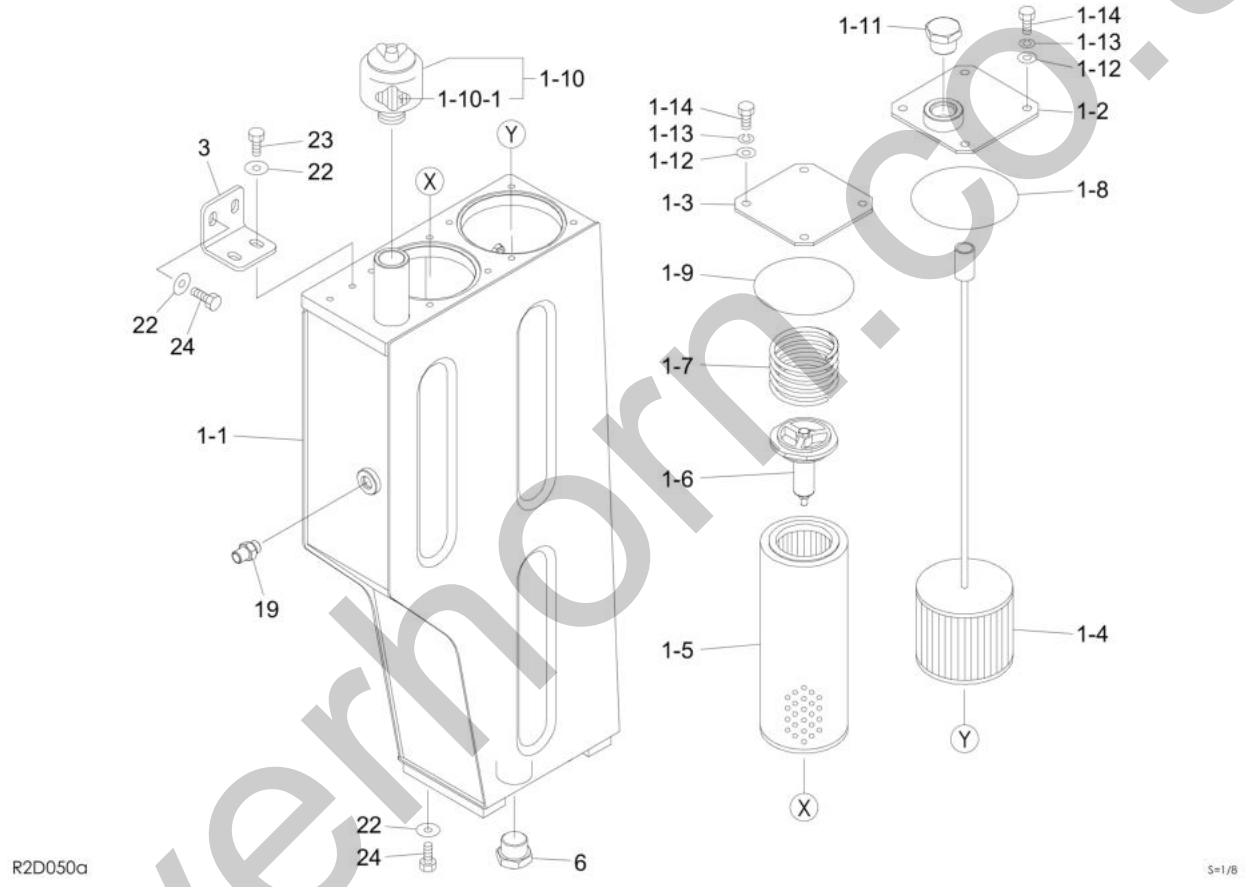

silverhorn.co.uk

Item	Part No.	Name	Qty	Uom	Remarks	SERIAL NUMBER
-	PNNA	TANK ASSY, hydraulic		EA		
1	**********	VALVE SUB ASSY, control	1	EA		
1-1	0658000003	TANK, hydraulic	1	EA		
1-2	0658000020	COVER	1	EA		
1-3	0658000600	PLATE	1	EA		
1-4	1550216640	FILTER	1	EA		
1-5	1551103900	FILTER (HYDRAULIC)	1	EA		
1-6	1551100300	VALVE	1	EA		
1-7	0007000031	SPRING	1	EA		
1-8	1420111350	O-RING	1	EA		
1-9	1420111250	O-RING (G-125)	1	EA		
1-10	1552000800	CAP ASSY, breather	1	EA		
1-10-1	1552000830	ELEMENT (HYDRAULIC BREATHER)	1	EA		
1-11	1501750010	PLUG	1	EA		
1-11	1420010290	O-RING	1	EA		
1-12	1141110010	WASHER, plain	8	EA		
1-13	1140020010	WASHER, spring	8	EA		
1-14	1100041020	BOLT	8	EA		
3	0658000025	BRACKET	1	EA		
6	1501750010	PLUG	1	EA		
6	1420010290	O-RING	1	EA		
19	1515600201	ADAPTOR	2	EA		
19	1420010140	O-RING	1	EA		
22	0003600025	WASHER	12	EA		
23	1100041020	BOLT	6	EA		
24	1100051025	BOLT (10TM10 X 25 P/1.5)	10	EA		

silverhorn.co.uk

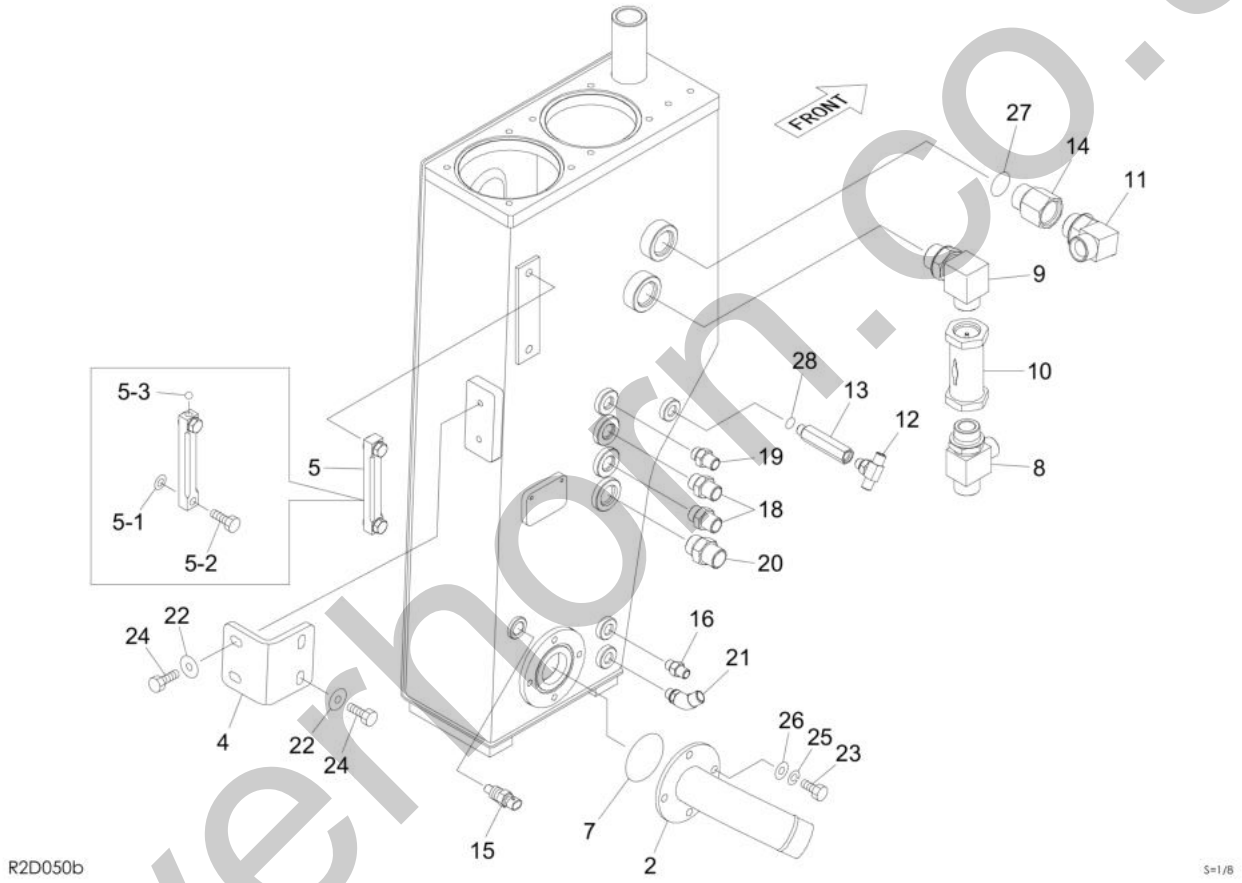

silverhorn.co.uk

Item	Part No.	Name	Qty	Uom	Remarks	SERIAL NUMBER
2	0658000022	PIPE	1	EA		
4	0658000026	BRACKET	1	EA		
5	1553020612	GAUGE	1	EA		
5-1	1553022650	GASKET	2	EA		
5-2	1553021650	BOLT	2	EA		
5-3	1553020603	FLOAT	1	EA		
7	1420110650	O-RING (65/70 T/3.1(-+0.1))	1	EA		
8	1512373018	TEE	1	EA		
8	1420010290	O-RING	1	EA		
9	1513370049	ELBOW	1	EA		
9	1420010290	O-RING	2	EA		
10	1540130830	VALVE, check	1	EA		
11	1515010044	ELBOW	1	EA		
11	1420010290	O-RING	1	EA		
12	1512370010	ADAPTOR	1	EA		
12	1420010110	O-RING	1	EA		
13	0007213041	BUSHING	1	EA		
14	0007213051	BUSHING	1	EA		
15	1700100119	SENSOR, temperature	1	EA		
16	1515600200	ADAPTOR	1	EA		
16	1420010110	O-RING	1	EA		
18	1515600202	ADAPTOR	2	EA		
18	1420010180	O-RING	1	EA		
19	1515600201	ADAPTOR	2	EA		
19	1420010140	O-RING	1	EA		
20	1515600203	ADAPTOR	1	EA		
20	1420010240	O-RING	1	EA		
21	1515100136	ELBOW	1	EA		
21	1420010110	O-RING	1	EA		
22	0003600025	WASHER	12	EA		
23	1100041020	BOLT	6	EA		
24	1100051025	BOLT (10TM10 X 25 P/1.5)	10	EA		
25	1140020010	WASHER, spring	4	EA		
26	1141110010	WASHER, plain	4	EA		
27	1420010290	O-RING	1	EA		
28	1420010110	O-RING	1	EA		

silverhorn.co.uk

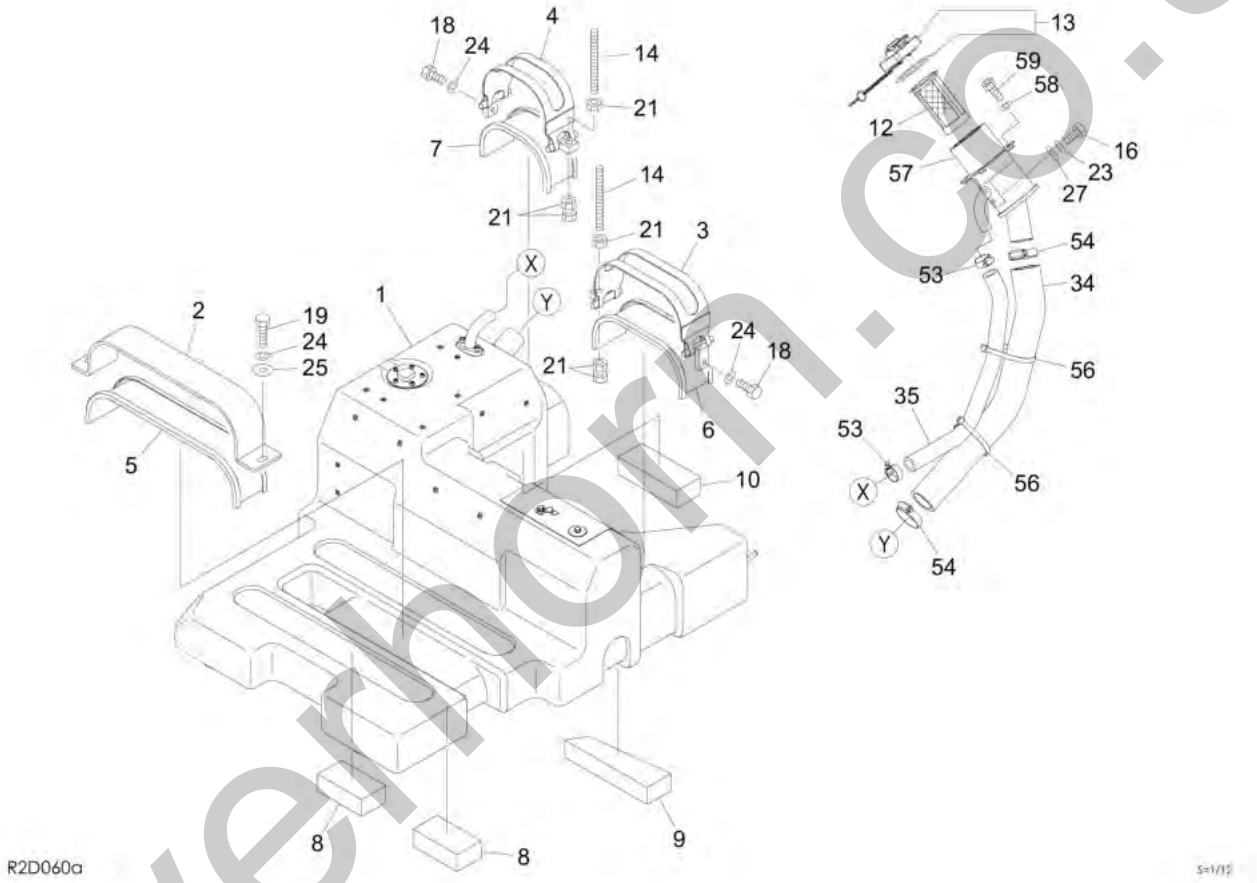

silverhorn.co.uk

Item	Part No.	Name	Qty	Uom	Remarks	SERIAL NUMBER
-	PNNA	TANK ASSY, fuel		EA		
1	**********	TANK SUB ASSY, fuel	1	EA	see page (2/2)	
2	0658100032	BAND	1	EA		
3	0658100021	BAND	1	EA		
4	0658100019	BAND	1	EA		
5	0658100023	RUBBER	1	EA		
6	0658100024	RUBBER	1	EA		
7	0658100025	RUBBER	1	EA		
8	0658100026	RUBBER	2	EA		
9	0658100027	RUBBER	1	EA		
10	0658100028	RUBBER	1	EA		
12	1552100320	STRAINER	1	EA		
13	1552101700	CAP, gas	1	EA		
14	0658100054	BOLT	2	EA		
16	1100050820	BOLT (10TM8 X 20 P/1.25)	2	EA		
18	1100041020	BOLT	2	EA		
19	1100051030	BOLT	2	EA		
21	1130050010	NUT	8	EA		
23	1140020008	WASHER, spring	3	EA		
24	1140020010	WASHER, spring	8	EA		
25	0003600025	WASHER	2	EA		
27	1141110008	WASHER	3	EA		
34	0658100030	HOSE	1	EA		
35	1530619000	HOSE, fuel (SOLD BY THE METER)	1	EA	sold by the meter	
53	1533700035	BAND	2	EA		
54	1533700060	BAND	2	EA		
56	1652231250	BAND (1st aux. Proportion)	4	EA		
57	0658100037	PORT, supply	1	EA		
58	1140020006	WASHER, spring	4	EA		
59	1110050616	SCREW, cap	4	EA		

silverhorn.co.uk

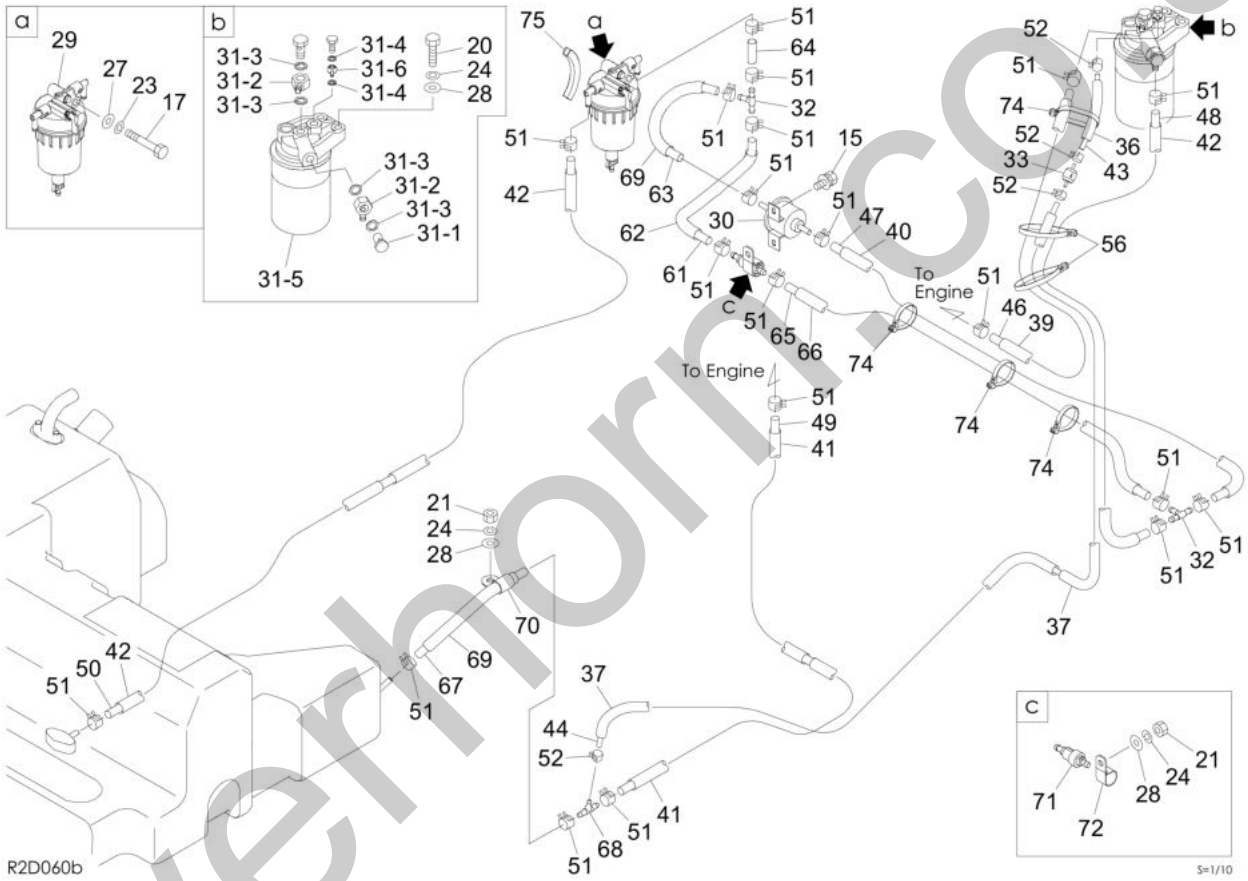

silverhorn.co.uk

Item	Part No.	Name	Qty	Uom	Remarks	SERIAL NUMBER
15	1100560612	BOLT, sems	2	EA		
17	1100050870	BOLT (10TM8 X 70 P/1.25)	1	EA		
20	1100051040	BOLT (10TM10 X 40 P/1.5)	2	EA		
21	1130050010	NUT	8	EA		
23	1140020008	WASHER, spring	3	EA		
24	1140020010	WASHER, spring	8	EA		
27	1141110008	WASHER	3	EA		
28	1141110010	WASHER, plain	4	EA		
29	KRD451-51360	FILTER ASSY (WITH WATER SEPARATOR)	1	EA	19102-91033	
30	K1G938-52033	PUMP, feed	1	EA	19102-49034	
31	**********	FILTER ASSY, fuel	1	EA		
31-1	K16541-95790	BOLT, joint	1	EA	19102-83052	
31-2	K15401-95690	JOINT, fuel	2	EA	19102-83053	
31-3	K17105-33680	GASKET (VO ZB)	4	EA	19102-83054	
31-4	K15021-33660	GASKET	2	EA	19102-83056	
31-5	K1J301-43010	FILTER, fuel	1	EA	19102-91031	
31-6	K14117-42560	PIPE, fuel	1	EA	19102-91051	
32	K3N600-42170	JOINT,T TYPE	2	EA	19104-57144	
33	K1C010-42460	VALVE	1	EA	19104-57057	
36	1531110011	PROTECTOR	1	EA	sold by the meter	
37	1531110093	PROTECTOR	2	EA	sold by the meter	
39	1531115081	PROTECTOR	1	EA	sold by the meter	
40	1531115086	PROTECTOR (SOLD BY THE METER)	1	EA	sold by the meter	
41	1531115000	HOSE, vinyl (SOLD BY THE METER)	2	EA	sold by the meter	
42	1531115000	HOSE, vinyl (SOLD BY THE METER)	3	EA	sold by the meter	
43	1531204016	HOSE	1	EA	sold by the meter	
44	1531204189	HOSE	1	EA	sold by the meter	
46	1531207000	HOSE, fuel (SOLD BY THE METER)	1	EA	sold by the meter	
47	1531207000	HOSE, fuel (SOLD BY THE METER)	1	EA	sold by the meter	
48	1531207000	HOSE, fuel (SOLD BY THE METER)	1	EA	sold by the meter	
49	1531207000	HOSE, fuel (SOLD BY THE METER)	1	EA	sold by the meter	
50	1531207000	HOSE, fuel (SOLD BY THE METER)	1	EA	sold by the meter	
51	1533120511	BAND	20	EA		
52	1533120806	BAND	4	EA		

silverhorn.co.uk

This page intentionally left blank

silverhorn.co.uk

Item	Part No.	Name	Qty	Uom	Remarks	SERIAL NUMBER
56	1652231250	BAND (1st aux. Proportion)	4	EA		
61	1531207000	HOSE, fuel (SOLD BY THE METER)	1	EA	sold by the meter	
62	1531115026	PROTECTOR	1	EA	sold by the meter	
63	1531207000	HOSE, fuel (SOLD BY THE METER)	1	EA	sold by the meter	
64	1531207000	HOSE, fuel (SOLD BY THE METER)	1	EA	sold by the meter	
65	1531207000	HOSE, fuel (SOLD BY THE METER)	1	EA	sold by the meter	
66	1531115080	PROTECTOR	1	EA	sold by the meter	
67	1531207000	HOSE, fuel (SOLD BY THE METER)	1	EA	sold by the meter	
68	K59750-77520	JOINT	1	EA	19104-62145	
69	1531115000	HOSE, vinyl (SOLD BY THE METER)	2	EA	sold by the meter	
70	0007300053	CLAMP	1	EA		
71	K1G911-42460	VALVE, fuel check	1	EA	19104-62146	
72	0007300001	CLAMP	1	EA		
74	1652231140	BAND	4	EA		
75	1654629010	TRIM	1	EA	sold by the meter	

silverhorn.co.uk

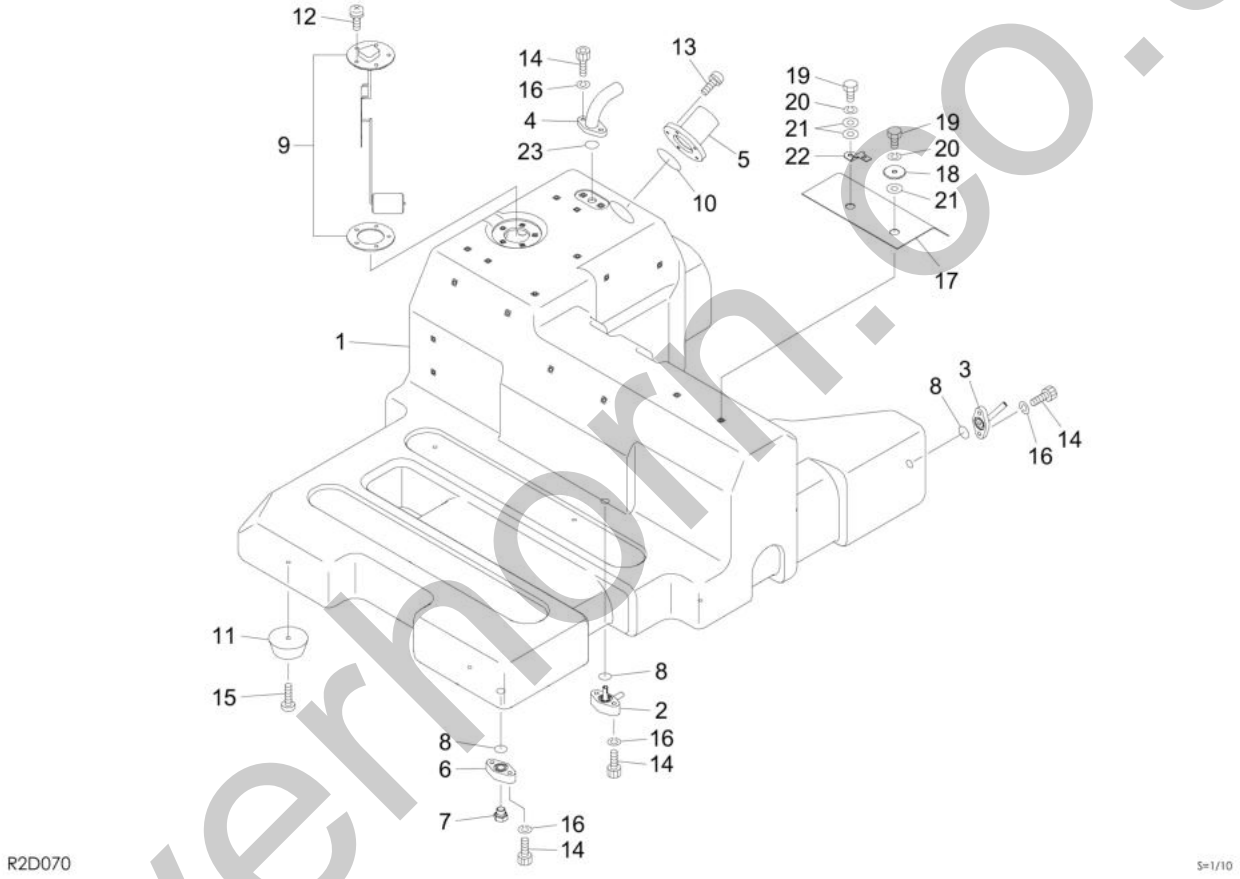

silvernorn.co.uk

Item	Part No.	Name	Qty	Uom	Remarks	SERIAL NUMBER
0-1	**********	TANK SUB ASSY, fuel	1	EA		
1	0658100015	TANK, fuel	1	EA		
2	0881811100	FLANGE	1	EA		
3	0658100047	FLANGE	1	EA		
4	0698102120	FLANGE	1	EA		
5	0881811090	FLANGE	1	EA		
6	0881811110	VALVE, drain	1	EA		
7	1501750002	PLUG (FOR O-RING USE # 1420010110)	1	EA		
7	1420010110	O-RING	1	EA		
8	1420010180	O-RING	3	EA		
9	1553203400	SENDER, fuel	1	EA		
10	1420010450	O-RING (P-45)	1	EA		
11	0881812080	RUBBER, cushion	5	EA		
12	1150110510	SCREW	5	EA		
13	1150110516	SCREW	5	EA		
14	1110050616	SCREW, cap	8	EA		
15	1120530620	SCREW (PHILLIPS 4TM6 X 20 P/1.0 PAN)	5	EA		
16	1140020006	WASHER, spring	8	EA		
17	0658100055	RUBBER	1	EA		
18	0003600043	WASHER	1	EA		
19	1100050612	BOLT (10TM6 X 12 P/1.0)	2	EA		
20	1140020006	WASHER, spring	2	EA		
21	1141110006	WASHER	3	EA		
22	1711900218	CLIP	1	EA		
23	1420010200	O-RING	1	EA		

silverhorn.co.uk

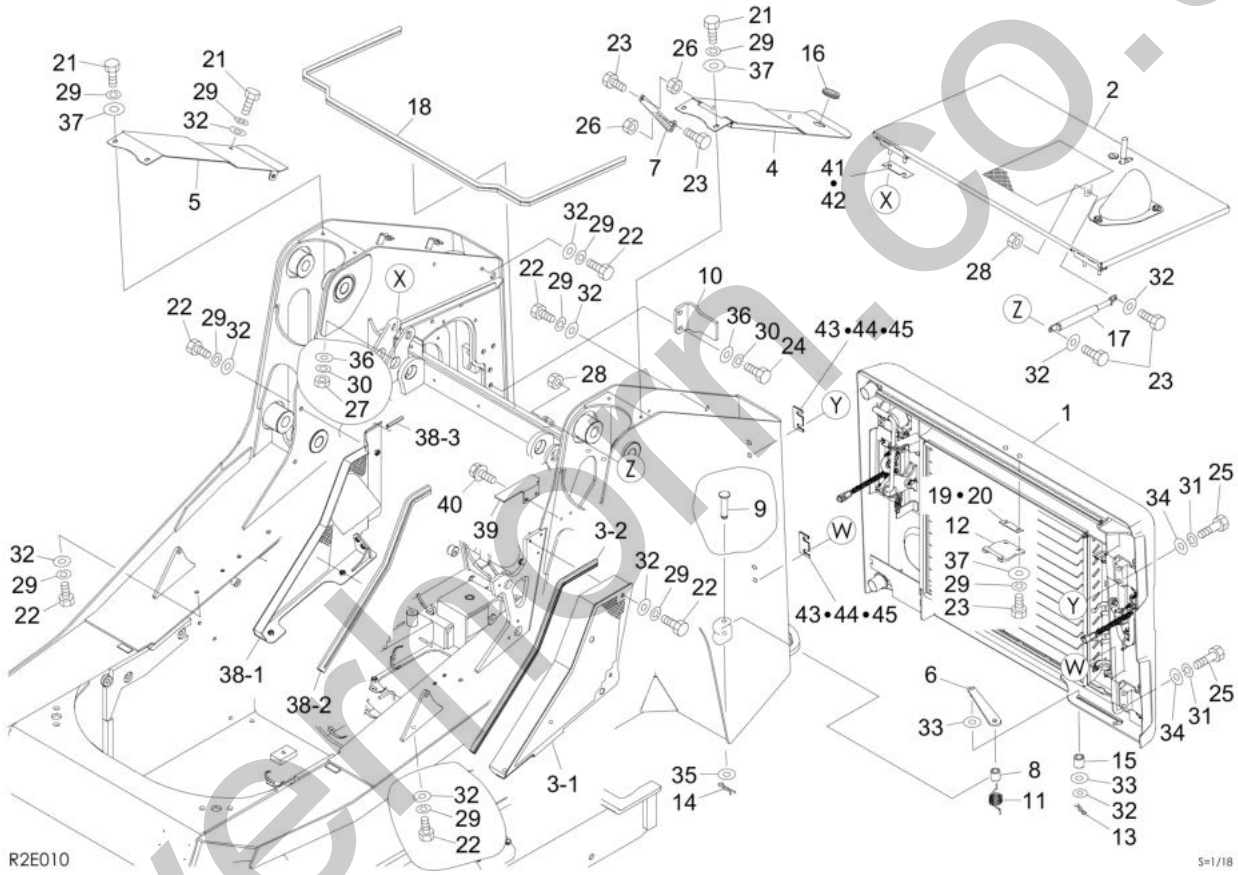

silverfern.co.uk

Item	Part No.	Name	Qty	Uom	Remarks	SERIAL NUMBER
-	PNNA	COVER ASSY		EA		
1	0658200107	DOOR ASSY, rear	1	EA	see page (3/3)	
2	0658200042	HOOD, engine	1	EA	see page (2/3)	
3	0658200061	COVER ASSY, side (L.H.)	1	EA		
3-1	0658200062	COVER, side (L.H.)	1	EA		
3-2	1654520000	RUBBER, molding (SOLD BY THE METER)	1	EA	sold by the meter	
4	0658200075	COVER (L.H.)	1	EA		
5	0658200081	COVER (R.H.)	1	EA		
6	0658200056	PLATE	1	EA		
7	0658200084	PLATE	1	EA		
8	0688200070	COLLAR	1	EA		
9	0688200071	PIN	1	EA		
10	0688200229	PLATE	1	EA		
11	0698200134	SPRING ASSY	1	EA		
12	0698200300	STRIKER	1	EA		
13	1214000008	PIN, snap	1	EA		
14	1214000010	PIN, snap	1	EA		
15	1314000812	BEARING	1	EA		
16	1652043015	GROMMET	1	EA		
17	1653900064	SPRING, gas	1	EA		
18	1654606000	SEAL (SOLD BY THE METER)	1	EA	sold by the meter	
19	0003900037	SPACER (T=4.5MM)	1	EA	t=4.5mm	
20	0003900038	SPACER (T=1.6MM)	1	EA	t=1.6mm	
21	1100090816	BOLT	5	EA		
22	1100050820	BOLT (10TM8 X 20 P/1.25)	10	EA		
23	1100050825	BOLT (10TM8 X 25 P/1.25)	6	EA		
24	1100051030	BOLT	2	EA		
25	1101051265	BOLT (10TM12 X 65 P/1.5)	4	EA		
26	1130050008	NUT	2	EA		
27	1130050010	NUT	4	EA		
28	1130140008	NUT (polycarbonate type)	2	EA		
29	1140020008	WASHER, spring	17	EA		
30	1140020010	WASHER, spring	6	EA		
31	1140020012	WASHER, spring (12MM)	4	EA		
32	1141110008	WASHER	14	EA		
33	1141110012	WASHER	2	EA		
34	1141550012	WASHER	4	EA		
35	1141810012	WASHER	1	EA		

silverhorn.co.uk

This page intentionally left blank

silverhorn.co.uk

Item	Part No.	Name	Qty	Uom	Remarks	SERIAL NUMBER
36	0003600025	WASHER	6	EA		
37	0003608252	WASHER	6	EA		
38	0658200120	COVER ASSY, side (R.H.)	1	EA		
38-1	0658100034	COVER, side (R.H.)	1	EA		
38-2	1654520000	RUBBER, molding (SOLD BY THE METER)	1	EA	sold by the meter	
38-3	1653916006	TRIM	1	EA	sold by the meter	
39	0658200101	PLATE	1	EA		
40	1100560612	BOLT, sems	2	EA		
41	0003900040	SPACER (t=1.6mm) (TL130/TL140/TL150)	1	EA	t=1.6mm	
42	0003900041	SPACER (T=2.3mm) (TL130/TL140/TL150)	1	EA	t=2.3mm	
43	0003900098	SPACER	1	EA	t=1.0mm	
44	0003900099	SPACER	1	EA	t=2.0mm	
45	0003900100	SPACER	1	EA	t=3.0mm	

silverhorn.co.uk

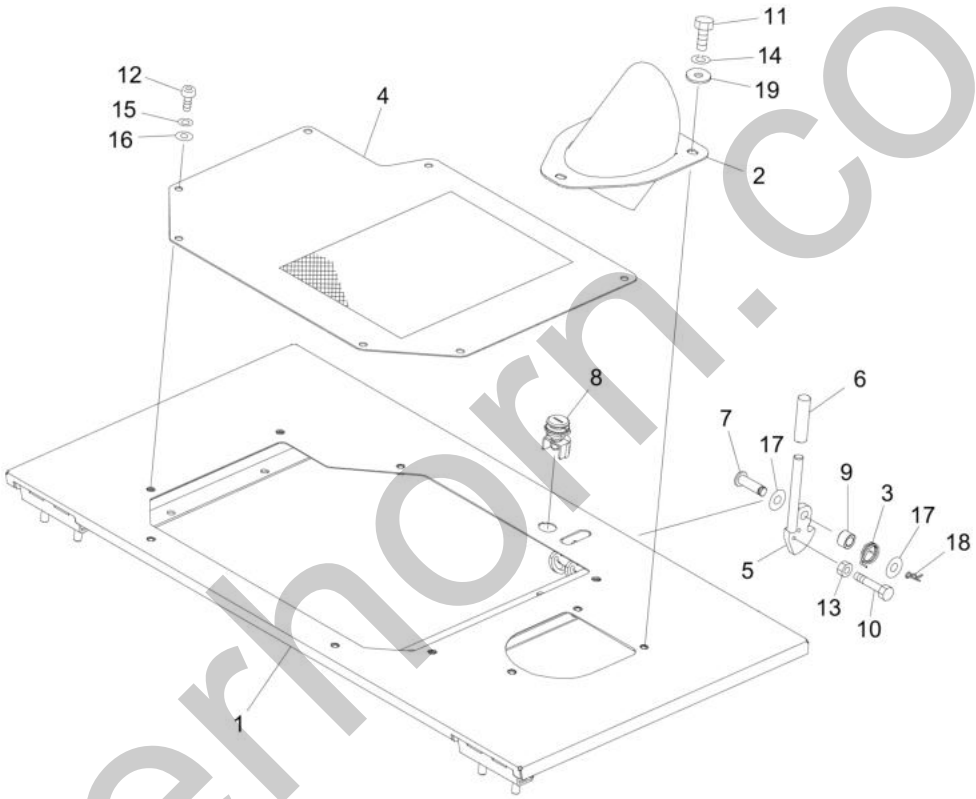

R2E040

S=1/8

silverhorn.co.uk

Item	Part No.	Name	Qty	Uom	Remarks	SERIAL NUMBER
0-2	0658200042	HOOD, engine	1	EA		
1	0658200043	HOOD, engine	1	EA		
2	0658200053	PIPE	1	EA		
3	0668200040	SPRING	1	EA		
4	0658200098	PLATE	1	EA		
5	0658200058	PLATE	1	EA		
6	1650202300	CAP	1	EA		
7	0004012035	PIN	1	EA		
8	0378219160	LOCK ASSY	1	EA		
9	0553500337	COLLAR	1	EA		
10	1100240650	BOLT	1	EA		
11	1100090816	BOLT	3	EA		
12	1120990820	BOLT	7	EA		
13	1130020006	NUT	1	EA		
14	1140020008	WASHER, spring	3	EA		
15	1140020008	WASHER, spring	7	EA		
16	1141190008	WASHER	7	EA		
17	1141810012	WASHER	2	EA		
18	1214000010	PIN, snap	1	EA		
19	0003608252	WASHER	3	EA		

silverhorn.co.uk

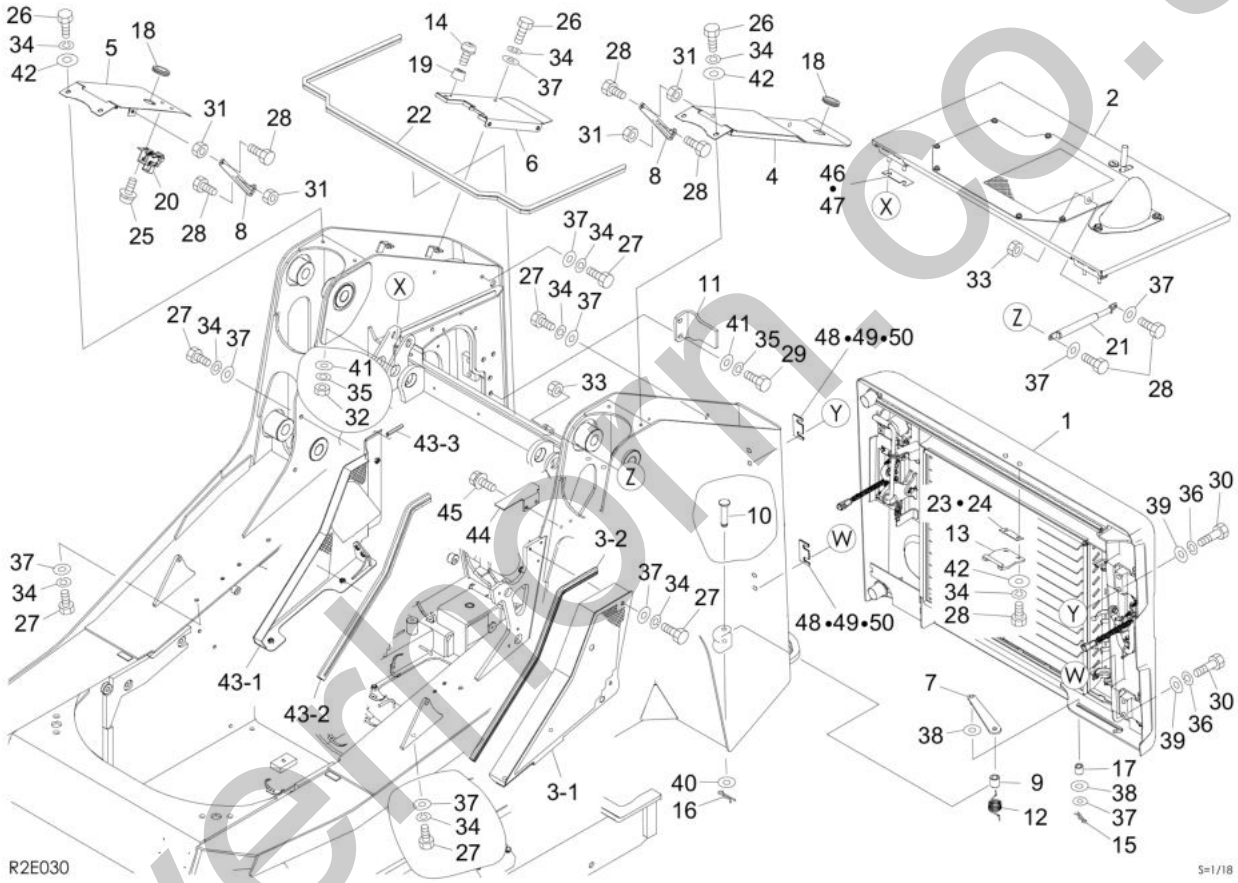

silverthorn.co.uk

Item	Part No.	Name	Qty	Uom	Remarks	SERIAL NUMBER
-	PNNA	COVER ASSY		EA		
1	0658200107	DOOR ASSY, rear	1	EA	see page (3/3)	
2	0658200042	HOOD, engine	1	EA	see page (2/3)	
3	0658200061	COVER ASSY, side (L.H.)	1	EA		
3-1	0658200062	COVER, side (L.H.)	1	EA		
3-2	1654520000	RUBBER, molding (SOLD BY THE METER)	1	EA	sold by the meter	
4	0658200075	COVER (L.H.)	1	EA		
5	0658200085	COVER (R.H.)	1	EA		
6	0658200089	COVER (R.H.)	1	EA		
7	0658200056	PLATE	1	EA		
8	0658200084	PLATE	2	EA		
9	0688200070	COLLAR	1	EA		
10	0688200071	PIN	1	EA		
11	0688200229	PLATE	1	EA		
12	0698200134	SPRING ASSY	1	EA		
13	0698200300	STRIKER	1	EA		
14	1150120416	BOLT	2	EA		
15	1214000008	PIN, snap	1	EA		
16	1214000010	PIN, snap	1	EA		
17	1314000812	BEARING	1	EA		
18	1652043015	GROMMET	2	EA		
19	1652102314	BUMPER	2	EA		
20	1653900016	LATCH	1	EA		
21	1653900064	SPRING, gas	1	EA		
22	1654606000	SEAL (SOLD BY THE METER)	1	EA	sold by the meter	
23	0003900037	SPACER (T=4.5MM)	1	EA	t=4.5mm	
24	0003900038	SPACER (T=1.6MM)	1	EA	t=1.6mm	
25	1150410512	SCREW, sems	2	EA		
26	1100090816	BOLT	6	EA		
27	1100050820	BOLT (10TM8 X 20 P/1.25)	11	EA		
28	1100050825	BOLT (10TM8 X 25 P/1.25)	8	EA		
29	1100051030	BOLT	2	EA		
30	1101051265	BOLT (10TM12 X 65 P/1.5)	4	EA		
31	1130140008	NUT (polycarbonate type)	4	EA		
32	1130240010	NUT	4	EA		
33	1130140008	NUT (polycarbonate type)	2	EA		
34	1140020008	WASHER, spring	19	EA		
35	1140020010	WASHER, spring	6	EA		

silvernorn.co.uk

This page intentionally left blank

silverhorn.co.uk

Item	Part No.	Name	Qty	Uom	Remarks	SERIAL NUMBER
36	1140020012	WASHER, spring (12MM)	4	EA		
37	1141110008	WASHER	16	EA		
38	1141110012	WASHER	2	EA		
39	1141550012	WASHER	4	EA		
40	1141810012	WASHER	1	EA		
41	0003600025	WASHER	6	EA		
42	0003608252	WASHER	6	EA		
43	0658200120	COVER ASSY, side (R.H.)	1	EA		
43-1	0658100034	COVER, side (R.H.)	1	EA		
43-2	1654520000	RUBBER, molding (SOLD BY THE METER)	1	EA	sold by the meter	
43-3	1653916006	TRIM	1	EA	sold by the meter	
44	0658200101	PLATE	1	EA		
45	1100560612	BOLT, sems	2	EA		
46	0003900040	SPACER (t=1.6mm) (TL130/TL140/TL150)	1	EA	t=1.6mm	
47	0003900041	SPACER (T=2.3mm) (TL130/TL140/TL150)	1	EA	t=2.3mm	
48	0003900098	SPACER	1	EA	t=1.0mm	
49	0003900099	SPACER	1	EA	t=2.0mm	
50	0003900100	SPACER	1	EA	t=3.0mm	

silverhorn.co.uk

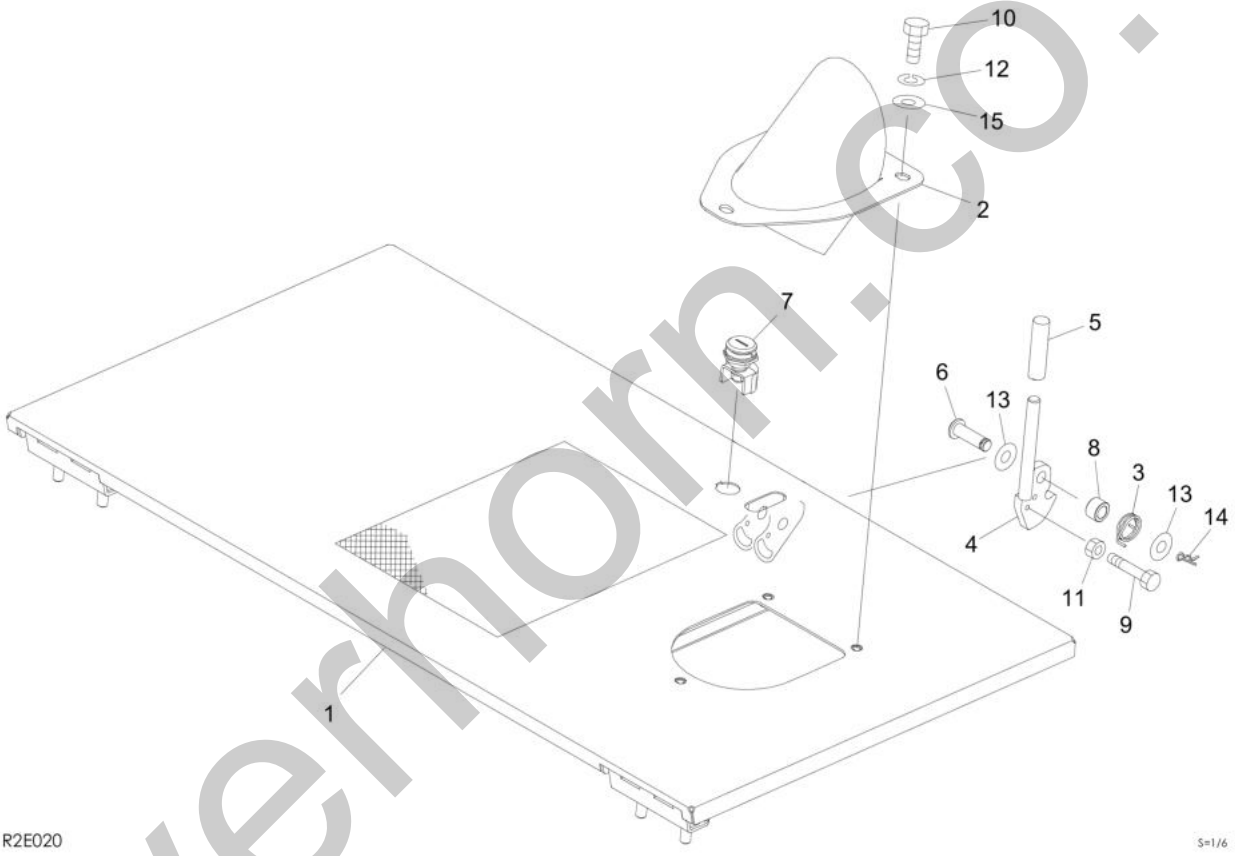

silverhorn.co.uk

Item	Part No.	Name	Qty	Uom	Remarks	SERIAL NUMBER
0-2	0658200042	HOOD, engine	1	EA		
1	0658200112	HOOD, engine	1	EA		
2	0658200053	PIPE	1	EA		
3	0668200040	SPRING	1	EA		
4	0658200058	PLATE	1	EA		
5	1650202300	CAP	1	EA		
6	0004012035	PIN	1	EA		
7	0378219160	LOCK ASSY	1	EA		
8	0553500337	COLLAR	1	EA		
9	1100240650	BOLT	1	EA		
10	1100090816	BOLT	3	EA		
11	1130020006	NUT	1	EA		
12	1140020008	WASHER, spring	3	EA		
13	1141810012	WASHER	2	EA		
14	1214000010	PIN, snap	1	EA		
15	0003608252	WASHER	3	EA		

silverhorn.co.uk

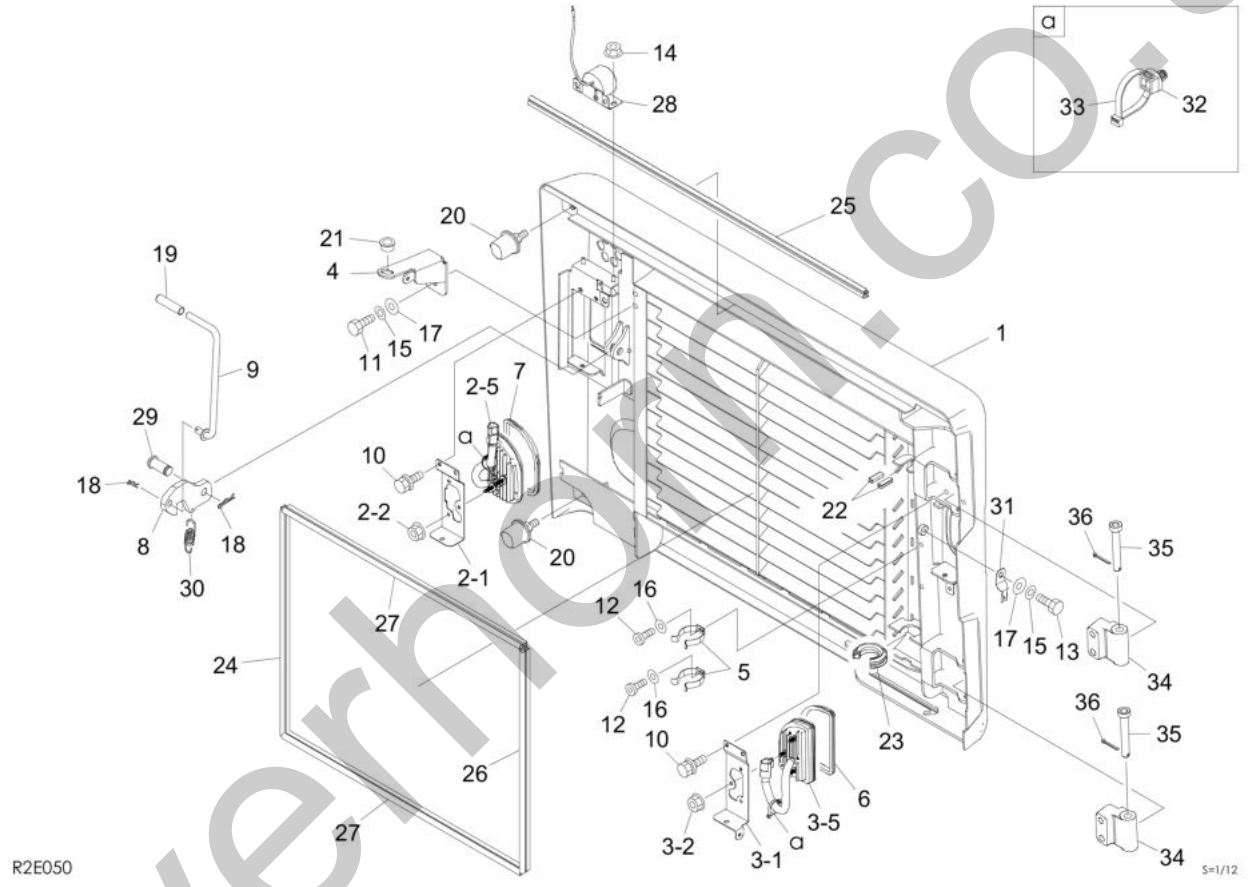

silverhorn.co.uk

Item	Part No.	Name	Qty	Uom	Remarks	SERIAL NUMBER
0-1	0658200107	DOOR ASSY, rear	1	EA		
1	0658200108	DOOR, rear	1	EA		
2	**********	UNIT ASSY	1	EA		
2-1	0658200038	PLATE (R.H.)	1	EA		
2-2	1131242006	NUT	3	EA		
2-5	0694200140	DOOR LAMP ASSY (R.H.), rear	1	EA		
3	**********	UNIT ASSY	1	EA		
3-1	0658200039	PLATE (L.H.)	1	EA		
3-2	1131242006	NUT	3	EA		
3-5	0694200139	DOOR LAMP ASSY (L.H.), rear	1	EA		
4	0688200213	PLATE	1	EA		
5	0688200231	CLAMP	2	EA		
6	0694200183	GROMMET	1	EA		
7	0694200184	GROMMET	1	EA		
8	0658200124	PLATE	1	EA		
9	0658200092	ROD	1	EA		
10	1100560616	BOLT, sems	6	EA		
11	1100050820	BOLT (10TM8 X 20 P/1.25)	2	EA		
12	1111850610	SCREW, cap	2	EA		
13	1100050812	BOLT (10TM8 X 12 P/1.25)	1	EA		
14	1131242006	NUT	2	EA		
15	1140020008	WASHER, spring	3	EA		
16	1141110006	WASHER	2	EA		
17	1141110008	WASHER	3	EA		
18	1214000012	PIN, snap	2	EA		
19	1650202300	CAP	1	EA		
20	1651101050	RUBBER	2	EA		
21	1652615200	BUSHING	1	EA		
22	1654601000	TRIM (SOLD BY THE METER)	2	EA	sold by the meter	
23	1654605000	STRIP, weather (SOLD BY THE METER)	1	EA	sold by the meter	
24	1654605000	STRIP, weather (SOLD BY THE METER)	1	EA	sold by the meter	
25	1654605000	STRIP, weather (SOLD BY THE METER)	1	EA	sold by the meter	
26	1654606000	SEAL (SOLD BY THE METER)	1	EA	sold by the meter	
27	1654606000	SEAL (SOLD BY THE METER)	2	EA	sold by the meter	
28	1703700013	BUZZER	1	EA		
29	0004015002	PIN	1	EA		

silverhorn.co.uk

This page intentionally left blank

silverhorn.co.uk

Item	Part No.	Name	Qty	Uom	Remarks	SERIAL NUMBER
30	0007000112	SPRING	1	EA		
31	1711900191	CLAMP	1	EA		
32	1652201010	MOUNT	2	EA		
33	1652201005	BAND	2	EA		
34	0698200261	HINGE	2	EA		
35	0698200240	PIN	2	EA		
36	1210010425	PIN, split	2	EA		

silverhorn.co.uk

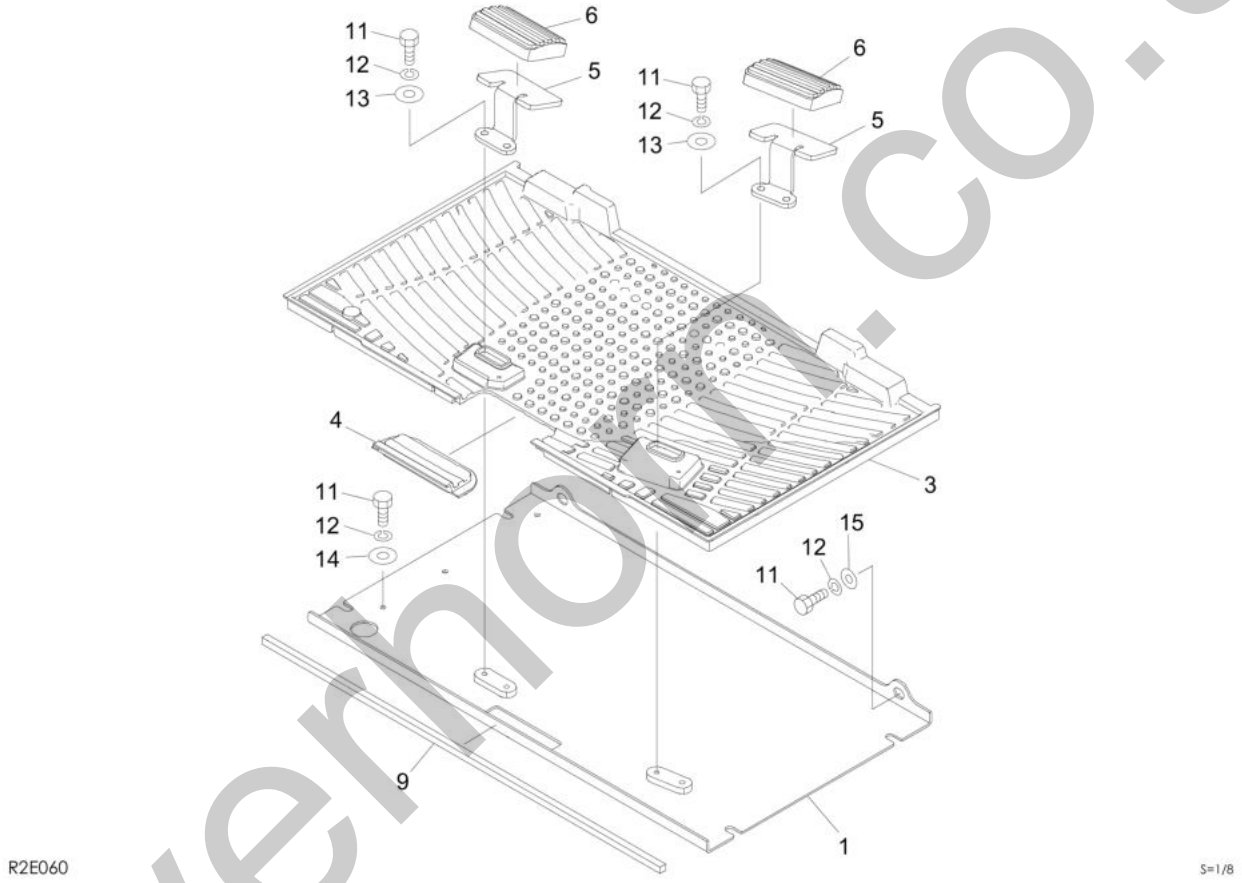

silvernon.co.uk

Item	Part No.	Name	Qty	Uom	Remarks	SERIAL NUMBER
-	PNNA	FLOOR ASSY		EA		
1	0653500037	FLOOR	1	EA		
3	0653500035	MAT, floor	1	EA		
4	0653500036	MAT, floor	1	EA		
5	0563219700	REST, foot	2	EA		
6	0563218500	COVER	2	EA		
9	1656711072	SPONGE	1	EA	sold by the meter	
11	1100050820	BOLT (10TM8 X 20 P/1.25)	10	EA		
12	1140020008	WASHER, spring	10	EA		
13	1141110008	WASHER	4	EA		
14	0003609003	WASHER (9/30 T/3.2)	4	EA		
15	0003608252	WASHER	2	EA		

silverhorn.co.uk

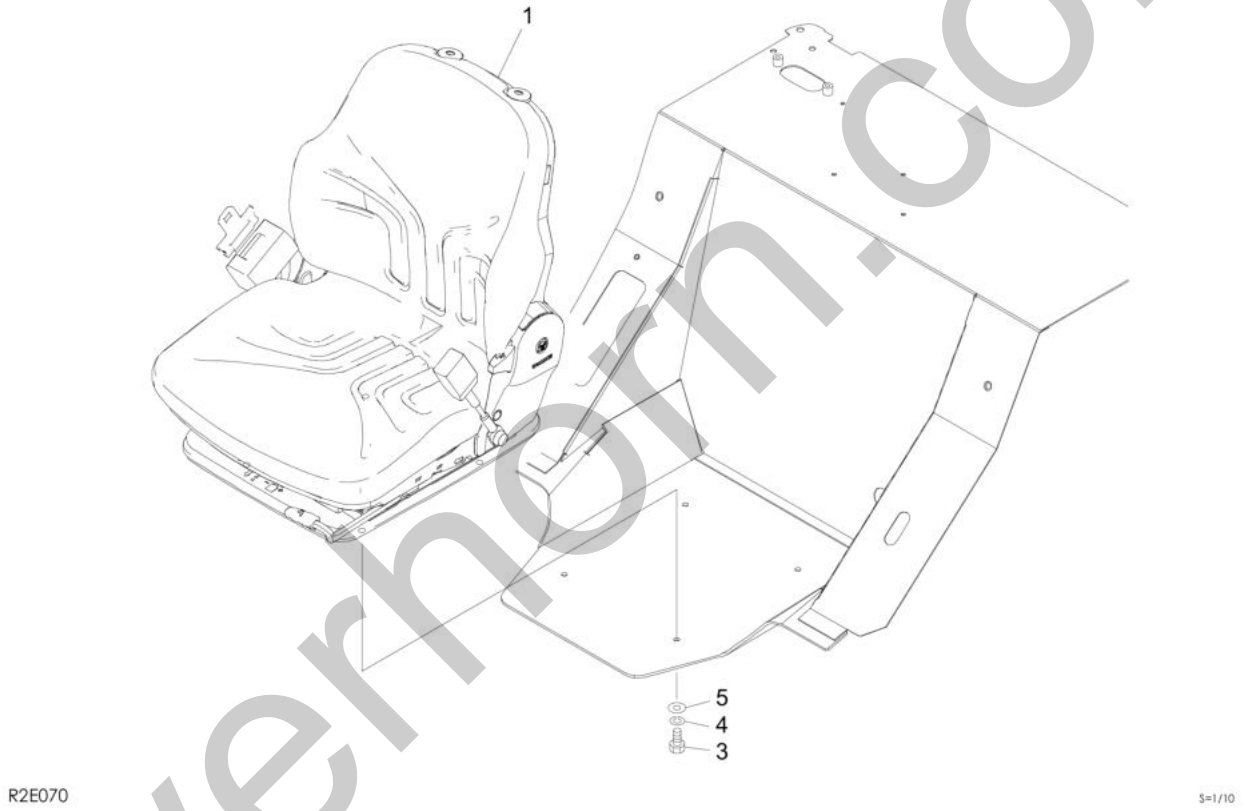

silverhorn.co.uk

Item	Part No.	Name	Qty	Uom	Remarks	SERIAL NUMBER
-	PNNA	SEAT ASSY		EA		
1	1914100149	SEAT ASSY	1	EA	see page (2/2)	
3	1100050820	BOLT (10TM8 X 20 P/1.25)	4	EA		
4	1140020008	WASHER, spring	4	EA		
5	1141110008	WASHER	4	EA		

silverhorn.co.uk

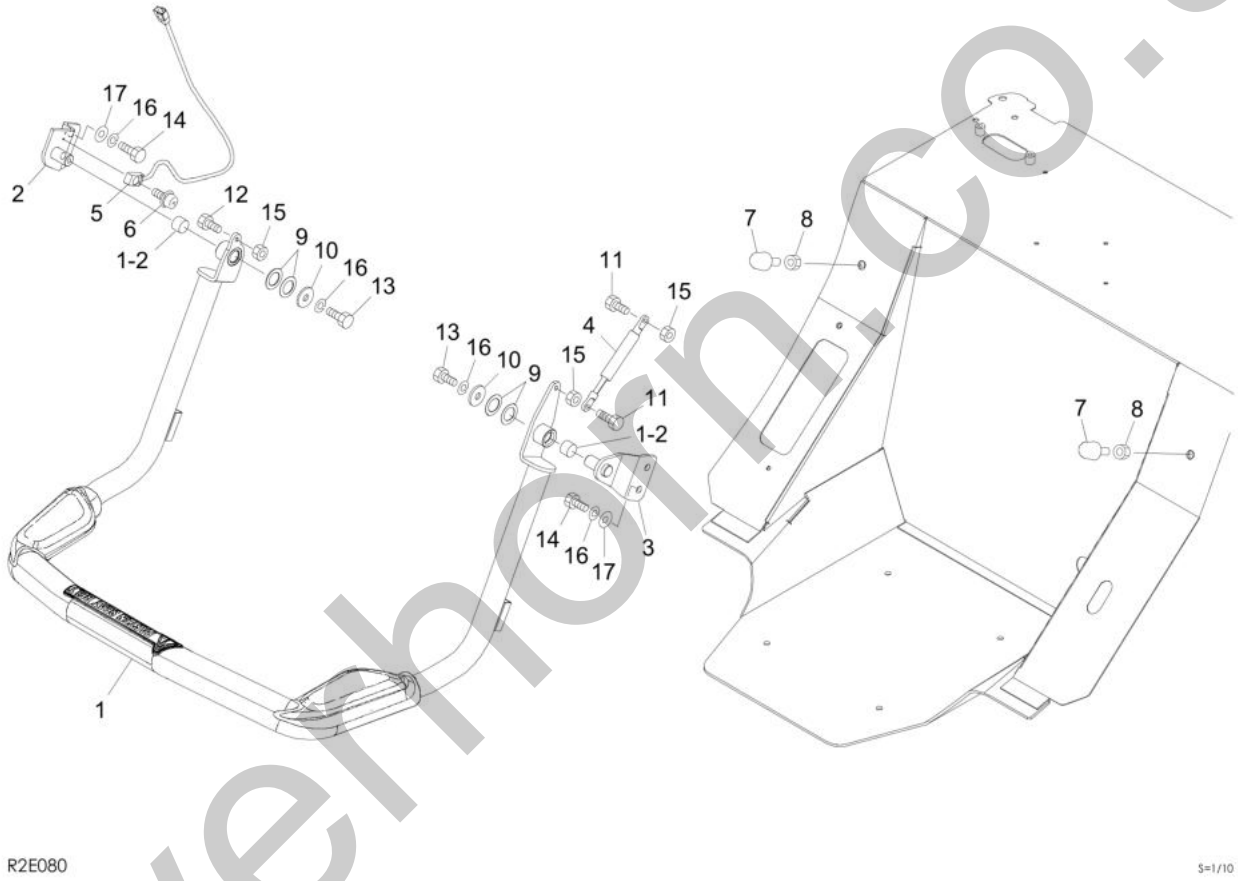

silverhorn.co.uk

Item	Part No.	Name	Qty	Uom	Remarks	SERIAL NUMBER
-	PNNA	BAR ASSY, safety		EA		
1	0654600010	BAR, safety	1	EA		
1-2	1333002020	BUSHING	2	EA		
2	0654600019	BRACKET (R.H.)	1	EA		
3	0654600022	BRACKET (L.H.)	1	EA		
4	1653900083	SPRING, gas	1	EA		
5	1700009010	SWITCH, proximity	1	EA		
6	1150410312	SCREW	2	EA		
7	1651101224	STOPPER	2	EA		
8	1130050012	NUT (8TM12 P/1.75)	2	EA		
9	0093208300	WASHER	4	EA		
10	0003600025	WASHER	2	EA		
11	1100050820	BOLT (10TM8 X 20 P/1.25)	2	EA		
12	1100050825	BOLT (10TM8 X 25 P/1.25)	1	EA		
13	1100041020	BOLT	2	EA		
14	1100051025	BOLT (10TM10 X 25 P/1.5)	4	EA		
15	1130050008	NUT	3	EA		
16	1140020010	WASHER, spring	6	EA		
17	1141110010	WASHER, plain	4	EA		

silverhorn.co.uk

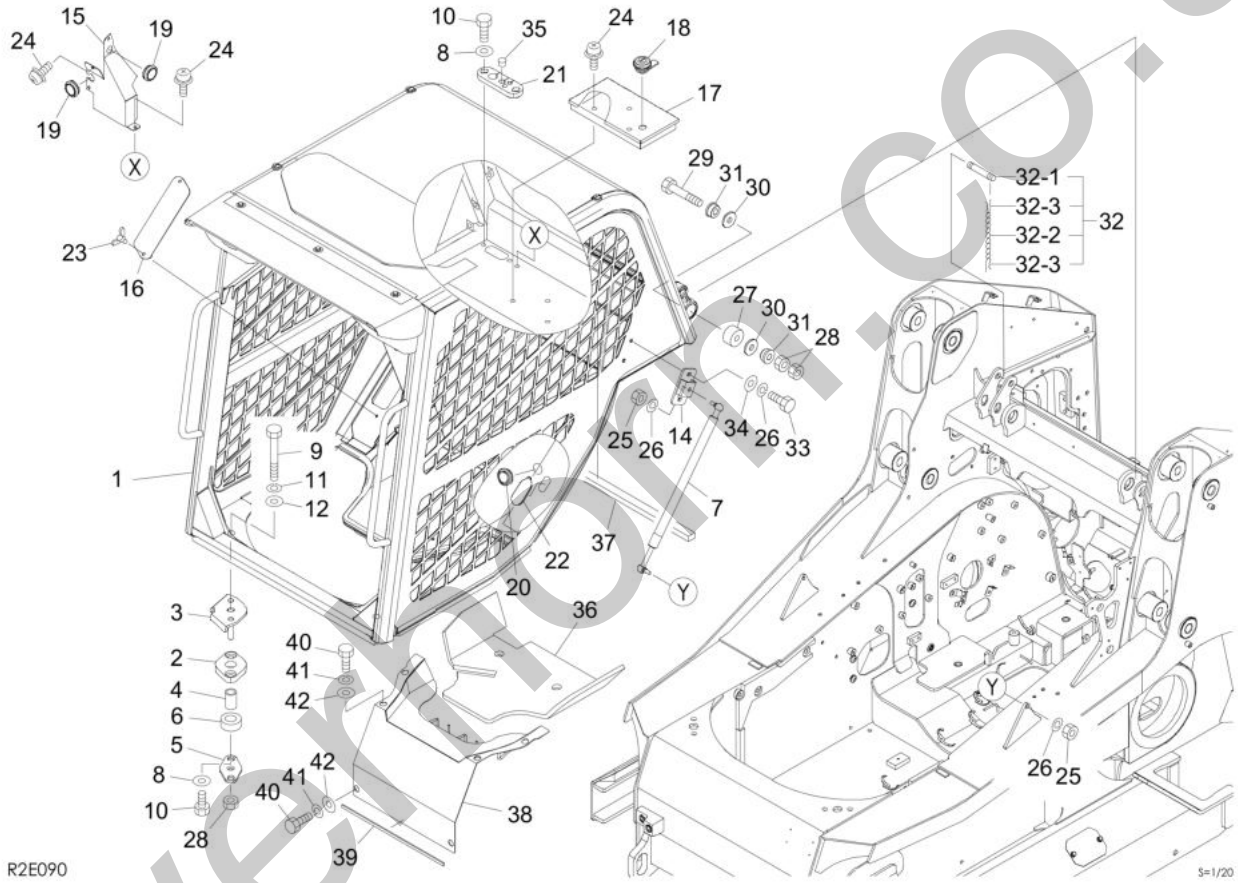

silverthorn.co.uk

Item	Part No.	Name	Qty	Uom	Remarks	SERIAL NUMBER
-	PNNA	CANOPY MOUNT		EA		
1	0658400004	CANOPY	1	EA		
2	0658600004	RUBBER	2	EA		
3	0658600025	PLATE	2	EA		
4	0563500600	TUBE	2	EA		
5	0658600008	PLATE	2	EA		
6	0433503100	RUBBER	2	EA		
7	1653900094	SPRING, gas	2	EA		
8	0003608252	WASHER	6	EA		
9	1100041690	BOLT	2	EA		
10	1100050812	BOLT (10TM8 X 12 P/1.25)	6	EA		
11	1140020016	WASHER, spring	2	EA		
12	1141550016	WASHER (HEAT M16)	2	EA		
14	0658600010	PLATE	2	EA		
15	0658400007	PLATE	1	EA		
16	0658400008	PLATE	1	EA		
17	0658400540	BOX	1	EA		
18	1653601395	LOCK ASSY (DOESNT INCLUDE KEYS #1700100019)	1	EA		
19	1652052400	GROMMET	2	EA		
20	1652053400	GROMMET	1	EA		
21	0654200089	GROMMET	1	EA		
22	0664300004	GROMMET	1	EA		
23	1121530816	BOLT, wing	2	EA		
24	1150420614	SCREW, sems	7	EA		
25	1130050010	NUT	4	EA		
26	1140020010	WASHER, spring	8	EA		
27	1651005030	RUBBER, cushion	2	EA		
28	1130050016	NUT	4	EA		
29	1100141610	BOLT	2	EA		
30	0880840070	WASHER	4	EA		
31	0881840008	COLLAR	4	EA		
32	0881841060	PIN ASSY	1	EA		
32-1	0881841061	PIN (CAN USE ASSEMBLY # 0881841060)	1	EA		
32-2	1652768610	CHAIN	1	EA		
32-3	1214000016	PIN, snap	2	EA		
33	1100051025	BOLT (10TM10 X 25 P/1.5)	4	EA		
34	1141110010	WASHER, plain	4	EA		

silverhorn.co.uk

This page intentionally left blank

silverhorn.co.uk

Item	Part No.	Name	Qty	Uom	Remarks	SERIAL NUMBER
35	1652533019	CAP	1	EA		
36	0658600026	ABSORBENT, noise	1	EA		
37	1654342085	SPONGE	1	EA	sold by the meter	
38	0653500025	COVER	1	EA		
39	1656710046	SPONGE	1	EA	sold by the meter	
40	1100050820	BOLT (10TM8 X 20 P/1.25)	6	EA		
41	1140020008	WASHER, spring	6	EA		
42	0003609003	WASHER (9/30 T/3.2)	6	EA		

silverhorn.co.uk

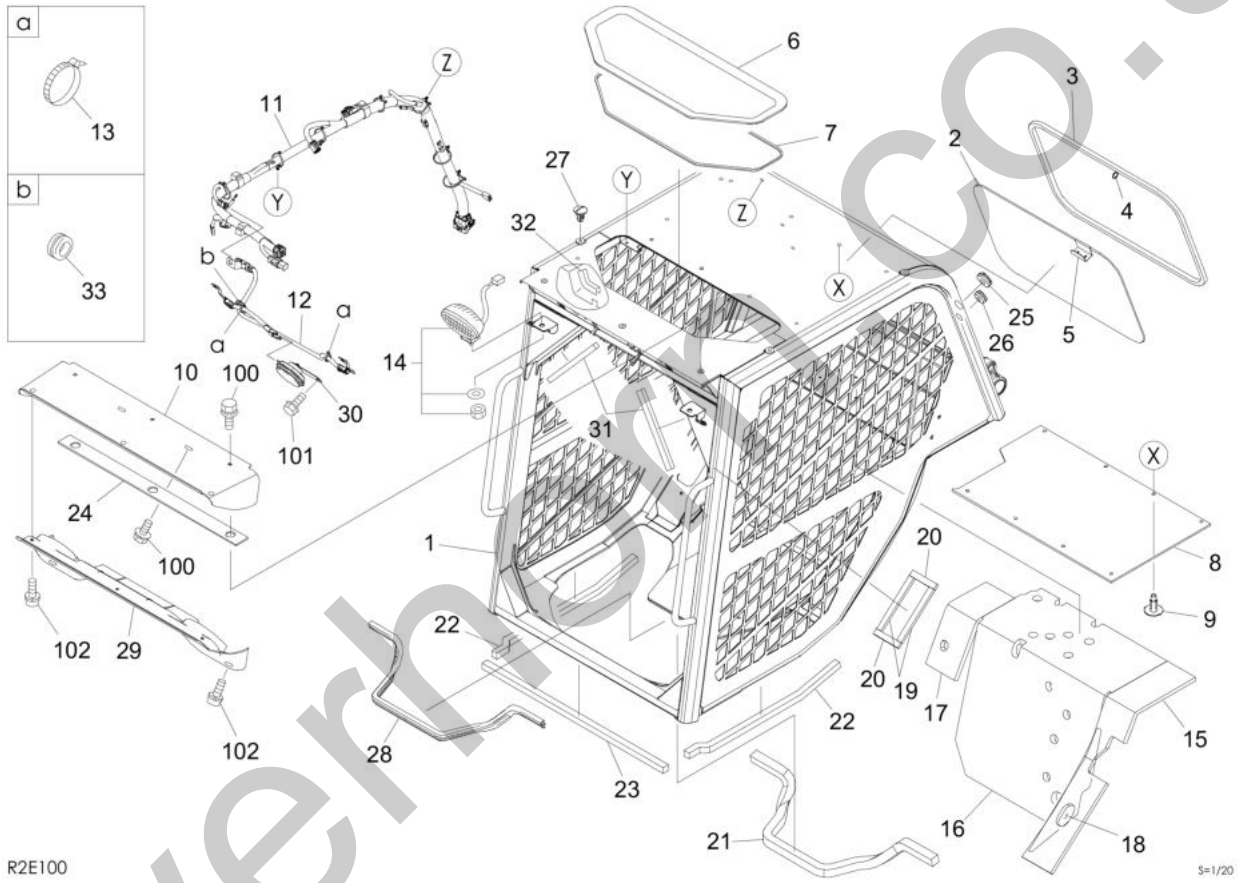

silverhook.co.uk

Item	Part No.	Name	Qty	Uom	Remarks	SERIAL NUMBER
0-1	0658400004	CANOPY	1	EA		
1	**********	CANOPY	1	EA		
2	0658400042	GLASS	1	EA		
3	1654253215	H-RUBBER	1	EA		
4	0880865139	RING	1	EA		
5	0882861185	HANDLE	1	EA		
6	0658400043	ROOF	1	EA		
7	1654615000	SEAL (CUSTOMER MUST ORDER LOT OF 15 EACH)	1	EA	sold by the meter	
8	0658400044	COVER	1	EA		
9	0698600224	RIVET	8	EA		
10	0658400041	COVER	1	EA		
11	0654200050	HARNESS, wiring	1	EA		
12	0658400045	HARNESS, wiring	1	EA		
13	1652200005	BAND	2	EA		
14	1703000030	LAMP ASSY	2	EA		
15	0658400046	ABSORBENT, noise	1	EA		
16	0658400047	ABSORBENT, noise	1	EA		
17	0658400048	ABSORBENT, noise	1	EA		
18	0658400049	ABSORBENT, noise	1	EA		
19	1656721020	SPONGE	2	EA		
20	1656721011	SPONGE	2	EA		
21	1656733115	SPONGE	1	EA		
22	0658400050	SPONGE	2	EA		
23	0658400051	SPONGE	1	EA		
24	0658400052	SPONGE	1	EA		
25	1654011962	CAP	1	EA		
26	1654011961	CAP	1	EA		
27	1653303012	CAP	4	EA		
28	1654639108	TRIM	1	EA		
29	0658600024	COVER	1	EA		
30	0698600157	HORN	1	EA		
31	1653916000	TRIM, rubber (SOLD BY THE METER)	2	EA		
32	1653916008	TRIM	1	EA		
33	1654011701	GROMMET	1	EA		
100	1100790820	BOLT	5	EA		
101	1100790816	BOLT	1	EA		
102	1150420616	SCREW, sems (polycarbonate type)	5	EA		

silverhorn.co.uk

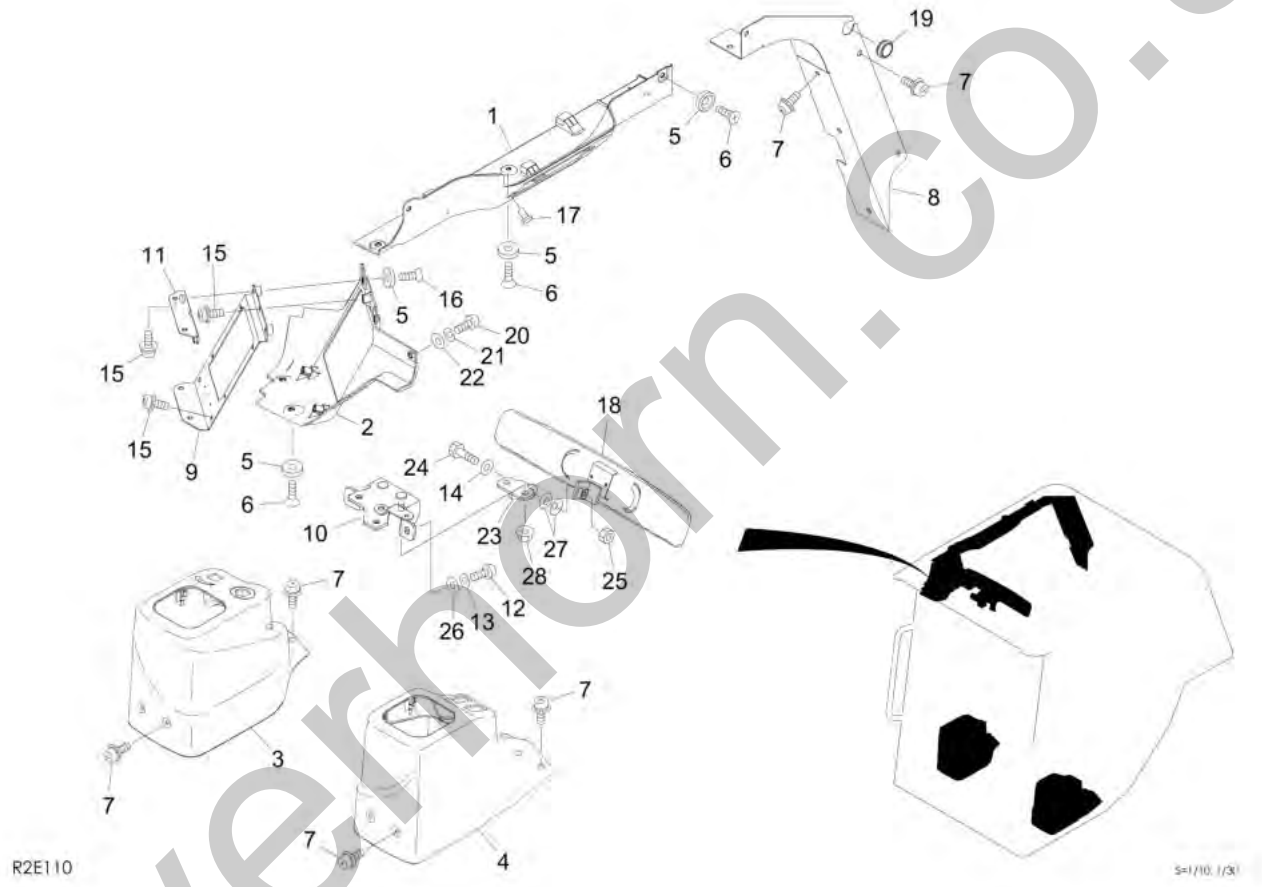

silverhorn.co.uk

Item	Part No.	Name	Qty	Uom	Remarks	SERIAL NUMBER
-	PNNA	CANOPY INTERIOR ASSY		EA		
1	0658600016	COVER	1	EA		
2	0658600014	COVER	1	EA		
3	0658600018	COVER (R.H.)	1	EA		
4	0658600017	COVER (L.H.)	1	EA		
5	1652900016	WASHER	9	EA		
6	1120790620	SCREW	7	EA		
7	1150420614	SCREW, sems	11	EA		
8	0658400009	COVER	1	EA		
9	0658600019	BRACKET	1	EA		
10	0658400021	BRACKET	1	EA		
11	0658400015	BRACKET	1	EA		
12	1120991025	SCREW	2	EA		
13	1140090010	WASHER, spring	2	EA		
14	1141110010	WASHER, plain	1	EA		
15	1150420612	BOLT, sems	5	EA		
16	1120790630	SCREW	2	EA		
17	1652900018	PIN	2	EA		
18	0658400020	MIRROR	1	EA		
19	1652052400	GROMMET	1	EA		
20	1120590514	SCREW	1	EA		
21	1140020005	WASHER, spring	1	EA		
22	1141110005	WASHER, flat (ZINC) (5MM)	1	EA		
23	0658400023	BRACKET	1	EA		
24	1101041035	BOLT	1	EA		
25	1130550010	NUT (8TM10 P/1.25)	1	EA		
26	1141110010	WASHER, plain	2	EA		
27	1225110010	WASHER, conical	2	EA		
28	1130140008	NUT (polycarbonate type)	2	EA		

silverhorn.co.uk

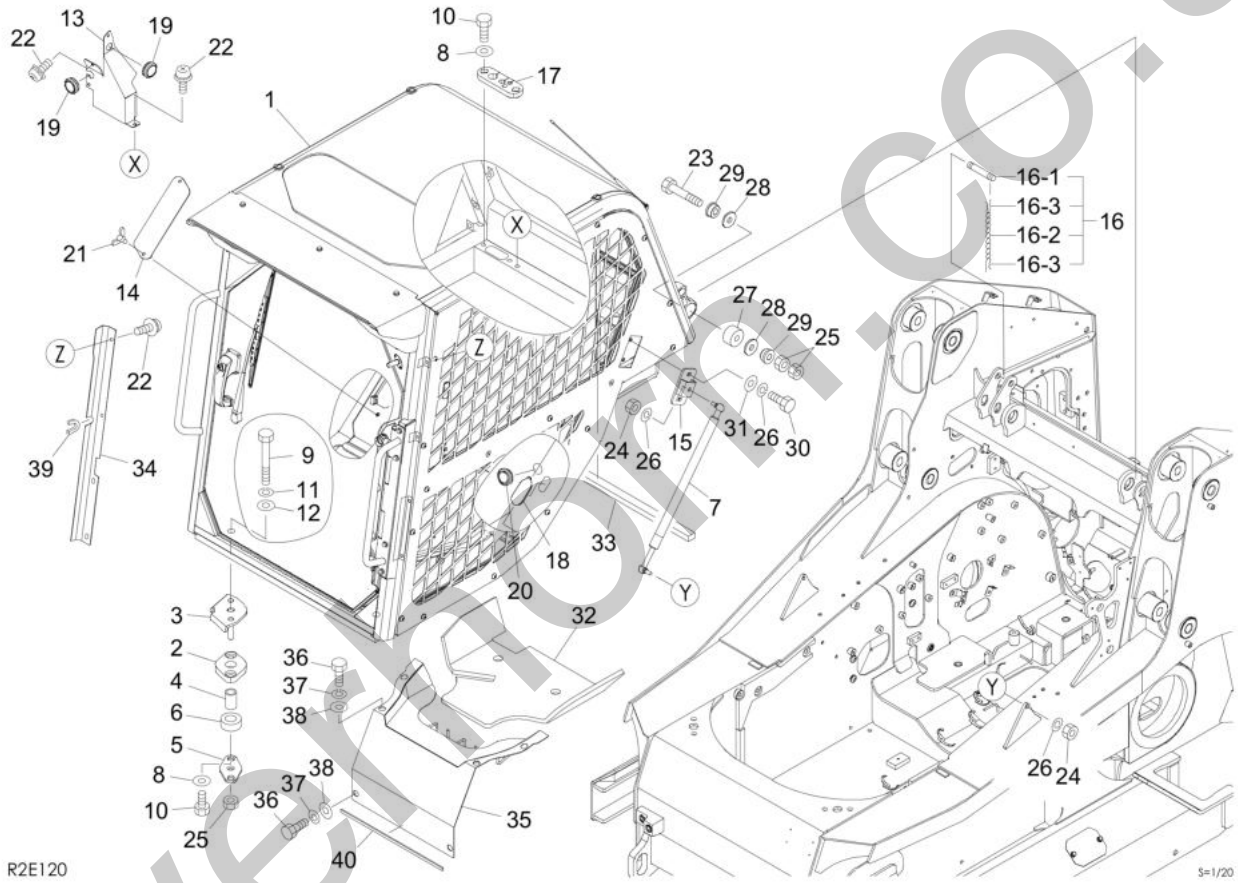

silverhorn.co.uk

Item	Part No.	Name	Qty	Uom	Remarks	SERIAL NUMBER
-	PNNA	CAB MOUNT		EA		
1	0658600058	CAB ASSY	1	EA		
2	0658600004	RUBBER	2	EA		
3	0658600025	PLATE	2	EA		
4	0563500600	TUBE	2	EA		
5	0658600008	PLATE	2	EA		
6	0433503100	RUBBER	2	EA		
7	1653900095	SPRING, gas	2	EA		
8	0003608252	WASHER	6	EA		
9	1100041690	BOLT	2	EA		
10	1100050812	BOLT (10TM8 X 12 P/1.25)	6	EA		
11	1140020016	WASHER, spring	2	EA		
12	1141550016	WASHER (HEAT M16)	2	EA		
13	0658400007	PLATE	1	EA		
14	0658400008	PLATE	1	EA		
15	0658600010	PLATE	2	EA		
16	0881841060	PIN ASSY	1	EA		
16-1	0881841061	PIN (CAN USE ASSEMBLY # 0881841060)	1	EA		
16-2	1652768610	CHAIN	1	EA		
16-3	1214000016	PIN, snap	2	EA		
17	0654200089	GROMMET	1	EA		
18	0664300004	GROMMET	1	EA		
19	1652052400	GROMMET	2	EA		
20	1652053400	GROMMET	1	EA		
21	1121530816	BOLT, wing	2	EA		
22	1150420614	SCREW, sems	8	EA		
23	1100141610	BOLT	2	EA		
24	1130050010	NUT	4	EA		
25	1130050016	NUT	6	EA		
26	1140020010	WASHER, spring	8	EA		
27	1651005030	RUBBER, cushion	2	EA		
28	0880840070	WASHER	4	EA		
29	0881840008	COLLAR	4	EA		
30	1100051025	BOLT (10TM10 X 25 P/1.5)	4	EA		
31	1141110010	WASHER, plain	4	EA		
32	0658600026	ABSORBENT, noise	1	EA		
33	1654342085	SPONGE	1	EA	sold by the meter	
34	0658600061	COVER	1	EA		

silverhorn.co.uk

This page intentionally left blank

silverhorn.co.uk

Item	Part No.	Name	Qty	Uom	Remarks	SERIAL NUMBER
35	0653500029	COVER	1	EA		
36	1100050820	BOLT (10TM8 X 20 P/1.25)	6	EA		
37	1140020008	WASHER, spring	6	EA		
38	0003609003	WASHER (9/30 T/3.2)	6	EA		
39	1653916007	TRIM	1	EA	sold by the meter	
40	1656710046	SPONGE	1	EA	sold by the meter	

silverhorn.co.uk

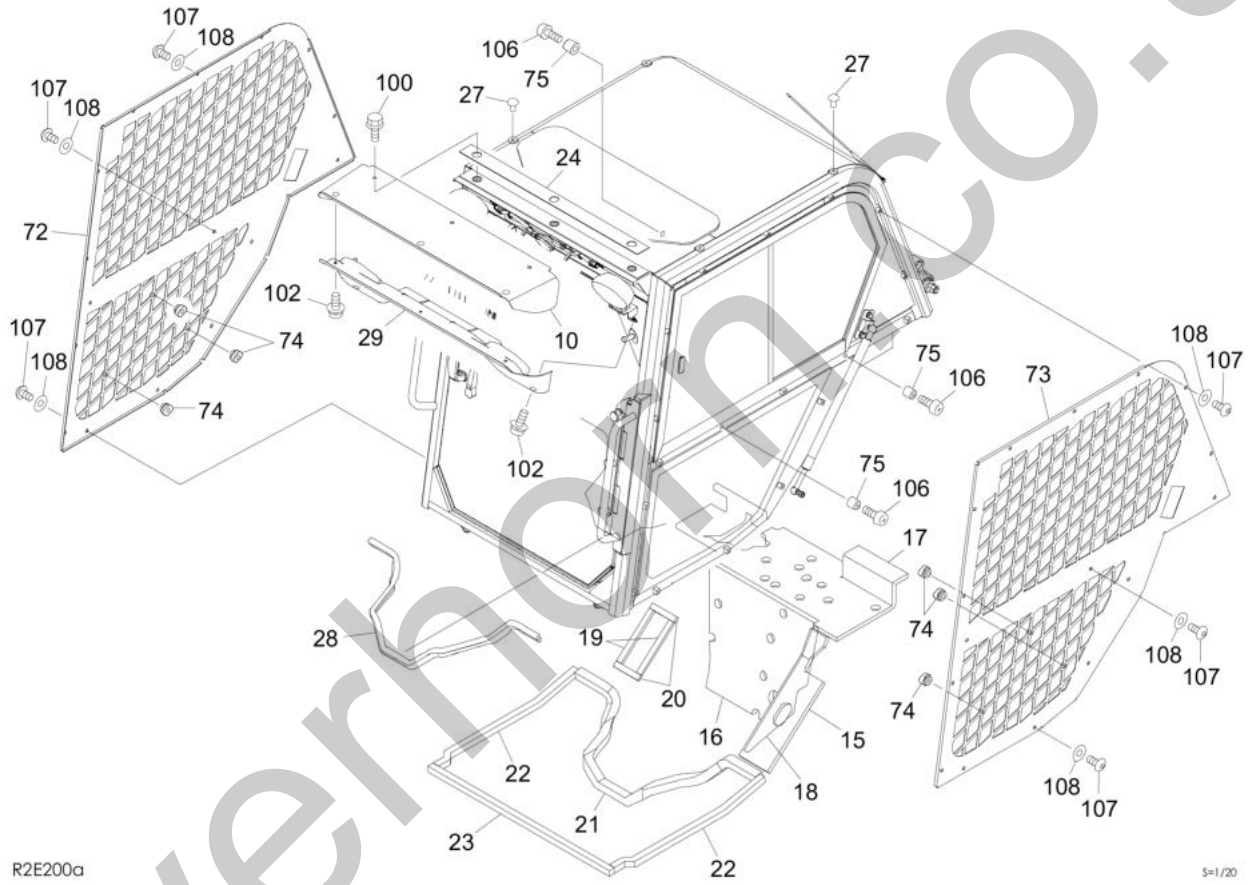

silverhorn.co.uk

Item	Part No.	Name	Qty	Uom	Remarks	SERIAL NUMBER
-	PNNA	CAB ASSY		EA		
10	0658400041	COVER	1	EA		
15	0658600065	ABSORBENT, noise	1	EA		
16	0658600066	ABSORBENT, noise	1	EA		
17	0658600064	ABSORBENT, noise	1	EA		
18	0658400048	ABSORBENT, noise	1	EA		
19	1656721020	SPONGE	2	EA		
20	1656721011	SPONGE	2	EA		
21	1656733125	SPONGE	1	EA		
22	0658400050	SPONGE	2	EA		
23	0658400051	SPONGE	1	EA		
24	0658400052	SPONGE	1	EA		
27	1653303012	CAP	4	EA		
28	1654639114	TRIM	1	EA		
29	0658600024	COVER	1	EA		
72	0658600072	GUARD (R.H.)	1	EA		
73	0658600073	GUARD (L.H.)	1	EA		
74	0698600234	CUSHION, rubber	6	EA		
75	1652102320	RUBBER	4	EA		
100	1100790820	BOLT	9	EA		
102	1150420616	SCREW, sems (polycarbonate type)	5	EA		
106	1120590416	SCREW	4	EA		
107	0658600074	BOLT	32	EA		
108	1654011948	WASHER (polycarbonate type)	32	EA		

silverhorn.co.uk

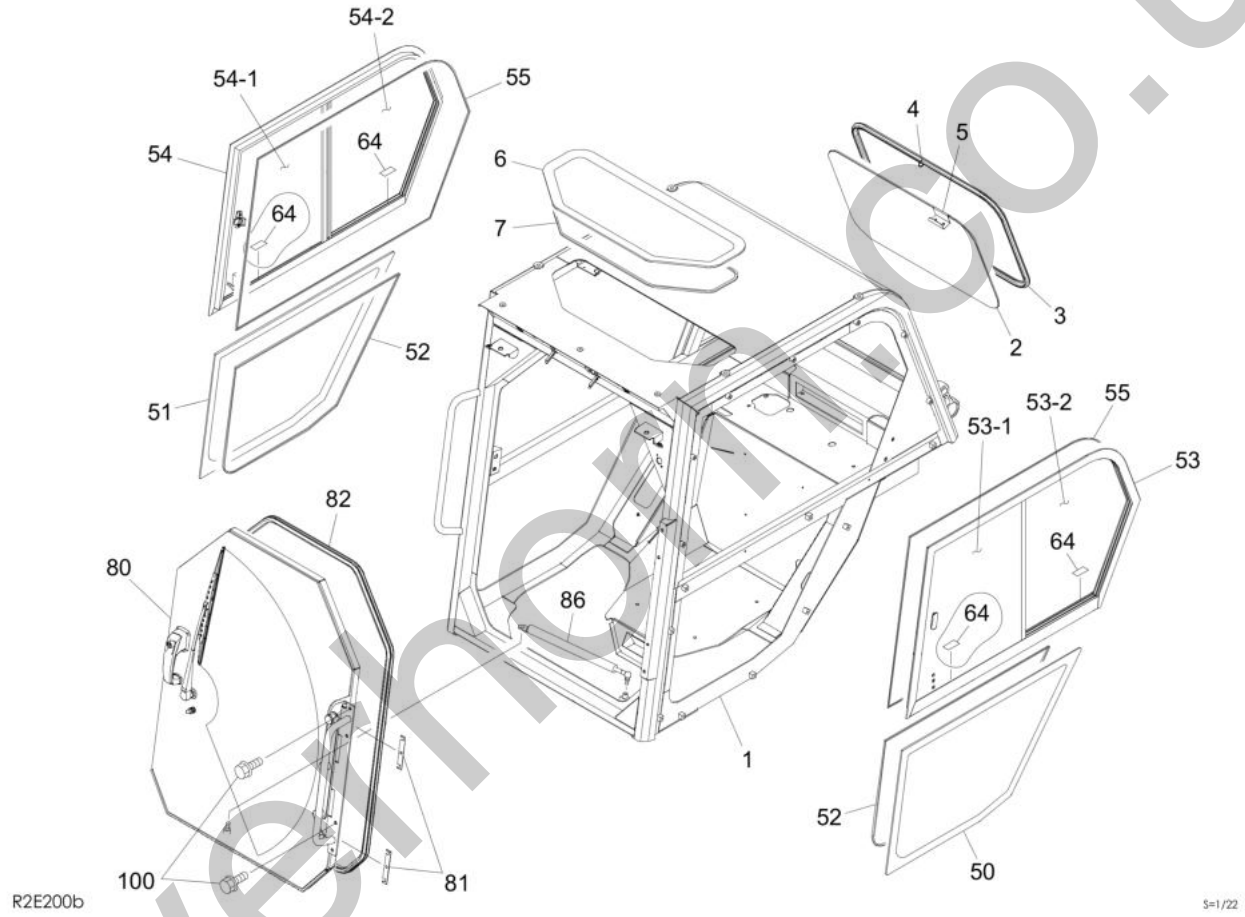

silverhorn.co.uk

Item	Part No.	Name	Qty	Uom	Remarks	SERIAL NUMBER
-	PNNA	CAB ASSY		EA		
1	**********	CAB	1	EA		
2	0658400042	GLASS	1	EA		
3	1654253215	H-RUBBER	1	EA		
4	0880865139	RING	1	EA		
5	0882861185	HANDLE	1	EA		
6	0658400043	ROOF	1	EA		
7	1654615000	SEAL (CUSTOMER MUST ORDER LOT OF 15 EACH)	1	EA	sold by the meter	
50	0658600068	GLASS	1	EA		
51	0658600069	GLASS	1	EA		
52	1654652000	DAM (SOLD BY THE METER)	2	EA	sold by the meter	
53	0658600071	SASH ASSY, side (L.H.)	1	EA		
53-1	0658600116	GLASS	1	EA		
53-2	0658600114	GLASS	1	EA		
54	0658600070	SASH ASSY, side (R.H.)	1	EA		
54-1	0658600115	GLASS	1	EA		
54-2	0658600113	GLASS	1	EA		
55	1654643302	DAM	2	EA	sold by the meter	
64	0578600193	SPACER	4	EA		
80	0658600075	DOOR ASSY	1	EA	see page (2/2)	
81	0658600095	SHIM	2	EA		
82	1654631330	SEAL	1	EA		
86	0658600059	SPRING, gas	1	EA		
100	1100790820	BOLT	9	EA		

silverhorn.co.uk

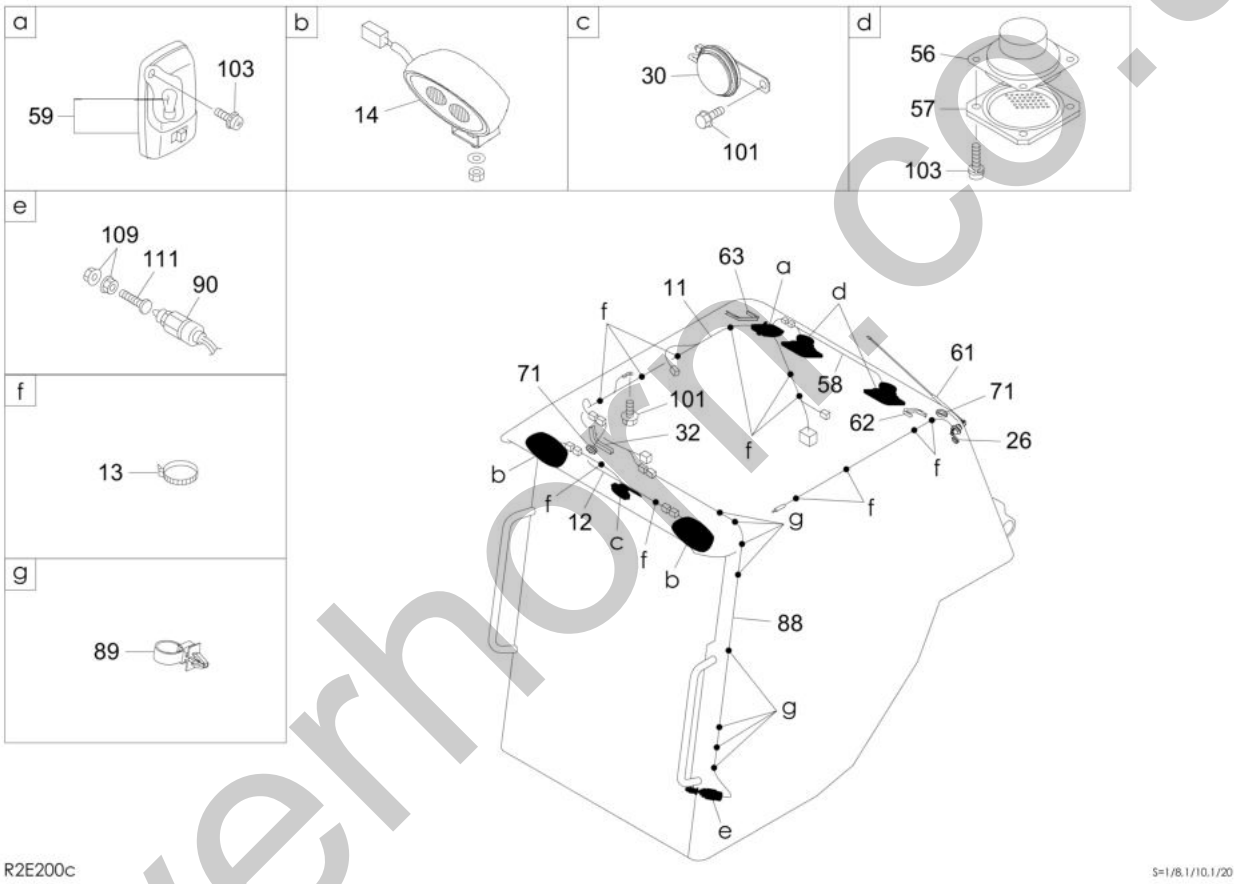

silverhorn.co.uk

Item	Part No.	Name	Qty	Uom	Remarks	SERIAL NUMBER
-	PNNA	CAB ASSY		EA		
11	0654200050	HARNESS, wiring	1	EA		
12	0658400045	HARNESS, wiring	1	EA		
13	1652200005	BAND	15	EA		
14	1703000030	LAMP ASSY	2	EA		
26	1654011961	CAP	1	EA		
30	0698600157	HORN	1	EA		
32	1653916008	TRIM	1	EA		
56	0658600099	SPEAKER	2	EA		
57	1705016001	GRILLE	2	EA		
58	0658600067	HARNESS	1	EA		
59	1703007300	LAMP ASSY (INCLUDES BULB #1703007301)	1	EA		
61	1705003460	ANTENNA	1	EA		
62	1654648010	TRIM	1	EA		
63	1654648015	TRIM	1	EA		
71	1654011701	GROMMET	3	EA		
88	0654200093	HARNESS, wiring	1	EA		
89	0658600093	CLAMP	8	EA		
90	1700000033	SWITCH, safety	1	EA		
101	1100790816	BOLT	2	EA		
103	1150420416	SCREW	10	EA		
109	1131213010	NUT	2	EA		
111	0658600101	BOLT	1	EA		

silverhorn.co.uk

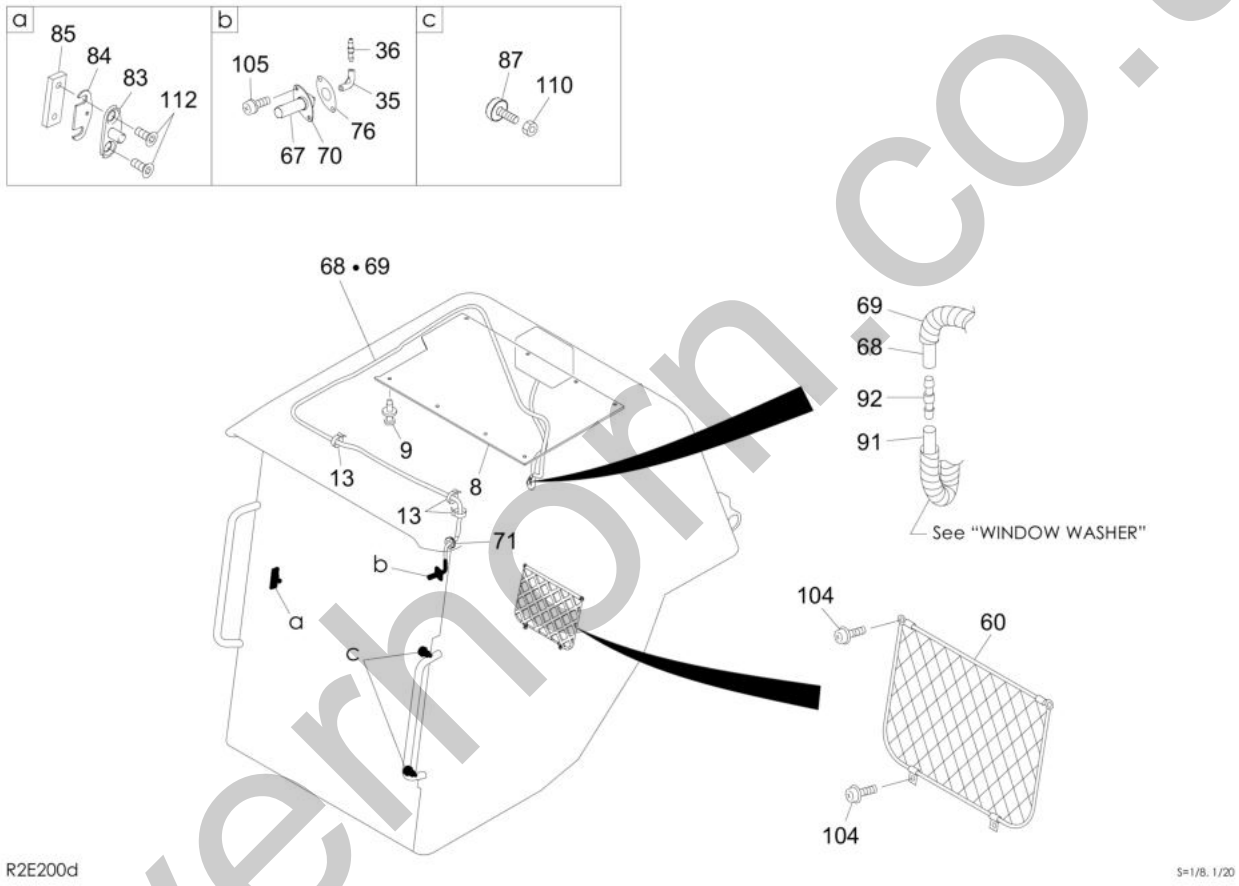

silverhorn.co.uk

Item	Part No.	Name	Qty	Uom	Remarks	SERIAL NUMBER
-	PNNA	CAB ASSY		EA		
8	0658600063	COVER	1	EA		
9	0698600224	RIVET	8	EA		
13	1652200005	BAND	15	EA		
35	1711910016	JOINT	1	EA		
36	0578600289	VALVE	1	EA		
60	1654010600	POCKET	1	EA		
67	0338600146	NOZZLE	1	EA		
68	1711919270	HOSE	1	EA		
69	1703230764	TUBE	1	EA		
70	0338600147	BRACKET	1	EA		
71	1654011701	GROMMET	3	EA		
76	0658600102	PACKING	1	EA		
83	0658600096	STRIKER	1	EA		
84	0658600097	SHIM	1	EA		
85	0658600098	PLATE	1	EA		
87	1651101027	STOPPER	2	EA		
91	1711919075	HOSE	1	EA		
92	1711910014	JOINT	1	EA		
104	1150410416	SCREW	4	EA		
105	1150420412	SCREW, sems	2	EA		
110	1130240010	NUT	2	EA		
112	1120801020	SCREW	2	EA		

silverhorn.co.uk

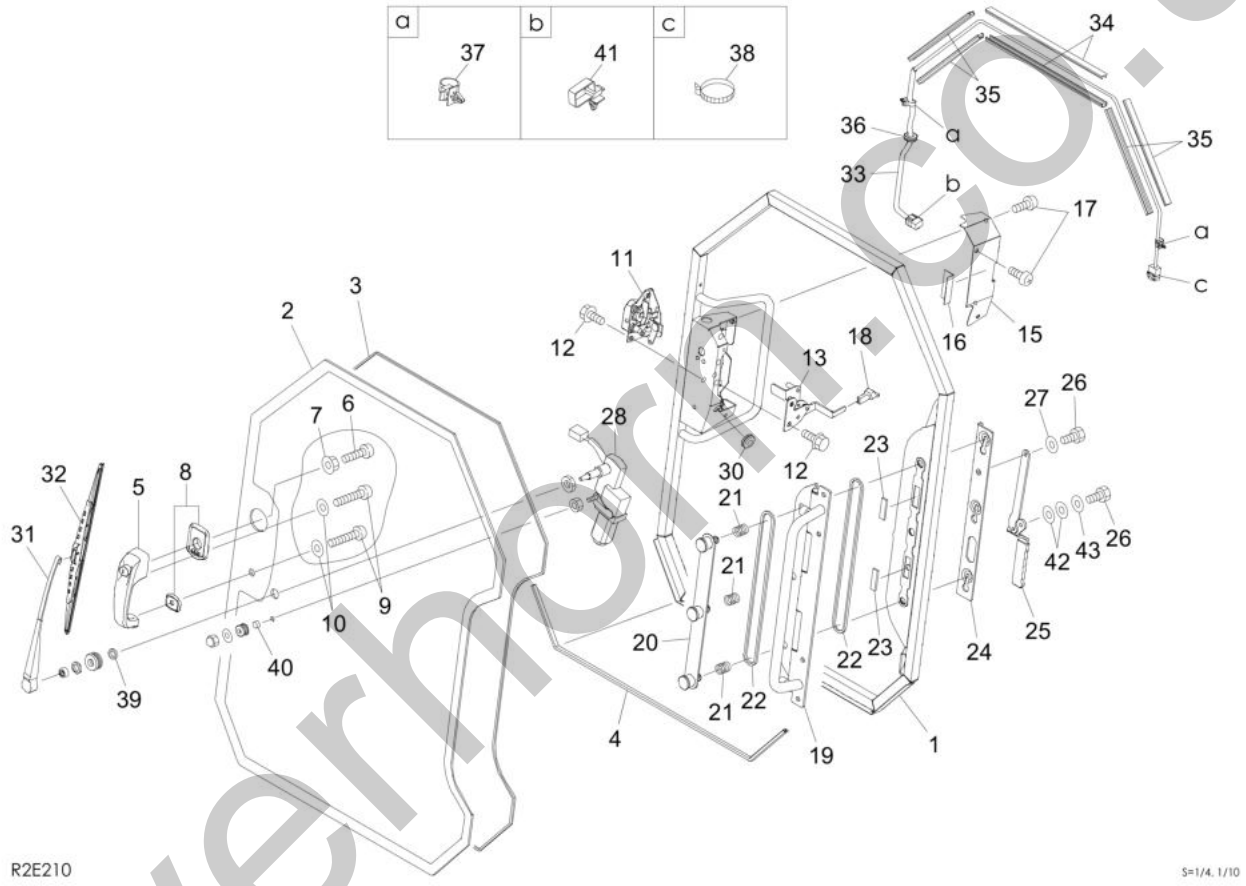

silverhorn.co.uk

Item	Part No.	Name	Qty	Uom	Remarks	SERIAL NUMBER
0	0658600075	DOOR ASSY	1	EA		
1	0658600076	DOOR	1	EA		
2	0658600077	GLASS, front	1	EA		
3	1654652000	DAM (SOLD BY THE METER)	1	EA	sold by the meter	
4	1653916090	TRIM	1	EA		
5	0698600198	HANDLE (OUTER)	1	EA		
6	1120990630	SCREW	1	EA		
7	1131213006	NUT	1	EA		
8	0698600257	COVER	1	EA		
9	1120990635	SCREW	3	EA		
10	1654011947	WASHER	3	EA		
11	0658600078	LOCK	1	EA		
12	1106690616	BOLT	5	EA		
13	0658600079	CONTROL	1	EA		
15	0658600080	COVER	1	EA		
16	0658600081	PACKING	1	EA		
17	1150420616	SCREW, sems (polycarbonate type)	4	EA		
18	1654008800	KNOB	1	EA		
19	0658600082	HINGE	1	EA		
20	0658600083	PLATE	1	EA		
21	0658600084	SPRING	3	EA		
23	0658600088	RUBBER, cushion	2	EA		
22	0658600085	SEAL	2	EA		
24	0658600086	PLATE	1	EA		
25	0658600087	LINK	1	EA		
26	0568660810	BOLT	2	EA		
27	1654011705	WASHER	1	EA		
28	0880865302	MOTOR, wiper	1	EA	DOES NOT WORK ON GEHL OR MUSTANG UNITS	
30	1654011700	GROMMET	1	EA		
31	0658600089	ARM, wiper	1	EA		
32	0658600094	WIPER, blade	1	EA		
33	0658600090	HARNESS, wiring	1	EA		
34	0658600091	DUCT	1	EA		
35	0658600092	DUCT	2	EA		
36	1654011701	GROMMET	1	EA		
37	0658600093	CLAMP	2	EA		
38	1652200005	BAND	1	EA		
39	0880865310	COLLAR	1	EA		

silvernorn.co.uk

This page intentionally left blank

silverhorn.co.uk

Item	Part No.	Name	Qty	Uom	Remarks	SERIAL NUMBER
40	0880865311	COLLAR	1	EA		
41	1654011931	CLAMP	1	EA		
42	0658600104	WASHER	2	EA		
43	0658600103	WASHER	1	EA		

silverhorn.co.uk

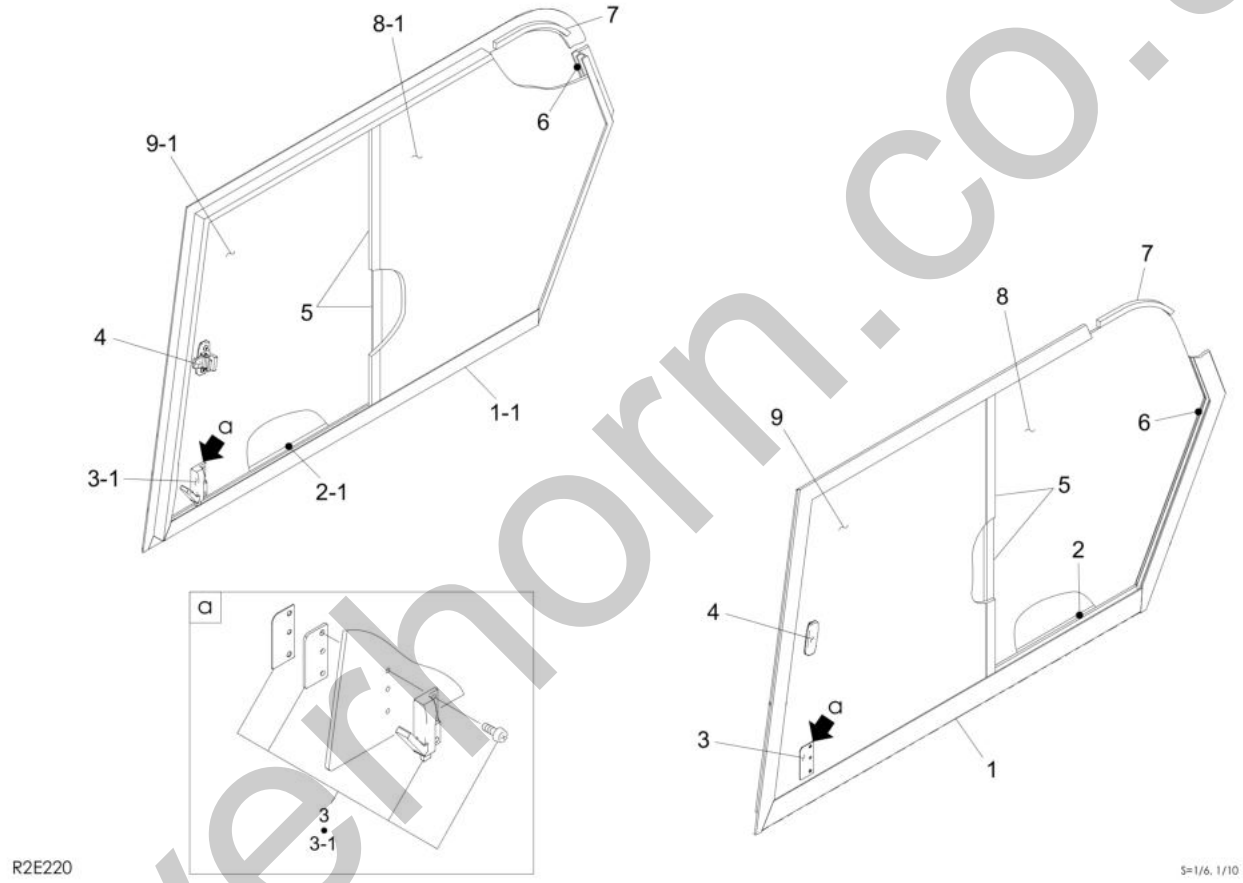

silverhorn.co.uk

Item	Part No.	Name	Qty	Uom	Remarks	SERIAL NUMBER
0	0658600071	SASH ASSY, side (L.H.)	1	EA		
0	0658600070	SASH ASSY, side (R.H.)	1	EA		
1	0658600107	FRAME (L.H.)	1	EA		
1-1	0658600106	FRAME (R.H.)	1	EA		
2	0658600109	RUN, glass (L.H.)	1	EA		
2-1	0658600108	RUN, glass (R.H.)	1	EA		
3	0698600262	LOCK ASSY (L.H.)	1	EA		
3-1	0698600271	LOCK ASSY (R.H.)	1	EA		
4	0698600263	LOCK	1	EA		
5	0658600110	SEAL	2	EA		
6	0658600111	SEAL	1	EA		
7	0658600112	STOPPER	1	EA		
8	0658600114	GLASS	1	EA		
8-1	0658600113	GLASS	1	EA		
9	0658600116	GLASS	1	EA		
9-1	0658600115	GLASS	1	EA		

silverhorn.co.uk

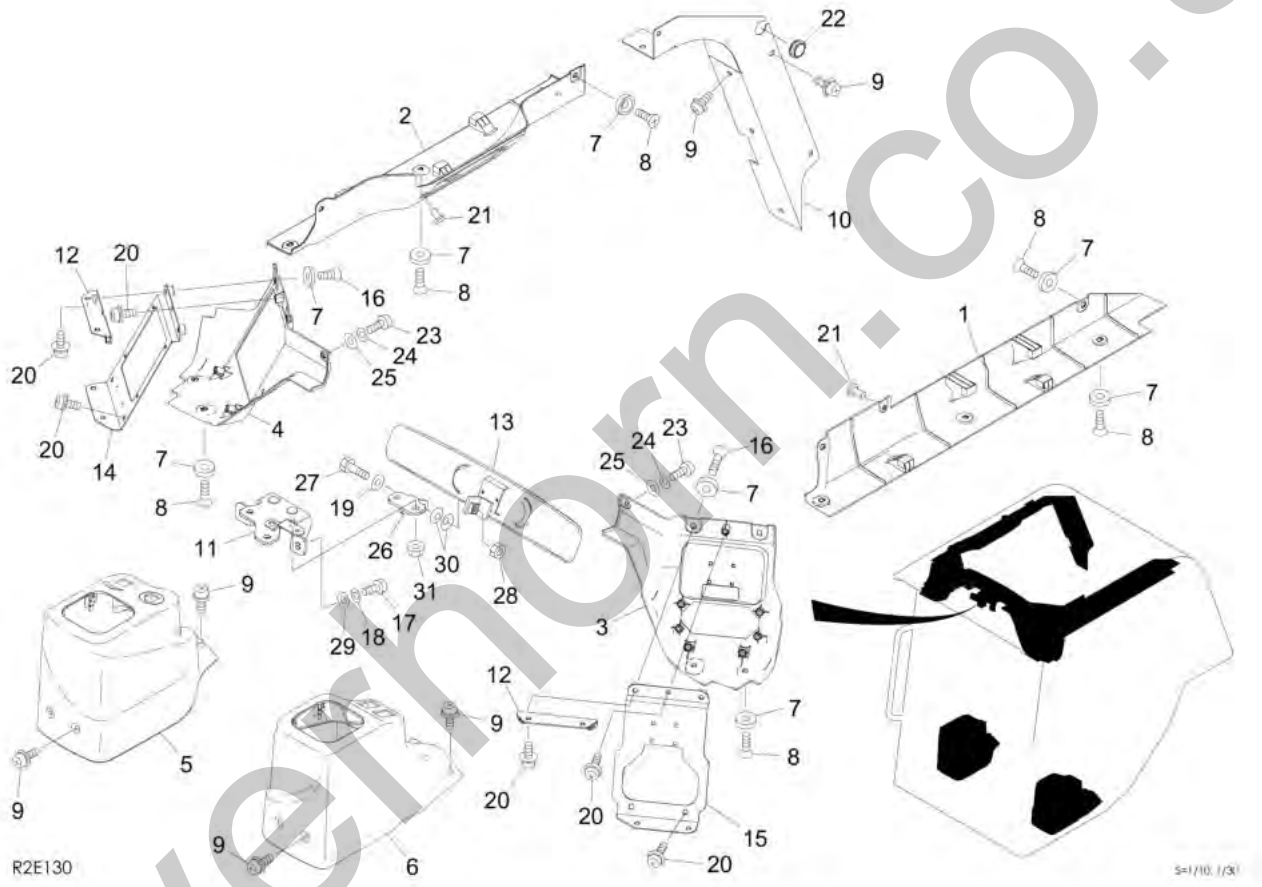

silvernorn.co.uk

Item	Part No.	Name	Qty	Uom	Remarks	SERIAL NUMBER
-	PNNA	CAB INTERIOR ASSY		EA		
1	0658600015	PANEL	1	EA		
2	0658600016	COVER	1	EA		
3	0658600013	PANEL	1	EA		
4	0658600014	COVER	1	EA		
5	0658600018	COVER (R.H.)	1	EA		
6	0658600017	COVER (L.H.)	1	EA		
7	1652900016	WASHER	18	EA		
8	1120790620	SCREW	14	EA		
9	1150420614	SCREW, sems	11	EA		
10	0658400009	COVER	1	EA		
11	0658400021	BRACKET	1	EA		
12	0658400015	BRACKET	2	EA		
13	0658400020	MIRROR	1	EA		
14	0658600019	BRACKET	1	EA		
15	0658600020	BRACKET	1	EA		
16	1120790630	SCREW	4	EA		
17	1120991025	SCREW	2	EA		
18	1140090010	WASHER, spring	2	EA		
19	1141110010	WASHER, plain	1	EA		
20	1150420612	BOLT, sems	10	EA		
21	1652900018	PIN	3	EA		
22	1652052400	GROMMET	1	EA		
23	1120590514	SCREW	2	EA		
24	1140020005	WASHER, spring	2	EA		
25	1141110005	WASHER, flat (ZINC) (5MM)	2	EA		
26	0658400023	BRACKET	1	EA		
27	1101041035	BOLT	1	EA		
28	1130550010	NUT (8TM10 P/1.25)	1	EA		
29	1141110010	WASHER, plain	2	EA		
30	1225110010	WASHER, conical	2	EA		
31	1130140008	NUT (polycarbonate type)	2	EA		

silvernorn.co.uk

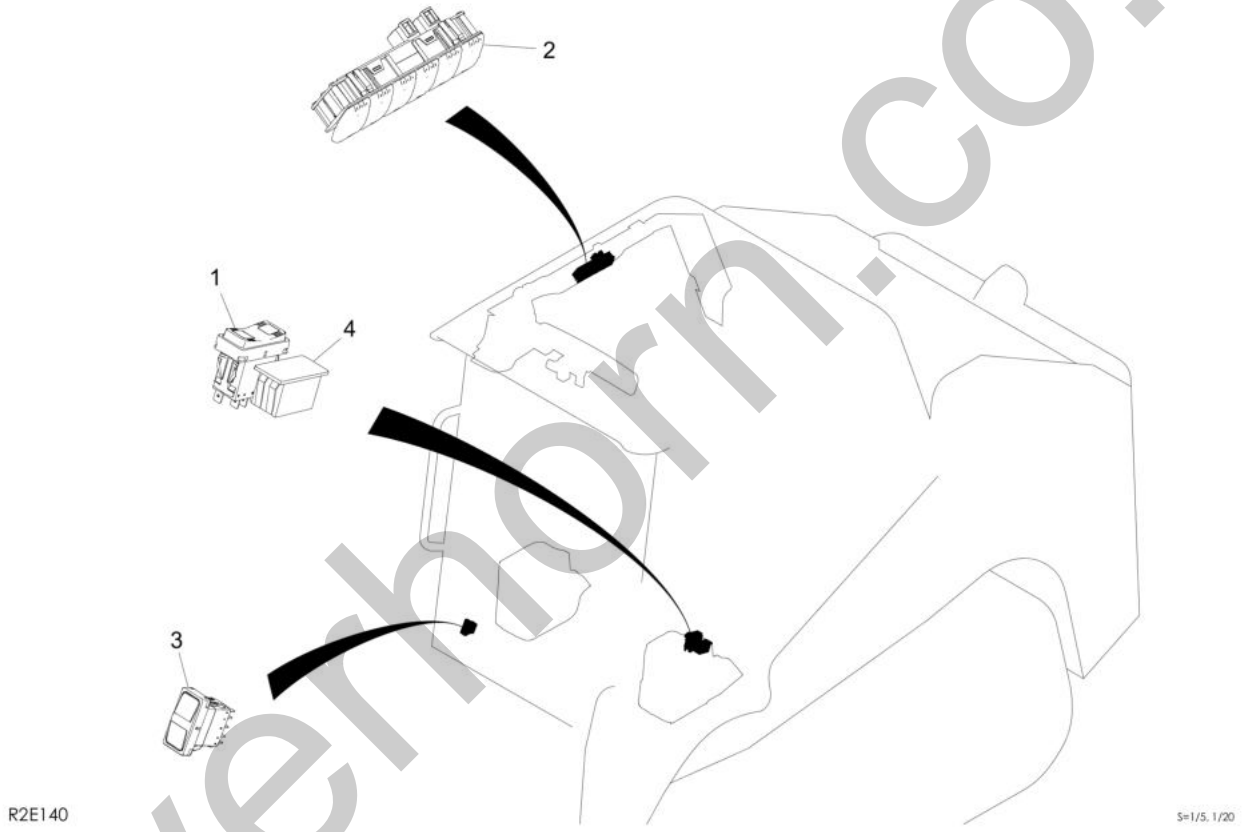

silverhorn.co.uk

Item	Part No.	Name	Qty	Uom	Remarks	SERIAL NUMBER
-	PNNA	SWITCH ASSY		EA		
1	1700008253	SWITCH (14pin H-G select)	1	EA	14pin H-G select	
2	1700008309	SWITCH	1	EA		
3	1700008272	SWITCH, engine stop	1	EA	engine shutdown	
4	1700008129	PLUG	1	EA		

silverhorn.co.uk

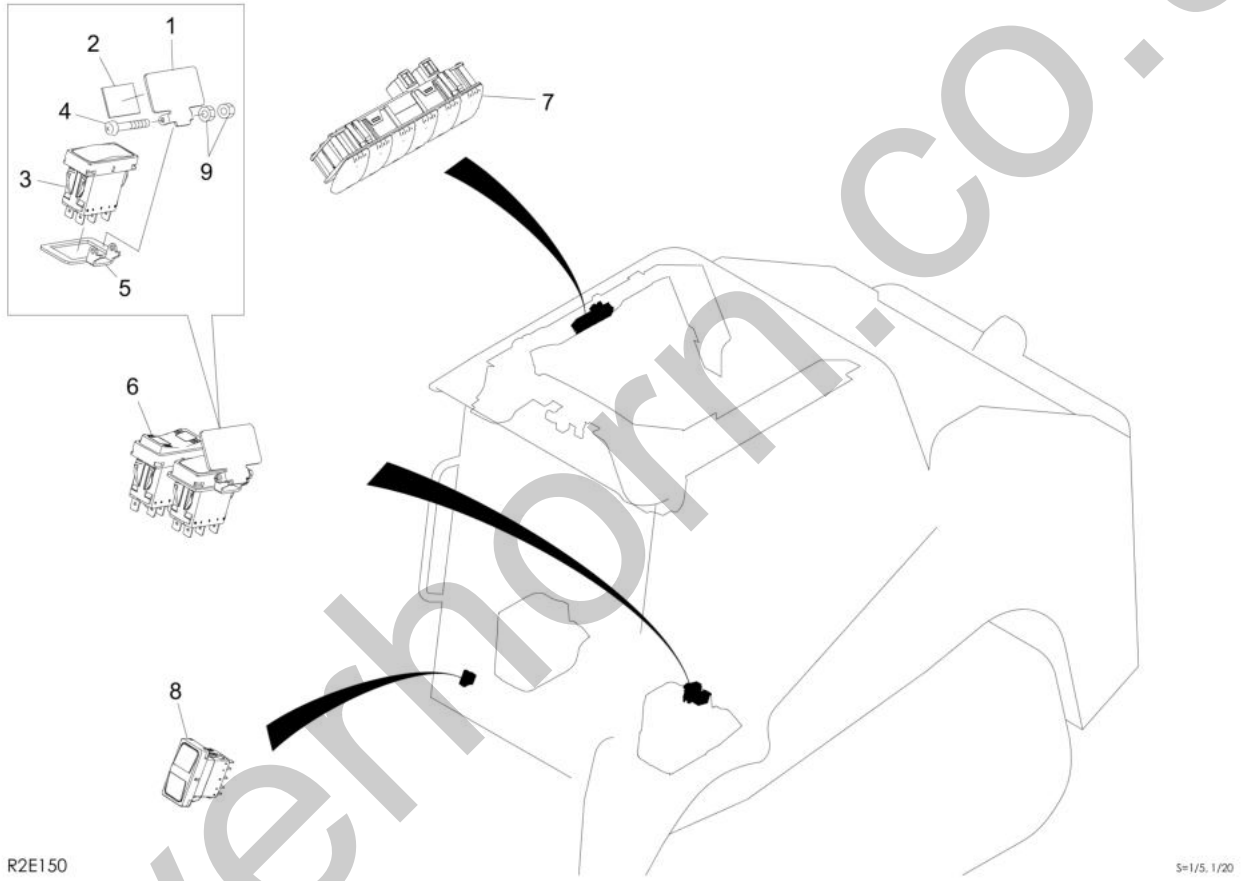

silverhorn.co.uk

Item	Part No.	Name	Qty	Uom	Remarks	SERIAL NUMBER
-	PNNA	SWITCH ASSY		EA		
1	0664300110	COVER	1	EA		
2	0664300140	RUBBER	1	EA		
3	1700008080	SWITCH (quick hitch)	1	EA	quick hitch	
4	1120530330	SCREW	1	EA		
5	0664300120	COVER	1	EA		
6	1700008253	SWITCH (14pin H-G select)	1	EA	14pin H-G select	
7	1700008311	SWITCH	1	EA		
8	1700008272	SWITCH, engine stop	1	EA	engine shutdown	
9	1130030003	NUT	2	EA		

silverhorn.co.uk

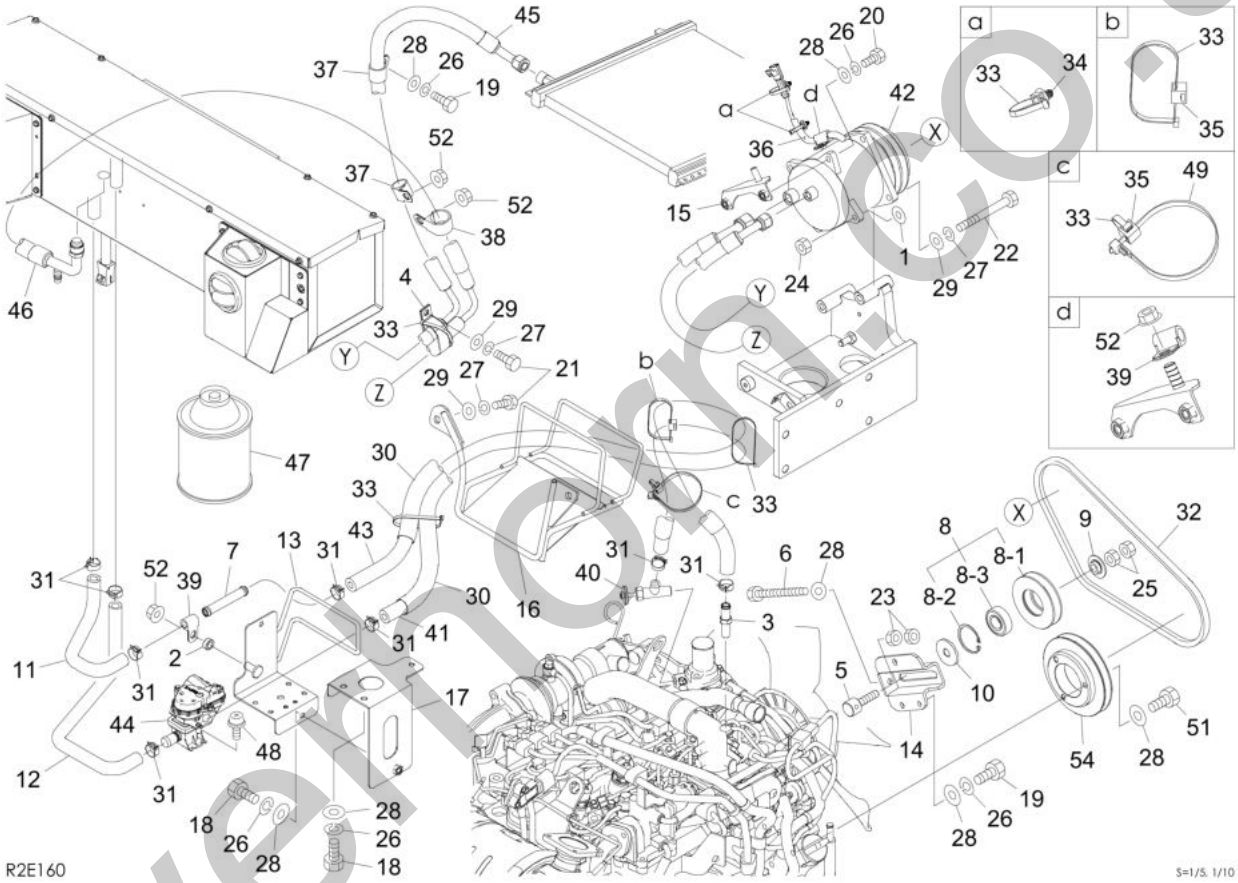

silvernorn.co.uk

Item	Part No.	Name	Qty	Uom	Remarks	SERIAL NUMBER
-	PNNA	COMPRESSOR ASSY	1	EA		
1	0003600223	SHIM (t=0.3mm)	1	EA	t=0.3mm	
2	0003600237	COLLAR	1	EA		
3	0007224020	ADAPTOR	1	EA		
4	0007300065	CLAMP	1	EA		
5	0374602650	SHAFT	1	EA		
6	0394602010	BOLT	1	EA		
7	0394617670	PIPE	1	EA		
8	0564634880	V-PULLEY	1	EA		
8-1	0564634881	PULLEY	1	EA		
8-2	1221000047	RING, snap (INTERNAL 47MM)	1	EA		
8-3	1304006204	BEARING	1	EA		
9	0564634890	COLLAR	1	EA		
10	0564634895	COLLAR	1	EA		
11	0654600038	HOSE	1	EA		
12	0654600039	HOSE	1	EA		
13	0654600040	PLATE	1	EA		
14	0654600092	BRACKET	1	EA		
15	0654600066	BRACKET	1	EA		
16	0654600082	BRACKET	1	EA		
17	0694600057	BRACKET	1	EA		
18	1100090816	BOLT	5	EA		
19	1100050820	BOLT (10TM8 X 20 P/1.25)	4	EA		
20	1100050825	BOLT (10TM8 X 25 P/1.25)	2	EA		
21	1100041020	BOLT	3	EA		
22	1103141005	BOLT	2	EA		
23	1130050008	NUT	2	EA		
24	1130050010	NUT	2	EA		
25	1130140012	NUT	2	EA		
26	1140020008	WASHER, spring	11	EA		
27	1140020010	WASHER, spring	5	EA		
28	1141110008	WASHER	15	EA		
29	1141110010	WASHER, plain	5	EA		
30	1531516080	PROTECTOR	2	EA	sold by the meter	
31	1533120020	BAND	8	EA		
32	1621073038	V-BELT (38")	1	EA		
33	1652201005	BAND	7	EA		
34	1652201010	MOUNT	2	EA		

silverhorn.co.uk

This page intentionally left blank

silverhorn.co.uk

Item	Part No.	Name	Qty	Uom	Remarks	SERIAL NUMBER
35	1652201011	SPACER	2	EA		
36	1703210700	TUBE (SOLD BY THE METER)	1	EA		
37	1711900071	CLAMP	2	EA		
38	1711900072	CLAMP	1	EA		
39	1711900105	CLAMP	2	EA		
40	1911502100	VALVE	1	EA		
41	1911505190	HOSE	1	EA		
42	1911506010	COMPRESSOR (SANDEN SD5H09)	1	EA		
43	1911501800	HOSE, heater (SOLD BY THE METER)	1	EA		
44	1911514870	VALVE	1	EA		
45	1911516952	HOSE	1	EA		
45	1911505602	O-RING	2	EA		
46	1911516954	HOSE	1	EA		
46	1911512066	O-RING	2	EA		
47	**********	GAS	8	EA	not service, incl. (2/3)	
48	1150420412	SCREW, sems	2	EA		
49	1652231250	BAND (1st aux. Proportion)	1	EA		
51	1100050840	BOLT (10TM8 X 40 P/1.25)	3	EA		
52	1131242010	NUT	4	EA		
54	0654600081	PULLEY	1	EA		

silverhorn.co.uk

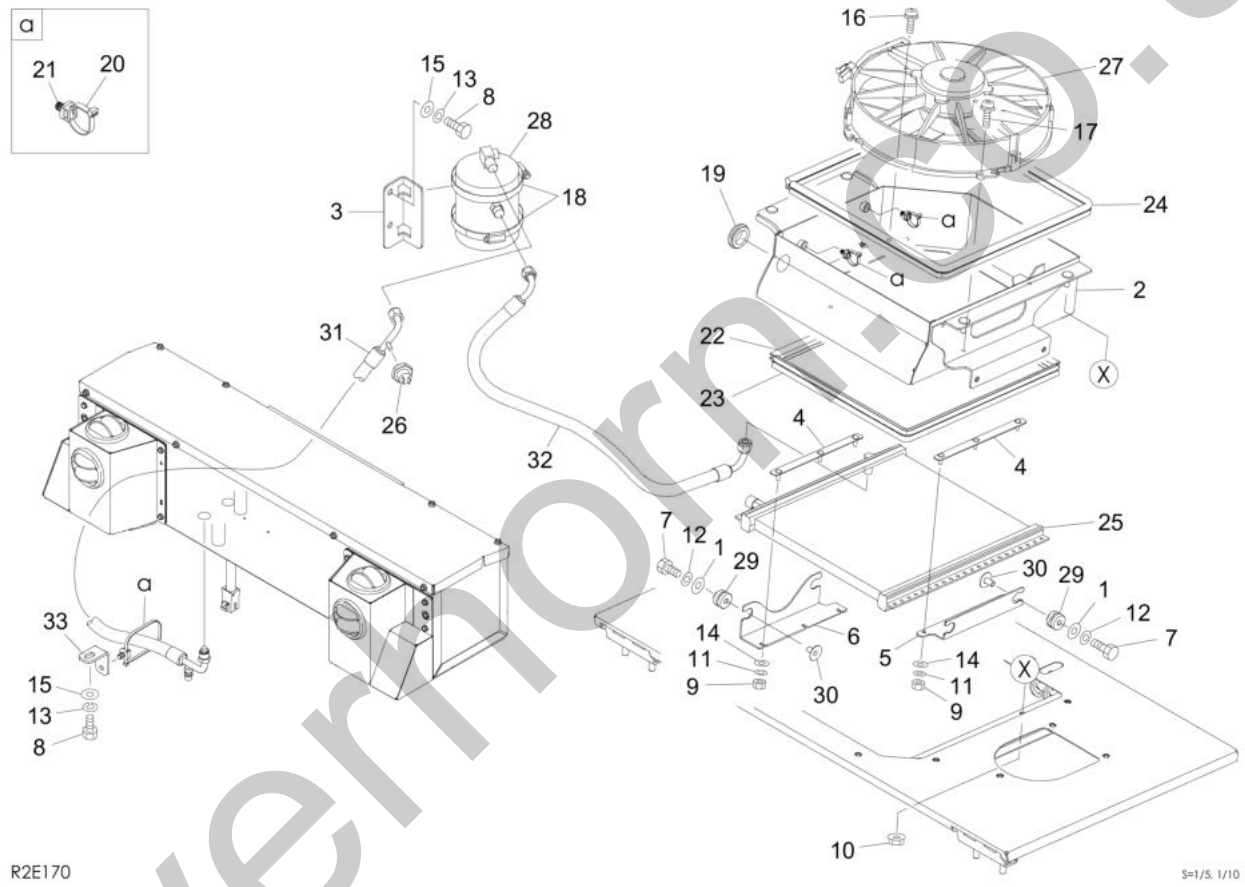

silvermorn.co.uk

Item	Part No.	Name	Qty	Uom	Remarks	SERIAL NUMBER
-	PNNA	CONDENSER ASSY	1	EA		
1	0003606202	WASHER	4	EA		
2	0654600090	BRACKET	1	EA		
3	0684600071	PLATE	1	EA		
4	0694600061	BRACKET	2	EA		
5	0694600064	PLATE	1	EA		
6	0694600071	PLATE	1	EA		
7	1100050635	BOLT (10TM6 X 35 P/1.0)	4	EA		
8	1100090816	BOLT	3	EA		
9	1130030004	NUT	6	EA		
10	1130140008	NUT (polycarbonate type)	4	EA		
11	1140020004	WASHER, spring	6	EA		
12	1140020006	WASHER, spring	4	EA		
13	1140020008	WASHER, spring	3	EA		
14	1141110004	WASHER	6	EA		
15	1141110008	WASHER	3	EA		
16	1150420516	SCREW	1	EA		
17	1150410520	SCREW	3	EA		
18	1533700113	BAND	2	EA		
19	1652053200	GROMMET	1	EA		
20	1652201005	BAND	3	EA		
21	1652201010	MOUNT	3	EA		
22	1654605000	STRIP, weather (SOLD BY THE METER)	1	EA	sold by the meter	
23	1654606000	SEAL (SOLD BY THE METER)	1	EA	sold by the meter	
24	1654606000	SEAL (SOLD BY THE METER)	1	EA	sold by the meter	
25	1911505503	CONDENSER	1	EA		
26	1911505514	SWITCH, pressure (FOR DUAL FUNCTION PRESSURE)	1	EA		
27	1911516213	FAN	1	EA		
28	1911508311	DRYER	1	EA		
29	1911513021	GROMMET	4	EA		
30	1911513022	BUSHING	4	EA		
31	1911516951	HOSE	1	EA		
31	1911505601	O-RING	2	EA		
32	1911516953	HOSE	1	EA		
32	1911505601	O-RING	2	EA		
33	0654600096	PLATE	1	EA		

silvernorn.co.uk

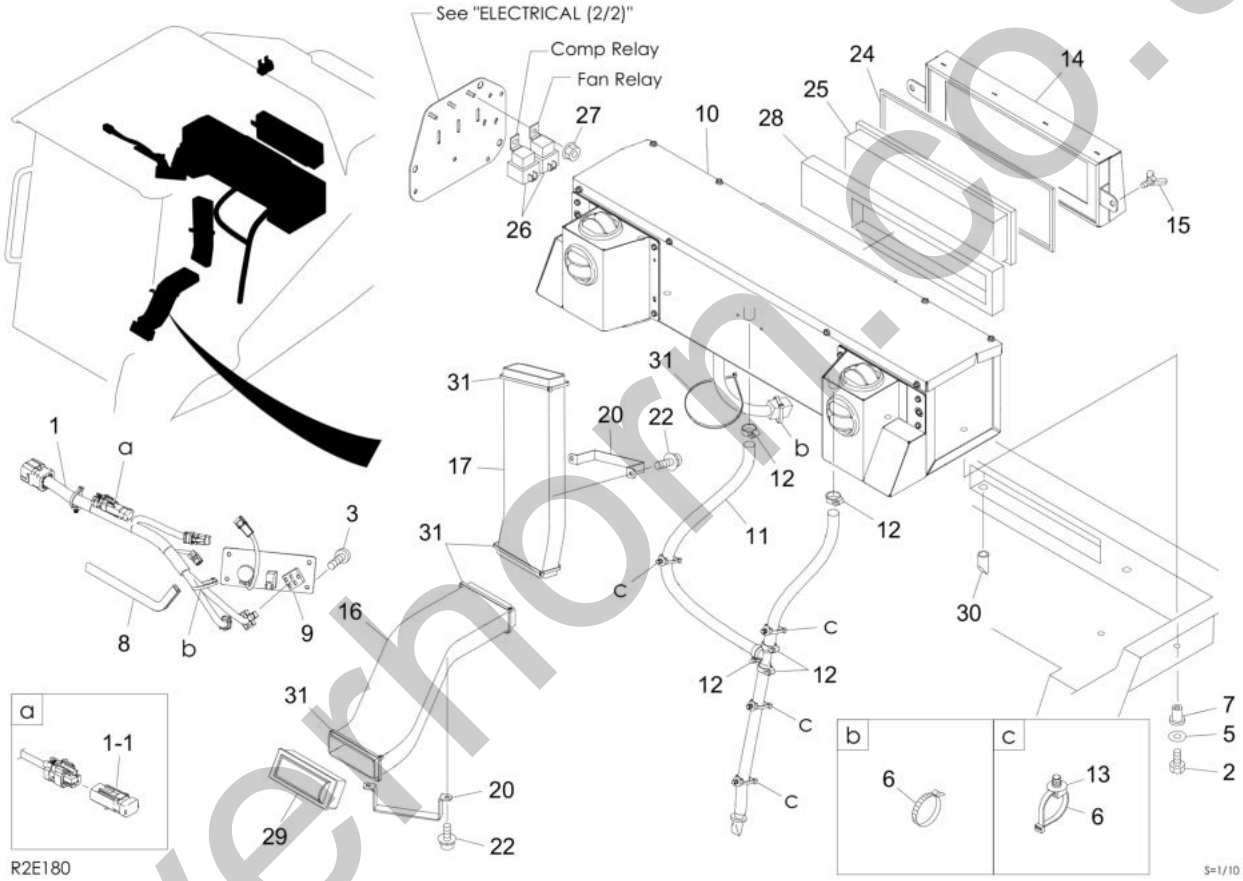

silverhorn.co.uk

Item	Part No.	Name	Qty	Uom	Remarks	SERIAL NUMBER
1	PNNA	UNIT ASSY, air conditioner	1	EA		
1	0654200087	HARNESS, wiring	1	EA		
1-1	1730500041	DIODE	1	EA		
2	1100050830	BOLT (10TM8 X 30 P/1.25)	4	EA		
3	1111850610	SCREW, cap	4	EA		
5	1141110008	WASHER	4	EA		
6	1652201005	BAND	6	EA		
7	1652520008	NUT	4	EA		
8	1653916022	TRIM	1	EA	sold by the meter	
9	1911514840	PANEL ASSY (AIR CONDITIONER)	1	EA	see page (4/4)	
10	1911516902	UNIT, air conditioner	1	EA	see page (4/4)	
11	1911516306	HOSE	1	EA		
12	1911500500	CLAMP	5	EA		
13	1652201010	MOUNT	4	EA		
14	0654600068	COVER	1	EA		
15	1121530816	BOLT, wing	2	EA		
16	0654600056	HOSE	1	EA		
17	0654600057	HOSE	1	EA		
20	0654600064	PLATE	2	EA		
22	1100560612	BOLT, sems	4	EA		
24	1656700100	SPONGE	1	EA	sold by the meter	
25	1911506052	FILTER	1	EA		
26	1911506041	RELAY (12V)	2	EA		
27	1131242006	NUT	2	EA		
28	0654600080	SPONGE	1	EA		
29	1911505723	LOUVER (DRIVER)	1	EA		
30	1911513150	CONNECTOR	2	EA		
31	1652201007	BAND	5	EA		

silverhorn.co.uk

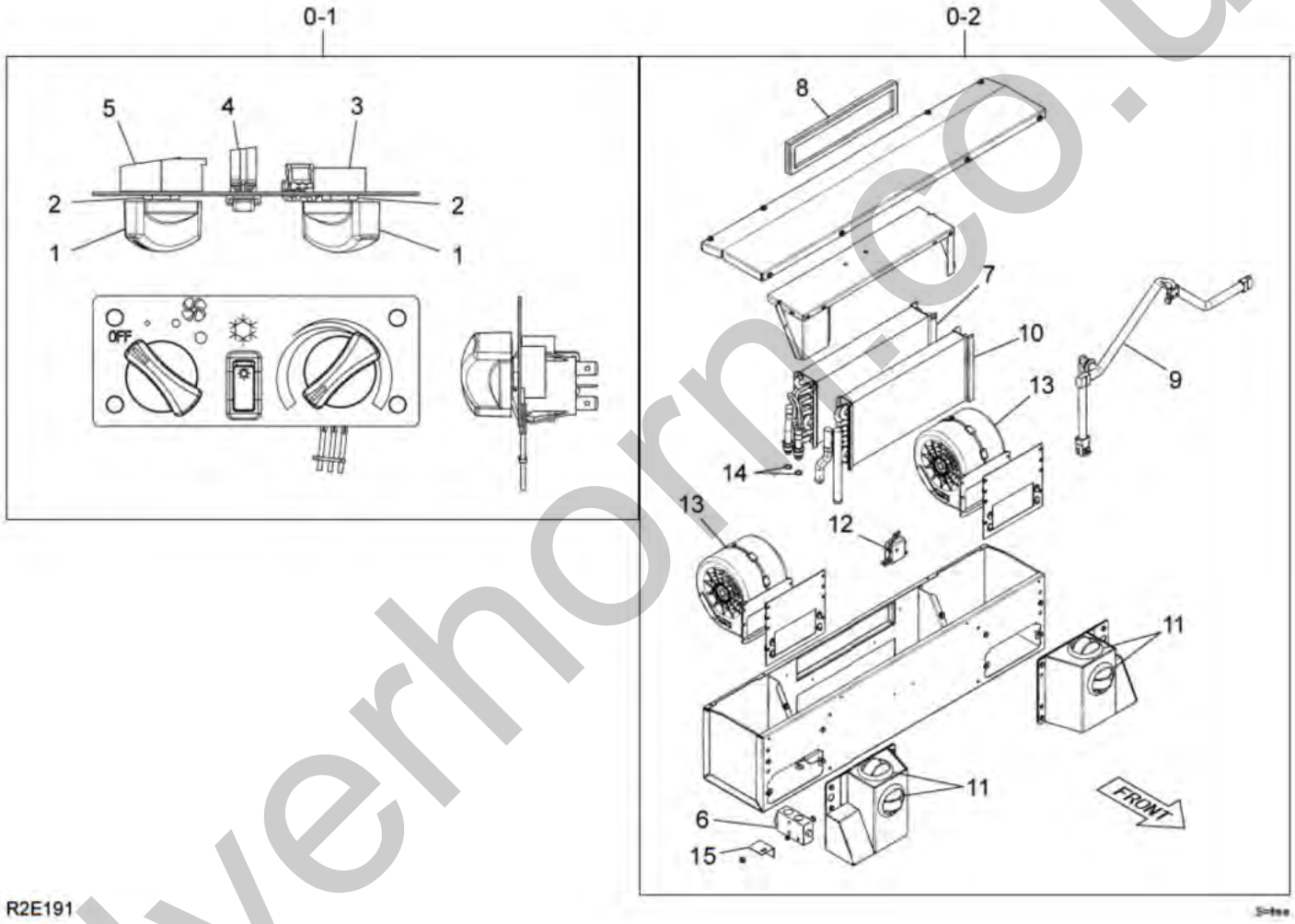

silverhorn.co.uk

Item	Part No.	Name	Qty	Uom	Remarks	SERIAL NUMBER
0-1	1911514840	PANEL ASSY (AIR CONDITIONER)	1	EA		
1	1911505763	KNOB (AIR CONDITIONER)	2	EA		
2	1911514842	NUT	2	EA		
3	1911514843	POTENTIOMETER	1	EA		
4	1911514422	SWITCH, air conditioner (NEW STYLE)	1	EA		
5	1911509280	SWITCH, 3-speed rotary	1	EA		
0-2	1911516902	UNIT, air conditioner	1	EA		
6	1911505422	VALVE, expansion	1	EA		
7	1903900261	EVAPORATOR	1	EA		
8	1911506095	FILTER-RECIRC	1	EA		
9	1903900255	HARNESS ASSY, wiring	1	EA	not shown	
10	1903900263	CORE, heater	1	EA		
11	1911506012	LOUVER	4	EA		
12	1903900214	THERMOSTAT	1	EA		
13	1911514416	MOTOR, blower	2	EA		
14	1911505602	O-RING	2	EA		
15	1903900260	BRACKET	1	EA		

silverhorn.co.uk

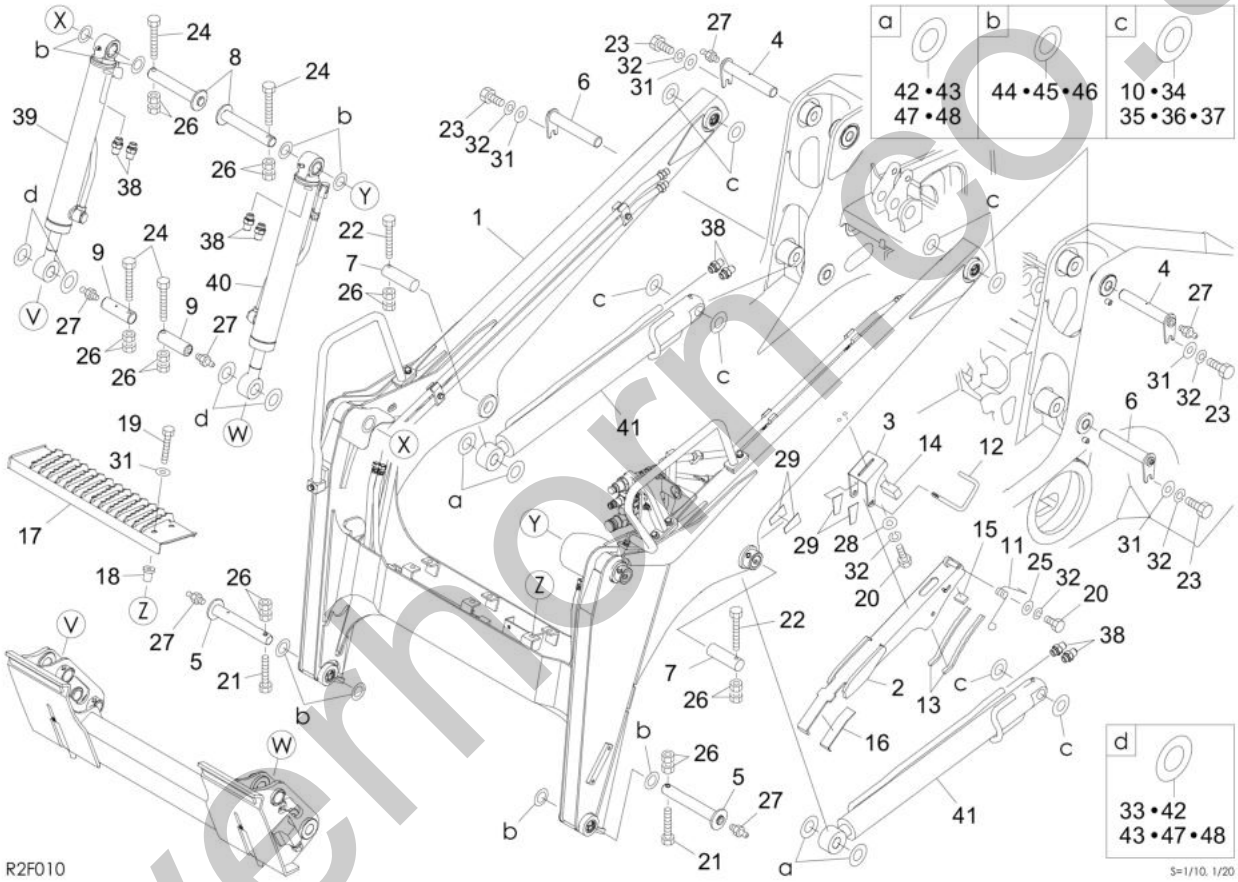

silvernorn.co.uk

Item	Part No.	Name	Qty	Uom	Remarks	SERIAL NUMBER
-	PNNA	ARM ASSY		EA		
-	PNNA	ARM ASSY(quick hitch for hydraulic type)		EA		
1	**********	ARM SUB ASSY	1	EA	see page (2/3)	
1	**********	ARM SUB ASSY(quick hitch for hydraulic type)	1	EA	see page (2/3)	
2	0656000086	LOCK (ARM)	1	EA		
3	0656000044	BRACKET	1	EA		
4	0011902010	PIN	2	EA		
5	0011902009	PIN	2	EA		
6	0011902011	PIN	2	EA		
7	0011513012	PIN	2	EA		
8	0001090009	PIN	2	EA		
9	0001673004	PIN	2	EA		
10	0003600230	SHIM (t=1.0mm)	1	EA	t=1.0mm	
11	0007000114	SPRING (FOR TRACK LOADERS)	1	EA		
12	0656000380	PIN ASSY	1	EA		
13	1654629023	TRIM	2	EA	sold by the meter	
14	0881604580	RUBBER	1	EA		
15	0656000017	RUBBER	1	EA		
16	0880606018	RUBBER	1	EA		
17	0656000031	STEP	1	EA		
18	1652520008	NUT	6	EA		
19	1100050830	BOLT (10TM8 X 30 P/1.25)	6	EA		
20	1100090816	BOLT	3	EA		
21	1103041075	BOLT	2	EA		
22	1103041080	BOLT	2	EA		
23	1100050820	BOLT (10TM8 X 20 P/1.25)	4	EA		
24	1103041075	BOLT	4	EA		
25	0003608252	WASHER	1	EA		
26	1130240010	NUT	16	EA		
27	1560001000	FITTING, grease	6	EA		
28	1141110008	WASHER	2	EA		
29	0880606034	RUBBER	4	EA		
31	0003608003	WASHER (8/30 T/2.3)	10	EA		
32	1140020008	WASHER, spring	7	EA		
33	0003600176	SHIM (t=1.0mm) (PLASTIC)	1	EA	t=1.0mm	
34	0003600231	SHIM (0.2MM)	1	EA	t=0.2mm	
35	0003600232	SHIM (t=0.5mm)	1	EA	t=0.5mm	

silverhorn.co.uk

This page intentionally left blank

silverhorn.co.uk

Item	Part No.	Name	Qty	Uom	Remarks	SERIAL NUMBER
36	0003600233	SHIM (t=1.2mm)	1	EA	t=1.2mm	
37	0003600234	SHIM (3.2MM)	1	EA	t=3.2mm	
38	1515600201	ADAPTOR	8	EA		
38	1420010140	O-RING	1	EA		
39	1900124300	CYLINDER, bucket (R.H.)	1	EA		
40	1900124400	CYLINDER, bucket (L.H.)	1	EA		
41	1900124500	CYLINDER, arm	2	EA		
42	0003600035	SHIM (METAL) (0.2MM)	1	EA	t=0.2mm	
43	0003600036	SHIM (METAL) (0.5MM)	1	EA	t=0.5mm	
44	0003600051	SHIM (METAL) (0.2MM)	1	EA	t=0.2mm	
45	0003600052	SHIM (METAL) (0.5MM)	1	EA	t=0.5mm	
46	0003600163	SHIM (t=1.0mm) (PLASTIC)	1	EA	t=1.0mm	
47	0003600188	SHIM	1	EA	t=3.2mm	
48	0003600189	SHIM	1	EA	t=4.5mm	

silverhorn.co.uk

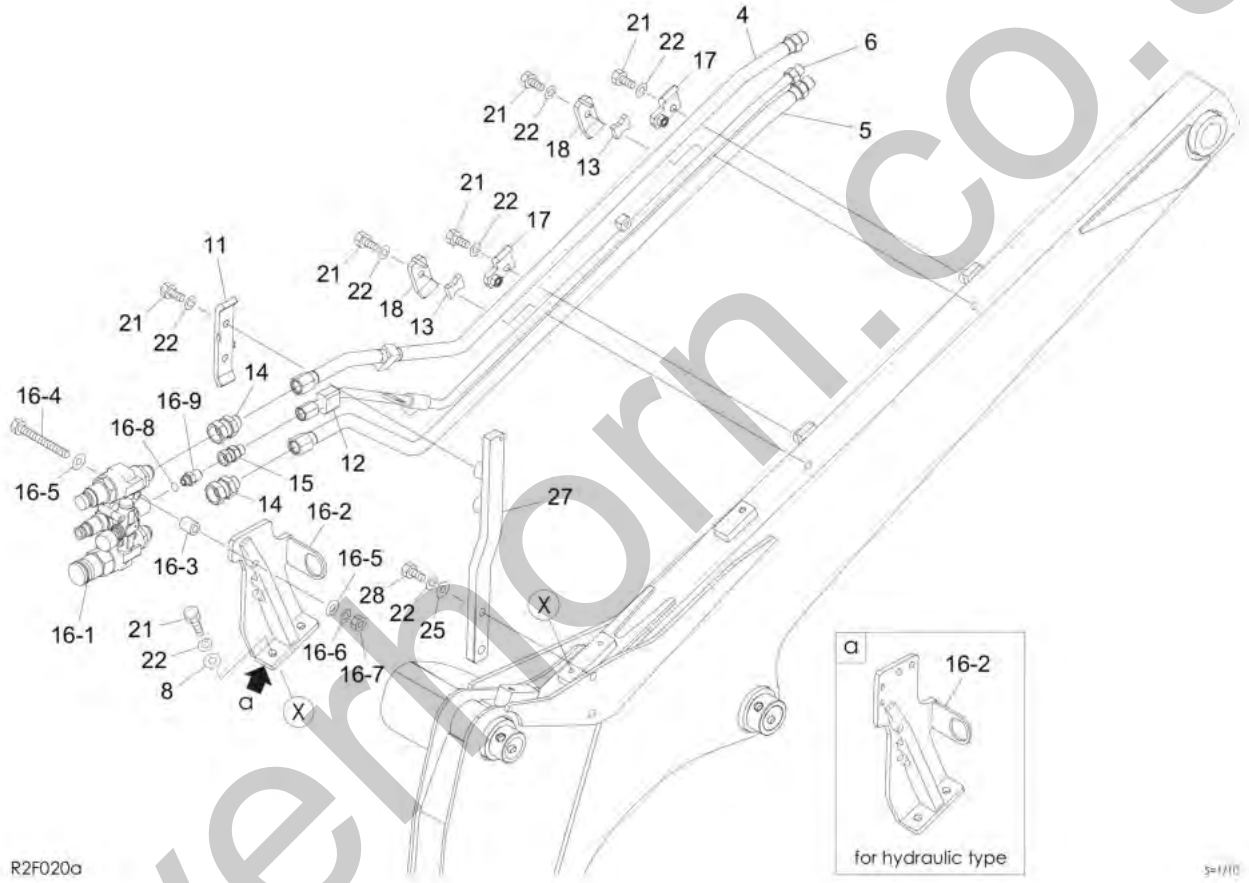

silverhorn.co.uk

Item	Part No.	Name	Qty	Uom	Remarks	SERIAL NUMBER
4	0657300068	PIPE	1	EA		
5	0657300072	PIPE	1	EA		
6	0657300074	PIPE	1	EA		
8	0003600020	WASHER	2	EA		
11	0881733550	CLAMP (LIGHT GRAY)	1	EA		
12	0880738140	RUBBER	1	EA		
13	0880738150	RUBBER	2	EA		
14	0007236045	CONNECTOR	2	EA		
15	1511410003	CONNECTOR	1	EA		
15	1420010140	O-RING	1	EA		
16	**********	VALVE ASSY	1	EA		
16	**********	VALVE ASSY (quick hitch for hydraulic type)	1	EA		
16-1	1901759900	SATURN BLK-M13 M9 F13 TWINPORTS-1 1 1/16UN-12 37 M	1	EA	see page (3/3)	
16-2	0657300085	BRACKET	1	EA		
16-2	0657300076	BRACKET (HYDRAULIC QUICK HITCH TYPE)	1	EA		
16-3	0697309210	SPACER	2	EA		
16-4	1100050880	BOLT (10TM8 X 80 P/1.25)	2	EA		
16-5	0003608252	WASHER	4	EA		
16-6	1140020008	WASHER, spring	2	EA		
16-7	1130050008	NUT	2	EA		
16-8	1420310906	O-RING (ARP568-906-1B)	1	EA		
16-9	0007203017	NIPPLE	1	EA		
17	0687300111	CLAMP	2	EA		
18	0687300113	CLAMP	2	EA		
21	1100051025	BOLT (10TM10 X 25 P/1.5)	15	EA		
22	1140020010	WASHER, spring	18	EA		
25	0003600025	WASHER	2	EA		
27	0656000089	BRACKET	1	EA		
28	1100051040	BOLT (10TM10 X 40 P/1.5)	2	EA		

silverhorn.co.uk

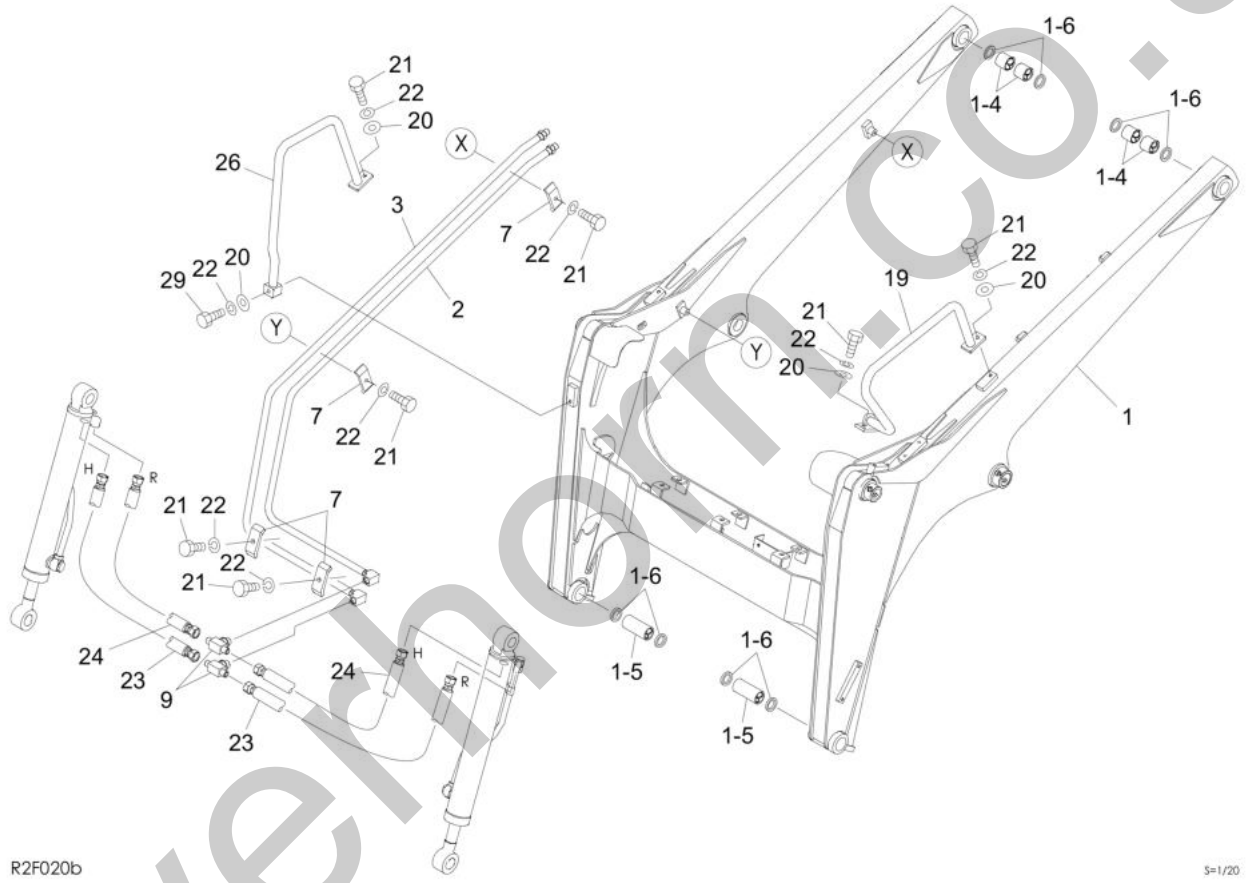

silverhorn.co.uk

Item	Part No.	Name	Qty	Uom	Remarks	SERIAL NUMBER
0-1	**********	ARM SUB ASSY	1	EA		
0-1	**********	ARM SUB ASSY(quick hitch for hydraulic type)	1	EA		
1	0656000076	ARM	1	EA		
1-4	0002400045	BUSHING	4	EA		
1-5	0002400076	BUSHING	2	EA		
1-6	1432200035	SEAL, dust (35/45 T/4)	8	EA		
2	0657300064	PIPE	1	EA		
3	0657300066	PIPE	1	EA		
7	0697300122	CLAMP	4	EA		
9	1512374014	TEE	2	EA		
9	1420010180	O-RING	1	EA		
19	0657300019	PROTECTOR	1	EA		
20	1141110010	WASHER, plain	4	EA		
21	1100051025	BOLT (10TM10 X 25 P/1.5)	15	EA		
22	1140020010	WASHER, spring	18	EA		
23	0657301170	HOSE ASSY	2	EA	18017-20073	
24	0657301180	HOSE ASSY	2	EA	18017-20077	
26	0656000094	HANDRAIL	1	EA		
29	1100041055	BOLT	1	EA		

silverhorn.co.uk

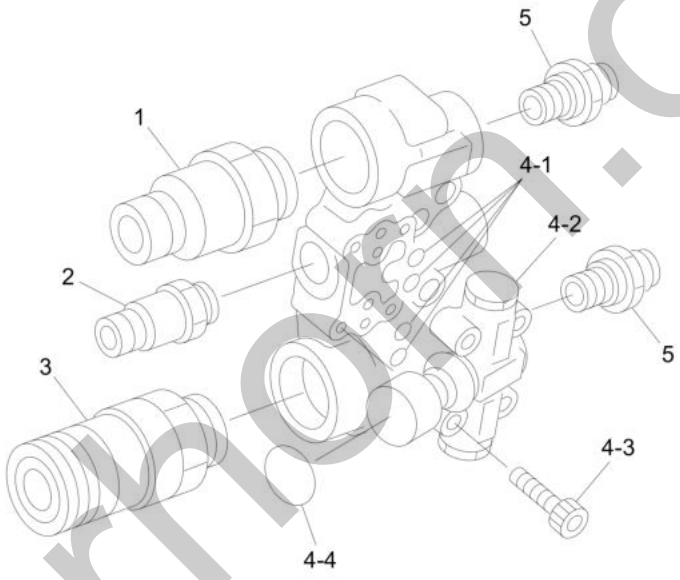

R2F030

S=1/3

silverhorn.co.uk

Item	Part No.	Name	Qty	Uom	Remarks	SERIAL NUMBER
0-1	1901759900	SATURN BLK-M13 M9 F13 TWINPORTS-1 1 1/16UN-12 37 M	1	EA		
1	K28857010	COUPLER, saturn block (MALE)(1/2 SAE EXT ON BLOCK)	1	EA		
1	1901758604	O-RING (SATURN BLK KIT) (SEE COMMENTS)	1	EA	FOR USE ON # K28857008, K28857009, K28857010 & K28857012	
2	1901758602	ADAPTOR, saturn block (MALE) (1/2" SAE)	1	EA		
2	1901758605	O-RING KIT (SATURN BLOCK) (FOR #1901758602)	1	EA		
3	K28857012	COUPLER, saturn block (FEMALE) (1/2 SAE EXT BLOCK)	1	EA		
3	1901758604	O-RING (SATURN BLK KIT) (SEE COMMENTS)	1	EA	FOR USE ON # K28857008, K28857009, K28857010 & K28857012	
4	1901758698	SPARE KIT	1	EA		
4-1	1901758606	O-RING (SATURN BLOCK) (FOR K28857008 & K28857009)	4	EA		
4-2	1901758607	VALVE, relief	1	EA		
4-3	1901758608	SCREW, cap	4	EA		
4-4	1901758609	DECAL	1	EA		
5	1901759905	ADAPTOR	2	EA		

silverhorn.co.uk

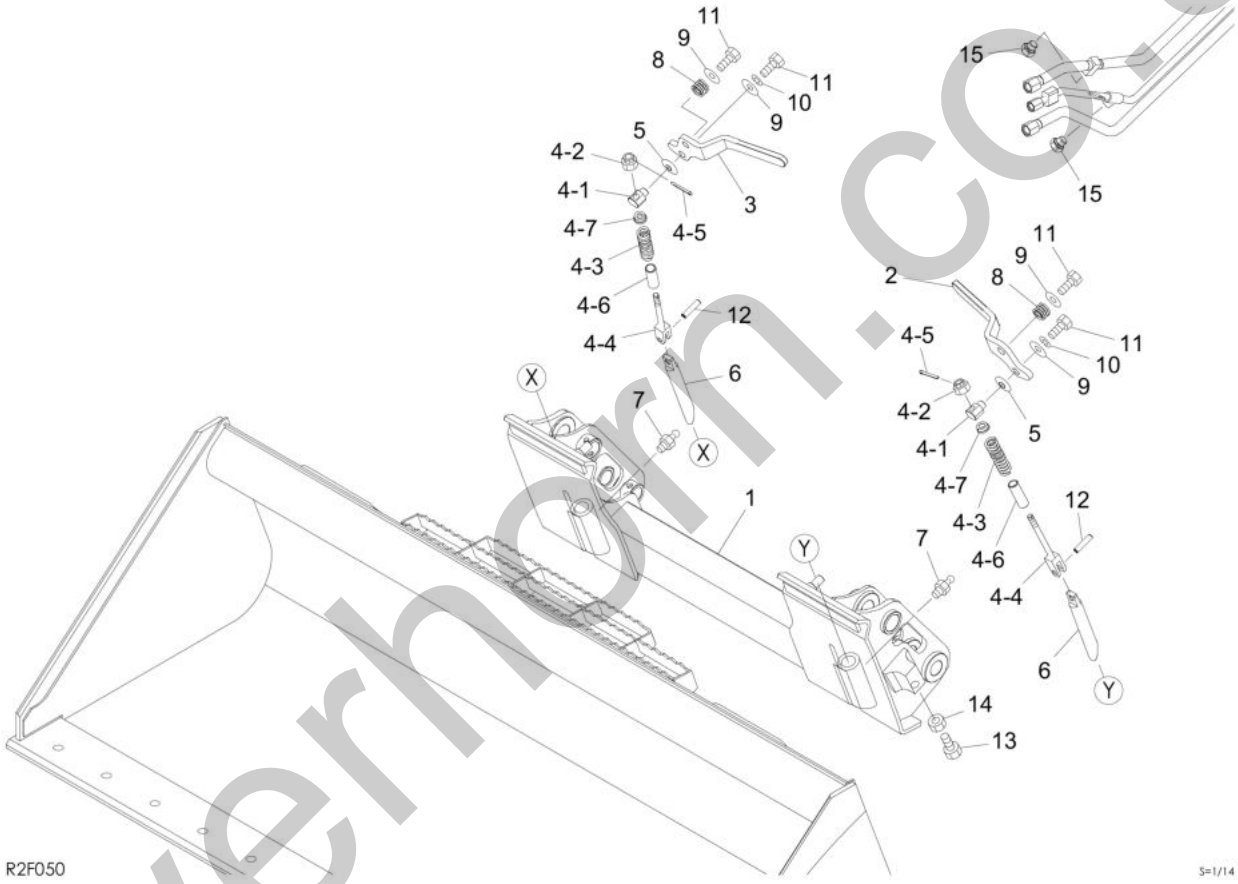

silverhorn.co.uk

Item	Part No.	Name	Qty	Uom	Remarks	SERIAL NUMBER
0	0656100027	HITCH ASSY, quick		EA		
1	0656100002	BRACKET	1	EA		
2	0656100300	LEVER (L.H.) (QUICK ATTACHMENT)	1	EA		
3	0656100200	LEVER (R.H.) (QUICK ATTACHMENT)	1	EA		
4	**********	LINK ASSY	1	EA		
4-1	0880612070	PIN	1	EA		
4-2	1132630012	NUT	1	EA		
4-3	0007000119	SPRING	1	EA		
4-4	0881612060	YOKE	1	EA		TL130 SN 21300661-; ALL TL140 SN; TL150 SN 21500556-
4-5	1210013225	PIN, split	1	EA		
4-6	0881612160	PIPE	1	EA		
4-7	0881612070	WASHER	1	EA		
5	1225120018	WASHER, conical	2	EA		
6	0881612150	PIN	2	EA		
7	1560001000	FITTING, grease	2	EA		
8	0007000016	SPRING (TL)	2	EA		
9	0003600025	WASHER	4	EA		
10	1140120010	WASHER, spring	2	EA		
11	1100041020	BOLT	4	EA		
12	1213001250	PIN, spring (M12 X 50)	2	EA		
13	0881962656	BOLT	2	EA		
14	0881604035	NUT	2	EA		
15	1501750002	PLUG (FOR O-RING USE # 1420010110)	2	EA		
15	1420010110	O-RING	1	EA		

silverhorn.co.uk

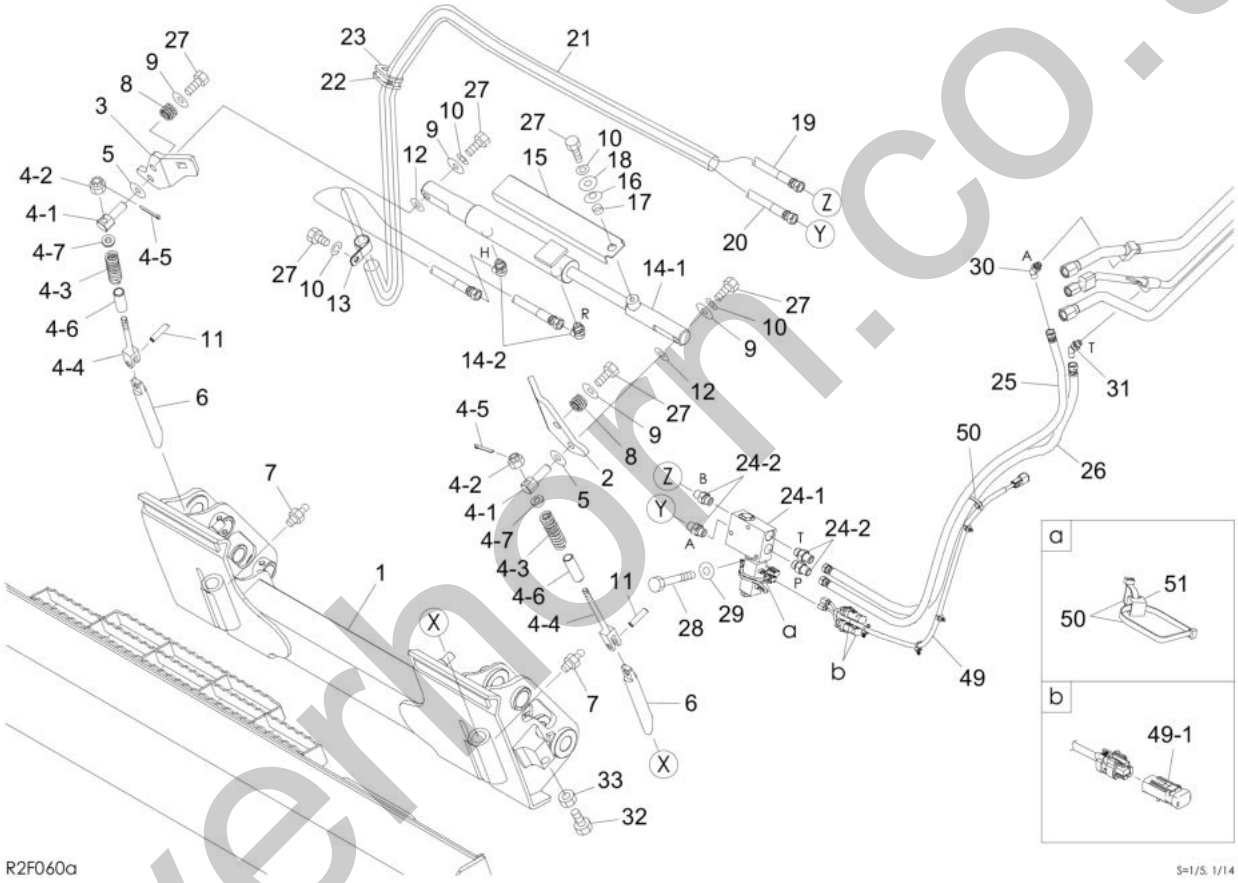

silverhorn.co.uk

Item	Part No.	Name	Qty	Uom	Remarks	SERIAL NUMBER
-	PNNA	HITCH ASSY, quick		EA		
1	0656100002	BRACKET	1	EA		
2	0666101590	PLATE (L.H.)	1	EA		
3	0666101600	PLATE (R.H.)	1	EA		
4	**********	LINK ASSY	1	EA		
4-1	0666101080	PIN	1	EA		
4-2	1132630012	NUT	1	EA		
4-3	0007000119	SPRING	1	EA		
4-4	0881612060	YOKE	1	EA		TL130 SN 21300661-; ALL TL140 SN; TL150 SN 21500556-
4-5	1210013225	PIN, split	1	EA		
4-6	0881612160	PIPE	1	EA		
4-7	0881612070	WASHER	1	EA		
5	1225120018	WASHER, conical	2	EA		
6	0881612150	PIN	2	EA		
7	1560001000	FITTING, grease	2	EA		
8	0007000016	SPRING (TL)	2	EA		
9	0003600025	WASHER	4	EA		
10	1140120010	WASHER, spring	4	EA		
11	1213001250	PIN, spring (M12 X 50)	2	EA		
12	0003600034	WASHER (20.5/30 L/3.2)	2	EA		
13	0007300001	CLAMP	1	EA		
14	**********	CYLINDER ASSY, quick hitch	1	EA		
14-1	1900120500	CYLINDER, quick hitch	1	EA		
14-2	1515012040	ELBOW	2	EA		
14-2	1420010110	O-RING	1	EA		
15	0666101230	COVER	1	EA		
16	1225121018	WASHER, conical	1	EA		
17	0003600228	COLLAR	1	EA		
18	0003610002	WASHER	1	EA		
19	0656100032	HOSE ASSY	1	EA	18019-00153	
20	0656100033	HOSE ASSY	1	EA	18019-00174	
21	1531520117	PROTECTOR (SOLD BY THE METER)	1	EA	sold by the meter	
22	1533811065	BAND	1	EA		
23	0656100031	GUARD	1	EA		
24	**********	VALVE ASSY, solenoid	1	EA		
24-1	1901764600	VALVE ASSY, solenoid	1	EA		
24-2	1515600200	ADAPTOR	4	EA		

silverhorn.co.uk

This page intentionally left blank

silverhorn.co.uk

Item	Part No.	Name	Qty	Uom	Remarks	SERIAL NUMBER
24-2	1420010110	O-RING	1	EA		
25	0656100007	HOSE ASSY	1	EA	18017-00115	
26	0656100008	HOSE ASSY	1	EA	18010-22105	
27	1100041020	BOLT	6	EA		
28	1100040855	BOLT	2	EA		
29	1141110008	WASHER	4	EA		
30	1512370012	ADAPTOR, elbow (with filter)	1	EA		
30	1420010110	O-RING	1	EA		
31	1515102110	ELBOW	1	EA		
31	1420010110	O-RING	1	EA		
32	0881962656	BOLT	2	EA		
33	0881604035	NUT	2	EA		
49	0654200053	HARNESS, wiring	1	EA		
49-1	1730500041	DIODE	2	EA		
50	1652201005	BAND	3	EA		
51	1652201011	SPACER	1	EA		

silverhorn.co.uk

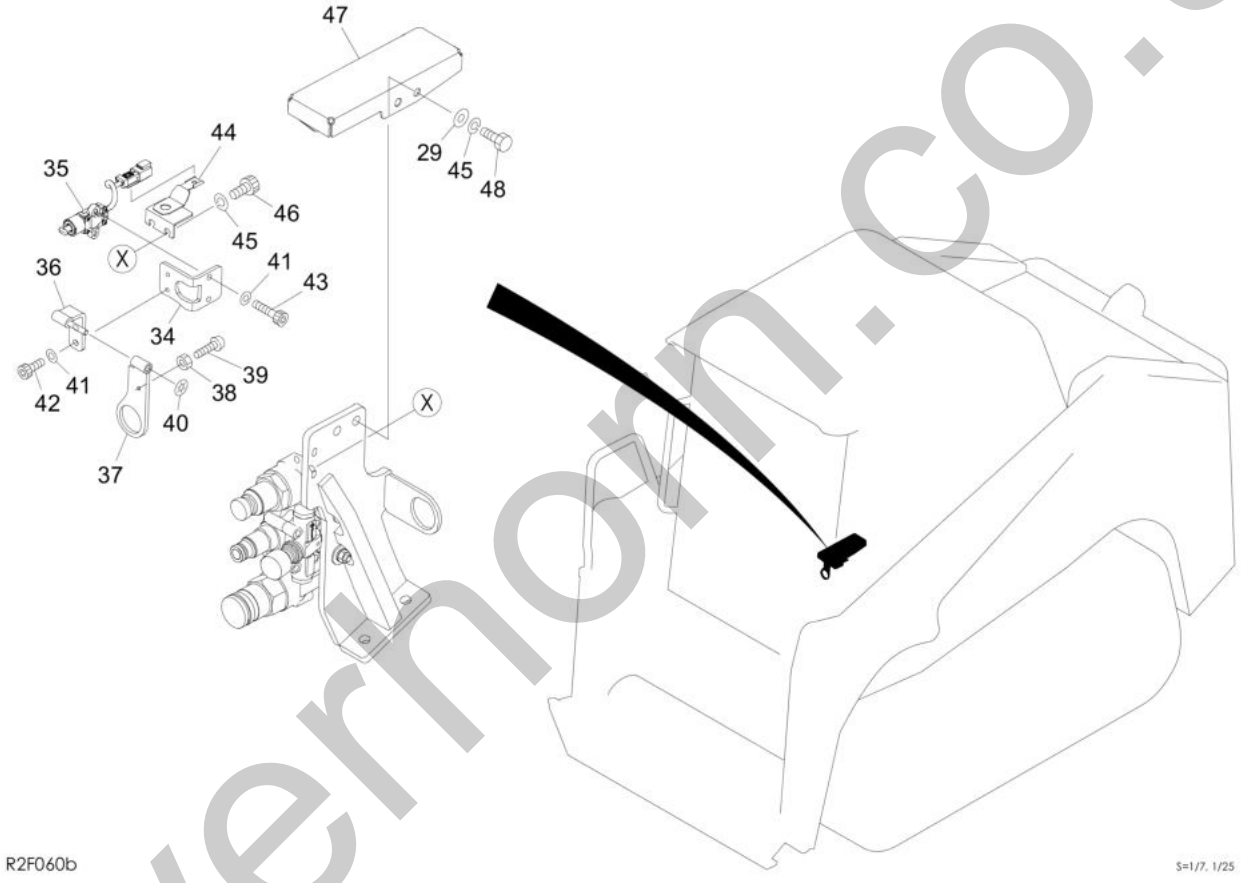

silverhorn.co.uk

Item	Part No.	Name	Qty	Uom	Remarks	SERIAL NUMBER
29	1141110008	WASHER	4	EA		
34	0656100013	PLATE	1	EA		
35	1700000043	SWITCH	1	EA		
36	0656100015	PLATE	1	EA		
37	0656100018	PLATE	1	EA		
38	1130040006	NUT	1	EA		
39	1120530620	SCREW (PHILLIPS 4TM6 X 20 P/1.0 PAN)	1	EA		
40	1224100009	NUT	1	EA		
41	1140020006	WASHER, spring	4	EA		
42	1110050612	BOLT, socket (10TM6 X 12 P/1.0)	2	EA		
43	1110040625	BOLT, socket (10TM6 X 25 P/1.0)	2	EA		
44	0656100023	BRACKET	1	EA		
45	1140020008	WASHER, spring	4	EA		
46	1110040812	SCREW, cap	2	EA		
47	0656100009	COVER	1	EA		
48	1100050825	BOLT (10TM8 X 25 P/1.25)	2	EA		

silverhorn.co.uk

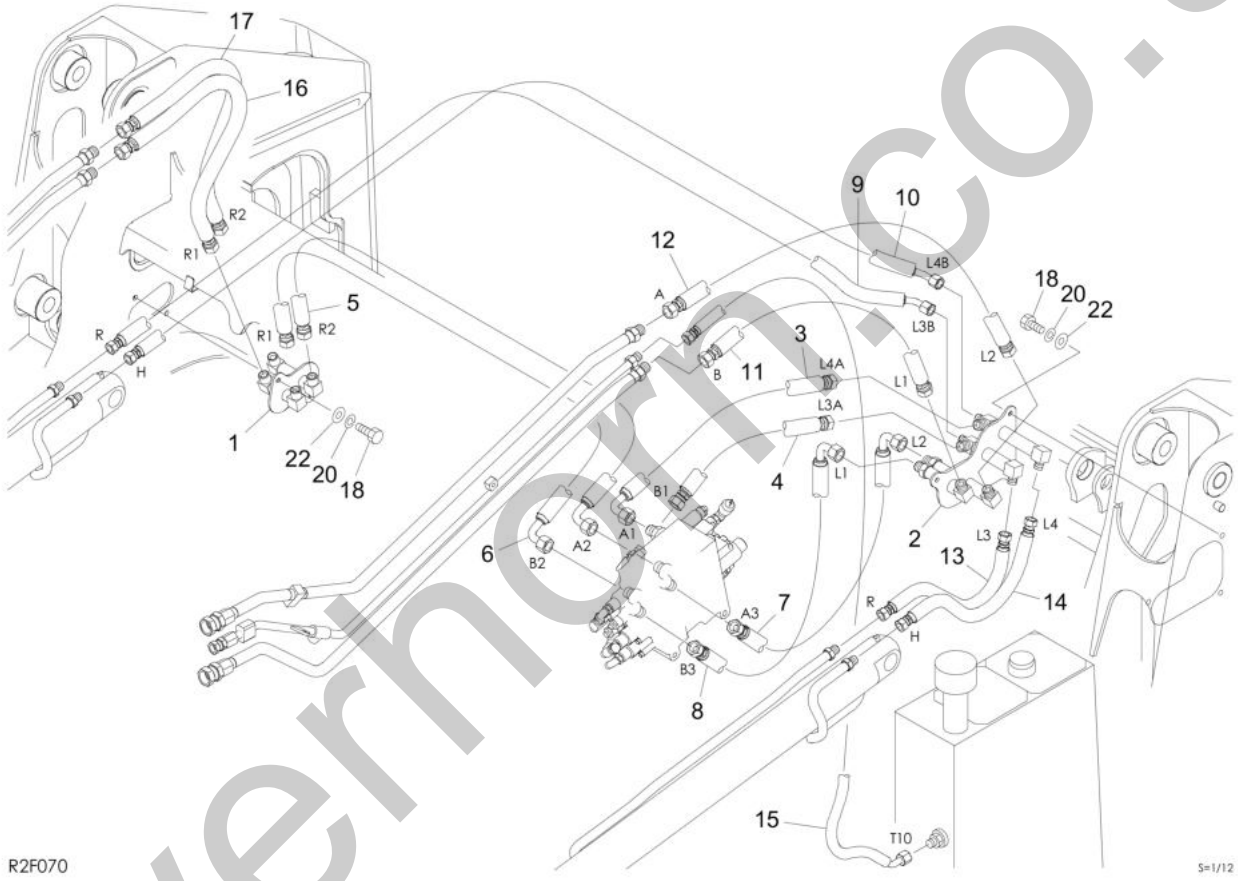

silverhorn.co.uk

Item	Part No.	Name	Qty	Uom	Remarks	SERIAL NUMBER
-	PNNA	PIPING ASSY		EA		
1	0657300062	BRACKET (R.H.)	1	EA		
2	0657300082	BRACKET (L.H.)	1	EA		
3	0657300036	HOSE ASSY	1	EA	18015-41045	
4	0657300037	HOSE ASSY	1	EA	18015-40042	
5	0657300038	HOSE ASSY	1	EA	18015-41116	
6	0657300039	HOSE ASSY	1	EA	18015-41121	
7	0657300040	HOSE ASSY	1	EA	18015-41045	
8	0657300041	HOSE ASSY	1	EA	18015-41051	
9	0657300042	HOSE ASSY	1	EA	18015-27167	
10	0657300043	HOSE ASSY	1	EA	18015-27163	
11	0657300045	HOSE ASSY	1	EA	18015-40063	
12	0657300046	HOSE ASSY	1	EA	18015-40067	
13	0657300047	HOSE ASSY	1	EA	18015-20047	
14	0657300048	HOSE ASSY	1	EA	18015-20051	
15	0657300084	HOSE ASSY	1	EA	18010-89080	
16	0657300051	HOSE ASSY	1	EA	18015-40073	
17	0657300052	HOSE ASSY	1	EA	18015-40073	
18	1100050825	BOLT (10TM8 X 25 P/1.25)	5	EA		
20	1140020008	WASHER, spring	5	EA		
22	1141110008	WASHER	5	EA		

silverhorn.co.uk

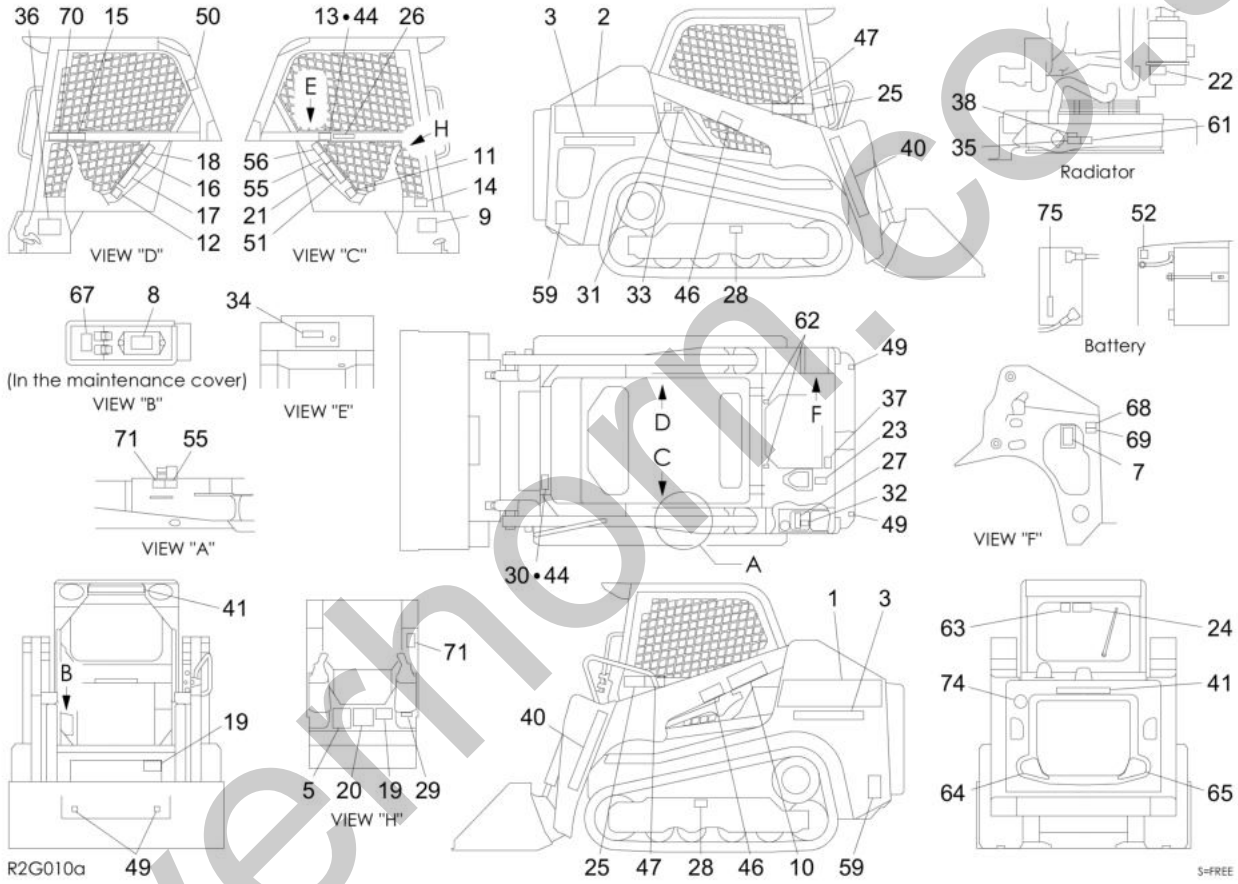

silverhorn.co.uk

Item	Part No.	Name	Qty	Uom	Remarks	SERIAL NUMBER
0	0659300032	DECAL SET	1	EA		
1	0659300039	DECAL	1	EA		
2	0659300040	DECAL	1	EA		
3	0008500050	DECAL	2	EA		
5	0659300018	DECAL	1	EA		
7	0659300038	DECAL	1	EA		
8	0659300024	DECAL	1	EA		
9	0659300025	DECAL	1	EA		
10	0669300110	DECAL (English)	1	EA		
11	0882030006	DECAL	1	EA		
12	0882030007	DECAL	1	EA		
13	**********	DECAL	1	EA		
14	0659300042	DECAL	1	EA		
15	0880031001	DECAL (English) "SAFETY BAR"	1	EA		
16	0659300012	DECAL	1	EA		
17	0880030010	DECAL (English) "DANGER"	1	EA		
18	0659300013	DECAL	1	EA		
19	0659300011	DECAL "WARNING"	3	EA		
20	0881030020	DECAL (English) "WARNING AVOID INJURY"	1	EA		
21	0880030015	DECAL (English) "CAUTION"	1	EA		
22	0339375040	DECAL (English) "CAUTION DO NOT USE EITHER"	1	EA		
23	0579303630	DECAL	1	EA		
24	0880031018	DECAL (English) "EXIT"	1	EA		
25	0880031005	DECAL (English) "WARNING"	2	EA		
26	0881030026	DECAL "WARNING OPERATOR MUST HAVE TRAINING" (ENG)	1	EA		
27	0880031017	DECAL (English) (OIL)	1	EA		
28	0579300052	DECAL	2	EA		
29	**********	DECAL	1	EA		
30	**********	DECAL	1	EA		
31	0359306600	DECAL (English) "DIESEL FUEL ONLY"	1	EA		
32	0359306700	DECAL (HYDRAULIC OIL-SAE SYMBOL)	1	EA		
33	0669300034	DECAL (English, for U.S.)	1	EA		
34	0880031016	DECAL (English)	1	EA		
35	0882031135	DECAL (English) "RADIATOR HOT"	1	EA		
36	0359313700	DECAL (English) "WARNING"	1	EA		

silverhorn.co.uk

This page intentionally left blank

silverhorn.co.uk

Item	Part No.	Name	Qty	Uom	Remarks	SERIAL NUMBER
37	0379366006	DECAL(English)"CAUTION STOP ENGINE BEFORE OPENING"	1	EA		
38	0359313900	DECAL (U.S. TAKEUCHI) (ANTIFREEZE)	1	EA		
40	0689300043	DECAL	2	EA		
41	0699300074	DECAL "TAKEUCHI LOGOTYPE"	2	EA		
44	**********	SCREW	8	EA		
46	0882031046	DECAL	2	EA		
47	0881030046	DECAL (English) "WARNING"	2	EA		
49	0881031549	DECAL (TIE DOWN POINT)	4	EA		
50	0399300400	DECAL	1	EA		
51	0881031551	DECAL (English)	1	EA		
52	0664401130	DECAL	1	EA		
55	0881031556	DECAL	2	EA		
56	0689300035	DECAL	1	EA		
59	0882031159	DECAL	2	EA		
61	0339376240	DECAL (English) "IMPORTANT DO NOT DAMAGE RADIATOR"	1	EA		
62	0399300500	DECAL (LIFT POINT)	2	EA		
63	0871086051	DECAL	1	EA		
64	0659300014	DECAL	1	EA		
65	0659300015	DECAL	1	EA		
67	0659300029	DECAL	1	EA		
68	**********	DECAL	1	EA		
69	**********	DECAL	1	EA		
70	0569300090	DECAL (English)	1	EA		
71	0669300024	DECAL	2	EA		
74	0359300052	DECAL (TFM DECAL)	1	EA		
75	0699300132	DECAL	1	EA		

silverhorn.co.uk

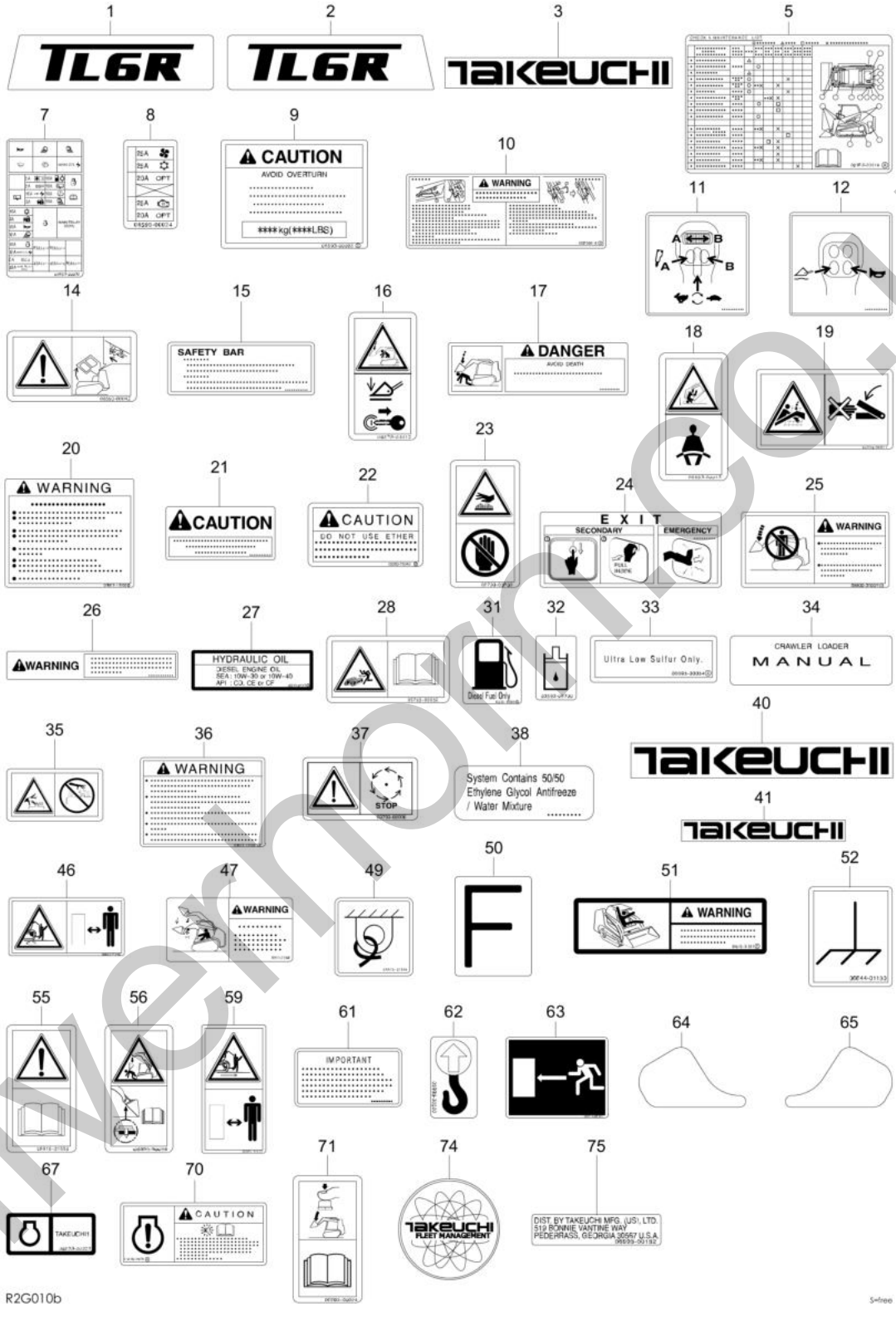

silvermorn.co.uk

Item	Part No.	Name	Qty	Uom	Remarks	SERIAL NUMBER
0	0659300032	DECAL SET	1	EA		
1	0659300039	DECAL	1	EA		
2	0659300040	DECAL	1	EA		
3	0008500050	DECAL	2	EA		
5	0659300018	DECAL	1	EA		
7	0659300038	DECAL	1	EA		
8	0659300024	DECAL	1	EA		
9	0659300025	DECAL	1	EA		
10	0669300110	DECAL (English)	1	EA		
11	0882030006	DECAL	1	EA		
12	0882030007	DECAL	1	EA		
14	0659300042	DECAL	1	EA		
15	0880031001	DECAL (English) "SAFETY BAR"	1	EA		
16	0659300012	DECAL	1	EA		
17	0880030010	DECAL (English) "DANGER"	1	EA		
18	0659300013	DECAL	1	EA		
19	0659300011	DECAL "WARNING"	3	EA		
20	0881030020	DECAL (English) "WARNING AVOID INJURY"	1	EA		
21	0880030015	DECAL (English) "CAUTION"	1	EA		
22	0339375040	DECAL (English) "CAUTION DO NOT USE EITHER"	1	EA		
23	0579303630	DECAL	1	EA		
24	0880031018	DECAL (English) "EXIT"	1	EA		
25	0880031005	DECAL (English) "WARNING"	2	EA		
26	0881030026	DECAL "WARNING OPERATOR MUST HAVE TRAINING" (ENG)	1	EA		
27	0880031017	DECAL (English) (OIL)	1	EA		
28	0579300052	DECAL	2	EA		
31	0359306600	DECAL (English) "DIESEL FUEL ONLY"	1	EA		
32	0359306700	DECAL (HYDRAULIC OIL-SAE SYMBOL)	1	EA		
33	0669300034	DECAL (English, for U.S.)	1	EA		
34	0880031016	DECAL (English)	1	EA		
35	0882031135	DECAL (English) "RADIATOR HOT"	1	EA		
36	0359313700	DECAL (English) "WARNING"	1	EA		
37	0379366006	DECAL(English)"CAUTION STOP ENGINE BEFORE OPENING"	1	EA		
38	0359313900	DECAL (U.S. TAKEUCHI) (ANTIFREEZE)	1	EA		

silverhorn.co.uk

This page intentionally left blank

silverhorn.co.uk

Item	Part No.	Name	Qty	Uom	Remarks	SERIAL NUMBER
40	0689300043	DECAL	2	EA		
41	0699300074	DECAL "TAKEUCHI LOGOTYPE"	2	EA		
46	0882031046	DECAL	2	EA		
47	0881030046	DECAL (English) "WARNING"	2	EA		
49	0881031549	DECAL (TIE DOWN POINT)	4	EA		
50	0399300400	DECAL	1	EA		
51	0881031551	DECAL (English)	1	EA		
52	0664401130	DECAL	1	EA		
55	0881031556	DECAL	2	EA		
56	0689300035	DECAL	1	EA		
59	0882031159	DECAL	2	EA		
61	0339376240	DECAL (English) "IMPORTANT DO NOT DAMAGE RADIATOR"	1	EA		
62	0399300500	DECAL (LIFT POINT)	2	EA		
63	0871086051	DECAL	1	EA		
64	0659300014	DECAL	1	EA		
65	0659300015	DECAL	1	EA		
67	0659300029	DECAL	1	EA		
70	0569300090	DECAL (English)	1	EA		
71	0669300024	DECAL	2	EA		
74	0359300052	DECAL (TFM DECAL)	1	EA		
75	0699300132	DECAL	1	EA		

silverhorn.co.uk

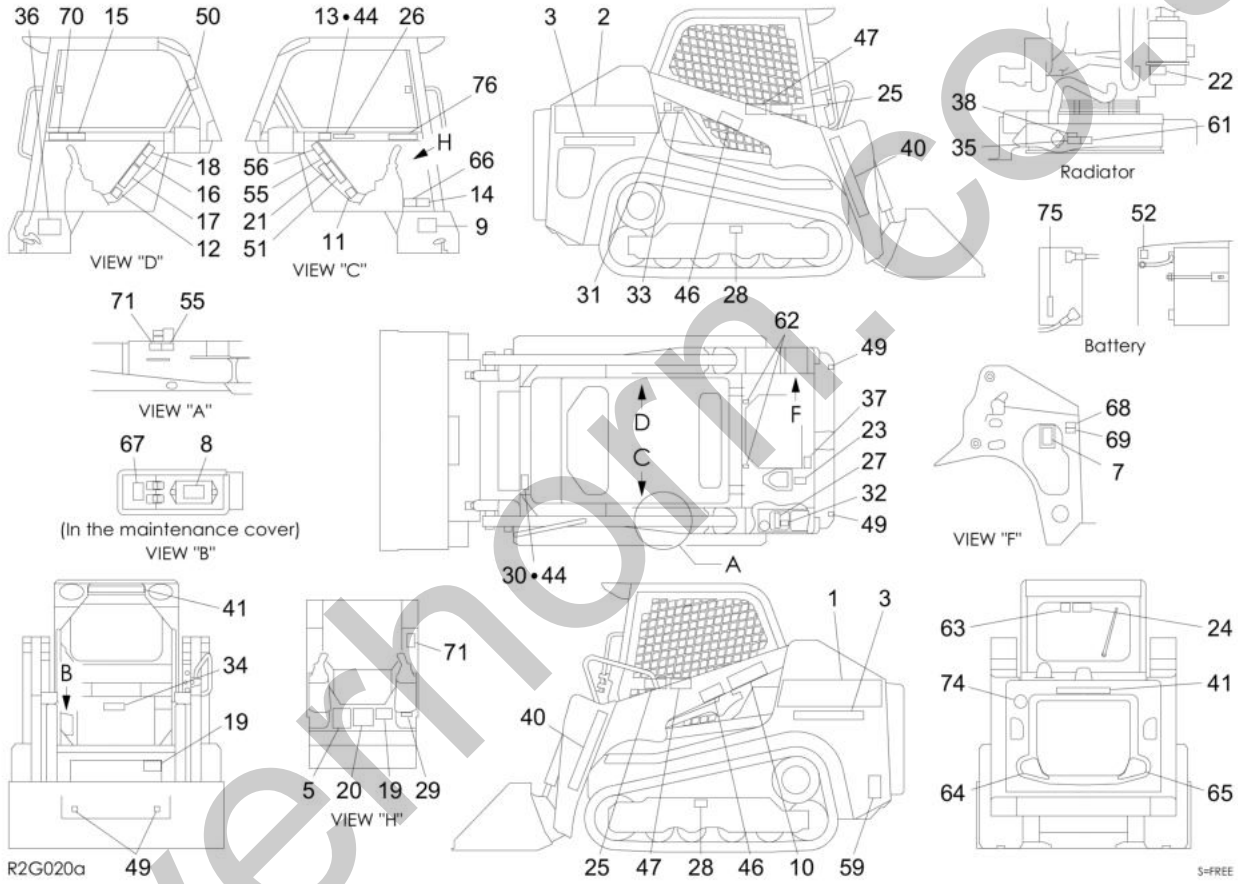

silverhorn.co.uk

Item	Part No.	Name	Qty	Uom	Remarks	SERIAL NUMBER
0	0659300031	DECAL SET	1	EA		
1	0659300039	DECAL	1	EA		
2	0659300040	DECAL	1	EA		
3	0008500050	DECAL	2	EA		
5	0659300018	DECAL	1	EA		
7	0659300038	DECAL	1	EA		
8	0659300024	DECAL	1	EA		
9	0659300025	DECAL	1	EA		
10	0669300110	DECAL (English)	1	EA		
11	0882030006	DECAL	1	EA		
12	0882030007	DECAL	1	EA		
13	**********	DECAL	1	EA		
14	0659300042	DECAL	1	EA		
15	0880031001	DECAL (English) "SAFETY BAR"	1	EA		
16	0659300012	DECAL	1	EA		
17	0880030010	DECAL (English) "DANGER"	1	EA		
18	0659300013	DECAL	1	EA		
19	0659300011	DECAL "WARNING"	3	EA		
20	0881030020	DECAL (English) "WARNING AVOID INJURY"	1	EA		
21	0880030015	DECAL (English) "CAUTION"	1	EA		
22	0339375040	DECAL (English) "CAUTION DO NOT USE EITHER"	1	EA		
23	0579303630	DECAL	1	EA		
24	0880031018	DECAL (English) "EXIT"	1	EA		
25	0880031005	DECAL (English) "WARNING"	2	EA		
26	0881030026	DECAL "WARNING OPERATOR MUST HAVE TRAINING" (ENG)	1	EA		
27	0880031017	DECAL (English) (OIL)	1	EA		
28	0579300052	DECAL	2	EA		
29	**********	DECAL	1	EA		
30	**********	DECAL	1	EA		
31	0359306600	DECAL (English) "DIESEL FUEL ONLY"	1	EA		
32	0359306700	DECAL (HYDRAULIC OIL-SAE SYMBOL)	1	EA		
33	0669300034	DECAL (English, for U.S.)	1	EA		
34	0880031016	DECAL (English)	1	EA		
35	0882031135	DECAL (English) "RADIATOR HOT"	1	EA		
36	0359313700	DECAL (English) "WARNING"	1	EA		

silverhorn.co.uk

This page intentionally left blank

silverhorn.co.uk

Item	Part No.	Name	Qty	Uom	Remarks	SERIAL NUMBER
37	0379366006	DECAL(English)"CAUTION STOP ENGINE BEFORE OPENING"	1	EA		
38	0359313900	DECAL (U.S. TAKEUCHI) (ANTIFREEZE)	1	EA		
40	0689300043	DECAL	2	EA		
41	0699300074	DECAL "TAKEUCHI LOGOTYPE"	2	EA		
44	**********	SCREW	8	EA		
46	0882031046	DECAL	2	EA		
47	0881030046	DECAL (English) "WARNING"	2	EA		
49	0881031549	DECAL (TIE DOWN POINT)	4	EA		
50	0399300400	DECAL	1	EA		
51	0881031551	DECAL (English)	1	EA		
52	0664401130	DECAL	1	EA		
55	0881031556	DECAL	2	EA		
56	0689300035	DECAL	1	EA		
59	0882031159	DECAL	2	EA		
61	0339376240	DECAL (English) "IMPORTANT DO NOT DAMAGE RADIATOR"	1	EA		
62	0399300500	DECAL (LIFT POINT)	2	EA		
63	0871086051	DECAL	1	EA		
64	0659300014	DECAL	1	EA		
65	0659300015	DECAL	1	EA		
66	0659300044	DECAL	1	EA		
67	0659300029	DECAL	1	EA		
68	**********	DECAL	1	EA		
69	**********	DECAL	1	EA		
70	0569300090	DECAL (English)	1	EA		
71	0669300024	DECAL	2	EA		
74	0359300052	DECAL (TFM DECAL)	1	EA		
75	0699300132	DECAL	1	EA		
76	0659300043	DECAL	1	EA		

silverhorn.co.uk

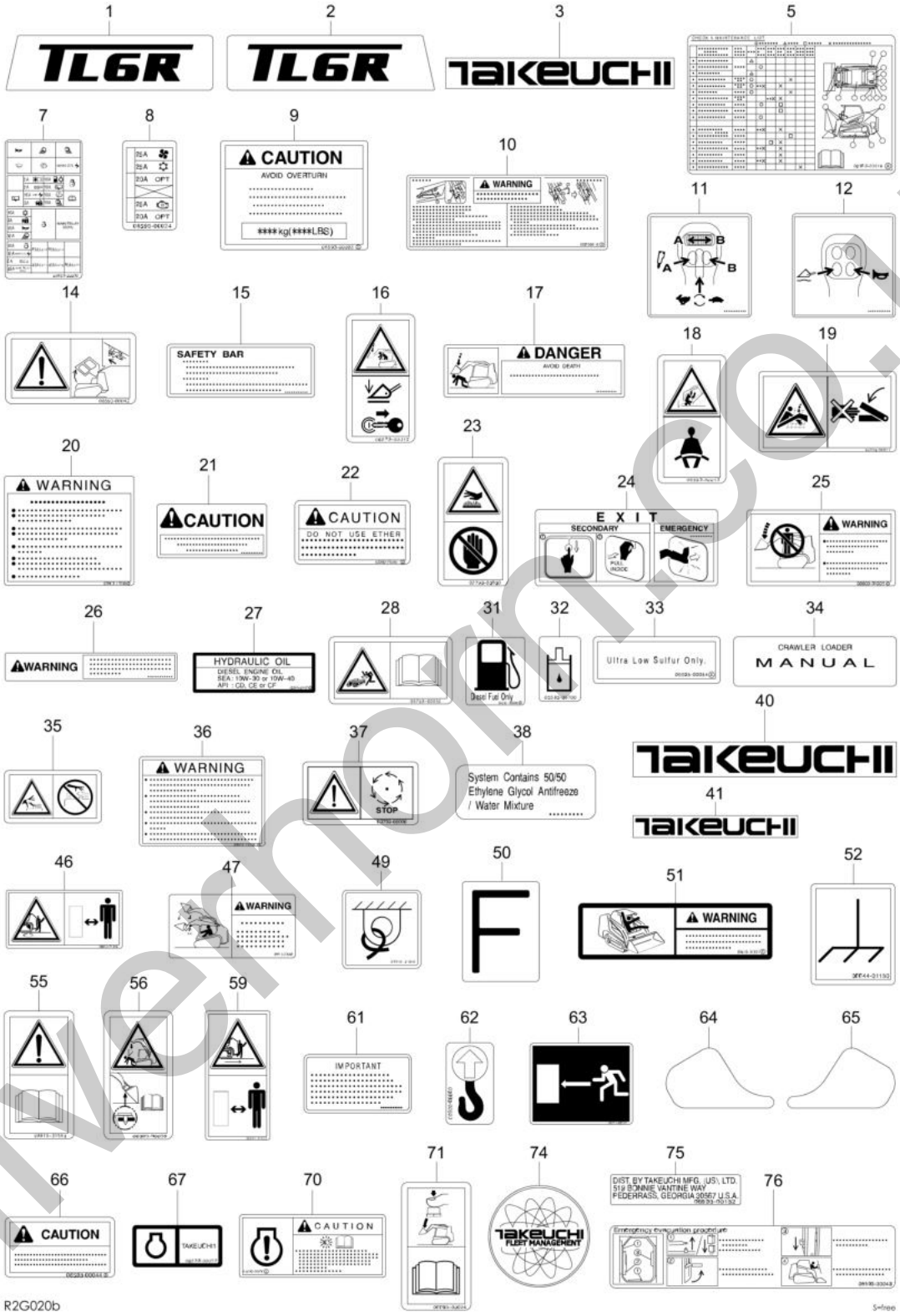

silvermorn.co.uk

Item	Part No.	Name	Qty	Uom	Remarks	SERIAL NUMBER
0	0659300031	DECAL SET	1	EA		
1	0659300039	DECAL	1	EA		
2	0659300040	DECAL	1	EA		
3	0008500050	DECAL	2	EA		
5	0659300018	DECAL	1	EA		
7	0659300038	DECAL	1	EA		
8	0659300024	DECAL	1	EA		
9	0659300025	DECAL	1	EA		
10	0669300110	DECAL (English)	1	EA		
11	0882030006	DECAL	1	EA		
12	0882030007	DECAL	1	EA		
14	0659300042	DECAL	1	EA		
15	0880031001	DECAL (English) "SAFETY BAR"	1	EA		
16	0659300012	DECAL	1	EA		
17	0880030010	DECAL (English) "DANGER"	1	EA		
18	0659300013	DECAL	1	EA		
19	0659300011	DECAL "WARNING"	3	EA		
20	0881030020	DECAL (English) "WARNING AVOID INJURY"	1	EA		
21	0880030015	DECAL (English) "CAUTION"	1	EA		
22	0339375040	DECAL (English) "CAUTION DO NOT USE EITHER"	1	EA		
23	0579303630	DECAL	1	EA		
24	0880031018	DECAL (English) "EXIT"	1	EA		
25	0880031005	DECAL (English) "WARNING"	2	EA		
26	0881030026	DECAL "WARNING OPERATOR MUST HAVE TRAINING" (ENG)	1	EA		
27	0880031017	DECAL (English) (OIL)	1	EA		
28	0579300052	DECAL	2	EA		
31	0359306600	DECAL (English) "DIESEL FUEL ONLY"	1	EA		
32	0359306700	DECAL (HYDRAULIC OIL-SAE SYMBOL)	1	EA		
33	0669300034	DECAL (English, for U.S.)	1	EA		
34	0880031016	DECAL (English)	1	EA		
35	0882031135	DECAL (English) "RADIATOR HOT"	1	EA		
36	0359313700	DECAL (English) "WARNING"	1	EA		
37	0379366006	DECAL(English)"CAUTION STOP ENGINE BEFORE OPENING"	1	EA		
38	0359313900	DECAL (U.S. TAKEUCHI) (ANTIFREEZE)	1	EA		

silverhorn.co.uk

This page intentionally left blank

silverhorn.co.uk

Item	Part No.	Name	Qty	Uom	Remarks	SERIAL NUMBER
40	0689300043	DECAL	2	EA		
41	0699300074	DECAL "TAKEUCHI LOGOTYPE"	2	EA		
46	0882031046	DECAL	2	EA		
47	0881030046	DECAL (English) "WARNING"	2	EA		
49	0881031549	DECAL (TIE DOWN POINT)	4	EA		
50	0399300400	DECAL	1	EA		
51	0881031551	DECAL (English)	1	EA		
52	0664401130	DECAL	1	EA		
55	0881031556	DECAL	2	EA		
56	0689300035	DECAL	1	EA		
59	0882031159	DECAL	2	EA		
61	0339376240	DECAL (English) "IMPORTANT DO NOT DAMAGE RADIATOR"	1	EA		
62	0399300500	DECAL (LIFT POINT)	2	EA		
63	0871086051	DECAL	1	EA		
64	0659300014	DECAL	1	EA		
65	0659300015	DECAL	1	EA		
66	0659300044	DECAL	1	EA		
67	0659300029	DECAL	1	EA		
70	0569300090	DECAL (English)	1	EA		
71	0669300024	DECAL	2	EA		
74	0359300052	DECAL (TFM DECAL)	1	EA		
75	0699300132	DECAL	1	EA		
76	0659300043	DECAL	1	EA		

silvermorn.co.uk

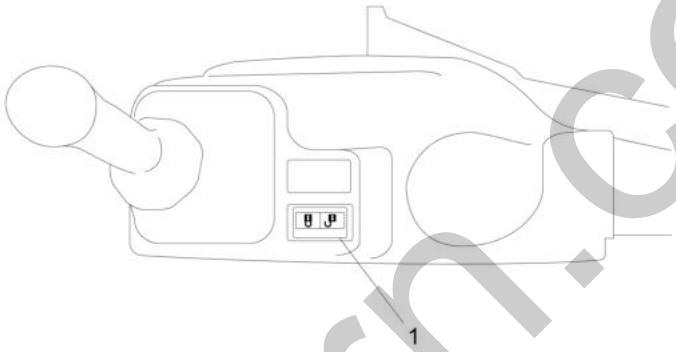

CONTROL BOX (L.H.)

R2G030

S=FREE

silverhorn.co.uk

Item	Part No.	Name	Qty	Uom	Remarks	SERIAL NUMBER
-	PNNA	DECAL SET		EA		
1	0664300130	DECAL	1	EA		

silverhorn.co.uk

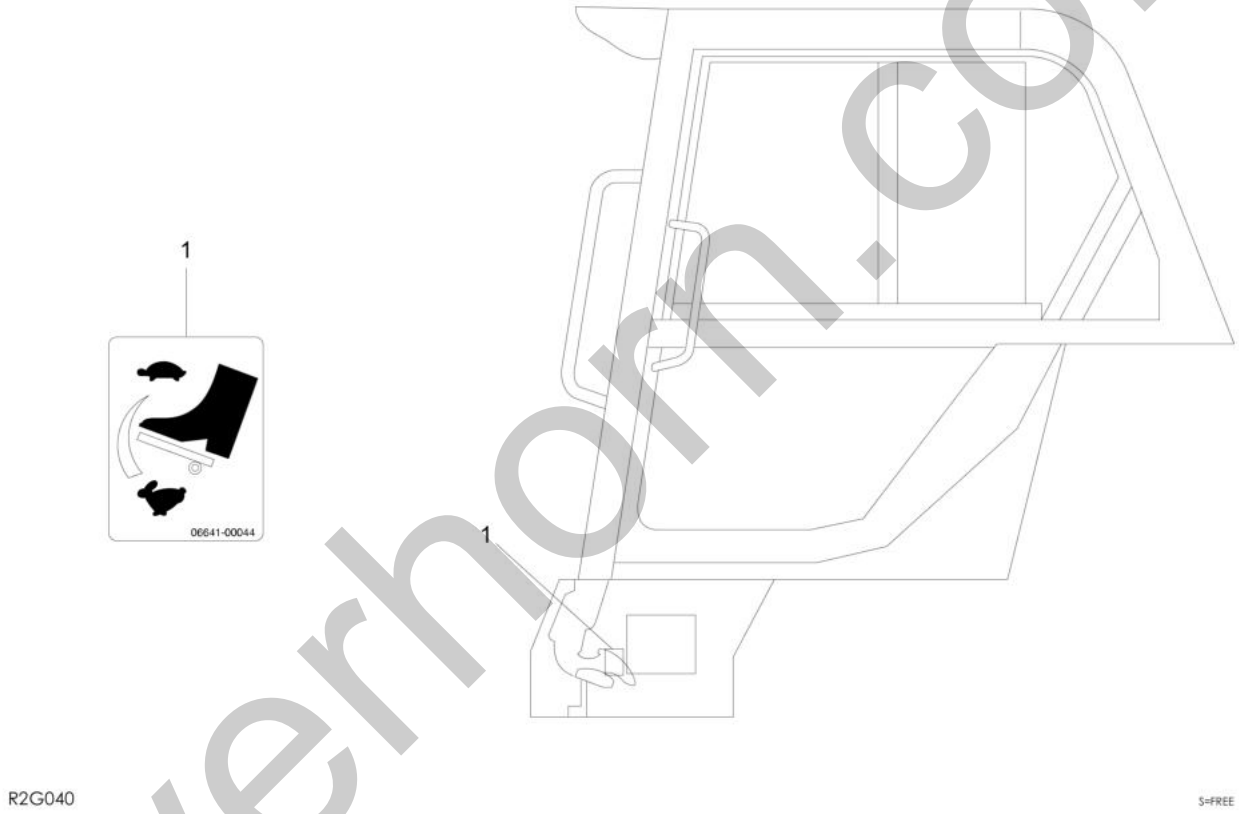

silverhorn.co.uk

Item	Part No.	Name	Qty	Uom	Remarks	SERIAL NUMBER
-	PNNA	DECAL SET		EA		
1	0664100044	DECAL	1	EA		

silverhorn.co.uk

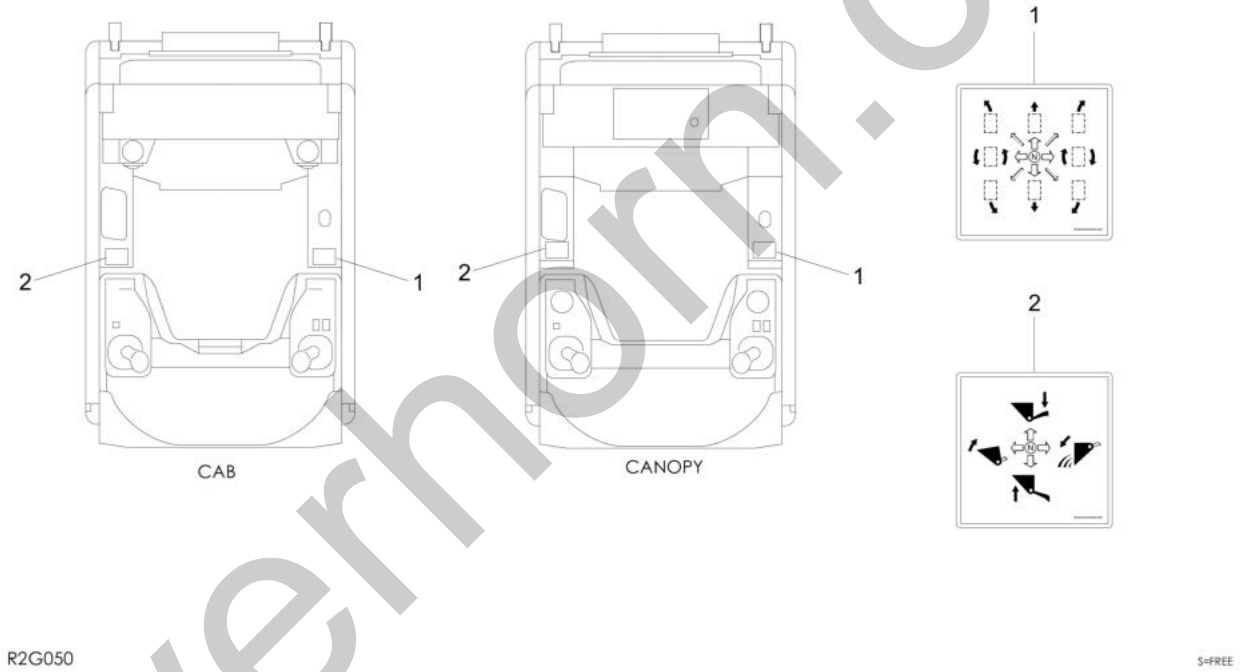

silverhorn.co.uk

Item	Part No.	Name	Qty	Uom	Remarks	SERIAL NUMBER
-	PNNA	DECAL SET		EA		
1	0669300006	DECAL	1	EA		
2	0669300007	DECAL	1	EA		

silverhorn.co.uk

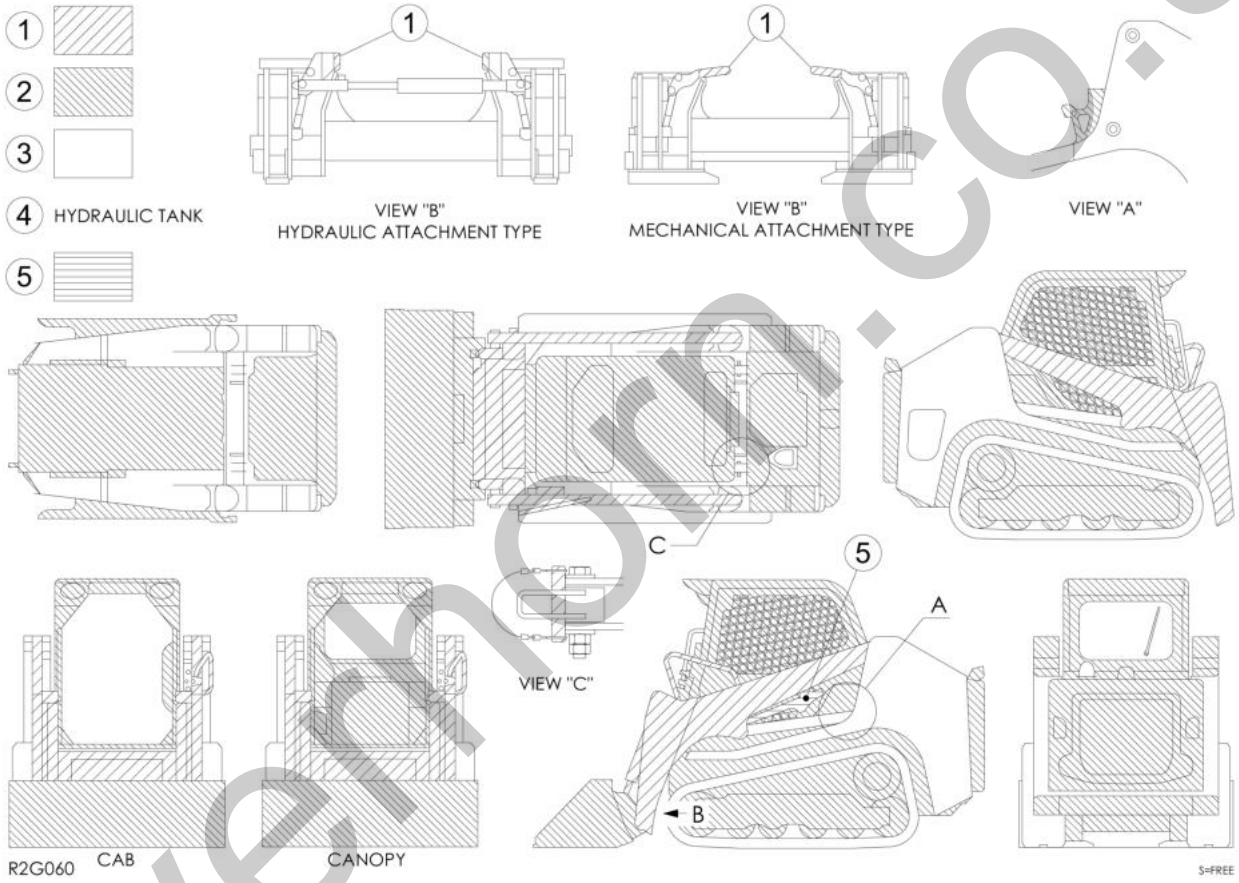

silverhorn.co.uk

Item	Part No.	Name	Qty	Uom	Remarks	SERIAL NUMBER
-	PNNA	PAINTED COLOR (canopy)		EA		
-	PNNA	PAINTED COLOR (cab)		EA		
1	1919060105	PAINT (QUART) (RED)	1	EA	**MUST SHIP GROUND ONLY**	
1	1919060104	PAINT (AEROSOL) (RED)	1	EA	spray, **MUST SHIP GROUND ONLY**	
2	1919060240	PAINT (GALLON) (MED. GRAY) (070)	1	EA	**MUST SHIP GROUND ONLY**	
2	1919060140	PAINT (AEROSOL) (MED.GRAY) (070)	1	EA	spray, **MUST SHIP GROUND ONLY**	
3	1919060141	PAINT (AEROSOL) (LT. GRAY)	1	EA	**MUST SHIP GROUND ONLY**	
4	1919060103	PAINT (GALLON) (BLACK)	1	EA	**MUST SHIP GROUND ONLY**	
4	1919069103	PAINT (AEROSOL) (BLACK) - NO LONGER AVAILABLE	1	EA	spray	
5	1919060231	PAINT (TURMERIC YELLOW) - NO LONGER AVAILABLE	1	EA	FITTING, grease	

silverhorn.co.uk

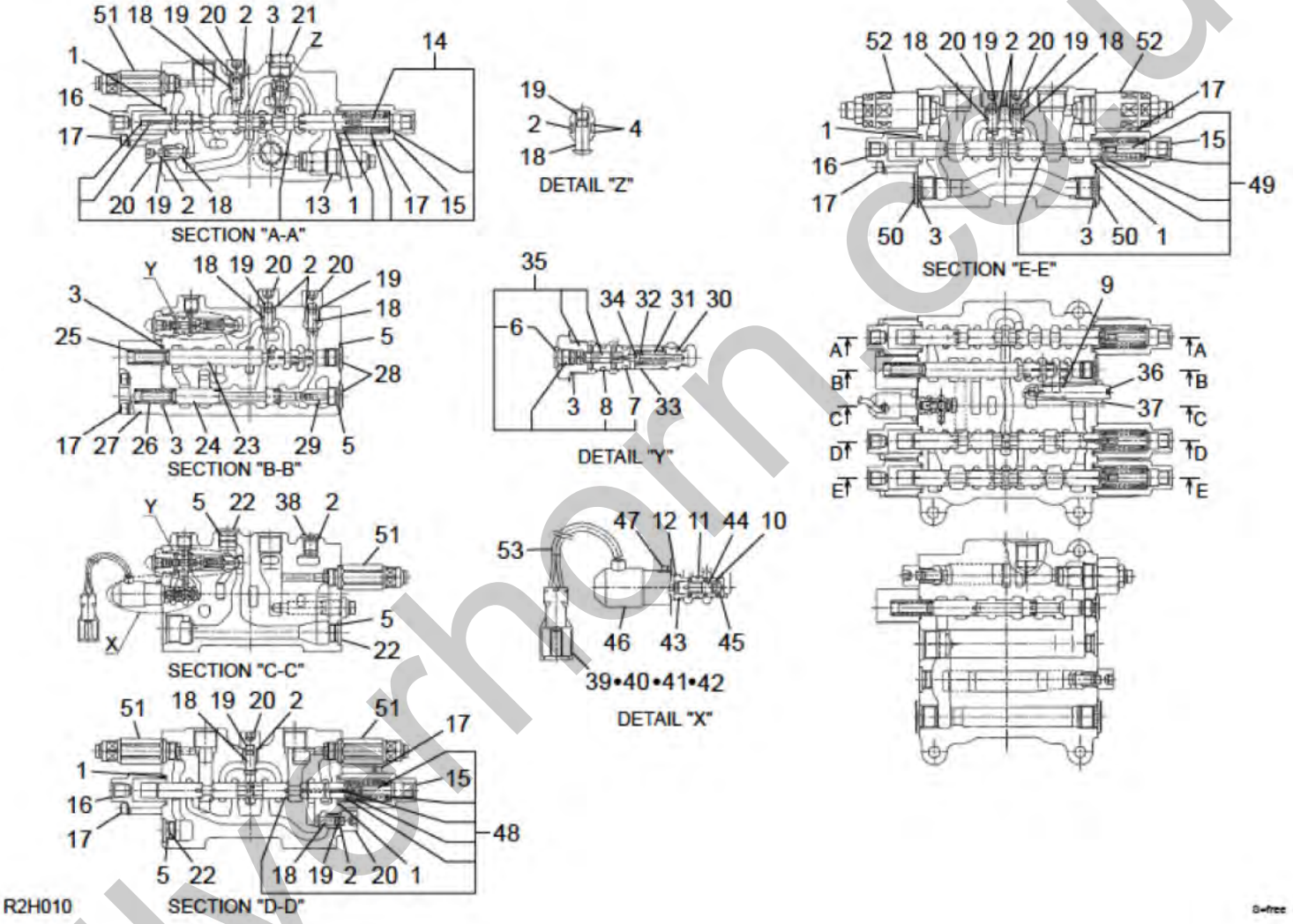

silverhorn.co.uk

Item	Part No.	Name	Qty	Uom	Remarks	SERIAL NUMBER
0	1901058400	VALVE, control	1	EA		
0-1	1901045299	KIT, seal (CONTROL VALVE)	1	EA	(DOESNT INCLUDE WEAR RINGS)	
1	1420300119	O-RING	6	EA		
2	1420010110	O-RING	10	EA		
3	1420010180	O-RING	7	EA		
4	1421020110	RING, back-up	2	EA		
5	1420010140	O-RING	5	EA		
6	1420010080	O-RING	2	EA		
7	1420010101	O-RING (P-10A 90B)	2	EA		
8	1420010120	O-RING	2	EA		
9	1420010090	O-RING (P-9 90B)	1	EA		
10	1420500100	O-RING (S-26)	1	EA		
11	1420500112	O-RING	1	EA		
12	1420500140	O-RING	1	EA		
13	1901058421	VALVE, relief	1	EA		
14	1901058498	SPOOL ASSY	1	EA		
15	1901045205	COVER	3	EA		
16	1901045206	COVER	3	EA		
17	1110540645	BOLT, sems	16	EA		
18	1901039426	PLUNGER	9	EA		
19	1901039456	SPRING	9	EA		
20	1901045210	PLUG	8	EA		
21	1901045212	PLUG	1	EA		
22	1901030672	PLUG	3	EA		
23	1901058471	SPOOL	1	EA		
24	1901045218	SPOOL	1	EA		
25	1901045219	SPRING	1	EA		
26	1901045220	SPRING	1	EA		
27	1901045221	HOLDER	1	EA		
28	1901045222	PLUG	2	EA		
29	1901045223	PISTON	1	EA		
30	1901049326	VALVE, check	2	EA		
31	1901045225	SPRING	2	EA		
32	1901045226	HOLDER	2	EA		
33	1221000009	RING, retaining	2	EA		
34	1901045228	VALVE	2	EA		
35	1901045295	GUIDE, piston	2	EA		
36	1901045235	SLEEVE	1	EA		

silverhorn.co.uk

This page intentionally left blank

silverhorn.co.uk

Item	Part No.	Name	Qty	Uom	Remarks	SERIAL NUMBER
37	1901045237	NUT	1	EA		
38	1901024795	PLUG	1	EA		
39	1901045239	ADAPTOR	1	EA		
40	1901045240	TERMINAL	2	EA		
41	1901045241	SEAL	2	EA		
42	1901045242	HOLDER	1	EA		
43	1901045243	SOCKET	1	EA		
44	1901045244	SPOOL	1	EA		
45	1901045245	SPRING	1	EA		
46	1901045249	SOLENOID	1	EA		
47	1110040408	BOLT	2	EA		
48	1901050197	SPOOL ASSY	1	EA		
49	1901045296	SPOOL ASSY	1	EA		
50	1901045253	PLUG	2	EA		
51	1901045254	VALVE, relief	4	EA		
52	1901058422	VALVE, relief	2	EA		
53	1901045256	TUBE	1	EA		

silverhorn.co.uk

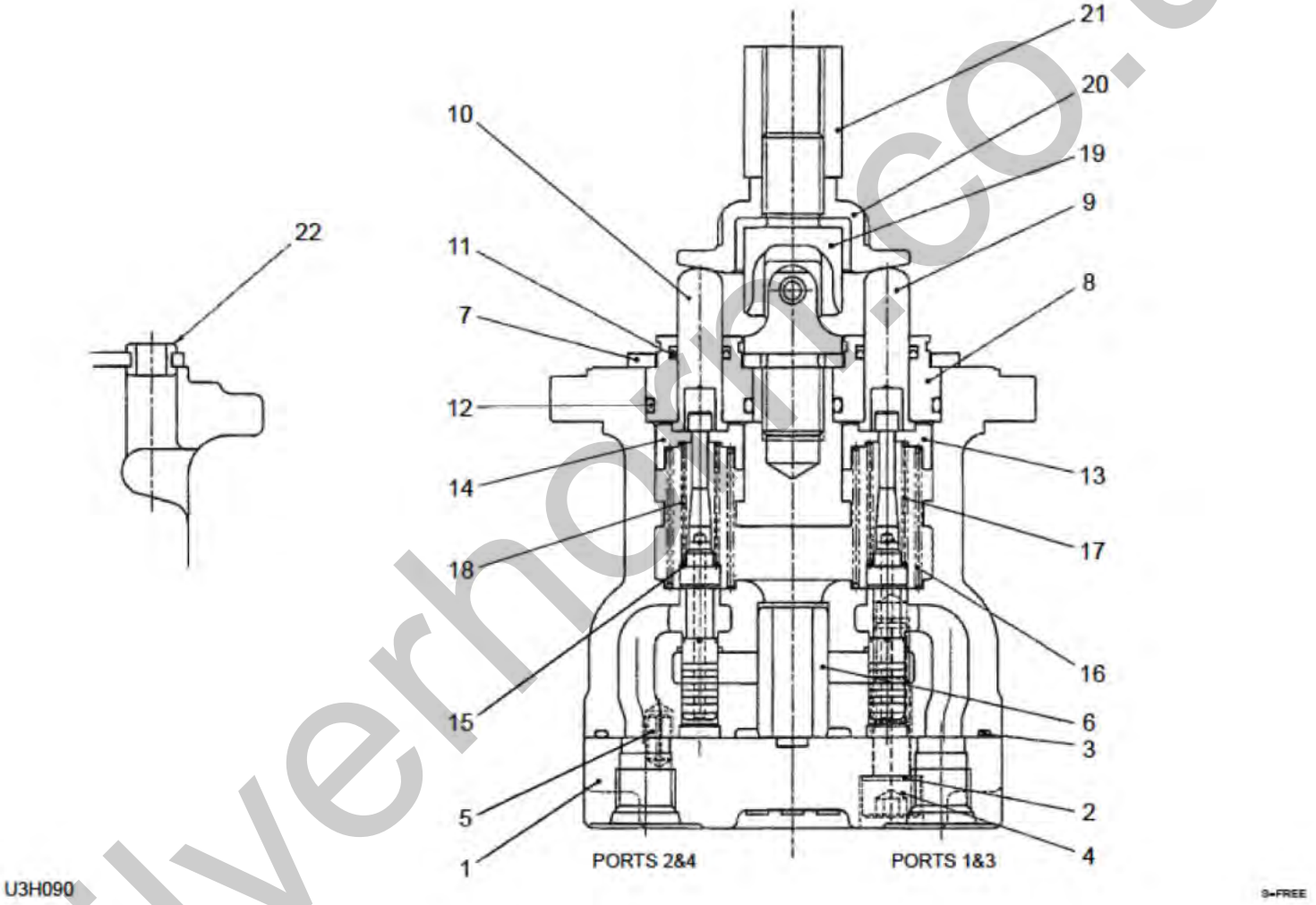

silverhorn.co.uk

Item	Part No.	Name	Qty	Uom	Remarks	SERIAL NUMBER
0	1901754000	VALVE ASSY, pilot (R.H.)	1	EA	RIGHT	
1	1901749511	PLATE	1	EA		
2	1901715103	WASHER	2	EA		
3	1420510850	O-RING	1	EA		
4	1110020835	SCREW, cap	2	EA		
5	1213000510	PIN, spring	1	EA		
6	1901743606	BUSHING	1	EA		
7	1901749551	PLATE	1	EA		
8	1901710912	PLUG	4	EA		
9	1901719011	ROD	2	EA		
10	1901719012	ROD	2	EA		
11	1901710914	SEAL	4	EA		
12	1420010200	O-RING	4	EA		
13	1901743614	HOLDER	2	EA		
14	1901743615	HOLDER	2	EA		
15	1901710917	WASHER	4	EA		
16	1901749521	SPRING	4	EA		
17	1901749541	SPRING	2	EA		
18	1901749542	SPRING	2	EA		
19	1901720232	JOINT	1	EA		
20	1901743620	PLATE	1	EA		
21	1901710922	NUT	1	EA		
22	1901735630	BUSHING	1	EA		

silverhorn.co.uk

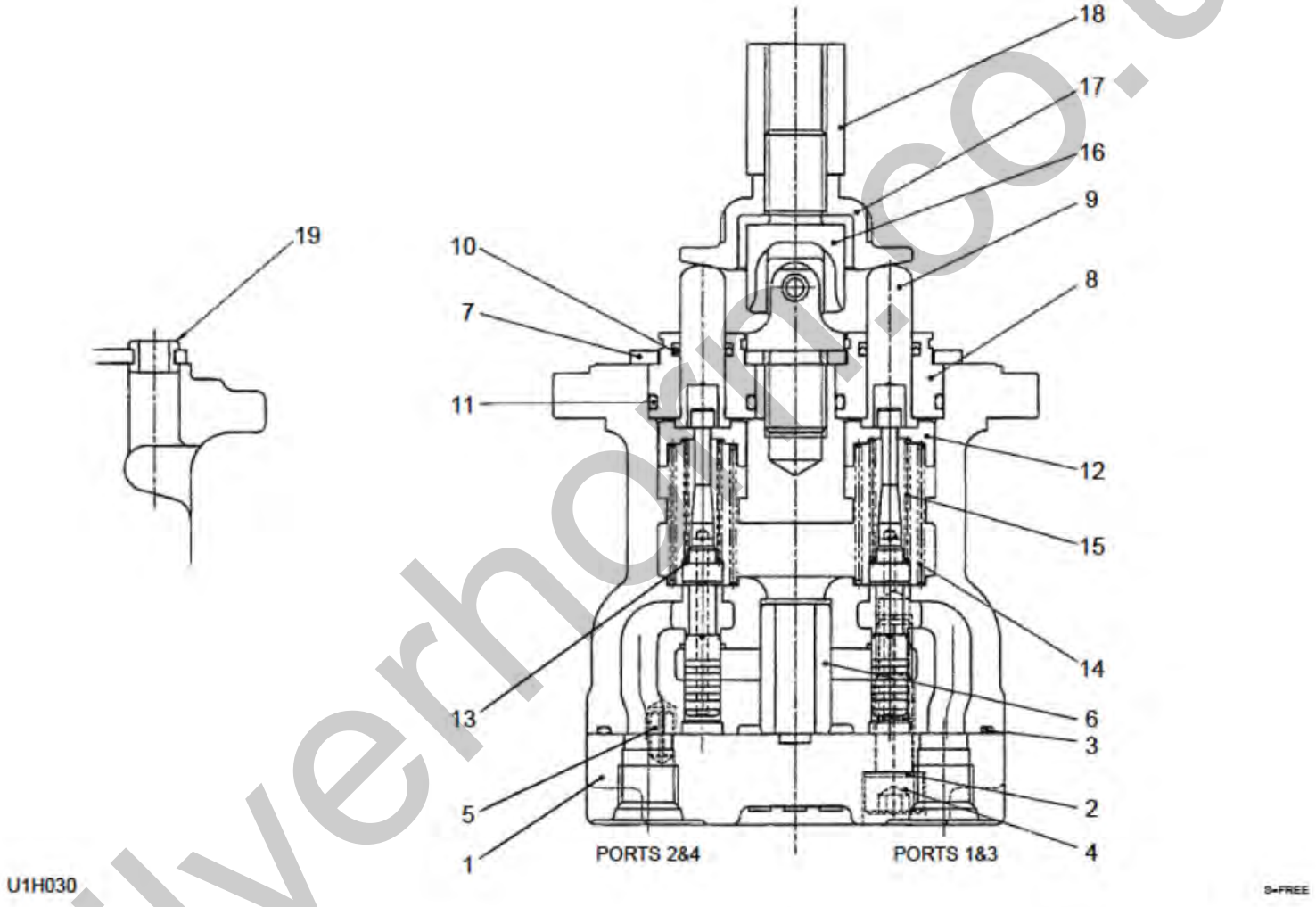

silverhorn.co.uk

Item	Part No.	Name	Qty	Uom	Remarks	SERIAL NUMBER
0	1901753900	VALVE ASSY, pilot (L.H.)	1	EA	LEFT	
1	1901749511	PLATE	1	EA		
2	1901715103	WASHER	2	EA		
3	1420510850	O-RING	1	EA		
4	1110040835	SCREW, cap	2	EA		
5	1213000510	PIN, spring	1	EA		
6	1901743606	BUSHING	1	EA		
7	1901749551	PLATE	1	EA		
8	1901710912	PLUG	4	EA		
9	1901719011	ROD	4	EA		
10	1901710914	SEAL	4	EA		
11	1420010200	O-RING	4	EA		
12	1901743614	HOLDER	4	EA		
13	1901710917	WASHER	4	EA		
14	1901749521	SPRING	4	EA		
15	1901749641	SPRING	4	EA		
16	1901720232	JOINT	1	EA		
17	1901743620	PLATE	1	EA		
18	1901710922	NUT	1	EA		
19	1901735630	BUSHING	1	EA		

silverhorn.co.uk

HYDRAULIC DEVICE HANDLE (with slide switch)

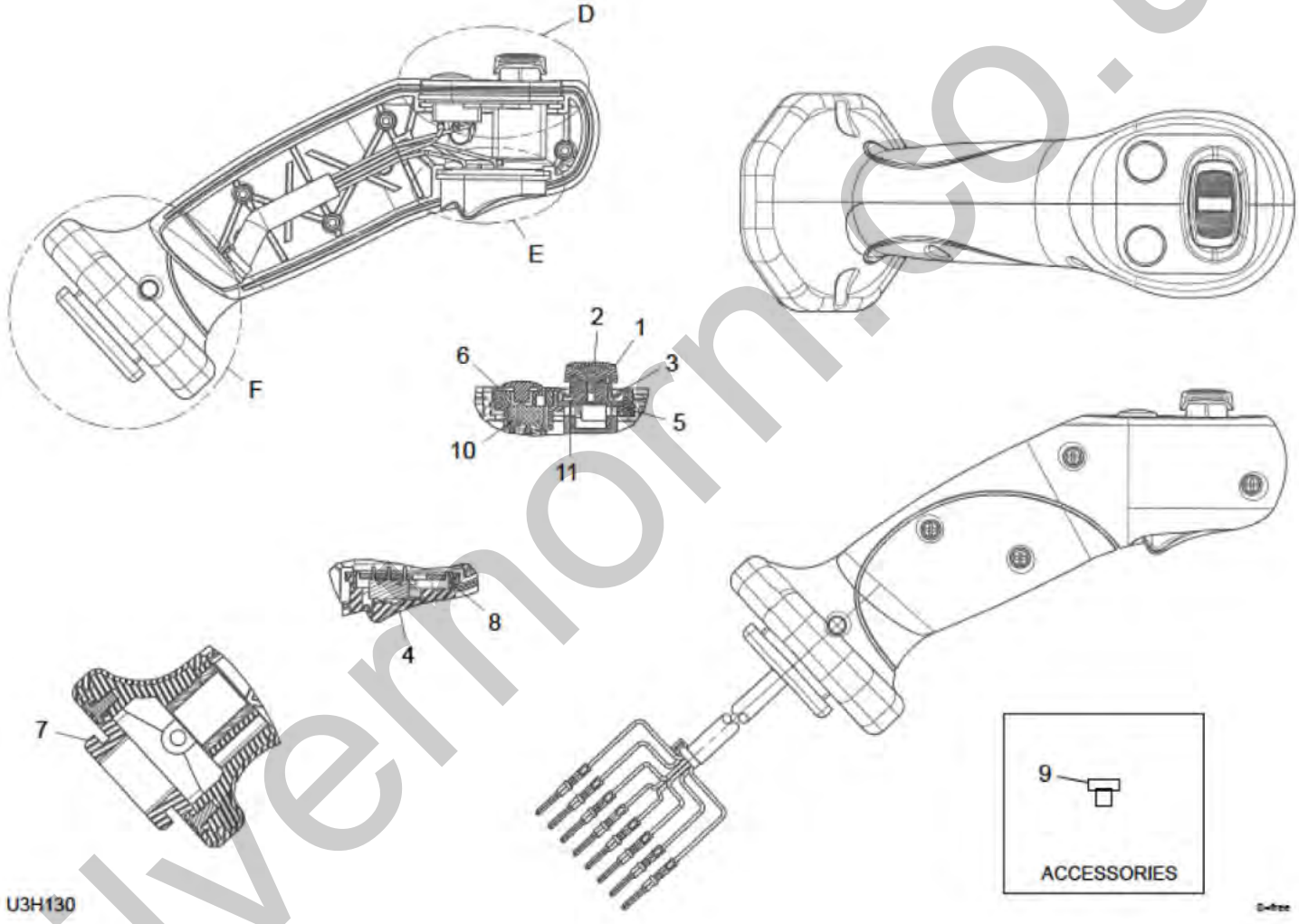

silvermorn.co.uk

Item	Part No.	Name	Qty	Uom	Remarks	SERIAL NUMBER
0	1650205500	HANDLE ASSY	1	EA	slide switch	
1	1650205508	BAR, slide	1	EA		
2	1650205509	COVER, slide bar	1	EA		
3	1650205510	COVER, rubber	1	EA		
4	1650205610	SWITCH, cover	1	EA		
5	1650205505	SWITCH, plate	1	EA		
6	1650205506	SPACER	1	EA		
7	1650205507	COVER, lower	1	EA		
8	1650205511	SWITCH, plate	1	EA		
9	1650205516	PIN, blanking	1	EA		
10	1650205520	SWITCH, micro	2	EA		
11	1650205522	SWITCH, proportional control	1	EA		

silverhorn.co.uk

HYDRAULIC DEVICE HANDLE (with 5 switch)

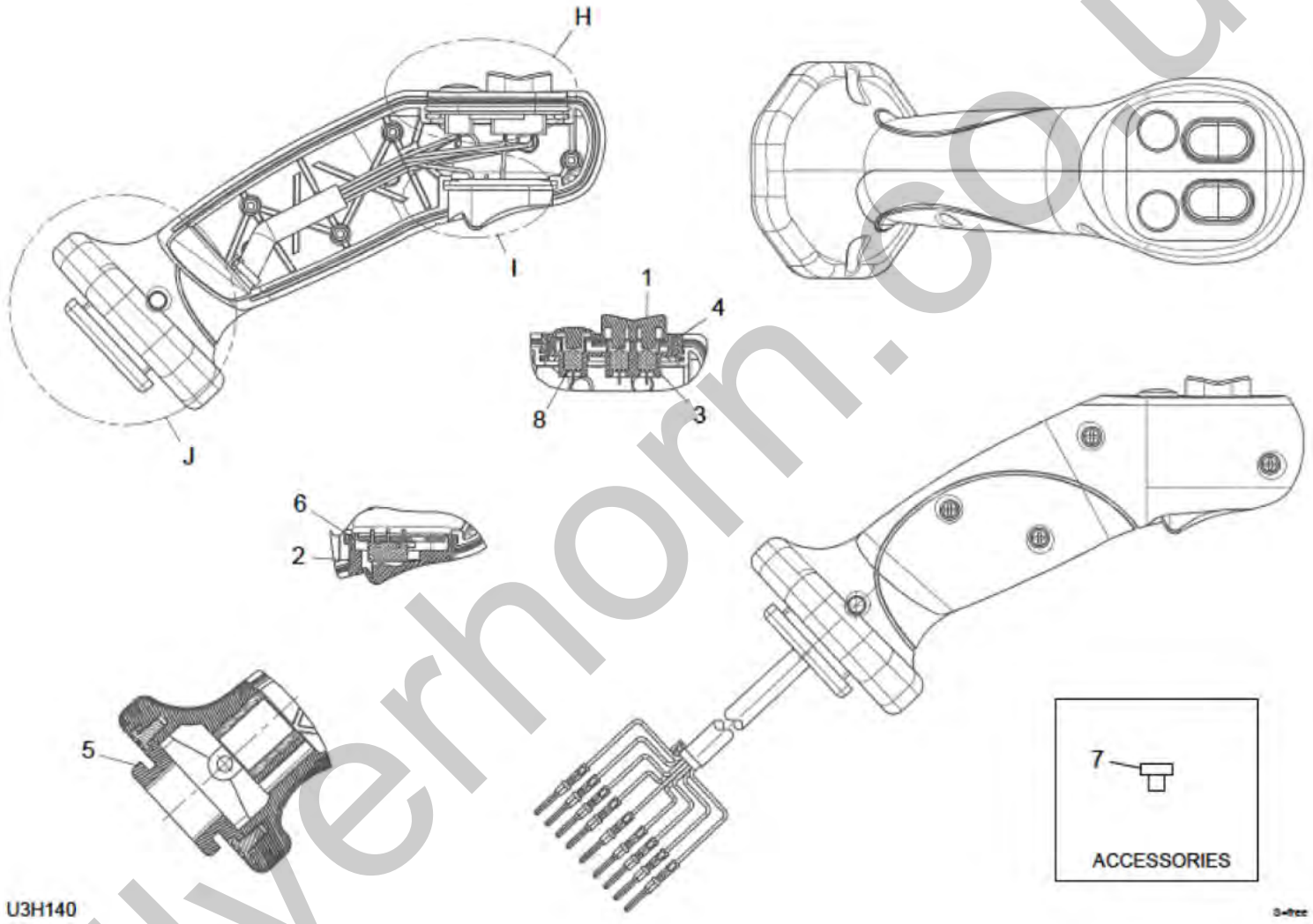

silverhorn.co.uk

Item	Part No.	Name	Qty	Uom	Remarks	SERIAL NUMBER
0	1650205600	HANDLE ASSY	1	EA	5 switches	
1	1650205608	COVER, rubber	1	EA		
2	1650205610	SWITCH, cover	1	EA		
3	1650205605	SWITCH, plate	1	EA		
4	1650205606	SPACER	1	EA		
5	1650205507	COVER, lower	1	EA		
6	1650205511	SWITCH, plate	1	EA		
7	1650205516	PIN, blanking	1	EA		
8	1650205521	SWITCH, micro	6	EA		

silverhorn.co.uk

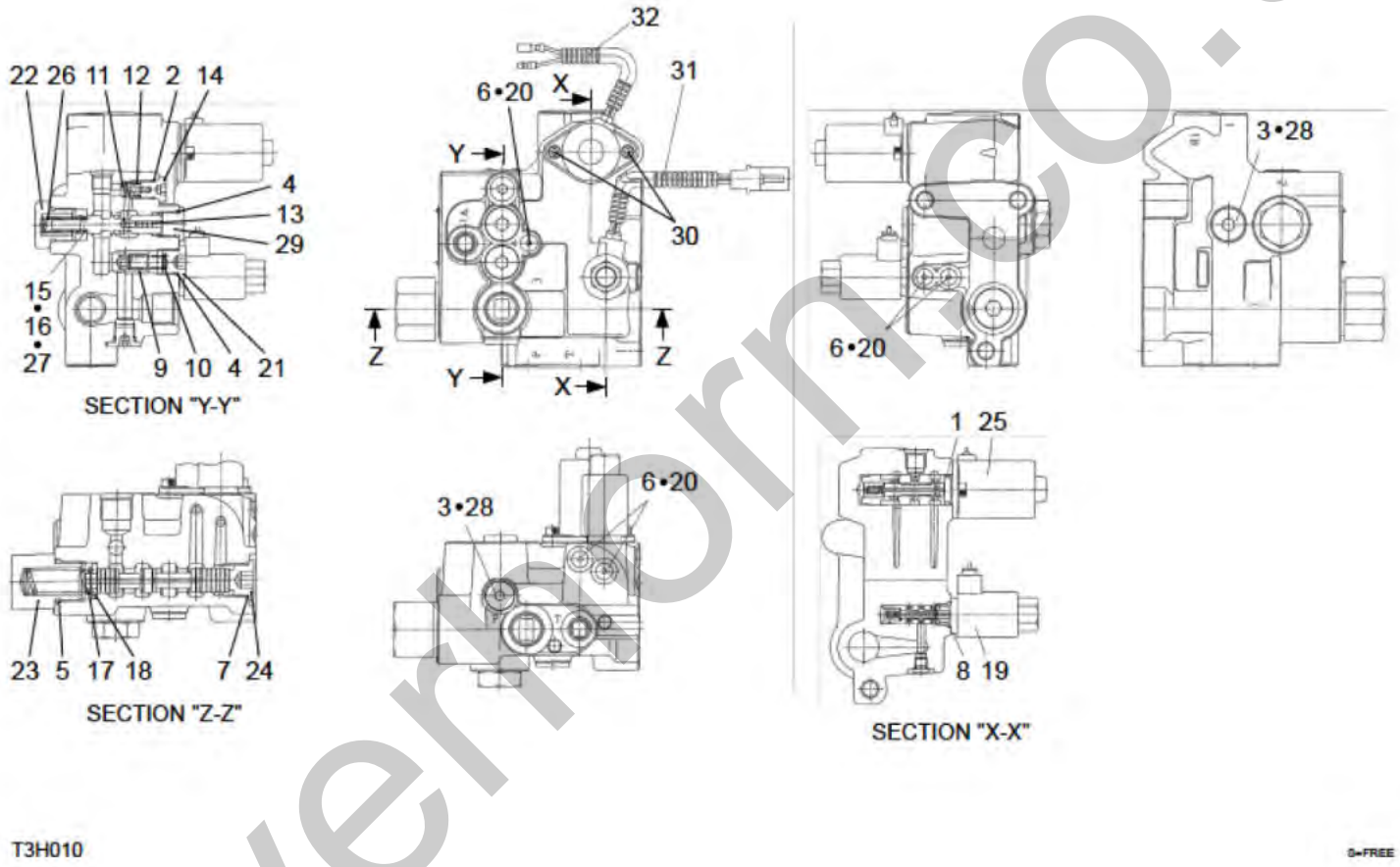

silvermorn.co.uk

Item	Part No.	Name	Qty	Uom	Remarks	SERIAL NUMBER
0	1901748100	VALVE, sub	1	EA		
0-1	1901748199	KIT, seal (DOESNT INCLUDE WEAR RINGS)	1	EA		
1	1420010160	O-RING	1	EA		
2	1420010100	O-RING (PUMP)	1	EA		
3	1420010110	O-RING	2	EA		
4	1420010140	O-RING	2	EA		
5	1420010240	O-RING	1	EA		
6	1420310902	O-RING (ARP568-902)	5	EA		
7	1420310910	O-RING	1	EA		
8	1420000125	O-RING	1	EA		
9	1901731901	POPPET	1	EA		
10	1901731903	SPRING	1	EA		
11	1901035426	PLUNGER	1	EA		
12	1901004357	SPRING	1	EA		
13	1901730412	PISTON	1	EA		
14	1901035471	PLUG	1	EA		
15	1901729709	SHIM (t=1.0)	1	EA	t=0.1mm	
16	1901729710	SHIM (t=0.2)	1	EA	t=0.2mm	
17	1901731911	SPRING	1	EA		
18	1901731912	WASHER	1	EA		
19	1901748114	SOLENOID	1	EA		
20	1901748119	PLUG	5	EA		
21	1901748126	PLUG	1	EA		
22	1901748127	PLUG	1	EA		
23	1901748128	PLUG	1	EA		
24	1901748129	PLUG	1	EA		
25	1901748130	SOLENOID	1	EA		
26	1901748131	SPRING	1	EA		
27	1901748132	SHIM (t=0.10mm)	1	EA	t=0.1mm	
28	1901738312	PLUG	2	EA		
29	1501750002	PLUG (FOR O-RING USE # 1420010110)	1	EA		
29	1420010110	O-RING	1	EA		
30	1110040512	SCREW, cap	2	EA		
31	1901044619	PROTECTOR	1	EA		
32	1901748828	TUBE	1	EA		

silverhorn.co.uk

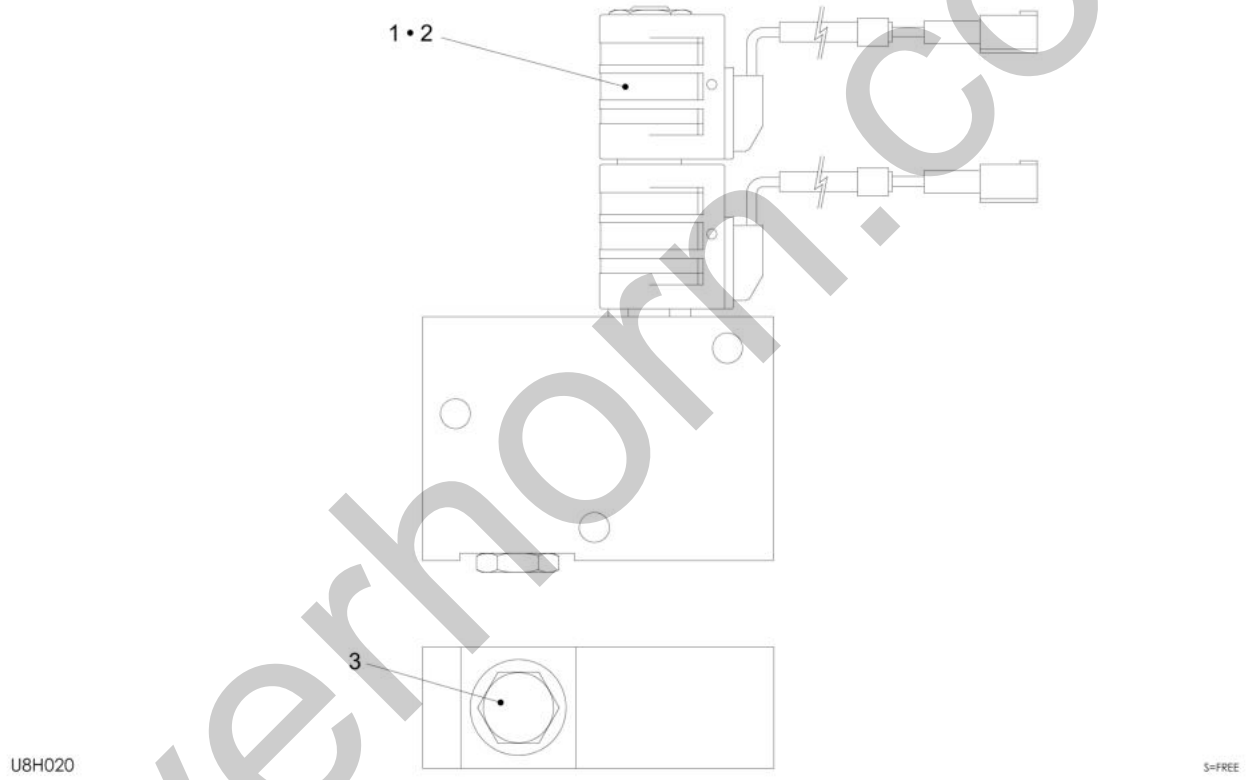

silverhorn.co.uk

Item	Part No.	Name	Qty	Uom	Remarks	SERIAL NUMBER
0	1901764600	VALVE ASSY, solenoid	1	EA		
1	1901764601	VALVE	1	EA		
2	1901741703	COIL	2	EA		
3	1901764603	VALVE, check	1	EA		

silverhorn.co.uk

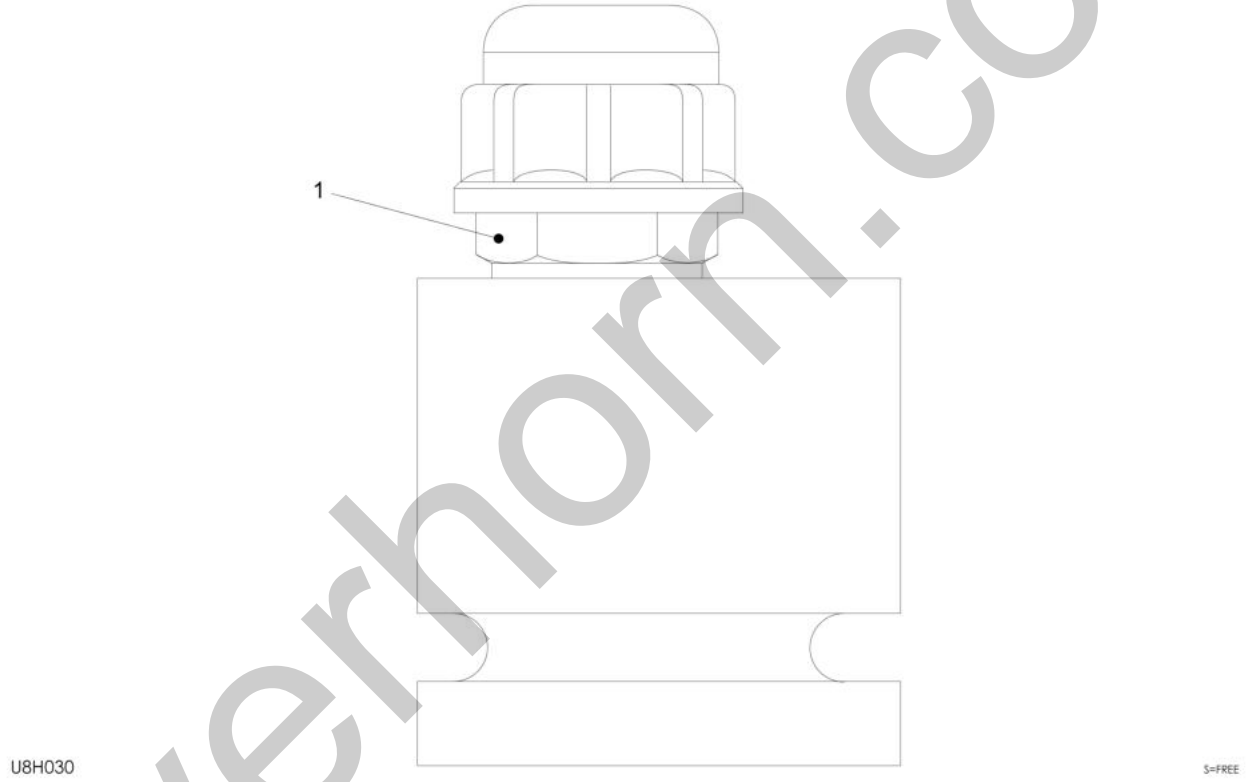

silverhorn.co.uk

Item	Part No.	Name	Qty	Uom	Remarks	SERIAL NUMBER
0	1901764700	VALVE, emergency	1	EA		
1	1901764701	VALVE, solenoid	1	EA		

silverhorn.co.uk

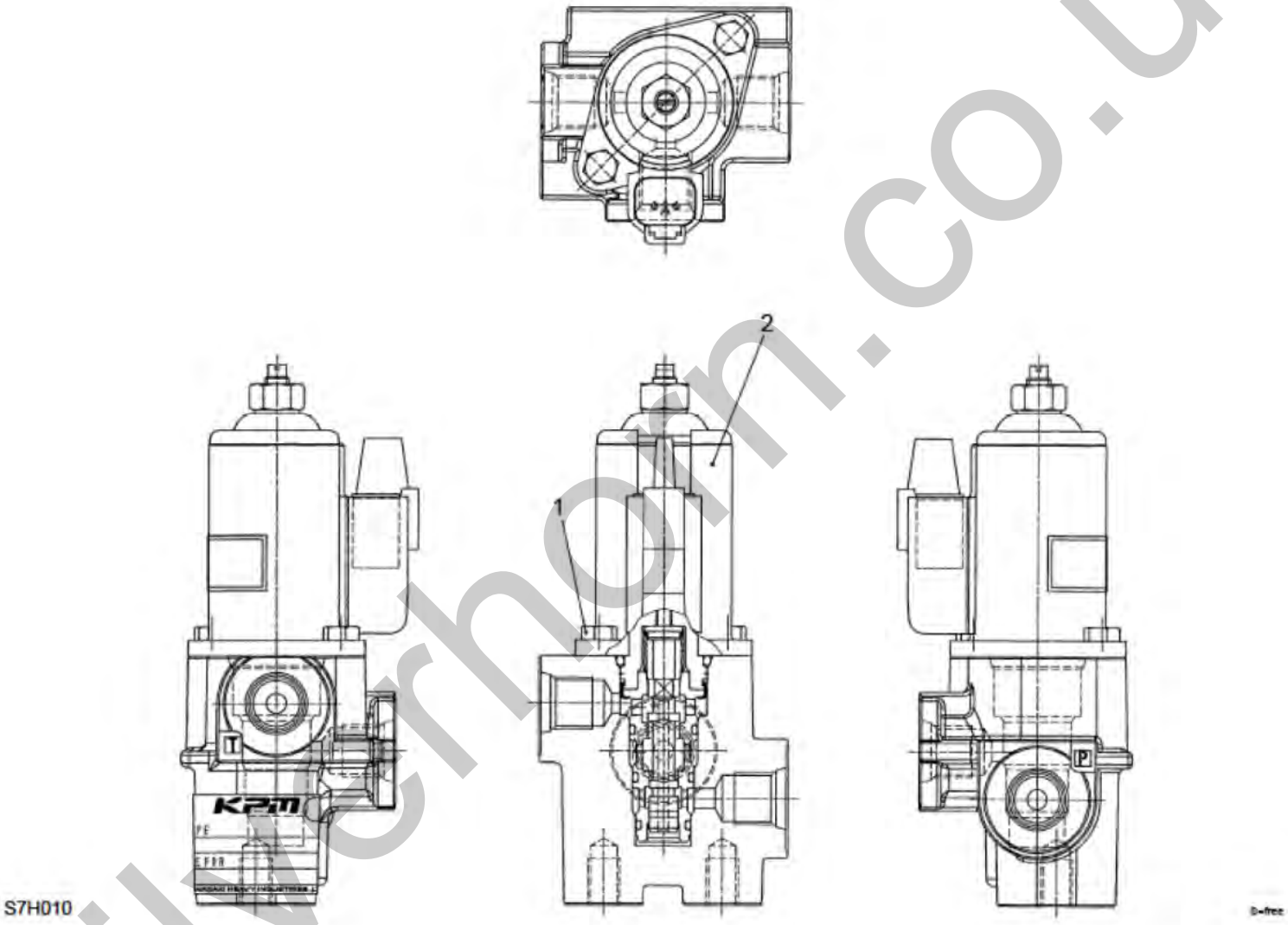

silverhorn.co.uk

Item	Part No.	Name	Qty	Uom	Remarks	SERIAL NUMBER
0	1901765600	VALVE ASSY, solenoid (1-block)	1	EA		
1	1100080512	BOLT	2	EA		
2	1901765602	VALVE, proportional	1	EA		

silverhorn.co.uk

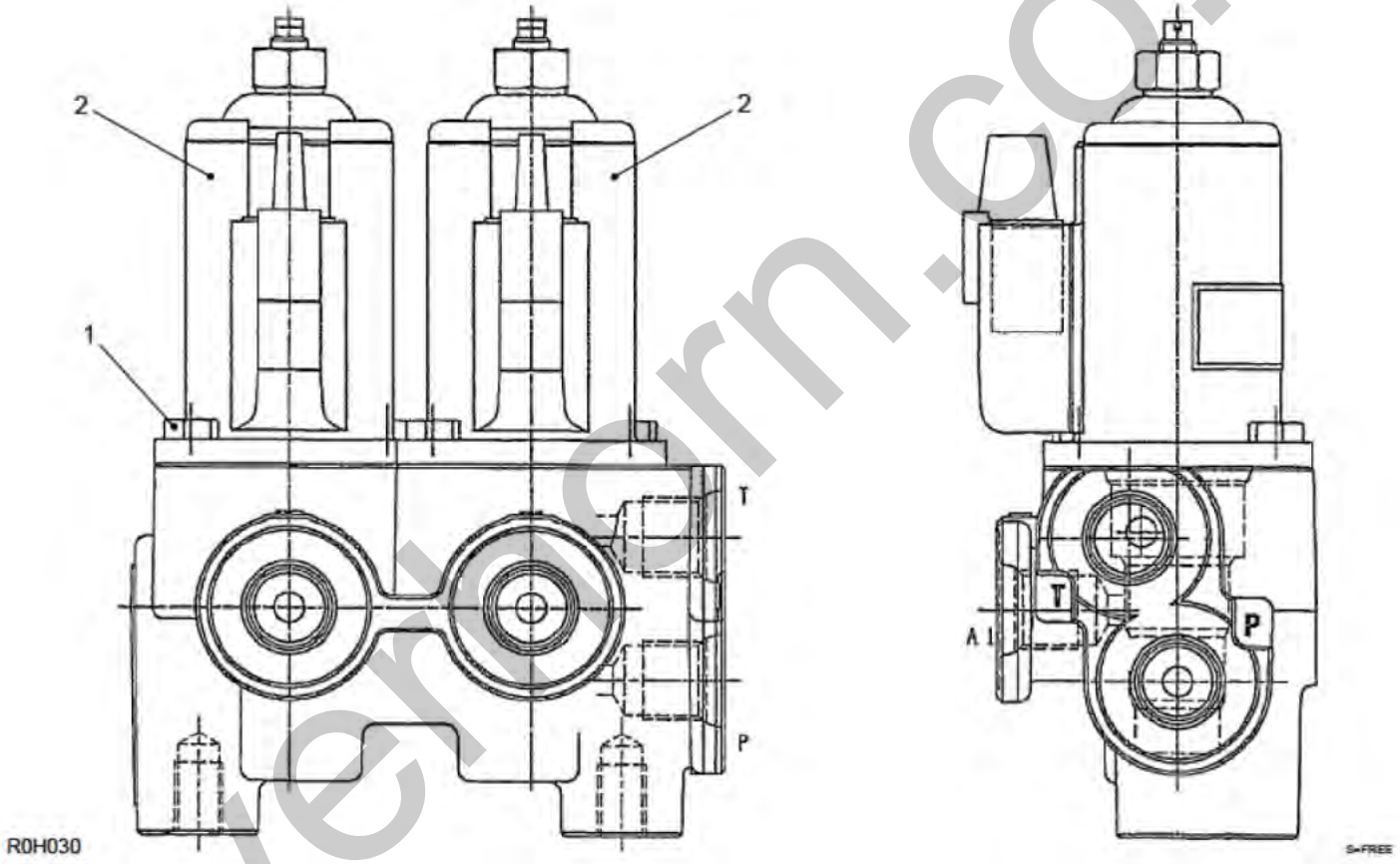

silvermorn.co.uk

Item	Part No.	Name	Qty	Uom	Remarks	SERIAL NUMBER
0	1901766400	VALVE, solenoid	1	EA		
1	1100020512	BOLT	4	EA		
2	1901765602	VALVE, proportional	2	EA		

silverhorn.co.uk

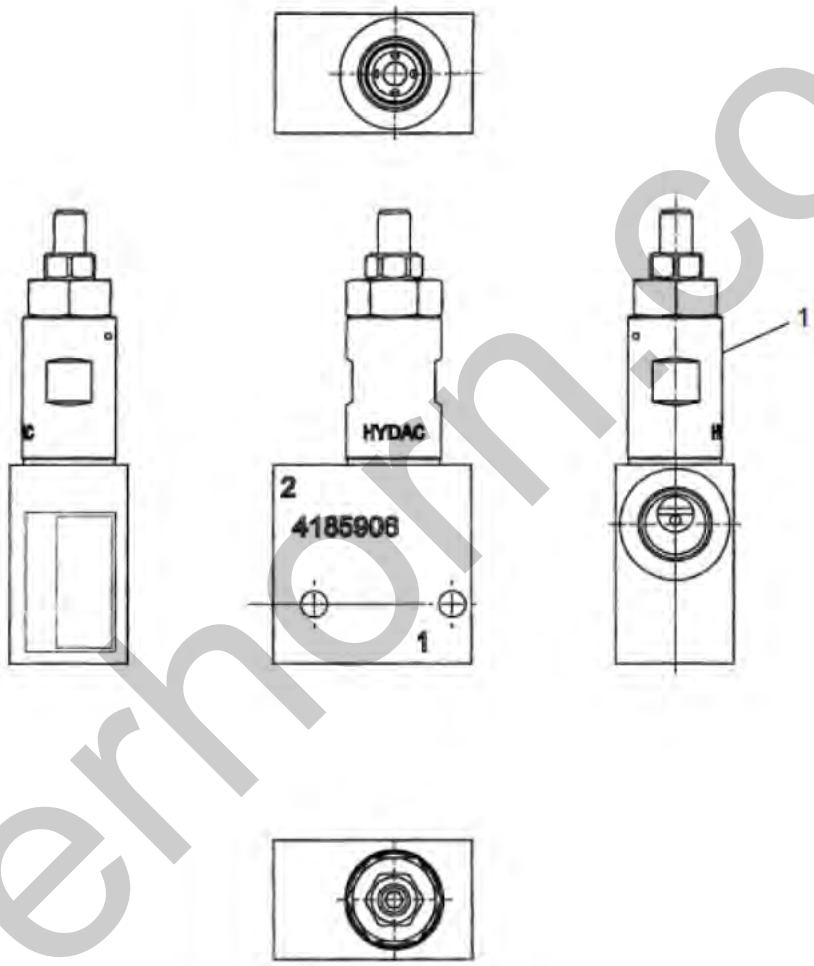

silverhorn.co.uk

Item	Part No.	Name	Qty	Uom	Remarks	SERIAL NUMBER
0	1901768800	VALVE ASSY, relief	1	EA		
1	1901768801	VALVE, relief	1	EA		

silverhorn.co.uk

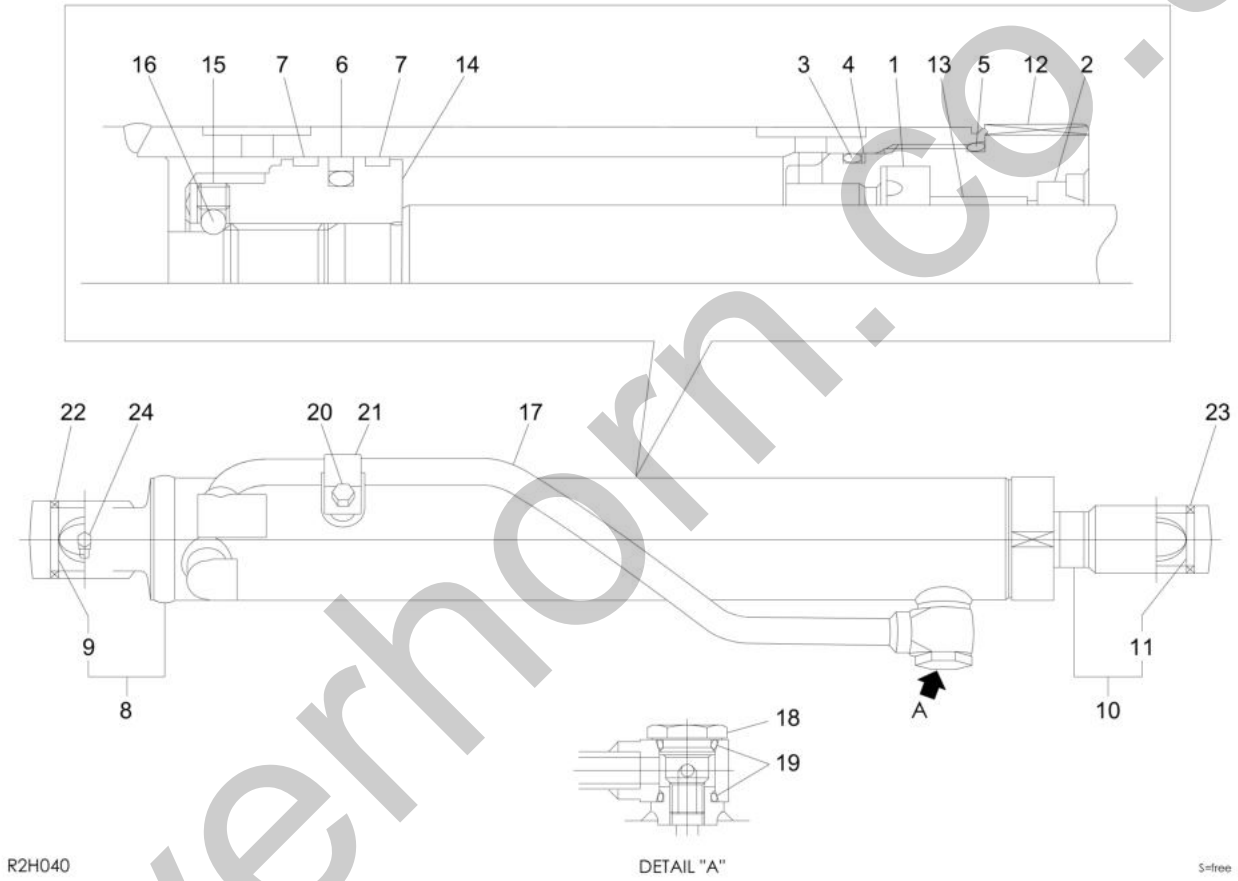

silverhorn.co.uk

Item	Part No.	Name	Qty	Uom	Remarks	SERIAL NUMBER
0	1900124300	CYLINDER, bucket (R.H.)	1	EA	bucket (R.H)	
0-1	1900124399	KIT, seal (BUCKET CYLINDER)	1	EA		
1	1900051631	PACKING, rod	1	EA		
2	1900073533	SEAL, dust	1	EA		
3	1420110600	O-RING (G-60)	1	EA		
4	1900102427	RING, back-up	1	EA		
5	1420110650	O-RING (65/70 T/3.1(-+0.1))	1	EA		
6	1900048232	PACKING, piston	1	EA		
7	1900102416	RING, wear	2	EA		
8	1900124398	TUBE ASSY	1	EA		
9	1900058202	BUSHING	1	EA		
10	1900124397	ROD ASSY, piston	1	EA		
11	1900043920	BUSHING (40/50 L35)	1	EA		
12	1900124303	COVER, rod	1	EA		
13	1900102413	BUSHING	1	EA		
14	1900124306	PISTON	1	EA		
15	1121050606	SET-SCREW	1	EA		
16	1390020250	BALL, steel	1	EA		
17	1900124319	PIPE	1	EA		
18	1900093327	PLUG	1	EA		
19	1420010220	O-RING	2	EA		
20	1900117819	BOLT	1	EA		
21	1900090017	HOLDER, pipe	1	EA		
22	1900124335	SEAL, dust	2	EA		
23	1900124336	SEAL, dust	2	EA		
24	1900105228	FITTING, grease	1	EA		

silverhorn.co.uk

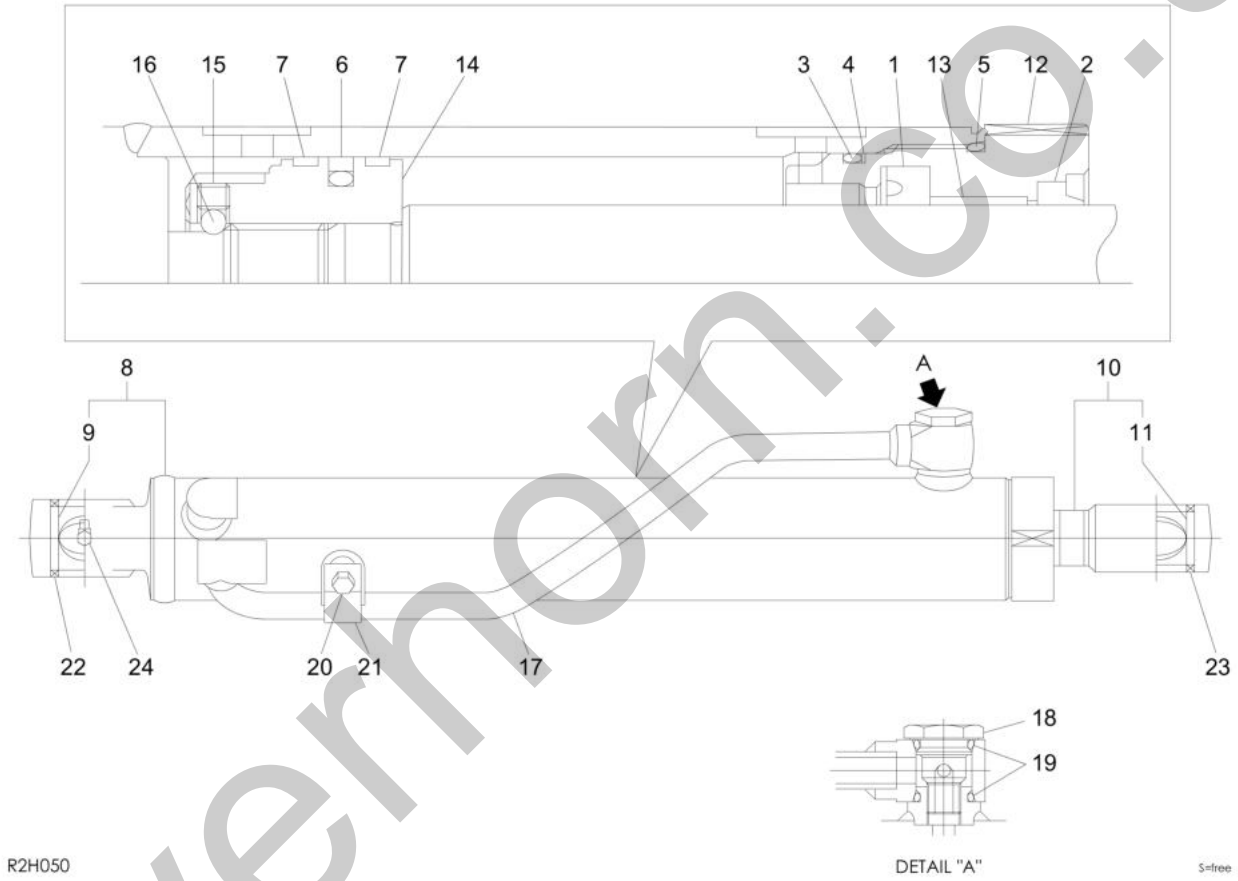

silverhorn.co.uk

Item	Part No.	Name	Qty	Uom	Remarks	SERIAL NUMBER
0	1900124400	CYLINDER, bucket (L.H.)	1	EA	bucket (L.H)	
0-1	1900124399	KIT, seal (BUCKET CYLINDER)	1	EA		
1	1900051631	PACKING, rod	1	EA		
2	1900073533	SEAL, dust	1	EA		
3	1420110600	O-RING (G-60)	1	EA		
4	1900102427	RING, back-up	1	EA		
5	1420110650	O-RING (65/70 T/3.1(-+0.1))	1	EA		
6	1900048232	PACKING, piston	1	EA		
7	1900102416	RING, wear	2	EA		
8	1900124498	TUBE ASSY	1	EA		
9	1900058202	BUSHING	1	EA		
10	1900124397	ROD ASSY, piston	1	EA		
11	1900043920	BUSHING (40/50 L35)	1	EA		
12	1900124303	COVER, rod	1	EA		
13	1900102413	BUSHING	1	EA		
14	1900124306	PISTON	1	EA		
15	1121050606	SET-SCREW	1	EA		
16	1390020250	BALL, steel	1	EA		
17	1900124419	PIPE	1	EA		
18	1900093327	PLUG	1	EA		
19	1420010220	O-RING	2	EA		
20	1900117819	BOLT	1	EA		
21	1900090017	HOLDER, pipe	1	EA		
22	1900124335	SEAL, dust	2	EA		
23	1900124336	SEAL, dust	2	EA		
24	1900105228	FITTING, grease	1	EA		

silverhorn.co.uk

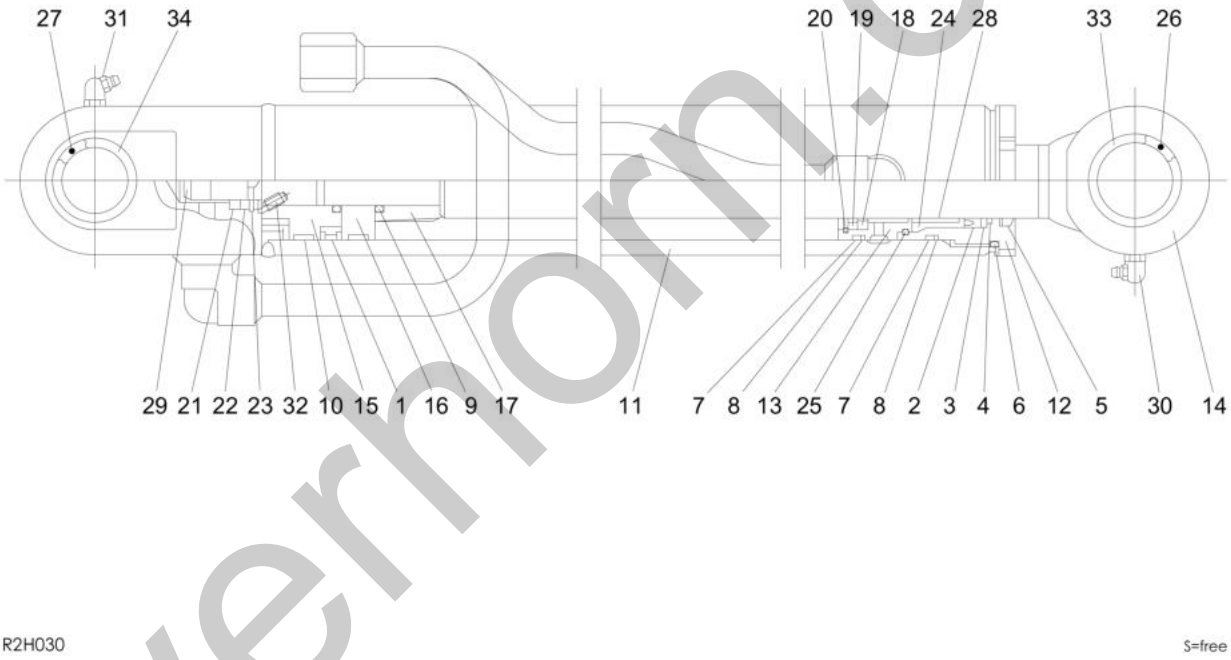

silverhorn.co.uk

Item	Part No.	Name	Qty	Uom	Remarks	SERIAL NUMBER
0	1900124500	CYLINDER, arm	1	EA	arm	
0-1	1900124599	KIT, seal	1	EA		
1	1420120650	PACKING, piston	1	EA		
2	1410540508	PACKING, rod (40/50 T/8)	1	EA		
3	1900124527	RING, back-up	1	EA		
4	1900124550	RING, back-up	1	EA		
5	1900124533	SEAL, dust	1	EA		
6	1420110650	O-RING (65/70 T/3.1(-+0.1))	1	EA		
7	1420110600	O-RING (G-60)	2	EA		
8	1421130600	RING, back-up	2	EA		
9	1420010280	O-RING (P-28)	2	EA		
10	1900124526	RING, wear	2	EA		
11	1900124598	TUBE ASSY	1	EA		
12	1900124503	COVER, rod	1	EA		
13	1900124530	COVER, rod	1	EA		
14	1900124597	ROD ASSY, piston	1	EA		
15	1900124506	PISTON	1	EA		
16	1900124508	HOLDER	1	EA		
17	1900124505	RING, cushion	1	EA		
18	1900035819	RING, seal	1	EA		
19	1900059426	STOPPER	1	EA		
20	1900059414	RING, stop	1	EA		
21	1900059627	RING, seal	1	EA		
22	1900059629	STOPPER	1	EA		
23	1900059615	RING, stop	1	EA		
24	1900124519	HOLDER	1	EA		
25	1900124528	RING	1	EA		
26	1900124502	BUSHING	1	EA		
27	1900124520	BUSHING	1	EA		
28	1900124561	BUSHING	1	EA		
29	1900124562	ORIFICE	1	EA		
30	1560001900	FITTING, grease (90 DEGREE)	1	EA		
31	1560001675	FITTING, grease (67.5 DEGREE)	1	EA		
32	1900124563	SET-SCREW	1	EA		
33	1432200040	SEAL, dust	2	EA		
34	1432200035	SEAL, dust (35/45 T/4)	2	EA		

silverhorn.co.uk

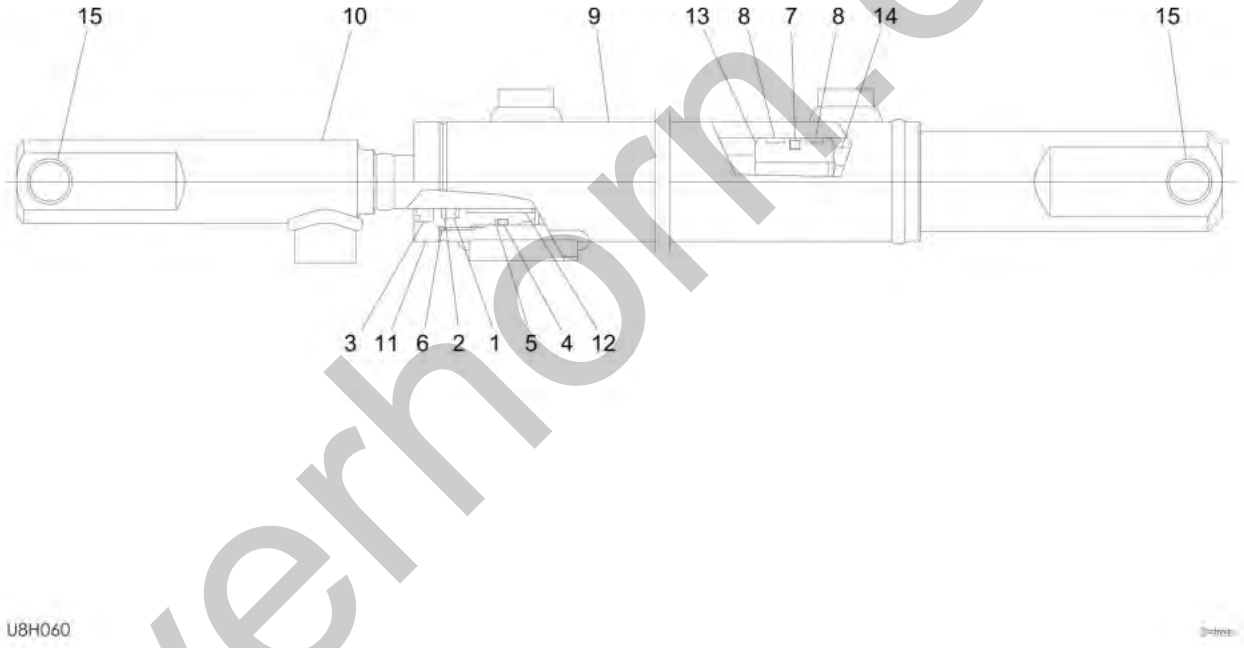

silverhorn.co.uk

Item	Part No.	Name	Qty	Uom	Remarks	SERIAL NUMBER
0	1900120500	CYLINDER, quick hitch	1	EA	quick hitch	
0-1	1900120599	KIT, seal	1	EA		
1	1900120532	PACKING, rod	1	EA		
2	1900120527	RING, back-up	1	EA		
3	1900120533	SEAL, dust	1	EA		
4	1900120535	O-RING	1	EA		
5	1900120536	RING, back-up	1	EA		
6	1900120537	O-RING	1	EA		
7	1900120534	PACKING, piston	1	EA		
8	1900120526	RING, wear	2	EA		
9	1900120598	TUBE ASSY	1	EA		
10	1900120597	ROD ASSY, piston	1	EA		
11	1900120503	COVER, rod	1	EA		
12	1900120502	BUSHING	1	EA		
13	1900120506	PISTON	1	EA		
14	1900120509	NUT	1	EA		
15	1900120520	BUSHING	2	EA		

silverhorn.co.uk

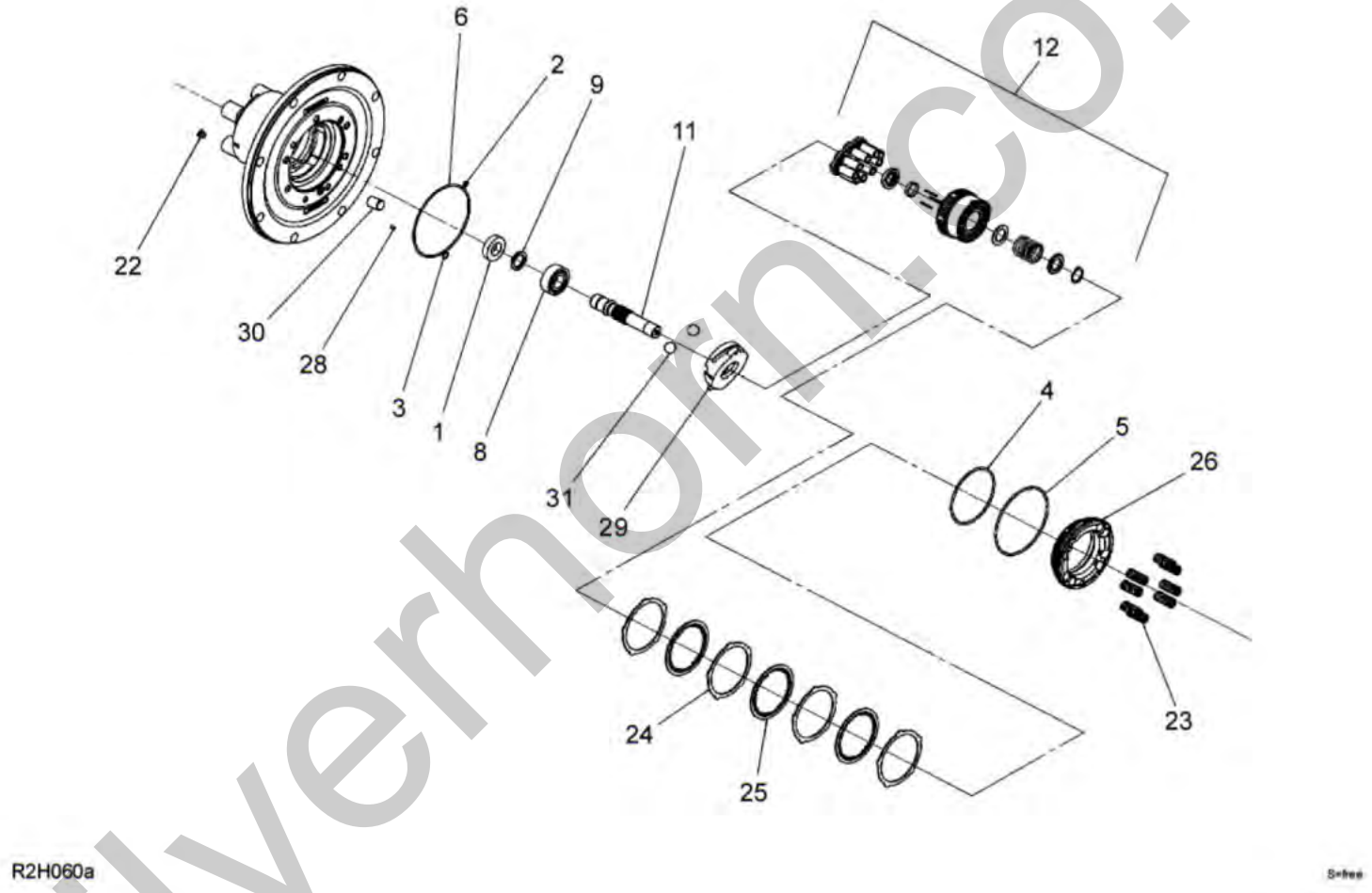

silverhorn.co.uk

Item	Part No.	Name	Qty	Uom	Remarks	SERIAL NUMBER
0	1903132500	MOTOR ASSY, travel	1	EA		
0-1	**********	MOTOR, hydraulic	1	EA		
0-2	1903912799	KIT, seal	1	EA		
1	1903912302	SEAL, oil	1	EA		
2	1420010090	O-RING (P-9 90B)	1	EA		
3	1420010110	O-RING	1	EA		
4	1420310244	O-RING	1	EA		
5	1420310250	O-RING	1	EA		
6	1420111350	O-RING	1	EA		
7	1902006702	PIN	2	EA		
8	1903907102	BEARING	1	EA		
9	1903912301	RING, snap	1	EA		
11	1903907107	SHAFT	1	EA		
12	1903908010	BLOCK KIT, cylinder	1	EA		
22	1903906427	PLUG ASSY	3	EA		
22	1420310903	O-RING	1	EA		
23	1903907128	SPRING	8	EA		
24	1903907129	PLATE	4	EA		
25	1903907130	PLATE	3	EA		
26	1903907131	PISTON, brake	1	EA		
28	1903908036	ORIFICE	1	EA		
29	1903912702	PLATE, wash	1	EA		
30	1903912703	PISTON	1	EA		
31	1903912309	BALL, steel	2	EA		

silverhorn.co.uk

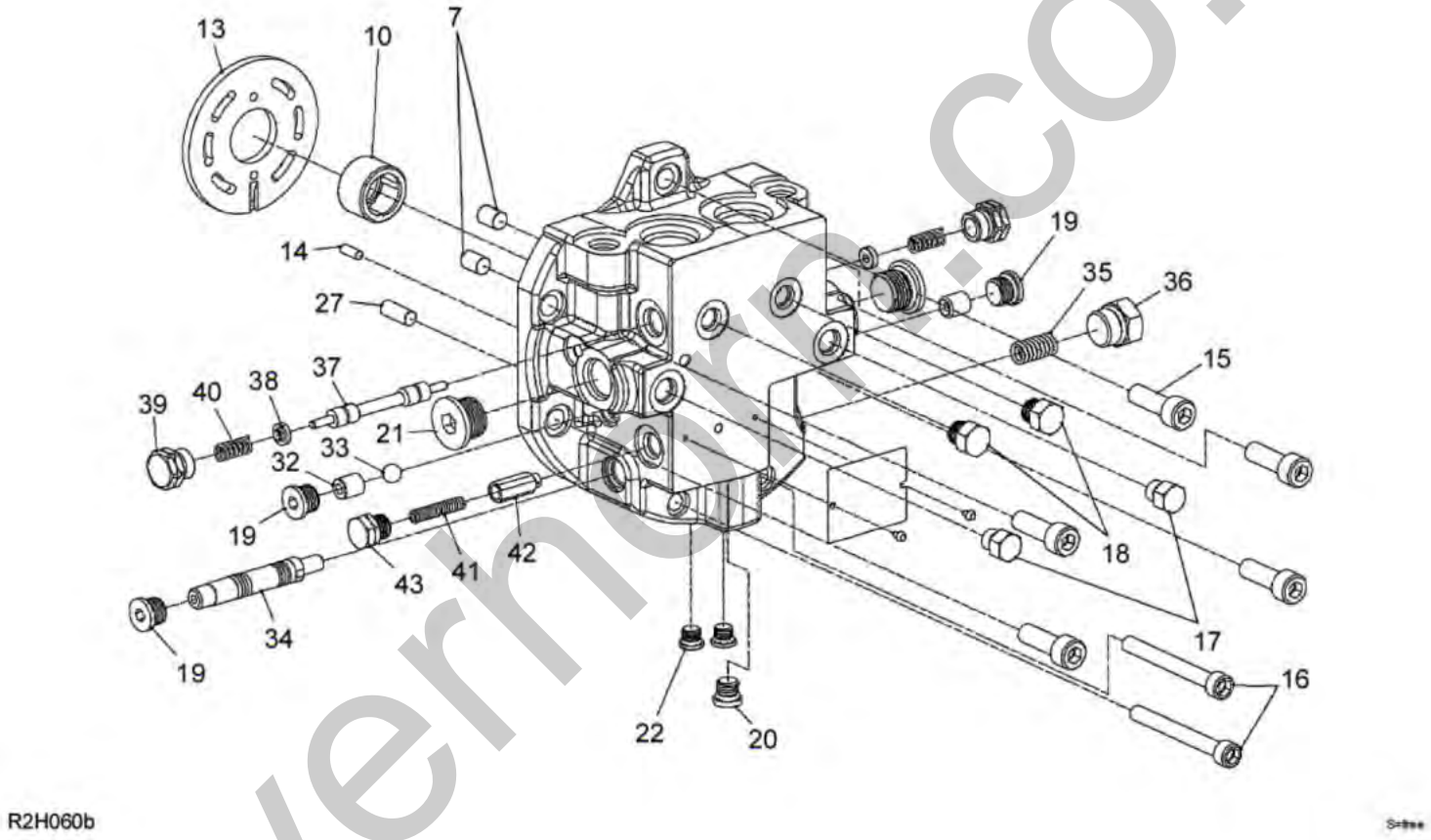

silvernorn.co.uk

Item	Part No.	Name	Qty	Uom	Remarks	SERIAL NUMBER
0	1903132500	MOTOR ASSY, travel	1	EA		
0-1	**********	MOTOR, hydraulic	1	EA		
0-2	1903912799	KIT, seal	1	EA		
7	1902006702	PIN	2	EA		
10	1903912303	BEARING	1	EA		
13	1903907111	PLATE	1	EA		
14	1902007411	PIN	1	EA		
15	1110021030	SCREW, cap (SOCKET HEAD)	5	EA		
16	1110020870	SCREW, cap	2	EA		
17	1902021416	PLUG ASSY	2	EA		
17	1420310905	O-RING (ARP568-905)	1	EA		
18	1903910113	PLUG ASSY	2	EA		
18	1420310904	O-RING	1	EA		
19	1903910115	PLUG ASSY	3	EA		
19	1420310906	O-RING (ARP568-906-1B)	1	EA		
20	1903910116	PLUG ASSY	1	EA		
20	1420310904	O-RING	1	EA		
21	1903912701	PLUG ASSY	2	EA		
21	1420010180	O-RING	1	EA		
22	1903906427	PLUG ASSY	3	EA		
22	1420310903	O-RING	1	EA		
27	1903906832	PIN	1	EA		
32	1903906840	PLUG	2	EA		
33	1903910129	BALL, steel	1	EA		
34	1903906842	SPOOL	1	EA		
35	1903906843	SPRING	1	EA		
36	1903910132	PLUG ASSY	1	EA		
36	1420310908	O-RING (ARP568-908-1B)	1	EA		
37	1901810212	SPOOL	1	EA		
38	1901810211	GUIDE	2	EA		
39	1903910135	PLUG ASSY	2	EA		
39	1420310906	O-RING (ARP568-906-1B)	1	EA		
40	1901810203	SPRING	2	EA		
41	1902017433	SPRING	1	EA		
42	1902017434	POPPET	1	EA		
43	1902016544	PLUG ASSY	1	EA		
43	1420310905	O-RING (ARP568-905)	1	EA		

silverhorn.co.uk

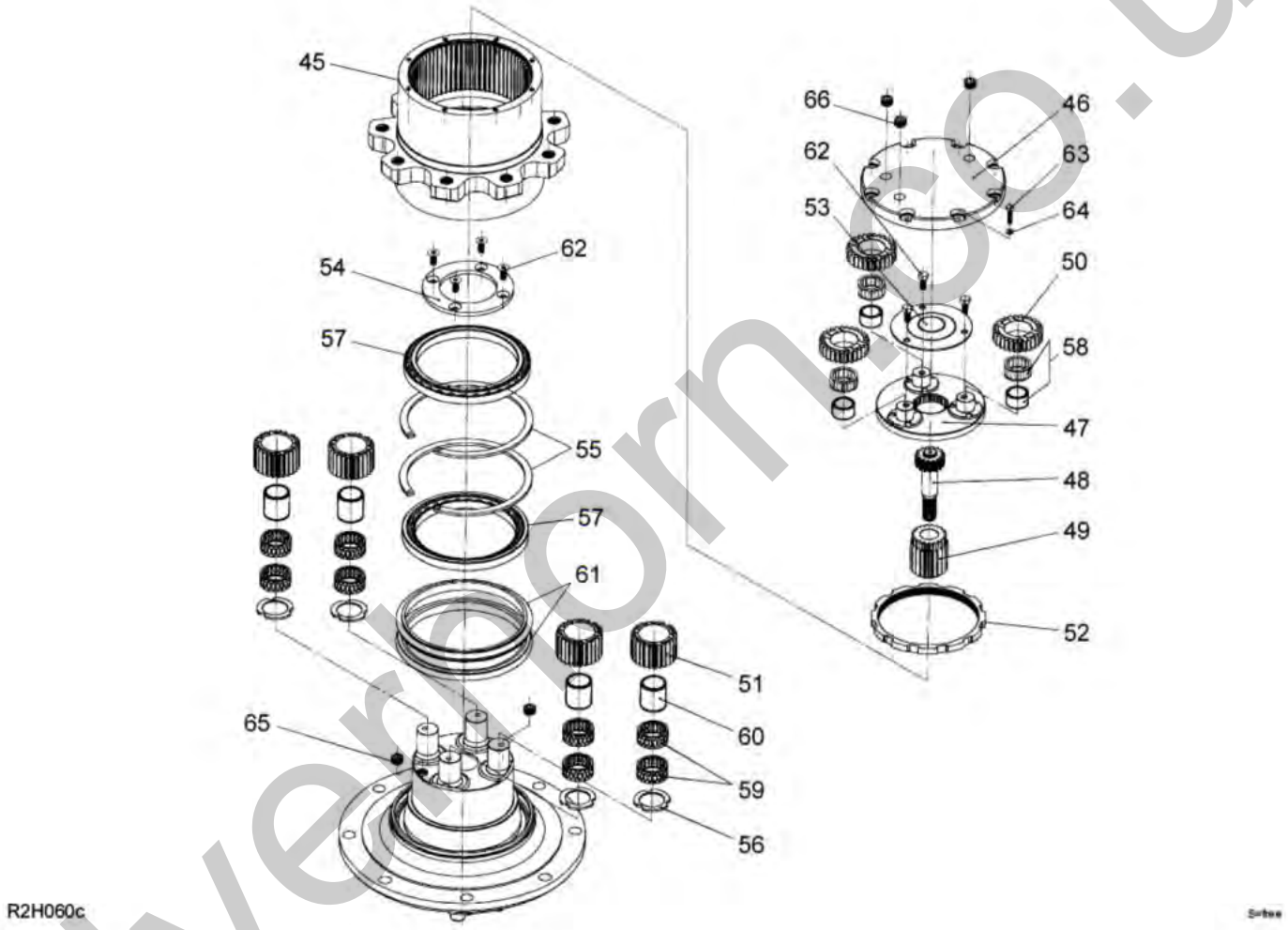

silverthorn.co.uk

Item	Part No.	Name	Qty	Uom	Remarks	SERIAL NUMBER
0-3	**********	GEAR, reduction	1	EA		
45	1912908702	GEAR, ring	1	EA		
46	1912908003	COVER	1	EA		
47	1912908704	CARRIER	1	EA		
48	1912908005	GEAR	1	EA		
49	1912908006	GEAR	1	EA		
50	1912908007	GEAR	3	EA		
51	1912908008	GEAR	4	EA		
52	1912908009	NUT	1	EA		
53	1912908010	PLATE KIT, stopper	1	EA		
54	1912908711	PLATE, stopper	1	EA		
55	1912908012	RING, snap	2	EA		
56	1912908013	WASHER	4	EA		
57	1912908014	BEARING	2	EA		
58	1912908015	BEARING	3	EA		
59	1912908016	BEARING	8	EA		
60	1912908017	RACE, inner	4	EA		
61	1912908018	SEAL KIT, floating(2 rings+2 orings=QTY 1)	1	EA		
62	1912908019	BOLT	7	EA		
63	1100050625	BOLT (10TM6 X 25 P/1.00)	8	EA		
64	1140020006	WASHER, spring	8	EA		
65	1501810003	PLUG	2	EA		
66	1912908023	PLUG	3	EA		

silverhorn.co.uk

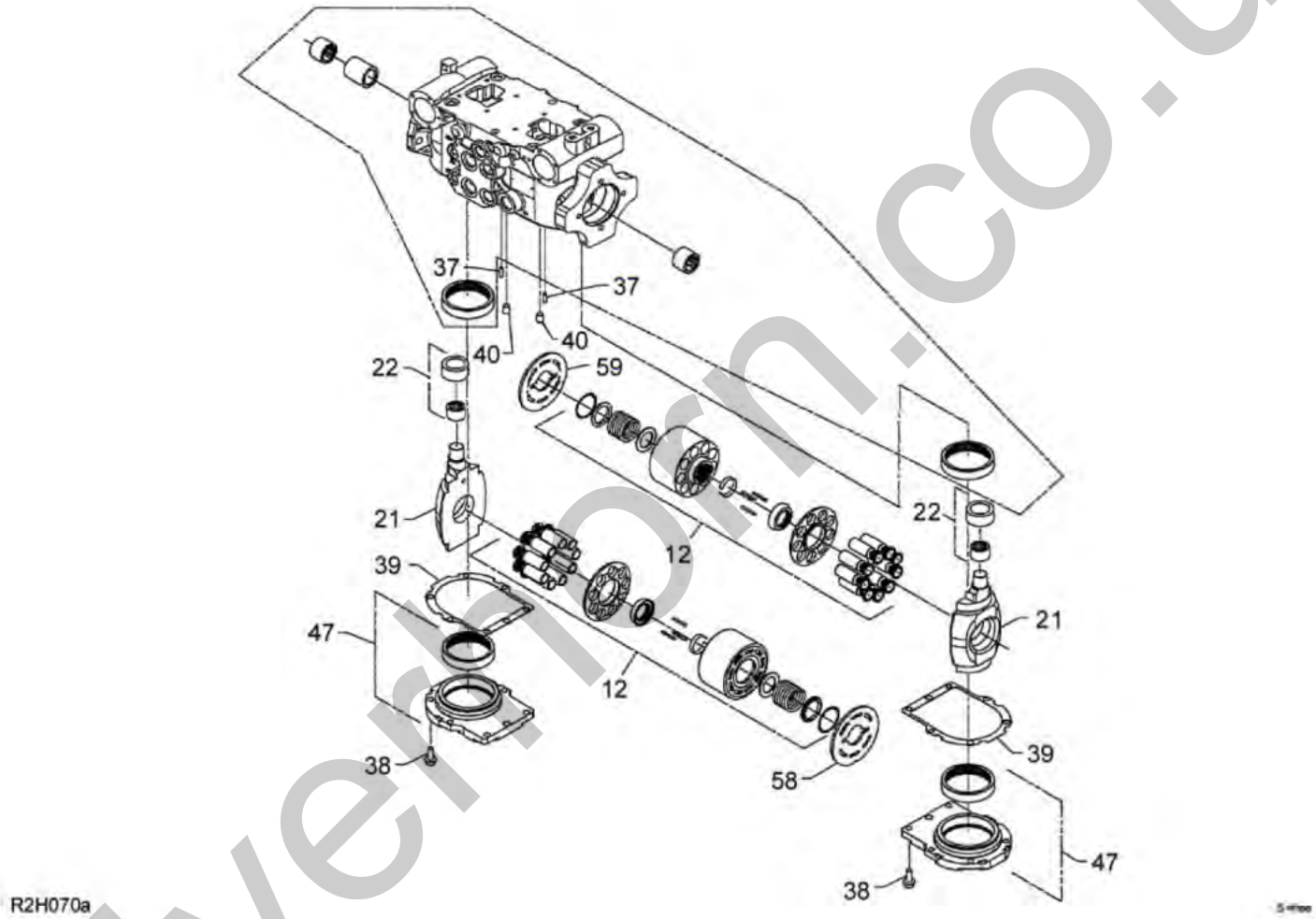

silverthorn.co.uk

Item	Part No.	Name	Qty	Uom	Remarks	SERIAL NUMBER
0	1902032500	PUMP, hydraulic	1	EA		
0-1	1902032599	KIT, seal	1	EA		
12	1902017428	BLOCK KIT, cylinder	2	EA		
21	1902021902	PLATE, swash	2	EA		
22	1902016501	BEARING	2	EA		
37	1902017413	PIN	2	EA		
38	1902020746	SCREW	12	EA		
39	1902020721	GASKET	2	EA		
40	1902006702	PIN	2	EA		
47	1902020723	COVER ASSY	2	EA		
58	1902017429	PLATE	1	EA		
59	1902032507	PLATE	1	EA		

silverhorn.co.uk

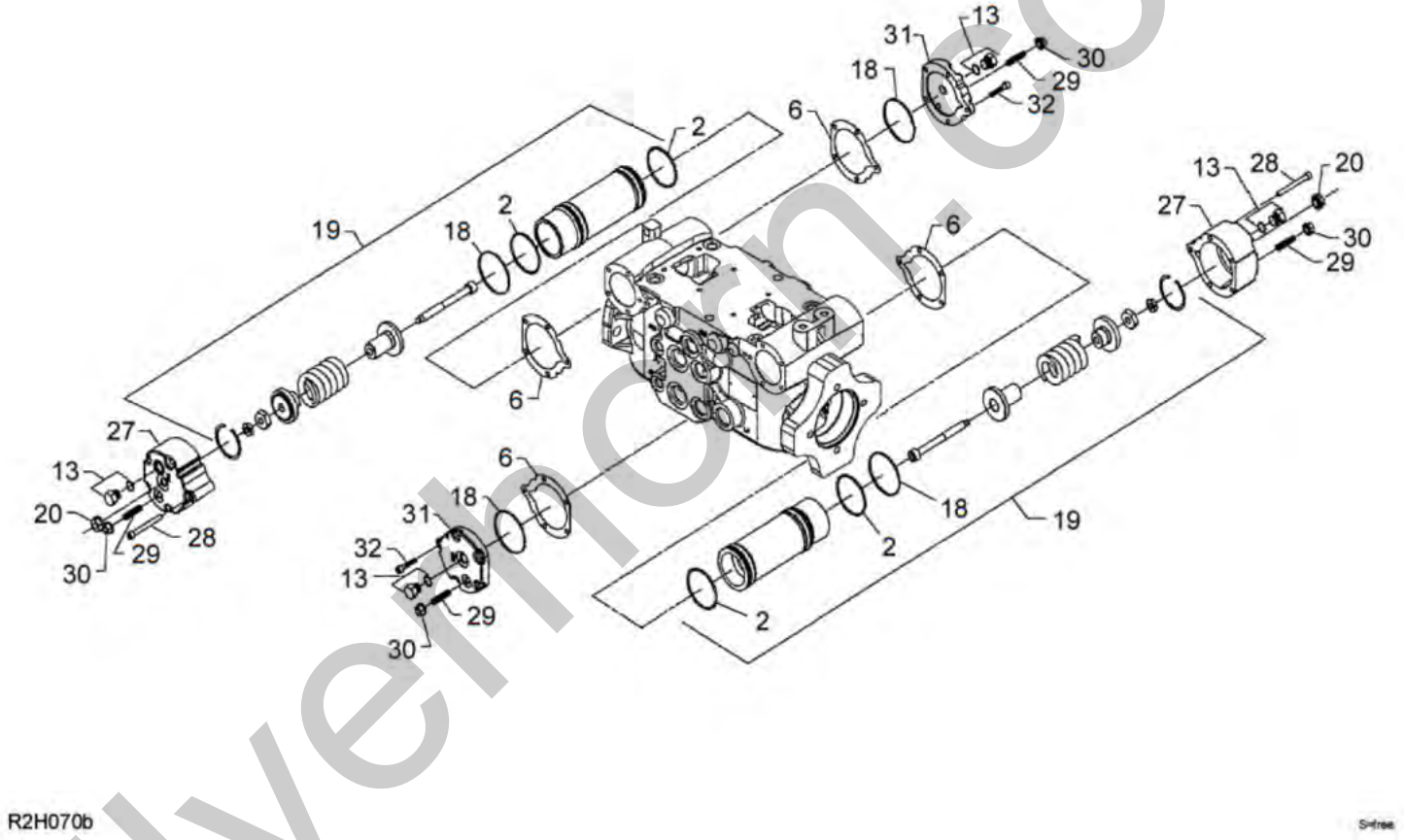

R2H070b

silvermorn.co.uk

Item	Part No.	Name	Qty	Uom	Remarks	SERIAL NUMBER
0	1902032500	PUMP, hydraulic	1	EA		
0-1	1902032599	KIT, seal	1	EA		
2	1420300131	O-RING	4	EA		
6	1902020216	GASKET	4	EA		
8	1902016508	SEAL, lip	1	EA		
13	1902016531	PLUG ASSY (FOR O-RING ONLY USE #1420370906)	8	EA		
13	1420310906	O-RING (ARP568-906-1B)	8	EA		
18	1902016555	RING, back-up	4	EA		
19	1902016556	PISTON ASSY, servo	2	EA		
20	1902018825	NUT, seal	2	EA		
27	1902017424	COVER	2	EA		
28	1110040660	SCREW, cap	10	EA		
29	1902017425	SCREW	4	EA		
30	1902020751	NUT	4	EA		
31	1902020234	COVER	2	EA		
32	1110040630	SCREW, cap	10	EA		

silverhorn.co.uk

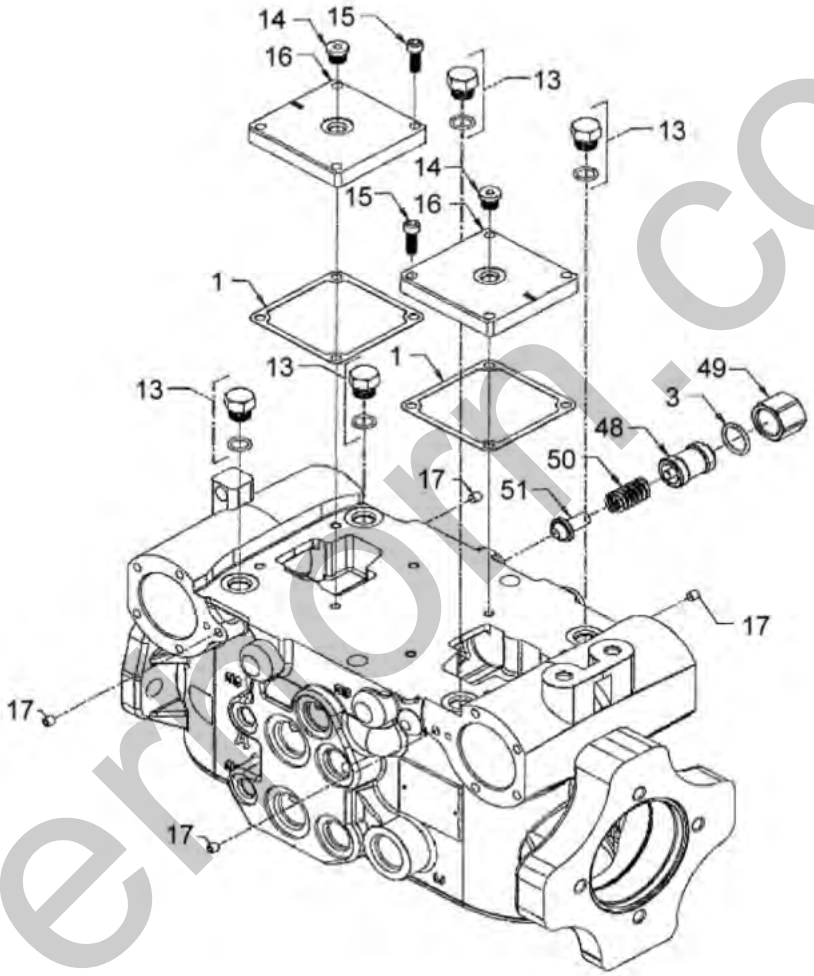

R2H070c

silverthorn.co.uk

Item	Part No.	Name	Qty	Uom	Remarks	SERIAL NUMBER
0	1902032500	PUMP, hydraulic	1	EA		
0-1	1902032599	KIT, seal	1	EA		
1	1902020733	GASKET	2	EA		
3	1420310910	O-RING	5	EA		
13	1902016531	PLUG ASSY (FOR O-RING ONLY USE #1420370906)	8	EA		
13	1420310906	O-RING (ARP568-906-1B)	8	EA		
14	1902010033	PLUG	2	EA		
15	1110050620	BOLT, socket (10TM6 X 20 P/1.0)	8	EA		
16	1902032501	COVER	2	EA		
17	1902018807	ORIFICE	2	EA		
48	1902032503	PLUG	1	EA		
49	1902016552	NUT	1	EA		
50	1902016553	SPRING	1	EA		
51	1902016554	POPPET	1	EA		

silverhorn.co.uk

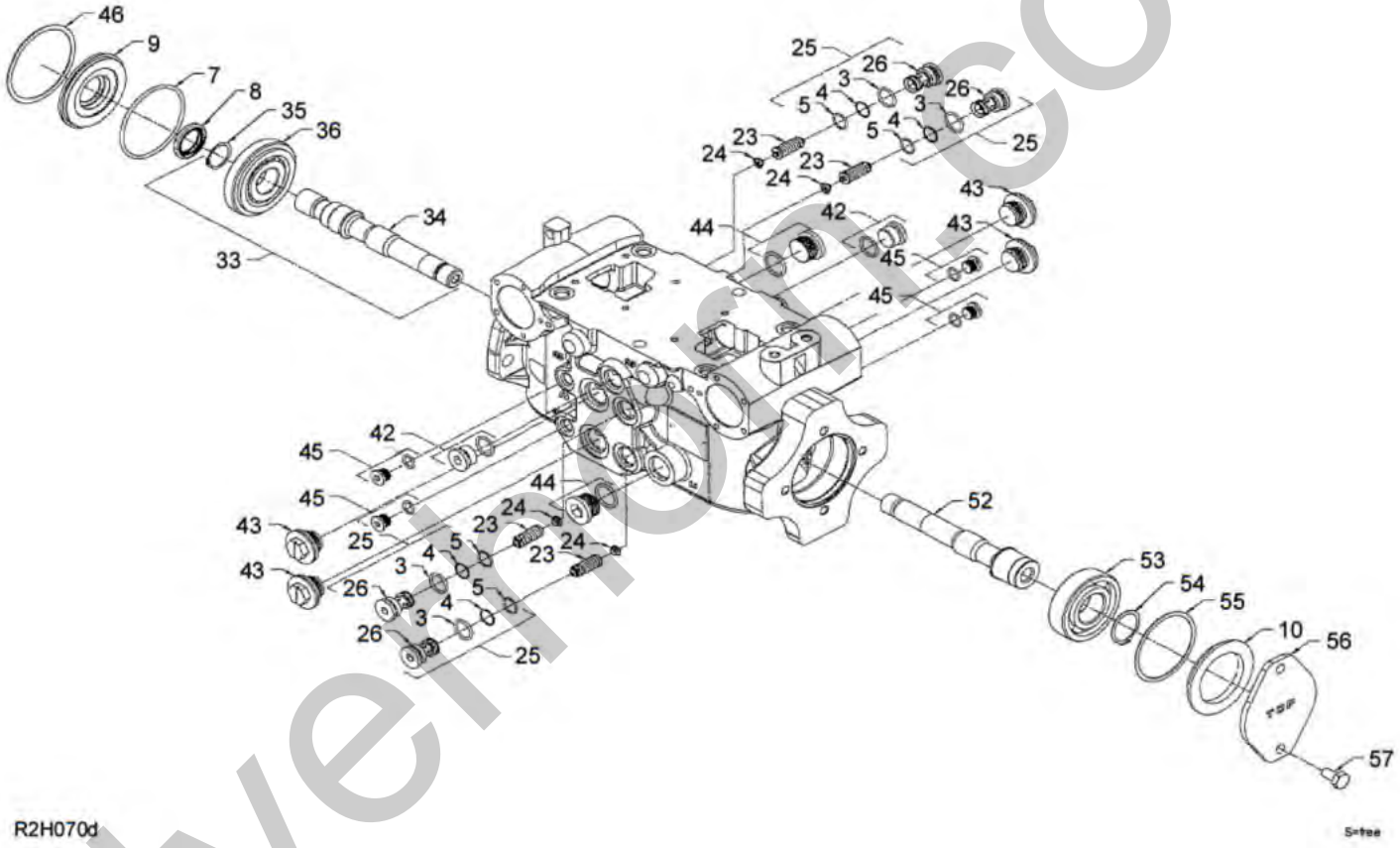

silvermoor.co.uk

Item	Part No.	Name	Qty	Uom	Remarks	SERIAL NUMBER
0	1902032500	PUMP, hydraulic	1	EA		
0-1	1902032599	KIT, seal	1	EA		
1	1902020733	GASKET	2	EA		
3	1420310910	O-RING	5	EA		
4	1902018815	RING, back-up	4	EA		
5	1902018814	O-RING	4	EA		
7	1902016507	O-RING	1	EA		
8	1902016508	SEAL, lip	1	EA		
9	1902021909	SEAL, carrier	1	EA		
10	1902024604	SEAL	1	EA		
23	1902023204	VALVE ASSY, SCR (A) (FRONT)	4	EA		
24	1902020736	SPRING	4	EA		
25	1902017716	PLUG ASSY	4	EA		
26	1902021410	PLUG	4	EA		
33	1902029204	SHAFT (15T)	1	EA		
34	1902021903	SHAFT	1	EA		
35	1902016505	RING, retaining	1	EA		
36	1902021906	BEARING	1	EA		
42	1912003106	PLUG ASSY	2	EA		
42	1420310910	O-RING	1	EA		
43	1902032502	PLUG	4	EA		
44	1902007412	PLUG (FOR O-RING USE # 1420310912)	2	EA		
44	1420310912	O-RING (ARP568-912-1B)	1	EA		
45	1901810214	PLUG ASSY	4	EA		
45	1420310906	O-RING (ARP568-906-1B)	1	EA		
46	1902016520	RING, retaining	1	EA		
52	1902032504	SHAFT	1	EA		
53	1902032505	BEARING	1	EA		
54	1902017704	RING, retaining	1	EA		
55	1902032506	RING, retaining	1	EA		
56	1902023219	PLATE	1	EA		
57	1100051020	BOLT (10TM10 X 20 P/1.5)	1	EA		
59	1902032507	PLATE	1	EA		

silverhorn.co.uk

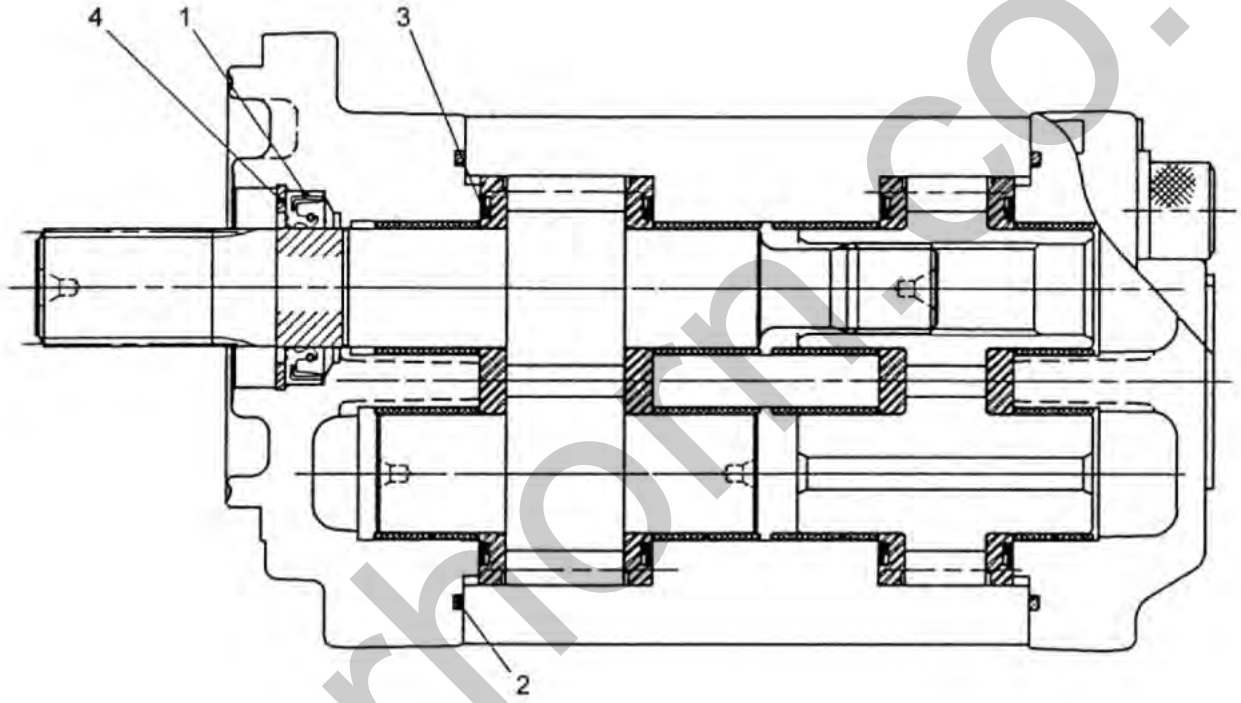

R2H080

silverhorn.co.uk

Item	Part No.	Name	Qty	Uom	Remarks	SERIAL NUMBER
0	1902032400	PUMP, gear	1	EA		
0-1	1902032499	KIT, seal	1	EA		
1	1902017618	SEAL, oil	1	EA		
2	1902018151	GASKET	2	EA		
3	1902017950	GASKET	4	EA		
4	1221000036	RING, snap	1	EA		

silverhorn.co.uk

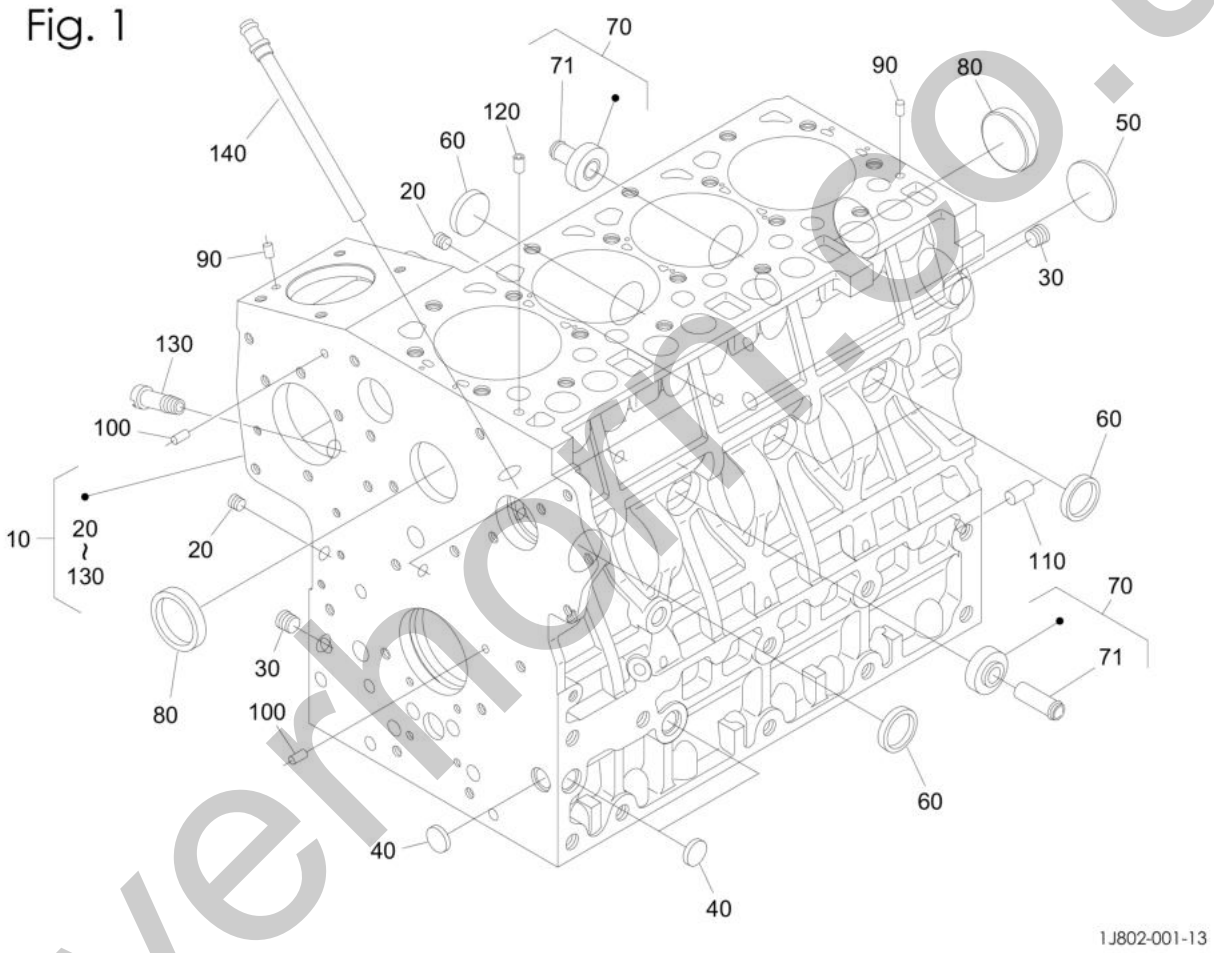

silverhoe.co.uk

Item	Part No.	Name	Qty	Uom	Remarks	SERIAL NUMBER
10	K1J802-01012	CRANKCASE (COMPLETE)	1	EA		
20	K15521-96020	PLUG	5	EA		
30	K15521-96030	PLUG	2	EA		
40	K17391-96160	PLUG, expansion	3	EA		
50	K16271-96160	PLUG	1	EA		
60	K15221-03380	CAP, sealing	4	EA		
70	K1J860-71010	PIPE (COMPLETE)	2	EA		
71	K17331-73342	PIPE, water return	2	EA		
80	K15221-03390	CAP, sealing	2	EA		
90	K05012-00609	PIN, straight	2	EA		
100	K05012-00612	PIN, straight	2	EA		
110	K05012-01018	PIN, straight	1	EA		
120	K15221-33650	PIN, pipe	1	EA		
130	K15321-73340	PIPE, water return	1	EA		
140	K1J801-05840	PIPE, oil return	1	EA		

silverhorn.co.uk

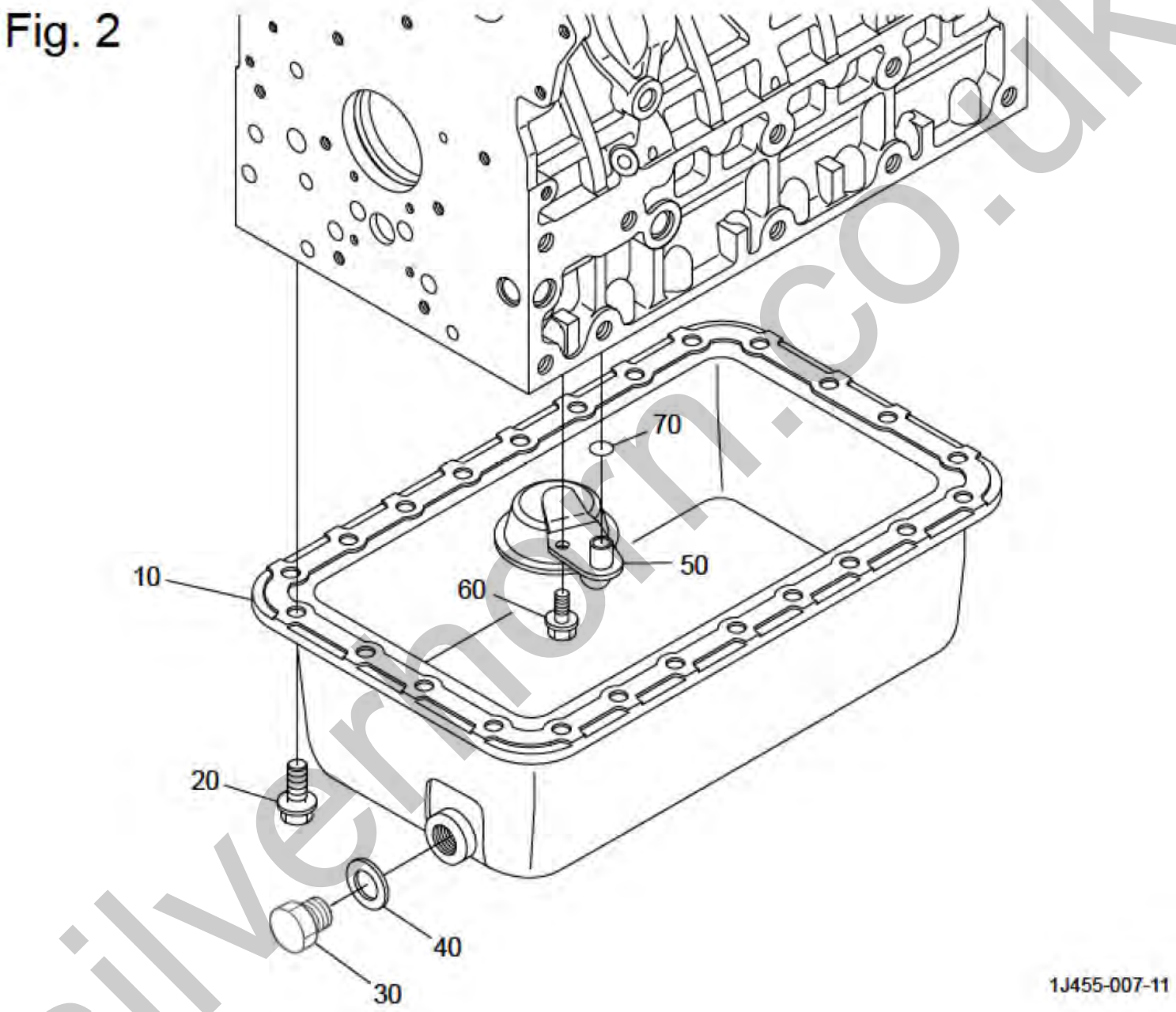

silvernorn.co.uk

Item	Part No.	Name	Qty	Uom	Remarks	SERIAL NUMBER
10	K17113-01613	PAN, oil	1	EA		
20	K1G861-91010	BOLT, flange	24	EA		
30	K06331-35016	PLUG, oil	1	EA		
40	K04724-00160	PACKING	1	EA		
50	K15628-32110	FILTER, oil	1	EA		
60	K01754-50812	BOLT, flange	1	EA		
70	K04817-00160	O-RING	1	EA		

silverhorn.co.uk

Fig. 3

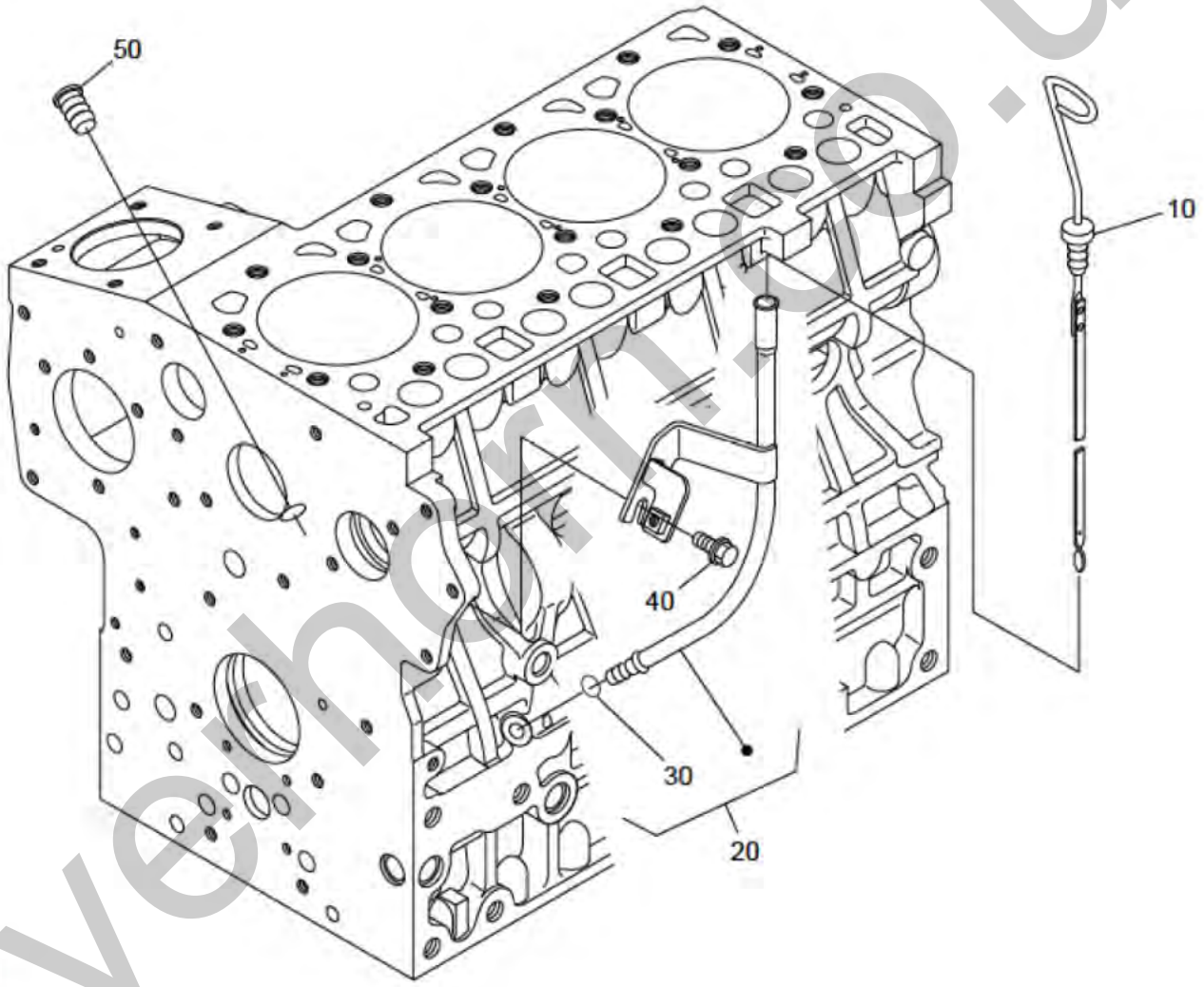

silverhorse.uk

Item	Part No.	Name	Qty	Uom	Remarks	SERIAL NUMBER
10	K1K841-36410	GAUGE, engine oil	1	EA		
20	K1K841-36500	GUIDE ASSY, gauge	1	EA		
30	K04814-00090	O-RING	1	EA		
40	K01754-50812	BOLT, flange	1	EA		
50	K1G513-36550	PLUG, oil gauge	1	EA		

silverhorn.co.uk

Fig. 4

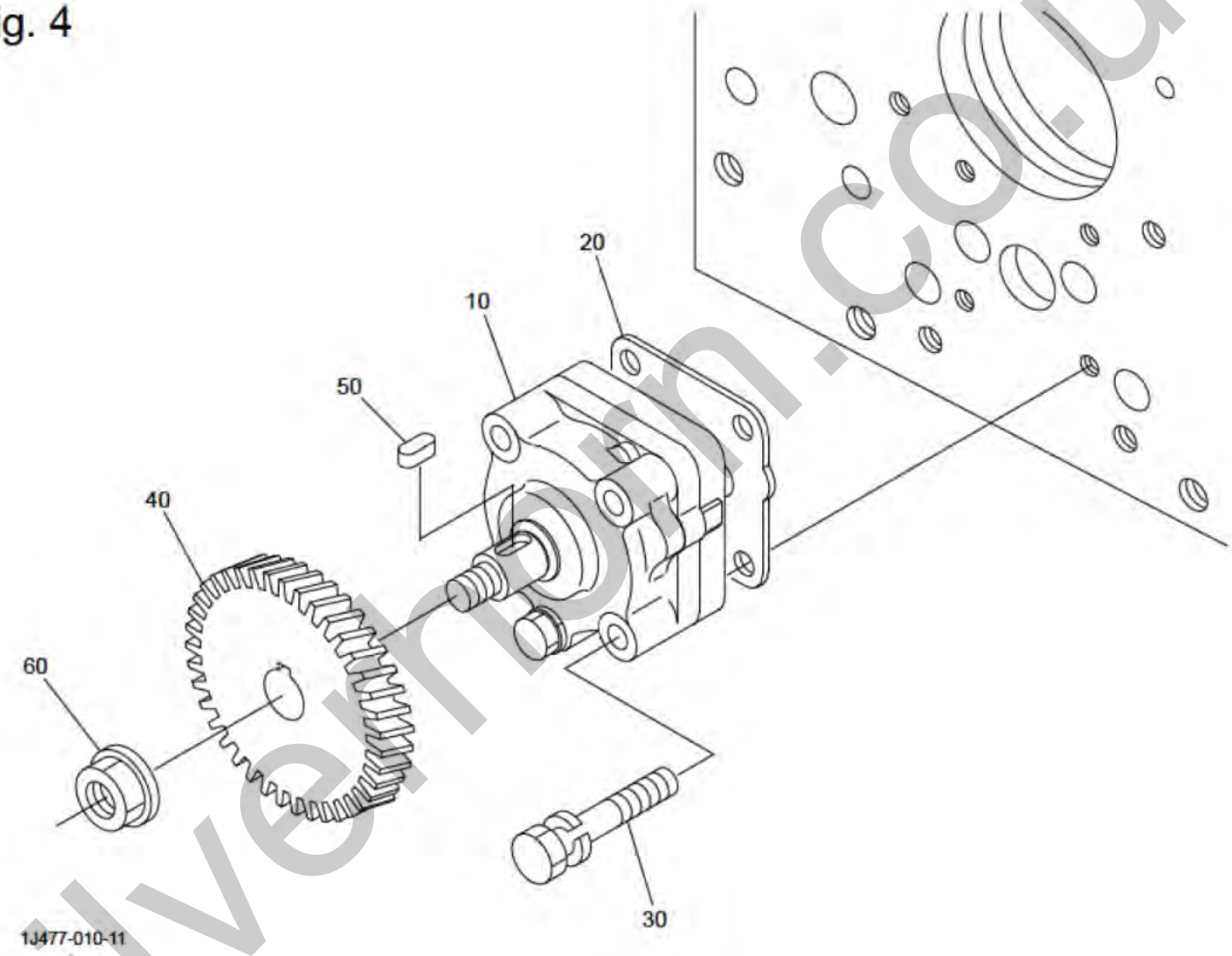

silverhorn.co.uk

Item	Part No.	Name	Qty	Uom	Remarks	SERIAL NUMBER
10	K15471-35013	PUMP ASSY, oil	1	EA		
20	K1A021-35150	GASKET, oil pump	1	EA		
30	K01023-50650	BOLT, sems	4	EA		
40	K17301-35663	GEAR, oil pump drive	1	EA		
50	K05712-00410	KEY, feather	1	EA		
60	K15221-35682	NUT	1	EA		

silverhorn.co.uk

Fig. 5

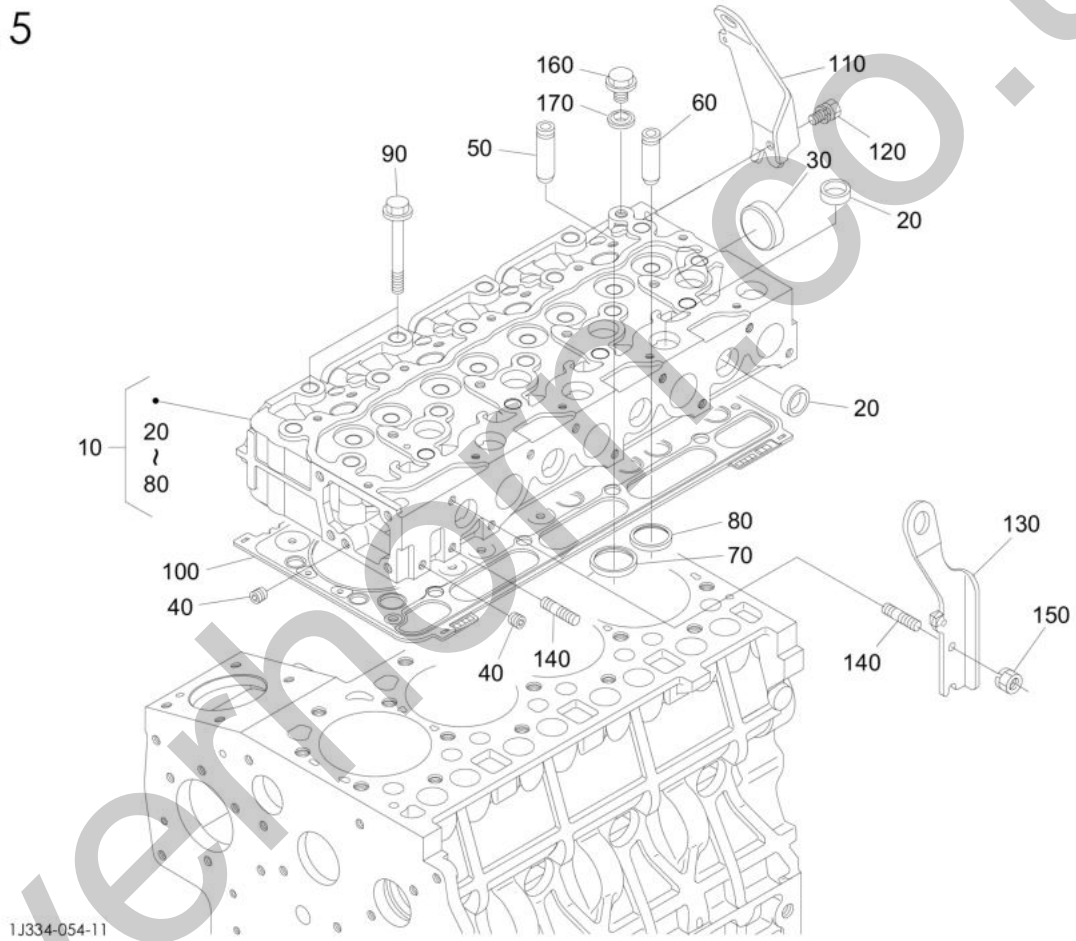

silverhorti.co.uk

Item	Part No.	Name	Qty	Uom	Remarks	SERIAL NUMBER
10	K1J800-03040	HEAD, cylinder (COMPLETE)	1	EA		
20	K15221-03370	CAP, sealing	12	EA		
30	K15221-03490	CAP, sealing	1	EA		
40	K15261-96010	PLUG	2	EA		
50	K1G896-13580	GUIDE, valve inlet	4	EA		
60	K1C010-13560	GUIDE, exhaust valve	4	EA		
70	K17111-13620	SEAT, inlet valve	4	EA		
80	K17111-13612	SEAT, exhaust valve	4	EA		
90	K19013-03450	BOLT, cylinder head	18	EA		
100	K1G790-03602	GASKET, cylinder head (1.15mm)	1	EA		
100	K1G790-03312	GASKET, cylinder head (1.20mm)	1	EA		
100	K1G790-03612	GASKET, cylinder head (1.25mm)	1	EA		
100	K1G790-03622	GASKET, cylinder head (1.30mm)	1	EA		
100	K1G790-03632	GASKET, cylinder head (1.35mm)	1	EA		
110	K1J801-01750	HOOK, engine (REAR)	1	EA		
120	K01123-50816	BOLT, sems	1	EA		
130	K1K841-01740	HOOK, engine (FRONT)	1	EA		
140	K15471-91530	STUD	2	EA		
150	K16429-92010	NUT (W/ LOCK WASHER)	1	EA		
160	K06311-55010	PLUG	1	EA		
170	K04717-01000	WASHER (WITH RUBBER)	1	EA		

silverhorn.co.uk

Fig. 6

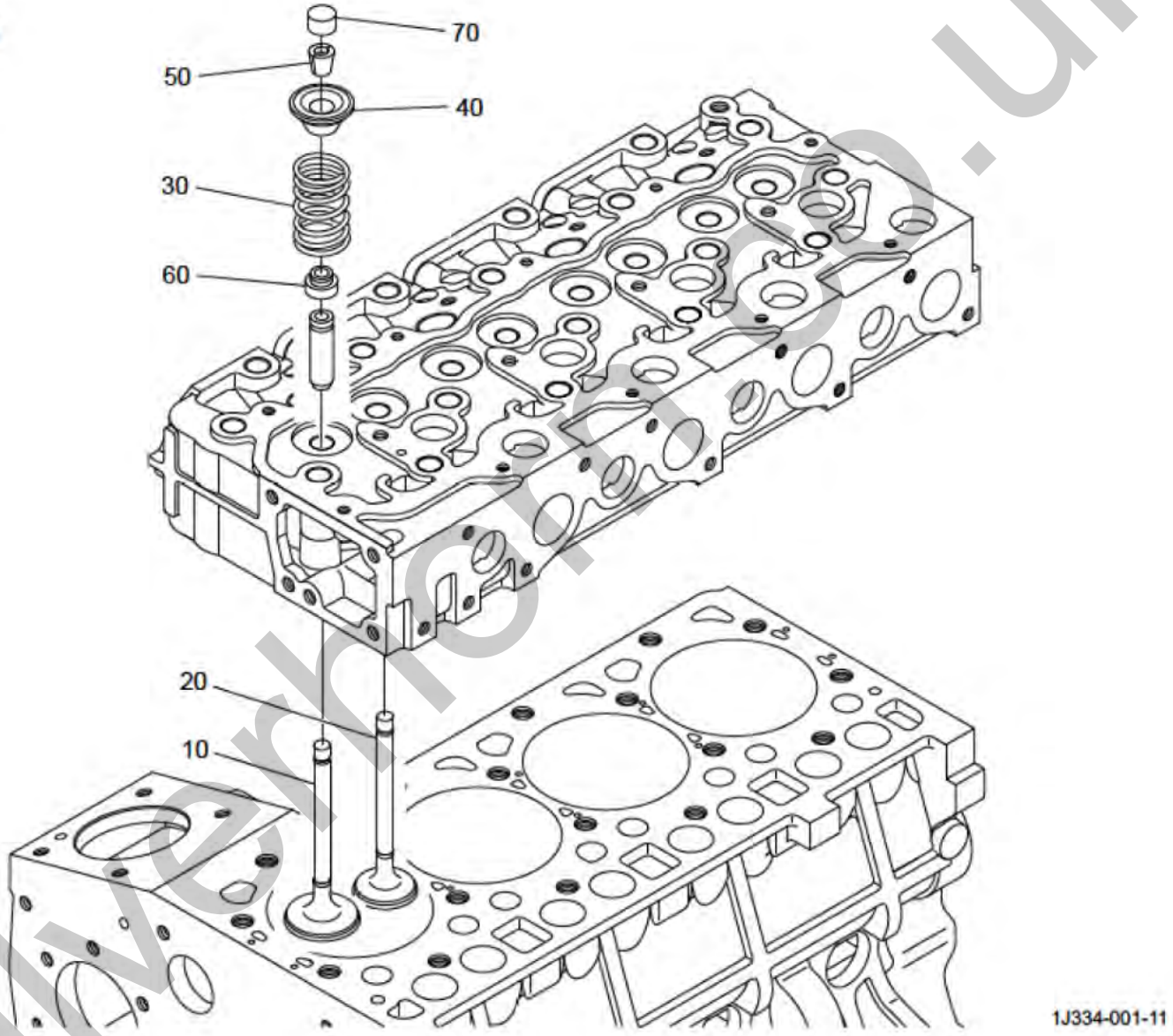

silverhorse.uk

Item	Part No.	Name	Qty	Uom	Remarks	SERIAL NUMBER
10	K1G852-13114	VALVE, inlet	4	EA		
20	K1G852-13124	VALVE, exhaust	4	EA		
30	K1G896-13240	SPRING, valve	8	EA		
40	K15221-13330	RETAINER, valve spring	8	EA		
50	K15221-13980	COLLETT, valve spring (SET)	8	EA		
60	K15221-13153	SEAL, valve stem	8	EA		
70	K1G896-13280	CAP, valve	8	EA		

silverhorn.co.uk

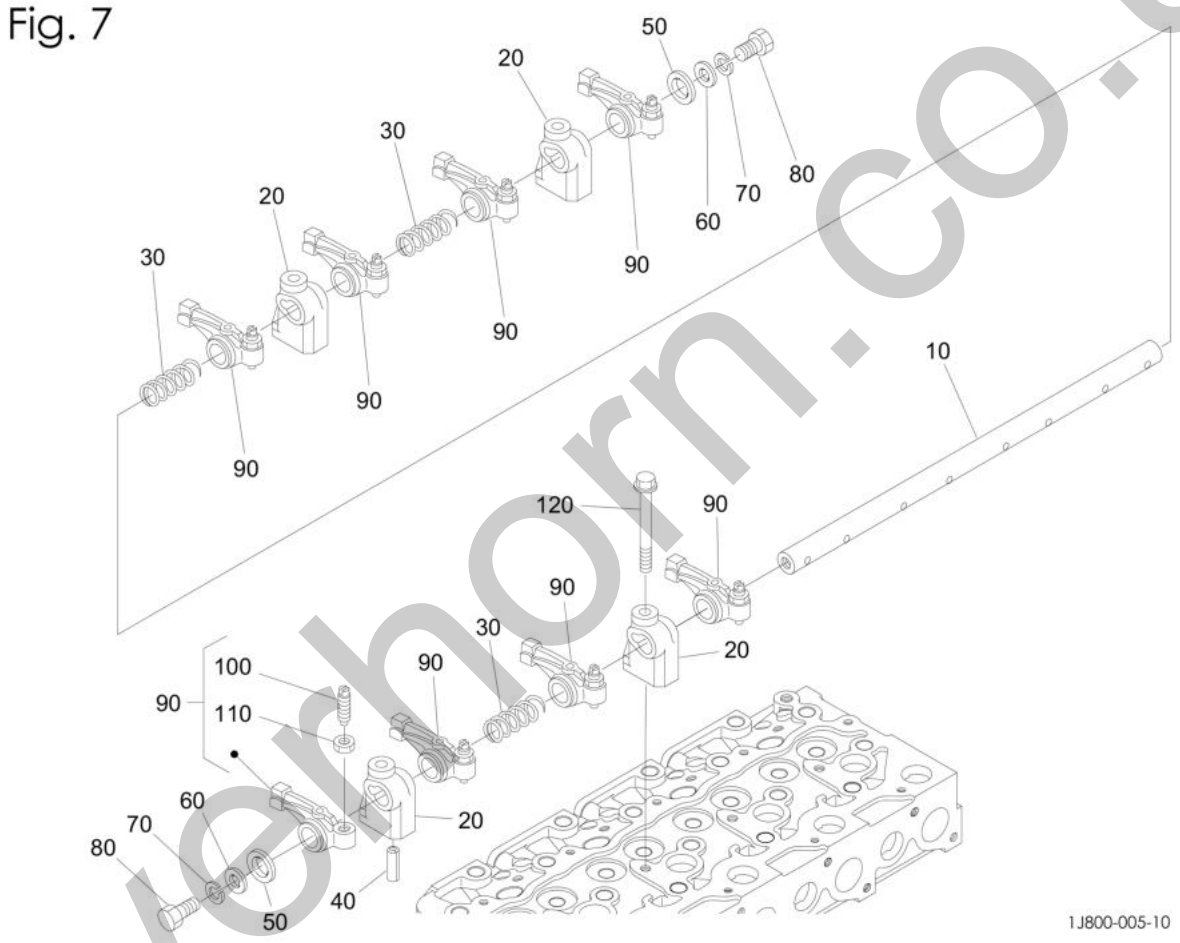

silverhorn.co.uk

Item	Part No.	Name	Qty	Uom	Remarks	SERIAL NUMBER
10	K1A091-14260	SHAFT, rocker arm	1	EA		
20	K15221-14353	BRACKET, rocker arm	4	EA		
30	K15221-14310	SPRING, rocker arm	3	EA		
40	K05411-00528	PIN, spring	1	EA		
50	K15221-14430	WASHER, rocker arm shaft	2	EA		
60	K04013-50080	WASHER, plain	2	EA		
70	K04512-60080	WASHER, spring	2	EA		
80	K01153-50812	BOLT, hex	2	EA		
90	K15621-14030	ARM ASSY, rocker	8	EA		
100	K1G896-14230	SCREW, adjusting	8	EA		
110	K15021-14240	NUT	8	EA		
120	K01754-50855	BOLT, flange	4	EA		

silverhorn.co.uk

Fig. 8

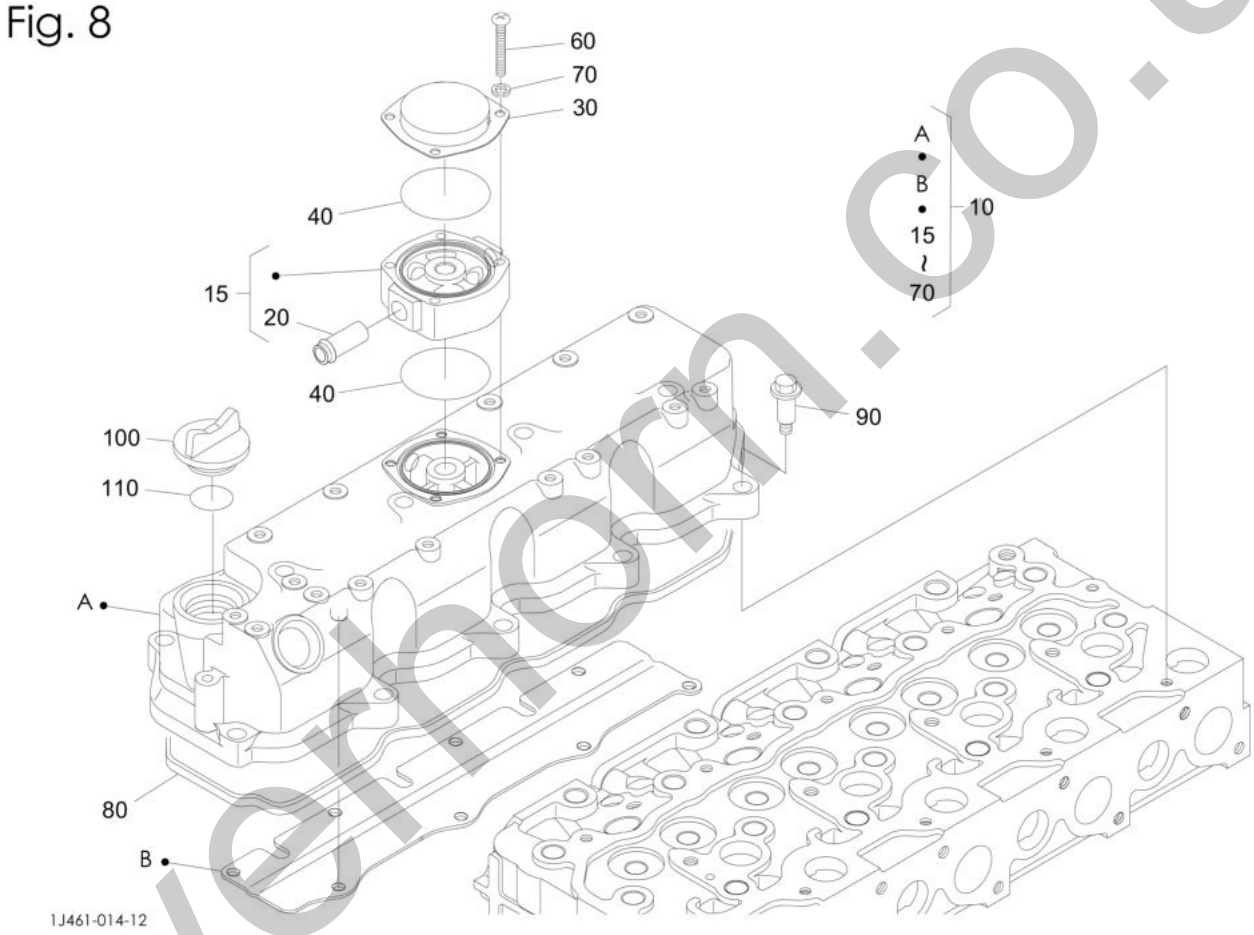

silverhorn.co.uk

Item	Part No.	Name	Qty	Uom	Remarks	SERIAL NUMBER
10	K1J801-14502	HEAD ASSY, cover	1	EA		
15	K1J802-14680	SPACER, breather (COMPLETE)	1	EA		
20	K17331-73342	PIPE, water return	1	EA		
30	K1G742-05120	COVER, breather	1	EA		
40	K1G924-05430	O-RING	2	EA		
60	K03054-50535	BOLT, sems (PAN HEAD/PHILLIPS)	4	EA		
70	K04512-50050	WASHER, spring lock	4	EA		
80	K1G911-14523	GASKET, head cover	1	EA		
90	K1G911-91022	BOLT	10	EA		
100	K15852-33140	PLUG, oil filler	1	EA		
110	K04817-50300	O-RING	1	EA		

silverhorn.co.uk

Fig. 9

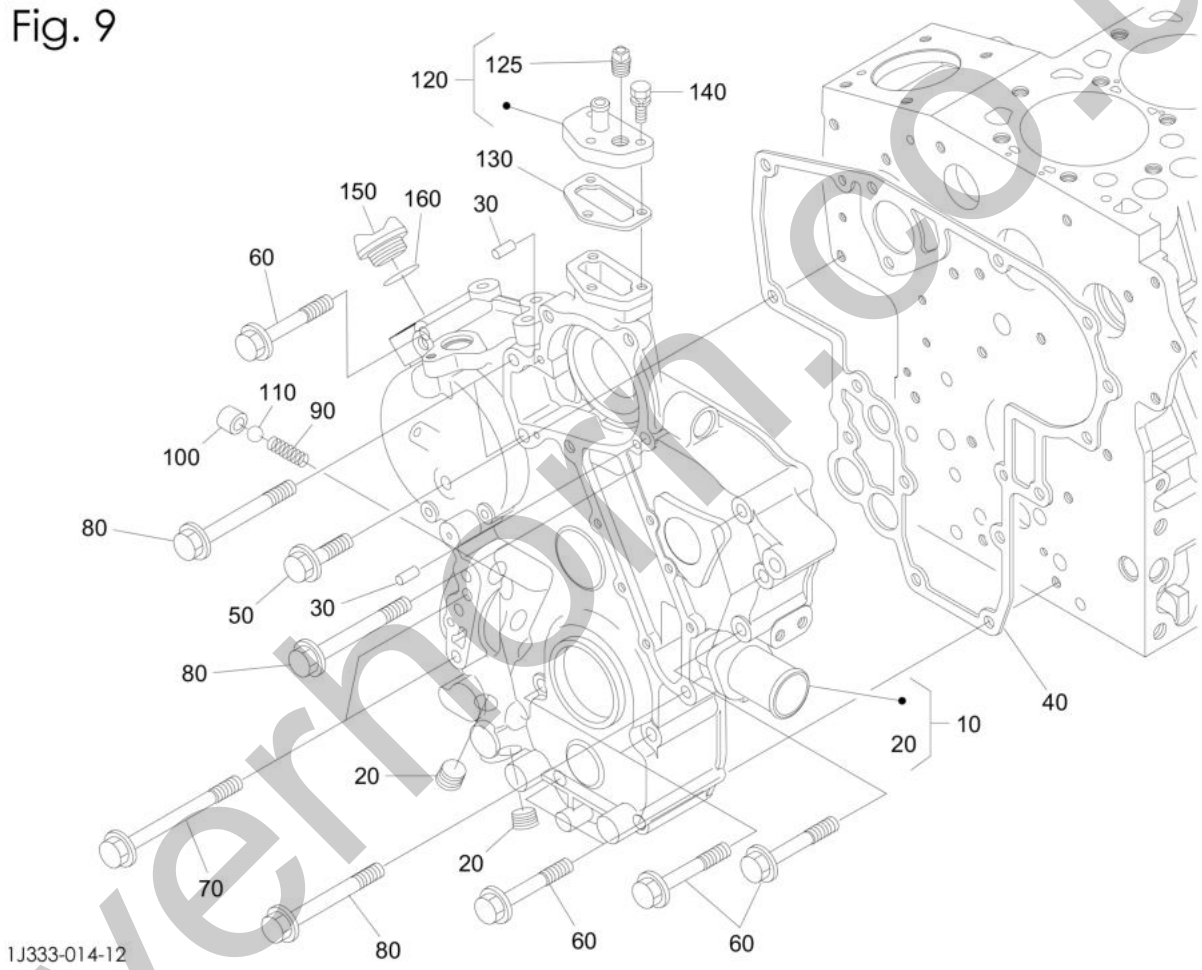

silverhorn.co.uk

Item	Part No.	Name	Qty	Uom	Remarks	SERIAL NUMBER
10	K1J801-04020	CASE, gear (COMPLETE)	1	EA		
20	K16241-96020	BOLT, flange	2	EA		
30	K05012-00612	PIN, straight	2	EA		
40	K1J801-04130	GASKET, gear case	1	EA		
50	K01754-50830	BOLT, flange	1	EA		
60	K1A021-91030	BOLT, sems	8	EA		
70	K1G841-91010	BOLT, sems	2	EA		
80	K01754-50885	BOLT, flange	4	EA		
90	K15241-36950	SPRING	1	EA		
100	K15521-36930	SEAT, valve	1	EA		
110	K07715-03213	BALL	1	EA		
120	K1J333-73442	FLANGE ASSY (WATER RETURN)	1	EA		
125	K1G390-96010	W-PLUG	1	EA		
130	K1A021-73332	GASKET, return flange	1	EA		
140	K01023-50625	BOLT, sems	3	EA		
150	K15852-33140	PLUG, oil filler	1	EA		
160	K04817-50300	O-RING	1	EA		

silverhorn.co.uk

Fig. 10

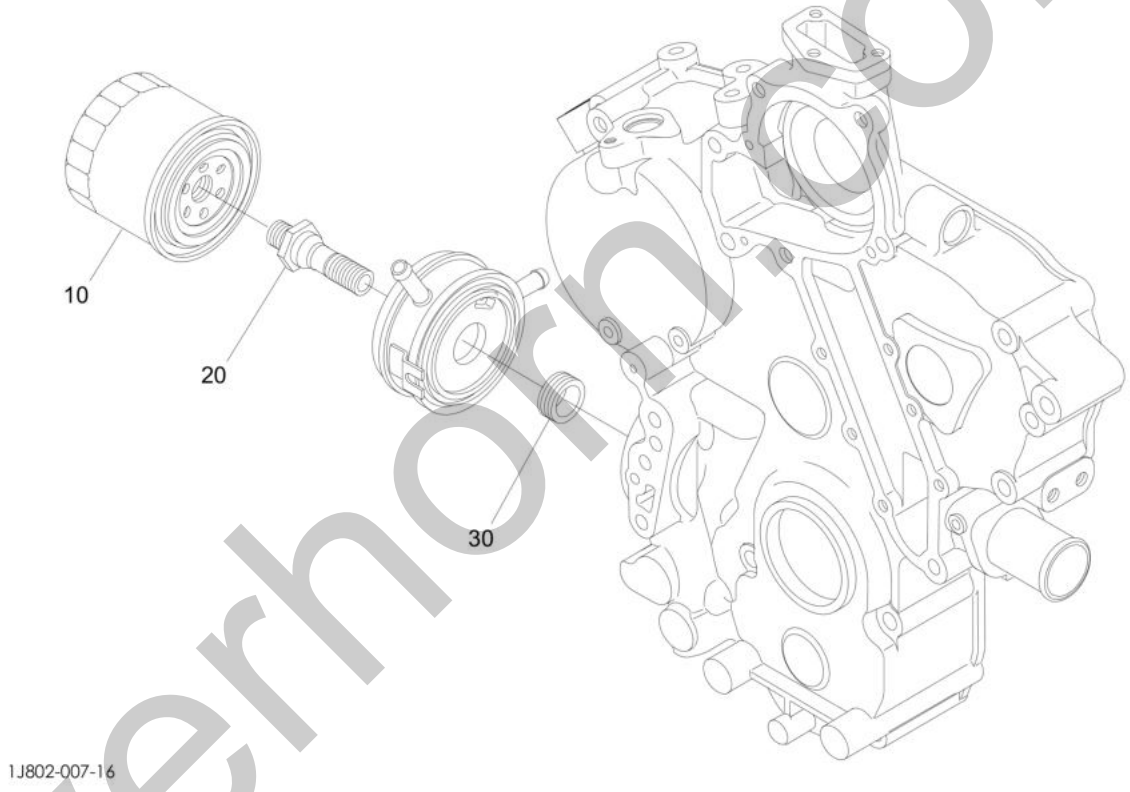

silverhorn.co.uk

Item	Part No.	Name	Qty	Uom	Remarks	SERIAL NUMBER
10	KHH164-32430	FILTER, oil (CARTRIDGE)	1	EA		
20	K1G622-37084	CONNECTOR	1	EA		
30	K1G897-37090	COLLAR	1	EA		

silverhorn.co.uk

Fig. 11

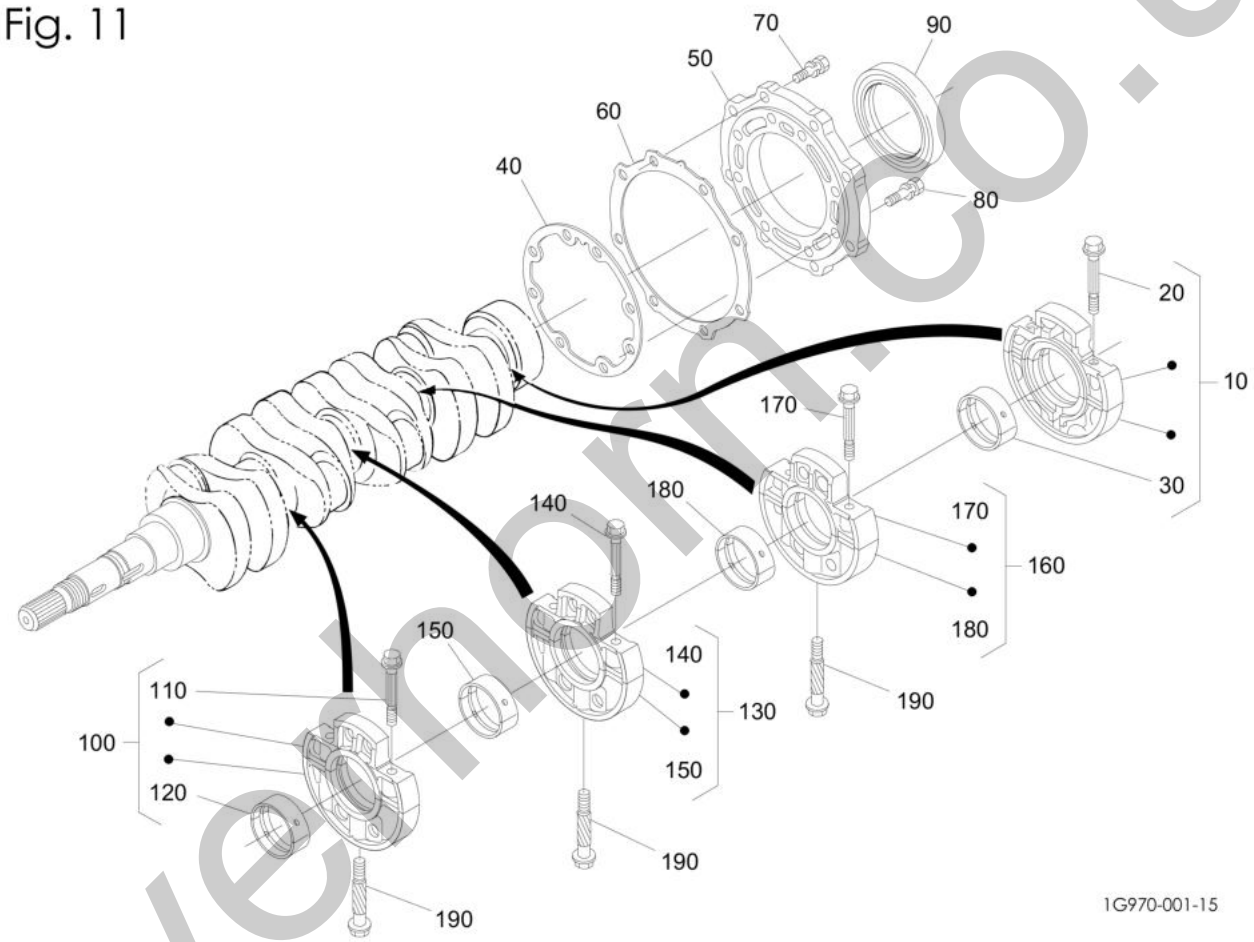

silvethorn.co.uk

Item	Part No.	Name	Qty	Uom	Remarks	SERIAL NUMBER
10	K1A091-07095	BEARING ASSY, wheel case	1	EA		
20	K1A091-04540	BOLT, bearing case	2	EA		
30	K1A091-23482	METAL SET, crankshaft (STANDARD)	1	EA		
30	K1A091-23930	METAL SET, crankshaft (-0.20mm)	1	EA		
30	K1A091-23940	METAL SET, crankshaft (-0.40mm)	1	EA		
40	K1A091-04362	GASKET, bearing case	1	EA		
50	K1G851-04813	COVER, bearing case	1	EA		
60	K1A091-04820	GASKET, case cover	1	EA		
70	K01123-50825	BOLT, sems	8	EA		
80	K01123-50828	BOLT, sems	8	EA		
90	K16433-04460	SEAL, oil	1	EA		
100	K1A071-07044	BEARING ASSY, main case	1	EA		
110	K1A091-04540	BOLT, bearing case	2	EA		
120	K1A091-23482	METAL SET, crankshaft (STANDARD)	1	EA		
120	K1A091-23930	METAL SET, crankshaft (-0.20mm)	1	EA		
120	K1A091-23940	METAL SET, crankshaft (-0.40mm)	1	EA		
130	K1A071-07054	BEARING ASSY, main case	1	EA		
140	K1A091-04540	BOLT, bearing case	2	EA		
150	K1A091-23482	METAL SET, crankshaft (STANDARD)	1	EA		
150	K1A091-23930	METAL SET, crankshaft (-0.20mm)	1	EA		
150	K1A091-23940	METAL SET, crankshaft (-0.40mm)	1	EA		
160	K1A071-07064	BEARING ASSY, main case	1	EA		
170	K1A091-04540	BOLT, bearing case	2	EA		
180	K1A091-23482	METAL SET, crankshaft (STANDARD)	1	EA		
180	K1A091-23930	METAL SET, crankshaft (-0.20mm)	1	EA		
180	K1A091-23940	METAL SET, crankshaft (-0.40mm)	1	EA		
190	K15601-04560	BOLT, bearing case	3	EA		

silvernorn.co.uk

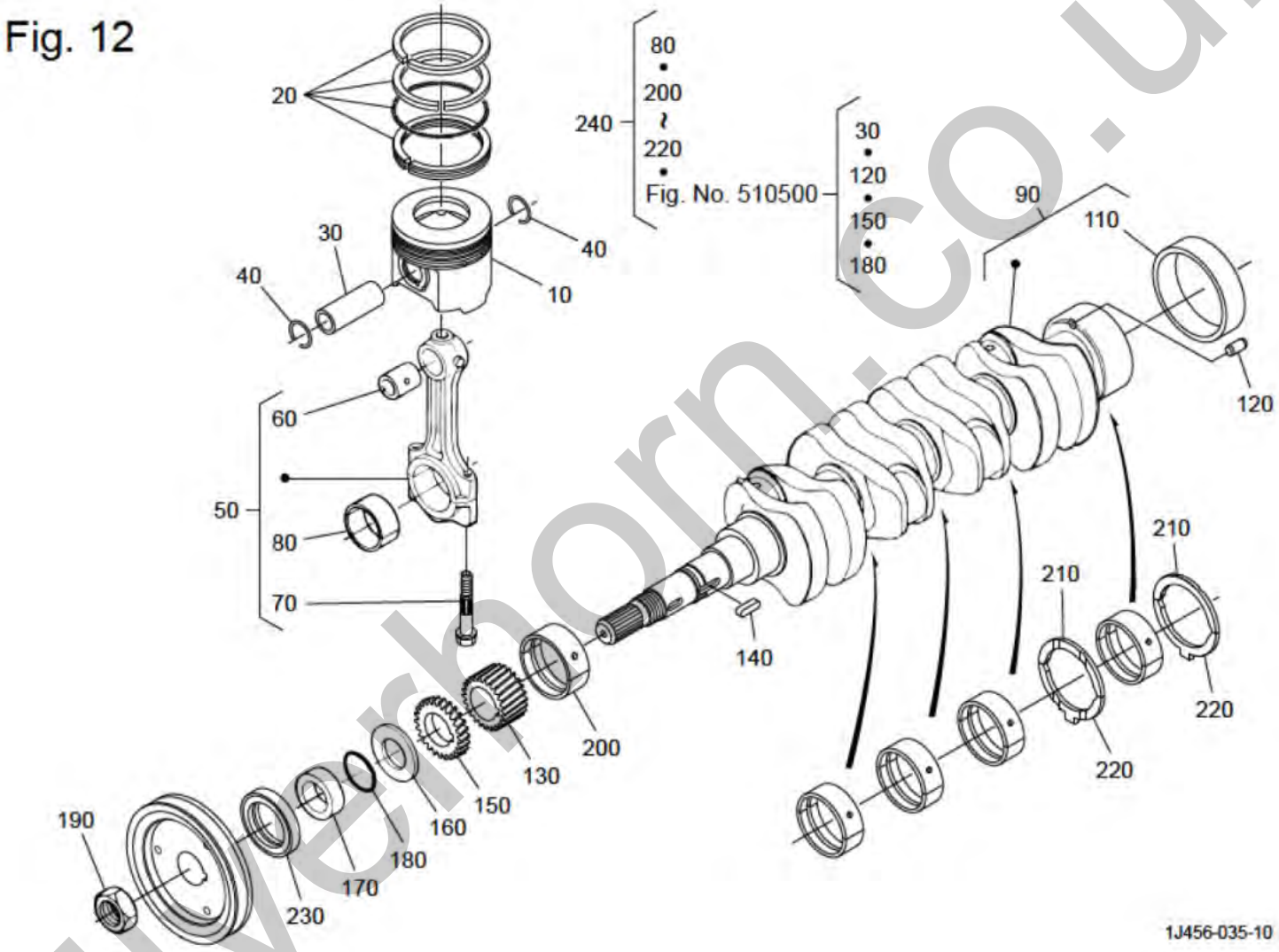

silverhorn.co.uk

Item	Part No.	Name	Qty	Uom	Remarks	SERIAL NUMBER
10	K1J803-21110	PISTON (STD)	4	EA		
10	K1J803-21900	PISTON (+0.25mm)	4	EA		
20	K1G924-21052	RING ASSY, piston (STD)	4	EA		
20	K1G924-21090	RING ASSY, piston (+0.25mm)	4	EA		
30	K1A021-21310	PIN, piston	4	EA		
40	K1G279-21330	CIRCLIP, internal	8	EA		
50	K1G924-22014	ROD ASSY, connecting	4	EA		
60	K1G924-21980	BUSH, piston pin	1	EA		
70	K1J700-22140	ROD ASSY, connecting	8	EA		
80	K17311-22312	METAL, crankpin (STD SET)	4	EA		
80	K17311-22970	METAL (CRANKPIN,02)(-0.20mm SET)	4	EA		
80	K17311-22980	METAL (CRANKPIN,04)(-0.40mm SET)	4	EA		
90	K1G851-23020	CRANKSHAFT (COMPLETE)	1	EA		
110	K19202-23280	BUSH, crankshaft	1	EA		
120	K1A021-23192	PIN, straight	1	EA		
130	K1J860-24110	GEAR, crankshaft	1	EA		
140	K05712-00730	KEY, feather	1	EA		
150	K15401-35630	GEAR, oil pump drive	1	EA		
160	K15471-23312	SLINGER, oil	1	EA		
170	K19202-23250	COLLAR, crankshaft	1	EA		
180	K04811-10300	O-RING	1	EA		
190	K15221-23360	NUT, crankshaft	1	EA		
200	K1A091-23472	METAL, crankshaft (STANDARD)	1	EA		
200	K1A091-23910	METAL, crankshaft (-0.20mm)	1	EA		
200	K1A091-23920	METAL, crankshaft (-0.40mm)	1	EA		
210	K1A091-23532	METAL, side (STD)	2	EA		
210	K1A091-23950	METAL, side (+0.20mm)	2	EA		
210	K1A091-23960	METAL, side (+0.40mm)	2	EA		
220	K1A091-23542	METAL, side (STD)	2	EA		
220	K1A091-23970	METAL, side (+0.20mm)	2	EA		
220	K1A091-23980	METAL, side (+0.40mm)	2	EA		
230	K1J826-04140	SEAL, oil	1	EA		
240	K1G856-23752	KIT, metal (ENGINE) (STD)	1	EA		
240	K1G856-23760	KIT, metal (ENGINE) (-0.20mm/+0.20mm)	1	EA		
240	K1G856-23770	KIT, metal (ENGINE) (-0.40mm/+0.40mm)	1	EA		

silverhorn.co.uk

Fig. 13

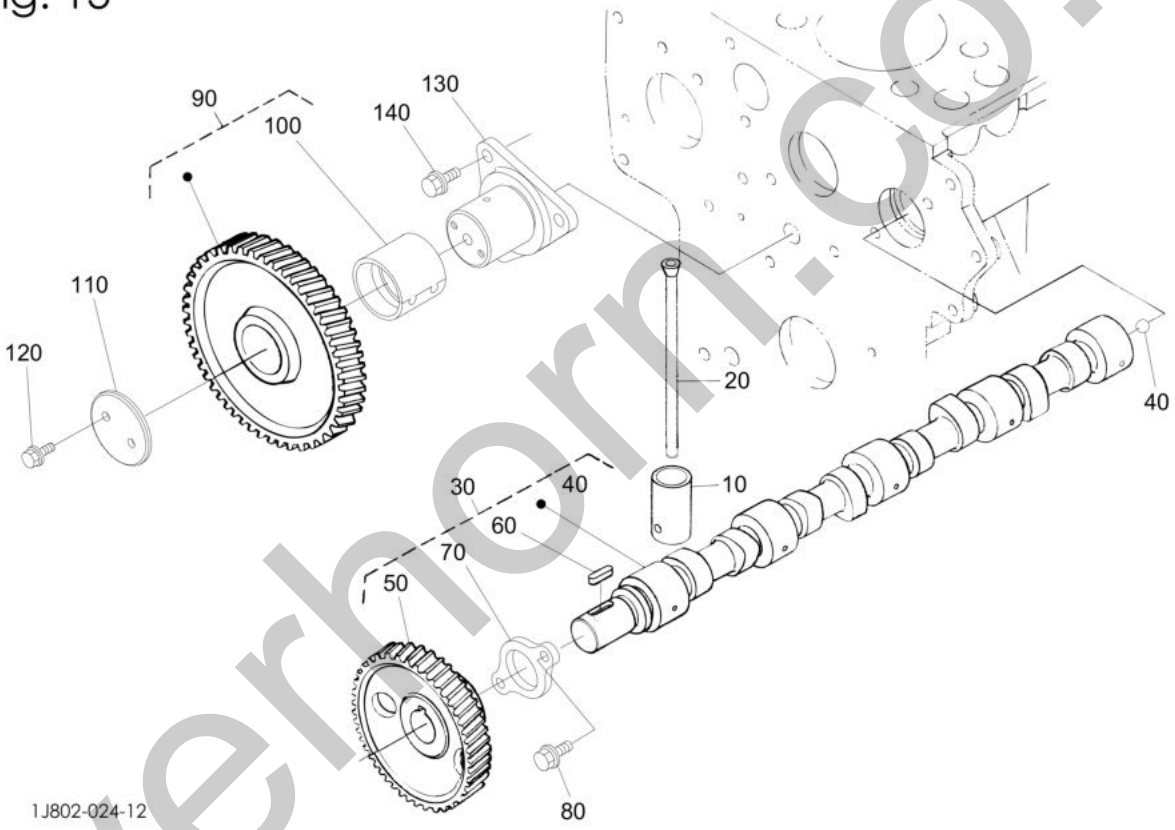

silverhorn.co.uk

Item	Part No.	Name	Qty	Uom	Remarks	SERIAL NUMBER
10	K15601-15553	TAPPET	8	EA		
20	K1A091-15110	ROD, push	8	EA		
30	K1G852-16010	CAMSHAFT ASSY	1	EA		
40	K07715-00401	BALL 1/4	1	EA		
50	K1A091-16513	GEAR, camshaft	1	EA		
60	K05712-00720	KEY, feather	1	EA		
70	K15221-16270	STOPPER, camshaft	1	EA		
80	K01754-50816	BOLT, flange	2	EA		
90	K1J854-24012	GEAR, idle (COMPLETE)	1	EA		
100	K1J860-24982	BUSH, idle gear	1	EA		
110	K1J854-24370	COLLAR, idle gear	1	EA		
120	K01754-50610	BOLT, flange	2	EA		
130	K1A021-24254	SHAFT, idle gear	1	EA		
140	K01754-50816	BOLT, flange	3	EA		

silverhorn.co.uk

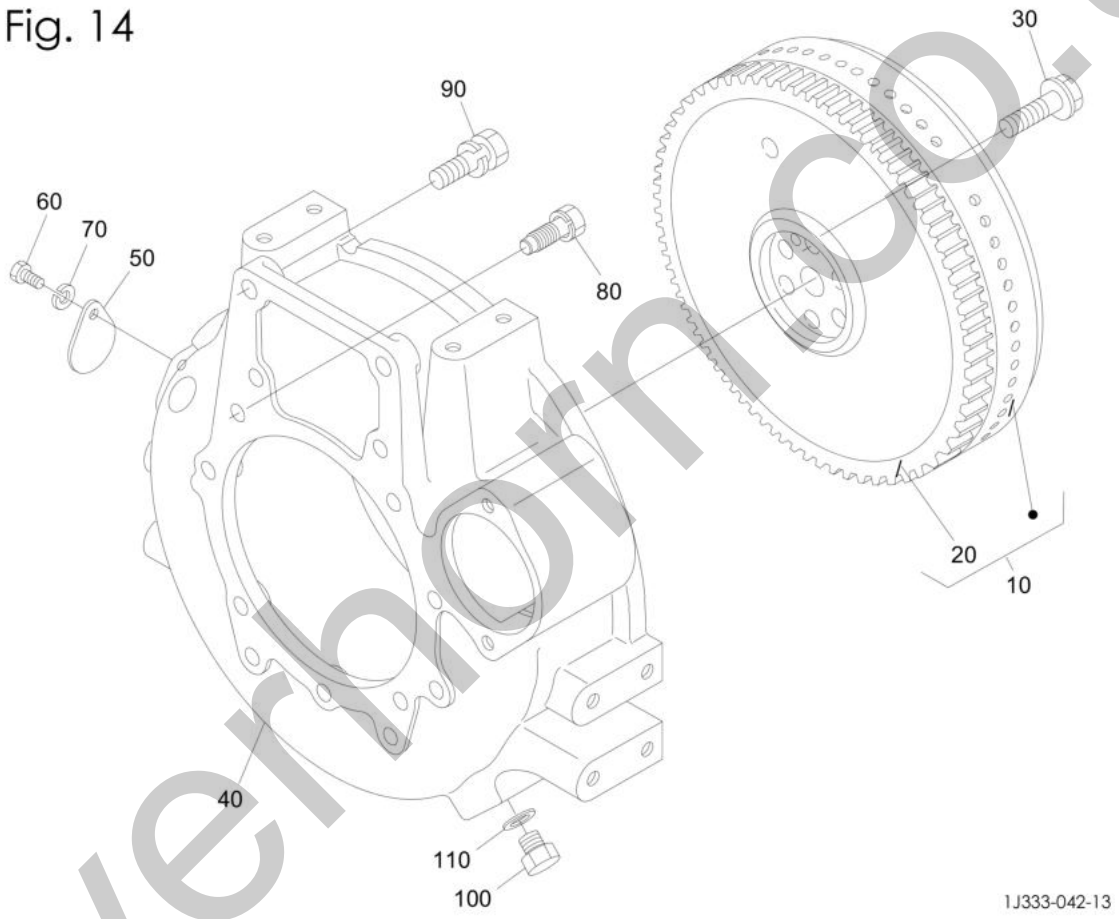

silverhorn.co.uk

Item	Part No.	Name	Qty	Uom	Remarks	SERIAL NUMBER
10	K1K841-25010	FLYWHEEL	1	EA		
20	K1A021-63820	GEAR, ring	1	EA		
30	K1G916-25160	BOLT, flywheel	6	EA		
40	K1K373-04612	HOUSING, flywheel	1	EA		
50	K31220-14172	COVER	1	EA		
60	K01153-50812	BOLT, hex	1	EA		
70	K04512-60080	WASHER, spring	1	EA		
80	K16427-91010	BOLT	11	EA		
90	K1J939-91010	BOLT	2	EA		
100	K36602-23240	PLUG	1	EA		
110	K04724-00180	GASKET	1	EA		

silverhorn.co.uk

Fig. 15

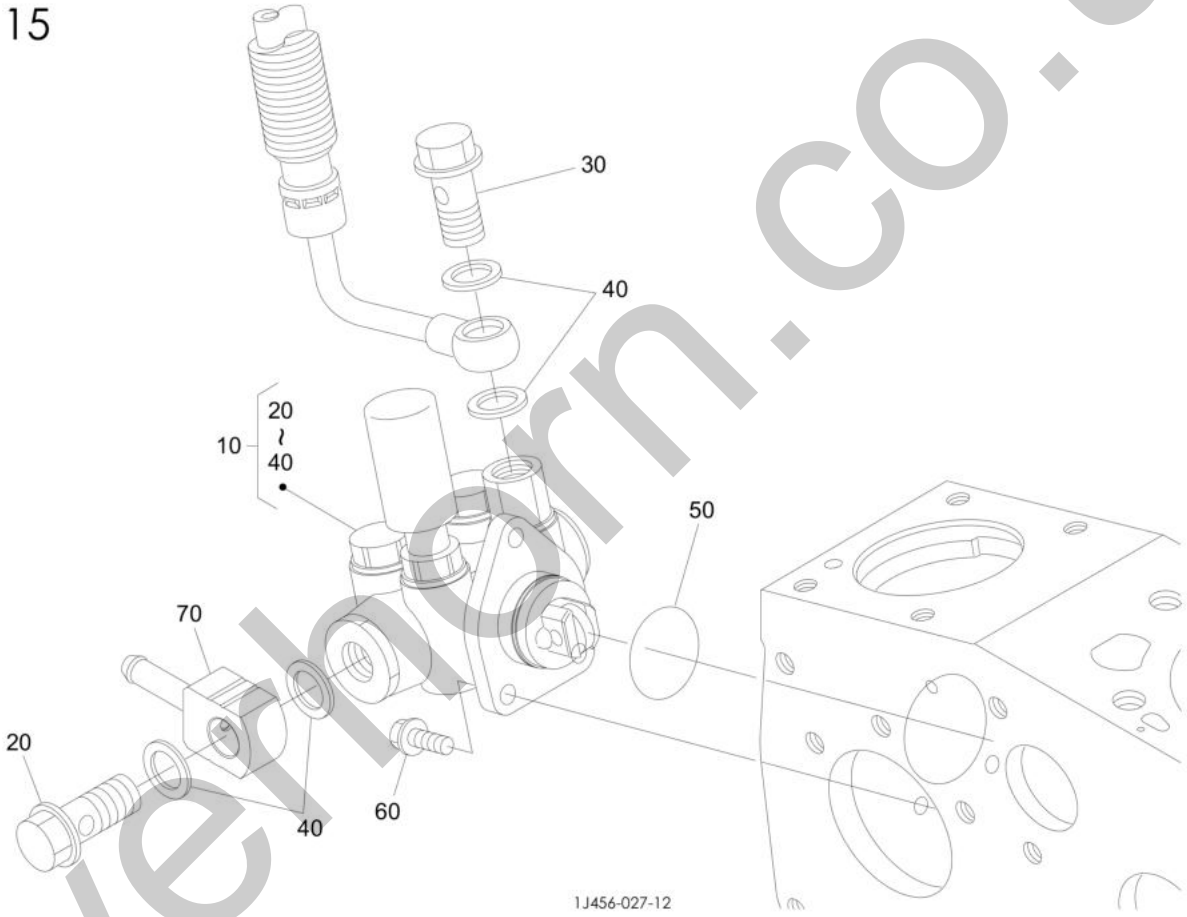

silverhorn.co.uk

Item	Part No.	Name	Qty	Uom	Remarks	SERIAL NUMBER
10	K1J801-52030	PUMP ASSY, fuel	1	EA		
20	K1J800-95810	BOLT, joint	1	EA		
30	K1J800-95820	BOLT, joint	1	EA		
40	K1J800-43650	GASKET (PIPE,JOINT)	4	EA		
50	K19013-96850	O-RING	1	EA		
60	K01754-50616	BOLT, flange	3	EA		
70	K1E417-95690	JOINT, pipe	1	EA		

silverhorn.co.uk

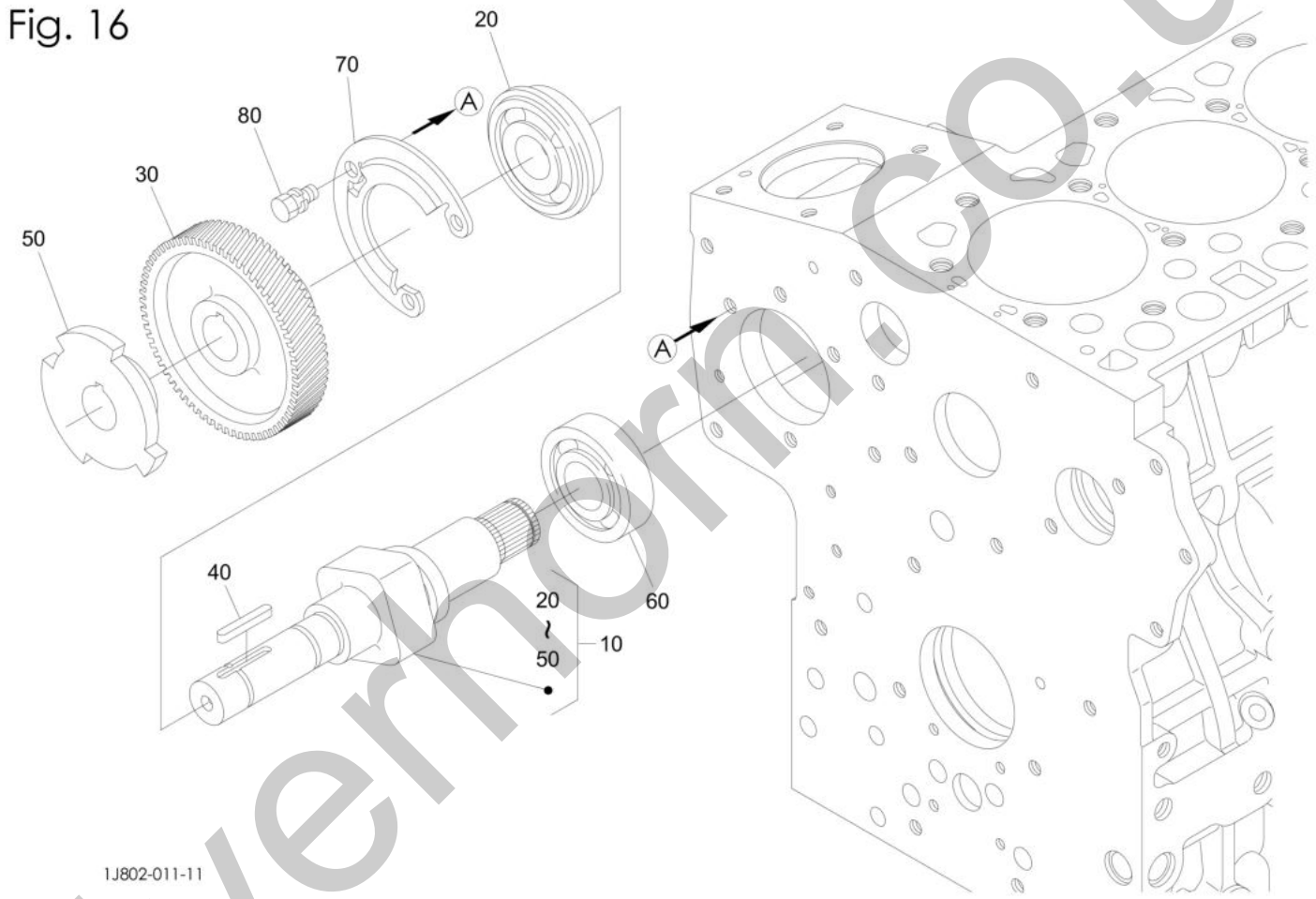

silverhorn.co.uk

Item	Part No.	Name	Qty	Uom	Remarks	SERIAL NUMBER
10	K1J801-16020	CAMSHAFT ASSY, fuel	1	EA		
20	K1G924-51750	BEARING, ball	1	EA		
30	K1J800-51150	GEAR	1	EA		
40	K05712-00535	KEY, feather	1	EA		
50	K1J801-16910	WHEEL	1	EA		
60	K1G861-97300	BEARING, ball	1	EA		
70	K1J800-16320	STOPPER, fuel (C/SHAFT)	1	EA		
80	K01123-50814	BOLT, sems	3	EA		

silverhorn.co.uk

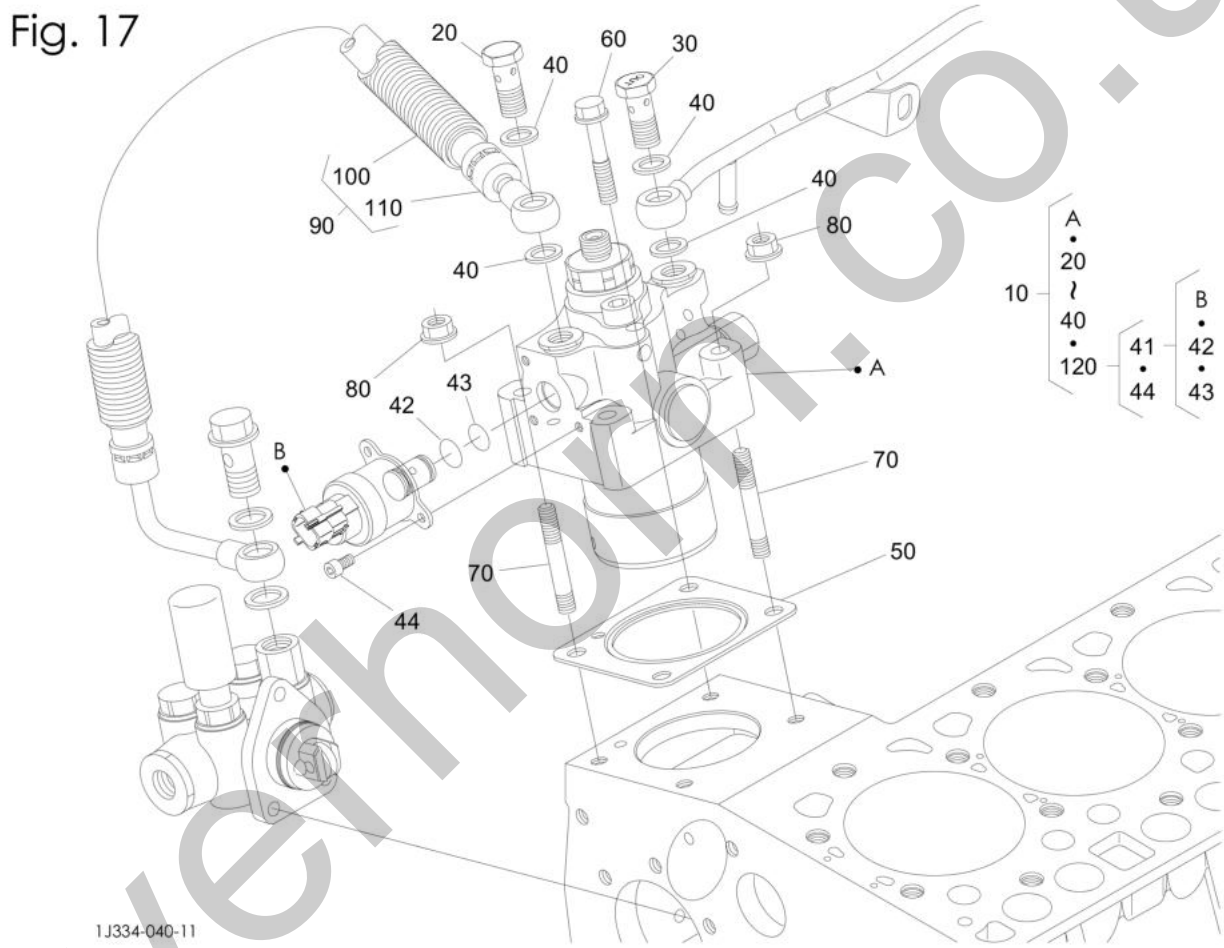

silverthorn.co.uk

Item	Part No.	Name	Qty	Uom	Remarks	SERIAL NUMBER
10	K1J801-50500	PUMP ASSY, supply	1	EA		
20	K1J800-95790	BOLT, joint	1	EA		
30	K1J800-95800	BOLT, joint	1	EA		
40	K1J800-50520	GASKET	4	EA		
41	K1J801-50540	VALVE ASSY (SCV)	1	EA		
42	K1J800-96780	O-RING(SCV,1)	1	EA		
43	K1J800-96790	O-RING(SCV,2)	1	EA		
44	K1J800-91430	BOLT (SCV)	3	EA		
50	K1J800-52130	GASKET, pump	1	EA		
60	K1J800-91010	BOLT, flange	2	EA		
70	K1J800-91490	STUD	2	EA		
80	K02751-50080	NUT, flange	2	EA		
90	K1E518-42070	HOSE ASSY, fuel	1	EA		
100	K1E518-42220	TUBE (PIPE)	1	EA		
110	K1E518-42090	HOSE, fuel (COMPLETE)	1	EA		
120	K1J801-97550	VALVE,KIT(SCV)	1	EA		

silverhorn.co.uk

Fig. 18

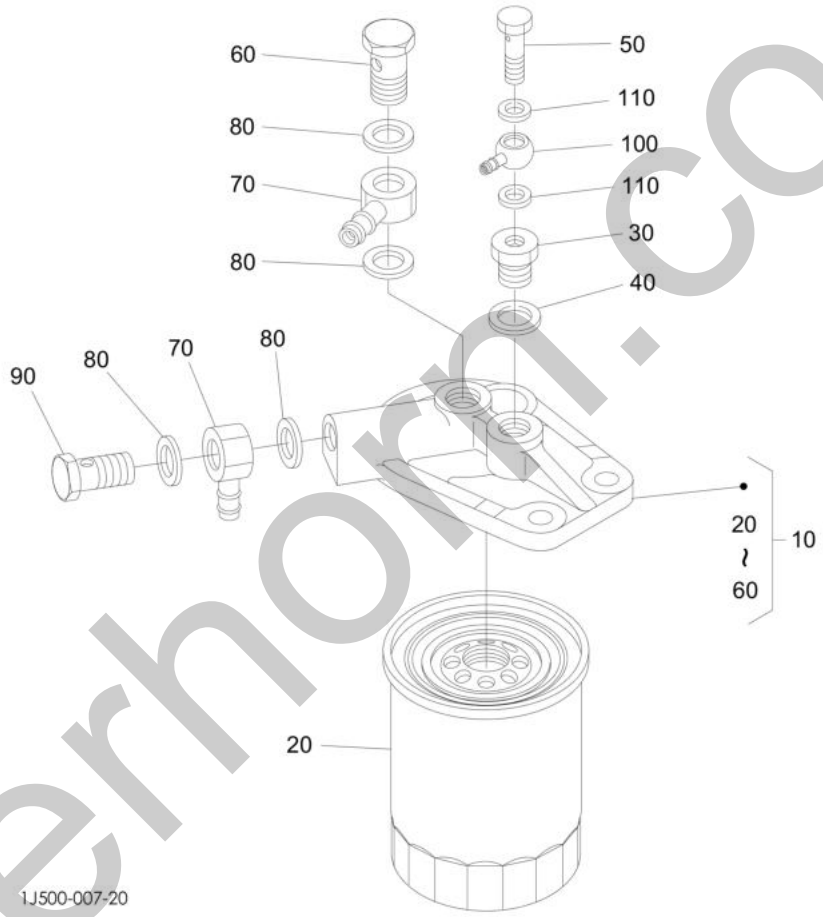

silverhorn.co.uk

Item	Part No.	Name	Qty	Uom	Remarks	SERIAL NUMBER
10	K1J301-43010	FILTER, fuel	1	EA		
20	K1J301-43170	FILTER, fuel (FOR AFTERMARKET SEE #AFK1J301-43170)	1	EA		
30	K1J301-95800	CONNECTOR	1	EA		
40	K1J301-33680	PACKING	1	EA		
50	K1J301-95810	CONNECTOR	1	EA		
60	K1K947-95790	BOLT, joint	1	EA		
70	K15401-95690	JOINT, fuel	2	EA		
80	K17105-33680	GASKET (VO ZB)	4	EA		
90	K16541-95790	BOLT, joint	1	EA		
100	K14117-42560	PIPE, fuel	1	EA		
110	K15021-33660	GASKET	2	EA		

silverhorn.co.uk

Fig. 19

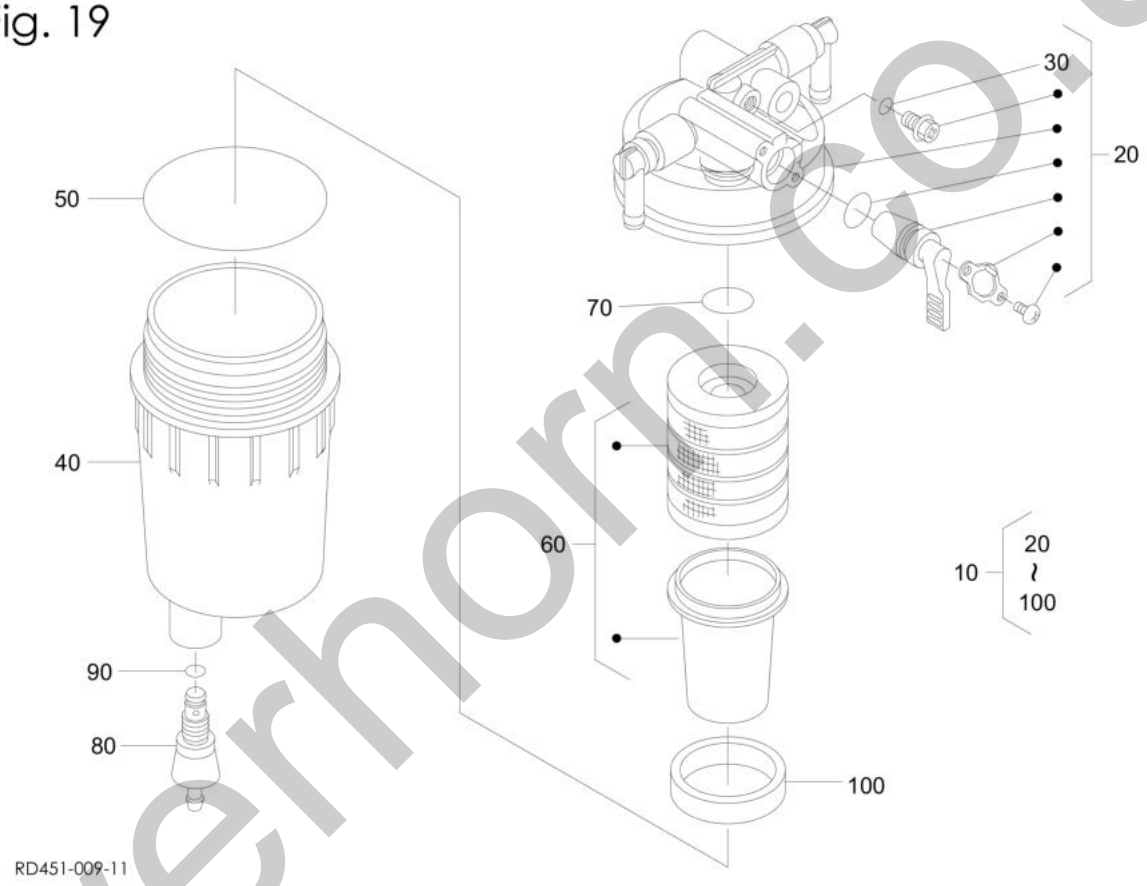

silverhorn.co.uk

Item	Part No.	Name	Qty	Uom	Remarks	SERIAL NUMBER
10	KRD451-51360	FILTER ASSY (WITH WATER SEPARATOR)	1	EA		
20	KRD451-51910	BODY ASSY	1	EA		
30	K04817-00060	O-RING	1	EA		
40	KRD451-51920	CUP	1	EA		
50	KRD451-51930	O-RING	1	EA		
60	KRD451-51940	ELEMENT (SEDIMENT STRAINER)	1	EA		
70	K04817-00160	O-RING	1	EA		
80	KRD451-51950	PLUG, drain	1	EA		
90	K04817-00070	O-RING	1	EA		
100	KRD451-51960	FLOAT	1	EA		

silverhorn.co.uk

Fig. 20

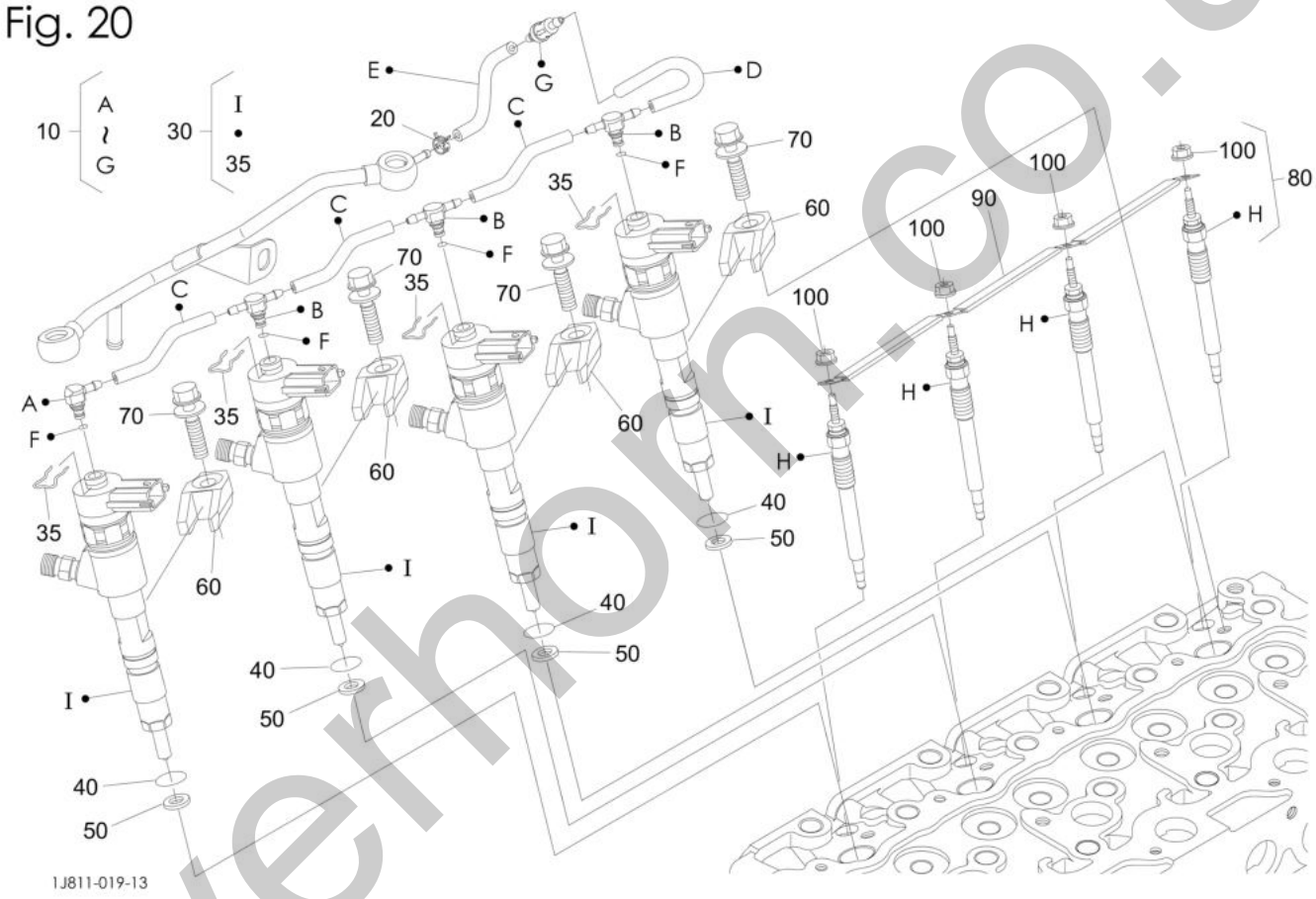

silverhorn.co.uk

Item	Part No.	Name	Qty	Uom	Remarks	SERIAL NUMBER
10	K1J800-42500	TUBE ASSY, overflow	1	EA		
20	K09318-88068	CLAMP, hose	1	EA		
30	K1J801-53052	INJECTOR ASSY	4	EA		
35	K1J800-42750	CLAMP	4	EA		
40	K1J800-53490	O-RING	4	EA		
50	K1G796-53620	GASKET	4	EA		
60	K1J800-53150	CLAMP	4	EA		
70	K1J800-53200	BOLT ASSY	4	EA		
80	K1G852-65512	PLUG, glow	4	EA		
90	K1J800-65560	CORD, glow plug	1	EA		
100	K02761-50040	NUT, flange	4	EA		

silverhorn.co.uk

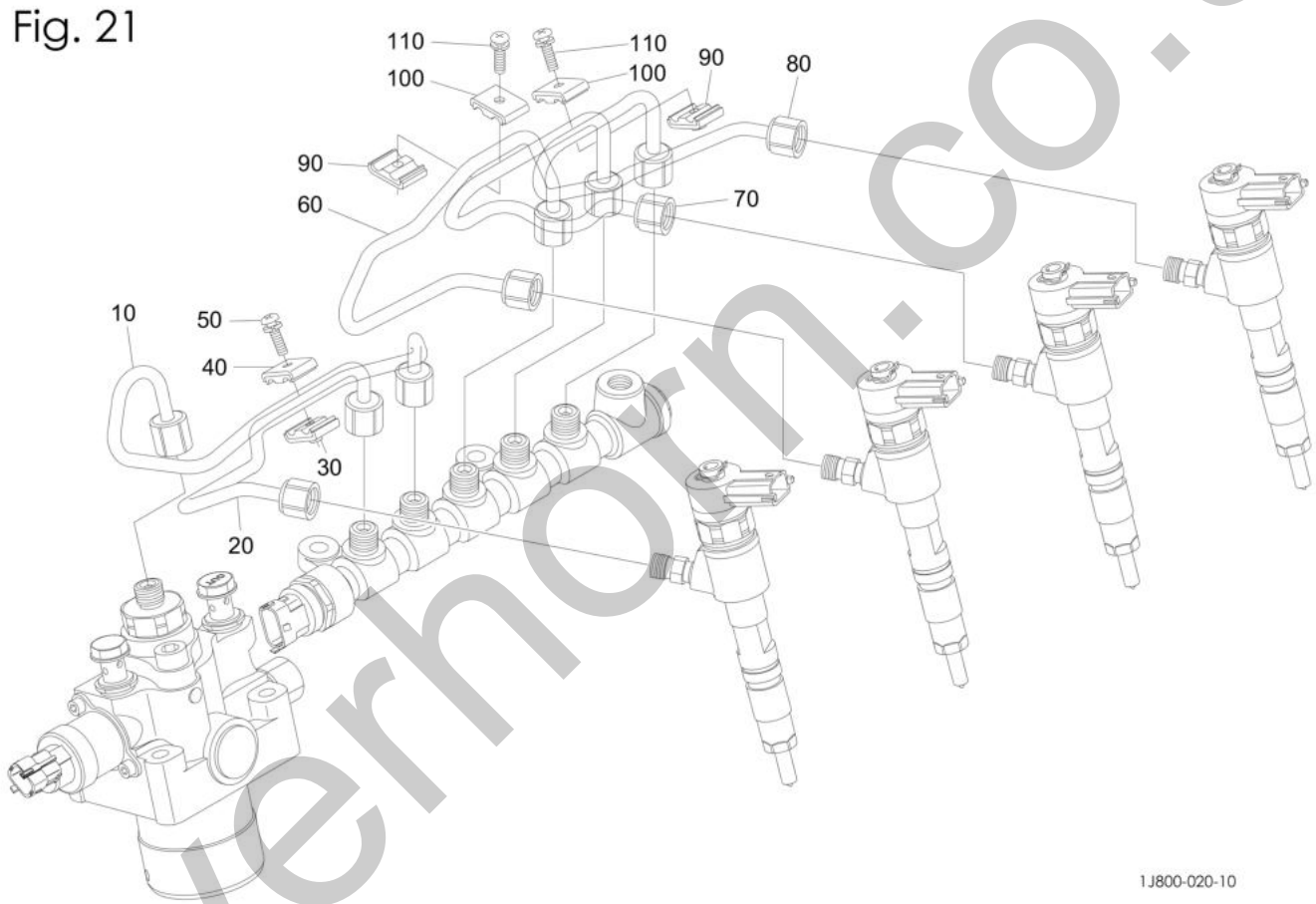

silverhorn.co.uk

Item	Part No.	Name	Qty	Uom	Remarks	SERIAL NUMBER
10	K1J801-53750	PIPE	1	EA		
20	K1J800-53710	PIPE, injection	1	EA		
30	K15841-53850	CLAMP, pipe	1	EA		
40	K15841-53860	CLAMP, pipe	1	EA		
50	K03024-50520	SCREW, sems (PAN HEAD)	1	EA		
60	K1J800-53720	PIPE, injection	1	EA		
70	K1J800-53730	PIPE, injection	1	EA		
80	K1J800-53740	PIPE, injection	1	EA		
90	K15841-53850	CLAMP, pipe	2	EA		
100	K15841-53860	CLAMP, pipe	2	EA		
110	K03024-50520	SCREW, sems (PAN HEAD)	2	EA		

silverhorn.co.uk

Fig. 22

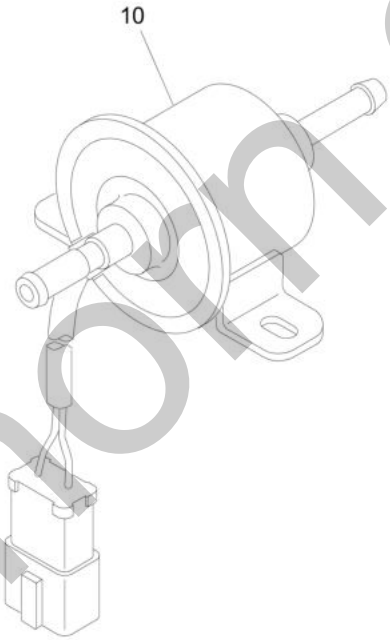

silverhorn.co.uk

Item	Part No.	Name	Qty	Uom	Remarks	SERIAL NUMBER
10	K1G938-52033	PUMP, feed	1	EA		

silverhorn.co.uk

Fig. 23

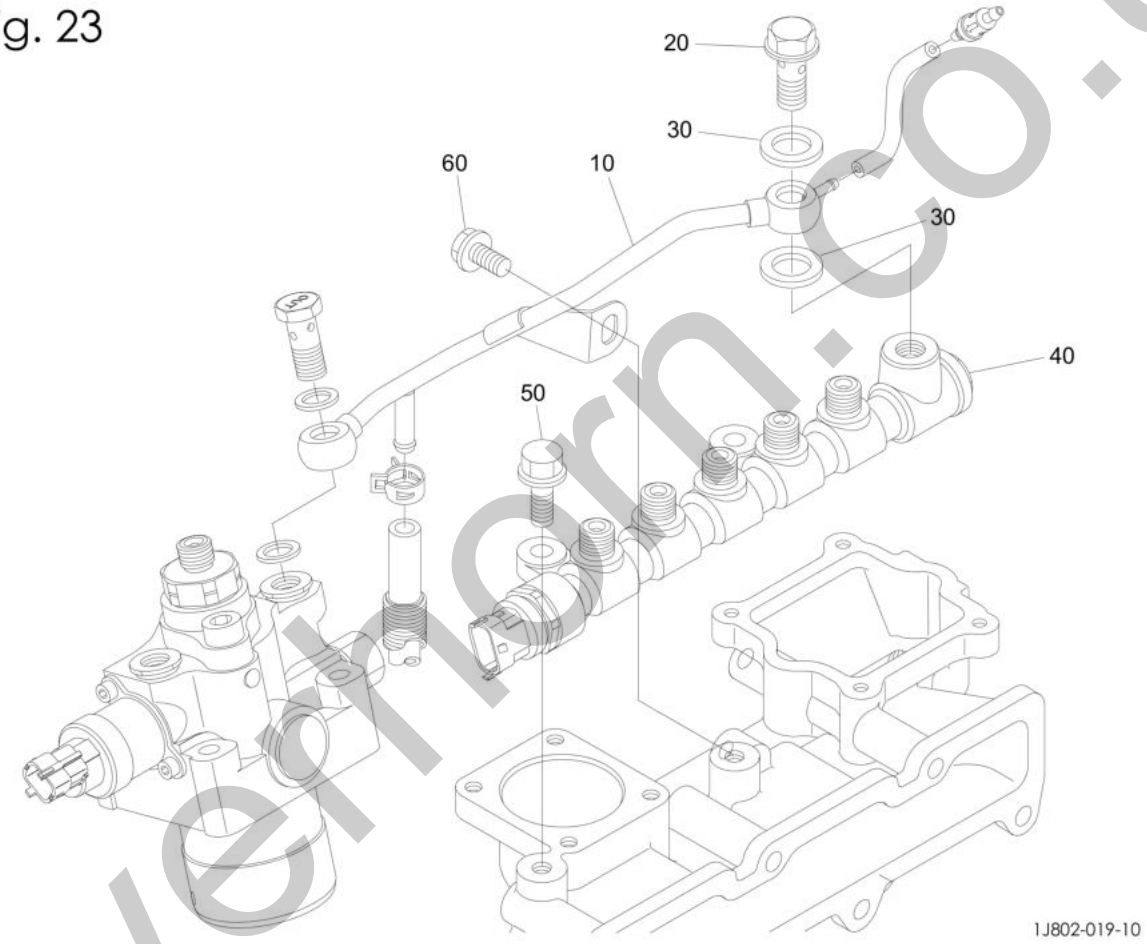

silverfarn.co.uk

Item	Part No.	Name	Qty	Uom	Remarks	SERIAL NUMBER
10	K1J801-42850	PIPE, comp (WATER OVERFLOW)	1	EA		
20	K1J800-95780	BOLT, joint	1	EA		
30	K1J800-50520	GASKET	2	EA		
40	K1J801-50602	RAIL ASSY	1	EA		
50	K01754-50825	BOLT, flange	2	EA		
60	K01754-50816	BOLT, flange	1	EA		

silverhorn.co.uk

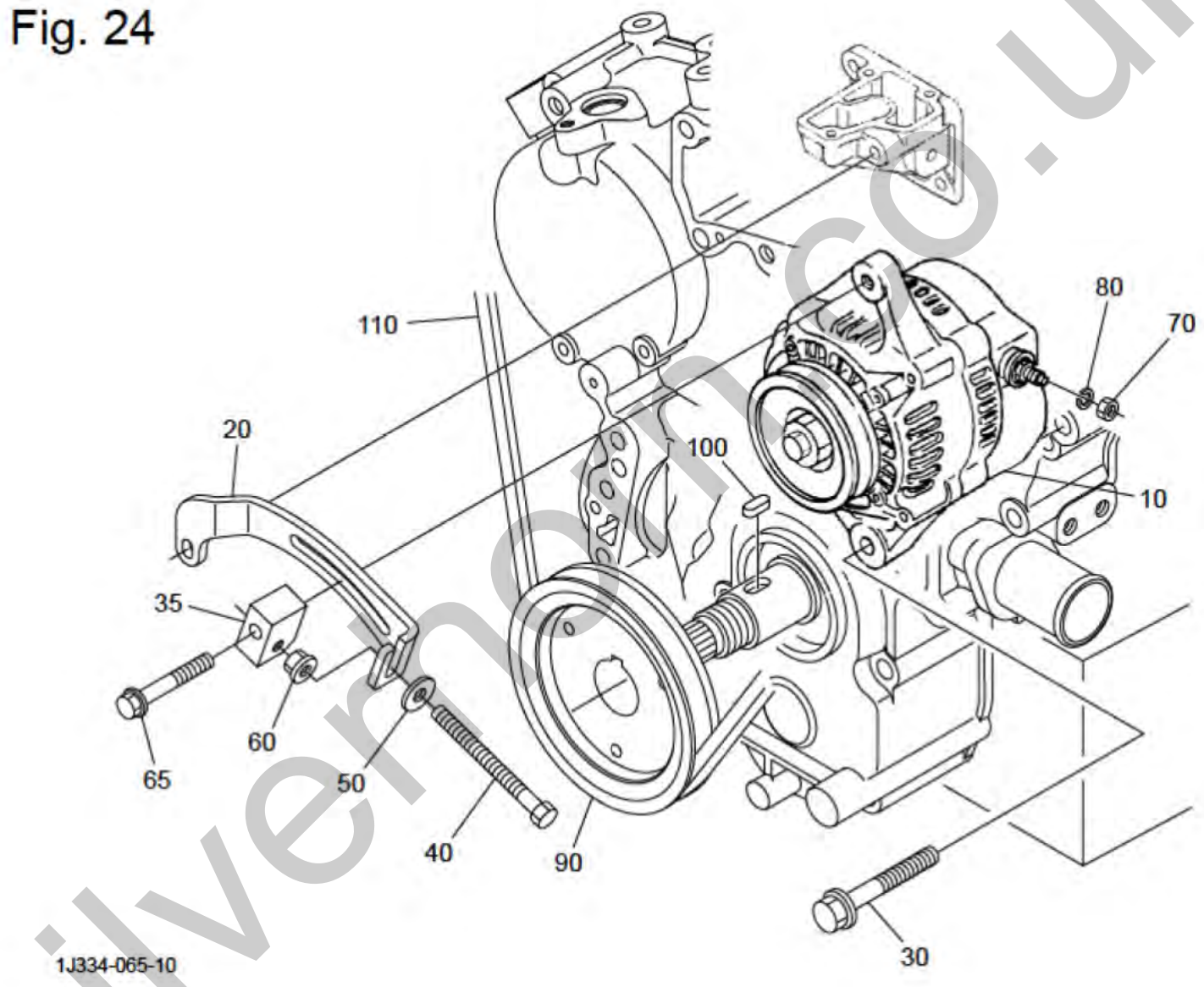

silvermoon.co.uk

Item	Part No.	Name	Qty	Uom	Remarks	SERIAL NUMBER
10	K3A611-74013	ALTERNATOR	1	EA		
20	K1K841-64420	STAY, dynamo	1	EA		
30	K01774-51070	BOLT, flange	1	EA		
35	K1J755-64460	SPACER	1	EA		
40	K6A671-75342	BOLT, flange (8MxL.100)	1	EA		
50	K04015-50080	WASHER, plain	1	EA		
60	K02751-50080	NUT, flange	1	EA		
65	K01754-50850	BOLT, flange	1	EA		
70	K02056-50060	NUT, hex	1	EA		
80	K04512-50060	WASHER, spring	1	EA		
90	K1G355-74280	PULLEY, fan drive	1	EA		
100	K05712-00720	KEY, feather	1	EA		
110	K1G355-97010	V-BELT, A (41.5in)	1	EA		

silverhorn.co.uk

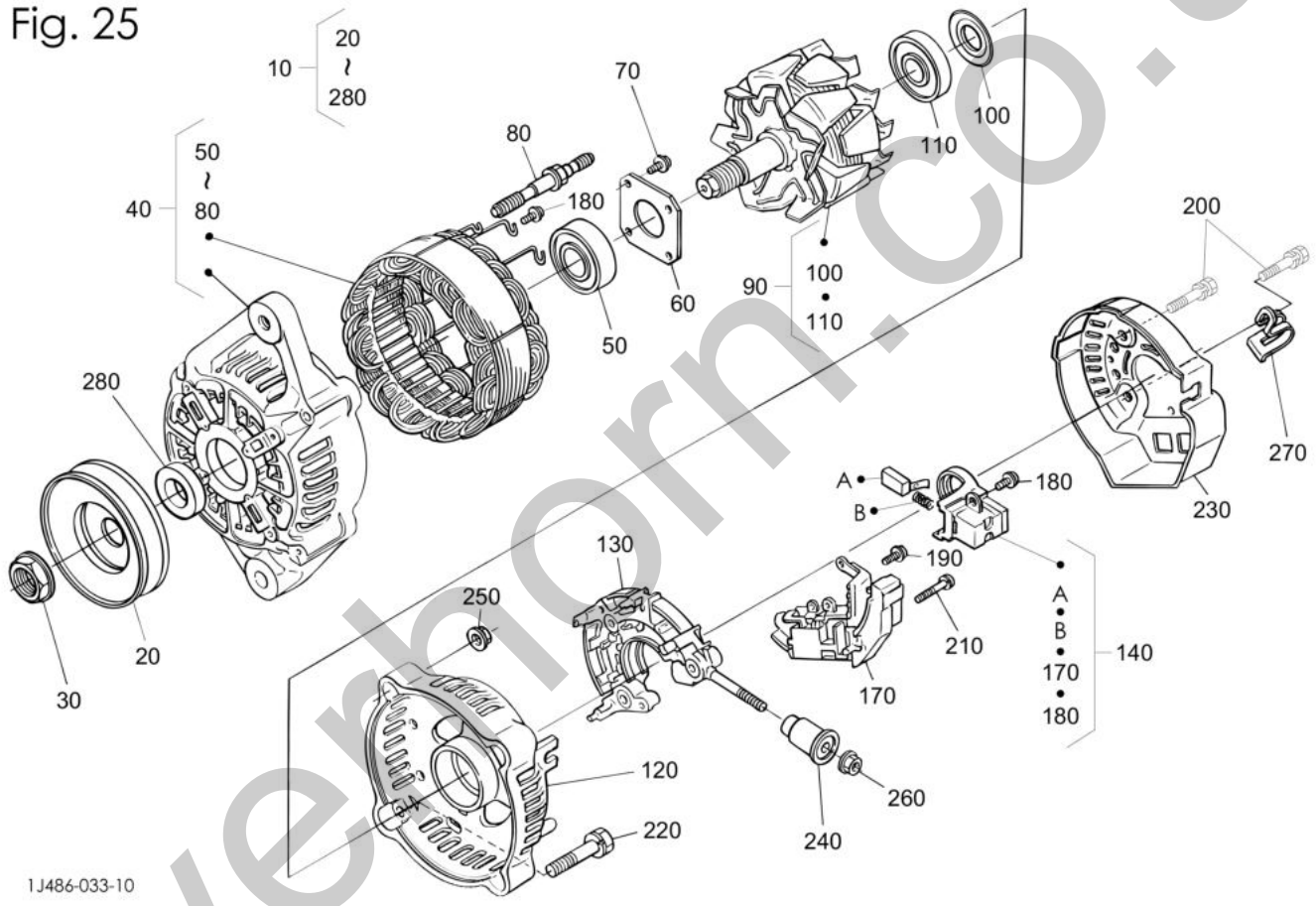

silverhorn.co.uk

Item	Part No.	Name	Qty	Uom	Remarks	SERIAL NUMBER
10	K3A611-74013	ALTERNATOR	1	EA		
20	K16427-64110	PULLEY	1	EA		
30	K15881-92010	NUT	1	EA		
40	KTA043-74032	FRAME, drive end	1	EA		
50	K16652-64782	BEARING, ball	1	EA		
60	K15881-64710	PLATE, retainer	1	EA		
70	K15881-93010	SCREW, round head	4	EA		
80	K15881-64260	BOLT, through	2	EA		
90	KTA043-64040	ROTOR	1	EA		
100	K15881-64800	COVER, bearing	1	EA		
110	K16652-64770	BEARING, ball	1	EA		
120	K17369-64060	FRAME, end	1	EA		
130	KTA043-64850	HOLDER, rectifier	1	EA		
140	K16652-64310	HOLDER, brush	1	EA		
170	K1K531-64602	REGULATOR ASSY	1	EA		
180	K15881-93030	SCREW, round head	6	EA		
190	K15881-93040	SCREW, round head	1	EA		
200	K15881-91040	BOLT	3	EA		
210	K15881-93020	SCREW, round head	2	EA		
220	K15881-91050	BOLT	2	EA		
230	K17369-64230	COVER, end	1	EA		
240	K15881-64900	BUSH, insulation	1	EA		
250	K15881-92020	NUT	2	EA		
260	K14182-92030	NUT	1	EA		
270	K17369-67570	CLAMP, cord	1	EA		
280	K15881-64150	COLLAR	1	EA		

silverhorn.co.uk

Fig. 26

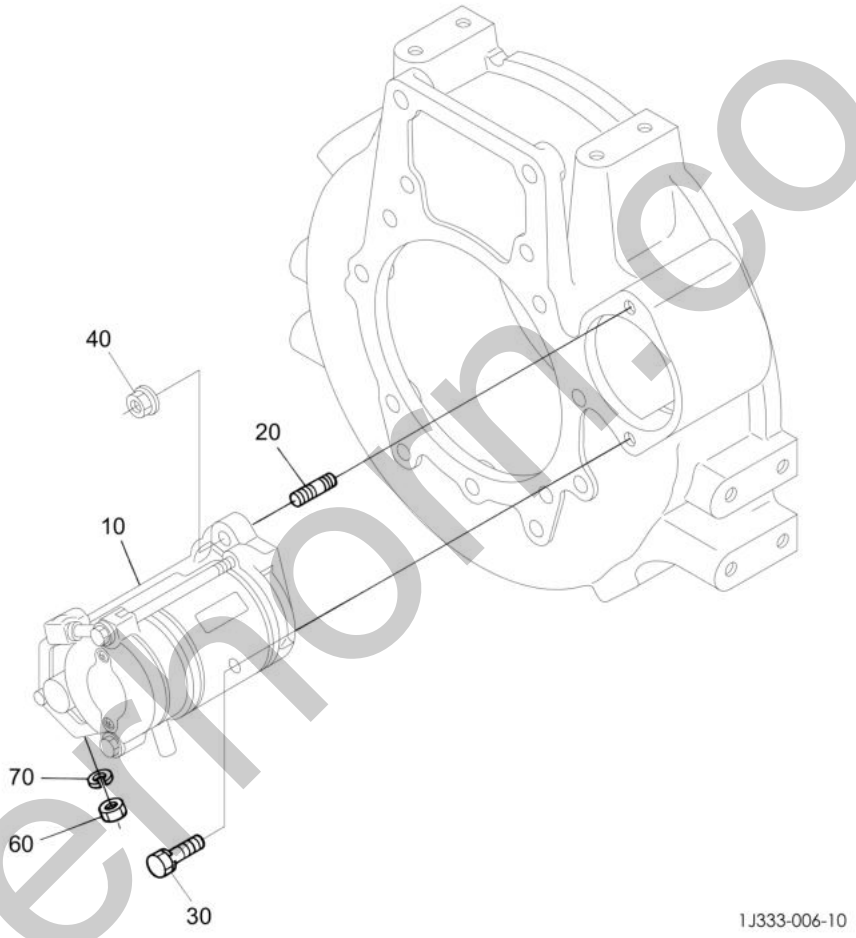

silvermore.co.uk

Item	Part No.	Name	Qty	Uom	Remarks	SERIAL NUMBER
10	K1K841-63010	STARTER	1	EA		
20	K01517-71030	STUD	1	EA		
30	K01133-51030	BOLT	1	EA		
40	K02771-50100	NUT, flange	1	EA		
60	K02114-50080	NUT	1	EA		
70	K04512-60080	WASHER, spring	1	EA		

silverhorn.co.uk

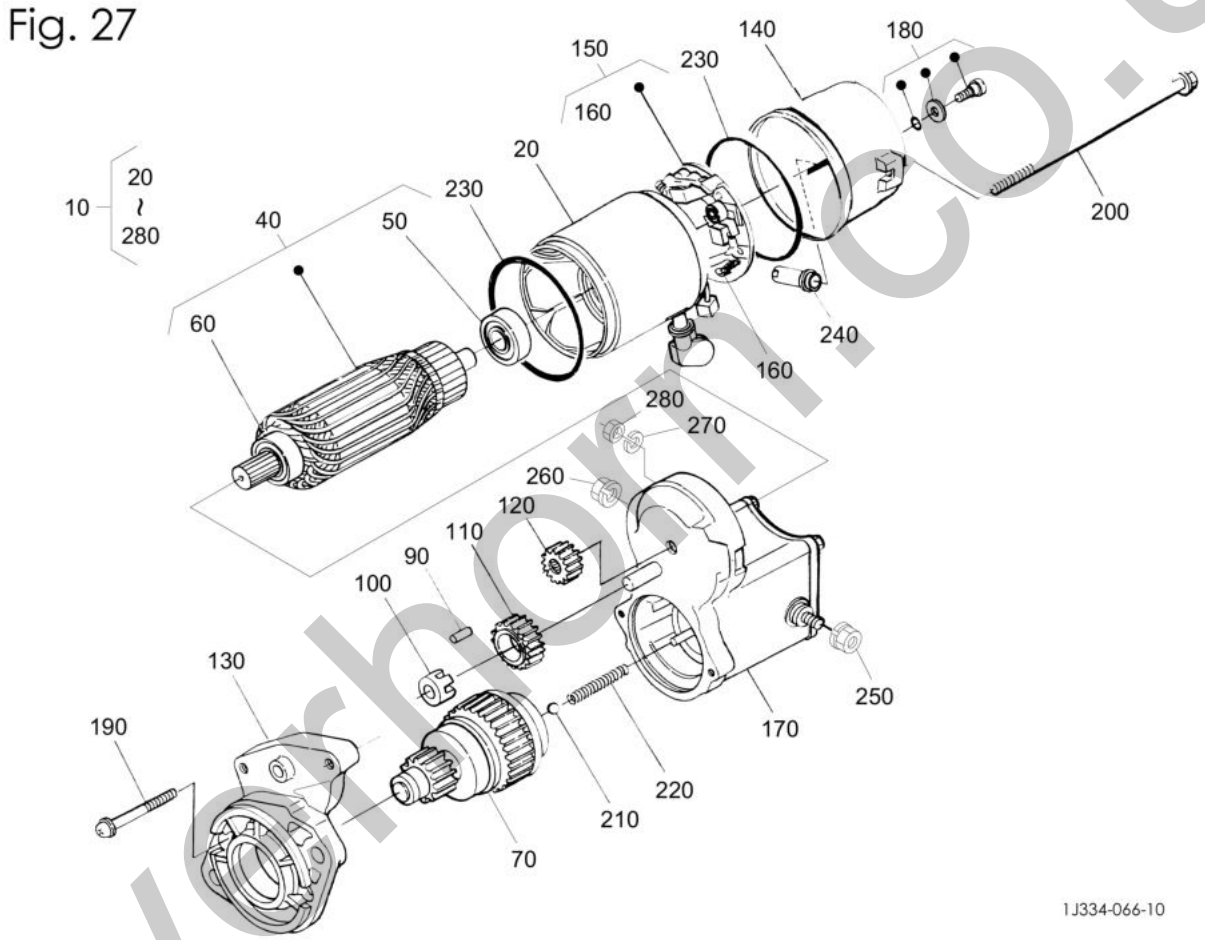

silvershorn.co.uk

Item	Part No.	Name	Qty	Uom	Remarks	SERIAL NUMBER
10	K1K841-63010	STARTER	1	EA		
20	K17123-63080	YOKE	1	EA		
40	K17123-63070	ARMATURE	1	EA		
50	K17123-63500	BEARING	1	EA		
60	K11460-63500	BEARING	1	EA		
70	K17123-63040	CLUTCH (OVER RUNNING)	1	EA		
90	K19212-63100	ROLLER	5	EA		
100	K11460-63110	RETAINER	1	EA		
110	K11460-63270	GEAR	1	EA		
120	K17123-63260	GEAR	1	EA		
130	K17123-63030	FRAME, drive end	1	EA		
140	K17123-63200	FRAME, end	1	EA		
150	K17123-63380	HOLDER, brush	1	EA		
160	K17123-63140	SPRING	4	EA		
170	K1K841-63020	SWITCH ASSY	1	EA		
180	K17123-93310	SCREW	2	EA		
190	K17123-93320	SCREW	2	EA		
200	K17123-63320	BOLT, through	2	EA		
210	K19212-97130	BALL	1	EA		
220	K11460-63120	SPRING	1	EA		
230	K15511-96660	O-RING	2	EA		
240	K16285-63570	PIPE, drain	1	EA		
250	K13963-92010	NUT, hexagon	1	EA		
260	K16285-92010	NUT,HEXAGON	1	EA		
270	K13801-94090	WASHER, spring	1	EA		
280	K1K841-92010	NUT	1	EA		

silverhorn.co.uk

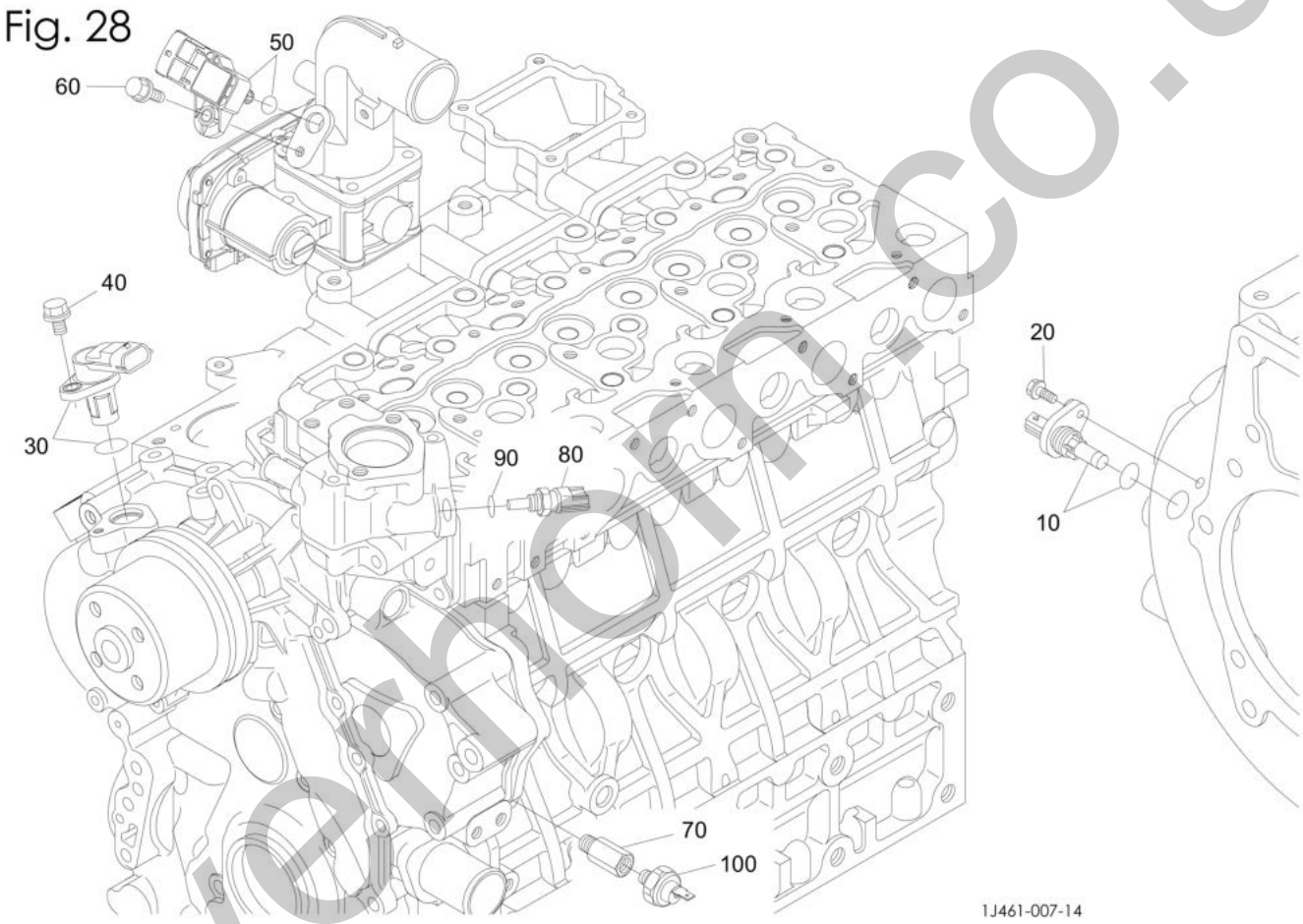

silverhorn.co.uk

Item	Part No.	Name	Qty	Uom	Remarks	SERIAL NUMBER
10	K1J800-59660	SENSOR	1	EA		
20	K01754-50616	BOLT, flange	1	EA		
30	K1J801-59710	SENSOR	1	EA		
40	K01754-50616	BOLT, flange	1	EA		
50	K1J803-59670	SENSOR, boost	1	EA		
60	K01754-50620	BOLT, flange	1	EA		
70	K1J455-39050	ADAPTER (SWITCH,OIL)	1	EA		
80	K5H601-41940	SENSOR, water temp	1	EA		
90	K04817-00100	O-RING	1	EA		
100	KT1850-39010	SWITCH, oil	1	EA		

silverhorn.co.uk

Fig. 29

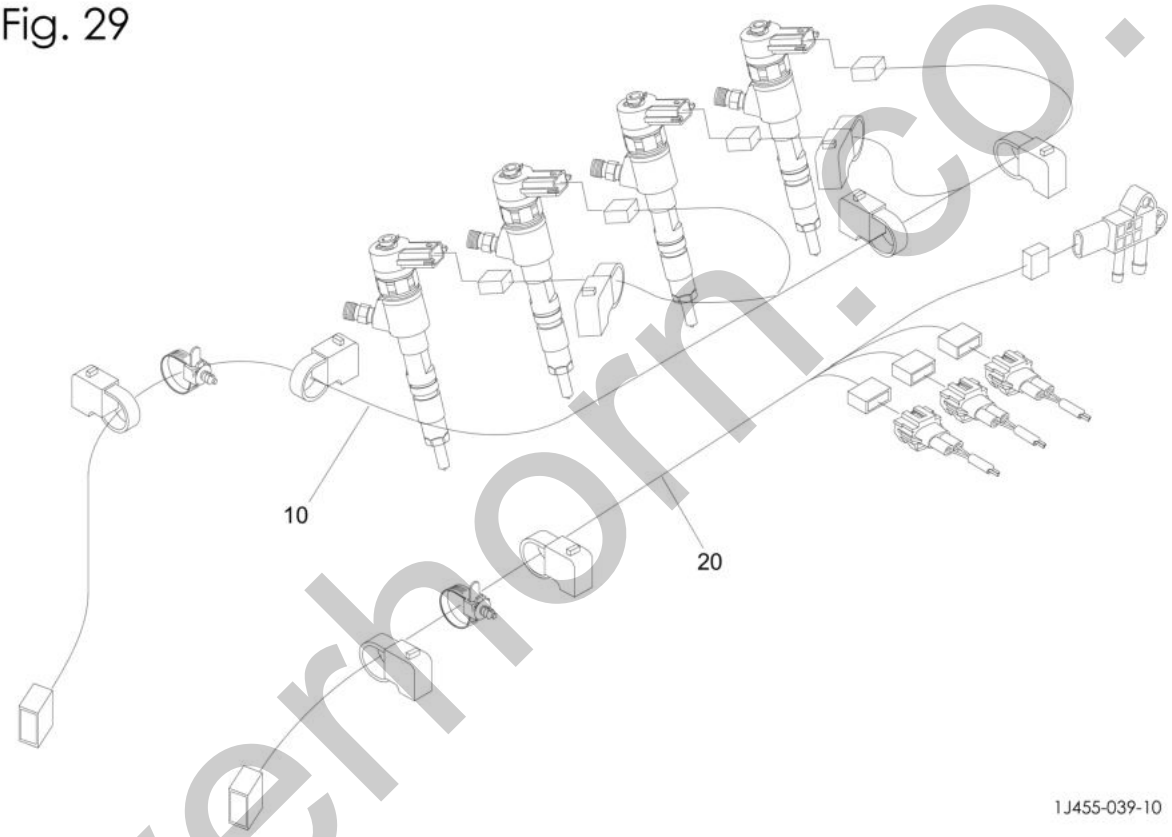

silverhorn.co.uk

Item	Part No.	Name	Qty	Uom	Remarks	SERIAL NUMBER
10	K1J801-65073	HARNESS ASSY, wiring (INJ)	1	EA		
20	K1J801-65084	HARNESS ASSY, wire (DPF)	1	EA		

silverhorn.co.uk

Fig. 30

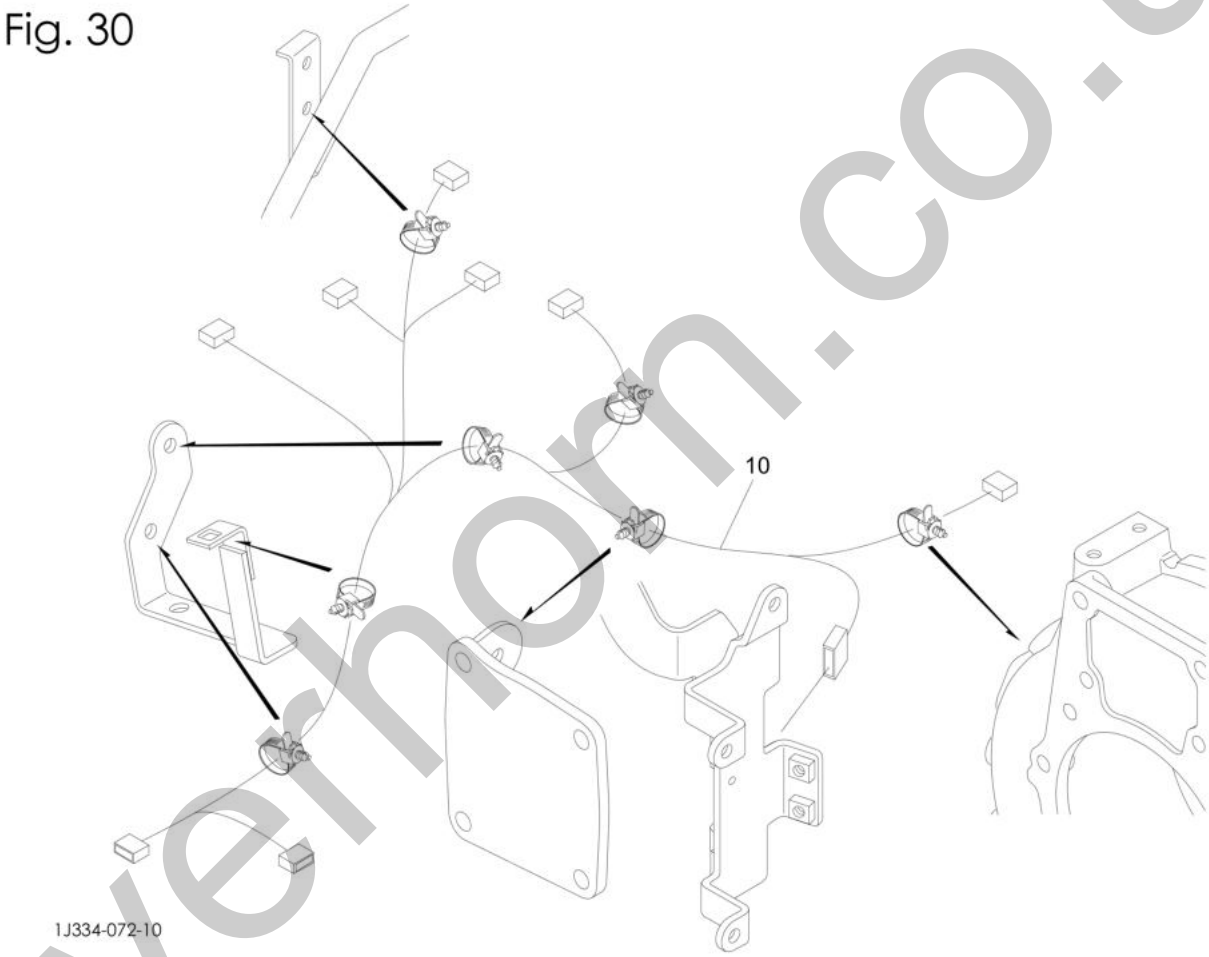

silverhorn.co.uk

Item	Part No.	Name	Qty	Uom	Remarks	SERIAL NUMBER
10	K1J801-65062	HARNESS ASSY, wiring (CRS)	1	EA		

silverhorn.co.uk

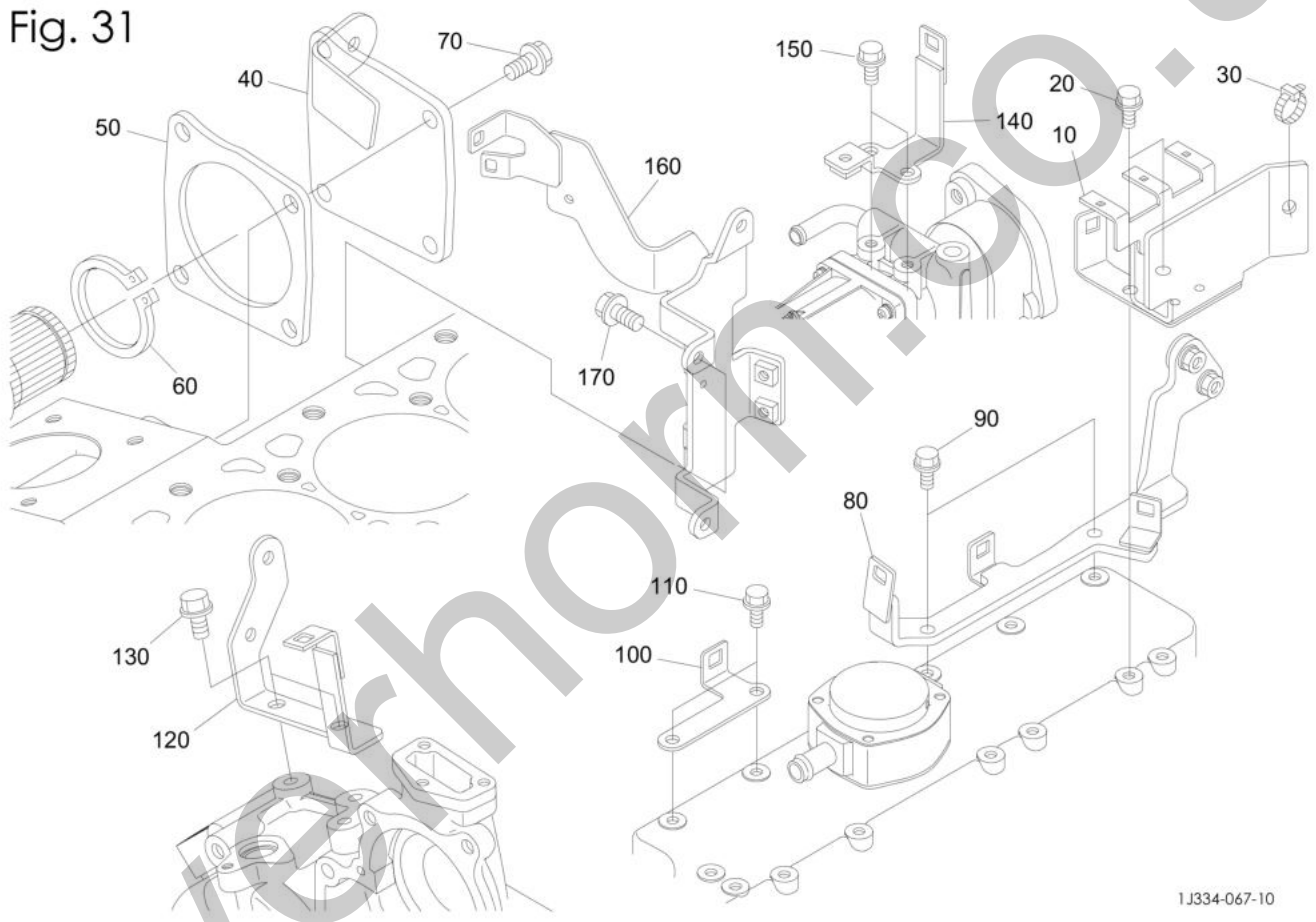

silverhorn.co.uk

Item	Part No.	Name	Qty	Uom	Remarks	SERIAL NUMBER
10	K1J801-65170	BRACKET (WH,7)	1	EA		
20	K01755-50612	BOLT, flange	2	EA		
30	KT1060-30540	CLIP	1	EA		
40	K1J801-16210	COVER (FUEL CAMSHAFT)	1	EA		
50	K1G492-16220	GASKET	1	EA		
60	K04612-00250	CIRCLIP (EXTERNAL)	1	EA		
70	K01754-50816	BOLT, flange	4	EA		
80	K1E581-65112	BRACKET (HARNESS)	1	EA		
90	K01755-50616	BOLT, flange	2	EA		
100	K1J802-65120	BRACKET (WH,2)	1	EA		
110	K01755-50612	BOLT, flange	2	EA		
120	K1J801-65132	BRACKET (WH,3)	1	EA		
130	K01754-50816	BOLT, flange	2	EA		
140	K1J801-65140	BRACKET (WH,4)	1	EA		
150	K01755-50612	BOLT, flange	2	EA		
160	K1K841-65200	BRACKET (CONNECTOR)	1	EA		
170	K01754-50816	BOLT, flange	3	EA		

silverhorn.co.uk

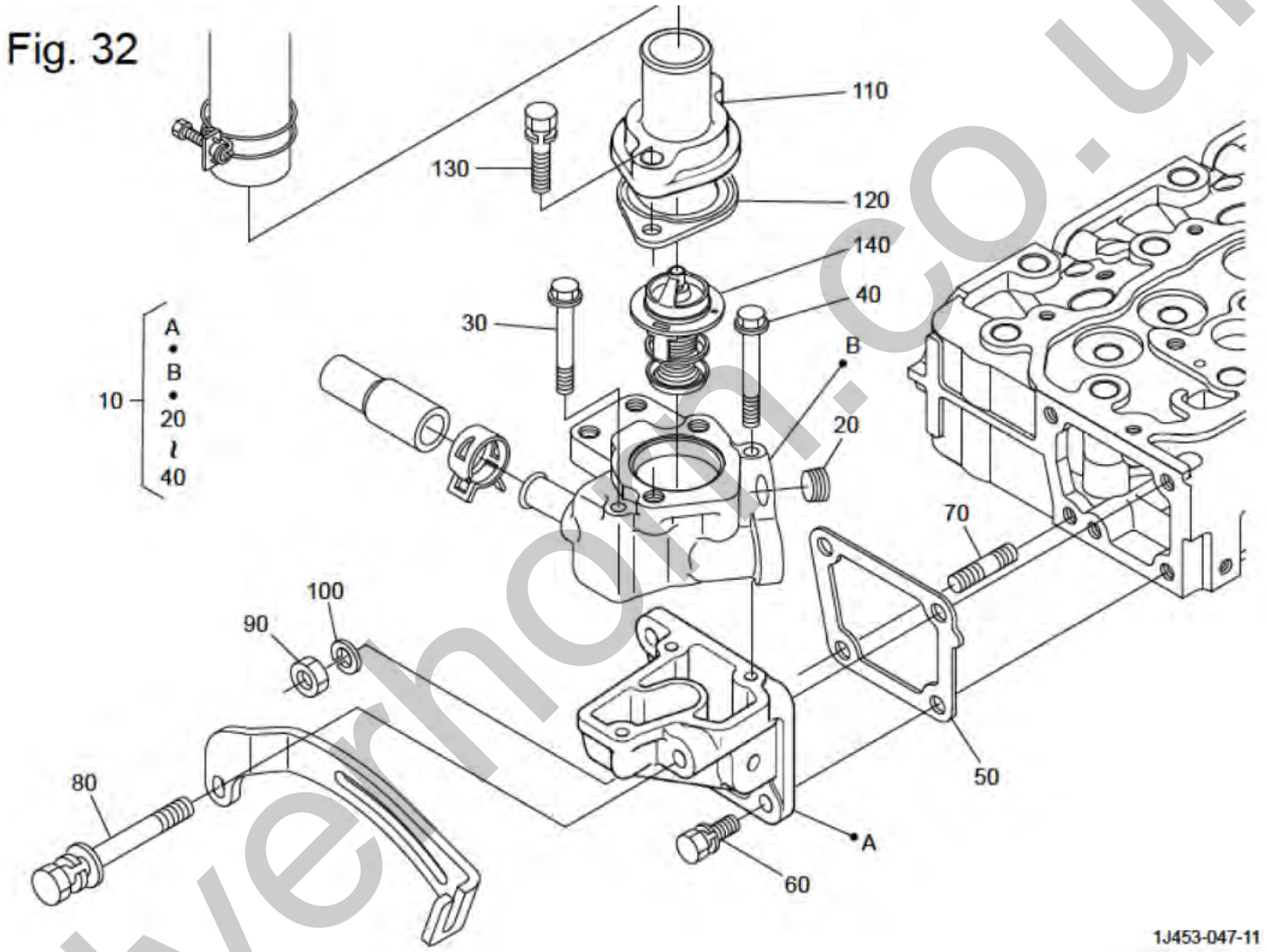

silverhorn.co.uk

Item	Part No.	Name	Qty	Uom	Remarks	SERIAL NUMBER
10	K1A085-72704	FLANGE, water (COMPLETE)	1	EA		
20	K1A021-96020	PLUG	1	EA		
30	K01754-50660	BOLT, flange	2	EA		
40	K01754-50665	BOLT, flange	1	EA		
50	K1A021-72920	PACKING	1	EA		
60	K01123-50820	BOLT, sems	2	EA		
70	K15221-91530	STUD	1	EA		
80	K1A021-91020	BOLT	1	EA		
90	K02156-50080	NUT	1	EA		
100	K04512-60080	WASHER, spring	1	EA		
110	K15321-73260	COVER, thermostat	1	EA		
120	K16221-73270	GASKET, thermostat	1	EA		
130	K01123-50835	BOLT, sems	2	EA		
140	K1G924-73010	THERMOSTAT	1	EA		

silverhorn.co.uk

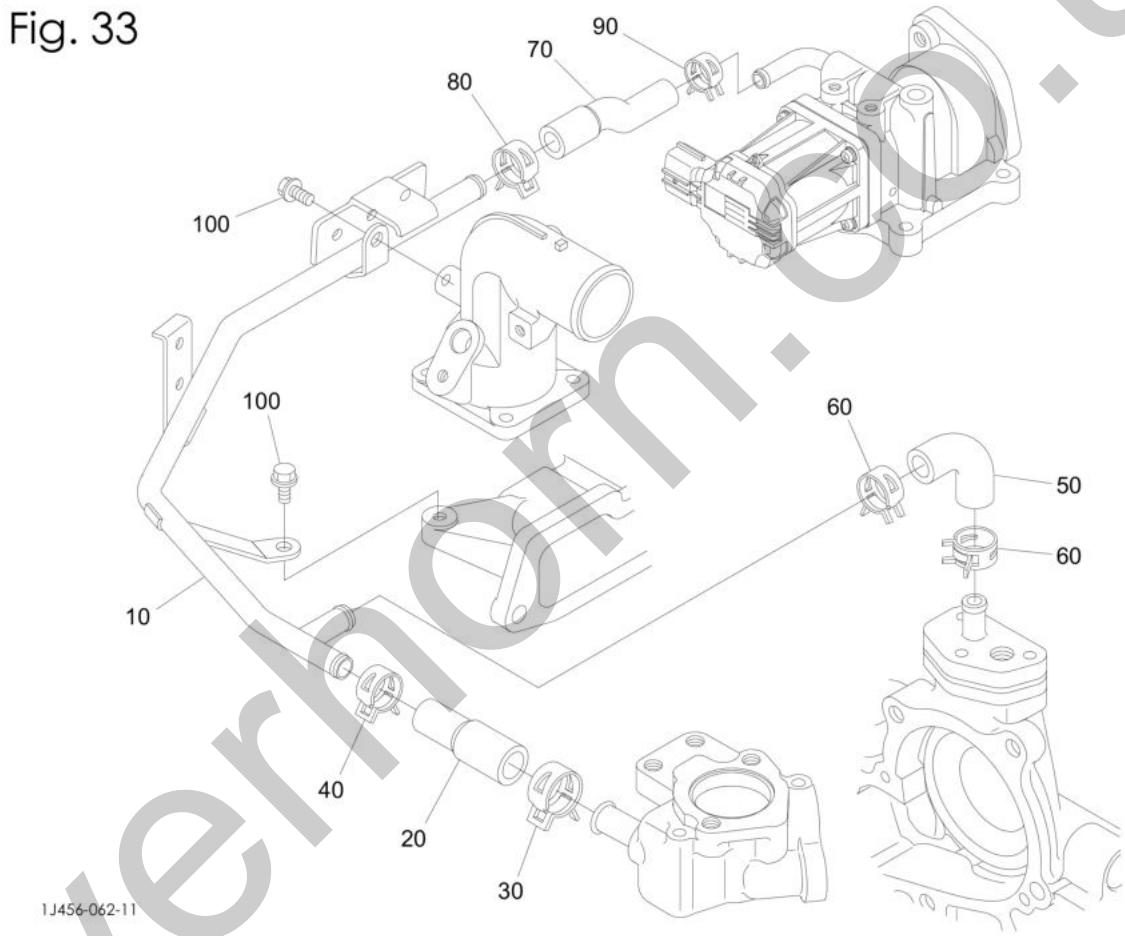

silverhorn.co.uk

Item	Part No.	Name	Qty	Uom	Remarks	SERIAL NUMBER
10	K1J802-73310	PIPE (COMPLETE) (WATER RETURN,2)	1	EA		
20	K1J803-73340	HOSE, water return (2-1)	1	EA		
30	K1A021-11720	CLAMP, hose	1	EA		
40	K09318-88155	CLAMP, hose	1	EA		
50	K1J333-73350	HOSE, water return (2-2)	1	EA		
60	K09318-88180	BAND, hose	2	EA		
70	K1J803-71820	HOSE	1	EA		
80	K09318-88155	CLAMP, hose	1	EA		
90	K09318-88130	CLAMP, hose	1	EA		
100	K01754-50612	BOLT, flange	2	EA		

silverhorn.co.uk

Fig. 34

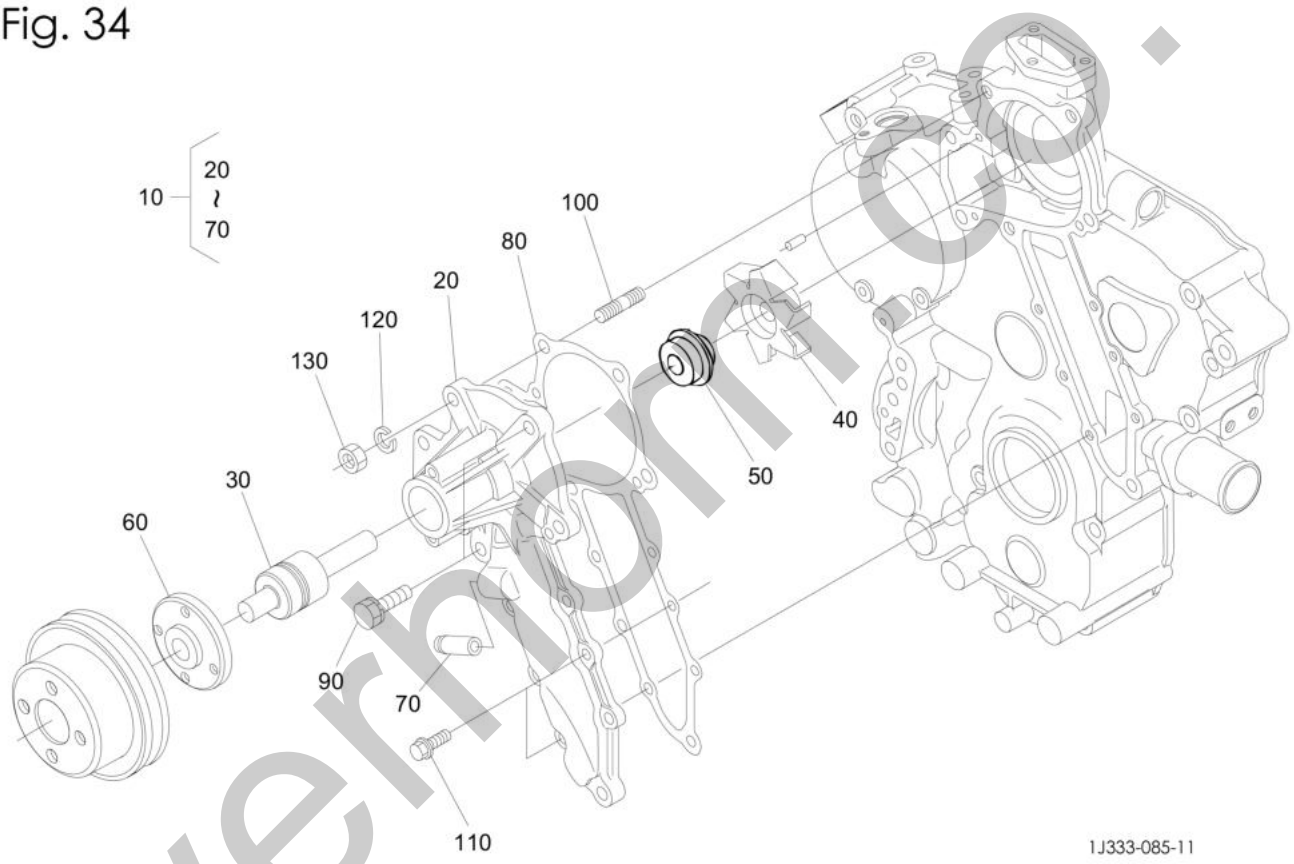

silvermoni.co.uk

Item	Part No.	Name	Qty	Uom	Remarks	SERIAL NUMBER
10	K1G489-73033	PUMP ASSY, water	1	EA		
20	K1G730-73412	BODY, water pump	1	EA		
30	K16661-73550	BEARING	1	EA		
40	K1A021-73510	IMPELLER	1	EA		
50	K1G610-73050	SEAL ASSY, mechanical	1	EA		
60	K1A021-73520	FLANGE (WATER PUMP SHAFT)	1	EA		
70	K16241-73370	PIPE, water return	1	EA		
80	K1A051-73430	GASKET	1	EA		
90	K01123-50828	BOLT, sems	2	EA		
100	K01518-50822	BOLT, stud	1	EA		
110	K01754-50616	BOLT, flange	6	EA		
120	K04512-60080	WASHER, spring	1	EA		
130	K02156-50080	NUT	1	EA		

silverhorn.co.uk

Fig. 35

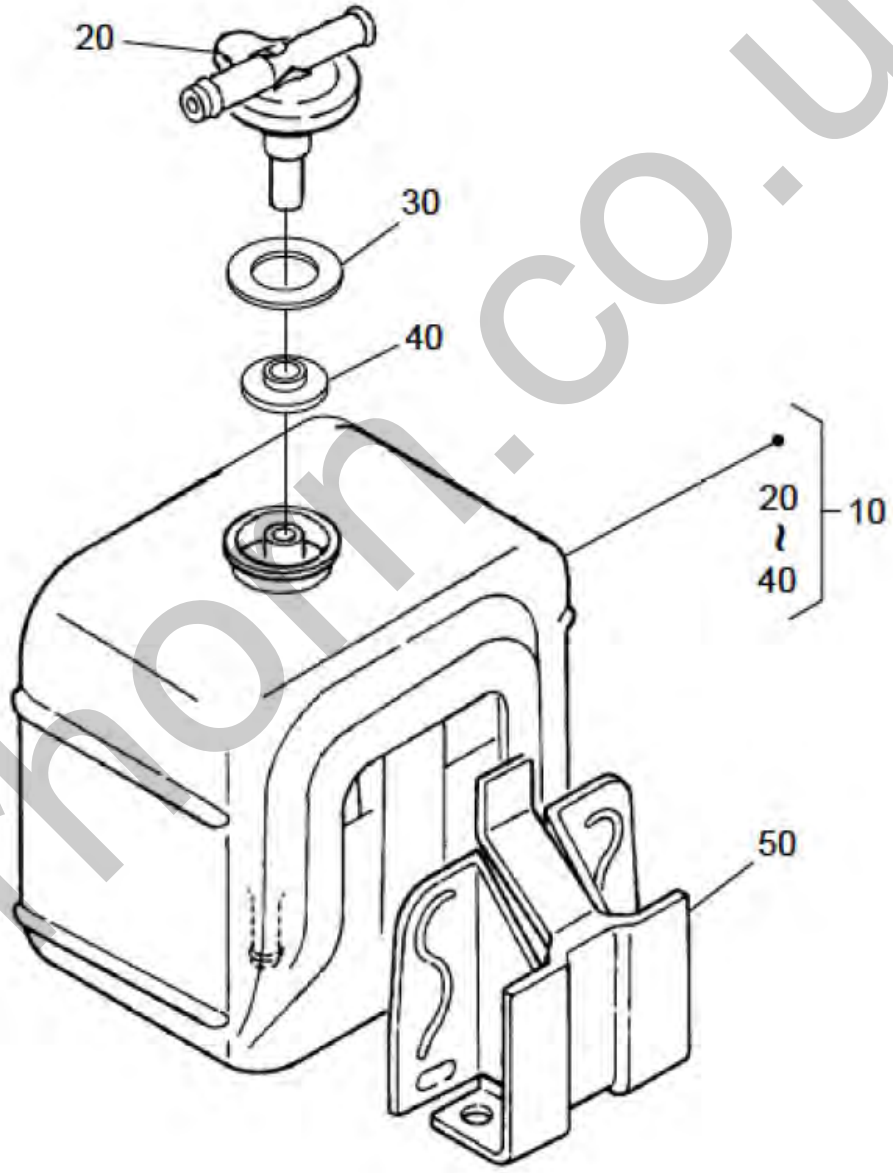

silverhorn.co.uk

Item	Part No.	Name	Qty	Uom	Remarks	SERIAL NUMBER
10	K1G642-72400	TANK ASSY, reserve	1	EA		
20	K15531-72422	CAP	1	EA		
30	K15531-72432	GASKET	1	EA		
40	K3G704-17390	PLATE	1	EA		
50	K15527-72460	STAY, reserve tank	1	EA		

silverhorn.co.uk

Fig. 36

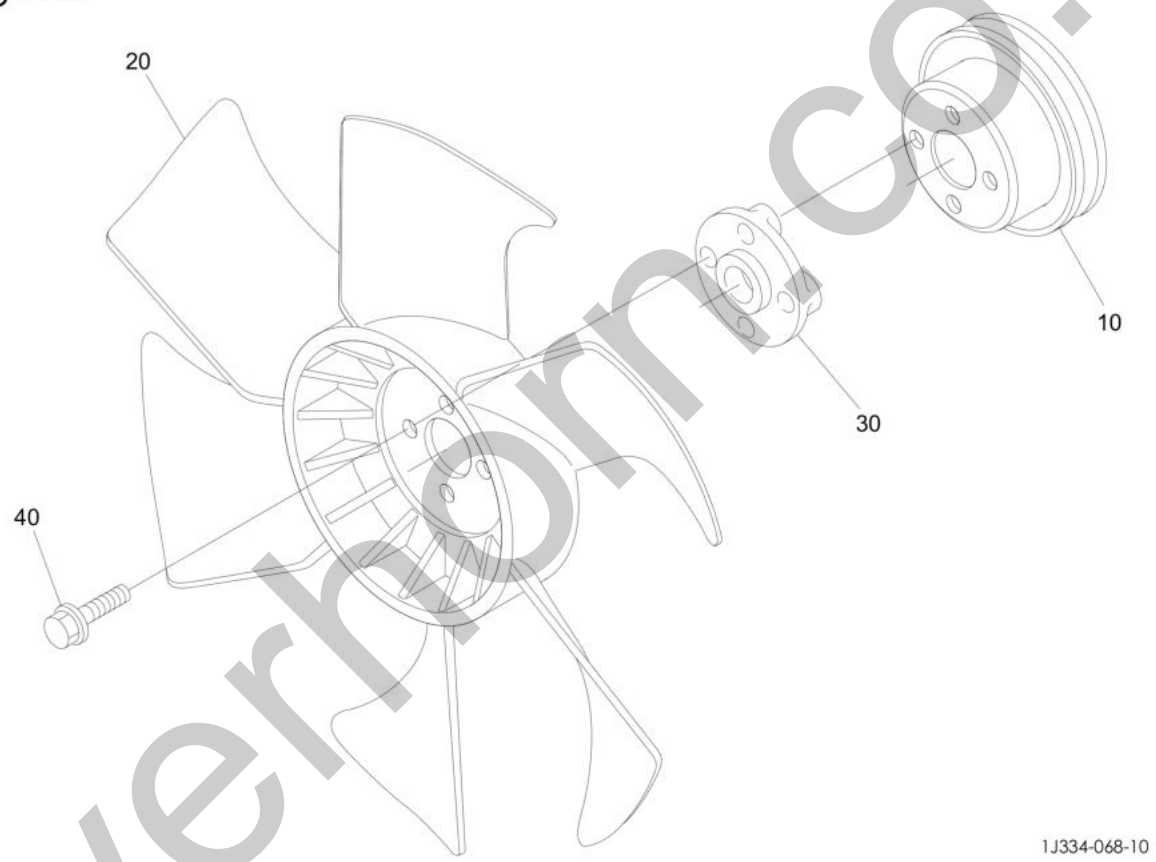

silverhorn.co.uk

Item	Part No.	Name	Qty	Uom	Remarks	SERIAL NUMBER
10	K17365-74252	PULLEY, fan	1	EA		
20	K15807-74110	FAN	1	EA		
30	K19818-74150	COLLAR, fan	1	EA		
40	K01754-50625	BOLT, flange	4	EA		

silverhorn.co.uk

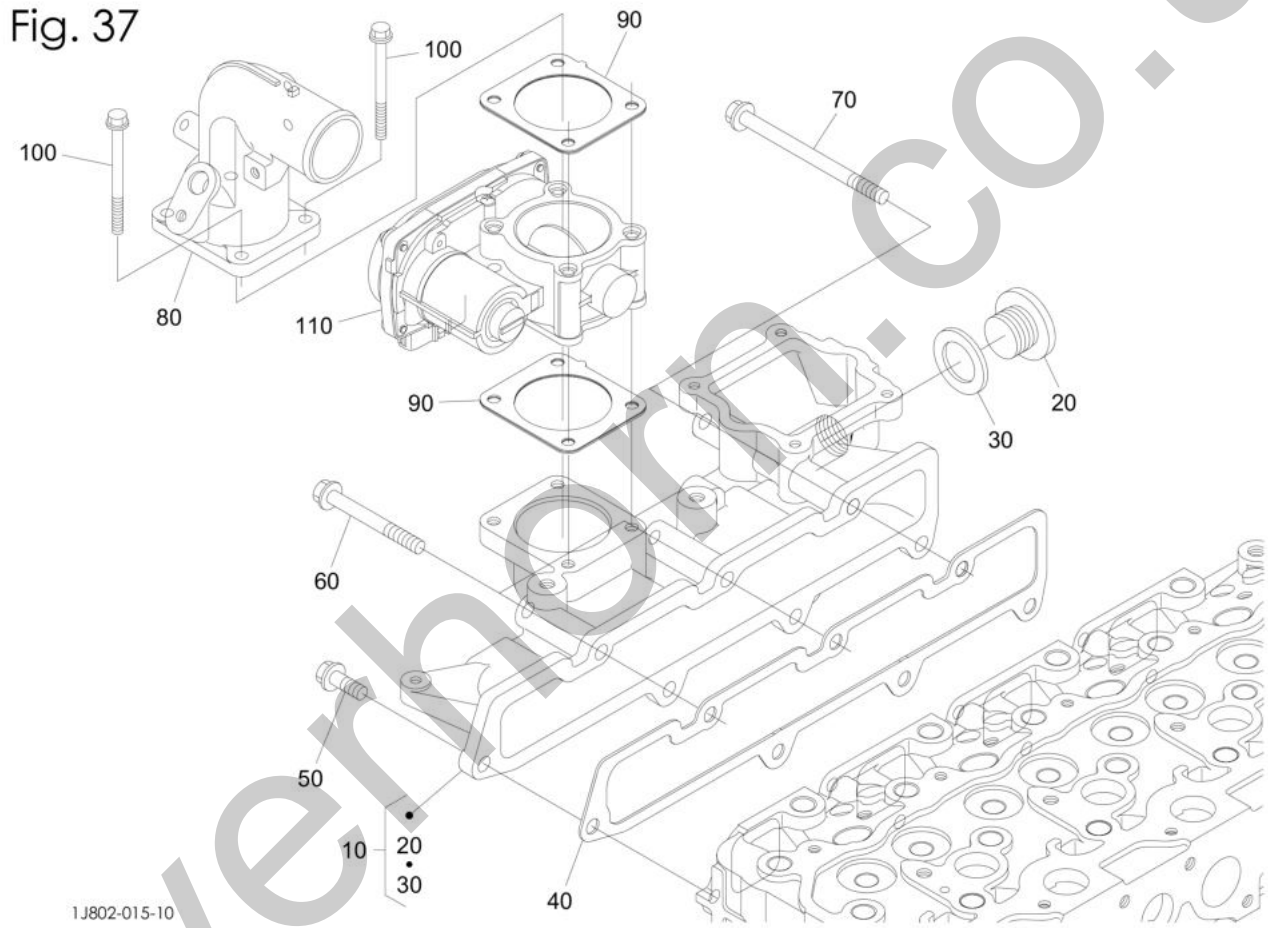

silverhorn.co.uk

Item	Part No.	Name	Qty	Uom	Remarks	SERIAL NUMBER
10	K1J803-11773	MANIFOLD ASSY, inlet	1	EA		
20	K1J803-96010	PLUG	1	EA		
30	K04724-00270	GASKET	1	EA		
40	K1J800-11820	GASKET, in-manifold	1	EA		
50	K01754-50820	BOLT, flange (M8X1.25X20)	4	EA		
60	K01754-50865	BOLT, flange	2	EA		
70	K01754-50804	BOLT, flange	1	EA		
80	K1J802-05660	FLANGE (INLET)	1	EA		
90	K1J800-05700	GASKET (INLET FLANGE)	2	EA		
100	K01754-50665	BOLT, flange	4	EA		
110	K1J802-10600	VALVE ASSY, throttle	1	EA		

silverhorn.co.uk

Fig. 38

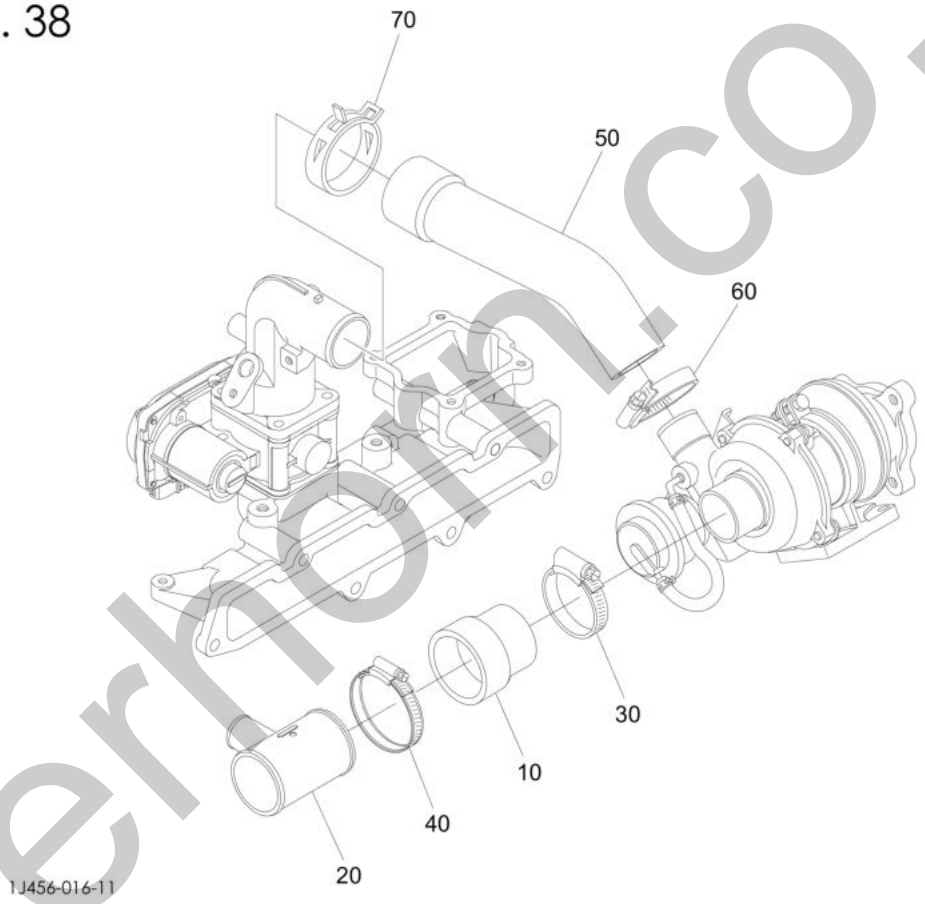

silverhorn.co.uk

Item	Part No.	Name	Qty	Uom	Remarks	SERIAL NUMBER
10	K1J802-11624	TUBE, inlet turbo	1	EA		
20	K1G776-05650	PIPE (BREATHER)	1	EA		
30	K51601-22240	CLAMP	1	EA		
40	KRC401-63190	CLAMP, hose	1	EA		
50	K1J802-11640	HOSE, inlet	1	EA		
60	K68311-72830	CLAMP, hose	1	EA		
70	K16241-11720	BAND, pipe	1	EA		

silverhorn.co.uk

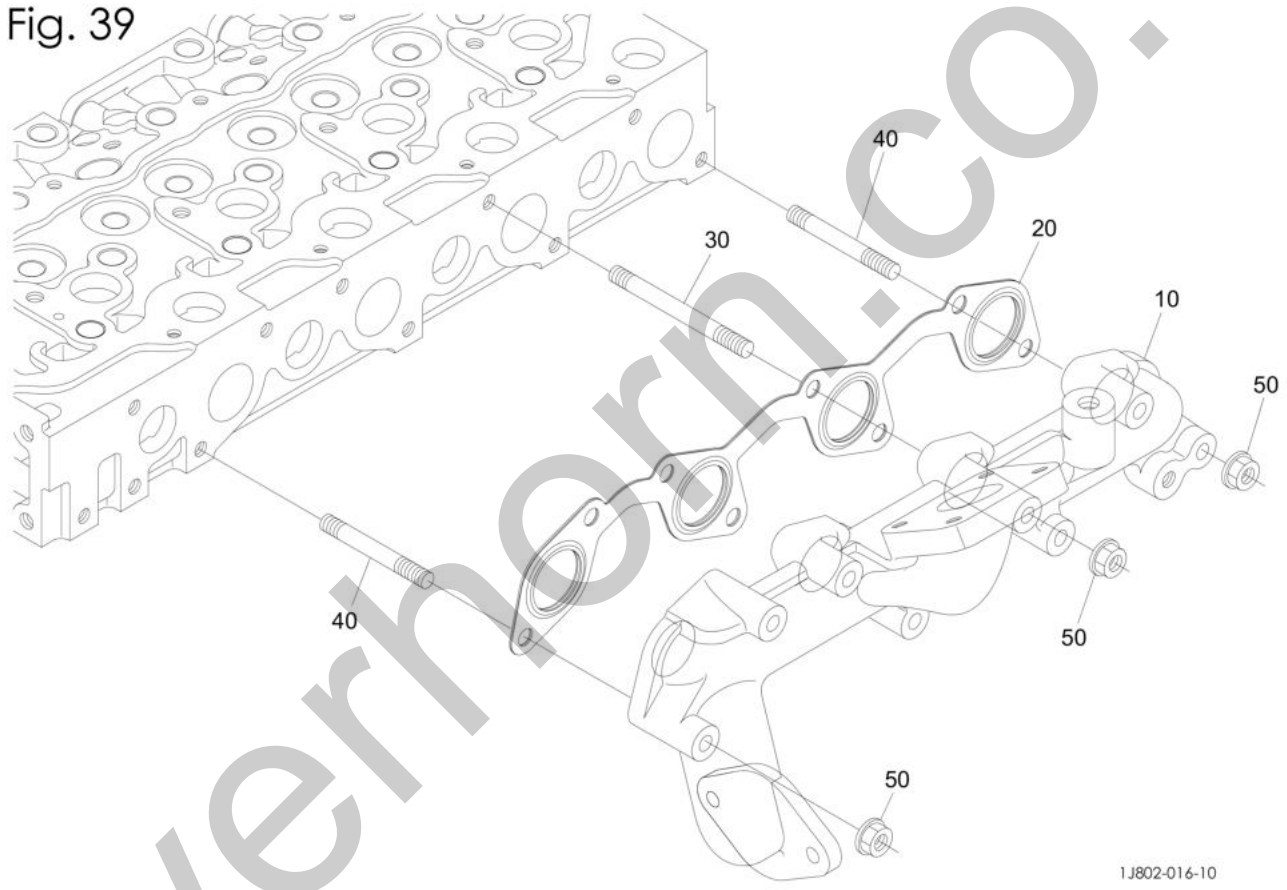

silverhorn.co.uk

Item	Part No.	Name	Qty	Uom	Remarks	SERIAL NUMBER
10	K1J802-12312	MANIFOLD, exhaust	1	EA		
20	K1J803-12350	GASKET, exhaust manifold	1	EA		
30	K1J802-91500	STUD	1	EA		
40	K1J801-91490	STUD (M8X55)	7	EA		
50	K1J542-92500	NUT, flange	8	EA		

silverhorn.co.uk

Fig. 40

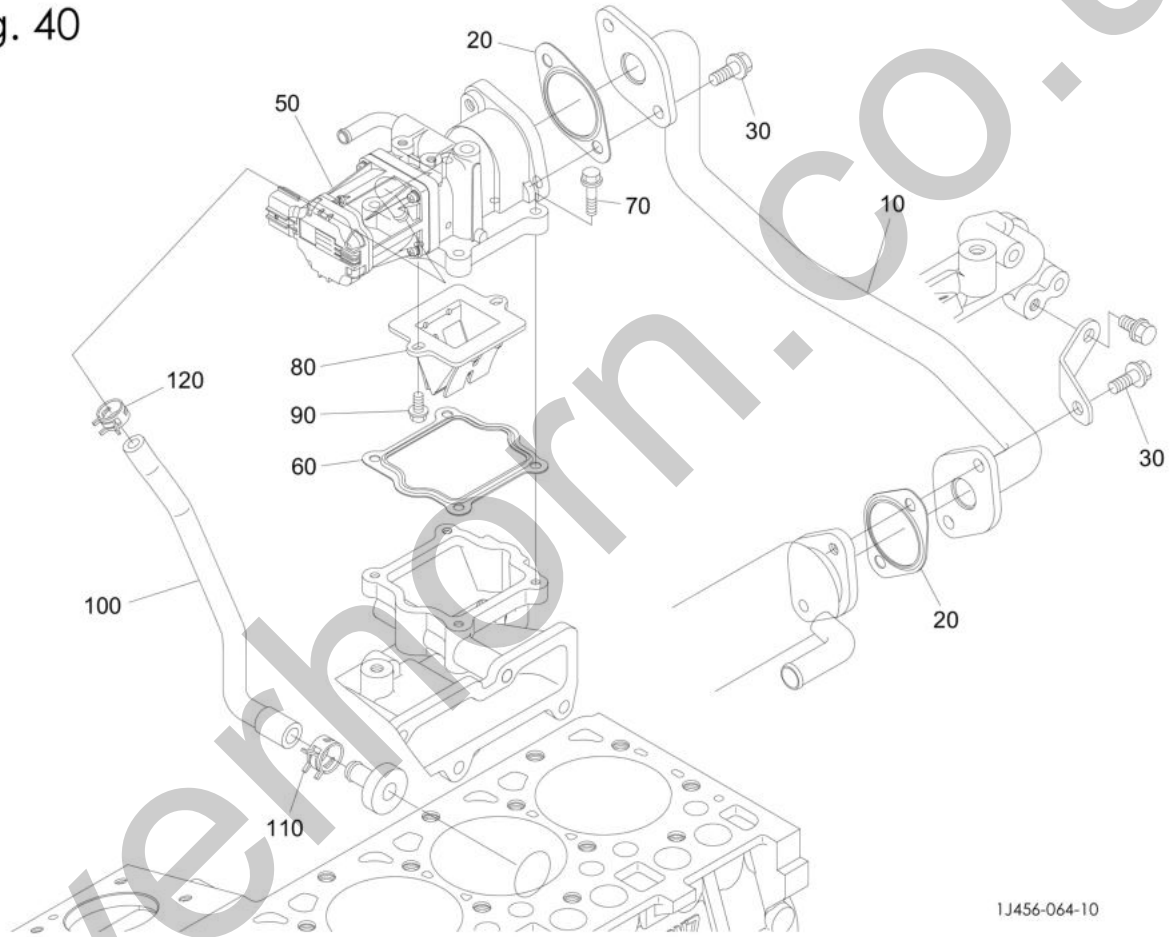

silverhorn.co.uk

Item	Part No.	Name	Qty	Uom	Remarks	SERIAL NUMBER
10	K1J803-17320	PIPE, EGR (COMPLETE)	1	EA		
20	K1J803-17430	GASKET (EGR COOLER)	2	EA		
30	K01754-50820	BOLT, flange (M8X1.25X20)	4	EA		
50	K1A333-62702	VALVE ASSY, EGR	1	EA		
60	K1J803-17410	GASKET (EGR VALVE)	1	EA		
70	K01754-50625	BOLT, flange	4	EA		
80	K1J574-13710	VALVE, lead	1	EA		
90	K01754-50612	BOLT, flange	2	EA		
100	K1A332-71810	HOSE	1	EA		
110	K09318-88180	BAND, hose	1	EA		
120	K09318-88130	CLAMP, hose	1	EA		

silverhorn.co.uk

Fig. 41

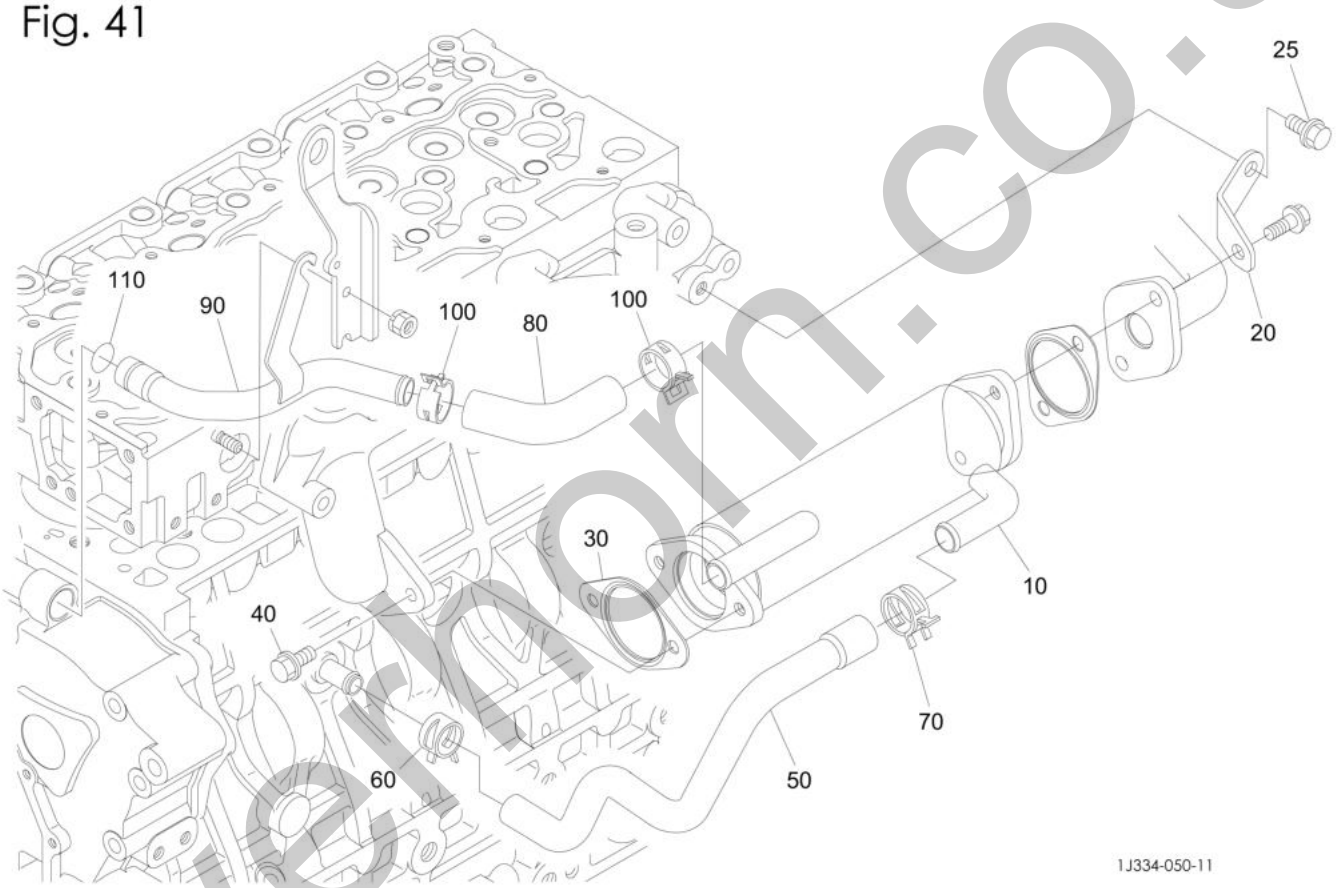

silvermorn.co.uk

Item	Part No.	Name	Qty	Uom	Remarks	SERIAL NUMBER
10	K1J803-71410	COOLER, EGR (COMPLETE)	1	EA		
20	K1J803-71432	STAY (EGR COOLER)	1	EA		
25	K01754-50816	BOLT, flange	1	EA		
30	K1J803-17430	GASKET (EGR COOLER)	1	EA		
40	K01754-50820	BOLT, flange (M8X1.25X20)	2	EA		
50	K1J801-71460	HOSE	1	EA		
60	K09318-88180	BAND, hose	1	EA		
70	K09318-88200	CLAMP, hose	1	EA		
80	K1J803-71470	HOSE	1	EA		
90	K1J803-71480	PIPE, EGR-C (2)	1	EA		
100	K1A021-11720	CLAMP, hose	2	EA		
110	K04816-05150	O-RING	1	EA		

silverhorn.co.uk

Fig. 42

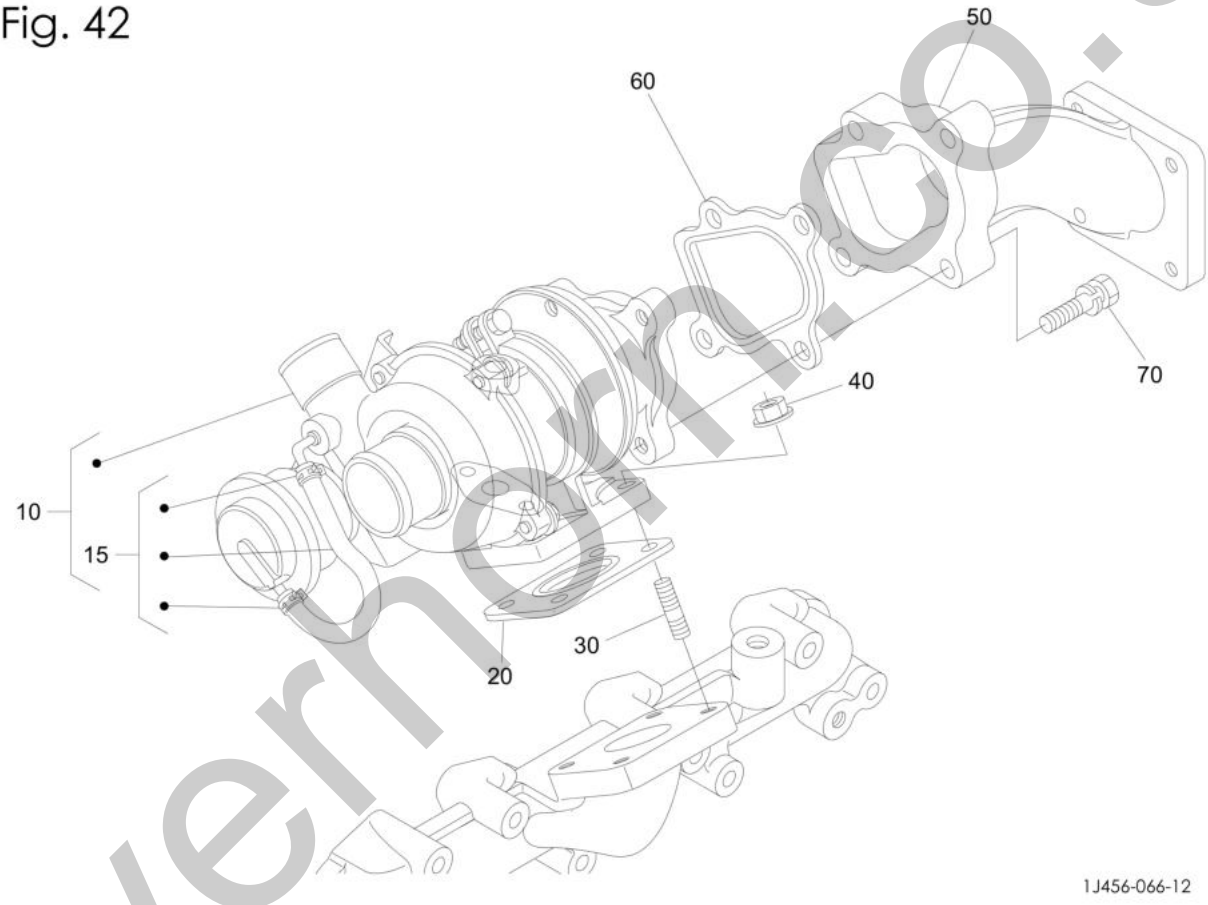

silverhorn.co.uk

Item	Part No.	Name	Qty	Uom	Remarks	SERIAL NUMBER
10	K1J802-17010	TURBO ASSY	1	EA		
15	K1G924-17200	HOSE ASSY	1	EA		
20	K16483-17100	GASKET	1	EA		
30	K1J530-91500	BOLT, stud	4	EA		
40	K1J542-92500	NUT, flange	4	EA		
50	K1J802-12320	FLANGE, muffler	1	EA		
60	K16483-17110	GASKET	1	EA		
70	K01123-50835	BOLT, sems	4	EA		

silverhorn.co.uk

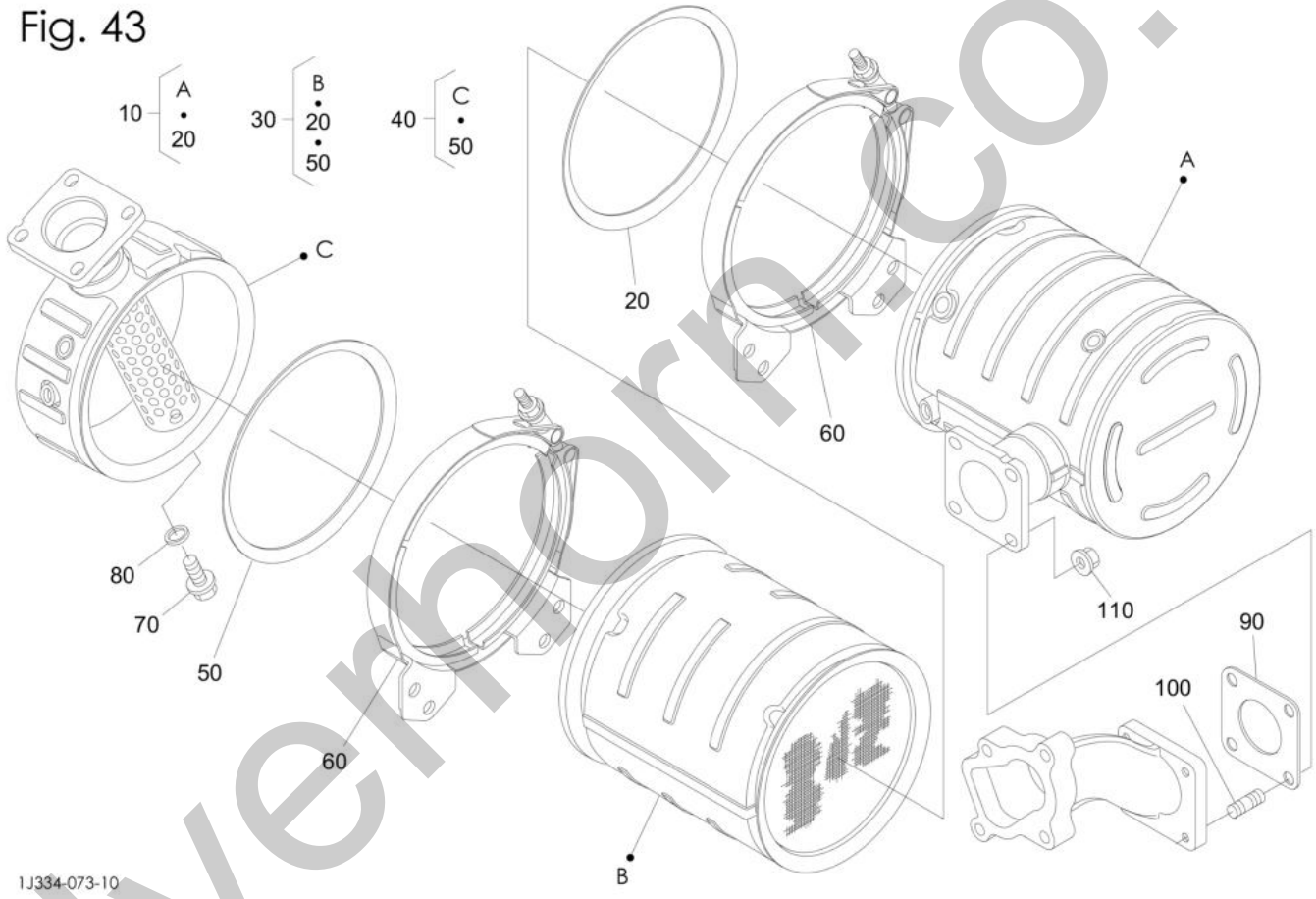

silverhorn.co.uk

Item	Part No.	Name	Qty	Uom	Remarks	SERIAL NUMBER
10	K1J801-18940	CATALYST KIT	1	EA		
20	K1J801-18412	GASKET (DPF)	1	EA		
30	K1J802-18930	FILTER KIT, DPF	1	EA		
30	K1J802-18910	FILTER KIT, DPF (EX)(REMANUFACTURED)	1	EA		
40	K1K976-18950	BODY, kit	1	EA		
50	K1J801-18412	GASKET (DPF)	1	EA		
60	K1J813-18800	BRACKET, V band (DPF)	2	EA		
70	K01754-50612	BOLT, flange	1	EA		
80	K15601-96650	GASKET	1	EA		
90	KT0070-16420	GASKET	1	EA		
100	K01513-50820	BOLT, stud	4	EA		
110	K02751-50080	NUT, flange	4	EA		

silverhorn.co.uk

Fig. 44

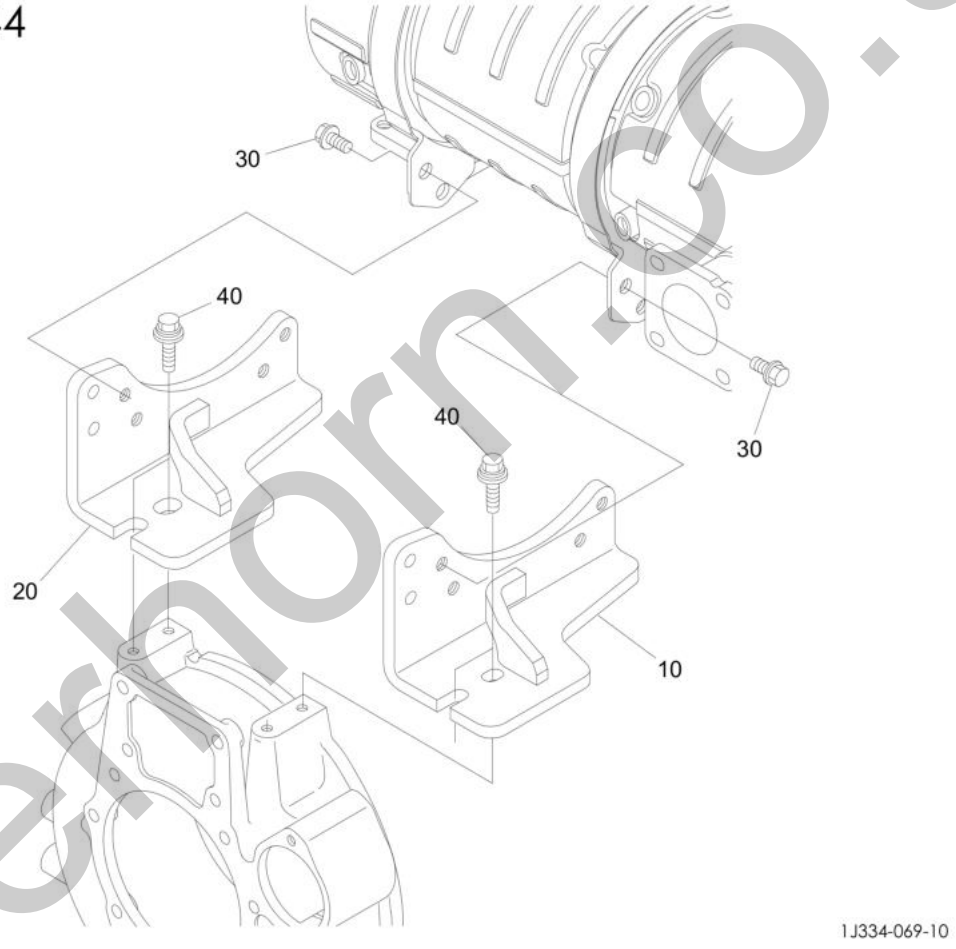

silverhorn.co.uk

Item	Part No.	Name	Qty	Uom	Remarks	SERIAL NUMBER
10	K1J333-18700	BRACKET, DPF (1)	1	EA		
20	K1K841-18710	BRACKET, DPF (2)	1	EA		
30	K01774-51016	BOLT, flange	8	EA		
40	K1K976-91012	BOLT	4	EA		

silverhorn.co.uk

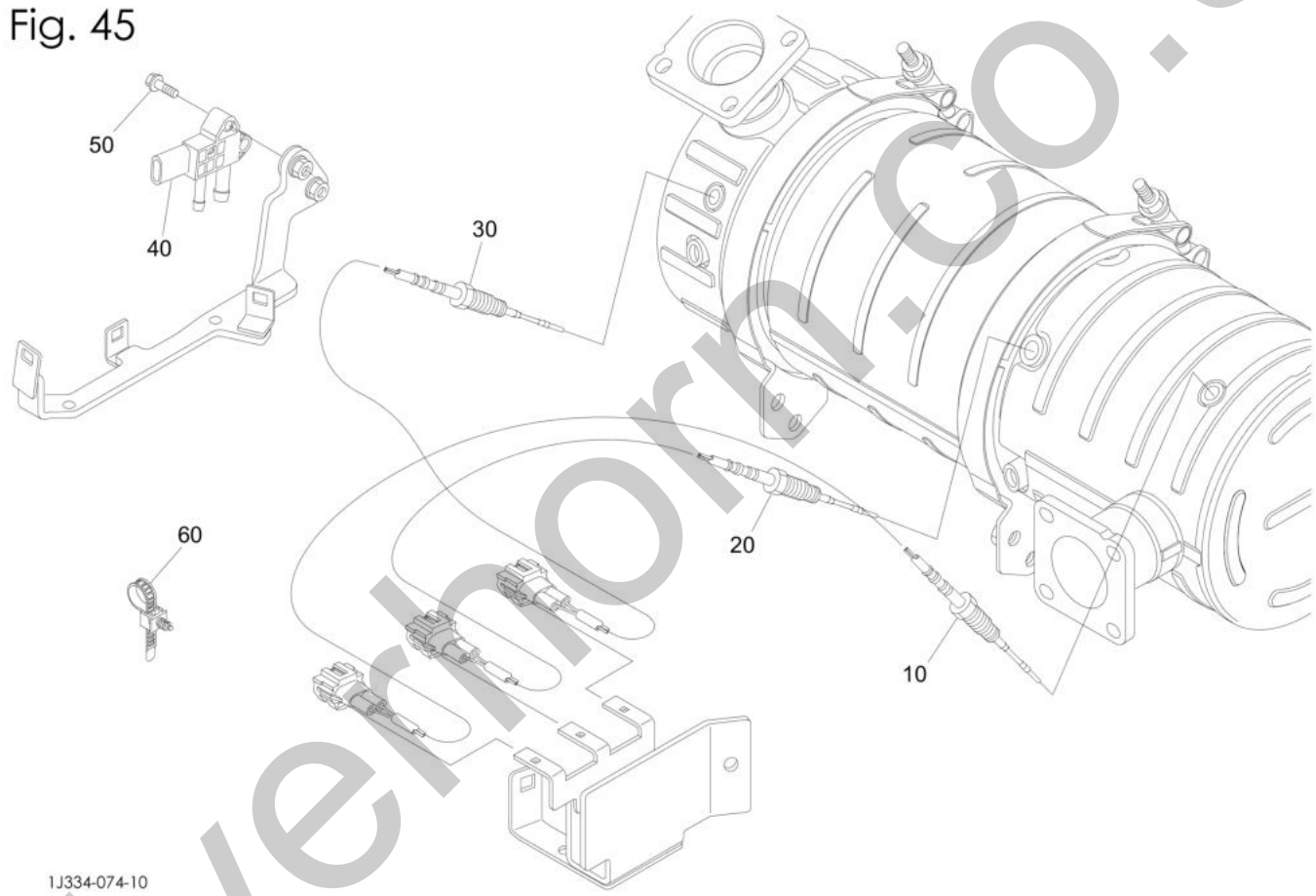

silverhorn.co.uk

Item	Part No.	Name	Qty	Uom	Remarks	SERIAL NUMBER
10	K1J500-18500	SENSOR (THERMO,0)	1	EA		
20	K1J500-18510	SENSOR (THERMO,1)	1	EA		
30	K1J770-18520	SENSOR (THERMO,2)	1	EA		
40	K1J520-18600	SENSOR (DIFFERENTIAL PRESSURE)	1	EA		
50	K01754-50630	BOLT, flange	2	EA		
60	K1J813-97280	CLAMP (OS160)	1	EA		

silverhorn.co.uk

TAKEUCHI
From World First to World Leader

Takeuchi DPF Cleaning Program

Takeuchi is pleased to provide an economical alternative to costly filter replacement. The Takeuchi DPF Cleaning Program provides dealers the ability to send in dirty diesel particulate filters and have them professionally cleaned of ash buildup. The cleaning process will remove approximately 98% of the ash deposits, allowing customers to reuse filters in a cost effective manner. DPFs must be cleaned at 3,000 hours or less per manufacturer recommendations. No exchanges or swap outs, your filters will be returned to you.

Step-by-Step Instructions:

Fill out DPF Cleaning Order Form: The Takeuchi DPF Cleaning Order Form is attached and should be completed and included with the returned DPF filter. Information on the form includes: dealer return shipment address, return shipment method, PO number, dealer representative contact information, and signature authorization. This form can also be downloaded from the Takeuchi Parts Portal Document Library.

Shipping: Dealer is responsible for shipping the dirty DPF to Takeuchi utilizing pre-paid freight. DPFs shipped to Takeuchi freight collect will be refused and sent back to the dealer. DPF shipment should be addressed as follows:

DPF Cleaning Technologies, Inc.
ATTN: Takeuchi DPF Cleaning Program
140A Auburn Park Drive
Auburn, GA 30011

Inspection and Cleaning: The DPF will be visually inspected for any cracks or damage. If damage is found, the dealer will be contacted for further guidance. If no damage is found, DPF will be thoroughly cleaned using a professional baking process. Once cleaning is complete, the DPF will be tested to ensure proper function. We will provide a quick turn-a-round, with product being cleaned and shipped within one (2) standard business days from receipt.

Pricing and Return Shipping: DPF Cleaning is **$250** per filter. Takeuchi will ship the cleaned DPF back to the dealer via UPS Next Day Air, 2nd Day Air, or Ground Service based on the shipping method selected by the dealer on the Takeuchi DPF Cleaning Order Form. Return freight charges will be pre-paid and added to the invoice charged to the dealer's open parts account.

Price does not include any hardware, gaskets, clamps, or shop supplies utilized for removal and replacement of the DPF in the machine. Price does not include our standard $7.50 per package shipping fee, fuel surcharges, or special delivery fees and charges that may apply.

silverthorn.co.uk

Please note that the entire assembly should not be sent to Takeuchi for cleaning. It is the dealer's responsibility to disassemble and ship <u>ONLY</u> the DPF section as shown below.

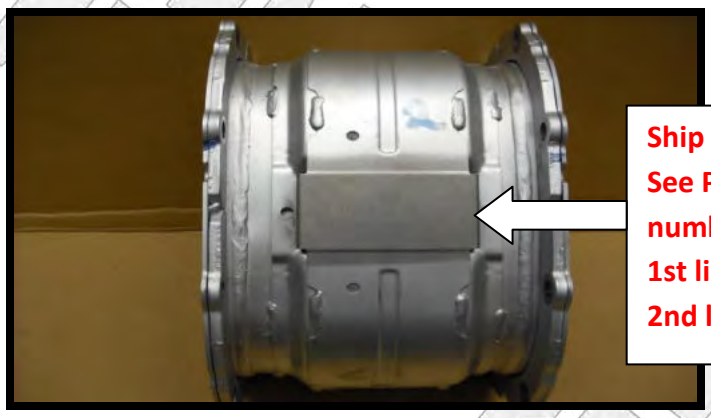

Ship DPF Core Section Only.
See Plate for part and serial number information.
1st line is part #.
2nd line is serial #.

The used DPF should be properly packaged by the dealer for shipment to Takeuchi. Please see example packaging below.

It is recommended that package is insured for full replacement value in case of loss or damage by the carrier. Takeuchi is not responsible for any loss or damage caused by the carrier or any loss or damage due to improper shipping or packaging by the dealer. Please see example packaging below.

- Seal the removed DPF filter comp with a plastic bag as shown in the photograph, so the ash will not escape during shipment.
- Put a cushioning material in the bottom, sides, and top of the cardboard box.
-
- Put "FRAGILE" sticker on the cardboard box.
- Ship Prepaid Freight to the address on the DPF cleaning form.
- Recommend insuring package with carrier for full replacement value in case of loss or damage to package.

If you have any questions, please contact the Takeuchi Service Department at 706-693-3600.

silverthorn.co.uk

TAKEUCHI
From World First to World Leader

DPF Cleaning Order Form

Please fill out this form completely and return with the DPF filter to:

DPF Cleaning Technologies, Inc.
ATTN: Takeuchi DPF Cleaning Program
140A Auburn Park Drive
Auburn, GA 30011

Note: Disassemble and send the center section of the DPF assembly only. Sending the complete DPF assembly will result in additional charges for disassembly.

DEALERSHIP CONTACT INFORMATION	
Dealer Name	
Dealer Account Number (Parts)	
Dealer Contact Name / Phone Number	
Ship to Address	
City, State, Zip	
Purchase Order Number	

MACHINE INFORMATION	
Model Number	
Serial Number	
Machine Hours	
DPF Serial Number (side of DPF)	

Return Freight will be pre-paid and added to the final invoice.

Return Freight Options:

UPS Next Day Air
UPS 2nd Day Air
UPS Ground

Date: _____

Authorized Signature: _____

silverhorn.co.uk

This page intentionally left blank

silverhorn.co.uk

Fig. 46

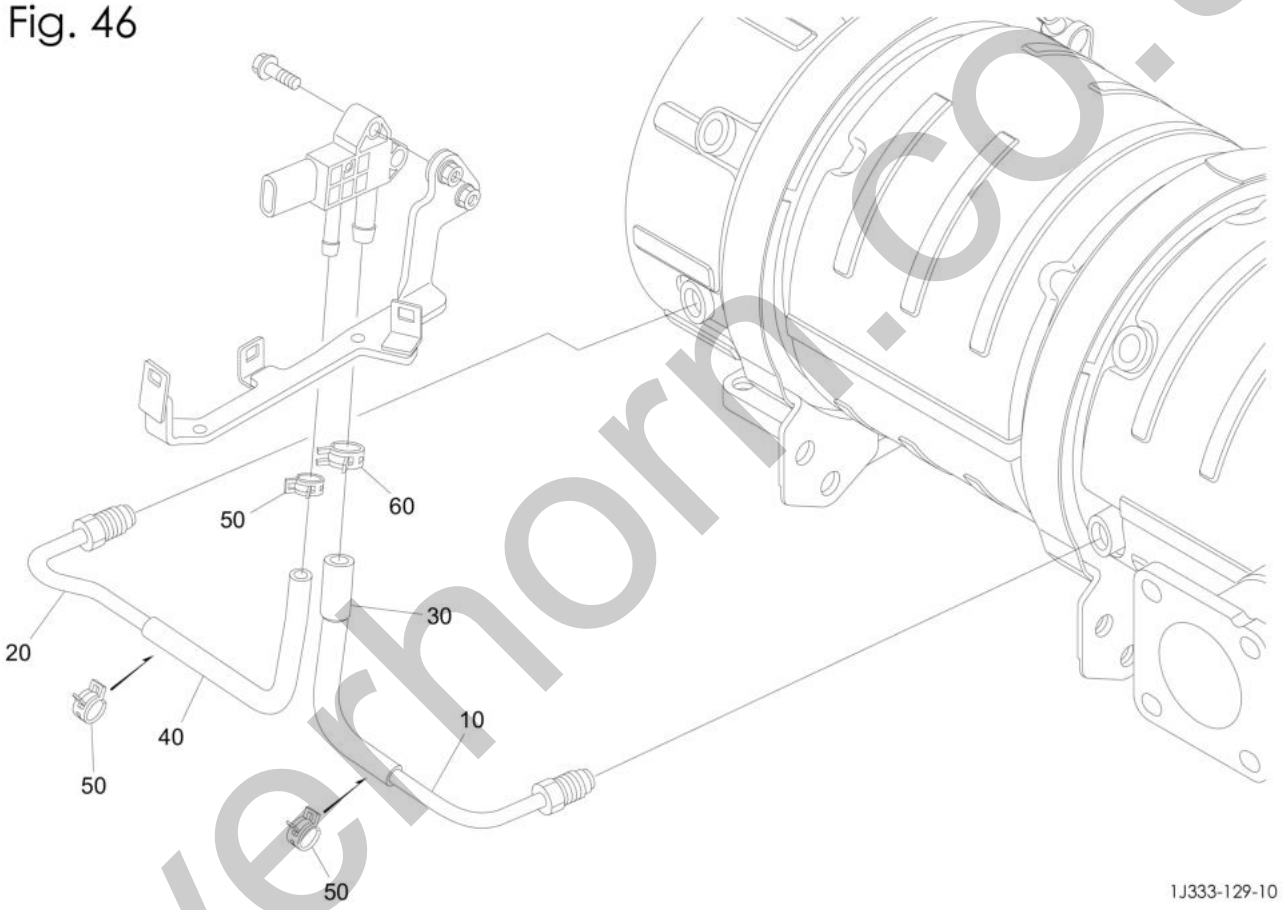

silverhorn.co.uk

Item	Part No.	Name	Qty	Uom	Remarks	SERIAL NUMBER
10	K1A332-18630	PIPE (COMPLETE) (PRESSURE,2)	1	EA		
20	K1K976-18630	PIPE (COMPLETE) (PRESSURE,2)	1	EA		
30	K1J333-18640	TUBE (PRESSURE,1)	1	EA		
40	K1K841-18650	TUBE (PRESSURE,2)	1	EA		
50	K09318-88100	CLAMP, hose	3	EA		
60	K09318-88115	CLAMP, hose	1	EA		

silverhorn.co.uk

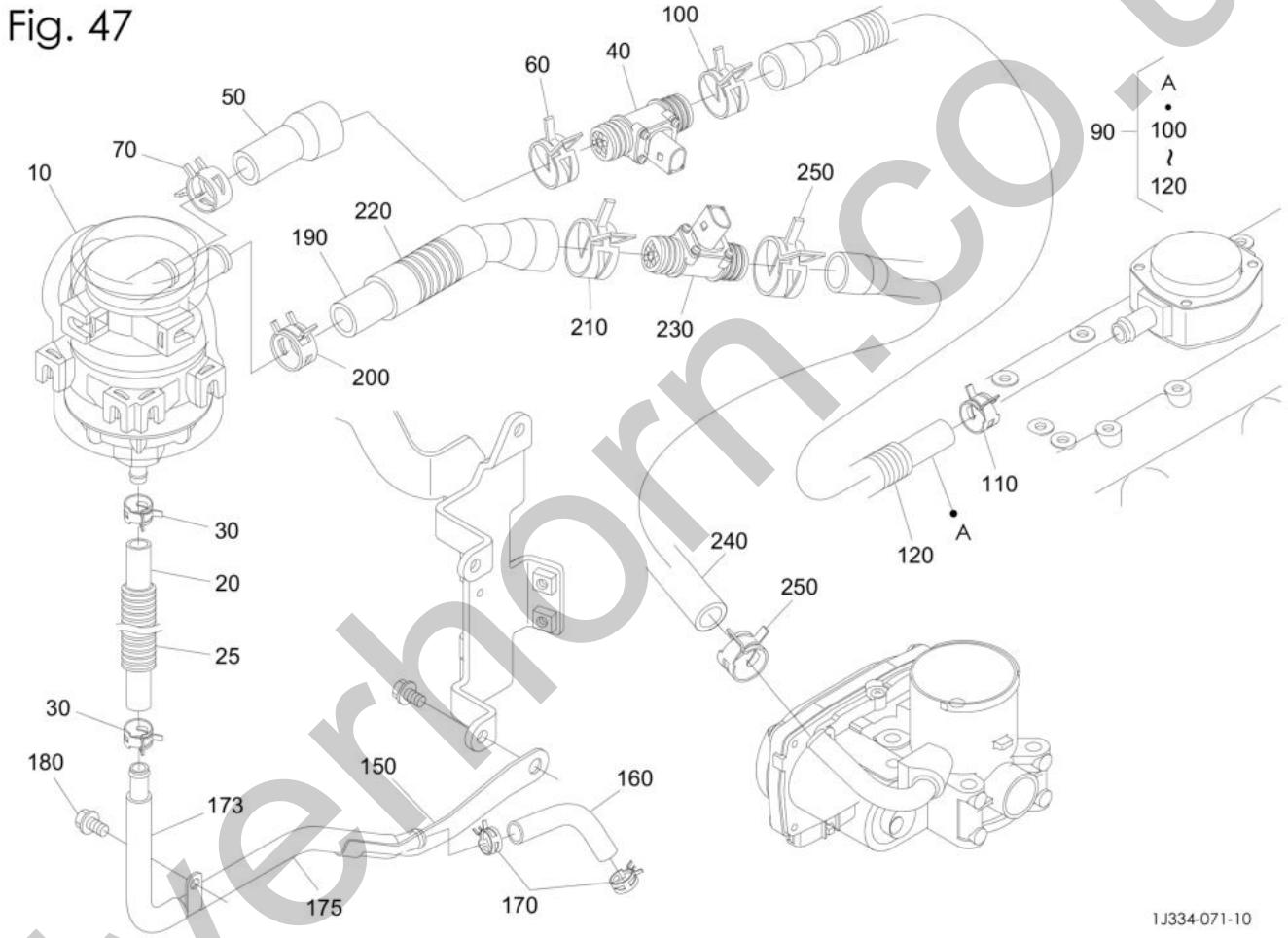

silverhorn.co.uk

Item	Part No.	Name	Qty	Uom	Remarks	SERIAL NUMBER
10	K1J775-05030	SEPARATOR ASSY	1	EA		
20	K1K995-05830	TUBE (OIL RETURN)	1	EA		
25	K1K841-42230	TUBE (CORRUGATE)	1	EA		
30	K09318-88130	CLAMP, hose	2	EA		
40	K1E475-05750	HEATER	1	EA		
50	K1K841-05860	TUBE (2,BREATHER)	1	EA		
60	K1E475-05580	CLAMP, hose	1	EA		
70	K09318-88200	CLAMP, hose	1	EA		
90	K1K841-05050	TUBE ASSY, breather	1	EA		
100	K1E475-05580	CLAMP, hose	1	EA		
110	K09318-88180	BAND, hose	1	EA		
120	K1K841-42210	TUBE (CORRUGATE)	1	EA		
150	K1K987-05870	PIPE (COMPLETE)	1	EA		
160	K1K987-05910	TUBE	1	EA		
170	K09318-88130	CLAMP, hose	2	EA		
173	K1K819-75810	INSULATION (1,PIPE)	1	EA		
175	K1K819-75820	INSULATION (2,PIPE)	1	EA		
180	K01754-50610	BOLT, flange	1	EA		
190	K1K841-05870	TUBE (3,SEPARATOR)	1	EA		
200	K09318-88200	CLAMP, hose	1	EA		
210	K1E475-05580	CLAMP, hose	1	EA		
220	K1K841-42220	TUBE (CORRUGATE)	1	EA		
230	K1E475-05750	HEATER	1	EA		
240	K1K841-05880	TUBE	1	EA		
250	K1E475-05580	CLAMP, hose	2	EA		

silverhorn.co.uk

Fig. 48

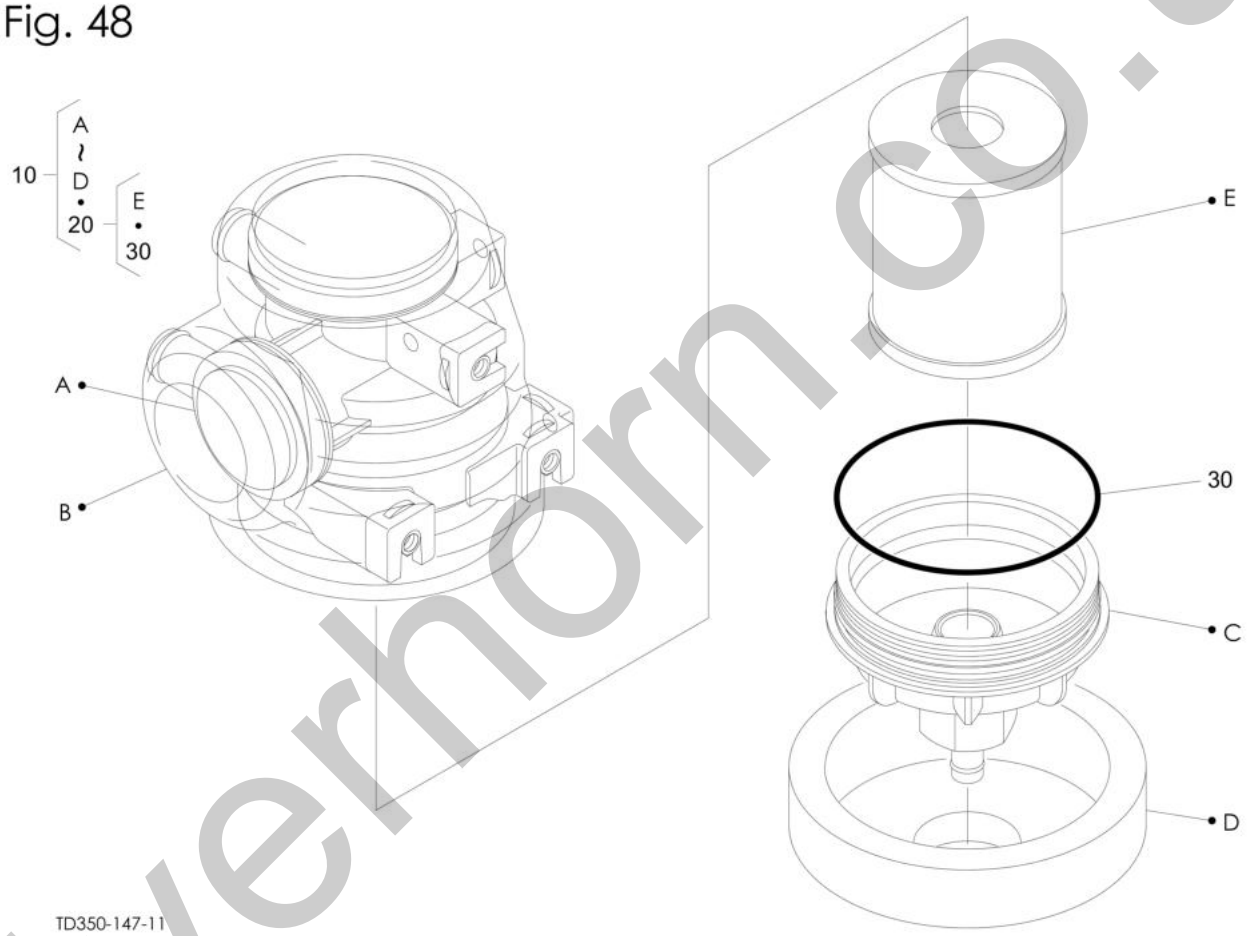

silverhorn.co.uk

Item	Part No.	Name	Qty	Uom	Remarks	SERIAL NUMBER
10	K1J775-05030	SEPARATOR ASSY	1	EA		
20	K1J770-05810	KIT, element	1	EA		
30	K1J770-05130	O-RING	1	EA		

silverhorn.co.uk

Fig. 49

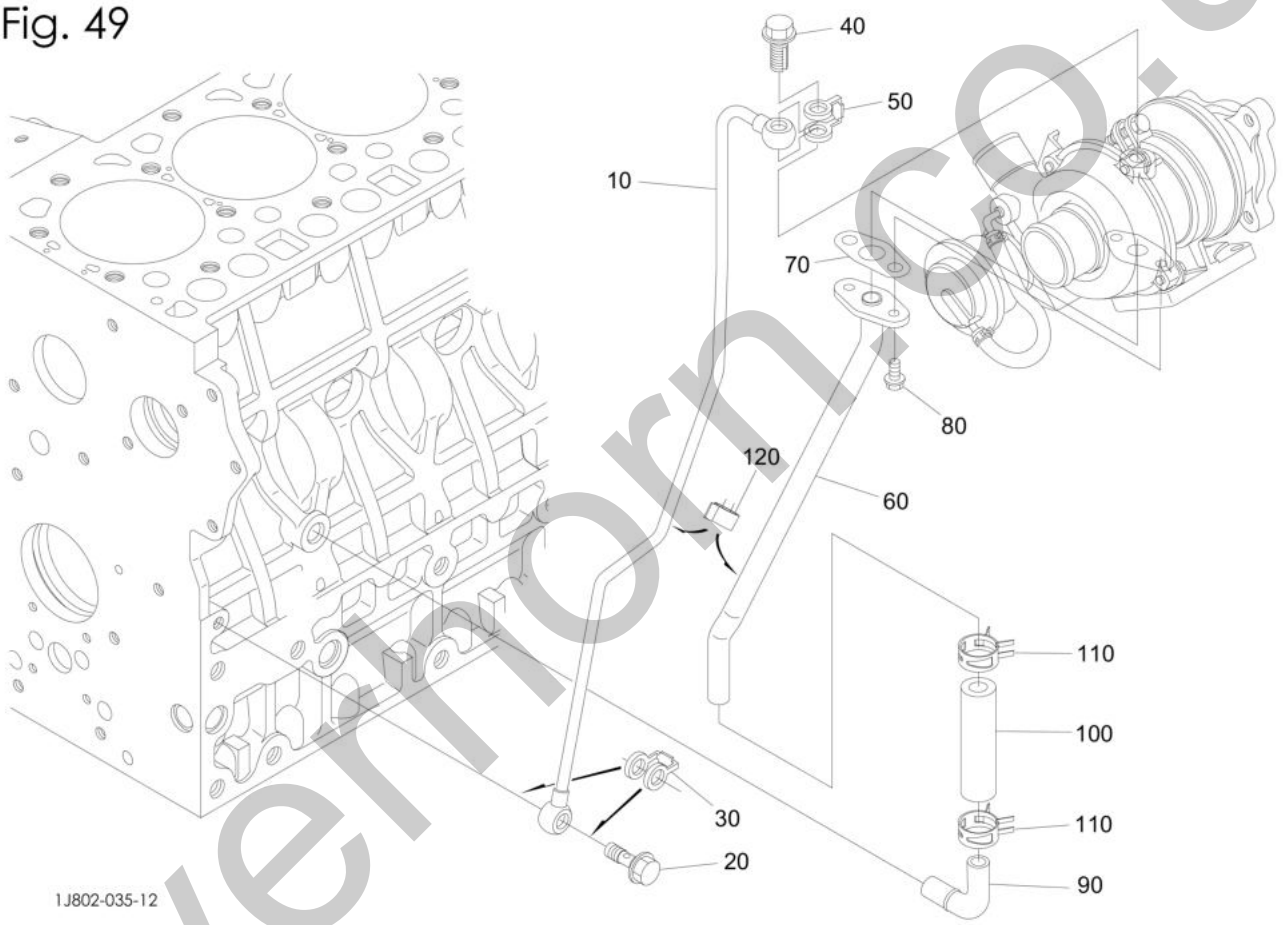

silverhorn.co.uk

Item	Part No.	Name	Qty	Uom	Remarks	SERIAL NUMBER
10	K1J802-33040	PIPE (COMPLETE)	1	EA		
20	K1J860-95790	BOLT, eye joint	1	EA		
30	K1G557-96650	GASKET	1	EA		
40	K1G924-95802	BOLT, eye joint	1	EA		
50	K1G777-96650	GASKET	1	EA		
60	K1J802-33050	PIPE (COMPLETE) (OIL,2)	1	EA		
70	K1C040-33670	GASKET, oil pipe	1	EA		
80	K01754-50612	BOLT, flange	2	EA		
90	K1A024-33230	PIPE (OIL,3)	1	EA		
100	K1G928-33240	TUBE, oil	1	EA		
110	K09318-88200	CLAMP, hose	2	EA		
120	K1J860-33520	CLAMP, pipe	1	EA		

silverhorn.co.uk

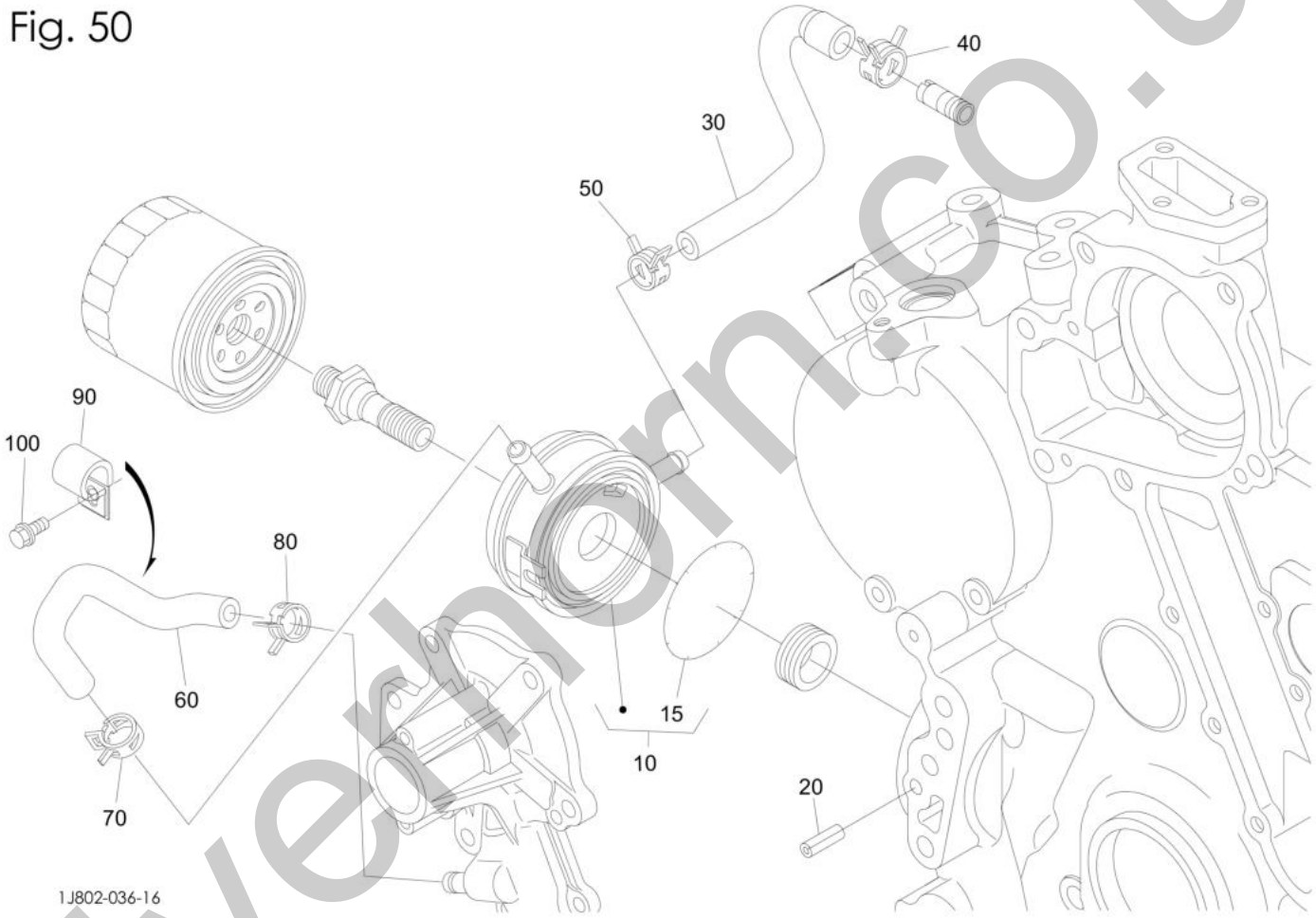

silverhorn.co.uk

Item	Part No.	Name	Qty	Uom	Remarks	SERIAL NUMBER
10	K1G896-37012	COOLER ASSY, oil	1	EA		
15	K1G896-37072	PACKING	1	EA		
20	K05411-00620	PIN, roller	1	EA		
30	K1A024-37152	HOSE, oil cooler	1	EA		
40	K09318-88180	BAND, hose	1	EA		
50	K16241-73360	BAND, pipe	1	EA		
60	K1J801-37160	HOSE, oil cooler	1	EA		
70	K16241-73360	BAND, pipe	1	EA		
80	K16241-73360	BAND, pipe	1	EA		
90	K1J801-37390	CLAMP	1	EA		
100	K01754-50612	BOLT, flange	1	EA		

silverhorn.co.uk

Fig. 51

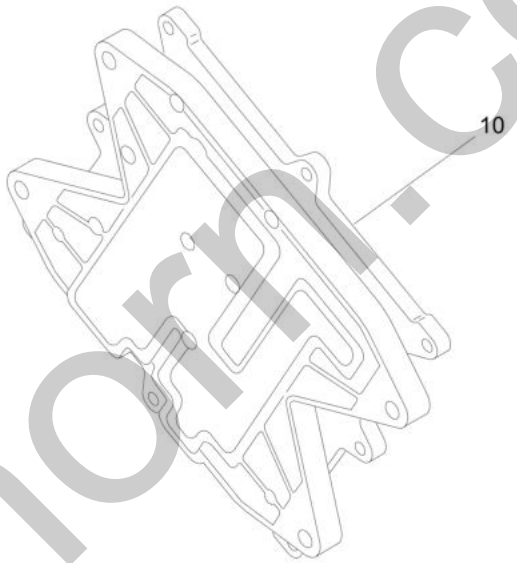

1J334-005-10

silverhorn.co.uk

Item	Part No.	Name	Qty	Uom	Remarks	SERIAL NUMBER
10	K1H044-59090	SUB ASSY, ECU	1	EA		

silverhorn.co.uk

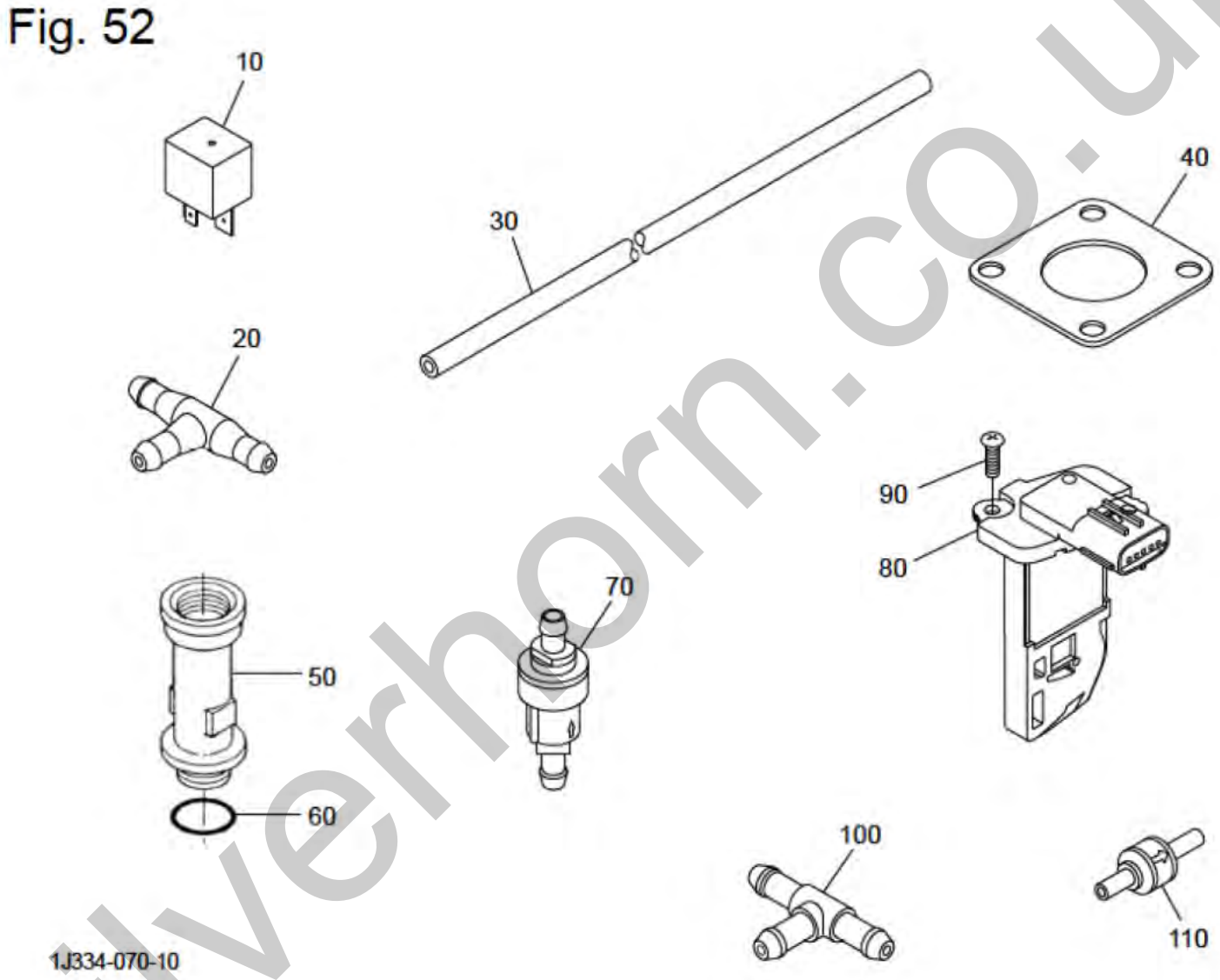

silverhorn.co.uk

Item	Part No.	Name	Qty	Uom	Remarks	SERIAL NUMBER
10	KRP421-53730	RELAY, grow	1	EA		
20	K59750-77520	JOINT	1	EA		
30	K09661-70650	TUBE, fuel (7.3X12.5X650L)	1	EA		
40	KT0070-16420	GASKET	1	EA		
50	K15412-33110	PIPE	1	EA		
60	K04817-50300	O-RING	1	EA		
70	K1G911-42460	VALVE, fuel check	1	EA		
80	K1J520-10700	SENSOR	1	EA		
90	K03054-50412	SCREW	2	EA		
100	K3N600-42170	JOINT,T TYPE	1	EA		
110	K1C010-42460	VALVE	1	EA		

silverhorn.co.uk

PICTURE NOT AVAILABLE
AT THIS TIME

silverhorn.co.uk

Item	Part No.	Name	Qty	Uom	Remarks	SERIAL NUMBER
-	PNNA	TL6R BUCKETS-BLADES-ATTACHMENTS		EA		
-	BTL867	BUCKET (67" SMOOTH) (WITH BOLT-ON BLADE)	1	EA		
-	BTL867T	BUCKET (67" TOOTH)	1	EA		
-	BPL1200	BLADE, dozer (84") (SIX-WAY)	1	EA		
-	BTLPF48	FORK ASSY (48") (BACKING FOR FORK) (HEAVY DUTY)	1	EA		
-	0880621202	BOLT-ON BLADE (67")(FOR BRADCO BUCKET #BTL867)	1	EA		

silverhorn.co.uk

silverhill.co.uk

Item	Part No.	Name	Qty	Uom	Remarks	SERIAL NUMBER
-	3100003	CORD, 4' (W/ELEMENT) (#3600023 IS CORD ONLY)		EA		

silverhorn.co.uk

TAKEUCHI
From World First to World Leader

TL6R RECOMMENDED STOCK LIST

FILTERS			
QUANTITY	PART NUMBER	DESCRIPTION	SERIAL BREAK (if applicable)
2	1551103900	FILTER (HYDRAULIC)	
4	KHH164-32430	CARTRIDGE, oil filter	
4	K1J301-43170	FUEL FILTER	
4	K1J301-43010	ELEMENT, FUEL FILTER	
4	1911262202	AIR FILTER (OUTER)	
4	1911262203	AIR FILTER (INNER)	
2	1551101001	FILTER (HYDRAULIC)	
2	K1J508-05810	KIT, element	
SEAL KITS			
QUANTITY	PART NUMBER	DESCRIPTION	SERIAL BREAK (if applicable)
2	1900124399	KIT, seal (BUCKET CYLINDER)	
2	1900124599	KIT, seal (ARM CYLINDER)	
MISC			
QUANTITY	PART NUMBER	DESCRIPTION	SERIAL BREAK (if applicable)
2	1703000030	LAMP ASSY	
2	1700100072	SWITCH, starter (KEY)	
10	1700100019	KEY (QTY 2 = 1 KEYS)	
2	K15807-74110	FAN	
2	K1G355-74280	PULLEY, fan drive	
2	0681600009	SPROCKET	
2	K1G355-97010	V-BELT, A (41.5in)	
2	0654000033	HOSE, radiator (LOWER)	
2	0654000032	HOSE, radiator (UPPER)	

519 Bonnie Valentine Way, Pendergrass GA 30567 | 706.693.3600 | www.takeuchi-us.com

silvermoor.co.uk

Item	Part No.	Name	Qty	Uom	Remarks	SERIAL NUMBER
1	1551103900	FILTER (HYDRAULIC)	2	EA		
2	K16414-32434	CARTRIDGE	4	EA		
3	K1J301-43170	FILTER, fuel (FOR AFTERMARKET SEE #AFK1J301-43170)	4	EA		
4	K1J301-43010	FILTER, fuel	4	EA		
5	1911262202	FILTER, air (INNER)	4	EA		
6	1911262203	FILTER, air (OUTER)	4	EA		
7	1551101001	FILTER (HYDRAULIC)(USES O-RING PART # 1420110600)	2	EA		
8	K1J508-05810	KIT, element	2	EA		
9	1900124399	KIT, seal (BUCKET CYLINDER)	2	EA		
10	1900124599	KIT, seal	2	EA		
11	1703000030	LAMP ASSY	2	EA		
12	1700100072	SWITCH, starter (KEY)	2	EA		
13	1700100019	KEY (QTY 2 = 1 KEYS)**KEYS ONLY**	10	EA		
14	K15807-74110	FAN	2	EA		
15	K1G355-74280	PULLEY, fan drive	2	EA		
16	0681600009	SPROCKET	2	EA		
17	K1G355-97010	V-BELT, A (41.5in)	2	EA		
18	0654000033	HOSE, radiator (LOWER)	2	EA		
19	0654000032	HOSE, radiator (UPPER)	2	EA		

silverhorn.co.uk

Those in the know, know Takeuchi

Takeuchi Fleet Management Component Guide

Version: 1
Release Date 08/01/2016

519 Bonnie Valentine Way, Pendergrass GA 30567 | 706.693.3600 | www.takeuchi-us.com

silverhorn.co.uk

Components

Monitoring Unit: M8HBI

Antenna Excavators: Dome Antenna

Antenna Track Loaders: Chocolate Bar Style Antenna

silverthorn.co.uk

Components Location Excavators

The monitoring unit is located behind the steel access panel under the operator's seat. The antenna is located in the plastic panel in the safety lever lock.
(TB230, TB240 Canopy, TB260 Canopy)

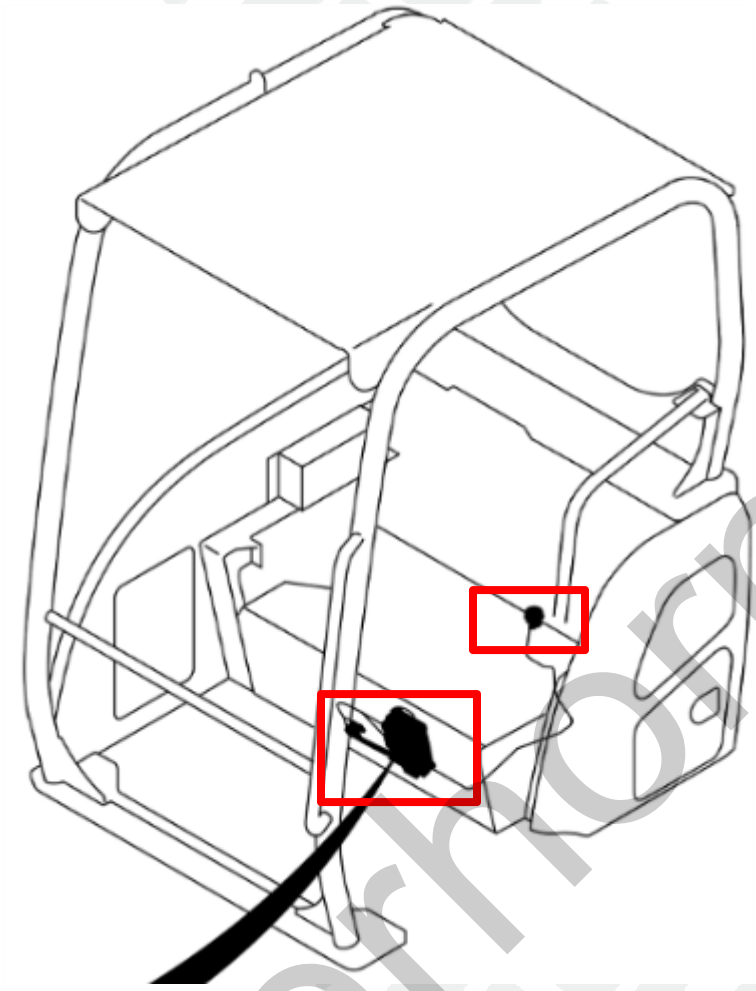

silverhorn.co.uk

The monitoring unit is located behind the plastic panel in the operator's station. The antenna is located in the plastic panel in the safety lever lock.
(TB260 Cab, TB290, TB280FR)

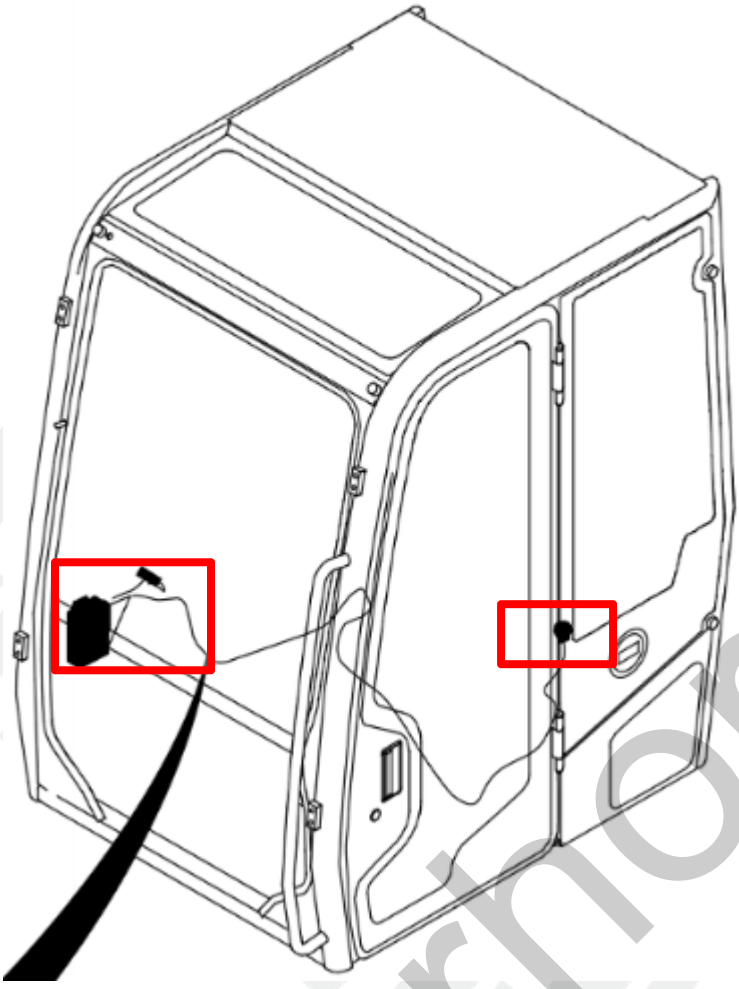

silvermorn.co.uk

Components Location Track Loaders

The monitoring unit is located under the cab in the engine room (tilting the cab is required to gain access). The antenna is located inside the cab behind the operator's seat.
(TL8 Canopy, TL10 Canopy, TL12 Canopy, TL12V2 Canopy)

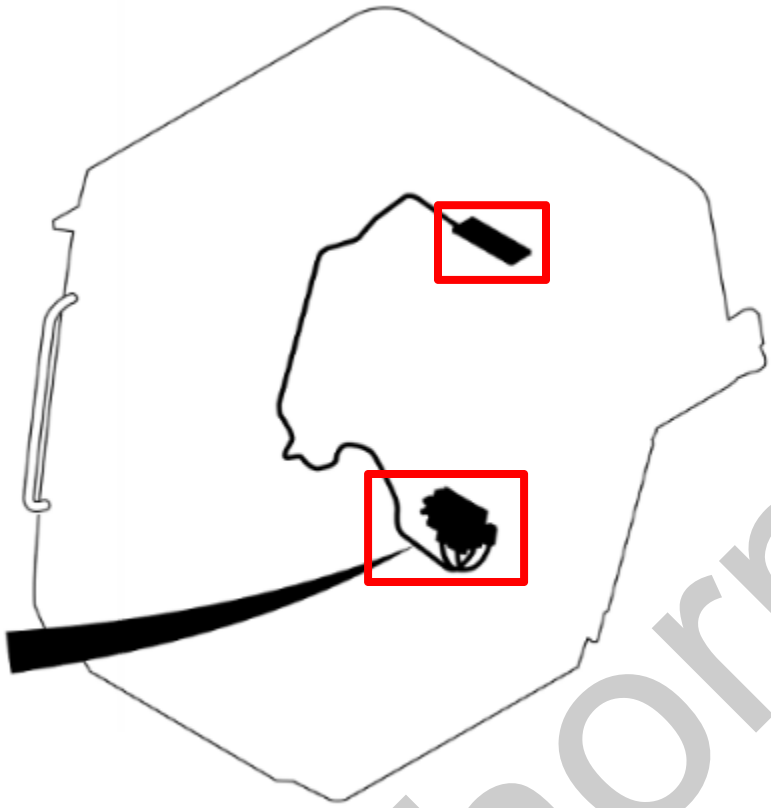

The monitoring unit is located in the same location for cab units. The antenna on the cab is located inside the cab behind the operator's seat in a slightly different location.

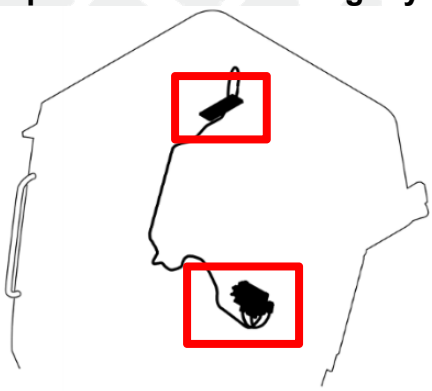

silverhorn.co.uk

Troubleshooting

Monitoring Unit Troubleshooting Guide		
Problem/Symptom	**Probable Cause**	**Correct Action Required**
Monitoring Unit Does not Power On	Pin Connector Loose	Ensure pin connector is full inserted and latch engaged.
	Power Connection Incorrectly Wired	Monitoring unit must have a continuous power connection. Observe monitoring unit LEDs - *Refer to LED Status Indicator.*
	Faulty Harness	Inspect harness for pinched or shorted wires
Monitoring Unit Does Not Check In/Not Available on Map	M8 is Not Powering On	Refer to probable cause above.
	Unit is not Activated	Contact Jonathan Martinez to confirm the monitoring unit is activated. Email: jmartinez@takeuchi-us.com Cell: (706)-429-7061
	Monitoring Unit is Damaged	Contact Jonathan Martinez to confirm the warranty process. Email: jmartinez@takeuchi-us.com Cell: (706)-429-7061
	Antenna Cables Faulty or Damaged Connections	Inspect for damage and proceed with warranty process as mentioned above.
	Antenna Cables Swapped	Ensure antenna cables are installed in the designated connectors

The monitoring unit is equipped with two Status LEDs*, one for COM (cellular network status) and one for GPS. The LEDs use the following blink patterns to indicate service:

COM 1 "Cellular" LED (Orange) Definitions

Condition	LED
Modem Off	Off
Com On – Searching	Slow Blinking
Network Available	Fast Blinking
Registered but no Inbound Acknowledgement	Alternates from Solid to Fast Blink every 1 second
Registered and Received Inbound Acknowledgement (Properly Activated)	Solid

silverhorns.co.uk

GPS LED (Green) Definitions

Condition	LED
GPS Off	Off
GPS On	Slow Blinking
GPS Time Sync	Fast Blinking
GPS Fix (Properly Activated)	Solid

LED Status Indicators

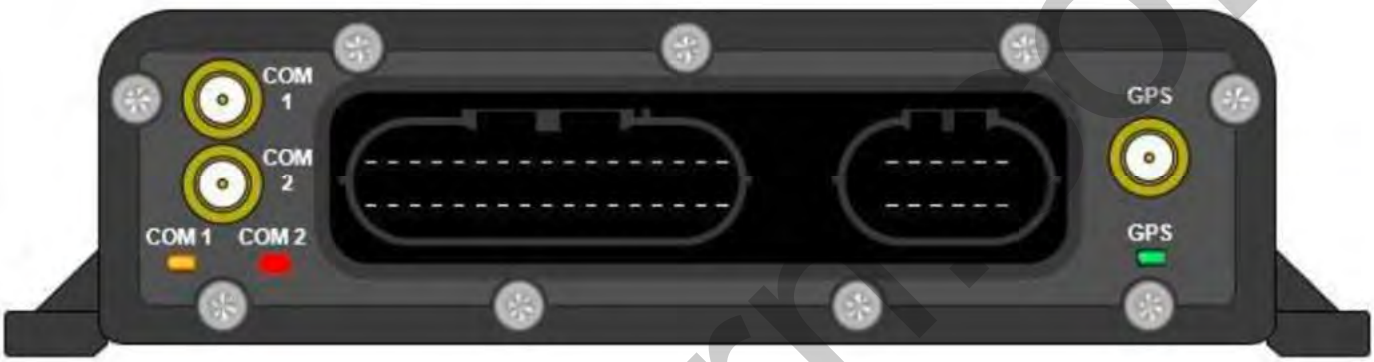

Antenna Connections

Should you have any further questions outside of this guide please contact Jonathan Martinez at:

Email: jmartinez@takeuchi-us.com

Cell: (706)-429-7061

silvershorn.co.uk

TFM Fuse Details

TB230 TB240 TB260 Uninstalled Fuse Example

TB230 TB240 TB260 Uninstalled Fuse Example Cover Open

TB230 TB240 TB260 Uninstalled Fuse Example 2 Cover Open

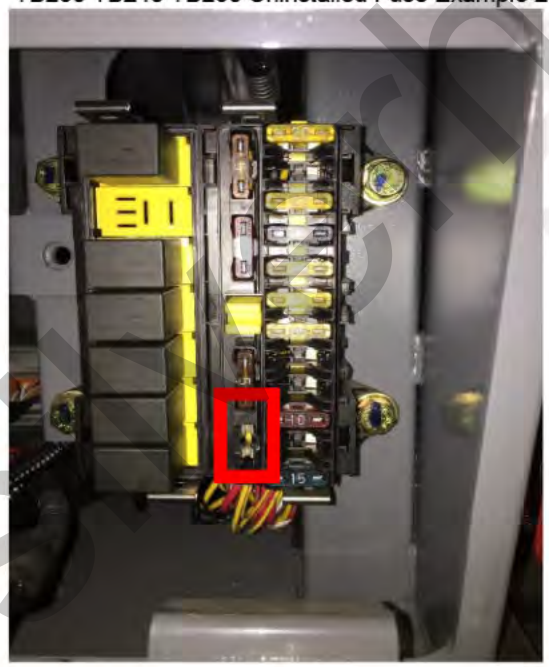

TB230 TB240 TB260 Fuse Detail

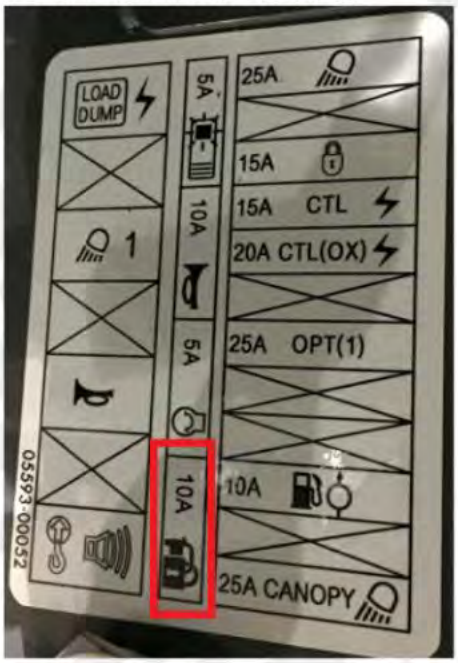

TB290 Uninstalled Fuse Example

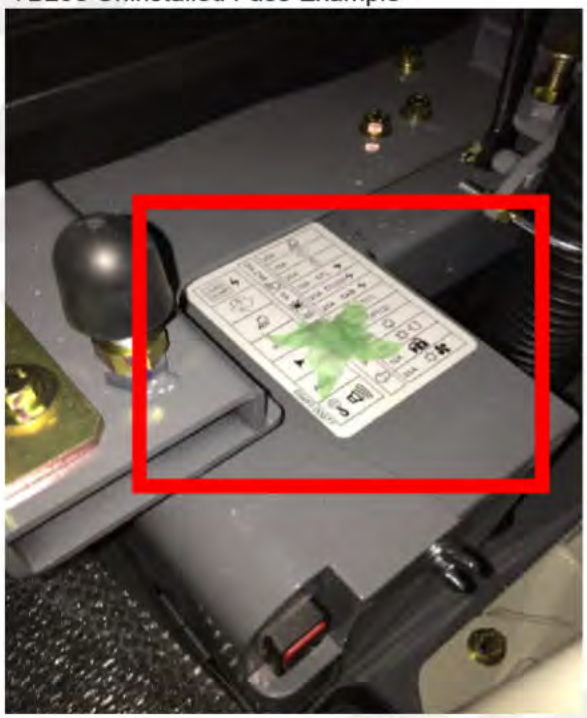

TB290 Uninstalled Fuse Example Cover Open

TB290 Fuse Detail

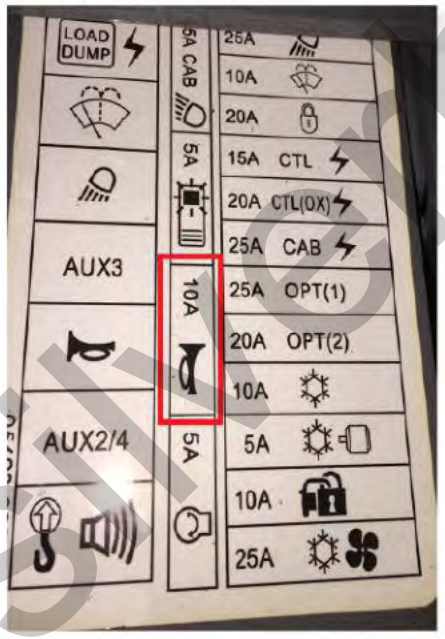

silvernorm.co.uk

TB2150 Uninstalled Fuse Example

TB2150 Uninstalle Fuse Example Cover Open

TB2150 Fuse Detail

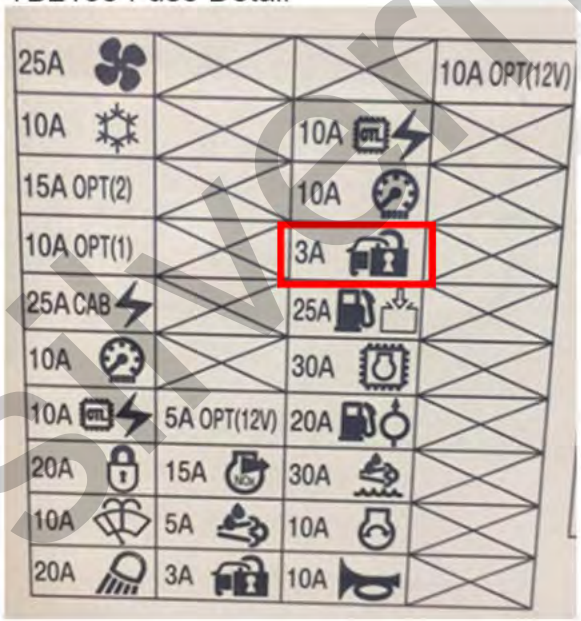

TL8 Uninstalled Fuse Example

TL8 Uninstalled Fuse Example Cover Open

TL8 Fuse Detail

silverhorn.co.uk

TL10 TL12 Uninstalled Fuse Example

TL10 TL12 Uninstalled Fuse Example Cover Open

TL10 TL12 Fuse Detail

silverhorse.co.uk

TL10V2 TL12R2 TL12V2 Uninstalled Fuse Example

TL10V2 TL12R2 TL12V2 Uninstalle Fuse Example Cover Open

TL10V2 TL12R2 TL12V2 Fuse Detail

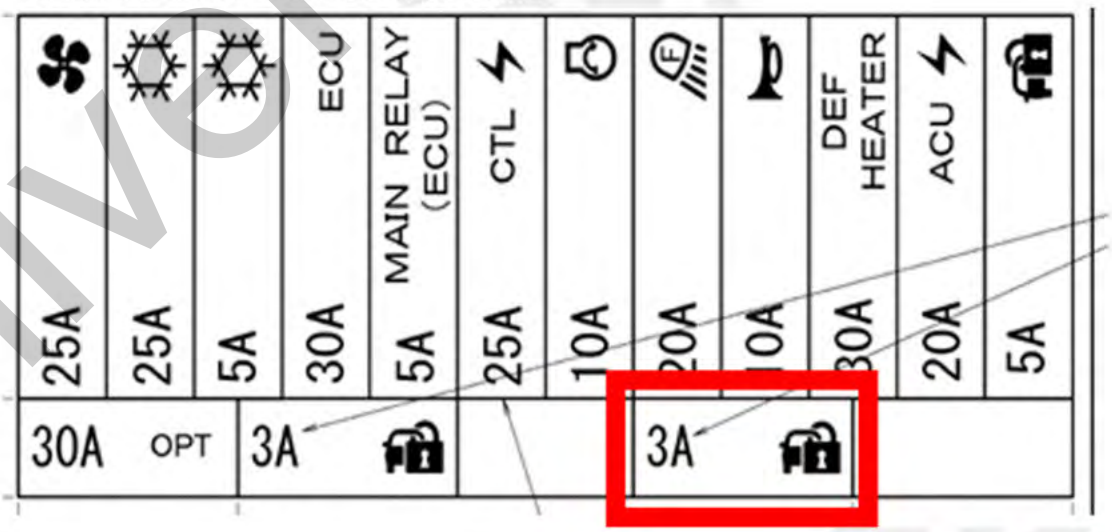

silverhorse.uk

silverhorn.co.uk

Appendix A:Pages Index

AIR CONDITIONER (1/4) (compressor) . . . 147
AIR CONDITIONER (2/4) (condenser) . . . 151
AIR CONDITIONER (3/4) (air conditioner unit) . . . 153
AIR CONDITIONER (4/4) . . . 155
ARM (1/3) . . . 157
ARM (2/3) 1 . . . 161
ARM (2/3) 2 . . . 163
ARM (3/3) . . . 165
BATTERY . . . 59
BLOCK HEATERS . . . 359
BUCKET CYLINDER (L.H.) . . . 225
BUCKET CYLINDER (R.H.) . . . 227
BUCKETS-BLADES-ATTACHMENTS . . . 357
CAB (1/2) 1 . . . 127
CAB (1/2) 2 . . . 129
CAB (1/2) 3 . . . 131
CAB (1/2) 4 . . . 133
CAB (2/2) (front door) . . . 135
CAB (3/3) (side sash) . . . 139
CAB INTERIOR . . . 141
CAB MOUNT . . . 123
CANOPY . . . 119
CANOPY INTERIOR . . . 121
CANOPY MOUNT . . . 115
CONTROL VALVE . . . 201
COVER (1/3) (cab) . . . 99
COVER (1/3) (canopy) . . . 93
COVER (2/3) (engine hood) (cab) . . . 97
COVER (2/3) (engine hood) (canopy) . . . 103
COVER (3/3) (rear door) . . . 105
CRAWLER BELT . . . 11
DECAL (cab) (English) (for U.S.) 1 . . . 185
DECAL (cab) (English) (for U.S.) 2 . . . 189
DECAL (canopy) (English) (for U.S.) 1 . . . 177
DECAL (canopy) (English) (for U.S.) 2 . . . 181
DECAL (foot accelerator) . . . 195
DECAL (hydraulic quick hitch type) . . . 193
DECAL (lever operation) . . . 197
DISPLAY(with out rear view camera) . . . 55
DISPLAY(with rear view camera) . . . 57
DPF CLEANING ORDER FORM - REV 021418 . . . 341
DPF CLEANING PROGRAM REV 021418 . . . 339
ELECTRICAL (1/2) 1 . . . 37
ELECTRICAL (1/2) 2 . . . 39
ELECTRICAL (1/2) 3 . . . 41
ELECTRICAL (2/2) 1 . . . 43
ELECTRICAL (2/2) 2 . . . 49
ELECTRICAL (attachment) . . . 51
ENGINE & ACCESSOREIS (5/5) . . . 33
ENGINE & ACCESSORIES (1/5) . . . 21
ENGINE & ACCESSORIES (2/5) . . . 25
ENGINE & ACCESSORIES (3/5) . . . 29
ENGINE & ACCESSORIES (4/5) . . . 31
FLOOR FRAME . . . 109
FOOT ACCELERATOR . . . 35
FRAME . . . 13
FRONT IDLER . . . 5
FUEL TANK & FUEL PIPING (1/2) 1 . . . 85
FUEL TANK & FUEL PIPING (1/2) 2 . . . 87
FUEL TANK & FUEL PIPING (2/2) . . . 91
Fig. 4 OIL PUMP . . . 255
Fig.1 CRANK CASE . . . 249
Fig.10 OIL FILTER . . . 267
Fig.11 MAIN BEARING CASE . . . 269
Fig.12 PISTON AND CRANKSHAFT . . . 271
Fig.13 CAMSHAFT AND IDLE GEAR SHAFT . . . 273
Fig.14 FLYWHEEL . . . 275
Fig.15 FUEL PUMP (MECHANICAL) . . . 277
Fig.16 FUEL CAMSHAFT . . . 279
Fig.17 SUPPLY PUMP . . . 281
Fig.18 FUEL FILTER . . . 283
Fig.19 SEPARATOR . . . 285
Fig.2 OIL PAN . . . 251
Fig.20 INJECTOR AND GLOW PLUG . . . 287
Fig.21 INJECTION PIPE . . . 289
Fig.22 FUEL PUMP (ELECTRICAL) . . . 291
Fig.23 COMMON RAIL . . . 293
Fig.24 ALTERNATOR AND PULLEY . . . 295
Fig.25 ALTERNATOR (COMPONENT PARTS) . . . 297
Fig.26 STARTER . . . 299
Fig.27 STARTER (COMPONENT PARTS) . . . 301
Fig.28 OIL SWITCH AND THERMOMETER . . . 303
Fig.29 INJECTOR HARNESS . . . 305
Fig.3 DIPSTICK AND GUIDE . . . 253
Fig.30 WIRE HARNESS . . . 307
Fig.31 WIRE HARNESS BRACKET . . . 309
Fig.32 WATER FLANGE AND THERMOSTAT . . . 311
Fig.33 WATER HOSE . . . 313
Fig.34 WATER PUMP . . . 315
Fig.35 RESERVE TANK . . . 317
Fig.36 FAN . . . 319
Fig.37 INLET MANIFOLD . . . 321
Fig.38 INLET PIPE . . . 323
Fig.39 EXHAUST MANIFOLD . . . 325
Fig.40 EGR VALVE . . . 327
Fig.41 EGR COOLER . . . 329
Fig.42 TURBO CHARGER . . . 331
Fig.43 DIESEL PARTICULATE FILTER MUFFLER . . . 333
Fig.44 DIESEL PARTICULATE FILTER MUFFLER BRACKET . . . 335
Fig.45 DIESEL PARTICULATE FILTER MUFFLER SENSOR . . . 337
Fig.46 PRESSURE PIPE . . . 342
Fig.47 OIL SEPARATOR . . . 345
Fig.48 OIL SEPARATOR (COMPONENT PARTS) . . . 347
Fig.49 OIL PIPE (TURBO CHARGER) . . . 349
Fig.5 CYLINDER HEAD . . . 257
Fig.50 OIL COOLER . . . 351
Fig.51 ECU . . . 353
Fig.52 ACCESSORIES AND SERVICE PARTS . . . 355
Fig.6 INLET VALVE AND EXHAUST VALVE . . . 259

silverhorn.co.uk

Fig.7 ROCKER ARM SHAFT 261
Fig.8 HEAD COVER 263
Fig.9 GEAR CASE 265
GEAR PUMP 247
GPS DEVICE 53
HANDLE (with 5 switch) 211
HANDLE (with slide switch) 209
HYDRAULIC PUMP (1/4) 239
HYDRAULIC PUMP (2/4) 241
HYDRAULIC PUMP (3/4) 243
HYDRAULIC PUMP (4/4) 245
HYDRAULIC TANK 1 81
HYDRAULIC TANK 2 83
LIFT ARM CYLINDER 229
OPERATION LEVER & STAND 15
PAINTED COLOR 199
PILOT VALVE (L.H.) 207
PILOT VALVE (R.H.) 205
PIPING 1 75
PIPING 2 77
PIPING; ARM 175
PIPING; OPERATION LEVER 1 17
PIPING; OPERATION LEVER 2 19
PUMP DRIVE 79
QUICK HITCH 167
QUICK HITCH (hydraulic type) 1 169
QUICK HITCH (hydraulic type) 2 173
QUICK HITCH CYLINDER 231
RADIO 63
REAR VIEW CAMERA 65
RECOMMENDED STOCK LIST (TL6R) 361
RELIEF VALVE 223
SAFETY BAR 113
SEAT (1/2) 111
SOLENOID VALVE; 1 BLOCK 215, 217, 219
SOLENOID VALVE; 2 BLOCKS 221
SUB VALVE 213
SWITCHES (cab) (for U.S.) 145
SWITCHES (canopy) (for U.S.) 143
TAKEUCHI FLEET MANAGEMENT COMPONENT GUIDE 363
TFM-FUSE DETAIL 11-18-16 370
TRACK ADJUSTER 7
TRACK ROLLER 1
TRAVEL DEVICE 9
TRAVEL MOTOR (1/3) 233
TRAVEL MOTOR (2/3) 235
TRAVEL MOTOR (3/3) 237
VALVE & ACCESSORIES (1/2) 1 67
VALVE & ACCESSORIES (1/2) 2 69
VALVE & ACCESSORIES (2/2) 73
WINDOW WASHER 61

silverhorn.co.uk

0001090009 158
0001673004 158
0002400045 164
0002400076 164
0003600020 . . . . . 14, 162
0003600025 . . . . . 22, 30, 32, 76, 78, 82, 84, 86, 96, 102, 114, 162, 168, 170
0003600026 32
0003600034 170
0003600035 160
0003600036 160
0003600043 92
0003600051 160
0003600052 160
0003600136 24
0003600163 160
0003600176 158
0003600188 160
0003600189 160
0003600223 148
0003600228 170
0003600230 158
0003600231 158
0003600232 158
0003600233 160
0003600234 160
0003600237 148
0003600274 18
0003606202 152
0003608003 158
0003608252 . . . . . 60, 70, 96, 98, 102, 104, 110, 116, 124, 158, 162
0003609003 . . . . . 68, 110, 118, 126
0003610002 170
0003900037 . . . . . 94, 100
0003900038 . . . . . 94, 100
0003900039 80
0003900040 . . . . . 96, 102
0003900041 . . . . . 96, 102
0003900098 . . . . . 96, 102
0003900099 . . . . . 96, 102
0003900100 . . . . . 96, 102
0004008021 22
0004012035 . . . . . 98, 104
0004015002 106
0007000004 6
0007000016 . . . . . 168, 170
0007000031 82
0007000112 108
0007000114 158
0007000119 . . . . . 168, 170
0007203017 162
0007203083 74
0007203093 10
0007203095 10
0007213010 10
0007213041 84
0007213042 . . . . . 70, 74
0007213051 84
0007224020 148
0007236045 162
0007300001 . . . . . 90, 170
0007300013 76
0007300039 20
0007300050 26
0007300053 90
0007300060 78
0007300065 . . . . . 18, 148
0007300069 . . . . . 18, 26
0008500050 . . . . . 178, 182, 186, 190
0011513012 158
0011902009 158
0011902010 158
0011902011 158
0093208300 114
0221240400 . . . . . 2, 2
0331018600 14
0334340191 38
0338600146 134
0338600147 134
0339375040 . . . . . 178, 182, 186, 190
0339376240 . . . . . 180, 184, 188, 192
0344200022 . . . . . 42, 50
0359300052 . . . . . 180, 184, 188, 192
0359306600 . . . . . 178, 182, 186, 190
0359306700 . . . . . 178, 182, 186, 190
0359313700 . . . . . 178, 182, 186, 190
0359313900 . . . . . 180, 182, 188, 190
0374602650 148
0375109110 . . . . . 16, 16
0378219160 . . . . . 98, 104
0379366006 . . . . . 180, 182, 188, 190
0394602010 148
0394617670 148
0399300400 . . . . . 180, 184, 188, 192
0399300500 . . . . . 180, 184, 188, 192
0433503100 . . . . . 116, 124
0553500337 . . . . . 98, 104
0563218500 110
0563219700 110
0563500600 . . . . . 116, 124
0564017460 22
0564200221 66
0564634880 148
0564634881 148
0564634890 148
0564634895 148
0568660810 136
0569300090 . . . . . 180, 184, 188, 192
0573300610 . . . . . 56, 58
0573500027 70

silverhorn.co.uk

0578600193 130
0578600289 134
0579300052 . . . . . 178, 182, 186, 190
0579303630 . . . . . 178, 182, 186, 190
0651300190 . . . . . 2, 2
0651400005 6
0651400010 6
0651400017 6
0651400019 6
0651400020 6
0651500007 8
0651500008 8
0651500009 8
0651500010 8
0651500014 6
0651500015 6
0651500017 6
0653000109 14
0653000110 14
0653000139 14
0653000145 14
0653000146 14
0653000147 14
0653000154 14
0653000157 14
0653500025 118
0653500029 126
0653500035 110
0653500036 110
0653500037 110
0654000004 32
0654000016 32
0654000020 22
0654000023 22
0654000032 . . . . . 30, 362
0654000033 . . . . . 28, 362
0654000034 24
0654000035 30
0654000043 26
0654000048 26
0654000052 26
0654000056 26
0654000057 26
0654000064 30
0654000065 32
0654000070 22
0654000071 26
0654000087 22
0654000098 22
0654000116 32
0654000117 32
0654000118 26
0654000124 30
0654000129 24
0654000130 32
0654000132 32
0654200001 . . . . . 44, 50
0654200002 36
0654200004 40
0654200005 46
0654200008 46
0654200015 44
0654200017 44
0654200019 42
0654200023 52
0654200028 46
0654200032 40
0654200040 40
0654200043 42
0654200044 52
0654200045 42
0654200048 44
0654200050 . . . . . 120, 132
0654200051 42
0654200052 40
0654200053 172
0654200054 44
0654200058 44
0654200063 44
0654200064 48
0654200068 44
0654200076 44
0654200077 46
0654200087 154
0654200089 . . . . . 116, 124
0654200090 48
0654200093 132
0654200111 66
0654200112 50
0654200113 52
0654200117 44
0654200122 46
0654400001 60
0654400002 60
0654400003 60
0654400005 60
0654400006 60
0654401030 60
0654600010 114
0654600019 114
0654600022 114
0654600038 148
0654600039 148
0654600040 148
0654600056 154
0654600057 154
0654600064 154
0654600066 148
0654600068 154
0654600080 154

silverhorn.co.uk

0654600081 150
0654600082 148
0654600090 152
0654600092 148
0654600094 26
0654600096 152
0655000003 74
0655000006 70
0655000016 70
0655000017 70
0655000022 68
0655100026 16
0655100028 16
0655100029 16
0655100042 16
0655100043 16
0655100044 16
0656000017 158
0656000031 158
0656000044 158
0656000076 164
0656000086 158
0656000089 162
0656000094 164
0656000380 158
0656100002 . . . . . 168, 170
0656100007 172
0656100008 172
0656100009 174
0656100013 174
0656100015 174
0656100018 174
0656100023 174
0656100027 168
0656100031 170
0656100032 170
0656100033 170
0656100200 168
0656100300 168
0657000002 78
0657000003 78
0657000004 76
0657000005 78
0657000006 78
0657000009 78
0657000011 76
0657000012 76
0657000013 78
0657000014 78
0657000015 78
0657000016 78
0657000017 78
0657000019 76
0657000022 76
0657000023 78
0657000027 78
0657000028 78
0657000032 76
0657000036 76
0657000037 76
0657000042 76
0657000043 76
0657000045 76
0657000047 78
0657000048 78
0657000049 76
0657000051 78
0657100002 18
0657100003 18
0657100004 18
0657100005 18
0657100006 18
0657100007 18
0657100008 . . . . . 18, 20
0657100009 . . . . . 18, 20
0657100011 20
0657100012 20
0657100013 20
0657100017 18
0657100019 18
0657100021 20
0657100023 18
0657100024 18
0657100025 18
0657100028 20
0657100029 20
0657100031 20
0657300019 164
0657300036 176
0657300037 176
0657300038 176
0657300039 176
0657300040 176
0657300041 176
0657300042 176
0657300043 176
0657300045 176
0657300046 176
0657300047 176
0657300048 176
0657300051 176
0657300052 176
0657300062 176
0657300064 164
0657300066 164
0657300068 162
0657300072 162
0657300074 162
0657300076 162
0657300082 176

silverhorn.co.uk

0657300084 176
0657300085 162
0657301170 164
0657301180 164
0658000003 82
0658000020 82
0658000022 84
0658000025 82
0658000026 84
0658000600 82
0658100015 92
0658100019 86
0658100021 86
0658100023 86
0658100024 86
0658100025 86
0658100026 86
0658100027 86
0658100028 86
0658100030 86
0658100032 86
0658100034 . . . . . 96, 102
0658100037 86
0658100047 92
0658100054 86
0658100055 92
0658200038 106
0658200039 106
0658200042 . . . . . 94, 98, 100, 104
0658200043 98
0658200053 . . . . . 98, 104
0658200056 . . . . . 94, 100
0658200058 . . . . . 98, 104
0658200061 . . . . . 94, 100
0658200062 . . . . . 94, 100
0658200075 . . . . . 94, 100
0658200081 94
0658200084 . . . . . 94, 100
0658200085 100
0658200089 100
0658200092 106
0658200098 98
0658200101 . . . . . 96, 102
0658200107 . . . . . 94, 100, 106
0658200108 106
0658200112 104
0658200120 . . . . . 96, 102
0658200124 106
0658400004 . . . . . 116, 120
0658400007 . . . . . 116, 124
0658400008 . . . . . 116, 124
0658400009 . . . . . 122, 142
0658400015 . . . . . 122, 142
0658400020 . . . . . 122, 142
0658400021 . . . . . 122, 142
0658400023 . . . . . 122, 142
0658400041 . . . . . 120, 128
0658400042 . . . . . 120, 130
0658400043 . . . . . 120, 130
0658400044 120
0658400045 . . . . . 120, 132
0658400046 120
0658400047 120
0658400048 . . . . . 120, 128
0658400049 120
0658400050 . . . . . 120, 128
0658400051 . . . . . 120, 128
0658400052 . . . . . 120, 128
0658400540 116
0658600004 . . . . . 116, 124
0658600008 . . . . . 116, 124
0658600010 . . . . . 116, 124
0658600013 142
0658600014 . . . . . 122, 142
0658600015 142
0658600016 . . . . . 122, 142
0658600017 . . . . . 122, 142
0658600018 . . . . . 122, 142
0658600019 . . . . . 122, 142
0658600020 142
0658600024 . . . . . 120, 128
0658600025 . . . . . 116, 124
0658600026 . . . . . 118, 124
0658600058 124
0658600059 130
0658600061 124
0658600063 134
0658600064 128
0658600065 128
0658600066 128
0658600067 132
0658600068 130
0658600069 130
0658600070 . . . . . 130, 140
0658600071 . . . . . 130, 140
0658600072 128
0658600073 128
0658600074 128
0658600075 . . . . . 130, 136
0658600076 136
0658600077 136
0658600078 136
0658600079 136
0658600080 136
0658600081 136
0658600082 136
0658600083 136
0658600084 136
0658600085 136
0658600086 136

silverhorn.co.uk

0658600087 136
0658600088 136
0658600089 136
0658600090 136
0658600091 136
0658600092 136
0658600093 . . . . . 132, 136
0658600094 136
0658600095 130
0658600096 134
0658600097 134
0658600098 134
0658600099 132
0658600101 132
0658600102 134
0658600103 138
0658600104 138
0658600106 140
0658600107 140
0658600108 140
0658600109 140
0658600110 140
0658600111 140
0658600112 140
0658600113 . . . . . 130, 140
0658600114 . . . . . 130, 140
0658600115 . . . . . 130, 140
0658600116 . . . . . 130, 140
0659300011 . . . . . 178, 182, 186, 190
0659300012 . . . . . 178, 182, 186, 190
0659300013 . . . . . 178, 182, 186, 190
0659300014 . . . . . 180, 184, 188, 192
0659300015 . . . . . 180, 184, 188, 192
0659300018 . . . . . 178, 182, 186, 190
0659300024 . . . . . 178, 182, 186, 190
0659300025 . . . . . 178, 182, 186, 190
0659300029 . . . . . 180, 184, 188, 192
0659300031 . . . . . 186, 190
0659300032 . . . . . 178, 182
0659300038 . . . . . 178, 182, 186, 190
0659300039 . . . . . 178, 182, 186, 190
0659300040 . . . . . 178, 182, 186, 190
0659300042 . . . . . 178, 182, 186, 190
0659300043 . . . . . 188, 192
0659300044 . . . . . 188, 192
0663000004 14
0663000005 14
0663000006 14
0663000123 14
0664100044 196
0664300004 . . . . . 116, 124
0664300011 38
0664300110 146
0664300120 146
0664300130 194
0664300140 146
0664400010 60
0664401130 . . . . . 180, 184, 188, 192
0665101203 . . . . . 16, 16
0665102120 . . . . . 16, 16
0666101080 170
0666101230 170
0666101590 170
0666101600 170
0668200040 . . . . . 98, 104
0669300006 198
0669300007 198
0669300024 . . . . . 180, 184, 188, 192
0669300034 . . . . . 178, 182, 186, 190
0669300110 . . . . . 178, 182, 186, 190
0681300004 . . . . . 2, 2
0681300008 2
0681300012 . . . . . 2, 6
0681300013 2
0681300019 2
0681300024 2
0681300027 2
0681300030 2
0681300031 2
0681300032 2
0681300038 2
0681300039 2
0681600009 . . . . . 10, 362
0684000295 30
0684005350 30
0684200117 42
0684600071 152
0685000032 72
0687300111 162
0687300113 162
0688200070 . . . . . 94, 100
0688200071 . . . . . 94, 100
0688200213 106
0688200229 . . . . . 94, 100
0688200231 106
0689300035 . . . . . 180, 184, 188, 192
0689300043 . . . . . 180, 184, 188, 192
0694000236 22
0694200108 44
0694200139 106
0694200140 106
0694200183 106
0694200184 106
0694200266 66
0694205589 42
0694205685 52
0694205695 52
0694300270 38
0694400019 60
0694400021 60

silverhorn.co.uk

0694400025 60
0694400026 60
0694600057 148
0694600061 152
0694600064 152
0694600071 152
0695000107 16
0695000108 16
0695000109 16
0695000111 16
0695000112 16
0697300122 164
0697309210 162
0698102120 92
0698200134 . . . . . 94, 100
0698200240 108
0698200261 108
0698200300 . . . . . 94, 100
0698600157 . . . . . 120, 132
0698600198 136
0698600224 . . . . . 120, 134
0698600234 128
0698600257 136
0698600262 140
0698600263 140
0698600271 140
0699300074 . . . . . 180, 184, 188, 192
0699300132 . . . . . 180, 184, 188, 192
0870431821 38
0871086051 . . . . . 180, 184, 188, 192
0880030010 . . . . . 178, 182, 186, 190
0880030015 . . . . . 178, 182, 186, 190
0880031001 . . . . . 178, 182, 186, 190
0880031005 . . . . . 178, 182, 186, 190
0880031016 . . . . . 178, 182, 186, 190
0880031017 . . . . . 178, 182, 186, 190
0880031018 . . . . . 178, 182, 186, 190
0880152220 8
0880408580 32
0880523200 80
0880606018 158
0880606034 158
0880612070 168
0880621202 358
0880738140 162
0880738150 162
0880840070 . . . . . 116, 124
0880865139 . . . . . 120, 130
0880865302 136
0880865310 136
0880865311 138
0881030020 . . . . . 178, 182, 186, 190
0881030026 . . . . . 178, 182, 186, 190
0881030046 . . . . . 180, 184, 188, 192
0881031549 . . . . . 180, 184, 188, 192
0881031551 . . . . . 180, 184, 188, 192
0881031556 . . . . . 180, 184, 188, 192
0881302095 14
0881402180 30
0881521010 26
0881521300 80
0881604035 . . . . . 168, 172
0881604580 158
0881612060 . . . . . 168, 170
0881612070 . . . . . 168, 170
0881612150 . . . . . 168, 170
0881612160 . . . . . 168, 170
0881733550 162
0881811090 92
0881811100 92
0881811110 92
0881812080 92
0881840008 . . . . . 116, 124
0881841060 . . . . . 116, 124
0881841061 . . . . . 116, 124
0881962656 . . . . . 168, 172
0882030006 . . . . . 178, 182, 186, 190
0882030007 . . . . . 178, 182, 186, 190
0882031046 . . . . . 180, 184, 188, 192
0882031135 . . . . . 178, 182, 186, 190
0882031159 . . . . . 180, 184, 188, 192
0882400190 24
0882502130 68
0882502140 68
0882861185 . . . . . 120, 130
109345 54
1100020512 222
1100040640 . . . . . 68, 72
1100040855 172
1100041020 . . . . 14, 24, 30, 40, 50, 52, 76, 82, 82, 84, 86, 114, 148, 168, 172
1100041055 164
1100041095 72
1100041635 10
1100041690 . . . . . 116, 124
1100050612 . . . . . 42, 92
1100050616 78
1100050625 238
1100050635 . . . . . 18, 152
1100050812 . . . . . 52, 106, 116, 124
1100050814 46
1100050820 . 22, 22, 32, 40, 42, 50, 56, 58, 60, 76, 86, 94, 100, 106, 110, 112, 114, 118, 126, 148, 158
1100050825 . . . . . 2, 20, 26, 46, 60, 68, 72, 94, 100, 114, 148, 174, 176
1100050830 . . . . . 46, 68, 154, 158
1100050835 72
1100050840 150
1100050870 88
1100050880 . . . . . 74, 162
1100051016 . . . . . 18, 32, 78
1100051020 246

silverhorn.co.uk

1100051025 . . . . . 14, 40, 52, 60, 72, 82, 84, 114, 116, 124, 162, 164
1100051030 . . . . . 22, 26, 86, 94, 100
1100051035 16
1100051040 . . . . . 24, 88, 162
1100051045 46
1100051050 18
1100051220 22
1100051225 70
1100051230 24
1100080512 220
1100090816 . 14, 22, 26, 30, 32, 36, 40, 42, 44, 46, 46, 60, 70, 72, 94, 98, 100, 104, 148, 152, 158
1100140605 44
1100141610 . . . . . 116, 124
1100240650 . . . . . 98, 104
1100560612 . . . . . 22, 32, 42, 46, 88, 96, 102, 154
1100560616 . . . . . 22, 36, 50, 106
1100790816 . . . . . 120, 132
1100790820 . . . . . 120, 128, 130
1101040820 40
1101041035 . . . . . 122, 142
1101041645 2
1101051255 2
1101051265 . . . . . 94, 100
1101141230 6
1101141640 22
1102041220 26
1102720832 80
1103041075 . . . . . 158, 158
1103041080 158
1103141005 148
1106241440 . . . . . 2, 6
1106690616 136
1110020835 206
1110020870 236
1110021030 236
1110040408 204
1110040512 214
1110040625 174
1110040630 242
1110040660 242
1110040812 174
1110040835 208
1110041645 14
1110041670 14
1110050525 54
1110050612 174
1110050616 . . . . . 86, 92
1110050620 . . . . . 16, 244
1110051035 80
1110540645 202
1111021030 26
1111041025 80
1111850610 . . . . . 106, 154
1112021230 26
1120530330 146
1120530620 . . . . . 92, 174
1120590416 128
1120590514 . . . . . 122, 142
1120790620 . . . . . 122, 142
1120790630 . . . . . 122, 142
1120801020 134
1120990630 136
1120990635 136
1120990820 98
1120991025 . . . . . 122, 142
1121050606 . . . . . 226, 228
1121530816 . . . . . 46, 116, 124, 154
1130020006 . . . . . 98, 104
1130030003 146
1130030004 152
1130040006 . . . . . 40, 52, 174
1130050008 . . . . . 32, 60, 94, 114, 148, 162
1130050010 . . . . . 86, 88, 94, 116, 124, 148
1130050012 . . . . . 32, 114
1130050016 . . . . . 116, 124
1130140008 . . . . . 46, 50, 94, 100, 100, 122, 142, 152
1130140012 148
1130240010 . . . . . 26, 100, 134, 158
1130550010 . . . . . 122, 142
1131213006 136
1131213010 132
1131242006 . . . . . 42, 46, 106, 106, 106, 154
1131242010 . . . . . 48, 150
1132030024 6
1132630012 . . . . . 168, 170
1140020004 152
1140020005 . . . . . 54, 122, 142
1140020006 . . . . . 16, 18, 40, 44, 52, 68, 72, 78, 86, 92, 92, 152, 174, 238
1140020008 . . . 2, 14, 20, 22, 22, 26, 30, 32, 36, 40, 42, 42, 44, 46, 46, 50, 52, 56, 58, 60, 68, 70, 72, 74, 76, 86, 88, 94, 98, 98, 100, 104, 106, 110, 112, 118, 126, 148, 152, 158, 162, 174, 176
1140020010 . . 14, 16, 18, 22, 30, 32, 40, 40, 46, 50, 52, 60, 72, 72, 76, 78, 82, 84, 86, 88, 94, 100, 114, 116, 124, 148, 162, 164
1140020012 . . . . . 24, 70, 94, 102
1140020016 . . . . . 24, 116, 124
1140090010 . . . . . 122, 142
1140120010 . . . . . 168, 170
1140330006 46
1140330010 . . . . . 50, 60
1140330012 . . . . . 24, 26
1140420010 80
1141110004 152
1141110005 . . . . . 54, 122, 142
1141110006 . . . . . 16, 18, 40, 44, 52, 68, 78, 92, 106
1141110008 . . 14, 22, 24, 26, 30, 32, 36, 40, 42, 42, 44, 46, 46, 50, 52, 56, 58, 60, 68, 72, 86, 88, 94, 102, 106, 110, 112, 148, 152, 154, 158, 172, 174, 176
1141110010 . . . 14, 16, 24, 26, 40, 40, 46, 50, 52, 60, 76, 82, 84, 88, 114, 116, 122, 122, 124, 142, 142, 148, 164
1141110012 . . . . . 24, 94, 102

silverhorn.co.uk

1141190008 98
1141450008 80
1141550010 26
1141550012 . . . . . 4, 6, 26, 94, 102
1141550016 . . . . . 4, 116, 124
1141550024 6
1141810012 . . . . . 94, 98, 102, 104
1150110510 92
1150110516 92
1150120416 100
1150410312 114
1150410410 . . . . . 56, 58
1150410416 134
1150410512 100
1150410516 44
1150410520 152
1150410612 62
1150410625 44
1150420310 . . . . . 56, 58
1150420412 . . . . . 64, 134, 150
1150420416 132
1150420516 152
1150420612 . . . . . 122, 142
1150420614 . . . . . 116, 122, 124, 142
1150420616 . . . . . 120, 128, 136
1150420625 66
1210000545 6
1210010425 108
1210013225 . . . . . 168, 170
1213000510 . . . . . 206, 208
1213000540 . . . . . 16, 16
1213001250 . . . . . 168, 170
1214000008 . . . . . 94, 100
1214000010 . . . . . 94, 98, 100, 104
1214000012 . . . . . 30, 106
1214000016 . . . . . 30, 116, 124
1220000035 . . . . . 2, 2
1221000009 202
1221000036 248
1221000047 148
1224100009 174
1225110010 . . . . . 122, 142
1225120018 . . . . . 168, 170
1225121018 170
1304006204 148
1305000006 . . . . . 2, 6
1314000812 . . . . . 94, 100
1333002020 114
1333073535 . . . . . 2, 2
1390020250 . . . . . 226, 228
1400402835 8
1410540508 230
1420000125 214
1420010080 202
1420010090 . . . . . 202, 234
1420010100 214
1420010101 202
1420010110 . . 10, 16, 16, 16, 68, 70, 70, 70, 70, 70, 70, 70, 70, 70, 72, 72, 72, 74, 74, 74, 74, 74, 74, 74, 74, 74, 80, 84, 84, 84, 84, 92, 168, 170, 172, 172, 172, 202, 214, 214, 234
1420010120 202
1420010140 . . . . . 72, 72, 82, 84, 160, 162, 202, 214
1420010160 214
1420010180 . . . 10, 10, 10, 70, 70, 72, 72, 74, 74, 74, 80, 80, 84, 92, 164, 202, 236
1420010200 . . . . . 92, 206, 208
1420010220 . . . . . 226, 228
1420010240 . . . . . 10, 74, 74, 84, 214
1420010280 230
1420010290 . . . . . 76, 82, 82, 84, 84, 84, 84
1420010450 92
1420010500 8
1420100300 . . . . . 2, 2, 2, 6
1420100400 80
1420100600 72
1420110600 . . . . . 226, 228, 230
1420110650 . . . . . 84, 226, 228, 230
1420111250 82
1420111350 . . . . . 82, 234
1420120650 230
1420300119 202
1420300131 242
1420300152 80
1420310244 234
1420310250 234
1420310902 214
1420310903 . . . . . 234, 236
1420310904 . . . . . 236, 236
1420310905 . . . . . 236, 236
1420310906 . . . . . 80, 162, 236, 236, 242, 244, 246
1420310908 236
1420310910 . . . . . 80, 214, 244, 246, 246
1420310912 . . . . . 80, 80, 80, 246
1420500100 202
1420500112 202
1420500140 202
1420510850 . . . . . 206, 208
1421020110 202
1421020500 8
1421130600 230
1432116221 26
1432200035 . . . . . 164, 230
1432200040 230
1432500560 6
1432500561 . . . . . 2, 2, 2
1501750002 . . . . . 70, 74, 80, 92, 168, 214
1501750010 . . . . . 82, 82
1501810003 238
1501820001 . . . . . 2, 6
1501840000 . . . . . 2, 2

silverhorn.co.uk

1511410003 162
1512330005 80
1512340004 70
1512350001 . . . . . 72, 74
1512370002 70
1512370008 16
1512370010 . . . . . 70, 74, 84
1512370011 70
1512370012 172
1512373014 70
1512373018 84
1512374014 164
1512375004 . . . . . 70, 74
1513300015 74
1513300016 10
1513370049 84
1513390029 74
1513390047 74
1515010044 . . . . . 76, 84
1515010052 74
1515010512 80
1515012040 . . . . . 70, 70, 72, 74, 170
1515012042 . . . . . 72, 80
1515012510 70
1515100136 84
1515102110 . . . . . 68, 172
1515102111 72
1515102112 70
1515200063 80
1515600200 . . . . . 16, 74, 84, 170
1515600201 . . . . . 72, 82, 84, 160
1515600202 . . . . . 10, 74, 84
1515600203 84
1515600212 80
1515600213 80
1515600571 . . . . . 16, 72
1530409029 28
1530409080 28
1530619000 86
1530808004 22
1530808087 30
1531010047 26
1531110011 88
1531110093 88
1531115000 . . . . . 88, 88, 90
1531115026 90
1531115080 90
1531115081 88
1531115086 88
1531118041 30
1531118050 30
1531204016 88
1531204189 88
1531207000 . . . . . 88, 88, 88, 88, 88, 90, 90, 90, 90, 90
1531407000 30
1531516080 148
1531520117 170
1531635088 20
1531645000 18
1531645079 18
1531650024 20
1533120011 30
1533120012 . . . . . 22, 22, 30
1533120020 148
1533120511 88
1533120806 88
1533700035 86
1533700048 . . . . . 24, 28, 30
1533700060 . . . . . 24, 76, 86
1533700071 76
1533700080 22
1533700113 152
1533811065 170
1534808021 28
1540130830 84
1541300502 8
1550216640 82
1551100300 82
1551101001 . . . . . 72, 362
1551101003 72
1551102500 72
1551102505 72
1551103900 . . . . . 82, 362
1552000800 82
1552000830 82
1552100320 86
1552101700 86
1553020603 84
1553020612 84
1553021650 84
1553022650 84
1553026008 32
1553203400 92
1554501650 26
1554512201 26
1560001000 . . . . . 158, 168, 170
1560001675 230
1560001900 230
1621073038 148
1650202300 . . . . . 98, 104, 106
1650205500 210
1650205505 210
1650205506 210
1650205507 . . . . . 210, 212
1650205508 210
1650205509 210
1650205510 210
1650205511 . . . . . 210, 212
1650205516 . . . . . 210, 212
1650205520 210

silverhorn.co.uk

1650205521 212
1650205522 210
1650205523 16
1650205600 212
1650205605 212
1650205606 212
1650205608 212
1650205610 . . . . . 210, 212
1650205611 16
1651005030 . . . . . 116, 124
1651021030 32
1651030024 24
1651030025 24
1651057014 72
1651101027 134
1651101050 106
1651101224 114
1652043015 . . . . . 94, 100
1652052400 . . . . . 116, 122, 124, 142
1652053200 152
1652053400 . . . . . 42, 116, 124
1652060042 38
1652102314 100
1652102320 128
1652200005 . . . . . 120, 132, 134, 136
1652200010 42
1652201005 . . . . 26, 36, 38, 40, 42, 42, 44, 46, 50, 52, 52, 54, 62, 64, 66, 108, 148, 152, 154, 172
1652201007 . . . . . 78, 154
1652201008 52
1652201010 . . . . . 38, 42, 42, 44, 46, 52, 66, 108, 148, 152, 154
1652201011 . . . . . 26, 40, 42, 150, 172
1652201026 50
1652201027 50
1652201028 52
1652231140 90
1652231250 . . . . . 18, 20, 78, 86, 90, 150
1652520005 54
1652520006 66
1652520008 . . . . . 154, 158
1652533019 118
1652533021 14
1652533022 56
1652615200 106
1652768610 . . . . . 116, 124
1652900016 . . . . . 122, 142
1652900018 . . . . . 122, 142
1652900019 50
1652900207 . . . . . 42, 50
1652900455 60
1652900802 42
1652900812 40
1652900821 40
1653303012 . . . . . 120, 128
1653601395 116
1653900016 100
1653900064 . . . . . 94, 100
1653900083 114
1653900094 116
1653900095 124
1653916000 120
1653916006 . . . . . 96, 102
1653916007 126
1653916008 . . . . . 120, 132
1653916022 154
1653916090 136
1654008800 136
1654010600 134
1654011700 136
1654011701 . . . . . 120, 132, 134, 136
1654011705 136
1654011931 138
1654011947 136
1654011948 128
1654011961 . . . . . 120, 132
1654011962 120
1654253215 . . . . . 120, 130
1654342085 . . . . . 118, 124
1654343000 . . . . . 32, 32
1654520000 . . . . . 94, 96, 100, 102
1654601000 106
1654605000 . . . . . 106, 106, 106, 152
1654606000 . . . . . 30, 30, 46, 46, 46, 46, 46, 46, 94, 100, 106, 106, 152, 152
1654615000 . . . . . 120, 130
1654619002 30
1654619008 30
1654619058 30
1654619061 30
1654629010 90
1654629020 30
1654629023 158
1654629026 14
1654631330 130
1654639108 120
1654639114 128
1654643302 130
1654648010 132
1654648015 132
1654652000 . . . . . 130, 136
1656700100 154
1656710046 . . . . . 118, 126
1656711072 110
1656721011 . . . . . 120, 128
1656721020 . . . . . 120, 128
1656722015 14
1656733115 120
1656733125 128
1700000033 132
1700000043 174
1700000059 38

silverhorn.co.uk

1700000066 38
1700000072 36
1700008080 146
1700008129 144
1700008253 . . . . . 144, 146
1700008272 . . . . . 144, 146
1700008309 144
1700008311 146
1700009010 114
1700100015 80
1700100019 . . . . . 38, 362
1700100060 74
1700100072 . . . . . 38, 362
1700100119 84
1700100133 74
1701310020 44
1701310025 44
1701311003 44
1701311005 44
1701311010 44
1701311015 44
1701311025 44
1702081531 60
1702108210 60
1702402002 26
1702901281 60
1702901283 . . . . . 60, 60
1702920060 60
1703000030 . . . . . 120, 132, 362
1703007300 132
1703210700 . . . . . 62, 150
1703230764 134
1703700013 106
1705003460 132
1705004780 64
1705016001 132
1711900071 . . . . . 50, 150
1711900072 . . . . . 40, 40, 150
1711900097 50
1711900105 150
1711900129 . . . . . 52, 60
1711900153 44
1711900155 52
1711900164 66
1711900191 108
1711900194 . . . . . 46, 46, 56
1711900196 . . . . . 56, 58
1711900198 52
1711900201 46
1711900202 42
1711900218 92
1711900219 . . . . . 56, 58
1711900520 38
1711910014 134
1711910016 134
1711910290 62
1711910291 62
1711919075 134
1711919270 134
1730143341 46
1730143426 54
1730143660 56
1730143661 58
1730500025 50
1730500041 . . . . . 40, 42, 44, 50, 154, 172
1900035819 230
1900043920 . . . . . 226, 228
1900048232 . . . . . 226, 228
1900051631 . . . . . 226, 228
1900058202 . . . . . 226, 228
1900059414 230
1900059426 230
1900059615 230
1900059627 230
1900059629 230
1900073533 . . . . . 226, 228
1900090017 . . . . . 226, 228
1900093327 . . . . . 226, 228
1900102413 . . . . . 226, 228
1900102416 . . . . . 226, 228
1900102427 . . . . . 226, 228
1900105228 . . . . . 226, 228
1900117819 . . . . . 226, 228
1900120500 . . . . . 170, 232
1900120502 232
1900120503 232
1900120506 232
1900120509 232
1900120520 232
1900120526 232
1900120527 232
1900120532 232
1900120533 232
1900120534 232
1900120535 232
1900120536 232
1900120537 232
1900120597 232
1900120598 232
1900120599 232
1900124300 . . . . . 160, 226
1900124303 . . . . . 226, 228
1900124306 . . . . . 226, 228
1900124319 226
1900124335 . . . . . 226, 228
1900124336 . . . . . 226, 228
1900124397 . . . . . 226, 228
1900124398 226
1900124399 . . . . . 226, 228, 362
1900124400 . . . . . 160, 228

silverhorn.co.uk

1900124419 228
1900124498 228
1900124500 . . . . . 160, 230
1900124502 230
1900124503 230
1900124505 230
1900124506 230
1900124508 230
1900124519 230
1900124520 230
1900124526 230
1900124527 230
1900124528 230
1900124530 230
1900124533 230
1900124550 230
1900124561 230
1900124562 230
1900124563 230
1900124597 230
1900124598 230
1900124599 . . . . . 230, 362
1901004357 214
1901024795 204
1901030672 202
1901035426 214
1901035471 214
1901039426 202
1901039456 202
1901044619 214
1901045205 202
1901045206 202
1901045210 202
1901045212 202
1901045218 202
1901045219 202
1901045220 202
1901045221 202
1901045222 202
1901045223 202
1901045225 202
1901045226 202
1901045228 202
1901045235 202
1901045237 204
1901045239 204
1901045240 204
1901045241 204
1901045242 204
1901045243 204
1901045244 204
1901045245 204
1901045249 204
1901045253 204
1901045254 204
1901045256 204
1901045295 202
1901045296 204
1901045299 202
1901049326 202
1901050197 204
1901058400 . . . . . 74, 202
1901058421 202
1901058422 204
1901058471 202
1901058498 202
1901710912 . . . . . 206, 208
1901710914 . . . . . 206, 208
1901710917 . . . . . 206, 208
1901710922 . . . . . 206, 208
1901715103 . . . . . 206, 208
1901719011 . . . . . 206, 208
1901719012 206
1901720232 . . . . . 206, 208
1901729709 214
1901729710 214
1901730412 214
1901731901 214
1901731903 214
1901731911 214
1901731912 214
1901735630 . . . . . 206, 208
1901738312 214
1901741703 216
1901743606 . . . . . 206, 208
1901743614 . . . . . 206, 208
1901743615 206
1901743620 . . . . . 206, 208
1901748100 . . . . . 70, 214
1901748114 214
1901748119 214
1901748126 214
1901748127 214
1901748128 214
1901748129 214
1901748130 214
1901748131 214
1901748132 214
1901748199 214
1901748828 214
1901749511 . . . . . 206, 208
1901749521 . . . . . 206, 208
1901749541 206
1901749542 206
1901749551 . . . . . 206, 208
1901749641 208
1901753900 . . . . . 16, 208
1901754000 . . . . . 16, 206
1901758602 166
1901758604 . . . . . 166, 166

silverhorn.co.uk

1901758605 166
1901758606 166
1901758607 166
1901758608 166
1901758609 166
1901758698 166
1901759900 . . . . . 162, 166
1901759905 166
1901764600 . . . . . 170, 216
1901764601 216
1901764603 216
1901764700 . . . . . 68, 218
1901764701 218
1901765600 . . . . . 70, 220
1901765602 . . . . . 220, 222
1901766400 . . . . . 72, 222
1901768800 . . . . . 72, 224
1901768801 224
1901810203 236
1901810211 236
1901810212 236
1901810214 246
1902006702 . . . . . 234, 236, 240
1902007411 236
1902007412 246
1902010033 244
1902016501 240
1902016505 246
1902016507 246
1902016508 . . . . . 242, 246
1902016520 246
1902016531 . . . . . 242, 244
1902016544 236
1902016552 244
1902016553 244
1902016554 244
1902016555 242
1902016556 242
1902017413 240
1902017424 242
1902017425 242
1902017428 240
1902017429 240
1902017433 236
1902017434 236
1902017618 248
1902017704 246
1902017716 246
1902017950 248
1902018151 248
1902018807 244
1902018814 246
1902018815 246
1902018825 242
1902020216 242
1902020234 242
1902020721 240
1902020723 240
1902020733 . . . . . 244, 246
1902020736 246
1902020746 240
1902020751 242
1902021410 246
1902021416 236
1902021902 240
1902021903 246
1902021906 246
1902021909 246
1902023204 246
1902023219 246
1902024604 246
1902029204 246
1902032400 . . . . . 80, 248
1902032499 248
1902032500 . . . . . 80, 240, 242, 244, 246
1902032501 244
1902032502 246
1902032503 244
1902032504 246
1902032505 246
1902032506 246
1902032507 . . . . . 240, 246
1902032599 . . . . . 240, 242, 244, 246
1903132500 . . . . . 10, 234, 236
1903900214 156
1903900244 . . . . . 44, 50
1903900249 44
1903900250 44
1903900251 44
1903900255 156
1903900260 156
1903900261 156
1903900263 156
1903906427 . . . . . 234, 236
1903906832 236
1903906840 236
1903906842 236
1903906843 236
1903907102 234
1903907107 234
1903907111 236
1903907128 234
1903907129 234
1903907130 234
1903907131 234
1903908010 234
1903908036 234
1903910113 236
1903910115 236
1903910116 236

silverhorn.co.uk

1903910129 . . . 236
1903910132 . . . 236
1903910135 . . . 236
1903912301 . . . 234
1903912302 . . . 234
1903912303 . . . 236
1903912309 . . . 234
1903912701 . . . 236
1903912702 . . . 234
1903912703 . . . 234
1903912799 . . . 234, 236
1910462001 . . . 26
1911102855 . . . 34
1911262104 . . . 34
1911262202 . . . 34, 362
1911262203 . . . 34, 362
1911262400 . . . 22, 34
1911300851 . . . 32
1911301050 . . . 32
1911500500 . . . 154
1911501800 . . . 150
1911502100 . . . 150
1911505190 . . . 150
1911505422 . . . 156
1911505503 . . . 152
1911505514 . . . 152
1911505601 . . . 152, 152
1911505602 . . . 150, 156
1911505723 . . . 154
1911505763 . . . 156
1911506010 . . . 150
1911506012 . . . 156
1911506041 . . . 154
1911506052 . . . 154
1911506095 . . . 156
1911508311 . . . 152
1911509280 . . . 156
1911512066 . . . 150
1911513021 . . . 152
1911513022 . . . 152
1911513150 . . . 154
1911514416 . . . 156
1911514422 . . . 156
1911514840 . . . 154, 156
1911514842 . . . 156
1911514843 . . . 156
1911514870 . . . 150
1911516213 . . . 152
1911516306 . . . 154
1911516902 . . . 154, 156
1911516951 . . . 152
1911516952 . . . 150
1911516953 . . . 152
1911516954 . . . 150
1911900004 . . . 22
1912003106 . . . 246
1912908003 . . . 238
1912908005 . . . 238
1912908006 . . . 238
1912908007 . . . 238
1912908008 . . . 238
1912908009 . . . 238
1912908010 . . . 238
1912908012 . . . 238
1912908013 . . . 238
1912908014 . . . 238
1912908015 . . . 238
1912908016 . . . 238
1912908017 . . . 238
1912908018 . . . 238
1912908019 . . . 238
1912908023 . . . 238
1912908702 . . . 238
1912908704 . . . 238
1912908711 . . . 238
1912911381 . . . 34
1914100149 . . . 112
1914312020 . . . 12
1919060103 . . . 200
1919060104 . . . 200
1919060105 . . . 200
1919060140 . . . 200
1919060141 . . . 200
1919060231 . . . 200
1919060240 . . . 200
1919069103 . . . 200
3100003 . . . 360
BPL1200 . . . 358
BTL867 . . . 358
BTL867T . . . 358
BTLPF48 . . . 358
K01023-50625 . . . 266
K01023-50650 . . . 256
K01123-50814 . . . 280
K01123-50816 . . . 258
K01123-50820 . . . 312
K01123-50825 . . . 270
K01123-50828 . . . 270, 316
K01123-50835 . . . 312, 332
K01133-51030 . . . 300
K01153-50812 . . . 262, 276
K01513-50820 . . . 334
K01517-71030 . . . 300
K01518-50822 . . . 316
K01754-50610 . . . 274, 346
K01754-50612 . . . 314, 328, 334, 350, 352
K01754-50616 . . . 278, 304, 304, 316
K01754-50620 . . . 304
K01754-50625 . . . 320, 328
K01754-50630 . . . 338

silverhorn.co.uk

K01754-50660 312
K01754-50665 . . . . . 312, 322
K01754-50804 322
K01754-50812 . . . . . 252, 254
K01754-50816 . . . . . 274, 274, 294, 310, 310, 310, 330
K01754-50820 . . . . . 322, 328, 330
K01754-50825 294
K01754-50830 266
K01754-50850 296
K01754-50855 262
K01754-50865 322
K01754-50885 266
K01755-50612 . . . . . 310, 310, 310
K01755-50616 310
K01774-51016 336
K01774-51070 296
K02056-50060 296
K02114-50080 300
K02156-50080 . . . . . 312, 316
K02751-50080 . . . . . 282, 296, 334
K02761-50040 288
K02771-50100 300
K03024-50520 . . . . . 290, 290
K03054-50412 . . . . . 22, 356
K03054-50535 264
K04013-50080 262
K04015-50080 296
K04512-50050 264
K04512-50060 296
K04512-60080 . . . . . 262, 276, 300, 312, 316
K04612-00250 310
K04717-01000 258
K04724-00160 252
K04724-00180 276
K04724-00270 322
K04811-10300 272
K04814-00090 254
K04816-05150 330
K04817-00060 286
K04817-00070 286
K04817-00100 304
K04817-00160 . . . . . 252, 286
K04817-50300 . . . . . 28, 264, 266, 356
K05012-00609 250
K05012-00612 . . . . . 250, 266
K05012-01018 250
K05411-00528 262
K05411-00620 352
K05712-00410 256
K05712-00535 280
K05712-00720 . . . . . 274, 296
K05712-00730 272
K06311-55010 258
K06331-35016 252
K07715-00401 274
K07715-03213 266
K09318-88068 288
K09318-88100 344
K09318-88115 344
K09318-88130 . . . . . 314, 328, 346, 346
K09318-88155 . . . . . 314, 314
K09318-88180 . . . . . 314, 328, 330, 346, 352
K09318-88200 . . . . . 330, 346, 346, 350
K09661-70650 . . . . . 22, 356
K11460-63110 302
K11460-63120 302
K11460-63270 302
K11460-63500 302
K13801-94090 302
K13963-92010 302
K14117-42560 . . . . . 88, 284
K14182-92030 298
K15021-14240 262
K15021-33660 . . . . . 88, 284
K15221-03370 258
K15221-03380 250
K15221-03390 250
K15221-03490 258
K15221-13153 260
K15221-13330 260
K15221-13980 260
K15221-14310 262
K15221-14353 262
K15221-14430 262
K15221-16270 274
K15221-23360 272
K15221-33650 250
K15221-35682 256
K15221-91530 312
K15241-36950 266
K15261-96010 258
K15321-73260 312
K15321-73340 250
K15401-35630 272
K15401-95690 . . . . . 88, 284
K15412-33110 . . . . . 26, 356
K15471-23312 272
K15471-35013 256
K15471-91530 258
K15511-96660 302
K15521-36930 266
K15521-96020 250
K15521-96030 250
K15527-72460 . . . . . 22, 318
K15531-72422 318
K15531-72432 318
K15601-04560 270
K15601-15553 274
K15601-96650 334
K15621-14030 262

silverhorn.co.uk

K15628-32110 252
K15807-74110 . . . . . 320, 362
K15841-53850 . . . . . 290, 290
K15841-53860 . . . . . 290, 290
K15852-33140 . . . . . 264, 266
K15881-64150 298
K15881-64260 298
K15881-64710 298
K15881-64800 298
K15881-64900 298
K15881-91040 298
K15881-91050 298
K15881-92010 298
K15881-92020 298
K15881-93010 298
K15881-93020 298
K15881-93030 298
K15881-93040 298
K16221-73270 312
K16241-11720 324
K16241-73360 . . . . . 352, 352, 352
K16241-73370 316
K16241-96020 266
K16271-96160 250
K16285-63570 302
K16285-92010 302
K16414-32434 362
K16427-64110 298
K16427-91010 276
K16429-92010 258
K16433-04460 270
K16483-17100 332
K16483-17110 332
K16541-95790 . . . . . 88, 284
K16652-64310 298
K16652-64770 298
K16652-64782 298
K16661-73550 316
K17105-33680 . . . . . 88, 284
K17111-13612 258
K17111-13620 258
K17113-01613 252
K17123-63030 302
K17123-63040 302
K17123-63070 302
K17123-63080 302
K17123-63140 302
K17123-63200 302
K17123-63260 302
K17123-63320 302
K17123-63380 302
K17123-63500 302
K17123-93310 302
K17123-93320 302
K17301-35663 256
K17311-22312 272
K17311-22970 272
K17311-22980 272
K17331-73342 . . . . . 250, 264
K17365-74252 320
K17369-64060 298
K17369-64230 298
K17369-67570 298
K17391-96160 250
K19013-03450 258
K19013-96850 278
K19202-23250 272
K19202-23280 272
K19212-63100 302
K19212-97130 302
K19818-74150 320
K1A021-11720 . . . . . 314, 330
K1A021-21310 272
K1A021-23192 272
K1A021-24254 274
K1A021-35150 256
K1A021-63820 276
K1A021-72920 312
K1A021-73332 266
K1A021-73510 316
K1A021-73520 316
K1A021-91020 312
K1A021-91030 266
K1A021-96020 312
K1A024-33230 350
K1A024-37152 352
K1A051-73430 316
K1A071-07044 270
K1A071-07054 270
K1A071-07064 270
K1A085-72704 312
K1A091-04362 270
K1A091-04540 . . . . . 270, 270, 270, 270
K1A091-04820 270
K1A091-07095 270
K1A091-14260 262
K1A091-15110 274
K1A091-16513 274
K1A091-23472 272
K1A091-23482 . . . . . 270, 270, 270, 270
K1A091-23532 272
K1A091-23542 272
K1A091-23910 272
K1A091-23920 272
K1A091-23930 . . . . . 270, 270, 270, 270
K1A091-23940 . . . . . 270, 270, 270, 270
K1A091-23950 272
K1A091-23960 272
K1A091-23970 272
K1A091-23980 272

silverhorn.co.uk

K1A332-18630 344
K1A332-71810 328
K1A333-62702 328
K1C010-13560 258
K1C010-42460 . . . . . 88, 356
K1C040-33670 350
K1E417-95690 278
K1E475-05580 . . . . . 346, 346, 346, 346
K1E475-05750 . . . . . 346, 346
K1E518-42070 282
K1E518-42090 282
K1E518-42220 282
K1E581-65112 310
K1G279-21330 272
K1G355-74280 . . . . . 296, 362
K1G355-97010 . . . . . 296, 362
K1G386-33081 26
K1G390-96010 266
K1G489-73033 316
K1G492-16220 310
K1G513-36550 254
K1G557-96650 350
K1G610-73050 316
K1G622-37084 268
K1G642-72400 . . . . . 22, 318
K1G730-73412 316
K1G742-05120 264
K1G776-05650 324
K1G777-96650 350
K1G790-03312 258
K1G790-03602 258
K1G790-03612 258
K1G790-03622 258
K1G790-03632 258
K1G796-53620 288
K1G841-91010 266
K1G851-04813 270
K1G851-23020 272
K1G852-13114 260
K1G852-13124 260
K1G852-16010 274
K1G852-65512 288
K1G856-23752 272
K1G856-23760 272
K1G856-23770 272
K1G861-91010 252
K1G861-97300 280
K1G896-13240 260
K1G896-13280 260
K1G896-13580 258
K1G896-14230 262
K1G896-37012 352
K1G896-37072 352
K1G897-37090 268
K1G911-14523 264
K1G911-42460 . . . . . 90, 356
K1G911-91022 264
K1G916-25160 276
K1G924-05430 264
K1G924-17200 332
K1G924-21052 272
K1G924-21090 272
K1G924-21980 272
K1G924-22014 272
K1G924-51750 280
K1G924-73010 312
K1G924-95802 350
K1G928-33240 350
K1G938-52033 . . . . . 88, 292
K1H044-59090 . . . . . 46, 354
K1J301-33680 284
K1J301-43010 . . . . . 88, 284, 362
K1J301-43170 . . . . . 284, 362
K1J301-95800 284
K1J301-95810 284
K1J333-18640 344
K1J333-18700 336
K1J333-73350 314
K1J333-73442 266
K1J455-39050 304
K1J500-18500 338
K1J500-18510 338
K1J508-05810 362
K1J520-10700 . . . . . 22, 356
K1J520-18600 338
K1J530-91500 332
K1J542-92500 . . . . . 326, 332
K1J574-13710 328
K1J700-22140 272
K1J755-64460 296
K1J770-05130 348
K1J770-05810 348
K1J770-18520 338
K1J775-05030 . . . . . 28, 346, 348
K1J800-03040 258
K1J800-05700 322
K1J800-11820 322
K1J800-16320 280
K1J800-42500 288
K1J800-42750 288
K1J800-43650 278
K1J800-50520 . . . . . 282, 294
K1J800-51150 280
K1J800-52130 282
K1J800-53150 288
K1J800-53200 288
K1J800-53490 288
K1J800-53710 290
K1J800-53720 290
K1J800-53730 290

silverhorn.co.uk

K1J800-53740 . . . 290
K1J800-59660 . . . 304
K1J800-65560 . . . 288
K1J800-91010 . . . 282
K1J800-91430 . . . 282
K1J800-91490 . . . 282
K1J800-95780 . . . 294
K1J800-95790 . . . 282
K1J800-95800 . . . 282
K1J800-95810 . . . 278
K1J800-95820 . . . 278
K1J800-96780 . . . 282
K1J800-96790 . . . 282
K1J801-01750 . . . 258
K1J801-04020 . . . 266
K1J801-04130 . . . 266
K1J801-05840 . . . 250
K1J801-14502 . . . 264
K1J801-16020 . . . 280
K1J801-16210 . . . 310
K1J801-16910 . . . 280
K1J801-18412 . . . 334, 334
K1J801-18940 . . . 334
K1J801-37160 . . . 352
K1J801-37390 . . . 352
K1J801-42850 . . . 294
K1J801-50500 . . . 282
K1J801-50540 . . . 282
K1J801-50602 . . . 294
K1J801-52030 . . . 278
K1J801-53052 . . . 288
K1J801-53750 . . . 290
K1J801-59710 . . . 304
K1J801-65062 . . . 308
K1J801-65073 . . . 306
K1J801-65084 . . . 306
K1J801-65132 . . . 310
K1J801-65140 . . . 310
K1J801-65170 . . . 310
K1J801-71460 . . . 330
K1J801-91490 . . . 326
K1J801-97550 . . . 282
K1J802-01012 . . . 250
K1J802-05660 . . . 322
K1J802-10600 . . . 322
K1J802-11624 . . . 324
K1J802-11640 . . . 324
K1J802-12312 . . . 326
K1J802-12320 . . . 332
K1J802-14680 . . . 264
K1J802-17010 . . . 332
K1J802-18910 . . . 334
K1J802-18930 . . . 334
K1J802-33040 . . . 350
K1J802-33050 . . . 350
K1J802-65120 . . . 310
K1J802-73310 . . . 314
K1J802-91500 . . . 326
K1J803-11773 . . . 322
K1J803-12350 . . . 326
K1J803-17320 . . . 328
K1J803-17410 . . . 328
K1J803-17430 . . . 328, 330
K1J803-21110 . . . 272
K1J803-21900 . . . 272
K1J803-59670 . . . 304
K1J803-71410 . . . 330
K1J803-71432 . . . 330
K1J803-71470 . . . 330
K1J803-71480 . . . 330
K1J803-71820 . . . 314
K1J803-73340 . . . 314
K1J803-96010 . . . 322
K1J813-18800 . . . 334
K1J813-97280 . . . 338
K1J826-04140 . . . 272
K1J854-24012 . . . 274
K1J854-24370 . . . 274
K1J860-24110 . . . 272
K1J860-24982 . . . 274
K1J860-33520 . . . 350
K1J860-71010 . . . 250
K1J860-95790 . . . 350
K1J939-91010 . . . 276
K1K373-04612 . . . 276
K1K531-64602 . . . 298
K1K819-75810 . . . 346
K1K819-75820 . . . 346
K1K841-01740 . . . 258
K1K841-05050 . . . 346
K1K841-05860 . . . 346
K1K841-05870 . . . 346
K1K841-05880 . . . 346
K1K841-18650 . . . 344
K1K841-18710 . . . 336
K1K841-25010 . . . 276
K1K841-36410 . . . 254
K1K841-36500 . . . 254
K1K841-42210 . . . 346
K1K841-42220 . . . 346
K1K841-42230 . . . 346
K1K841-63010 . . . 300, 302
K1K841-63020 . . . 302
K1K841-64420 . . . 296
K1K841-65200 . . . 310
K1K841-92010 . . . 302
K1K947-95790 . . . 284
K1K976-18630 . . . 344
K1K976-18950 . . . 334
K1K976-91012 . . . 336

silverhorn.co.uk

K1K987-05870 346
K1K987-05910 346
K1K995-05830 346
K28857010 166
K28857012 166
K31220-14172 276
K36602-23240 276
K3A611-74013 . . . . . 296, 298
K3G704-17390 318
K3N600-42170 . . . . . 88, 356
K51601-22240 324
K59750-77520 . . . . . 90, 356
K5H601-41940 304
K68311-72830 324
K6A671-75342 296
KHH164-32430 268
KRC401-63190 324
KRD451-51360 . . . . . 88, 286
KRD451-51910 286
KRD451-51920 286
KRD451-51930 286
KRD451-51940 286
KRD451-51950 286
KRD451-51960 286
KRP421-53730 . . . . . 46, 356
KT0070-16420 . . . . . 26, 334, 356
KT1060-30540 310
KT1850-39010 304
KTA043-64040 298
KTA043-64850 298
KTA043-74032 298

silverhorn.co.uk