TL140

Book No.BT9Z009-2
Serial No.21400011-

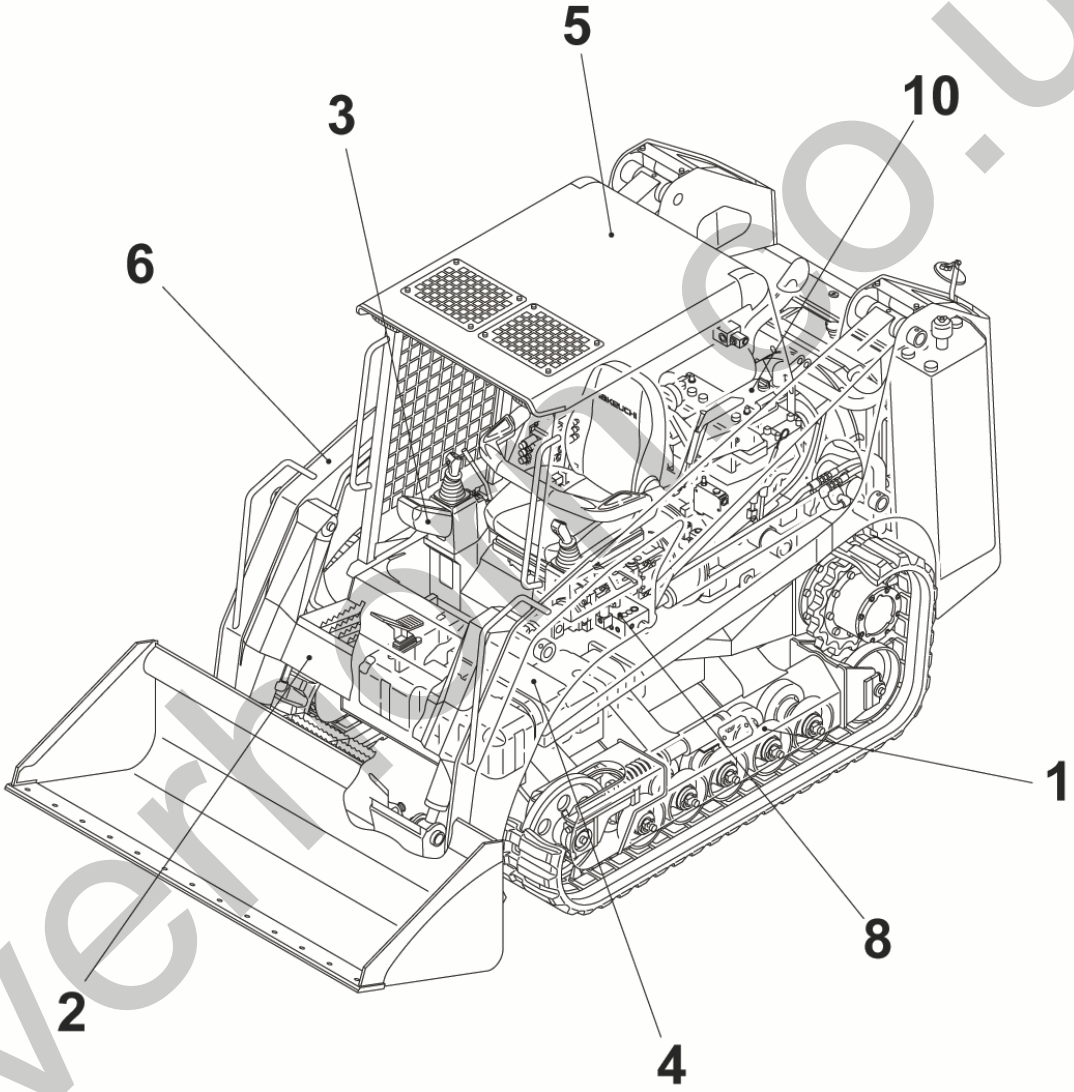

silverhill.co.uk

TAKEUCHI

silverhorn.co.uk

INDEX

Item	Part number	Description	Q'ty	Chan.	Serial No.	Serv.	Remarks
1		UNDERCARRIAGE					
2		MAIN FRAME & CONTROL LEVER					
3		ENGINE & ELECTRICAL SYSTEM					
4		HYDRAULIC PIPNG & TANK					
5		COVER & CAB					
6		ATTACHMENT					
7		DECAL & TOOL					
8		HYDRAULIC DEVICE					
10		ENGINE(ISUZU 4JG1-TPA)					
		2007.04.18					
99		Kits, Attachments and Quick Reference					

silverhorn.co.uk

TRACK ROLLER B

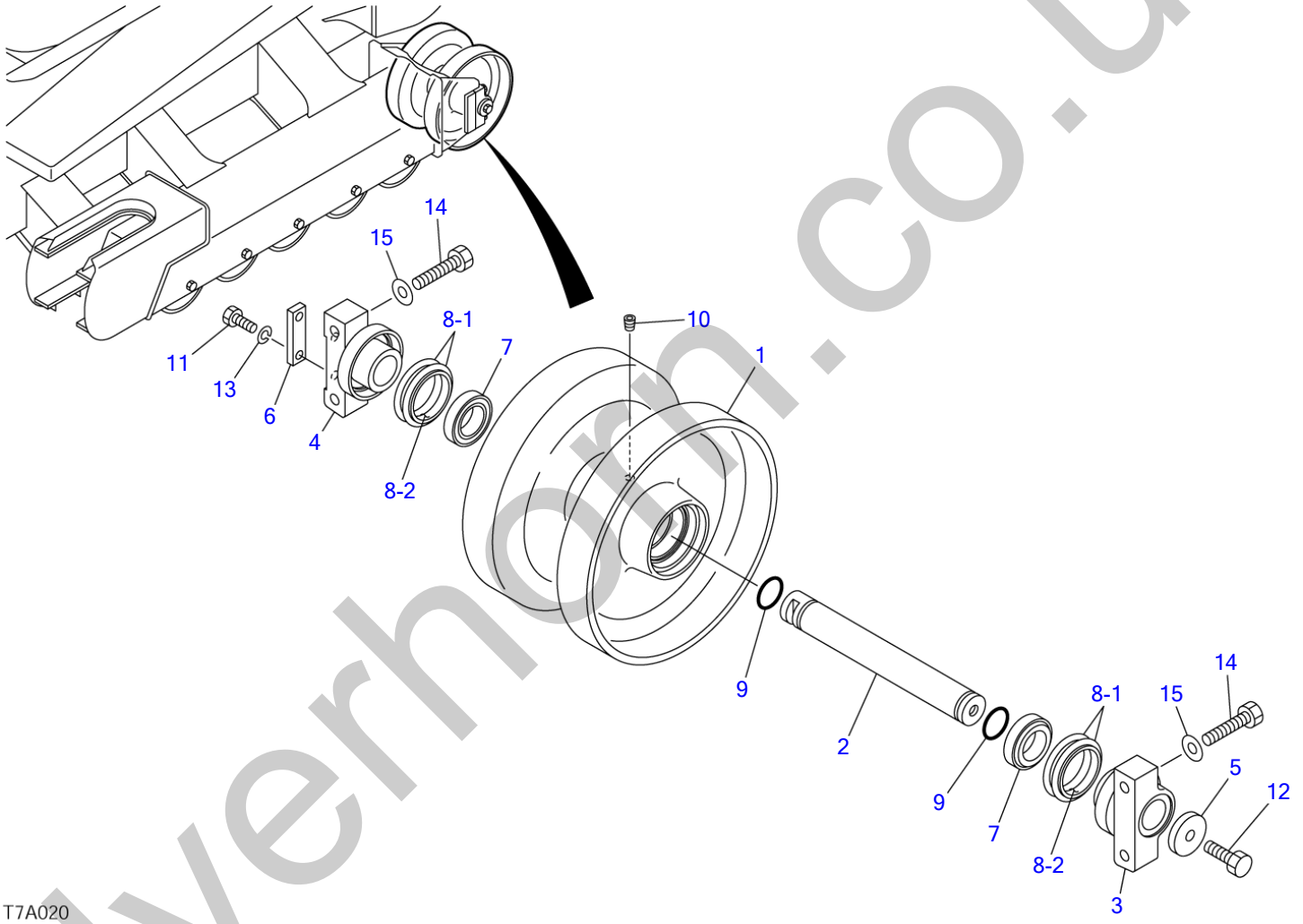

silverhorn.co.uk

TRACK ROLLER B

Item	Part number	Description	Q'ty	Chan.	Serial No.	Serv.	Remarks
		ROLLER ASSY, track					X08811-31200-5
0-1	0881131300	ROLLER SUB ASSY, track	2				
1	0881131310	・ROLLER	1				
2	0881131320	・SHAFT	1				
3	0881131330	・COVER	1				
4	0881131340	・COVER	1				
5	0881131350	・PLATE	1				
6	0881131360	・PLATE	1				
7	1305000004	・BEARING	2				
8	1432500640	・SEAL, floating	2				
8-1	1432500641	・・O-RING	2				
8-2	1432500642	・・RING, seal	2				
9	1420100350	・O-RING	2				
10	1501810001	・PLUG	1				
11	1100041030	・BOLT	2				
12	1106241440	・BOLT	1				
13	1140020010	・WASHER, spring	2				
14	1100041460	BOLT	8				
15	1141550014	WASHER	8				
	T7a024						

silverhorn.co.uk

FRONT IDLER

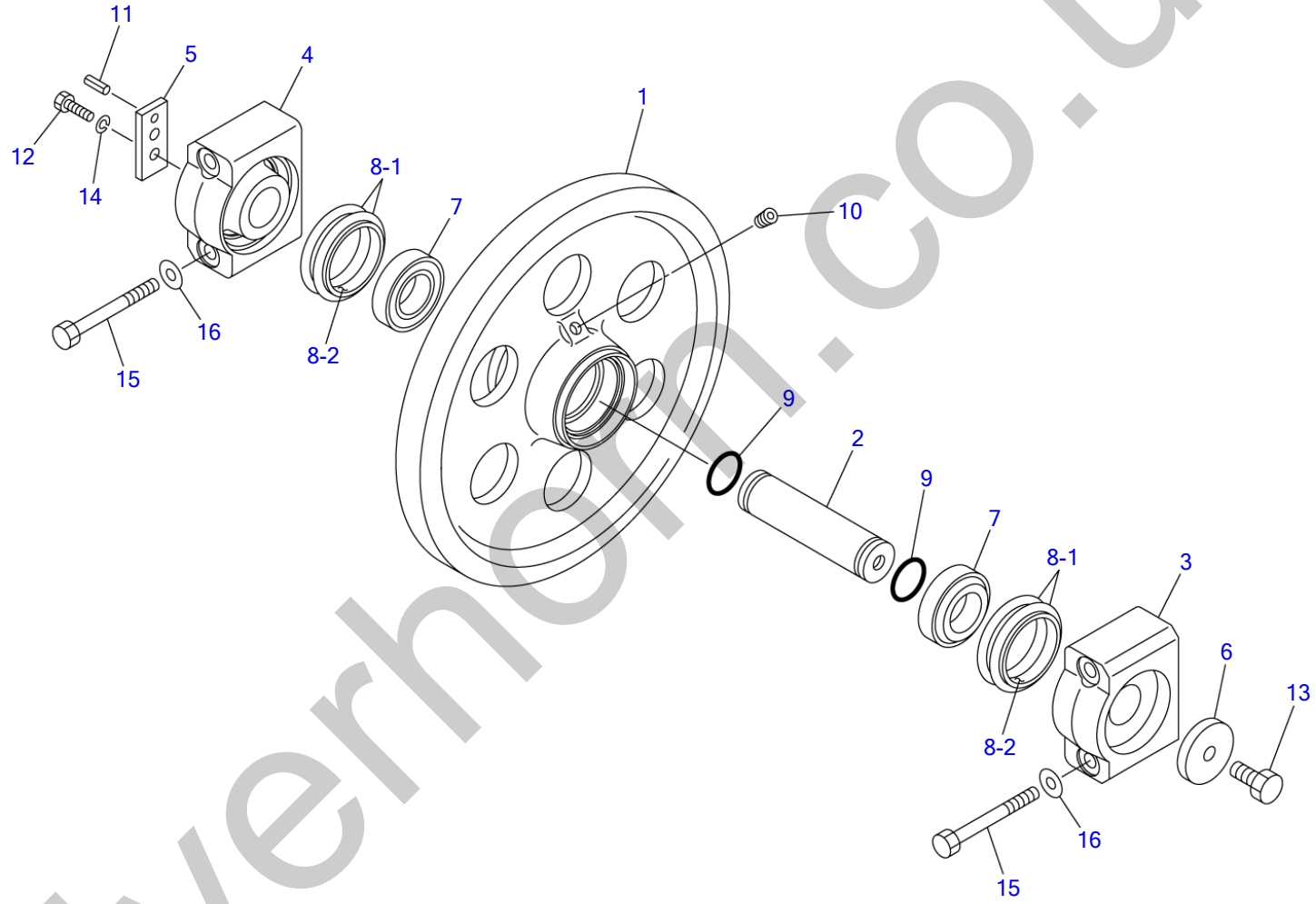

silverhorn.co.uk

FRONT IDLER

Item	Part number	Description	Q'ty	Chan.	Serial No.	Serv.	Remarks
		IDLER ASSY, front					X08811-40200-2
0-1	0881140300	IDLER SUB ASSY, front	2				
1	0881140310	・IDLER	1				
2	0881140320	・SHAFT	1				
3	0881140330	・COVER	1				
4	0881140340	・COVER	1				
5	0881140350	・PLATE	1				
6	0881140360	・PLATE	1				
7	1305000005	・BEARING	2				
8	1432500800	・SEAL, floating	2				
8-1	1432500801	・・O-RING	2				
8-2	1432500802	・・RING, seal	2				
9	1420100400	・O-RING	2				
10	1501810001	・PLUG	1				
11	1213001026	・PIN, spring	1				
12	1100041030	・BOLT	2				
13	1106041635	・BOLT	1				
14	1140020010	・WASHER, spring	2				
15	1101141420	BOLT	8				
16	1141550014	WASHER	8				
	T7a031						

silverhorn.co.uk

TRACK ADJUSTER

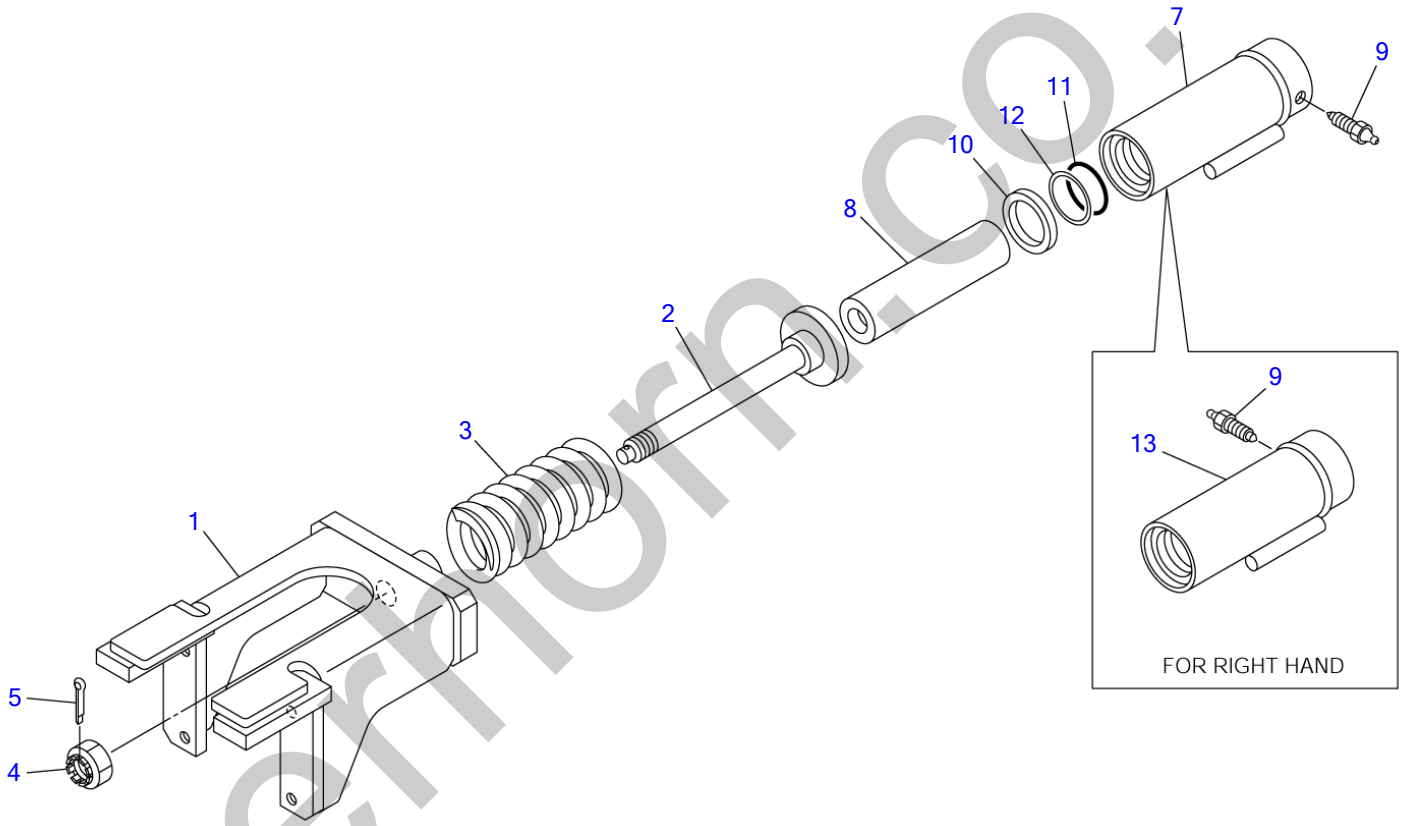

T9A010

S=1/8

silvermorn.co.uk

TRACK ADJUSTER

Item	Part number	Description	Q'ty	Chan.	Serial No.	Serv.	Remarks
0	0882150000	SPRING ASSY (L.H.)	1				X08821-50000-1
	0882150100	SPRING ASSY (R.H.)	1				X08821-50100-1
1	0882150210	・YOKE	1				
2	0881151200	・ROD	1				
3	0007000002	・SPRING	1				
4	1132530027	・NUT	1				
5	1210000545	・PIN, split	1				
0-1	0881152400	・CYLINDER ASSY (L.H.)	1				
	0881152600	・CYLINDER ASSY (R.H.)	1				
7	0881152100	・・CYLINDER, grease (L.H.)	1				
8	0881152200	・・PISTON	1				
9	1541300501	・・VALVE ASSY, check	1				
10	1400403203	・・SEAL, oil	1				
11	1422010600	・・O-RING	1				
12	1421020600	・・RING, back-up	1				
13	0881152300	・・CYLINDER, grease (R.H.)	1				
	T9a011						

silverhorn.co.uk

TRAVEL DEVICE (21400011-21401390)

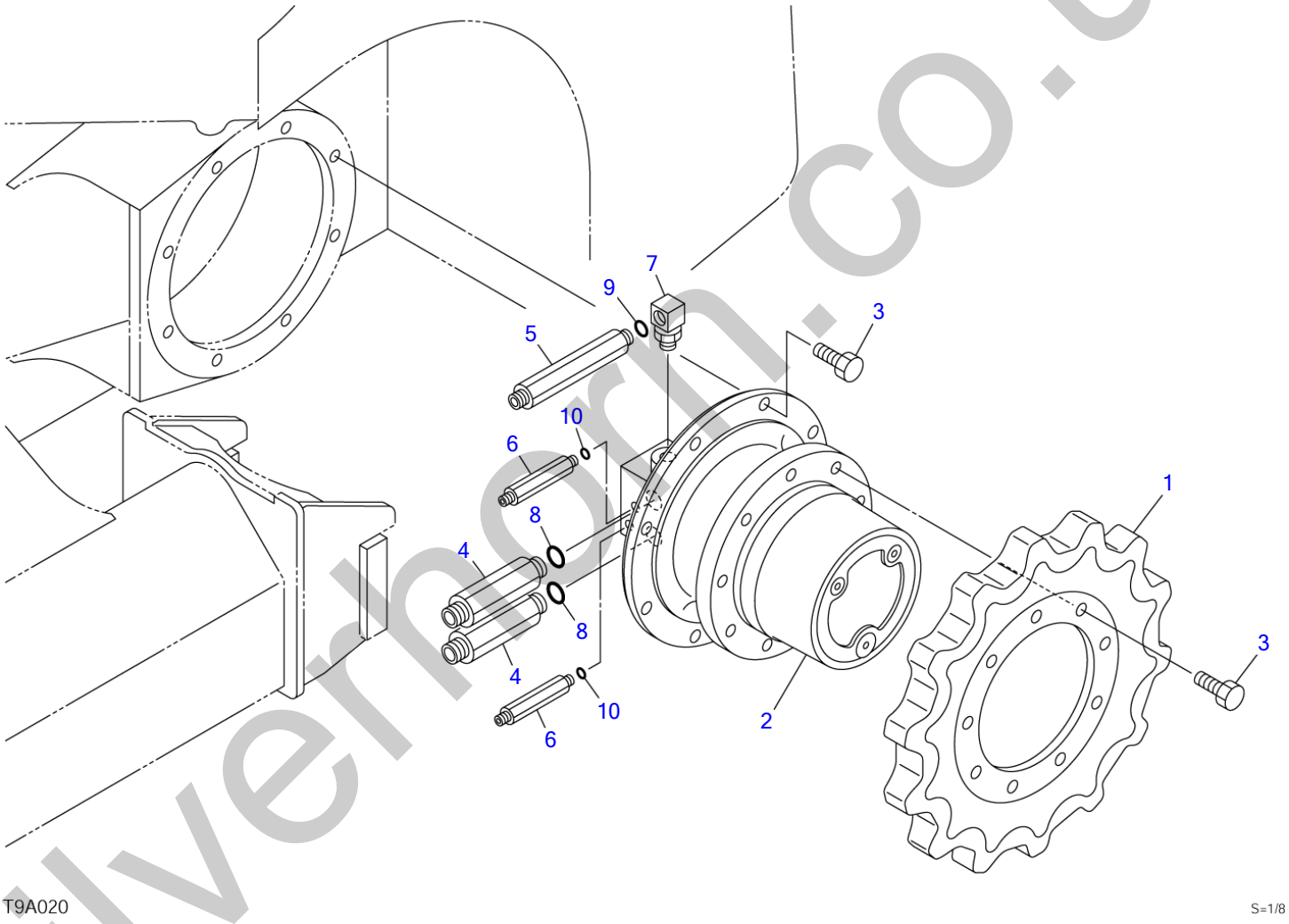

silverhorn.co.uk

TRAVEL DEVICE (21400011-21401390)

Item	Part number	Description	Q'ty	Chan.	Serial No.	Serv.	Remarks
		MOTOR ASSY, travel					X08821-60100-2
1	0882160010	SPROCKET	2				
2	1903123800	MOTOR, travel	2				
3	1100051635	BOLT	34				
4	0882160140	ADAPTOR	4				
5	0007203068	ADAPTOR	2				
6	0007203069	ADAPTOR	4				
7	1513300016	ELBOW	2				
	1420010180	・O-RING	1				
8	1420010240	O-RING	4				
9	1420010180	O-RING	2				
10	1420010110	O-RING	4				
	T9a020						

silverhorn.co.uk

TRAVEL DEVICE (21402001-)

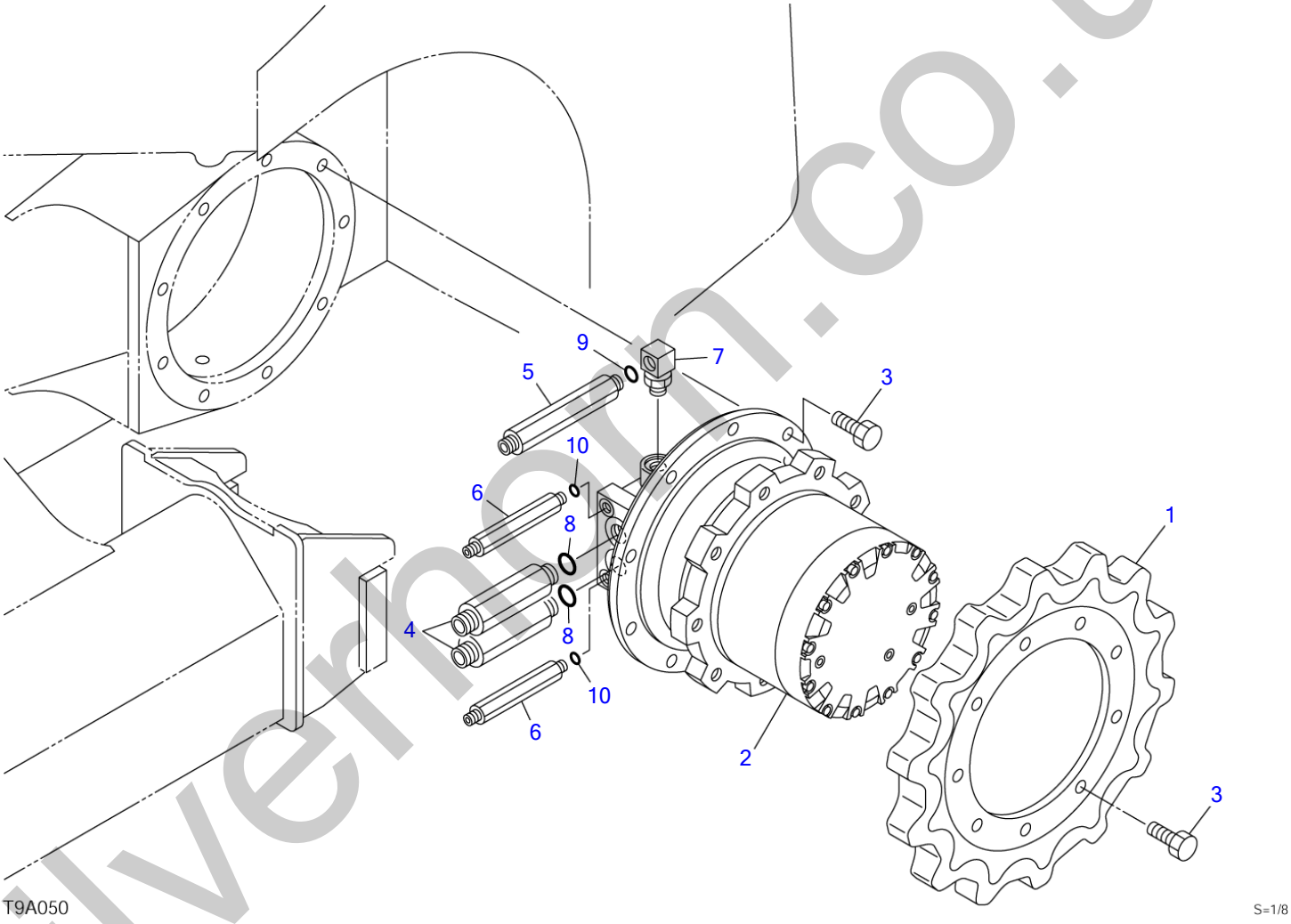

silvermoon.co.uk

TRAVEL DEVICE (21402001-)

Item	Part number	Description	Q'ty	Chan.	Serial No.	Serv.	Remarks
		MOTOR ASSY, travel					X08821-60200-0
1	0881160110	SPROCKET	2				
2	1903122700	MOTOR, travel	2				
	1903128100	MOTOR, TRAVEL	2				
3	1100041635	BOLT	36				
4	0882160210	ADAPTOR	4				
5	0007203081	ADAPTOR	2				
6	0007203069	ADAPTOR	4				
7	1513300020	ELBOW	2				
	1420010240	・O-RING	1				
8	1420010240	O-RING	4				
9	1420010180	O-RING	2				
10	1420010110	O-RING	4				
	T9a050-1						

silverhorn.co.uk

CRAWLER BELT

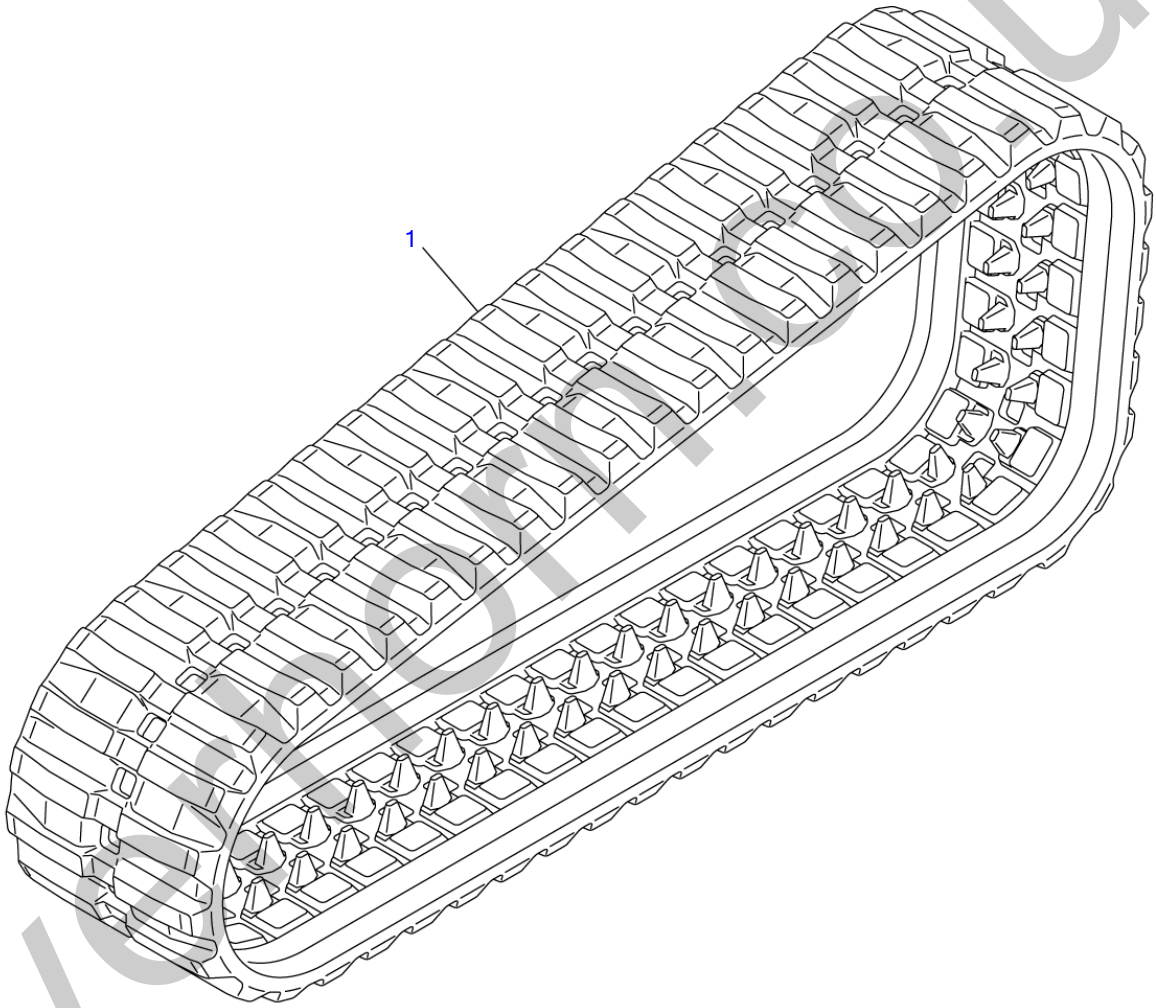

T7A060

5=1/12

silvermoor.co.uk

CRAWLER BELT

Item	Part number	Description	Q'ty	Chan.	Serial No.	Serv.	Remarks
1	**1914099510**	BELT, rubber crawler	2		21400011~2140#		X19140-99510-0
	1914099520	BELT, rubber crawler	2	(H)	2140#~		X19140-99520-0
	T9a031						

silverhorn.co.uk

FRAME

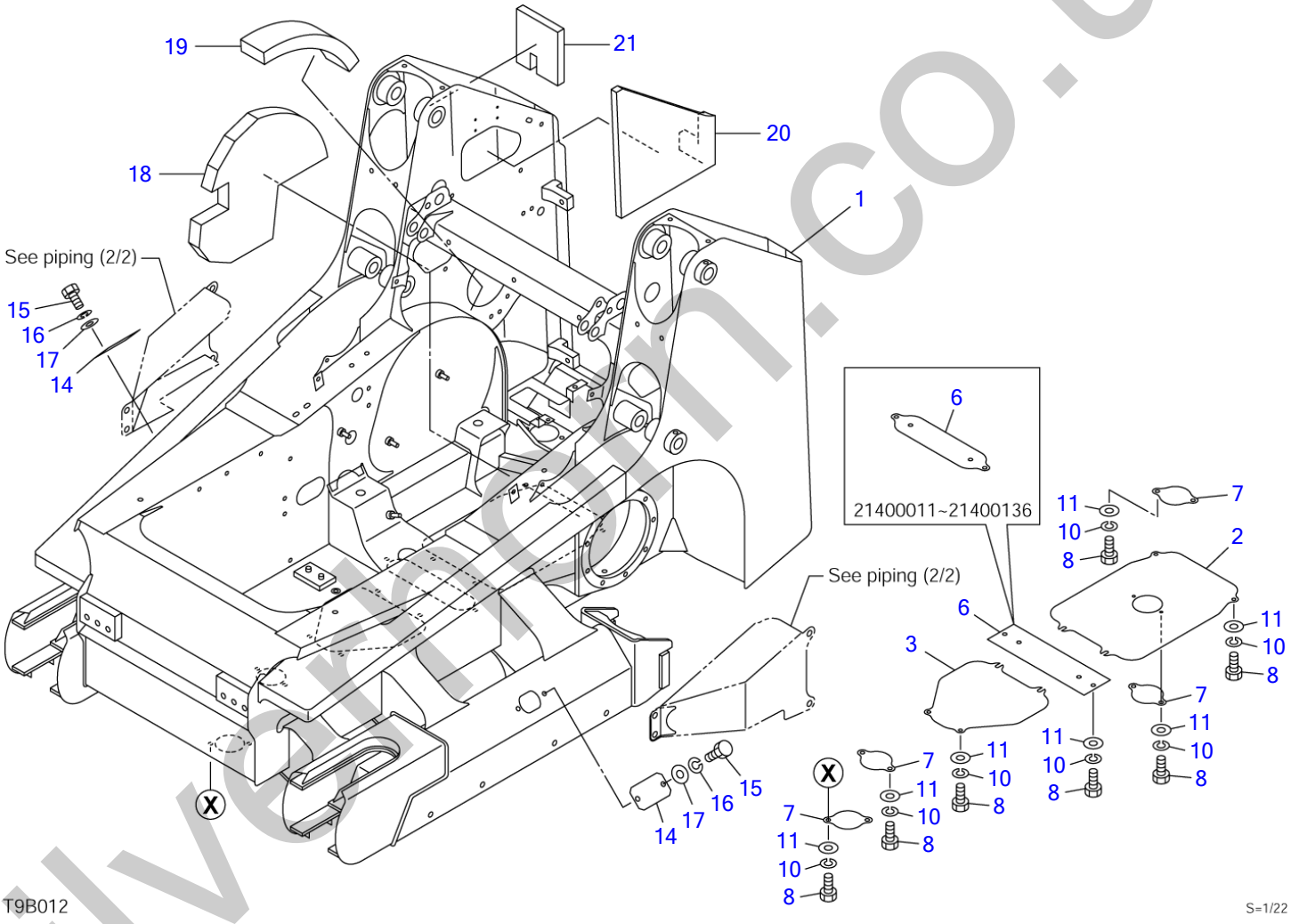

silverfern.co.uk

FRAME

Item	Part number	Description	Q'ty	Chan.	Serial No.	Serv.	Remarks
		FRAME ASSY					X08823-03500-0
		FRAME ASSY (for EU)					X08823-04000-1
1	X **********	FRAME	1				
2	0882300010	COVER	1				
3	0882300020	COVER	1				
6	0880305080	COVER	1				
7	0881302095	COVER	4				
8	1100041020	BOLT	16				
10	1140020010	WASHER, spring	16				
11	1141110010	WASHER	16				
14	0331018600	COVER	2				
15	1100040816	BOLT	4				
16	1140020008	WASHER, spring	4				
17	1141110008	WASHER	4				
18	0882304050	ABSORBENT, noise	1		21403609~		for EU
19	0882304060	ABSORBENT, noise	1		21403609~		for EU
20	0882304070	ABSORBENT, noise	1		21403609~		for EU
21	0882304080	ABSORBENT, noise	1		21403609~		for EU
	T9b012						

silverhorn.co.uk

ARM STOPPER

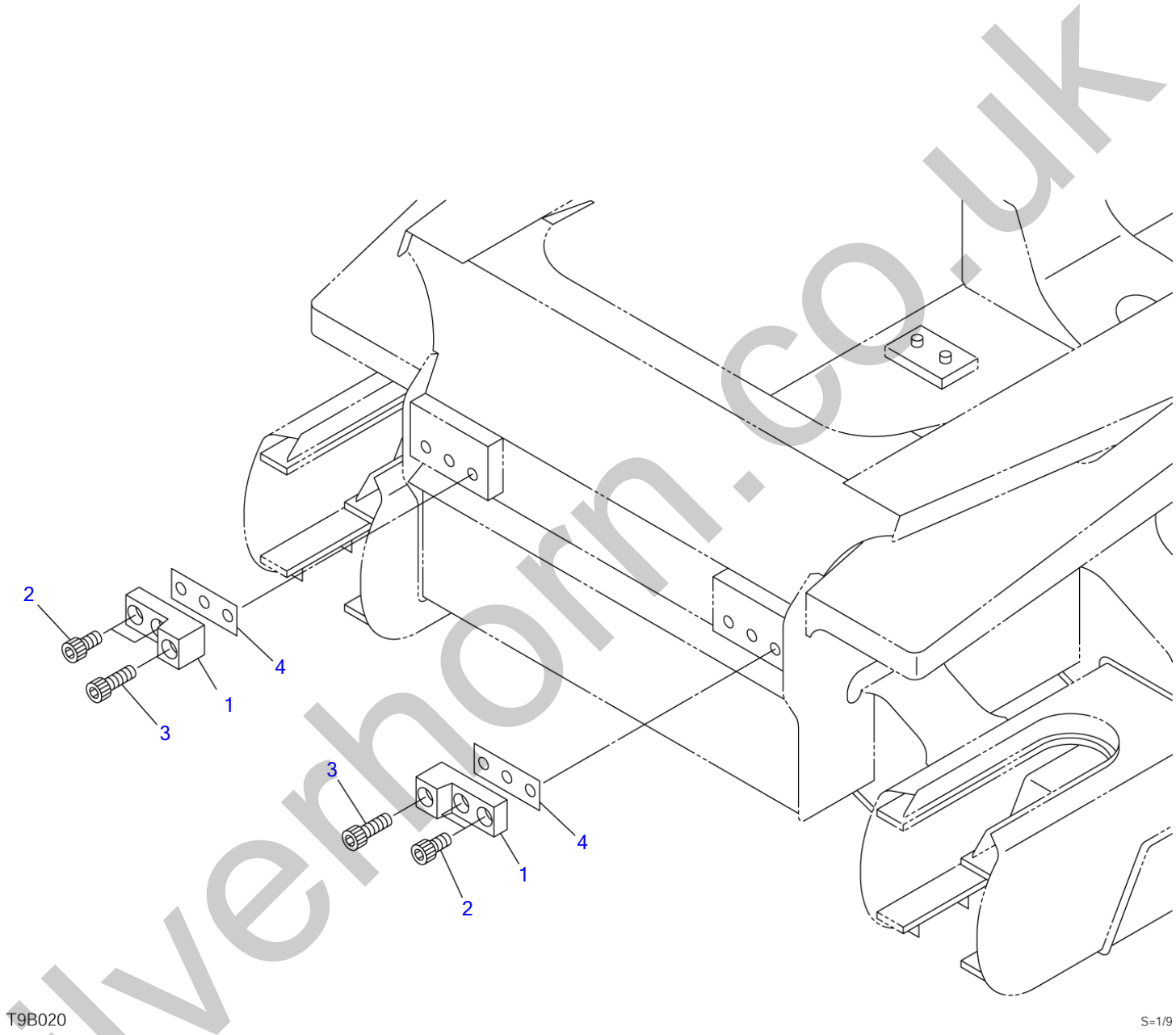

silverhorn.co.uk

ARM STOPPER

Item	Part number	Description	Q'ty	Chan.	Serial No.	Serv.	Remarks
		STOPPER ASSY, arm					X08826-00900-0
1	0881602910	STOPPER, arm	2				
2	1110042035	SCREW, cap	4				
3	1110042060	SCREW, cap	2				
4	0881602950	SHIM	AR				t=0.5mm
	0881600950	SHIM	AR				t=1.0mm
	0881602960	SHIM	AR				t=3.2mm
	T9b020						

silverhorn.co.uk

HOOK

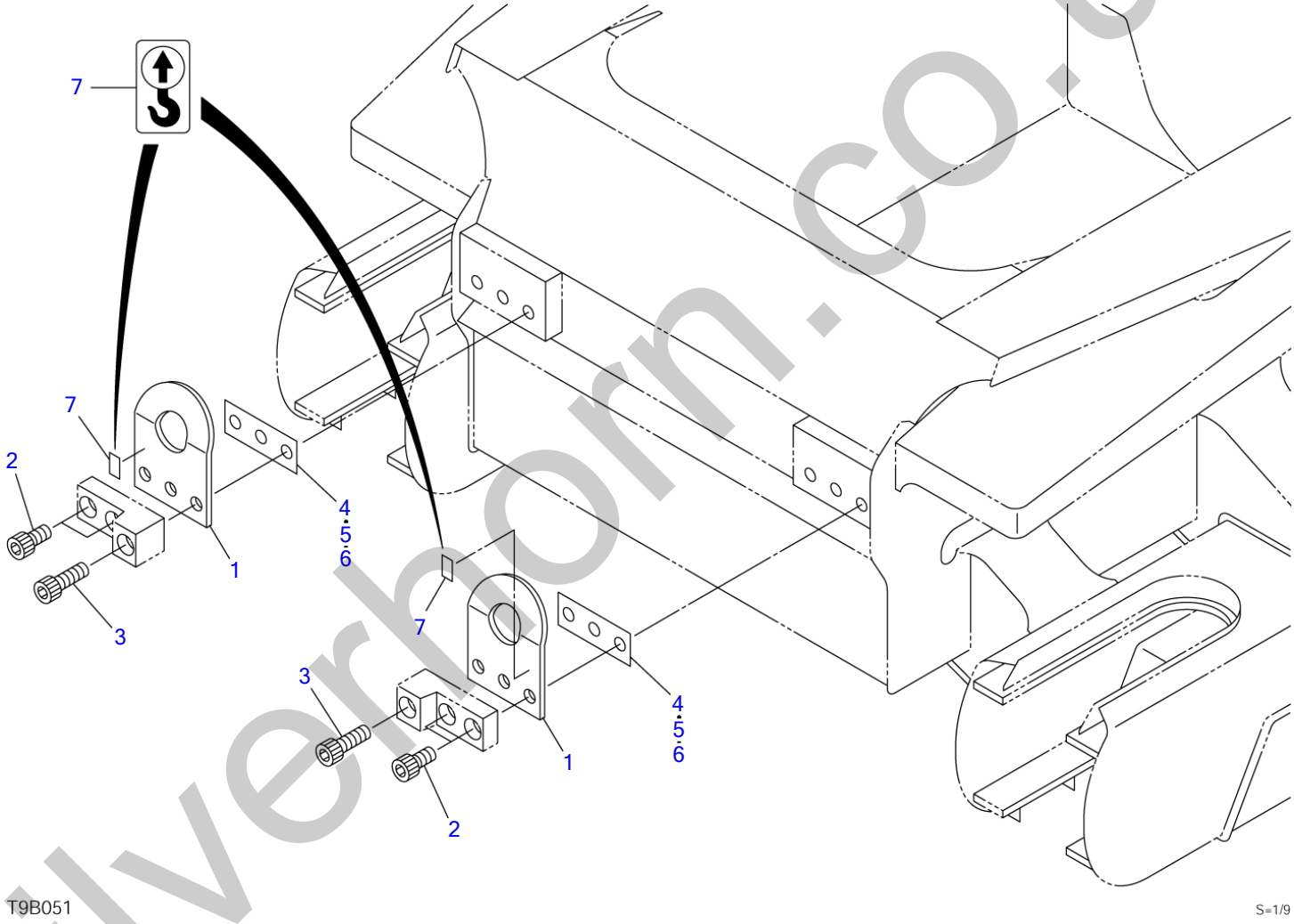

silverhorn.co.uk

HOOK

Item	Part number	Description	Q'ty	Chan.	Serial No.	Serv.	Remarks
		HOOK ASSY					X08823-03000-1
1	0881304520	HOOK	2				
2	1110042040	SCREW, cap	4				
3	1110042070	SCREW, cap	2				
4	0881602950	SHIM	AR				t=0.5mm
5	0881600950	SHIM	AR				t=1.0mm
6	0881602960	SHIM	AR				t=3.2mm
7	0399300500	DECAL	2				
	T9b051						

silverhorn.co.uk

OPERATION LEVER & STAND

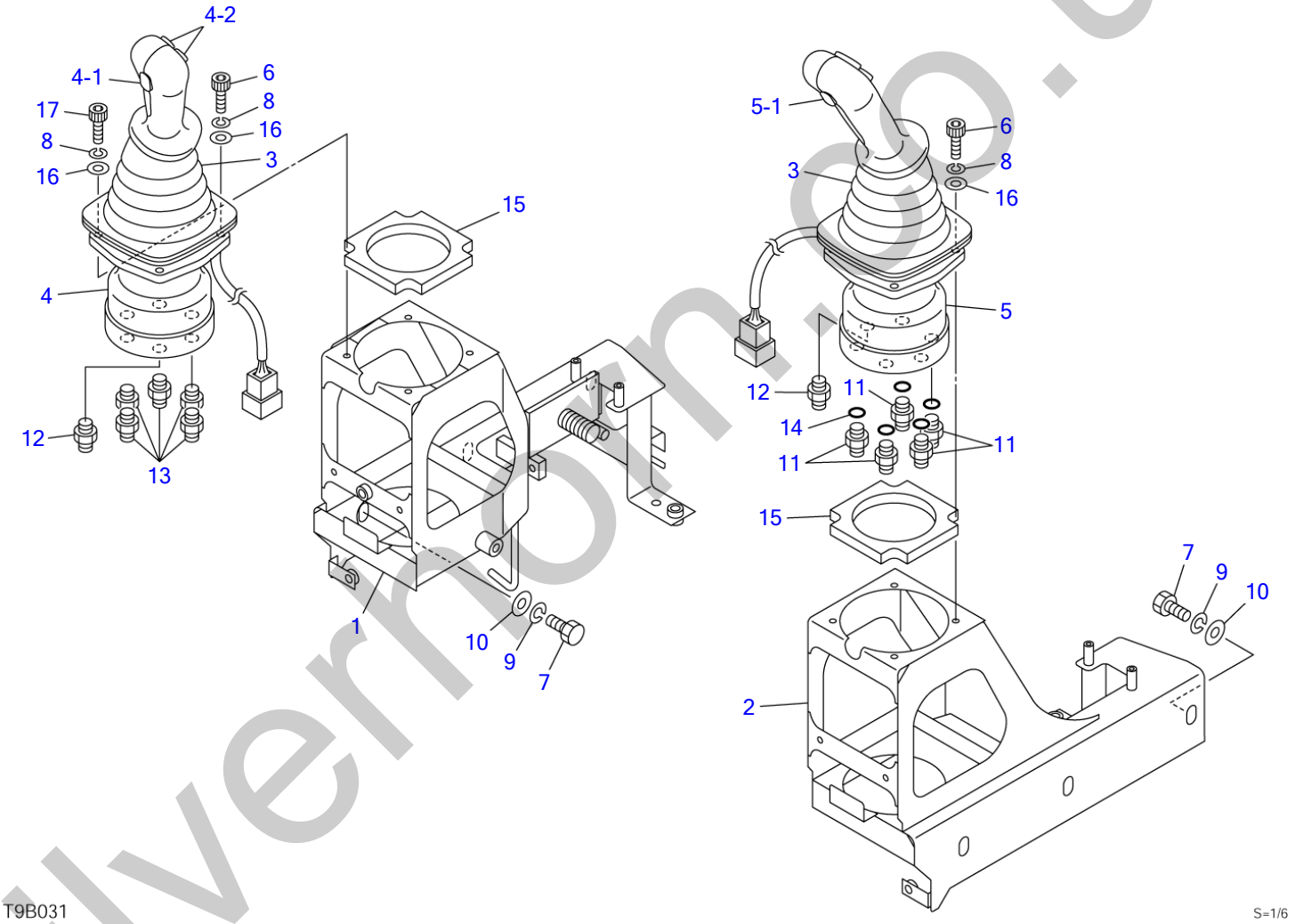

silverhorn.co.uk

OPERATION LEVER & STAND

Item	Part number	Description	Q'ty	Chan.	Serial No.	Serv.	Remarks
		VALVE ASSY					X08825-11000-0
1	0882510500	BRACKET (R.H.)	1				
2	0882510600	BRACKET (L.H.)	1				
3	0881510020	BOOT	2				
4	1901741500	VALVE ASSY (R.H.) (steel)	1		21400011~21404476		3 switch
	1901749800	VALVE ASSY (R.H.) (aluminum)	1	(H)	21404477~		3 switch
4-1	1901740402	・BUTTON	1				
4-2	1901741216	・BUTTON	2				
5	1901739900	VALVE ASSY (L.H.)	1		21400011~21404476		slide switch
	1901749700	VALVE ASSY (L.H.)	1	(H)	21404477~		slide switch
5-1	1901740402	・BUTTON	1				
6	1110040620	SCREW, cap	6				
7	1100041020	BOLT	6				
8	1140420006	WASHER, spring	8				
9	1140020010	WASHER, spring	6				
10	1141110010	WASHER	6				
11	1515600571	ADAPTOR	5				
	1420010110	・O-RING	1				
12	1512370008	ADAPTOR (with filter)	2				
	1420010110	・O-RING	1				
13	1515600200	ADAPTOR	5				
	1420010110	・O-RING	1				
14	1420010110	O-RING	5				
15	0881511150	SPONGE	2				
16	1141110006	WASHER	8				
17	1110040625	SCREW, cap	2				
	T9b031						

silverhorn.co.uk

PIPING; OPERATION LEVER (21400011-21401390)

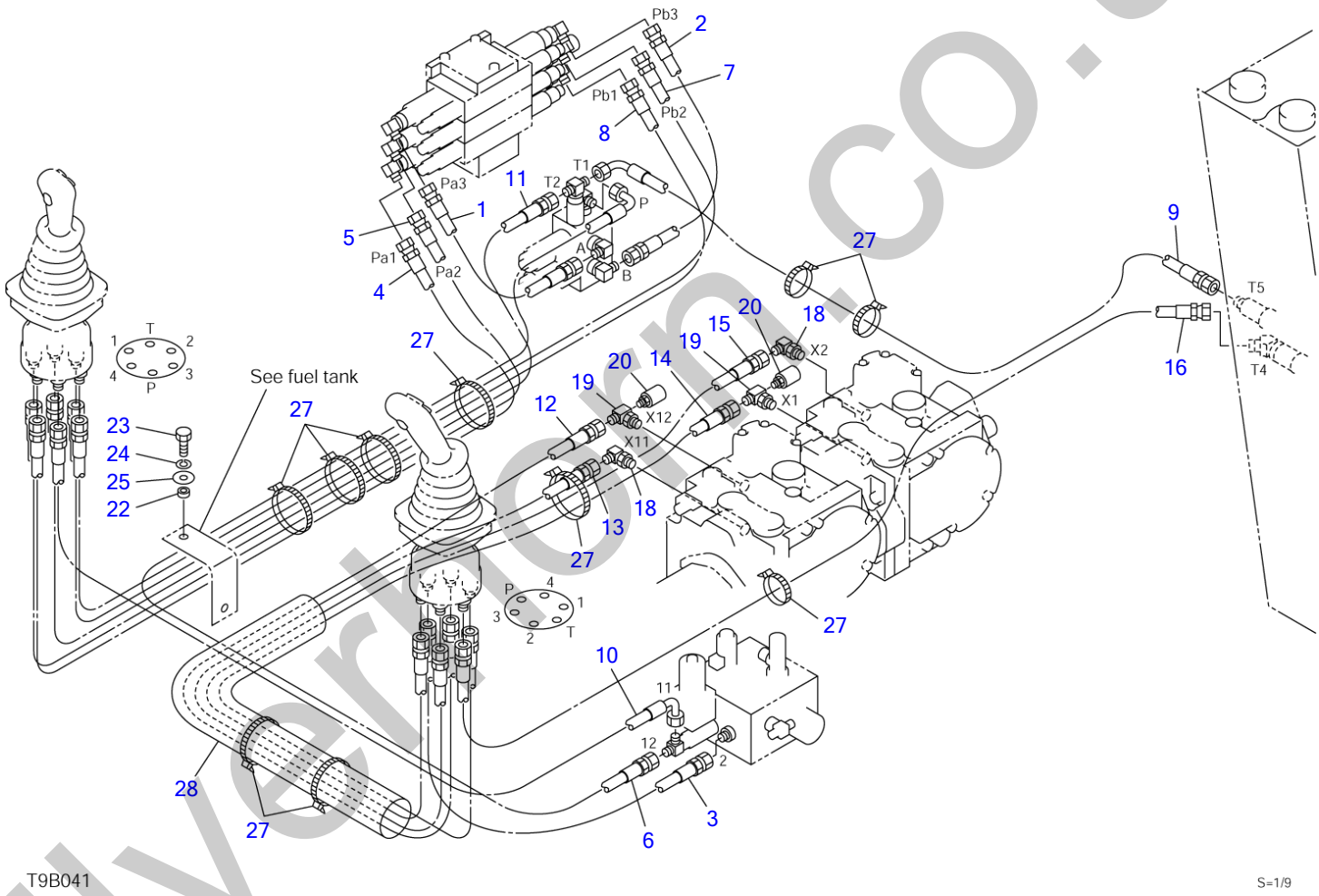

silverthorn.co.uk

PIPING; OPERATION LEVER (21400011-21401390)

Item	Part number	Description	Q'ty	Chan.	Serial No.	Serv.	Remarks
		PIPING ASSY					X08827-10000-2
1	0882710010	HOSE ASSY	1				18010-22032
2	0882710020	HOSE ASSY	1				18010-22050
3	0882710030	HOSE ASSY	1				18010-22050
4	0882710040	HOSE ASSY	1				18010-22114
5	0882710050	HOSE ASSY	1				18010-22114
6	0882710060	HOSE ASSY	1				18010-52148
7	0882710070	HOSE ASSY	1				18010-22144
8	0882710080	HOSE ASSY	1				18010-22144
9	0882710090	HOSE ASSY	1				18010-52165
10	0882710100	HOSE ASSY	1				18010-52112
11	0882710110	HOSE ASSY	1				18010-22104
12	0882710120	HOSE ASSY	1				18010-23120
13	0882710130	HOSE ASSY	1				18010-23120
14	0882710140	HOSE ASSY	1				18010-23144
15	0882710150	HOSE ASSY	1				18010-23144
16	0882710160	HOSE ASSY	1				18010-23190
18	1512375006	ELBOW	2				
	1420370906	・O-RING	1				
19	1512330005	ELBOW	2				
	1420370906	・O-RING	1				
20	1700100015	SWITCH, pressure	2				
22	0881711360	COLLAR	1				
23	1100040620	BOLT	1				
24	1140020006	WASHER, spring	1				
25	0003600043	WASHER	1				
27	1652241300	STRAP	10				
28	1531645080	PROTECTOR	1				sold by the meter
	T9b041						

silverhorn.co.uk

PIPING; OPERATION LEVER (21402001-)

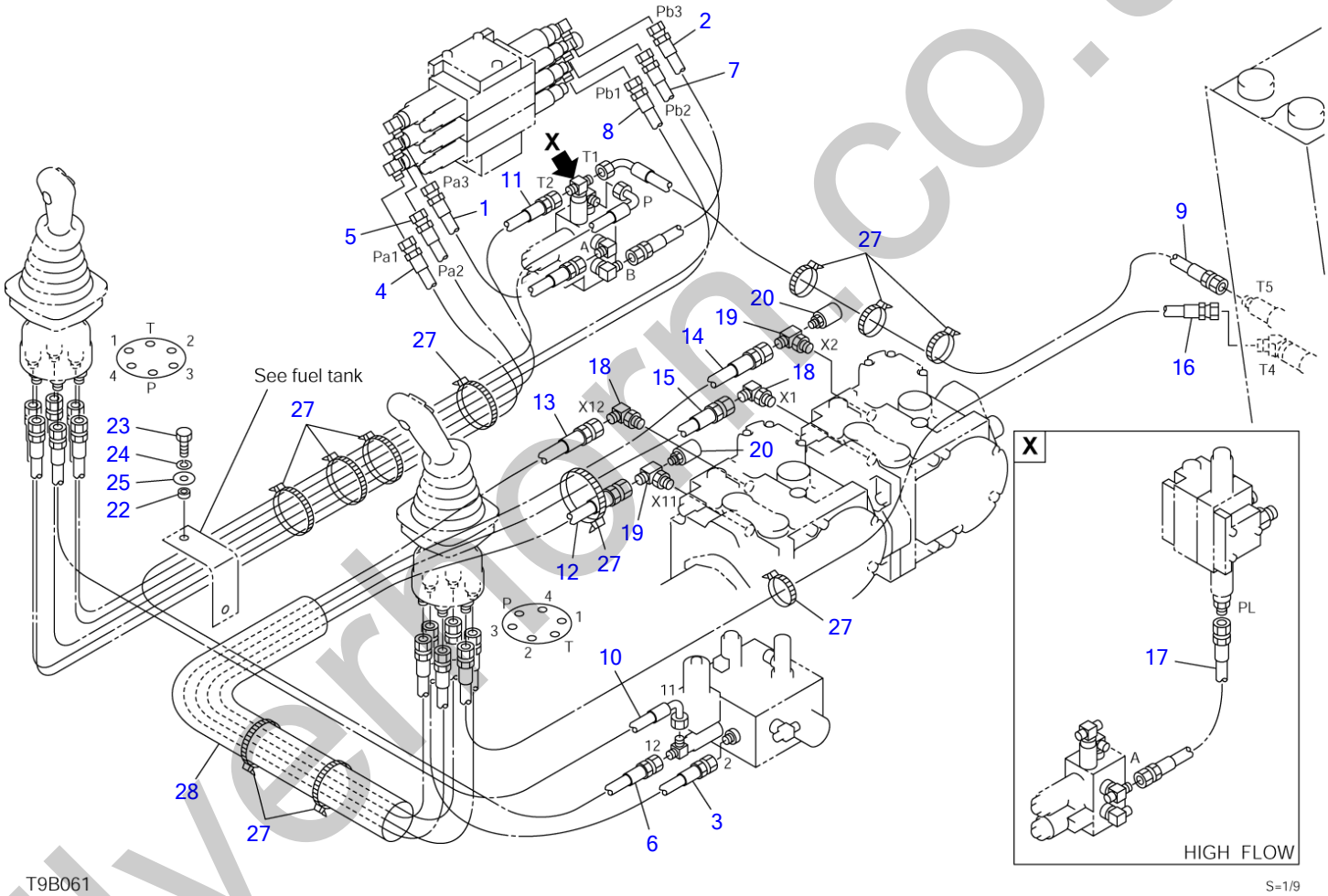

silverthorn.co.uk

PIPING; OPERATION LEVER (21402001-)

Item	Part number	Description	Q'ty	Chan.	Serial No.	Serv.	Remarks
		PIPING ASSY					X08827-10500-3
		PIPING ASSY (high flow)					X08827-10700-3
1	0882710010	HOSE ASSY	1				18010-22032
2	0882710020	HOSE ASSY	1				18010-22050
3	0882710030	HOSE ASSY	1				18010-22050
4	0882710040	HOSE ASSY	1				18010-22114
5	0882710050	HOSE ASSY	1				18010-22114
6	0882710060	HOSE ASSY	1				18010-52148
7	0882710070	HOSE ASSY	1				18010-22144
8	0882710080	HOSE ASSY	1				18010-22144
9	0882710090	HOSE ASSY	1				18010-52165
10	0882710100	HOSE ASSY	1				18010-52112
11	0882710110	HOSE ASSY	1				18010-22104
12	0882710620	HOSE ASSY	1				18010-23120
13	0882710630	HOSE ASSY	1				18010-23120
14	0882710640	HOSE ASSY	1				18010-23144
15	0882710650	HOSE ASSY	1				18010-23144
16	0882710160	HOSE ASSY	1				18010-23190
17	0882710710	HOSE ASSY (high flow)	1		214034597		18010-22120
18	1512375006	ELBOW	2				
	1420370906	・O-RING	1				
19	1512330005	ELBOW	2				
	1420370906	・O-RING	1				
20	1700100015	SWITCH, pressure	2				
22	0881711360	COLLAR	1				
23	1100040620	BOLT	1				
24	1140020006	WASHER, spring	1				
25	0003600043	WASHER	1				
27	1652241300	STRAP	11				
28	1531645080	PROTECTOR	1				sold by the meter
	T9b062						

silverhorn.co.uk

ENGINE & ACCESSORIES (1/2) (21400011-21401186, 21402001-21402084)

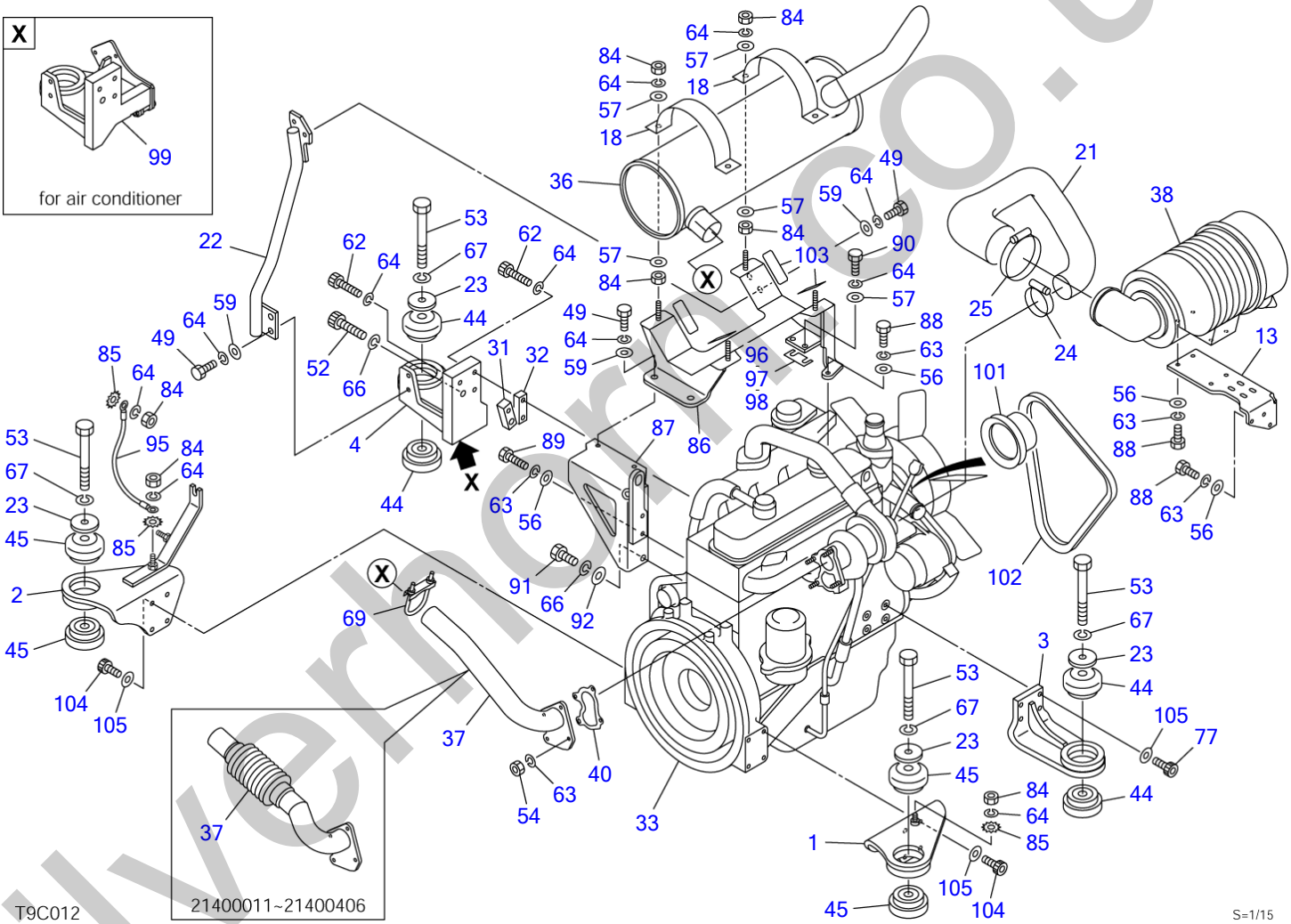

silverhorse.co.uk

ENGINE & ACCESSORIES (1/2) (21400011-21401186, 21402001-21402084)

Item	Part number	Description	Q'ty	Chan.	Serial No.	Serv.	Remarks
		ENGINE ASSY					X08824-01000-13
		ENGINE ASSY (for air conditioner)					X08824-01900-13
1	0882401010	FOOT, engine (F.L.)	1				
2	0882401020	FOOT, engine (F.R.)	1				
3	0882401030	FOOT, engine (R.L.)	1				
4	0882401040	FOOT, engine (R.R.)	1				
13	0882401090	BRACKET	1				
18	0882401250	CLAMP	2				
21	0882402170	HOSE	1				
22	0882401240	PIPE	1				
23	0882400190	WASHER	4				
24	0882401200	CLAMP	1				
25	0881402560	CLAMP	1				
31	0882401045	PLATE	1				
32	0882401046	PLATE	1				
33	1910182001	ENGINE	1				ISUZU 4JG1-TPA
36	1910182005	MUFFLER	1				ISUZU F-10606002-F
37	1910182021	PIPE	1		21400011~21400406		ISUZU F-10605009-F
	0882402300	PIPE	1	(H)	21400407~		
38	1910182007	CLEANER, air	1				ISUZU F-18406001-F
40	1910172022	GASKET	1				ISUZU 8-94433604-0
44	1651030004	RUBBER, cushion	4				
45	1651030005	RUBBER, cushion	4				
49	1100041025	BOLT	6				
52	1111021460	SCREW, cap	1				
53	1101141640	BOLT	4				
54	1130040008	NUT	4				
56	1141110008	WASHER	10				
57	1141110010	WASHER	10				
59	0003600003	WASHER	6				
62	1111021055	SCREW, cap	3				
63	1140020008	WASHER, spring	14				
64	1140020010	WASHER, spring	16				
66	1140020014	WASHER, spring	1				
67	1140020016	WASHER, spring	4				
69	1533300063	U-BOLT	1				
77	1111021035	SCREW, cap	4				
84	1130040010	NUT	11				
85	1140330010	WASHER	3				
86	0882401220	BRACKET	1				
87	0882401230	BRACKET	1				
88	1100040825	BOLT	14				
89	1100040835	BOLT	2				
90	1101041025	BOLT	2				
91	1101041435	BOLT	1				
92	1141110014	WASHER	1				
95	1702402001	CABLE, earth	1				
96	0882402180	SHIM	AR				t=0.5mm
97	0882402190	SHIM	AR				t=1.0mm
98	0882402200	SHIM	AR				t=2.3mm
99	0882401910	FOOT, engine (R.R.)	1				for air conditioner
101	0882401920	PULLEY	1				for air conditioner
102	0882401930	V-BELT	1				for air conditioner
103	0882402340	SHIM	AR				
104	1110021035	SCREW, cap	8				
105	1141550010	WASHER	12				
	T9c012						

silverthorn.co.uk

ENGINE & ACCESSORIES (2/2) (21400011-21401186, 21402001-21402084)

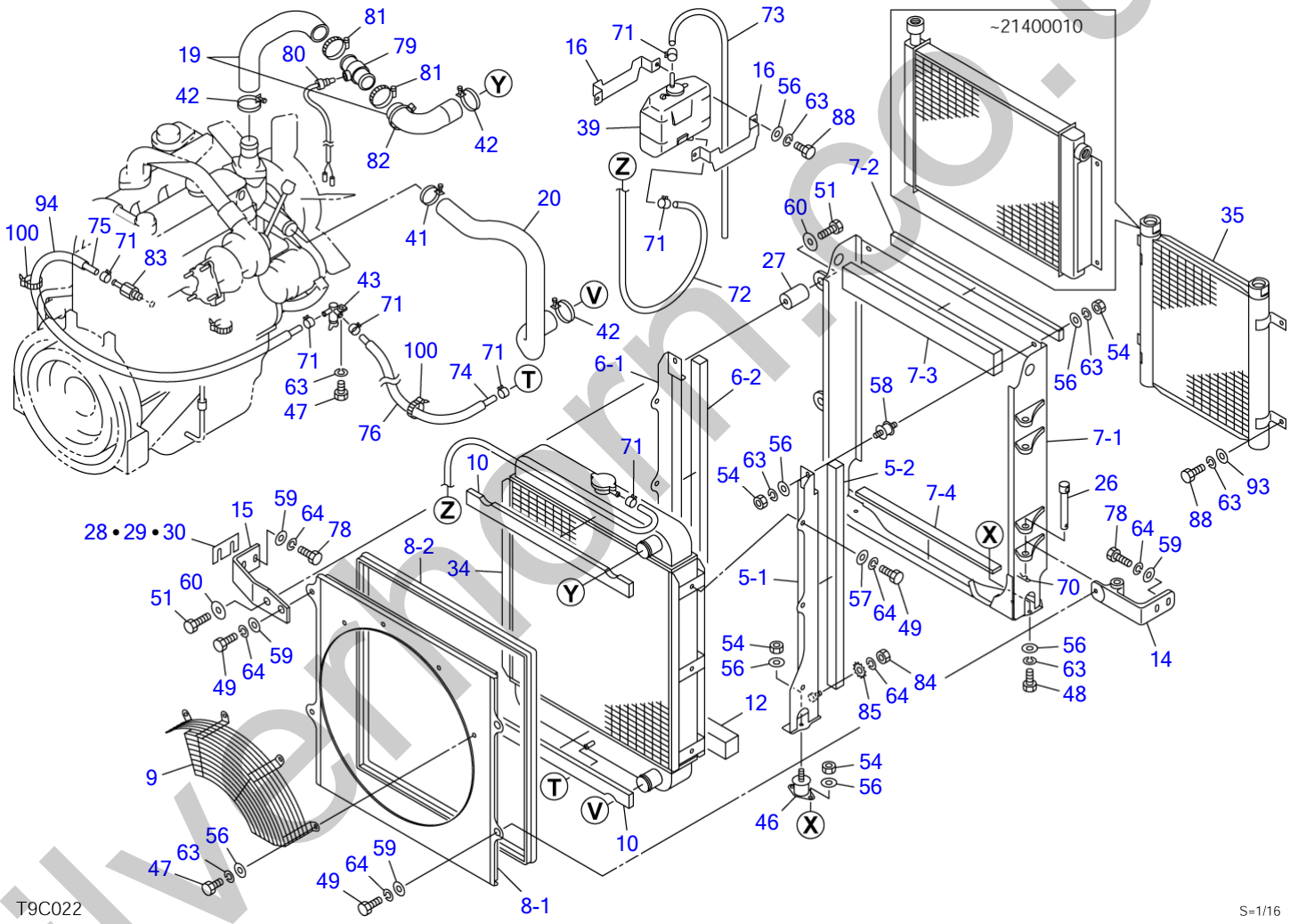

silvermern.co.uk

ENGINE & ACCESSORIES (2/2) (21400011-21401186, 21402001-21402084)

Item	Part number	Description	Q'ty	Chan.	Serial No.	Serv.	Remarks
		ENGINE ASSY					X08824-01000-13
		ENGINE ASSY (for air conditioner)					X08824-01900-13
5	X 0882401700	BRACKET ASSY	1				
5-1	0882401710	・BRACKET	1				
5-2	1654345067	・SPONGE	1				sold by the meter
6	X 0882401750	BRACKET ASSY	1				
6-1	0882401760	・BRACKET	1				
6-2	1654345067	・SPONGE	1				sold by the meter
7	X 0882401800	FRAME ASSY	1				
7-1	0882401810	・FRAME	1				
7-2	1654344059	・SPONGE	1				sold by the meter
7-3	1654347053	・SPONGE	1				sold by the meter
7-4	1654348048	・SPONGE	1				sold by the meter
8	X 0882401500	SHROUD ASSY	1				
8-1	0882401600	・SHROUD	1				
8-2	1654606242	・TRIM	2				sold by the meter
9	0882401100	GUARD	1				
10	0882401060	SPONGE	2				
12	1654346053	SPONGE	1				sold by the meter
14	0882402560	HINGE	2				
15	0882401180	BRACKET	2				
16	0882401125	HOLDER	2				
19	0882402150	HOSE	1				
20	0882401160	HOSE	1				
26	0881402180	PIN	2				
27	0881401260	BOSS	2				
28	0880406610	SHIM	AR				t=1.6mm
29	0880406620	SHIM	AR				t=3.2mm
30	0880406630	SHIM	AR				t=4.5mm
34	1910182002	RADIATOR	1				ISUZU F18406-008F
35	1910161003	COOLER, oil	1		~21400010		
	1911300010	COOLER, oil	1		21400011~		
39	1910049039	TANK, sub	1				ISUZU 894440-9690
41	1910172016	BAND	1				ISUZU 909915-5121
42	1910172015	BAND	3				ISUZU 909915-412A
43	1911900004	VALVE, drain	1				
46	1651021040	RUBBER, cushion	2				
47	1100040816	BOLT	3				
48	1100040820	BOLT	4				
49	1100041025	BOLT	10				
51	1100041235	BOLT	4				
54	1130040008	NUT	10				
56	1141110008	WASHER	20				
57	1141110010	WASHER	6				
58	1651014003	RUBBER, cushion	2				
59	0003600003	WASHER	12				
60	0003600136	SHIM	4				
63	1140020008	WASHER, spring	19				
64	1140020010	WASHER, spring	19				
70	1214000016	PIN, snap	2				
71	1533120011	CLAMP	7				
72	1531407140	HOSE	1				sold by the meter
73	1531407065	HOSE	1				sold by the meter
74	1531211060	HOSE	1				sold by the meter
75	1531211098	HOSE	1				sold by the meter
76	1531115025	HOSE	2				sold by the meter
78	1100041030	BOLT	16				
79	0881402590	JOINT	1				
80	1700100046	SENSOR	1				
81	1533700057	CLAMP	2				
82	1652241200	BAND	1				
83	0882401210	ADAPTOR	1				
84	1130040010	NUT	1				
85	1140330010	WASHER	1				
88	1100040825	BOLT	6				
93	0003609003	WASHER	4				
94	1531115044	HOSE	2				sold by the meter

silverthorn.co.uk

ENGINE & ACCESSORIES (2/2) (21400011-21401186, 21402001-21402084)

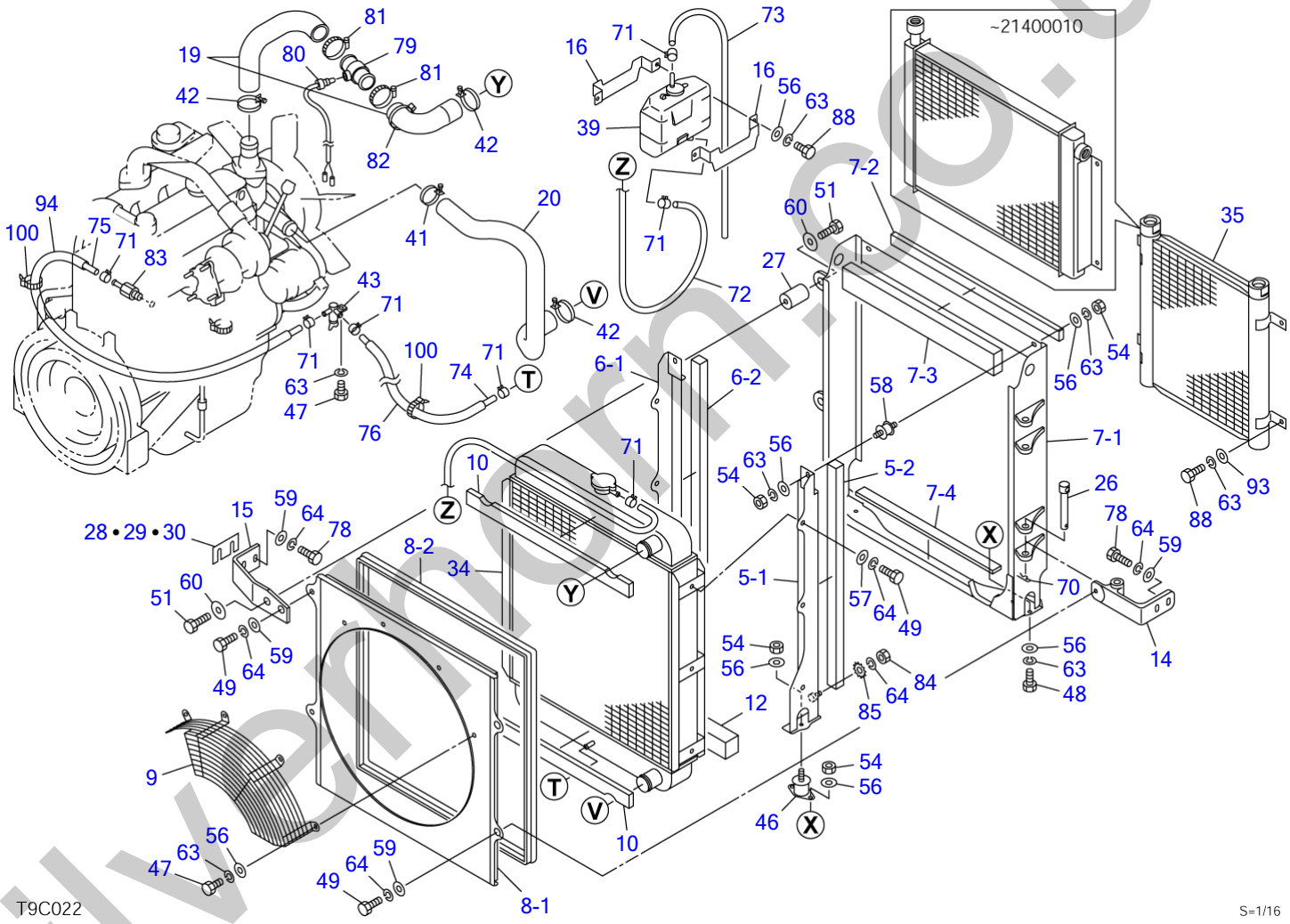

silvermern.co.uk

ENGINE & ACCESSORIES (2/2) (21400011-21401186, 21402001-21402084)

Item	Part number	Description	Q'ty	Chan.	Serial No.	Serv.	Remarks
100	**1652231250**	BAND	1				
100	**1652231250**	BAND	2				for air conditioner
	T9c022						

silverhorn.co.uk

ENGINE & ACCESSORIES (1/2)

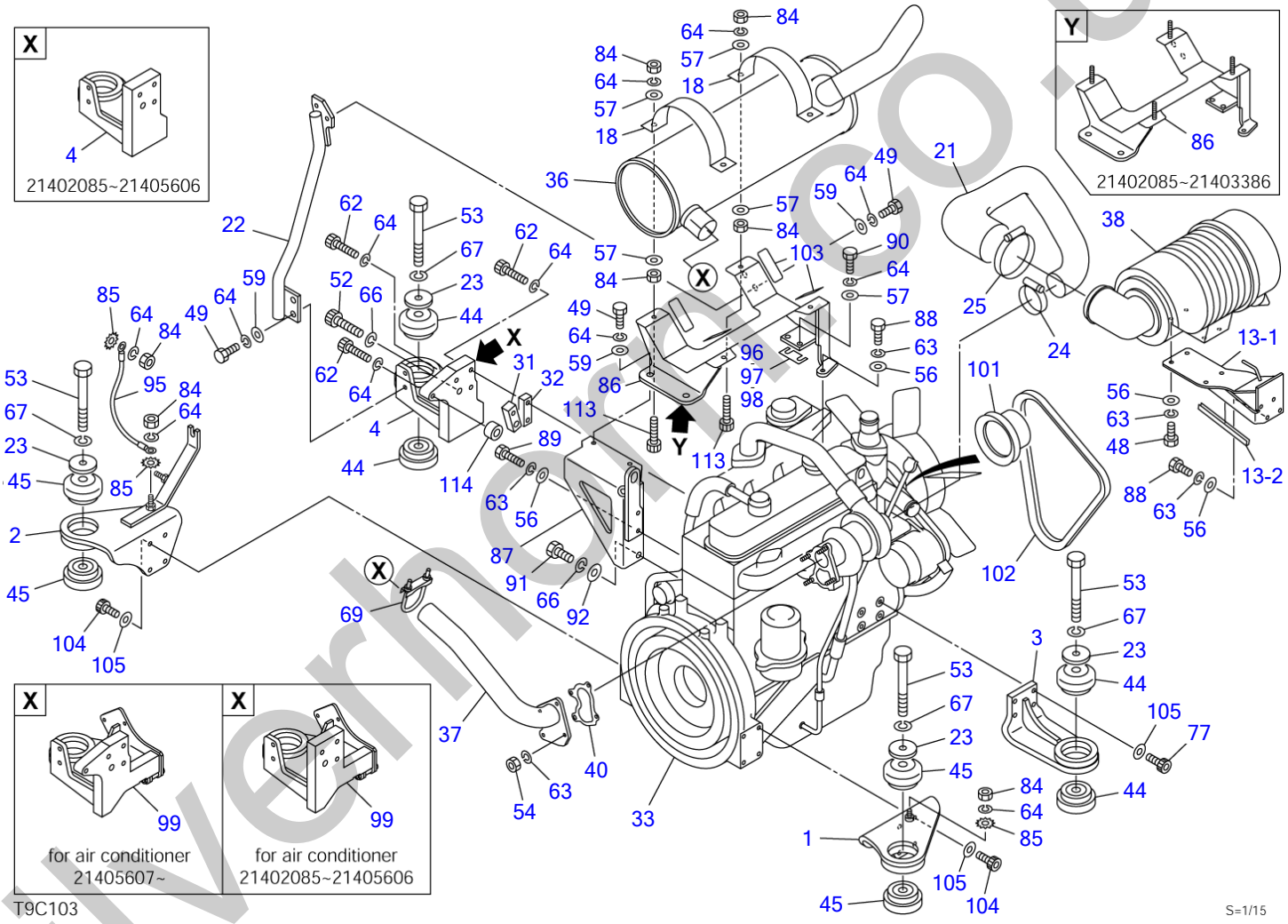

silverhome.co.uk

ENGINE & ACCESSORIES (1/2)

Item	Part number	Description	Q'ty	Chan.	Serial No.	Serv.	Remarks
		ENGINE ASSY					X08824-03000-12
		ENGINE ASSY (for air conditioner)					X08824-03900-12
1	0882401010	FOOT, engine (F.L.)	1				
2	0882401020	FOOT, engine (F.R.)	1				
3	0882401030	FOOT, engine (R.L.)	1				
4	0882401040	FOOT, engine (R.R.)	1		21402085~21405606	M	
	0882401940	FOOT, engine (R.R.)	1		21405607~	M	
13	0882402350	BRACKET ASSY	1				
13-1	0882402360	・BRACKET	1				
13-2	1654629015	・TRIM	1				sold by the meter
18	0882401250	CLAMP	2				
21	0882402260	HOSE	1				
22	0882401240	PIPE	1				
23	0882400190	WASHER	4				
24	1533701250	BAND	1			M	
25	0881402560	BAND	1				
31	0882401045	PLATE	1				
32	0882401046	PLATE	1				
33	1910182001	ENGINE	1				ISUZU 4JG1-TPA
36	1910182005	MUFFLER	1				ISUZU F-10606002-F
37	0882402300	PIPE	1				
38	1910182007	CLEANER, air	1				ISUZU F-18406001-F
40	1910172022	GASKET	1				ISUZU 8-94433604-0
44	1651030004	RUBBER, cushion	4				
45	1651030005	RUBBER, cushion	4				
48	1100040820	BOLT	4				
49	1100041025	BOLT	6				
52	1111021460	SCREW, cap	1				
53	1101141640	BOLT	4				
54	1130040008	NUT	4				
56	1141110008	WASHER	11				
57	1141110010	WASHER	10				
59	0003600025	WASHER	6				
62	1111021055	SCREW, cap	4				
63	1140020008	WASHER, spring	15				
64	1140020010	WASHER, spring	17				
66	1140020014	WASHER, spring	1				
67	1140020016	WASHER, spring	4				
69	1533300063	U-BOLT	1				
77	1111021035	SCREW, cap	4				
84	1130040010	NUT	10				
85	1140330010	WASHER	2				
86	0882401220	BRACKET	1				
87	0882401230	BRACKET	1				
88	1100040825	BOLT	5				
89	1100040835	BOLT	2				
90	1101041025	BOLT	2				
91	1101041435	BOLT	1				
92	1141110014	WASHER	1				
95	1702402001	CABLE, earth	1				
96	0882402180	SHIM	AR				t=0.5mm
97	0882402190	SHIM	AR				t=1.0mm
98	0882402200	SHIM	AR				t=2.3mm
99	0882401910	FOOT, engine (R.R.)	1		21402085~21405606	M	for air conditioner
	0882401950	FOOT, engine (R.R.)	1		21405607~	M	for air conditioner
101	0882401920	PULLEY	1				for air conditioner
102	0882401930	V-BELT	1				for air conditioner
103	0882402340	SHIM	AR				
104	1110021035	SCREW, cap	8				
105	1141550010	WASHER	12				
113	1100241050	BOLT	4				
114	0882401970	SPACER	1		21405607~	M	
	T9c107						

silverthorn.co.uk

ENGINE & ACCESSORIES (2/2)

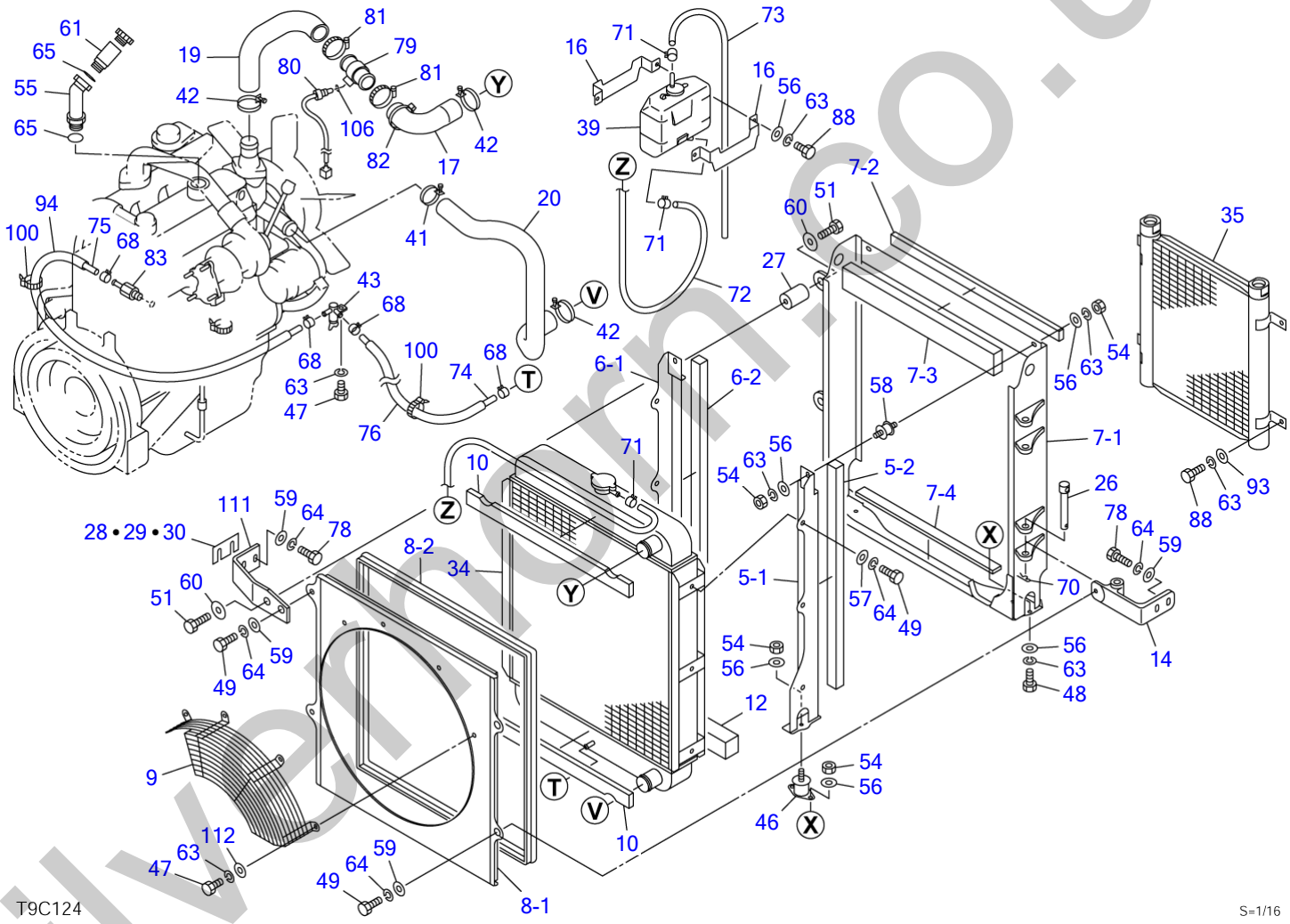

silvermoon.co.uk

ENGINE & ACCESSORIES (2/2)

Item	Part number	Description	Q'ty	Chan.	Serial No.	Serv.	Remarks
		ENGINE ASSY					X08824-03000-12
		ENGINE ASSY (for air conditioner)					X08824-03900-12
5	X 0882401700	BRACKET ASSY	1				
5-1	0882401710	・BRACKET	1				
5-2	1654345067	・SPONGE	1				sold by the meter
6	X 0882401750	BRACKET ASSY	1				
6-1	0882401760	・BRACKET	1				
6-2	1654345067	・SPONGE	1				sold by the meter
7	X 0882401800	FRAME ASSY	1				
7-1	0882401810	・FRAME	1				
7-2	1654344059	・SPONGE	1				sold by the meter
7-3	1654347053	・SPONGE	1				sold by the meter
7-4	1654348048	・SPONGE	1				sold by the meter
8	X 0882401500	SHROUD ASSY	1				
8-1	0882401600	・SHROUD	1				
8-2	1654606242	・TRIM	2				sold by the meter
9	0882401100	GUARD	1				
10	0882401060	SPONGE	2				
12	1654346053	SPONGE	1				sold by the meter
14	0882402560	HINGE	2				
16	0882401125	HOLDER	2				
17	0882402252	HOSE	1				
19	0882402251	HOSE	1				
20	0882401160	HOSE	1				
26	0881402180	PIN	2				
27	0881401260	BOSS	2				
28	0880406610	SHIM	AR				t=1.6mm
29	0880406620	SHIM	AR				t=3.2mm
30	0880406630	SHIM	AR				t=4.5mm
34	1910182002	RADIATOR	1				ISUZU F-18406008-F
35	1911300010	COOLER, oil	1				
39	1910049039	TANK, sub	1				ISUZU 894440-9690
41	1910172016	BAND	1				ISUZU 909915-5121
42	1910172015	BAND	3				ISUZU 909915-412A
43	1911900004	VALVE, drain	1				
46	1651021040	RUBBER, cushion	2				
47	1100040816	BOLT	3				
48	1100040820	BOLT	8				
49	1100041025	BOLT	10				
51	1100041235	BOLT	4				
54	1130040008	NUT	10				
55	0882403010	PIPE	1				
56	1141110008	WASHER	16				
57	1141110010	WASHER	6				
58	1651014003	RUBBER, cushion	2				
59	0003600025	WASHER	12				
60	0003600136	SHIM	4				
61	0882403020	PIPE	1			M	
63	1140020008	WASHER, spring	19				
64	1140020010	WASHER, spring	19				
65	1420010290	O-RING	2				
68	1533120012	CLAMP	4				
70	1214000016	PIN, snap	2				
71	1533120011	CLAMP	3				
72	1531407140	HOSE	1				sold by the meter
73	1531407065	HOSE	1				sold by the meter
74	1530808060	HOSE	1				sold by the meter
75	1530808098	HOSE	1				sold by the meter
76	1531115025	HOSE	2				sold by the meter
78	1100041030	BOLT	16				
79	0881402595	JOINT	1				
80	1700100046	SENSOR	1				
81	1533700057	CLAMP	2				
82	1652241200	BAND	1				
83	0882401210	ADAPTOR	1				
88	1100040825	BOLT	6				
93	0003609003	WASHER	4				
94	1531115044	HOSE	2				sold by the meter

silverthorn.co.uk

ENGINE & ACCESSORIES (2/2)

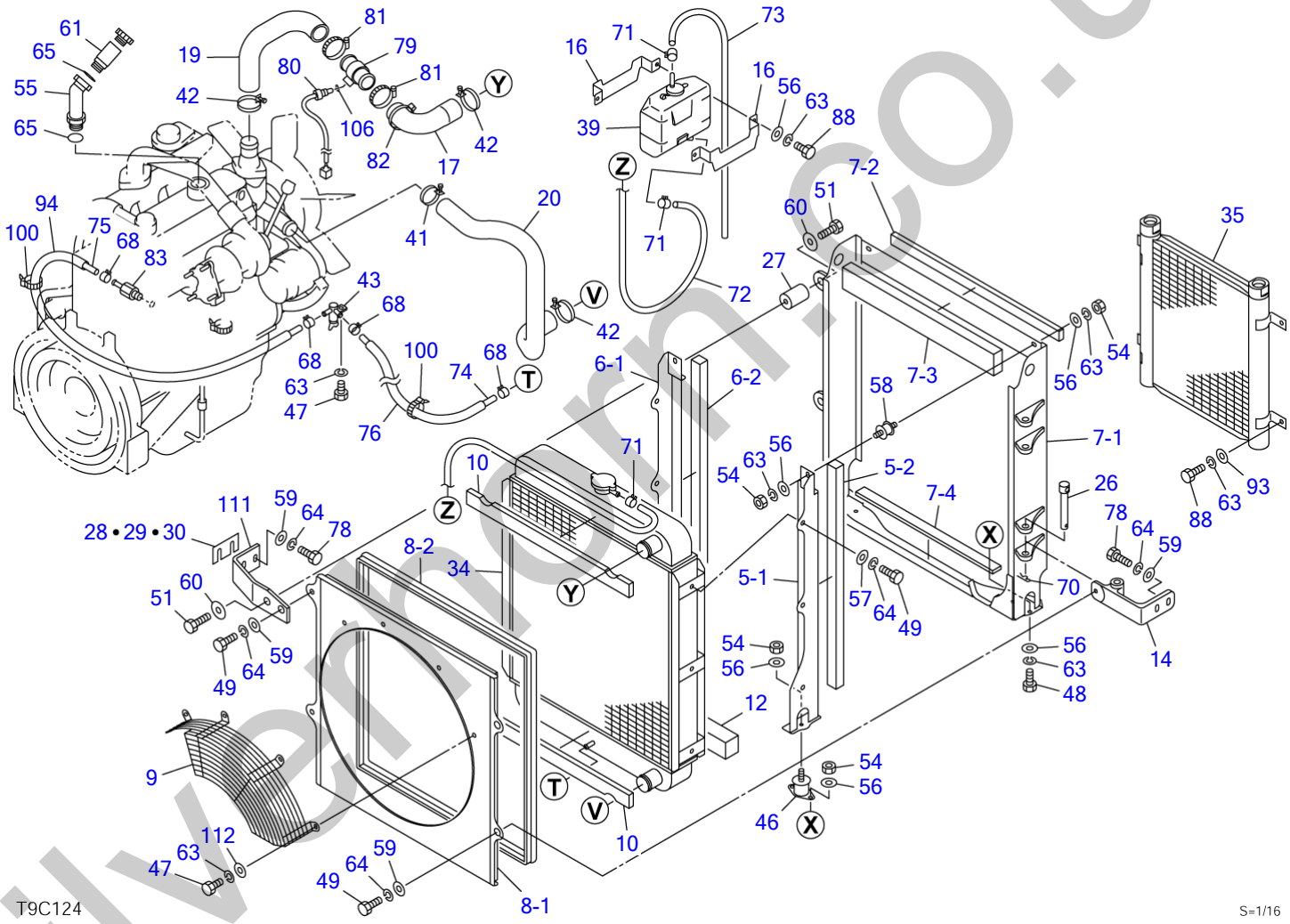

silvermoon.co.uk

ENGINE & ACCESSORIES (2/2)

Item	Part number	Description	Q'ty	Chan.	Serial No.	Serv.	Remarks
100	**1652231250**	BAND	1				
100	**1652231250**	BAND	2				for air conditioner
106	**1420000100**	O-RING	1				
111	**0882403930**	BRACKET	2				
112	**0003600011**	WASHER	4				
	T9c127						

silverhorn.co.uk

ENGINE & ACCESSORIES (1/2) (for EU, with air con. ; 21402415-21403458)

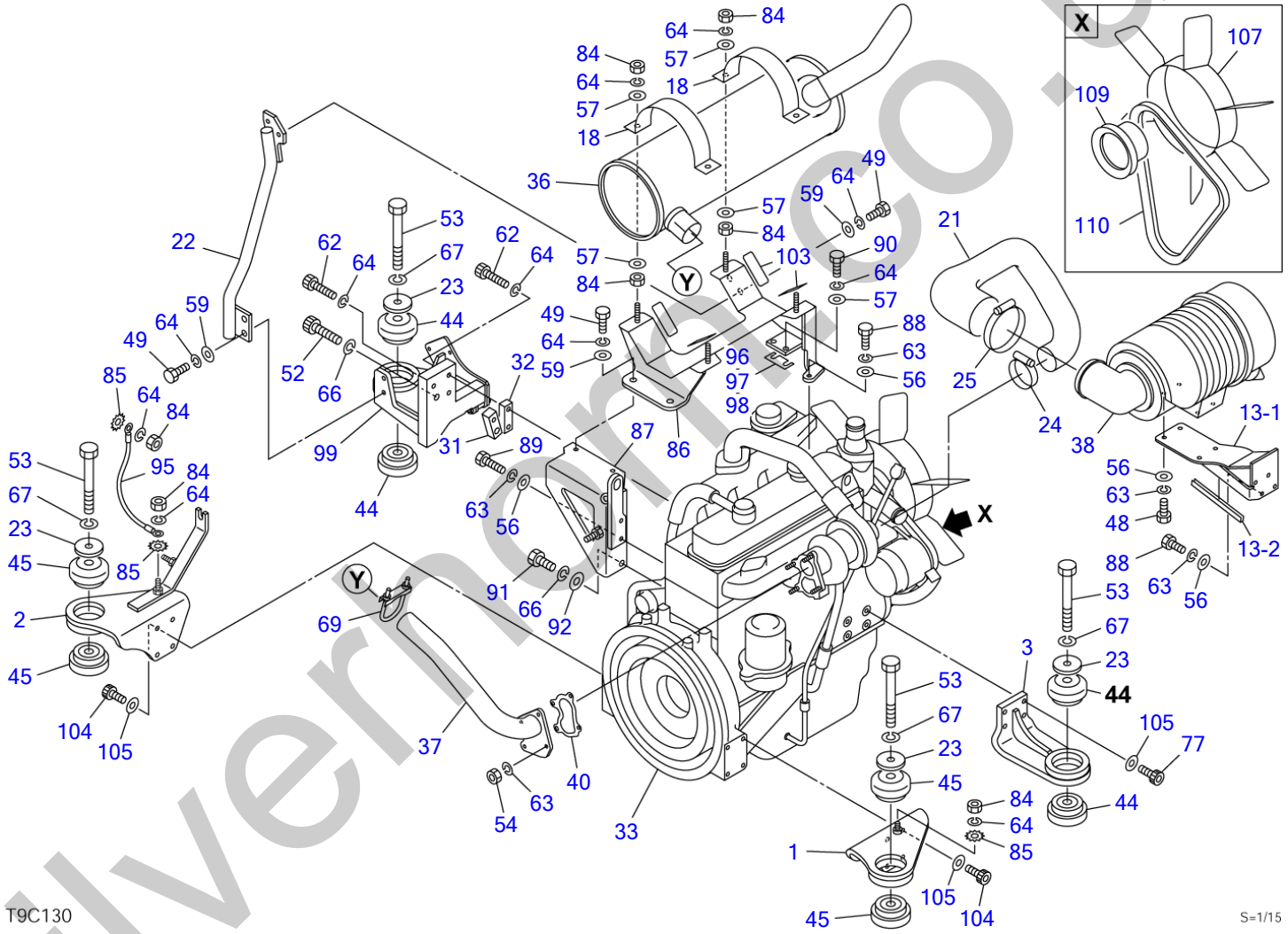

silvermoor.co.uk

ENGINE & ACCESSORIES (1/2) (for EU, with air con. ; 21402415-21403458)

Item	Part number	Description	Q'ty	Chan.	Serial No.	Serv.	Remarks
		ENGINE ASSY (for air conditioner)					X08824-03950-4
1	0882401010	FOOT, engine (F.L.)	1				
2	0882401020	FOOT, engine (F.R.)	1				
3	0882401030	FOOT, engine (R.L.)	1				
13	0882402350	BRACKET ASSY	1				
13-1	0882402360	・BRACKET	1				
13-2	1654629015	・TRIM	1				sold by the meter
18	0882401250	CLAMP	2				
21	0882402260	HOSE	1				
22	0882401240	PIPE	1				
23	0882400190	WASHER	4				
24	0882401200	CLAMP	1				
25	0881402560	CLAMP	1				
31	0882401045	PLATE	1				
32	0882401046	PLATE	1				
33	1910182001	ENGINE	1				ISUZU 4JG1-TPA
36	1910182005	MUFFLER	1				ISUZU F-10606002-F
37	0882402300	PIPE	1				
38	1910182007	CLEANER, air	1				ISUZU F-18406001-F
40	1910172022	GASKET	1				ISUZU 8-94433604-0
44	1651030004	RUBBER, cushion	4				
45	1651030005	RUBBER, cushion	4				
48	1100040820	BOLT	4				
49	1100041025	BOLT	6				
52	1111021460	SCREW, cap	1				
53	1101141640	BOLT	4				
54	1130040008	NUT	4				
56	1141110008	WASHER	11				
57	1141110010	WASHER	10				
59	0003600003	WASHER	6				
62	1111021055	SCREW, cap	3				
63	1140020008	WASHER, spring	15				
64	1140020010	WASHER, spring	16				
66	1140020014	WASHER, spring	1				
67	1140020016	WASHER, spring	4				
69	1533300063	U-BOLT	1				
77	1111021035	SCREW, cap	4				
84	1130040010	NUT	10				
85	1140330010	WASHER	2				
86	0882401220	BRACKET	1				
87	0882401230	BRACKET	1				
88	1100040825	BOLT	5				
89	1100040835	BOLT	2				
90	1101041025	BOLT	2				
91	1101041435	BOLT	1				
92	1141110014	WASHER	1				
95	1702402001	CABLE, earth	1				
96	0882402180	SHIM	AR				t=0.5mm
97	0882402190	SHIM	AR				t=1.0mm
98	0882402200	SHIM	AR				t=2.3mm
99	0882401910	FOOT, engine (R.R.)	1				
103	0882402340	SHIM	AR				
104	1110021035	SCREW, cap	8				
105	1141550010	WASHER	12				
107	1910000104	FAN	1				
109	0882403910	PULLEY	1				
110	0882403920	V-BELT	1				
	T9c131						

silverthorn.co.uk

ENGINE & ACCESSORIES (2/2) (for EU, with air con. ; 21402415-21403458)

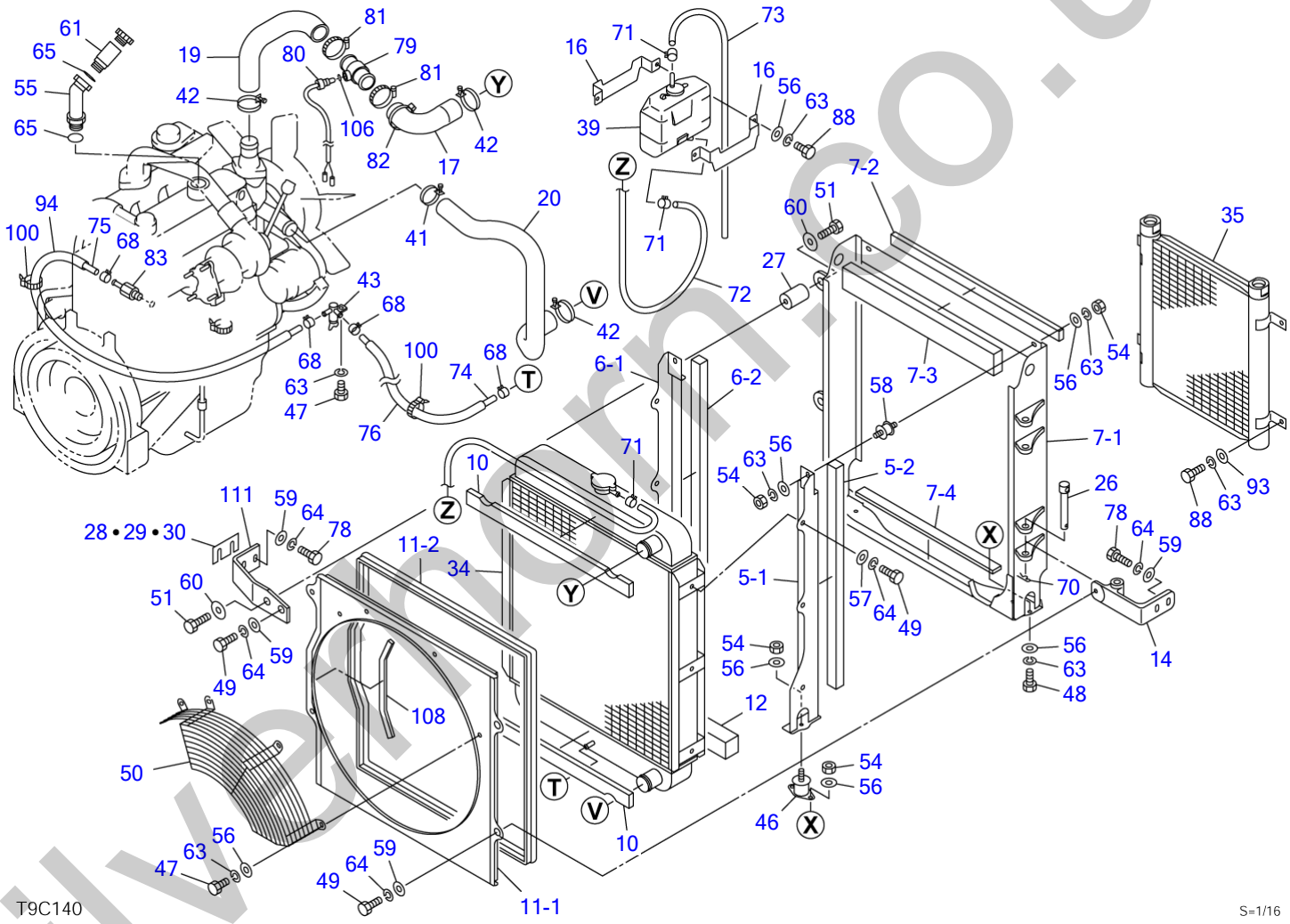

silvermoon.co.uk

ENGINE & ACCESSORIES (2/2) (for EU, with air con. ; 21402415-21403458)

Item	Part number	Description	Q'ty	Chan.	Serial No.	Serv.	Remarks
		ENGINE ASSY (for air conditioner)					X08824-03950-4
5	X 0882401700	BRACKET ASSY	1				
5-1	0882401710	・BRACKET	1				
5-2	1654345067	・SPONGE	1				sold by the meter
6	X 0882401750	BRACKET ASSY	1				
6-1	0882401760	・BRACKET	1				
6-2	1654345067	・SPONGE	1				sold by the meter
7	X 0882401800	FRAME ASSY	1				
7-1	0882401810	・FRAME	1				
7-2	1654344059	・SPONGE	1				sold by the meter
7-3	1654347053	・SPONGE	1				sold by the meter
7-4	1654348048	・SPONGE	1				sold by the meter
10	0882401060	SPONGE	2				
11	X 0882403960	SHROUD ASSY	1				
11-1	0882962970	・SHROUD	1				
11-2	1654606213	・TRIM	2				sold by the meter
12	1654346053	SPONGE	1				sold by the meter
14	0882402560	HINGE	2				
16	0882401125	HOLDER	2				
17	0882402252	HOSE	1				
19	0882402251	HOSE	1				
20	0882401160	HOSE	1				
26	0881402180	PIN	2				
27	0881401260	BOSS	2				
28	0880406610	SHIM	AR				t=1.6mm
29	0880406620	SHIM	AR				t=3.2mm
30	0880406630	SHIM	AR				t=4.5mm
34	1910182002	RADIATOR	1				ISUZU F-18406008-F
35	1911300010	COOLER, oil	1				
39	1910049039	TANK, sub	1				ISUZU 894440-9690
41	1910172016	BAND	1				ISUZU 909915-5121
42	1910172015	BAND	3				ISUZU 909915-412A
43	1911900004	VALVE, drain	1				
46	1651021040	RUBBER, cushion	2				
47	1100040816	BOLT	3				
48	1100040820	BOLT	8				
49	1100041025	BOLT	10				
50	0882403980	GUARD	1				
51	1100041235	BOLT	4				
54	1130040008	NUT	10				
55	0882403010	PIPE	1				
56	1141110008	WASHER	20				
57	1141110010	WASHER	6				
58	1651014003	RUBBER, cushion	2				
59	0003600003	WASHER	12				
60	0003600136	SHIM	4				
61	0882403010	PIPE	1				
63	1140020008	WASHER, spring	19				
64	1140020010	WASHER, spring	19				
65	1420010290	O-RING	2				
68	1533120012	CLAMP	4				
70	1214000016	PIN, snap	2				
71	1533120011	CLAMP	3				
72	1531407140	HOSE	1				sold by the meter
73	1531407065	HOSE	1				sold by the meter
74	1530808060	HOSE	1				sold by the meter
75	1530808098	HOSE	1				sold by the meter
76	1531115025	HOSE	2				sold by the meter
78	1100041030	BOLT	16				
79	0881402595	JOINT	1				
80	1700100046	SENSOR	1				
81	1533700057	CLAMP	2				
82	1652241200	BAND	1				
83	0882401210	ADAPTOR	1				
88	1100040825	BOLT	6				
93	0003609003	WASHER	4				
94	1531115044	HOSE	2				sold by the meter
100	1652231250	BAND	2				

silvethorn.co.uk

ENGINE & ACCESSORIES (2/2) (for EU, with air con. ; 21402415-21403458)

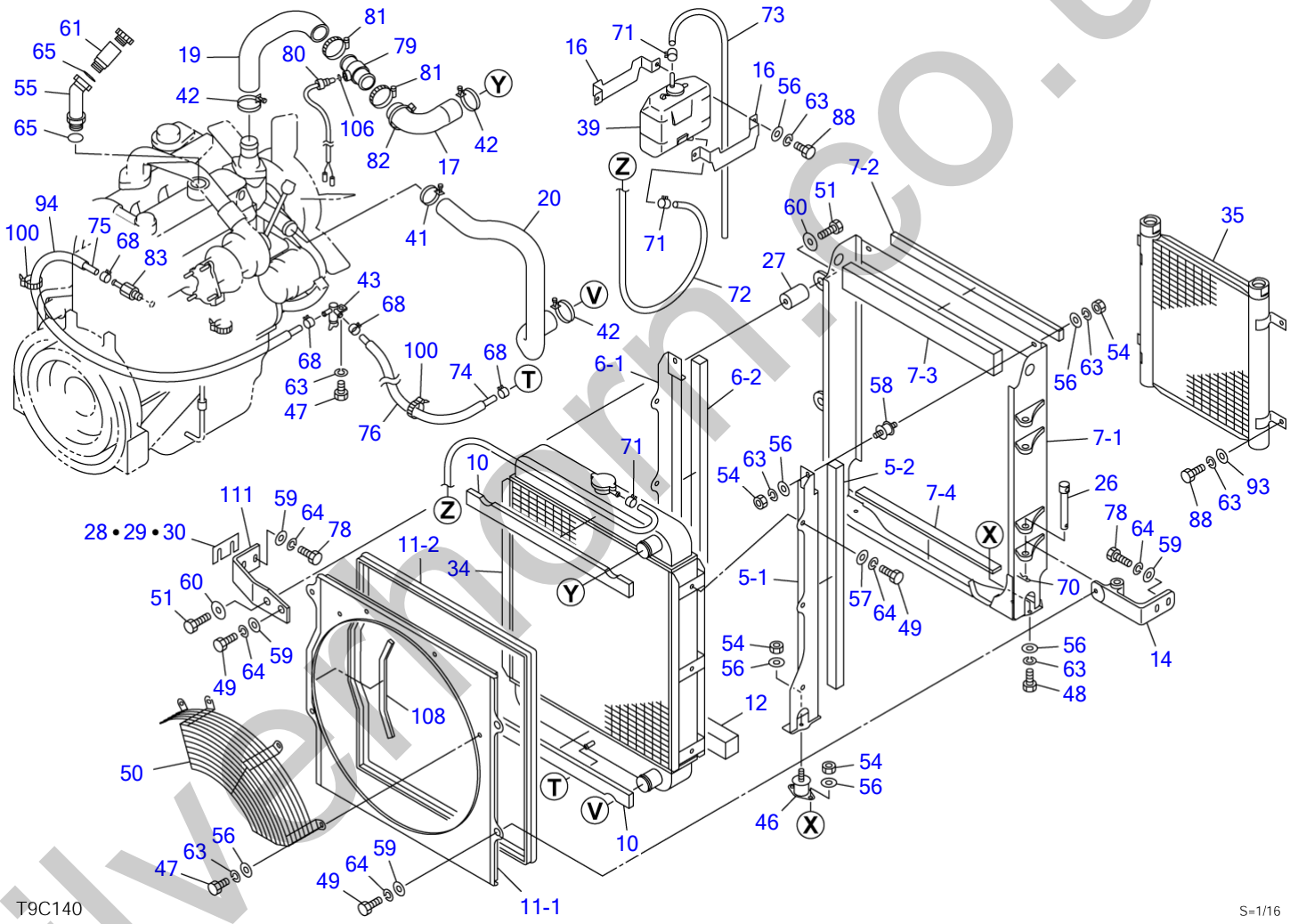

silvermoon.co.uk

ENGINE & ACCESSORIES (2/2) (for EU, with air con. ; 21402415-21403458)

Item	Part number	Description	Q'ty	Chan.	Serial No.	Serv.	Remarks
106	**1420000100**	O-RING	1				
108	**1654351030**	SPONGE	1				
111	**0882403930**	BRACKET	2				
	T9c141						

silverhorn.co.uk

ENGINE & ACCESSORIES (1/2) (for GEHL; 21405703-)

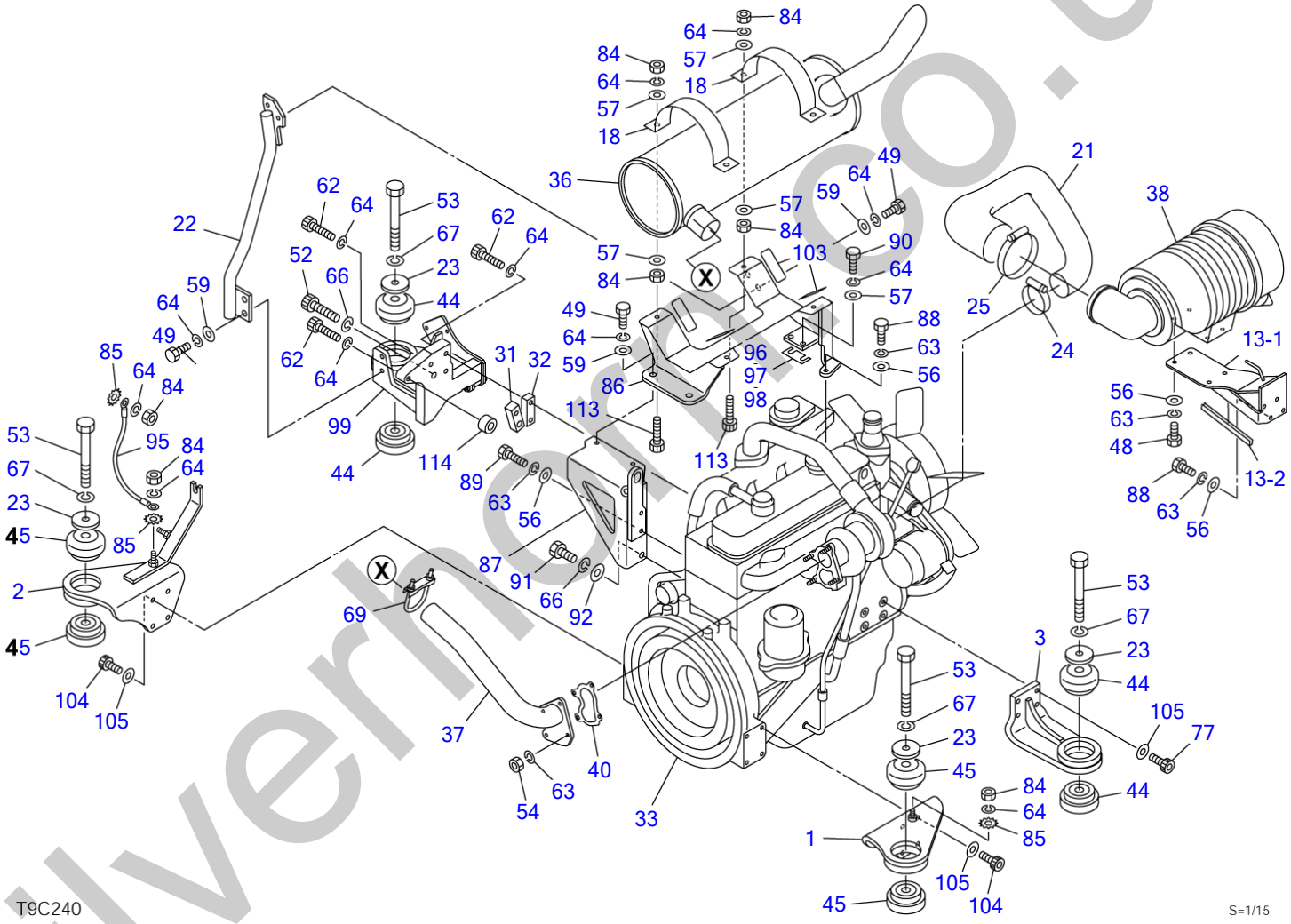

silverhome.co.uk

ENGINE & ACCESSORIES (1/2) (for GEHL; 21405703-)

Item	Part number	Description	Q'ty	Chan.	Serial No.	Serv.	Remarks
		ENGINE ASSY					X08824-05000-12
1	0882401010	FOOT, engine (F.L.)	1			M	
2	0882401020	FOOT, engine (F.R.)	1			M	
3	0882401030	FOOT, engine (R.L.)	1			M	
13	0882402350	BRACKET ASSY	1			M	
13-1	0882402360	・BRACKET	1			M	
13-2	1654629015	・TRIM	1			M	sold by the meter
18	0882401250	CLAMP	2			M	
21	0882402260	HOSE	1			M	
22	0882401240	PIPE	1			M	
23	0882400190	WASHER	4			M	
24	1533701250	BAND	1			M	
25	0881402560	BAND	1			M	
31	0882401045	PLATE	1			M	
32	0882401046	PLATE	1			M	
33	1910182001	ENGINE	1			M	ISUZU 4JG1-TPA
36	1910182005	MUFFLER	1			M	ISUZU F-10606002-F
37	0882402300	PIPE	1			M	
38	1910182007	CLEANER, air	1			M	ISUZU F-18406001-F
40	1910172022	GASKET	1			M	ISUZU 8-94433604-0
44	1651030004	RUBBER, cushion	4			M	
45	1651030005	RUBBER, cushion	4			M	
48	1100040820	BOLT	4			M	
49	1100041025	BOLT	6			M	
52	1111021460	SCREW, cap	1			M	
53	1101141640	BOLT	4			M	
54	1130040008	NUT	4			M	
56	1141110008	WASHER	11			M	
57	1141110010	WASHER	10			M	
59	0003600025	WASHER	6			M	
62	1111021055	SCREW, cap	4			M	
63	1140020008	WASHER, spring	15			M	
64	1140020010	WASHER, spring	17			M	
66	1140020014	WASHER, spring	1			M	
67	1140020016	WASHER, spring	4			M	
69	1533300063	U-BOLT	1			M	
77	1111021035	SCREW, cap	4			M	
84	1130040010	NUT	10			M	
85	1140330010	WASHER	2			M	
86	0882401220	BRACKET	1			M	
87	0882401230	BRACKET	1			M	
88	1100040825	BOLT	5			M	
89	1100040835	BOLT	2			M	
90	1101041025	BOLT	2			M	
91	1101041435	BOLT	1			M	
92	1141110014	WASHER	1			M	
95	1702402001	CABLE, earth	1			M	
96	0882402180	SHIM	AR			M	t=0.5mm
97	0882402190	SHIM	AR			M	t=1.0mm
98	0882402200	SHIM	AR			M	t=2.3mm
99	0882401950	FOOT, engine (R.R.)	1			M	
103	0882402340	SHIM	AR			M	
104	1110021035	SCREW, cap	8			M	
105	1141550010	WASHER	12			M	
113	1100241050	BOLT	4			M	
114	0882401970	SPACER	1			M	
	T9c240						

silverthorn.co.uk

ENGINE & ACCESSORIES (2/2) (for GEHL; 21405703-)

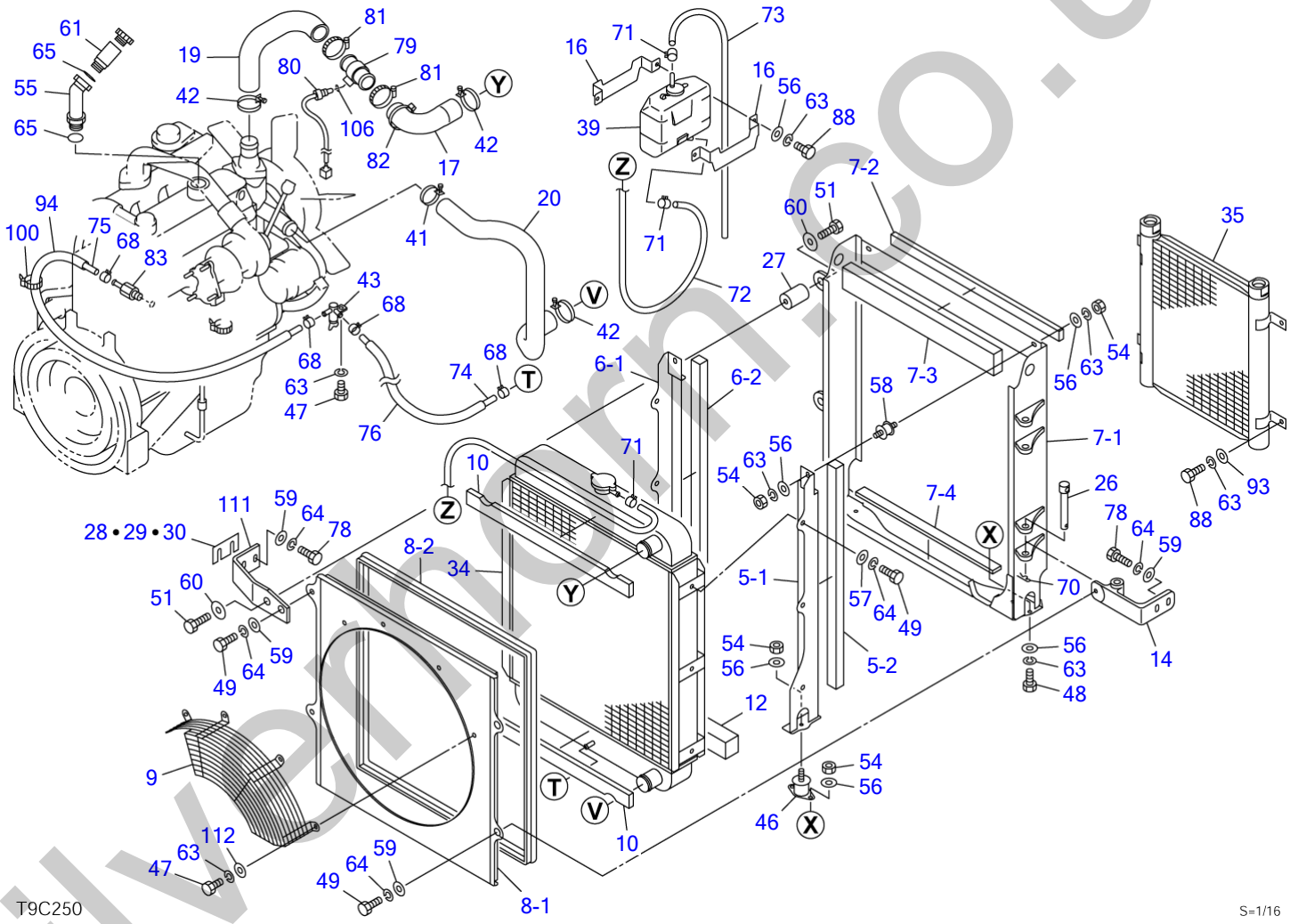

silvermerm.co.uk

ENGINE & ACCESSORIES (2/2) (for GEHL; 21405703-)

Item	Part number	Description	Q'ty	Chan.	Serial No.	Serv.	Remarks
		ENGINE ASSY					X08824-05000-12
5	X 0882401700	BRACKET ASSY	1			M	
5-1	0882401710	・BRACKET	1			M	
5-2	1654345067	・SPONGE	1			M	sold by the meter
6	X 0882401750	BRACKET ASSY	1			M	
6-1	0882401760	・BRACKET	1			M	
6-2	1654345067	・SPONGE	1			M	sold by the meter
7	X 0882401800	FRAME ASSY	1			M	
7-1	0882401810	・FRAME	1			M	
7-2	1654344059	・SPONGE	1			M	sold by the meter
7-3	1654347053	・SPONGE	1			M	sold by the meter
7-4	1654348048	・SPONGE	1			M	sold by the meter
8	X 0882401500	SHROUD ASSY	1			M	
8-1	0882401600	・SHROUD	1			M	
8-2	1654606242	・TRIM	2			M	sold by the meter
9	0882401100	GUARD	1			M	
10	0882401060	SPONGE	2			M	
12	1654346053	SPONGE	1			M	sold by the meter
14	0882402560	HINGE	2			M	
16	0882401125	HOLDER	2			M	
17	0882402252	HOSE	1			M	
19	0882402251	HOSE	1			M	
20	0882401160	HOSE	1			M	
26	0881402180	PIN	2			M	
27	0881401260	BOSS	2			M	
28	0880406610	SHIM	AR			M	t=1.6mm
29	0880406620	SHIM	AR			M	t=3.2mm
30	0880406630	SHIM	AR			M	t=4.5mm
34	1910182002	RADIATOR	1			M	ISUZU F-18406008-F
35	1911300010	COOLER, oil	1			M	
39	1910049039	TANK, sub	1			M	ISUZU 894440-9690
41	1910172016	BAND	1			M	ISUZU 909915-5121
42	1910172015	BAND	3			M	ISUZU 909915-412A
43	1911900004	VALVE, drain	1			M	
46	1651021040	RUBBER, cushion	2			M	
47	1100040816	BOLT	3			M	
48	1100040820	BOLT	8			M	
49	1100041025	BOLT	10			M	
51	1100041235	BOLT	4			M	
54	1130040008	NUT	10			M	
55	0882403010	PIPE	1			M	
56	1141110008	WASHER	16			M	
57	1141110010	WASHER	6			M	
58	1651014003	RUBBER, cushion	2			M	
59	0003600025	WASHER	12			M	
60	0003600136	SHIM	4			M	
61	0882403020	PIPE	1			M	
63	1140020008	WASHER, spring	19			M	
64	1140020010	WASHER, spring	19			M	
65	1420010290	O-RING	2			M	
68	1533120012	CLAMP	4			M	
70	1214000016	PIN, snap	2			M	
71	1533120011	CLAMP	3			M	
72	1531407140	HOSE	1			M	sold by the meter
73	1531407065	HOSE	1			M	sold by the meter
74	1530808060	HOSE	1			M	sold by the meter
75	1530808098	HOSE	1			M	sold by the meter
76	1531115025	HOSE	2			M	sold by the meter
78	1100041030	BOLT	16			M	
79	0881402595	JOINT	1			M	
80	1700100046	SENSOR	1			M	
81	1533700057	CLAMP	2			M	
82	1652241200	BAND	1			M	
83	0882401210	ADAPTOR	1			M	
88	1100040825	BOLT	6			M	
93	0003609003	WASHER	4			M	
94	1531115044	HOSE	2			M	sold by the meter
100	1652231250	BAND	1			M	

silvethorn.co.uk

ENGINE & ACCESSORIES (2/2) (for GEHL; 21405703-)

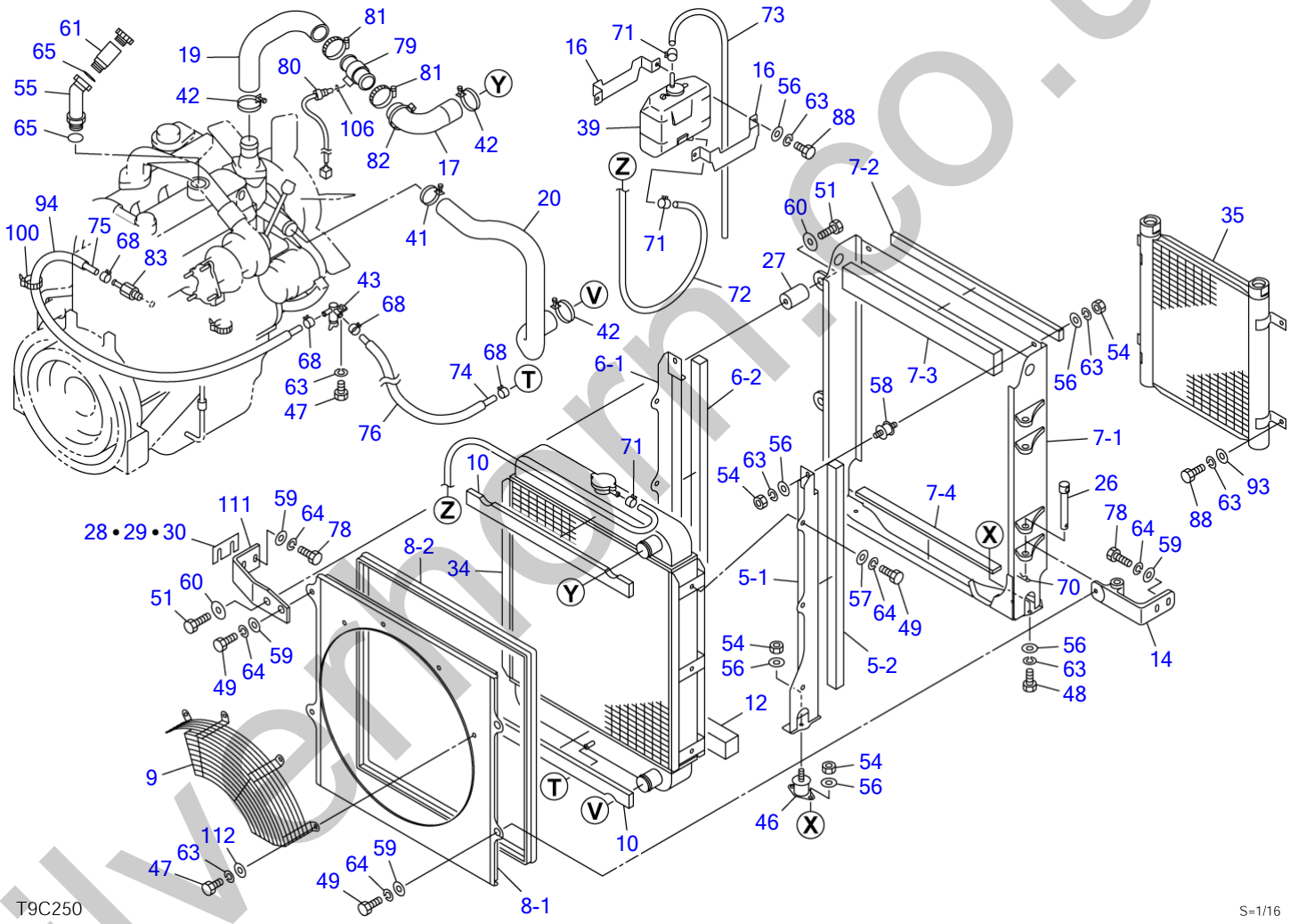

silvermerm.co.uk

ENGINE & ACCESSORIES (2/2) (for GEHL; 21405703-)

Item	Part number	Description	Q'ty	Chan.	Serial No.	Serv.	Remarks
106	**1420000100**	O-RING	1			M	
111	**0882403930**	BRACKET	2			M	
112	**0003600011**	WASHER	4			M	
	T9c250						

silverhorn.co.uk

ENGINE & ACCESSORIES (1/2) (high flow; 21403459-)

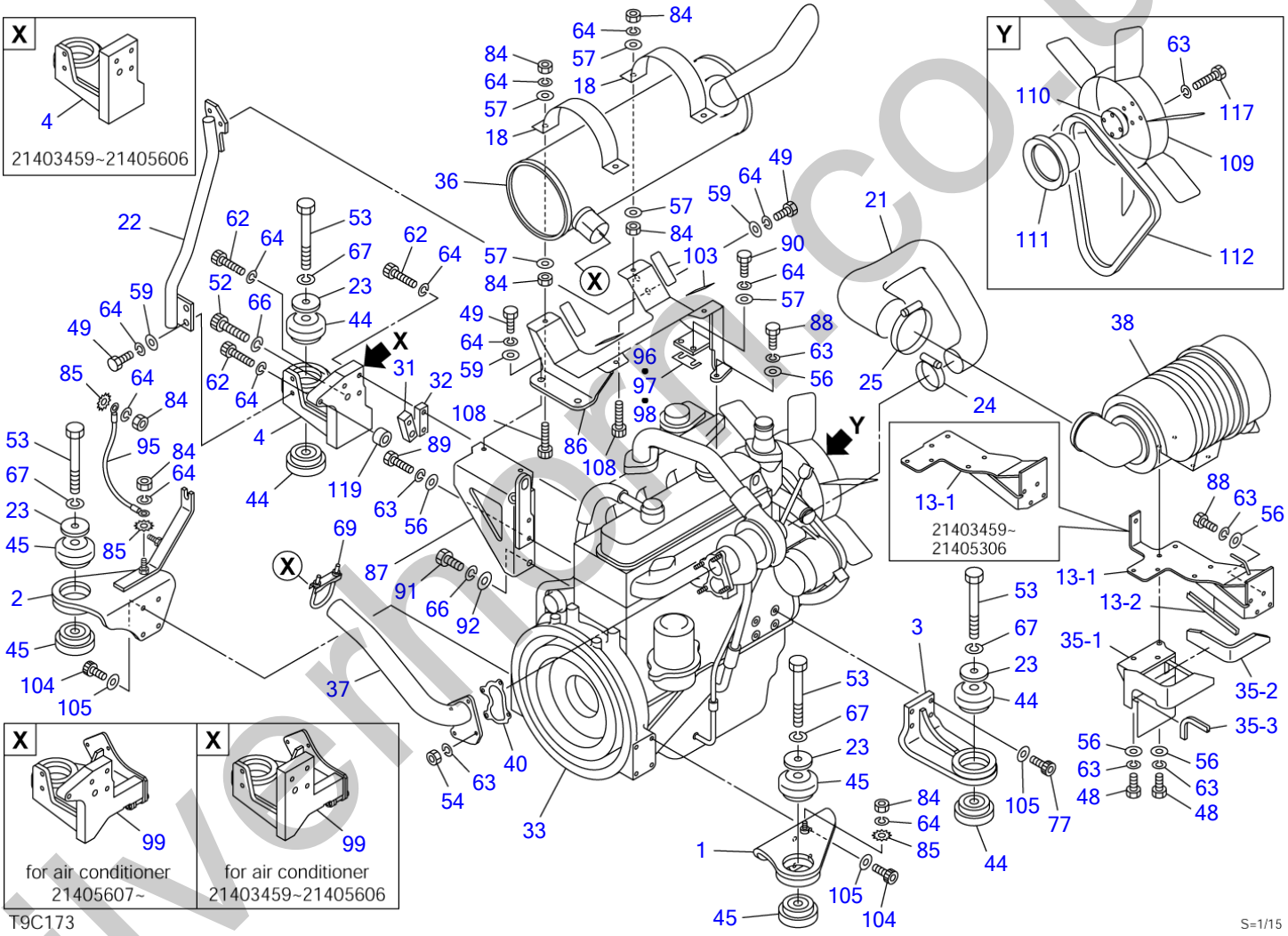

silverhill.co.uk

ENGINE & ACCESSORIES (1/2) (high flow; 21403459-)

Item	Part number	Description	Q'ty	Chan.	Serial No.	Serv.	Remarks
		ENGINE ASSY					X08824-04000-9
		ENGINE ASSY (for air conditioner)					X08824-04900-9
1	0882401010	FOOT, engine (F.L.)	1				
2	0882401020	FOOT, engine (F.R.)	1				
3	0882401030	FOOT, engine (R.L.)	1				
4	0882401040	FOOT, engine (R.R.)	1		21403459~21405606	M	
	0882401940	FOOT, engine (R.R.)	1		21405607~	M	
13	0882404720	BRACKET ASSY	1				
13-1	0882404730	・BRACKET	1		21403459~21405306		
	0882404810	・BRACKET	1		21405307~		
13-2	1654629015	・TRIM	1				sold by the meter
18	0882401250	CLAMP	2				
21	0882402260	HOSE	1				
22	0882401240	PIPE	1				
23	0882400190	WASHER	4				
24	1533701250	BAND	1			M	
25	0881402560	BAND	1				
31	0882401045	PLATE	1				
32	0882401046	PLATE	1				
33	1910225001	ENGINE	1				ISUZU 4JG1-TPA
35	0882404740	COVER ASSY	1				
35-1	0882404750	・COVER	1				
35-2	0882404760	・ABSORBENT, noise	1				
35-3	1654601030	・TRIM	1				sold by the meter
36	1910182005	MUFFLER	1				ISUZU F-10606002-F
37	0882402300	PIPE	1				
38	1910182007	CLEANER, air	1				ISUZU F-18406001-F
40	1910172022	GASKET	1				ISUZU 8-94433604-0
44	1651030004	RUBBER, cushion	4				
45	1651030005	RUBBER, cushion	4				
48	1100040820	BOLT	6				
49	1100041025	BOLT	6				
52	1111021460	SCREW, cap	1				
53	1101141640	BOLT	4				
54	1130040008	NUT	4				
56	1141110008	WASHER	13				
57	1141110010	WASHER	10				
59	0003600025	WASHER	6				
62	1111021055	SCREW, cap	4			M	
63	1140020008	WASHER, spring	21				
64	1140020010	WASHER, spring	17			M	
66	1140020014	WASHER, spring	1				
67	1140020016	WASHER, spring	4				
69	1533300063	U-BOLT	1				
77	1111021035	SCREW, cap	4				
84	1130040010	NUT	10				
85	1140330010	WASHER	2				
86	0882401220	BRACKET	1				
87	0882401230	BRACKET	1				
88	1100040825	BOLT	5				
89	1100040835	BOLT	2				
90	1101041025	BOLT	2				
91	1101041435	BOLT	1				
92	1141110014	WASHER	1				
95	1702402001	CABLE, earth	1				
96	0882402180	SHIM	AR				t=0.5mm
97	0882402190	SHIM	AR				t=1.0mm
98	0882402200	SHIM	AR				t=2.3mm
99	0882401910	FOOT, engine (R.R.)	1		21403459~21405606	M	for air conditioner
	0882401950	FOOT, engine (R.R.)	1		21405607~	M	for air conditioner
103	0882402340	SHIM	AR				
104	1110021035	SCREW, cap	8				
105	1141550010	WASHER	12				
108	1100241050	BOLT	4				
109	1910000104	FAN	1		21403459~21403968	M	ISUZU 897255-1540
110	0882404710	SPACER, fan	1				ISUZU 989136-4230
111	0882403910	PULLEY	1				

silverhorn.co.uk

ENGINE & ACCESSORIES (1/2) (high flow; 21403459-)

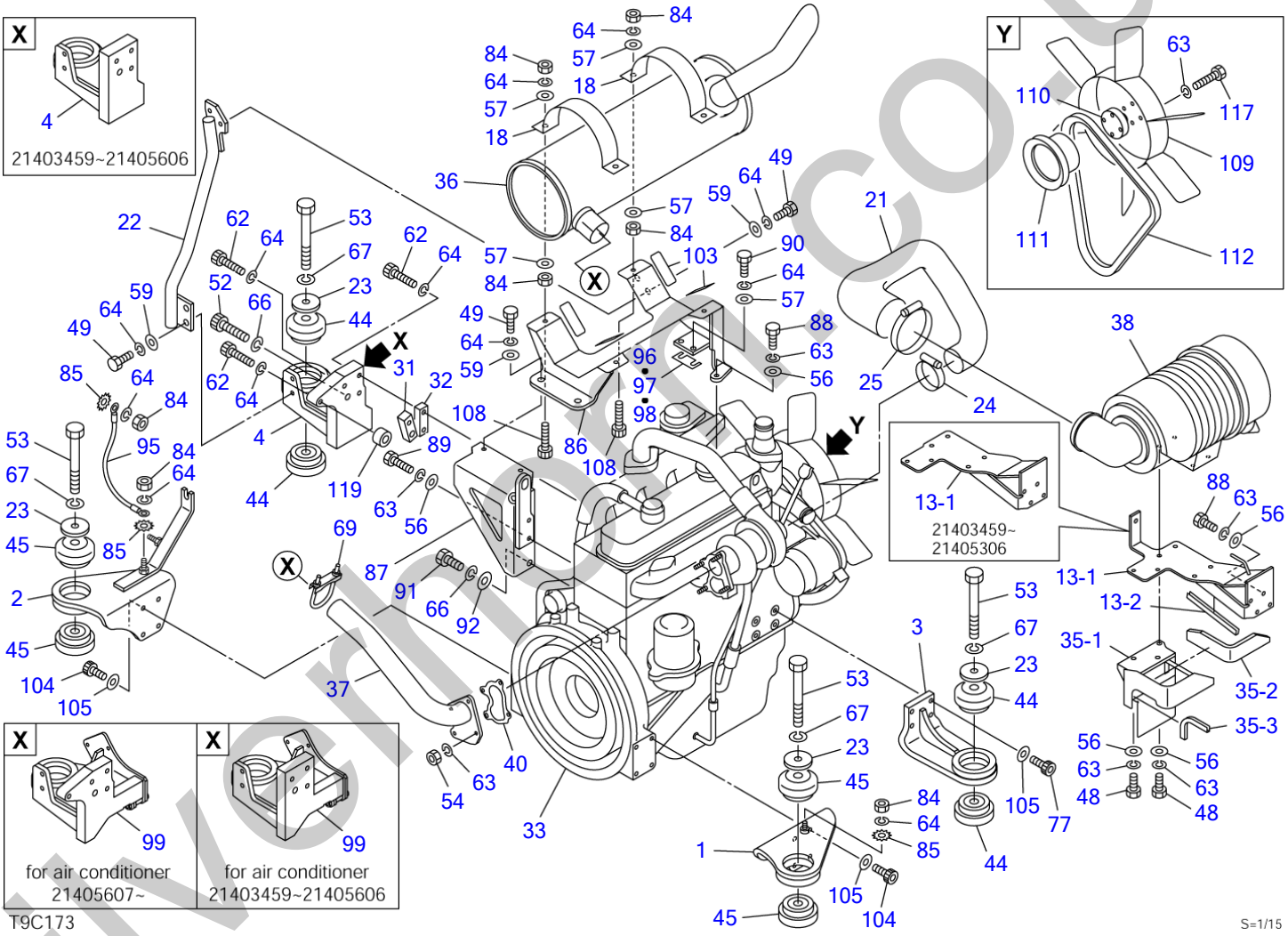

silverhill.co.uk

ENGINE & ACCESSORIES (1/2) (high flow; 21403459-)

Item	Part number	Description	Q'ty	Chan.	Serv.	Remarks
112	**0882403920**	V-BELT	1			B-45
117	**1100040895**	BOLT	4			
119	**0882401970**	SPACER	1	21405607~	M	
	T9c174					

silverhorn.co.uk

ENGINE & ACCESSORIES (2/2) (high flow; 21403459-)

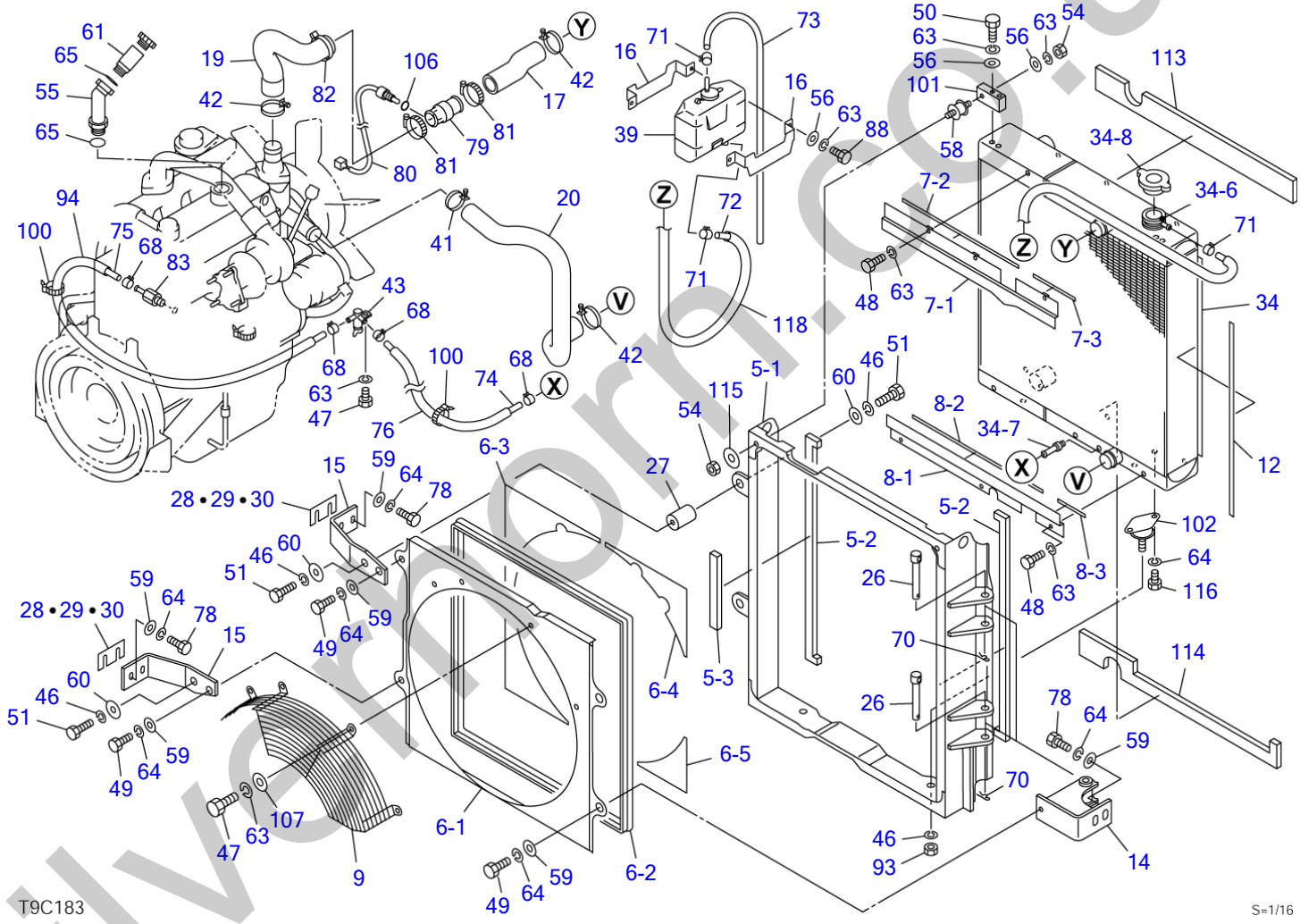

silvermorn.co.uk

ENGINE & ACCESSORIES (2/2) (high flow; 21403459-)

Item	Part number	Description	Q'ty	Chan.	Serial No.	Serv.	Remarks
		ENGINE ASSY					X08824-04000-9
		ENGINE ASSY (for air conditioner)					X08824-04900-9
5	X 0882404100	FRAME ASSY	1				
5-1	0882404110	・FRAME	1				
5-2	0882404120	・SPONGE	2				
5-3	1654343022	・SPONGE	1		21403459~21403968		sold by the meter
6	X 0882404610	SHROUD ASSY	1		21403459~21403968		
	X 0882404770	SHROUD ASSY	1	(H)	21403969~		
6-1	0882404620	・SHROUD	1		21403459~21403968		
	0882404780	・SHROUD	1	(H)	21403969~		
6-2	1654606231	・TRIM	1		21403459~21403968		sold by the meter
	1654606251	・TRIM	1		21403969~		sold by the meter
6-3	0882404613	・RUBBER	1		21403459~21403968		
6-4	0882404614	・RUBBER	1		21403459~21403968		
6-5	0882404615	・RUBBER	1		21403459~21403968		
7	X 0882404300	PLATE ASSY	1				
7-1	0882404310	・PLATE	1				
7-2	1654355040	・SPONGE	1				sold by the meter
7-3	1654355015	・SPONGE	1				sold by the meter
8	X 0882404350	PLATE ASSY	1				
8-1	0882404360	・PLATE	1				
8-2	1654355045	・SPONGE	1				sold by the meter
8-3	1654355010	・SPONGE	1				sold by the meter
9	0882404670	GUARD	1		21403459~21403968		
	0882401100	GUARD	1	(H)	21403969~		
12	1654343058	SPONGE	1				sold by the meter
14	0882404500	HINGE	2				
15	0882404520	BRACKET	2				
16	0882401125	HOLDER	2				
17	0882404530	HOSE	1				
19	0882404540	HOSE	1				
20	0882404550	HOSE	1				
26	0881402180	PIN	2				
27	0881401260	BOSS	2				
28	0880406610	SHIM	AR				t=1.6mm
29	0880406620	SHIM	AR				t=3.2mm
30	0880406630	SHIM	AR				t=4.5mm
34	1911300080	RADIATOR & COOLER, oil	1				AKG
34-6	1911300076	・FITTING, hose	1				
34-7	1911300077	・NIPPLE	1				
34-8	1911300078	・CAP, radiator	1				
39	1910049039	TANK, sub	1				ISUZU 894440-9690
41	1910172016	BAND	1				ISUZU 909915-5121
42	1910172015	BAND	3				ISUZU 909915-412A
43	1911900004	VALVE, drain	1				
46	1140020012	WASHER, spring	6				
47	1100040816	BOLT	5				
48	1100040820	BOLT	6				
49	1100041025	BOLT	4				
50	1100040850	BOLT	4				
51	1100041235	BOLT	4				
54	1130040008	NUT	4				
55	0882403010	PIPE	1				
56	1141110008	WASHER	10				
58	1651014003	RUBBER, cushion	2				
59	0003600025	WASHER	12				
60	0003600136	SHIM	4				
61	0882403020	PIPE	1				
63	1140020008	WASHER, spring	23				
64	1140020010	WASHER, spring	16				
65	1420010290	O-RING	2				
68	1533120012	CLAMP	4				
70	1214000016	PIN, snap	2				
71	1533120011	CLAMP	3				
72	1531407174	HOSE	1				sold by the meter
73	1531407065	HOSE	1				sold by the meter

silverthorn.co.uk

ENGINE & ACCESSORIES (2/2) (high flow; 21403459-)

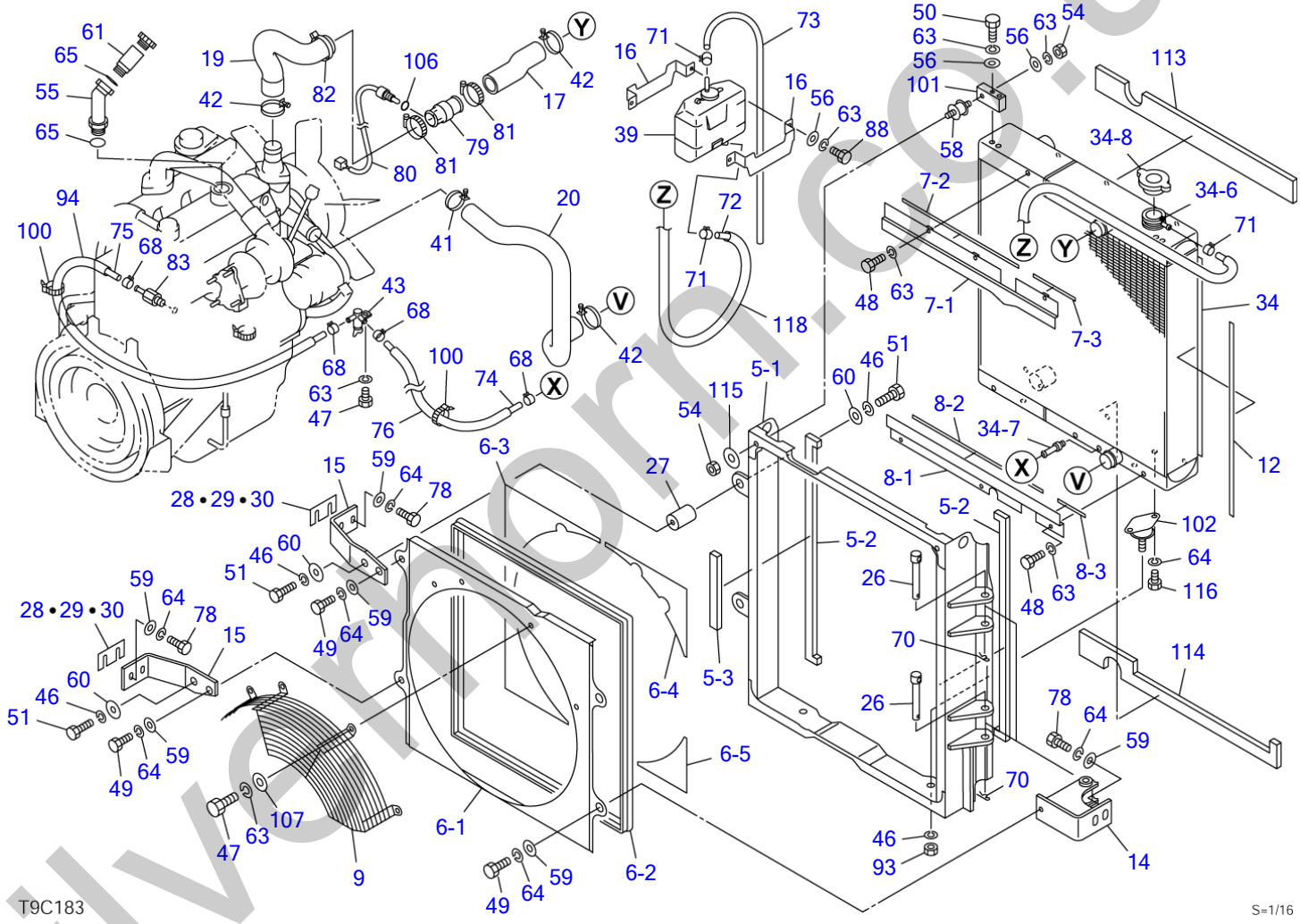

silvermorn.co.uk

ENGINE & ACCESSORIES (2/2) (high flow; 21403459-)

Item	Part number	Description	Q'ty	Chan.	Serial No.	Serv.	Remarks
74	1530808072	HOSE	1				sold by the meter
75	1530808098	HOSE	1				sold by the meter
76	1531115025	HOSE	2				sold by the meter
78	1100041030	BOLT	8				
79	0881402595	JOINT	1				
80	1700100046	SENSOR	1				
81	1533700057	CLAMP	2				
82	1652241200	BAND	1				
83	0882401210	ADAPTOR	1				
88	1100040825	BOLT	2				
93	1130040012	NUT	2				
94	1531115044	HOSE	2				
100	1652231250	BAND	2				
101	0880408550	STAY	2				
102	0880408580	RUBBER, cushion	2				
106	1420000100	O-RING	1				
107	0003600011	WASHER	4				
113	0882404680	SPONGE	1				
114	0882404690	SPONGE	1				
115	0003608252	WASHER	1				
116	1100041020	BOLT	4				
118	1531115166	HOSE	1				sold by the meter
	T9c184						

silverhorn.co.uk

ENGINE & ACCESSORIES (1/2) (high flow, for GEHL; 21405511-)

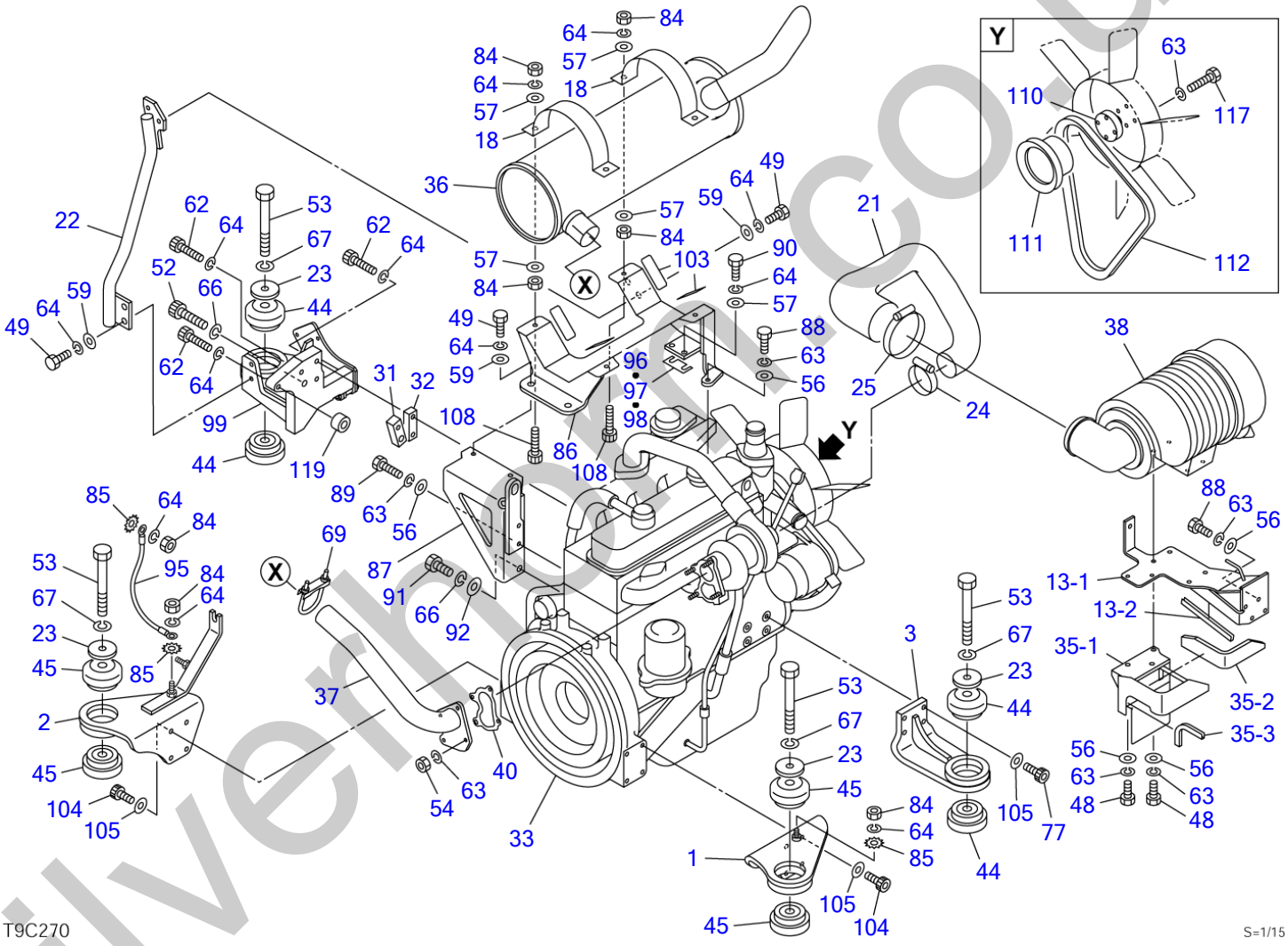

silverhill.co.uk

ENGINE & ACCESSORIES (1/2) (high flow, for GEHL; 21405511-)

Item	Part number	Description	Q'ty	Chan.	Serial No.	Serv.	Remarks
		ENGINE ASSY					X08824-04900-9
1	0882401010	FOOT, engine (F.L.)	1			M	
2	0882401020	FOOT, engine (F.R.)	1			M	
3	0882401030	FOOT, engine (R.L.)	1			M	
13	0882404720	BRACKET ASSY	1			M	
13-1	0882404810	・BRACKET	1			M	
13-2	1654629015	・TRIM	1			M	sold by the meter
18	0882401250	CLAMP	2			M	
21	0882402260	HOSE	1			M	
22	0882401240	PIPE	1			M	
23	0882400190	WASHER	4			M	
24	1533701250	BAND	1			M	
25	0881402560	BAND	1			M	
31	0882401045	PLATE	1			M	
32	0882401046	PLATE	1			M	
33	1910225001	ENGINE	1			M	ISUZU 4JG1-TPA
35	0882404740	COVER ASSY	1			M	
35-1	0882404750	・COVER	1			M	
35-2	0882404760	・ABSORBENT, noise	1			M	
35-3	1654601030	・TRIM	1			M	sold by the meter
36	1910182005	MUFFLER	1			M	ISUZU F-10606002-F
37	0882402300	PIPE	1			M	
38	1910182007	CLEANER, air	1			M	ISUZU F-18406001-F
40	1910172022	GASKET	1			M	ISUZU 8-94433604-0
44	1651030004	RUBBER, cushion	4			M	
45	1651030005	RUBBER, cushion	4			M	
48	1100040820	BOLT	6			M	
49	1100041025	BOLT	6			M	
52	1111021460	SCREW, cap	1			M	
53	1101141640	BOLT	4			M	
54	1130040008	NUT	4			M	
56	1141110008	WASHER	13			M	
57	1141110010	WASHER	10			M	
59	0003600025	WASHER	6			M	
62	1111021055	SCREW, cap	4			M	
63	1140020008	WASHER, spring	21			M	
64	1140020010	WASHER, spring	17			M	
66	1140020014	WASHER, spring	1			M	
67	1140020016	WASHER, spring	4			M	
69	1533300063	U-BOLT	1			M	
77	1111021035	SCREW, cap	4			M	
84	1130040010	NUT	10			M	
85	1140330010	WASHER	2			M	
86	0882401220	BRACKET	1			M	
87	0882401230	BRACKET	1			M	
88	1100040825	BOLT	5			M	
89	1100040835	BOLT	2			M	
90	1101041025	BOLT	2			M	
91	1101041435	BOLT	1			M	
92	1141110014	WASHER	1			M	
95	1702402001	CABLE, earth	1			M	
96	0882402180	SHIM	AR			M	t=0.5mm
97	0882402190	SHIM	AR			M	t=1.0mm
98	0882402200	SHIM	AR			M	t=2.3mm
99	0882401950	FOOT, engine (R.R.)	1			M	
103	0882402340	SHIM	AR			M	
104	1110021035	SCREW, cap	8			M	
105	1141550010	WASHER	12			M	
108	1100241050	BOLT	4			M	
110	0882404710	SPACER, fan	1			M	ISUZU 989136-4230
111	0882403910	PULLEY	1			M	
112	0882403920	V-BELT	1			M	B-45
117	1100040895	BOLT	4			M	
119	0882401970	SPACER	1			M	
	T9c270						

silvertorn.co.uk

ENGINE & ACCESSORIES (2/2) (high flow, for GEHL; 21405511-)

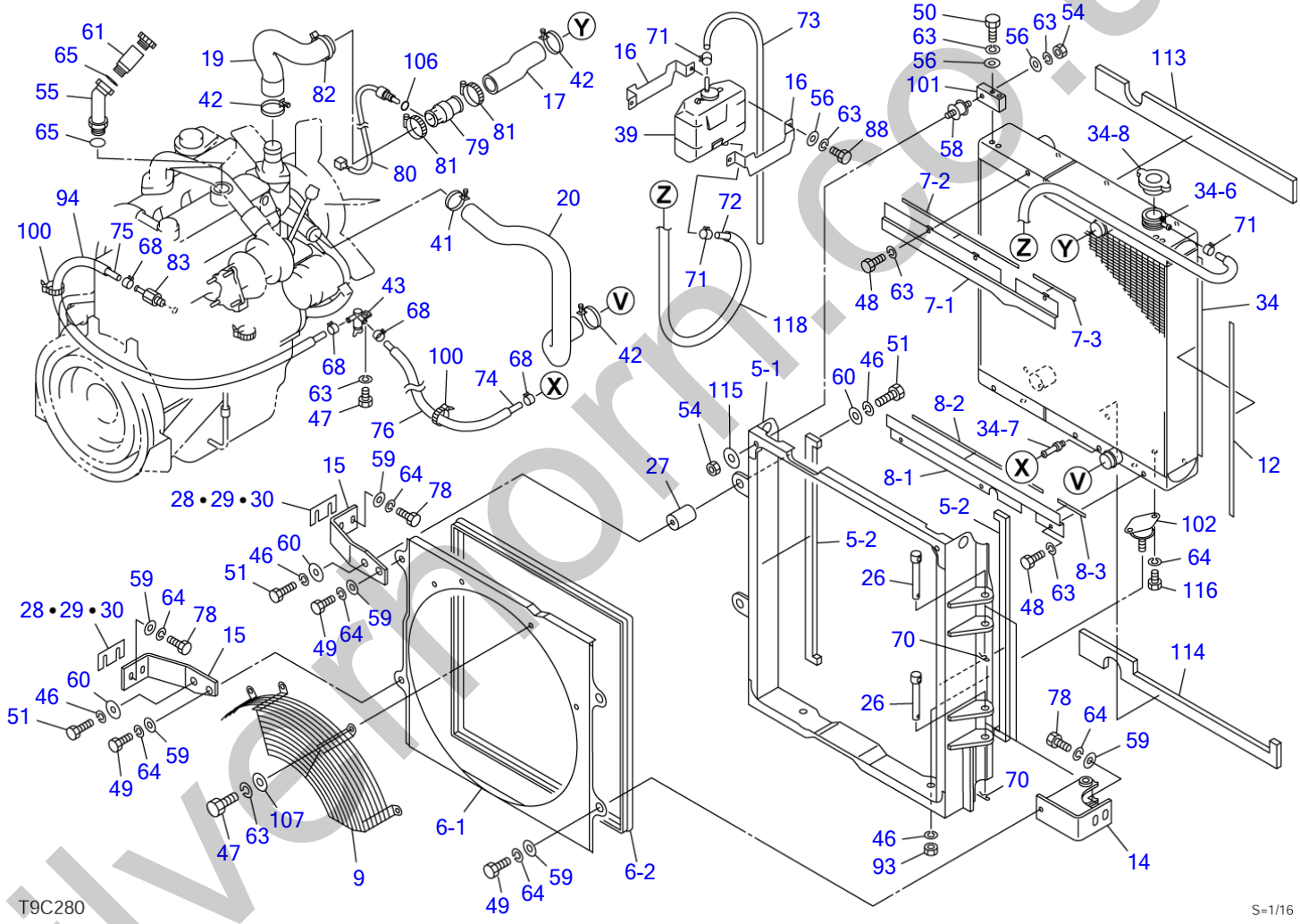

silvermorn.co.uk

ENGINE & ACCESSORIES (2/2) (high flow, for GEHL; 21405511-)

Item	Part number	Description	Q'ty	Chan.	Serial No.	Serv.	Remarks
		ENGINE ASSY					X08824-04900-9
5	X 0882404100	FRAME ASSY	1			M	
5-1	0882404110	・FRAME	1			M	
5-2	0882404120	・SPONGE	2			M	
6	X 0882404770	SHROUD ASSY	1			M	
6-1	0882404780	・SHROUD	1			M	
6-2	1654606251	・TRIM	1			M	sold by the meter
7	X 0882404300	PLATE ASSY	1			M	
7-1	0882404310	・PLATE	1			M	
7-2	1654355040	・SPONGE	1			M	sold by the meter
7-3	1654355015	・SPONGE	1			M	sold by the meter
8	X 0882404350	PLATE ASSY	1			M	
8-1	0882404360	・PLATE	1			M	
8-2	1654355045	・SPONGE	1			M	sold by the meter
8-3	1654355010	・SPONGE	1			M	sold by the meter
9	0882401100	GUARD	1			M	
12	1654343058	SPONGE	1			M	sold by the meter
14	0882404500	HINGE	2			M	
15	0882404520	BRACKET	2			M	
16	0882401125	HOLDER	2			M	
17	0882404530	HOSE	1			M	
19	0882404540	HOSE	1			M	
20	0882404550	HOSE	1			M	
26	0881402180	PIN	2			M	
27	0881401260	BOSS	2			M	
28	0880406610	SHIM	AR			M	t=1.6mm
29	0880406620	SHIM	AR			M	t=3.2mm
30	0880406630	SHIM	AR			M	t=4.5mm
34	1911300080	RADIATOR & COOLER, oil	1			M	AKG
34-6	1911300076	・FITTING, hose	1			M	
34-7	1911300077	・NIPPLE	1			M	
34-8	1911300078	・CAP, radiator	1			M	
39	1910049039	TANK, sub	1			M	ISUZU 894440-9690
41	1910172016	BAND	1			M	ISUZU 909915-5121
42	1910172015	BAND	3			M	ISUZU 909915-412A
43	1911900004	VALVE, drain	1			M	
46	1140020012	WASHER, spring	6			M	
47	1100040816	BOLT	5			M	
48	1100040820	BOLT	6			M	
49	1100041025	BOLT	4			M	
50	1100040850	BOLT	4			M	
51	1100041235	BOLT	4			M	
54	1130040008	NUT	4			M	
55	0882403010	PIPE	1			M	
56	1141110008	WASHER	10			M	
58	1651014003	RUBBER, cushion	2			M	
59	0003600025	WASHER	12			M	
60	0003600136	SHIM	4			M	
61	0882403020	PIPE	1			M	
63	1140020008	WASHER, spring	23			M	
64	1140020010	WASHER, spring	16			M	
65	1420010290	O-RING	2			M	
68	1533120012	CLAMP	4			M	
70	1214000016	PIN, snap	2			M	
71	1533120011	CLAMP	3			M	
72	1531407174	HOSE	1			M	sold by the meter
73	1531407065	HOSE	1			M	sold by the meter
74	1530808072	HOSE	1			M	sold by the meter
75	1530808098	HOSE	1			M	sold by the meter
76	1531115025	HOSE	2			M	sold by the meter
78	1100041030	BOLT	8			M	
79	0881402595	JOINT	1			M	
80	1700100046	SENSOR	1			M	
81	1533700057	CLAMP	2			M	
82	1652241200	BAND	1			M	
83	0882401210	ADAPTOR	1			M	
88	1100040825	BOLT	2			M	
93	1130040012	NUT	2			M	

silvermorn.co.uk

ENGINE & ACCESSORIES (2/2) (high flow, for GEHL; 21405511-)

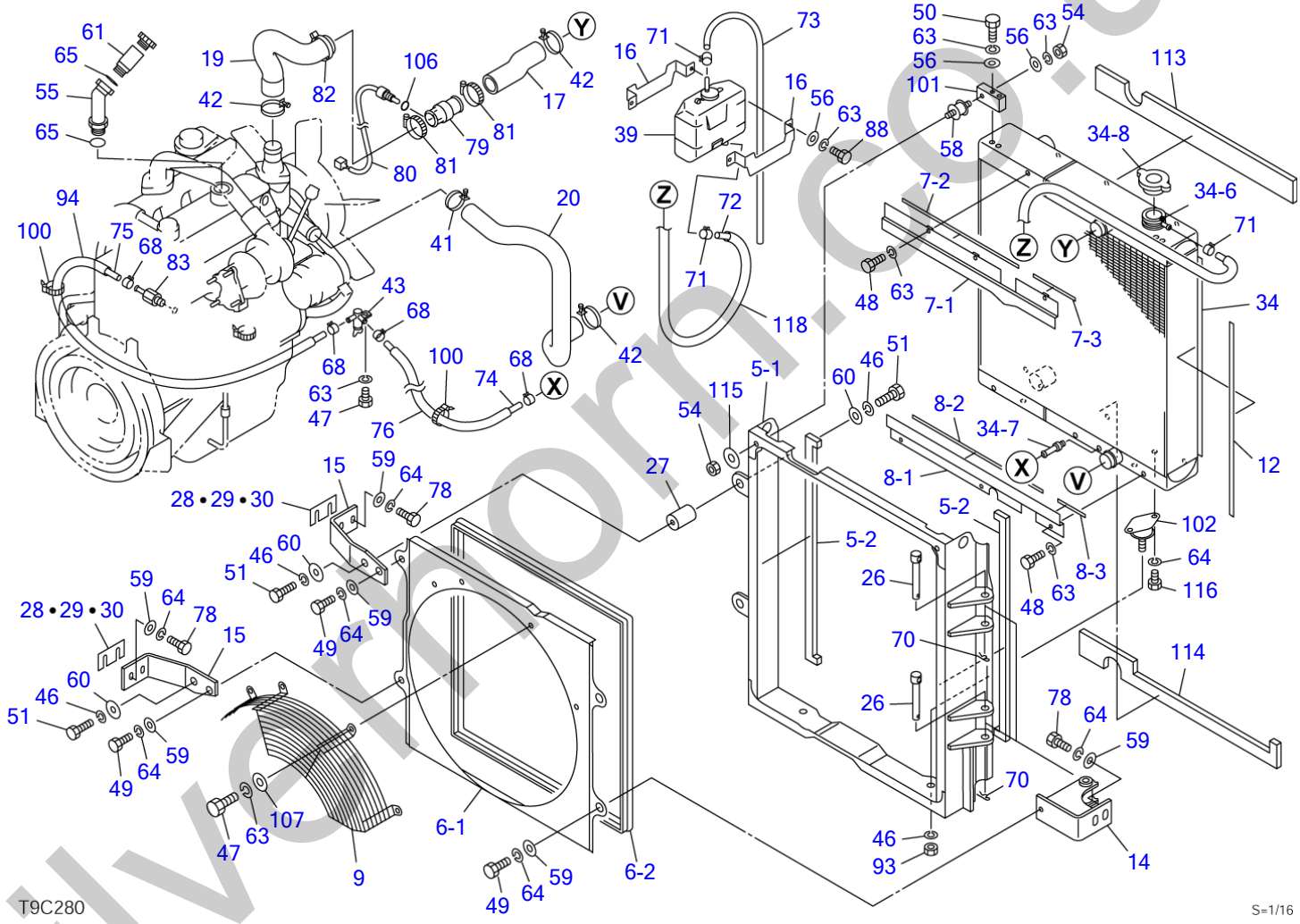

silvermorn.co.uk

ENGINE & ACCESSORIES (2/2) (high flow, for GEHL; 21405511-)

Item	Part number	Description	Q'ty	Chan.	Serial No.	Serv.	Remarks
94	**1531115044**	HOSE	2			M	
100	**1652231250**	BAND	2			M	
101	**0880408550**	STAY	2			M	
102	**0880408580**	RUBBER, cushion	2			M	
106	**1420000100**	O-RING	1			M	
107	**0003600011**	WASHER	4			M	
113	**0882404680**	SPONGE	1			M	
114	**0882404690**	SPONGE	1			M	
115	**0003608252**	WASHER	1			M	
116	**1100041020**	BOLT	4			M	
118	**1531115166**	HOSE	1			M	sold by the meter
	T9c280						

silverhorn.co.uk

PRECLEANER (for US)

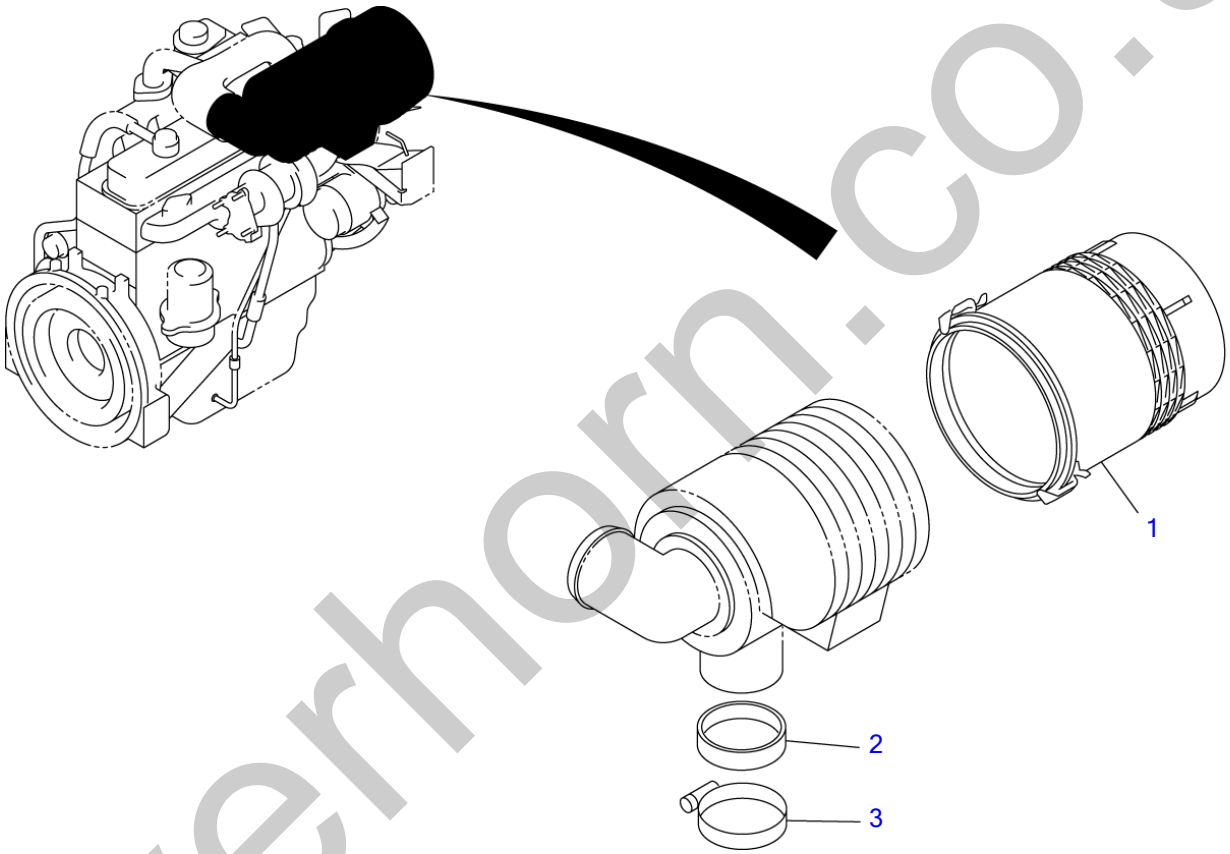

T9C260

S=1/8,1/15

silverhorn.co.uk

PRECLEANER (for US)

Item	Part number	Description	Q'ty	Chan.	Serial No.	Serv.	Remarks
		PRECLEANER ASSY					08824-03030-0
1	1911240040	PRECLEANER	1			M	
2	1911240060	CAP	1			M	
3	1911240061	CLIP	1			M	
	T9c260						

silverhorn.co.uk

DRAIN PLUG

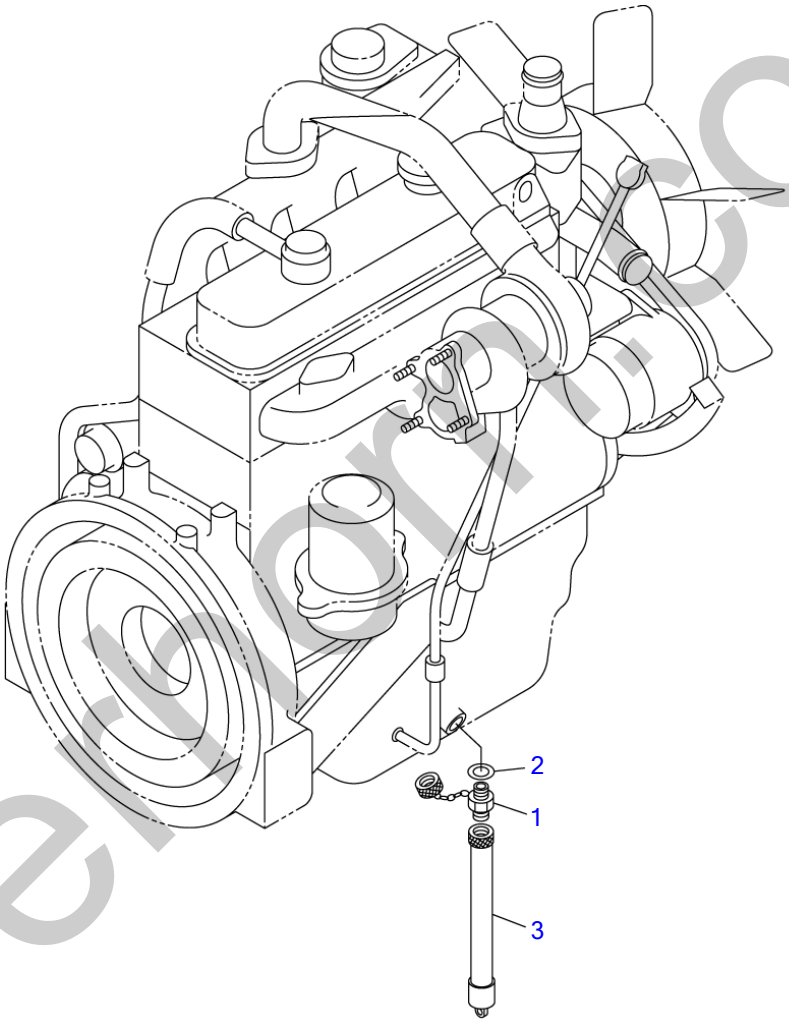

T9C110

S=1/8

silverfrom.co.uk

DRAIN PLUG

Item	Part number	Description	Q'ty	Chan.	Serial No.	Serv.	Remarks
		PLUG ASSY, drain					X08824-02000-1
1	1554502050	PLUG	1				
2	1432120261	WASHER	1				
3	1554512600	TUBE	1				
	T9c111						

silverhorn.co.uk

CONTROL BOX; R.H.

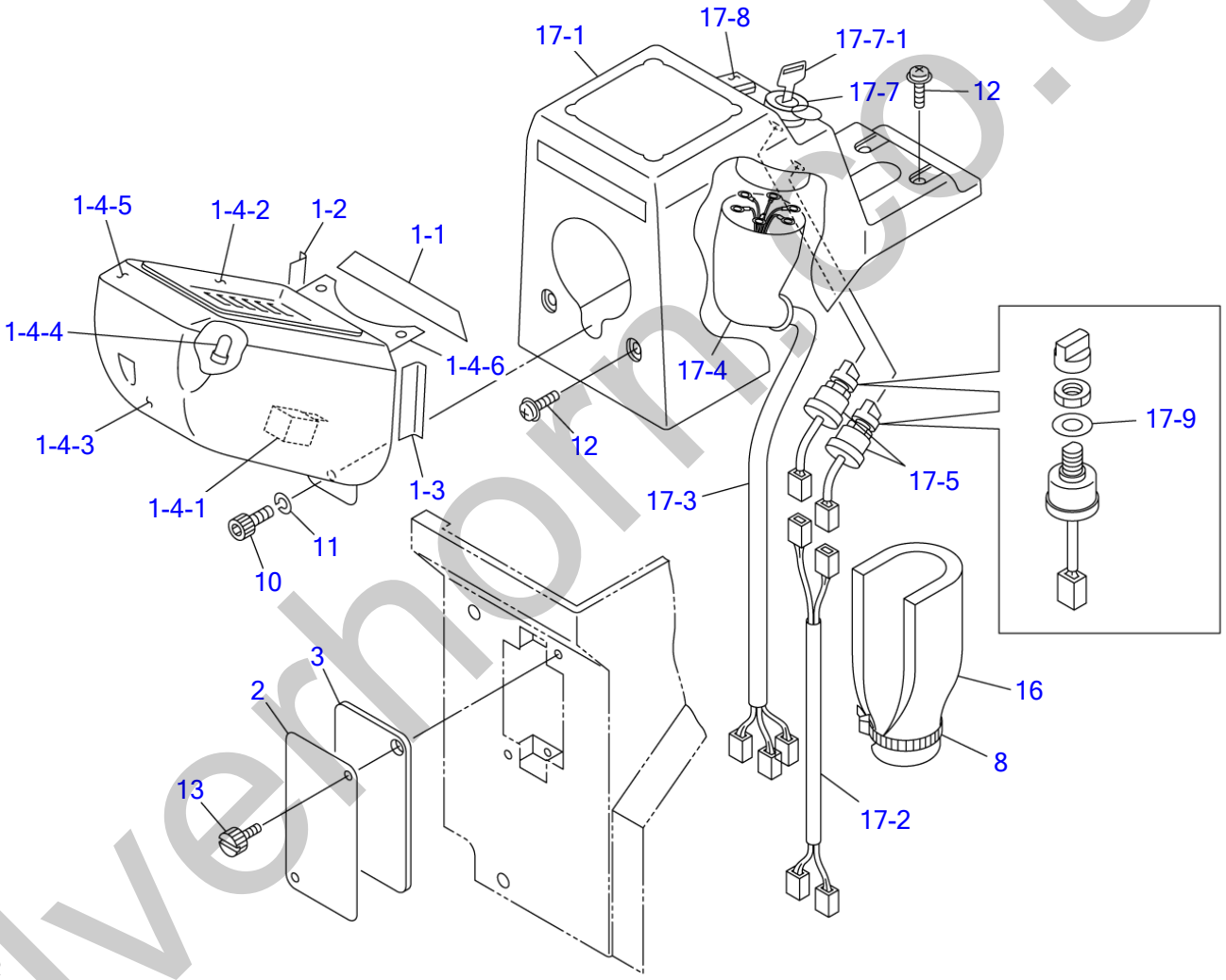

silverhorn.co.uk

CONTROL BOX; R.H.

Item	Part number	Description	Q'ty	Chan.	Serial No.	Serv.	Remarks
		COVER ASSY (R.H.)					X08824-30000-2
1	0881430900	GAUGE ASSY, cluster	1		21400011~21400484		
	0881430910	GAUGE ASSY, cluster	1	(H)	21400485~		
1-1	0881430901	・ABSORBENT, noise	1				
1-2	0881430902	・ABSORBENT, noise	1				
1-3	0881430903	・ABSORBENT, noise	1				
1-4	1730140690	・GAUGE, cluster	1		21400011~21400484		
	1730140920	・GAUGE, cluster	1	(H)	21400485~		
1-4-1	1730140691	・・RELAY	1				12V
1-4-2	1730140782	・・GLASS	1				
1-4-3	1730140785	・・COVER	1				
1-4-4	1730140696	・・BULB	10				14V, 1.4W
1-4-5	1730140788	・・VISOR	1				
1-4-6	1730140694	・・BRACKET	1				
2	0881430802	COVER	1				
3	0881430803	INSULATOR	1				
8	1652231250	BAND	1				
10	1110020820	SCREW, cap	1				
11	1140090008	WASHER, spring	1				
12	1150420614	SCREW	4				
13	1652711698	SCREW	2				
16	0881430805	INSULATOR	1				
17	0882430100	COVER ASSY, sub (R.H.)	1				
17-1	0881430870	・COVER (R.H.)	1				
17-2	0881430880	・HARNESS, wiring	1				
17-3	0881422400	・HARNESS, wiring	1				
17-4	0870431821	・COVER	1				
17-5	1700000010	・SWITCH, lamp	2				
17-7	1700100052	・SWITCH, starter	1				
17-7-1	1700100019	・KEY	1				
17-8	1700550024	・ORNAMENT	1				
17-9	1141810012	・WASHER	2				
	T9c032						

silverhorn.co.uk

CONTROL BOX; R.H. (for GEHL & MUSTANG)

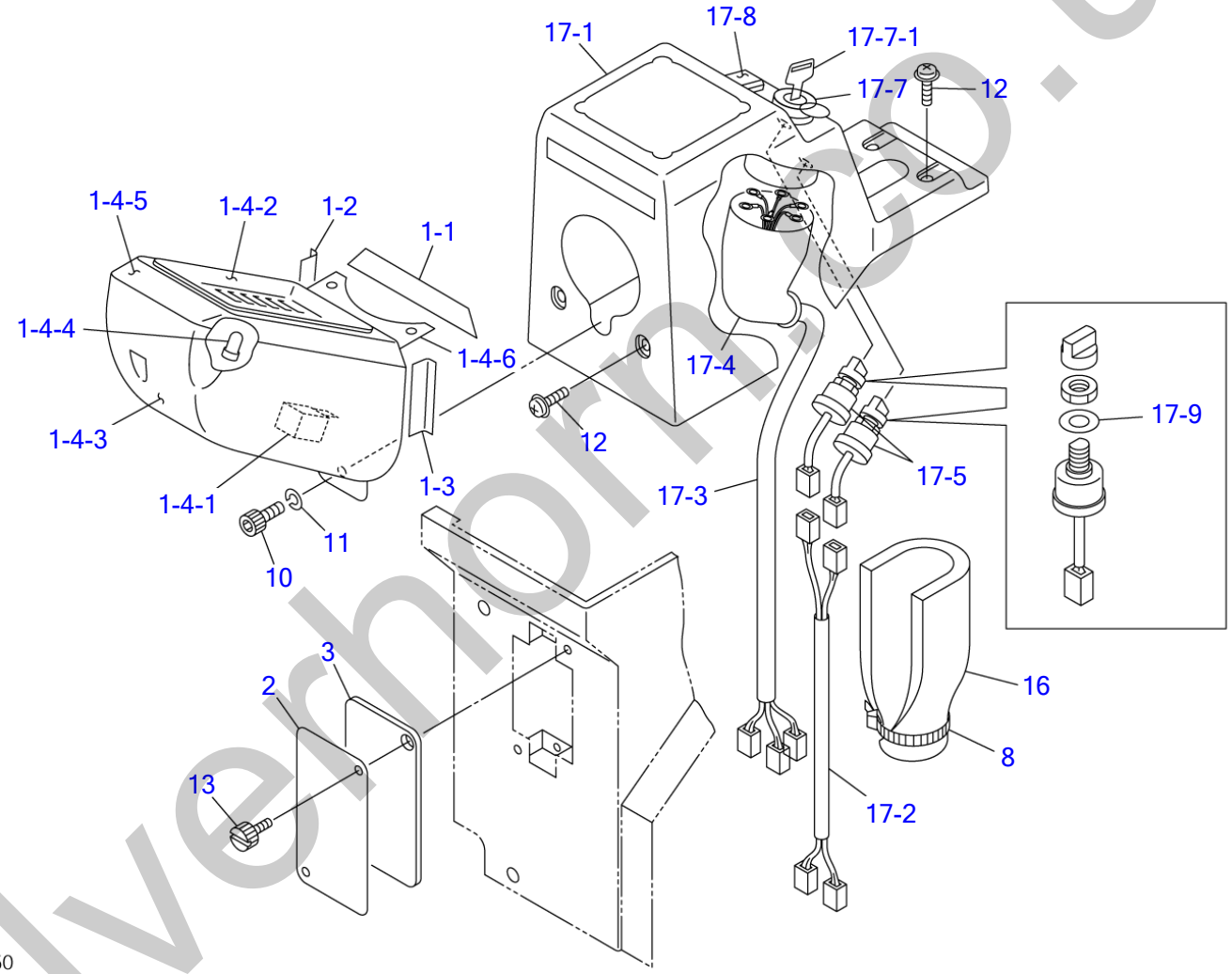

silverhorn.co.uk

CONTROL BOX; R.H. (for GEHL & MUSTANG)

Item	Part number	Description	Q'ty	Chan.	Serial No.	Serv.	Remarks
		COVER ASSY (R.H.)					X08824-31000-2
1	0881431110	GAUGE ASSY, cluster	1		21400011~21400484		
	0881431120	GAUGE ASSY, cluster	1	(H)	21400485~		
1-1	0881430901	・ABSORBENT, noise	1				
1-2	0881430902	・ABSORBENT, noise	1				
1-3	0881430903	・ABSORBENT, noise	1				
1-4	1730140770	・GAUGE, cluster	1		21400011~21400484		
	1730140930	・GAUGE, cluster	1	(H)	21400485~		
1-4-1	1730140691	・・RELAY	1				12V
1-4-2	1730140782	・・GLASS	1				
1-4-3	1730140785	・・COVER	1				
1-4-4	1730140696	・・BULB	10				14V, 1.4W
1-4-5	1730140788	・・VISOR	1				
1-4-6	1730140694	・・BRACKET	1				
2	0881430802	COVER	1				
3	0881430803	INSULATOR	1				
8	1652231250	BAND	1				
10	1110020820	SCREW, cap	1				
11	1140090008	WASHER, spring	1				
12	1150420614	SCREW	4				
13	1652711698	SCREW	2				
16	0881430805	INSULATOR	1				
17	0882430100	COVER ASSY, sub (R.H.)	1				
17-1	0881430870	・COVER (R.H.)	1				
17-2	0881430880	・HARNESS, wiring	1				
17-3	0881422400	・HARNESS, wiring	1				
17-4	0870431821	・COVER	1				
17-5	1700000010	・SWITCH, lamp	2				
17-7	1700100052	・SWITCH, starter	1				
17-7-1	1700100019	・KEY	1				
17-8	1700550024	・ORNAMENT	1				
17-9	1141810012	・WASHER	2				
	T9c150						

silverhorn.co.uk

CONTROL BOX; R.H. (high flow; 21404515-)

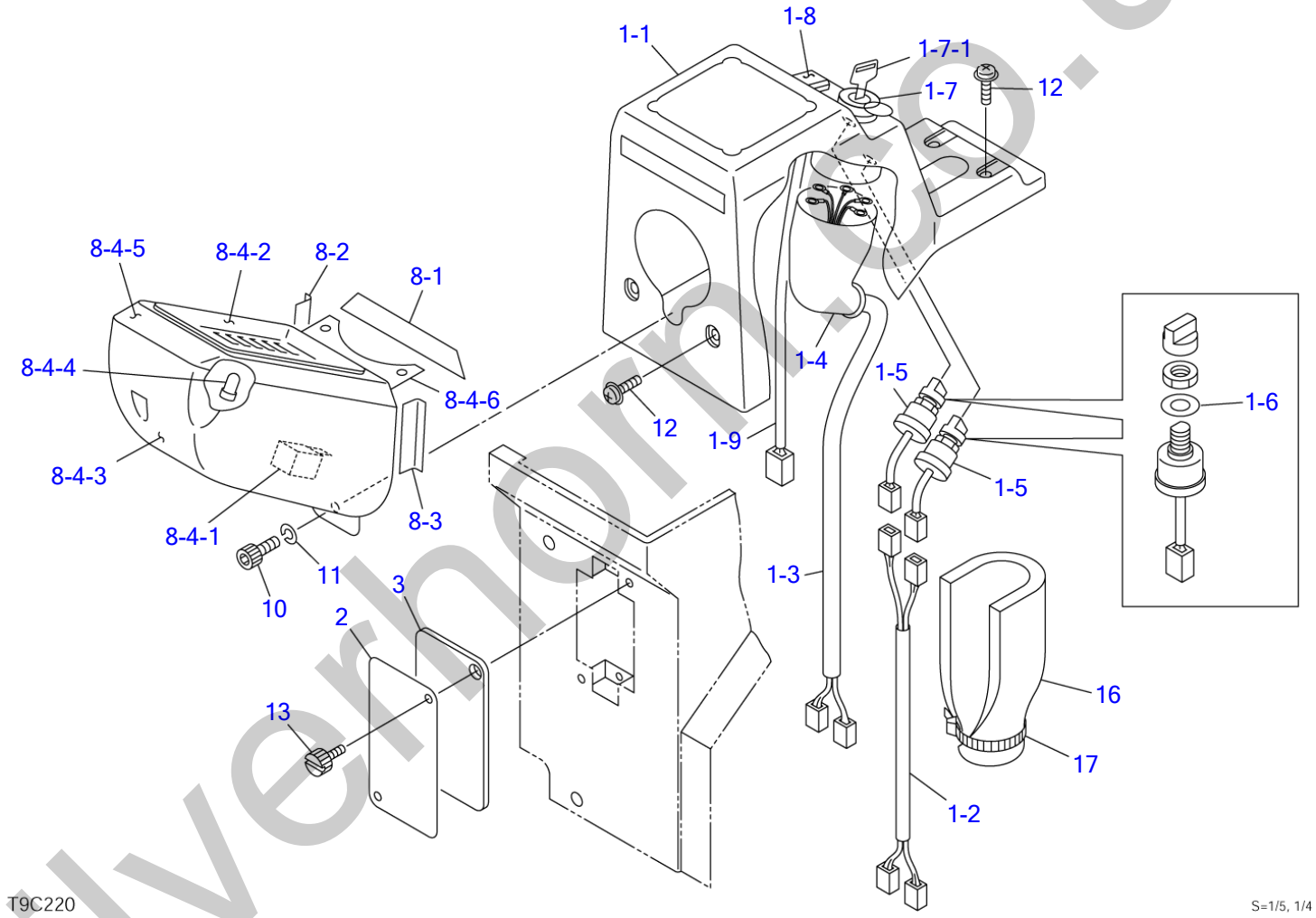

silverhorn.co.uk

CONTROL BOX; R.H. (high flow; 21404515-)

Item	Part number	Description	Q'ty	Chan.	Serial No.	Serv.	Remarks
		COVER ASSY (R.H.)					X08814-31200-7
1	0881430950	COVER ASSY	1				
1-1	0881430870	・COVER (R.H.)	1				
1-2	0881430880	・HARNESS, wiring	1				
1-3	0881430960	・HARNESS, wiring	1				
1-4	0870431821	・COVER	1				
1-5	1700000010	・SWITCH, lamp	2				
1-6	1141810012	・WASHER	2				
1-7	1700100052	・SWITCH, starter	1				
1-7-1	1700100019	・KEY	1				
1-8	1700000034	・SWITCH	1				
1-9	0881430970	・HARNESS, wiring	1				
2	0881430802	COVER	1				
3	0881430803	INSULATOR	1				
8	0881430910	GAUGE ASSY, cluster	1				
8-1	0881430901	・ABSORBENT, noise	1				
8-2	0881430902	・ABSORBENT, noise	1				
8-3	0881430903	・ABSORBENT, noise	1				
8-4	1730140920	・GAUGE, cluster	1				
8-4-1	1730140691	・・RELAY	1				12V
8-4-2	1730140782	・・GLASS	1				
8-4-3	1730140785	・・COVER	1				
8-4-4	1730140696	・・BULB	10				14V, 1.4W
8-4-5	1730140788	・・VISOR	1				
8-4-6	1730140694	・・BRACKET	1				
10	1110020820	SCREW, cap	1				
11	1140090008	WASHER, spring	1				
12	1150420614	SCREW, sems	4				
13	1652711698	SCREW	2				
16	0881430805	INSULATOR	1				
17	1652231250	BAND	1				
	T9c220						

silverhorn.co.uk

CONTROL BOX; R.H. (high flow, for GEHL & MUSTANG; 21404515-)

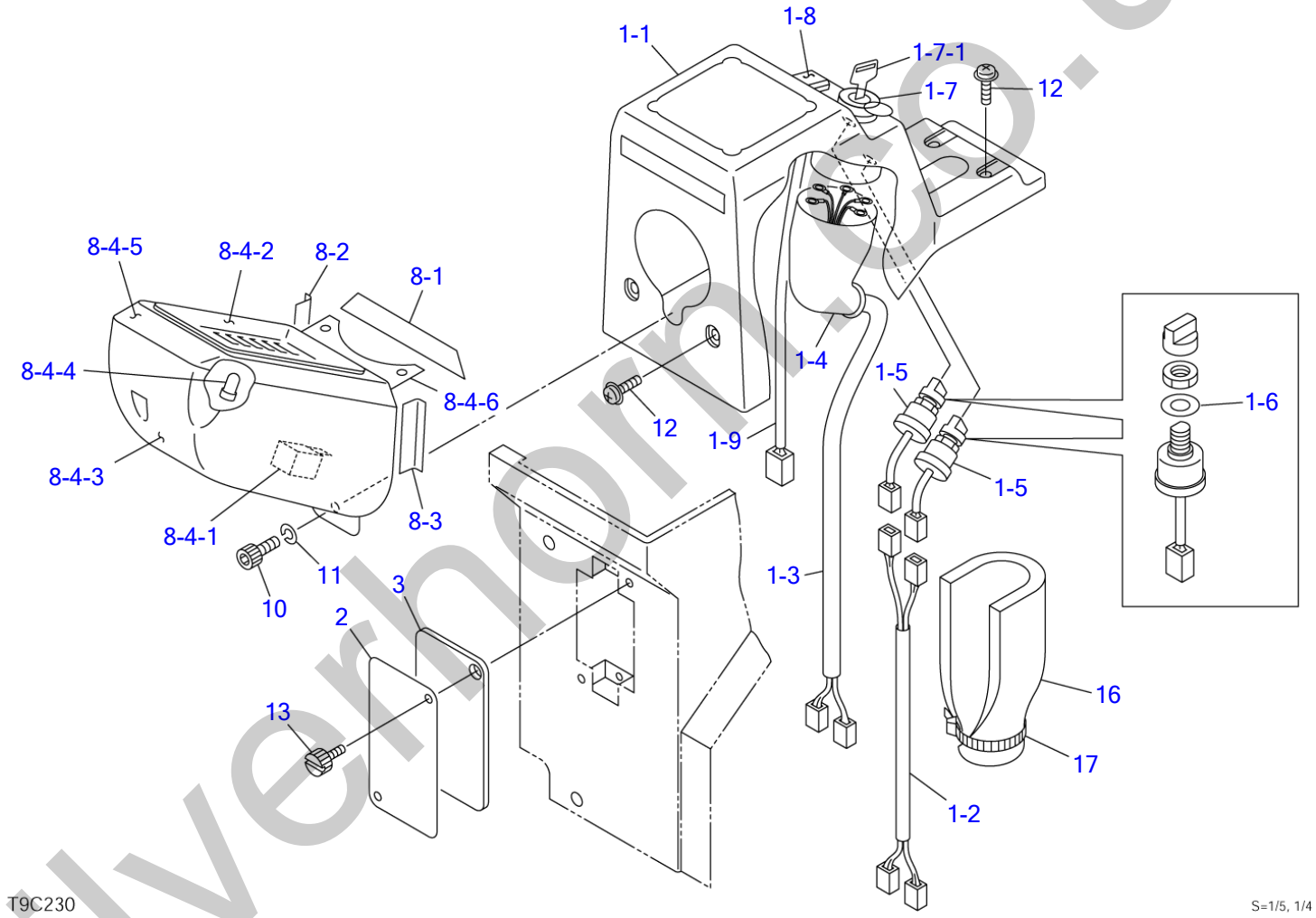

silverhorn.co.uk

CONTROL BOX; R.H. (high flow, for GEHL & MUSTANG; 21404515-)

Item	Part number	Description	Q'ty	Chan.	Serial No.	Serv.	Remarks
		COVER ASSY (R.H.) (for GEHL & MUSTANG)					X08814-31300-7
1	0881430950	COVER ASSY	1				
1-1	0881430870	・COVER (R.H.)	1				
1-2	0881430880	・HARNESS, wiring	1				
1-3	0881430960	・HARNESS, wiring	1				
1-4	0870431821	・COVER	1				
1-5	1700000010	・SWITCH, lamp	2				
1-6	1141810012	・WASHER	2				
1-7	1700100052	・SWITCH, starter	1				
1-7-1	1700100019	・KEY	1				
1-8	1700000034	・SWITCH	1				
1-9	0881430970	・HARNESS, wiring	1				
2	0881430802	COVER	1				
3	0881430803	INSULATOR	1				
8	0881431120	GAUGE ASSY, cluster	1				
8-1	0881430901	・ABSORBENT, noise	1				
8-2	0881430902	・ABSORBENT, noise	1				
8-3	0881430903	・ABSORBENT, noise	1				
8-4	1730140930	・GAUGE, cluster	1				
8-4-1	1730140691	・・RELAY	1				12V
8-4-2	1730140782	・・GLASS	1				
8-4-3	1730140785	・・COVER	1				
8-4-4	1730140696	・・BULB	10				14V, 1.4W
8-4-5	1730140788	・・VISOR	1				
8-4-6	1730140694	・・BRACKET	1				
10	1110020820	SCREW, cap	1				
11	1140090008	WASHER, spring	1				
12	1150420614	SCREW, sems	4				
13	1652711698	SCREW	2				
16	0881430805	INSULATOR	1				
17	1652231250	BAND	1				
	T9c230						

silverhorn.co.uk

CONTROL BOX; L.H.

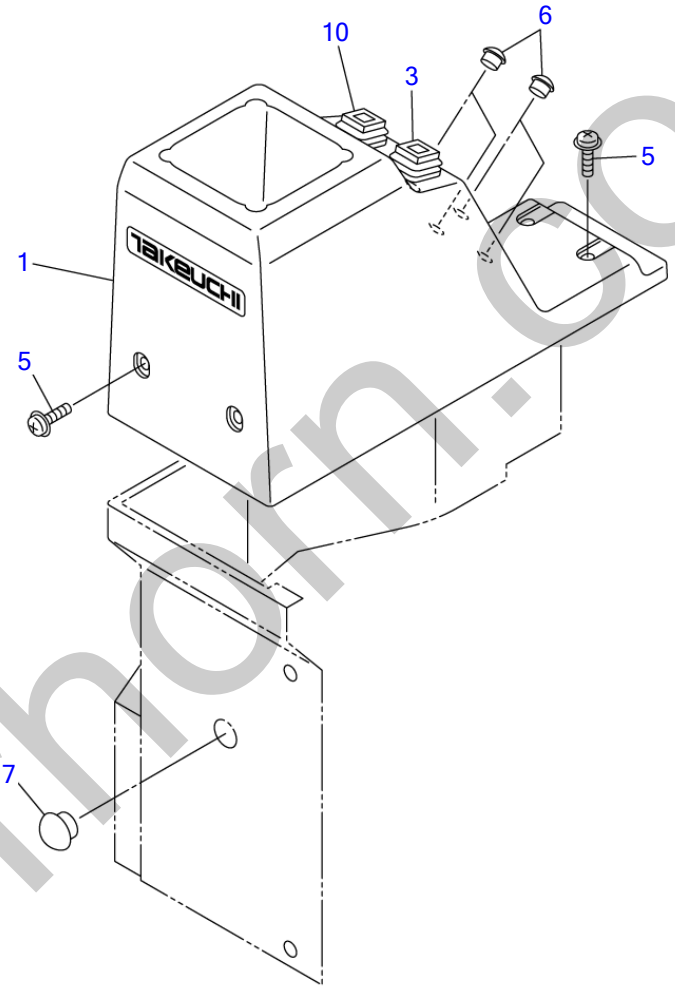

T7C040

S=1/5

silverhorn.co.uk

CONTROL BOX; L.H.

Item	Part number	Description	Q'ty	Chan.	Serial No.	Serv.	Remarks
		COVER ASSY (L.H.)					X08814-30700-2
1	**0881430770**	COVER (L.H.)	1				
3	**1700000034**	SWITCH	1				
5	**1150420614**	SCREW, sems	4				
6	**1652533019**	CAP	4				
7	**1652533023**	CAP	1				
10	**1700000035**	SWITCH	1				
	T7c041						

silverhorn.co.uk

ENGINE CONTROL

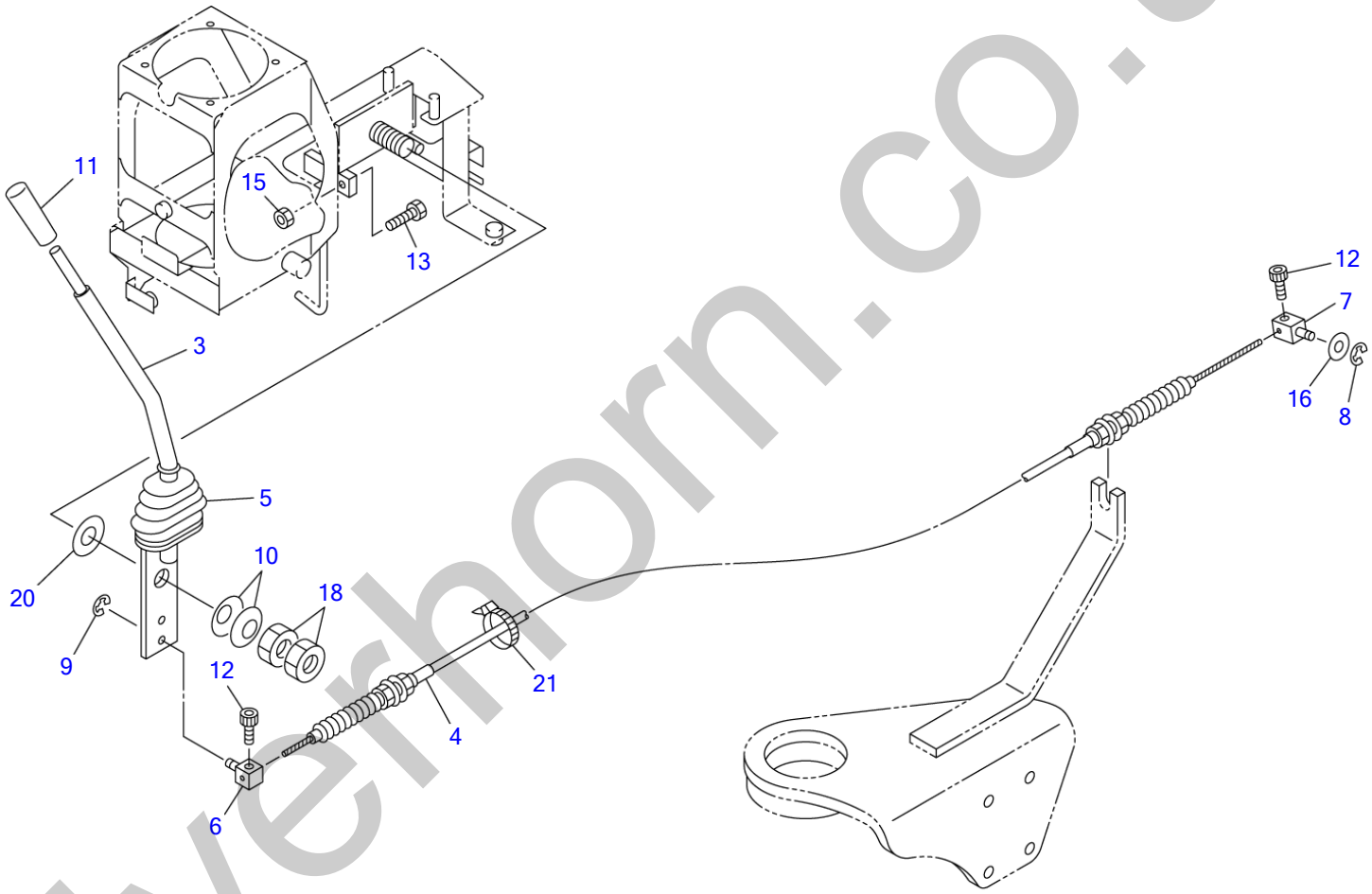

silverhorn.co.uk

ENGINE CONTROL

Item	Part number	Description	Q'ty	Chan.	Serial No.	Serv.	Remarks
		CONTROL ASSY, engine					X08824-10000-3
3	0880411200	LEVER	1				
4	0882410030	WIRE	1				
5	0334120100	BOOT	1				
6	0007900020	PIN	1				
7	0007900023	PIN	1				
8	1224010004	RING, retaining	1				
9	1224010006	RING, retaining	1				
10	1225110018	WASHER, conical	2				
11	1650132050	GRIP	1				
12	1110040510	SCREW, cap	2				
13	1100040830	BOLT	1				
15	1130040008	NUT	1				
16	1141110006	WASHER	1				
18	0064111700	NUT	2				
20	1141550018	WASHER	1				
21	1652231250	BAND	1				
	T9c040						

silverhorn.co.uk

ELECTRICAL (1/3)

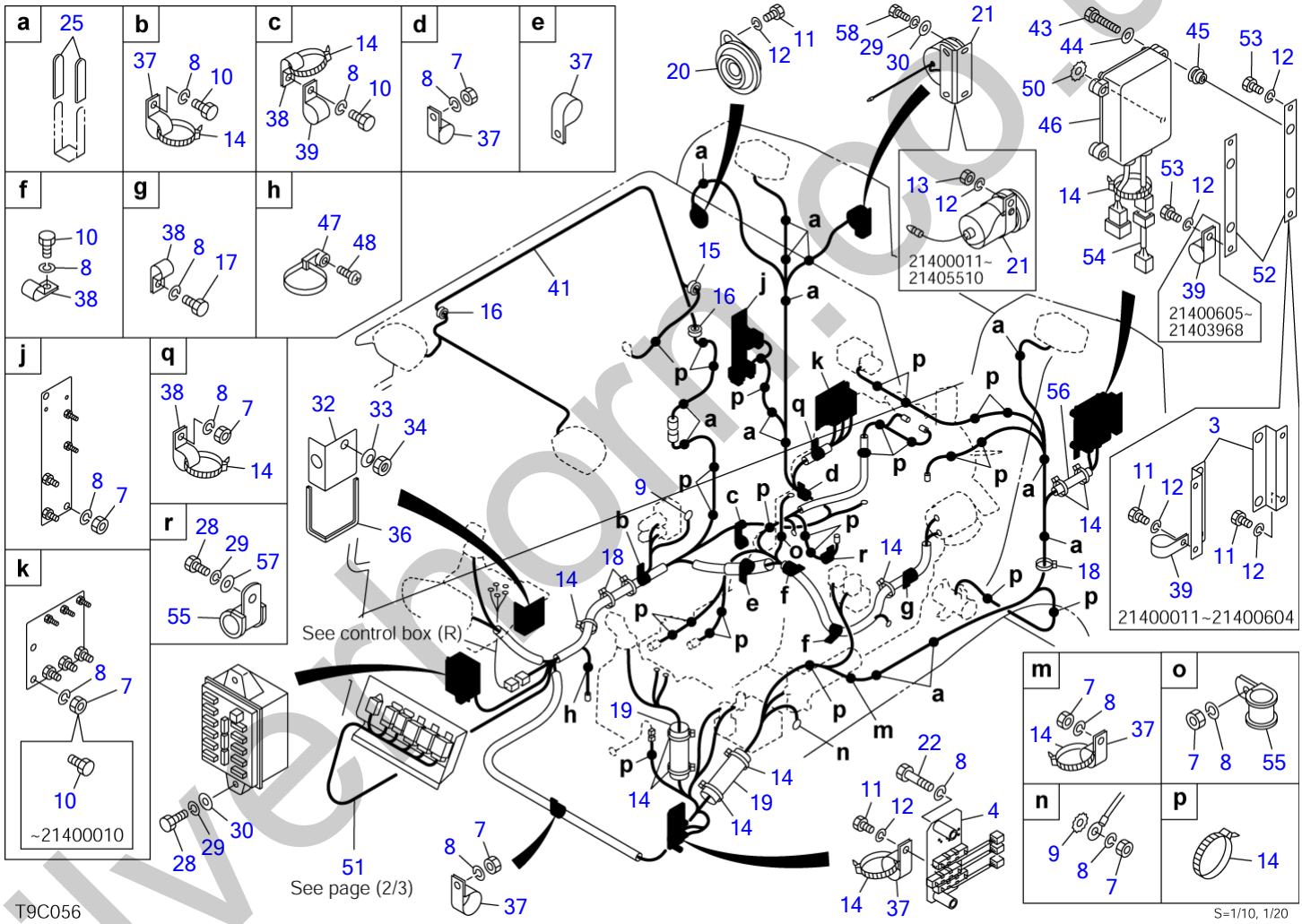

silverborn.co.uk

ELECTRICAL (1/3)

Item	Part number	Description	Q'ty	Chan.	Serial No.	Serv.	Remarks
		ELECTRICAL ASSY					X08824-21000-11
3	0882421030	PLATE	2		21400011~21400604		
4	0882420450	RESISTOR	1				
7	1130040010	NUT	13				
8	1140020010	WASHER, spring	18				
9	1140330010	WASHER	2				
10	1100041016	BOLT	5		~21400010		
	1100041016	BOLT	3		21400011~		
11	1100040812	BOLT	3				
12	1140020008	WASHER, spring	7			M	
13	1130040008	NUT	1		21400011~21405510	M	
14	1652231250	BAND	36				
15	1652052800	GROMMET	1		~21400010		
16	1652053600	GROMMET	2		~21400010		
17	1101041020	BOLT	1				
18	1652241400	BAND	3				
19	0880422080	PROTECTOR	2				
20	1703500612	HORN	1				
21	0354211050	BUZZER	1		21400011~21405510	M	
	1703700013	BUZZER	1		21405511~	M	
22	1100041050	BOLT	2				
25	0872433150	TUBE	28				
28	1100040616	BOLT	3				
29	1140020006	WASHER, spring	5			M	
30	0003600110	WASHER	4			M	
32	0880426020	COVER	1				
33	1225000018	WASHER	1				
34	1130640018	NUT	1				
36	1653916030	TRIM	1				sold by the meter
37	1711900097	CLAMP	6				
38	1711900071	CLAMP	5				
39	1711900072	CLAMP	2		21400011~21403968		
	1711900072	CLAMP	1		21403969~		
41	0881422300	HARNESS, wiring	1				
43	1100040850	BOLT	4				
44	1141110008	WASHER	4				
45	1652520008	NUT	4				
46	1730140730	CONTROLLER	1				
47	1652261225	BAND	1				
48	1150420614	SCREW	1				
50	1140330008	WASHER	1				
51	0882421200	UNIT ASSY, relay	1				see page (2/3)
52	0882421070	PLATE	2		21400605~		
53	1100040820	BOLT	4		21400605~		
54	1730140739	HARNESS, wiring	1		21400011~21400214		
55	1711900105	CLAMP	2				
56	1531660015	PROTECTOR	1				sold by the meter
57	0003606202	WASHER	1				
58	1100040610	BOLT	2		21405511~	M	
	T9c057						

silvermorn.co.uk

ELECTRICAL (2/3)

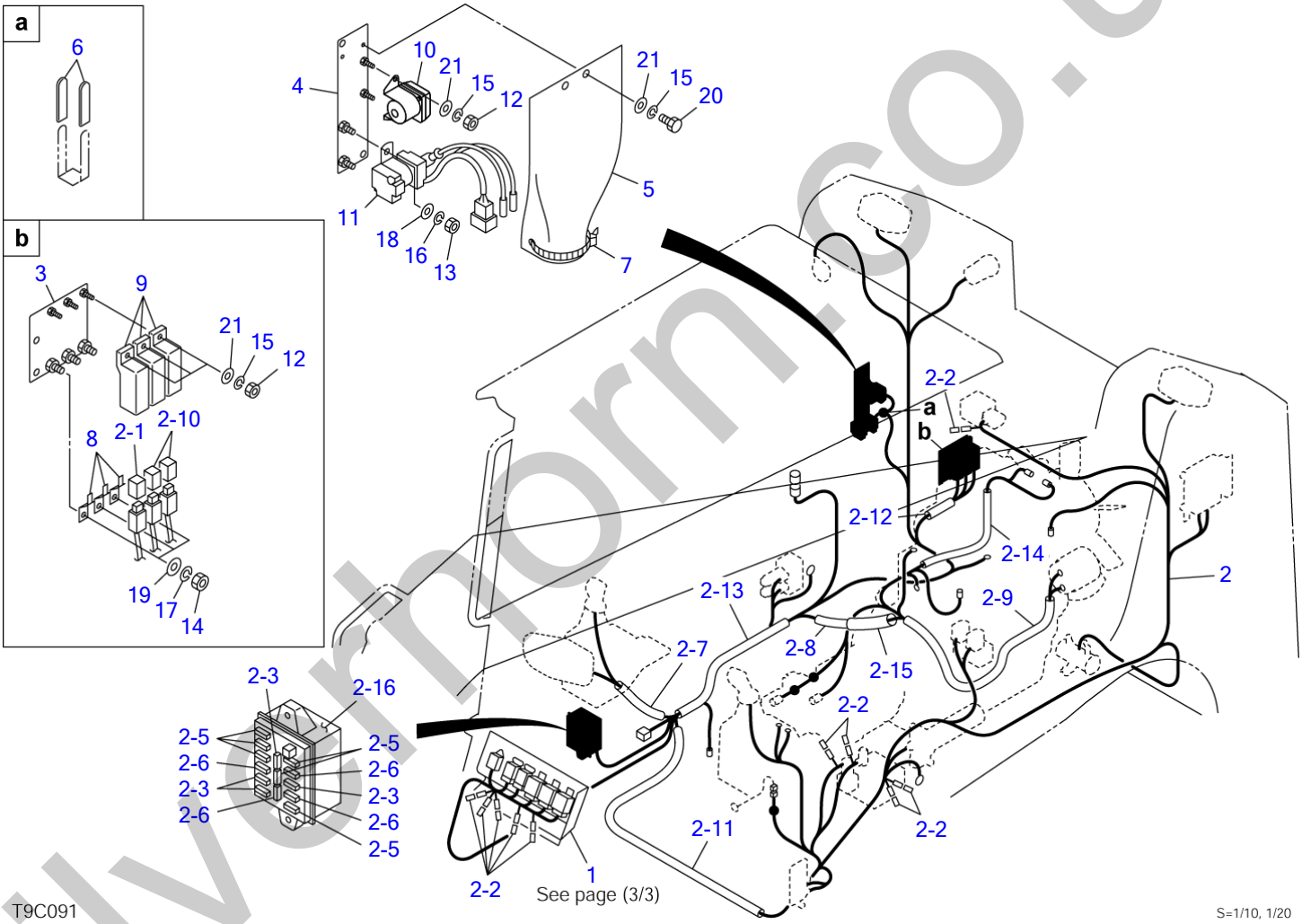

silverthorn.co.uk

ELECTRICAL (2/3)

Item	Part number	Description	Q'ty	Chan.	Serial No.	Serv.	Remarks
0-1	0882421200	UNIT ASSY, relay	1				X08824-21200-0
1	0882420200	・RELAY ASSY	1				see page (3/3)
2	0882421100	・HARNESS, wiring	1				
2-1	1701330065	・・LINK, fusible	1				65A
2-2	1730500008	・・DIODE (3A yellow)	10				
2-3	1701310010	・・FUSE	4				10A
2-5	1701310020	・・FUSE	6				20A
2-6	1701310030	・・FUSE	4				30A
2-7	1531325025	・・PROTECTOR	1				sold by the meter
2-8	1531325033	・・PROTECTOR	1				sold by the meter
2-9	1531315100	・・PROTECTOR	1				sold by the meter
2-10	1701330045	・・LINK, fusible	2				45A
2-11	1531335082	・・PROTECTOR	1				sold by the meter
2-12	1531325010	・・PROTECTOR	1				sold by the meter
2-13	1531325070	・・PROTECTOR	1				sold by the meter
2-14	1531007075	・・PROTECTOR	1				sold by the meter
2-15	1531335015	・・PROTECTOR	1				sold by the meter
2-16	1701200002	・・BOX	1				V72774A-0100
3	0882421050	・BRACKET	1				
4	0882421060	・BRACKET	1				
5	0882421001	・RUBBER	1				
6	0872433150	・TUBE	2				
7	1652231250	・BAND	2				
8	1711900064	・CLAMP	3				
9	1700100038	・COVER	3				
10	1711900100	・RELAY, heater	1				
11	1910124101	・RELAY, safety	1				ISUZU 1825530400
12	1130040006	・NUT	5				
13	1130040008	・NUT	2				
14	1130040010	・NUT	3				
15	1140020006	・WASHER, spring	7				
16	1140020008	・WASHER, spring	2				
17	1140020010	・WASHER, spring	3				
18	1141110008	・WASHER	2				
19	1141110010	・WASHER	3				
20	1100040612	・BOLT	2				
21	0003600110	・WASHER	7				
	T9c092						

silverhorn.co.uk

ELECTRICAL (3/3)

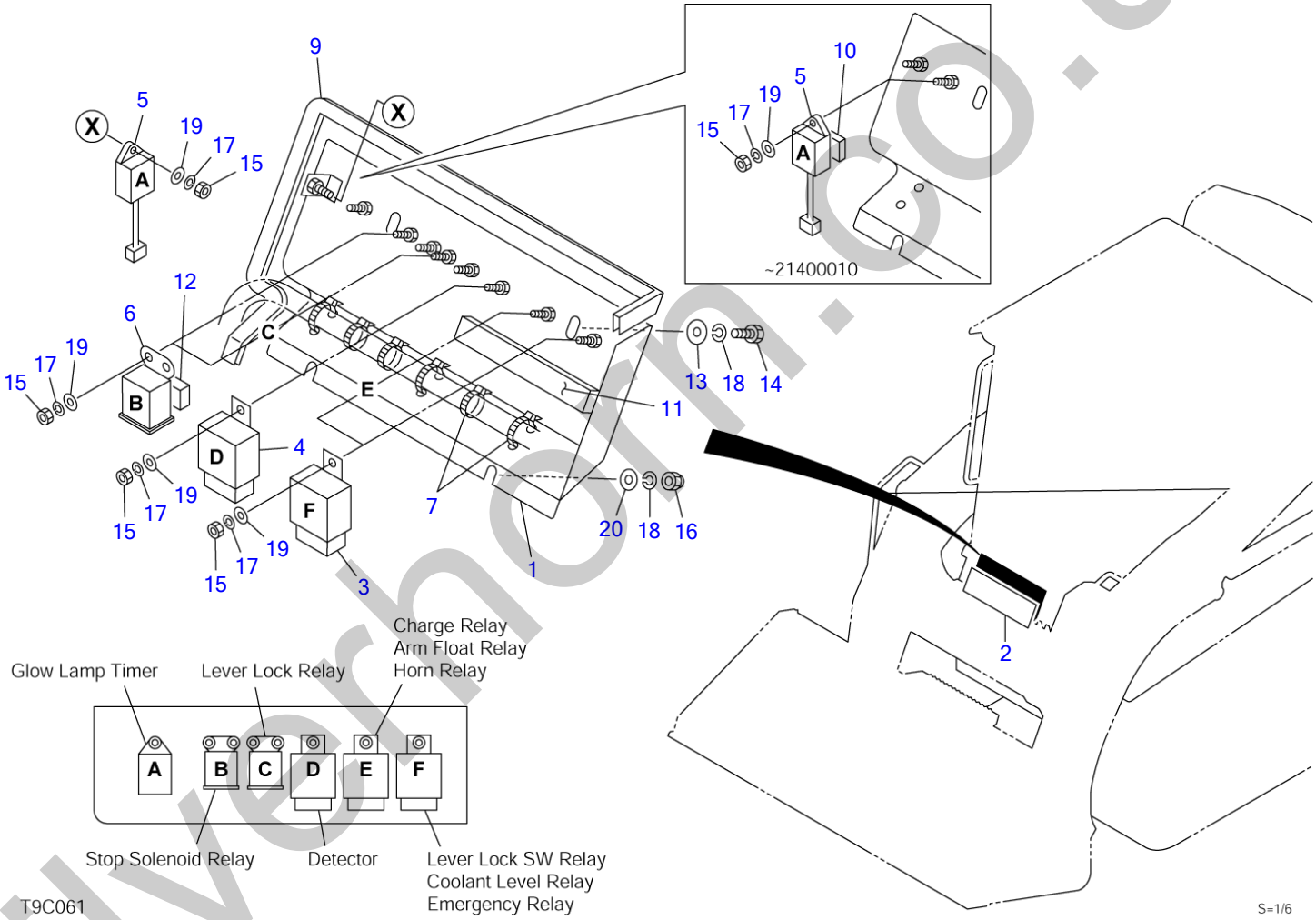

silverhorn.co.uk

ELECTRICAL (3/3)

Item	Part number	Description	Q'ty	Chan.	Serial No.	Serv.	Remarks
0-2	0882420200	RELAY ASSY	1				X08824-20200-6
1	0882420250	・BOX	1				
2	0882420220	・PLATE, rubber	1				
3	1711900062	・RELAY	2				
4	1711900131	・DETECTOR	1				
5	1910172113	・UNIIT, timer	1				ISUZU 3-220232-A
6	1711900099	・RELAY	2				
7	1652231250	・BAND	6				
9	1654606083	・TRIM	1				sold by the meter
10	1654301003	・SPONGE	1		~21400010		sold by the meter
11	1654302017	・SPONGE	1				sold by the meter
12	1654302003	・SPONGE	2				sold by the meter
13	0003608252	・WASHER	2				
14	1100040816	・BOLT	2				
15	1130040006	・NUT	8				
16	1134230008	・NUT	2				
17	1140020006	・WASHER, spring	8				
18	1140020008	・WASHER, spring	4				
19	1141110006	・WASHER	8				
20	1141110008	・WASHER	2				
	T9c062						

silverhorn.co.uk

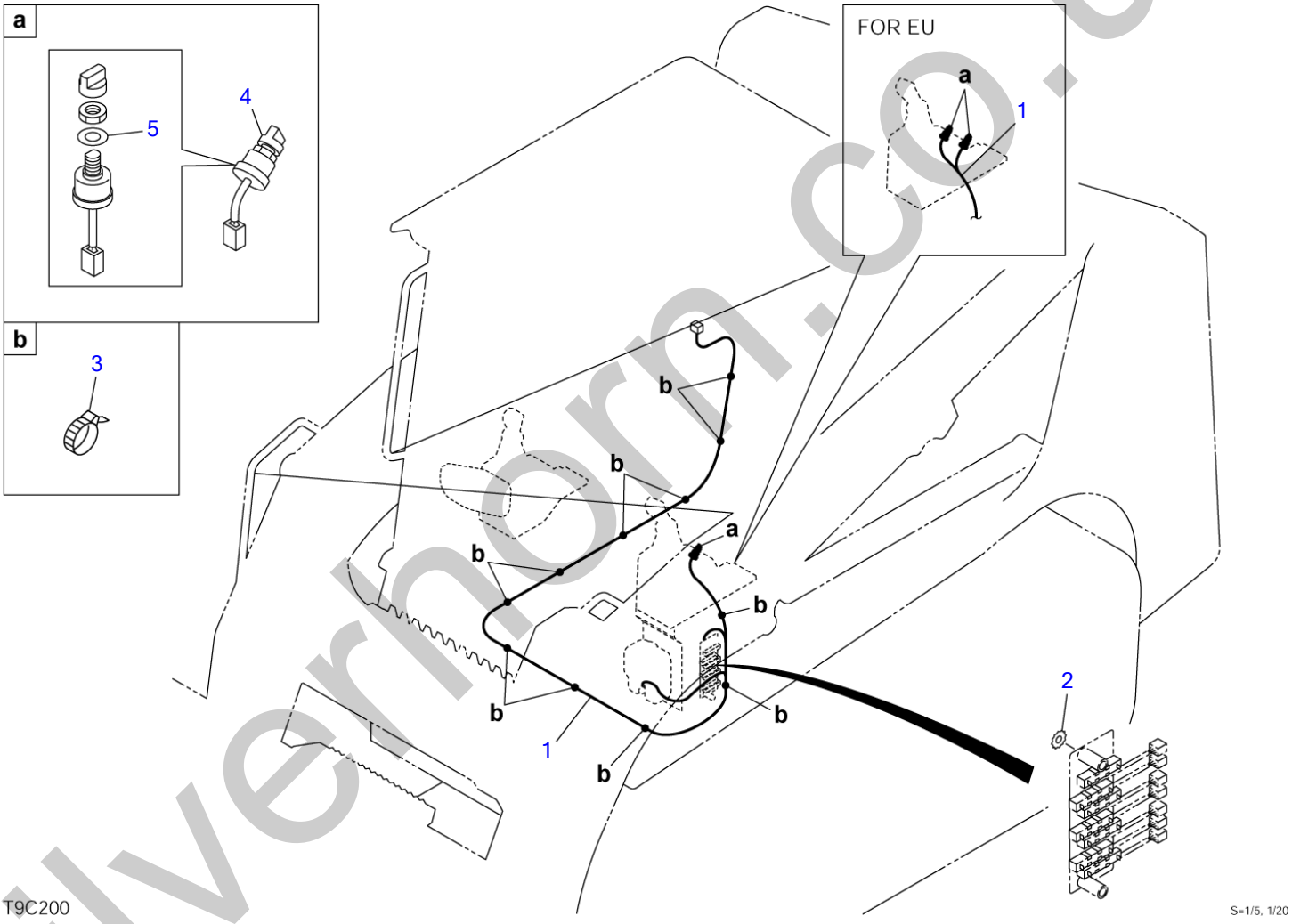

silverhorn.co.uk

ELECTRICAL (cab)

Item	Part number	Description	Q'ty	Chan.	Serial No.	Serv.	Remarks
		ELECTRICAL ASSY					X08804-27800-1
		ELECTRICAL ASSY (for EU)					X08824-21400-0
1	0880427810	HARNESS, wiring	1				
	0882421410	HARNESS, wiring	1		21403789~		for EU
2	1140330010	WASHER	1				
3	1652231250	BAND	10				
4	1704300007	SWITCH, wiper	1				
	1704300007	SWITCH, wiper	2		21403789~		for EU
5	1141810012	WASHER	1				
	1141810012	WASHER	2		21403789~		for EU
	T9c200						

silverhorn.co.uk

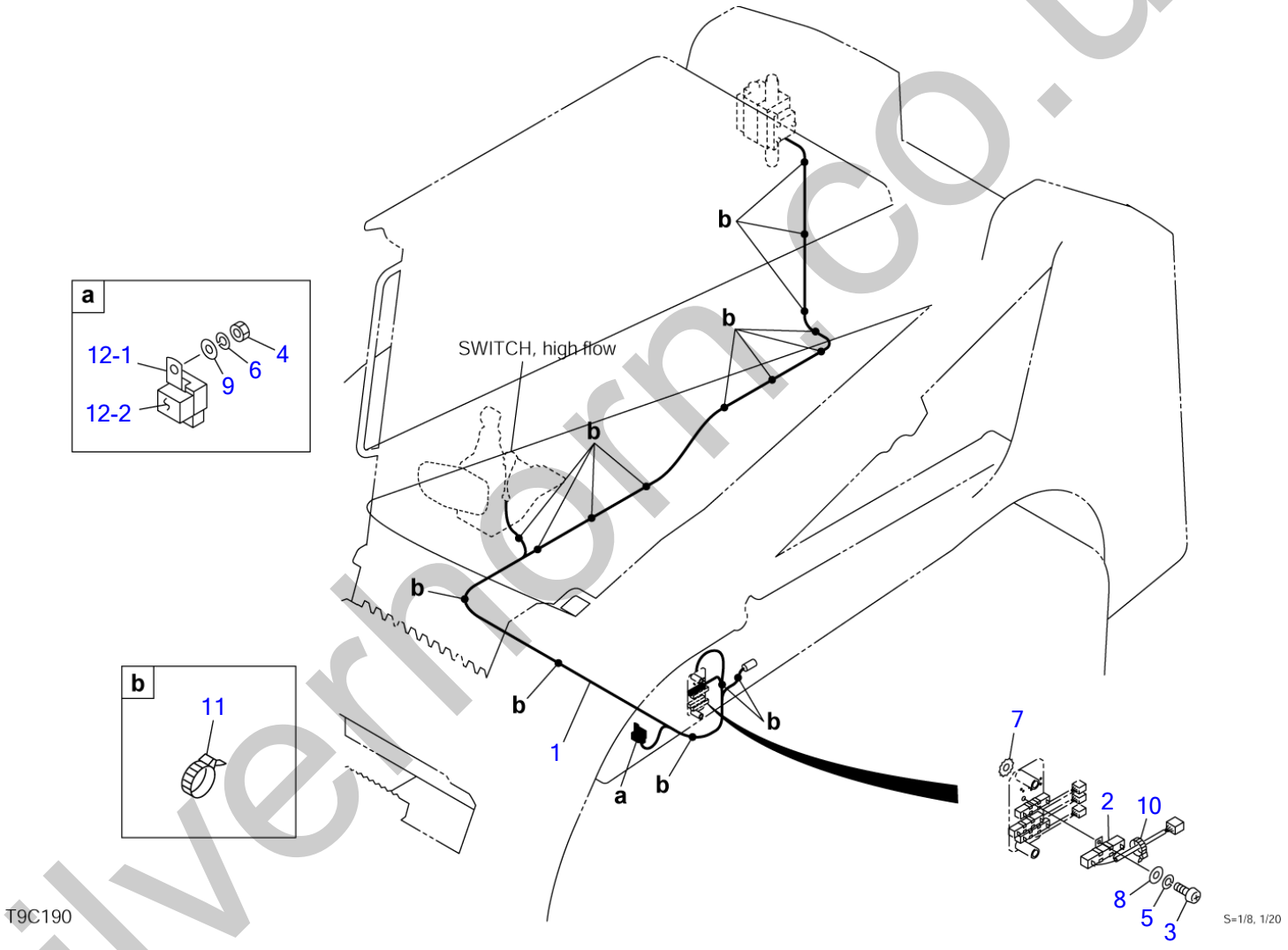

silverhorn.co.uk

ELECTRICAL (high flow; 21403459-)

Item	Part number	Description	Q'ty	Chan.	Serial No.	Serv.	Remarks
		ELECTRICAL ASSY					X08824-21300-0
1	0880426600	HARNESS, wiring	1				
2	0881421710	RESISTOR	1				
3	1120530306	SCREW	1				
4	1130040006	NUT	1				
5	1140020003	WASHER, spring	1				
6	1140020006	WASHER, spring	1				
7	1140330010	WASHER	1				
8	1141110003	WASHER	1				
9	1141110006	WASHER	1				
10	1652200003	BAND	1				
11	1652231250	BAND	16				
12	0334230130	RELAY ASSY	1				
12-1	1711900042	・RELAY	1				
12-2	1654302003	・SPONGE	1				
	T9c190						

silverhorn.co.uk

BATTERY

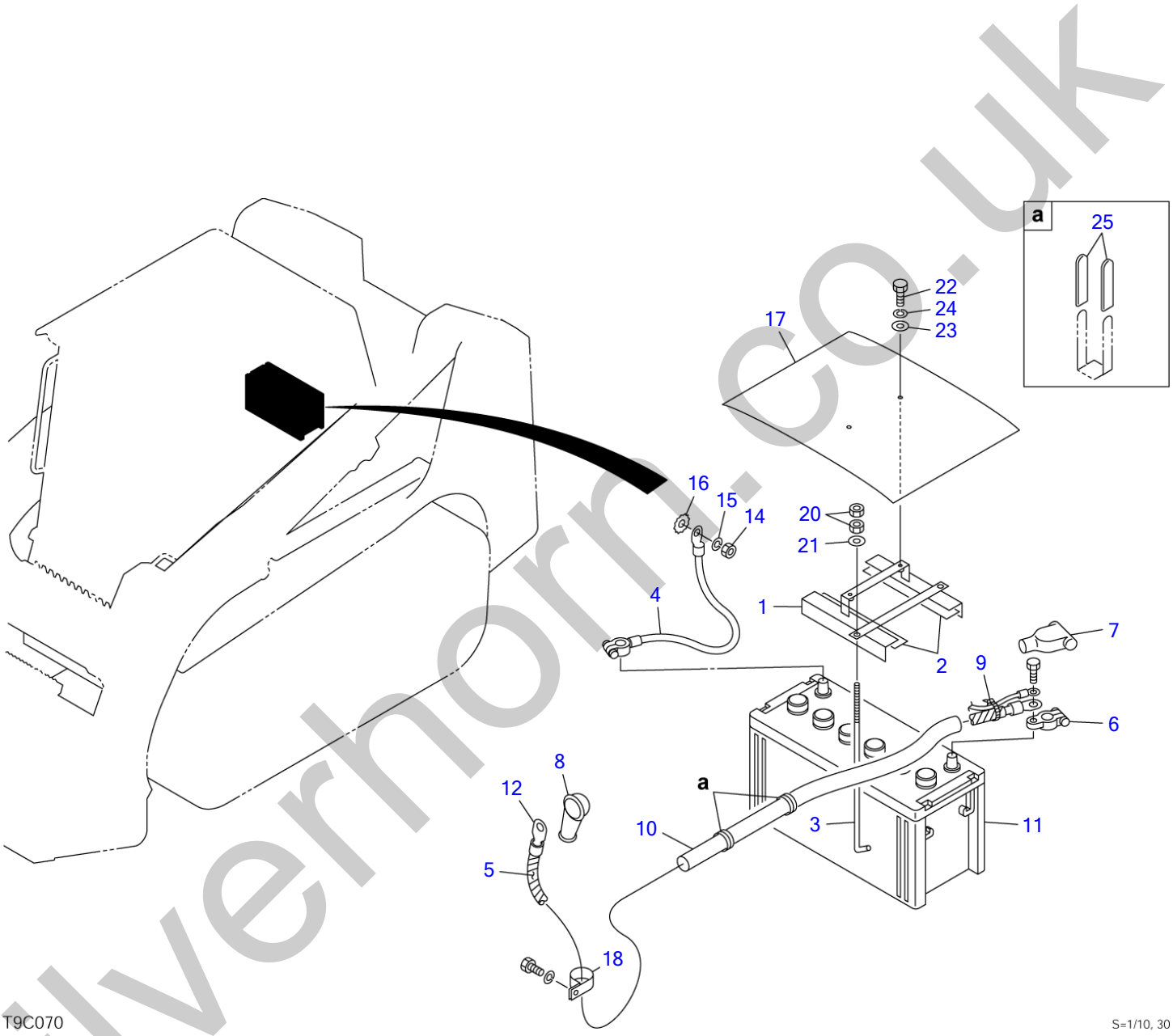

silverhorn.co.uk

BATTERY

Item	Part number	Description	Q'ty	Chan.	Serial No.	Serv.	Remarks
		BATTERY ASSY					X08824-40000-3
1	0880442020	CLAMP	1				
2	0880442050	RUBBER	2				
3	1702108260	BOLT	2				
4	1702230020	CABLE, earth	1				
5	1703221302	TUBE	1				
6	1702330000	TERMINAL	1				
7	1702920080	COVER	1				
8	1702901281	CAP	1				
9	1652231140	BAND	1				
10	1531325100	PROTECTOR	1				sold by the meter
11	1702050141	BATTERY	1				
12	1702530110	CABLE, battery	1				
14	1130040010	NUT	1				
15	1140020010	WASHER, spring	1				
16	1140330010	WASHER	1				
17	0882440001	SHEET	1				
18	1711900072	CLAMP	1				
20	1130040008	NUT	4				
21	1141110008	WASHER	2				
22	1100040616	BOLT	2				
23	0003606202	WASHER	2				
24	1140020006	WASHER, spring	2				
25	0872433150	TUBE	8				
	T9c070						

silverhorn.co.uk

REAR LAMP

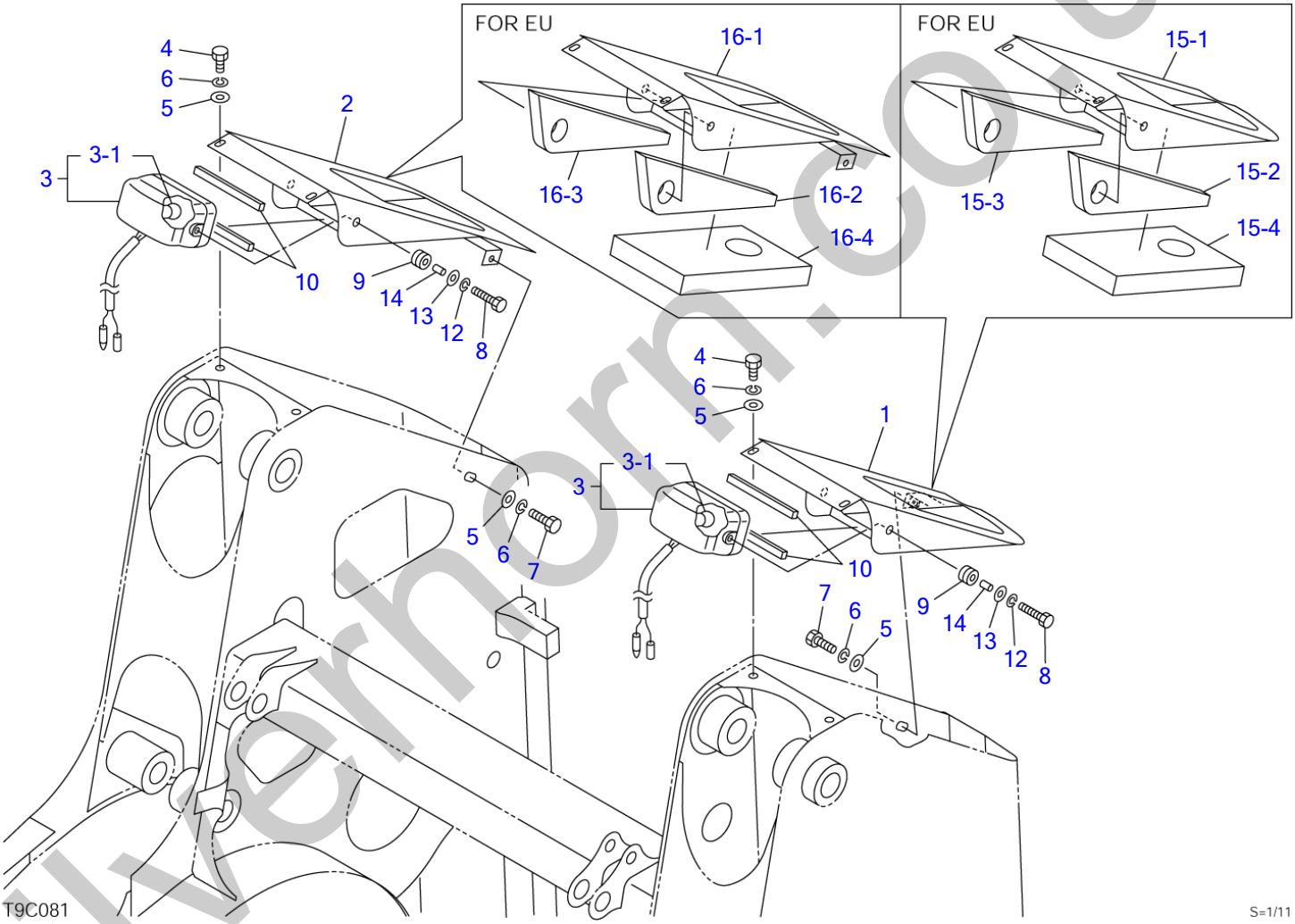

silverhorn.co.uk

REAR LAMP

Item	Part number	Description	Q'ty	Chan.	Serial No.	Serv.	Remarks
		LIGHT ASSY, rear					X08824-90000-3
		LIGHT ASSY, rear (for EU)					X08824-91000-3
1	0882490300	COVER (L.H.)	1				
2	0882490400	COVER (R.H.)	1				
3	1703006900	LAMP ASSY	2				
3-1	1703006902	・BULB	1				12V, 55W
4	1100040816	BOLT	4				
5	0003608252	WASHER	6				
6	1140020008	WASHER, spring	6				
7	1100040825	BOLT	2				
8	1100040625	BOLT	4				
9	1651057052	GROMMET	4				
10	0882490001	SPONGE	4				
12	1140020006	WASHER, spring	4				
13	0003600110	WASHER	4				
14	0882490002	COLLAR	4				
15	0882491100	COVER (L.H.) ASSY	1		21403459~		for EU
15-1	0882490300	・COVER (L.H.)	1		21403459~		for EU
15-2	0882491050	・ABSORBENT, noise	1		21403459~		for EU
15-3	0882491060	・ABSORBENT, noise	1		21403459~		for EU
15-4	0882491070	・ABSORBENT, noise	1		21403459~		for EU
16	0882491200	COVER (R.H.) ASSY	1		21403459~		for EU
16-1	0882490400	・COVER (R.H.)	1		21403459~		for EU
16-2	0882491050	・ABSORBENT, noise	1		21403459~		for EU
16-3	0882491060	・ABSORBENT, noise	1		21403459~		for EU
16-4	0882491070	・ABSORBENT, noise	1		21403459~		for EU
	T9c081						

silverhorn.co.uk

MAINTENANCE LIGHT SOCKET

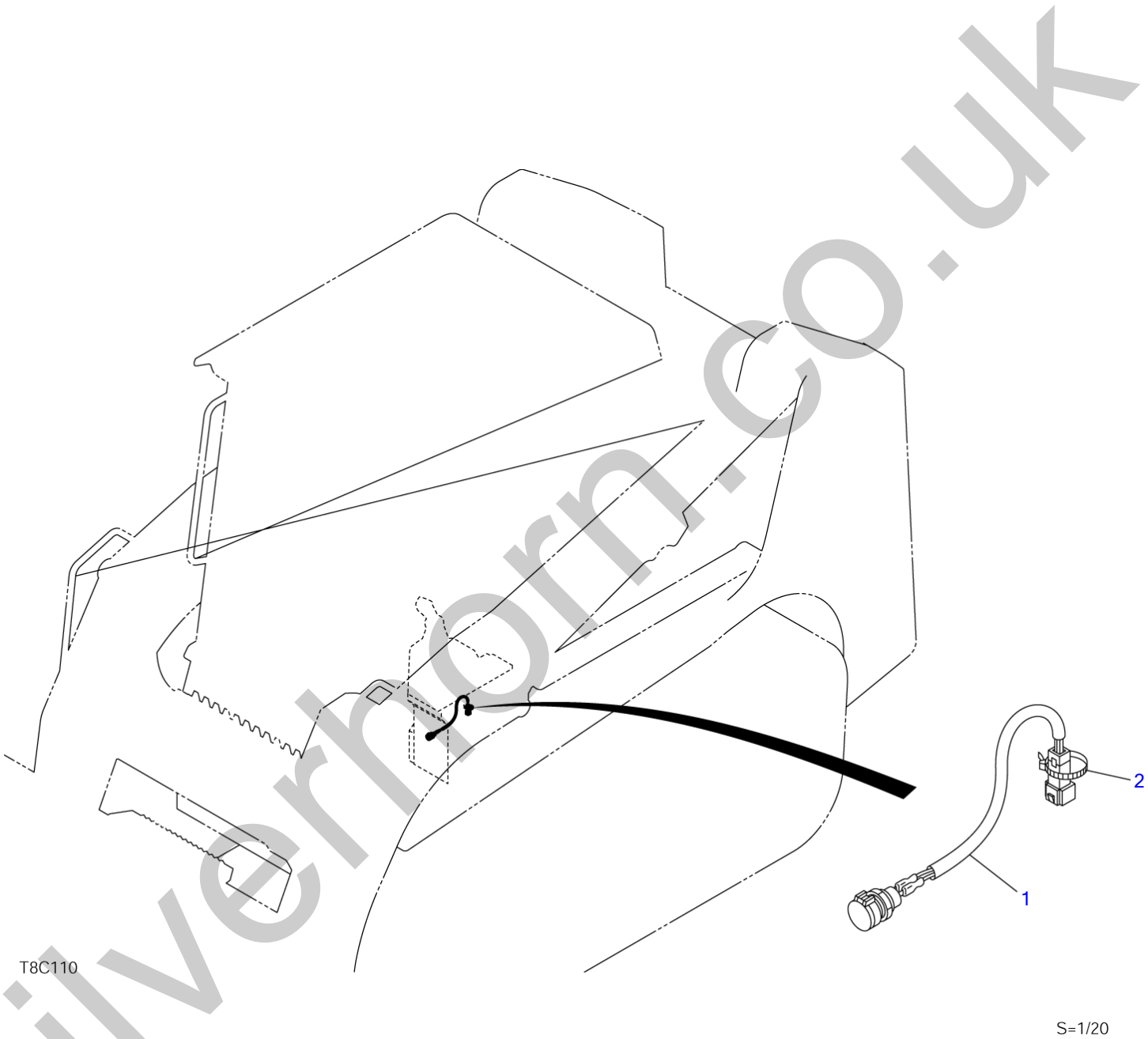

silverhorn.co.uk

MAINTENANCE LIGHT SOCKET

Item	Part number	Description	Q'ty	Chan.	Serial No.	Serv.	Remarks
		SOCKET ASSY, maintenance light					X08814-21900-0
1	**0394203100**	SOCKET ASSY	1				
2	**1652231250**	BAND	1				
	T8c110						

silverhorn.co.uk

ROOM LAMP (-21400007)

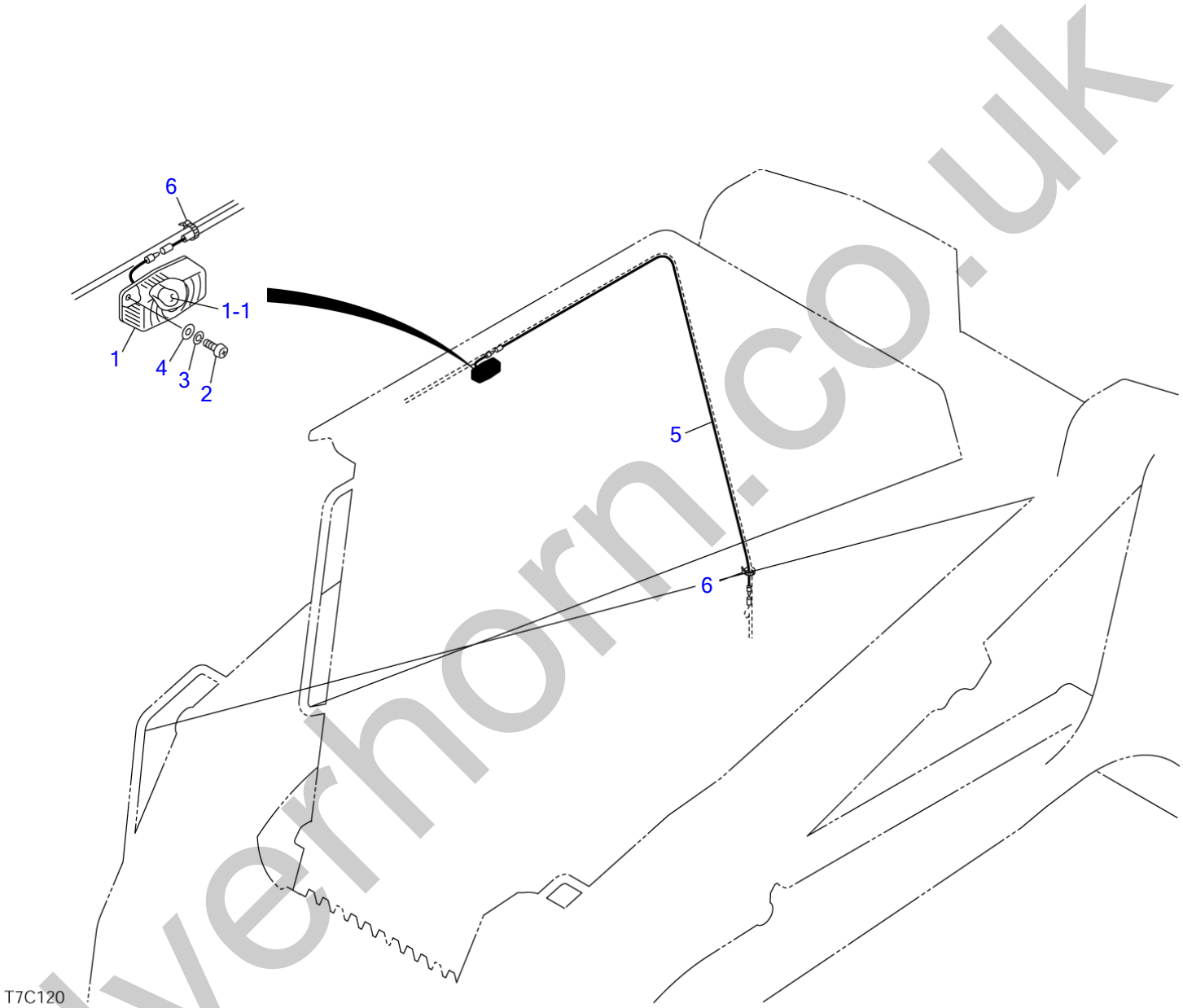

S=1/5, 1/15

silverhorn.co.uk

ROOM LAMP (-21400007)

Item	Part number	Description	Q'ty	Chan.	Serial No.	Serv.	Remarks
		LAMP ASSY, room					X08814-93500-1
1	1703001700	LAMP, room	1				
1-1	1703001701	・BULB	1				
2	1120530412	SCREW	2				
3	1140020004	WASHER, spring	2				
4	1141110004	WASHER	2				
5	0881963170	HARNESS, wiring	1				
6	1652231140	BAND	2				
	T7c120						

silverhorn.co.uk

WINDOW WASHER

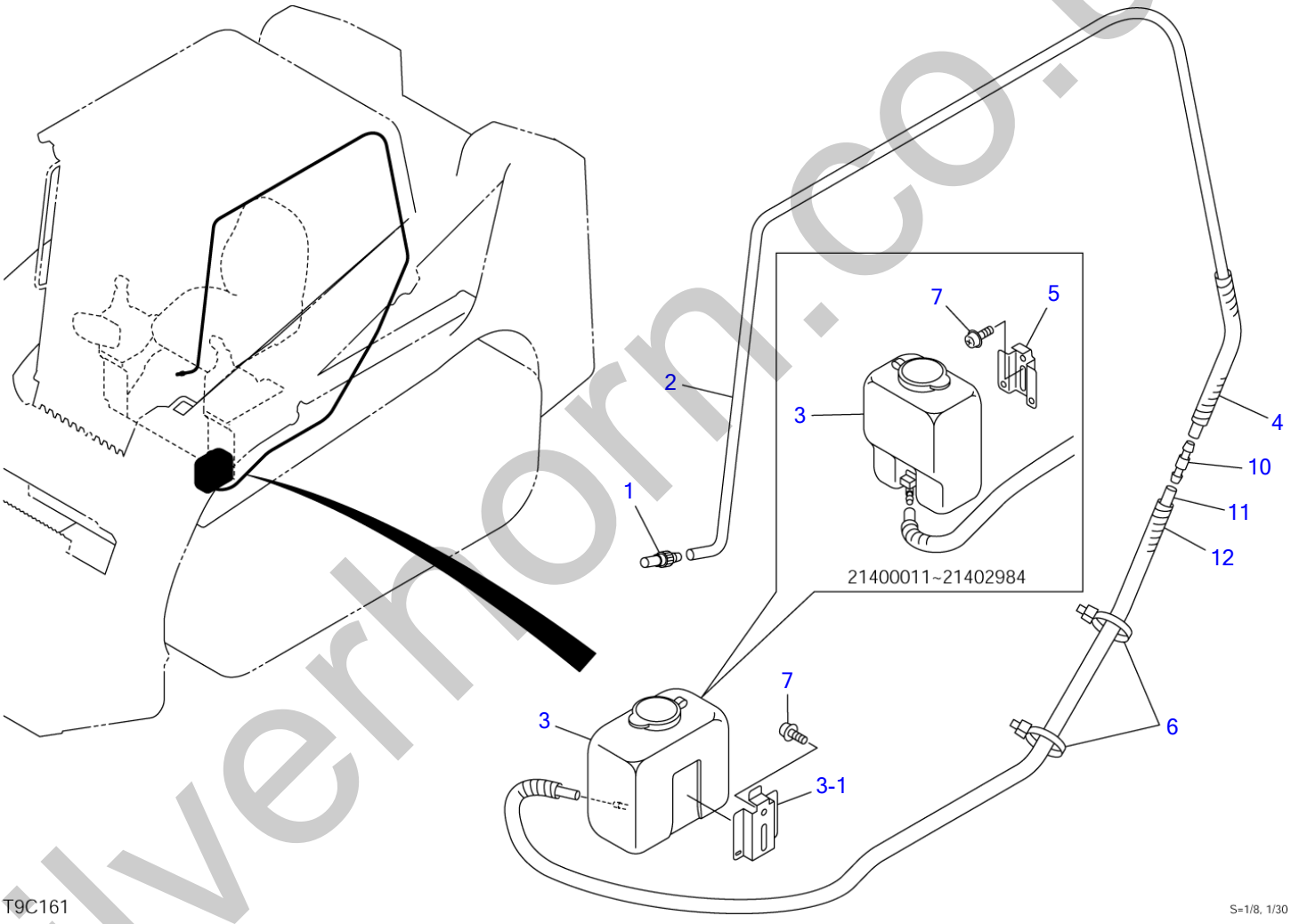

silverhorn.co.uk

WINDOW WASHER

Item	Part number	Description	Q'ty	Chan.	Serial No.	Serv.	Remarks
		WASHER ASSY, window					X08808-90500-1
1	1711910040	NOZZLE	1				
2	1711919300	HOSE	1				sold by the meter
3	1711910101	TANK	1		21400011~21402984		
	1711910290	TANK	1		21402985~		
3-1	1711910291	▪ BRACKET	1		21402985~		
4	1703210770	PROTECTOR	1				sold by the meter
5	1711910062	BRACKET	1		21400011~21402984		
6	1652231140	BAND	2				
7	1150410612	SCREW	2				
10	1711910014	JOINT	1				
11	1711919150	HOSE	1				sold by the meter
12	1703220750	PROTECTOR	1				sold by the meter
	T9c161						

silverhorn.co.uk

WINDOW WASHER (for EU; 21403789-)

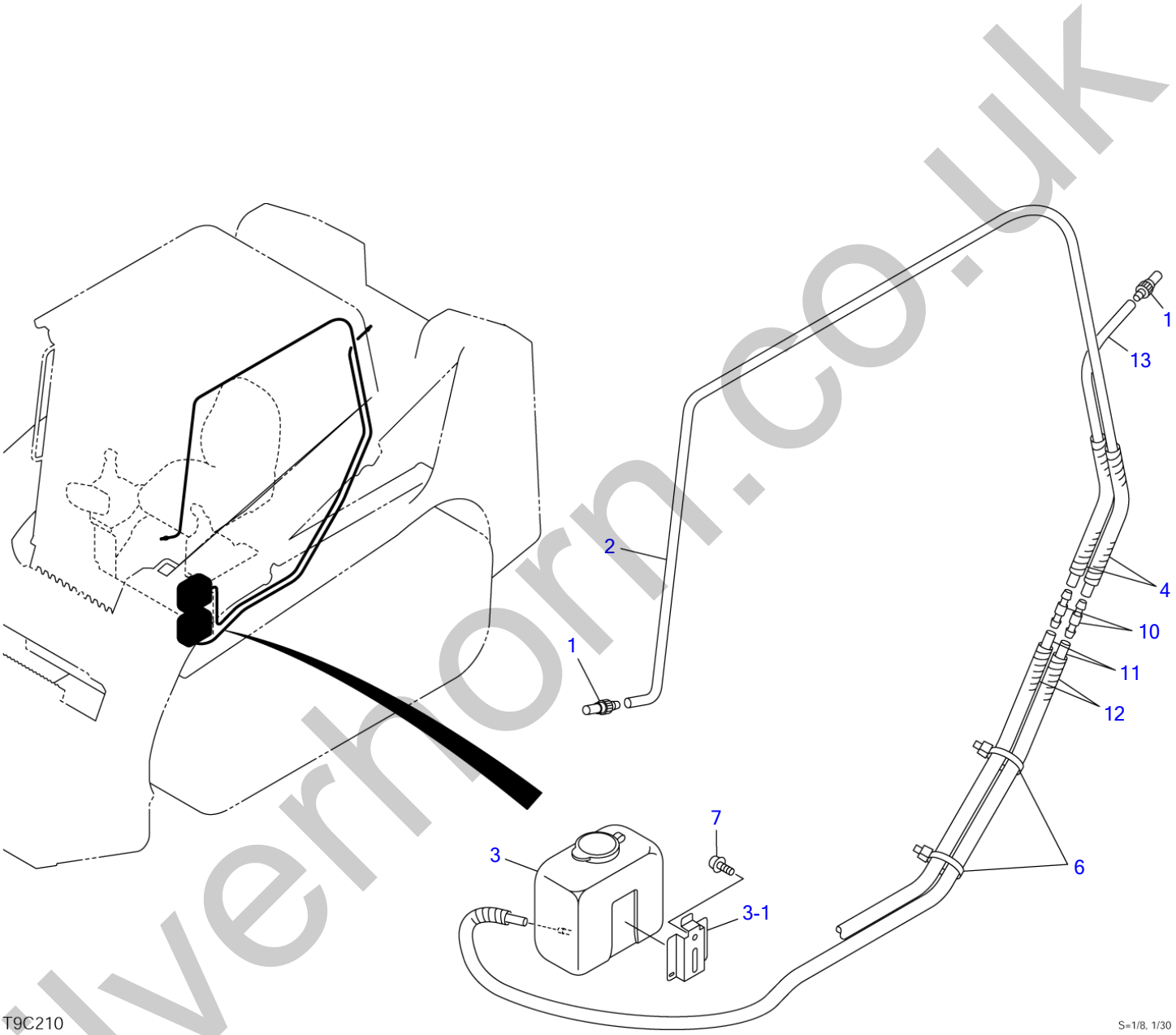

silverhorn.co.uk

WINDOW WASHER (for EU; 21403789-)

Item	Part number	Description	Q'ty	Chan.	Serial No.	Serv.	Remarks
		WASHER ASSY, window					X08828-90000-0
1	1711910040	NOZZLE	2				
2	1711919300	HOSE	1				sold by the meter
3	1711910290	TANK	2				
3-1	1711910291	▪ BRACKET	2				
4	1703210770	PROTECTOR	2				sold by the meter
6	1652231140	BAND	2				
7	1150410616	SCREW	4				
10	1711910014	JOINT	2				
11	1711919150	HOSE	2				sold by the meter
12	1703220750	PROTECTOR	2				sold by the meter
13	1711919120	HOSE	1				sold by the meter
	T9c210						

silverhorn.co.uk

VALVE & ACCESSORIES (21400011-21405078)

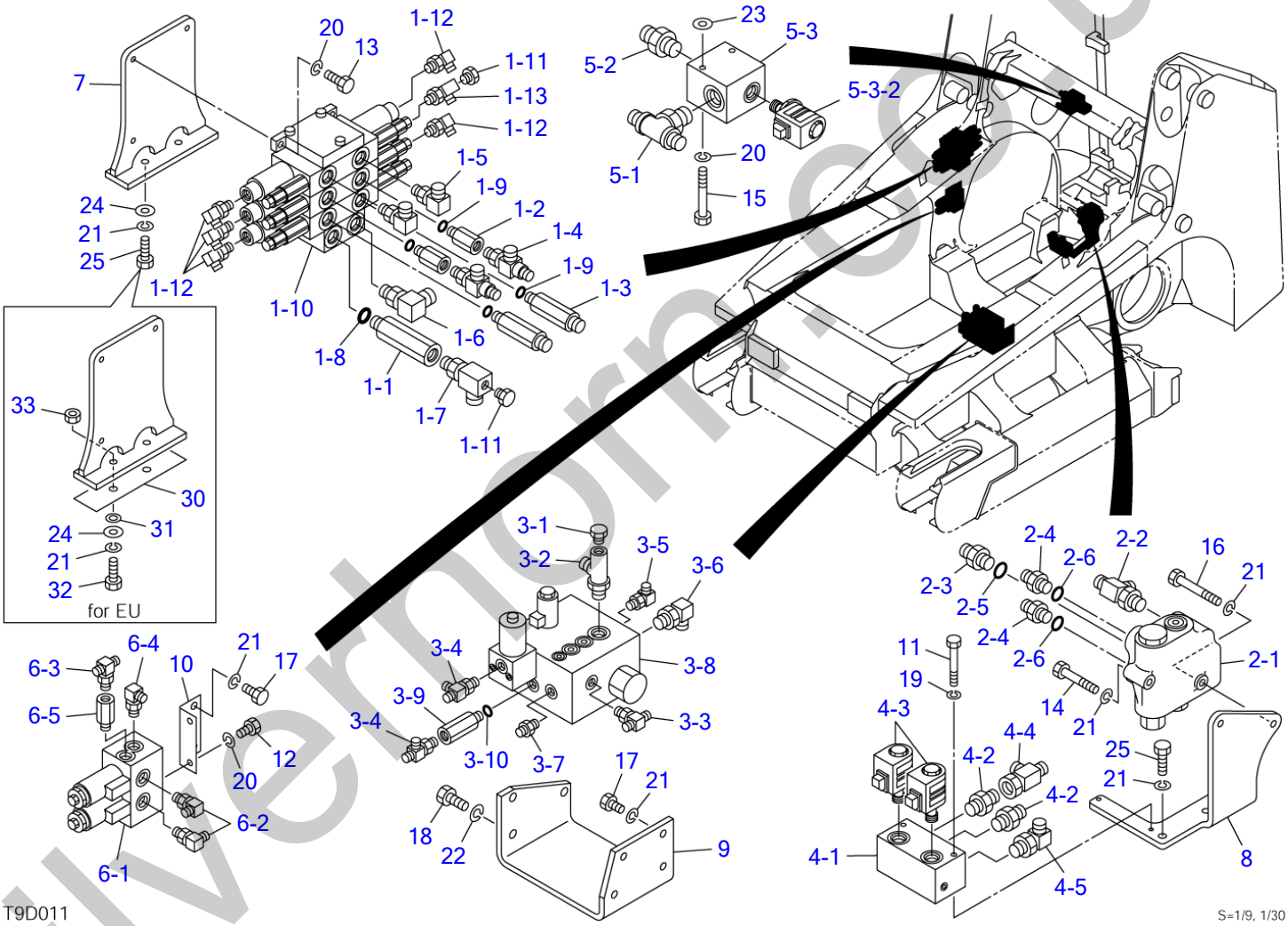

silvermoor.co.uk

VALVE & ACCESSORIES (21400011-21405078)

Item	Part number		Description	Q'ty	Chan.	Serial No.	Serv.	Remarks
			VALVE ASSY, control					X08825-00000-5
			VALVE ASSY, control (for EU)					X08825-02000-5
1	X	**********	VALVE SUB ASSY	1				X08825-00010-1
1-1		0007213059	・BUSHING	1				
1-2		0007213049	・BUSHING	2				
1-3		0007203072	・ADAPTOR	2				
1-4		1512373010	・TEE	2				
		1420010180	・・O-RING	1				
1-5		1515200067	・ELBOW	2				
		1420370908	・・O-RING	1				
1-6		1512375003	・ELBOW	1				
		1420370910	・・O-RING	1				
1-7		1512340015	・ELBOW	1				
		1420010240	・・O-RING	1				
1-8		1420370910	・O-RING	1				
1-9		1420370908	・O-RING	4				
1-10		1901042100	・VALVE, control	1				
1-11		1501750002	・PLUG	2				
		1420010110	・・O-RING	1				
1-12		1515012040	・ELBOW	5				
		1420010110	・・O-RING	1				
1-13		1512340001	・ELBOW	1				
		1420010110	・・O-RING	1				
2	X	**********	VALVE SUB ASSY	1				X08825-00020-0
2-1		1901736100	・VALVE, self-level	1				
2-2		1512373009	・TEE	1				
		1420370908	・・O-RING	1				
2-3		0007203007	・ADAPTOR	1				
		1420310908	・・O-RING	1				
2-4		0007203017	・ADAPTOR	2				
		1420310906	・・O-RING	1				
2-5		1420370910	・O-RING	1				
2-6		1420370906	・O-RING	2				
3	X	**********	VALVE SUB ASSY	1				X08825-00030-0
3-1		1501750002	・PLUG	1				
		1420010110	・・O-RING	1				
3-2		1512340004	・ELBOW	1				
		1420010180	・・O-RING	1				
3-3		1512370010	・ADAPTOR	1				
		1420010110	・・O-RING	1				
3-4		1512370011	・TEE	2				
		1420010110	・・O-RING	1				
3-5		1515012040	・ELBOW	1				
		1420010110	・・O-RING	1				
3-6		1515010042	・ELBOW	1				
		1420010180	・・O-RING	1				
3-7		1515600200	・ADAPTOR	1				
		1420010110	・・O-RING	1				
3-8		1901735500	・VALVE, sub	1				
3-9		0007213061	・BUSHING	1				
3-10		1420010110	・O-RING	1				
4	X	**********	VALVE SUB ASSY	1				X08825-00040-1
4-1		0881501100	・BLOCK, valve	1				
4-2		1515600202	・ADAPTOR	2				
		1420010180	・・O-RING	1				
4-3		1901723200	・VALVE, solenoid	2				
4-4		1513390034	・TEE	1				
4-5		1515010042	・ELBOW	1				
		1420010180	・・O-RING	1				
5	X	**********	VALVE SUB ASSY	1				X08825-00050-0
5-1		1512374011	・TEE	1				
		1420010240	・・O-RING	1				
5-2		1515600574	・ADAPTOR	1				
		1420010240	・・O-RING	1				
5-3		1901734500	・VALVE, solenoid	1				
5-3-2		1901734502	・・SOLENOID	1				
6	X	**********	VALVE SUB ASSY	1				X08825-00060-1
6-1		1901738400	・VALVE, proportional control	1				

silverform.co.uk

VALVE & ACCESSORIES (21400011-21405078)

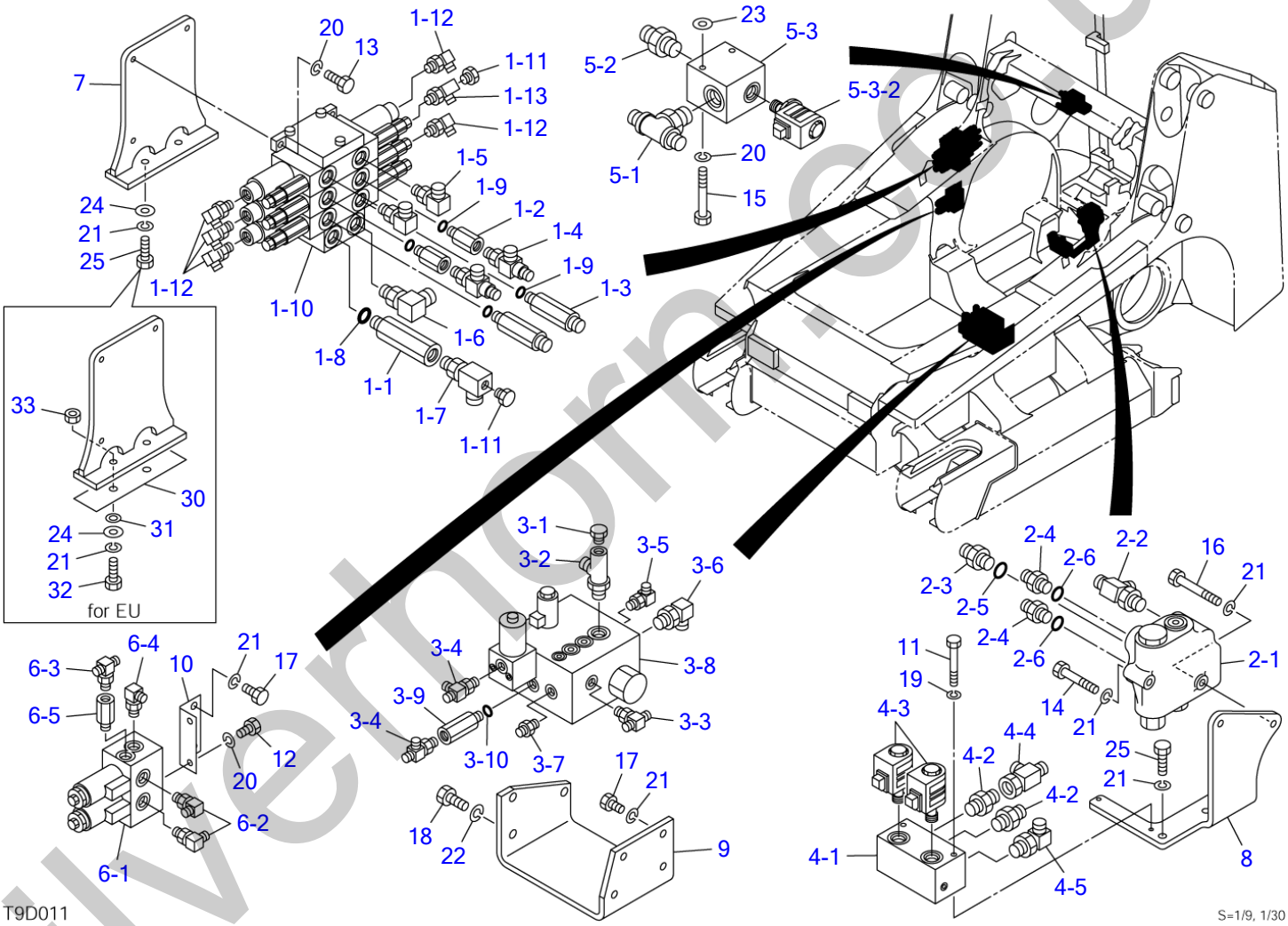

silvermoor.co.uk

VALVE & ACCESSORIES (21400011-21405078)

Item	Part number	Description	Q'ty	Chan.	Serial No.	Serv.	Remarks
6-2	1515012040	・ELBOW	2				
6-2	1420010110	・・O-RING	1				
6-3	1512370010	・TEE	1				
6-3	1420010110	・・O-RING	1				
6-4	1512375004	・ELBOW	1				
6-4	1420010110	・・O-RING	1				
6-5	0007213028	・BUSHING	1				
7	0882500070	BRACKET	1				
8	0882500085	BRACKET	1				
9	0882500090	BRACKET	1				
10	0882500100	BRACKET	1				
11	1100040665	BOLT	2				
12	1100040816	BOLT	2				
13	1100040820	BOLT	3				
14	1100041055	BOLT	1				
15	1100040870	BOLT	2				
16	1100041075	BOLT	1				
17	1100041020	BOLT	6				
18	1100041225	BOLT	3				
19	1140020006	WASHER, spring	2				
20	1140020008	WASHER, spring	7				
21	1140020010	WASHER, spring	12				
22	1140020012	WASHER, spring	3				
23	1141110008	WASHER	2				
24	0003600025	WASHER	2				
25	1100041030	BOLT	4				
25	1100041030	BOLT	2				for EU
30	0882502010	RUBBER	1				for EU
31	0882702480	RUBBER	2				for EU
32	1100041045	BOLT	2				for EU
33	1130040010	NUT	2				for EU
	T9d013						

silverhorn.co.uk

VALVE & ACCESSORIES (21405079-)

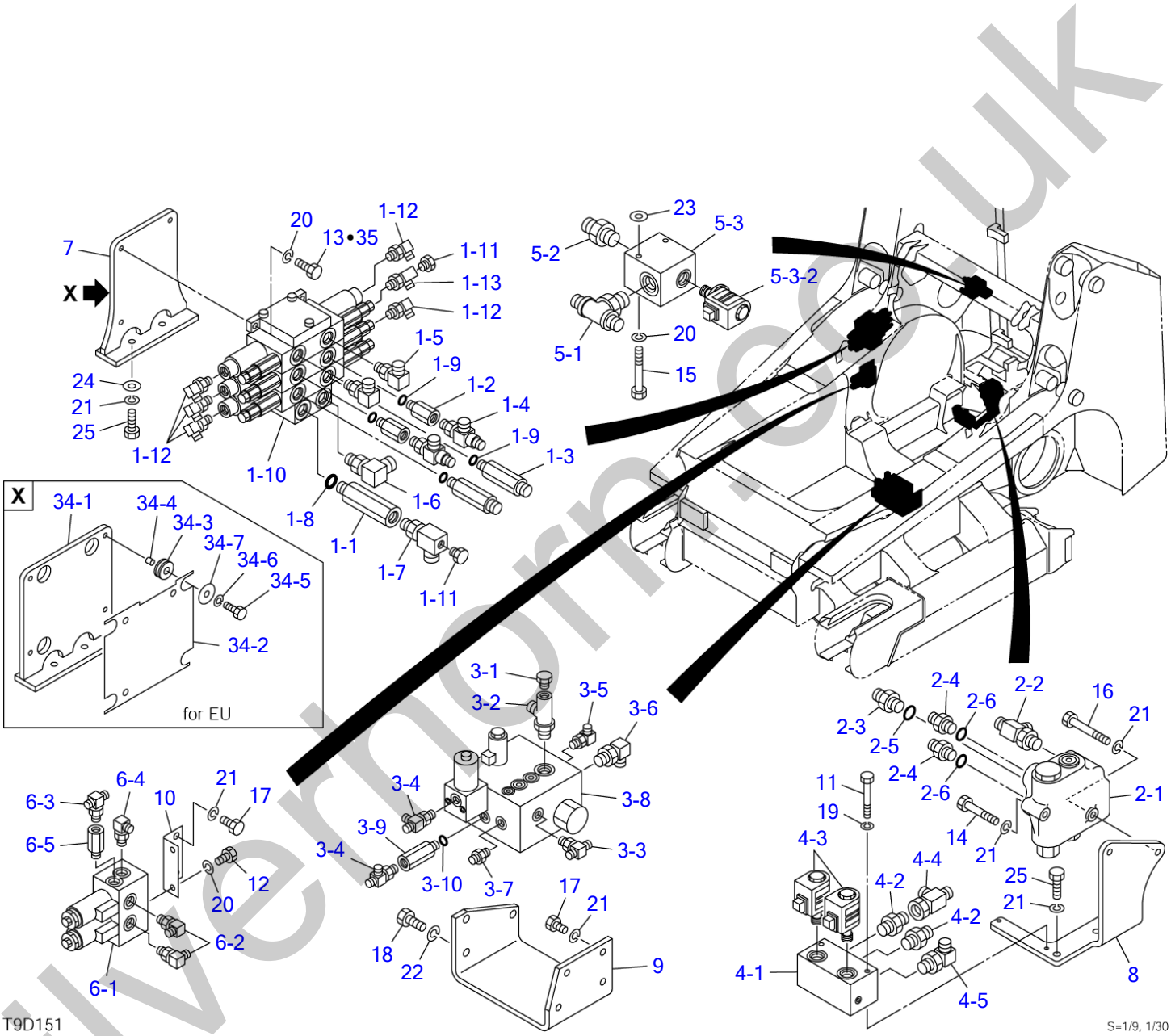

silvermore.co.uk

VALVE & ACCESSORIES (21405079-)

Item	Part number		Description	Q'ty	Chan.	Serial No.	Serv.	Remarks
			VALVE ASSY, control					X08825-00000-7
			VALVE ASSY, control (for EU)					X08825-02000-7
1	X	**********	VALVE SUB ASSY	1				X08825-00010-1
1-1		0007213059	・BUSHING	1				
1-2		0007213049	・BUSHING	2				
1-3		0007203072	・ADAPTOR	2				
1-4		1512373010	・TEE	2				
		1420010180	・・O-RING	1				
1-5		1515200067	・ELBOW	2				
		1420370908	・・O-RING	1				
1-6		1512375003	・ELBOW	1				
		1420370910	・・O-RING	1				
1-7		1512340015	・ELBOW	1				
		1420010240	・・O-RING	1				
1-8		1420370910	・O-RING	1				
1-9		1420370908	・O-RING	4				
1-10		1901042100	・VALVE, control	1				
1-11		1501750002	・PLUG	2				
		1420010110	・・O-RING	1				
1-12		1515012040	・ELBOW	5				
		1420010110	・・O-RING	1				
1-13		1512340001	・ELBOW	1				
		1420010110	・・O-RING	1				
2	X	**********	VALVE SUB ASSY	1				X08825-00020-0
2-1		1901736100	・VALVE, self-level	1				
2-2		1512373009	・TEE	1				
		1420370908	・・O-RING	1				
2-3		0007203007	・ADAPTOR	1				
		1420310908	・・O-RING	1				
2-4		0007203017	・ADAPTOR	2				
		1420310906	・・O-RING	1				
2-5		1420370910	・O-RING	1				
2-6		1420370906	・O-RING	2				
3	X	**********	VALVE SUB ASSY	1				X08825-00030-0
3-1		1501750002	・PLUG	1				
		1420010110	・・O-RING	1				
3-2		1512340004	・ELBOW	1				
		1420010180	・・O-RING	1				
3-3		1512370010	・ADAPTOR	1				
		1420010110	・・O-RING	1				
3-4		1512370011	・TEE	2				
		1420010110	・・O-RING	1				
3-5		1515012040	・ELBOW	1				
		1420010110	・・O-RING	1				
3-6		1515010042	・ELBOW	1				
		1420010180	・・O-RING	1				
3-7		1515600200	・ADAPTOR	1				
		1420010110	・・O-RING	1				
3-8		1901735500	・VALVE, sub	1				
3-9		0007213061	・BUSHING	1				
3-10		1420010110	・O-RING	1				
4	X	**********	VALVE SUB ASSY	1				X08825-00040-1
4-1		0881501100	・BLOCK, valve	1				
4-2		1515600202	・ADAPTOR	2				
		1420010180	・・O-RING	1				
4-3		1901723200	・VALVE, solenoid	2				
4-4		1513390034	・TEE	1				
4-5		1515010042	・ELBOW	1				
		1420010180	・・O-RING	1				
5	X	**********	VALVE SUB ASSY	1				X08825-00050-0
5-1		1512374011	・TEE	1				
		1420010240	・・O-RING	1				
5-2		1515600574	・ADAPTOR	1				
		1420010240	・・O-RING	1				
5-3		1901734500	・VALVE, solenoid	1				
5-3-2		1901734502	・・SOLENOID	1				
6	X	**********	VALVE SUB ASSY	1				X08825-00060-1
6-1		1901738400	・VALVE, proportional control	1				

silverform.co.uk

VALVE & ACCESSORIES (21405079-)

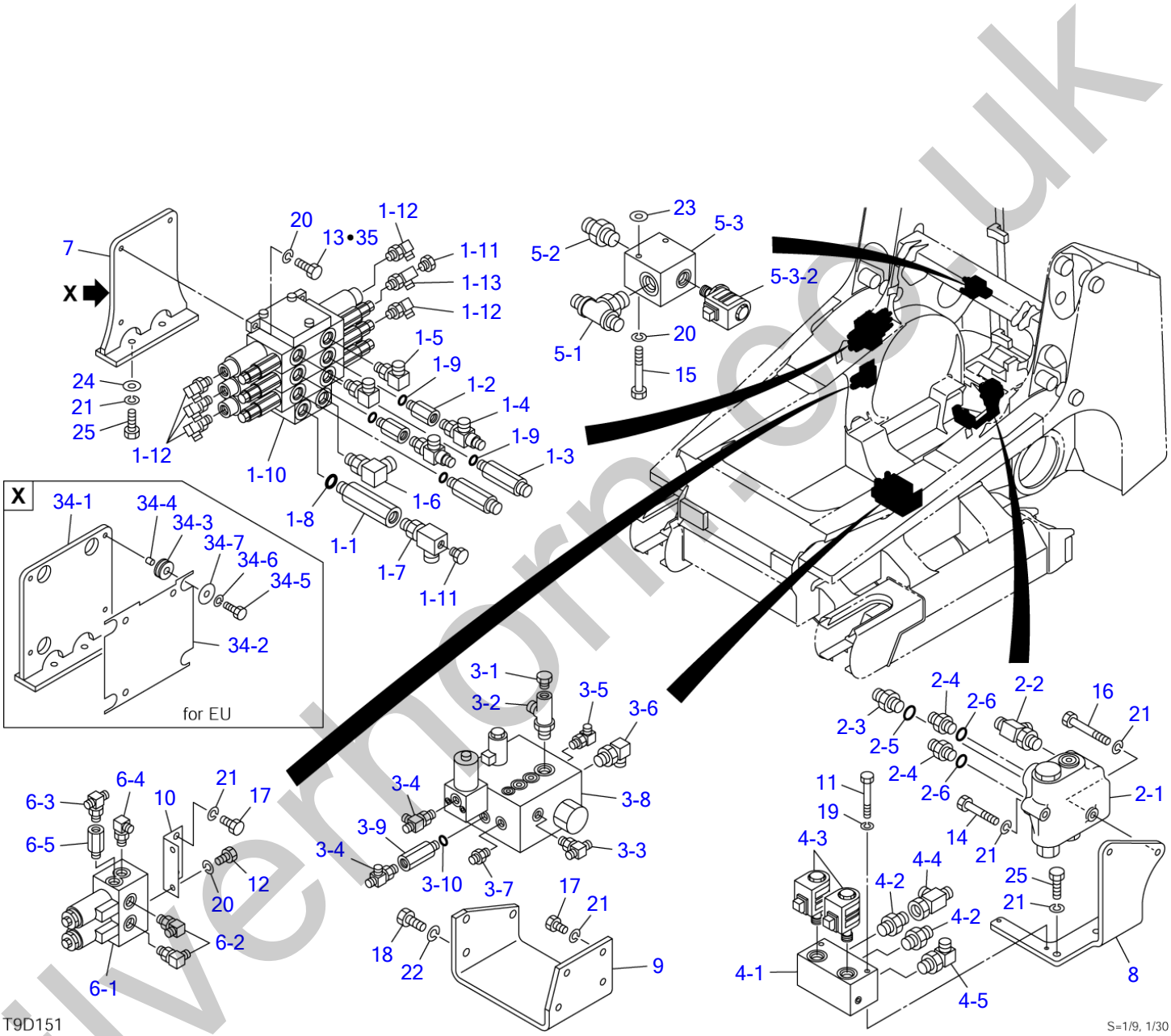

silvermore.co.uk

VALVE & ACCESSORIES (21405079-)

Item	Part number	Description	Q'ty	Chan.	Serial No.	Serv.	Remarks
6-2	1515012040	・ELBOW	2				
6-2	1420010110	・・O-RING	1				
6-3	1512370010	・TEE	1				
6-3	1420010110	・・O-RING	1				
6-4	1512375004	・ELBOW	1				
6-4	1420010110	・・O-RING	1				
6-5	0007213028	・BUSHING	1				
7	0882500070	BRACKET	1				
8	0882500085	BRACKET	1				
9	0882500090	BRACKET	1				
10	0882500100	BRACKET	1				
11	1100040665	BOLT	2				
12	1100040816	BOLT	2				
13	1100040820	BOLT	3				
14	1100041050	BOLT	1			M	
15	1100040870	BOLT	2				
16	1100041075	BOLT	1				
17	1100041020	BOLT	6				
18	1100041225	BOLT	3				
19	1140020006	WASHER, spring	2				
20	1140020008	WASHER, spring	7				
21	1140020010	WASHER, spring	12				
22	1140020012	WASHER, spring	3				
23	1141110008	WASHER	2				
24	0003600025	WASHER	2				
25	1100041030	BOLT	4				
34	0882502100	BRACKET ASSY	1				for EU
34-1	0882502110	BRACKET	1				for EU
34-2	0882502120	PLATE	1				for EU
34-3	0882502130	CUSHION	4				for EU
34-4	0882502140	PIPE	4				for EU
34-5	1100040825	BOLT	4				for EU
34-6	1140020008	WASHER, spring	4				for EU
34-7	0003609003	WASHER	4				for EU
35	1100040825	BOLT	3			M	for EU
	T9d151						

silverhorn.co.uk

VALVE & ACCESSORIES (high flow; 21403459-21405078)

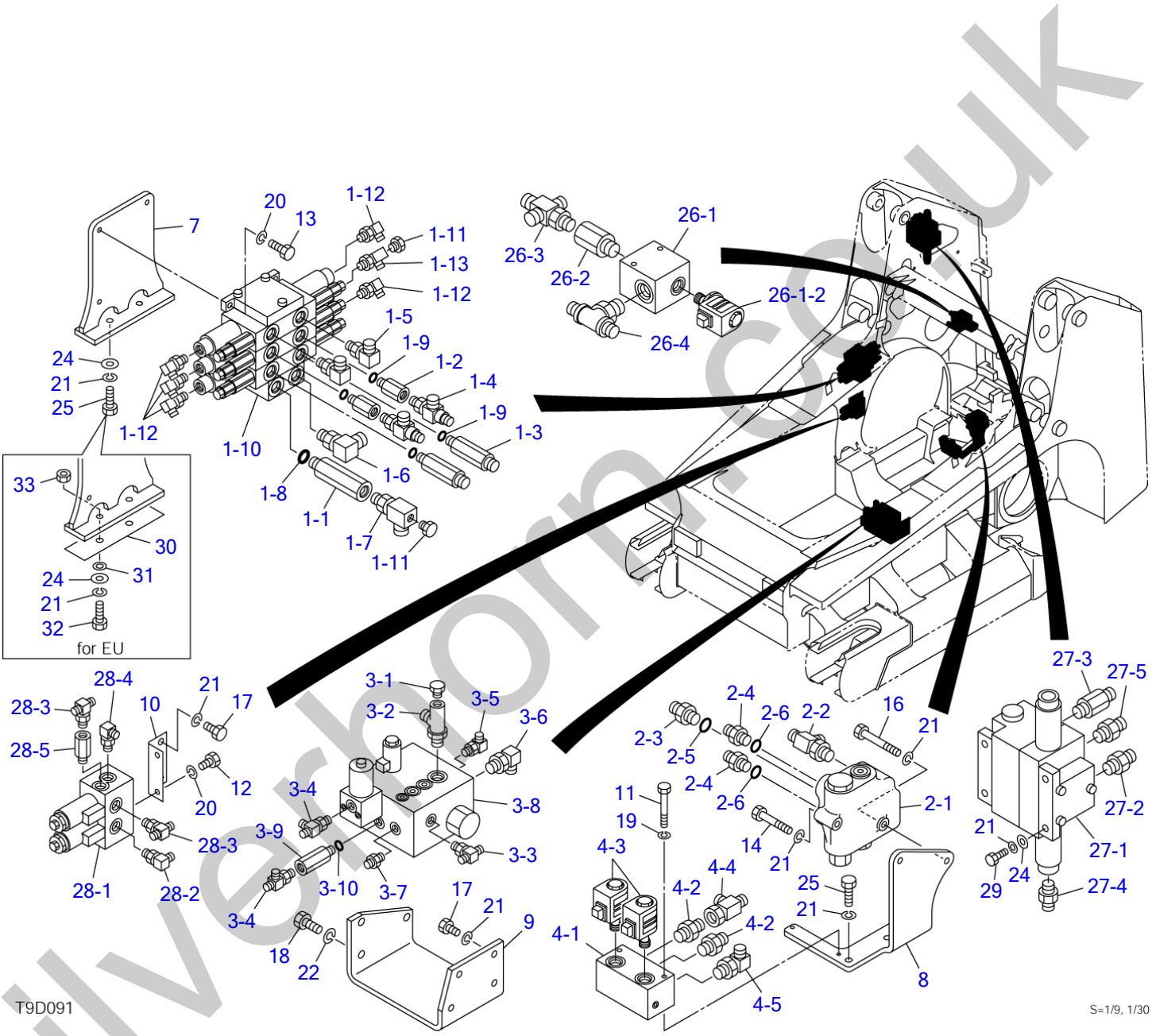

silverthorn.co.uk

VALVE & ACCESSORIES (high flow; 21403459-21405078)

Item	Part number		Description	Q'ty	Chan.	Serial No.	Serv.	Remarks
			VALVE ASSY, control					X08825-01000-5
			VALVE ASSY, control (for EU)					X08825-02500-5
1	X	**********	VALVE SUB ASSY	1				X08825-00010-1
1-1		0007213059	・BUSHING	1				
1-2		0007213049	・BUSHING	2				
1-3		0007203072	・ADAPTOR	2				
1-4		1512373010	・TEE	2				
		1420010180	・・O-RING	1				
1-5		1515200067	・ELBOW	2				
		1420370908	・・O-RING	1				
1-6		1512375003	・ELBOW	1				
		1420370910	・・O-RING	1				
1-7		1512340015	・ELBOW	1				
		1420010240	・・O-RING	1				
1-8		1420370910	・O-RING	1				
1-9		1420370908	・O-RING	4				
1-10		1901042100	・VALVE, control	1				
1-11		1501750002	・PLUG	2				
		1420010110	・・O-RING	1				
1-12		1515012040	・ELBOW	5				
		1420010110	・・O-RING	1				
1-13		1512340001	・ELBOW	1				
		1420010110	・・O-RING	1				
2	X	**********	VALVE SUB ASSY	1				X08825-00020-0
2-1		1901736100	・VALVE, self-level	1				
2-2		1512373009	・TEE	1				
		1420370908	・・O-RING	1				
2-3		0007203007	・ADAPTOR	1				
		1420310908	・・O-RING	1				
2-4		0007203017	・ADAPTOR	2				
		1420310906	・・O-RING	1				
2-5		1420370910	・O-RING	1				
2-6		1420370906	・O-RING	2				
3	X	**********	VALVE SUB ASSY	1				X08825-00030-0
3-1		1501750002	・PLUG	1				
		1420010110	・・O-RING	1				
3-2		1512340004	・ELBOW	1				
		1420010180	・・O-RING	1				
3-3		1512370010	・ADAPTOR	1				
		1420010110	・・O-RING	1				
3-4		1512370011	・TEE	2				
		1420010110	・・O-RING	1				
3-5		1515012040	・ELBOW	1				
		1420010110	・・O-RING	1				
3-6		1515010042	・ELBOW	1				
		1420010180	・・O-RING	1				
3-7		1515600200	・ADAPTOR	1				
		1420010110	・・O-RING	1				
3-8		1901735500	・VALVE, sub	1				
3-9		0007213061	・BUSHING	1				
3-10		1420010110	・O-RING	1				
4	X	**********	VALVE SUB ASSY	1				X08825-00040-1
4-1		0881501100	・BLOCK, valve	1				
4-2		1515600202	・ADAPTOR	2				
		1420010180	・・O-RING	1				
4-3		1901723200	・VALVE, solenoid	2				
4-4		1513390034	・TEE	1				
4-5		1515010042	・ELBOW	1				
		1420010180	・・O-RING	1				
7		0882500070	BRACKET	1				
8		0882500085	BRACKET	1				
9		0882500090	BRACKET	1				
10		0882500100	BRACKET	1				
11		1100040665	BOLT	2				
12		1100040816	BOLT	2				
13		1100040820	BOLT	3				
14		1100041055	BOLT	1				
16		1100041075	BOLT	1				

silverform.co.uk

VALVE & ACCESSORIES (high flow; 21403459-21405078)

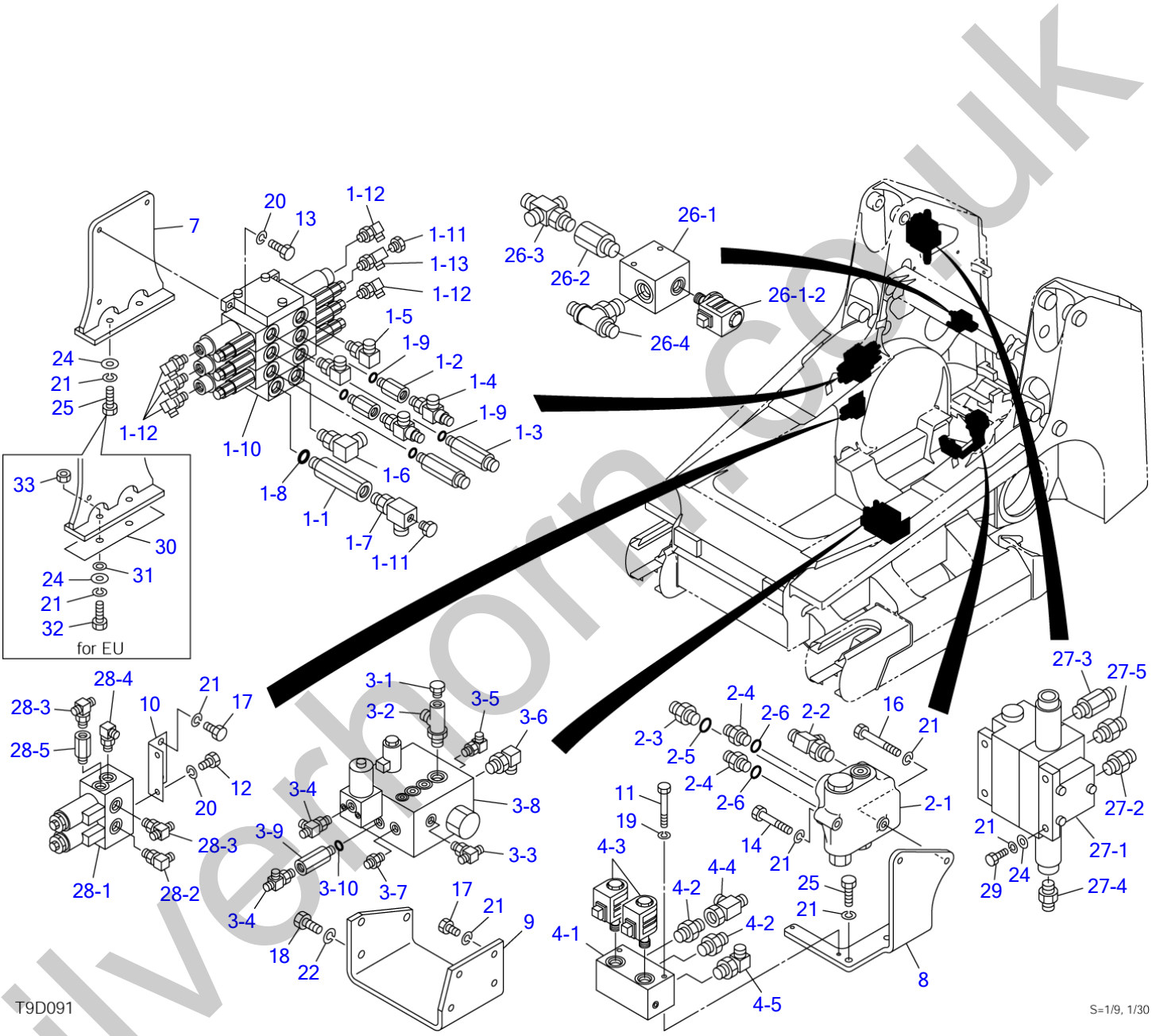

silverthorn.co.uk

VALVE & ACCESSORIES (high flow; 21403459-21405078)

Item	Part number		Description	Q'ty	Chan.	Serv.	Remarks
17		1100041020	BOLT	6			
18		1100041225	BOLT	3			
19		1140020006	WASHER, spring	2			
20		1140020008	WASHER, spring	7			
21		1140020010	WASHER, spring	15			
22		1140020012	WASHER, spring	3			
24		0003600025	WASHER	5			
25		1100041030	BOLT	4			
25		1100041030	BOLT	2			for EU
26	X	**********	VALVE SUB ASSY	1			X08815-03060-0
26-1		1901734500	・VALVE, solenoid	1			
26-1-2		1901734502	・・SOLENOID	1			
26-2		0007213050	・BUSHING	1			
26-3		0881732610	・CROSS	1			
26-4		1512374012	・TEE	1			
26-4		1420010240	・・O-RING	1			
27	X	**********	VALVE SUB ASSY	1			X08815-03100-0
27-1		1901039500	・VALVE, control	1			
27-2		0007203007	・ADAPTOR	1			
27-2		1420310908	・・O-RING	1			
27-3		0007203058	・ADAPTOR	1			
27-3		1420010180	・・O-RING	1			
27-4		1515600200	・ADAPTOR	1			
27-4		1420010110	・・O-RING	1			
27-5		1515600202	・ADAPTOR	1			
27-5		1420010180	・・O-RING	1			
28	X	**********	VALVE SUB ASSY	1			X08825-01100-0
28-1		1901738400	・VALVE, proportional control	1			
28-2		1515012040	・ELBOW	1			
28-2		1420010110	・・O-RING	1			
28-3		1512370010	・TEE	2			
28-3		1420010110	・・O-RING	1			
28-4		1512375004	・ELBOW	1			
28-4		1420010110	・・O-RING	1			
28-5		0007213028	・BUSHING	1			
29		1101041025	BOLT	3			
30		0882502010	RUBBER	1			for EU
31		0882702480	RUBBER	2			for EU
32		1100041045	BOLT	2			for EU
33		1130040010	NUT	2			for EU
		T9d092					

silverhorn.co.uk

VALVE & ACCESSORIES (high flow; 21405079-)

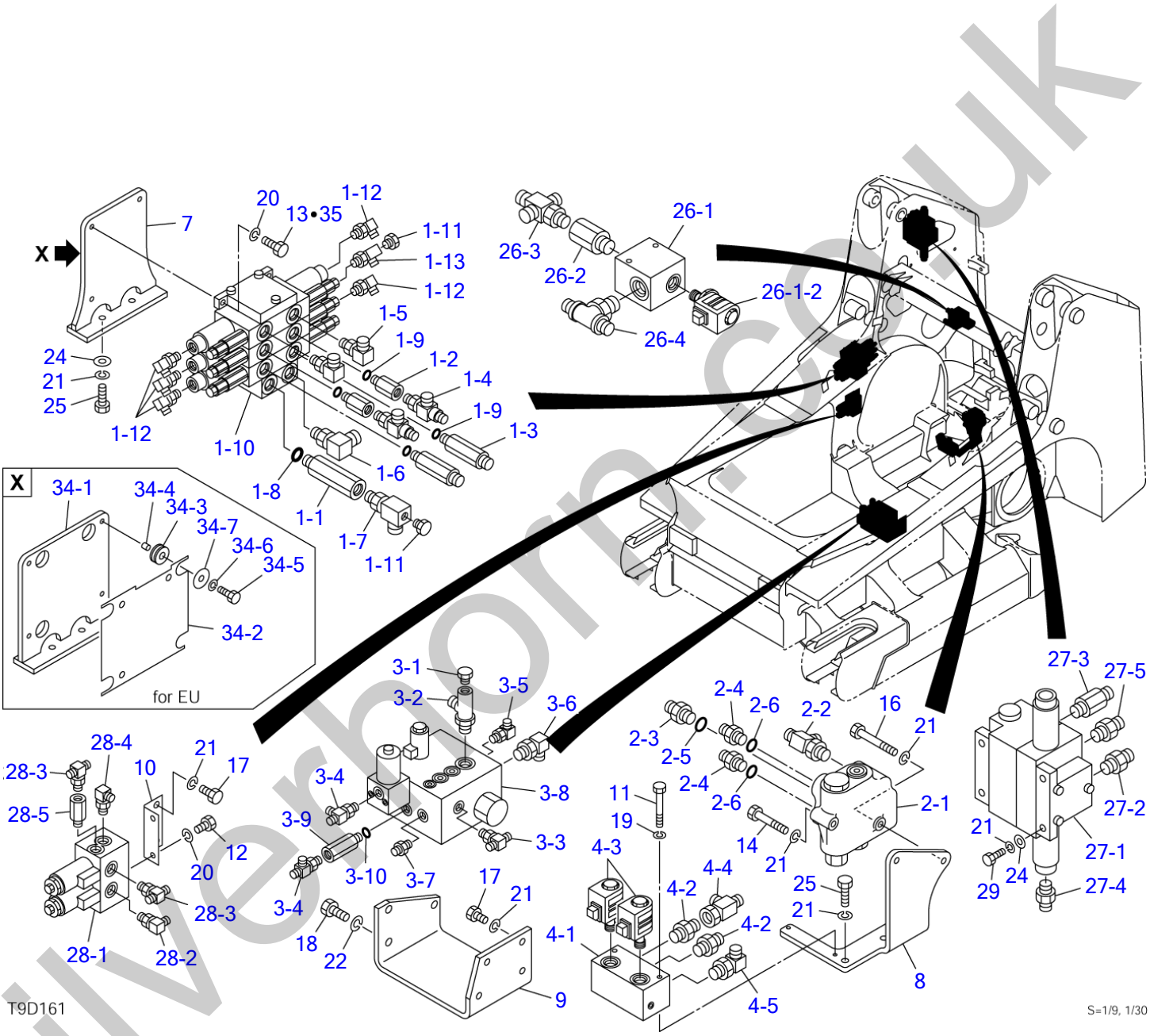

silverhorn.co.uk

VALVE & ACCESSORIES (high flow; 21405079-)

Item	Part number		Description	Q'ty	Chan.	Serial No.	Serv.	Remarks
			VALVE ASSY, control					X08825-01000-7
			VALVE ASSY, control (for EU)					X08825-02500-7
1	X	**********	VALVE SUB ASSY	1				X08825-00010-1
1-1		0007213059	・BUSHING	1				
1-2		0007213049	・BUSHING	2				
1-3		0007203072	・ADAPTOR	2				
1-4		1512373010	・TEE	2				
		1420010180	・・O-RING	1				
1-5		1515200067	・ELBOW	2				
		1420370908	・・O-RING	1				
1-6		1512375003	・ELBOW	1				
		1420370910	・・O-RING	1				
1-7		1512340015	・ELBOW	1				
		1420010240	・・O-RING	1				
1-8		1420370910	・O-RING	1				
1-9		1420370908	・O-RING	4				
1-10		1901042100	・VALVE, control	1				
1-11		1501750002	・PLUG	2				
		1420010110	・・O-RING	1				
1-12		1515012040	・ELBOW	5				
		1420010110	・・O-RING	1				
1-13		1512340001	・ELBOW	1				
		1420010110	・・O-RING	1				
2	X	**********	VALVE SUB ASSY	1				X08825-00020-0
2-1		1901736100	・VALVE, self-level	1				
2-2		1512373009	・TEE	1				
		1420370908	・・O-RING	1				
2-3		0007203007	・ADAPTOR	1				
		1420310908	・・O-RING	1				
2-4		0007203017	・ADAPTOR	2				
		1420310906	・・O-RING	1				
2-5		1420370910	・O-RING	1				
2-6		1420370906	・O-RING	2				
3	X	**********	VALVE SUB ASSY	1				X08825-00030-0
3-1		1501750002	・PLUG	1				
		1420010110	・・O-RING	1				
3-2		1512340004	・ELBOW	1				
		1420010180	・・O-RING	1				
3-3		1512370010	・ADAPTOR	1				
		1420010110	・・O-RING	1				
3-4		1512370011	・TEE	2				
		1420010110	・・O-RING	1				
3-5		1515012040	・ELBOW	1				
		1420010110	・・O-RING	1				
3-6		1515010042	・ELBOW	1				
		1420010180	・・O-RING	1				
3-7		1515600200	・ADAPTOR	1				
		1420010110	・・O-RING	1				
3-8		1901735500	・VALVE, sub	1				
3-9		0007213061	・BUSHING	1				
3-10		1420010110	・O-RING	1				
4	X	**********	VALVE SUB ASSY	1				X08825-00040-1
4-1		0881501100	・BLOCK, valve	1				
4-2		1515600202	・ADAPTOR	2				
		1420010180	・・O-RING	1				
4-3		1901723200	・VALVE, solenoid	2				
4-4		1513390034	・TEE	1				
4-5		1515010042	・ELBOW	1				
		1420010180	・・O-RING	1				
7		0882500070	BRACKET	1				
8		0882500085	BRACKET	1				
9		0882500090	BRACKET	1				
10		0882500100	BRACKET	1				
11		1100040665	BOLT	2				
12		1100040816	BOLT	2				
13		1100040820	BOLT	3				
14		1100041050	BOLT	1			M	
16		1100041075	BOLT	1				

silverform.co.uk

VALVE & ACCESSORIES (high flow; 21405079-)

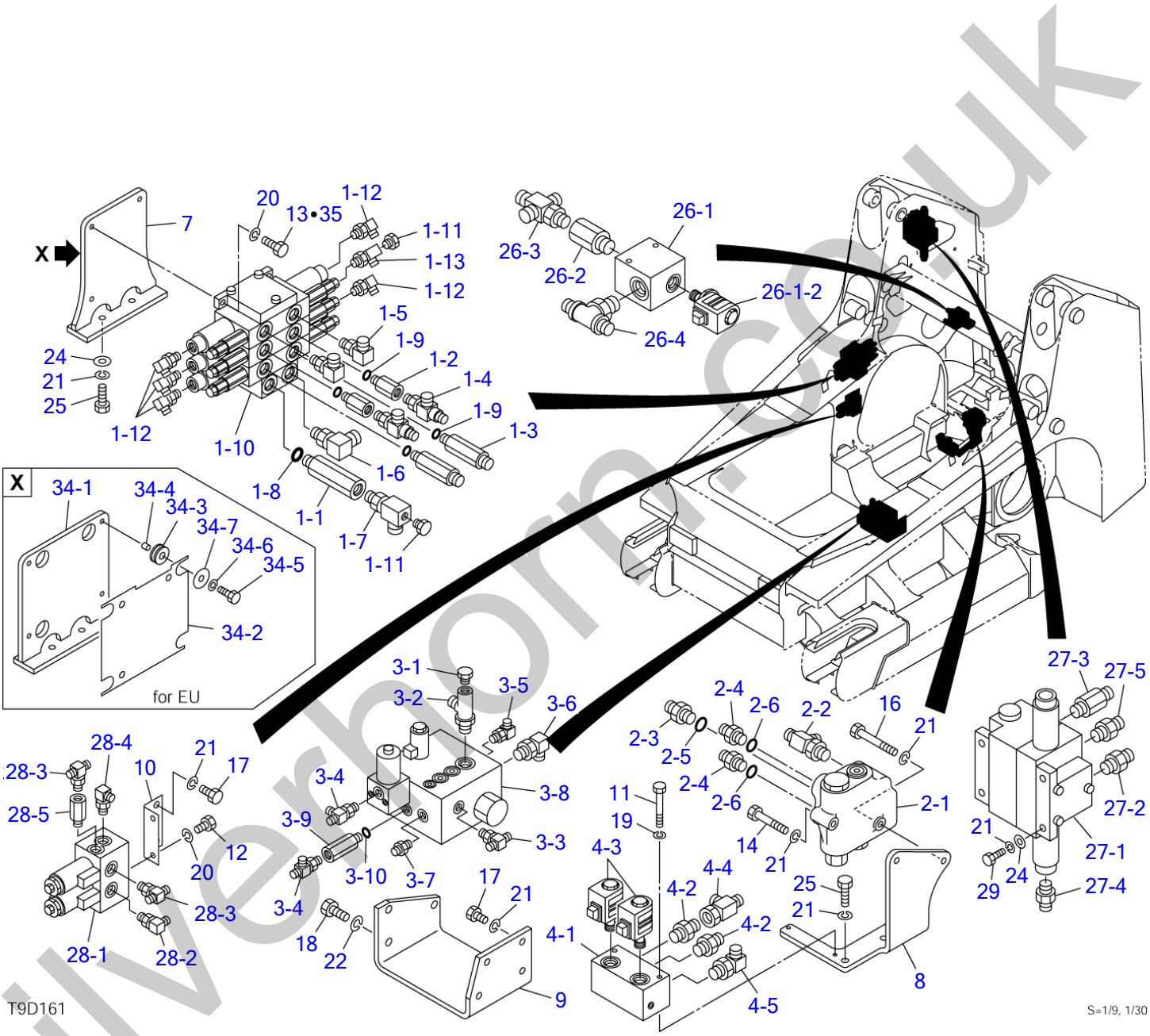

silverhorn.co.uk

VALVE & ACCESSORIES (high flow; 21405079-)

Item	Part number	Description	Q'ty	Chan.	Serial No.	Serv.	Remarks
17	1100041020	BOLT	6				
18	1100041225	BOLT	3				
19	1140020006	WASHER, spring	2				
20	1140020008	WASHER, spring	7				
21	1140020010	WASHER, spring	15				
22	1140020012	WASHER, spring	3				
24	0003600025	WASHER	5				
25	1100041030	BOLT	4				
26	X **********	VALVE SUB ASSY	1				X08815-03060-0
26-1	1901734500	・VALVE, solenoid	1				
26-1-2	1901734502	・・SOLENOID	1				
26-2	0007213050	・BUSHING	1				
26-3	0881732610	・CROSS	1				
26-4	1512374012	・TEE	1				
26-4	1420010240	・・O-RING	1				
27	X **********	VALVE SUB ASSY	1				X08815-03100-0
27-1	1901039500	・VALVE, control	1				
27-2	0007203007	・ADAPTOR	1				
27-2	1420310908	・・O-RING	1				
27-3	0007203058	・ADAPTOR	1				
27-3	1420010180	・・O-RING	1				
27-4	1515600200	・ADAPTOR	1				
27-4	1420010110	・・O-RING	1				
27-5	1515600202	・ADAPTOR	1				
27-5	1420010180	・・O-RING	1				
28	X **********	VALVE SUB ASSY	1				X08825-01100-0
28-1	1901738400	・VALVE, proportional control	1				
28-2	1515012040	・ELBOW	1				
28-2	1420010110	・・O-RING	1				
28-3	1512370010	・TEE	2				
28-3	1420010110	・・O-RING	1				
28-4	1512375004	・ELBOW	1				
28-4	1420010110	・・O-RING	1				
28-5	0007213028	・BUSHING	1				
29	1101041025	BOLT	3				
34	0882502100	BRACKET ASSY	1				for EU
34-1	0882502110	BRACKET	1				for EU
34-2	0882502120	PLATE	1				for EU
34-3	0882502130	CUSHION	4				for EU
34-4	0882502140	PIPE	4				for EU
34-5	1100040825	BOLT	4				for EU
34-6	1140020008	WASHER, spring	4				for EU
34-7	0003609003	WASHER	4				for EU
35	1100040825	BOLT	3			M	for EU
	T9d161						

silverhorn.co.uk

PIPING (1/2)

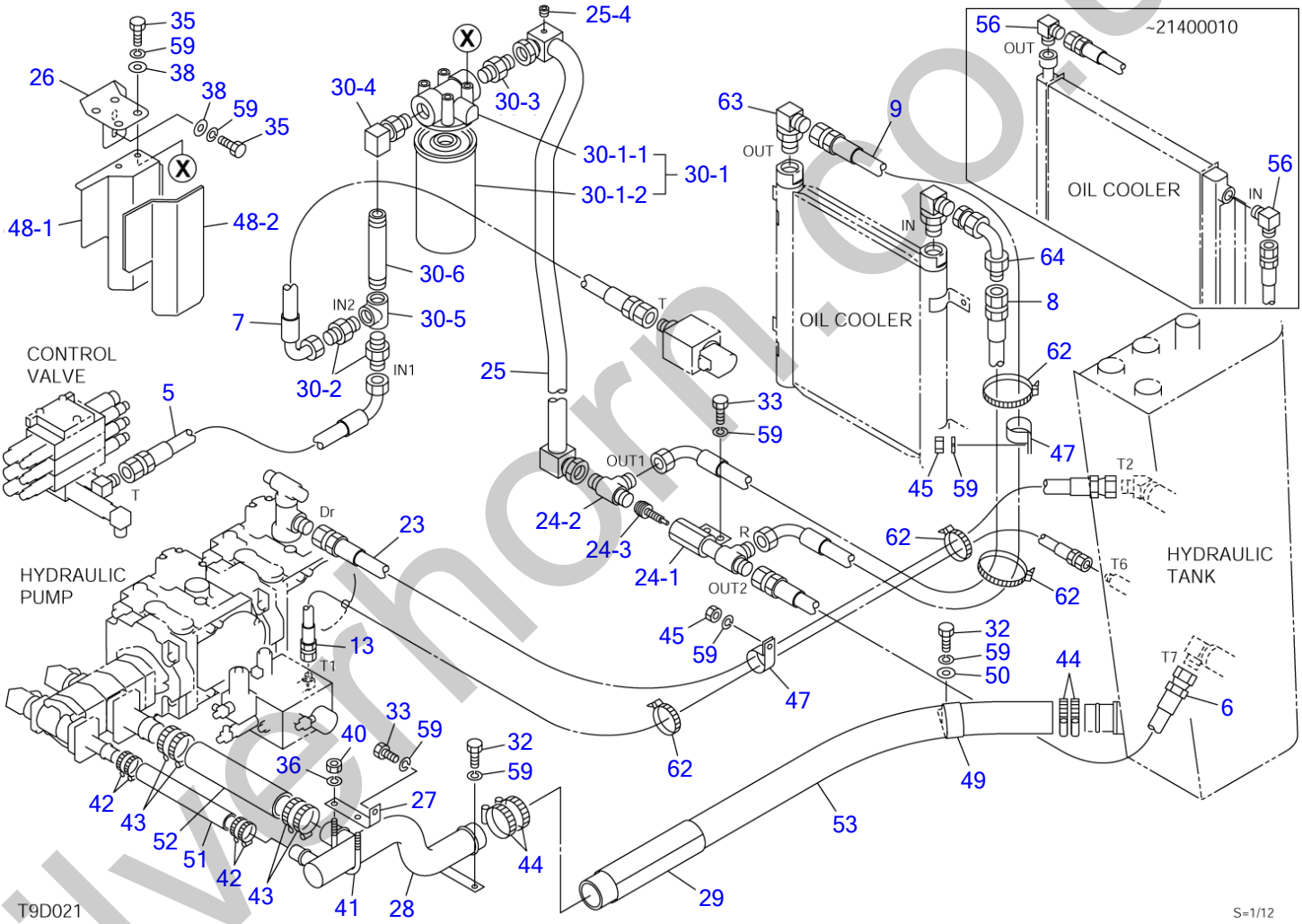

silverthorn.co.uk

PIPING (1/2)

Item	Part number		Description	Q'ty	Chan.	Serial No.	Serv.	Remarks
			PIPING ASSY, upper					X08827-01000-0
5		0882700050	HOSE ASSY	1				SF-AF90 1-600
6		0882700060	HOSE ASSY	1				SF-SF 1-650
7		0882700070	HOSE ASSY	1				SF-AF90 1-600
8		0882700080	HOSE ASSY	1				SF-AF90 1-1190
9		0882700090	HOSE ASSY	1				SF-AF90 1-1710
13		0882700130	HOSE ASSY	1				18010-22150
23		0882700230	HOSE ASSY	1				18010-26130
24	X	**********	MANIFOLD ASSY	1				X08827-00240
24-1		0881701241	・JOINT	1				
24-2		0882700242	・TEE	1				
24-3		1540140820	・VALVE, check	1				
25		0882700295	PIPE	1				
25-4		1501820001	・PLUG	1				
26		0882700265	BRACKET	1				
27		0882700270	PLATE	1				
28		0882700280	PIPE	1				
29		0881701670	PROTECTOR	1				
30	X	**********	FILTER ASSY	1				X08827-00300
30-1		1551000500	・FILTER	1				
30-1-1		1551000510	・・COVER	1				
30-1-2		1551000520	・・CARTRIDGE	1				
30-2		1511050010	・ADAPTOR	2				
30-3		1515600204	・ADAPTOR	1				
		1420010290	・・O-RING	1				
30-4		1513300025	・ELBOW	1				
		1420010290	・・O-RING	1				
30-5		1508210010	・TEE	1				
30-6		0009110220	・NIPPLE	1				
32		1100041016	BOLT	2				
33		1100041020	BOLT	3				
35		1100041030	BOLT	6				
36		1140020008	WASHER, spring	2				
38		0003600003	WASHER	6				
40		1130020008	NUT	2				
41		1533201014	U-BOLT	1				
42		1533700041	BAND	4				
43		1533700054	BAND	4				
44		1533700070	BAND	4				
45		1130040010	NUT	2				
47		0007300030	CLAMP	2				
48	X	**********	COVER ASSY	1				X08817-02060
48-1		0881702070	・COVER	1				
48-2		0881702062	・ABSORBENT, noise	1				
49		0007300061	CLAMP	1				
50		0003600020	WASHER	1				
51		0881701510	HOSE	1				
52		0881701520	HOSE	1				
53		0882700530	HOSE	1				
56		1511151006	ELBOW	2		~21400010		
59		1140020010	WASHER, spring	12				
62		1652241300	BAND	4				
63		1515010044	ELBOW	2				
		1420010290	・O-RING	1				
64		0882700320	ELBOW	1				
		T9d023						

silvershorn.co.uk

PIPING (2/2) (21400011-21401390)

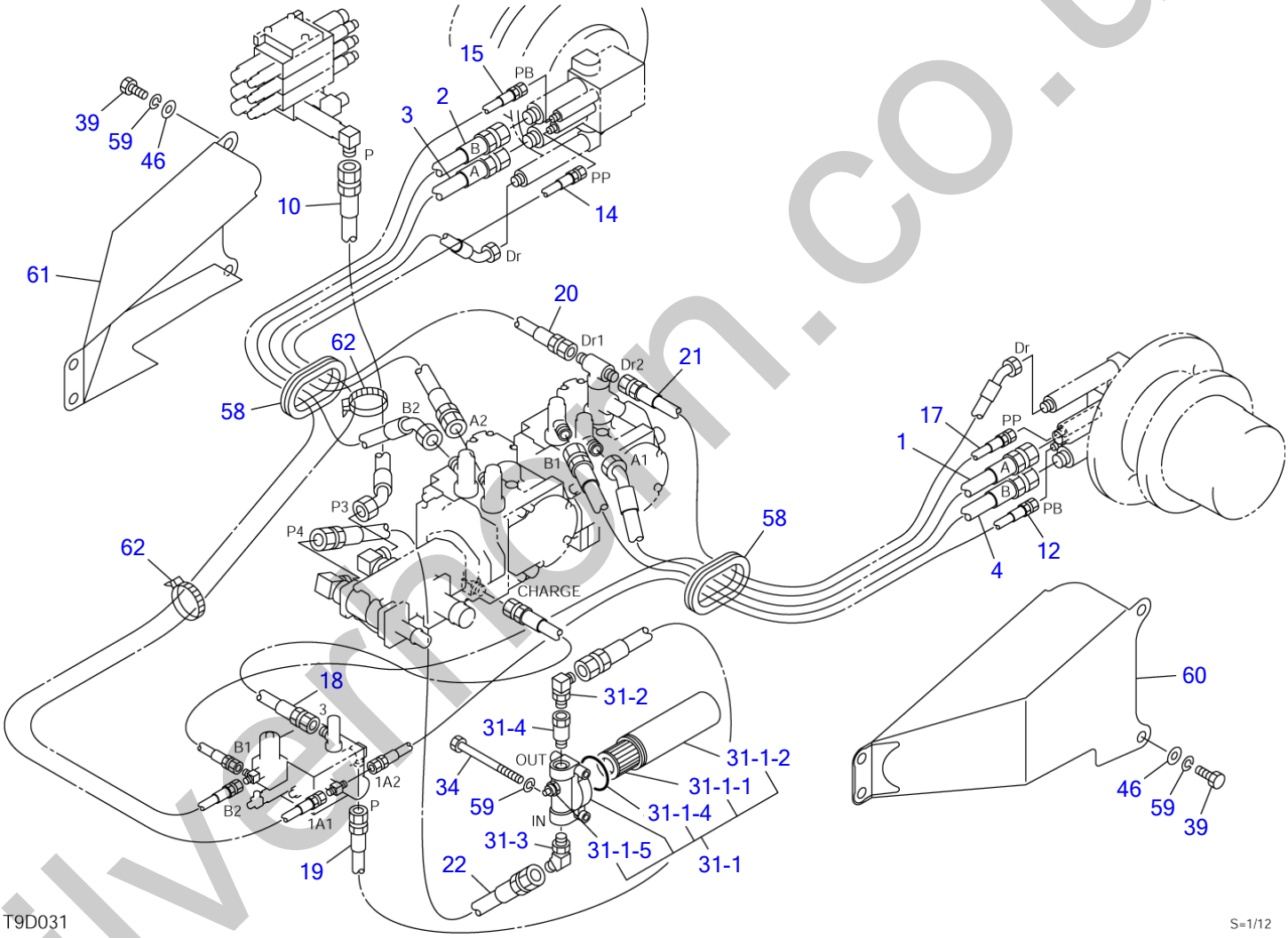

silvermoon.co.uk

PIPING (2/2) (21400011-21401390)

Item	Part number	Description	Q'ty	Chan.	Serial No.	Serv.	Remarks
		PIPING ASSY, upper					X08827-00000-6
1	0882700010	HOSE ASSY	1				4-710
2	0882700020	HOSE ASSY	1				4-770
3	0882700030	HOSE ASSY	1				4-820
4	0882700040	HOSE ASSY	1				4-870
10	0882700105	HOSE ASSY	1				8-840
12	0882700120	HOSE ASSY	1				18010-22070
14	0882700140	HOSE ASSY	1				18010-22148
15	0882700150	HOSE ASSY	1				18010-22160
17	0882700170	HOSE ASSY	1				18010-22094
18	0882700180	HOSE ASSY	1				2-550
19	0882700190	HOSE ASSY	1				18010-27082
20	0882700200	HOSE ASSY	1				18010-91080
21	0882700210	HOSE ASSY	1				18010-91084
22	0882700220	HOSE ASSY	1				18010-27080
31	X **********	FILTER ASSY	1				X08827-00310
31-1	1551102500	・FILTER	1				
31-1-1	1551101001	・・ELEMENT	1				
31-1-2	1551101003	・・CASE	1				
31-1-4	1420100600	・・O-RING	1				
31-1-5	1551102505	・・SWITCH, pressure	1				
31-2	1515010042	・ELBOW	1				
	1420010180	・・O-RING	1				
31-3	1515100112	・ELBOW	1				
	1420010180	・・O-RING	1				
31-4	0007213055	・BUSHING	1				
34	1100041095	BOLT	2				
39	1100041025	BOLT	8				
46	0003600020	WASHER	8				
58	0881701580	GROMMET	2				
59	1140020010	WASHER, spring	10				
60	0882700605	COVER (L.H.)	1				
61	0882700615	COVER (R.H.)	1				
62	1652241300	BAND	2				
	T9d031						

silverhorn.co.uk

PIPING (2/2) (21402001-)

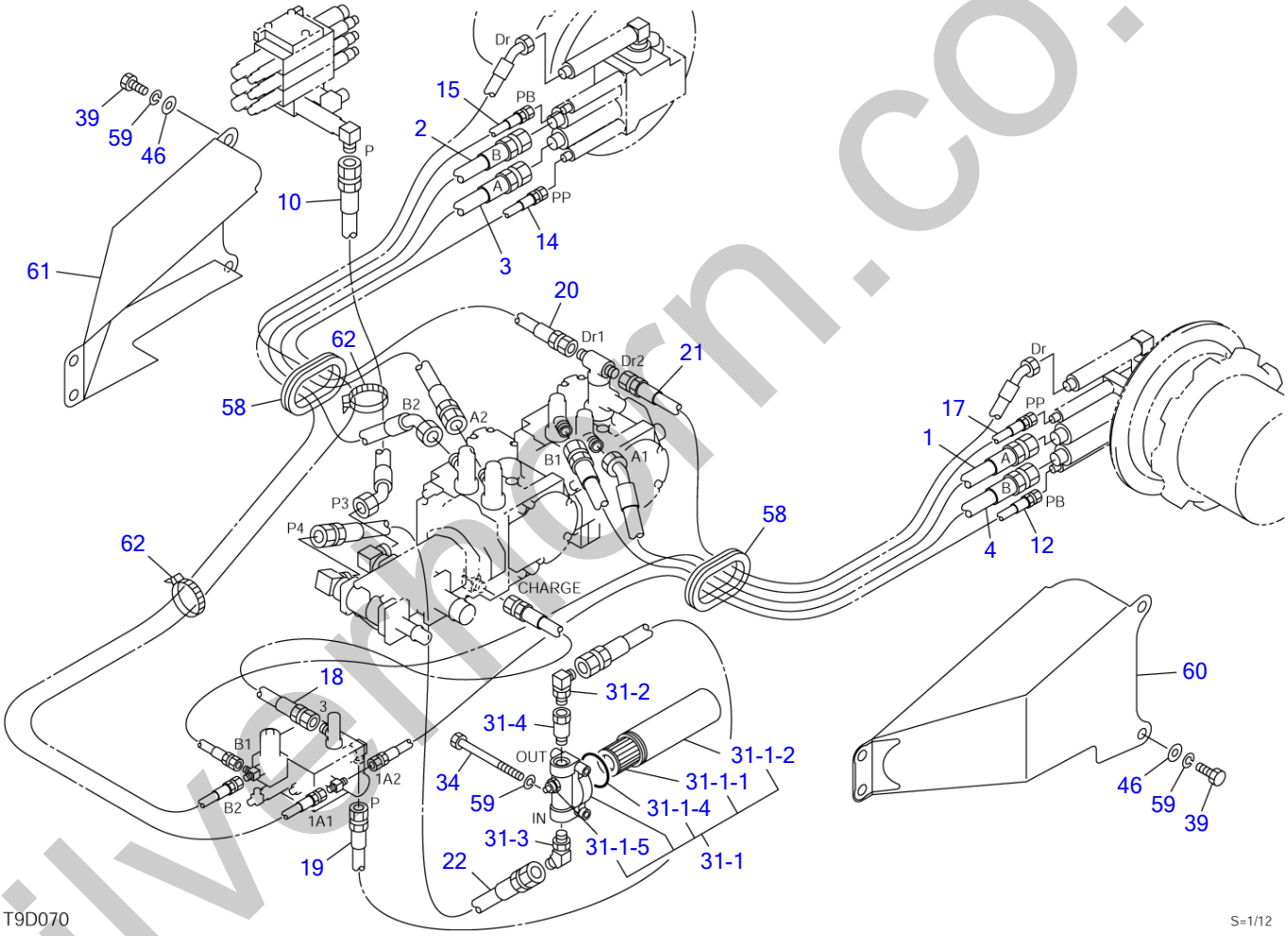

silvermorn.co.uk

PIPING (2/2) (21402001-)

Item	Part number	Description	Q'ty	Chan.	Serial No.	Serv.	Remarks
		PIPING ASSY, upper					X08827-01000-0
1	0882700010	HOSE ASSY	1				4-710
2	0882700020	HOSE ASSY	1				4-770
3	0882700030	HOSE ASSY	1				4-820
4	0882700040	HOSE ASSY	1				4-870
10	0882700105	HOSE ASSY	1				8-840
12	0882700120	HOSE ASSY	1				18010-22070
14	0882700140	HOSE ASSY	1				18010-22148
15	0882700150	HOSE ASSY	1				18010-22160
17	0882700170	HOSE ASSY	1				18010-22094
18	0882700180	HOSE ASSY	1				2-550
19	0882700190	HOSE ASSY	1				18010-27082
20	0882701010	HOSE ASSY	1				18010-91082
21	0882701020	HOSE ASSY	1				18010-91086
22	0882700220	HOSE ASSY	1				18010-27080
31	X **********	FILTER ASSY	1				X08827-00310
31-1	1551102500	・FILTER	1				
31-1-1	1551101001	・・ELEMENT	1				
31-1-2	1551101003	・・CASE	1				
31-1-4	1420100600	・・O-RING	1				
31-1-5	1551102505	・・SWITCH, pressure	1				
31-2	1515010042	・ELBOW	1				
	1420010180	・・O-RING	1				
31-3	1515100112	・ELBOW	1				
	1420010180	・・O-RING	1				
31-4	0007213055	・BUSHING	1				
34	1100041095	BOLT	2				
39	1100041025	BOLT	8				
46	0003600020	WASHER	8				
58	0881701580	GROMMET	2				
59	1140020010	WASHER, spring	10				
60	0882700605	COVER (L.H.)	1				
61	0882700615	COVER (R.H.)	1				
62	1652241300	BAND	2				
	T9d073						

silverhorn.co.uk

PIPING (1/2) (high flow; 21403459-)

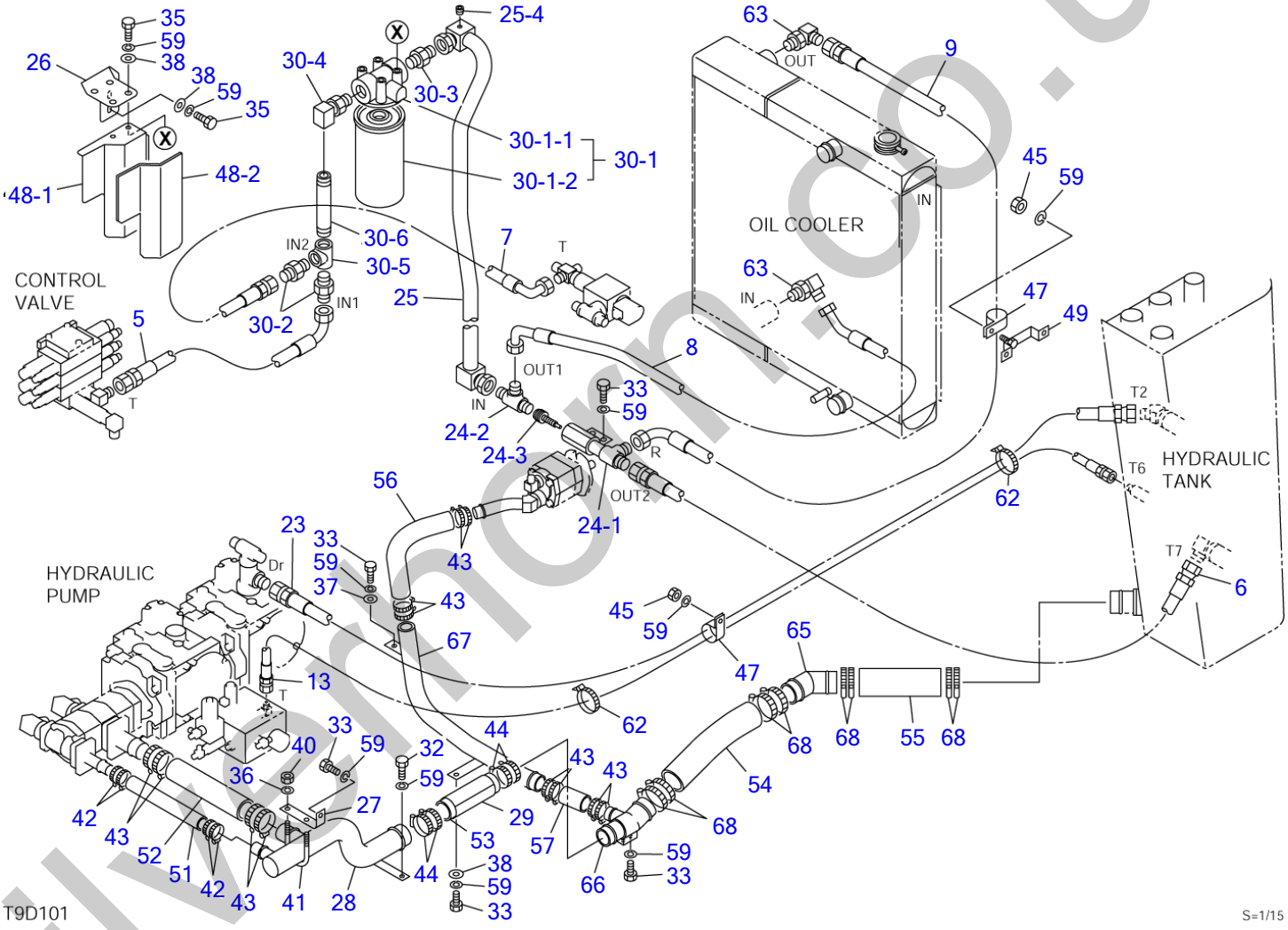

silvermoon.co.uk

PIPING (1/2) (high flow; 21403459-)

Item	Part number		Description	Q'ty	Chan.	Serial No.	Serv.	Remarks
			PIPING ASSY, upper					X08827-02000-5
			PIPING ASSY, upper (for EU)					X08827-04000-5
5		0882700050	HOSE ASSY	1				SF-AF90 1-600
6		0882700060	HOSE ASSY	1				SF-SF 1-650
7		0882702070	HOSE ASSY	1				SF-AF90 1-600
8		0882702080	HOSE ASSY	1				SF-AF90 1-1190
9		0882702090	HOSE ASSY	1				SF-AF90 1-1710
13		0882700130	HOSE ASSY	1				18010-22150
23		0882700230	HOSE ASSY	1				18010-26130
24	X	**********	MANIFOLD ASSY	1				X08827-03240
24-1		0881701241	・JOINT	1				
24-2		0882700242	・TEE	1				
24-3		1540140820	・VALVE, check	1				
25		0882700295	PIPE	1				
25-4		1501820001	・PLUG	1				
26		0882700265	BRACKET	1				
27		0882700270	PLATE	1				
28		0882700280	PIPE	1				
29		0881701670	PROTECTOR	1				
30	X	**********	FILTER ASSY	1				X08827-00300
30-1		1551000500	・FILTER	1				
30-1-1		1551000510	・・COVER	1				
30-1-2		1551000520	・・CARTRIDGE	1				
30-2		1511050010	・ADAPTOR	2				
30-3		1515600204	・ADAPTOR	1				
		1420010290	・・O-RING	1				
30-4		1513300025	・ELBOW	1				
		1420010290	・・O-RING	1				
30-5		1508210010	・TEE	1				
30-6		0009110220	・NIPPLE	1				
32		1100041016	BOLT	2				
33		1100041020	BOLT	3				
35		1100041030	BOLT	6				
36		1140020008	WASHER, spring	2				
37		1141110010	WASHER	1				
38		0003600025	WASHER	7				
40		1130020008	NUT	2				
41		1533201014	U-BOLT	1				
42		1533700041	BAND	4				
43		1533700054	BAND	12				
44		1533700070	BAND	4				
45		1130040010	NUT	2				
47		0007300030	CLAMP	2				
48	X	**********	COVER ASSY	1				X08817-02060
48-1		0881702070	・COVER	1				
48-2		0881702062	・ABSORBENT, noise	1				
49		0882702490	PLATE	1				
51		0881701510	HOSE	1				
52		0881701520	HOSE	1				
53		0882731090	HOSE	1				
54		0882700890	HOSE	1				
55		0881734170	HOSE	1				
56		0882702560	HOSE	1				
57		1530538012	HOSE	1				
59		1140020010	WASHER, spring	17				
62		1652241300	BAND	2				
63		1515010044	ELBOW	2				
		1420010290	・O-RING	1				
65		0882700880	PIPE	1				
66		0882731060	PIPE	1				
67		0882702670	PIPE	1				
68		1533700090	BAND	8				
		T9d103						

silvermorn.co.uk

PIPING (2/2) (high flow; 21403459-)

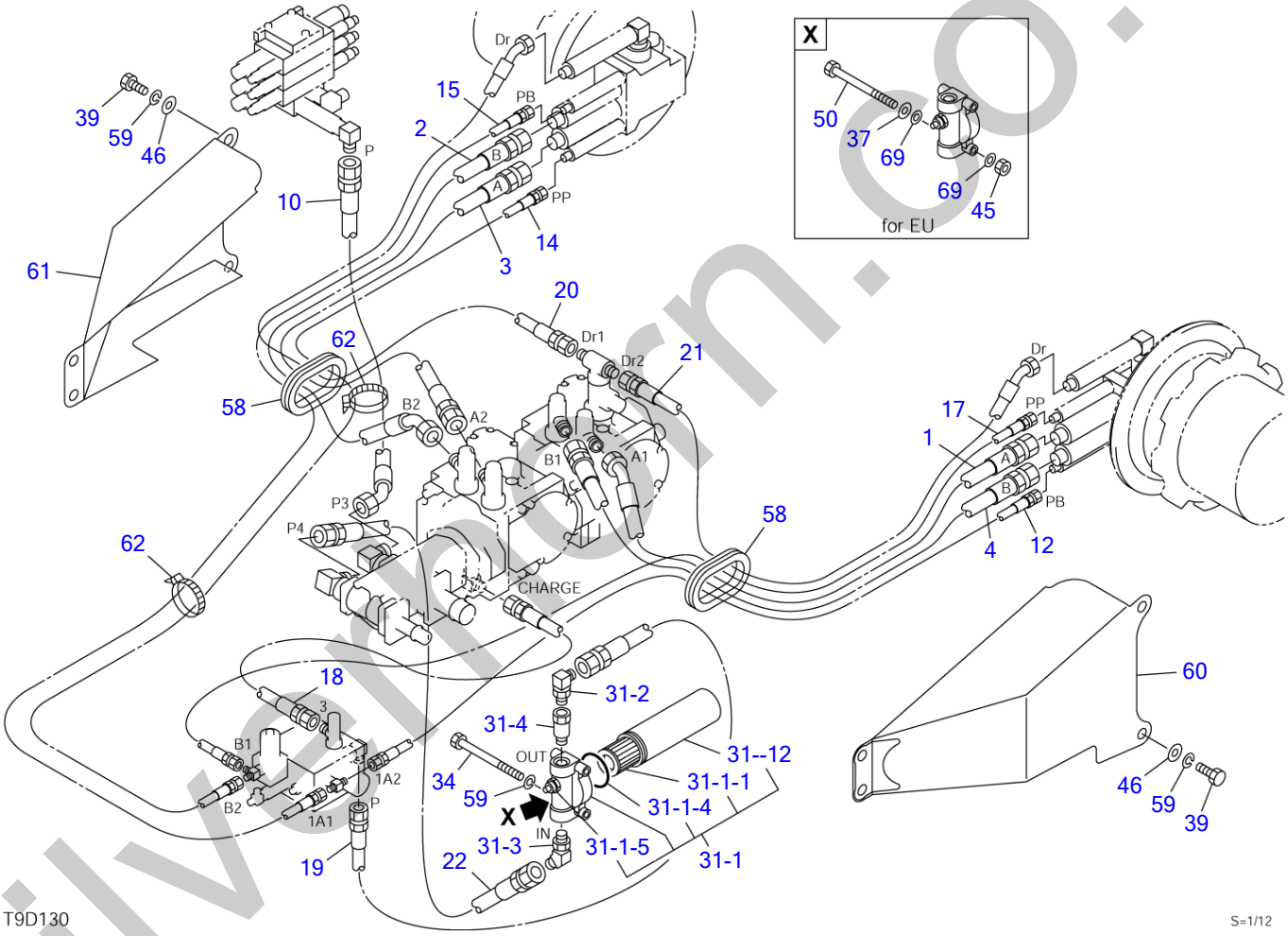

silvermorn.co.uk

PIPING (2/2) (high flow; 21403459-)

Item	Part number	Description	Q'ty	Chan.	Serial No.	Serv.	Remarks
		PIPING ASSY, upper					X08827-02000-5
		PIPING ASSY, upper (for EU)					X08827-04000-5
1	0882700010	HOSE ASSY	1				4-710
2	0882700020	HOSE ASSY	1				4-770
3	0882700030	HOSE ASSY	1				4-820
4	0882700040	HOSE ASSY	1				4-870
10	0882700105	HOSE ASSY	1				8-840
12	0882700120	HOSE ASSY	1				18010-22070
14	0882700140	HOSE ASSY	1				18010-22148
15	0882700150	HOSE ASSY	1				18010-22160
17	0882700170	HOSE ASSY	1				18010-22094
18	0882700180	HOSE ASSY	1				2-550
19	0882700190	HOSE ASSY	1				18010-27082
20	0882701010	HOSE ASSY	1				18010-91082
21	0882701020	HOSE ASSY	1				18010-91086
22	0882700220	HOSE ASSY	1				18010-27080
31	X **********	FILTER ASSY	1				X08827-00310
31-1	1551102500	・FILTER	1				
31-1-1	1551101001	・・ELEMENT	1				
31-1-2	1551101003	・・CASE	1				
31-1-4	1420100600	・・O-RING	1				
31-1-5	1551102505	・・SWITCH, pressure	1				
31-2	1515010042	・ELBOW	1				
	1420010180	・・O-RING	1				
31-3	1515100112	・ELBOW	1				
	1420010180	・・O-RING	1				
31-4	0007213055	・BUSHING	1				
34	1100041095	BOLT	2				except for EU
37	1141110010	WASHER	2				for EU
39	1100041025	BOLT	8				
45	1130040010	NUT	2				for EU
46	0003600020	WASHER	8				
50	1100141005	BOLT	2				for EU
58	0881701580	GROMMET	2				
59	1140020010	WASHER, spring	10				
60	0882700605	COVER (L.H.)	1				
61	0882700615	COVER (R.H.)	1				
62	1652241300	BAND	2				
69	0882702480	RUBBER	4				for EU
	T9d131						

silverhorn.co.uk

PIPING (1/2) (for EU; 21403459-)

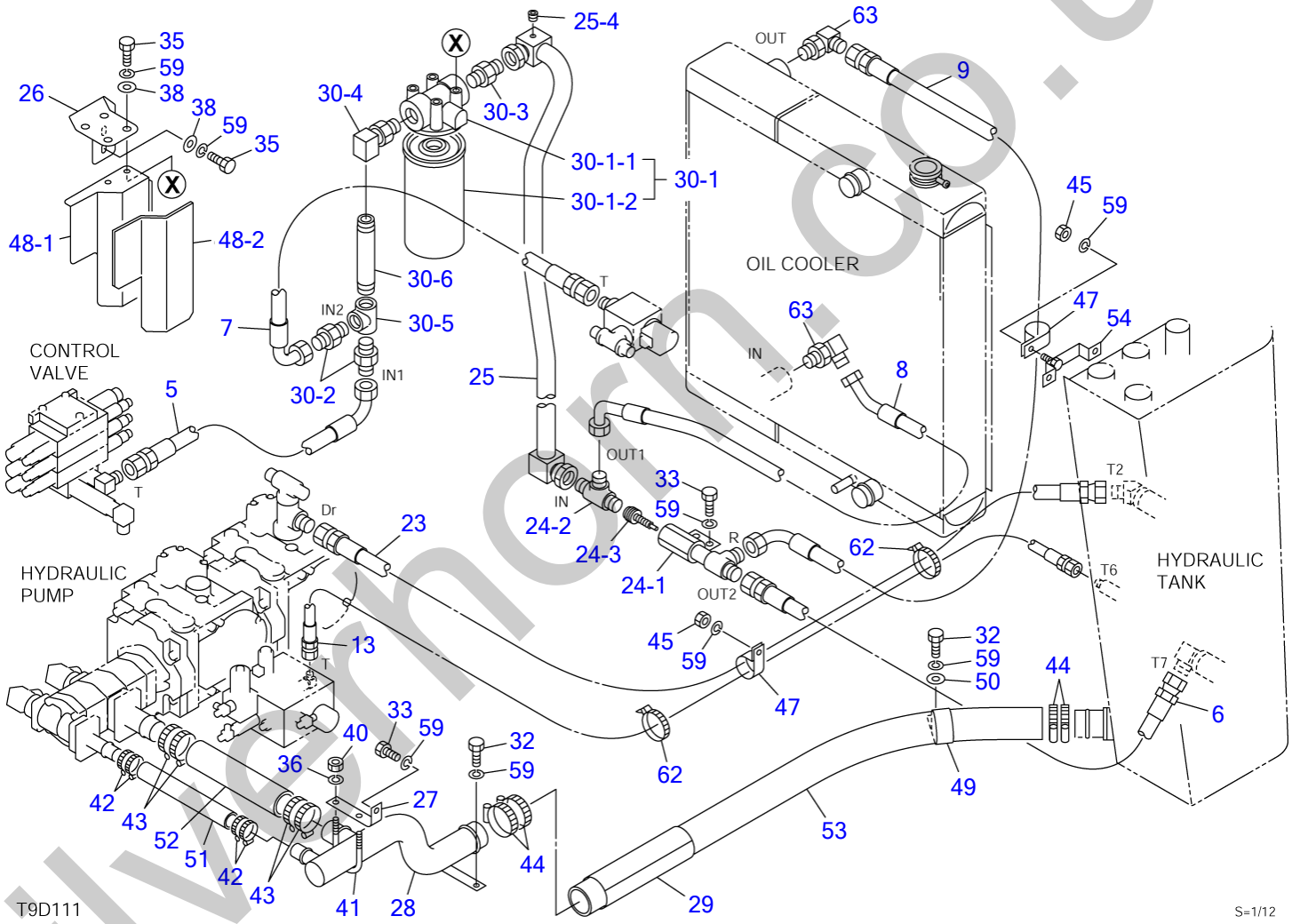

silverhorn.co.uk

PIPING (1/2) (for EU; 21403459-)

Item	Part number		Description	Q'ty	Chan.	Serial No.	Serv.	Remarks
			PIPING ASSY, upper (for EU)					X08827-03000-5
5		0882700050	HOSE ASSY	1				SF-AF90 1-600
6		0882700060	HOSE ASSY	1				SF-SF 1-650
7		0882700070	HOSE ASSY	1				SF-AF90 1-600
8		0882702080	HOSE ASSY	1				SF45-AF90 1-900
9		0882702090	HOSE ASSY	1				SF-AF90 1-1750
13		0882700130	HOSE ASSY	1				18010-22150
23		0882700230	HOSE ASSY	1				18010-26130
24	X	**********	MANIFOLD ASSY	1				X08827-03240
24-1		0881701241	・JOINT	1				
24-2		0882700242	・TEE	1				
24-3		1540140820	・VALVE, check	1				
25		0882700295	PIPE	1				
25-4		1501820001	・PLUG	1				
26		0882700265	BRACKET	1				
27		0882700270	PLATE	1				
28		0882700280	PIPE	1				
29		0881701670	PROTECTOR	1				
30	X	**********	FILTER ASSY	1				X08827-00300
30-1		1551000500	・FILTER	1				
30-1-1		1551000510	・・COVER	1				
30-1-2		1551000520	・・CARTRIDGE	1				
30-2		1511050010	・ADAPTOR	2				
30-3		1515600204	・ADAPTOR	1				
		1420010290	・・O-RING	1				
30-4		1513300025	・ELBOW	1				
		1420010290	・・O-RING	1				
30-5		1508210010	・TEE	1				
30-6		0009110220	・NIPPLE	1				
32		1100041016	BOLT	2				
33		1100041020	BOLT	3				
35		1100041030	BOLT	6				
36		1140020008	WASHER, spring	2				
38		0003600025	WASHER	6				
40		1130020008	NUT	2				
41		1533201014	U-BOLT	1				
42		1533700041	BAND	4				
43		1533700054	BAND	4				
44		1533700070	BAND	4				
45		1130040010	NUT	2				
47		0007300030	CLAMP	2				
48	X	**********	COVER ASSY	1				X08817-02060
48-1		0881702070	・COVER	1				
48-2		0881702062	・ABSORBENT, noise	1				
49		0007300061	CLAMP	1				
50		0003600020	WASHER	1				
51		0881701510	HOSE	1				
52		0881701520	HOSE	1				
53		0882700530	HOSE	1				
54		0882702490	PLATE	1				
59		1140020010	WASHER, spring	12				
62		1652241300	BAND	2				
63		1515010044	ELBOW	2				
		1420010290	・O-RING	1				
		T9d113						

silvernorn.co.uk

PIPING (2/2) (for EU; 21403459-)

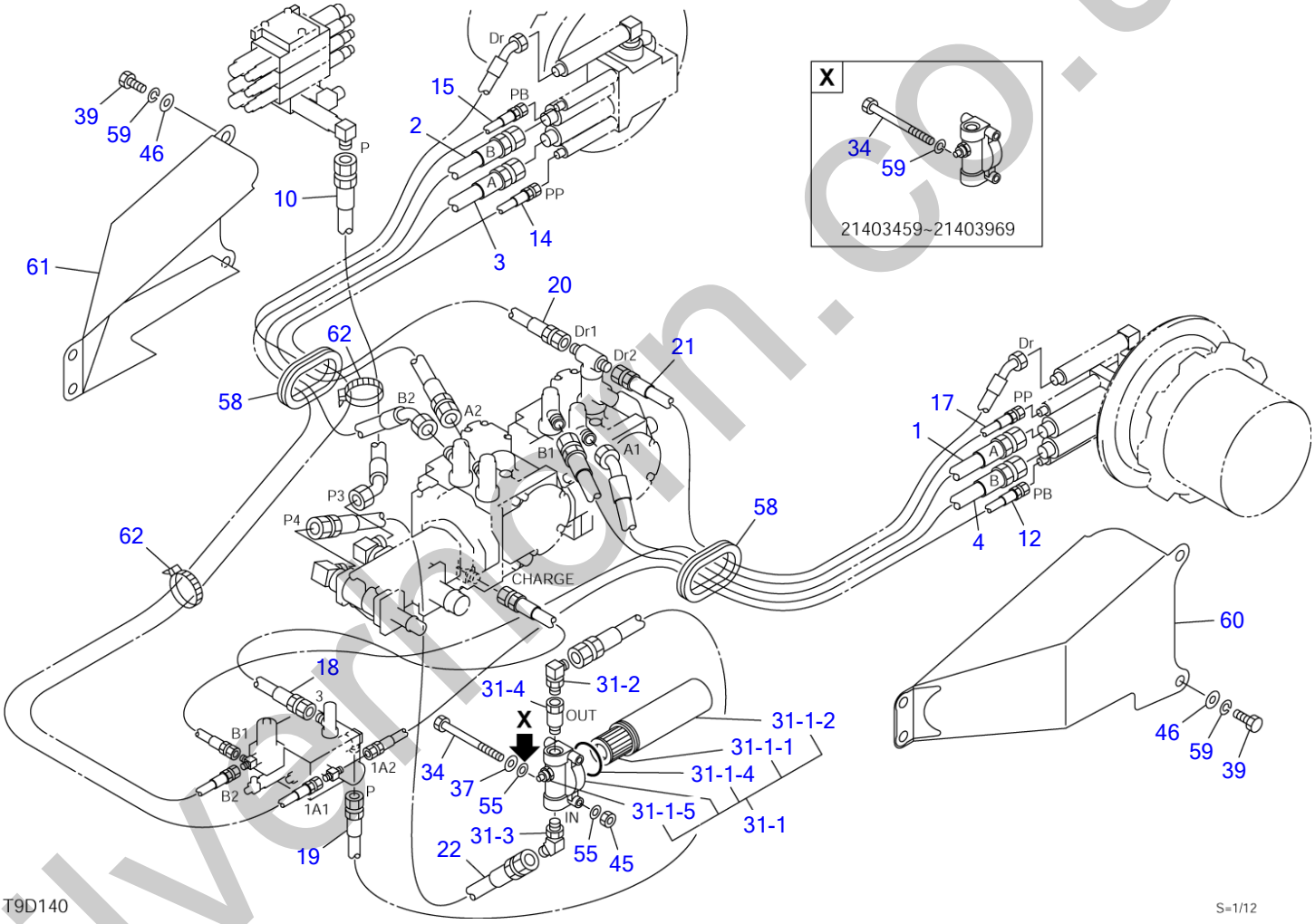

silvermoon.co.uk

PIPING (2/2) (for EU; 21403459-)

Item	Part number	Description	Q'ty	Chan.	Serial No.	Serv.	Remarks
		PIPING ASSY, upper					X08827-03000-5
1	0882700010	HOSE ASSY	1				4-710
2	0882700020	HOSE ASSY	1				4-770
3	0882700030	HOSE ASSY	1				4-820
4	0882700040	HOSE ASSY	1				4-870
10	0882700105	HOSE ASSY	1				8-840
12	0882700120	HOSE ASSY	1				18010-22070
14	0882700140	HOSE ASSY	1				18010-22148
15	0882700150	HOSE ASSY	1				18010-22160
17	0882700170	HOSE ASSY	1				18010-22094
18	0882700180	HOSE ASSY	1				2-550
19	0882700190	HOSE ASSY	1				18010-27082
20	0882701010	HOSE ASSY	1				18010-91082
21	0882701020	HOSE ASSY	1				18010-91086
22	0882700220	HOSE ASSY	1				18010-27080
31	X **********	FILTER ASSY	1				X08827-00310
31-1	1551102500	・FILTER	1				
31-1-1	1551101001	・・ELEMENT	1				
31-1-2	1551101003	・・CASE	1				
31-1-4	1420100600	・・O-RING	1				
31-1-5	1551102505	・・SWITCH, pressure	1				
31-2	1515010042	・ELBOW	1				
	1420010180	・・O-RING	1				
31-3	1515100112	・ELBOW	1				
	1420010180	・・O-RING	1				
31-4	0007213055	・BUSHING	1				
34	1100041095	BOLT	2		21403459~21403968		
	1100141005	BOLT	2		21403969~		
37	1141110008	WASHER	2		21403969~		
39	1100041025	BOLT	8				
45	1130040010	NUT	2		21403969~		
46	0003600020	WASHER	8				
55	0882702480	RUBBER	4		21403969~		
58	0881701580	GROMMET	2				
59	1140020010	WASHER, spring	10				
60	0882700605	COVER (L.H.)	1				
61	0882700615	COVER (R.H.)	1				
62	1652241300	BAND	2				
	T9d141						

silverhorn.co.uk

PUMP DRIVE

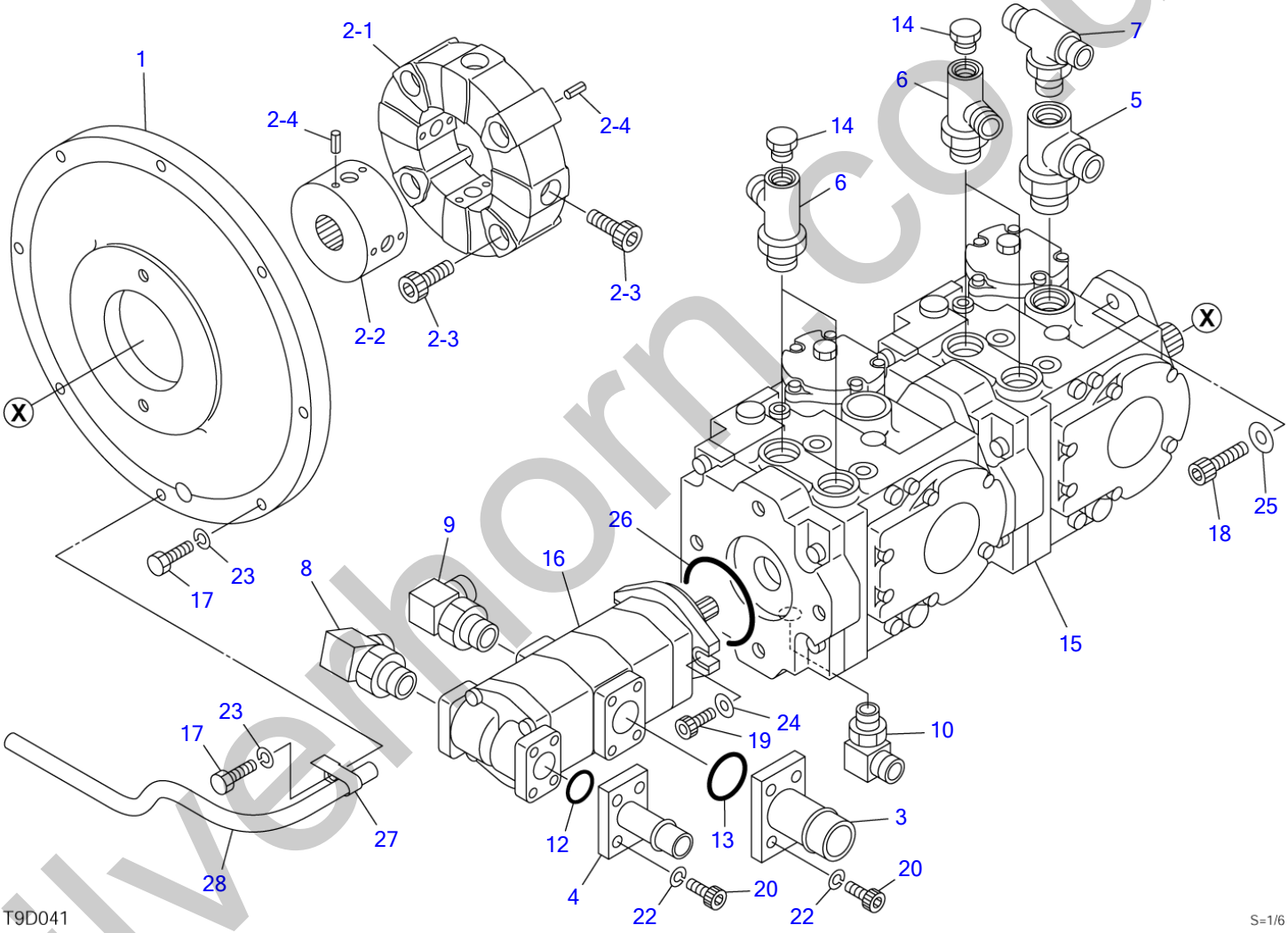

silverthorn.co.uk

PUMP DRIVE

Item	Part number	Description	Q'ty	Chan.	Serial No.	Serv.	Remarks
		PUMP ASSY, drive					X08825-20000-5
1	0882520020	HOUSING	1	A	21400011~21403152		not service
	0882520030	HOUSING	1	a(H)	21403153~		
2	0881520200	COUPLING	1				
2-1	0881520201	・COUPLING, frex	1				
2-2	0881520202	・COUPLING	1				
2-3	1110051650	・SCREW, cap	8				
2-4	1213000510	・PIN, spring	12				
3	0881521250	FLANGE	1				
4	0881521100	FLANGE	1				
5	0881520700	TEE	1				
	1420310912	・O-RING	1				
6	0881521300	TEE	4				
	1420310912	・O-RING	1				
7	1512374011	TEE	1				
	1420010240	・O-RING	1				
8	1515010052	ELBOW	1				
	1420010240	・O-RING	1				
9	1515010043	ELBOW	1				
	1420010240	・O-RING	1				
10	1515200067	ELBOW	1				
	1420370908	・O-RING	1				
12	1420100300	O-RING	1				
13	1420100400	O-RING	1				
14	1501750002	PLUG	4				
	1420010110	・O-RING	1				
15	1902019200	PUMP, hydraulic	1				
16	1902019500	PUMP, gear	1				
17	1100041040	BOLT	8				
18	1111021235	SCREW, cap	2	A	21400011~21403152		not service
	1102720838	SCREW, cap	2	a(H)	21403153~		
19	1102240632	SCREW, cap	2				
20	1111041025	SCREW, cap	8				
22	1140490010	WASHER, conical	8				
23	1140020010	WASHER, spring	8				
24	0003900039	WASHER	2				
25	1141550012	WASHER	2	A	21400011~21403152		not service
	1141450008	WASHER	2	a(H)	21403153~		
26	1420360152	O-RING	1				
27	0882820040	CLAMP	1		21405955~	M	
28	1531010065	HOSE	1		21405955~	M	sold by the meter
		<<NOTE>> SET "A" is interchangeable with SET "a".					
	T9d044						

silverthorn.co.uk

GEAR PUMP DRIVE (high flow)

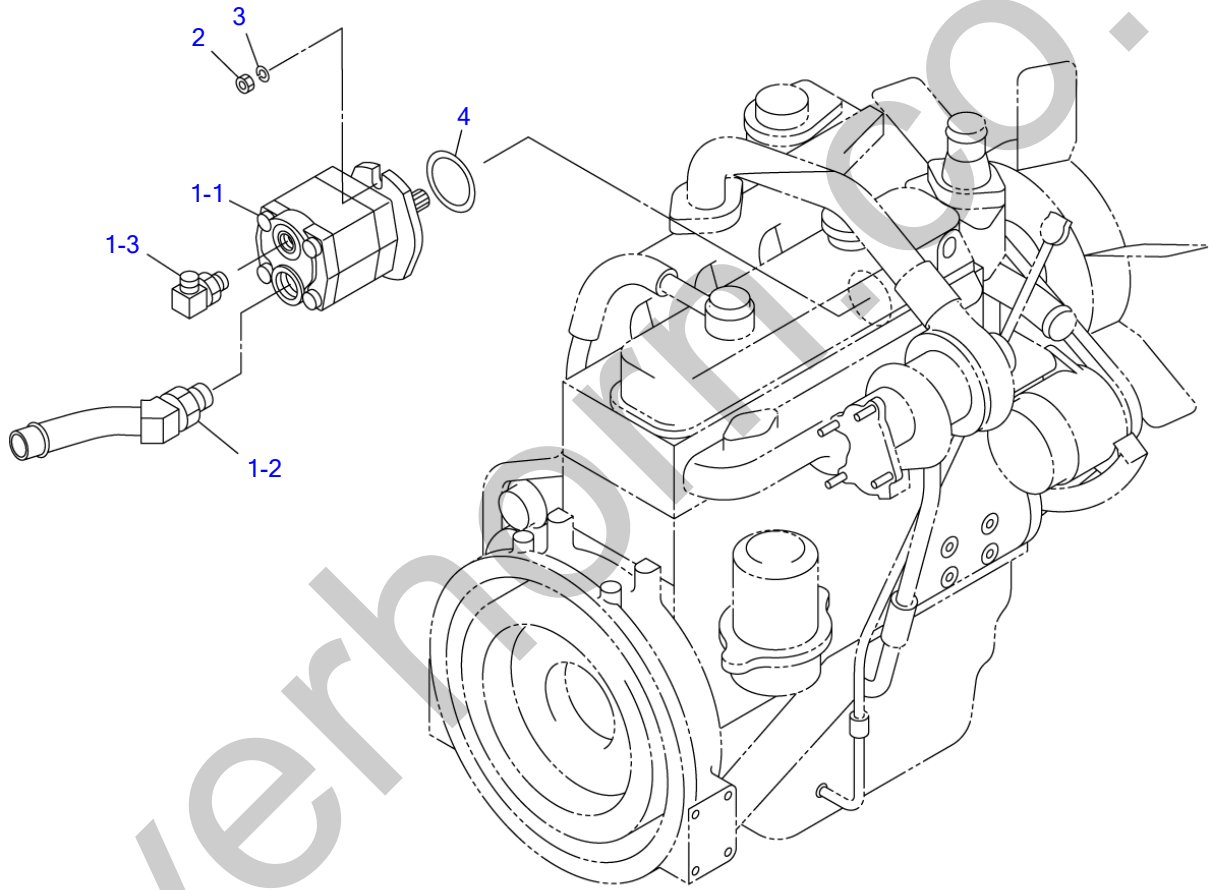

T9D080

S=1/8

silverhorn.co.uk

GEAR PUMP DRIVE (high flow)

Item	Part number	Description	Q'ty	Chan.	Serial No.	Serv.	Remarks
		PUMP ASSY					X08825-21000-2
1	X **********	PUMP ASSY, gear	1		21404149~		X08825-21100-1
1-1	1902021600	・PUMP, gear	1				
1-2	0882731290	・PIPE	1				
1-3	1515010042	・ELBOW	1				
	1420010180	・・O-RING	1				
2	1130540010	NUT	2				
3	1141550010	WASHER	2				
4	1910172054	PACKING	1				ISUZU 511322-0180
	T9d082						

silverhorn.co.uk

GEAR PUMP DRIVE (for EU, high flow)

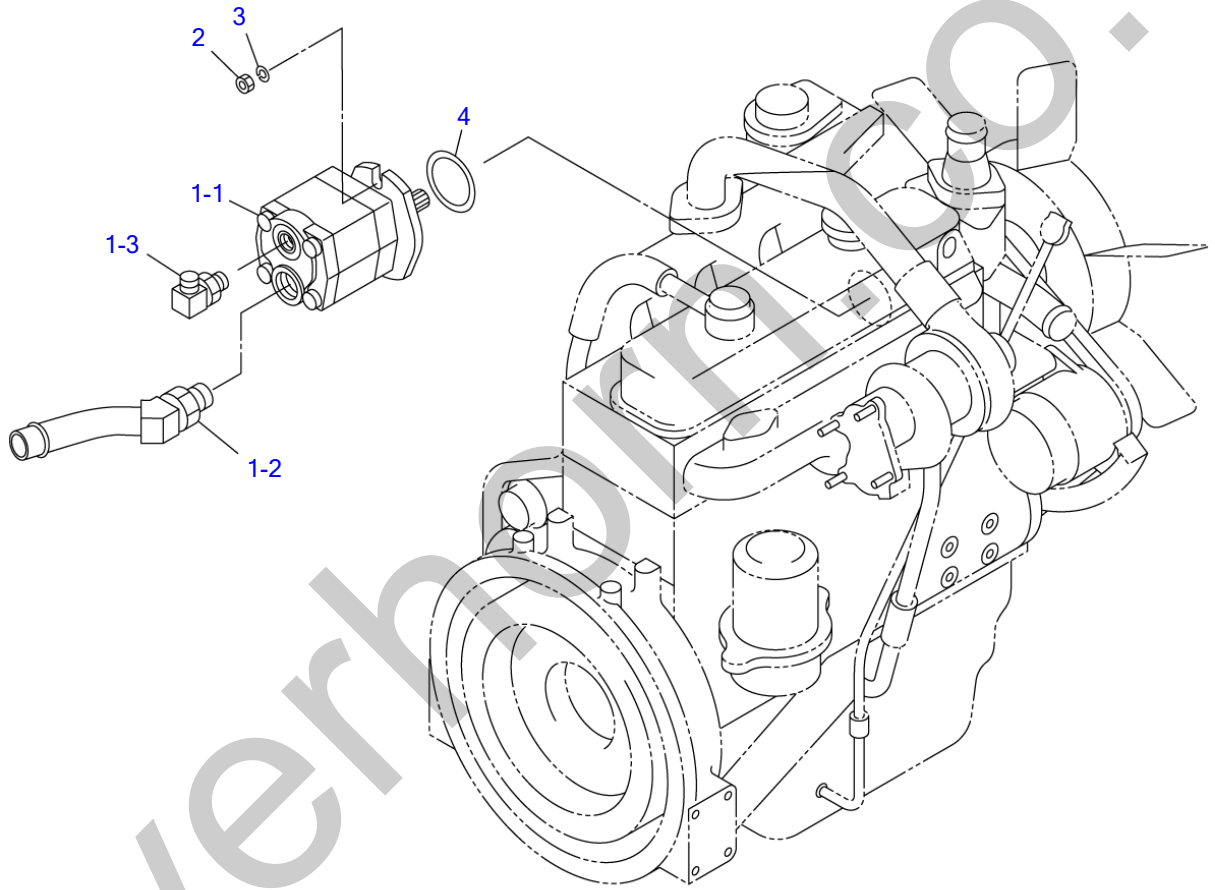

T9D080

S=1/8

silverhorn.co.uk

GEAR PUMP DRIVE (for EU, high flow)

Item	Part number	Description	Q'ty	Chan.	Serial No.	Serv.	Remarks
		PUMP ASSY					X08825-21500-2
1	X **********	PUMP ASSY, gear	1				X08825-21600-1
1-1	1902022700	・PUMP, gear	1				
1-2	0882731290	・PIPE	1				
1-3	1515010042	・ELBOW	1				
	1420010180	・・O-RING	1				
2	1130540010	NUT	2				
3	1141550010	WASHER	2				
4	1910172054	PACKING	1				ISUZU 511322-0180
	T9d121						

silverhorn.co.uk

HYDRAULIC TANK

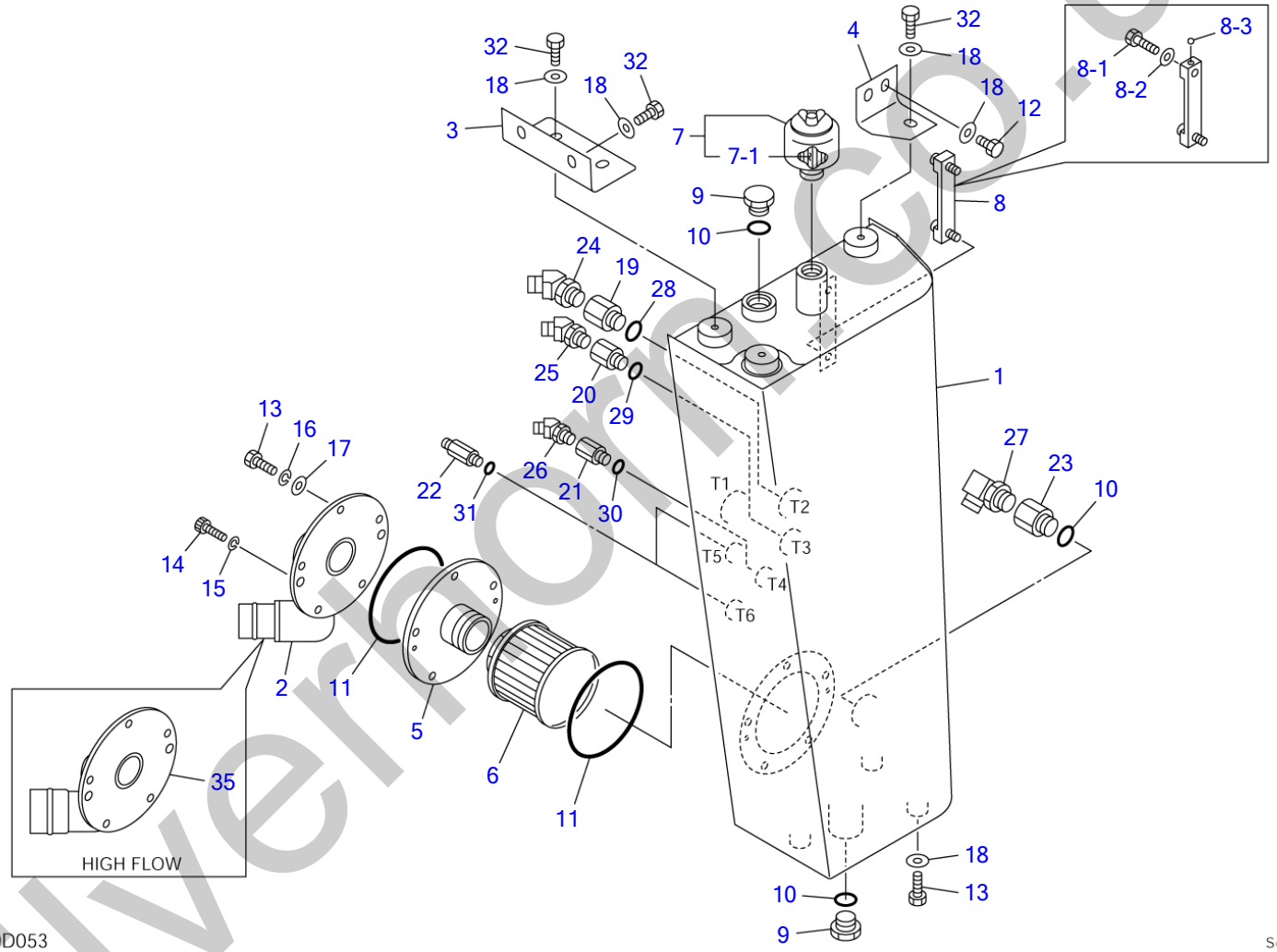

silverthorn.co.uk

HYDRAULIC TANK

Item	Part number	Description	Q'ty	Chan.	Serial No.	Serv.	Remarks
		TANK ASSY, hydraulic					X08828-01000-4
		TANK ASSY, hydraulic (high flow)			21403459~		X08828-02000-4
1	0882801300	TANK, hydraulic	1				
2	0882800200	FLANGE	1				
3	0882801410	BRACKET	1				
4	0882801420	BRACKET	1				
5	0881802400	FLANGE	1				
6	1550020150	STRAINER	1				
7	1552000800	BREATHER, air	1				
7-1	1552000830	・ELEMENT	1				
8	1553020612	GAUGE	1				
8-1	1553021650	・BOLT	2				
8-2	1553022650	・PACKING	2				
8-3	1553020603	・FLOAT	1				
9	0007256006	PLUG	2				
10	1420010290	O-RING	3				
11	1420101450	O-RING	2				
12	1100041020	BOLT	2				
13	1100041030	BOLT	13				
14	1110040620	SCREW, cap	2				
15	1140420006	WASHER, spring	2				
16	1140020010	WASHER, spring	5				
17	1141110010	WASHER	5				
18	0003600025	WASHER	10				
19	0007213034	BUSHING	1				
20	0007213010	BUSHING	1				
21	0007213016	BUSHING	1				
22	0007203022	ADAPTOR	2				
23	0007213051	BUSHING	1				
24	1515100113	ELBOW	1				
	1420010240	・O-RING	1				
25	1515100112	ELBOW	1				
	1420010180	・O-RING	1				
26	1515100111	ELBOW	1				
	1420010140	・O-RING	1				
27	1515010044	ELBOW	1				
	1420010290	・O-RING	1				
28	1420010240	O-RING	1				
29	1420010180	O-RING	1				
30	1420010140	O-RING	1				
31	1420010110	O-RING	2				
32	1100041025	BOLT	5				
35	0882731080	PIPE	1				high flow
	T9d053						

silverthorn.co.uk

FUEL TANK & FUEL PIPING (-21400010)

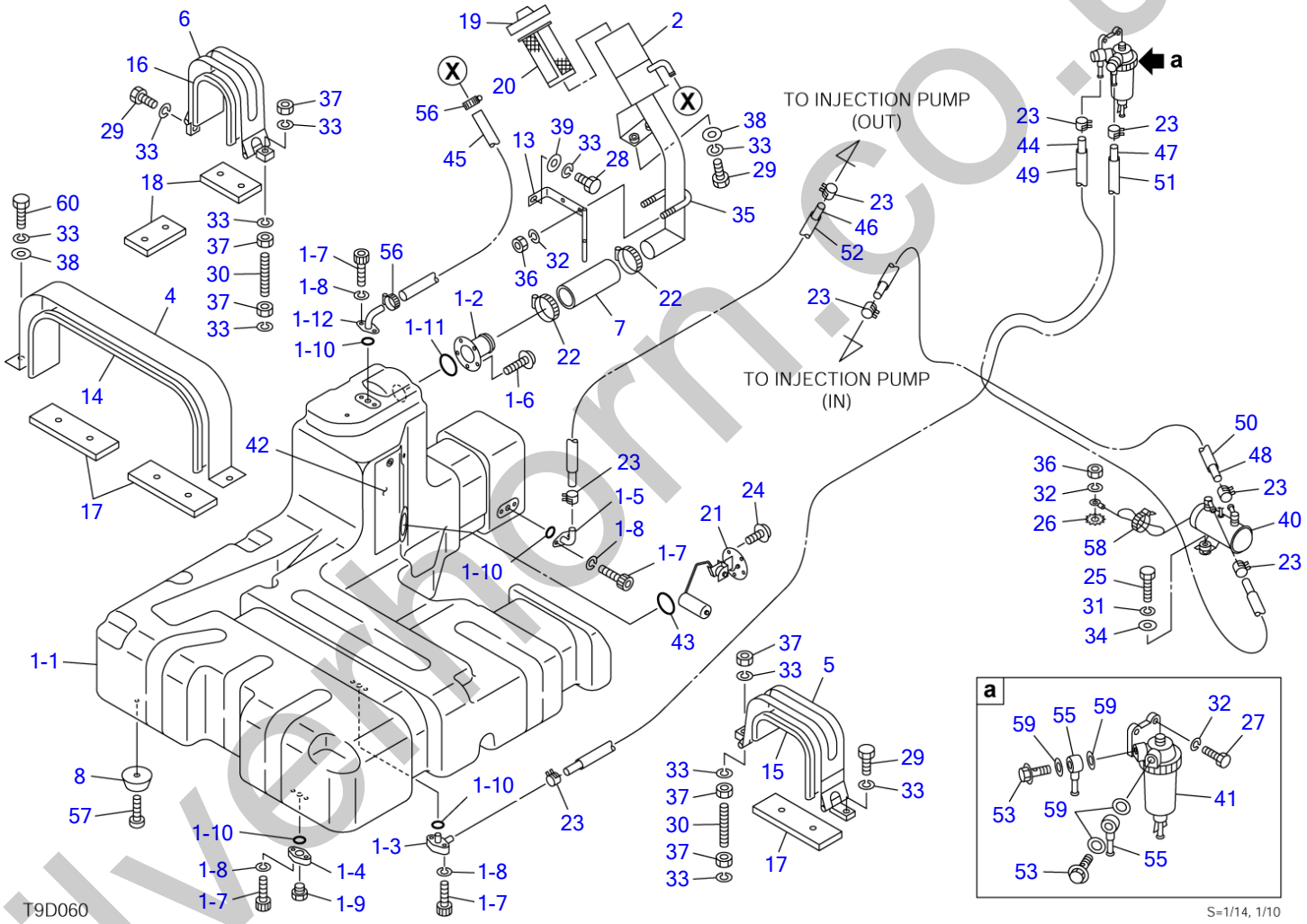

silverthorn.co.uk

FUEL TANK & FUEL PIPING (-21400010)

Item	Part number	Description	Q'ty	Chan.	Serial No.	Serv.	Remarks
		TANK ASSY, fuel					X08828-10000-3
1	X **********	TANK SUB ASSY, fuel	1				X08828-10500
1-1	0882810510	・TANK, fuel	1				
1-2	0881811090	・FLANGE	1				
1-3	0881811100	・FLANGE	1				
1-4	0881811110	・FLANGE	1				
1-5	0881811120	・FLANGE	1				
1-6	1150110516	・SCREW	5				
1-7	1110040616	・SCREW, cap	8				
1-8	1140420006	・WASHER, spring	8				
1-9	1501750002	・PLUG	1				
	1420010110	・・O-RING	1				
1-10	1420000180	・O-RING	4				
1-11	1420000450	・O-RING	1				
1-12	0881811510	・FLANGE	1				
2	0882810650	PORT, supply	1				
4	0882810045	PLATE	1				
5	0882810050	CLAMP	1				
6	0882810060	CLAMP	1				
7	0882810070	HOSE	1				
8	0881812080	RUBBER	5				
13	0882810135	PLATE	1				
14	0882810140	RUBBER	1				
15	0882810150	RUBBER	1				
16	0882810160	RUBBER	1				
17	0881811170	RUBBER	3				
18	0881811180	RUBBER	2				
19	1552100500	CAP	1				
20	1552100320	STRAINER	1				
21	1553202100	SENDER, fuel	1				
22	1533700060	CLIP	2				
23	1533120012	CLAMP	8				
24	1150110510	SCREW	5				
25	1100040625	BOLT	2				
26	1140330008	WASHER	1				
27	1100040825	BOLT	2				
28	1100041020	BOLT	1				
29	1100041025	BOLT	4				
30	0881812300	BOLT	2				
31	1140020006	WASHER, spring	2				
32	1140020008	WASHER, spring	5				
33	1140020010	WASHER, spring	13				
34	1141110006	WASHER	2				
35	1533201012	U-BOLT	1				
36	1130040008	NUT	3				
37	1130040010	NUT	6				
38	0003600003	WASHER	4				
39	1141110010	WASHER	1				
40	1910172034	PUMP, feed	1				ISUZU 897039-8340
41	1910172033	SEPARATOR, water	1				ISUZU 897218-6470
42	0882810420	SHEET	1				
43	1420000450	O-RING	1				
44	1531207140	HOSE	1				sold by the meter
45	1530612057	HOSE	1				sold by the meter
46	1531207110	HOSE	1				sold by the meter
47	1531207230	HOSE	1				sold by the meter
48	1531207140	HOSE	1				sold by the meter
49	1531115132	HOSE	1				sold by the meter
50	1531115142	HOSE	1				sold by the meter
51	1531115113	HOSE	2				sold by the meter
52	1531115102	HOSE	1				sold by the meter
53	1910172051	BOLT, joint	2				ISUZU 109675-0860
55	1910172052	PIPE	2				ISUZU 515411-2250
56	1533700019	CLAMP	2				
57	1120530620	SCREW	5				
58	1652231250	BAND	1				
59	1910172053	PACKING	4				ISUZU 109630-0850
60	1100041030	BOLT	2				

silvermorn.co.uk

FUEL TANK & FUEL PIPING (21400011-)

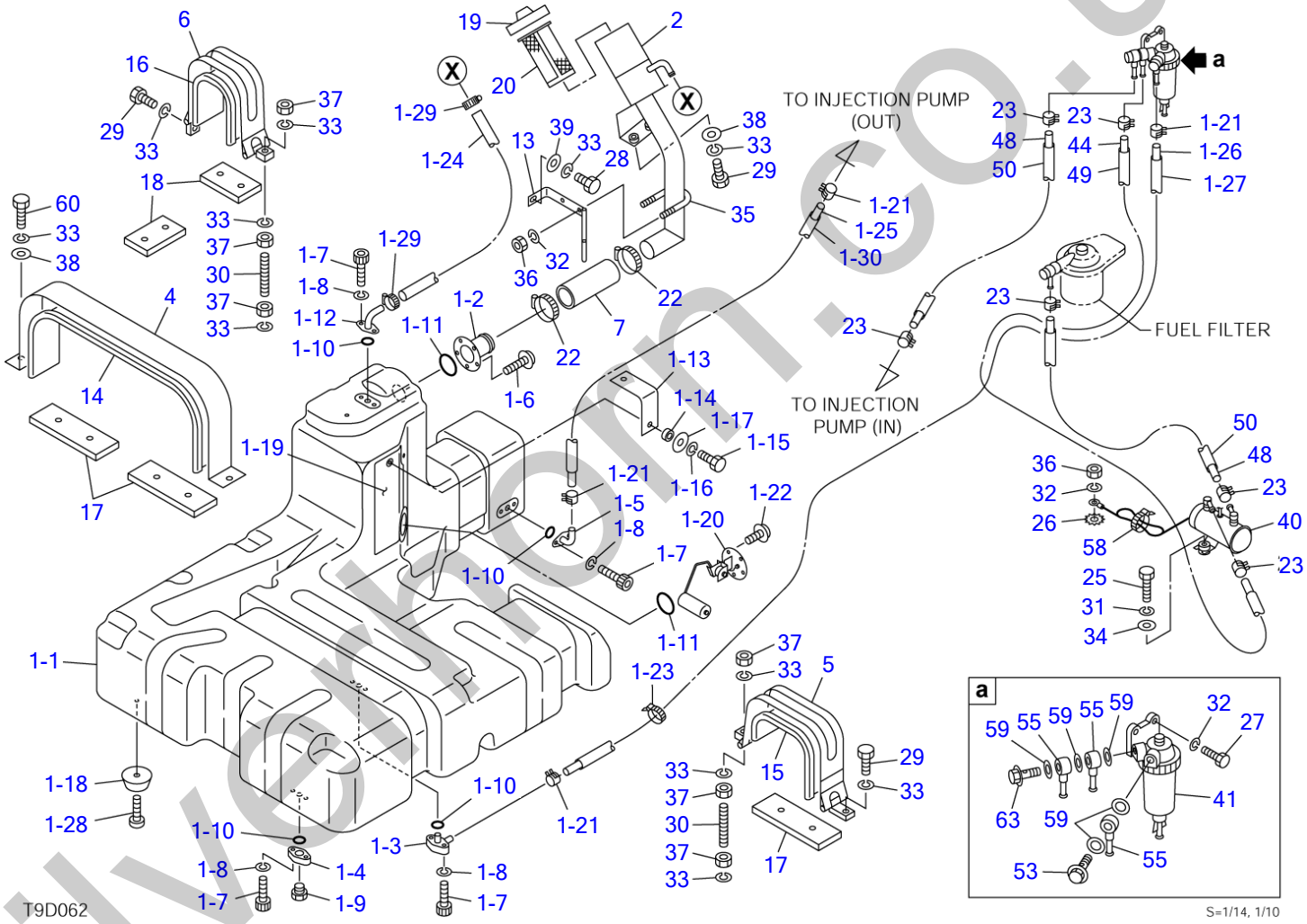

silverhorn.co.uk

FUEL TANK & FUEL PIPING (21400011-)

Item	Part number	Description	Q'ty	Chan.	Serial No.	Serv.	Remarks
		TANK ASSY, fuel					X08828-10000-7
1	X **********	TANK SUB ASSY, fuel	1				X08828-10500
1-1	0882810510	・TANK, fuel	1				
1-2	0881811090	・FLANGE	1				
1-3	0881811100	・FLANGE	1				
1-4	0881811110	・FLANGE	1				
1-5	0881811120	・FLANGE	1				
1-6	1150110516	・SCREW	5				
1-7	1110040616	・SCREW, cap	8				
1-8	1140420006	・WASHER, spring	8				
1-9	1501750002	・PLUG	1				
	1420010110	・・O-RING	1				
1-10	1420000180	・O-RING	4				
1-11	1420000450	・O-RING	2				
1-12	0881811510	・FLANGE	1				
1-13	0881711350	・BAND	1				
1-14	0881711360	・COLLAR	1				
1-15	1100040620	・BOLT	1				
1-16	1140020006	・WASHER, spring	1				
1-17	0003600043	・WASHER	1				
1-18	0881812080	・RUBBER	5				
1-19	0882810420	・SHEET	1				
1-20	1553202100	・SENDER, fuel	1				
1-21	1533120511	・CLAMP	4				
1-22	1150110510	・SCREW	5				
1-23	1652201008	・BAND	1				
1-24	1530612057	・HOSE	1				sold by the meter
1-25	1531207110	・HOSE	1				sold by the meter
1-26	1531207230	・HOSE	1				sold by the meter
1-27	1531115113	・HOSE	2				sold by the meter
1-28	1120530620	・SCREW	5				
1-29	1533700019	・CLAMP	2				
1-30	1531115102	・HOSE	1				sold by the meter
2	0882810650	PORT, supply	1				
4	0882810045	PLATE	1				
5	0882810050	CLAMP	1				
6	0882810060	CLAMP	1				
7	0882810070	HOSE	1				
13	0882810135	PLATE	1				
14	0882810140	RUBBER	1				
15	0882810150	RUBBER	1				
16	0882810160	RUBBER	1				
17	0881811170	RUBBER	3				
18	0881811180	RUBBER	2				
19	1552100500	CAP	1				
20	1552100320	STRAINER	1				
22	1533700060	CLIP	2				
23	1533120511	CLAMP	6				
25	1100040625	BOLT	2				
26	1140330008	WASHER	1				
27	1100040825	BOLT	2				
28	1100041020	BOLT	1				
29	1100041025	BOLT	4				
30	0881812300	BOLT	2				
31	1140020006	WASHER, spring	2				
32	1140020008	WASHER, spring	5				
33	1140020010	WASHER, spring	13				
34	1141110006	WASHER	2				
35	1533201012	U-BOLT	1				
36	1130040008	NUT	3				
37	1130040010	NUT	6				
38	0003600025	WASHER	4				
39	1141110010	WASHER	1				
40	1910172034	PUMP, feed	1				ISUZU 897039-8340
41	1910172033	SEPARATOR, water	1				ISUZU 897218-6470
44	1531207136	HOSE	1				sold by the meter
48	1531207115	HOSE	2				sold by the meter
49	1531115121	HOSE	1				sold by the meter

silverthorn.co.uk

FUEL TANK & FUEL PIPING (21400011-)

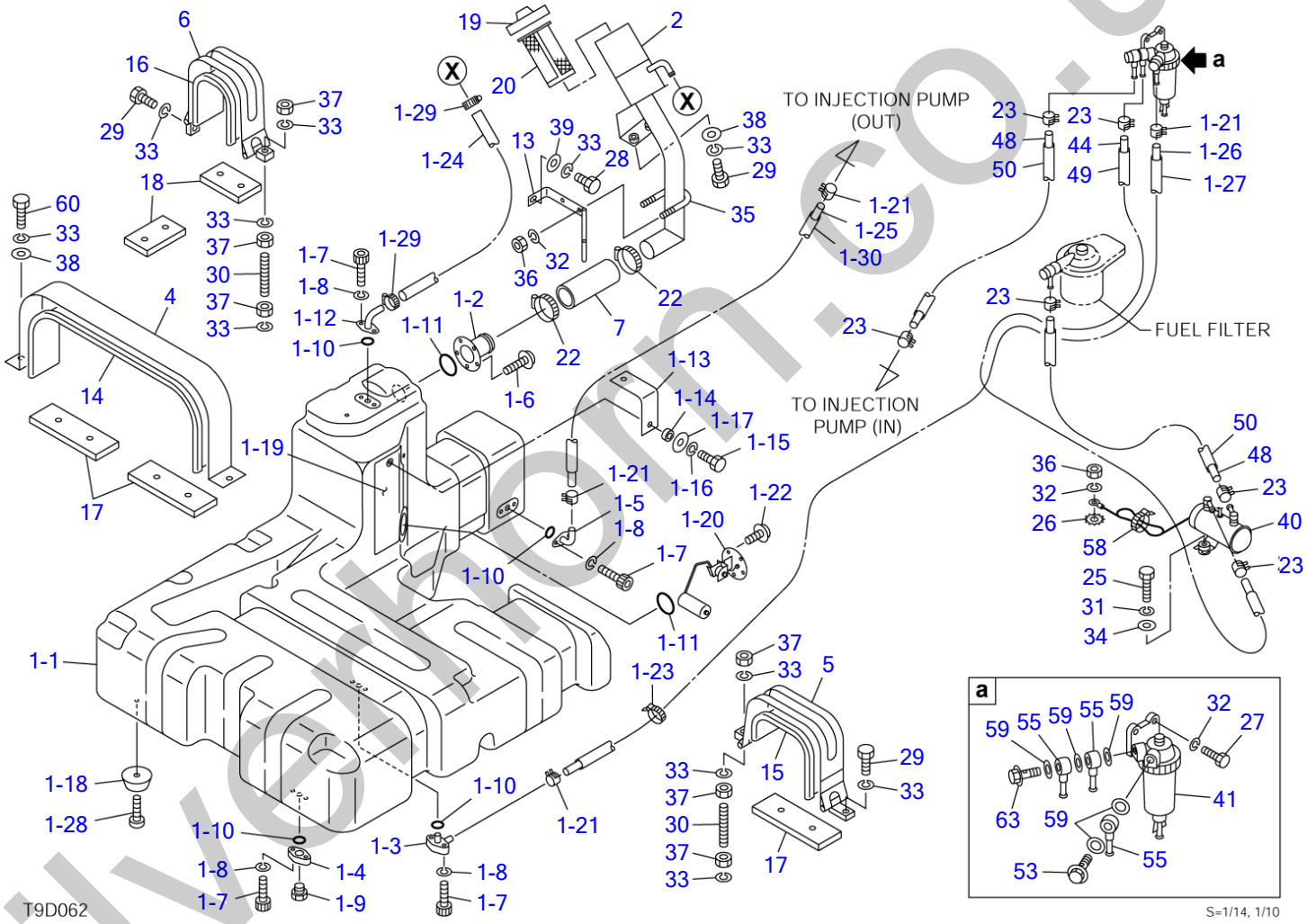

silverhorn.co.uk

FUEL TANK & FUEL PIPING (21400011-)

Item	Part number	Description	Q'ty	Chan.	Serial No.	Serv.	Remarks
50	**1531115100**	HOSE	2				sold by the meter
53	**1910172051**	BOLT, joint	1				ISUZU 109675-0860
55	**1910172052**	PIPE	3				ISUZU 515411-2250
58	**1652231250**	BAND	1				
59	**1910172053**	PACKING	5				ISUZU 109630-0850
60	**1100041030**	BOLT	2				
63	**1910188054**	BOLT, joint	1				ISUZU 1-09675023-1
	T9d063						

silverhorn.co.uk

COVER (1/3) (21400011-21405378)

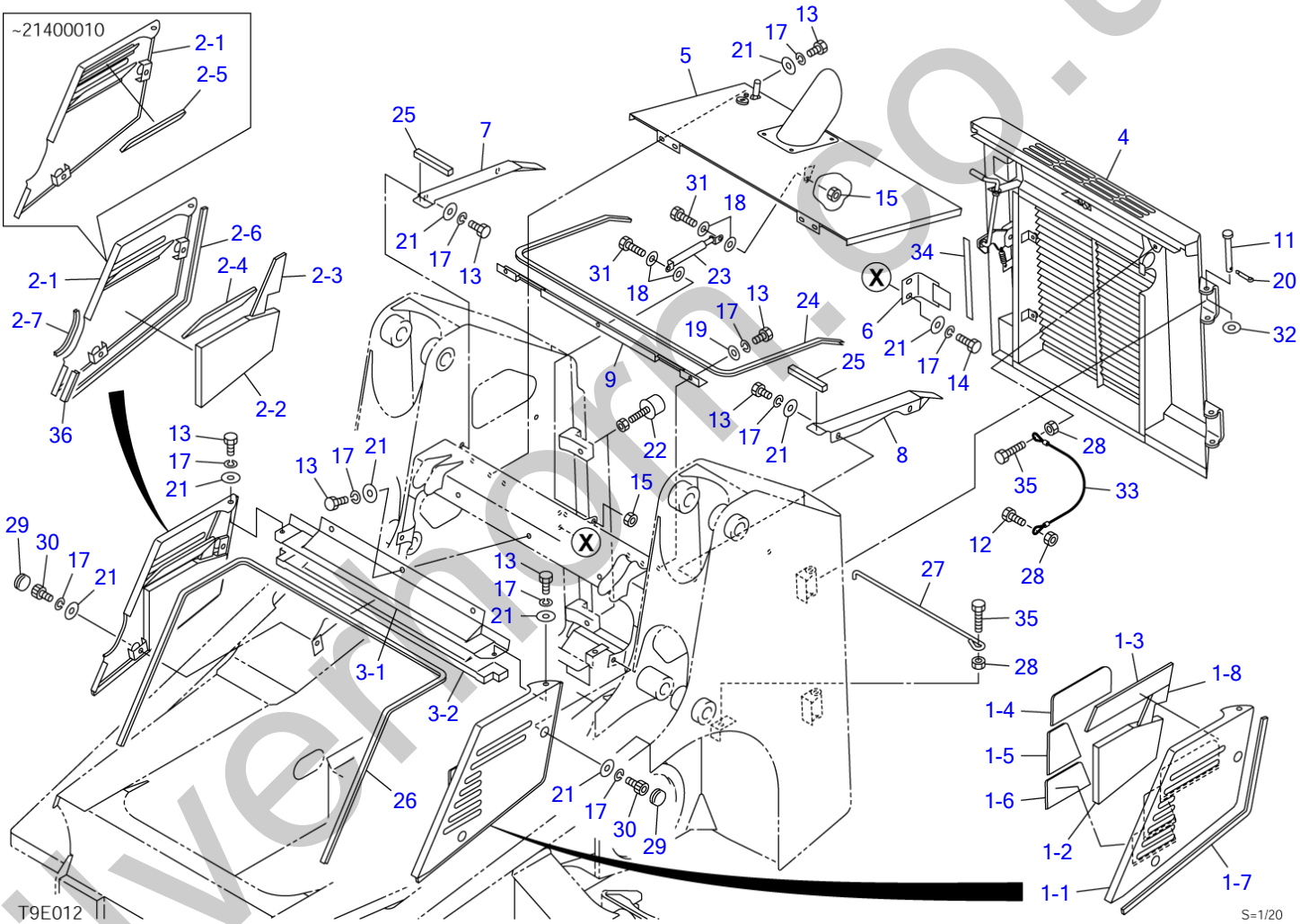

silvermorn.co.uk

COVER (1/3) (21400011-21405378)

Item	Part number	Description	Q'ty	Chan.	Serial No.	Serv.	Remarks
		COVER ASSY					X08828-21000-4
1	0882821050	COVER ASSY, side (L.H.)	1				X08828-21050-3
1-1	0882821060	・COVER, side (L.H.)	1		~21400010		
	0882821100	・COVER, side (L.H.)	1	(H)	21400011~		
1-2	0882821052	・ABSORBENT, noise	1		21400011~21400059		
1-3	0882821053	・ABSORBENT, noise	1				
1-4	0882821058	・ABSORBENT, noise (L.H.)	1				
1-5	0882821055	・ABSORBENT, noise	1				
1-6	0882821056	・ABSORBENT, noise	1				
1-7	1654311088	・SPONGE	1				sold by the meter
1-8	0882821059	・SPONGE	1				
2	0882821070	COVER ASSY, side (R.H.)	1				X08828-21070-2
2-1	0882821080	・COVER, side (R.H.)	1		~21400010		
	0882821110	・COVER, side (R.H.)	1	(H)	21400011~		
2-2	0882821072	・ABSORBENT, noise	1				
2-3	0882821073	・ABSORBENT, noise	1				
2-4	0882821078	・ABSORBENT, noise (R.H.)	1				
2-5	0882821075	・ABSORBENT, noise	1		~21400010		
2-6	1654311088	・SPONGE	1				sold by the meter
2-7	1653916020	・TRIM	1				sold by the meter
3	0882820300	COVER ASSY, center	1				
3-1	0882820350	・COVER	1				
3-2	0882820302	・ABSORBENT, noise	1				
4	0882821200	DOOR ASSY, rear	1		~21400010		see page (2/3)
	0882821700	DOOR ASSY, rear	1		21400011~		see page (2/3)
5	0882821400	HOOD ASSY, engine	1				see page (3/3)
6	0882820040	BRACKET	1		~21400130		
	0882820160	BRACKET	1		21400131~		
7	0882821007	PLATE (R.H.)	1				
8	0882821008	PLATE (L.H.)	1				
9	0882821090	TABLE	1				
11	0881822020	PIN	2				
12	1100041025	BOLT	1				
13	1100041020	BOLT	12				
14	1100041030	BOLT	3				
15	1130040008	NUT	2				
17	1140020010	WASHER, spring	18				
18	1141110008	WASHER	4				
19	1141110010	WASHER	3				
20	1210010425	PIN, split	2				
21	0003600020	WASHER	16				
22	1651101050	RUBBER	2				
23	1653900057	SPRING, gas	1				
24	1654623200	TRIM	1				sold by the meter
25	1654302015	SPONGE	2				sold by the meter
26	1654520290	TRIM	1				sold by the meter
27	0881822027	ROD	1				
28	1130040010	NUT	3				
29	1652053400	GROMMET	4				
30	1110041020	SCREW, cap	4				
31	1100040825	BOLT	2				
32	1141110016	WASHER	2				
33	1929900437	ROPE	1				
34	0881823034	RUBBER	1				
35	1100041035	BOLT	2				
36	1654520010	TRIM	1				sold by the meter
	T9e012						

silverthorn.co.uk

COVER (1/3) (21405379-)

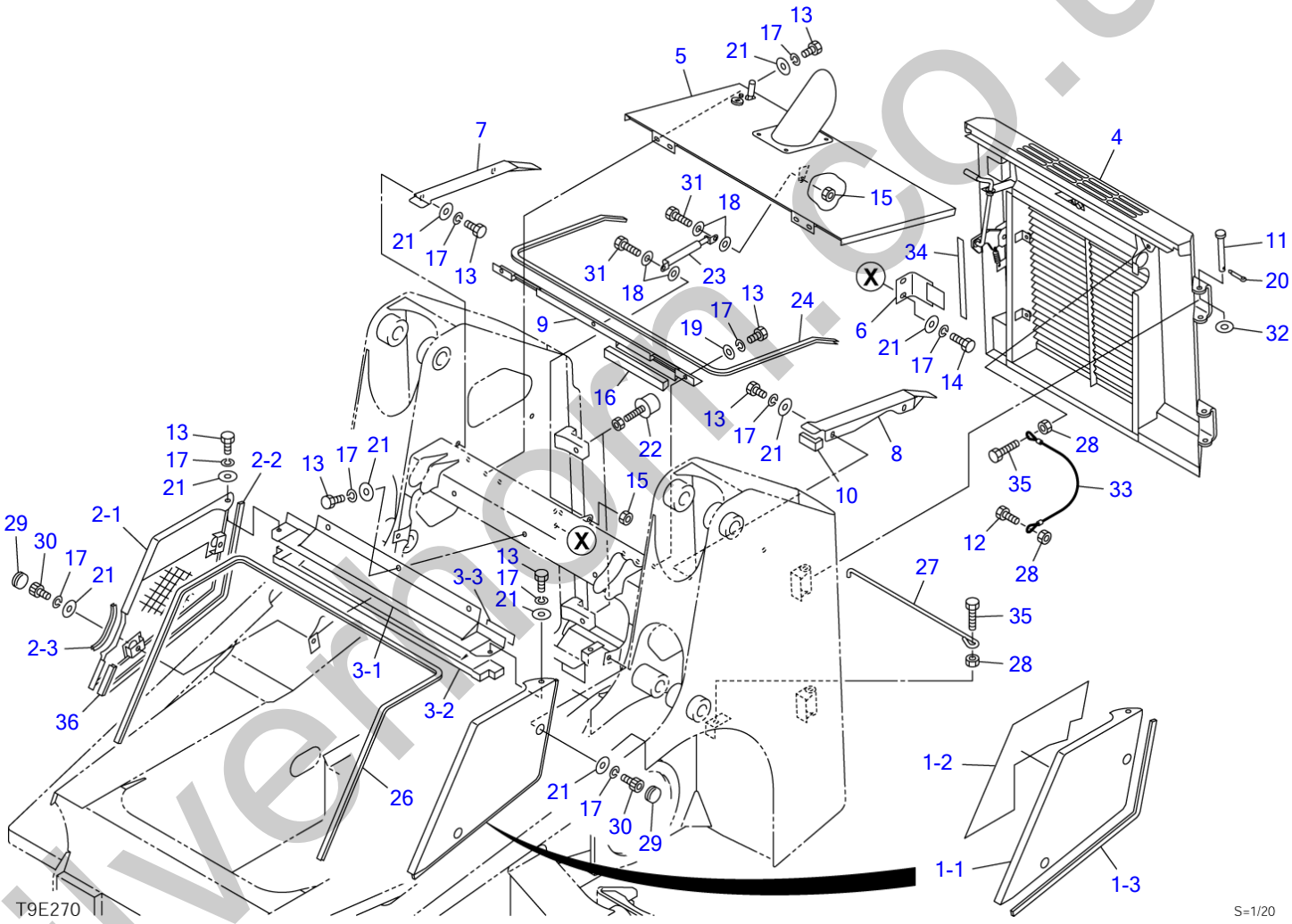

silvermoon.co.uk

COVER (1/3) (21405379-)

Item	Part number	Description	Q'ty	Chan.	Serial No.	Serv.	Remarks
		COVER ASSY					X08828-21000-6
1	0882822800	COVER ASSY, side (L.H.)	1				X08828-22800-0
1-1	0882822850	・COVER, side (L.H.)	1				
1-2	0882822810	・ABSORBENT, noise	1				
1-3	1654311088	・SPONGE	1				sold by the meter
2	0882822900	COVER ASSY, side (R.H.)	1				X08828-22900-0
2-1	0882822950	・COVER, side (R.H.)	1				
2-2	1654311088	・SPONGE	1				sold by the meter
2-3	1653916020	・TRIM	1				sold by the meter
3	0882822960	COVER ASSY, center	1				
3-1	0882822970	・COVER	1				
3-2	0882820302	・ABSORBENT, noise	1				
3-3	1654301012	・SPONGE	1				sold by the meter
4	0882821700	DOOR ASSY, rear	1				see page (2/3)
5	0882821400	HOOD ASSY, engine	1				see page (3/3)
6	0882820160	BRACKET	1				
7	0882821007	PLATE (R.H.)	1				
8	0882822870	PLATE (L.H.)	1				
9	0882822860	TABLE	1				
10	1654344012	SPONGE	1				sold by the meter
11	0881822020	PIN	2				
12	1100041025	BOLT	1				
13	1100041020	BOLT	12				
14	1100041030	BOLT	3				
15	1130040008	NUT	2				
16	1654613022	SPONGE	1				sold by the meter
17	1140020010	WASHER, spring	18				
18	1141110008	WASHER	4				
19	1141110010	WASHER	3				
20	1210010425	PIN, split	2				
21	0003600020	WASHER	16				
22	1651101050	RUBBER	2				
23	1653900057	SPRING, gas	1				
24	1654623200	TRIM	1				sold by the meter
26	1654520290	TRIM	1				sold by the meter
27	0881822027	ROD	1				
28	1130040010	NUT	3				
29	1652053400	GROMMET	4				
30	1110041020	SCREW, cap	4				
31	1100040825	BOLT	2				
32	1141110016	WASHER	2				
33	1929900437	ROPE	1				
34	0881823034	RUBBER	1				
35	1100041035	BOLT	2				
36	1654520010	TRIM	1				sold by the meter
	T9e270						

silverhorn.co.uk

COVER (1/3) (high flow; 21403459-)

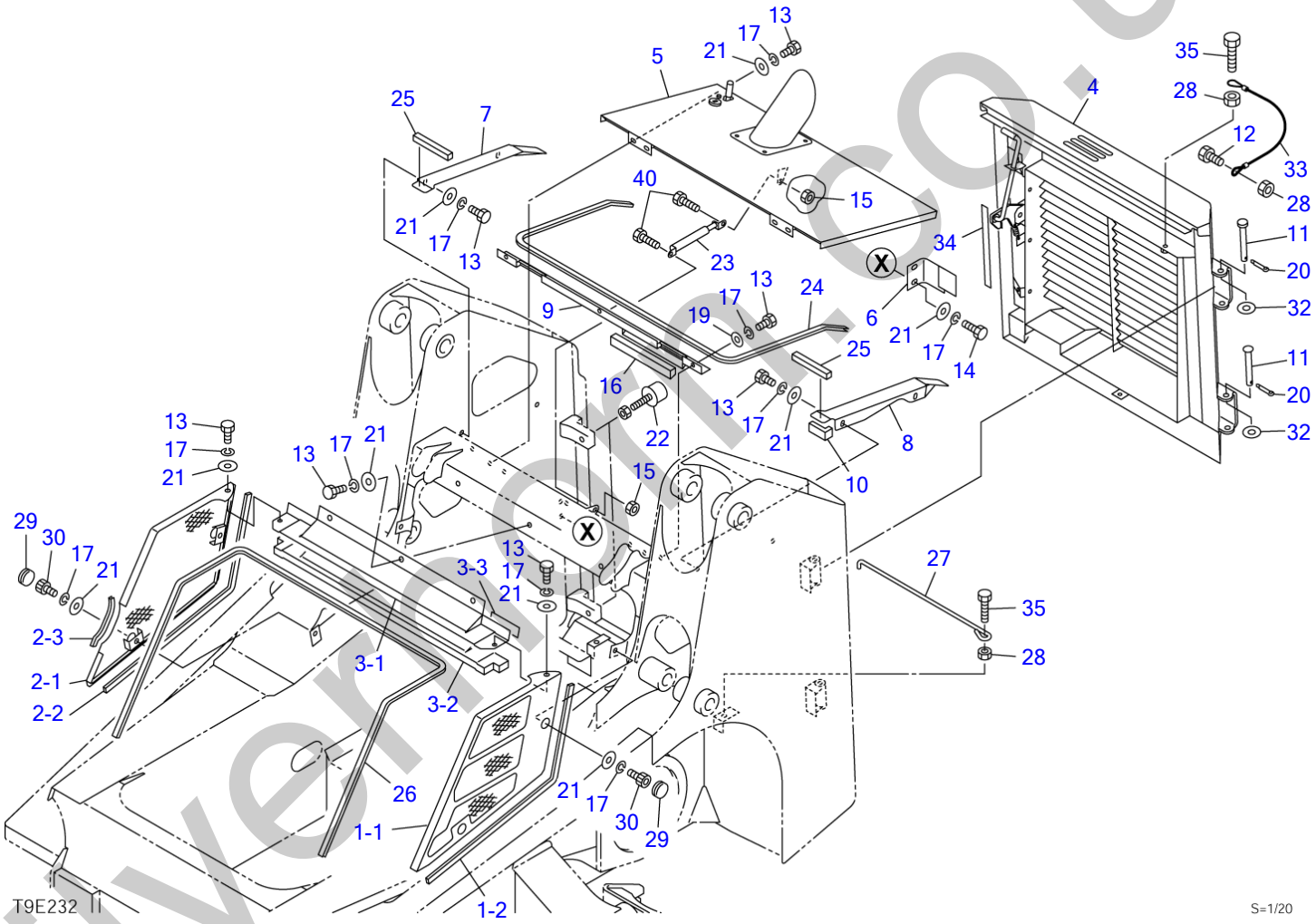

silvermore.co.uk

COVER (1/3) (high flow; 21403459-)

Item	Part number	Description	Q'ty	Chan.	Serial No.	Serv.	Remarks
		COVER ASSY					X08828-22000-5
1	0882822100	COVER ASSY, side (L.H.)	1				X08828-22100-0
1-1	0882822110	・COVER, side (L.H.)	1				
1-2	1654311088	・SPONGE	1				sold by the meter
2	0882822200	COVER ASSY, side (R.H.)	1				X08828-22200-0
2-1	0882822210	・COVER, side (R.H.)	1				
2-2	1654311088	・SPONGE	1				sold by the meter
2-3	1653916020	・TRIM	1				sold by the meter
3	0882820300	COVER ASSY, center	1		21403459~21405378		
	0882822960	COVER ASSY, center	1		21405379~		
3-1	0882820350	・COVER	1		21403459~21405378		
	0882822970	・COVER	1		21405379~		
3-2	0882820302	・ABSORBENT, noise	1				
3-3	1654301012	・SPONGE	1		21405379~		sold by the meter
4	0882822300	DOOR ASSY, rear	1				see page (2/3)
5	0882822600	HOOD ASSY, engine	1				see page (3/3)
6	0882822060	BRACKET	1				
7	0882821007	PLATE (R.H.)	1				
8	0882821008	PLATE (L.H.)	1		21403459~21405378		
	0882822870	PLATE (L.H.)	1		21405379~		
9	0882821090	TABLE	1		21403459~21405378		
	0882822860	TABLE	1		21405379~		
10	1654344012	SPONGE	1				sold by the meter
11	0881822020	PIN	2				
12	1100041050	BOLT	1				
13	1100041020	BOLT	12				
14	1100041030	BOLT	3				
15	1130040008	NUT	2				
16	1654613022	SPONGE	1				sold by the meter
17	1140020010	WASHER, spring	18				
19	1141110010	WASHER	3				
20	1210010425	PIN, split	2				
21	0003600020	WASHER	16				
22	1651101050	RUBBER	2				
23	1653900041	SPRING, gas	1				
24	1654623200	TRIM	1				sold by the meter
25	1654302015	SPONGE	2		21403459~21405378		sold by the meter
26	1654520290	TRIM	1				sold by the meter
27	0881822027	ROD	1				
28	1130040010	NUT	3				
29	1652053400	GROMMET	4				
30	1110041020	SCREW, cap	4				
32	1141110016	WASHER	2				
33	1929900437	ROPE	1				
34	0881823034	RUBBER	1				
35	1100041035	BOLT	2				
40	0138255300	BOLT	2				
	T9e232						

silvethorn.co.uk

COVER (2/3) (rear door; -21400010)

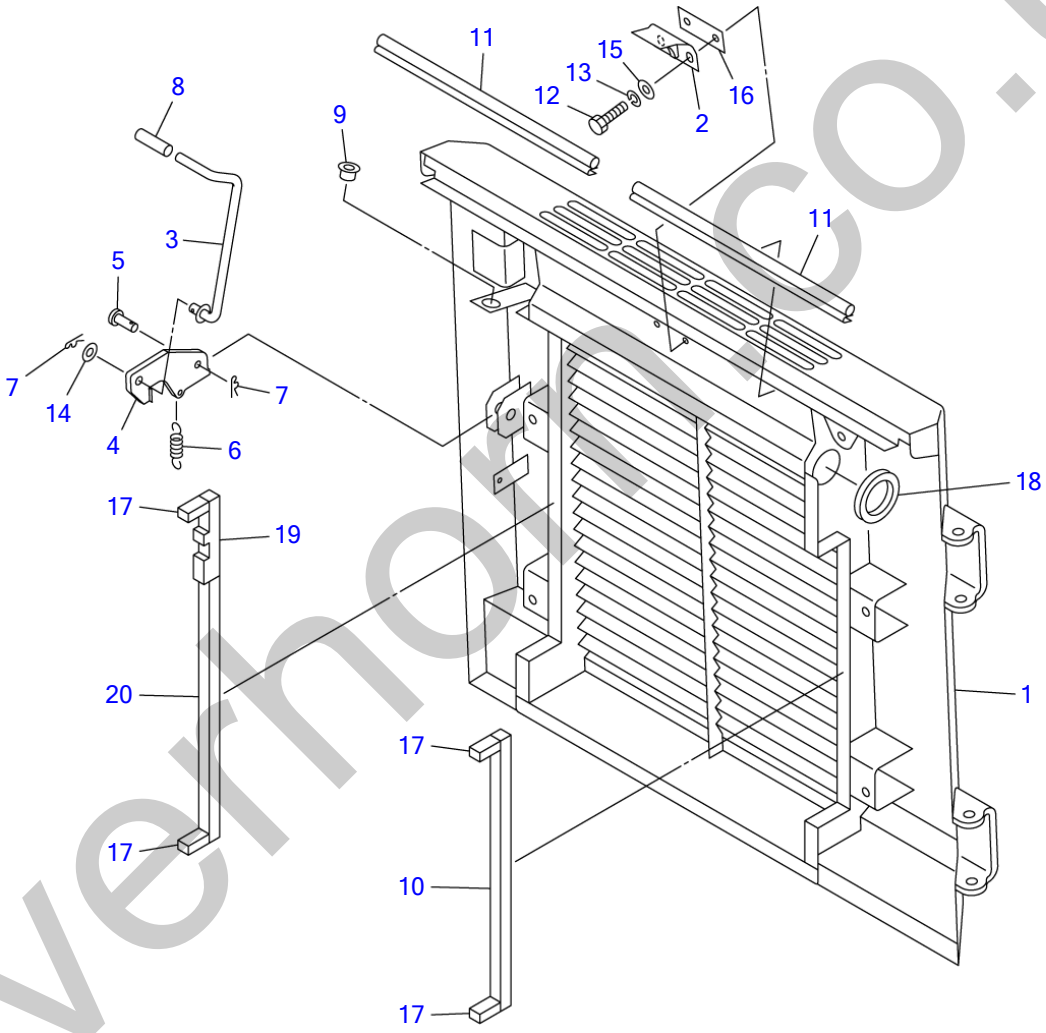

silverhorn.co.uk

COVER (2/3) (rear door; -21400010)

Item	Part number	Description	Q'ty	Chan.	Serial No.	Serv.	Remarks
0-1	0882821200	DOOR ASSY, rear	1				X08828-21200-2
1	0882821600	・DOOR, rear	1				
2	0880823670	・STRIKER	1				
3	0882821230	・ROD	1				
4	0881822550	・PLATE	1				
5	0004015002	・PIN	1				
6	0007000112	・SPRING	1				
7	1214000012	・PIN, snap	2				
8	1650202300	・CAP	1				
9	1652615200	・BUSHING	1				
10	1654306045	・SPONGE	1				sold by the meter
11	1654605041	・TRIM	2				sold by the meter
12	1100040825	・BOLT	2				
13	1140020008	・WASHER, spring	2				
14	1141110012	・WASHER	1				
15	0003608252	・WASHER	2				
16	0003900037	・SPACER	AR				t=4.5mm
	0003900038	・SPACER	AR				t=1.6mm
17	1654304004	・SPONGE	4				sold by the meter
18	1653917017	・TRIM	1				sold by the meter
19	0882821219	・SPONGE	1				
20	1654306044	・SPONGE	2				sold by the meter
	T9e020						

silverhorn.co.uk

COVER (2/3) (rear door; 21400011-)

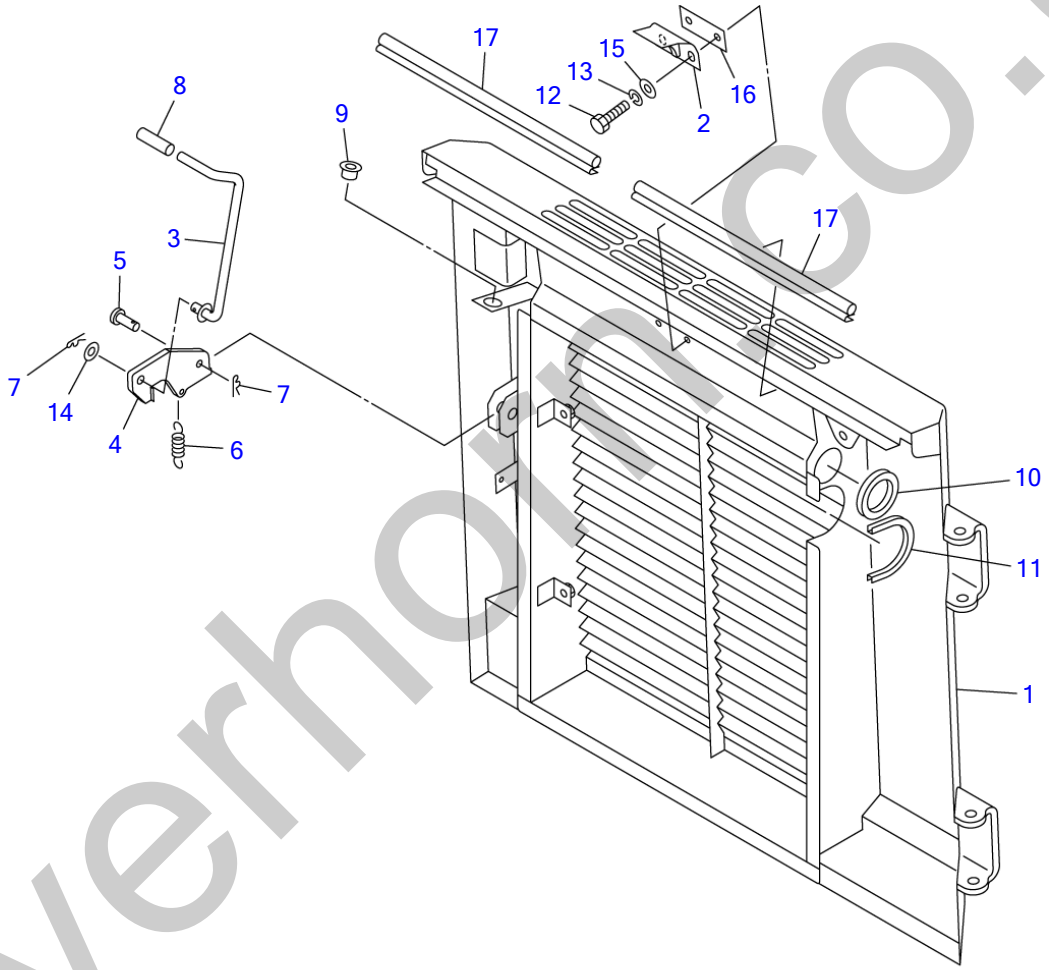

T9E021

S=1/10

silverhorn.co.uk

COVER (2/3) (rear door; 21400011-)

Item	Part number	Description	Q'ty	Chan.	Serial No.	Serv.	Remarks
0-1	0882821700	DOOR ASSY, rear	1				X08828-21700-0
1	0882821800	・DOOR, rear	1				
2	0880823670	・STRIKER	1				
3	0882821230	・ROD	1				
4	0881822550	・PLATE	1				
5	0004015002	・PIN	1				
6	0007000112	・SPRING	1				
7	1214000012	・PIN, snap	2				
8	1650202300	・CAP	1				
9	1652615200	・BUSHING	1				
10	1653917017	・TRIM	1				sold by the meter
11	1654606016	・TRIM	1				sold by the meter
12	1100040825	・BOLT	2				
13	1140020008	・WASHER, spring	2				
14	1141110012	・WASHER	1				
15	0003608252	・WASHER	2				
16	0003900037	・SPACER	AR				t=4.5mm
	0003900038	・SPACER	AR				t=1.6mm
17	1654605041	・TRIM	2				sold by the meter
	T9e021						

silverhorn.co.uk

COVER (2/3) (rear door, high flow; 21403459-)

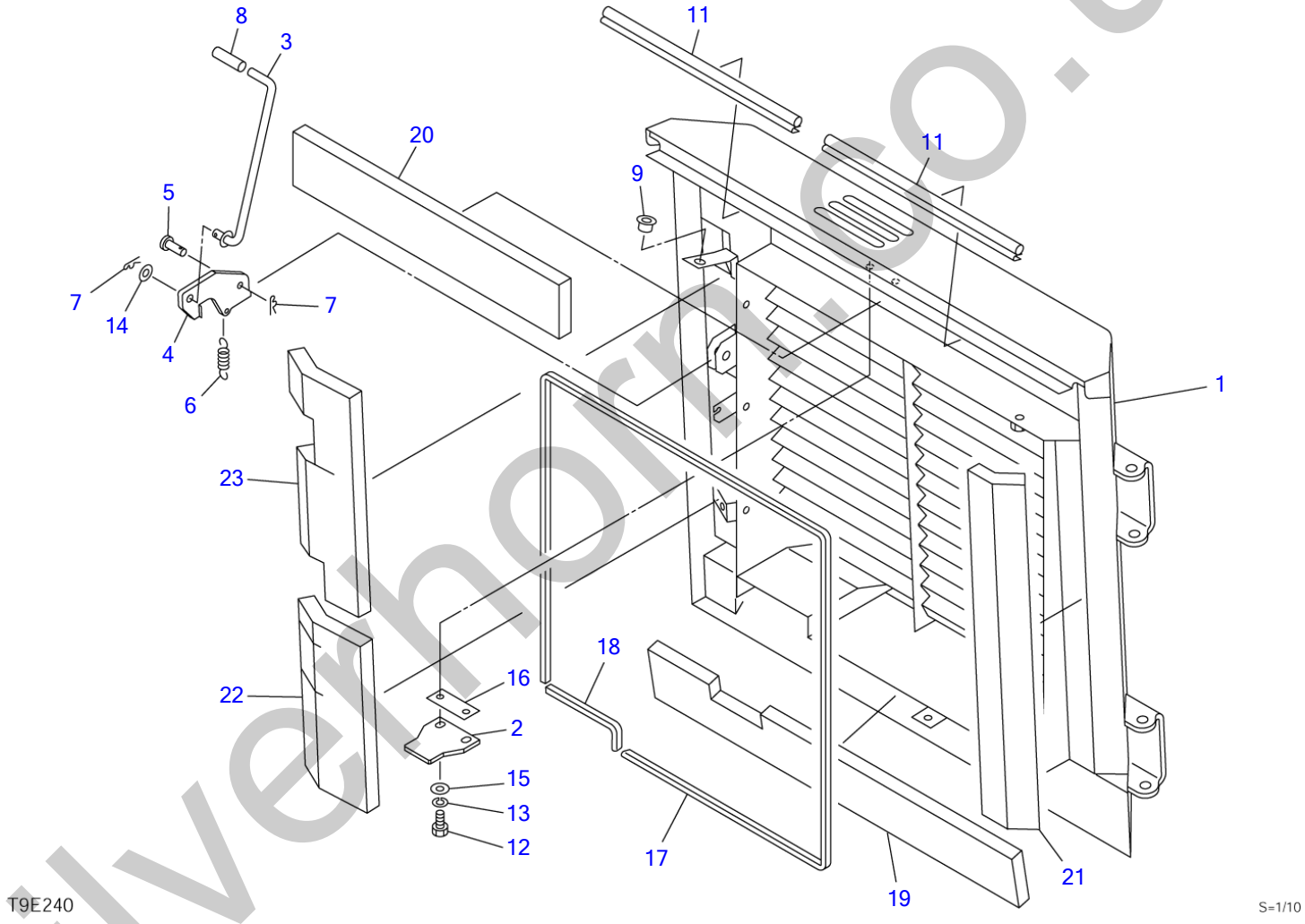

silverhorn.co.uk

COVER (2/3) (rear door, high flow; 21403459-)

Item	Part number	Description	Q'ty	Chan.	Serial No.	Serv.	Remarks
0-1	0882822300	DOOR ASSY, rear	1				X08828-22300-1
1	0882822400	・DOOR, rear	1				
2	0880822650	・STRIKER	1				
3	0882822350	・ROD	1				
4	0880826160	・PLATE	1				
5	0004015002	・PIN	1				
6	0007000112	・SPRING	1				
7	1214000012	・PIN, snap	2				
8	1650202300	・CAP	1				
9	1652615200	・BUSHING	1				
11	1654605041	・TRIM	2				sold by the meter
12	1100040825	・BOLT	2				
13	1140020008	・WASHER, spring	2				
14	1141110012	・WASHER	1				
15	0003608252	・WASHER	2				
16	0003900037	・SPACER	AR				t=4.5mm
17	1654606237	・TRIM	1				sold by the meter
18	1654606018	・TRIM	1				sold by the meter
19	0882822360	・ABSORBENT, noise	1				
20	0882822365	・ABSORBENT, noise	1				
21	0882822370	・ABSORBENT, noise	1				
22	0882822375	・ABSORBENT, noise	1				
23	0882822380	・ABSORBENT, noise	1				
	T9e241						

silverhorn.co.uk

COVER (3/3) (engine hood)

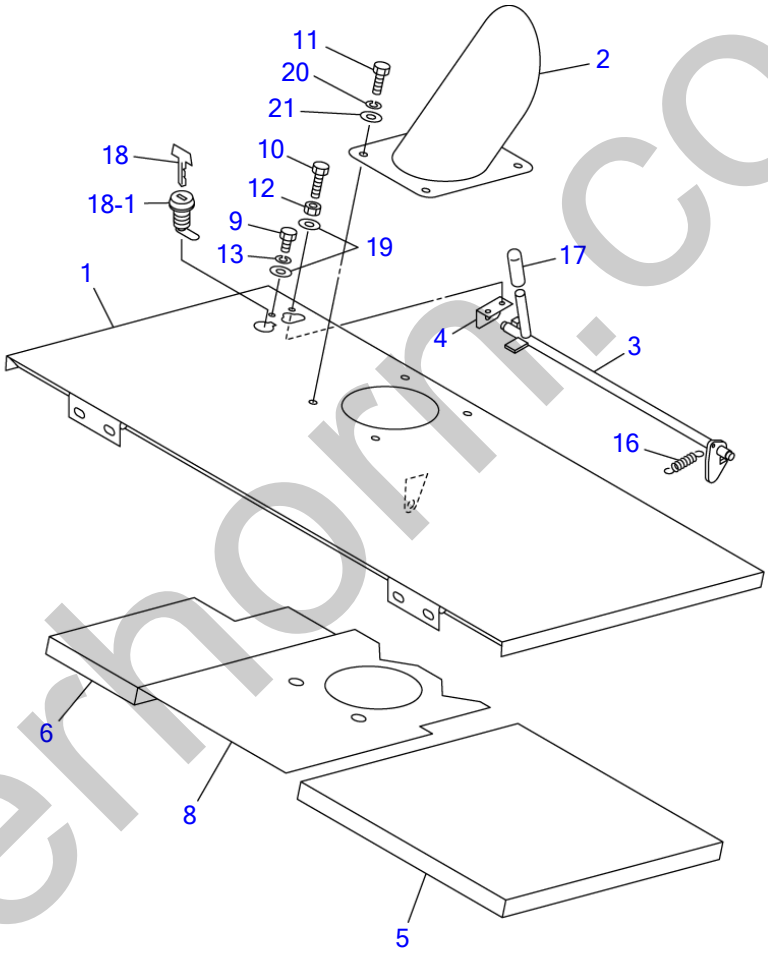

T9E032

S=1/10

silverhorn.co.uk

COVER (3/3) (engine hood)

Item	Part number	Description	Q'ty	Chan.	Serial No.	Serv.	Remarks
0-2	0882821400	HOOD ASSY, engine	1				X08828-21400-3
1	0882821450	・HOOD, engine	1				
2	0882961790	・NOZZLE	1				
3	0880823660	・LEVER	1				
4	0880820080	・ANGLE	1				
5	0882820905	・ABSORBENT, noise	1				
6	0882821406	・ABSORBENT, noise	1				
8	0882821408	・INSULATOR	1				
9	1100040612	・BOLT	1				
10	1100040620	・BOLT	1				
11	1100040816	・BOLT	4				
12	1130040006	・NUT	1				
13	1140020006	・WASHER, spring	1				
16	0007000070	・SPRING	1				
17	1650202300	・CAP	1				
18	1653601395	・LOCK	1				
18-1	1700100019	・KEY	1				
19	1141110006	・WASHER	2				
20	1140020008	・WASHER, spring	4				
21	0003608252	・WASHER	4				
	T9e032						

silverhorn.co.uk

COVER (3/3) (engine hood, high flow; 21403459-)

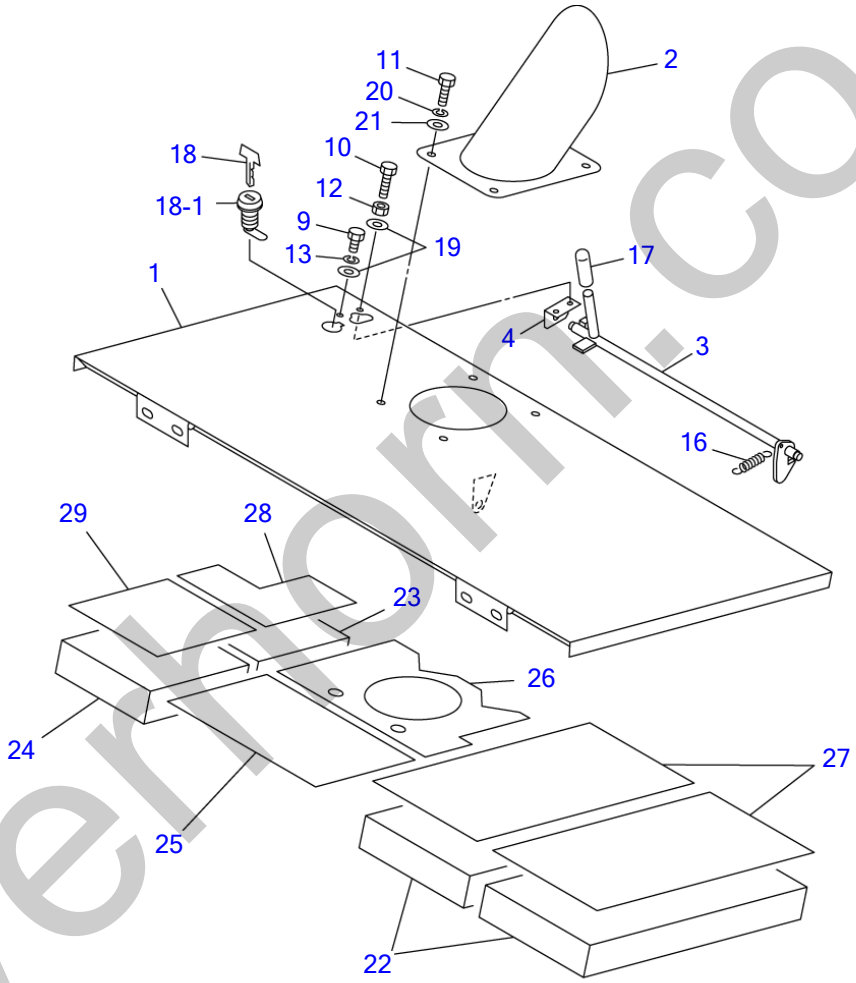

T9E250

S=1/10

silverhorn.co.uk

COVER (3/3) (engine hood, high flow; 21403459-)

Item	Part number	Description	Q'ty	Chan.	Serial No.	Serv.	Remarks
0-2	0882822600	HOOD ASSY, engine	1				X08828-22600-1
1	0882822700	・HOOD, engine	1				
2	0882822650	・NOZZLE	1				
3	0880823660	・LEVER	1				
4	0880820080	・ANGLE	1				
9	1100040612	・BOLT	1				
10	1100040620	・BOLT	1				
11	1100040816	・BOLT	4				
12	1130040006	・NUT	1				
13	1140020006	・WASHER, spring	1				
16	0007000070	・SPRING	1				
17	1650202300	・CAP	1				
18	1653601395	・LOCK	1				
18-1	1700100019	・KEY	1				
19	1141110006	・WASHER	2				
20	1140020008	・WASHER, spring	4				
21	0003608252	・WASHER	4				
22	0882822622	・ABSORBENT, noise	2				
23	0882822623	・ABSORBENT, noise	1				
24	0882822624	・ABSORBENT, noise	1				
25	0882822625	・INSULATOR	1				
26	0882822626	・INSULATOR	1				
27	0882822627	・RUBBER	2				
28	0882822628	・RUBBER	1				
29	0882822629	・RUBBER	1				
	T9e250						

silverhorn.co.uk

FLOOR FRAME (21400011-21404898)

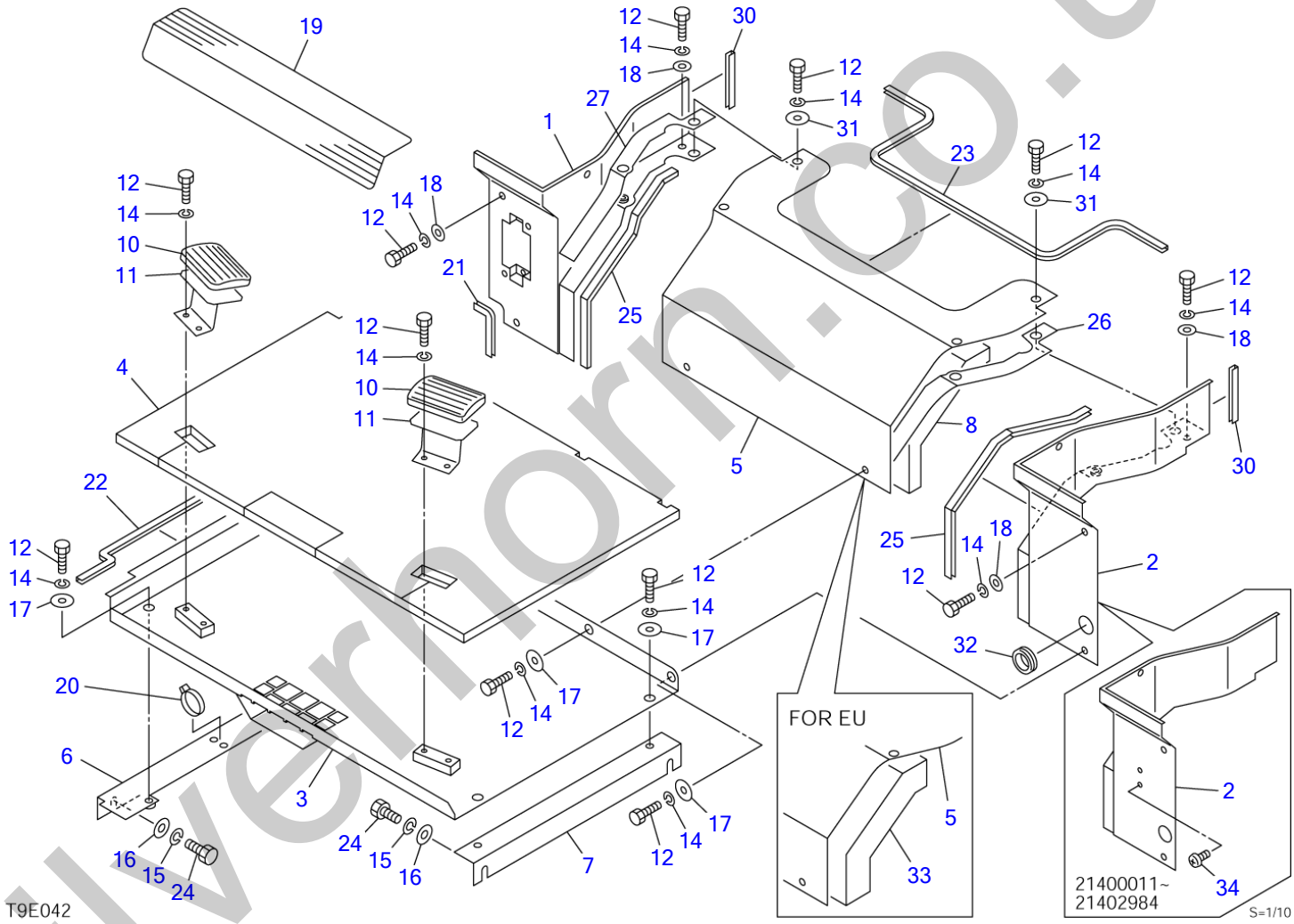

silvernorn.co.uk

FLOOR FRAME (21400011-21404898)

Item	Part number	Description	Q'ty	Chan.	Serial No.	Serv.	Remarks
		FLOOR ASSY					X08823-50500-2
		FLOOR ASSY (for EU)					X08823-50700-2
1	0882350060	COVER (R.H.)	1				
2	0882350070	COVER (L.H.)	1		21400011~21402984		
	0882350550	COVER (L.H.)	1		21402985~		
3	0882350080	PLATE	1				
4	0882350040	MAT, floor	1				
5	0880353550	COVER	1				
6	0881351500	STAY	1				
7	0881351010	STAY	1				
8	0881351020	ABSORBENT, noise	1				
10	0563218500	COVER	2				
11	0563219700	REST, foot	2				
12	1100040820	BOLT	22				
14	1140020008	WASHER, spring	22				
15	1140020010	WASHER, spring	4				
16	1141110010	WASHER	4				
17	0003608252	WASHER	8				
18	1141110008	WASHER	6				
19	0880821355	SHEET	1				
20	1652231250	STRAP	1				
21	1653916007	TRIM	1				sold by the meter
22	1654606048	TRIM	1				sold by the meter
23	1654605080	RUBBER	1				sold by the meter
24	1100041020	BOLT	4				
25	1653916043	TRIM	2				sold by the meter
26	0880353526	SPONGE	1				
27	0880353527	SPONGE	1				
30	1654605010	RUBBER	2				sold by the meter
31	0003608003	WASHER	4				
32	1652053001	GROMMET	1				
33	0881353540	ABSORBENT, noise	1		21403459~		for EU
34	1120530612	SCREW	2		21400011~21402984		
	T9e042						

silverhorn.co.uk

FLOOR FRAME (21404899-21405078)

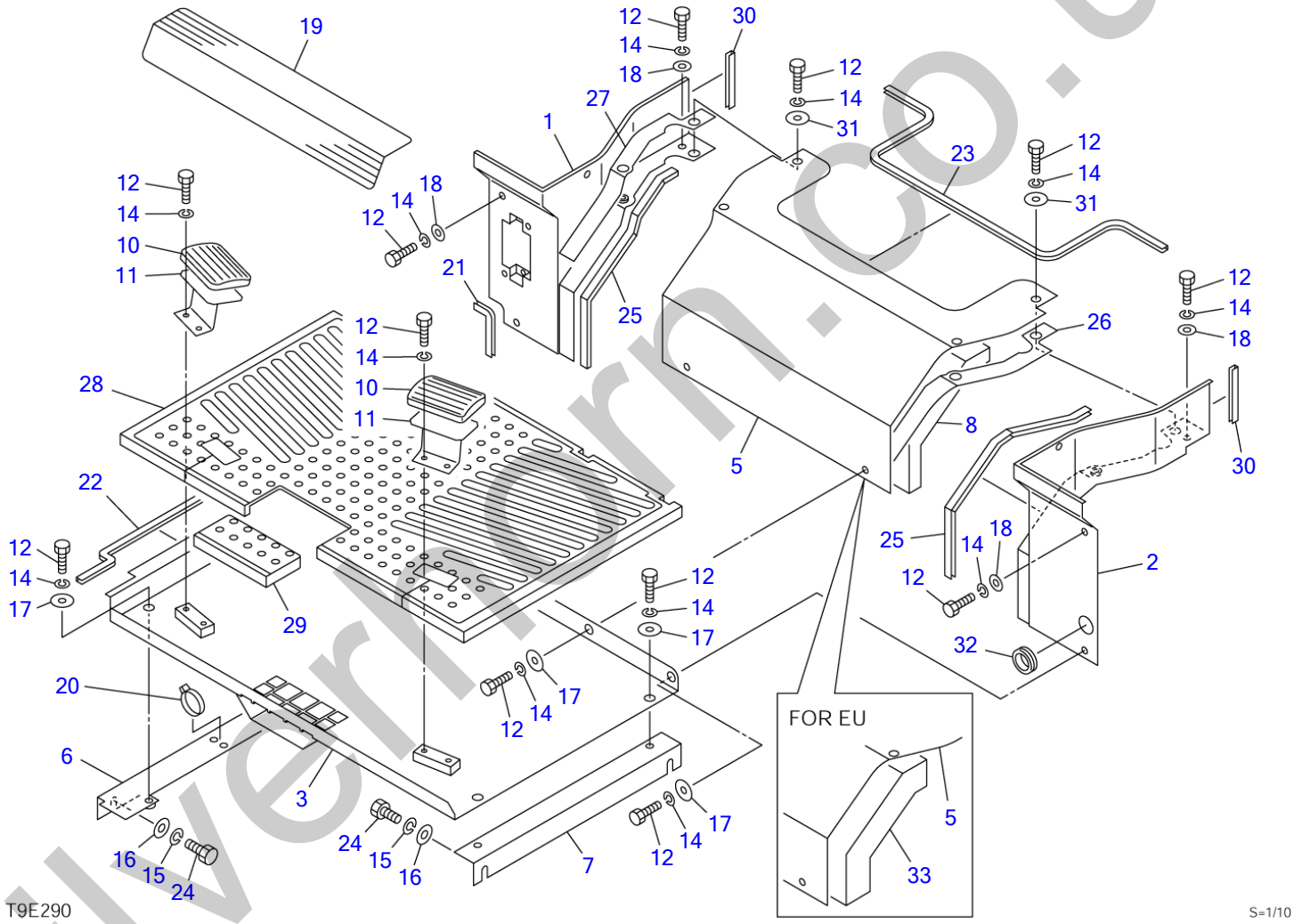

silverfern.co.uk

FLOOR FRAME (21404899-21405078)

Item	Part number	Description	Q'ty	Chan.	Serial No.	Serv.	Remarks
		FLOOR ASSY					X08823-50500-3
		FLOOR ASSY (for EU)					X08823-50700-3
1	0882350060	COVER (R.H.)	1				
2	0882350550	COVER (L.H.)	1				
3	0882350080	PLATE	1				
5	0880353550	COVER	1				
6	0881351500	STAY	1				
7	0881351010	STAY	1				
8	0881351020	ABSORBENT, noise	1				
10	0563218500	COVER	2				
11	0563219700	REST, foot	2				
12	1100040820	BOLT	22				
14	1140020008	WASHER, spring	22				
15	1140020010	WASHER, spring	4				
16	1141110010	WASHER	4				
17	0003608252	WASHER	8				
18	1141110008	WASHER	6				
19	0880821355	SHEET	1				
20	1652231250	STRAP	1				
21	1653916007	TRIM	1				sold by the meter
22	1654606048	TRIM	1				sold by the meter
23	1654605080	RUBBER	1				sold by the meter
24	1100041020	BOLT	4				
25	1653916043	TRIM	2				sold by the meter
26	0880353526	SPONGE	1				
27	0880353527	SPONGE	1				
28	0882350560	MAT, floor	1				
29	0881353080	MAT, floor	1				
30	1654605010	RUBBER	2				sold by the meter
31	0003608003	WASHER	4				
32	1652053001	GROMMET	1				
33	0881353540	ABSORBENT, noise	1				for EU
	T9e290						

silverhorn.co.uk

FLOOR FRAME (21405079-)

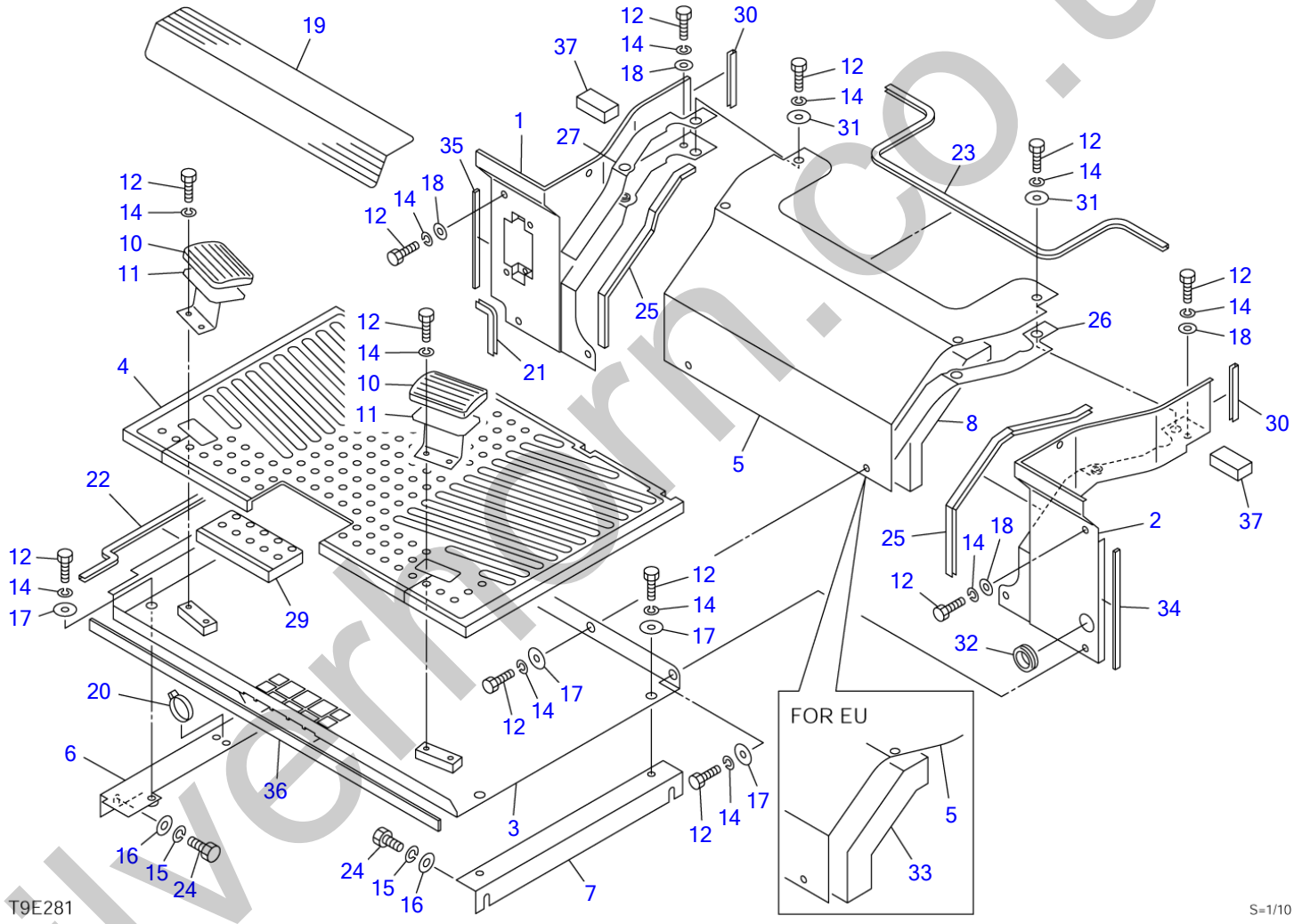

silvermorn.co.uk

FLOOR FRAME (21405079-)

Item	Part number	Description	Q'ty	Chan.	Serial No.	Serv.	Remarks
		FLOOR ASSY					X08823-51000-0
		FLOOR ASSY (for EU)					X08823-51500-0
1	0882350730	COVER (R.H.)	1				
2	0882350740	COVER (L.H.)	1				
3	0882350710	PLATE	1				
4	0882350040	MAT, floor	1	A	21405079~21405774	M	
	0882351050	MAT, floor	1	a	21405775~	M	
5	0880354650	COVER	1				
6	0881351500	STAY	1				
7	0881351010	STAY	1				
8	0881351020	ABSORBENT, noise	1				
10	0563218500	COVER	2				
11	0563219700	REST, foot	2				
12	1100040820	BOLT	22				
14	1140020008	WASHER, spring	22				
15	1140020010	WASHER, spring	4				
16	1141110010	WASHER	4				
17	0003608252	WASHER	8				
18	1141110008	WASHER	6				
19	0880821355	SHEET	1				
20	1652231250	STRAP	1				
21	1653916007	TRIM	1				sold by the meter
22	1654606048	TRIM	1				sold by the meter
23	1654605080	RUBBER	1				sold by the meter
24	1100041020	BOLT	4				
25	1653916043	TRIM	2				sold by the meter
26	0880353526	SPONGE	1				
27	0880353527	SPONGE	1				
29	0881353080	MAT	1	a	21405775~	M	
30	1654605010	RUBBER	2				sold by the meter
31	0003608003	WASHER	4				
32	1652053001	GROMMET	1				
33	0881353540	ABSORBENT, noise	1				for EU
34	1654355022	SPONGE	1				sold by the meter
35	1654355018	SPONGE	1				sold by the meter
36	1654354074	SPONGE	1				sold by the meter
37	1654342006	SPONGE	2				sold by the meter
		<<NOTE>>				M	
		"A" is interchangeable with				M	
		SET "a".					
	T9e281						

silverhorn.co.uk

SEAT (1/2)

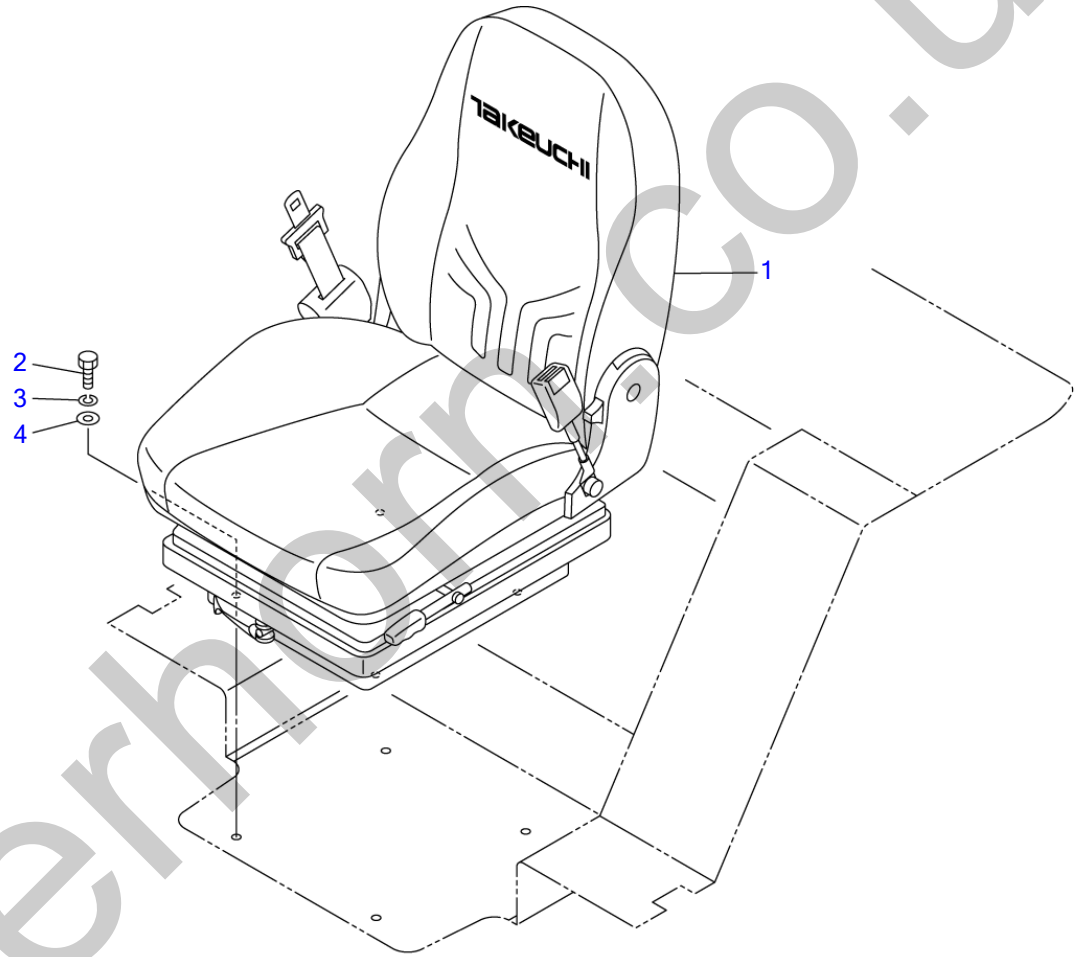

T7E050

S=1/10

silverhorn.co.uk

SEAT (1/2)

Item	Part number	Description	Q'ty	Chan.	Serial No.	Serv.	Remarks
		SEAT ASSY					X08813-40000-2
1	**1914100079**	SEAT	1				see page (2/2)
2	**1100040820**	BOLT	4				
3	**1140020008**	WASHER, spring	4				
4	**1141110008**	WASHER	4				
	T7e051						

silverhorn.co.uk

SEAT (2/2)

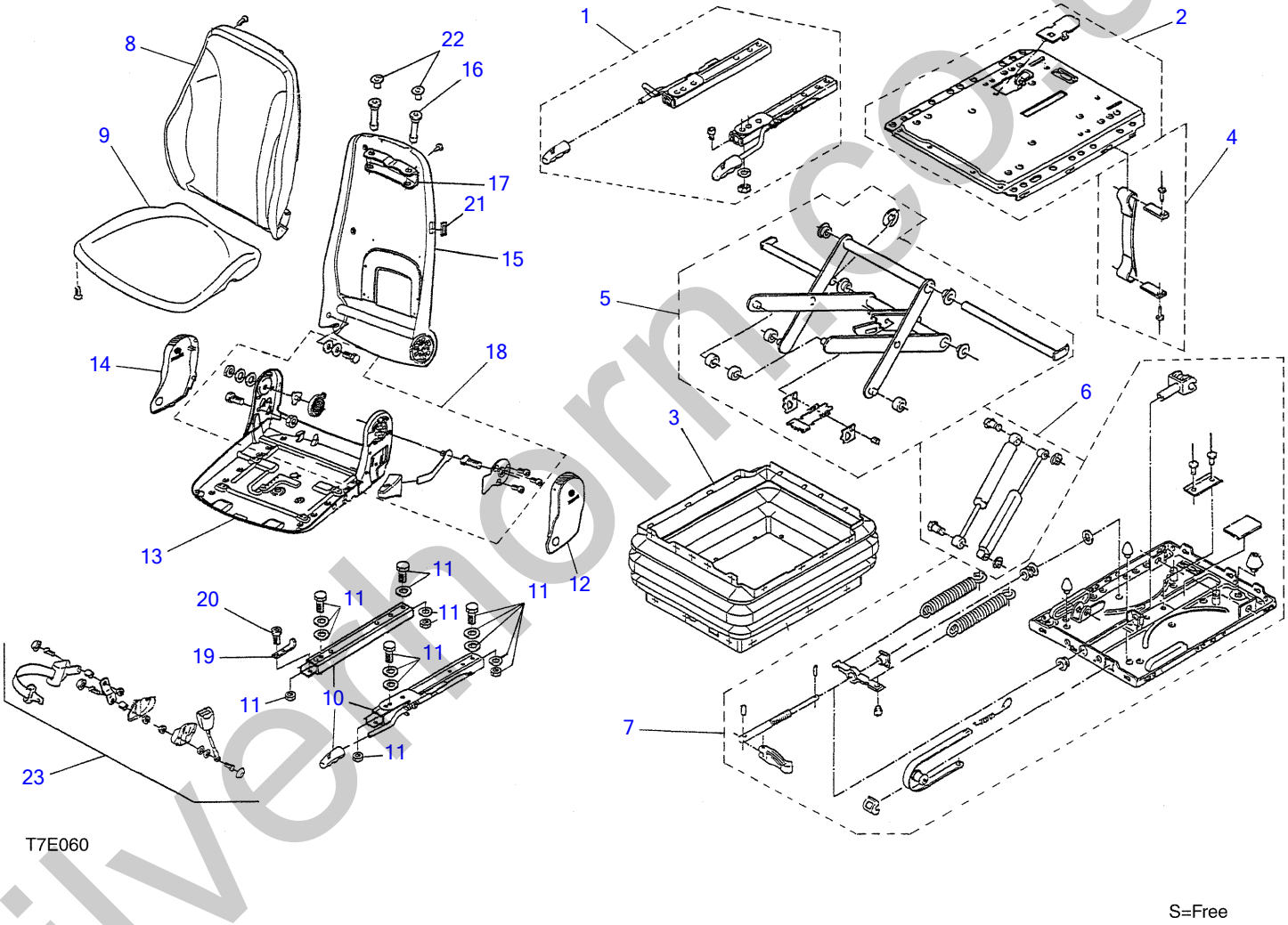

silverthorn.co.uk

SEAT (2/2)

Item	Part number	Description	Q'ty	Chan.	Serial No.	Serv.	Remarks
0	1914100079	SEAT ASSY	1				PVC
1	1914101072	・RAIL ASSY	1				
2	1914102072	・PLATE ASSY	1				
3	1914103072	・BOOT	1				
4	1914104072	・ANGLE ASSY	1				
5	1914105072	・LINK ASSY	1				
6	1914106072	・DAMPER ASSY	1				
7	1914107072	・SPRING ASSY	1				
8	1914108072	・TRIM	1				
9	1914109072	・TRIM	1				
10	1914110072	・RAIL ASSY	1				
11	1914111072	・BOLT ASSY	1				
12	1914112072	・COVER (L.H.)	1				
13	1914113072	・FRAME	1				
14	1914114072	・COVER (R.H.)	1				
15	1914115072	・FRAME	1				
16	1914116072	・GUIDE	2				
17	1914117072	・BRACKET	1				
18	1914118072	・JOINT ASSY	1				
19	1914119072	・PLATE	1				
20	1914120072	・SCREW, cap	1				
21	1914121072	・PLATE	1				
22	1914122072	・PLUG	2				
23	1914123072	・BELT ASSY, seat	1				
	T7e060						

silverhorn.co.uk

SEAT (1/2) (for GEHL & MUSTANG)

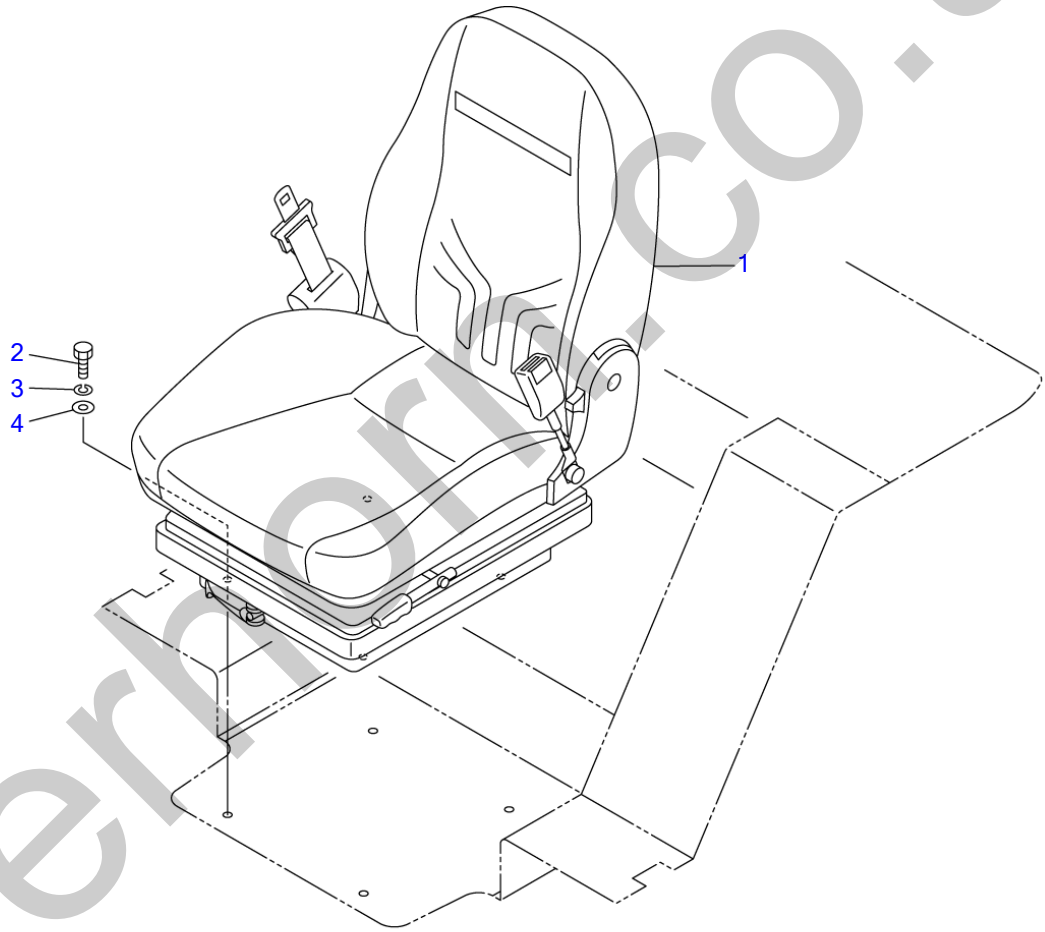

T7E170

S=1/10

silverhorn.co.uk

SEAT (1/2) (for GEHL & MUSTANG)

Item	Part number	Description	Q'ty	Chan.	Serial No.	Serv.	Remarks
		SEAT ASSY					X08813-41000-2
1	**1914100090**	SEAT	1				see page (2/2)
2	**1100040820**	BOLT	4				
3	**1140020008**	WASHER, spring	4				
4	**1141110008**	WASHER	4				
	T7e170						

silverhorn.co.uk

SEAT (2/2) (for GEHL & MUSTANG)

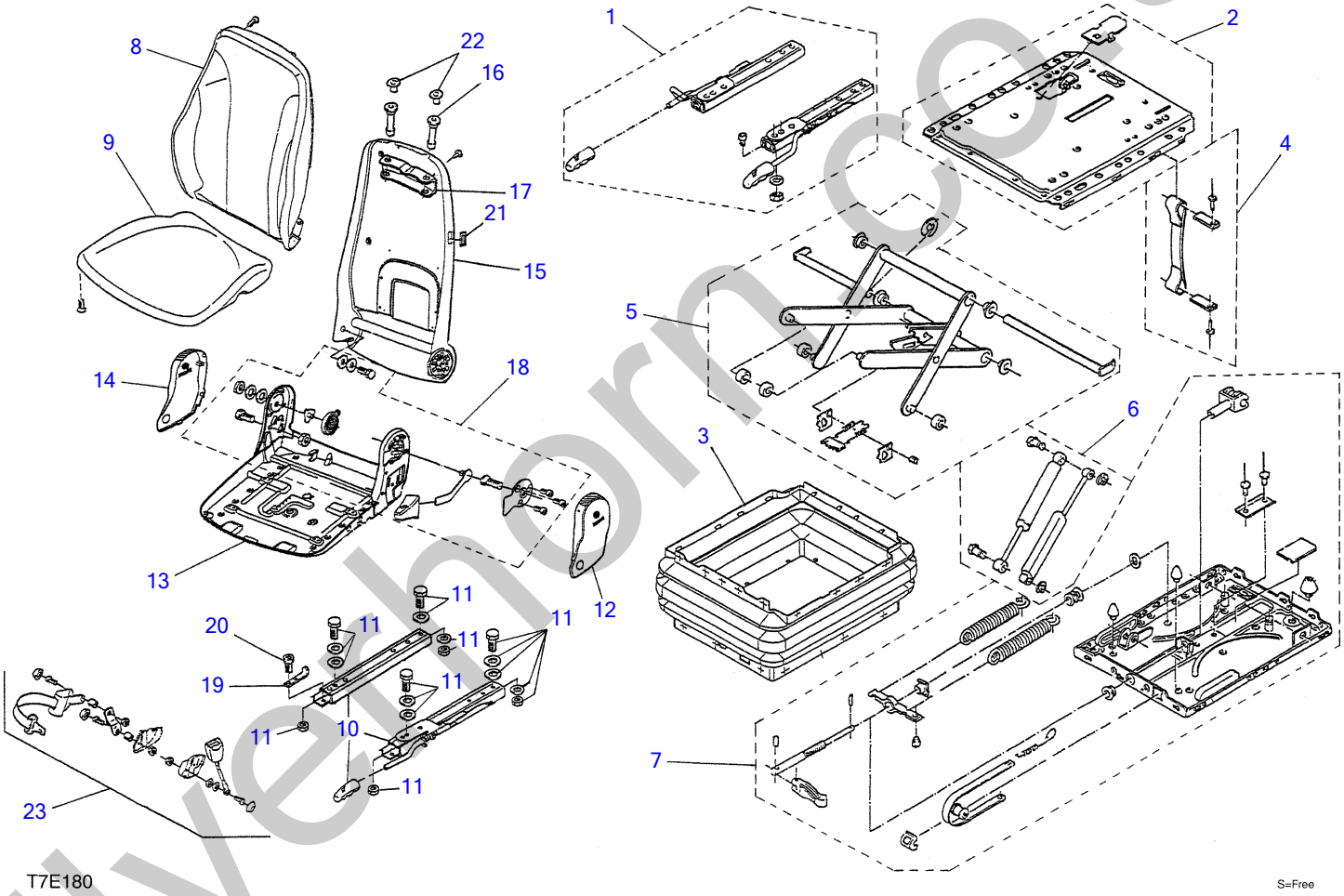

silverthorn.co.uk

SEAT (2/2) (for GEHL & MUSTANG)

Item	Part number	Description	Q'ty	Chan.	Serial No.	Serv.	Remarks
0	1914100090	SEAT ASSY	1				PVC
1	1914101072	・RAIL ASSY	1				
2	1914102072	・PLATE ASSY	1				
3	1914103072	・BOOT	1				
4	1914104072	・ANGLE ASSY	1				
5	1914105072	・LINK ASSY	1				
6	1914106072	・DAMPER ASSY	1				
7	1914107072	・SPRING ASSY	1				
8	1914108089	・TRIM	1				
9	1914109072	・TRIM	1				
10	1914110072	・RAIL ASSY	1				
11	1914111072	・BOLT ASSY	1				
12	1914112072	・COVER (L.H.)	1				
13	1914113072	・FRAME	1				
14	1914114072	・COVER (R.H.)	1				
15	1914115072	・FRAME	1				
16	1914116072	・GUIDE	2				
17	1914117072	・BRACKET	1				
18	1914118072	・JOINT ASSY	1				
19	1914119072	・PLATE	1				
20	1914120072	・SCREW, cap	1				
21	1914121072	・PLATE	1				
22	1914122072	・PLUG	2				
23	1914123072	・BELT ASSY, seat	1				
	T7e180						

silverhorn.co.uk

SEAT SWITCH

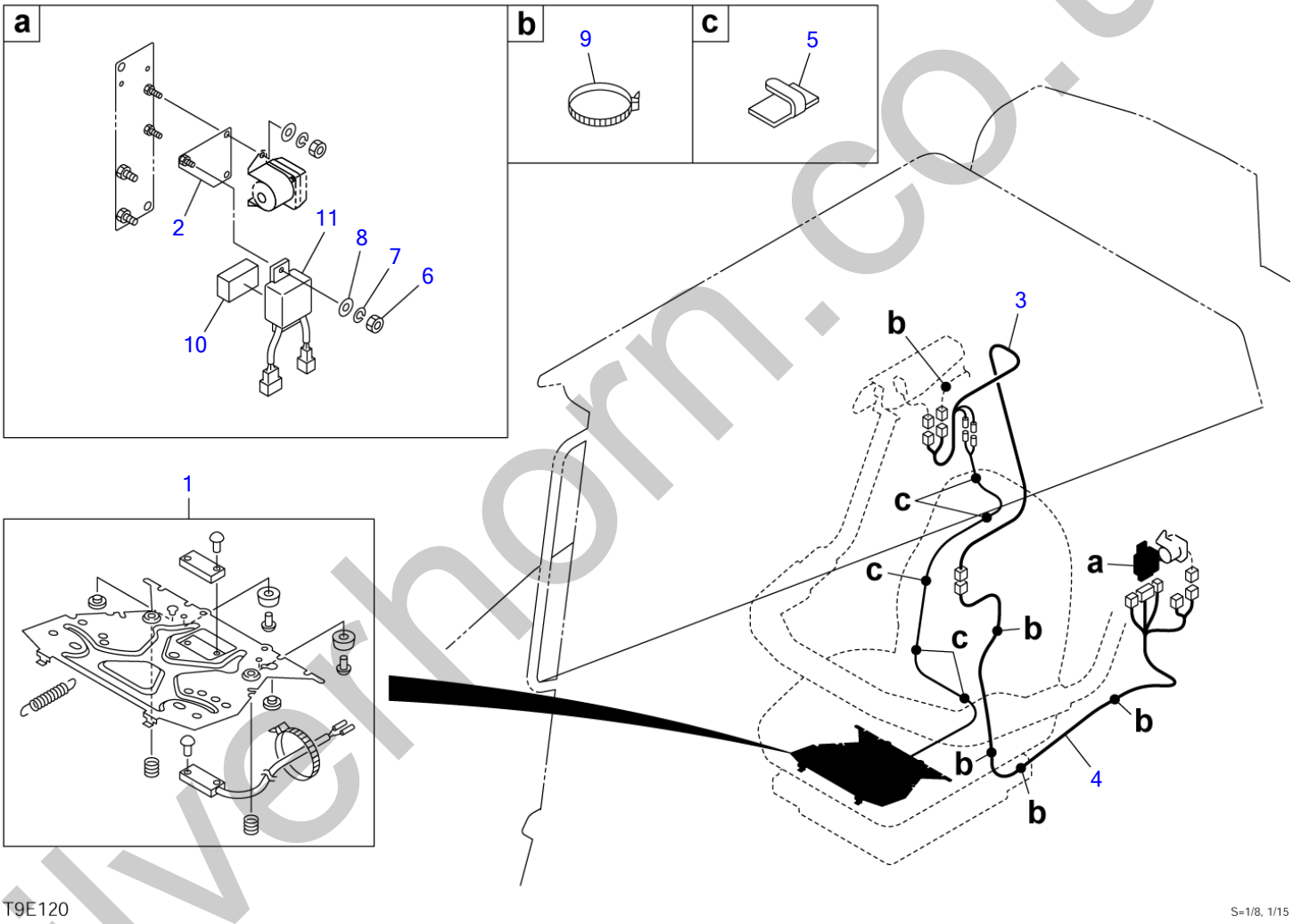

silverhorn.co.uk

SEAT SWITCH

Item	Part number	Description	Q'ty	Chan.	Serial No.	Serv.	Remarks
0	0882340000	SWITCH ASSY, seat	1				X08823-40000-0
1	1914100086	・SWITCH, seat	1				
2	0882340200	・BRACKET	1				
3	0881422540	・HARNESS, wiring	1				
4	0882340100	・HARNESS, wiring	1				
5	1711900074	・STICKER	5				
6	1130040006	・NUT	1				
7	1140020006	・WASHER, spring	1				
8	1141110006	・WASHER	1				
9	1652231250	・BAND	6				
10	1654314005	・SPONGE	1				
11	1711900062	・RELAY	1				
	T9e120						

silverhorn.co.uk

SAFETY BAR

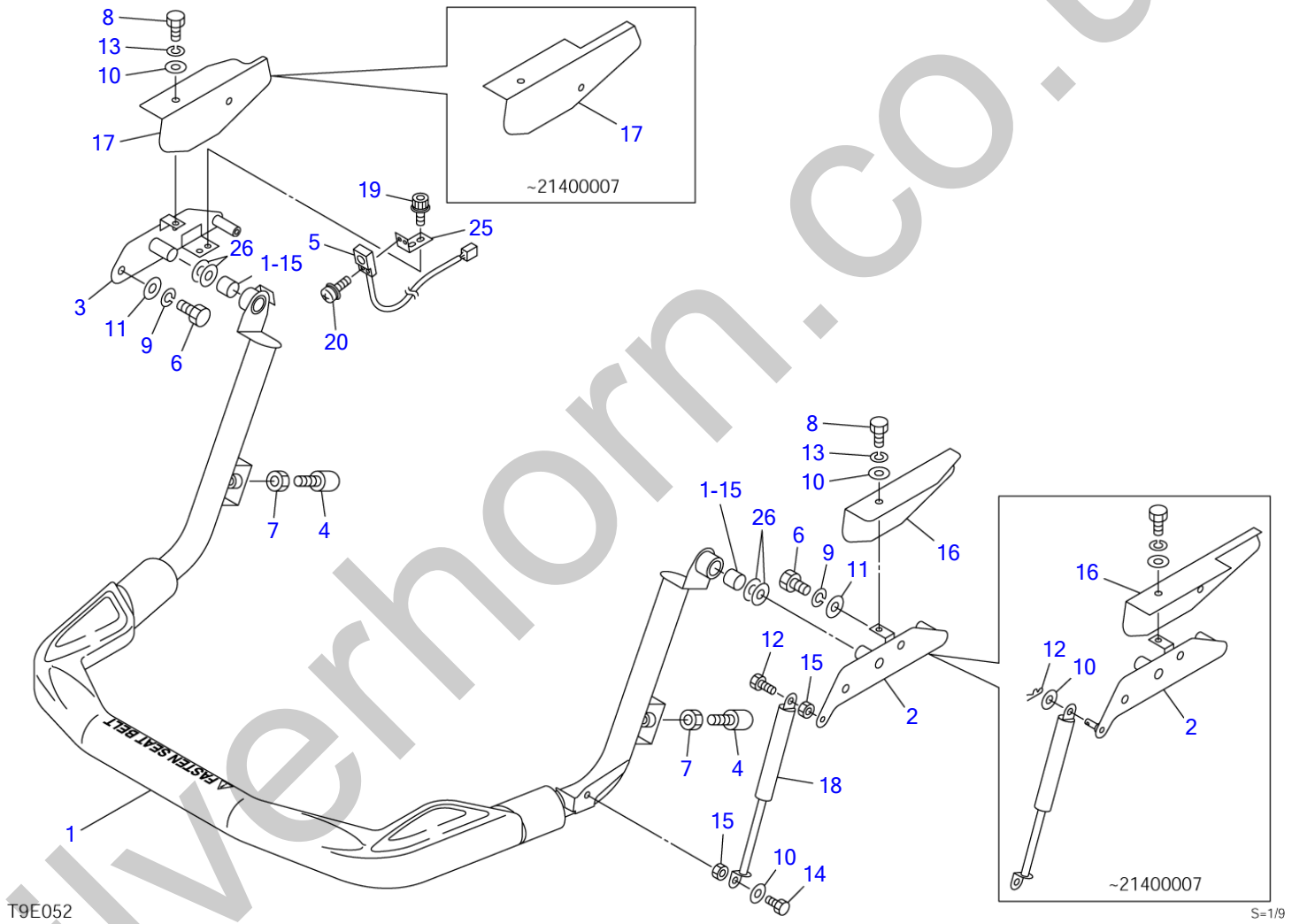

silverhorn.co.uk

SAFETY BAR

Item	Part number	Description	Q'ty	Chan.	Serial No.	Serv.	Remarks
		BAR ASSY, safety					X08804-64000-2
1	0881463100	BAR, safety	1				
1-15	1333002020	・BUSHING	2				
2	0881461090	BRACKET(L.H.)	1		~21400007		
	0881463010	BRACKET(L.H.)	1		21400008~		
3	0881461040	BRACKET(R.H.)	1		~21400007		
	0881463020	BRACKET(R.H.)	1		21400008~		
4	1651101224	STOPPER	2				
5	1700009010	SWITCH, proximity	1				
6	1100041020	BOLT	4				
7	1130040012	NUT	2				
8	1100040816	BOLT	4				
9	1140020010	WASHER, spring	4				
10	1141110008	WASHER	5				
11	1141110010	WASHER	4				
12	1214000008	PIN, snap	1		~21400007		
	1100040820	BOLT	1		21400008~		
13	1140020008	WASHER, spring	4				
14	1100240825	BOLT	1				
15	1130040008	NUT	2				
16	0880463616	COVER(L.H.)	1		~21400007		
	0880464010	COVER(L.H.)	1		21400008~		
17	0880463617	COVER(R.H.)	1		~21400007		
	0880464020	COVER(R.H.)	1		21400008~		
18	1653900057	SPRING, gas	1				
19	1110540512	SCREW, cap	2				
20	1150410312	SCREW	2				
25	0881461025	PLATE	1		~21400007		
	0881463050	PLATE	1		21400008~		
26	0093208300	WASHER	4				
	T9e052						

silverhorn.co.uk

SAFETY BAR (for GEHL & MUSTANG; 21400695-)

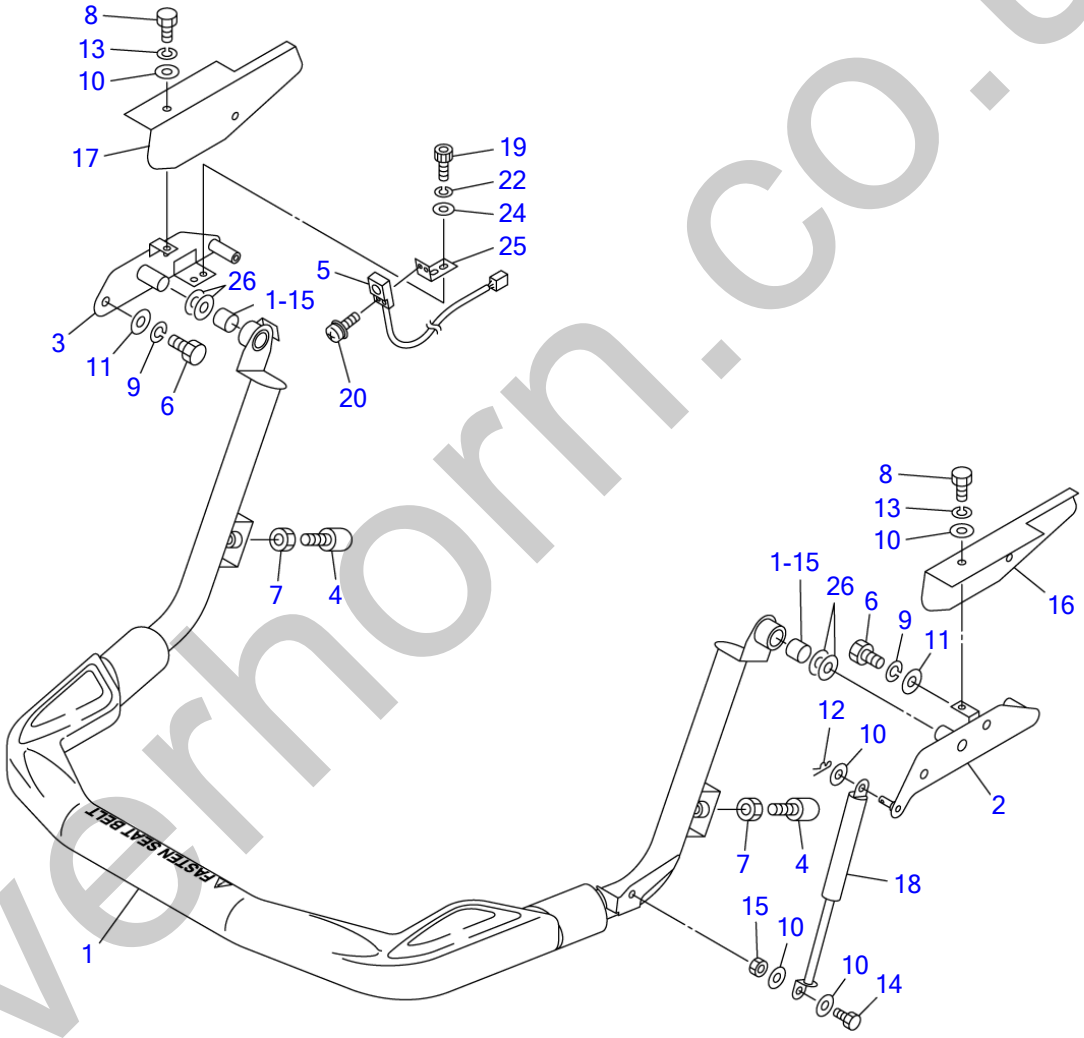

silverhorn.co.uk

SAFETY BAR (for GEHL & MUSTANG; 21400695-)

Item	Part number	Description	Q'ty	Chan.	Serial No.	Serv.	Remarks
		BAR ASSY, safety					X08804-63600-5
1	0881463100	BAR, safety	1				
1-15	1333002020	・BUSHING	2				
2	0881461090	BRACKET(L.H.)	1				
3	0881461040	BRACKET(R.H.)	1				
4	1651101224	STOPPER	2				
5	1700009010	SWITCH, proximity	1				
6	1100041020	BOLT	4				
7	1130040012	NUT	2				
8	1100040816	BOLT	4				
9	1140020010	WASHER, spring	4				
10	1141110008	WASHER	7				
11	1141110010	WASHER	4				
12	1214000008	PIN, snap	1				
13	1140020008	WASHER, spring	4				
14	1100040830	BOLT	1				
15	1130040008	NUT	1				
16	0880463616	COVER(L.H.)	1				
17	0880463617	COVER(R.H.)	1				
18	1653900057	SPRING, gas	1				
19	1110040512	SCREW, cap	2				
20	1150410312	SCREW	2				
22	1140020005	WASHER, spring	2				
24	1141110005	WASHER	2				
25	0881461025	PLATE	1				
26	0093208300	WASHER	4				
	T9e132						

silverhorn.co.uk

CANOPY (-21400010)

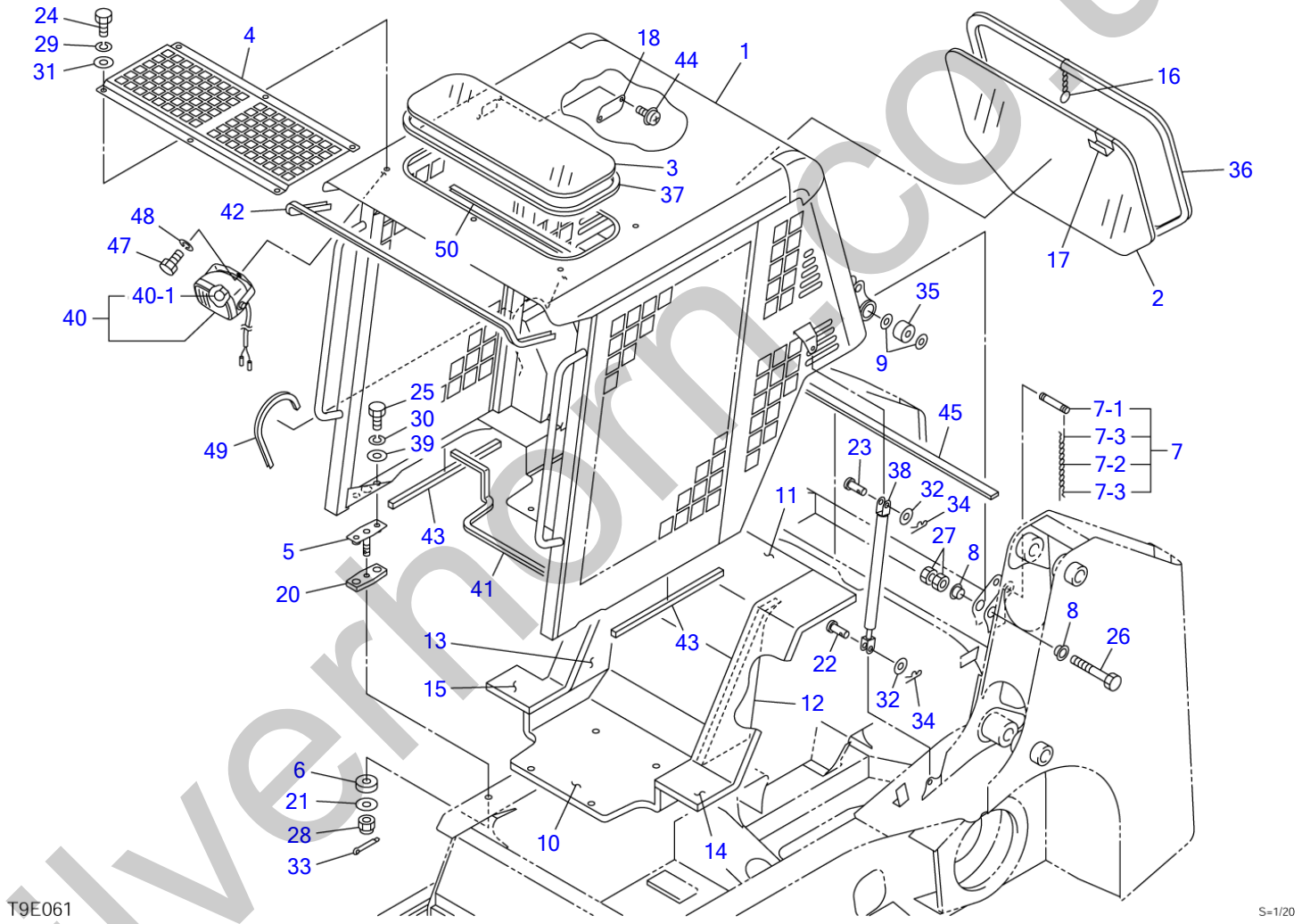

silvernorm.co.uk

CANOPY (-21400010)

Item	Part number	Description	Q'ty	Chan.	Serial No.	Serv.	Remarks
		CANOPY ASSY					X08808-44000-4
1	0880844100	CANOPY	1				
2	0881842002	GLASS	1				
3	0880844003	GLASS	1				
4	0880844004	PLATE	1				
5	0881842030	BOLT	2				
6	0881842050	RUBBER, cushion	2				
7	0881841060	PIN ASSY	1				
7-1	0881841061	・PIN	1				
7-2	1652735886	・CHAIN	1				
7-3	1214000016	・PIN, snap	2				
8	0881840008	COLLAR	4				
9	0880840070	WASHER	4				
10	0881842010	ABSORBENT, noise	1				
11	0880844011	ABSORBENT, noise	1				
12	0881842012	ABSORBENT, noise(L.H.)	1				
13	0881842013	ABSORBENT, noise(R.H.)	1				
14	0880843514	ABSORBENT, noise	1				
15	0880844015	ABSORBENT, noise	1				
16	0880841040	RING, pull	1				
17	0880841080	HANDLE	1				
18	0881842017	PLATE	1				
20	0881842040	RUBBER, cushion	2				
21	0003900044	WASHER	2				
22	0343503200	PIN	2				
23	0004010025	PIN	2				
24	1100040816	BOLT	6				
25	1100041225	BOLT	4				
26	1100141610	BOLT	2				
27	1130040016	NUT	4				
28	1132030016	NUT	2				
29	1140020008	WASHER, spring	6				
30	1140020012	WASHER, spring	4				
31	1141110008	WASHER	6				
32	1141110010	WASHER	4				
33	1210010432	PIN, split	2				
34	1214000008	PIN, snap	4				
35	1651005030	RUBBER, cushion	2				
36	1654252253	H-RUBBER	1				sold by the meter
37	1654252200	H-RUBBER	1				sold by the meter
38	1653900047	SPRING, gas	2				
39	0003600165	WASHER	4				
40	1703006600	LAMP ASSY	2				
40-1	1703006605	・BULB	1				12V, 55W
41	1654623120	TRIM	1				sold by the meter
42	1654601153	TRIM	1				sold by the meter
43	1654306057	SPONGE	2				sold by the meter
44	1150420412	SCREW	2				
45	1654308100	SPONGE	1				sold by the meter
47	1100041020	BOLT	2				
48	1140020010	WASHER, spring	2				
49	1653916038	TRIM	1				sold by the meter
50	1654601060	TRIM	1				sold by the meter
	T9e060						

silverthorn.co.uk

CANOPY MOUNT (21400011-)

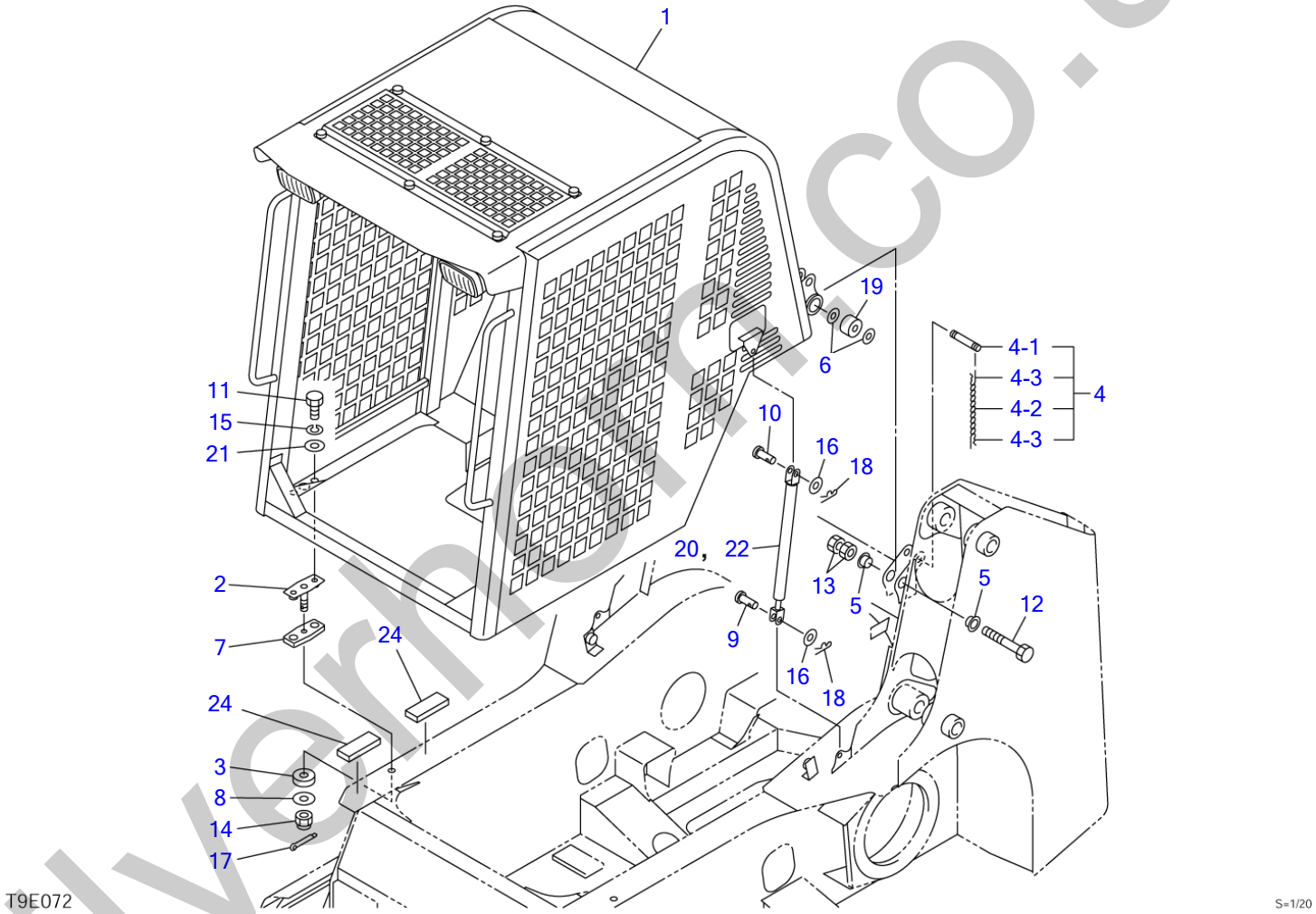

silverhill.co.uk

CANOPY MOUNT (21400011-)

Item	Part number	Description	Q'ty	Chan.	Serial No.	Serv.	Remarks
		CANOPY MOUNT					X08828-40000-3
		CANOPY MOUNT (for EU)					X08828-40500-3
1	0880845300	CANOPY ASSY	1				
	0880845600	CANOPY ASSY	1				for EU
2	0881842030	BOLT ASSY	2				
3	0881842050	RUBBER, cushion	2				
4	0881841060	PIN ASSY	1				
4-1	0881841061	・PIN	1				
4-2	1652735886	・CHAIN	1				
4-3	1214000016	・PIN, snap	2				
5	0881840008	COLLAR	4				
6	0880840070	WASHER	4				
7	0881842040	RUBBER, cushion	2				
8	0003900044	WASHER	2				
9	0343503200	PIN	2				
10	0004010025	PIN	2				
11	1100041225	BOLT	4				
12	1100141610	BOLT	2				
13	1130040016	NUT	4				
14	1132080016	NUT	2				
15	1140020012	WASHER, spring	4				
16	1141110010	WASHER	4				
17	1210010432	PIN, split	2				
18	1214000008	PIN, snap	4				
19	1651005030	RUBBER, cushion	2				
20	1653900059	SPRING, gas	2				for EC
21	0003600165	WASHER	4				
22	1653900065	SPRING, gas	2				
24	1654306008	SPONGE	4				sold by the meter
	T9e073						

silverhorn.co.uk

CANOPY (1/3)

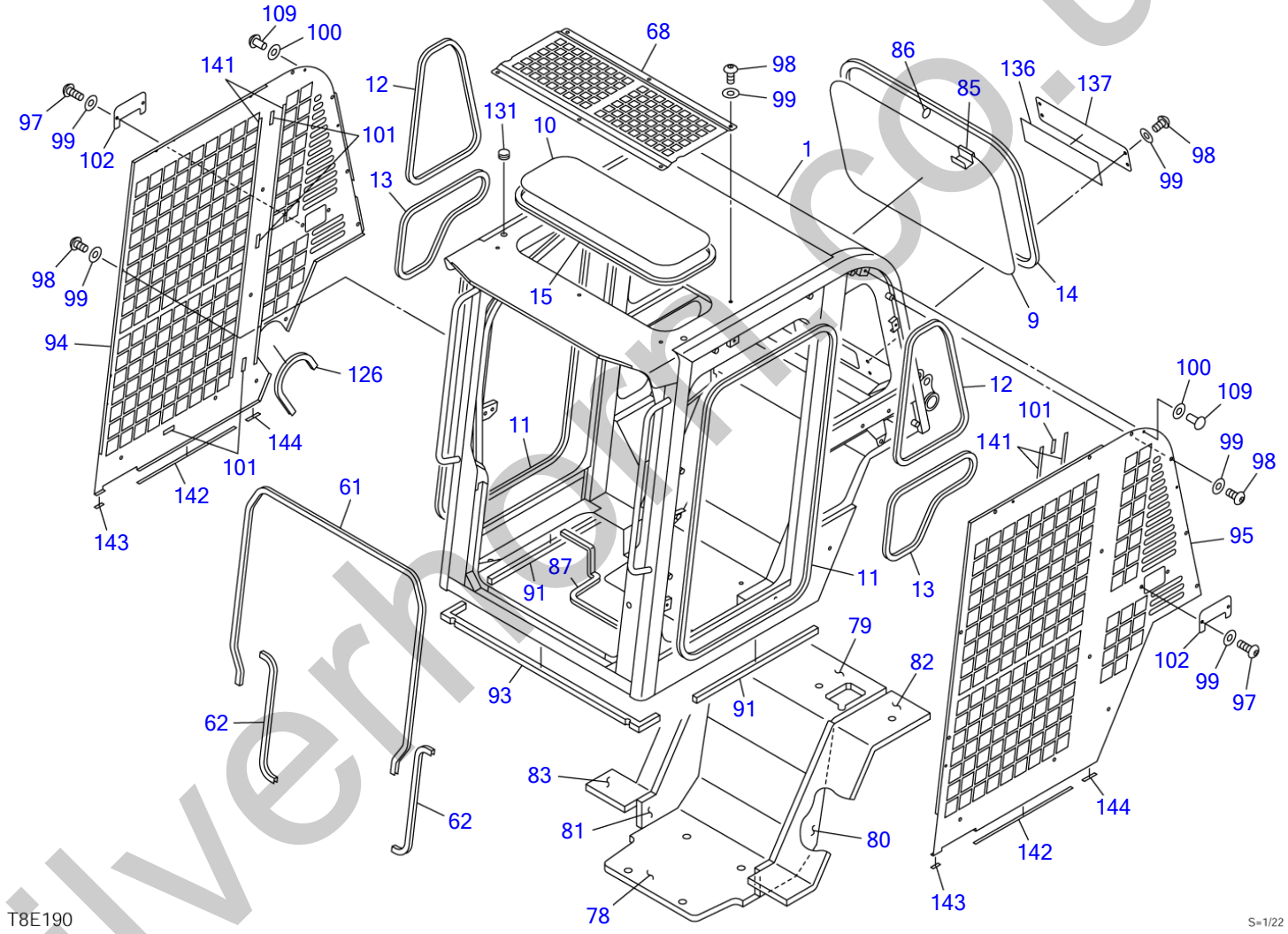

silverhorn.co.uk

CANOPY (1/3)

Item	Part number	Description	Q'ty	Chan.	Serial No.	Serv.	Remarks
0	0880845300	CANOPY ASSY	1				X08808-45300-1
1	0880865200	・CANOPY	1				
9	0880865103	・GLASS	1				
10	0880865104	・GLASS	1				
11	1653916320	・TRIM	2				sold by the meter
12	1653916148	・TRIM	2				sold by the meter
13	1653916120	・TRIM	2				sold by the meter
14	1654231273	・H-RUBBER	1				sold by the meter
15	1654231195	・H-RUBBER	1				sold by the meter
61	1654630240	・TRIM	1				sold by the meter
62	1654630060	・TRIM	2				sold by the meter
68	0880865129	・GUARD	1				
78	0881842010	・ABSORBENT, noise	1				
79	0880865133	・ABSORBENT, noise	1				
80	0880865134	・ABSORBENT, noise	1				
81	0880865135	・ABSORBENT, noise	1				
82	0880865136	・ABSORBENT, noise	1				
83	0880865137	・ABSORBENT, noise	1				
85	0880865138	・GRIP	1				
86	0880865139	・RING	1				
87	1654630130	・TRIM	1				sold by the meter
91	0880865140	・SEAL	2				
93	0880865141	・SEAL	1				
94	0880865142	・GUARD	1				
95	0880865143	・GUARD	1				
97	1120990820	・BOLT	4				
98	1120990816	・BOLT	37				
99	1654011705	・WASHER	41				
100	0880865144	・WASHER	8				
101	0880865145	・PLATE	8				
102	0880865146	・COVER	2				
109	0880865150	・RIVET	8				
126	1653916037	・TRIM	1				sold by the meter
131	1653303010	・CAP	2				
136	0880845301	・PACKING	1				
137	0880845302	・PLATE	1				
141	0880845303	・PLATE	4				
142	0880845304	・PLATE	2				
143	0880845305	・PLATE	2				
144	0880845306	・PLATE	2				
	T8e190						

silverhorn.co.uk

CANOPY (2/3)

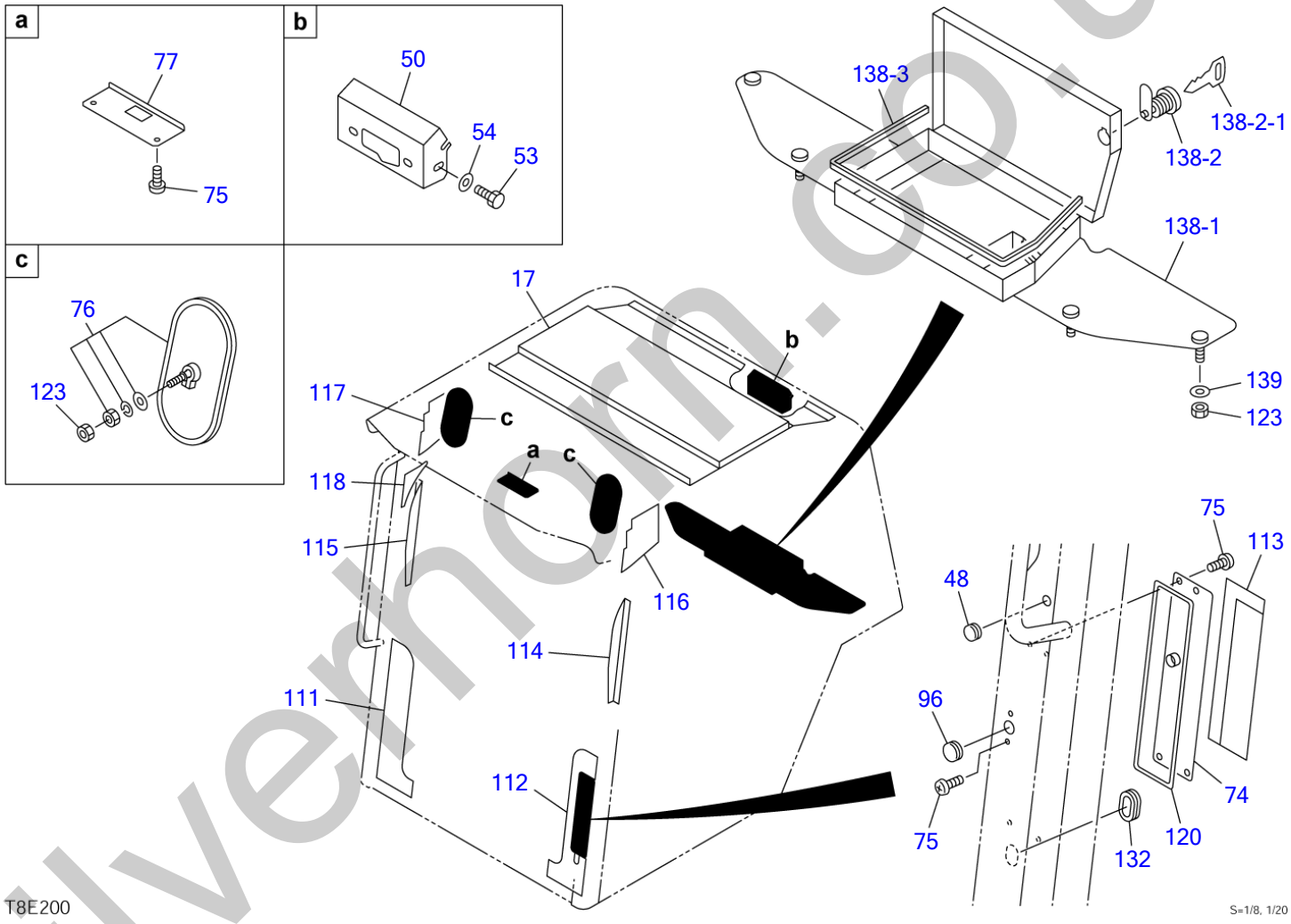

silvernorn.co.uk

CANOPY (2/3)

Item	Part number	Description	Q'ty	Chan.	Serial No.	Serv.	Remarks
0	0880845300	CANOPY ASSY	1				X08808-45300-1
17	0880865106	・ABSORBENT, noise	1				
48	1654011703	・CAP	1				
50	0880865121	・BRACKET	1				
53	1100090820	・BOLT	3				
54	1654011705	・WASHER	3				
74	0880865130	・COVER	1				
75	1150420512	・SCREW	8				
76	0880865131	・MIRROR, rearview	2				
77	0880865132	・COVER	1				
96	1654011704	・CAP	1				
111	0880865151	・ABSORBENT, noise	1				
112	0880865152	・ABSORBENT, noise	1				
113	0880865153	・ABSORBENT, noise	1				
114	0880865154	・ABSORBENT, noise	1				
115	0880865155	・ABSORBENT, noise	1				
116	0880865156	・ABSORBENT, noise	1				
117	0880865157	・ABSORBENT, noise	1				
118	0880865158	・ABSORBENT, noise	1				
120	0880865159	・SEAL	1				
123	1130040008	・NUT	6				
132	1654011701	・GROMMET	1				
138	0880845320	・CASE ASSY	1				
138-1	0880845321	・・CASE	1				
138-2	1653601395	・・LOCK	1				
138-2-1	1700100019	・・KEY	1				
138-3	1653916058	・・TRIM	1				sold by the meter
139	1141550008	・WASHER	4				
	T8e200						

silverhorn.co.uk

CANOPY (3/3)

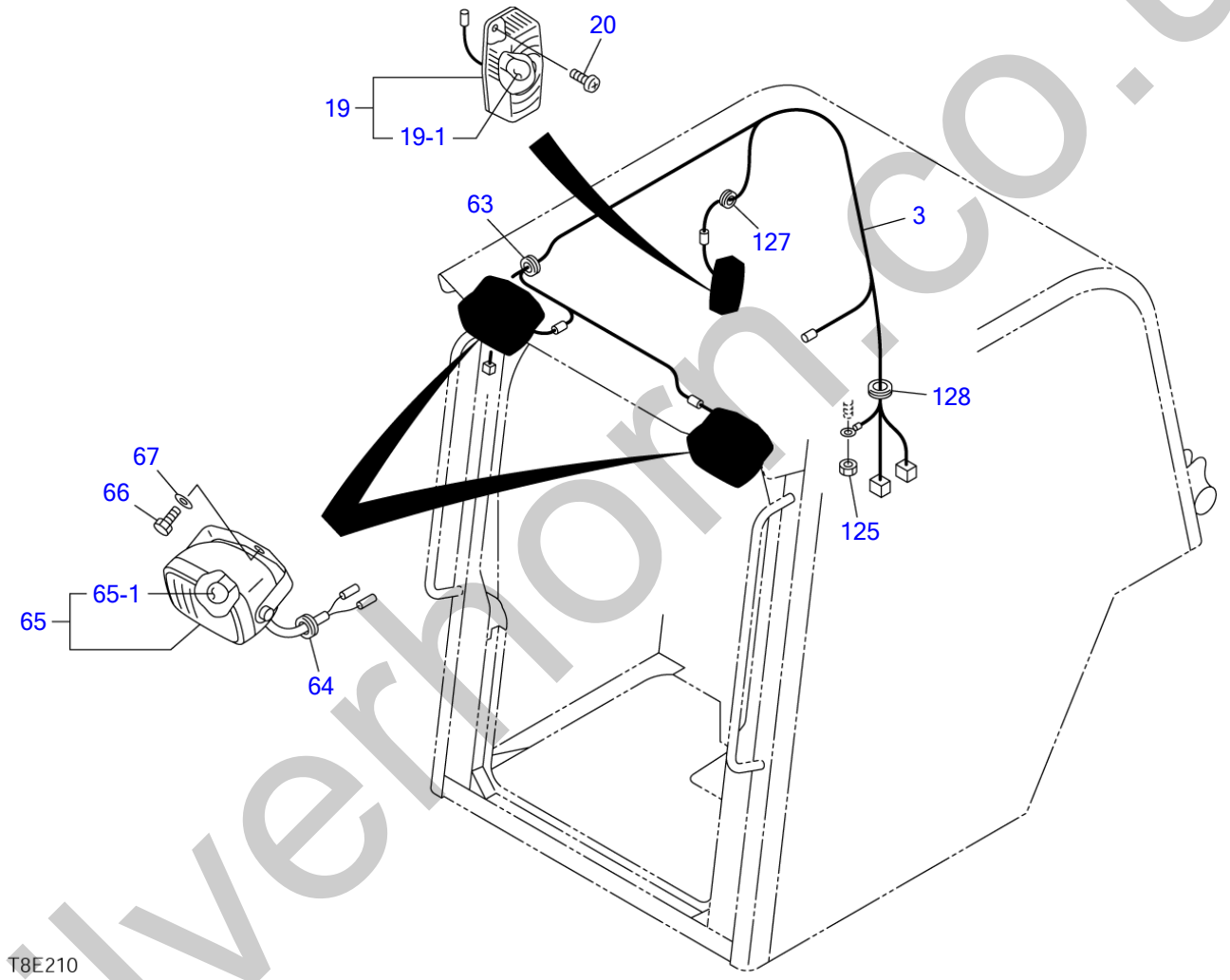

silverhorn.co.uk

CANOPY (3/3)

Item	Part number	Description	Q'ty	Chan.	Serial No.	Serv.	Remarks
0	0880845300	CANOPY ASSY	1				X08808-45300-1
3	0880865400	・HARNESS, wiring	1				
19	1703001700	・LAMP, room	1				
19-1	1703001701	・・BULB	1				
20	1150410412	・SCREW	2				
63	1652042030	・GROMMET	1				
64	1652000602	・GROMMET	2				
65	1703006600	・LAMP, ASSY	2				
65-1	1703006605	・・BULB	1				
66	1100091020	・BOLT	2				
67	1654011706	・WASHER	2				
125	1130040010	・NUT	1				
127	1654011700	・GROMMET	1				
128	1654011702	・GROMMET	1				
	T8e210						

silverhorn.co.uk

CANOPY (1/3) (for EU)

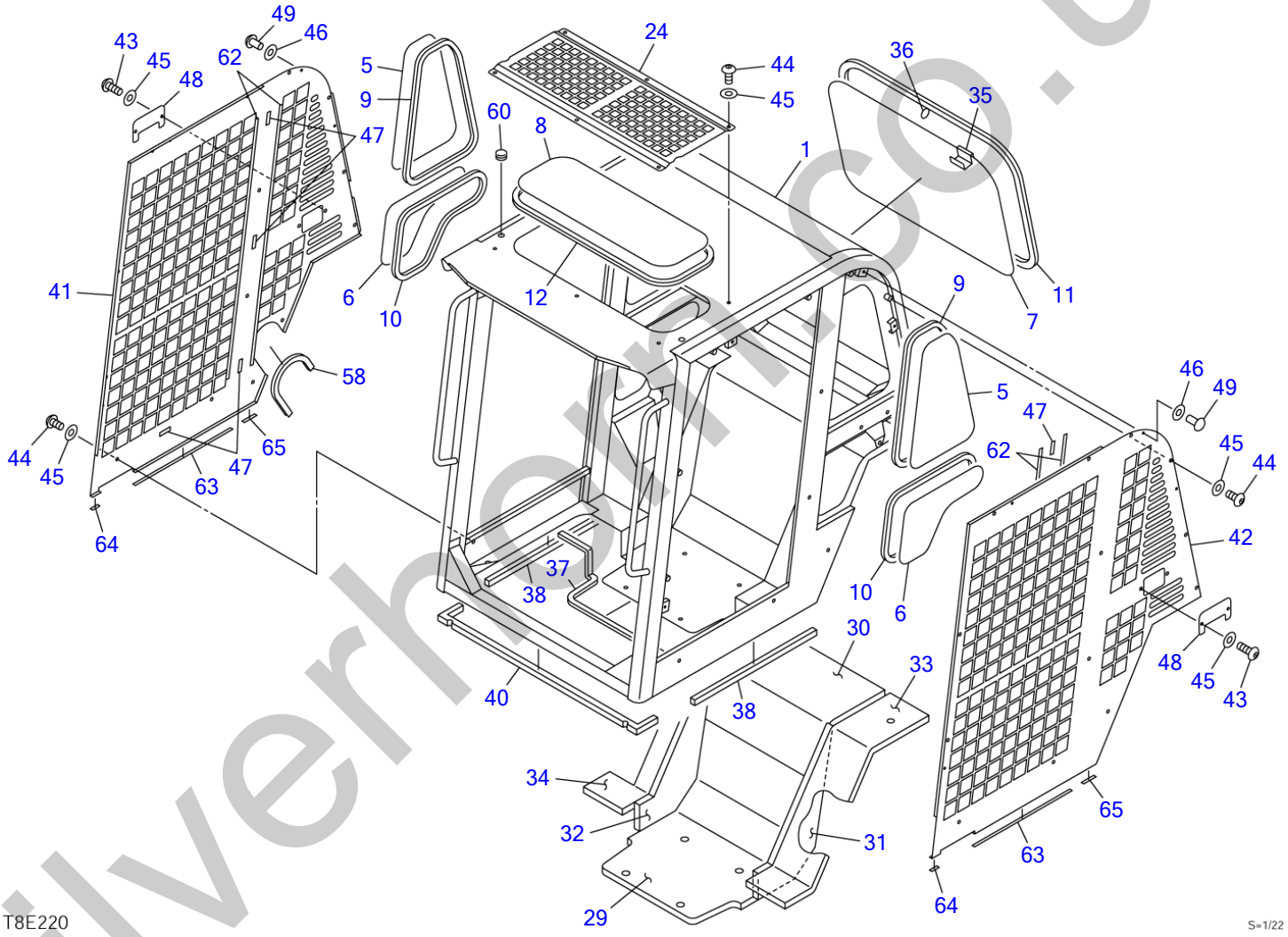

silverhorn.co.uk

CANOPY (1/3) (for EU)

Item	Part number	Description	Q'ty	Chan.	Serial No.	Serv.	Remarks
0	0880845600	CANOPY ASSY	1				X08808-45600-2
1	0880845700	・CANOPY	1				
5	0880865101	・GLASS	2				
6	0880865102	・GLASS	2				
7	0880865103	・GLASS	1				
8	0880865104	・GLASS	1				
9	1654231148	・H-RUBBER	2				sold by the meter
10	1654231120	・H-RUBBER	2				sold by the meter
11	1654231273	・H-RUBBER	1				sold by the meter
12	1654231195	・H-RUBBER	1				sold by the meter
24	0880865129	・GUARD	1				
29	0881842010	・ABSORBENT, noise	1				
30	0880845605	・ABSORBENT, noise	1				
31	0880865134	・ABSORBENT, noise	1				
32	0880865135	・ABSORBENT, noise	1				
33	0880865136	・ABSORBENT, noise	1				
34	0880865137	・ABSORBENT, noise	1				
35	0880865138	・GRIP	1				
36	0880865139	・RING	1				
37	1654623130	・TRIM	1				sold by the meter
38	0880865140	・SEAL	2				
40	0880865141	・SEAL	1				
41	0880865142	・GUARD	1				
42	0880865143	・GUARD	1				
43	1120990820	・BOLT	4				
44	1120990816	・BOLT	33				
45	1654011705	・WASHER	37				
46	0880865144	・WASHER	8				
47	0880865145	・PLATE	8				
48	0880865146	・COVER	2				
49	0880865150	・RIVET	8				
58	1653916037	・TRIM	1				sold by the meter
60	1653303010	・SCREW, cap	2				
62	0880845303	・PLATE	4				
63	0880845304	・PLATE	2				
64	0880845305	・PLATE	2				
65	0880845306	・PLATE	2				
	T8e221						

silverhorn.co.uk

CANOPY (2/3) (for EU)

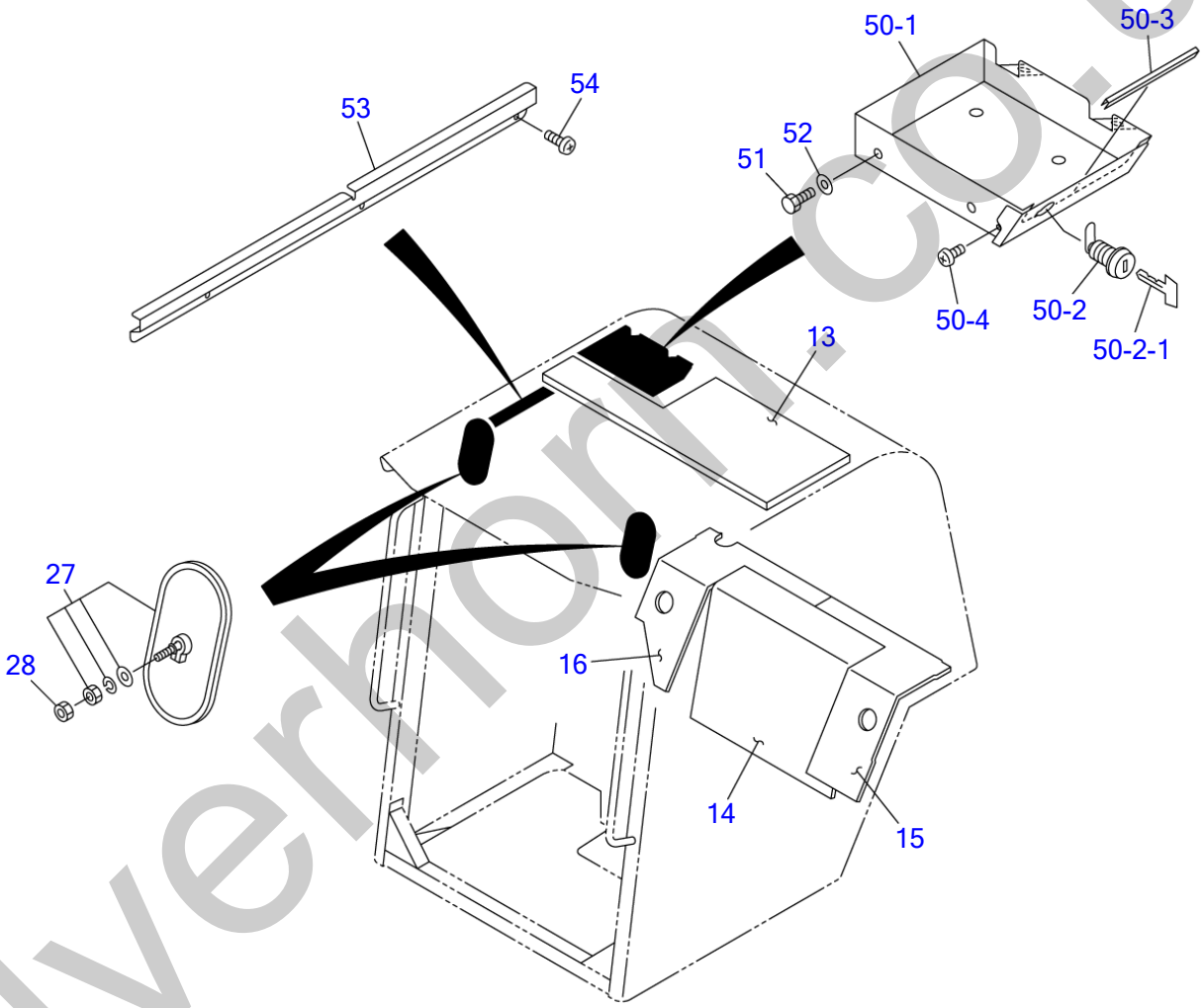

silverhorn.co.uk

CANOPY (2/3) (for EU)

Item	Part number	Description	Q'ty	Chan.	Serial No.	Serv.	Remarks
0	0880845600	CANOPY ASSY	1				X08808-45600-2
13	0880845601	・ABSORBENT, noise	1				
14	0880845602	・ABSORBENT, noise	1				
15	0880845603	・ABSORBENT, noise	1				
16	0880845604	・ABSORBENT, noise	1				
27	0880865131	・MIRROR, rearview	2				
28	1130090008	・NUT	2				
50	0880845680	・CASE ASSY	1				
50-1	0880845681	・・CASE	1				
50-2	1653601395	・・LOCK	1				
50-2-1	1700100019	・・KEY	1				
50-3	1654520014	・・TRIM	1				sold by the meter
50-4	1150420610	・・SCREW	1				
51	1100090820	・BOLT	4				
52	1654011705	・WASHER	4				
53	0880845605	・COVER	1				
54	1150420512	・SCREW	3				
	T8e231						

silverhorn.co.uk

CANOPY (3/3) (for EU)

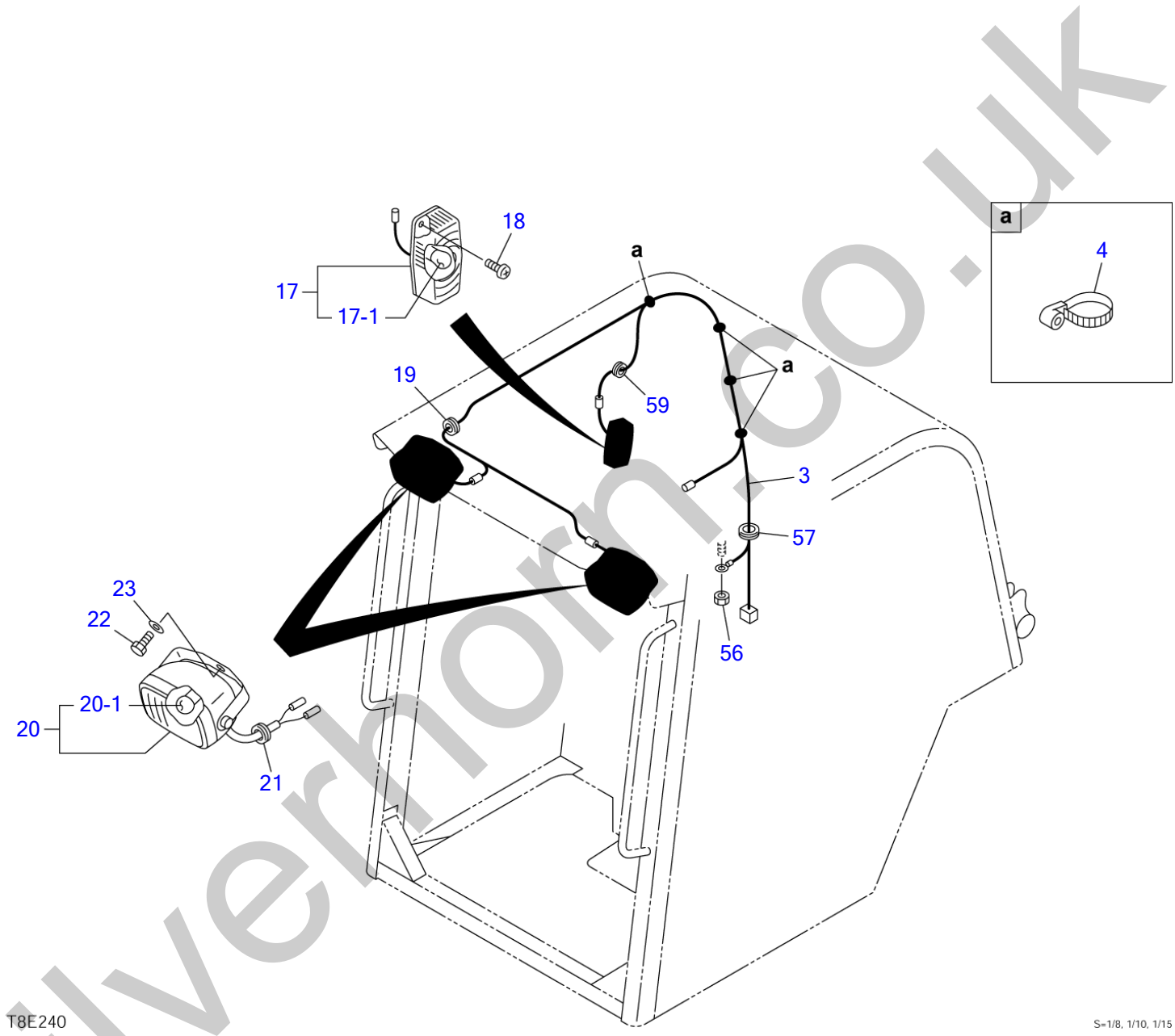

silverhorn.co.uk

CANOPY (3/3) (for EU)

Item	Part number	Description	Q'ty	Chan.	Serial No.	Serv.	Remarks
0	0880845600	CANOPY ASSY	1				X08808-45600-2
3	0880845670	・HARNESS, wiring	1				
4	1652221050	・CLIP	4				
17	1703001700	・LAMP, room	1				
17-1	1703001701	・・BULB	1				
18	1150410412	・SCREW	2				
19	1652042030	・GROMMET	1				
20	1703006600	・LAMP, ASSY	2				
20-1	1703006605	・・BULB	1				
21	1652000602	・GROMMET	2				
22	1100091020	・BOLT	2				
23	1654011706	・WASHER	2				
56	1130040010	・NUT	1				
57	1654011702	・GROMMET	1				
59	1654011700	・GROMMET	1				
	T8e241						

silverhorn.co.uk

CANOPY MOUNT (for GEHL & MUSTANG; 21400011-21400694)

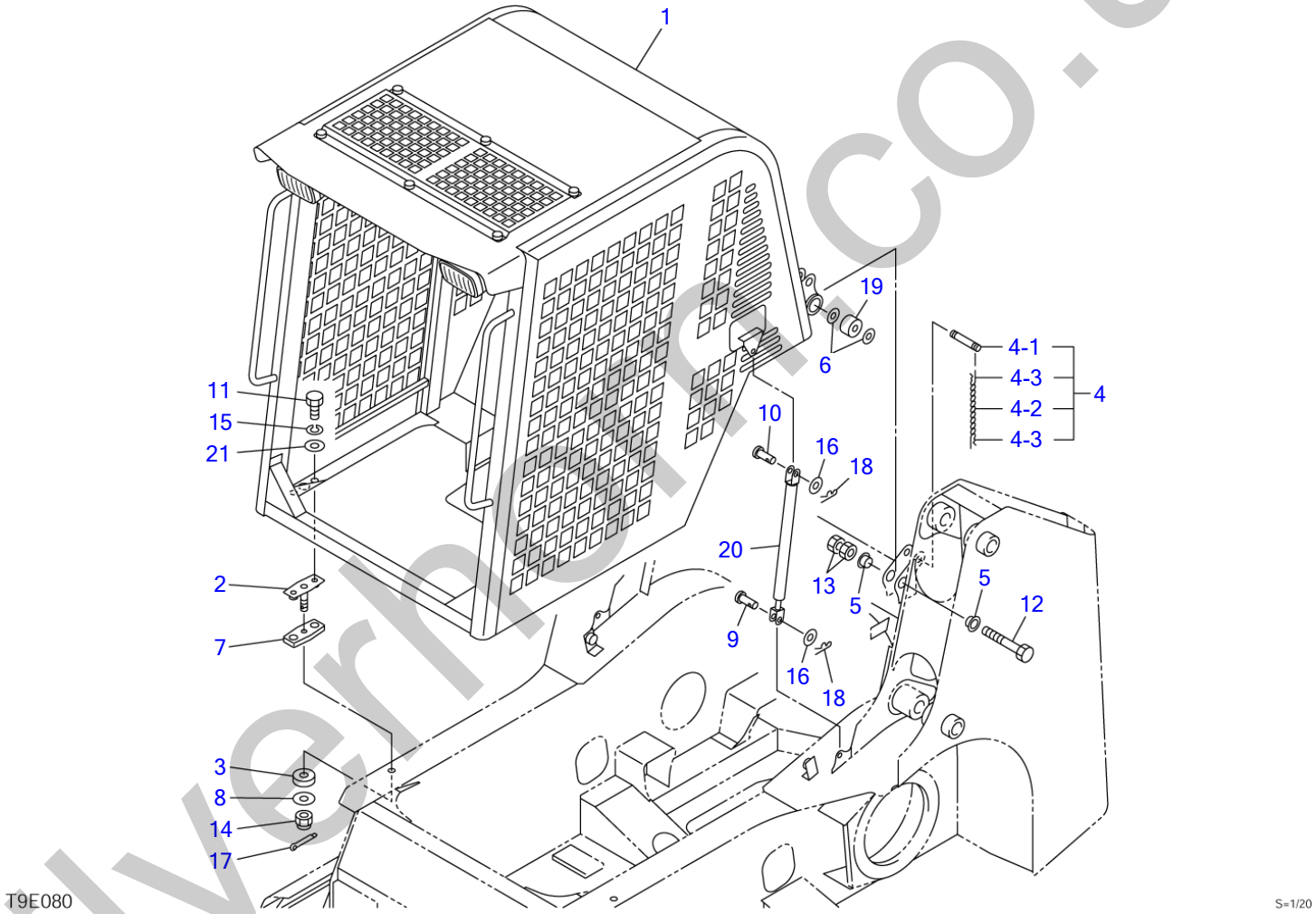

silverhill.co.uk

CANOPY MOUNT (for GEHL & MUSTANG; 21400011-21400694)

Item	Part number	Description	Q'ty	Chan.	Serial No.	Serv.	Remarks
		CANOPY MOUNT					X08828-41000-2
1	0880845400	CANOPY ASSY	1				
2	0881842030	BOLT ASSY	2				
3	0881842050	RUBBER, cushion	2				
4	0881841060	PIN ASSY	1				
4-1	0881841061	・PIN	1				
4-2	1652735886	・CHAIN	1				
4-3	1214000016	・PIN, snap	2				
5	0881840008	COLLAR	4				
6	0880840070	WASHER	4				
7	0881842040	RUBBER, cushion	2				
8	0003900044	WASHER	2				
9	0343503200	PIN	2				
10	0004010025	PIN	2				
11	1100041225	BOLT	4				
12	1100141610	BOLT	2				
13	1130040016	NUT	4				
14	1132080016	NUT	2				
15	1140020012	WASHER, spring	4				
16	1141110010	WASHER	4				
17	1210010432	PIN, split	2				
18	1214000008	PIN, snap	4				
19	1651005030	RUBBER, cushion	2				
20	1653900059	SPRING, gas	2				
21	0003600165	WASHER	4				
	T9e081						

silverhorn.co.uk

CANOPY (1/3) (for GEHL & MUSTANG; 21400011-21400694)

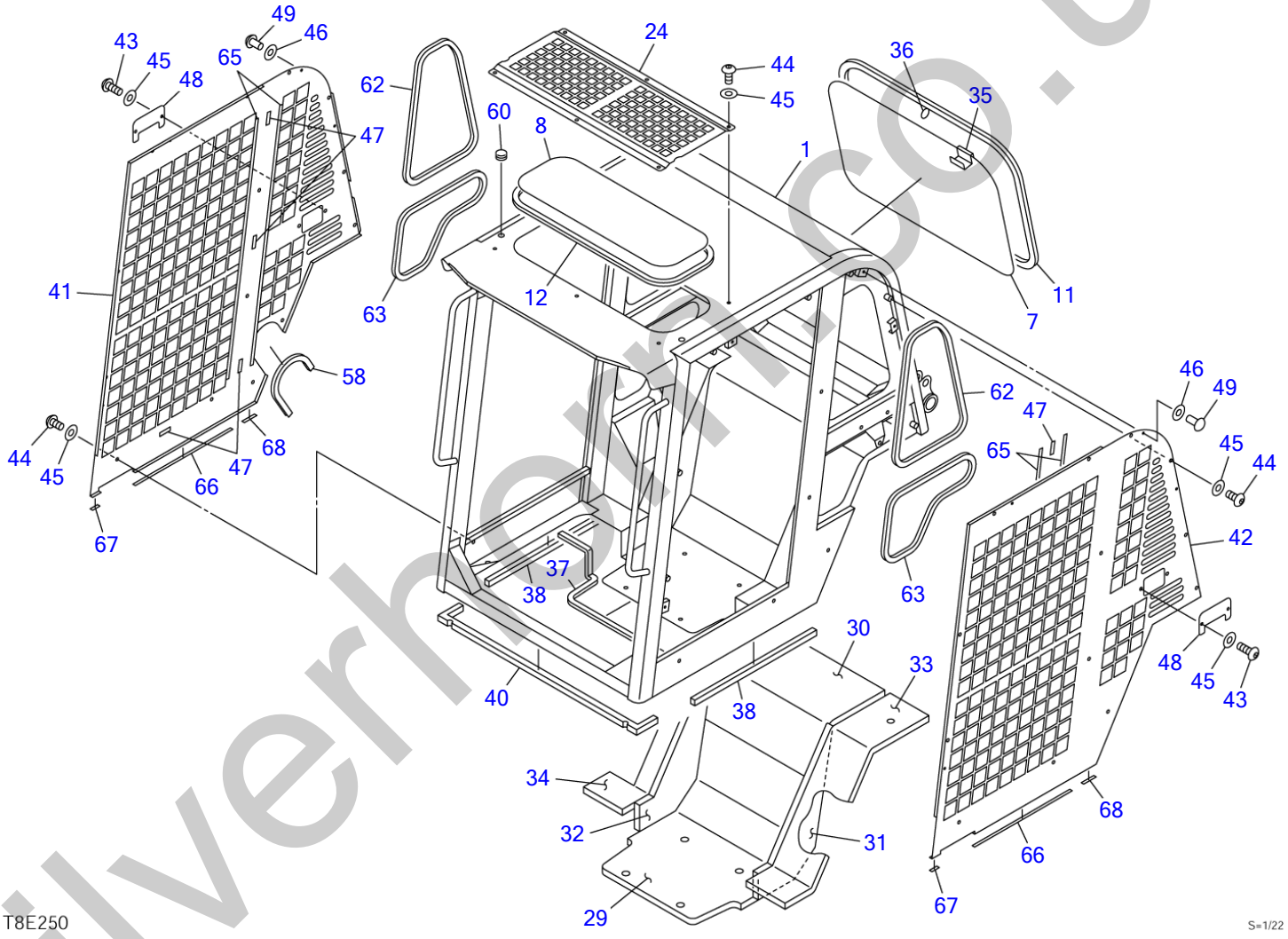

silverhorn.co.uk

CANOPY (1/3) (for GEHL & MUSTANG; 21400011-21400694)

Item	Part number	Description	Q'ty	Chan.	Serial No.	Serv.	Remarks
0	0880845400	CANOPY ASSY	1				X08808-45400-1
1	0880845700	・CANOPY	1				
7	0880865103	・GLASS	1				
8	0880865104	・GLASS	1				
11	1654231273	・H-RUBBER	1				sold by the meter
12	1654231195	・H-RUBBER	1				sold by the meter
24	0880865129	・GUARD	1				
29	0881842010	・ABSORBENT, noise	1				
30	0880845605	・ABSORBENT, noise	1				
31	0880865134	・ABSORBENT, noise	1				
32	0880865135	・ABSORBENT, noise	1				
33	0880865136	・ABSORBENT, noise	1				
34	0880865137	・ABSORBENT, noise	1				
35	0880865138	・GRIP	1				
36	0880865139	・RING	1				
37	1654630130	・TRIM	1				sold by the meter
38	0880865140	・SEAL	2				
40	0880865141	・SEAL	1				
41	0880865142	・GUARD	1				
42	0880865143	・GUARD	1				
43	1120990820	・BOLT	4				
44	1120990816	・BOLT	33				
45	1654011705	・WASHER	37				
46	0880865144	・WASHER	8				
47	0880865145	・PLATE	8				
48	0880865146	・COVER	2				
49	0880865150	・RIVET	8				
58	1653916037	・TRIM	1				sold by the meter
60	1653303010	・SCREW, cap	2				
62	1653916148	・TRIM	2				sold by the meter
63	1653916120	・TRIM	2				sold by the meter
65	0880845303	・PLATE	4				
66	0880845304	・PLATE	2				
67	0880845305	・PLATE	2				
68	0880845306	・PLATE	2				
	T8e250						

silverhorn.co.uk

CANOPY (2/3) (for GEHL & MUSTANG; 21400011-21400694)

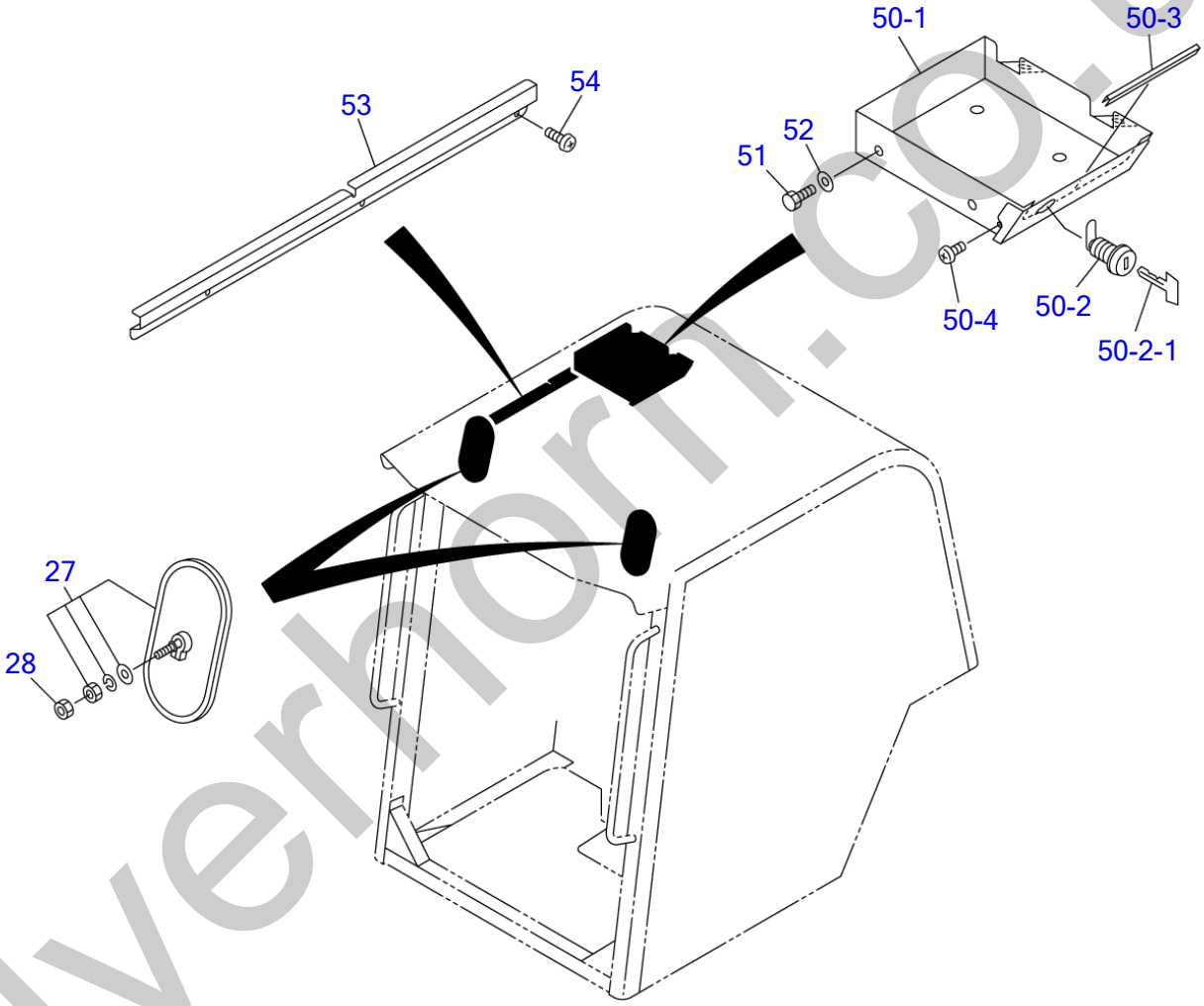

silverhorn.co.uk

CANOPY (2/3) (for GEHL & MUSTANG; 21400011-21400694)

Item	Part number	Description	Q'ty	Chan.	Serial No.	Serv.	Remarks
0	0880845400	CANOPY ASSY	1				X08808-45400-1
27	0880865131	・MIRROR, rearview	2				
28	1130090008	・NUT	2				
50	0880845680	・CASE ASSY	1				
50-1	0880845681	・・CASE	1				
50-2	1653601395	・・LOCK	1				
50-2-1	1700100019	・・KEY	1				
50-3	1654520014	・・TRIM	1				sold by the meter
50-4	1150420610	・・SCREW	1				
51	1100090820	・BOLT	4				
52	1654011705	・WASHER	4				
53	0880845606	・COVER	1				
54	1150420512	・SCREW	3				
	T8e260						

silverhorn.co.uk

CANOPY (3/3) (for GEHL & MUSTANG; 21400011-21400694)

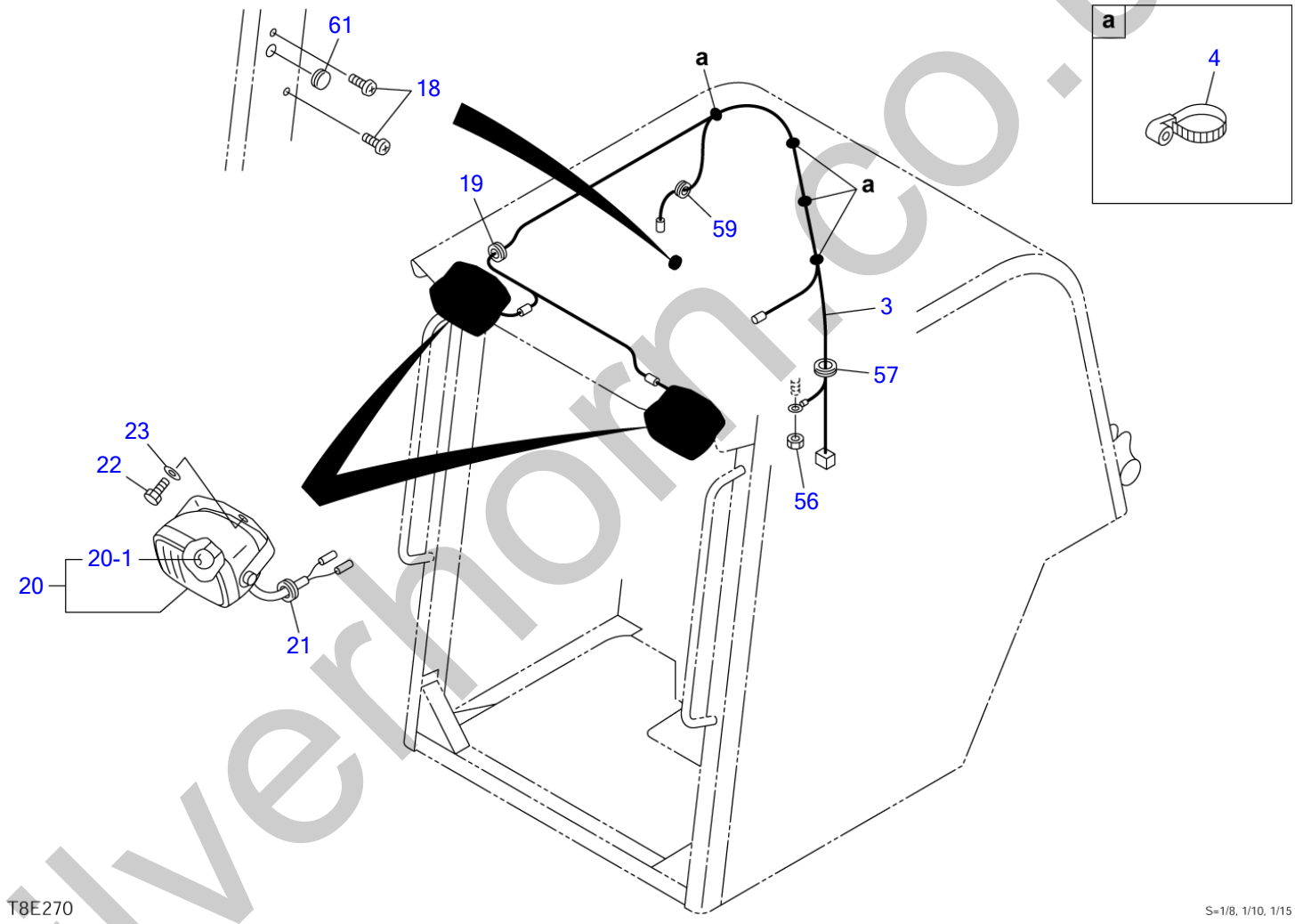

silverhorn.co.uk

CANOPY (3/3) (for GEHL & MUSTANG; 21400011-21400694)

Item	Part number	Description	Q'ty	Chan.	Serial No.	Serv.	Remarks
0	**0880845400**	CANOPY ASSY	1				X08808-45400-1
3	**0880845670**	・HARNESS, wiring	1				
4	**1652221050**	・CLIP	4				
18	**1150410412**	・SCREW	2				
19	**1652042030**	・GROMMET	1				
20	**1703006600**	・LAMP, ASSY	2				
20-1	**1703006605**	・・BULB	1				
21	**1652000602**	・GROMMET	2				
22	**1100091020**	・BOLT	2				
23	**1654011706**	・WASHER	2				
56	**1130040010**	・NUT	1				
57	**1654011702**	・GROMMET	1				
59	**1654011700**	・GROMMET	1				
61	**1654011704**	・CAP	1				
	T8e270						

silverhorn.co.uk

CANOPY MOUNT (for GEHL & MUSTANG; 21400695-)

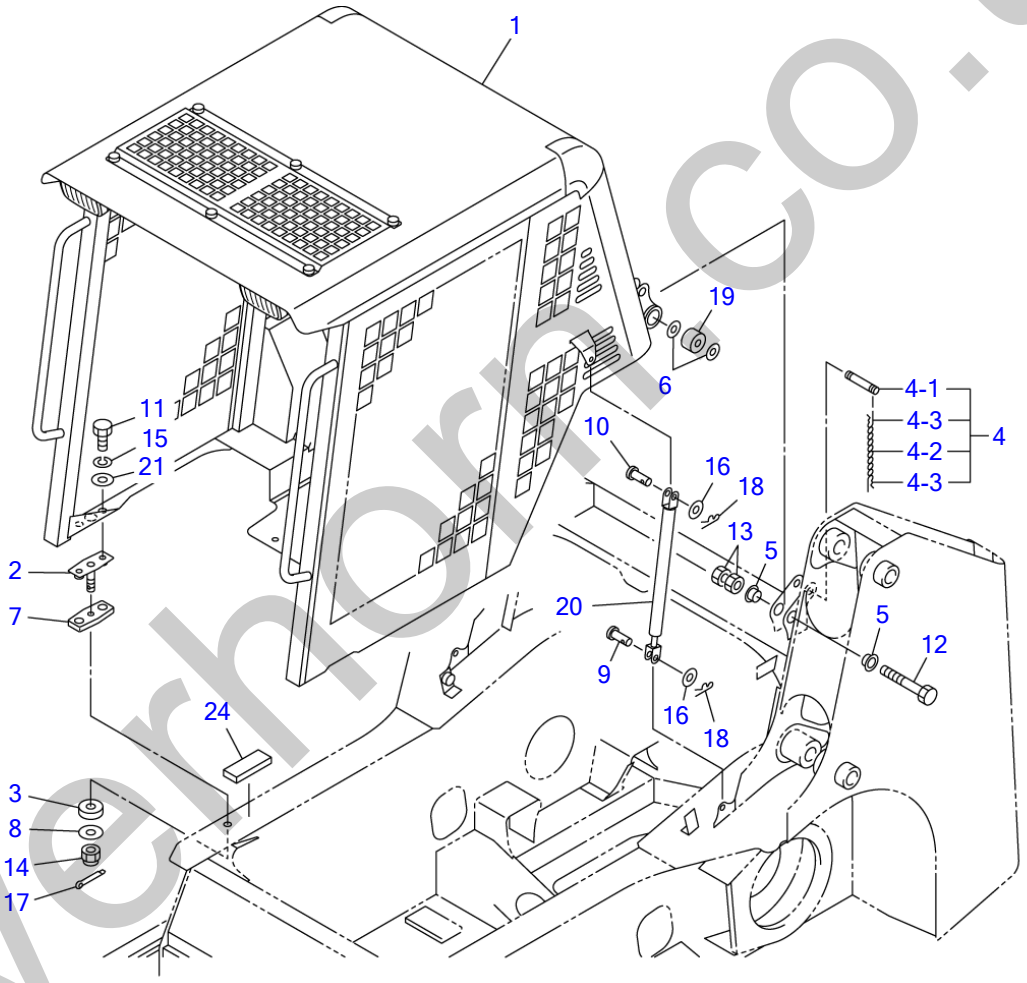

T9E350

S=1/20

silverhorn.co.uk

CANOPY MOUNT (for GEHL & MUSTANG; 21400695-)

Item	Part number	Description	Q'ty	Chan.	Serial No.	Serv.	Remarks
		CANOPY MOUNT				M	X08828-42500-0
1	0880844000	CANOPY ASSY	1		21400695~21405954	M	
	0880846600	CANOPY ASSY	1	(H)	21405955~	M	
2	0881842030	BOLT	2			M	
3	0881842050	RUBBER, cushion	2			M	
4	0881841060	PIN ASSY	1			M	
4-1	0881841061	・PIN	1			M	
4-2	1652735886	・CHAIN	1			M	
4-3	1214000016	・PIN, snap	2			M	
5	0881840008	COLLAR	4			M	
6	0880840070	WASHER	4			M	
7	0881842040	RUBBER, cushion	2			M	
8	0003900044	WASHER	2			M	
9	0343503200	PIN	2			M	
10	0004010025	PIN	2			M	
11	1100041225	BOLT	4			M	
12	1100141610	BOLT	2			M	
13	1130040016	NUT	4			M	
14	1132080016	NUT	2			M	
15	1140020012	WASHER, spring	4			M	
16	1141110010	WASHER	4			M	
17	1210010432	PIN, split	2			M	
18	1214000008	PIN, snap	4			M	
19	1651005030	RUBBER, cushion	2			M	
20	1653900047	SPRING, gas	2			M	
21	0003600165	WASHER	4			M	
24	1654306008	SPONGE	2			M	sold by the meter
	T9e350						

silverhorn.co.uk

CANOPY (1/2) (for GEHL & MUSTANG; 21400695-)

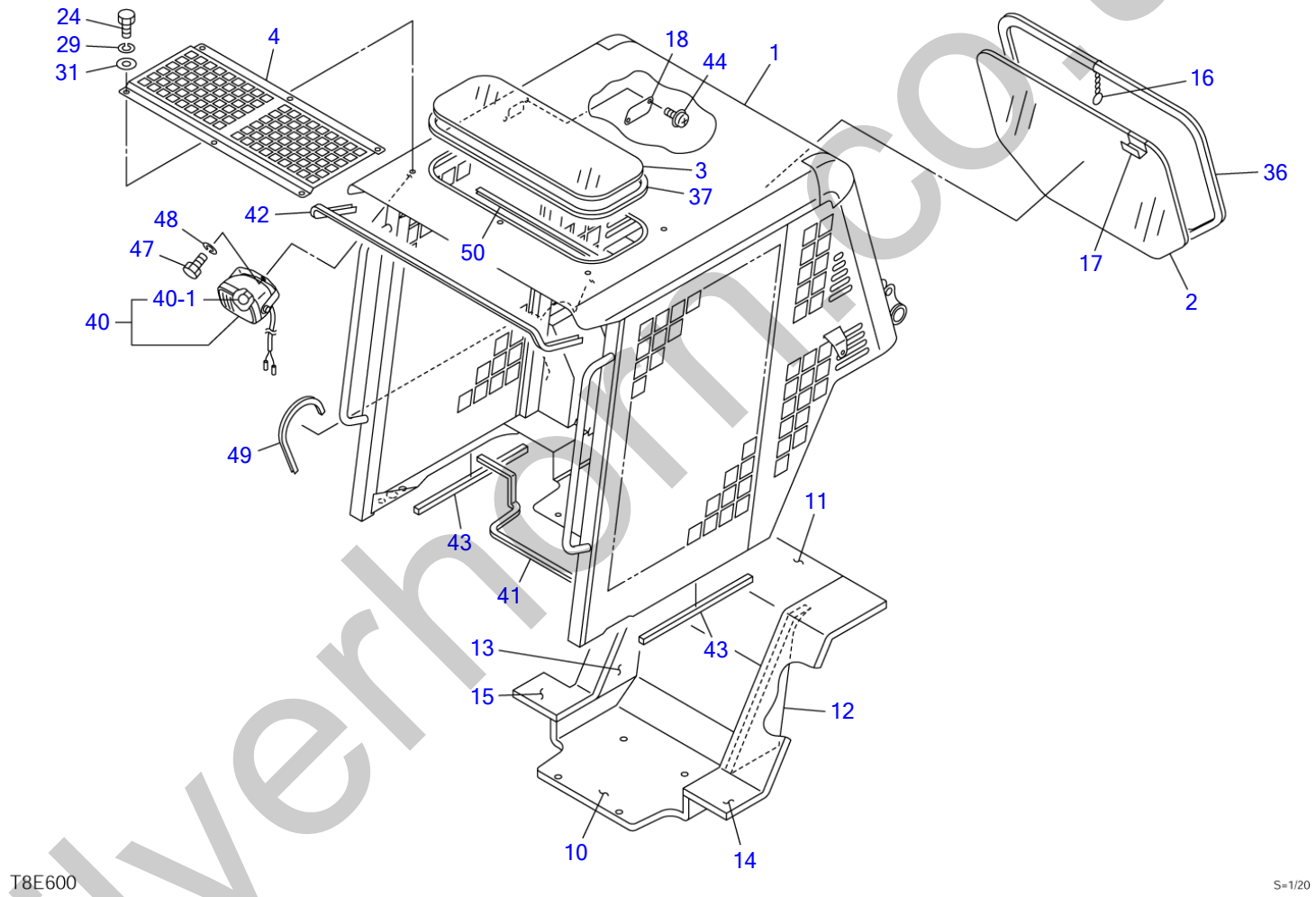

silverhorn.co.uk

CANOPY (1/2) (for GEHL & MUSTANG; 21400695-)

Item	Part number	Description	Q'ty	Chan.	Serial No.	Serv.	Remarks
0	0880844000	CANOPY ASSY	1		21400695~21405954	M	X08808-44000-9
	0880846600	CANOPY ASSY	1	(H)	21405955~	M	X08808-46600-0
1	0880844100	・CANOPY	1		21400695~21405954	M	
	0880846700	・CANOPY	1	(H)	21405955~	M	
2	0881842002	・GLASS	1			M	
3	0880844003	・GLASS	1			M	
4	0880844004	・PLATE	1			M	
10	0881842010	・ABSORBENT, noise	1			M	
11	0880844011	・ABSORBENT, noise	1			M	
12	0881842012	・ABSORBENT, noise (L.H.)	1			M	
13	0881842013	・ABSORBENT, noise (R.H.)	1			M	
14	0880843514	・ABSORBENT, noise	1			M	
15	0880844015	・ABSORBENT, noise	1			M	
16	0880841040	・RING, pull	1			M	
17	0880841080	・HANDLE	1			M	
18	0881842017	・PLATE	1			M	
24	1100040816	・BOLT	6			M	
29	1140020008	・WASHER, spring	6			M	
31	1141110008	・WASHER	6			M	
36	1654252253	・H-RUBBER	1			M	sold by the meter
37	1654252200	・H-RUBBER	1			M	sold by the meter
40	1703006600	・LAMP ASSY	2			M	
40-1	1703006605	・・BULB	1			M	12V, 55W
41	1654623120	・TRIM	1			M	sold by the meter
42	1654601153	・TRIM	1			M	sold by the meter
43	1654350057	・SPONGE	2			M	sold by the meter
44	1150420412	・SCREW	2			M	
47	1100041020	・BOLT	2			M	
48	1140020010	・WASHER, spring	2			M	
49	1653916038	・TRIM	1			M	sold by the meter
50	1654601060	・TRIM	1			M	sold by the meter
	T9e360						

silverhorn.co.uk

CANOPY (2/2) (for GEHL & MUSTANG; 21400695-)

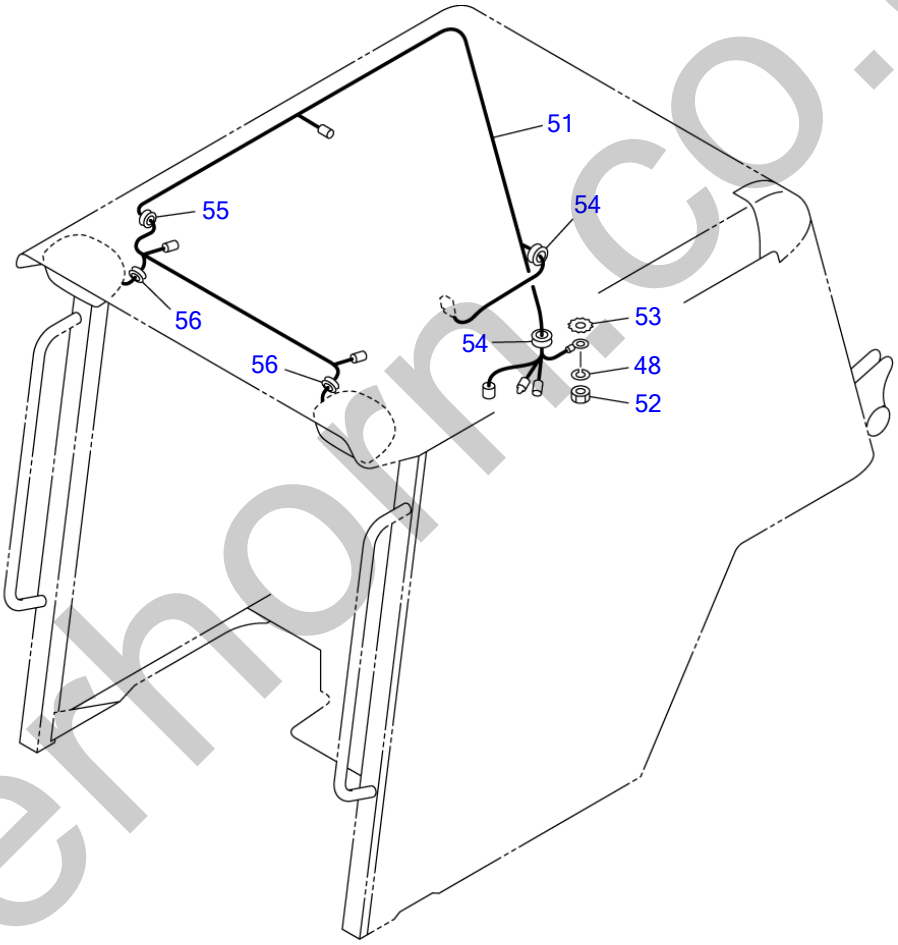

T8E530

S=1/15

silverhorn.co.uk

CANOPY (2/2) (for GEHL & MUSTANG; 21400695-)

Item	Part number	Description	Q'ty	Chan.	Serial No.	Serv.	Remarks
0	0880844000	CANOPY ASSY	1		21400695~21405954	M	X08808-44000-9
	0880846600	CANOPY ASSY	1	(H)	21405955~	M	X08808-46600-0
48	1140020010	・WASHER, spring	1			M	
51	0881842060	・HARNESS, wiring	1			M	
52	1130040010	・NUT	1			M	
53	1140330010	・WASHER	1			M	
54	1652052800	・GROMMET	3			M	
55	1652053600	・GROMMET	1			M	
56	1652040930	・GROMMET	2			M	
	T9e370						

silverhorn.co.uk

CAB MOUNT (21400011-)

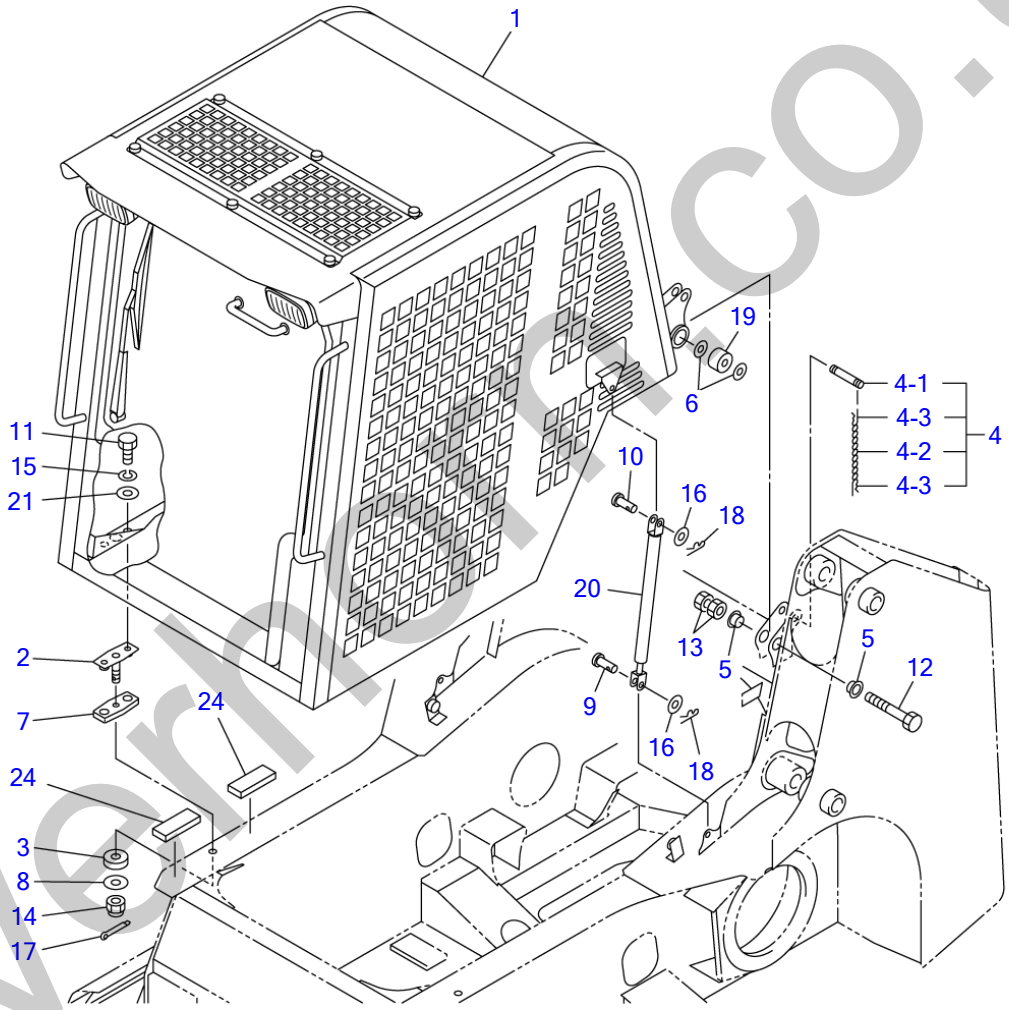

silverhill.co.uk

CAB MOUNT (21400011-)

Item	Part number	Description	Q'ty	Chan.	Serial No.	Serv.	Remarks
		CAB MOUNT					X08828-60000-2
		CAB MOUNT (for EU)					X08828-61000-0
1	0880865100	CAB	1				
	0882861100	CAB	1		21403789~		for EU
2	0881842030	BOLT ASSY	2				
3	0881842050	RUBBER, cushion	2				
4	0881841060	PIN ASSY	1				
4-1	0881841061	・PIN	1				
4-2	1652735886	・CHAIN	1				
4-3	1214000016	・PIN, snap	2				
5	0881840008	COLLAR	4				
6	0880840070	WASHER	4				
7	0881842040	RUBBER, cushion	2				
8	0003900044	WASHER	2				
9	0343503200	PIN	2				
10	0004010025	PIN	2				
11	1100041225	BOLT	4				
12	1100141610	BOLT	2				
13	1130040016	NUT	4				
14	1132080016	NUT	2				
15	1140020012	WASHER, spring	4				
16	1141110010	WASHER	4				
17	1210010432	PIN, split	2				
18	1214000008	PIN, snap	4				
19	1651005030	RUBBER, cushion	2				
20	1653900060	SPRING, gas	2				
21	0003600165	WASHER	4				
24	1654306008	SPONGE	4				sold by the meter
	T9e093						

silverhorn.co.uk

CAB (1/6)

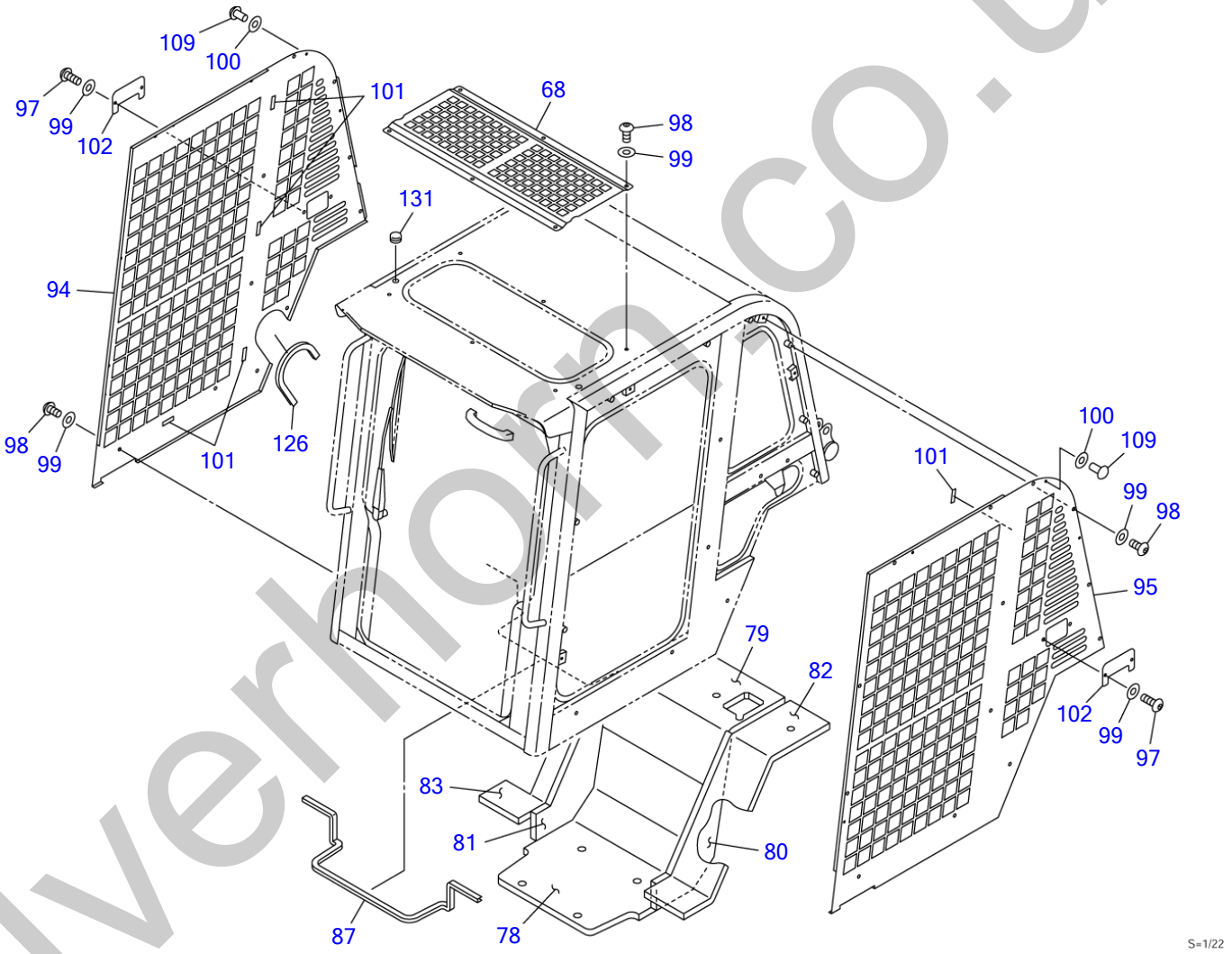

silverhorn.co.uk

CAB (1/6)

Item	Part number	Description	Q'ty	Chan.	Serial No.	Serv.	Remarks
0	0880865100	CAB ASSY	1				X08808-65100-5
	0882861100	CAB ASSY (for EU)	1				X08828-61100-0
68	0880865129	・GUARD	1				
78	0881842010	・ABSORBENT, noise	1				
	0882861178	・ABSORBENT, noise	1		21403789~		for EU
79	0880865133	・ABSORBENT, noise	1				
80	0880865134	・ABSORBENT, noise	1				
	0882861180	・ABSORBENT, noise	1		21403789~		for EU
81	0880865135	・ABSORBENT, noise	1				
	0882861181	・ABSORBENT, noise	1		21403789~		for EU
82	0880865136	・ABSORBENT, noise	1				
	0882861182	・ABSORBENT, noise	1		21403789~		for EU
83	0880865137	・ABSORBENT, noise	1				
	0882861183	・ABSORBENT, noise	1		21403789~		for EU
87	1654623130	・TRIM	1				sold by the meter
94	0880865142	・GUARD	1				
95	0880865143	・GUARD	1				
97	1120990820	・BOLT	4				
98	1120990816	・BOLT	33				
99	1654011705	・WASHER	37				
100	0880865144	・WASHER	8				
101	0880865145	・PLATE	8				
102	0880865146	・COVER	2				
109	0880865150	・RIVET	8				
126	1653916037	・TRIM	1				sold by the meter
131	1653303010	・CAP	2				
	T9e340						

silverhorn.co.uk

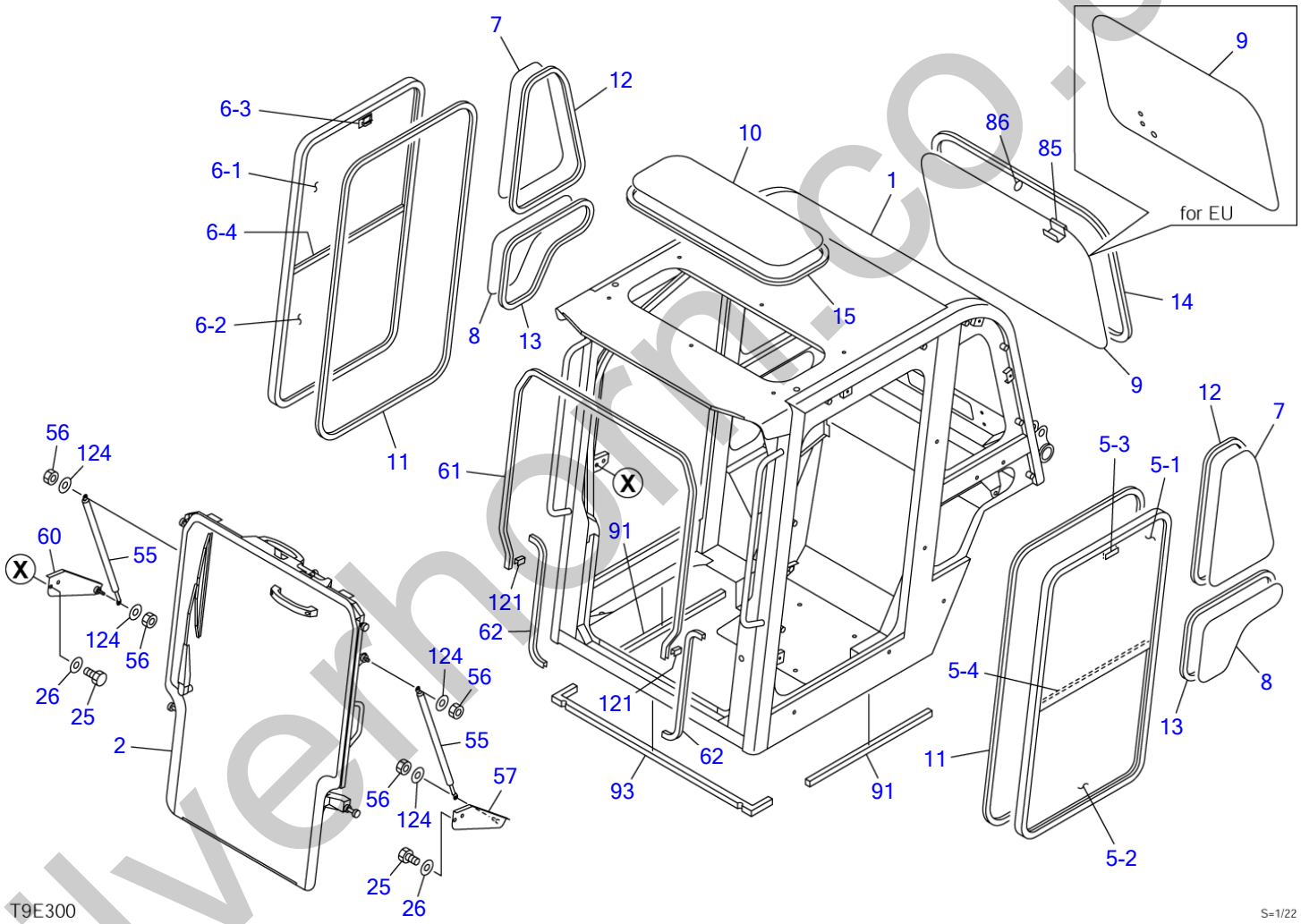

silverhorn.co.uk

CAB (2/6)

Item	Part number	Description	Q'ty	Chan.	Serial No.	Serv.	Remarks
0	0880865100	CAB ASSY	1				X08808-65100-5
	0882861100	CAB ASSY (for EU)	1				X08828-61100-0
1	X **********	・CAB	1				
2	0880865300	・DOOR ASSY, front	1				see page (6/6)
5	0880865420	・SIDE SASH ASSY (L.H.)	1				
5-1	0880865422	・・GLASS	1				
5-2	0880865423	・・GLASS	1				
5-3	0880865424	・・LOCK ASSY	1				
5-4	0880865427	・・STRIP, weather	1				
6	0880865430	・SIDE SASH ASSY (R.H.)	1				
6-1	0880865422	・・GLASS	1				
6-2	0880865423	・・GLASS	1				
6-3	0880865424	・・LOCK ASSY	1				
6-4	0880865437	・・STRIP, weather	1				
7	0880865101	・GLASS	2				
8	0880865102	・GLASS	2				
9	0880865103	・GLASS	1				
	0882861109	・GLASS	1		21403789~		for EU
10	0880865104	・GLASS	1				
11	1654253320	・H-RUBBER	2				sold by the meter
12	1654231148	・H-RUBBER	2				sold by the meter
13	1654231120	・H-RUBBER	2				sold by the meter
14	1654231273	・H-RUBBER	1				sold by the meter
	1654253273	・H-RUBBER (for EU)	1		21403789~		sold by the meter
15	1654231195	・H-RUBBER	1				sold by the meter
25	1100091020	・BOLT	4				
26	1654011706	・WASHER	4				
55	0880865124	・SPRING, gas	2				
56	1134090006	・NUT	4				
57	0880865125	・BRACKET	1				
60	0880865126	・BRACKET	1				
61	1654630240	・TRIM	1				sold by the meter
62	1654630060	・TRIM	2				sold by the meter
85	0880865138	・GRIP	1				
	0882861185	・GRIP	1		21403789~		for EU
86	0880865139	・RING	1				
91	0880865140	・SEAL	2				
93	0880865141	・SEAL	1				
121	1654619003	・SEAL	2				sold by the meter
124	1141190008	・WASHER	4				
	T9e300						

silverhorn.co.uk

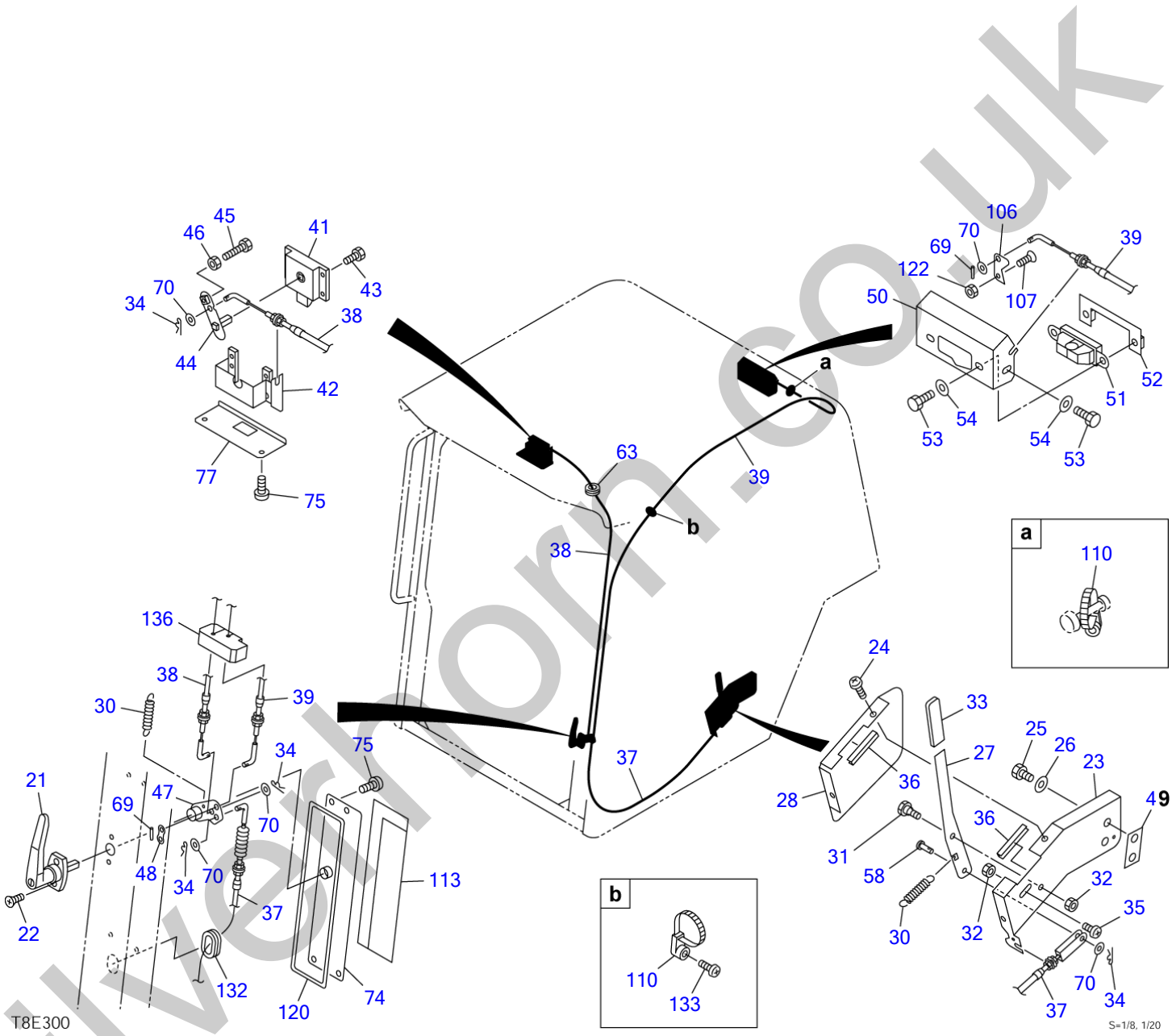

silverhorn.co.uk

CAB (3/6)

Item	Part number	Description	Q'ty	Chan.	Serial No.	Serv.	Remarks
0	0880865100	CAB ASSY	1				X08808-65100-5
	0882861100	CAB ASSY (for EU)	1				X08828-61100-0
21	1654011500	・HANDLE	1				
22	1120690520	・SCREW	2				
23	0880865161	・BRACKET	1				
24	1150420512	・SCREW	2				
25	1100091020	・BOLT	2				
26	1654011706	・WASHER	2				
27	0880865162	・LEVER	1				
28	0880865110	・COVER	1				
30	0880865112	・SPRING	2				
31	1654010800	・PIN	1				
32	1131242006	・NUT	2				
33	0438601760	・COVER	1				
34	1214000006	・PIN, snap	4				
35	1150410612	・BOLT, sems	1				
36	1653916005	・TRIM	2				sold by the meter
37	0880865163	・CABLE	1				
38	0880865164	・CABLE	1				
39	0880865165	・CABLE	1				
41	1654011740	・LATCH	1				
42	0880865118	・PLATE	1				
43	1100090616	・BOLT	4				
44	0880865166	・PLATE	1				
45	1100240630	・BOLT	1				
46	1131242006	・NUT	1				
47	0880865167	・PLATE	1				
48	0880865168	・PLATE	1				
49	0880865169	・SHIM	1				
50	0880865121	・BRACKET	1				
51	1653384630	・LOCK	1				
52	0880865123	・PLATE	1				
53	1100090820	・BOLT	5				
54	1654011705	・WASHER	5				
58	0880865170	・PIN	1				
63	1652042030	・GROMMET	1				
69	1211000212	・PIN	2				
70	1654011711	・WASHER	4				
74	0880865130	・COVER	1				
75	1150420512	・SCREW	6				
77	0880865132	・COVER	1				
106	0880865171	・BRACKET	1				
107	1120630512	・SCREW	1				
110	1652221050	・BAND	2				
113	0880865153	・ABSORBENT, noise	1				
120	0880865159	・SEAL	1				
122	1131242005	・NUT	1				
132	1654011701	・GROMMET	1				
133	1150420512	・SCREW	1				
136	0880865160	・PACKING	2				
	T9e310						

silverthorn.co.uk

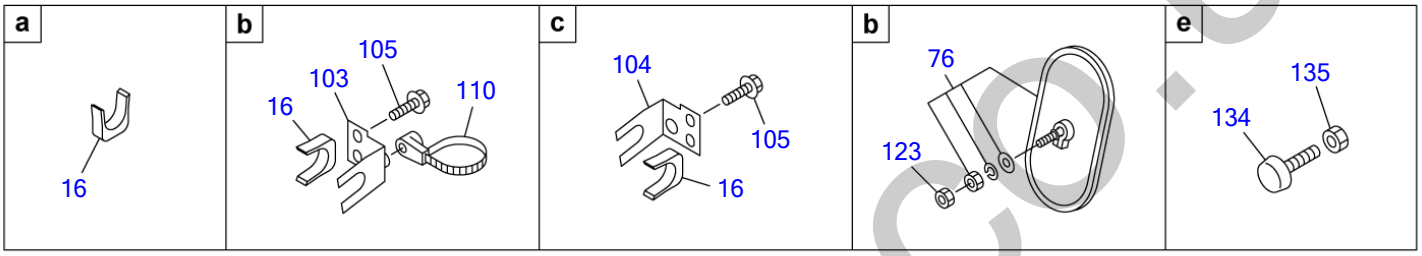

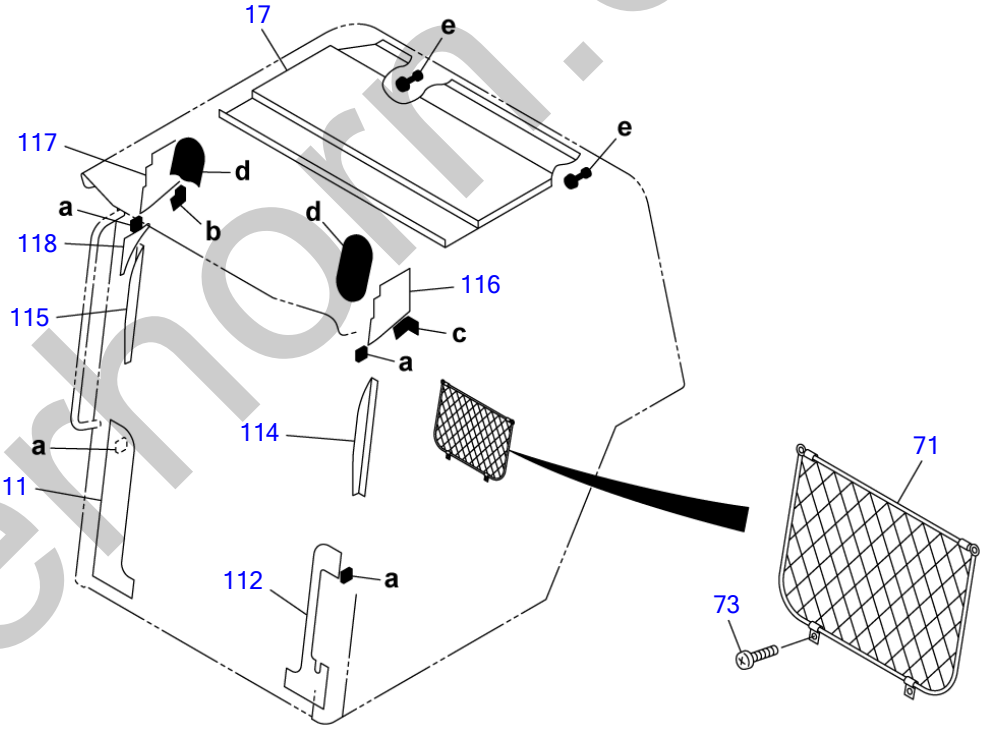

silvernorn.co.uk

CAB (4/6)

Item	Part number	Description	Q'ty	Chan.	Serial No.	Serv.	Remarks
0	0880865100	CAB ASSY	1				X08808-65100-5
	0882861100	CAB ASSY (for EU)	1				X08828-61100-0
16	0880865105	・STOPPER	6				
17	0880865106	・ABSORBENT, noise	1				
71	1654010600	・POCKET	1				
73	1150410416	・SCREW	4				
76	0880865131	・MIRROR, rearview	2				
103	0880865147	・BRACKET	1				
104	0880865148	・BRACKET	1				
105	1100090620	・BOLT	4				
110	1652221050	・BAND	1				
111	0880865151	・ABSORBENT, noise	1				
112	0880865152	・ABSORBENT, noise	1				
114	0880865154	・ABSORBENT, noise	1				
115	0880865155	・ABSORBENT, noise	1				
116	0880865156	・ABSORBENT, noise	1				
117	0880865157	・ABSORBENT, noise	1				
118	0880865158	・ABSORBENT, noise	1				
123	1130040008	・NUT	2				
134	1651101042	・STOPPER	2				
135	1130090010	・NUT	2				
	T9e320						

silverhorn.co.uk

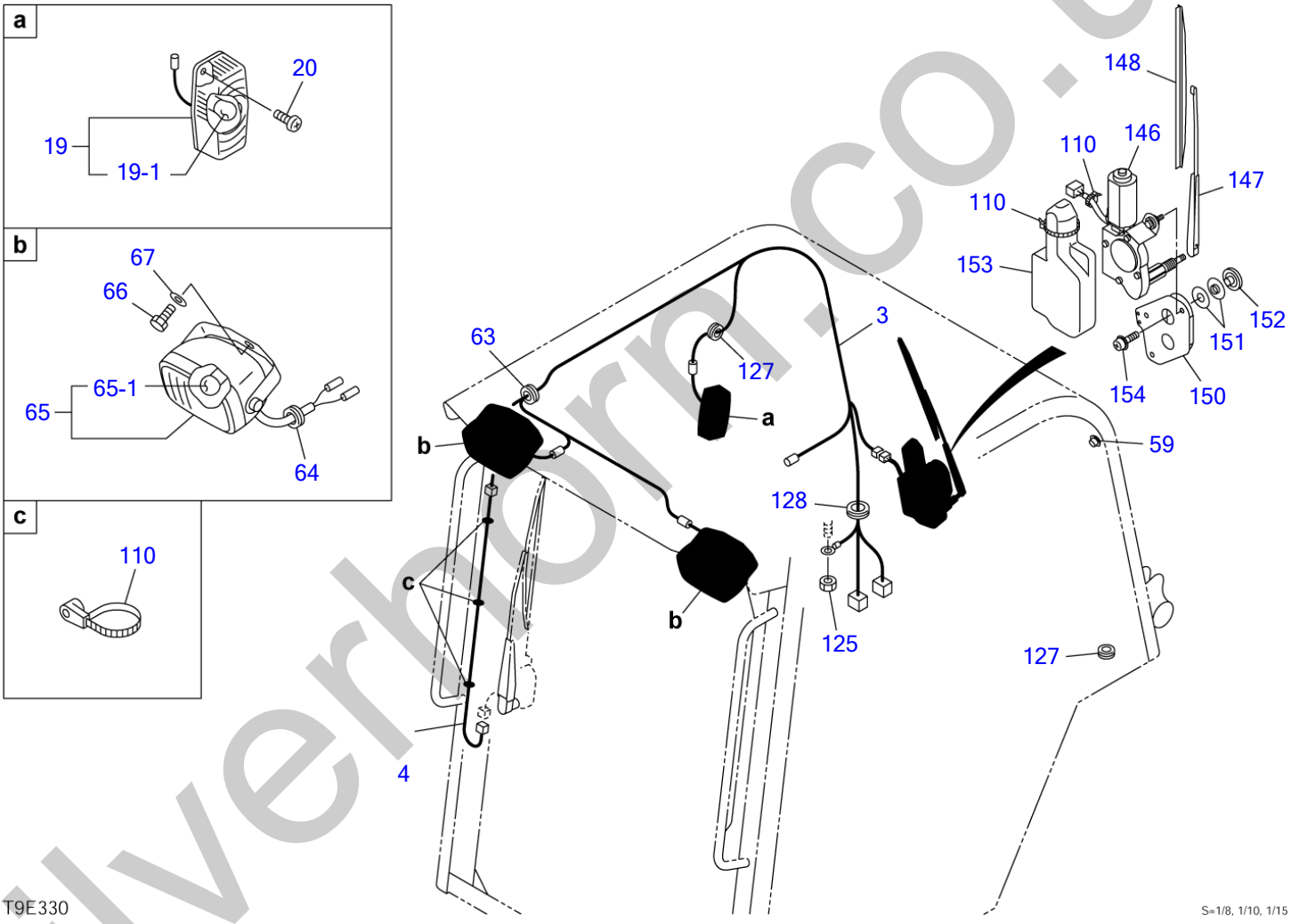

silverhorn.co.uk

CAB (5/6)

Item	Part number	Description	Q'ty	Chan.	Serial No.	Serv.	Remarks
0	0880865100	CAB ASSY	1				X08808-65100-5
	0882861100	CAB ASSY (for EU)	1				X08828-61100-0
3	0880865400	・HARNESS, wiring	1				
	0882861300	・HARNESS, wiring	1		21403789~		for EU
4	0880865410	・HARNESS, wiring	1				
19	1703001700	・LAMP, room	1				
19-1	1703001701	・・BULB	1				
20	1150410412	・SCREW	2				
59	1654011703	・CAP	1				
63	1652042030	・GROMMET	1				
64	1652000602	・GROMMET	2				
65	1703006600	・LAMP, ASSY	2				
65-1	1703006605	・・BULB	1				
66	1100091020	・BOLT	2				
67	1654011706	・WASHER	2				
110	1652221050	・BAND	5				
125	1130040010	・NUT	1				
127	1654011700	・GROMMET	2				
128	1654011702	・GROMMET	1				
146	1704051212	・MOTOR, wiper	1		21403789~		for EU
147	1704120300	・ARM, wiper	1		21403789~		for EU
148	1704201330	・BLADE	1		21403789~		for EU
150	0882861250	・BRACKET	1		21403789~		for EU
151	0880865314	・PACKING	4		21403789~		for EU
152	0880865313	・NUT	2		21403789~		for EU
153	1704400001	・COVER	1		21403789~		for EU
154	1150420616	・SCREW	2		21403789~		for EU
	T9e330						

silverhorn.co.uk

CAB (6/6) (front door)

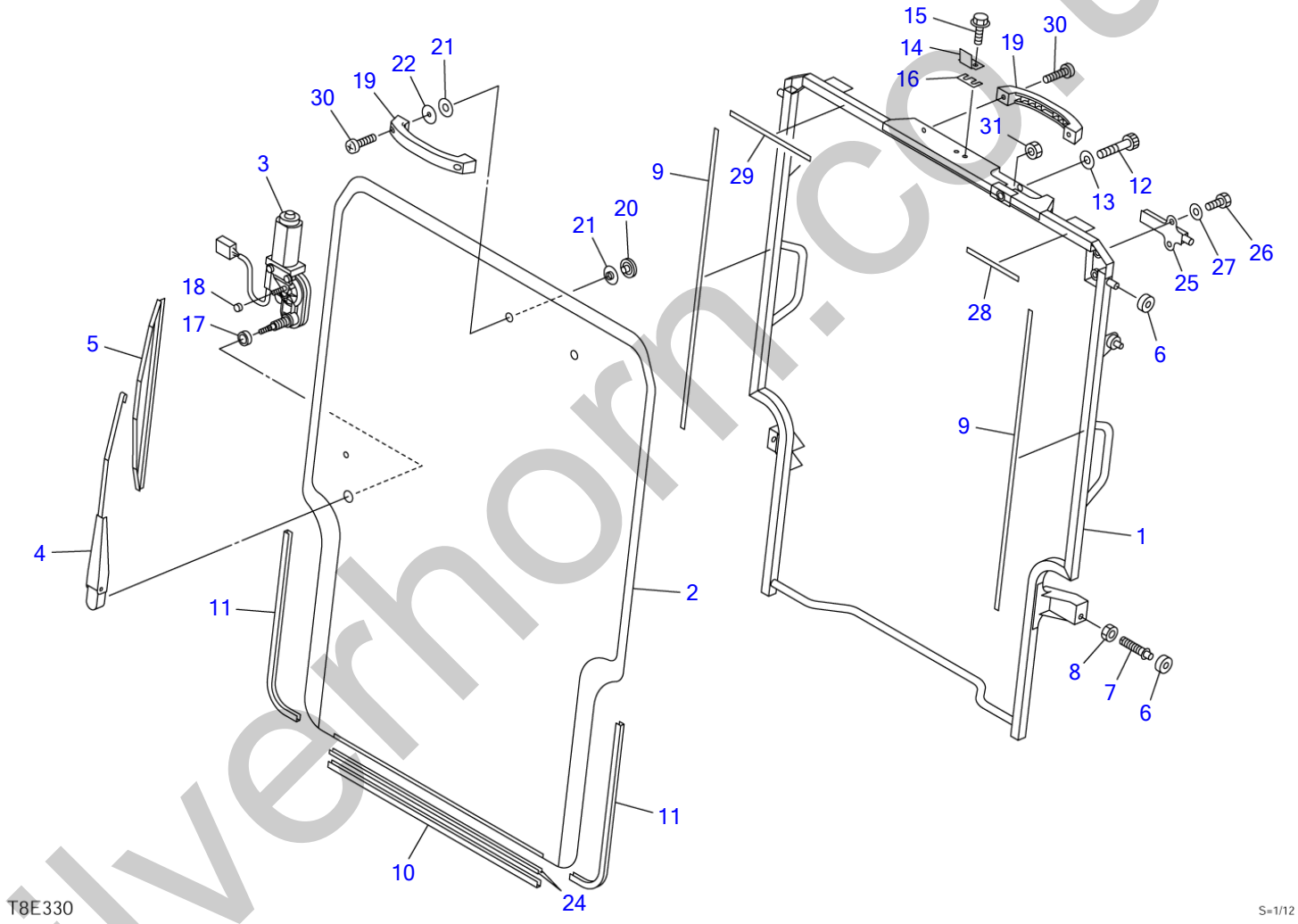

silverhorn.co.uk

CAB (6/6) (front door)

Item	Part number	Description	Q'ty	Chan.	Serial No.	Serv.	Remarks
0	0880865300	・・DOOR ASSY, front	1				
1	0880865340	・・DOOR, front	1				
2	0880865301	・・GLASS	1				
3	0880865302	・・MOTOR, wiper	1				
4	0880865303	・・ARM, wiper	1				
5	0880865304	・・BLADE	1				
6	0880865305	・・ROLLER	4				
7	0880865306	・・BOLT	2				
8	1130040012	・・NUT	2				
9	1654615210	・・DAM	1				sold by the meter
10	1654631054	・・SEAL	1				sold by the meter
11	1653916045	・・TRIM	2				sold by the meter
12	0880865307	・・BOLT	1				
13	1654011707	・・WASHER	1				
14	0880865308	・・PLATE	1				
15	1100090620	・・BOLT	2				
16	0880865309	・・SHIM	4				
17	0880865310	・・COLLAR	1				
18	0880865311	・・COLLAR	1				
19	0880865312	・・HANDLE	2				
20	0880865313	・・NUT	2				
21	0880865314	・・GROMMET	4				
22	0880865315	・・WASHER	2				
24	0880865316	・・SHEET	2				
25	0880865317	・・LATCH	1				
26	1100090820	・・BOLT	2				
27	1654011705	・・WASHER	2				
28	1654615013	・・DAM	1				sold by the meter
29	1654615020	・・DAM	1				sold by the meter
30	1150420620	・・SCREW	4				
31	1130190012	・・NUT	1				
	T8e331						

silverhorn.co.uk

CAB KIT (1/5) (for US)

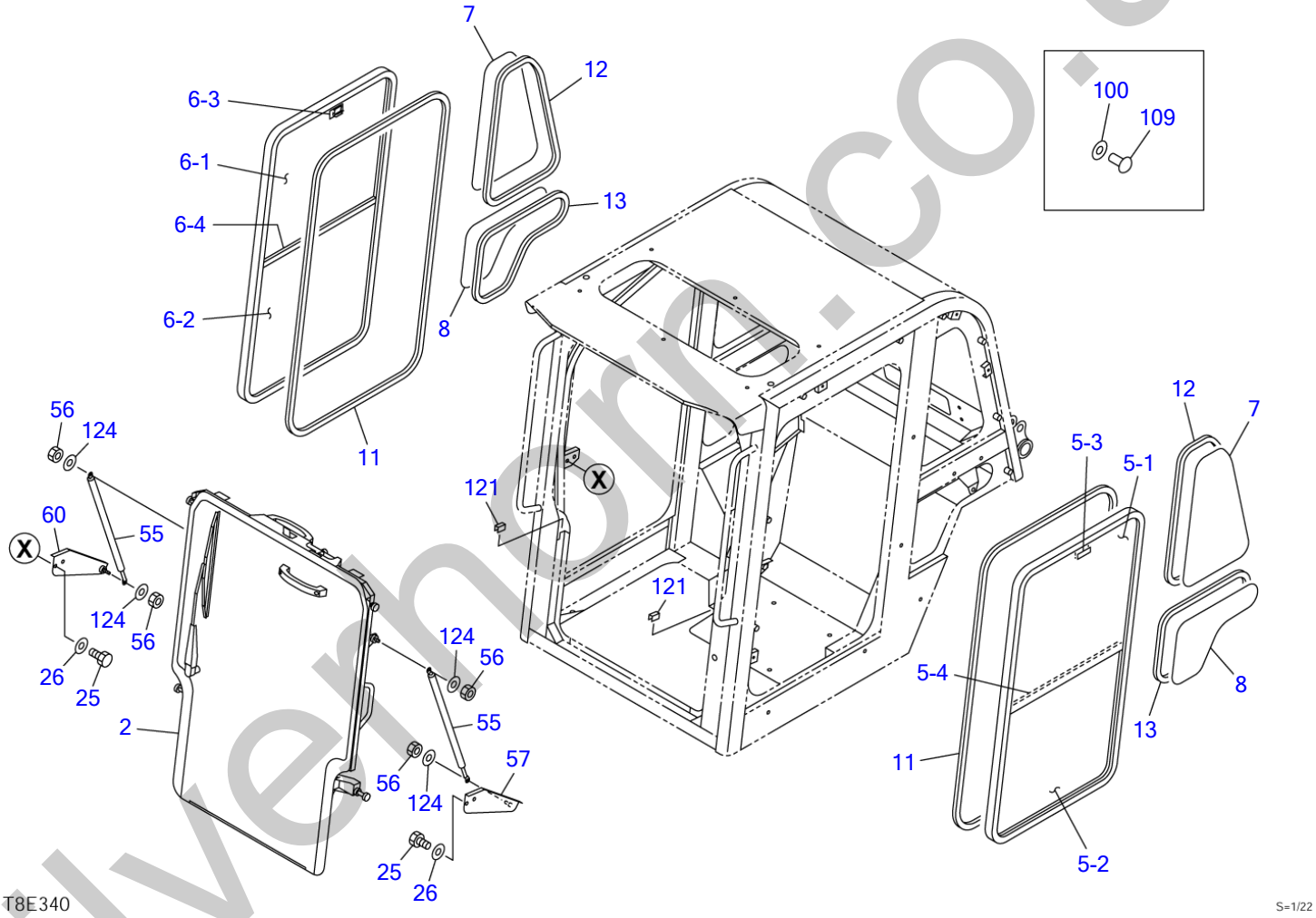

silverhorn.co.uk

CAB KIT (1/5) (for US)

Item	Part number	Description	Q'ty	Chan.	Serial No.	Serv.	Remarks
0	0880865500	CAB KIT	1		21400011~21402984		X08808-65500-8
	0882860500	CAB KIT	1		21402985~		X08828-60500-0
0-1	0880865600	・SUB CAB KIT (1/5)~(4/5)	1		21400011~21402984		X08808-65600-2
	0882860600	・SUB CAB KIT (1/5)~(4/5)	1	(H)	21402985~		X08828-60600-0
2	0880865300	・・DOOR ASSY, front	1				see page (2/5)
5	0880865420	・・SIDE SASH ASSY (L.H.)	1				
5-1	0880865422	・・・GLASS	1				
5-2	0880865423	・・・GLASS	1				
5-3	0880865424	・・・LOCK ASSY	1				
5-4	0880865427	・・・STRIP, weather	1				
6	0880865430	・・SIDE SASH ASSY (R.H.)	1				
6-1	0880865422	・・・GLASS	1				
6-2	0880865423	・・・GLASS	1				
6-3	0880865424	・・・LOCK ASSY	1				
6-4	0880865437	・・・STRIP, weather	1				
7	0880865101	・・GLASS	2				
8	0880865102	・・GLASS	2				
11	1654253320	・・H-RUBBER	2				sold by the meter
12	1654231148	・・H-RUBBER	2				sold by the meter
13	1654231120	・・H-RUBBER	2				sold by the meter
25	1100091020	・・BOLT	4				
26	1654011706	・・WASHER	4				
55	0880865124	・・SPRING, gas	2				
56	1134090006	・・NUT	4				
57	0880865125	・・BRACKET	1				
60	0880865126	・・BRACKET	1				
100	0880865144	・・WASHER	8				
109	0880865150	・・RIVET	8				
121	1654619003	・・SEAL	2				sold by the meter
124	1141190008	・・WASHER	4				
	T9e180						

silverhorn.co.uk

CAB KIT (2/5) (for US, front door)

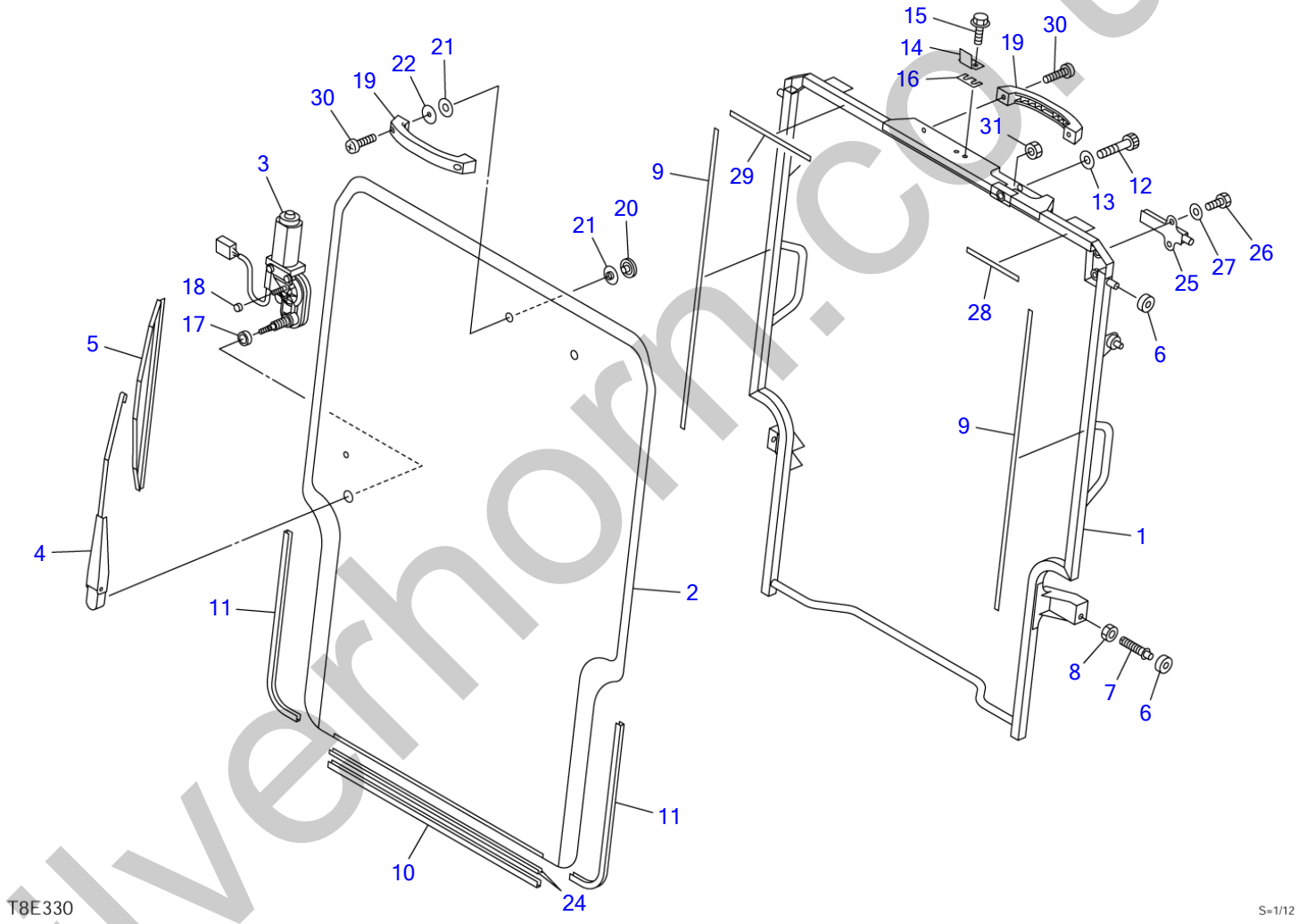

silverhorn.co.uk

CAB KIT (2/5) (for US, front door)

Item	Part number	Description	Q'ty	Chan.	Serial No.	Serv.	Remarks
0	0880865500	CAB KIT	1		21400011~21402984		X08808-65500-8
	0882860500	CAB KIT	1		21402985~		X08828-60500-0
0-1	0880865600	・SUB CAB KIT (1/5)~(4/5)	1		21400011~21402984		X08808-65600-2
	0882860600	・SUB CAB KIT (1/5)~(4/5)	1	(H)	21402985~		X08828-60600-0
0-2	0880865300	・・DOOR ASSY, front	1				
1	0880865340	・・・DOOR, front	1				
2	0880865301	・・・GLASS	1				
3	0880865302	・・・MOTOR, wiper	1				
4	0880865303	・・・ARM, wiper	1				
5	0880865304	・・・BLADE	1				
6	0880865305	・・・ROLLER	4				
7	0880865306	・・・BOLT	2				
8	1130040012	・・・NUT	2				
9	1654615210	・・・DAM	2				sold by the meter
10	1654631054	・・・SEAL	1				sold by the meter
11	1653916045	・・・TRIM	2				sold by the meter
12	0880865307	・・・BOLT	1				
13	1654011707	・・・WASHER	1				
14	0880865308	・・・PLATE	1				
15	1100090620	・・・BOLT	2				
16	0880865309	・・・SHIM	4				
17	0880865310	・・・COLLAR	1				
18	0880865311	・・・COLLAR	1				
19	0880865312	・・・HANDLE	2				
20	0880865313	・・・NUT	2				
21	0880865314	・・・GROMMET	4				
22	0880865315	・・・WASHER	2				
24	0880865316	・・・SHEET	2				
25	0880865317	・・・LATCH	1				
26	1100090820	・・・BOLT	2				
27	1654011705	・・・WASHER	2				
28	1654615013	・・・DAM	1				sold by the meter
29	1654615020	・・・DAM	1				sold by the meter
30	1150420620	・・・SCREW	4				
31	1130190012	・・・NUT	1				
	T9e190						

silverhorn.co.uk

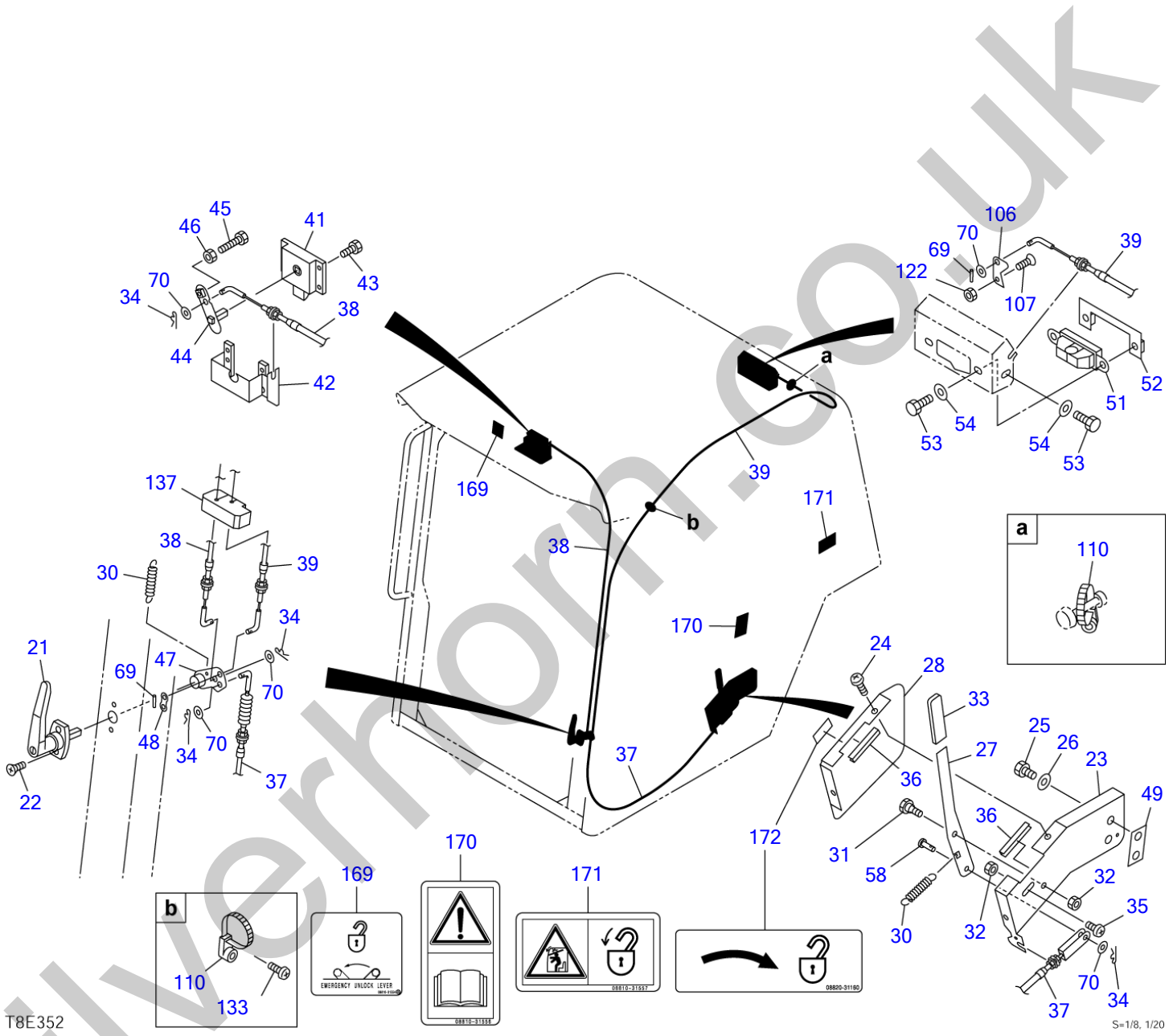

silverhorn.co.uk

CAB KIT (3/5) (for US)

Item	Part number	Description	Q'ty	Chan.	Serial No.	Serv.	Remarks
0	0880865500	CAB KIT	1		21400011~21402984		X08808-65500-8
	0882860500	CAB KIT	1		21402985~		X08828-60500-0
0-1	0880865600	・SUB CAB KIT (1/5)~(4/5)	1		21400011~21402984		X08808-65600-2
	0882860600	・SUB CAB KIT (1/5)~(4/5)	1	(H)	21402985~		X08828-60600-0
21	1654011500	・・HANDLE	1				
22	1120690520	・・SCREW	2				
23	0880865161	・・BRACKET	1				
24	1150420512	・・SCREW	2				
25	1100091020	・・BOLT	2				
26	1654011706	・・WASHER	2				
27	0880865162	・・LEVER	1				
28	0880865110	・・COVER	1				
30	0880865112	・・SPRING	2				
31	1654010800	・・PIN	1				
32	1131242006	・・NUT	2				
33	0438601760	・・COVER	1				
34	1214000006	・・PIN, snap	4				
35	1150410612	・・BOLT, sems	1				
36	1653916005	・・TRIM	2				sold by the meter
37	0880865163	・・CABLE	1				
38	0880865164	・・CABLE	1				
39	0880865165	・・CABLE	1				
41	1654011740	・・LATCH	1				
42	0880865118	・・PLATE	1				
43	1100090616	・・BOLT	4				
44	0880865166	・・PLATE	1				
45	1100240630	・・BOLT	1				
46	1131242006	・・NUT	1				
47	0880865167	・・PLATE	1				
48	0880865168	・・PLATE	1				
49	0880865169	・・SHIM	1				
51	1653384630	・・LOCK	1				
52	0880865123	・・PLATE	1				
53	1100090820	・・BOLT	2				
54	1654011705	・・WASHER	2				
58	0880865170	・・PIN	1				
69	1211000212	・・PIN	2				
70	1654011711	・・WASHER	4				
106	0880865171	・・BRACKET	1				
107	1120630512	・・SCREW	1				
110	1652221050	・・BAND	2				
122	1131242005	・・NUT	1				
133	1150420512	・・SCREW	1				
137	0880865160	・・PACKING	2				
169	0881031554	・・DECAL	1				
170	0881031556	・・DECAL	1				
171	0881031557	・・DECAL	1				
172	0882031160	・・DECAL	1				
	T9e200						

silverhorn.co.uk

CAB KIT (4/5) (for US)

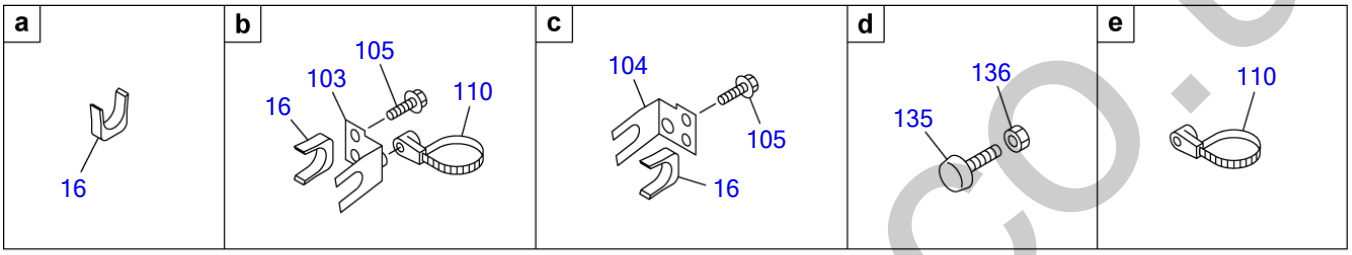

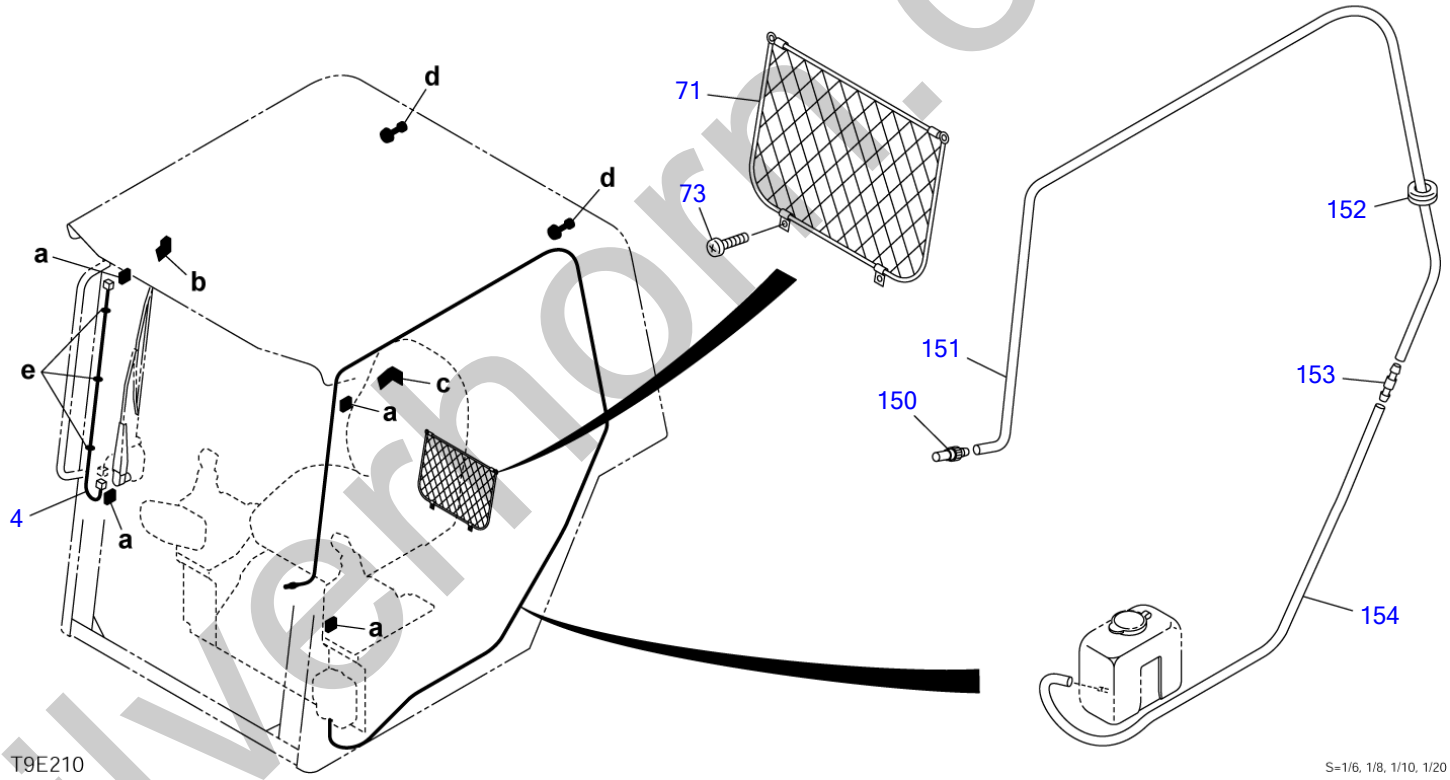

silverthorn.co.uk

CAB KIT (4/5) (for US)

Item	Part number	Description	Q'ty	Chan.	Serial No.	Serv.	Remarks
0	0880865500	CAB KIT	1		21400011~21402984		X08808-65500-8
	0882860500	CAB KIT	1		21402985~		X08828-60500-0
0-1	0880865600	・SUB CAB KIT (1/5)~(4/5)	1		21400011~21402984		X08808-65600-2
	0882860600	・SUB CAB KIT (1/5)~(4/5)	1	(H)	21402985~		X08828-60600-0
4	0880865410	・・HARNESS, wiring	1				
16	0880865105	・・STOPPER	6				
71	1654010600	・・POCKET	1				
73	1150410416	・・SCREW	4				
103	0880865147	・・BRACKET	1				
104	0880865148	・・BRACKET	1				
105	1100090620	・・BOLT	4				
110	1652221050	・・BAND	4				
135	1651101042	・・STOPPER	2				
136	1130090010	・・NUT	2				
150	1711910040	・・NOZZLE	1				
151	1711919300	・・HOSE	1				sold by the meter
152	1654011700	・・GROMMET	1				
153	1711910014	・・JOINT	1				
154	1711919150	・・HOSE	1				sold by the meter
	T9e210						

silverhorn.co.uk

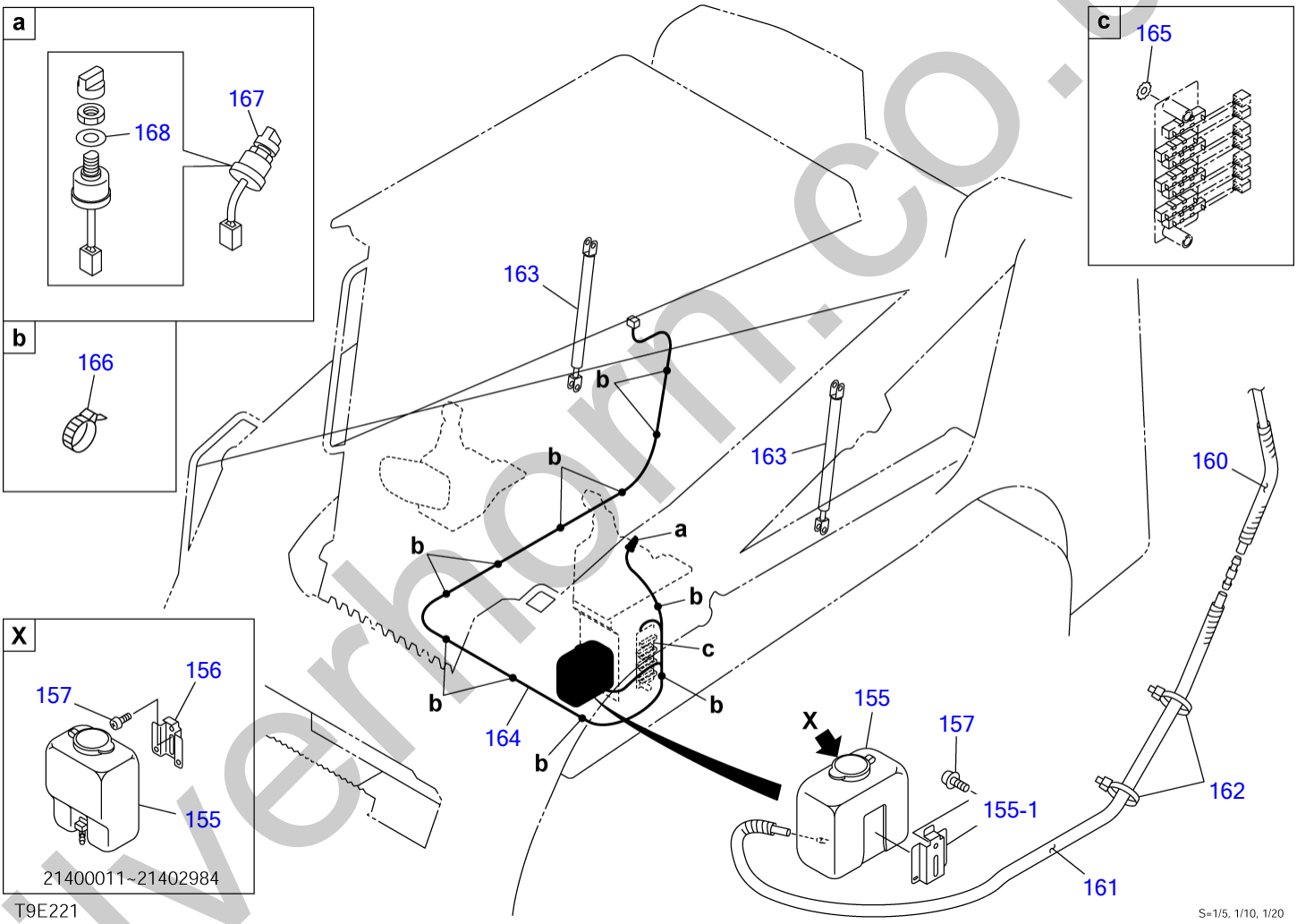

silverhorn.co.uk

CAB KIT (5/5) (for US)

Item	Part number	Description	Q'ty	Chan.	Serial No.	Serv.	Remarks
0	0880865500	CAB KIT	1		21400011~21402984		X08808-65500-8
	0882860500	CAB KIT	1		21402985~		X08828-60500-1
155	1711910101	・TANK	1		21400011~21402984		
	1711910290	・TANK	1		21402985~		
155-1	1711910291	・・BRACKET	1		21402985~		
156	1711910062	・BRACKET	1		21400011~21402984		
157	1150410612	・SCREW	2				
160	1703210770	・PROTECTOR	1				
161	1703220750	・PROTECTOR	1				sold by the meter
162	1652231140	・BAND	2				
163	1653900060	・SPRING, gas	2				
164	0880427810	・HARNESS, wiring	1				
165	1140330010	・WASHER	1				
166	1652231250	・BAND	10				
167	1704300007	・SWITCH, wiper	1				
168	1141810012	・WASHER	1				
	T9e221						

silverhorn.co.uk

REAR MIRROR

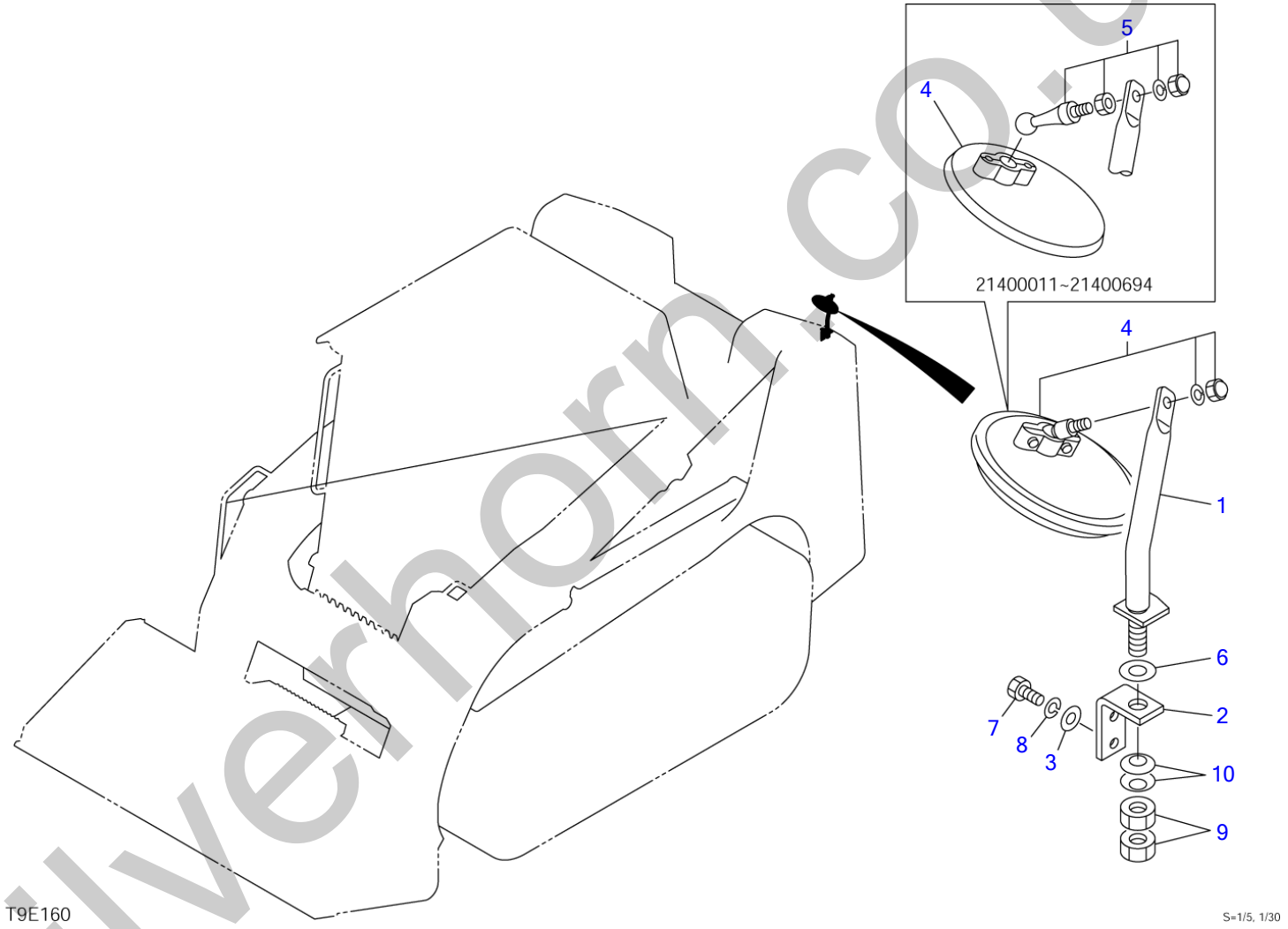

silverhorn.co.uk

REAR MIRROR

Item	Part number	Description	Q'ty	Chan.	Serial No.	Serv.	Remarks
		MIRROR ASSY, rear					X08808-71000-4
1	0880870020	STAY	1				
2	0881870010	BRACKET	1				
3	0003608252	WASHER	2				
4	1656500110	MIRROR	1	(L)	21400011~21400694		
	1656500130	MIRROR	1	(H)	21400695~		
5	1654006100	PIVOT	1		21400011~21400694		
6	1141210014	WASHER	1				
7	1100040816	BOLT	2				
8	1140020008	WASHER, spring	2				
9	1130640014	NUT	2				
10	1225110014	WASHER, conical	2				
	T9e160						

silverhorn.co.uk

REARVIEW MIRROR (-21400010)

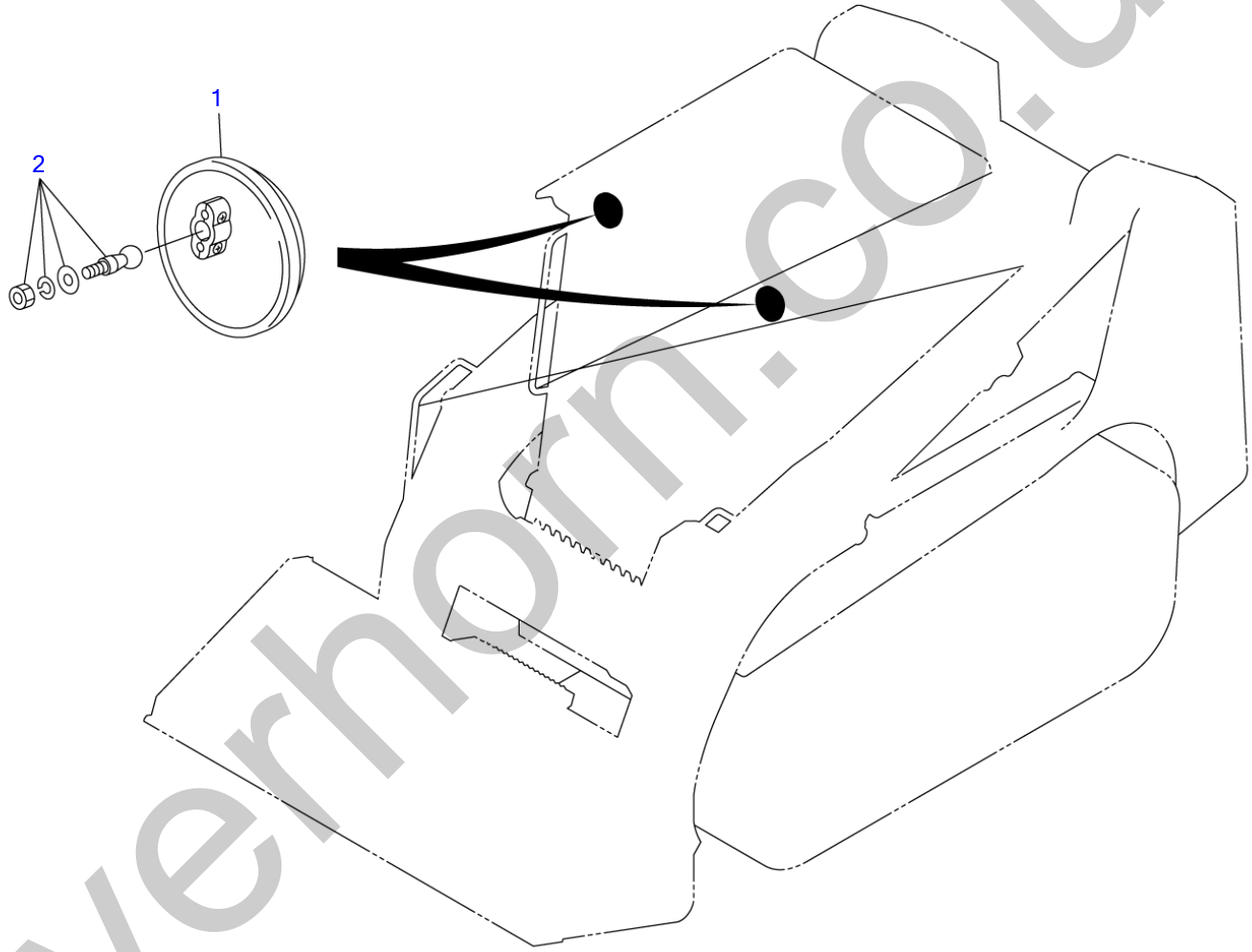

T7E100

S=1/5, 1/25

silverhorn.co.uk

REARVIEW MIRROR (-21400010)

Item	Part number	Description	Q'ty	Chan.	Serial No.	Serv.	Remarks
		MIRROR ASSY, rearview					X08818-72000-0
1	**1656500110**	MIRROR	2				
2	**1654006000**	PIVOT	2				
	T7e100						

silverhorn.co.uk

REARVIEW MIRROR (for GEHL & MUSTANG; 21400695-)

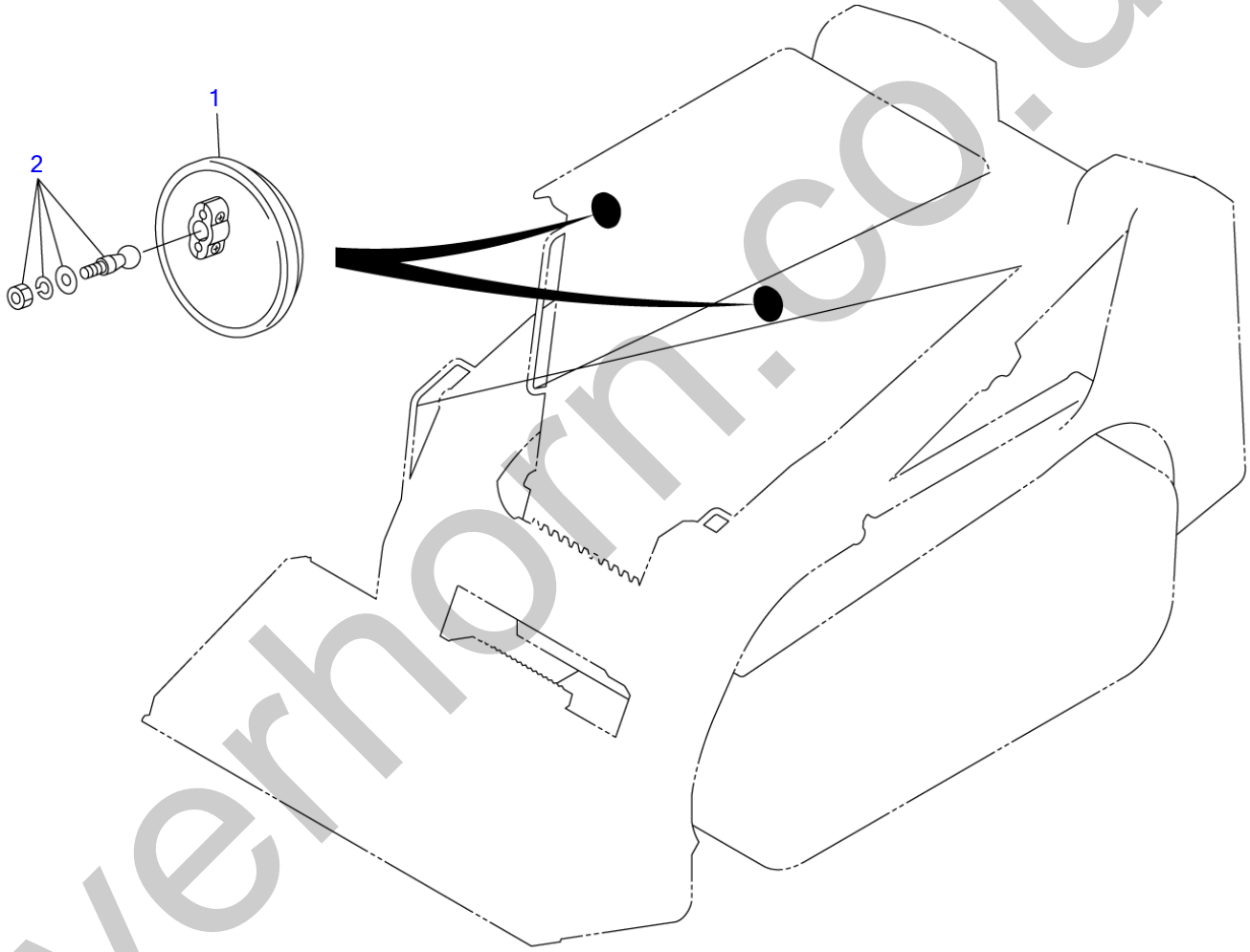

T7E100

S=1/5, 1/25

silverhorn.co.uk

REARVIEW MIRROR (for GEHL & MUSTANG; 21400695-)

Item	Part number	Description	Q'ty	Chan.	Serial No.	Serv.	Remarks
		MIRROR ASSY, rearview					X08818-72000-0
1	**1656500110**	MIRROR	2				
2	**1654006000**	PIVOT	2				
	T7e100						

silverhorn.co.uk

MANUAL STORAGE (-21400010)

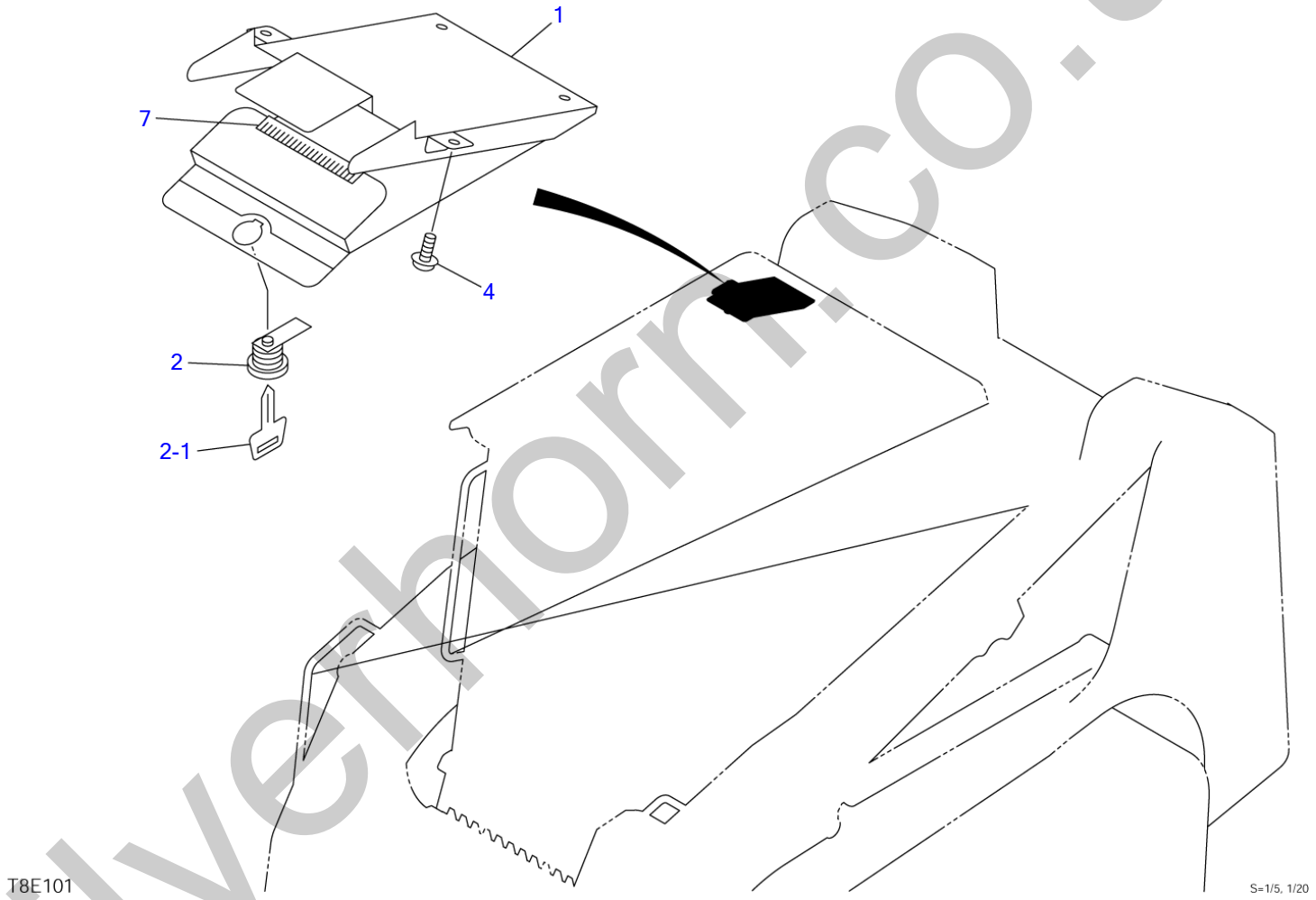

silverhorn.co.uk

MANUAL STORAGE (-21400010)

Item	Part number	Description	Q'ty	Chan.	Serial No.	Serv.	Remarks
		MANUAL STORAGE					X08818-41500-2
1	**0881841510**	BOX	1				
2	**1653601395**	LOCK	1				
2-1	**1700100019**	KEY	1				
4	**1150420612**	SCREW	4				
7	**1654605010**	RUBBER, sash	1				sold by the meter
	T8e101						

silverhorn.co.uk

MANUAL STORAGE (for GEHL & MUSTANG; 21400695-)

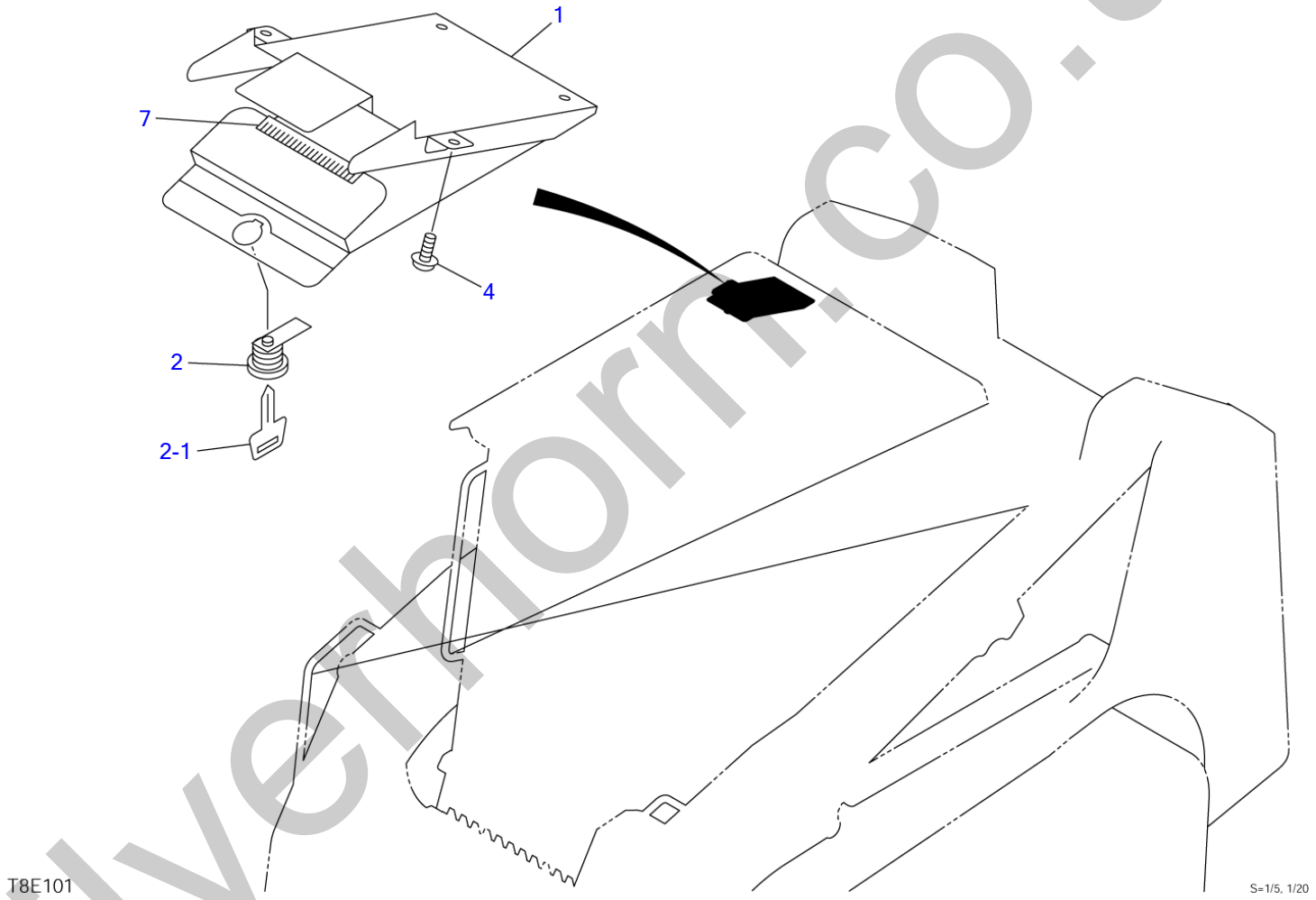

silverhorn.co.uk

MANUAL STORAGE (for GEHL & MUSTANG; 21400695-)

Item	Part number	Description	Q'ty	Chan.	Serial No.	Serv.	Remarks
		MANUAL STORAGE					X08818-41500-2
1	**0881841510**	BOX	1				
2	**1653601395**	LOCK	1				
2-1	**1700100019**	KEY	1				
4	**1150420612**	SCREW	4				
7	**1654605010**	RUBBER, sash	1				sold by the meter
	T8e101						

silverhorn.co.uk

AIR CONDITIONER (1/5) (compressor)

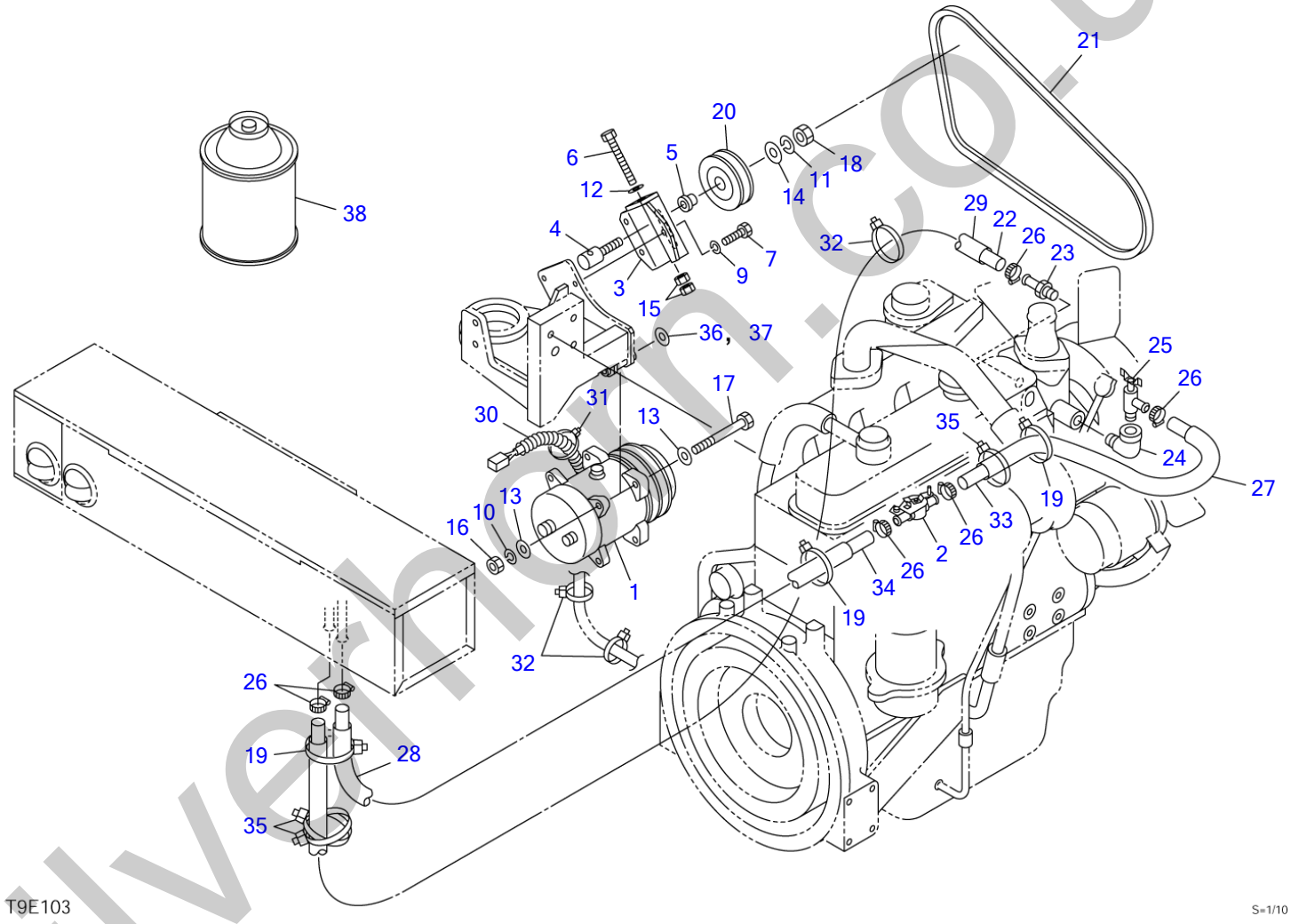

silverhorn.co.uk

AIR CONDITIONER (1/5) (compressor)

Item	Part number	Description	Q'ty	Chan.	Serial No.	Serv.	Remarks
0	0882460100	COMPRESSOR ASSY	1				X08824-60100-6
1	1911506010	・COMPRESSOR	1				
2	1911506008	・VALVE	1				
3	0564618790	・BRACKET	1				
4	0564619210	・SHAFT	1				
5	0564619240	・COLLAR	1				
6	1100440810	・BOLT	1				
7	1100040825	・BOLT	3				
9	1140020008	・WASHER, spring	3				
10	1140020010	・WASHER, spring	2				
11	1140020012	・WASHER, spring	1				
12	1141110008	・WASHER	1				
13	1141110010	・WASHER	4				
14	1141110012	・WASHER	1				
15	1130040008	・NUT	2				
16	1130040010	・NUT	2				
17	1100141005	・BOLT	2				
18	1130040012	・NUT	1				
19	1652201007	・BAND	3				
20	1911505700	・PULLEY	1				
21	1911506330	・V-BELT	1				
22	1911511890	・HOSE (1900mm)	1			M	sold by the meter
23	0007224009	・ADAPTOR	1				
24	1501300003	・ELBOW	2				
25	1911502100	・VALVE	1				
26	1911500500	・CLAMP	6				
27	1531325055	・PROTECTOR	1				sold by the meter
28	1531325060	・PROTECTOR	1				sold by the meter
29	1531325180	・PROTECTOR	1				sold by the meter
30	1703210720	・PROTECTOR	1				sold by the meter
31	1652231100	・PROTECTOR	1				sold by the meter
32	1652231250	・BAND	3				
33	1911501865	・HOSE (650mm)	1			M	sold by the meter
34	1911501870	・HOSE (700mm)	1			M	sold by the meter
35	1652201008	・BAND	3				
36	0003600222	・SHIM	AR				t=0.2mm
37	0003600223	・SHIM	AR				t=0.3mm
38	1919055000	・GAS, coolant	8				100g
	T9e105						

silverhorn.co.uk

AIR CONDITIONER (2/5) (condenser; 21400011-21404706)

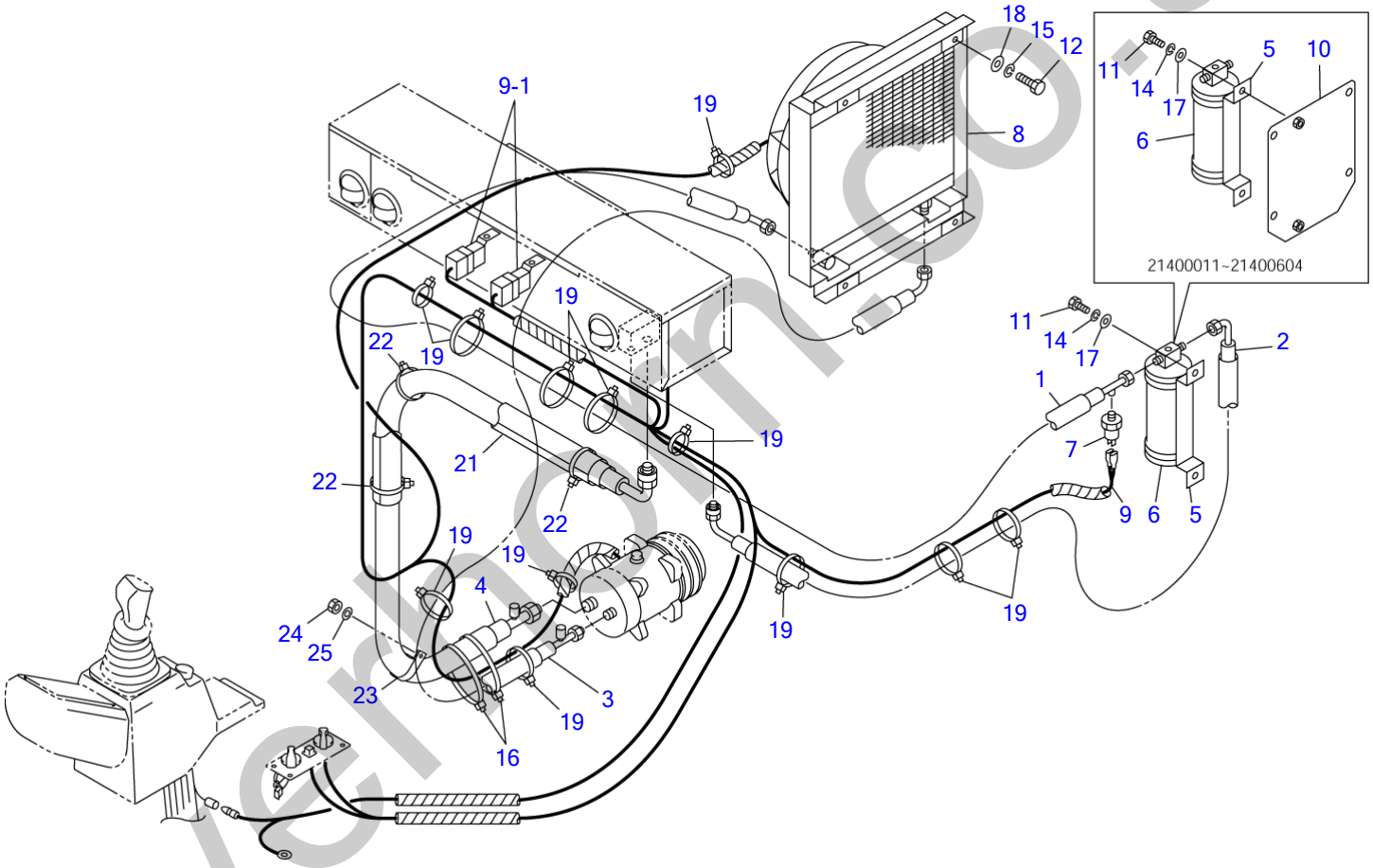

silverhomes.co.uk

AIR CONDITIONER (2/5) (condenser; 21400011-21404706)

Item	Part number	Description	Q'ty	Chan.	Serial No.	Serv.	Remarks
0	0882460200	CONDENSER ASSY	1				X08824-60200-3
1	1911505931	・HOSE ASSY	1				
	1911505601	・・O-RING	1				
2	1911505932	・HOSE ASSY	1				
	1911505601	・・O-RING	1				
3	1911505933	・HOSE ASSY	1				
	1911505602	・・O-RING	1				
4	1911505934	・HOSE ASSY	1				
	1911505603	・・O-RING	1				
5	1911506005	・BRACKET	1				
6	1911505511	・DRYER	1				
7	1911505514	・SWITCH, pressure	1				
8	1911506080	・CONDENSER ASSY	1				see page (4/5)
9	1911505910	・HARNESS, wiring	1				
9-1	1911506041	・・RELAY	2				
10	0882460250	・BRACKET	1		21400011~21400604		
11	1100040616	・BOLT	2		21400011~21400604		
	1100040612	・BOLT	2		21400605~		
12	1100040820	・BOLT	4				
14	1140020006	・WASHER, spring	2				
15	1140020008	・WASHER, spring	4				
16	1652201008	・BAND	2				
17	1141110006	・WASHER	2				
18	1141110008	・WASHER	4				
19	1652231250	・BAND	10				
21	0882460210	・INSULATION	1				
22	1533700057	・BAND	3				
23	1711900097	・CLAMP	1				
24	1130040010	・NUT	1				
25	1140020010	・WASHER, spring	1				
	T9e114						

silverhorn.co.uk

AIR CONDITIONER (2/5) (condenser; 21404707-)

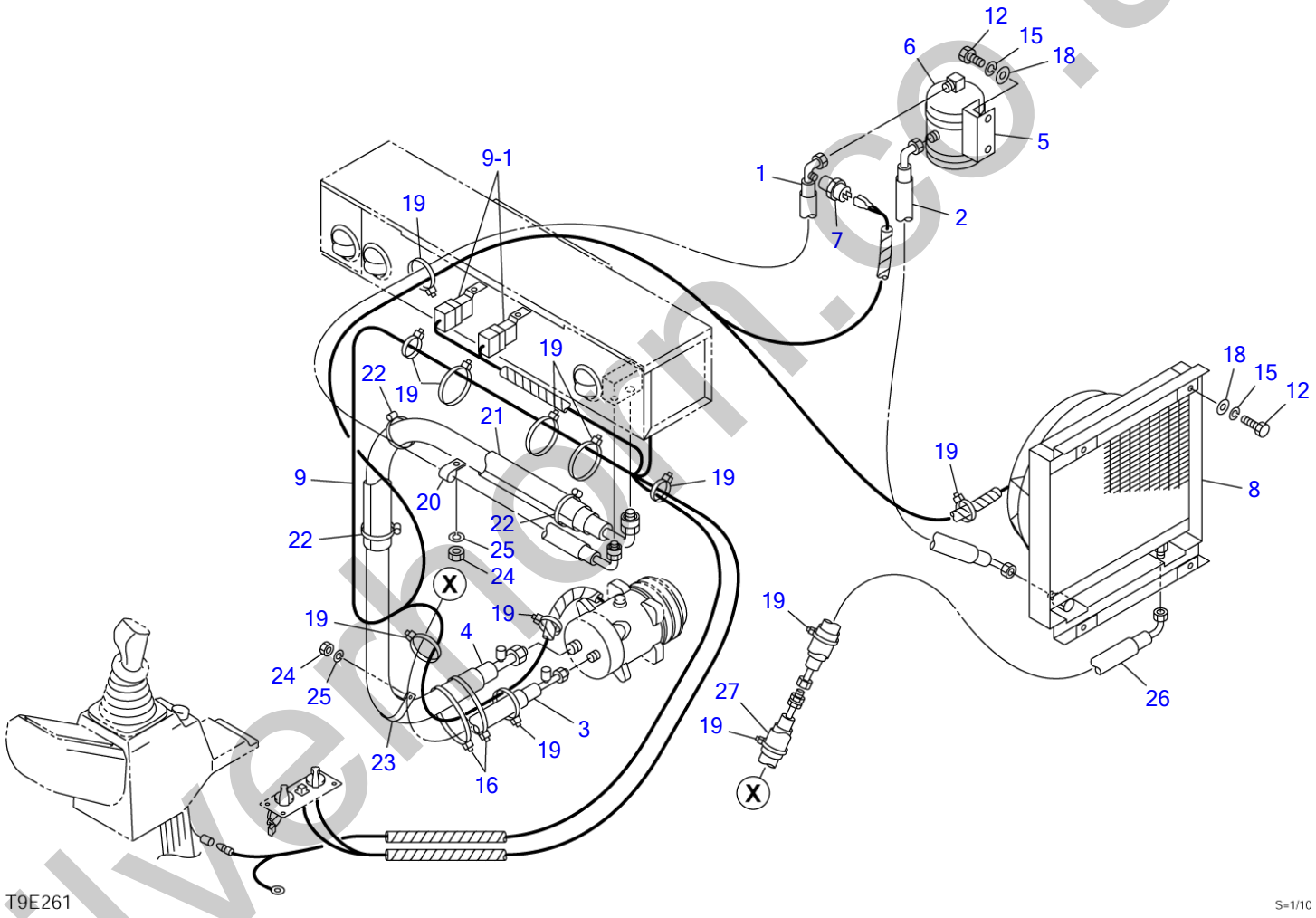

silverlean.co.uk

AIR CONDITIONER (2/5) (condenser; 21404707-)

Item	Part number	Description	Q'ty	Chan.	Serial No.	Serv.	Remarks
0	0882460700	CONDENSER ASSY	1			M	X08824-60700-1
1	1911508421	・HOSE ASSY	1				
	1911505601	・・O-RING	1				
2	1911508432	・HOSE ASSY	1				
	1911505601	・・O-RING	1				
3	1911508913	・HOSE ASSY	1				
	1911505602	・・O-RING	1			M	
4	1911505934	・HOSE ASSY	1				
	1911505603	・・O-RING	1				
5	0880465610	・BRACKET	1				
6	1911508311	・DRYER	1				
7	1911505514	・SWITCH, pressure	1				
8	1911506080	・CONDENSER ASSY	1				see page (4/5)
9	1911508410	・HARNESS, wiring	1				
9-1	1911506041	・・RELAY	2				
12	1100040825	・BOLT	6				
15	1140020008	・WASHER, spring	6				
16	1652201008	・BAND	2				
18	1141110008	・WASHER	6				
19	1652231250	・BAND	12			M	
20	1711900071	・CLAMP	1			M	
21	0882460210	・INSULATION	1				
22	1533700057	・BAND	3				
23	1711900097	・CLAMP	1				
24	1130040010	・NUT	2			M	
25	1140020010	・WASHER, spring	2			M	
26	1911508914	・HOSE ASSY	1				
	1911515602	・・O-RING	1				
27	1531335025	・PROTECTOR	1				sold by the meter
	T9e261						

silverhorn.co.uk

AIR CONDITIONER (3/5) (air conditioner unit)

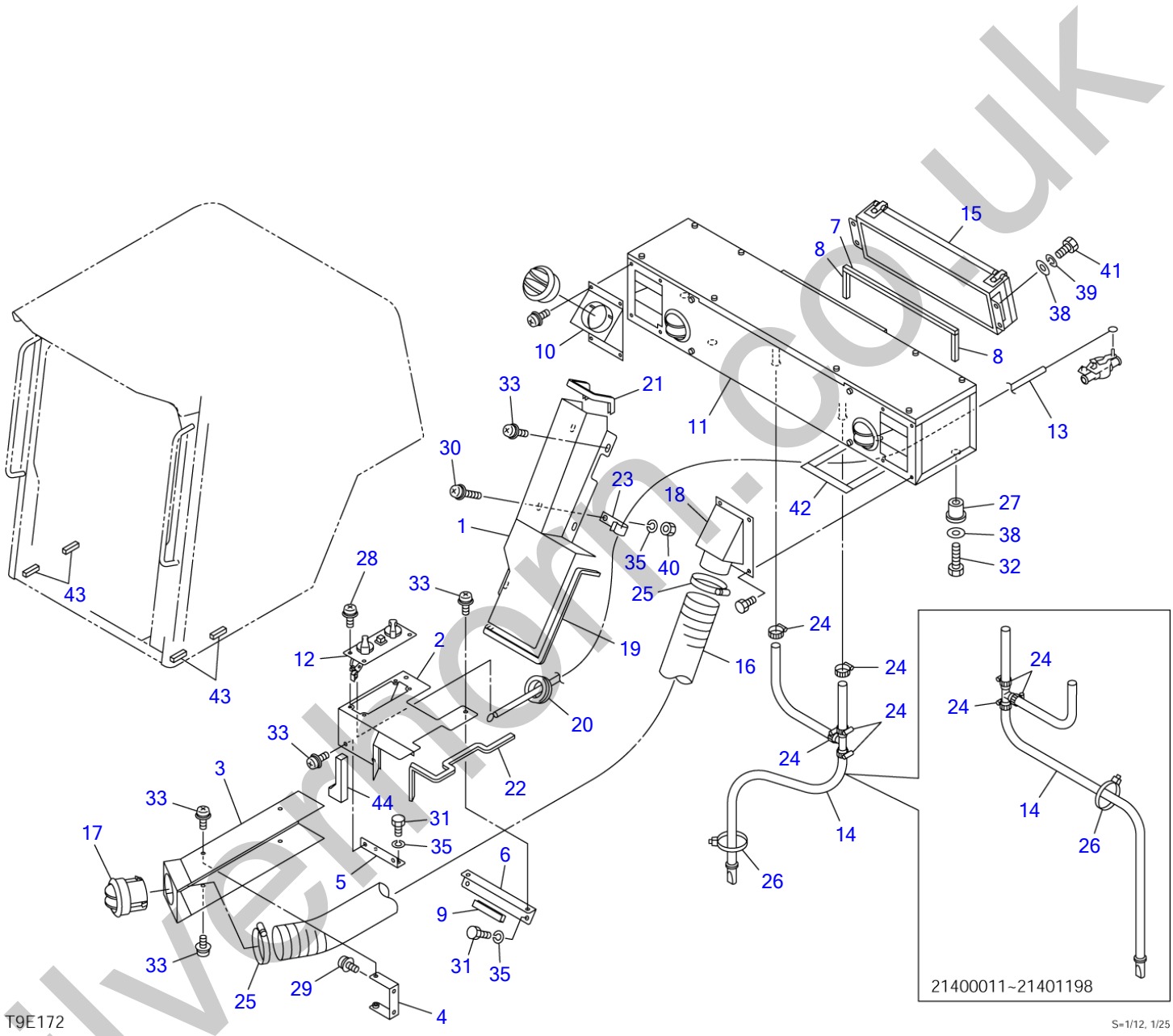

silverthorn.co.uk

AIR CONDITIONER (3/5) (air conditioner unit)

Item	Part number	Description	Q'ty	Chan.	Serial No.	Serv.	Remarks
0	0880465300	UNIT ASSY, air conditioner	1		21400011~21401198		X08804-65300-4
	0882460300	UNIT ASSY, air conditioner	1		21401199~		X08824-60300-3
1	0880465310	・COVER	1				
2	0881464320	・COVER	1				
3	0881464330	・COVER	1				
4	0881464340	・BRACKET	2				
5	0881464350	・BRACKET	1				
6	0881464360	・BRACKET	1				
7	0881464370	・URETHANE	1				
8	0881464380	・URETHANE	2				
9	1653916008	・TRIM	1				
10	1911505920	・ADAPTOR, hose	1				
11	1911506090	・UNIT, air conditioner	1				see page (4/5)
12	1911506020	・PANEL ASSY	1				see page (5/5)
13	1911506006	・CABLE, control	1				
14	1911506030	・TUBE ASSY	1				
15	1911506050	・BOX	1				see page (5/5)
16	1911508559	・HOSE	1				
17	1911506060	・LOUVER	1				
18	0880465320	・ADAPTOR	1				
19	1653916049	・TRIM	1				sold by the meter
20	1652053600	・GROMMET	1				
21	1653916023	・TRIM	1				sold by the meter
22	1653916043	・TRIM	1				sold by the meter
23	0007300010	・CLAMP	1				
24	1911500500	・CLAMP	5				
25	1533700076	・CLAMP	2				
26	1652231250	・BAND	1		21400011~21401198		
	1652201008	・BAND	1		21401199~		
27	1652520008	・GROMMET	4				
28	1150420510	・SCREW	4				
29	1150420610	・SCREW	4				
30	1150420625	・SCREW	1				
31	1100040610	・BOLT	4				
32	1100040830	・BOLT	4				
33	1150420614	・SCREW	12				
35	1140020006	・WASHER, spring	5				
38	1141110008	・WASHER	8				
39	1140020008	・WASHER, spring	4				
40	1130040006	・NUT	1				
41	1100040816	・BOLT	4				
42	1654313013	・SPONGE	4				sold by the meter
43	1654306008	・SPONGE	4		21400011~21406570		sold by the meter
44	0880465344	・INSULATOR	2				
	T9e174						

silverthorn.co.uk

AIR CONDITIONER (4/5)

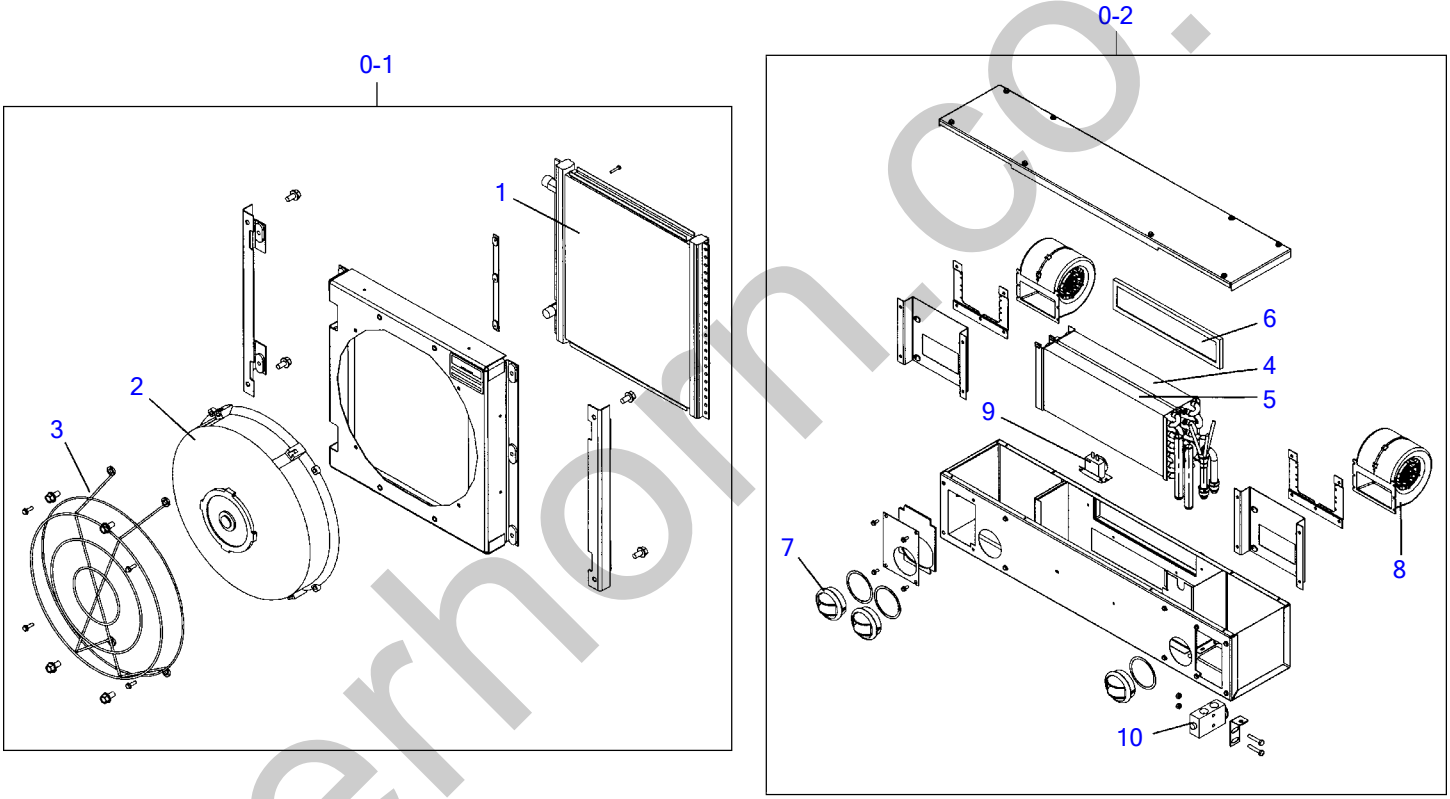

T8E401

S=free

silverhorn.co.uk

AIR CONDITIONER (4/5)

Item	Part number	Description	Q'ty	Chan.	Serial No.	Serv.	Remarks
0-1	1911506080	CONDENSER ASSY	1				
1	1911505503	・CONDENSER	1				
2	1911506083	・MOTOR	1				
3	1911505505	・GURD	1				
0-2	1911506090	UNIT, air conditioner	1				
4	1911506091	・CORE	1				
5	1911506092	・CORE	1				
6	1911506095	・FILTER	1				
7	1911506012	・LOUVER	2				
8	1911506096	・MOTOR	2				
9	1911505421	・THERMOSTAT	1				
10	1911505422	・VALVE	1				
11	1911506089	・HARNESS ASSY, wiring	1				not shown
	T8e401						

silverhorn.co.uk

AIR CONDITIONER (5/5)

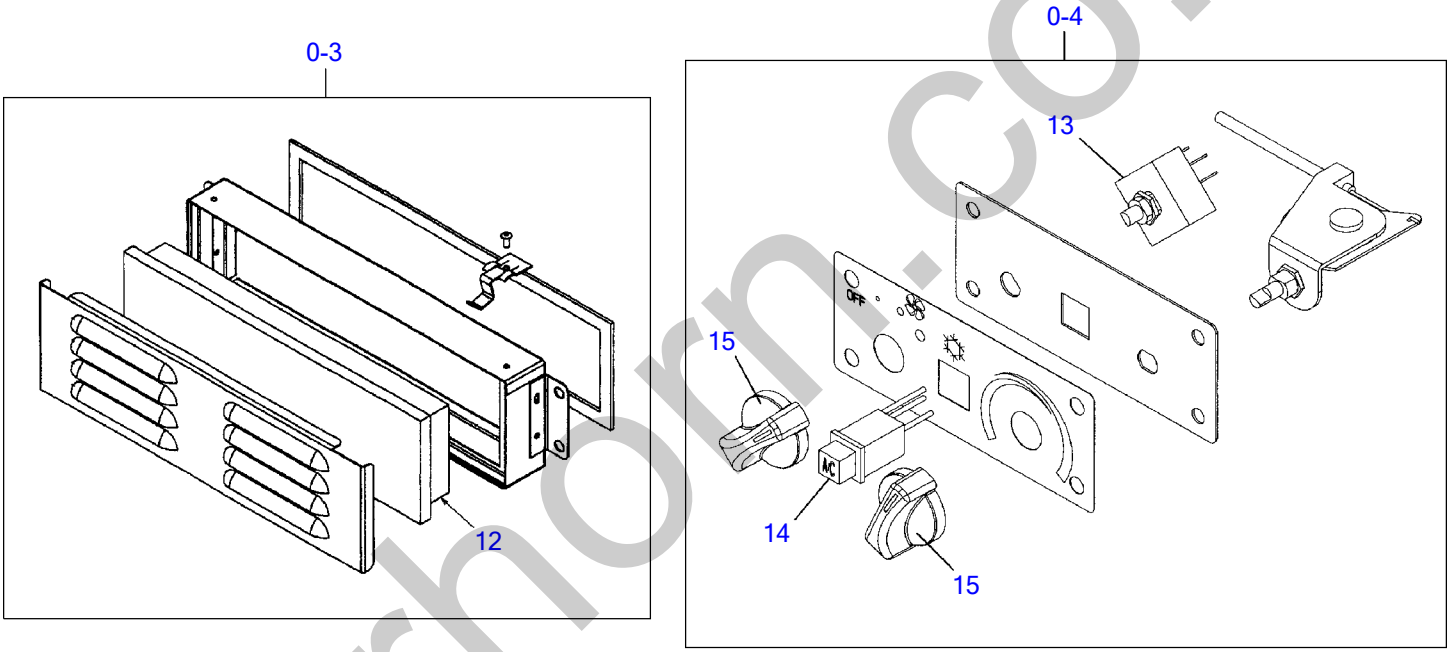

T8E410

S=free

silverhorn.co.uk

AIR CONDITIONER (5/5)

Item	Part number	Description	Q'ty	Chan.	Serial No.	Serv.	Remarks
0-3	1911506050	BOX	1				
12	1911506052	・FILTER	1				
0-4	1911506020	PANEL ASSY	1				
13	1911506027	・SWITCH	1				
14	1911505767	・SWITCH	1				
15	1911505763	・KNOB	2				
	T8e410						

silverhorn.co.uk

ARM

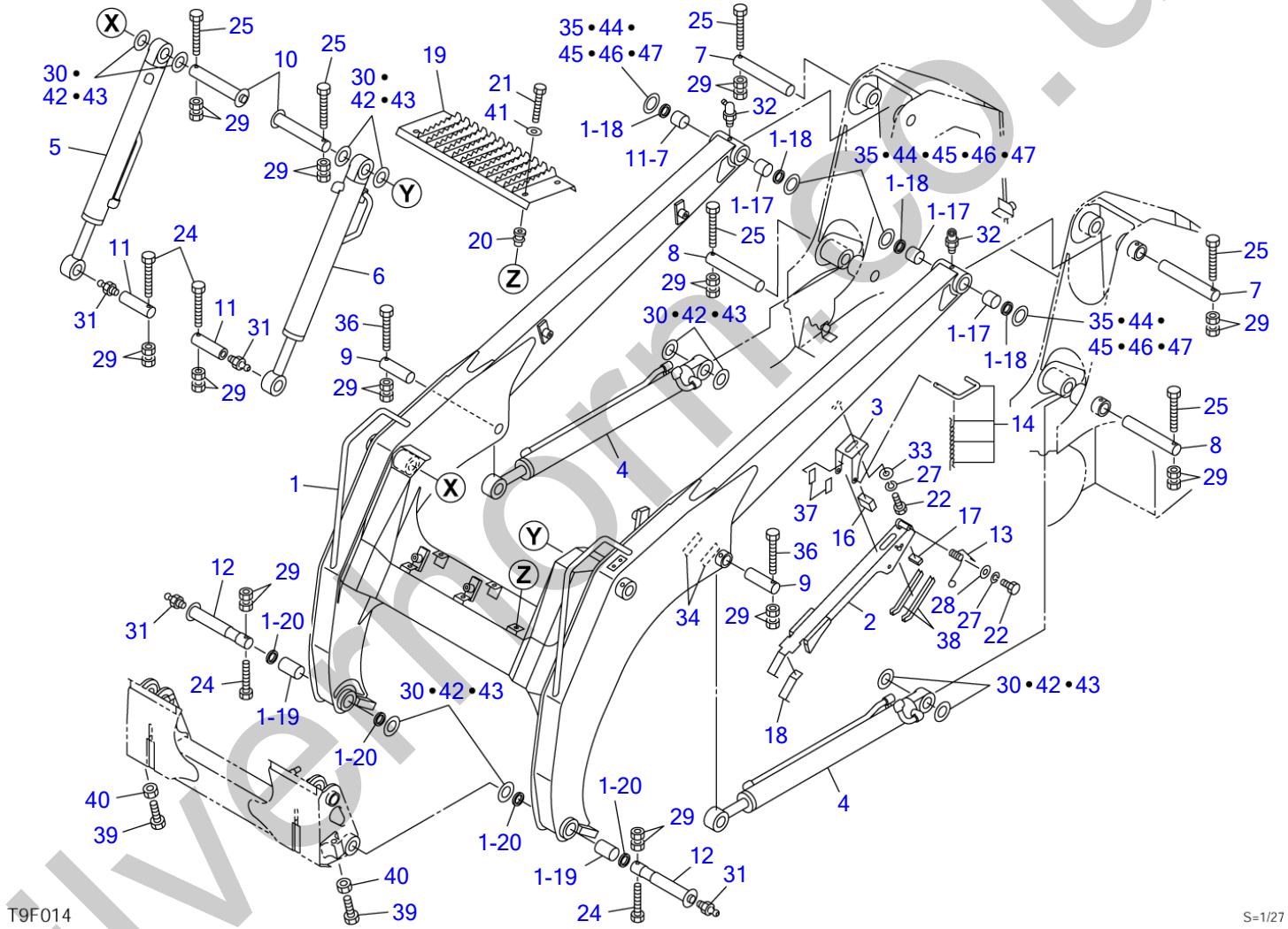

silvermorn.co.uk

ARM

Item	Part number	Description	Q'ty	Chan.	Serial No.	Serv.	Remarks
		ARM ASSY					X08826-00000-12
1	0882601100	ARM	1		21400011~21400568		
	0882601700	ARM	1		21400569~		
1-17	0002400040	・BUSHING	4				
1-18	1432200045	・SEAL, dust	4				
1-19	0002400068	・BUSHING	2				
1-20	1432200040	・SEAL, dust	4				
2	0882601500	LOCK	1		21400011~21400741		
	0882601550	LOCK	1	(H)	21400742~		
3	0881604650	BRACKET	1				
4	1900085600	CYLINDER, arm	2				
5	1900085700	CYLINDER, bucket (R.H.)	1				
6	1900085800	CYLINDER, bucket (L.H.)	1				
7	0011504275	PIN	2				
8	0001603270	PIN	2				
9	0001603135	PIN	2				
10	0001090003	PIN	2				
11	0001673002	PIN	2				
12	0011904008	PIN	2				
13	0007000114	SPRING	1				
14	0881604670	PIN ASSY	1				
16	0881604580	URETHANE	1				
17	0881602017	RUBBER	1				
18	0880606018	RUBBER	1				
19	0882600800	STEP	1	(L)	21400011~21400382		
	0880606800	STEP	1	(H)	21400383~		
20	1652520008	BAND	6				
21	1100040830	BOLT	6				
22	1100040816	BOLT	3				
24	1103041075	BOLT	4				
25	1103041095	BOLT	6				
27	1140020008	WASHER, spring	3				
28	0003608252	WASHER	1				
29	1130240010	NUT	24				
30	0003600176	SHIM	AR				t=1.0mm
31	1560001000	FITTING, grease	4				
32	1560001675	FITTING, grease	2				
33	1141110008	WASHER	2				
34	0880606034	RUBBER	1				
35	0003600172	SHIM	AR				t=1.0mm
36	1103041080	BOLT	2				
37	0881604036	RUBBER	2				
38	1654629020	TRIM	2				sold by the meter
39	0881962656	BOLT	2				
40	0881604035	NUT	2				
41	0003608252	WASHER	6				
42	0003600035	SHIM	AR				t=0.2mm
43	0003600036	SHIM	AR				t=0.5mm
44	0003600171	SHIM	AR				t=0.2mm
45	0003600091	SHIM	AR				t=0.5mm
46	0003600184	SHIM	AR				t=3.2mm
47	0003600185	SHIM	AR				t=4.5mm
	T9f015						

silverthorn.co.uk

QUICK ATTACHMENT

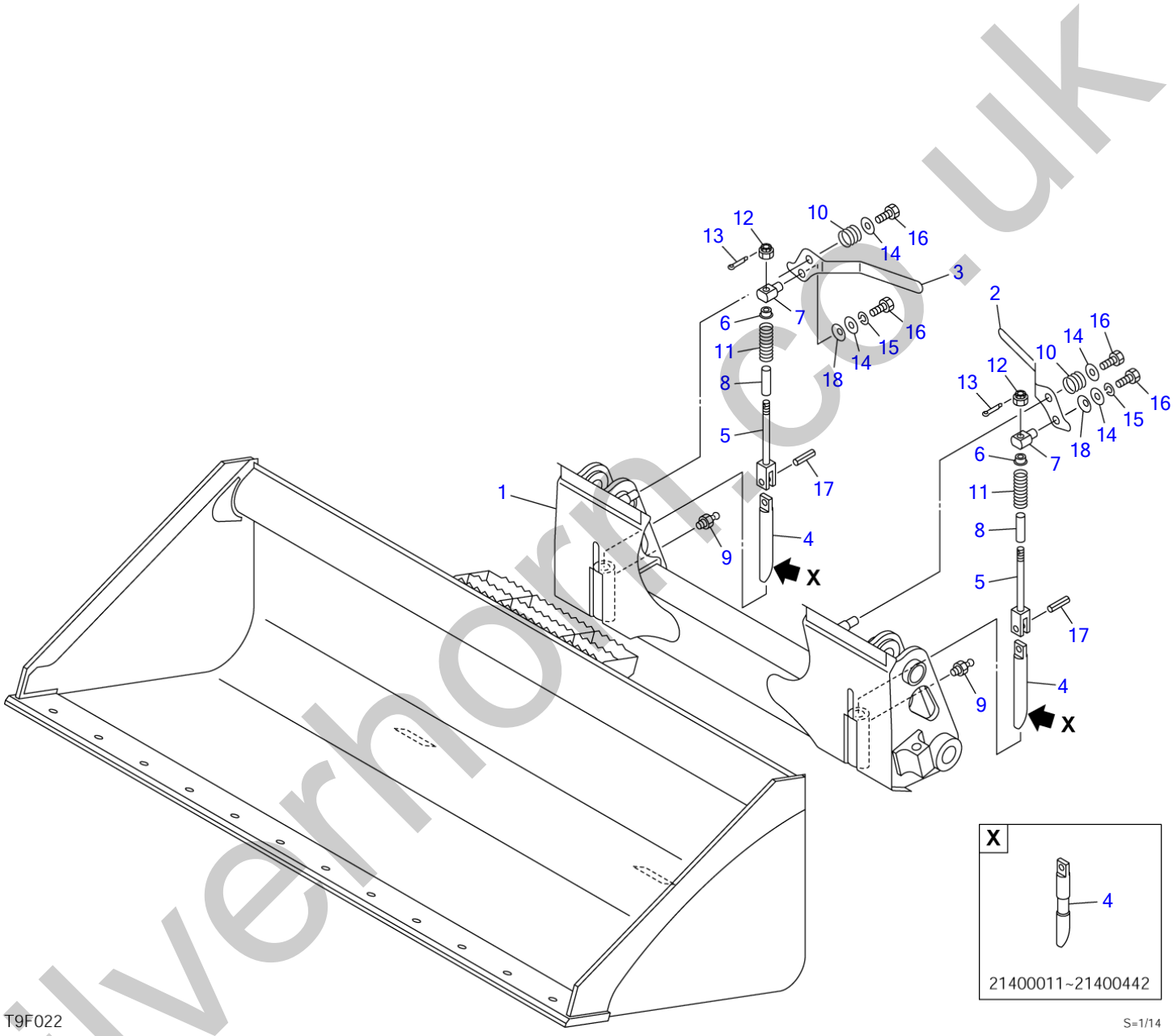

silverhorn.co.uk

QUICK ATTACHMENT

Item	Part number	Description	Q'ty	Chan.	Serial No.	Serv.	Remarks
0	0882610000	ATTACHMENT ASSY, quick (for EU)	1			M	X08826-10000-5
	0882611000	ATTACHMENT ASSY, quick (for US)	1			M	X08826-11000-5
1	0882610600	・BRACKET	1				for EU
	0882611100	・BRACKET	1				USŒüfor US
2	0881612040	・LEVER(L.H.)	1				
3	0881612050	・LEVER(R.H.)	1				
4	0880612040	・PIN	2		21400011~21400442		
	0881612150	・PIN	2	(H)	21400443~		
5	0881612060	・YOKE	2				
6	0881612070	・WASHER	2				
7	0880612070	・PIN	2				
8	0880612080	・PIPE	2		21400011~21400382		
	0881612160	・PIPE	2	(H)	21400383~		
9	1560001000	・FITTING, grease	2				
10	0007000016	・SPRING	2				
11	0007000076	・SPRING	2		21400011~21400382		
	0007000119	・SPRING	2	(H)	21400383~		
12	1132630012	・NUT	2				
13	1210013225	・PIN, split	2				
14	0003600025	・WASHER	4				
15	1140120010	・WASHER, spring	2				
16	1100041020	・BOLT	4				
17	1213001250	・PIN, spring	2				
18	1225120018	・WASHER, conical	2			M	
	T9f023						

silverhorn.co.uk

BUCKET

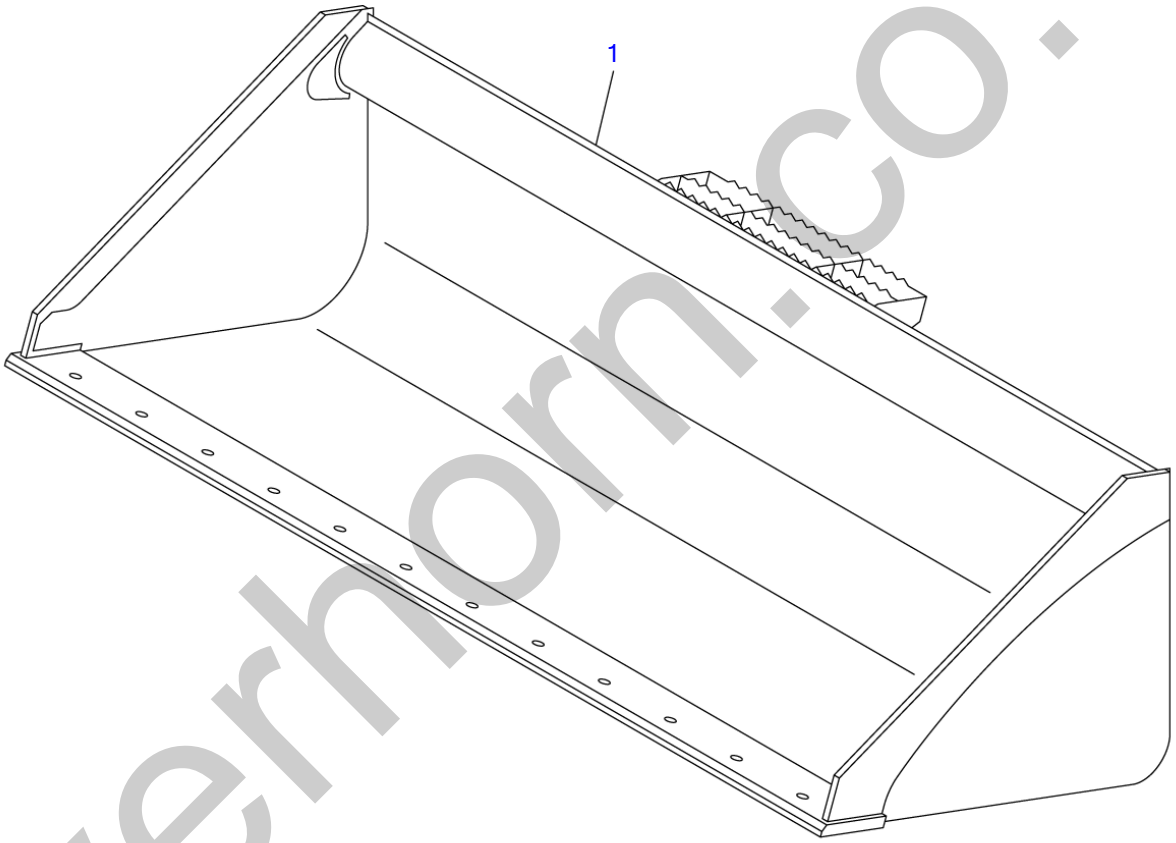

T9F030

S=free

silverhorn.co.uk

BUCKET

Item	Part number	Description	Q'ty	Chan.	Serial No.	Serv.	Remarks
		BUCKET ASSY (for EU)					X08826-20000-2
		BUCKET ASSY (for US)					X08826-20500-2
1	0882620100	BUCKET	1				for EU
	0882620600	BUCKET	1				USŒüfor US
	T9f031						

silverhorn.co.uk

PIPING; ARM (21400011-21400568)

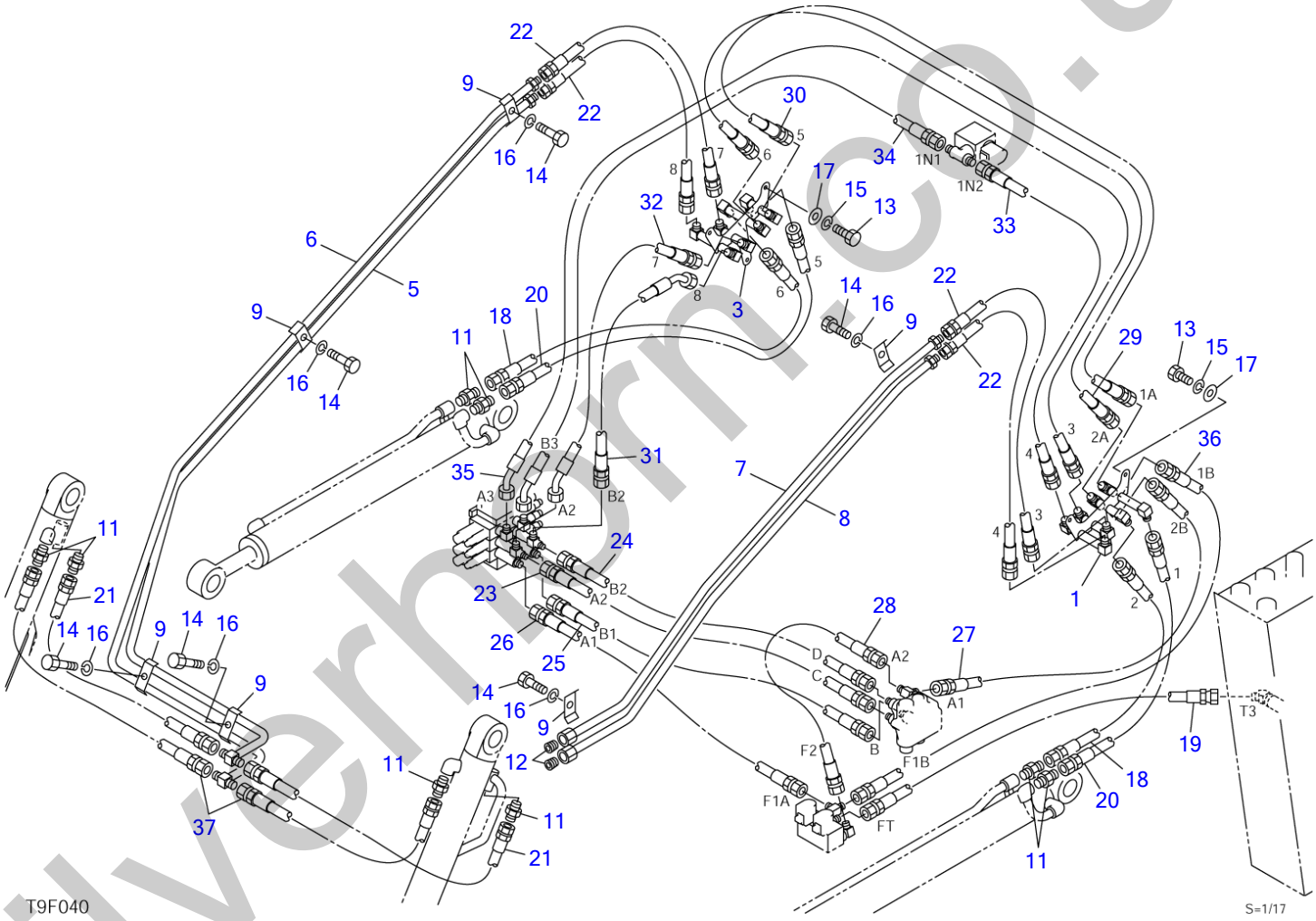

silverhorm.co.uk

PIPING; ARM (21400011-21400568)

Item	Part number	Description	Q'ty	Chan.	Serial No.	Serv.	Remarks
		PIPING ASSY					X08827-30000-2
1	0882730500	BRACKET (L.H.)	1				
3	0882730600	BRACKET (R.H.)	1				
5	0882730700	PIPE	1				
6	0882730750	PIPE	1				
7	0882730800	PIPE	1				
8	0882730850	PIPE	1				
9	0880736090	CLAMP	6				
11	1515600202	ADAPTOR	8				
	1420010180	・O-RING	1				
12	1501810004	PLUG	2				
13	1100040816	BOLT	6				
14	1100041025	BOLT	7				
15	1140020008	WASHER, spring	6				
16	1140020010	WASHER, spring	7				
17	1141110008	WASHER	6				
18	1801540064	HOSE ASSY	2				
19	0882730190	HOSE ASSY	1				18010-24094
20	1801540058	HOSE ASSY	2				
21	0882730210	HOSE ASSY	2				18017-40062
22	0882730220	HOSE ASSY	4				18015-70070
23	0882730230	HOSE ASSY	1				18015-20067
24	0882730240	HOSE ASSY	1				18015-20068
25	0882730250	HOSE ASSY	1				18015-70068
26	0881733033	HOSE ASSY	1				
27	0882730275	HOSE ASSY	1				18015-70084
28	0882730280	HOSE ASSY	1				18015-40054
29	0882730290	HOSE ASSY	1				18015-40122
30	0882730300	HOSE ASSY	1				18015-40122
31	0882730315	HOSE ASSY	1				18015-77058
32	0882730325	HOSE ASSY	1				18015-77066
33	0882730330	HOSE ASSY	1				18015-70060
34	0882730340	HOSE ASSY	1				18015-77066
35	0882730350	HOSE ASSY	1				18015-77144
36	0882730360	HOSE ASSY	1				18015-70090
37	0882730370	HOSE ASSY	2				18017-40064
	T9f040						

silverhorn.co.uk

PIPING; ARM (1/2) (21400569-)

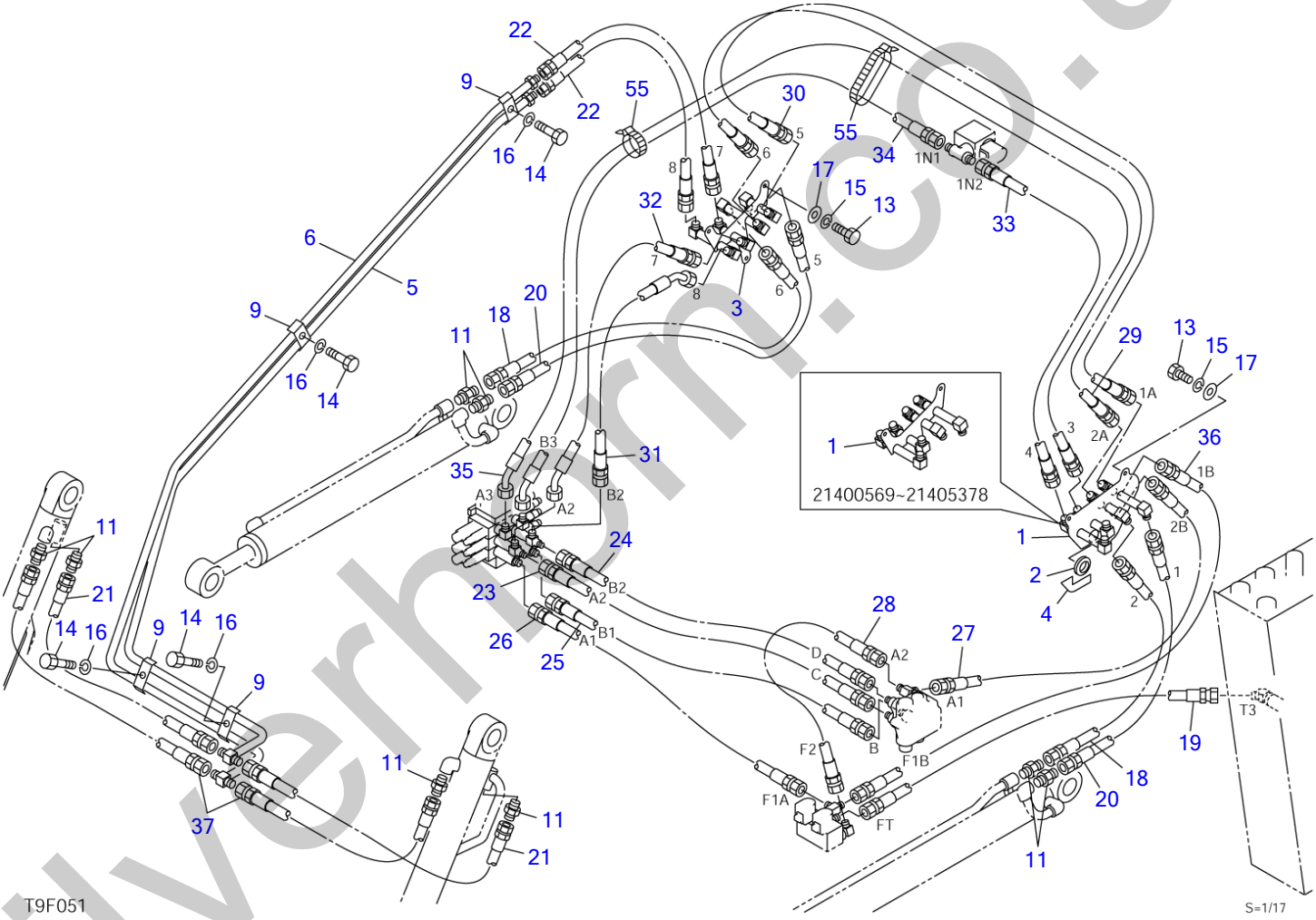

silverhorn.co.uk

PIPING; ARM (1/2) (21400569-)

Item	Part number	Description	Q'ty	Chan.	Serial No.	Serv.	Remarks
		PIPING ASSY					X08827-32000-9
		PIPING ASSY (with coupler)					X08827-32300-9
1	0882730500	BRACKET (L.H.)	1		21400569~21405378		
	0882732060	BRACKET (L.H.)	1		21405379~		
2	1652061035	BUSHING	1		21405379~		
3	0882730600	BRACKET (R.H.)	1				
4	0882732070	RUBBER	1		21405379~		
5	0882730700	PIPE	1				
6	0882730750	PIPE	1				
9	0880736090	CLAMP	4				
11	1515600202	ADAPTOR	8				
	1420010180	・O-RING	1				
13	1100040820	BOLT	6				
14	1100041025	BOLT	4				
15	1140020008	WASHER, spring	6				
16	1140020010	WASHER, spring	4				
17	1141110008	WASHER	6				
18	1801540064	HOSE ASSY	2				
19	0882730190	HOSE ASSY	1				18010-24094
20	1801540058	HOSE ASSY	2				
21	0882730210	HOSE ASSY	2				18017-40062
22	0882730220	HOSE ASSY	2				18015-70070
23	0882730230	HOSE ASSY	1				18015-20067
24	0882730240	HOSE ASSY	1				18015-20068
25	0882730250	HOSE ASSY	1				18015-70068
26	0881733033	HOSE ASSY	1				
27	0882730275	HOSE ASSY	1				18015-70084
28	0882730280	HOSE ASSY	1				18015-40054
29	0882730290	HOSE ASSY	1				18015-40123
30	0882730300	HOSE ASSY	1				18015-40123
31	0882730315	HOSE ASSY	1				18015-77058
32	0882730325	HOSE ASSY	1				18015-77066
33	0882730330	HOSE ASSY	1				18015-70061
34	0882730340	HOSE ASSY	1				18015-77066
35	0882730350	HOSE ASSY	1				18017-77141
36	0882730360	HOSE ASSY	1				18015-70090
37	0882730370	HOSE ASSY	2				18017-40064
55	1652231250	BAND	2				
	T9f053						

silverhorn.co.uk

PIPING; ARM (2/2) (21400569-)

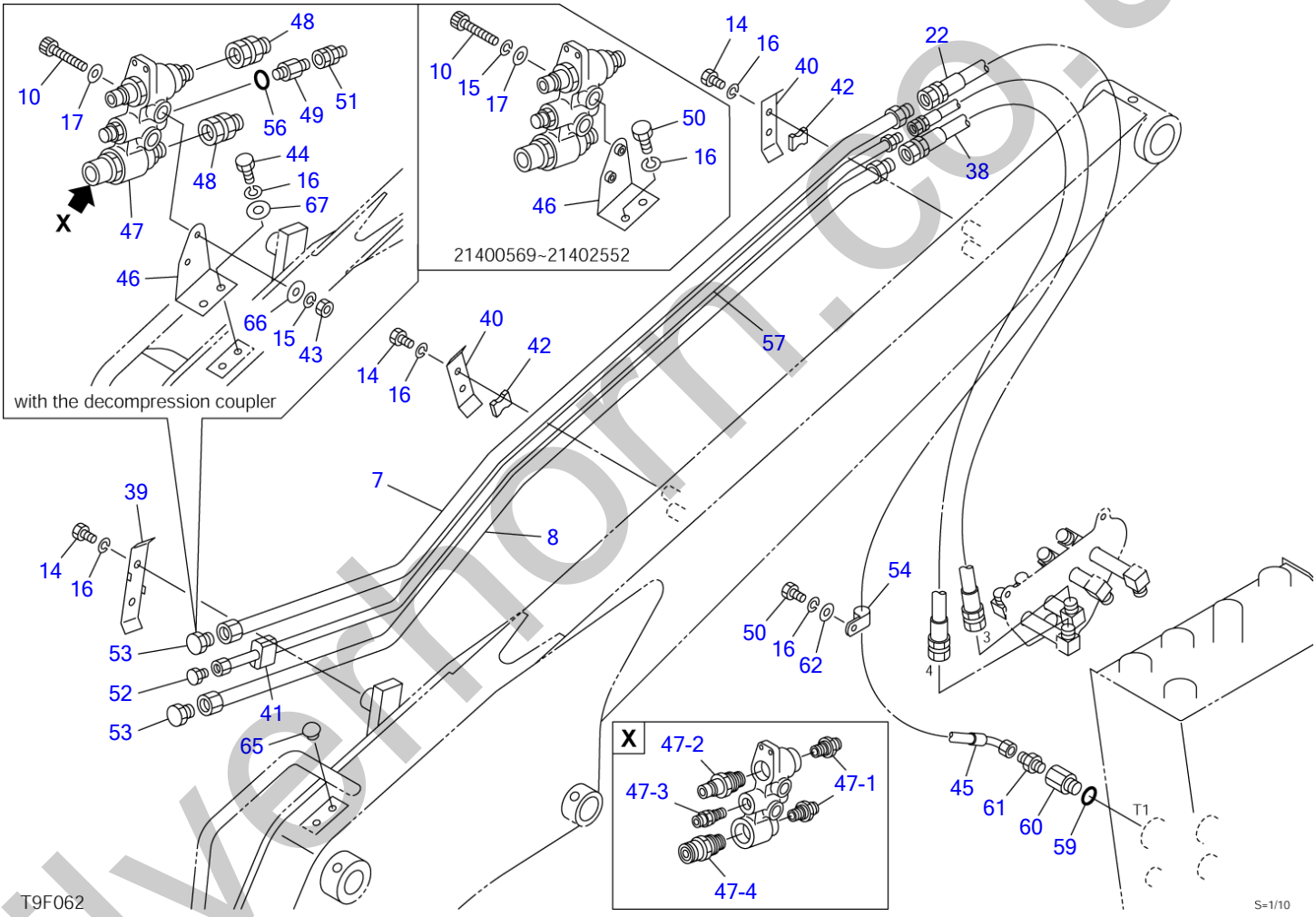

silverhorn.co.uk

PIPING; ARM (2/2) (21400569-)

Item	Part number	Description	Q'ty	Chan.	Serial No.	Serv.	Remarks
		PIPING ASSY					X08827-32000-9
		PIPING ASSY (with coupler)					X08827-32300-9
7	0882732010	PIPE	1				
8	0882732020	PIPE	1				
10	1110040865	SCREW, cap	2				with coupler
14	1100041025	BOLT	6				
15	1140020008	WASHER, spring	2				with coupler
16	1140020010	WASHER, spring	7				without coupler
	1140020010	WASHER, spring	9				with coupler
17	1141110008	WASHER	2				with coupler
22	0882730220	HOSE ASSY	1				18015-70070
38	0882732040	HOSE ASSY	1				G-G ƒÓ15-720
39	0881733550	CLAMP	1				
40	0880738130	CLAMP	2				
41	0880738140	RUBBER	1				
42	0880738150	RUBBER	2				
43	1130040008	NUT	2	a	21402553~		with coupler
44	1100041020	BOLT	2	a	21402553~		with coupler
45	0882732050	HOSE ASSY	1				18010-89119
46	0880738160	BRACKET	1	A, a			with coupler
47	1901747000	COUPLER, block	1				with coupler
47-1	1901747001	・ADAPTOR	2				with coupler
47-2	1901747002	・ADAPTOR	1				with coupler
47-3	1901747003	・ADAPTOR	1				with coupler
47-4	1901747004	・ADAPTOR	1				with coupler
48	0007236045	ADAPTOR	2				with coupler
49	0007203017	NIPPLE	1				with coupler
	1420310906	・O-RING	1				
50	1100041016	BOLT	1				
51	1511410003	ADAPTOR	1				with coupler
	1420010140	・O-RING	1				
52	1501750003	PLUG	1				without coupler
	1420010140	・O-RING	1				
53	1501750004	PLUG	2				without coupler
	1420010180	・O-RING	1				
54	1711900071	CLAMP	1				
56	1420310906	O-RING	1				with coupler
57	0882732030	PIPE	1				
59	1420010290	O-RING	1				
60	0007213068	BUSHING	1				
61	1515600577	ADAPTOR	1				
	1420010180	・O-RING	1				
62	1141110010	WASHER	1				
65	1652533018	CAP	2				without coupler
66	0003608252	WASHER	2	a	21402553~		with coupler
67	0003600020	WASHER	2	a	21402553~		with coupler
		<<NOTE>>					
		"A" is interchangeable with SET "a".					
	T9f063						

silvermorn.co.uk

PIPING; ARM (for GEHL & MUSTANG; 21400695-)

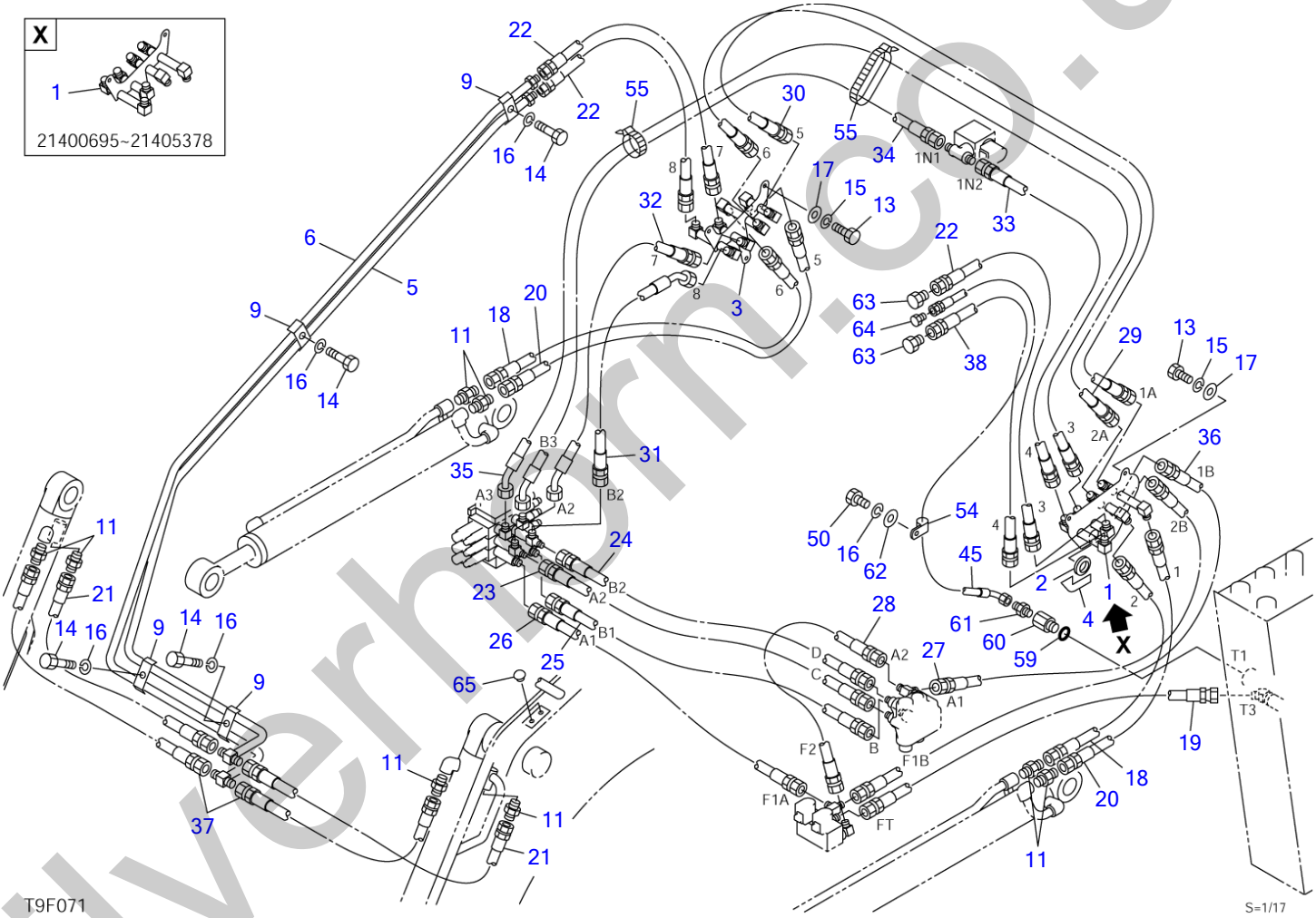

silverhorn.co.uk

PIPING; ARM (for GEHL & MUSTANG; 21400695-)

Item	Part number	Description	Q'ty	Chan.	Serial No.	Serv.	Remarks
		PIPING ASSY					X08827-32500-9
1	0882730500	BRACKET (L.H.)	1		21400695~21405378		
	0882732060	BRACKET (L.H.)	1		21405379~		
2	1652061035	BUSHING	1		21405379~		
3	0882730600	BRACKET (R.H.)	1				
4	0882732070	RUBBER	1		21405379~		
5	0882730700	PIPE	1				
6	0882730750	PIPE	1				
9	0880736090	CLAMP	4				
11	1515600202	ADAPTOR	8				
	1420010180	・O-RING	1				
13	1100040820	BOLT	6				
14	1100041025	BOLT	4				
15	1140020008	WASHER, spring	6				
16	1140020010	WASHER, spring	5				
17	1141110008	WASHER	6				
18	1801540064	HOSE ASSY	2				
19	0882730190	HOSE ASSY	1				18010-24094
20	1801540058	HOSE ASSY	2				
21	0882730210	HOSE ASSY	2				18017-40062
22	0882730220	HOSE ASSY	3				18015-70070
23	0882730230	HOSE ASSY	1				18015-20067
24	0882730240	HOSE ASSY	1				18015-20068
25	0882730250	HOSE ASSY	1				18015-70068
26	0881733033	HOSE ASSY	1				
27	0882730275	HOSE ASSY	1				18015-70084
28	0882730280	HOSE ASSY	1				18015-40054
29	0882730290	HOSE ASSY	1				18015-40123
30	0882730300	HOSE ASSY	1				18015-40123
31	0882730315	HOSE ASSY	1				18015-77058
32	0882730325	HOSE ASSY	1				18015-77066
33	0882730330	HOSE ASSY	1				18015-70061
34	0882730340	HOSE ASSY	1				18015-77066
35	0882730350	HOSE ASSY	1				18017-77141
36	0882730360	HOSE ASSY	1				18015-70090
37	0882730370	HOSE ASSY	2				18017-40064
38	0882732040	HOSE ASSY	1				G-G ƒÓ15-720
45	0882732050	HOSE ASSY	1				18010-89119
50	1100041016	BOLT	1				
54	1711900071	CLAMP	1				
55	1652231250	BAND	2				
59	1420010290	O-RING	1				
60	0007213068	BUSHING	1				
61	1515600577	ADAPTOR	1				
	1420010180	・O-RING	1				
62	1141110010	WASHER	1				
63	1513940004	PLUG	2				
64	1513940003	PLUG	1				
65	1652533018	CAP	2				
	T9f073						

silvethorn.co.uk

PIPING; ARM (1/2) (high flow; 21403459-)

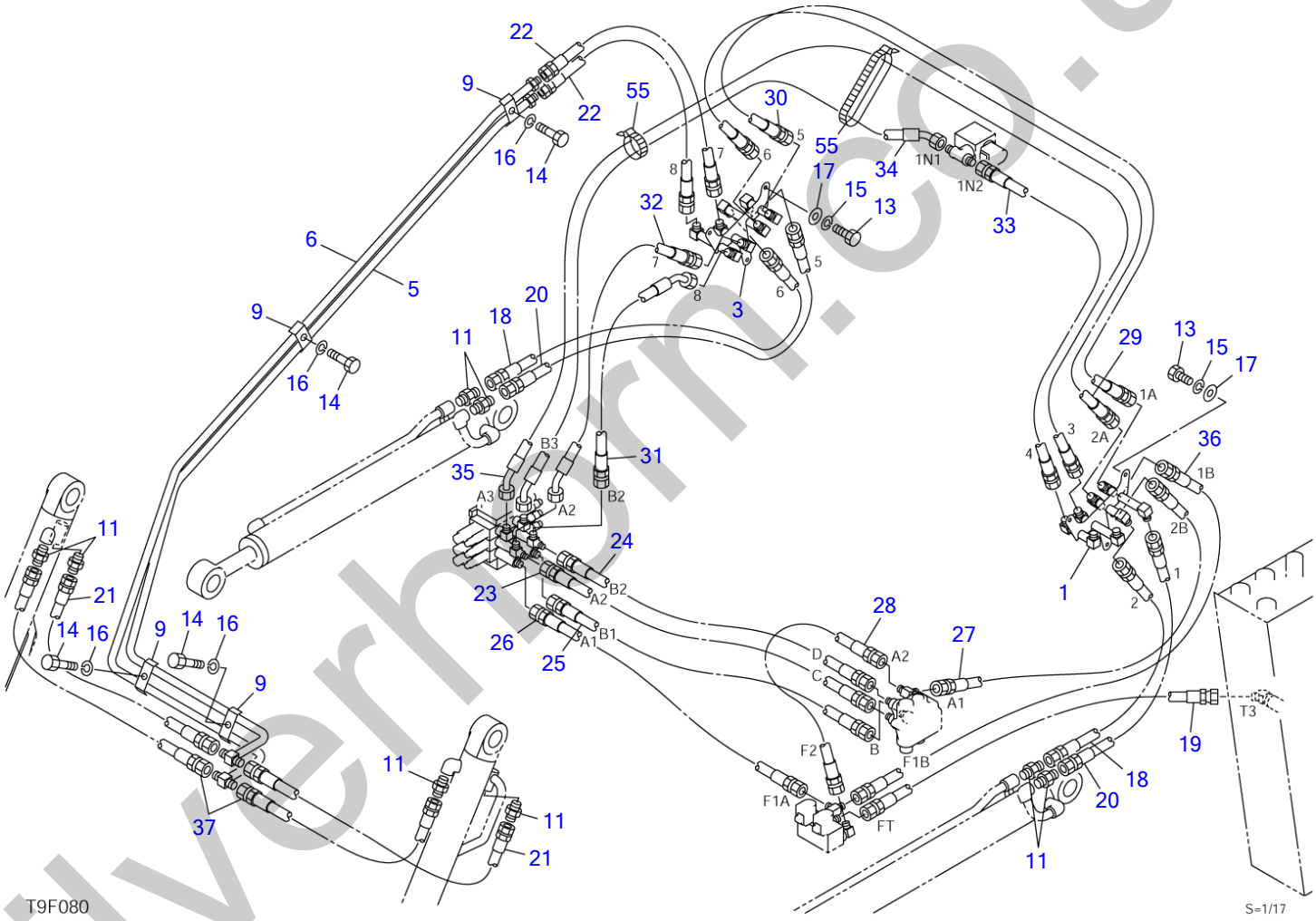

silverhorn.co.uk

PIPING; ARM (1/2) (high flow; 21403459-)

Item	Part number	Description	Q'ty	Chan.	Serial No.	Serv.	Remarks
		PIPING ASSY					X08827-33000-5
1	0882733100	BRACKET (L.H.)	1				
3	0882730600	BRACKET (R.H.)	1				
5	0882730700	PIPE	1				
6	0882730750	PIPE	1				
9	0880736090	CLAMP	4				
11	1515600202	ADAPTOR	8				
	1420010180	▪ O-RING	1				
13	1100040820	BOLT	6				
14	1100041025	BOLT	4				
15	1140020008	WASHER, spring	6				
16	1140020010	WASHER, spring	4				
17	1141110008	WASHER	6				
18	1801540064	HOSE ASSY	2				
19	0882730190	HOSE ASSY	1				18010-24094
20	1801540058	HOSE ASSY	2				
21	0882730210	HOSE ASSY	2				18017-40062
22	0882730220	HOSE ASSY	2				18015-70070
23	0882730230	HOSE ASSY	1				18015-20067
24	0882730240	HOSE ASSY	1				18015-20068
25	0882730250	HOSE ASSY	1				18015-70068
26	0881733033	HOSE ASSY	1				
27	0882730275	HOSE ASSY	1				18015-70084
28	0882730280	HOSE ASSY	1				18015-40054
29	0882730290	HOSE ASSY	1				18015-40123
30	0882730300	HOSE ASSY	1				18015-40123
31	0882730315	HOSE ASSY	1				18015-77058
32	0882730325	HOSE ASSY	1				18015-77066
33	0882733330	HOSE ASSY	1				18015-70065
34	0882733340	HOSE ASSY	1				G45-G45 ƒÓ15-560
35	0882730350	HOSE ASSY	1				18017-77141
36	0882730360	HOSE ASSY	1				18015-70090
37	0882730370	HOSE ASSY	2				18017-40064
55	1652231250	BAND	2				
	T9f081						

silverhorn.co.uk

PIPING; ARM (2/2) (high flow; 21403459-)

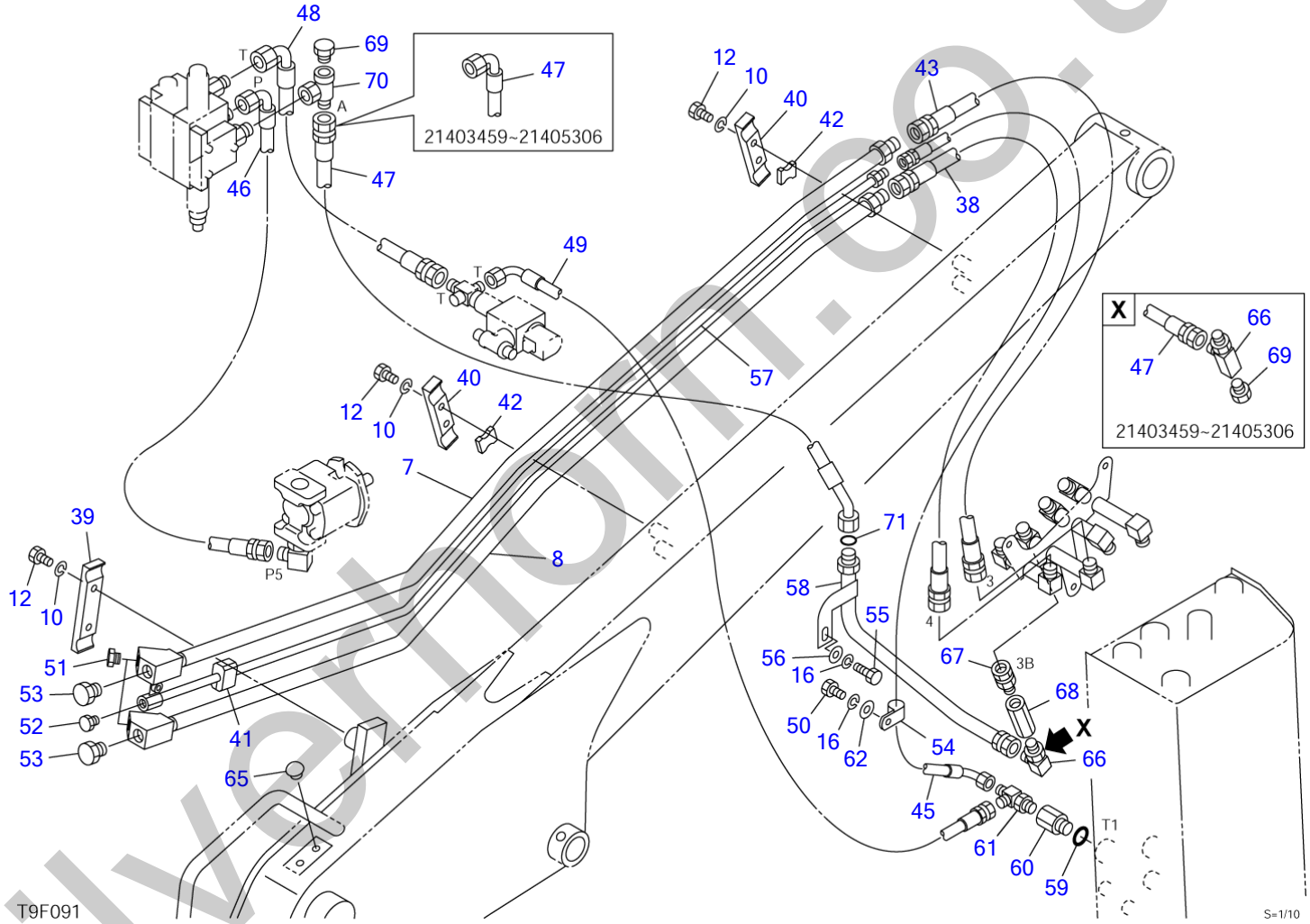

silverhorn.co.uk

PIPING; ARM (2/2) (high flow; 21403459-)

Item	Part number	Description	Q'ty	Chan.	Serv.	Remarks
		PIPING ASSY				X08827-33000-5
7	0882731700	PIPE	1			
8	0882731710	PIPE	1			
10	1140420010	WASHER, spring	6			
12	1110041025	BOLT	6			
16	1140020010	WASHER, spring	2			
38	0882733380	HOSE ASSY	1			18015-50069
39	0882733390	CLAMP	1			
40	0882733400	CLAMP	2			
41	0880738140	RUBBER	1			
42	0880738150	RUBBER	2			
43	0882733430	HOSE ASSY	1			18015-50069
45	0882732050	HOSE ASSY	1			18010-89119
46	0882733460	HOSE ASSY	1			18017-71125
47	0882733470	HOSE ASSY	1		21403459~21405306	18017-71205
	0882733930	HOSE ASSY	1		21405307~	18017-77145
48	0882733480	HOSE ASSY	1			18010-56107
49	0882733490	HOSE ASSY	1			18010-24102
50	1100041016	BOLT	1			
51	1501750006	PLUG	2			
	1420010240	・O-RING	1			
52	1501750003	PLUG	1			
	1420010140	・O-RING	1			
53	1501750004	PLUG	2			
	1420010180	・O-RING	1			
54	1711900071	CLAMP	1			
55	1100041020	BOLT	1		21405307~	
56	0003600025	WASHER	1		21405307~	
57	0882731720	PIPE	1			
58	0882733920	PIPE	1		21405307~	
59	1420010290	O-RING	1			
60	0007213068	BUSHING	1			
61	1512373010	ADAPTOR	1			
	1420010180	・O-RING	1			
62	1141110010	WASHER	1			
65	1652533018	CAP	2			
66	1512340004	ELBOW	1		21403459~21405306	
	1515010042	ELBOW	1		21405307~	
	1420010180	・O-RING	1			
67	0007236041	ADAPTOR	1			
	1420010180	・O-RING	1			
68	1901743200	VALVE,check	1			
69	1501750002	PLUG	1			
	1420010110	・O-RING	1			
70	1513390044	TEE	1		21405307~	
71	1420010180	O-RING	1			
	T9f091					

silverthorn.co.uk

PIPING; ARM (1/2) (high flow, for GEHL & MUSTANG; 21403459-)

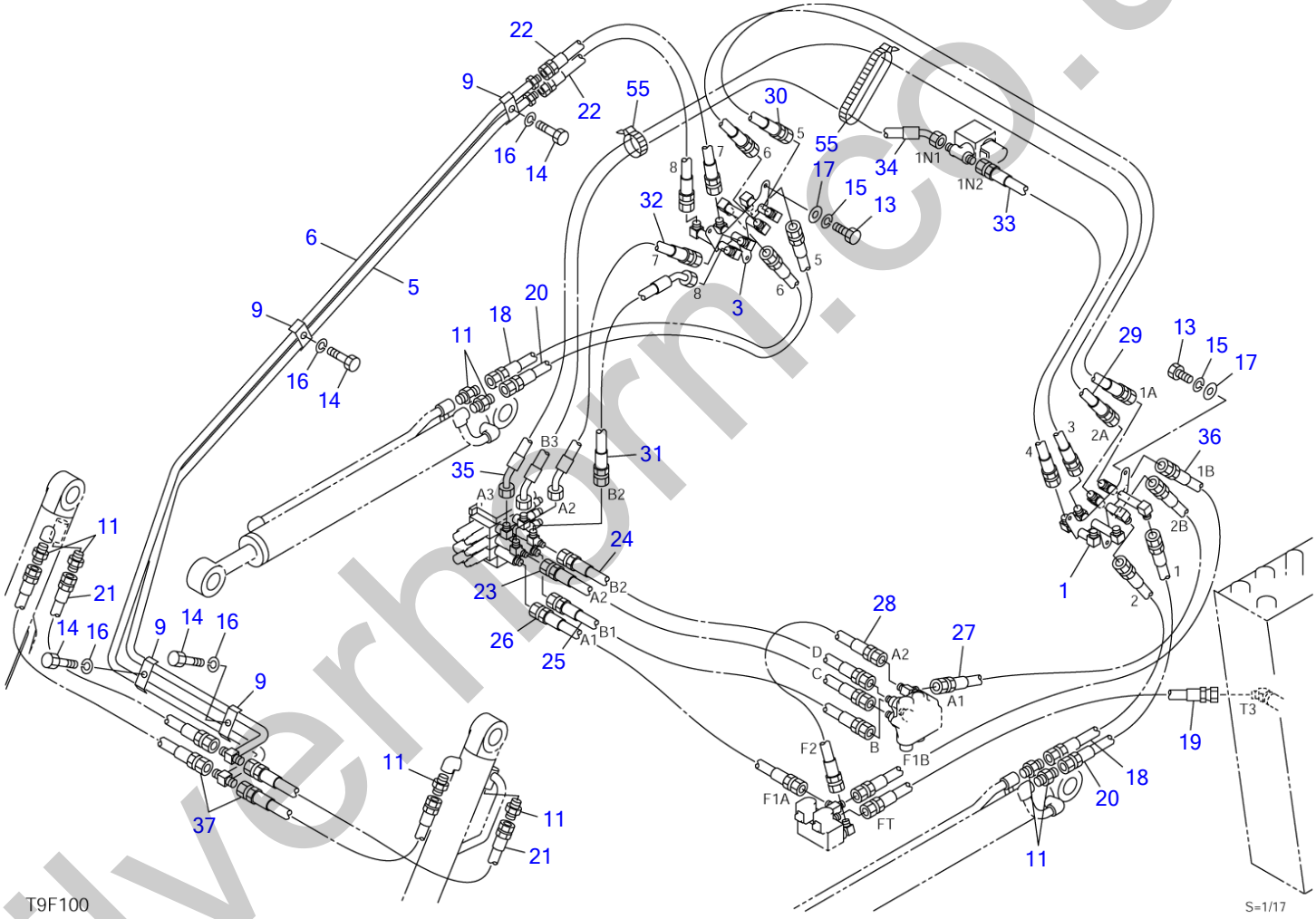

silverhorn.co.uk

PIPING; ARM (1/2) (high flow, for GEHL & MUSTANG; 21403459-)

Item	Part number	Description	Q'ty	Chan.	Serial No.	Serv.	Remarks
		PIPING ASSY					X08827-33500-5
1	0882733100	BRACKET (L.H.)	1				
3	0882730600	BRACKET (R.H.)	1				
5	0882730700	PIPE	1				
6	0882730750	PIPE	1				
9	0880736090	CLAMP	4				
11	1515600202	ADAPTOR	8				
	1420010180	▪ O-RING	1				
13	1100040820	BOLT	6				
14	1100041025	BOLT	4				
15	1140020008	WASHER, spring	6				
16	1140020010	WASHER, spring	4				
17	1141110008	WASHER	6				
18	1801540064	HOSE ASSY	2				
19	0882730190	HOSE ASSY	1				18010-24094
20	1801540058	HOSE ASSY	2				
21	0882730210	HOSE ASSY	2				18017-40062
22	0882730220	HOSE ASSY	2				18015-70070
23	0882730230	HOSE ASSY	1				18015-20067
24	0882730240	HOSE ASSY	1				18015-20068
25	0882730250	HOSE ASSY	1				18015-70068
26	0881733033	HOSE ASSY	1				
27	0882730275	HOSE ASSY	1				18015-70084
28	0882730280	HOSE ASSY	1				18015-40054
29	0882730290	HOSE ASSY	1				18015-40123
30	0882730300	HOSE ASSY	1				18015-40123
31	0882730315	HOSE ASSY	1				18015-77058
32	0882730325	HOSE ASSY	1				18015-77066
33	0882733330	HOSE ASSY	1				18015-70065
34	0882733340	HOSE ASSY	1				G45-G45 ƒÓ15-560
35	0882730350	HOSE ASSY	1				18017-77141
36	0882730360	HOSE ASSY	1				18015-70090
37	0882730370	HOSE ASSY	2				18017-40064
55	1652231250	BAND	2				
	T9f101						

silverhorn.co.uk

PIPING; ARM (2/2) (high flow, for GEHL & MUSTANG; 21403459-)

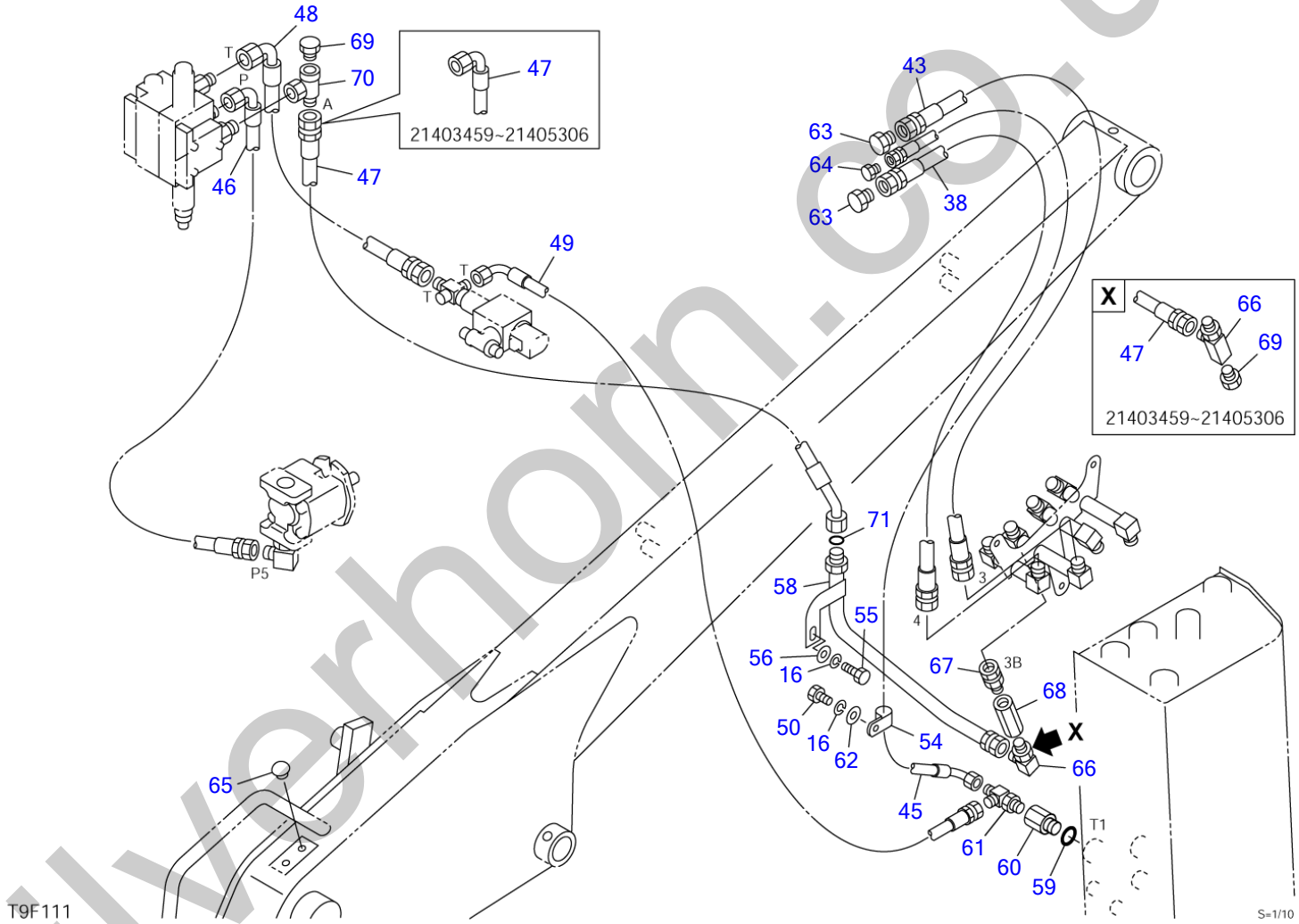

silverhorn.co.uk

PIPING; ARM (2/2) (high flow, for GEHL & MUSTANG; 21403459-)

Item	Part number	Description	Q'ty	Chan.	Serv.	Remarks
		PIPING ASSY				X08827-33500-5
16	1140020010	WASHER, spring	2			
38	0882733380	HOSE ASSY	1			18015-50069
43	0882733430	HOSE ASSY	1			18015-50069
45	0882732050	HOSE ASSY	1			18010-89119
46	0882733460	HOSE ASSY	1			18017-71125
47	0882733470	HOSE ASSY	1		21403459~21405306	18017-71205
	0882733930	HOSE ASSY	1		21405307~	18017-77145
48	0882733480	HOSE ASSY	1			18010-56107
49	0882733490	HOSE ASSY	1			18010-24102
50	1100041016	BOLT	1			
54	1711900071	CLAMP	1			
55	1100041020	BOLT	1		21405307~	
56	0003600025	WASHER	1		21405307~	
58	0882733920	PIPE	1		21405307~	
59	1420010290	O-RING	1			
60	0007213068	BUSHING	1			
61	1512373010	ADAPTOR	1			
	1420010180	・O-RING	1			
62	1141110010	WASHER	1			
63	1513940006	PLUG	2			
64	1513940003	PLUG	1			
65	1652533018	CAP	2			
66	1512340004	ELBOW	1		21403459~21405306	
	1515010042	ELBOW	1		21405307~	
	1420010180	・O-RING	1			
67	0007236041	ADAPTOR	1			
	1420010180	・O-RING	1			
68	1901743200	VALVE,check	1			
69	1501750002	PLUG	1			
	1420010110	・O-RING	1			
70	1513390044	TEE	1		21405307~	
71	1420010180	O-RING	1			
	T9f111					

silverhorn.co.uk

DECAL (canopy)

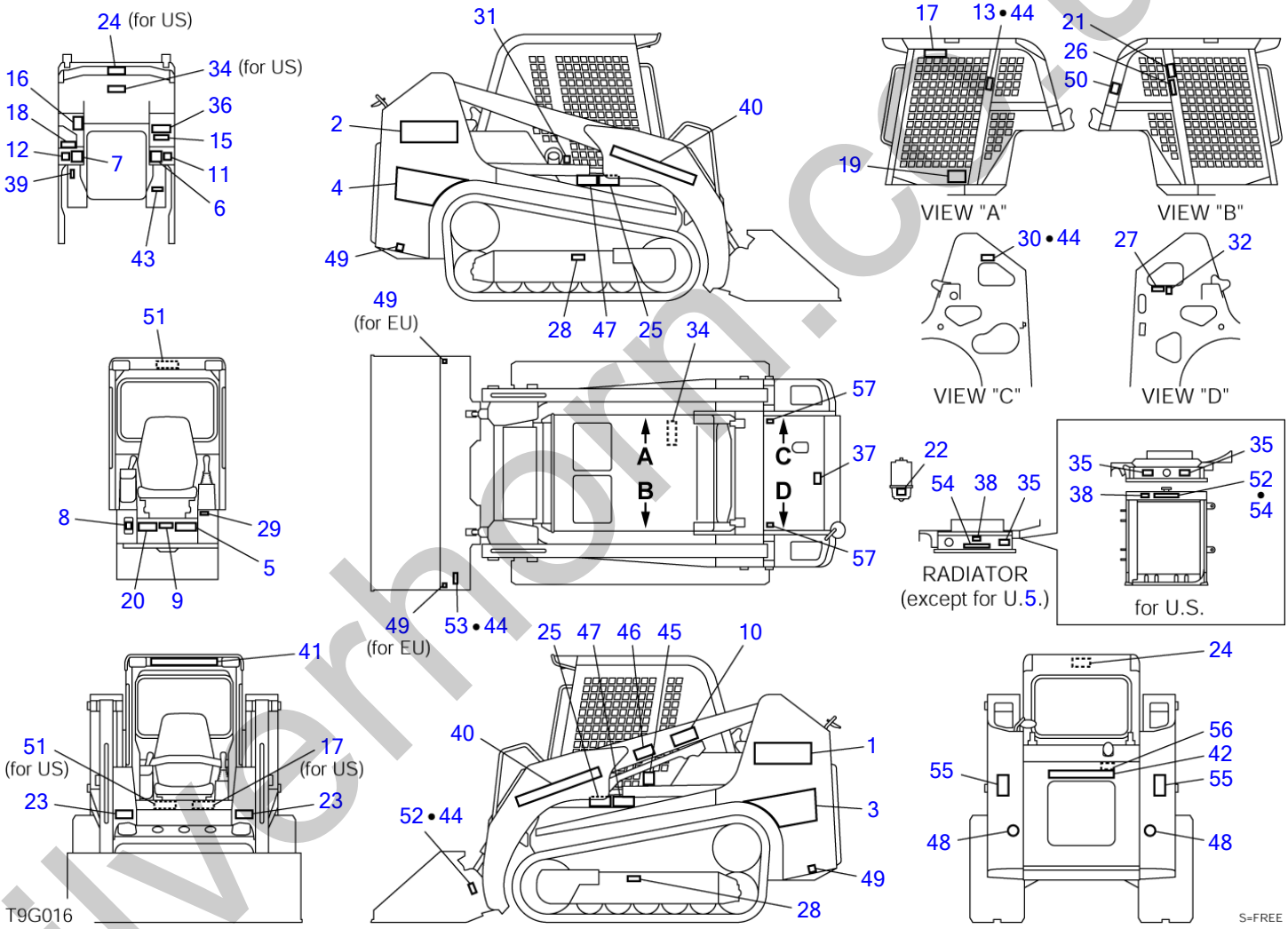

silverhorn.co.uk

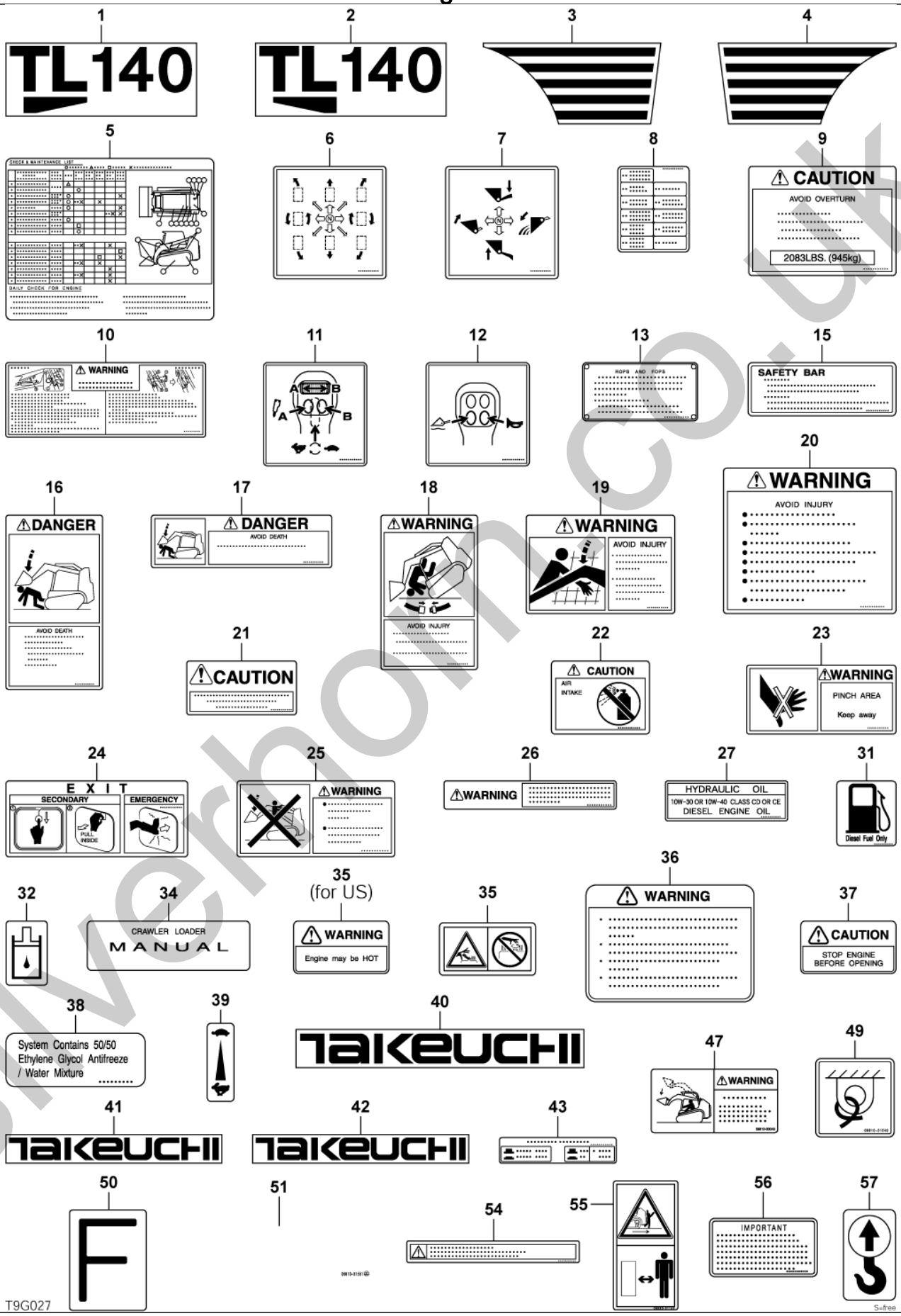

silverhorn.co.uk

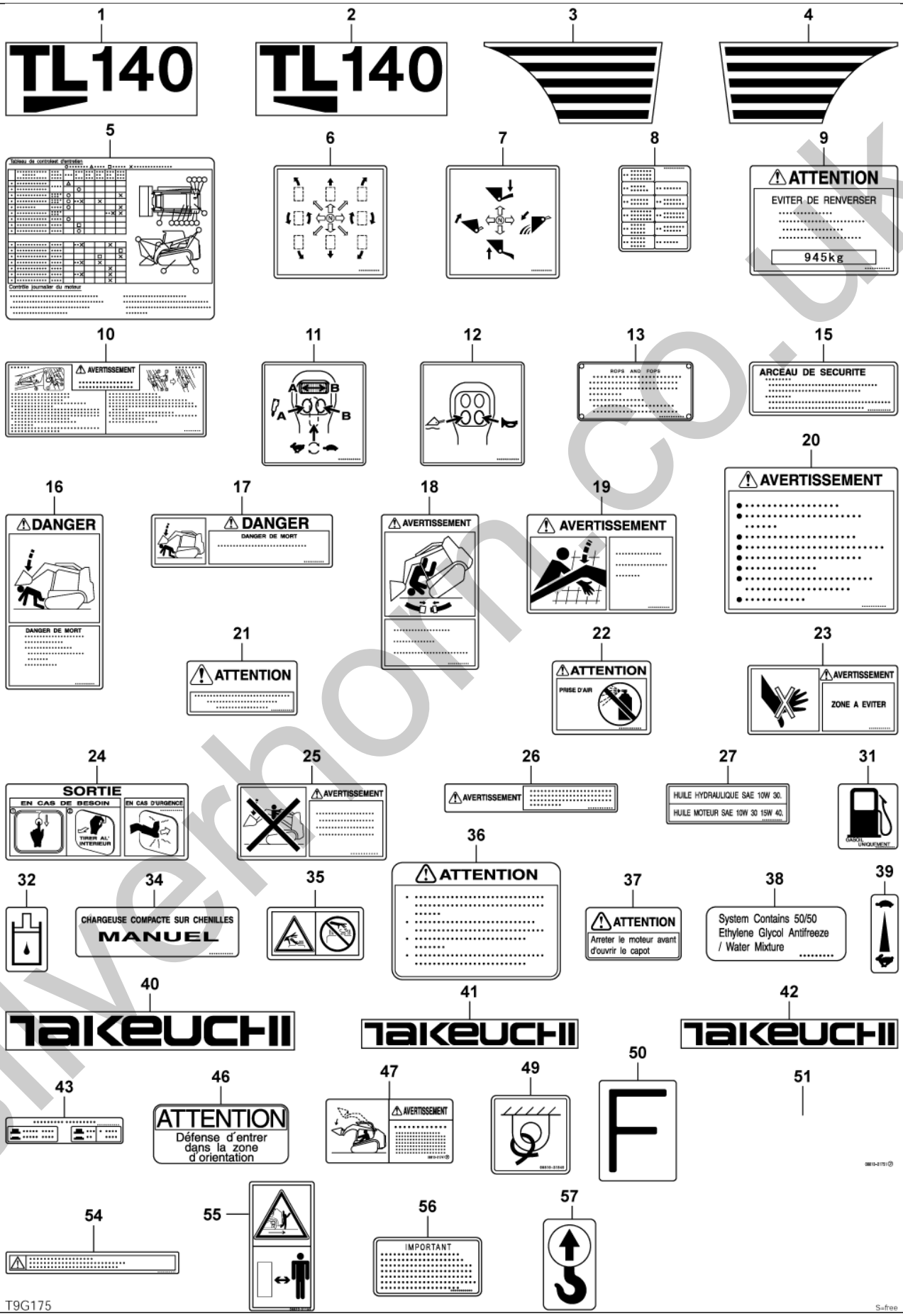

silverhorn.co.uk

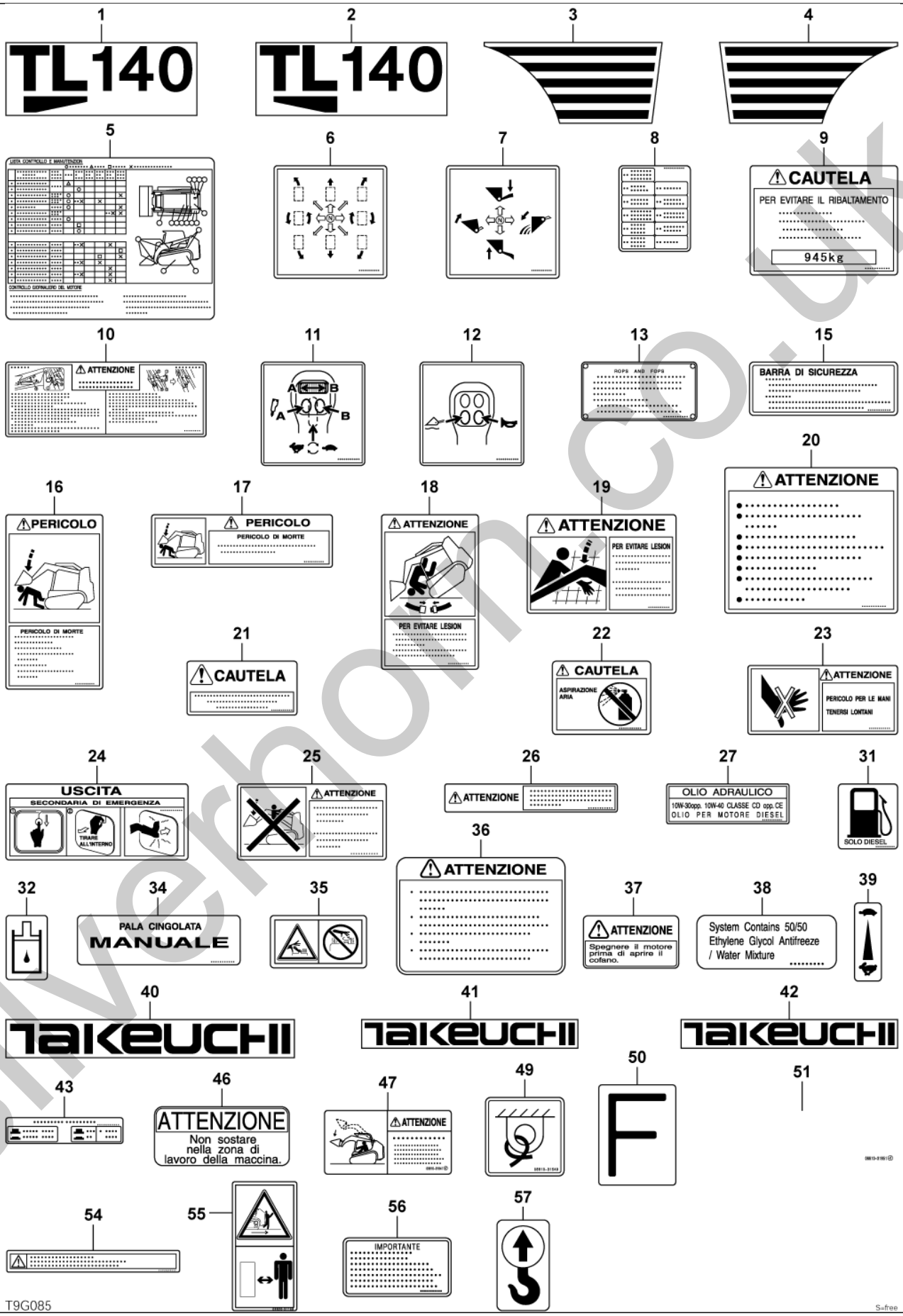

silverhorn.co.uk

DECAL (canopy)

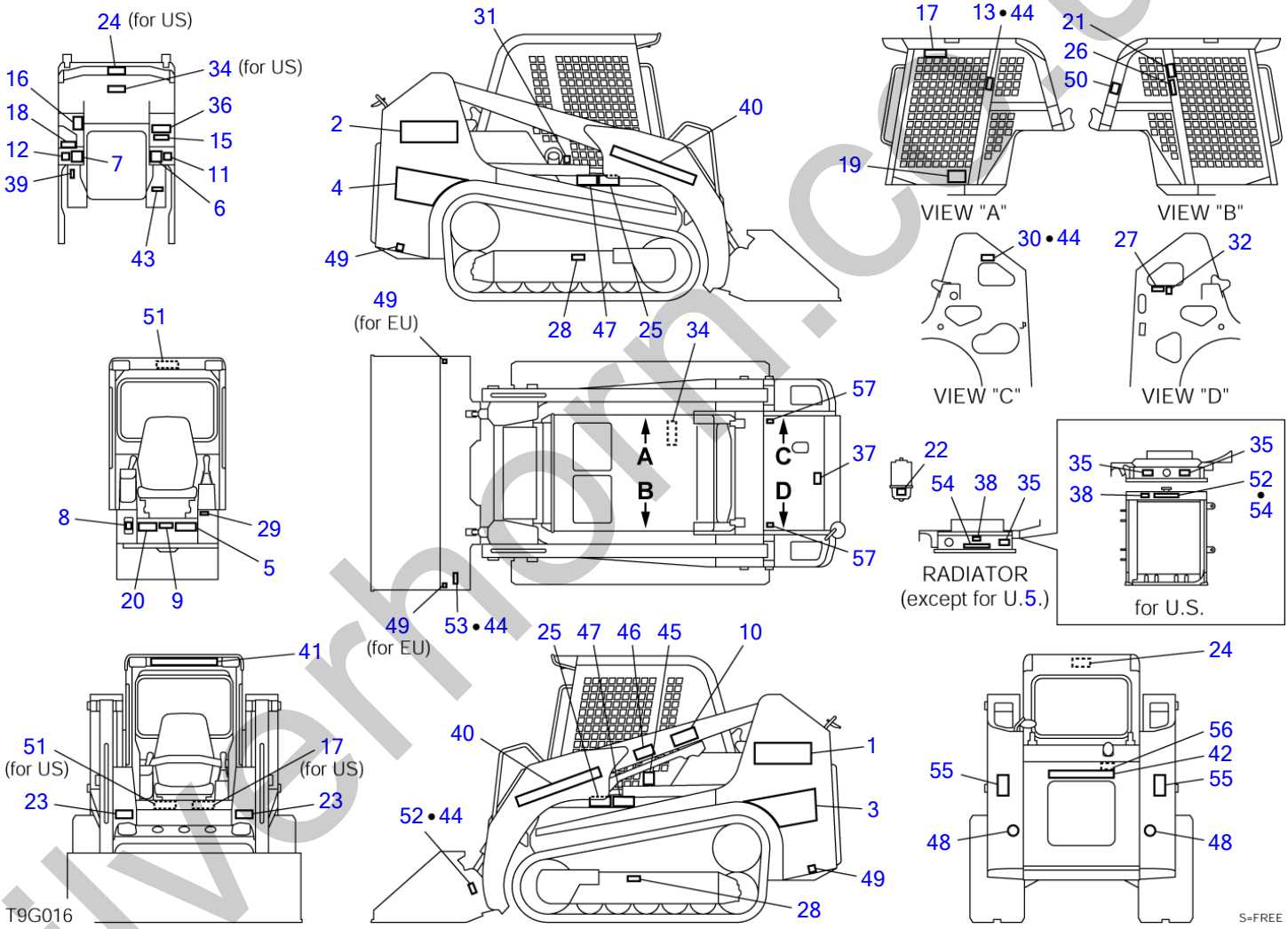

silverhorn.co.uk

DECAL (canopy)

Item	Part number	Description	Q'ty	Chan.	Serial No.	Serv.	Remarks
0	0882030000	DECAL SET (English)	1				X08820-30000-7
	0882030100	DECAL SET (English, for Europe)	1				X08820-30100-8
	0882030200	DECAL SET (French)	1				X08820-30200-8
	0882030300	DECAL SET (Italian)	1				X08820-30300-8
	0882030400	DECAL SET (German)	1				X08820-30400-8
	0882031500	DECAL SET (Dutch)	1			M	X08820-31500-8
	0882031600	DECAL SET (Russian)	1			M	X08820-31600-8
1	0882030001	・DECAL	1				
2	0882030002	・DECAL	1				
3	0882030003	・DECAL	1				
4	0882030004	・DECAL	1				
5	0882030010	・DECAL (English)	1				
	0882031205	・DECAL (French)	1				
	0882031305	・DECAL (Italian)	1				
	0882031405	・DECAL (German)	1				
	0882031601	・DECAL (Russian)	1			M	
6	0881030006	・DECAL	1				
7	0881030007	・DECAL	1				
8	0881030008	・DECAL (English, Dutch)	1			M	
	0881030208	・DECAL (French)	1				
	0881030308	・DECAL (Italian)	1				
	0881030508	・DECAL (German)	1				
	0881032202	・DECAL (Russian)	1			M	
9	0882030009	・DECAL (English)	1				
	0882030209	・DECAL (French)	1				
	0882030309	・DECAL (Italian)	1				
	0882030409	・DECAL (German)	1				
	0882031603	・DECAL (Russian)	1			M	
10	0881030110	・DECAL (English)	1				
	0881030260	・DECAL (French)	1				
	0881030360	・DECAL (Italian)	1				
	0881030560	・DECAL (German)	1				
	0881032204	・DECAL (Russian)	1			M	
11	0882030006	・DECAL	1				
12	0882030007	・DECAL	1				
13	X **********	・DECAL	1				
15	0880031001	・DECAL (English)	1				
	0880038607	・DECAL (French)	1				
	0881030315	・DECAL (Italian)	1				
	0880034007	・DECAL (German)	1				
	0881032206	・DECAL (Russian)	1			M	
16	0880030009	・DECAL (English)	1				
	0880038609	・DECAL (French)	1				
	0881030316	・DECAL (Italian)	1				
	0880034009	・DECAL (German)	1				
	0881032207	・DECAL (Russian)	1			M	
17	0880030010	・DECAL (English)	1				
	0880038610	・DECAL (French)	1				
	0881030317	・DECAL (Italian)	1				
	0880034010	・DECAL (German)	1				
	0881032208	・DECAL (Russian)	1			M	
18	0880030011	・DECAL (English)	1				
	0880038611	・DECAL (French)	1				
	0881030318	・DECAL (Italian)	1				
	0880034011	・DECAL (German)	1				
	0881032209	・DECAL (Russian)	1			M	
19	0880031003	・DECAL (English)	1				
	0880038612	・DECAL (French)	1				
	0881030319	・DECAL (Italian)	1				
	0880034012	・DECAL (German)	1				
	0881032210	・DECAL (Russian)	1			M	
20	0881030020	・DECAL (English)	1				
	0880038613	・DECAL (French)	1				
	0881030320	・DECAL (Italian)	1				
	0881030520	・DECAL (German)	1				
	0881032211	・DECAL (Russian)	1			M	
21	0880030015	・DECAL (English)	1				
	0880038615	・DECAL (French)	1				

silverthorn.co.uk

DECAL (canopy)

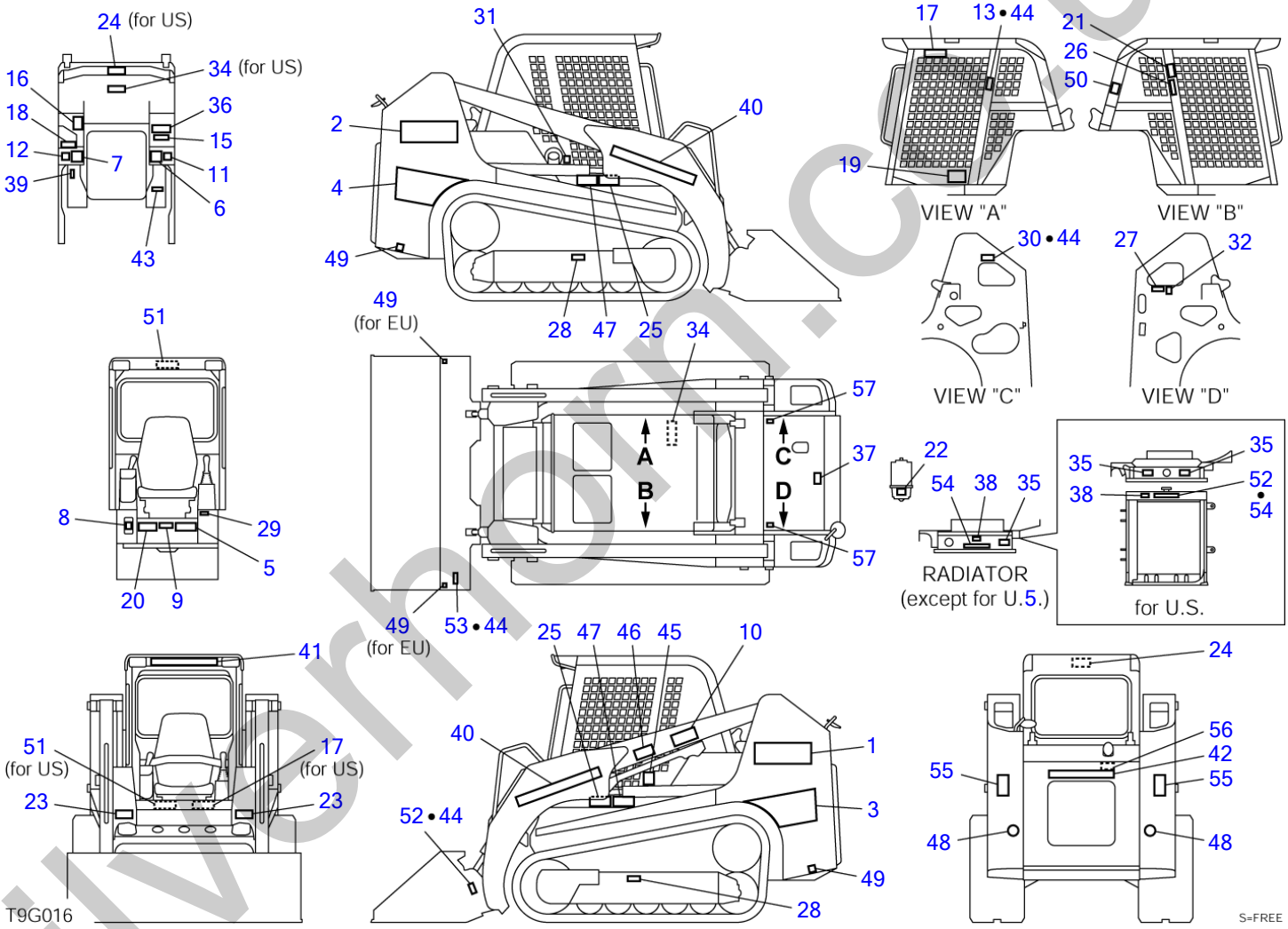

silverhorn.co.uk

DECAL (canopy)

Item	Part number	Description	Q'ty	Chan.	Serial No.	Serv.	Remarks
21	0881030321	・DECAL (Italian)	1				
21	0880034015	・DECAL (German)	1				
21	0881032212	・DECAL (Russian)	1			M	
22	0880030016	・DECAL (English)	1				
22	0880038616	・DECAL (French)	1				
22	0881030322	・DECAL (Italian)	1				
22	0880034016	・DECAL (German)	1				
22	0881032213	・DECAL (Russian)	1			M	
23	0880030017	・DECAL (English)	2				
23	0880038617	・DECAL (French)	2				
23	0881030323	・DECAL (Italian)	2				
23	0880034017	・DECAL (German)	2				
23	0881032214	・DECAL (Russian)	2			M	
24	0880031018	・DECAL (English)	1				
24	0880038618	・DECAL (French)	1				
24	0881030324	・DECAL (Italian)	1				
24	0880034018	・DECAL (German)	1				
24	0881032215	・DECAL (Russian)	1			M	
25	0880031005	・DECAL (English)	2				
25	0880038620	・DECAL (French)	2				
25	0881030325	・DECAL (Italian)	2				
25	0880034019	・DECAL (German)	2				
25	0881032216	・DECAL (Russian)	2			M	
26	0881030026	・DECAL (English)	1				
26	0880038621	・DECAL (French)	1				
26	0881030326	・DECAL (Italian)	1				
26	0881030526	・DECAL (German)	1				
26	0881032217	・DECAL (Russian)	1			M	
27	0880031017	・DECAL (English)	1				
27	0880038623	・DECAL (French)	1				
27	0881030327	・DECAL (Italian)	1				
27	0880034022	・DECAL (German)	1				
27	0881032218	・DECAL (Russian)	1			M	
28	0149362200	・DECAL (English)	2				
28	0880038624	・DECAL (French)	2				
28	0881030328	・DECAL (Italian)	2				
28	0880034023	・DECAL (German)	2				
28	0881032219	・DECAL (Russian)	2			M	
29	X **********	・DECAL	1				
30	X **********	・DECAL	1				
31	0359306600	・DECAL (English)	1				
31	0339375460	・DECAL (French)	1				
31	0339375660	・DECAL (Italian)	1				
31	0339375260	・DECAL (German)	1				
31	0579300603	・DECAL (Russian)	1			M	
32	0359306700	・DECAL	1				
34	0880031016	・DECAL (English)	1				
34	0880038634	・DECAL (French)	1				
34	0881030334	・DECAL (Italian)	1				
34	0880034027	・DECAL (German)	1				
34	0881032221	・DECAL (Russian)	1			M	
35	0569321980	・DECAL (English)	1				for US
35	0882031135	・DECAL (English)	1				for EU
36	0359313700	・DECAL (English)	1				
36	0359315700	・DECAL (French)	1				
36	0359316700	・DECAL (Italian)	1				
36	0359314700	・DECAL (German)	1				
36	0579300606	・DECAL (Russian)	1			M	
37	0359307400	・DECAL (English)	1				
37	0359315400	・DECAL (French)	1				
37	0359316400	・DECAL (Italian)	1				
37	0359314400	・DECAL (German)	1				
37	0579300602	・DECAL (Russian)	1			M	
38	0359313900	・DECAL	1				
39	0359317200	・DECAL	1				
40	0399305100	・DECAL	2				
41	0359341020	・DECAL	1				
42	0359306300	・DECAL	1				

silverthorn.co.uk

DECAL (canopy)

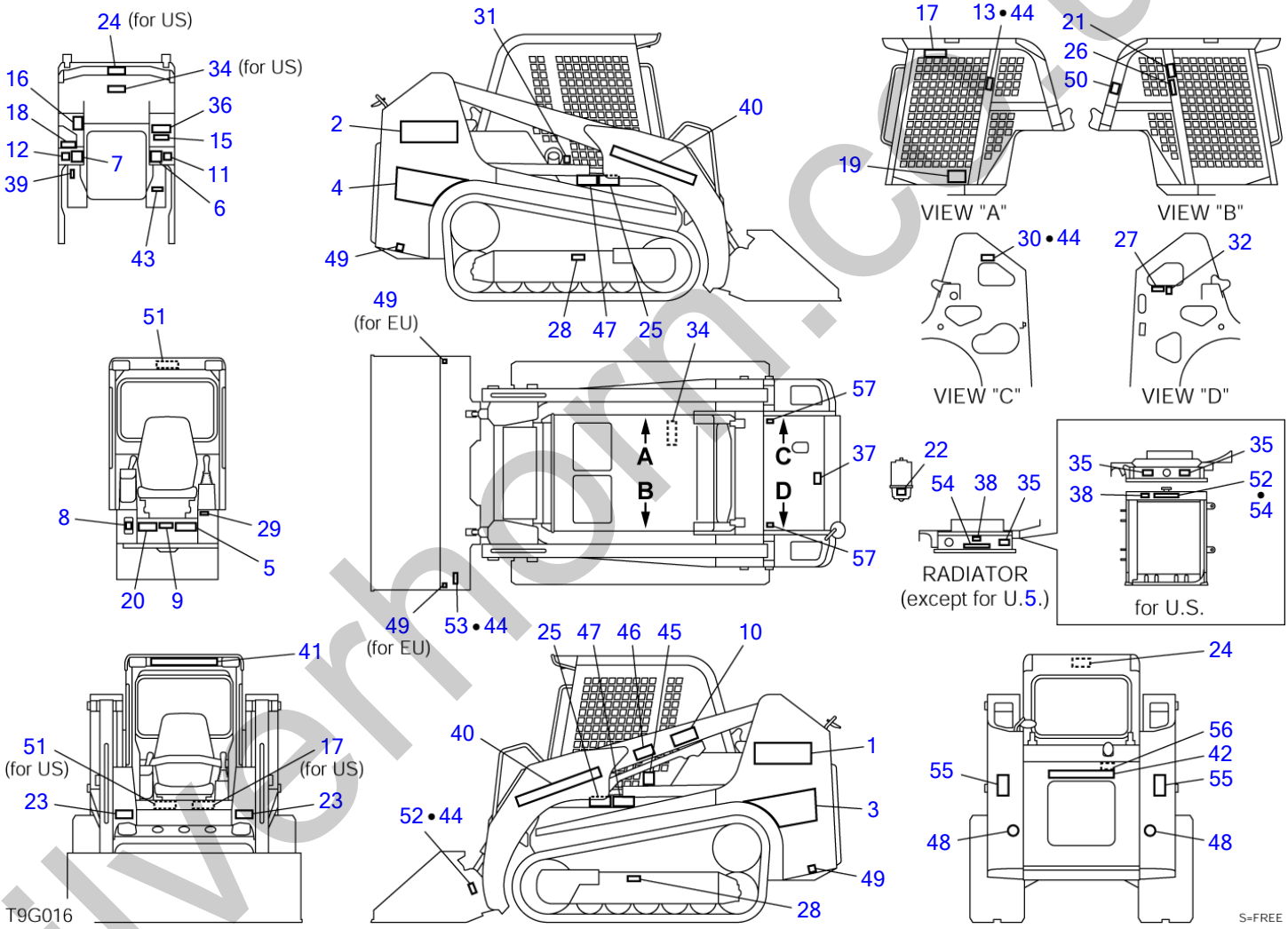

silverhorn.co.uk

DECAL (canopy)

Item		Part number	Description	Q'ty	Chan.	Serial No.	Serv.	Remarks
43		0881030043	・DECAL (English)	1				
43		0881030243	・DECAL (French)	1				
43		0881030343	・DECAL (Italian)	1				
43		0881030543	・DECAL (German)	1				
43		0881032224	・DECAL (Russian)	1			M	
44	X	**********	・SCREW	16				
45	X	**********	・DECAL	1				for EU
46		0359309100	・DECAL (French)	1				
46		0359310100	・DECAL (Italian)	1				
46		0359308100	・DECAL (German)	1				
46		0399356001	・DECAL (Russian)	1			M	
47		0881030046	・DECAL (English)	2				
47		0881031747	・DECAL (French)	2				
47		0881031847	・DECAL (Italian)	2				
47		0881031947	・DECAL (German)	2				
47		0881032225	・DECAL (Russian)	2			M	
48		0874030360	・DECAL	2				
49		0881031549	・DECAL	4				
50		0399300400	・DECAL	1				
51		0881031551	・DECAL (English)	1				
51		0881031751	・DECAL (French)	1				
51		0881031851	・DECAL (Italian)	1				
51		0881031951	・DECAL (German)	1				
51		0881032226	・DECAL (Russian)	1			M	
52	X	**********	・DECAL	1				for EU
52		0882030052	・DECAL	1				for US
53	X	**********	・DECAL	1				for EU
54		0882030052	・DECAL (English)	1				
54		0882030254	・DECAL (French)	1				
54		0882030354	・DECAL (Italian)	1				
54		0882030454	・DECAL (German)	1				
54		0882031602	・DECAL (Russian)	1			M	
55		0882031159	・DECAL	2				for EU
56		0339376240	・DECAL (English)	1				
56		0339379440	・DECAL (French)	1				
56		0339379540	・DECAL (Italian)	1				
56		0339376340	・DECAL (German)	1				
56		0579300613	・DECAL (Russian)	1			M	
57		0399300500	・DECAL	2				
		T9g018						

silverhorn.co.uk

DECAL (cab)

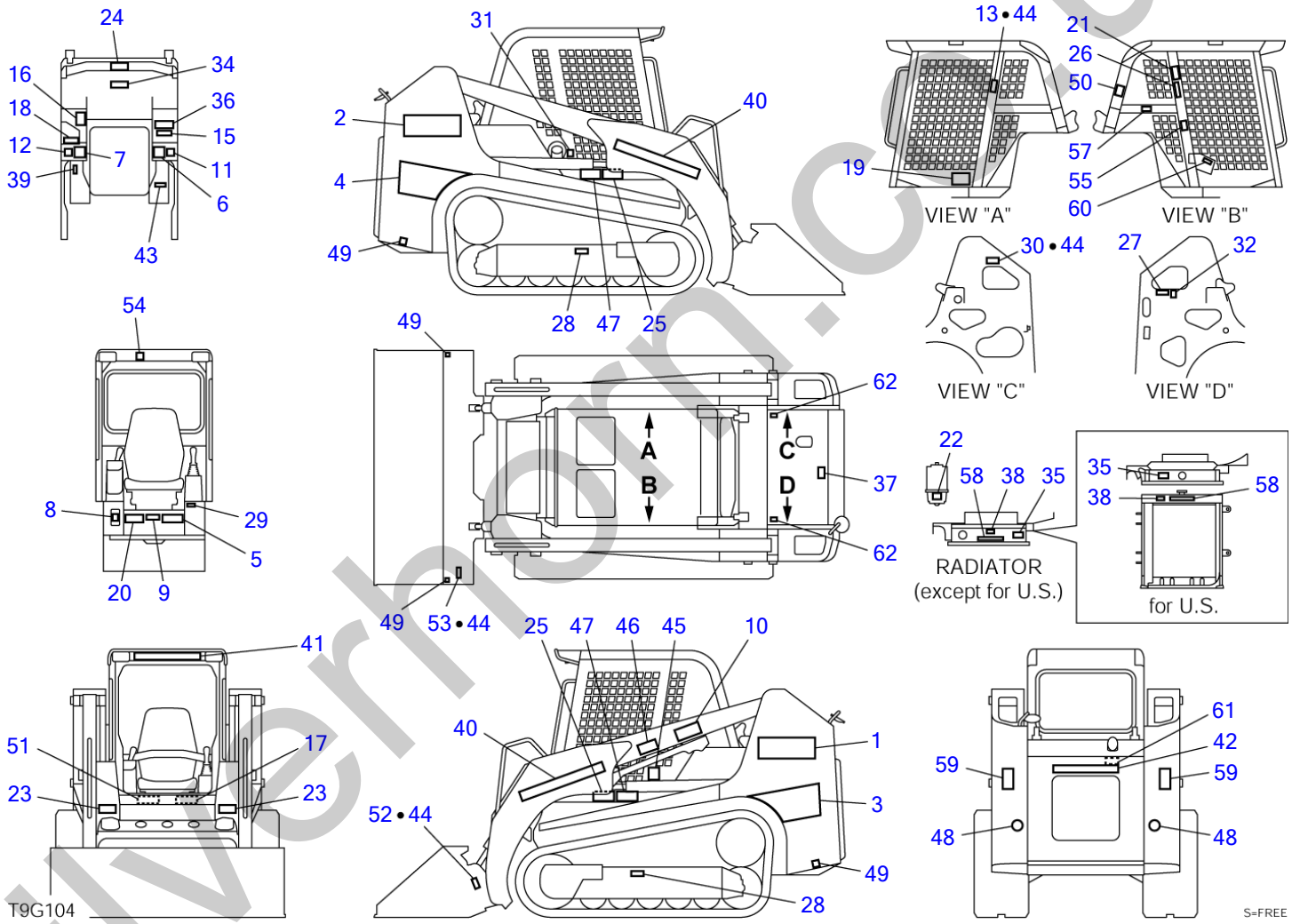

silverhorn.co.uk

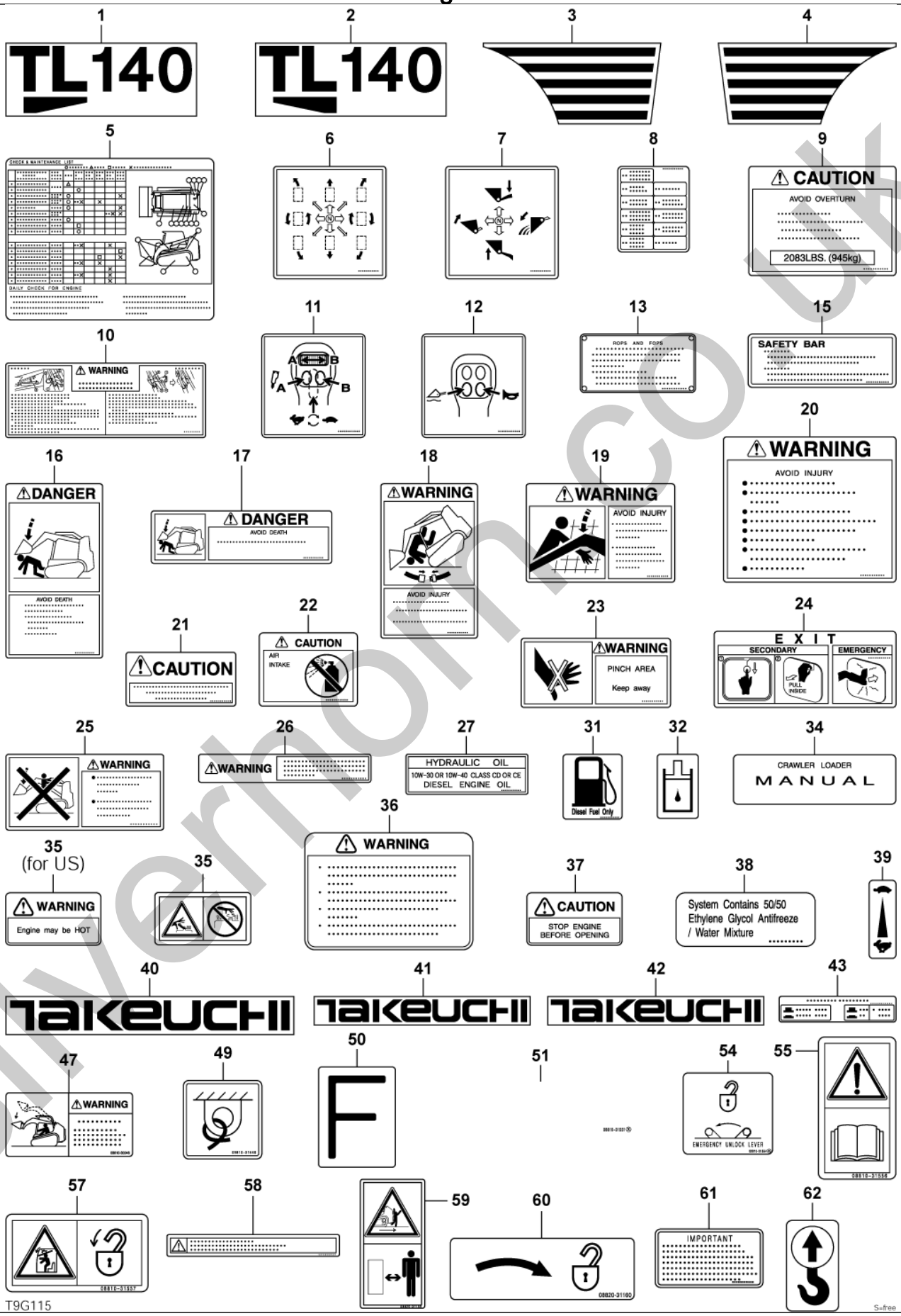

silverhorn.co.uk

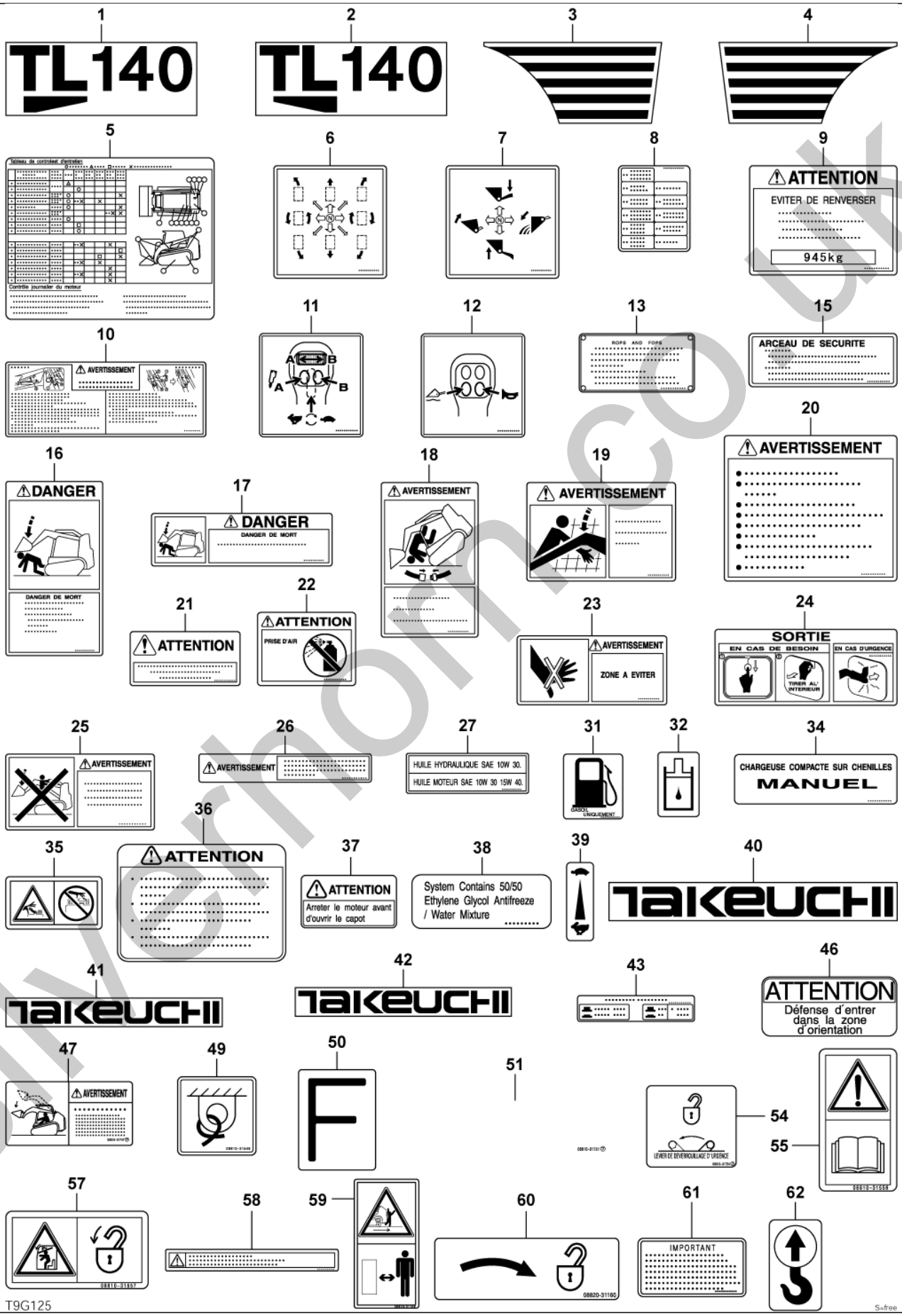

silverhorn.co.uk

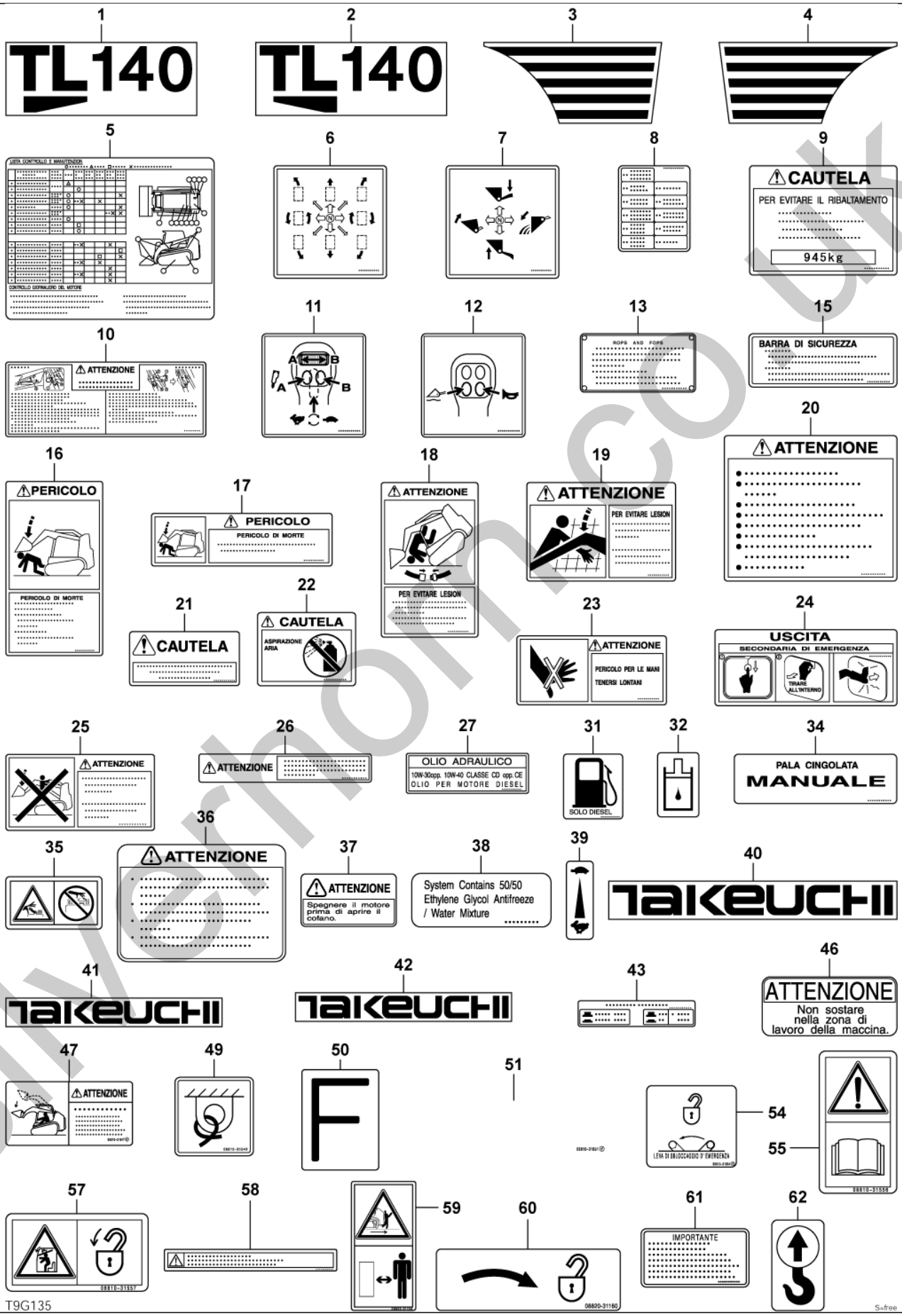

silverhomco.uk

DECAL (cab)

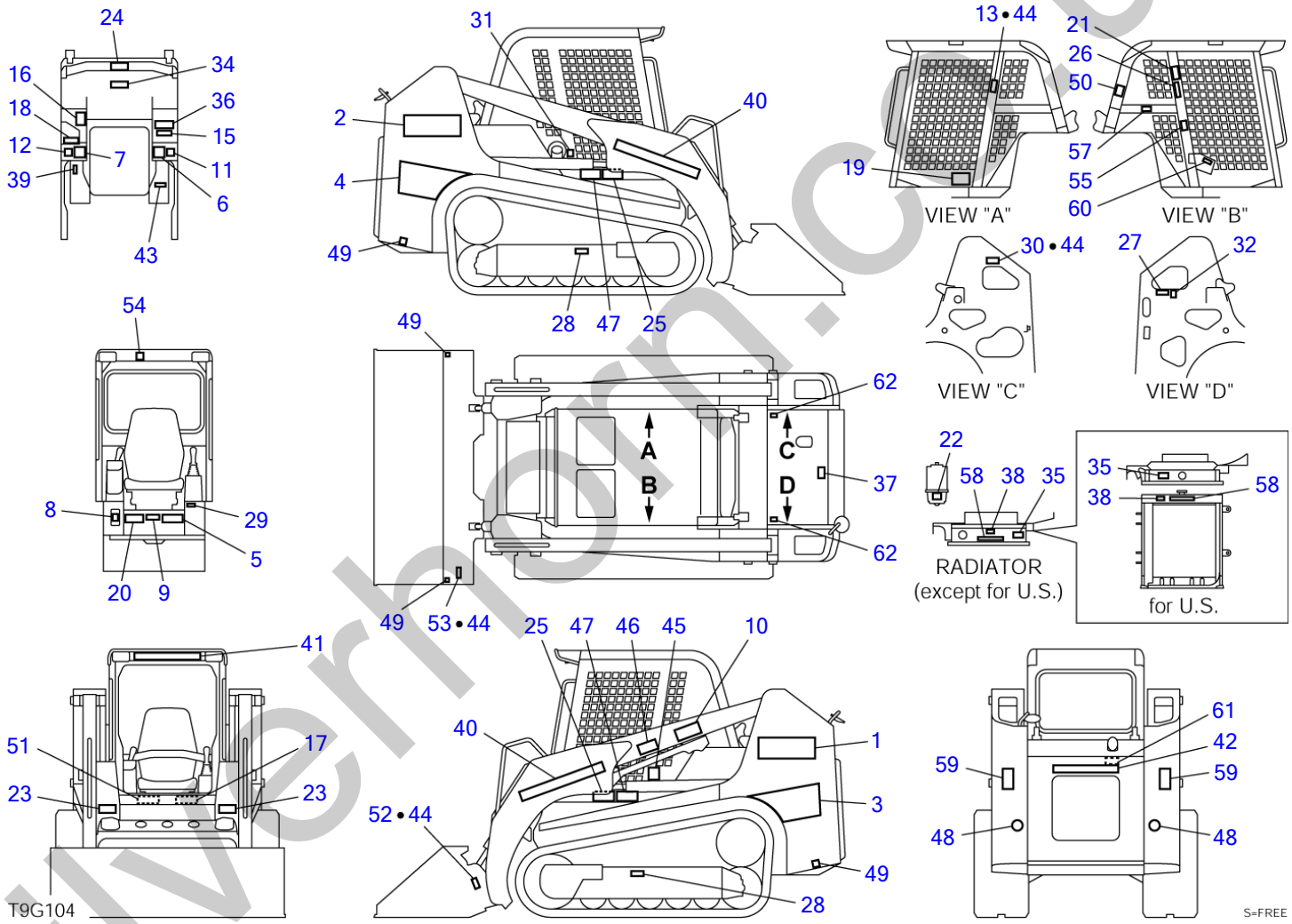

silverhorn.co.uk

DECAL (cab)

Item	Part number	Description	Q'ty	Chan.	Serial No.	Serv.	Remarks
0	0882031000	DECAL SET (English)	1				X08820-31000-11
	0882031100	DECAL SET (English, for Europe)	1				X08820-31100-11
	0882031200	DECAL SET (French)	1				X08820-31200-11
	0882031300	DECAL SET (Italian)	1				X08820-31300-11
	0882031400	DECAL SET (German)	1				X08820-31400-11
	0882031800	DECAL SET (Dutch)	1			M	X08820-31800-11
	0882031900	DECAL SET (Russian)	1			M	X08820-31900-11
1	0882030001	・DECAL	1				
2	0882030002	・DECAL	1				
3	0882030003	・DECAL	1				
4	0882030004	・DECAL	1				
5	0882030010	・DECAL (English)	1				
	0882031205	・DECAL (French)	1				
	0882031305	・DECAL (Italian)	1				
	0882031405	・DECAL (German)	1				
	0882031601	・DECAL (Russian)	1			M	
6	0881030006	・DECAL	1				
7	0881030007	・DECAL	1				
8	0881030008	・DECAL (English, Dutch)	1			M	
	0881030208	・DECAL (French)	1				
	0881030308	・DECAL (Italian)	1				
	0881030508	・DECAL (German)	1				
	0881032202	・DECAL (Russian)	1			M	
9	0882030009	・DECAL (English)	1				
	0882030209	・DECAL (French)	1				
	0882030309	・DECAL (Italian)	1				
	0882030409	・DECAL (German)	1				
	0882031603	・DECAL (Russian)	1			M	
10	0881030110	・DECAL (English)	1				
	0881030260	・DECAL (French)	1				
	0881030360	・DECAL (Italian)	1				
	0881030560	・DECAL (German)	1				
	0881032204	・DECAL (Russian)	1			M	
11	0882030006	・DECAL	1				
12	0882030007	・DECAL	1				
13	X **********	・DECAL	1				
15	0880031001	・DECAL (English)	1				
	0880038607	・DECAL (French)	1				
	0881030315	・DECAL (Italian)	1				
	0880034007	・DECAL (German)	1				
	0881032206	・DECAL (Russian)	1			M	
16	0880030009	・DECAL (English)	1				
	0880038609	・DECAL (French)	1				
	0881030316	・DECAL (Italian)	1				
	0880034009	・DECAL (German)	1				
	0881032207	・DECAL (Russian)	1			M	
17	0880030010	・DECAL (English)	1				
	0880038610	・DECAL (French)	1				
	0881030317	・DECAL (Italian)	1				
	0880034010	・DECAL (German)	1				
	0881032208	・DECAL (Russian)	1			M	
18	0880030011	・DECAL (English)	1				
	0880038611	・DECAL (French)	1				
	0881030318	・DECAL (Italian)	1				
	0880034011	・DECAL (German)	1				
	0881032209	・DECAL (Russian)	1			M	
19	0880031003	・DECAL (English)	1				
	0880038612	・DECAL (French)	1				
	0881030319	・DECAL (Italian)	1				
	0880034012	・DECAL (German)	1				
	0881032210	・DECAL (Russian)	1			M	
20	0881030020	・DECAL (English)	1				
	0880038613	・DECAL (French)	1				
	0881030320	・DECAL (Italian)	1				
	0881030520	・DECAL (German)	1				
	0881032211	・DECAL (Russian)	1			M	
21	0880030015	・DECAL (English)	1				
	0880038615	・DECAL (French)	1				

silverthorn.co.uk

DECAL (cab)

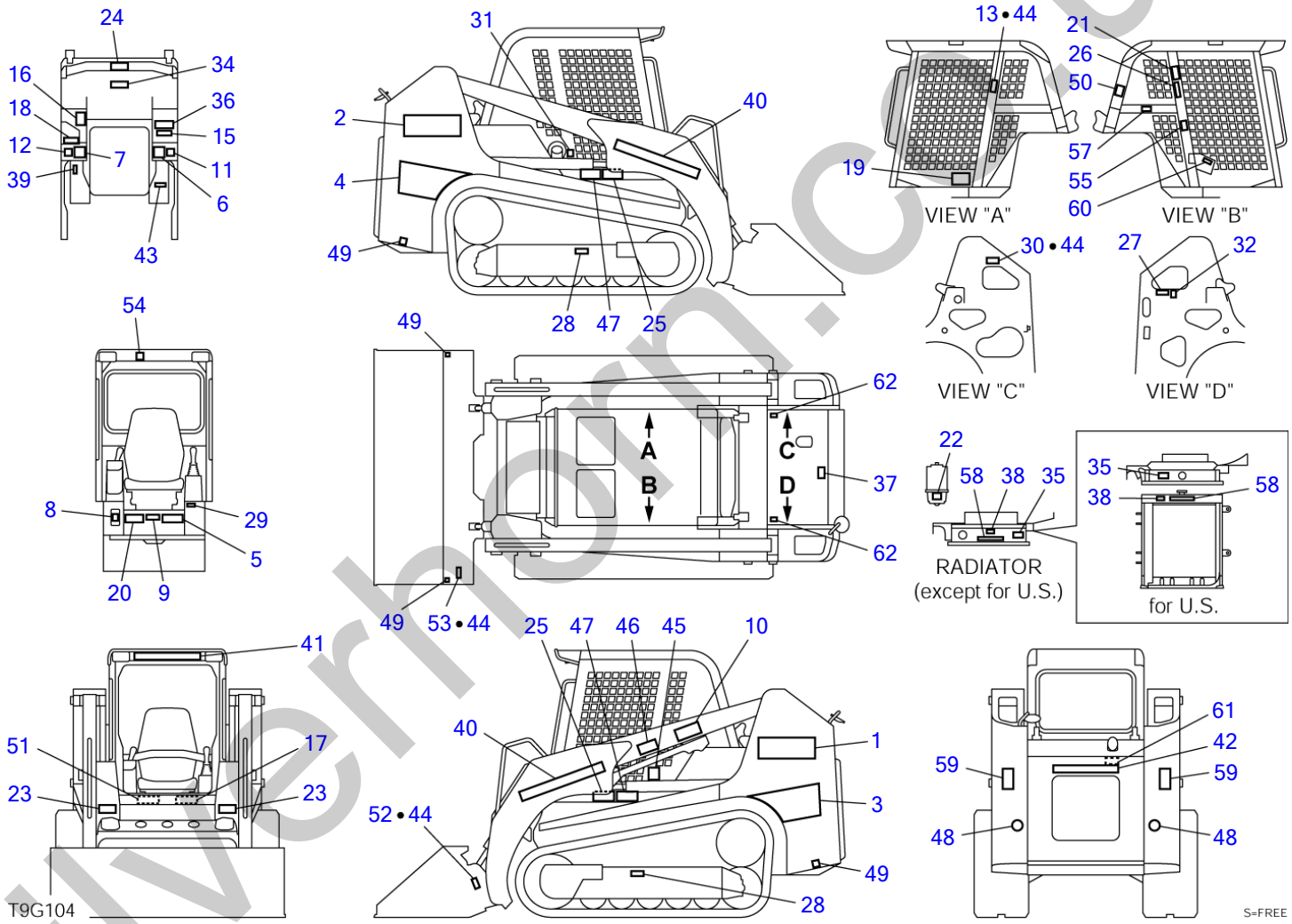

silverhorn.co.uk

DECAL (cab)

Item	Part number	Description	Q'ty	Chan.	Serial No.	Serv.	Remarks
21	0881030321	・DECAL (Italian)	1				
21	0880034015	・DECAL (German)	1				
21	0881032212	・DECAL (Russian)	1			M	
22	0880030016	・DECAL (English)	1				
22	0880038616	・DECAL (French)	1				
22	0881030322	・DECAL (Italian)	1				
22	0880034016	・DECAL (German)	1				
22	0881032213	・DECAL (Russian)	1			M	
23	0880030017	・DECAL (English)	2				
23	0880038617	・DECAL (French)	2				
23	0881030323	・DECAL (Italian)	2				
23	0880034017	・DECAL (German)	2				
23	0881032214	・DECAL (Russian)	2			M	
24	0880031018	・DECAL (English)	1				
24	0880038618	・DECAL (French)	1				
24	0881030324	・DECAL (Italian)	1				
24	0880034018	・DECAL (German)	1				
24	0881032215	・DECAL (Russian)	1			M	
25	0880031005	・DECAL (English)	2				
25	0880038620	・DECAL (French)	2				
25	0881030325	・DECAL (Italian)	2				
25	0880034019	・DECAL (German)	2				
25	0881032216	・DECAL (Russian)	2			M	
26	0881030026	・DECAL (English)	1				
26	0880038621	・DECAL (French)	1				
26	0881030326	・DECAL (Italian)	1				
26	0881030526	・DECAL (German)	1				
26	0881032217	・DECAL (Russian)	1			M	
27	0880031017	・DECAL (English)	1				
27	0880038623	・DECAL (French)	1				
27	0881030327	・DECAL (Italian)	1				
27	0880034022	・DECAL (German)	1				
27	0881032218	・DECAL (Russian)	1			M	
28	0149362200	・DECAL (English)	2				
28	0880038624	・DECAL (French)	2				
28	0881030328	・DECAL (Italian)	2				
28	0880034023	・DECAL (German)	2				
28	0881032219	・DECAL (Russian)	2			M	
29	X **********	・DECAL	1				
30	X **********	・DECAL	1				
31	0359306600	・DECAL (English)	1				
31	0339375460	・DECAL (French)	1				
31	0339375660	・DECAL (Italian)	1				
31	0339375260	・DECAL (German)	1				
31	0579300603	・DECAL (Russian)	1			M	
32	0359306700	・DECAL	1				
34	0880031016	・DECAL (English)	1				
34	0880038634	・DECAL (French)	1				
34	0881030334	・DECAL (Italian)	1				
34	0880034027	・DECAL (German)	1				
34	0881032221	・DECAL (Russian)	1			M	
35	0569321980	・DECAL (English)	1				for US
35	0882031135	・DECAL (English)	1				for EU
36	0359313700	・DECAL (English)	1				
36	0359315700	・DECAL (French)	1				
36	0359316700	・DECAL (Italian)	1				
36	0359314700	・DECAL (German)	1				
36	0579300606	・DECAL (Russian)	1			M	
37	0359307400	・DECAL (English)	1				
37	0359315400	・DECAL (French)	1				
37	0359316400	・DECAL (Italian)	1				
37	0359314400	・DECAL (German)	1				
37	0579300602	・DECAL (Russian)	1			M	
38	0359313900	・DECAL	1				
39	0359317200	・DECAL	1				
40	0399305100	・DECAL	2				
41	0359341020	・DECAL	1				
42	0359306300	・DECAL	1				

silverthorn.co.uk

DECAL (cab)

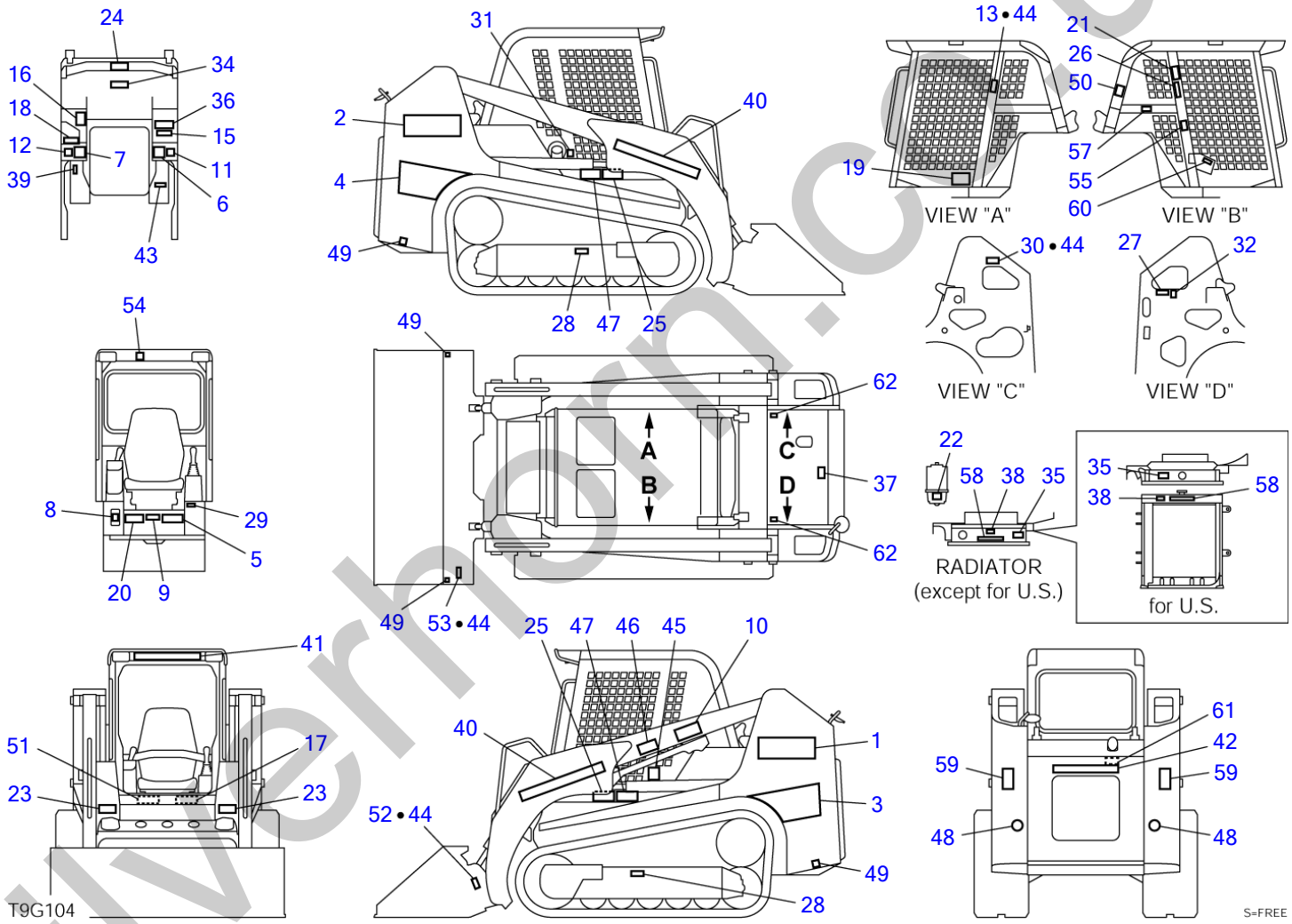

silverhorn.co.uk

DECAL (cab)

Item		Part number	Description	Q'ty	Chan.	Serial No.	Serv.	Remarks
43		0881030043	・DECAL (English)	1				
43		0881030243	・DECAL (French)	1				
43		0881030343	・DECAL (Italian)	1				
43		0881030543	・DECAL (German)	1				
43		0881032224	・DECAL (Russian)	1			M	
44	X	**********	・SCREW	16				
45	X	**********	・DECAL	1				for EU
46		0359309100	・DECAL (French)	1				
46		0359310100	・DECAL (Italian)	1				
46		0359308100	・DECAL (German)	1				
46		0399356001	・DECAL (Russian)	1			M	
47		0881030046	・DECAL (English)	2				
47		0881031747	・DECAL (French)	2				
47		0881031847	・DECAL (Italian)	2				
47		0881031947	・DECAL (German)	2				
47		0881032225	・DECAL (Russian)	2			M	
48		0874030360	・DECAL	2				
49		0881031549	・DECAL	4				
50		0399300400	・DECAL	1				
51		0881031551	・DECAL (English)	1				
51		0881031751	・DECAL (French)	1				
51		0881031851	・DECAL (Italian)	1				
51		0881031951	・DECAL (German)	1				
51		0881032226	・DECAL (Russian)	1			M	
52	X	**********	・DECAL	1				for EU
53	X	**********	・DECAL	1				for EU
54		0881031554	・DECAL (English)	1				
54		0881031754	・DECAL (French)	1				
54		0881031854	・DECAL (Italian)	1				
54		0881031954	・DECAL (German)	1				
54		0881032227	・DECAL (Russian)	1			M	
55		0881031556	・DECAL	1				
57		0881031557	・DECAL	1				
58		0882030052	・DECAL (English)	1				
58		0882030254	・DECAL (French)	1				
58		0882030354	・DECAL (Italian)	1				
58		0882030454	・DECAL (German)	1				
58		0882031602	・DECAL (Russian)	1			M	
59		0882031159	・DECAL	2				for EU
60		0882031160	・DECAL	1				
61		0339376240	・DECAL (English)	1				
61		0339379440	・DECAL (French)	1				
61		0339379540	・DECAL (Italian)	1				
61		0339376340	・DECAL (German)	1				
61		0579300613	・DECAL (Russian)	1			M	
62		0399300500	・DECAL	2				
		T9g106						

silverthorn.co.uk

DECAL (for GEHL & MUSTANG; 21400001-21400010, 21400695-)

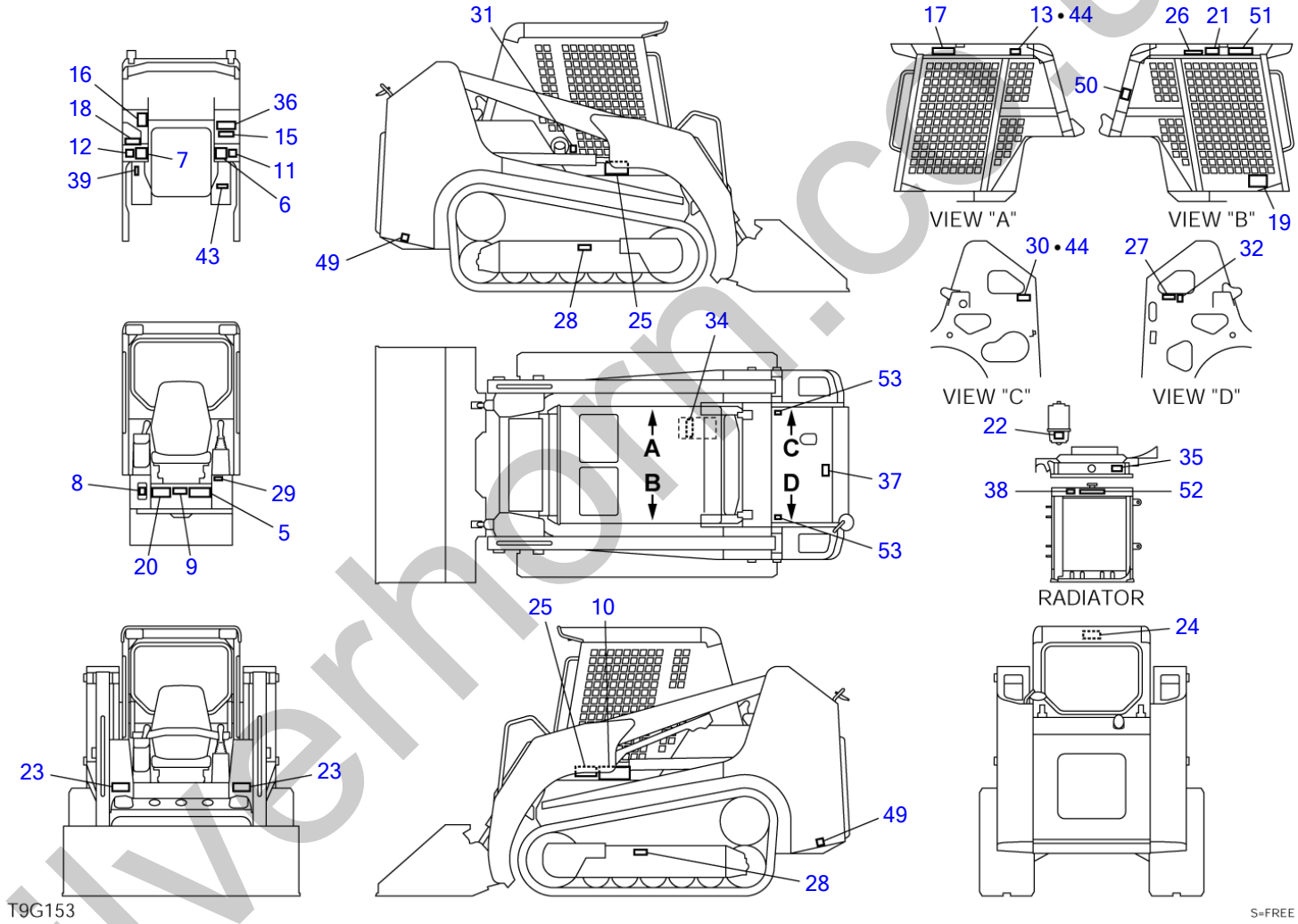

silverhorn.co.uk

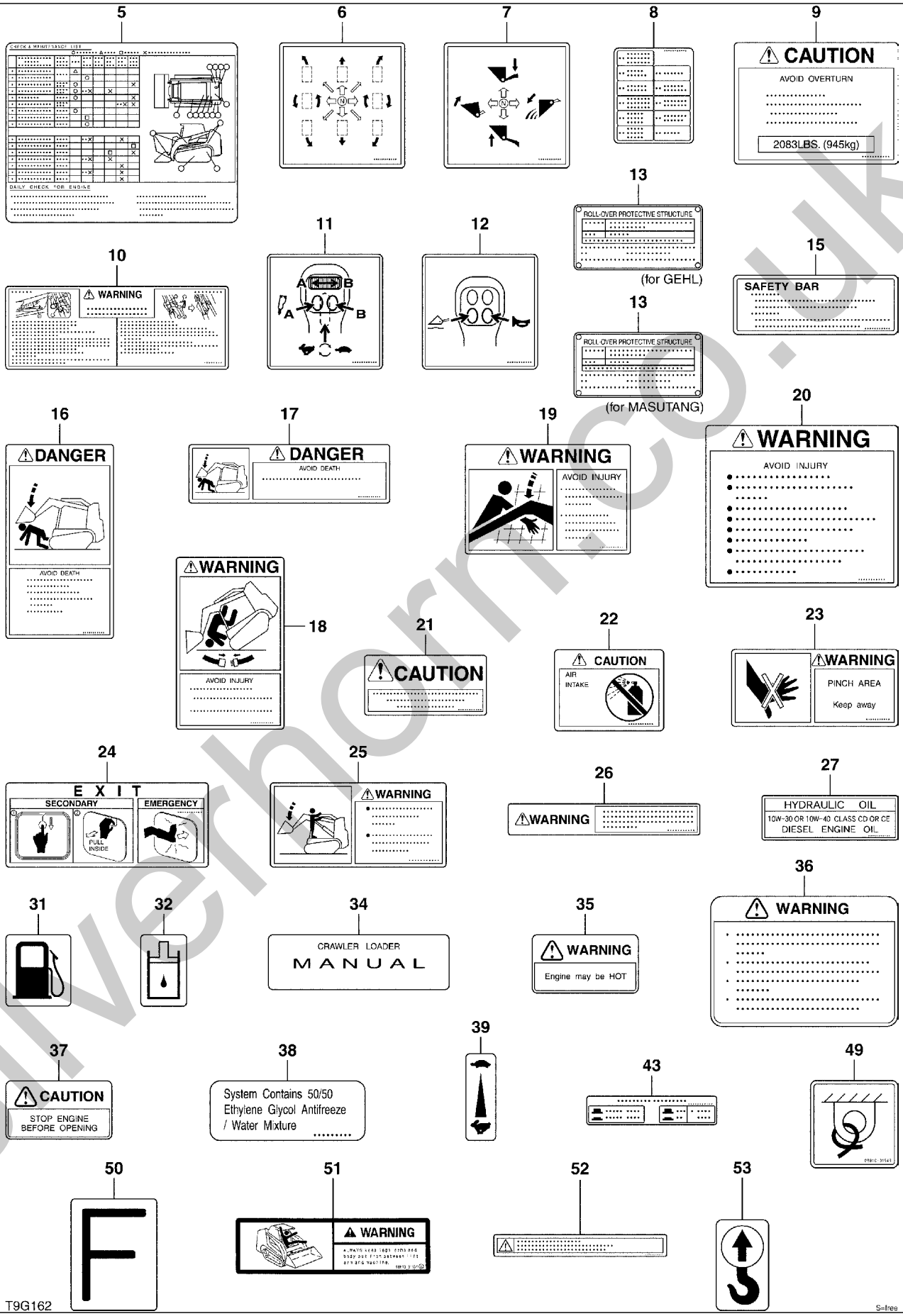

silverhorn.co.uk

DECAL (for GEHL & MUSTANG; 21400001-21400010, 21400695-)

Item	Part number	Description	Q'ty	Chan.	Serial No.	Serv.	Remarks
0	0882030700	DECAL SET (for GEHL)	1				X08820-30700-6
	0882030800	DECAL SET (for MUSTANG)	1				X08820-30800-6
5	0882030010	・DECAL	1				
6	0881030006	・DECAL	1				
7	0881030007	・DECAL	1				
8	0881030008	・DECAL	1				
9	0882030009	・DECAL	1				
10	0881030110	・DECAL	1				
11	0882030006	・DECAL	1				
12	0882030007	・DECAL	1				
13	X **********	・DECAL	1				for GEHL
	X **********	・DECAL	1				for MUSTANG
15	0880031001	・DECAL	1				
16	0880030009	・DECAL	1				
17	0880030010	・DECAL	1				
18	0880030011	・DECAL	1				
19	0880031003	・DECAL	1				
20	0881030020	・DECAL	1				
21	0880030015	・DECAL	1				
22	0880030016	・DECAL	1				
23	0880030017	・DECAL	2				
24	0880031018	・DECAL	1				
25	0880031005	・DECAL	2				
26	0881030026	・DECAL	1				
27	0880031017	・DECAL	1				
28	0149362200	・DECAL	2				
29	X **********	・DECAL	1				
30	X **********	・DECAL	1				
31	0359306600	・DECAL	1				
32	0359306700	・DECAL	1				
34	0880031016	・DECAL	1				
35	0569321980	・DECAL	1				
36	0359313700	・DECAL	1				
37	0359307400	・DECAL	1				
38	0359313900	・DECAL	1				
39	0359317200	・DECAL	1				
43	0881030043	・DECAL	1				
44	X **********	・SCREW	8				
49	0881031549	・DECAL	2				
50	0399300400	・DECAL	1				
51	0881031551	・DECAL	1				
52	0882030052	・DECAL	1				
53	0399300500	・DECAL	2				
	T9g152						

silverthorn.co.uk

DECAL (for GEHL & MUSTANG; 21400011-21400694)

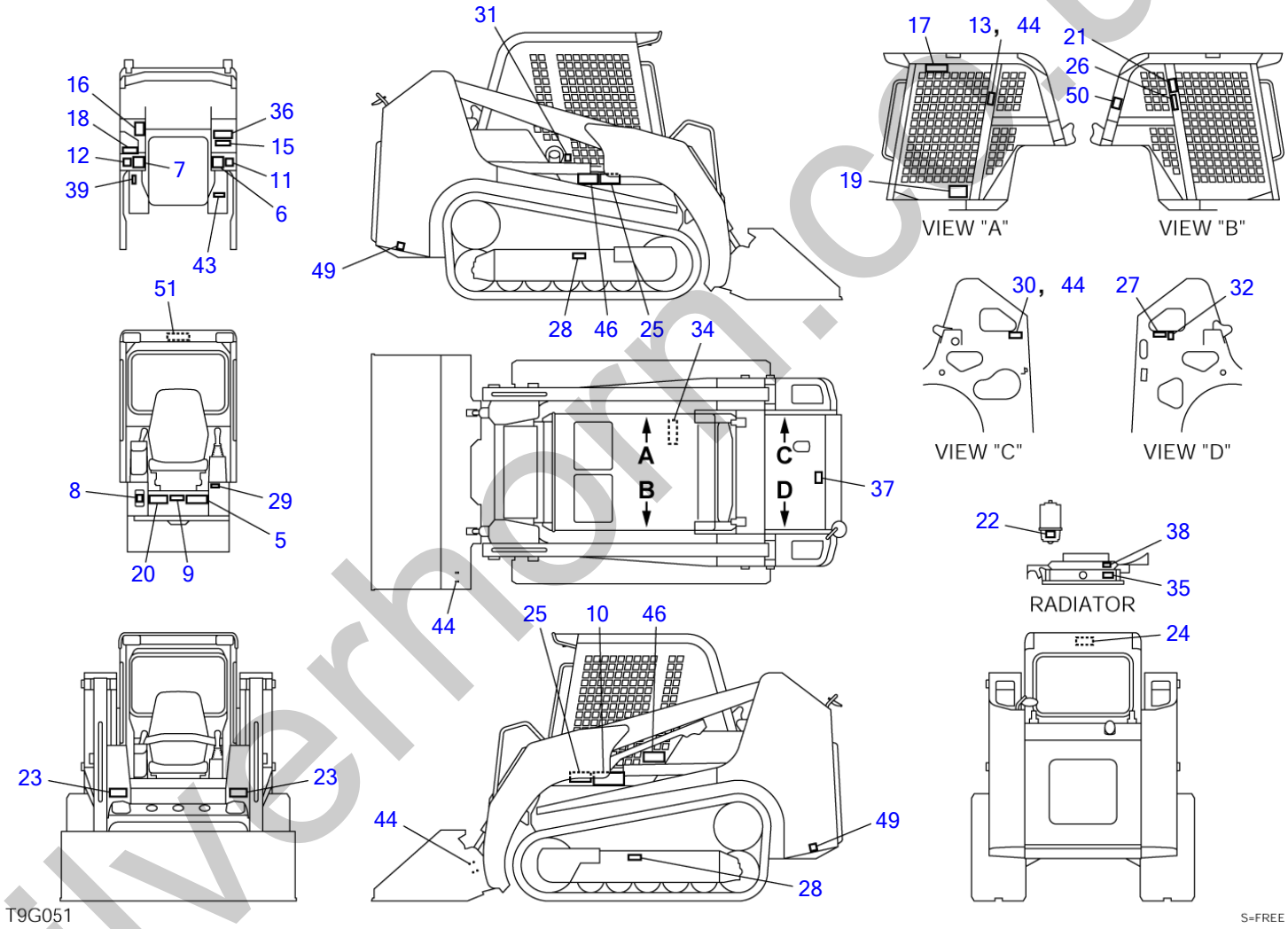

silverhorn.co.uk

5
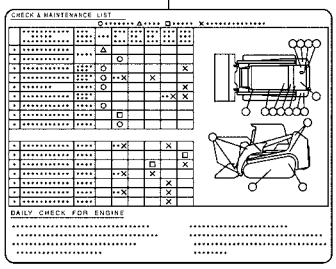

6
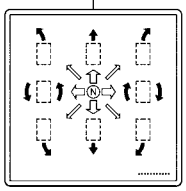

7
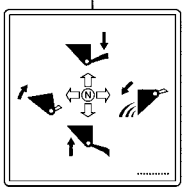

8
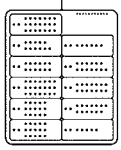

9

10
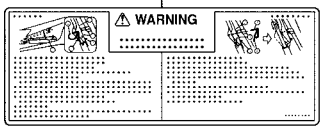

11
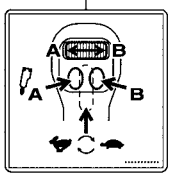

12
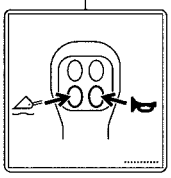

13
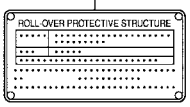

(for GEHL)

13
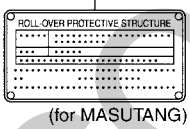

(for MASUTANG)

15
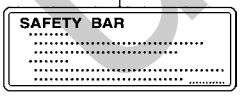

16

17
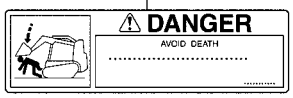

19

20

18
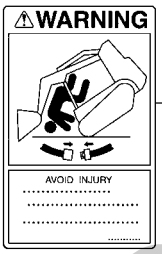

21
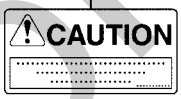

22

23

24
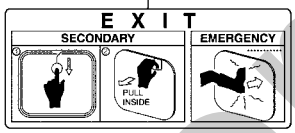

25
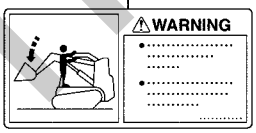

26
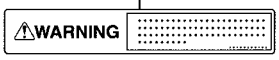

27
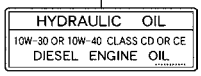

31

32
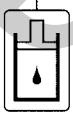

34
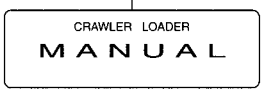

35
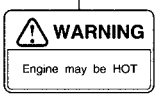

36
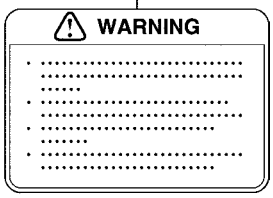

37
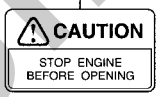

38
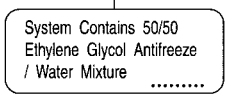

39

43
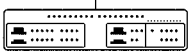

46
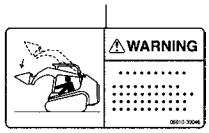

49

50
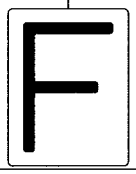

51

T9G061

S=free

silverhorn.co.uk

DECAL (for GEHL & MUSTANG; 21400011-21400694)

Item	Part number	Description	Q'ty	Chan.	Serial No.	Serv.	Remarks
0	0882030700	DECAL SET (for GEHL)	1				X08820-30700-2
	0882030800	DECAL SET (for MUSTANG)	1				X08820-30800-2
5	0882030010	・DECAL	1				
6	0881030006	・DECAL	1				
7	0881030007	・DECAL	1				
8	0881030008	・DECAL	1				
9	0882030009	・DECAL	1				
10	0881030110	・DECAL	1				
11	0882030006	・DECAL	1				
12	0882030007	・DECAL	1				
13	X **********	・DECAL	1				for GEHL
	X **********	・DECAL	1				for MUSTANG
15	0880031001	・DECAL	1				
16	0880030009	・DECAL	1				
17	0880030010	・DECAL	1				
18	0880030011	・DECAL	1				
19	0880031003	・DECAL	1				
20	0881030020	・DECAL	1				
21	0880030015	・DECAL	1				
22	0880030016	・DECAL	1				
23	0880030017	・DECAL	2				
24	0880031018	・DECAL	1				
25	0880031005	・DECAL	2				
26	0881030026	・DECAL	1				
27	0880031017	・DECAL	1				
28	0149362200	・DECAL	2				
29	X **********	・DECAL	1				
30	X **********	・DECAL	1				
31	0359306600	・DECAL	1				
32	0359306700	・DECAL	1				
34	0880031016	・DECAL	1				
35	0569321980	・DECAL	1				
36	0359313700	・DECAL	1				
37	0359307400	・DECAL	1				
38	0359313900	・DECAL	1				
39	0359317200	・DECAL	1				
43	0881030043	・DECAL	1				
44	X **********	・SCREW	16				
46	0881030046	・DECAL	2				
49	0881031549	・DECAL	2				
50	0399300400	・DECAL	1				
51	0881031551	・DECAL	1				
	T9g051						

silverthorn.co.uk

DECAL (high flow; 21403459-)

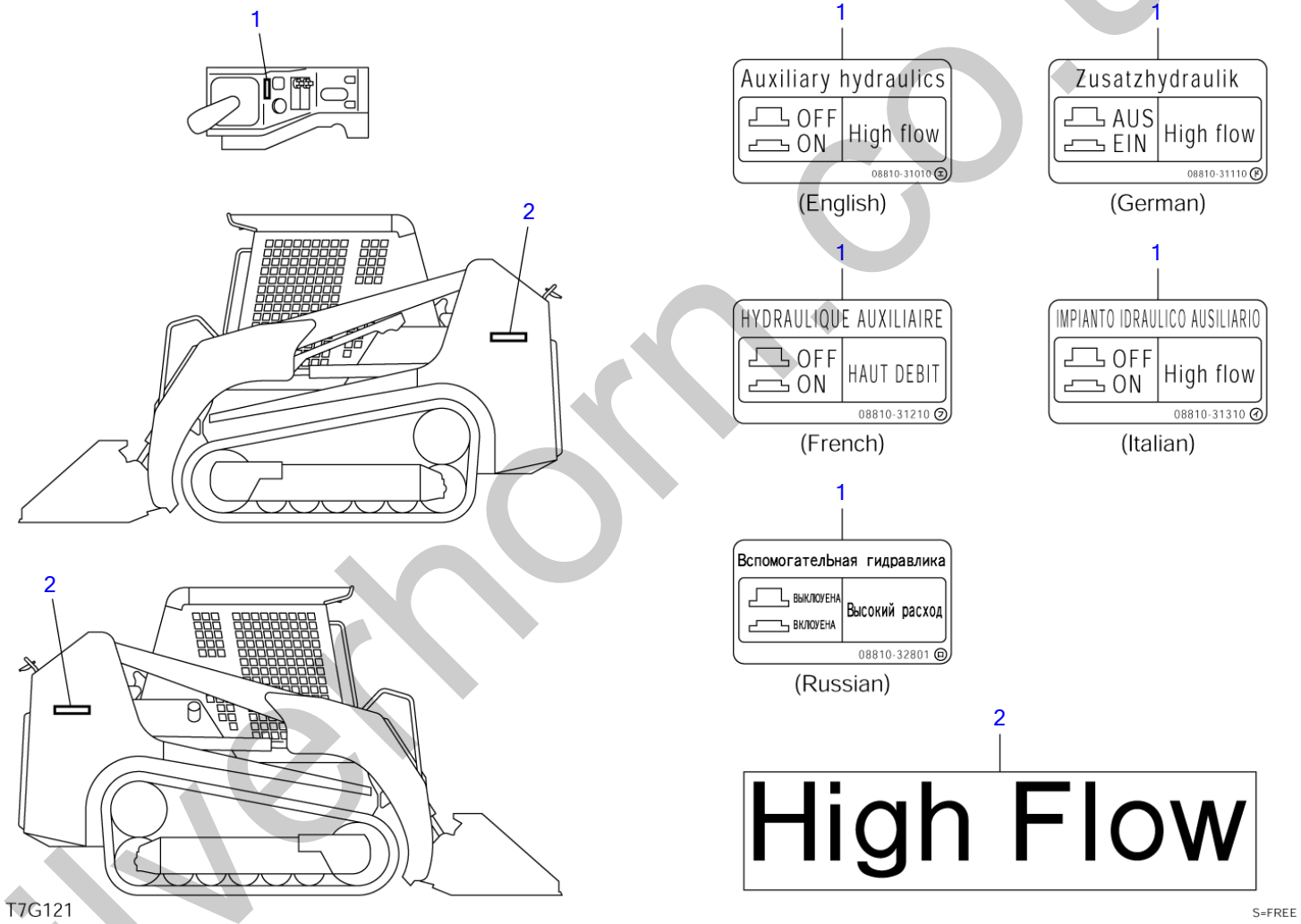

silverhorn.co.uk

DECAL (high flow; 21403459-)

Item	Part number	Description	Q'ty	Chan.	Serial No.	Serv.	Remarks
0	0881032000	DECAL SET (English)	1				X08810-32000-1
	0881032100	DECAL SET (German)	1				X08810-32100-1
	0881032200	DECAL SET (French)	1				X08810-32200-1
	0881032300	DECAL SET (Italian)	1				X08810-32300-1
	0882032600	DECAL SET (Dutch)	1			M	X08820-32600-1
	0882032700	DECAL SET (Russian)	1			M	X08810-32700-1
1	0881031010	・DECAL (English)	1				
	0881031110	・DECAL (German)	1				
	0881031210	・DECAL (French)	1				
	0881031310	・DECAL (Italian)	1				
	0881032801	・DECAL (Russian)	1			M	
2	0881031020	・DECAL	2				
	T9g181						

silverhorn.co.uk

DECAL (high flow, for GEHL & MUSTANG; 21403459-)

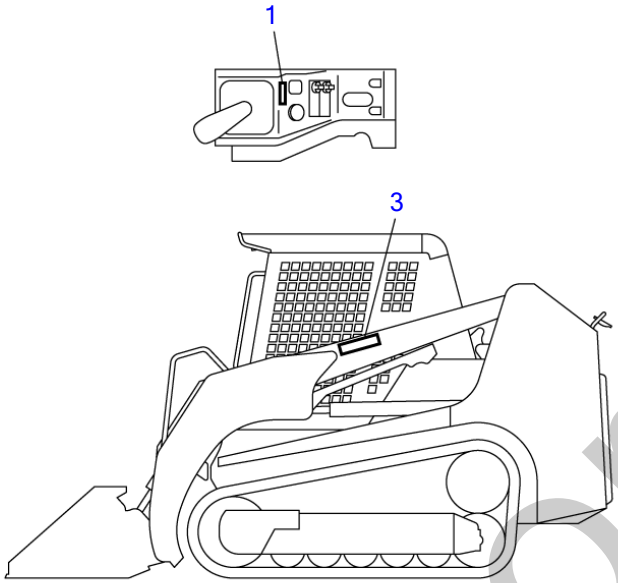

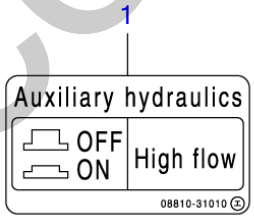

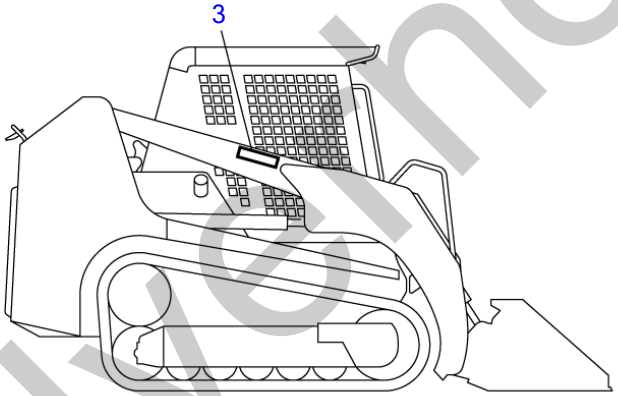

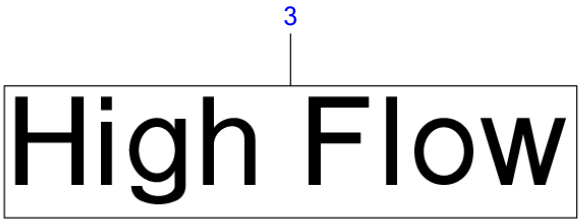

T7G131

S=FREE

silverthorn.co.uk

DECAL (high flow, for GEHL & MUSTANG; 21403459-)

Item	Part number	Description	Q'ty	Chan.	Serial No.	Serv.	Remarks
0	**0881032400**	DECAL SET (GEHL & MUSTANG)	1				X08810-32400-1
1	**0881031010**	・DECAL	1				
3	**0881031030**	・DECAL	2				
	T9g191						

silverhorn.co.uk

TOOL & ACCESSORIES

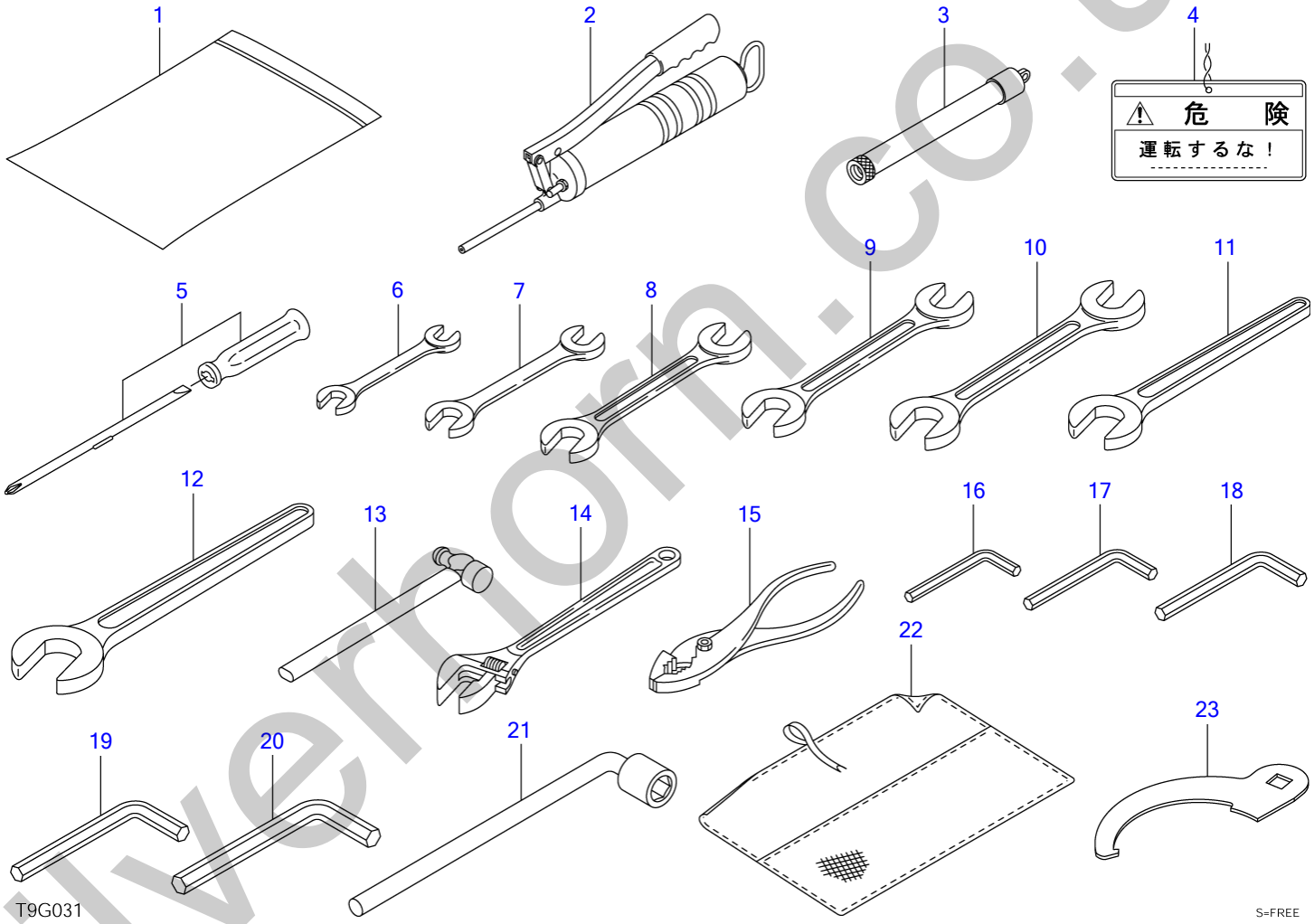

silverhorn.co.uk

TOOL & ACCESSORIES

Item	Part number	Description	Q'ty	Chan.	Serial No.	Serv.	Remarks
		TOOL SET	1				X08820-20100-0, 20200-0
1	1691900001	CASE	1				
2	1691060600	GUN, grease	1				
	1691010800	GUN, grease	1				for JAPAN
3	1554512600	TUBE	1				
4	0359325160	PLATE	1				for JAPAN
0-1	0880921260	TOOL SET	1				
5	1690220205	・SCREWDRIVER	1				
6	1690001012	・SPANNER	1				
7	1690001113	・SPANNER	1				
8	1690001417	・SPANNER	1				
9	1690001922	・SPANNER	1				
10	1690002427	・SPANNER	1				
11	1690100030	・SPANNER	1				
12	1690100041	・SPANNER	1				
13	1690300330	・HAMMER	1				
14	1690400250	・WRENCH, monkey	1				
15	1690500200	・PLIER	1				
16	1690600500	・WRENCH, hex	1				
17	1690600600	・WRENCH, hex	1				
18	1690600800	・WRENCH, hex	1				
19	1690601000	・WRENCH, hex	1				
20	1690601400	・WRENCH, hex	1				
21	1690830019	・WRENCH, hex	1				
22	1691400001	・CASE, tool	1				
23	0881920060	・WRENCH, filter	1				
	T9g031						

silverhorn.co.uk

PAINTED COLOR

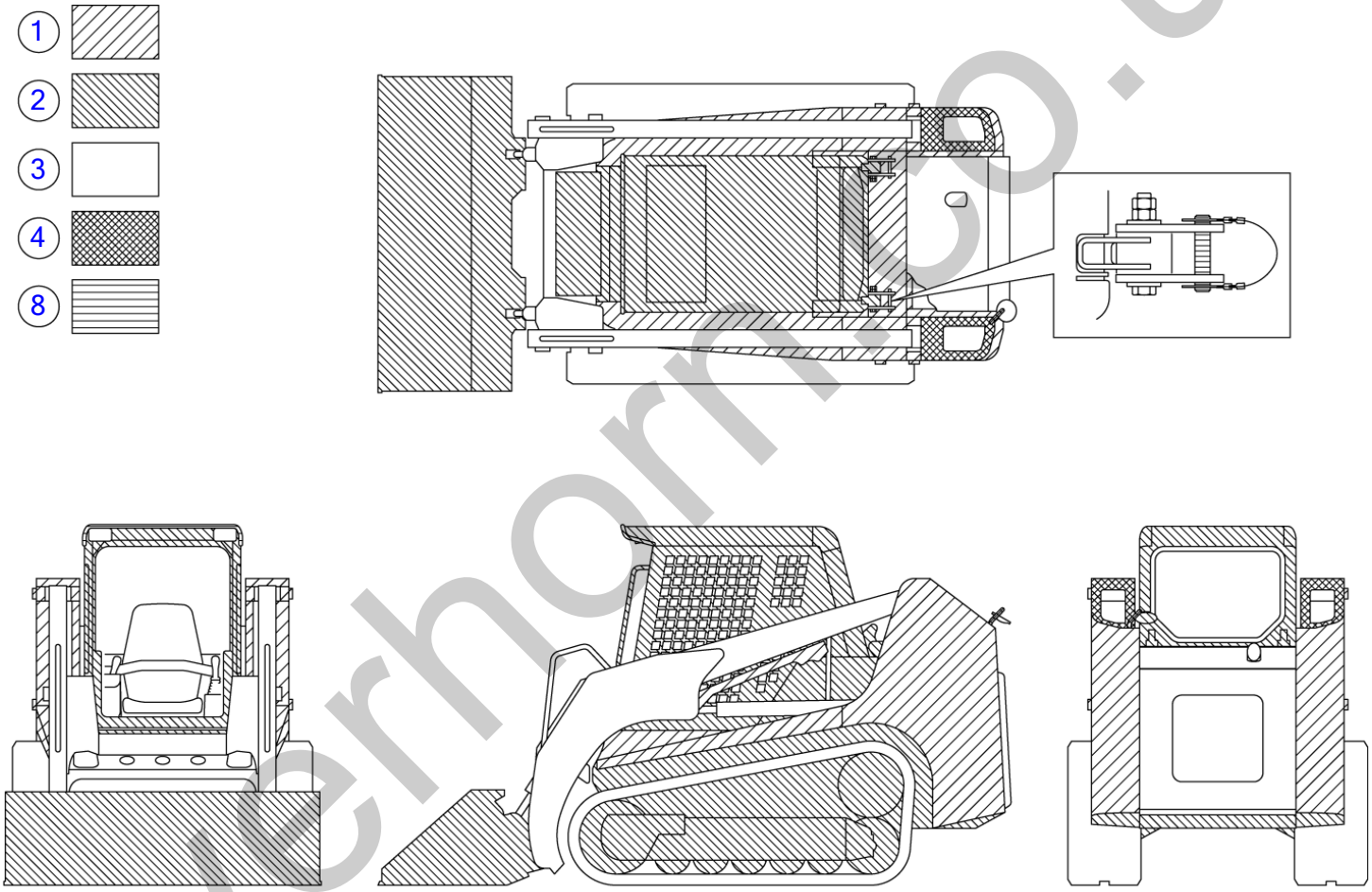

T9G042

S=FREE

silverhorn.co.uk

PAINTED COLOR

Item	Part number	Description	Q'ty	Chan.	Serial No.	Serv.	Remarks
		PAINTED COLOR					X08820-10000-2
1	1919060105	RED	1				
	1919069105	RED	1				spray
2	1919060144	GRAY	1				
	1919069144	GRAY	1				spray
3	1919060142	LIGHT GRAY	1				
	1919069142	LIGHT GRAY	1				spray
4	1919060103	BLACK	1				
	1919069103	BLACK	1				spray
8	1919069175	YELLOW	1				spray
	T9g042						

silverhorn.co.uk

PAINTED COLOR (for GEHL)

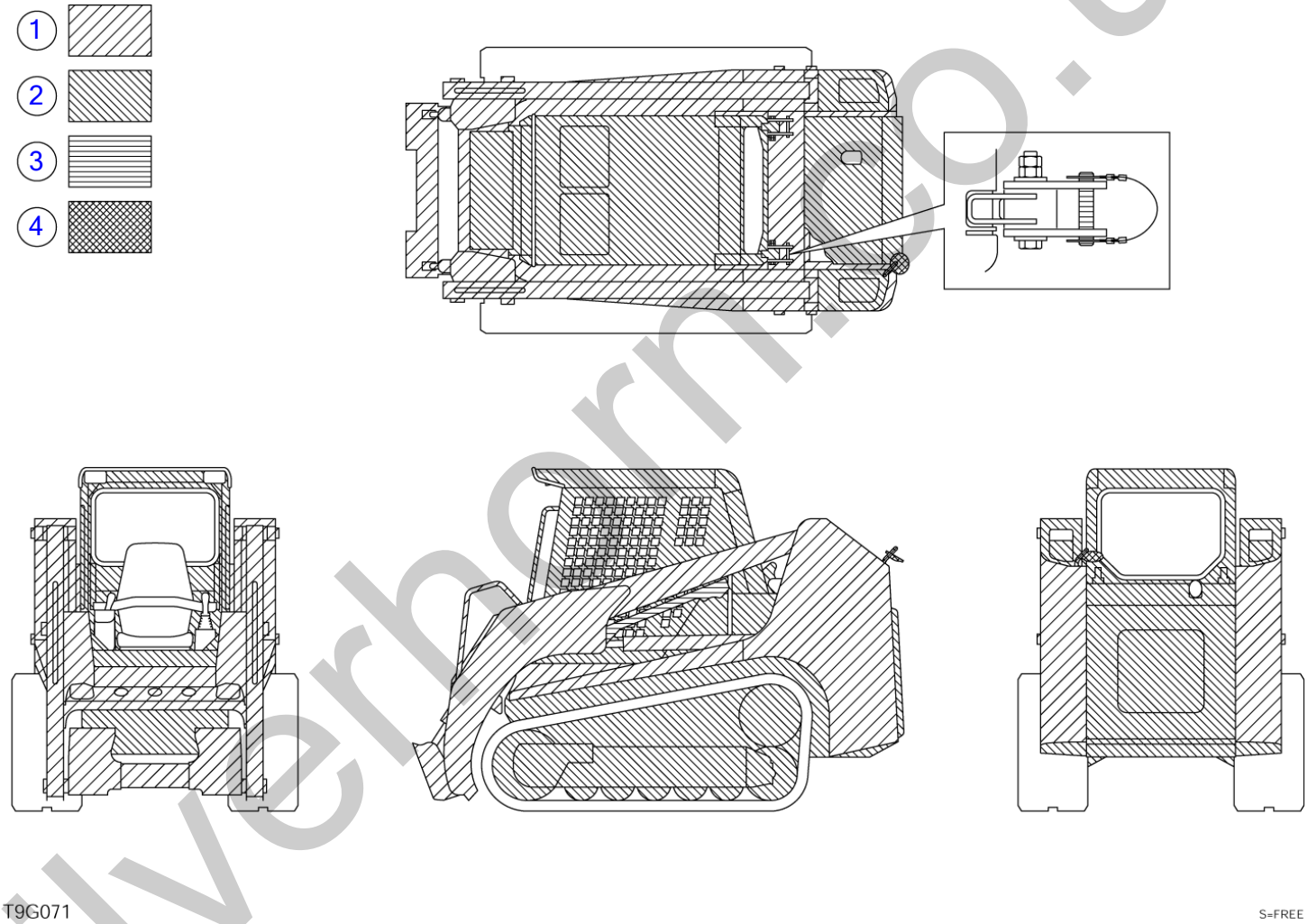

silverhorn.co.uk

PAINTED COLOR (for GEHL)

Item	Part number	Description	Q'ty	Chan.	Serial No.	Serv.	Remarks
		PAINTED COLOR					X08820-10100-1
1	1919060177	GEHL YELLOW	1				
	1919069177	GEHL YELLOW	1				spray
2	1919060180	GEHL GRAY	1				
	1919069180	GEHL GRAY	1				spray
3	1919060105	RED	1				
	1919069105	RED	1				spray
4	1919060103	BLACK	1				
	1919069103	BLACK	1				spray
	T9g072						

silverhorn.co.uk

PAINTED COLOR (for MUSTANG)

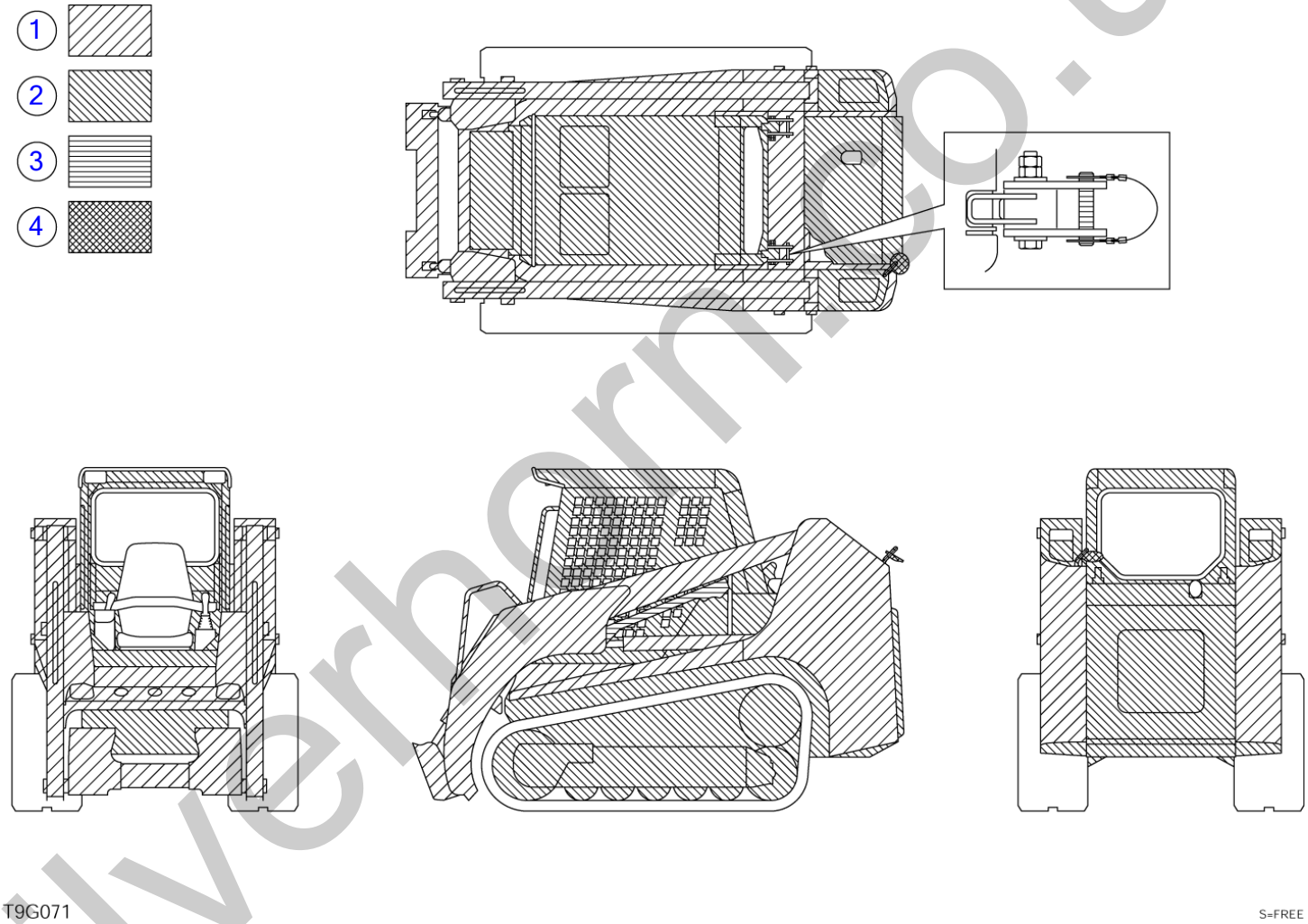

silverhorm.co.uk

PAINTED COLOR (for MUSTANG)

Item	Part number	Description	Q'ty	Chan.	Serial No.	Serv.	Remarks
		PAINTED COLOR					X08820-10200-1
1	1919060183	MUSTANG YELLOW	1				
	1919069183	MUSTANG YELLOW	1				spray
2	1919060180	GEHL GRAY	1				
	1919069180	GEHL GRAY	1				spray
3	1919060105	RED	1				
	1919069105	RED	1				spray
4	1919060103	BLACK	1				
	1919069103	BLACK	1				spray
	T9g082						

silverhorn.co.uk

CONTROL VALVE

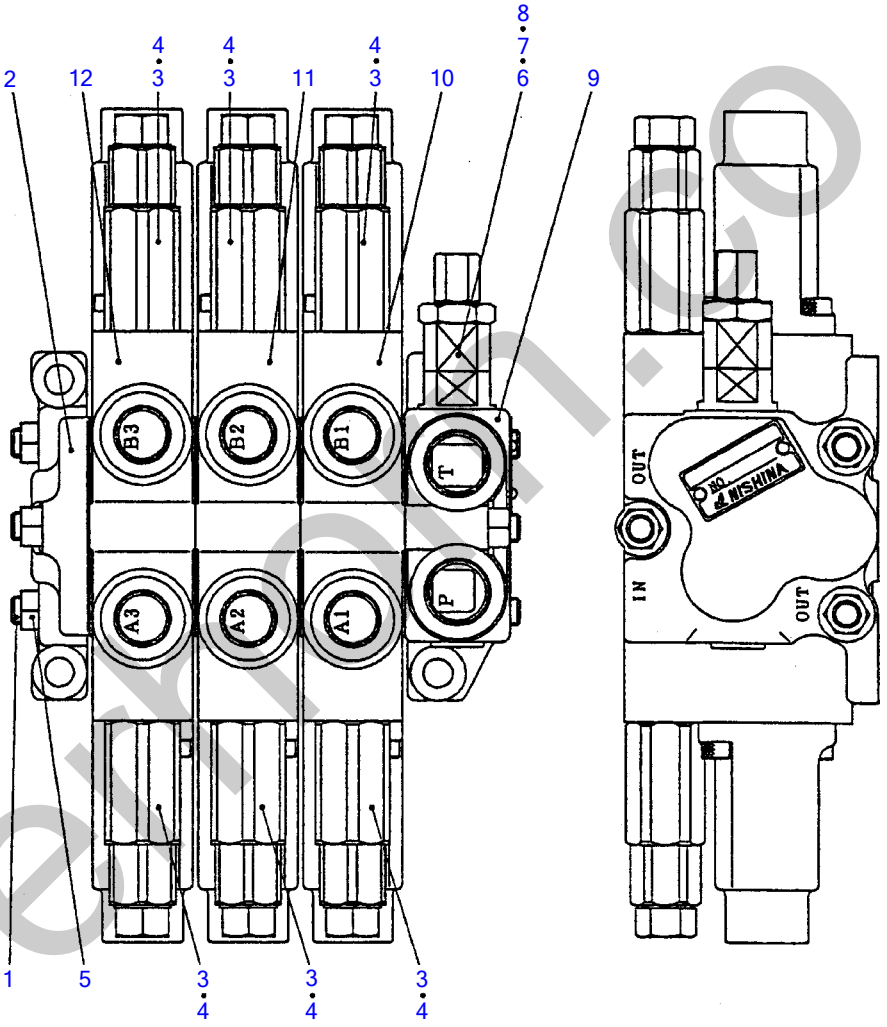

T7H010

silverhill.co.uk

CONTROL VALVE

Item	Part number	Description	Q'ty	Chan.	Serial No.	Serv.	Remarks
0	1901042100	VALVE ASSY, control	1				
1	1901038106	・ROD, tie	3				
2	1901038108	・HOUSING, outlet	1				
3	1901038125	・VALVE ASSY	6				over load
4	1420010220	・・O-RING	1				
5	1130250010	・NUT	6				
6	1901038122	・VALVE ASSY	1				main relief
7	1420010120	・・O-RING	1				
8	1420010220	・・O-RING	1				
9	1901038103	・HOUSING, inlet	1				
10	1901042112	・BLOCK ASSY, NO. 1	1				lift arm
11	1901042113	・BLOCK ASSY, NO. 2	1				bucket
12	1901042119	・BLOCK ASSY, NO. 3	1				service
	T9h010						

silverhorn.co.uk

INLET HOUSING ASSY

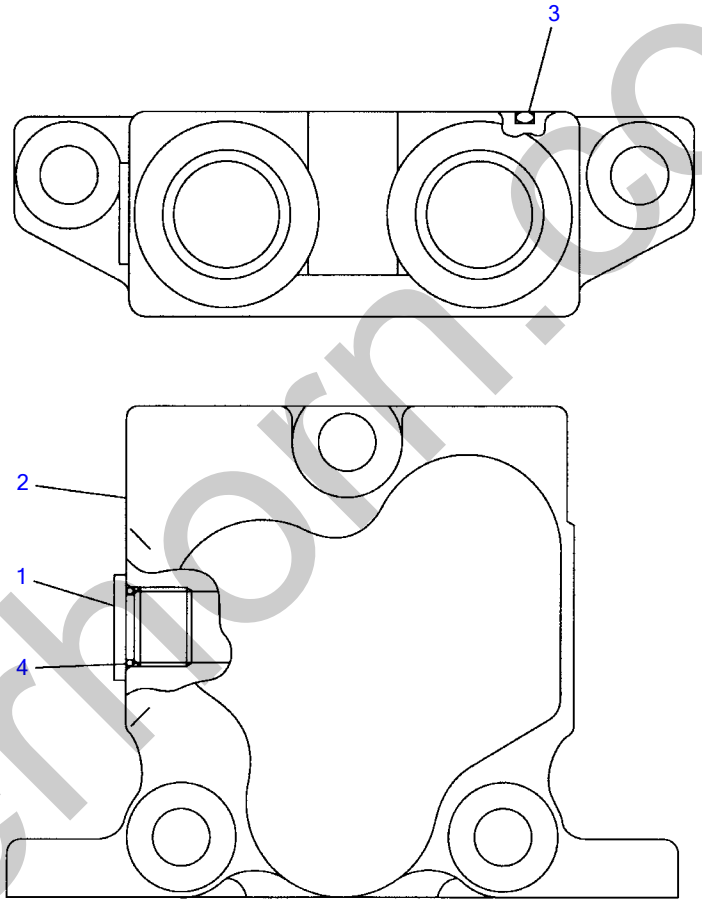

T7H020

silverhorn.co.uk

INLET HOUSING ASSY

Item	Part number	Description	Q'ty	Chan.	Serial No.	Serv.	Remarks
0	1901038103	HOUSING, inlet	1				
1	1513500028	・PLUG	1				
2	1901038105	・HOUSING	1				
3	1420110650	・O-RING	1				
4	1420310906	・O-RING	1				
	T7h020						

silverhorn.co.uk

BLOCK ASSY; No. 1

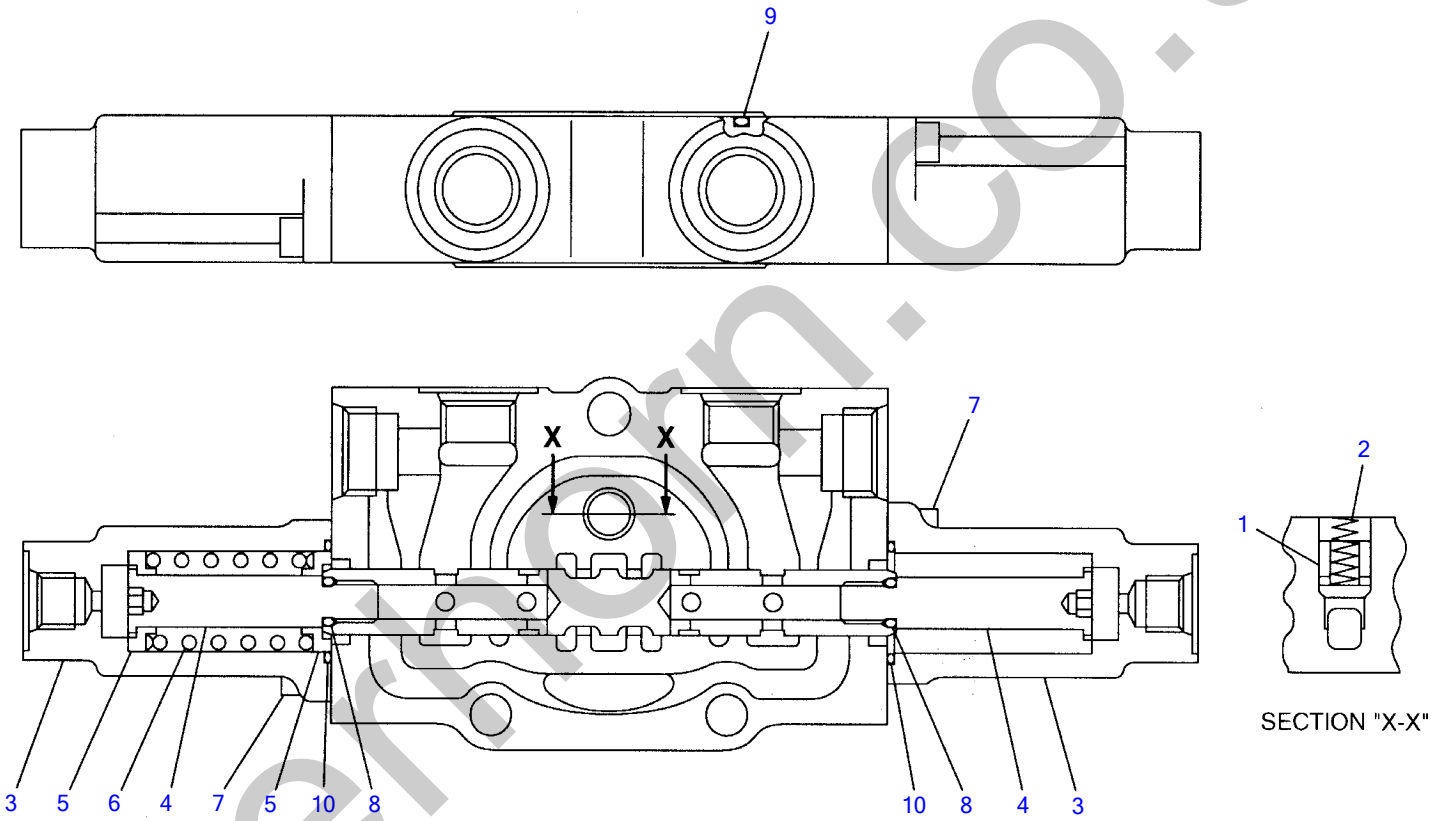

T7H030

silvermoon.co.uk

BLOCK ASSY; No. 1

Item	Part number	Description	Q'ty	Chan.	Serial No.	Serv.	Remarks
0	1901042112	BLOCK ASSY, NO. 1	1				arm
1	1901038126	・PLUNGER	1				
2	1901038156	・SPRING	1				
3	1901038166	・CAP	2				
4	1901038131	・END, spool	2				
5	1901035151	・HOLDER, spring	2				
6	1901042157	・SPRING	1				
7	1110020620	・SCREW, cap	4				
8	1420010070	・O-RING	2				
9	1420110650	・O-RING	1				
10	1420300023	・O-RING	2				
	T9h020						

silverhorn.co.uk

BLOCK ASSY; No. 2

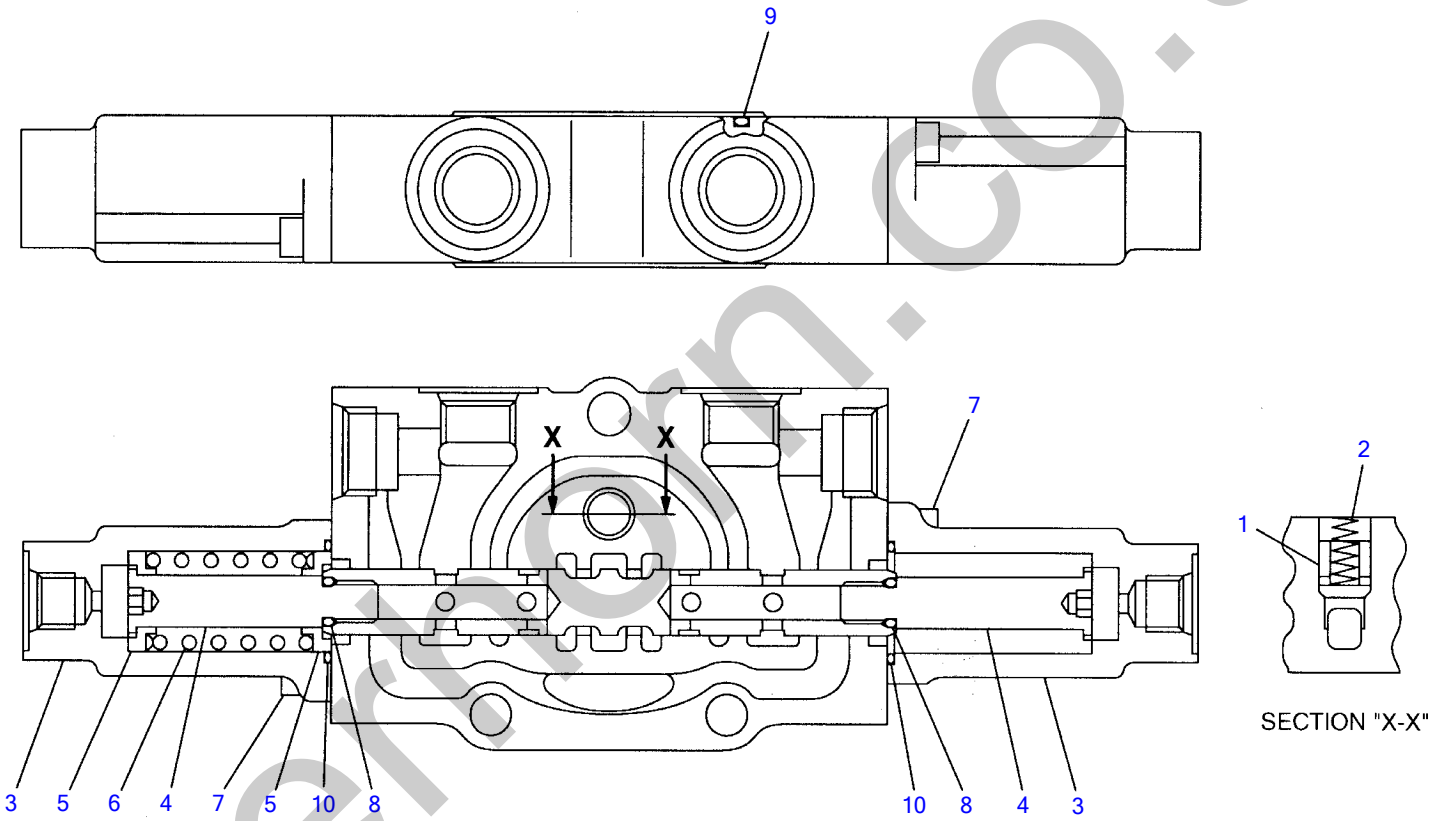

T7H030

silvermoon.co.uk

BLOCK ASSY; No. 2

Item	Part number	Description	Q'ty	Chan.	Serial No.	Serv.	Remarks
0	1901042113	BLOCK ASSY, NO. 2	1				bucket
1	1901038126	・PLUNGER	1				
2	1901038156	・SPRING	1				
3	1901038166	・CAP	2				
4	1901038131	・END, spool	2				
5	1901035151	・HOLDER, spring	2				
6	1901042157	・SPRING	1				
7	1110020620	・SCREW, cap	4				
8	1420010070	・O-RING	2				
9	1420110650	・O-RING	1				
10	1420300023	・O-RING	2				
	T9h030						

silverhorn.co.uk

BLOCK ASSY; No. 3

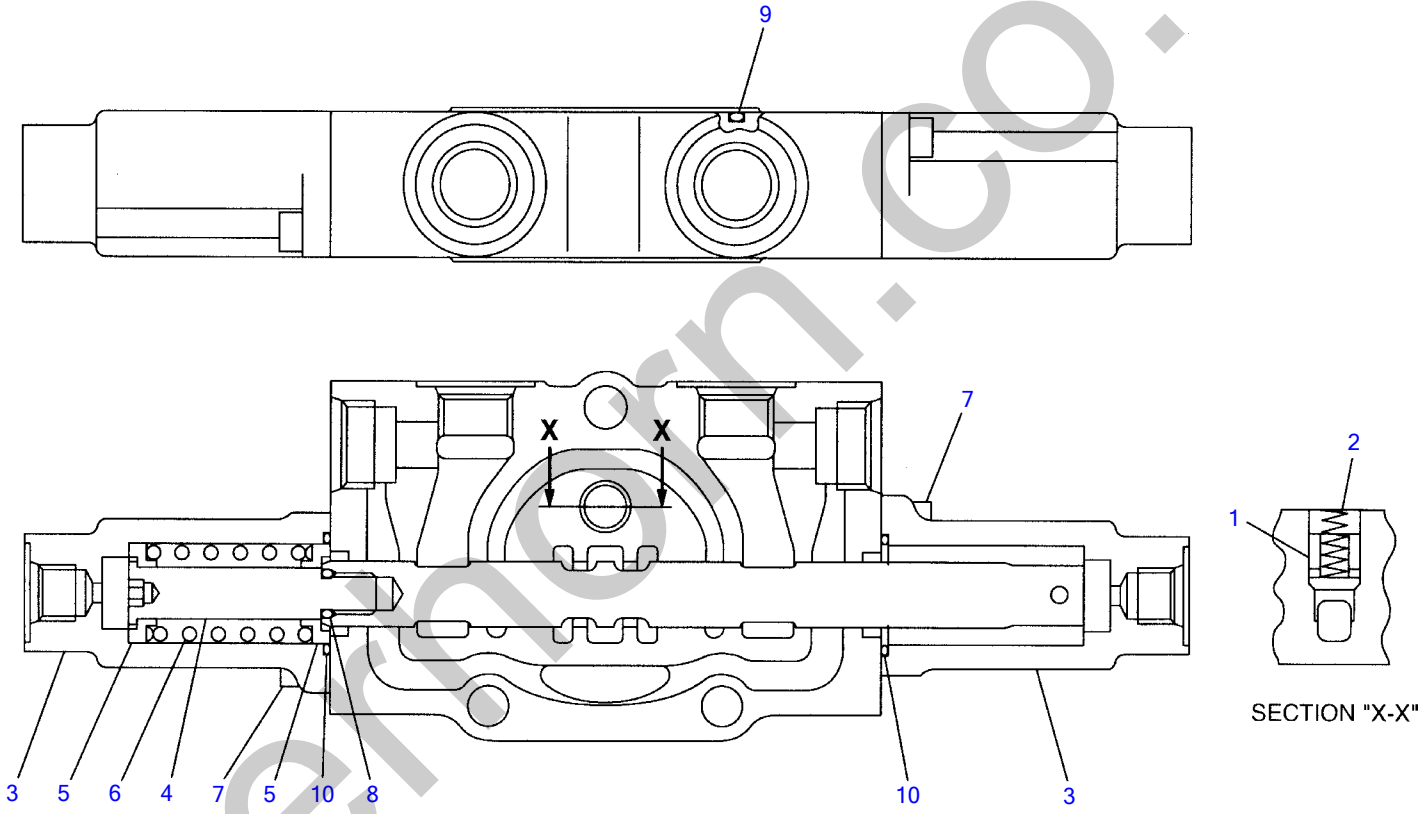

T7H050

silvernorn.co.uk

BLOCK ASSY; No. 3

Item	Part number	Description	Q'ty	Chan.	Serial No.	Serv.	Remarks
0	1901042119	BLOCK ASSY, NO. 3	1				service
1	1901038126	・PLUNGER	1				
2	1901038156	・SPRING	1				
3	1901038166	・CAP	2				
4	1901038131	・END, spool	1				
5	1901035151	・HOLDER, spring	2				
6	1901042157	・SPRING	1				
7	1110020620	・SCREW, cap	4				
8	1420010070	・O-RING	1				
9	1420110650	・O-RING	1				
10	1420300023	・O-RING	2				
	T9h040						

silverhorn.co.uk

CONTROL VALVE (high flow; 21403459-)

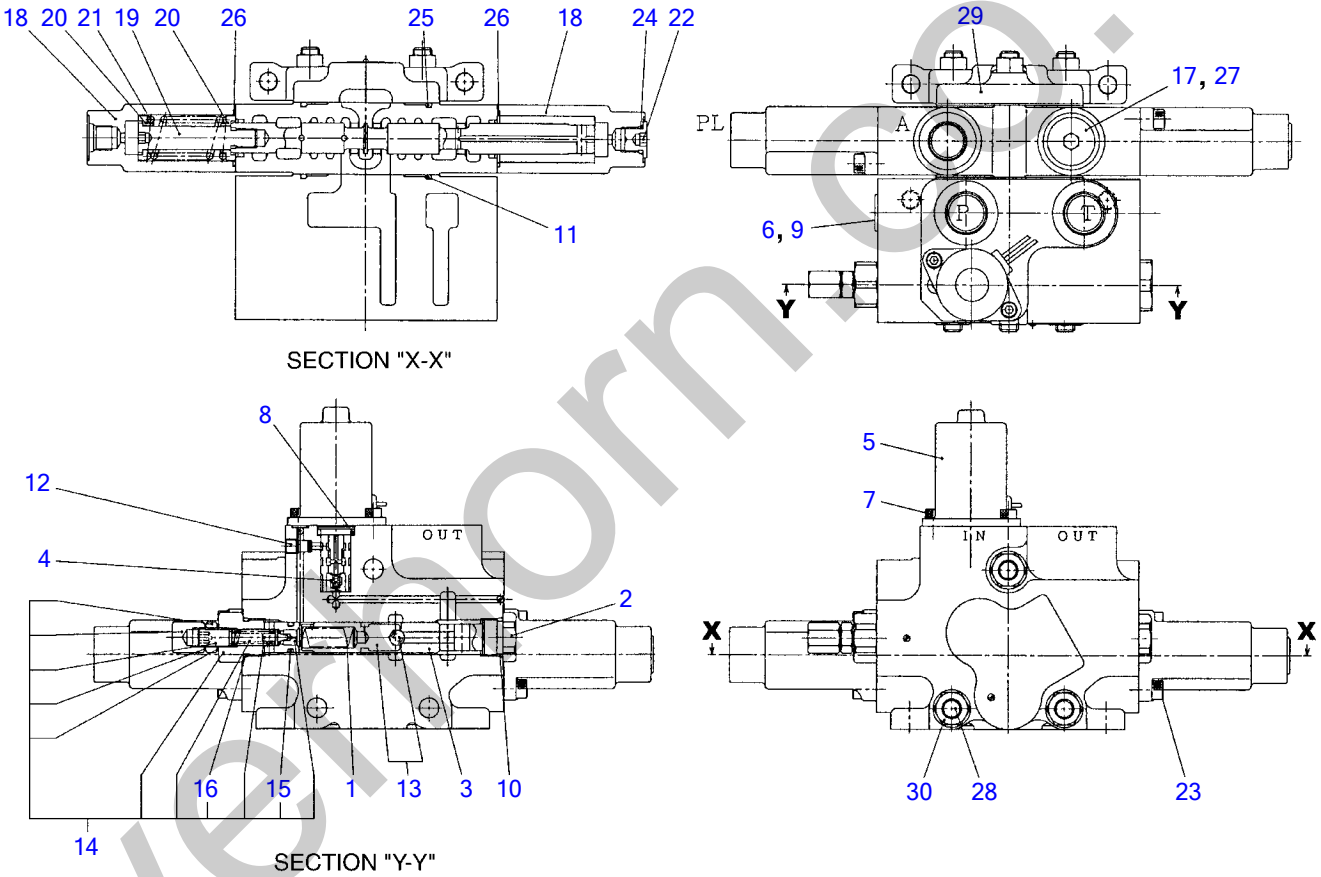

T7H260

S=free

silvermorn.co.uk

CONTROL VALVE (high flow; 21403459-)

Item	Part number	Description	Q'ty	Chan.	Serial No.	Serv.	Remarks
0	1901039500	VALVE ASSY, control	1				
0-1	1901039511	・BLOCK ASSY, solenoid	1				
1	1901039556	・・SPRING	1				
2	1901039513	・・PLUG	1				
3	1901039526	・・HOLDER, spring	1				
4	1901039557	・・SPRING	1				
5	1901039525	・・SOLENOID	1				
6	1901720720	・・PLUG	1				
7	1110040510	・・SCREW, cap	2				
8	1420000160	・・O-RING	1				
9	1420010110	・・O-RING	1				
10	1420010160	・・O-RING	1				
11	1420110650	・・O-RING	1				
12	1501810000	・・PLUG	1				
13	1901039527	・・PLUNGER	1				
14	1901039521	・・VALVE.relief	1				
15	1420010120	・・・O-RING	1				
16	1420010160	・・・O-RING	1				
0-2	1901039510	・BLOCK ASSY	1				
17	1513500008	・・PLUG	1				
18	1901038166	・・COVER	2				
19	1901038131	・・END, spool	1				
20	1901035151	・・HOLDER, spring	2				
21	1901038157	・・SPRING	1				
22	1901720720	・・PLUG	1				
23	1110020620	・・SCREW, cap	4				
24	1420010110	・・O-RING	1				
25	1420110650	・・O-RING	1				
26	1420310023	・・O-RING	2				
27	1420310908	・・O-RING	1				
28	1901039507	・ROD, tie	3				
29	1901039504	・HOUSING, inlet	1				
30	1130050010	・NUT	6				
	T7h260						

silverhorn.co.uk

SUB VALVE

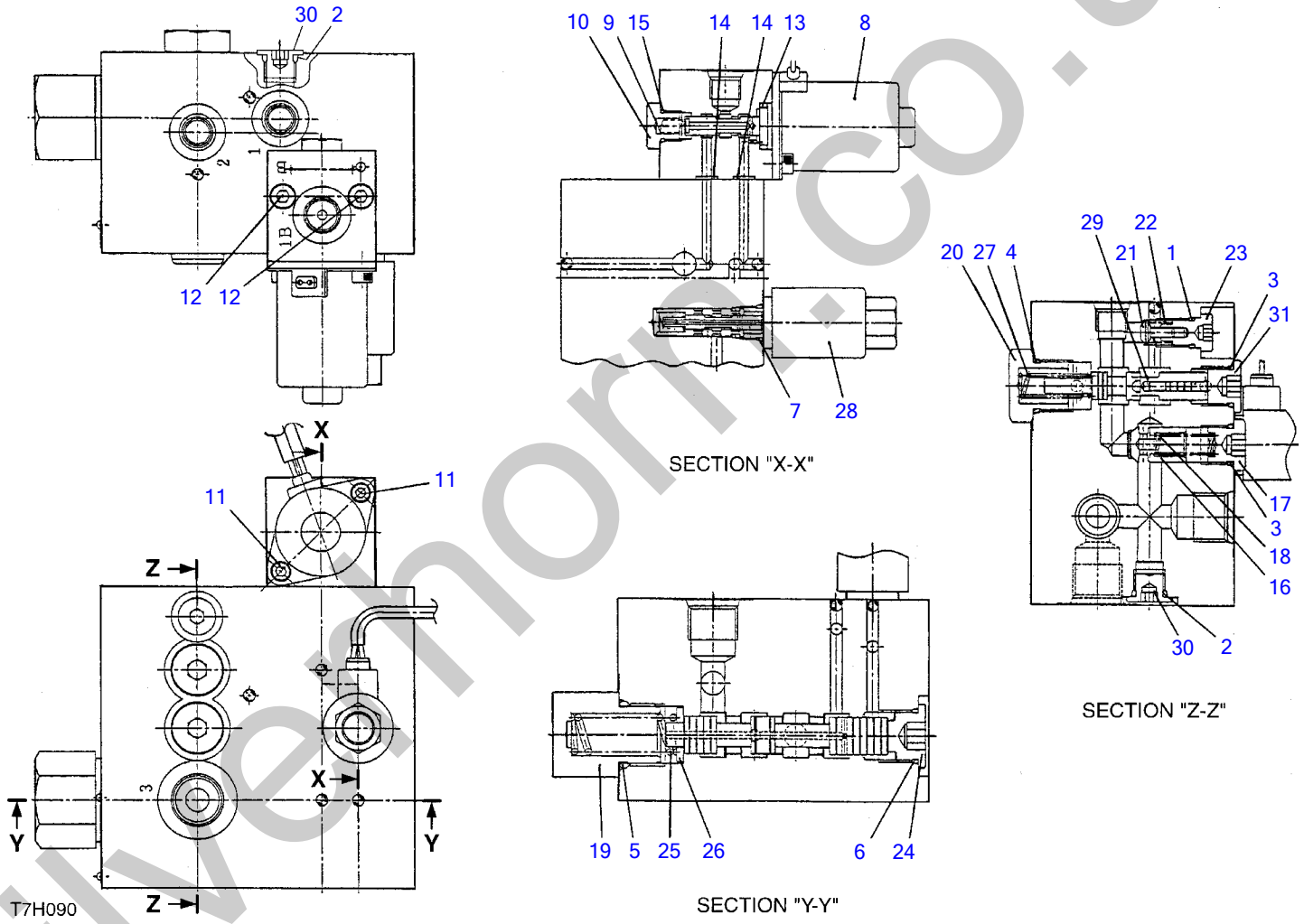

silverthorn.co.uk

SUB VALVE

Item		Part number	Description	Q'ty	Chan.	Serial No.	Serv.	Remarks
0		1901735500	VALVE, sub	1				
0-1		1901735599	・KIT, seal	1				
1	X	1420010100	・・O-RING	1				
2	X	1420010110	・・O-RING	2				
3	X	1420010140	・・O-RING	2				
4	X	1420010200	・・O-RING	1				
5	X	1420010240	・・O-RING	1				
6	X	1420310910	・・O-RING	1				
7	X	1420000125	・・O-RING	1				
0-2		1901735598	・SOLENOID ASSY	1				
8		1901735510	・・SOLENOID	1				
9		1901735511	・・SPRING	1				
10		1901735524	・・PLUG	1				
11		1110050510	・・SCREW, cap	2				
12		1110050645	・・SCREW, cap	2				
13		1420010160	・・O-RING	1				
14		1420300010	・・O-RING	2				
15		1420300013	・・O-RING	1				
16		1901731901	・POPPET	1				
17		1901731902	・PLUG	1				
18		1901731903	・SPRING	1				
19		1901731904	・PLUG	1				
20		1901700411	・PLUG	1				
21		1901035426	・PLUNGER	1				
22		1901004357	・SPRING	1				
23		1901035471	・PLUG	1				
24		1901731910	・PLUG	1				
25		1901731911	・SPRING	1				
26		1901731912	・WASHER	1				
27		1901731917	・SPRING	1				
28		1901731918	・VALVE, solenoid	1				
29		1901731919	・RING, wire	1				
30		1901720720	・PLUG	2				
31		1901712505	・PLUG	1				
		T7h090						

silverhorn.co.uk

SELF LEVEL VALVE

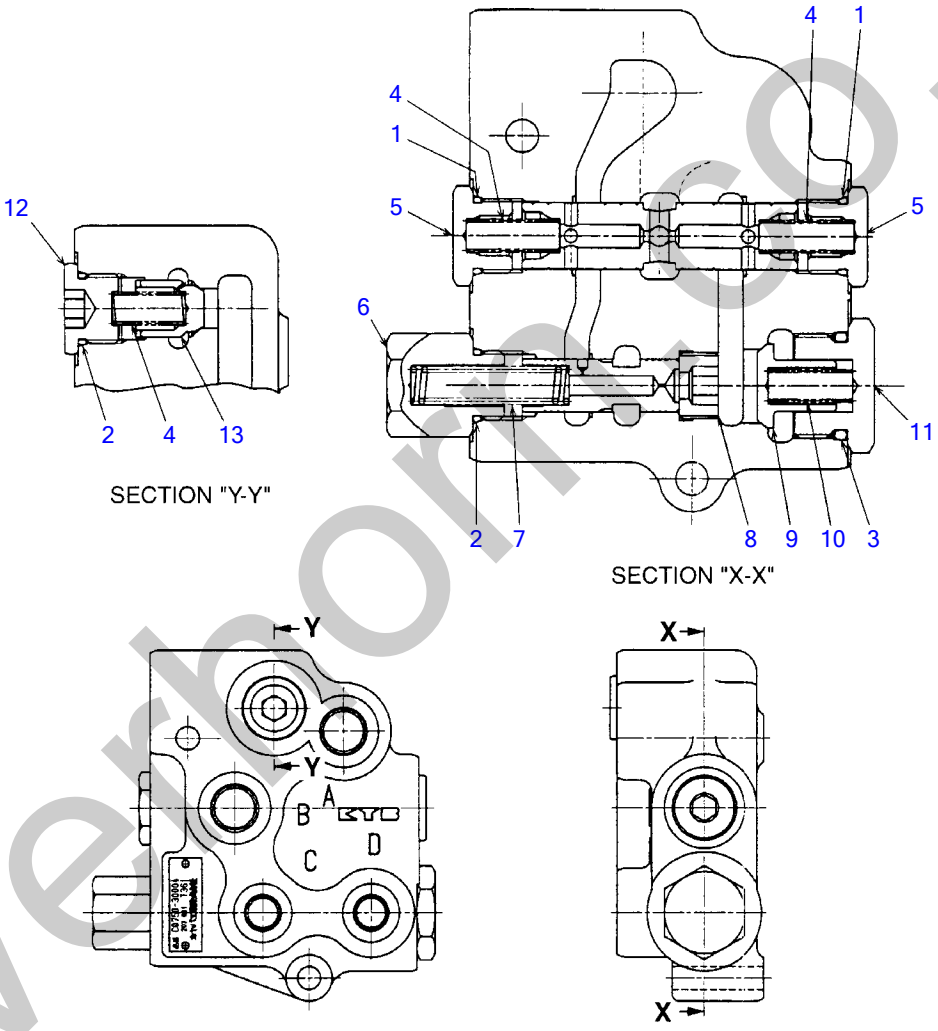

T9H050

S=free

silverhorse.co.uk

SELF LEVEL VALVE

Item	Part number	Description	Q'ty	Chan.	Serial No.	Serv.	Remarks
0	1901736100	VALVE ASSY, self-level	1				
0-1	1901736199	・KIT, seal	1				
1	X 1420310910	・・O-RING	2				
2	X 1420010180	・・O-RING	2				
3	X 1901736119	・・O-RING	1				
4	1901736103	・SPRING	3				
5	1901736106	・PLUG	2				
6	1901736107	・PLUG	1				
7	1901736109	・SPRING	1				
8	1901736115	・STOPPER	1				
9	1901736116	・POPPET	1				
10	1901736117	・PLUG	1				
11	1901736118	・PLUG	1				
12	1901736120	・PLUG	1				
13	1901736121	・POPPET	1				
	T9h050						

silverhorn.co.uk

PILOT VALVE (R.H.) (21400011-21404476)

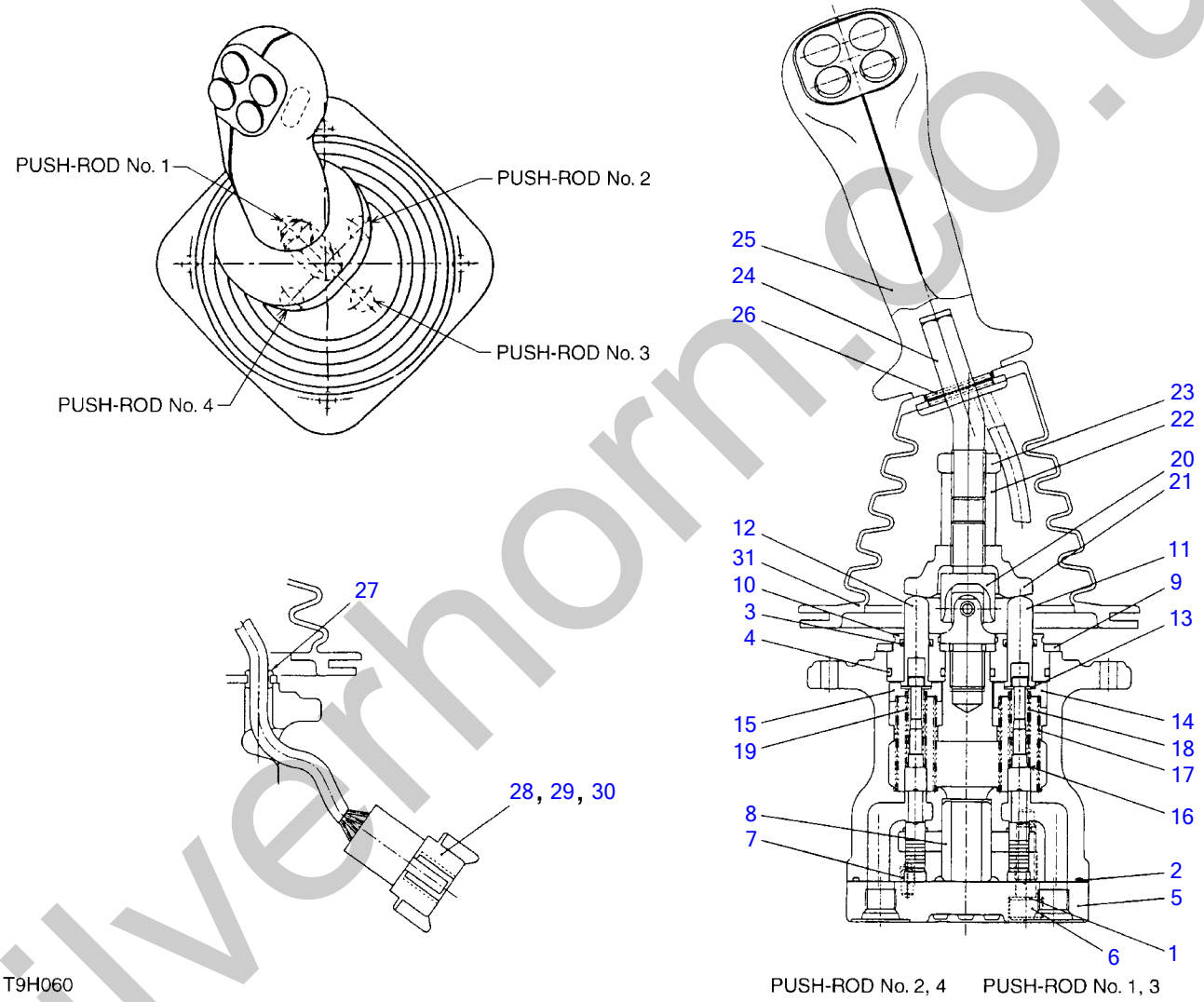

silverhorn.co.uk

PILOT VALVE (R.H.) (21400011-21404476)

Item	Part number	Description	Q'ty	Chan.	Serial No.	Serv.	Remarks
0	1901741500	VALVE ASSY, pilot	1				RIGHT
0-1	1901721199	・KIT, seal	1				
1	X 1901715103	・・WASHER	2				
2	X 1420500900	・・O-RING	1				
3	X 1901710914	・・SEAL	4				
4	X 1420010200	・・O-RING	4				
5	1901715102	・PLATE	1				
6	1110020830	・SCREW, cap	2				
7	1213000510	・PIN, spring	1				
8	1901710905	・BUSHING	1				
9	1901735608	・PLATE	1				
10	1901710912	・PLUG	4				
11	1901719011	・ROD	2				
12	1901719012	・ROD	2				
13	1901710915	・WASHER	8				
14	1901715115	・HOLDER	2				
15	1901710916	・HOLDER	2				
16	1901710917	・WASHER	4				
17	1901716316	・SPRING	4				
18	1901723320	・SPRING	2				
19	1901734020	・SPRING	2				
20	1901720232	・JOINT	1				
21	1901720233	・PLATE	1				
22	1901710922	・NUT	1				
23	1901719025	・NUT	1				
24	1901741526	・LEVER	1				
25	1901741210	・HANDLE	1				
26	1213000528	・PIN, spring	1				
27	1901735630	・BUSHING	1				
28	1901740446	・RECEPTACLE	1				
29	1901740447	・WEDGE	1				
30	1901741263	・PLUG	3				
31	1901735632	・BOOT	1				
	T9h060						

silverhorn.co.uk

PILOT VALVE (R.H.) (21404477-)

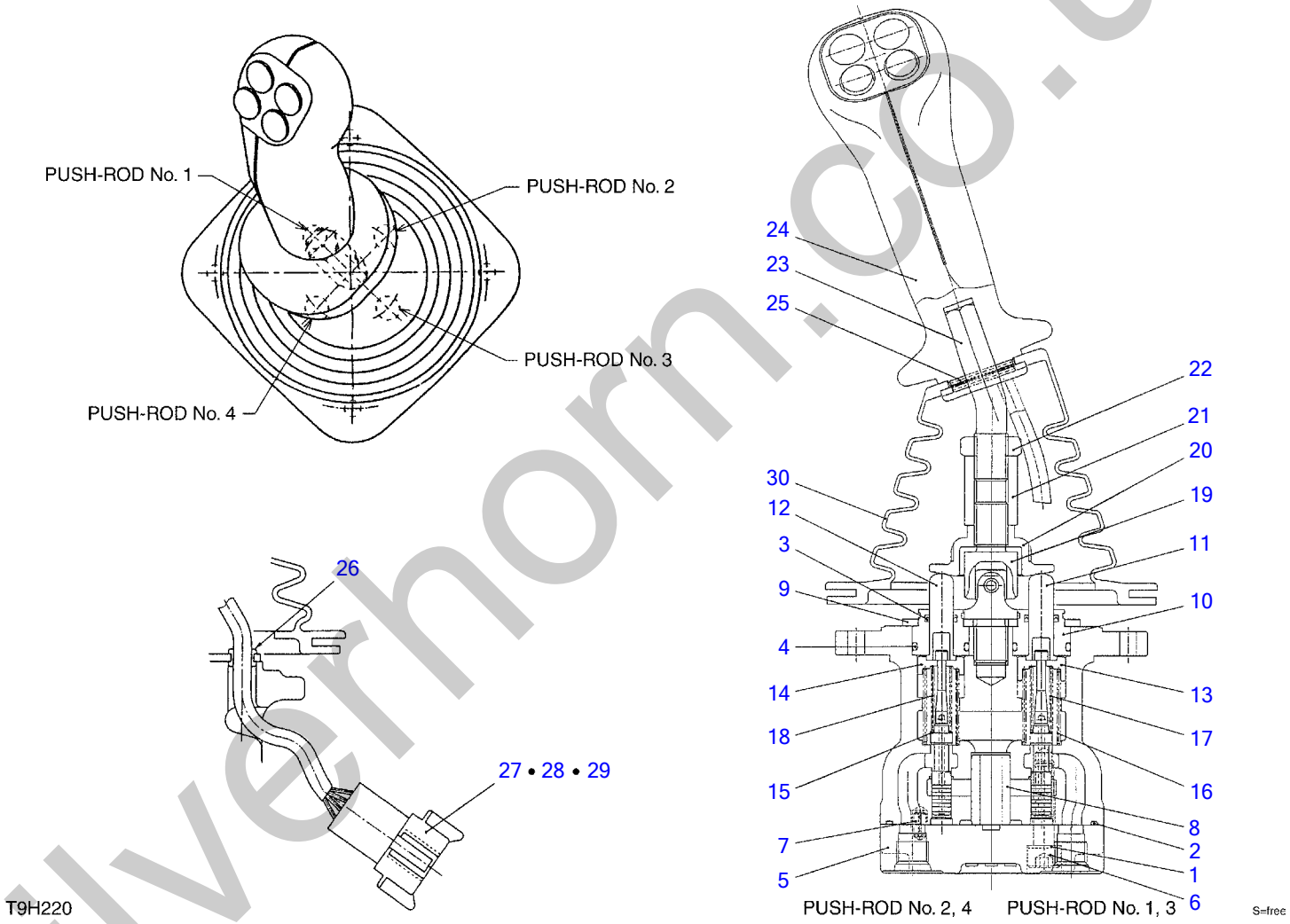

silverhorn.co.uk

PILOT VALVE (R.H.) (21404477-)

Item	Part number	Description	Q'ty	Chan.	Serial No.	Serv.	Remarks
0	1901749800	VALVE ASSY, pilot	1				RIGHT
0-1	1901749599	・KIT, seal	1				
1	X 1901715103	・・WASHER	2				
2	X 1420510850	・・O-RING	1				
3	X 1901710914	・・SEAL	4				
4	X 1420010200	・・O-RING	4				
5	1901749511	・PLATE	1				
6	1110020835	・SCREW, cap	2				
7	1213000510	・PIN, spring	1				
8	1901743606	・BUSHING	1				
9	1901749551	・PLATE	1				
10	1901710912	・PLUG	4				
11	1901719011	・ROD	2				
12	1901719012	・ROD	2				
13	1901743614	・HOLDER	2				
14	1901743615	・HOLDER	2				
15	1901710917	・WASHER	4				
16	1901749521	・SPRING	4				
17	1901749541	・SPRING	2				
18	1901749542	・SPRING	2				
19	1901720232	・JOINT	1				
20	1901743620	・PLATE	1				
21	1901710922	・NUT	1				
22	1901719025	・NUT	1				
23	1901741526	・LEVER	1				
24	1901741210	・HANDLE	1				
25	1213000528	・PIN, spring	1				
26	1901735630	・BUSHING	1				
27	1901740446	・RECEPTACLE	1				
28	1901740447	・WEDGE	1				
29	1901741263	・PLUG	3				
30	1901735632	・BOOT	1				
	T9h220						

silverhorn.co.uk

PILOT VALVE (L.H.) (21400011-21404476)

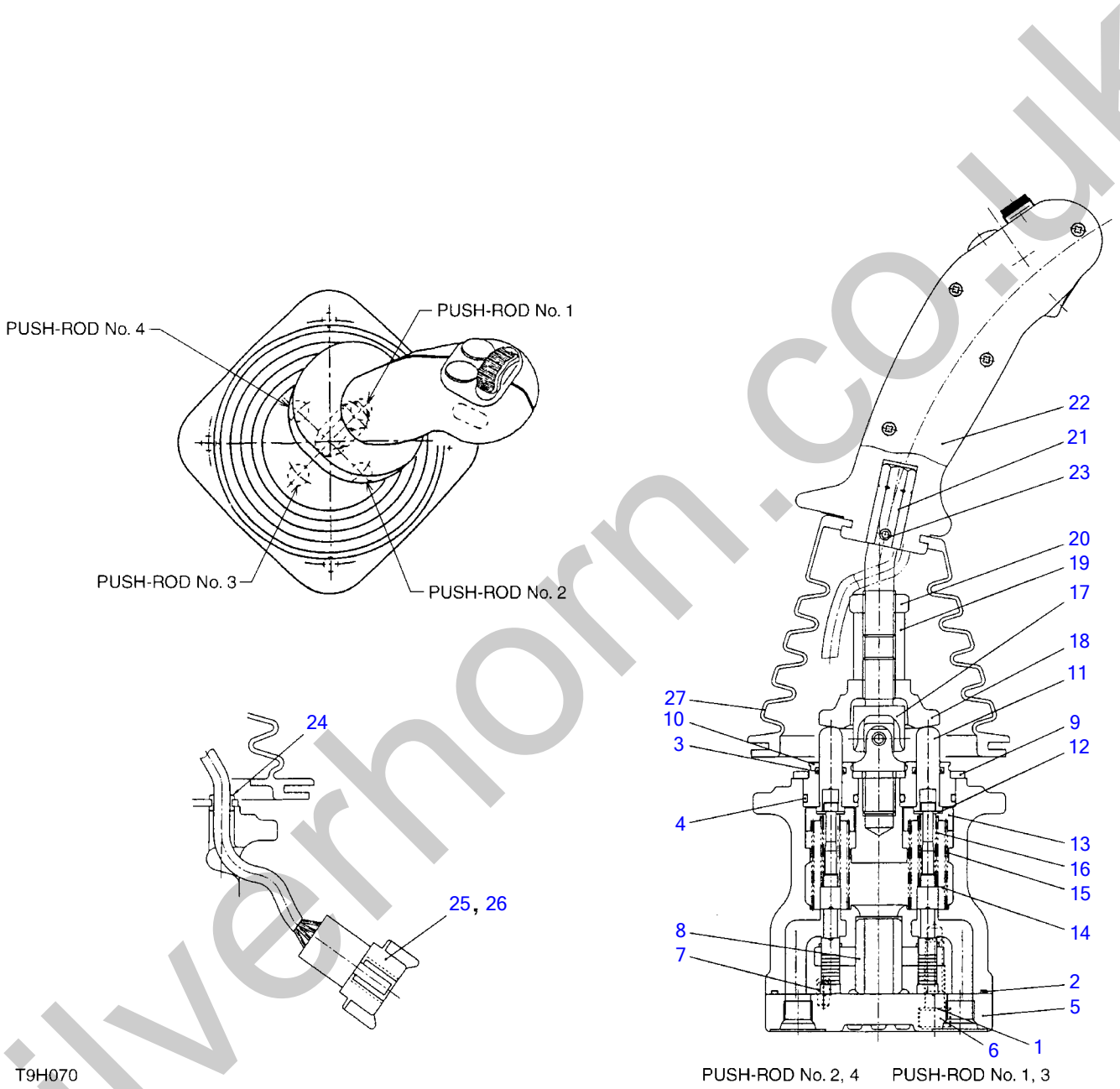

silverhorn.co.uk

PILOT VALVE (L.H.) (21400011-21404476)

Item	Part number	Description	Q'ty	Chan.	Serial No.	Serv.	Remarks
0	1901739900	VALVE ASSY, pilot	1				LEFT
0-1	1901721199	・KIT, seal	1				
1	X 1901715103	・・WASHER	2				
2	X 1420500900	・・O-RING	1				
3	X 1901710914	・・SEAL	4				
4	X 1420010200	・・O-RING	4				
5	1901715102	・PLATE	1				
6	1110020830	・SCREW, cap	2				
7	1213000510	・PIN, spring	1				
8	1901710905	・BUSHING	1				
9	1901735608	・PLATE	1				
10	1901710912	・PLUG	4				
11	1901719011	・ROD	4				
12	1901710915	・WASHER	8				
13	1901715115	・HOLDER	4				
14	1901710917	・WASHER	4				
15	1901716316	・SPRING	4				
16	1901723320	・SPRING	4				
17	1901720232	・JOINT	1				
18	1901720233	・PLATE	1				
19	1901710922	・NUT	1				
20	1901719025	・NUT	1				
21	1901739923	・LEVER	1				
22	1901740410	・HANDLE	1				
23	1213000528	・PIN, spring	1				
24	1901735630	・BUSHING	1				
25	1901740446	・RECEPTACLE	1				
26	1901740447	・WEDGE	1				
27	1901735632	・BOOT	1				
	T9h070						

silverhorn.co.uk

PILOT VALVE (L.H.) (21404477-)

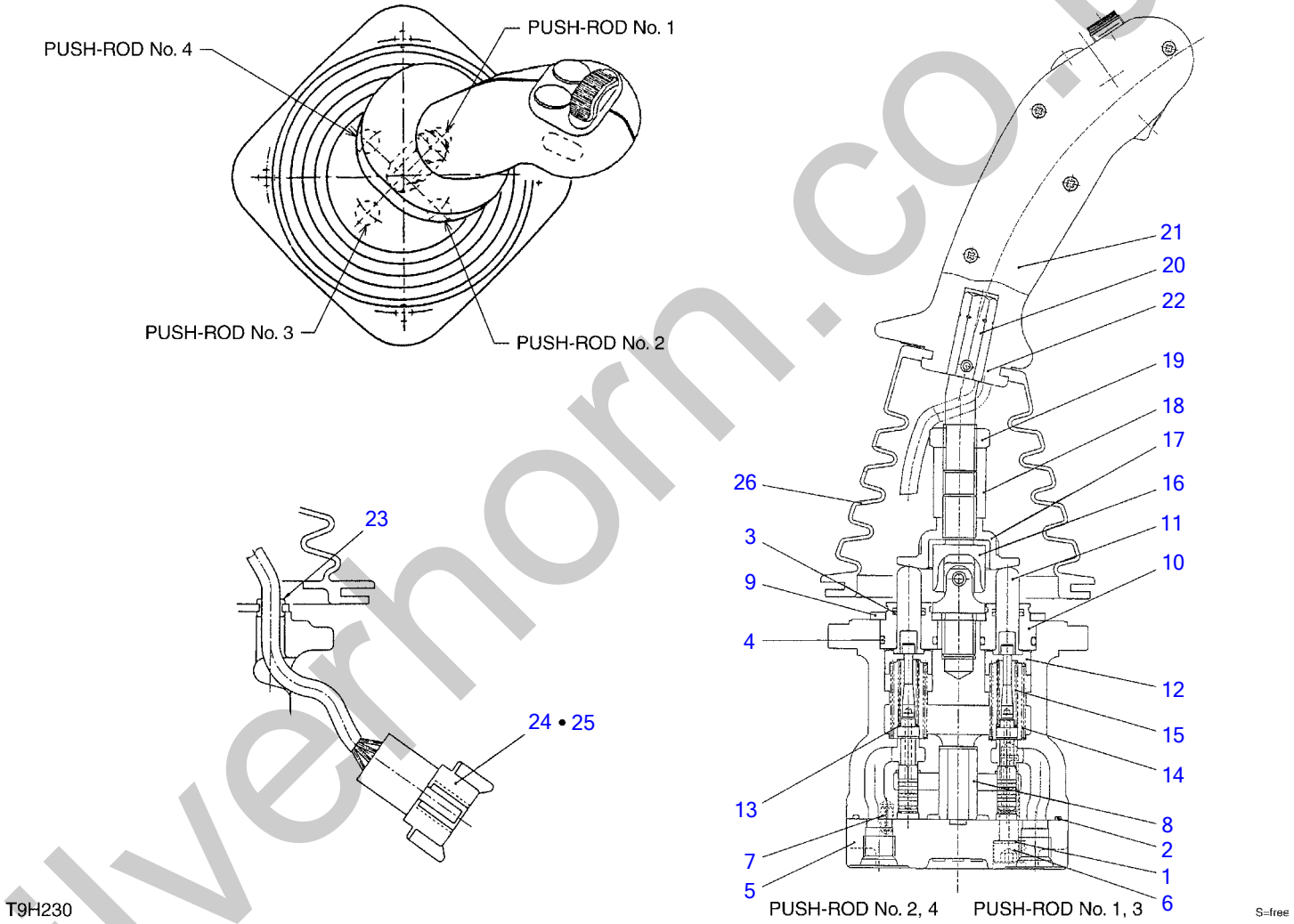

silverhorn.co.uk

PILOT VALVE (L.H.) (21404477-)

Item	Part number	Description	Q'ty	Chan.	Serial No.	Serv.	Remarks
0	1901749700	VALVE ASSY, pilot	1				Left
0-1	1901749599	・KIT, seal	1				
1	X 1901715103	・・WASHER	2				
2	X 1420510850	・・O-RING	1				
3	X 1901710914	・・SEAL	4				
4	X 1420010200	・・O-RING	4				
5	1901749511	・PLATE	1				
6	1110020835	・SCREW, cap	2				
7	1213000510	・PIN, spring	1				
8	1901743606	・BUSHING	1				
9	1901749551	・PLATE	1				
10	1901710912	・PLUG	4				
11	1901719011	・ROD	4				
12	1901743614	・HOLDER	4				
13	1901710917	・WASHER	4				
14	1901749521	・SPRING	4				
15	1901749641	・SPRING	4				
16	1901720232	・JOINT	1				
17	1901743620	・PLATE	1				
18	1901710922	・NUT	1				
19	1901719025	・NUT	1				
20	1901739923	・LEVER	1				
21	1901740410	・HANDLE	1				
22	1213000528	・PIN, spring	1				
23	1901735630	・BUSHING	1				
24	1901740446	・RECEPTACLE	1				
25	1901740447	・WEDGE	1				
26	1901735632	・BOOT	1				
	T9h230						

silverhorn.co.uk

HANDLE (with slide switch)

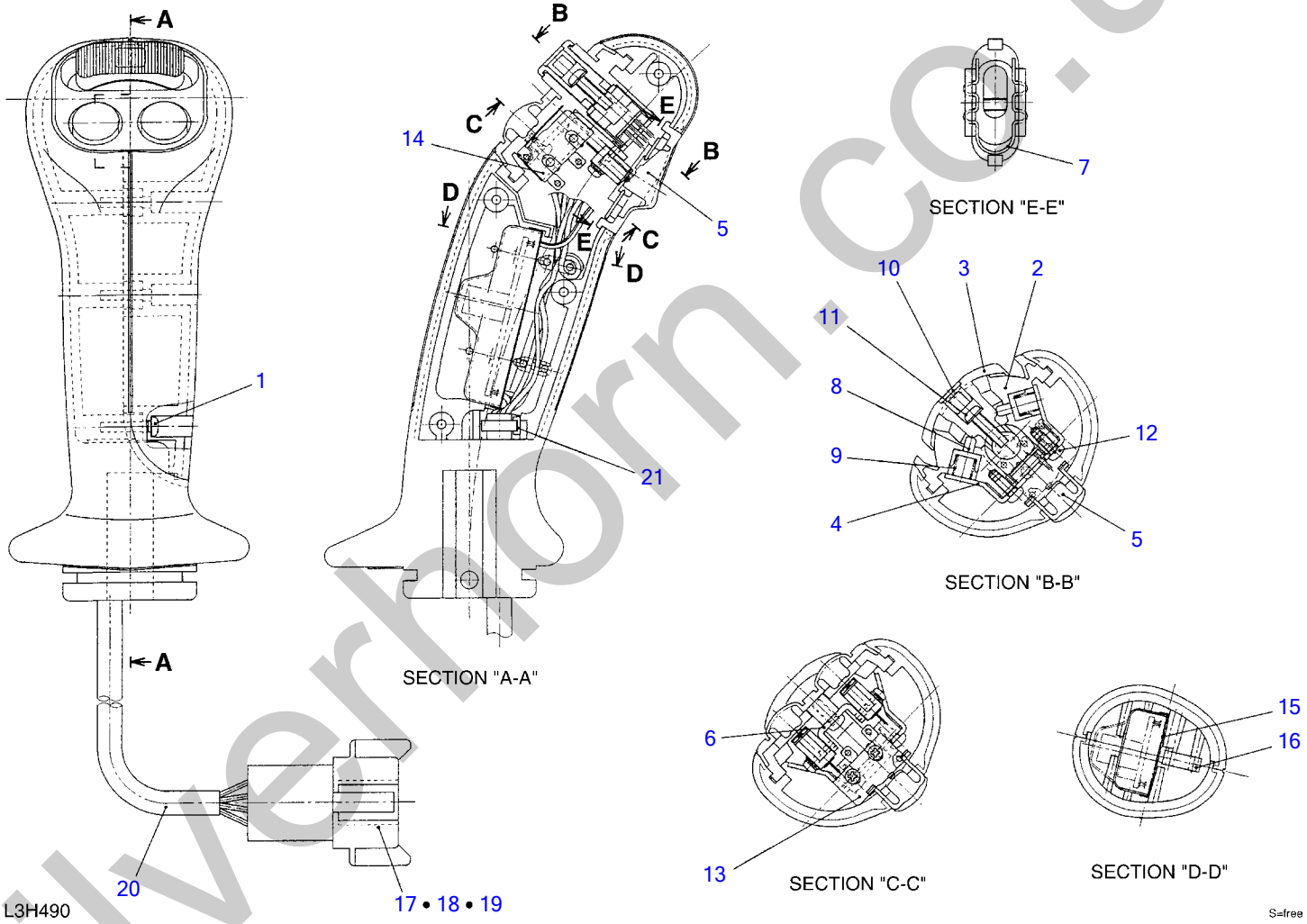

silverhorn.co.uk

HANDLE (with slide switch)

Item	Part number	Description	Q'ty	Chan.	Serial No.	Serv.	Remarks
0	1901740410	HANDLE ASSY	1				
1	1122400312	・SCREW	4				
2	1901740417	・CASE	1				
3	1901740418	・CAM	1				
4	1901740401	・PLATE	1				
5	1901740402	・BUTTON	1				
6	1901740403	・BRACKET	1				
7	1901740404	・CLIP	1				
8	1901740405	・PISTON	2				
9	1901740406	・SPRING	2				
10	1901740407	・CAP	1				
11	1150010312	・SCREW	1				
12	1122400306	・SCREW	3				
13	1901740408	・SWITCH	1				
14	1901740409	・SWITCH	2				
15	1901740411	・COVER	1				
16	1901740412	・CAP	2				
17	1901740446	・RECEPTACLE	1				
18	1901740447	・WEDGE	1				
19	1901740413	・PIN	8				
20	1901740414	・PROTECTOR	1				
21	1901740415	・BAND	1				
	L3h490						

silverhorn.co.uk

HANDLE (with 3 switchs)

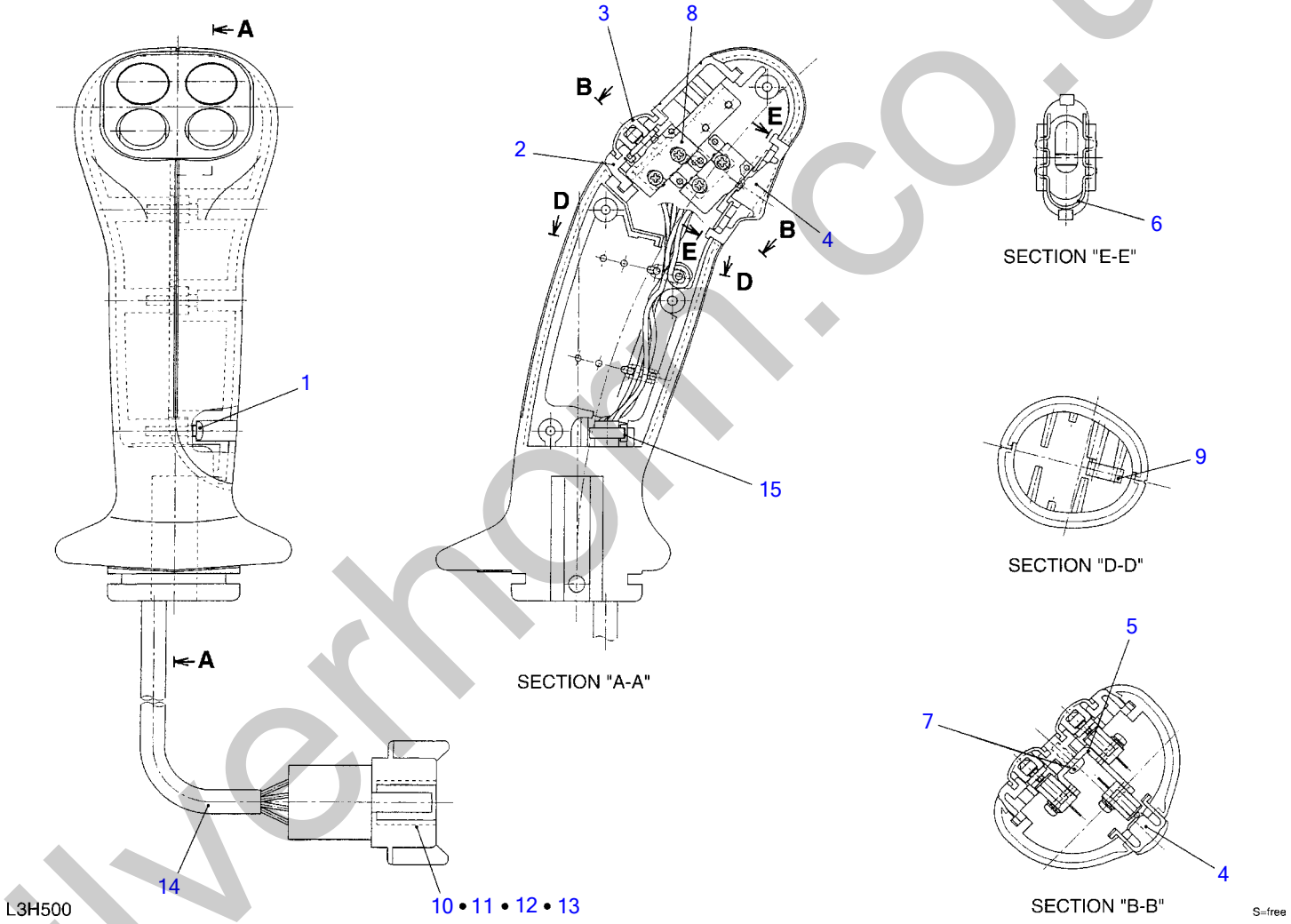

silverhorn.co.uk

HANDLE (with 3 switchs)

Item	Part number	Description	Q'ty	Chan.	Serial No.	Serv.	Remarks
0	1901741210	HANDLE ASSY	1				
1	1122400312	・SCREW	4				
2	1901741211	・CASE	1				
3	1901741216	・BUTTON	2				
4	1901740402	・BUTTON	1				
5	1901741218	・BRACKET	1				
6	1901740404	・CLIP	1				
7	1122400306	・SCREW	2				
8	1901740408	・SWITCH	3				
9	1901740412	・CAP	2				
10	1901740446	・RECEPTACLE	1				
11	1901740447	・WEDGE	1				
12	1901740413	・PIN	5				
13	1901741263	・PIN, BLANKING	3				
14	1901740414	・PROTECTOR	1				
15	1901740415	・BAND	1				
	L3h500						

silverhorn.co.uk

PROPORTIONAL VALVE

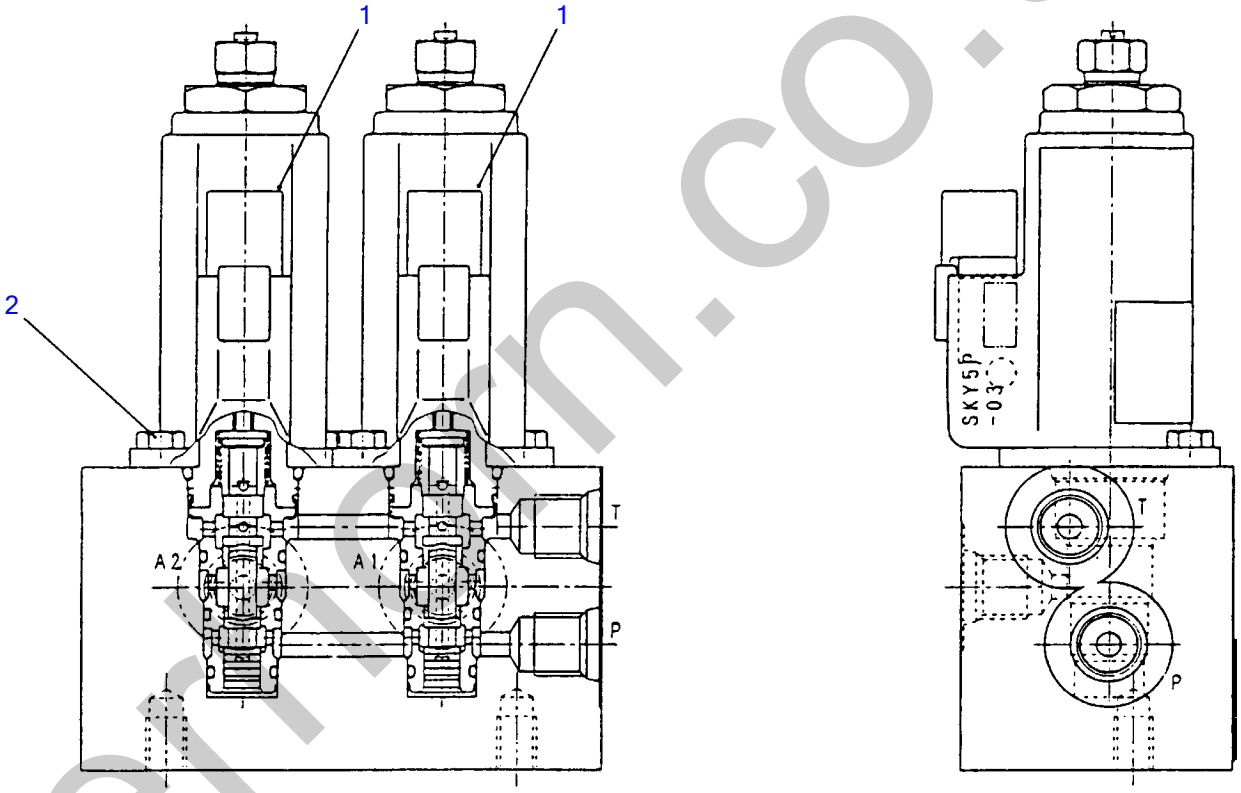

W2H140

silverfern.co.uk

PROPORTIONAL VALVE

Item	Part number	Description	Q'ty	Chan.	Serial No.	Serv.	Remarks
0	1901738400	VALVE ASSY, proportional	1				
1	1901738460	・VALVE, proportional	2				
2	1100050512 T9h080	・BOLT	4				

silverhorn.co.uk

LIFT ARM CYLINDER

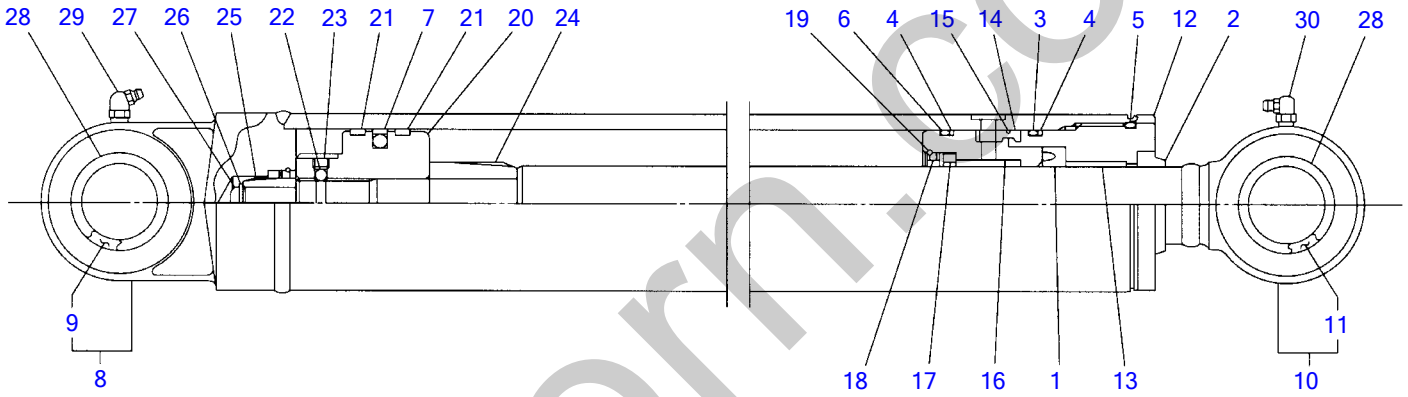

T9H090

S=FREE

silverhorn.co.uk

LIFT ARM CYLINDER

Item	Part number		Description	Q'ty	Chan.	Serial No.	Serv.	Remarks
0		1900085600	CYLINDER ASSY	2				lift arm
0-1		1900085699	・KIT, seal	1				
1	X	1900080808	・・PACKING, rod	1				
2	X	1900073033	・・SEAL, dust	1				
3	X	1420110650	・・O-RING	1				
4	X	1421130650	・・RING, back-up	2				
5	X	1420110700	・・O-RING	1				
6	X	1420110600	・・O-RING	1				
7	X	1900051132	・・PACKING, piston	1				
8		1900085698	・TUBE ASSY	1				
9		1900016002	・・BUSHING	1				
10		1900085697	・ROD ASSY, piston	1				
11		1900016002	・・BUSHING	1				
12		1900052003	・COVER, rod	1				
13		1333004030	・BUSHING	1				
14		1900052027	・CONNCTOR	1				
15		1900064426	・STOPPER	1				
16		1900085604	・RETAINER	1				
17		1900052016	・RING, cushion	1				
18		1900052015	・SPACER	1				
19		1900052026	・STOPPER	1				
20		1900085606	・PISTON	1				
21		1900051131	・RING, wear	2				
22		1390020250	・BALL, steel	1				
23		1121050608	・SET-SCREW	1				
24		1900085616	・BEARING, cushion	1				
25		1900085628	・BEARING, cushion	1				
26		1900064428	・WASHER	1				
27		1900064429	・BOLT	1				
28		1432200040	・SEAL, dust	4				
29		1560001675	・FITTING, grease	1				
30		1560001900	・FITTING, grease	1				
		T9h090						

silverhorn.co.uk

BUCKET CYLINDER

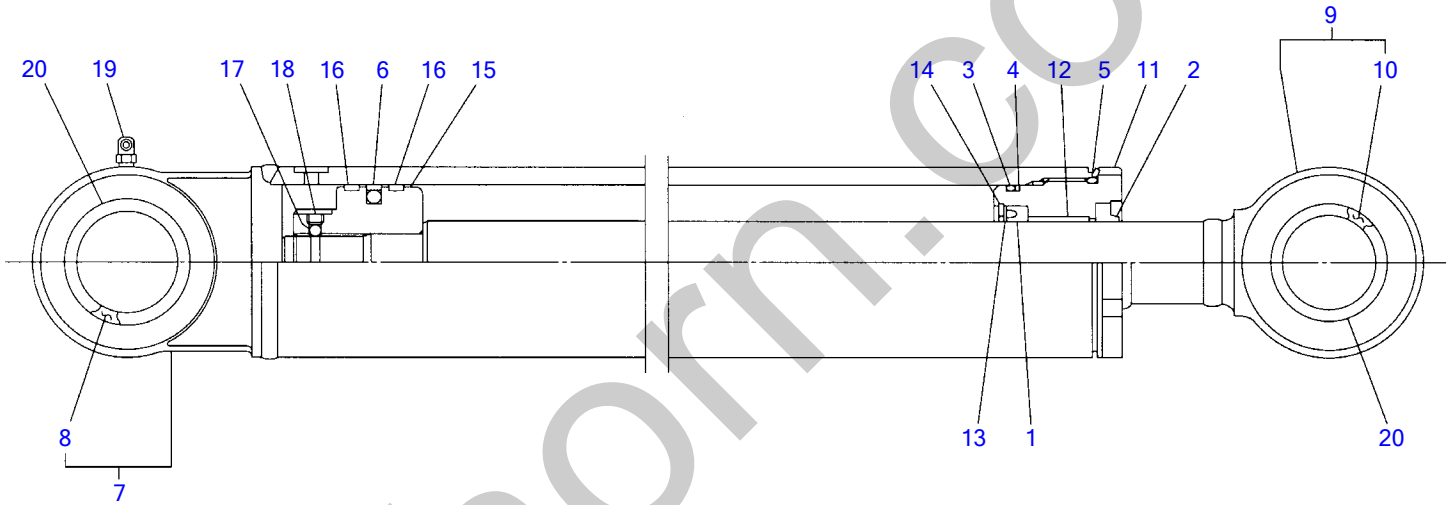

T9H100

S=free

silverhorn.co.uk

BUCKET CYLINDER

Item	Part number	Description	Q'ty	Chan.	Serial No.	Serv.	Remarks
0	1900085700	CYLINDER ASSY (R.H.)	1				bucket
	1900085800	CYLINDER ASSY (L.H.)	1				bucket
0-1	1900077499	・KIT, seal	1				
1	X 1410540559	・・PACKING, rod	1				
2	X 1900073033	・・SEAL, dust	1				
3	X 1420110650	・・O-RING	1				
4	X 1421130650	・・RING, back-up	1				
5	X 1420110700	・・O-RING	1				
6	X 1900051132	・・PACKING, piston	1				
7	1900085798	・TUBE ASSY (R.H.)	1				
	1900085898	・TUBE ASSY (L.H.)	1				
8	1900015902	・・BUSHING	1				
9	1900085797	・ROD ASSY, piston	1				
10	1900015902	・・BUSHING	1				
11	1900085703	・COVER, rod	1				
12	1333004030	・BUSHING	1				
13	1900056308	・HOLDER, rod packing	1				
14	1221000055	・RING, snap	1				
15	1900085606	・PISTON	1				
16	1900051131	・RING, wear	2				
17	1390020250	・BALL, steel	1				
18	1121050608	・SET-SCREW	1				
19	1560001900	・FITTING, grease	1				
20	1432200040	・SEAL, dust	4				
	T9h100						

silverhorn.co.uk

TRAVEL MOTOR (1/3) (reduction sec. ; 21400011-21401390)

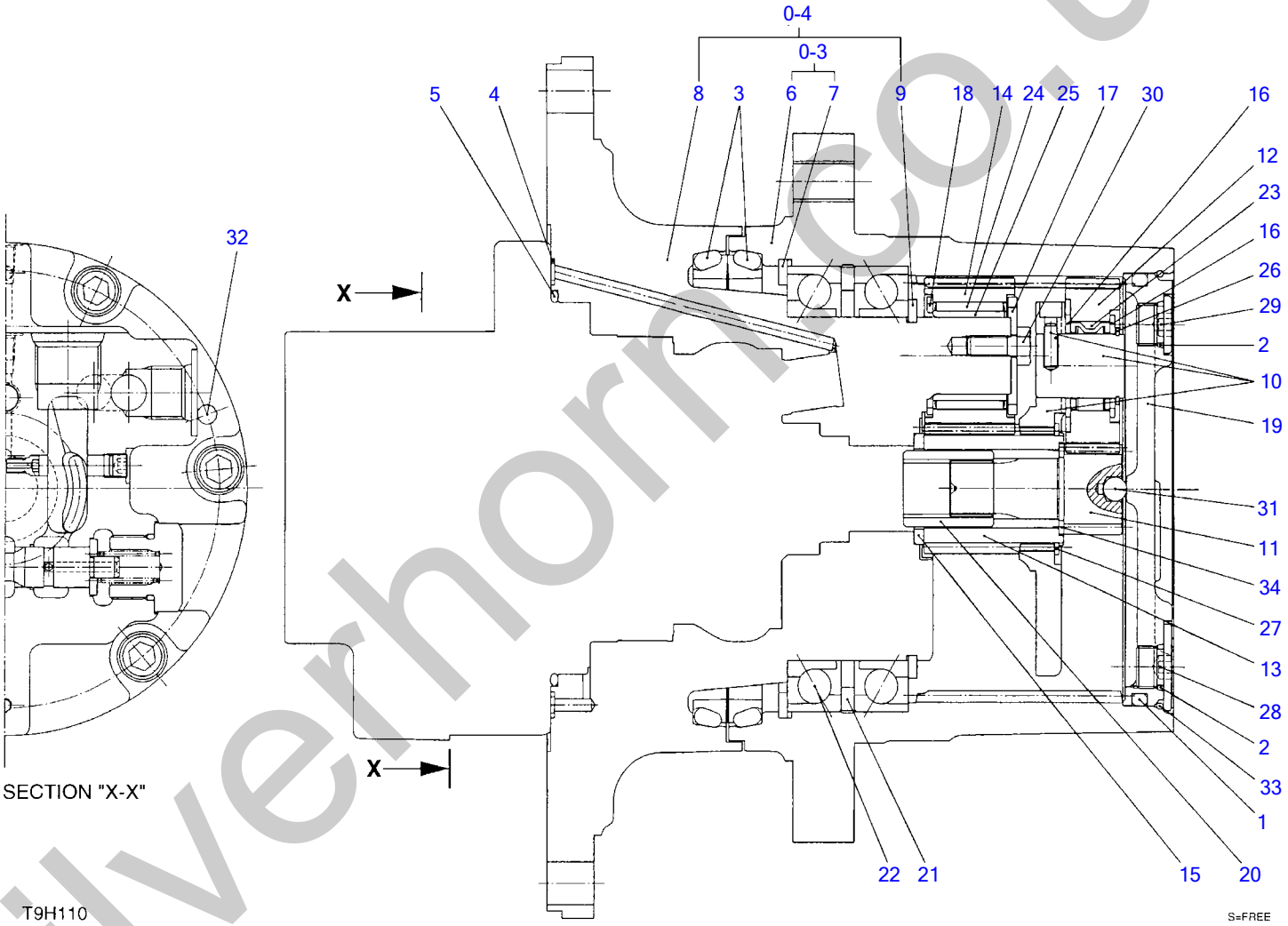

silverhorn.co.uk

TRAVEL MOTOR (1/3) (reduction sec. ; 21400011-21401390)

Item		Part number	Description	Q'ty	Chan.	Serial No.	Serv.	Remarks
0		1903123800	MOTOR ASSY, travel	2				
0-1	X	**********	・GEAR, reduction	1				X19129-07400
0-2	X	1912907199	・・KIT, seal	1				
1	X	1420101600	・・・O-RING	1				
2	X	1420010140	・・・O-RING	3				
3	X	1912907138	・・・SEAL ASSY, floating	1				
4	X	1420010070	・・・O-RING	2				
5	X	1420100350	・・・O-RING	1				
0-3		1912907498	・・HUB KIT	1				
6	X	**********	・・・HUB	1				
7	X	**********	・・・RING, retaining	1				see note
0-4		1912907497	・・SPINDLE KIT	1				
8	X	**********	・・・SPINDLE	1				
9	X	**********	・・・RING, retaining	1				see note
10		1912907403	・・CARRIER ASSY	1				
11		1912907407	・・GEAR	1				
12		1912907408	・・GEAR	3				
13		1912907409	・・GEAR	1				
14		1912907410	・・GEAR	4				
15		1912906509	・・COLLAR	1				
16		1912907412	・・COLLAR	6				
17		1912907413	・・PLATE	4				
18		1912907414	・・COLLAR	4				
19		1912907415	・・COVER	1				
20		1912906514	・・COUPLING	1				
21		1912906521	・・COLLAR	1				
22		1912906524	・・BEARING	2				
23		1903004829	・・BEARING	3				
24		1912906528	・・BEARING	4				
25		1912906530	・・RING, inner	4				
26		1220000025	・・RING, retaining	3				
27		1220000045	・・RING, retaining	1				
28		1912906533	・・PLUG	1				
29		1903902921	・・PLUG	2				
30		1100020820	・・SCREW, cap	4				
31		1390020600	・・BALL, steel	1				
32		1212000822	・・PIN	2				
33		1912906545	・・RING	1				
34		1903906307	・・WASHER	1				

<<NOTE>>

item7 t=over 3.91mm and up to 4.09mm
< 0.10mm interval >
t=over 3.40mm and up to 3.50mm

item9 t=over 3.92mm and up to 4.08mm
< 0.05mm interval >
t=over 3.20mm and up to 3.25mm

T9h111

silverhorn.co.uk

TRAVEL MOTOR (2/3) (motor sec. ; 21400011-21401390)

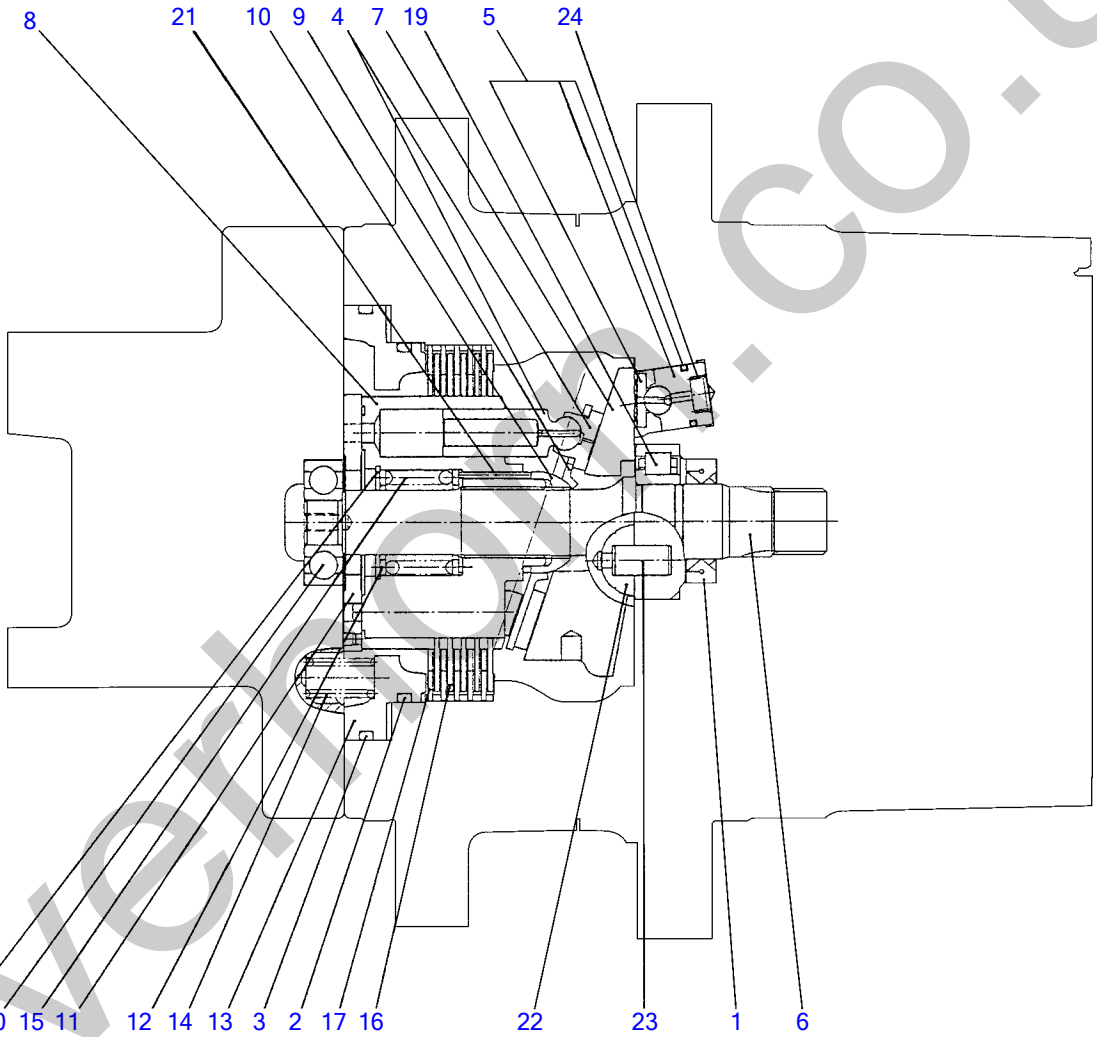

T8H071

S=FREE

silverthorn.co.uk

TRAVEL MOTOR (2/3) (motor sec. ; 21400011-21401390)

Item		Part number	Description	Q'ty	Chan.	Serial No.	Serv.	Remarks
0		1903123800	MOTOR ASSY, travel	2				
0-5	X	**********	・MOTOR ASSY	1				X19039-06300
0-6		1903906399	・・KIT, seal	1				
1	X	1903905832	・・・SEAL, oil	1				
2	X	1420310246	・・・O-RING	1				
3	X	1420310254	・・・O-RING	1				
4		1903906398	・・PISTON KIT	1				
5		1903906397	・・PISTON ASSY	1		21400011~21400018		
		1903906396	・・PISTON KIT	1	(H)	21400019~		
6		1903906302	・・SHAFT	1				
7		1903906303	・・PLATE	1				
8		1903906304	・・BLOCK, cylinder	1				
9		1903906305	・・PLATE	1				
10		1903906306	・・BALL	1				
11		1903905809	・・PLATE	1				
12		1903906307	・・WASHER	2				
13		1903905812	・・PISTON	1				
14		1903905813	・・SPRING	8				
15		1903905814	・・SPRING	1				
16		1903905815	・・PLATE	5				
17		1903905816	・・PLATE	5				
18		1903905845	・・RETAINING RING	1				
19		1903905849	・・BEARING	1				
20		1903905850	・・BEARING	1				
21		1903905851	・・PIN	3				
22		1903904076	・・PIVOT	2				
23		1903904077	・・PIN	2				
24		1903904085	・・SPRING	1				
		T9h121						

silverhorn.co.uk

TRAVEL MOTOR (3/3) (valve sec. ; 21400011-21401390)

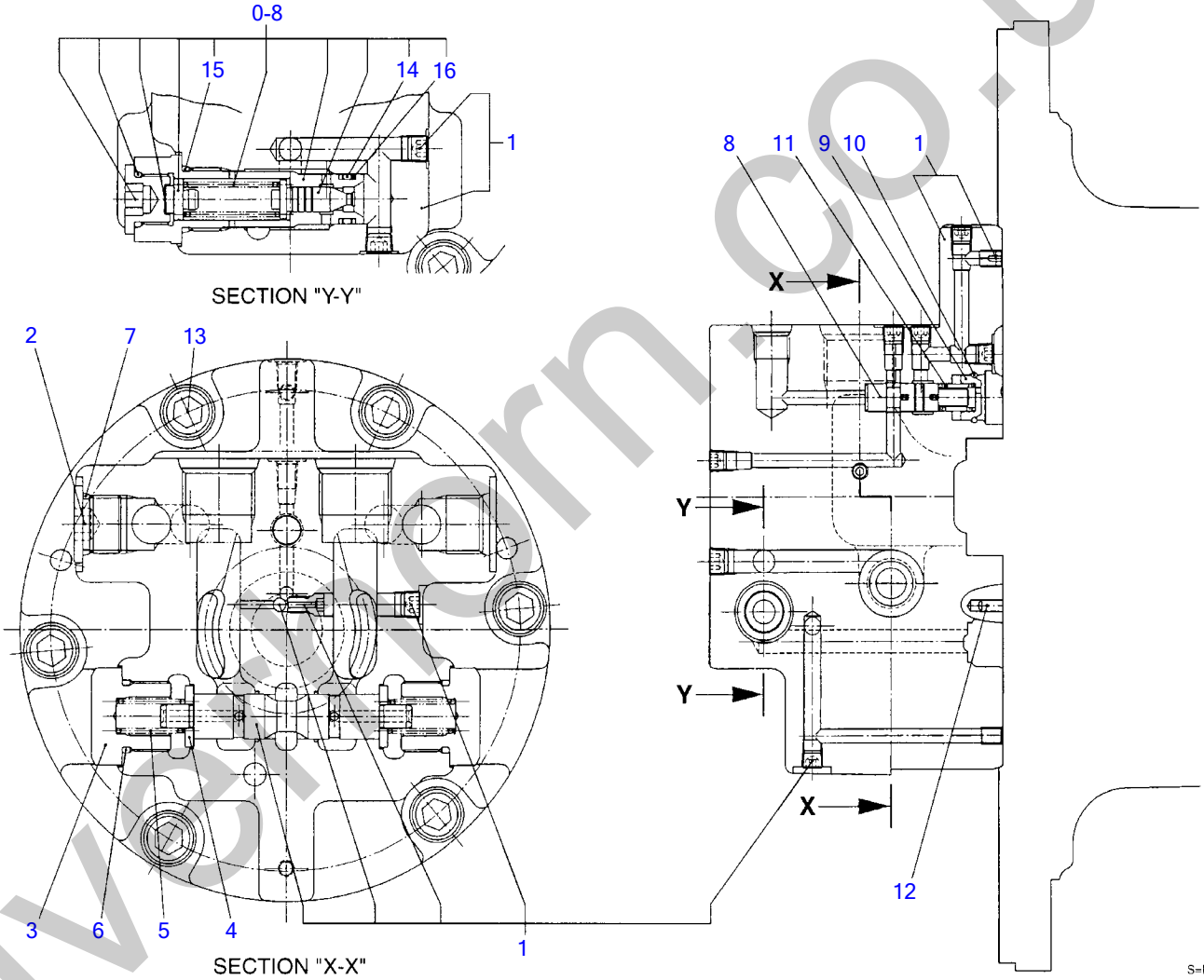

silverthorn.co.uk

TRAVEL MOTOR (3/3) (valve sec. ; 21400011-21401390)

Item	Part number	Description	Q'ty	Chan.	Serial No.	Serv.	Remarks
0	1903123800	MOTOR ASSY, travel	2				
0-7	1901810300	・FLANGE ASSY, rear	1				
1	1901810391	・・FLANGE KIT, rear	1				
2	1901809601	・・PLUG	1				
3	1901809602	・・PLUG	2				
4	1901809603	・・COLLAR	2				
5	1901809604	・・SPRING	2				
6	1420010220	・・O-RING	2				
7	1420010180	・・O-RING	1				
8	1903903263	・・VALVE	1				
9	1903902964	・・STOPPER	1				
10	1903902965	・・RING	1				
11	1901809704	・・SPRING	1				
12	1212000410	・・PIN	2				
13	1110021232	・・SCREW, cap	6				
0-8	1901810398	・VALVE KIT	1				
14	1420010140	・・O-RING	1				
15	1420010900	・・O-RING	1				
16	1421020140	・・RING, back-up	2				
	T9h130						

silverhorn.co.uk

TRAVEL MOTOR (1/3) (reduction sec. ; 21402001-)

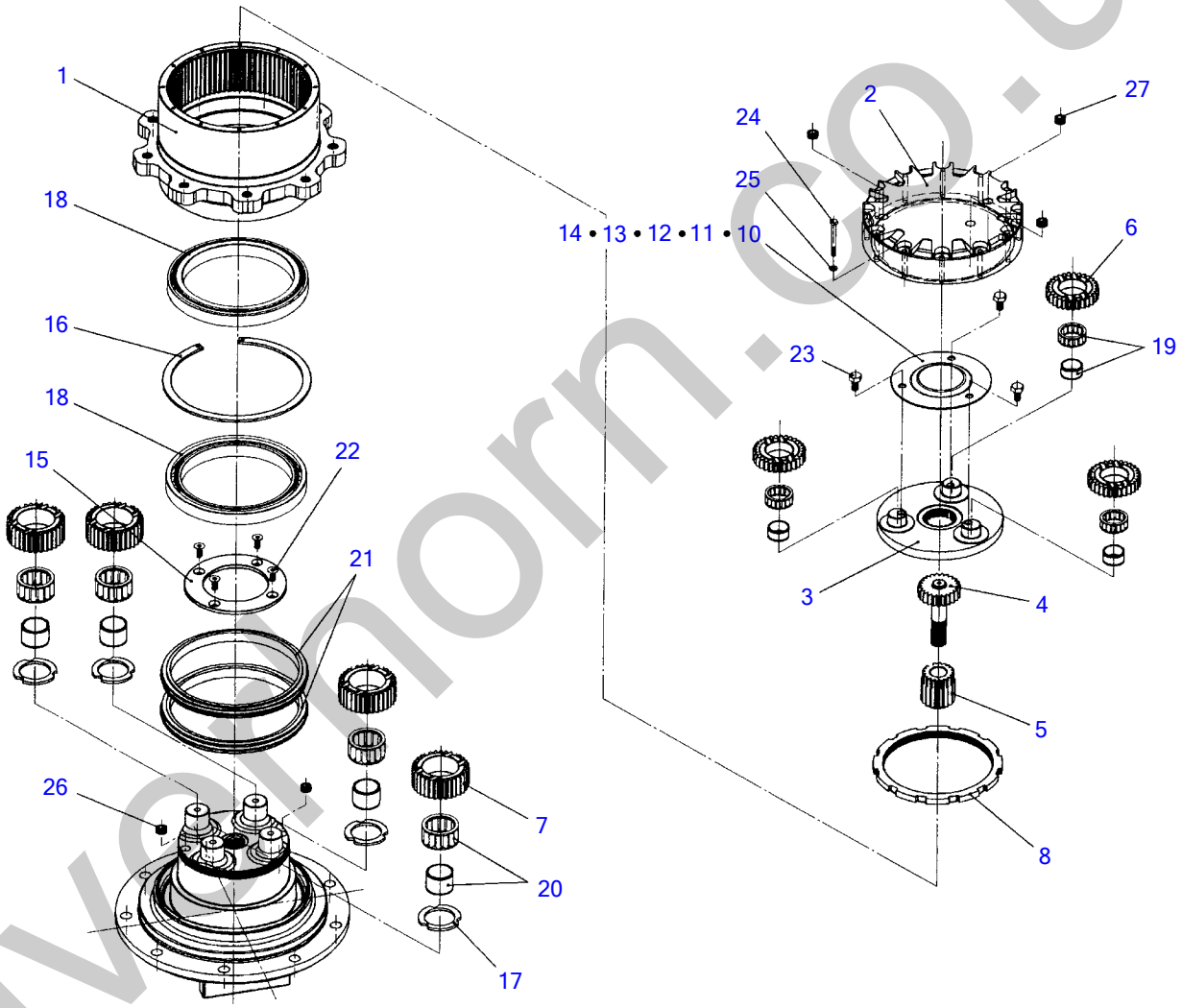

silvernorn.co.uk

TRAVEL MOTOR (1/3) (reduction sec. ; 21402001-)

Item	Part number	Description	Q'ty	Chan.	Serial No.	Serv.	Remarks
0	1903122700	MOTOR ASSY, travel	1				
	1903128100	MOTOR ASSY, TRAVEL	1				
0-1	X **********	・GEAR, reduction	1				X19129-07800
1	1912907801	・・GEAR, ring	1				
2	1912907802	・・COVER	1				
	1912907832	* * COVER	1				
3	1912907803	・・CARRIER	1				
4	1912907804	・・GEAR	1				
5	1912907805	・・GEAR	1				
6	1912907806	・・GEAR	3				
7	1912907807	・・GEAR	4				
8	1912907809	・・NUT	1				
9	1912907810	・・PLATE KIT, stopper	1				
10	1912907811	・・・PLAT, stopper	1				t=6.4mm
11	1912907812	・・・PLAT, stopper	1				t=6.8mm
12	1912907813	・・・PLAT, stopper	1				t=6.8mm
13	1912907814	・・・PLAT, stopper	1				t=7.0mm
14	1912907815	・・・PLAT, stopper	1				t=7.2mm
15	1912907818	・・PLAT, stopper	1				
16	1912907819	・・RING, snap	1				
17	1912907820	・・WASHER	4				
18	1912907821	・・BEARING	2				
19	1912907822	・・BEARING	3				
20	1912907824	・・BEARING	4				
21	1912907826	・・SEAL KIT, floating	1				
22	1912907827	・・SCREW, cap	4				
23	1912907828	・・BOLT	3				
24	1100041050	・・BOLT	12				
25	1141120010	・・WASHER	12				
26	1501810003	・・PLUG	2				
27	1912907830	・・PLUG	3				
	T9h192-1						

silverhorn.co.uk

TRAVEL MOTOR (2/3) (motor sec. ; 21402001-)

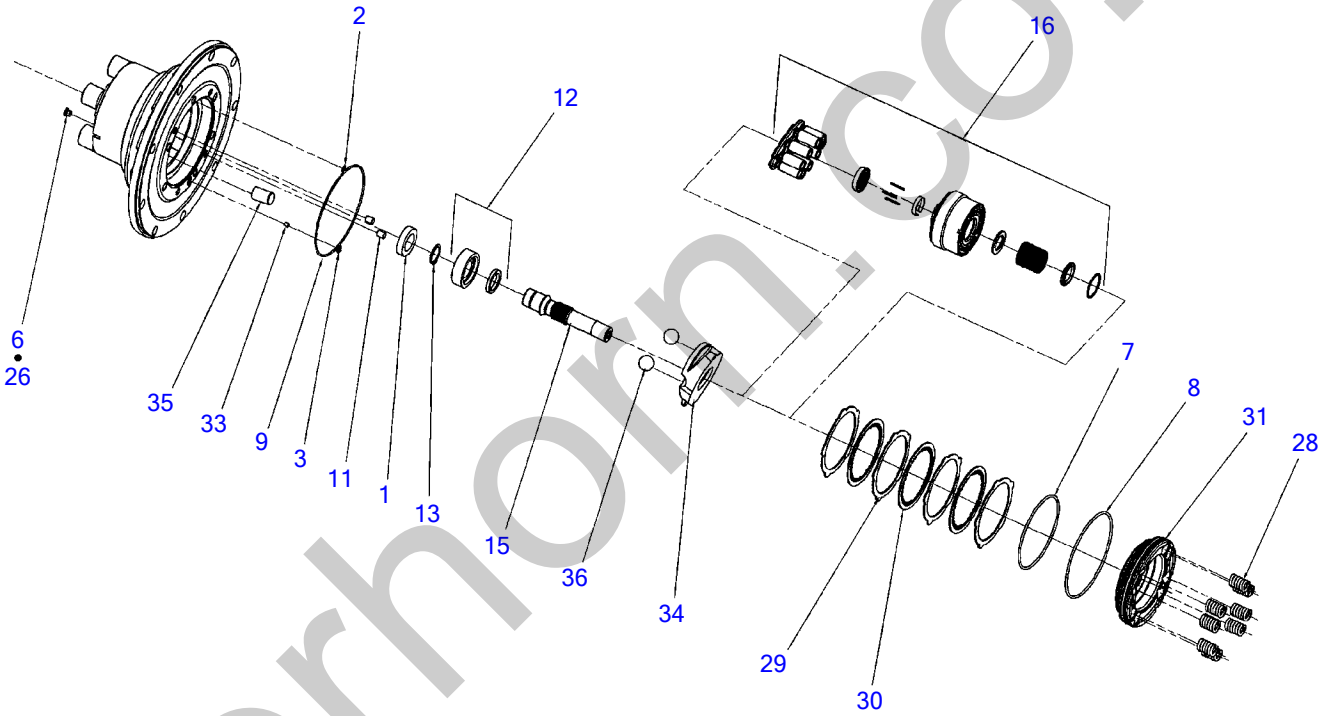

T7H291

S=free

silverhorn.co.uk

TRAVEL MOTOR (2/3) (motor sec. ; 21402001-)

Item		Part number	Description	Q'ty	Chan.	Serial No.	Serv.	Remarks
0		1903122700	MOTOR ASSY, travel	1				
		1903128100	MOTOR ASSY, TRAVEL	1				
0-2	X	**********	・MOTOR ASSY (19039-06900)	1				incl. (3/3)
0-3		1903906898	・・KIT, seal	1				
1	X	1903906406	・・・SEAL, oil	1				
2	X	1420010090	・・・O-RING	1				
3	X	1420010110	・・・O-RING	1				
6	X	1420310903	・・・O-RING	1				
7	X	1420300250	・・・O-RING	1				
8	X	1420300257	・・・O-RING	1				
9	X	1420300164	・・・O-RING	1				
11		1902006702	・・PIN	2				
12		1903906803	・・BEARING	1				
13		1220000030	・・RING, snap	1				
15		1903906807	・・SHAFT	1				
16		1903906910	・・CYLINDER BLOCK KIT	1				
26		1501750003	・・PLUG	1				
		1420010140	・・・O-RING	1				
28		1903906828	・・SPRING	8				
29		1903906829	・・PLATE	4				
30		1903906830	・・PLATE	3				
31		1903906831	・・PISTON, brake	1				
33		1903906459	・・ORIFICE	1				
34		1903906837	・・PLATE, swash	1				
35		1903906838	・・PISTON	1				
36		1390021600	・・BALL, steel	2				
		T9h201-1						

silverhorn.co.uk

TRAVEL MOTOR (3/3) (valve sec. ; 21402001-)

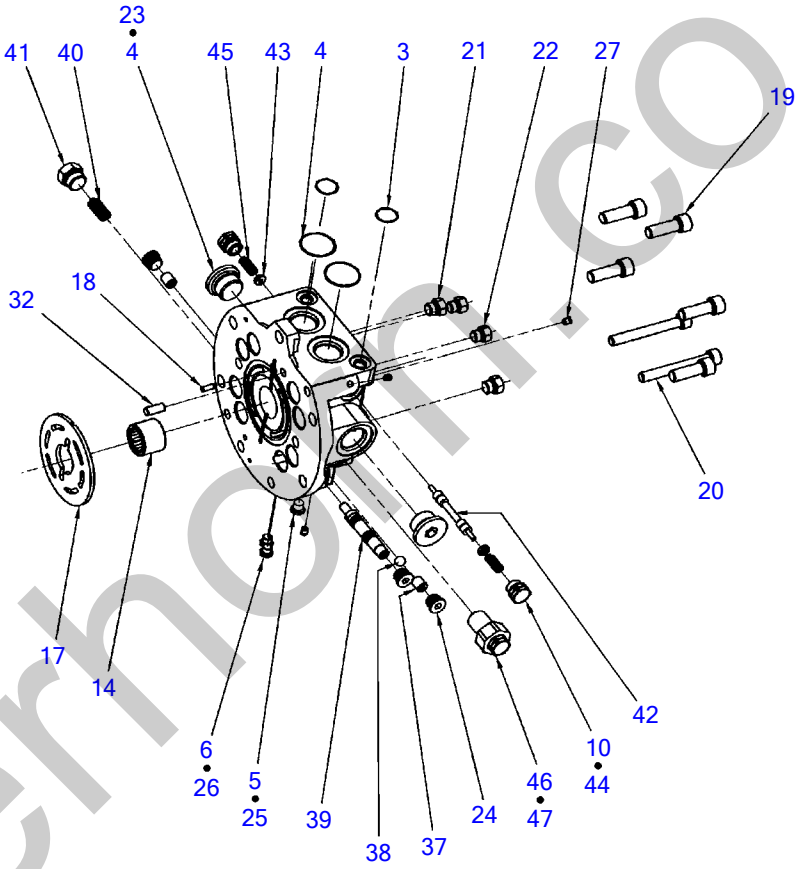

T7H300

S=free

silverhorn.co.uk

TRAVEL MOTOR (3/3) (valve sec. ; 21402001-)

Item	Part number	Description	Q'ty	Chan.	Serial No.	Serv.	Remarks
0	1903122700	MOTOR ASSY, travel	1				
	1903128100	MOTOR ASSY, TRAVEL	1				
0-2	X **********	・MOTOR ASSY (19039-06900)	1				incl. (2/3)
3	1420010110	・・O-RING	2				
4	1420010224	・・O-RING	1				
5	1420310904	・・O-RING	1				
6	1420310903	・・O-RING	2				
10	1420310906	・・O-RING	2				
14	1903906806	・・BEARING	1				
	1903908406	* * BEARING	1				
17	1903906811	・・PLATE	1				
	1903908411	* * PLATE	1				
18	1902007411	・・PIN	1				
19	1110041235	・・SCREW, cap	5				
20	1110041080	・・SCREW, cap	2				
21	1902007455	・・PLUG ASSY	2				
	1420310906	・・・O-RING	1				
22	1903007626	・・PLUG ASSY	2				
	1420310904	・・・O-RING	1				
23	1903908620	・・PLUG	2				
24	1901810214	・・PLUG	3				
	1420310906	・・・O-RING	1				
25	1902010033	・・PLUG	1				
26	1501750003	・・PLUG	2				
	1420010140	・・・O-RING	1				
27	1903906827	・・PLUG	3				
32	1903906832	・・PIN	1				
37	1903906840	・・PLUG	2				
38	1390020600	・・BALL, steel	1				
39	1903906842	・・SPOOL	1				
40	1903906843	・・SPRING	1				
41	1903007636	・・PLUG ASSY	1				
	1420310908	・・・O-RING	1				
42	1901810212	・・SPOOL	1				
43	1901810211	・・GUIDE	2				
44	1901810202	・・PLUG	2				
45	1901810203	・・SPRING	2				
46	1903906850	・・VALVE, relief	1				
	1903908550	* * VALVE, RELIEF	1				
47	1903906851	・・SPRING	1				
	T9h210-1						

silverhorn.co.uk

HYDRAULIC PUMP (1/4)

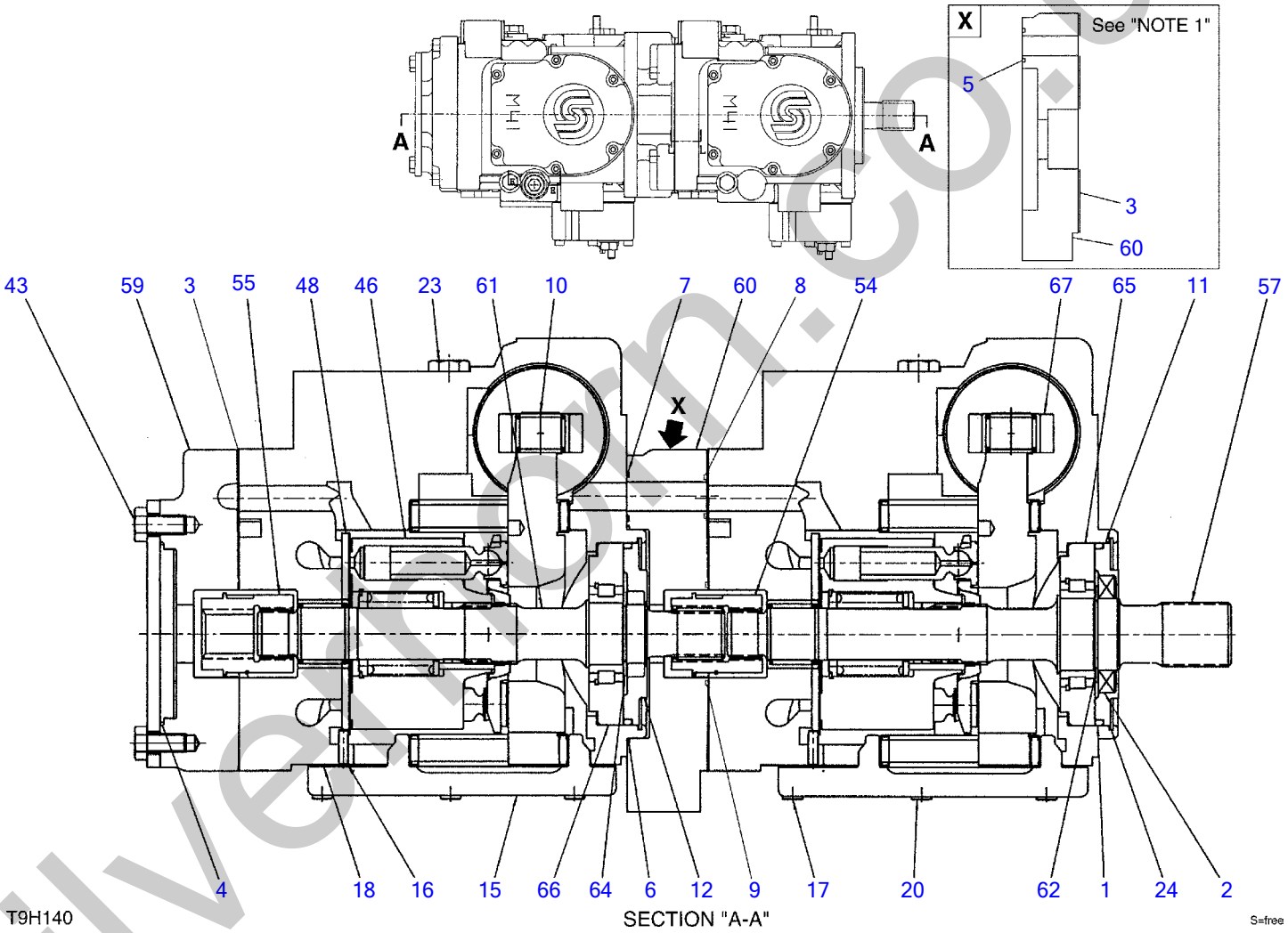

silvermon.co.uk

HYDRAULIC PUMP (1/4)

Item	Part number	Description	Q'ty	Chan.	Serial No.	Serv.	Remarks
0	1902019200	PUMP, hydraulic	1				
0-1	1902019299	・KIT, seal	1		~2003.7		see "NOTE 1"
	1902019298	・KIT, seal	1		2003.7~		see "NOTE 2"
1	X 1902016507	・・O-RING	2				
2	X 1902017707	・・SEAL, lip	1				
3	X 1902020357	・・GASKET	2		~2003.7		see "NOTE 1"
	X 1902020357	・・GASKET	1		2003.7~		see "NOTE 2"
4	X 1420300156	・・O-RING	1				
5	X 1902016564	・・O-RING	1		~2003.7		see "NOTE 1"
6	X 1902016566	・・O-RING	1				
7	X 1902016565	・・O-RING	1		2003.7~		see "NOTE 2"
8	X 1902019270	・・O-RING	1		2003.7~		see "NOTE 2"
9	X 1902019285	・・O-RING	1		2003.7~		see "NOTE 2"
10	1902018802	・PLATE, swash	2				
11	1902018806	・SEAL, carrier	1				
12	1902017409	・SEAL, carrier	1				
15	1902018808	・COVER ASSY	2				
16	1902018809	・PIN	2				
17	1100020620	・BOLT	4				
18	1902017712	・GASKET	2				
20	1100020630	・BOLT	8				
23	1902019215	・PLUG ASSY	2				
24	1902016520	・RING, retaining	2				
43	1100050630	・BOLT	4				
46	1902019247	・KIT, cylinder block	2				
48	1902018823	・PLATE, valve	2				
54	1902017730	・COUPLING	1				
55	1902017731	・COUPLING	1				
57	1902018803	・SHAFT (19T)	1				
59	1902017449	・ADAPTOR, A pat	1				
60	1902017450	・ADAPTOR, B pat (not service)	1		~2003.7		see "NOTE 1"
	1902019271	・ADAPTOR, B pat	1	(H)	2003.7~		see "NOTE 2"
61	1902018804	・SHAFT (15T)	1				
62	1902017704	・RING, retaining	1				
64	1902016505	・RING, retaining	1				
65	1902018805	・BEARING	1				
66	1902016506	・BEARING	1				
67	1902018801	・BEARING	2				
		<<NOTE 1>>					
		21400011~21400111, 21400117~21400124					
		21400132~21400133, 21400135					
		21400141~21400142					
		<<NOTE 2>>					
		21400112~21400116, 21400125~21400131					
		21400134, 21400137~21400140, 21400143~					
	T9h143						

silverton.co.uk

HYDRAULIC PUMP (2/4)

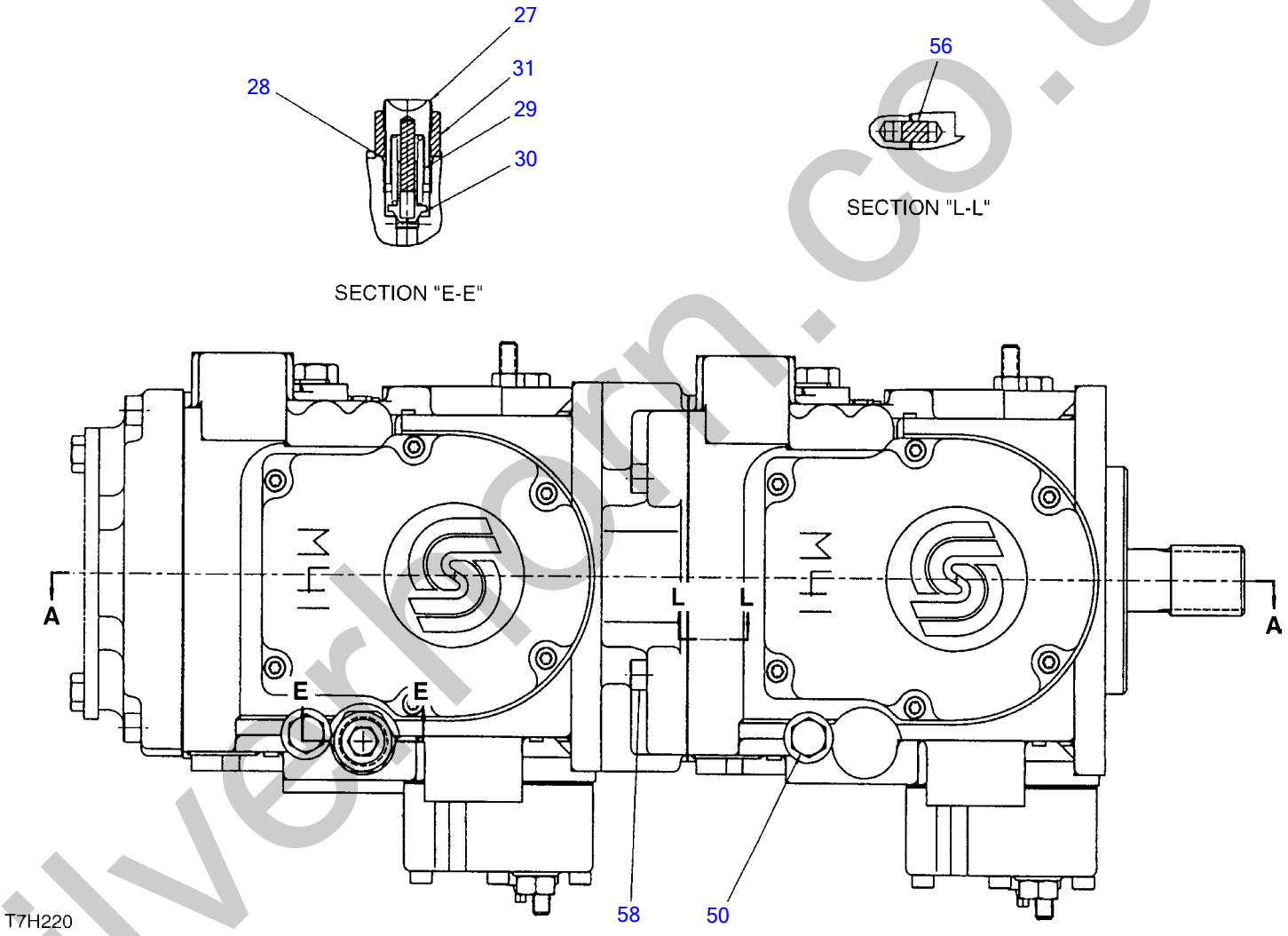

silverhorn.co.uk

HYDRAULIC PUMP (2/4)

Item	Part number	Description	Q'ty	Chan.	Serial No.	Serv.	Remarks
0	1902019200	PUMP, hydraulic	1				
27	1902019226	・PLUG ASSY	1				
28	1420310910	・O-RING	1				
29	1902016553	・SPRING	1				
30	1902016554	・POPPET	1				
31	1902016552	・NUT	1				
50	1902019215	・PLUG ASSY	1				
56	1902006702	・PIN	4				
58	1902020358	・SCREW, cap	8				
	T9h151						

silverhorn.co.uk

HYDRAULIC PUMP (3/4)

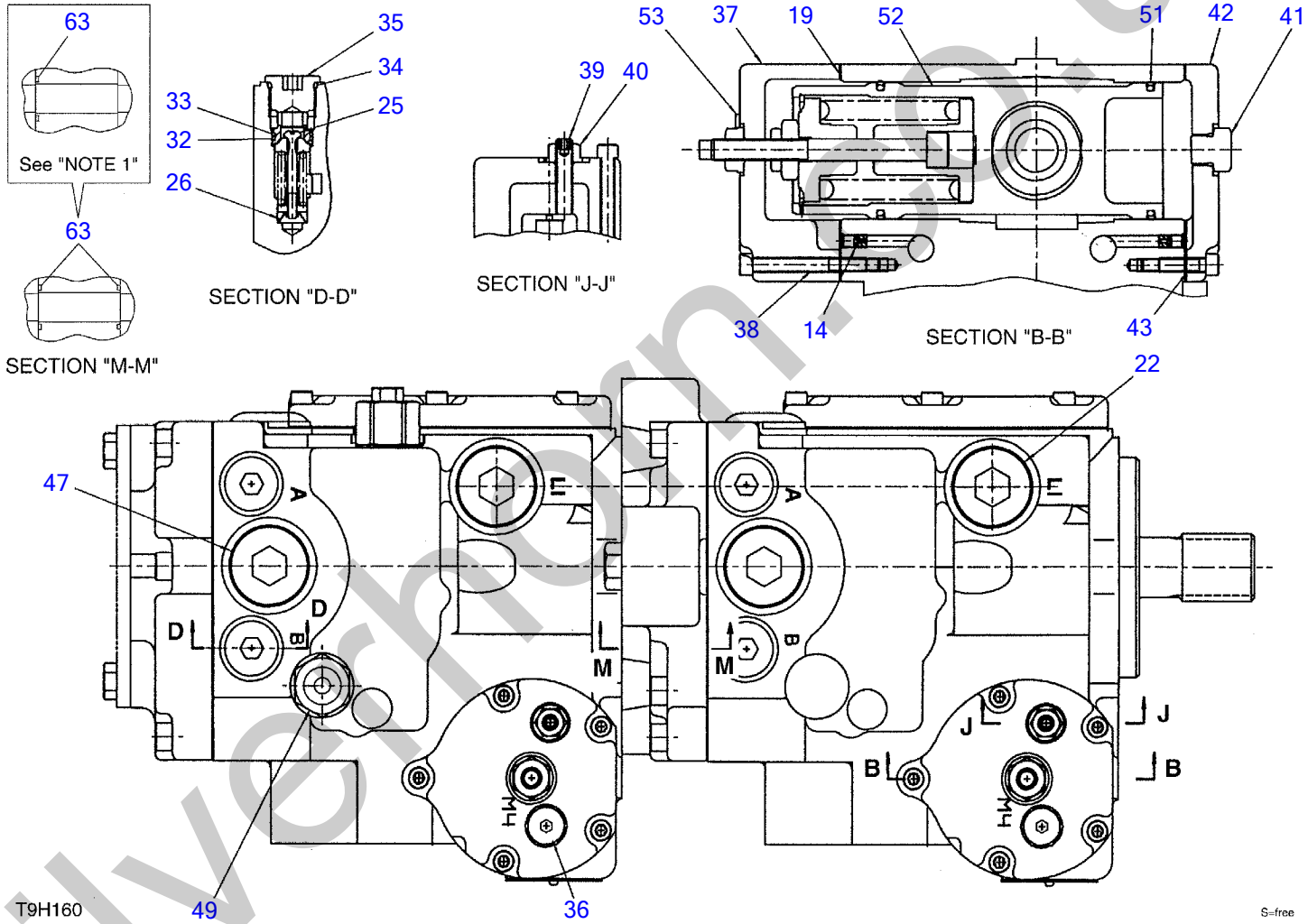

silverhorn.co.uk

HYDRAULIC PUMP (3/4)

Item	Part number	Description	Q'ty	Chan.	Serial No.	Serv.	Remarks
0	1902019200	PUMP, hydraulic	1				
14	1902018807	・ORIFICE	4				
19	1902017713	・GASKET	4				
22	1902017724	・PLUG ASSY	4				
25	1902019229	・VALVE	4				
26	1902020736	・SPRING	4				
32	1902018814	・O-RING	4				
33	1902018815	・RING, back-up	4				
34	1420310910	・O-RING	4				
35	1902018817	・PLUG ASSY	4				
36	1902019215	・PLUG ASSY	2				
37	1902018818	・COVER	2				
38	1100050660	・BOLT	10				
39	1902017425	・SCREW	2				
40	1902017719	・NUT, seal	2				
41	1902017410	・PLUG ASSY	2				
42	1902018820	・COVER	2				
43	1100050630	・BOLT	6				
47	1902017724	・PLUG ASSY	1				
49	1902019251	・PLUG	1				
51	1902017727	・RING, back-up	2				
52	1902018824	・PISTON ASSY	2				
53	1902018825	・NUT, seal	2				
63	1902016565	・O-RING	1		~2003.7		see "NOTE 1"
	1902016564	・O-RING	2		2003.7~		see "NOTE 2"
		<<NOTE 1>>					
		21400011~21400111, 21400117~21400124					
		21400132~21400133, 21400135					
		21400141~21400142					
		<<NOTE 2>>					
		21400112~21400116, 21400125~21400131					
		21400134, 21400137~21400140,					
		21400143~					
	T9h163						

silverhorn.co.uk

HYDRAULIC PUMP (4/4)

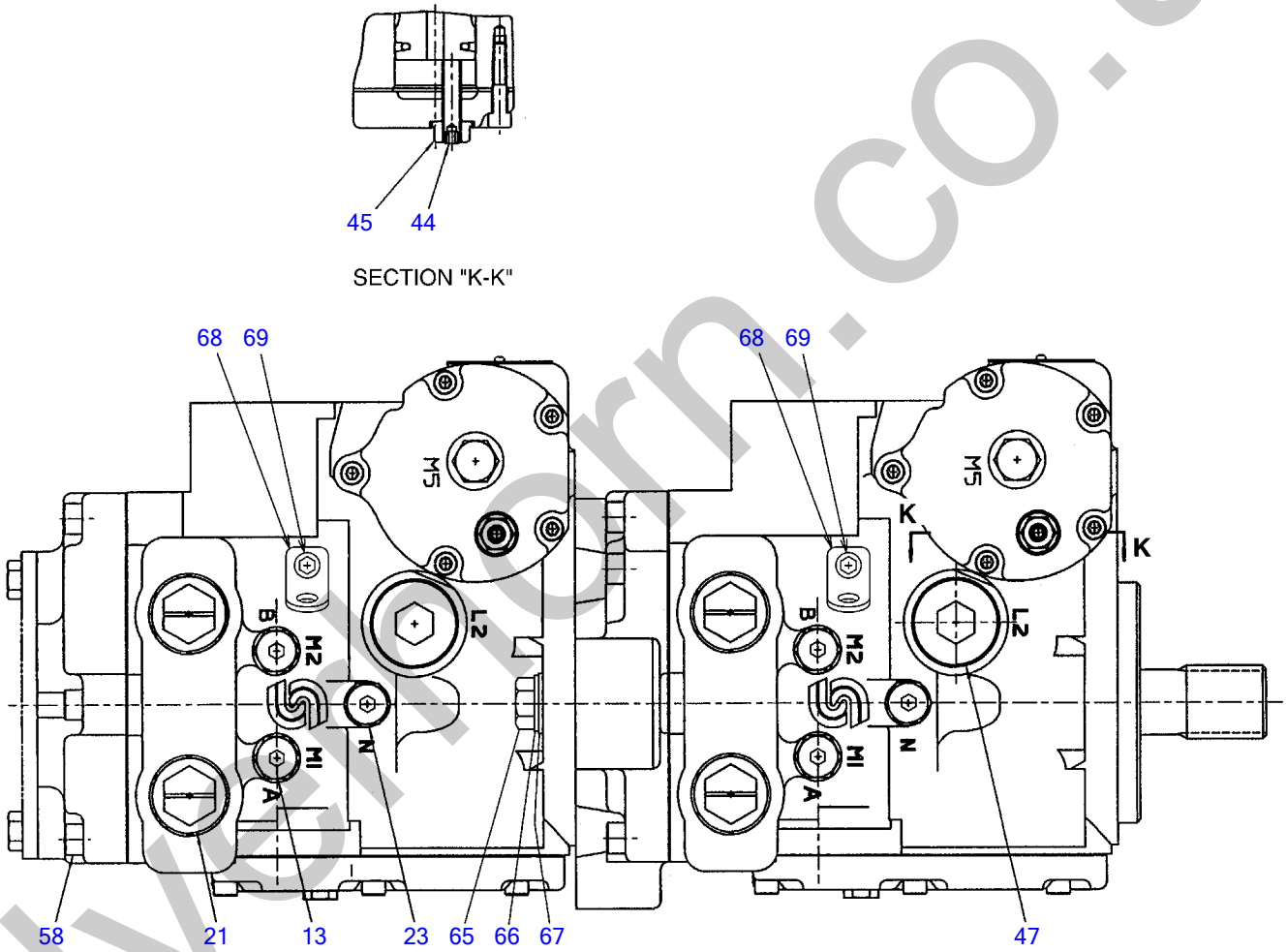

T7H241

S=free

silverfern.co.uk

HYDRAULIC PUMP (4/4)

Item	Part number	Description	Q'ty	Chan.	Serial No.	Serv.	Remarks
0	1902019200	PUMP, hydraulic	1				
13	1902019215	・PLUG ASSY	4				
21	1902019129	・PLUG ASSY	4				
23	1902019215	・PLUG ASSY	2				
44	1902017425	・SCREW	2				
45	1902017719	・NUT, seal	2				
47	1902017724	・PLUG ASSY	1				
58	1902020358	・SCREW, cap	6				
65	1902010035	・BOLT	2				
66	1902016567	・WASHER, spring	2				
67	1141200014	・WASHER	2				
68	1902020297	・PLATE	2			M	
69	1902020298	・BOLT	2			M	
	T9h172						

silverhorn.co.uk

GEAR PUMP

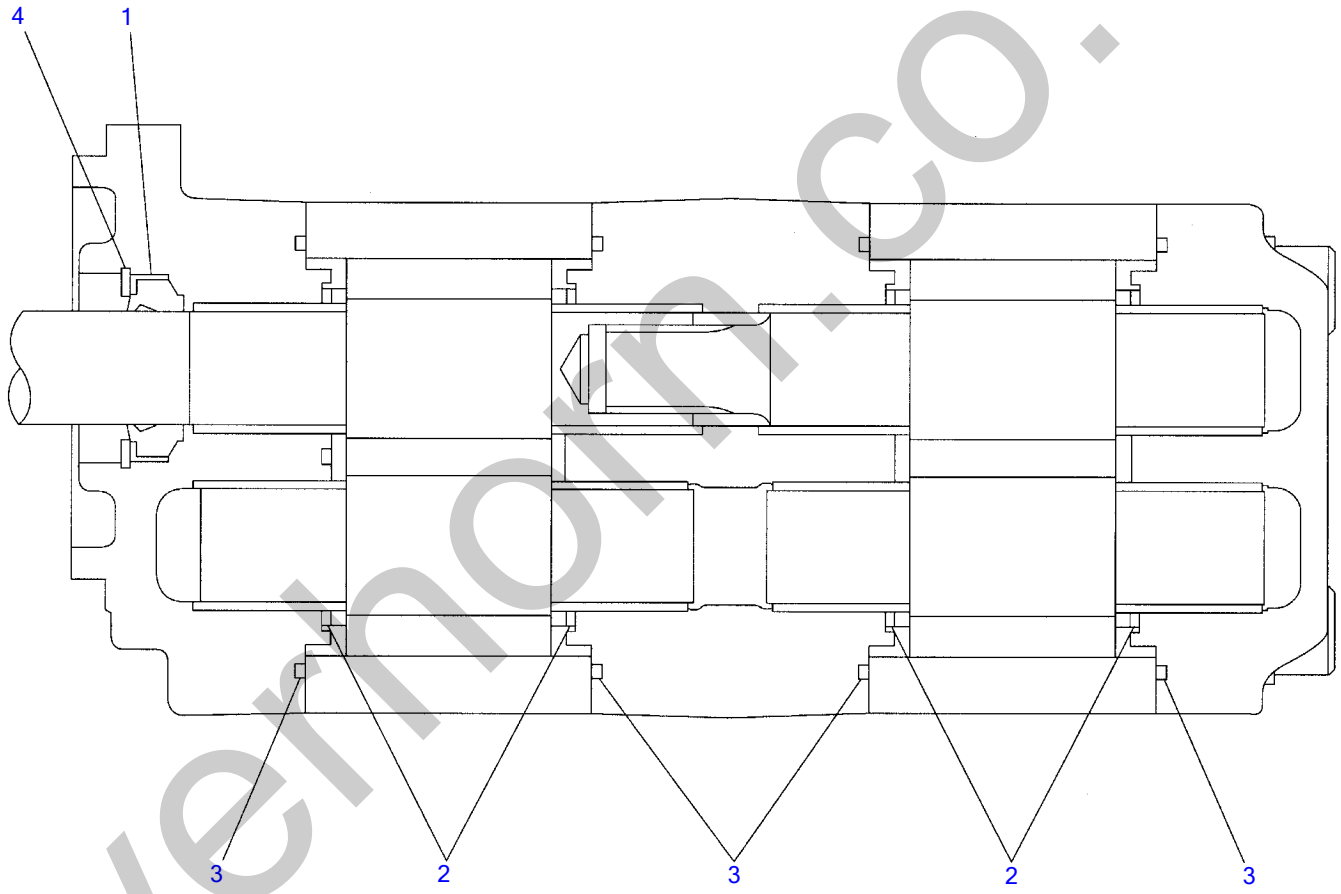

TH200

silverhorn.co.uk

GEAR PUMP

Item	Part number	Description	Q'ty	Chan.	Serial No.	Serv.	Remarks
0	1902019500	PUMP ASSY, gear	1				
0-1	1902018199	・KIT, seal	1				
1	X 1902018154	・・SEAL, oil	1				
2	X 1902018150	・・GASKET	4				
3	X 1902018151	・・GASKET	4				
4	X 1221000036 T9h180	・・RING, snap	1				

silverhorn.co.uk

GEAR PUMP (high flow)

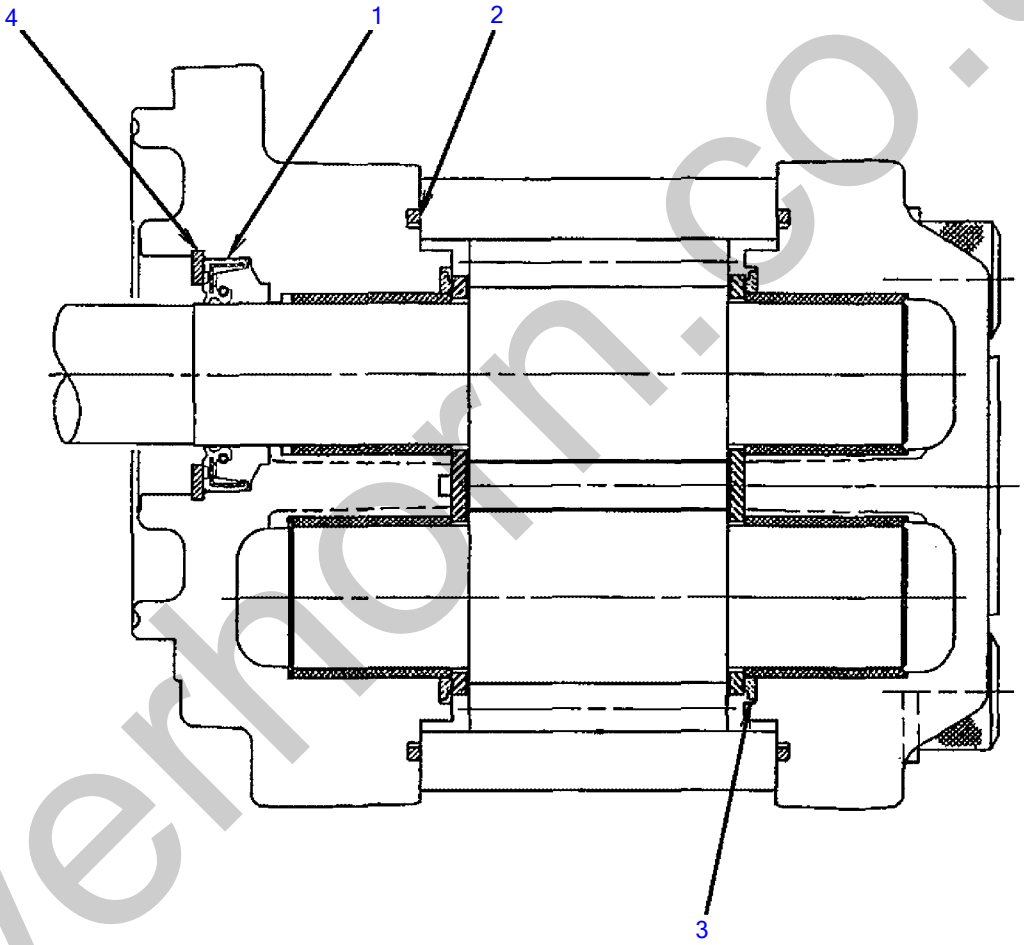

T8H170

S=free

silverhorn.co.uk

GEAR PUMP (high flow)

Item	Part number		Description	Q'ty	Chan.	Serial No.	Serv.	Remarks
0		1902021600	PUMP ASSY, gear	1				
		1902022700	PUMP ASSY, gear	1				for EU
0-1		1902021199	・KIT, seal	1				
1	X	1902017618	・・SEAL, oil	1				
2	X	1902018151	・・GASKET	2				
3	X	1902018150	・・GASKET	2				
4	X	1221000036	・・RING, snap	1				
		T9h240						

silverhorn.co.uk

Heater Kit

silverno.co.uk

Heater Kit

Item	Part number	Description	Q'ty	Chan.	Serial No.	Serv.	Remarks
		Heater Kit					
	BHEATTL150	Heater Kit	1				
1	**R2700**	Blower Unit (motor and core)	1				
2	**RD-4198-0P**	Hose 5/8" ID	1				
3	**RED-72R2500**	Ball Louver	1				
4	**RD-5-5192-0P**	Water Valve	2				
5	**RD-4130-1P**	Heater Core Nipple	2				
6	**RD-5-4035-10M**	Hose Clamp 5/8"	8				
7	**RED71R4040**	Control Knob	1				
8	**1911505768**	Rotary Switch	1				
9	**1911508559**	Heater Hose	1				

silverhorn.co.uk

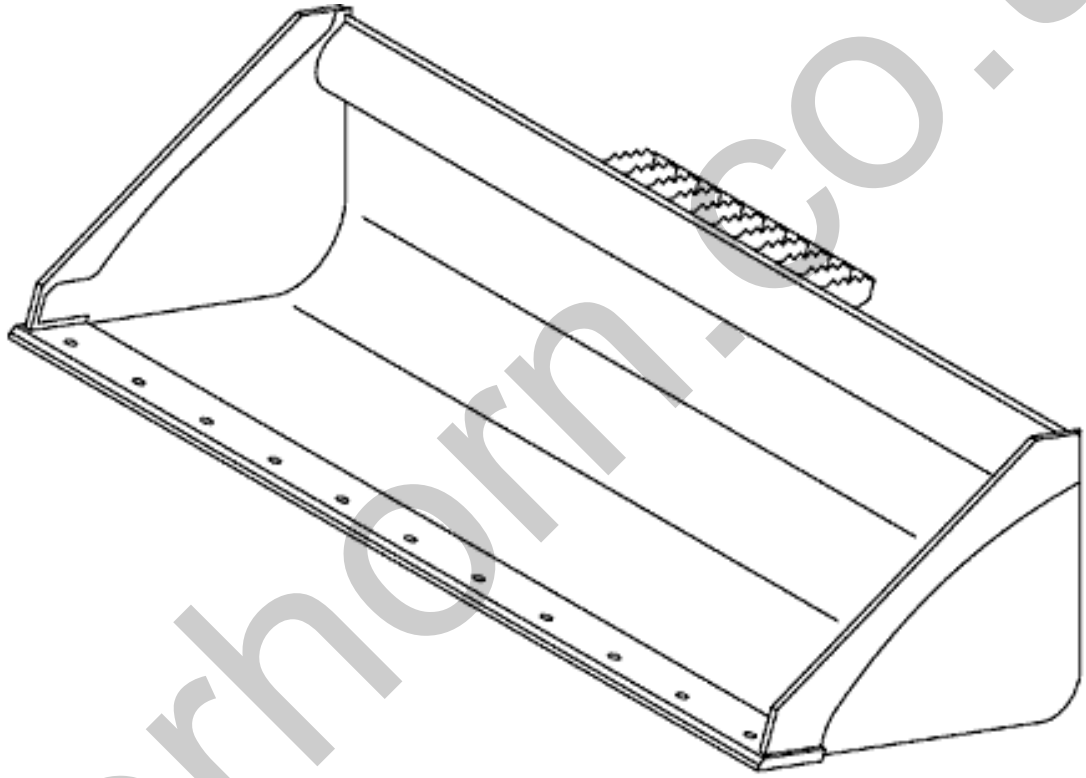

silverhorn.co.uk

TL140 Buckets

Item	Part number	Description	Q'ty	Chan.	Serial No.	Serv.	Remarks
		TL140 Buckets					
	BTL14076	76" Smooth Bucket	1				
	BTL14077	76" Tooth Bucket	1				

silverhorn.co.uk

Bucket Teeth

silverhorn.co.uk

Bucket Teeth

Item	Part number	Description	Q'ty	Chan.	Serial No.	Serv.	Remarks
		Bucket Teeth					
1	1914272300	Tooth Kit	1				
2	1914200230	* Tooth	8				
3	1914200023	* Lock	8				
4	1914202300	- Adaptor	8				

silverhorn.co.uk

Blades

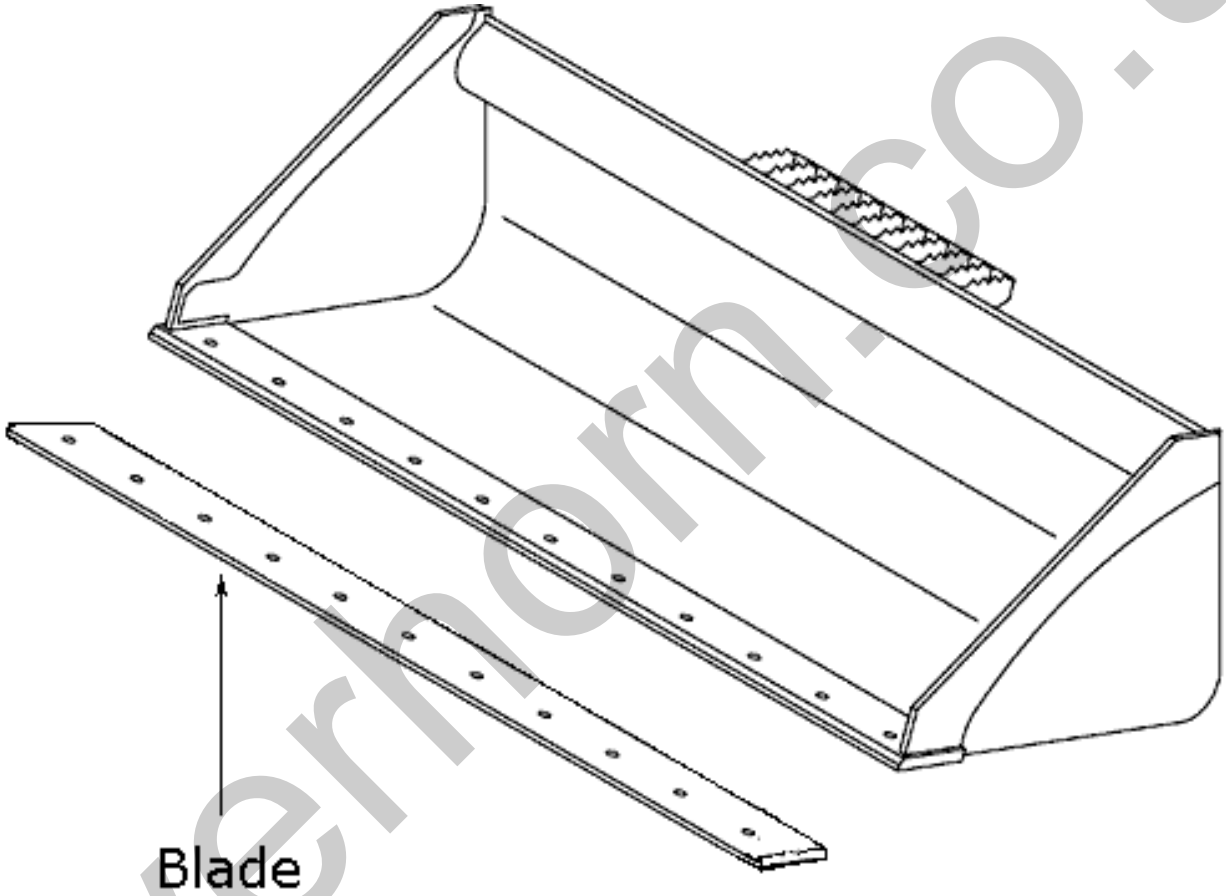

silverhorn.co.uk

Blades

Item	Part number	Description	Q'ty	Chan.	Serial No.	Serv.	Remarks
		Blades					
	BTL14076A	76" Bolt-on Blade for Bucket Model 19420 or 18877	1				

silverhorn.co.uk

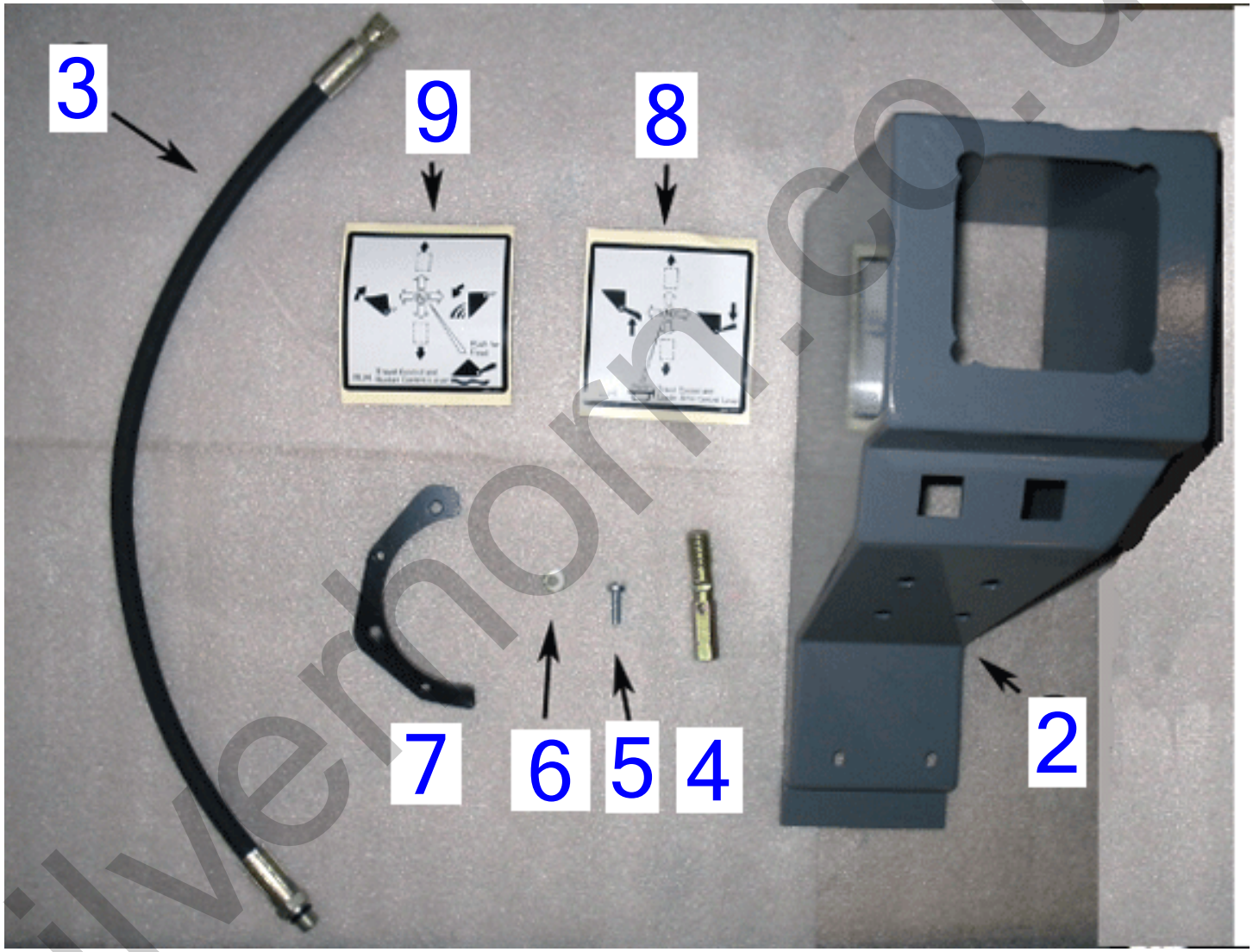

silvernorn.co.uk

Case Control Kit

Item	Part number	Description	Q'ty	Chan.	Serial No.	Serv.	Remarks
		Case Control Kit					
	BCASETL150	Case Control Kit	1				
2	BCASETL150A	Case Control Console Box	1				
3	BCASETL150HOSE	Case Control Hose Assy	2				
4	1901734123	Lever	1				
5	1120530620	Pan Screw 4tm6 X 20 P-1.0 phillips	4				
6	1140020006	Spring Washer	4				
7	0880710010	Spacer	2				
8	0880031012	Decal	1				
9	0880031011	Decal	1				

silverhorn.co.uk

Six Way Dozer Blade

silvermoon.co.uk

Six way Dozer Blade

Item	Part number	Description	Q'ty	Chan.	Serial No.	Serv.	Remarks
		Six Way Dozer Blade					
1	**BPL1200**	7' Blade Assy	1				
2	**89942**	Bradoc Blade Harness	1				

silverhorn.co.uk

250 Hour Filter Kit

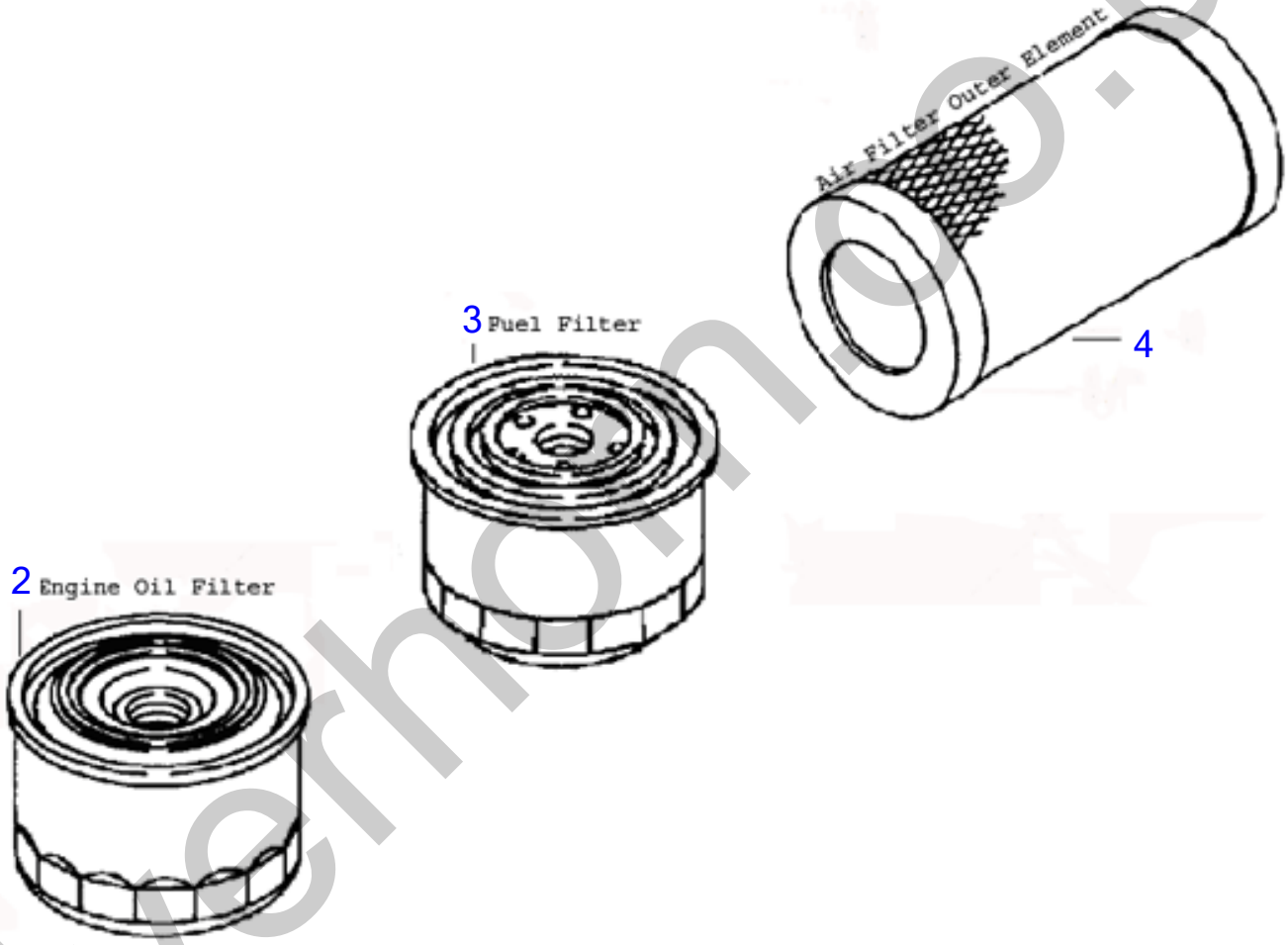

silverhomes.uk

250 Hour Filter Kit

Item	Part number	Description	Q'ty	Chan.	Serial No.	Serv.	Remarks
		250 Hour Filter Kit					
	1909914000	250 Hour Filter Kit	1				
2	I5-87310-3370	* Engine Oil Filter	1				
3	X13240015	* Fuel Filter	1				
4	Y119117-12560	* Oyter Air Filter	1				

silverhorn.co.uk

Annual Filter Kit

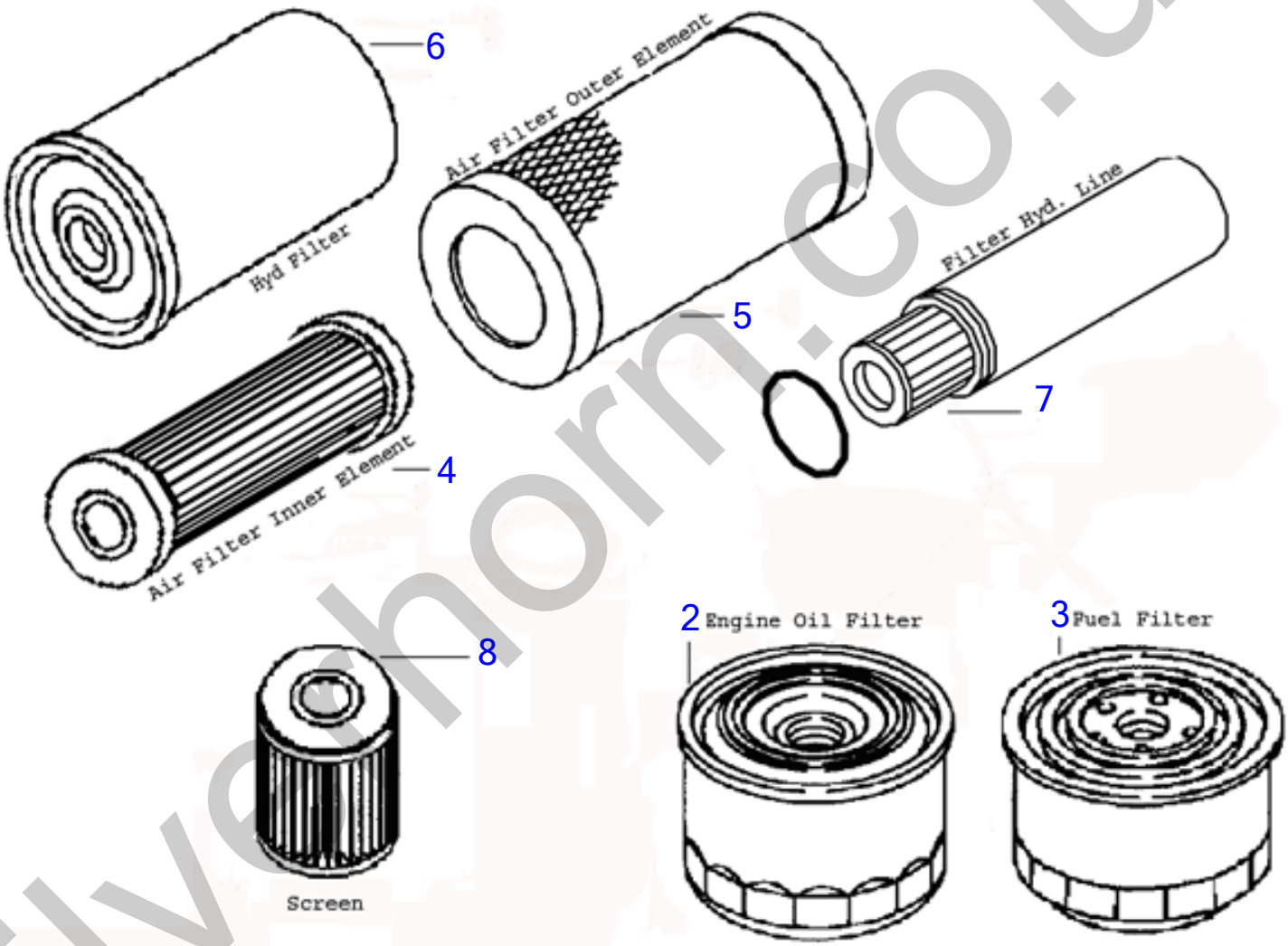

silverhorn.co.uk

Annual Filter Kit

Item	Part number	Description	Q'ty	Chan.	Serial No.	Serv.	Remarks
		Annual Filter Kit					
	1909914010	Annual Filter Kit	1				
2	I5-87310-3370	*Engine Oil Filter	1				
3	X13240015	* Fuel Filter	1				
4	Y119117-12570	* Inner Air Filter	1				
5	Y119117-12560	* Outer Air Filter	1				
6	1551000520	* Hydraulic Filter	1				
7	1551101001	* Hydraulic Filter Line	1				
8	Y129535-52150	* Feed Pump Fuel Filter	1				

silverhorn.co.uk

Faster Coupler New

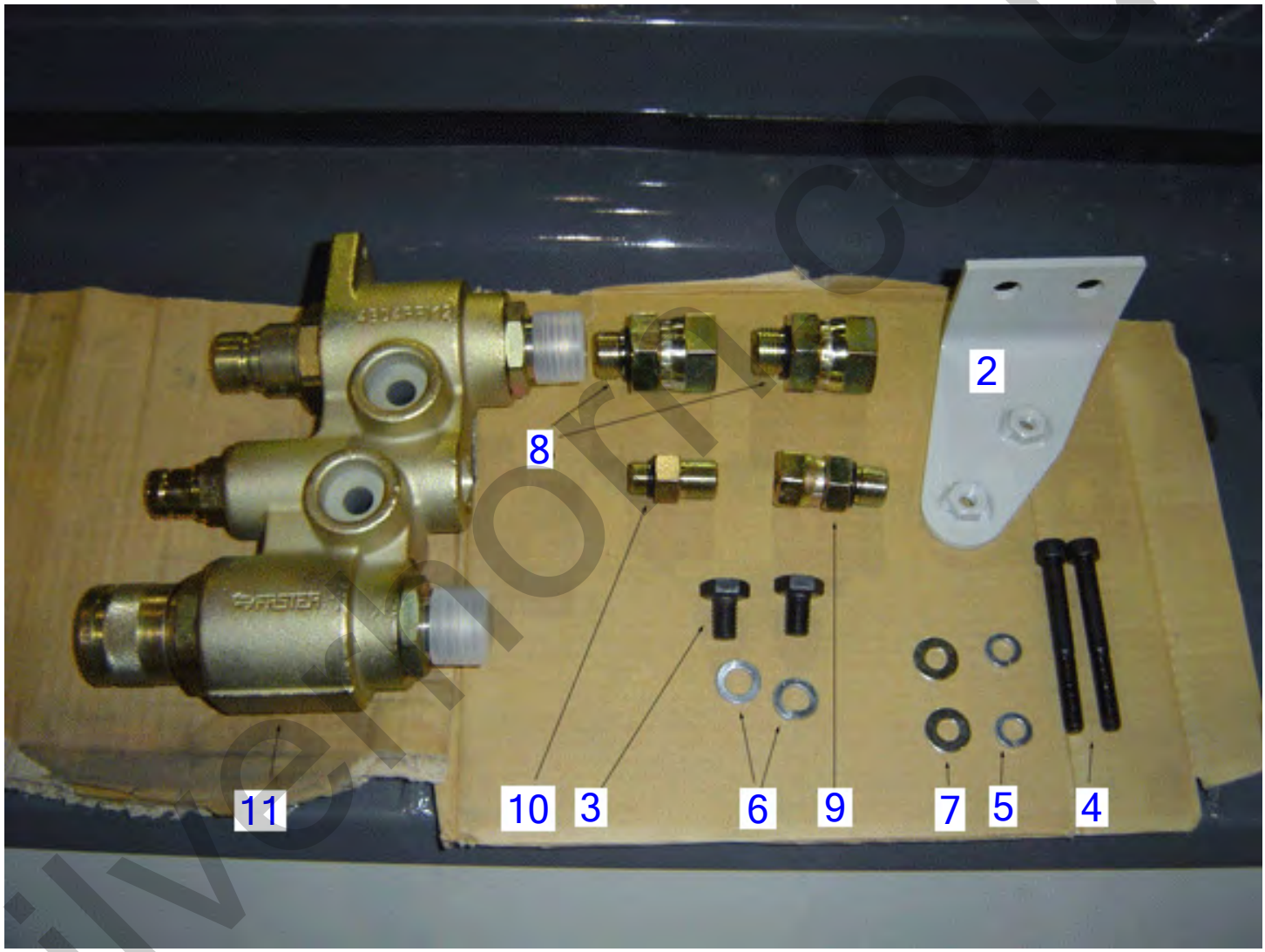

silvermoor.co.uk

Faster Coupler New

Item	Part number	Description	Q'ty	Chan.	Serial No.	Serv.	Remarks
	08888140FC	Faster Coupler Kit SN 21400569-up	1				
2	0882731830	* Bracket	1				
3	1100051016	* Bolt	1				
4	1100050865	* Bolt 10tn8 X 65 P/1.25	2				
5	1140020008	* Spring Washer	2				
6	1140020010	* Spring Washer	2				
7	1141110008	* Washer	2				
8	007236045	* Adaptor	2				
9	1511410003	* Adaptor	1				
10	0007203017	* Tapered Adaptor 3/8" Male w/O-Ring	1				
11	08888FASTER	* Block Coupler for TL1 Series	1				

silverhorn.co.uk

Faster Coupler Old

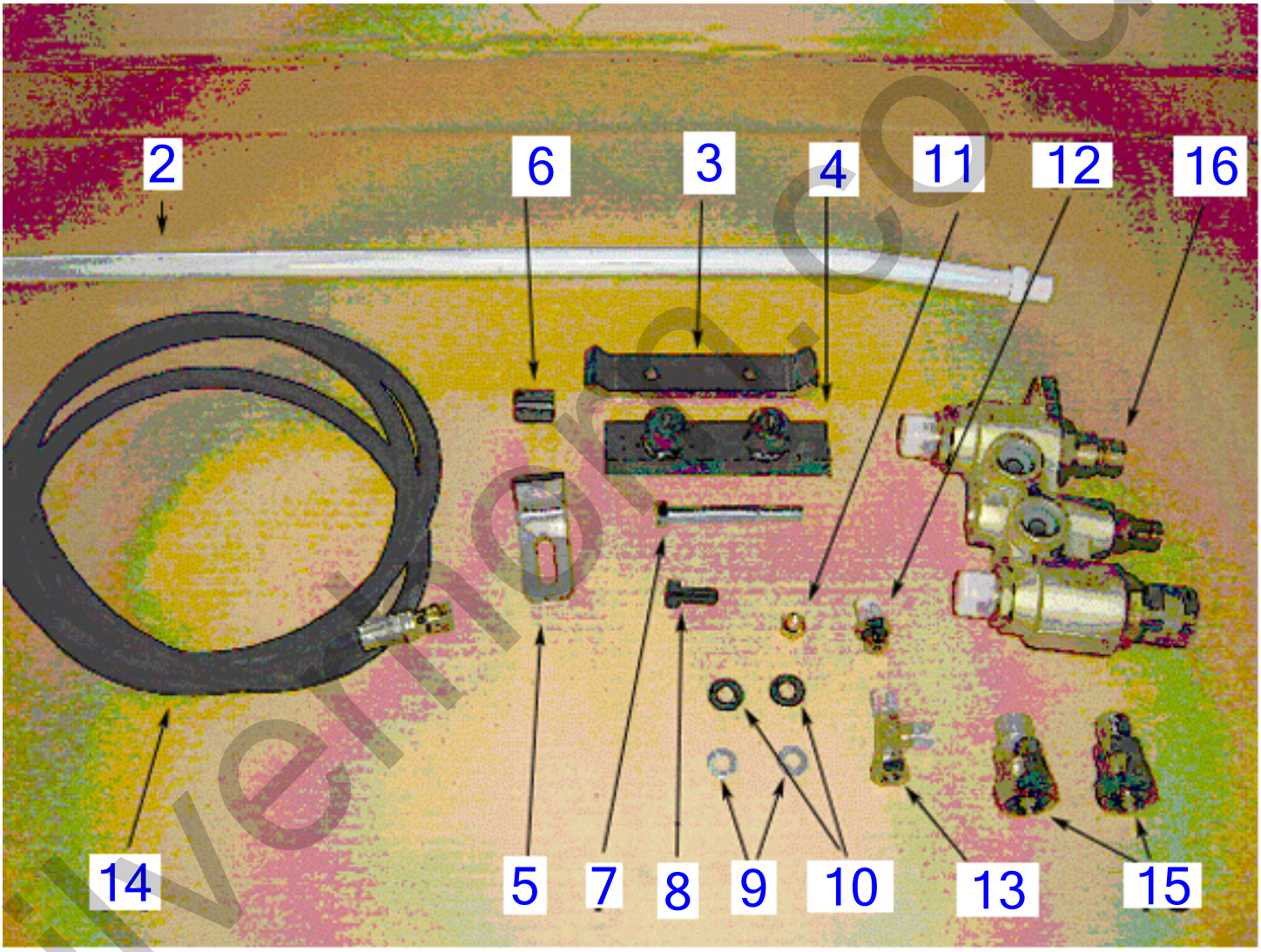

silvermoor.co.uk

Faster Coupler Old

Item	Part number	Description	Q'ty	Chan.	Serial No.	Serv.	Remarks
		Faster Coupler Old					
	08888140FFC	Faster Coupler Kit SN 21400004-21400568	1				
2	0882730100	* Pipe	1				
3	0880735280	* Clamp	1				
4	0880735290	* Support	1				
5	0881732830	* Bracket	1				
6	0881732840	* Collar	1				
7	1100051090	* Bolt 10 X 90	1				
8	1100051025	* Bolt 10tm10 X 25 P/1.5	1				
9	1140020010	* Spring Washer	2				
10	1141110010	* Plain Wasehr	2				
11	1130240010	* Nut	1				
12	1515600210	* Adapter	1				
13	1513390015	* Adaptor T	1				
14	1801022260	* Hose	1				
15	08888128F63MX	Field Campaign Adapter	2				
16	08888FASTER	Block Coupler for TL1 Series	1				

silverhorn.co.uk

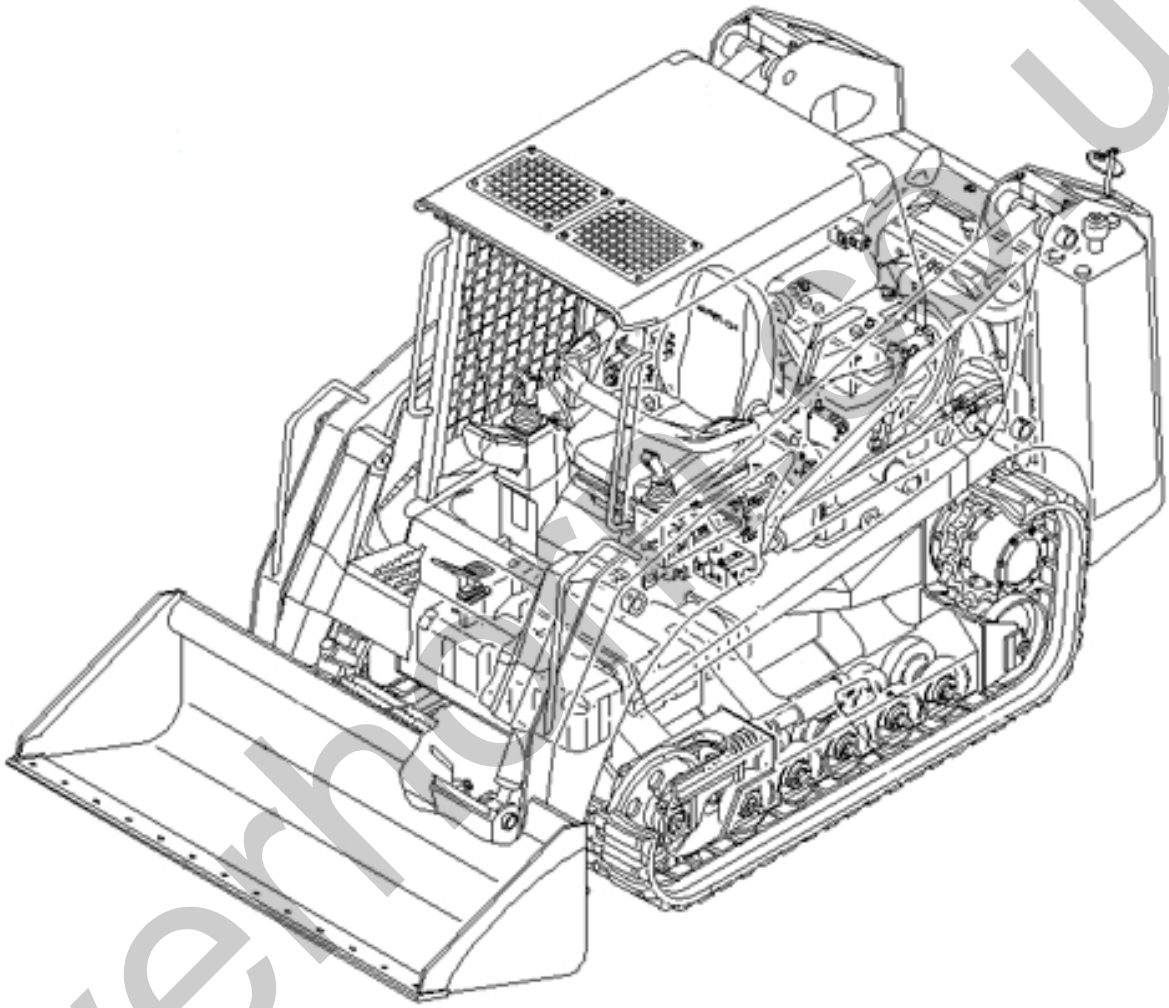

silverhurst.co.uk

Recommended Stock List

Item	Part number	Description	Q'ty	Chan.	Serial No.	Serv.	Remarks
		Recommended Stock List					
	1551101001	Hydraulic Filter Line SN 21400011-21401390	2				
	1551000520	Hydraulic Filter (for O-Ring use 1420110800)	6				
	Y119117-12570	Inner Air Filter	3				
	Y119117-12560	Outer Air Filter	6				
	I5-87310-3370	Engine Oil Filter	6				
	X13240015	Fuel Filter	3				
	1909914000	250 Hour Filter Kit	1				
	1909914010	Annual Filter Kit	1				
	1900052099	Multi Use Seal Kit	2				
	1900085699	Arm Cylinder Seal Kit	2				
	1432500640	Floating Seal (2 pieces = 1 Seal)	2				
	1400403203	Seal	2				
	1421020600	Backup Ring P-60 Bias Cut	2				
	1515600200	Adaptor	2				
	1501750002	Plug (for O-Ring use 1420010110)	2				
	1914200230	Tooth	10				
	1914200023	Lock	10				
	1914202300	Adaptor	10				
	0880612070	Pin	2				
	0007000070	TL Series Spring	2				
	1213001250	Spring Pin M12 X 50	1				
	0007000119	Spring	2				
	0881612040	Left Hand Lever SN 21400011-up	2				
	0881612050	Right Hand Lever SN 21400011-up	2				
	0881612060	Yoke	2				
	0881612150	Pin	2				
	0011904008	Arm Pin SN 21400011-21400568	2				
	0001673002	Arm Pin SN 2140569-up	2				
	0881612070	Washer	2				
	0007000016	TL Series Spring	2				
	0881602910	Stopper	2				
	0880823670	Door Striker	1				
	1914099520	Flat Block Tread Rubber Track	2				
	0882160010	Sprocket SN 21400004-21402000	2				
	1552100500	Fuel Cap	1				
	1700100018	Starter Switch	1				
	1703002706	Bulb	1				
	1700100019	Keys (Qty 1 = 2 keys)	2				
	1703002706	Bulb	2				
	1700000010	Light Switch	1				
	I1-13671-2080	Cooling Fan Belt	1				
	0880612080	Pipe	2				
	1700009010	Switch	1				
	1919060104	Red Aerosol Paint	2				
	1919060139	Light Gray Aerosol Paint	2				
	1919060140	Medium Gray Aerosol Paint (070)	2				
	1560001000	Straight Grease Fitting	10				
	1560001675	Grease Fitting 67.5 degree	6				
	1560001900	Grease Fitting 90 degree	6				
	0882402250	Radiator Hose	1				
	0882401160	Lower Radiator Hose	1				

silverthorn.co.uk

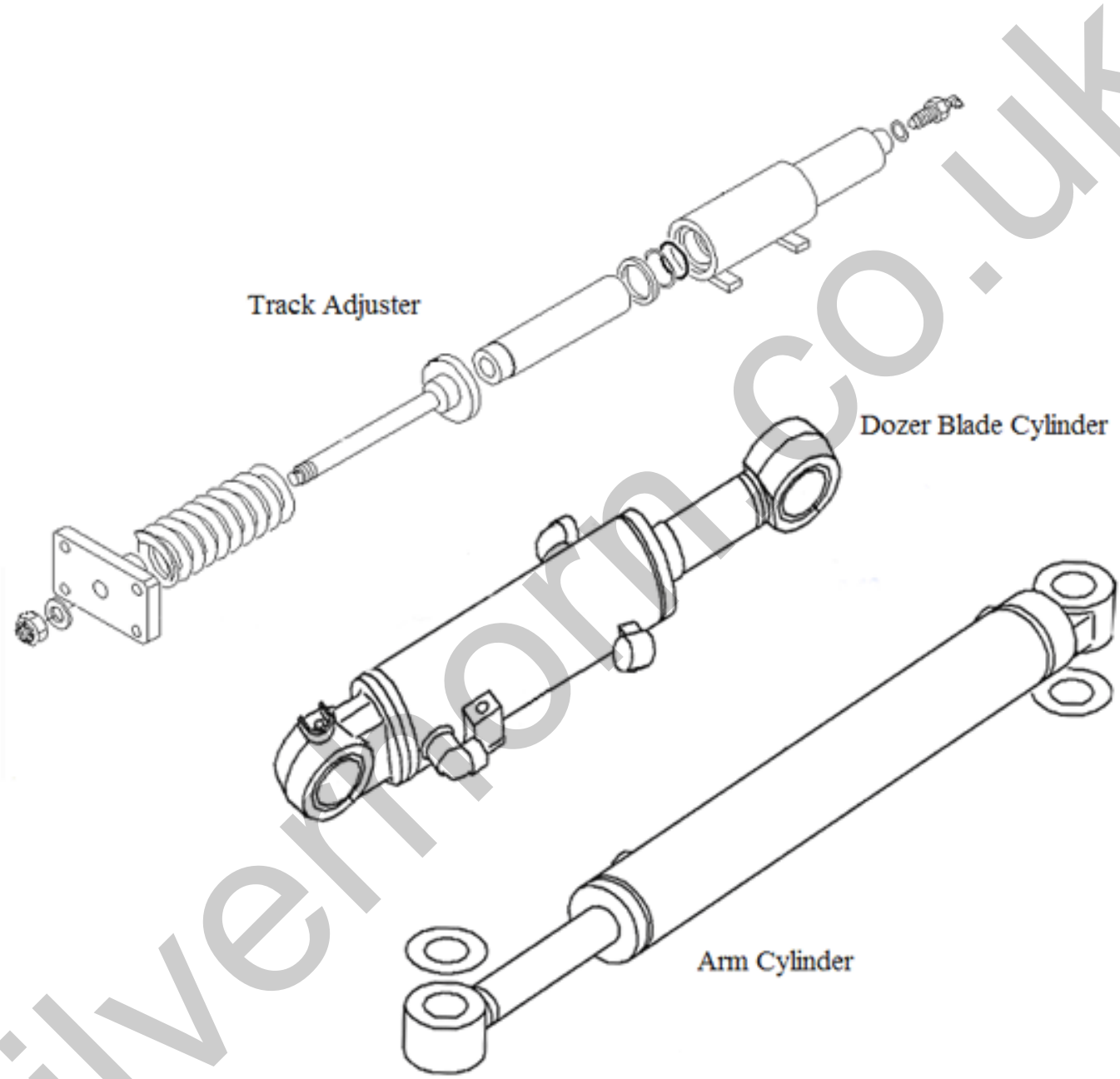

silverhorn.co.uk

Seal Kits

Item	Part number	Description	Q'ty	Chan.	Serial No.	Serv.	Remarks
		Seal Kits					
	1900085699	Arm Cylinder Seal Kit	1				
	1900052099	Bucket Cylinder Multi Use Seal Kit	1				

silverhorn.co.uk

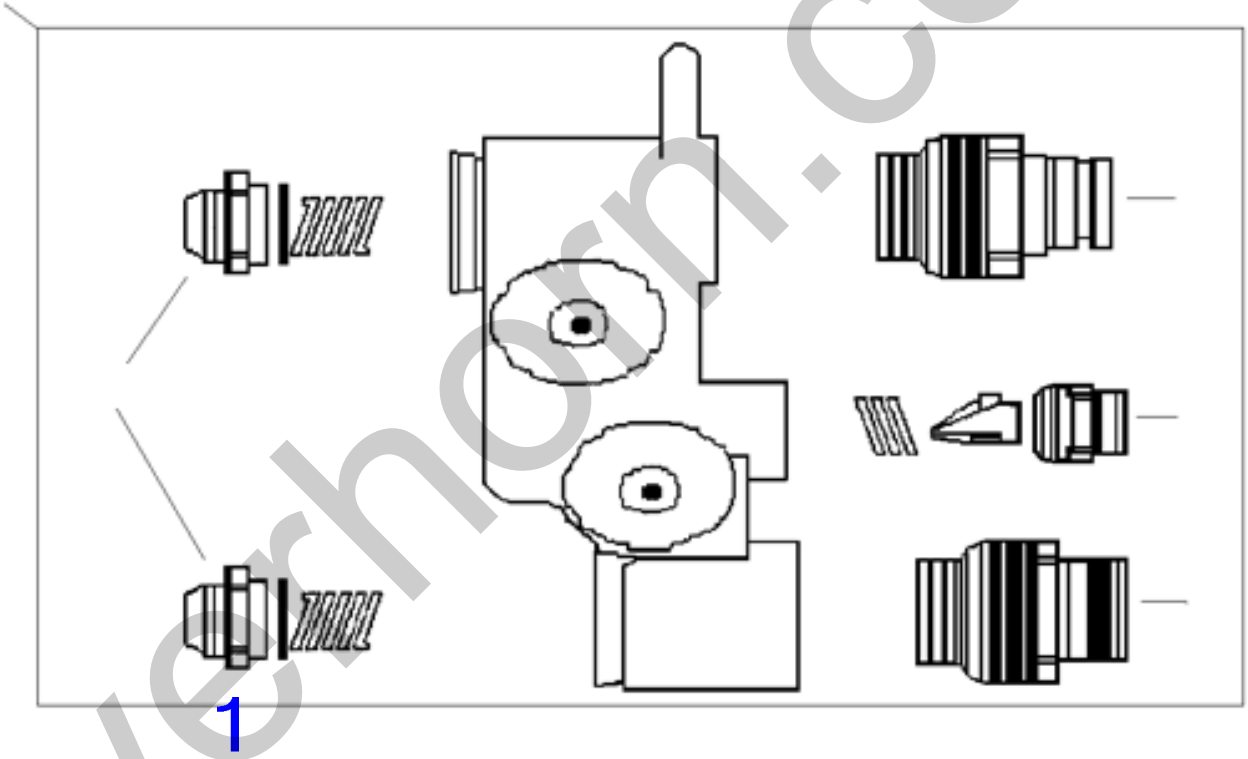

silverhorn.co.uk

Faster TL Series

Item	Part number	Description	Q'ty	Chan.	Serial No.	Serv.	Remarks
		Faster TL Series					
1	**08888FASTER**	Block Coupler	1				
	08888FASTERORING	O-Ring Kit	1				
3	**08888FASTERF**	Female Coupler	1				
4	**08888FASTERCD**	Male Case Drain Coupler	1				
5	**08888FASTERM**	Male Coupler	1				
6	**08888FASTERADPT**	Adaptor Kit (for O-ring use 1420010220)	2				

silverhorn.co.uk

All TL140 Manuals

Item	Part number	Description	Q'ty	Chan.	Serial No.	Serv.	Remarks
		TL140 Manuals					
	LT14000001SP	Operators Manual TL120/TL130/TL140/TL150 AT7S003 Spanish	1				
	LT14000001TNV	Operators Manual TL120/TL130/TL140/TL150 AT7E023 TIER 2 ENG	1				
	LT14000003	Parts Manual TL140 BT9Z0009-1	1				
	LT14000004	Service Manual TL140 CT9E003	1				

silverhorn.co.uk

How to read this Parts Catalog.

1. Parts mentioned in this Parts Catalog may not necessarily be standard equipping parts.
2. Parts change may be made without prior notice.
3. Form of this Parts Catalog.

Fig.29 燃料噴射ポンプ(ブーコン用)
FUEL INJECTION PUMP (W/BOOST)

A= 4JH-DT	D= 4JH-DTZA
B= 4JH-DTZ	E= 4JH-DTZY
C= 4JH-DTZP	F=

見出 REF.No.		部品番号 PARTS No.	部品名	DESCRIPTION	個数 (Q'ty) A	B	C	D	E	F	I	R
1		729595-51390	FOポンプ ASY(ブーコンツキ	FULE INJECTION PUMP	1	1	1	1	1			1
1- 1		729595-51391	FOポンプ ASY(ブーコンツキ	FULE INJECTION PUMP	1	1	1	1	1			1
	(A=E/#00185)(B=E/#00200)											
3		26022-060162	ナベコネジ M 6X 16	SCREW M 6X 16	9	9	9	9	9			
I 3- 1		26022-060162	ナベコネジ M 6X 16	SCREW M 6X 16	4	4	4	4	4		K	
	(A=E/#00185)(B=E/#00200)(C=E/#00156)(D=E/#00156)(E=E/#00156)											
4		129470-51040	カムシャフト	CAMSHAFT	1	1	1	1	1			
5		122710-51050	ベアリングキローラ	BEARING, ROLLER	2	2	2	2	2			
6		129470-51060	ベアリングオサエ	RETAINER	1	1	1	1	1			

備考	Remarks
(1) ブーストコンペンセータ付き、4JH-DT, 4JH-DTZとも E／#00155までは、特別注文仕様とします	(1) BOOST COMPEMSATOR TYPE. OPTIONAL PART, TO E／#00155. (4JH－DT,4JH－DTZ)

① Ref. No.

The Ref. No. in the list may not be accord with the Ref. No. on illustration.

(Ex.) Illustration No. 1 — List head No. 1 (Befor change) ⟶ 1 [－1] (After change)

When interchangeable symbol N, R, and K, illustrations for new parts are sometimes omitted.

③ Change Mark

Change Mark "I" is given to the part for which a desigh change was made at this time.
The design change was not shown in the last published Parts Catalog.

④ Interchangeability Mark

In the case where a part change took place,one of the following interchangeability marks is indicated for that part.

Symbol	interchangeability	Contents note
N	Old ⇄ New	New Part is interchangeable for Old Part but not interchangeable conversely.
Q	Old ⇄ New	New Part is not interchangeable for Old Part but interchangeable conversely.
R	Old ⇄ New	New Part is interchangeable for Old Part and vice versa.
S	Old ⇄ New	New Part is not interchangeable for Old Part and vice versa.
W		Part newly added.
Z		Part discontinued.
F		Not interchangeable single part but interchangeable by set of the related parts.
K		Changed only in quantity used.

⑤ Effective Machine No.

When a part is changed,Effective Machine No. of a Model for which the part is applicable is indication in each column of (A)- (F).

Product Symbol	Product No.	Product Symbol	Product No.
C	Clutch No. Compressor No.	M	Machine No.
D	Drive No.	T	Tractor No.
E	Engine No.	Note1) ※	Date

Note1) Date may follow the symbol in some cases. (Ex.) ※ 1996.01
Note2) As far as engine models shown by "XXX" are concerned, the modification of the parts could not be predicted or the engine models themselves could not be identified.
Note3) (A=E/#00185) means that the design change on the part has been effective for the model at the column (A)(in this case, for 4JH- DT) on and from E/#(Engine Serial Number) 00185.

⑥ Remarks Mark

Figures or alphabets (Symbols) are entered in the remark column.
The comments(remarks)on the pertinent parts are indicated in the lower part of the list by the same symbols as those stated above.

silvermorn.co.uk

Engine for TL140 4JG1-TPA (ISUZU)

ENGINE GASKET KIT

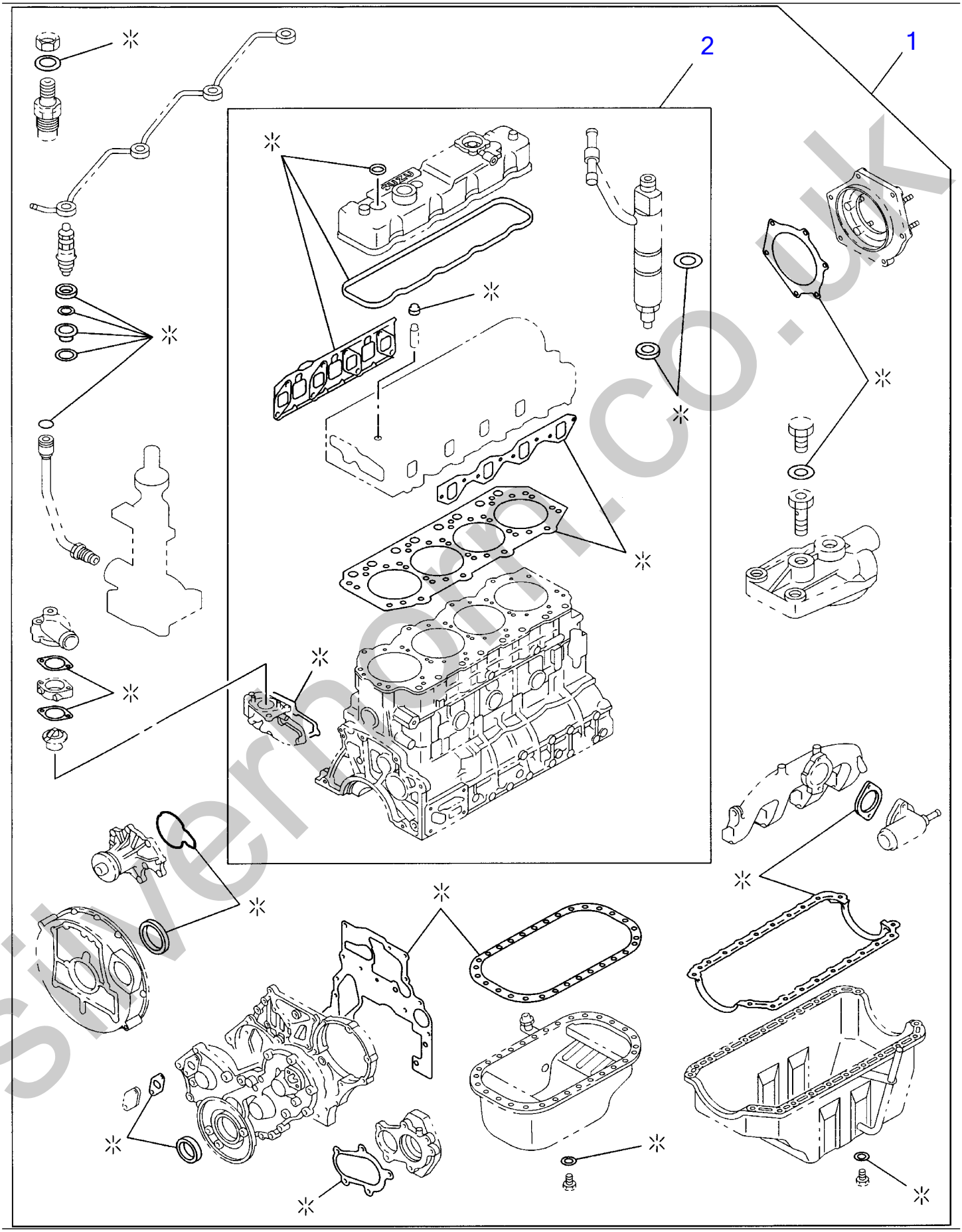

silvermoon.co.uk

Engine for TL140 4JG1-TPA (ISUZU)

ENGINE GASKET KIT

Item	Part No	Description	Qty
1	I5-87814-2702	GSKET SET; ENG OVERHAUL	1
2	I5-87814-0222	GSKET SET; ENG HD OVERHAUL	1

silverhorn.co.uk

CYLINDER HEAD

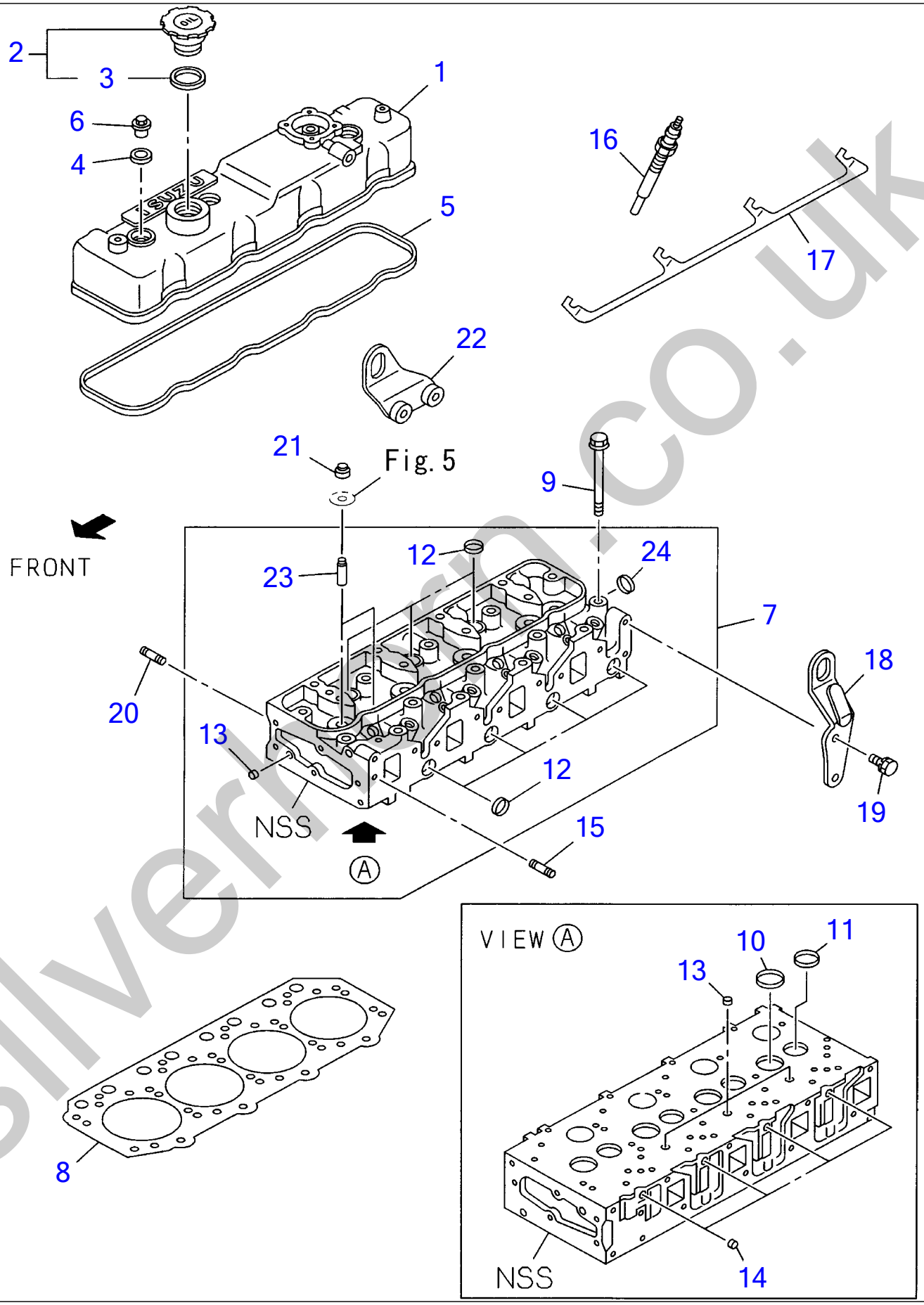

silverhorn.co.uk

CYLINDER HEAD

Item	Part No	Description	Qty
1	I8-97081-7422	COVER; CYL HD	1
2	I8-94133-2075	CAP; OIL FILLER	1
3	I8-94123-6231	GASKET; OIL FILLER	1
4	I8-94202-4563	GASKET; HD COVER	3
5	I8-97161-1310	GASKET; HD TO COVER (-03.01)	1
	I8-97349-4160	GASKET; HD TO COVER (03.02-)	1
6	I8-94173-4300	NUT; CAP, HD COVER (-03.07)	3
	I8-94158-1080	NUT; CAP, HD COVER (03.08-)	3
7	I8-97120-1783	HEAD ASM; CYL (-03.06)	1
	I8-97109-6423	HEAD ASM; CYL (03.07-)	1
8	I8-97066-1980	GASKET; CYL HD	1
9	I8-97133-4161	BOLT; CYL HD TO BLOCK	18
10	I8-97231-2280	SEAT; VLV INSERT	4
11	I8-97231-2290	SEAT; VLV INSERT	4
12	I8-97209-6090	CUP; SEALING, CYL HEAD	7
13	I5-11129-0060	CUP; SEALING, CYL HEAD	3
14	I5-09600-0130	CUP; SEALING, CYL HEAD	5
15	I9-04110-8250	STUD; INL MANIF	2
16	I8-97073-6411	PLUG; GLOW (-03.02)	4
	I8-97364-1281	PLUG; GLOW (03.03-)	4
17	I8-94153-7232	CONNECTOR; GLOW PLUG	1
18	I8-97107-7390	HANGER; ENG, RR	1
19	I0-28680-8200	BOLT; HANGER (-05.12)	2
	I0-28650-8200	BOLT; HANGER (06.01-)	2
20	I8-97048-0551	STUD; EXH MANIF (-04.08)	2
	I8-97378-0650	STUD; EXH MANIF (04.09-)	2
21	I8-97120-3070	SEAL; OIL VLV STEM	8
22	I8-94440-4290	HANGER; ENG, FRT	1
23	I5-11721-0160	GUIDE; VLV	8
24	I8-97351-4510	CUP; SEALING, CYL HEAD (-05.03)	1
	I1-09600-0052	CUP; SEALING, CYL HEAD (05.04-)	1

silverhorn.co.uk

CYLINDER BLOCK

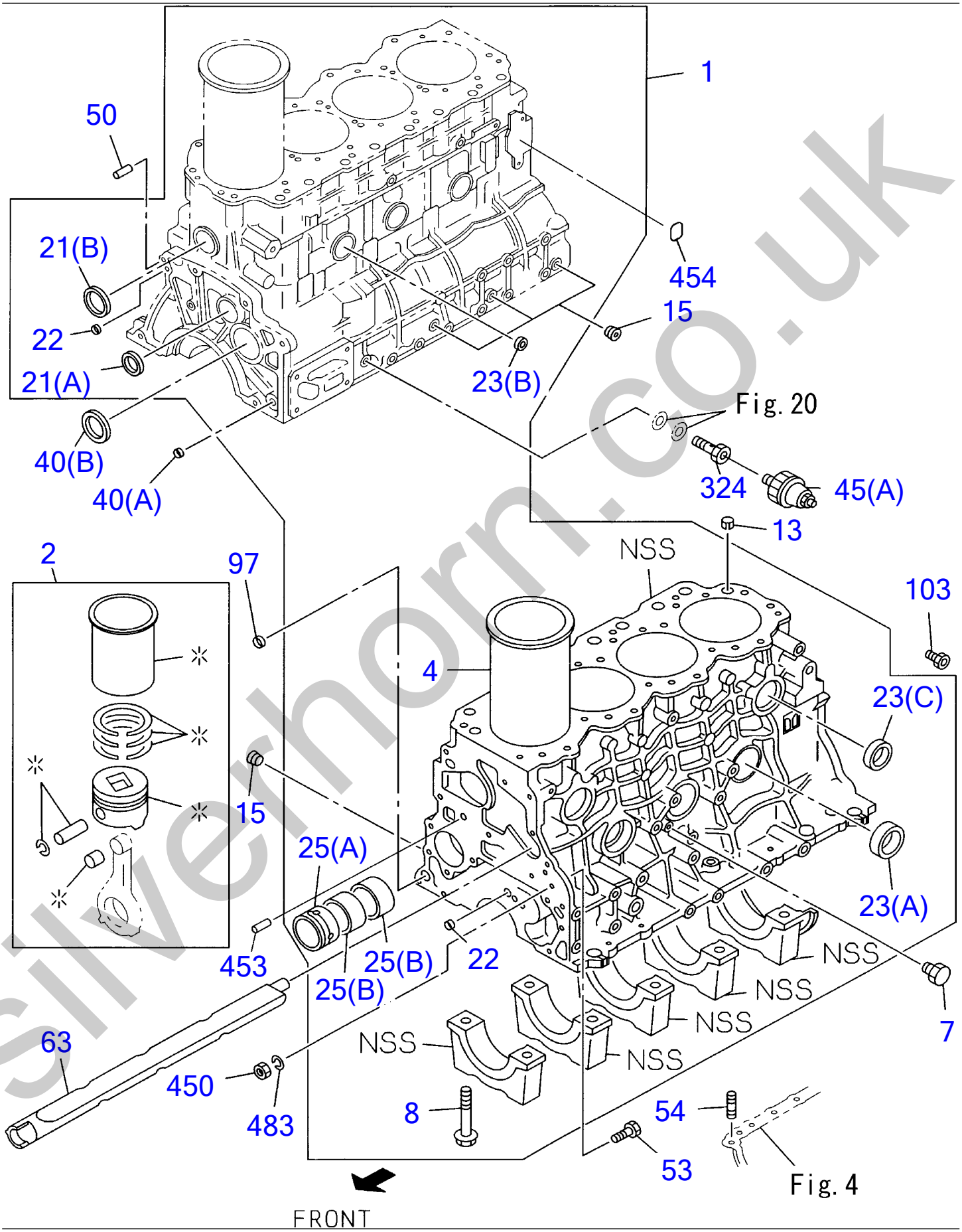

silverhorn.co.uk

Engine for TL140 4JG1-TPA (ISUZU)

CYLINDER BLOCK

Item	Part No	Description	Qty
1	I8-97352-7442	BLOCK ASM; CYL	1
2	I5-87814-6130	LINER SET; ENG CYL (GRADE=1)	4
	I5-87814-6140	LINER SET; ENG CYL (GRADE=2)	4
	I5-87814-6150	LINER SET; ENG CYL (GRADE=3)	4
	I5-87814-6160	LINER SET; ENG CYL (GRADE=4)	4
4	I8-97176-6990	LINER; C/BL (OD GRD=1, ID GRD=AX)	4
	I8-97176-7000	LINER; C/BL (OD GRD=1, ID GRD=CX)	4
	I8-97176-7010	LINER; C/BL (OD GRD=2, ID GRD=AX)	4
	I8-97176-7020	LINER; C/BL (OD GRD=2, ID GRD=CX)	4
	I8-97176-7030	LINER; C/BL (OD GRD=3, ID GRD=AX)	4
	I8-97176-7040	LINER; C/BL (OD GRD=3, ID GRD=CX)	4
	I8-97176-7050	LINER; C/BL (OD GRD=4, ID GRD=AX)	4
	I8-97176-7060	LINER; C/BL (OD GRD=4, ID GRD=CX)	4
7	I9-09664-0010	PLUG; WATER DRAIN	1
8	I8-94432-6420	BOLT; BRG CAP	10
13	I8-94453-3440	DOWEL; C/BL TO HD	2
15	I1-09605-0500	PLUG; OIL GALLERY	3
21(A)	I5-11219-0170	CUP; SEALING, RR (OD=38)	1
21(B)	I5-11219-0180	CUP; SEALING, RR (OD=36)	1
22	I5-09600-0130	CUP; SEALING, DUCT HOLE	1
23(A)	I8-97036-5501	CUP; SEALING, C/BL FRT & RR (OD=45)	3
23(B)	I5-11219-0080	CUP; SEALING, C/BL FRT & RR (OD=18)	3
23(C)	I5-11219-0150	CUP; SEALING, C/BL FRT & RR (OD=32)	2
23(D)	I5-11219-0180	CUP; SEALING, C/BL FRT & RR (OD=36)	3
25(A)	I8-94427-2062	METAL; CM/SHF (FRONT) (-04.11)	1
	I8-97378-1480	METAL; CM/SHF (FRONT) (04.12-)	1
25(B)	I8-94427-2012	METAL; CM/SHF (CENTER) (-04.11)	2
	I8-97378-1470	METAL; CM/SHF (CENTER) (04.12-)	2
40(A)	I5-11129-0060	CUP; SEALING, C/BL RR (OD=16)	3
40(B)	I8-94250-5141	CUP; SEALING, C/BL RR (OD=56)	1
45(A)	I1-82410-0082	SWITCH; OIL PRESSURE	1
50	I9-08161-0320	PIN; STRAIGHT, RR PLATE	1
53	I9-09606-5350	BOLT; REAMER	1
54	I8-94133-9742	STUD; OIL PAN TO BLOCK (93.11-)	8
	I8-97253-9990	STUD; OIL PAN TO BLOCK (00.06-)	4
63	I8-94456-7943	DUCT; WATER, C/BL	1
97	I5-11129-0030	CUP; SEALING	1
103	I8-94130-0211	NIPPLE; OIL FEED	1
324	I8-97238-9910	ADAPTER; OIL PRESSURE SW	1
450	I9-09111-5100	NUT; REAMER BOLT (-05.12)	1
	I0-91111-5100	NUT; REAMER BOLT (06.01-)	1
453	I9-08151-0500	PIN	2
454	I8-97016-4730	SEAL; C/BL	1
483	I9-09150-5100	WASHER; LK, REAMER BOLT	1

silverhorn.co.uk

OIL PAN & LEVEL GAUGE

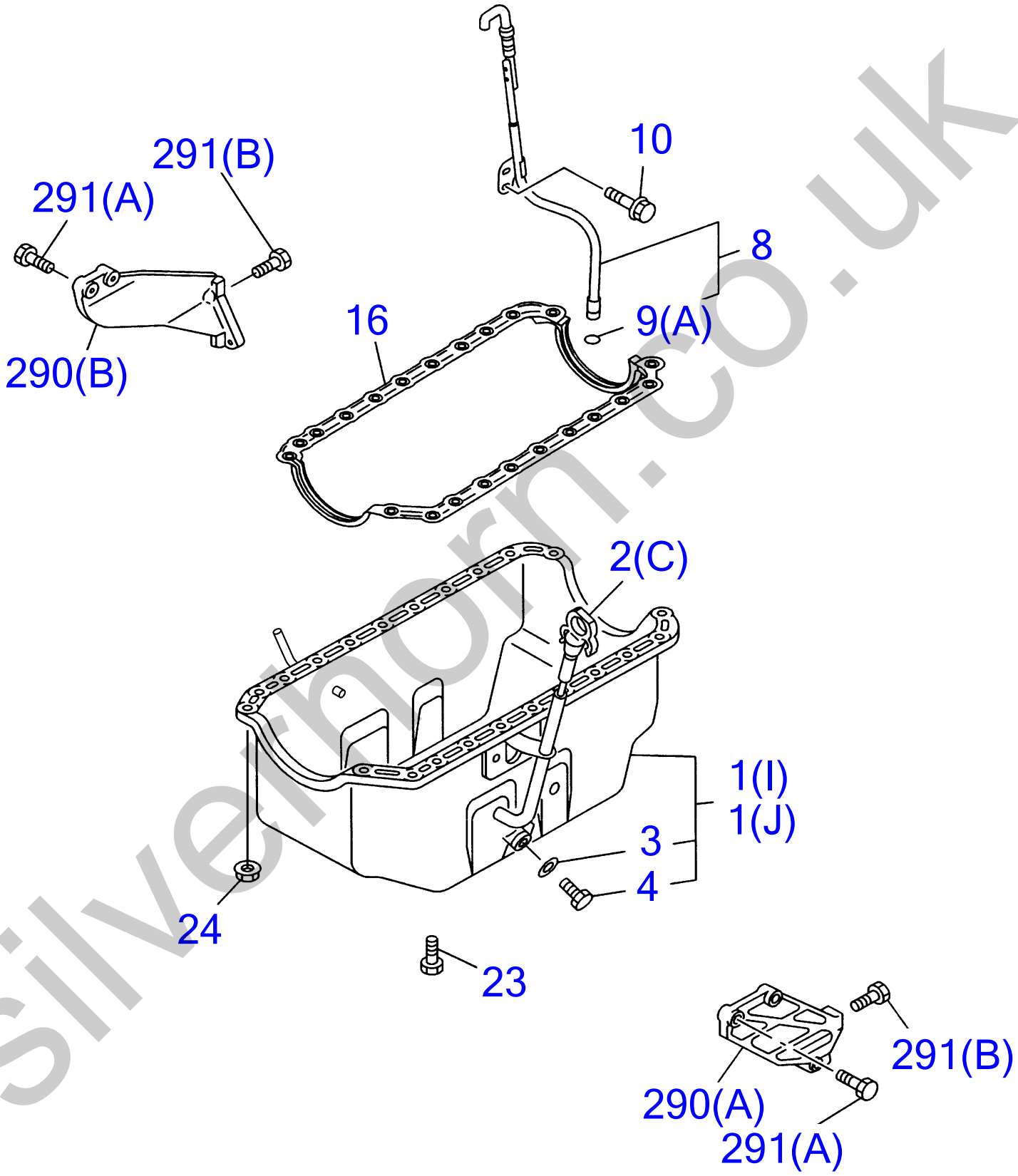

silverthorn.co.uk

OIL PAN & LEVEL GAUGE

Item	Part No	Description	Qty
1(I)	I8-97253-9900	PAN ASM; OIL (-05.06)	1
1(J)	I8-98020-5360	PAN ASM; OIL (05.07-)	1
2(C)	I8-97239-8071	GAUGE; OIL LEVEL	1
3	I1-09623-0570	GASKET; DRAIN PLUG	1
4	I9-09662-0120	PLUG; DRAIN, OIL	1
8	I8-97352-8860	TUBE; GUIDE, OIL LEVEL GAUGE	1
9(A)	I5-09623-0020	GASKET; GUIDE TUBE, OIL LEVEL GAUGE	2
10	I0-28080-8120	BOLT; GUIDE TUBE (-05.11)	1
	I0-28050-8120	BOLT; GUIDE TUBE (05.12-)	1
16	I8-97080-1940	GASKET; OIL PAN TO C/BL	1
23	I8-94133-9732	BOLT; OIL PAN	9
24	I5-09440-0100	NUT; OIL PAN	13
290(A)	I8-97230-0700	STIFFNER; OIL PAN	1
290(B)	I8-97230-0690	STIFFNER; OIL PAN	1
291(A)	I0-28681-0400	BOLT; STIFFNER, OIL PAN (-05.12)	4
	I0-28651-0400	BOLT; STIFFNER, OIL PAN (06.01-)	4
291(B)	I0-28681-2300	BOLT; STIFFNER, OIL PAN (-05.12)	2
	I0-28651-2300	BOLT; STIFFNER, OIL PAN (06.01-)	2

silverhorn.co.uk

CAMSHAFT & VALVE

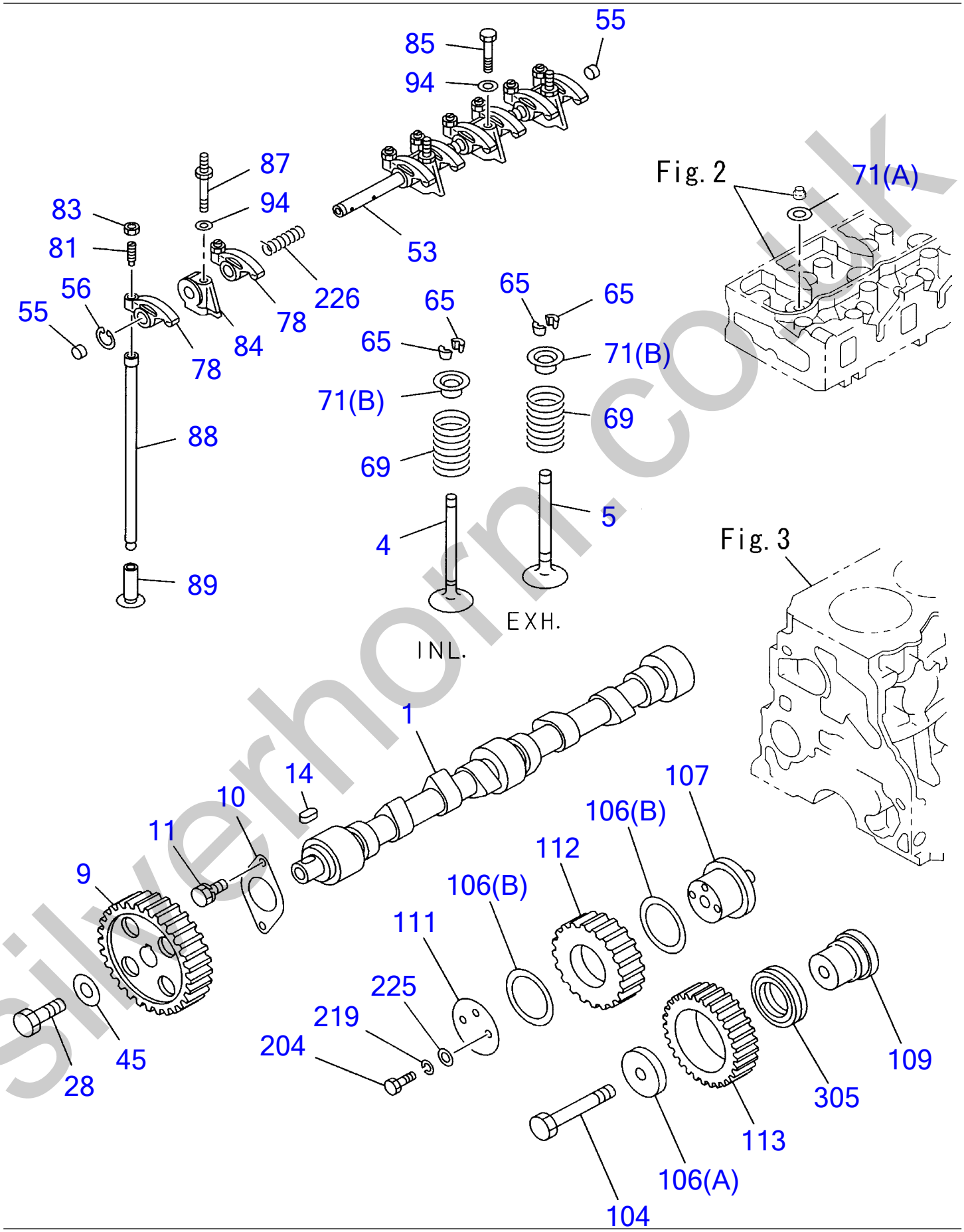

silverhorn.co.uk

CAMSHAFT & VALVE

Item	Part No	Description	Qty
1	I8-97287-6570	CAMSHAFT	1
4	I8-94133-2751	VALVE; INL	4
5	I8-97065-9700	VALVE; EXH	4
9	I8-94328-4480	GEAR; CM/SHF	1
10	I8-94110-4801	PLATE; THRUST	1
11	I0-50040-8160	BOLT; THRUST PLATE TO C/BL (-05.12)	2
	I0-50540-8160	BOLT; THRUST PLATE TO C/BL (06.01-)	2
14	I9-08000-7180	KEY; CM/SHF	1
28	I5-09000-0690	BOLT; CAM PULLEY	1
45	I5-12519-0021	WASHER; GEAR CAM	1
53	I8-94152-3460	SHAFT; ROCKER ARM	1
55	I9-12626-0050	PLUG; ROCKER SHAFT END	2
56	I9-09180-0190	RING; SNAP, ROCKER ARM	2
65	I5-12565-0040	COLLAR; SPLIT	16
69	I8-94252-5361	SPRING; VLV, OUTER	8
71(A)	I5-12563-0010	SEAT; SPR	8
71(B)	I8-94133-7312	SEAT; SPR	8
78	I8-94152-3440	ARM; ROCKER	8
81	I8-94152-2831	SCREW; ADJ, ROCKER ARM	8
83	I9-09111-5080	NUT; ADJ SCREW, LK (-05.12)	8
	I0-91111-5080	NUT; ADJ SCREW, LK (06.01-)	8
84	I8-94152-3451	BRACKET; ROCKER SHAFT, INTER	4
85	I8-94433-3020	BOLT; BRKT	1
87	I8-94433-3040	BOLT; ROCKER SHAFT	3
88	I8-97071-6730	ROD; PUSH	8
89	I8-94438-3051	TAPPET; VLV	8
94	I9-09164-0100	WASHER; PL, BRKT	4
104	I0-28081-2800	BOLT; SHAFT IDLE (-05.11)	1
	I0-28051-2800	BOLT; SHAFT IDLE (05.12-)	1
106(A)	I8-97101-5021	WASHER; IDLE GEAR SHAFT	1
106(B)	I8-97258-7660	WASHER; IDLE GEAR SHAFT	2
107	I8-97253-0940	SHAFT; IDLE GEAR	1
109	I8-97247-2902	SHAFT; IDLE GEAR	1
111	I8-94171-2890	COLLAR; THRUST, IDLE GEAR	1
112	I8-97115-1311	GEAR; IDLE	1
113	I8-97020-5701	GEAR; IDLE	1
204	I9-01065-8650	BOLT; IDLE GEAR SHAFT	2
219	I9-09150-8080	WASHER; LK, SHAFT	2
225	I9-09164-6080	WASHER; PL, THRUST COLLAR & IDLE GEAR	2
226	I8-94433-3030	SPRING; CMPR, ROCKER ARM	3
305	I8-97252-2890	BEARING; IDLE GEAR	1

silvethorn.co.uk

CRANKSHAFT, PISTON & FLYWHEEL

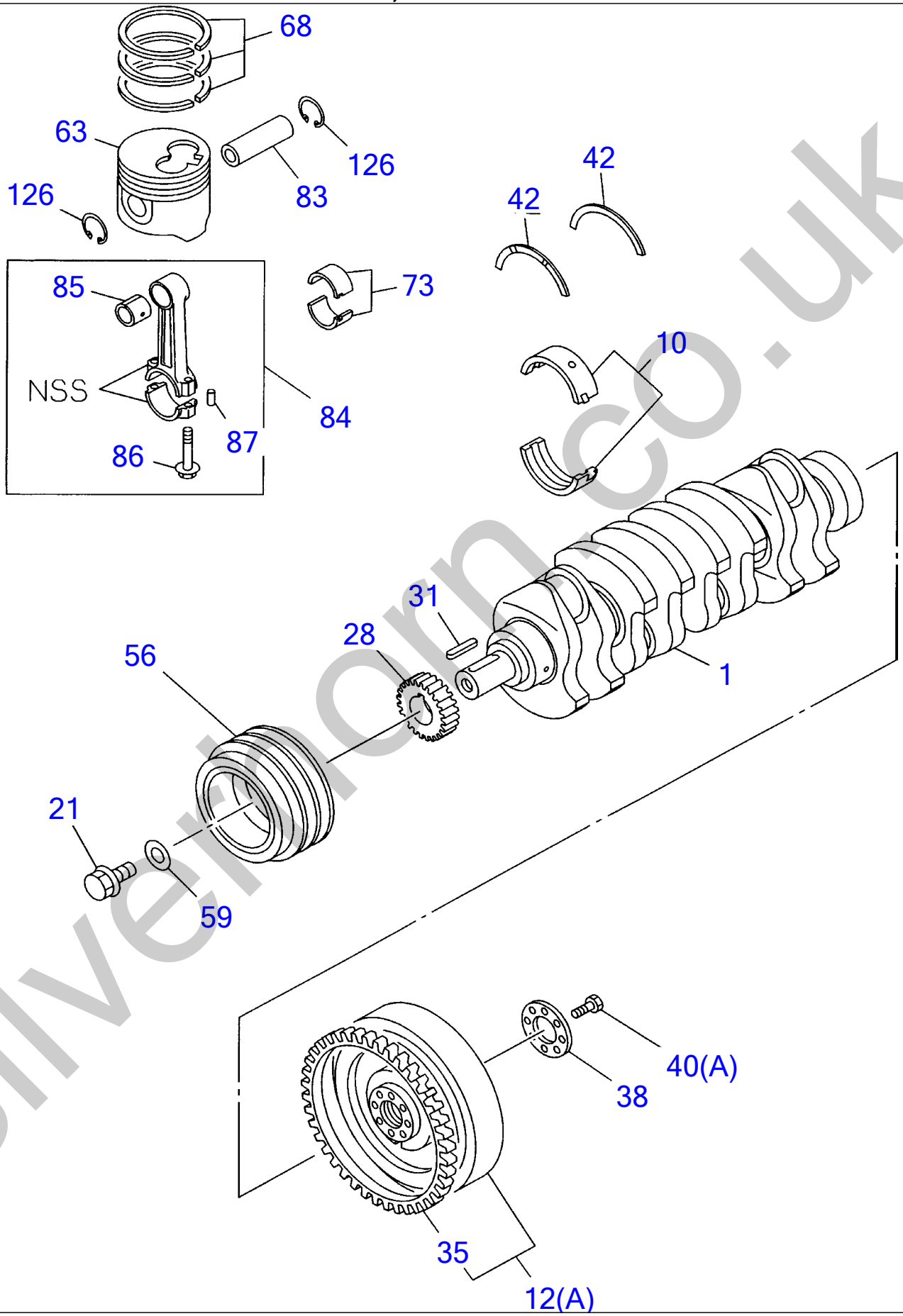

silverthorn.co.uk

CRANKSHAFT, PISTON & FLYWHEEL

Item	Part No	Description	Qty
1	I8-97190-9301	CRANKSHAFT	1
10	I8-97202-8780	METAL SET; CRANKSHAFT, STD (GRADE=1) (-04.11)	5
	I8-97387-9640	METAL SET; CRANKSHAFT, STD (GRADE=1) (04.12-)	5
	I8-97202-8800	METAL SET; CRANKSHAFT, STD (GRADE=3) (-04.11)	5
	I8-97387-9660	METAL SET; CRANKSHAFT, STD (GRADE=3) (04.12-)	5
	I8-97202-8820	METAL SET; CRANKSHAFT, STD (GRADE=5) (-04.11)	5
	I8-97387-9680	METAL SET; CRANKSHAFT, STD (GRADE=5) (04.12-)	5
12(A)	I8-97239-8312	FLYWHEEL	1
21	I8-94153-7221	BOLT; PULLEY FIX	1
28	I8-94328-4470	GEAR; CR/SHF	1
31	I8-94201-6410	KEY; FEATHER, CR/SHF	1
35	I8-94419-6021	GEAR; RING	1
38	I8-94142-1561	WASHER; FLYWHEEL	1
40(A)	I8-97065-9841	BOLT; FLYWHEEL	8
42	I8-94453-5200	WASHER; THRUST, CR/SHF (-04.11)	2
	I8-97383-7400	WASHER; THRUST, CR/SHF (04.12-)	2
56	I8-97168-0732	PULLEY; CR/SHF DAMPER	1
59	I5-09503-1270	WASHER; CR/SHF PULLEY	1
63	I8-97245-4140	PISTON (GRADE=AX)	4
	I8-97245-4150	PISTON (GRADE=CX)	4
68	I8-97147-9840	RING SET; PISTON, STD	4
73	I8-94324-1590	METAL SET; CONN ROD, STD	4
83	I8-94457-0081	PIN; PISTON	4
84	I8-97289-2631	ROD ASM; CONN (-05.04)	4
	I8-98013-9621	ROD ASM; CONN (05.05-)	4
85	I8-97289-2640	BUSHING; CONNROD	4
86	I8-97062-0860	BOLT; CONNROD	8
87	I9-08160-5080	PIN; CONNROD BIG END	8
126	I8-94460-6870	RING; SNAP, PISTON PIN	8

silverhorn.co.uk

GEAR CASE & FLYWHEEL HOUSING

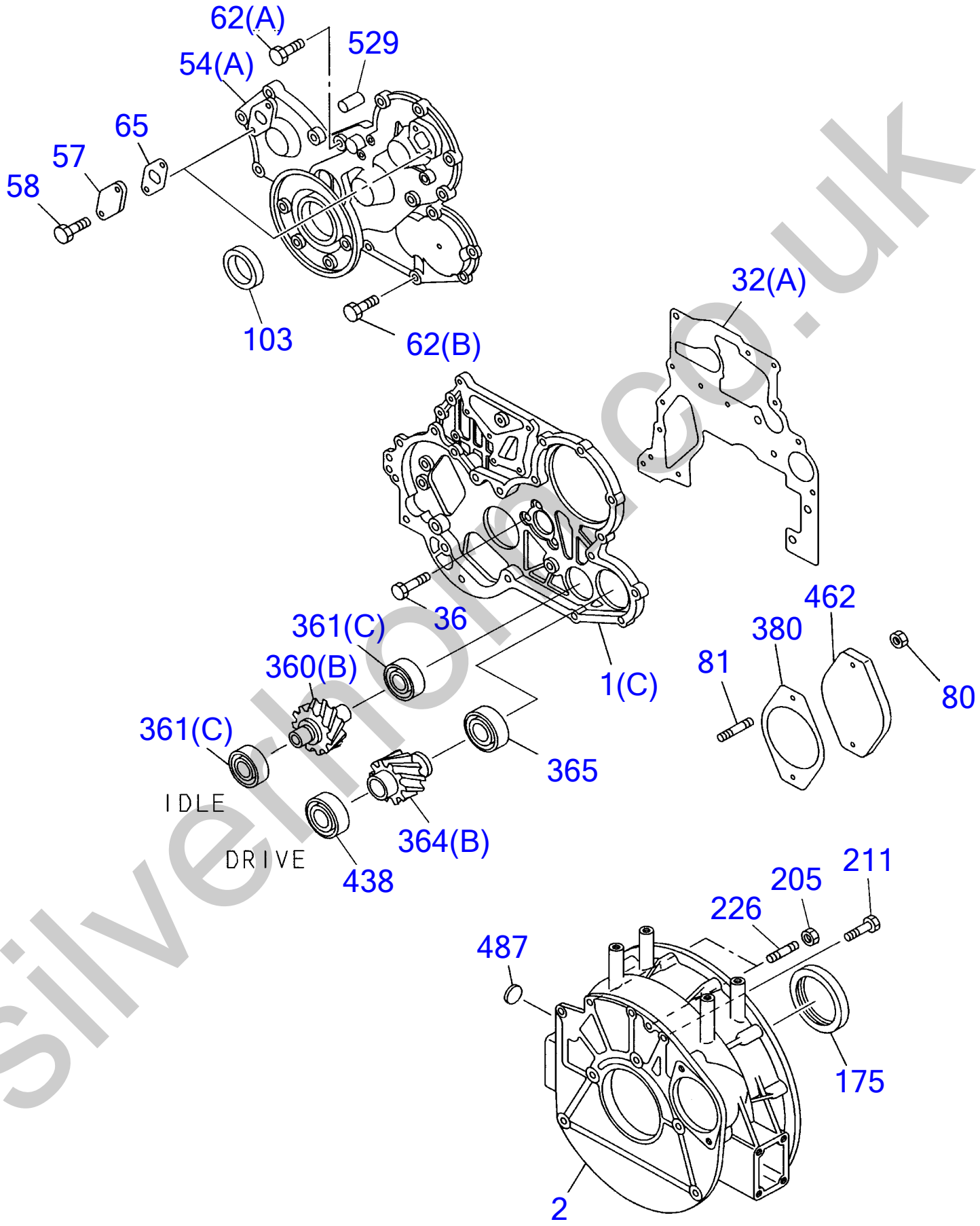

silverhome.co.uk

GEAR CASE & FLYWHEEL HOUSING

Item	Part No	Description	Qty
1(C)	I8-97225-4724	CASE; TIMING GEAR	1
2	I8-97218-1121	HOUSING; FLYWHEEL	1
32(A)	I8-97117-2421	GASKET; GEAR CASE TO C/BL	1
36	I050040-8200	BOLT; GEAR CASE	7
54(A)	I8-97225-4733	COVER; GEAR CASE	1
57	I5-11321-0090	COVER; TIMING CHECK HOLE	2
58	I0-28080-6120	BOLT; CHECK HOLE COVER (-05.12)	4
	I0-28050-6120	BOLT; CHECK HOLE COVER (06.01-)	4
62(A)	I0-28081-2700	BOLT; COVER (-05.11)	1
	I0-28051-2700	BOLT; COVER (05.12-)	1
62(B)	I0-28080-8400	BOLT; COVER (M8X40 FLANGE) (-05.11)	9
	I0-28050-8400	BOLT; COVER (M8X40 FLANGE) (05.12-)	9
	I0-28080-8600	BOLT; COVER (M8X60 FLANGE) (-05.11)	2
	I0-28050-8600	BOLT; COVER (M8X60 FLANGE) (05.12-)	2
	I0-28080-8700	BOLT; COVER (M8X70 FLANGE) (-05.11)	3
	I0-28050-8700	BOLT; COVER (M8X70 FLANGE) (05.12-)	3
65	I8-97027-6011	GASKET; COVER, TIMING CHECK HOLE	2
80	I9-09110-4100	NUT; COVER (-05.11)	2
	I0-91110-5100	NUT; COVER (05.12-)	2
81	I9-04411-0250	STUD; GEAR CASE COVER FIX	2
103	I5-09625-0790	SEAL; OIL, CR/SHF, FRT	1
175	I8-97071-5611	SEAL; OIL, CR/SHF, RR	1
205	I0-91150-2100	NUT; HSG	2
211	I5-09000-2270	BOLT; HSG (M12X25)	3
	I0-28681-0300	BOLT; HSG (M10X30 FLANGE) (-05.12)	1
	I0-28651-0300	BOLT; HSG (M10X30 FLANGE) (06.01-)	1
226	I8-94107-7260	STUD; HSG	2
360(B)	I8-97302-6870	GEAR; IDLE, PTO	1
361(C)	I8-97303-5640	BEARING; IDLE GEAR	2
364(B)	I8-97302-6880	GEAR; PTO	1
365	I8-97303-5650	BEARING; GEAR	1
380	I5-11322-0180	GASKET; COVER	1
438	I8-97303-5650	BEARING; BALL, PTO FRT	1
462	I5-11321-0360	COVER; ADAPTER	1
487	I8-97220-7400	COVER; HOLE	1
529	I9-08161-0160	PIN; STRAIGHT	1

silverthorn.co.uk

ENGINE MOUNTING

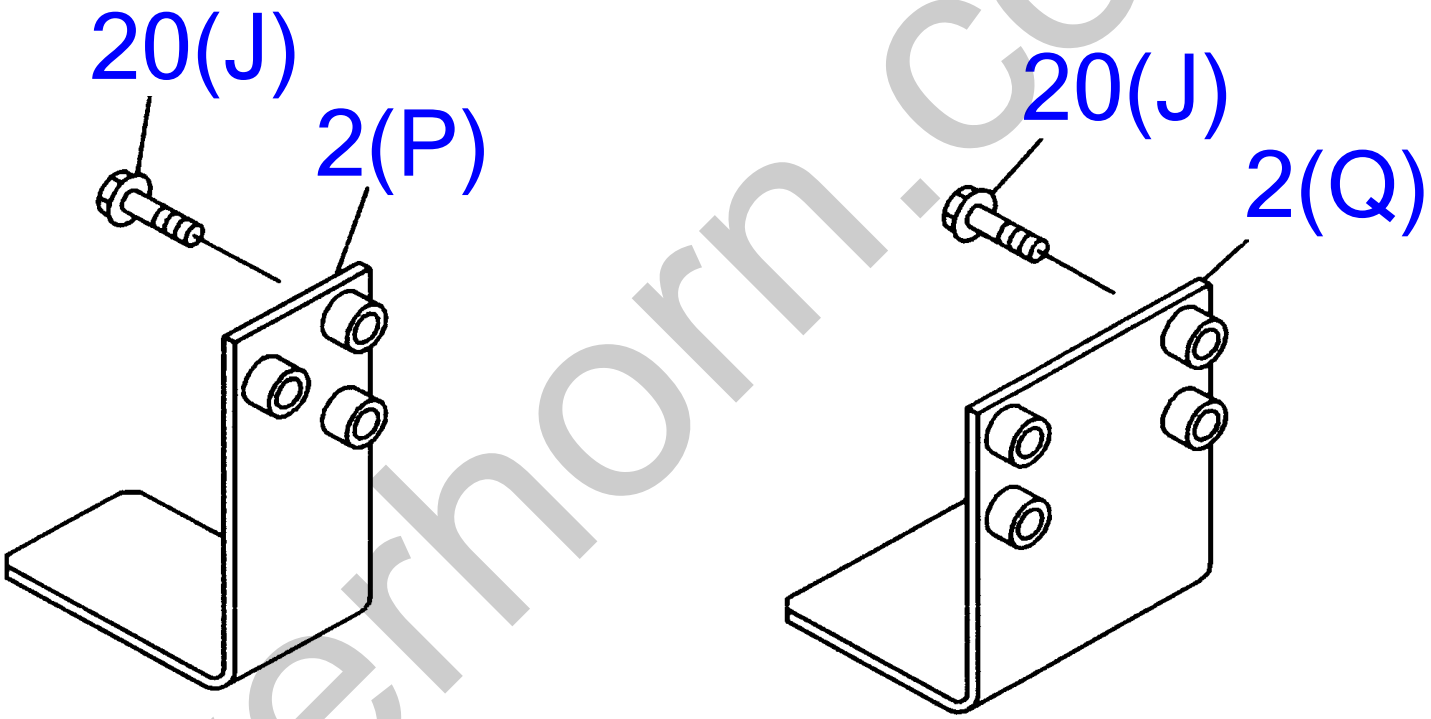

silverhorn.co.uk

ENGINE MOUNTING

Item	Part No	Description	Qty
2(P)	I8-97352-9481	FOOT; ENG	1
2(Q)	I8-97352-9470	FOOT; ENG	1
20(J)	I0-28681-0350	BOLT; ENG FOOT (-05.11)	8
	I0-28651-0350	BOLT; ENG FOOT (05.12-)	8

silverhorn.co.uk

MANIFOLD

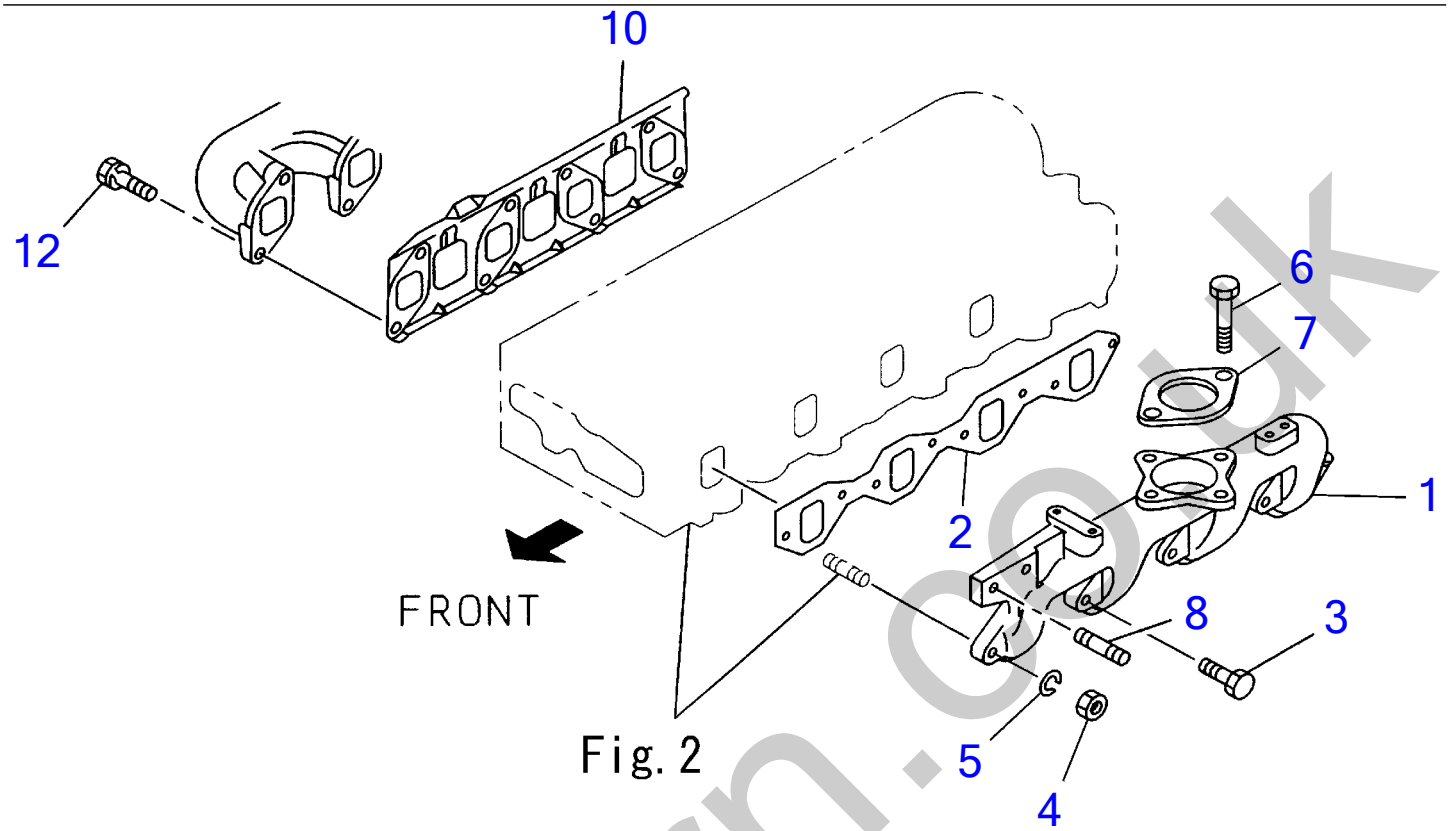

Fig. 2

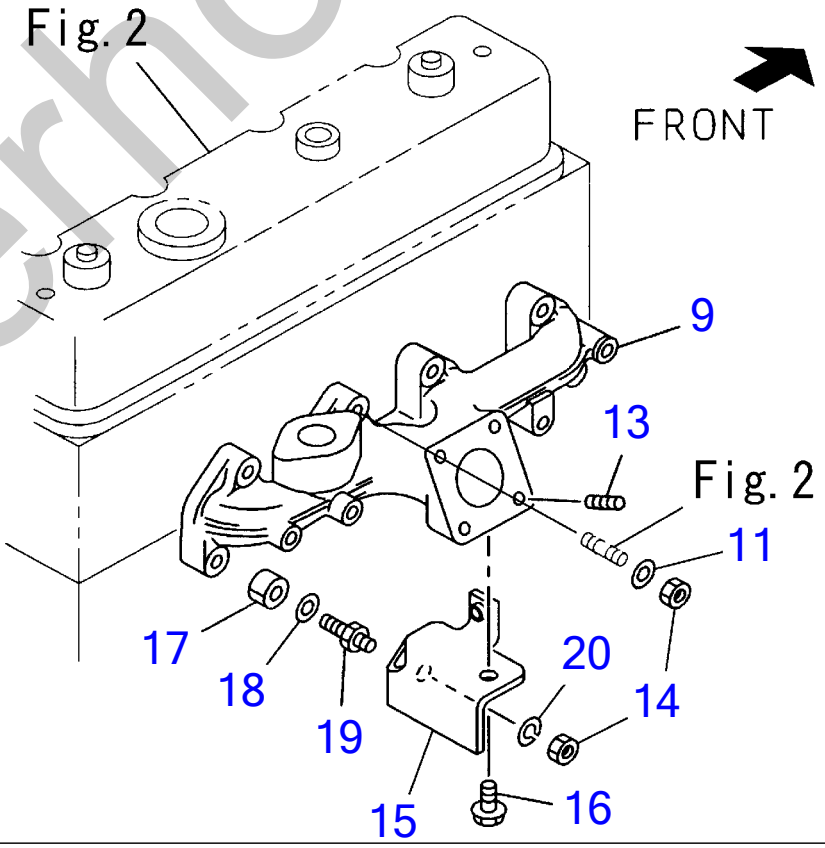

silverhorn.co.uk

MANIFOLD

Item	Part No	Description	Qty
1	I8-97011-4882	MANIFOLD; INL	1
2	I8-97212-5401	GASKET; INL MANIF TO HD	1
3	I0-28080-8250	BOLT; INL MANIF (-05.12)	6
	I0-28050-8250	BOLT; INL MANIF (06.01-)	6
4	I0-91150-2080	NUT; INL MANIF (-05.12)	2
	I0-91180-2080	NUT; INL MANIF (06.01-)	2
5	I9-09150-5080	WASHER; LK, INL MANIF	2
6	I0-28681-0250	BOLT; INL PIPE TO MANIF (-05.12)	2
	I0-28651-0250	BOLT; INL PIPE TO MANIF (-06.01)	2
7	I8-97022-5711	GASKET; INL PIPE	1
8	I9-09630-0200	STUD; FUEL FILTER	2
9	I8-97039-4733	MANIFOLD; EXHAUST	1
10	I8-97350-3170	GASKET; EXH MANIF TO HD	1
11	I8-97257-9140	WASHER; PL, EXH MANIF	2
12	I8-97131-5971	BOLT; EXH MANIF	6
13	I8-94257-3190	STUD; MANIF TO TURBOCHARGER	4
14	I0-91150-2080	NUT; EXH MANIF (-05.12)	2
	I0-91180-2080	NUT; EXH MANIF (06.01-)	2
15	I8-94449-9453	BRACKET; EXH MANIF	1
16	I8-94312-6991	BOLT; BRKT TO EXH MANIF (-04.08)	1
	I8-97378-0750	BOLT; BRKT TO EXH MANIF (04.09-)	1
17	I9-51249-6040	SPACER; BRKT TO BODY	1
18	I9-09164-7080	WASHER; PL, SPACER	1
19	I9-09630-0341	STUD; BRKT, EXH MANIFOLD	1
20	I9-09150-5080	WASHER; LK, EXH MANIF	1

silverhorn.co.uk

VENTILATION SYSTEM

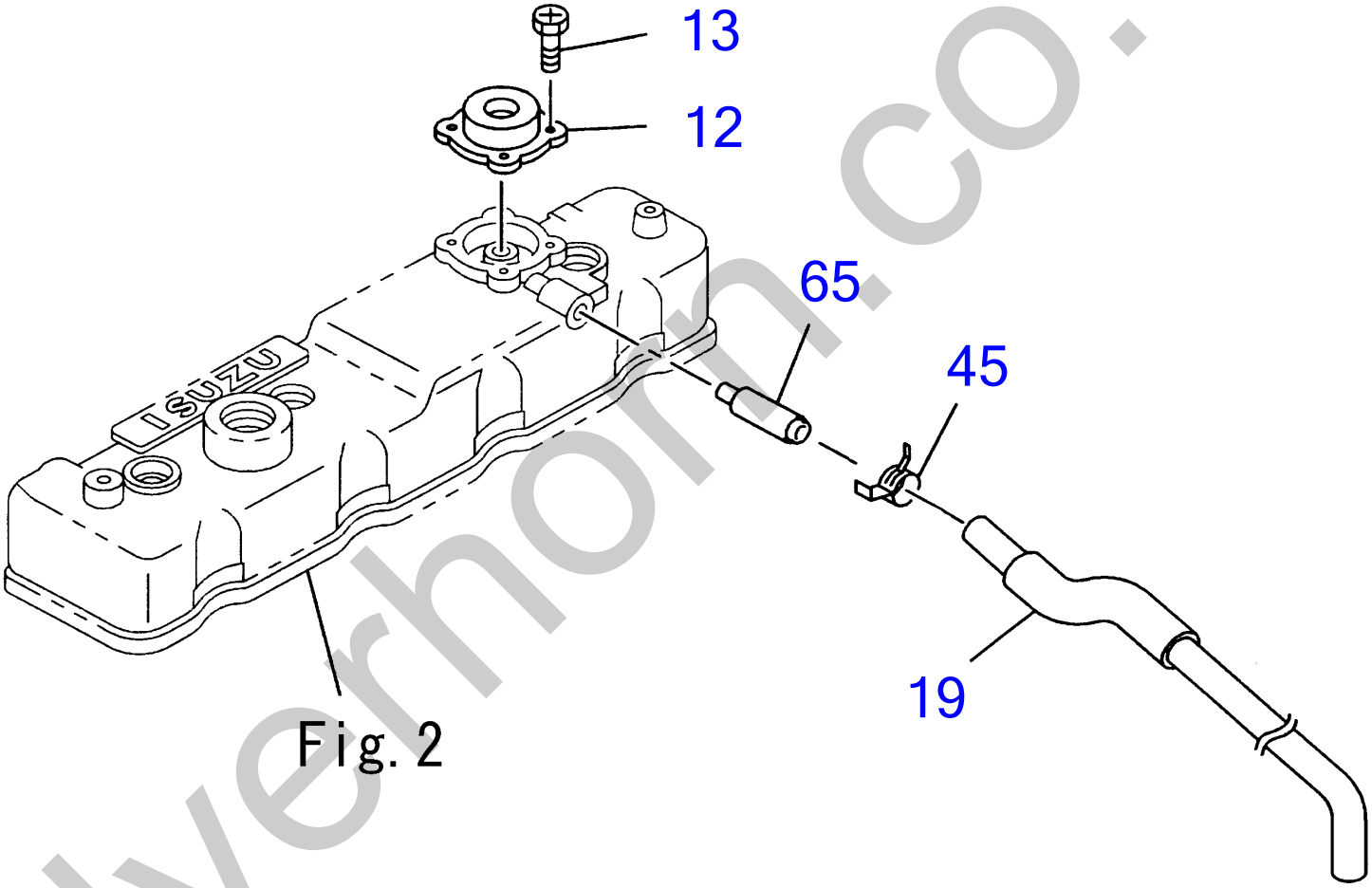

Fig. 2

silverhorn.co.uk

VENTILATION SYSTEM

Item	Part No	Description	Qty
12	I8-97119-8870	VENTILATOR; AIR	1
13	I9-03910-4080	SCREW; VENTILATOR TO HD COVER	4
19	I8-97018-5510	HOSE; RUBBER BREATHER (-03.11)	1
	I8-97037-1581	HOSE; RUBBER BREATHER (03.12-05.06)	1
45	I8-94121-1131	CLIP; PCV HOSE	1
65	I8-94250-6151	PIPE; BREATHER	1

silverhorn.co.uk

VENTILATION SYSTEM (Machine S/N 21403031~)

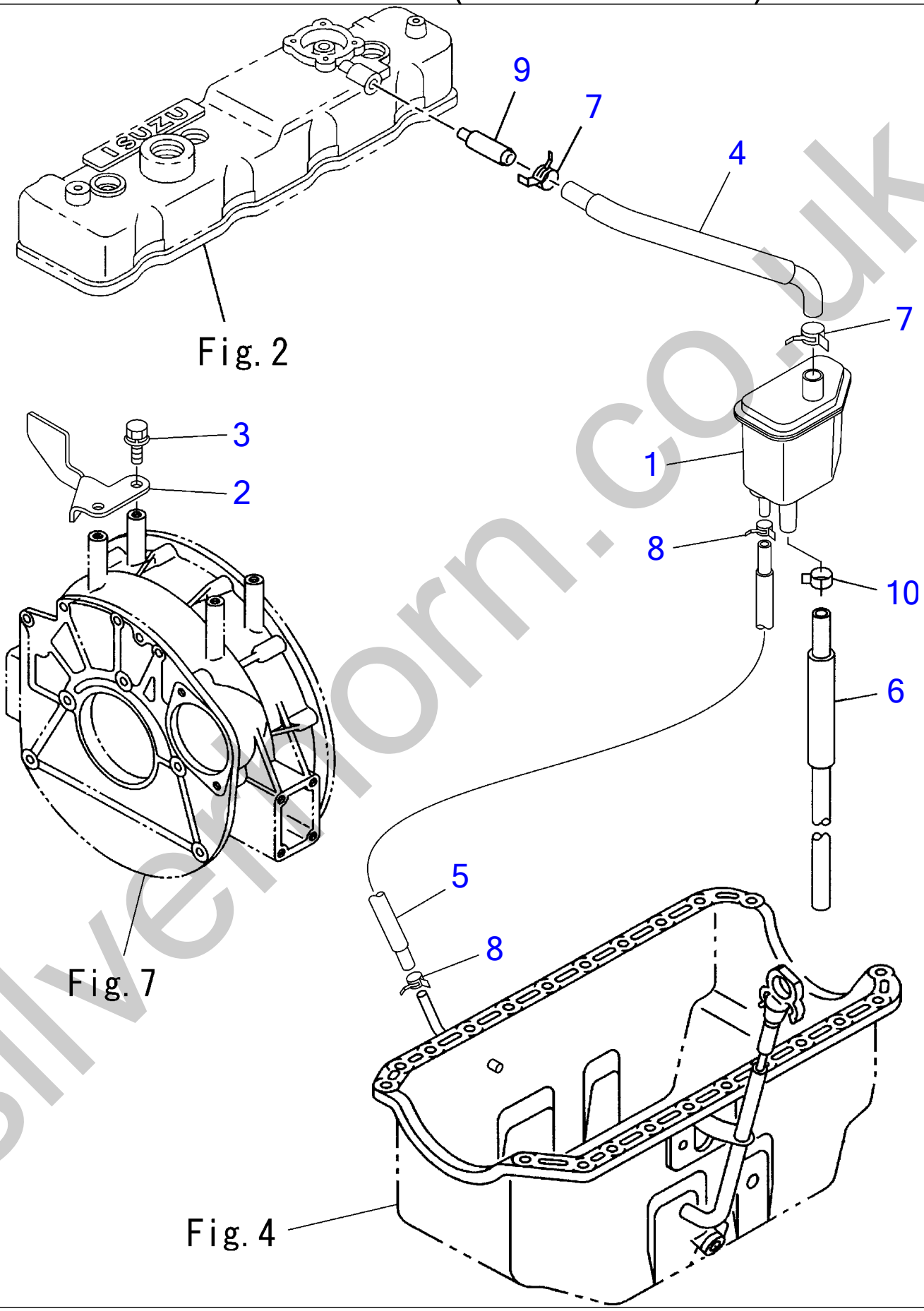

silverthorn.co.uk

VENTILATION SYSTEM (Machine S/N 21403031~)

Item	Part No	Description	Qty
1	I8-97232-2113	TANK; CATCH, OIL	1
2	I8-98020-5370	BRACKET; CATCH TANK	1
3	I0-28181-0600	BOLT; BRACKET FIX (-05.11)	2
	I0-28151-0600	BOLT; BRACKET FIX (05.12-)	2
4	I8-98020-4800	HOSE; RUBBER, PCV-TANK	1
5	I8-98020-4820	HOSE; RUBBER, TANK-OILPAN	1
6	I8-98020-4810	HOSE; RUBBER, TANK OUT	1
7	I8-94121-1131	CLIP; HOSE, PCV-TANK	2
8	I8-94238-6100	CLIP; HOSE, TANK-OILPAN	2
9	I8-94250-6151	PIPE; BREATHER	1
10	I8-94121-1131	CLIP; HOSE	1

silverhorn.co.uk

WATER PUMP

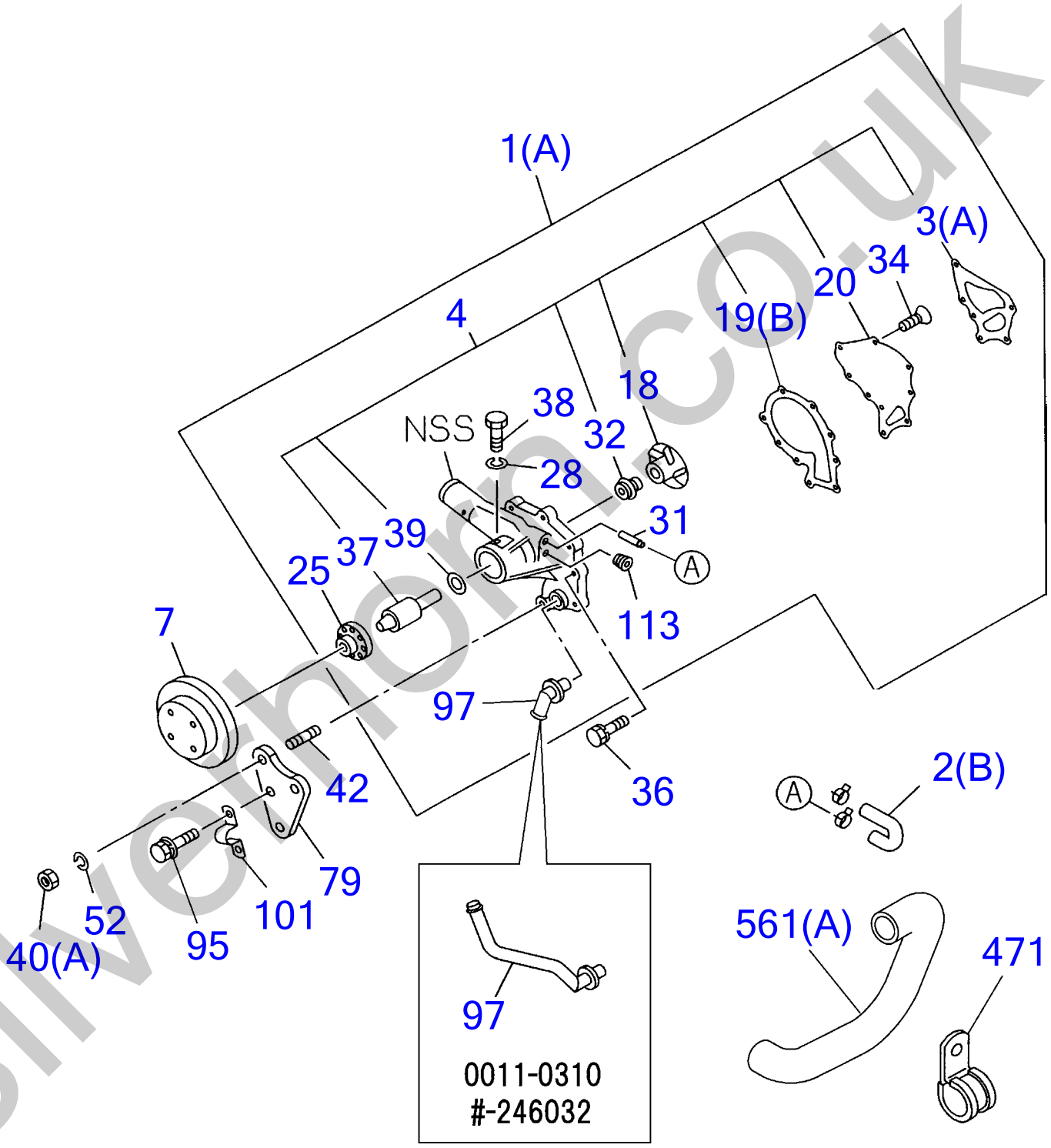

silvethorn.co.uk

WATER PUMP

Item	Part No	Description	Qty
1(A)	I8-97333-3950	PUMP ASM; WATER, W/GASKET (93.11-03.10) #-246032	1
	I8-97375-6480	1¦PUMP ASM; WATER, W/GASKET (03.11-) #246033-	1
2(B)	I8-94328-8320	HOSE; WATER, BY-PASS	1
3(A)	I8-97095-5120	GASKET; PUMP TO C/BL	1
4	I8-97333-3960	REPAIR KIT; WATER PUMP	1
7	I8-97258-9830	PULLEY; WATER PUMP (93.11-03.10) #-246032	1
	I8-97375-0220	PULLEY; WATER PUMP (03.11-) #246033-	1
18	I8-94114-7270	IMPELLER; WATER PUMP	1
19(B)	I8-94170-1280	GASKET; COVER TO BODY	1
20	I8-94170-1270	COVER; WATER PUMP	1
25	I5-13642-0640	CENTER; WATER PUMP	1
28	I9-09150-5080	WASHER; WATER PUMP	1
31	I8-94111-6150	PIPE; SUCTION, INL	1
32	I8-97237-5320	SEAL UNIT; WATER PUMP	1
34	I9-03065-8160	SCREW; COVER TO BODY, WATER PUMP	3
36	I0-28680-8400	BOLT; WATER PUMP TO C/BL (M10X40 FLANGE) (-01.03)	1
	I0-28080-8400	BOLT; WATER PUMP TO C/BL (M10X40 FLANGE) (01.04-05.11)	1
	I0-28050-8400	BOLT; WATER PUMP TO C/BL (M10X40 FLANGE) (05.12-)	1
	I0-28080-8600	BOLT; WATER PUMP TO C/BL (M10X60 FLANGE) (-05.11)	2
	I0-28050-8600	BOLT; WATER PUMP TO C/BL (M10X60 FLANGE) (05.12-)	2
37	I8-94110-5600	BEARING UNIT; WATER PUMP	1
38	I9-09814-0141	SCREW; WATER PUMP	1
39	I9-13639-0010	THROWER; WATER PUMP	1
40(A)	I9-09110-4080	NUT; WATER PUMP (-05.11)	3
	I0-91110-5080	NUT; WATER PUMP (05.12-)	3
42	I904110-8400	STUD; WATER PUMP (M8X40 L=52)	1
52	I9-09150-5080	WASHER; LK, WATER PUMP	3
79	I8-97310-6880	BRACKET; WATER PUMP	1
95	I0-50140-8200	BOLT; CLIP	2
97	I8-97306-0970	PIPE; WATER (00.11-03.10) #-246032	1
	I8-97374-7050	PIPE; WATER (03.11-) #246033-	1
101	I8-97310-6840	CLIP; WATER PUMP	1
113	I5-09605-0050	PLUG; WATER PUMP	1
471	I1-09700-9440	1¦CLIP; HOSE	1
561(A)	I8-97374-7060	1¦HOSE; OIL COOLER	1

silvernorn.co.uk

THERMOSTAT & HOUSING

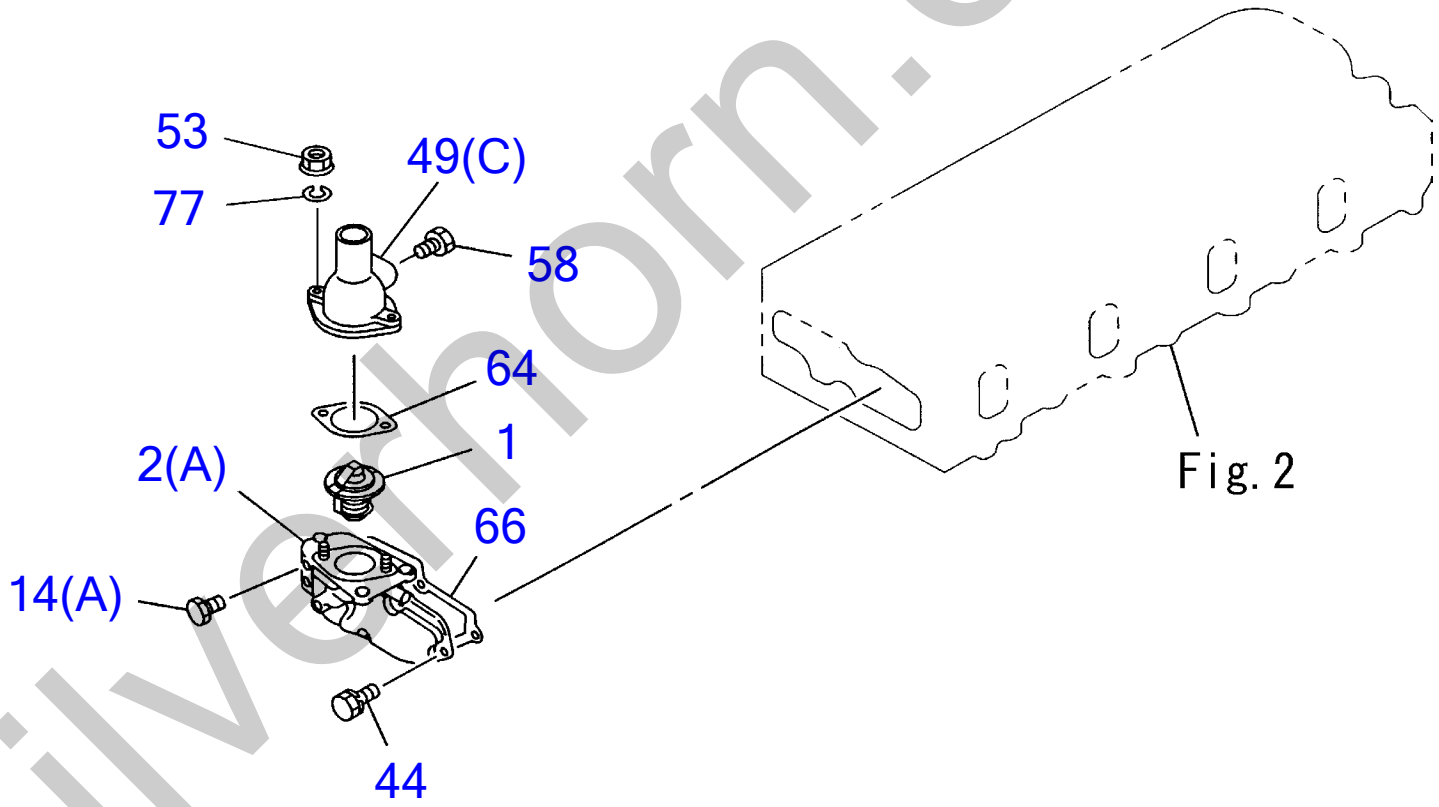

silverhorn.co.uk

THERMOSTAT & HOUSING

Item	Part No	Description	Qty
1	I8-97211-2090	THERMOSTAT	1
2(A)	I8-97018-6640	HOUSING; THERMOSTAT	1
14(A)	I9-09661-0050	PLUG; SW	1
44	I0-28080-8160	BOLT; HSG TO HD (M8X16 FLANGE) (-05.11)	3
	I0-28050-8160	BOLT; HSG TO HD (M8X16 FLANGE) (05.12-)	3
	I0-28680-8350	BOLT; HSG TO HD (M8X35 FLANGE) (-05.11)	2
	I0-28650-8350	BOLT; HSG TO HD (M8X35 FLANGE) (05.12-)	2
49(C)	I8-97217-8270	PIPE; WATER OUTLET	1
53	I9-09110-5080	NUT; OUTLET PIPE	2
58	I5-09605-0050	PLUG; WATER OUTLET PIPE	1
64	I8-94365-6742	GASKET; OUTLET PIPE TO HSG	1
66	I8-97090-8790	GASKET; THERMOSTAT HSG	1
77	I9-09150-5080	WASHER; LK	2

silverhorn.co.uk

FAN & FAN BELT

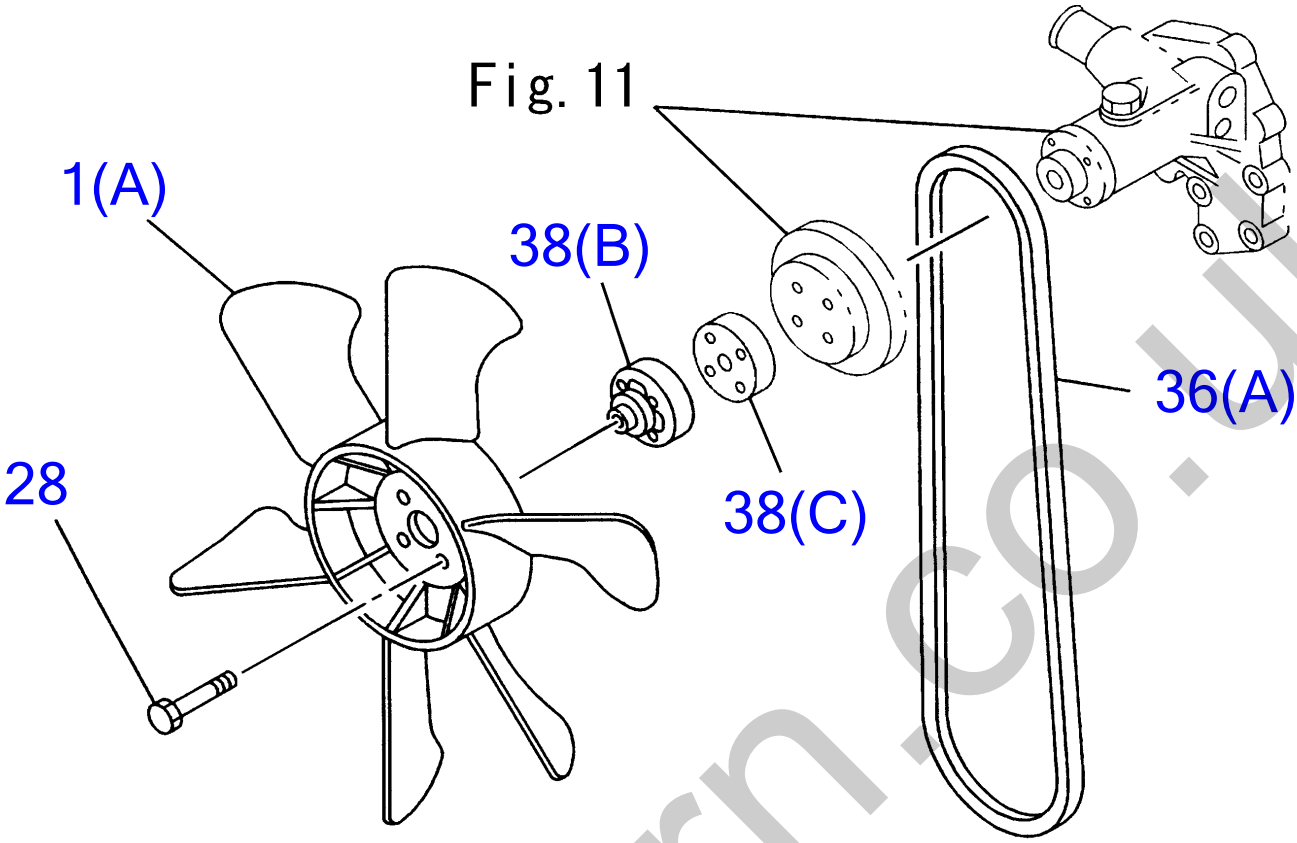

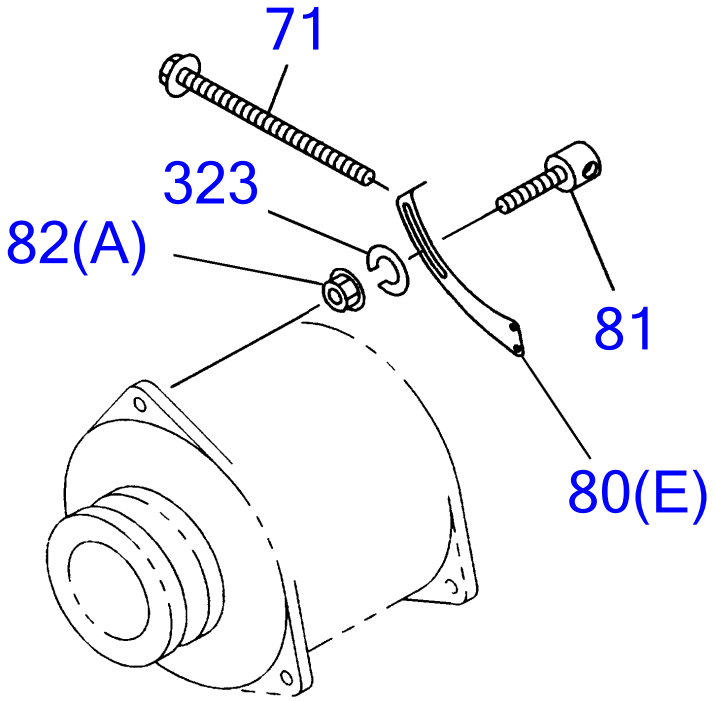

silverhorn.co.uk

FAN & FAN BELT

Item	Part No	Description	Qty
1(A)	I8-94416-8642	FAN; COOLING	1
28	I0-28080-8800	BOLT; COOLING FAN (-05.11)	4
	I0-28050-8800	BOLT; COOLING FAN (05.12-)	4
36(A)	I1-13671-2080	BELT; COOLING FAN (-03.10)	1
	I1-13671-2220	BELT; COOLING FAN (03.11-)	1
38(B)	I9-13642-0790	SPACER; FAN	1
38(C)	I8-97063-4003	SPACER; FAN	1
71	I8-97172-7201	BOLT; ADJ PLATE, GEN	1
80(E)	I8-97288-8880	PLATE; ADJ	1
81	I8-97257-2230	PIECE; SLIDING	1
82(A)	I9-09110-5080	NUT; ADJ PLATE	1
323	I9-09150-5080	WASHER; LK, SLIDING PIECE	1

silverhorn.co.uk

TURBOCHARGER SYSTEM

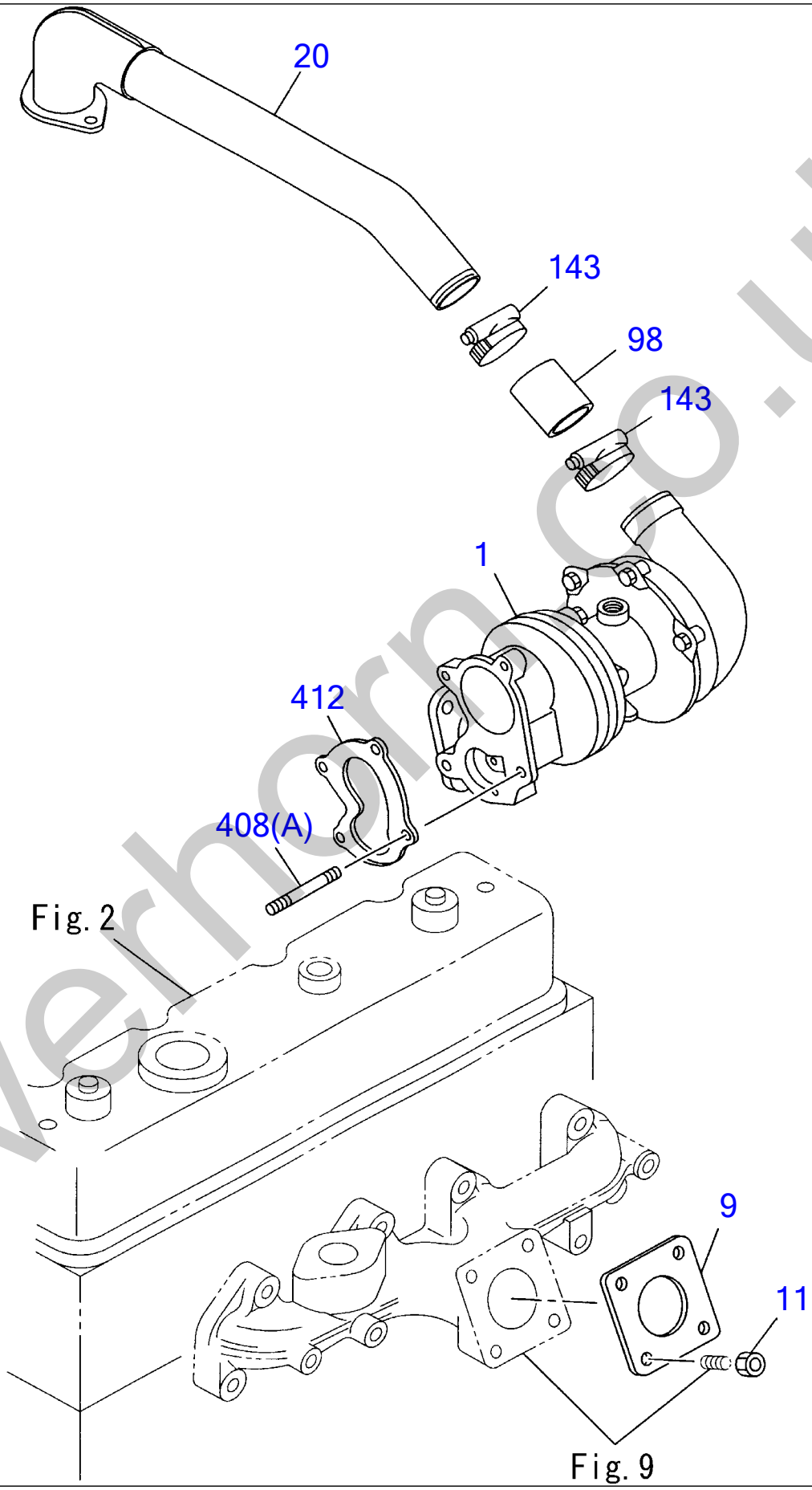

silverhorn.co.uk

TURBOCHARGER SYSTEM

Item	Part No	Description	Qty
1	I8-97238-9791	TURBOCHARGER ASM	1
9	I8-94433-6050	GASKET; TURBOCHARGER TO EXH DUCT	1
11	I8-97061-4011	NUT; TURBOCHARGER	4
20	I8-97017-7820	PIPE; INL, TURBOCHARGER OUT	1
98	I8-94343-3622	HOSE; RUBBER, TURBOCHARGER OUTLET	1
143	I8-94126-7700	CLIP; HOSE, TURBOCHARGER OUTLET (-05.06)	2
	I8-94162-5680	CLIP; HOSE, TURBOCHARGER OUTLET (05.07-)	2
408(A)	I8-94476-2820	STUD; TURBOCHARGER TO ADAPTER	4
412	I8-94433-6040	GASKET; TURBOCHARGER	1

silverhorn.co.uk

FUEL INJECTION SYSTEM

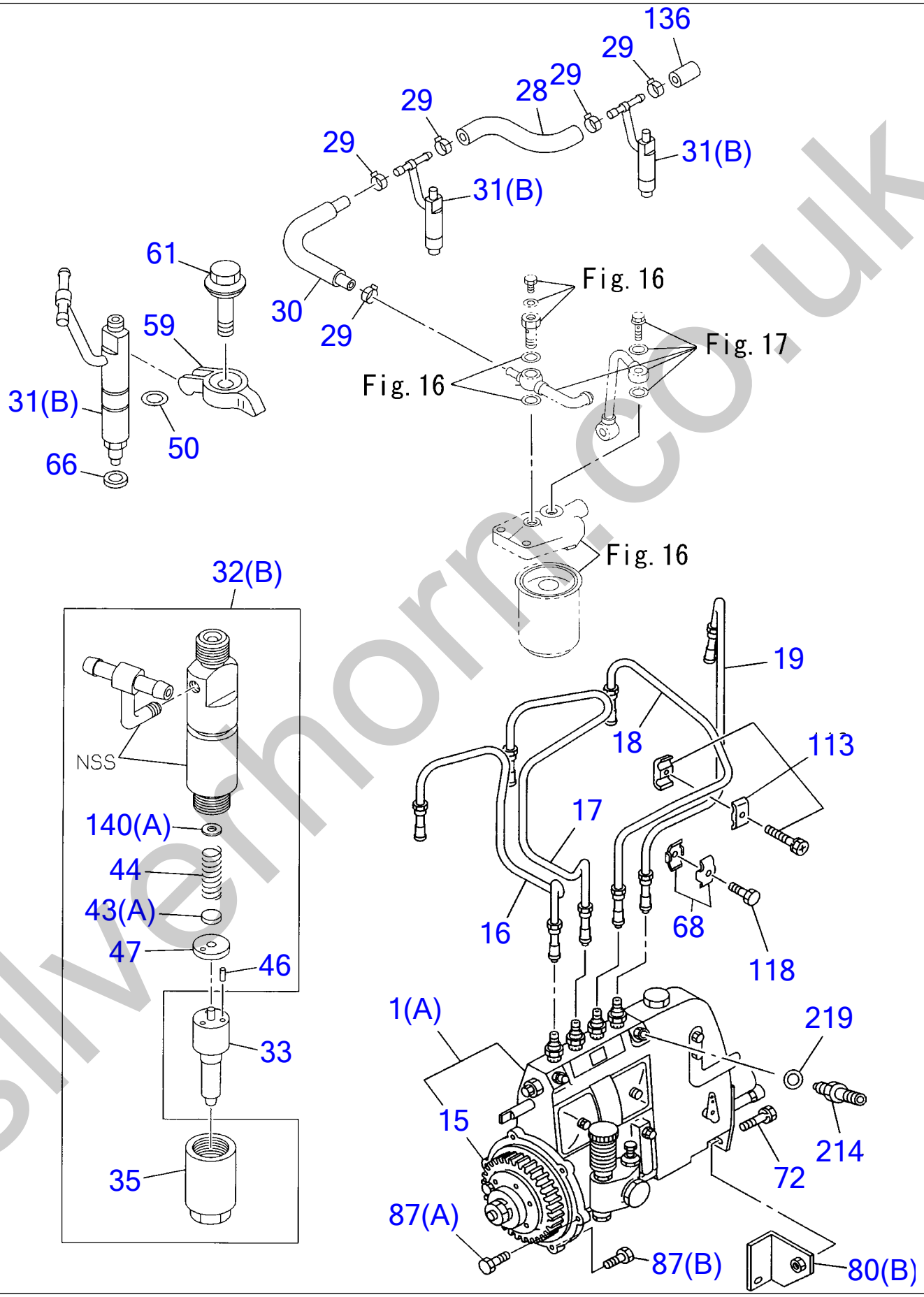

silverhorn.co.uk

FUEL INJECTION SYSTEM

Item	Part No	Description	Qty
1(A)	I8-97352-8651	PUMP ASM; INJ	1
15	I8-97249-9760	COUPLING ASM; INJ PUMP	1
16	I8-97238-9800	PIPE; INJ NO. 1	1
17	I8-97238-9810	PIPE; INJ NO. 2	1
18	I8-97238-9820	PIPE; INJ NO. 3	1
19	I8-97238-9830	PIPE; INJ NO. 4	1
28	I8-94152-3530	HOSE; FUEL, NOZZLE TO NOZZLE	3
29	I8-94238-6100	CLIP; HOSE, LEAK OFF PIPE	9
30	I8-94427-5012	HOSE; RUBBER, FUEL LEAK	1
31(B)	I8-97238-9780	NOZZLE ASM; INJ	4
32(B)	I8-94442-2250	HOLDER ASM; NOZZLE	4
33	I8-97241-3620	NOZZLE; INJ	4
35	I8-94174-1840	NUT; NOZZLE RET, NOZZLE HOLDER	4
43(A)	I8-94312-7230	SEAT; NOZZLE SPRING, NOZZLE HOLDER	4
44	I8-94174-1410	SPRING; NOZZLE, NOZZLE HOLDER	4
46	I8-94174-1390	PIN; NOZZLE SET, NOZZLE HOLDER	8
47	I8-94174-1830	SPACER; NOZZLE SPRING, NOZZLE HOLDER	4
50	I8-94326-4390	GASKET; NOZZLE HOLDER	4
59	I8-94433-4270	CLAMP; NOZZLE HOLDER	4
61	I8-94433-7171	BOLT; CLAMP NOZZLE HOLDER	4
66	I8-94391-4720	GASKET; INJ NOZZLE	4
68	I8-94430-0000	CLIP; INJ PIPE (UPPER)	1
	I8-94430-0010	CLIP; INJ PIPE (LOWER)	1
72	I0-50141-0250	BOLT; BRKT TO INJ PUMP (M10X25) (-05.12)	1
	I0-50641-0250	BOLT; BRKT TO INJ PUMP (M10X25) (06.01-)	1
	I0-28680-8200	BOLT; BRKT TO INJ PUMP (M8X20) (-05.12)	1
	I0-28650-8200	BOLT; BRKT TO INJ PUMP (M8X20) (06.01-)	1
80(B)	I8-97247-3140	BRACKET; PUMP	1
87(A)	I0-28080-8600	BOLT; PUMP (-05.11)	4
	I0-28050-8600	BOLT; PUMP (05.12-)	4
87(B)	I0-28680-8250	BOLT; PUMP (-05.11)	1
	I0-28050-8250	BOLT; PUMP (05.12-)	1
113	I9-15419-0721	CLIP; INJ PIPE	3
118	I0-50140-8180	BOLT; CLIP, INJ PIPE	1
136	I8-94473-9670	CAP; NOZZLE, FUEL END	1
140(A)	I8-97116-0290	SHIM; NOZZLE SPR, NOZZLE HOLDER (T=0.100)	?
	I8-97116-0320	SHIM; NOZZLE SPR, NOZZLE HOLDER (T=0.200)	?
	I8-97116-0330	SHIM; NOZZLE SPR, NOZZLE HOLDER (T=0.300)	?
	I8-97116-0340	SHIM; NOZZLE SPR, NOZZLE HOLDER (T=0.400)	?
	I8-97116-0350	SHIM; NOZZLE SPR, NOZZLE HOLDER (T=0.500)	?
	I8-97116-0360	SHIM; NOZZLE SPR, NOZZLE HOLDER (T=0.510)	?
	I8-97116-0370	SHIM; NOZZLE SPR, NOZZLE HOLDER (T=0.520)	?
	I8-97116-0380	SHIM; NOZZLE SPR, NOZZLE HOLDER (T=0.530)	?
	I8-97116-0390	SHIM; NOZZLE SPR, NOZZLE HOLDER (T=0.540)	?
	I8-97116-0400	SHIM; NOZZLE SPR, NOZZLE HOLDER (T=0.550)	?
	I8-97116-0410	SHIM; NOZZLE SPR, NOZZLE HOLDER (T=0.560)	?
	I8-9116-0420	SHIM; NOZZLE SPR, NOZZLE HOLDER (T=0.570)	?
	I8-97116-0430	SHIM; NOZZLE SPR, NOZZLE HOLDER (T=0.580)	?
	I8-97116-0440	SHIM; NOZZLE SPR, NOZZLE HOLDER (T=0.590)	?
214	I8-97213-6680	ORIFICE; INJ PUMP	1
219	I9-09572-0140	GASKET	1

silcmom.co.uk

FUEL FILTER & BRACKET

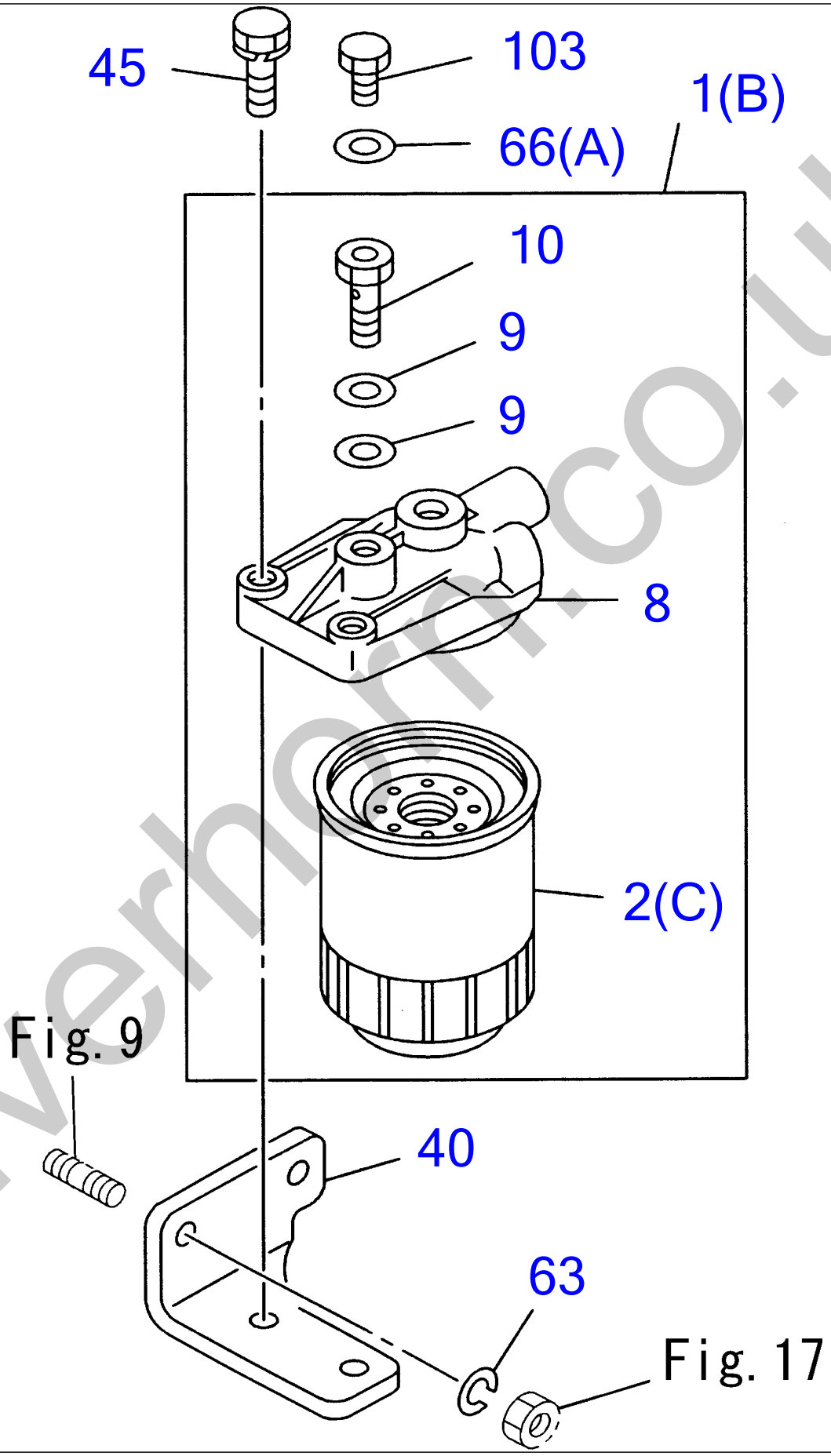

silverhorn.co.uk

FUEL FILTER & BRACKET

Item	Part No	Description	Qty
1(B)	I8-97179-8541	FILTER ASM; FUEL	1
2(C)	I8-97172-5491	ELEMENT KIT; FUEL FILTER	1
8	I8-97179-8550	COVER; FUEL FILTER	1
9	I1-09630-0850	GASKET; EYE JOINT	2
10	I1-13260-0470	VALVE; OVERFLOW, FUEL FILTER	1
40	I8-94410-4040	BRACKET; FUEL FILTER	1
45	I0-28681-0350	BOLT; FUEL FILTER (-05.12)	2
	I0-28651-0350	BOLT; FUEL FILTER (06.01-)	2
63	I9-09150-5100	WASHER; LK, FUEL FILTER	2
66(A)	I9-09571-4080	GASKET; PLUG, FUEL FILTER	1
103	I9-09202-3080	PLUG; OVER FLOW VLV	1

silverhorn.co.uk

FUEL PUMP & PIPE

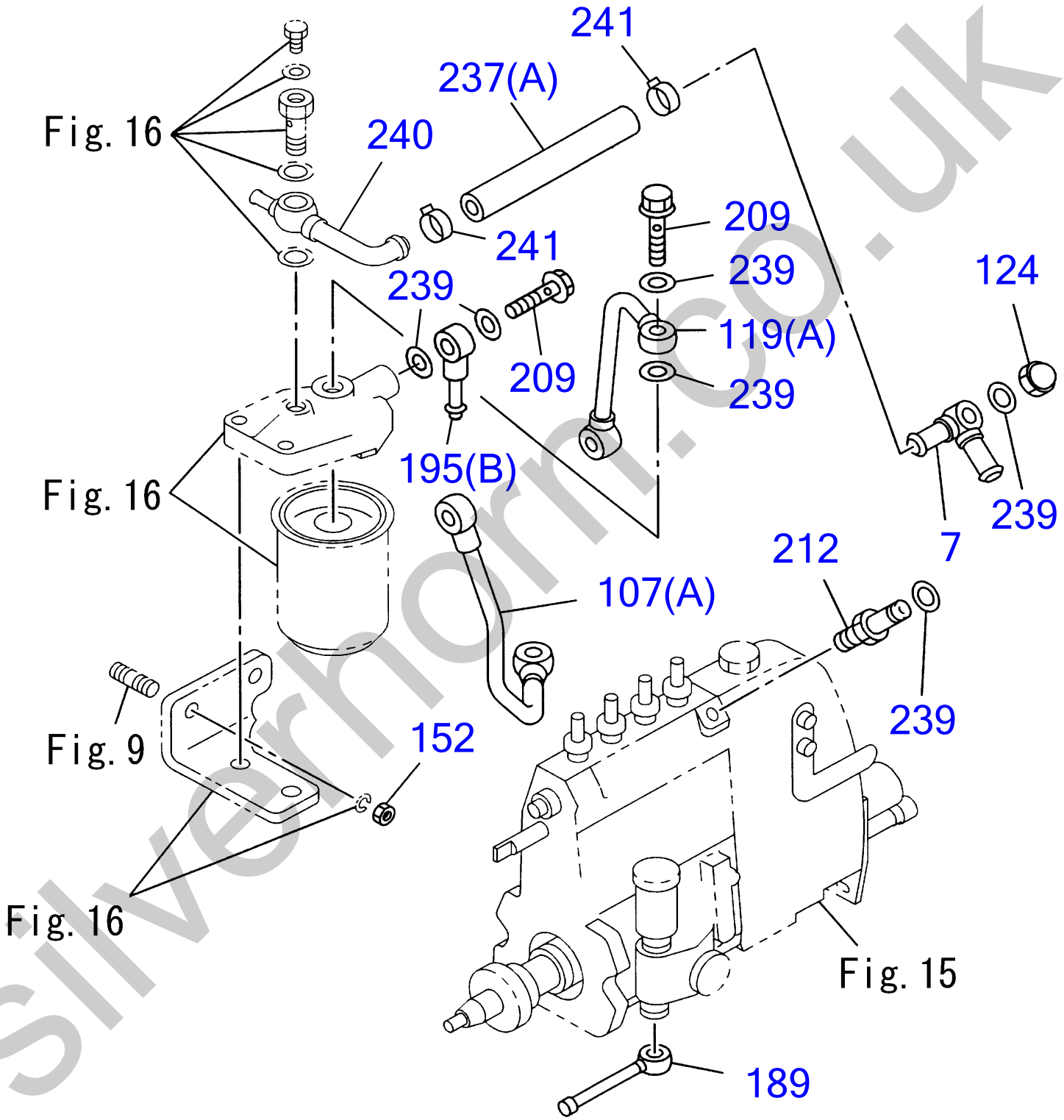

silverhorn.co.uk

FUEL PUMP & PIPE

Item	Part No	Description	Qty
7	I8-97352-8850	PIPE ASM; FUEL OVERFLOW	1
107(A)	I8-94424-1421	PIPE; FUEL, FEED PUMP TO FUEL FILTER	1
119(A)	I8-94424-1430	PIPE; FUEL, FUEL FILTER TO INJ PUMP	1
124	I1-09468-0021	NUT; CAP, FUEL PIPE	1
152	I9-09110-5100	NUT; BRKT	2
189	I5-15411-2250	PIPE ASM; FUEL, FEED PUMP	1
209	I9-09906-3251	BOLT; EYE, FUEL FILTER	2
212	I1-13260-0011	VALVE; OVERFLOW	1
237(A)	I0-01259-3000	HOSE; RUBBER, FUEL FILTER TO PUMP	1
239	I9-09572-0140	GASKET	6
240	I8-94441-5921	PIPE; FUEL FILTER TO PUMP	1
241	I8-94140-4310	CLIP; HOSE	2
195(B)	I5-15411-2250	PIPE ASM; FUEL	1

silverhorn.co.uk

OIL COOLER & OIL FILTER

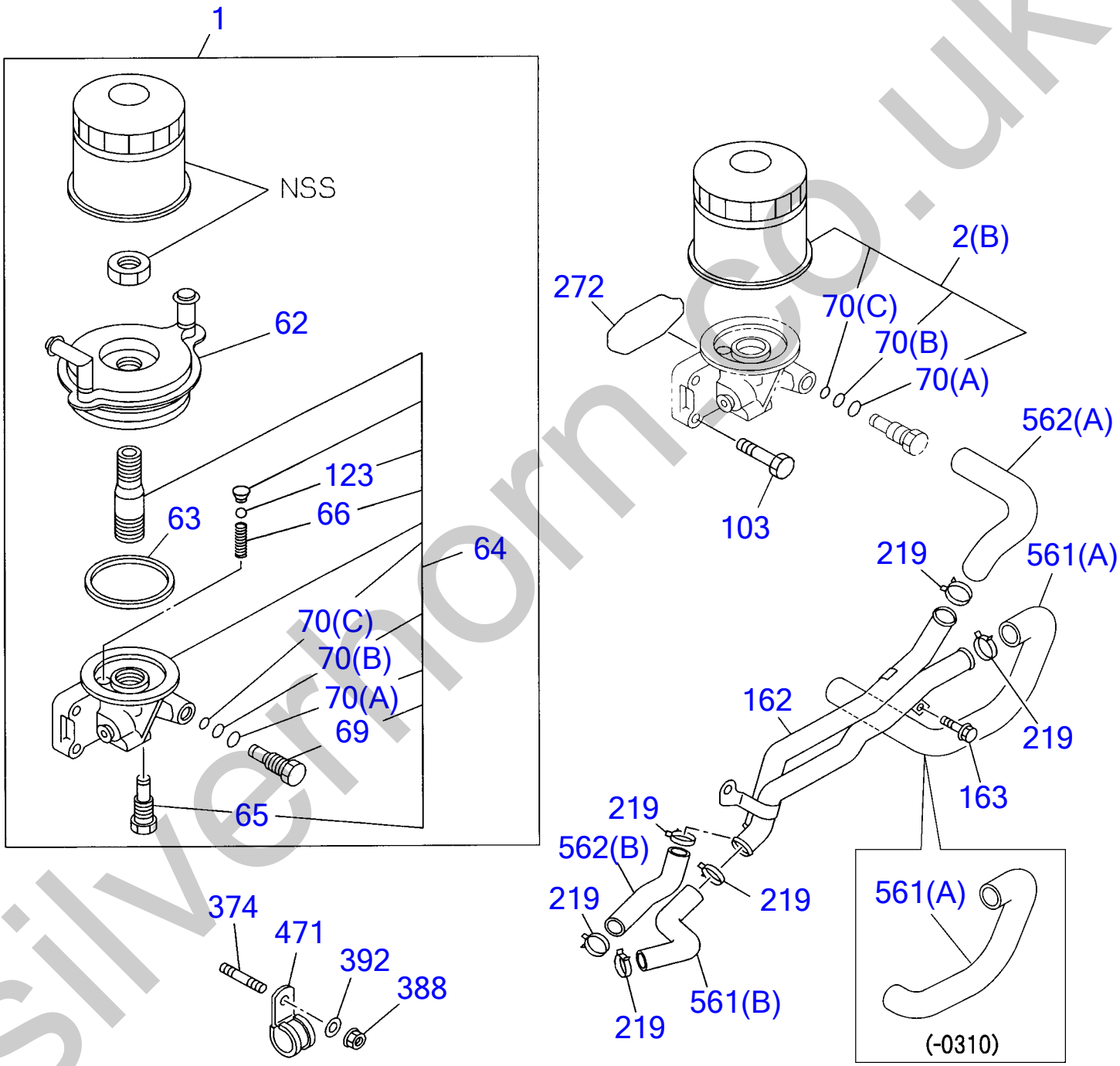

silverthorn.co.uk

OIL COOLER & OIL FILTER

Item	Part No	Description	Qty
1	I8-94327-2721	FILTER & COOLER ASM; OIL	1
2(B)	I8-97049-7081	ELEMENT; OIL FILTER	1
62	I8-94401-6800	COOLER ASM; OIL	1
63	I8-94383-7200	GASKET; COOLER TO BRKT	1
64	I8-97081-7560	BODY; OIL FILTER & OIL COOLER	1
65	I8-94167-8820	VALVE; OIL COOLER	1
66	I8-94401-6790	SPRING; VLV	1
69	I8-94167-8830	PLUG; BODY, OIL FILTER	1
70(A)	I8-94167-8840	GASKET; PLUG, OIL FILTER	1
70(B)	I8-94167-8850	GASKET; PLUG, OIL FILTER	1
70(C)	I8-94167-8860	GASKET; PLUG, OIL FILTER	1
103	I0-28680-8300	BOLT; OIL COOLER	4
123	I9-00097-0110	BALL; STEEL, ADAPTER	1
162	I8-97238-9960	PIPE; WATER, OIL COOLER	1
163	I0-50040-8140	BOLT; WATER PIPE (-03.04)	1
	I0-28080-8160	BOLT; WATER PIPE (03.05-05.11)	1
	I0-28050-8160	BOLT; WATER PIPE (05.12-)	1
219	I8-94125-8621	CLIP; HOSE, OIL COOLER	8
272	I8-97065-9830	GASKET; OIL FILTER TO C/BL	1
374	I9-04110-8140	STUD; OIL FILTER	1
388	I9-09110-5080	NUT; CLIP (-05.11)	1
	I0-91110-5080	NUT; CLIP (05.12-)	1
392	I9-09150-5080	WASHER; LK	1
471	I1-09700-8090	CLIP; HOSE	1
561(A)	I8-97288-8850	HOSE; OIL COOLER (-03.10)	1
	I8-97374-7060	HOSE; OIL COOLER (03.11-)	1
561(B)	I8-97240-5920	HOSE; FEED, OIL COOLER	1
562(A)	I8-97288-8860	HOSE	1
562(B)	I8-97240-5930	HOSE; RETURN, OIL COOLER	1

silverhorn.co.uk

OIL PUMP & OIL STRAINER

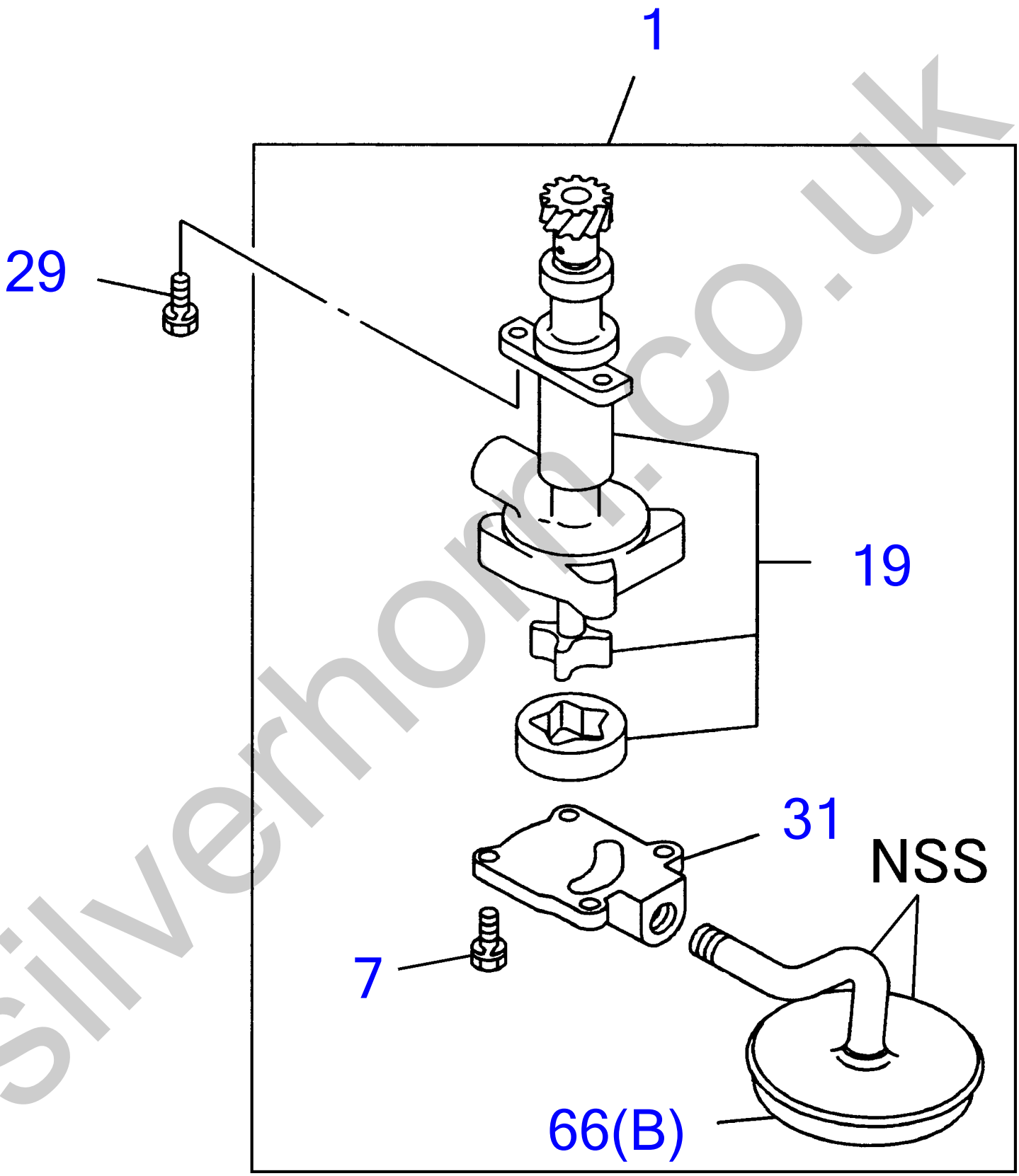

silverhorn.co.uk

OIL PUMP & OIL STRAINER

Item	Part No	Description	Qty
1	I8-97325-1570	PUMP ASM; OIL	1
7	I9-01900-8250	BOLT; COVER, OIL PUMP	4
19	I8-97044-1120	GEAR SET; OIL PUMP	1
29	I0-50140-8250	BOLT; OIL PUMP (-05.12)	2
	I0-50640-8250	BOLT; OIL PUMP (06.01-)	2
31	I9-13113-0771	COVER; OIL PUMP (INCL. REF. NO. 31-1)	1
66(B)	I9-13143-0100	GAUZE; OIL STRAINER	1

silverhorn.co.uk

OIL & VACUUM PIPING; ENGINE

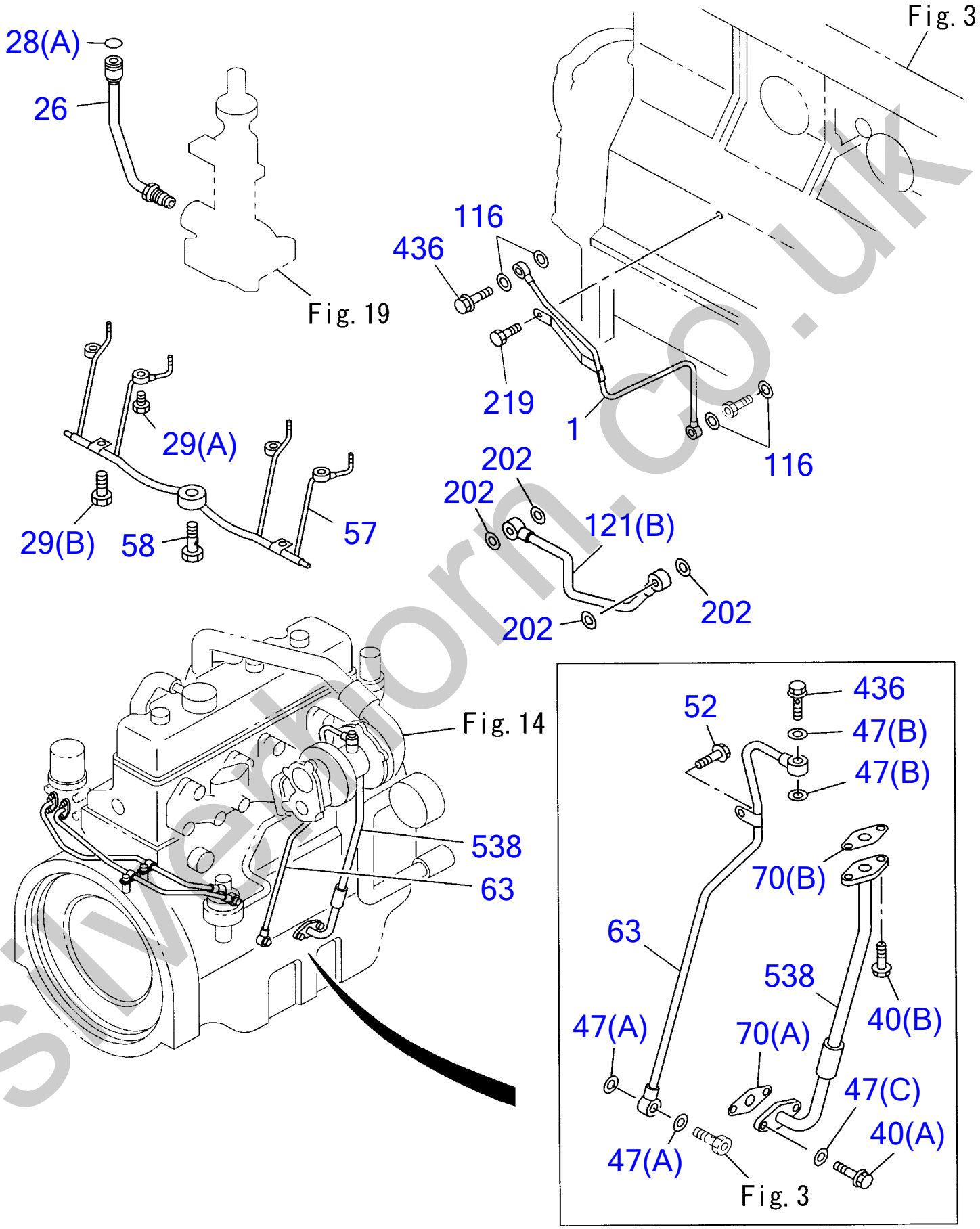

silverthorn.co.uk

OIL & VACUUM PIPING; ENGINE

Item	Part No	Description	Qty
1	I8-97232-9570	PIPE; OIL, INJ PUMP TO C/BL	1
26	I8-94434-8271	PIPE; OIL, PUMP TO C/BL	1
28(A)	I5-09623-0020	GASKET; OIL PIPE	1
29(A)	I0-28080-6200	BOLT; OIL PIPE, OIL JET (-05.11)	4
	I0-28050-6200	BOLT; OIL PIPE, OIL JET (05.12-)	4
29(B)	I0-28080-8100	BOLT; OIL PIPE, OIL JET (-05.11)	1
	I0-28050-8100	BOLT; OIL PIPE, OIL JET (05.12-)	1
40(A)	I0-28080-8220	BOLT; OIL PIPE	2
40(B)	I0-50040-6180	BOLT; OIL PIPE	2
47(A)	I9-09571-4140	GASKET; OIL PIPE	2
47(C)	I9-09572-0080	GASKET; OIL PIPE	2
47(B)	I9-09571-4100	GASKET; OIL PIPE	2
52	I0-50140-8140	BOLT; OIL PIPE CLIP	1
57	I8-97043-7412	PIPE; OIL, OIL JET	1
58	I8-97311-9761	VALVE; RELIEF, OIL, OIL JET	1
63	I8-97238-9400	PIPE; OIL TURBOCHARGER FEED	1
70(A)	I8-94341-8741	GASKET; OIL PIPE, TURBOCHARGER	1
70(B)	I8-94362-6720	GASKET; OIL PIPE, TURBOCHARGER	1
116	I9-09572-0080	GASKET; CAP NUT, OIL PIPE	4
121(B)	I8-97113-3361	PIPE; OIL, GEAR CASE	1
202	I9-09571-4080	GASKET; OIL PIPE	4
219	I0-50040-6120	BOLT; CLIP FIX, OIL PIPE (-05.12)	1
	I0-50540-6120	BOLT; CLIP FIX, OIL PIPE (06.01-)	1
436	I8-97241-6220	BOLT; JOINT	1
538	I8-97238-9420	PIPE; OIL, TURBOCHARGER OUT	1

silverhorn.co.uk

ELECTRICAL CONTROL PARTS

Fig. 12

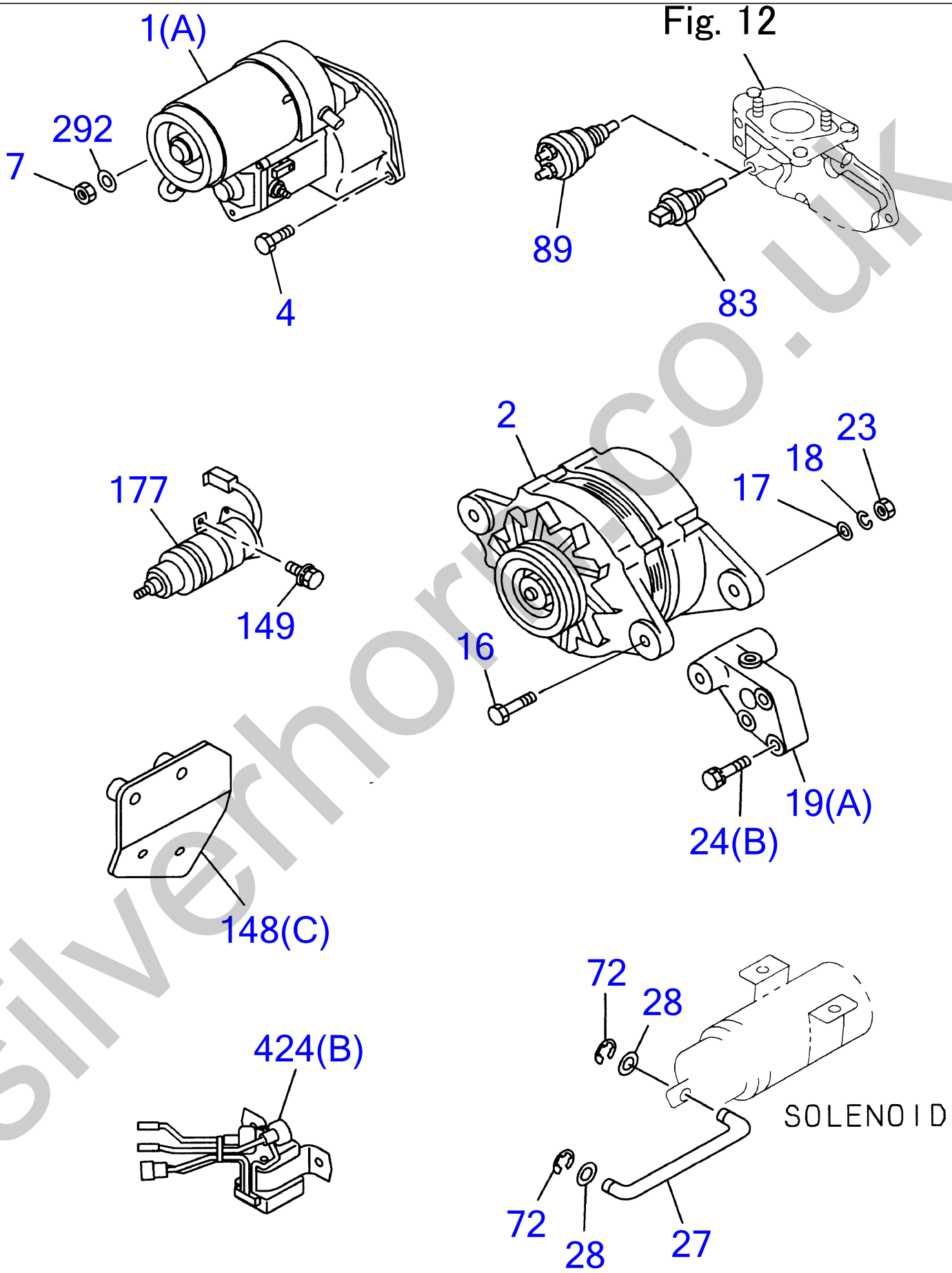

silverhorse.co.uk

ELECTRICAL CONTROL PARTS

Item	Part No	Description	Qty
1(A)	I8-97349-4020	STARTER ASM	1
2	I8-97228-3180	GENERATOR ASM	1
4	I0-28181-2350	BOLT; STARTER (-05.12)	2
	I0-28151-2350	BOLT; STARTER (06.01-)	2
7	I9-09111-4080	NUT; STARTER (-05.12)	1
	I0-91111-5080	NUT; STARTER (06.01-)	1
16	I0-28085-8120	BOLT; GEN	1
17	I9-09160-5080	WASHER; PL, GEN	1
18	I9-09150-5080	WASHER; LK, GEN	1
19(A)	I8-94170-1360	BRACKET; GEN	1
23	I9-09110-4080	NUT; GEN (-05.12)	1
	I0-91110-5080	NUT; GEN (06.01-)	1
24(B)	I0-50040-8350	BOLT; GEN BRK (M8X35) (-05.12)	1
	I0-50540-8350	BOLT; GEN BRK (M8X35) (06.01-)	1
	I5-09000-0841	BOLT; GEN BRK (M8X55)	1
27	I8-97231-0270	ROD; LINK	1
28	I9-09160-5050	WASHER; PL	2
72	I9-09185-4040	RING; SNAP, LINK ROD	2
83	I9-83151-4320	THERMOMETER UNIT	1
89	I8-97125-6001	SWITCH; OVER HEAT WARNING	1
148(C)	I8-97286-8930	BRACKET; SOLENOID VLV	1
149	I0-50040-6160	BOLT; SOLENOID VLV	4
177	I8-94450-7231	SOLENOID ASM; ENG STOP (21400011-21401222)	1
	I8-97376-9381	SOLENOID ASM; ENG STOP (21401223-)	1
292	I9-09150-5080	WASHER; LK, STARTER	1
424(B)	I1-82553-0401	RELAY	1

silverhorn.co.uk

STARTER

ASM
8-97349-402-※

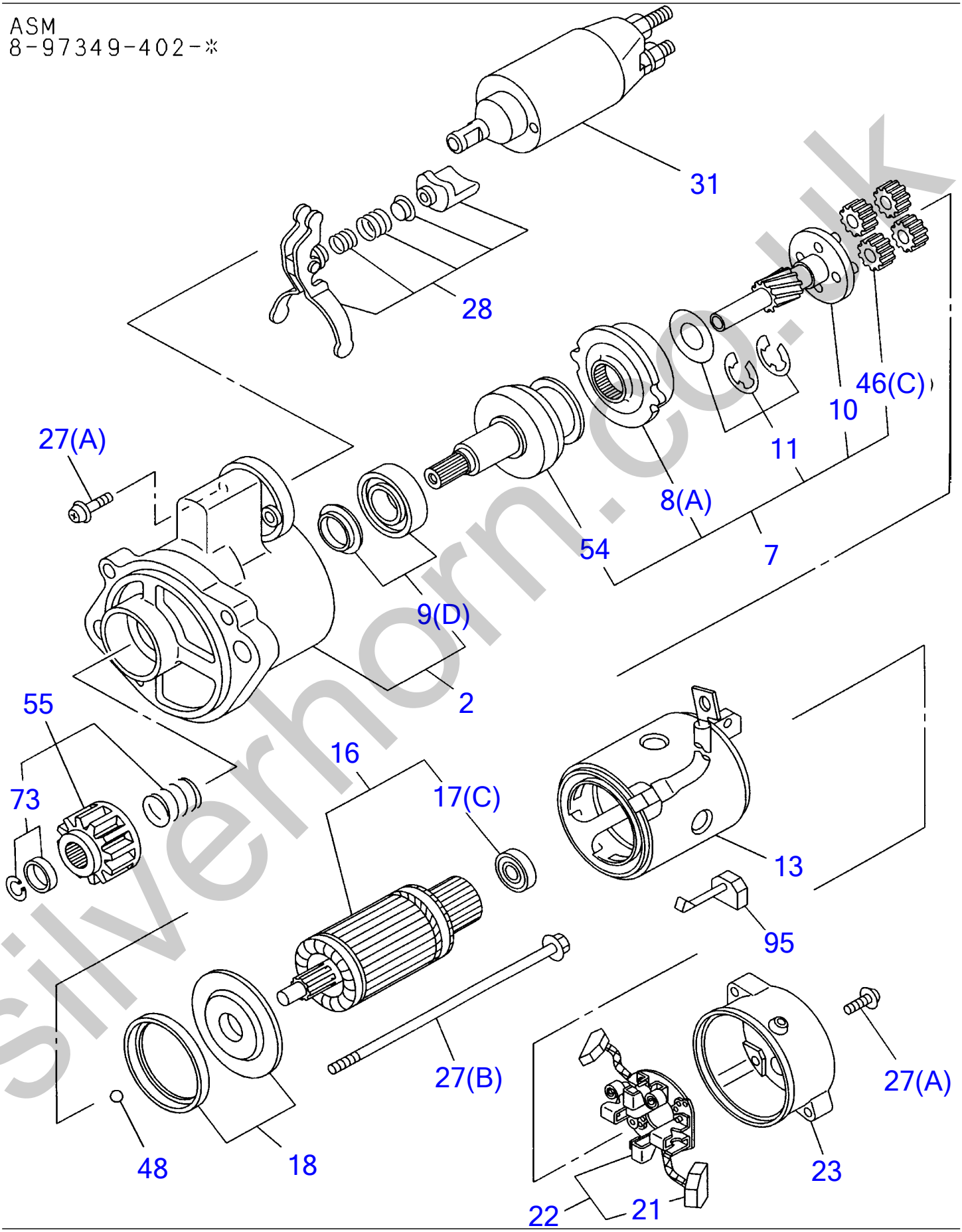

silverhorn.co.uk

STARTER

Item	Part No	Description	Qty
2	I8-97225-2070	CASE; PINION, STARTER	1
7	I8-97116-4820	CLUTCH ASM; PINION, STARTER	1
8(A)	I8-97116-4850	BRACKET; CENTER STARTER	1
9(D)	I8-97116-4810	BEARING; GEAR SHAFT STARTER	1
10	I8-97116-4830	SHAFT; GEAR STARTER	1
11	I8-97116-4840	WASHER; GEAR SHAFT STARTER	1
13	I8-97358-4640	YOKE; STARTER	1
16	I8-97231-2760	ARMATURE; STARTER	1
17(C)	I1-81129-8370	BEARING; ARMATURE, STARTER	1
18	I8-97116-4890	WASHER; THRUST, ARMATURE, STARTER	1
21	I8-97172-0560	SPRING; BRUSH HOLDER STARTER	4
22	I8-97172-0550	HOLDER; BRUSH STARTER	1
23	I8-97210-9170	COVER; RR COVER STARTER	1
27(A)	I8-97116-4950	BOLT; THROUGH, STARTER	1
27(B)	I8-94475-6980	BOLT; THROUGH, STARTER	1
28	I8-97172-0480	LEVER; SHIFT, STARTER	1
31	I8-97358-4630	SWITCH; ENGAGE STARTER	1
46(C)	I8-97116-4900	GEAR; CLU STARTER	4
48	I8-97116-5150	BALL; PINION, STARTER	1
54	I8-97116-4880	CLUTCH; PINION, STARTER	1
55	I8-97137-6060	PINION; CLU, STARTER	1
73	I8-94475-6880	STOPPER SET; PINION	1
95	I8-97172-0580	BRUSH SET; (+) & (-), STARTER	2

silverhorn.co.uk

GENERATOR

ASM
8-97228-318-*

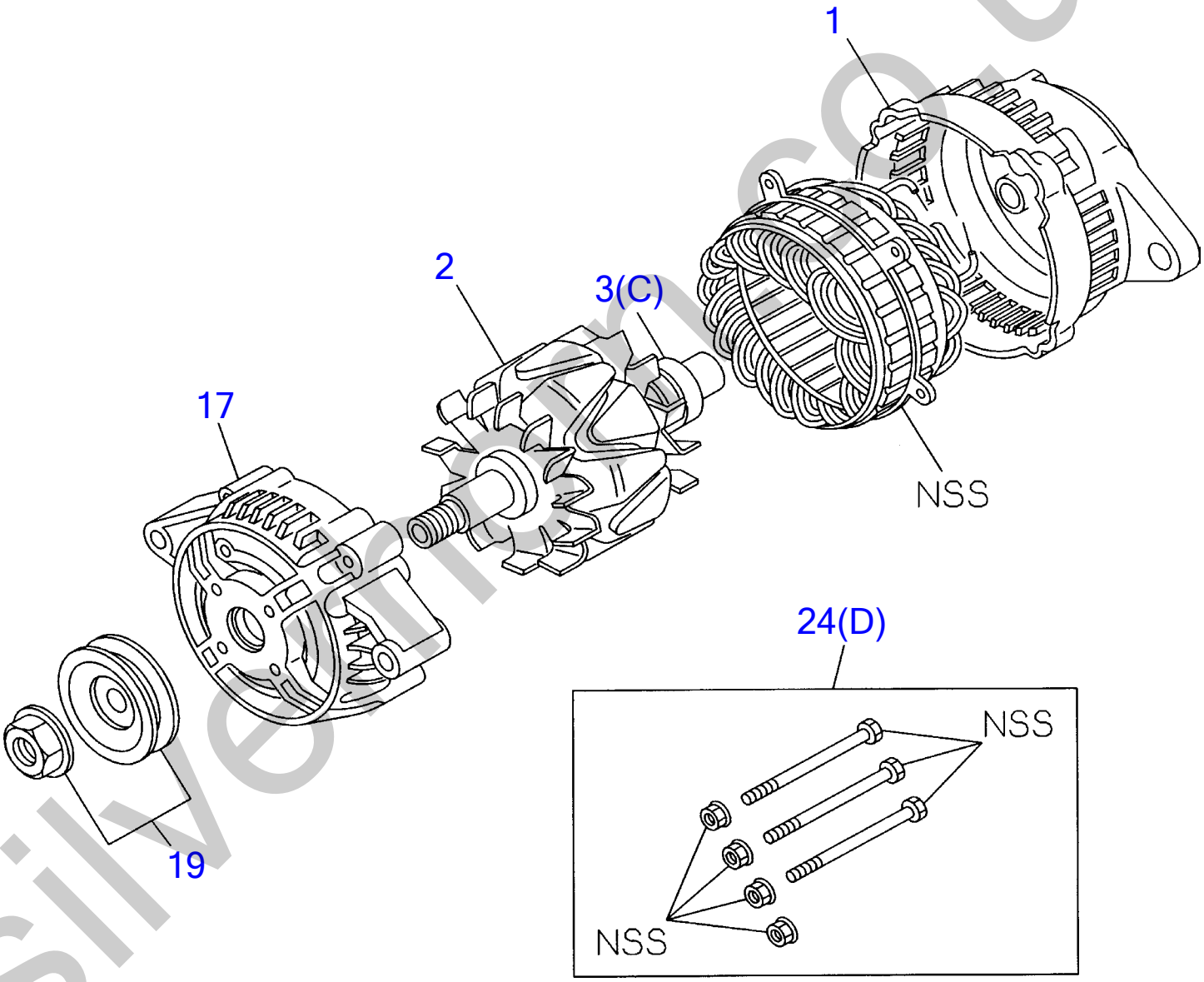

silvermac.co.uk

GENERATOR

Item	Part No	Description	Qty
1	I8-97212-5040	COVER ASM; RR, GEN	1
2	I8-97212-5000	ROTOR; GEN	1
3(C)	I8-97212-5020	BEARING; ROTOR, GEN	1
17	I8-97256-0370	COVER ASM; FRT, GEN	1
19	I8-97212-5080	PULLEY; GEN	1
24(D)	I8-97212-5100	SCREW; RECTIFIER, GEN	1

silverhorn.co.uk

INJECTION PUMP

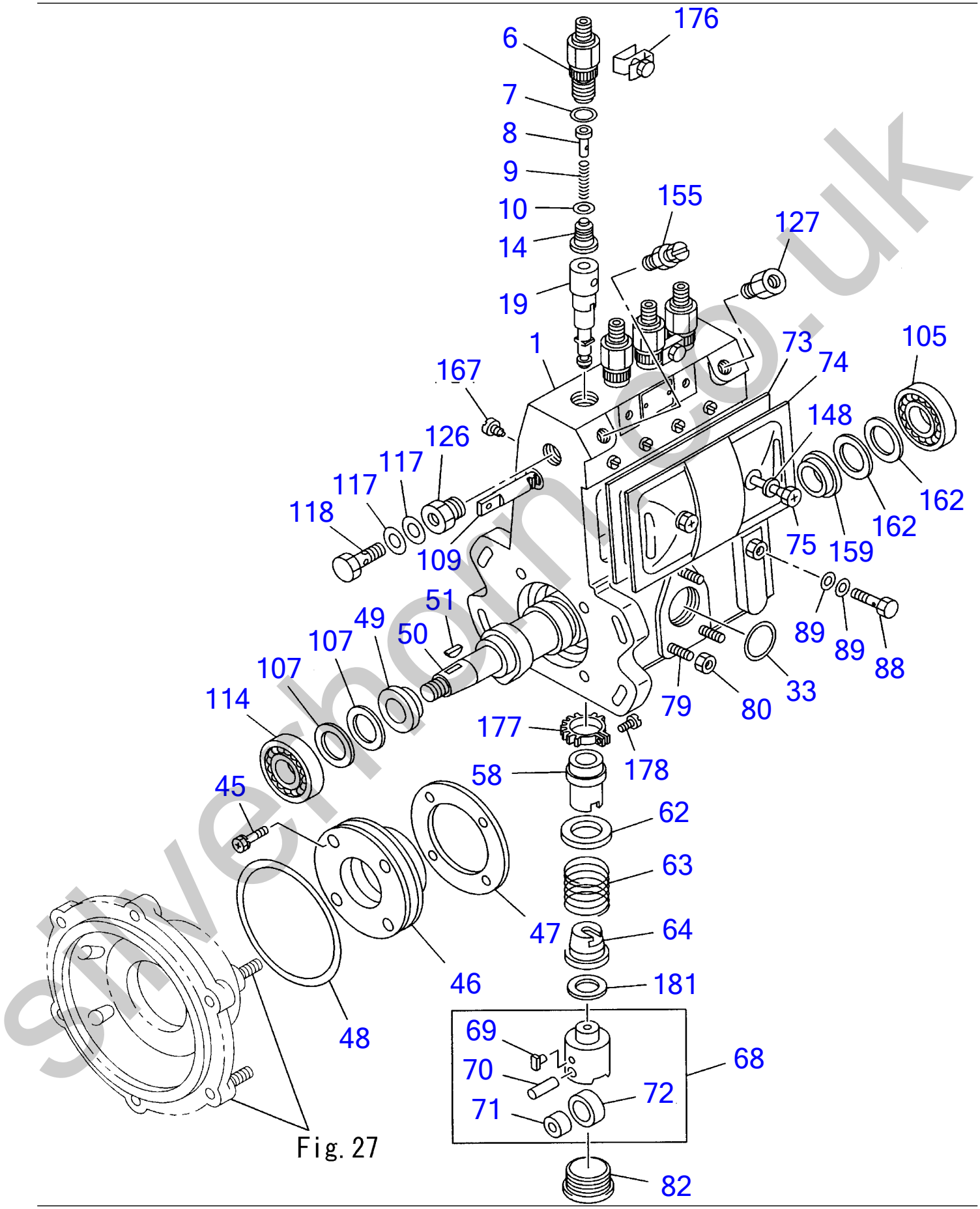

Fig. 27

silverhorse.co.uk

INJECTION PUMP

Item	Part No	Description	Qty
1	I8-97251-4190	HOUSING; PUMP, FUEL INJ	1
6	I5-15644-0170	HOLDER; DELIVERY VALVE, INJ PUMP	4
7	I1-09623-0520	GASKET; HOLDER, DELIVERY VALVE	4
8	I5-15629-0450	STOPPER; DELIVERY VALVE, INJ PUMP	4
9	I5-15643-0010	SPRING; DELIVERY VALVE	4
10	I1-15649-0010	GASKET; DELIVERY VALVE, INJ PUMP	4
14	I8-97138-5330	VALVE; DELIVERY, INJ PUMP	4
19	I8-97205-6610	PLUNGER ASM; INJ PUMP (-05.08)	4
	I8-98014-3790	PLUNGER ASM; INJ PUMP (05.09-)	4
33	I1-09623-0130	GASKET; FUEL FEED PUMP, INJ PUMP	1
45	I1-15619-2820	BOLT; FRT COVER TO HSG	1
46	I8-97181-5090	COVER; FRT, PUMP HSG	1
47	I8-97083-3370	SHIM; FRT COVER, INJ PUMP HSG	1
48	I5-15629-0490	GASKET; FRT COVER TO HSG	1
49	I1-15629-0040	RING; FRT BRG, CM/SHF	1
50	I8-97251-4200	CAMSHAFT; INJ PUMP	1
51	I5-83539-0240	KEY; DRIVE GEAR, INJ PUMP	1
58	I9-81225-0580	SLEEVE; CONT, INJ PUMP	4
62	I9-81235-0150	SEAT; PLUNGER SPRING, INJ PUMP	4
63	I8-94387-9770	SPRING; PLUNGER, INJ PUMP	4
64	I9-81235-0210	SEAT; PLUNGER SPRING LWR, INJ PUMP	4
68	I5-15622-0090	TAPPET; CM/SHF, INJ PUMP	4
69	I5-15619-0410	GUIDE; TAPPET, INJ PUMP	4
70	I5-15622-0060	PIN; TAPPET ROLLER, INJ PUMP	4
71	I1-15629-0010	BUSHING; TAPPET ROLLER, INJ PUMP	4
72	I1-15622-0030	ROLLER; TAPPET, INJ PUMP	4
73	I8-94386-5960	GASKET; COVER TO HSG	1
74	I8-94171-1090	COVER; HSG, INJ PUMP	1
75	I1-15619-0030	SCREW; COVER TO HSG	2
79	I9-81215-1150	STUD; FUEL FEED PUMP TO HSG	3
80	I8-94171-1100	NUT; FUEL FEED PUMP FIX	3
82	I5-15619-1360	PLUG; HSG, INJ PUMP	4
88	I8-97012-8360	BOLT; EYE, OIL FEED, INJ PUMP	1
89	I9-09572-0100	GASKET; OIL FEED BOLT, INJ PUMP	2
105	I9-00090-6770	BEARING; CM/SHF RR, INJ PUMP (NSK)	1
	I5-09800-0380	BEARING; CM/SHF RR, INJ PUMP (NTN)	1
107	I5-15629-0150	SHIM; RR BEARING, CM/SHF (T=0.10)	1
	I5-15629-0160	SHIM; RR BEARING, CM/SHF (T=0.12)	1
	I5-15629-0170	SHIM; RR BEARING, CM/SHF (T=0.14)	1
	I5-15629-0180	SHIM; RR BEARING, CM/SHF (T=0.16)	1
	I5-15629-0190	SHIM; RR BEARING, CM/SHF (T=0.18)	1
	I5-15629-0200	SHIM; RR BEARING, CM/SHF (T=0.50)	1
	I5-15629-0380	SHIM; RR BEARING, CM/SHF (T=1.00)	1
	I9-81225-0330	SHIM; RR BEARING, CM/SHF (T=0.30)	1
	I5-15619-0390	SHIM; RR BEARING, CM/SHF (T=0.70)	1
	I5-15629-0900	SHIM; RR BEARING, CM/SHF (T=1.40)	1
	I1-15639-0880	SHIM; RR BEARING, CM/SHF (T=2.40)	1
109	I5-15637-0020	RACK; CONT, INJ PUMP	1
114	I1-15629-0020	BEARING; CM/SHF FRT, INJ PUMP (NSK)	1
	I1-15629-0030	BEARING; CM/SHF FRT, INJ PUMP (NTN)	1
117	I1-15759-0010	GASKET; EYE BOLT, INJ PUMP	2
118	I1-15619-0820	BOLT; EYE, FUEL INL, INJ PUMP	1
126	I9-81235-0170	ADAPTER; EYE BOLT, PUMP HSG	1
127	I5-15619-0440	ADAPTER; FUEL PIPE	1
148	I9-81215-1440	GASKET; COVER FIX BOLT	2
155	I1-15619-0240	BOLT; AIR BLEED, INJ PUMP	1
159	I9-81225-0470	RING; RRBEARING, CM/SHF, INJ PUMP	1
162	I9-81225-0490	SHIM; FRT BRG, CM/SHF (T=0.10) (-05.08)	1
	I5-15629-0250	SHIM; FRT BRG, CM/SHF (T=0.10) (05.09-)	1
	I9-81225-0500	SHIM; FRT BRG, CM/SHF (T=0.12) (-05.08)	1

simonform.co.uk

INJECTION PUMP

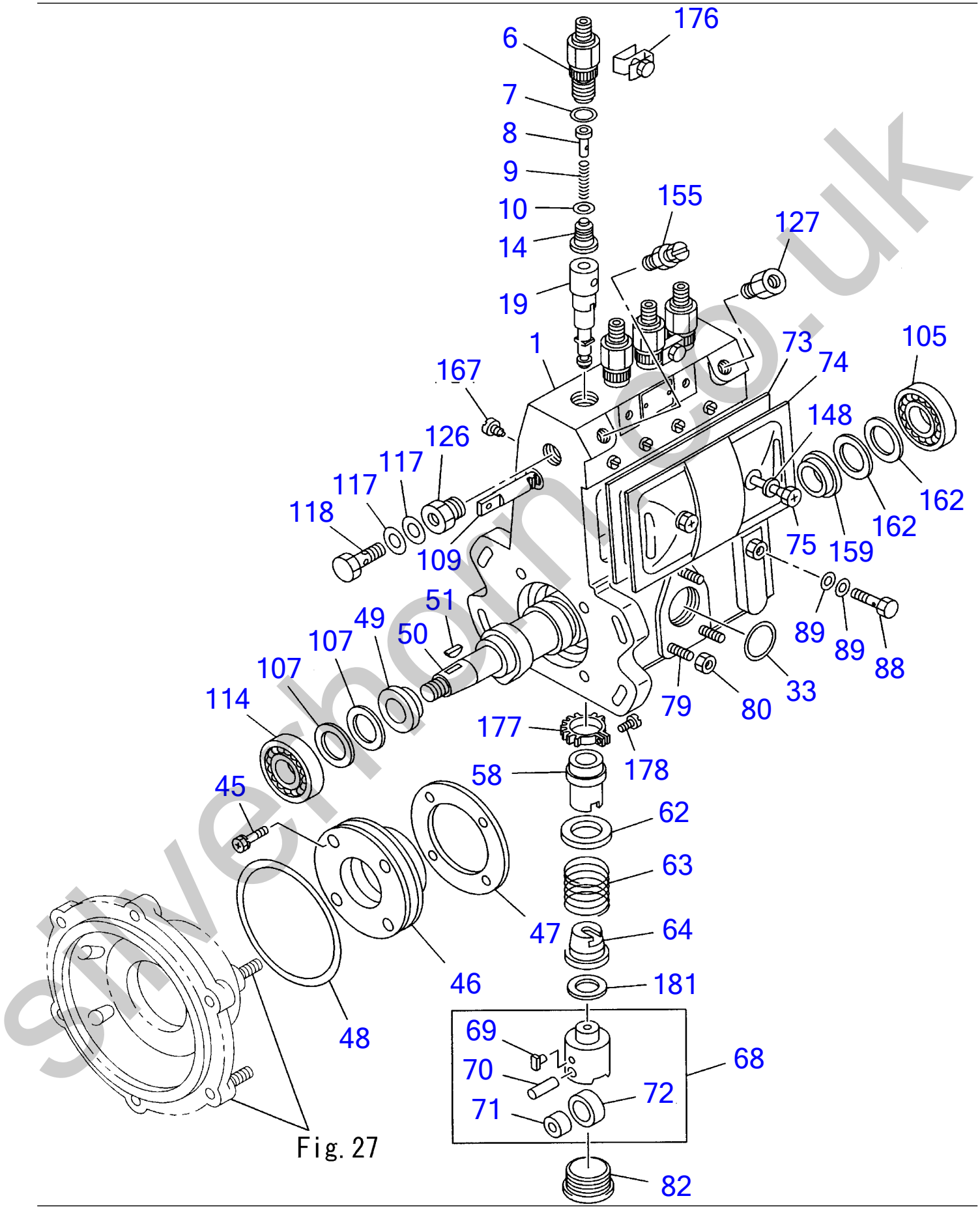

Fig. 27

silverhorse.co.uk

INJECTION PUMP

Item	Part No	Description	Qty
162	I5-15629-0260	SHIM; FRT BRG, CM/SHF (T=0.12) (05.09-)	1
162	I9-81225-0510	SHIM; FRT BRG, CM/SHF (T=0.14) (-05.08)	1
162	I5-15629-0270	SHIM; FRT BRG, CM/SHF (T=0.14) (05.09-)	1
162	I9-81225-0520	SHIM; FRT BRG, CM/SHF (T=0.16) (-05.08)	1
162	I5-15629-0280	SHIM; FRT BRG, CM/SHF (T=0.16) (05.09-)	1
162	I9-81225-0530	SHIM; FRT BRG, CM/SHF (T=0.18) (-05.08)	1
162	I5-15629-0290	SHIM; FRT BRG, CM/SHF (T=0.18) (05.09-)	1
162	I9-81225-0540	SHIM; FRT BRG, CM/SHF (T=0.50) (-05.08)	1
162	I5-15629-0310	SHIM; FRT BRG, CM/SHF (T=0.50) (05.09-)	1
162	I1-15629-0070	SHIM; FRT BRG, CM/SHF (T=0.30) (-05.08)	1
162	I5-15629-0300	SHIM; FRT BRG, CM/SHF (T=0.30) (05.09-)	1
162	I1-15629-0080	SHIM; FRT BRG, CM/SHF (T=1.00) (-05.08)	1
162	I5-15629-0320	SHIM; FRT BRG, CM/SHF (T=1.00) (05.09-)	1
162	I1-15629-1050	SHIM; FRT BRG, CM/SHF (T=0.70) (-05.08)	1
167	I1-15639-0030	BOLT; CONT RACK, INJ PUMP	1
176	I5-15625-0010	PLATE; LK, DELIVERY VALVE HOLDER	2
177	I9-81225-0570	PINION; CONT SLEEVE, INJ PUMP	4
178	I9-81235-0030	SCREW; PINION, INJ PUMP	4
181	I5-15619-0340	SHIM; TAPPET, INJ PUMP (T=0.30)	1
181	I5-15619-0350	SHIM; TAPPET, INJ PUMP (T=0.40)	1
181	I5-15619-0360	SHIM; TAPPET, INJ PUMP (T=0.50)	1
181	I5-15619-0010	SHIM; TAPPET, INJ PUMP (T=0.60)	1
181	I5-15619-0020	SHIM; TAPPET, INJ PUMP (T=0.70)	1
181	I5-15619-0030	SHIM; TAPPET, INJ PUMP (T=0.80)	1
181	I5-15619-0040	SHIM; TAPPET, INJ PUMP (T=0.90)	1
181	I5-15619-0050	SHIM; TAPPET, INJ PUMP (T=1.00)	1
181	I5-15619-0070	SHIM; TAPPET, INJ PUMP (T=1.10)	1
181	I5-15619-0080	SHIM; TAPPET, INJ PUMP (T=1.20)	1
181	I5-15619-0090	SHIM; TAPPET, INJ PUMP (T=1.30)	1
181	I5-15619-0100	SHIM; TAPPET, INJ PUMP (T=1.40)	1
181	I5-15619-0110	SHIM; TAPPET, INJ PUMP (T=0.55)	1
181	I5-15619-0120	SHIM; TAPPET, INJ PUMP (T=0.65)	1
181	I5-15619-0130	SHIM; TAPPET, INJ PUMP (T=0.75)	1
181	I5-15619-0150	SHIM; TAPPET, INJ PUMP (T=0.85)	1
181	I9-81235-0420	SHIM; TAPPET, INJ PUMP (T=0.95)	1
181	I9-81235-0430	SHIM; TAPPET, INJ PUMP (T=1.05)	1
181	I9-81235-0440	SHIM; TAPPET, INJ PUMP (T=1.15)	1
181	I9-81235-0450	SHIM; TAPPET, INJ PUMP (T=1.25)	1
181	I5-15619-1060	SHIM; TAPPET, INJ PUMP (T=1.50)	1
181	I5-15619-1070	SHIM; TAPPET, INJ PUMP (T=1.60)	1
181	I5-15619-0250	SHIM; TAPPET, INJ PUMP (T=0.20)	1
181	I5-15619-0260	SHIM; TAPPET, INJ PUMP (T=0.25)	1
181	I5-15619-0270	SHIM; TAPPET, INJ PUMP (T=0.35)	1
181	I5-15619-0370	SHIM; TAPPET, INJ PUMP (T=0.45)	1
181	I5-15619-1080	SHIM; TAPPET, INJ PUMP (T=1.35)	1
181	I5-15619-1090	SHIM; TAPPET, INJ PUMP (T=1.45)	1
181	I5-15619-1100	SHIM; TAPPET, INJ PUMP (T=1.55)	1

simonsmith.co.uk

GOVERNOR; INJECTION PUMP

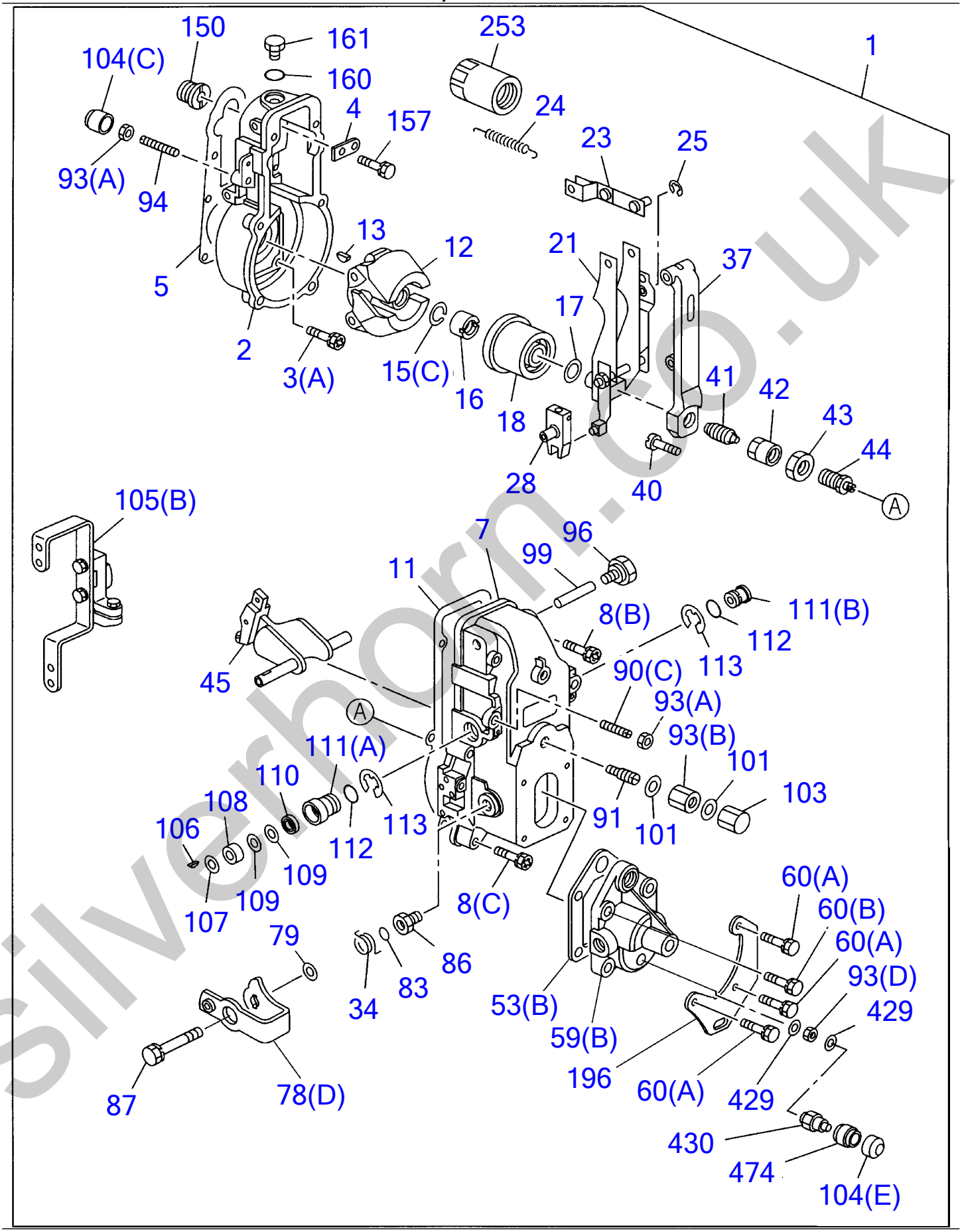

silverhorn.co.uk

GOVERNOR; INJECTION PUMP

Item	Part No	Description	Qty
1	I8-97352-8660	GOVERNOR ASM; INJ PUMP (-05.08)	1
	I8-98022-0380	GOVERNOR ASM; INJ PUMP (05.09-)	1
2	I1-15721-1040	HOUSING; GOV, INJ PUMP	1
3(A)	I5-15729-0270	BOLT; GOV HSG, INJ PUMP	6
4	I8-91325-3970	PLATE; START SPRING, GOV	1
5	I1-15779-0930	GASKET; GOV TO INJ PUMP HSG	1
7	I8-97251-4210	COVER ASM; GOV, INJ PUMP	1
8(B)	I5-15729-0540	BOLT; GOV COVER, INJ PUMP	2
8(C)	I5-15729-0330	BOLT; GOV COVER, INJ PUMP	4
11	I1-15779-0940	GASKET; COVER TO HSG, GOV	1
12	I1-15722-0170	FLYWEIGHT ASM; GOV	1
13	I5-19619-0490	KEY; FLYWEIGHT, GOV	1
15(C)	I5-15729-0340	WASHER; LK, FLYWEIGHT FIX, GOV	1
16	I9-81325-0860	NUT; FLYWEIGHT FIX, GOV	1
17	I9-81325-0880	SHIM; FLYWEIGHT SLEEVE, GOV (T=0.20)	1
	I9-81325-5510	SHIM; FLYWEIGHT SLEEVE, GOV (T=0.30)	1
	I9-81325-5520	SHIM; FLYWEIGHT SLEEVE, GOV (T=0.40)	1
	I9-81325-5530	SHIM; FLYWEIGHT SLEEVE, GOV (T=1.00)	1
	I5-15729-2860	SHIM; FLYWEIGHT SLEEVE, GOV (T=0.50)	1
	I5-15729-2870	SHIM; FLYWEIGHT SLEEVE, GOV (T=1.50)	1
	I1-15729-8910	SHIM; FLYWEIGHT SLEEVE, GOV (T=2.00)	1
	I1-15729-8920	SHIM; FLYWEIGHT SLEEVE, GOV (T=3.00)	1
	I1-15729-8930	SHIM; FLYWEIGHT SLEEVE, GOV (T=4.00)	1
18	I5-15729-3720	SLEEVE; GOV	1
21	I8-97251-4220	LEVER ASM; GUIDE, GOV	1
23	I1-15725-0110	LINK; LEVER TO CONT RACK, GOV	1
24	I9-81321-6840	SPRING; START, GOV, INJ PUMP	1
25	I9-09185-4040	RING; SNAP	1
28	I1-15725-0170	LEVER; SUPPORTING, GOV	1
34	I1-15723-2190	SPRING; SPD CONT LEVER, GOV	1
37	I8-97251-4230	LEVER ASM; TENSION, GOV (-05.08)	1
	I1-15725-9660	LEVER ASM; TENSION, GOV (05.09-)	1
40	I1-15779-5800	SCREW; LEVER ADJ, GOV	1
41	I8-97039-5380	SPRING CAPSULE; IDLE CONT, GOV (-05.08)	1
	I8-97205-6650	SPRING CAPSULE; IDLE CONT, GOV (05.09-)	1
42	I9-00813-0230	NUT; SPRING CAPSULE, IDLE CONT, GOV	1
43	I9-81325-5390	NUT; IDLING CONT SPRING, GOV	1
44	I1-15723-1030	SPRING CAPSULE; IDLE CONT, GOV	1
45	I8-97046-4250	LEVER ASM; GOV, INJ PUMP	1
59(B)	I1-15721-3520	COVER; GOV COVER	1
60(A)	I1-15619-2820	BOLT; COVER FIX, GOV COVER	1
60(B)	I9-01900-6160	BOLT; COVER FIX, GOV COVER	1
63(B)	I1-15779-5810	GASKET; COVER TO GOV COVER	1
78(D)	I8-94322-7060	LEVER; STOPPER, GOV	1
79	I9-88410-4210	SHIM; LEVER SETTING, GOV (T=0.20)	1
	I9-81325-5560	SHIM; LEVER SETTING, GOV (T=0.50)	1
83	I1-15729-8850	SEAL; OIL, CONT SHAFT, GOV	1
86	I9-81325-4290	BUSHING; CONT SHAFT, GOV COVER	1
87	I9-01900-6160	BOLT; RETURN SPRING, GOV	1
90(C)	I5-15729-1230	SCREW; FULL LOAD ADJ, GOV	1
91	I8-94427-8480	SPRING CAPSULE; ADJ, GOV (-05.08)	1
	I1-15723-1270	SPRING CAPSULE; ADJ, GOV (05.09-)	1
93(A)	I9-84410-0270	NUT; ADJ SCREW LK, INJ PUMP GOV	1
	I1-15779-5080	NUT; ADJ SCREW LK, INJ PUMP GOV	1
93(B)	I1-15729-0550	NUT; ADJ SCREW LK, INJ PUMP GOV	1
93(D)	I1-15729-9560	NUT; ADJ SCREW LK, INJ PUMP GOV	1
94	I1-15779-5020	SCREW; ADJ, CONT LEVER, GOV	1
96	I5-15729-0530	PLUG; LEVER SHAFT, GOV	1
99	I1-15729-7300	PIN; TENSION LEVER, GOV	1
101	I8-94144-5880	GASKET; ADJ SPRING CAPSULE, GOV	2

silverform.co.uk

GOVERNOR; INJECTION PUMP

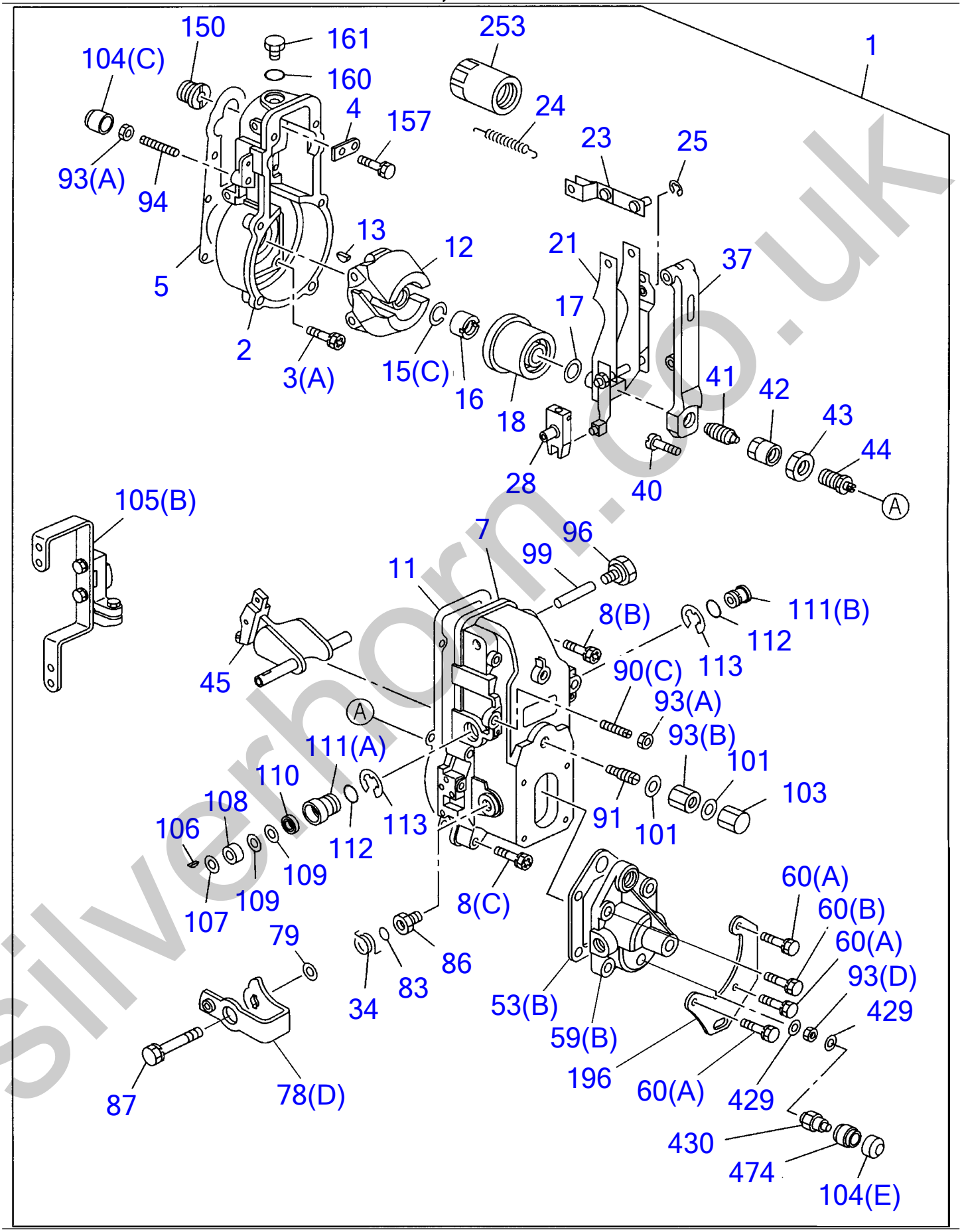

silverhorn.co.uk

GOVERNOR; INJECTION PUMP

Item	Part No	Description	Qty
103	I1-15729-0920	NUT; CAP, ADJ SPRING CAPSULE, GOV	1
104(C)	I8-97179-6700	CAP; LOCK NUT, ADJ SCREW	1
104(E)	I1-15779-5650	CAP; LOCK NUT, ADJ SCREW	1
105(B)	I8-94441-8410	LEVER; SPD CONT, GOV	1
106	I9-81325-0300	KEY; SWIVEL LEVER, GOV	1
107	I9-81325-4880	WASHER; SWIVEL LEVER, GOV	1
108	I1-15729-3010	COLLAR; SWIVEL LEVER, GOV	1
109	I1-15729-0990	SHIM; SWIVEL LEVER, GOV	1
109	I9-81325-1730	SHIM; SWIVEL LEVER, GOV (T=0.5)	1
110	11-5779-5760	SEAL; OIL, SWIVEL LEVER, GOV	1
111(A)	I8-97233-0850	BUSHING; SWIVEL LEVER, GOV	1
111(B)	I8-97233-0860	BUSHING; SWIVEL LEVER, GOV	1
112	I1-15779-5730	GASKET; SWIVEL LEVER, GOV	2
113	I9-09185-4150	RING; SNAP, SWIVEL LEVER, GOV	2
150	I9-81315-0650	ADAPTER; GOV HSG, INJ PUMP	1
157	I9-01900-8180	BOLT; START SPRING PLATE, GOV	1
160	I1-15729-0150	GASKET; PLUG TO HSG	1
161	I1-15729-0380	PLUG; HSG	1
196	I8-97251-4240	BRACKET; COVER	1
253	I8-94167-7920	LIMITTER; GOV CONT	1
429	I8-94227-6020	GASKET; CAP NUT	2
430	I1-15779-5070	CAP NUT; ADJ LEVER	1
474	I1-15779-5820	ADAPTER; GOV, INJ PUMP	1

silverhorn.co.uk

FEED PUMP; INJECTION PUMP

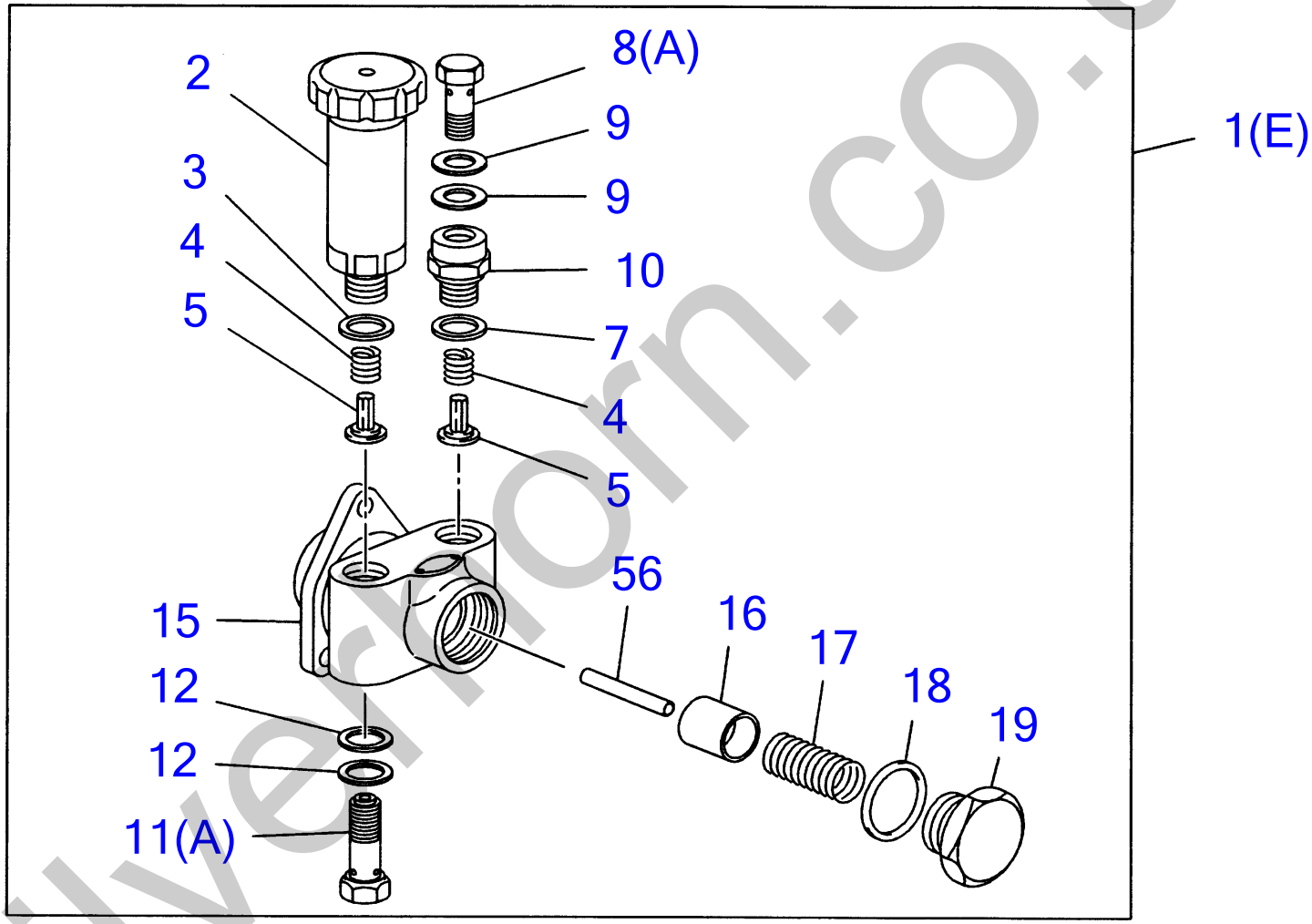

silverhorn.co.uk

FEED PUMP; INJECTION PUMP

Item	Part No	Description	Qty
1(E)	I8-97357-1140	PUMP ASM; FUEL FEED, INJ PUMP	1
2	I1-15761-0061	PUMP; PRIMING, FUEL FEED PUMP	1
3	I1-19623-0160	GASKET; PRIMING PUMP, FUEL FEED PUMP	1
4	I9-81351-7020	SPRING; VALVE, FUEL FEED PUMP	2
5	I1-15755-0020	VALVE; FUEL FEED PUMP	2
7	I1-19623-0160	GASKET; PLUG, FUEL FEED PUMP	1
8(A)	I1-15619-0820	BOLT; EYE, FUEL OUTLET, FEED PUMP	1
9	I1-15759-0010	GASKET; EYE BOLT, OUTLET, FUEL FEED PUMP	2
10	I1-15759-0030	ADAPTER; EYE BOLT, FUEL FEED PUMP	1
11(A)	I5-15759-0270	BOLT; EYE, FUEL INL, FEED PUMP	1
12	I1-15759-0010	GASKET; EYE BOLT, INL, FUEL FEED PUMP	2
15	I8-97138-6470	HOUSING; FUEL FEED PUMP	1
16	I1-15752-0010	PISTON; FUEL FEED PUMP	1
17	I9-81351-3030	SPRING; PISTON, FUEL FEED PUMP	1
18	I1-15759-0420	GASKET; PISTON PLUG, FUEL FEED PUMP	1
19	I8-94171-1850	PLUG; PISTON SPRING, FUEL FEED PUMP	1
56	I8-97115-9910	PUSH ROD	1

silverhorn.co.uk

COUPLING; INJECTION PUMP

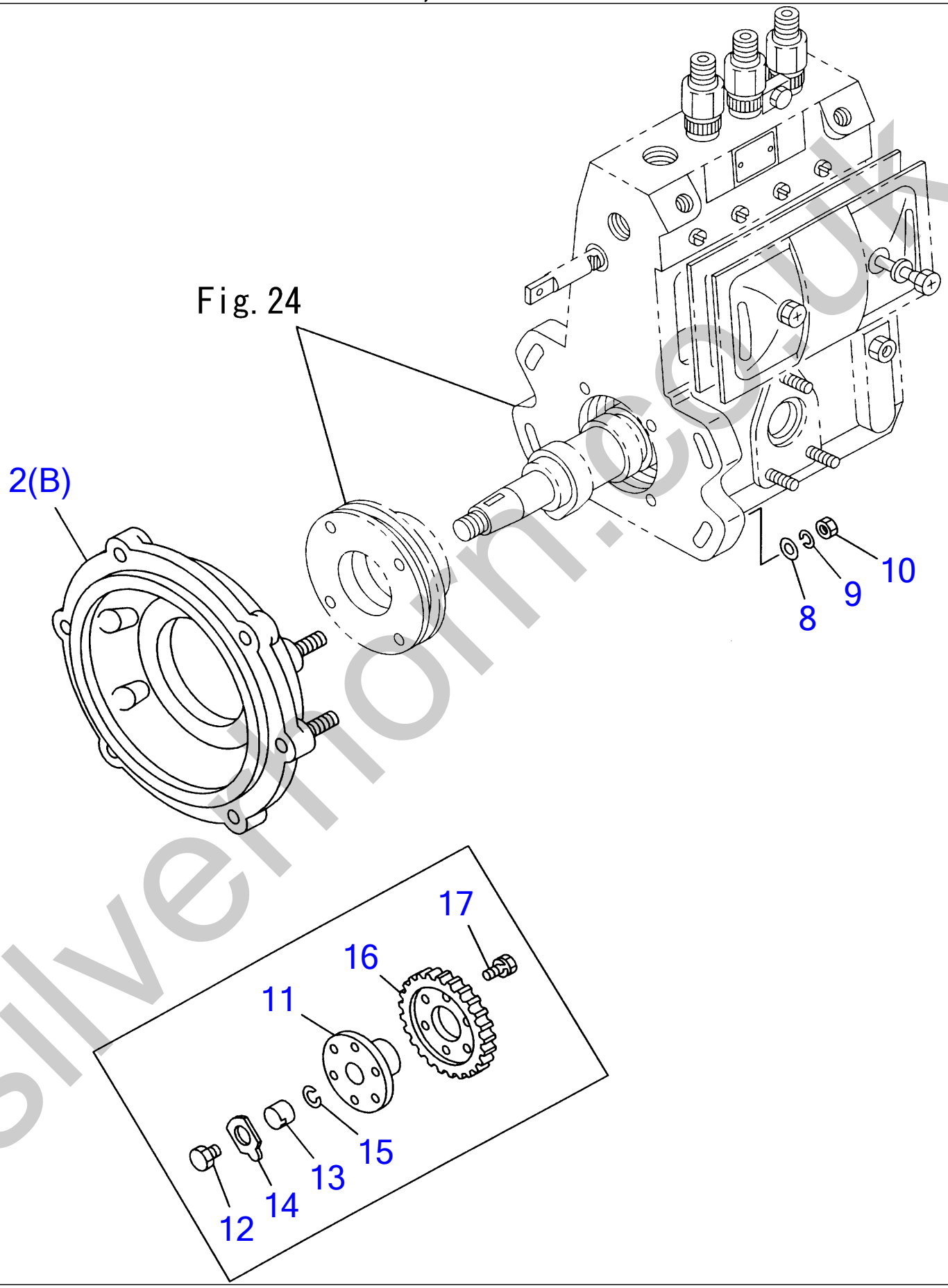

silverthorn.co.uk

COUPLING; INJECTION PUMP

Item	Part No	Description	Qty
2(B)	I8-97306-0550	BRACKET; HSG & TIMER, INJ PUMP	1
8	I9-09164-5100	WASHER; PL, HSG BRKT, INJ PUMP	4
9	I9-09150-6100	WASHER; LK, HSG BRKT, INJ PUMP	4
10	I5-15639-0020	NUT; HSG BRKT, INJ PUMP	4
11	I8-97257-1920	COUPLING; INJ PUMP DRIVE	1
12	I9-09662-0070	BOLT; COUPLING FIX, INJ PUMP	1
13	I1-15789-0940	NUT; COUPLING FIX, INJ PUMP	1
14	I5-09539-0020	PLATE; LK, COUPLING FIX, INJ PUMP	1
15	I9-88410-2640	WASHER; COUPLING FIX, INJ PUMP	1
16	I8-94324-3391	GEAR; COUPLING	1
17	I8-94457-5170	BOLT; GEAR TO COUPLING	6

silverhorn.co.uk

SUB TANK

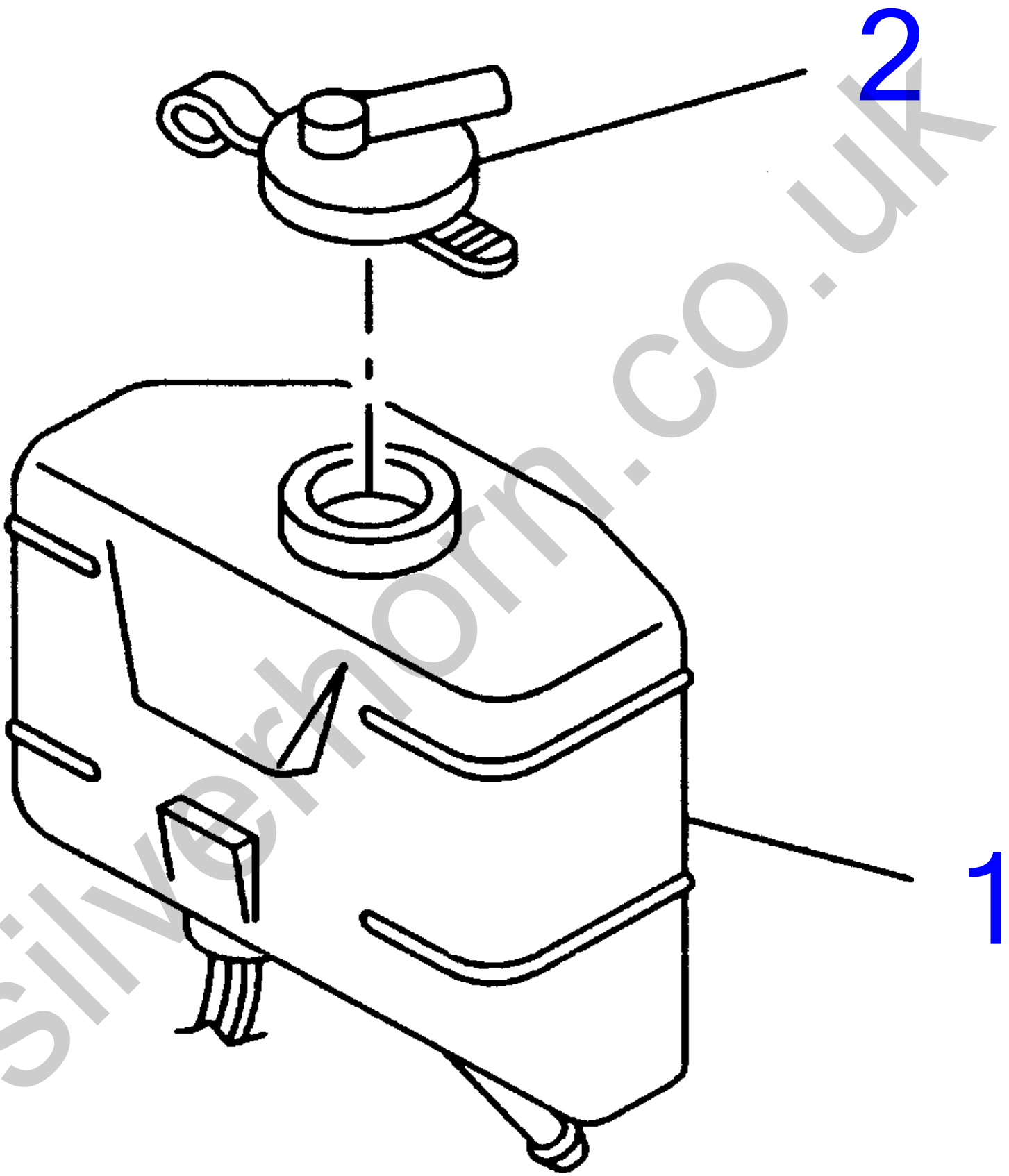

silverhorn.co.uk

SUB TANK

Item	Part No	Description	Qty
1	I8-94440-9690	TANK; SURGE, RAD	1
2	I8-94449-3630	CAP; SURGE TANK	1

silverhorn.co.uk

FUEL TANK

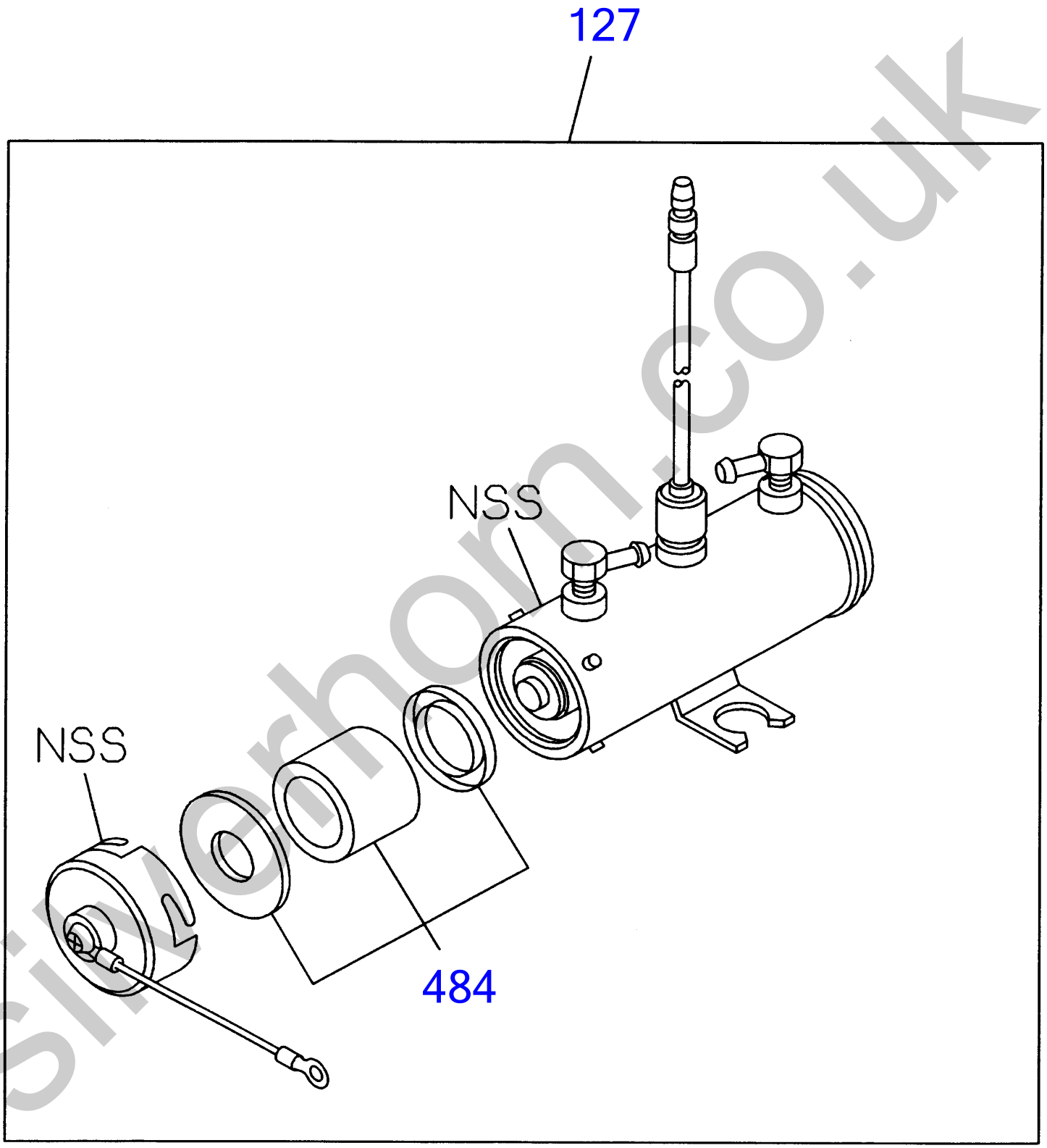

silverhorn.co.uk

FUEL TANK

Item	Part No	Description	Qty
127	I8-97039-8340	PUMP ASM; FUEL, ELEC	1
484	I8-94337-0220	REPAIR KIT; FUEL PUMP	1

silverhorn.co.uk

WATER SEDIMENTER; FUEL

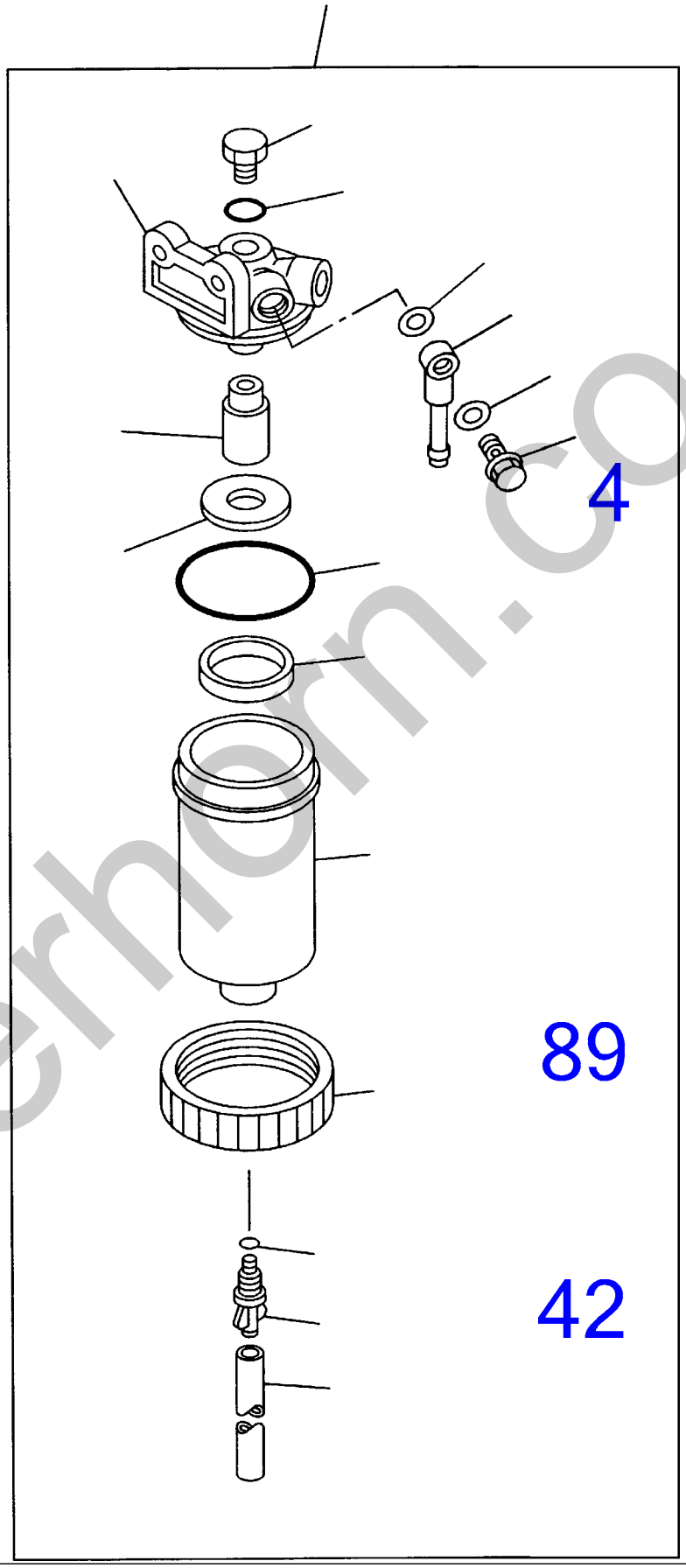

silverhorn.co.uk

WATER SEDIMENTER; FUEL

Item	Part No	Description	Qty
1(B)	I8-97218-6470	SEDIMENTER; FUEL	1
4	I8-97289-1170	COVER; UPR, SEDIMENTER ASM	1
5	I8-94155-1830	GASKET; UPR COVER, SEDIMENTER	1
7	I8-97213-4730	PLUG; DRAIN, SEDIMENTER	1
9	I8-97213-4740	GASKET; DRAIN PLUG & CONNECTOR	1
34	I8-97289-1320	PLUG; DRAIN, FUEL FILTER	1
35	I8-97289-1330	GASKET; DRAIN PLUG	1
36	I8-97289-1310	RING; BODY TO CASE	1
38	I8-97289-1250	FLOAT; SEDIMENTER	1
39	I8-97289-1360	HOSE; SEDIMENTER	1
42	I8-97289-1340	PLATE; BAFFLE	1
44	I5-15411-2250	PIPE; FUEL, SEDIMENTER	2
56	I8-97289-1180	CASE; FUEL SEDIMENTER	1
73	I9-09572-0140	GASKET; EYE JOINT	4
77	I9-09906-3251	JOINT; EYE, FUEL SEDIMENTER	1
89	I8-97289-1350	ADAPTER	1

silverhorn.co.uk

AIR CLEANER ASM.

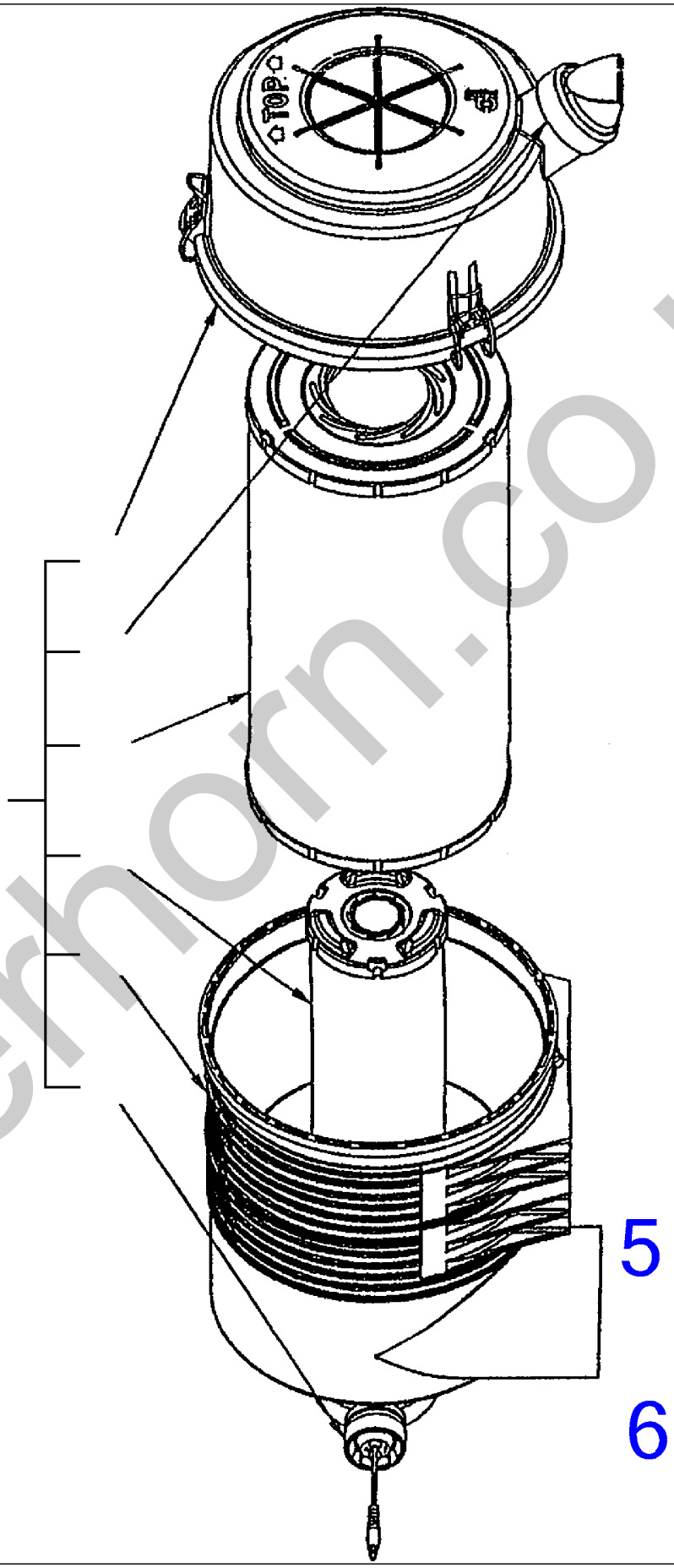

silverhorn.co.uk

AIR CLEANER ASM.

Item	Part No	Description	Qty
1	IF-18406001-F	AIR CLEANER ASM.	1
2	not service	BODY ASSY	1
3	IF-10604002-F	ELEMENT ASSY, INNER	1
4	IF-10604003-F	ELEMENT ASSY, OUTER	1
5	IF-10704002-F	COVER ASSY	1
6	IF-10704003-F	VACUATOR VALVE	1
7	IF-10704004-F	INDICATOR KIT	1

silverhorn.co.uk

RADIATOR ASM.

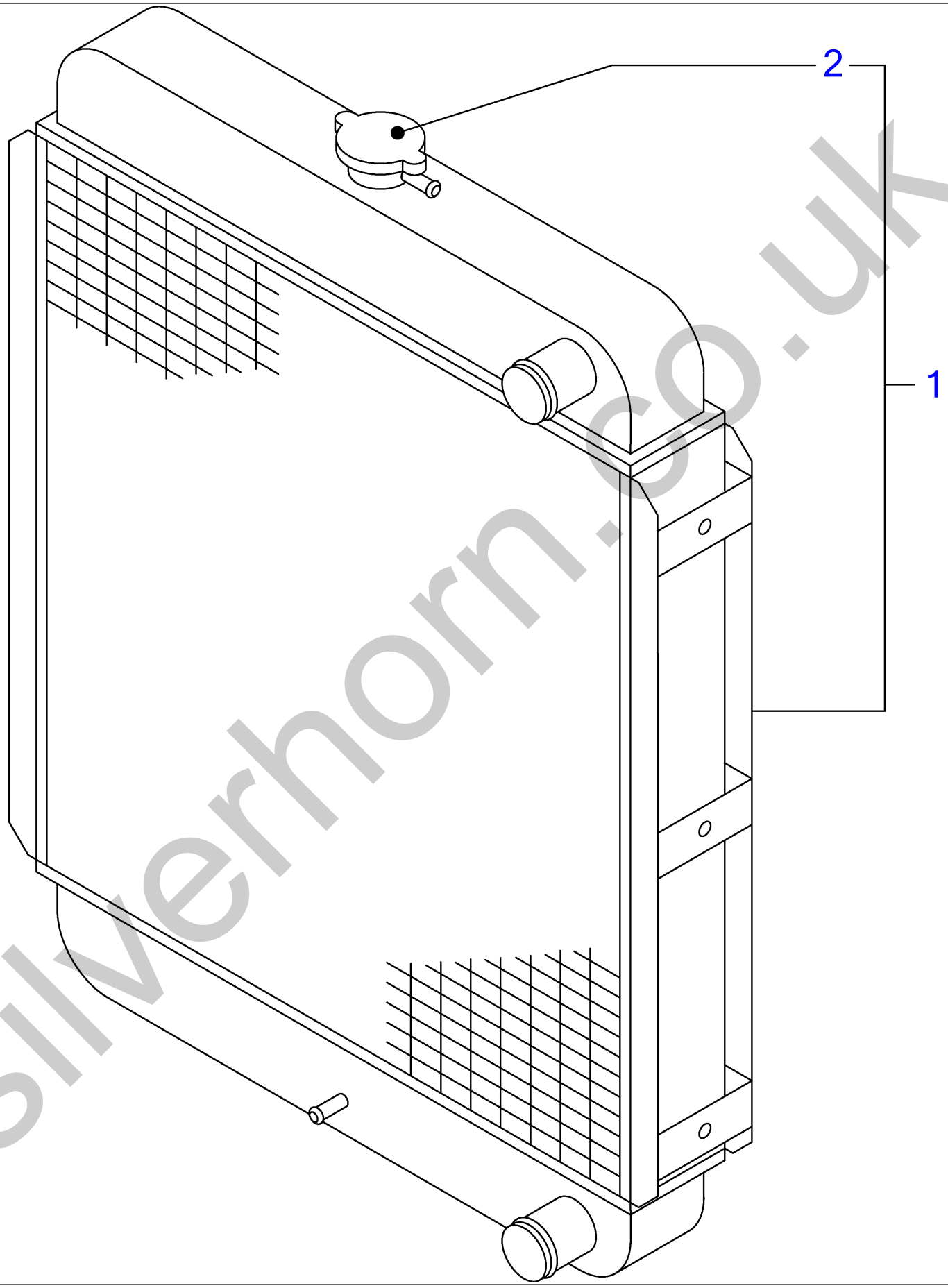

silverhorn.co.uk

RADIATOR ASM.

Item	Part No	Description	Qty
1	IF-18406008-F	RADIATOR ASM.	1
2	IF-10804001-F	CAP	1

silverhorn.co.uk