PARTS MANUAL

TL220

Serial No. 222000001~

BU0Z001(P-TL220BAB)

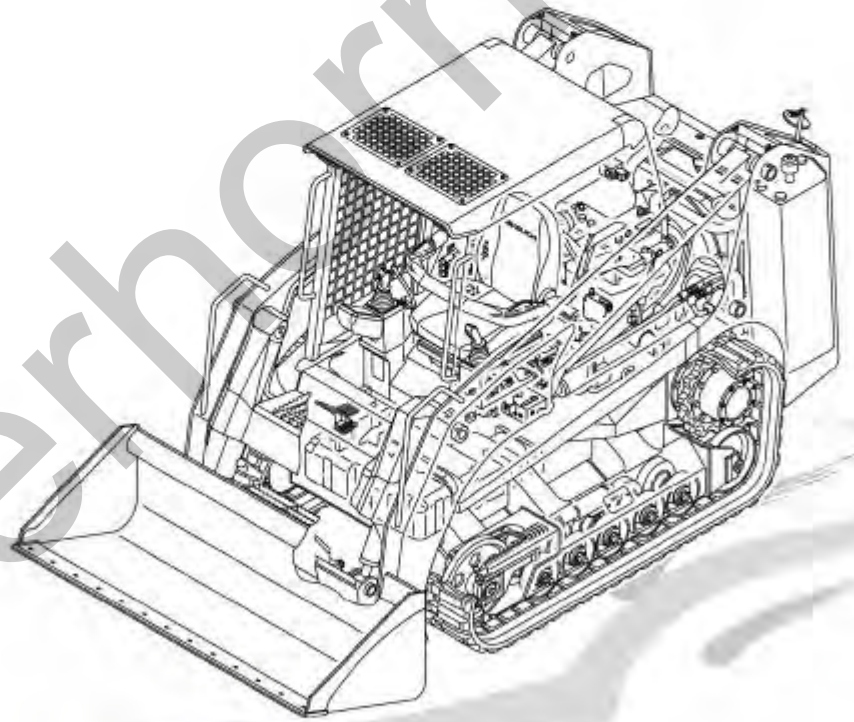

CRAWLER LOADER

TAKEUCHI

silverhorn.co.uk

silverhorn.co.uk

INDEX

Item	Part number	Description	Q'ty	Chan.	Serial No.	Serv.	Remarks
1		UNDERCARRIAGE					
2		MAIN FRAME & CONTROL LEVER					
3		ENGINE & ELECTRICAL SYSTEM					
4		HYDRAULIC PIPNG & TANK					
5		COVER & CAB					
6		ATTACHMENT					
7		DECAL & TOOL					
8		HYDRAULIC DEVICE					
10		ENGINE(4TNV84T-ZKTBL)					
		2008.09.12 RV-1					
		CODE 06500-00400					
99		Kits, Attachments and Quick Reference					

silverhorn.co.uk

TRACK ROLLER B

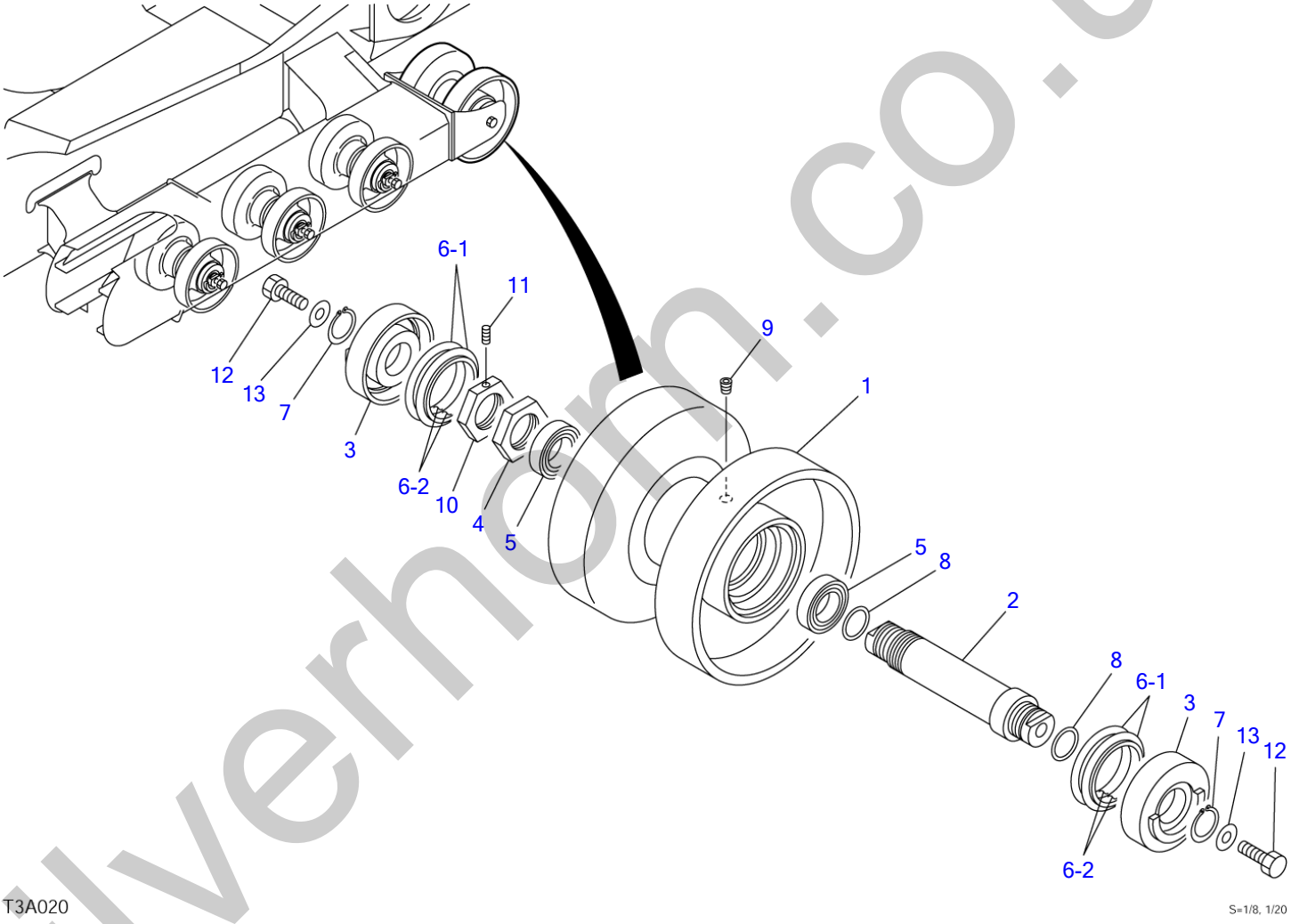

silverhorn.co.uk

TRACK ROLLER B

Item	Part number	Description	Q'ty	Chan.	Serial No.	Serv.	Remarks
		ROLLER ASSY, track					
0-1	0880135100	ROLLER SUB ASSY, track	2				
1	0880135200	・ROLLER	1				
2	0880133300	・SHAFT	1				
3	0880132400	・COVER	2				
4	0880133500	・NUT	1				
5	1305000004	・BEARING	2				
6	1432500660	・SEAL, floating	2				
6-1	1432500661	・・O-RING	2				
6-2	1432500662	・・RING, seal	2				
7	1220000035	・RING, retaining	2				
8	1420100300	・O-RING	2				
9	1501810001	・PLUG	1				
10	0880133600	・NUT	1				
11	1121340608	・SET-SCREW	1				
12	1100051645	BOLT	4				
13	1141540016	WASHER	4				
	U0a020						

silverhorn.co.uk

FRONT IDLER

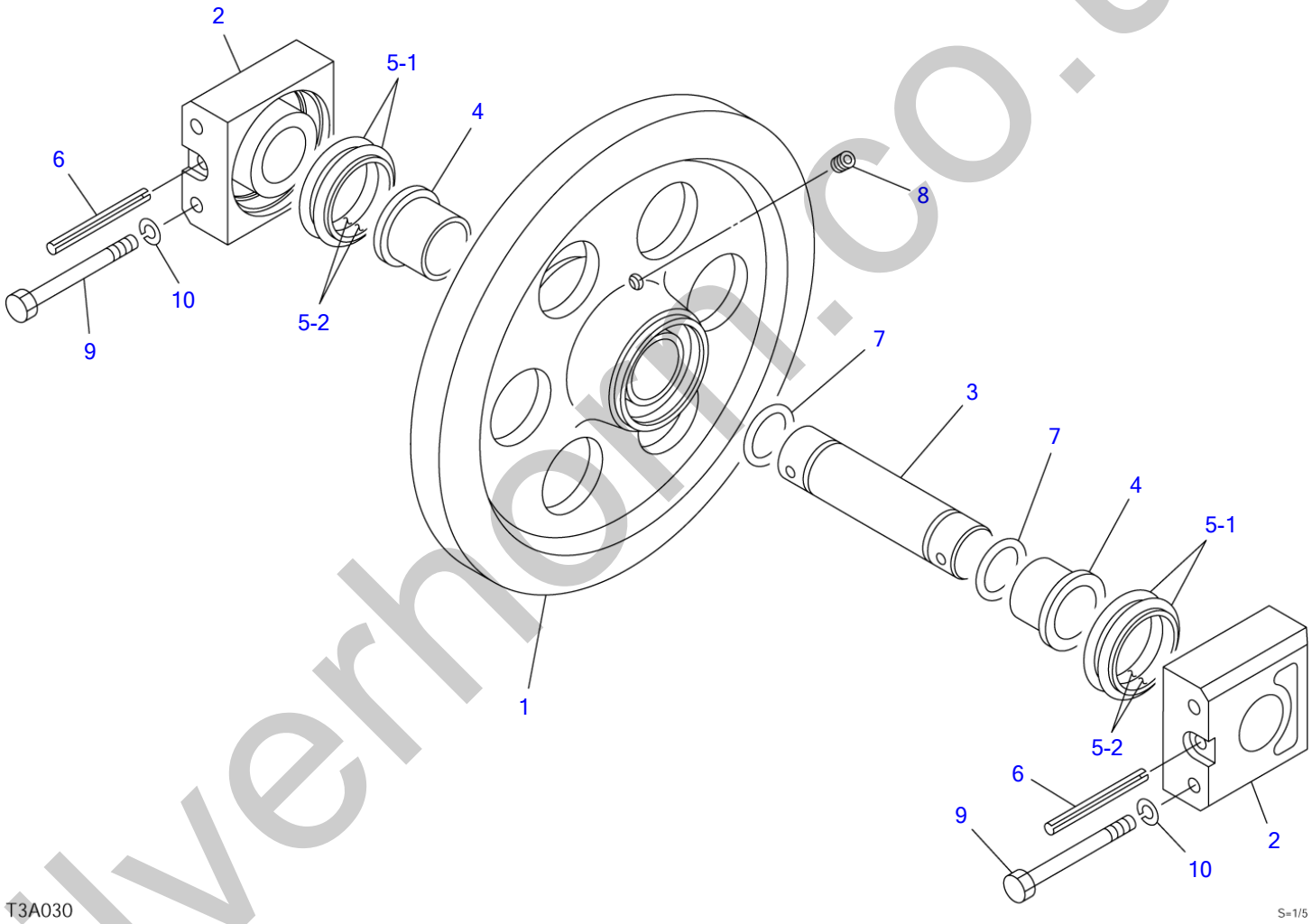

silverhorn.co.uk

FRONT IDLER

Item	Part number	Description	Q'ty	Chan.	Serial No.	Serv.	Remarks
		IDLER ASSY, front					
0-1	0651400100	IDLER SUB ASSY, front	2				
1	0651400110	・IDLER	1				
2	0651400120	・COVER	2				
3	0651400130	・SHAFT	1				
4	1333064039	・BUSHING	2				
5	1432500640	・SEAL, floating	2				
5-1	1432500641	・・O-RING	2				
5-2	1432500642	・・RING, seal	2				
6	1213001085	・PIN, spring	2			M	
7	1420100350	・O-RING	2				
8	1501820001	・PLUG	1				
9	1101041235	BOLT	8			M	
10	1140020012	WASHER, spring	8				
	U0a030						

silverhorn.co.uk

TRACK ADJUSTER

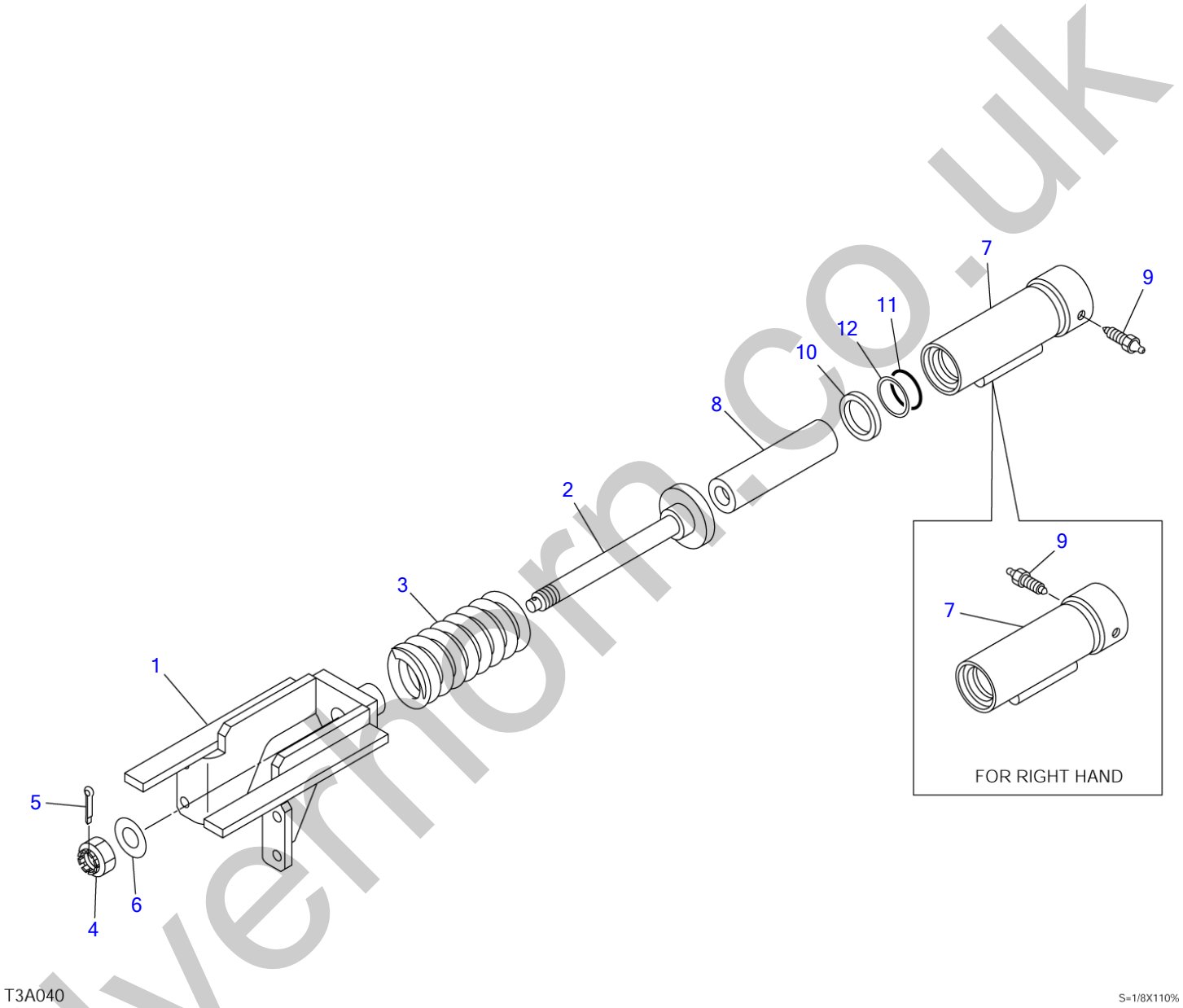

silvermorn.co.uk

TRACK ADJUSTER

Item	Part number	Description	Q'ty	Chan.	Serial No.	Serv.	Remarks
		SPRING ASSY (L.H.)					
		SPRING ASSY (R.H.)					
0-1	0651500100	SPRING SUB ASSY	2				
1	0651500110	・YOKE	1				
2	0880152120	・ROD	1				
3	0007000004	・SPRING	1				
4	1132030024	・NUT	1				
5	1210000545	・PIN, split	1				
6	1141550024	・WASHER	1				
0-2	0651500200	CYLINDER ASSY (L.H.)	1				
	0651500300	CYLINDER ASSY (R.H.)	1				
7	0651500210	・CYLINDER, grease (L.H.)	1				
	0651500310	・CYLINDER, grease (R.H.)	1				
8	0651500220	・PISTON	1				
9	1541300501	・VALVE ASSY, check	1				
10	1400402640	・SEAL, oil	1				
11	1422010450	・O-RING	1				
12	1421020450	・RING, back-up	1				
	U0a041						

silverhorn.co.uk

TRAVEL DEVICE

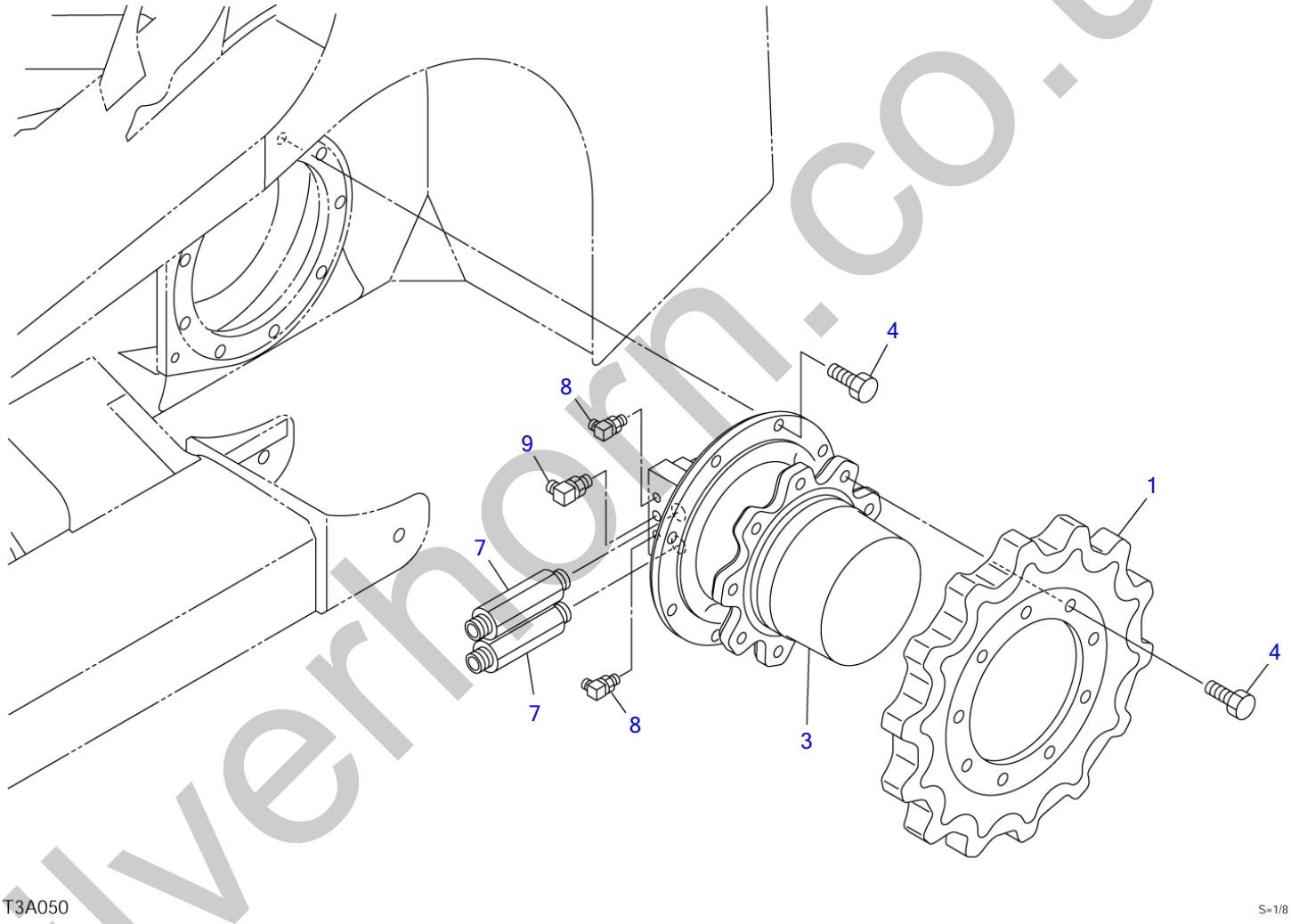

silverhorn.co.uk

TRAVEL DEVICE

Item	Part number	Description	Q'ty	Chan.	Serial No.	Serv.	Remarks
		MOTOR ASSY, travel					
1	0651600010	SPROCKET	2				
3	1903127800	MOTOR, travel	2			M	
4	1100041635	BOLT	36				
7	0882160140	ADAPTOR	4				
	1420010240	・O-RING	1				
8	1515012040	ELBOW	4				
	1420010110	・O-RING	1				
9	1515012041	ELBOW	2				
	1420010140	・O-RING	1				
	U0a050						

silverhorn.co.uk

CRAWLER BELT

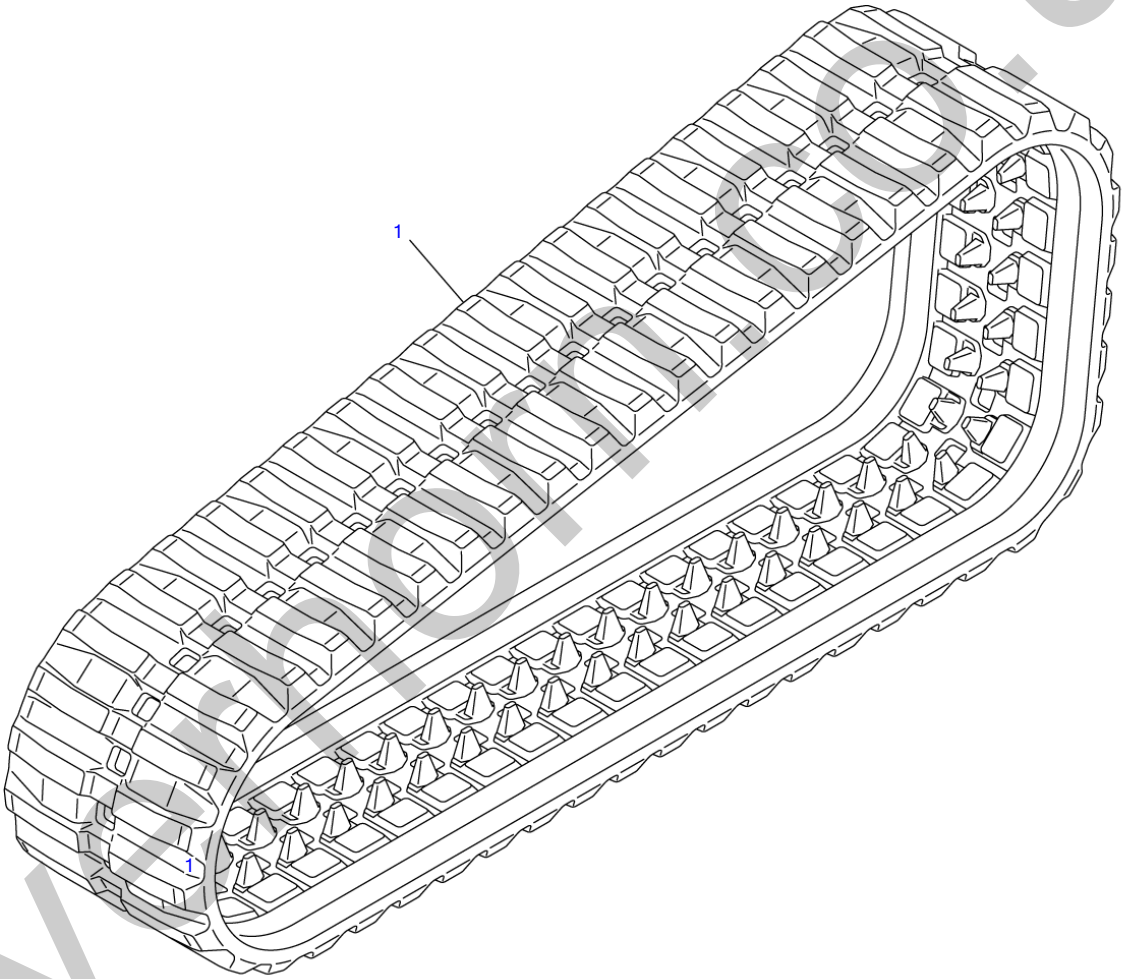

T7A060

S=1/12

silvermoor.co.uk

CRAWLER BELT

Item	Part number	Description	Q'ty	Chan.	Serial No.	Serv.	Remarks
1	1914301310	BELT, rubber crawler	2				
	1914301320	BELT, RUBBER CRAWLER 9FLAT TREAD PATTERN)	2				
	U0A060						

silverhorn.co.uk

FRAME

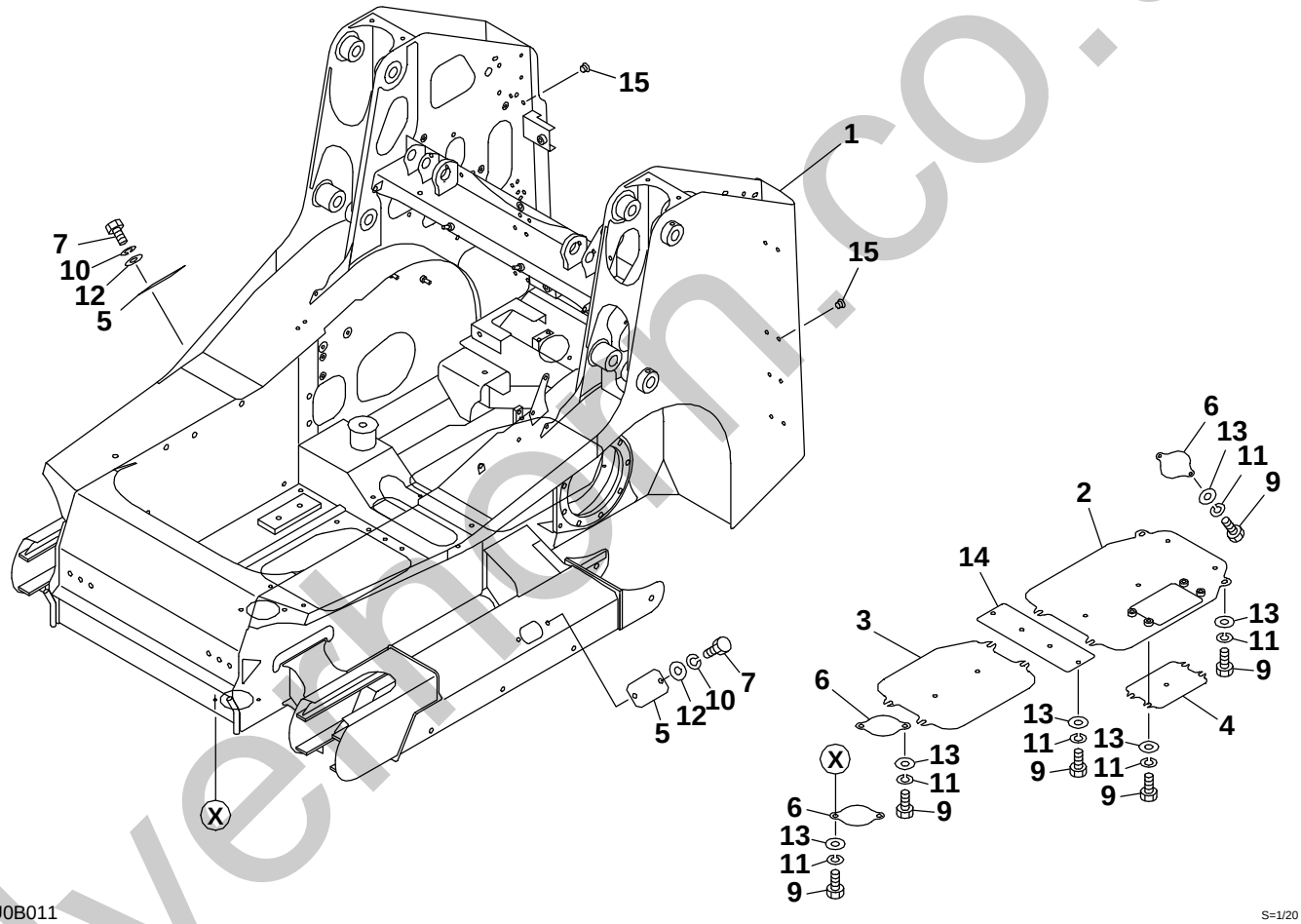

U0B011

S=1/20

silverthorn.co.uk

FRAME

Item	Part number	Description	Q'ty	Chan.	Serial No.	Serv.	Remarks
		TURNTABLE ASSY					
1	X 0653003100	FRAME	1			M	
2	0653001010	COVER	1				
3	0653000020	COVER	1				
4	0653001030	COVER	1				
5	0331018600	COVER	2				
6	0881302095	COVER	3				
7	1100040816	BOLT	4				
9	1100041020	BOLT	20				
10	1140020008	WASHER, spring	4				
11	1140020010	WASHER, spring	20				
12	1141110008	WASHER	4				
13	1141110010	WASHER	20				
14	0653000040	COVER	1				
15	1652533021	CAP	16				
	U0b011						

silverhorn.co.uk

ARM STOPPER

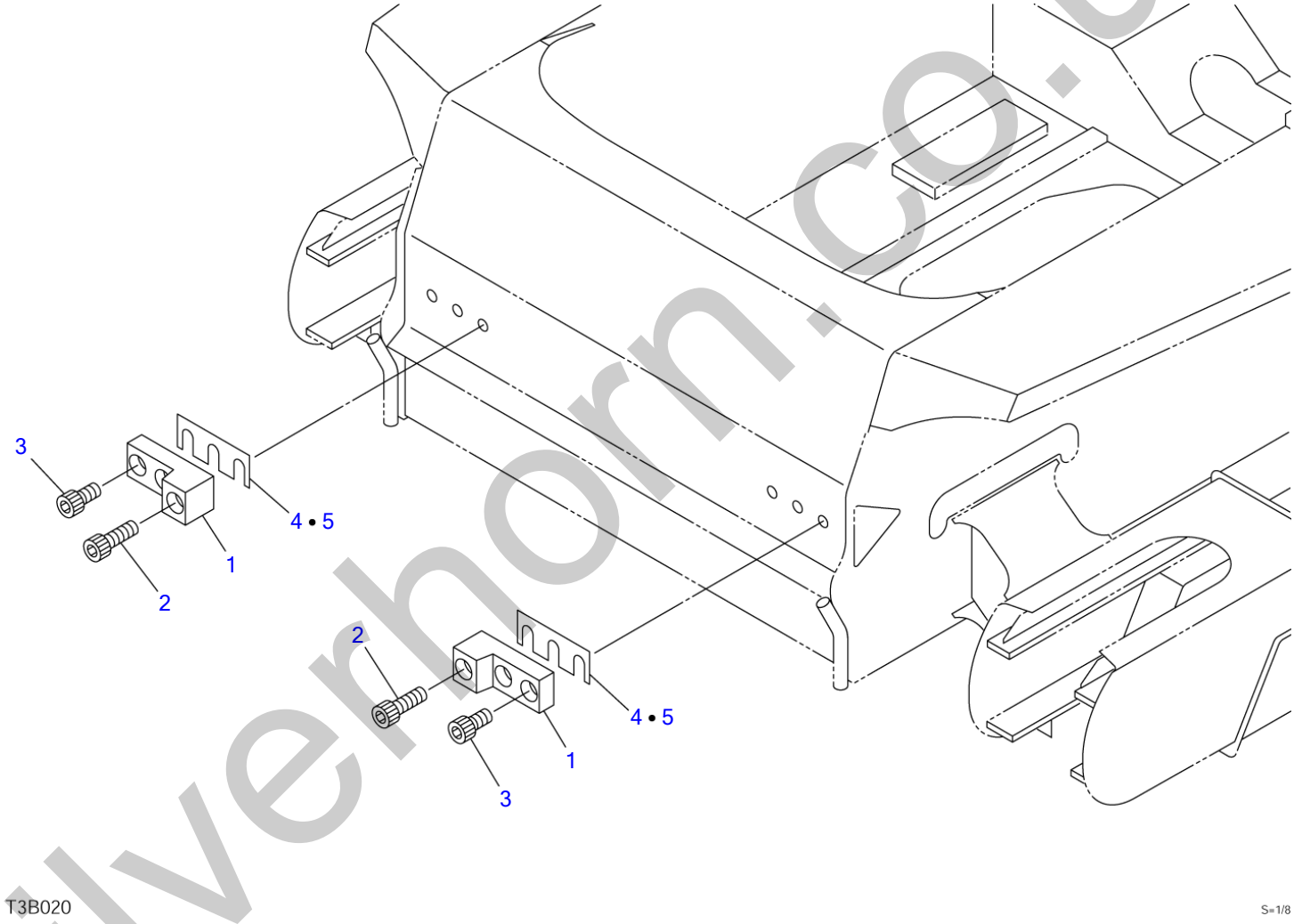

silverhorn.co.uk

ARM STOPPER

Item	Part number	Description	Q'ty	Chan.	Serial No.	Serv.	Remarks
		STOPPER ASSY					
1	0880604910	STOPPER	2				
2	1110041660	SCREW, cap	2				
3	1110041645	SCREW, cap	4				
4	0880606950	SHIM	AR				t=0.5mm
5	0880604950	SHIM	AR				t=1.0mm
	T3b020						

silverhorn.co.uk

HOOK

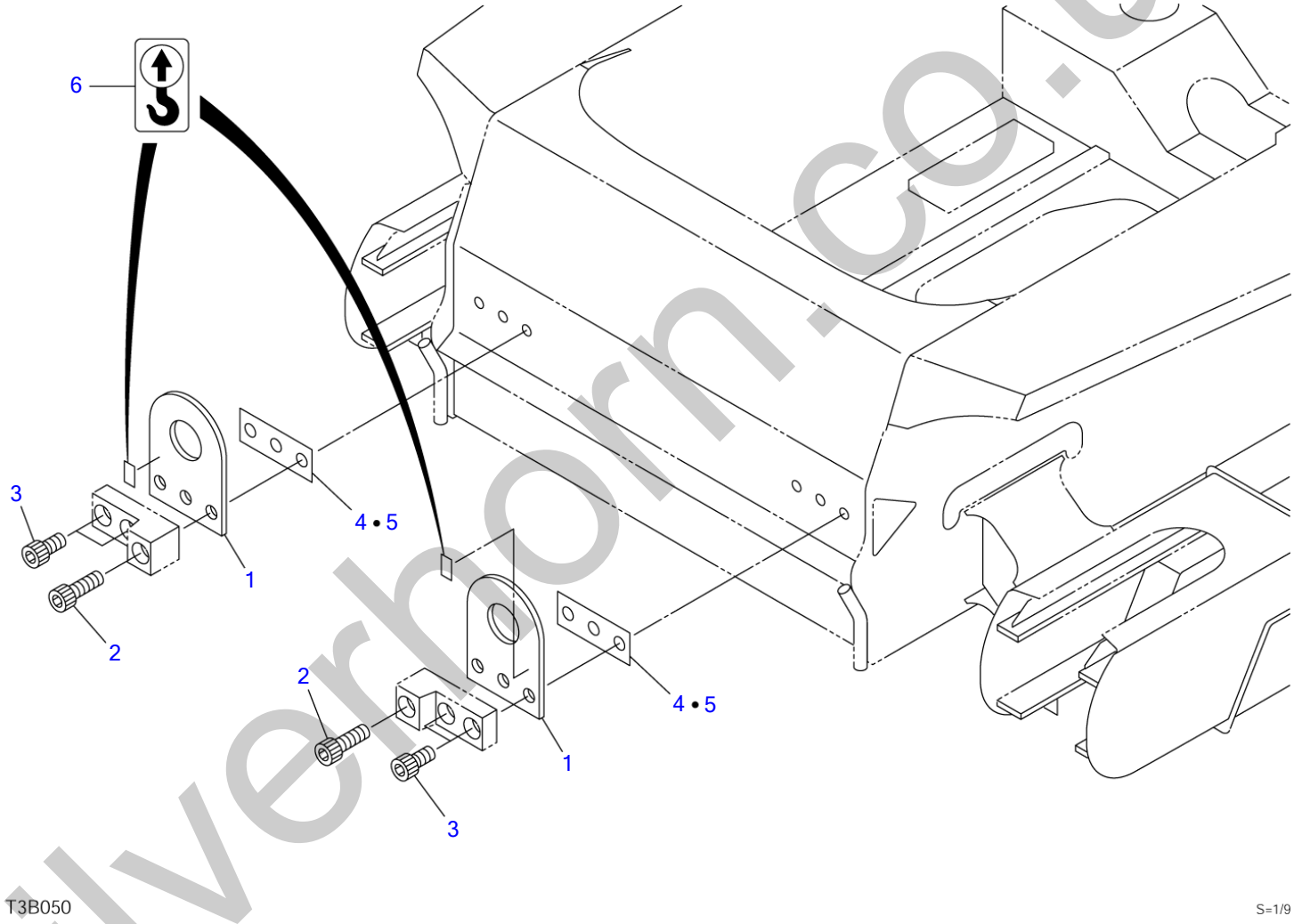

silverhorn.co.uk

HOOK

Item	Part number	Description	Q'ty	Chan.	Serial No.	Serv.	Remarks
		HOOK ASSY					
1	0653002010	HOOK	2				
2	1110041670	SCREW, cap	2				
3	1110041645	SCREW, cap	4				
4	0880606950	SHIM	AR				t=0.5mm
5	0880604950	SHIM	AR				t=1.0mm
6	0399300500	DECAL	2				
	U0b020						

silverhorn.co.uk

OPERATION LEVER & STAND

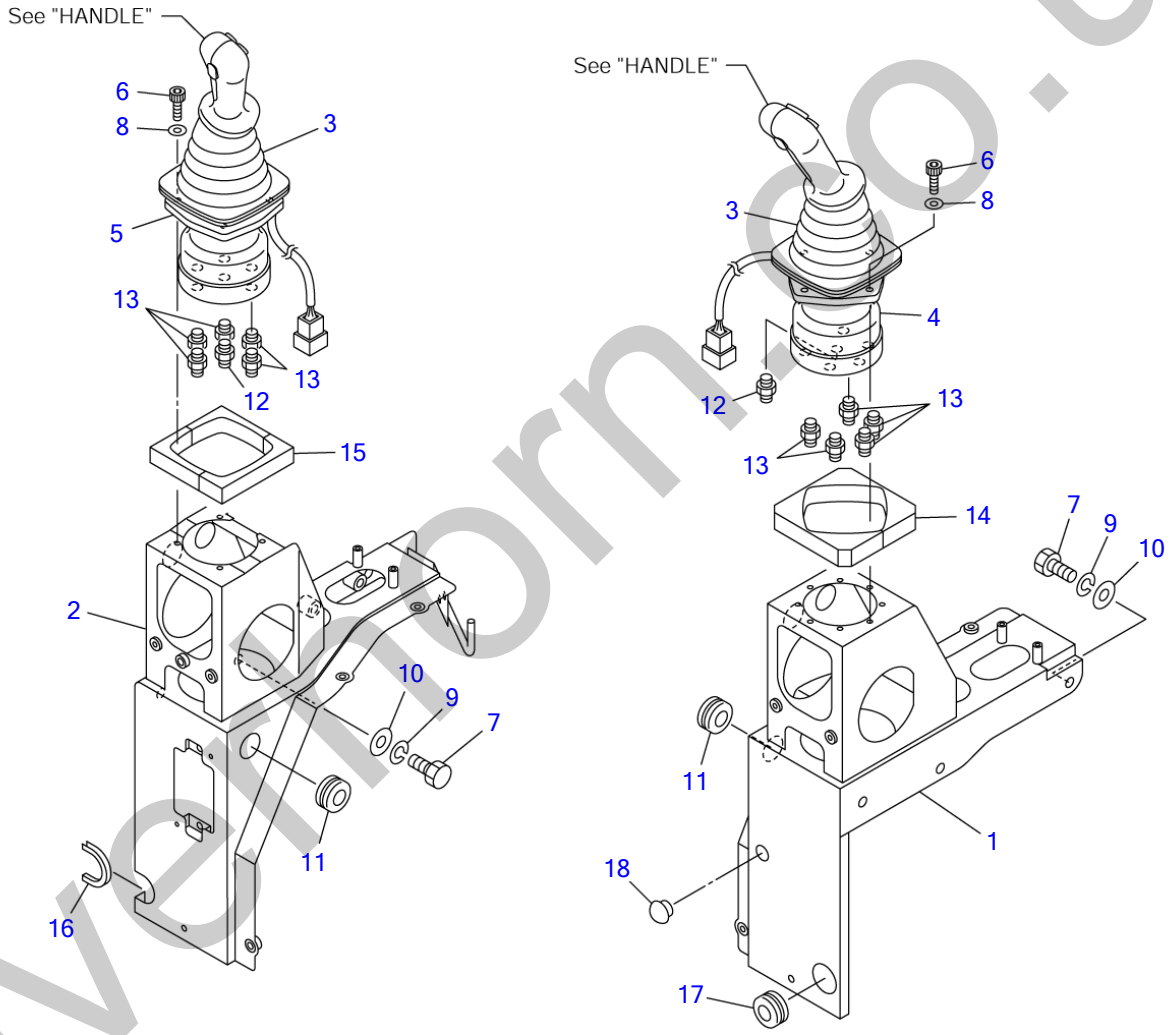

silverthorn.co.uk

OPERATION LEVER & STAND

Item	Part number	Description	Q'ty	Chan.	Serial No.	Serv.	Remarks
		VALVE ASSY					
1	0655100600	BRACKET (L.H.)	1			M	
2	0655100750	BRACKET (R.H.)	1			M	
3	0881510020	BOOT	2				
4	1901747900	VALVE ASSY (L.H.)	1				
5	1901747800	VALVE ASSY (R.H.)	1				
6	1110040625	SCREW, cap	8				
7	1100041020	BOLT	6				
8	1141110006	WASHER	8				
9	1140020010	WASHER, spring	6				
10	0003600020	WASHER	6				
11	1652053001	GROMMET	2				
12	1512370008	ADAPTOR (with filter)	2				
	1420010110	・O-RING	1				
13	1515600200	ADAPTOR	10				
	1420010110	・O-RING	1				
14	0655100014	SPONGE	1				
15	0655100015	SPONGE	1				
16	1653916011	TRIM	1				sold by the meter
17	1652053600	GROMMET	1				
18	1652533023	CAP	1				
	U0b030						

silverhorn.co.uk

PIPING; OPERATION LEVER

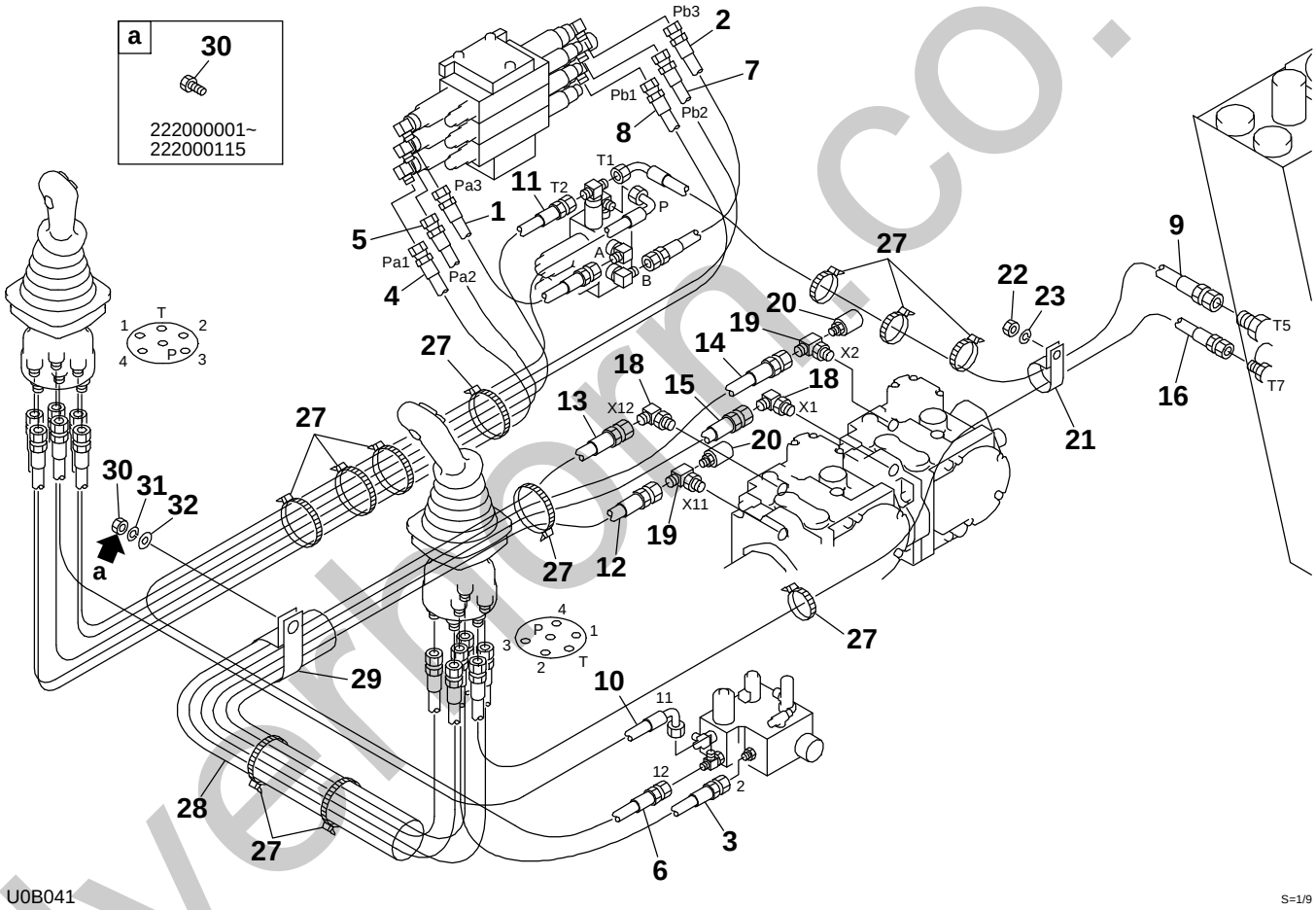

silverthorn.co.uk

OPERATION LEVER & STAND (multi-functional grip type)

Item	Part number	Description	Q'ty	Chan.	Serial No.	Serv.	Remarks
		PIPING ASSY					
1	0657100010	HOSE ASSY	1				18010-22032
2	0657100020	HOSE ASSY	1				18010-22048
3	0657100030	HOSE ASSY	1				18010-22044
4	0657101040	HOSE ASSY	1			M	18010-22080
5	0657100050	HOSE ASSY	1				18010-22084
6	0657100060	HOSE ASSY	1				18010-52122
7	0657100070	HOSE ASSY	1				18010-22114
8	0657100080	HOSE ASSY	1				18010-22114
9	0657100090	HOSE ASSY	1				18010-52144
10	0657100100	HOSE ASSY	1				18010-52098
11	0657100110	HOSE ASSY	1				18010-22080
12	0657100120	HOSE ASSY	1				
13	0657100130	HOSE ASSY	1				
14	0657100140	HOSE ASSY	1				
15	0657100150	HOSE ASSY	1				
16	0657100160	HOSE ASSY	1				
18	1512375006	ELBOW	2				
	1420310906	・O-RING	1				
19	1512330005	ELBOW	2				
	1420310906	・O-RING	1				
20	1700100015	SWITCH, pressure	2				
21	0007300030	CLAMP	1			M	
22	1130040010	NUT	1				
23	1140020010	WASHER, spring	1				
27	1652241300	BAND	11				
28	1531645063	PROTECTOR	1				sold by the meter
29	0007300044	CLAMP	1				
30	1100040820	BOLT	1				
	1130040008	NUT	1				
31	1140020008	WASHER, spring	1				
32	1141110008	WASHER	1				
	U0b041						

silverhorn.co.uk

ENGINE & ACCESSORIES (1/4)

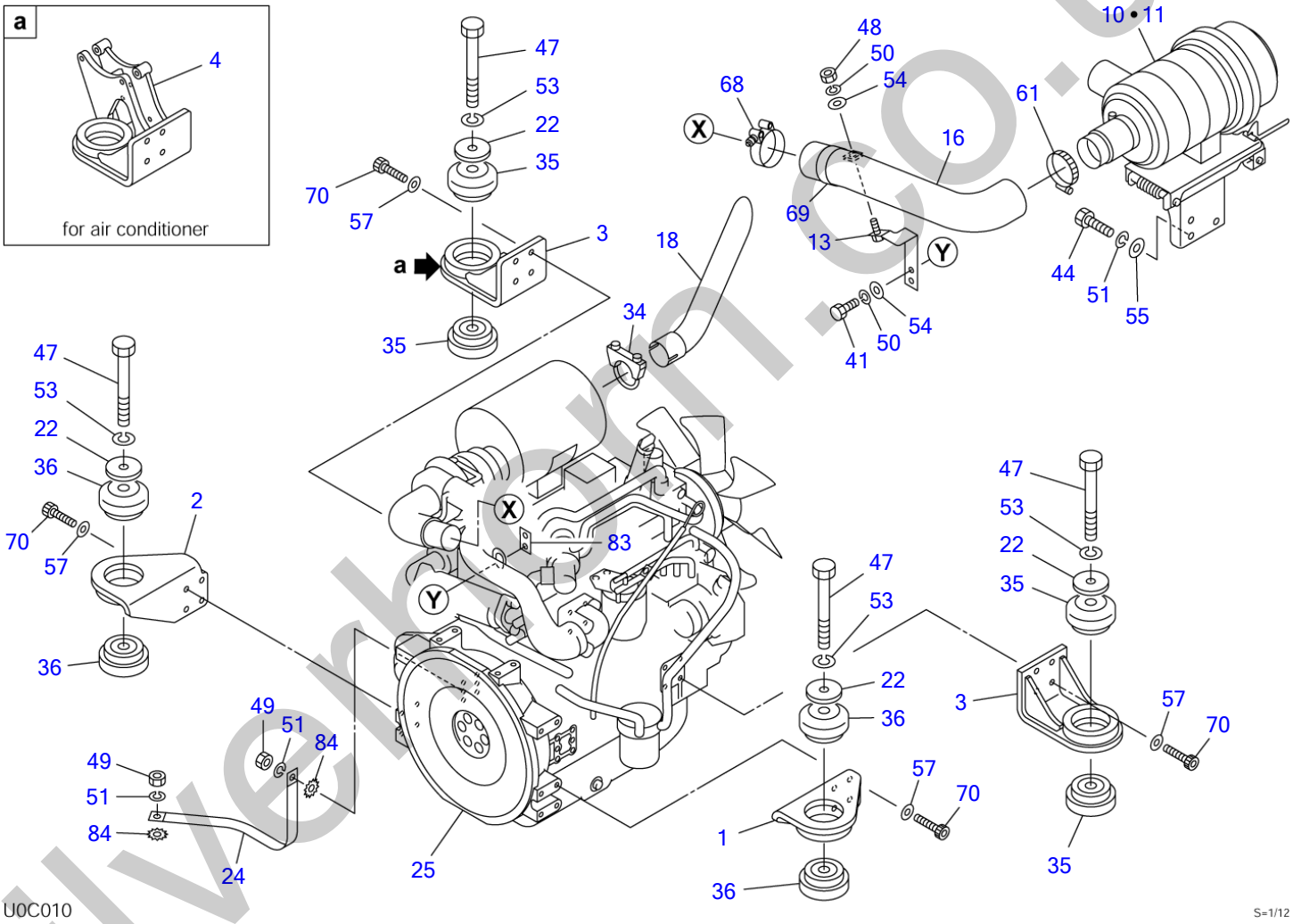

silverhorn.co.uk

ENGINE & ACCESSORIES (1/4)

Item	Part number	Description	Q'ty	Chan.	Serial No.	Serv.	Remarks
		ENGINE ASSY (for US) ENGINE ASSY (for EU) ENGINE ASSY (for US, with air conditioner) ENGINE ASSY (for EU, with air conditioner)					
1	0654000100	FOOT, engine (F.L.)	1				
2	0654002420	FOOT, engine (F.R.)	1			M	
3	0654000710	FOOT, engine (R.H.)	2				
	0654000710	FOOT, engine (R.H.)	1				with air conditioner
4	0654001100	FOOT, engine (R.R.)	1				with air conditioner
10	0654002750	PRECLEANER ASSY (for US)	1			M	see page (4/4)
11	0654002700	CLEANER ASSY, air (for EU)	1			M	see page (4/4)
13	0654002460	BRACKET	1			M	
16	0654002470	HOSE	1			M	
18	0654000610	PIPE	1				
22	0882400190	WASHER	4				
24	1702402002	CABLE	1			M	
25	1910265001	ENGINE	1			M	4TNV84T-ZKTBL
34	1533300048	CLAMP	1				
35	1651030004	RUBBER, cushion	4				
36	1651030012	RUBBER, cushion	4				
41	1100040830	BOLT	2				
44	1100041025	BOLT	3				
47	1101141640	BOLT	4				
48	1130040008	NUT	1				
49	1130040010	NUT	2				
50	1140020008	WASHER, spring	3				
51	1140020010	WASHER, spring	5				
53	1140020016	WASHER, spring	4				
54	1141110008	WASHER	3				
55	1141110010	WASHER	3				
57	1141550010	WASHER	16				
61	1533700080	BAND	1			M	
68	1533701250	BAND	1				
69	0881964241	CLAMP	1			M	
70	1110021030	SCREW, cap	16				
83	0684000600	PLATE	1			M	
84	1140330010	WASHER	2				
	U0c011						

silverhorn.co.uk

ENGINE & ACCESSORIES (2/4)

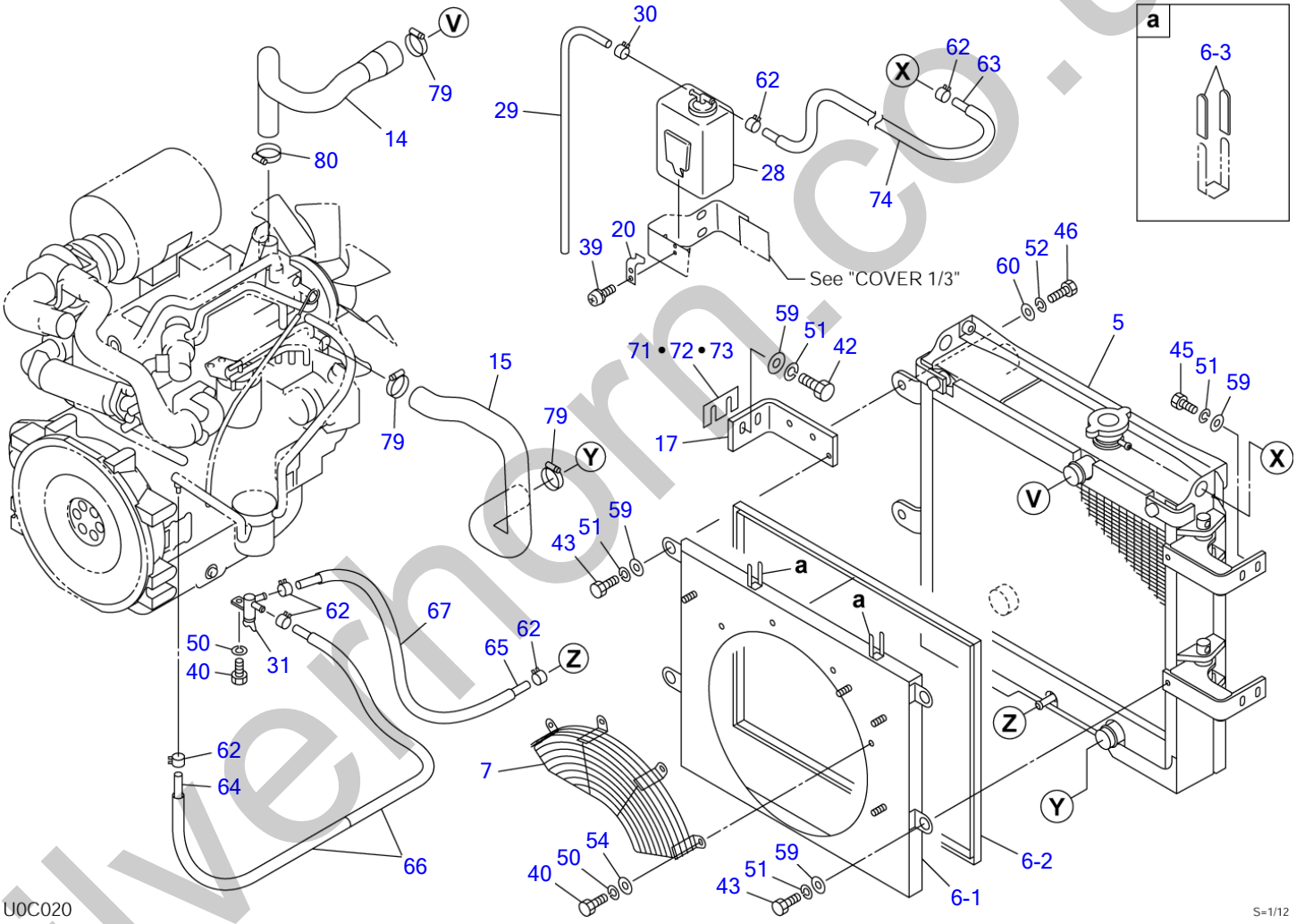

silverhorn.co.uk

ENGINE & ACCESSORIES (2/4)

Item	Part number	Description	Q'ty	Chan.	Serial No.	Serv.	Remarks
		ENGINE ASSY (for US) ENGINE ASSY (for EU) ENGINE ASSY (for US, with air conditioner) ENGINE ASSY (for EU, with air conditioner)					
5	0654002600	RADIATOR ASSY	1			M	see page (3/4)
6	0654002800	SHROUD ASSY	1			M	
6-1	0654002810	・SHROUD	1			M	
6-2	1654606220	・TRIM	1			M	sold by the meter
6-3	0872433150	・TUBE	4				
7	0654002450	GUARD	1			M	
14	0654002140	HOSE	1			M	
15	0654000150	HOSE	1				
17	0654002480	BRACKET	2			M	
20	0880406110	PLATE	1				
28	1910146020	TANK, sub	1				Y129466-44510
29	1910161013	HOSE	1				Y105840-59100
30	1533120508	BAND	1				
31	1910078037	VALVE	1				Y129150-49100
39	1150120410	SCREW	2				
40	1100040816	BOLT	5				
42	1100041035	BOLT	4				
43	1100041020	BOLT	4				
45	1100041030	BOLT	4				
46	1100041230	BOLT	2				
50	1140020008	WASHER, spring	5				
51	1140020010	WASHER, spring	12				
52	1140020012	WASHER, spring	2				
54	1141110008	WASHER	4				
59	0003600025	WASHER	12				
60	0003600136	SHIM	2				
62	1533120012	BAND	6				
63	1530808120	HOSE	1			M	sold by the meter
64	1530808130	HOSE	1				sold by the meter
65	1530808038	HOSE	1			M	sold by the meter
66	1531115060	HOSE	2				sold by the meter
67	1531115032	HOSE	1			M	sold by the meter
71	0880406610	SHIM	AR				t=1.6mm
72	0880406620	SHIM	AR				t=3.2mm
73	0880406630	SHIM	AR				t=4.5mm
74	1531115110	HOSE	1				sold by the meter
79	1533700057	BAND	3				
80	1533700045	BAND	1			M	
	U0c021						

silvernorn.co.uk

ENGINE & ACCESSORIES (3/4)

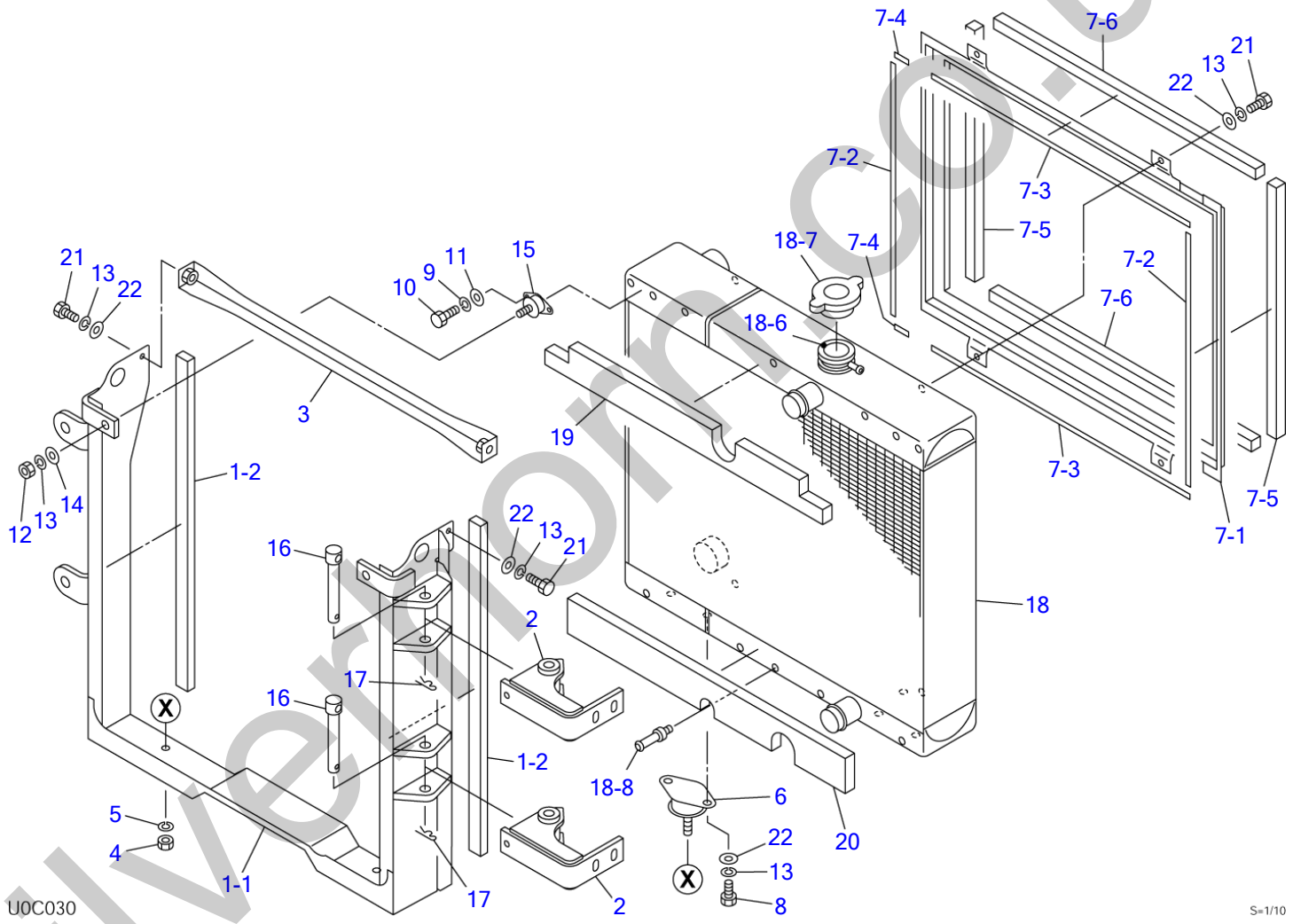

silvermorn.co.uk

ENGINE & ACCESSORIES (3/4)

Item	Part number	Description	Q'ty	Chan.	Serial No.	Serv.	Remarks
0-1	X **********	RADIATOR ASSY	1			M	
1	0654002610	・FRAME ASSY	1			M	
1-1	0654002620	・・FRAME	1			M	
1-2	1654343062	・・SPONGE	2				sold by the meter
2	0654002630	・HINGE	2			M	
3	0654002220	・STAY	1			M	
4	1130040010	・NUT	2				
5	1140020010	・WASHER, spring	2				
6	0881406050	・RUBBER, cushion	2				
7	0654000400	・COVER ASSY	1				
7-1	0654000410	・・COVER	1				
7-2	1654318049	・・SPONGE	2				sold by the meter
7-3	1654307056	・・SPONGE	2				sold by the meter
7-4	1654307003	・・SPONGE	2				sold by the meter
7-5	1654349048	・・SPONGE	2				sold by the meter
7-6	1654349059	・・SPONGE	2				sold by the meter
8	1100040816	・BOLT	4				
9	1140020006	・WASHER, spring	4				
10	1100040612	・BOLT	4				
11	1141110006	・WASHER	4				
12	1130040008	・NUT	2				
13	1140020008	・WASHER, spring	12				
14	0003600025	・WASHER	2				
15	1651021030	・RUBBER, cushion	2			M	
16	0881402180	・PIN	2				
17	1214000016	・PIN, snap	2				
18	1911300390	・RADIATOR & COOLER, oil	1			M	
18-6	1911300076	・・FITTING, hose	1				
18-7	1911300078	・・CAP, radiator	1				
18-8	1911300077	・・NIPPLE	1				
19	0654002230	・SPONGE	1			M	
20	0654002602	・SPONGE	1			M	
21	1100040820	・BOLT	6				
22	1141110008	・WASHER	10				
	U0c030						

silverhorn.co.uk

ENGINE & ACCESSORIES (4/4)

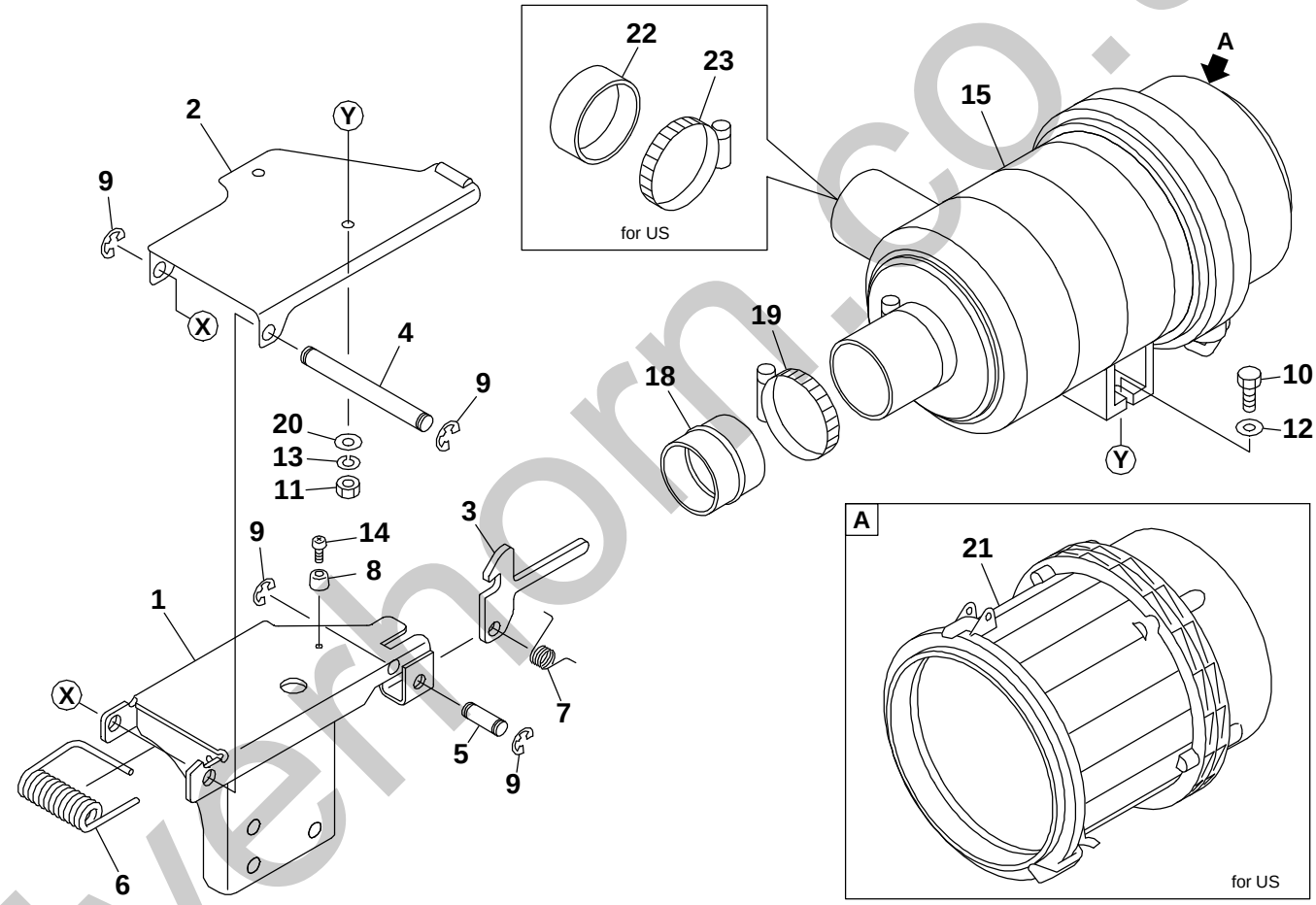

U0C041

S=1/5

silverhorn.co.uk

ENGINE & ACCESSORIES (4/4)

Item	Part number	Description	Q'ty	Chan.	Serial No.	Serv.	Remarks
0-2	0654002700	CLEANER ASSY, air (for EU)	1			M	
	0654002750	PRECLEANER ASSY (for US)	1			M	
1	0654002710	・BRACKET	1			M	
2	0654002360	・PLATE	1			M	
3	0664001250	・PLATE	1			M	
4	0654002101	・PIN	1			M	
5	0664000705	・PIN	1			M	
6	0664000706	・SPRING	1			M	
7	0664000707	・SPRING	1			M	
8	1652111610	・RUBBER	1			M	
9	1224010010	・RING, retaining	4			M	
10	1100240830	・BOLT	2			M	
11	1130040008	・NUT	2				
12	0003608252	・WASHER	2				
13	1140020008	・WASHER, spring	2				
14	1120530308	・SCREW	1			M	
15	1910265007	・CLEANER, air	1			M	Y129536-12510
18	0664001230	・PIPE	1			M	
19	1533700070	・BAND	1				
20	1141110008	・WASHER	2				
21	1911240110	・PRECLEANER	1			M	for US
22	1901240130	・CAP	1			M	for US
23	1911240131	・BAND	1			M	for US
	U0c041						

silverhorn.co.uk

ENGINE & ACCESSORIES (1/4) (for GEHL & MUSTANG)

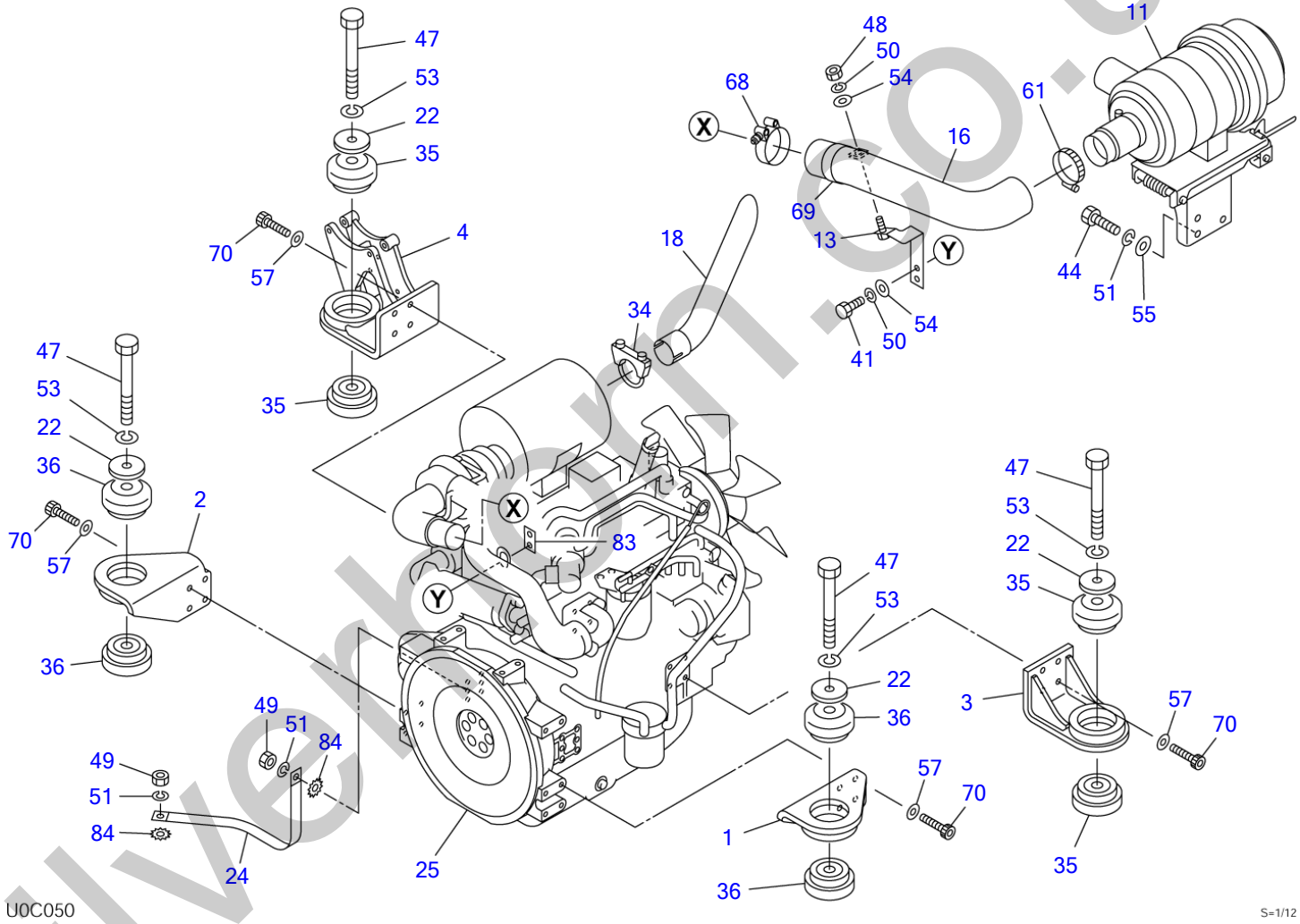

U0C050

S=1/12

silverhorn.co.uk

ENGINE & ACCESSORIES (1/4) (for GEHL & MUSTANG)

Item	Part number	Description	Q'ty	Chan.	Serial No.	Serv.	Remarks
		ENGINE ASSY					
1	0654000100	FOOT, engine (F.L.)	1				
2	0654002420	FOOT, engine (F.R.)	1			M	
3	0654000710	FOOT, engine (R.H.)	1				
4	0654001100	FOOT, engine (R.R.)	1				
11	0654002700	CLEANER ASSY, air	1			M	see page (4/4)
13	0654002460	BRACKET	1			M	
16	0654002470	HOSE	1			M	
18	0654000610	PIPE	1				
22	0882400190	WASHER	4				
24	1702402002	CABLE	1			M	
25	1910265001	ENGINE	1			M	4TNV84T-ZKTBL
34	1533300048	CLAMP	1				
35	1651030004	RUBBER, cushion	4				
36	1651030012	RUBBER, cushion	4				
41	1100040830	BOLT	2				
44	1100041025	BOLT	3				
47	1101141640	BOLT	4				
48	1130040008	NUT	1				
49	1130040010	NUT	2				
50	1140020008	WASHER, spring	3				
51	1140020010	WASHER, spring	5				
53	1140020016	WASHER, spring	4				
54	1141110008	WASHER	3				
55	1141110010	WASHER	3				
57	1141550010	WASHER	16				
61	1533700080	BAND	1			M	
68	1533701250	BAND	1				
69	0881964241	CLAMP	1			M	
70	1110021030	SCREW, cap	16				
83	0684000600	PLATE	1			M	
84	1140330010	WASHER	2				
	U0c051						

silverhorn.co.uk

ENGINE & ACCESSORIES (2/4) (for GEHL & MUSTANG)

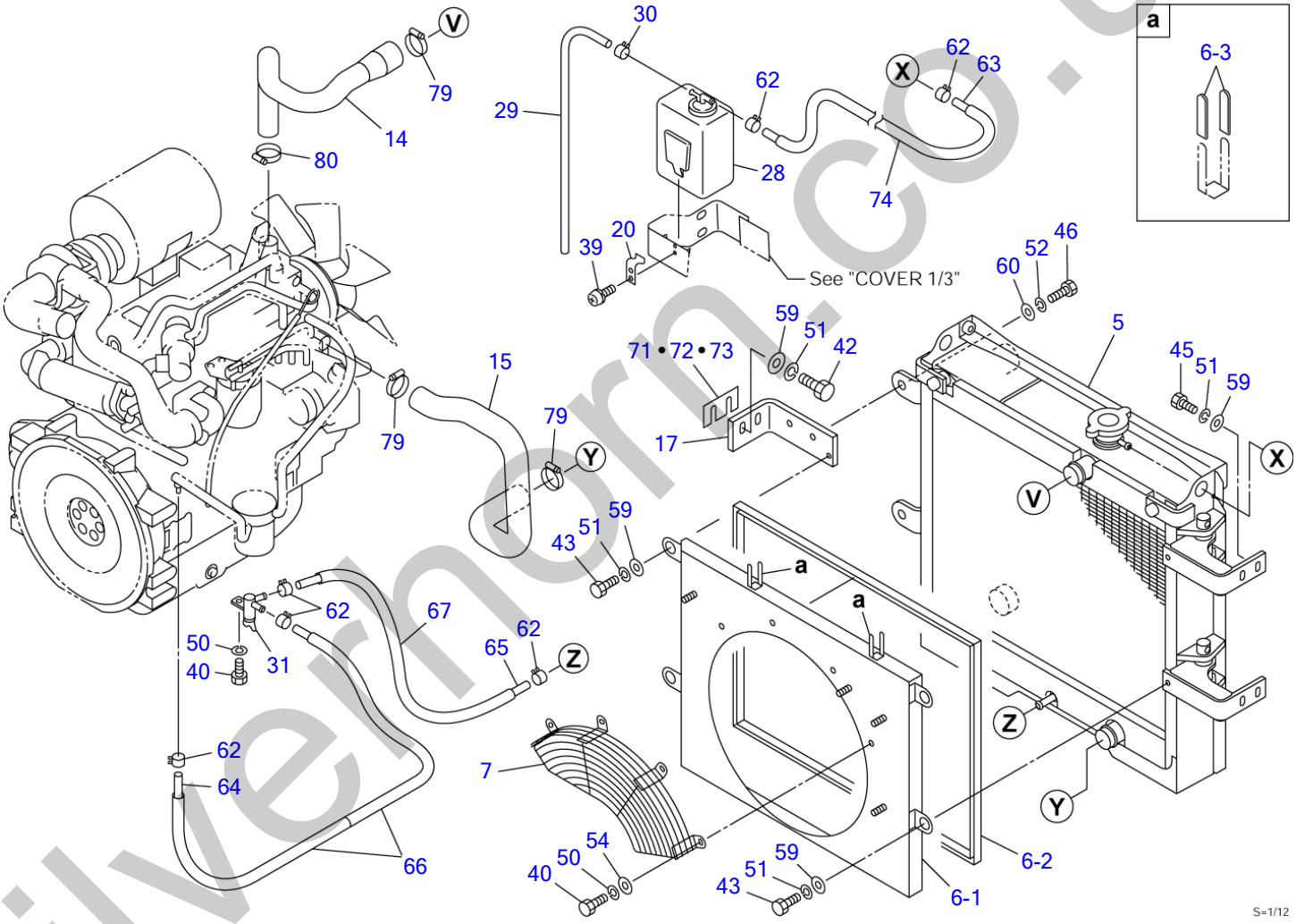

silverhorn.co.uk

ENGINE & ACCESSORIES (2/4) (for GEHL & MUSTANG)

Item	Part number	Description	Q'ty	Chan.	Serial No.	Serv.	Remarks
		ENGINE ASSY					
5	X **********	RADIATOR ASSY	1				see page (3/4)
6	0654002800	SHROUD ASSY	1			M	
6-1	0654002810	・SHROUD	1			M	
6-2	1654606220	・TRIM	1			M	sold by the meter
6-3	0872433150	・TUBE	4				
7	0654002450	GUARD	1			M	
14	0654002140	HOSE	1			M	
15	0654000150	HOSE	1				
17	0654002480	BRACKET	2			M	
20	0880406110	PLATE	1				
28	1910146020	TANK, sub	1				Y129466-44510
29	1910161013	HOSE	1				Y105840-59100
30	1533120008	BAND	1				
31	1910078037	VALVE	1				Y129150-49100
39	1150120410	SCREW	2				
40	1100040816	BOLT	5				
42	1100041035	BOLT	4				
43	1100041020	BOLT	4				
45	1100041030	BOLT	4				
46	1100041230	BOLT	2				
50	1140020008	WASHER, spring	5				
51	1140020010	WASHER, spring	12				
52	1140020012	WASHER, spring	2				
54	1141110008	WASHER	4				
59	0003600025	WASHER	12				
60	0003600136	SHIM	2				
62	1533120012	BAND	6				
63	1530808120	HOSE	1			M	sold by the meter
64	1530808130	HOSE	1				sold by the meter
65	1530808038	HOSE	1			M	sold by the meter
66	1531115060	HOSE	2				sold by the meter
67	1531115032	HOSE	1			M	sold by the meter
71	0880406610	SHIM	AR				t=1.6mm
72	0880406620	SHIM	AR				t=3.2mm
73	0880406630	SHIM	AR				t=4.5mm
74	1531115110	HOSE	1				sold by the meter
79	1533700057	BAND	3				
80	1533700045	BAND	1			M	
	U0c191						

silverhorn.co.uk

ENGINE & ACCESSORIES (3/4) (for GEHL & MUSTANG)

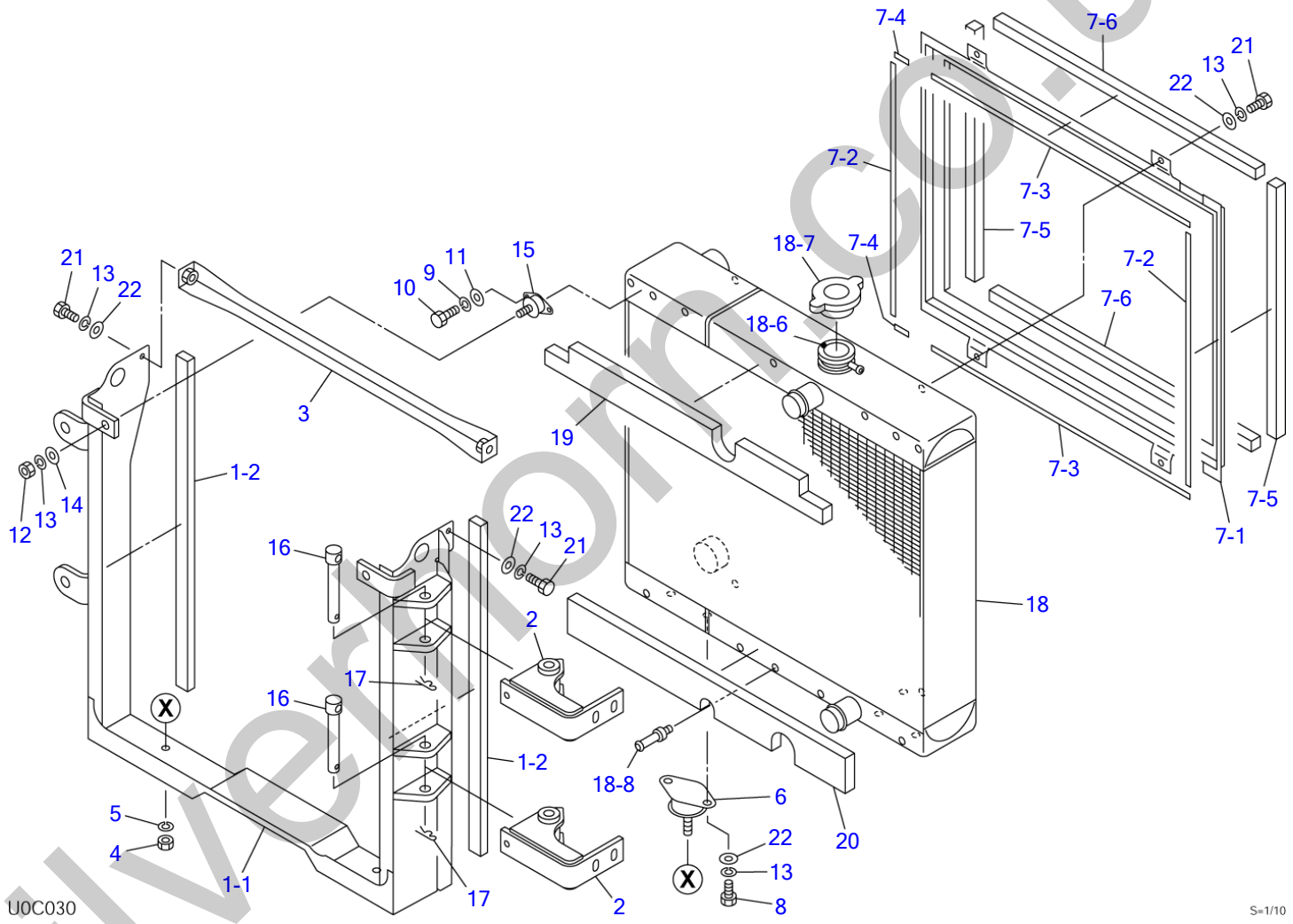

silvermoon.co.uk

ENGINE & ACCESSORIES (3/4) (for GEHL & MUSTANG)

Item	Part number	Description	Q'ty	Chan.	Serial No.	Serv.	Remarks
0-1	X **********	RADIATOR ASSY	1			M	
1	0654002610	・FRAME ASSY	1			M	
1-1	0654002620	・・FRAME	1			M	
1-2	1654343062	・・SPONGE	2				sold by the meter
2	0654002630	・HINGE	2			M	
3	0654002220	・STAY	1			M	
4	1130040010	・NUT	2				
5	1140020010	・WASHER, spring	2				
6	0881406050	・RUBBER, cushion	2				
7	0654000400	・COVER ASSY	1				
7-1	0654000410	・・COVER	1				
7-2	1654318049	・・SPONGE	2				sold by the meter
7-3	1654307056	・・SPONGE	2				sold by the meter
7-4	1654307003	・・SPONGE	2				sold by the meter
7-5	1654349048	・・SPONGE	2				sold by the meter
7-6	1654349059	・・SPONGE	2				sold by the meter
8	1100040816	・BOLT	4				
9	1140020006	・WASHER, spring	4				
10	1100040612	・BOLT	4				
11	1141110006	・WASHER	4				
12	1130040008	・NUT	2				
13	1140020008	・WASHER, spring	12				
14	0003600025	・WASHER	2				
15	1651021030	・RUBBER, cushion	2			M	
16	0881402180	・PIN	2				
17	1214000016	・PIN, snap	2				
18	1911300390	・RADIATOR & COOLER, oil	1			M	
18-6	1911300076	・・FITTING, hose	1				
18-7	1911300078	・・CAP, radiator	1				
18-8	1911300077	・・NIPPLE	1				
19	0654002230	・SPONGE	1			M	
20	0654002602	・SPONGE	1			M	
21	1100040820	・BOLT	6				
22	1141110008	・WASHER	10				
	U0c030						

silverhorn.co.uk

ENGINE & ACCESSORIES (4/4) (for GEHL & MUSTANG)

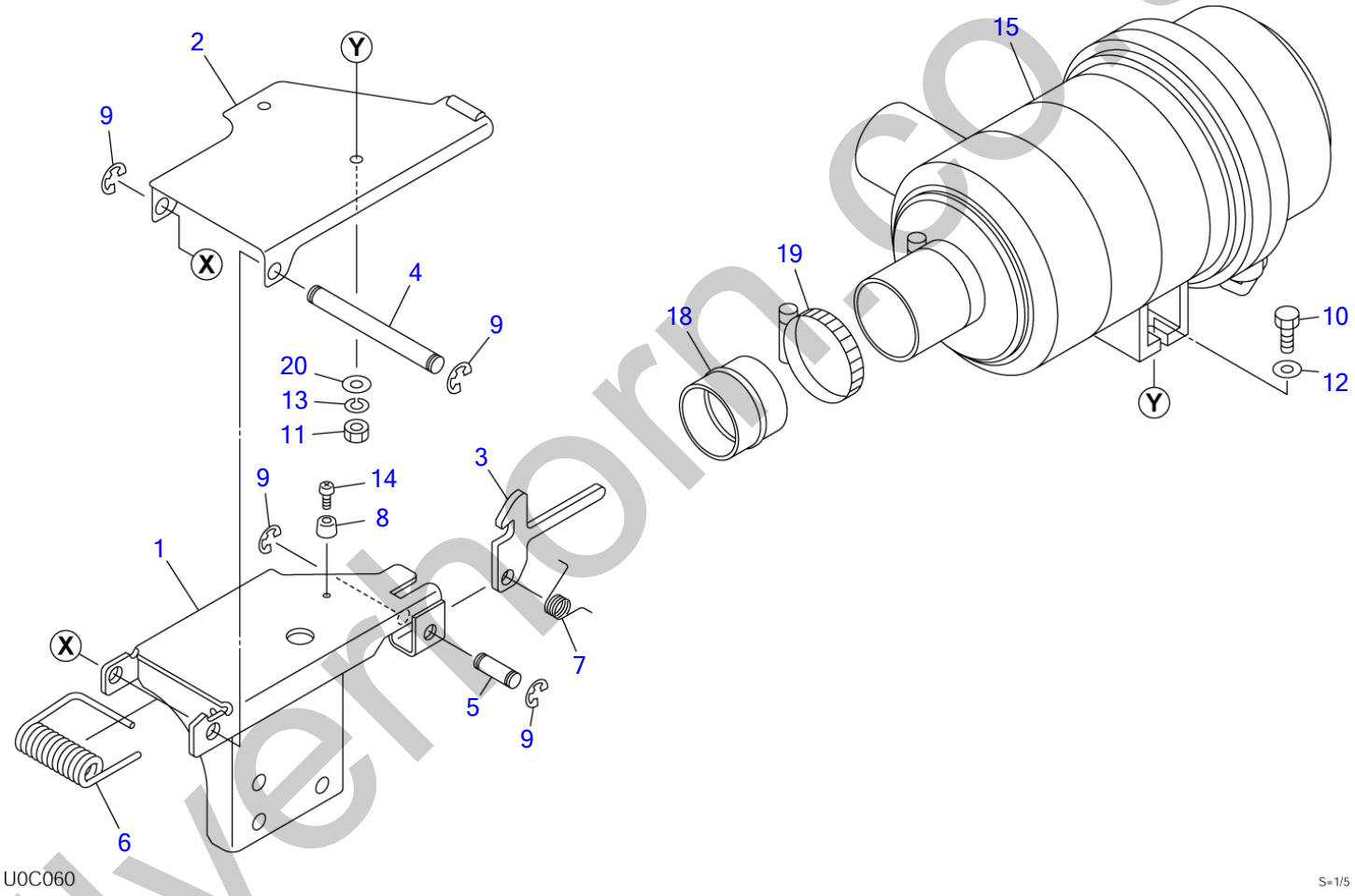

silverhorn.co.uk

ENGINE & ACCESSORIES (4/4) (for GEHL & MUSTANG)

Item	Part number	Description	Q'ty	Chan.	Serial No.	Serv.	Remarks
0-2	0654002700	CLEANER ASSY, air	1			M	
1	0654007210	・BRACKET	1			M	
2	0654002360	・PLATE	1			M	
3	0664001250	・PLATE	1			M	
4	0654002101	・PIN	1			M	
5	0664000705	・PIN	1			M	
6	0664000706	・SPRING	1			M	
7	0664000707	・SPRING	1			M	
8	1652111610	・RUBBER	1			M	
9	1224010010	・RING, retaining	4			M	
10	1100240830	・BOLT	2			M	
11	1130040008	・NUT	2				
12	0003608252	・WASHER	2				
13	1140020008	・WASHER, spring	2				
14	1120530308	・SCREW	1			M	
15	1910265007	・CLEANER, air	1			M	
18	0664001230	・PIPE	1			M	
19	1533700070	・BAND	1				
20	1141110008	・WASHER	2				
	U0c061						

silverhorn.co.uk

DRAIN PLUG

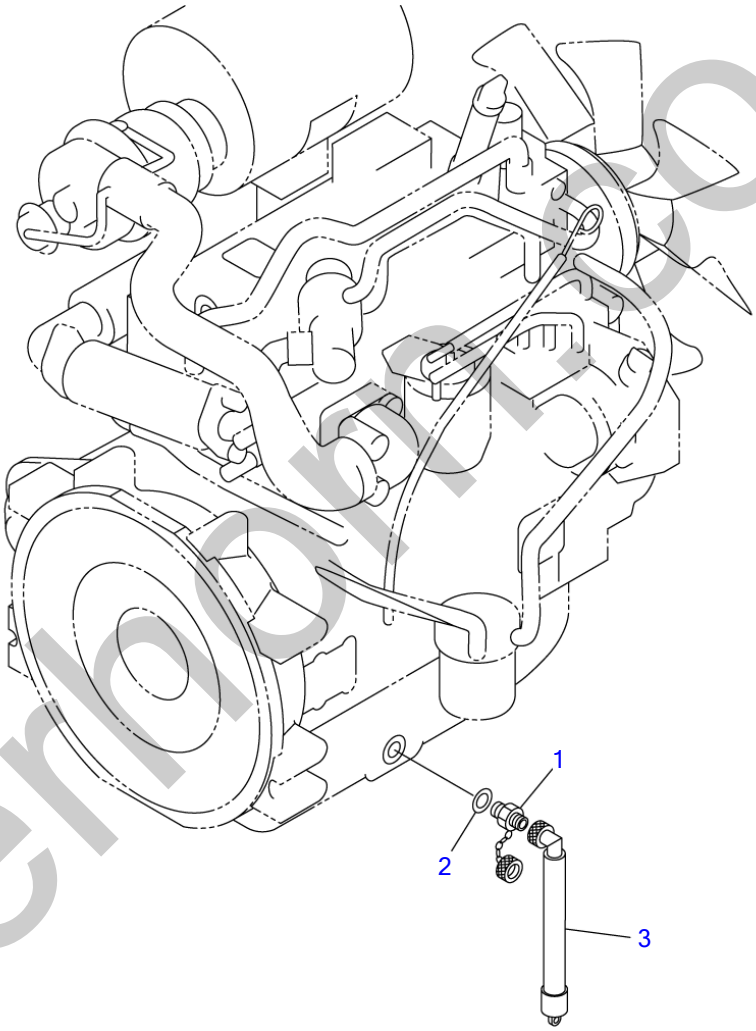

U0C070

S=1/7

silverhomes.co.uk

DRAIN PLUG

Item	Part number	Description	Q'ty	Chan.	Serial No.	Serv.	Remarks
		PLUG ASSY, drain					
1	1554502250	PLUG	1				
2	1432122032	WASHER	1				
3	1554512601	TUBE	1				
	U0c070						

silverhorn.co.uk

CONTROL BOX; R.H.

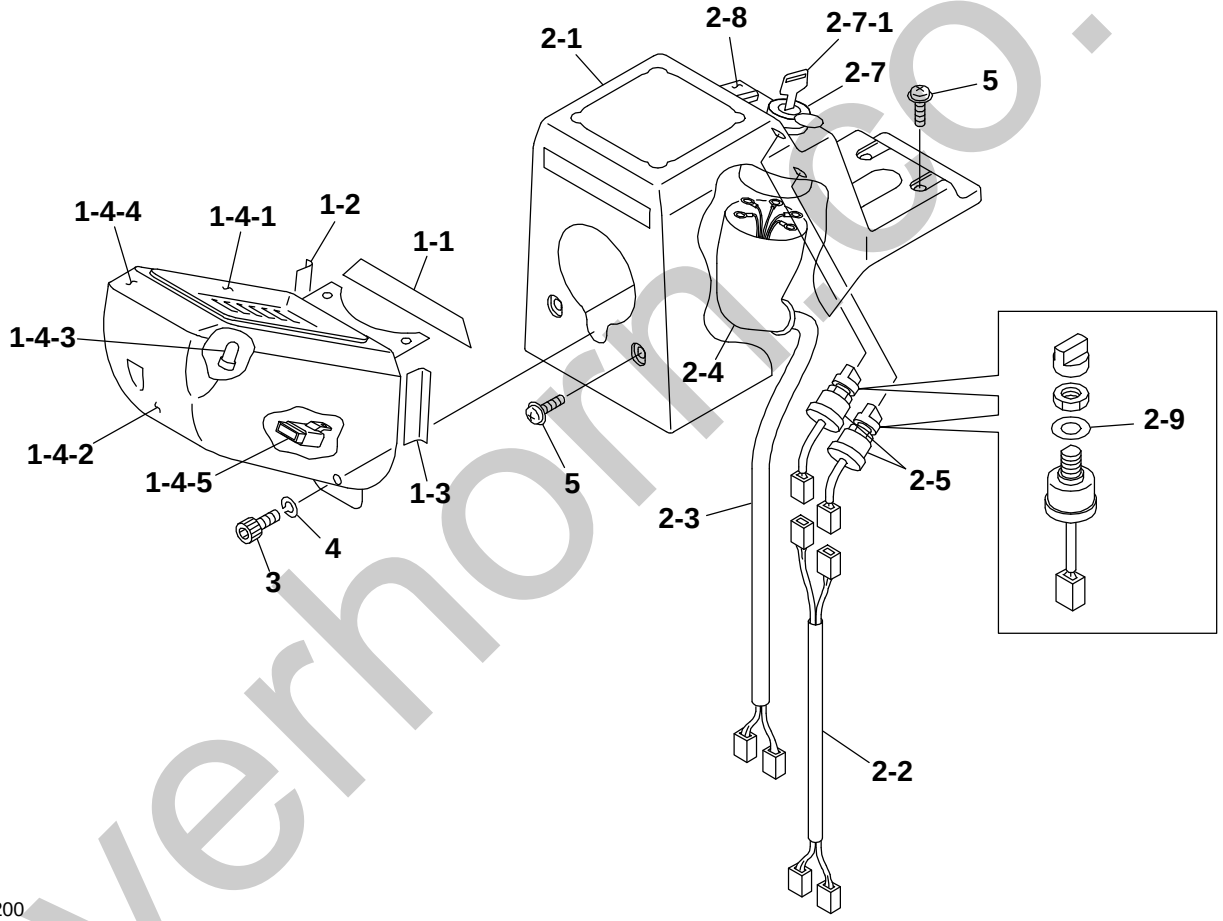

U0C200

S=1/5, 1/4

silverhorse.co.uk

RH CONTROL BOX

Item	Part number	Description	Q'ty	Chan.	Serial No.	Serv.	Remarks
		RH CONTROL BOX					
1	0654300100	CLUSTER GAUGE ASSY	1				
	0654302010	CLUSTER GAUGE ASSY	1				
1-1	0881430901	* NOISE ABSORBENT	1				
1-2	0881430902	* NOISE ABSORBENT	1				
1-3	0881430903	* NOISE ABSORBENT	1				
1-4	1730140970	* CLUSTER GAUGE	1				
	1730142100	* CLUSTER GAUGE	1				
1-4-1	1730140782	* * GLASS	1				
1-4-2	1730140785	* * COVER	1				
1-4-3	1730140796	* * BULB	10				
1-4-4	1730140788	* * VISOR	1				
1-4-5	1730140691	* * RELAY	1				
2	0882430100	RH SUB COVER ASSY	1				
2-1	0881430870	* RH COVER	1				
2-2	0881430880	* WIRING HARNESS	1				
2-3	0881430960	* WIRING HARNESS	1				
2-4	0870431821	* COVER	1				
2-5	1700000010	* LAMP SWITCH	2				
2-7	1700100052	* STARTER SWITCH	1				
2-7-1	1700100019	* KEY	1				
2-8	1700550024	* ORNAMENT	1				
2-9	1141810012	* WASHER	2				
3	1110020820	CAP SCREW	1				
4	1140090008	SPRING WASHER	1				
5	1150420614	SCREW	4				
	U0C200						

silverhorn.co.uk

CONTROL BOX; R.H. (for GEHL & MUSTANG)

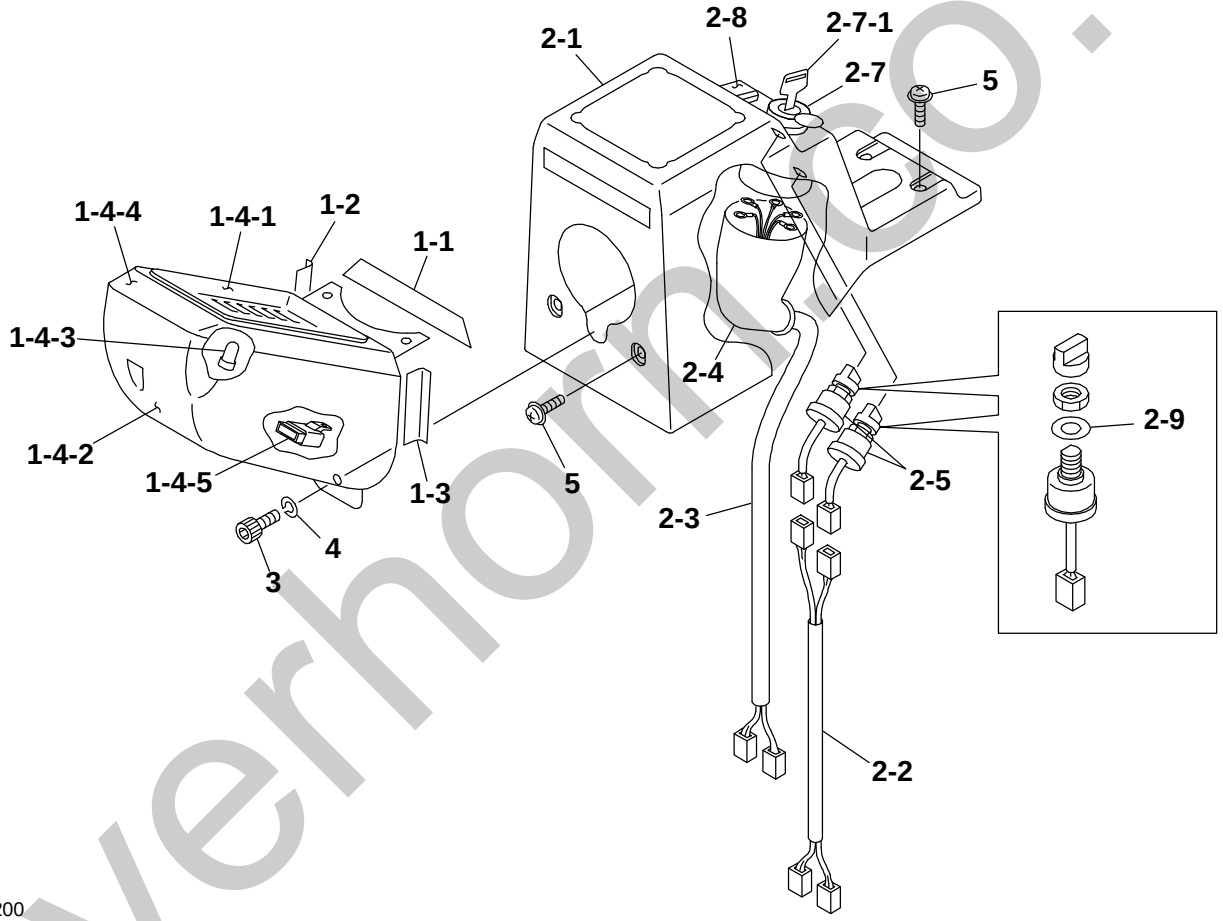

U0C200

S=1/5, 1/4

silverhorse.co.uk

RH CONTROL BOX (GEHL & MUSTANG)

Item	Part number	Description	Q'ty	Chan.	Serial No.	Serv.	Remarks
		RH COVER ASSY					
1	654301100	CLUSTER GAUGE ASSY	1				
	654302510	CLUSTER GAUGE ASSY	1				
1-1	0881430901	* NOISE ABSORBENT	1				
1-2	0881430902	* NOISE ABSORBENT	1				
1-3	0881430903	* NOISE ABSORBENT	1				
1-4	1730140980	* CLUSTER GAUGE	1				
	1730142120	* CLUSTER GAUGE	1				
1-4-1	1730140782	* * GLASS	1				
1-4-2	1730140785	* * COVER	1				
1-4-3	1730140796	* * BULB	1				
1-4-4	1730140788	* * VISOR	1				
1-4-5	1730140691	* * RELAY	1				
2	0882430100	RH SUB COVER ASSY	1				
2-1	0881430870	* RH COVER	1				
2-2	0881430880	* WIRING HARNESS	1				
2-3	0881430960	* WIRUNG HARNESS	1				
2-4	0870431821	* COVER	1				
2-5	1700000010	* LAMP SWITCH	2				
2-7	1700100052	* STARTER SWITCH	1				
2-7-1	1700100019	* KEY	1				
2-8	1700550024	* ORNAMENT	1				
2-9	1141810012	* WASHER	2				
3	1110020820	CAP SCREW	1				
4	1140090008	SPRING WASHER	1				
5	1150420614	SCREW	4				
	U0C220						

silverhorn.co.uk

CONTROL BOX; L.H.

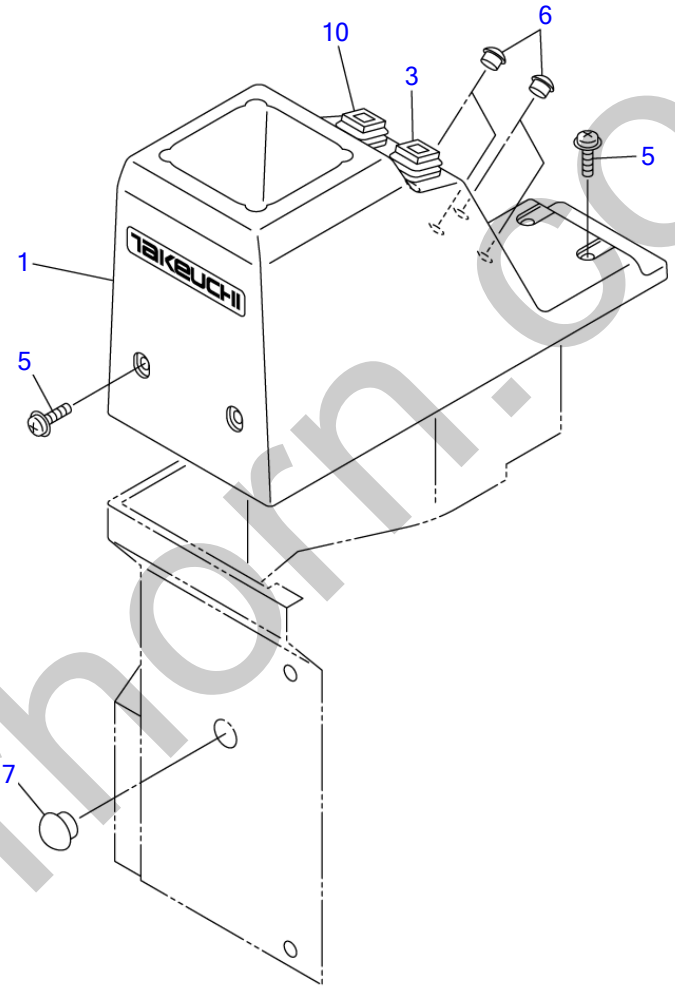

T7C040

S=1/5

silverhorn.co.uk

CONTROL BOX; L.H.

Item	Part number	Description	Q'ty	Chan.	Serial No.	Serv.	Remarks
		COVER ASSY (L.H.)					
1	0881430770	COVER (L.H.)	1				
3	1700000034	SWITCH	1				
5	1150420614	SCREW, sems	4				
6	1652533019	CAP	4				
7	1652533023	CAP	1				
10	1700000035	SWITCH	1				
	T7c041						

silverhorn.co.uk

CONTROL BOX; L.H. (hydraulic quick hitch type)

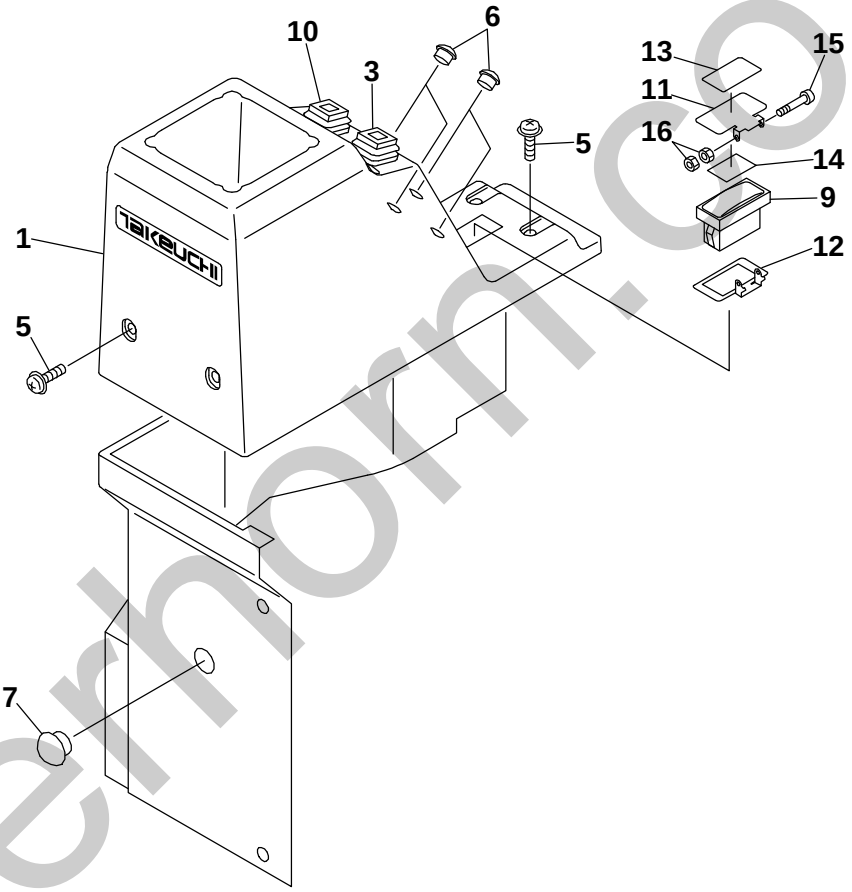

U1C081

S=1/5

silverhorn.co.uk

CONTROL BOX; L.H. (hydraulic attachment type)

Item	Part number	Description	Q'ty	Chan.	Serial No.	Serv.	Remarks
		COVER ASSY (L.H.)					
1	0664300010	COVER (L.H.)	1			M	
3	1700000034	SWITCH	1				
5	1150420614	SCREW	4				
6	1652533019	CAP	4				
7	1652533023	CAP	1				
9	1700008080	SWITCH	1			M	
10	1700000035	SWITCH	1				
11	0664300110	COVER	1				
12	0664300120	COVER	1				
13	0664300130	DECAL	1				
14	0664300140	RUBBER	1				
15	1120530330	SCREW	1				
16	1130040003	NUT	2				
	U0c091						

silverhorn.co.uk

ENGINE CONTROL

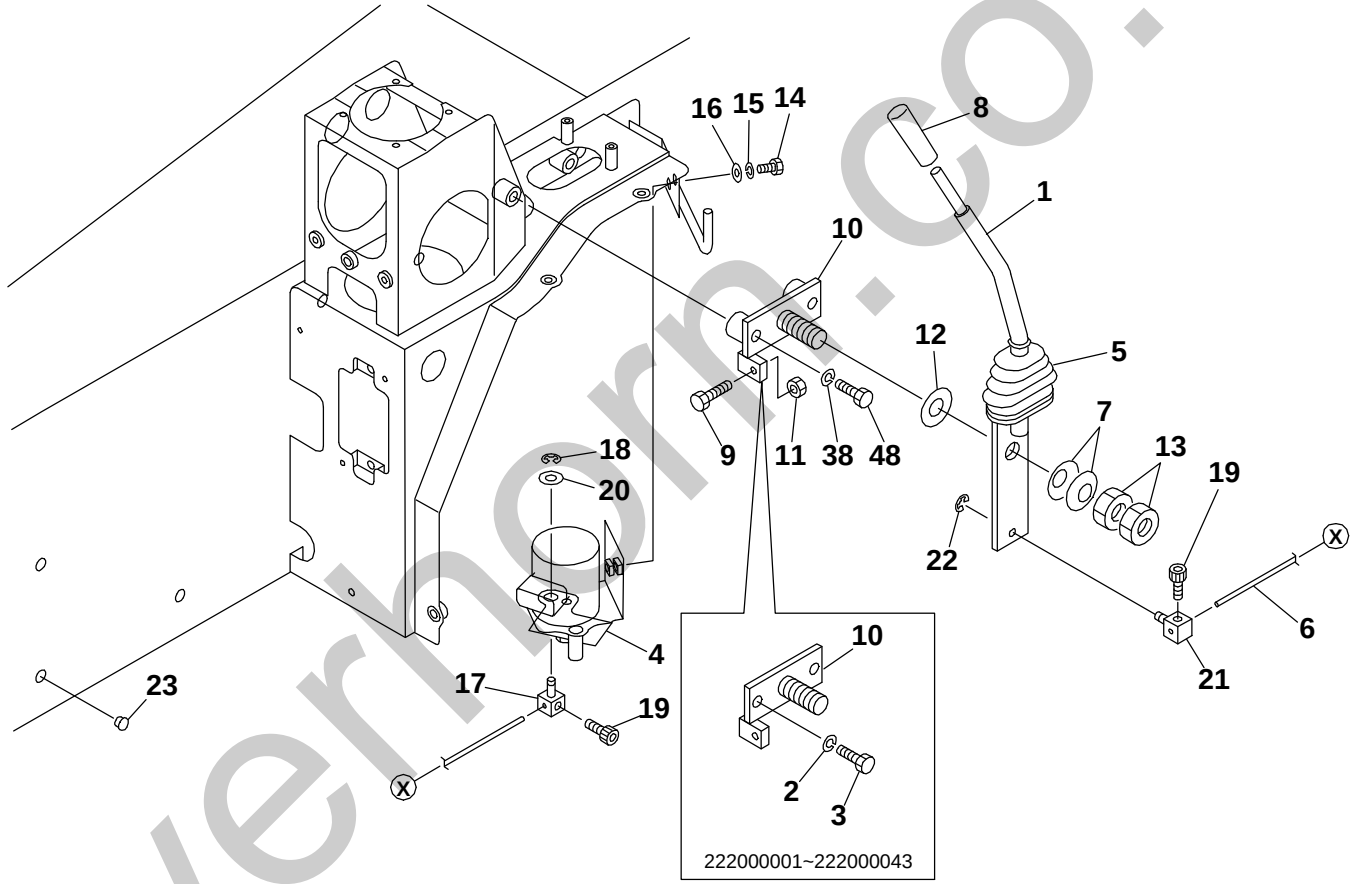

U0C101

S=1/6

silverhorn.co.uk

ENGINE CONTROL

Item	Part number	Description	Q'ty	Chan.	Serial No.	Serv.	Remarks
		CONTROL ASSY, engine					
1	0654101610	LEVER	1			M	
2	1140020010	WASHER, spring	2				
3	1100041020	BOLT	2				
4	1910253126	SENSOR, accel.	1			M	Y129938-77800
5	0334120100	BOOT	1				
6	0654101506	WIRE	1			M	
7	1225110018	WASHER, conical	2				
8	1650132050	GRIP	1				
9	1100040830	BOLT	1				
10	0654101510	PLATE	1			M	
	0654102060	PLATE	1				
11	1130040008	NUT	1				
12	1141550018	WASHER	1				
13	0064111700	NUT	2				
14	1100040616	BOLT	2				
15	1140020006	WASHER, spring	2				
16	1141110006	WASHER	2				
17	0007900020	PIN	1				
18	1224010006	RING, retaining	1				
19	1110040510	SCREW, cap	2				
20	1141110008	WASHER	1				
21	0007900023	PIN	1			M	
22	1224010004	RING, retaining	1			M	
23	1652533017	CAP	3				
38	1140020008	SPRING WASHER	2				
48	1100040845	BOLT	2				
	U0c101						

silverhorn.co.uk

ENGINE CONTROL (throttle pedal type)

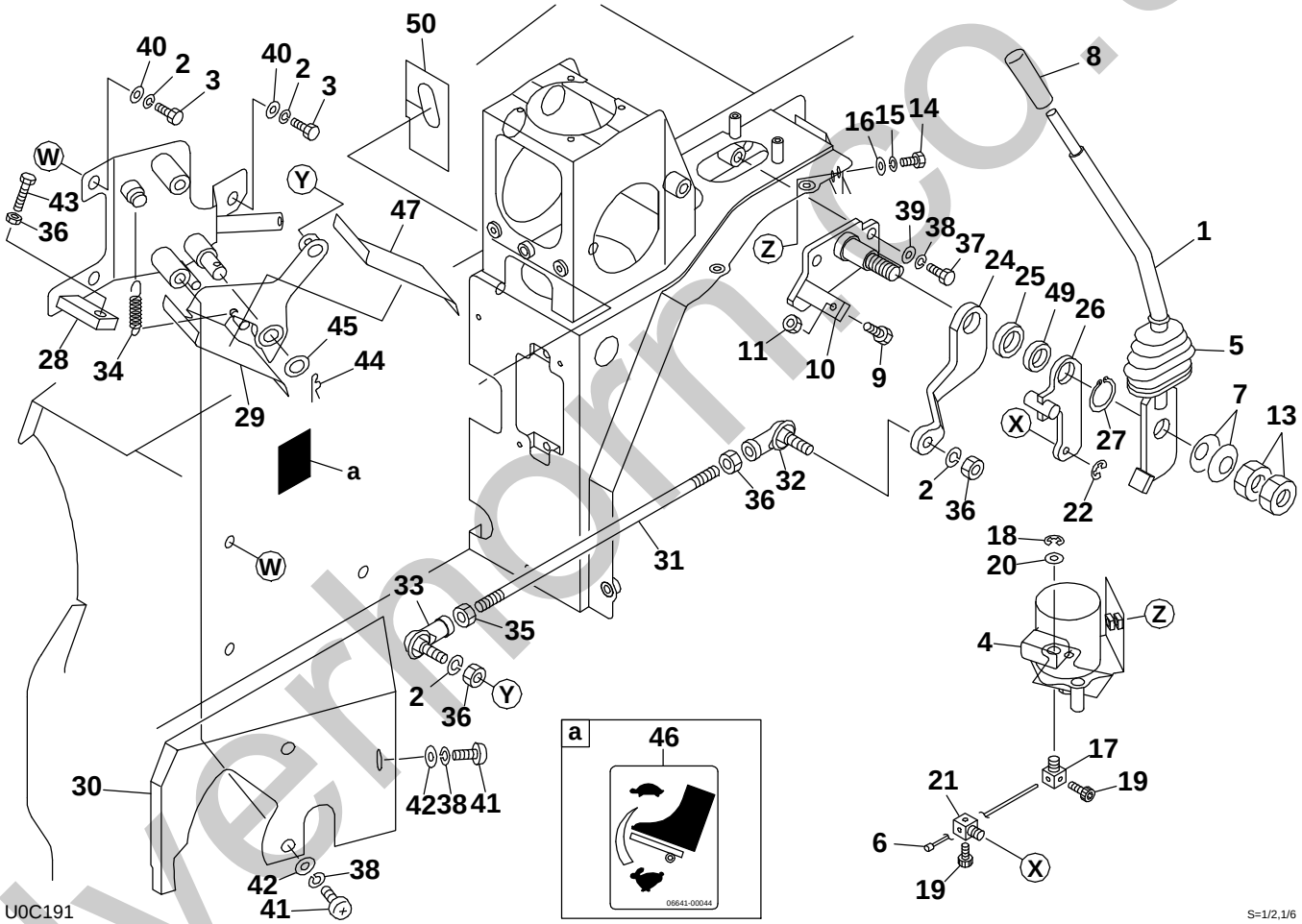

silverhorn.co.uk

ENGINE CONTROL (THROTTLE PEDAL TYPE)

Item	Part number	Description	Q'ty	Chan.	Serial No.	Serv.	Remarks
		ENGINE CONTROL ASSY					
1	0654102020	LEVER	1				
2	1140020010	SPRING WASHER	5				
3	1100041020	BOLT	3				
4	1910253126	ACCEL. SENSOR	1				
5	0334120100	BOOT	1				
6	0654102201	WIRE	1				
7	1225110015	CONICAL WASHER	2				
8	1650132050	GRIP	1				
9	1100240830	BOLT	1				
10	0654102010	PLATE	1				
11	1130040008	NUT	1				
13	0064111700	NUT	2				
14	1100040616	BOLT	2				
15	1140020006	SPRING WASHER	2				
16	1141110006	WASHER	2				
17	0007900020	PIN	1				
18	1224010006	RETAINING RING	1				
19	1110040510	CAP SCREW	2				
20	1141110008	WASHER	1				
21	0007900023	PIN	1				
22	1224010004	RETAINING RING	1				
24	0654102050	PLATE	1				
25	0654102040	COLLAR	1				
26	0654102030	PLATE	1				
27	1220000022	RETAINING RING	1				
28	0664100710	FRAME	1				
29	0664100670	PEDAL	1				
30	0664100650	COVER	1				
31	0005010250	ROD	1				
32	1340000100	ROD END	1				
33	1340000105	ROD END	1				
34	0007000074	SPRING	1				
35	1131540010	NUT	1				
36	1130040010	NUT	4				
37	1100040825	BOLT	2				
38	1140020008	SPRING WASHER	5				
39	1141110008	WASHER	2				
40	1141110010	WASHER	3				
41	1120940816	SCREW	3				
42	0003608252	WASHER	3				
43	1100241050	BOLT	1				
44	1214000014	SNAP PIN	1				
45	1141110014	WASHER	1				
46	0664100044	DECAL	1				
47	0684100670	SHEET	1				
49	0003600248	WASHER	1				
50	0694101304	SHEET	1				
	U0C192						

silverthorn.co.uk

ELECTRICAL (1/2) (KPM controller type; 222000001-222000013)

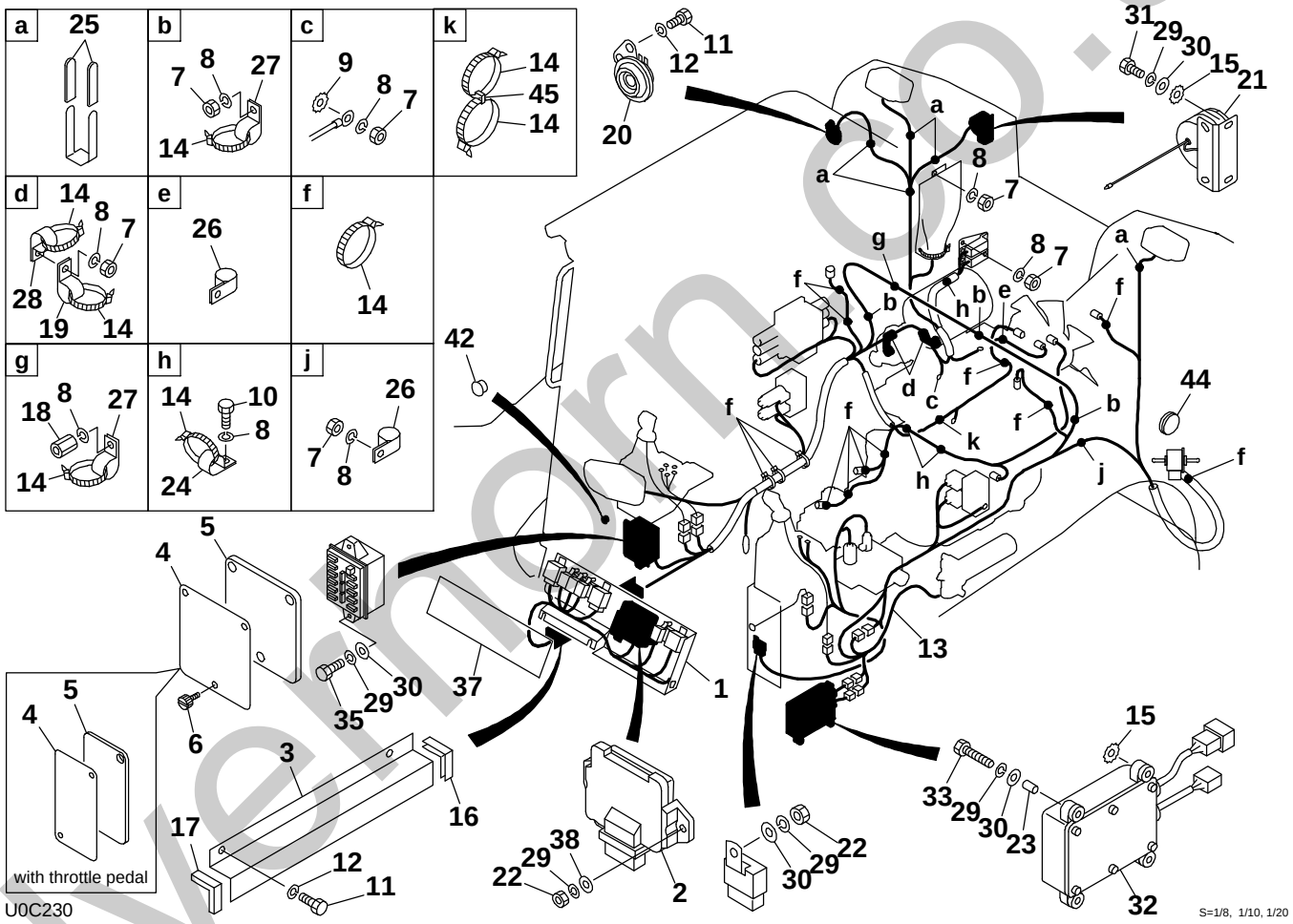

silvermorn.co.uk

ELECTRICAL (1/4)KPM CONTROLLER TYPE

Item	Part number	Description	Q'ty	Chan.	Serial No.	Serv.	Remarks
		ELECTRICAL ASSY					
1	0654210110	RELAY UNIT ASSY	1				
2	1910265127	E-ECU	1				
3	0654201010	PLATE	1				
4	0664300040	COVER	1				
	0881430802	COVER	1				
5	0664300030	INSULATOR	1				
	0881430803	INSULATOR	1				
6	1652711698	SCREW	2				
7	1130040010	NUT	11				
8	1140020010	SPRING WASHER	14				
9	1140330010	WASHER	1				
10	1100041016	BOLT	2				
11	1100040812	BOLT	4				
	1100040812	BOLT	2				
12	1140020008	CONICAL WASHER	4				
	1140020008	CONICAL WASHER	2				
13	0654202400	WIRING HARNESS	1				
14	1652231250	BAND	43				
15	1140330006	WASHER	2				
16	1654606009	TRIM	1				
17	1653916009	TRIM	1				
18	1134841025	NUT	1				
19	1711900129	CLAMP	2				
20	1703500712	HORN	1				
21	1703700013	BUZZER	1				
22	1130040006	NUT	4				
23	1531007002	HOSE	4				
24	1711900076	CLAMP	2				
25	0872433150	TUBE	12				
26	1711900105	CLAMP	2				
27	1711900071	CLAMP	4				
28	1711900072	CLAMP	2				
29	1140020006	SPRING WASHER	12				
30	1141110006	WASHER	9				
31	1100040610	BOLT	2				
32	1730140730	CONTROLLER	1				
33	1100040630	BOLT	4				
35	1100040612	BOLT	2				
37	0882420220	RUBBER	1				
38	0003608252	WASHER	3				
42	1652533015	CAP	1				
44	1652060051	BUSHING	1				
45	1652200010	BAND	1				
	U0C230						

silverhorn.co.uk

ELECTRICAL (1/2) (KPM controller type; 222000014-222000254)

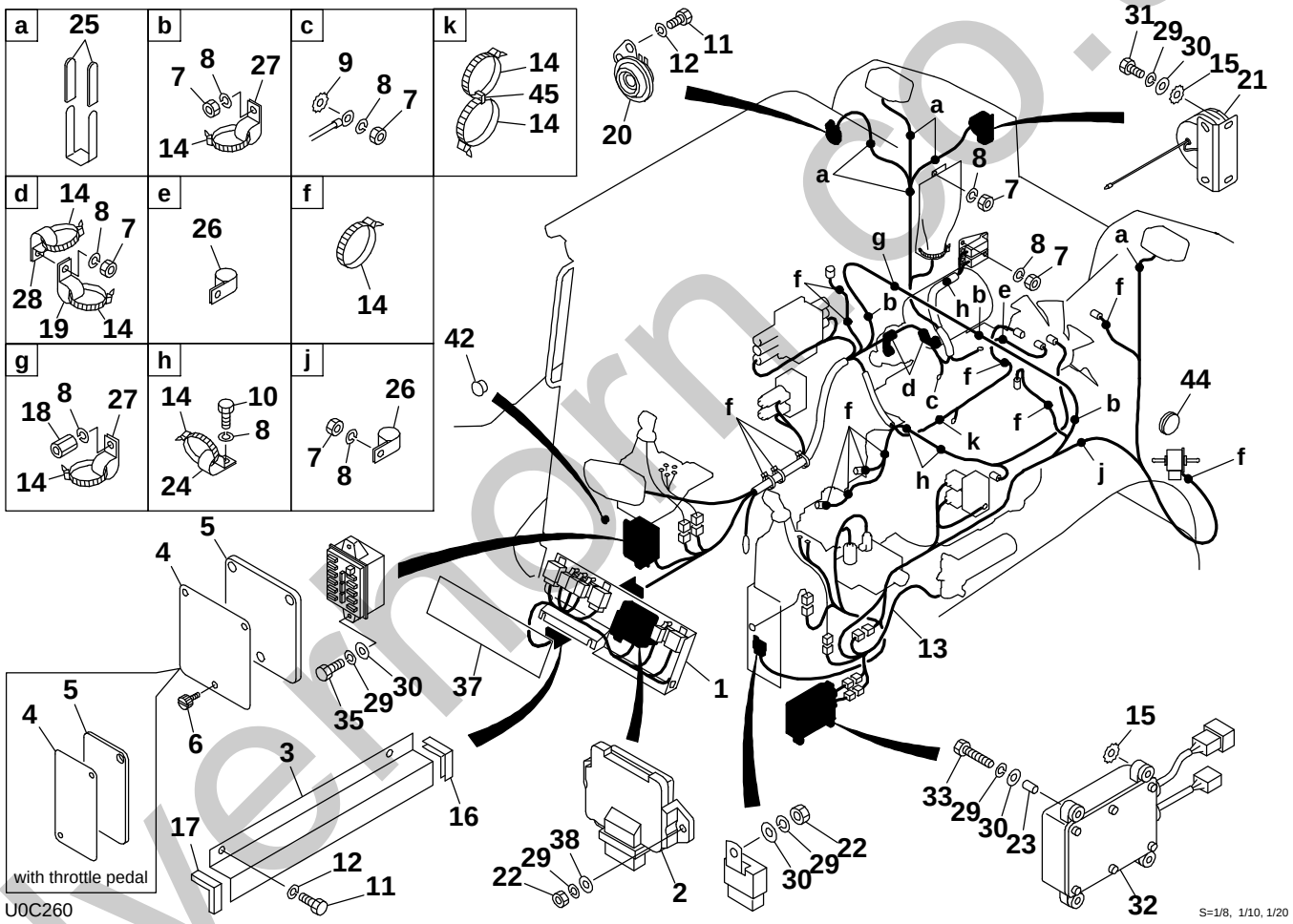

silvermorn.co.uk

ELECTRICAL (2/4)KPM CONTROLLER TYPE

Item	Part number	Description	Q'ty	Chan.	Serial No.	Serv.	Remarks
		ELECTRICAL ASSY					
1	0654210120	RELAY UNIT ASSY	1				
2	1910265127	E-ECU	1				
3	0654201010	PLATE	1				
4	0664300040	COVER	1				
	0881430802	COVER	1				
5	0664300030	INSULATOR	1				
	0881430803	INSULATOR	1				
6	1652711698	SCREW	2				
7	1130040010	NUT	11				
8	1140020010	SPRING WASHER	14				
9	1140330010	WASHER	1				
10	1100041016	BOLT	2				
11	1100040812	BOLT	4				
	1100040812	BOLT	2				
12	1140020008	CONICAL WASHER	4				
	1140020008	CONICAL WASHER	2				
13	0654202400	WIRING HARNESS	1				
14	1652231250	BAND	43				
15	1140330006	WASHER	2				
16	1654606009	TRIM	1				
17	1653916009	TRIM	1				
18	1134841025	NUT	1				
19	1711900129	CLAMP	2				
20	1703500712	HORN	1				
21	1703700013	BUZZER	1				
22	1130040006	NUT	4				
23	1531007002	HOSE	4				
24	1711900076	CLAMP	2				
25	0872433150	TUBE	12				
26	1711900105	CLAMP	2				
27	1711900071	CLAMP	4				
28	1711900072	CLAMP	2				
29	1140020006	SPRING WASHER	12				
30	1141110006	WASHER	9				
31	1100040610	BOLT	2				
32	1730140730	CONTROLLER	1				
33	1100040630	BOLT	4				
35	1100040612	BOLT	2				
37	0882420220	RUBBER	1				
38	0003608252	WASHER	3				
42	1652533015	CAP	1				
44	1652060051	BUSHING	1				
45	1652200010	BAND	1				
	U0C260						

silverhorn.co.uk

ELECTRICAL (1/2) (KPM controller type; 222000255-222000353)

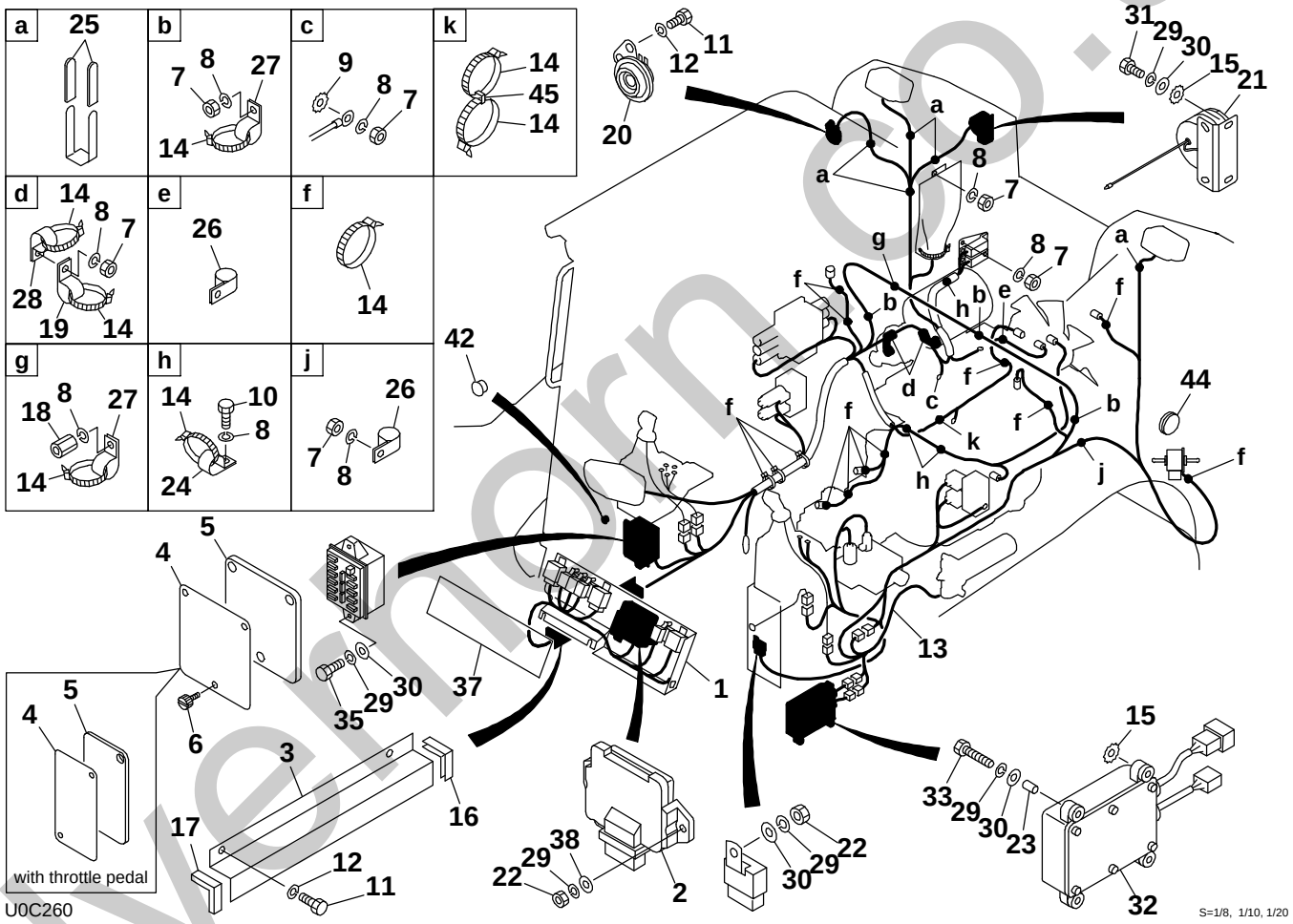

silvermorn.co.uk

ELECTRICAL (3/4)KPM CONTROLLER TYPE

Item	Part number	Description	Q'ty	Chan.	Serial No.	Serv.	Remarks
		ELECTRICAL ASSY					
1	0654203100	RELAY UNIT ASSY	1				
2	1910265127	E-ECU	1				
3	0654201010	PLATE	1				
4	0664300040	COVER	1				
	0881430802	COVER	1				
5	0664300030	INSULATOR	1				
	0881430803	INSULATOR	1				
6	1652711698	SCREW	2				
7	1130040010	NUT	11				
8	1140020010	SPRING WASHER	14				
9	1140330010	WASHER	1				
10	1100041016	BOLT	2				
11	1100040812	BOLT	4				
	1100040812	BOLT	2				
12	1140020008	CONICAL WASHER	4				
	1140020008	CONICAL WASHER	2				
13	0654202400	WIRING HARNESS	1				
14	1652231250	BAND	27				
15	1140330006	WASHER	2				
16	1654606009	TRIM	1				
17	1653916009	TRIM	1				
18	1134841025	NUT	1				
19	1711900129	CLAMP	2				
20	1703500712	HORN	1				
21	1703700013	BUZZER	1				
22	1130040006	NUT	4				
23	1531007002	HOSE	4				
24	1711900076	CLAMP	2				
25	0872433150	TUBE	12				
26	1711900105	CLAMP	2				
27	1711900071	CLAMP	4				
28	1711900072	CLAMP	2				
29	1140020006	SPRING WASHER	12				
30	1141110006	WASHER	9				
31	1100040610	BOLT	2				
32	1730140730	CONTROLLER	1				
33	1100040630	BOLT	4				
35	1100040612	BOLT	2				
37	0882420220	RUBBER	1				
38	0003608252	WASHER	3				
42	1652533015	CAP	1				
44	1652060051	BUSHING	1				
45	1652200010	BAND	1				
	U0C290						

silverhorn.co.uk

ELECTRICAL (1/2) (KPM controller type; 222000354-)

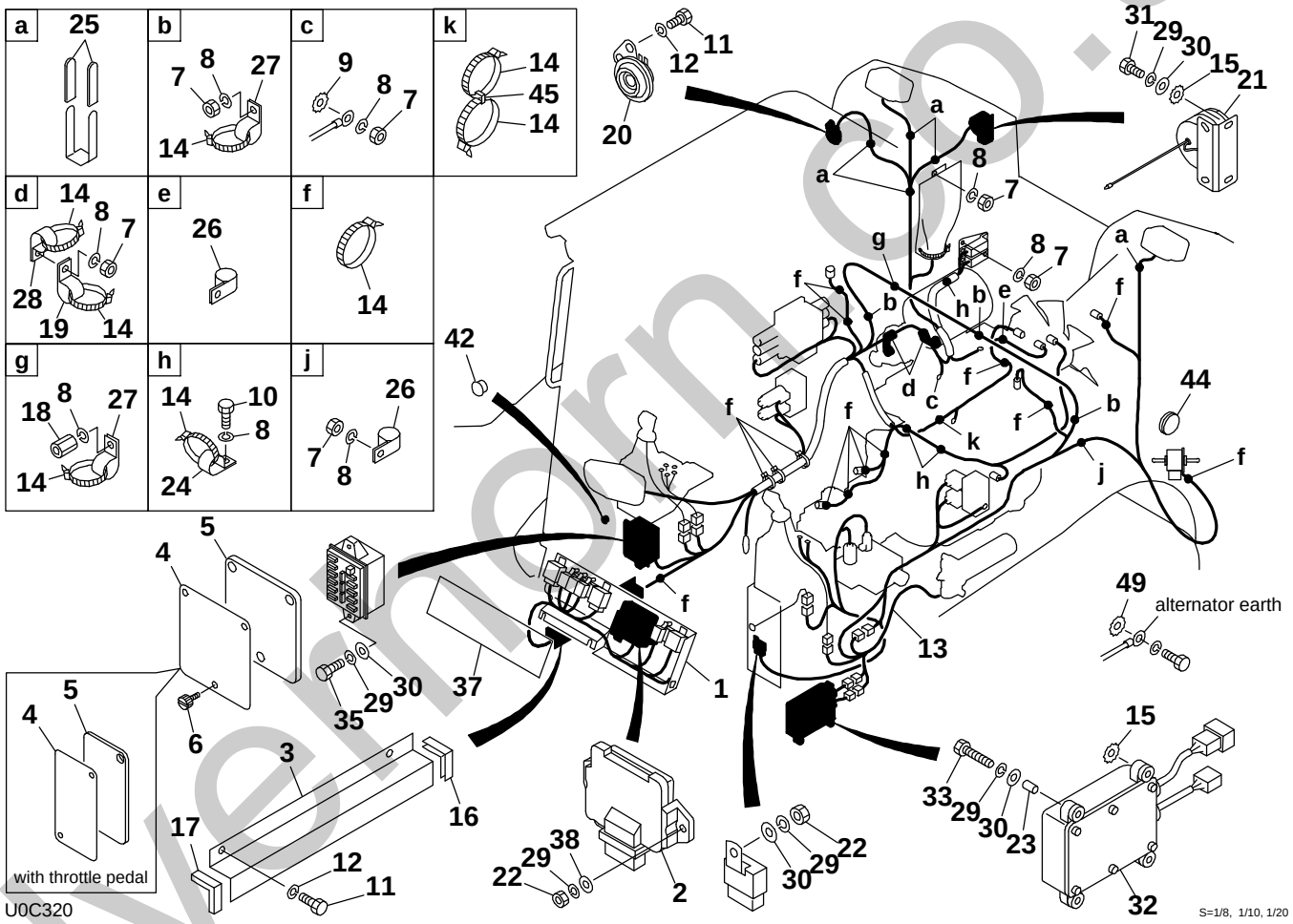

silvermorn.co.uk

ELECTRICAL (4/4)KPM CONTROLLER TYPE

Item	Part number	Description	Q'ty	Chan.	Serial No.	Serv.	Remarks
		ELECTRICAL ASSY					
1	0654204100	RELAY UNIT ASSY	1				
2	1910265127	E-ECU	1				
3	0654201010	PLATE	1				
4	0664300040	COVER	1				
	0881430802	COVER	1				
5	0664300030	INSULATOR	1				
	0881430803	INSULATOR	1				
6	1652711698	SCREW	2				
7	1130040010	NUT	11				
8	1140020010	SPRING WASHER	14				
9	1140330010	WASHER	1				
10	1100041016	BOLT	2				
11	1100040812	BOLT	4				
	1100040812	BOLT	2				
12	1140020008	CONICAL WASHER	4				
	1140020008	CONICAL WASHER	2				
13	0654202400	WIRING HARNESS	1				
14	1652201007	BAND	27				
	1652201007	BAND	28				
15	1140330006	WASHER	2				
16	1654606009	TRIM	1				
17	1653916009	TRIM	1				
18	1134841025	NUT	1				
19	1711900129	CLAMP	2				
20	1703500712	HORN	1				
21	1703700013	BUZZER	1				
22	1130040006	NUT	4				
23	1531007002	HOSE	4				
24	1711900076	CLAMP	2				
25	0872433150	TUBE	12				
26	1711900105	CLAMP	2				
27	1711900071	CLAMP	4				
28	1711900072	CLAMP	2				
29	1140020006	SPRING WASHER	12				
30	1141110006	WASHER	9				
31	1100040610	BOLT	2				
32	1730140730	CONTROLLER	1				
33	1100040630	BOLT	4				
35	1100040612	BOLT	2				
37	0882420220	RUBBER	1				
38	0003608252	WASHER	3				
42	1652533015	CAP	1				
44	1652060051	BUSHING	1				
45	1652200010	BAND	1				
49	1140330005	WASHER	1				
	U0C320						

silverthorn.co.uk

ELECTRICAL (1/2) (SPK controller type; 222000001-222000013)

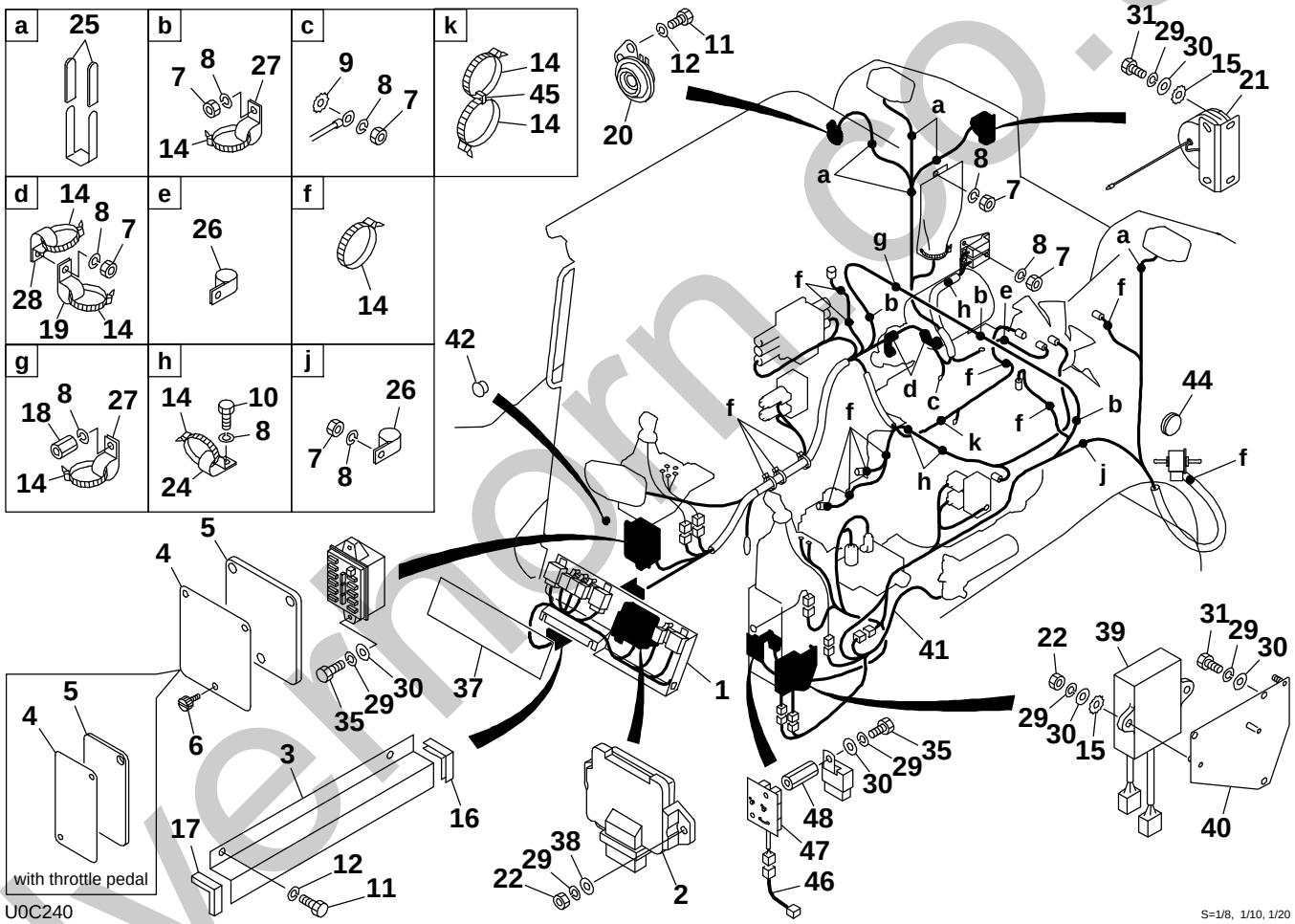

silvermorn.co.uk

ELECTRICAL (1/4) SPK CONTROLLER TYPE

Item	Part number	Description	Q'ty	Chan.	Serial No.	Serv.	Remarks
		ELECTRICAL ASSY					
1	0654210110	RELAY UNIT ASSY	1				
2	1910265127	E-ECU	1				
3	0654201010	PLATE	1				
4	0664300040	COVER	1				
	0881430802	COVER	1				
5	0664300030	INSULATOR	1				
	0881430803	INSULATOR	1				
6	1652711698	SCREW	2				
7	1130040010	NUT	11				
8	1140020010	SPRING WASHER	14				
9	1140330010	WASHER	1				
10	1100041016	BOLT	2				
11	1100040812	BOLT	4				
	1100040812	BOLT	2				
12	1140020008	CONICAL WASHER	4				
	1140020008	CONICAL WASHER	2				
14	1652231250	BAND	43				
15	1140330006	WASHER	2				
16	1654606009	TRIM	1				
17	1653916009	TRIM	1				
18	1134841025	NUT	1				
19	1711900129	CLAMP	2				
20	1703500712	HORN	1				
21	1703700013	BUZZER	1				
22	1130040006	NUT	5				
24	1711900076	CLAMP	2				
25	0872433150	TUBE	12				
26	1711900105	CLAMP	2				
27	1711900071	CLAMP	4				
28	1711900072	CLAMP	2				
29	1140020006	SPRING WASHER	13				
30	1141110006	WASHER	10				
31	1100040610	BOLT	5				
35	1100040612	BOLT	3				
37	0882420220	RUBBER	1				
38	0003608252	WASHER	3				
39	1730142090	CONTROLLER	1				
40	0654203510	BRACKET	1				
41	0654203520	WIRING HARNESS	1				
42	1652533015	CAP	1				
44	1652060051	BUSHING	1				
45	1652200010	BAND	1				
46	0654203530	WIRING HARNESS	1				
47	0654203550	RESISTOR	1				
48	1134830635	NUT	1				
	U0C240						

silverthorn.co.uk

ELECTRICAL (1/2) (SPK controller type; 222000014-222000254)

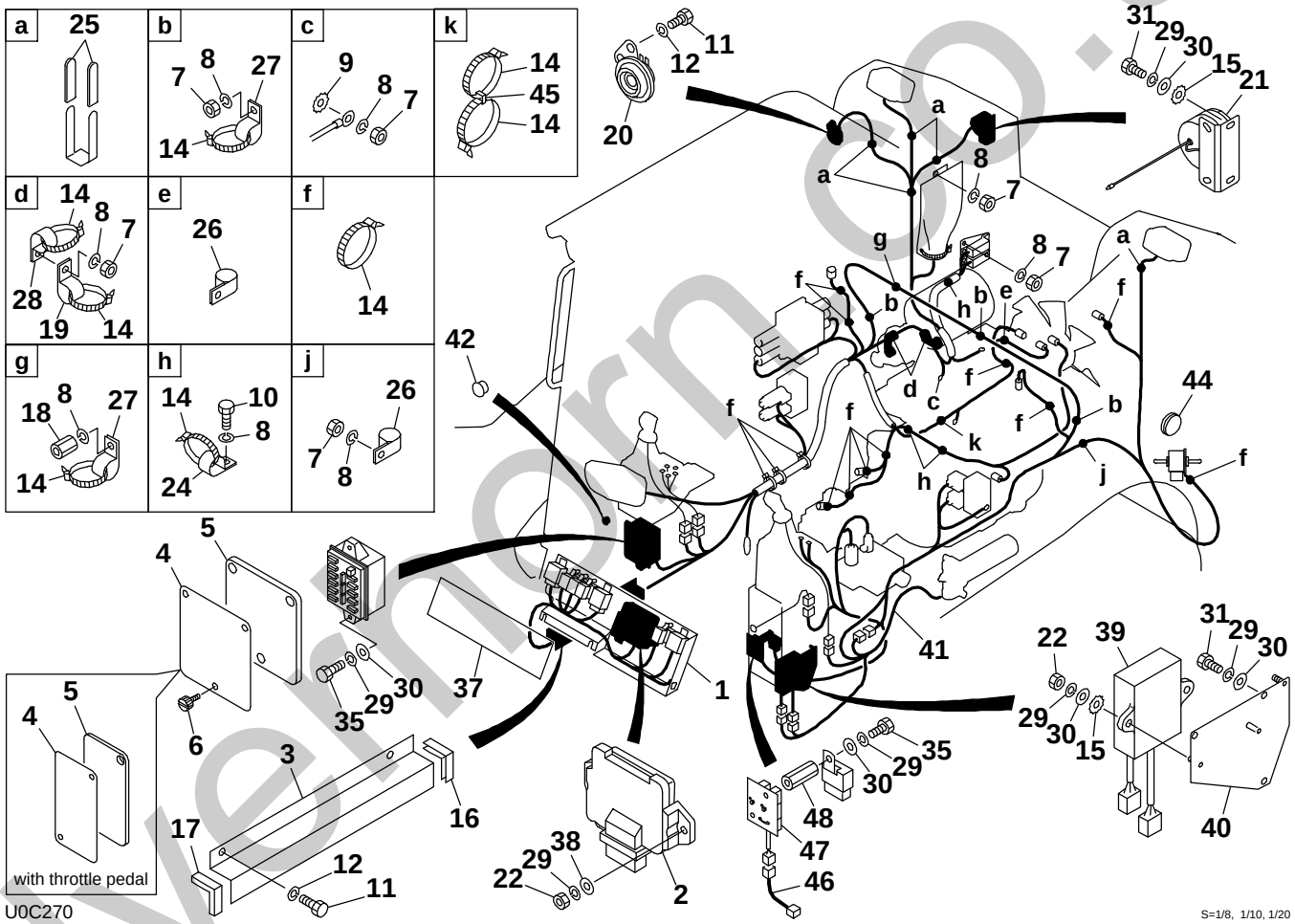

silvermorn.co.uk

ELECTRICAL (2/4) SPK CONTROLLER TYPE

Item	Part number	Description	Q'ty	Chan.	Serial No.	Serv.	Remarks
		ELECTRICAL ASSY					
1	0654210120	RELAY UNIT ASSY	1				
2	1910265127	E-ECU	1				
3	0654201010	PLATE	1				
4	0664300040	COVER	1				
	0881430802	COVER	1				
5	0664300030	INSULATOR	1				
	0881430803	INSULATOR	1				
6	1652711698	SCREW	2				
7	1130040010	NUT	11				
8	1140020010	SPRING WASHER	14				
9	1140330010	WASHER	1				
10	1100041016	BOLT	2				
11	1100040812	BOLT	4				
	1100040812	BOLT	2				
12	1140020008	CONICAL WASHER	4				
	1140020008	CONICAL WASHER	2				
14	1652231250	BAND	43				
15	1140330006	WASHER	2				
16	1654606009	TRIM	1				
17	1653916009	TRIM	1				
18	1134841025	NUT	1				
19	1711900129	CLAMP	2				
20	1703500712	HORN	1				
21	1703700013	BUZZER	1				
22	1130040006	NUT	5				
24	1711900076	CLAMP	2				
25	0872433150	TUBE	12				
26	1711900105	CLAMP	2				
27	1711900071	CLAMP	4				
28	1711900072	CLAMP	2				
29	1140020006	SPRING WASHER	13				
30	1141110006	WASHER	10				
31	1100040610	BOLT	5				
35	1100040612	BOLT	3				
37	0882420220	RUBBER	1				
38	0003608252	WASHER	3				
39	1730142090	CONTROLLER	1				
40	0654203510	BRACKET	1				
41	0654203520	WIRING HARNESS	1				
42	1652533015	CAP	1				
44	1652060051	BUSHING	1				
45	1652200010	BAND	1				
46	0654203530	WIRING HARNESS	1				
47	0654203550	RESISTOR	1				
48	1134830635	NUT	1				
	U0C270						

silverthorn.co.uk

ELECTRICAL (1/2) (SPK controller type; 222000255-222000353)

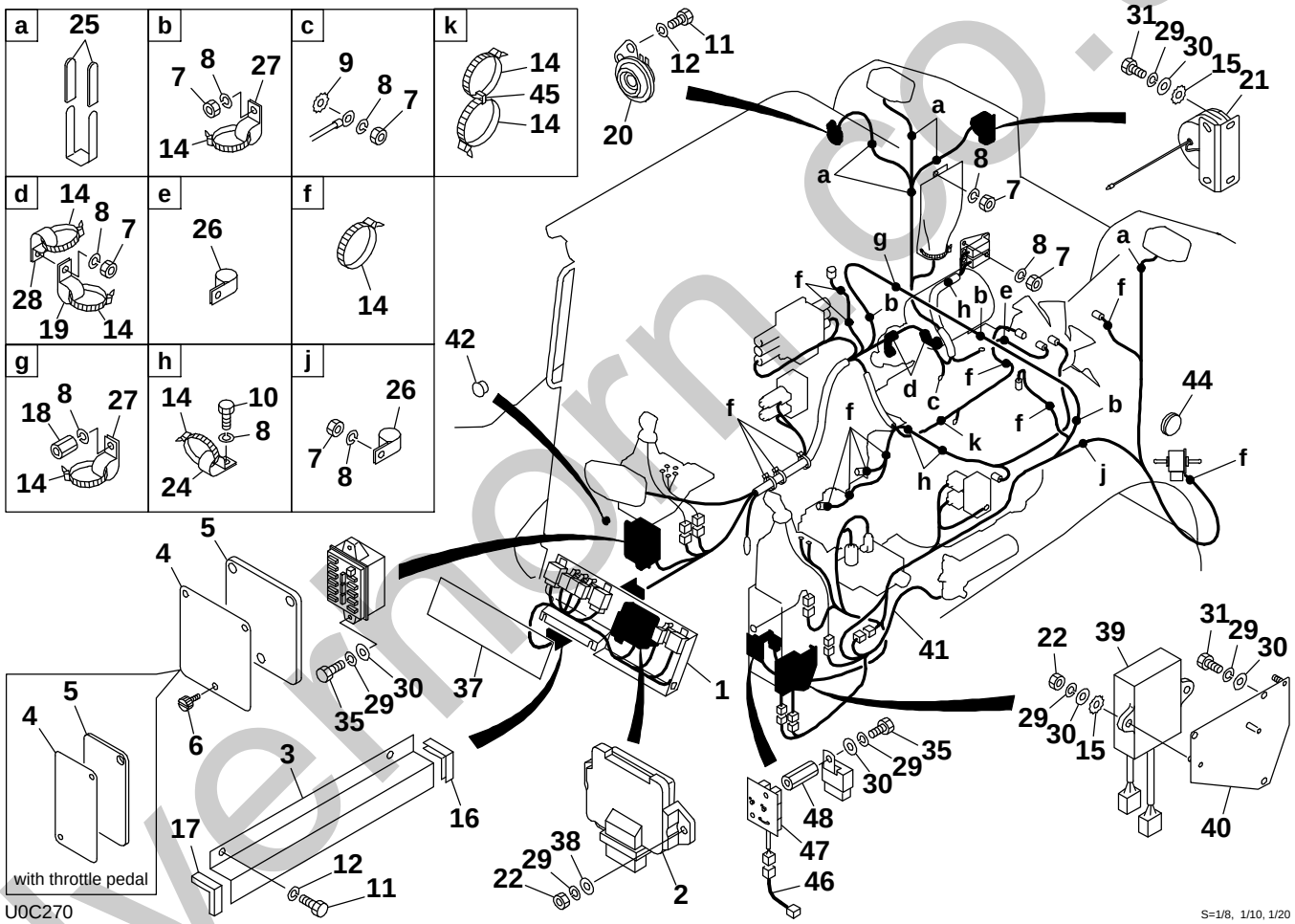

silvermorn.co.uk

ELECTRICAL (3/4) SPK CONTROLLER TYPE

Item	Part number	Description	Q'ty	Chan.	Serial No.	Serv.	Remarks
		ELECTRICAL ASSY					
1	0654203100	RELAY UNIT ASSY	1				
2	1910265127	E-ECU	1				
3	0654201010	PLATE	1				
4	0664300040	COVER	1				
	0881430802	COVER	1				
5	0664300030	INSULATOR	1				
	0881430803	INSULATOR	1				
6	1652711698	SCREW	2				
7	1130040010	NUT	11				
8	1140020010	SPRING WASHER	14				
9	1140330010	WASHER	1				
10	1100041016	BOLT	2				
11	1100040812	BOLT	4				
	1100040812	BOLT	2				
12	1140020008	CONICAL WASHER	4				
	1140020008	CONICAL WASHER	2				
14	1652231250	BAND	27				
15	1140330006	WASHER	2				
16	1654606009	TRIM	1				
17	1653916009	TRIM	1				
18	1134841025	NUT	1				
19	1711900129	CLAMP	2				
20	1703500712	HORN	1				
21	1703700013	BUZZER	1				
22	1130040006	NUT	5				
24	1711900076	CLAMP	2				
25	0872433150	TUBE	12				
26	1711900105	CLAMP	2				
27	1711900071	CLAMP	4				
28	1711900072	CLAMP	2				
29	1140020006	SPRING WASHER	13				
30	1141110006	WASHER	10				
31	1100040610	BOLT	5				
35	1100040612	BOLT	3				
37	0882420220	RUBBER	1				
38	0003608252	WASHER	3				
39	1730142090	CONTROLLER	1				
40	0654203510	BRACKET	1				
41	0654203520	WIRING HARNESS	1				
42	1652533015	CAP	1				
44	1652060051	BUSHING	1				
45	1652200010	BAND	1				
46	0654203530	WIRING HARNESS	1				
47	0654203550	RESISTOR	1				
48	1134830635	NUT	1				
	U0C300						

silverthorn.co.uk

ELECTRICAL (1/2) (SPK controller type; 222000354-)

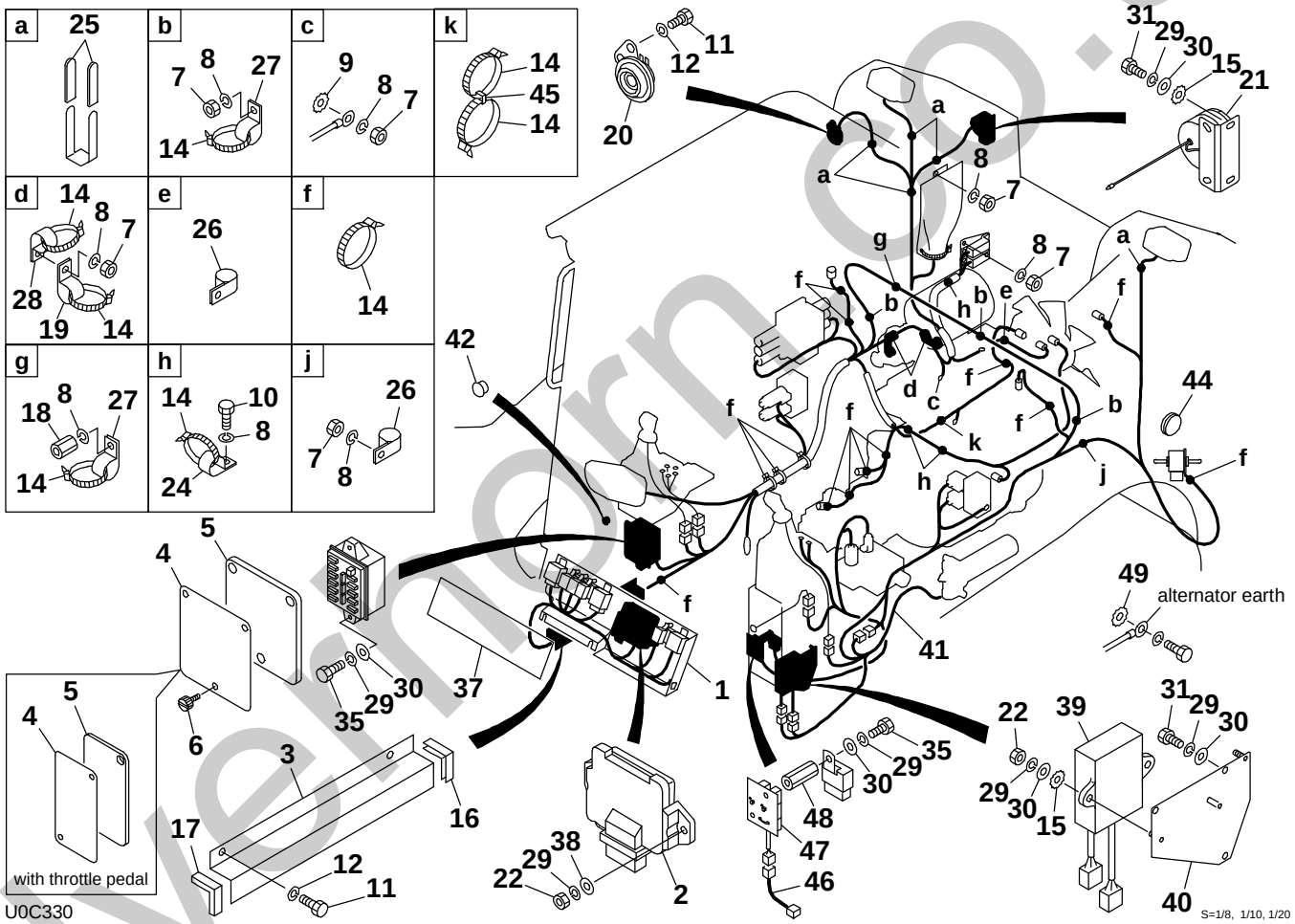

silvermorn.co.uk

ELECTRICAL (4/4) SPK CONTROLLER TYPE

Item	Part number	Description	Q'ty	Chan.	Serial No.	Serv.	Remarks
		ELECTRICAL ASSY					
1	0654203100	RELAY UNIT ASSY	1				
2	1910265127	E-ECU	1				
3	0654201010	PLATE	1				
4	0664300040	COVER	1				
	0881430802	COVER	1				
5	0664300030	INSULATOR	1				
	0881430803	INSULATOR	1				
6	1652711698	SCREW	2				
7	1130040010	NUT	11				
8	1140020010	SPRING WASHER	14				
9	1140330010	WASHER	1				
10	1100041016	BOLT	2				
11	1100040812	BOLT	4				
	1100040812	BOLT	2				
12	1140020008	CONICAL WASHER	4				
	1140020008	CONICAL WASHER	2				
14	1652201007	BAND	27				
	1652201007	BAND	28				
15	1140330006	WASHER	2				
16	1654606009	TRIM	1				
17	1653916009	TRIM	1				
18	1134841025	NUT	1				
19	1711900129	CLAMP	2				
20	1703500712	HORN	1				
21	1703700013	BUZZER	1				
22	1130040006	NUT	5				
24	1711900076	CLAMP	2				
25	0872433150	TUBE	12				
26	1711900105	CLAMP	2				
27	1711900071	CLAMP	4				
28	1711900072	CLAMP	2				
29	1140020006	SPRING WASHER	13				
30	1141110006	WASHER	10				
31	1100040610	BOLT	5				
35	1100040612	BOLT	3				
37	0882420220	RUBBER	1				
38	0003608252	WASHER	3				
39	1730142090	CONTROLLER	1				
40	0654203510	BRACKET	1				
41	0654203520	WIRING HARNESS	1				
42	1652533015	CAP	1				
44	1652060051	BUSHING	1				
45	1652200010	BAND	1				
46	0654203530	WIRING HARNESS	1				
47	0654203550	RESISTOR	1				
48	1134830635	NUT	1				
49	1140330005	WASHER	1				
	U0C330						

silverthorn.co.uk

ELECTRICAL (2/2) (222000001-222000013)

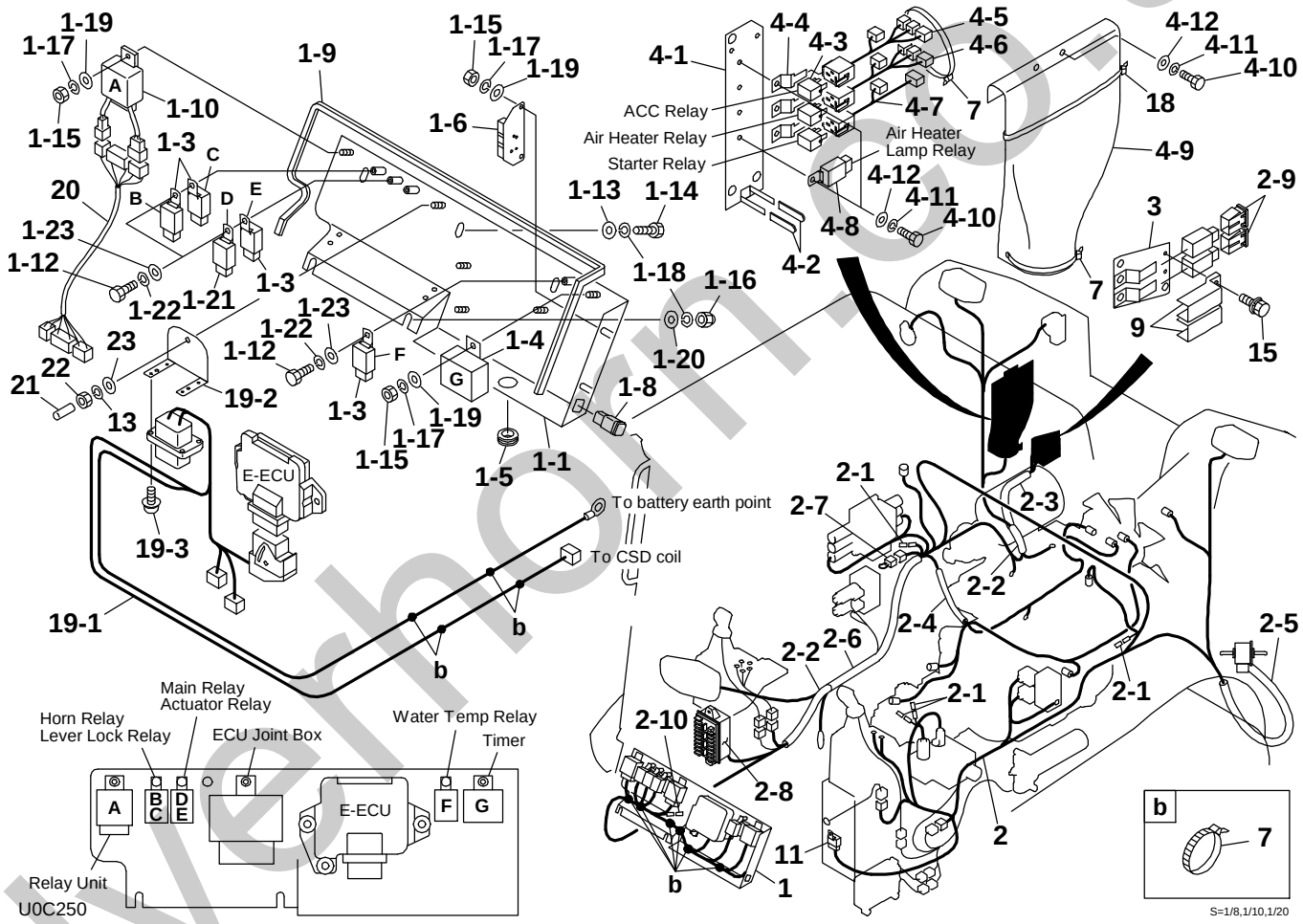

silverhorn.co.uk

ELECTRICAL (1/4) 222000001-222000013

Item	Part number	Description	Q'ty	Chan.	Serial No.	Serv.	Remarks
0-1	0654210110	RELAY UNIT ASSY	1				
1	0654210310	* RELAY UNIT	1				
1-1	0654202310	* * BOX	1				
1-3	1711900042	* * RELAY	4				
1-4	1711900140	* * TIMER UNIT (30SEC)	1				
1-5	1652060035	* * BUSHING	1				
1-6	0664201320	* * RESISTOR	1				
1-8	1700550017	* * PILOT LAMP	1				
1-9	1654606100	* * TRIM	1				
1-10	1711900062	* * RELAY	1				
1-12	1100040516	* * BOLT	3				
1-13	0003608252	* * WASHER	3				
1-14	1100040816	* * BOLT	3				
1-15	1130040006	* * NUT	4				
1-16	1134230008	* * NUT	2				
1-17	1140020006	* * SPRING WASHER	4				
1-18	1140020008	* * SPRING WASHER	5				
1-19	1141110006	* * WASHER	4				
1-20	1141110008	* * WASHER	2				
1-21	1910245135	* * RELAY	1				
1-22	1140020005	* * SPRING WASHER	3				
1-23	1141110005	* * WASHER	3				
2	0654202200	* WIRING HARNESS ASSY	1				
2-1	1730500008	* * DIODE (3A YELLOW)	4				
2-2	1531325020	* * PROTECTOR	2				
2-3	1531325025	* * PROTECTOR	1				
2-4	1531325035	* * PROTECTOR	1				
2-5	1531312058	* * PROTECTOR	1				
2-6	1531325080	* * PROTECTOR	1				
2-7	0394221010	* * SHORT CONNECTOR	1				
2-8	1701204920	* * FUSE BOX	1				
2-9	1701330045	* * FUSIBLE LINK	2				
2-10	1730500023	* * DIODE (3A)	1				
3	0654202130	* BRACKET	1				
4	0654202660	* RELAY UNIT	1				
4-1	0654202670	* * BRACKET	1				
4-2	0872433150	* * TUBE	2				
4-3	1910245125	* * RELAY	3				
4-4	1910245130	* * BRACKET	3				
4-5	0654203740	* * WIRING HARNESS	1				
4-6	0654203730	* * WIRING HARNESS	1				
4-7	0654203720	* * WIRING HARNESS	1				
4-8	1711900123	* * RELAY	1				
4-9	0882421001	* * RUBBER	1				
4-10	1100040612	* * BOLT	6				
4-11	1140020006	* * SPRING WASHER	6				
4-12	0003600110	* * WASHER	6				
7	1652231250	* BAND	8				
9	1700100038	* COVER	2				
11	1711900042	* RELAY	1				
13	1140020006	* SPRING WASHER	1				
15	1150420612	* SEMS BOLT	2				
18	1652201007	* BAND	1				
19	0654203700	* JOINT HARNESS ASSY	1				
19-1	0654203790	* * JOINT HARNESS	1				
19-2	0654203791	* * BRACKET	1				
19-3	1150420310	* * SCREW	4				
20	0654203710	* WIRING HARNESS	1				
21	1650205700	* CAP	1				
22	1130040006	* NUT	1				
23	1141110006	* WASHER	1				
	U0C250						

silverhorn.co.uk

ELECTRICAL (2/2) (222000014-222000254)

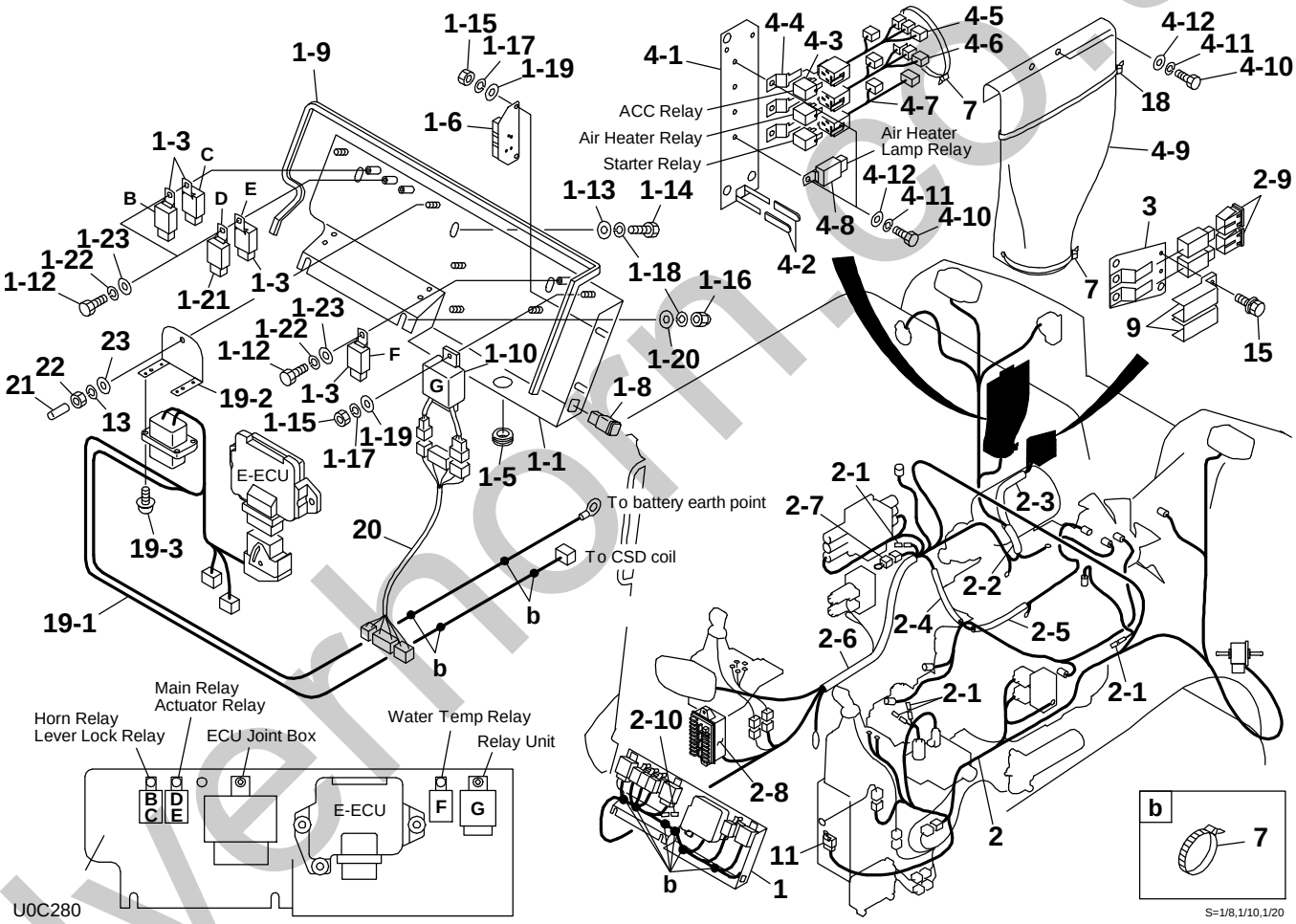

silverhorn.co.uk

ELECTRICAL (2/4) 222000014-222000254

Item	Part number	Description	Q'ty	Chan.	Serial No.	Serv.	Remarks
0-1	0654210120	RELAY UNIT ASSY	1				
1	0654210320	* RELAY UNIT	1				
1-1	0654202310	* * BOX	1				
1-3	1711900042	* * RELAY	4				
1-5	1652060035	* * BUSHING	1				
1-6	0664201320	* * RESISTOR	1				
1-8	1700550017	* * PILOT LAMP	1				
1-9	1654606100	* * TRIM	1				
1-10	1711900062	* * RELAY	1				
1-12	1100040516	* * BOLT	3				
1-13	0003608252	* * WASHER	3				
1-14	1100040816	* * BOLT	3				
1-15	1130040006	* * NUT	3				
1-16	1134230008	* * NUT	2				
1-17	1140020006	* * SPRING WASHER	3				
1-18	1140020008	* * SPRING WASHER	5				
1-19	1141110006	* * WASHER	3				
1-20	1141110008	* * WASHER	2				
1-21	1910245135	* * RELAY	1				
1-22	1140020005	* * SPRING WASHER	3				
1-23	1141110005	* * WASHER	3				
2	0654203200	* WIRING HARNESS ASSY	1				
2-1	1730500008	* * DIODE (3A YELLOW)	4				
2-2	1531325020	* * PROTECTOR	2				
2-3	1531325025	* * PROTECTOR	1				
2-4	1531325035	* * PROTECTOR	1				
2-5	1531315030	* * PROTECTOR	1				
2-6	1531325080	* * PROTECTOR	1				
2-7	0394221010	* * SHORT CONNECTOR	1				
2-8	1701204920	* * FUSE BOX	1				
2-9	1701330045	* * FUSIBLE LINK	2				
2-10	1730500023	* * DIODE (3A)	1				
3	0654202130	* BRACKET	1				
4	0654202660	* RELAY UNIT	1				
4-1	0654202670	* * BRACKET	1				
4-2	0872433150	* * TUBE	2				
4-3	1910245125	* * RELAY	3				
4-4	1910245130	* * BRACKET	3				
4-5	0654203740	* * WIRING HARNESS	1				
4-6	0654203730	* * WIRING HARNESS	1				
4-7	0654203720	* * WIRING HARNESS	1				
4-8	1711900123	* * RELAY	1				
4-9	0882421001	* * RUBBER	1				
4-10	1100040612	* * BOLT	6				
4-11	1140020006	* * SPRING WASHER	6				
4-12	0003600110	* * WASHER	6				
7	1652231250	* BAND	7				
9	1700100038	* COVER	2				
11	1711900042	* RELAY	1				
13	1140020006	* SPRING WASHER	1				
15	1150420612	* SEMS BOLT	2				
18	1652201007	* BAND	1				
19	0654203700	* JOINT HARNESS ASSY	1				
19-1	0654203790	* * JOINT HARNESS	1				
19-2	0654203791	* * BRACKET	1				
19-3	1150420310	* * SCREW	4				
20	0654203710	* WIRING HARNESS	1				
21	1650205700	* CAP	1				
22	1130040006	* NUT	1				
23	1141110006	* WASHER	1				
	U0C280						

silverhorn.co.uk

ELECTRICAL (2/2) (222000255-222000353)

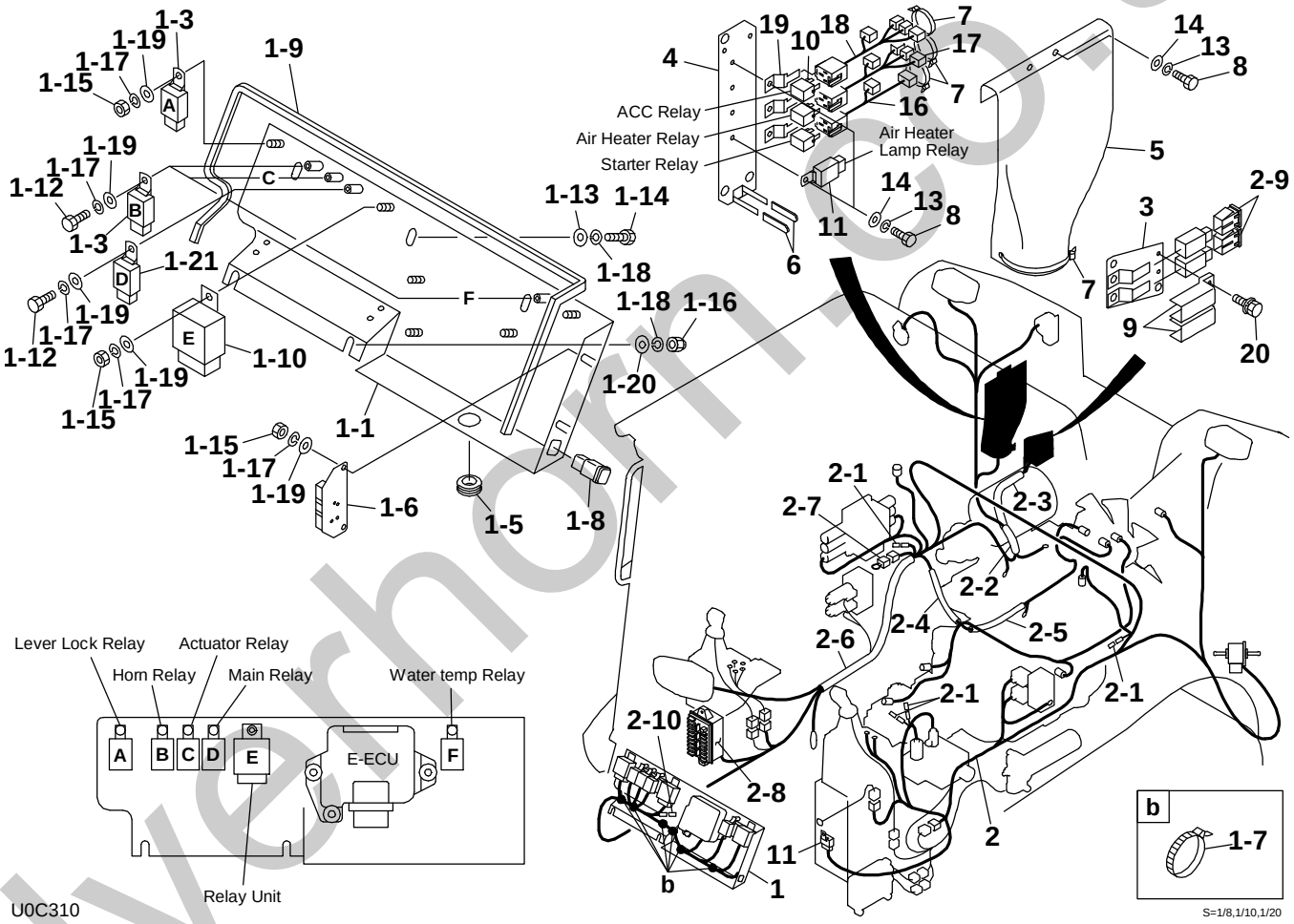

silverhorn.co.uk

ELECTRICAL (3/4) 222000255-222000353

Item	Part number	Description	Q'ty	Chan.	Serial No.	Serv.	Remarks
0-1	0654203100	RELAY UNIT ASSY	1				
1	0654203300	* RELAY UNIT	1				
1-1	0654202310	* * BOX	1				
1-3	1711900042	* * RELAY	4				
1-5	1652060035	* * BUSHING	1				
1-6	0664201320	* * RESISTOR	1				
1-7	1652231250	* * band	6				
1-8	1700550017	* * PILOT LAMP	1				
1-9	1654606100	* * TRIM	1				
1-10	1711900062	* * RELAY	1				
1-12	1100040616	* * BOLT	3				
1-13	0003608252	* * WASHER	3				
1-14	1100040816	* * BOLT	3				
1-15	1130040006	* * NUT	4				
1-16	1134230008	* * NUT	2				
1-17	1140020006	* * SPRING WASHER	4				
1-18	1140020008	* * SPRING WASHER	5				
1-19	1141110006	* * WASHER	4				
1-20	1141110008	* * WASHER	2				
1-21	1910245135	* * RELAY	1				
2	0654203200	* WIRING HARNESS ASSY	1				
2-1	1730500008	* * DIODE (3A YELLOW)	4				
2-2	1531325020	* * PROTECTOR	2				
2-3	1531325025	* * PROTECTOR	1				
2-4	1531325035	* * PROTECTOR	1				
2-5	1531315030	* * PROTECTOR	1				
2-6	1531325080	* * PROTECTOR	1				
2-7	0394221010	* * SHORT CONNECTOR	1				
2-8	1701204920	* * FUSE BOX	1				
2-9	1701330045	* * FUSIBLE LINK	2				
2-10	1730500023	* * DIODE (3A)	1				
3	0654202130	* BRACKET	1				
4	0684202220	* BRACKET	1				
5	0882421001	* RUBBER	1				
6	0872433150	* TUBE	2				
7	1652231250	* BAND	4				
8	1100040612	* BOLT	6				
9	1700100038	* COVER	2				
10	1910245125	* RELAY	3				
11	1711900042	* RELAY	2				
13	1140020006	* SPRING WASHER	6				
14	0003600110	* WASHER	6				
16	0654203720	* WIRING HARNESS	1				
17	0654203730	* WIRING HARNESS	1				
18	0654203740	* WIRING HARNESS	1				
19	1910245130	* BRACKET	3				
20	1150420612	* SEMS BOLT	2				
	U0C310						

silverthorn.co.uk

ELECTRICAL (2/2) (222000354-)

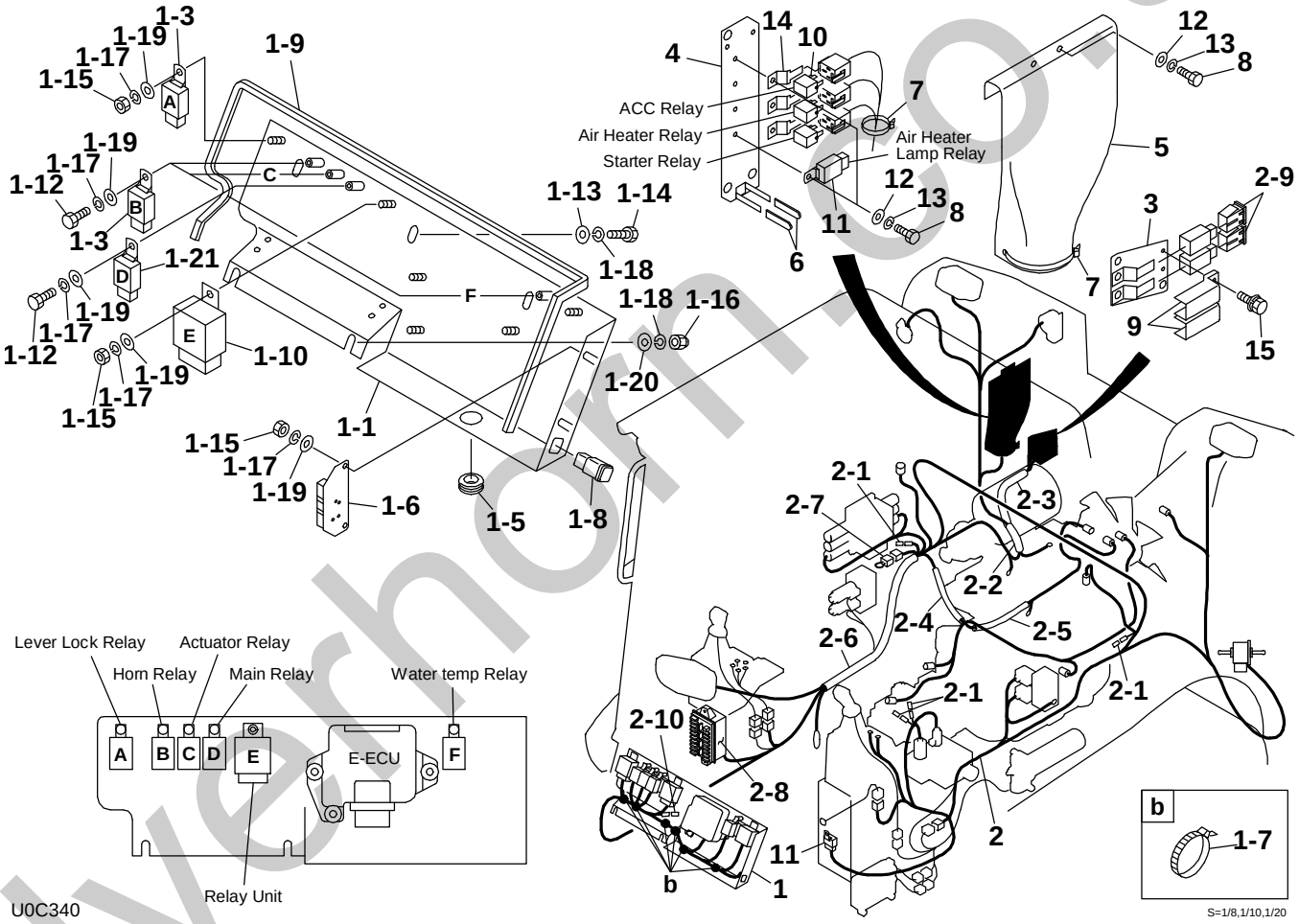

silverhorn.co.uk

ELECTRICAL (4/4) 222000254~

Item	Part number	Description	Q'ty	Chan.	Serial No.	Serv.	Remarks
0-1	0654204100	RELAY UNIT ASSY	1				
1	0654204300	* RELAY UNIT	1				
1-1	0654202310	* * BOX	1				
1-3	1711900042	* * RELAY	4				
1-5	1652060035	* * BUSHING	1				
1-6	0664201320	* * RESISTOR	1				
1-7	1652231250	* * band	6				
1-8	1700550017	* * PILOT LAMP	1				
1-9	1654606100	* * TRIM	1				
1-10	1711900062	* * RELAY	1				
1-12	1100040616	* * BOLT	4				
1-13	0003608252	* * WASHER	3				
1-14	1100040816	* * BOLT	3				
1-15	1130040006	* * NUT	4				
1-16	1134230008	* * NUT	2				
1-17	1140020006	* * SPRING WASHER	8				
1-18	1140020008	* * SPRING WASHER	5				
1-19	1141110006	* * WASHER	8				
1-20	1141110008	* * WASHER	2				
1-21	1910245135	* * RELAY	1				
2	0654204200	* WIRING HARNESS ASSY	1				
2-1	1730500008	* * DIODE (3A YELLOW)	4				
2-2	1531325020	* * PROTECTOR	2				
2-3	1531325025	* * PROTECTOR	1				
2-4	1531325035	* * PROTECTOR	1				
2-5	1531315030	* * PROTECTOR	1				
2-6	1531325080	* * PROTECTOR	1				
2-7	0394221010	* * SHORT CONNECTOR	1				
2-8	1701204920	* * FUSE BOX	1				
2-9	1701330045	* * FUSIBLE LINK	2				
2-10	1730500023	* * DIODE (3A)	1				
3	0654202130	* BRACKET	1				
4	0654204110	* BRACKET	1				
5	0882421001	* RUBBER	1				
6	0872433150	* TUBE	2				
7	1652231250	* BAND	2				
8	1100040612	* BOLT	6				
9	1700100038	* COVER	2				
10	1910245125	* RELAY	3				
11	1711900042	* RELAY	2				
12	0003600110	* WASHER	6				
13	1140020006	* SPRING WASHER	6				
14	1910245130	* BRACKET	3				
15	1150420612	* SEMS BOLT	2				
	U0C340						

silverhorn.co.uk

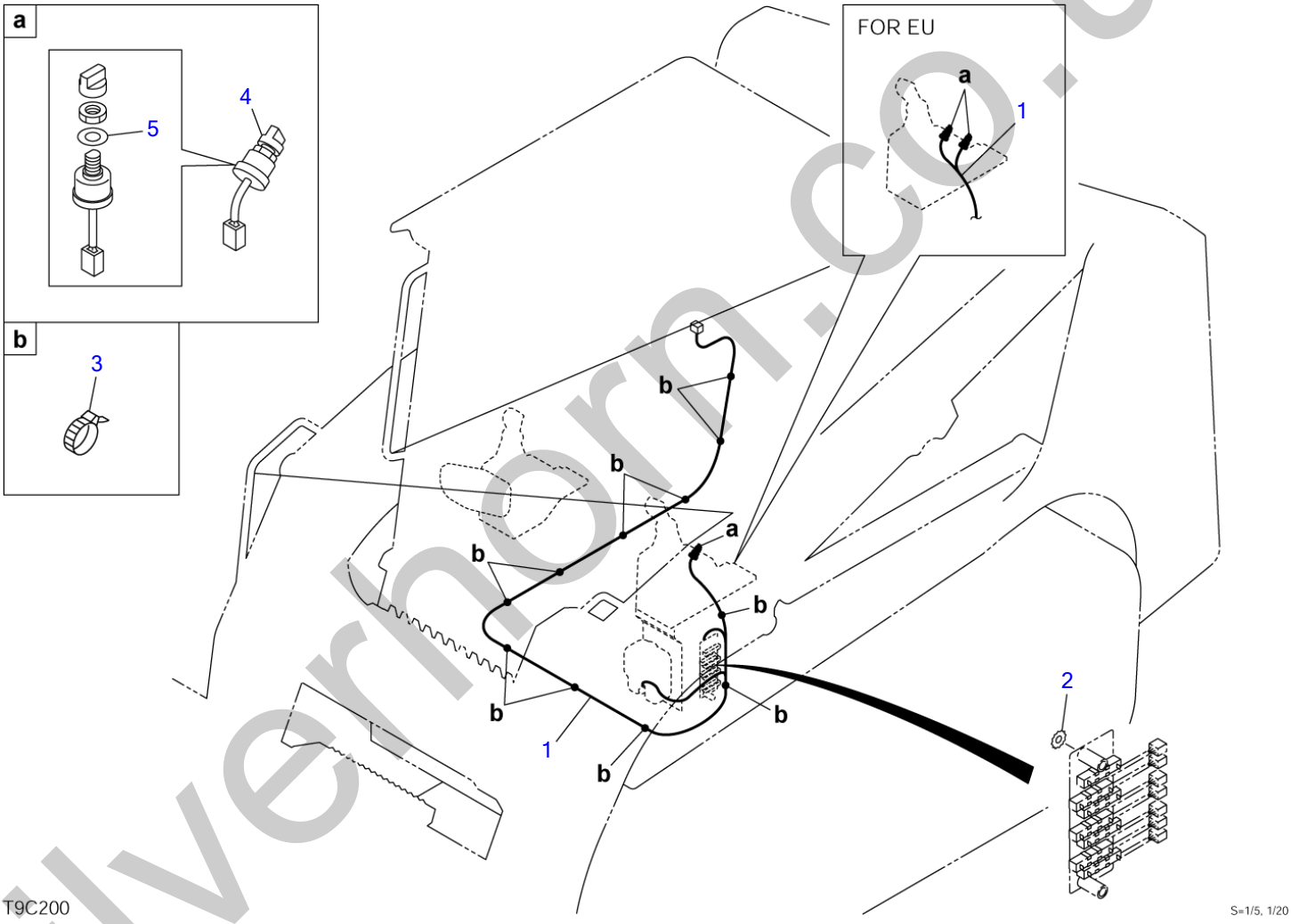

silverhorn.co.uk

ELECTRICAL (cab)

Item	Part number	Description	Q'ty	Chan.	Serial No.	Serv.	Remarks
		ELECTRICAL ASSY					
		ELECTRICAL ASSY (for EU)					
1	0880427810	HARNESS, wiring	1				
	0882421410	HARNESS, wiring	1			M	for EU
2	1140330010	WASHER	1				
3	1652231250	BAND	10				
4	1704300007	SWITCH, wiper	1				
	1704300007	SWITCH, wiper	2				for EU
5	1141810012	WASHER	1				
	1141810012	WASHER	2				for EU
	U0c130						

silverhorn.co.uk

ELECTRICAL (multi-functional grip type)

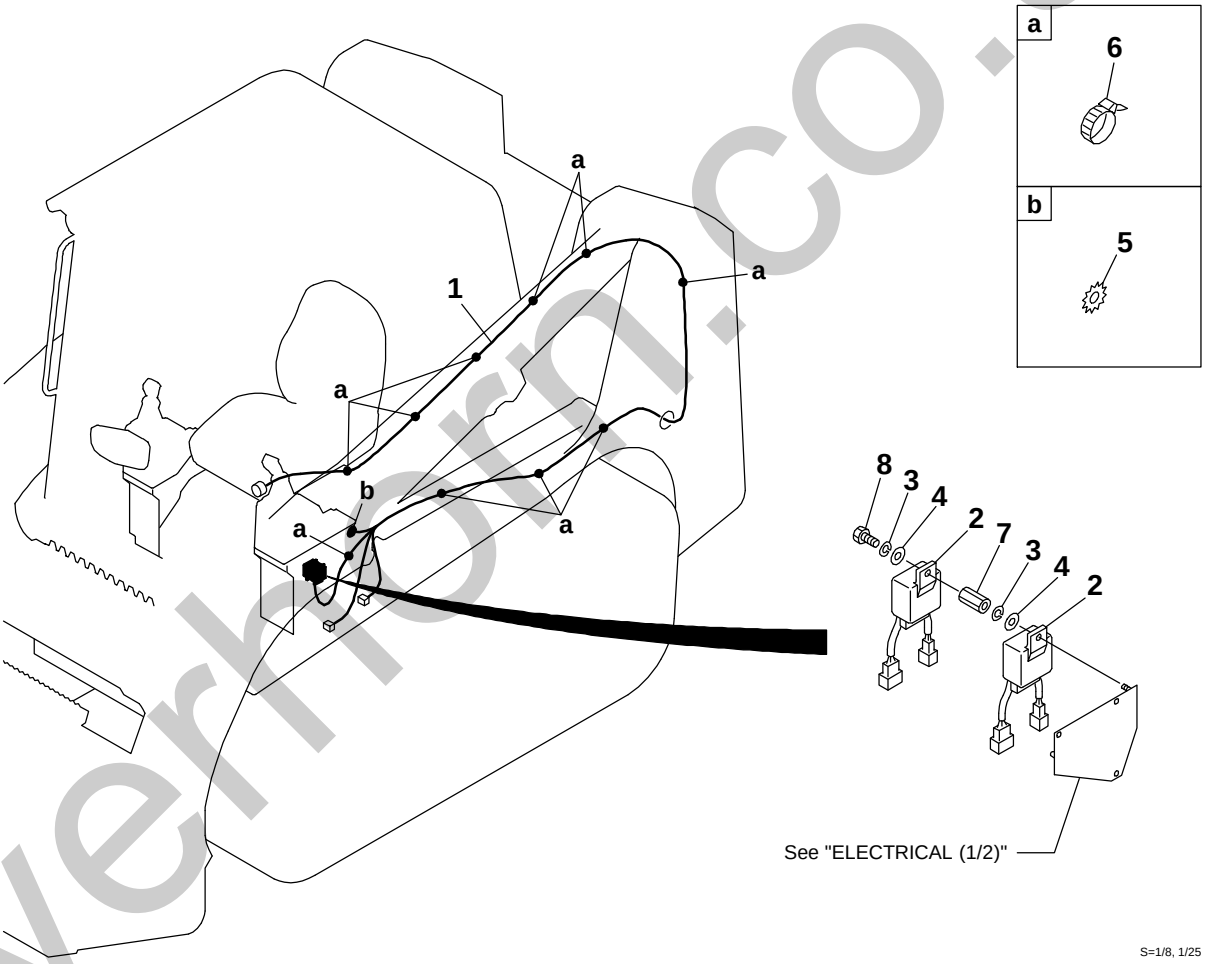

U0C210

S=1/8, 1/25

silverhorn.co.uk

ELECTRICAL (MULTI-FUNCTIONAL GRIP TYPE)

Item	Part number	Description	Q'ty	Chan.	Serial No.	Serv.	Remarks
		GRIP SWITCH ASSY	1				
1	0654202530	WIRING HARNESS	1				
	0654207100	WIRING HARNESS	1				
2	1711900062	RELAY	2				
3	1140020006	SPRING WASHER	2				
4	1141110006	WASHER	2				
5	1140330010	WASHER	1				
6	1652201008	BAND	11				
7	1134830635	NUT	1				
8	1100040616	BOLT	1				
	U0C210						

silverhorn.co.uk

BATTERY

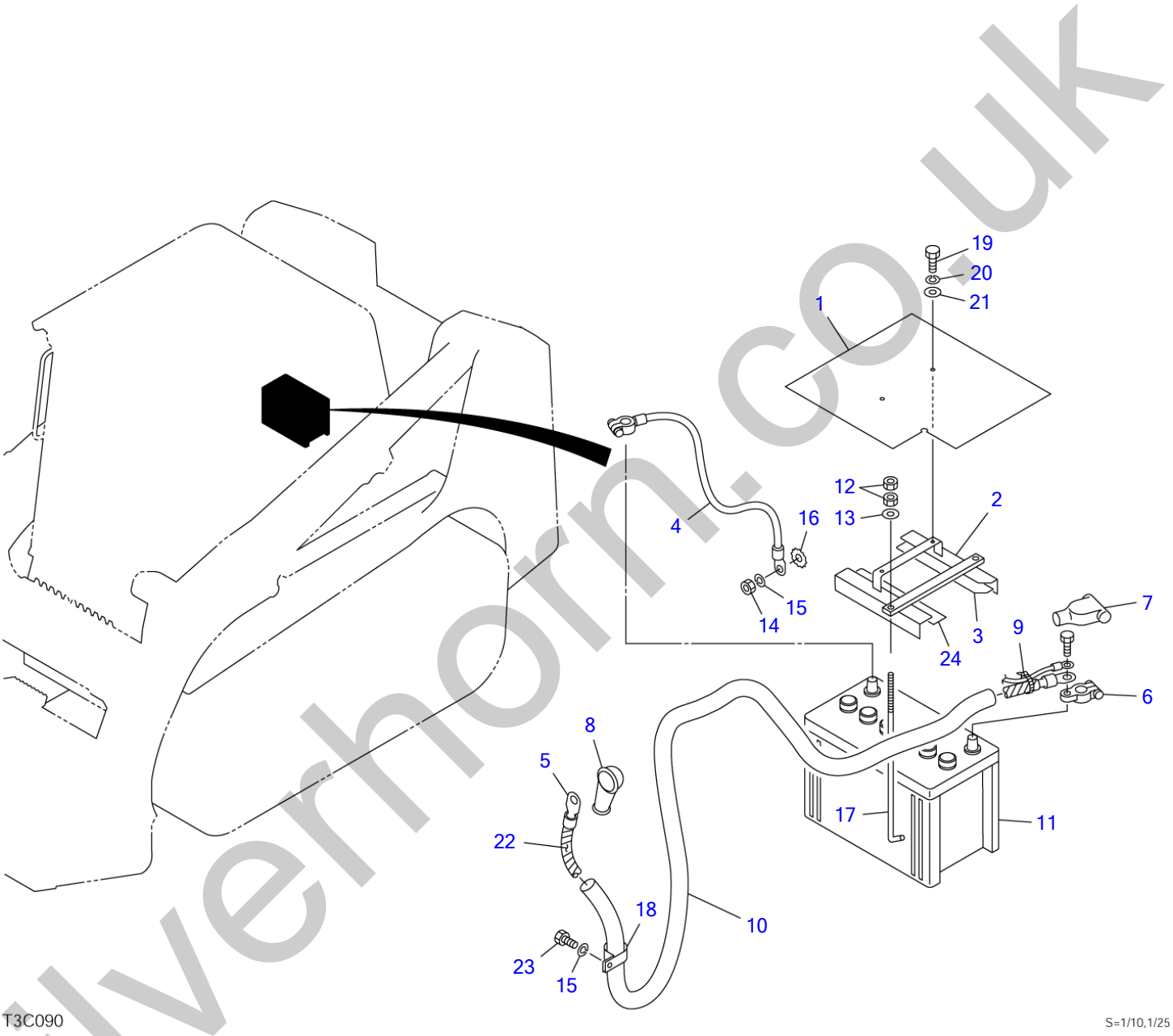

silverhorn.co.uk

BATTERY

Item	Part number	Description	Q'ty	Chan.	Serial No.	Serv.	Remarks
		BATTERY ASSY					
1	0654400010	SHEET	1				
2	0654401020	CLAMP	1				
3	0654401030	RUBBER	1				
4	1702230030	CABLE, earth	1				
5	1702530130	CABLE, battery	1				
6	1702330000	TERMINAL	1				
7	1702920080	COVER	1				
8	1702901283	CAP	1			M	
9	1652231140	BAND	1				
10	1531118120	PROTECTOR	1				sold by the meter
11	1702021531	BATTERY	1				
12	1130040008	NUT	4				
13	1141110008	WASHER	2				
14	1130040010	NUT	1				
15	1140020010	WASHER, spring	2				
16	1140330010	WASHER	1				
17	1702108250	BOLT	2				
18	1711900129	CLAMP	1				
19	1100040616	BOLT	2				
20	1140020006	WASHER, spring	2				
21	0003606202	WASHER	2				
22	1703221026	PROTECTOR	1			M	sold by the meter
23	1100041016	BOLT	1				
24	0880442050	RUBBER	1				
	U0c140						

silverhorn.co.uk

REAR LAMP

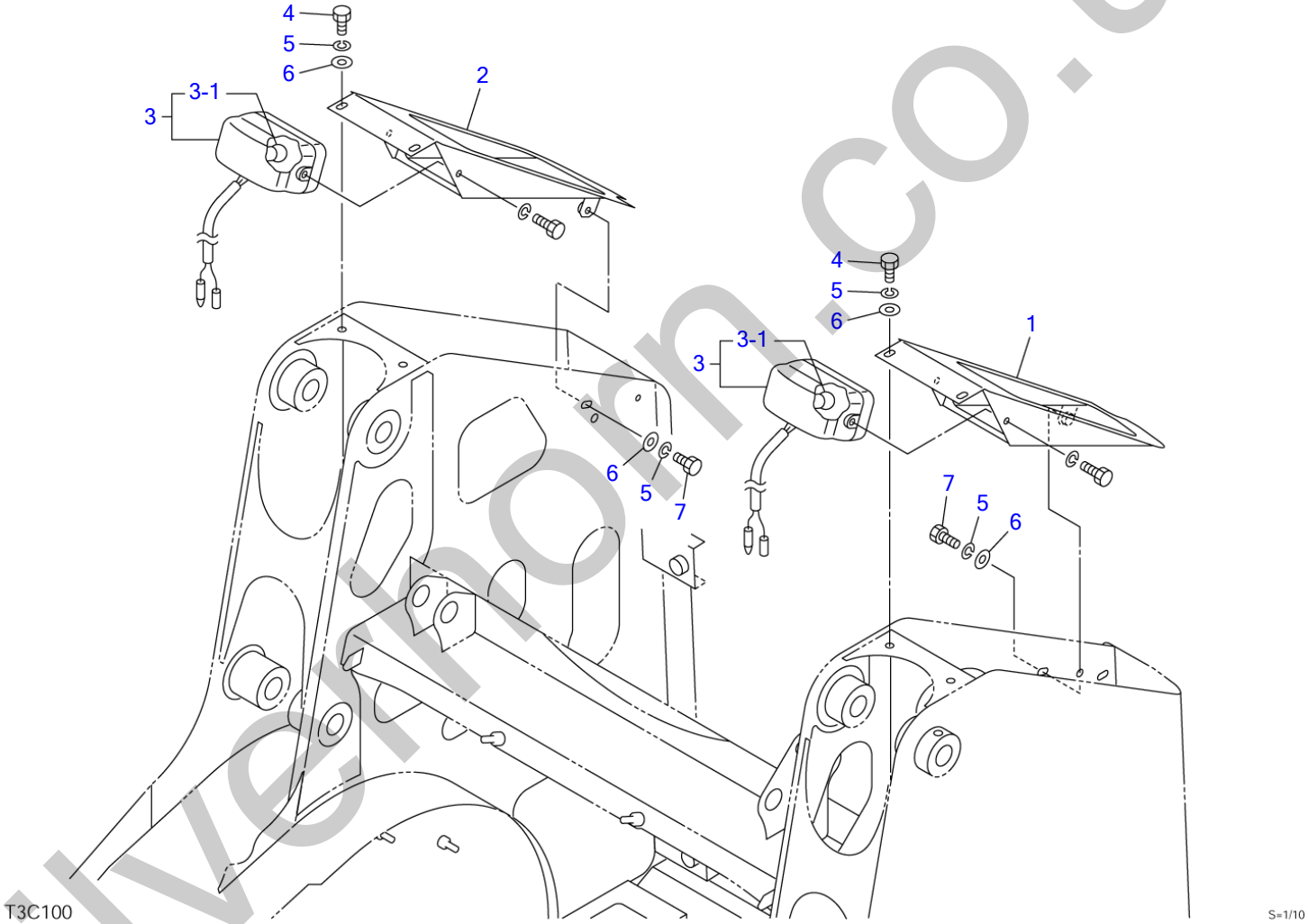

silverthorn.co.uk

REAR LAMP

Item	Part number	Description	Q'ty	Chan.	Serial No.	Serv.	Remarks
		LIGHT ASSY, rear					
1	0654900510	COVER (L.H.)	1				
2	0654900520	COVER (R.H.)	1				
3	1703006900	LAMP ASSY	2				
3-1	1703006902	▪ BULB	1				12V, 55W
4	1100040816	BOLT	4				
5	1140020008	WASHER, spring	6				
6	0003608252	WASHER	6				
7	1100040820	BOLT	2				
	T3c100						

silverhorn.co.uk

MAINTENANCE LIGHT SOCKET

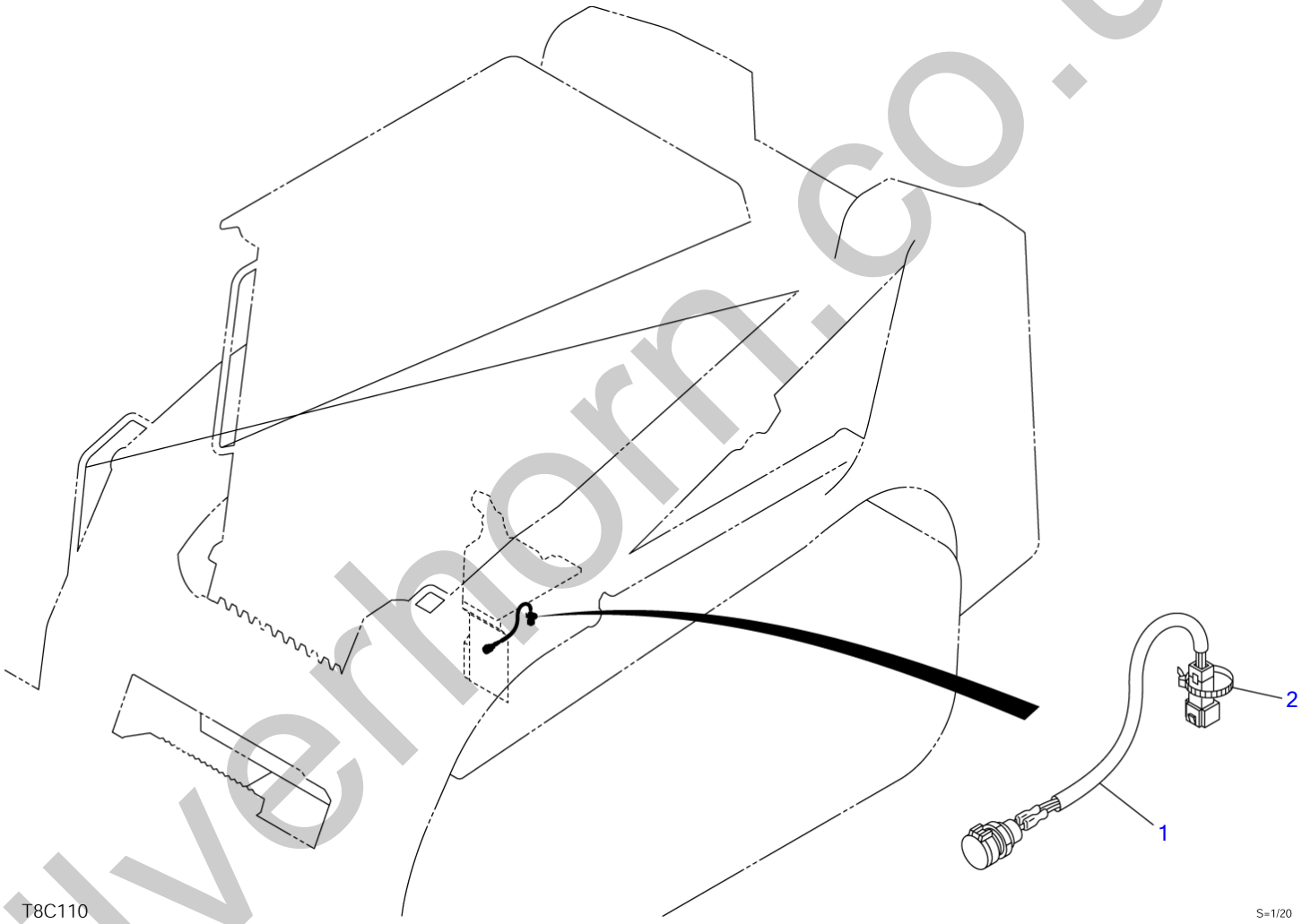

silverhorn.co.uk

MAINTENANCE LIGHT SOCKET

Item	Part number	Description	Q'ty	Chan.	Serial No.	Serv.	Remarks
		SOCKET ASSY, maintenance light					
1	**0394203100**	SOCKET ASSY	1				
2	**1652231250**	BAND	1				
	U0c150						

silverhorn.co.uk

WINDOW WASHER

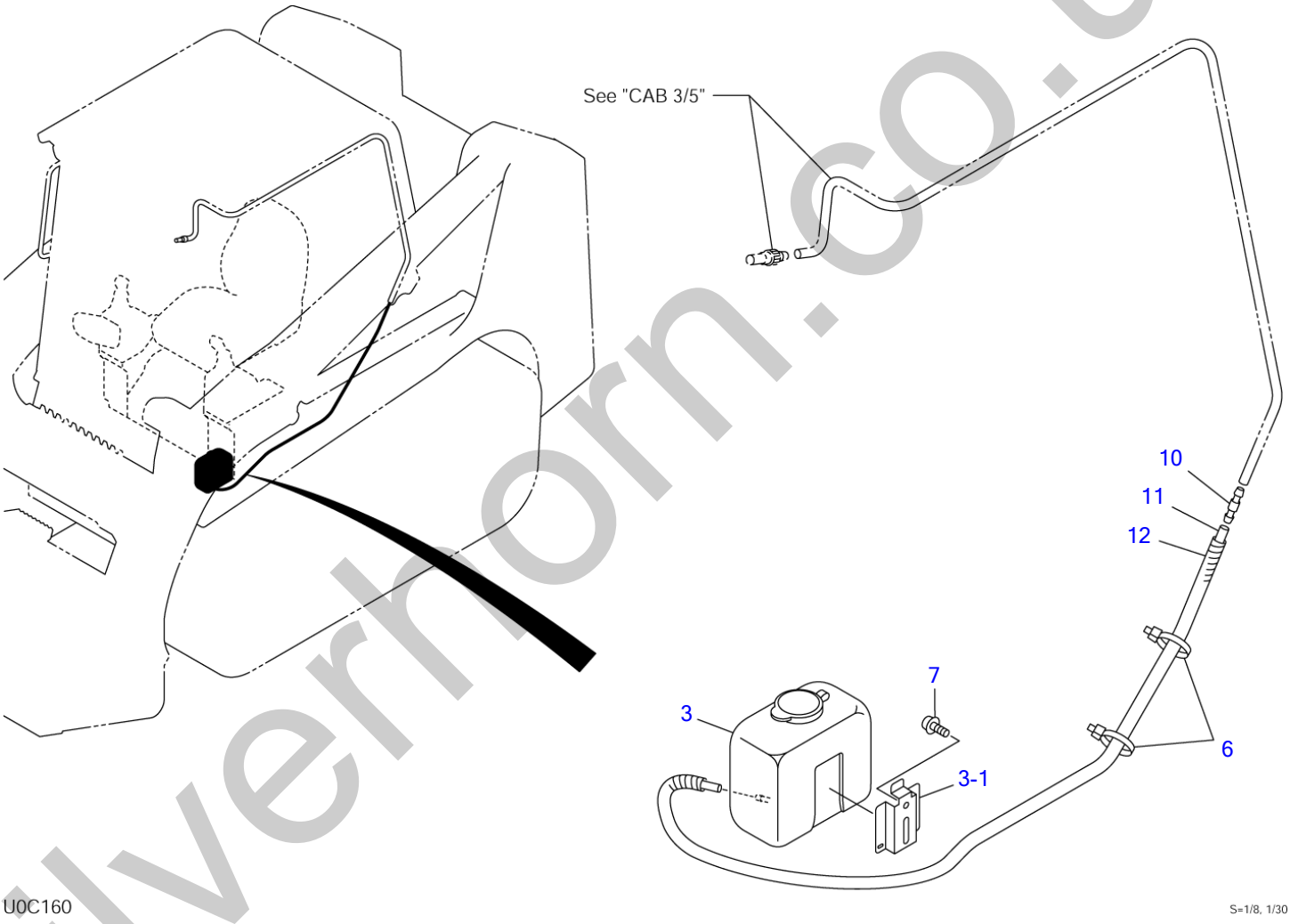

silverhorn.co.uk

WINDOW WASHER

Item	Part number	Description	Q'ty	Chan.	Serial No.	Serv.	Remarks
		WASHER ASSY, window					
3	1711910290	TANK	1				
3-1	1711910291	・BRACKET	1				
6	1652231140	BAND	2				
7	1150410612	BOLT, sems	2				
10	1711910014	JOINT	1				
11	1711919150	HOSE	1				sold by the meter
12	1703220750	PROTECTOR	1				sold by the meter
	T3c110						

silverhorn.co.uk

RADIO

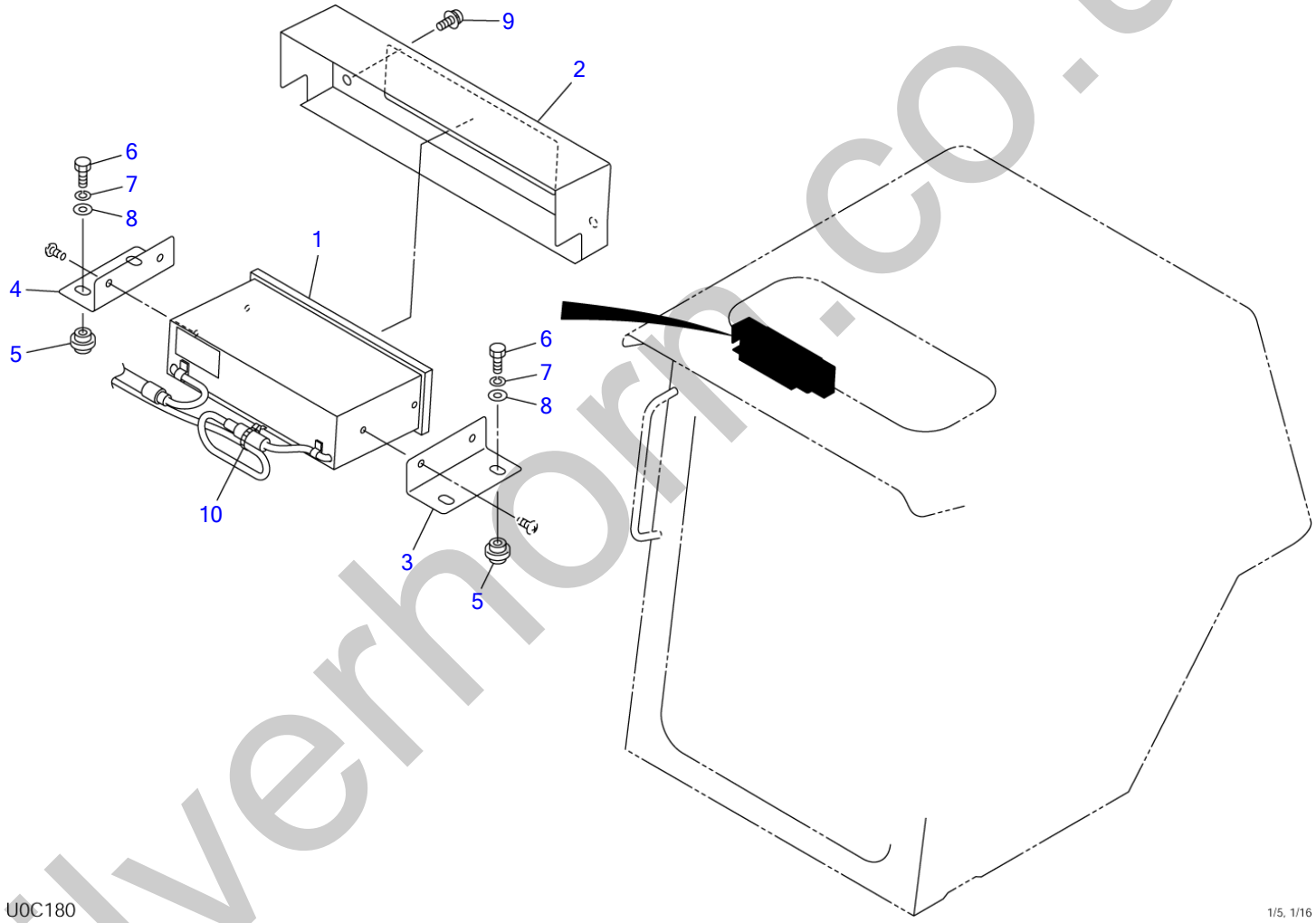

silverhorn.co.uk

RADIO

Item	Part number	Description	Q'ty	Chan.	Serial No.	Serv.	Remarks
		RADIO ASSY (for Europe, Asia, Oceania)					
		RADIO ASSY (for America)					
		RADIO ASSY (for Japan)					
1	1705004660	RADIO (for Europe, Asia, Oceania)	1			M	
	1705004670	RADIO (for America)	1			M	
	1705004680	RADIO (for Japan)	1			M	
2	0654700020	CASE	1			M	
3	0654700130	BRACKET (L.H.)	1			M	
4	0654700140	BRACKET (R.H.)	1			M	
5	1652520006	RUBBER, cushion	4			M	
6	1100040625	BOLT	4			M	
7	1140020006	WASHER, spring	4				
8	1141110006	WASHER	4				
9	1150420614	SCREW	2				
10	1652231100	BAND	1				
	U0c180						

silverhorn.co.uk

VALVE & ACCESSORIES

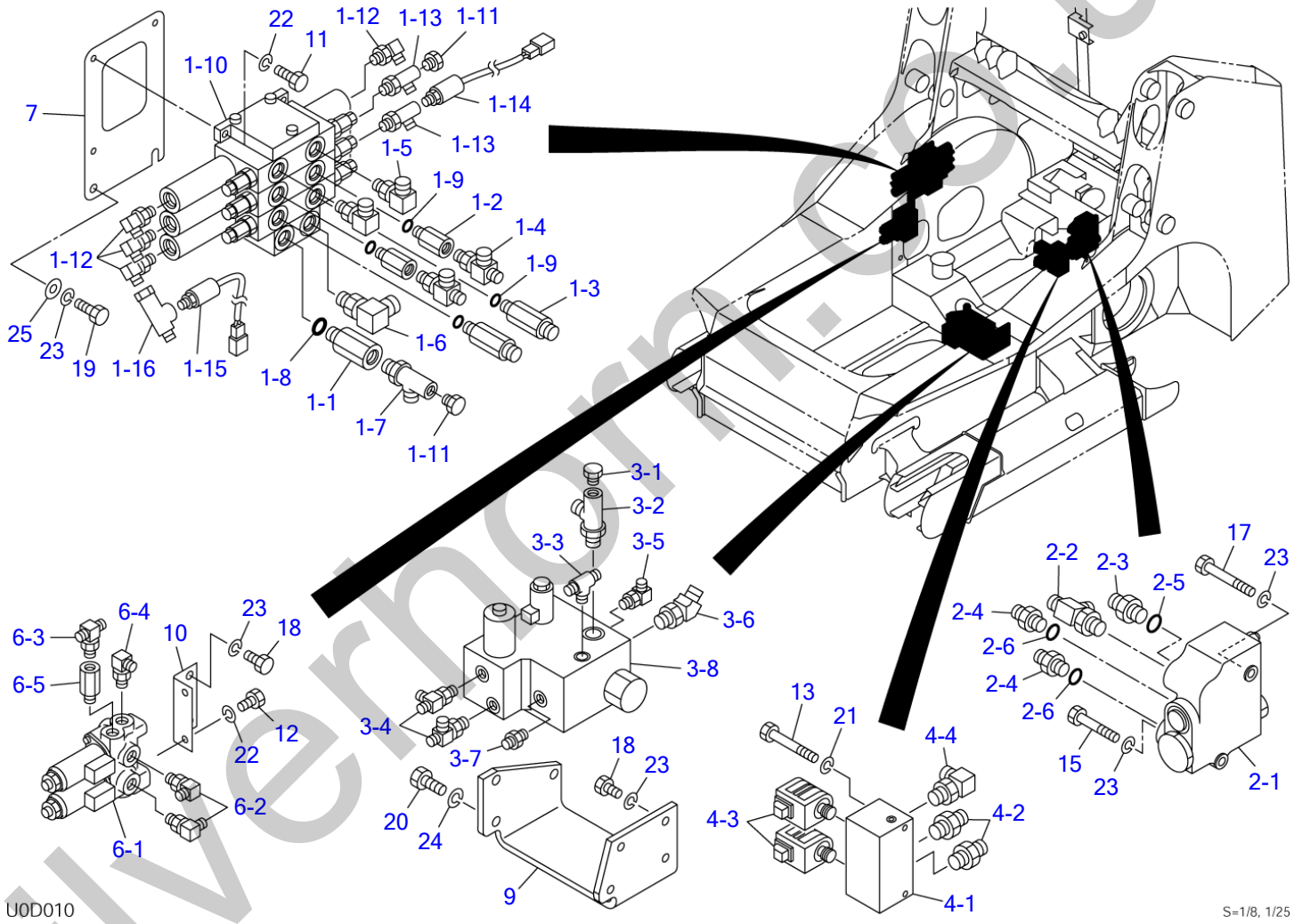

silvernorm.co.uk

VALVE & ACCESSORIES

Item	Part number	Description	Q'ty	Chan.	Serial No.	Serv.	Remarks
		VALVE ASSY, control					
1	X **********	VALVE SUB ASSY	1				
1-1	0007213056	・BUSHING	1				
1-2	0007213076	・BUSHING	2			M	
1-3	0007203084	・ADAPTOR	2			M	
1-4	1512373017	・TEE	2			M	
	1420010180	・・O-RING	1				
1-5	1515200067	・ELBOW	2				
	1420310908	・・O-RING	1				
1-6	1515200068	・ELBOW	1				
	1420310910	・・O-RING	1				
1-7	1512340004	・TEE	1				
	1420010180	・・O-RING	1				
1-8	1420370910	・O-RING	1				
1-9	1420370908	・O-RING	4				
1-10	1901042900	・VALVE, control	1				
1-11	1501750002	・PLUG	2				
	1420010110	・・O-RING	1				
1-12	1515010040	・ELBOW	4				
	1420010110	・・O-RING	1				
1-13	1512340001	・TEE	2				
	1420010110	・・O-RING	1				
1-14	1700100041	・SWITCH, pressure	1			M	
	1420010110	・・O-RING	1				
1-15	1700100060	・SWITCH, pressure	1			M	
	1420010110	・・O-RING	1				
1-16	1513390047	・TEE	1			M	
2	X **********	VALVE SUB ASSY	1				
2-1	1901748000	・VALVE, self-level	1				
2-2	1512373009	・TEE	1				
	1420310908	・・O-RING	1				
2-3	0007203007	・ADAPTOR	1				
	1420310908	・・O-RING	1				
2-4	0007203017	・ADAPTOR	2				
	1420310906	・・O-RING	1				
2-5	1420370910	・O-RING	1				
2-6	1420370906	・O-RING	2				
3	X **********	VALVE SUB ASSY	1				
3-1	1501750002	・PLUG	1				
	1420010110	・・O-RING	1				
3-2	1512340004	・TEE	1				
	1420010180	・・O-RING	1				
3-3	1512370010	・TEE	1				
	1420010110	・・O-RING	1				
3-4	1512370011	・TEE	2				
	1420010110	・・O-RING	1				
3-5	1515012040	・ELBOW	1				
	1420010110	・・O-RING	1				
3-6	1515100112	・ELBOW	1				
	1420010180	・・O-RING	1				
3-7	1515600200	・ADAPTOR	1				
	1420010110	・・O-RING	1				
3-8	1901748100	・VALVE, sub	1				
4	X **********	VALVE SUB ASSY	1				
4-1	0881501100	・BLOCK, valve	1				
4-2	1515600202	・ADAPTOR	2				
	1420010180	・・O-RING	1				
4-3	1901723200	・VALVE, solenoid	2				
4-4	1515010042	・ELBOW	1				
	1420010180	・・O-RING	1				
6	X **********	VALVE SUB ASSY	1				
6-1	1901752100	・VALVE, proportional control	1			M	
6-2	1515012040	・ELBOW	2				
	1420010110	・・O-RING	1				
6-3	1512370010	・TEE	1				
	1420010110	・・O-RING	1				
6-4	1512375004	・ELBOW	1				
	1420010110	・・O-RING	1				

silverthorn.co.uk

VALVE & ACCESSORIES

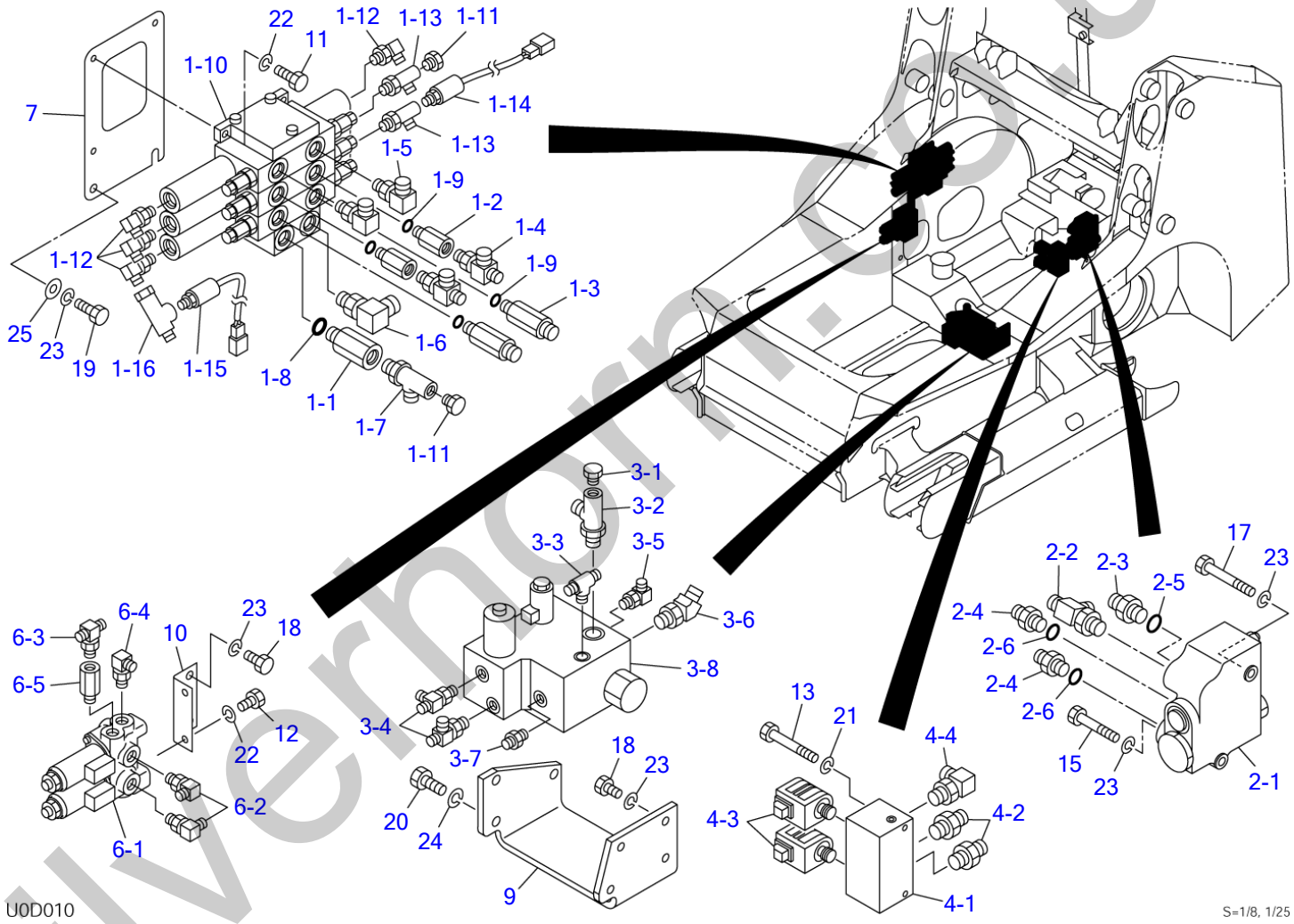

silvernorm.co.uk

VALVE & ACCESSORIES

Item	Part number	Description	Q'ty	Chan.	Serial No.	Serv.	Remarks
6-5	0007213028	・BUSHING	1				
6-5	1420010110	・・O-RING	1				
7	0655001070	BRACKET	1			M	
9	0665001090	BRACKET	1			M	
10	0882500100	BRACKET	1				
11	1100040825	BOLT	3				
12	1100040816	BOLT	2				
13	1100040665	BOLT	2				
15	1100041055	BOLT	1				
17	1100041070	BOLT	1				
18	1100041020	BOLT	6				
19	1100041025	BOLT	2				
20	1100041225	BOLT	3				
21	1140020006	WASHER, spring	2				
22	1140020008	WASHER, spring	5				
23	1140020010	WASHER, spring	10				
24	1140020012	WASHER, spring	3				
25	0003600003	WASHER	2				
	U0d010						

silverhorn.co.uk

PIPING (1/2)

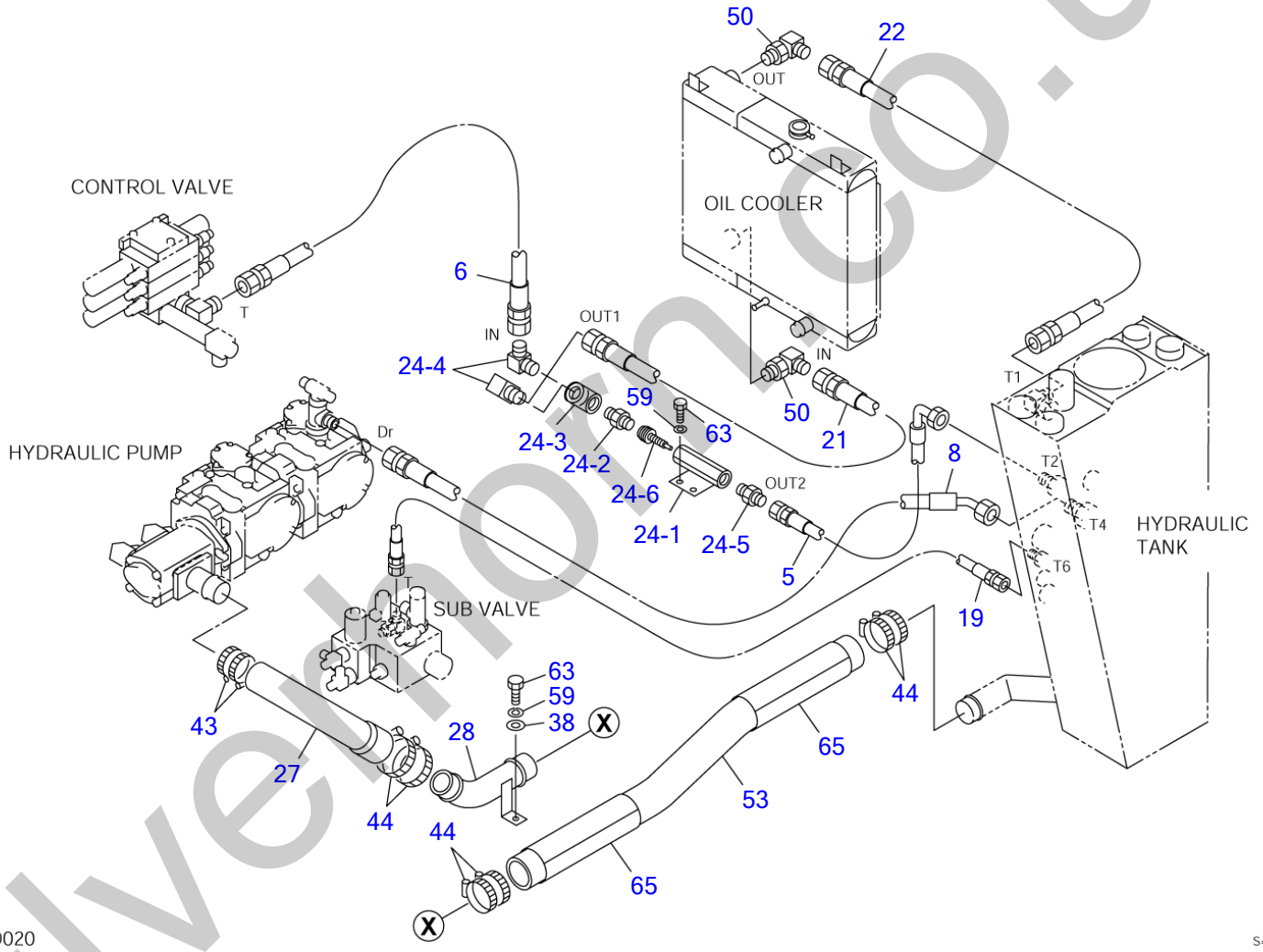

silverhorn.co.uk

PIPING (1/2)

Item	Part number	Description	Q'ty	Chan.	Serial No.	Serv.	Remarks
		PIPING ASSY, upper					
5	0657000050	HOSE ASSY	1				18010-54090
6	0657000060	HOSE ASSY	1				18010-25108
8	0657000080	HOSE ASSY	1				
19	0657000190	HOSE ASSY	1				18010-22117
21	0657000210	HOSE ASSY	1				18010-26084
22	0657000220	HOSE ASSY	1				18010-26084
24	X **********	MANIFOLD ASSY	1				
24-1	0657000241	・JOINT	1				
24-2	1501501006	・ADAPTOR	1				
24-3	1508210006	・TEE	1				
24-4	1511150006	・ELBOW	2				
24-5	1515600578	・ADAPTOR	1				
	1420010240	・・O-RING	1				
24-6	1540140820	・VALVE, check	1				
27	0657000270	HOSE	1				
28	0657000285	PIPE	1				
38	1141110010	WASHER	2				
43	1533700060	BAND	2				
44	1533700070	BAND	6				
50	1515010053	ELBOW	2				
	1420010290	・O-RING	1				
53	0657000530	HOSE	1				
59	1140020010	WASHER, spring	4				
63	1100041020	BOLT	4				
65	0881701670	PROTECTOR	2				
	U0D040						

silverhorn.co.uk

PIPING (2/2)

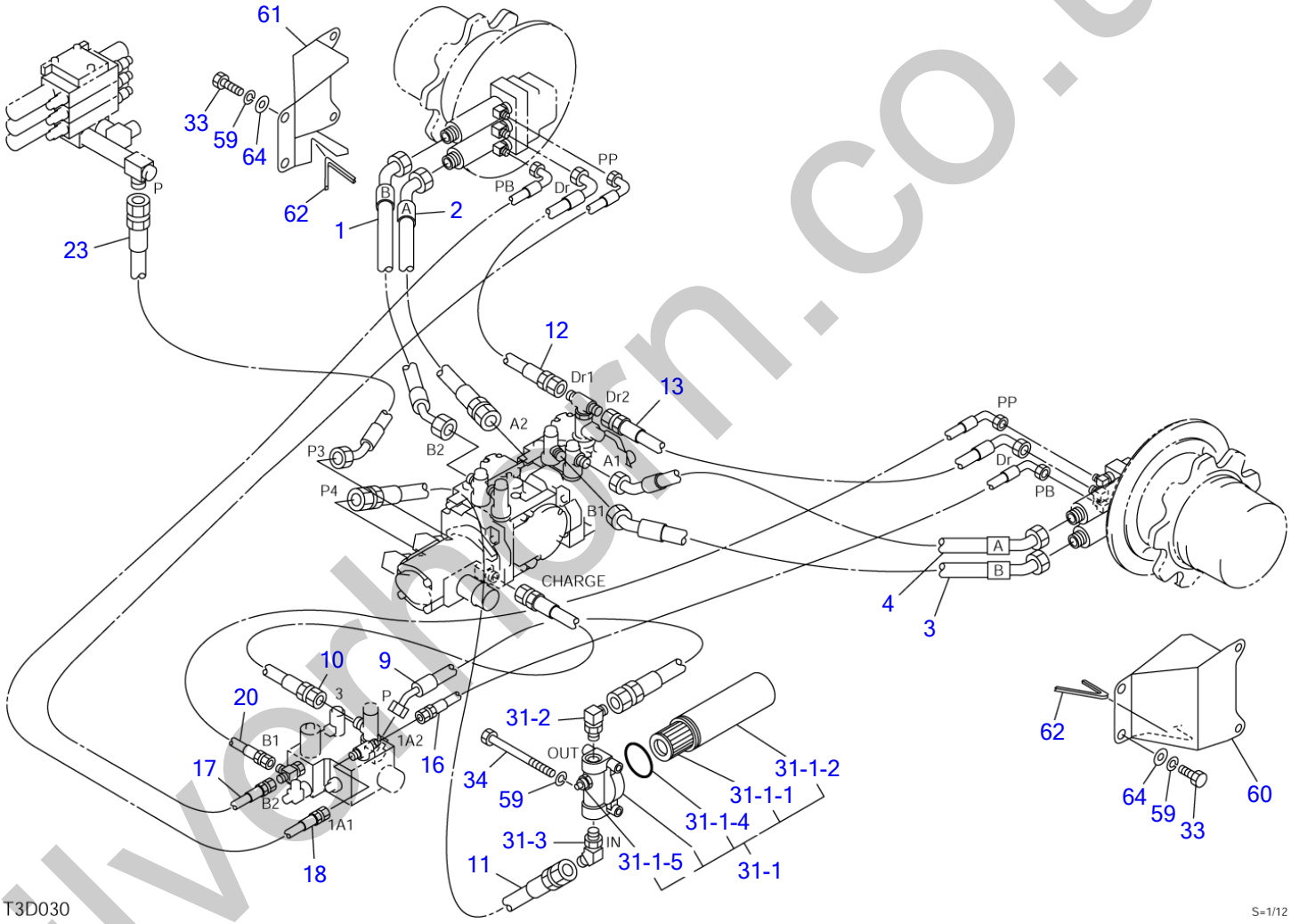

silverthorn.co.uk

PIPING (2/2)

Item	Part number	Description	Q'ty	Chan.	Serial No.	Serv.	Remarks
		PIPING ASSY, upper					
1	0657000010	HOSE ASSY	1				
2	0657000020	HOSE ASSY	1				
3	0657000030	HOSE ASSY	1				
4	0657000040	HOSE ASSY	1				
9	0657000090	HOSE ASSY	1				18010-91042
10	0657000100	HOSE ASSY	1				18010-24052
11	0657000110	HOSE ASSY	1				18010-24076
12	0657000120	HOSE ASSY	1				18010-53054
13	0657000130	HOSE ASSY	1				18010-53062
16	0657000160	HOSE ASSY	1				18010-52060
17	0657000170	HOSE ASSY	1				18010-52130
18	0657000180	HOSE ASSY	1				18010-52150
20	0657000200	HOSE ASSY	1				
23	0657000230	HOSE ASSY	1				18015-47060
31	X **********	FILTER ASSY	1				
31-1	1551102500	・FILTER	1				
31-1-1	1551101001	・・ELEMENT	1				
31-1-2	1551101003	・・CASE	1				
31-1-4	1420100600	・・O-RING	1				
31-1-5	1551102505	・・SWITCH, pressure	1				
31-2	1515010042	・ELBOW	1				
	1420010180	・・O-RING	1				
31-3	1515100112	・ELBOW	1				
	1420010180	・・O-RING	1				
33	1100041025	BOLT	8				
34	1100041095	BOLT	2				
59	1140020010	WASHER, spring	10				
60	0657000600	COVER (L.H.)	1				
61	0657000610	COVER (R.H.)	1				
62	1654606015	TRIM	2				sold by the meter
64	0003600020	WASHER	8				
	U0D050						

silverhorn.co.uk

PUMP DRIVE

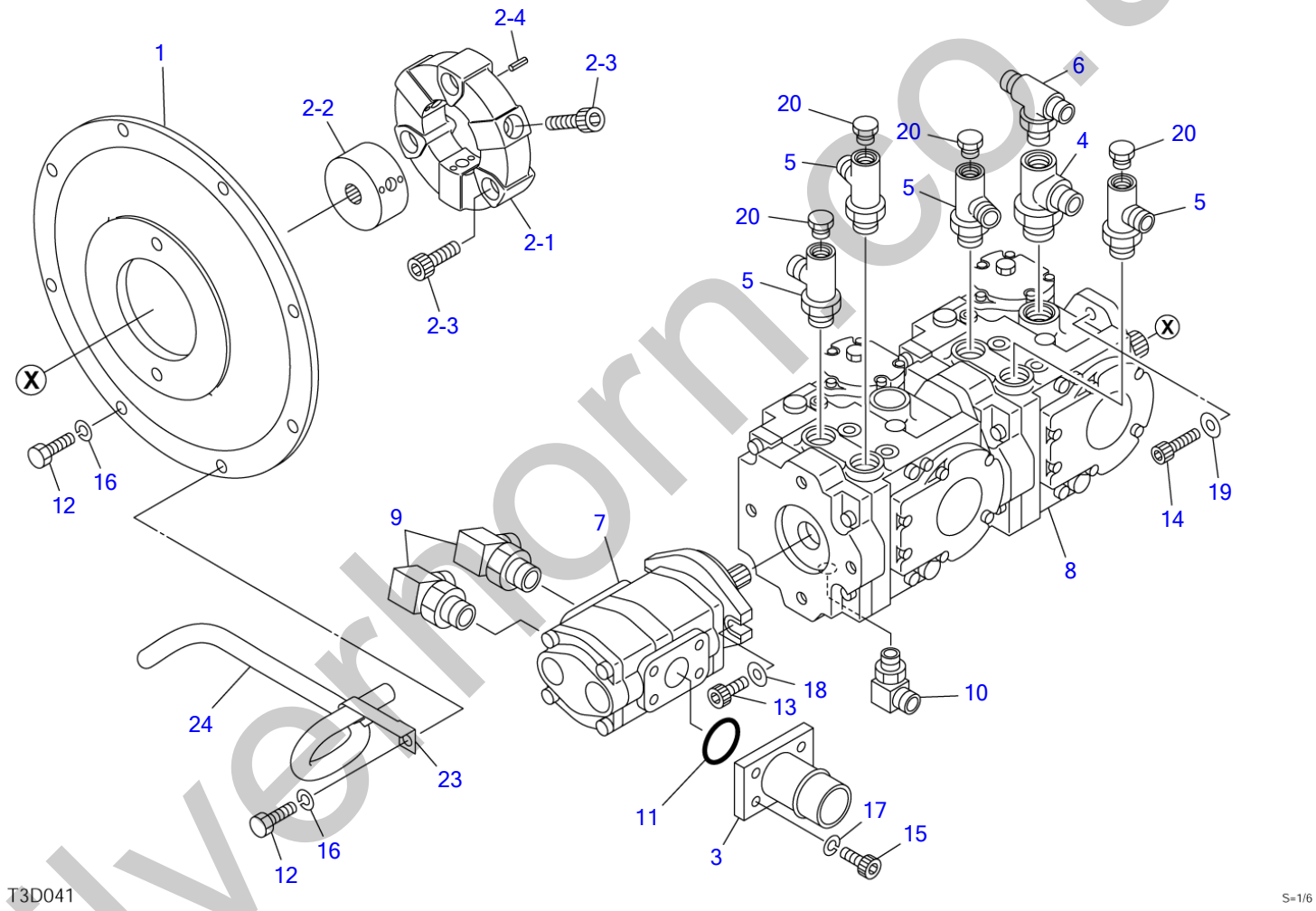

silverhorn.co.uk

PUMP DRIVE

Item	Part number	Description	Q'ty	Chan.	Serial No.	Serv.	Remarks
		PUMP ASSY, drive					
1	0655200050	HOUSING	1				
2	0655200070	COUPLING ASSY	1				
2-1	0655200071	・COUPLING, flex	1				
2-2	0655200072	・COUPLING	1				
2-3	1110041440	・SCREW, cap	6				
2-4	1213000510	・PIN, spring	3				
3	0880523200	FLANGE	1				
4	0880522500	TEE	1				
	1420310912	・O-RING	1				
5	0655200060	TEE	4				
	1420310912	・O-RING	1				
6	1512374014	TEE	1				
	1420010180	・O-RING	1				
7	1902021800	PUMP, gear	1				
8	1902021900	PUMP, hydraulic	1				
9	1515010042	ELBOW	2				
	1420010180	・O-RING	1				
10	1515200062	ELBOW	1				
	1420310910	・O-RING	1				
11	1420100400	O-RING	1				
12	1100041030	BOLT	8				
13	1102240632	SCREW, cap	2				
14	1102720832	SCREW, cap	2				
15	1111041025	SCREW, cap	4				
16	1140020010	WASHER, spring	8				
17	1140490010	WASHER, spring	4				
18	0003900039	WASHER	2				
19	1141450008	WASHER	2				
20	1501750002	PLUG	4				
	1420010110	・O-RING	1				
23	0881521010	CLAMP	1				
24	1531110060	HOSE	1				sold by the meter
	U0d020						

silverhorn.co.uk

HYDRAULIC TANK

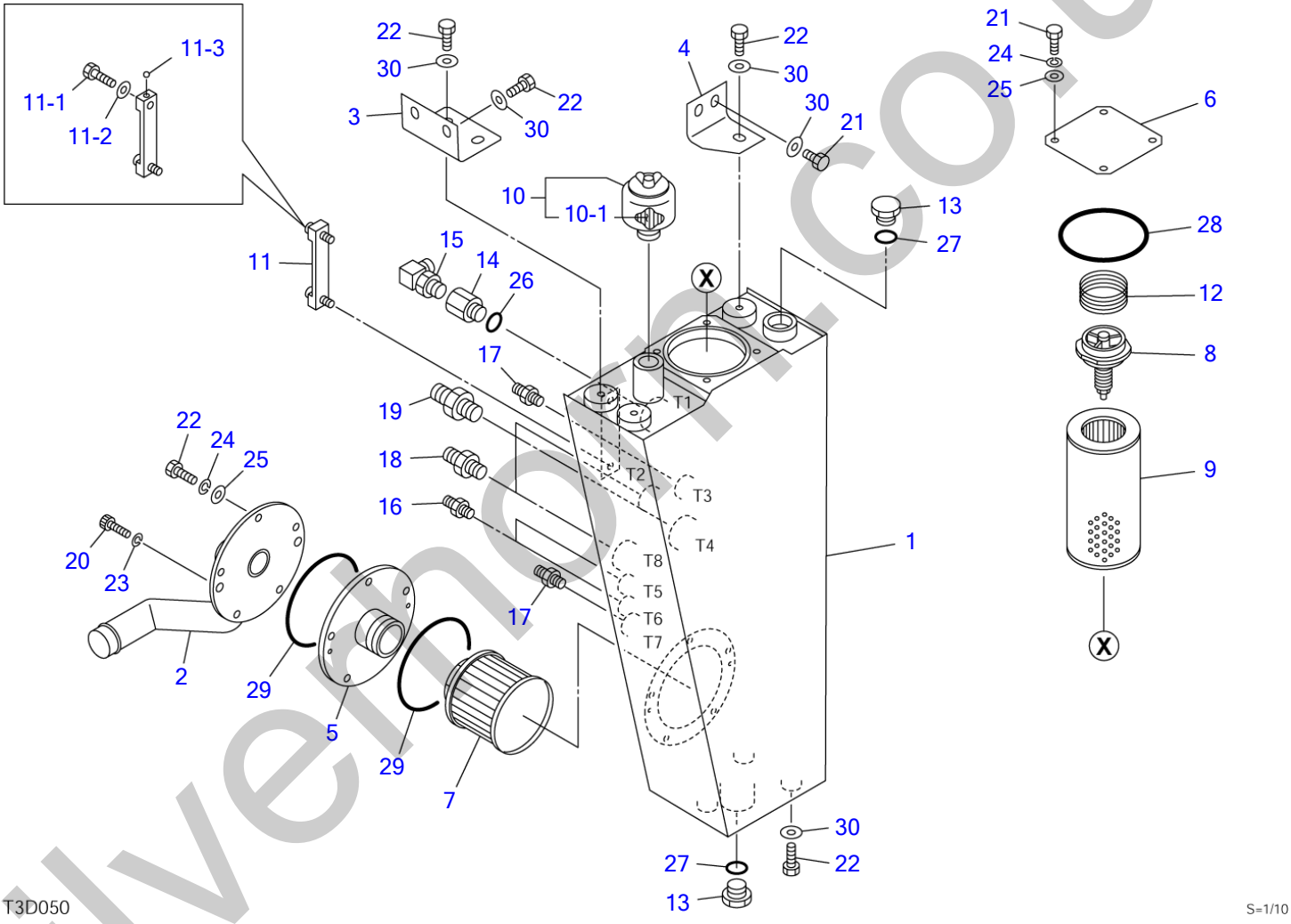

silvermoor.co.uk

HYDRAULIC TANK

Item	Part number	Description	Q'ty	Chan.	Serial No.	Serv.	Remarks
		TANK ASSY, hydraulic					
1	0658001100	TANK, hydraulic	1				
2	0658001200	PIPE	1				
3	0658000300	BRACKET	1				
4	0658000400	BRACKET	1				
5	0658000500	FLANGE	1				
6	0658000600	PLATE	1				
7	1550014150	STRAINER	1				
8	1551100300	VALVE ASSY	1				
9	1551102600	FILTER	1				
10	1552000800	BREATHER, air	1				
10-1	1552000830	・ELEMENT	1				
11	1553020612	GAUGE	1				
11-1	1553021650	・BOLT	2				
11-2	1553022650	・PACKING	2				
11-3	1553020603	・FLOAT	1				
12	0007000031	SPRING	1				
13	0007256006	PLUG	2				
14	0007213034	BUSHING	1				
15	1515010043	ELBOW	1				
	1420010240	・O-RING	1				
16	1515600200	ADAPTOR	2				
	1420010110	・O-RING	1				
17	1515600201	ADAPTOR	2				
	1420010140	・O-RING	1				
18	1515600202	ADAPTOR	2				
	1420010180	・O-RING	1				
19	1515600203	ADAPTOR	1				
	1420010240	・O-RING	1				
20	1100040616	BOLT	2				
21	1100041020	BOLT	6				
22	1100041025	BOLT	13				
23	1140020006	WASHER, spring	2				
24	1140020010	WASHER, spring	9				
25	1141110010	WASHER	9				
26	1420010240	O-RING	1				
27	1420010290	O-RING	2				
28	1420101250	O-RING	1				
29	1420101450	O-RING	2				
30	0003600025	WASHER	10				
	T3d050						

silverhorn.co.uk

FUEL TANK & FUEL PIPING

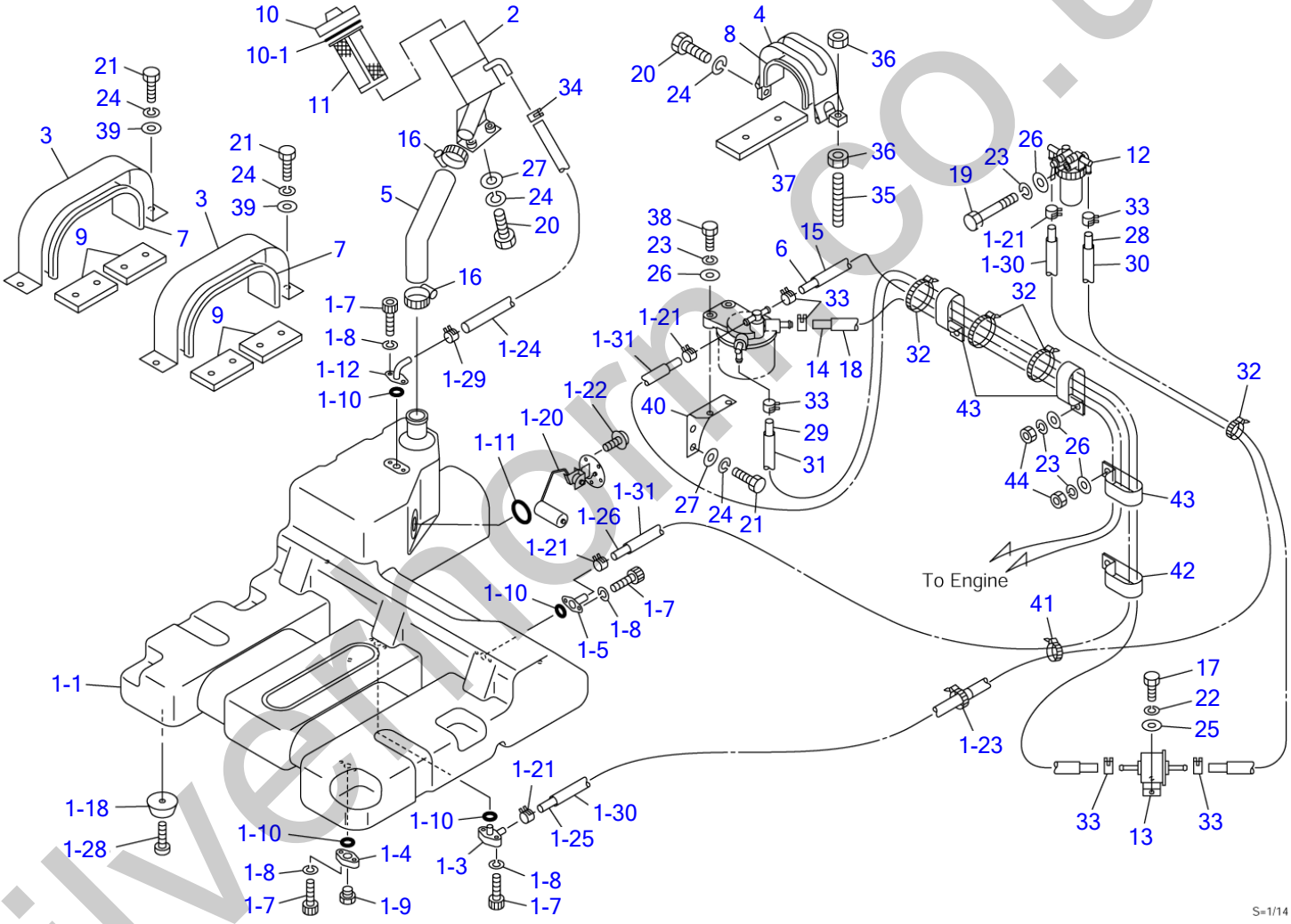

silvermorn.co.uk

FUEL TANK & FUEL PIPING

Item	Part number	Description	Q'ty	Chan.	Serial No.	Serv.	Remarks
		TANK ASSY, fuel					
1	X **********	TANK SUB ASSY, fuel	1				
1-1	0658100150	・TANK, fuel	1				
1-3	0881811100	・FLANGE	1				
1-4	0881811110	・VALVE, drain	1				
1-5	0658100160	・FLANGE	1				
1-7	1110040616	・SCREW, cap	8				
1-8	1140420006	・WASHER, spring	8				
1-9	1501750002	・PLUG	1				
	1420010110	・・O-RING	1				
1-10	1420010180	・O-RING	4				
1-11	1420010450	・O-RING	1				
1-12	0881811510	・FLANGE	1				
1-18	0881812080	・RUBBER	4				
1-20	1553202100	・SENDER, fuel	1				
1-21	1533120511	・BAND	4				
1-22	1150110510	・SCREW	5				
1-23	1652201008	・BAND	1				
1-24	1530612057	・HOSE	1				sold by the meter
1-25	1531207290	・HOSE	1				sold by the meter
1-26	1531207311	・HOSE	1			M	sold by the meter
1-28	1120530620	・SCREW	4				
1-29	1533700019	・BAND	1				
1-30	1531115133	・PROTECTOR	1				sold by the meter
1-31	1531115153	・PROTECTOR	3			M	sold by the meter
2	0658100250	PORT, supply	1				
3	0658100003	BAND	2				
4	0658100050	BAND	1				
5	0658100060	HOSE	1				
6	1531207103	HOSE	1			M	sold by the meter
7	0658100070	RUBBER	2				
8	0658100080	RUBBER	1				
9	0881811180	RUBBER	4				
10	1552100500	CAP	1				
10-1	1552100507	・PACKING	1				
11	1552100320	STRAINER	1				
12	1910186033	SEPARATOR, water	1				Y129906-55700
13	1910199034	PUMP, feed	1				Y129612-52100
14	1531207103	HOSE	1			M	sold by the meter
15	1531115090	HOSE	1				sold by the meter
16	1533700060	BAND	2				
17	1100040616	BOLT	2				
18	1531115095	HOSE	1			M	sold by the meter
19	1100040865	BOLT	1				
20	1100041020	BOLT	3				
21	1100041030	BOLT	6				
22	1140020006	WASHER, spring	2				
23	1140020008	WASHER, spring	7				
24	1140020010	WASHER, spring	9				
25	1141110006	WASHER	2				
26	1141110008	WASHER	7				
27	1141110010	WASHER	4				
28	1531207110	HOSE	1			M	sold by the meter
29	1531207168	HOSE	1			M	sold by the meter
30	1531115100	PROTECTOR	1			M	sold by the meter
31	1531115160	PROTECTOR	1			M	sold by the meter
32	1652231250	BAND	4				
33	1533120511	BAND	8				
34	1533700019	BAND	1				
35	0881812300	BOLT	1				
36	1130040010	NUT	2				
37	0881811170	RUBBER	1				
38	1100040830	BOLT	2				
39	0003600025	WASHER	4				
40	0658102010	BRACKET	1			M	
41	1652201008	BAND	1			M	
42	0007300013	CLAMP	1			M	
43	0007300018	CLAMP	3			M	

silvermorn.co.uk

FUEL TANK & FUEL PIPING

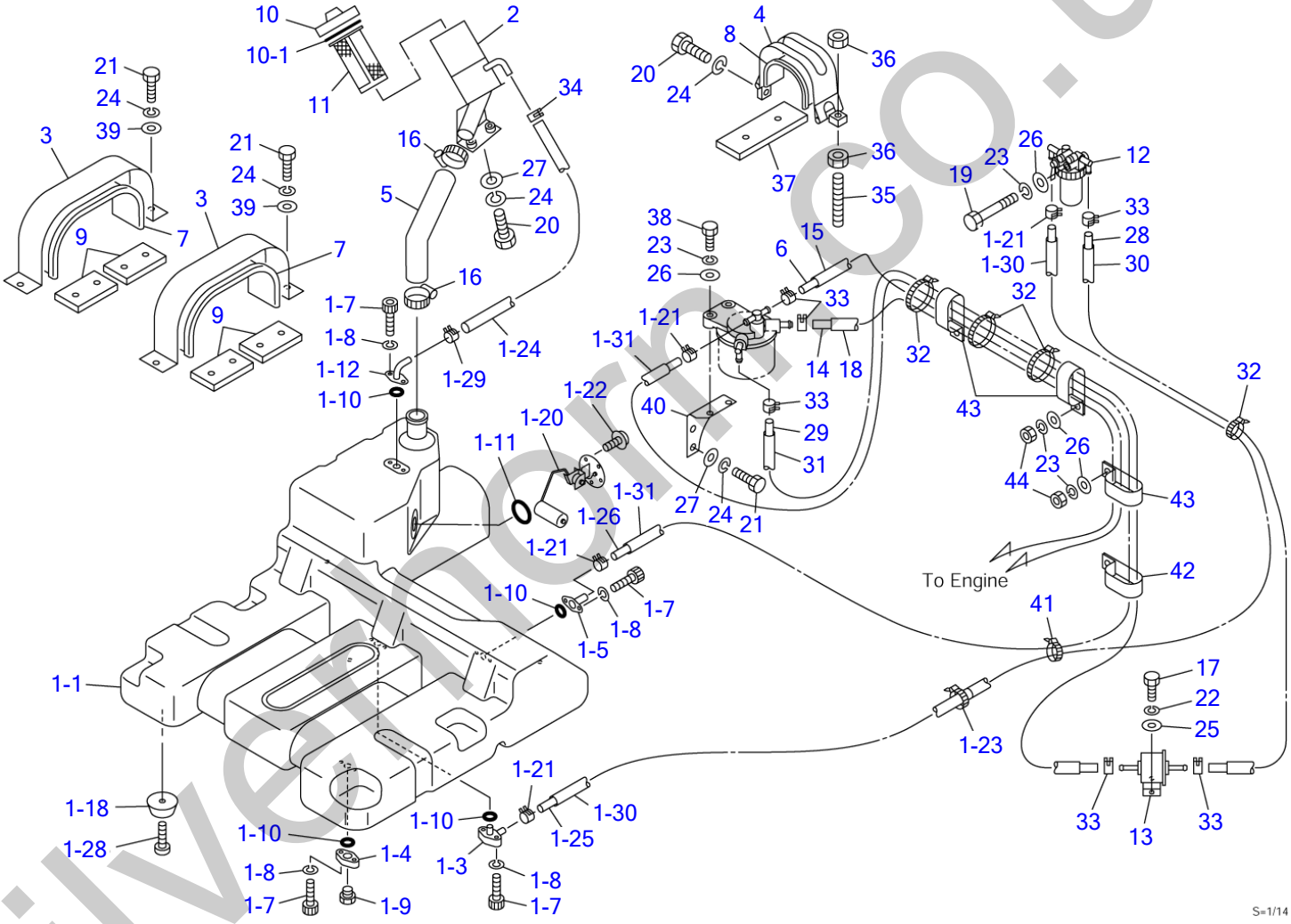

silvermorn.co.uk

Item	Part number	Description	Q'ty	Chan.	Serial No.	Serv.	Remarks
44	1130040008	NUT	4				
	U0D031						

silverhorn.co.uk

COVER (1/3)

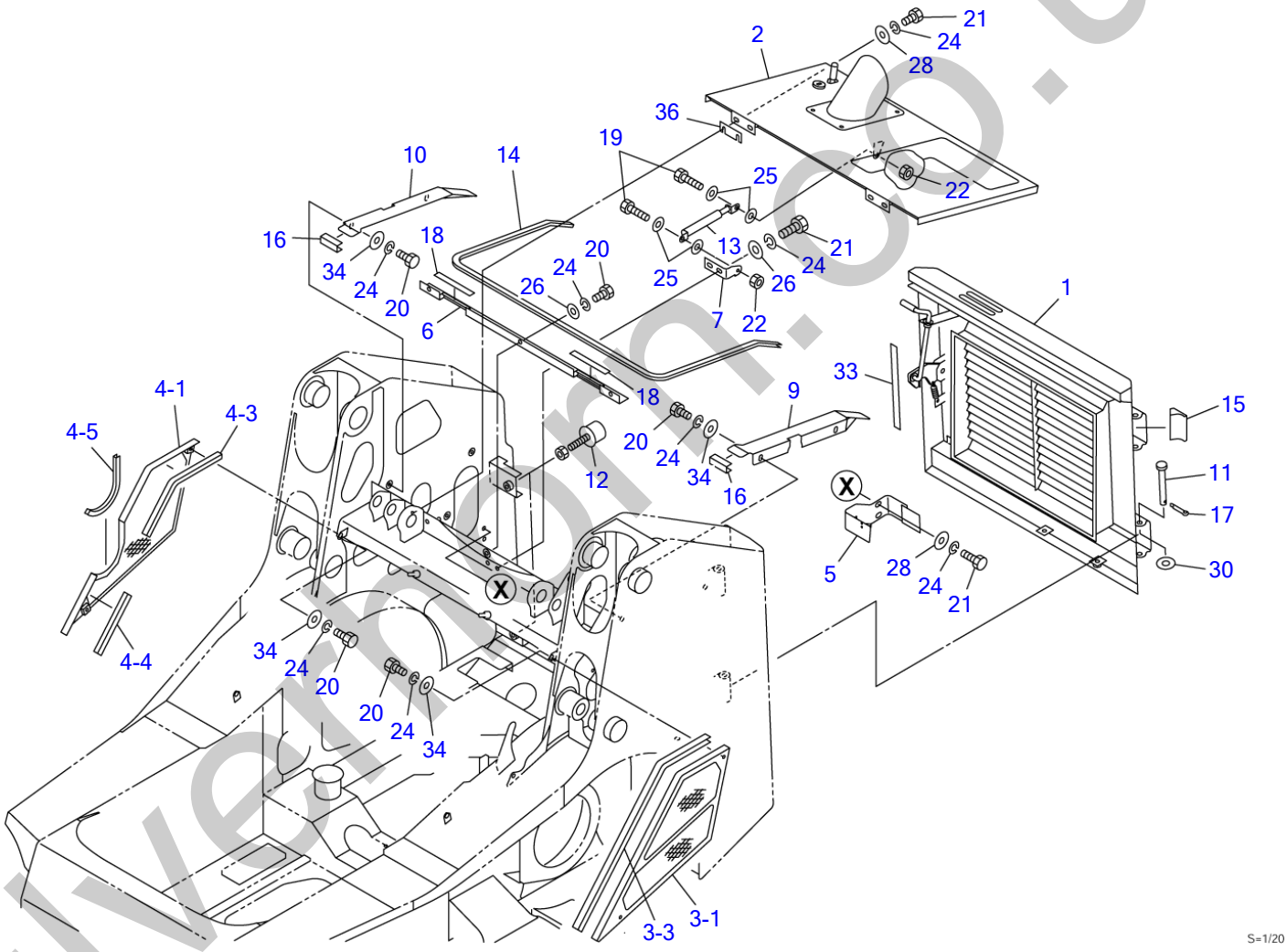

silvermoon.co.uk

COVER (1/3)

Item	Part number	Description	Q'ty	Chan.	Serial No.	Serv.	Remarks
		COVER ASSY					
1	0658202100	DOOR ASSY, rear	1			M	see page (2/3)
2	0658202300	HOOD, engine	1			M	see page (3/3)
3	0658202400	COVER ASSY, side (L.H.)	1			M	
3-1	0658202410	・COVER, side (L.H.)	1			M	
3-3	1654520075	・TRIM	1			M	sold by the meter
4	0658202500	COVER ASSY, side (R.H.)	1			M	
4-1	0658202510	・COVER, side (R.H.)	1			M	
4-3	1654605037	・TRIM	1				sold by the meter
4-4	1654605020	・TRIM	1				sold by the meter
4-5	1653916024	・TRIM	1				sold by the meter
5	0658200050	BRACKET	1			M	
6	0658200040	TABLE	1				
7	0880825007	PLATE	1				
9	0658200009	PLATE (L.H.)	1				
10	0658200010	PLATE (R.H.)	1				
11	0881822020	PIN	2				
12	1651101050	RUBBER	2				
13	1653900057	SPRING, gas	1				
14	1654623180	TRIM	1				sold by the meter
15	0658200015	RUBBER	1				
16	1654606007	TRIM	2				sold by the meter
17	1210010425	PIN, split	2				
18	1654302015	SPONGE	2				sold by the meter
19	1100040825	BOLT	2				
20	1100041020	BOLT	11				
21	1100041025	BOLT	8				
22	1130040008	NUT	2				
24	1140020010	WASHER, spring	19				
25	1141110008	WASHER	4				
26	1141110010	WASHER	5				
28	0003600025	WASHER	2				
30	1141110016	WASHER	2				
33	0881823034	RUBBER	1				
34	0003600020	WASHER	12				
36	0003900040	SHIM	AR				t=1.6mm
	0003900041	SHIM	AR				t=2.3mm
	U0e011						

silverhorn.co.uk

COVER (2/3) (rear door)

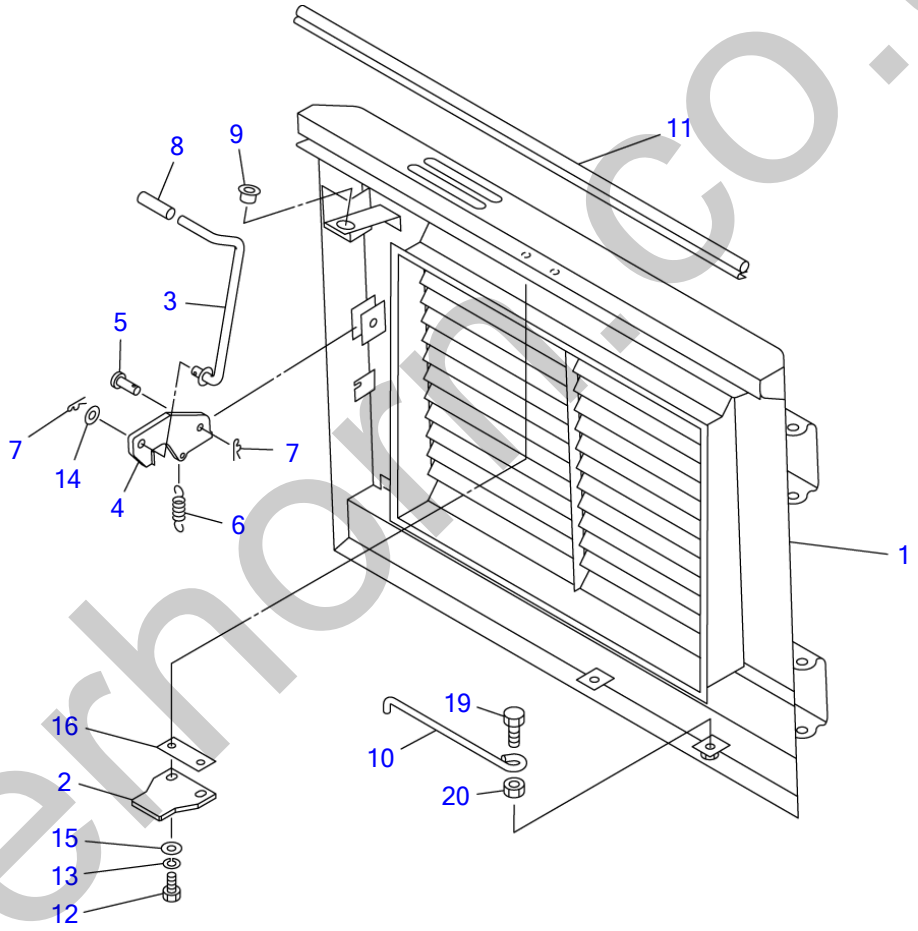

U0E020

S=1/10

silverhorn.co.uk

COVER (2/3) (rear door)

Item	Part number	Description	Q'ty	Chan.	Serial No.	Serv.	Remarks
0-1	0658202100	DOOR ASSY, rear	1			M	
1	0658202200	・DOOR, rear	1			M	
2	0880825650	・STRIKER	1			M	
3	0881822540	・ROD	1				
4	0881822550	・PLATE	1				
5	0004015002	・PIN	1				
6	0007000112	・SPRING	1				
7	1214000012	・PIN, snap	2				
8	1650202300	・CAP	1				
9	1652615200	・BUSHING	1				
10	0658200110	・ROD	1				
11	1654605085	・TRIM	1				sold by the meter
12	1100040825	・BOLT	2				
13	1140020008	・WASHER, spring	2				
14	1141110012	・WASHER	1				
15	0003608252	・WASHER	2				
16	0003900037	・SHIM	AR				t=4.5mm
	0003900038	・SHIM	AR				t=1.6mm
19	1100041035	・BOLT	1				
20	1130040010	・NUT	1				
	U0e020						

silverhorn.co.uk

COVER (3/3) (engine hood)

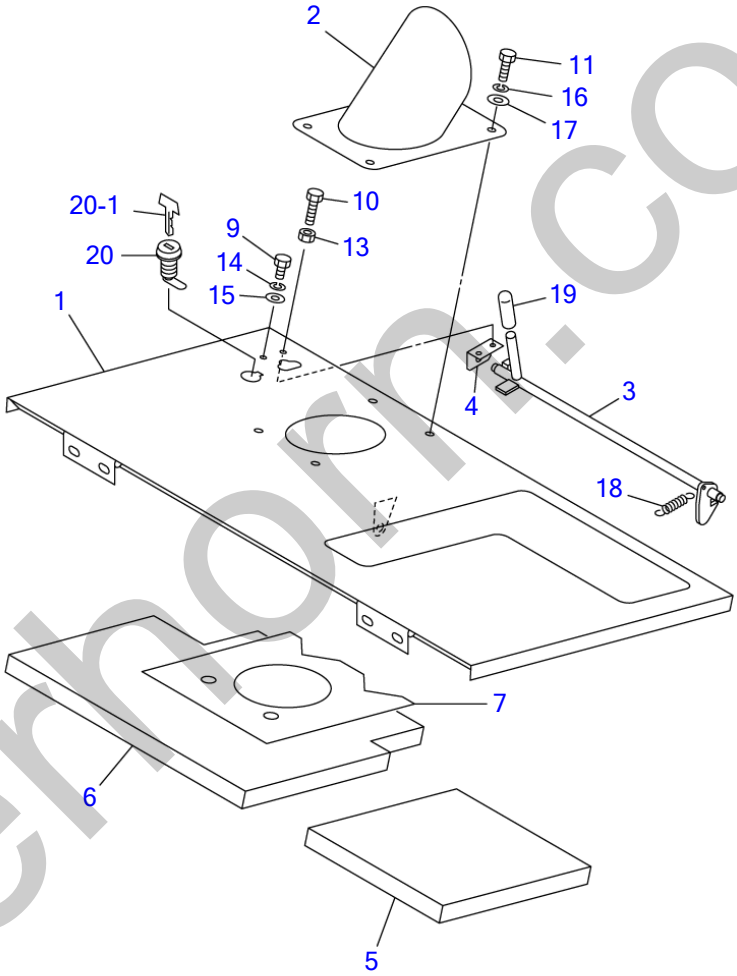

U0E030

S=1/10

silverhorn.co.uk

COVER (3/3) (engine hood)

Item	Part number	Description	Q'ty	Chan.	Serial No.	Serv.	Remarks
0-2	0658202300	HOOD, engine	1			M	
1	0658202310	・HOOD, engine	1			M	
2	0658202320	・NOZZLE	1			M	
3	0880823660	・LEVER	1				
4	0880820080	・ANGLE	1				
5	0658202305	・ABSORBENT, noise	1			M	
6	0658200306	・ABSORBENT, noise	1				
7	0658202308	・INSULATOR	1			M	
9	1100040612	・BOLT	1				
10	1100040620	・BOLT	1				
11	1100040816	・BOLT	4				
13	1130040006	・NUT	1				
14	1140020006	・WASHER, spring	1				
15	1141110006	・WASHER	1				
16	1140020008	・WASHER, spring	4				
17	0003608252	・WASHER	4				
18	0007000070	・SPRING	1				
19	1650202300	・CAP	1				
20	1653601395	・LOCK	1				
20-1	1700100019	・KEY	1				
	U0e030						

silverhorn.co.uk

FLOOR FRAME

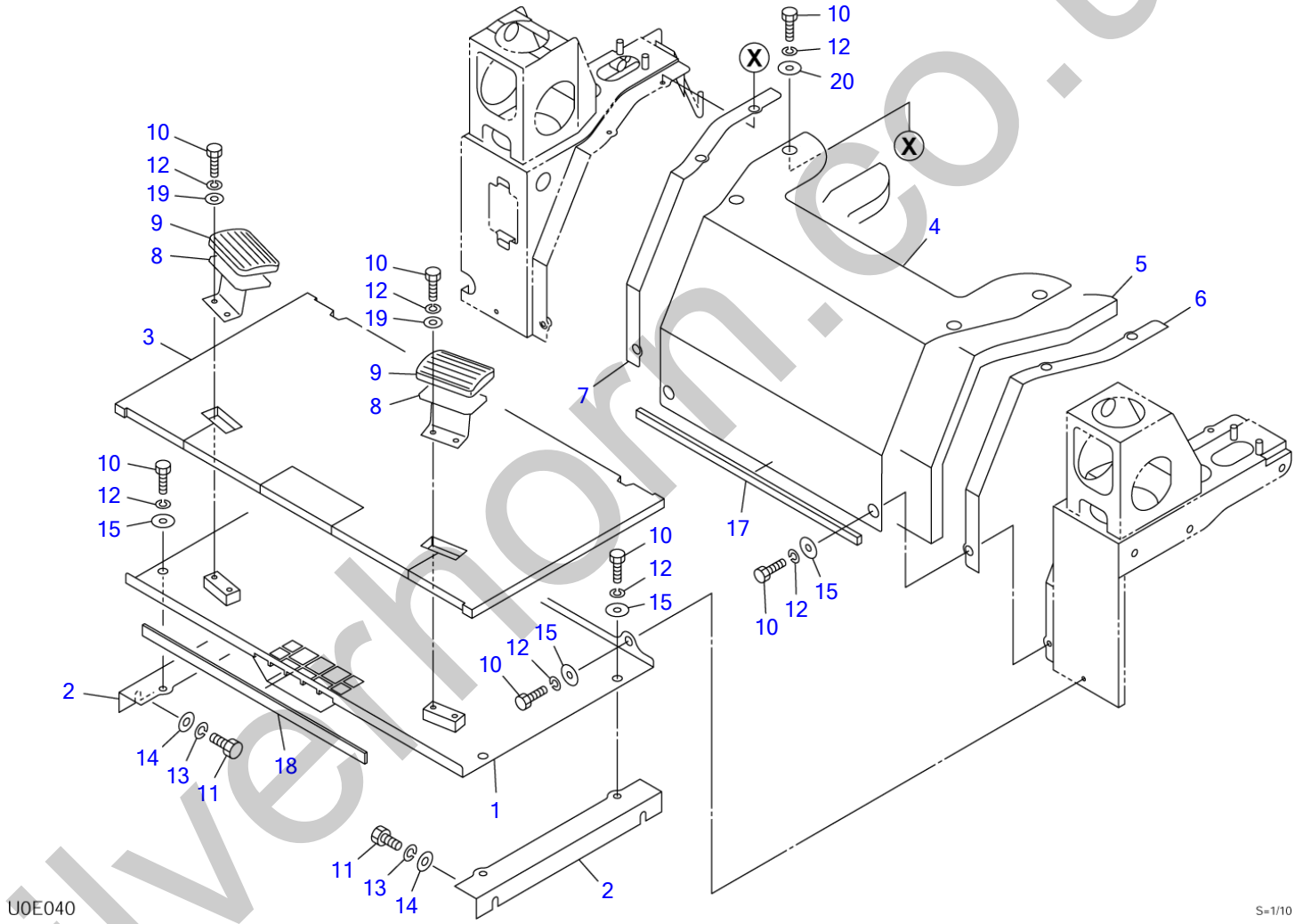

silverthorn.co.uk

FLOOR FRAME

Item	Part number	Description	Q'ty	Chan.	Serial No.	Serv.	Remarks
		FLOOR ASSY					
1	0653500090	PLATE	1				
2	0653500060	STAY	2				
3	0653500070	MAT, floor	1				
4	0653500080	COVER	1				
5	0653500005	ABSORBENT, noise	1				
6	0653500006	SPONGE	1				
7	0653500007	SPONGE	1				
8	0563219700	REST, foot	2				
9	0563218500	COVER	2				
10	1100040820	BOLT	16				
11	1100041020	BOLT	4				
12	1140020008	WASHER, spring	16				
13	1140020010	WASHER, spring	4				
14	1141110010	WASHER	4				
15	0003608252	WASHER	8				
17	1654319050	SPONGE	1				sold by the meter
18	1654301074	SPONGE	1				sold by the meter
19	1141110008	WASHER	4				
20	0003609003	WASHER	10				
	U0e041						

silverhorn.co.uk

FLOOR FRAME (222000044-)

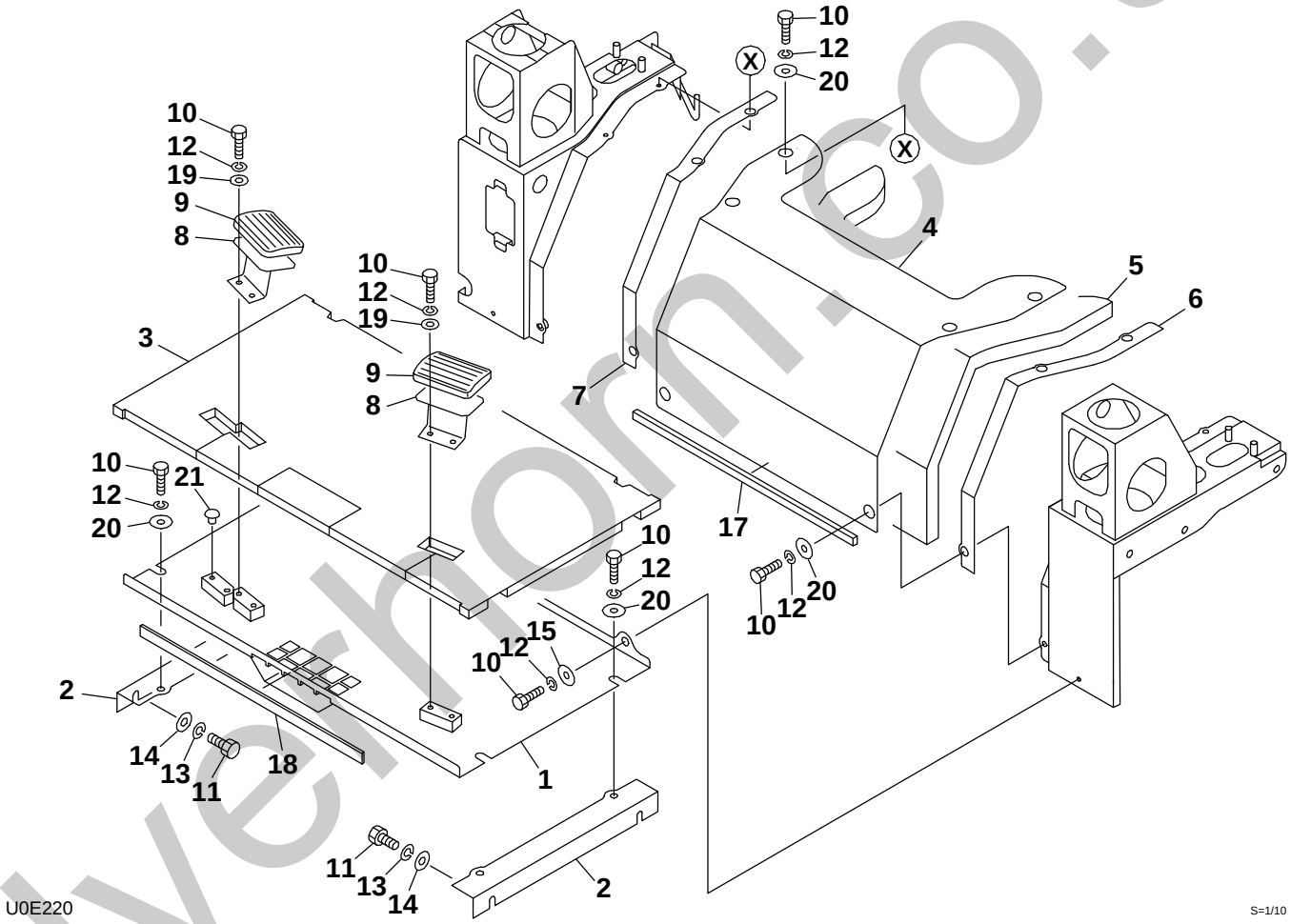

silverthorn.co.uk

FLOOR FRAME SN 222000044~

Item	Part number	Description	Q'ty	Chan.	Serial No.	Serv.	Remarks
		FLOOR FRAME					
1	0653501010	PLATE	1				
2	0653500060	STAY	2				
3	0653501030	FLOOR MAT	1				
4	0653500080	COVER	1				
5	0653500005	NOISE ABSORBENT	1				
6	0653500006	SPONGE	1				
7	0653500007	SPONGE	1				
8	0563219700	FOOT REST	2				
9	0563218500	COVER	2				
10	1100040820	BOLT	16				
11	1100041020	BOLT	4				
12	1140020008	SPRING WASHER	16				
13	1140020010	SPRING WASHER	4				
14	1141110010	WASHER	4				
15	0003608252	WASHER	2				
17	1654319050	SPONGE	1				
18	1654301074	SPONGE	1				
19	1141110008	WASHER	4				
20	0003609003	WASHER	10				
21	1652533016	CAP	2				
	U0E220						

silverhorn.co.uk

SEAT (1/2)

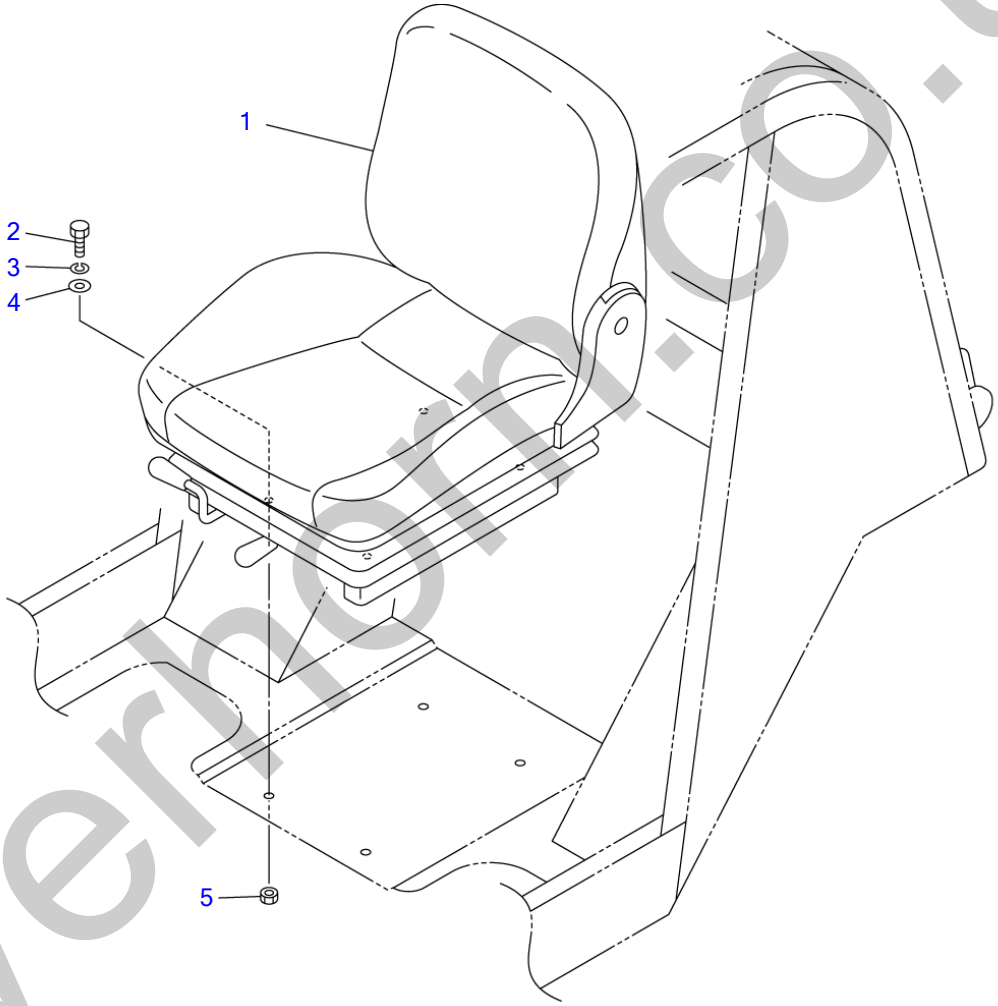

U0E050

S=1/10

silverhorn.co.uk

SEAT (1/2)

Item	Part number	Description	Q'ty	Chan.	Serial No.	Serv.	Remarks
		SEAT ASSY					
1	1914100099	SEAT ASSY	1				
2	1110040825	BOLT	4			M	
3	1140020008	WASHER, spring	4				
4	1141110008	WASHER	4				
5	1130040008	NUT	4				
	U0e050						

silverhorn.co.uk

SAFETY BAR

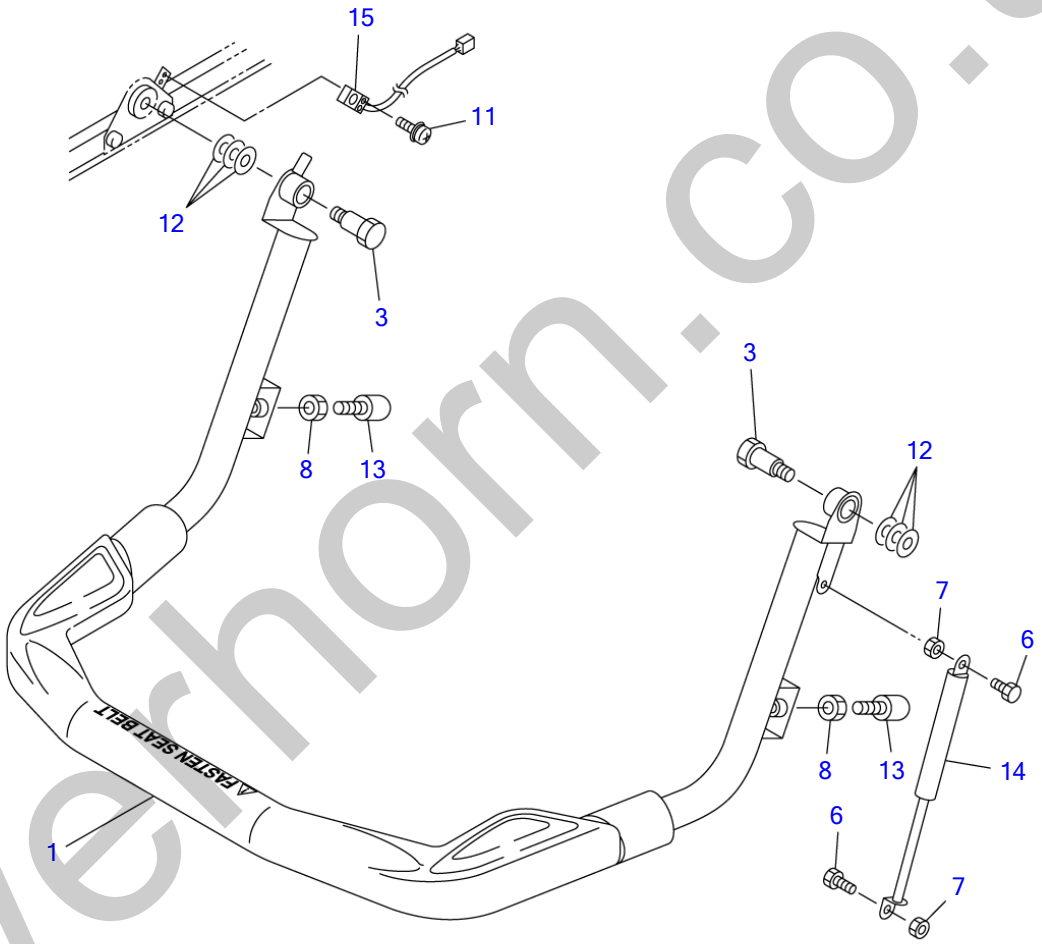

T3E060

S=1/8

silverhorn.co.uk

SAFETY BAR

Item	Part number	Description	Q'ty	Chan.	Serial No.	Serv.	Remarks
		BAR ASSY, safety					
1	0654600300	BAR, safety	1				
3	0654600003	BOLT	2				
6	1100040820	BOLT	2				
7	1130040008	NUT	2				
8	1130040012	NUT	2				
11	1150410312	SCREW	2				
12	0093208300	WASHER	6				
13	1651101224	STOPPER	2				
14	1653900057	SPRING, gas	1				
15	1700009010	SWITCH, proximity	1				
	T3e060						

silverhorn.co.uk

CANOPY MOUNT

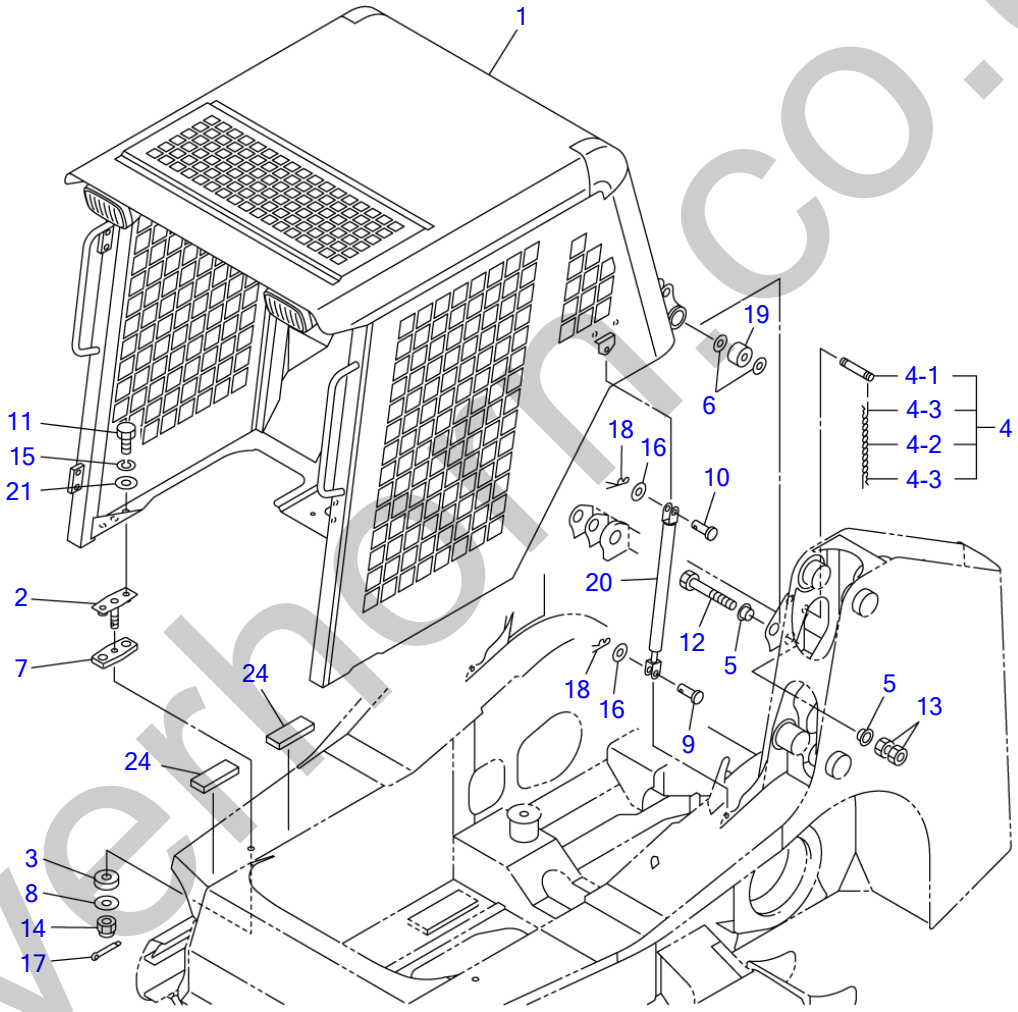

U0E060

S=1/20

silverhorn.co.uk

CANOPY MOUNT

Item	Part number	Description	Q'ty	Chan.	Serial No.	Serv.	Remarks
		CANOPY MOUNT					
1	0658400500	CANOPY ASSY	1				
2	0881842030	BOLT ASSY	2				
3	0881842050	RUBBER, cushion	2				
4	0881841060	PIN ASSY	1				
4-1	0881841061	PIN	1				
4-2	1652735886	CHAIN	1				
4-3	1214000016	PIN, snap	2				
5	0881840008	COLLAR	4				
6	0880840070	WASHER	4				
7	0881842040	RUBBER, cushion	2				
8	0003900044	WASHER	2				
9	0343503200	PIN	2				
10	0004010025	PIN	2				
11	1100041225	BOLT	4				
12	1100141610	BOLT	2				
13	1130040016	NUT	4				
14	1132080016	NUT	2				
15	1140020012	WASHER, spring	4				
16	1141110010	WASHER	4				
17	1210010432	PIN, split	2				
18	1214000008	PIN, snap	4				
19	1651005030	RUBBER, cushion	2				
20	1653900047	SPRING, gas	2				
21	0003600165	WASHER	4				
24	1654306008	SPONGE	4				sold by the meter
	U0e060						

silverhorn.co.uk

CANOPY (1/2)

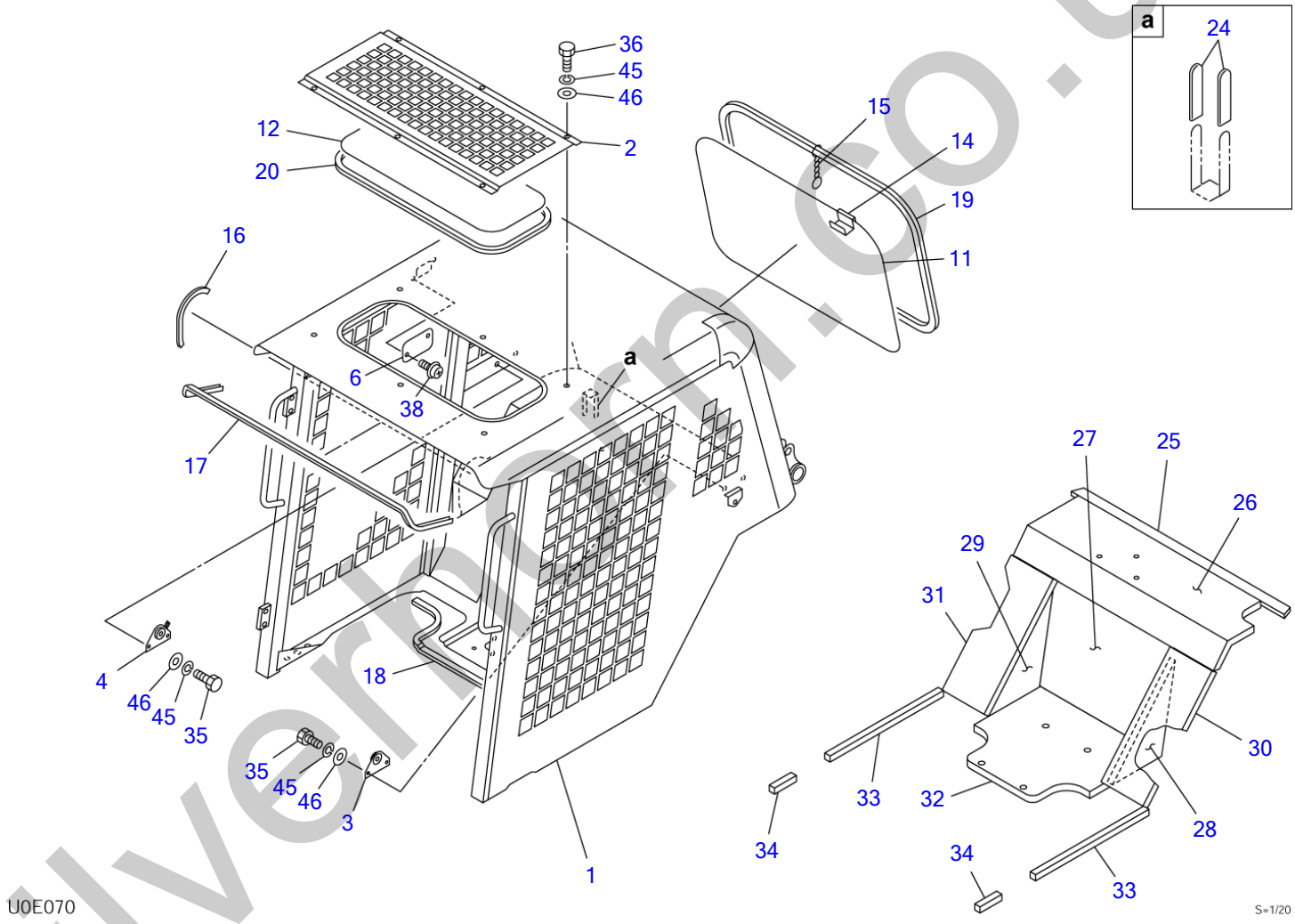

silvermcn.co.uk

CANOPY (1/2)

Item	Part number	Description	Q'ty	Chan.	Serial No.	Serv.	Remarks
0	0658400500	CANOPY ASSY	1				
1	0658400600	・CANOPY	1				
2	0658400502	・COVER	1				
3	0658400510	・BRACKET (L.H.)	1				
4	0658400520	・BRACKET (R.H.)	1				
6	0881842017	・PLATE	1			M	
11	0658400511	・GLASS	1				
12	0658400512	・GLASS	1				
14	0880841080	・PLATE	1				
15	0880841040	・RING	1				
16	1653916030	・TRIM	1			M	sold by the meter
17	1654601153	・TRIM	1				sold by the meter
18	1654623120	・TRIM	1				sold by the meter
19	1654252230	・H-RUBBER	1				sold by the meter
20	1654252176	・H-RUBBER	1				sold by the meter
24	0872433150	・TUBE	2				
25	0658400525	・SHEET	1				
26	0658400526	・ABSORBENT, noise	1				
27	0658400527	・ABSORBENT, noise	1				
28	0658400528	・ABSORBENT, noise	1				
29	0658400529	・ABSORBENT, noise	1				
30	0658400530	・ABSORBENT, noise	1				
31	0658400531	・ABSORBENT, noise	1				
32	0658400532	・ABSORBENT, noise	1				
33	0658400533	・SHEET	2				
34	0658400534	・SHEET	2				
35	1100040820	・BOLT	4				
36	1100040816	・BOLT	6				
38	1150410414	・SCREW, sems	2				
45	1140010008	・WASHER, spring	10			M	
46	1141110008	・WASHER	10				
	U0e071						

silverhorn.co.uk

CANOPY (2/2)

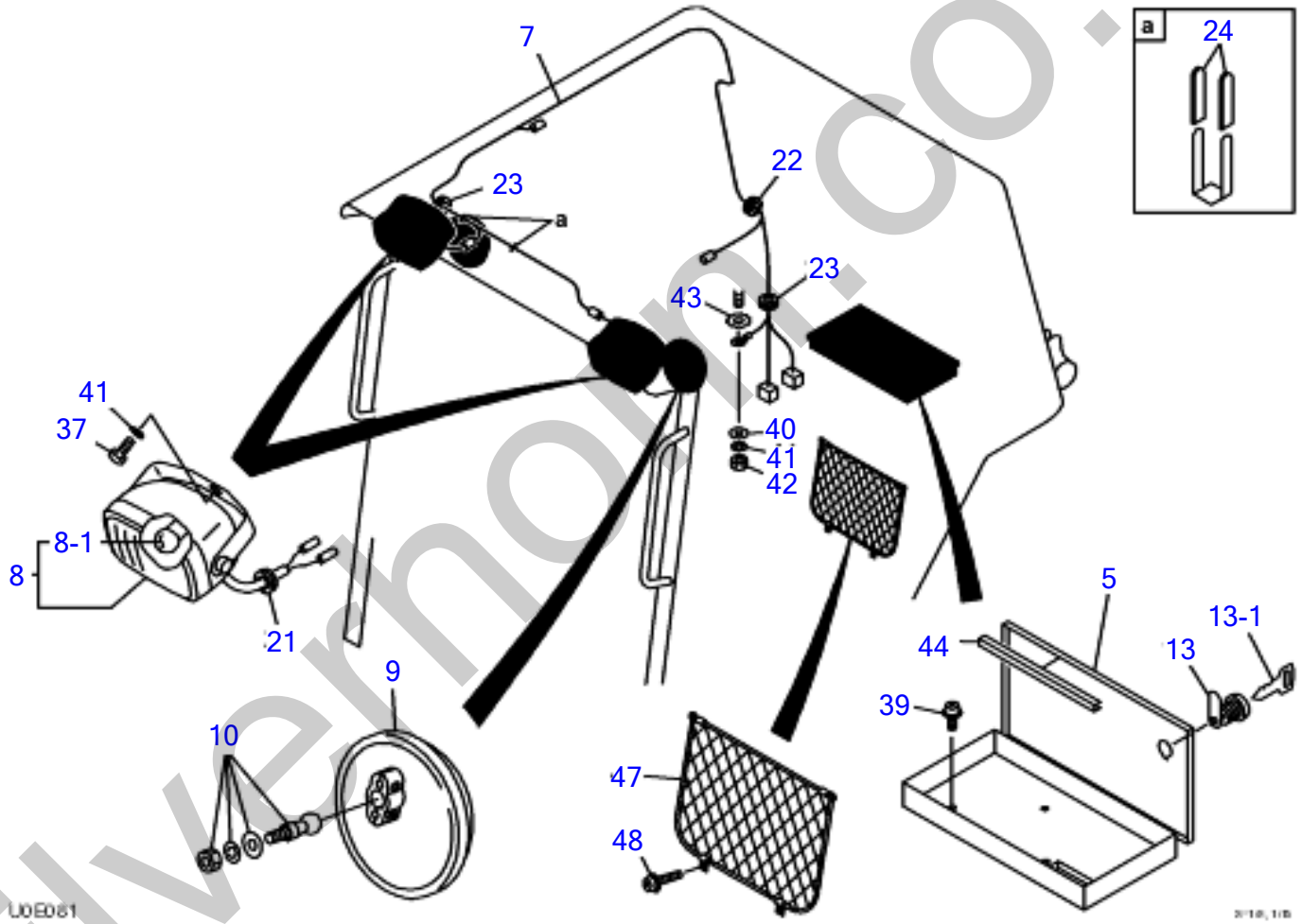

silverhorn.co.uk

CANOPY (2/2)

Item	Part number	Description	Q'ty	Chan.	Serial No.	Serv.	Remarks
0	0658400500	CANOPY ASSY	1				
5	0658400540	・BOX	1				
7	0658400550	・HARNESS	1			M	
8	1703006600	・LAMP ASSY	2				
8-1	1703006605	・・BULB	1				
9	1656500110	・MIRROR, rearview	2				
10	1654006000	・PIVOT	2				
13	1653601395	・LOCK	1				
13-1	1700100019	・KEY	1				
21	1652040930	・GROMMET	2			M	
22	1652052800	・GROMMET	1				
23	1652053600	・GROMMET	2				
24	0872433150	・TUBE	4				
37	1100041020	・BOLT	2				
39	1150410612	・SCREW, sems	3				
40	1141110010	・WASHER	1				
41	1140020010	・WASHER, spring	3				
42	1130040010	・NUT	1				
43	1140330010	・WASHER	1				
44	1653916025	・TRIM	1			M	sold by the meter
47	1653691350	* POCKET	1				
48	1150010514	* SCREW	4				
	U0e081						

silverhorn.co.uk

CAB MOUNT

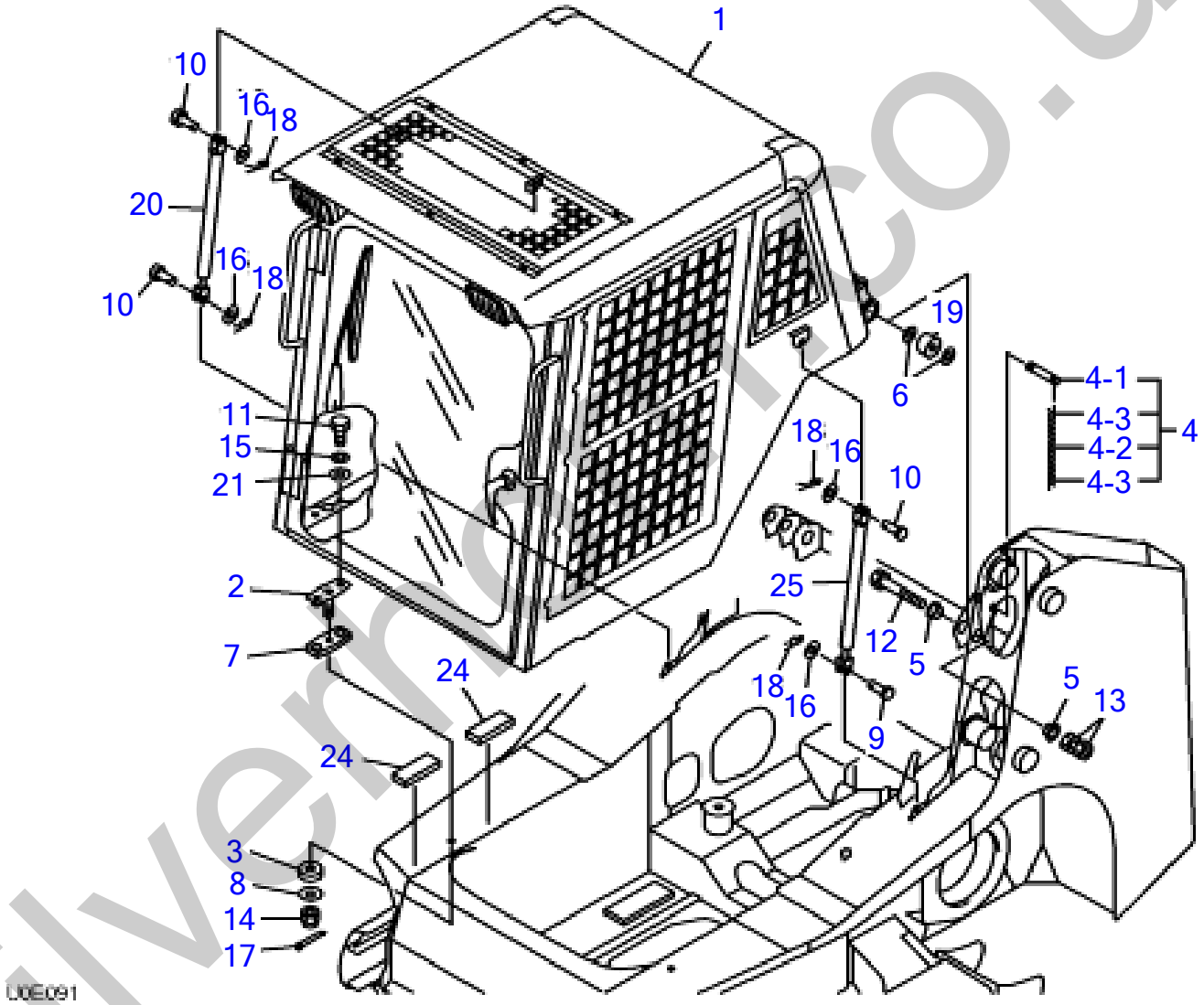

silvermoto.co.uk

CAB MOUNT

Item	Part number	Description	Q'ty	Chan.	Serial No.	Serv.	Remarks
		CAB MOUNT (for US)				M	
		CAB MOUNT (for EU)				M	
1	0658600500	CAB (for US)	1				
	0658601600	CAB (for EU)	1				
2	0881842030	BOLT ASSY	2				
3	0881842050	RUBBER, cushion	2				
4	0881841060	PIN ASSY	1				
4-1	0881841061	・PIN	1				
4-2	1652735886	・CHAIN	1				
4-3	1214000016	・PIN, snap	2				
5	0881840008	COLLAR	4				
6	0880840070	WASHER	4				
7	0881842040	RUBBER, cushion	2				
8	0003900044	WASHER	2				
9	0343503200	PIN	2				
10	0004010025	PIN	2				
11	1100041225	BOLT	4				
12	1100141610	BOLT	2				
13	1130040016	NUT	4				
14	1132080016	NUT	2				
15	1140020012	WASHER, spring	4				
16	1141110010	WASHER	4				
17	1210010432	PIN, split	2				
18	1214000008	PIN, snap	4				
19	1651005030	RUBBER, cushion	2				
20	1653900065	SPRING, gas	2				
21	0003600165	WASHER	4				
24	1654306008	SPONGE	4				sold by the meter
25	1653900060	LH GAS SPRING	1				
	U0e091						

silverhorn.co.uk

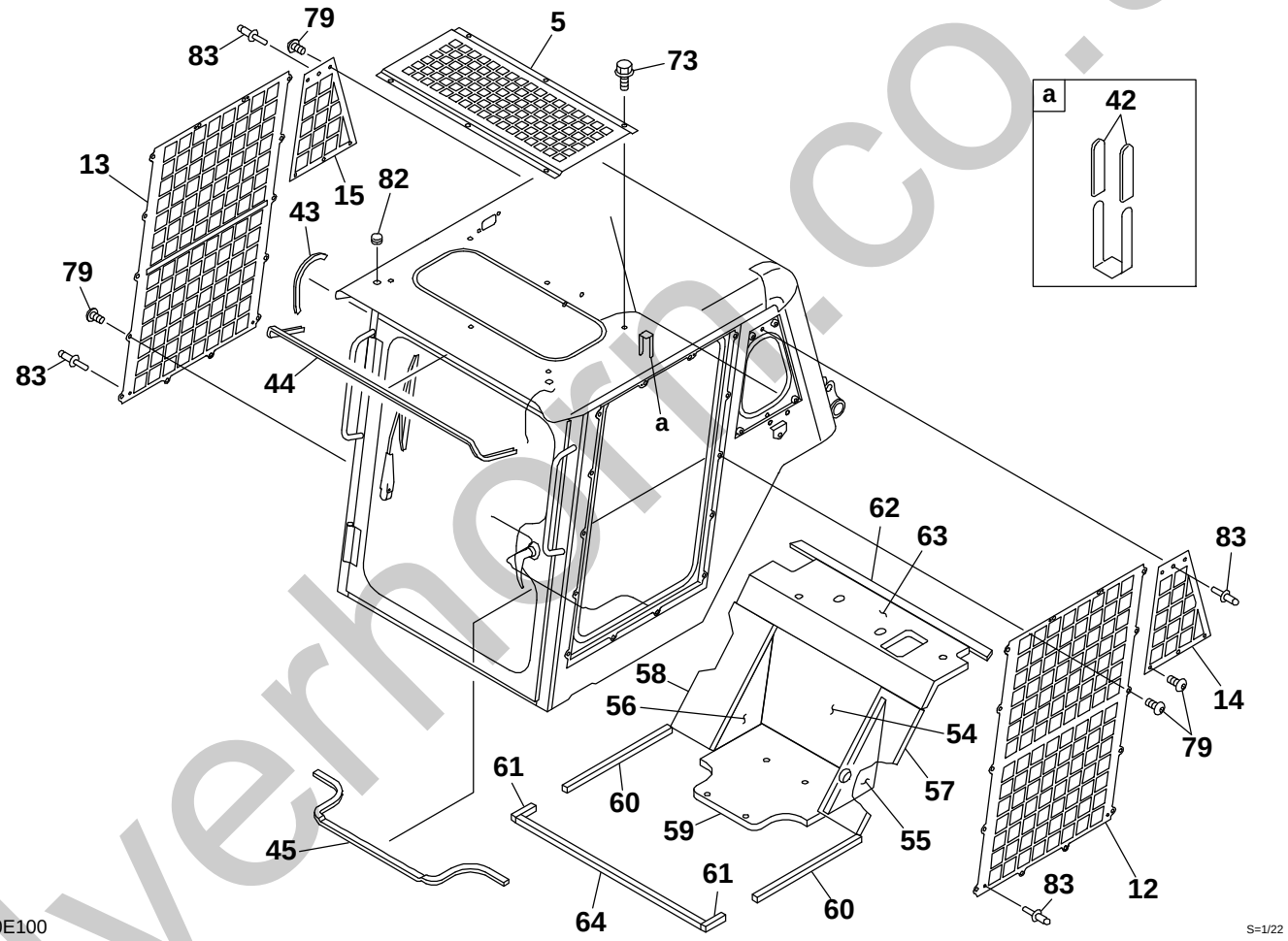

silverhorn.co.uk

CAB (1/5)

Item	Part number	Description	Q'ty	Chan.	Serial No.	Serv.	Remarks
0	0658600500	CAB ASSY (for US)	1				
	0658601600	CAB ASSY (for EU)	1				
5	0658400502	・COVER	1				
12	0658600530	・PLATE (L.H.)	1				
13	0658600540	・PLATE (R.H.)	1				
14	0658600514	・PLATE (L.H.)	1				
15	0658600515	・PLATE (R.H.)	1				
42	0872433150	・TUBE	2				
43	1653916038	・TRIM	1				sold by the meter
44	1654601153	・TRIM	1				sold by the meter
45	1654623120	・TRIM	1				sold by the meter
54	0658400527	・ABSORBENT, noise	1				
55	0658400528	・ABSORBENT, noise	1				
56	0658400529	・ABSORBENT, noise	1				
57	0658600558	・ABSORBENT, noise	1				
58	0658400531	・ABSORBENT, noise	1				
59	0658400532	・ABSORBENT, noise	1				
60	0658400533	・SPONGE	2				
61	0658600561	・SHEET	2				
62	0658400525	・SPONGE	1				
63	0658600564	・ABSORBENT, noise	1				
64	0658600565	・SHEET	1				
73	1100790816	・BOLT	6				
79	0658600579	・BOLT	36				
82	1653303010	・CAP	2				
83	0658600583	・RIVET	12				
	U0e101						

silverhorn.co.uk

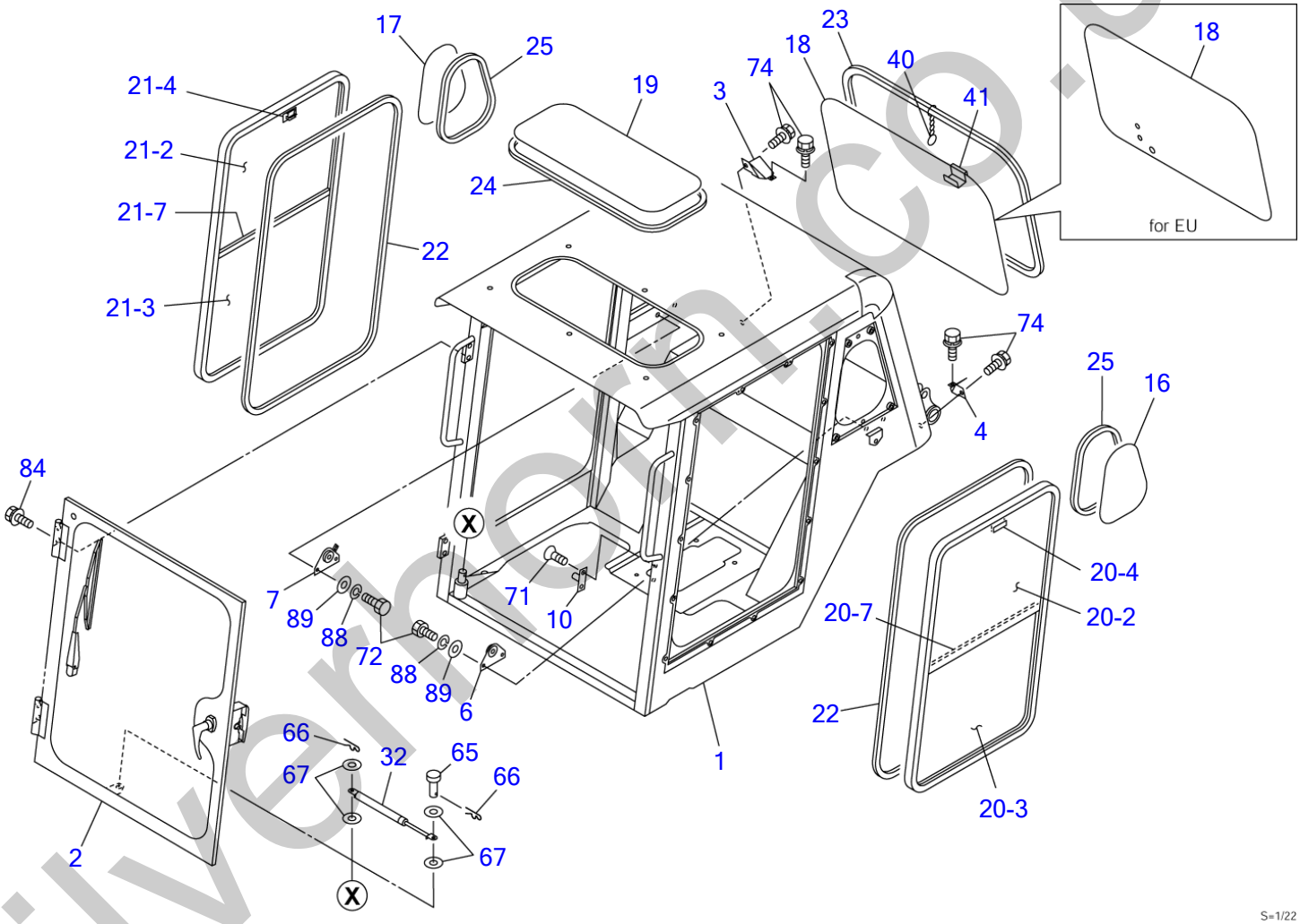

silverhorn.co.uk

CAB (2/5)

Item	Part number	Description	Q'ty	Chan.	Serial No.	Serv.	Remarks
0	0658600500	CAB ASSY (for US)	1				
	0658601600	CAB ASSY (for EU)	1				
1	0658600600	・CAB	1				
2	0658600800	・DOOR ASSY, front	1				see page (5/5)
	0658601800	* FRONT DOOR ASSY	1				
3	0658600503	・COVER (R.H.)	1				
4	0658600504	・COVER (L.H.)	1				
6	0658400510	・BRACKET (L.H.)	1				
7	0658400520	・BRACKET (R.H.)	1				
10	0658600510	・STRIKER	1				
16	0658600516	・GLASS	1				
17	0658600517	・GLASS	1				
18	0658400511	・GLASS	1				for US
	0658601618	・GLASS (OLD TYPE)	1				fo,' EU
	0658601718	* GLASS (NEW TYPE)	1				
19	0658400512	・GLASS	1				
20	0658600550	・SIDE SASH ASSY (L.H.)	1				
20-2	0658600552	・・GLASS	1				
20-3	0658600553	・・GLASS	1				
20-4	0880865424	・・LOCK ASSY	1				
20-7	0880865427	・・STRIP, weather	1				
21	0658600560	・SIDE SASH ASSY (R.H.)	1				
21-2	0658600552	・・GLASS	1				
21-3	0658600553	・・GLASS	1				
21-4	0880865424	・・LOCK ASSY	1				
21-7	0880865427	・・STRIP, weather	1				
22	1654261292	・H-RUBBER	2				sold by the meter
23	1654261230	・H-RUBBER	1				sold by the meter
24	1654261176	・H-RUBBER	1				sold by the meter
25	1654261087	・H-RUBBER	2				sold by the meter
32	0658600580	・SPRING, gas	1				
40	0880841040	・RING, pull	1				
41	0880841080	・HANDLE	1				
65	0658600566	・PIN	1				
66	1210010216	・PIN, split	2				
67	0003610003	・WASHER	4				
71	1120801020	・SCREW	2				
72	1100040820	・BOLT	4				
74	1100740616	・BOLT	4				
84	1100790820	・BOLT	4				
88	1140020008	・WASHER, spring	4				
89	1141110008	・WASHER	8				
	U0e111						

silverhorn.co.uk

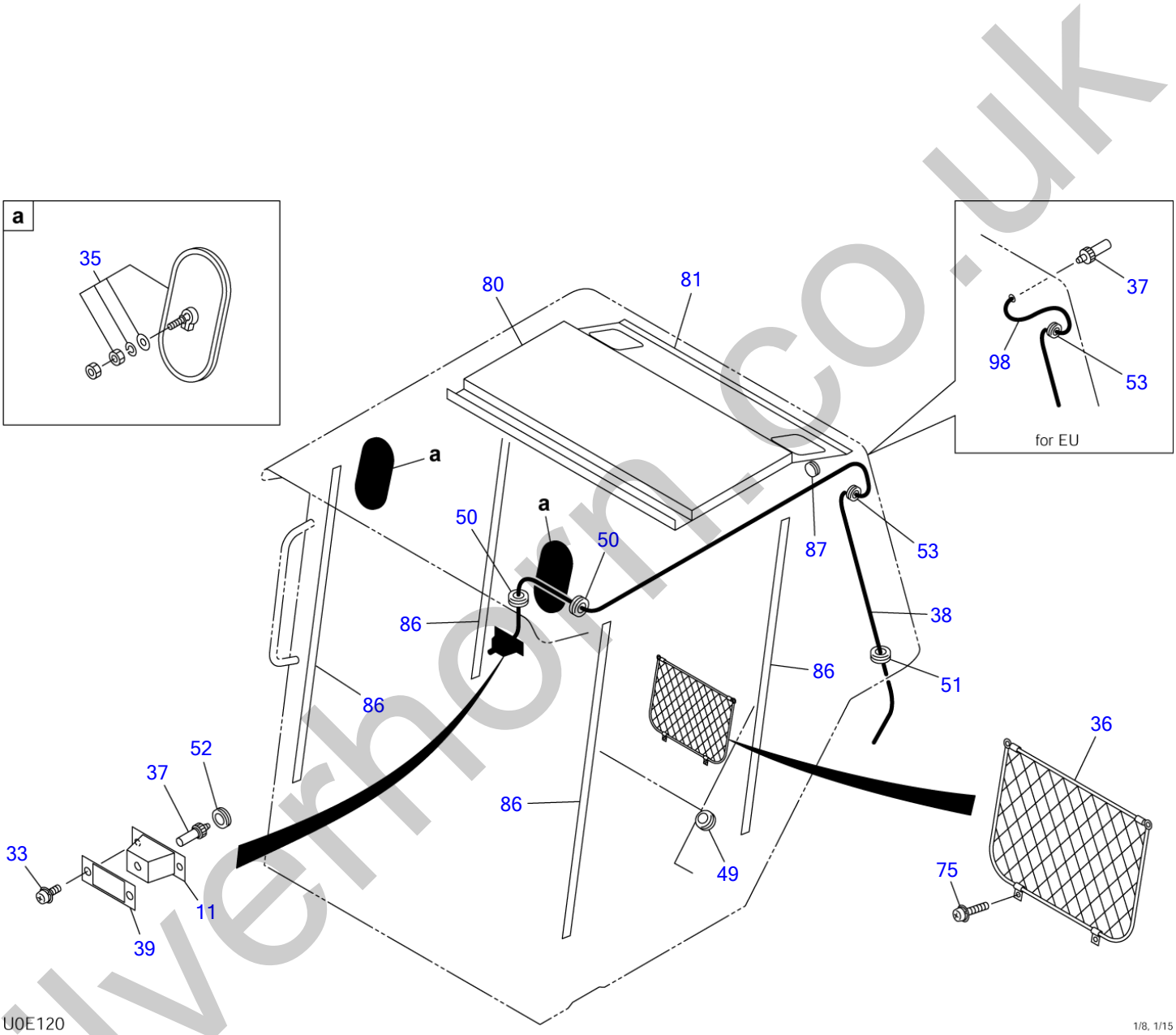

silverhorn.co.uk

CAB (3/5)

Item	Part number	Description	Q'ty	Chan.	Serial No.	Serv.	Remarks
0	0658600500	CAB ASSY (for US)	1				
	0658601600	CAB ASSY (for EU)	1				
11	0658600520	・COVER	1				
33	1150420616	・SCREW	2				
35	0880865131	・MIRROR, room	2				
36	1653691350	・POCKET	1				
37	1711910040	・NOZZLE	1				for US
	1711910040	・NOZZLE	2				fo,' EU
38	1711919300	・HOSE	1				sold by the meter
39	0658600590	・SHEET	1				
49	1652053600	・GROMMET	1				
50	1652042030	・GROMMET	2				
51	1652051800	・GROMMET	1				
52	1652041530	・GROMMET	1				
53	1652051400	・GROMMET	1				
75	1150010514	・SCREW	4				
80	0658600581	・SHEET	1				
81	0658600582	・SHEET	1				
86	0658600586	・SHEET	4				
87	1652050900	・GROMMET	1				for US
98	1711919120	・HOSE (for EU)	1				sold by the meter
	U0e121						

silverhorn.co.uk

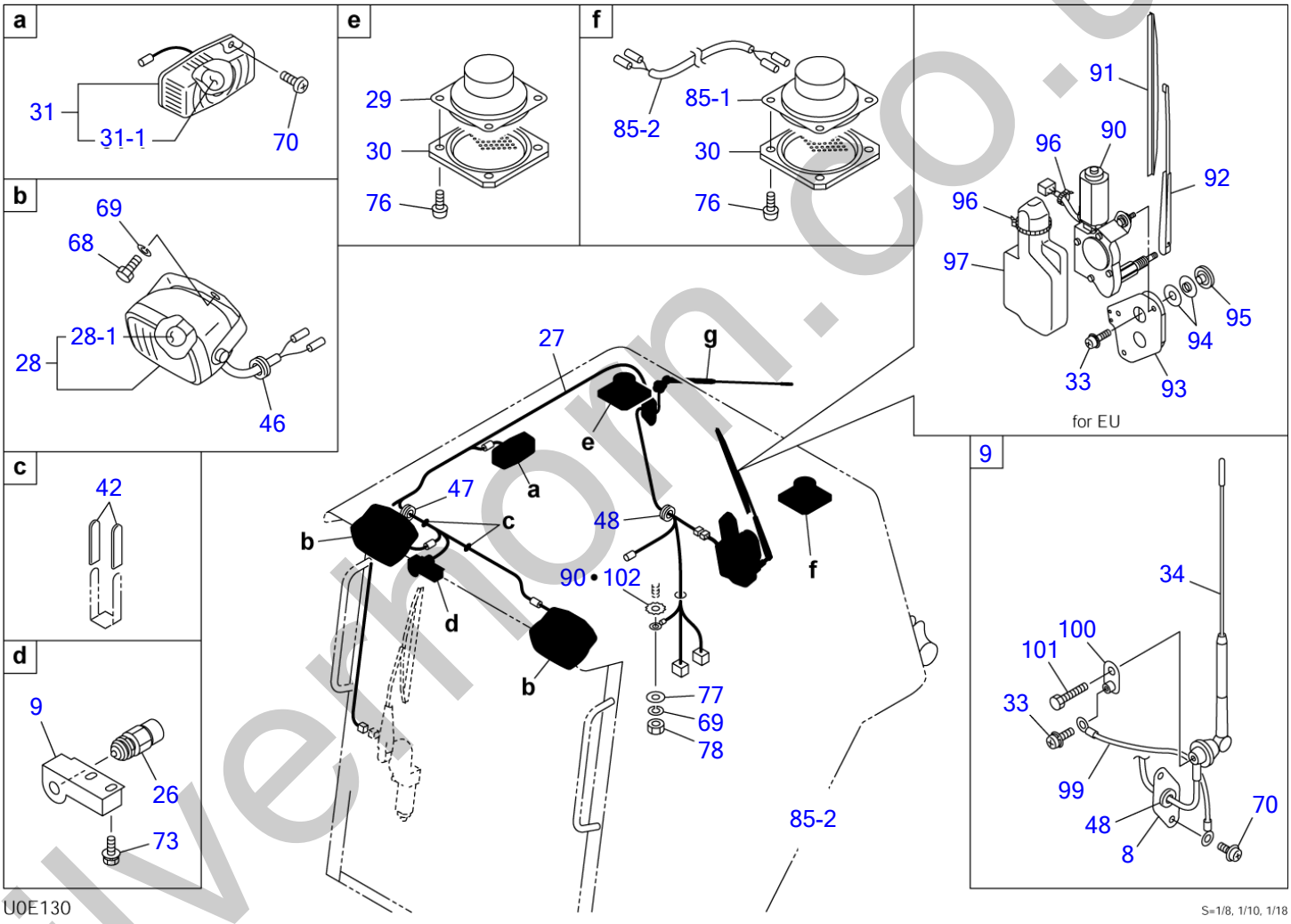

silverthorn.co.uk

CAB (4/5)

Item	Part number	Description	Q'ty	Chan.	Serial No.	Serv.	Remarks
0	0658600500	CAB ASSY (for US)	1				
	0658601600	CAB ASSY (for EU)	1				
8	0658600508	・PLATE	1				
9	0658600509	・BRACKET	1				
26	1700000033	・SWITCH, limit	1				
27	0658600570	・HARNESS	1				
28	1703006600	・LAMP ASSY	2				
28-1	1703006605	・・BULB	1				
29	1705003500	・SPEAKER	1				
30	1705003550	・GRILLE	2				
31	1703001700	・LAMP, room	1				
31-1	1703001701	・・BULB	1				
33	1150420616	・SCREW	3				fo,' EU
34	1705003460	・ANTENNA	1				
42	0872433150	・TUBE	4				
46	1652051200	・GROMMET	2				
47	1652054400	・GROMMET	1				
48	1652052800	・GROMMET	2				
68	1100041020	・BOLT	2				
69	1140020010	・WASHER, spring	3				
70	1150410414	・SCREW	4				
73	1100790816	・BOLT	2				
76	1120590412	・SCREW	8				
77	1141110010	・WASHER	1				
78	1130030010	・NUT	1				
85	0658600480	・SPEAKER ASSY	1				
85-1	1705003500	・・SPEAKER	1				
85-2	0658600482	・・HARNESS	1				
90	1140330010	・WASHER	1				for US
	1704051212	・MOTOR, wiper	1				fo,' EU
91	1704201330	・BLADE	1				fo,' EU
92	1704102510	・ARM, wiper	1				fo,' EU
93	0882861250	・BRACKET	1				fo,' EU
94	0880865314	・PACKING	4				fo,' EU
95	0880865313	・RETAINER	2				fo,' EU
96	1652221050	・BAND	4				fo,' EU
97	1704400001	・COVER	1				fo,' EU
99	0658601710	・HARNESS	1				fo,' EU
100	0658601720	・PLATE	1				fo,' EU
101	1100220640	・BOLT	1				fo,' EU
102	1140330010	・WASHER	1				fo,' EU
	U0e131						

silverthorn.co.uk

CAB (5/5) (front door)

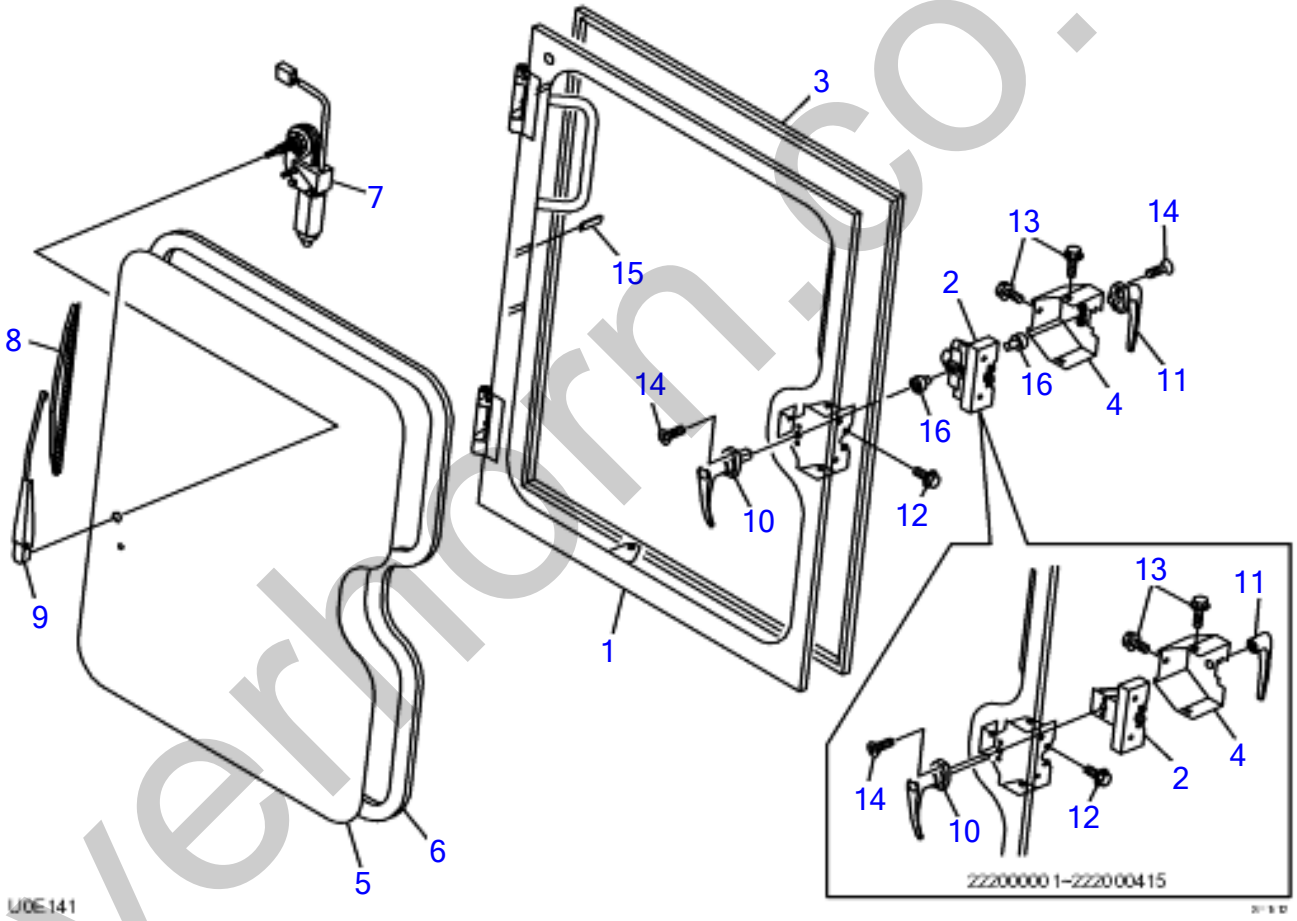

silverhorn.co.uk

CAB (5/5) (front door)

Item	Part number	Description	Q'ty	Chan.	Serial No.	Serv.	Remarks
0-1	0658600800	DOOR ASSY, front	1				
	0658601800	FRONT DOOR ASSY	1				
1	0658600900	・DOOR	1				
2	0658600810	・LATCH	1				
	0658601010	* LATCH	1				
3	0658600820	・TRIM	1				
4	0658600804	・COVER	1				
	0658600940	* COVER	1				
5	0658600805	・GLASS	1				
6	1654261346	・H-RUBBER	1				sold by the meter
7	0880865302	・MOTOR, wiper	1				
8	0658600808	・BLADE	1				
9	0658600809	・ARM, wiper	1				
10	0658600830	・HANDLE	1				
	0658601030	* HANDLE	1				
11	0658600840	・HANDLE	1				
	0658601040	* HANDLE	1				
12	1100740620	・BOLT	4				
13	1100740616	・BOLT	3				
14	1120790520	・SCREW	2				
15	0658600815	・TUBE	3				
16	0658600860	* JOINT	2				
	U0e141						

silverhorn.co.uk

CAB MOUNT (GEHL & MUSTANG)

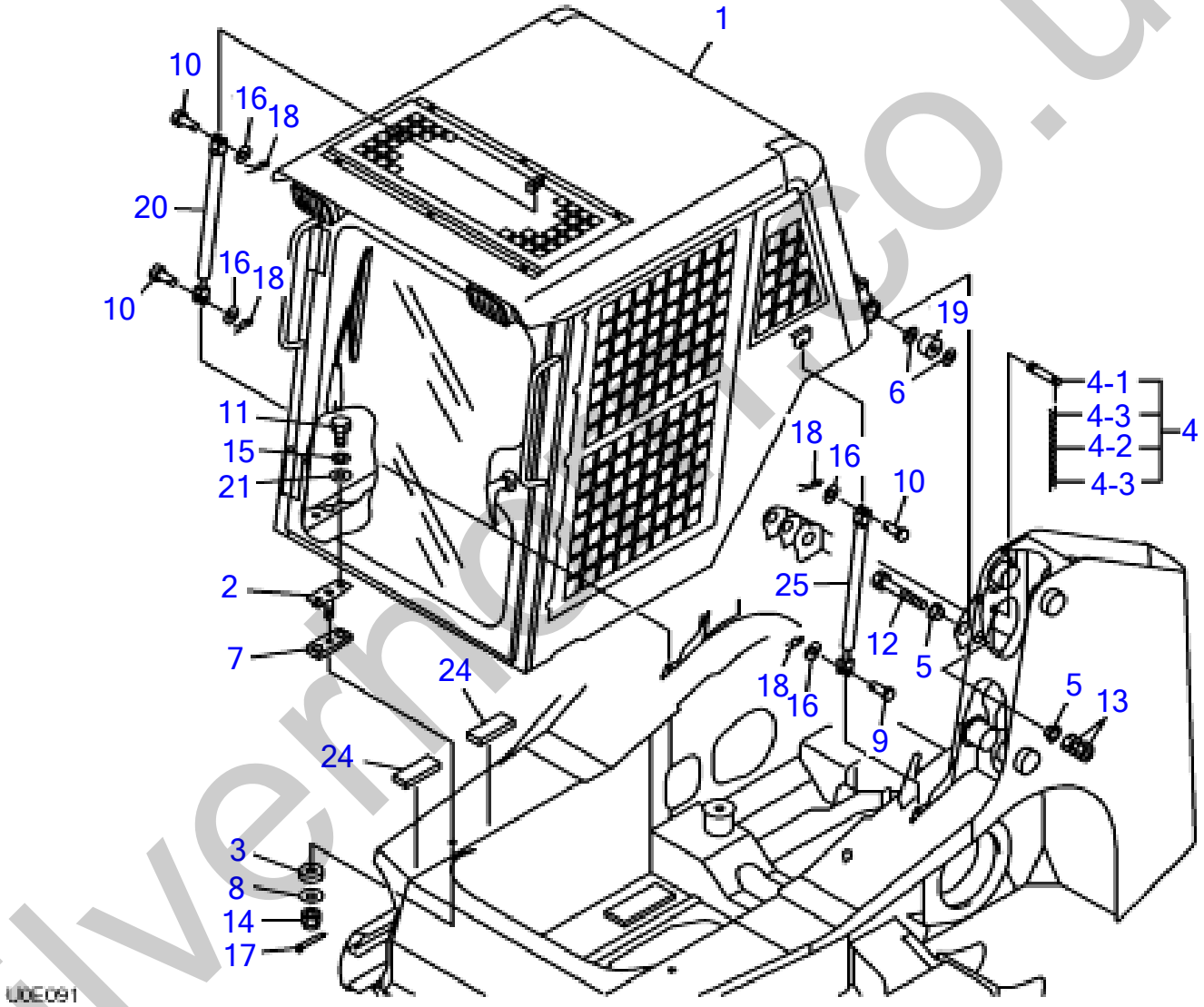

silverhead.co.uk

CAB MOUNT (GEHL & MUSTANG)

Item	Part number	Description	Q'ty	Chan.	Serial No.	Serv.	Remarks
		CAB MOUNT					
1	0658602100	CAB	1				
2	0881842030	BOLT ASSY	2				
3	0881842050	CUSHION RUBBER	2				
4	0881841060	PIN ASSY	1				
4-1	0881841061	* PIN	1				
4-2	1652735886	* CHAIN	1				
4-3	1214000016	* SNAP PIN	2				
5	0881840008	COLLAR	4				
6	0880840070	WASHER	4				
7	0881842040	CUSHION RUBBER	2				
8	0003900044	WASHER	2				
9	0343503200	PIN	2				
10	0004010025	PIN	2				
11	1100041225	BOLT	4				
12	1100141610	BOLT	2				
13	1130040016	NUT	4				
14	1132080016	NUT	2				
15	1140020012	SPRING WASHER	4				
16	1141110010	WASHER	4				
17	1210010432	SPLIT PIN	2				
18	1214000008	SNAP PIN	4				
19	1651005030	CUSHION RUBBER	2				
20	1653900065	RH GAS SPRING	1				
21	0003600165	WASHER	4				
24	1654306008	SPONGE	4				
25	1653900060	LH GAS SPRING	1				
	U0E170						

silverhorn.co.uk

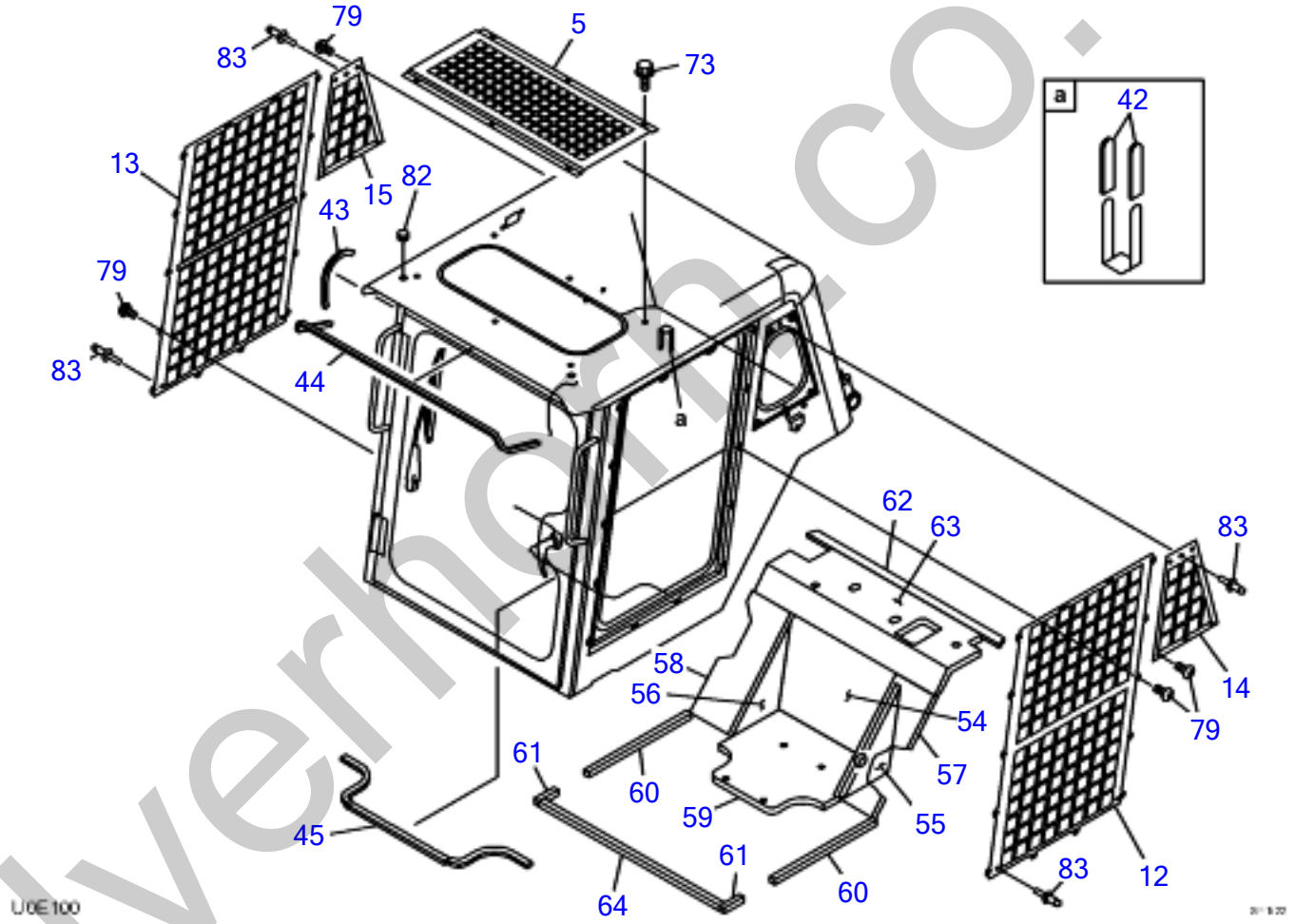

silverhorn.co.uk

CAB (1/5) GEHL & MUSTANG

Item	Part number	Description	Q'ty	Chan.	Serial No.	Serv.	Remarks
0	0658602100	CAB ASSY	1				
5	0658400502	* COVER	1				
12	0658600530	* LH PLATE	1				
13	0658600540	* RH PLATE	1				
14	0658600514	* LH PLATE	1				
15	0658600515	* RH PLATE	1				
42	0872433150	* TUBE	2				
43	1653916038	* TRIM	1				
44	1654601153	* TRIM	1				
45	1654623120	* TRIM	1				
54	0658400527	* NOISE ABSORBENT	1				
55	0658400528	* NOISE ABSORBENT	1				
56	0658400529	* NOISE ABSORBENT	1				
57	0658600558	* NOISE ABSORBENT	1				
58	0658400531	* NOISE ABSORBENT	1				
59	0658400532	* NOISE ABSORBENT	1				
60	0658400533	* SPONGE	2				
61	0658600561	* SHEET	2				
62	0658400525	* SPONGE	1				
63	0658600564	* NOISE ABSORBENT	1				
64	0658600565	* SHEET	1				
73	1100790816	* BOLT	6				
79	0658600579	* BOLT	36				
82	1653303010	* CAP	2				
83	0658600583	* RIVET	12				
	U0C180						

silverhorn.co.uk

CAB (2/5) (for GEHL & MUSTANG; 222000344-)

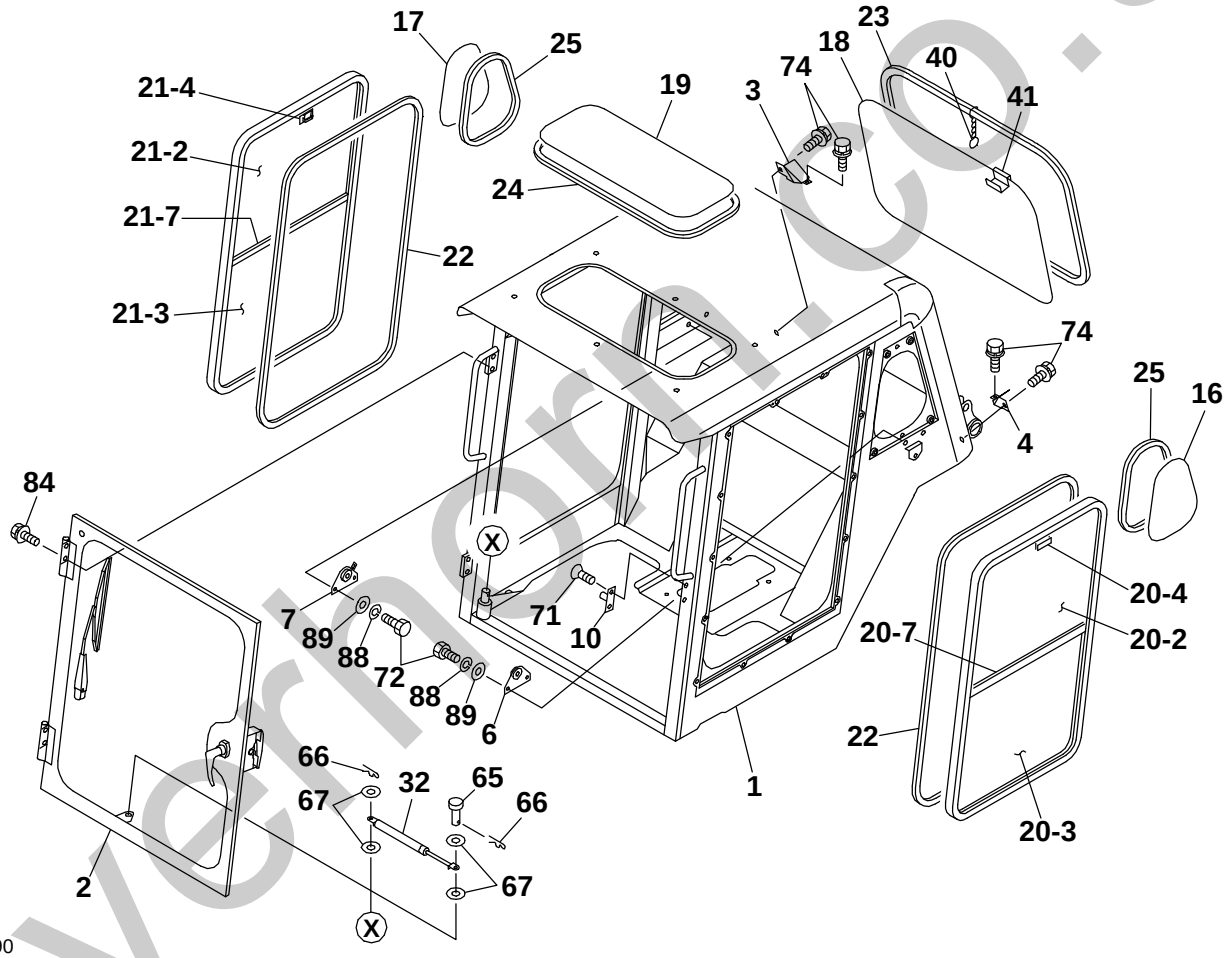

U0E190

S=1/22

silvermoon.co.uk

CAB (2/5) GEHL & MUSTANG

Item	Part number	Description	Q'ty	Chan.	Serial No.	Serv.	Remarks
0	0658602100	CAB ASSY	1				
1	0658600600	* CAB	1				
2	0658600800	* FRONT DOOR ASSY	1				
	0658601800	* FRONT DOOR ASSY	1				
3	0658600503	* RH COVER	1				
4	0658600504	* LH COVER	1				
6	0658400510	* LH BRACKET	1				
7	0658400520	* RH BRACKET	1				
10	0658600510	* STRIKER	1				
16	0658600516	* GLASS	1				
17	0658600517	* GLASS	1				
18	0658400511	* GLASS	1				
19	0658400512	* GLASS	1				
20	0658600550	* LH SIDE SASH ASSY	1				
20-2	0658600552	* * GLASS	1				
20-3	0658600553	* * GLASS	1				
20-4	0880865424	* * LOCK ASSY	1				
20-7	0880865427	* * WEATHER STRIP	1				
21	0658600560	* RH SIDE SASH ASSY	1				
21-2	0658600552	* * GLASS	1				
21-3	0658600553	* * GLASS	1				
21-4	0880865424	* * LOCK ASSY	1				
21-7	0880865427	* * WEATHER STRIP	1				
22	1654261292	* H-RUBBER	2				
23	1654261230	* H-RUBBER	1				
24	1654261176	* H0RUBBER	1				
25	1654261087	* H-RUBBER	2				
32	0658600580	* GAS SPRING	1				
40	0880841040	* PULL RING	1				
41	0880841080	* HANDLE	1				
65	0658600566	* PIN	1				
66	1210010216	* SPLIT PIN	2				
67	0003610003	* WASHER	4				
71	1120801020	* SCREW	2				
72	1100040820	* BOLT	4				
74	1100740616	* BOLT	4				
84	1100790820	* BOLT	4				
88	1140020008	* SPRING WASHER	4				
89	1141110008	* WASHER	8				
	U0E190						

silverhorn.co.uk

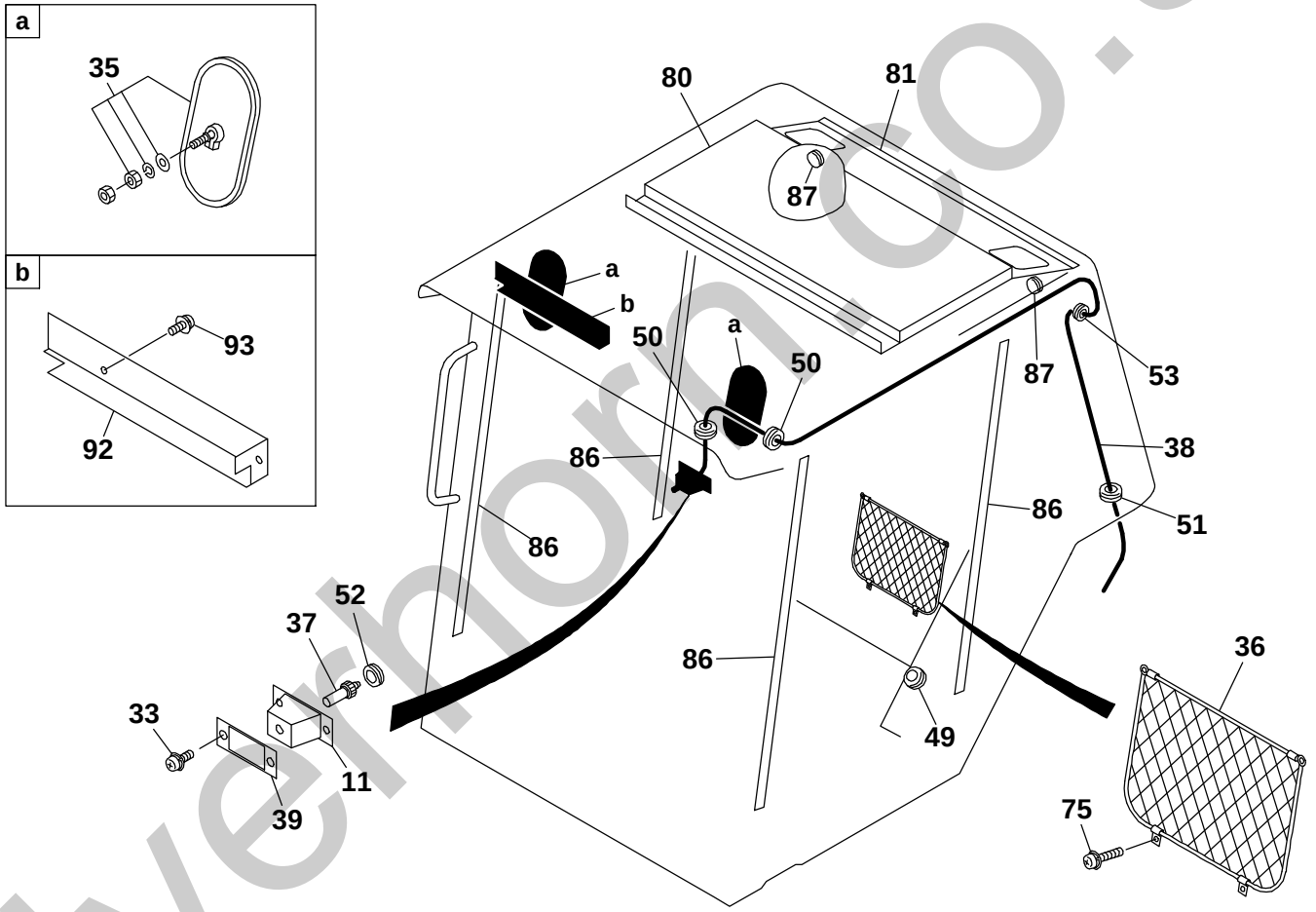

U0E200

1/8, 1/15

silverhorn.co.uk

CAB (3/5) GHEL & MUSTANG

Item	Part number	Description	Q'ty	Chan.	Serial No.	Serv.	Remarks
0	0658602100	CAB ASSY	1				
11	0658600520	* COVER	1				
33	1150420616	* SCREW	2				
35	0880865131	* ROOM MIRROR	2				
36	1653691350	* POCKET	1				
37	1711910040	* PIPE	1				
38	1711919300	* HOSE	1				
39	0658600590	* SHEET	1				
49	1652053600	* GROMMET	1				
50	1652042030	* GROMMET	2				
51	1652051800	* GROMMET	1				
52	1652041530	* GROMMET	1				
53	1652051400	* GROMMET	1				
75	1150010514	* SCREW	4				
80	0658600581	* SHEET	1				
81	0658600582	* SHEET	1				
86	0658600586	* SHEET	4				
87	1652050900	* GROMMET	2				
92	0658602020	* COVER	1				
93	1150420614	* SCREW	2				
	U0E200						

silverhorn.co.uk

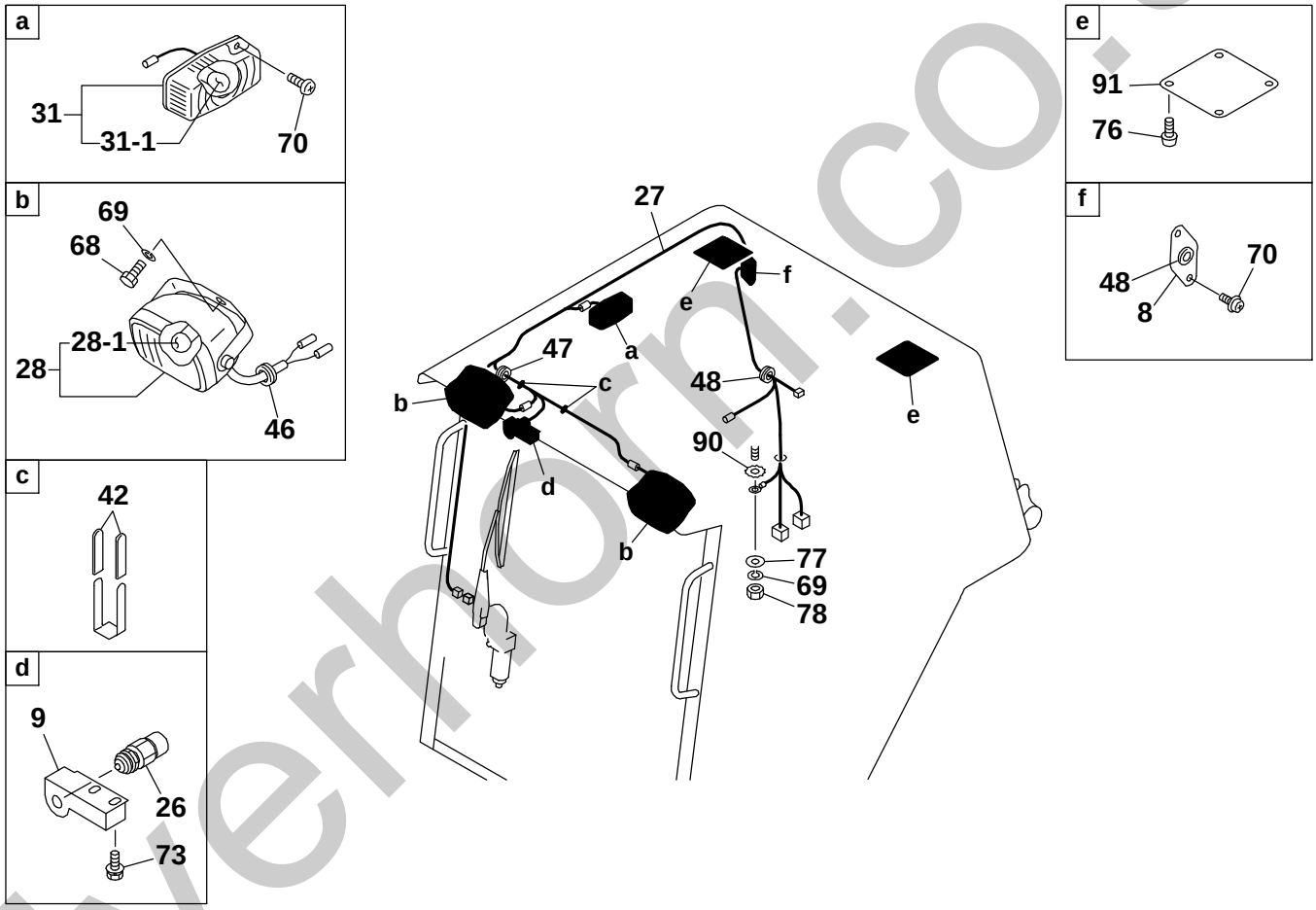

U0E210

S=1/8, 1/10, 1/18

silverhorn.co.uk

CAB (4/5) GEHL & MUSTANG

Item	Part number	Description	Q'ty	Chan.	Serial No.	Serv.	Remarks
0	0658602100	CAB ASSY	1				
8	0658600508	* PLATE	1				
9	0658600509	* BRACKET	1				
26	1700000033	* LIMIT SWITCH	1				
27	0658600570	* HARNESS	1				
28	1703006600	* LAMP ASSY	2				
28-1	1703006605	* * BULB	1				
31	1703001700	* ROOM LAMP	1				
31-1	1703001701	* * BULB	1				
42	0872433150	* TUBE	4				
46	1652051200	* GROMMET	2				
47	1652054400	* GROMMET	1				
48	1652052800	* GROMMET	2				
68	1100041020	* BOLT	2				
69	1140020010	* SPRING WASHER	3				
70	1150410414	* SCREW	4				
73	1100790816	* BOLT	2				
76	1120590412	* SCREW	8				
77	1141110010	* WASHER	1				
78	1130030010	* NUT	1				
90	1140330010	* WASHER	1				
91	0658602191	* PLATE	2				
	U0E210						

silverhorn.co.uk

CAB (5/5) (front door, for GEHL & MUSTANG; 222000344-)

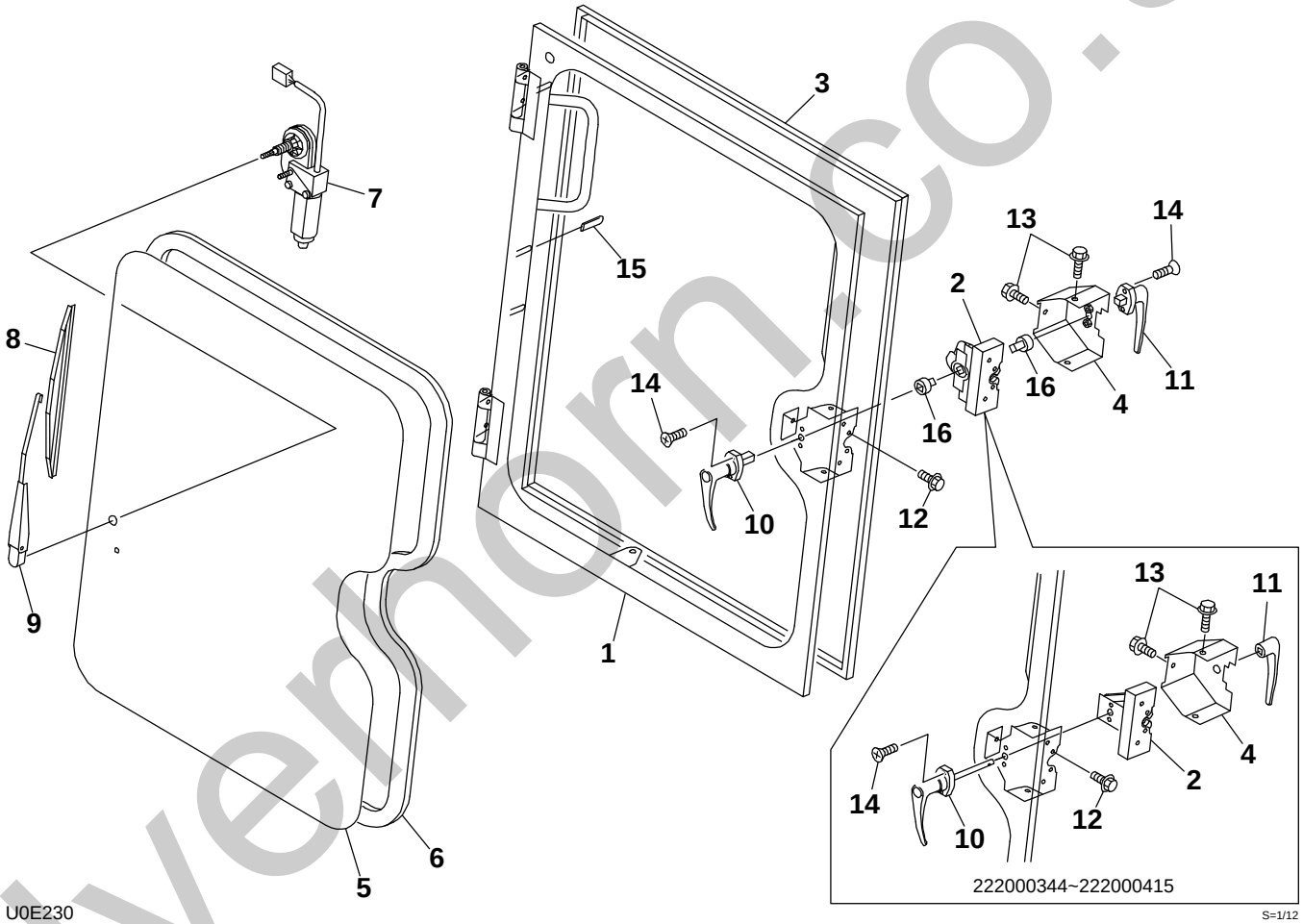

U0E230

S=1/12

silvernorn.co.uk

CAB (5/5) GEHL & MUSTANG FRONT DOOR

Item	Part number	Description	Q'ty	Chan.	Serial No.	Serv.	Remarks
0-1	0658600800	FRONT DOOR ASSY	1				
	0658601800	FRONT DOOR ASSY	1				
1	0658600900	* DOOR	1				
2	0658600810	* LATCH	1				
	0658601010	* LATCH	1				
3	0658600820	* TRIM	1				
4	0658600804	* COVER	1				
	0658600940	* COVER	1				
5	0658600805	* GLASS	1				
6	1654261346	* H-RUBBER	1				
7	0880865302	* WIPER MOTOR	1				
8	0658600808	* BLADE	1				
9	0658600809	* WIPER ARM	1				
10	0658600830	* HANDLE	1				
	0658601030	* HANDLE	1				
11	0658600840	* HANDLE	1				
	0658601040	* HANDLE	1				
12	1100740620	* BOLT	4				
13	1100740616	* BOLT	3				
14	1120790520	* SCREW	4				
15	0658600815	* TUBE	3				
16	0658600860	* JOINT	2				
	U0E230						

silverhorn.co.uk

REAR MIRROR

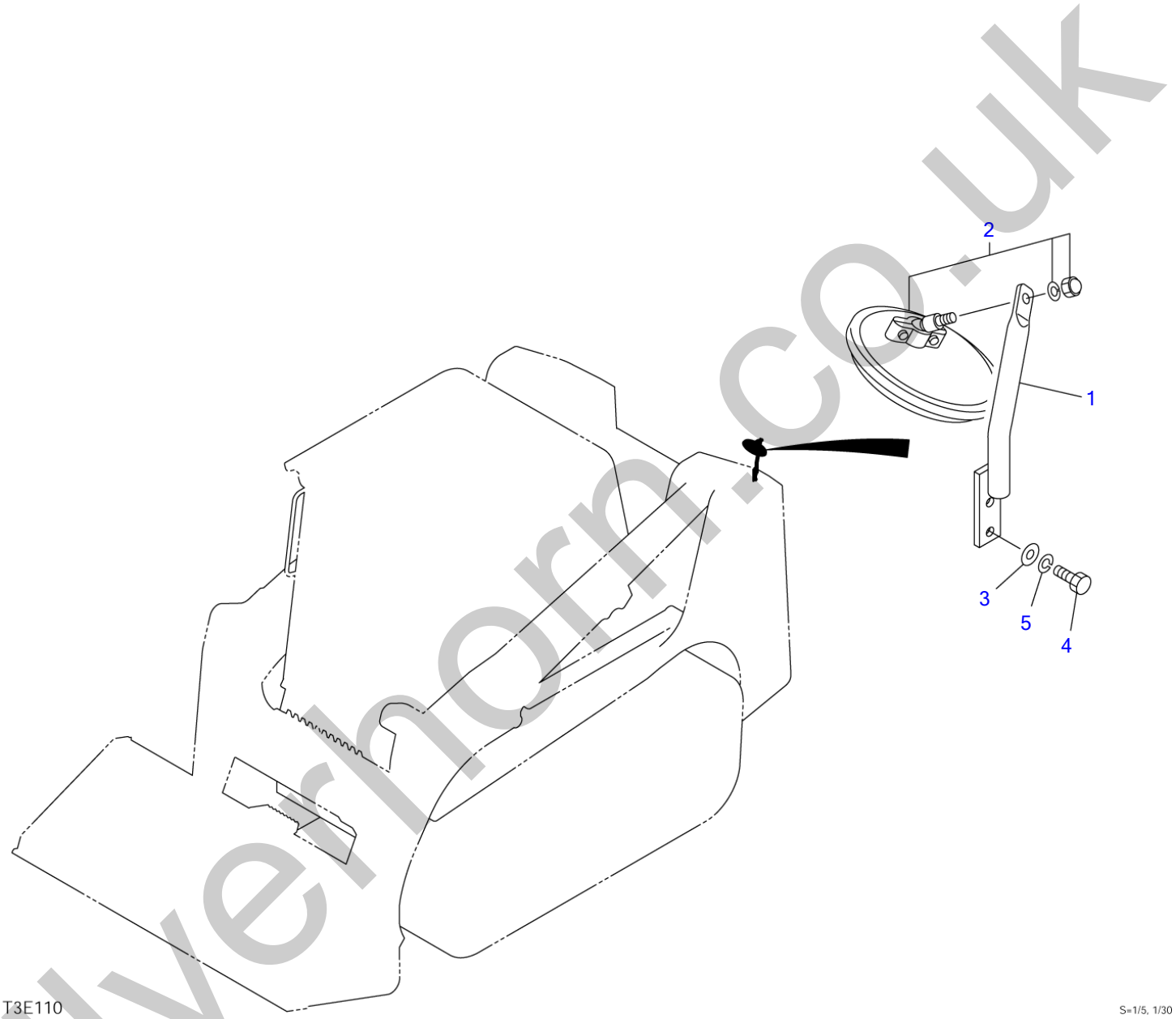

silverhorn.co.uk

REAR MIRROR

Item	Part number	Description	Q'ty	Chan.	Serial No.	Serv.	Remarks
		MIRROR ASSY, rear					
1	0658700010	STAY	1				
2	1656500130	MIRROR	1				
3	0003608252	WASHER	2				
4	1100040816	BOLT	2				
5	1140020008	WASHER, spring	2				
	T3e110						

silverhorn.co.uk

AIR CONDITIONER (1/5) (compressor)

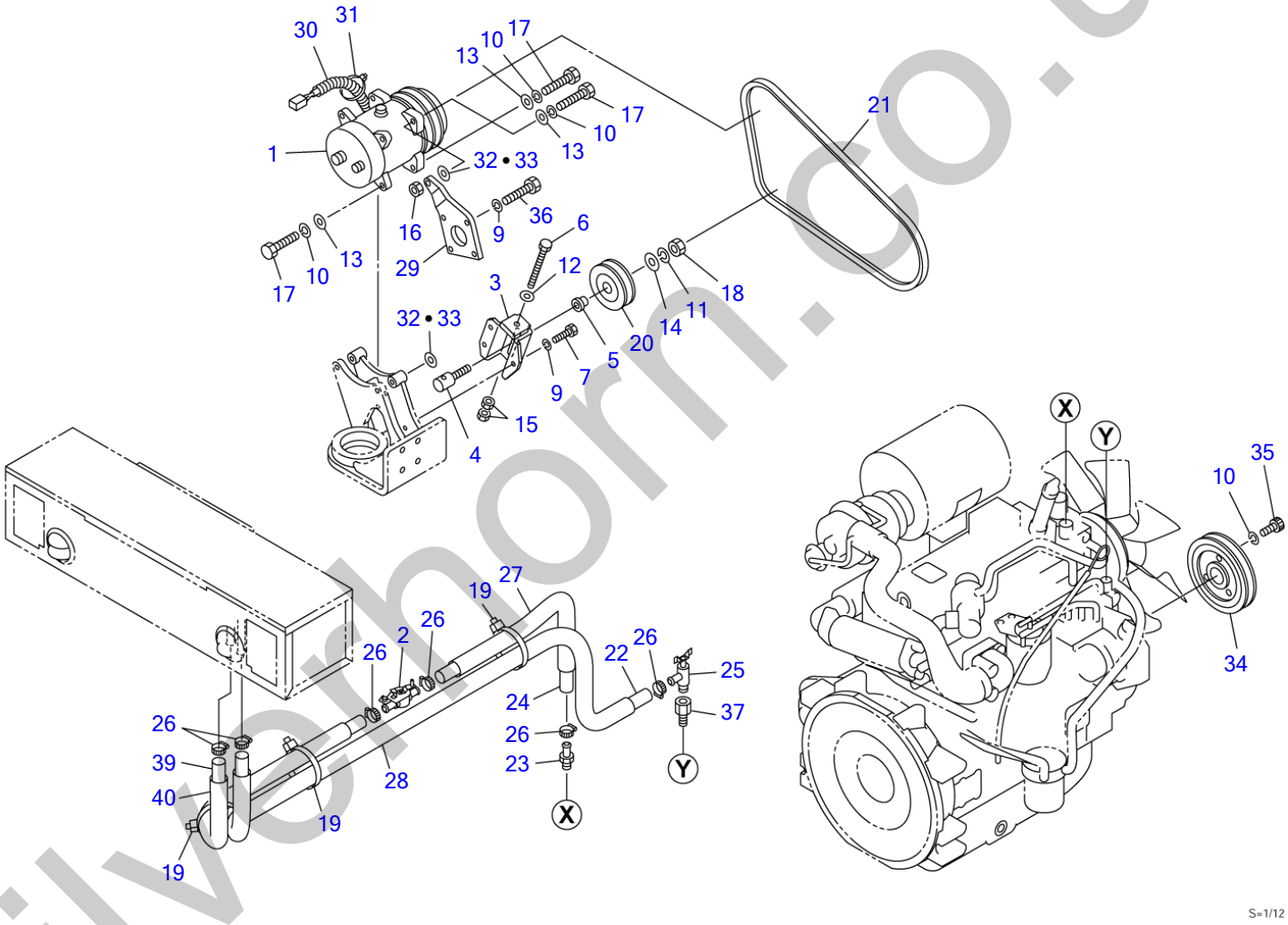

silverhorn.co.uk

AIR CONDITIONER (1/5) (compressor)

Item	Part number	Description	Q'ty	Chan.	Serial No.	Serv.	Remarks
0	0654602100	COMPRESSOR ASSY	1			M	
1	1911506010	・COMPRESSOR	1				
2	1911506008	・VALVE	1				
3	0564618790	・BRACKET	1				
4	0564619210	・SHAFT	1				
5	0564619240	・COLLAR	1				
6	1100440810	・BOLT	1				
7	1100040816	・BOLT	3				
9	1140020008	・WASHER, spring	7				
10	1140020010	・WASHER, spring	8				
11	1140020012	・WASHER, spring	1				
12	1141110008	・WASHER	1				
13	1141110010	・WASHER	5				
14	1141550012	・WASHER	1			M	
15	1130040008	・NUT	2				
16	1130240010	・NUT	1				
17	1103041035	・BOLT	5			M	
18	1130040012	・NUT	1				
19	1652201007	・BAND	3				
20	1911505700	・PULLEY	1				
21	1911508305	・V-BELT	1				A44
22	1911511825	・HOSE	1			M	sold by the meter
23	0007224009	・ADAPTOR	1				
24	1911501870	・HOSE	1				sold by the meter
25	1911502100	・VALVE	1				
26	1911500500	・BAND	6				
27	1531325060	・PROTECTOR	1				sold by the meter
28	1531325115	・PROTECTOR	1			M	sold by the meter
29	0654601110	・STAY	1				
30	1703210720	・PROTECTOR	1				sold by the meter
31	1652231100	・BAND	1				
32	0003600222	・SHIM	AR				t=0.2mm
33	0003600223	・SHIM	AR				t=0.3mm
34	0394614710	・PULLEY	1				
35	1100041020	・BOLT	3				
36	1100040830	・BOLT	4				
37	1501910303	・CONNECTOR	1			M	
39	1911501850	・HOSE	1			M	sold by the meter
40	1531325040	・PROTECTOR	1			M	sold by the meter
	U0e151						

silverhorn.co.uk

AIR CONDITIONER (1/5) (compressor; 222000116-)

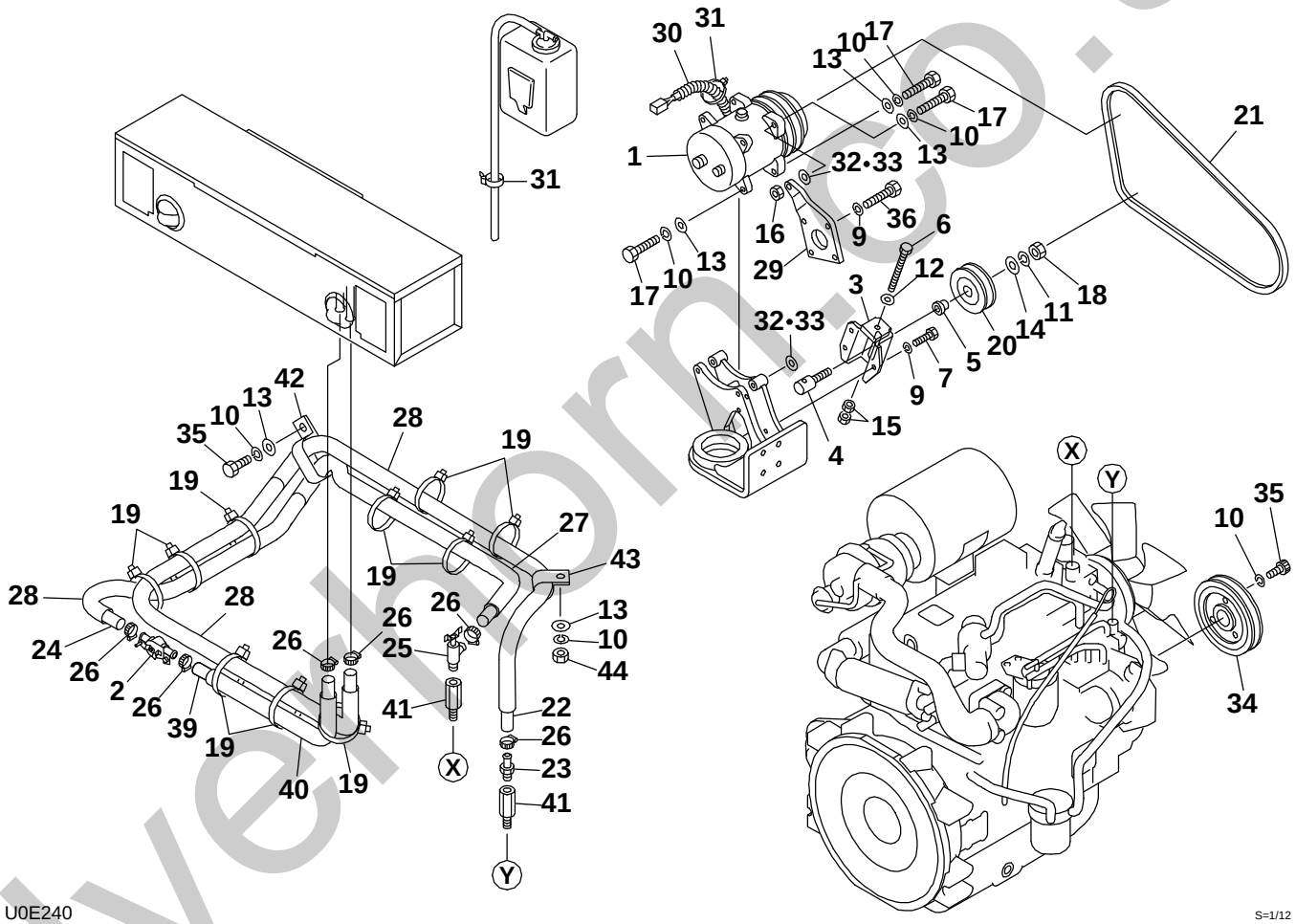

silverthorn.co.uk

AIR CONDITIONER (1/5) COMPRESSOR

Item	Part number	Description	Q'ty	Chan.	Serial No.	Serv.	Remarks
0	0654602100	COMPRESSOR ASSY	1				
1	1911506010	* COMPRESSOR	1				
2	1911506008	* VALVE	1				
3	0564618790	* BRACKET	1				
4	0564619210	* SHAFT	1				
5	0564619240	* COLLAR	1				
6	1100440810	* BOLT	1				
7	1100040816	* BOLT	3				
9	1140020008	* SPRING WASHER	7				
10	1140020010	* SPRING WASHER	10				
11	1140020012	* SPRING WASHER	1				
12	1141110008	* WASHER	1				
13	1141110010	* WASHER	7				
14	1141550012	* WASHER	1				
15	1130040008	* NUT	2				
16	1130240010	* NUT	1				
17	1103041035	* BOLT	5				
18	1130040012	* NUT	1				
19	1652201007	* BAND	10				
20	1911505700	* PULLEY	1				
21	1911508305	* V-BELT	1				
22	1911521820	* HOSE	1				
23	0007224009	* ADAPTOR	1				
24	1911511850	* HOSE	1				
25	1911502100	* VALVE	1				
26	1911500500	* BAND	6				
27	1531325025	* PROTECTOR	1				
28	1531325100	* PROTECTOR	3				
29	0654601110	* STAY	1				
30	1703210720	* PROTECTOR	1				
31	1652231100	* BAND	2				
32	0003600222	* SHIM					
33	0003600223	* SHIM					
34	0394614710	* PULLEY	1				
35	1100041020	* BOLT	4				
36	1100040830	* BOLT	4				
39	1911501845	* HOSE	1				
40	1531325035	* PROTECTOR	1				
41	0007200016	* CONNECTOR	1				
42	0007300065	* CLAMP	1				
43	0007300030	* CLAMP	1				
44	1130040010	* NUT	1				
	U0E240						

silverform.co.uk

AIR CONDITIONER (2/5) (condenser)

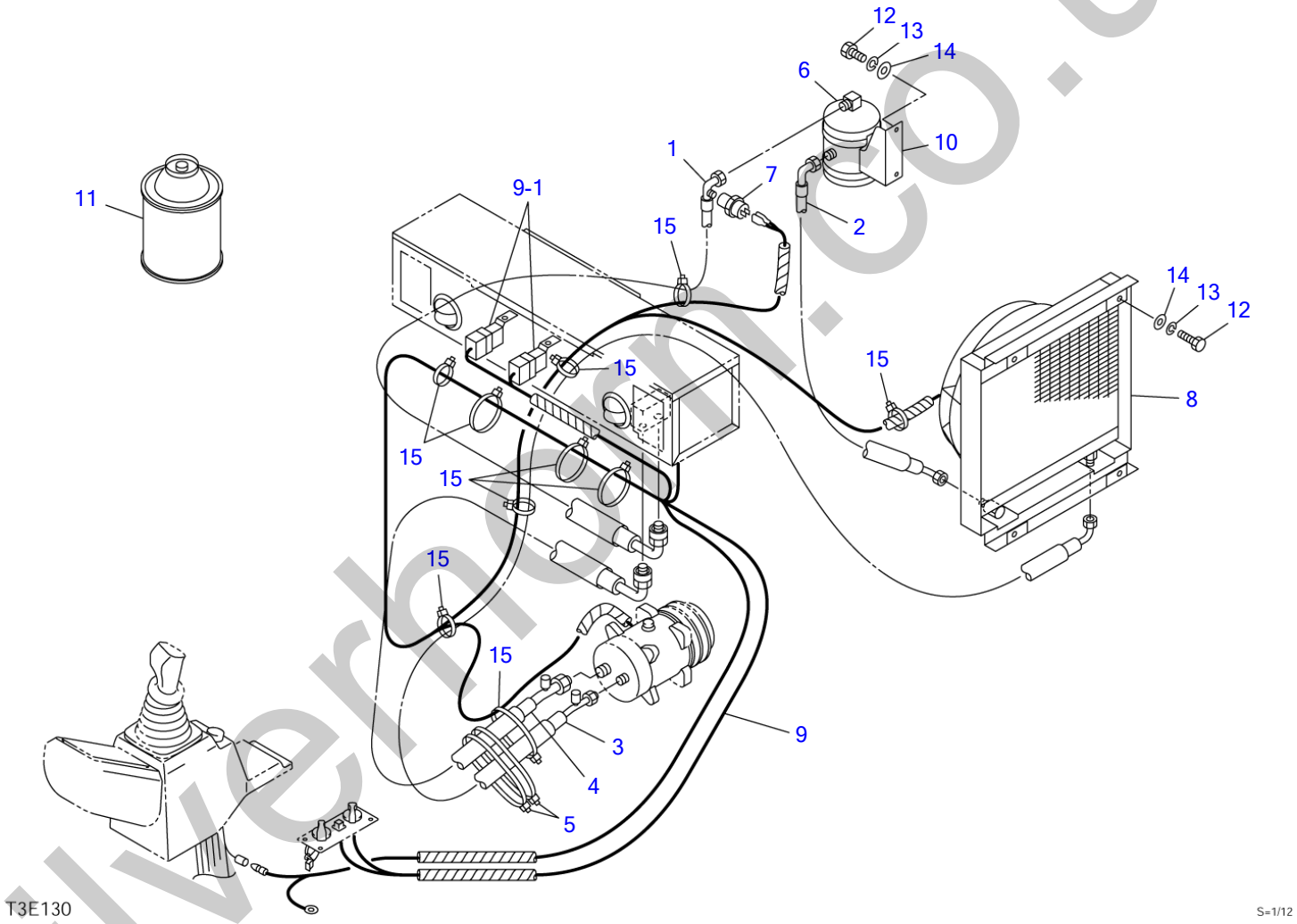

silverhorn.co.uk

AIR CONDITIONER (2/5) (condenser)

Item	Part number	Description	Q'ty	Chan.	Serial No.	Serv.	Remarks
0	0654601200	CONDENSER ASSY	1				
1	1911508331	・HOSE ASSY	1				
	1911505601	・・O-RING	2				
2	1911508332	・HOSE ASSY	1				
	1911505601	・・O-RING	2				
3	1911508333	・HOSE ASSY	1				
	1911505602	・・O-RING	2				
4	1911508334	・HOSE ASSY	1				
	1911505603	・・O-RING	2				
5	1652201008	・BAND	4				
6	1911508311	・DRYER	1				
7	1911505514	・SWITCH	1				
8	1911508380	・CONDENSER	1				
9	1911508310	・HARNESS, wiring	1				
9-1	1911506041	・・RELAY	2				
10	0654601220	・BRACKET	1				
11	0872463100	・GAS	4				200g
12	1100040820	・BOLT	6				
13	1140020008	・WASHER, spring	6				
14	1141110008	・WASHER	6				
15	1652231250	・BAND	10				
	T3e130						

silverhorn.co.uk

AIR CONDITIONER (3/5) (air conditioner unit)

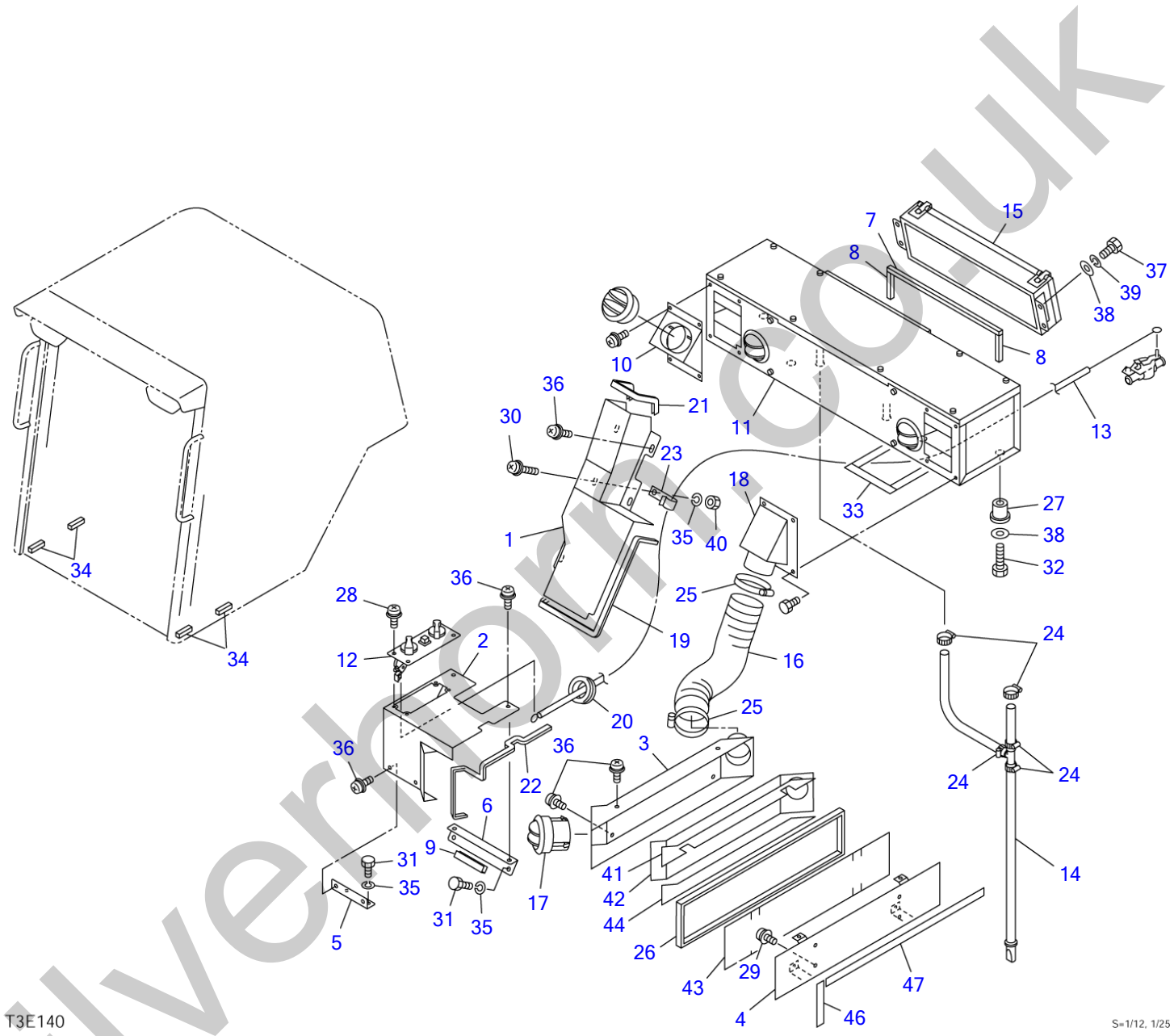

silverhorn.co.uk

AIR CONDITIONER (3/5) (air conditioner unit)

Item	Part number	Description	Q'ty	Chan.	Serial No.	Serv.	Remarks
0	0654601300	UNIT ASSY, air conditioner	1				
1	0654601310	・COVER	1				
2	0654601320	・COVER	1				
3	0654601330	・COVER	1				
4	0654601340	・BRACKET	1				
5	0654601350	・BRACKET	1				
6	0654601360	・BRACKET	1				
7	0881464370	・URETHANE	1				
8	0881464380	・URETHANE	2				
9	1653916008	・TRIM	1				sold by the meter
10	1911505920	・ADAPTOR	1				
11	1911508390	・UNIT, air conditioner	1				see page (4/5)
12	1911506020	・PANEL ASSY	1				see page (5/5)
13	1911506006	・CABLE, control	1				
14	1911506030	・TUBE ASSY	1				
15	1911506050	・BOX, filter	1				see page (5/5)
16	1911506009	・HOSE	1				
17	1911506675	・LOUVER	1				
18	0880465320	・ADAPTOR	1				
19	1653916049	・TRIM	1				sold by the meter
20	1652053600	・GROMMET	1				
21	1653916023	・TRIM	1				sold by the meter
22	1653916043	・TRIM	1				sold by the meter
23	0007300010	・CLAMP	1				
24	1911500500	・BAND	5				
25	1533700070	・BAND	2				
26	1654613120	・PACKING	1				sold by the meter
27	1652520008	・NUT	4				
28	1150420510	・BOLT, sems	4				
29	1150420610	・BOLT, sems	4				
30	1150420625	・BOLT, sems	1				
31	1100040610	・BOLT	4				
32	1100040830	・BOLT	4				
33	1654313013	・SPONGE	4				sold by the meter
34	1654306008	・SPONGE	4				sold by the meter
35	1140020006	・WASHER, spring	5				
36	1150420614	・SCREW	12				
37	1100040816	・BOLT	4				
38	1141110008	・WASHER	8				
39	1140020008	・WASHER, spring	4				
40	1130040006	・NUT	1				
41	0654601341	・ABSORBENT, noise	1				
42	0654601342	・ABSORBENT, noise	1				
43	0654601343	・ABSORBENT, noise	1				
44	0654601344	・ABSORBENT, noise	1				
46	1654301011	・SPONGE	1				sold by the meter
47	1654301047	・SPONGE	1				sold by the meter
	U0e160						

silverhorn.co.uk

AIR CONDITIONER (4/5)

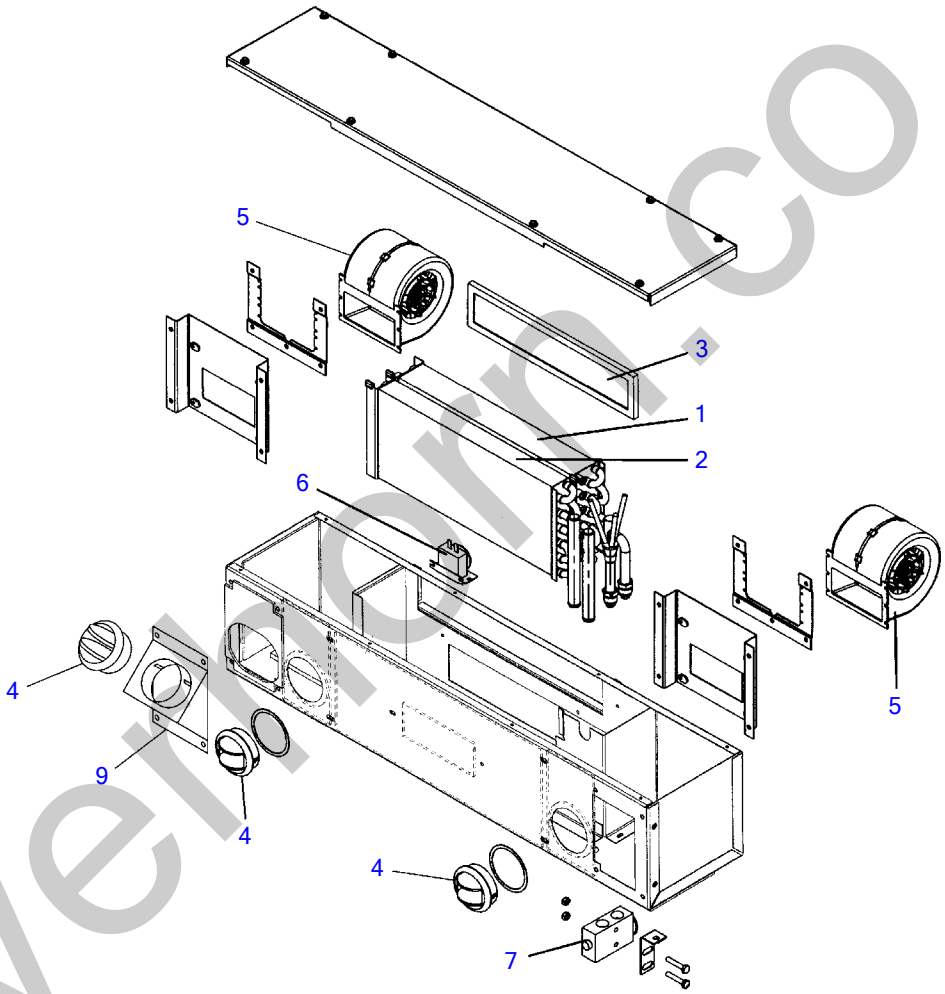

T3E150

S=free

silvermarn.co.uk

AIR CONDITIONER (4/5)

Item	Part number	Description	Q'ty	Chan.	Serial No.	Serv.	Remarks
0-1	1911508390	UNIT, air conditioner	1				
1	1911506091	・CORE	1				
2	1911506092	・CORE	1				
3	1911508397	・FILTER	1				
4	1911506012	・LOUVER	2				
5	1911506096	・MOTOR	2				
6	1911505421	・THERMOSTAT	1				
7	1911505422	・VALVE	1				
8	1911506089	・HARNESS ASSY, wiring	1				not shown
9	1911505920	・ADAPTOR	1				
	T3e150						

silverhorn.co.uk

AIR CONDITIONER (5/5)

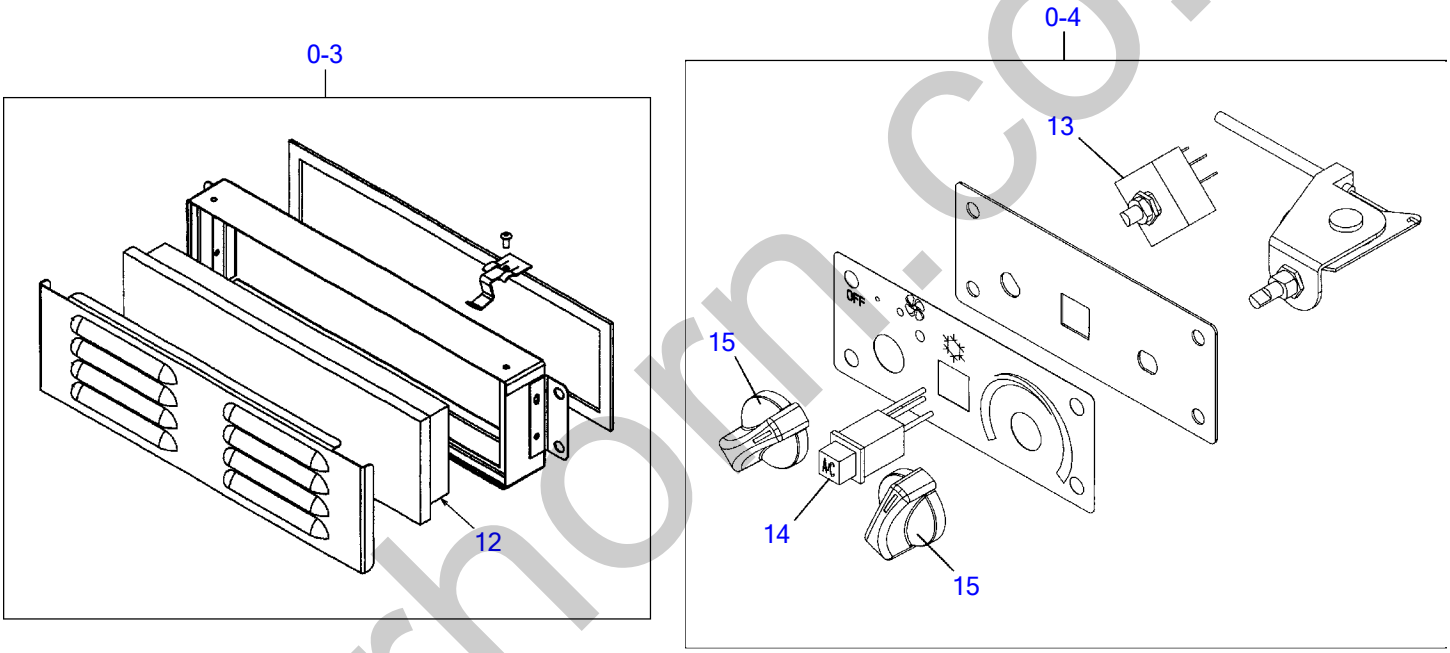

T8E410

S=free

silverhorn.co.uk

AIR CONDITIONER (5/5)

Item	Part number	Description	Q'ty	Chan.	Serial No.	Serv.	Remarks
0-3	1911506050	BOX	1				
12	1911506052	・FILTER	1				
0-4	1911506020	PANEL ASSY	1				
13	1911506027	・SWITCH	1				
14	1911505767	・SWITCH	1				
15	1911505763	・KNOB	2				
	T8e410						

silverhorn.co.uk

ARM

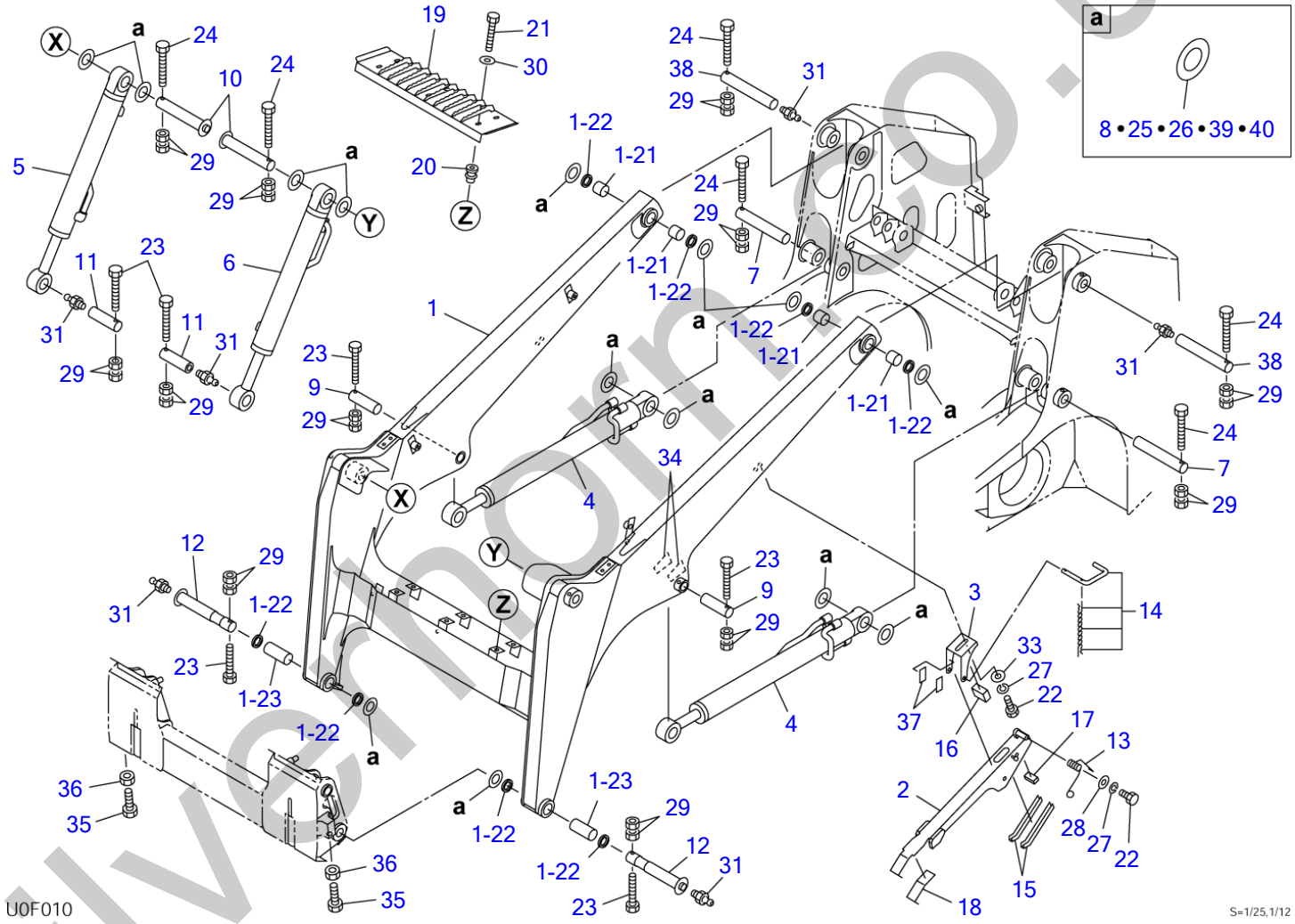

silvermorn.co.uk

ARM

Item	Part number	Description	Q'ty	Chan.	Serial No.	Serv.	Remarks
		ARM ASSY					
1	0656002100	ARM	1			M	
1-21	0002400045	・BUSHING	4				
1-22	1432200035	・SEAL, dust	8				
1-23	0002400076	・BUSHING	2				
2	0656000520	LOCK	1				
3	0656000530	BRACKET	1				
4	1900096800	CYLINDER, arm	2				
5	1900103700	CYLINDER, bucket (R.H.)	1			M	
6	1900103800	CYLINDER, bucket (L.H.)	1			M	
7	0011502230	PIN	2				
8	0003600230	SHIM	AR				t=1.0mm
9	0011502110	PIN	2				
10	0001090004	PIN	2				
11	0001672005	PIN	2				
12	0011902009	PIN	2				
13	0007000114	SPRING	1				
14	0656000350	PIN ASSY	1				
15	1654628023	TRIM	2				sold by the meter
16	0881604580	RUBBER	1				
17	0656000017	RUBBER	1				
18	0880606018	RUBBER	1				
19	0656000360	STEP	1				
20	1652520008	NUT	6				
21	1100040830	BOLT	6				
22	1100040816	BOLT	3				
23	1103041070	BOLT	6				
24	1103041090	BOLT	6				
25	0003600231	SHIM	AR				t=0.2mm
26	0003600232	SHIM	AR				t=0.5mm
27	1140020008	WASHER, spring	3				
28	0003608252	WASHER	1				
29	1130240010	NUT	24				
30	0003608003	WASHER	6				
31	1560001000	FITTING, grease	6				
33	1141110008	WASHER	2				
34	0880606034	RUBBER	2				
35	0881962656	BOLT	2				
36	0881604035	NUT	2				
37	0881604036	RUBBER	2				
38	0001672006	PIN	2				
39	0003600233	SHIM	AR				t=1.2mm
40	0003600234	SHIM	AR				t=3.2mm
	U0f010						

silverhorn.co.uk

QUICK ATTACHMENT

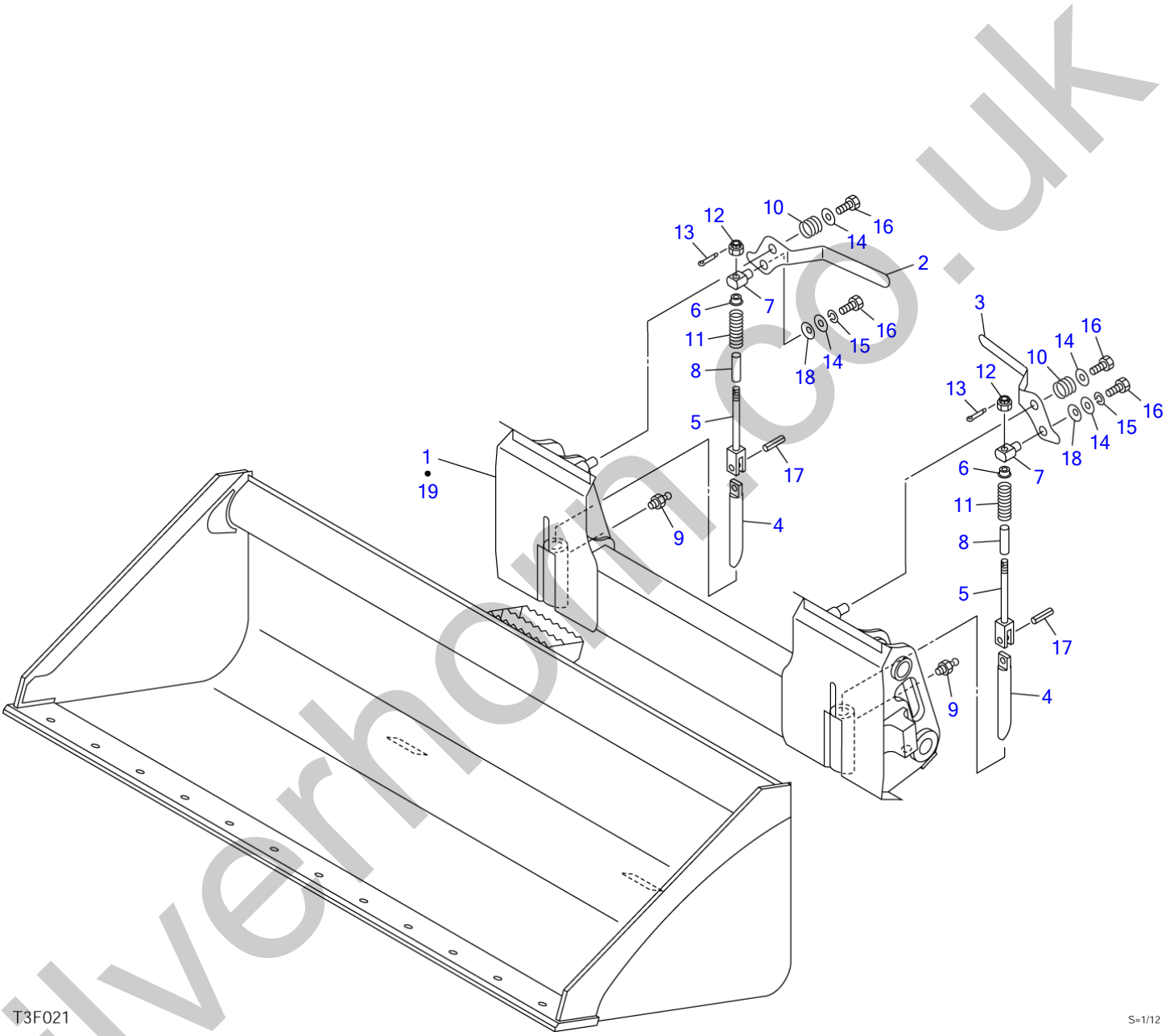

silverhorn.co.uk

QUICK ATTACHMENT

Item	Part number	Description	Q'ty	Chan.	Serial No.	Serv.	Remarks
0	0656102000	ATTACHMENT ASSY, quick (for U.S.)	1			M	
	0656103000	ATTACHMENT ASSY, quick (for E.U.)	1			M	
1	0656102100	・BRACKET	1			M	for U.S.
2	0656100200	・LEVER (R.H.)	1				
3	0656100300	・LEVER (L.H.)	1				
4	0881612150	・PIN	2				
5	0881612060	・YOKE	2				
6	0881612070	・WASHER	2				
7	0880612070	・PIN	2				
8	0881612160	・PIPE	2				
9	1560001000	・FITTING, grease	2				
10	0007000016	・SPRING	2				
11	0007000119	・SPRING	2				
12	1132630012	・NUT	2				
13	1210013225	・PIN, split	2				
14	0003600025	・WASHER	4				
15	1140120010	・WASHER, spring	2				
16	1100041020	・BOLT	4				
17	1213001250	・PIN, spring	2				
18	1225120018	・WASHER, conical	2				
19	0656102200	・BRACKET	1			M	for E.U.
	U0f021						

silverhorn.co.uk

QUICK ATTACHMENT (1/2) (hydraulic type)

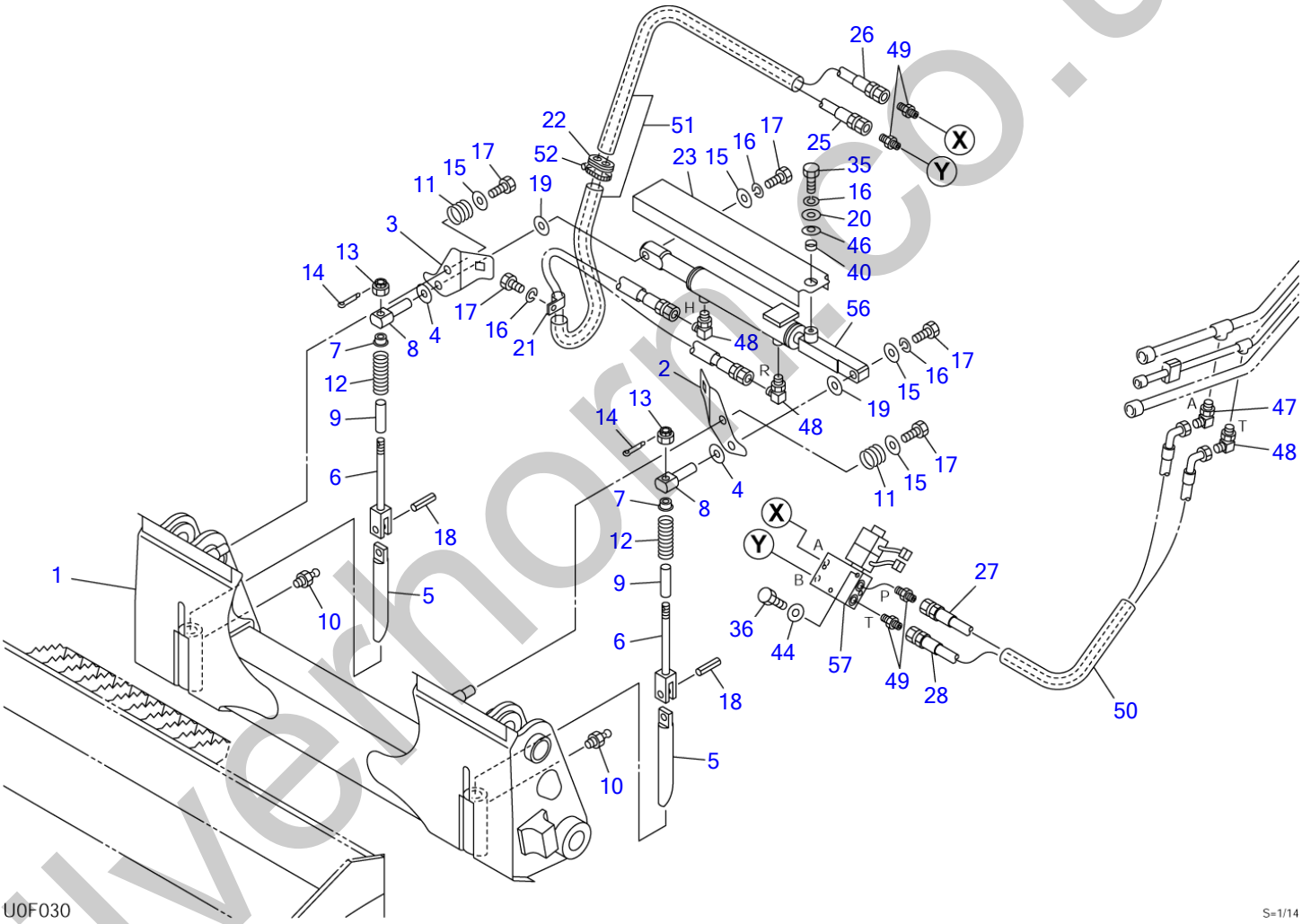

silvernorm.co.uk

QUICK ATTACHMENT (1/2) (hydraulic type)

Item	Part number	Description	Q'ty	Chan.	Serial No.	Serv.	Remarks
0	0656104000	ATTACHMENT ASSY, quick (for US)	1			M	
	0656105000	ATTACHMENT ASSY, quick (for EU)	1			M	
	0656104000	QUICK HITCH ASSY (FOR US)	1				
1	0656102100	・BRACKET	1			M	for US
	0656102200	・BRACKET	1			M	for EU
2	0666101590	・PLATE (L.H.)	1			M	
3	0666101600	・PLATE (R.H.)	1			M	
4	1225120018	・WASHER, conical	2				
5	0881612150	・PIN	2				
6	0881612060	・YOKE	2				
7	0881612070	・WASHER	2				
8	0666101080	・PIN	2			M	
9	0881612160	・PIPE	2				
10	1560001000	・FITTING, grease	2				
11	0007000016	・SPRING	2				
12	0007000119	・SPRING	2				
13	1132630012	・NUT	2				
14	1210013225	・PIN, split	2				
15	0003600025	・WASHER	4				
16	1140120010	・WASHER, spring	5				
17	1100041020	・BOLT	5				
18	1213001250	・PIN, spring	2				
19	0003600034	・WASHER	2			M	
20	0003610002	・WASHER	1			M	
21	0007300001	・CLAMP	1			M	
22	0097210300	・GUARD	1			M	
23	0666101230	・COVER	1			M	
25	0656104250	・HOSE ASSY	1			M	18019-00150
26	0656104260	・HOSE ASSY	1			M	18019-00175
27	0656104270	・HOSE ASSY	1			M	18015-01096
28	0656104280	・HOSE ASSY	1			M	18010-22089
35	1100041016	・BOLT	1				
36	1100040850	・BOLT	2			M	
40	0003600228	・COLLAR	1			M	
44	1141110008	・WASHER	2				
46	1225121018	・WASHER, conical	1			M	
47	1512375004	・ELBOW	1				
	1420010110	・・O-RING	1				
48	1515012040	・ELBOW	3				
	1420010110	・・O-RING	1				
49	1515600200	・ADAPTOR	4				
	1420010110	・・O-RING	1				
50	1531335075	・PROTECTOR	1			M	sold by the meter
51	1531520117	・PROTECTOR	1			M	sold by the meter
52	1533811065	・BAND	1			M	
56	1900100700	・CYLINDER, quick	1			M	
57	1901752000	・VALVE, solenoid	1			M	
	U0f031						

silverthorn.co.uk

QUICK ATTACHMENT (2/2) (hydraulic type)

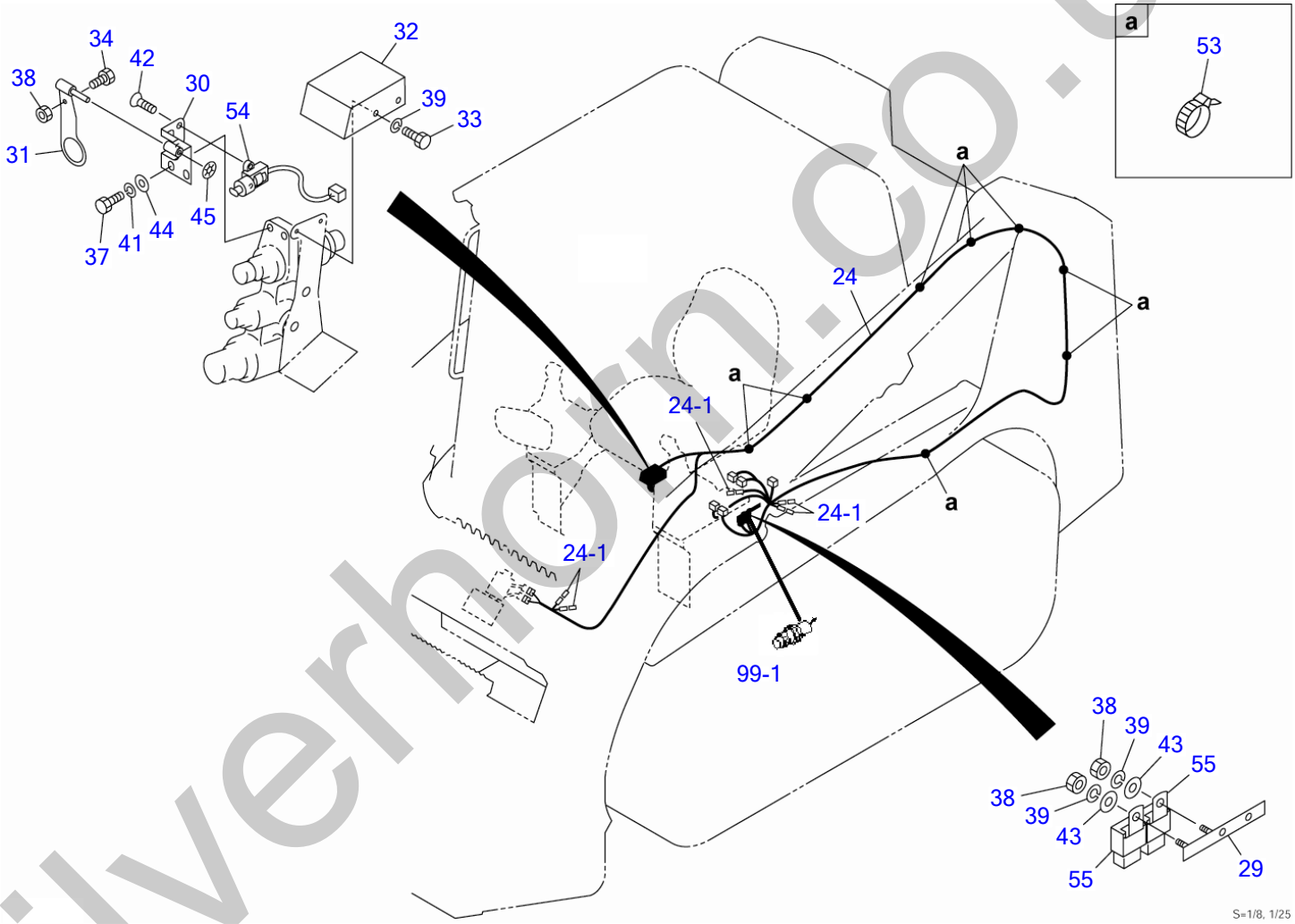

silverhorn.co.uk

QUICK ATTACHMENT (2/2) (hydraulic type)

Item	Part number	Description	Q'ty	Chan.	Serial No.	Serv.	Remarks
0	0656104000	ATTACHMENT ASSY, quick (for US)	1			M	
	0656105000	ATTACHMENT ASSY, quick (for EU)	1			M	
24	0666101240	・HARNESS, wiring	1			M	
24-1	1730500008	・・DIODE (3A yellow)	5				
29	0666100290	・BRACKET	1			M	
30	0656104300	・PLATE	1			M	
31	0656104310	・PLATE	1			M	
32	0656104320	・COVER	1			M	
33	1100040612	・BOLT	2				
34	1100040620	・BOLT	1				
37	1111840518	・BOLT	2			M	
38	1130040006	・NUT	3				
39	1140020006	・WASHER, spring	4				
41	1140020008	・WASHER, spring	2				
42	1120630612	・SCREW	2			M	
43	1141110006	・WASHER	2				
44	1141110008	・WASHER	2				
45	1224100009	・BUSHING	1			M	
53	1652201008	・BAND	12				
54	1700000043	・SWITCH	1			M	
55	1711900042	・RELAY	2				
99-1	113330	WIRE ADAPTER FOR DOZER BLADE CONNECTION	1				
99-1A	K28827302	TL200 SERIES 14 PIN CONNECTOR REPAIR KIT - MACHINE	1				
99-1B	K28827301	TL200 SERIES 14 PIN CONNECTOR REPAIR KIT - ATTACHMENT	1				
	U0f041						

silverhorn.co.uk

BUCKET

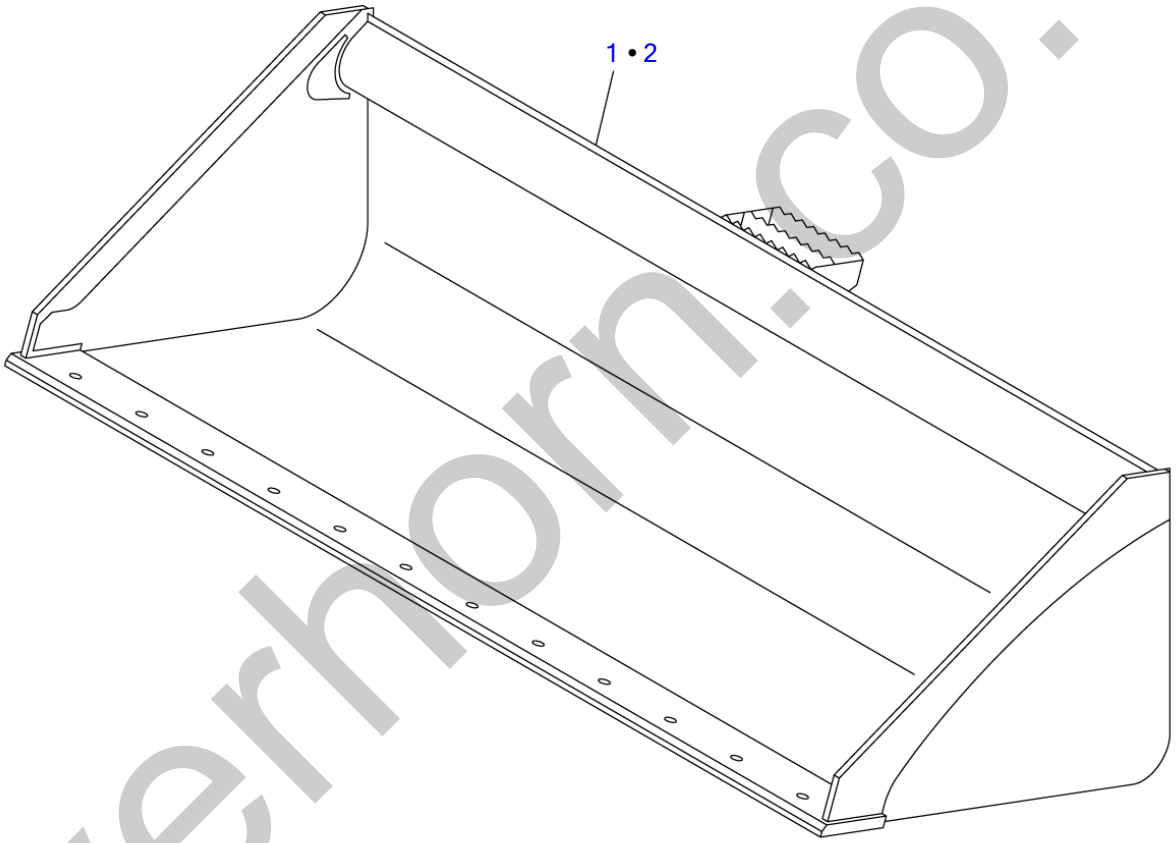

T3F031

S=FREE

silverhorn.co.uk

BUCKET

Item	Part number	Description	Q'ty	Chan.	Serial No.	Serv.	Remarks
		BUCKET ASSY (for U.S.)					
		BUCKET ASSY (for E.U.)					
1	0656200100	BUCKET	1				for U.S.
2	0656200600	BUCKET	1				for E.U.
	U0f050						

silverhorn.co.uk

PIPING; ARM (1/2)

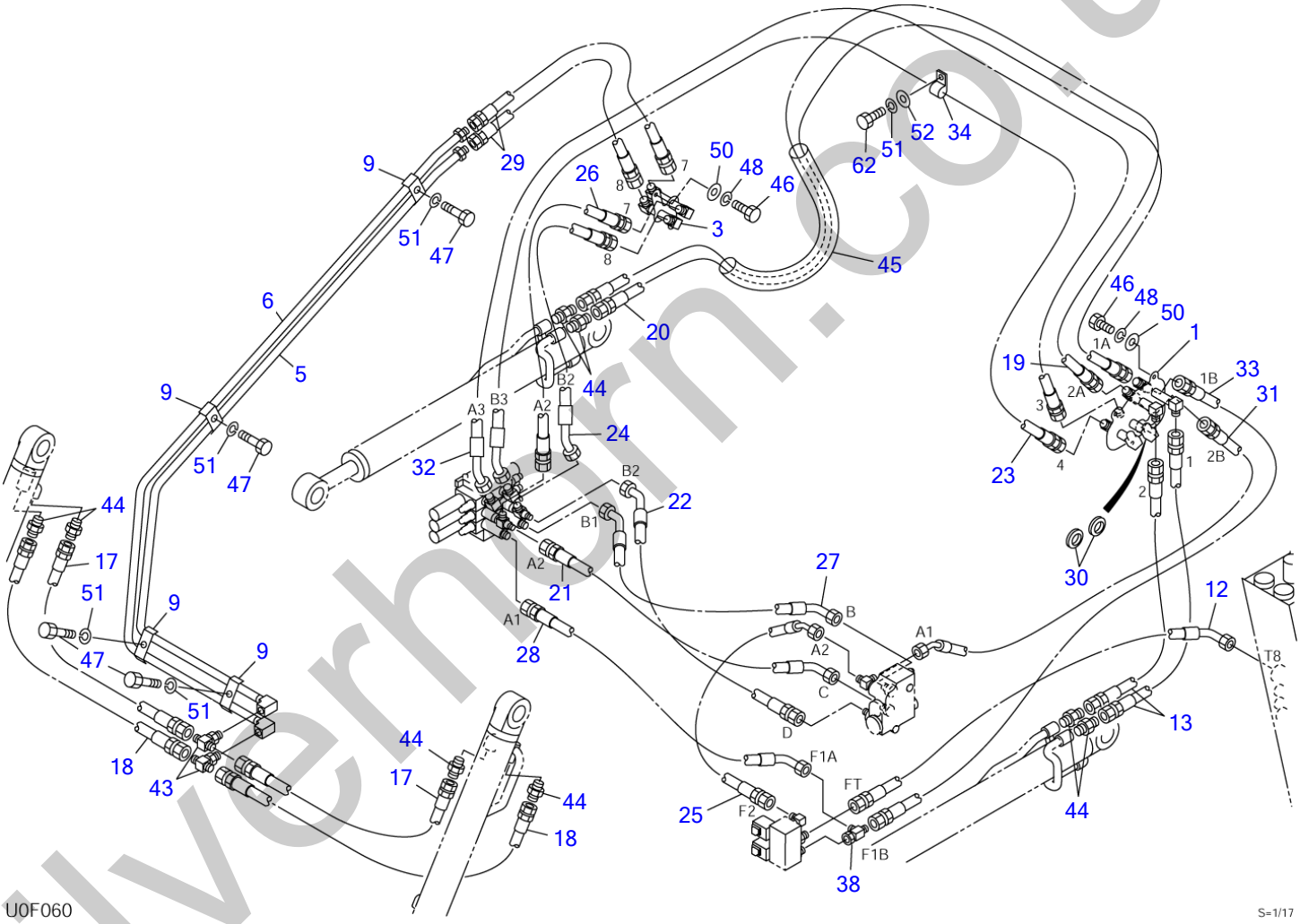

silverhorn.co.uk

PIPING; ARM (1/2)

Item	Part number	Description	Q'ty	Chan.	Serial No.	Serv.	Remarks
		PIPING ASSY					
		PIPING ASSY (with coupler)					
		PIPING ASSY (hydraulic attachment type)					
		PIPING ASSY (for US)					
1	0657303010	BRACKET (L.H.)	1			M	
3	0657300030	BRACKET (R.H.)	1				
5	0657300050	PIPE	1				
6	0657300060	PIPE	1				
9	0880736090	CLAMP	4				
12	0657300120	HOSE ASSY	1				
13	1801520050	HOSE ASSY	2				
17	0657300170	HOSE ASSY	2				18015-20071
18	0657300180	HOSE ASSY	2				18015-20075
19	0657301190	HOSE ASSY	1			M	18015-20156
20	0657301200	HOSE ASSY	1			M	18015-20156
21	0657303210	HOSE ASSY	1			M	18015-27057
22	0657303220	HOSE ASSY	1			M	18015-27057
23	0657300230	HOSE ASSY	1				18015-47112
24	0657300240	HOSE ASSY	1				18015-47055
25	0657303250	HOSE ASSY	1			M	18015-47054
26	0657300260	HOSE ASSY	1				18015-40065
27	0657301270	HOSE ASSY	1			M	
28	0657301280	HOSE ASSY	1			M	18015-47056
29	0657300290	HOSE ASSY	2				18015-40072
30	1652061035	BUSHING	2			M	
31	0657303310	HOSE ASSY	1			M	18015-47079
32	0657303320	HOSE ASSY	1			M	18017-47121
33	0657303330	HOSE ASSY	1			M	18015-40074
34	1711900071	CLAMP	1				
38	1513390034	TEE	1				
43	1512374014	TEE	2				
	1420010180	・O-RING	1				
44	1515600201	ADAPTOR	8				
	1420010140	・O-RING	1				
45	1531645060	PROTECTOR	1				sold by the meter
46	1100040816	BOLT	5				
47	1100041025	BOLT	4				
48	1140020008	WASHER, spring	5				
50	1141110008	WASHER	5				
51	1140020010	WASHER, spring	5				
52	1141110010	WASHER	1				
62	1100041016	BOLT	1				
	U0f061						

silverthorn.co.uk

PIPING; ARM (2/2)

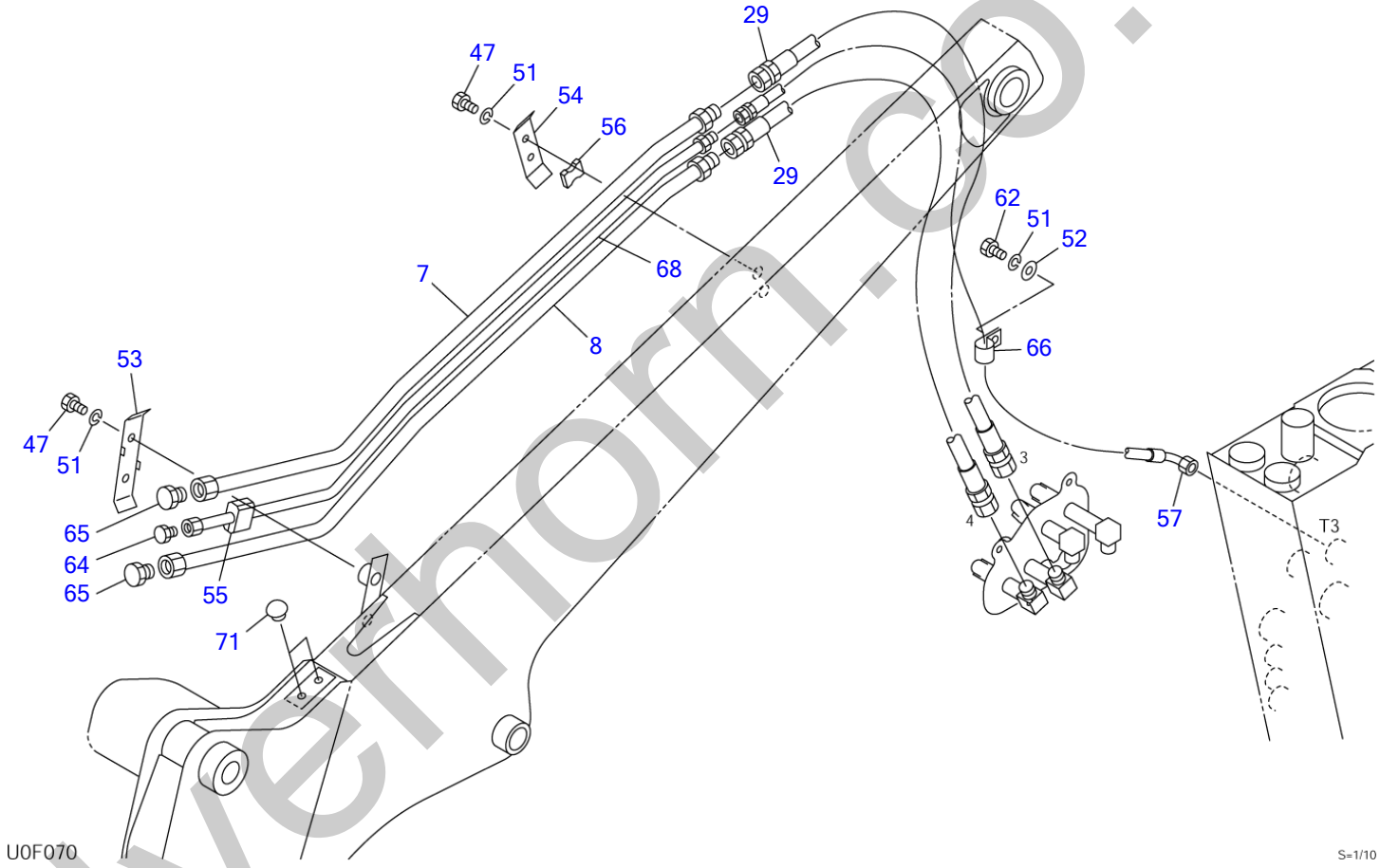

silverhorn.co.uk

PIPING; ARM (2/2)

Item	Part number	Description	Q'ty	Chan.	Serial No.	Serv.	Remarks
		PIPING ASSY					
7	0657300070	PIPE	1				
8	0657300080	PIPE	1				
29	0657300290	HOSE ASSY	2				18015-40072
47	1100041025	BOLT	4				
51	1140020010	WASHER, spring	5				
52	1141110010	WASHER	1				
53	0881733550	CLAMP	1				
54	0880738130	CLAMP	1				
55	0880738140	RUBBER	1				
56	0880738150	RUBBER	1				
57	0657300570	HOSE ASSY	1				
62	1100041016	BOLT	1				
64	1501750003	PLUG	1				
	1420010140	・O-RING	1				
65	1501750004	PLUG	2				
	1420010180	・O-RING	1				
66	1711900071	CLAMP	1				
68	0657300680	PIPE	1				
71	1652533018	CAP	2				
	U0f071						

silverhorn.co.uk

PIPING; ARM (2/2) (with coupler, hydraulic attachment type)

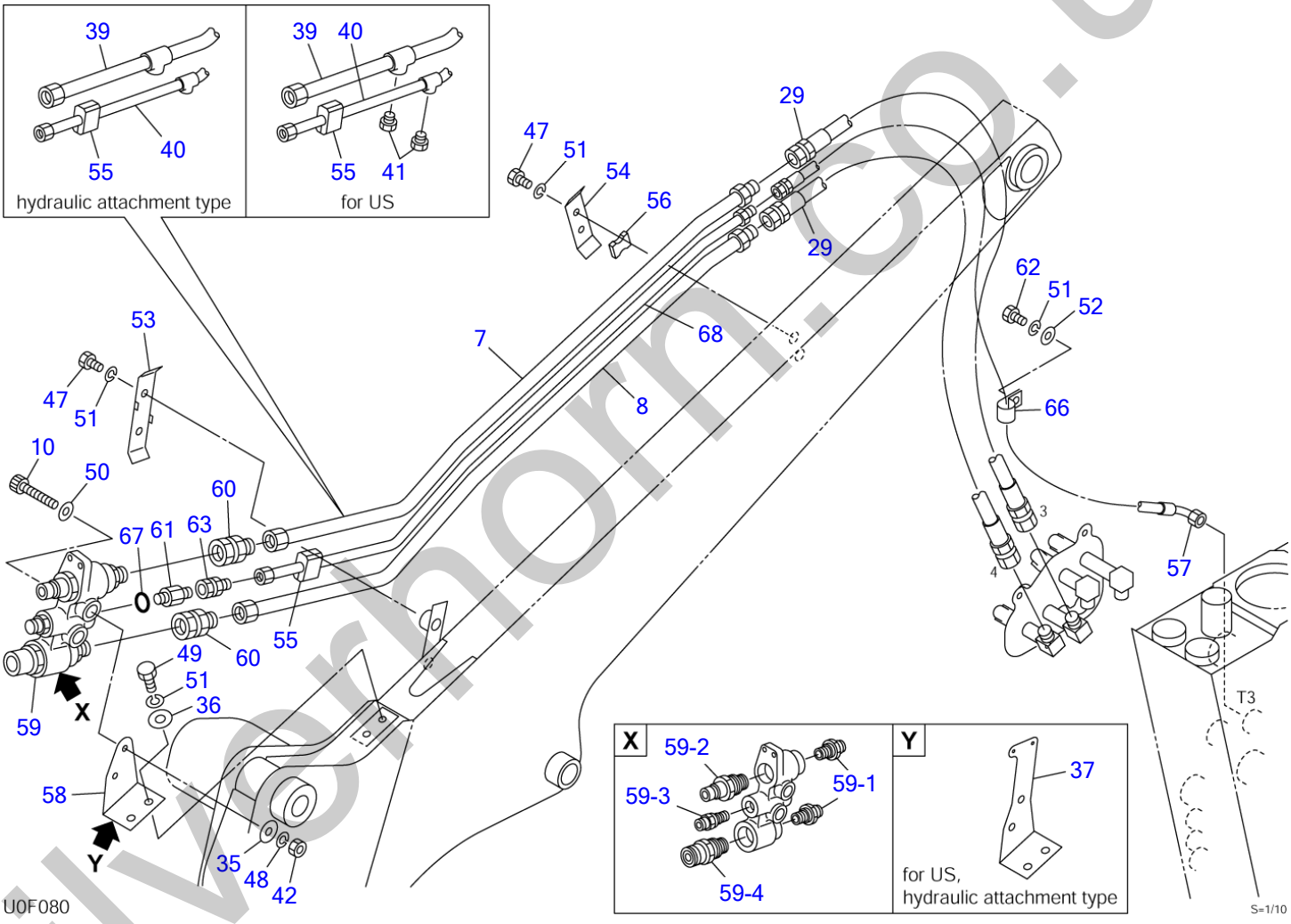

silverhorn.co.uk

PIPING; ARM (2/2) (with coupler, hydraulic attachment type)

Item	Part number	Description	Q'ty	Chan.	Serial No.	Serv.	Remarks
		PIPING ASSY (with coupler)					
		PIPING ASSY (hydraulic attachment type)					
		PIPING ASSY (for US)					
7	0657300070	PIPE	1				with coupler
8	0657300080	PIPE	1				
10	1110040865	SCREW, cap	2				
29	0657300290	HOSE ASSY	2				18015-40072
35	0003608252	WASHER	2				
36	0003600020	WASHER	2				
37	0657300720	BRACKET (hydraulic attachment type, for US)	1			M	
39	0657305390	PIPE(hydraulic attachment type, for US)	1			M	
40	0657305400	PIPE(hydraulic attachment type, for US)	1			M	
41	1501750002	PLUG	2				for US
	1420010110	・O-RING	1				
42	1130040008	NUT	2				
47	1100041025	BOLT	4				
48	1140020008	WASHER, spring	2				
49	1100041020	BOLT	2				
50	1141110008	WASHER	2				
51	1140020010	WASHER, spring	7				
52	1141110010	WASHER	1				
53	0881733550	CLAMP	1				
54	0880738130	CLAMP	1				
55	0880738140	RUBBER	1				
56	0880738150	RUBBER	1				
57	0657300570	HOSE ASSY	1				
58	0657300580	BRACKET	1				with coupler
59	1901747000	COUPLER, block	1				
59-1	1901747001	・ADAPTOR	2				
59-2	1901747002	・ADAPTOR	1				
59-3	1901747003	・ADAPTOR	1				
59-4	1901747004	・ADAPTOR	1				
60	0007236045	ADAPTOR	2				
61	0007203017	NIPPLE	1				
	1420310906	・O-RING	1				
62	1100041016	BOLT	1				
63	1511410003	ADAPTOR	1				
	1420010140	・O-RING	1				
66	1711900071	CLAMP	1				
67	1420310906	O-RING	1				
68	0657300680	PIPE	1				with coupler
	U0f081						

silverthorn.co.uk

PIPING; ARM (for GEHL & MUSTANG)

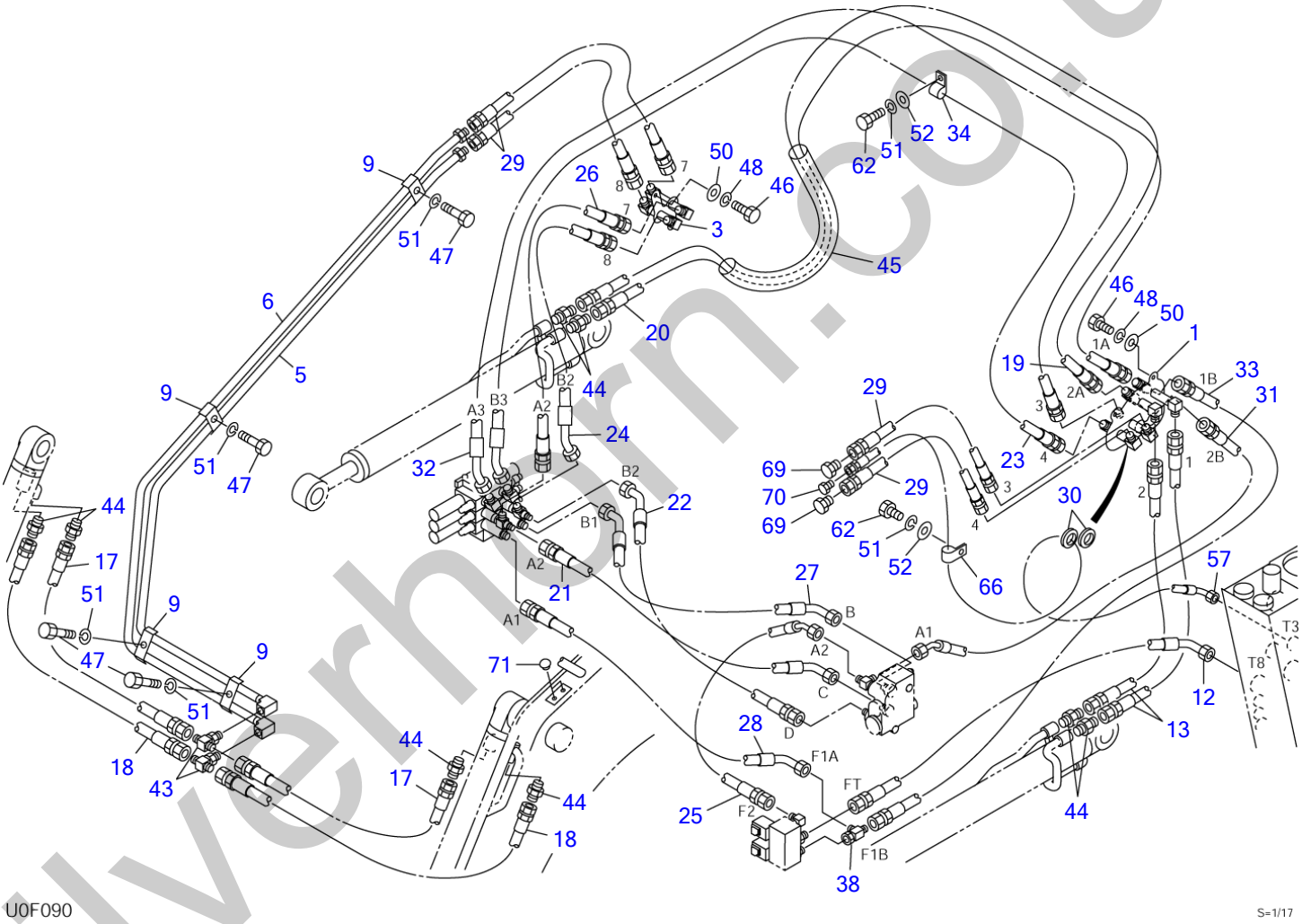

silverhorn.co.uk

PIPING; ARM (for GEHL & MUSTANG)

Item	Part number	Description	Q'ty	Chan.	Serial No.	Serv.	Remarks
		PIPING ASSY					
1	0657303010	BRACKET (L.H.)	1			M	
3	0657300030	BRACKET (R.H.)	1				
5	0657300050	PIPE	1				
6	0657300060	PIPE	1				
9	0880736090	CLAMP	4				
12	0657300120	HOSE ASSY	1				
13	1801520050	HOSE ASSY	2				
17	0657300170	HOSE ASSY	2				18015-20071
18	0657300180	HOSE ASSY	2				18015-20075
19	0657301190	HOSE ASSY	1			M	18015-20156
20	0657301200	HOSE ASSY	1			M	18015-20156
21	0657303210	HOSE ASSY	1			M	18015-27057
22	0657303220	HOSE ASSY	1			M	18015-27057
23	0657300230	HOSE ASSY	1				18015-47112
24	0657300240	HOSE ASSY	1				18015-47055
25	0657303250	HOSE ASSY	1			M	18015-47054
26	0657300260	HOSE ASSY	1				18015-40065
27	0657301270	HOSE ASSY	1			M	
28	0657301280	HOSE ASSY	1			M	18015-47056
29	0657300290	HOSE ASSY	4				18015-40072
30	1652061035	BUSHING	2			M	
31	0657303310	HOSE ASSY	1			M	18015-47079
32	0657303320	HOSE ASSY	1			M	18017-47121
33	0657303330	HOSE ASSY	1			M	18015-40074
34	1711900071	CLAMP	1				
38	1513390034	TEE	1				
43	1512374014	TEE	2				
	1420010180	・O-RING	1				
44	1515600201	ADAPTOR	8				
	1420010140	・O-RING	1				
45	1531645060	PROTECTOR	1				sold by the meter
46	1100040816	BOLT	5				
47	1100041025	BOLT	4				
48	1140020008	WASHER, spring	5				
50	1141110008	WASHER	5				
51	1140020010	WASHER, spring	6				
52	1141110010	WASHER	2				
57	0657300570	HOSE ASSY	1				
62	1100041016	BOLT	2				
66	1711900071	CLAMP	1				
69	1513940004	PLUG	2				
70	1513940003	PLUG	1				
71	1652533018	CAP	2				
	U0f091						

silverthorn.co.uk

DECAL (canopy)

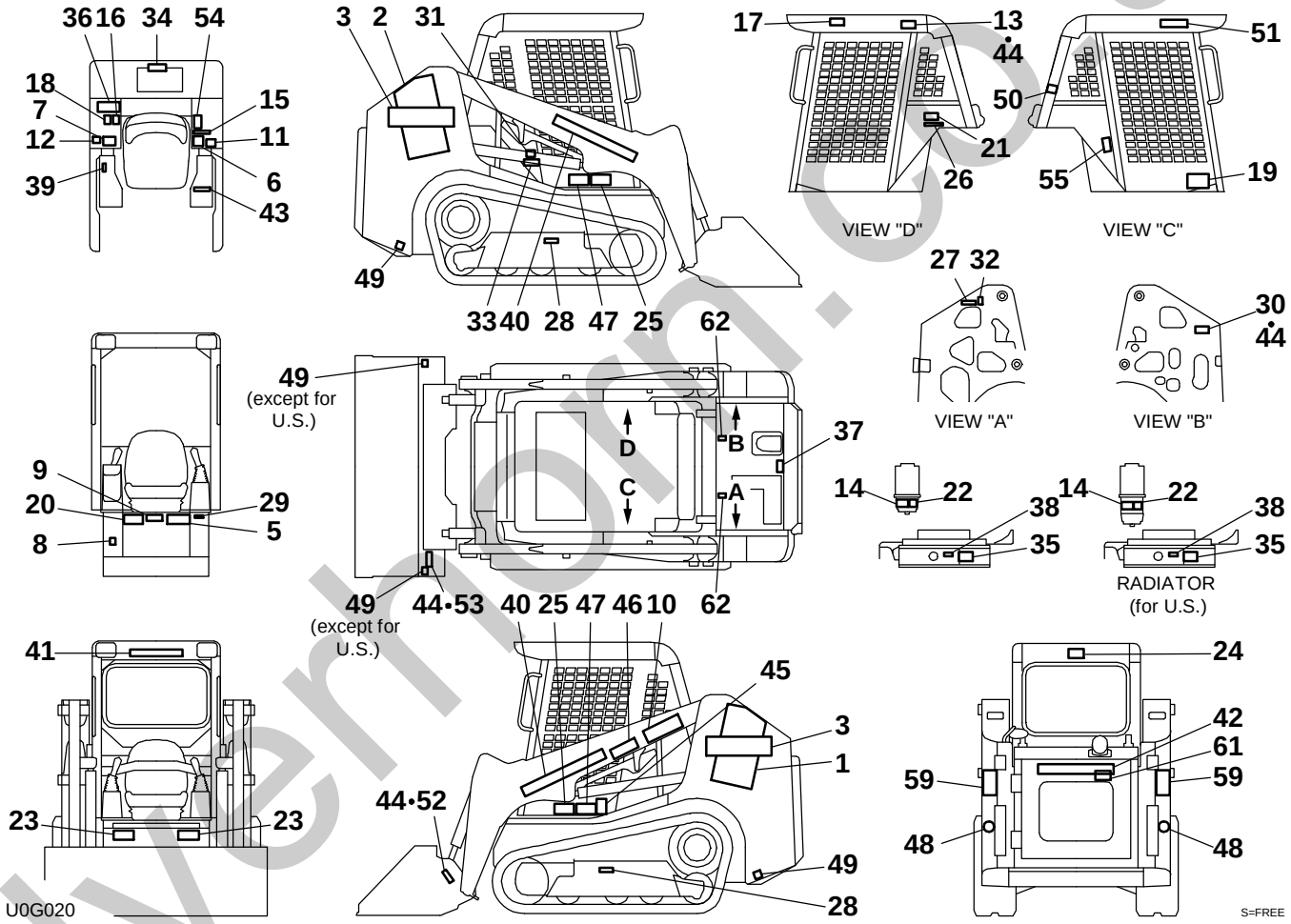

silverhorn.co.uk

TL220 (P-TL220BAB) BU0Z001 S/N 222000001-
English

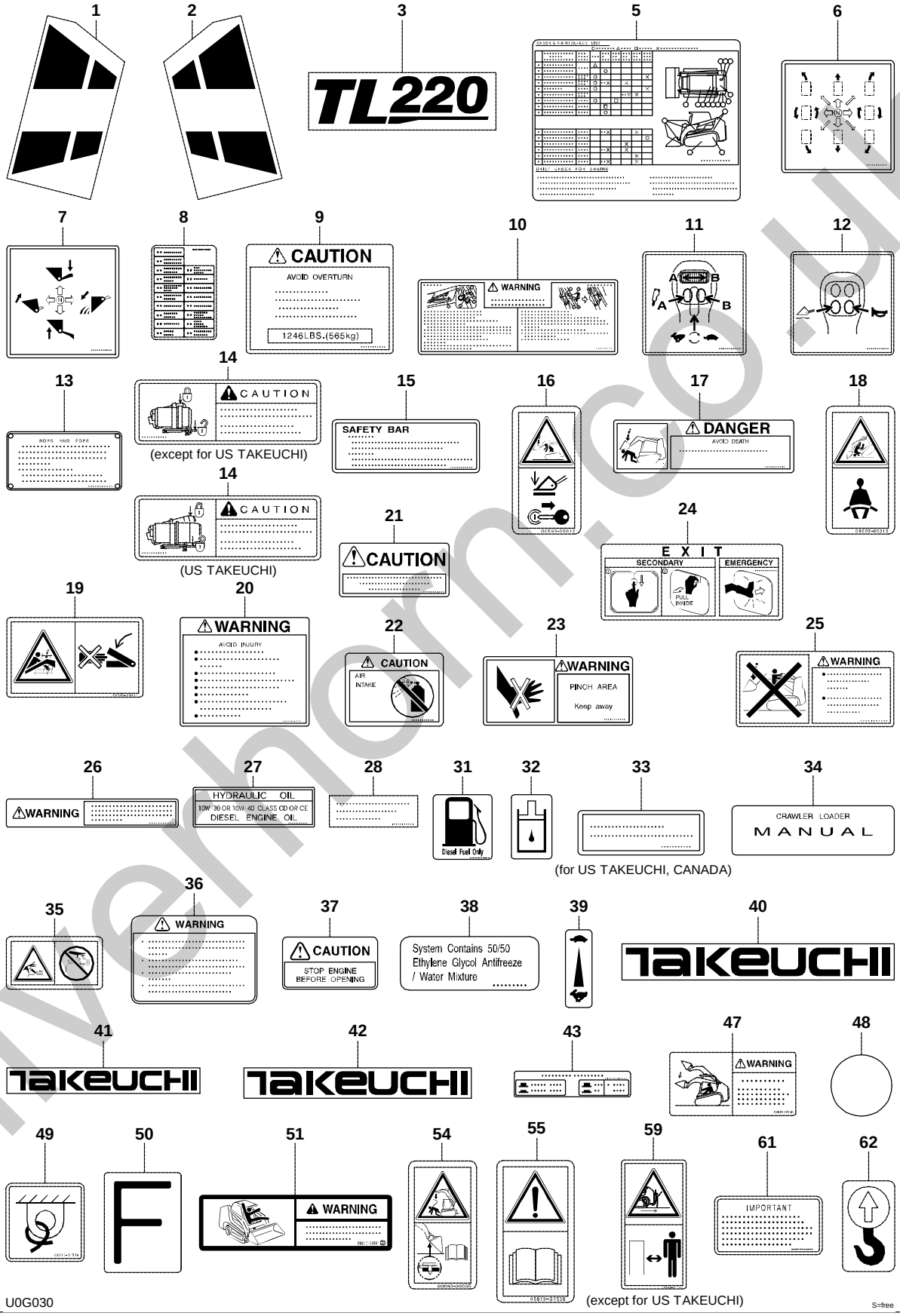

silverhorn.co.uk

TL220 (P-TL220BAB) BU0Z001 S/N 222000001-
French

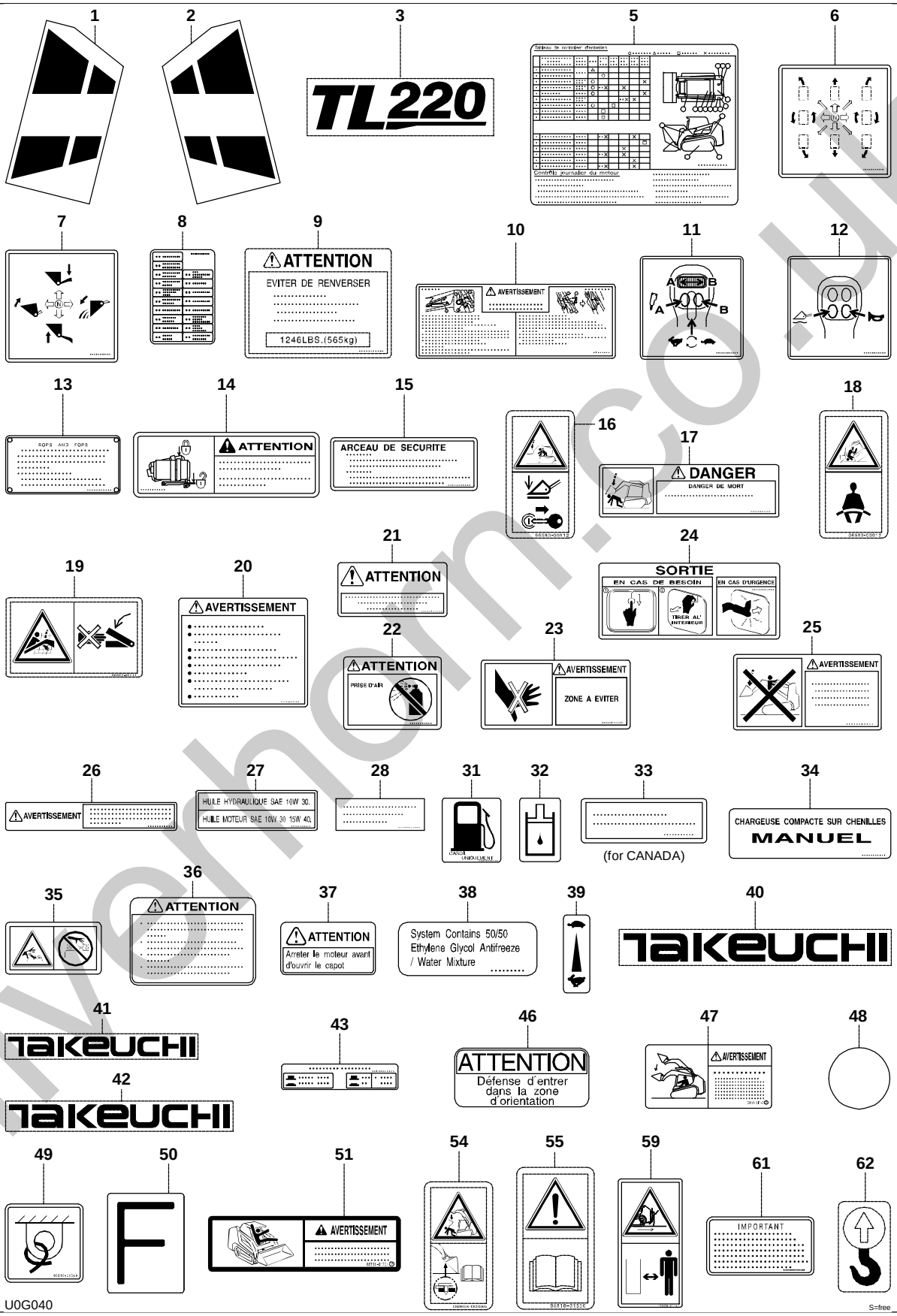

silverhorn.co.uk

TL220 (P-TL220BAB) BU0Z001 S/N 222000001-
Italian

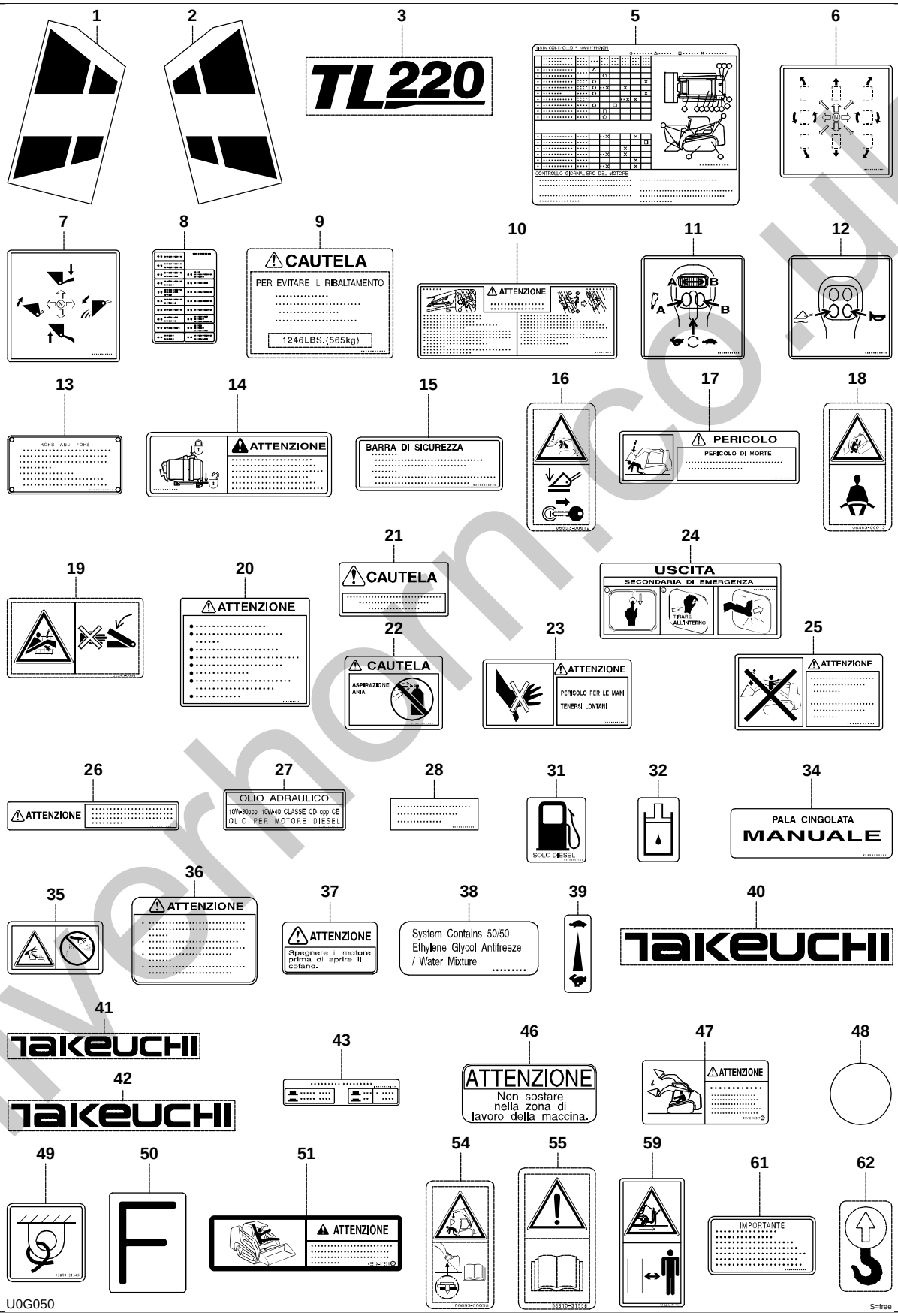

silverhorn.co.uk

DECAL (canopy)

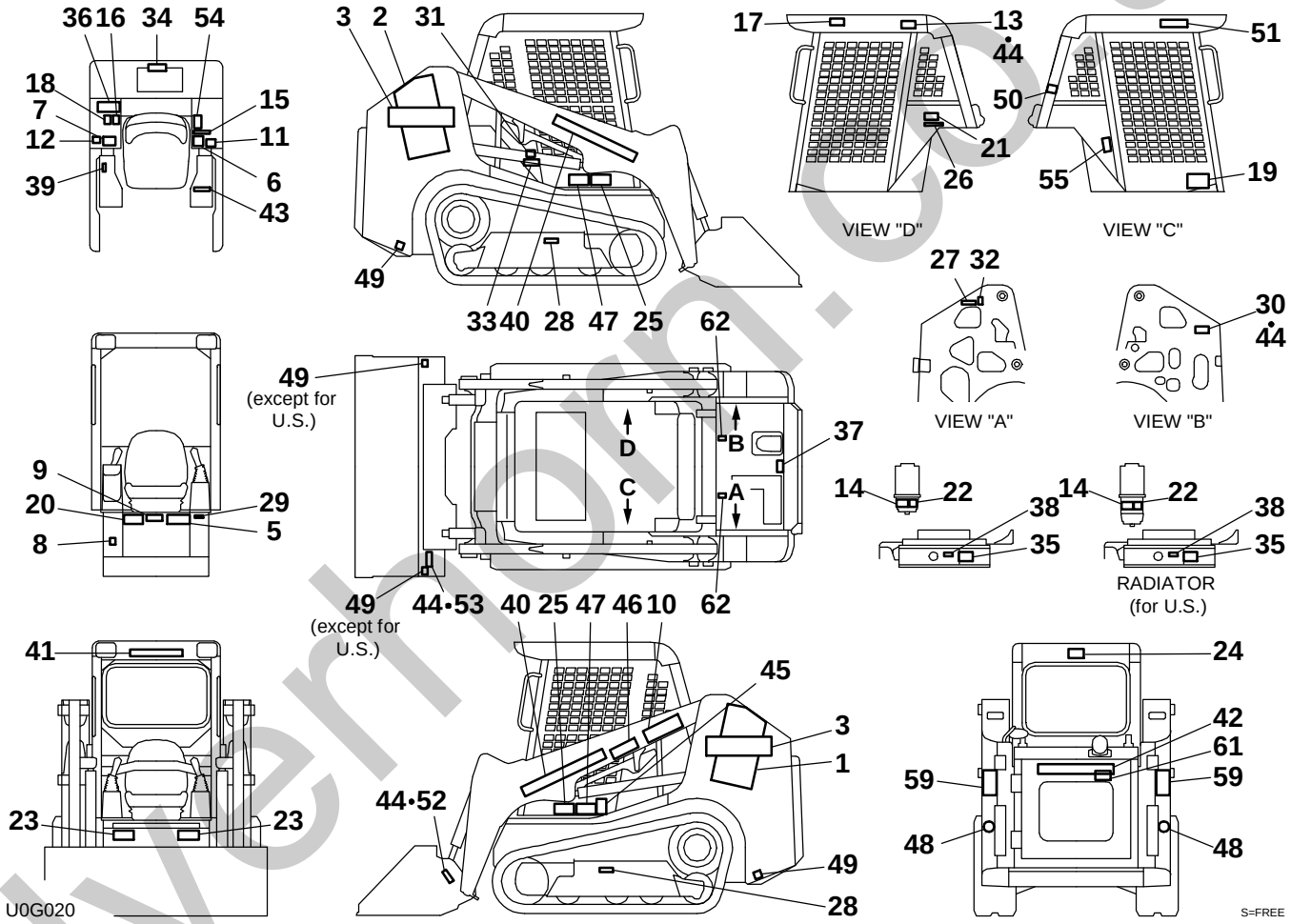

silverhorn.co.uk

DECAL (CANOPY)

Item	Part number	Description	Q'ty	Chan.	Serial No.	Serv.	Remarks
0	0659302800	DECAL SET (ENGLISH FOR US)	1				
	0659302200	DECAL SET (ITALIAN)	1				
	0659303800	DECAL SET (ENGLISH FOR CANADA)	1				
	0659303900	DECAL SET (FRENCH FOR CANADA)	1				
1	0659302001	* DECAL	1				
2	0659302002	* DECAL	1				
3	0659302003	* DECAL	2				
5	0669300005	* DECAL (ENGLISH)	1				
	0669300105	* DECAL (FRENCH)	1				
	0669300205	* DECAL (ITALIAN)	1				
6	0669300006	* DECAL	1				
7	0669300007	* DECAL	1				
8	0669300008	* DECAL (ENGLISH)	1				
	0699300108	* DECAL (FRENCH)	1				
	0669300208	* DECAL (ITALIAN)	1				
9	0659300009	* DECAL (ENGLISH)	1				
	0659300202	* DECAL (FRENCH)	1				
	0659300302	* DECAL (ITALIAN)	1				
10	0881030110	* DECAL (ENGLISH)	1				
	0881030260	* DECAL (FRENCH)	1				
	0881030360	* DECAL (ITALIAN)	1				
11	0882030006	* DECAL	1				
12	0882030007	* DECAL	1				
13	**********	* DECAL	1				
14	0669300814	* DECAL (US TAKEUCHI)	1				
	0669300114	* DECAL (FRENCH)	1				
	0669300214	* DECAL (ITALIAN)	1				
15	0880031001	* DECAL (ENGLISH)	1				
	0880038607	* DECAL (FRENCH)	1				
	0881030315	* DECAL (ITALIAN)	1				
16	0659300012	* DECAL	1				
17	0880030010	* DECAL (ENGLISH)	1				
	0880038610	* DECAL (FRENCH)	1				
	0881030317	* DECAL (ITALIAN)	1				
18	0659300013	* DECAL	1				
19	0659300011	* DECAL	1				
20	0881030020	* DECAL (ENGLISH)	1				
	0880038613	* DECAL (FRENCH)	1				
	0881030320	* DECAL (ITALIAN)	1				
21	0880030015	* DECAL (ENGLISH)	1				
	0880038615	* DECAL (FRENCH)	1				
	0881030321	* DECAL (ITALIAN)	1				
22	0880030016	* DECAL (ENGLISH)	1				
	0880038616	* DECAL FRENCH)	1				
	0881030322	* DECAL (ITALIAN)	1				
23	0880030017	* DECAL (ENGLISH)	2				
	0880038617	* DECAL (FRENCH)	2				
	0881030323	* DECAL (ITALIAN)	2				
24	0880031018	* DECAL (ENGLISH)	1				
	0880038618	* DECAL (FRENCH)	1				
	0881030324	* DECAL (ITALIAN)	1				
25	0880031005	* DECAL (ENGLISH)	2				
	0880038620	* DECAL (FRENCH)	2				
	0881030325	* DECAL (ITALIAN)	2				
26	0881030026	* DECAL (ENGLISH)	1				
	0880038621	* DECAL (FRENCH)	1				
	0881030326	* DECAL (ITALIAN)	1				
27	0880031017	* DECAL (ENGLISH)	1				
	0880038623	* DECAL (FRENCH)	1				
	0881030327	* DECAL (ITALIAN)	1				
28	0149362200	* DECAL (ENGLISH)	2				
	0880038624	* DECAL (FRENCH)	2				
	0881030328	* DECAL (ITALIAN)	2				
29	*********	* DECAL	1				
30	**********	* DECAL	1				
31	0359306600	* DECAL (ENGLISH)	1				
	0339375460	* DECAL (FRENCH)	1				
	0339375660	* DECAL (ITALIAN)	1				

silverthorn.co.uk

DECAL (canopy)

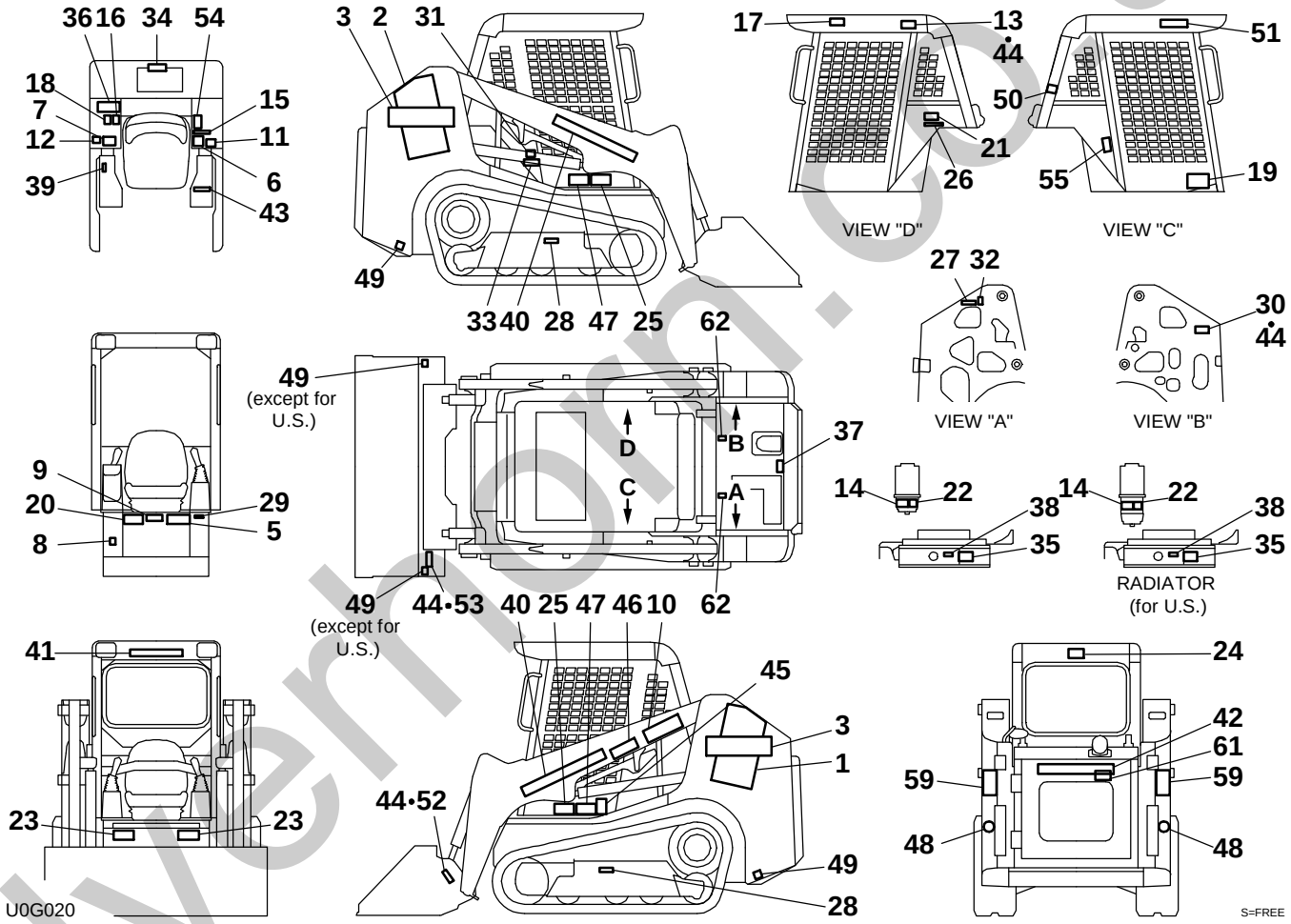

silverhorn.co.uk

DECAL (CANOPY)

Item	Part number		Description	Q'ty	Chan.	Serial No.	Serv.	Remarks
32	0359306700	*	DECAL	1				
33	0669300033	*	DECAL (US AND CANADA)	1				
34	0880031016	*	DECAL (ENGLISH)	1				
	0880038634	*	DECAL (FRENCH)	1				
	0881030334	*	DECAL (ITALIAN)	1				
35	0882031135	*	DECAL	1				
36	0359313700	*	DECAL (ENGLISH)	1				
	0359315700	*	DECAL (FRENCH)	1				
	0359316700	*	DECAL (ITALIAN)	1				
37	0359307400	*	DECAL (ENGLISH)	1				
	0359315400	*	DECAL (FRENCH)	1				
	0359316400	*	DECAL (ITALIAN)	1				
38	0359313900	*	DECAL	1				
39	0359317200	*	DECAL	1				
40	0008500060	*	DECAL	2				
41	0008500140	*	DECAL	1				
42	0008500050	*	DECAL	1				
43	0881030043	*	DECAL (ENGLISH)	1				
	0881030243	*	DECAL (FRENCH)	1				
	0881030343	*	DECAL (ITALIAN)	1				
44	**********	*	SCREW	16				
45	**********	*	DECAL	1				
46	0359309100	*	DECAL (FRENCH)	1				
	0359310100	*	DECAL (ITALIAN)	1				
47	0881030046	*	DECAL (ENGLISH)	2				
	0881031747	*	DECAL (FRENCH)	2				
	0881031847	*	DECAL (ITALIAN)	2				
48	0874030360	*	DECAL	2				
49	0881031549	*	DECAL	4				
50	039930040	*	DECAL	1				
51	0881031551	*	DECAL (ENGLISH)	1				
	0881031751	*	DECAL (FRENCH)	1				
	0881031851	*	DECAL (ITALIAN)	1				
54	0689300035	*	DECAL	1				
55	0881031556	*	DECAL	1				
59	0882031159	*	DECAL	2				
61	0339376240	*	DECAL (ENGLISH)	1				
	0339379440	*	DECAL (FRENCH)	1				
	0339379540	*	DECAL (ITALIAN)	1				
62	0399300500	*	DECAL	2				
	U0G020							

silverhorn.co.uk

DECAL (cab)

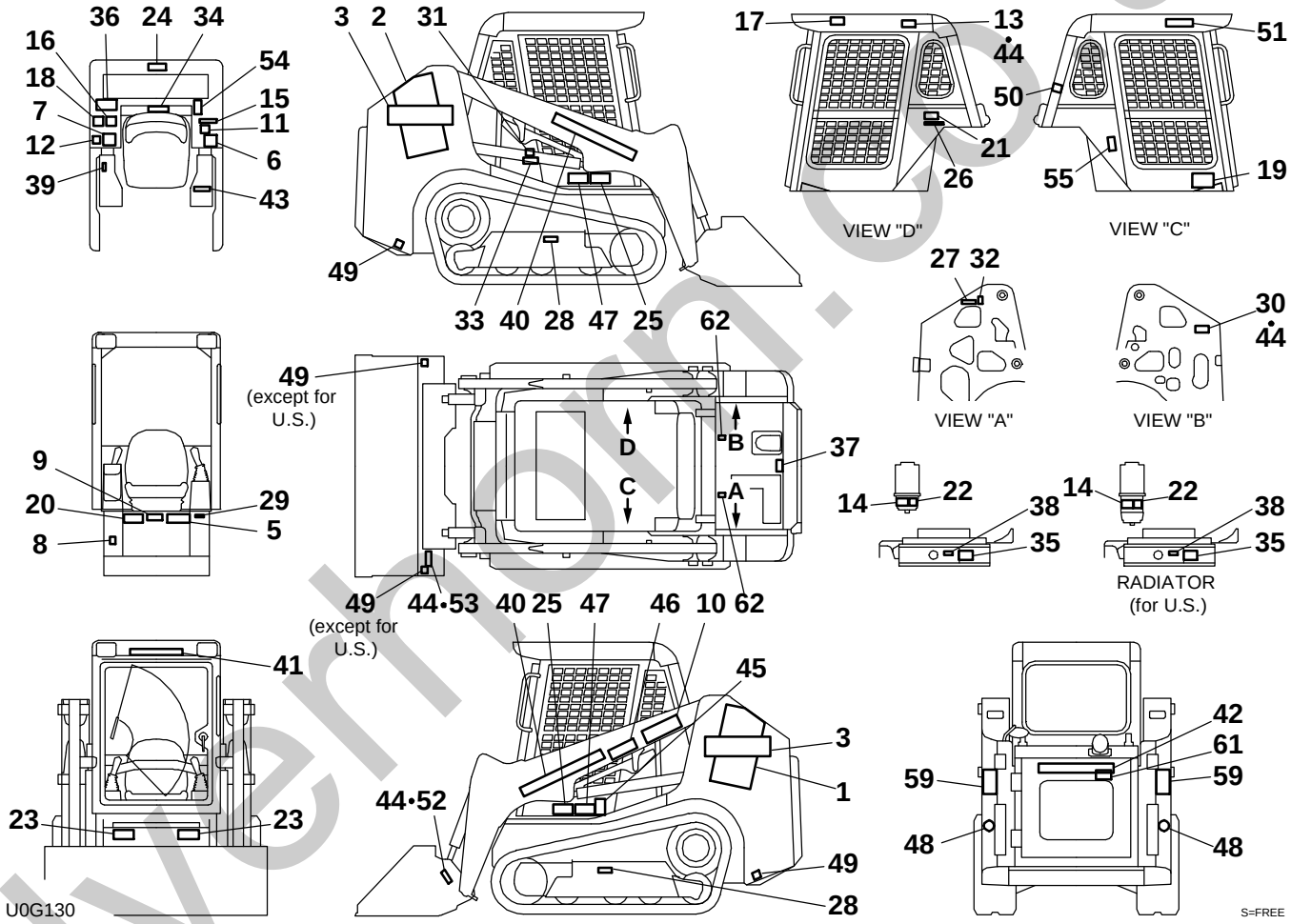

silverhorn.co.uk

TL220 (P-TL220BAB) BU0Z001 S/N 222000001-
English

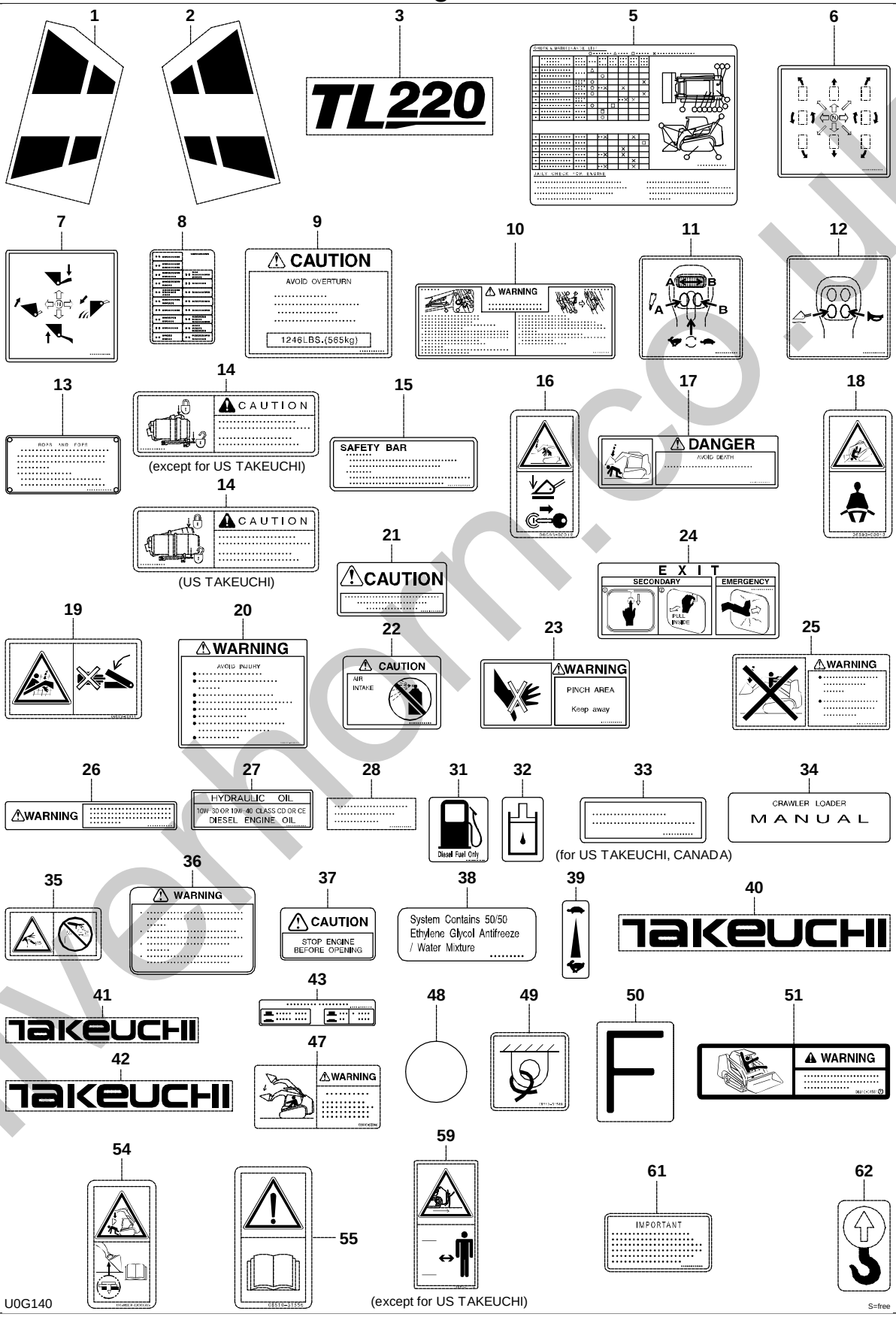

silverhorn.co.uk

TL220 (P-TL220BAB) BU0Z001 S/N 222000001-
French

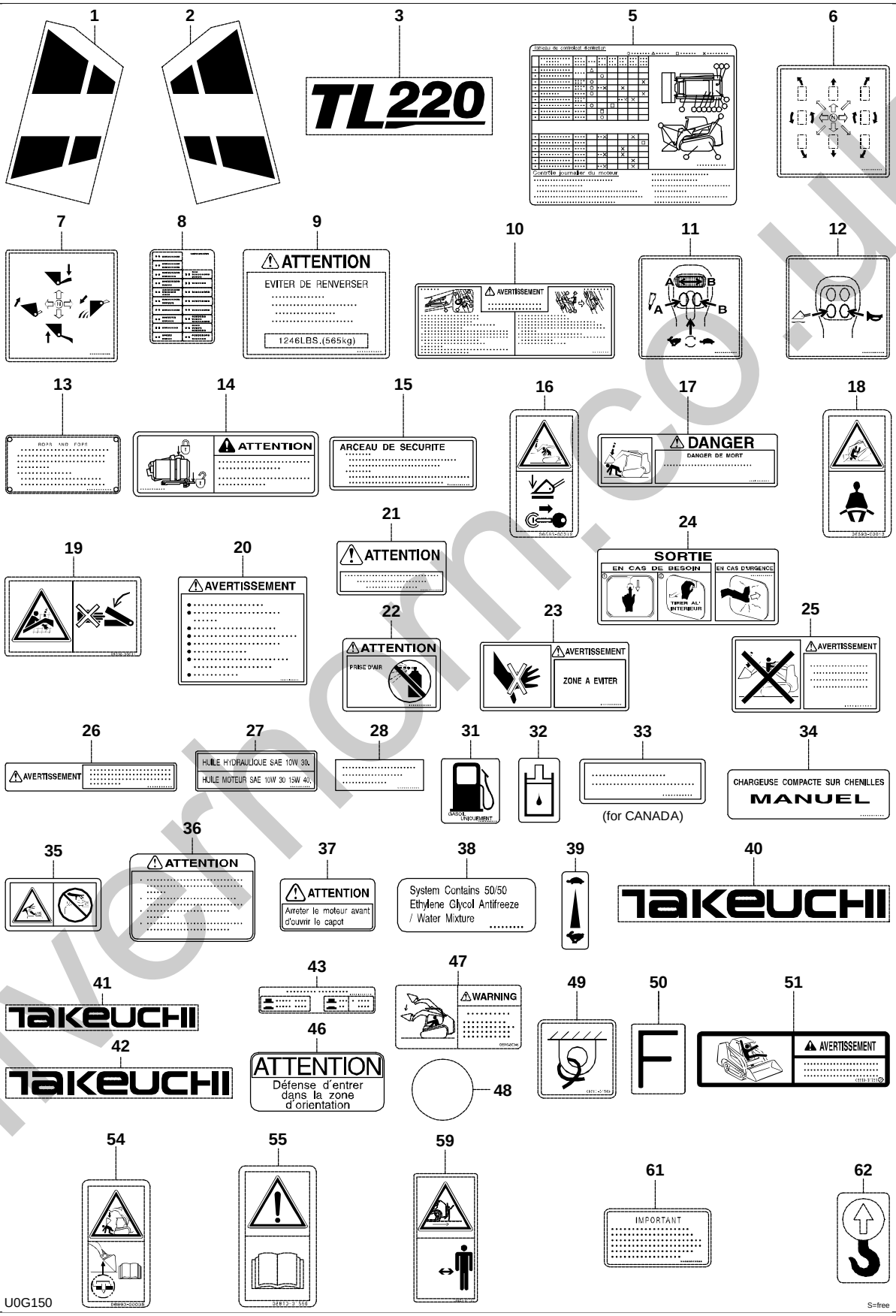

silvermorn.co.uk

TL220 (P-TL220BAB) BU0Z001 S/N 222000001-
Italian

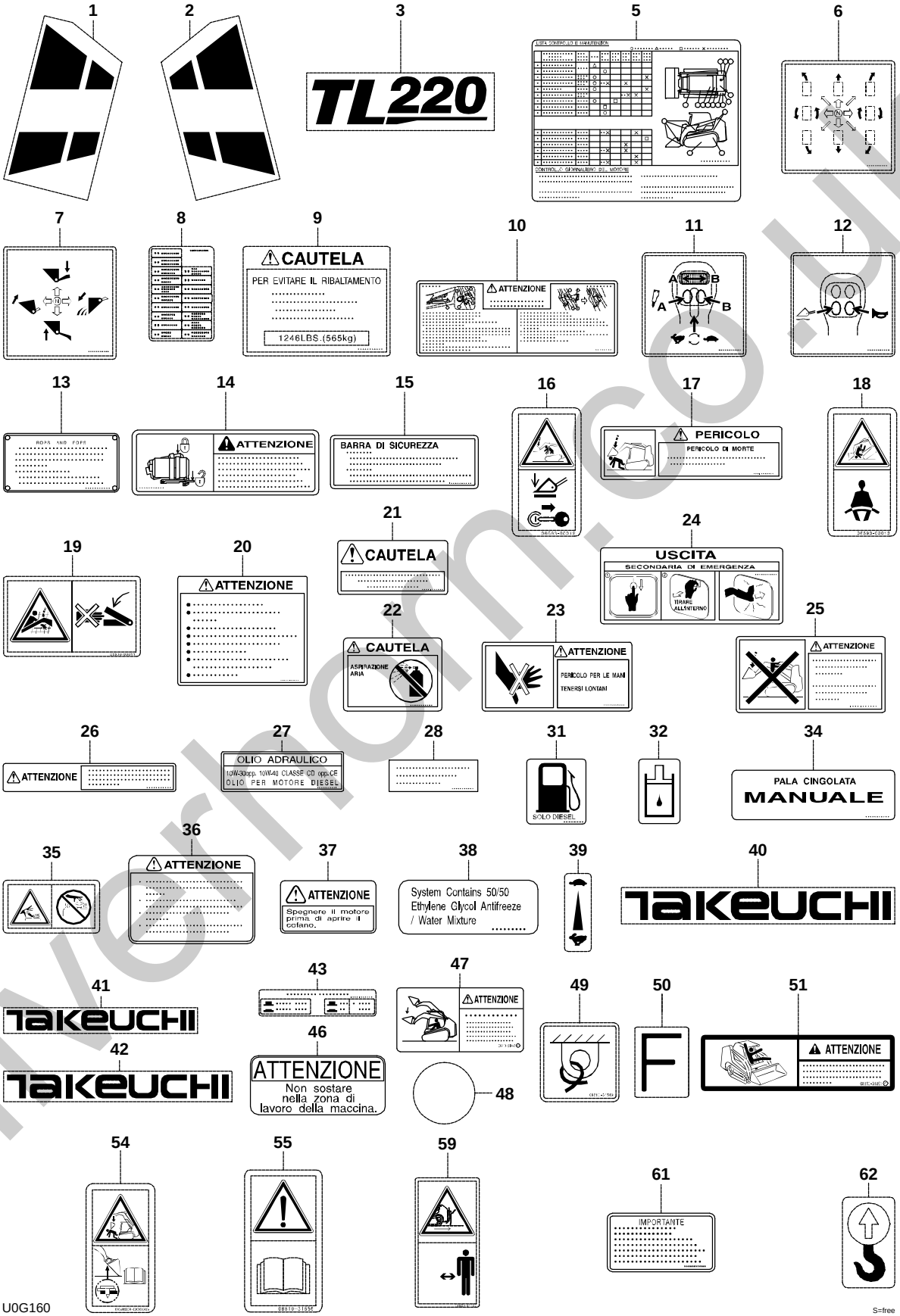

silverhorn.co.uk

DECAL (cab)

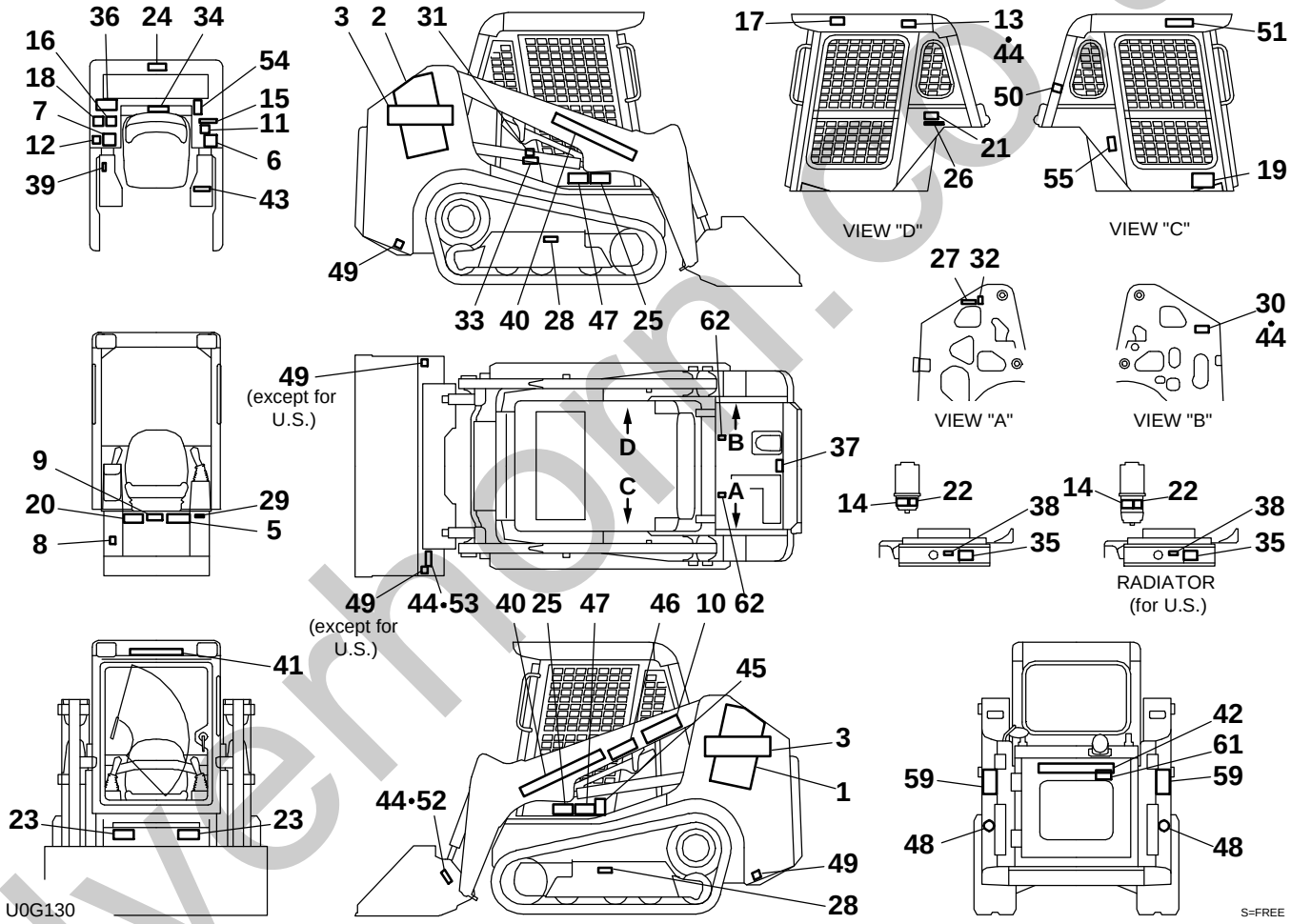

silverhorn.co.uk

DECAL (CAB)

Item	Part number	Description	Q'ty	Chan.	Serial No.	Serv.	Remarks
0	0659302900	DECAL SET (ENGLISH FOR US)	1				
	0659303200	DECAL SET (ITALIAN)	1				
	0659304000	DECAL SET (ENGLISH FOR CANADA)	1				
	0659304100	DECAL SET (FRENCH FOR CANADA)	1				
1	0659302001	* DECAL	1				
2	0659302002	* DECAL	1				
3	0659302003	* DECAL	2				
5	0669300005	* DECAL (ENGLISH)	1				
	0669300105	* DECAL (FRENCH)	1				
	0669300205	* DECAL (ITALIAN)	1				
6	0669300006	* DECAL	1				
7	0669300007	* DECAL	1				
8	0669300008	* DECAL (ENGLISH)	1				
	0699300108	* DECAL (FRENCH)	1				
	0669300208	* DECAL (ITALIAN)	1				
9	0659300009	* DECAL (ENGLISH)	1				
	0659300202	* DECAL (FRENCH)	1				
	0659300302	* DECAL (ITALIAN)	1				
10	0881030110	* DECAL (ENGLISH)	1				
	0881030260	* DECAL (FRENCH)	1				
	0881030360	* DECAL (ITALIAN)	1				
11	0882030006	* DECAL	1				
12	0882030007	* DECAL	1				
13	**********	* DECAL	1				
14	0669300814	* DECAL (US TAKEUCHI)	1				
	0669300114	* DECAL (FRENCH)	1				
	0669300214	* DECAL (ITALIAN)	1				
15	0880031001	* DECAL (ENGLISH)	1				
	0880038607	* DECAL (FRENCH)	1				
	0881030315	* DECAL (ITALIAN)	1				
16	0659300012	* DECAL	1				
17	0880030010	* DECAL (ENGLISH)	1				
	0880038610	* DECAL (FRENCH)	1				
	0881030317	* DECAL (ITALIAN)	1				
18	0659300013	* DECAL	1				
19	0659300011	* DECAL	1				
20	0881030020	* DECAL (ENGLISH)	1				
	0880038613	* DECAL (FRENCH)	1				
	0881030320	* DECAL (ITALIAN)	1				
21	0880030015	* DECAL (ENGLISH)	1				
	0880038615	* DECAL (FRENCH)	1				
	0881030321	* DECAL (ITALIAN)	1				
22	0880030016	* DECAL (ENGLISH)	1				
	0880038616	* DECAL FRENCH)	1				
	0881030322	* DECAL (ITALIAN)	1				
23	0880030017	* DECAL (ENGLISH)	2				
	0880038617	* DECAL (FRENCH)	2				
	0881030323	* DECAL (ITALIAN)	2				
24	0880031018	* DECAL (ENGLISH)	1				
	0880038618	* DECAL (FRENCH)	1				
	0881030324	* DECAL (ITALIAN)	1				
25	0880031005	* DECAL (ENGLISH)	2				
	0880038620	* DECAL (FRENCH)	2				
	0881030325	* DECAL (ITALIAN)	2				
26	0881030026	* DECAL (ENGLISH)	1				
	0880038621	* DECAL (FRENCH)	1				
	0881030326	* DECAL (ITALIAN)	1				
27	0880031017	* DECAL (ENGLISH)	1				
	0880038623	* DECAL (FRENCH)	1				
	0881030327	* DECAL (ITALIAN)	1				
28	0149362200	* DECAL (ENGLISH)	2				
	0880038624	* DECAL (FRENCH)	2				
	0881030328	* DECAL (ITALIAN)	2				
29	*********	* DECAL	1				
30	**********	* DECAL	1				
31	0359306600	* DECAL (ENGLISH)	1				
	0339375460	* DECAL (FRENCH)	1				
	0339375660	* DECAL (ITALIAN)	1				

silverthorn.co.uk

DECAL (cab)

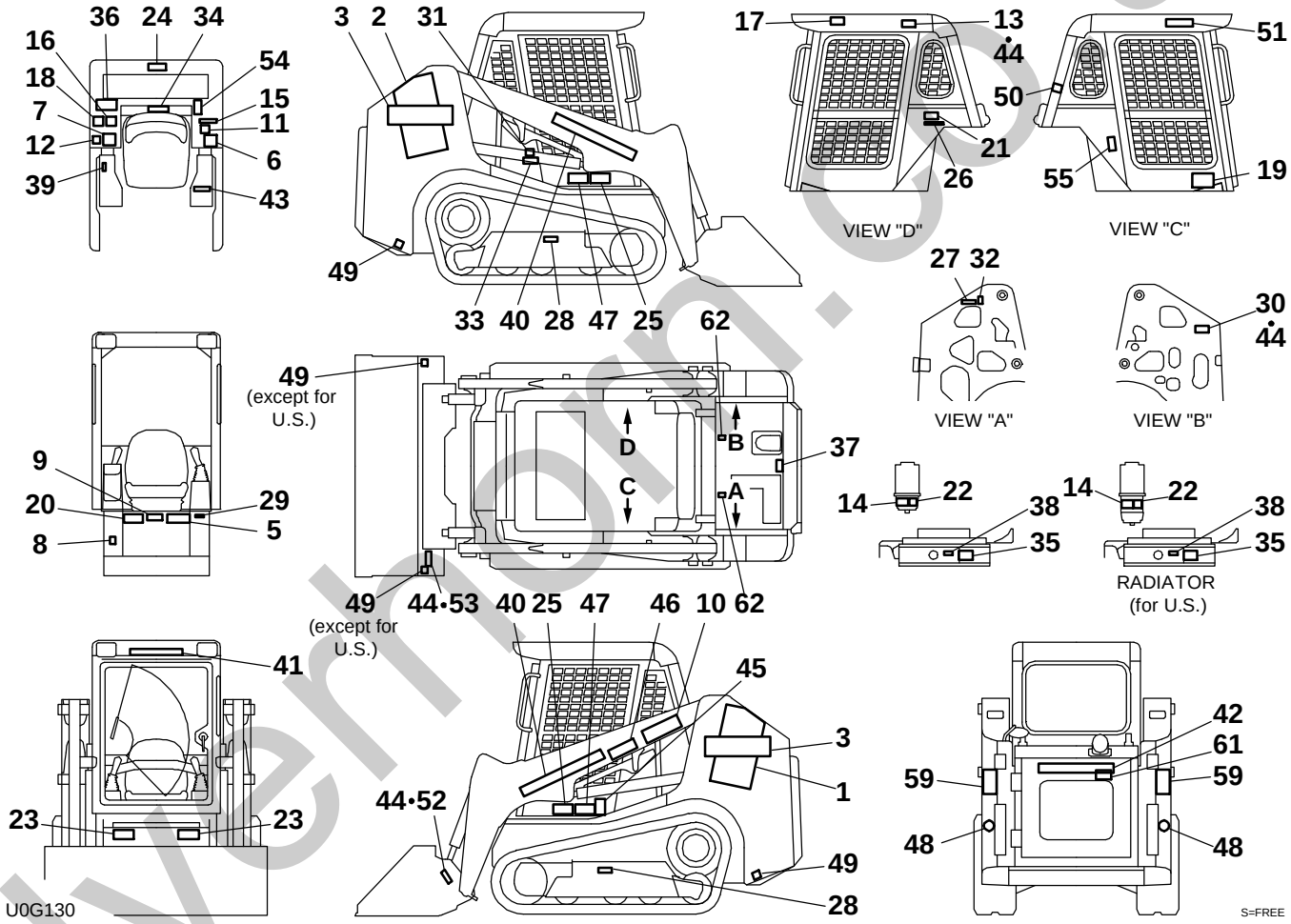

silverhorn.co.uk

DECAL (CAB)

Item	Part number		Description	Q'ty	Chan.	Serial No.	Serv.	Remarks
32	0359306700	*	DECAL	1				
33	0669300033	*	DECAL (US AND CANADA)	1				
34	0880031016	*	DECAL (ENGLISH)	1				
	0880038634	*	DECAL (FRENCH)	1				
	0881030334	*	DECAL (ITALIAN)	1				
35	0882031135	*	DECAL	1				
36	0359313700	*	DECAL (ENGLISH)	1				
	0359315700	*	DECAL (FRENCH)	1				
	0359316700	*	DECAL (ITALIAN)	1				
37	0359307400	*	DECAL (ENGLISH)	1				
	0359315400	*	DECAL (FRENCH)	1				
	0359316400	*	DECAL (ITALIAN)	1				
38	0359313900	*	DECAL	1				
39	0359317200	*	DECAL	1				
40	0008500060	*	DECAL	2				
41	0008500140	*	DECAL	1				
42	0008500050	*	DECAL	1				
43	0881030043	*	DECAL (ENGLISH)	1				
	0881030243	*	DECAL (FRENCH)	1				
	0881030343	*	DECAL (ITALIAN)	1				
44	**********	*	SCREW	16				
45	**********	*	DECAL	1				
46	0359309100	*	DECAL (FRENCH)	1				
	0359310100	*	DECAL (ITALIAN)	1				
47	0881030046	*	DECAL (ENGLISH)	2				
	0881031747	*	DECAL (FRENCH)	2				
	0881031847	*	DECAL (ITALIAN)	2				
48	0874030360	*	DECAL	2				
49	0881031549	*	DECAL	4				
50	039930040	*	DECAL	1				
51	0881031551	*	DECAL (ENGLISH)	1				
	0881031751	*	DECAL (FRENCH)	1				
	0881031851	*	DECAL (ITALIAN)	1				
54	0689300035	*	DECAL	1				
55	0881031556	*	DECAL	1				
59	0882031159	*	DECAL	2				
61	0339376240	*	DECAL (ENGLISH)	1				
	0339379440	*	DECAL (FRENCH)	1				
	0339379540	*	DECAL (ITALIAN)	1				
62	0399300500	*	DECAL	2				
	U0G130							

silverhorn.co.uk

DECAL (canopy) (for GEHL & MUSTANG)

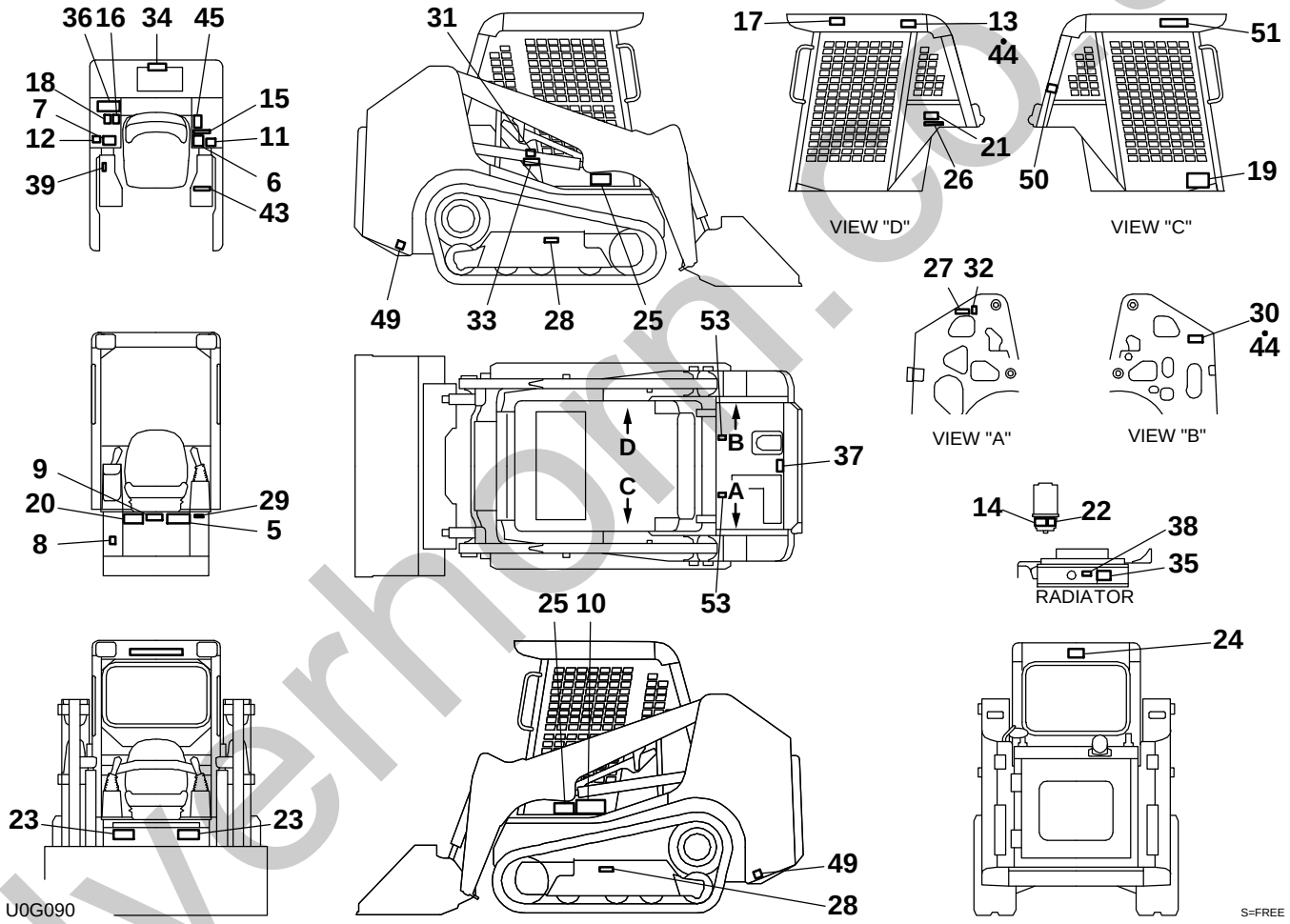

silverhorn.co.uk

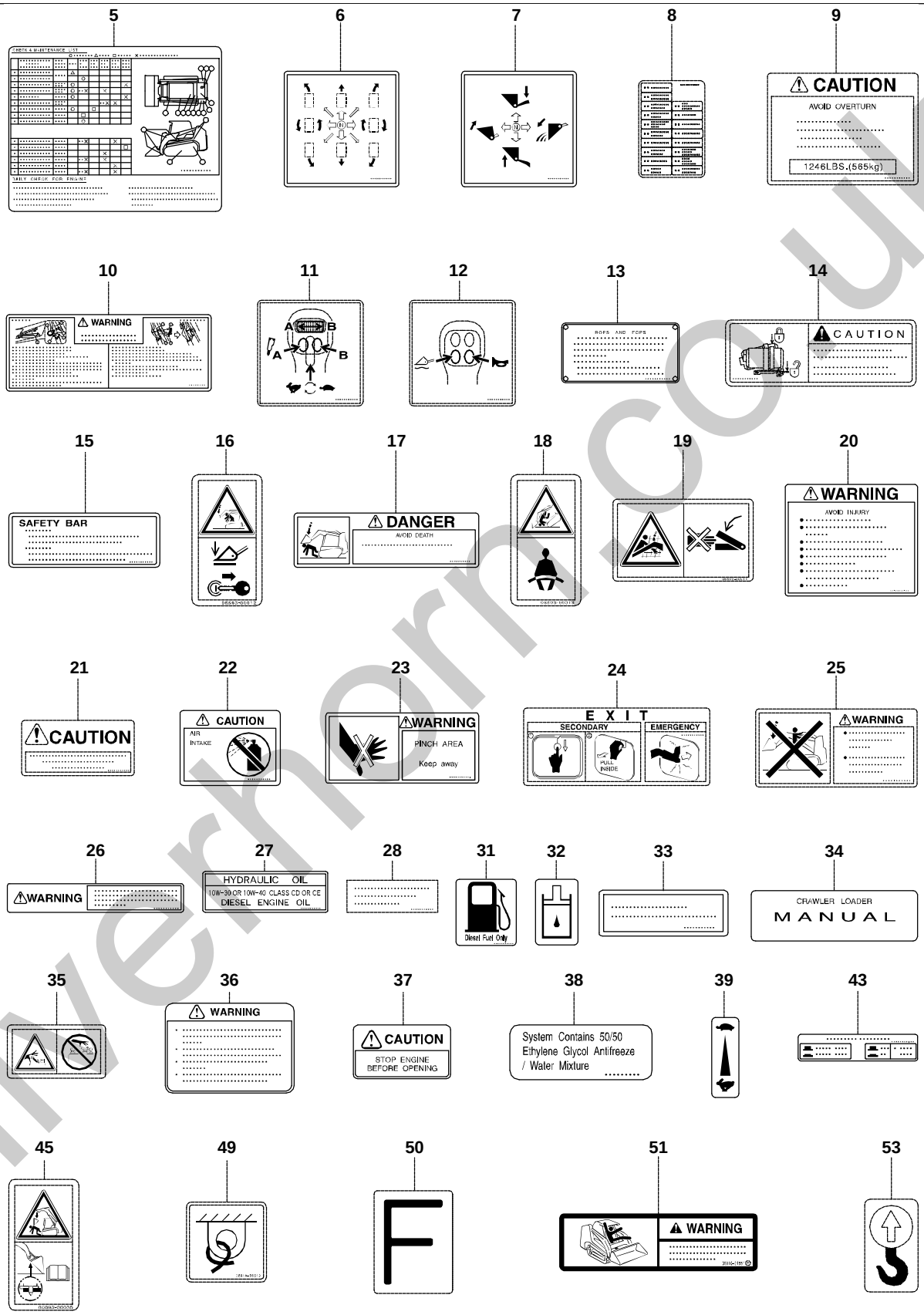

U0G100

S=free

silverthorn.co.uk

DECAL (canopy) (for GEHL & MUSTANG)

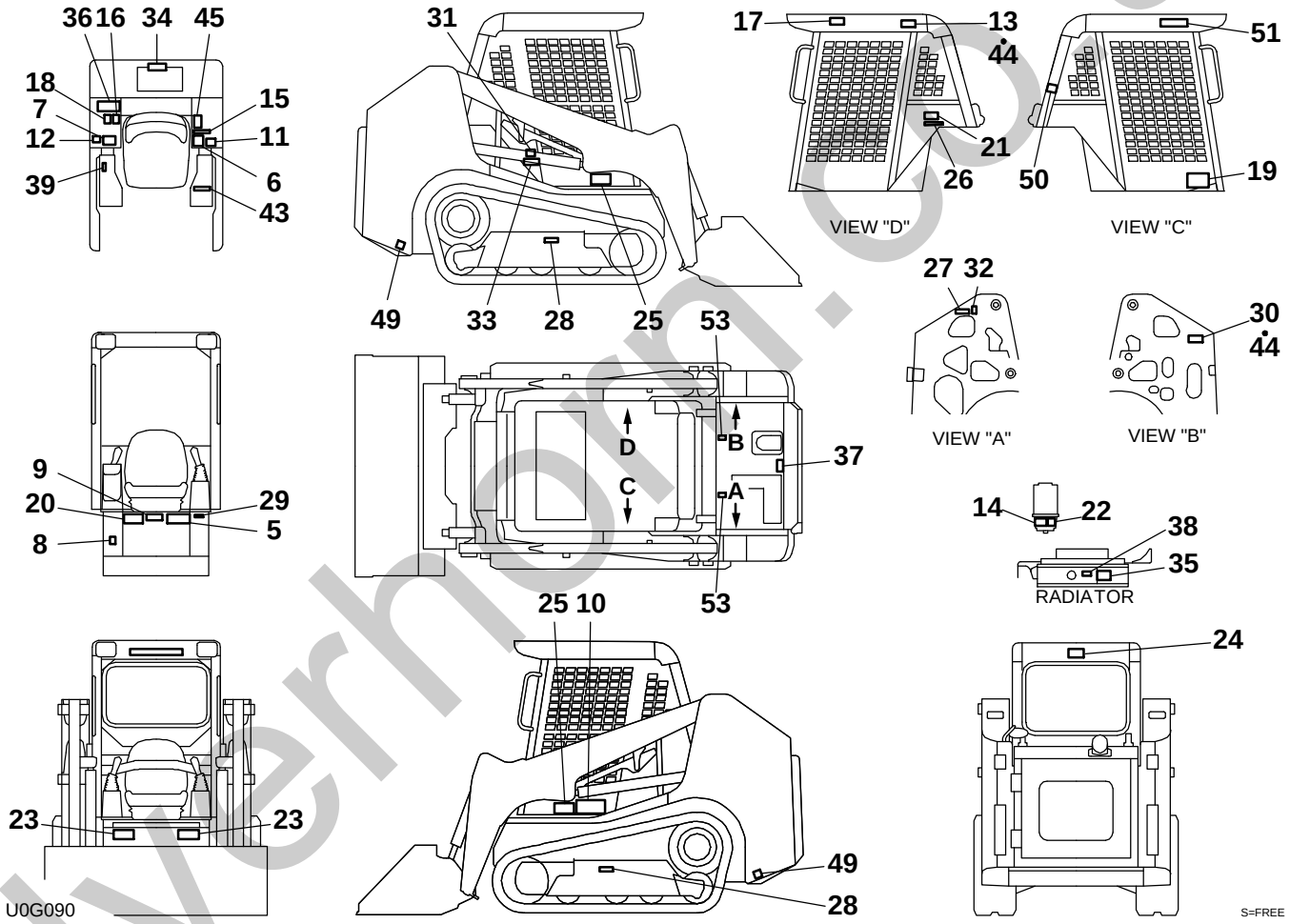

silverhorn.co.uk

DECAL (CANOPY) GEHL & MUSTANG

Item	Part number	Description	Q'ty	Chan.	Serial No.	Serv.	Remarks
0	0659302600	DECAL SET (GEHL & MUSTANG)	1				
5	0669300005	* DECAL	1				
6	0669300006	* DECAL	1				
7	0669300007	* DECAL	1				
8	0669300008	* DECAL	1				
9	0880038009	* DECAL	1				
10	0881030110	* DECAL	1				
11	0882030006	* DECAL	1				
12	0882030007	* DECAL	1				
13	**********	* DECAL	1				
14	0669300014	* DECAL	1				
15	0880031001	* DECAL	1				
16	0659300012	* DECAL	1				
17	0880030010	* DECAL	1				
18	0659300013	* DECAL	1				
19	0659300011	* DECAL	1				
20	0881030020	* DECAL	1				
21	0880030015	* DECAL	1				
22	0880030016	* DECAL	1				
23	0880030017	* DECAL	2				
24	0880031018	* DECAL	1				
25	0880031005	* DECAL	2				
26	0881030026	* DECAL	1				
27	0880031017	* DECAL	1				
28	0149362200	* DECAL	2				
29	**********	* DECAL	1				
30	**********	* DECAL	1				
31	0359306600	* DECAL	1				
32	0359306700	* DECAL	1				
33	0669300033	* DECAL	1				
34	0880031016	* DECAL	1				
35	0882031135	* DECAL	1				
36	0359313700	* DECAL	1				
37	0359307400	* DECAL	1				
38	0359313900	* DECAL	1				
39	0359317200	* DECAL	1				
43	0881030043	* DECAL	1				
44	**********	* SCREW	8				
45	0689300035	* DECAL	1				
49	0881031549	* DECAL	2				
50	0399300400	* DECAL	1				
51	0881031551	* DECAL	1				
53	0399300500	* DECAL	2				
	U0G090						

silverthorn.co.uk

DECAL (cab) (for GEHL & MUSTANG)

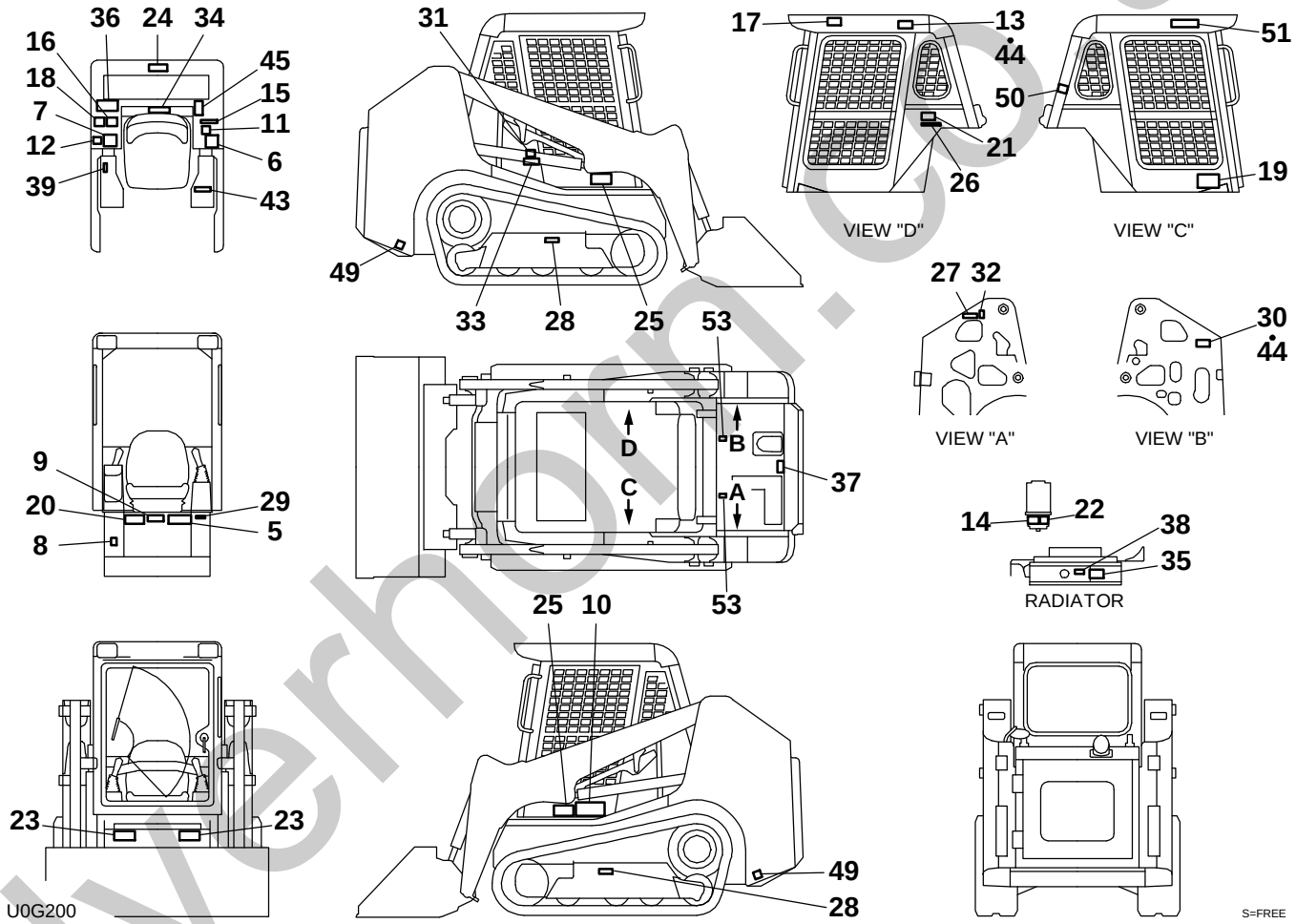

silverhorn.co.uk

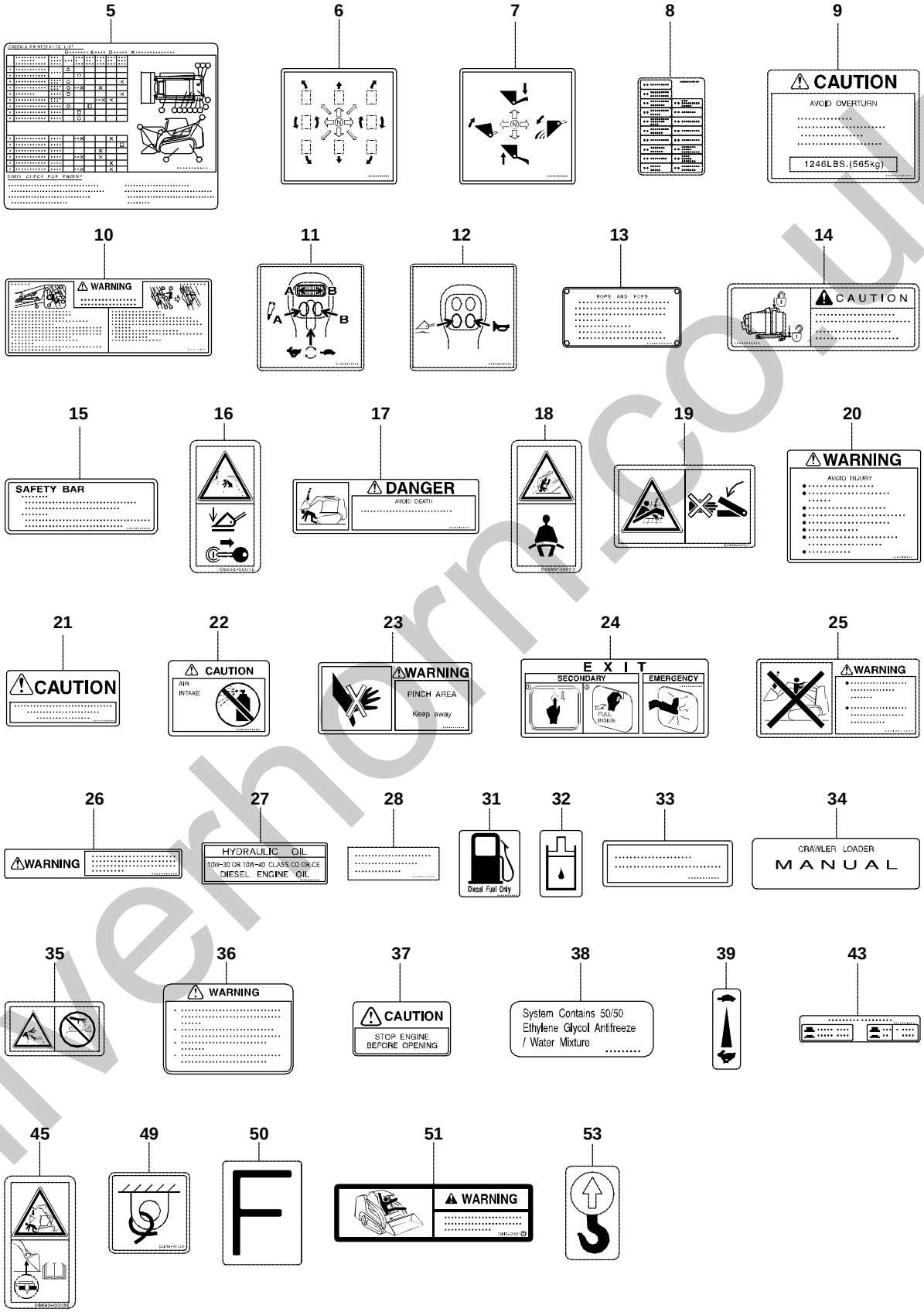

U0G210

S=free

silverhorn.co.uk

DECAL (cab) (for GEHL & MUSTANG)

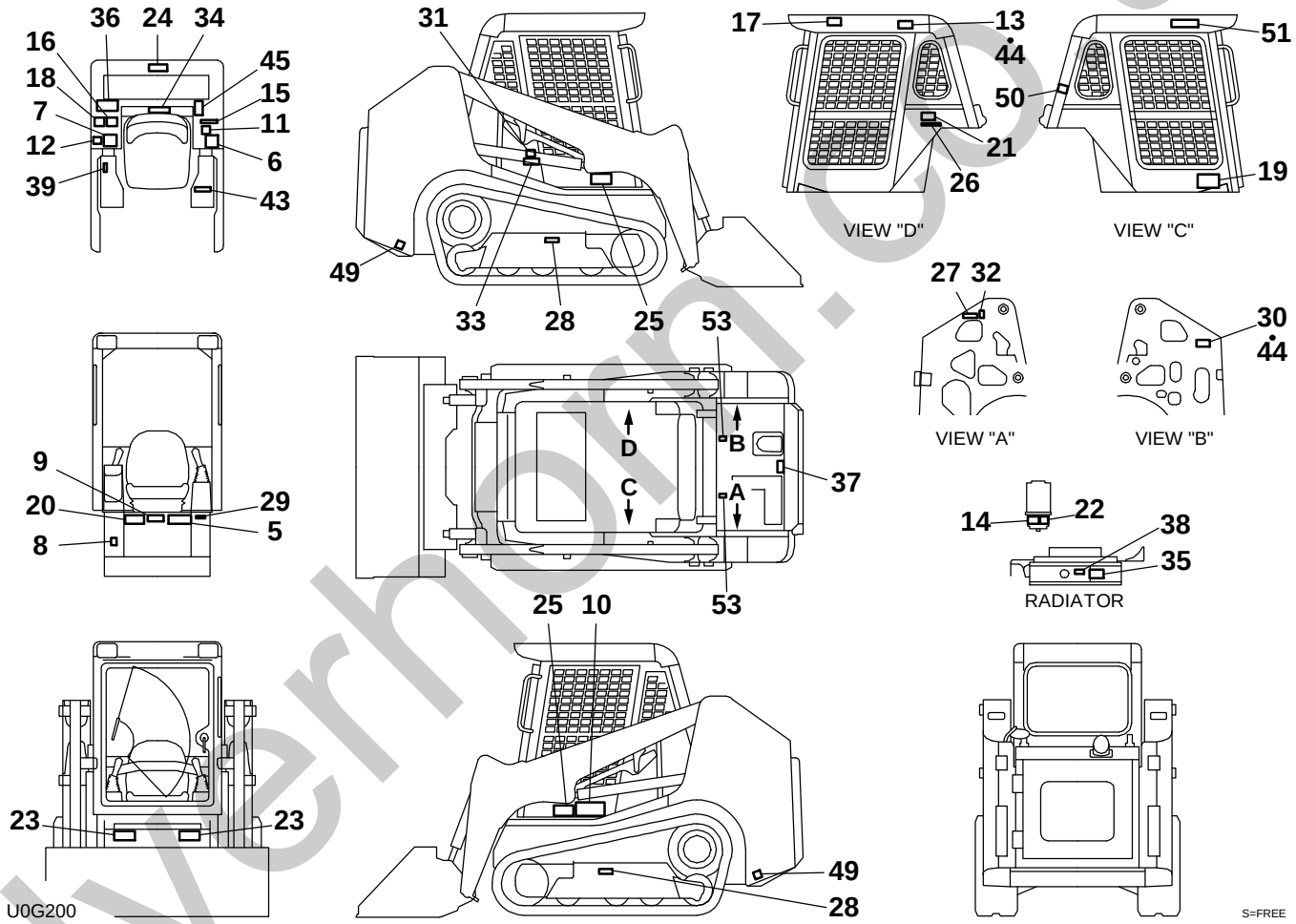

silverhorn.co.uk

DECAL (CAB) GEHL & MUSTANG

Item	Part number	Description	Q'ty	Chan.	Serial No.	Serv.	Remarks
0	0659303700	DECAL SET (GEHL & MUSTANG)	1				
5	0669300005	* DECAL	1				
6	0669300006	* DECAL	1				
7	0669300007	* DECAL	1				
8	0669300008	* DECAL	1				
9	0880038009	* DECAL	1				
10	0881030110	* DECAL	1				
11	0882030006	* DECAL	1				
12	0882030007	* DECAL	1				
13	**********	* DECAL	1				
14	0669300014	* DECAL	1				
15	0880031001	* DECAL	1				
16	0659300012	* DECAL	1				
17	0880030010	* DECAL	1				
18	0659300013	* DECAL	1				
19	0659300011	* DECAL	1				
20	0881030020	* DECAL	1				
21	0880030015	* DECAL	1				
22	0880030016	* DECAL	1				
23	0880030017	* DECAL	2				
24	0880031018	* DECAL	1				
25	0880031005	* DECAL	2				
26	0881030026	* DECAL	1				
27	0880031017	* DECAL	1				
28	0149362200	* DECAL	2				
29	**********	* DECAL	1				
30	**********	* DECAL	1				
31	0359306600	* DECAL	1				
32	0359306700	* DECAL	1				
33	0669300033	* DECAL	1				
34	0880031016	* DECAL	1				
35	0882031135	* DECAL	1				
36	0359313700	* DECAL	1				
37	0359307400	* DECAL	1				
38	0359313900	* DECAL	1				
39	0359317200	* DECAL	1				
43	0881030043	* DECAL	1				
44	**********	* SCREW	8				
45	0689300035	* DECAL	1				
49	0881031549	* DECAL	2				
50	0399300400	* DECAL	1				
51	0881031551	* DECAL	1				
53	0399300500	* DECAL	2				
	U0G090						

silverthorn.co.uk

TOOL

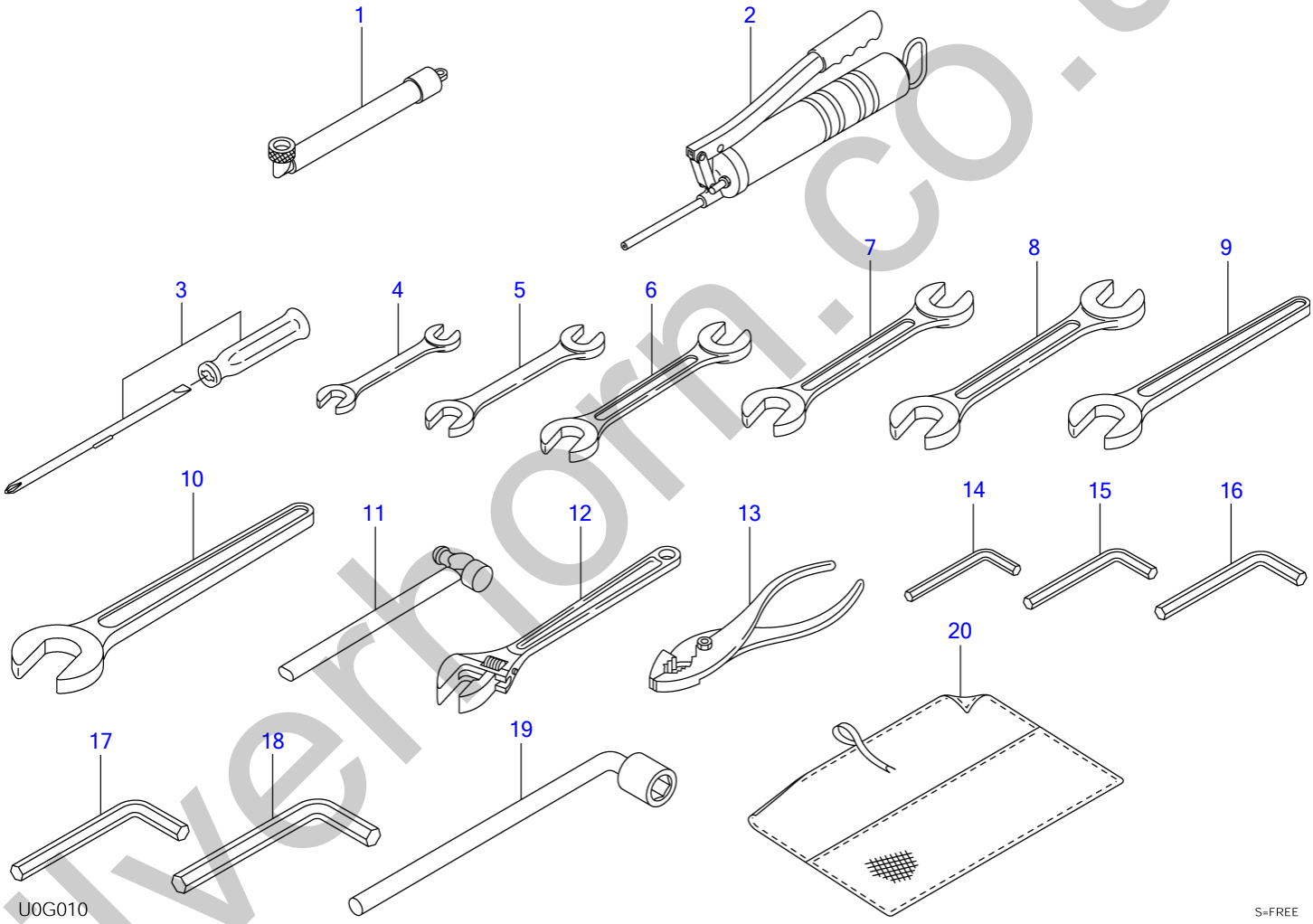

silverhorn.co.uk

TOOL

Item	Part number	Description	Q'ty	Chan.	Serial No.	Serv.	Remarks
		TOOL SET					
1	1554512601	TUBE	1				
2	1691060600	GUN, grease	1				
0-1	0659200060	TOOL SET	1				
3	1690220205	・SCREW DRIVER	1				
4	1690001012	・SPANNER	1				
5	1690001113	・SPANNER	1				
6	1690001417	・SPANNER	1				
7	1690001922	・SPANNER	1				
8	1690002427	・SPANNER	1				
9	1690100030	・SPANNER	1				
10	1690100041	・SPANNER	1				
11	1690300330	・HAMMER	1				
12	1690400250	・WRENCH, monkey	1				
13	1690500200	・PLIER	1				
14	1690600500	・WRENCH, hex	1				
15	1690600600	・WRENCH, hex	1				
16	1690600800	・WRENCH, hex	1				
17	1690601000	・WRENCH, hex	1				
18	1690601400	・WRENCH, hex	1				
19	1690830019	・WRENCH, hex	1				
20	1691400001	・CASE, tool	1				
	U0g010						

silverhorn.co.uk

PAINTED COLOR

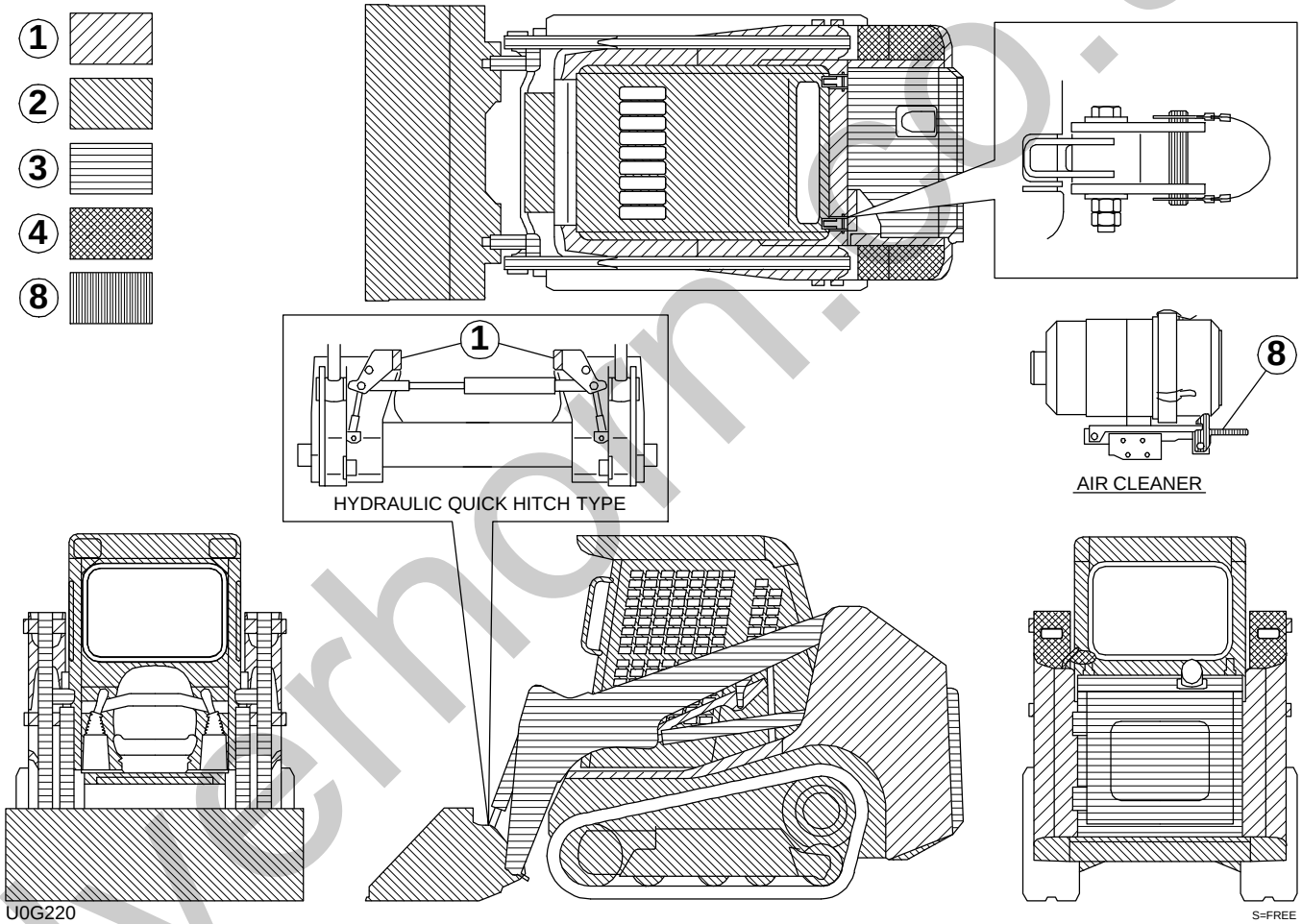

silverhorn.co.uk

PAINTED COLOR

Item	Part number	Description	Q'ty	Chan.	Serial No.	Serv.	Remarks
		PAINTED COLOR					
1	1919060105	RED	1				
	1919069105	RED	1				
2	1919060144	GRAY	1				
	1919069144	GRAY	1				
3	1919060142	LIGHT GRAY	1				
	1919069142	LIGHT GRAY	1				
4	1919060103	BLACK	1				
	1919069103	BLACK	1				
8	1919069175	YELLOW	1				
	U0G220						

silverhorn.co.uk

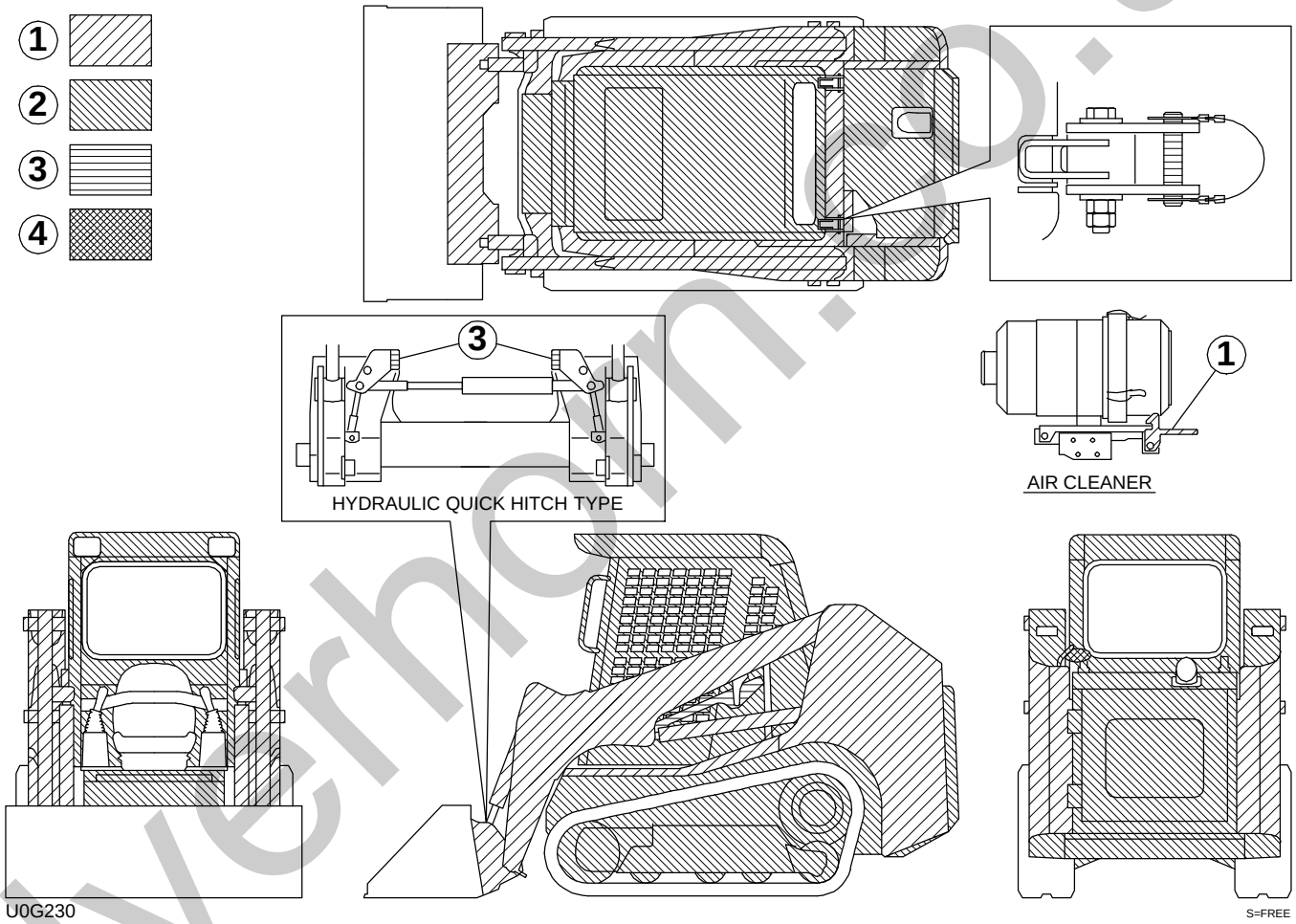

silverhorn.co.uk

PAINTED COLOR FOR GEHL & MUSTANG

Item	Part number	Description	Q'ty	Chan.	Serial No.	Serv.	Remarks
		PAINTED COLOR					
1	1919060177	GEHL YELLOW	1				
	1919069177	GEHL YELLOW	1				
2	1919060180	GEHL GRAY	1				
	1919069180	GEHL GRAY	1				
3	1919060105	RED	1				
	1919069105	RED	1				
4	1919060103	BLACK	1				
	1919069103	BLACK	1				
	U0G230						

silverhorn.co.uk

CONTROL VALVE

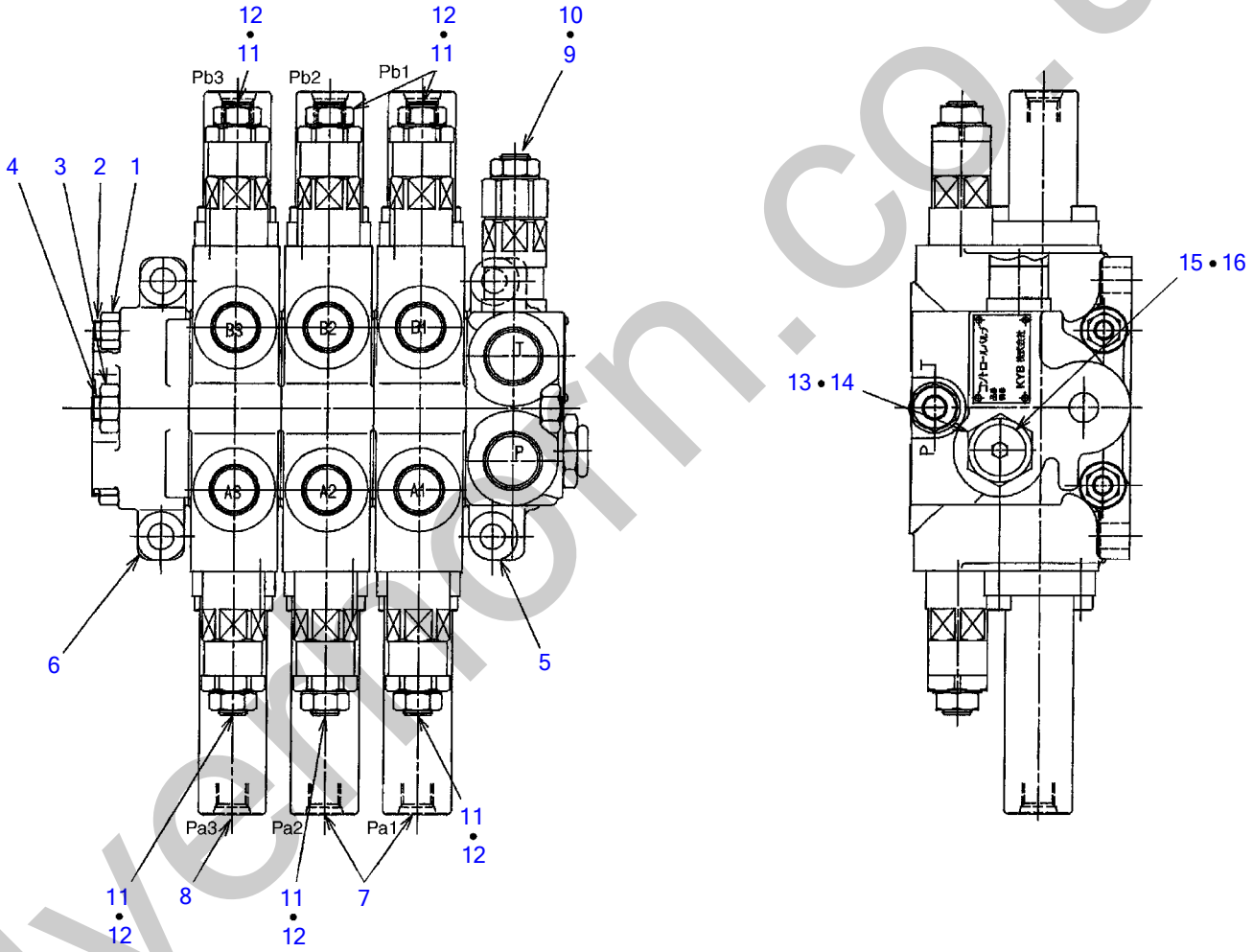

T3H090

S=FREE

silvermorn.co.uk

CONTROL VALVE

Item	Part number	Description	Q'ty	Chan.	Serial No.	Serv.	Remarks
0	1901042900	VALVE ASSY, control	1				
1	1130250008	・NUT	4				
2	1901030107	・ROD, tie	2				
3	1130250010	・NUT	2				
4	1901030106	・ROD, tie	1				
5	1901042903	・HOUSING, inlet	1				
6	1901025504	・HOUSING, outlet	1				
7	1901042912	・VALVE ASSY	2				arm, bucket
8	1901042919	・VALVE ASSY	1				service
9	1901042921	・VALVE ASSY	1				relief
10	1901025482	・・O-RING	1				
11	1901042922	・VALVE ASSY	6				over load
12	1901025482	・・O-RING	1				
13	1901042971	・PLUG	1				
14	1420310910	・O-RING	1				
15	1901036573	・PLUG	1				
16	1420010110	・・O-RING	1				
	T3h090						

silverhorn.co.uk

INLET HOUSING ASSY

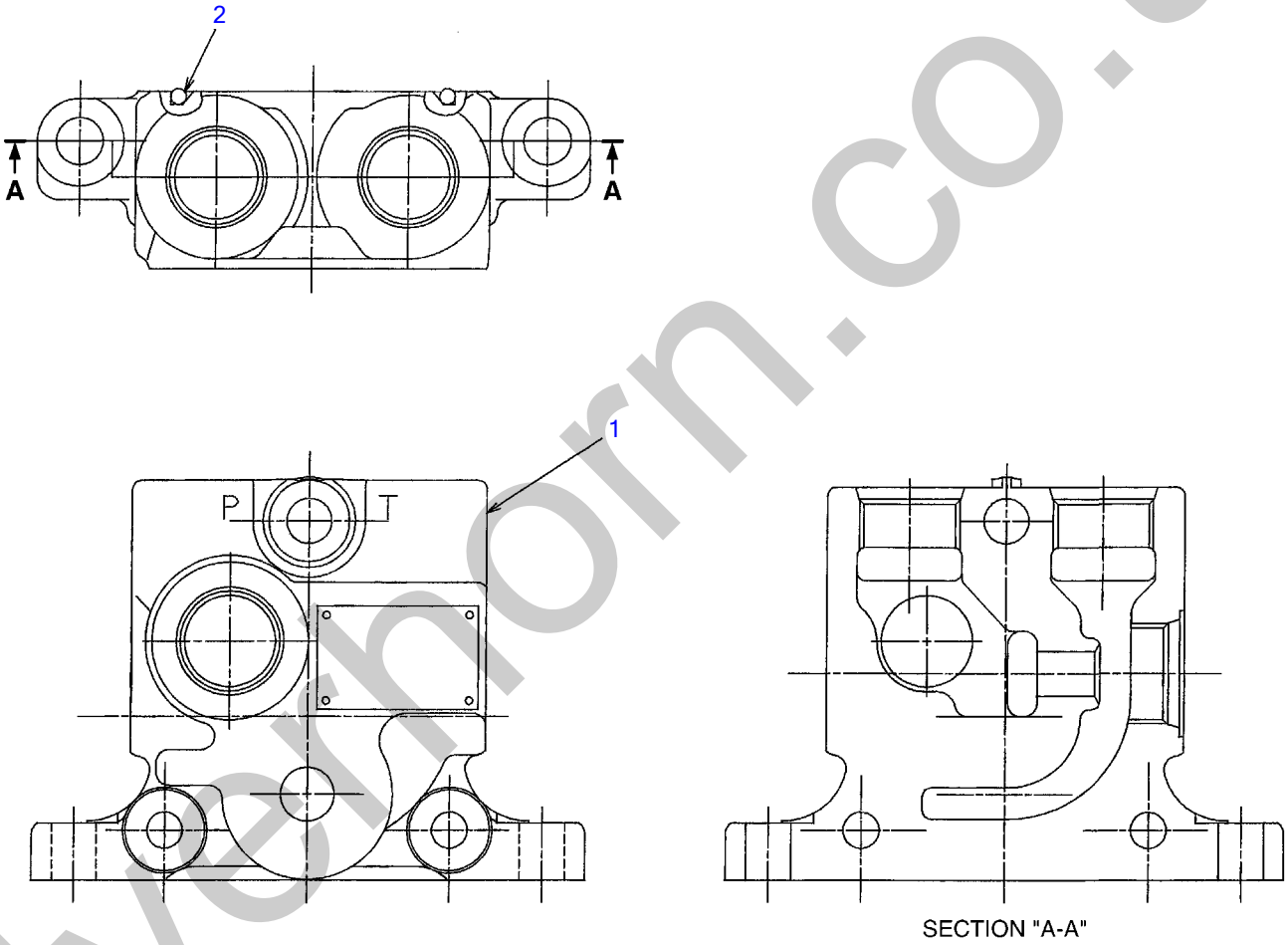

T3H100

S=FREE

silverhorn.co.uk

INLET HOUSING ASSY

Item	Part number	Description	Q'ty	Chan.	Serial No.	Serv.	Remarks
0	**1901042903**	HOUSING, inlet	1				
1	**1901042905**	・HOUSING	1				
2	**1901025480**	・O-RING	1				
	T3h100						

silverhorn.co.uk

BLOCK ASSY; No. 1

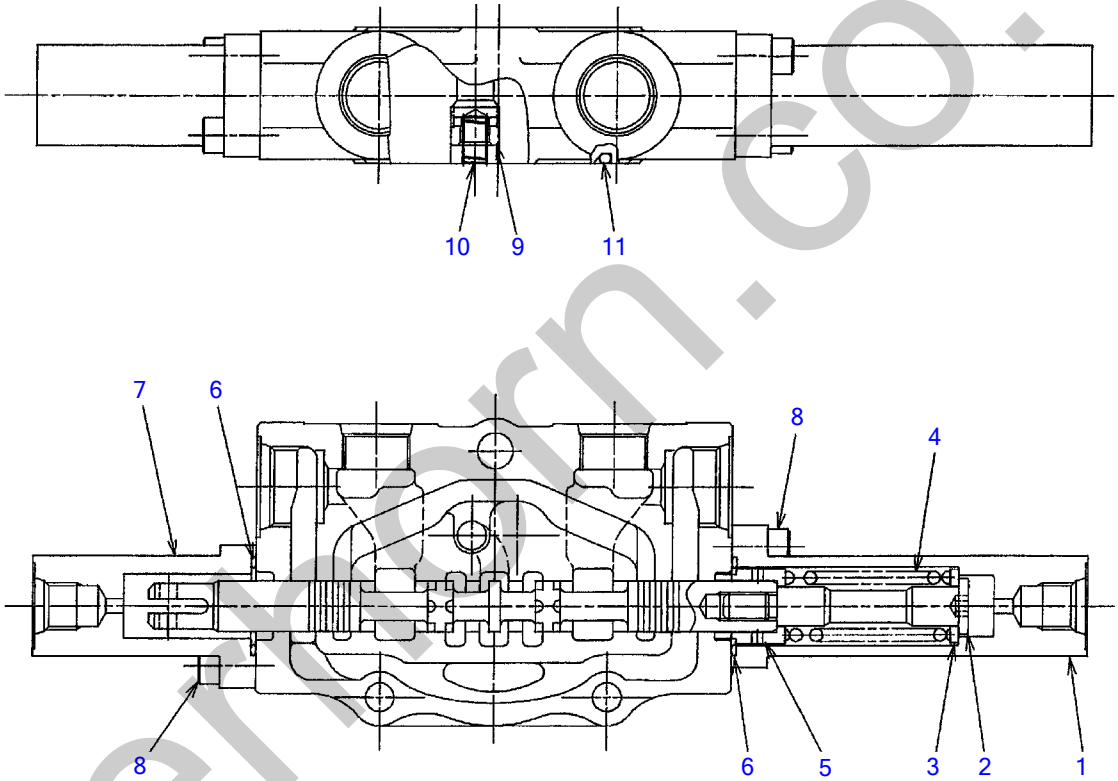

T3H110

S=FREE

silvermorn.co.uk

BLOCK ASSY; No. 1

Item	Part number	Description	Q'ty	Chan.	Serial No.	Serv.	Remarks
0	1901042912	VALVE ASSY	2				arm, bucket
1	1901029755	・CAP	1				
2	1901029731	・END, spool	1				
3	1901029754	・HOLDER, spring	1				
4	1901029759	・SPRING	1				
5	1901029753	・SEAT, spring	1				
6	1420500240	・O-RING	2				
7	1901029762	・CAP	1				
8	1110020618	・SCREW, cap	4				
9	1901025467	・PLUNGER	1				
10	1901042256	・SPRING	1				
11	1901025480	・O-RING	1				
	T3h110						

silverhorn.co.uk

BLOCK ASSY; No. 2

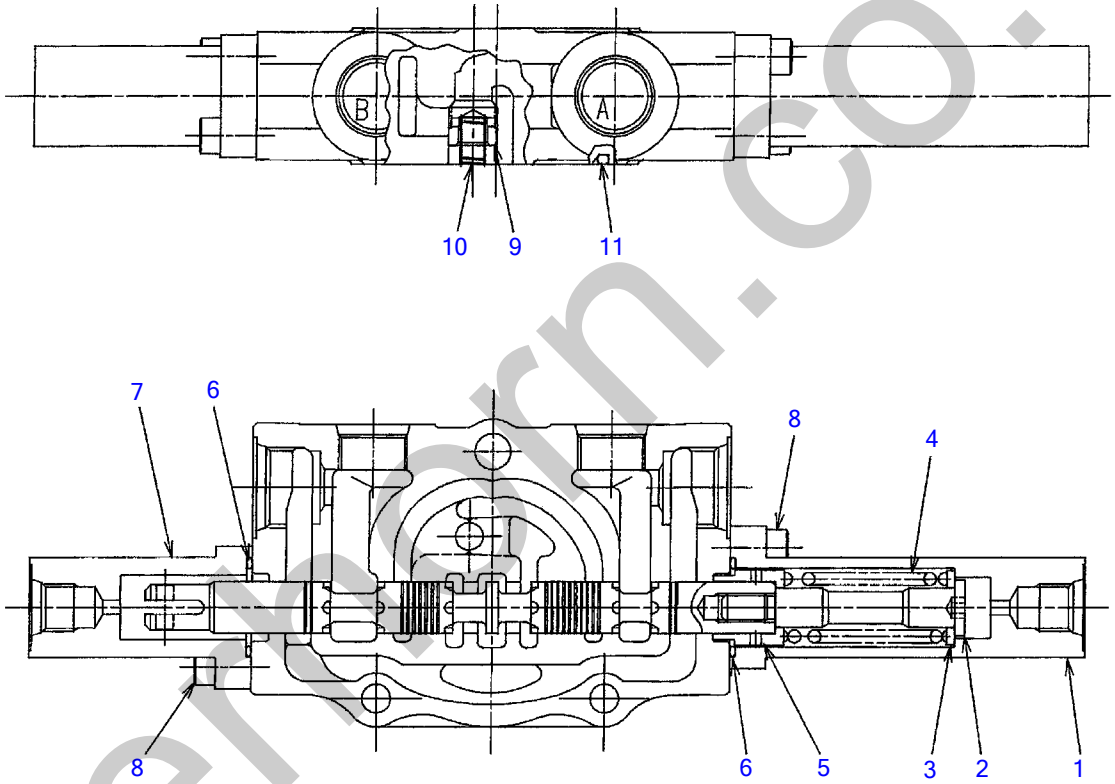

T3H120

S=FREE

silvermorn.co.uk

BLOCK ASSY; No. 2

Item	Part number	Description	Q'ty	Chan.	Serial No.	Serv.	Remarks
0	1901042919	VALVE ASSY	1				service
1	1901029755	・CAP	1				
2	1901029731	・END, spool	1				
3	1901029754	・HOLDER, spring	1				
4	1901029759	・SPRING	1				
5	1901029753	・SEAT, spring	1				
6	1420500240	・O-RING	2				
7	1901029762	・CAP	1				
8	1110020618	・SCREW, cap	4				
9	1901025467	・PLUNGER	1				
10	1901042256	・SPRING	1				
11	1901025480	・O-RING	1				
	T3h120						

silverhorn.co.uk

SUB VALVE

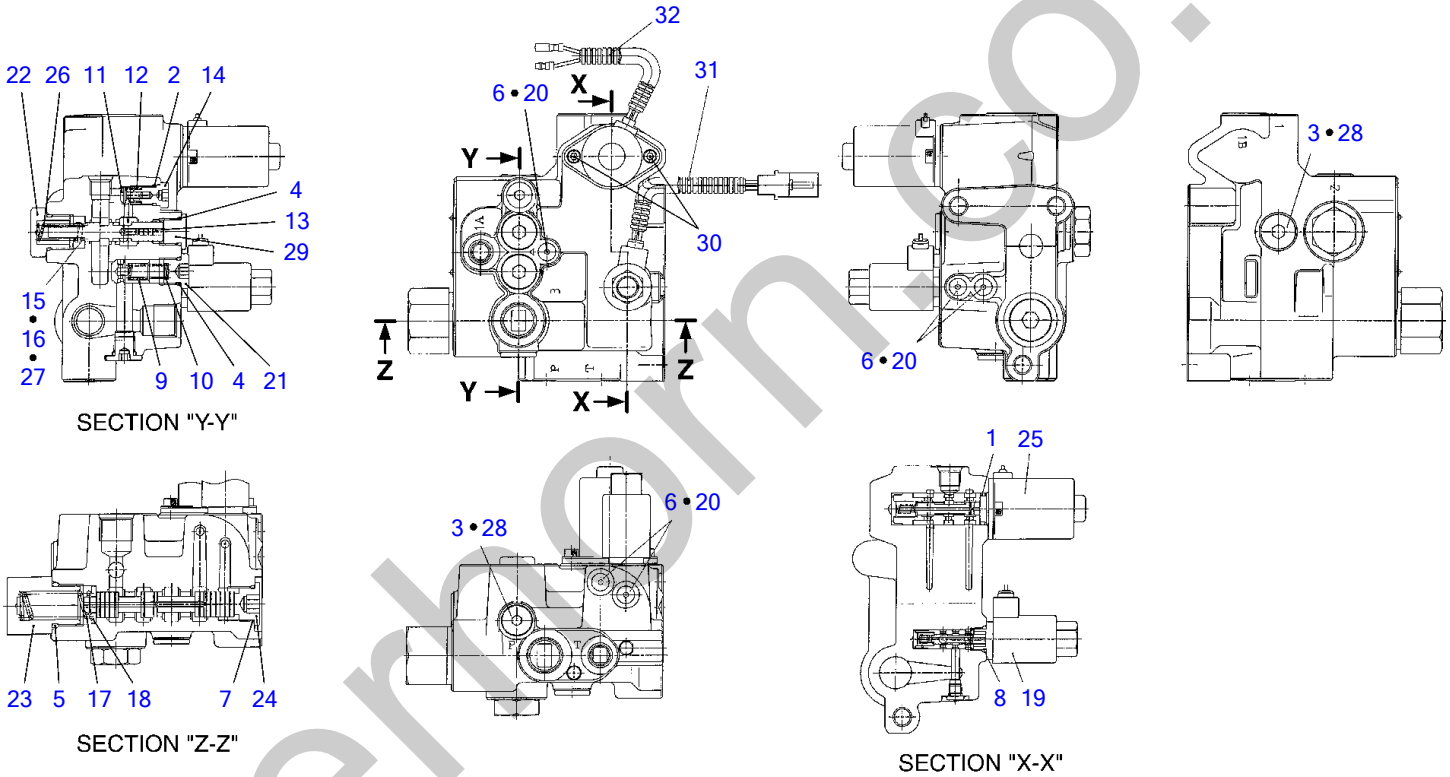

T3H010

S=FREE

silverhorn.co.uk

SUB VALVE

Item	Part number	Description	Q'ty	Chan.	Serial No.	Serv.	Remarks
0	1901748100	VALVE, sub	1				
0-1	1901748199	・KIT, seal	1				
1	X 1420010160	・・O-RING	1				
2	X 1420010100	・・O-RING	1				
3	X 1420010110	・・O-RING	2				
4	X 1420010140	・・O-RING	2				
5	X 1420010240	・・O-RING	1				
6	X 1420310902	・・O-RING	5				
7	X 1420310910	・・O-RING	1				
8	X 1420000125	・・O-RING	1				
9	1901731901	・POPPET	1				
10	1901731903	・SPRING	1				
11	1901035426	・PLUNGER	1				
12	1901004357	・SPRING	1				
13	1901730412	・PISTON	1				
14	1901035471	・PLUG	1				
15	1901729709	・SHIM	1				t=0.1mm
16	1901729710	・SHIM	1				t=0.2mm
17	1901731911	・SPRING	1				
18	1901731912	・WASHER	1				
19	1901748114	・SOLENOID	1				
20	1901748119	・PLUG	5				
21	1901748126	・PLUG	1				
22	1901748127	・PLUG	1				
23	1901748128	・PLUG	1				
24	1901748129	・PLUG	1				
25	1901748130	・SOLENOID	1				
26	1901748131	・SPRING	1				
27	1901748132	・SHIM	1				t=0.1mm
28	1901738312	・PLUG	2				
29	1501750002	・PLUG	1				
	1420010110	・・O-RING	1				
30	1110040512	・SCREW, cap	2				
31	1901044619	・TUBE	1				
32	1901748828	・TUBE	1				
	T3h010						

silverhorn.co.uk

SELF LEVEL VALVE

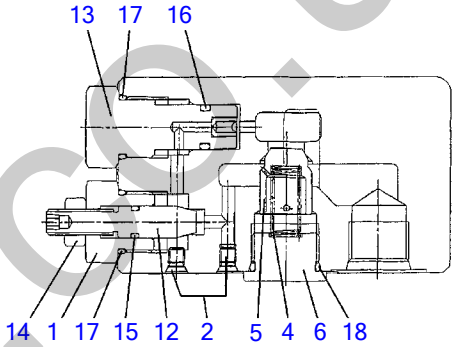

SECTION "Z-Z"

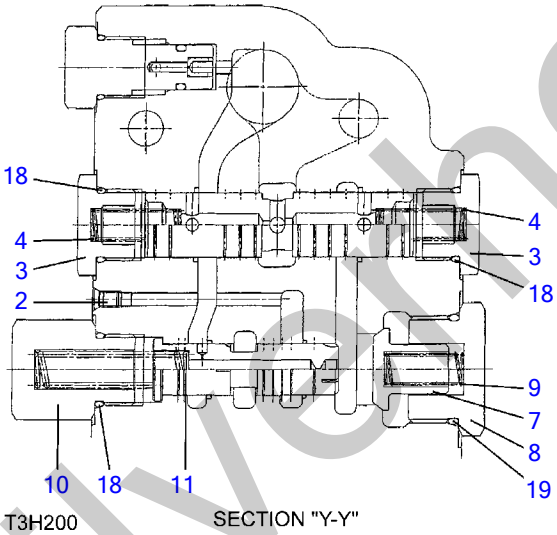

T3H200

SECTION "Y-Y"

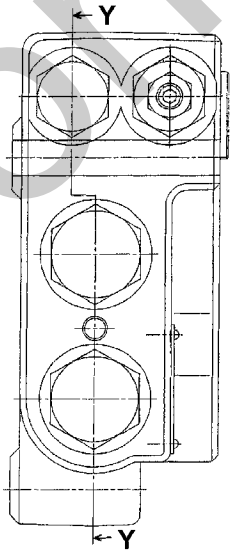

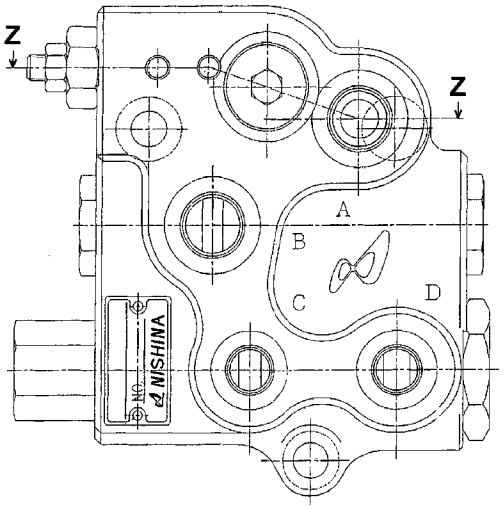

S=free

silverthorn.co.uk

SELF LEVEL VALVE

Item	Part number	Description	Q'ty	Chan.	Serial No.	Serv.	Remarks
0	1901748000	VALVE ASSY, self-level	1				
1	1901748001	・PLUG	1				
2	1901748003	・PLUG	3				
3	1901748005	・PLUG	2				
4	1901748006	・SPRING	3				
5	1901748007	・POPPET	1				
6	1901748008	・PLUG	1				
7	1901748009	・POPPET	1				
8	1901748010	・PLUG	1				
9	1901748011	・SPRING	1				
10	1901748013	・PLUG	1				
11	1901748014	・SPRING	1				
12	1901748015	・NEEDLE	1				
13	1901748016	・PLUG	1				
14	1130020008	・NUT	1				
15	1420000070	・O-RING	1				
16	1420010101	・O-RING	1				
17	1420010140	・O-RING	2				
18	1420310910	・O-RING	4				
19	1420310916	・O-RING	1				
	T3h200						

silverhorn.co.uk

PILOT VALVE (R.H.)

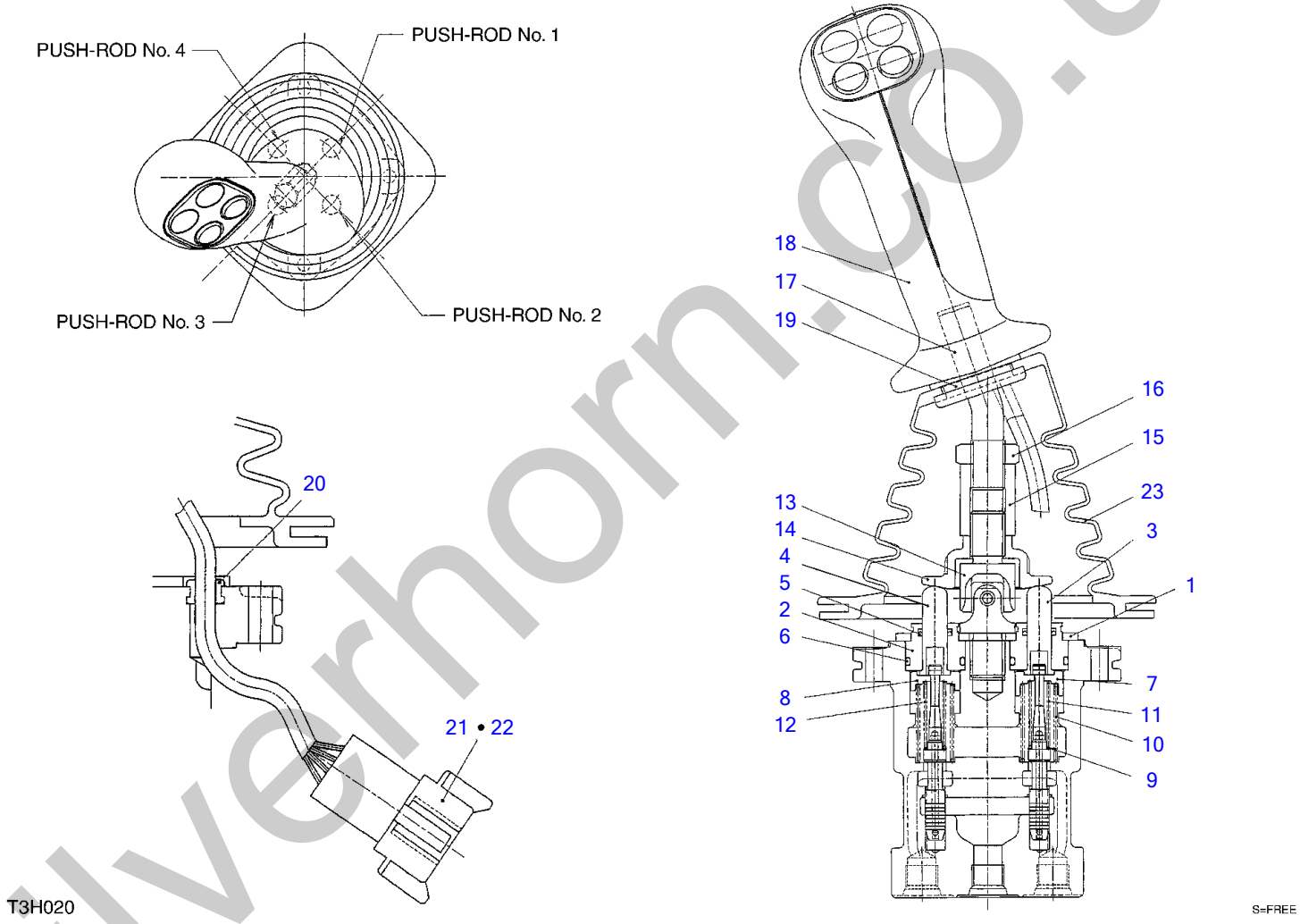

silverhorn.co.uk

PILOT VALVE (R.H.)

Item	Part number	Description	Q'ty	Chan.	Serial No.	Serv.	Remarks
0	1901747800	VALVE ASSY (R.H.)	1				right
1	1901745702	・PLATE	1				
2	1901710912	・PLUG	4				
3	1901719011	・ROD	2				
4	1901719012	・ROD	2				
5	1901710914	・SEAL	4				
6	1420010200	・O-RING	4				
7	1901745709	・HOLDER	2				
8	1901745710	・HOLDER	2				
9	1901710917	・WASHER	4				
10	1901749521	・SPRING	4				
11	1901749541	・SPRING	2				
12	1901749542	・SPRING	2				
13	1901720232	・JOINT	1				
14	1901743620	・PLATE	1				
15	1901710922	・NUT	1				
16	1901719025	・NUT	1				
17	1901741526	・LEVER	1				
18	1901741210	・HANDLE	1				
19	1213000528	・PIN, spring	1				
20	1901735630	・BUSHING	1				
21	1901740446	・RECEPTACLE	1				
22	1901740447	・WEDGE	1				
23	1901735632	・BOOT	1				
	T3h020						

silverhorn.co.uk

PILOT VALVE (L.H.)

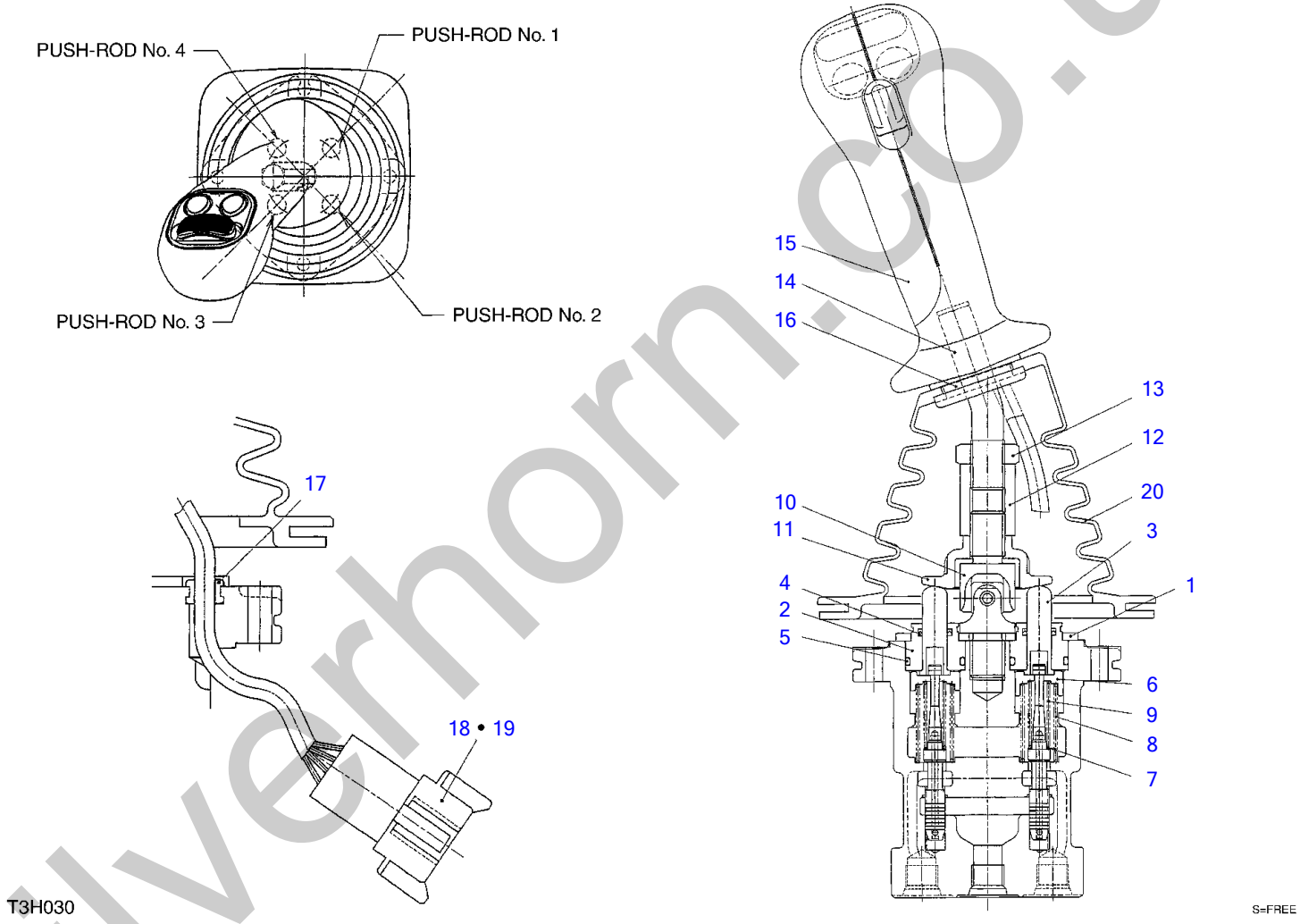

silverhorn.co.uk

PILOT VALVE (L.H.)

Item	Part number	Description	Q'ty	Chan.	Serial No.	Serv.	Remarks
0	1901747900	VALVE ASSY (L.H.)	1				left
1	1901745702	・PLATE	1				
2	1901710912	・PLUG	4				
3	1901719011	・ROD	4				
4	1901710914	・SEAL	4				
5	1420010200	・O-RING	4				
6	1901745709	・HOLDER	4				
7	1901710917	・WASHER	4				
8	1901749521	・SPRING	4				
9	1901749641	・SPRING	4				
10	1901720232	・JOINT	1				
11	1901743620	・PLATE	1				
12	1901710922	・NUT	1				
13	1901719025	・NUT	1				
14	1901741526	・LEVER	1				
15	1901740410	・HANDLE	1				
16	1213000528	・PIN, spring	1				
17	1901735630	・BUSHING	1				
18	1901740446	・RECEPTACLE	1				
19	1901740447	・WEDGE	1				
20	1901735632	・BOOT	1				
	T3h030						

silverhorn.co.uk

HANDLE (with 3 switch)

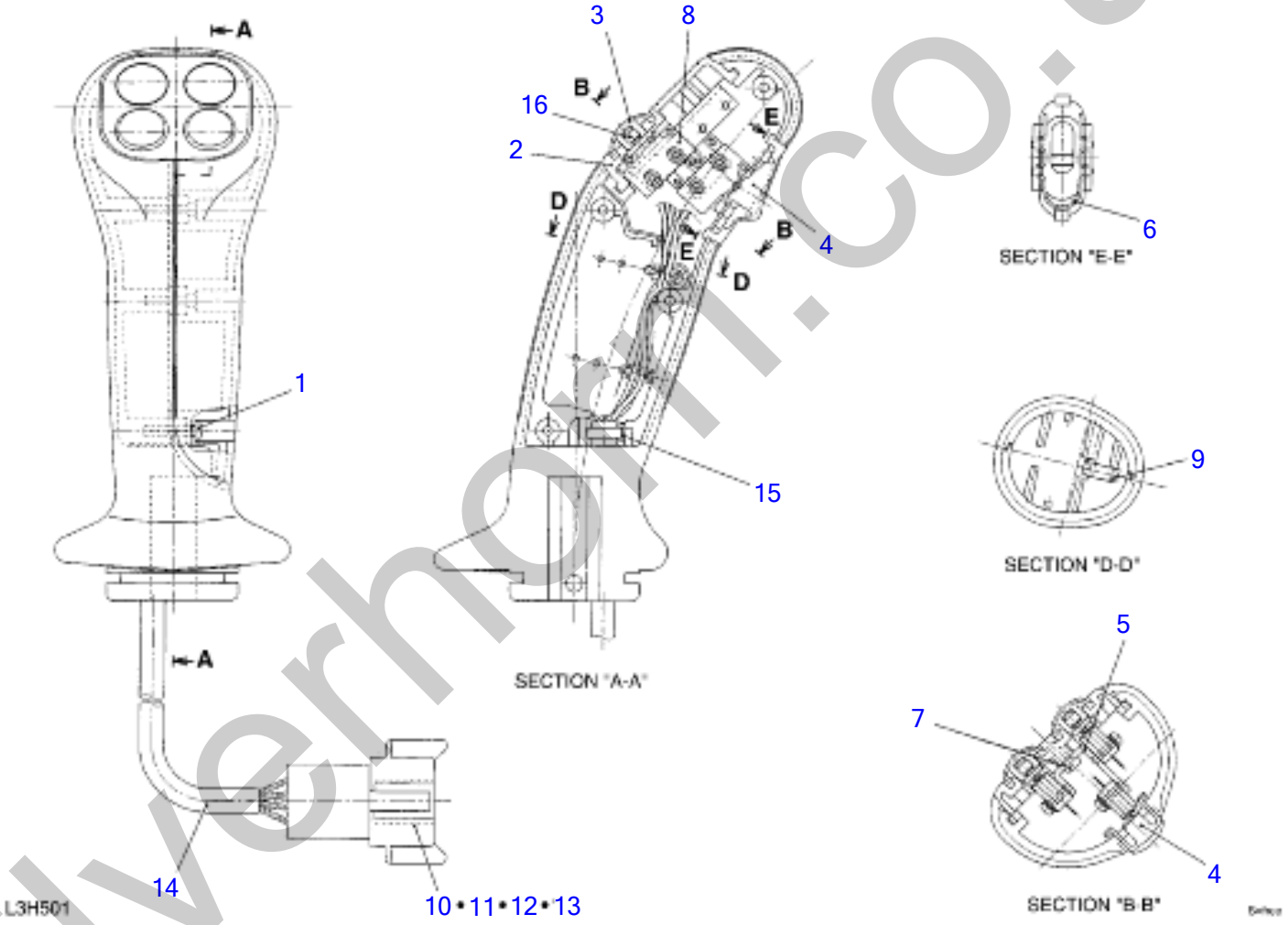

silverhorn.co.uk

HANDLE (with 3 switch)

Item	Part number	Description	Q'ty	Chan.	Serial No.	Serv.	Remarks
0	1901741210	HANDLE ASSY	1				3 switches
1	1122400312	・SCREW	4				
2	1901741211	・CASE	1				
3	1901741216	・BUTTON	2				
4	1901740402	・BUTTON	1				
5	1901741218	・BRACKET	1				
6	1901740404	・CLIP	1				
7	1122400306	・SCREW	2				
8	1901740408	・SWITCH	3				
9	1901740412	・CAP	2				
10	1901740446	・RECEPTACLE	1				
11	1901740447	・WEDGE	1				
12	1901740413	・PIN	5				
13	1901741263	・PIN, BLANKING	3				
14	1901740414	・PROTECTOR	1				
15	1901740415	・BAND	1				
16	1901741312	* RETAINER	2				
	L3h501						

silverhorn.co.uk

HANDLE (with slide switch)

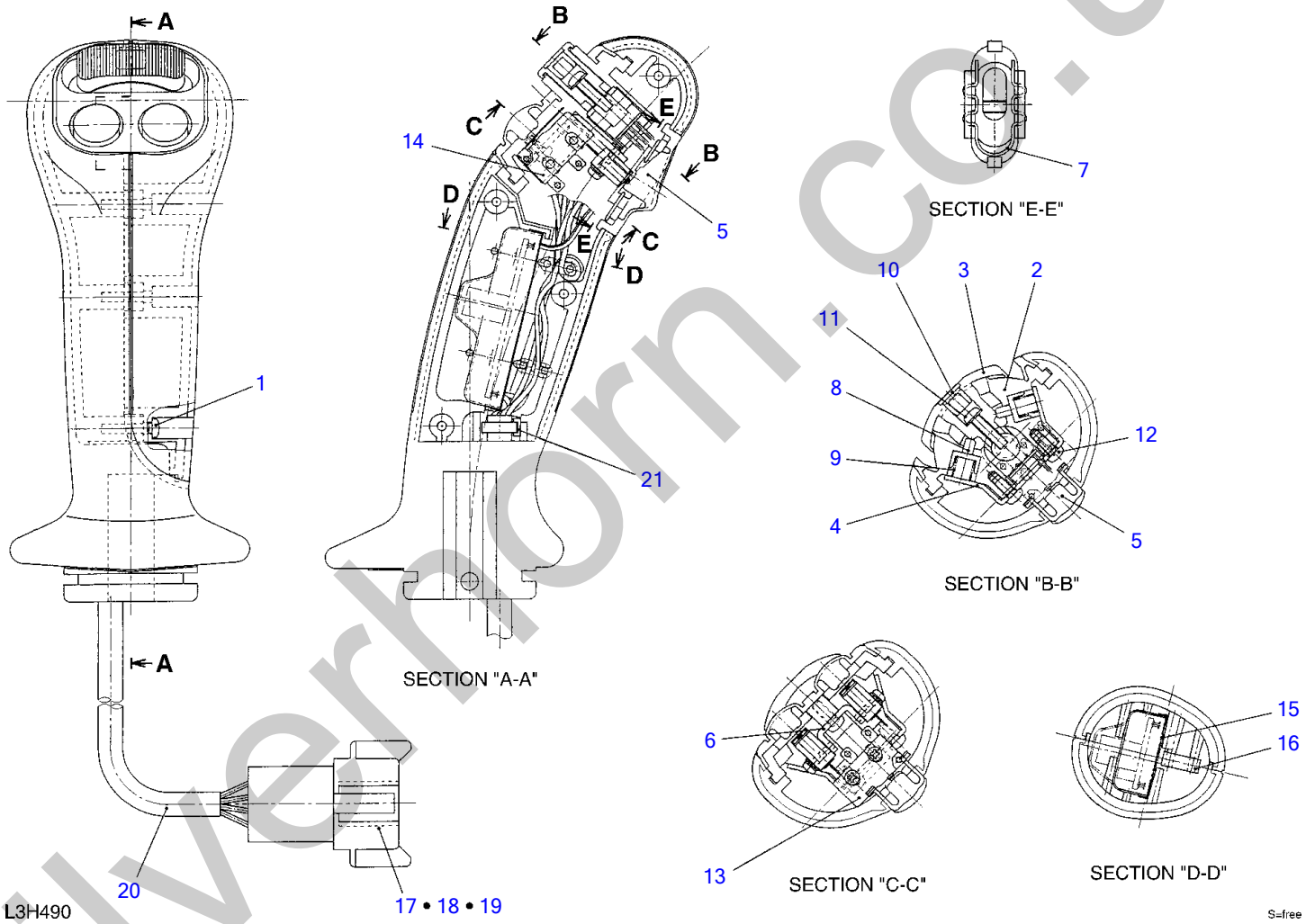

silverhorn.co.uk

HANDLE (with slide switch)

Item	Part number	Description	Q'ty	Chan.	Serial No.	Serv.	Remarks
0	1901740410	HANDLE ASSY	1				slide switch
1	1122400312	・SCREW	4				
2	1901740417	・CASE	1				
3	1901740418	・CAM	1				
4	1901740401	・PLATE	1				
5	1901740402	・BUTTON	1				
6	1901740403	・BRACKET	1				
7	1901740404	・CLIP	1				
8	1901740405	・PISTON	2				
9	1901740406	・SPRING	2				
10	1901740407	・CAP	1				
11	1150010312	・SCREW	1				
12	1122400306	・SCREW	3				
13	1901740408	・SWITCH	1				
14	1901740409	・SWITCH	2				
15	1901740411	・COVER	1				
16	1901740412	・CAP	2				
17	1901740446	・RECEPTACLE	1				
18	1901740447	・WEDGE	1				
19	1901740413	・PIN	8				
20	1901740414	・PROTECTOR	1				
21	1901740415	・BAND	1				
	L3h490						

silverhorn.co.uk

PILOT VALVE (R.H.) (multi-functional grip type)

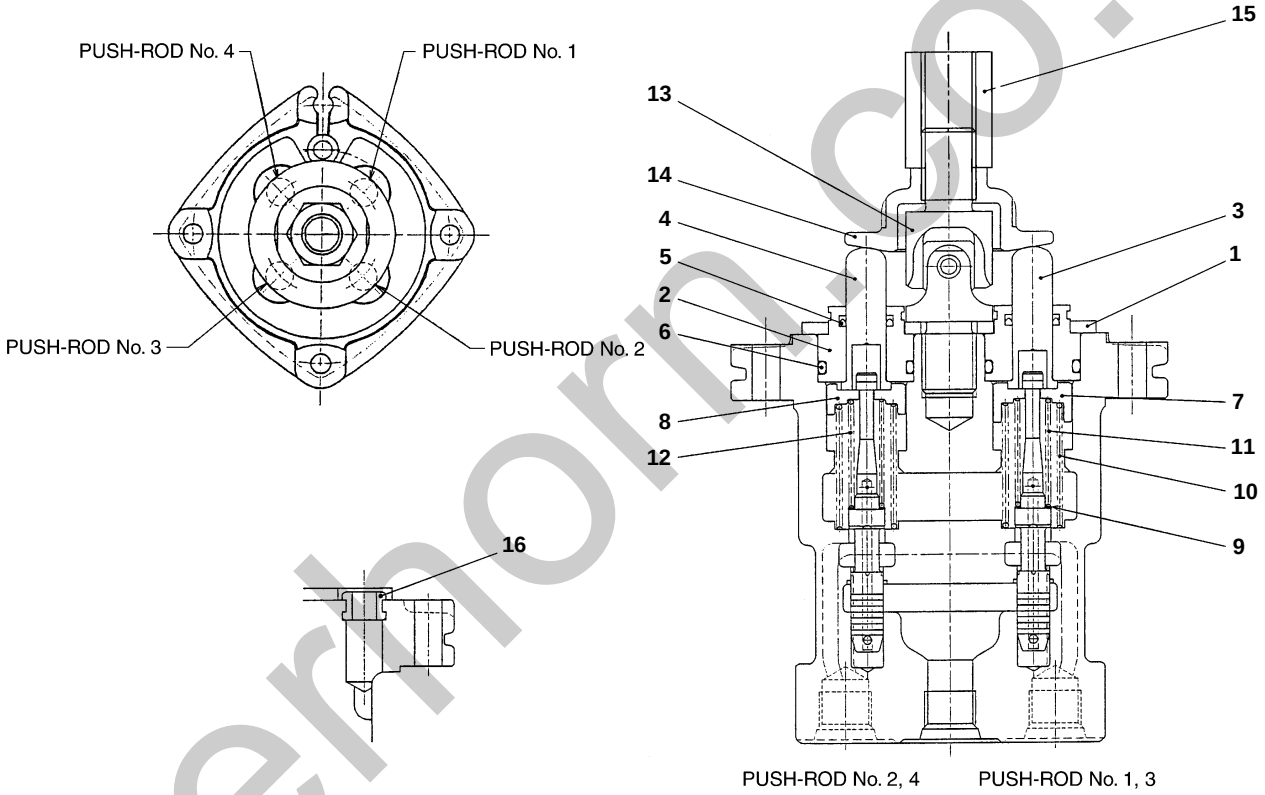

U0H050

S=free

silverhorn.co.uk

RH PILOT VALVE MULTI-FUNCTIONAL GRIP TYPE

Item	Part number	Description	Q'ty	Chan.	Serial No.	Serv.	Remarks
0	1901753800	PILOT VALVE ASSY	1				
1	1901745702	* PLATE	1				
2	1901710912	* PLUG	4				
3	1901719011	* ROD	2				
4	1901719012	* ROD	2				
5	1901710914	* SEAL	4				
6	1420010200	* O-RING	4				
7	1901745709	* HOLDER	2				
8	1901745710	* HOLDER	2				
9	1901710917	* ROD	4				
10	1901749521	* SPRING	4				
11	1901749541	* SPRING	2				
12	1901749542	* SPRING	2				
13	1901720232	* JOINT	1				
14	1901743620	* PLATE	1				
15	1901710922	* NUT	1				
16	1901735630	* BUSHING	1				
	U0H050						

silverhorn.co.uk

PILOT VALVE (L.H.) (multi-functional grip type)

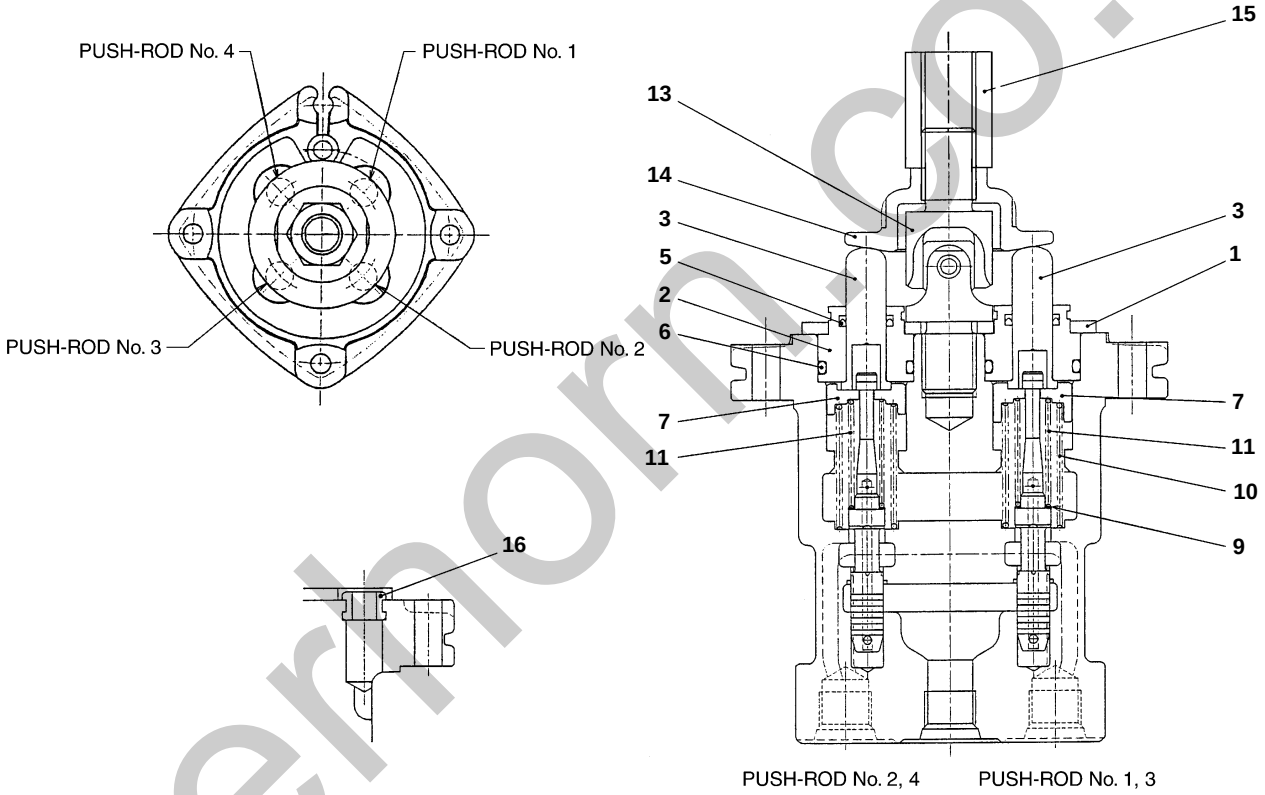

U0H060

S=free

silverhorn.co.uk

LH PILOT VALVE MULTI-FUNCTIONAL GRIP TYPE

Item	Part number	Description	Q'ty	Chan.	Serial No.	Serv.	Remarks
0	1901753700	PILOT VALVE ASSY	1				
1	1901745702	* PLATE	1				
2	1901710912	* PLUG	4				
3	1901719011	* ROD	2				
5	1901710914	* SEAL	4				
6	1420010200	* O-RING	4				
7	1901745709	* HOLDER	2				
9	1901710917	* ROD	4				
10	1901749521	* SPRING	4				
11	1901749641	* SPRING	2				
13	1901720232	* JOINT	1				
14	1901743620	* PLATE	1				
15	1901710922	* NUT	1				
16	1901735630	* BUSHING	1				
	U0H060						

silverhorn.co.uk

HANDLE (multi-functional grip type, with slide switch)

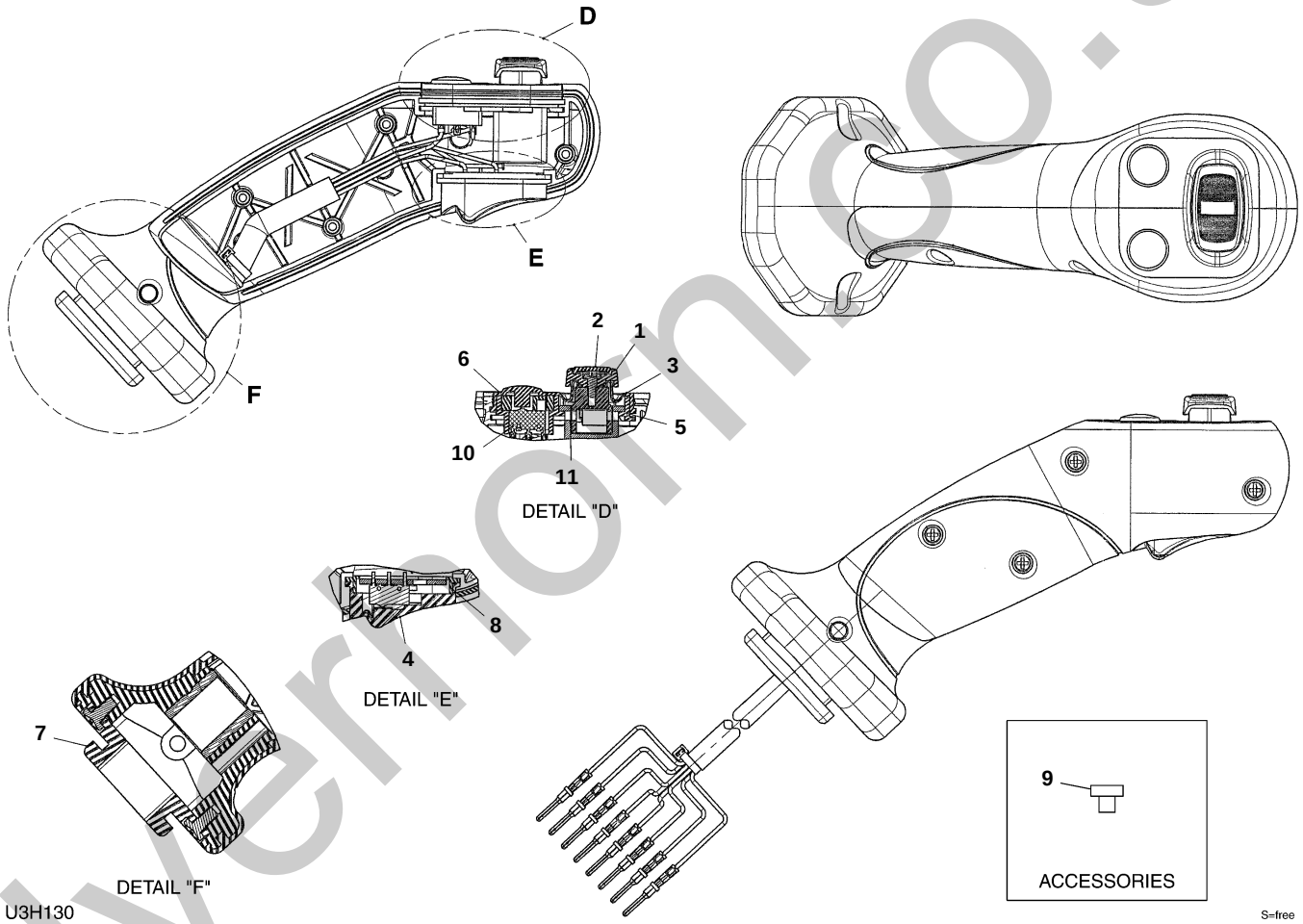

silvermoon.co.uk

HANDLE (multi-functional grip type, with slide switch)

Item	Part number	Description	Q'ty	Chan.	Serial No.	Serv.	Remarks
0	1650205500	HANDLE ASSY	1			M	
1	1650205508	・BAR, slide	1			M	
2	1650205509	・COVER, slide bar	1			M	
3	1650205510	・COVER, rubber	1			M	
4	1650205610	・COVER, switch	1			M	
5	1650205505	・PLATE, switch	1			M	
6	1650205506	・SPACER	1			M	
7	1650205507	・COVER, lower	1			M	
8	1650205511	・PLATE, switch	1			M	
9	1650205516	・PIN, blanking	1			M	
10	1650205520	・SWITCH, micro	2			M	
11	1650205522	・SWITCH, proportional control	1			M	
	U3h130						

silverhorn.co.uk

HANDLE (multi-functional grip type, with 5 switch)

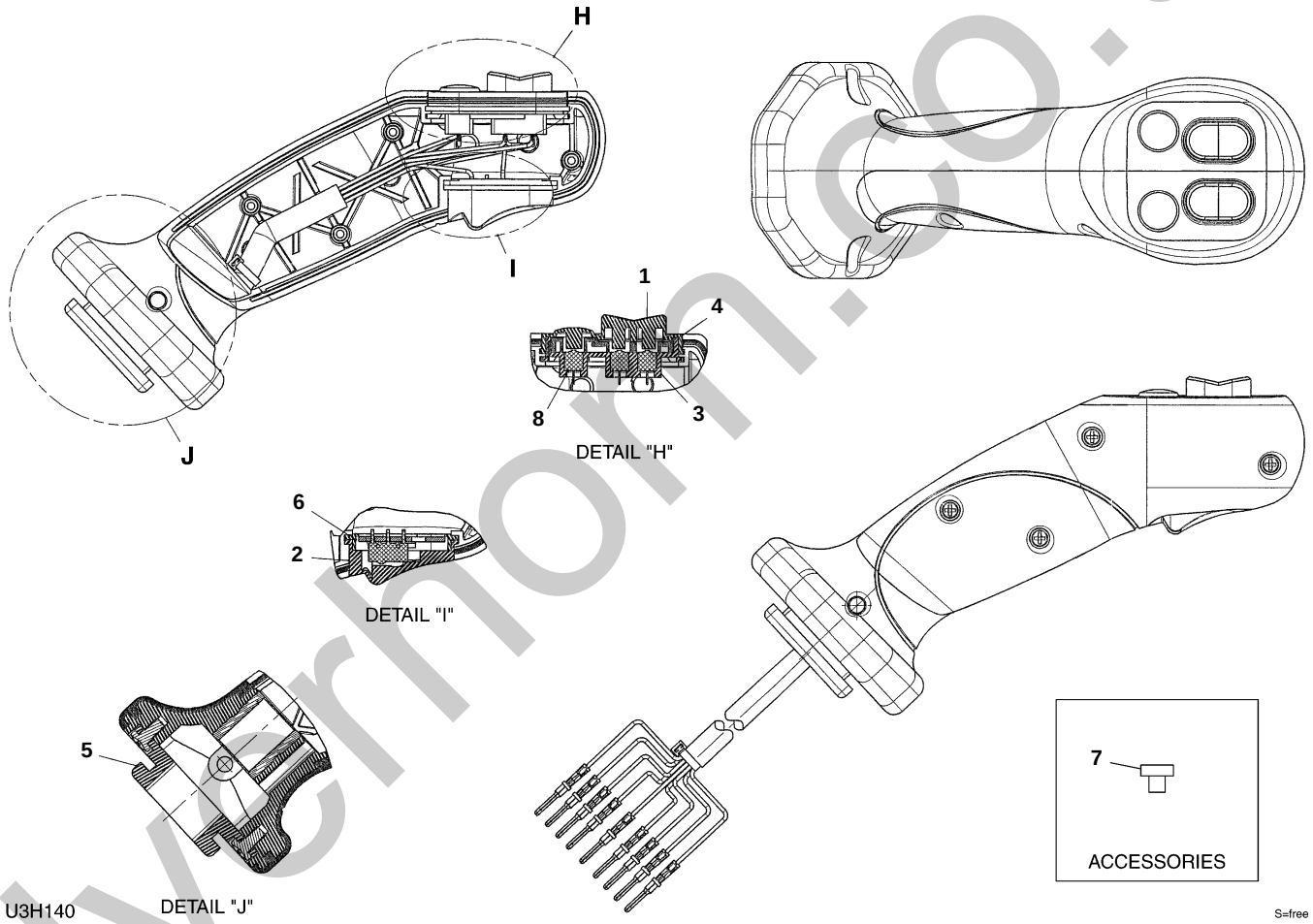

silvermoon.co.uk

HANDLE (multi-functional grip type, with 5 switch)

Item	Part number	Description	Q'ty	Chan.	Serial No.	Serv.	Remarks
0	1650205600	HANDLE ASSY	1			M	
1	1650205608	・COVER, rubber	1			M	
2	1650205610	・COVER, switch	1			M	
3	1650205605	・PLATE, switch	1			M	
4	1650205606	・SPACER	1			M	
5	1650205507	・COVER, lower	1			M	
6	1650205511	・PLATE, switch	1			M	
7	1650205516	・PIN, blanking	1			M	
8	1650205521	・SWITCH, micro	6			M	
	U3h140						

silverhorn.co.uk

SOLENOID VALVE; 1 BLOCK

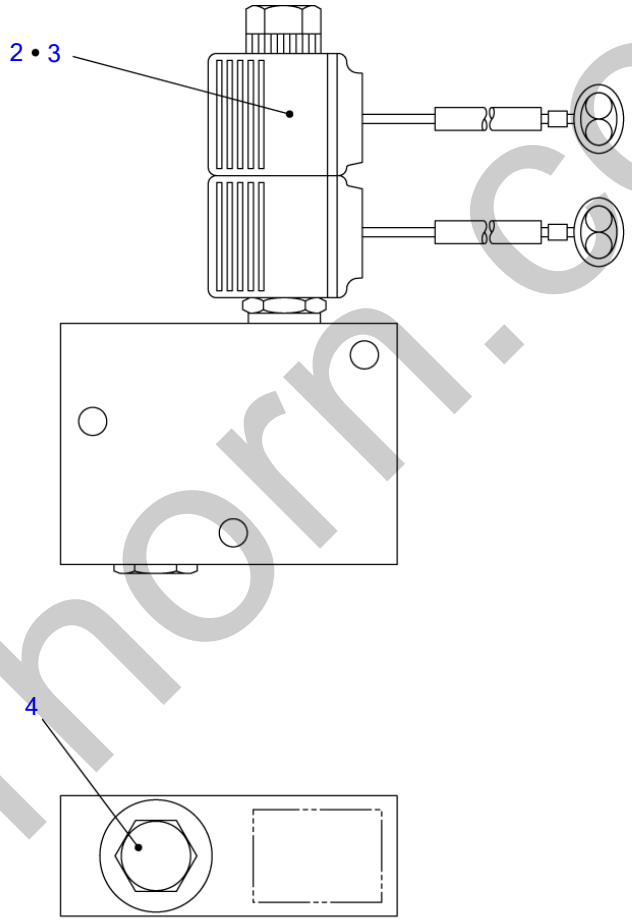

U1H020

S=FREE

silverhorn.co.uk

SOLENOID VALVE; 1 BLOCK

Item	Part number	Description	Q'ty	Chan.	Serial No.	Serv.	Remarks
0	**1901752000**	VALVE ASSY, solenoid	1			M	
2	**1901752002**	・VALVE, solenoid	1			M	
3	**1901752003**	・COIL	2			M	
4	**1901741704**	・PLUG	1			M	
	U1h020					M	

silverhorn.co.uk

PROPORTIONAL VALVE

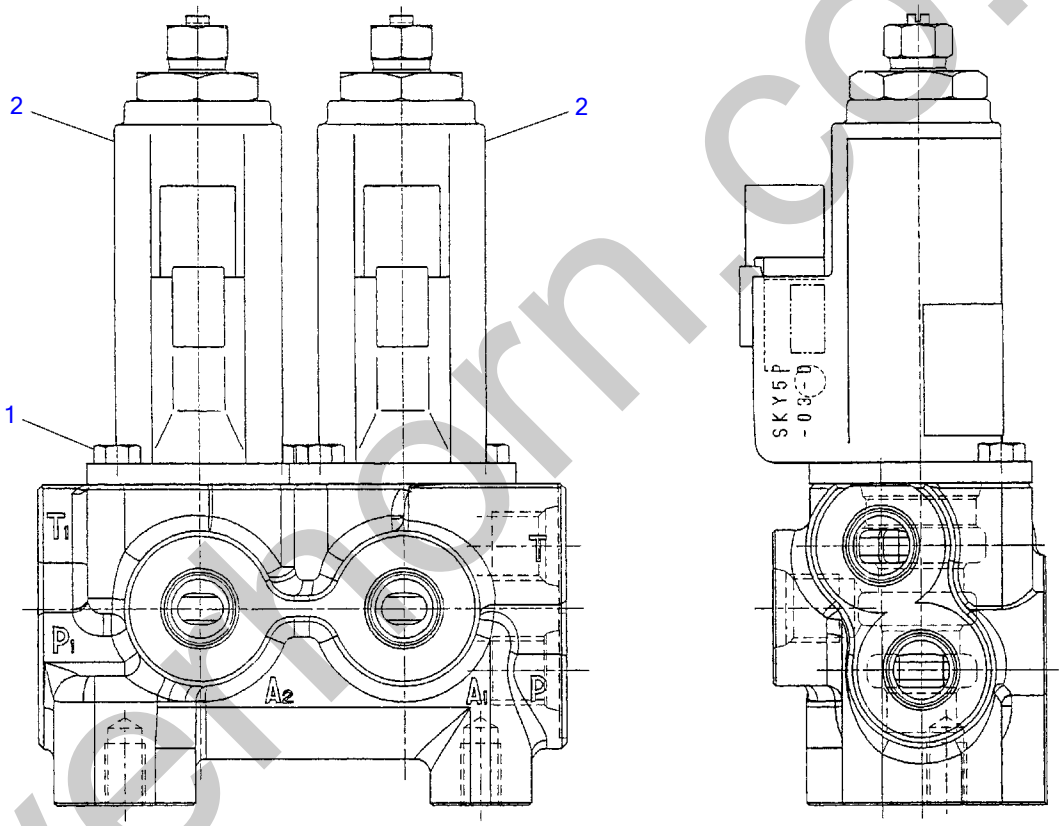

J3H020

S=free

silverthorn.co.uk

PROPORTIONAL VALVE

Item	Part number	Description	Q'ty	Chan.	Serial No.	Serv.	Remarks
0	**1901752100**	VALVE ASSY, proportional	1			M	
1	**1110050512**	・BOLT	4			M	
2	**1901752103**	・VALVE, proportional	2			M	
	J3h020						

silverhorn.co.uk

ARM CYLINDER

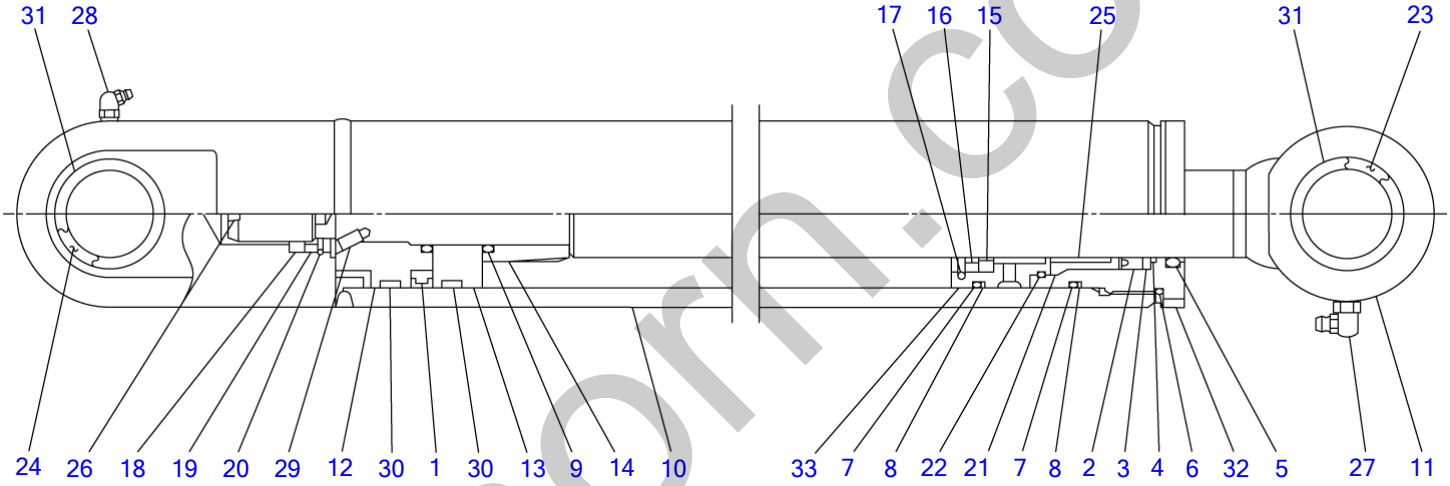

T3H060

S=FREE

silverhorn.co.uk

ARM CYLINDER

Item	Part number	Description	Q'ty	Chan.	Serial No.	Serv.	Remarks
0	1900096800	CYLINDER ASSY	1				arm
0-1	1900096899	・KIT, seal	1				
1	X 1410220600	・・PACKING, piston	1				
2	X 1410535458	・・PACKING, rod	1				
3	X 1411245353	・・RING, back-up	1				
4	X 1900096838	・・RING, back-up	1				
5	X 1900088433	・・SEAL, dust	1				
6	X 1420110600	・・O-RING	1				
7	X 1420110550	・・O-RING	2				
8	X 1421130550	・・RING, back-up	2				
9	X 1420110250	・・O-RING	2				
10	1900096807	・TUBE ASSY	1				
11	1900096801	・ROD ASSY, piston	1				
12	1900096806	・PISTON	1				
13	1900096808	・HOLDER, packing	1				
14	1900096805	・CUSHION, rod	1				
15	1900096831	・RING, seal	1				
16	1900096835	・STOPPER	1				
17	1900096836	・RING, stop	1				
18	1900096833	・RING, seal	1				
19	1900096832	・STOPPER	1				
20	1900096837	・RING, stop	1				
21	1900096804	・HOLDER	1				
22	1900096814	・RING	1				
23	1900096802	・BUSHING	1				
24	1900096820	・BUSHING	1				
25	1333003525	・BUSHING	1				
26	1900096870	・ORIFICE	1				
27	1560001675	・FITTING, grease	1				
28	1560001900	・FITTING, grease	1				
29	1121050610	・SET-SCREW	1				
30	1410706008	・RING, wear	2				
31	1432200035	・SEAL, dust	4				
32	1900096830	・COVER, rod	1				
33	1900096829	・COVER, rod	1				
	T3h060						

silverhorn.co.uk

BUCKET CYLINDER

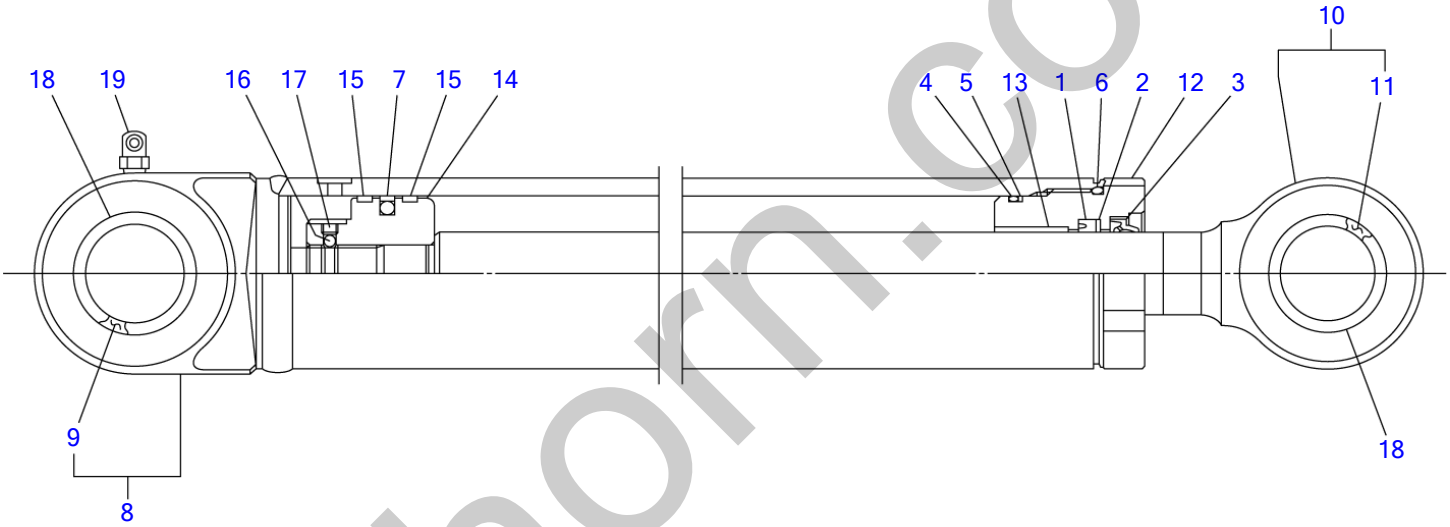

U0H010

S=free

silverhorn.co.uk

BUCKET CYLINDER

Item	Part number		Description	Q'ty	Chan.	Serial No.	Serv.	Remarks
0		1900103700	CYLINDER ASSY (R.H.)	1			M	bucket
		1900103800	CYLINDER ASSY (L.H.)	1			M	bucket
0-1		1900103899	・KIT, seal	1			M	
1	X	1900095108	・・PACKING, rod	1				
2	X	1900095127	・・RING, back-up	1				
3	X	1900073533	・・SEAL, dust	1				
4	X	1420110550	・・O-RING	1				
5	X	1421130550	・・RING, back-up	1				
6	X	1420110600	・・O-RING	1				
7	X	1900053331	・・PACKING, piston	1				
8		1900103798	・TUBE ASSY (R.H.)	1			M	
		1900103898	・TUBE ASSY (L.H.)	1			M	
9		1900044802	・・BUSHING	1				
10		1900095197	・ROD ASSY, piston	1				
11		1900044802	・・BUSHING	1				
12		1900095130	・COVER, rod	1				
13		1900103802	・BUSHING	1			M	
14		1900095106	・PISTON	1				
15		1900066826	・RING, wear	2				
16		1390020250	・BALL, steel	1				
17		1121050608	・SET-SCREW	1				
18		1432200035	・SEAL, dust	4				
19		1560001900	・FITTING, grease	1				
		U0h010						

silverhorn.co.uk

ATTACHMENT CYLINDER

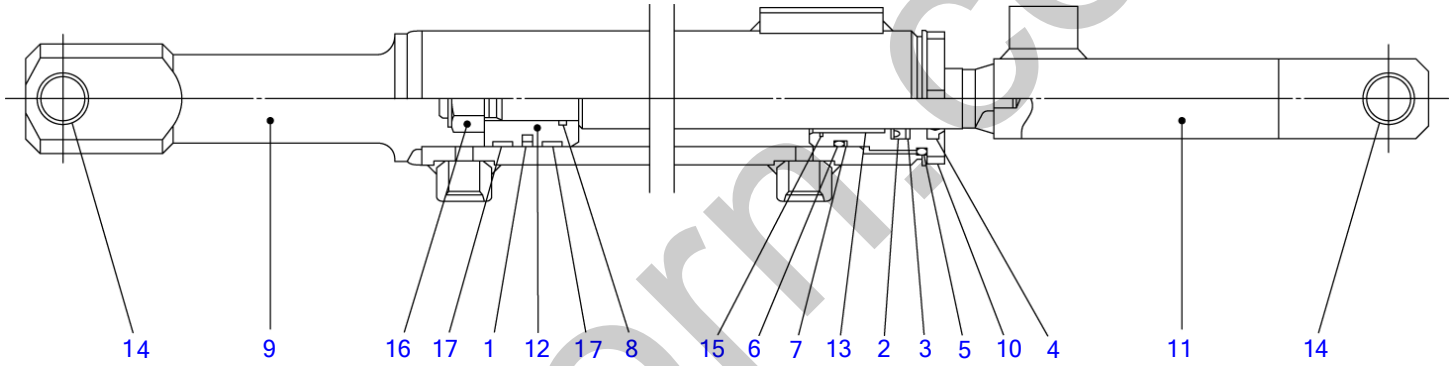

U1H050

S=FREE

silverhorn.co.uk

ATTACHMENT CYLINDER

Item	Part number	Description	Q'ty	Chan.	Serial No.	Serv.	Remarks
0	1900100700	CYLINDER ASSY	1			M	attachment
0-1	1900100799	・KIT, seal	1			M	
1	X 1410200400	・・PACKING, piston	1			M	
2	X 1411140250	・・PACKING, rod	1			M	
3	X 1411233252	・・RING, back-up	1			M	
4	X 1411110250	・・SEAL, dust	1			M	
5	X 1420110400	・・O-RING	1			M	
6	X 1420110350	・・O-RING	1			M	
7	X 1421130350	・・RING, back-up	1			M	
8	X 1420010180	・・O-RING	1			M	
9	1900100707	・TUBE ASSY	1			M	
10	1900100706	・COVER, rod	1			M	
11	1900100701	・ROD ASSY, piston	1			M	
12	1900100705	・PISTON	1			M	
13	1333002525	・BUSHING	1			M	
14	1333001830	・BUSHING	2			M	
15	1225620029	・RING, snap	1			M	
16	1132711016	・NUT	1			M	
17	1410810400	・RING, wear	2			M	
	U1h051						

silverhorn.co.uk

TRAVEL MOTOR (1/3) (reduction sec.)

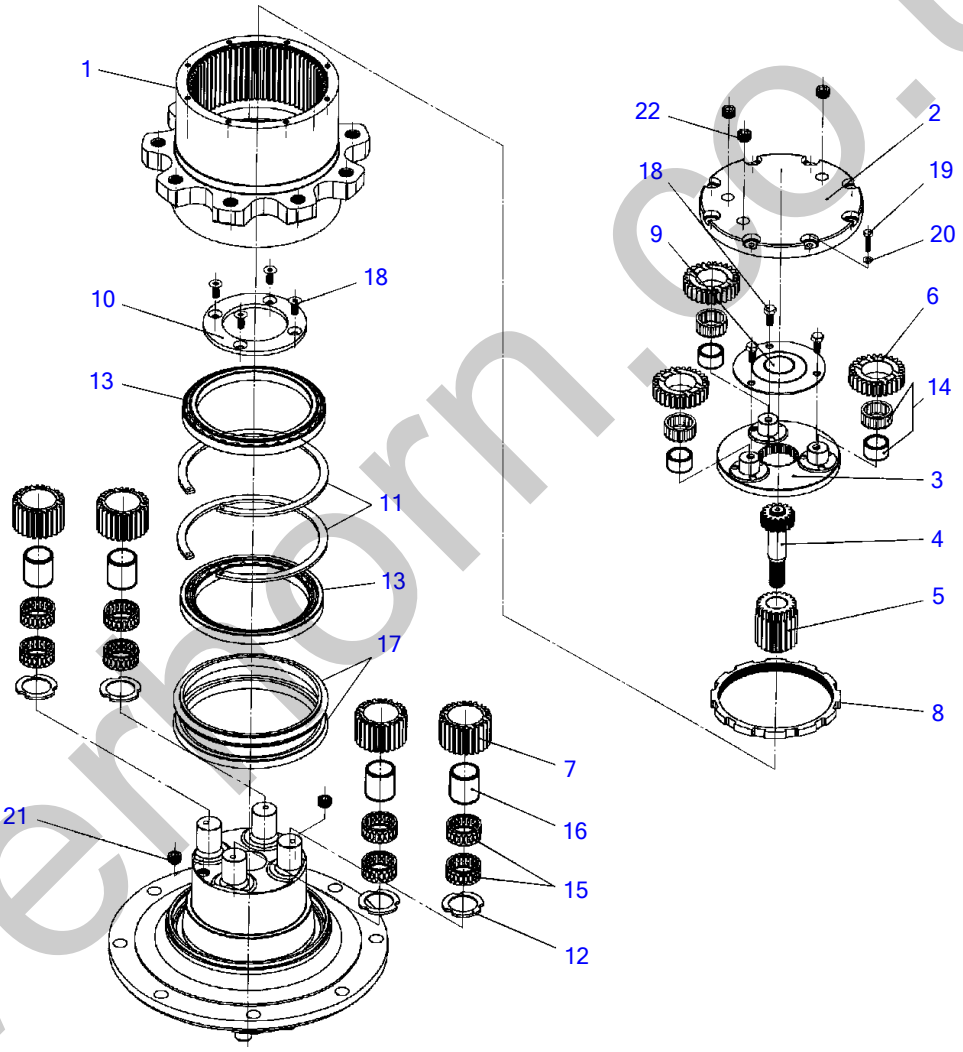

U0H020

S=free

silverhorn.co.uk

TRAVEL MOTOR (1/3) (reduction sec.)

Item	Part number	Description	Q'ty	Chan.	Serial No.	Serv.	Remarks
0	1903127800	MOTOR ASSY, travel	2			M	
0-1	X **********	・GEAR, reduction	1				
1	1912908702	・・GEAR, ring	1			M	
2	1912908003	・・COVER	1				
3	1912908704	・・CARRIER	1			M	
4	1912908005	・・GEAR	1				
5	1912908006	・・GEAR	1				
6	1912908007	・・GEAR	3				
7	1912908008	・・GEAR	4				
8	1912908009	・・NUT	1				
9	1912908010	・・PLATE KIT, stopper	1				
10	1912908711	・・PLAT, stopper	1			M	
11	1912908012	・・RING, snap	2				
12	1912908013	・・WASHER	4				
13	1912908014	・・BEARING	2				
14	1912908015	・・BEARING	3				
15	1912908016	・・BEARING	8				
16	1912908017	・・LACE, inner	4				
17	1912908018	・・SEAL KIT, floating	1				
18	1912908019	・・BOLT	7				
19	1100050625	・・BOLT	8				
20	1140020006	・・WASHER, spring	8				
21	1501810003	・・PLUG	2				
22	1912908023	・・PLUG	3				
	U0h020						

silverhorn.co.uk

TRAVEL MOTOR (2/3) (motor sec.)

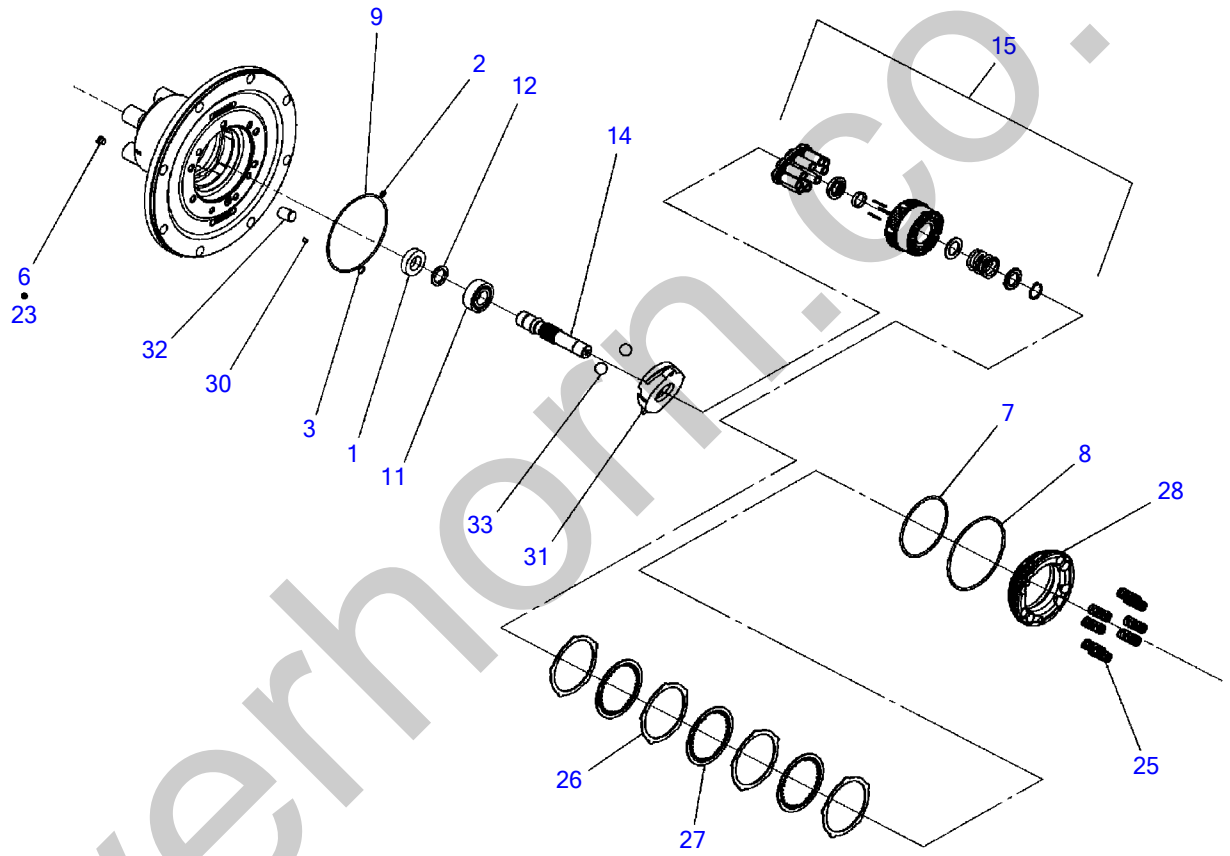

T8H150

S=free

silverhorn.co.uk

TRAVEL MOTOR (2/3) (motor sec.)

Item		Part number	Description	Q'ty	Chan.	Serial No.	Serv.	Remarks
0		1903127800	MOTOR ASSY, travel	2			M	
0-2	X	**********	・MOTOR ASSY (19039-08300)	1				incl. (3/3)
0-3		1903907198	・・KIT, seal	1				
1	X	1903907105	・・・SEAL, oil	1				
2	X	1420010090	・・・O-RING	1				
3	X	1420010110	・・・O-RING	1				
6	X	1420300903	・・・O-RING	1				
7	X	1420310244	・・・O-RING	1				
8	X	1420310250	・・・O-RING	1				
9	X	1420111350	・・・O-RING	1				
11		1903907102	・・BEARING	1				
12		1220000025	・・RING, snap	1				
14		1903907107	・・SHAFT	1				
15		1903908010	・・CYLINDER BLOCK KIT	1				
23		1903906427	・・PLUG	1				
25		1903907128	・・SPRING	8				
26		1903907129	・・PLATE	4				
27		1903907130	・・PLATE	3				
28		1903907131	・・PISTON, brake	1				
30		1903908036	・・ORIFICE	1				
31		1903907137	・・PLATE, swash	1				
32		1903907138	・・PISTON	1				
33		1390011600	・・BALL, steel	2				
		U0h030						

silverhorn.co.uk

TRAVEL MOTOR (3/3) (valve sec.)

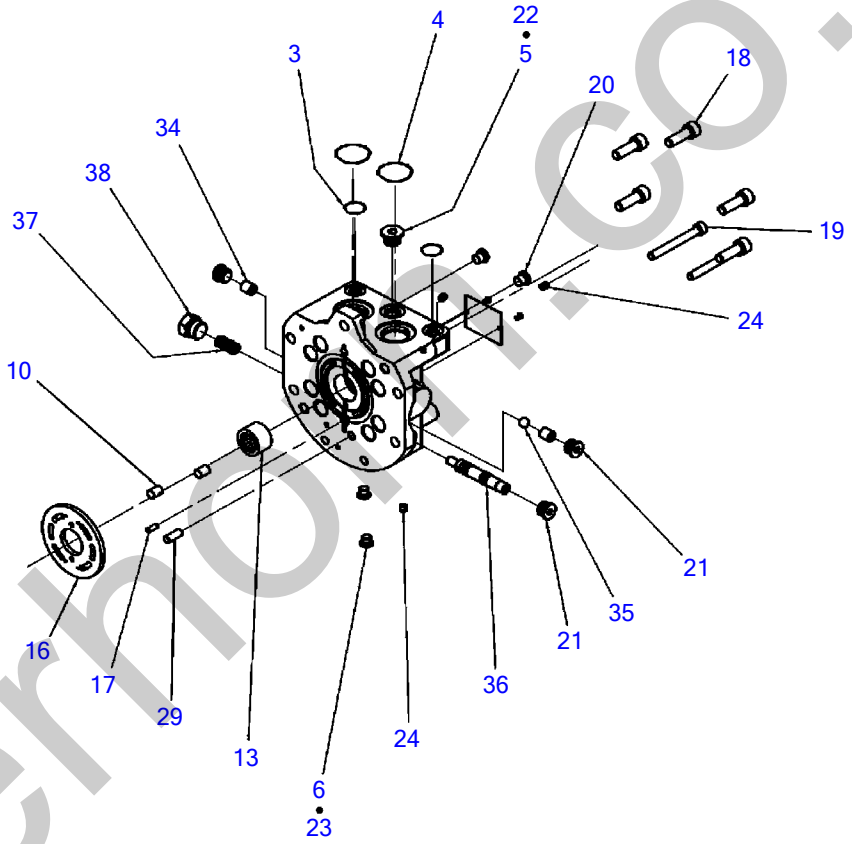

T8H160

S=free

silverhorn.co.uk

TRAVEL MOTOR (3/3) (valve sec.)

Item	Part number	Description	Q'ty	Chan.	Serial No.	Serv.	Remarks
0	1903127800	MOTOR ASSY, travel	2			M	
0-2	X **********	・MOTOR ASSY (19039-08300)	1				incl. (2/3)
3	1420010110	・・O-RING	2				
4	1420010224	・・O-RING	4				
5	1420010140	・・O-RING	1				
6	1420300903	・・O-RING	2				
10	1902006702	・・PIN	2				
13	1903907106	・・BEARING	1				
16	1903907111	・・PLATE	1				
17	1902007411	・・PIN	1				
18	1110021030	・・SCREW, cap	5				
19	1110020870	・・SCREW, cap	2				
20	1903007626	・・PLUG ASSY	2				
21	1901810214	・・PLUG	3				
22	1903907123	・・PLUG	1				
23	1903906427	・・PLUG	2				
24	1903906827	・・PLUG	3				
29	1903906832	・・PIN	1				
34	1903906840	・・PLUG	2				
35	1390010600	・・BALL, steel	1				
36	1903906842	・・SPOOL	1				
37	1903906843	・・SPRING	1				
38	1903007636	・・PLUG ASSY	1				
	U0h040						

silverhorn.co.uk

HYDRAULIC PUMP (1/4)

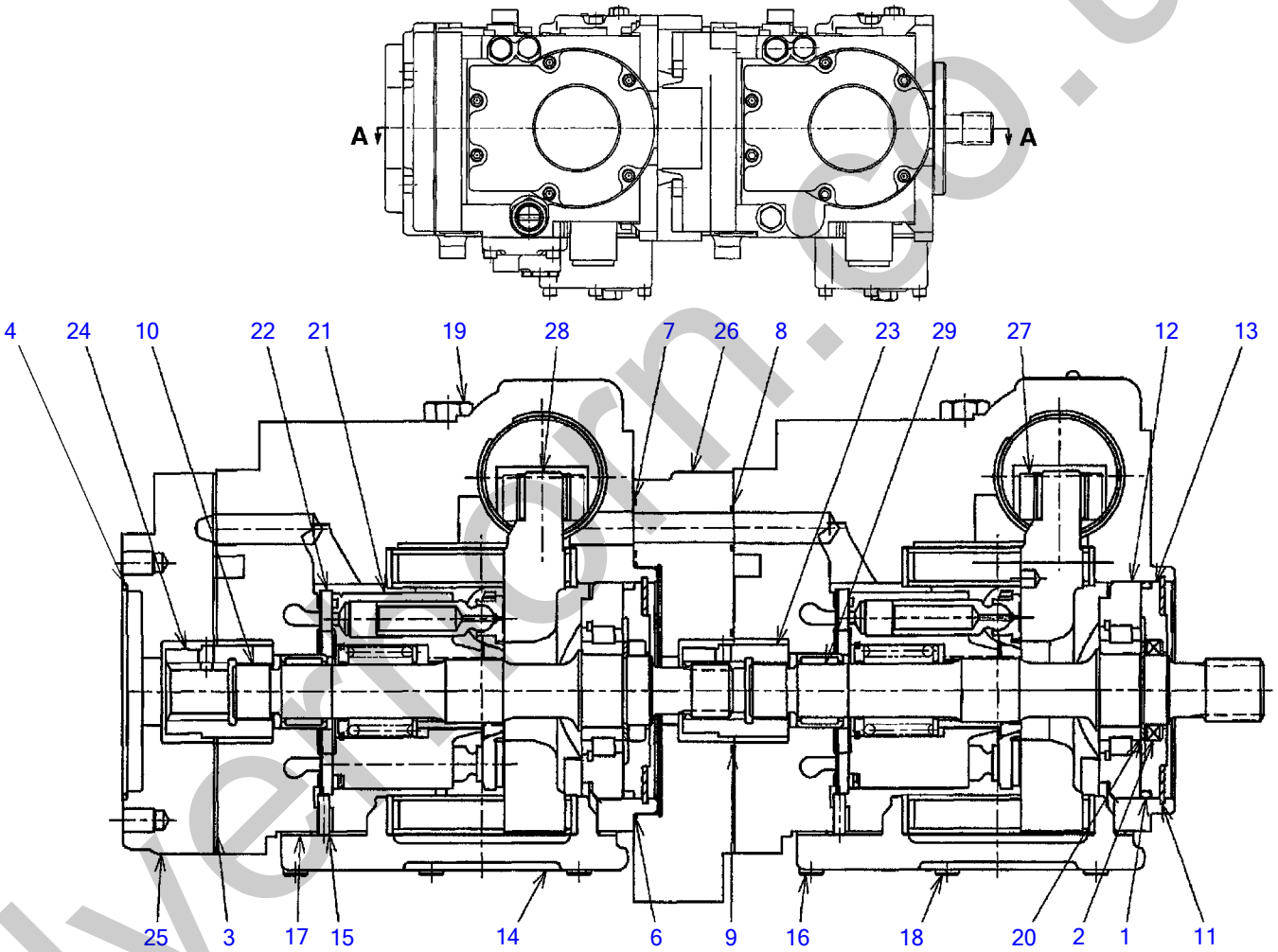

T3H160

SECTION "A-A"

S=FREE

silverthorn.co.uk

HYDRAULIC PUMP (1/4)

Item	Part number	Description	Q'ty	Chan.	Serial No.	Serv.	Remarks
0	1902021900	PUMP, hydraulic	1				
0-1	1902021999	・KIT,seal	1				
1	1902016507	・・O-RING	1				
2	1902016508	・・SEAL, lip	1				
3	1902020357	・・GASKET	1				
4	1420300152	・・O-RING	1				
6	1420310044	・・O-RING	1				
7	1420310019	・・O-RING	1				
8	1902021976	・・O-RING	1				
9	1420310032	・・O-RING	1				
10	1902021904	・SHAFT	1				
11	1902016520	・RING, retaining	2				
12	1902021906	・BEARING	2				
13	1902021909	・SEAL, carrier	2				
14	1902017412	・COVER ASSY	2				
15	1902017413	・PIN	2				
16	1110020620	・SCREW, cap	4				
17	1902020215	・GASKET	2				
18	1110020630	・SCREW, cap	8				
19	1902019215	・PLUG ASSY	4				
20	1902016505	・RING, retaining	2				
21	1902017428	・BLOCK KIT, cylinder	2				
22	1902017429	・PLATE, valve	2				
23	1902021962	・COUPLING	1				
24	1902921963	・COUPLING	1				
25	1902017449	・ADAPTOR, A pat	1				
26	1902019271	・ADAPTOR, B pat	1				
27	1902016501	・BEARING	2				
28	1902021902	・PLATE, swash	2				
29	1902021903	・SHAFT	1				
	T3h160						

silverhorn.co.uk

HYDRAULIC PUMP (2/4)

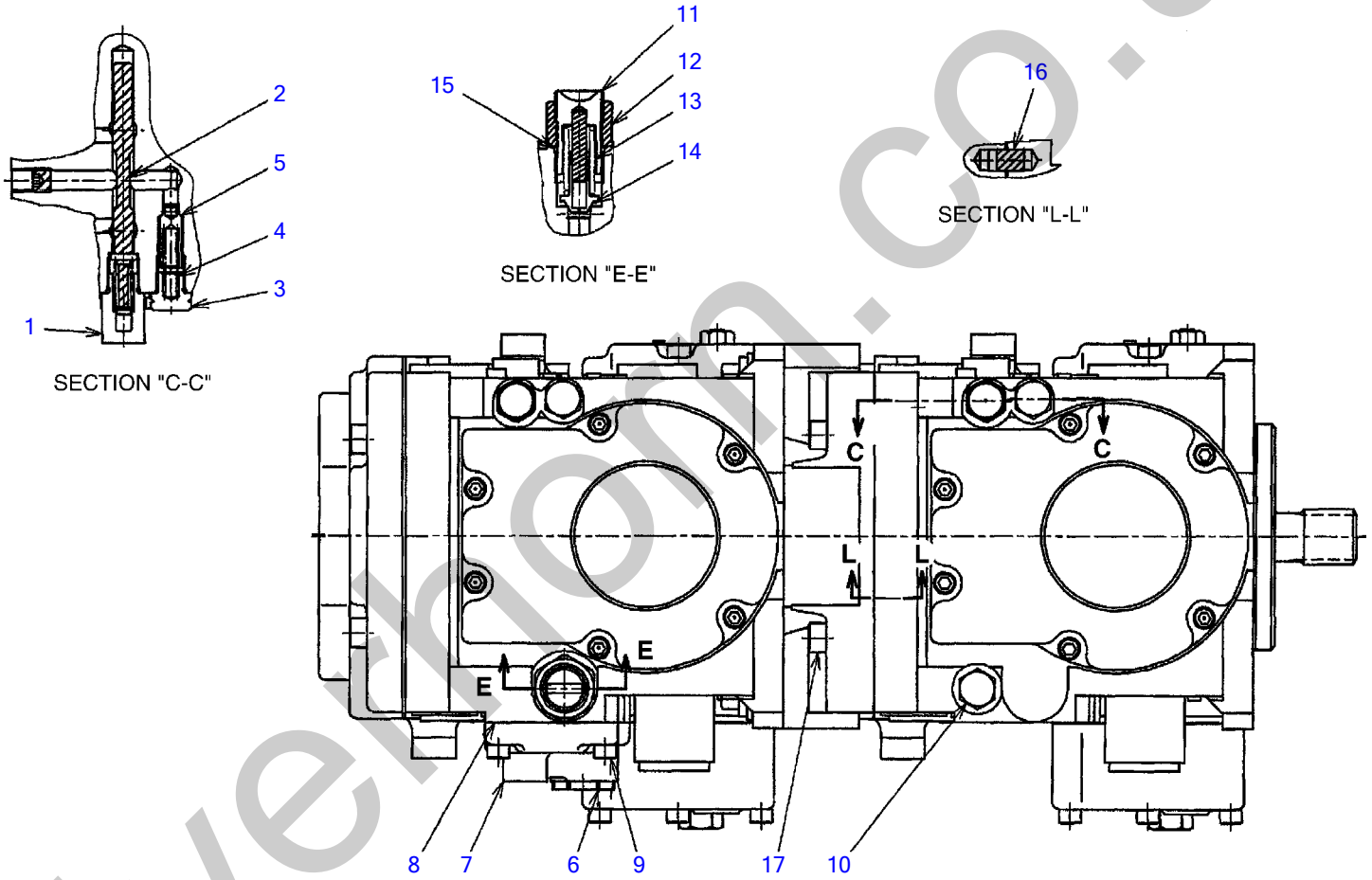

T3H170

S=FREE

silverthorn.co.uk

HYDRAULIC PUMP (2/4)

Item	Part number	Description	Q'ty	Chan.	Serial No.	Serv.	Remarks
0	1902021900	PUMP, hydraulic	1				
1	1902017430	・PLUG ASSY	2				
2	1902020244	・SPOOL ASSY	2				
3	1902017432	・PLUG ASSY	2				
4	1902017433	・SPRING	2				
5	1902017434	・POPPET	2				
6	1902006725	・PLUG	1				
7	1902017436	・ADAPTOR	1				
8	1902016548	・GASKET	1				
9	1110020630	・SCREW, cap	7				
10	1902019215	・PLUG ASSY	1				
11	1902019226	・PLUG ASSY	1				
12	1902016552	・NUT	1				
13	1902016553	・SPRING	1				
14	1902016554	・POPPET	1				
15	1420310910	・O-RING	1				
16	1902006702	・PIN	4				
17	1902020358	・SCREW, cap	8				
	T3h170						

silverhorn.co.uk

HYDRAULIC PUMP (3/4)

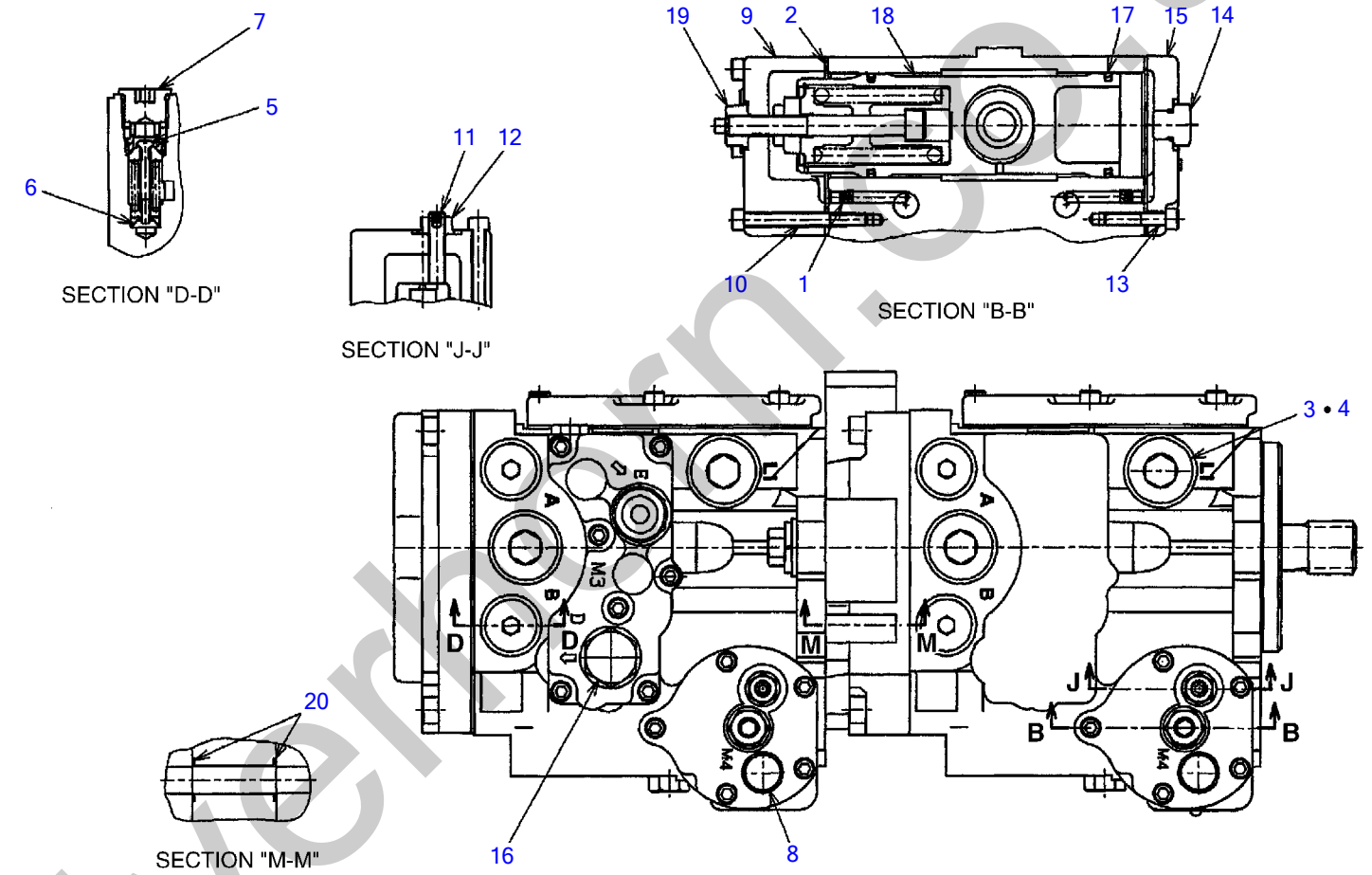

T3H180

S=FREE

silverhorn.co.uk

HYDRAULIC PUMP (3/4)

Item	Part number	Description	Q'ty	Chan.	Serial No.	Serv.	Remarks
0	1902021900	PUMP, hydraulic	1				
1	1902021911	・ORIFICE	4				
2	1902020216	・GASKET	4				
3	1902007412	・PLUG	4				
4	1420310912	・O-RING	4				
5	1902021927	・VALVE	4				
6	1902020736	・SPRING	4				
7	1902021929	・PLUG ASSY	4				
8	1902019215	・PLUG ASSY	2				
9	1902017424	・COVER	2				
10	1110020660	・SCREW, cap	10				
11	1902017425	・SCREW	2				
12	1902020751	・NUT	2				
13	1110020630	・SCREW, cap	10				
14	1902019215	・PLUG ASSY	2				
15	1902020234	・COVER	2				
16	1902006768	・PLUG ASSY	1				
17	1902016555	・RING, back-up	2				
18	1902017444	・PISTON ASSY	2				
19	1902018825	・NUT, seal	2				
20	1420310017	・O-RING	3				
	T3h180						

silverhorn.co.uk

HYDRAULIC PUMP (4/4)

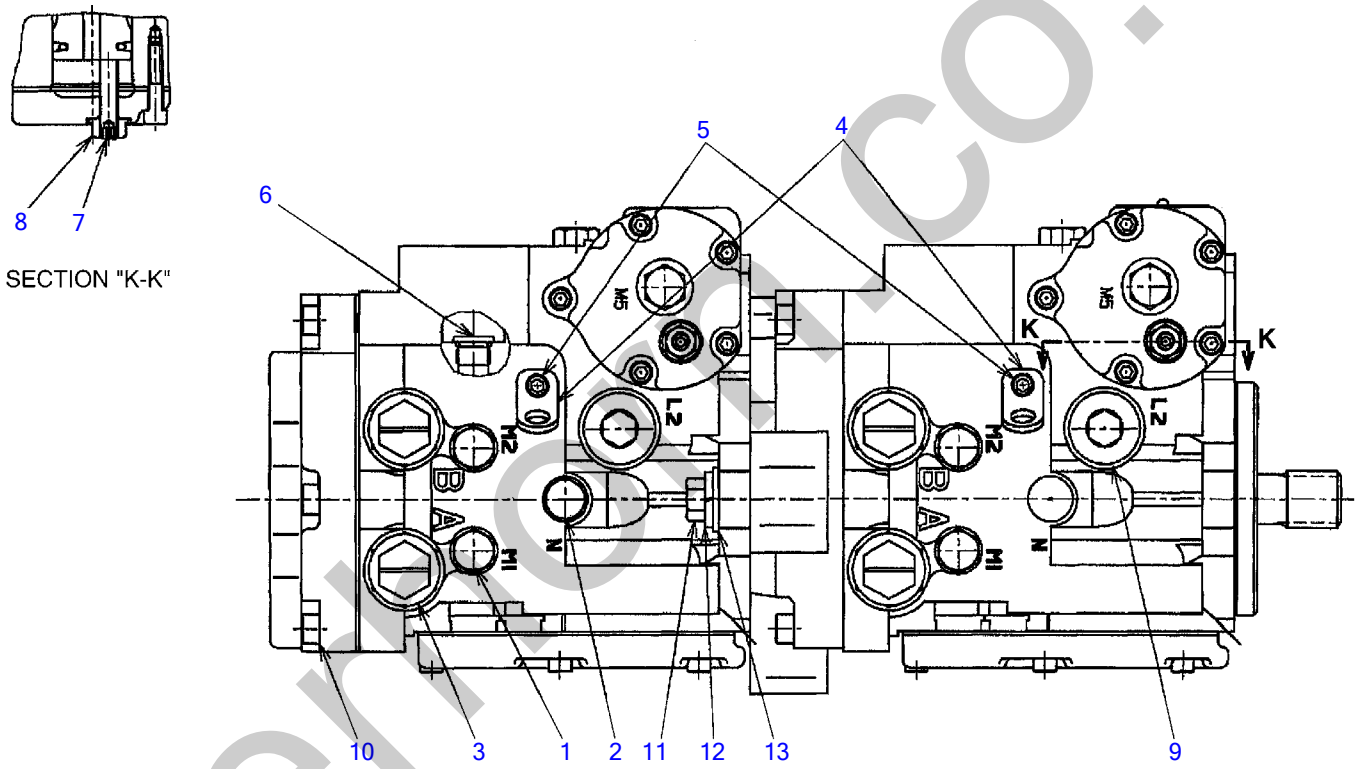

T3H190

S=FREE

silvermoon.co.uk

HYDRAULIC PUMP (4/4)

Item	Part number	Description	Q'ty	Chan.	Serial No.	Serv.	Remarks
0	1902021900	PUMP, hydraulic	1				
1	1902019215	・PLUG ASSY	4				
2	1902019215	・PLUG ASSY	1				
3	1902007451	・PLUG	4				
4	1902020297	・BRACKET	2				
5	1110020620	・SCREW, cap	2				
6	1902019215	・PLUG ASSY	2				
7	1902017425	・SCREW	2				
8	1902020751	・NUT	2				
9	1902007412	・PLUG ASSY	2				
10	1902020358	・SCREW, cap	7				
11	1902010035	・BOLT	2				
12	1902016567	・WASHER, conical	2				
13	1902010037	・WASHER	2				
	T3h190						

silverhorn.co.uk

GEAR PUMP

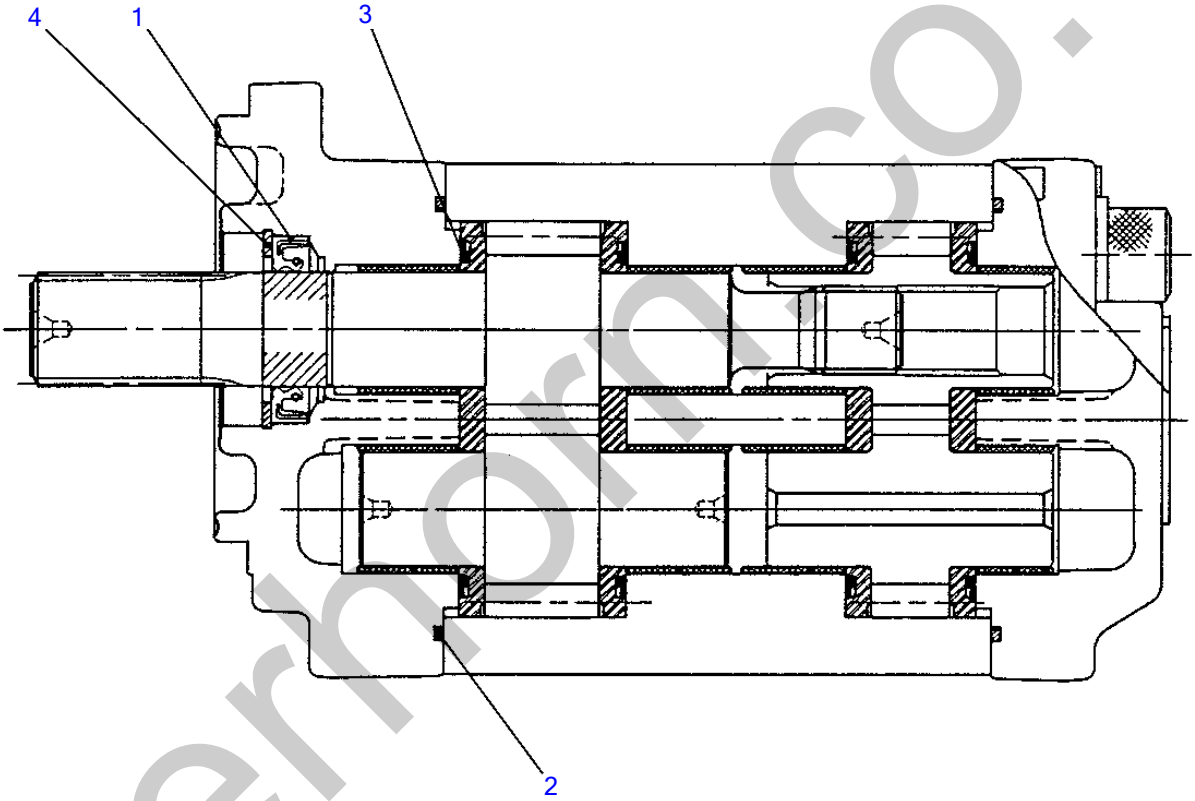

T3H080

S=FREE

silverhorn.co.uk

GEAR PUMP

Item	Part number	Description	Q'ty	Chan.	Serial No.	Serv.	Remarks
0	1902021800	PUMP ASSY, gear	1				
0-1	1902017999	・KIT, seal	1				
1	X 1902017618	・・SEAL, oil	1				
2	X 1902018151	・・GASKET	2				
3	X 1902017950	・・GASKET	4				
4	X 1221000036	・・RING, snap	1				
	T3h080						

silverhorn.co.uk

TL220

Serial No. 222000001~

BU0Z001(P-TL220BAB)

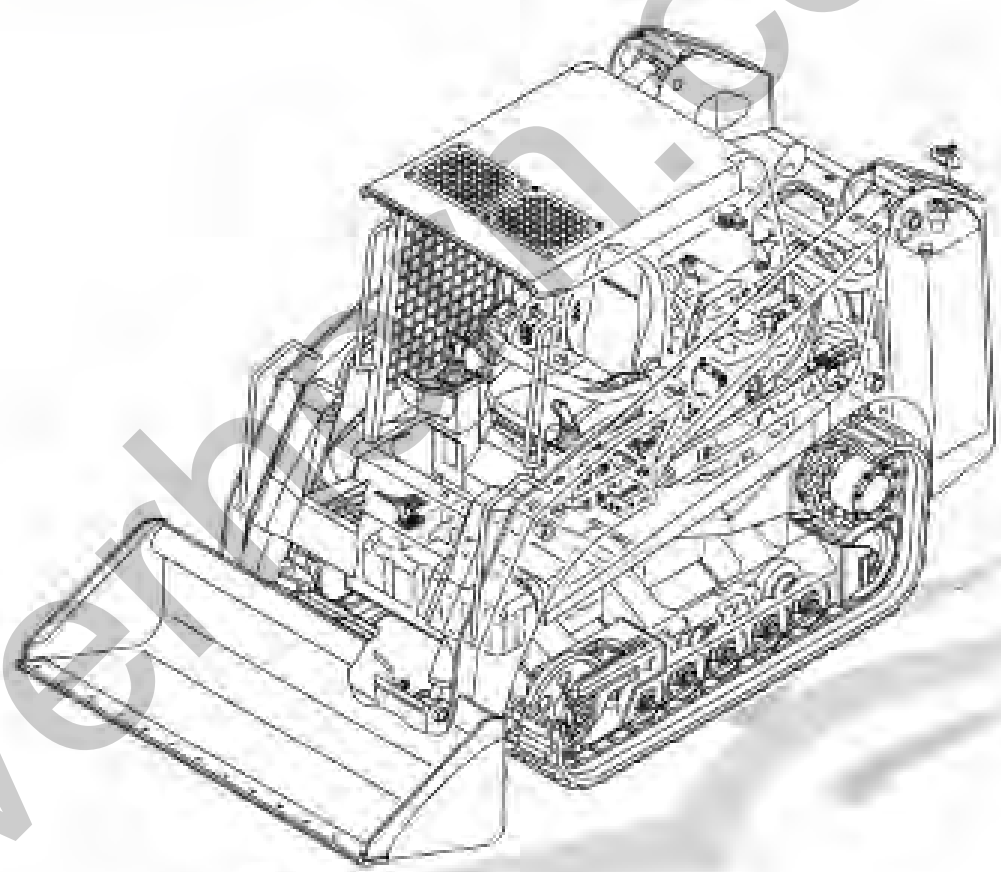

CRAWLER LOADER

TAKEUCHI

silverhorn.co.uk

Recommended Stock List

Item	Part number	Description	Q'ty	Chan.	Serial No.	Serv.	Remarks
		Recommended Stock List					
	1551101001	Hydraulic Filter Line	2				
	Y129939-12630	Inner Air Filter	2				
	y129939-12621	Outer Air Filter	2				
	Y129150-35160	Engine Oil Filter	2				
	Y129004-55801	Fuel Filter	3				
	1900103899	Bucket Cylinder Seal Kit	2				
	1900096899	Arm Cylinder Seal Kit	2				
	1432500560	Floating Seal (2 pieces = 1 seal)	2				
	1432500660	Floating Seal (2 pieces = 1 seal)	2				
	1400402640	Oil Seal	2				
	1422010450	O-Ring P-45	2				
	1421020450	Backup Ring	2				
	1914200230	Tooth	10				
	1914200023	Lock	10				
	1914202300	Adaptor	10				
	0881612150	Pin	2				
	0007000070	Spring TL Series	2				
	1213001250	Spring Pin M12 X 50	1				
	0007000119	Spring	2				
	0656100300	LH Lever	2				
	0656100200	RH Lever	2				
	0881612060	Yoke	2				
	0001672005	Pin	2				
	0011902009	Arm Pin	2				
	0007000016	Spring (TL)	2				
	0880604910	Stopper	2				
	0880825650	Door Striker	1				
	1914301310	Rubber Track	2				
	0651600010	Sprocket	2				
	1552100500	Fuel Cap	1				
	1700100052	Starter Switch	1				
	1700100019	Key (qty 1 = 2 keys)	2				
	Y124001-42290	Fan Belt	1				
	1700009010	Proximityt Switch	1				
	1919060104	Red Aerosol Paint	2				
	1919060139	Light Gray Aerosol Paint	2				
	1919060140	Medium Gray Aerosol Paint (070)	2				
	0654002140	Upper Radiator Hose	1				
	0654000150	Lower Radiator Hose	1				

silverthorn.co.uk

Item	Part number	Description	Q'ty	Chan.	Serial No.	Serv.	Remarks
		TL220 Manuals					
	LTL2200001SP	Operators Manual TL1220/TL230/TL240/TL250 AU7S000 Spanish	1				
	LTL2200001	Operators Manual TL220/TL230/TL240/TL250 Interim Tier 4	1				
	LTL22000003	Parts Manual TL220 BU0Z000 Interim Tier 4	1				
	LTL22000004	Service Manual TL220 CU0E001	1				

silverhorn.co.uk

silverhorn.co.uk

CYLINDER BLOCK

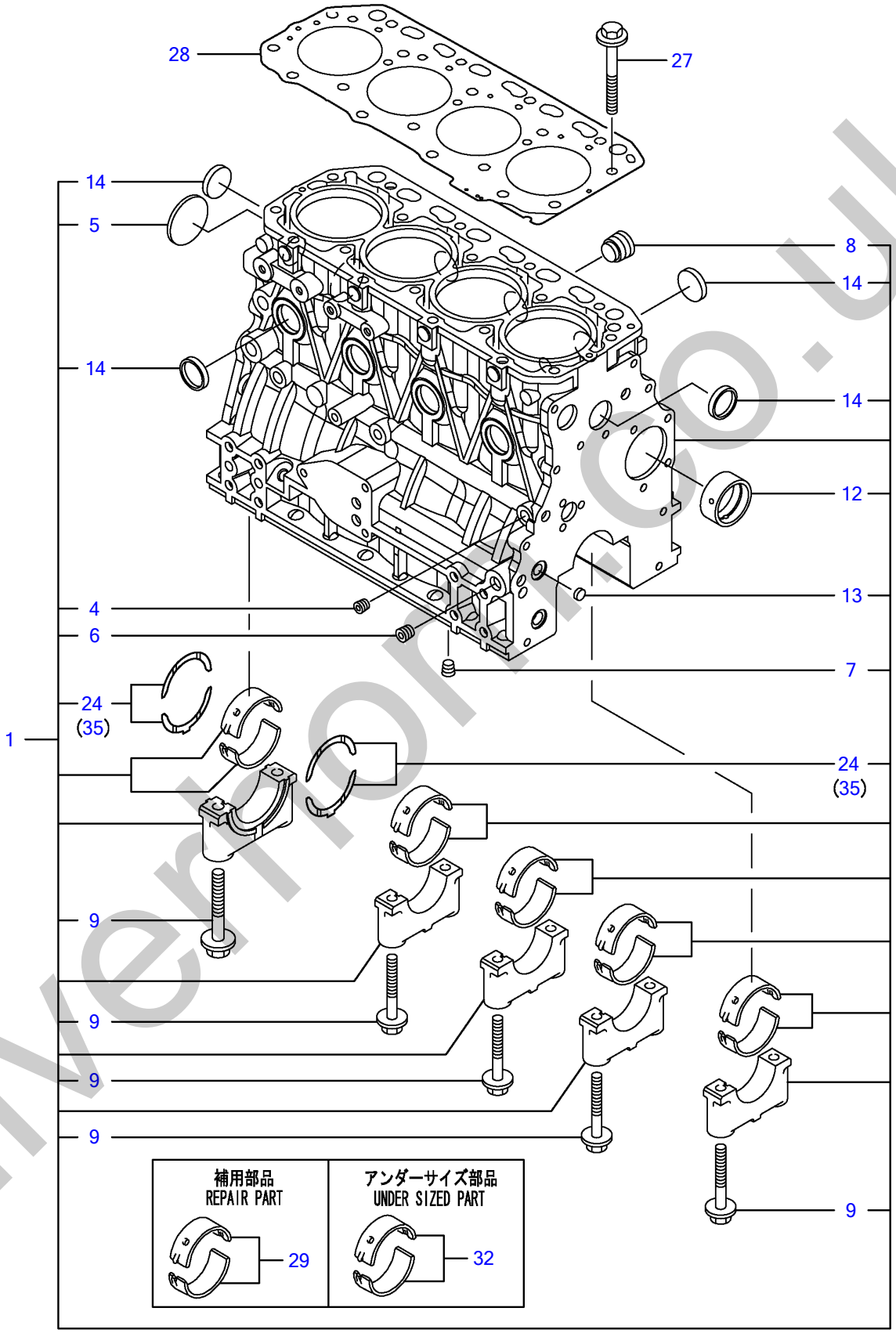

Y00D9950	1. シリンダブロック				
4TNV84T-ZKTBL		1. 08/01	2	3	PLUS

silverfront.co.uk

Engine for TL220 4TNV84T-ZKTBL

CYLINDER BLOCK

Item	Part No	Description	Qty
1	Y729509-01560	BLOCK ASSY, CYLINDER	1
4	Y124060-01050	・PLUG PT1/8	1
5	Y129001-01250	・PLUG 50	1
6	Y124160-01910	・PLUG PT1/4	2
7	Y124160-01910	・PLUG PT1/4	1
8	Y171051-01921	・PLUG	1
9	Y129150-02020	・BOLT, METAL CAP	10
12	Y129795-02412	・BUSH, CAMSHAFT	1
13	Y27241-120000	・PLUG 12	2
14	Y27241-300000	・PLUG 30	8
24	Y129150-02931	・METAL, THRUST	2
27	Y129150-01200	STUD, CYL. HEAD	18
28	Y129508-01330	GASKET, HEAD	1
29	Y129001-02931	MAIN BEARING SET	5
32	Y129150-02871	MAIN METAL US=0.25	5
35	Y129150-02941	METAL,THRUST.25(4PIE	1

silverhorn.co.uk

GEAR HOUSING

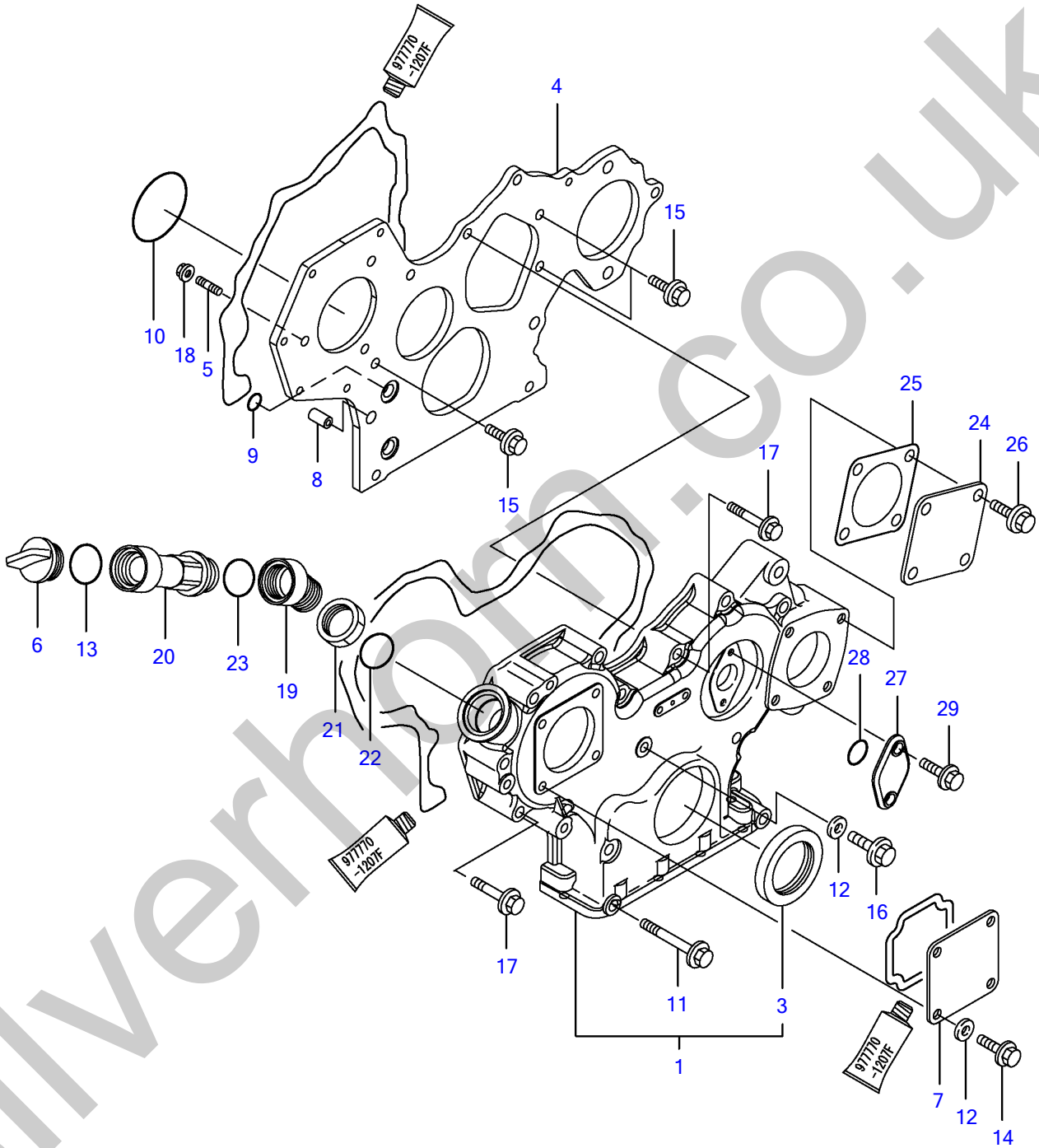

silverhorn.co.uk

Y00D9950	2, ギヤケース			
4TNV84T-ZKTBL	1, 08/01	2	3	PLUS

Engine for TL220 4TNV84T-ZKTBL

GEAR HOUSING

Item	Part No	Description	Qty
1	Y729652-01500	GEAR CASE ASSY	1
3	Y119934-01800	・SEAL, OIL	1
4	Y129604-01520	FLANGE, GEAR CASE	1
5	Y119802-01561	STUD, M8X25	3
6	Y124160-01751	COVER,FILLER	1
7	Y124240-01871	COVER, HO-P	1
8	Y129795-01950	PIPE, KNOCK L=18	2
9	Y119609-32040	O-RING P16	2
10	Y121850-51960	O-RING, F.I.PUMP	1
11	Y129001-91841	BOLT M 8X 85 PLATED	3
12	Y22190-080002	SEAL WASHER 8S	5
13	Y24311-000320	O-RING 1A P-32.0	1
14	Y26106-080162	BOLT M 8X 16 PLATED	4
15	Y26106-080162	BOLT M 8X 16 PLATED	3
16	Y26106-080302	BOLT M 8X 30 PLATED	1
17	Y26106-080552	BOLT M 8X 55 PLATED	10
18	Y26306-080002	NUT	3
19	Y119225-11740	ADAPTOR, OIL FILLER	1
20	Y171031-11741	PIPE	1
21	Y119225-11750	NUT, OIL FILLER	1
22	Y24311-000300	O-RING 1A P-30.0	1
23	Y24311-000320	O-RING 1A P-32.0	1
24	Y124240-01871	COVER, HO-P	1
25	Y124240-01883	GASKET, (NON-ASB.)	1
26	Y26106-080122	BOLT M 8X 12 PLATED	4
27	Y121023-01551	COVER, BLIND	1
28	Y24341-000240	O-RING 1A S-24.0	1
29	Y26106-060162	BOLT M 6X 16 PLATED	2

silverhorn.co.uk

FLYWHEEL HOUSING & OIL SUMP

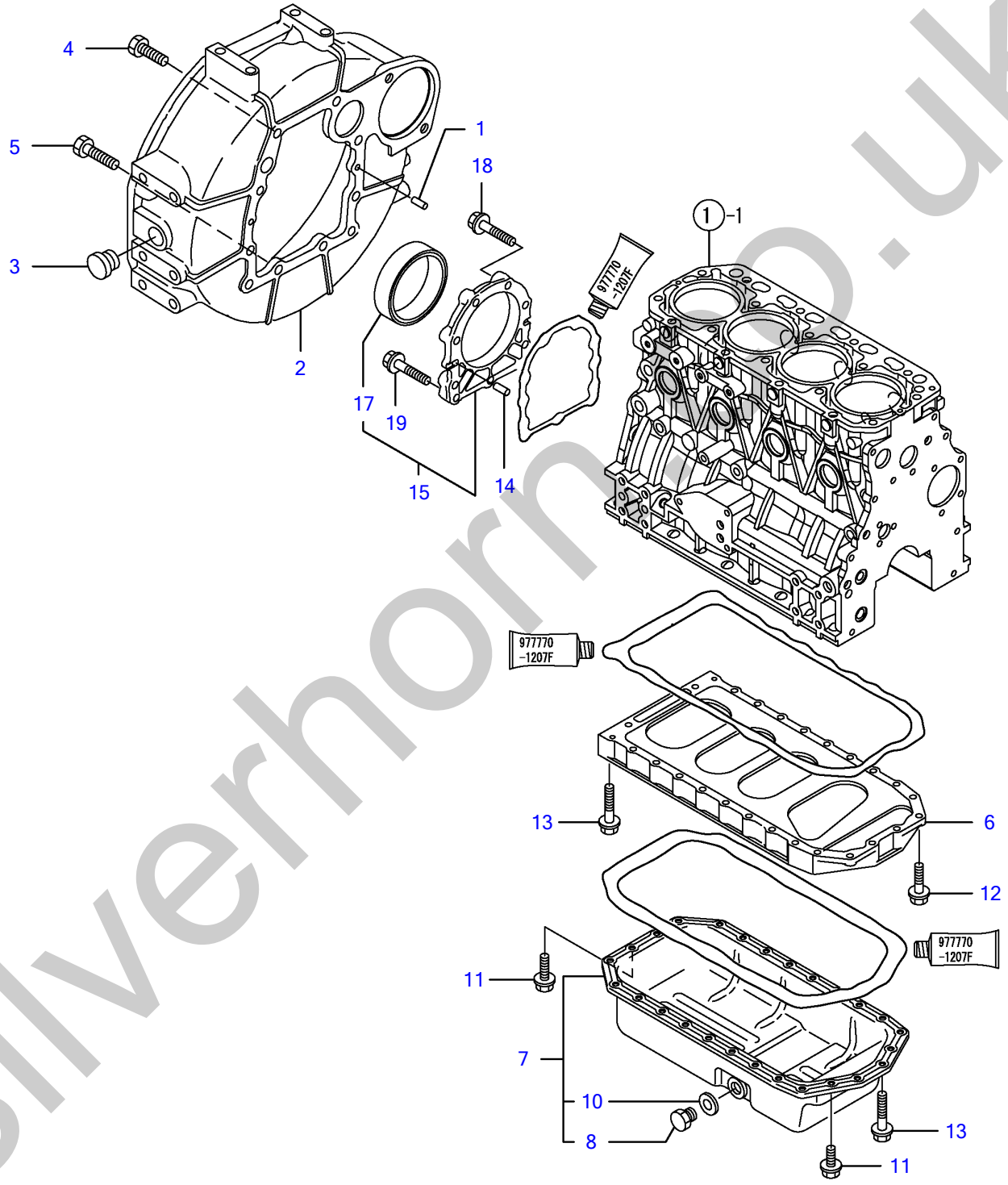

silverhorn.co.uk

Y00D9950	3, フライホイルハウジング & オイルパン			
4TNV84T-ZKTBL	1, 08/01	2	3	PLUS

FLYWHEEL HOUSING & OIL SUMP

Item	Part No	Description	Qty
1	Y129100-01580	PARALLEL PIN 8X16	2
2	Y129612-01600	HOUSING,FLYWHEEL	1
3	Y119620-01750	CAP, FLYWHEEL COVER	1
4	Y26206-100252	BOLT M10X25	6
5	Y26206-100302	BOLT M10X30	4
6	Y129400-01730	SPACER, OIL SUMP	1
7	Y129400-01770	SUMP ASSY, LUB. OIL	1
8	Y119640-01640	・DRAIN PLUG M22	1
10	Y22190-220002	・SEAL WASHER 22S	1
11	Y26106-080162	BOLT M 8X 16 PLATED	4
12	Y26106-080252	BOLT M 8X 25 PLATED	2
13	Y26106-080452	BOLT M 8X 45 PLATED	24
14	Y129100-01580	PARALLEL PIN 8X16	2
15	Y129100-01640	CASE ASSY, OIL SEAL	1
17	Y129795-01780	・SEAL, OIL	1
18	Y129486-01670	BOLT M8X30,COLLAR HD	6
19	Y26106-080352	BOLT M 8X 35 PLATED	3

silverhorn.co.uk

CYLINDER HEAD & BONNET

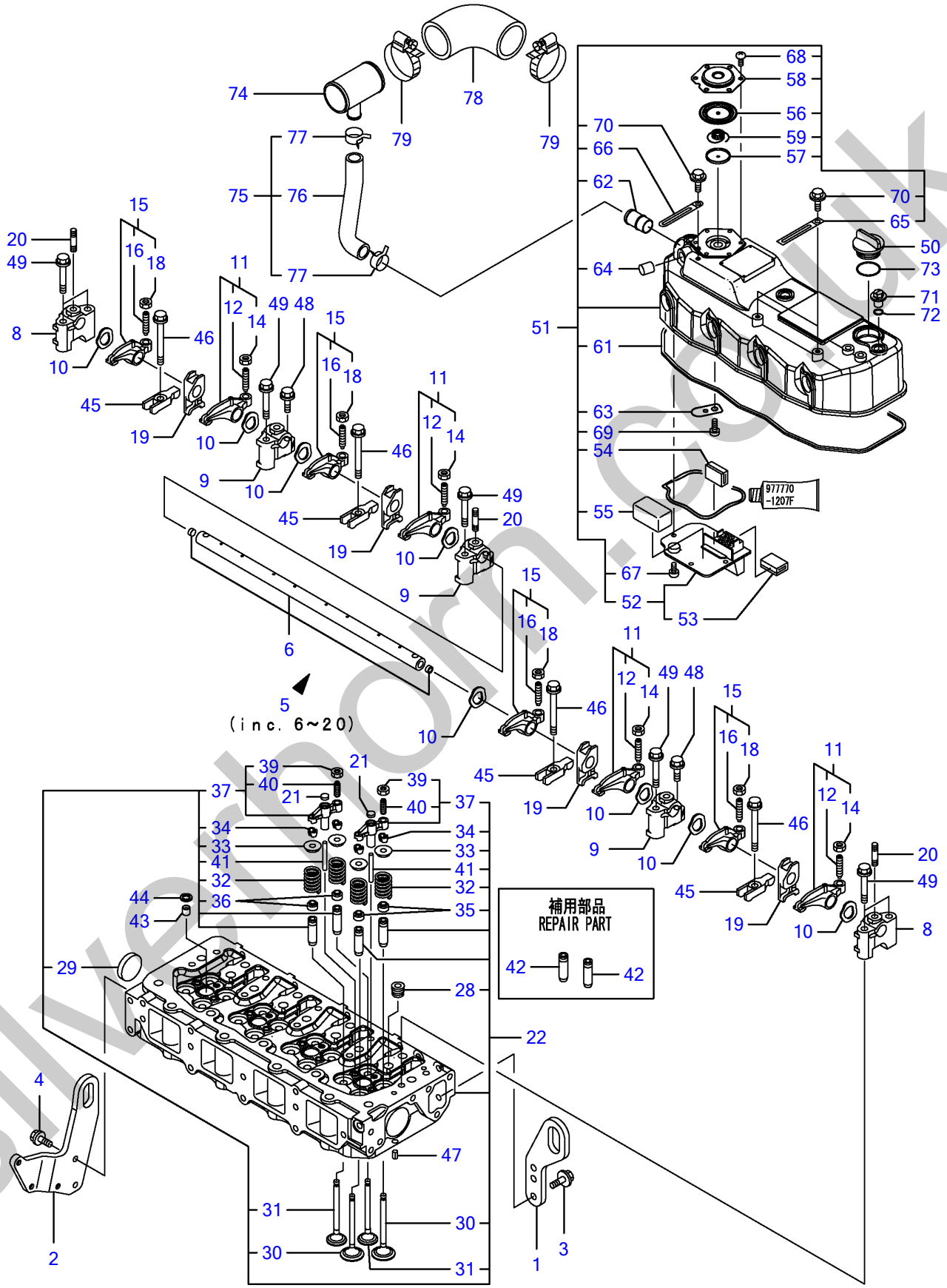

Y00D9950	4, シリンダヘッド & ボンネット				
4TNV84T-ZKTBL		1, 08/01	2	3	PLUS

silverhorn.co.uk

Engine for TL220 4TNV84T-ZKTBL

CYLINDER HEAD & BONNET

Item	Part No	Description	Qty
1	Y129486-07901	LIFTINGS	1
2	Y129928-07900	LIFTER, ENGINE	1
3	Y26106-080162	BOLT M 8X 16 PLATED	2
4	Y26106-080202	BOLT M 8X 20 PLATED	2
5	Y129508-11241	SHAFT ASSY, ROCKER	1
6	Y129508-11250	· SHAFT	1
8	Y129508-11260	· SUPPORT, ROCKER ARM	2
9	Y129508-11270	· SUPPORT, ROCKER ARM	3
10	Y129508-11280	· WASHER, WAVE M	8
11	Y129508-11650	· ARM ASSY, ROCKER	4
12	Y129150-11230	· · SCREW, VALVE	4
14	Y129150-11750	· · NUT M8XP1.0	4
15	Y129508-11660	· ARM ASSY, ROCKER	4
16	Y129150-11230	· · SCREW, VALVE	4
18	Y129150-11750	· · NUT M8XP1.0	4
19	Y129508-11920	· PEDESTAL,RETAINER	4
20	Y26226-080352	· STUD M 8X 35 PLATED	3
21	Y123907-11550	SEAT A,VALVE BRIDGE	8
22	Y129509-11700	HED ASSY, CYLINDER	1
28	Y23876-020000	· PLUG PT1/4,SCREW	4
29	Y27241-400000	· PLUG 40	2
30	Y129508-11100	· VALVE, INTAKE	8
31	Y129508-11110	· VALVE, EXHAUST	8
32	Y129508-11130	· SPRING, VALVE	16
33	Y129508-11180	· RETAINER, SPRING	16
34	Y119717-11190	· COTTER, VALVE	32
35	Y119717-11340	· SEAL, VALVE STEM	8
36	Y119717-11350	· SEAL, VALVE STEM	8
37	Y129672-11510	· BRIDGE, VALVE	8
39	Y129150-11750	· · NUT M8XP1.0	8
40	Y123907-11830	· · SCRWE,VALVE BRIDGE	8
41	Y129508-11820	· GUIDE,VALVE BRIDGE	8
42	Y119717-11800	GUIDE, VALVE	16
43	Y119802-11870	PROTECTOR, NOZZLE	4
44	Y119625-11880	SEAT, NOZZLE	4
45	Y129508-11900	RETAINER,F.I.VALVE	4
46	Y129907-11950	FLANGE BOLT,RETAINER	4
47	Y22351-060012	SPRING PIN 6X12	2
48	Y26106-080252	BOLT M 8X 25 PLATED	3
49	Y26106-080502	BOLT M 8X 50 PLATED	7
50	Y124160-01751	COVER,FILLER	1
51	Y129509-11350	BONNET ASSY	1
52	Y129508-03010	· PLATE, BAFFLE	1
53	Y119802-03070	· · BAFFLE, BREATHER	1
54	Y129150-03070	· BAFFLE, BREATHER	1
55	Y129907-03070	· BAFFLE	1
56	Y123907-03100	· DIAPHRAGM,BREATHER	1
57	Y123907-03110	· CENTER PLATE	1
58	Y123907-03120	· PLATE,BREATHER	1
59	Y123907-03140	· SPRING, DIAPHRAGM	1
61	Y129508-11310	· PK,BONNET	1
62	Y129001-11340	· HOSE	1
63	Y129009-11340	· SPRING,PLATE	1
64	Y119640-61400	· PLUG	1
65	Y129509-79700	· CLIP	2
66	Y175339-79700	· CLIP	1
67	Y22857-500100	· SCREW 5X10,TAPPING	4
68	Y22857-500100	· SCREW 5X10,TAPPING	6
69	Y22857-500100	· SCREW 5X10,TAPPING	1
70	Y26106-060122	· BOLT M 6X 12 PLATED	3

silverhorn.co.uk

CYLINDER HEAD & BONNET

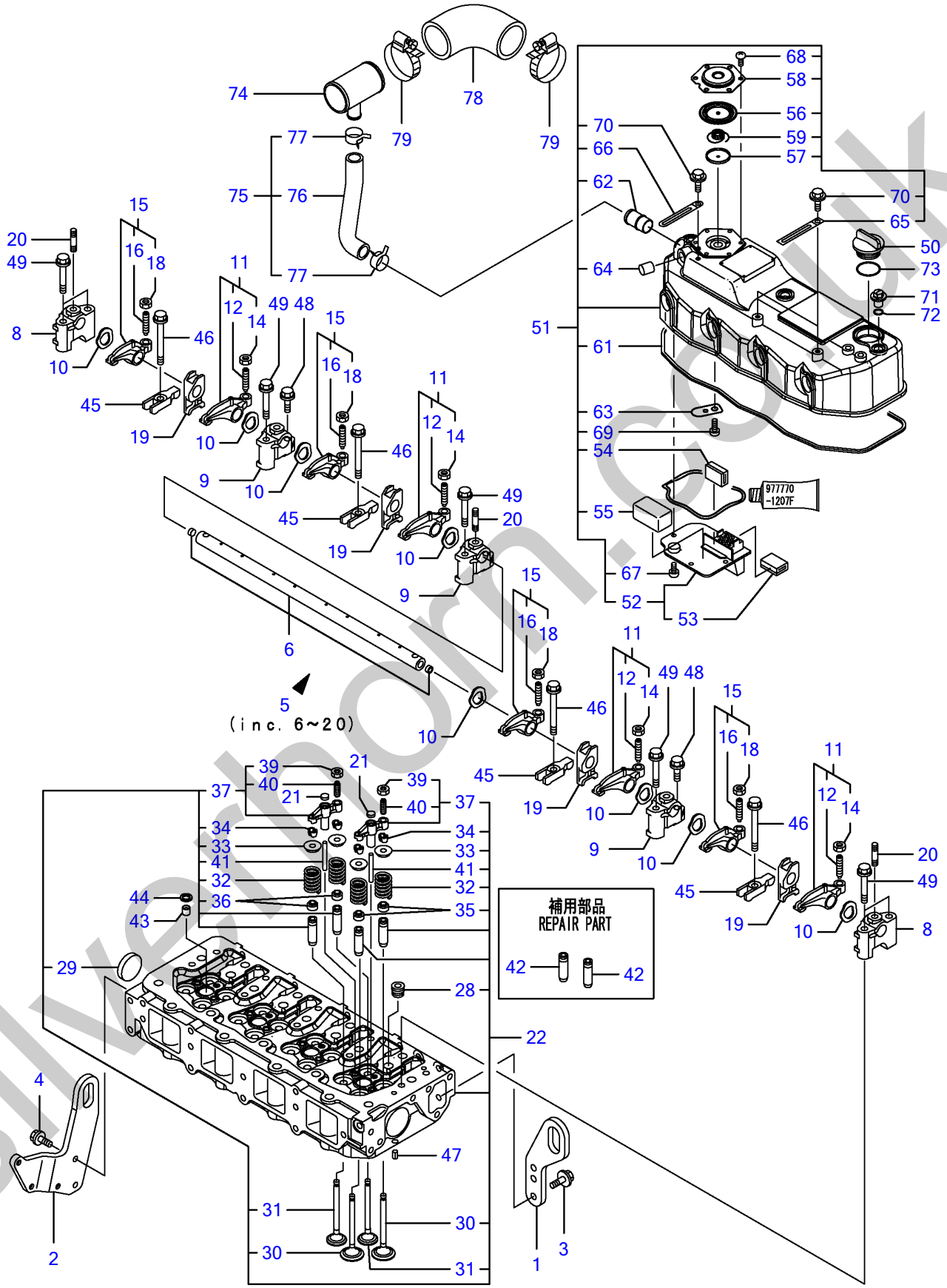

Y00D9950	4, シリンダヘッド & ボンネット				
4TNV84T-ZKTBL		1, 08/01	2	3	PLUS

silverhorn.co.uk

CYLINDER HEAD & BONNET

Item	Part No	Description	Qty
71	Y124160-11360	KNOB	3
72	Y24311-000120	O-RING 1A P 12.0	3
73	Y24311-000320	O-RING 1A P-32.0	1
74	Y129509-03050	JOINT,BREATHER	1
75	Y129509-03080	HOSE CMP, BREATHER	1
76	Y129509-03090	・HOSE, BREATHER	1
77	Y129410-03990	・CLAMP 22	2
78	Y129509-12070	HOSE,INTAKE	1
79	Y23000-060000	CLAMP 60	2

silverhorn.co.uk

SUCTION MANIFOLD & AIR CLEANER

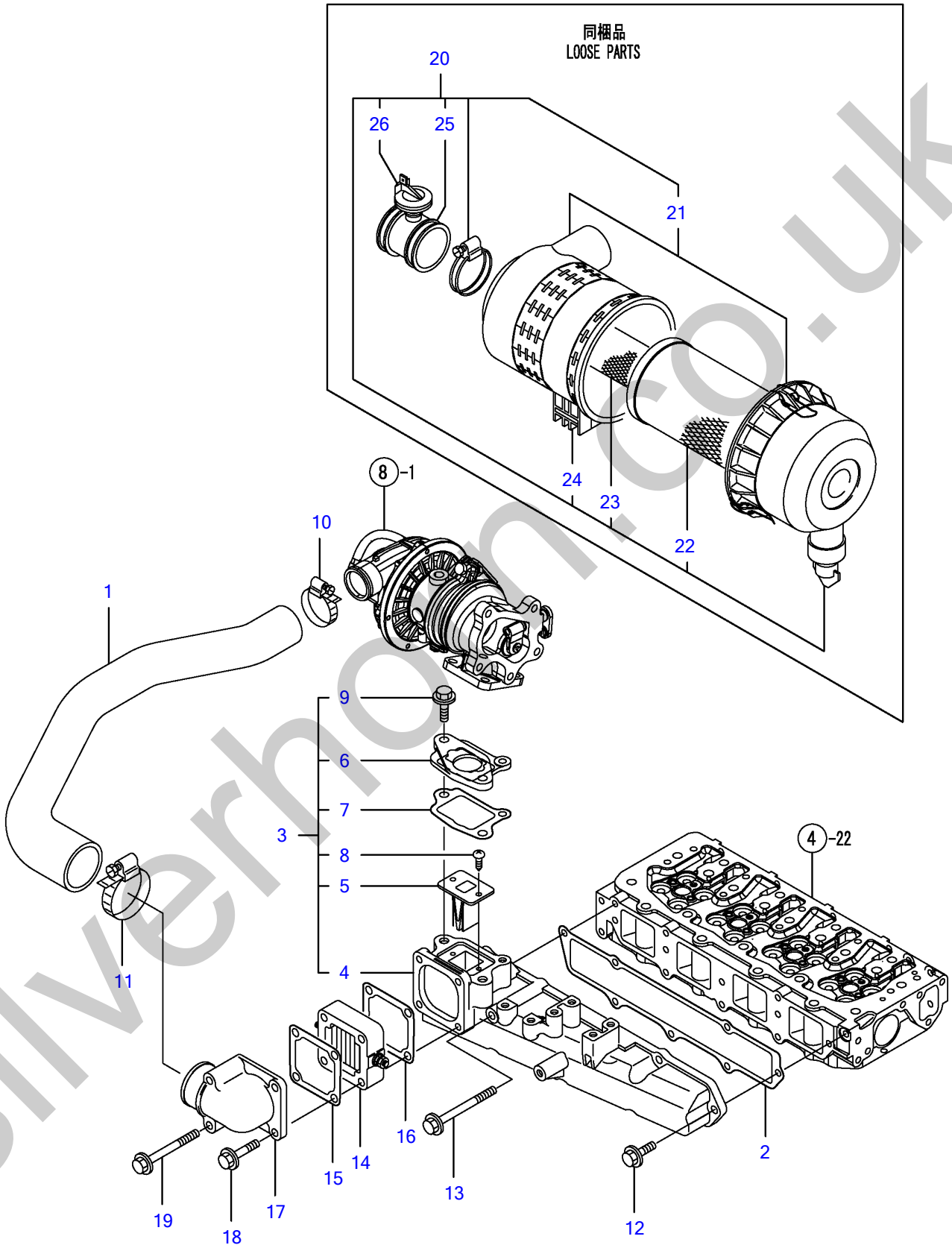

Y00D9950	5, キュウキマニホールド & エアクリーナ			
4TNV84T-ZKTBL	1, 08/01	2	3	PLUS

silverhorn.co.uk

Engine for TL220 4TNV84T-ZKTBL

SUCTION MANIFOLD & AIR CLEANER

Item	Part No	Description	Qty
1	Y129509-12060	HOSE,INTAKE	1
2	Y129508-12110	GASKET, MAFIFOLD	1
3	Y129509-12150	MANIFOLD CMP,INTAKE	1
4	Y129509-12100	・MANIFOLD, INTAKE	1
5	Y129509-13700	・VALVE	1
6	Y129509-13710	・SPACER(EGR VALVE	1
7	Y129509-13720	・GASKET	1
8	Y22857-500160	・SCREW 5X16	2
9	Y26106-080202	・BOLT M 8X 20 PLATED	1
10	Y23000-048000	CLAMP 48	1
11	Y23000-060000	CLAMP 60	1
12	Y26106-080202	BOLT M 8X 20 PLATED	5
13	Y26106-080902	BOLT M 8X 90 PLATED	2
14	Y129100-77501	HEATER, AIR	1
15	Y129100-77510	GASKET, AIR HEATER	1
16	Y129150-77511	GASKET, (NON-ASB.)	1
17	Y171340-77520	BEND	1
18	Y26106-080402	BOLT M 8X 40 PLATED	2
19	Y26106-080802	BOLT M 8X 80 PLATED	2
20	Y129536-12510	CLEANER ASSY, AIR	1
21	Y129536-12610	・HOUSING BOTTOM	1
22	Y129939-12621	・MAIN ELEMENT	1
23	Y129939-12630	・SECONDARY ELEMENT	1
24	Y129939-12640	・BLACKET	1
25	Y129939-12650	・CONNECTINNG SOCKET	1
26	Y129948-12660	・SERVICE SWITCH	1

silverhorn.co.uk

EXHAUST MANIFOLD & SILENCER

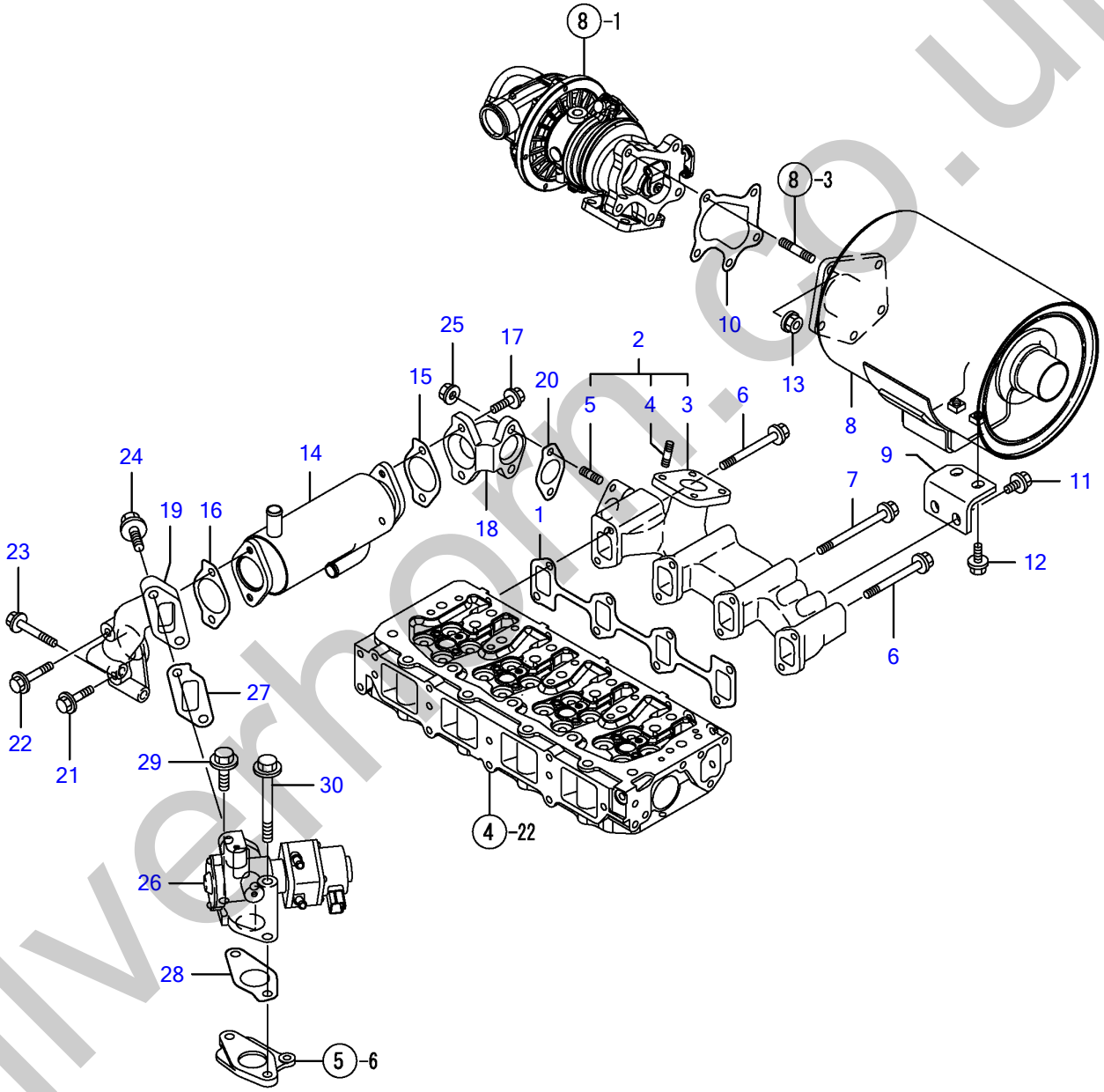

silverhorn.co.uk

Y00D9950	6, ハイキマニホールド & サイレンサ			
4TNV84T-ZKTBL	1, 08/01	2	3	PLUS

Engine for TL220 4TNV84T-ZKTBL

EXHAUST MANIFOLD & SILENCER

Item	Part No	Description	Qty
1	Y129550-13110	GASKET, EXH.MANIFOLD	1
2	Y129509-13150	MANIFOLD ASSY,EXH	1
3	Y129509-13100	・MANIFOLD, EXHAUST	1
4	Y129418-18320	・STUD BOLT M8X20	4
5	Y129418-18320	・STUD BOLT M8X20	2
6	Y123900-13630	BOLT 8X80	4
7	Y129693-44310	BOLT(CFW COOLER	4
8	Y129648-13520	MUFFLER	1
9	Y129648-13570	SUPPORT, SILENCER	1
10	Y129508-18090	GASKET, TURBOCHARGER	1
11	Y26106-080142	BOLT 8X 14 PLATED	2
12	Y26106-080202	BOLT M 8X 20 PLATED	2
13	Y26306-080002	NUT	5
14	Y129509-13400	EGR COOLER	1
15	Y129928-13410	GASKET, EGR COOLER	1
16	Y129928-13410	GASKET, EGR COOLER	1
17	Y119802-13790	BOLT, M8X25	2
18	Y129928-13800	PIPE(EGR IN	1
19	Y129509-13810	PIPE(EGR OUT	1
20	Y129927-13810	GASKET, EGR PIPE	1
21	Y26106-080352	BOLT M 8X 35 PLATED	1
22	Y26106-080452	BOLT M 8X 45 PLATED	1
23	Y26106-080552	BOLT M 8X 55 PLATED	2
24	Y26106-100252	BOLT M10X 25 PLATED	2
25	Y26306-080002	NUT	2
26	Y129927-13900	EGR VALVE	1
27	Y129927-13910	GASKET(EGR-V IN	1
28	Y129927-13920	GASKET(EGR-V OUT	1
29	Y26106-100402	BOLT M10X 40 PLATED	1
30	Y26106-101052	BOLT M10X105 PLATED	1

silverhorn.co.uk

CAMSHAFT & DRIVING GEAR

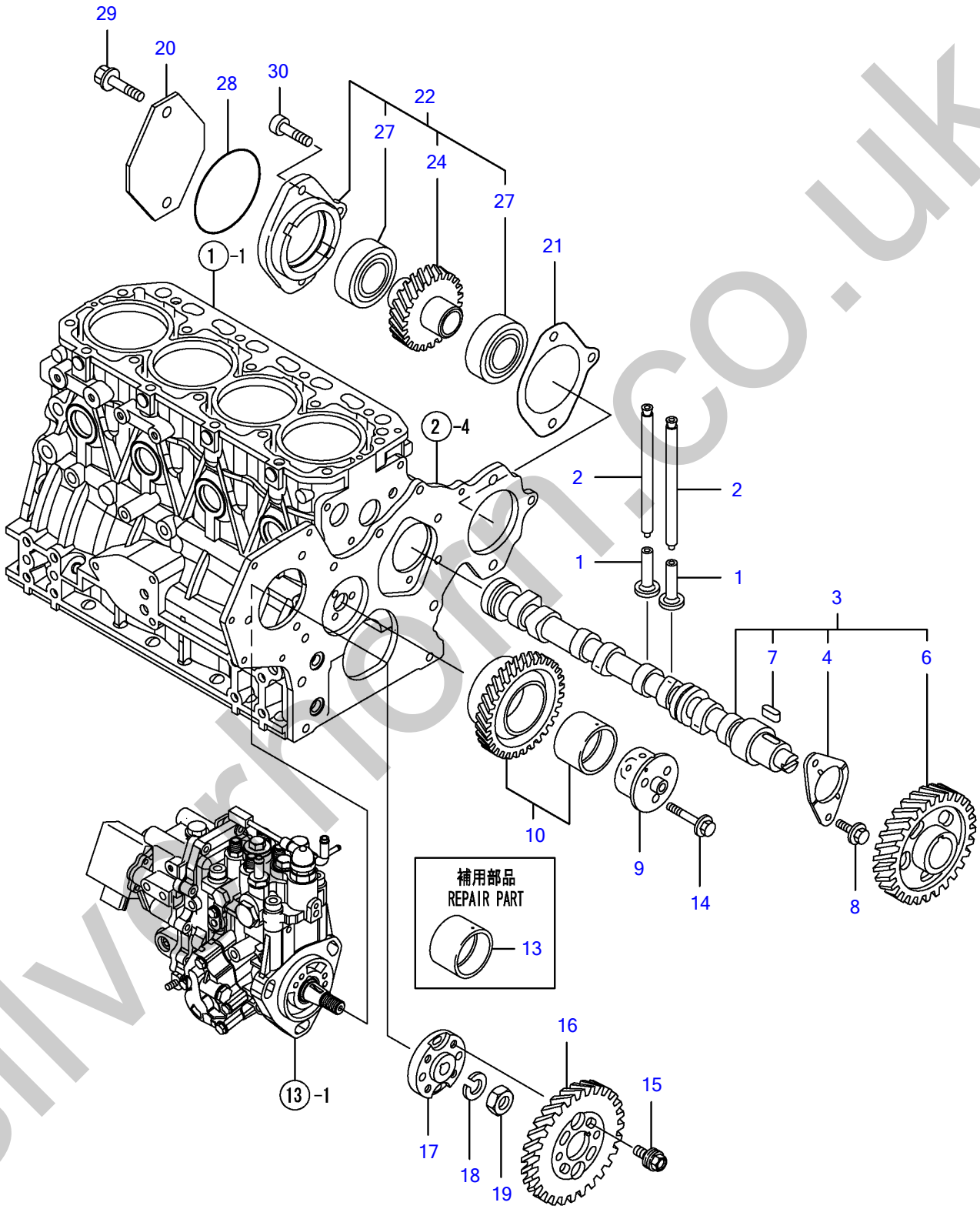

silverthorn.co.uk

Y00D9950	7. カムシャフト & クドウギヤ			
4TNV84T-ZKTBL	1. 08/01	2	3	PLUS

CAMSHAFT & DRIVING GEAR

Item	Part No	Description	Qty
1	Y129150-14200	TAPPET	8
2	Y129150-14400	ROD, PUSH	8
3	Y129508-14580	CAMSHAFT ASSY	1
4	Y129150-02450	・METAL,THRUST(CAM	1
6	Y129150-14101	・GEAR, CAMSHAFT	1
7	Y22512-070140	・KEY 7X 14	1
8	Y26106-080142	BOLT 8X 14 PLATED	2
9	Y119803-25050	SHAFT, IDLE GEAR	1
10	Y119802-25101	GEAR ASSY, IDLE	1
13	Y119802-25071	BUSH, IDLE GEAR	1
14	Y26106-080402	BOLT M 8X 40 PLATED	3
15	Y129150-25301	BOLT,FI-P	4
16	Y119802-25901	GEAR, PUMP	1
17	Y158552-51151	FLANGE	1
18	Y22217-140000	SPRING WASHER 14	1
19	Y26776-140002	LOCK NUT M14 PLATED	1
20	Y121023-26070	COVER, HO-P	1
21	Y171353-26081	GASKET,HO-P BRACKET	1
22	Y129484-26200	GEAR ASSY, H.O. PUMP	1
24	Y129484-26210	・GEAR W/SHAFT	1
27	Y24105-060064	・BALL BEARING	2
28	Y24321-000850	O-RING 1A G-85.0	1
29	Y26106-100452	BOLT M10X 45 PLATED	2
30	Y26450-080282	BOLT M 8X 28	1

silverhorn.co.uk

TURBINE

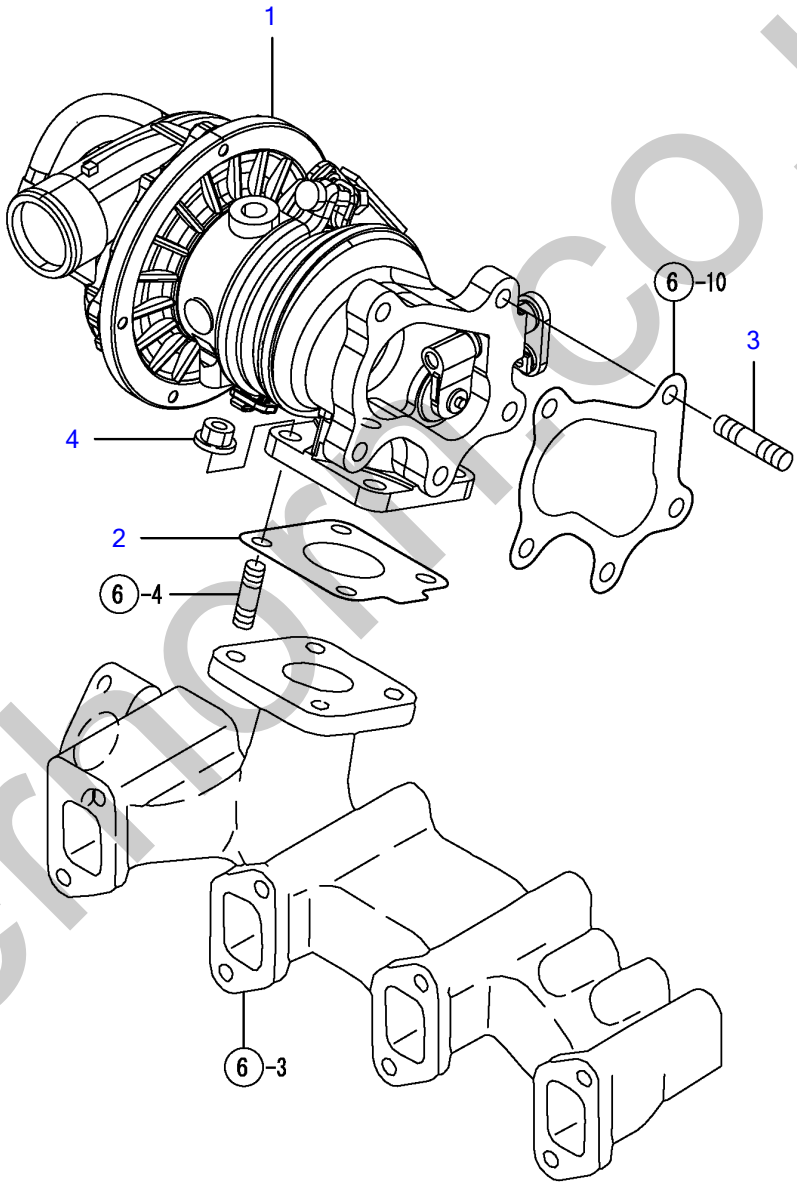

silverhomes.co.uk

Y00D9950	8, タービン				
4TNV84T-ZKTBL		1, 08/01	2	3	PLUS

TURBINE

Item	Part No	Description	Qty
1	Y129508-18010	TURBINE, RHF4	1
2	Y129508-18080	GASKET	1
3	Y129418-18320	STUD BOLT M8X20	5
4	Y26306-080002	NUT	4

silverhorn.co.uk

CRANKSHAFT & PISTON

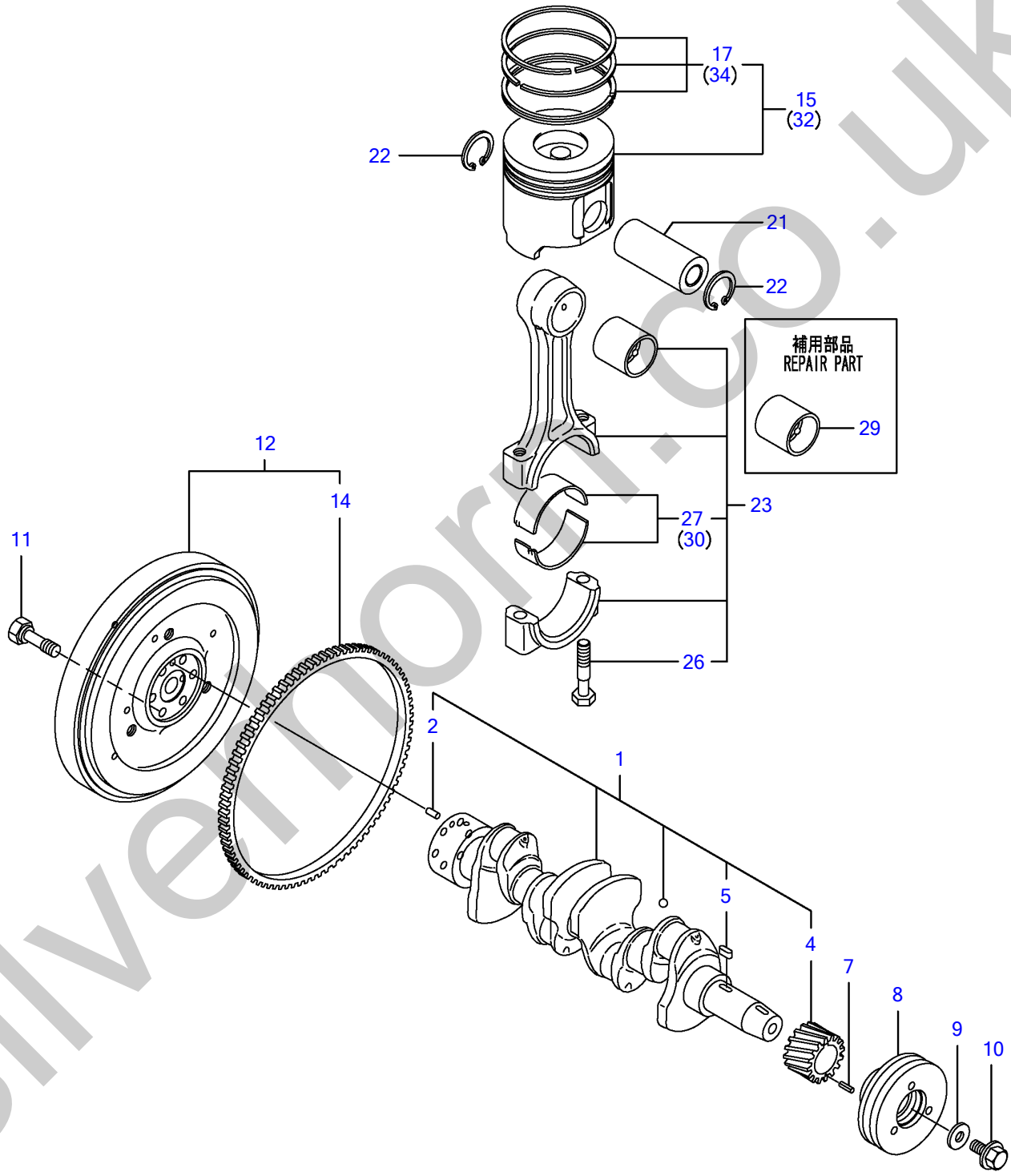

silverport.co.uk

Y00D9950	9. クランクシャフト&ピストン			
4TNV84T-ZKTBL	1. 08/01	2	3	PLUS

CRANKSHAFT & PISTON

Item	Part No	Description	Qty
1	Y129509-21000	CRANKSHAFT ASSY	1
2	Y129100-01580	· PARALLEL PIN 8X16	1
4	Y119803-21200	· GEAR, CRANKSHAFT	1
5	Y22512-070140	· KEY 7X 14	1
7	Y22351-030010	SPRING PIN 3X10	1
8	Y119802-21660	V-PULLEY, CRANKSHAFT	1
9	Y129795-21661	WASHER	1
10	Y121850-21680	BOLT, V-PULLEY	1
11	Y121111-21501	BOLT, FLYWHEEL	6
12	Y129642-21590	FLYWHEEL ASSY	1
14	Y119865-21600	· GEAR, RING	1
15	Y129509-22080	PISTON ASSY	4
17	Y129509-22500	· RING SET,PISTON	4
21	Y129202-22300	PIN, PISTON(D26,L70)	4
22	Y22252-000260	CIRCLIP 26	8
23	Y729402-23100	ROD ASSY, CONNECTING	4
26	Y121550-23200	· BOLT, CONNECTING ROD	8
27	Y129150-23601	· METAL, CRANKPIN	4
29	Y129100-23910	BUSH, PISTON PIN	4
30	Y129150-23611	METAL.PIN US=0.25	4
32	Y729509-22900	PISTON W/RING,0.25OS	4
34	Y729509-22950	· RING SET, 0.25OS	4

silverhorn.co.uk

LUB.OIL SYSTEM

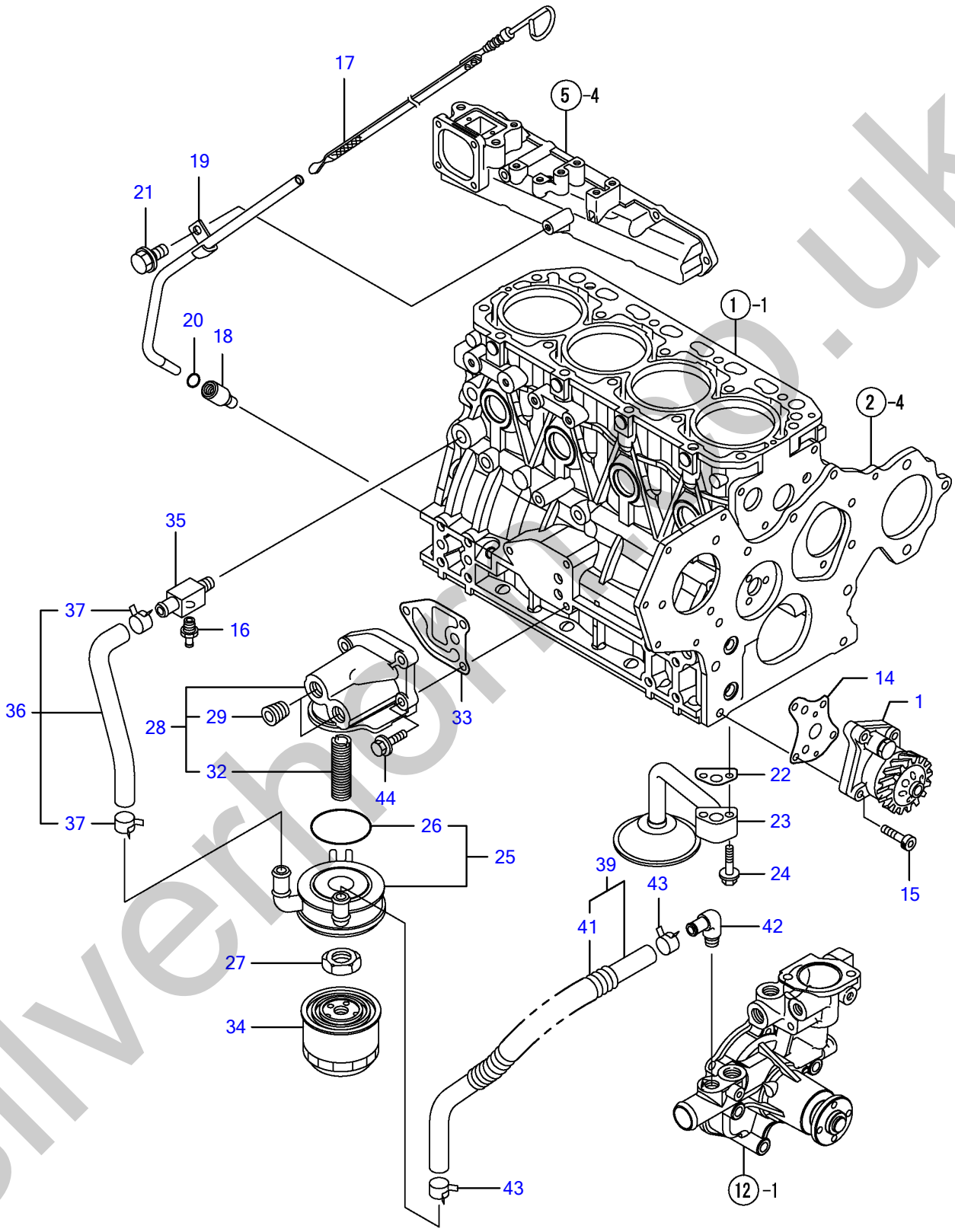

silverhorse.co.uk

Y00D9950	10, LOシステム			
4TNV84T-ZKTBL	1, 08/01	2	3	PLUS

LUB.OIL SYSTEM

Item	Part No	Description	Qty
1	Y129418-32000	PUMP ASSY, LUB. OIL	1
14	Y129150-32020	GASKET, L.O. PUMP	1
15	Y26450-060252	BOLT M 6X 25	4
16	Y121550-49111	JOINT PT1/4	1
17	Y129244-34802	DIPSTICK, LUB.OIL	1
18	Y119260-34810	GUIDE, DIPSTICK	1
19	Y129536-34860	GUIDE, DIPSTICK	1
20	Y24311-240100	O-RING 1A P-10A	1
21	Y26106-080162	BOLT M 8X 16 PLATED	1
22	Y129150-35042	GASKET, (NON-ASB.)	1
23	Y129436-35091	PIPE ASSY, LUB. OIL	1
24	Y26106-080352	BOLT M 8X 35 PLATED	2
25	Y129067-33011	COOLER ASSY, OIL	1
26	Y129508-33050	・O-RING	1
27	Y129417-33110	NUT OIL COOLER	1
28	Y129033-35100	BRACKET ASSY	1
29	Y129033-01770	・PLUG NPT1/2	2
32	Y129417-35150	・STUD	1
33	Y129103-35122	GASKET, (NON-ASB.)	1
34	Y129150-35152	FILTER 80X80L	1
35	Y129006-44480	JOINT	1
36	Y129033-49030	PIPE ASSY, COOLER IN	1
37	Y171008-03990	・CLAMP 18.5	2
39	Y129467-49040	PIPE CMP.,COOL.WATER	1
41	Y129165-49060	・TUBE CORRUGATED	1
42	Y129103-49301	ELBOW PT 1/4	1
43	Y23080-018000	CLAMP 18	2
44	Y26106-080252	BOLT M 8X 25 PLATED	3

silverhorn.co.uk

LUB.OIL LINE

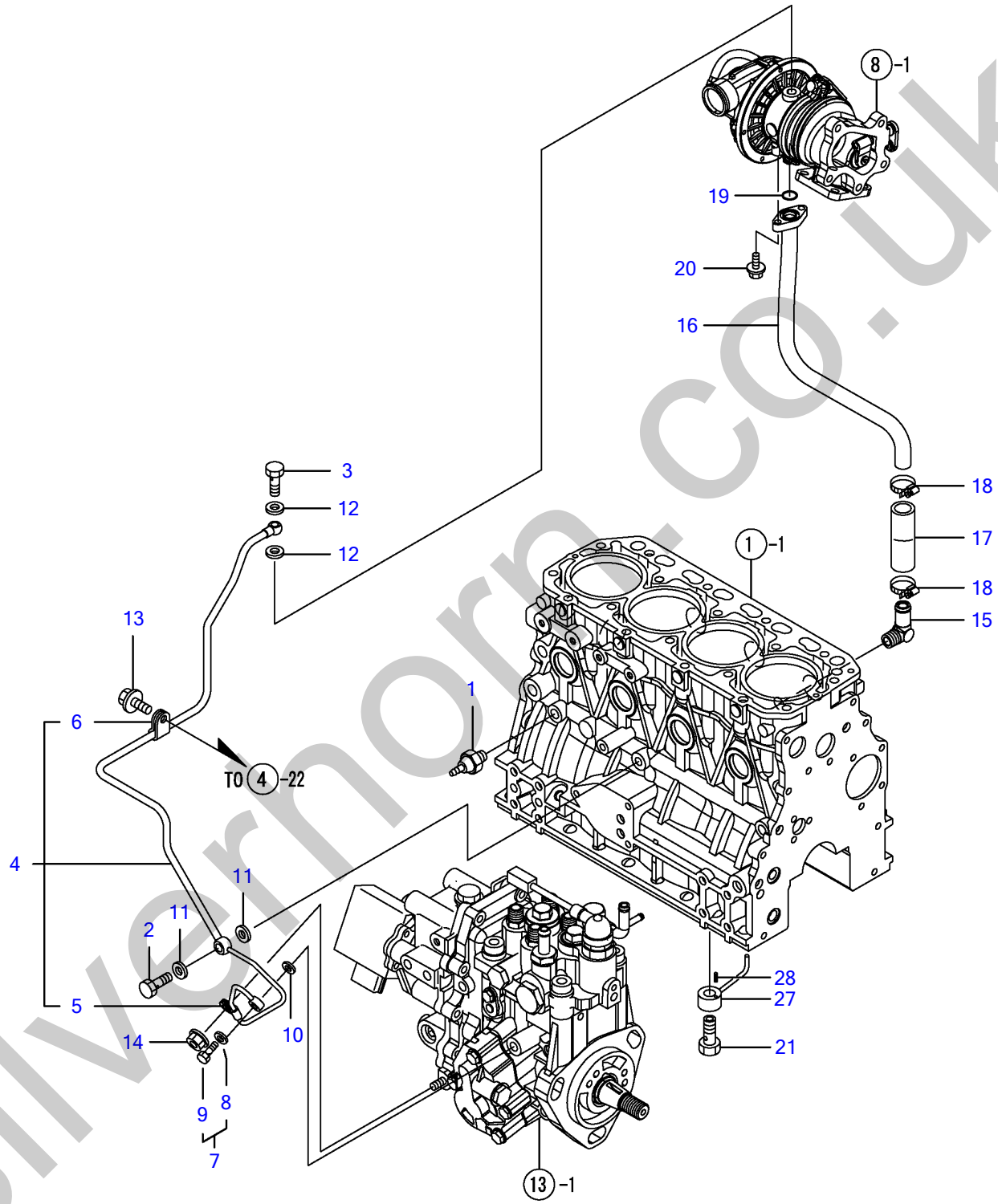

silvernorn.co.uk

Y00D9950	11, LOパイプ			
4TNV84T-ZKTBL	1, 08/01	2	3	PLUS

LUB.OIL LINE

Item	Part No	Description	Qty
1	Y114250-39450	SWITCH,(0.5KG)L.O.	1
2	Y124160-39140	BOLT 10, PIPE JOINT	1
3	Y121252-39150	BOLT, PIPE JOINT	1
4	Y129508-39450	PIPE ASSY, LUB. OIL	1
5	Y119802-39500	・RETAINER	1
6	Y124223-39900	・RETAINER	1
7	Y129005-59830	BOLT ASSY, JOINT	1
8	Y22190-080002	・SEAL WASHER 8S	1
9	Y23857-030000	・JOINT BOLT 3	1
10	Y22190-080002	SEAL WASHER 8S	1
11	Y22190-100002	SEAL WASHER 10S	2
12	Y23414-100000	GASKET 10, ROUND	2
13	Y26106-080122	BOLT M 8X 12 PLATED	1
14	Y26366-060002	NUT M 6	1
15	Y124070-13300	ELBOW (PT3/8)	1
16	Y129508-39600	PIPE, FUEL RETURN	1
17	Y123901-39820	HOSE	1
18	Y23000-025000	CLAMP 25	2
19	Y24316-000160	O-RING 4D P-16.0	1
20	Y26106-060162	BOLT M 6X 16 PLATED	2
21	Y129792-39410	VALVE ASSY, CHECK	4
27	Y129553-39650	NOZZLE	4
28	Y22351-030010	SPRING PIN 3X10	4

silverhorn.co.uk

COOLING WATER SYSTEM

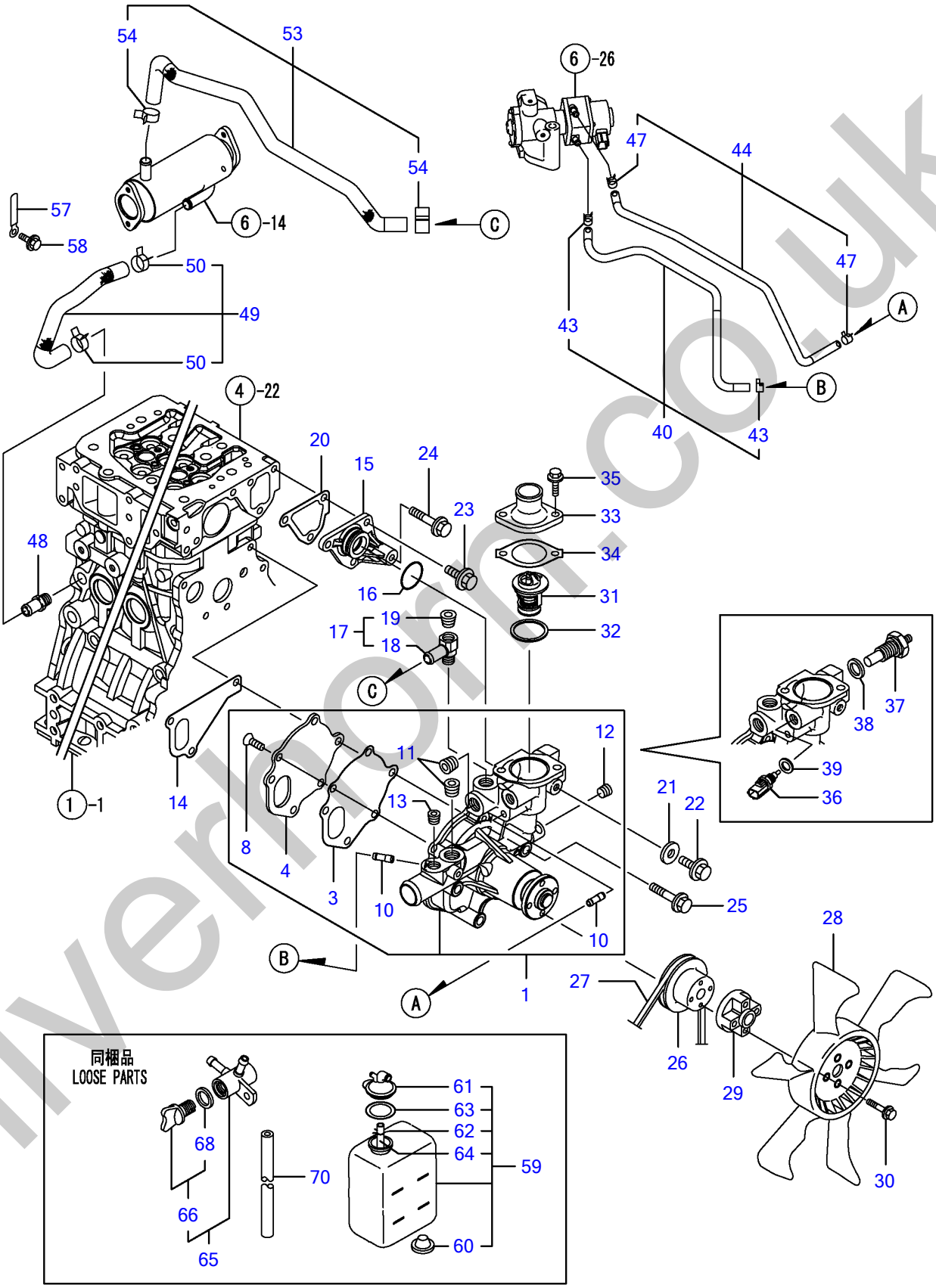

silverhorn.co.uk

Y00D9950	12, CWシステム			
4TNV84T-ZKTBL	1, 08/01	2	3	PLUS

Engine for TL220 4TNV84T-ZKTBL
COOLING WATER SYSTEM

Item	Part No	Description	Qty
1	Y129509-42001	PUMP ASSY, WATER	1
3	Y129100-42051	・GASKET, (NON-ASB.)	1
4	Y129100-42121	・PLATE	1
8	Y121850-42410	・SCREW	3
10	Y129509-49540	・JOINT	2
11	Y129916-49740	・PLUG, DRAIN R03	2
12	Y23876-010000	・PLUG PT1/8,SCREW	1
13	Y23876-020000	・PLUG PT1/4,SCREW	1
14	Y129486-42021	GASKET	1
15	Y129004-42040	JOINT	1
16	Y129486-42140	O-RING,CW-P	1
17	Y129928-49400	JOINT CMP	1
18	Y129928-49410	・JOINT	1
19	Y23875-030000	・PLUG PT3/8,STEEL	1
20	Y124395-49840	GASKET, THERMO. CASE	1
21	Y23414-080000	GASKET 8, ROUND	1
22	Y26106-080122	BOLT M 8X 12 PLATED	1
23	Y26106-080162	BOLT M 8X 16 PLATED	3
24	Y26106-080452	BOLT M 8X 45 PLATED	1
25	Y26106-080602	BOLT M 8X 60 PLATED	3
26	Y129403-42380	V-PULLEY(D=110)	1
27	Y129612-42310	V-BELT	1
28	Y129612-44700	FAN, COOLING	1
29	Y171353-44760	SPACER	1
30	Y26106-060402	BOLT M 6X 40 PLATED	4
31	Y129457-49801	THERMOSTAT,82	1
32	Y129150-49811	GASKET, (NON-ASB.)	1
33	Y129350-49530	COVER, THERMOSTAT	1
34	Y129795-49551	GASKET, (NON-ASB.)	1
35	Y26106-080222	BOLT M 8X 22 PLATED	2
36	Y129927-44900	THERMOMETER	1
37	Y119266-49350	SENSOR, THERMO.	1
38	Y129150-49360	GASKET 10	1
39	Y22190-120002	SEAL WASHER 12	1
40	Y129509-49630	CW-T A(EGR-V CMP	1
43	Y23080-012000	・CLAMP 12	2
44	Y129509-49640	CW-T B (EGR-V CMP	1
47	Y23080-012000	・CLAMP 12	2
48	Y129928-49420	JOINT	1
49	Y129509-49610	CW-T IN(EGR-C CMP	1
50	Y129960-03990	・HOSE CLIP 22	2
53	Y129536-49620	CW-T OUT CMP	1
54	Y129960-03990	・HOSE CLIP 22	2
57	Y105430-67110	CLAMP	1
58	Y26106-080122	BOLT M 8X 12 PLATED	1
59	Y129466-44510	SUBTANK	1
60	Y121468-44540	・PLUG, SUB-TANK	1
61	Y121450-44531	・CAP	1
62	Y124450-44560	・CLAMP	1
63	Y121470-44581	・GASKET	1
64	Y121267-44590	・PIPE	1
65	Y129150-49100	COCK ASSY, 3-WAY	1
66	Y129150-49080	・COCK, DRAIN	1
68	Y119629-49080	・・GASKET	1
70	Y105840-59100	PIPE, FUEL	1

silvermorn.co.uk

FUEL INJECTION PUMP

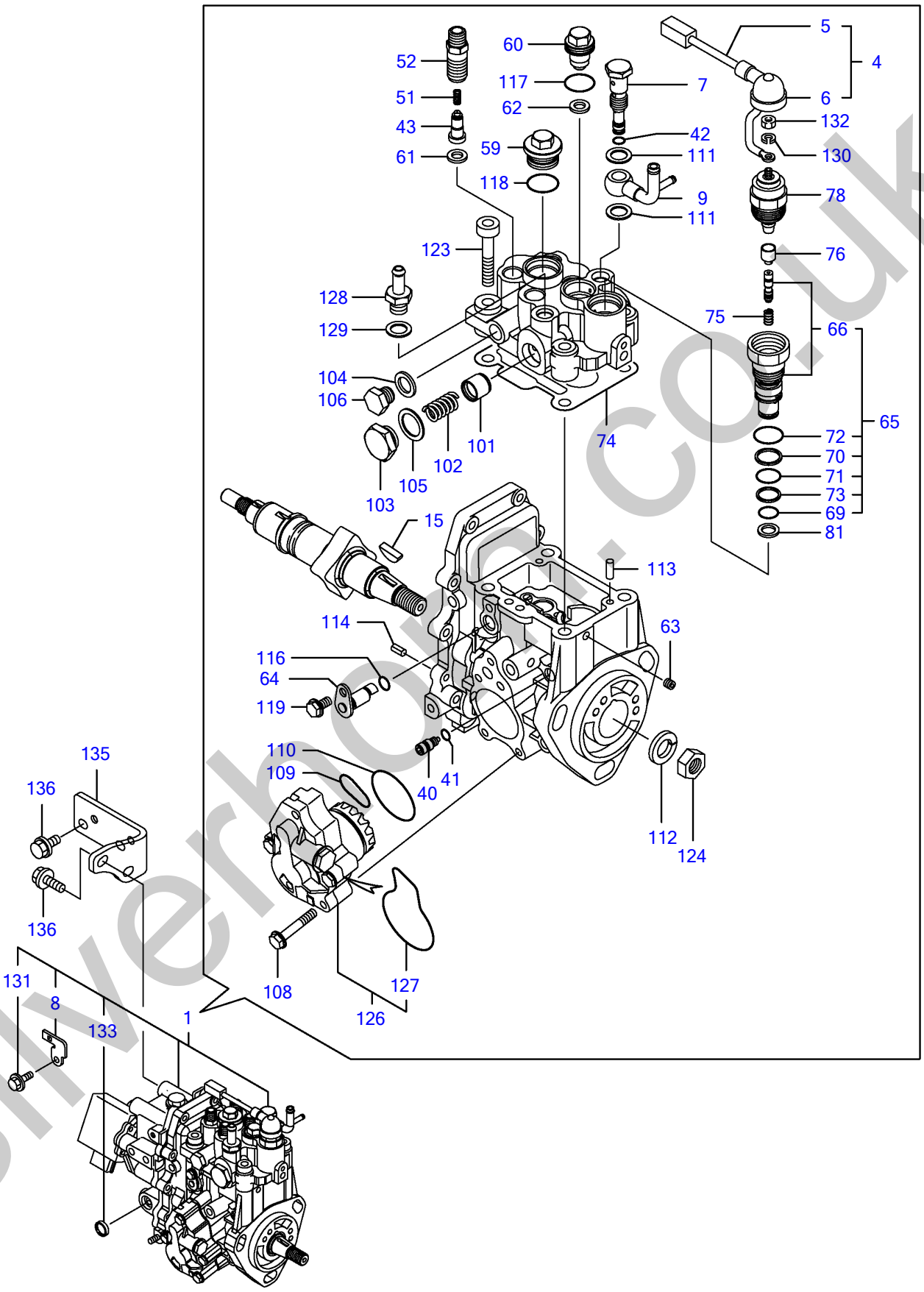

Y00D9950	13. FOフンシャポンプ				
4TNV84T-ZKTBL		1. 08/01	2	3	PLUS

silverhoe.co.uk

FUEL INJECTION PUMP

Item	Part No	Description	Qty
1	Y729536-51300	INJECTION PUMP ASSY	1
4	Y129927-51650	· HARNESS CMP	1
5	Y129927-51660	· · HARNESS ,CSD	1
6	Y129263-77941	· · CAP,RUBBER	1
7	Y158601-51650	· JOINT	1
8	Y129927-51670	· BRACKET ,CSD	1
9	Y158552-51670	· JOINT	1
15	Y119802-51090	· KEY,WOODRUFF 4X16	1
40	Y158600-51270	· STOPPER	1
41	Y158563-51281	· O-RING	1
42	Y158563-51281	· O-RING	1
43	Y129008-51300	· VALVE ASSY, DILEVERY	4
51	Y158563-51330	· SPRING	4
52	Y129008-51340	· HOLDER, DELIVERY	4
59	Y158601-51550	· PLUG	1
60	Y119802-51560	· BARREL PLUG	1
61	Y158552-51570	· PK(BARREL PLUG	4
62	Y158552-51570	· PK(BARREL PLUG	1
63	Y158557-51570	· PLUG	1
64	Y158552-51580	· LIFTER	1
65	Y129657-51590	· TIMER SET	1
66	Y129657-51600	· · TIMER CMP	1
69	Y158553-51670	· · O-RING, 1011	1
70	Y119802-51680	· · BACKUP RING	1
71	Y119802-51690	· · O RING	1
72	Y24356-010200	· · PACKING, 1020	1
73	Y24372-000150	· · RING, BACKUP T2 P 15	1
74	Y158552-51600	· PACKING, HEAD	1
75	Y119852-51630	· SPRING,TIMER	1
76	Y119852-51640	· CAP,TIMER	1
78	Y119852-51650	· VALVE,SOLENOIDE	1
81	Y158553-51680	· PACKING,TIMER	1
101	Y158601-51770	· PISTON	1
102	Y158552-51781	· SPRING	1
103	Y158601-51790	· PLUG	1
104	Y22190-120002	· SEAL WASHER 12	1
105	Y22190-180002	· SEAL WASHER 18	1
106	Y23887-120002	· PLUG M12,HEX.	1
108	Y158553-51770	· BOLT	4
109	Y158552-52310	· O-RING	1
110	Y158552-52400	· O-RING 4E S42	1
111	Y22190-120002	· SEAL WASHER 12	2
112	Y22217-140000	· SPRING WASHER 14	1
113	Y22312-050140	· PARALLEL PIN 5X14	2
114	Y22351-050010	· SPRING PIN 5X10	2
116	Y24311-000070	· O-RING 1A P-7.0	1
117	Y24356-010180	· O-RING	1
118	Y24356-010200	· PACKING, 1020	1
119	Y26106-060102	· BOLT 6X 10 PLATED	1
123	Y26450-080452	· BOLT M 8X 45	4
124	Y26776-140002	· LOCK NUT M14 PLATED	1
126	Y158552-52100	· PUMP ASSY,FEED	1
127	Y158552-52500	· · O-RING(FEED P INNER	1
128	Y119934-59910	· JOINT,PIPE	1
129	Y22190-120002	· SEAL WASHER 12	1
130	Y22217-050000	· SPRING WASHER 5	1
131	Y26106-060142	· BOLT M 6X 14 PLATED	1
132	Y26716-050002	· NUT M 5	1
133	Y27241-160000	· PLUG 16	1
135	Y129263-51251	RETAINER,PUMP	1

silverhorn.co.uk

FUEL INJECTION PUMP

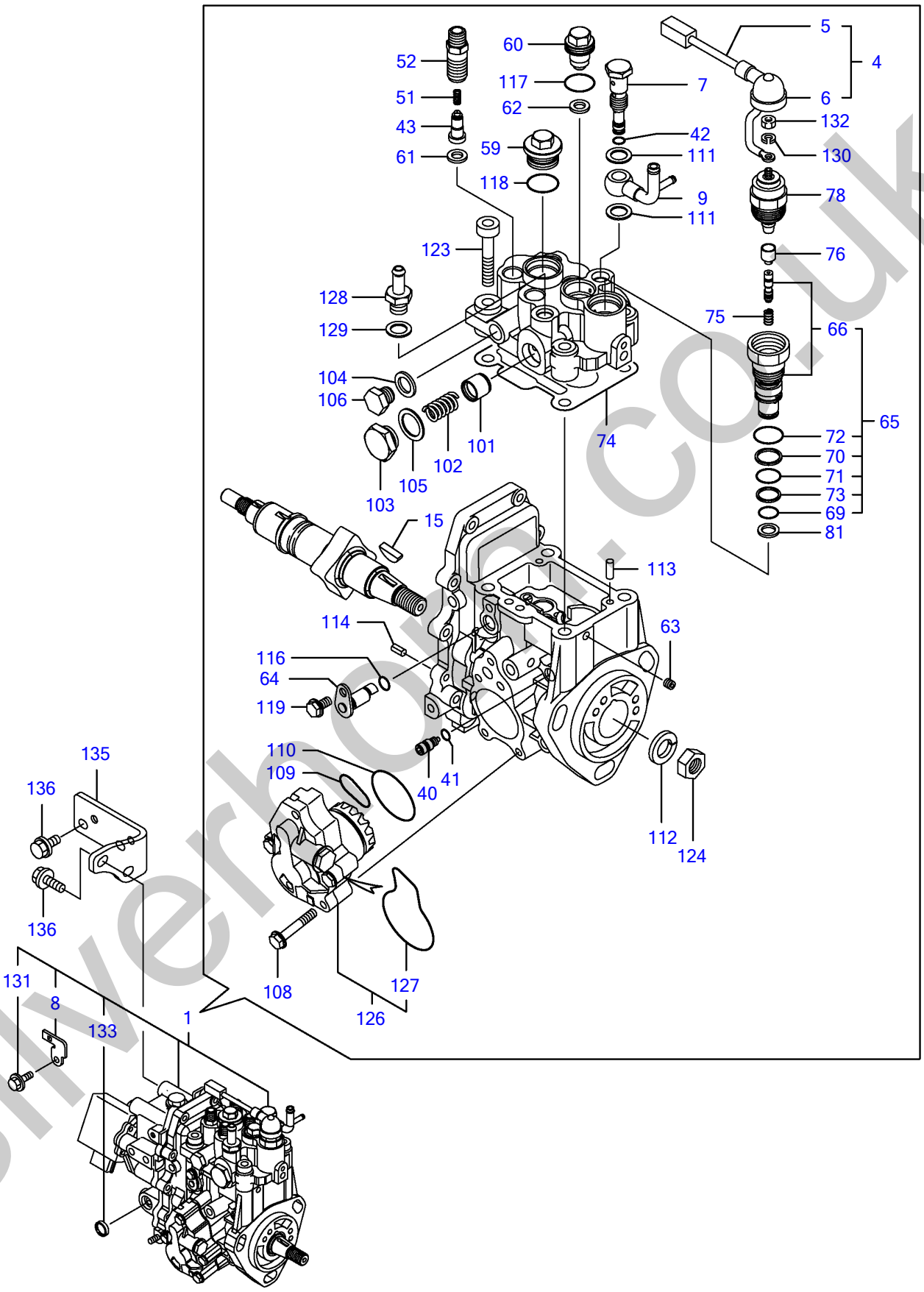

Y00D9950	13. FOフンシャポンプ				
4TNV84T-ZKTBL		1. 08/01	2	3	PLUS

silverhoe.co.uk

FUEL INJECTION PUMP

Item	Part No	Description	Qty
136	Y26106-080162	BOLT M 8X 16 PLATED	4

silverhorn.co.uk

GOVERNOR

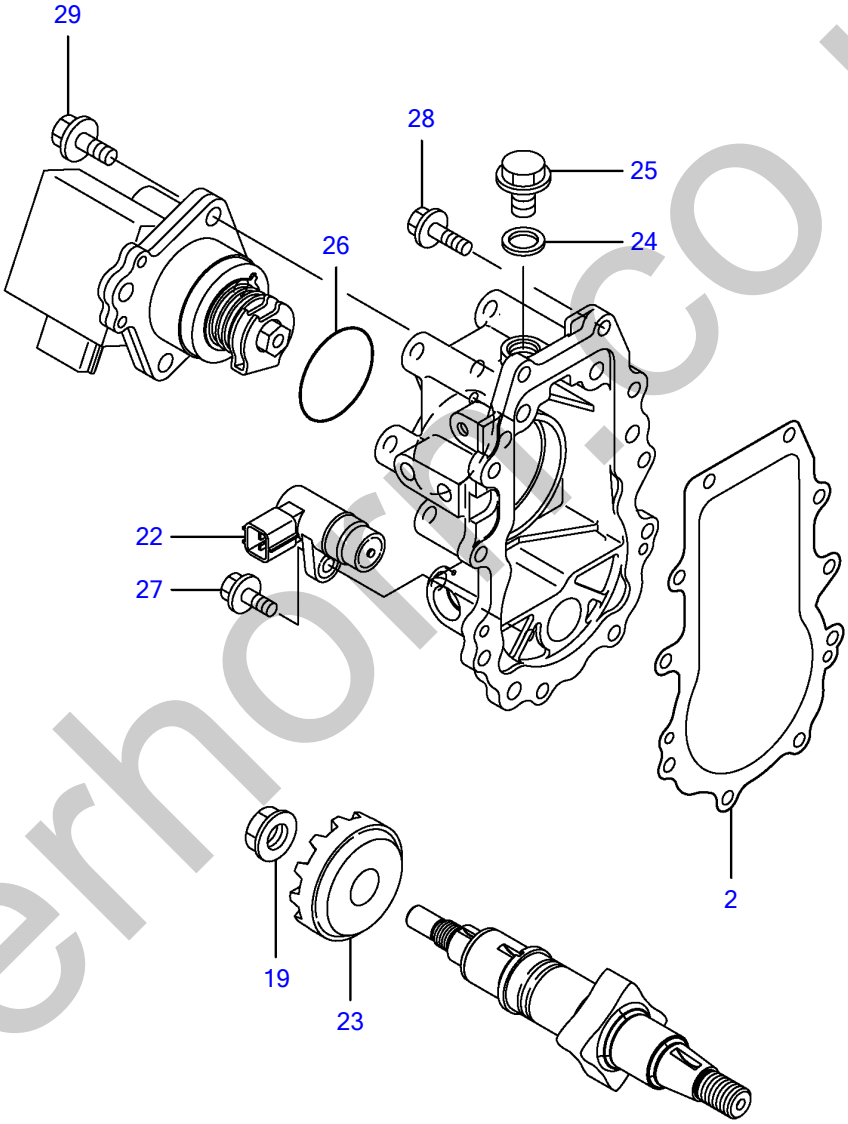

silverhorn.co.uk

Y00D9950	14, ガ バ ナ			
4TNV84T-ZKTBL	1, 08/01	2	3	PLUS

GOVERNOR

Item	Part No	Description	Qty
2	Y158553-61050	PACKING, CASE	1
19	Y129008-61301	NUT, GOVERNOR WEIGHT	1
22	Y158557-61720	SENSOR	1
23	Y158553-61780	GEAR,SENSOR	1
24	Y23414-120000	GASKET 12, ROUND	1
25	Y23887-120002	PLUG M12,HEX.	1
26	Y24341-000480	O-RING 1A S-48.0	1
27	Y26106-060162	BOLT M 6X 16 PLATED	1
28	Y26106-060202	BOLT M 6X 20 PLATED	10
29	Y26106-080252	BOLT M 8X 25 PLATED	3

silverhorn.co.uk

FUEL INJECTION VALVE

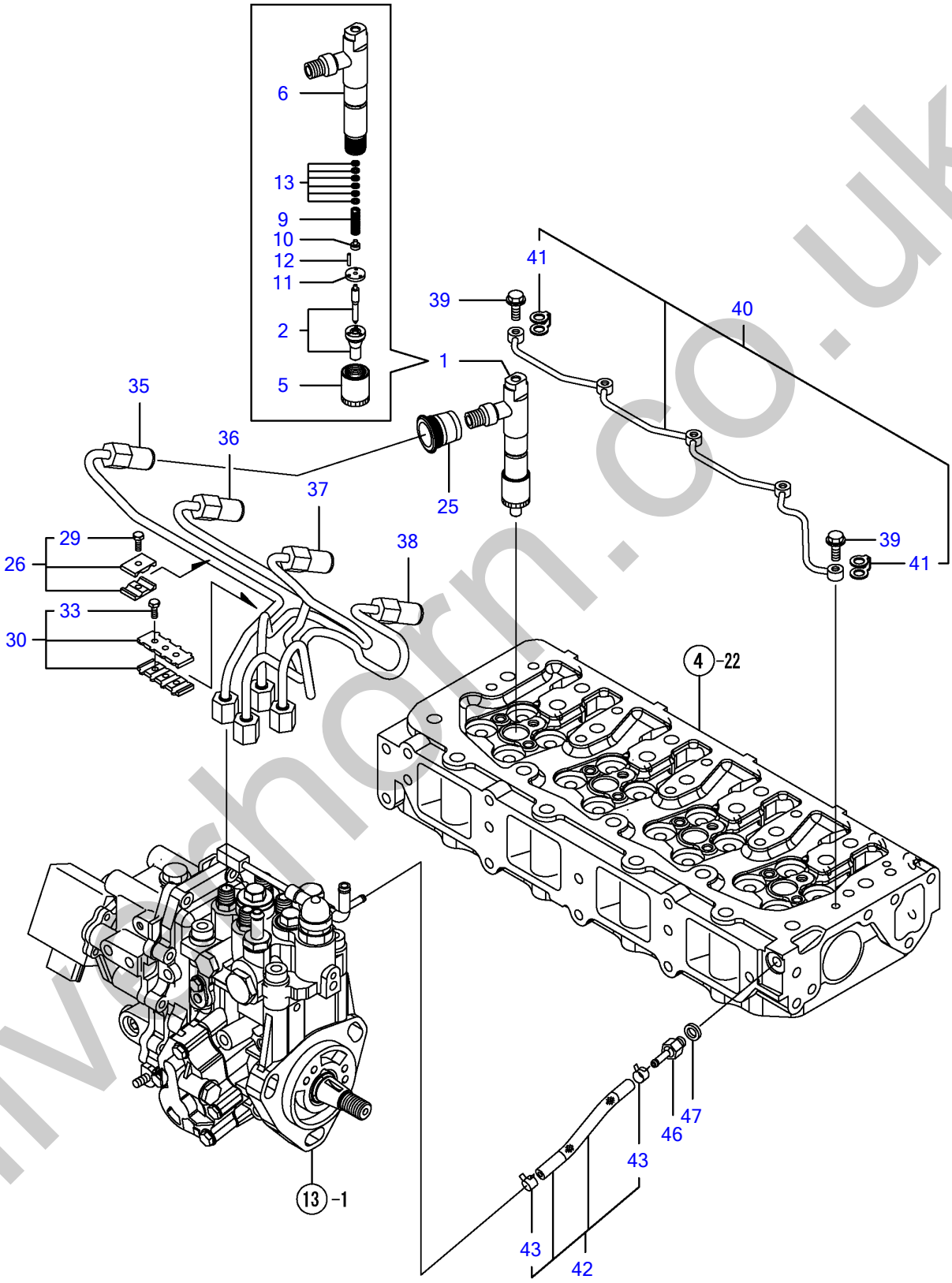

silverhorn.co.uk

FUEL INJECTION VALVE

Item	Part No	Description	Qty
1	Y729530-53200	FUEL INJECTOR(RDW	4
2	Y129530-53000	・NOZZLE ASSY	4
5	Y114250-53080	・NUT, NOZZLE CASE	4
6	Y129508-53100	・HOLDER ASSY, NOZZLE	4
9	Y114250-53120	・SPRING, NOZZLE	4
10	Y114250-53130	・SEAT, NOZZLE SPRING	4
11	Y114250-53140	・PLATE, STOP	4
12	Y114250-53210	・PIN	8
13	Y114250-53400	・SHIM PACK	4
25	Y123907-11601	PIPE SEAL	4
26	Y119305-59120	RETAINER	2
29	Y129150-59131	・BOLT M4X14,HEX.SCKT.	2
30	Y129550-59120	RETAINER	1
33	Y129150-59131	・BOLT M4X14,HEX.SCKT.	2
35	Y129508-59910	PIPE ASSY, INJECTION	1
36	Y129508-59920	PIPE ASSY, INJECTION	1
37	Y129508-59930	PIPE ASSY, INJECTION	1
38	Y129508-59940	PIPE ASSY, INJECTION	1
39	Y123907-59540	JOINT BOLT M6	5
40	Y129508-59550	PIPE ASSY,F.O.RETURN	1
41	Y123907-59550	・PACKING,FUEL RETURN	5
42	Y129509-59550	PIPE ASSY, RETURN	1
43	Y124722-59050	・CLAMP 9	2
46	Y123907-59560	HOSE JOINT 4	1
47	Y22190-080002	SEAL WASHER 8S	1

silverhorn.co.uk

FUEL FILTER

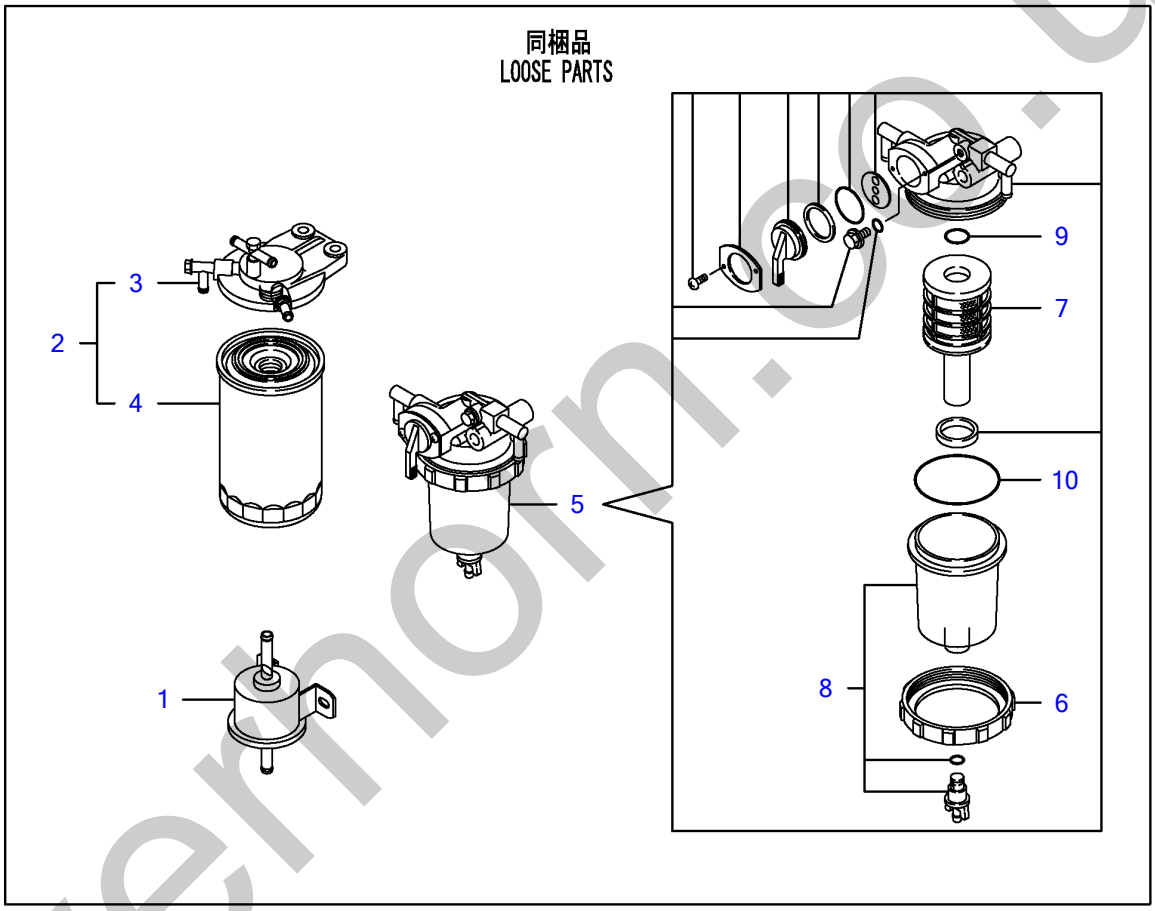

silverthorn.co.uk

Y00D9950	16, FOフィルタ			
4TNV84T-ZKTBL	1, 08/01	2	3	PLUS

FUEL FILTER

Item	Part No	Description	Qty
1	Y129612-52100	FUEL PUMP	1
2	Y129940-55610	FILTER ASSY, FUEL	1
3	Y129004-55612	・BRACKET,FUEL FILTER	1
4	Y129907-55801	・FILTER, FUEL OIL	1
5	Y129906-55700	SEPARATOR ASSY	1
6	Y129100-55690	・RING, RETAINING	1
7	Y119802-55710	・ELEMENT	1
8	Y119802-55730	・CUP ASSY(SERVICE PAR	1
9	Y24311-000160	・O-RING 1A P-16.0	1
10	Y24321-000650	・O-RING 1A G-65.0	1

silverhorn.co.uk

STARTING MOTOR

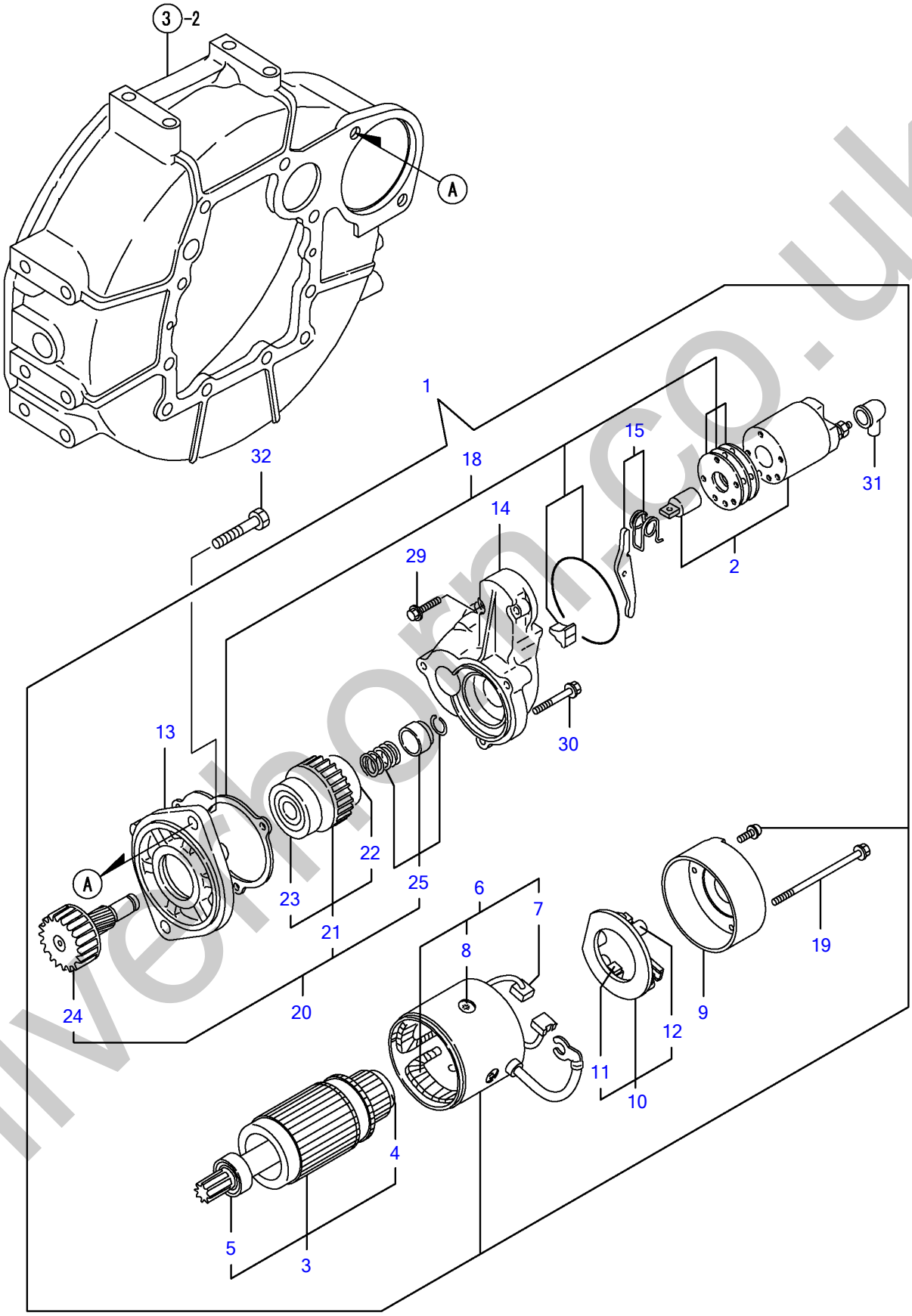

silverthorn.co.uk

Y00D9950	17. スターティングモータ			
4TNV84T-ZKTBL	1. 08/01	2	3	PLUS

STARTING MOTOR

Item	Part No	Description	Qty
1	Y129136-77011	STARTER	1
2	Y129136-77310	· SHAFT, PINION	1
3	Y129900-77400	· ARMATURE ASSY	1
4	YX2130350900	· · BALL BEARING	1
5	YX2114255110	· · BALL BEARING	1
6	Y129900-77440	· COIL ASSY, FIELD	1
7	Y129900-77450	· · BRUSH (+)	2
8	Y171008-77450	· · SCREW, POLE CORE SET	4
9	Y129900-77460	· COVER, REAR	1
10	Y129900-77480	· HOLDER ASSY, BRASH	1
11	Y129900-77450	· · BRUSH (+)	2
12	Y129400-77490	· · SPRING, BRUSH	4
13	Y171008-77510	· HOUSING ASSY, GEAR	1
14	Y129136-77520	· CENTER HOUSING	1
15	Y171008-77540	· LEVER SET, SHIFT	1
18	Y129400-77571	· DUST COVER,(NON-ASB.	1
19	Y129900-77640	· BOLT, THROUGHT	2
20	Y171008-77650	· PINION ASSY	1
21	YX2114555500	· · CLUTCH ASSY	1
22	YX2114955020	· · · BALL BEARING	1
23	YX2240410100	· · · BALL BEARING	1
24	Y171008-77660	· · SHAFT, PINION	1
25	Y171008-77670	· · STOPPER SET, PINION	1
29	Y26106-060322	· BOLT M 6X 32 PLATED	2
30	Y26106-060402	· BOLT M 6X 40 PLATED	3
31	Y171008-77750	· COVER, M TERMINAL	1
32	Y26116-120252	BOLT M12X 25 PLATED	2

silverhorn.co.uk

GENERATOR

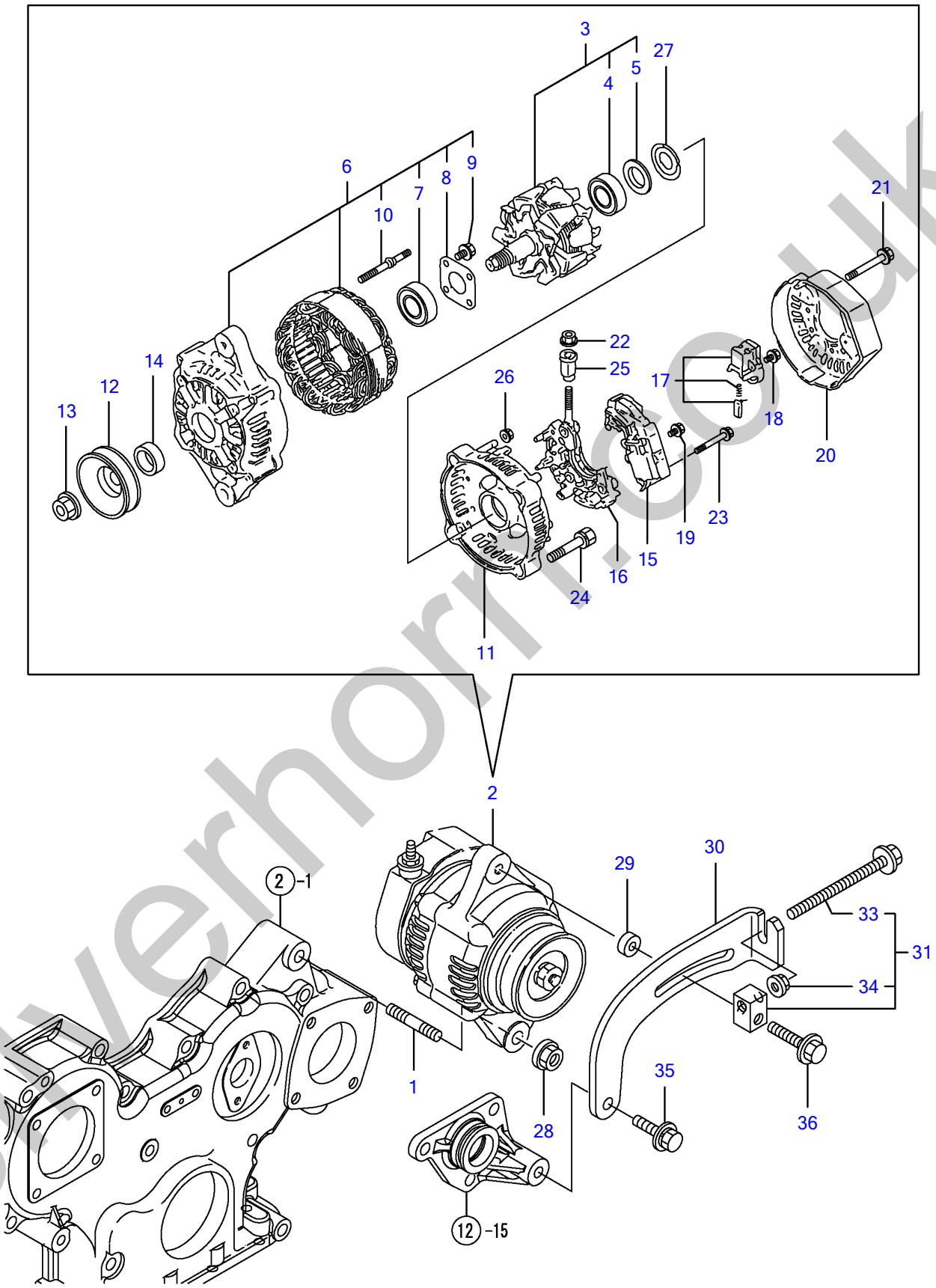

silverhorse.co.uk

Y00D9950	18, ジェネレータ			
4TNV84T-ZKTBL	1, 08/01	2	3	PLUS

GENERATOR

Item	Part No	Description	Qty
1	Y129795-01900	STUD	1
2	Y129240-77200	ALTERNATOR	1
3	Y119620-77380	· ROTOR ASSY	1
4	Y123501-79240	· · BEARING, BALL	1
5	Y119620-79250	· · COVER, BEARING	1
6	Y119620-77421	· FLAME ASSY, DRIVE	1
7	Y119620-79200	· · BALL BEARING	1
8	Y119620-79210	· · PLATE	1
9	Y119620-79220	· · SCREW	4
10	Y119620-79230	· · BOLT, STUD	2
11	Y119620-77440	· FLAME ASSY, REAR	1
12	Y119620-77461	· PULLEY	1
13	Y119620-77471	· NUT	1
14	Y119620-77490	· COLLAR	1
15	Y129240-77710	· REGULATOR ASSY	1
16	Y119620-79260	· HOLDER	1
17	Y129052-79270	· HOLDER, BRUSH	1
18	Y119620-79290	· SCREW	6
19	Y119620-79300	· SCREW	1
20	Y129240-79300	· COVER	1
21	Y119620-79310	· BOLT	3
22	Y129240-79310	· NUT	1
23	Y119620-79320	· SCREW W/WASHER	2
24	Y119620-79330	· BOLT	2
25	Y119620-79340	· INSULATION BUSH	1
26	Y119620-79350	· NUT	2
27	Y119620-79360	· THRUST WASHER	1
28	Y26306-100002	NUT	1
29	Y119940-77270	ADJUSTER, BELT	1
30	Y129536-77300	ADJUSTER,BELT	1
31	Y119624-77351	BROCK,GENERATOR CMP	1
33	Y26106-081004	· BOLT 8*100	1
34	Y26306-080002	· NUT	1
35	Y26106-080452	BOLT M 8X 45 PLATED	1
36	Y26106-080552	BOLT M 8X 55 PLATED	1

silverhorn.co.uk

ELECTRIC PARTS

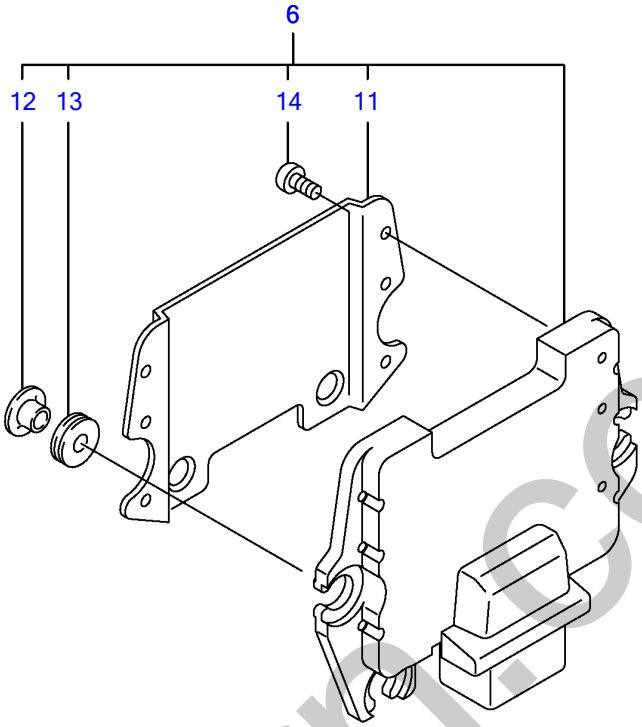

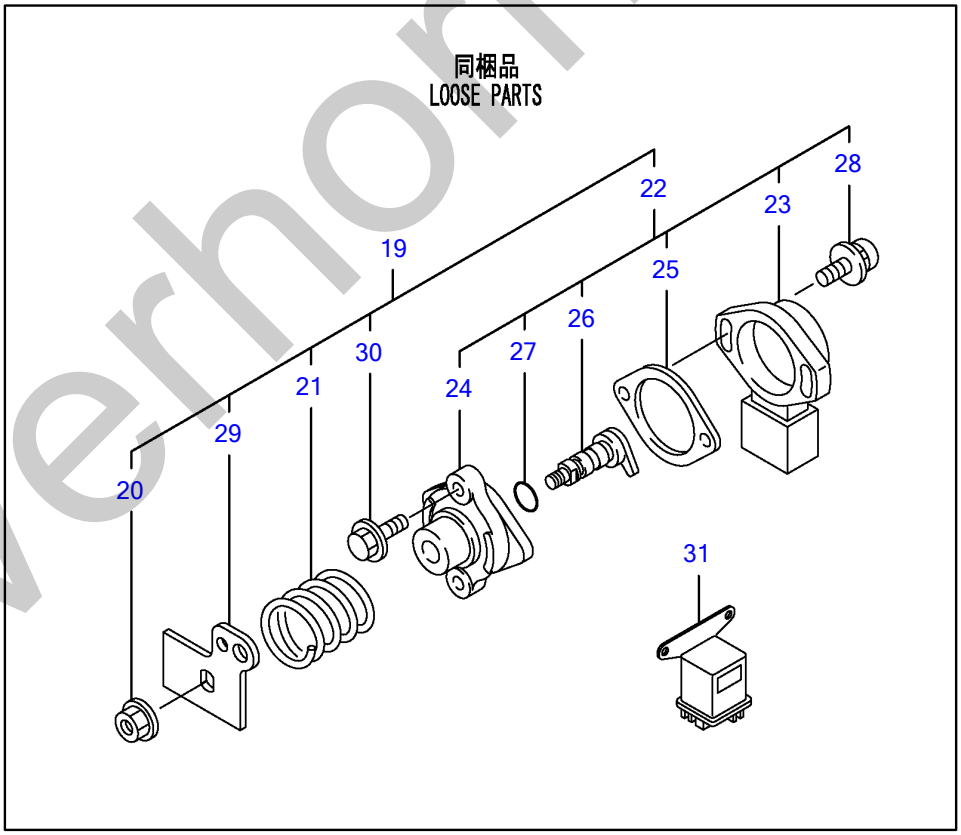

silverhorn.co.uk

Y00D9950	19, デンソウヒン			
4TNV84T-ZKTBL	1, 08/01	2	3	PLUS

ELECTRIC PARTS

Item	Part No	Description	Qty
6	Y129536-75020	CONTROLLER CMP	1
11	Y129927-77600	・SHIELD,ECU	1
12	Y129927-77680	・COLLAR, CONTROLLER	3
13	Y119578-91351	・RUBBER, CUSHION	3
14	Y22877-500080	・SCREW, 5.0 X 8	6
19	Y129938-77800	ACCEL SENSOR ASSY	1
20	Y194990-22130	・NUT W/WASHER 6	1
21	Y119060-61990	・SPRING, RETURN	1
22	Y129054-77800	・SENSOR COMP.,ACCEL	1
23	Y185100-50070	・・BODY	1
24	Y129054-77811	・・SUPPORT	1
25	Y129054-77820	・・GASKET, SUPPORT	1
26	Y129054-77830	・・SHAFT ASY	1
27	Y24311-000070	・・O-RING 1A P-7.0	1
28	Y26023-040202	・・SCREW M 4X 20	2
29	Y129938-77810	・ACCEL SENSOR LEVER	1
30	Y26106-060122	・BOLT M 6X 12 PLATED	2
31	Y119646-77900	RELAY, POWER	2

silverhorn.co.uk

GASKET SET

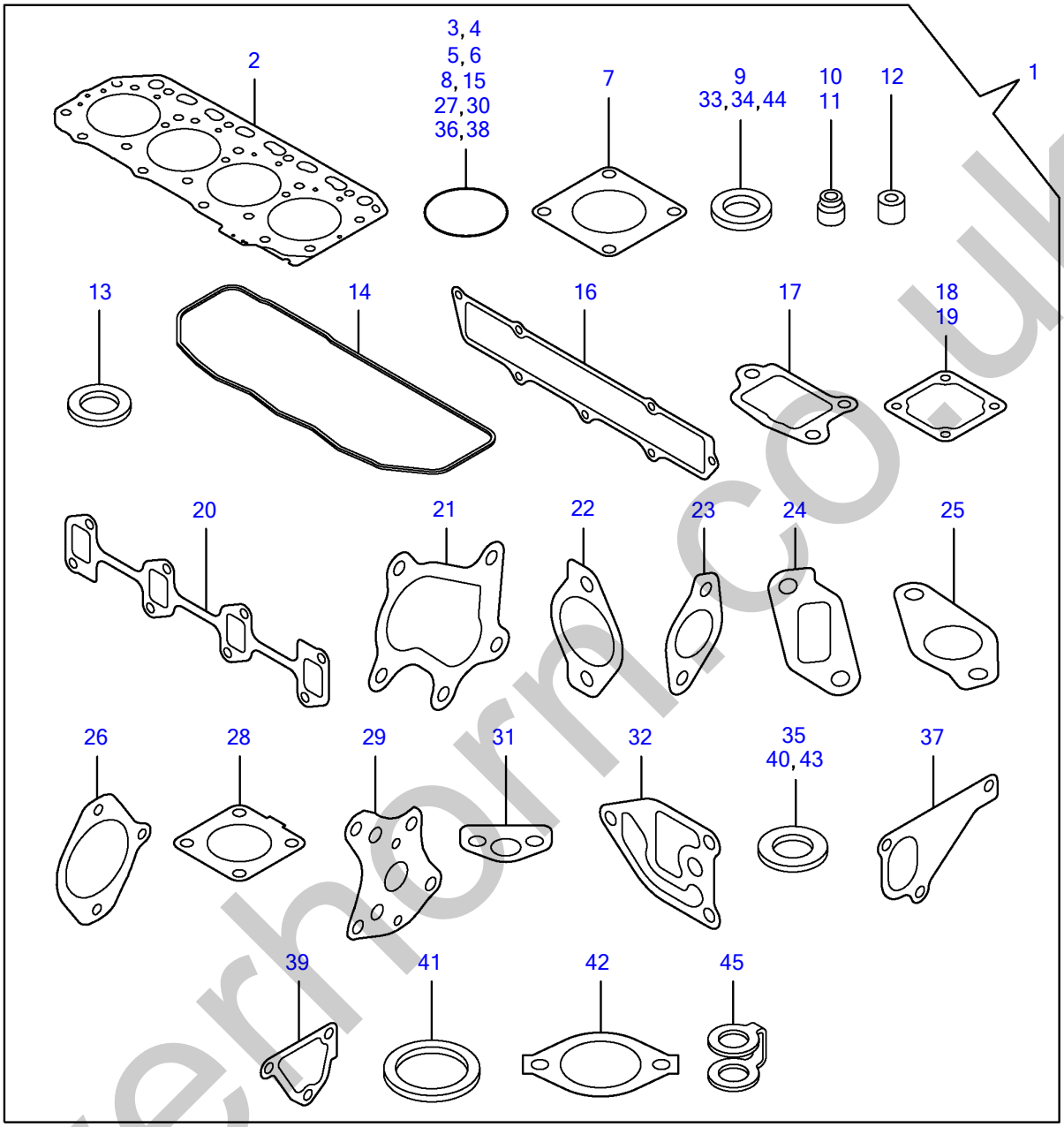

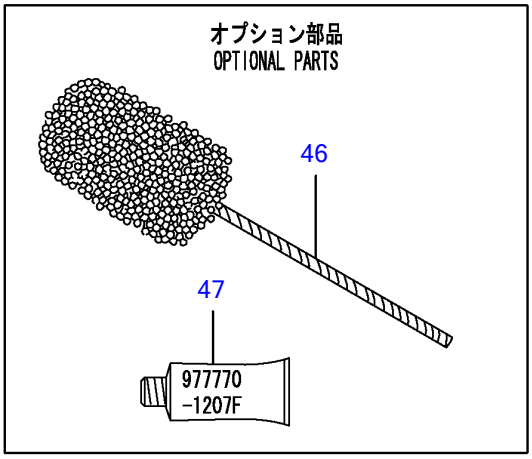

Y00D9950	20, パッキンセット			
4TNV84T-ZKTBL	1, 08/01	2	3	PLUS

silverhorn.co.uk

Engine for TL220 4TNV84T-ZKTBL

GASKET SET

Item	Part No	Description	Qty
1	Y729509-92600	GASKET SET(NON-ASB.)	1
2	Y129508-01330	・GASKET, HEAD	1
3	Y119609-32040	・O-RING P16	2
4	Y121850-51960	・O-RING, F.I.PUMP	1
5	Y24311-000320	・O-RING 1A P-32.0	3
6	Y24311-000300	・O-RING 1A P-30.0	1
7	Y124240-01883	・GASKET, (NON-ASB.)	1
8	Y24341-000240	・O-RING 1A S-24.0	1
9	Y22190-220002	・SEAL WASHER 22S	1
10	Y119717-11340	・SEAL, VALVE STEM	8
11	Y119717-11350	・SEAL, VALVE STEM	8
12	Y119802-11870	・PROTECTOR, NOZZLE	4
13	Y119625-11880	・SEAT, NOZZLE	4
14	Y129508-11310	・PK,BONNET	1
15	Y24311-000120	・O-RING 1A P 12.0	3
16	Y129508-12110	・GASKET, MAFIFOLD	1
17	Y129509-13720	・GASKET	1
18	Y129100-77510	・GASKET, AIR HEATER	1
19	Y129150-77511	・GASKET, (NON-ASB.)	1
20	Y129550-13110	・GASKET, EXH.MANIFOLD	1
21	Y129508-18090	・GASKET, TURBOCHARGER	1
22	Y129928-13410	・GASKET, EGR COOLER	2
23	Y129927-13810	・GASKET, EGR PIPE	1
24	Y129927-13910	・GASKET(EGR-V IN	1
25	Y129927-13920	・GASKET(EGR-V OUT	1
26	Y171353-26081	・GASKET,HO-P BRACKET	1
27	Y24321-000850	・O-RING 1A G-85.0	1
28	Y129508-18080	・GASKET	1
29	Y129150-32020	・GASKET, L.O. PUMP	1
30	Y24311-240100	・O-RING 1A P-10A	1
31	Y129150-35042	・GASKET, (NON-ASB.)	1
32	Y129103-35122	・GASKET, (NON-ASB.)	1
33	Y22190-080002	・SEAL WASHER 8S	3
34	Y22190-100002	・SEAL WASHER 10S	2
35	Y23414-100000	・GASKET 10, ROUND	2
36	Y24316-000160	・O-RING 4D P-16.0	1
37	Y129486-42021	・GASKET	1
38	Y129486-42140	・O-RING,CW-P	1
39	Y124395-49840	・GASKET, THERMO. CASE	1
40	Y23414-080000	・GASKET 8, ROUND	1
41	Y129150-49811	・GASKET, (NON-ASB.)	1
42	Y129795-49551	・GASKET, (NON-ASB.)	1
43	Y129150-49360	・GASKET 10	1
44	Y22190-120002	・SEAL WASHER 12	1
45	Y123907-59550	・PACKING,FUEL RETURN	5
46	Y129400-92420	FLEX HORN	1
47	Y977770-1207F	GASKET.LIQUID	1

silverhorn.co.uk