PARTS MANUAL

TL230

Serial No. 223000001~

BU1Z004(P-TL230BAC)

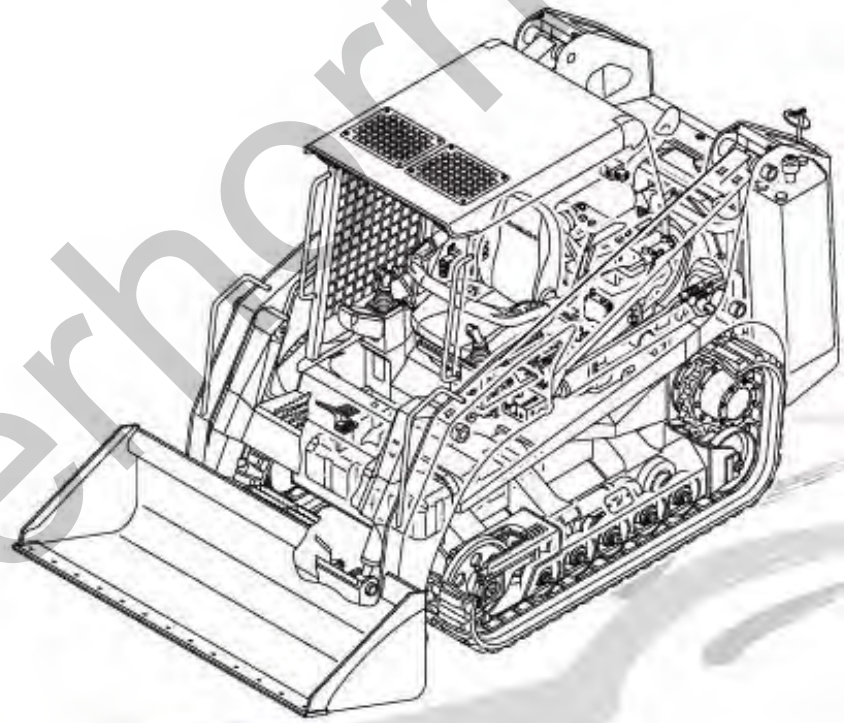

CRAWLER LOADER

TAKEUCHI

silverhorn.co.uk

silverhorn.co.uk

INDEX

Item	Part number	Description	Q'ty	Chan.	Serial No.	Serv.	Remarks
1		UNDERCARRIAGE					
2		MAIN FRAME & CONTROL LEVER					
3		ENGINE & ELECTRICAL SYSTEM					
4		HYDRAULIC PIPNG & TANK					
5		COVER & CAB					
6		ATTACHMENT					
7		DECAL & TOOL					
8		HYDRAULIC DEVICE					
10		ENGINE (4TNV98-ZNTBL)					
		2008.09.12 RV-1					
99		Kits, Attachments and Quick Reference					

silverhorn.co.uk

TRACK ROLLER A

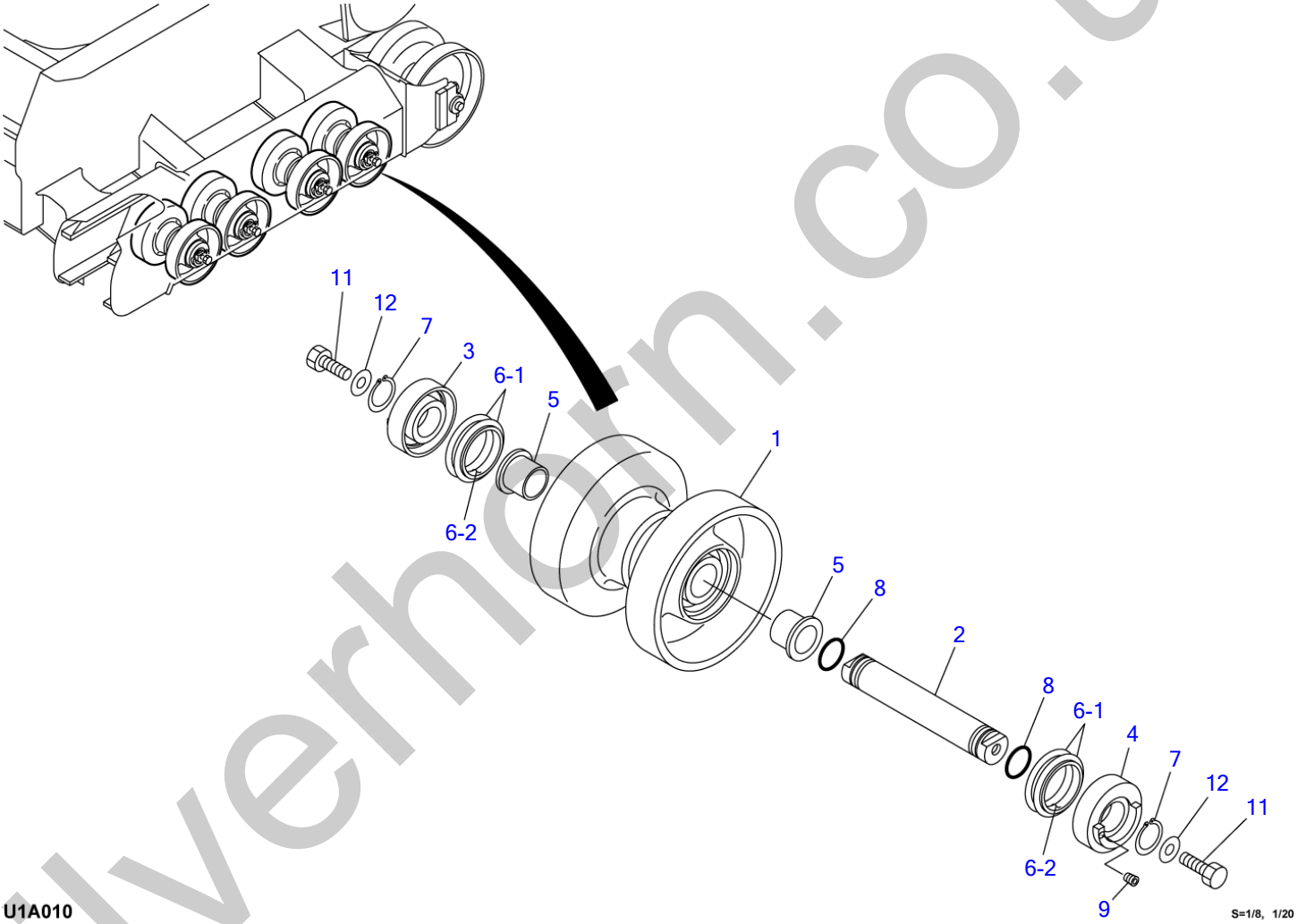

silverhorn.co.uk

TRACK ROLLER A

Item	Part number	Description	Q'ty	Chan.	Serial No.	Serv.	Remarks
		ROLLER ASSY, track					
0-1	0880130100	ROLLER SUB ASSY, track	8				
1	0880130010	・ROLLER	1				
2	0860134010	・SHAFT	1				
3	0221240400	・COVER	1				
4	0651300190	・COVER	1				
5	1333073535	・BUSHING	2				
6	1432500560	・SEAL, floating	2				
6-1	1432500561	・・O-RING	2				
6-2	1432500562	・・RING, seal	2				
7	1220000035	・RING, snap	2				
8	1420100300	・O-RING	2				
9	1501840000	・PLUG	1				
11	1100041645	BOLT	16				
12	1141550016	WASHER	16				
	U1a010						

silverhorn.co.uk

TRACK ROLLER B

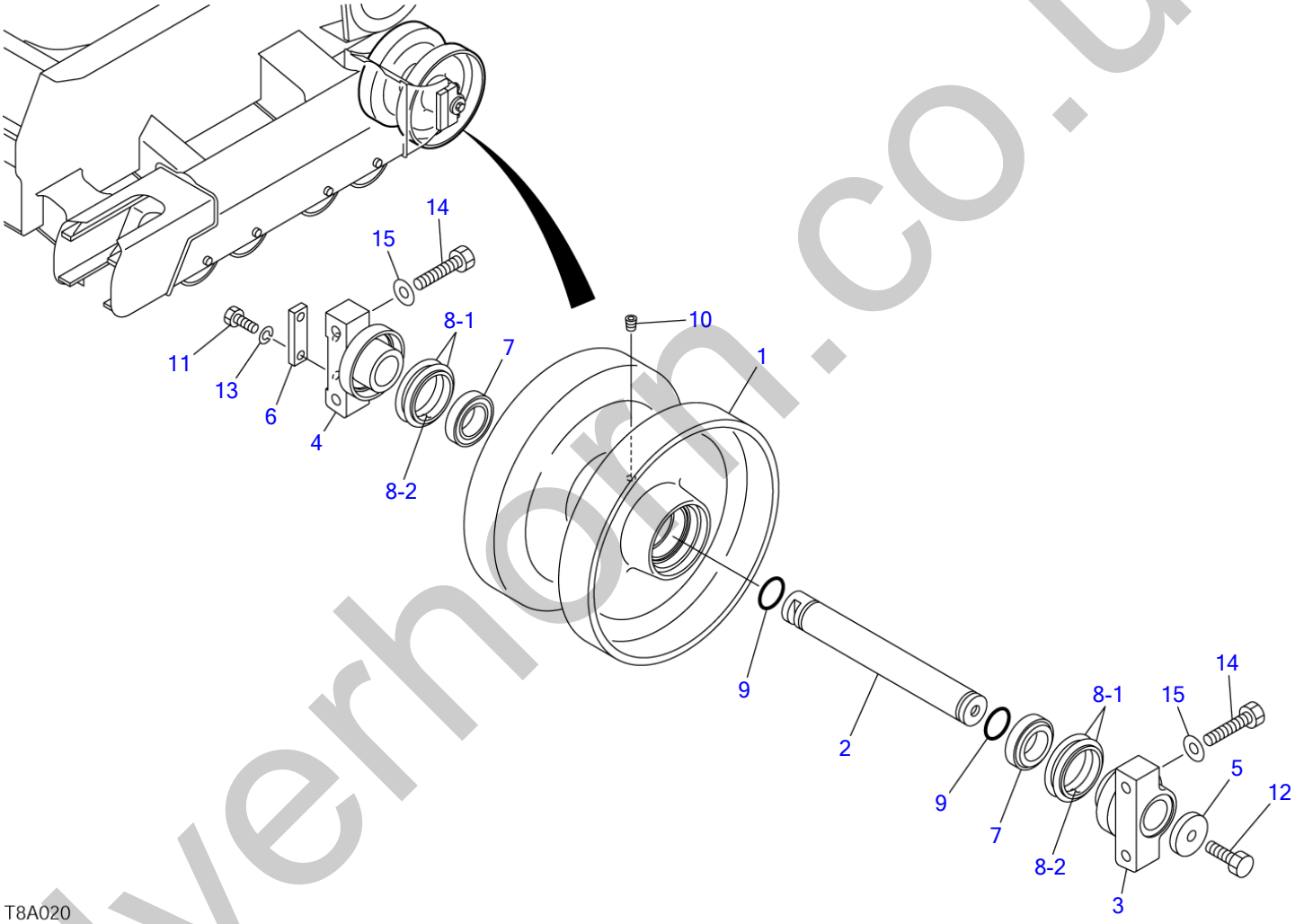

silverhorn.co.uk

TRACK ROLLER B

Item	Part number	Description	Q'ty	Chan.	Serial No.	Serv.	Remarks
		ROLLER ASSY, track					
0-1	0880135600	ROLLER SUB ASSY, track	2				
1	0880135610	・ROLLER	1				
2	0880135620	・SHAFT	1				
3	0881131330	・COVER	1				
4	0881131340	・COVER	1				
5	0881131350	・PLATE	1				
6	0881131360	・PLATE	1				
7	1305000004	・BEARING	2				
8	1432500640	・SEAL, floating	2				
8-1	1432500641	・・O-RING	2				
8-2	1432500642	・・RING, seal	2				
9	1420100350	・O-RING	2				
10	1501810001	・PLUG	1				
11	1100041030	・BOLT	2				
12	1106241440	・BOLT	1				
13	1140020010	・WASHER, spring	2				
14	1100041460	BOLT	8				
15	1141550014	WASHER	8				
	U1a030						

silverhorn.co.uk

FRONT IDLER

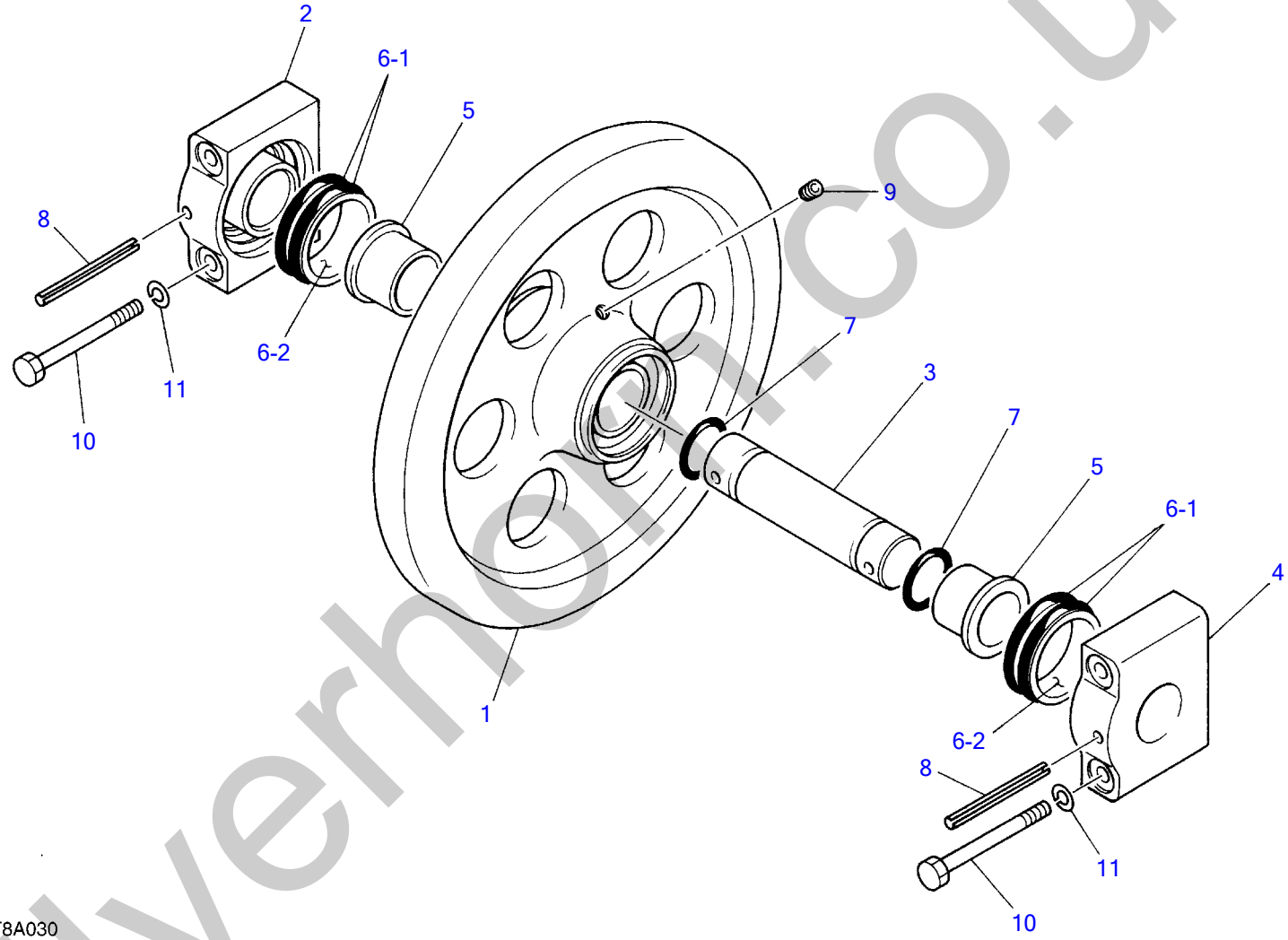

T8A030

S=1/5

silverhorn.co.uk

FRONT IDLER

Item	Part number	Description	Q'ty	Chan.	Serial No.	Serv.	Remarks
0	0880140000	IDLER ASSY	2				
1	0880140010	・IDLER	1				
2	0880140020	・COVER (R.H.)	1				
3	0871140030	・SHAFT	1				
4	0880140030	・COVER (L.H.)	1				
5	1333064540	・BUSH	2				
6	1432500640	・SEAL, floating	2				
6-1	1432500641	・・O-RING	2				
6-2	1432500642	・・RING, seal	2				
7	1420100400	・O-RING	2				
8	1213101000	・PIN, spring	2				
9	1501820001	・PLUG	1				
10	1101141215	BOLT	8				
11	1140020012	WASHER, spring	8				
	U1a041						

silverhorn.co.uk

TRACK ADJUSTER

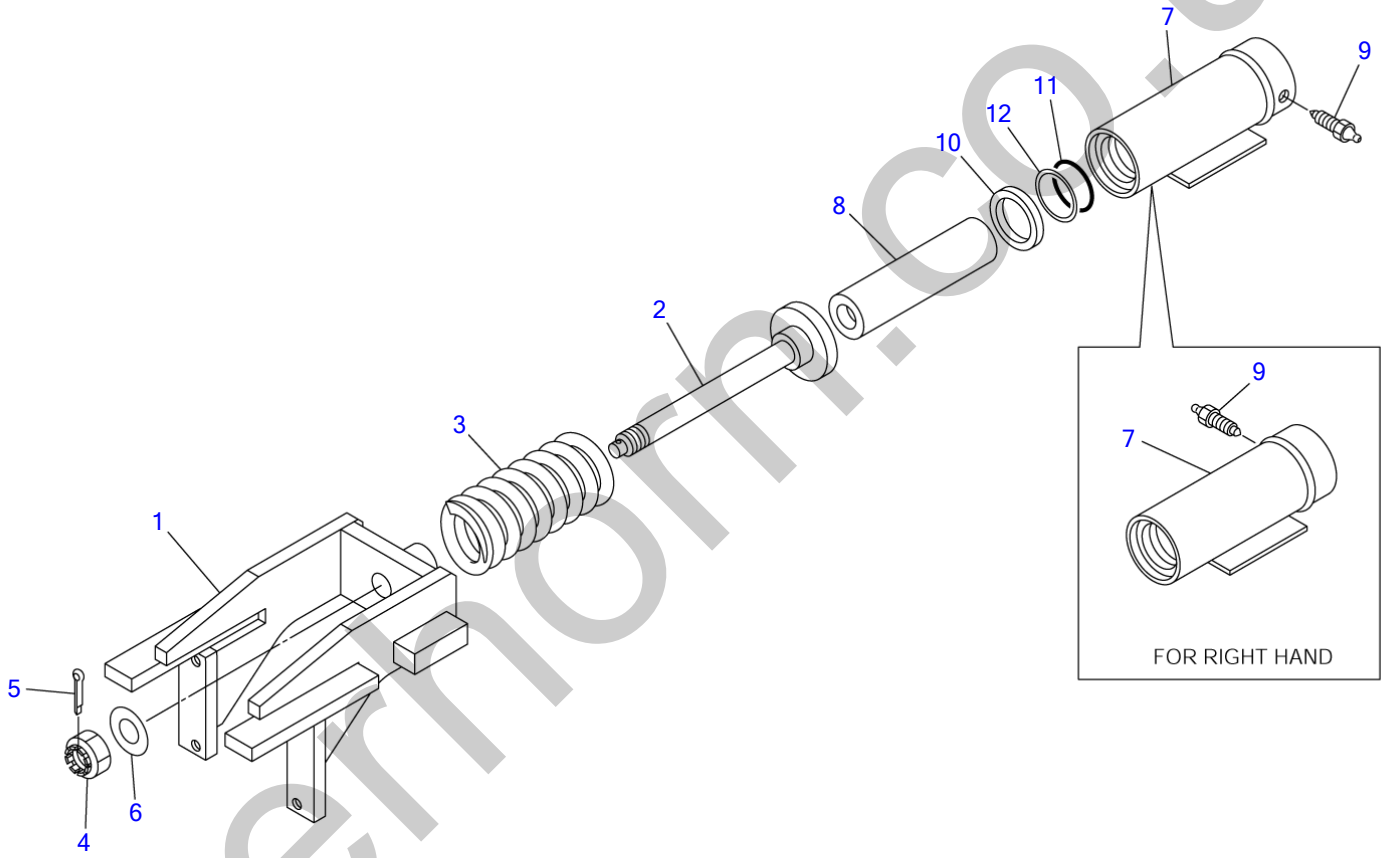

T8A040

S=1/8X110%

silvernorn.co.uk

TRACK ADJUSTER

Item	Part number	Description	Q'ty	Chan.	Serial No.	Serv.	Remarks
0-1	0880152000	SPRING ASSY(L.H.)	1				
	0880152300	SPRING ASSY(R.H.)	1				
1	0880152110	・YOKE	1				
2	0880152120	・ROD	1				
3	0007000004	・SPRING	1				
4	1132030024	・NUT	1				
5	1210000545	・PIN, split	1				
6	1141550024	・WASHER	1				
0-1	0880152200	・CYLINDER ASSY (L.H.)	1				
	0880152400	・CYLINDER ASSY (R.H.)	1				
7	0880152210	・・CYLINDER, grease(L.H.)	1				
	0880152410	・・CYLINDER, grease(R.H.)	1				
8	0880152220	・・PISTON	1				
9	1541300501	・・VALVE ASSY, check	1				
10	1400402835	・・SEAL, oil	1				
11	1422010500	・・O-RING	1				
12	1421020500	・・RING, back-up	1				
	U1a051						

silverhorn.co.uk

TRAVEL DEVICE

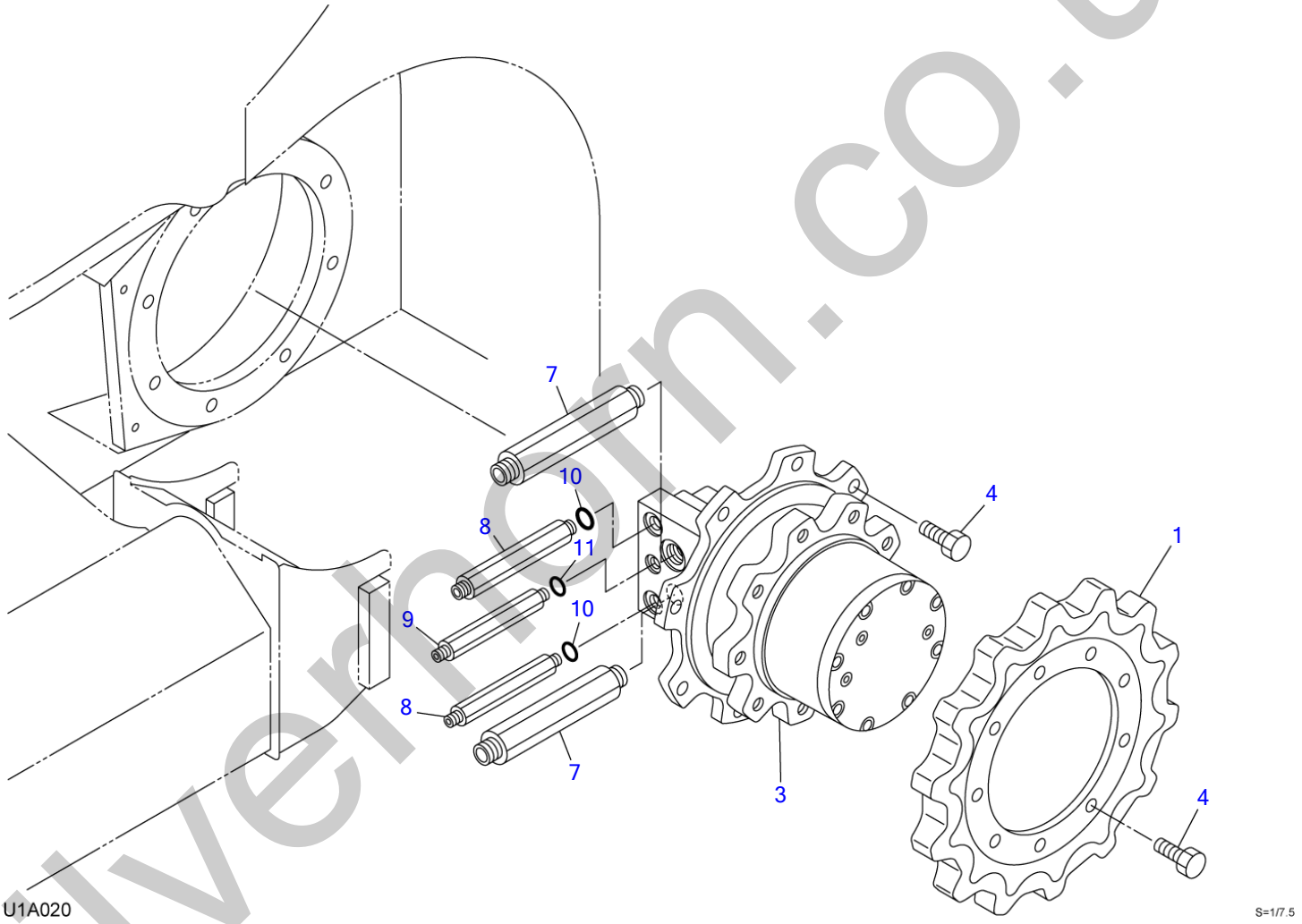

silvernorn.co.uk

TRAVEL DEVICE

Item	Part number	Description	Q'ty	Chan.	Serial No.	Serv.	Remarks
		MOTOR ASSY, travel					
1	0880166210	SPROCKET	2				
3	1903126600	MOTOR, travel	2				
4	1100041635	BOLT	34				
7	0880166130	ADAPTOR	4				
	1420010240	・O-RING	1				
8	0007203069	ADAPTOR	4				
9	0007203073	ADAPTOR	2				
10	1420010110	O-RING	4				
11	1420010140	O-RING	2				
	U1a021						

silverhorn.co.uk

CRAWLER BELT

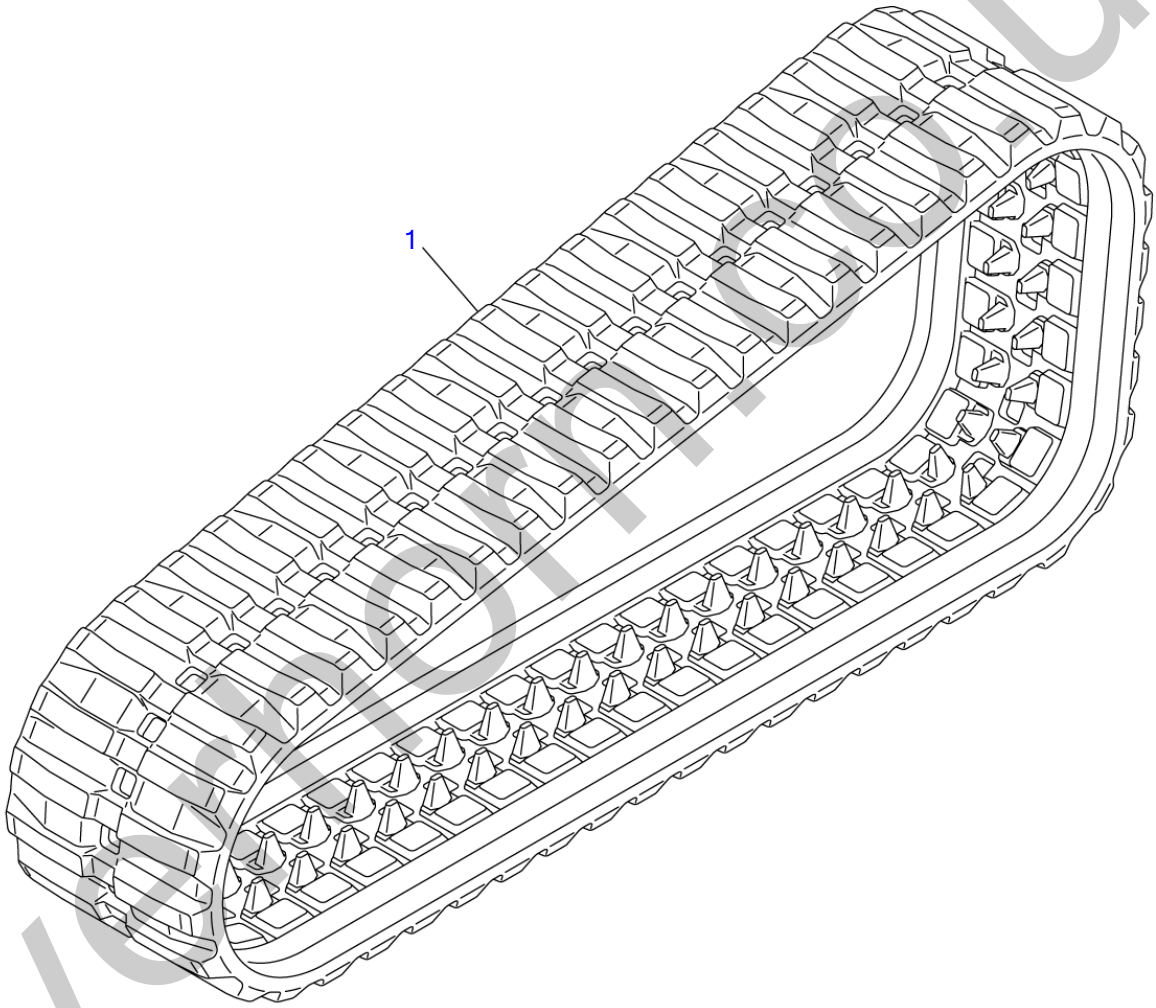

T7A060

S=1/12

silverpartsuk

CRAWLER BELT

Item	Part number	Description	Q'ty	Chan.	Serial No.	Serv.	Remarks
1	**1914061430**	BELT, rubber crawler	2				
	1914061410	BELT, RUBBER CRAWLER	2				
	U1A060						

silverhorn.co.uk

FRAME

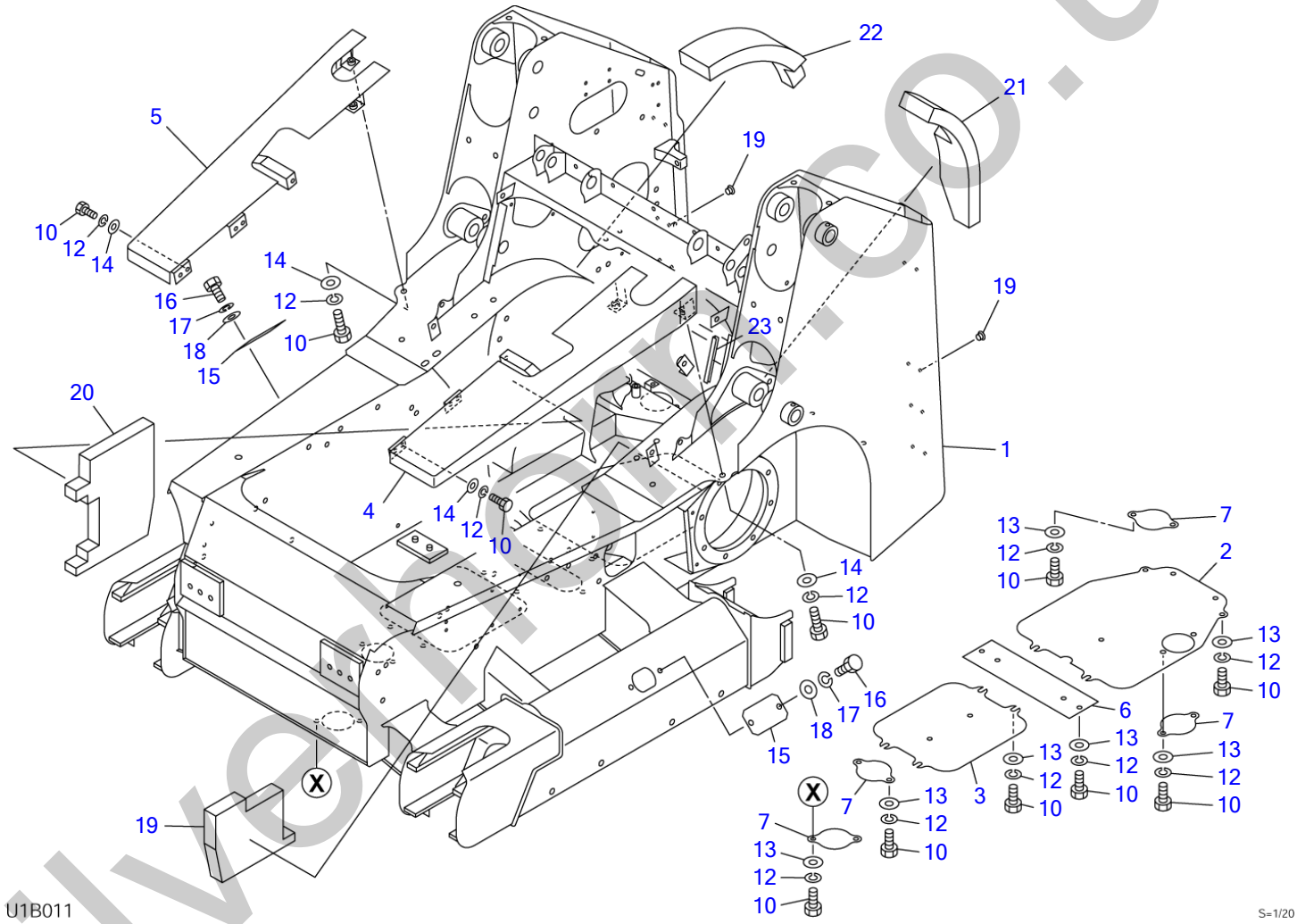

silverhorse.co.uk

FRAME

Item	Part number	Description	Q'ty	Chan.	Serial No.	Serv.	Remarks
		FRAME ASSY					
		FRAME ASSY (for EU)					
1	X **********	FRAME	1				
2	0880308010	COVER	1				
3	0880308020	COVER	1				
4	0880309300	COVER(L.H.)	1				
5	0880309350	COVER(R.H.)	1				
6	0880305080	COVER	1				
7	0881302095	COVER	4				
10	1100041020	BOLT	28				
12	1140020010	WASHER, spring	32				
13	1141110010	WASHER	18				
14	0003600025	WASHER	14				
15	0331018600	COVER	2				
16	1100040816	BOLT	4				
17	1140020008	WASHER, spring	4				
18	1141110008	WASHER	4				
19	1652533021	CAP	16		223000051~	M	
	0880963990	ABSORBENT, noise	1				for EU
20	0880964000	ABSORBENT, noise	1				for EU
21	0880964010	ABSORBENT, noise	1				for EU
22	0663002050	ABSORBENT, noise	1				for EU
23	1653916015	TRIM (sold by the meter)	1				for EU
	U1b011						

silverhorn.co.uk

ARM STOPPER

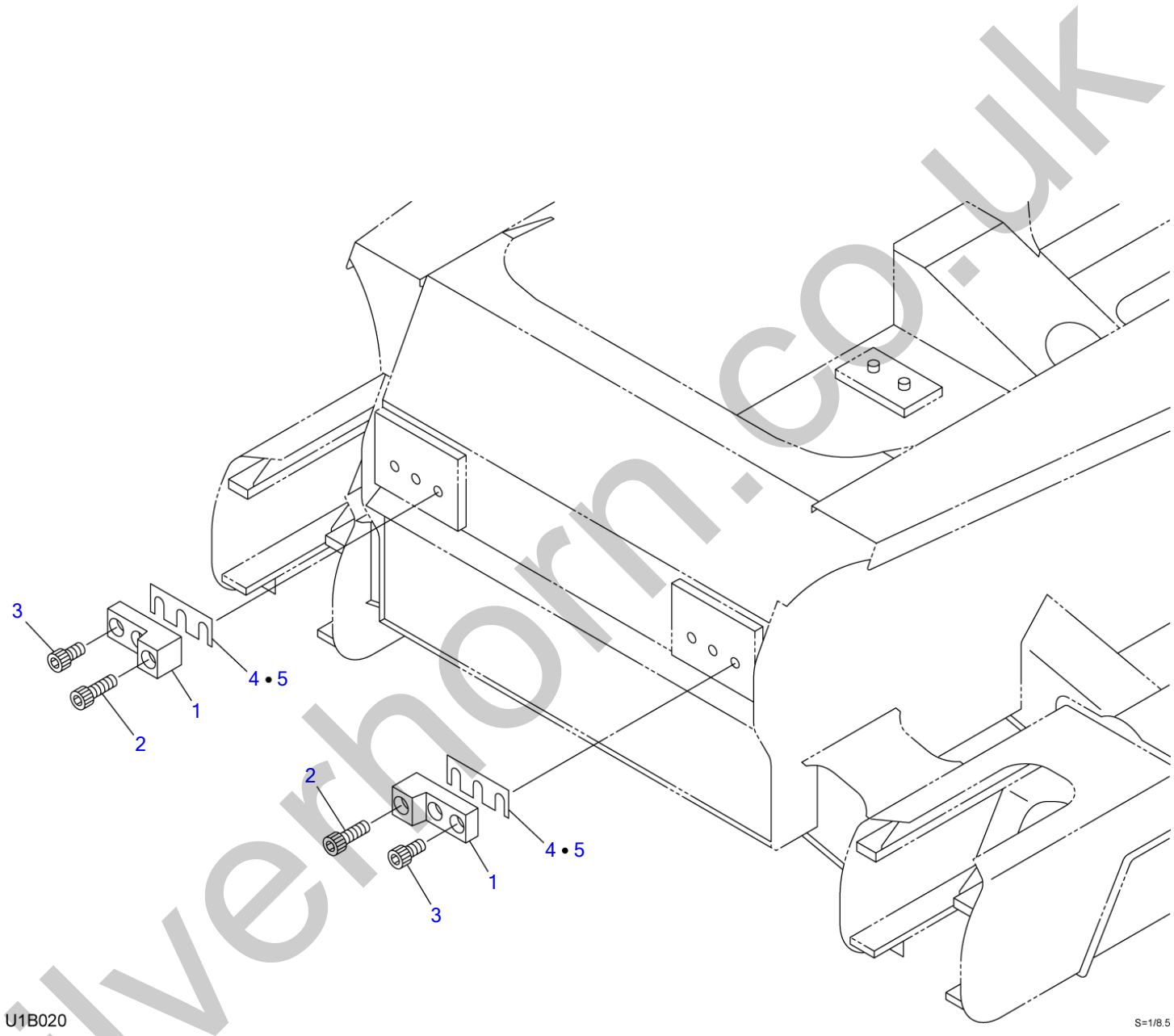

silverhorn.co.uk

ARM STOPPER

Item	Part number	Description	Q'ty	Chan.	Serial No.	Serv.	Remarks
		STOPPER ASSY					
1	0880604910	STOPPER	2				
2	1110041645	SCREW, cap	2				
3	1110041625	SCREW, cap	4				
4	0880604950	SHIM	AR				t=1.0mm
5	0880606950	SHIM	AR				t=0.5mm
	T8b020						

silverhorn.co.uk

HOOK

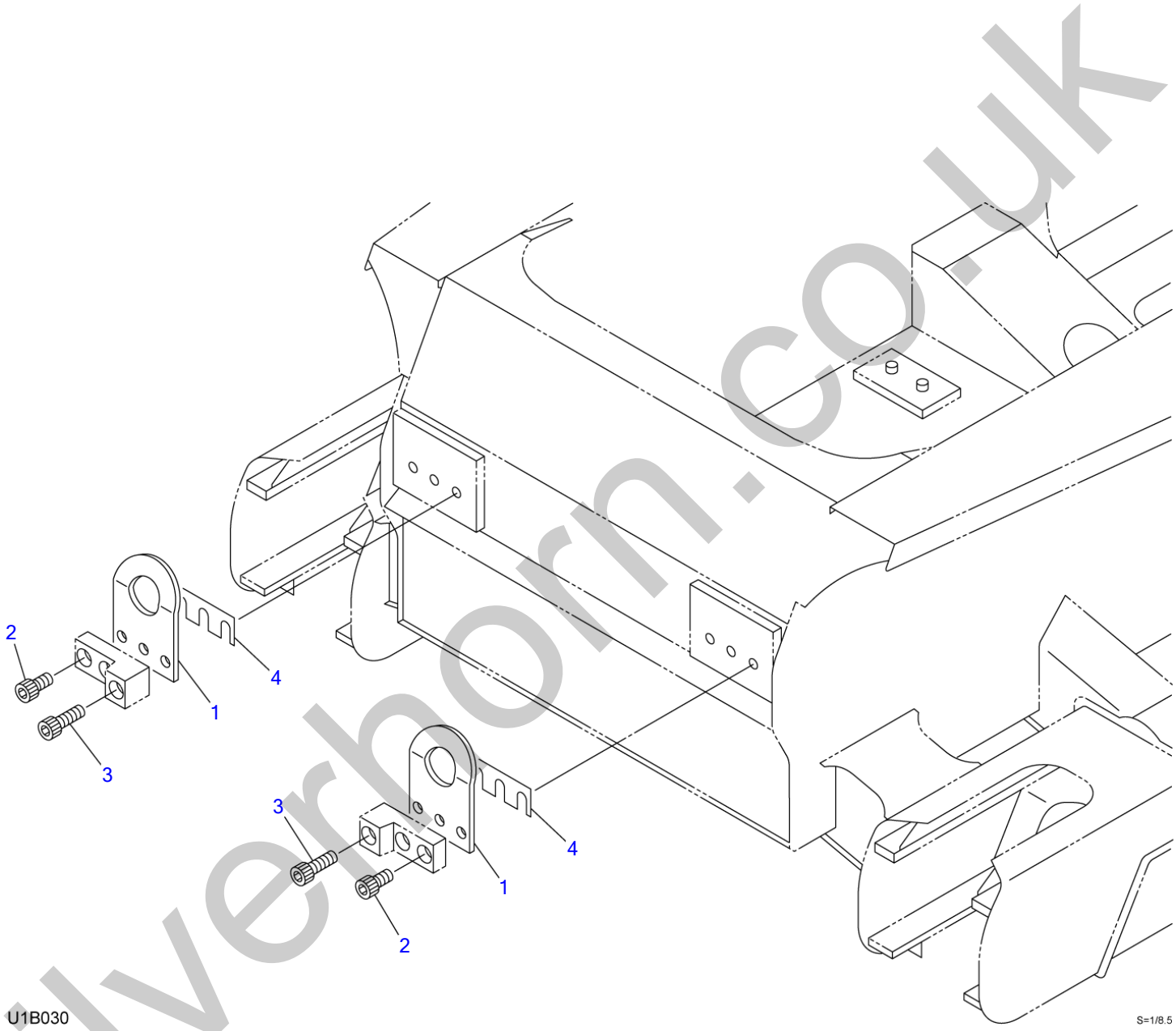

silverhorn.co.uk

HOOK

Item	Part number	Description	Q'ty	Chan.	Serial No.	Serv.	Remarks
		HOOK ASSY					
1	0880311020	HOOK	2				
2	1110041635	SCREW, cap	4				
3	1110041655	SCREW, cap	2				
4	0880604950	SHIM	AR				t=1.0mm
	0880606950	SHIM	AR				t=0.5mm
	U1b030						

silverhorn.co.uk

OPERATION LEVER & STAND

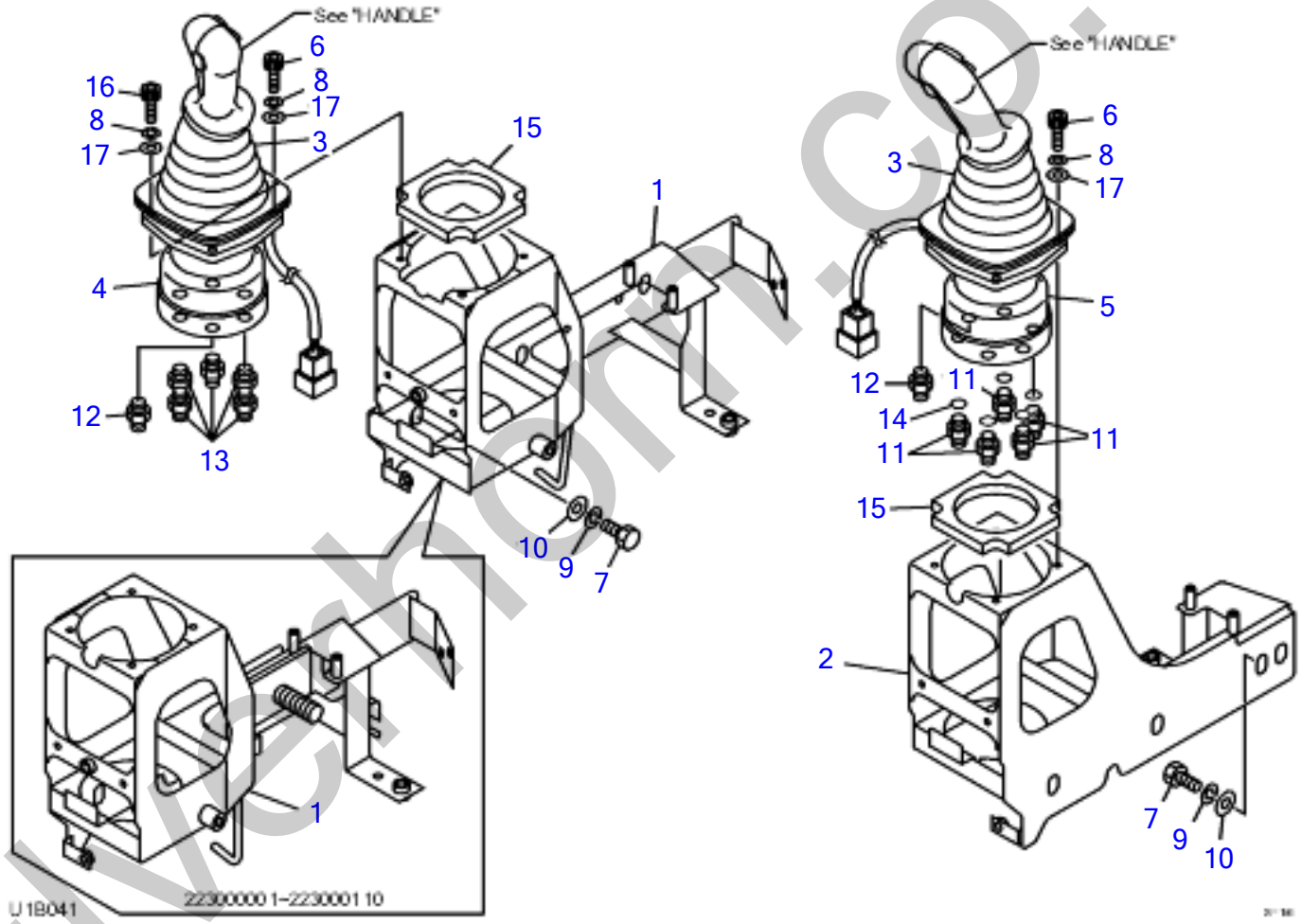

silvershorn.co.uk

OPERATION LEVER & STAND

Item	Part number	Description	Q'ty	Chan.	Serial No.	Serv.	Remarks
		VALVE ASSY					
1	0665100100	BRACKET(R.H.)	1				
	0665100200	RH BRACKET	1				
2	0880512200	BRACKET(L.H.)	1				
3	0881510020	BOOT	2				
4	1901749800	VALVE, pilot(R.H.)	1				3 switch
5	1901749700	VALVE, pilot(L.H.)	1				slide switch
6	1110040620	SCREW, cap	6				
7	1100041020	BOLT	6				
8	1140420006	WASHER, spring	8				
9	1140020010	WASHER, spring	6				
10	0003600020	WASHER	6				
11	1515600571	ADAPTOR	5				
	1420010110	・O-RING	1				
12	1512370008	ADAPTOR (wth filter)	2				
	1420010110	・O-RING	1				
13	1515600200	ADAPTOR	5				
	1420010110	・O-RING	1				
14	1420010110	O-RING	5				
15	0881511150	SPONGE	2				
16	1110040625	SCREW, cap	2				
17	1141110006	WASHER	8				
	U1b041						

silverhorn.co.uk

OPERATION LEVER & STAND (multi-functional grip type; for U.S. TAKEUCHI, GEHL & MUSTANG)

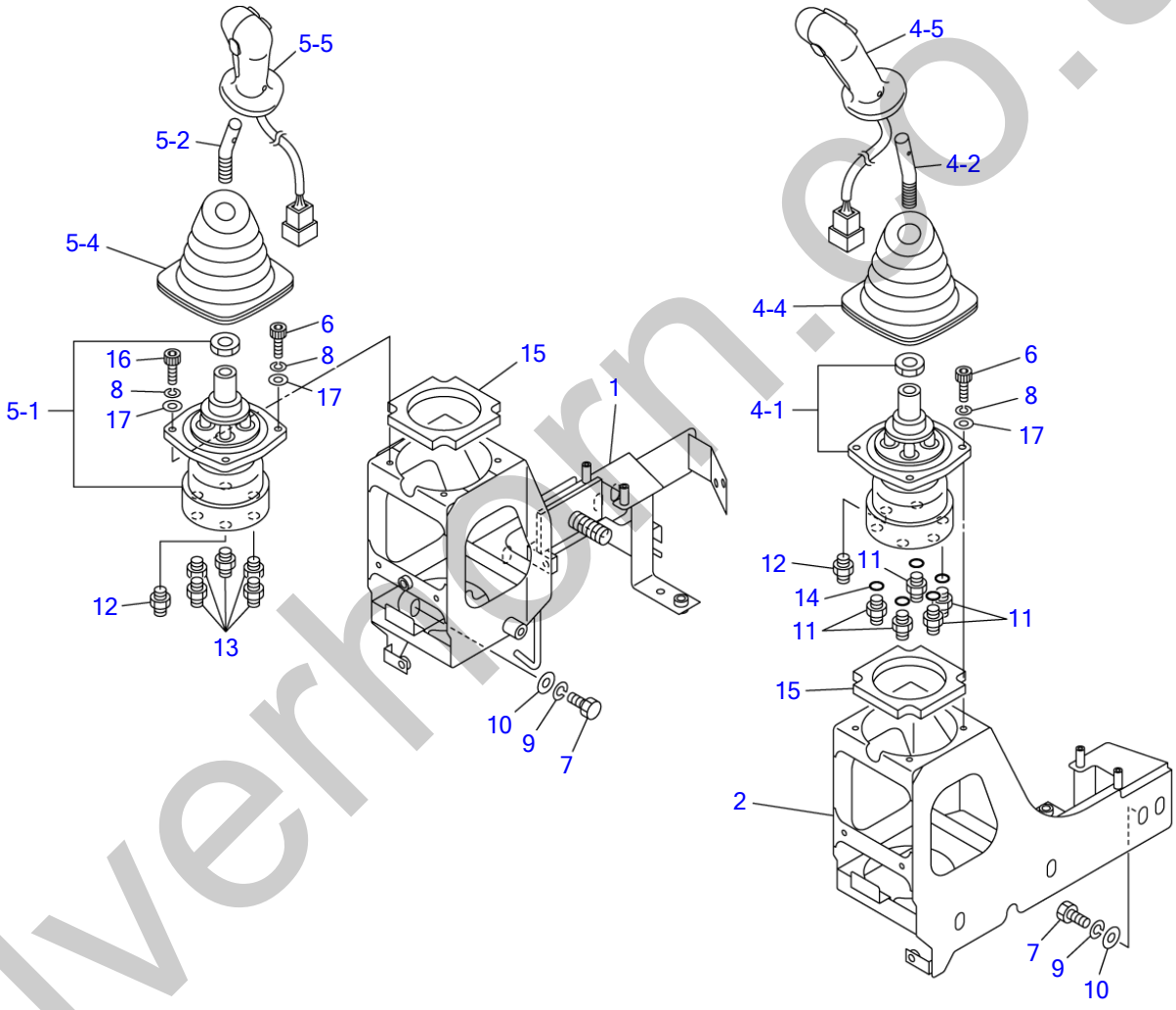

silverhorn.co.uk

OPERATION LEVER & STAND (multi-functional grip type; for U.S. TAKEUCHI, GEHL & MUSTANG)

Item	Part number	Description	Q'ty	Chan.	Serial No.	Serv.	Remarks
		VALVE ASSY					
1	0665100100	BRACKET (R.H.)	1			M	
	0665100200	BRACKET RH	1				
2	0880512200	BRACKET (L.H.)	1			M	
4	0665101100	VALVE ASSY (L.H.)	1			M	
4-1	1901753900	・VALVE, pilot (L.H.)	1			M	
4-2	0665101120	・LEVER	1			M	
4-4	0375109110	・BOOT	1			M	
4-5	1650205500	・GRIP (L.H.)	1			M	slide switch
5	0665101200	VALVE ASSY (R.H.)	1			M	
5-1	1901754000	・VALVE, pilot (R.H.)	1			M	
5-2	0665102120	・LEVER	1			M	
5-4	0375109110	・BOOT	1			M	
5-5	1650205600	・GRIP (R.H.)	1			M	5 switch
6	1110040620	SCREW, cap	6			M	
7	1100041020	BOLT	6			M	
8	1140420006	WASHER, spring	8			M	
9	1140020010	WASHER, spring	6			M	
10	0003600020	WASHER	6			M	
11	1515600571	ADAPTOR	5			M	
12	1512370008	ADAPTOR (with filter)	2			M	
	1420010110	・O-RING	1			M	
13	1515600200	ADAPTOR	5			M	
	1420010110	・O-RING	1			M	
14	1420010110	O-RING	5			M	
15	0881511150	SPONGE	2			M	
16	1110040625	SCREW, cap	2			M	
17	1141110006	WASHER	8			M	
	U1b060						

silverhorn.co.uk

PIPING; OPERATION LEVER

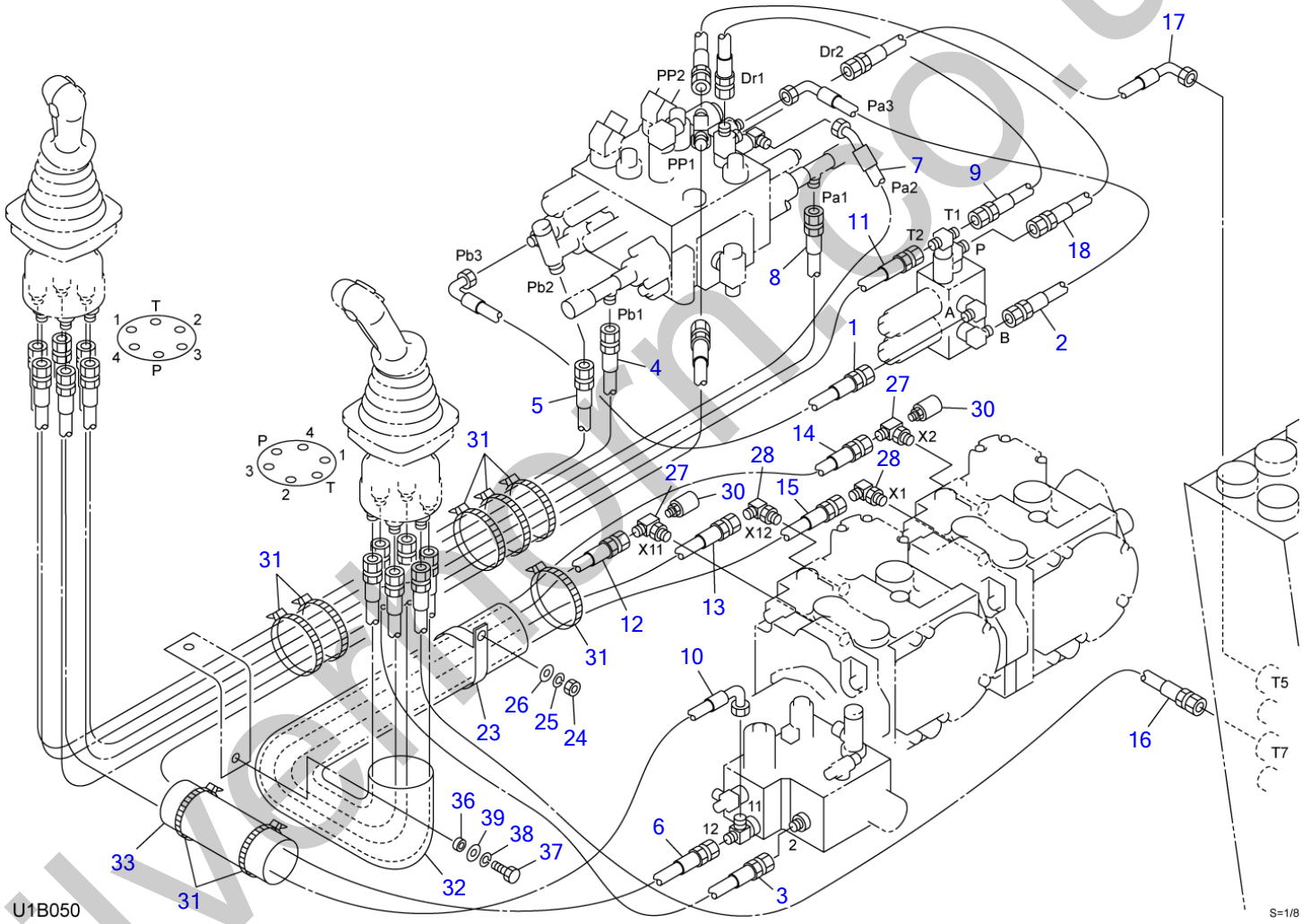

silvermtn.co.uk

PIPING; OPERATION LEVER

Item	Part number	Description	Q'ty	Chan.	Serial No.	Serv.	Remarks
		PIPING ASSY					
1	0667100010	HOSE ASSY	1				18010-52033
2	0667100020	HOSE ASSY	1				18010-52052
3	0667100030	HOSE ASSY	1				18010-22046
4	0667100040	HOSE ASSY	1				18010-22120
5	0667100050	HOSE ASSY	1				18010-22120
6	0667100060	HOSE ASSY	1				18010-22155
7	0667100070	HOSE ASSY	1				18010-79154
8	0667100080	HOSE ASSY	1				18010-22148
9	0667100090	HOSE ASSY	1				18010-22052
10	0667100100	HOSE ASSY	1				18010-52095
11	0667100110	HOSE ASSY	1				18010-22118
12	0667101120	HOSE ASSY	1				18010-23102
13	0667101130	HOSE ASSY	1				18010-23102
14	0667101140	HOSE ASSY	1				18010-23125
15	0667101150	HOSE ASSY	1				18010-23125
16	0667100160	HOSE ASSY	1				18010-23190
17	0667101170	HOSE ASSY	1				18010-52158
18	0667100180	HOSE ASSY	1				18010-22054
23	0007300044	CLAMP	1				
24	1130040008	NUT	1				
25	1140020008	WASHER, spring	1				
26	1141110008	WASHER	1				
27	1512330005	ELBOW	2				
	1420370906	・O-RING	1				
28	1512375006	ELBOW	2				
	1420370906	・O-RING	1				
30	1700100015	SWITCH, pressure	2				
31	1652241300	BAND	8				
32	1531645060	PROTECTOR	1				sold by the meter
33	0880717520	PROTECTOR	1				
36	0881711360	COLLAR	1				
37	1100040620	BOLT	1				
38	1140020006	WASHER, spring	1				
39	0003600043	WASHER	1				
	U1b050						

silverhorn.co.uk

ENGINE & ACCESSORIES (1/4)

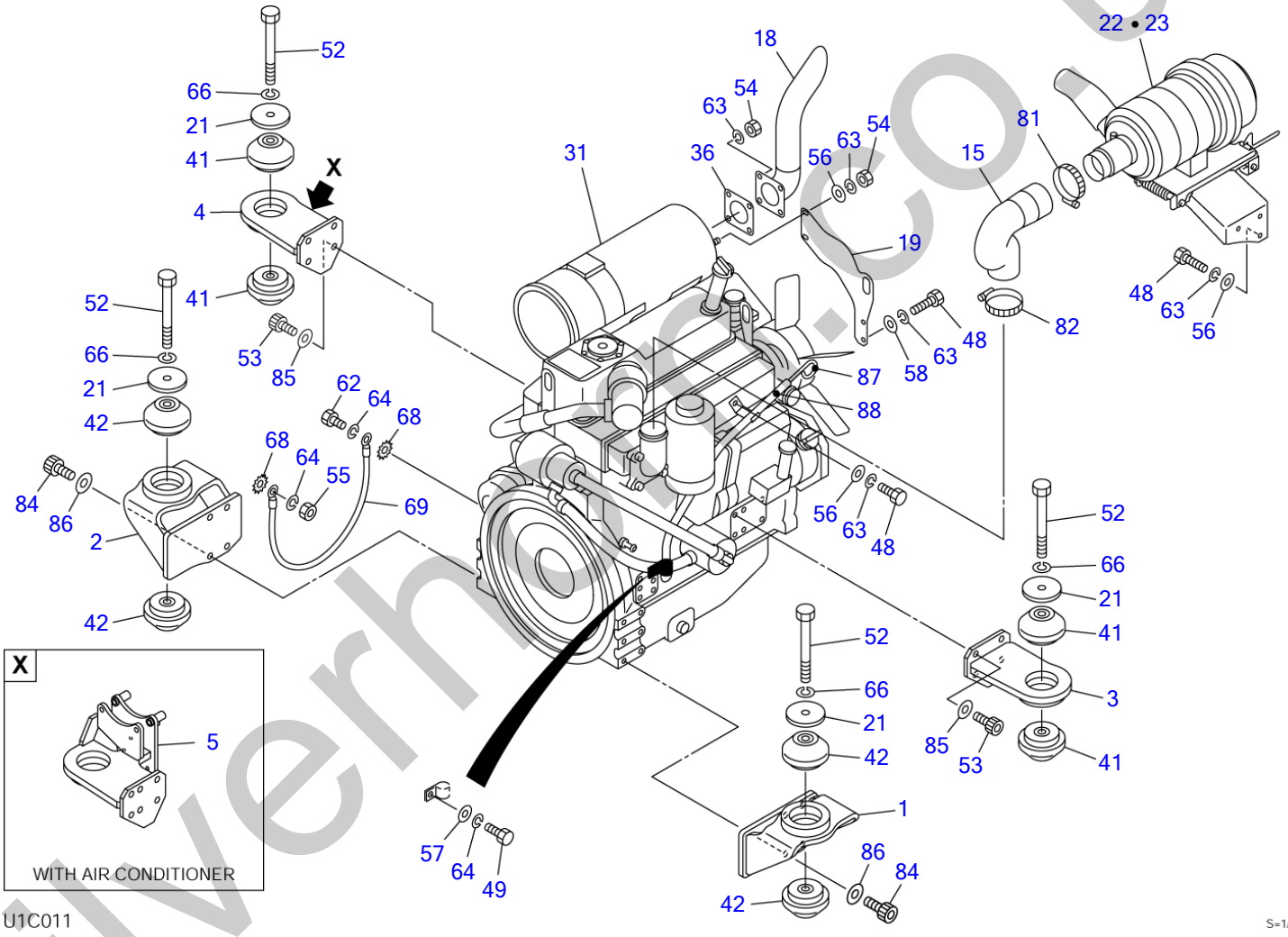

silverhorse.co.uk

ENGINE & ACCESSORIES (1/4)

Item	Part number	Description	Q'ty	Chan.	Serial No.	Serv.	Remarks
		ENGINE ASSY (for US) ENGINE ASSY (for EU) ENGINE ASSY (for US, with air conditioner) ENGINE ASSY (for EU, with air conditioner)					
1	0664001010	FOOT, engine (F.L.)	1				
2	0664001020	FOOT, engine (F.R.)	1				
3	0664001030	FOOT, engine (R.L.)	1				
4	0664001040	FOOT, engine (R.R.)	1				
5	0664001050	FOOT, engine (R.R.)	1				with air conditioner
15	0664000156	HOSE	1				
18	0880406890	PIPE	1				
19	0880407730	PLATE	1				
21	0881400210	WASHER	4				
22	0664001200	CLEANER ASSY, air (for EU)	1				see page (4/4)
23	0664001400	PRECLEANER ASSY (for US)	1				see page (4/4)
31	1910259001	ENGINE	1				4TNV98-ZNTBL
36	1910197023	GASKET	1				Y129930-13201
41	1651030004	RUBBER, cushion	4				
42	1651030005	RUBBER, cushion	4				
48	1100040820	BOLT	6				
49	1100041025	BOLT	1				
52	1101141640	BOLT	4				
53	1110021030	SCREW, cap	8				
	1110021030	SCREW, cap	10				with air conditioner
54	1130040008	NUT	6				
55	1130040010	NUT	1				
56	1141110008	WASHER	6				
57	1141110010	WASHER	1				
58	0003608252	WASHER	2				
62	1100041016	BOLT	1			M	
63	1140020008	WASHER, spring	12				
64	1140020010	WASHER, spring	3				
66	1140020016	WASHER, spring	4				
68	1140330010	WASHER	2				
69	1702402002	CABLE	1			M	
81	1533700080	BAND	1				
82	1533701300	BAND	1			M	
84	1110021230	SCREW, cap	8				
85	1141550010	WASHER	8				
	1141550010	WASHER	10				with air conditioner
86	1141550012	WASHER	8				
87	1910259051	STICK, oil dip	1				Y129951-34801
88	1910259052	GUIDE	1				Y129939-34810
	U1c011						

silvermorn.co.uk

ENGINE & ACCESSORIES (2/4)

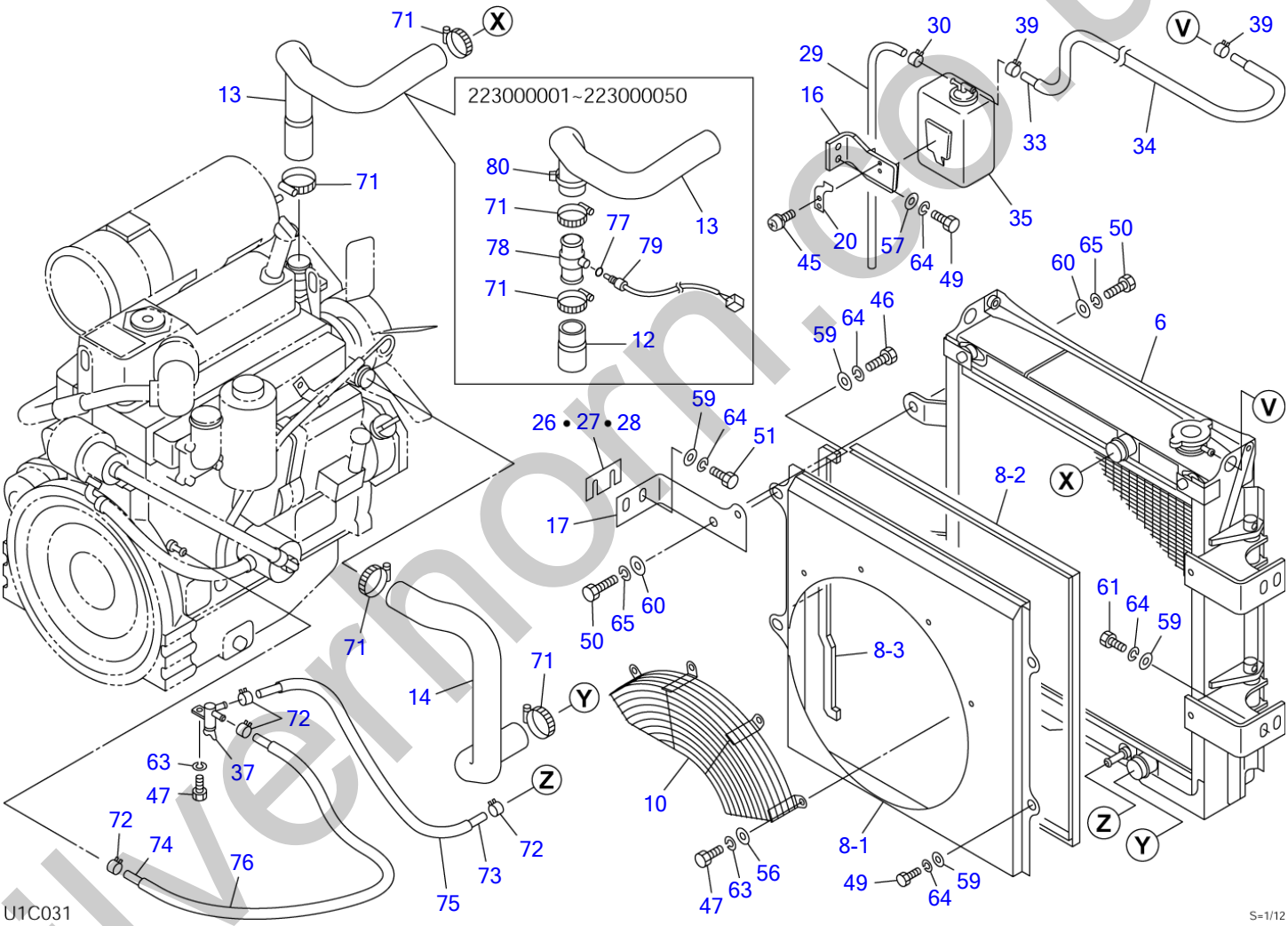

silvernorn.co.uk

ENGINE & ACCESSORIES (2/4)

Item	Part number	Description	Q'ty	Chan.	Serial No.	Serv.	Remarks
		ENGINE ASSY (for US) ENGINE ASSY (for EU) ENGINE ASSY (for US, with air conditioner) ENGINE ASSY (for EU, with air conditioner)					
6	0664001100	RADIATOR ASSY	1				see page (3/4)
8	0664001300	SHROUD ASSY	1				
8-1	0664001310	・SHROUD	1				
8-2	1654606175	・TRIM	1				sold by the meter
8-3	0664001330	・SPONGE	1				
10	0664001070	GUIDE	1				
12	0664001350	HOSE	1		223000001~223000050		
13	0664001360	HOSE	1		223000001~223000050		
	0664001370	HOSE	1		223000051~	M	
14	0880408030	HOSE	1				
16	0664001080	BRACKET	1				
17	0664001060	BRACKET	2				
20	0880406110	PLATE	1				
26	0880406610	SHIM	AR				t=1.6mm
27	0880406620	SHIM	AR				t=3.2mm
28	0880406630	SHIM	AR				t=4.5mm
29	1910161013	HOSE	1				Y105840-59100
30	1533120508	BAND	1			M	
33	1531407113	HOSE	1				sold by the meter
34	1531115110	PROTECTOR	1				sold by the meter
35	1910146020	TANK, sub	1				Y129466-44510
37	1910078037	COCK	1				Y129150-49100
39	1533120011	BAND	2			M	
45	1150120410	SCREW	2				
46	1100041020	BOLT	2				
47	1100040816	BOLT	5				
49	1100041025	BOLT	5				
50	1100041230	BOLT	2				
51	1100041035	BOLT	4				
56	1141110008	WASHER	4				
57	1141110010	WASHER	2				
59	0003600025	WASHER	12				
60	0003600136	SHIM	2				
61	1100041030	BOLT	4				
63	1140020008	WASHER, spring	5				
64	1140020010	WASHER, spring	12				
65	1140020012	WASHER, spring	2				
71	1533700057	BAND	6		223000001~223000050		
	1533700057	BAND	4		223000051~	M	
72	1533120012	BAND	4				
73	1530808068	HOSE	1				sold by the meter
74	1530808115	HOSE	1				sold by the meter
75	1531115030	PROTECTOR	2				sold by the meter
76	1531115055	PROTECTOR	2				sold by the meter
77	1420000100	O-RING	1		223000001~223000050		
78	0881402595	JOINT	1		223000001~223000050		
79	1700100046	SENSOR	1		223000001~223000050		
80	1652241200	BAND	1		223000001~223000050		
	U1c032						

silvermorn.co.uk

ENGINE & ACCESSORIES (3/4)

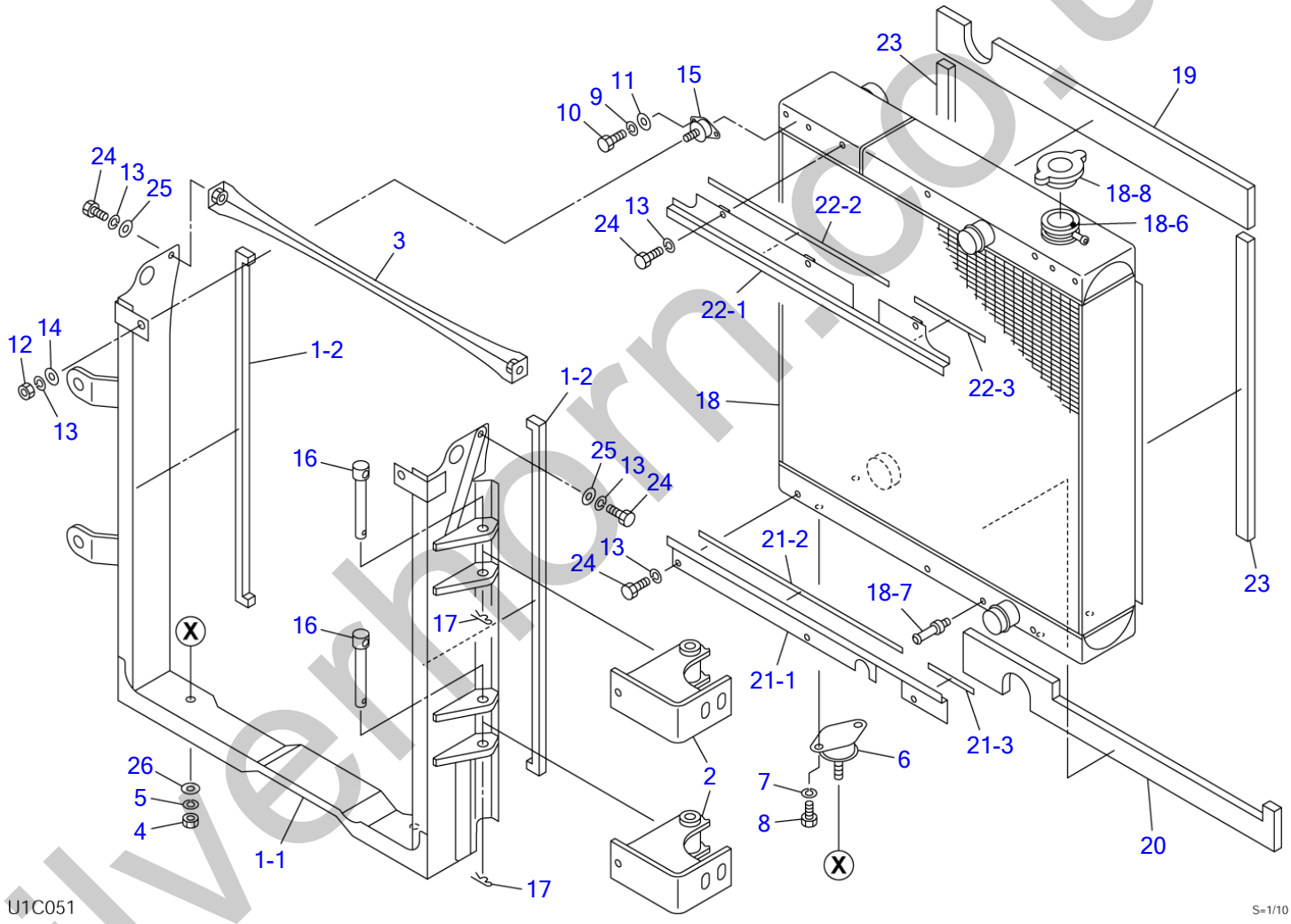

silverhorn.co.uk

ENGINE & ACCESSORIES (3/4)

Item	Part number	Description	Q'ty	Chan.	Serial No.	Serv.	Remarks
0-1	0664001100	RADIATOR ASSY	1				
1	0664001110	・FRAME ASSY	1				
1-1	0664001120	・・FRAME	1				
1-2	0664000520	・・SPONGE	2				
2	0880408590	・HINGE	2				
3	0880408150	・STAY	1				
4	1130040012	・NUT	2				
5	1140020012	・WASHER, spring	2				
6	0880408580	・RUBBER, cushion	2				
7	1140020010	・WASHER, spring	4				
8	1100041016	・BOLT	4				
9	1140020006	・WASHER, spring	4				
10	1100040612	・BOLT	4				
11	1141110006	・WASHER	4				
12	1130040008	・NUT	2				
13	1140020008	・WASHER, spring	10				
14	0003600025	・WASHER	2				
15	1651021030	・RUBBER, cushion	2				
16	0881402180	・PIN	2				
17	1214000016	・PIN, snap	2				
18	1911300310	・RADIATOR & COOLER, oil	1				AKG
18-6	1911300076	・・FITTING, hose	1				
18-7	1911300077	・・NIPPLE	1				
18-8	1911300078	・・CAP, radiator	1				
19	0664001130	・SPONGE	1				
20	0664001140	・SPONGE	1				
21	0880408500	・PLATE ASSY	1			M	
21-1	0880408510	・・PLATE	1			M	
21-2	1654355044	・・SPONGE	1				sold by the meter
21-3	1654355010	・・SPONGE	1				sold by the meter
22	0664000800	・PLATE ASSY	1				
22-1	0664000810	・・PLATE	1				
22-2	1654355039	・・SPONGE	1				sold by the meter
22-3	1654355015	・・SPONGE	1				sold by the meter
23	1654343056	・SPONGE	2				sold by the meter
24	1100040820	・BOLT	8				
25	1141110008	・WASHER	2				
26	0003600026	・WASHER	2			M	
	U1c051						

silverhorn.co.uk

ENGINE & ACCESSORIES (4/4)

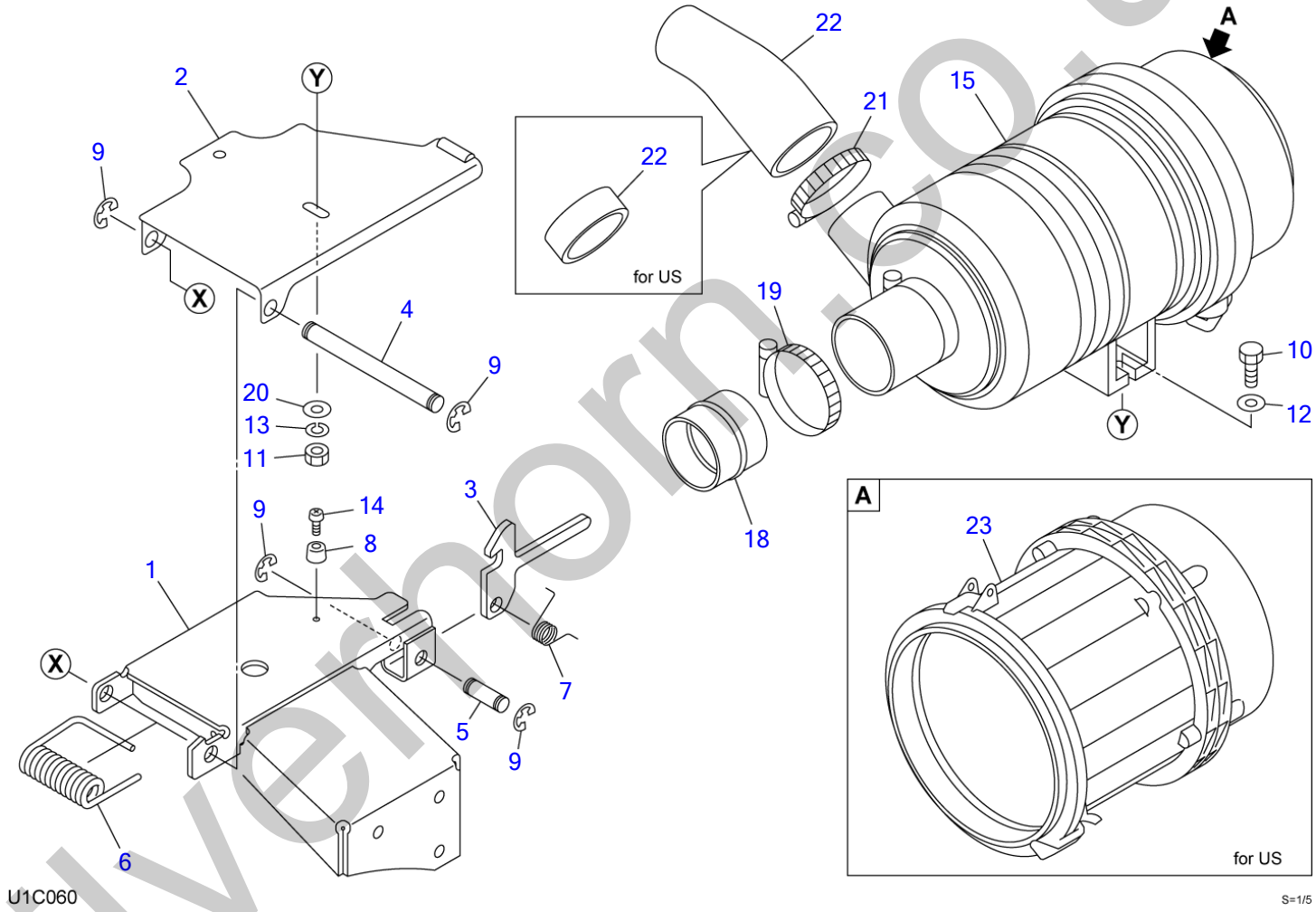

silverhorn.co.uk

ENGINE & ACCESSORIES (4/4)

Item	Part number	Description	Q'ty	Chan.	Serial No.	Serv.	Remarks
0-2	0664001200	CLEANER ASSY, air (for EU)	1				
	0664001400	PRECLEANER ASSY (for US)					
1	0664001210	・BRACKET	1				
2	0664001220	・PLATE	1				
3	0664001250	・PLATE	1				
4	0664000704	・PIN	1				
5	0664000705	・PIN	1				
6	0664000706	・SPRING	1				
7	0664000707	・SPRING	1				
8	1652111610	・RUBBER	1				
9	1224010010	・RING, retaining	4				
10	1100240830	・BOLT	2				
11	1130040008	・NUT	2				
12	0003608252	・WASHER	2				
13	1140020008	・WASHER, spring	2				
14	1120530308	・SCREW	1				
15	1910259007	・CLEANER, air	1				Y529939-12510
18	0664001230	・PIPE	1				
19	1533700070	・BAND	1				
20	1141110008	・WASHER	2				
21	1533700080	・BAND	1				
	1911240131	・BAND	1				for US
22	0664001240	・PIPE	1				
	1901240130	・CAP	1				for US
23	1911240110	・PRECLEANER	1				for US
	U1c061						

silverhorn.co.uk

ENGINE & ACCESSORIES (1/4) (for GEHL & MUSTANG)

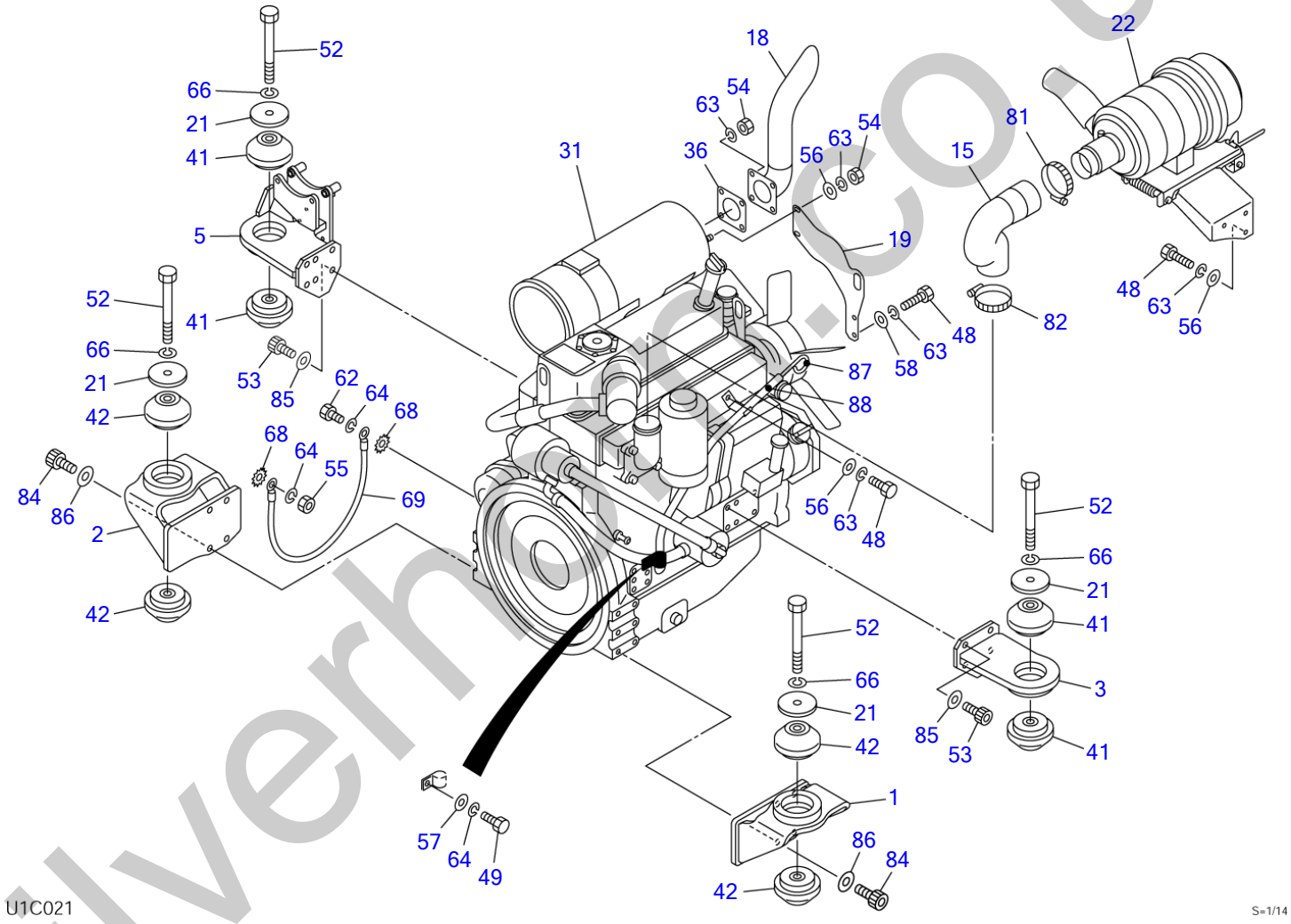

silverhome.co.uk

ENGINE & ACCESSORIES (1/4) (for GEHL & MUSTANG)

Item	Part number	Description	Q'ty	Chan.	Serial No.	Serv.	Remarks
		ENGINE ASSY					
1	0664001010	FOOT, engine (F.L.)	1				
2	0664001020	FOOT, engine (F.R.)	1				
3	0664001030	FOOT, engine (R.L.)	1				
5	0664001050	FOOT, engine (R.R.)	1				
15	0664000156	HOSE	1				
18	0880406890	PIPE	1				
19	0880407730	PLATE	1				
21	0881400210	WASHER	4				
22	0664001200	CLEANER ASSY	1				see page (4/4)
31	1910259001	ENGINE	1				4TNV98-ZNTBL
36	1910197023	GASKET	1				Y129930-13201
41	1651030004	RUBBER, cushion	4				
42	1651030005	RUBBER, cushion	4				
48	1100040820	BOLT	6				
49	1100041025	BOLT	1				
52	1101141640	BOLT	4				
53	1110021030	SCREW, cap	10				
54	1130040008	NUT	6				
55	1130040010	NUT	1				
56	1141110008	WASHER	6				
57	1141110010	WASHER	1				
58	0003608252	WASHER	2				
62	1100041016	BOLT	1			M	
63	1140020008	WASHER, spring	12				
64	1140020010	WASHER, spring	3				
66	1140020016	WASHER, spring	4				
68	1140330010	WASHER	2				
69	1702402002	CABLE	1			M	
81	1533700080	BAND	1				
82	1533701300	BAND	1			M	
84	1110021230	SCREW, cap	8				
85	1141550010	WASHER	10				
86	1141550012	WASHER	8				
87	1910259051	STICK, oil dip	1				Y129951-34801
88	1910259052	GUIDE	1				Y129939-34810
	U1c022						

silverhorn.co.uk

ENGINE & ACCESSORIES (2/4) (for GEHL & MUSTANG)

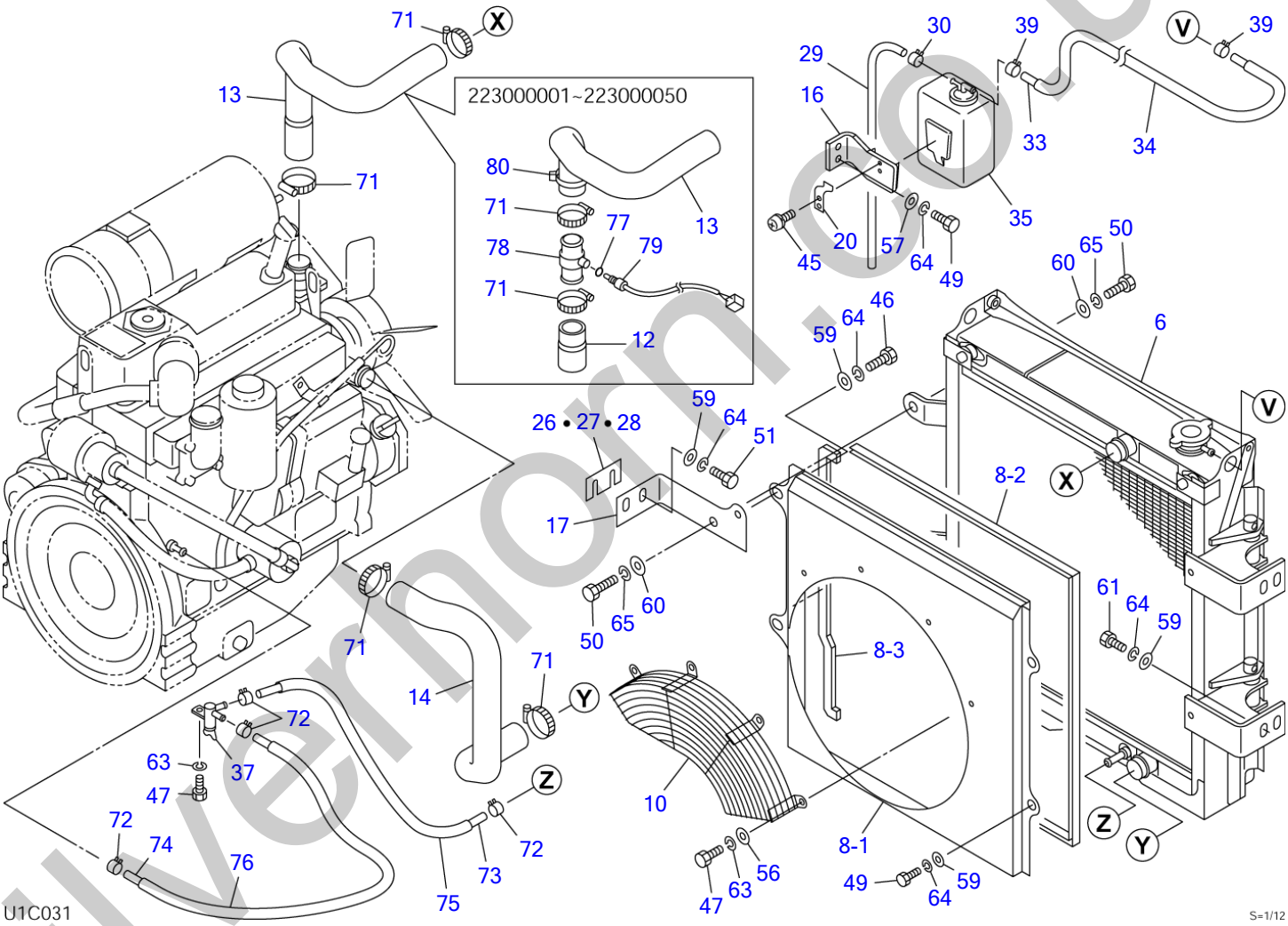

silvernorn.co.uk

ENGINE & ACCESSORIES (2/4) (for GEHL & MUSTANG)

Item	Part number	Description	Q'ty	Chan.	Serial No.	Serv.	Remarks
		ENGINE ASSY					
6	0664001100	RADIATOR ASSY	1				see page (3/4)
8	0664001300	SHROUD ASSY	1				
8-1	0664001310	・SHROUD	1				
8-2	1654606175	・TRIM	1				sold by the meter
8-3	0664001330	・SPONGE	1				
10	0664001070	GUIDE	1				
12	0664001350	HOSE	1		223000001~223000050		
13	0664001360	HOSE	1		223000001~223000050		
	0664001370	HOSE	1		223000051~	M	
14	0880408030	HOSE	1				
16	0664001080	BRACKET	1				
17	0664001060	BRACKET	2				
20	0880406110	PLATE	1				
26	0880406610	SHIM	AR				t=1.6mm
27	0880406620	SHIM	AR				t=3.2mm
28	0880406630	SHIM	AR				t=4.5mm
29	1910161013	HOSE	1				Y105840-59100
30	1533120508	BAND	1			M	
33	1531407113	HOSE	1				sold by the meter
34	1531115110	PROTECTOR	1				sold by the meter
35	1910146020	TANK, sub	1				Y129466-44510
37	1910078037	COCK	1				Y129150-49100
39	1533120011	BAND	2			M	
45	1150120410	SCREW	2				
46	1100041020	BOLT	2				
47	1100040816	BOLT	5				
49	1100041025	BOLT	5				
50	1100041230	BOLT	2				
51	1100041035	BOLT	4				
56	1141110008	WASHER	4				
57	1141110010	WASHER	2				
59	0003600025	WASHER	12				
60	0003600136	SHIM	2				
61	1100041030	BOLT	4				
63	1140020008	WASHER, spring	5				
64	1140020010	WASHER, spring	12				
65	1140020012	WASHER, spring	2				
71	1533700057	BAND	6		223000001~223000050		
	1533700057	BAND	4		223000051~	M	
72	1533120012	BAND	4				
73	1530808068	HOSE	1				sold by the meter
74	1530808115	HOSE	1				sold by the meter
75	1531115030	PROTECTOR	2				sold by the meter
76	1531115055	PROTECTOR	2				sold by the meter
77	1420000100	O-RING	1		223000001~223000050		
78	0881402595	JOINT	1		223000001~223000050		
79	1700100046	SENSOR	1		223000001~223000050		
80	1652241200	BAND	1		223000001~223000050		
	U1c042						

silvethorn.co.uk

ENGINE & ACCESSORIES (3/4) (for GEHL & MUSTANG)

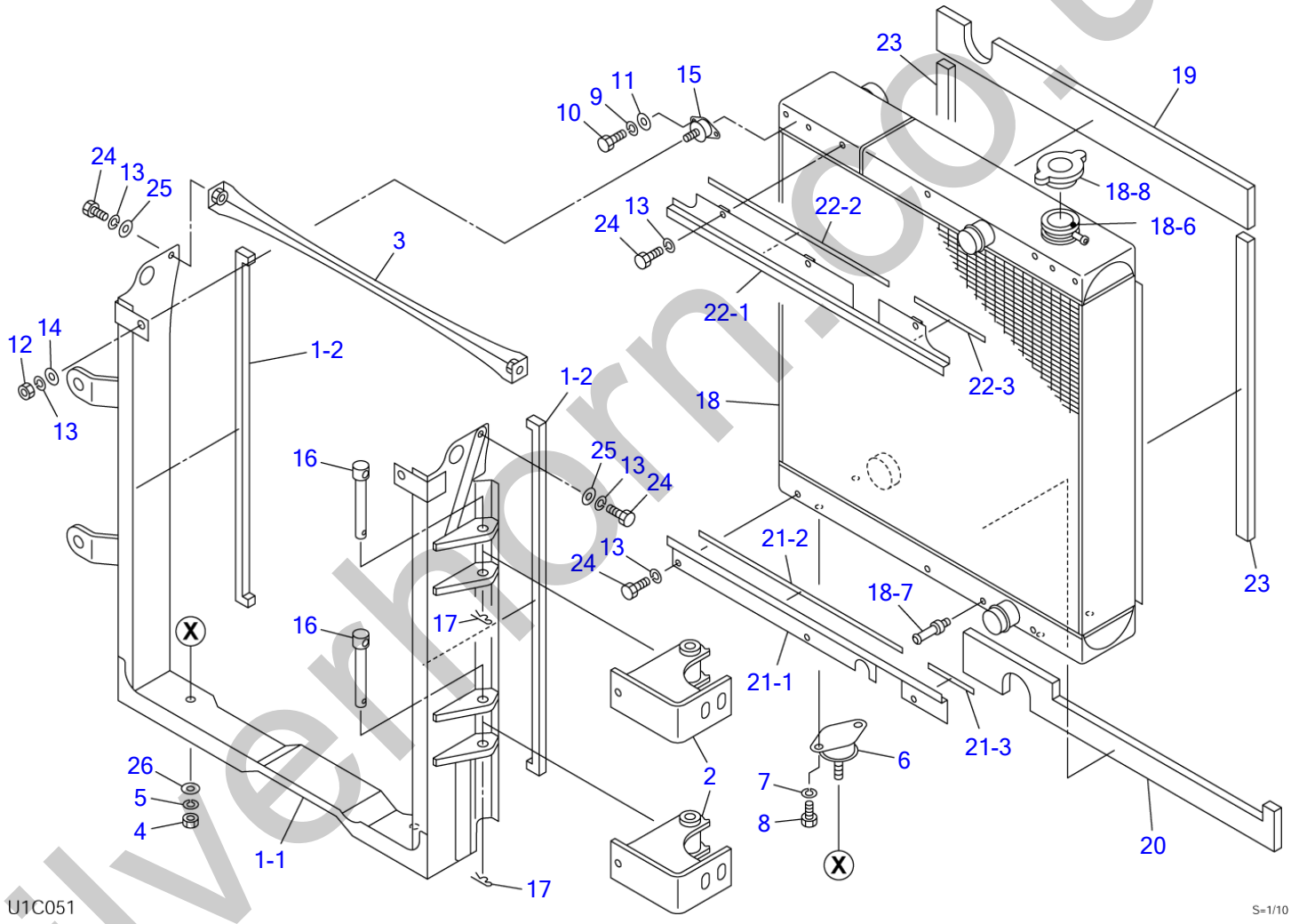

silverhorn.co.uk

ENGINE & ACCESSORIES (3/4) (for GEHL & MUSTANG)

Item	Part number	Description	Q'ty	Chan.	Serial No.	Serv.	Remarks
0-1	0664001100	RADIATOR ASSY	1				
1	0664001110	・FRAME ASSY	1				
1-1	0664001120	・・FRAME	1				
1-2	0664000520	・・SPONGE	2				
2	0880408590	・HINGE	2				
3	0880408150	・STAY	1				
4	1130040012	・NUT	2				
5	1140020012	・WASHER, spring	2				
6	0880408580	・RUBBER, cushion	2				
7	1140020010	・WASHER, spring	4				
8	1100041016	・BOLT	4				
9	1140020006	・WASHER, spring	4				
10	1100040612	・BOLT	4				
11	1141110006	・WASHER	4				
12	1130040008	・NUT	2				
13	1140020008	・WASHER, spring	10				
14	0003600025	・WASHER	2				
15	1651021030	・RUBBER, cushion	2				
16	0881402180	・PIN	2				
17	1214000016	・PIN, snap	2				
18	1911300310	・RADIATOR & COOLER, oil	1				AKG
18-6	1911300076	・・FITTING, hose	1				
18-7	1911300077	・・NIPPLE	1				
18-8	1911300078	・・CAP, radiator	1				
19	0664001130	・SPONGE	1				
20	0664001140	・SPONGE	1				
21	0880408500	・PLATE ASSY	1			M	
21-1	0880408510	・・PLATE	1			M	
21-2	1654355044	・・SPONGE	1				sold by the meter
21-3	1654355010	・・SPONGE	1				sold by the meter
22	0664000800	・PLATE ASSY	1				
22-1	0664000810	・・PLATE	1				
22-2	1654355039	・・SPONGE	1				sold by the meter
22-3	1654355015	・・SPONGE	1				sold by the meter
23	1654343056	・SPONGE	2				sold by the meter
24	1100040820	・BOLT	8				
25	1141110008	・WASHER	2				
26	0003600026	・WASHER	2			M	
	U1c051						

silverhorn.co.uk

ENGINE & ACCESSORIES (4/4) (for GEHL & MUSTANG)

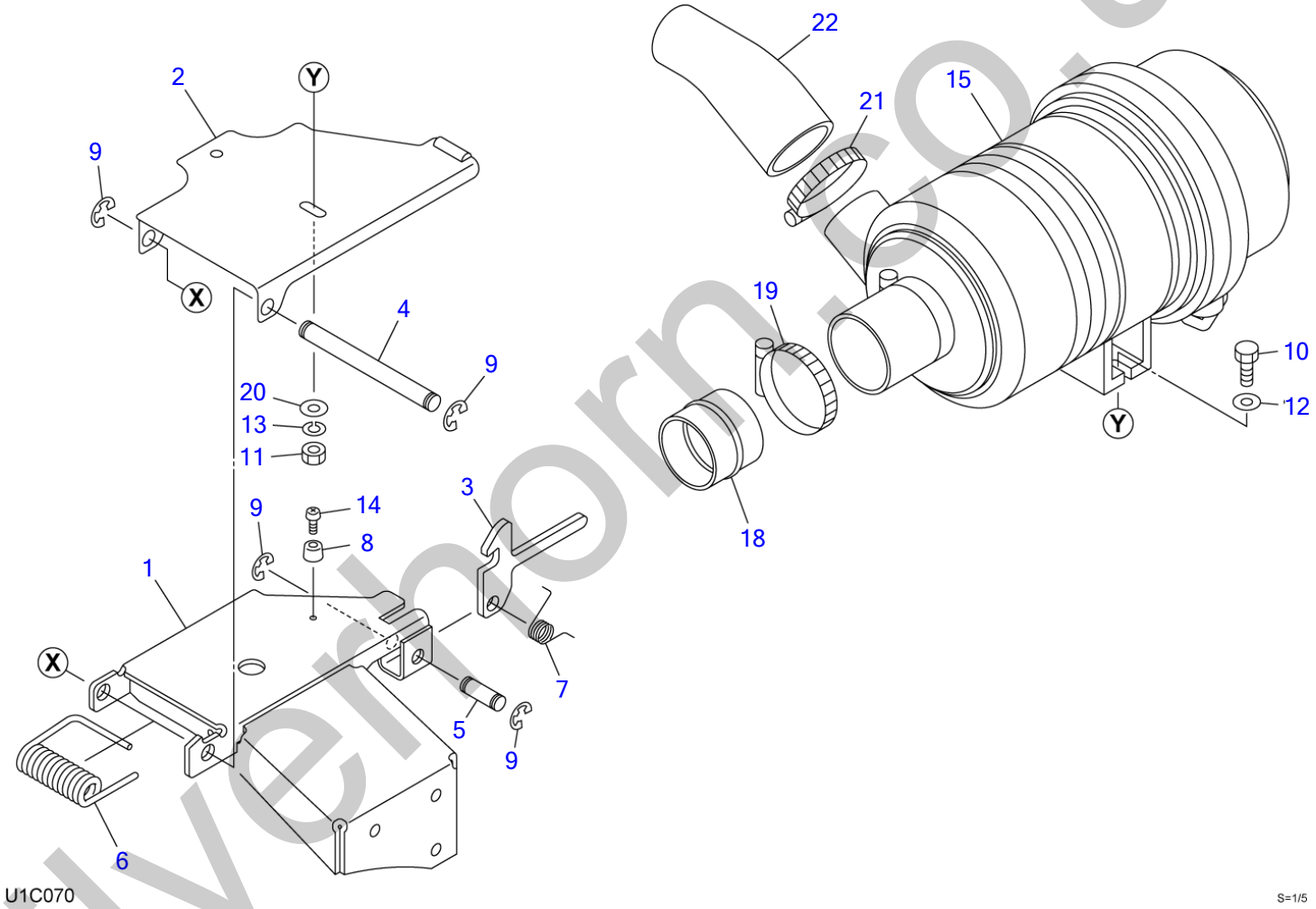

silverhorn.co.uk

ENGINE & ACCESSORIES (4/4) (for GEHL & MUSTANG)

Item	Part number	Description	Q'ty	Chan.	Serial No.	Serv.	Remarks
0-2	0664001200	CLEANER ASSY, air	1				
1	0664001210	・BRACKET	1				
2	0664001220	・PLATE	1				
3	0664001250	・PLATE	1				
4	0664000704	・PIN	1				
5	0664000705	・PIN	1				
6	0664000706	・SPRING	1				
7	0664000707	・SPRING	1				
8	1652111610	・RUBBER	1				
9	1224010010	・RING, retaining	4				
10	1100240830	・BOLT	2				
11	1130040008	・NUT	2				
12	0003608252	・WASHER	2				
13	1140020008	・WASHER, spring	2				
14	1120530308	・SCREW	1				
15	1910259007	・CLEANER, air	1				Y529939-12510
18	0664001230	・JOINT	1				
19	1533700070	・BAND	1				
20	1141110008	・WASHER	2				
21	1533700080	・BAND	1				
22	0664001240	・PIPE	1				
	U1c071						

silverhorn.co.uk

DRAIN PLUG

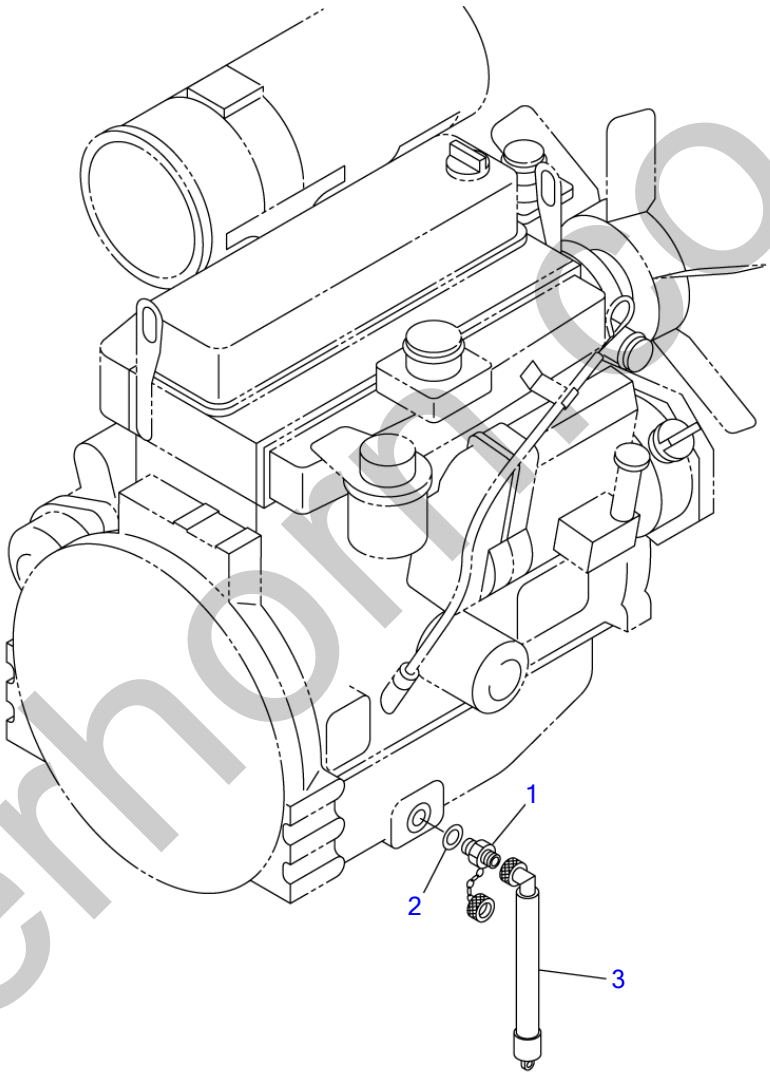

T8C030

S=1/8

silverhorse.co.uk

DRAIN PLUG

Item	Part number	Description	Q'ty	Chan.	Serial No.	Serv.	Remarks
		PLUG ASSY, drain					
1	1554502250	PLUG	1				
2	1432122032	WASHER	1				
3	1554512601	TUBE	1				
	T8c031						

silverhorn.co.uk

CONTROL BOX; R.H. (223000001-223000050)

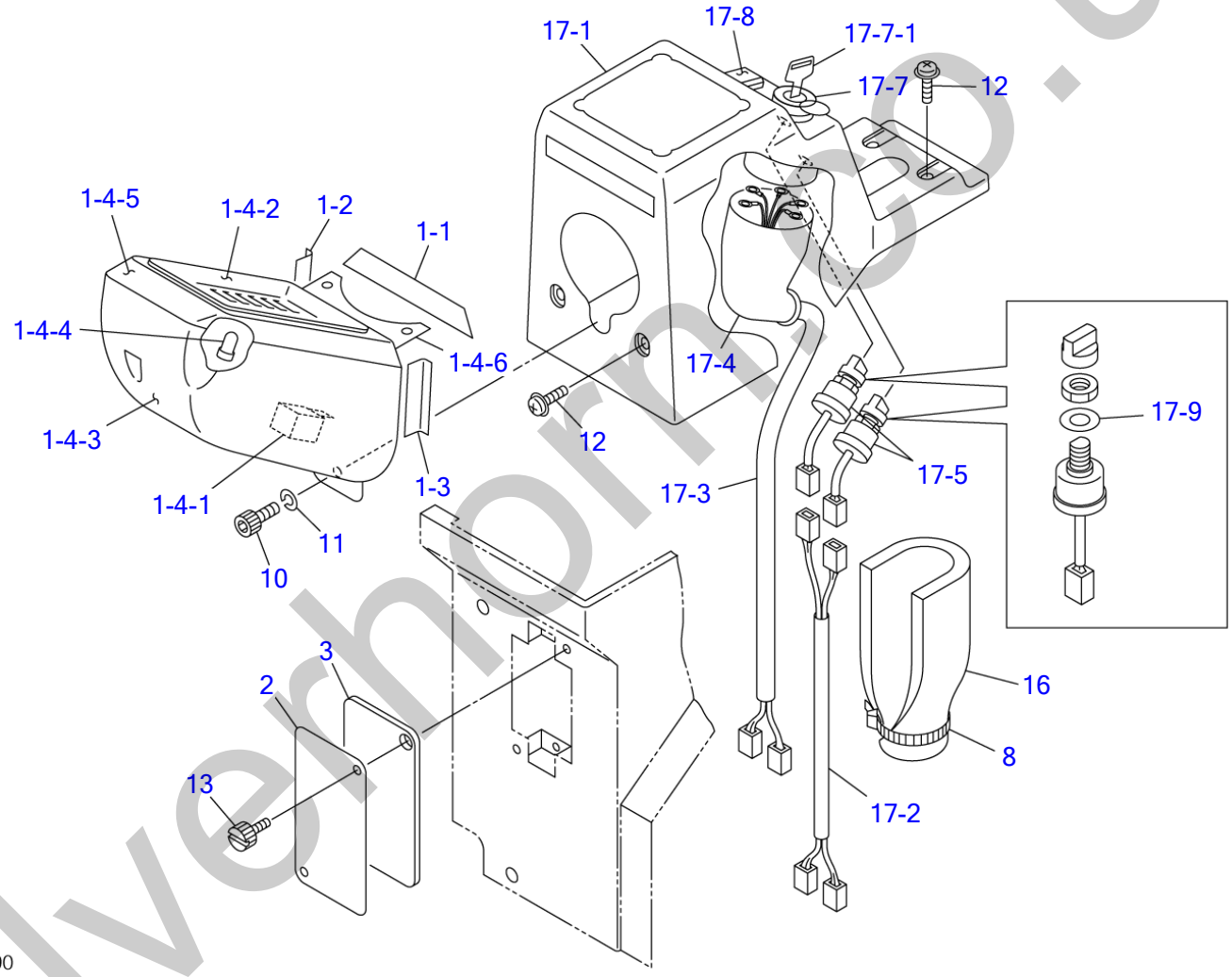

silverhorn.co.uk

CONTROL BOX; R.H. (223000001-223000050)

Item	Part number	Description	Q'ty	Chan.	Serial No.	Serv.	Remarks
		COVER ASSY (R.H.)					
1	0881430910	GAUGE ASSY, cluster	1				
1-1	0881430901	・ABSORBENT, noise	1				
1-2	0881430902	・ABSORBENT, noise	1				
1-3	0881430903	・ABSORBENT, noise	1				
1-4	1730140920	・GAUGE, cluster	1		223000001~223000122		
1-4-1	1730140691	・・RELAY	1				12V
1-4-2	1730140782	・・GLASS	1				
1-4-3	1730140785	・・COVER	1				
1-4-4	1730140696	・・BULB	10				14V, 1.4W
1-4-5	1730140788	・・VISOR	1				
1-4-6	1730140694	・・BRACKET	1				
2	0881430802	COVER	1				
3	0881430803	INSULATOR	1				
8	1652231250	BAND	1				
10	1110020820	SCREW, cap	1				
11	1140090008	WASHER, spring	1				
12	1150420614	SCREW	4				
13	1652711698	SCREW	2				
16	0881430805	INSULATOR	1				
17	0882430100	COVER ASSY, sub (R.H.)	1				
17-1	0881430870	・COVER (R.H.)	1				
17-2	0881430880	・HARNESS, wiring	1				
17-3	0881430960	・HARNESS, wiring	1				
17-4	0870431821	・COVER	1				
17-5	1700000010	・SWITCH, lamp	2				
17-7	1700100052	・SWITCH, starter	1				
17-7-1	1700100019	・KEY	1				
17-8	1700550024	・ORNAMENT	1				
17-9	1141810012	・WASHER	2				
	T8c190						

silverhorn.co.uk

CONTROL BOX; R.H. (high flow; 223000001-223000050)

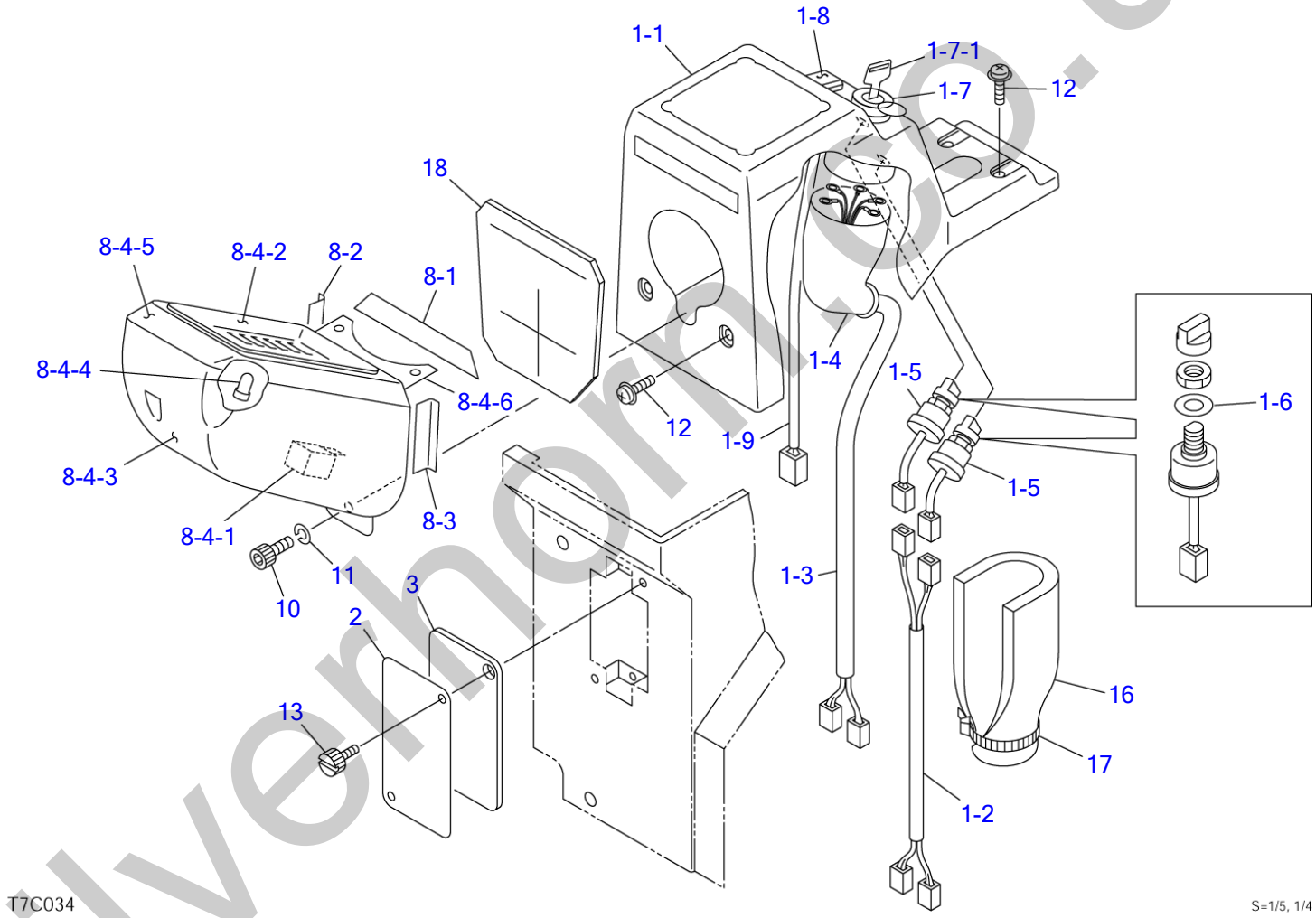

silverhorn.co.uk

CONTROL BOX; R.H. (high flow; 223000001-223000050)

Item	Part number	Description	Q'ty	Chan.	Serial No.	Serv.	Remarks
		COVER ASSY (R.H.)					
1	0881430950	COVER ASSY	1				
1-1	0881430870	・COVER (R.H.)	1				
1-2	0881430880	・HARNESS, wiring	1				
1-3	0881430960	・HARNESS, wiring	1				
1-4	0870431821	・COVER	1				
1-5	1700000010	・SWITCH, lamp	2				
1-6	1141810012	・WASHER	2				
1-7	1700100052	・SWITCH, starter	1				
1-7-1	1700100019	・KEY	1				
1-8	1700000034	・SWITCH	1				
1-9	0881430970	・HARNESS, wiring	1				
2	0881430802	COVER	1				
3	0881430803	INSULATOR	1				
8	0881430910	GAUGE ASSY, cluster	1				
8-1	0881430901	・ABSORBENT, noise	1				
8-2	0881430902	・ABSORBENT, noise	1				
8-3	0881430903	・ABSORBENT, noise	1				
8-4	1730140920	・GAUGE, cluster	1		223000001~223000122		
8-4-1	1730140691	・・RELAY	1				12V
8-4-2	1730140782	・・GLASS	1				
8-4-3	1730140785	・・COVER	1				
8-4-4	1730140696	・・BULB	10				14V, 1.4W
8-4-5	1730140788	・・VISOR	1				
8-4-6	1730140694	・・BRACKET	1				
10	1110020820	SCREW, cap	1				
11	1140090008	WASHER, spring	1				
12	1150420614	SCREW, sems	4				
13	1652711698	SCREW	2				
16	0881430805	INSULATOR	1				
17	1652231250	BAND	1				
18	0881430801	ABSORBENT, noise	1				
	T8c270						

silverhorn.co.uk

CONTROL BOX; R.H. (for GEHL & MUSTANG; 223000001-223000050)

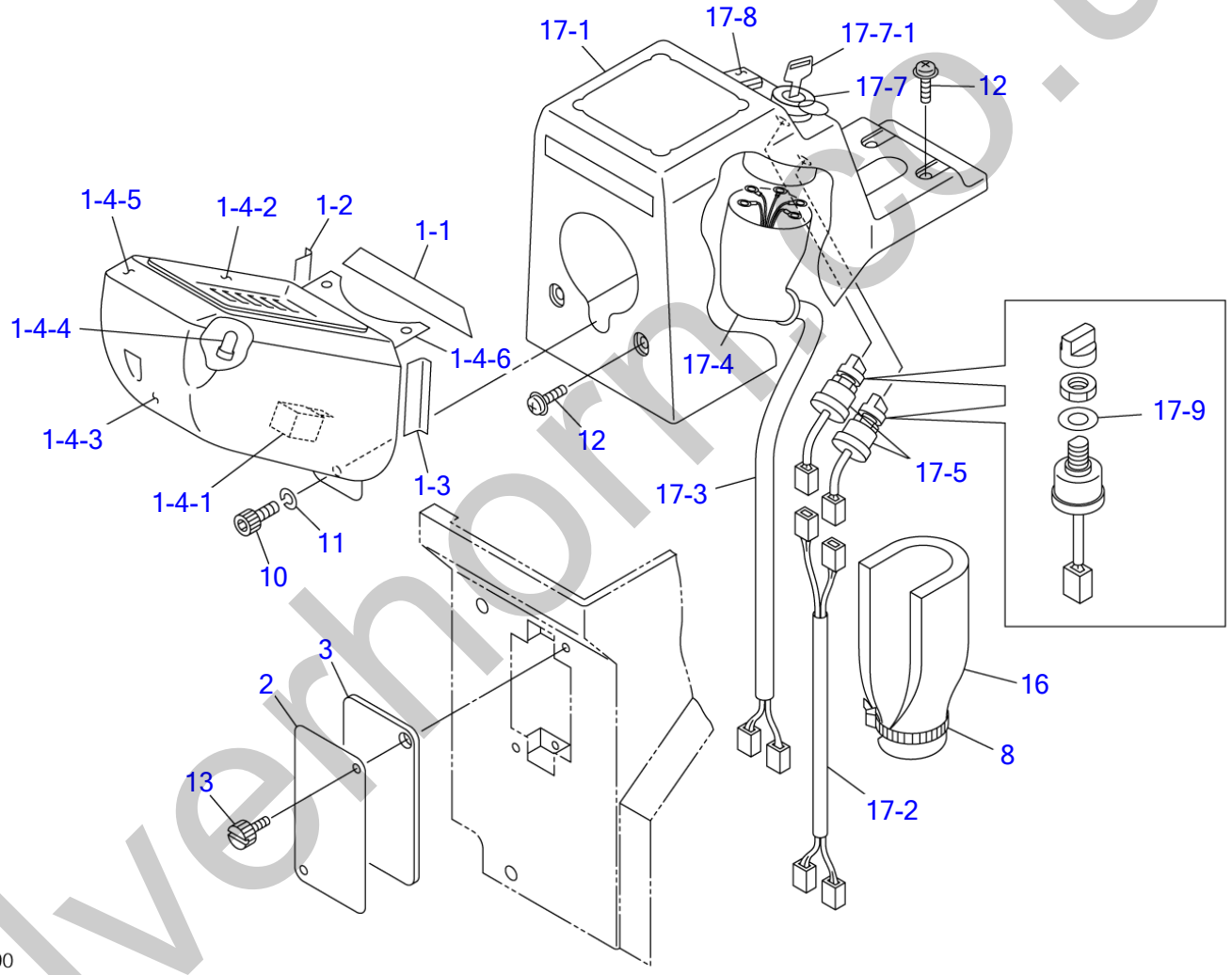

silverhorn.co.uk

CONTROL BOX; R.H. (for GEHL & MUSTANG; 223000001-223000050)

Item	Part number	Description	Q'ty	Chan.	Serial No.	Serv.	Remarks
		COVER ASSY (R.H.)					
1	0881431120	GAUGE ASSY, cluster	1				
1-1	0881430901	・ABSORBENT, noise	1				
1-2	0881430902	・ABSORBENT, noise	1				
1-3	0881430903	・ABSORBENT, noise	1				
1-4	1730140930	・GAUGE, cluster	1		223000001~223000128		
1-4-1	1730140691	・・RELAY	1				12V
1-4-2	1730140782	・・GLASS	1				
1-4-3	1730140785	・・COVER	1				
1-4-4	1730140696	・・BULB	10				14V, 1.4W
1-4-5	1730140788	・・VISOR	1				
1-4-6	1730140694	・・BRACKET	1				
2	0881430802	COVER	1				
3	0881430803	INSULATOR	1				
8	1652231250	BAND	1				
10	1110020820	SCREW, cap	1				
11	1140090008	WASHER, spring	1				
12	1150420614	SCREW	4				
13	1652711698	SCREW	2				
16	0881430805	INSULATOR	1				
17	0882430100	COVER ASSY, sub (R.H.)	1				
17-1	0881430870	・COVER (R.H.)	1				
17-2	0881430880	・HARNESS, wiring	1				
17-3	0881430960	・HARNESS, wiring	1				
17-4	0870431821	・COVER	1				
17-5	1700000010	・SWITCH, lamp	2				
17-7	1700100052	・SWITCH, starter	1				
17-7-1	1700100019	・KEY	1				
17-8	1700550024	・ORNAMENT	1				
17-9	1141810012	・WASHER	2				
	T8c200						

silverhorn.co.uk

CONTROL BOX; R.H. (high flow, for GEHL & MUSTANG; 223000001-223000050)

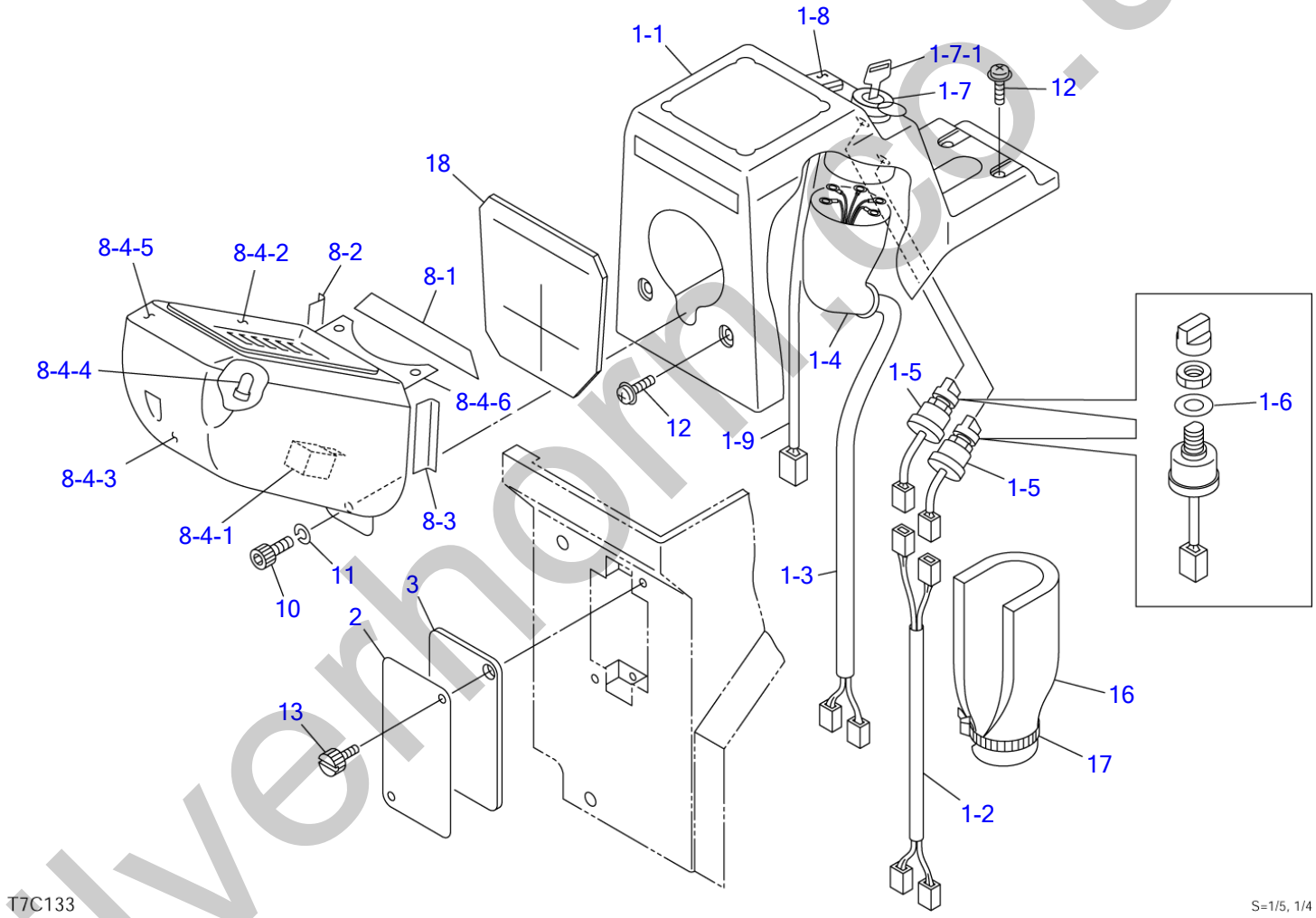

silverhorn.co.uk

CONTROL BOX; R.H. (high flow, for GEHL & MUSTANG; 223000001-223000050)

Item	Part number	Description	Q'ty	Chan.	Serial No.	Serv.	Remarks
		COVER ASSY (R.H.) (for GEHL & MUSTANG)					
1	0881430950	COVER ASSY	1				
1-1	0881430870	・COVER (R.H.)	1				
1-2	0881430880	・HARNESS, wiring	1				
1-3	0881430960	・HARNESS, wiring	1				
1-4	0870431821	・COVER	1				
1-5	1700000010	・SWITCH, lamp	2				
1-6	1141810012	・WASHER	2				
1-7	1700100052	・SWITCH, starter	1				
1-7-1	1700100019	・KEY	1				
1-8	1700000034	・SWITCH	1				
1-9	0881430970	・HARNESS, wiring	1				
2	0881430802	COVER	1				
3	0881430803	INSULATOR	1				
8	0881431120	GAUGE ASSY, cluster	1				
8-1	0881430901	・ABSORBENT, noise	1				
8-2	0881430902	・ABSORBENT, noise	1				
8-3	0881430903	・ABSORBENT, noise	1				
8-4	1730140930	・GAUGE, cluster	1		223000001~223000128		
8-4-1	1730140691	・・RELAY	1				12V
8-4-2	1730140782	・・GLASS	1				
8-4-3	1730140785	・・COVER	1				
8-4-4	1730140696	・・BULB	10				14V, 1.4W
8-4-5	1730140788	・・VISOR	1				
8-4-6	1730140694	・・BRACKET	1				
10	1110020820	SCREW, cap	1				
11	1140090008	WASHER, spring	1				
12	1150420614	SCREW, sems	4				
13	1652711698	SCREW	2				
16	0881430805	INSULATOR	1				
17	1652231250	BAND	1				
18	0881430801	ABSORBENT, noise	1				
	T8c280						

silverhorn.co.uk

CONTROL BOX; R.H. (223000051-)

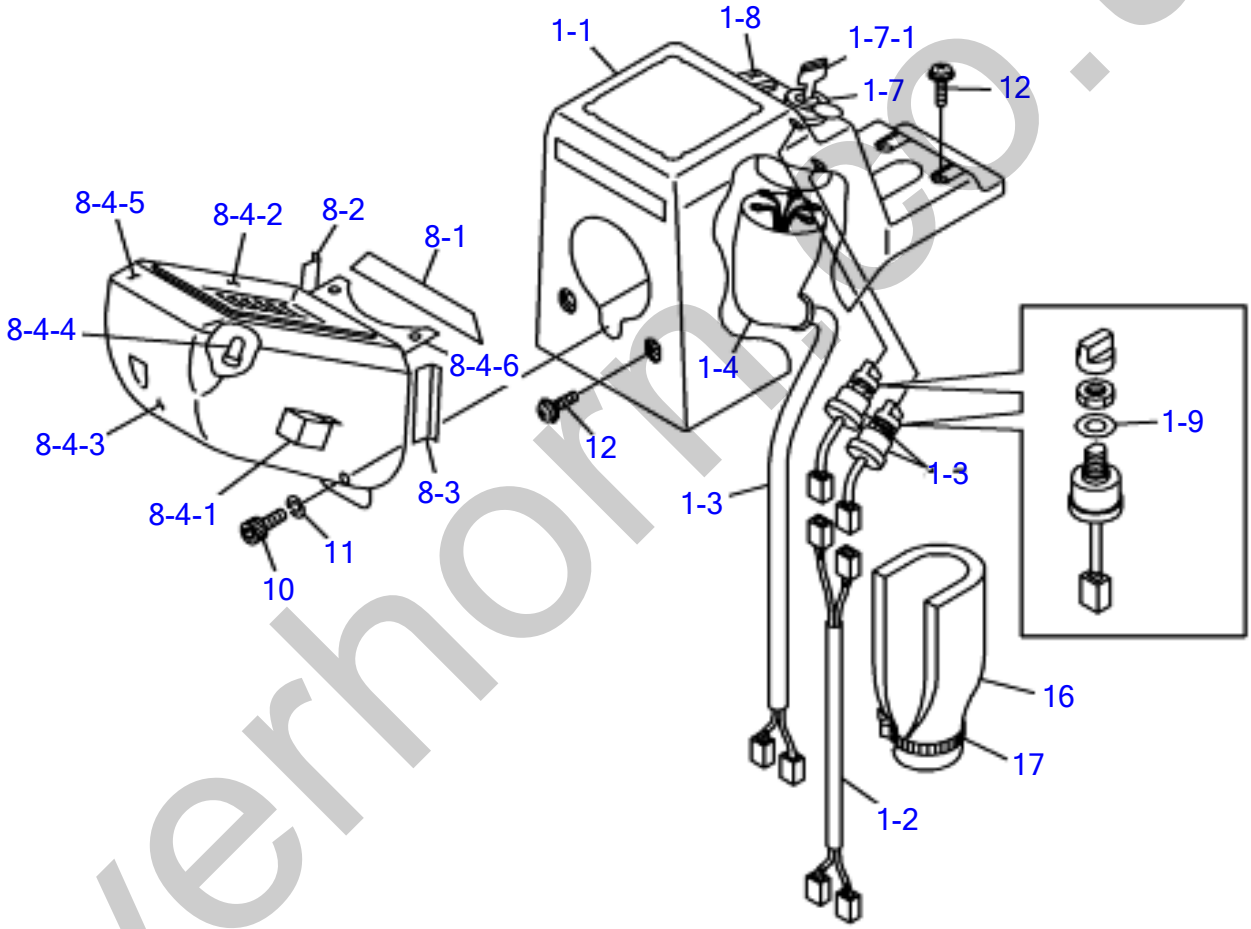

silverhorse.uk

CONTROL BOX; R.H. (223000051-)

Item	Part number	Description	Q'ty	Chan.	Serial No.	Serv.	Remarks
		COVER ASSY (R.H.)					
1	0882430100	COVER ASSY, sub (R.H.)	1			M	
1-1	0881430870	・COVER (R.H.)	1			M	
1-2	0881430880	・HARNESS, wiring	1			M	
1-3	0881430960	・HARNESS, wiring	1			M	
1-4	0870431821	・COVER	1			M	
1-5	1700000010	・SWITCH, lamp	2			M	
1-7	1700100052	・SWITCH, starter	1			M	
1-7-1	1700100019	・KEY	1			M	
1-8	1700550024	・ORNAMENT	1			M	
1-9	1141810012	・WASHER	2			M	
8	0664301010	GAUGE ASSY, cluster	1			M	
8-1	0881430901	・ABSORBENT, noise	1			M	
8-2	0881430902	・ABSORBENT, noise	1			M	
8-3	0881430903	・ABSORBENT, noise	1			M	
8-4	1730142110	・GAUGE, cluster	1		223000123~	M	
8-4-1	1730140691	・・RELAY	1			M	12V
8-4-2	1730140782	・・GLASS	1			M	
8-4-3	1730140785	・・COVER	1			M	
8-4-4	1730140696	・・BULB	8			M	14V, 1.4W
8-4-5	1730140788	・・VISOR	1			M	
8-4-6	1730140694	・・BRACKET	1			M	
10	1110020820	SCREW, cap	1			M	
11	1140090008	WASHER, spring	1			M	
12	1150420614	SCREW	4			M	
16	0881430805	INSULATOR	1			M	
17	1652231250	BAND	1			M	
	U1c201						

silverhorn.co.uk

CONTROL BOX; R.H. (high flow; 223000051-)

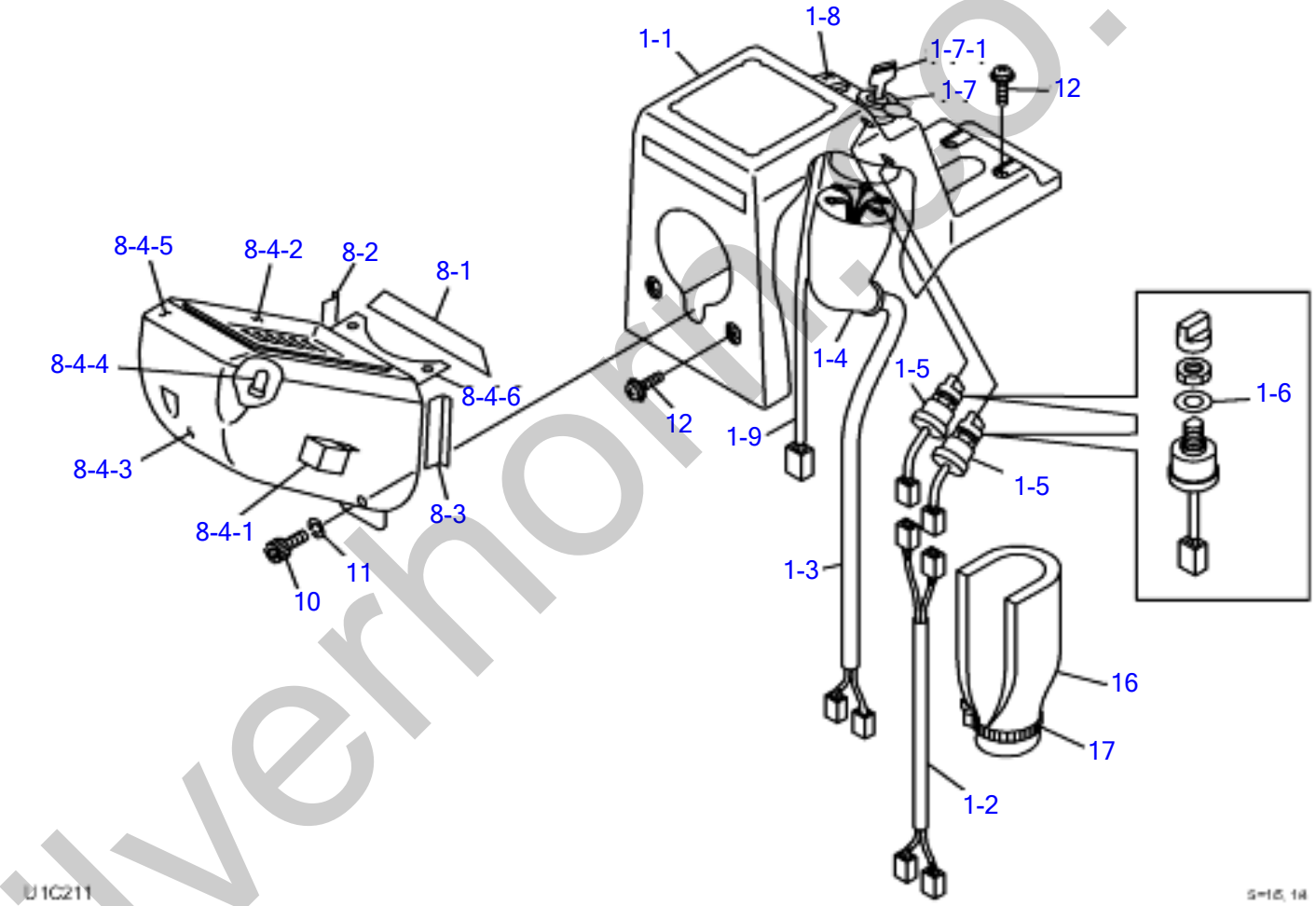

silverhorse.co.uk

CONTROL BOX; R.H. (high flow; 223000051-)

Item	Part number	Description	Q'ty	Chan.	Serial No.	Serv.	Remarks
		COVER ASSY (R.H.)					
1	0881430950	COVER ASSY	1			M	
1-1	0881430870	・COVER (R.H.)	1			M	
1-2	0881430880	・HARNESS, wiring	1			M	
1-3	0881430960	・HARNESS, wiring	1			M	
1-4	0870431821	・COVER	1			M	
1-5	1700000010	・SWITCH, lamp	2			M	
1-6	1141810012	・WASHER	2			M	
1-7	1700100052	・SWITCH, starter	1			M	
1-7-1	1700100019	・KEY	1			M	
1-8	1700000034	・SWITCH	1			M	
1-9	0881430970	・HARNESS, wiring	1			M	
8	0664301010	GAUGE ASSY, cluster	1			M	
8-1	0881430901	・ABSORBENT, noise	1			M	
8-2	0881430902	・ABSORBENT, noise	1			M	
8-3	0881430903	・ABSORBENT, noise	1			M	
8-4	1730142110	・GAUGE, cluster	1		223000123~	M	
8-4-1	1730140691	・・RELAY	1			M	12V
8-4-2	1730140782	・・GLASS	1			M	
8-4-3	1730140785	・・COVER	1			M	
8-4-4	1730140696	・・BULB	8			M	14V, 1.4W
8-4-5	1730140788	・・VISOR	1			M	
8-4-6	1730140694	・・BRACKET	1			M	
10	1110020820	SCREW, cap	1			M	
11	1140090008	WASHER, spring	1			M	
12	1150420614	SCREW, sems	4			M	
16	0881430805	INSULATOR	1			M	
17	1652231250	BAND	1			M	
	U1c211						

silverhorn.co.uk

CONTROL BOX; R.H. (for GEHL & MUSTANG; 223000051-)

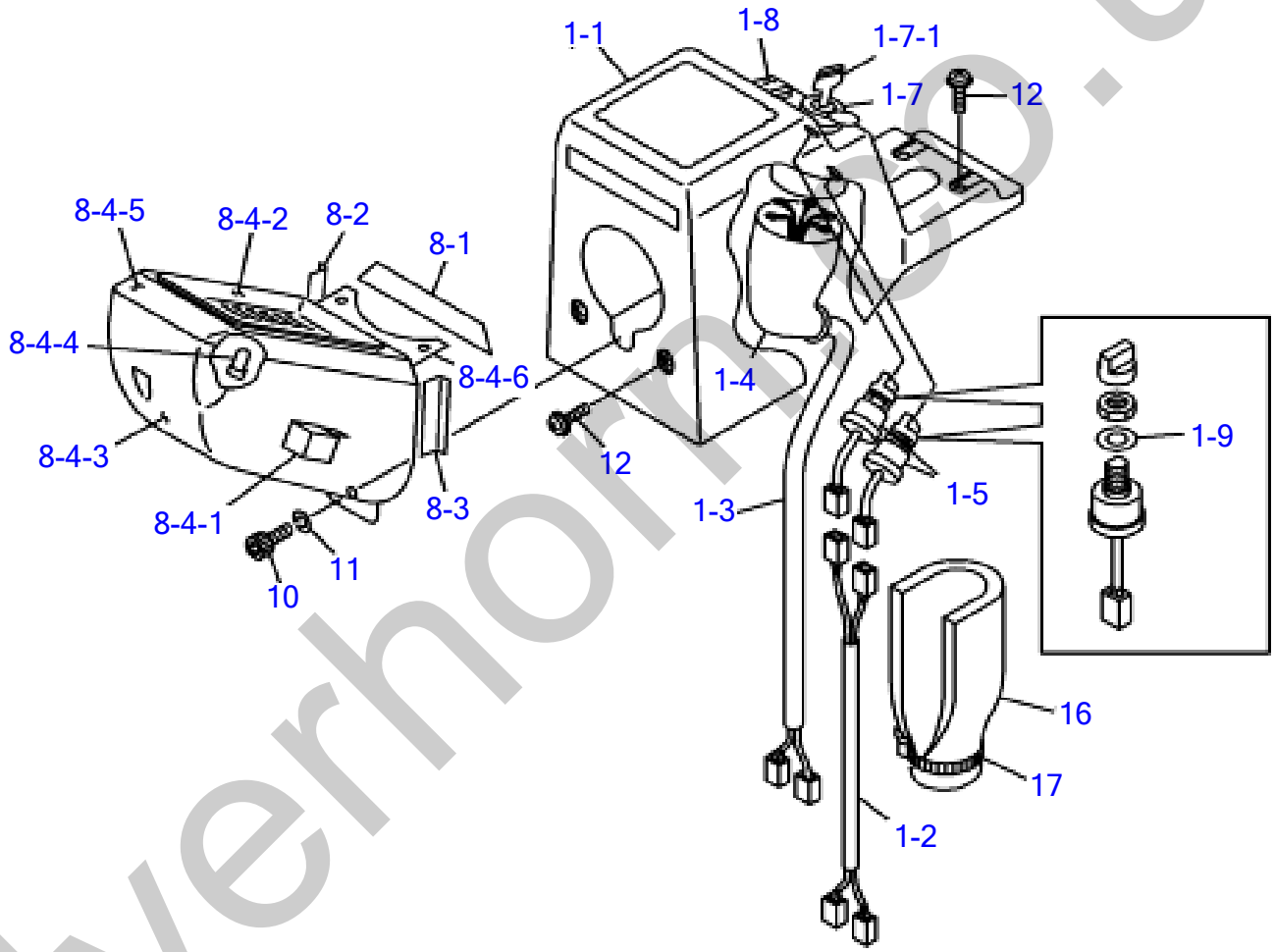

silverhorse.uk

CONTROL BOX; R.H. (for GEHL & MUSTANG; 223000051-)

Item	Part number	Description	Q'ty	Chan.	Serial No.	Serv.	Remarks
		COVER ASSY (R.H.)					
1	0882430100	COVER ASSY, sub (R.H.)	1			M	
1-1	0881430870	・COVER (R.H.)	1			M	
1-2	0881430880	・HARNESS, wiring	1			M	
1-3	0881430960	・HARNESS, wiring	1			M	
1-4	0870431821	・COVER	1			M	
1-5	1700000010	・SWITCH, lamp	2			M	
1-7	1700100052	・SWITCH, starter	1			M	
1-7-1	1700100019	・KEY	1			M	
1-8	1700550024	・ORNAMENT	1			M	
1-9	1141810012	・WASHER	2			M	
8	0664301510	GAUGE ASSY, cluster	1			M	
8-1	0881430901	・ABSORBENT, noise	1			M	
8-2	0881430902	・ABSORBENT, noise	1			M	
8-3	0881430903	・ABSORBENT, noise	1			M	
8-4	1730142130	・GAUGE, cluster	1		223000129~	M	
8-4-1	1730140691	・・RELAY	1			M	12V
8-4-2	1730140782	・・GLASS	1			M	
8-4-3	1730140785	・・COVER	1			M	
8-4-4	1730140696	・・BULB	8			M	14V, 1.4W
8-4-5	1730140788	・・VISOR	1			M	
8-4-6	1730140694	・・BRACKET	1			M	
10	1110020820	SCREW, cap	1			M	
11	1140090008	WASHER, spring	1			M	
12	1150420614	SCREW	4			M	
16	0881430805	INSULATOR	1			M	
17	1652231250	BAND	1			M	
	U1c171						

silverhorn.co.uk

CONTROL BOX; R.H. (high flow, for GEHL & MUSTANG; 223000051-)

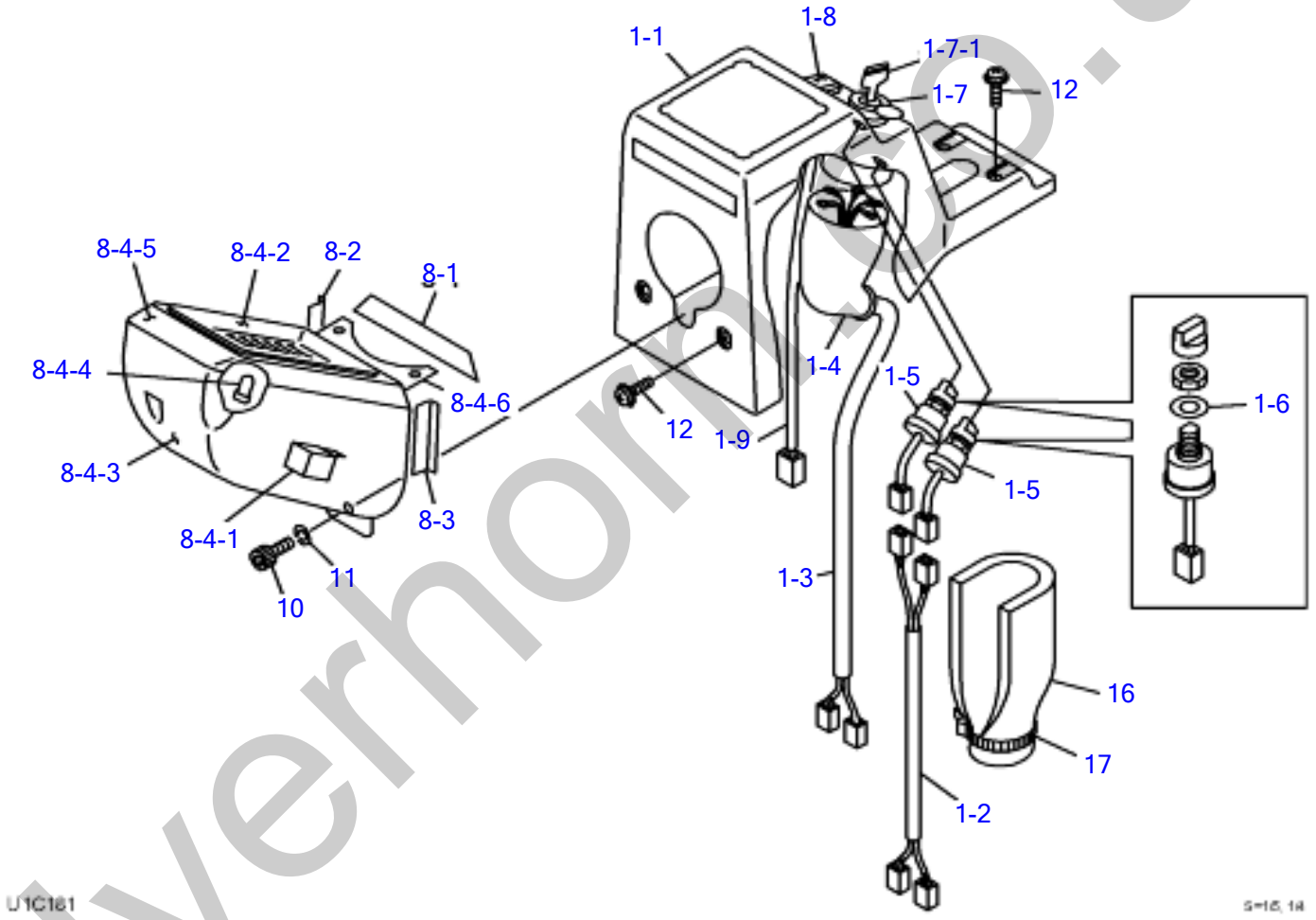

silverhorn.co.uk

CONTROL BOX; R.H. (high flow, for GEHL & MUSTANG; 223000051-)

Item	Part number	Description	Q'ty	Chan.	Serial No.	Serv.	Remarks
		COVER ASSY (R.H.)					
1	0881430950	COVER ASSY	1			M	
1-1	0881430870	・COVER (R.H.)	1			M	
1-2	0881430880	・HARNESS, wiring	1			M	
1-3	0881430960	・HARNESS, wiring	1			M	
1-4	0870431821	・COVER	1			M	
1-5	1700000010	・SWITCH, lamp	2			M	
1-6	1141810012	・WASHER	2			M	
1-7	1700100052	・SWITCH, starter	1			M	
1-7-1	1700100019	・KEY	1			M	
1-8	1700000034	・SWITCH	1			M	
1-9	0881430970	・HARNESS, wiring	1			M	
8	0664301510	GAUGE ASSY, cluster	1			M	
8-1	0881430901	・ABSORBENT, noise	1			M	
8-2	0881430902	・ABSORBENT, noise	1			M	
8-3	0881430903	・ABSORBENT, noise	1			M	
8-4	1730142130	・GAUGE, cluster	1		223000129~	M	
8-4-1	1730140691	・・RELAY	1			M	12V
8-4-2	1730140782	・・GLASS	1			M	
8-4-3	1730140785	・・COVER	1			M	
8-4-4	1730140696	・・BULB	8			M	14V, 1.4W
8-4-5	1730140788	・・VISOR	1			M	
8-4-6	1730140694	・・BRACKET	1			M	
10	1110020820	SCREW, cap	1			M	
11	1140090008	WASHER, spring	1			M	
12	1150420614	SCREW, sems	4			M	
16	0881430805	INSULATOR	1			M	
17	1652231250	BAND	1			M	
	U1c181						

silverhorn.co.uk

CONTROL BOX; L.H.

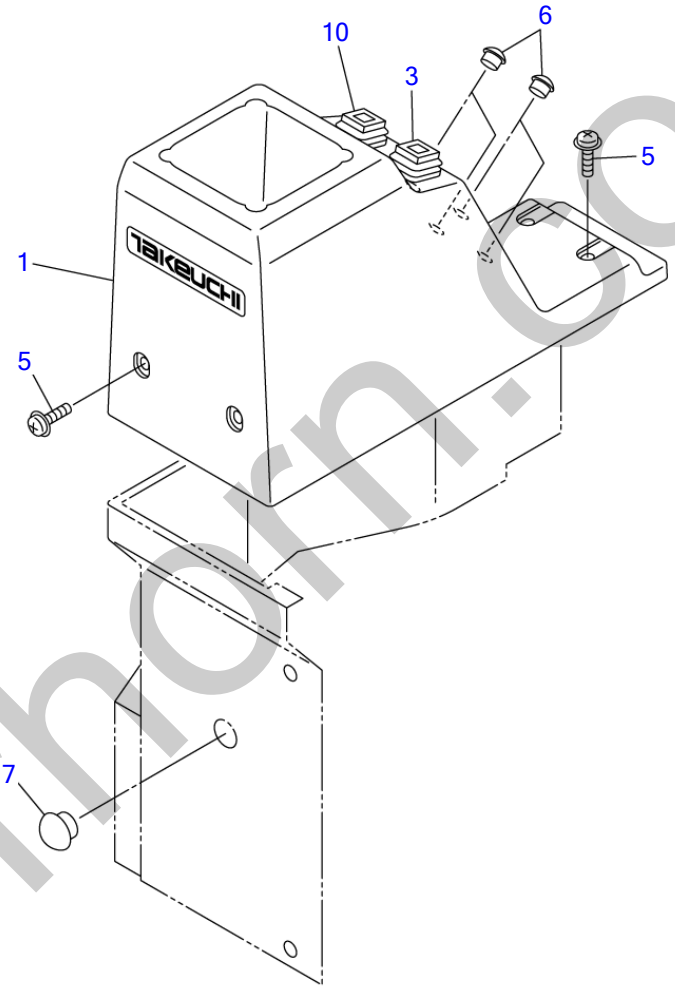

T7C040

S=1/5

silverhorn.co.uk

CONTROL BOX; L.H.

Item	Part number	Description	Q'ty	Chan.	Serial No.	Serv.	Remarks
		COVER ASSY (L.H.)					
1	0881430770	COVER (L.H.)	1				
3	1700000034	SWITCH	1				
5	1150420614	SCREW, sems	4				
6	1652533019	CAP	4				
7	1652533023	CAP	1				
10	1700000035	SWITCH	1				
	T7c041						

silverhorn.co.uk

CONTROL BOX; L.H. (hydraulic attachment type)

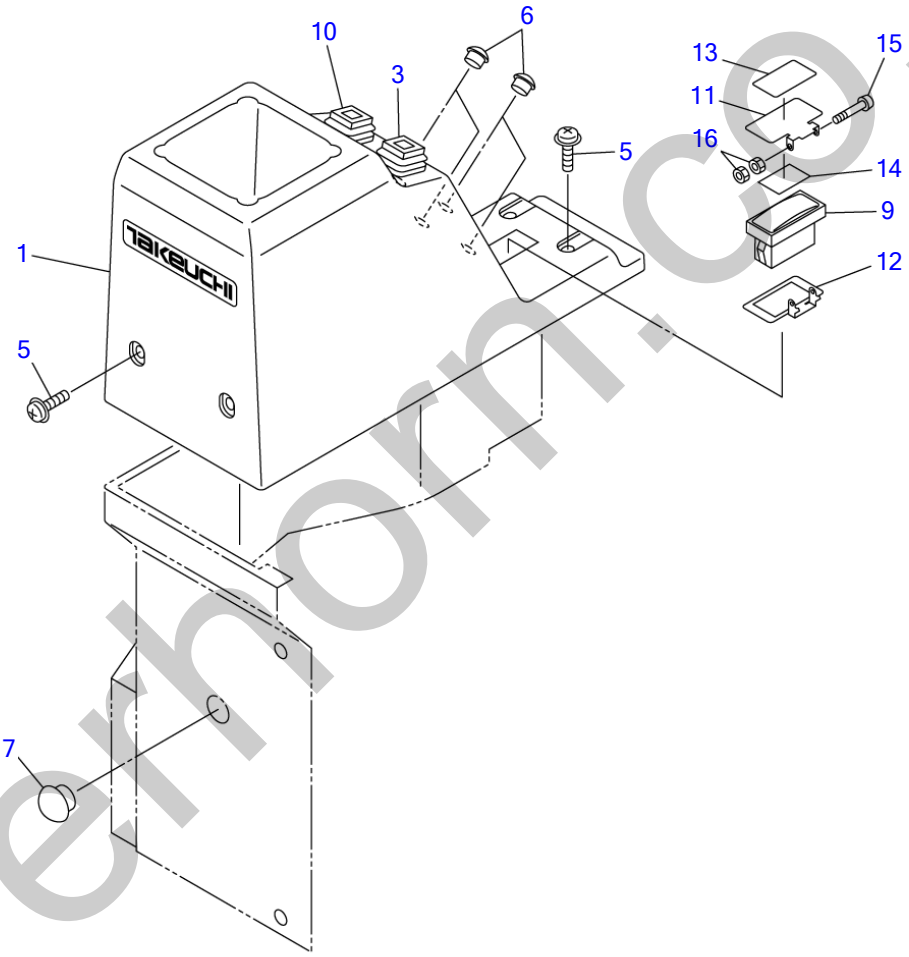

U1C081

S=1/5

silverhorn.co.uk

CONTROL BOX; L.H. (hydraulic attachment type)

Item	Part number	Description	Q'ty	Chan.	Serial No.	Serv.	Remarks
		COVER ASSY (L.H.)					
1	0664300010	COVER (L.H.)	1				
3	1700000034	SWITCH	1				
5	1150420614	SCREW	4				
6	1652533019	CAP	4				
7	1652533023	CAP	1				
9	1700008080	SWITCH	1				
10	1700000035	SWITCH	1				
11	0664300110	COVER	1		223000051~	M	
12	0664300120	COVER	1		223000051~	M	
13	0664300130	DECAL	1		223000051~	M	
14	0664300140	RUBBER	1		223000051~	M	
15	1120530330	SCREW	1		223000051~	M	
16	1130040003	NUT	2		223000051~	M	
	U1c082						

silverhorn.co.uk

ENGINE CONTROL (throttle pedal type)

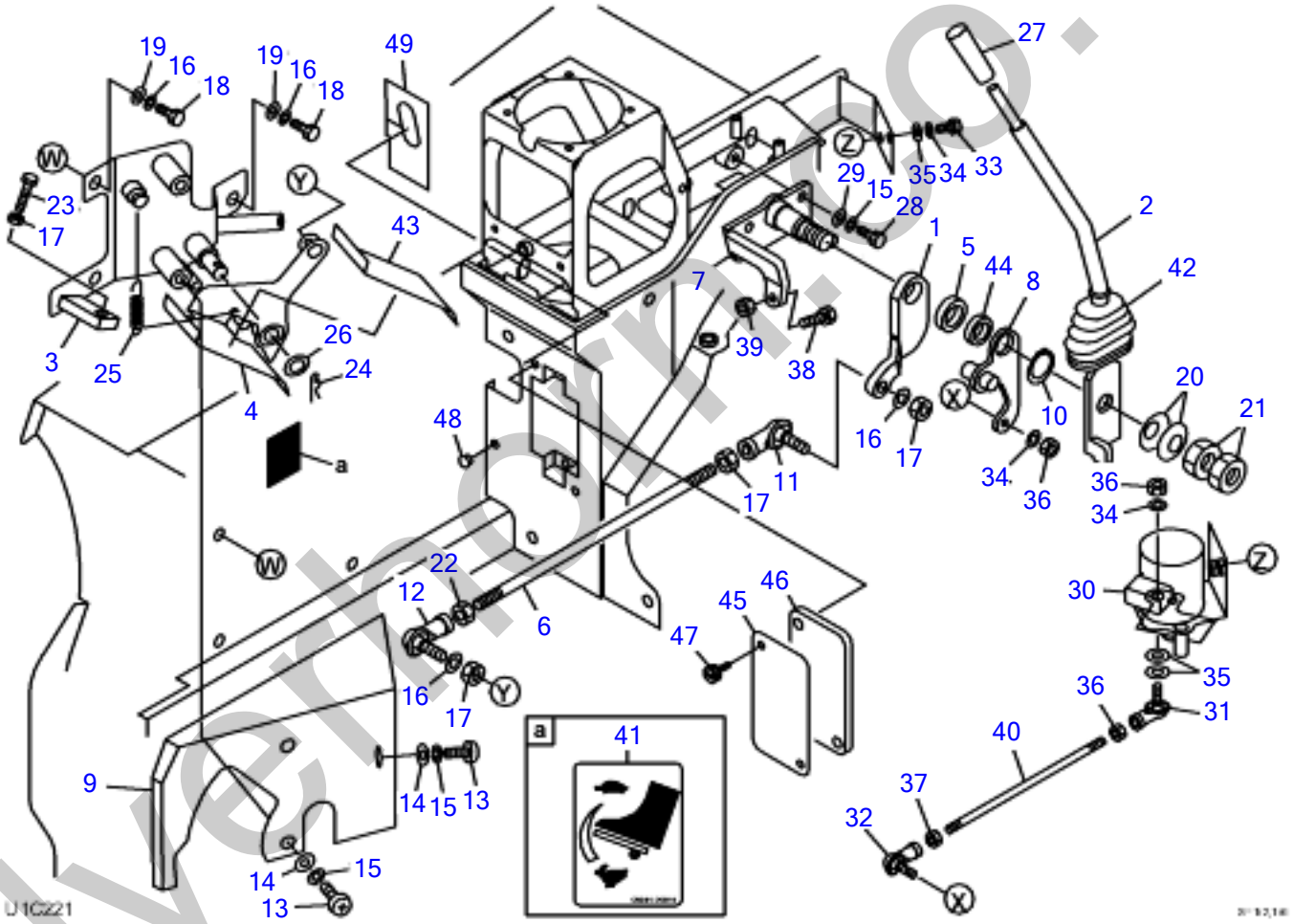

silvermore.co.uk

ENGINE CONTROL (throttle pedal type)

Item	Part number	Description	Q'ty	Chan.	Serial No.	Serv.	Remarks
		CONTROL ASSY, engine					
1	0664100550	PLATE	1			M	
2	0684100640	LEVER	1			M	
3	0664100710	FRAME	1			M	
4	0664100670	PEDAL	1			M	
5	0684100660	COLLAR	1			M	
6	0005010305	ROD	1			M	
7	0684100620	BASE	1			M	
8	0684100630	PLATE	1			M	
9	0664100650	COVER	1			M	
10	1220000022	RING, retaining	1			M	
11	1340000100	END, rod	1			M	
12	1340000105	END, rod	1			M	
13	1120940816	SCREW	3			M	
14	0003608252	WASHER	3			M	
15	1140020008	WASHER, spring	5			M	
16	1140020010	WASHER, spring	5			M	
17	1130040010	NUT	4			M	
18	1100041020	BOLT	3			M	
19	1141110010	WASHER	3			M	
20	1225110018	WASHER, conical	2			M	
21	0064111700	NUT	2			M	
22	1131540010	NUT	1			M	
23	1100241050	BOLT	1			M	
24	1214000014	PIN, snap	1			M	
25	0007000074	SPRING	1			M	
26	1141110014	WASHER	1			M	
27	1650132050	GRIP	1			M	
28	1100040820	BOLT	2			M	
29	1141110008	WASHER	2			M	
30	1910253126	SENSOR, accel	1			M	
31	1340010060	END, rod	1			M	
32	1340010065	END, rod	1			M	
33	1100040616	BOLT	2			M	
34	1140020006	WASHER, spring	4			M	
35	1141110006	WASHER	4			M	
36	1130040006	NUT	3			M	
37	1131540006	NUT	1			M	
38	1100240840	BOLT	1			M	
39	1130040008	NUT	1			M	
40	0005006100	ROD	1			M	
41	0664100044	DECAL	1			M	
42	0334120100	BOOT	1			M	
43	0684100670	SHEET	1			M	
44	0003600248	WASHER	1		223000387~	M	
45	0881430802	COVER	1		223000471~	M	
46	0664300020	INSULATOR	1		223000471~	M	
47	1652711698	SCREW	2		223000471~	M	
48	1652533015	CAP	1		223000471~	M	
49	0694101304	SHEET	1				
	U1c221						

silverthorn.co.uk

ELECTRICAL (2/2) (223000001-223000050)

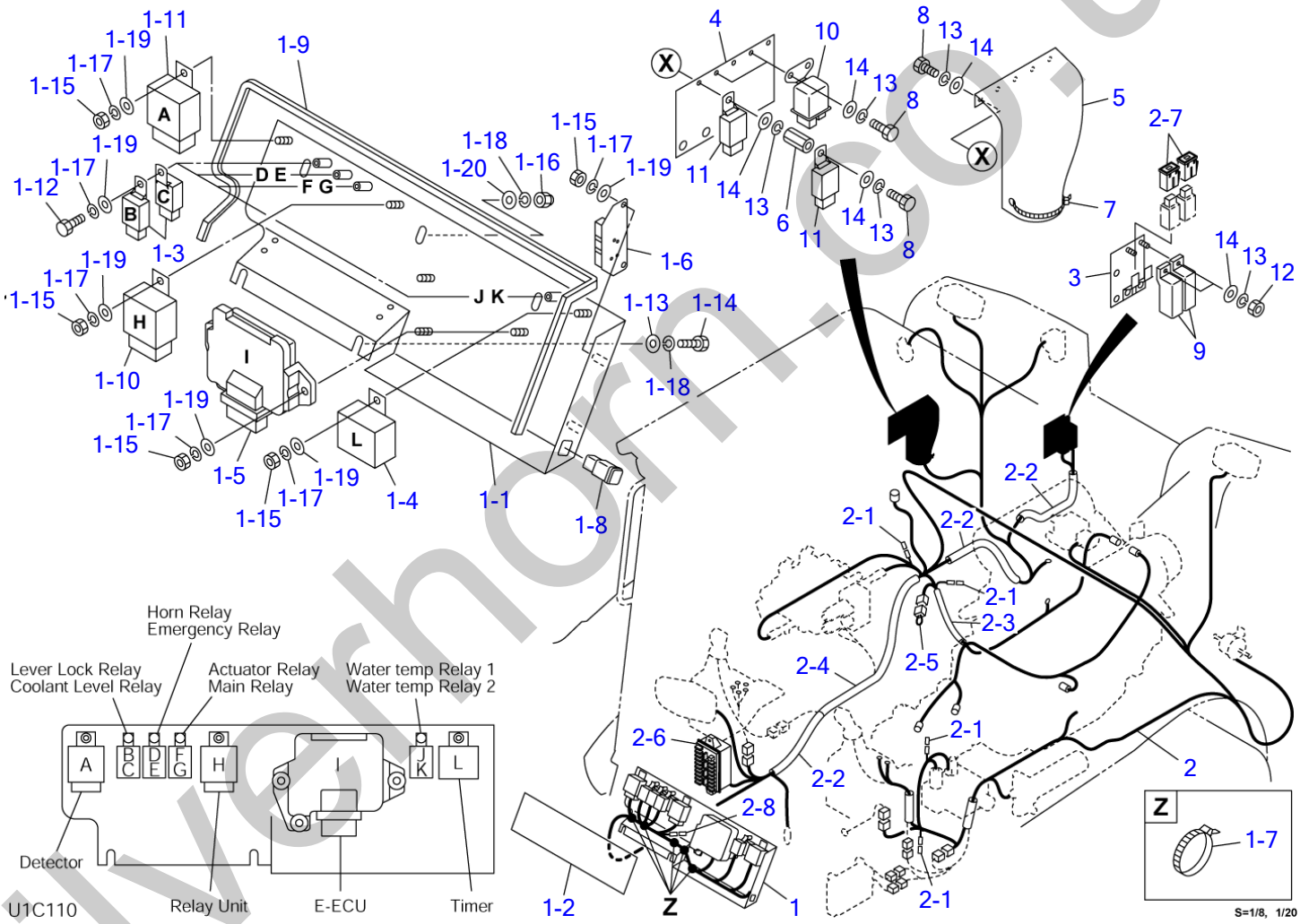

silverhorn.co.uk

ELECTRICAL (2/2) (223000001-223000050)

Item	Part number	Description	Q'ty	Chan.	Serial No.	Serv.	Remarks
0-1	0664201100	UNIT ASSY, relay	1				
1	0664201300	・RELAY UNIT	1				
1-1	0664201310	・・BOX	1				
1-2	0882420220	・・RUBBER	1				
1-3	1711900042	・・RELAY	8				
1-4	1711900140	・・UNIT, timer (30sec)	1				
1-5	1730142050	・・CONTROLLER	1				
1-6	0664201320	・・RESISTOR	1				
1-7	1652231250	・・BAND	5				
1-8	1700550024	・・ORNAMENT	1				
1-9	1654606100	・・TRIM	1				sold by the meter
1-10	1711900062	・・RELAY	1				
1-11	1711900131	・・DETECTOR	1				
1-12	1100040616	・・BOLT	4				
1-13	0003608252	・・WASHER	2				
1-14	1100040816	・・BOLT	2				
1-15	1130040006	・・NUT	8				
1-16	1134230008	・・NUT	2				
1-17	1140020006	・・WASHER, spring	12				
1-18	1140020008	・・WASHER, spring	4				
1-19	1141110006	・・WASHER	12				
1-20	1141110008	・・WASHER	2				
2	0664201200	・HARNESS ASSY, wiring	1				
2-1	1730500008	・・DIODE (3A yellow)	4				
2-2	1531325025	・・PROTECTOR	3				sold by the meter
2-3	1531525035	・・PROTECTOR	1				sold by the meter
2-4	1531525085	・・PROTECTOR	1				sold by the meter
2-5	0394221010	・・CONNECTOR, short	1				
2-6	1701204920	・・BOX, fuse	1				V716801-H100
2-7	1701330045	・・LINK, fusible	2				
2-8	1730500023	・・DIODE (3A)	1				
3	0664200060	・BRACKET	1				
4	0664200050	・BRACKET	1				
5	0880427010	・RUBBER	1				
6	1134830620	・NUT	1				
7	1652231250	・BAND	2				
8	1100040616	・BOLT	6				
9	1700100038	・COVER	2				
10	1711900099	・RELAY	2				Y119646-77900
11	1711900042	・RELAY	2				
12	1130040006	・NUT	4				
13	1140020006	・WASHER, spring	8				
14	0003600110	・WASHER	11				
	U1c110						

silverthorn.co.uk

ELECTRICAL (1/2) (223000051-)

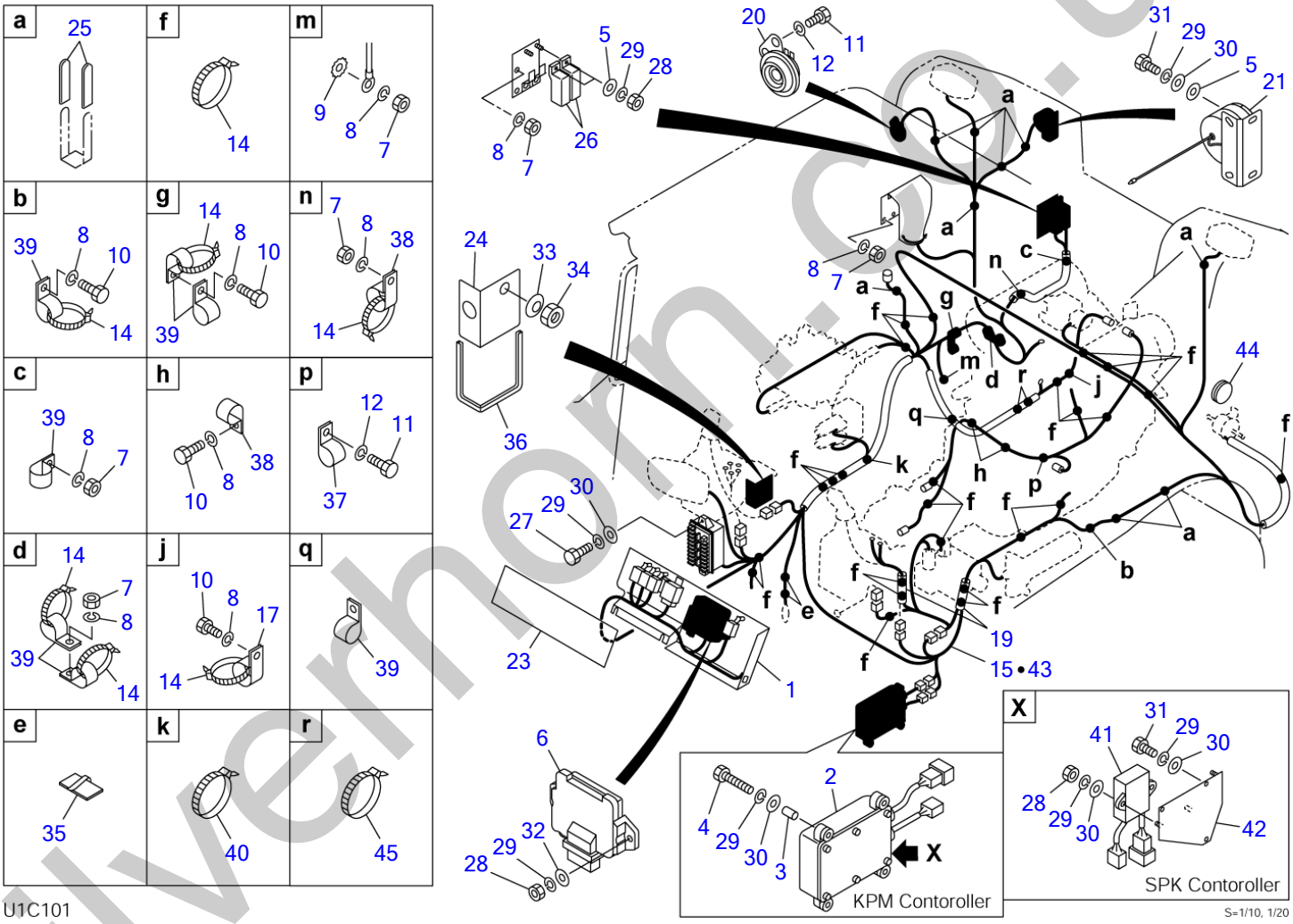

silverhorn.co.uk

ELECTRICAL (1/2) (223000051-)

Item	Part number	Description	Q'ty	Chan.	Serial No.	Serv.	Remarks
		ELECTRICAL ASSY (with KPM Controller)					
		ELECTRICAL ASSY (with SPK Controller)					
1	0664202100	UNIT ASSY, relay	1			M	see page (2/2)
2	1730140730	CONTROLLER	1				with KPM Controller
3	1531007002	HOSE (sold by the meter)	4				with KPM Controller
4	1100040630	BOLT	4				with KPM Controller
5	0003600110	WASHER	4				
6	1730142050	CONTROLLER	1			M	
7	1130040010	NUT	8				
8	1140020010	WASHER, spring	12				
9	1140330010	WASHER	1				
10	1100041016	BOLT	4				
11	1100040812	BOLT	2				
12	1140020008	WASHER, spring	5				
14	1652231250	BAND	36				
15	0664201250	HARNESS, wiring	1				with KPM Controller
17	1711900105	CLAMP	1				
19	0880422080	PROTECTOR	2				
20	1703500712	HORN	1			M	
21	1703700013	BUZZER	1				
23	0882420220	RUBBER	1			M	
24	0880426020	COVER	1				
25	0872433150	TUBE	20				
26	1700100038	COVER	2			M	
27	1100040616	BOLT	2				
28	1130040006	NUT	7			M	
29	1140020006	WASHER, spring	18				
30	1141110006	WASHER	13				
31	1100040610	BOLT	5				
32	0003608252	WASHER	3			M	
33	1225000018	WASHER	1				
34	1130640018	NUT	1				
35	1711900074	DECAL	2				
36	1653916030	TRIM	1				sold by the meter
37	1711900127	CLAMP	1			M	
38	1711900071	CLAMP	4				
39	1711900072	CLAMP	11				
40	1652201007	BAND	1				
41	1730142090	CONTROLLER	1			M	with SPK Controller
42	0654203510	BRACKET	1			M	with SPK Controller
43	0664202400	HARNESS, wiring	1			M	with SPK Controller
44	1652060051	BUSHING	1			M	
45	1652251002	BAND	2			M	
	U1c101						

silvermorn.co.uk

ENGINE CONTROL

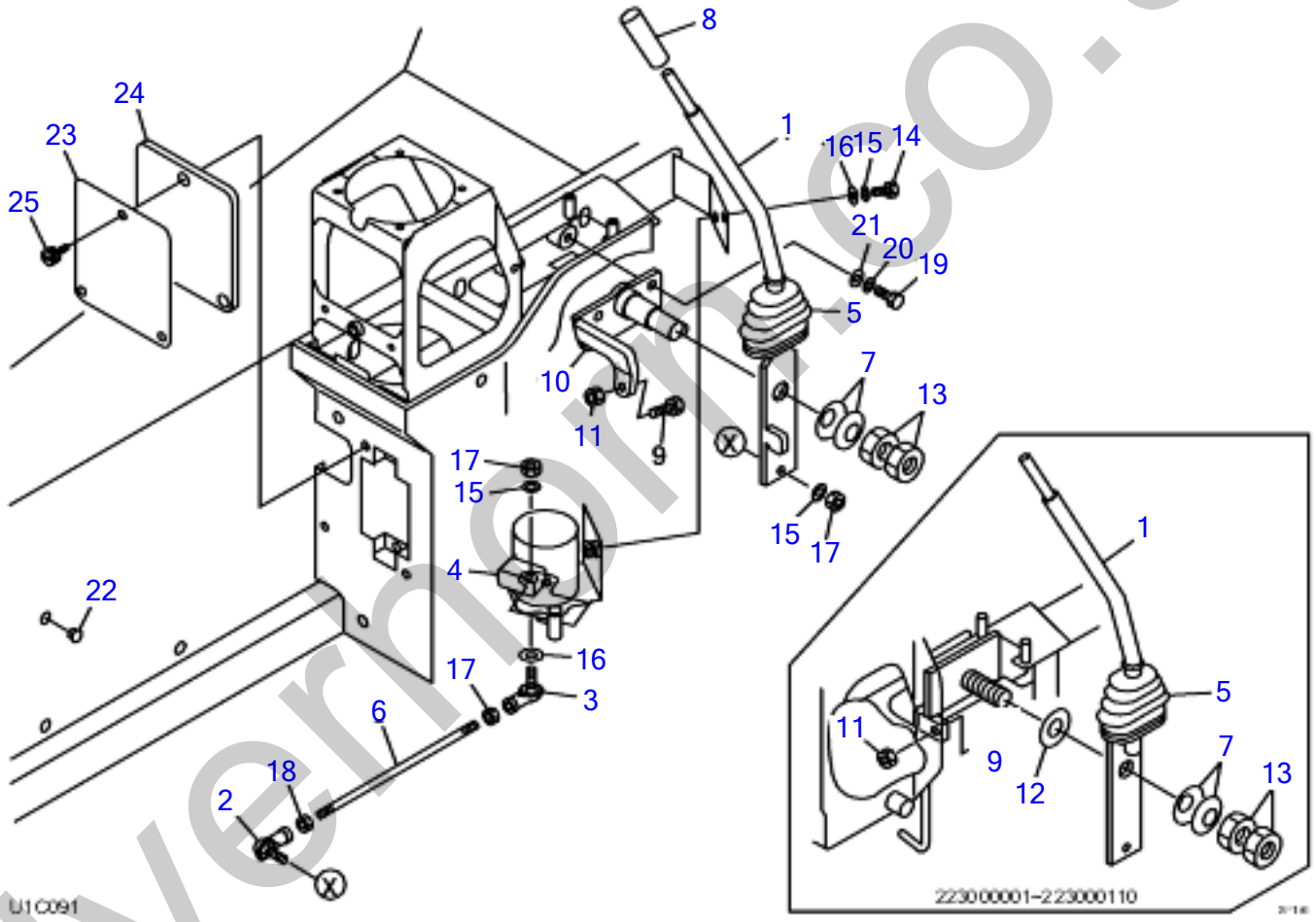

silvermore.co.uk

ENGINE CONTROL

Item	Part number	Description	Q'ty	Chan.	Serial No.	Serv.	Remarks
		CONTROL ASSY, engine					
1	0664100010	LEVER	1				
	0664100720	LEVER	1				
2	1340010065	END, rod	1				
3	1340010060	END, rod	1				
4	1910253126	SENSOR, accel.	1				Y129938-77800
5	0334120100	BOOT	1				
6	0005006100	ROD	1				
7	1225110018	WASHER, conical	2				
8	1650132050	GRIP	1				
9	1100040840	BOLT	1				
10	0684100620	BASE	1				
11	1130040008	NUT	1				
12	1141550018	WASHER	1				
13	0064111700	NUT	2				
14	1100040616	BOLT	2				
15	1140020006	WASHER, spring	4				
16	1141110006	WASHER	3				
17	1130040006	NUT	3				
18	1131540006	NUT	1				
19	1100040820	BOLT	2				
20	1140020008	SPRING WASHER	2				
21	1141110008	WASHER	2				
22	1652533017	CAP	3				
23	0664300040	COVER	1				
24	0664300030	INSULATOR	1				
25	1652711698	SCREW	3				
	U1c091						

silverhorn.co.uk

ELECTRICAL (2/2) (223000051-)

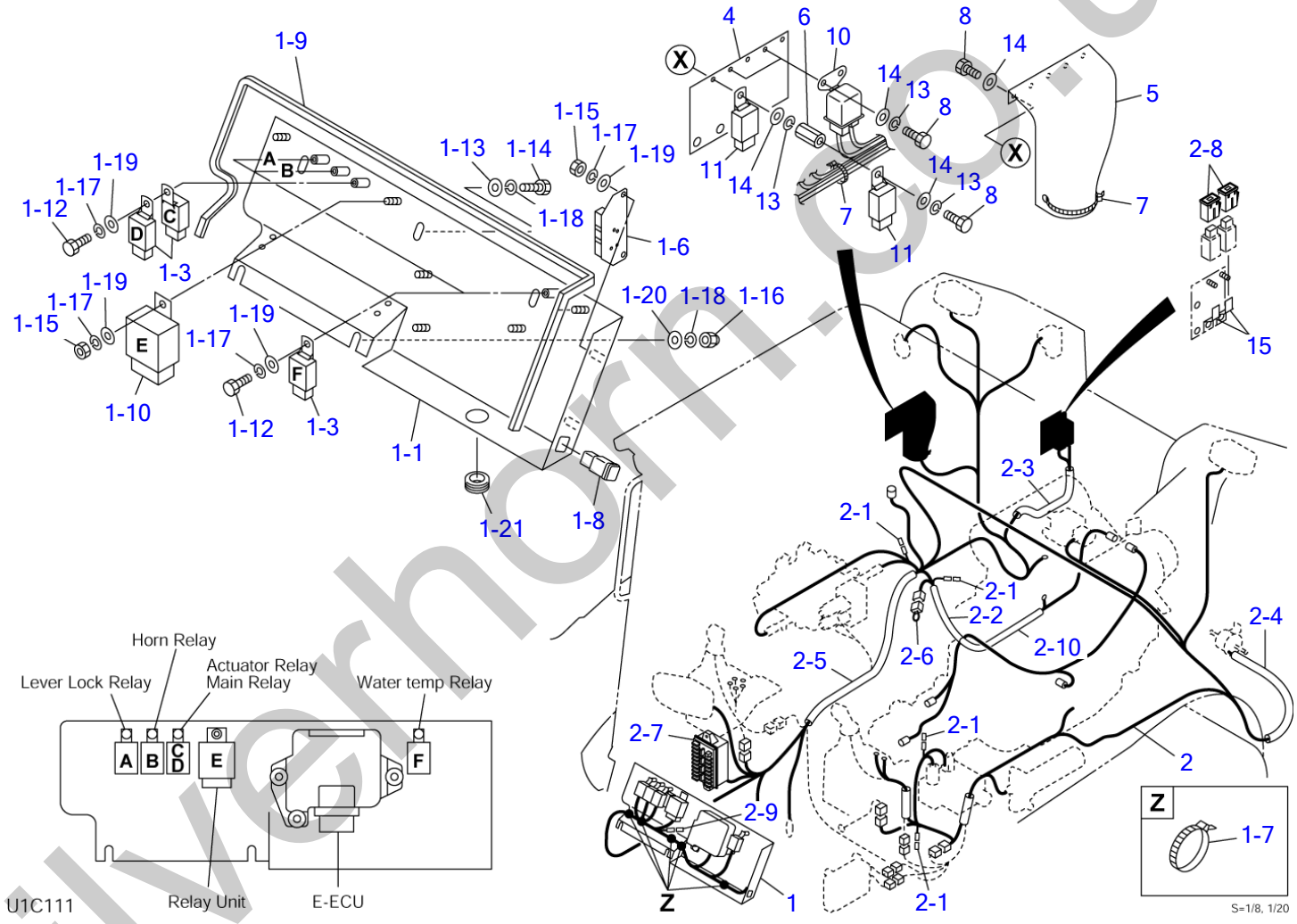

silverhorn.co.uk

ELECTRICAL (2/2) (223000051-)

Item	Part number	Description	Q'ty	Chan.	Serial No.	Serv.	Remarks
0-1	0664202100	UNIT ASSY, relay	1			M	
1	0664202300	・RELAY UNIT	1			M	
1-1	0664201310	・・BOX	1				
1-3	1711900042	・・RELAY	5				
1-6	0664201320	・・RESISTOR	1				
1-7	1652231250	・・BAND	5				
1-8	1700550017	・・LAMP, pilot	1			M	
1-9	1654606100	・・TRIM	1				sold by the meter
1-10	1711900062	・・RELAY	1				
1-12	1100040616	・・BOLT	4				
1-13	0003608252	・・WASHER	3				
1-14	1100040816	・・BOLT	3				
1-15	1130040006	・・NUT	3				
1-16	1134230008	・・NUT	2				
1-17	1140020006	・・WASHER, spring	7				
1-18	1140020008	・・WASHER, spring	5				
1-19	1141110006	・・WASHER	7				
1-20	1141110008	・・WASHER	2				
1-21	1652060035	・・BUSHING	1			M	
2	0664202200	・HARNESS ASSY, wiring	1			M	
2-1	1730500008	・・DIODE (3A yellow)	4				
2-2	1531325035	・・PROTECTOR	1			M	sold by the meter
2-3	1531325060	・・PROTECTOR	1			M	sold by the meter
2-4	1531312068	・・PROTECTOR	1			M	sold by the meter
2-5	1531325090	・・PROTECTOR	1			M	sold by the meter
2-6	0394221010	・・CONNECTOR, short	1				
2-7	1701204920	・・BOX, fuse	1				V716801-H100
2-8	1701330045	・・LINK, fusible	2				
2-9	1730500023	・・DIODE (3A)	1				
2-10	1531315040	・・PROTECTOR	1			M	sold by the meter
4	0664200050	・BRACKET	1				
5	0880427010	・RUBBER	1				
6	1134830620	・NUT	1				
7	1652231250	・BAND	2				
8	1100040616	・BOLT	6				
10	1711900099	・RELAY	2				Y119646-77900
11	1711900042	・RELAY	2				
13	1140020006	・WASHER, spring	6				
14	0003600110	・WASHER	9				
15	1711900064	・CLAMP	2			M	
	U1c111						

silverhorn.co.uk

ELECTRICAL (1/3)

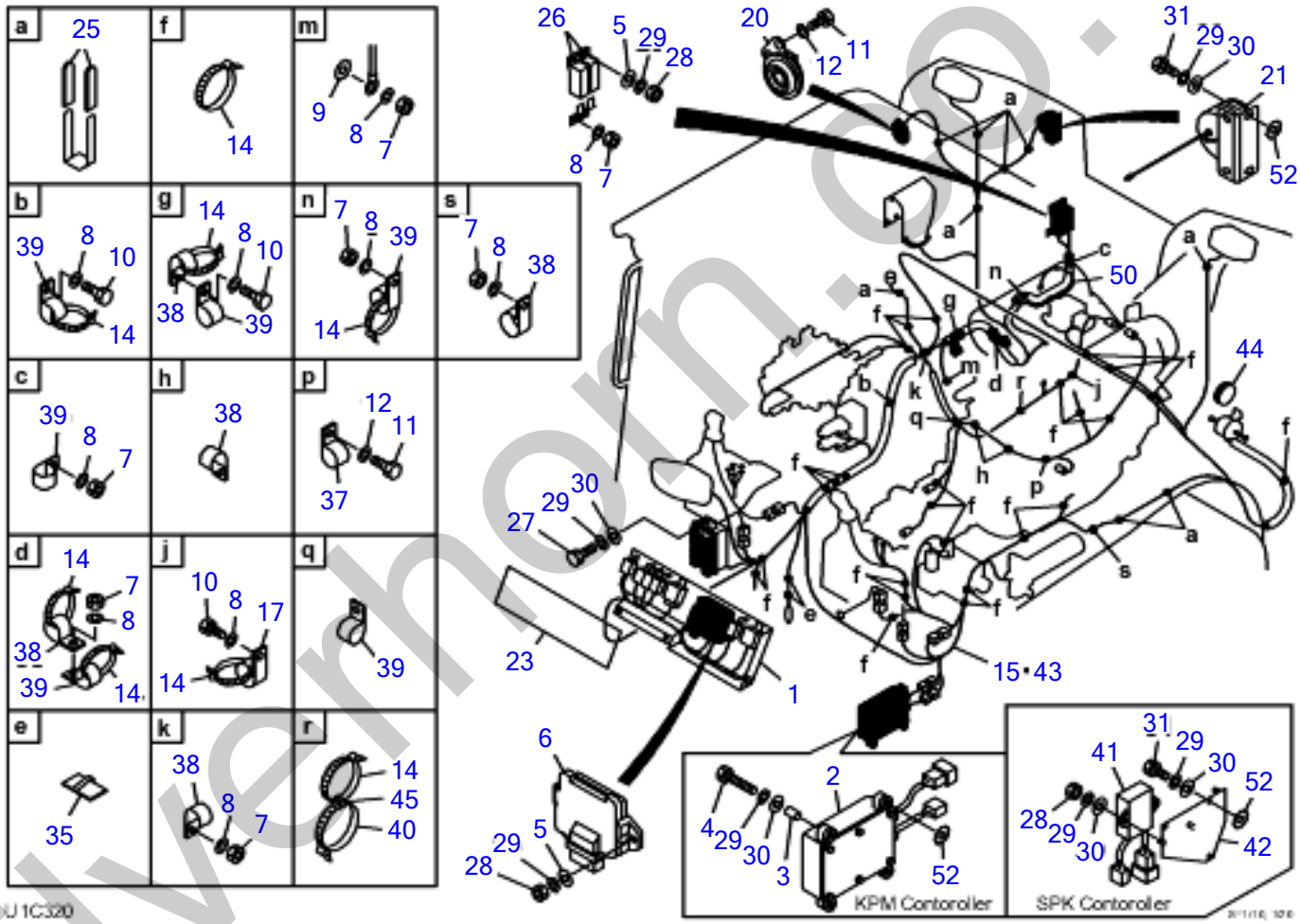

silverhorn.co.uk

ELECTRICAL (1/3)

Item	Part number	Description	Q'ty	Chan.	Serial No.	Serv.	Remarks
		ELECTRICAL (1/3)					
		ELECTRICAL (1/3)					
		ELECTRICAL (1/3)					
		ELECTRICAL (1/3)					
		ELECTRICAL ASSY (KPM CONTROLLER TYPE)					
		ELECTRICAL ASSY (KPM CONTROLLER TYPE, HIGH FLOW)					
		ELECTRICAL ASSY (SPK CONTROLLER TYPE)					
		ELECTRICAL ASSY (SPK CONTROLLER TYPE, HIGH FLOW)					
1	0664210110	RELAY UNIT ASSY	1				
2	1730140730	CONTROLLER	1				
3	1531007002	HOSE 9SOLD BY THE METER)	4				
4	1100040630	BOLT	4				
5	0003600110	WASHER	5				
6	1910259127	E-ECU	1				
7	1130040010	NUT	8				
8	1140020010	SPRING WASHER	10				
9	1140330010	WASHER	1				
10	1100041016	BOLT	2				
11	1100040812	BOLT	2				
12	1140020008	SPRING WASHER	5				
14	1652231250	BAND	36				
15	0664201250	WIRING HARNESS	1				
17	1711900105	CLAMP	1				
20	1703500712	HORN	1				
21	1703700013	BUZZER	1				
23	0882420220	RUBBER	1				
25	0872433150	TUBE	20				
26	1700100038	COVER	2				
27	1100040616	BOLT	2				
28	1130040006	NUT	7				
29	1140020006	SPRING WASHER	18				
30	1141110006	WASHER	13				
31	1100040610	BOLT	5				
35	1711900074	STICKER	2				
37	1711900129	CLAMP	1				
38	1711900071	CLAMP	6				
39	1711900072	CLAMP	6				
40	1652201007	BAND	1				
41	1730142090	CONTROLLER	1				
42	0654203510	BRACKET	1				
43	0664202400	WIRING HARNESS	1				
44	1652060051	BUSHING	1				
45	1652200010	RING	1				
50	0664202810	EARTH CABLE	1				
52	1140330006	WASHER	2				
	U1C320						

silvermorn.co.uk

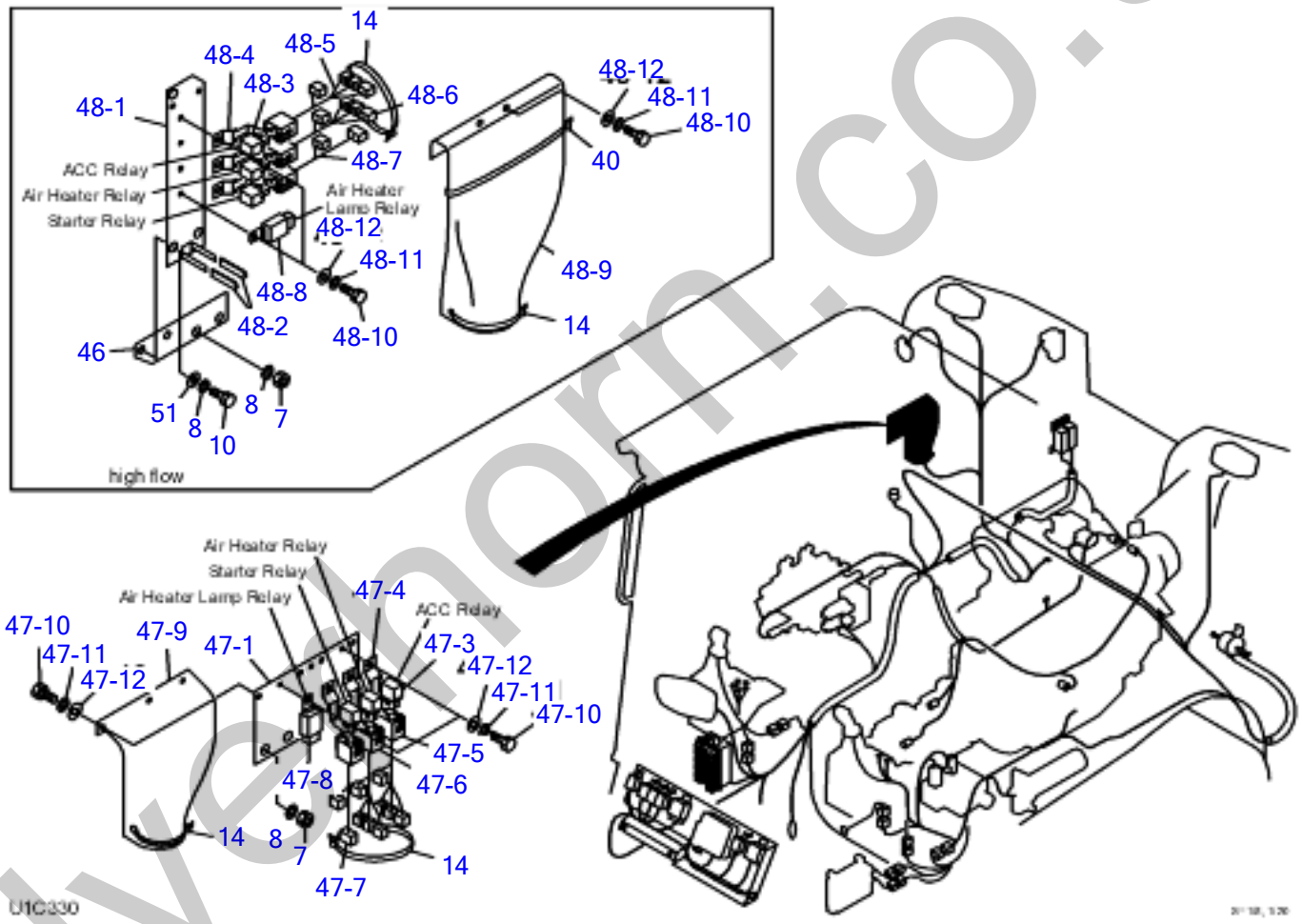

silvethorn.co.uk

Item	Part number	Description	Q'ty	Chan.	Serial No.	Serv.	Remarks
		ELECTRICAL (2/3)					
		ELECTRICAL (2/3)					
		ELECTRICAL (2/3)					
		ELECTRICAL (2/3)					
		ELECTRICAL ASSY (KPM CONTROLLER TYPE)					
		ELECTRICAL ASSY (KPM CONTROLLER TYPE, HIGH FLOW)					
		ELECTRICAL ASSY (SPK CONTROLLER TYPE)					
		ELECTRICAL ASSY (SPK CONTROLLER TYPE, HIGH FLOW)					
7	1130040010	NUT	2				
8	1140020010	SPRING WASHER	4				
10	1100041016	BOLT	2				
14	1652231250	BAND	2				
40	1652201007	BAND	1				
46	0664202540	BRACKET	1				
47	0664202510	RELAY UNIT	1				
47-1	0664202520	* BRACKET	1				
47-3	1910245125	* RELAY	3				
47-4	1910245130	* BRACKET	3				
47-5	0654203740	* WIRING HARNESS	1				
47-6	0654203730	* WIRING HARNESS	1				
47-7	0654203720	* WIRING HARNESS	1				
47-8	1711900123	* RELAY	1				
47-9	0664202530	* RUBBER	1				
47-10	1100040612	* BOLT	7				
47-11	1140020006	* SPRING WASHER	7				
47-12	0003600110	* WASHER	7				
48	0654202660	HIGH FLOW RELAY UNIT	1				
48-1	0654202670	* BRACKET	1				
48-2	0872433150	* TUBE	2				
48-3	1910245125	* RELAY	3				
48-4	1910245130	* BRACKET	3				
48-5	0654203740	* WIRING HARNESS	1				
48-6	0654203730	* WIRING HARNESS	1				
48-7	0654203720	* WIRING HARNESS	1				
48-8	1711900123	* RELAY	1				
48-9	0882421001	* RUBBER	1				
48-10	1100040612	* BOLT	6				
48-11	1140020006	* SPRING WASHER	6				
48-12	0003600110	* WASHER	6				
51	1141110010	WASHER	2				
	U1C330						

silverthorn.co.uk

ELECTRICAL (3/3)

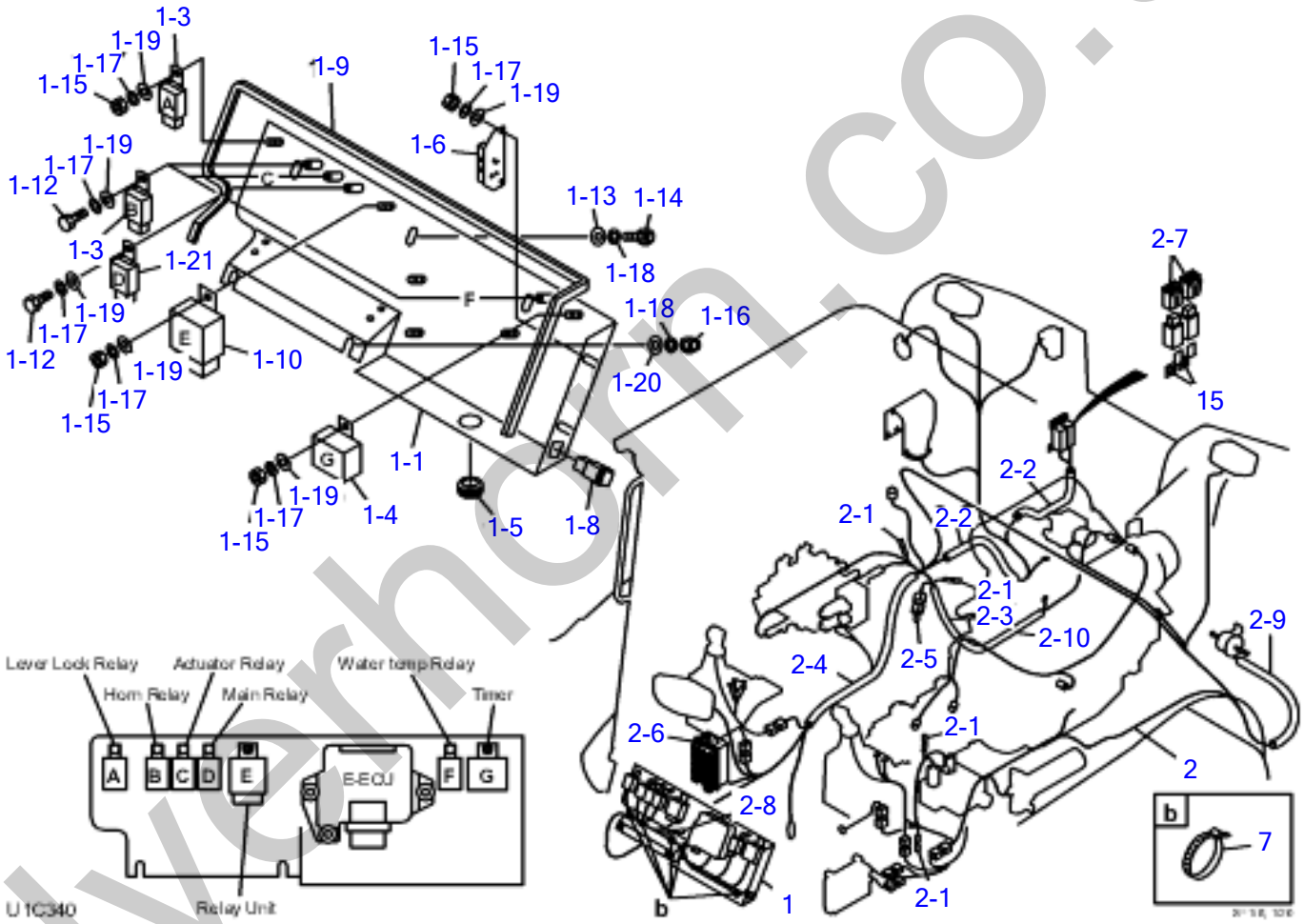

silverhorn.co.uk

ELECTRICAL (3/3)

Item	Part number	Description	Q'ty	Chan.	Serial No.	Serv.	Remarks
		ELECTRICAL (3/3)					
		ELECTRICAL (3/3)					
		ELECTRICAL (3/3)					
		ELECTRICAL (3/3)					
0-1	0664210110	RELAY UNIT ASSY	1				
1	0664210310	* RELAY UNIT	1				
1-1	0664201310	* * BOX	1				
1-3	1711900042	* * RELAY	4				
1-4	1711900140	* * TIMER UNIT	1				
1-5	1652060035	* * BUSHING	1				
1-6	0664201320	* * RESISTOR	1				
1-8	1700550017	* * PILOT LAMP	1				
1-9	1654606100	* * TRIM	1				
1-10	1711900062	* * RELAY	1				
1-12	1100040616	* * BOLT	4				
1-13	0003608252	* * WASHER	3				
1-14	1100040816	* * BOLT	3				
1-15	1130040006	* * NUT	5				
1-16	1134230008	* * NUT	2				
1-17	1140020006	* * SPRING WASHER	9				
1-18	1140020008	* * SPRING WASHER	5				
1-19	1141110006	* * WASHER	9				
1-20	1141110008	* * WASHER	2				
1-21	1910245135	* * RELAY	1				
2	0664201200	* WIRING HARNESS ASSY	1				
2-1	1730500008	* * DIODE 3A YELLOW	4				
2-2	1531325025	* * PROTECTOR	2				
2-3	1531325035	* * PROTECTOR	1				
2-4	1531325085	* * PROTECTOR	1				
2-5	0394221010	* * SHORT CONNECTOR	1				
2-6	1701204920	* * FUSE BOX	1				
	1701311005	* * * FUSE					
	1701311010	* * * FUSE					
	1701311015	* * * FUSE					
	1701311020	* * * FUSE					
	1701311030	* * * FUSE					
2-7	1701330045	FUSIBLE LINK	2				
2-8	1730500023	* * DIODE 3A	1				
2-9	1531312068	* * PROTECTOR	1				
2-10	1531315040	* * PROTECTOR	1				
7	1652231250	* BAND	5				
15	1711900064	* CLAMP	2				
	U1C340						

silverhorn.co.uk

ELECTRICAL (1/3)

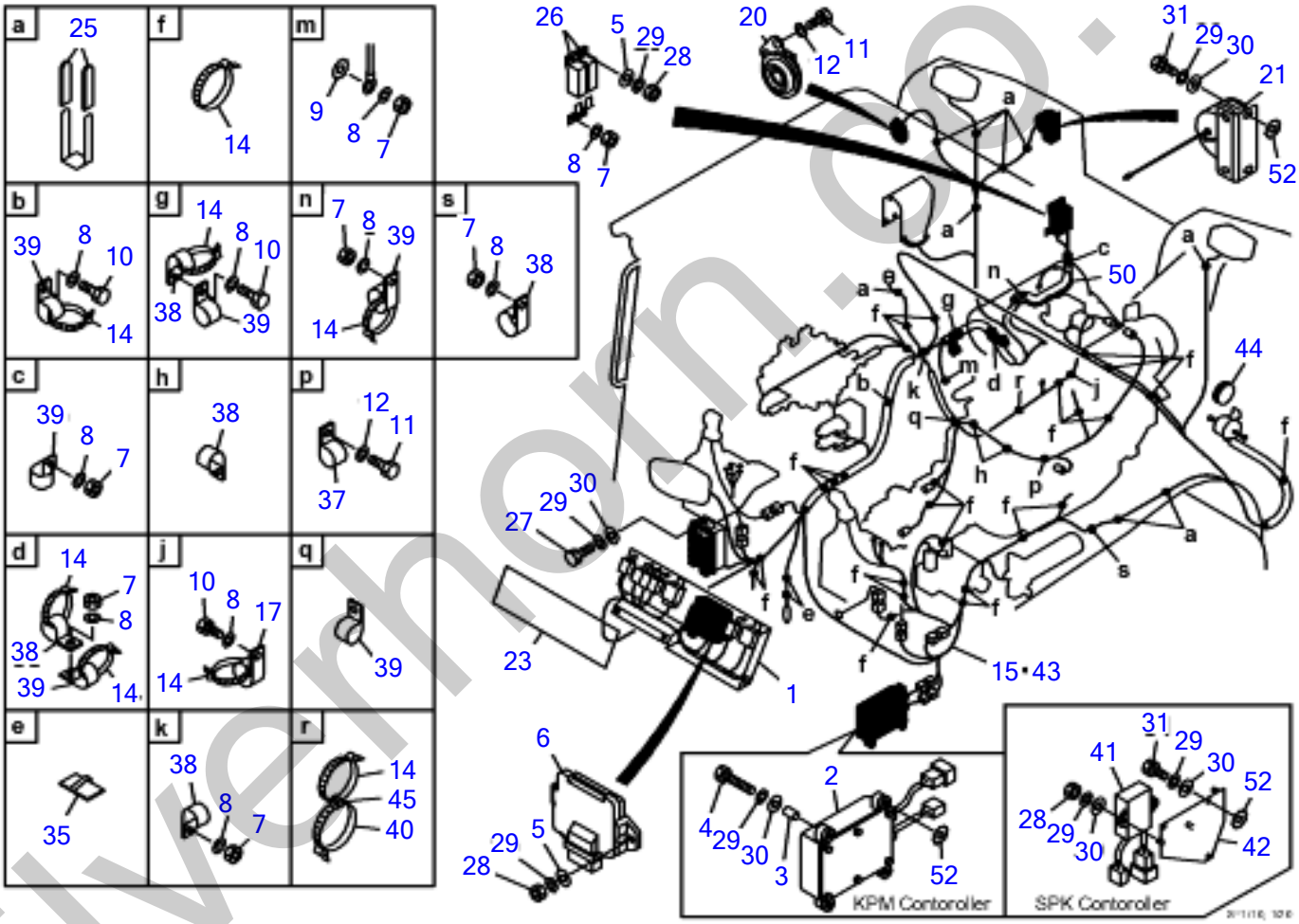

silverhorn.co.uk

ELECTRICAL (1/3)

Item	Part number	Description	Q'ty	Chan.	Serial No.	Serv.	Remarks
		ELECTRICAL (1/3)					
		ELECTRICAL (1/3)					
		ELECTRICAL (1/3)					
		ELECTRICAL ASSY (KPM CONTROLLER TYPE)					
		ELECTRICAL ASSY (KPM CONTROLLER TYPE, HIGH FLOW)					
		ELECTRICAL ASSY (SPK CONTROLLER TYPE)					
		ELECTRICAL ASSY (SPK CONTROLLER TYPE, HIGH FLOW)					
1	0664210130	RELAY UNIT ASSY	1				
2	1730140730	CONTROLLER	1				
3	1531007002	HOSE 9SOLD BY THE METER)	4				
4	1100040630	BOLT	4				
5	0003600110	WASHER	5				
6	1910259127	E-ECU	1				
7	1130040010	NUT	8				
8	1140020010	SPRING WASHER	10				
9	1140330010	WASHER	1				
10	1100041016	BOLT	2				
11	1100040812	BOLT	2				
12	1140020008	SPRING WASHER	5				
14	1652231250	BAND	36				
15	0664201250	WIRING HARNESS	1				
17	1711900105	CLAMP	1				
20	1703500712	HORN	1				
21	1703700013	BUZZER	1				
23	0882420220	RUBBER	1				
25	0872433150	TUBE	20				
26	1700100038	COVER	2				
27	1100040616	BOLT	2				
28	1130040006	NUT	7				
29	1140020006	SPRING WASHER	18				
30	1141110006	WASHER	13				
31	1100040610	BOLT	5				
35	1711900074	STICKER	2				
37	1711900129	CLAMP	1				
38	1711900071	CLAMP	6				
39	1711900072	CLAMP	6				
40	1652201007	BAND	1				
41	1730142090	CONTROLLER	1				
42	0654203510	BRACKET	1				
43	0664202400	WIRING HARNESS	1				
44	1652060051	BUSHING	1				
45	1652200010	RING	1				
50	0664202810	EARTH CABLE	1				
52	1140330006	WASHER	2				
	U1C380						

silvehorn.co.uk

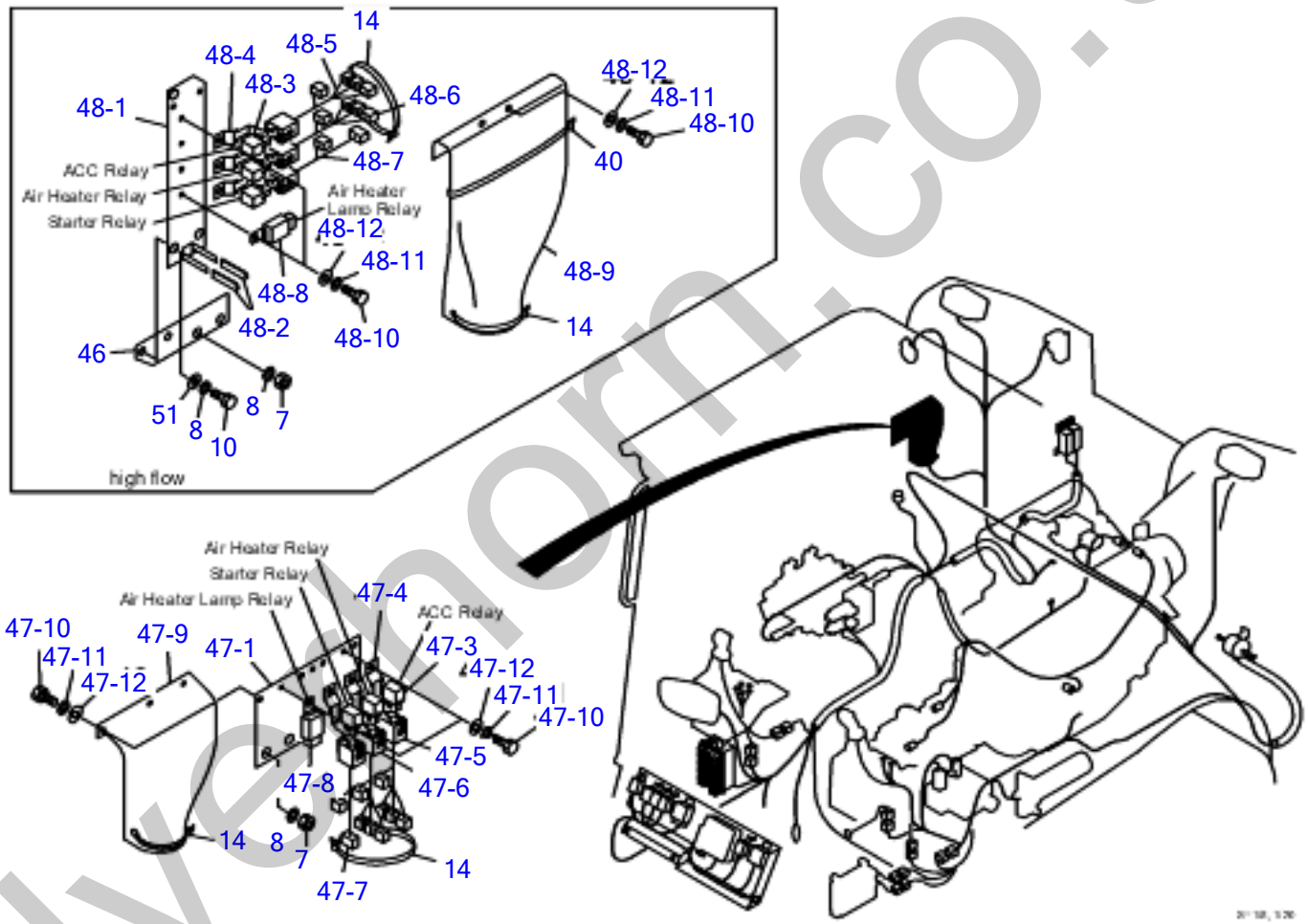

silvethorn.co.uk

Item	Part number	Description	Q'ty	Chan.	Serial No.	Serv.	Remarks
		ELECTRICAL (2/3)					
		ELECTRICAL (2/3)					
		ELECTRICAL (2/3)					
		ELECTRICAL ASSY (KPM CONTROLLER TYPE)					
		ELECTRICAL ASSY (KPM CONTROLLER TYPE, HIGH FLOW)					
		ELECTRICAL ASSY (SPK CONTROLLER TYPE)					
		ELECTRICAL ASSY (SPK CONTROLLER TYPE, HIGH FLOW)					
7	1130040010	NUT	2				
8	1140020010	SPRING WASHER	4				
10	1100041016	BOLT	2				
14	1652231250	BAND	2				
40	1652201007	BAND	1				
46	0664202540	BRACKET	1				
47	0664202510	RELAY UNIT	1				
47-1	0664202520	* BRACKET	1				
47-3	1910245125	* RELAY	3				
47-4	1910245130	* BRACKET	3				
47-5	0654203740	* WIRING HARNESS	1				
47-6	0654203730	* WIRING HARNESS	1				
47-7	0654203720	* WIRING HARNESS	1				
47-8	1711900123	* RELAY	1				
47-9	0664202530	* RUBBER	1				
47-10	1100040612	* BOLT	7				
47-11	1140020006	* SPRING WASHER	7				
47-12	0003600110	* WASHER	7				
48	0654202660	HIGH FLOW RELAY UNIT	1				
48-1	0654202670	* BRACKET	1				
48-2	0872433150	* TUBE	2				
48-3	1910245125	* RELAY	3				
48-4	1910245130	* BRACKET	3				
48-5	0654203740	* WIRING HARNESS	1				
48-6	0654203730	* WIRING HARNESS	1				
48-7	0654203720	* WIRING HARNESS	1				
48-8	1711900123	* RELAY	1				
48-9	0882421001	* RUBBER	1				
48-10	1100040612	* BOLT	6				
48-11	1140020006	* SPRING WASHER	6				
48-12	0003600110	* WASHER	6				
51	1141110010	WASHER	2				
	U1C390						

silverthorn.co.uk

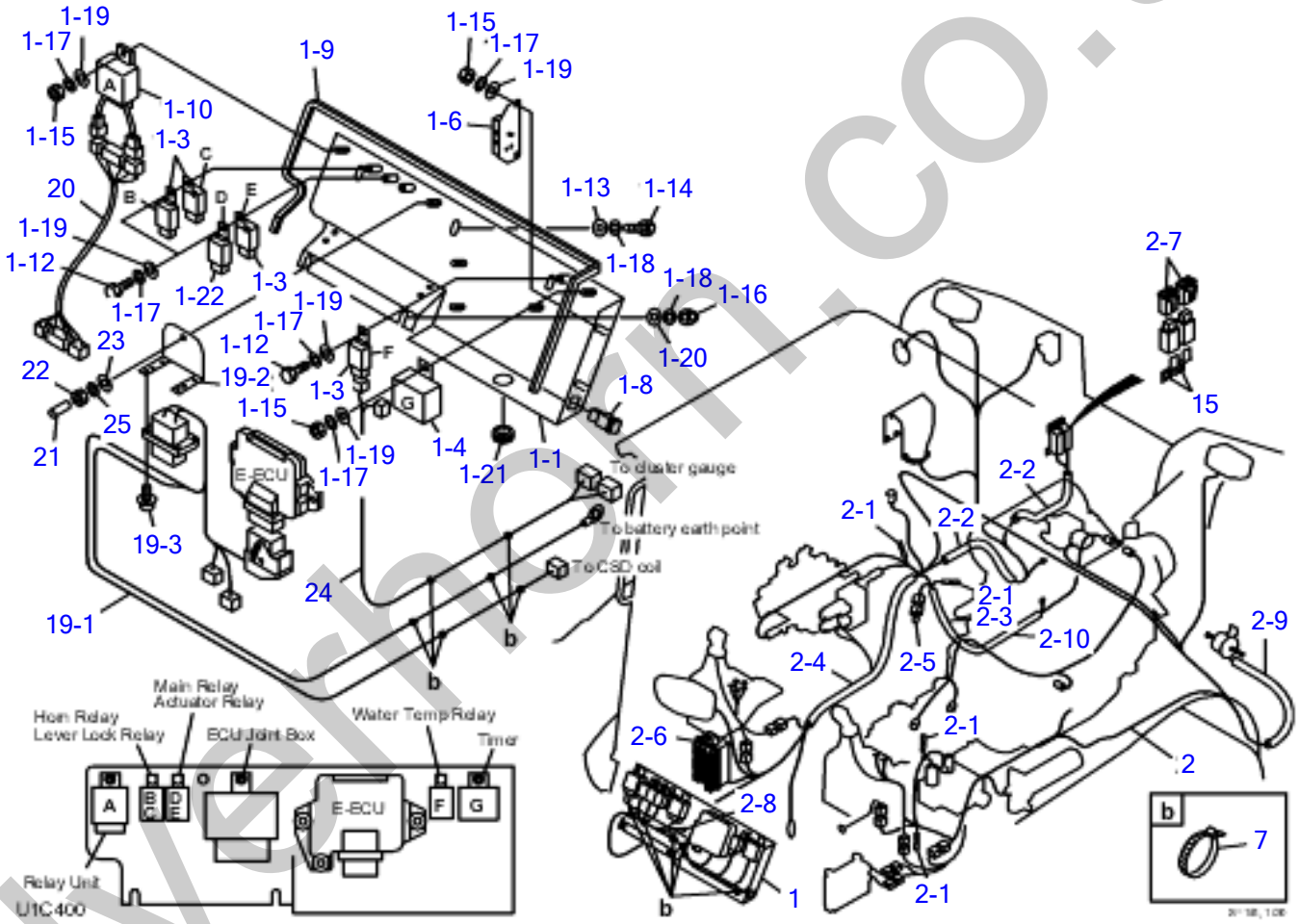

silverhorn.co.uk

ELECTRICAL (3/3)

Item	Part number	Description	Q'ty	Chan.	Serial No.	Serv.	Remarks
		ELECTRICAL (3/3)					
		ELECTRICAL (3/3)					
		ELECTRICAL (3/3)					
0-1	0664210130	RELAY UNIT ASSY	1				
1	0684210310	* RELAY UNIT	1				
1-1	0664201310	* * BOX	1				
1-3	1711900042	* * RELAY	4				
1-4	1711900140	* * TIMER UNIT	1				
1-6	0664201320	* * RESISTOR	1				
1-8	1700550017	* * PILOT LAMP	1				
1-9	1654606100	* * TRIM	1				
1-10	1711900062	* * RELAY	1				
1-12	1100040616	* * BOLT	3				
1-13	0003608252	* * WASHER	3				
1-14	1100040816	* * BOLT	3				
1-15	1130040006	* * NUT	4				
1-16	1134230008	* * NUT	2				
1-17	1140020006	* * SPRING WASHER	7				
1-18	1140020008	* * SPRING WASHER	5				
1-19	1141110006	* * WASHER	7				
1-20	1141110008	* * WASHER	2				
1-21	1652060035	* * BUSHING	1				
1-22	1910245135	* * RELAY	1				
2	0664201200	* WIRING HARNESS ASSY	1				
2-1	1730500008	* * DIODA 3A YELLOW	4				
2-2	1531325025	* * PROTECTOR	2				
2-3	1531325035	* * PROTECTOR	1				
2-4	1531325085	* * PROTECTOR	1				
2-5	0394221010	* * SHORT CONNECTOR	1				
2-6	1701204920	* * FUSE BOX	1				
	1701311005	* * * FUSE					
	1701311010	* * * FUSE					
	1703111015	* * * FUSE					
	1701311020	* * * FUSE					
	1701311030	* * * FUSE					
2-7	1701330045	* * FUSIBLE LINK	2				
2-8	1730500023	* * DIODE 3A	1				
2-9	1531312068	* * PROTECTOR	1				
2-10	1531315040	* * PROTECTOR	1				
7	1652231250	* BAND	7				
15	1711900064	* CLAMP	2				
19	0654203700	* JOINT HARNESS ASSY	1				
19-1	0654203790	* * JOINT HARNESS	1				
19-2	0654203791	* * BRACKET	1				
19-3	1150420310	* * SCREW	4				
20	0654203710	* WIRING HARNESS	1				
21	1650205700	* CAP	1				
22	1130040006	* NUT	1				
23	1141110006	* WASHER	1				
24	0664202610	* JOINT HARNESS	1				
25	1140020006	* SPRING WASHER	1				
	U1C400						

silverthorn.co.uk

ELECTRICAL (1/3)

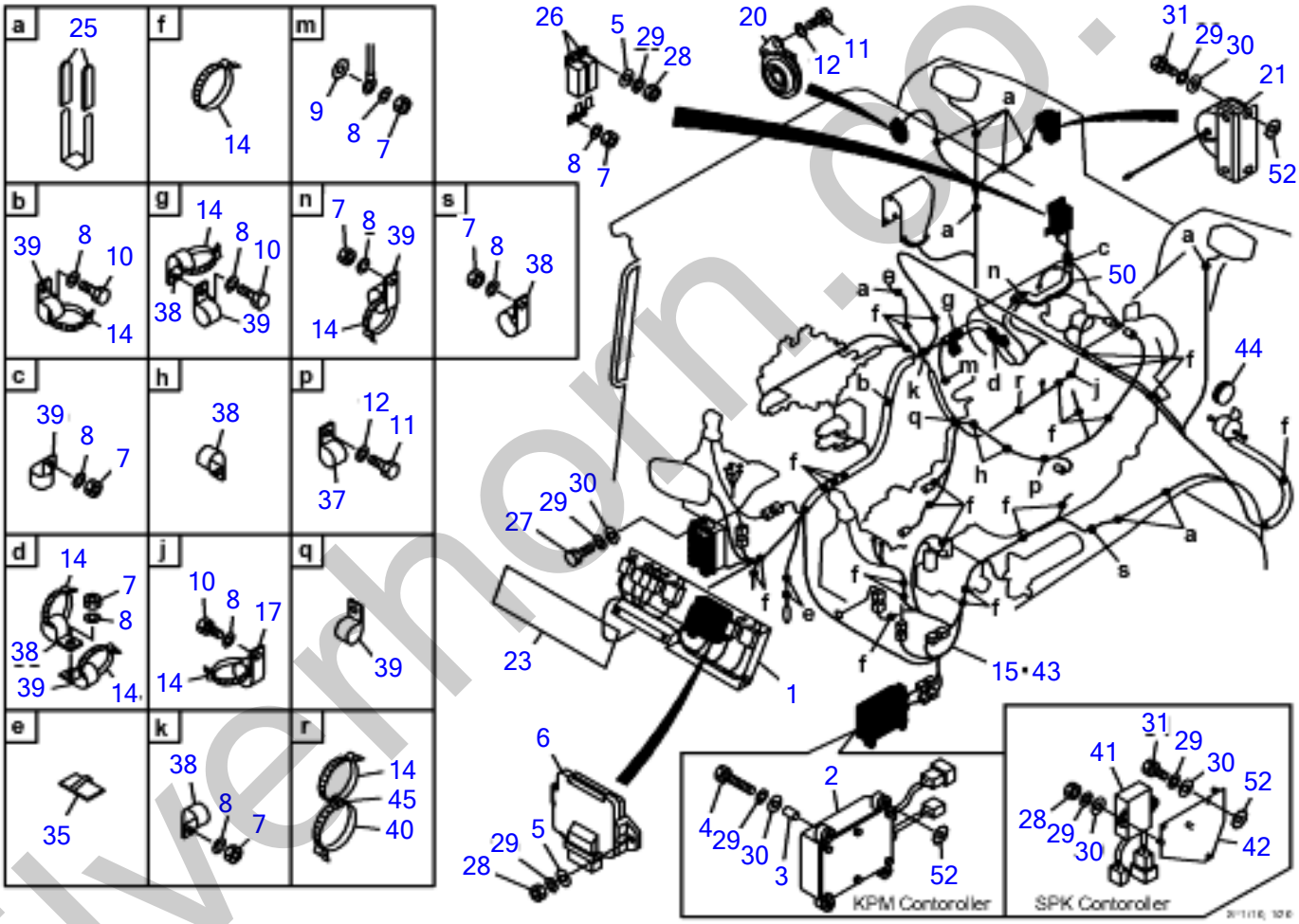

silverhorn.co.uk

ELECTRICAL (1/3)

Item	Part number	Description	Q'ty	Chan.	Serial No.	Serv.	Remarks
		ELECTRICAL (1/3) ELECTRICAL ASSY (KPM CONTROLLER TYPE) ELECTRICAL ASSY (KPM CONTROLLER TYPE, HIGH FLOW) ELECTRICAL ASSY (SPK CONTROLLER TYPE) ELECTRICAL ASSY (SPK CONTROLLER TYPE, HIGH FLOW)					
1	0664210120	RELAY UNIT ASSY	1				
2	1730140730	CONTROLLER	1				
3	1531007002	HOSE 9SOLD BY THE METER)	4				
4	1100040630	BOLT	4				
5	0003600110	WASHER	5				
6	1910259127	E-ECU	1				
7	1130040010	NUT	8				
8	1140020010	SPRING WASHER	10				
9	1140330010	WASHER	1				
10	1100041016	BOLT	2				
11	1100040812	BOLT	2				
12	1140020008	SPRING WASHER	5				
14	1652231250	BAND	36				
15	0664201250	WIRING HARNESS	1				
17	1711900105	CLAMP	1				
20	1703500712	HORN	1				
21	1703700013	BUZZER	1				
23	0882420220	RUBBER	1				
25	0872433150	TUBE	20				
26	1700100038	COVER	2				
27	1100040616	BOLT	2				
28	1130040006	NUT	7				
29	1140020006	SPRING WASHER	18				
30	1141110006	WASHER	13				
31	1100040610	BOLT	5				
35	1711900074	STICKER	2				
37	1711900129	CLAMP	1				
38	1711900071	CLAMP	6				
39	1711900072	CLAMP	6				
40	1652201007	BAND	1				
41	1730142090	CONTROLLER	1				
42	0654203510	BRACKET	1				
43	0664202400	WIRING HARNESS	1				
44	1652060051	BUSHING	1				
45	1652200010	RING	1				
50	0664202810	EARTH CABLE	1				
52	1140330006	WASHER	2				
	U1C350						

silvermorn.co.uk

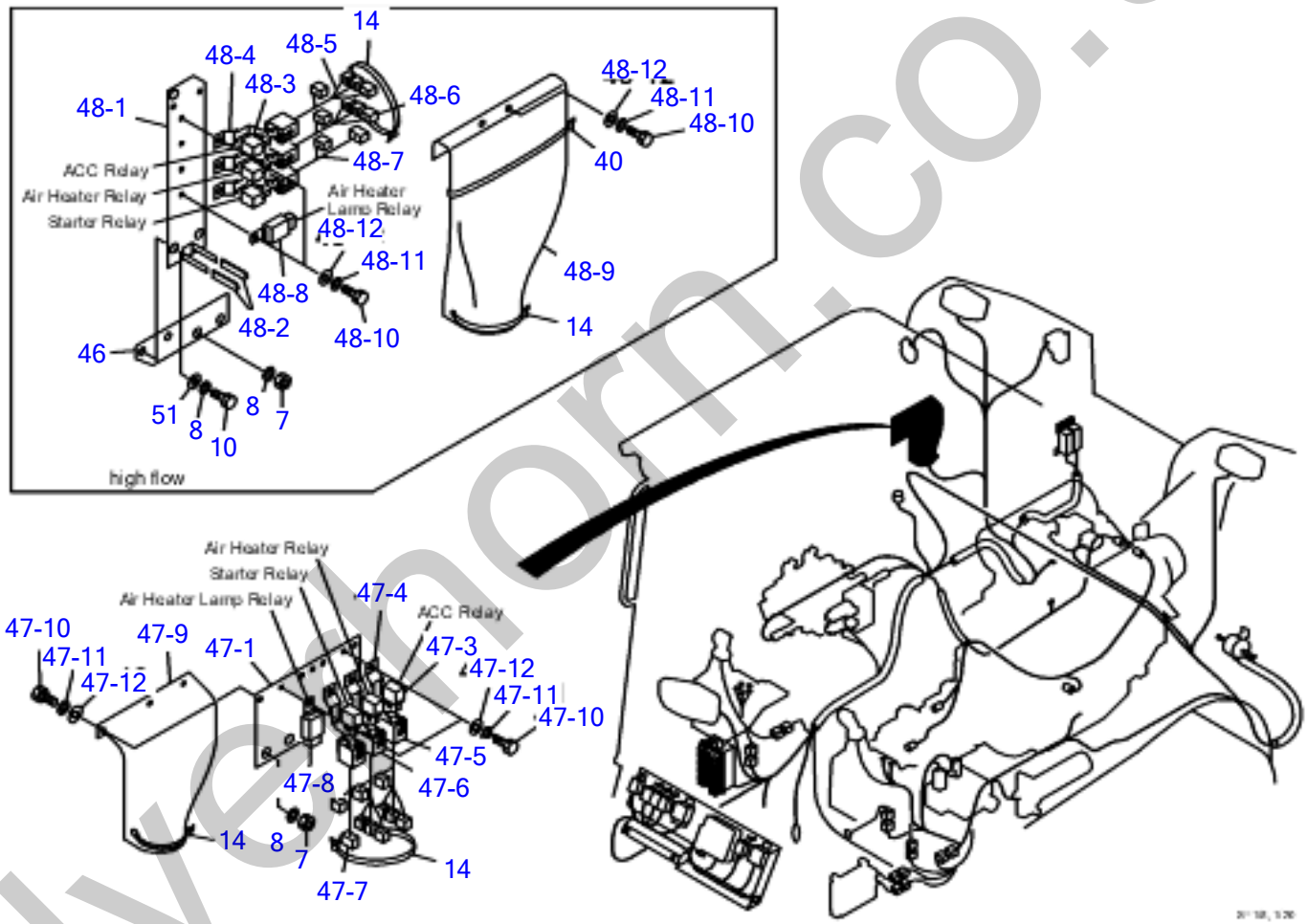

silvethorn.co.uk

ELECTRICAL (2/3)

Item	Part number	Description	Q'ty	Chan.	Serial No.	Serv.	Remarks
		ELECTRICAL (2/3) ELECTRICAL ASSY (KPM CONTROLLER TYPE) ELECTRICAL ASSY (KPM CONTROLLER TYPE, HIGH FLOW) ELECTRICAL ASSY (SPK CONTROLLER TYPE) ELECTRICAL ASSY (SPK CONTROLLER TYPE, HIGH FLOW)					
7	1130040010	NUT	2				
8	1140020010	SPRING WASHER	4				
10	1100041016	BOLT	2				
14	1652231250	BAND	2				
40	1652201007	BAND	1				
46	0664202540	BRACKET	1				
47	0664202510	RELAY UNIT	1				
47-1	0664202520	* BRACKET	1				
47-3	1910245125	* RELAY	3				
47-4	1910245130	* BRACKET	3				
47-5	0654203740	* WIRING HARNESS	1				
47-6	0654203730	* WIRING HARNESS	1				
47-7	0654203720	* WIRING HARNESS	1				
47-8	1711900123	* RELAY	1				
47-9	0664202530	* RUBBER	1				
47-10	1100040612	* BOLT	7				
47-11	1140020006	* SPRING WASHER	7				
47-12	0003600110	* WASHER	7				
48	0654202660	HIGH FLOW RELAY UNIT	1				
48-1	0654202670	* BRACKET	1				
48-2	0872433150	* TUBE	2				
48-3	1910245125	* RELAY	3				
48-4	1910245130	* BRACKET	3				
48-5	0654203740	* WIRING HARNESS	1				
48-6	0654203730	* WIRING HARNESS	1				
48-7	0654203720	* WIRING HARNESS	1				
48-8	1711900123	* RELAY	1				
48-9	0882421001	* RUBBER	1				
48-10	1100040612	* BOLT	6				
48-11	1140020006	* SPRING WASHER	6				
48-12	0003600110	* WASHER	6				
51	1141110010	WASHER	2				
	U1C360						

silverhorn.co.uk

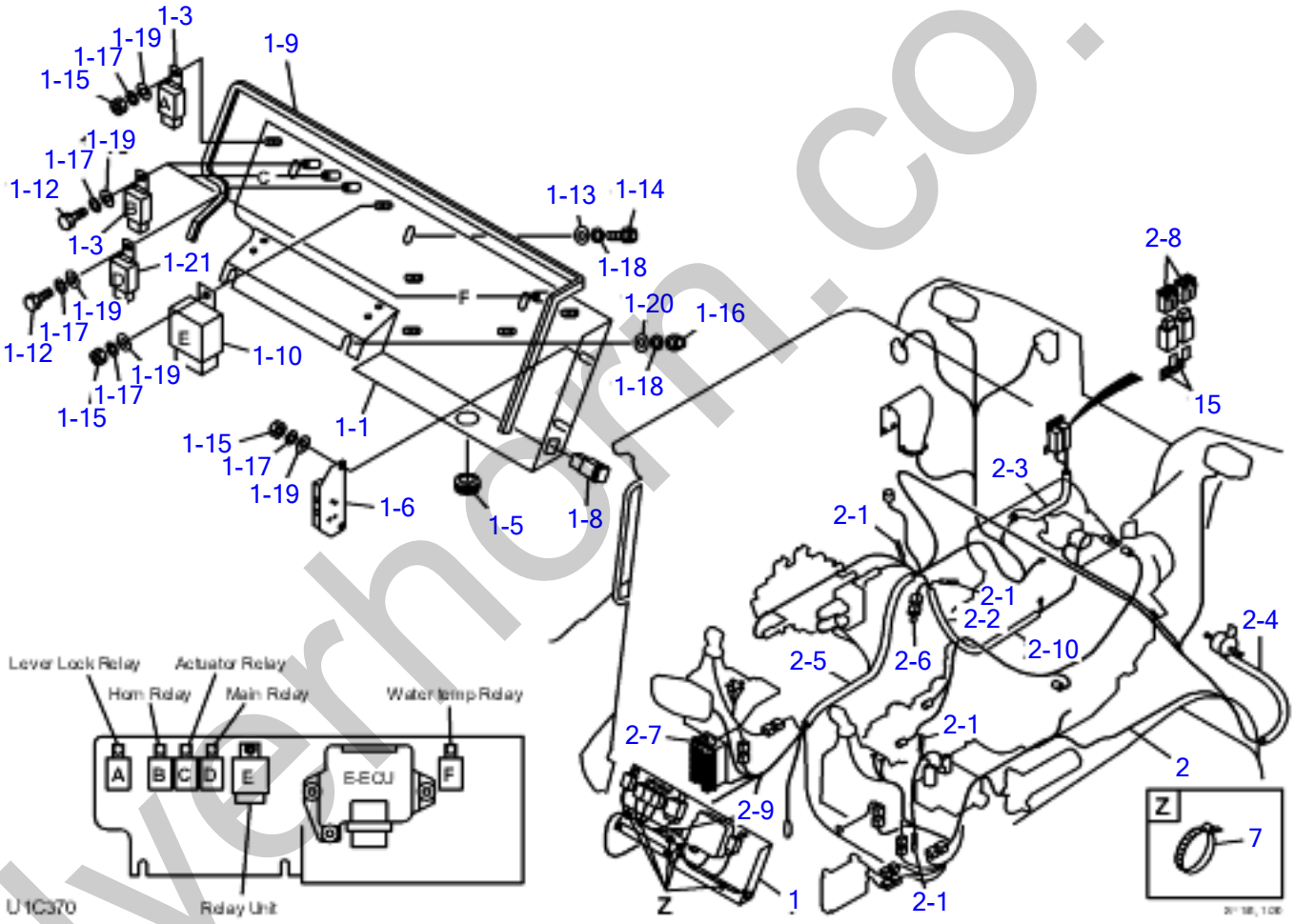

silverhorn.co.uk

ELECTRICAL (3/3)

Item	Part number	Description	Q'ty	Chan.	Serial No.	Serv.	Remarks
		ELECTRICAL (3/3)					
0-1	0664210120	RELAY UNIT ASSY	1				
1	0664210320	* RELAY UNIT	1				
1-1	0664201310	* * BOX	1				
1-3	1711900042	* * RELAY	4				
1-5	1652060035	* * BUSHING	1				
1-6	0664201320	* * RESISTOR	1				
1-8	1700550017	* * PILOT LAMP	1				
1-9	1654606100	* * TRIM	1				
1-10	1711900062	* * RELAY	1				
1-12	1100040616	* * BOLT	4				
1-13	0003608252	* * WASHER	3				
1-14	1100040816	* * BOLT	3				
1-15	1130040006	* * NUT	4				
1-16	1134230008	* * NUT	2				
1-17	1140020006	* * SPRING WASHER	8				
1-18	1140020008	* * SPRING WASHER	5				
1-19	1141110006	* * WASHER	8				
1-20	1141110008	* * WASHER	2				
1-21	1910245135	* * RELAY	1				
2	0664202200	* WIRING HARNESS ASSY	1				
2-1	1730500008	* * DIODE 3A YELLOW	4				
2-2	1531325035	* * PROTECTOR	1				
2-3	1531325060	* * PROTECTOR	1				
2-4	1531312068	* * PROTECTOR	1				
2-5	1531325090	* * PROTECTOR	1				
2-6	0394221010	* * SHORT CONNECTOR	1				
2-7	1701204920	* * FUSE BOX	1				
	1701311005	* * * FUSE					
	1701311010	* * * FUSE					
	1701311015	* * * FUSE					
	1701311020	* * * FUSE					
	1701311030	* * * FUSE					
2-8	1701330045	* * FUSIBLE LINK	2				
2-9	1730500023	* * DIODE 3A	1				
2-10	1531315040	* * PROTECTOR	1				
7	1652231250	* BAND	5				
15	1711900064	* CLAMP	2				
	U1C370						

silverhorn.co.uk

ELECTRICAL (1/3)

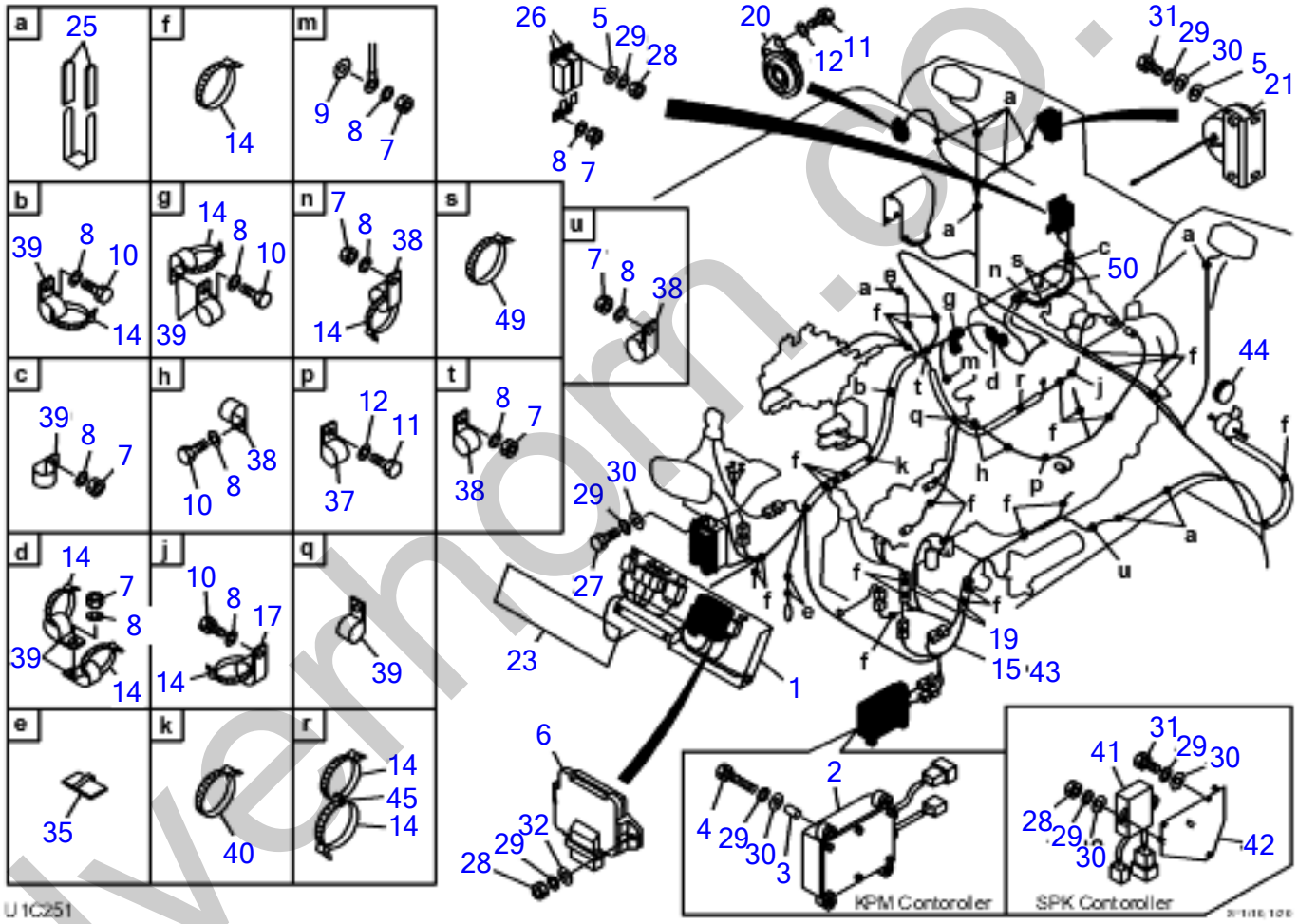

silverhorn.co.uk

ELECTRICAL (1/3)

Item	Part number	Description	Q'ty	Chan.	Serial No.	Serv.	Remarks
		ELECTRICAL (1/3) ELECTRICAL ASSY (KPM CONTROLLER TYPE) ELECTRICAL ASSY (KPM CONTROLLER TYPE, HIGH FLOW) ELECTRICAL ASSY (SPK CONTROLLER TYPE) ELECTRICAL ASSY (SPK CONTROLLER TYPE, HIGH FLOW)					
1	0664206100	RELAY UNIT ASSY	1				
2	1730140730	CONTROLLER	1				
3	1531007002	HOSE 9SOLD BY THE METER)	4				
4	1100040630	BOLT	4				
5	0003600110	WASHER	5				
6	1910259127	E-ECU	1				
7	1130040010	NUT	8				
8	1140020010	SPRING WASHER	10				
9	1140330010	WASHER	1				
10	1100041016	BOLT	2				
11	1100040812	BOLT	2				
12	1140020008	SPRING WASHER	5				
14	1652231250	BAND	36				
15	0664201250	WIRING HARNESS	1				
17	1711900105	CLAMP	1				
19	0880422080	PROTECTOR	2				
20	1703500712	HORN	1				
21	1703700013	BUZZER	1				
23	0882420220	RUBBER	1				
25	0872433150	TUBE	20				
26	1700100038	COVER	2				
27	1100040616	BOLT	2				
28	1130040006	NUT	7				
29	1140020006	SPRING WASHER	18				
30	1141110006	WASHER	13				
31	1100040610	BOLT	5				
32	0003608252	WASHER	3				
35	1711900074	STICKER	2				
37	1711900129	CLAMP	1				
38	1711900071	CLAMP	6				
39	1711900072	CLAMP	6				
40	1652201007	BAND	1				
41	1730142090	CONTROLLER	1				
42	0654203510	BRACKET	1				
43	0664202400	WIRING HARNESS	1				
44	1652060051	BUSHING	1				
45	1652200010	RING	1				
50	0664202810	EARTH CABLE	1				
	U1C250						

silvehorn.co.uk

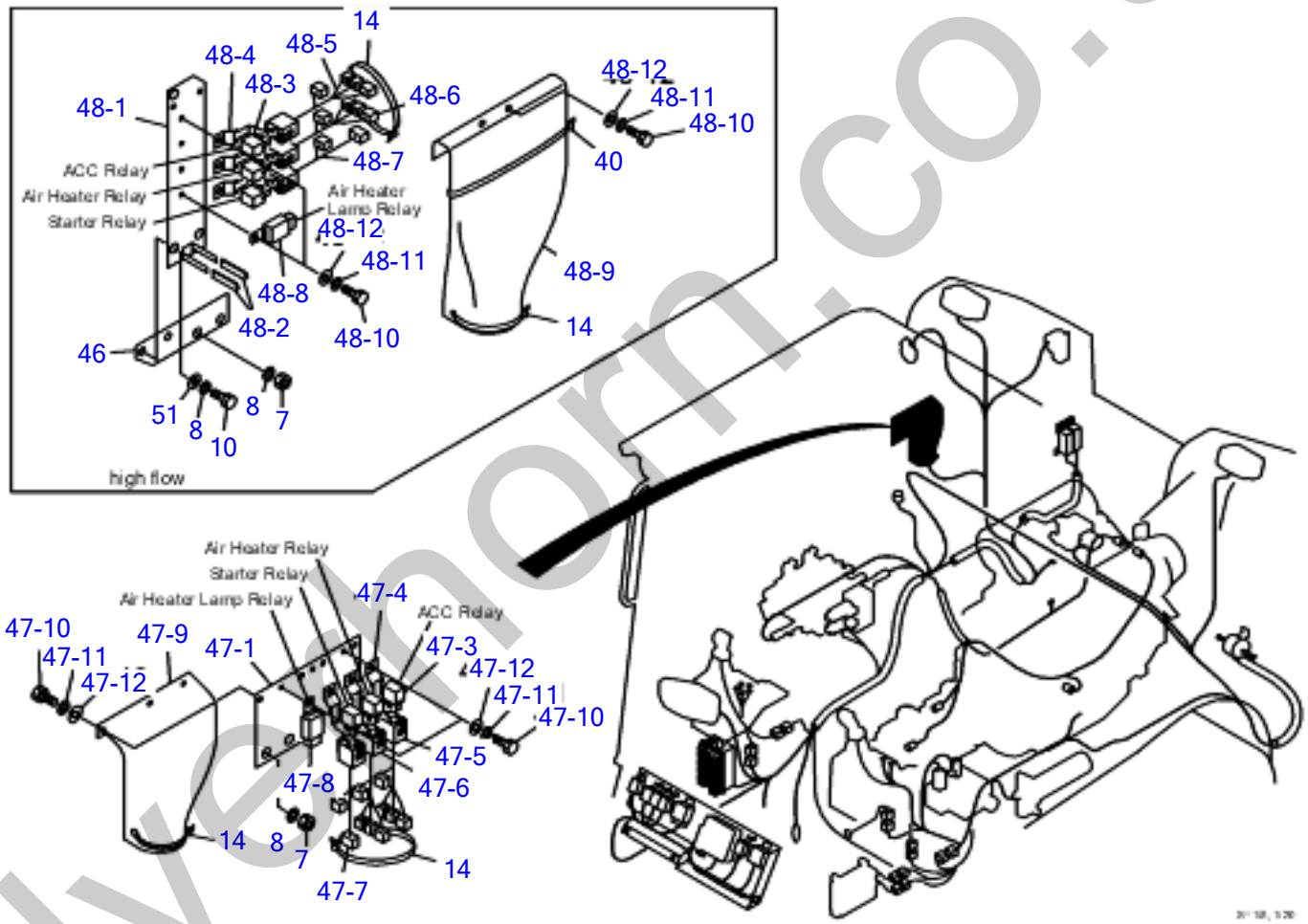

silvethorn.co.uk

ELECTRICAL (2/3)

Item	Part number	Description	Q'ty	Chan.	Serial No.	Serv.	Remarks
		ELECTRICAL (2/3) ELECTRICAL ASSY (KPM CONTROLLER TYPE) ELECTRICAL ASSY (KPM CONTROLLER TYPE, HIGH FLOW) ELECTRICAL ASSY (SPK CONTROLLER TYPE) ELECTRICAL ASSY (SPK CONTROLLER TYPE, HIGH FLOW)					
7	1130040010	NUT	2				
8	1140020010	SPRING WASHER	2				
	1140020010	SPRING WASHER	4				
10	1100041016	BOLT	2				
14	1652231250	BAND	2				
40	1652201007	BAND	1				
46	0664202540	BRACKET	1				
47	0664202510	RELAY UNIT	1				
47-1	0664202520	* BRACKET	1				
47-3	1910245125	* RELAY	3				
47-4	1910245130	* BRACKET	3				
47-5	0654203740	* WIRING HARNESS	1				
47-6	0654203730	* WIRING HARNESS	1				
47-7	0654203720	* WIRING HARNESS	1				
47-8	1711900123	* RELAY	1				
47-9	0664202530	* RUBBER	1				
47-10	1100040612	* BOLT	7				
47-11	1140020006	* SPRING WASHER	7				
47-12	0003600110	* WASHER	7				
48	0654202660	HIGH FLOW RELAY UNIT	1				
48-1	0654202670	* BRACKET	1				
48-2	0872433150	* TUBE	2				
48-3	1910245125	* RELAY	3				
48-4	1910245130	* BRACKET	3				
48-5	0654203740	* WIRING HARNESS	1				
48-6	0654203730	* WIRING HARNESS	1				
48-7	0654203720	* WIRING HARNESS	1				
48-8	1711900123	* RELAY	1				
48-9	0882421001	* RUBBER	1				
48-10	1100040612	* BOLT	6				
48-11	1140020006	* SPRING WASHER	6				
48-12	0003600110	* WASHER	6				
51	1141110010	WASHER	2				
	U1C260						

silverhorn.co.uk

ELECTRICAL (3/3)

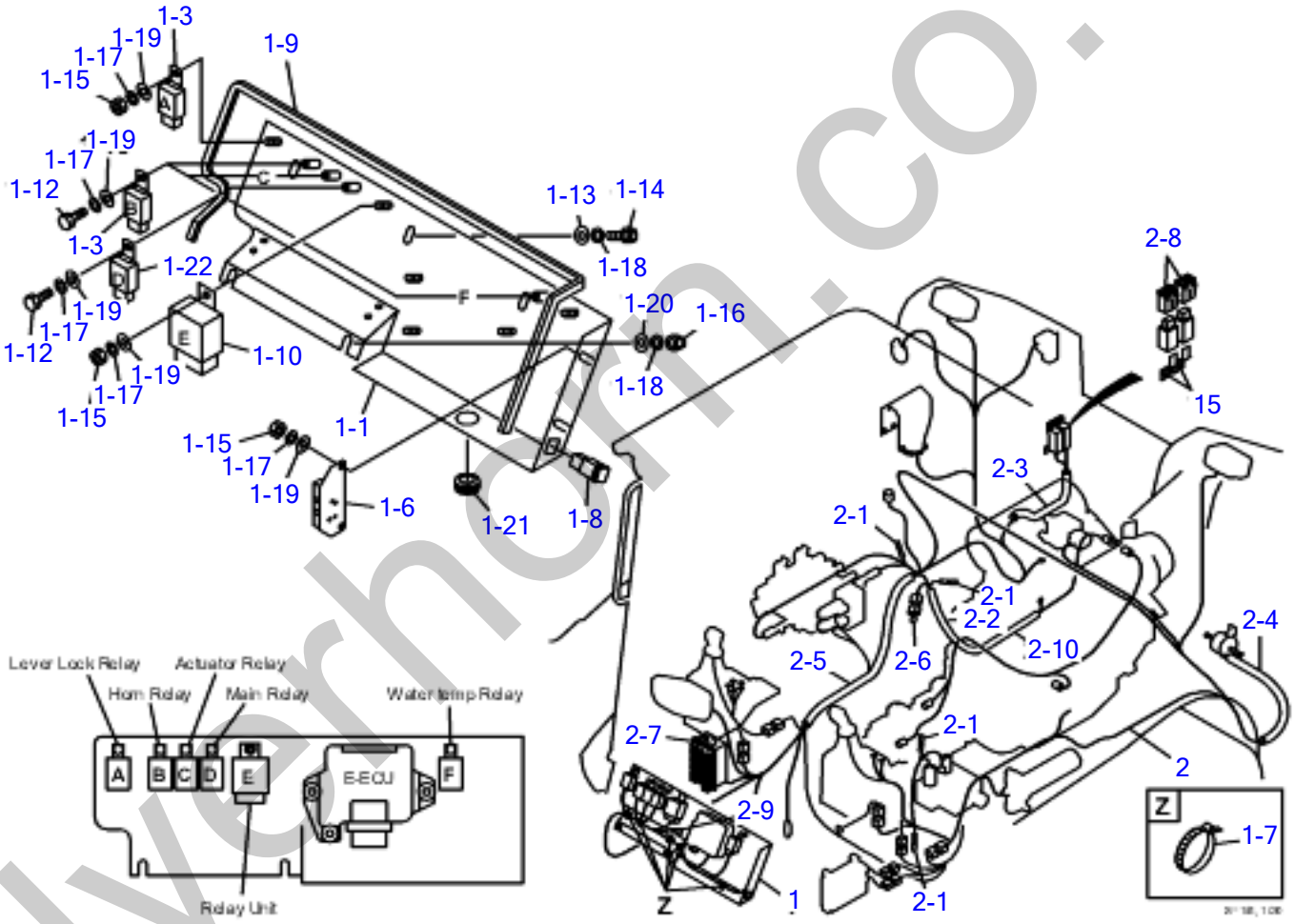

silverhorn.co.uk

ELECTRICAL (3/3)

Item	Part number	Description	Q'ty	Chan.	Serial No.	Serv.	Remarks
		ELECTRICAL (3/3)					
0-1	0664206100	RELAY UNIT ASSY	1				
1	0664202300	* RELAY UNIT	1				
1-1	0664201310	* * BOX	1				
1-3	1711900042	* * RELAY	4				
1-6	0664201320	* * RESISTOR	1				
1-7	1652231250	* * BAND	5				
1-8	1700550017	* * PILOT LAMP	1				
1-9	1654606100	* * TRIM	1				
1-10	1711900062	* * RELAY	1				
1-12	1100040616	* * BOLT	4				
1-13	0003608252	* * WASHER	3				
1-14	1100040816	* * BOLT	3				
1-15	1130040006	* * NUT	4				
1-16	1134230008	* * NUT	2				
1-17	1140020006	* * SPRING WASHER	8				
1-18	1140020008	* * SPRING WASHER	5				
1-19	1141110006	* * WASHER	8				
1-20	1141110008	* * WASHER	2				
1-21	1910245135	* * RELAY	1				
1-22	1910245135	* * RELAY	1				
2	0664202200	* WIRING HARNESS ASSY	1				
2-1	1730500008	* * DIODE 3A YELLOW	4				
2-2	1531325035	* * PROTECTOR	1				
2-3	1531325060	* * PROTECTOR	1				
2-4	1531312068	* * PROTECTOR	1				
2-5	1531325090	* * PROTECTOR	1				
2-6	0394221010	* * SHORT CONNECTOR	1				
2-7	1701204920	* * FUSE BOX	1				
	1701311005	* * * FUSE					
	1701311010	* * * FUSE					
	1701311015	* * * FUSE					
	1701311020	* * * FUSE					
	1701311030	* * * FUSE					
2-8	1701330045	* * FUSIBLE LINK	2				
2-9	1730500023	* * DIODE 3A	1				
2-10	1531315040	* * PROTECTOR	1				
15	1711900064	* CLAMP	2				
	U1C271						

silverhorn.co.uk

ELECTRICAL (1/3)

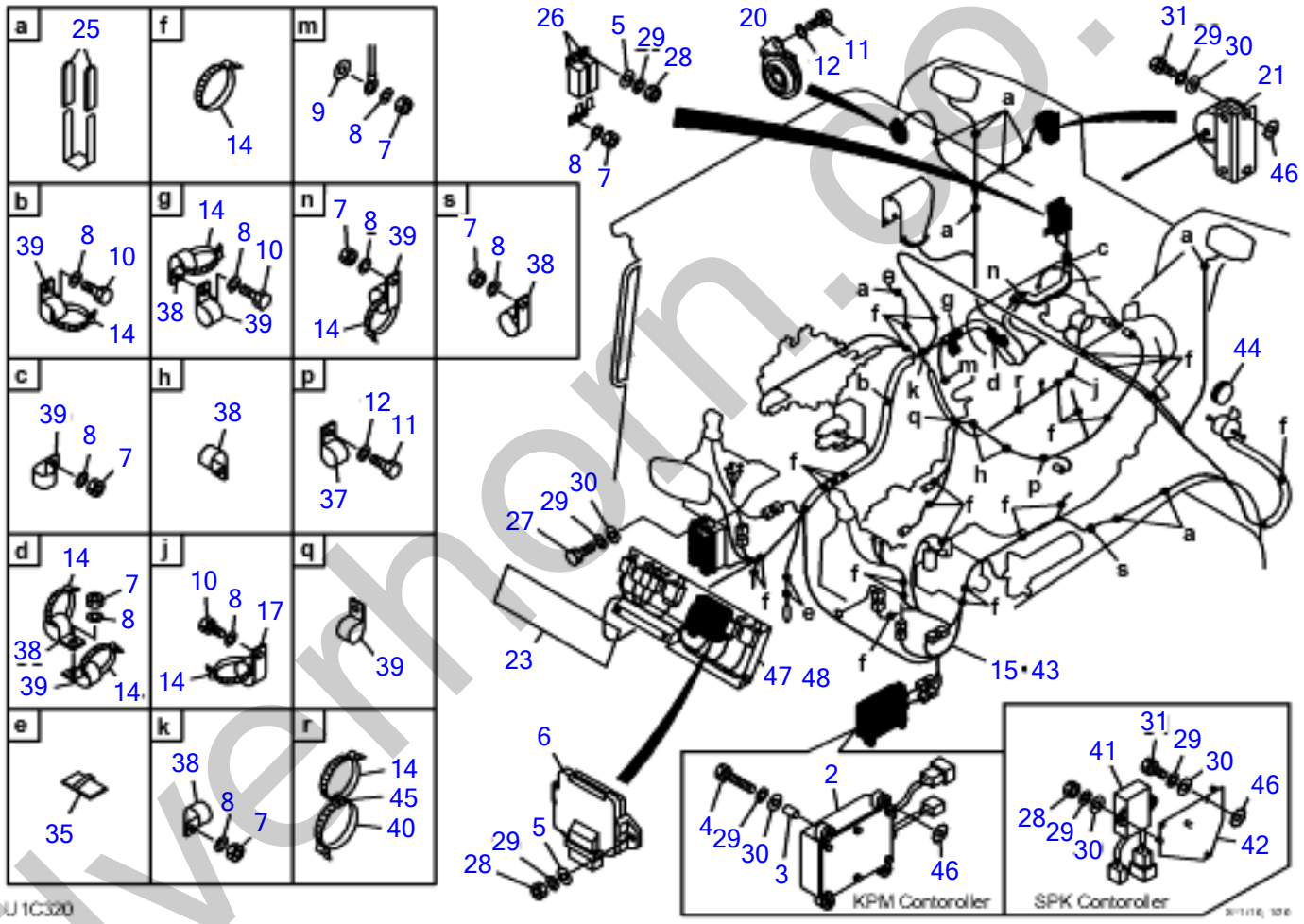

silverhorn.co.uk

ELECTRICAL (1/3)

Item	Part number	Description	Q'ty	Chan.	Serial No.	Serv.	Remarks
		ELECTRICAL (1/3) ELECTRICAL ASSY (KPM CONTROLLER TYPE) ELECTRICAL ASSY (KPM CONTROLLER TYPE, HIGH FLOW) ELECTRICAL ASSY (SPK CONTROLLER TYPE) ELECTRICAL ASSY (SPK CONTROLLER TYPE, HIGH FLOW)					
2	1730140730	CONTROLLER	1				
3	1531007002	HOSE 9SOLD BY THE METER)	4				
4	1100040630	BOLT	4				
5	0003600110	WASHER	5				
6	1910259127	E-ECU	1				
7	1130040010	NUT	8				
8	1140020010	SPRING WASHER	10				
9	1140330010	WASHER	1				
10	1100041016	BOLT	2				
11	1100040812	BOLT	2				
12	1140020008	SPRING WASHER	5				
14	1652231250	BAND	36				
15	0664201250	WIRING HARNESS	1				
17	1711900105	CLAMP	1				
20	1703500712	HORN	1				
21	1703700013	BUZZER	1				
23	0882420220	RUBBER	1				
25	0872433150	TUBE	20				
26	1700100038	COVER	2				
27	1100040616	BOLT	2				
28	1130040006	NUT	7				
29	1140020006	SPRING WASHER	18				
30	1141110006	WASHER	13				
31	1100040610	BOLT	5				
35	1711900074	STICKER	2				
37	1711900129	CLAMP	1				
38	1711900071	CLAMP	6				
39	1711900072	CLAMP	6				
40	1652201007	BAND	1				
41	1730142090	CONTROLLER	1				
42	0654203510	BRACKET	1				
43	0664202400	WIRING HARNESS	1				
44	1652060051	BUSHING	1				
45	1652200010	RING	1				
46	1140330006	WASHER	2				
47	0664206100	RELAY UNIT ASSY	1				
48	0664207100	RELAY UNIT ASSY	1				
	U1C410						

silverhorn.co.uk

ELECTRICAL (3/3)

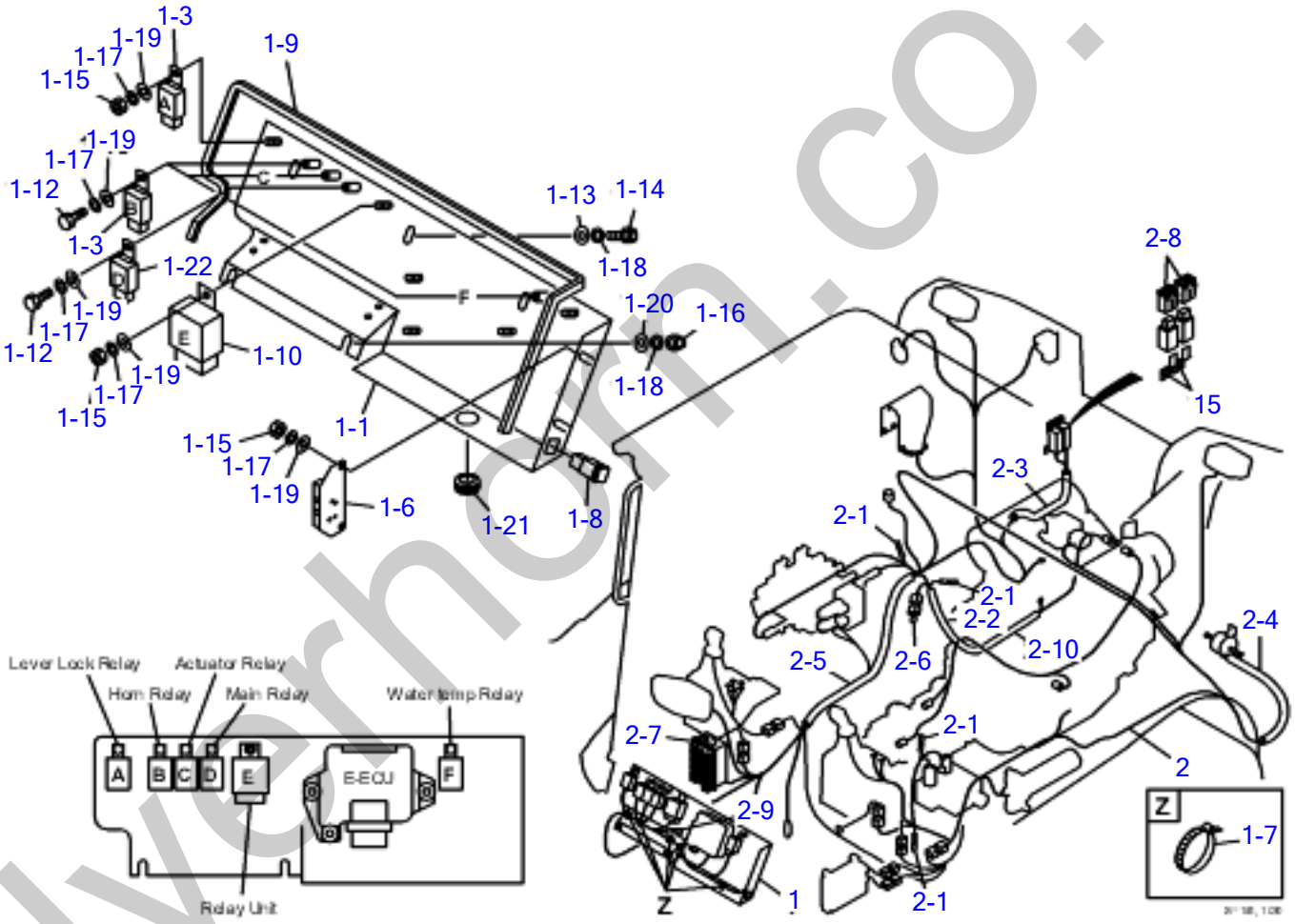

silverhorn.co.uk

ELECTRICAL (2/3)

Item	Part number	Description	Q'ty	Chan.	Serial No.	Serv.	Remarks
		ELECTRICAL (3/3)					
0-1	0664206100	RELAY UNIT ASSY	1				
	0664207100	RELAY UNIT ASSY					
1	0664202300	* RELAY UNIT	1				
1-1	0664201310	* * BOX	1				
1-3	1711900042	* * RELAY	4				
1-6	0664201320	* * RESISTOR	1				
1-7	1652231250	* * BAND	5				
1-8	1700550017	* * PILOT LAMP	1				
1-9	1654606100	* * TRIM	1				
1-10	1711900062	* * RELAY	1				
1-12	1100040616	* * BOLT	4				
1-13	0003608252	* * WASHER	3				
1-14	1100040816	* * BOLT	3				
1-15	1130040006	* * NUT	4				
1-16	1134230008	* * NUT	2				
1-17	1140020006	* * SPRING WASHER	8				
1-18	1140020008	* * SPRING WASHER	5				
1-19	1141110006	* * WASHER	8				
1-20	1141110008	* * WASHER	2				
1-21	1910245135	* * RELAY	1				
1-22	1910245135	* * RELAY	1				
2	0664207200	* WIRING HARNESS ASSY	1				
2-1	1730500008	* * DIODE 3A YELLOW	4				
2-2	1531325035	* * PROTECTOR	1				
2-3	1531325060	* * PROTECTOR	1				
2-4	1531312073	* * PROTECTOR	1				
2-5	1531325090	* * PROTECTOR	1				
2-6	0394221010	* * SHORT CONNECTOR	1				
2-7	1701204920	* * FUSE BOX	1				
	1701311005	* * * FUSE					
	1701311010	* * * FUSE					
	1701311015	* * * FUSE					
	1701311020	* * * FUSE					
	1701311030	* * * FUSE					
2-8	1701330045	* * FUSIBLE LINK	2				
2-9	1730500023	* * DIODE 3A	1				
2-10	1531315040	* * PROTECTOR	1				
15	1711900064	* CLAMP	2				
	U1C420						

silverhorn.co.uk

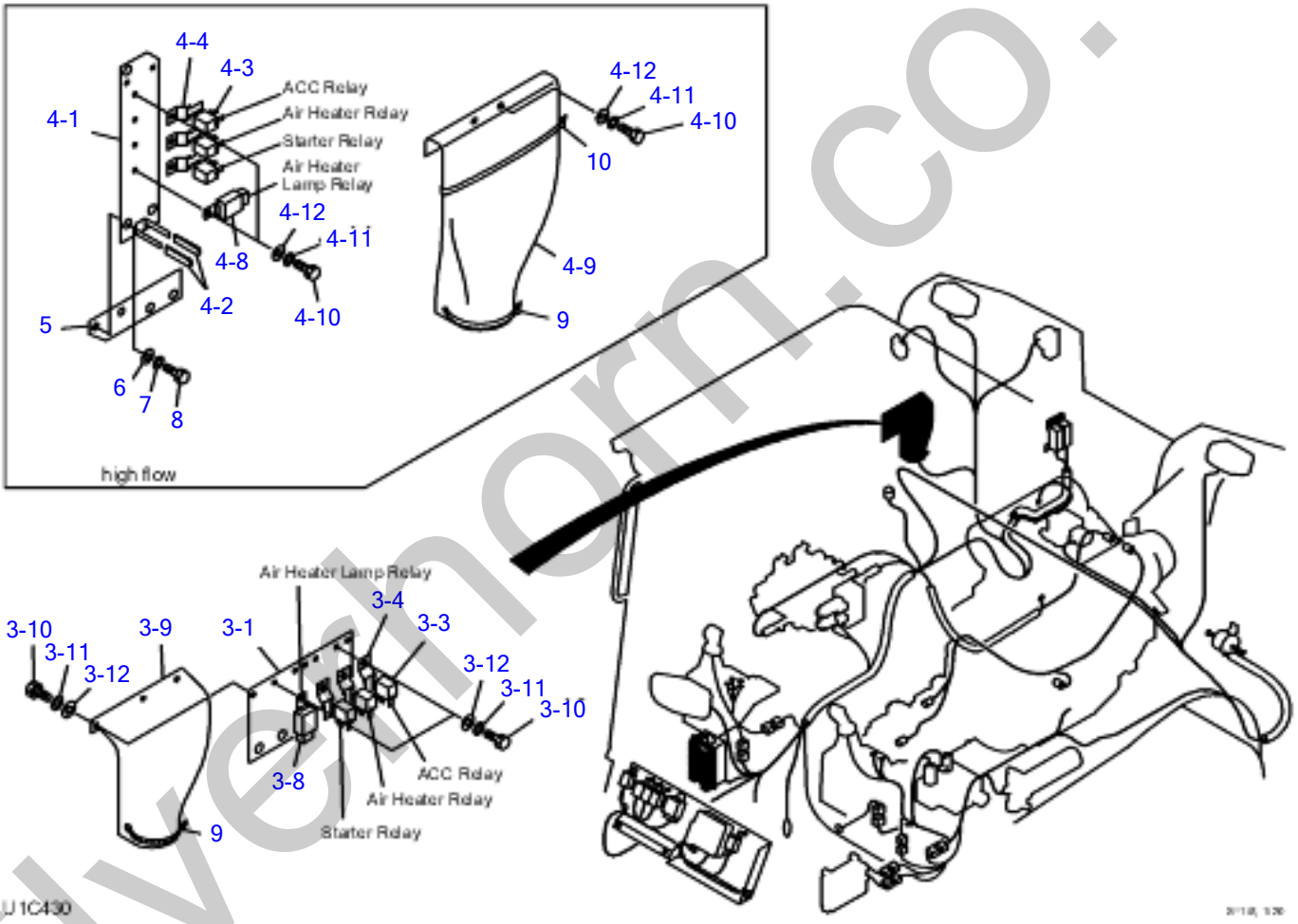

silvethorn.co.uk

ELECTRICAL (3/3)

Item	Part number	Description	Q'ty	Chan.	Serial No.	Serv.	Remarks
		ELECTRICAL (3/3)					
0-1	0664206100	RELAY UNIT ASSY	1				
	0664207100	RELAY UNIT ASSY	1				
3	0664206110	* RELAY UNIT	1				
3-1	0664202520	* * BRACKET	1				
3-3	1910245125	* * RELAY	3				
3-4	1910245130	* * BRACKET	3				
3-8	1711900123	* * RELAY	1				
3-9	0664202530	* * RUBBER	1				
3-10	1100040612	* * BOLT	7				
3-11	1140020006	* * SPRING WASHER	7				
3-12	0003600110	* * WASHER	7				
4	0664207110	* RELAY UNIT	1				
4-1	0654202670	* * BRACKET	1				
4-2	0872433150	* * TUBE	2				
4-3	1910245125	* * RELAY	3				
4-4	1910245130	* * BRACKET	3				
4-8	1711900123	* * RELAY	1				
4-9	0882421001	* * RUBBER	1				
4-10	1100040612	* * BOLT	6				
4-11	1140020006	* * SPRING WASHER	6				
4-12	0003600110	* * WASHER	6				
5	0664202540	* BRACKET	1				
6	1141110010	* WASHER	2				
7	1140020010	* SPRING WASHER	2				
8	1100041016	* BOLT	2				
9	1652231250	* BAND	1				
10	1652201007	* BAND	1				
	U1C430						

silverhorn.co.uk

RADIO

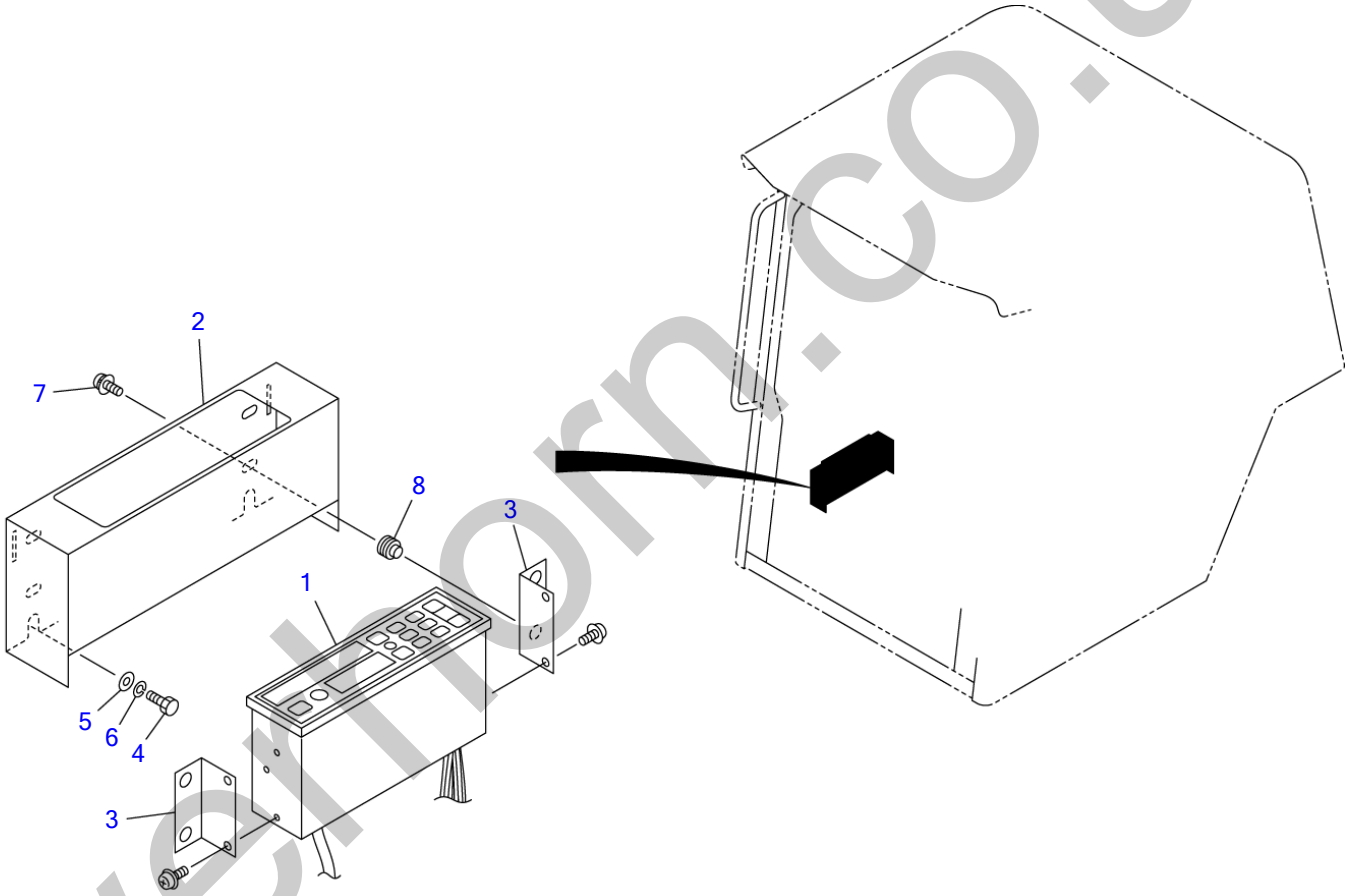

U1C150

S=1/5, 1/20

silverthorn.co.uk

RADIO

Item	Part number	Description	Q'ty	Chan.	Serial No.	Serv.	Remarks
		RADIO ASSY (for Europe, Asia, Oceania)					
		RADIO ASSY (for America)					
		RADIO ASSY (for Japan)					
1	1705004660	RADIO (for Europe, Asia, Oceania)	1			M	
	1705004670	RADIO (for America)	1			M	
	1705004680	RADIO (for Japan)	1			M	
2	0664700020	CASE	1			M	
3	0664700030	BRACKET	2			M	
4	1100040816	BOLT	2				
5	1141110008	WASHER	2				
6	1140020008	WASHER, spring	2				
7	1150410520	SCREW	4			M	
8	1652520005	RUBBER, cushion	4			M	
	U1c150						

silverhorn.co.uk

ELECTRICAL (multi-functional grip type)

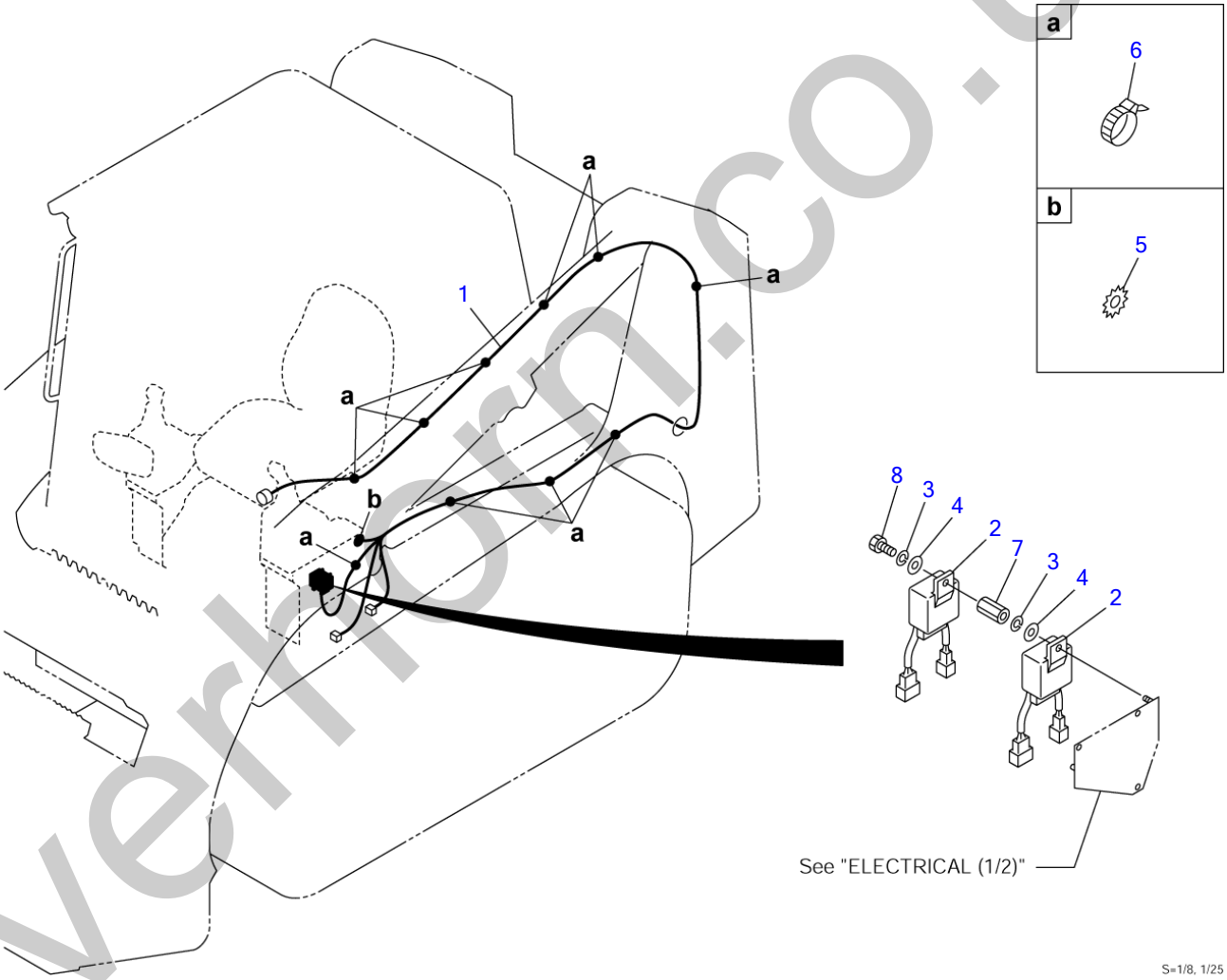

S=1/8, 1/25

silverhorn.co.uk

ELECTRICAL (multi-functional grip type)

Item	Part number	Description	Q'ty	Chan.	Serial No.	Serv.	Remarks
		SWITCH ASSY, grip	1				
1	0654202530	HARNESS, wiring	1			M	
	0664203600	WIRING HARNESS	1				
2	1711900062	RELAY	2			M	
3	1140020006	WASHER, spring	2			M	
4	1141110006	WASHER	2			M	
5	1140330010	WASHER	1			M	
6	1652231250	BAND	11			M	
7	1134830635	NUT	1			M	
8	1100040616	BOLT	1			M	
	U1c191						

silverhorn.co.uk

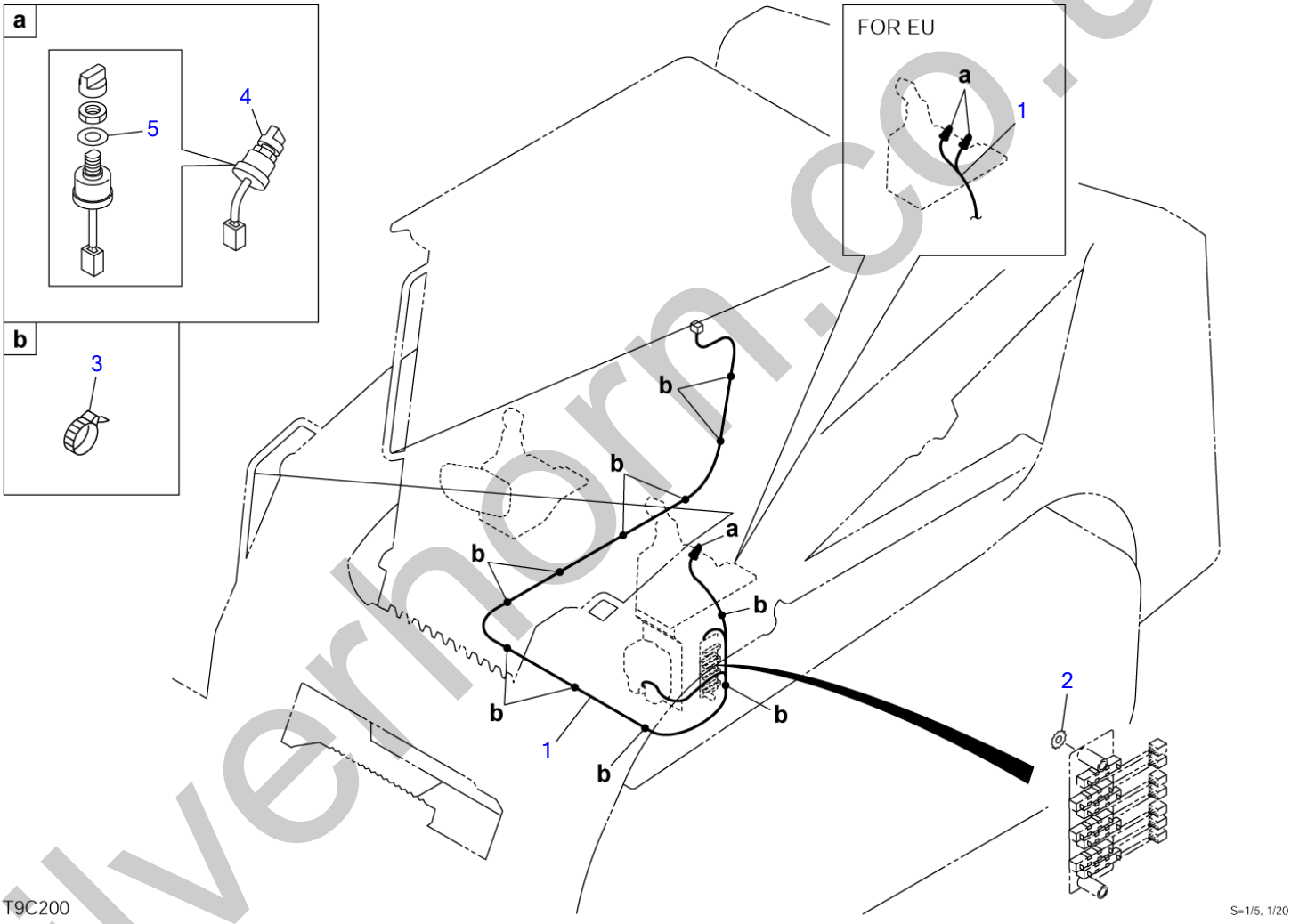

silverhorn.co.uk

ELECTRICAL (cab)

Item	Part number	Description	Q'ty	Chan.	Serial No.	Serv.	Remarks
		ELECTRICAL ASSY					
		ELECTRICAL ASSY (for EU)					
1	0880427810	HARNESS, wiring	1				
	0882421410	HARNESS, wiring	1				for EU
2	1140330010	WASHER	1				
3	1652231250	BAND	10				
4	1704300007	SWITCH, wiper	1				
	1704300007	SWITCH, wiper	2				for EU
5	1141810012	WASHER	1				
	1141810012	WASHER	2				for EU
	U1c120						

silverhorn.co.uk

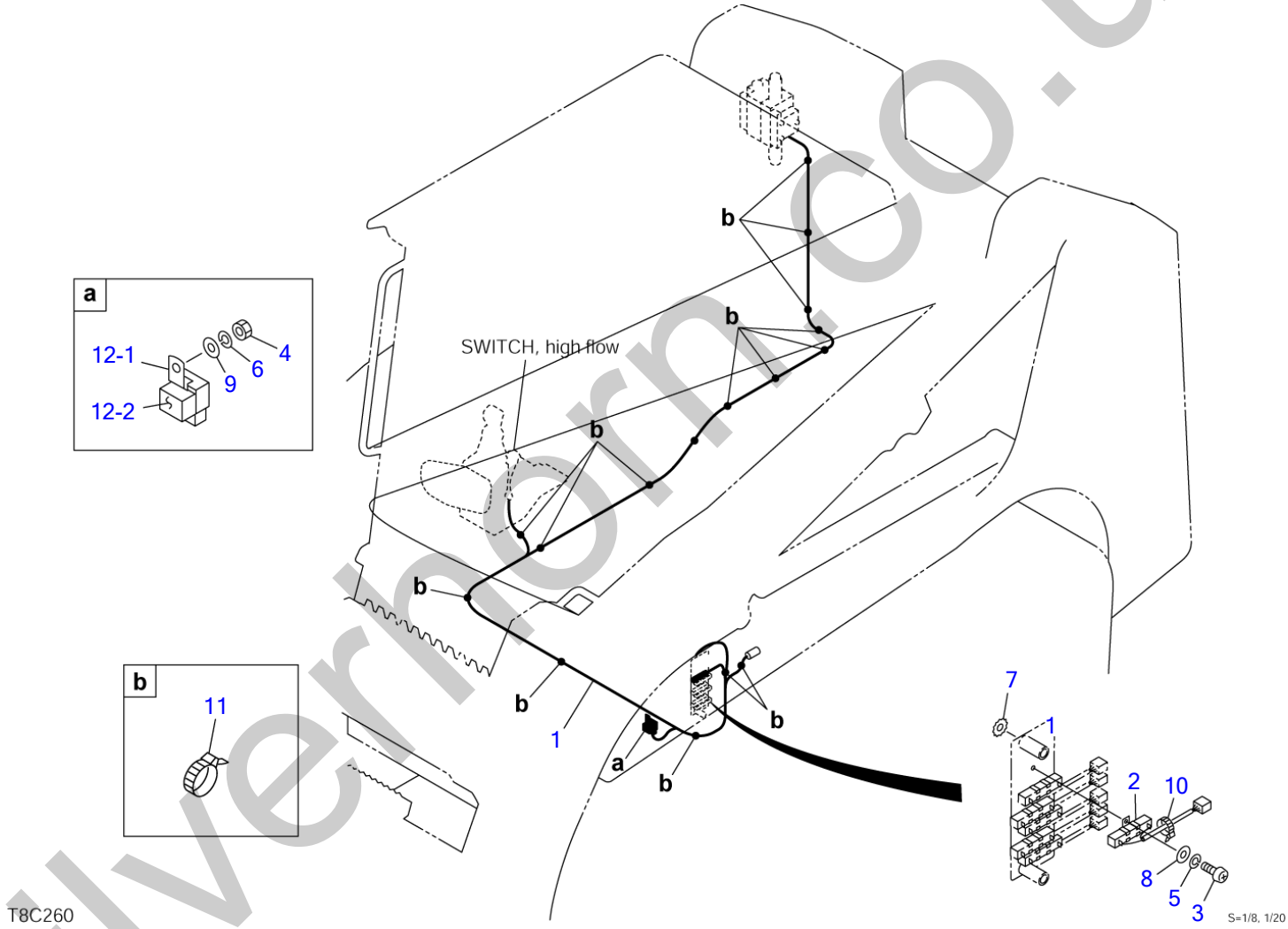

silverhorn.co.uk

ELECTRICAL (high flow)

Item	Part number	Description	Q'ty	Chan.	Serial No.	Serv.	Remarks
		ELECTRICAL ASSY					
1	0880426600	HARNESS, wiring	1				
2	0881421710	RESISTOR	1				
3	1120530306	SCREW	1				
4	1130040006	NUT	1				
5	1140020003	WASHER, spring	1				
6	1140020006	WASHER, spring	1				
7	1140330010	WASHER	1				
8	1141110003	WASHER	1				
9	1141110006	WASHER	1				
10	1652200003	BAND	1				
11	1652231250	BAND	16				
12	0334230130	RELAY ASSY	1				
12-1	1711900042	・RELAY	1				
12-2	1654302003	・SPONGE	1				
	T8c260						

silverhorn.co.uk

ELECTRICAL (high flow)

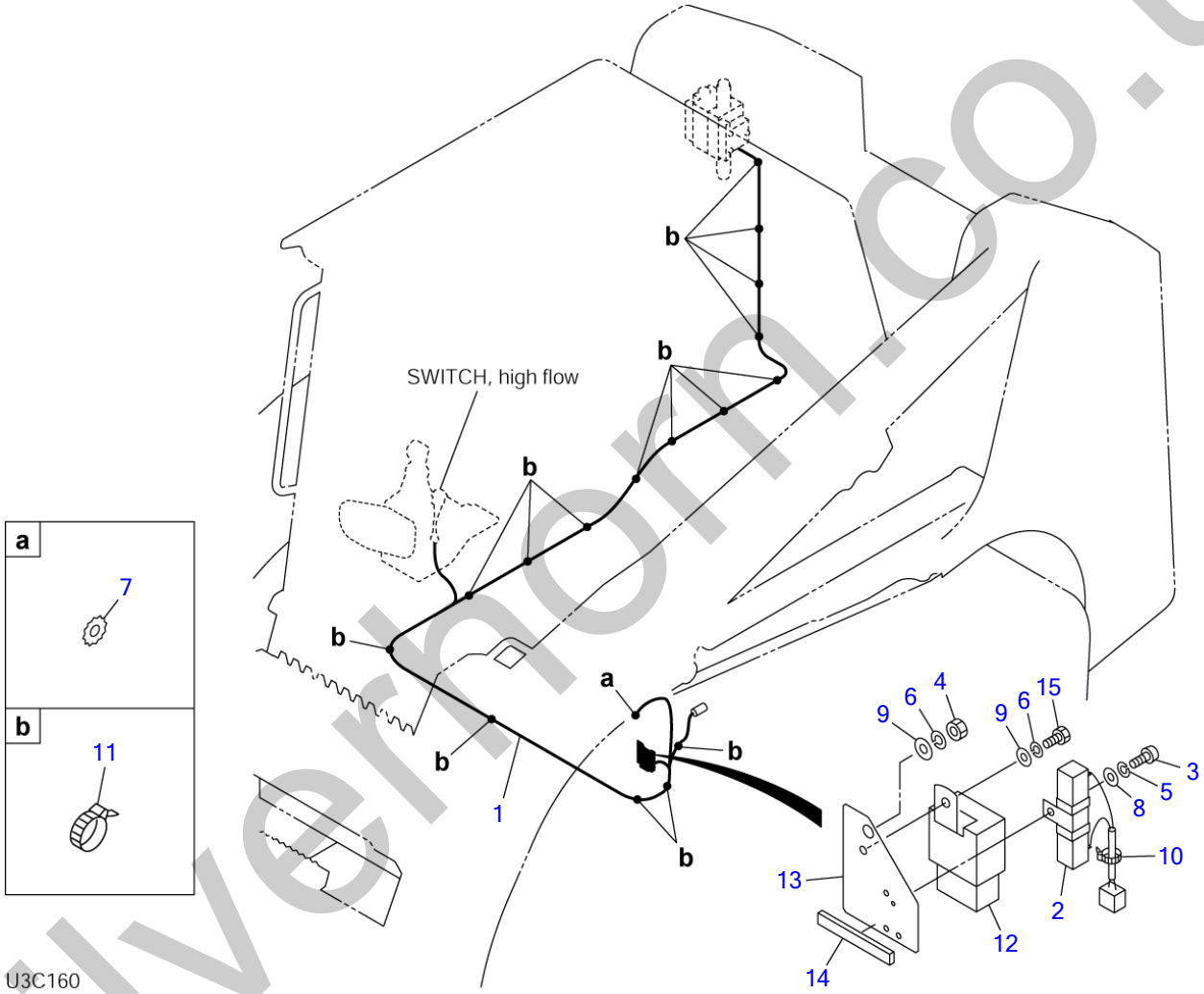

silvernorm.co.uk

ELECTRICAL (high flow)

Item	Part number	Description	Q'ty	Chan.	Serial No.	Serv.	Remarks
		ELECTRICAL ASSY					
1	0694200510	HARNESS, wiring	1				
1-1	1730500008	・DIODE (3A yellow)	1				
2	0881421710	RESISTOR	1				
3	1120530306	SCREW	1				
4	1130040006	NUT	1				
5	1140020003	WASHER, spring	1				
6	1140020006	WASHER, spring	2				
7	1140330010	WASHER	1				
8	1141110003	WASHER	1				
9	1141110006	WASHER	2				
10	1652200003	BAND	1				
11	1652231250	BAND	16				
12	1711900042	RELAY	1				
13	0694200520	BRACKET	1				
14	1654301006	SPONGE	1				sold by the meter
15	1100040610	BOLT	1				
	U3c160						

silverhorn.co.uk

BATTERY

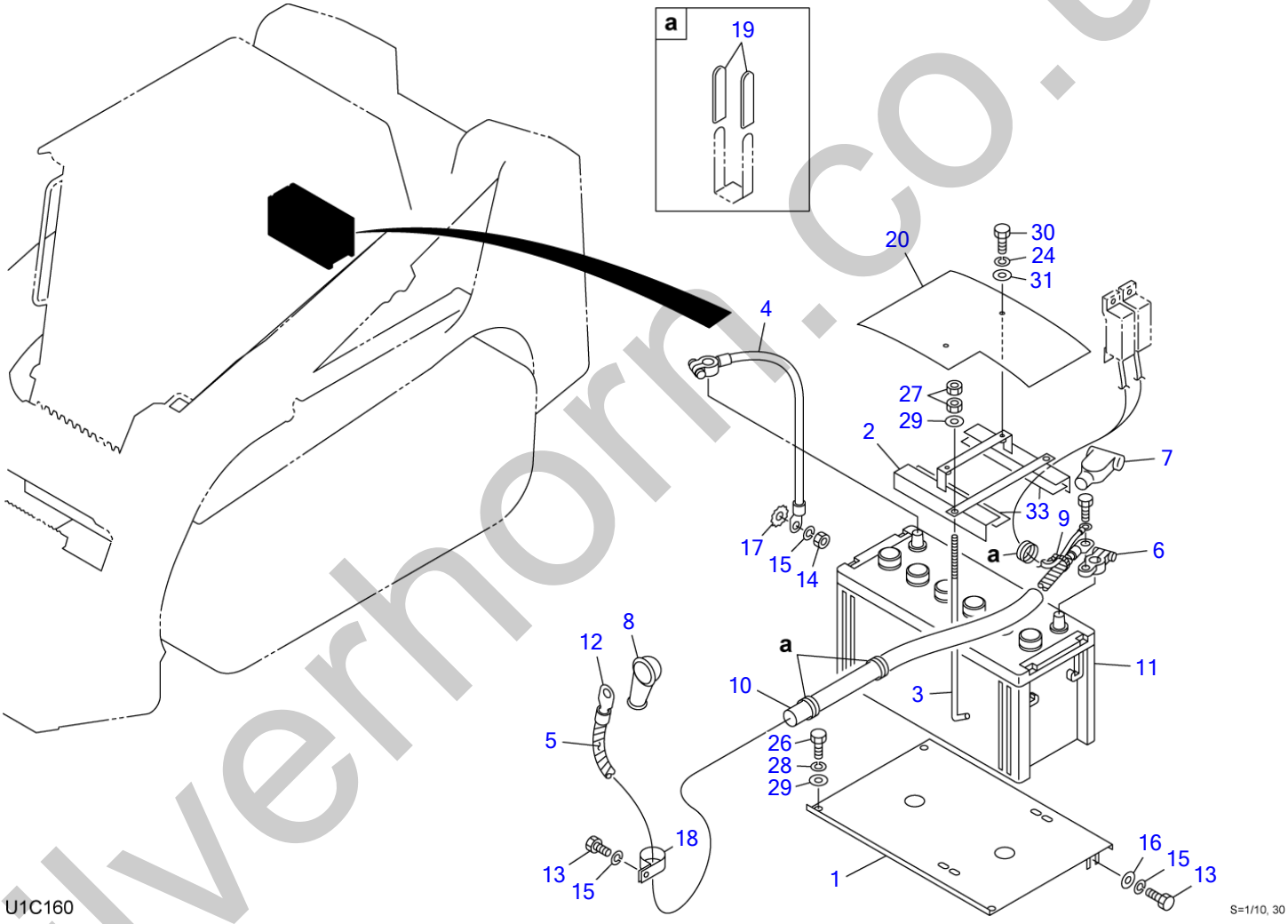

silverhorn.co.uk

BATTERY

Item	Part number	Description	Q'ty	Chan.	Serial No.	Serv.	Remarks
		BATTERY ASSY					
1	0880442060	PLATE	1				
2	0880442020	CLAMP	1				
3	1702108245	BOLT	2				
4	1702230030	CABLE, earth	1				
5	1703221330	PROTECTOR	1				sold by the meter
6	1702330000	TERMINAL	1				
7	1702920080	COVER	1				
8	1702901283	CAP	1				
9	1652231140	BAND	1				
10	1531325110	PROTECTOR	1				sold by the meter
11	1702050141	BATTERY	1				
12	1702530135	CABLE, battery	1				
13	1100041016	BOLT	2				
14	1130040010	NUT	1				
15	1140020010	WASHER, spring	3				
16	1141110010	WASHER	1				
17	1140330010	WASHER	1				
18	1711900072	CLAMP	1				
19	0872433150	TUBE	6				
20	0880442001	SHEET	1				
24	1140020006	WASHER, spring	2				
26	1100040816	BOLT	3				
27	1130040008	NUT	4				
28	1140020008	WASHER, spring	3				
29	1141110008	WASHER	5				
30	1100040616	BOLT	2				
31	0003606202	WASHER	2				
33	0880442050	RUBBER	2				
	U1c160						

silverhorn.co.uk

REAR LAMP

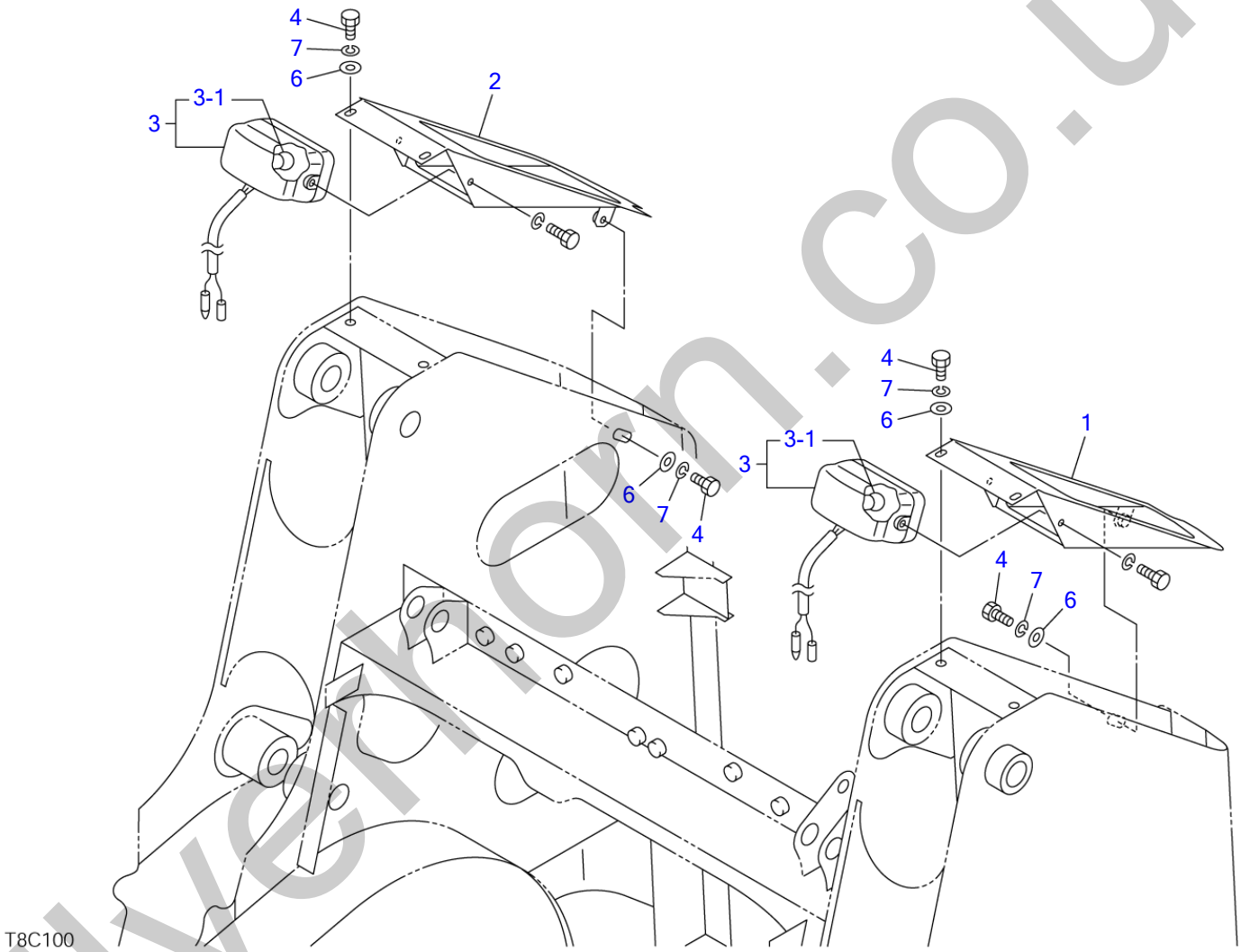

S=1/10

silverhorn.co.uk

REAR LAMP

Item	Part number	Description	Q'ty	Chan.	Serial No.	Serv.	Remarks
		LAMP ASSY, rear					
1	0880491100	COVER(L.H.)	1				
2	0880491200	COVER(R.H.)	1				
3	1703006900	LAMP	2				
3-1	1703006902	▪ BULB	1				12V, 55W
4	1100040816	BOLT	6				
6	0003608252	WASHER	6				
7	1140020008	WASHER, spring	6				
	T8c101						

silverhorn.co.uk

MAINTENANCE LIGHT SOCKET

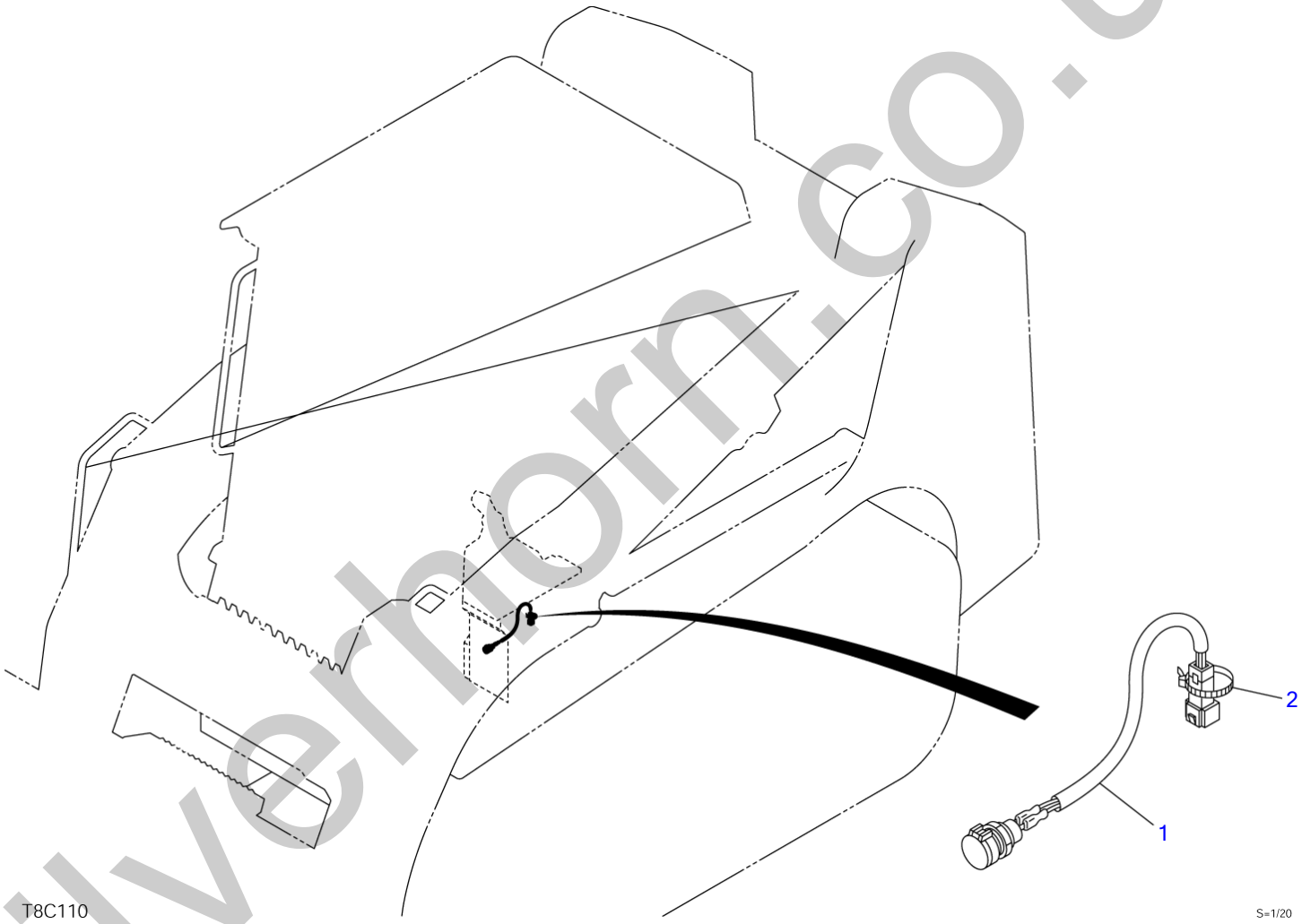

silverhorn.co.uk

MAINTENANCE LIGHT SOCKET

Item	Part number	Description	Q'ty	Chan.	Serial No.	Serv.	Remarks
		SOCKET ASSY, maintenance light					
1	**0394203100**	SOCKET ASSY	1				
2	**1652231250**	BAND	1				
	T8c110						

silverhorn.co.uk

WINDOW WASHER

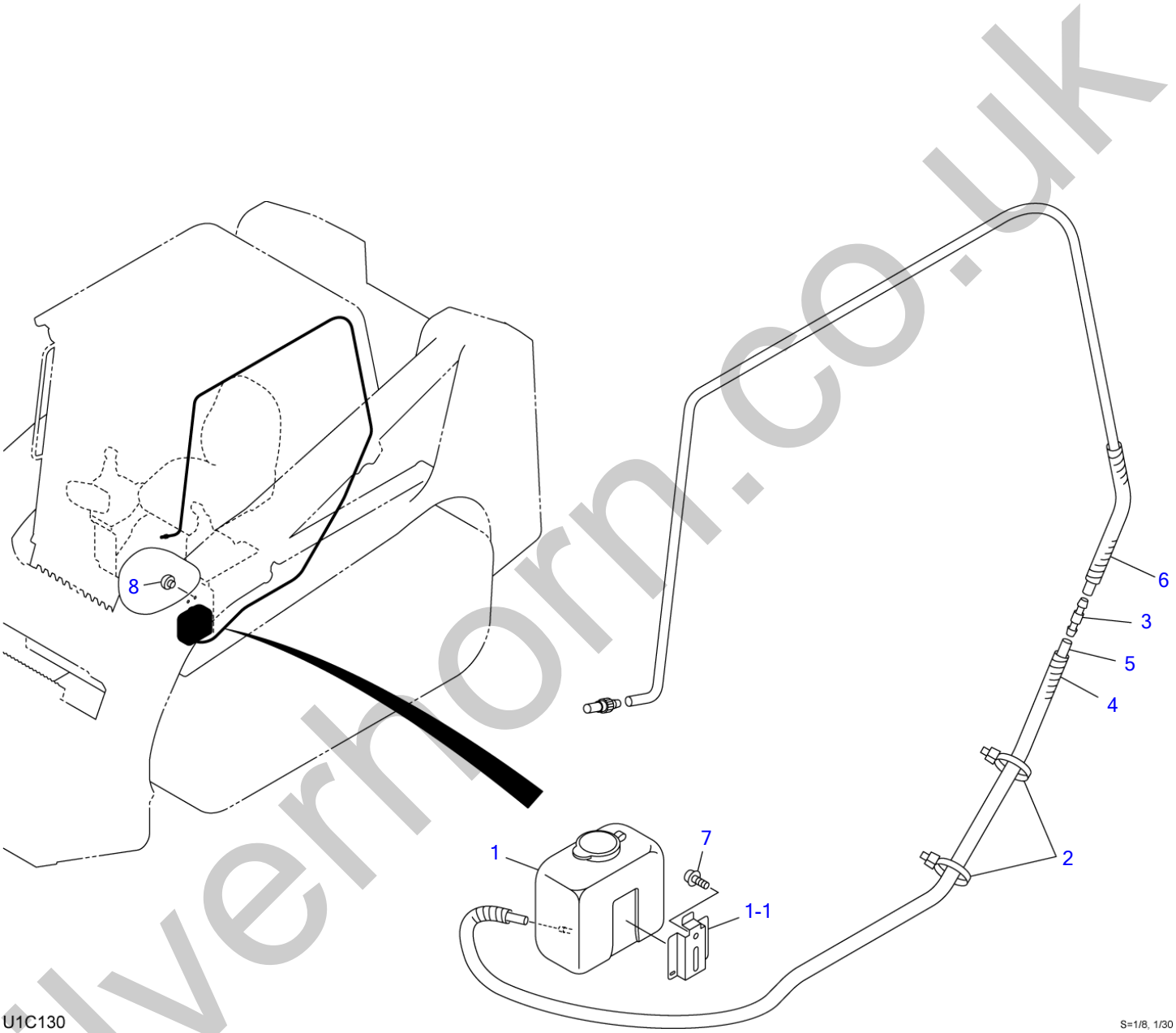

silverhorn.co.uk

WINDOW WASHER

Item	Part number	Description	Q'ty	Chan.	Serial No.	Serv.	Remarks
		WASHER ASSY, window					
1	1711910290	TANK	1				
1-1	1711910291	・BRACKET	1				
2	1652231140	BAND	2				
3	1711910014	JOINT	1				
4	1703220750	PROTECTOR	1				sold by the meter
5	1711919150	HOSE	1				sold by the meter
6	1703210725	PROTECTOR	1				sold by the meter
7	1150410612	SCREW	2				
8	1652533015	CAP	2				
	U1c130						

silverhorn.co.uk

WINDOW WASHER (for EU)

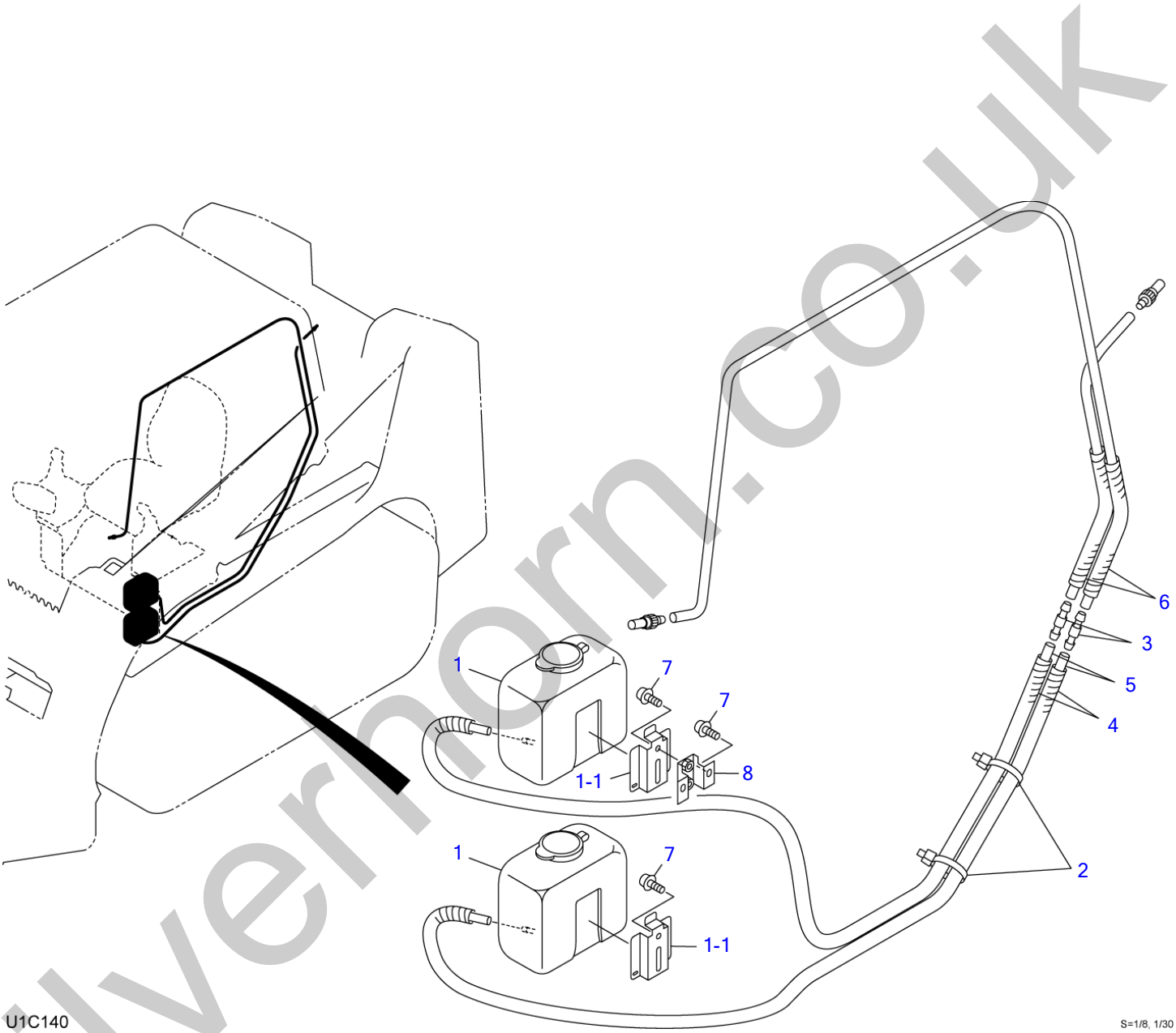

silverhorn.co.uk

WINDOW WASHER (for EU)

Item	Part number	Description	Q'ty	Chan.	Serial No.	Serv.	Remarks
		WASHER ASSY, window					
1	1711910290	TANK	2				
1-1	1711910291	・BRACKET	2				
2	1652231140	BAND	2				
3	1711910014	JOINT	2				
4	1703220750	PROTECTOR	2				sold by the meter
5	1711919150	HOSE	2				sold by the meter
6	1703210725	PROTECTOR	2				sold by the meter
7	1150410612	SCREW	6				
8	0668900180	BRACKET	1				
	U1c140						

silverhorn.co.uk

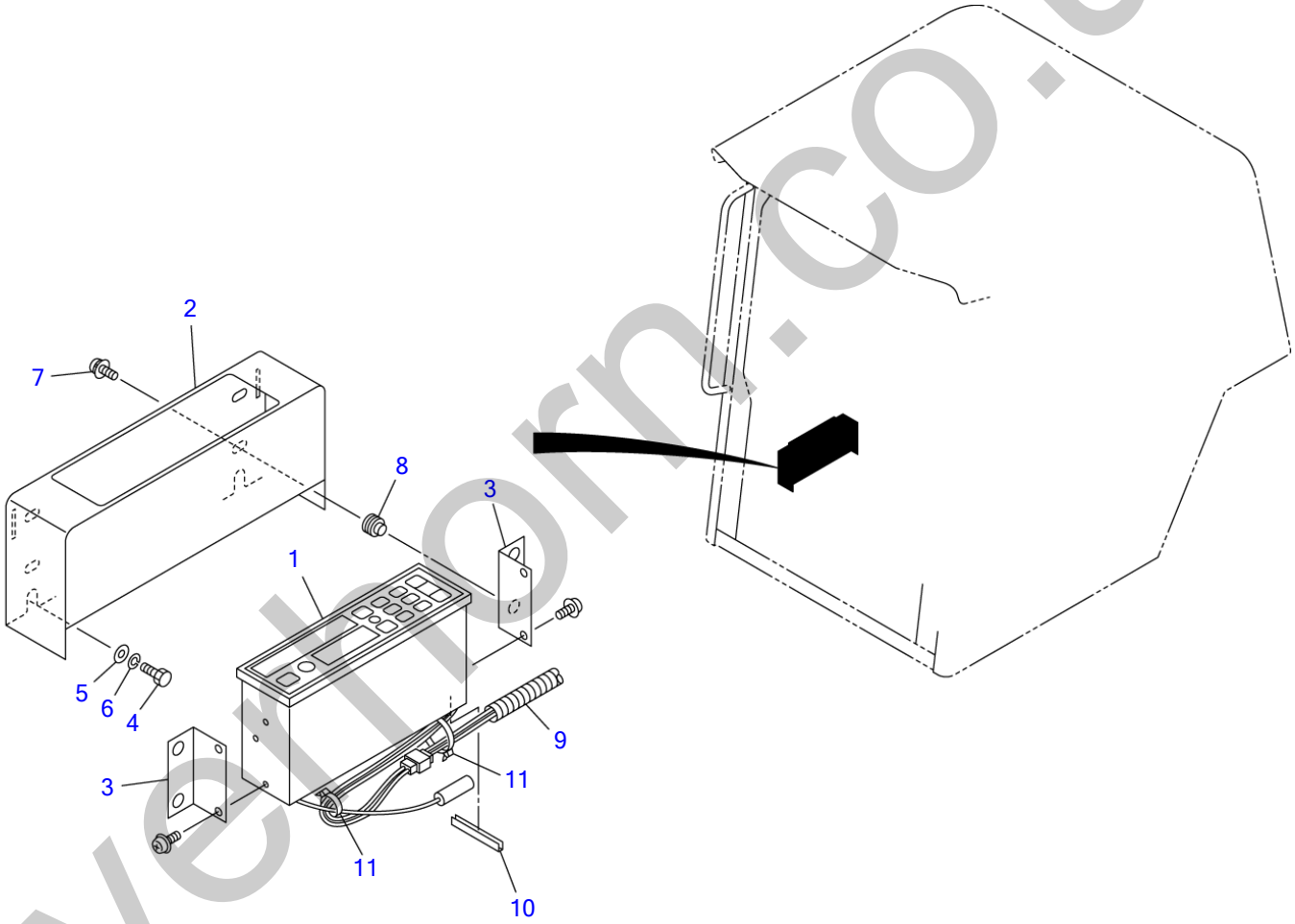

U3C210

S=1/5, 1/20

silverthorn.co.uk

RADIO

Item	Part number	Description	Q'ty	Chan.	Serial No.	Serv.	Remarks
		RADIO ASSY (for Europe, Asia, Oceania)					
		RADIO ASSY (for America)					
		RADIO ASSY (for Japan)					
1	1705004660	RADIO (for Europe, Asia, Oceania)	1			M	
	1705004670	RADIO (for America)	1			M	
	1705004680	RADIO (for Japan)	1			M	
2	0694700025	CASE	1			M	
3	0694700030	BRACKET	2			M	
4	1100040816	BOLT	2			M	
5	1141110008	WASHER	2			M	
6	1140020008	WASHER, spring	2			M	
7	1150410520	SCREW	4			M	
8	1652520005	RUBBER, cushion	4			M	
9	1703252240	TUBE	1			M	
10	1653916005	TRIM	1			M	sold by the meter
11	1652201003	BAND	2			M	
	U3c210						

silverhorn.co.uk

VALVE & ACCESSORIES (1/2)

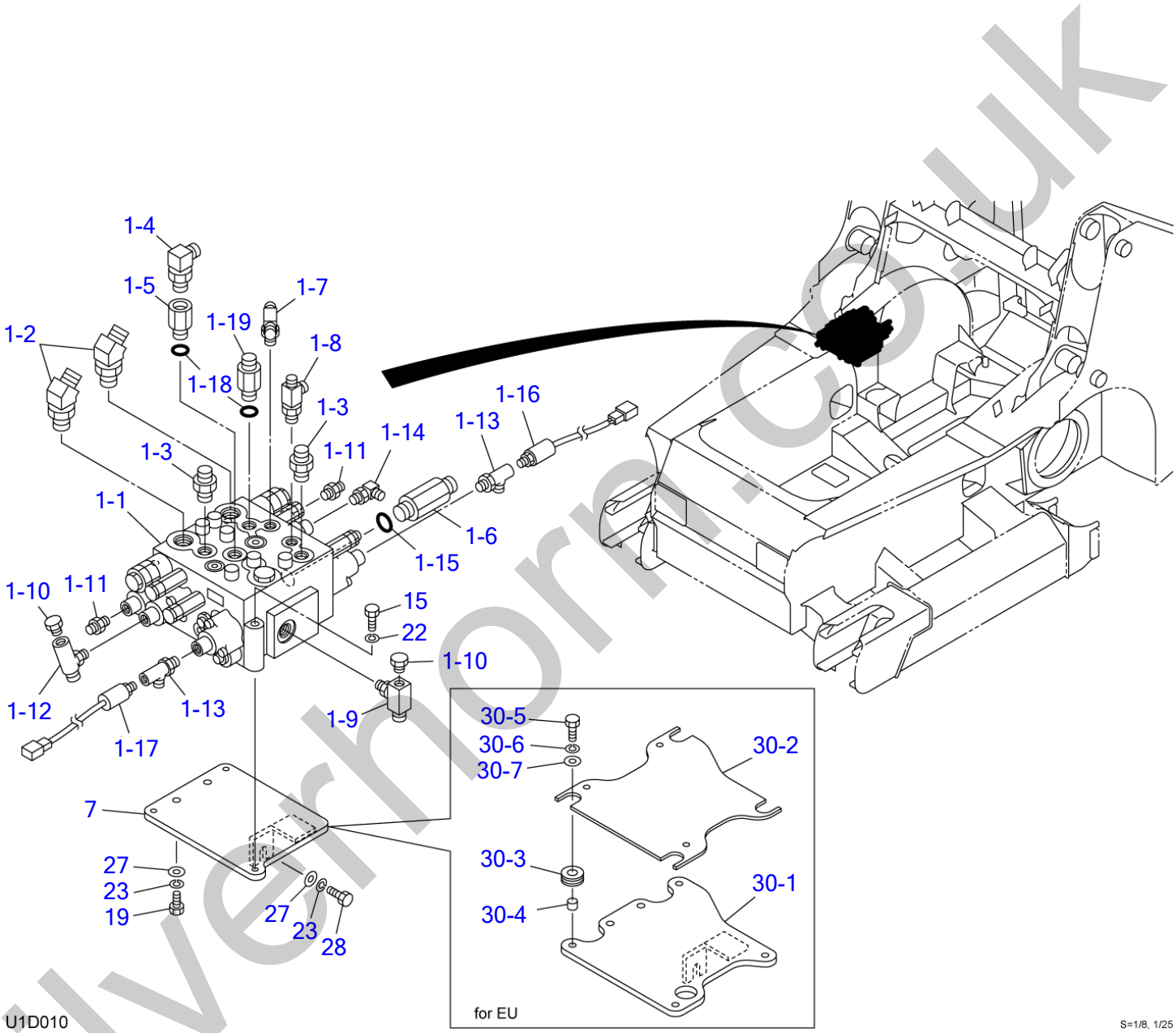

silverthorn.co.uk

VALVE & ACCESSORIES (1/2)

Item	Part number	Description	Q'ty	Chan.	Serial No.	Serv.	Remarks
		VALVE ASSY, control					
		VALVE ASSY, control (high flow)					
		VALVE ASSY, control (for EU)					
		VALVE ASSY, control (for EU, high flow)					
1	X **********	VALVE ASSY, control	1				
1-1	1901045200	・VALVE, control	1				
1-2	1515100048	・ELBOW	2				
	1420010240	・・O-RING	1				
1-3	1515600202	・ADAPTOR	2				
	1420010180	・・O-RING	1				
1-4	1515010042	・ELBOW	1				
	1420010180	・・O-RING	1				
1-5	0007213010	・BUSHING	1				
1-6	0007203083	・ADAPTOR	1				
1-7	1512370002	・TEE (with filter)	1				
	1420010110	・・O-RING	1				
1-8	1512370011	・TEE	1				
	1420010110	・・O-RING	1				
1-9	1513390014	・TEE	1				
	1420010180	・・O-RING	1				
1-10	1501750002	・PLUG	2				
	1420010110	・・O-RING	1				
1-11	1515600200	・ADAPTOR	2				
	1420010110	・・O-RING	1				
1-12	1513390029	・TEE	1				
	1420010110	・・O-RING	1				
1-13	1512340001	・TEE	2				
	1420010110	・・O-RING	1				
1-14	1515012040	・ELBOW	1				
	1420010110	・・O-RING	1				
1-15	1420010240	・O-RING	1				
1-16	1700100041	・SWITCH, pressure	1				
	1420010110	・・O-RING	1				
1-17	1700100060	・SWITCH, pressure	1				
	1420010110	・・O-RING	1				
1-18	1420010180	・O-RING	2				
1-19	0007203033	・ADAPTOR	1				
7	0665001070	BRACKET	1				
15	1100040880	BOLT	3				
19	1100041030	BOLT	2				
22	1140020008	WASHER, spring	3				
23	1140020010	WASHER, spring	3				
27	0003600020	WASHER	3				
28	1100041025	BOLT	1				
30	0665001300	BRACKET ASSY	1				for EU
30-1	0665001310	・PLATE	1				for EU
30-2	0665001320	・PLATE	1				for EU
30-3	0882502130	・CUSHION	4				for EU
30-4	0882502140	・PIPE	4				for EU
30-5	1100040825	・BOLT	4				for EU
30-6	1140020008	・WASHER, spring	4				for EU
30-7	0003609003	・WASHER	4				for EU
	U1d011						

silvermorn.co.uk

VALVE & ACCESSORIES (2/2)

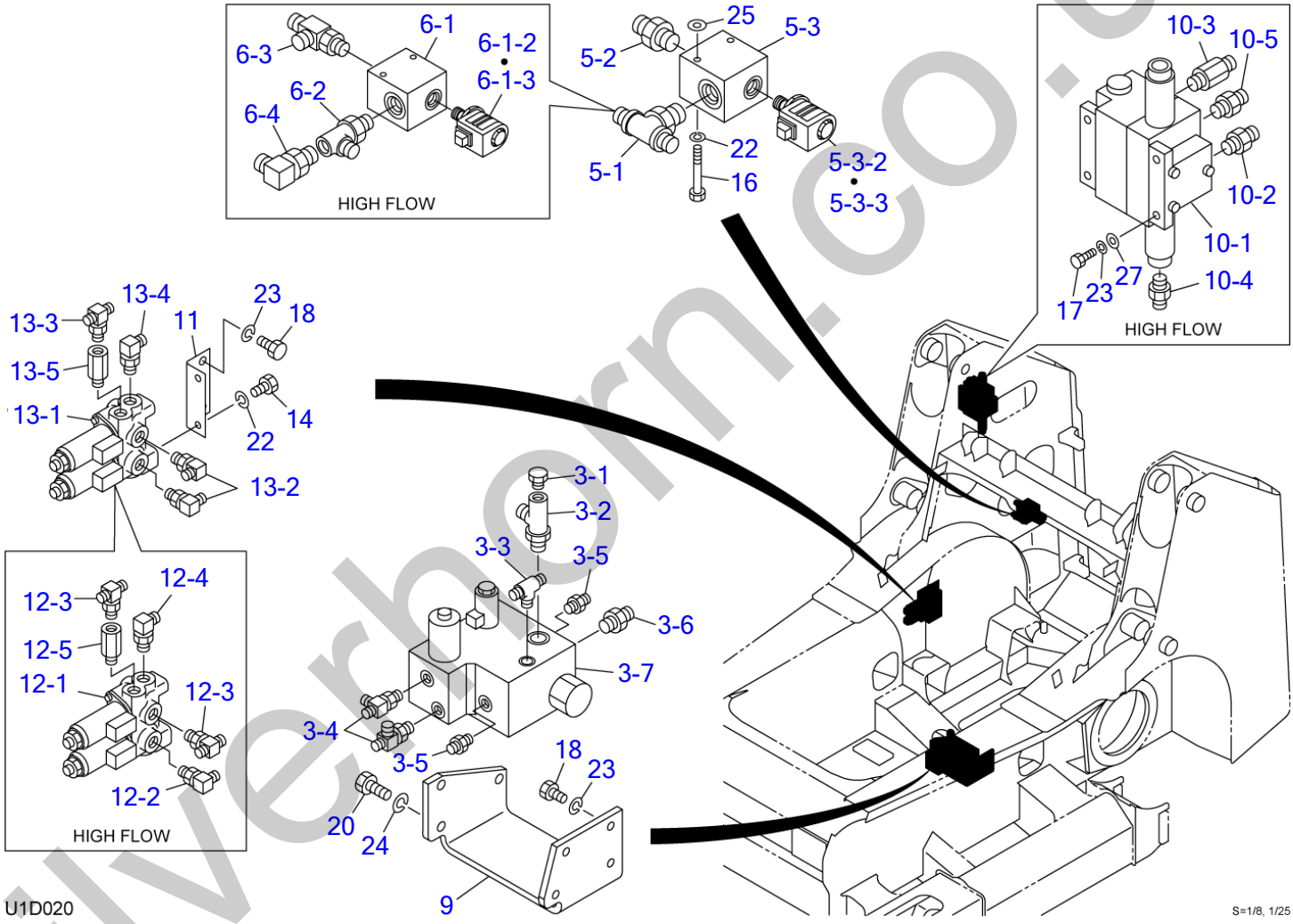

silverhorn.co.uk

VALVE & ACCESSORIES (2/2)

Item	Part number	Description	Q'ty	Chan.	Serial No.	Serv.	Remarks
		VALVE ASSY, control					
		VALVE ASSY, control (high flow)					
		VALVE ASSY, control (for EU)					
		VALVE ASSY, control (for EU, high flow)					
3	X **********	VALVE ASSY, sub	1				
3-1	1501750002	・PLUG	1				
	1420010110	・・O-RING	1				
3-2	1512340004	・ELBOW	1				
	1420010180	・・O-RING	1				
3-3	1512370010	・TEE	1				
	1420010110	・・O-RING	1				
3-4	1512370011	・TEE	2				
	1420010110	・・O-RING	1				
3-5	1515600200	・ADAPTOR	2				
	1420010110	・・O-RING	1				
3-6	1515600202	・ADAPTOR	1				
	1420010180	・・O-RING	1				
3-7	1901748100	・VALVE, sub	1				
5	X **********	VALVE ASSY, solenoid	1				
5-1	1512374011	・TEE	1				
	1420010240	・・O-RING	1				
5-2	1515600203	・ADAPTOR	1				
	1420010240	・・O-RING	1				
5-3	1901753600	・VALVE, solenoid	1				
5-3-2	1901753602	・・SOLENOID	1				
5-3-3	1901753603	・・COIL	1				
6	X **********	VALVE ASSY, solenoid (high flow)	1				
6-1	1901753600	・VALVE, solenoid	1				high flow
6-1-2	1901753602	・・SOLENOID	1				high flow
6-1-3	1901753603	・・COIL	1				high flow
6-2	1512340019	・ELBOW	1				high flow
	1420010240	・・O-RING	1				high flow
6-3	0695000063	・TEE	1				high flow
6-4	1515010042	・ELBOW	1				high flow
	1420010180	・・O-RING	1				high flow
9	0665001090	BRACKET	1				
10	X **********	VALVE SUB ASSY (high flow)	1				
10-1	1901039500	・VALVE, control	1				high flow
10-2	0007203007	・ADAPTOR	1				high flow
	1420310908	・・O-RING	1				high flow
10-3	0007203058	・ADAPTOR	1				high flow
	1420010180	・・O-RING	1				high flow
10-4	0575002020	・ADAPTOR	1				high flow
	1420010110	・・O-RING	1				high flow
10-5	1515600202	・ADAPTOR	1				high flow
	1420010180	・・O-RING	1				high flow
11	0882500100	BRACKET	1				
12	X **********	VALVE SUB ASSY (high flow)	1				
12-1	1901752100	・VALVE, proportional control	1				high flow
12-2	1515012040	・ELBOW	1				high flow
	1420010110	・・O-RING	1				high flow
12-3	1512370010	・TEE	2				high flow
	1420010110	・・O-RING	1				high flow
12-4	1512375004	・ELBOW (with filter)	1				high flow
	1420010110	・・O-RING	1				high flow
12-5	0007213028	・BUSHING	1				high flow
	1420010110	・・O-RING	1				high flow
13	X **********	VALVE SUB ASSY	1				
13-1	1901752100	・VALVE, proportional control	1				
13-2	1515012040	・ELBOW	2				
	1420010110	・・O-RING	1				
13-3	1512370010	・TEE	1				
	1420010110	・・O-RING	1				
13-4	1512375004	・ELBOW (with filter)	1				
	1420010110	・・O-RING	1				
13-5	0007213028	・BUSHING	1				
	1420010110	・・O-RING	1				
14	1100040816	BOLT	2				

silverthorn.co.uk

VALVE & ACCESSORIES (2/2)

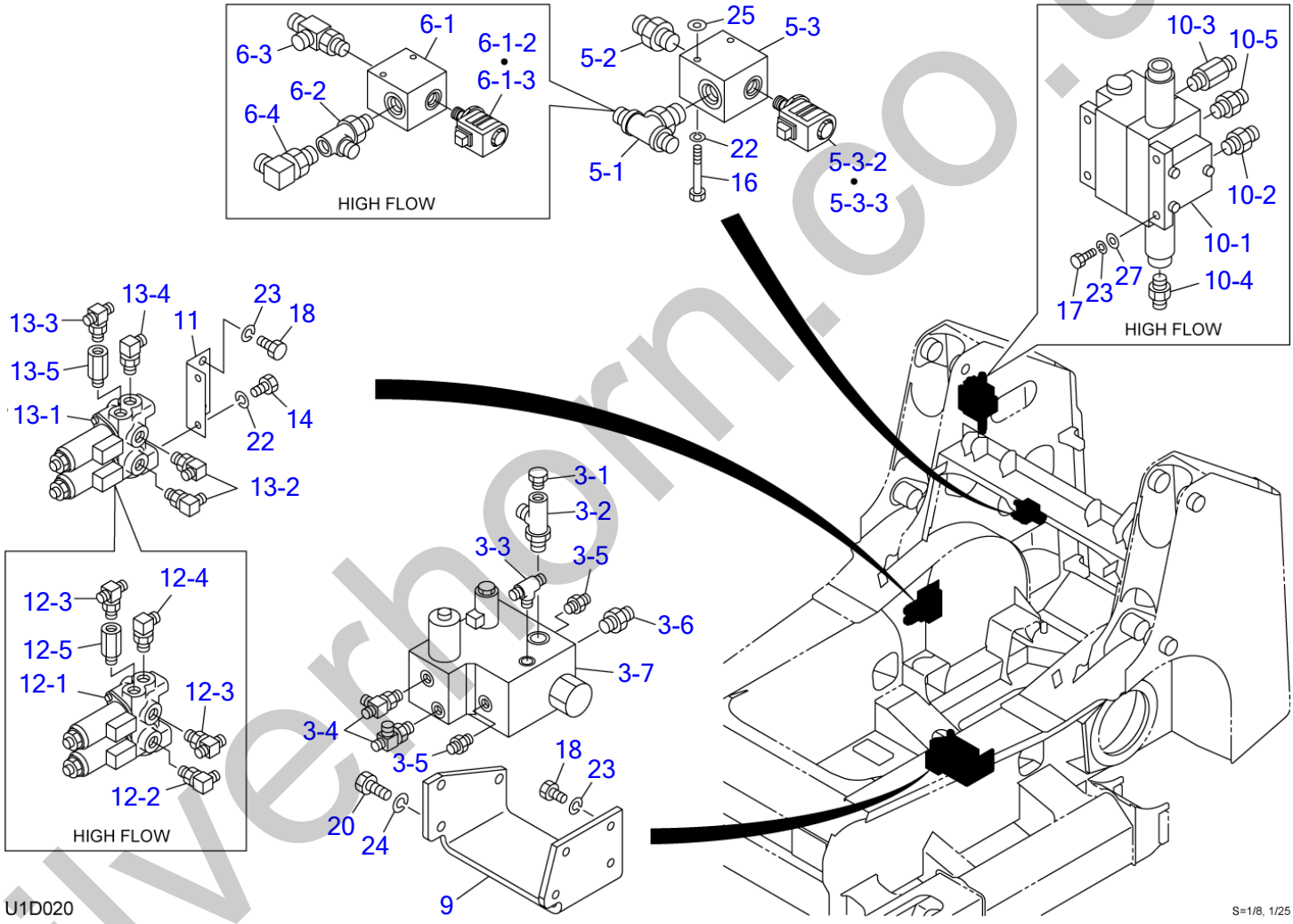

silverhorn.co.uk

VALVE & ACCESSORIES (2/2)

Item	Part number	Description	Q'ty	Chan.	Serial No.	Serv.	Remarks
16	1100040870	BOLT	2				
17	1101041025	BOLT	3				high flow
18	1100041020	BOLT	6				
20	1100041225	BOLT	3				
22	1140020008	WASHER, spring	4				
23	1140020010	WASHER, spring	6				
23	1140020010	WASHER, spring	9				high flow
24	1140020012	WASHER, spring	3				
25	1141110008	WASHER	2				
27	0003600020	WASHER	3				high flow
	U1d020						

silverhorn.co.uk

VALVE & ACCESSORIES (2/2) (for GEHL & MUSTANG)

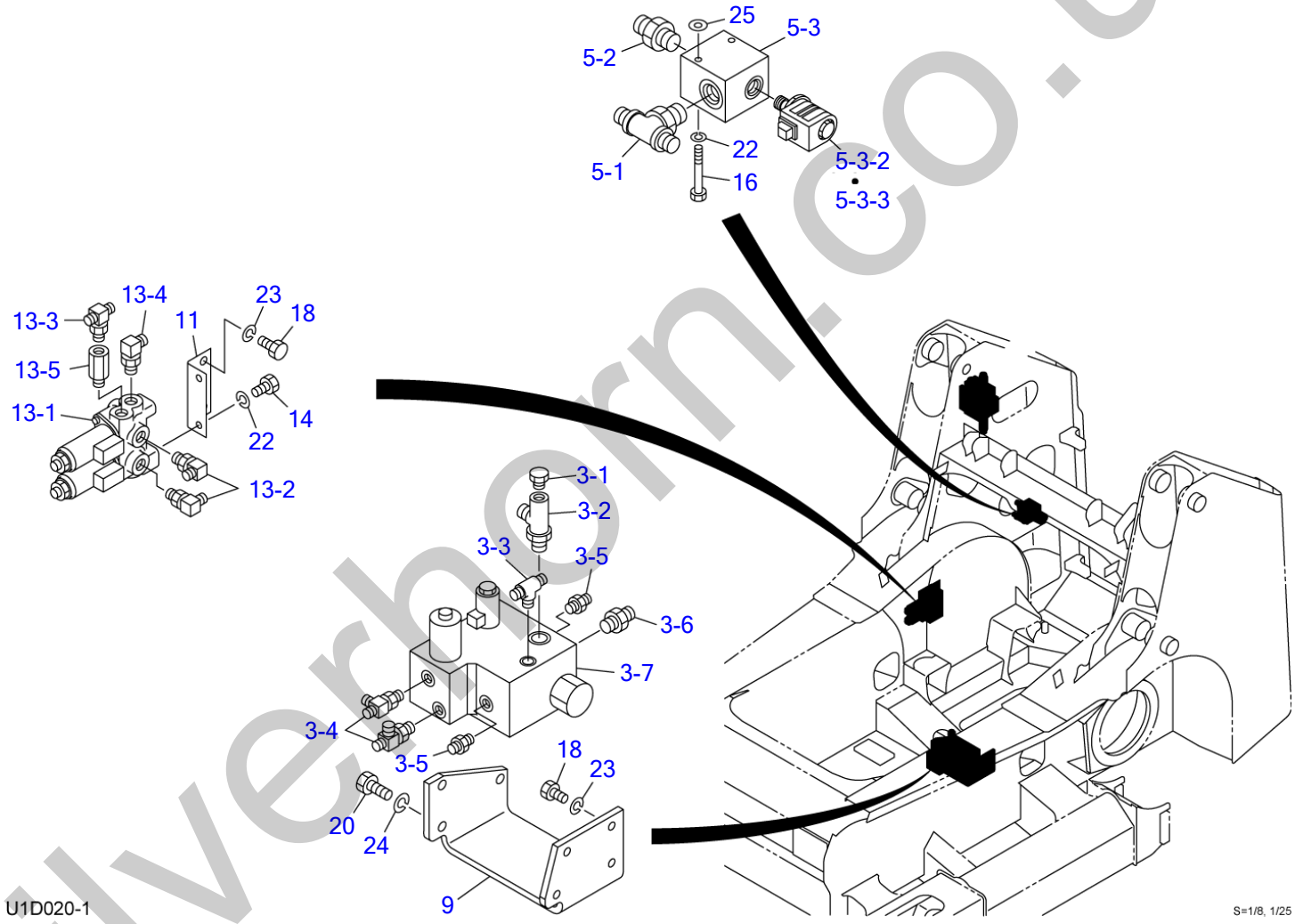

silverhorn.co.uk

VALVE & ACCESSORIES (2/2) (for GEHL & MUSTANG)

Item	Part number	Description	Q'ty	Chan.	Serial No.	Serv.	Remarks
		VALVE ASSY, control					
		VALVE ASSY, control (for EU)					
3	X **********	VALVE ASSY, sub	1				
3-1	1501750002	・PLUG	1				
	1420010110	・・O-RING	1				
3-2	1512340004	・ELBOW	1				
	1420010180	・・O-RING	1				
3-3	1512370010	・TEE	1				
	1420010110	・・O-RING	1				
3-4	1512370011	・TEE	2				
	1420010110	・・O-RING	1				
3-5	1515600200	・ADAPTOR	2				
	1420010110	・・O-RING	1				
3-6	1515600202	・ADAPTOR	1				
	1420010180	・・O-RING	1				
3-7	1901748100	・VALVE, sub	1			M	
5	X **********	VALVE ASSY, solenoid	1				
5-1	1512374011	・TEE	1				
	1420010240	・・O-RING	1				
5-2	1515600203	・ADAPTOR	1				
	1420010240	・・O-RING	1				
5-3	1901753600	・VALVE, solenoid	1			M	
5-3-2	1901753602	・・SOLENOID	1			M	
5-3-3	1901753603	・・COIL	1			M	
9	0665001090	BRACKET	1			M	
11	0882500100	BRACKET	1			M	
13	X **********	VALVE SUB ASSY	1				
13-1	1901752100	・VALVE, proportional control	1			M	
13-2	1515012040	・ELBOW	2				
	1420010110	・・O-RING	1				
13-3	1512370010	・TEE	1				
	1420010110	・・O-RING	1				
13-4	1512375004	・ELBOW (with filter)	1			M	
	1420010110	・・O-RING	1				
13-5	0007213028	・BUSHING	1			M	
	1420010110	・・O-RING	1				
14	1100040816	BOLT	2				
16	1100040870	BOLT	2				
18	1100041020	BOLT	6				
20	1100041225	BOLT	3				
22	1140020008	WASHER, spring	4				
23	1140020010	WASHER, spring	6				
24	1140020012	WASHER, spring	3				
25	1141110008	WASHER	2				
	U1d020-1						

silverhorn.co.uk

VALVE & ACCESSORIES (1/2) (for GEHL & MUSTANG)

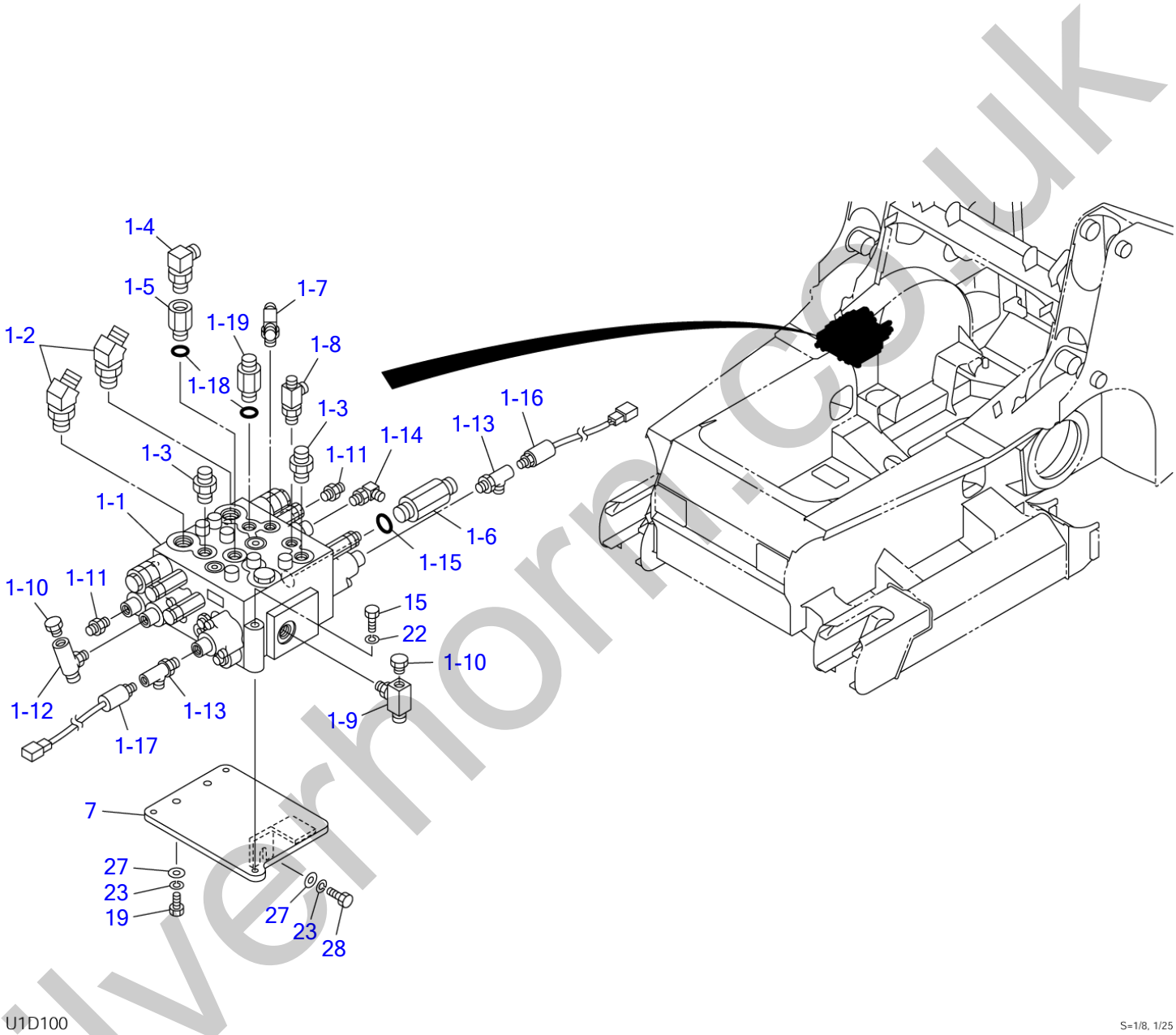

silverhorn.co.uk

VALVE & ACCESSORIES (1/2) (for GEHL & MUSTANG)

Item	Part number	Description	Q'ty	Chan.	Serial No.	Serv.	Remarks
		VALVE ASSY, control					
		VALVE ASSY, control (high flow)					
1	X **********	VALVE ASSY, control	1				
1-1	1901045200	・VALVE, control	1				
1-2	1515100048	・ELBOW	2				
	1420010240	・・O-RING	1				
1-3	1515600202	・ADAPTOR	2				
	1420010180	・・O-RING	1				
1-4	1515010042	・ELBOW	1				
	1420010180	・・O-RING	1				
1-5	0007213010	・BUSHING	1				
1-6	0007203083	・ADAPTOR	1				
1-7	1512370002	・TEE (with filter)	1				
	1420010110	・・O-RING	1				
1-8	1512370011	・TEE	1				
	1420010110	・・O-RING	1				
1-9	1513390014	・TEE	1				
	1420010180	・・O-RING	1				
1-10	1501750002	・PLUG	2				
	1420010110	・・O-RING	1				
1-11	1515600200	・ADAPTOR	2				
	1420010110	・・O-RING	1				
1-12	1513390029	・TEE	1				
	1420010110	・・O-RING	1				
1-13	1512340001	・TEE	2				
	1420010110	・・O-RING	1				
1-14	1515010040	・ELBOW	1				
	1420010110	・・O-RING	1				
1-15	1420010240	・O-RING	1				
1-16	1700100041	・SWITCH, pressure	1				
	1420010110	・・O-RING	1				
1-17	1700100060	・SWITCH, pressure	1				
	1420010110	・・O-RING	1				
1-18	1420010180	・O-RING	2				
1-19	0007203033	・ADAPTOR	1				
7	0665001070	BRACKET	1				
15	1100040880	BOLT	3				
19	1100041030	BOLT	2				
22	1140020008	WASHER, spring	3				
23	1140020010	WASHER, spring	3				
27	0003600020	WASHER	3				
28	1100041025	BOLT	1				
	U1d101						

silverthorn.co.uk

VALVE & ACCESSORIES (2/2) (for GEHL & MUSTANG)

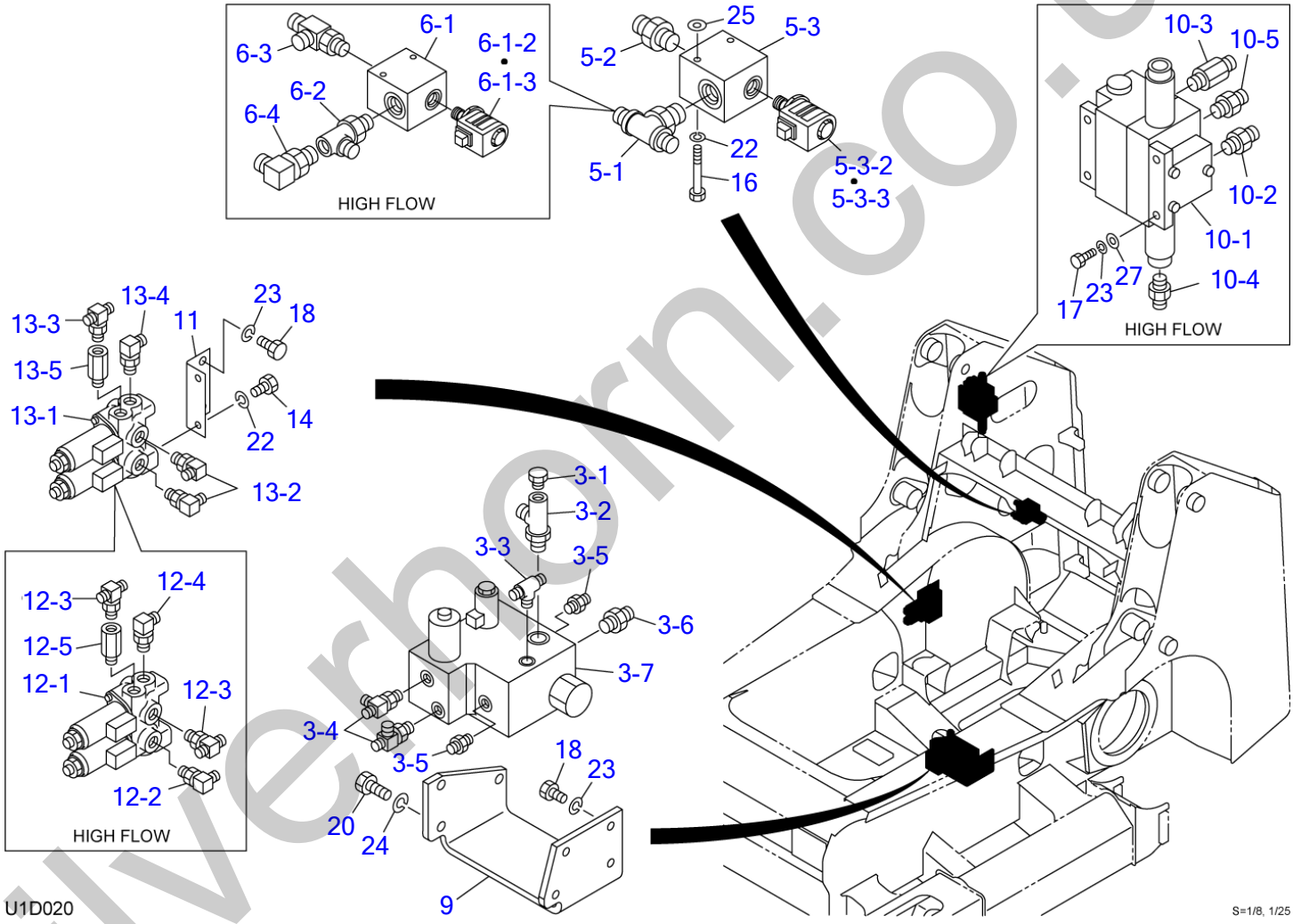

silverhorn.co.uk

VALVE & ACCESSORIES (2/2) (for GEHL & MUSTANG)

Item	Part number	Description	Q'ty	Chan.	Serial No.	Serv.	Remarks
		VALVE ASSY, control					
		VALVE ASSY, control (high flow)					
3	X **********	VALVE ASSY, sub	1				
3-1	1501750002	・PLUG	1				
	1420010110	・・O-RING	1				
3-2	1512340004	・ELBOW	1				
	1420010180	・・O-RING	1				
3-3	1512370010	・TEE	1				
	1420010110	・・O-RING	1				
3-4	1512370011	・TEE	2				
	1420010110	・・O-RING	1				
3-5	1515600200	・ADAPTOR	2				
	1420010110	・・O-RING	1				
3-6	1515600202	・ADAPTOR	1				
	1420010180	・・O-RING	1				
3-7	1901748100	・VALVE, sub	1				
5	X **********	VALVE ASSY, solenoid	1				
5-1	1512374011	・TEE	1				
	1420010240	・・O-RING	1				
5-2	1515600203	・ADAPTOR	1				
	1420010240	・・O-RING	1				
5-3	1901753600	・VALVE, solenoid	1				
5-3-2	1901753602	・・SOLENOID	1				
5-3-3	1901753603	・・COIL	1				
6	X **********	VALVE ASSY, solenoid (high flow)	1				
6-1	1901753600	・VALVE, solenoid	1				high flow
6-1-2	1901753602	・・SOLENOID	1				high flow
6-1-3	1901753603	・・COIL	1				high flow
6-2	1512340019	・ELBOW	1				high flow
	1420010240	・・O-RING	1				high flow
6-3	0695000063	・TEE	1				high flow
6-4	1515010042	・ELBOW	1				high flow
	1420010180	・・O-RING	1				high flow
9	0665001090	BRACKET	1				
10	X **********	VALVE SUB ASSY (high flow)	1				
10-1	1901039500	・VALVE, control	1				high flow
10-2	0007203007	・ADAPTOR	1				high flow
	1420310908	・・O-RING	1				high flow
10-3	0007203058	・ADAPTOR	1				high flow
	1420010180	・・O-RING	1				high flow
10-4	0575002020	・ADAPTOR	1				high flow
	1420010110	・・O-RING	1				high flow
10-5	1515600202	・ADAPTOR	1				high flow
	1420010180	・・O-RING	1				high flow
11	0882500100	BRACKET	1				
12	X **********	VALVE SUB ASSY (high flow)	1				
12-1	1901752100	・VALVE, proportional control	1				high flow
12-2	1515012040	・ELBOW	1				high flow
	1420010110	・・O-RING	1				high flow
12-3	1512370010	・TEE	2				high flow
	1420010110	・・O-RING	1				high flow
12-4	1512375004	・ELBOW (with filter)	1				high flow
	1420010110	・・O-RING	1				high flow
12-5	0007213028	・BUSHING	1				high flow
	1420010110	・・O-RING	1				high flow
13	X **********	VALVE SUB ASSY	1				
13-1	1901752100	・VALVE, proportional control	1				
13-2	1515012040	・ELBOW	2				
	1420010110	・・O-RING	1				
13-3	1512370010	・TEE	1				
	1420010110	・・O-RING	1				
13-4	1512375004	・ELBOW (with filter)	1				
	1420010110	・・O-RING	1				
13-5	0007213028	・BUSHING	1				
	1420010110	・・O-RING	1				
14	1100040816	BOLT	2				
16	1100040870	BOLT	2				
17	1101041025	BOLT	3				high flow

silverthorn.co.uk

VALVE & ACCESSORIES (2/2) (for GEHL & MUSTANG)

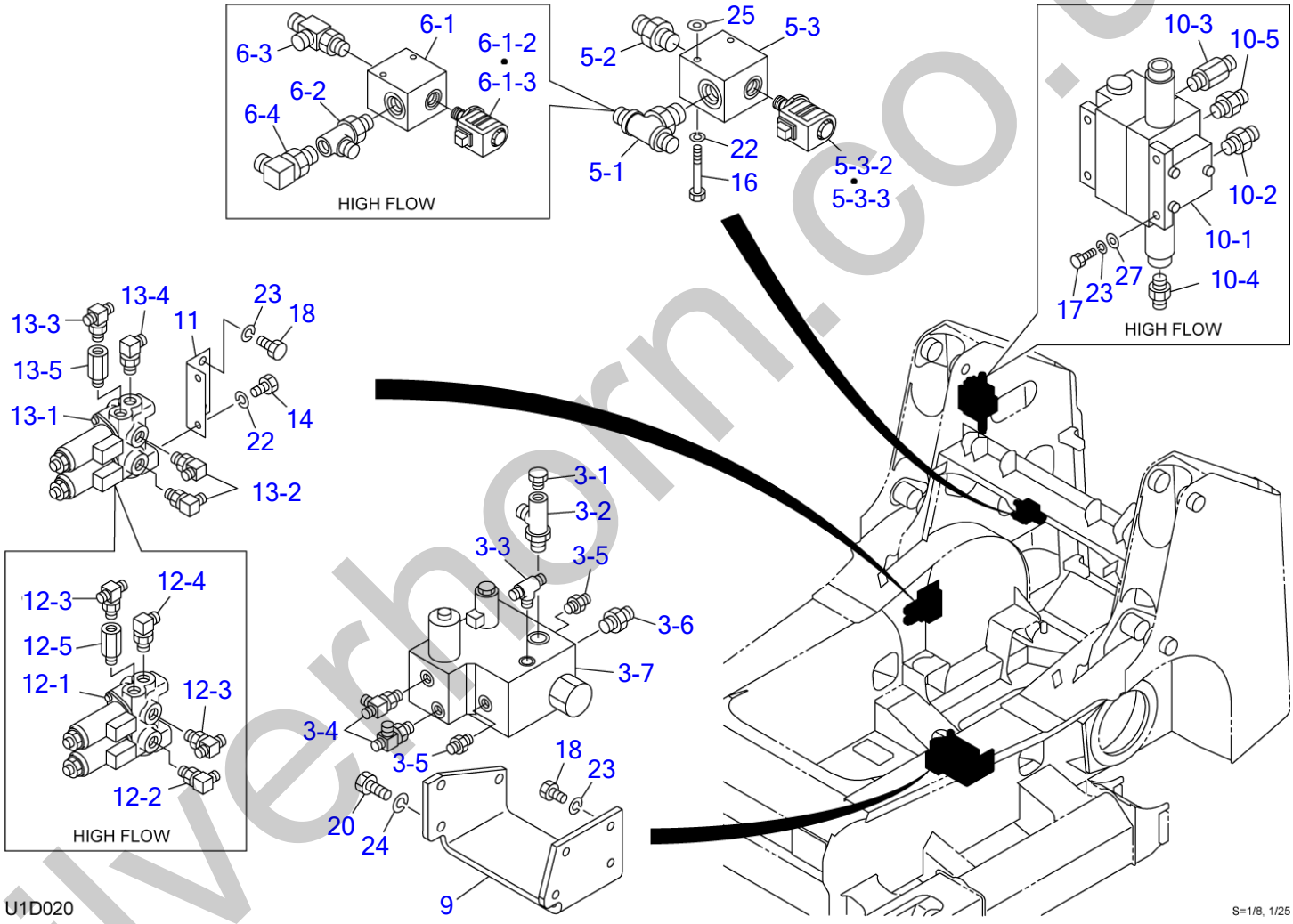

silverhorn.co.uk

VALVE & ACCESSORIES (2/2) (for GEHL & MUSTANG)

Item	Part number	Description	Q'ty	Chan.	Serial No.	Serv.	Remarks
18	**1100041020**	BOLT	6				
20	**1100041225**	BOLT	3				
22	**1140020008**	WASHER, spring	4				
23	**1140020010**	WASHER, spring	6				
23	**1140020010**	WASHER, spring	9				high flow
24	**1140020012**	WASHER, spring	3				
25	**1141110008**	WASHER	2				
27	**0003600020**	WASHER	3				high flow
	U1d110						

silverhorn.co.uk

PIPING (1/2)

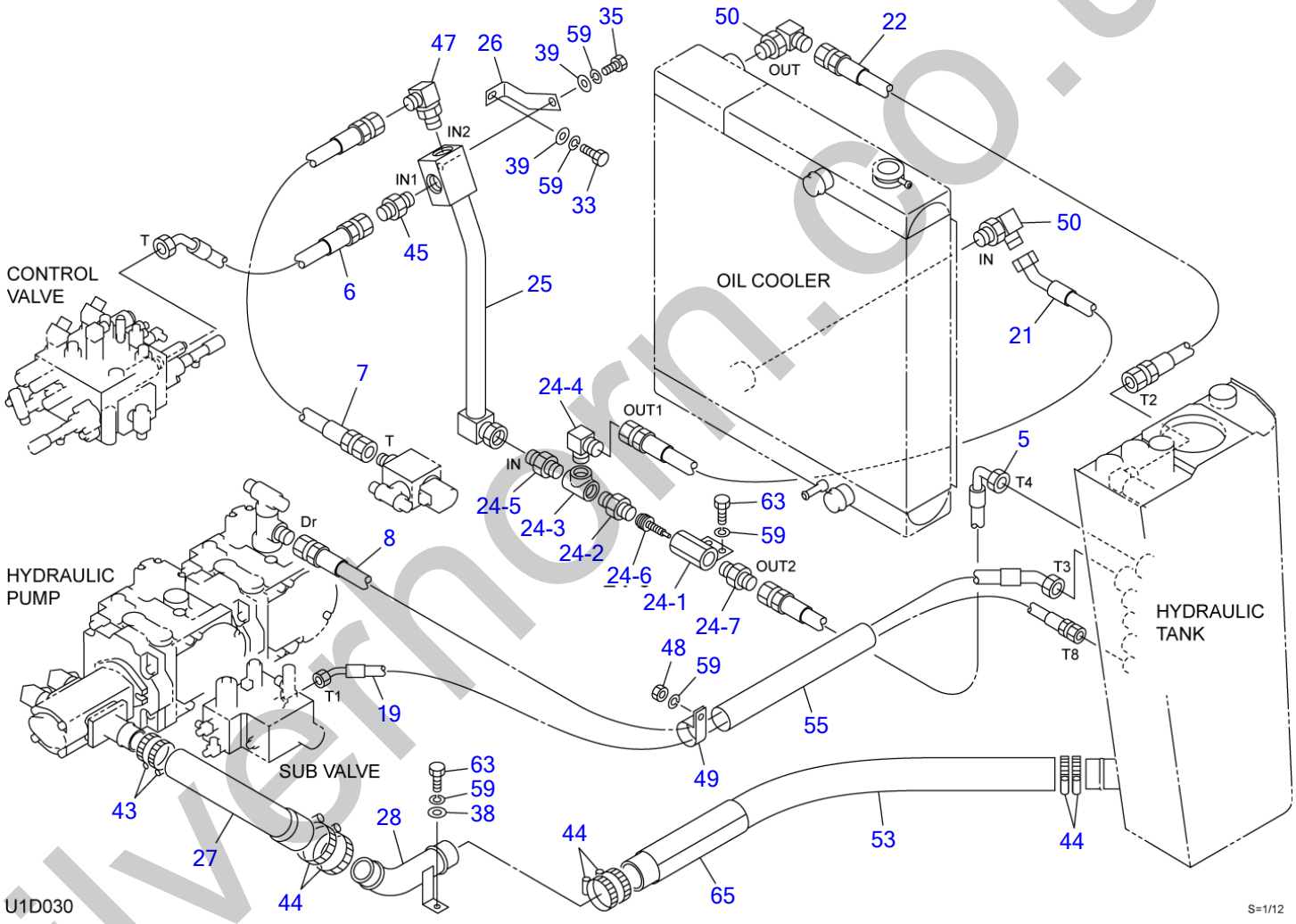

silverhorn.co.uk

PIPING (1/2)

Item	Part number	Description	Q'ty	Chan.	Serial No.	Serv.	Remarks
		PIPING ASSY, upper					
		PIPING ASSY, upper (for EU)					
5	0667001050	HOSE ASSY	1				18010-56086
6	0667000060	HOSE ASSY	1				
7	0667001070	HOSE ASSY	1				19346-26070
8	0667000080	HOSE ASSY	1				18010-26116
19	0667000190	HOSE ASSY	1				18010-79135
21	0667000210	HOSE ASSY	1				
22	0667000220	HOSE ASSY	1				
24	X **********	MANIFOLD ASSY	1				
24-1	0667001241	・JOINT	1				
24-2	1501501006	・ADAPTOR	1				
24-3	1508210006	・TEE	1				
24-4	1511151006	・ADAPTOR	1				
24-5	1511051006	・ADAPTOR	1				
24-6	1540140830	・VALVE, check	1				
24-7	1515600203	・ADAPTOR	1				
	1420010240	・・O-RING	1				
25	0667000250	PIPE	1				
26	0667001260	BRACKET	1				
27	0880705270	HOSE	1				
28	0880705280	PIPE	1				
33	1100041025	BOLT	1				
35	1100041030	BOLT	1				
38	1141110010	WASHER	2				
39	0003600025	WASHER	2				
43	1533700060	BAND	2				
44	1533700070	BAND	6				
45	1515600579	ADAPTOR	1				
47	1515010053	ELBOW	1				
	1420010290	・O-RING	1				
48	1130040010	NUT	1				
49	0007300030	CLAMP	1				
	1420010290	・O-RING	1				
50	1515010044	ELBOW	2				
	1420010290	・O-RING	1				
53	0880707530	HOSE	1				
55	1531350040	PROTECTOR	1				sold by the meter
59	1140020010	WASHER, spring	7				
63	1100041020	BOLT	4				
65	0881701670	PROTECTOR	1				
	U1d031						

silverthorn.co.uk

PIPING (2/2)

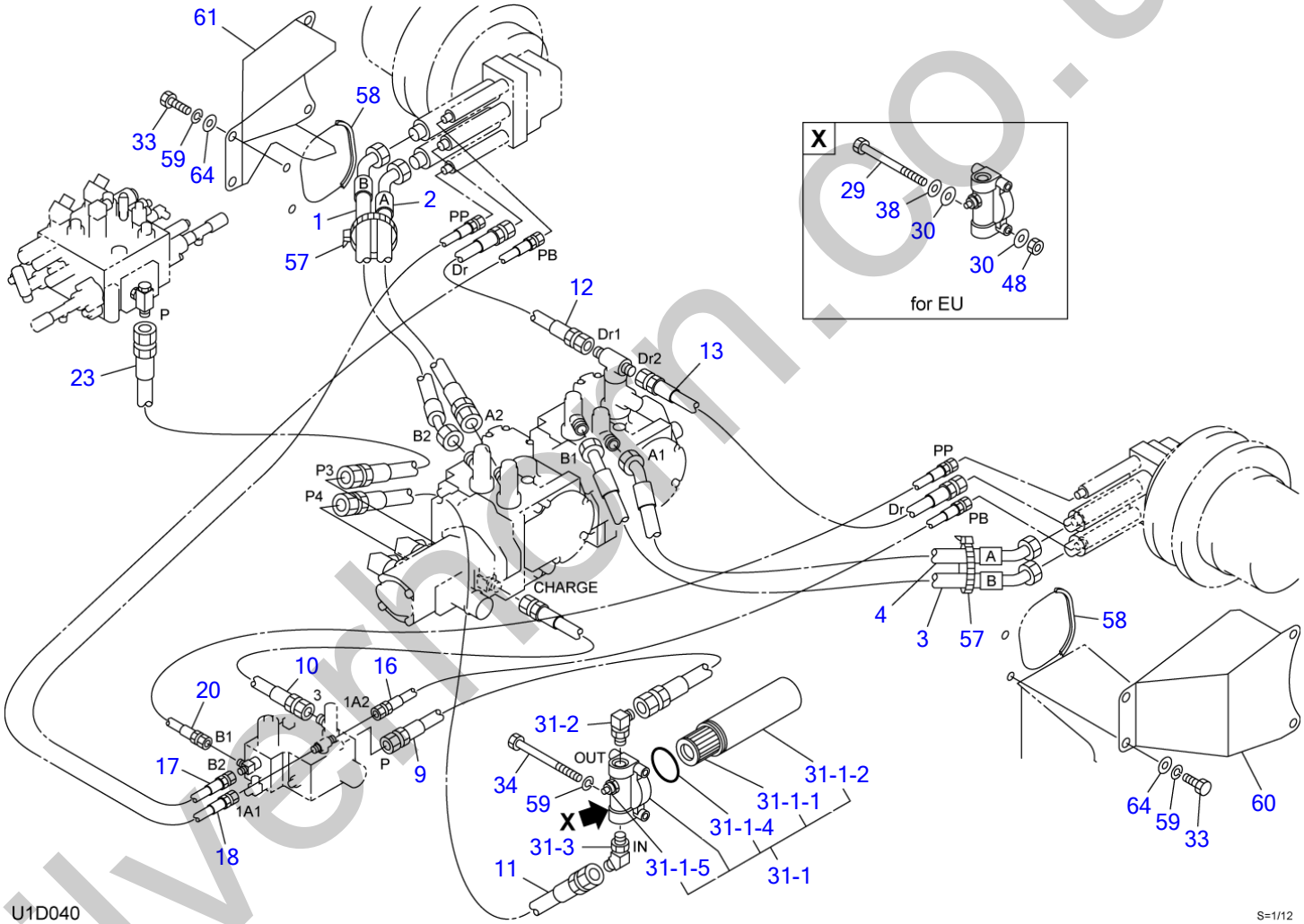

silverhorn.co.uk

PIPING (2/2)

Item	Part number	Description	Q'ty	Chan.	Serial No.	Serv.	Remarks
		PIPING ASSY, upper					
		PIPING ASSY, upper (for EU)					
1	0880707015	HOSE ASSY	1				
2	0880707020	HOSE ASSY	1				
3	0880707030	HOSE ASSY	1				
4	0880707040	HOSE ASSY	1				
9	0880707090	HOSE ASSY	1				
10	0880707100	HOSE ASSY	1				
11	0880707110	HOSE ASSY	1				
12	0880707120	HOSE ASSY	1				18010-23054
13	0880707130	HOSE ASSY	1				18010-23064
16	0667000160	HOSE ASSY	1				18010-22055
17	0880707170	HOSE ASSY	1				
18	0880707180	HOSE ASSY	1				
20	0880707200	HOSE ASSY	1				
23	0880707230	HOSE ASSY	1				
29	1100141005	BOLT	2				for EU
30	0882702480	RUBBER	4				for EU
31	X **********	FILTER ASSY	1				
31-1	1551102500	・FILTER, line	1				
31-1-1	1551101001	・・ELEMENT	1				
31-1-2	1551101003	・・CASE	1				
31-1-4	1420100600	・・O-RING	1				
31-1-5	1551102505	・・SWITCH, pressure	1				
31-2	1515010042	・ELBOW	1				
	1420010180	・・O-RING	1				
31-3	1515100112	・ELBOW	1				
	1420010180	・・O-RING	1				
33	1100041025	BOLT	8				
34	1100041095	BOLT	2				
38	1141110010	WASHER	2				for EU
48	1130040010	NUT	2				for EU
57	1652241300	BAND	2				
58	1654601019	TRIM	2				sold by the meter
59	1140020010	WASHER, spring	10				
	1140020010	WASHER, spring	8				for EU
60	0880707600	COVER (L.H.)	1				
61	0880707610	COVER (R.H.)	1				
64	0003600020	WASHER	8				
	U1d041						

silverhorn.co.uk

PIPING (1/2) (high flow)

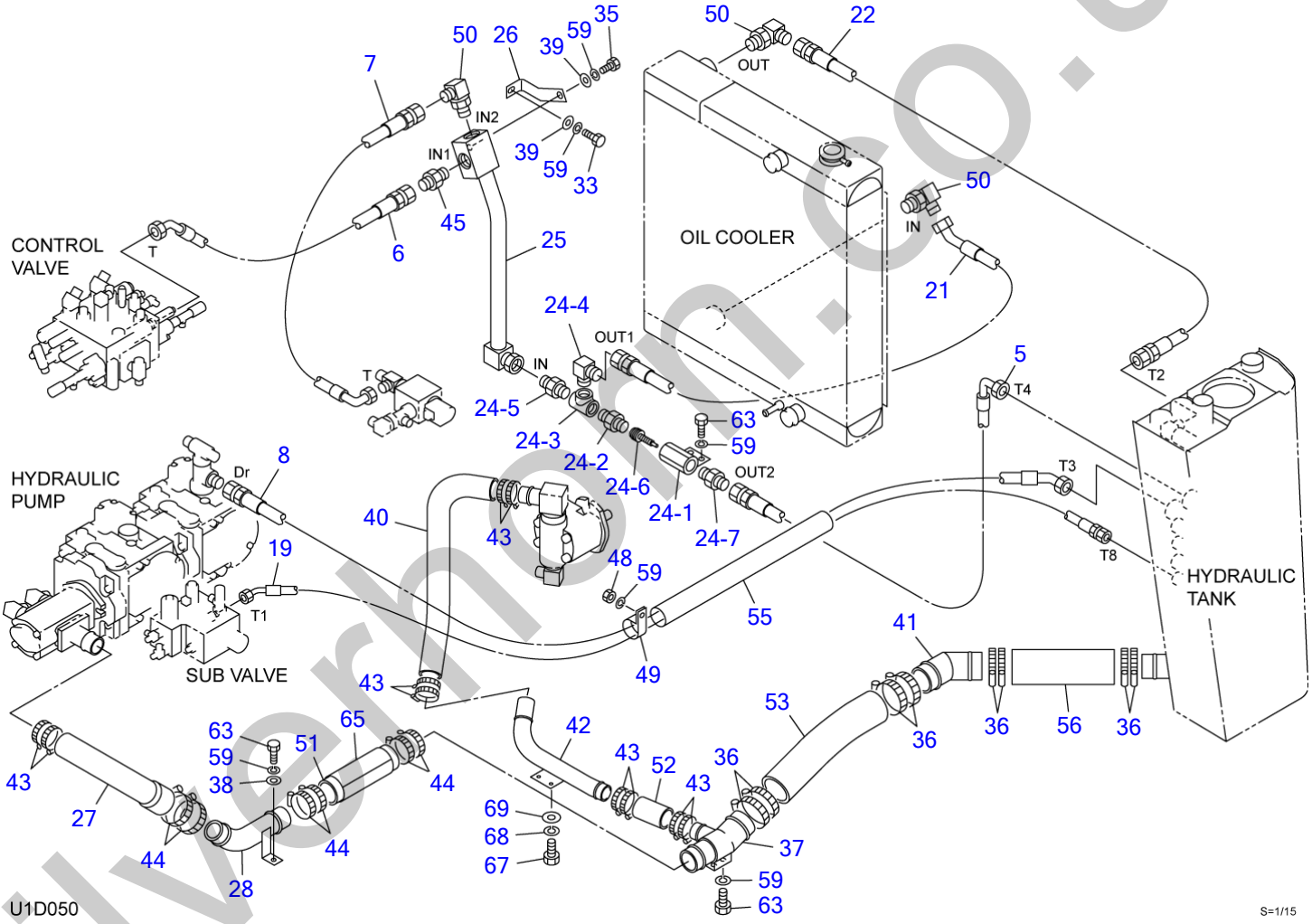

silvermoon.co.uk

PIPING (1/2) (high flow)

Item	Part number	Description	Q'ty	Chan.	Serial No.	Serv.	Remarks
		PIPING ASSY, upper					
		PIPING ASSY, upper (for EU)					
5	0667001050	HOSE ASSY	1				18010-56086
6	0667000060	HOSE ASSY	1				
7	0667000070	HOSE ASSY	1				
8	0667000080	HOSE ASSY	1				18010-26116
19	0667000190	HOSE ASSY	1				18010-79135
21	0667000210	HOSE ASSY	1				
22	0667000220	HOSE ASSY	1				
24	X **********	MANIFOLD ASSY	1				
24-1	0667001241	・JOINT	1				
24-2	1501501006	・ADAPTOR	1				
24-3	1508210006	・TEE	1				
24-4	1511151006	・ADAPTOR	1				
24-5	1511051006	・ADAPTOR	1				
24-6	1540140830	・VALVE, check	1				
24-7	1515600203	・ADAPTOR	1				
	1420010240	・・O-RING	1				
25	0667000250	PIPE	1				
26	0667001260	BRACKET	1				
27	0880705270	HOSE	1				
28	0880705280	PIPE	1				
33	1100041025	BOLT	1				
35	1100041030	BOLT	1				
36	1533700090	BAND	8				
37	0667003370	PIPE	1				
38	1141110010	WASHER	2				
39	0003600025	WASHER	2				
40	0880709600	HOSE	1				
41	0667000410	PIPE	1				
42	0880709610	PIPE	1				
43	1533700060	BAND	10				
44	1533700070	BAND	6				
45	1515600579	ADAPTOR	1				
48	1130040010	NUT	1				
49	0007300030	CLAMP	1				
50	1515010044	ELBOW	3				
	1420010290	・O-RING	1				
51	0880735090	HOSE	1				
52	1530538011	HOSE	1				sold by the meter
53	0880708240	HOSE	1				
55	1531350040	PROTECTOR	1				sold by the meter
56	0880708250	HOSE	1				
59	1140020010	WASHER, spring	9				
63	1100041020	BOLT	6				
65	0881701670	PROTECTOR	1				
67	1100040816	BOLT	2				
68	1140020008	WASHER, spring	2				
69	0003608003	WASHER	2				
	U1d051						

silvermorn.co.uk

PIPING (2/2) (high flow)

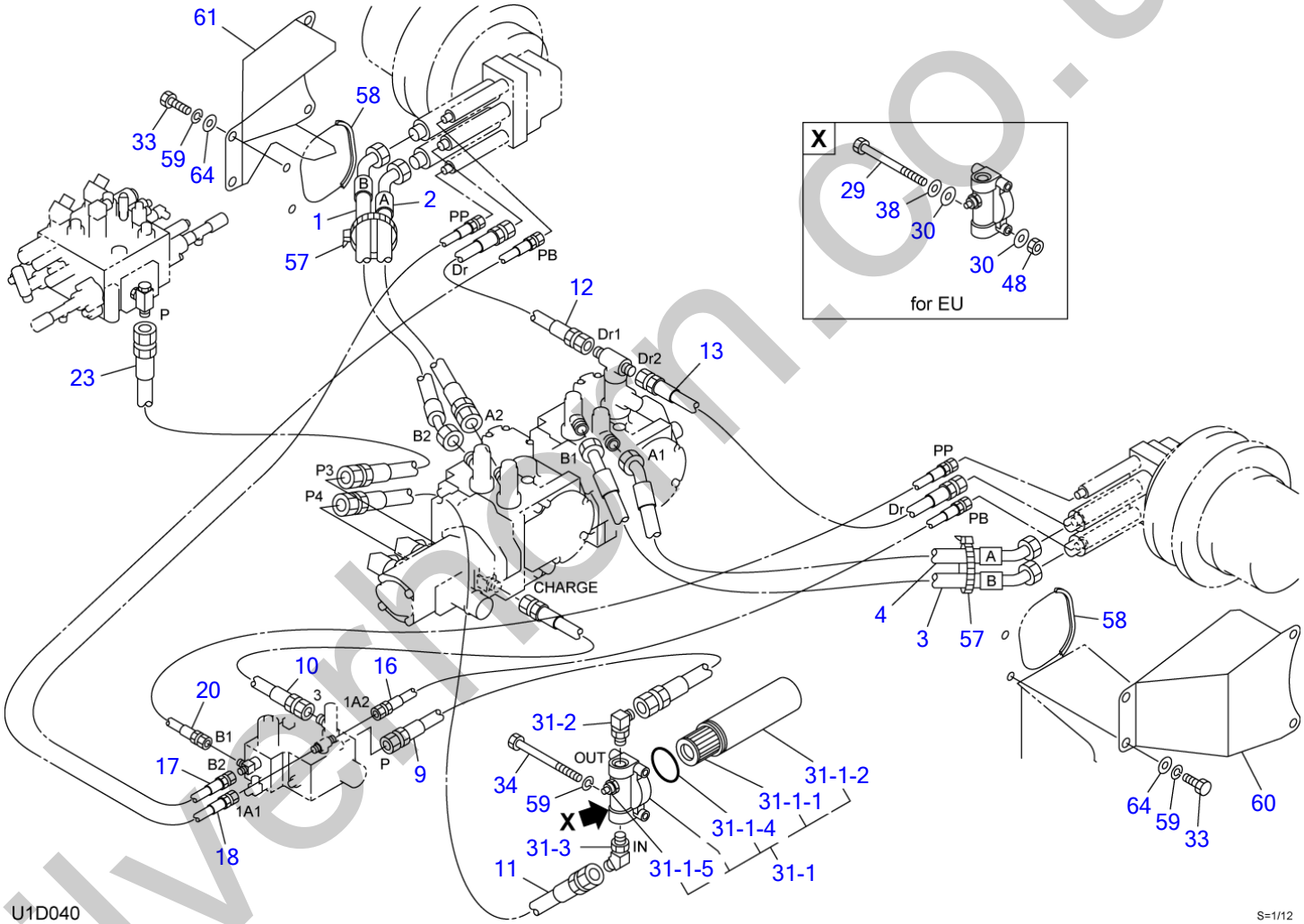

silverhorn.co.uk

PIPING (2/2) (high flow)

Item	Part number	Description	Q'ty	Chan.	Serial No.	Serv.	Remarks
		PIPING ASSY, upper					
		PIPING ASSY, upper (for EU)					
1	0880707015	HOSE ASSY	1				
2	0880707020	HOSE ASSY	1				
3	0880707030	HOSE ASSY	1				
4	0880707040	HOSE ASSY	1				
9	0880707090	HOSE ASSY	1				
10	0880707100	HOSE ASSY	1				
11	0880707110	HOSE ASSY	1				
12	0880707120	HOSE ASSY	1				18010-23054
13	0880707130	HOSE ASSY	1				18010-23064
16	0667000160	HOSE ASSY	1				18010-22055
17	0880707170	HOSE ASSY	1				
18	0880707180	HOSE ASSY	1				
20	0880707200	HOSE ASSY	1				
23	0880707230	HOSE ASSY	1				
29	1100141005	BOLT	2				for EU
30	0882702480	RUBBER	4				for EU
31	X **********	FILTER ASSY	1				
31-1	1551102500	・FILTER, line	1				
31-1-1	1551101001	・・ELEMENT	1				
31-1-2	1551101003	・・CASE	1				
31-1-4	1420100600	・・O-RING	1				
31-1-5	1551102505	・・SWITCH, pressure	1				
31-2	1515010042	・ELBOW	1				
	1420010180	・・O-RING	1				
31-3	1515100112	・ELBOW	1				
	1420010180	・・O-RING	1				
33	1100041025	BOLT	8				
34	1100041095	BOLT	2				
38	1141110010	WASHER	2				for EU
48	1130040010	NUT	2				for EU
57	1652241300	BAND	2				
58	1654601019	TRIM	2				sold by the meter
59	1140020010	WASHER, spring	10				
	1140020010	WASHER, spring	8				for EU
60	0880707600	COVER (L.H.)	1				
61	0880707610	COVER (R.H.)	1				
64	0003600020	WASHER	8				
	U1d061						

silverhorn.co.uk

PUMP DRIVE

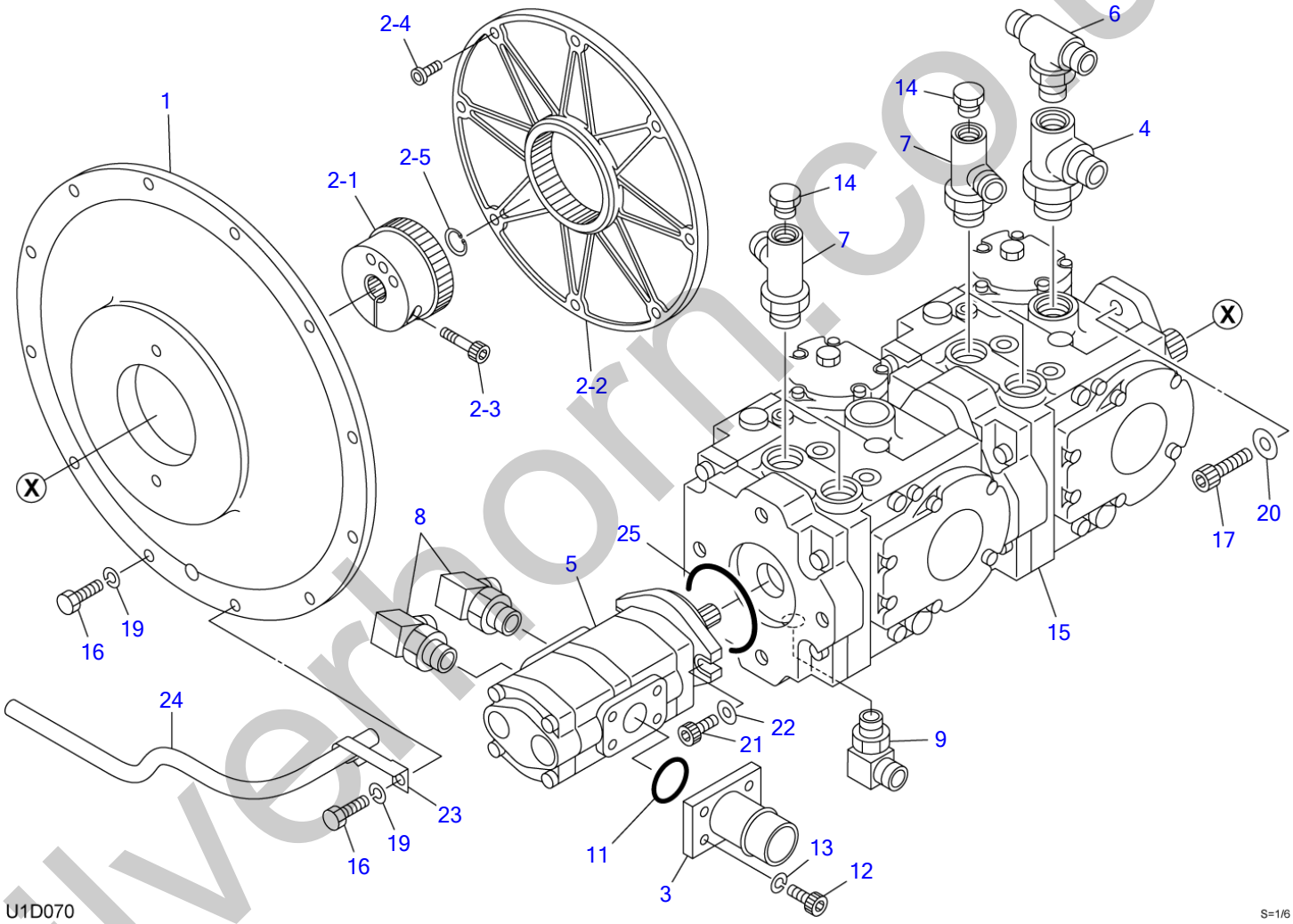

silverhorn.co.uk

PUMP DRIVE

Item	Part number	Description	Q'ty	Chan.	Serial No.	Serv.	Remarks
		PUMP ASSY, drive					
1	0880523150	HOUSING	1				
2	1607000070	COUPLING ASSY	1				
2-1	1607000071	・HUB	1				
2-2	1607000072	・FLANGE	1				
2-3	1110021235	・SCREW, cap	1				
2-4	1106641025	・BOLT	8				
2-5	1221000023	・RING, snap	1				
3	0880523200	FLANGE	1				
4	0880522500	TEE	1				
	1420310912	・O-RING	1				
5	1902017900	PUMP, gear	1				
6	1512374014	TEE	1				
	1420010180	・O-RING	1				
7	0881521300	TEE	4				
	1420310912	・O-RING	1				
8	1515010042	ELBOW	2				
	1420010180	・O-RING	1				
9	1515200062	ELBOW	1				
	1420370910	・O-RING	1				
11	1420100400	O-RING	1				
12	1111041025	SCREW, cap	4				
13	1140420010	WASHER, spring	4				
14	1501750002	PLUG	4				
	1420010110	・O-RING	1				
15	1902020200	PUMP, hydraulic	1				
16	1100041030	BOLT	12				
17	1102720838	SCREW, cap	2				
19	1140020010	WASHER, spring	12				
20	1141450008	WASHER	2				
21	1102240632	SCREW, cap	2				
22	0003900039	WASHER	2				
23	0881521010	CLAMP	1				
24	1531010065	HOSE	1				sold by the meter
	U1d070						

silverhorn.co.uk

GEAR PUMP DRIVE (high flow)

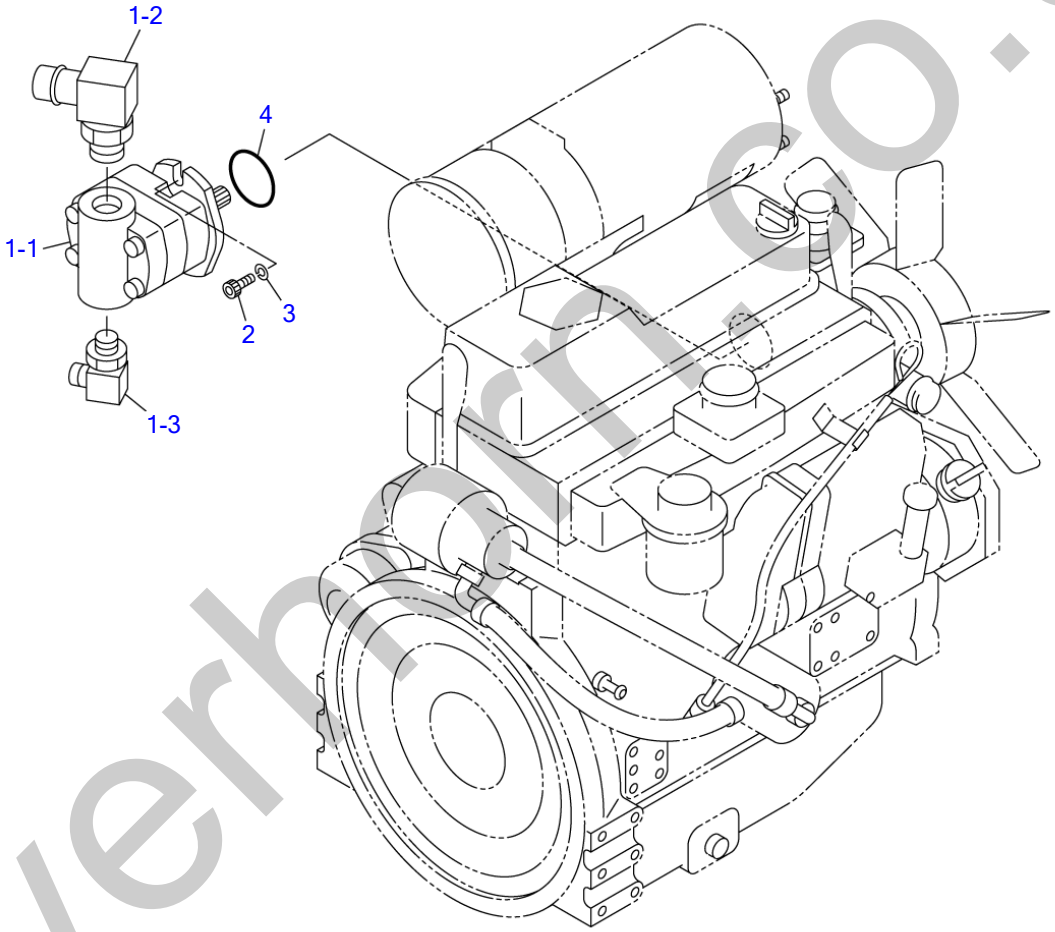

T8D140

S=1/8

silverhorn.co.uk

GEAR PUMP DRIVE (high flow)

Item	Part number	Description	Q'ty	Chan.	Serial No.	Serv.	Remarks
		PUMP ASSY					
1	X **********	PUMP ASSY, gear	1				
1-1	1902021100	・PUMP, gear	1				
1-2	0881732082	・ELBOW	1				
	1420010290	・・O-RING	1				
1-3	1515010042	・ELBOW	1				
	1420010180	・・O-RING	1				
2	1110041030	BOLT	2				
3	1141550010	WASHER	2				
4	1420110850	O-RING	1				
	T8d141						

silverhorn.co.uk

HYDRAULIC TANK

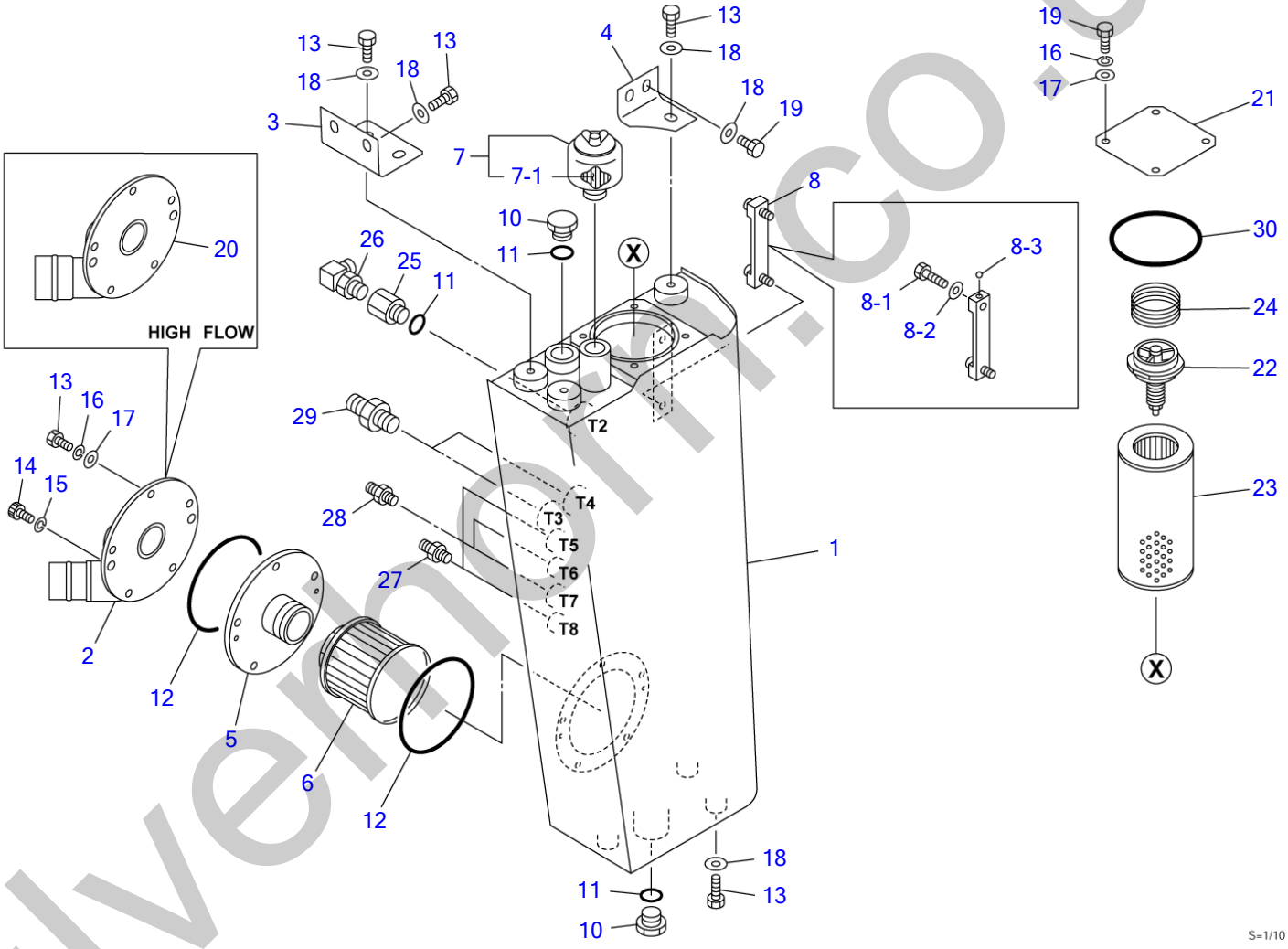

silvermoor.co.uk

HYDRAULIC TANK

Item	Part number	Description	Q'ty	Chan.	Serial No.	Serv.	Remarks
		TANK ASSY, hydraulic					
		TANK ASSY, hydraulic (high flow)					
1	0668001100	TANK, hydraulic	1				
2	0880803300	PIPE	1				
3	0880804200	BRACKET	1				
4	0668001040	BRACKET	1				
5	0880804300	FLANGE	1				
6	1550020150	FILTER	1				
7	1552000800	BREATHER, air	1				
7-1	1552000830	・ELEMENT	1				
8	1553020612	GAUGE	1				
8-1	1553021650	・BOLT	2				
8-2	1553022650	・PACKING	2				
8-3	1553020603	・FLOAT	1				
10	1501750010	PLUG	2				
	1420010290	* O-RING	1				
11	1420010290	O-RING	2				
12	1420101450	O-RING	2				
13	1100041025	BOLT	13				
14	1110040616	SCREW, cap	2				
15	1140020006	WASHER, spring	2				
16	1140020010	WASHER, spring	9				
17	1141110010	WASHER	9				
18	0003600025	WASHER	10				
19	1100041020	BOLT	6				
20	0668002100	PIPE	1				high flow
21	0658000600	PLATE	1				
22	1551100300	VALVE ASSY	1				
23	1551102600	FILTER	1				
24	0007000031	SPRING	1				
25	0007213051	BUSHING	1				
26	1515010044	ELBOW	1				
	1420010290	・O-RING	1				
27	1515600200	ADAPTOR	2				
	1420010110	・O-RING	1				
28	1515600201	ADAPTOR	2				
	1420010140	・O-RING	1				
29	1515600203	ADAPTOR	2				
	1420010240	・O-RING	1				
30	1420101250	O-RING	1				
	U1d082						

silverthorn.co.uk

FUEL TANK & FUEL PIPING

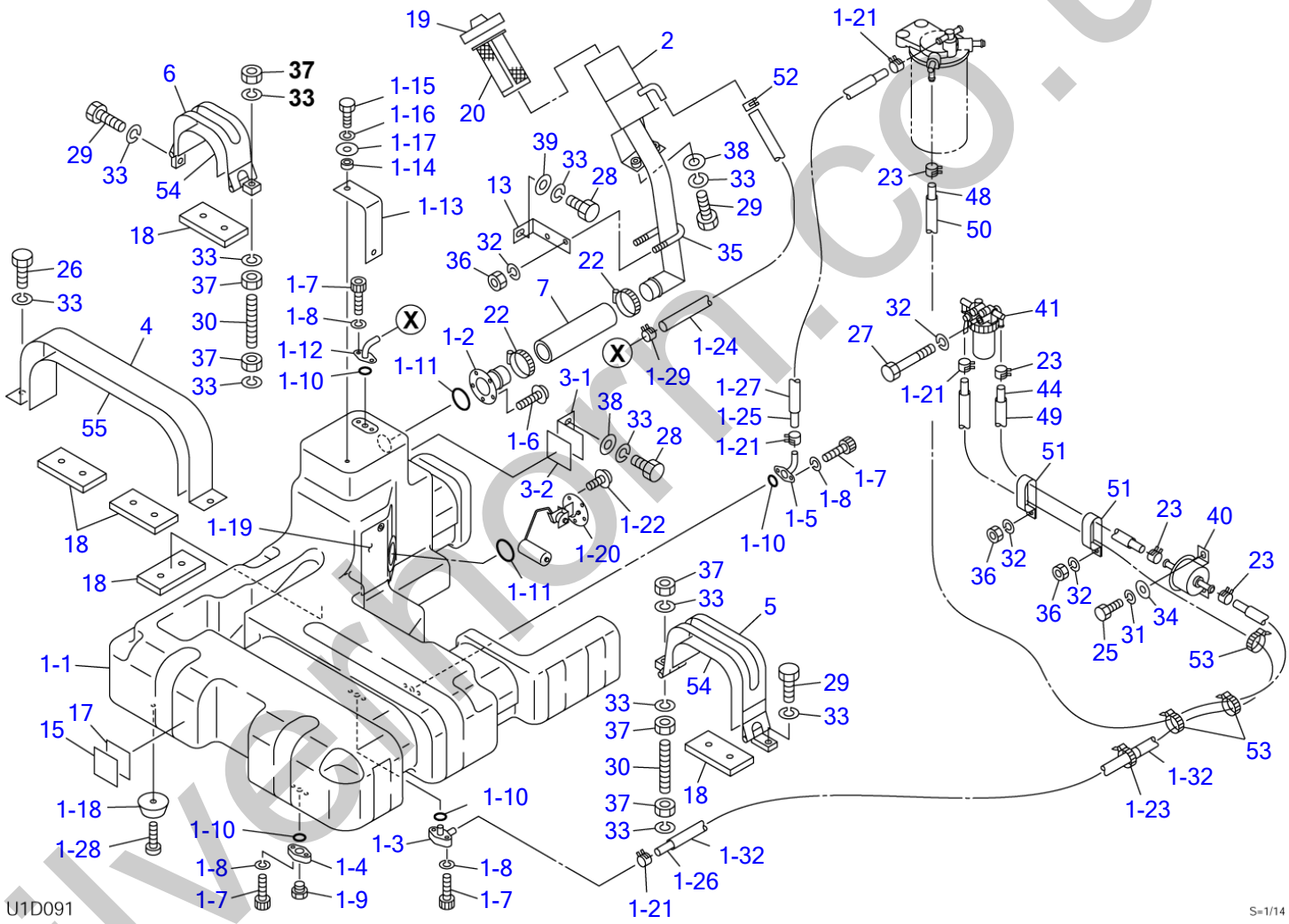

silvermorn.co.uk

FUEL TANK & FUEL PIPING

Item	Part number	Description	Q'ty	Chan.	Serial No.	Serv.	Remarks
		TANK ASSY, fuel					
1	X **********	TANK SUB ASSY, fuel	1		223000001~223000008		
	X **********	TANK SUB ASSY, fuel	1		223000009~	M	
1-1	0880813010	・TANK, fuel	1				
1-2	0881811090	・FLANGE	1				
1-3	0881811100	・FLANGE	1				
1-4	0881811110	・VALVE, drain	1				
1-5	0881811120	・FLANGE	1				
1-6	1150110516	・SCREW	5				
1-7	1110040616	・SCREW, cap	8				
1-8	1140420006	・WASHER, spring	8				
1-9	1501750002	・PLUG	1				
	1420010110	・・O-RING	1				
1-10	1420010180	・O-RING	4				
1-11	1420010450	・O-RING	2				
1-12	0881811510	・FLANGE	1				
1-13	0881711350	・BAND	1				
1-14	0881711360	・COLLAR	1				
1-15	1100040620	・BOLT	1				
1-16	1140020006	・WASHER, spring	1				
1-17	0003600043	・WASHER	1				
1-18	0881812080	・RUBBER, cushion	4				
1-19	0880814090	・SHEET	1		223000001~223000008		
1-20	1553202100	・SENDER, fuel	1				
1-21	1533120511	・BAND	4				
1-22	1150110510	・SCREW	5				
1-23	1652201008	・BAND	1				
1-24	1530612063	・HOSE	1				sold by the meter
1-25	1531207160	・HOSE	1				sold by the meter
1-26	1531207320	・HOSE	1				sold by the meter
1-27	1531115150	・PROTECTOR	1				sold by the meter
1-28	1120530620	・SCREW	4				
1-29	1533700019	・BAND	1				
1-32	1531115158	・PROTECTOR	2				sold by the meter
2	0668101200	PORT, supply	1				
3	X **********	PLATE ASSY	1				
3-1	0880814031	・PLATE	1				
3-2	0880814170	・RUBBER	1				
4	0880813095	PLATE	1				
5	0880813050	BAND	1				
6	0880813060	BAND	1				
7	0880813070	HOSE	1				
13	0880814130	PLATE	1				
15	0880814175	RUBBER	1				t=2.0mm
17	0880814170	RUBBER	1				t=5.0mm
18	0880813180	RUBBER	5				
19	1552100500	CAP	1				
20	1552100320	STRAINER	1				
22	1533700060	BAND	2				
23	1533120511	BAND	4				
25	1100040616	BOLT	2				
26	1100041030	BOLT	2				
27	1100040865	BOLT	1				
28	1100041020	BOLT	3				
29	1100041025	BOLT	4				
30	0881812300	BOLT	2				
31	1140020006	WASHER, spring	2				
32	1140020008	WASHER, spring	6				
33	1140020010	WASHER, spring	15				
34	1141110006	WASHER	2				
35	1533201012	U-BOLT	1				
36	1130040008	NUT	5				
37	1130040010	NUT	6				
38	0003600025	WASHER	4				
39	1141110010	WASHER	1				
40	1910199034	PUMP, feed	1				Y129612-52100
41	1910186033	SEPARATOR, water	1				Y129906-55700
44	1531207078	HOSE	1				sold by the meter

silverthorn.co.uk

FUEL TANK & FUEL PIPING

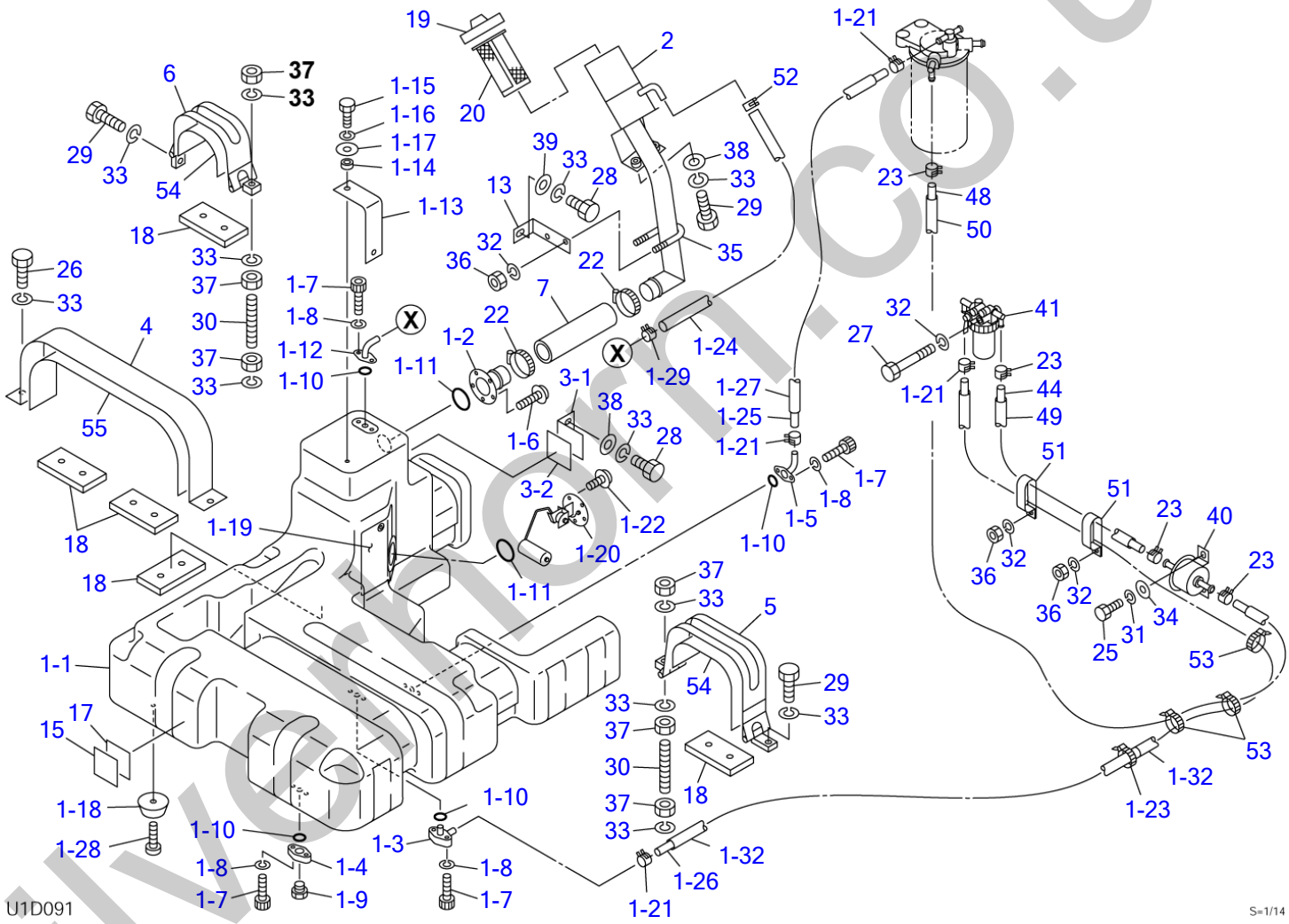

silvermorn.co.uk

FUEL TANK & FUEL PIPING

Item	Part number	Description	Q'ty	Chan.	Serial No.	Serv.	Remarks
48	1531207140	HOSE	1			M	sold by the meter
49	1531115068	PROTECTOR	1				sold by the meter
50	1531115130	PROTECTOR	1			M	sold by the meter
51	0007300013	CLAMP	2				
52	1533700019	BAND	1				
53	1652231250	BAND	3				
54	0881812140	RUBBER	2				
55	0880814160	RUBBER	1				
	U1d091						

silverhorn.co.uk

COVER (1/3)

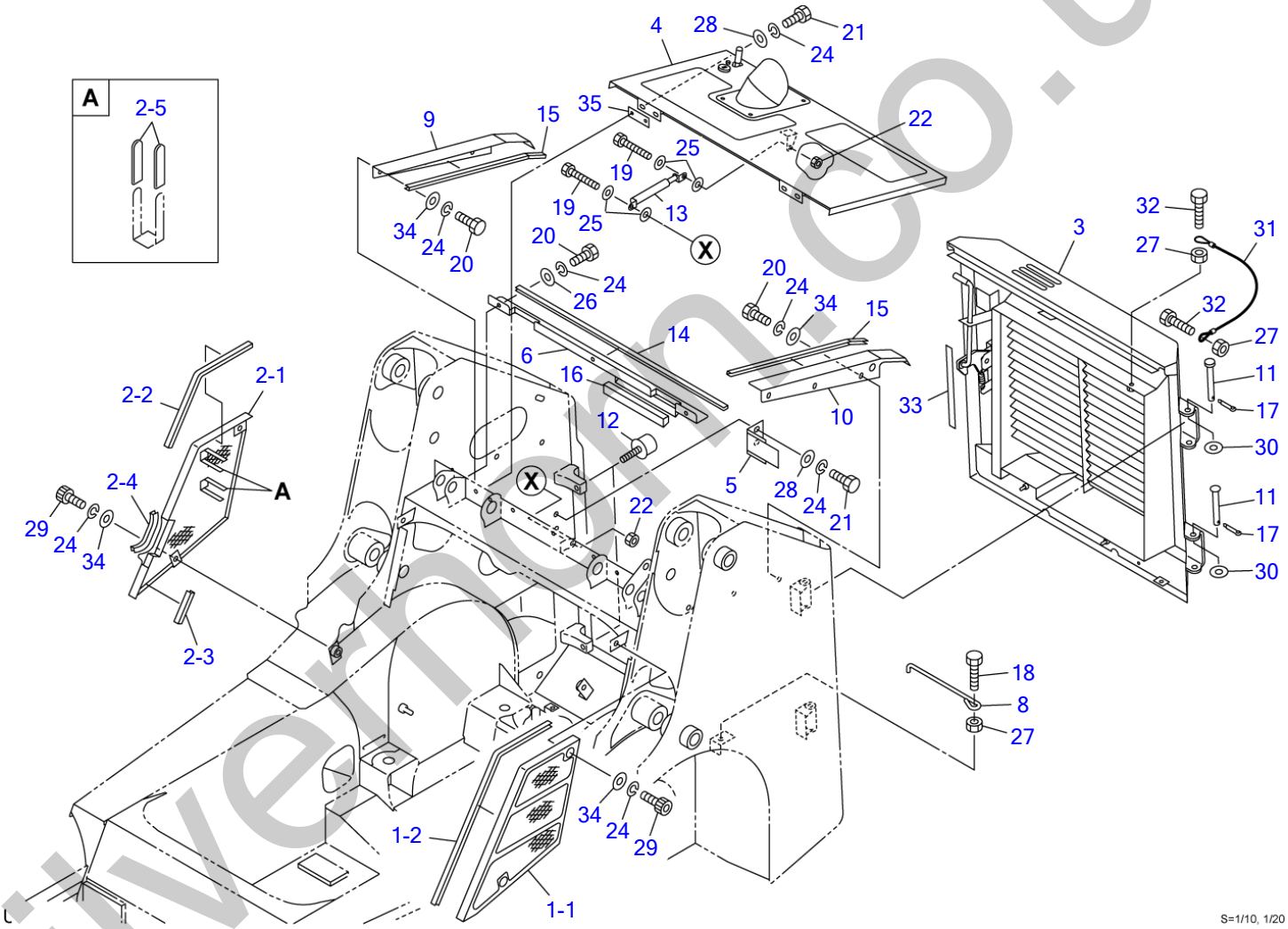

silvermern.co.uk

COVER (1/3)

Item	Part number	Description	Q'ty	Chan.	Serial No.	Serv.	Remarks
		COVER ASSY					
1	0668201100	COVER ASSY, side(L.H.)	1				
1-1	0668201110	・COVER, side(L.H.)	1				
1-2	1654520070	・TRIM	1				sold by the meter
2	0668201200	COVER ASSY, side(R.H.)	1				
2-1	0668201210	・COVER, side(R.H.)	1				
2-2	1654520046	・TRIM	1				sold by the meter
2-3	1654520009	・TRIM	1				sold by the meter
2-4	1653916016	・TRIM	1				sold by the meter
2-5	0872433150	・TUBE	4				
3	0668201300	DOOR ASSY, rear	1				see page (2/3)
4	0668201500	HOOD, engine	1				see page (3/3)
5	0668200050	BRACKET	1				
6	0880826560	TABLE	1				
8	0658200110	ROD	1				
9	0880824820	PLATE(R.H.)	1				
10	0880824830	PLATE(L.H.)	1				
11	0881822020	PIN	2				
12	1651101050	STOPPER	2				
13	1653900057	SPRING, gas	1				
14	1654623088	TRIM	1				sold by the meter
15	1654623056	TRIM	2				sold by the meter
16	1654613028	SPONGE	1				sold by the meter
17	1210010425	PIN, split	2				
18	1100041035	BOLT	1				
19	1100040825	BOLT	2				
20	1100041020	BOLT	9				
21	1100041025	BOLT	6				
22	1130040008	NUT	2				
24	1140020010	WASHER, spring	19				
25	1141110008	WASHER	4				
26	1141110010	WASHER	3				
27	1130040010	NUT	3				
28	0003600025	WASHER	6				
29	1110041020	SCREW, cap	4				
30	1141110016	WASHER	AR				
31	1929900437	ROPE	1				
32	1100241050	BOLT	2				
33	0881823034	RUBBER	1				
34	0003600020	WASHER	10				
35	0003900040	SPACER	AR				t=1.6mm
	0003900041	SPACER	AR				t=2.3mm
	U1e011						

silverthorn.co.uk

COVER (2/3) REAR DOOR

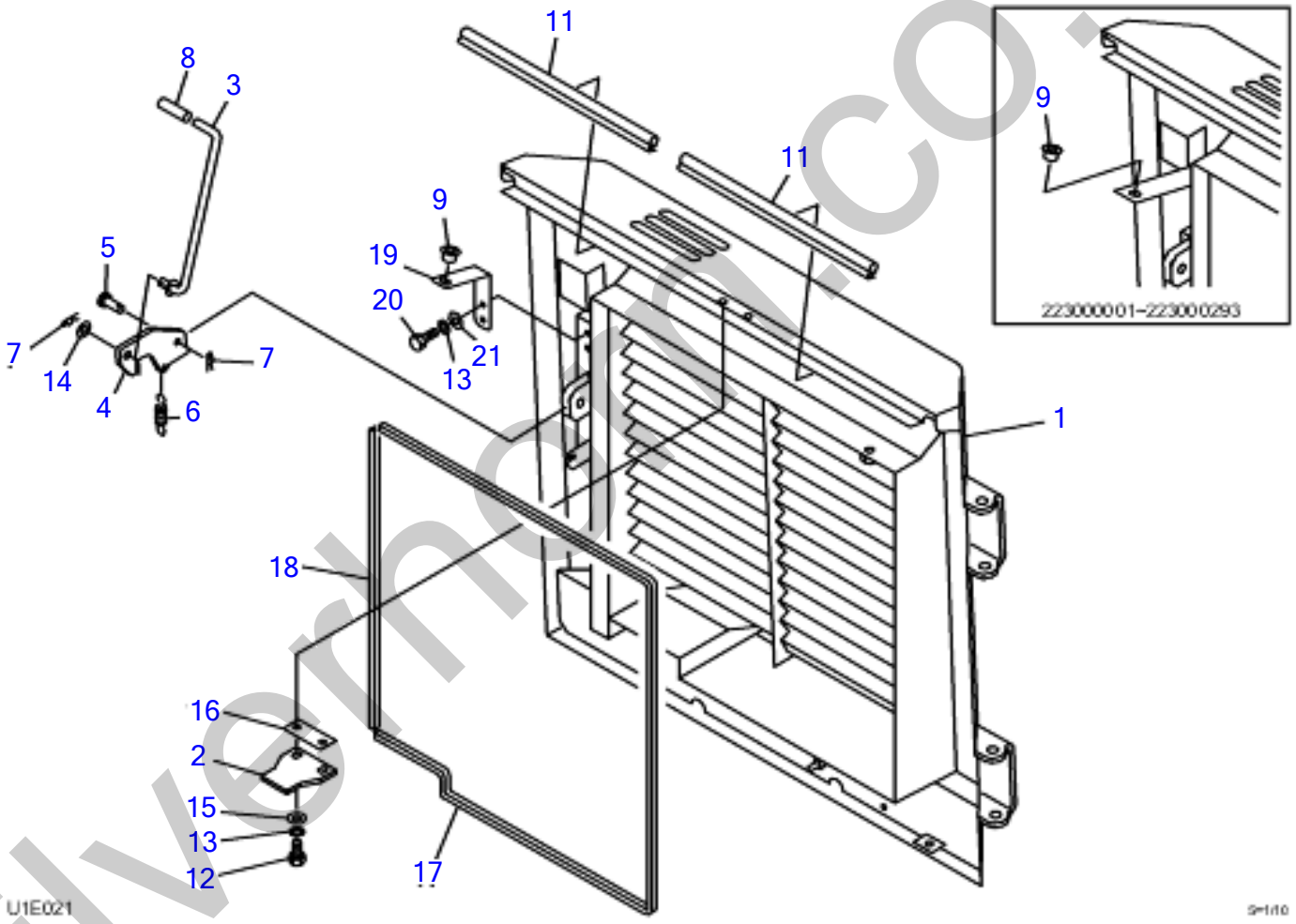

silverhill.co.uk

COVER (2/3) REAR DOOR

Item	Part number	Description	Q'ty	Chan.	Serial No.	Serv.	Remarks
		COVER (2/3) REAR DOOR					
0-1	0668201500	REAR DOOR ASSY	1				
1	0668201600	* REAR DOOR	1				
2	0880825650	* STRIKER	1				
3	0880826150	* ROD	1				
4	0880826160	* PLATE	1				
	0668201540	* PLATE	1				
5	0004015002	* PIN	1				
6	0007000112	* SPRING	1				
7	1214000012	* SNAP PIN	2				
8	1650202300	* CAP	1				
9	1652615200	* BUSHING	1				
11	1654605041	* TRIM	2				
12	1100040825	* BOLT	2				
13	1140020008	* SPRING WASHER	4				
14	1141110012	* WASHER	1				
15	0003608252	* WASHER	2				
16	0003900037	* SPACER					
17	1654606189	* TRIM	1				
18	1654605058	* TRIM	1				
19	0698201122	* PLATE	1				
20	1100040820	* BOLT	2				
21	1141110008	* WASHER	2				
	U1E022						

silverhorn.co.uk

COVER (3/3) (engine hood)

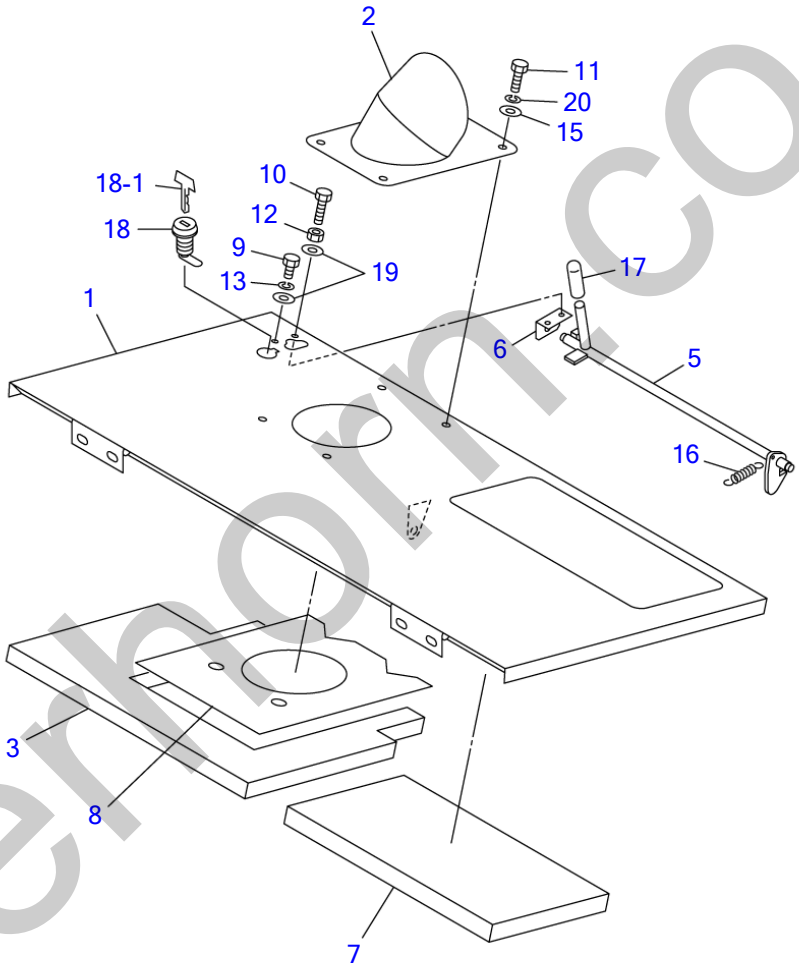

U1E031

S=1/10

silverhorn.co.uk

COVER (3/3) (engine hood)

Item	Part number	Description	Q'ty	Chan.	Serial No.	Serv.	Remarks
0-2	0668201300	HOOD ASSY, engine	1			M	
1	0668201310	・HOOD, engine	1				
2	0880825710	・NOZZLE	1				
3	0880825706	・ABSORBENT, noise	1			M	
5	0880823660	・LEVER	1				
6	0880820080	・ANGLE	1				
7	0668201370	・ABSORBENT, noise	1				
8	0880825708	・INSULATOR	1			M	
9	1100040612	・BOLT	1				
10	1100040620	・BOLT	1				
11	1100040816	・BOLT	4				
12	1130040006	・NUT	1				
13	1140020006	・WASHER, spring	1				
15	0003608252	・WASHER	4				
16	0007000070	・SPRING	1				
17	1650202300	・CAP	1				
18	1653601395	・LOCK	1				
18-1	1700100019	・KEY	1				
19	1141110006	・WASHER	2				
20	1140020008	・WASHER, spring	4				
	U1e031						

silverhorn.co.uk

FLOOR FRAME

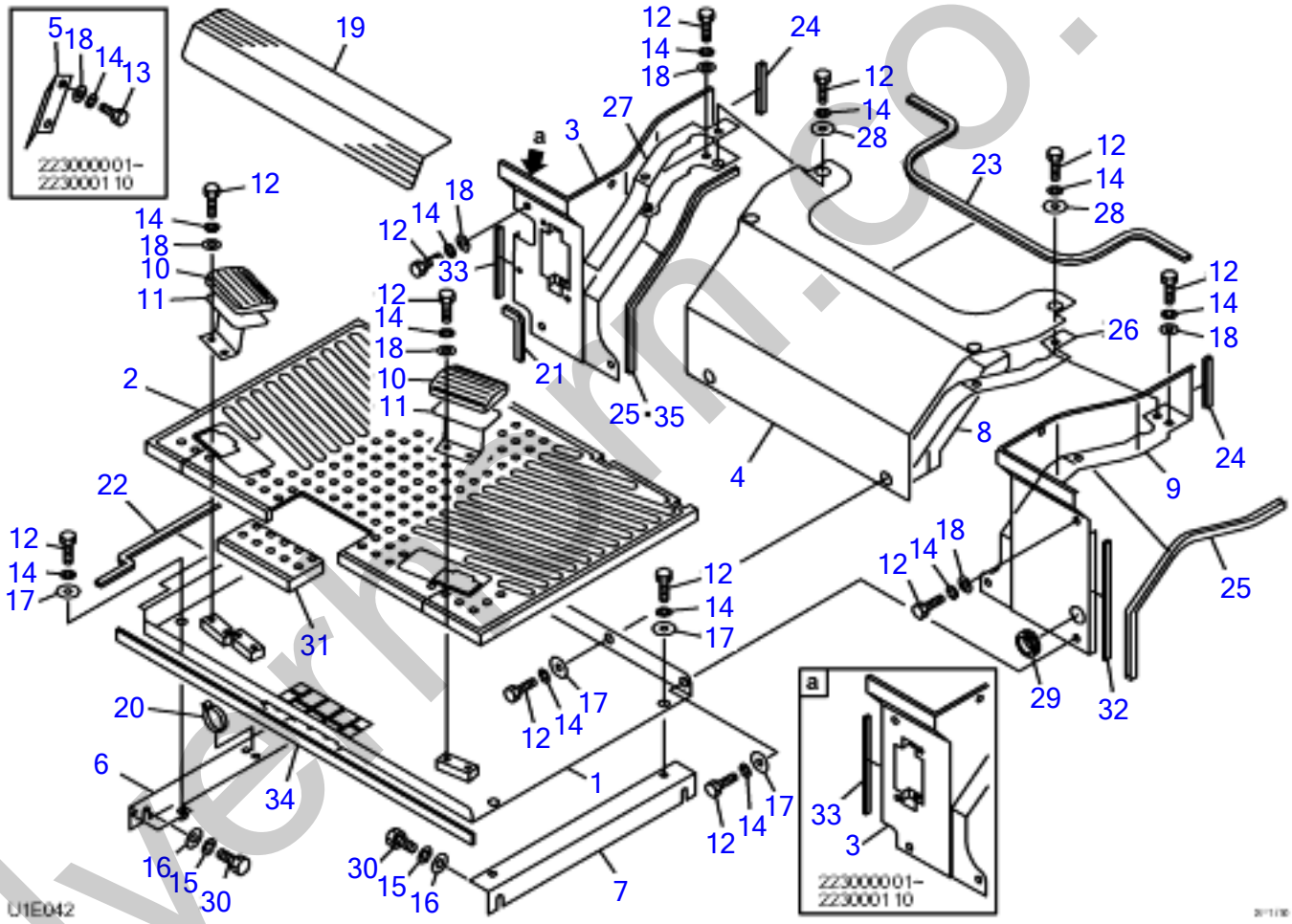

silvermann.co.uk

FLOOR FRAME

Item	Part number	Description	Q'ty	Chan.	Serial No.	Serv.	Remarks
		FLOOR ASSY					
1	0663500100	PLATE	1				
2	0663500020	MAT, floor	1				
3	0880354630	COVER (R.H.)	1		223000001~223000032		
	0880354670	COVER (R.H.)	1	(H)	223000033~	M	
	0663500250	COVER RH	1				
4	0663500400	COVER	1				
5	0880353050	COVER	1				
6	0881351500	STAY	1				
7	0881351010	STAY	1				
8	0663500080	ABSORBENT, noise	1				
9	0880354640	COVER (L.H.)	1				
10	0563218500	COVER	2				
11	0563219700	REST, foot	2				
12	1100040820	BOLT	22				
13	1100040812	BOLT	2				
14	1140020008	WASHER, spring	22				
15	1140020010	WASHER, spring	4				
16	1141110010	WASHER	4				
17	0003608252	WASHER	8				
18	1141110008	WASHER	10				
19	0880821355	SHEET	1				
20	1652231250	BAND	1				
21	1653916007	TRIM	1				sold by the meter
22	1654606048	TRIM	1				sold by the meter
23	1654623076	TRIM	1		223000001~223000032		sold by the meter
24	1654639009	TRIM	2		223000001~223000032		sold by the meter
	1654623010	TRIM	2		223000033~	M	sold by the meter
25	1653916043	TRIM	2		223000001~223000032		sold by the meter
	1653916043	TRIM	1		223000033~	M	sold by the meter
26	0880353526	SPONGE	1				
27	0880353527	SPONGE	1				
28	0003608003	WASHER	4				
29	1652053001	GROMMET	1		223000001~223000032		
	1652053600	GROMMET	1		223000033~	M	
30	1100041020	BOLT	4				
31	0881353080	MAT, floor	1				
32	1654355022	SPONGE	1				sold by the meter
33	1654355018	SPONGE	1				sold by the meter
	1654355013	SPONGE	1				
34	1654354071	SPONGE	1				sold by the meter
35	1653916036	TRIM	1		223000033~	M	sold by the meter
	U1e042						

silverhorn.co.uk

FLOOR FRAME (THROTTLE PEDAL TYPE)

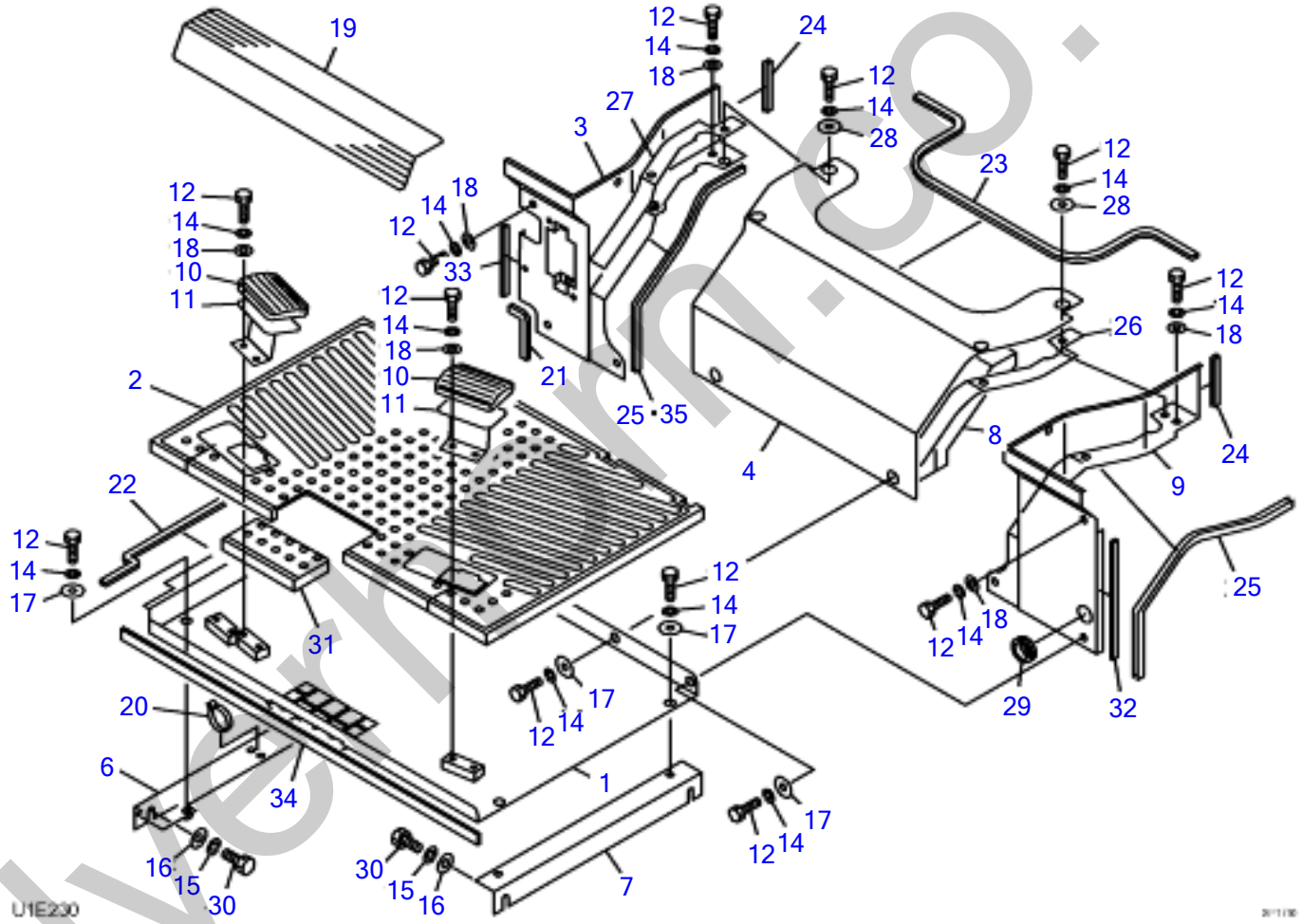

silvermm.co.uk

FLOOR FRAME (THROTTLE PEDAL TYPE)

Item	Part number	Description	Q'ty	Chan.	Serial No.	Serv.	Remarks
		FLOOR FRAME					
1	663500100	PLATE	1				
2	0663500030	FLOOR MAT	1				
3	0663500250	RH COVER	1				
4	0663500400	COVER	1				
6	0881351500	STAY	1				
7	0881351010	STAY	1				
8	0663500080	NOISE ABSORBENT	1				
9	0880354640	LH COVER	1				
10	0563218500	COVER	2				
11	0563219700	FOOT REST	2				
12	1100040820	BOLT	22				
14	1140020008	SPRING WASHER	22				
15	1140020010	SPRING WASHER	4				
16	1141110010	WASHER	4				
17	0003608252	WASHER	8				
18	1141110008	WASHER	10				
19	0880821355	SHEET	1				
20	1652231250	BAND	1				
21	1653916007	TRIM	1				
22	1654606048	TRIM	1				
23	1654623076	TRIM	1				
24	1654623010	TRIM	2				
25	1653916043	TRIM	1				
26	0880353526	SPONGE	1				
27	0880353527	SPONGE	1				
28	0003608003	WASHER	4				
29	1652053600	GROMMET	1				
30	1100041020	BOLT	4				
31	0881353080	FLOOR MAT	1				
32	1654355022	SPONGE	1				
33	1654355013	SPONGE	1				
34	1654354071	SPONGE	1				
35	1653916036	TRIM	1				
	UIE230						

silverhorn.co.uk

SEAT (1/2)

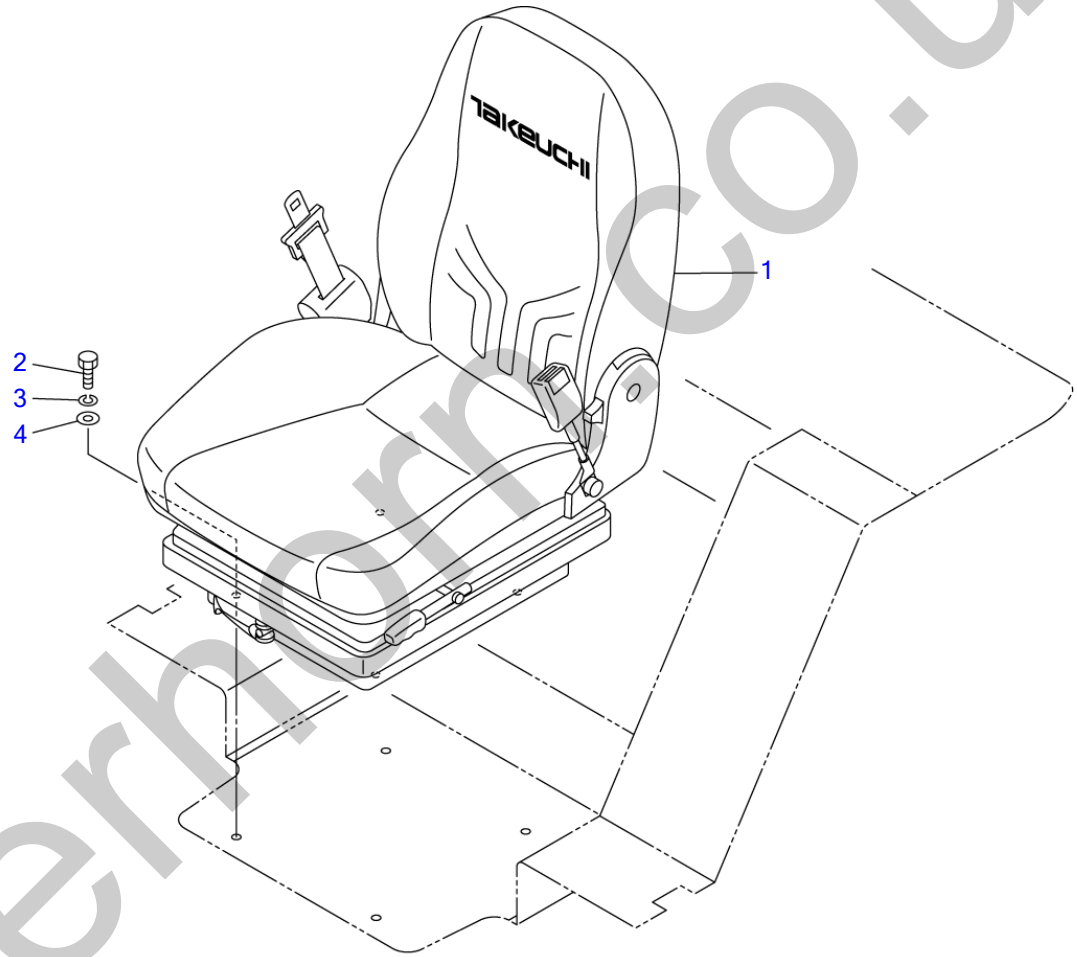

T7E050

S=1/10

silverhorn.co.uk

SEAT (1/2)

Item	Part number	Description	Q'ty	Chan.	Serial No.	Serv.	Remarks
		SEAT ASSY					
1	1914100079	SEAT	1				see page (2/2)
2	1100040820	BOLT	4				
3	1140020008	WASHER, spring	4				
4	1141110008	WASHER	4				
	T7e051						

silverhorn.co.uk

SEAT (2/2)

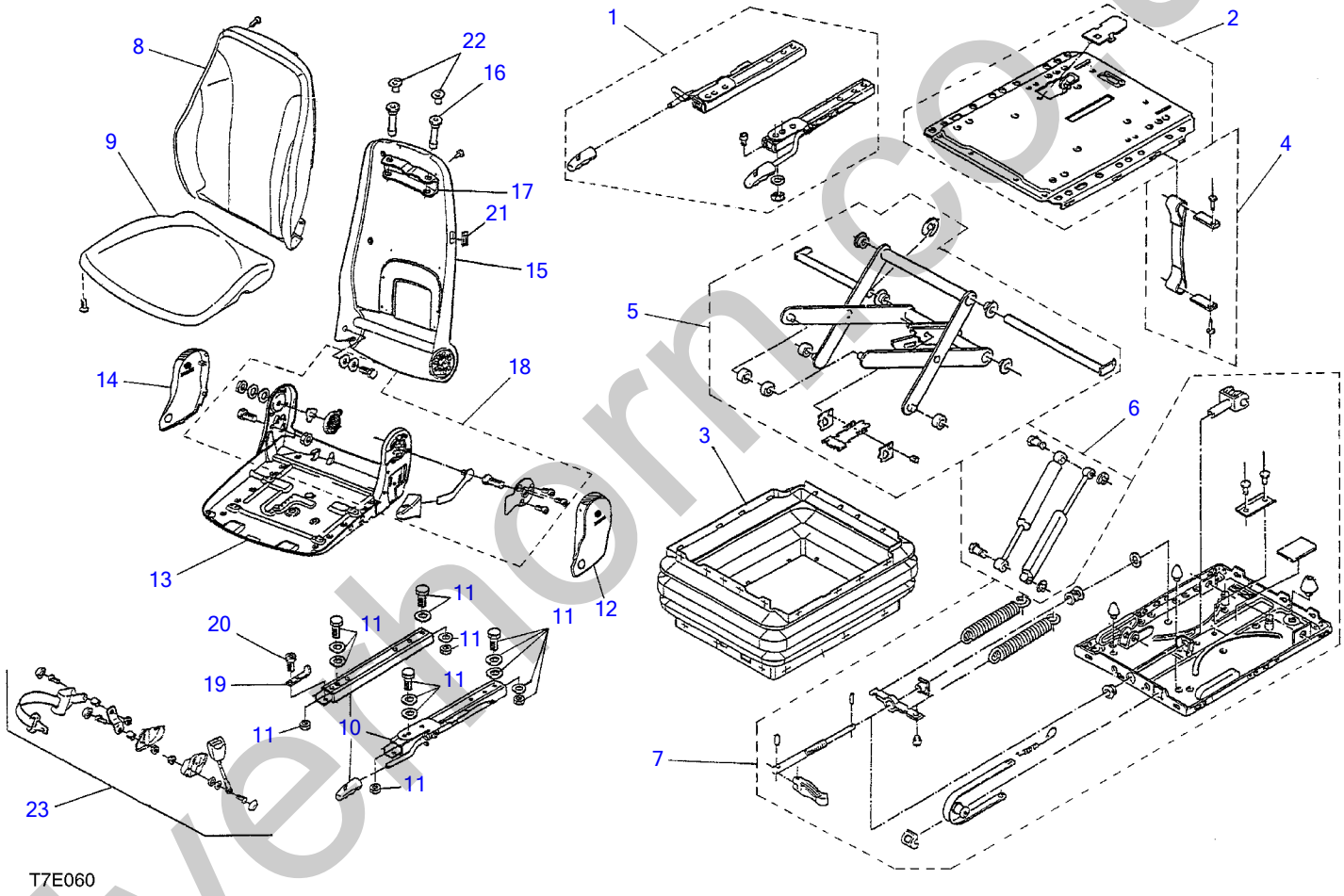

silverthorn.co.uk

SEAT (2/2)

Item	Part number	Description	Q'ty	Chan.	Serial No.	Serv.	Remarks
0	1914100079	SEAT ASSY	1				PVC
1	1914101072	・RAIL ASSY	1				
2	1914102072	・PLATE ASSY	1				
3	1914103072	・BOOT	1				
4	1914104072	・ANGLE ASSY	1				
5	1914105072	・LINK ASSY	1				
6	1914106072	・DAMPER ASSY	1				
7	1914107072	・SPRING ASSY	1				
8	1914108072	・TRIM	1				
9	1914109072	・TRIM	1				
10	1914110072	・RAIL ASSY	1				
11	1914111072	・BOLT ASSY	1				
12	1914112072	・COVER (L.H.)	1				
13	1914113072	・FRAME	1				
14	1914114072	・COVER (R.H.)	1				
15	1914115072	・FRAME	1				
16	1914116072	・GUIDE	2				
17		・BRACKET	1				
18	1914118072	・JOINT ASSY	1				
19	1914119072	・PLATE	1				
20	1914120072	・SCREW, cap	1				
21	1914121072	・PLATE	1				
22	1914122072	・PLUG	2				
23	1914123072	・BELT ASSY, seat	1				
	T7e061						

silverhorn.co.uk

SEAT (1/2) (for GEHL & MUSTANG)

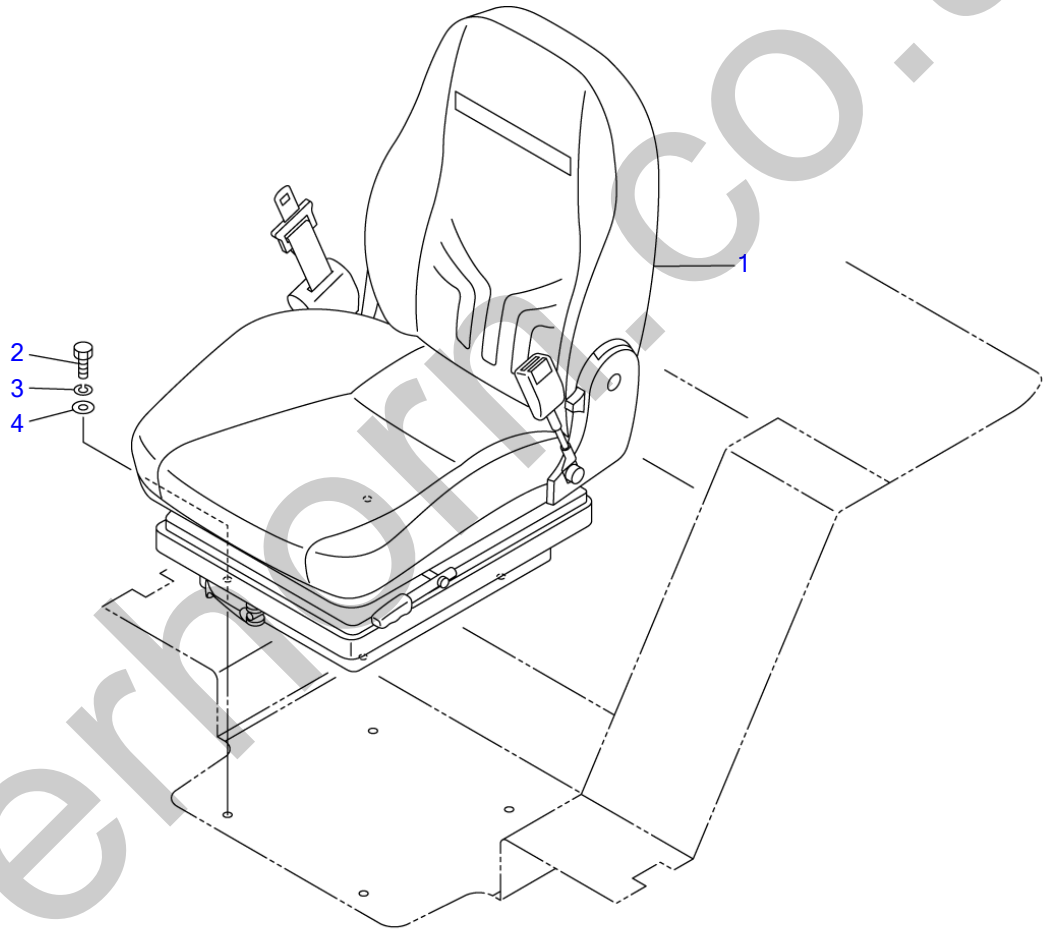

T7E170

S=1/10

silverhorn.co.uk

SEAT (1/2) (for GEHL & MUSTANG)

Item	Part number	Description	Q'ty	Chan.	Serial No.	Serv.	Remarks
		SEAT ASSY					
1	**1914100090**	SEAT	1				see page (2/2)
2	**1100040820**	BOLT	4				
3	**1140020008**	WASHER, spring	4				
4	**1141110008**	WASHER	4				
	T7e170						

silverhorn.co.uk

SEAT (2/2) (for GEHL & MUSTANG)

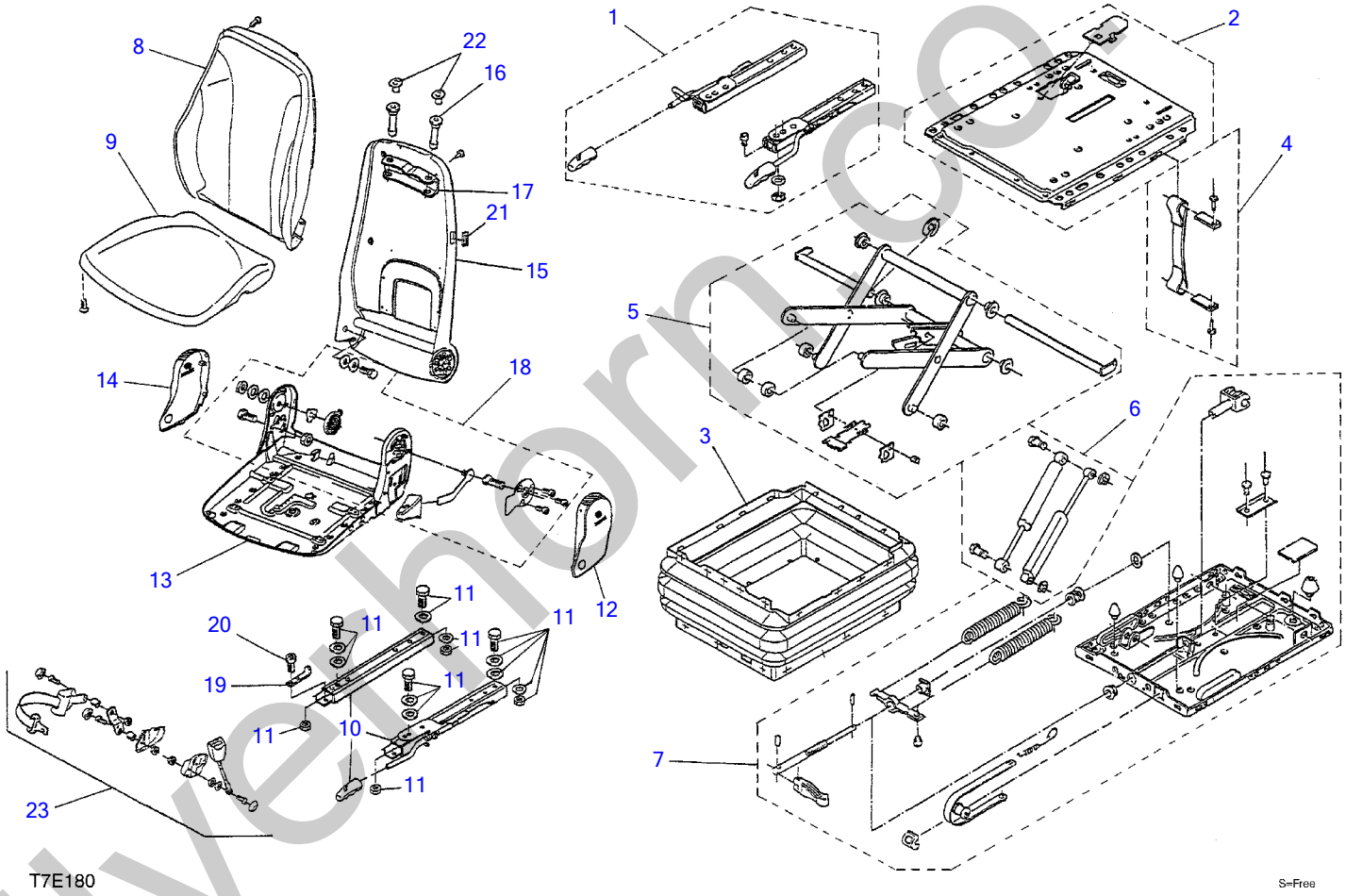

silverhorn.co.uk

SEAT (2/2) (for GEHL & MUSTANG)

Item	Part number	Description	Q'ty	Chan.	Serial No.	Serv.	Remarks
0	1914100090	SEAT ASSY	1				PVC
1	1914101072	・RAIL ASSY	1				
2	1914102072	・PLATE ASSY	1				
3	1914103072	・BOOT	1				
4	1914104072	・ANGLE ASSY	1				
5	1914105072	・LINK ASSY	1				
6	1914106072	・DAMPER ASSY	1				
7	1914107072	・SPRING ASSY	1				
8	1914108089	・TRIM	1				
9	1914109072	・TRIM	1				
10	1914110072	・RAIL ASSY	1				
11	1914111072	・BOLT ASSY	1				
12	1914112072	・COVER (L.H.)	1				
13	1914113072	・FRAME	1				
14	1914114072	・COVER (R.H.)	1				
15	1914115072	・FRAME	1				
16	1914116072	・GUIDE	2				
17		・BRACKET	1				
18	1914118072	・JOINT ASSY	1				
19	1914119072	・PLATE	1				
20	1914120072	・SCREW, cap	1				
21	1914121072	・PLATE	1				
22	1914122072	・PLUG	2				
23	1914123072	・BELT ASSY, seat	1				
	T7e181						

silverhorn.co.uk

SEAT SWITCH (223000001-223000182)

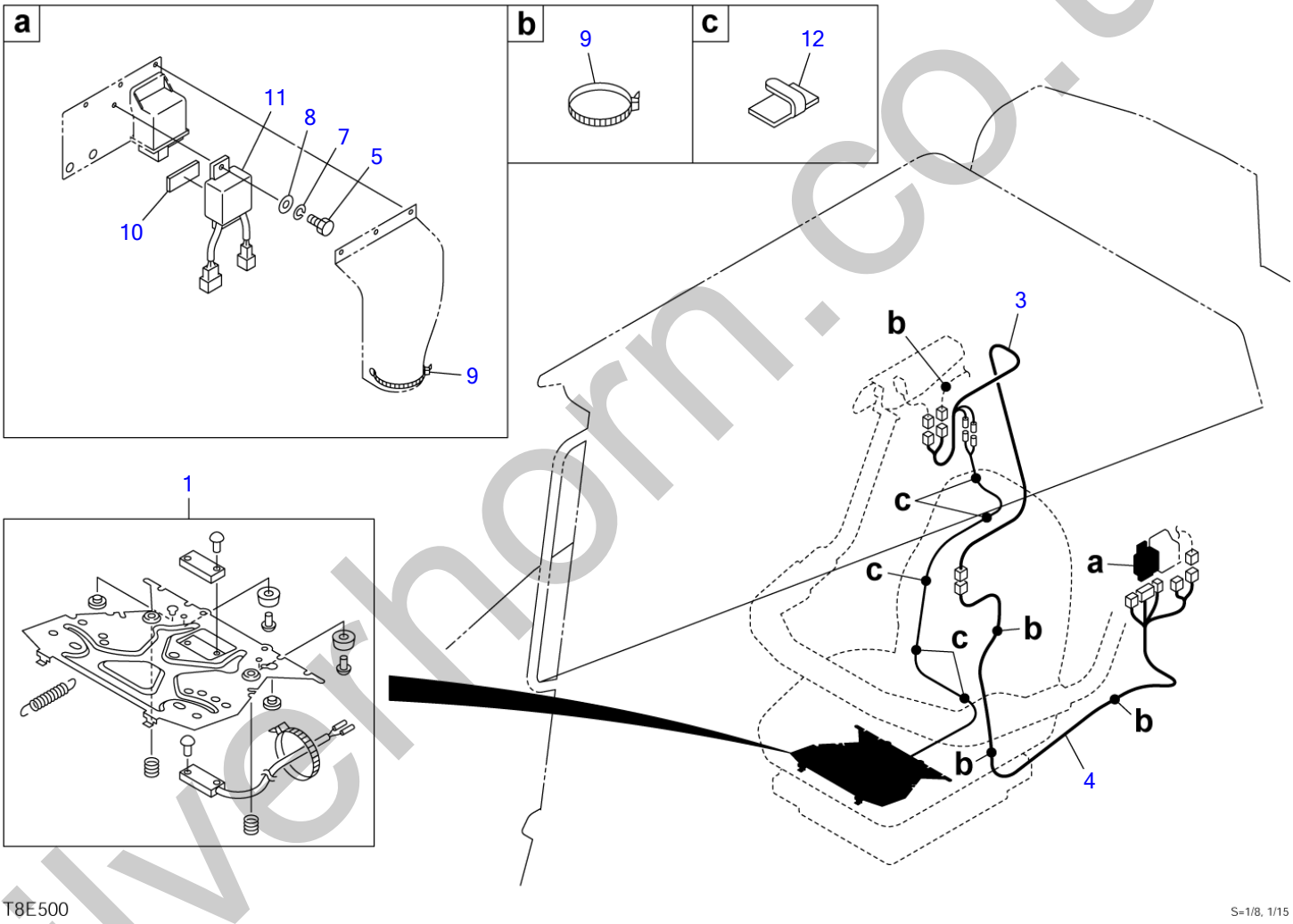

silverhorn.co.uk

SEAT SWITCH (223000001-223000182)

Item	Part number	Description	Q'ty	Chan.	Serial No.	Serv.	Remarks
0	0880348500	SWITCH ASSY, seat	1				
1	1914100086	・SWITCH, seat	1				
3	0881422540	・HARNESS, wiring	1				
4	0880348520	・HARNESS, wiring	1				
5	1100040616	・BOLT	1				
7	1140020006	・WASHER, spring	1				
8	1141110006	・WASHER	1				
9	1652231250	・BAND	5				
10	1654301005	・SPONGE	1				sold by the meter
11	1711900062	・RELAY	1				
12	1711900074	・STICKER	5				
	T8e500						

silverhorn.co.uk

SEAT SWITCH (223000183-)

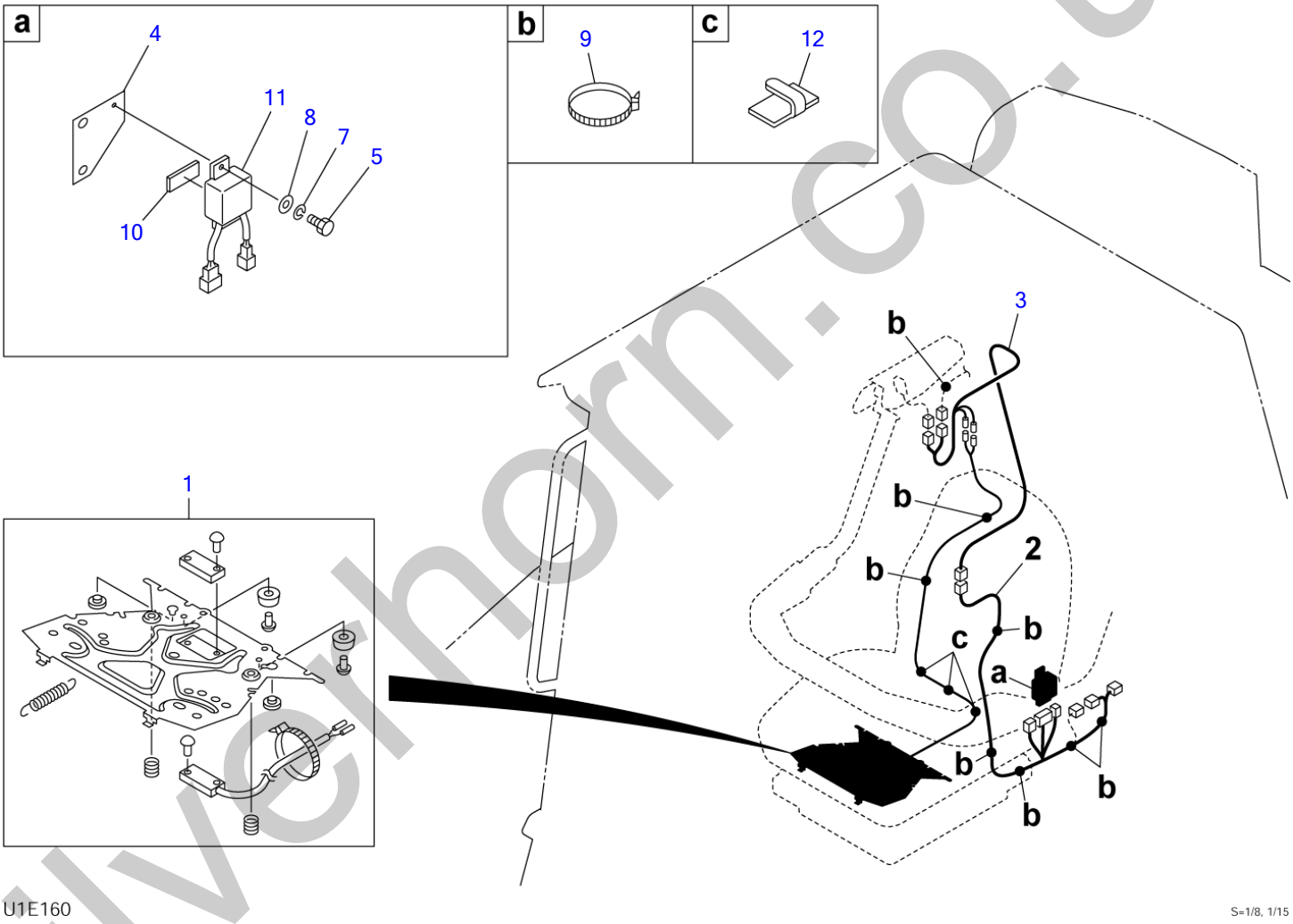

silverhorn.co.uk

SEAT SWITCH (223000183-)

Item	Part number	Description	Q'ty	Chan.	Serial No.	Serv.	Remarks
0	**0663400000**	SWITCH ASSY, seat	1			M	
1	**1914100086**	・SWITCH, seat	1			M	
2	**0663400010**	・HARNESS, wiring	1			M	
3	**0881422540**	・HARNESS, wiring	1			M	
4	**0663400020**	・BRACKET	1			M	
5	**1100040616**	・BOLT	1			M	
7	**1140020006**	・WASHER, spring	1			M	
8	**1141110006**	・WASHER	1			M	
9	**1652231250**	・BAND	8			M	
10	**1654301005**	・SPONGE	1			M	sold by the meter
11	**1711900062**	・RELAY	1			M	
12	**1711900074**	・STICKER	3			M	
	U1e160						

silverhorn.co.uk

SAFETY BAR

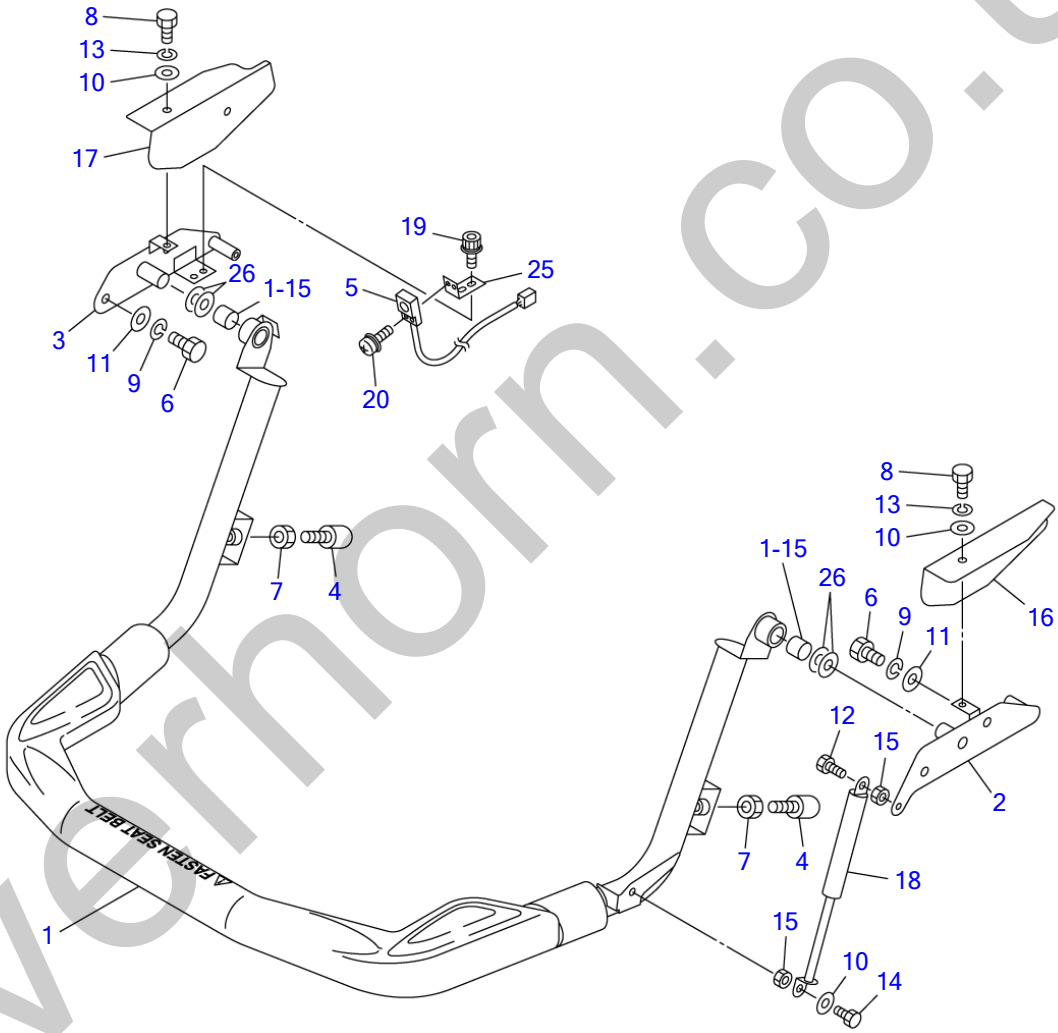

U1E050

S=1/9

silverhorn.co.uk

SAFETY BAR

Item	Part number	Description	Q'ty	Chan.	Serial No.	Serv.	Remarks
		BAR ASSY, safety					
1	0881463100	BAR, safety	1				
1-15	1333002020	・BUSHING	2				
2	0881463010	BRACKET(L.H.)	1				
3	0881463020	BRACKET(R.H.)	1				
4	1651101224	STOPPER	2				
5	1700009010	SWITCH, proximity	1				
6	1100041020	BOLT	4				
7	1130040012	NUT	2				
8	1100040816	BOLT	4				
9	1140020010	WASHER, spring	4				
10	1141110008	WASHER	5				
11	1141110010	WASHER	4				
12	1100040820	BOLT	1				
13	1140020008	WASHER, spring	4				
14	1100240825	BOLT	1				
15	1130040008	NUT	2				
16	0880464010	COVER(L.H.)	1				
17	0880464020	COVER(R.H.)	1				
18	1653900057	SPRING, gas	1				
19	1110540512	SCREW, cap	2				
20	1150410312	SCREW	2				
25	0881463050	PLATE	1				
26	0093208300	WASHER	4				
	U1e050						

silverhorn.co.uk

SAFETY BAR (for GEHL & MUSTANG)

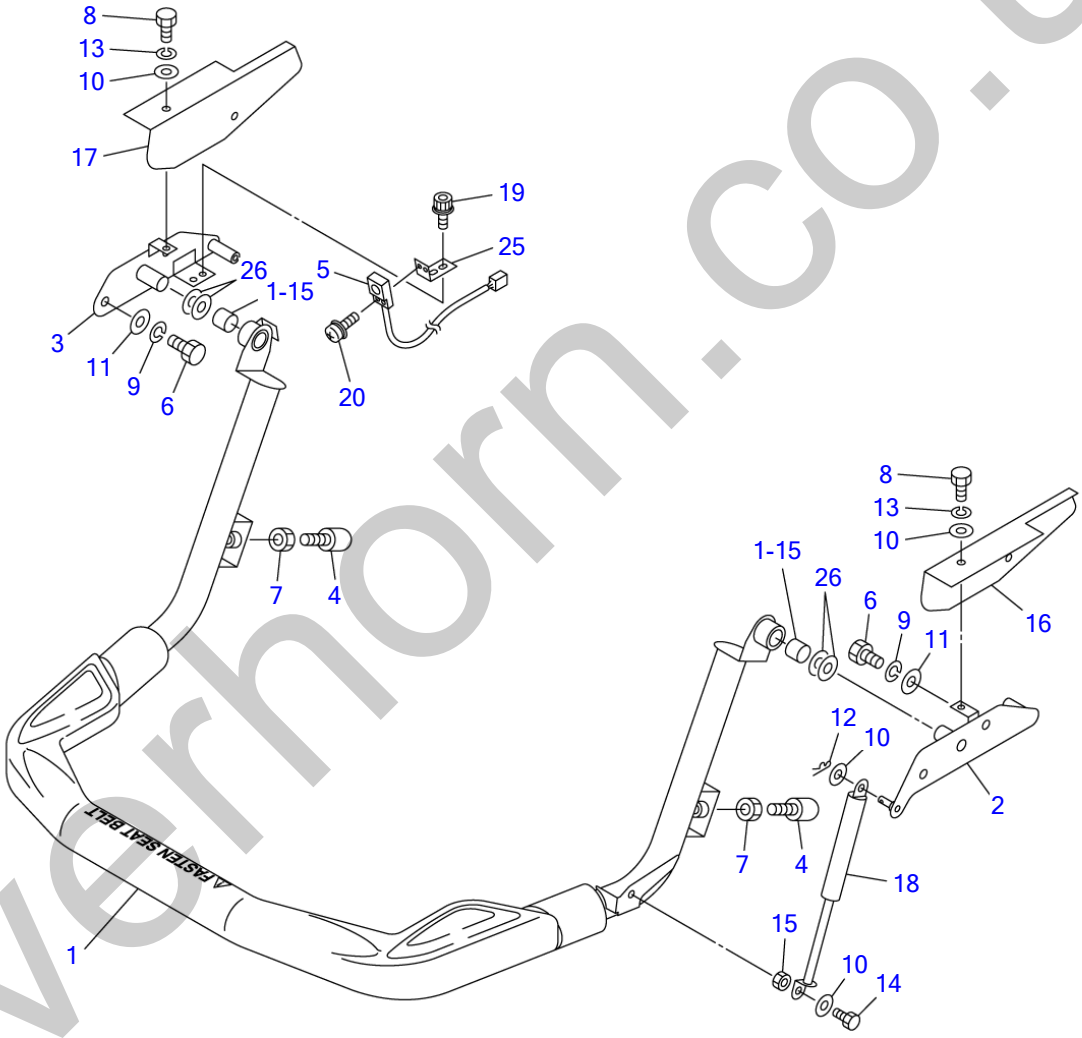

silverhorn.co.uk

SAFETY BAR (for GEHL & MUSTANG)

Item	Part number	Description	Q'ty	Chan.	Serial No.	Serv.	Remarks
		BAR ASSY, safety					
1	0881463100	BAR, safety	1				
1-15	1333002020	・BUSHING	2				
2	0881461090	BRACKET(L.H.)	1				
3	0881461040	BRACKET(R.H.)	1				
4	1651101224	STOPPER	2				
5	1700009010	SWITCH, proximity	1				
6	1100041020	BOLT	4				
7	1130040012	NUT	2				
8	1100040816	BOLT	4				
9	1140020010	WASHER, spring	4				
10	1141110008	WASHER	7				
11	1141110010	WASHER	4				
12	1214000008	PIN, snap	1				
13	1140020008	WASHER, spring	4				
14	1100040830	BOLT	1				
15	1130040008	NUT	1				
16	0880463616	COVER(L.H.)	1				
17	0880463617	COVER(R.H.)	1				
18	1653900057	SPRING, gas	1				
19	1110540512	SCREW, cap	2				
20	1150410312	SCREW	2				
25	0881461025	PLATE	1				
26	0093208300	WASHER	4				
	T8e512						

silverhorn.co.uk

CANOPY MOUNT (for EU)

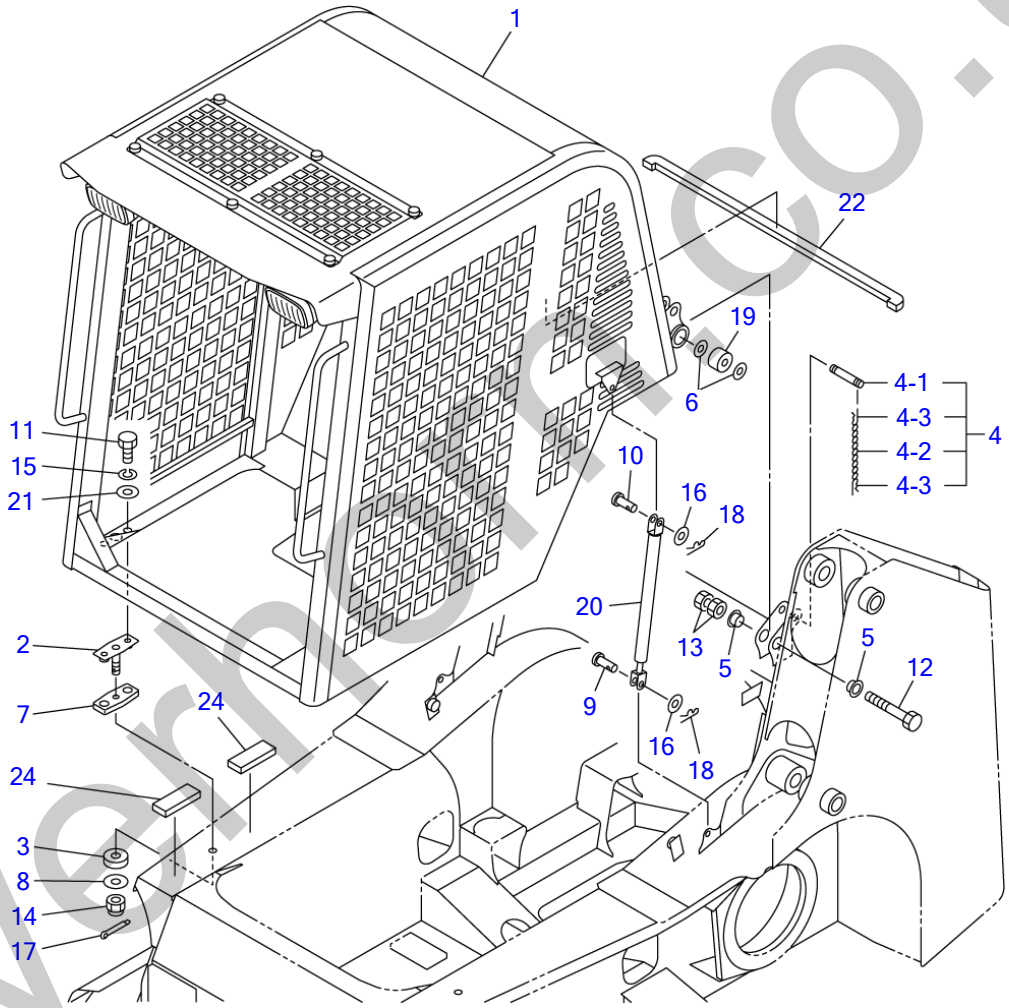

U1E060

S=1/20

silverhill.co.uk

CANOPY MOUNT (for EU)

Item	Part number	Description	Q'ty	Chan.	Serial No.	Serv.	Remarks
		CANOPY MOUNT					
1	0880845600	CANOPY ASSY	1				
2	0881842030	BOLT ASSY	2				
3	0881842050	RUBBER, cushion	2				
4	0881841060	PIN ASSY	1				
4-1	0881841061	・PIN	1				
4-2	1652735886	・CHAIN	1				
4-3	1214000016	・PIN, snap	2				
5	0881840008	COLLAR	4				
6	0880840070	WASHER	4				
7	0881842040	RUBBER, cushion	2				
8	0003900044	WASHER	2				
9	0343503200	PIN	2				
10	0004010025	PIN	2				
11	1100041225	BOLT	4				
12	1100141610	BOLT	2				
13	1130040016	NUT	4				
14	1132080016	NUT	2				
15	1140020012	WASHER, spring	4				
16	1141110010	WASHER	4				
17	1210010432	PIN, split	2				
18	1214000008	PIN, snap	4				
19	1651005030	RUBBER, cushion	2				
20	1653900059	SPRING, gas	2				
21	0003600165	WASHER	4				
22	0880866140	SPONGE	1				
24	1654306008	SPONGE	4				sold by the meter
	U1e060						

silverhorn.co.uk

CANOPY (1/3) (for EU)

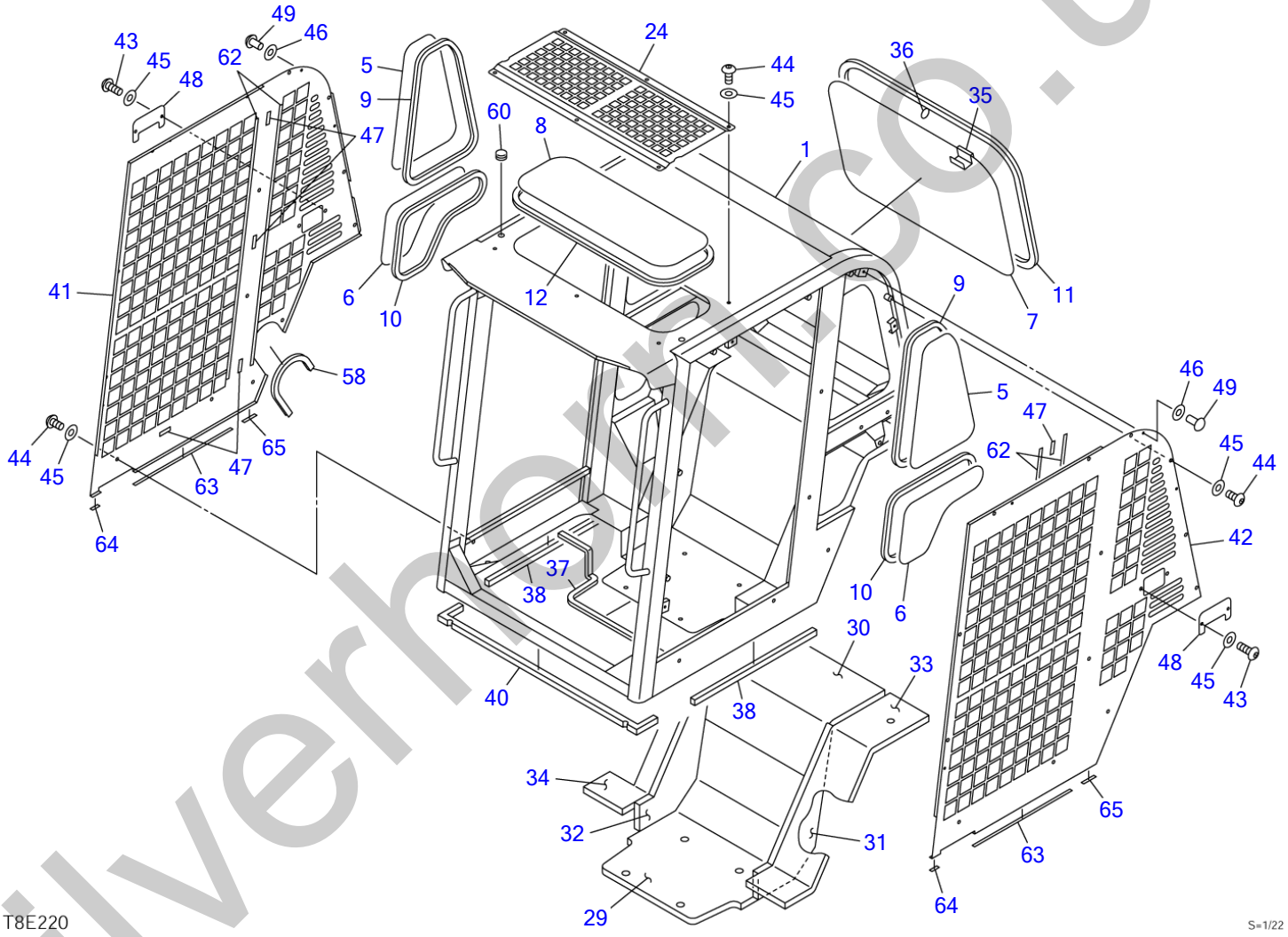

silverhorn.co.uk

CANOPY (1/3) (for EU)

Item	Part number	Description	Q'ty	Chan.	Serial No.	Serv.	Remarks
0	0880845600	CANOPY ASSY	1				
1	0880845700	・CANOPY	1				
5	0880865101	・GLASS	2				
6	0880865102	・GLASS	2				
7	0880865103	・GLASS	1				
8	0880865104	・GLASS	1				
9	1654231148	・H-RUBBER	2				sold by the meter
10	1654231120	・H-RUBBER	2				sold by the meter
11	1654231273	・H-RUBBER	1				sold by the meter
12	1654231195	・H-RUBBER	1				sold by the meter
24	0880865129	・GUARD	1				
29	0881842010	・ABSORBENT, noise	1				
30	0880845605	・ABSORBENT, noise	1				
31	0880865134	・ABSORBENT, noise	1				
32	0880865135	・ABSORBENT, noise	1				
33	0880865136	・ABSORBENT, noise	1				
34	0880865137	・ABSORBENT, noise	1				
35	0880865138	・GRIP	1				
36	0880865139	・RING	1				
37	1654623130	・TRIM	1				sold by the meter
38	0880865140	・SEAL	2				
40	0880865141	・SEAL	1				
41	0880865142	・GUARD	1				
42	0880865143	・GUARD	1				
43	1120990820	・BOLT	4				
44	1120990816	・BOLT	33				
45	1654011705	・WASHER	37				
46	0880865144	・WASHER	8				
47	0880865145	・PLATE	8				
48	0880865146	・COVER	2				
49	0880865150	・RIVET	8				
58	1653916037	・TRIM	1				sold by the meter
60	1653303010	・SCREW, cap	2				
62	0880845303	・PLATE	4				
63	0880845304	・PLATE	2				
64	0880845305	・PLATE	2				
65	0880845306	・PLATE	2				
	T8e221						

silverhorn.co.uk

CANOPY (2/3) (for EU)

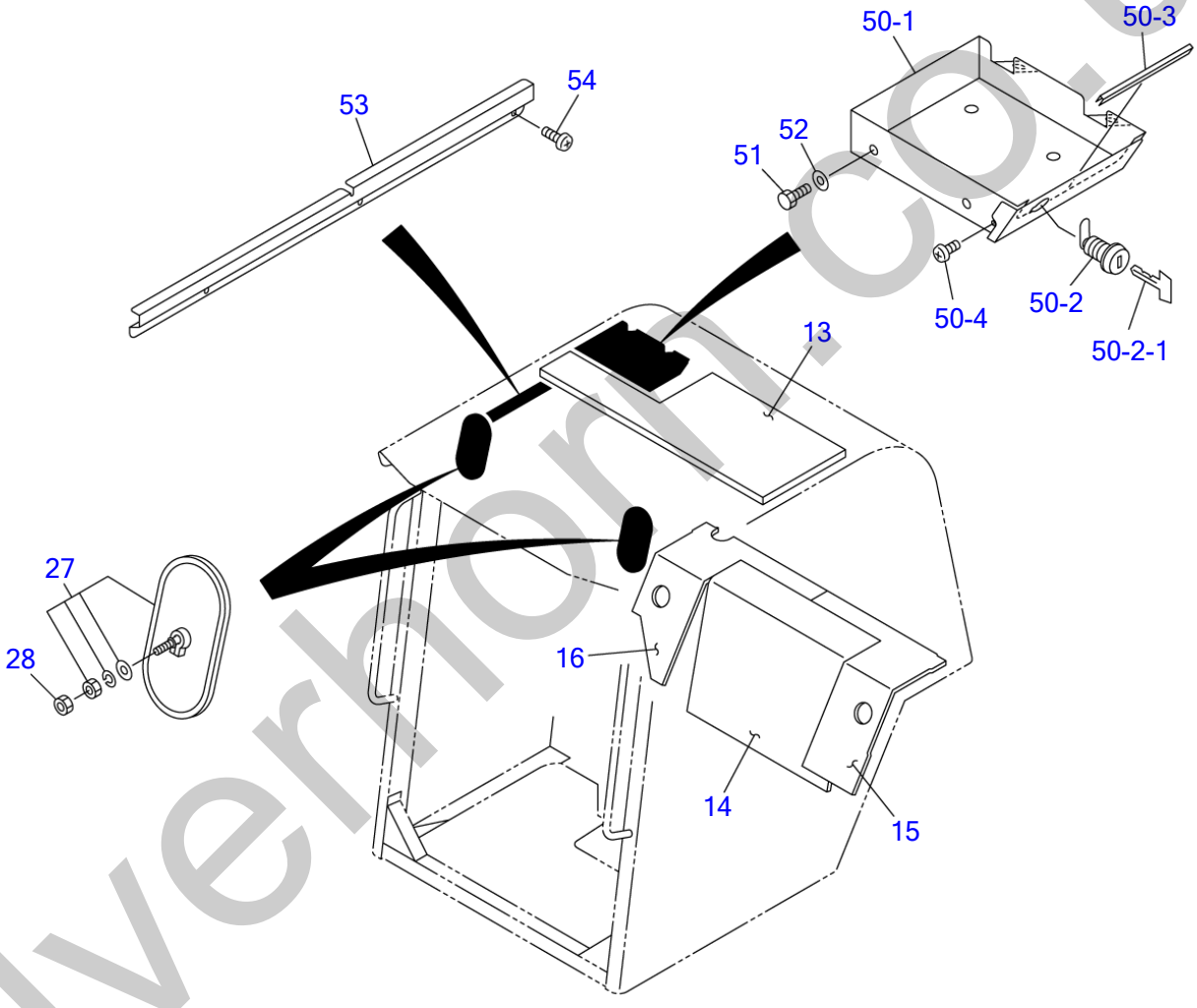

silverhorn.co.uk

CANOPY (2/3) (for EU)

Item	Part number	Description	Q'ty	Chan.	Serial No.	Serv.	Remarks
0	0880845600	CANOPY ASSY	1				
13	0880845601	・ABSORBENT, noise	1				
14	0880845602	・ABSORBENT, noise	1				
15	0880845603	・ABSORBENT, noise	1				
16	0880845604	・ABSORBENT, noise	1				
27	0880865131	・MIRROR, rearview	2				
28	1130090008	・NUT	2				
50	0880845680	・CASE ASSY	1				
50-1	0880845681	・・CASE	1				
50-2	1653601395	・・LOCK	1				
50-2-1	1700100019	・・KEY	1				
50-3	1654520014	・・TRIM	1				sold by the meter
50-4	1150420610	・・SCREW	1				
51	1100090820	・BOLT	4				
52	1654011705	・WASHER	4				
53	0880845605	・COVER	1				
54	1150420512	・SCREW	3				
	T8e231						

silverhorn.co.uk

CANOPY (3/3) (for EU)

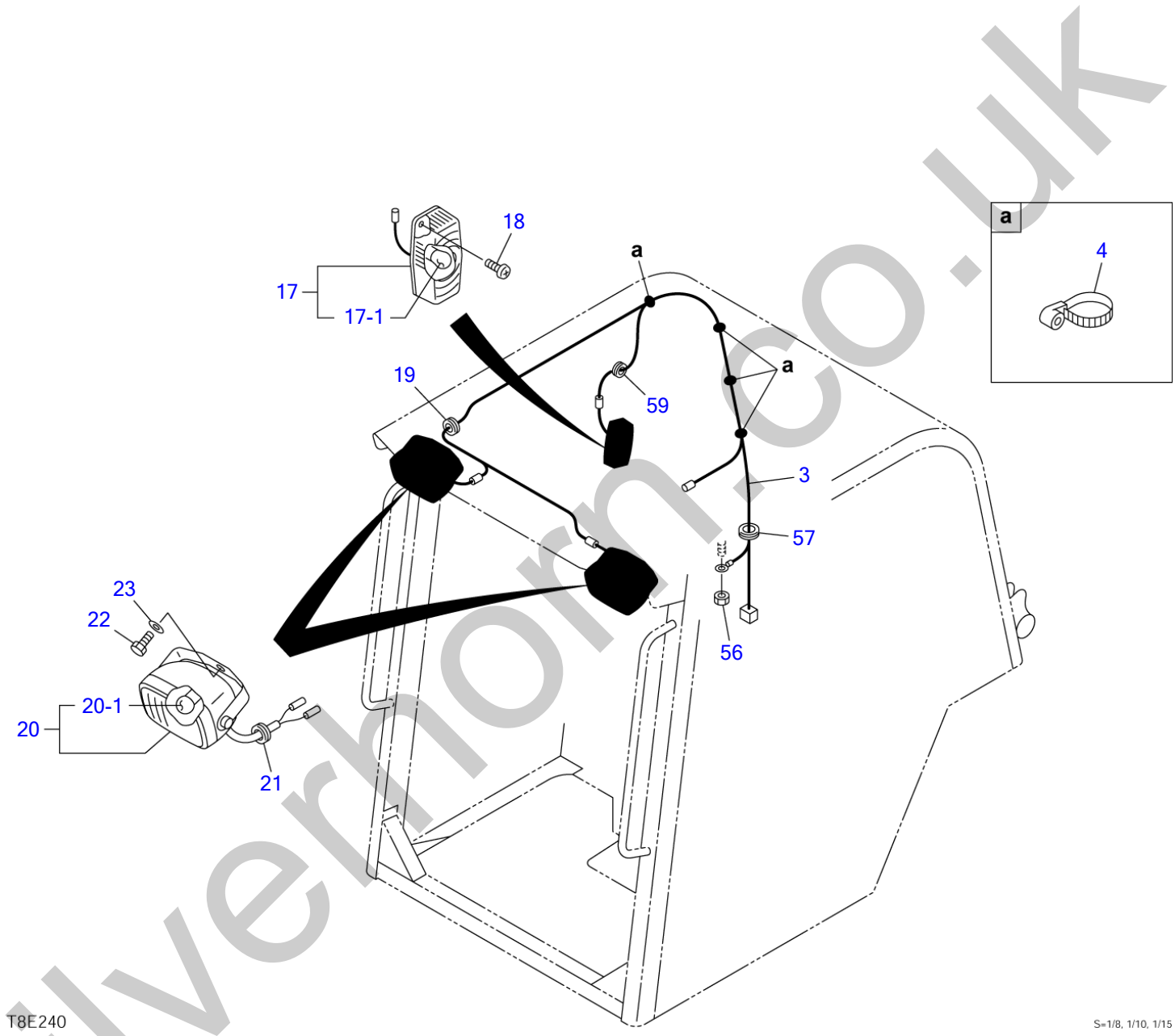

silverhorn.co.uk

CANOPY (3/3) (for EU)

Item	Part number	Description	Q'ty	Chan.	Serial No.	Serv.	Remarks
0	0880845600	CANOPY ASSY	1				
3	0880845670	・HARNESS, wiring	1				
4	1652221050	・CLIP	4				
17	1703001700	・LAMP, room	1				
17-1	1703001701	・・BULB	1				
18	1150410412	・SCREW	2				
19	1652042030	・GROMMET	1				
20	1703006600	・LAMP, ASSY	2				
20-1	1703006605	・・BULB	1				
21	1652000602	・GROMMET	2				
22	1100091020	・BOLT	2				
23	1654011706	・WASHER	2				
56	1130040010	・NUT	1				
57	1654011702	・GROMMET	1				
59	1654011700	・GROMMET	1				
	T8e241						

silverhorn.co.uk

CANOPY MOUNT (for US)

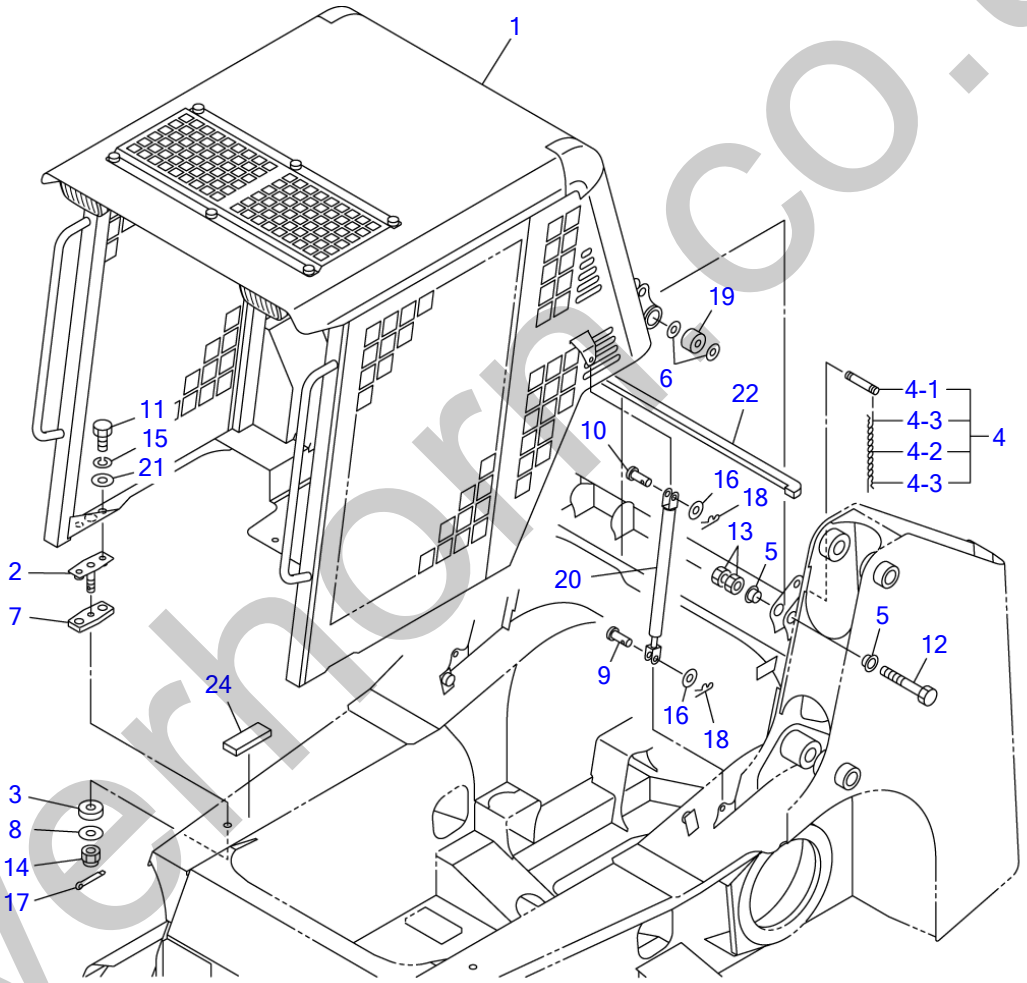

U1E070

S=1/20

silverhorn.co.uk

CANOPY MOUNT (for US)

Item	Part number	Description	Q'ty	Chan.	Serial No.	Serv.	Remarks
		CANOPY MOUNT					
1	0880844000	CANOPY ASSY	1				
2	0881842030	BOLT	2				
3	0881842050	RUBBER, cushion	2				
4	0881841060	PIN ASSY	1				
4-1	0881841061	・PIN	1				
4-2	1652735886	・CHAIN	1				
4-3	1214000016	・PIN, snap	2				
5	0881840008	COLLAR	4				
6	0880840070	WASHER	4				
7	0881842040	RUBBER, cushion	2				
8	0003900044	WASHER	2				
9	0343503200	PIN	2				
10	0004010025	PIN	2				
11	1100041225	BOLT	4				
12	1100141610	BOLT	2				
13	1130040016	NUT	4				
14	1132080016	NUT	2				
15	1140020012	WASHER, spring	4				
16	1141110010	WASHER	4				
17	1210010432	PIN, split	2				
18	1214000008	PIN, snap	4				
19	1651005030	RUBBER, cushion	2				
20	1653900047	SPRING, gas	2				
21	0003600165	WASHER	4				
22	0880866140	SPONGE	1				
24	1654306008	SPONGE	2				sold by the meter
	U1e070						

silverhorn.co.uk

CANOPY (1/2) (for US)

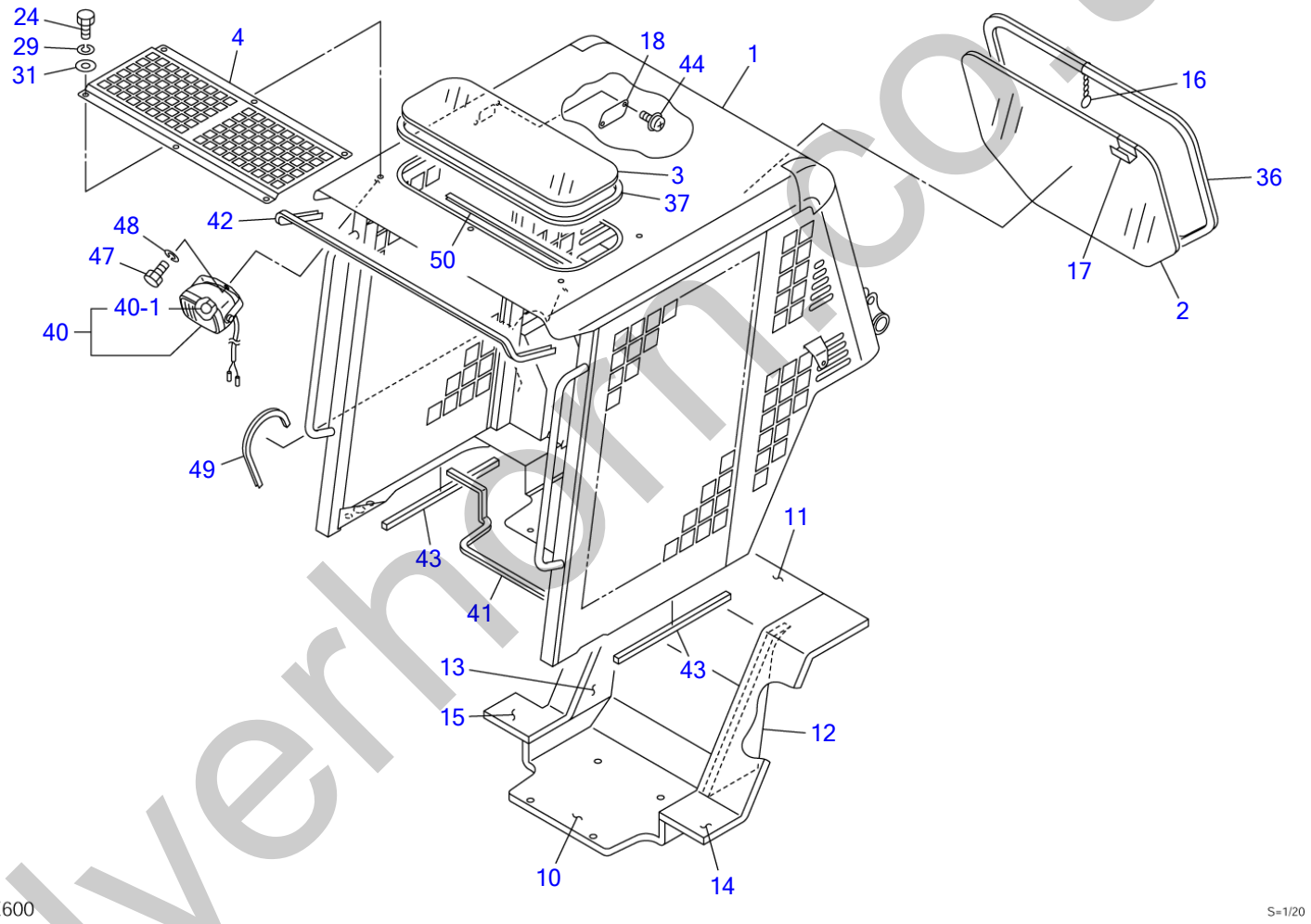

silverhorn.co.uk

CANOPY (1/2) (for US)

Item	Part number	Description	Q'ty	Chan.	Serial No.	Serv.	Remarks
0	0880844000	CANOPY ASSY	1				
1	0880844100	・CANOPY	1				
2	0881842002	・GLASS	1				
3	0880844003	・GLASS	1				
4	0880844004	・PLATE	1				
10	0881842010	・ABSORBENT, noise	1				
11	0880844011	・ABSORBENT, noise	1				
12	0881842012	・ABSORBENT, noise (L.H.)	1				
13	0881842013	・ABSORBENT, noise (R.H.)	1				
14	0880843514	・ABSORBENT, noise	1				
15	0880844015	・ABSORBENT, noise	1				
16	0880841040	・RING, pull	1				
17	0880841080	・HANDLE	1				
18	0881842017	・PLATE	1				
24	1100040816	・BOLT	6				
29	1140020008	・WASHER, spring	6				
31	1141110008	・WASHER	6				
36	1654252253	・H-RUBBER	1				sold by the meter
37	1654252200	・H-RUBBER	1				sold by the meter
40	1703006600	・LAMP ASSY	2				
40-1	1703006605	・・BULB	1				12V, 55W
41	1654639134	・TRIM	1				sold by the meter
42	1654601153	・TRIM	1				sold by the meter
43	1654350057	・SPONGE	2				sold by the meter
44	1150420412	・SCREW	2				
47	1100041020	・BOLT	2				
48	1140020010	・WASHER, spring	2				
49	1653916038	・TRIM	1				sold by the meter
50	1654601060	・TRIM	1				sold by the meter
	U1E240						

silverhorn.co.uk

CANOPY (2/2) (for US)

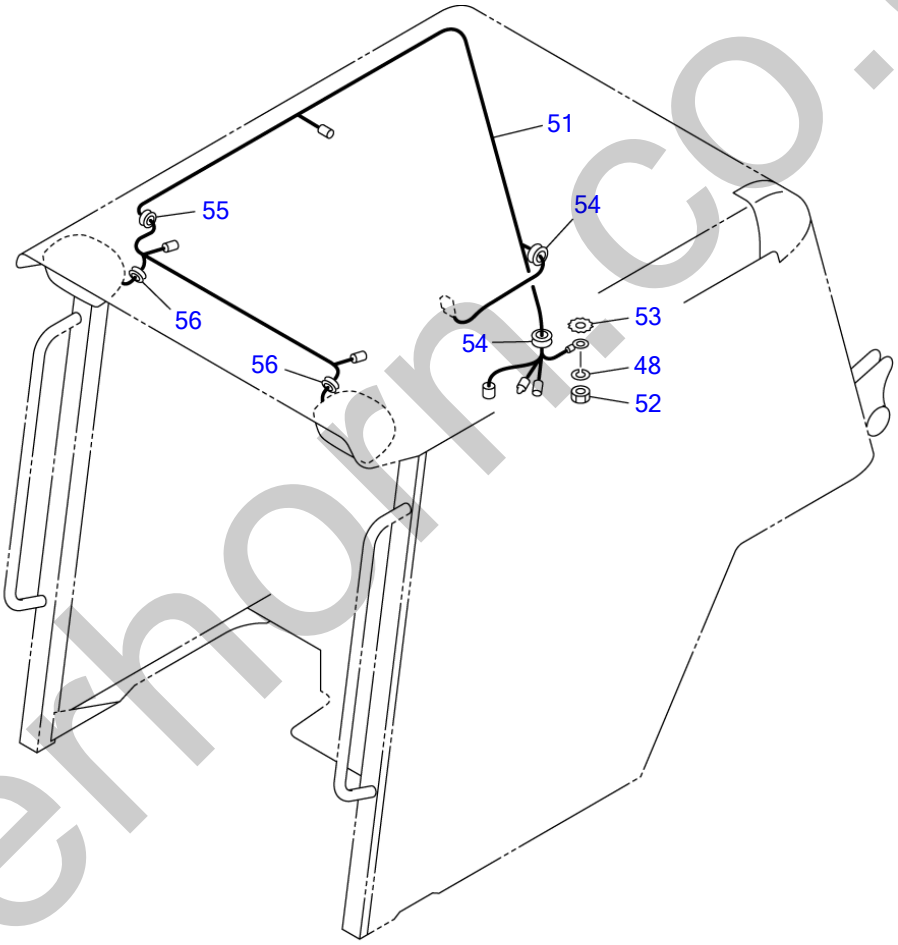

T8E530

S=1/15

silverhorn.co.uk

CANOPY (2/2) (for US)

Item	Part number	Description	Q'ty	Chan.	Serial No.	Serv.	Remarks
0	0880844000	CANOPY ASSY	1				
48	1140020010	・WASHER, spring	1				
51	0881842060	・HARNESS, wiring	1				
52	1130040010	・NUT	1				
53	1140330010	・WASHER	1				
54	1652052800	・GROMMET	3				
55	1652053600	・GROMMET	1				
56	1652040930	・GROMMET	2				
	T8e610						

silverhorn.co.uk

CANOPY (2/2) FOR US

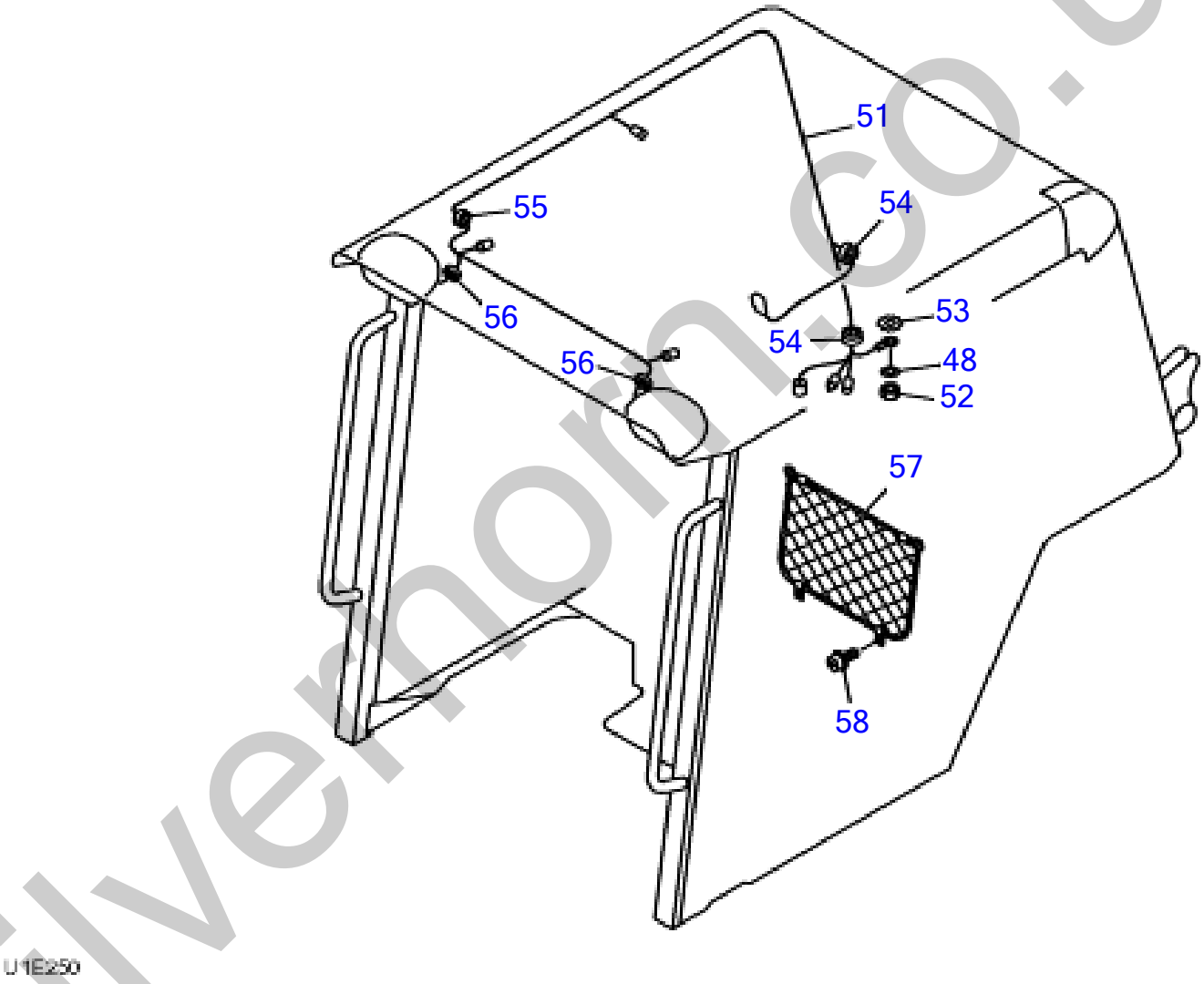

silvermorn.co.uk

CANOPY (2/2) FOR US

Item	Part number	Description	Q'ty	Chan.	Serial No.	Serv.	Remarks
		CANOPY (2/2) FOR US					
0	0880844000	CANOPY ASSY	1				
48	1140020010	* SPRING WASHER	1				
51	0881842060	* WIRING HARNESS	1				
52	1130040010	* NUT	1				
53	1140330010	* WASHER	1				
54	1652052800	* GROMMET	3				
55	1652053600	* GROMMET	1				
56	1652040930	* GROMMET	2				
57	1653691350	* POCKET	1				
58	1150010514	* SCREW	4				
	U1E250						

silverhorn.co.uk

CANOPY MOUNT (for GEHL & MUSTANG)

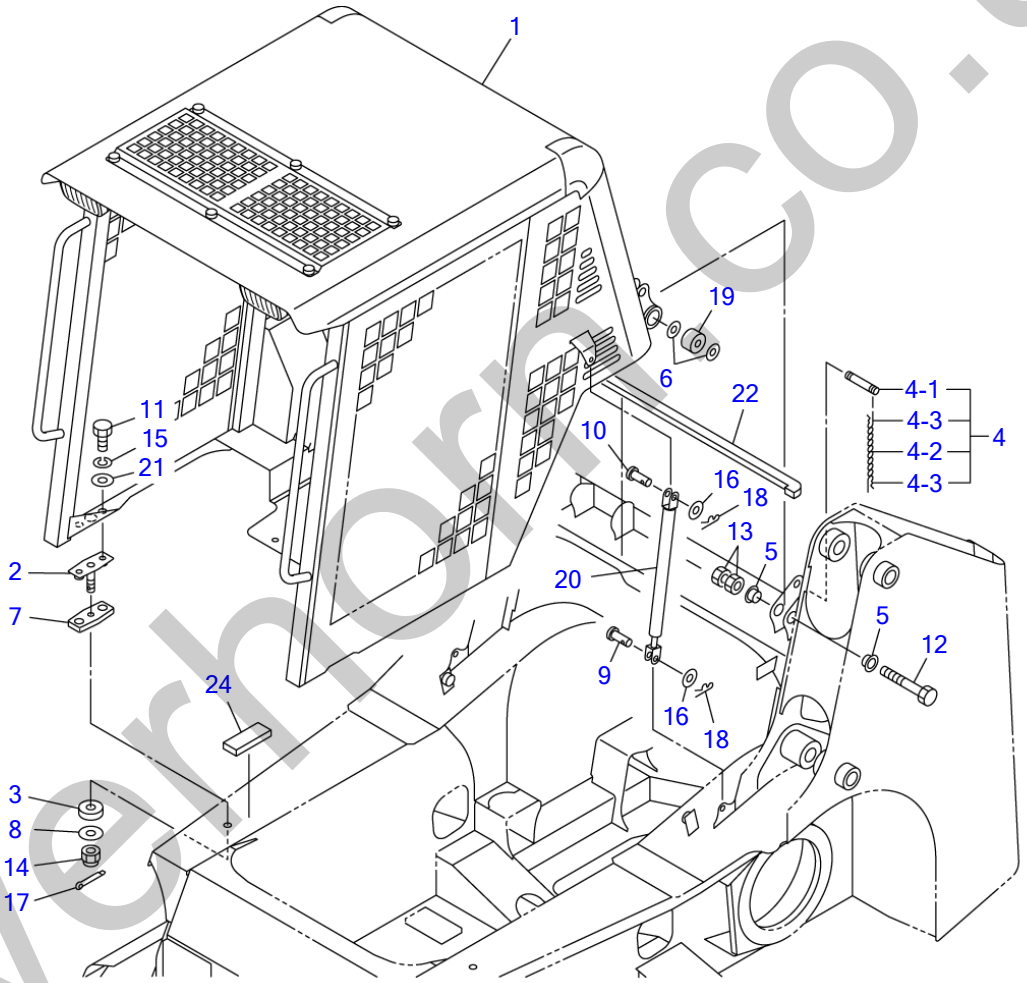

U1E070

S=1/20

silverhorn.co.uk

CANOPY MOUNT (for GEHL & MUSTANG)

Item	Part number	Description	Q'ty	Chan.	Serial No.	Serv.	Remarks
		CANOPY MOUNT					
1	0880846600	CANOPY ASSY	1				
2	0881842030	BOLT	2				
3	0881842050	RUBBER, cushion	2				
4	0881841060	PIN ASSY	1				
4-1	0881841061	・PIN	1				
4-2	1652735886	・CHAIN	1				
4-3	1214000016	・PIN, snap	2				
5	0881840008	COLLAR	4				
6	0880840070	WASHER	4				
7	0881842040	RUBBER, cushion	2				
8	0003900044	WASHER	2				
9	0343503200	PIN	2				
10	0004010025	PIN	2				
11	1100041225	BOLT	4				
12	1100141610	BOLT	2				
13	1130040016	NUT	4				
14	1132080016	NUT	2				
15	1140020012	WASHER, spring	4				
16	1141110010	WASHER	4				
17	1210010432	PIN, split	2				
18	1214000008	PIN, snap	4				
19	1651005030	RUBBER, cushion	2				
20	1653900047	SPRING, gas	2				
21	0003600165	WASHER	4				
22	0880866140	SPONGE	1				
24	1654306008	SPONGE	2				sold by the meter
	U1e080						

silverhorn.co.uk

CANOPY (1/2) (for GEHL & MUSTANG)

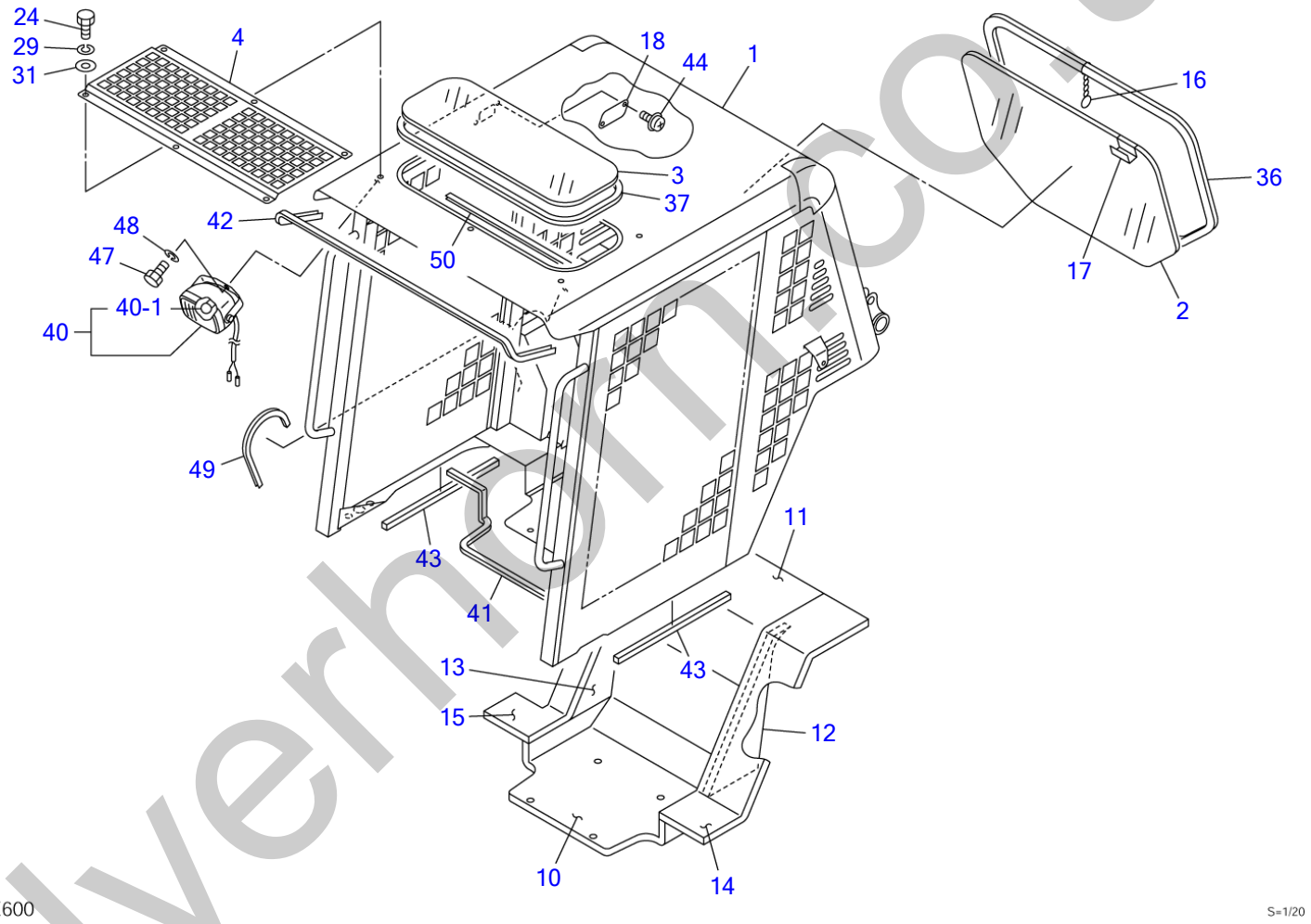

silverhorn.co.uk

CANOPY (1/2) (for GEHL & MUSTANG)

Item	Part number	Description	Q'ty	Chan.	Serial No.	Serv.	Remarks
0	0880846600	CANOPY ASSY	1				
1	0880846700	・CANOPY	1				
2	0881842002	・GLASS	1				
3	0880844003	・GLASS	1				
4	0880844004	・PLATE	1				
10	0881842010	・ABSORBENT, noise	1				
11	0880844011	・ABSORBENT, noise	1				
12	0881842012	・ABSORBENT, noise (L.H.)	1				
13	0881842013	・ABSORBENT, noise (R.H.)	1				
14	0880843514	・ABSORBENT, noise	1				
15	0880844015	・ABSORBENT, noise	1				
16	0880841040	・RING, pull	1				
17	0880841080	・HANDLE	1				
18	0881842017	・PLATE	1				
24	1100040816	・BOLT	6				
29	1140020008	・WASHER, spring	6				
31	1141110008	・WASHER	6				
36	1654252253	・H-RUBBER	1				sold by the meter
37	1654252200	・H-RUBBER	1				sold by the meter
40	1703006600	・LAMP ASSY	2				
40-1	1703006605	・・BULB	1				12V, 55W
41	1654639134	・TRIM	1				sold by the meter
42	1654601153	・TRIM	1				sold by the meter
43	1654350057	・SPONGE	2				sold by the meter
44	1150420412	・SCREW	2				
47	1100041020	・BOLT	2				
48	1140020010	・WASHER, spring	2				
49	1653916038	・TRIM	1				sold by the meter
50	1654601060	・TRIM	1				sold by the meter
	U1e091						

silverhorn.co.uk

CANOPY (2/2) (for GEHL & MUSTANG)

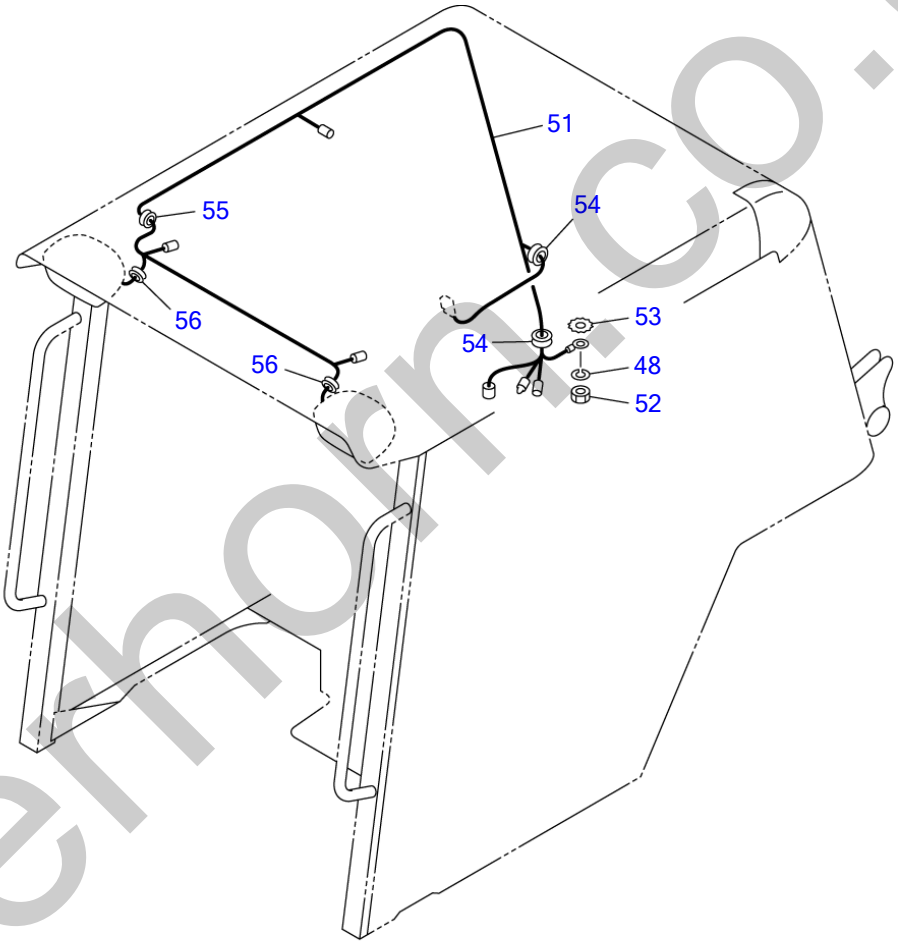

T8E530

S=1/15

silverhorn.co.uk

CANOPY (2/2) (for GEHL & MUSTANG)

Item	Part number	Description	Q'ty	Chan.	Serial No.	Serv.	Remarks
0	**0880846600**	CANOPY ASSY	1				
48	**1140020010**	・WASHER, spring	1				
51	**0881842060**	・HARNESS, wiring	1				
52	**1130040010**	・NUT	1				
53	**1140330010**	・WASHER	1				
54	**1652052800**	・GROMMET	3				
55	**1652053600**	・GROMMET	1				
56	**1652040930**	・GROMMET	2				
	U1e100						

silverhorn.co.uk

CANOPY (2/2) FOR GEHL & MUSTANG

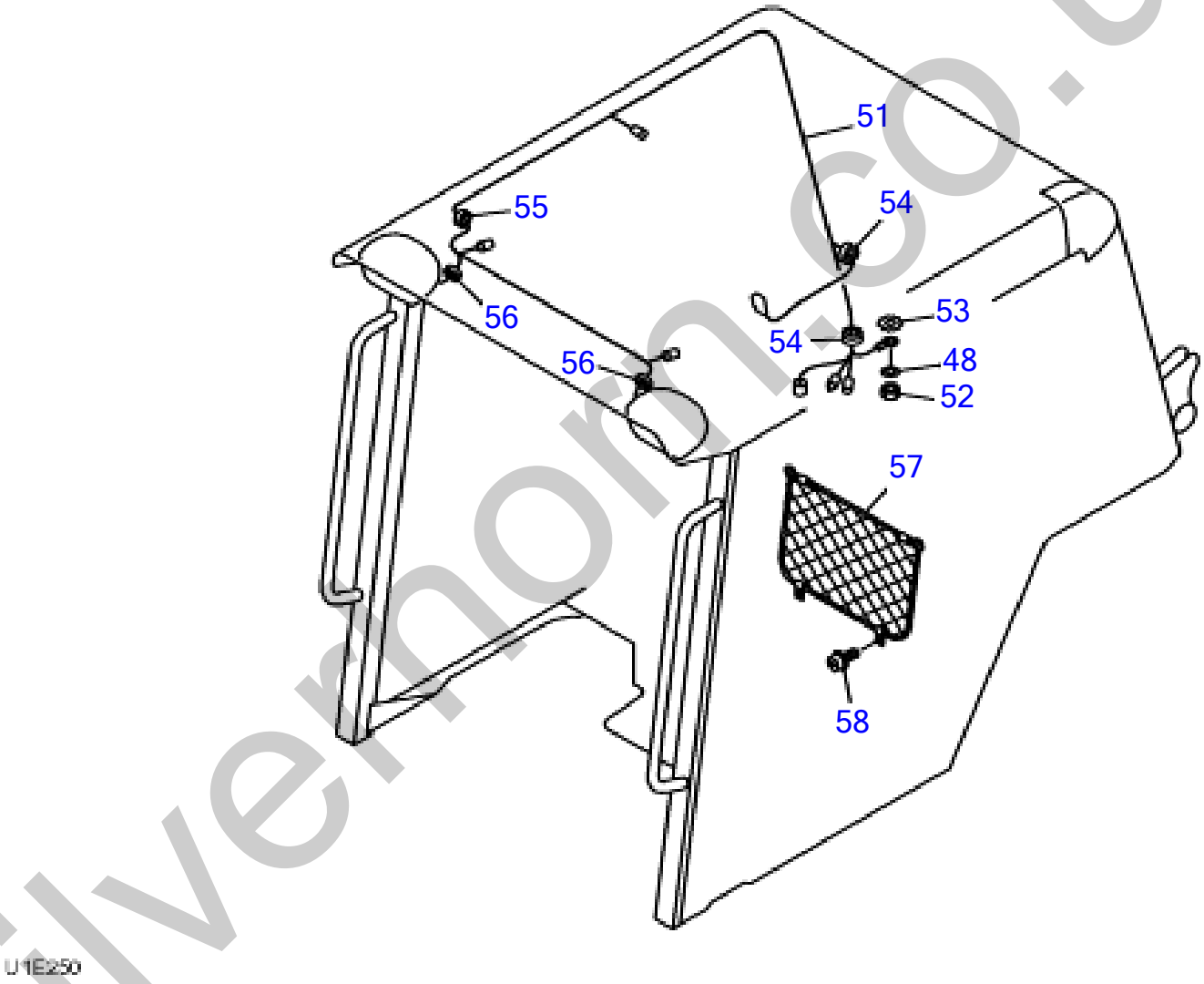

silvermorn.co.uk

CANOPY (2/2) FOR GEHL & MUSTANG

Item	Part number	Description	Q'ty	Chan.	Serial No.	Serv.	Remarks
		CANOPY (2/2) FOR GEHL & MUSTANG					
0	0880846600	CANOPY ASSY	1				
48	1140020010	* SPRING WASHER	1				
51	0881842060	* WIRING HARNESS	1				
52	1130040010	* NUT	1				
53	1140330010	* WASHER	1				
54	1652052800	* GROMMET	3				
55	1652053600	* GROMMET	1				
56	1652040930	* GROMMET	2				
57	1653691350	* POCKET	1				
58	1150010514	* SCREW	4				
	U1E101						

silverhorn.co.uk

CAB MOUNT

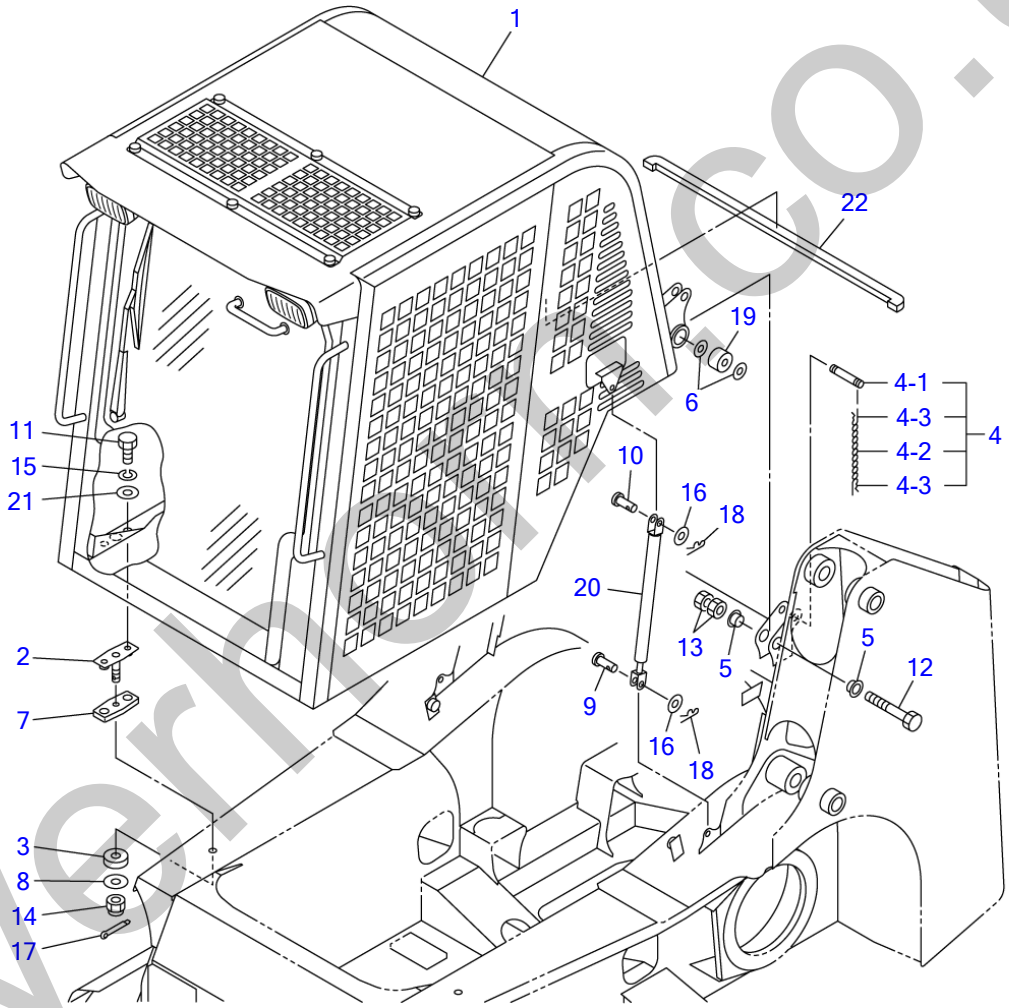

U1E150

S=1/20

silverhill.co.uk

CAB MOUNT

Item	Part number	Description	Q'ty	Chan.	Serial No.	Serv.	Remarks
		CAB MOUNT					
		CAB MOUNT (for EU)					
1	0668601000	CAB	1				
	0668602000	CAB	1				for EU
2	0881842030	BOLT ASSY	2				
3	0881842050	RUBBER, cushion	2				
4	0881841060	PIN ASSY	1				
4-1	0881841061	・PIN	1				
4-2	1652735886	・CHAIN	1				
4-3	1214000016	・PIN, snap	2				
5	0881840008	COLLAR	4				
6	0880840070	WASHER	4				
7	0881842040	RUBBER, cushion	2				
8	0003900044	WASHER	2				
9	0343503200	PIN	2				
10	0004010025	PIN	2				
11	1100041225	BOLT	4				
12	1100141610	BOLT	2				
13	1130040016	NUT	4				
14	1132080016	NUT	2				
15	1140020012	WASHER, spring	4				
16	1141110010	WASHER	4				
17	1210010432	PIN, split	2				
18	1214000008	PIN, snap	4				
19	1651005030	RUBBER, cushion	2				
20	1653900060	SPRING, gas	2				
21	0003600165	WASHER	4				
22	0880866140	SPONGE	1				
	U1e150						

silverhorn.co.uk

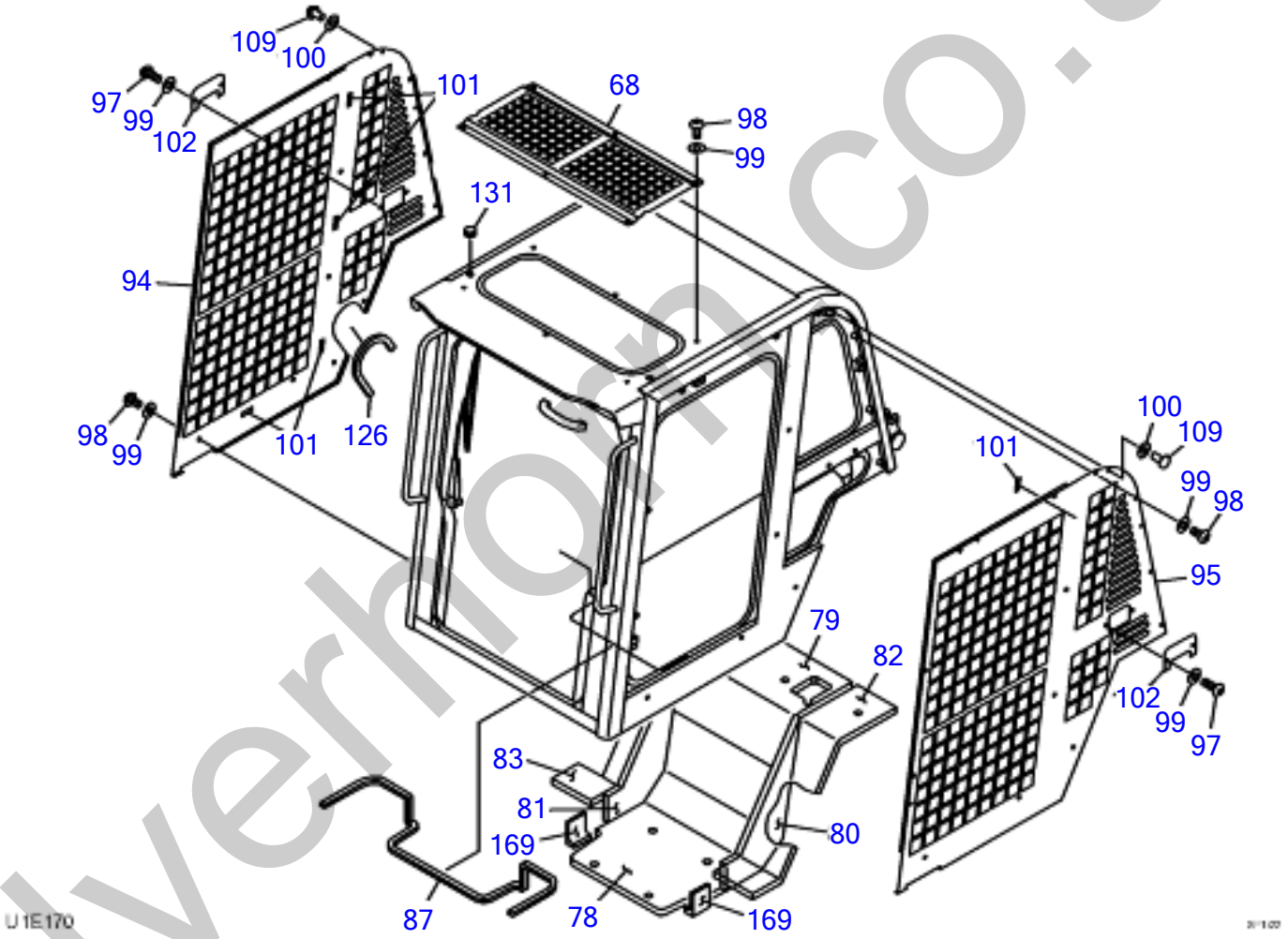

silverhorn.co.uk

CAB (1/6)

Item	Part number	Description	Q'ty	Chan.	Serial No.	Serv.	Remarks
		CAB (1/6)					
0	668601000	CAB ASSY	1				
68	0880865129	* GUARD	1				
78	0881842010	* NOISE ABSORBENT	1				
79	0880865133	* NOISE ABSORBENT	1				
80	0880865134	* NOISE ABSORBENT	1				
81	0880865135	* NOISE ABSORBENT	1				
82	0880865136	* NOISE ABSORBENT	1				
83	0880865137	* NOISE ABSORBENT	1				
87	1654639203	* TRIM	1				
94	0880865142	* GUARD	1				
95	0880865143	* GUARD	1				
97	1120990820	* BOLT	4				
98	1120990816	* BOLT	33				
99	1654011705	* WASHER	37				
100	0880865144	* WASHER	8				
101	0880865145	* PLATE	8				
102	0880865146	* COVER	2				
109	0880865150	* RIVET	8				
126	1653918037	* TRIM	1				
131	1653303010	* CAP	2				
169	0668601009	* SPONGE	2				
	U1E171						

silverhorn.co.uk

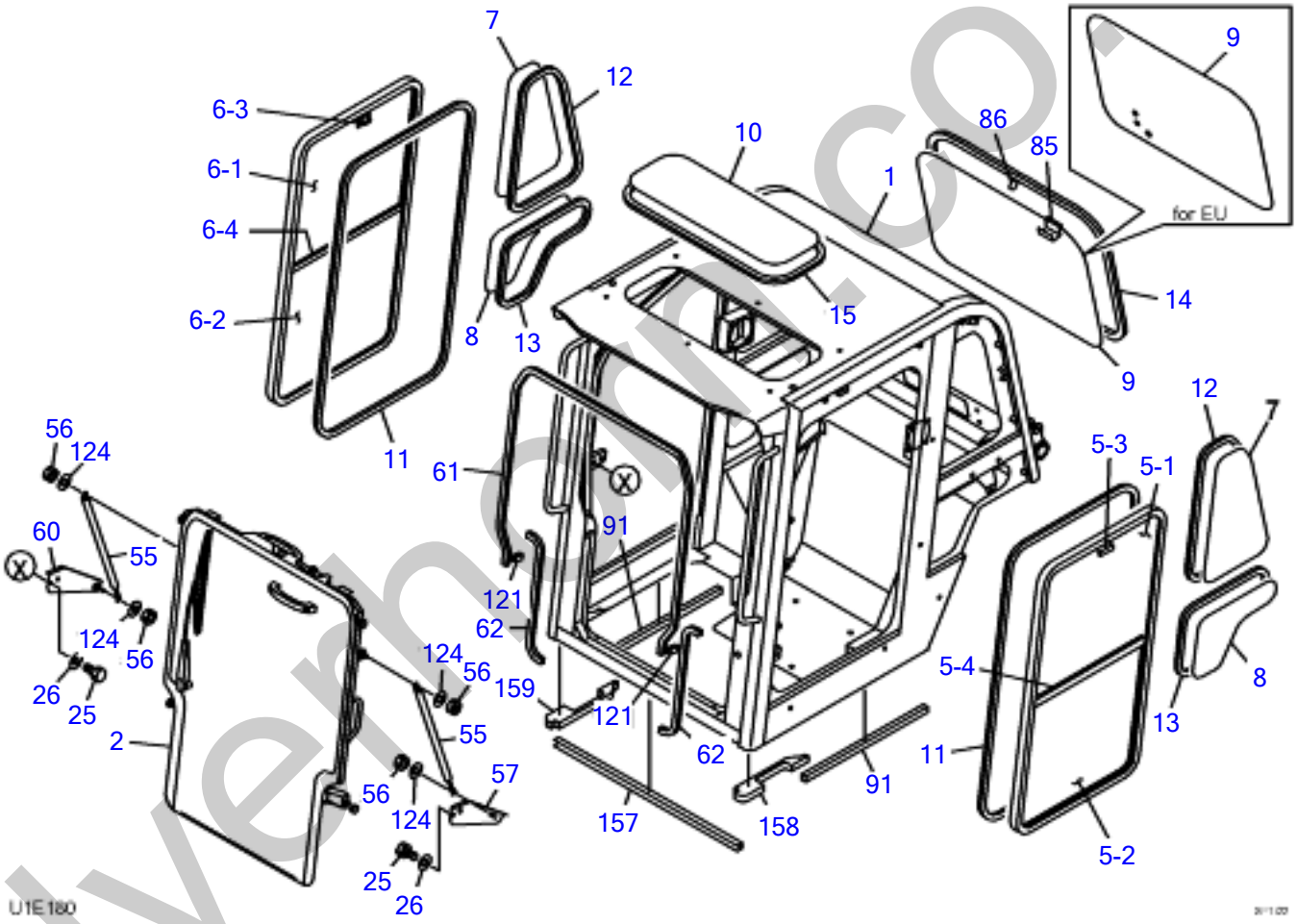

silverhand.co.uk

CAB (2/6)

Item	Part number	Description	Q'ty	Chan.	Serial No.	Serv.	Remarks
		CAB (2/6)					
0	0668601000	CAB ASSY	1				
2	0668601200	* FRONT DORR ASSY	1				
5	0880865420	* LH SIDE SASH ASSY	1				
5-1	0880865422	* * GLASS	1				
5-2	0880865423	* * GLASS	1				
5-3	0880865424	* * LOCK ASSY	1				
5-4	0880865427	* * WEATHER STRIP	1				
6	0880865430	* RH SIDE SASH ASSY	1				
6-1	0880865422	* * GLASS	1				
6-2	0880865423	* * GLASS	1				
6-3	0880865424	* * LOCK ASSY	1				
6-4	0880865437	* * WEATHER STRIP	1				
7	0880865101	* GLASS	2				
8	0880865102	* GLASS	2				
9	0880865103	* GLASS	1				
10	0880865104	* GLASS	1				
11	1654253320	* H-RUBBER	2				
12	1654231148	* H-RUBBER	2				
13	1654231120	* H-RUBBER	2				
14	1654231265	* H-RUBBER	1				
15	1654231195	* H-RUBBER	1				
25	1100091020	* BOLT	4				
26	1654011706	* WASHER	4				
55	0880865124	* GAS SPRING	2				
56	1134090006	* NUT	4				
57	0880865125	* BRACKET	1				
60	0880865126	* BRACKET	1				
61	1654630240	* TRIM	1				
62	1654630060	* TRIM	2				
85	0880865138	* GRIP	1				
86	0880865139	* RING	1				
91	0880865140	* SEAL	2				
121	1654619003	* SEAL	2				
124	1141190008	* WASHER	4				
157	1654605088	* RUBBER	1				
158	0668600240	* SEAL	1				
159	0668600250	* SEAL	1				
	U1E181						

silverhorn.co.uk

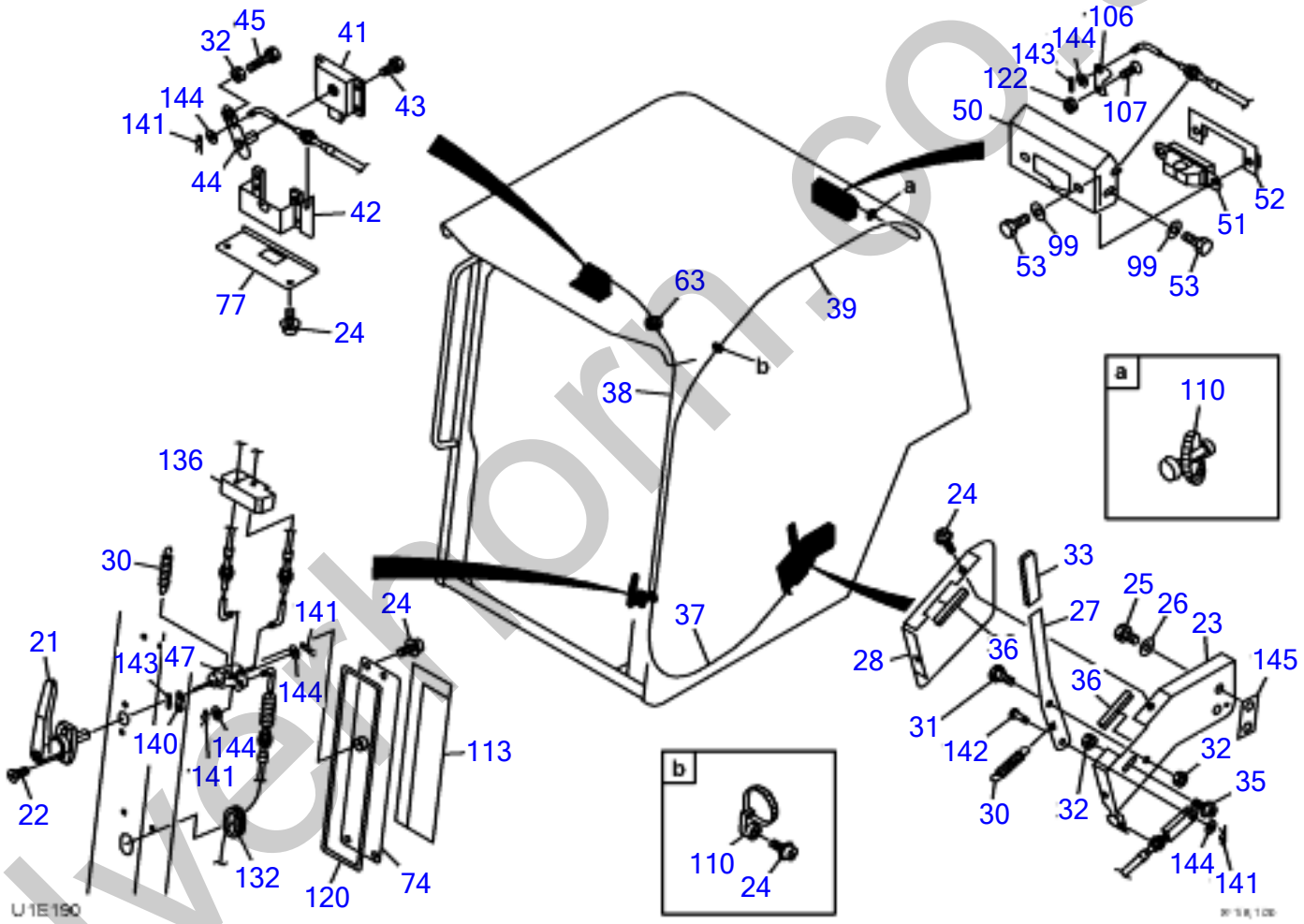

silverhorn.co.uk

CAB (3/6)

Item	Part number	Description	Q'ty	Chan.	Serial No.	Serv.	Remarks
		CAB (3.6)					
0	0668601000	CAB ASSY	1				
21	1654011520	* HANDLE	1				
22	1120690520	* SCREW	2				
23	0880865161	* BRACKET	1				
24	1150420512	* SCREW	9				
25	1100091020	* BOLT	2				
26	1654011706	* WASHER	2				
27	0880865162	* LEVER	1				
28	0880865110	* COVER	1				
30	0880865112	* SPRING	2				
31	1654010800	* PIN	1				
32	1131242006	* NUT	3				
33	0438601760	* COVER	1				
35	1150410612	* SEMS BOLT	1				
36	1653916005	* TRIM	2				
37	0880865163	* CABLE	1				
38	0880865164	* CABLE	1				
39	0880865165	* CABLE	1				
41	1654011740	* LATCH	1				
42	0880865118	* PLATE	1				
43	1100090616	* BOLT	4				
44	0880865166	* PLATE	1				
45	1100240630	* BOLT	1				
47	0880865167	* PLATE	1				
50	0880865121	* BRACKET	1				
51	1653384630	* LOCK	1				
52	0880865123	* PLATE	1				
53	1100090820	* BOLT	5				
63	1652042030	* GROMMET	1				
74	0880865130	* COVER	1				
77	0880865132	* COVER	1				
99	1654011705	* WASHER	5				
106	0880865171	* BRACKET	1				
107	1120630512	* SCREW	1				
110	1652221050	* BAND	2				
113	0880865153	* NOISE ABSORBENT	1				
120	0880865159	* SEAL	1				
122	1131242005	* NUT	1				
132	1654011701	* GROMMET	1				
136	0880865160	* PACKING	2				
140	0880865168	* PLATE	1				
141	1214000006	* PIN	4				
142	0880865170	* PIN	1				
143	1210002012	* PIN	2				
144	1654011711	* WASHER	4				
145	0880865169	* SHIM	1				
	U1E191						

silverhorn.co.uk

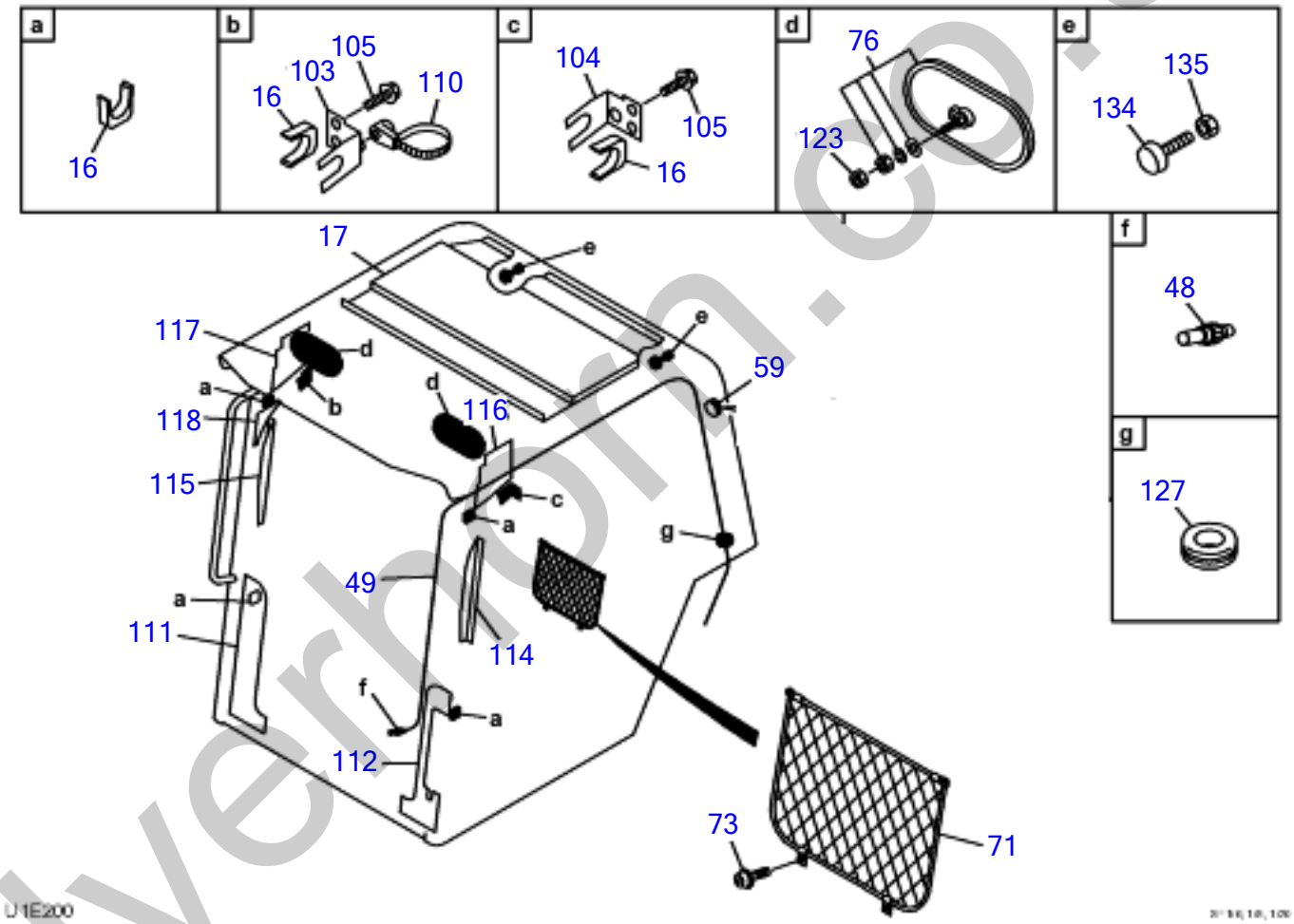

silverhorn.co.uk

CAB (4/6)

Item	Part number	Description	Q'ty	Chan.	Serial No.	Serv.	Remarks
		CAB (4/6)					
0	0668601000	CAB ASSY	1				
16	0880865105	* STOPPER	6				
17	0880865106	* NOISE ABSORBENT	1				
48	1711910040	* WASHER NOZZLE	1				
49	1711919285	* HOSE	1				
59	1654011703	* CAP	1				
71	1654010600	* POCKET	1				
73	1150410416	* SCREW	4				
76	0880865131	* REARVIEW MIRROR	2				
103	0880865147	* BRACKET	1				
104	0880865148	* BRACKET	1				
105	1100090620	* BOLT	4				
110	1652221050	* BAND	1				
111	0880865151	* NOISE ABSORBENT	1				
112	0880865152	* NOISE ABSORBENT	1				
114	0880865154	* NOISE ABSORBENT	1				
115	0880865155	* NOISE ABSORBENT	1				
116	0880865156	* NOISE ABSORBENT	1				
117	0880865157	* NOISE ABSORBENT	1				
118	0880865158	* NOISE ABSORBENT	1				
123	1130040008	* NUT	2				
127	1654011700	* GROMMET	1				
134	1651101042	* STOPPER	2				
135	1130090010	* NUT	2				
	U1E201						

silverhorn.co.uk

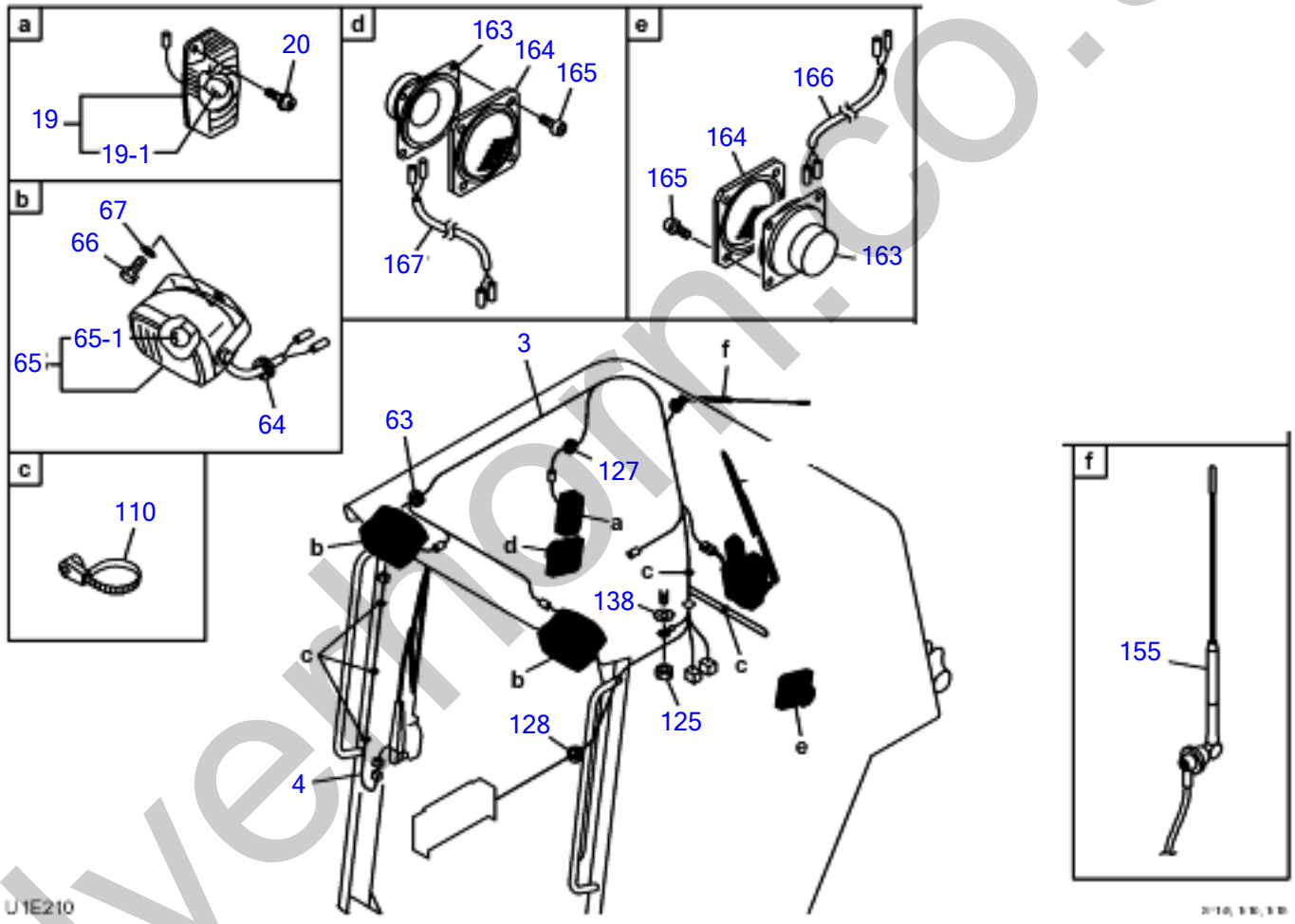

silverhorn.co.uk

CAB (5/6)

Item	Part number	Description	Q'ty	Chan.	Serial No.	Serv.	Remarks
		CAB (5/6)					
0	0668601000	CAB ASSY	1				
3	0668601010	* WIRING HARNESS	1				
4	0880865410	* WIRING HARNESS	1				
19	1703001700	* ROOM LAMP	1				
19-1	1703001701	* * BULB	1				
20	1150410412	* SCREW	2				
63	1652042030	* GROMMET	1				
64	1652000602	* GROMMET	2				
65	1703006600	* LAMP ASSY	2				
65-1	1703006605	* * BULB	1				
66	1100041020	* BOLT	2				
67	1654011900	* WASHER	2				
110	1652221050	* BAND	5				
125	1130040010	* NUT	1				
127	1654011700	* GROMMET	1				
128	1652053600	* GROMMET	1				
138	1140330010	* WASHER	1				
155	1705003460	* ANTENNA	1				
163	1705003500	* SPEAKER	2				
164	1705003550	* GRILLE	2				
165	1150120412	* SCREW	8				
166	0668601006	* WIRING HARNESS	1				
167	0668601007	* WIRING HARNESS	1				
	U1E211						

silverhorn.co.uk

CAB (6/6) FRONT DOOR

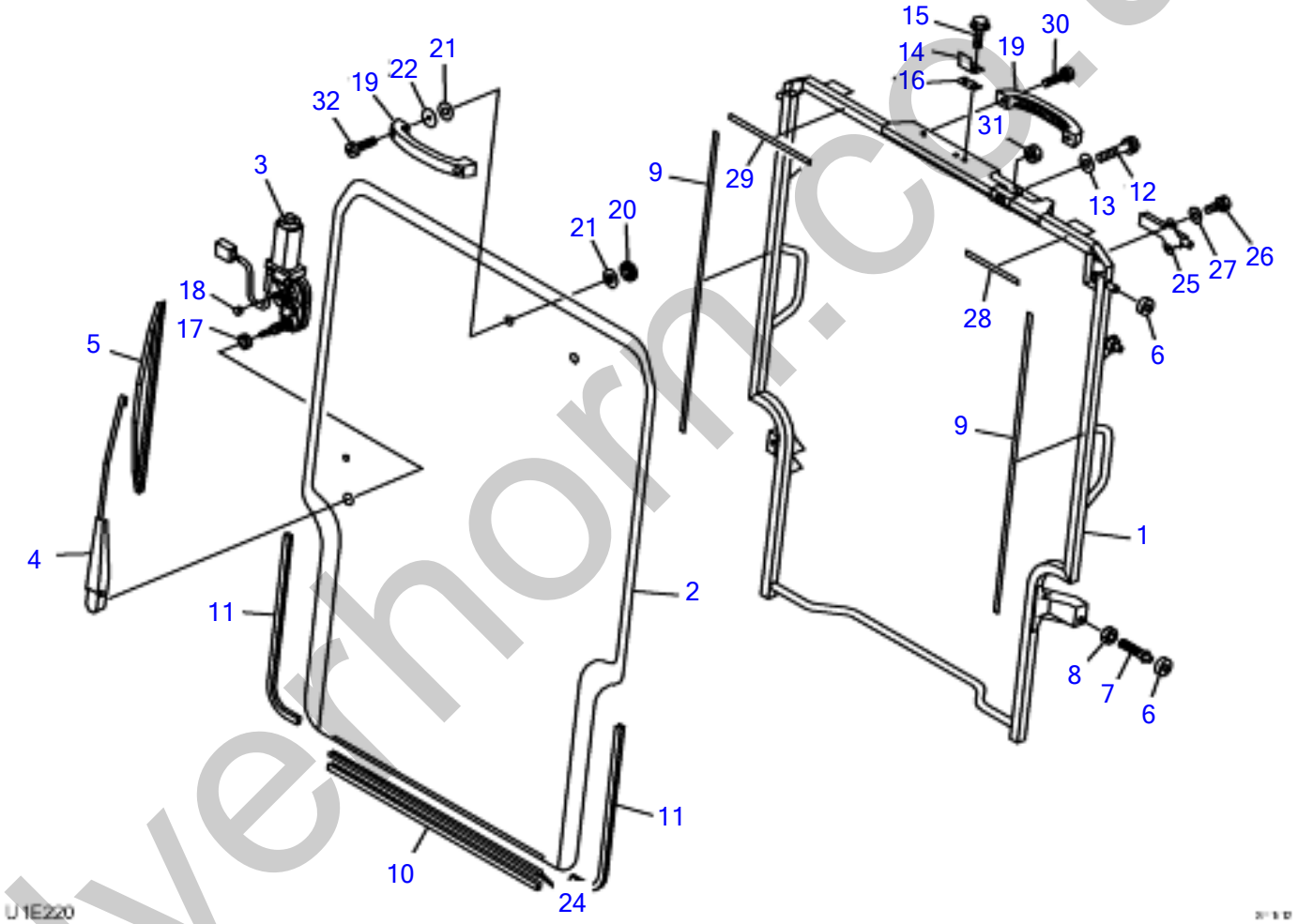

silverhorn.co.uk

CAB (6/6) FRONT DOOR

Item	Part number	Description	Q'ty	Chan.	Serial No.	Serv.	Remarks
		CAB (6/6) FRONT DOOR					
0	668601200	FRONT DOOR ASSY	1				
1	066861210	* FRONT DOOR	1				
2	0880865301	* GLASS	1				
3	0880865302	* WIPER MOTOR	1				
4	0880865303	* WIPER ARM	1				
5	0880865304	* BLADE	1				
6	0880865305	* ROLLER	4				
7	0880865306	* BOLT	2				
8	1130040012	* NUT	2				
9	1654615210	* DAM	1				
10	1654631054	* SEAL	1				
11	1653916045	* TRIM	2				
12	0880865307	* BOLT	1				
13	1654011707	* WASHER	1				
14	0880865308	* PLATE	1				
15	1100090620	* BOLT	2				
16	0880865309	* SHIM	4				
17	0880865310	* COLLAR	1				
18	0880865311	* COLLAR	1				
19	0880865312	* HANDLE	2				
20	08/80865313	* NUT	2				
21	0880865314	* GROMMET	4				
22	0880865315	* WASHER	2				
24	0880865316	* SHEET	2				
25	0880865317	* LATCH	1				
26	1100090820	* BOLT	2				
27	1654011705	* washer	2				
28	1654615013	* DAM	1				
29	1654615020	* DAM	1				
30	1150420620	* SCREW	2				
31	1130190012	* NUT	1				
32	1150410620	* SCREW	2				
	U1E220						

silverhorn.co.uk

REAR MIRROR

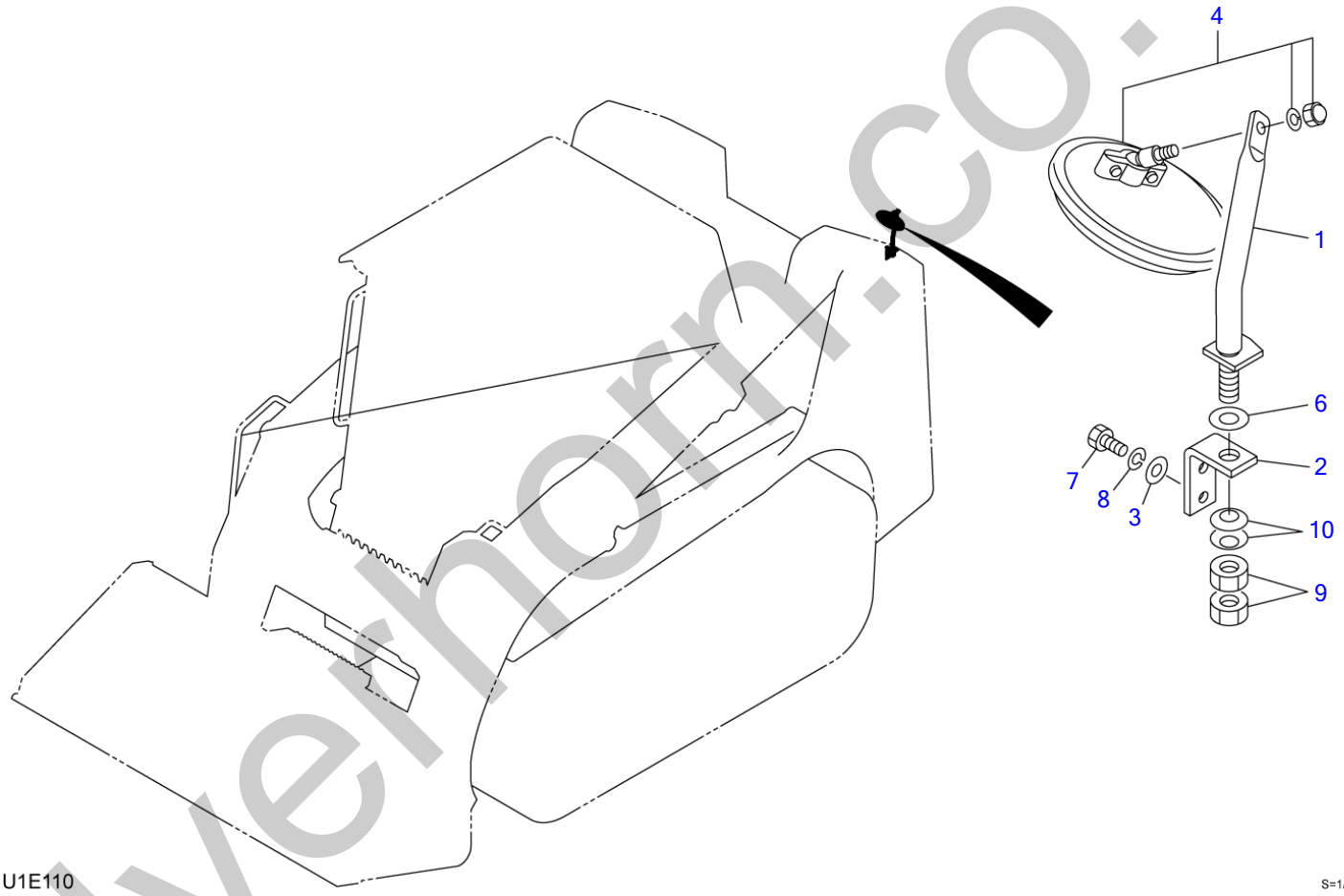

silverthorn.co.uk

REAR MIRROR

Item	Part number	Description	Q'ty	Chan.	Serial No.	Serv.	Remarks
		MIRROR ASSY, rear					
1	0880870020	STAY	1				
2	0881870010	BRACKET	1				
3	0003608252	WASHER	2				
4	1656500130	MIRROR	1				
6	1141210014	WASHER	1				
7	1100040816	BOLT	2				
8	1140020008	WASHER, spring	2				
9	1130640014	NUT	2				
10	1225110014	WASHER, conical	2				
	U1e110						

silverhorn.co.uk

REARVIEW MIRROR

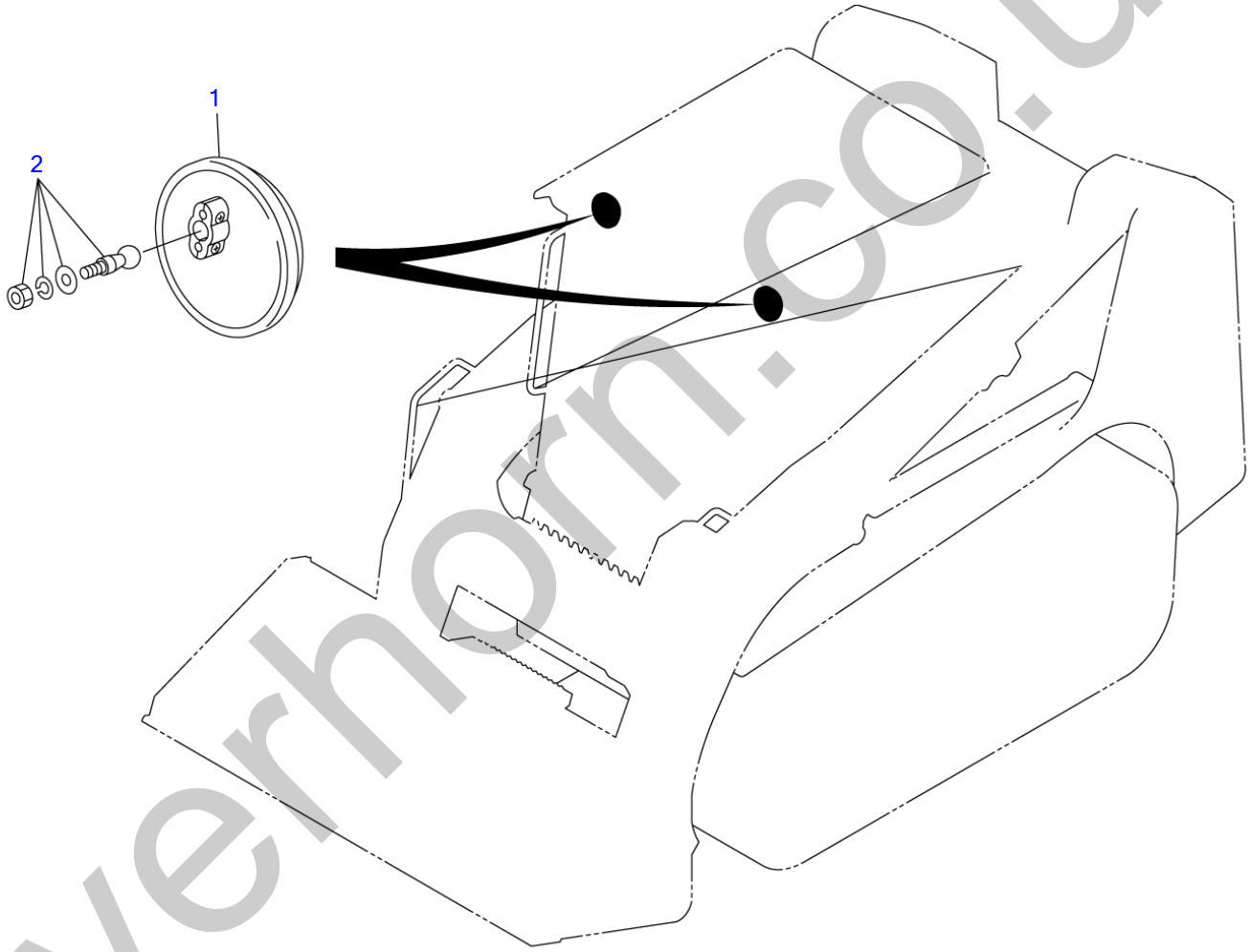

T7E100

S=1/5, 1/25

silverhorn.co.uk

REARVIEW MIRROR

Item	Part number	Description	Q'ty	Chan.	Serial No.	Serv.	Remarks
		MIRROR ASSY, rearview					
1	**1656500110**	MIRROR	2				
2	**1654006000**	PIVOT	2				
	T8e090						

silverhorn.co.uk

MANUAL STORAGE

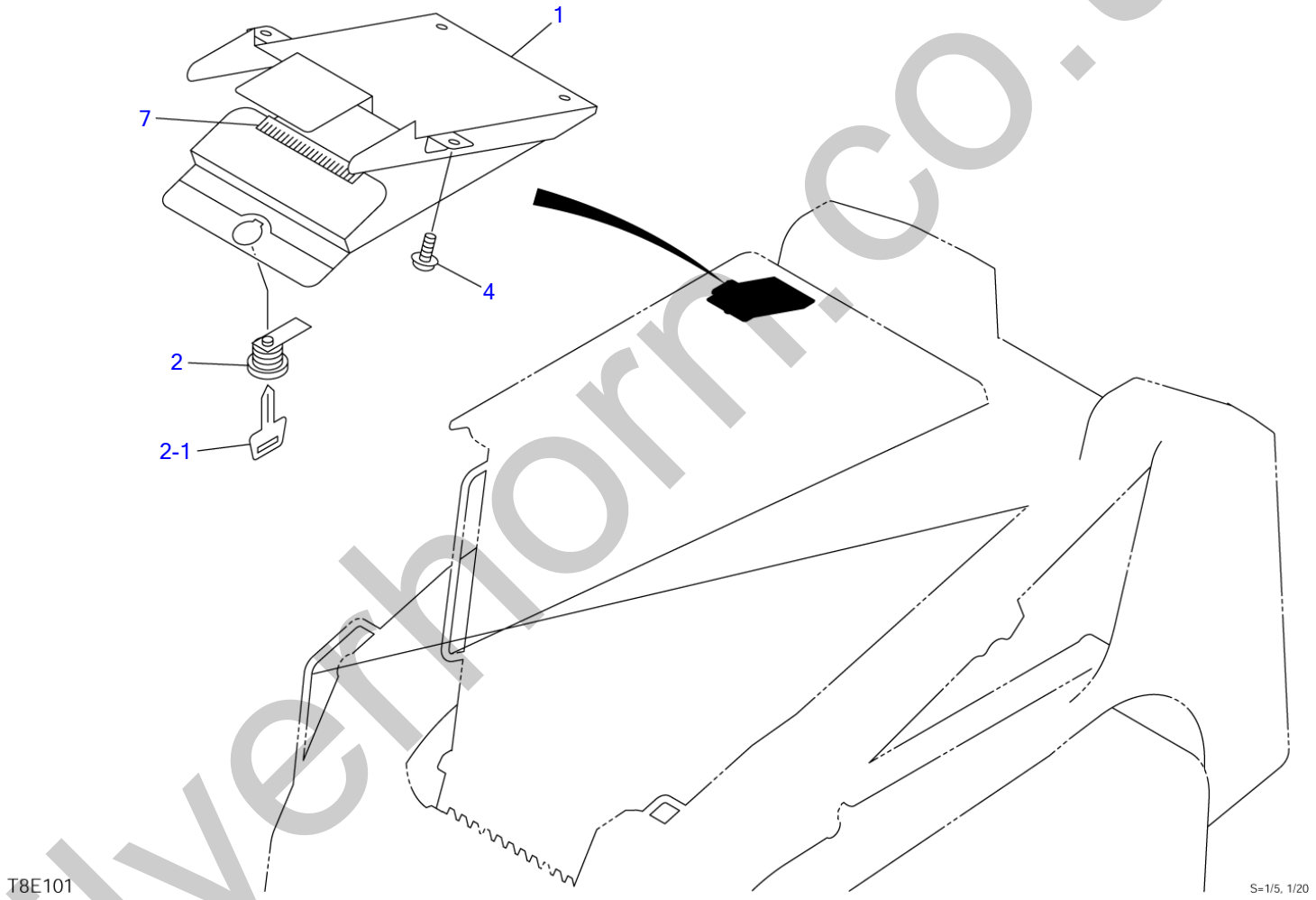

silverhorn.co.uk

MANUAL STORAGE

Item	Part number	Description	Q'ty	Chan.	Serial No.	Serv.	Remarks
		MANUAL STORAGE					
1	0881841510	BOX	1				
2	1653601395	LOCK	1				
2-1	1700100019	KEY	1				
4	1150420612	SCREW	4				
7	1654605010	RUBBER, sash	1				sold by the meter
	T8e101						

silverhorn.co.uk

AIR CONDITIONER (1/5) (compressor)

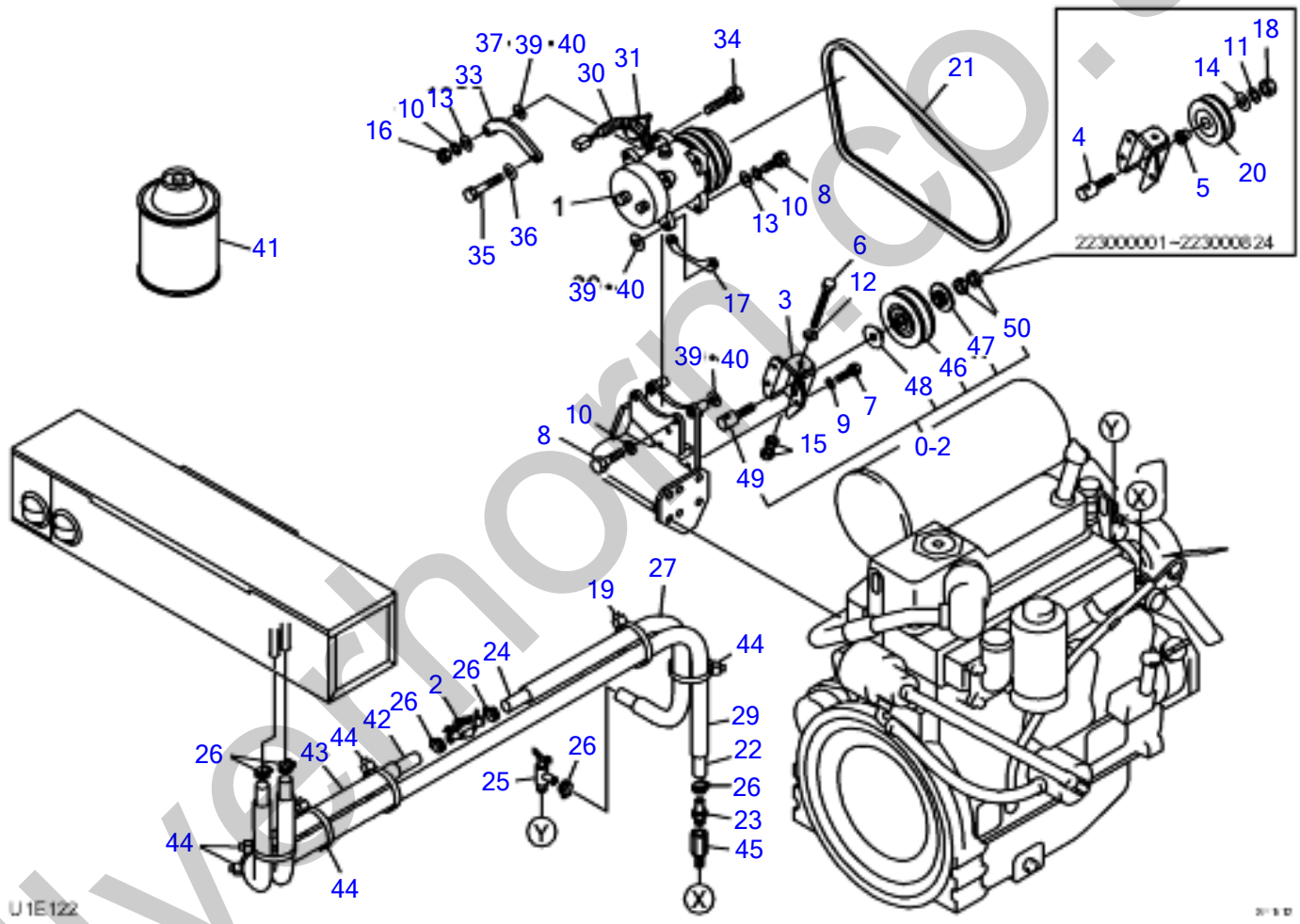

silverthorn.co.uk

AIR CONDITIONER (1/5) (compressor)

Item	Part number	Description	Q'ty	Chan.	Serial No.	Serv.	Remarks
0	0664600100	COMPRESSOR ASSY	1			M	
1	1911506010	・COMPRESSOR	1				
2	1911506008	・VALVE	1				
3	0564618790	・BRACKET	1				
4		・SHAFT	1				
5		・COLLAR	1				
6	1100440810	・BOLT	1				
7	1100040825	・BOLT	3				
8	1103041035	・BOLT	4				
9	1140020008	・WASHER, spring	3				
10	1140020010	・WASHER, spring	3				
11	1140020012	・WASHER, spring	1				
12	1141110008	・WASHER	1				
13	1141110010	・WASHER	4				
14	1141550012	・WASHER	1			M	
15	1130040008	・NUT	2				
16	1130240010	・NUT	1				
17	0880465520	・PLATE	1				
18	1130040012	・NUT	1				
19	1652201007	・BAND	3				
20		・PULLEY	1				
21	1911508406	・V-BELT	1				A47
22	1911511805	・HOSE	1			M	sold by the meter
23	0007224009	・ADAPTOR	1				
24	1911501845	・HOSE	1			M	sold by the meter
25	1911502100	・VALVE	1				
26	1911500500	・CLAMP	6				
27	1531325035	・PROTECTOR	1			M	sold by the meter
29	1531325095	・PROTECTOR	1			M	sold by the meter
30	1703210720	・PROTECTOR	1				sold by the meter
31	1652231100	・BAND	1				
33	0880465510	・BRACKET	1				
34	1100041055	・BOLT	1				
35	1103041050	・BOLT	1				
36	1225110010	・WASHER	1				
37	0003600047	・SHIM	AR				
39	0003600222	・SHIM	AR				t=0.2mm
40	0003600223	・SHIM	AR				t=0.3mm
41	1919055000	・GAS, coolant	8				100g
42	1911501855	・HOSE	1			M	sold by the meter
43	1531325045	・PROTECTOR	1			M	sold by the meter
44	1652201008	・BAND	5			M	
45	0007210029	・BUSHING	1			M	
46	0564634880	* PULLEY ASSY	1				
47	0564634890	* COLLAR	1				
48	0564634895	* COLLAR	1				
49	0564626010	* SHAFT	1				
50	1130140012	* NUT	2				
0-2	0569617280	* PULLEY KIT	1				
	U1e122						

silverhorn.co.uk

AIR CONDITIONER (2/5) (condenser)

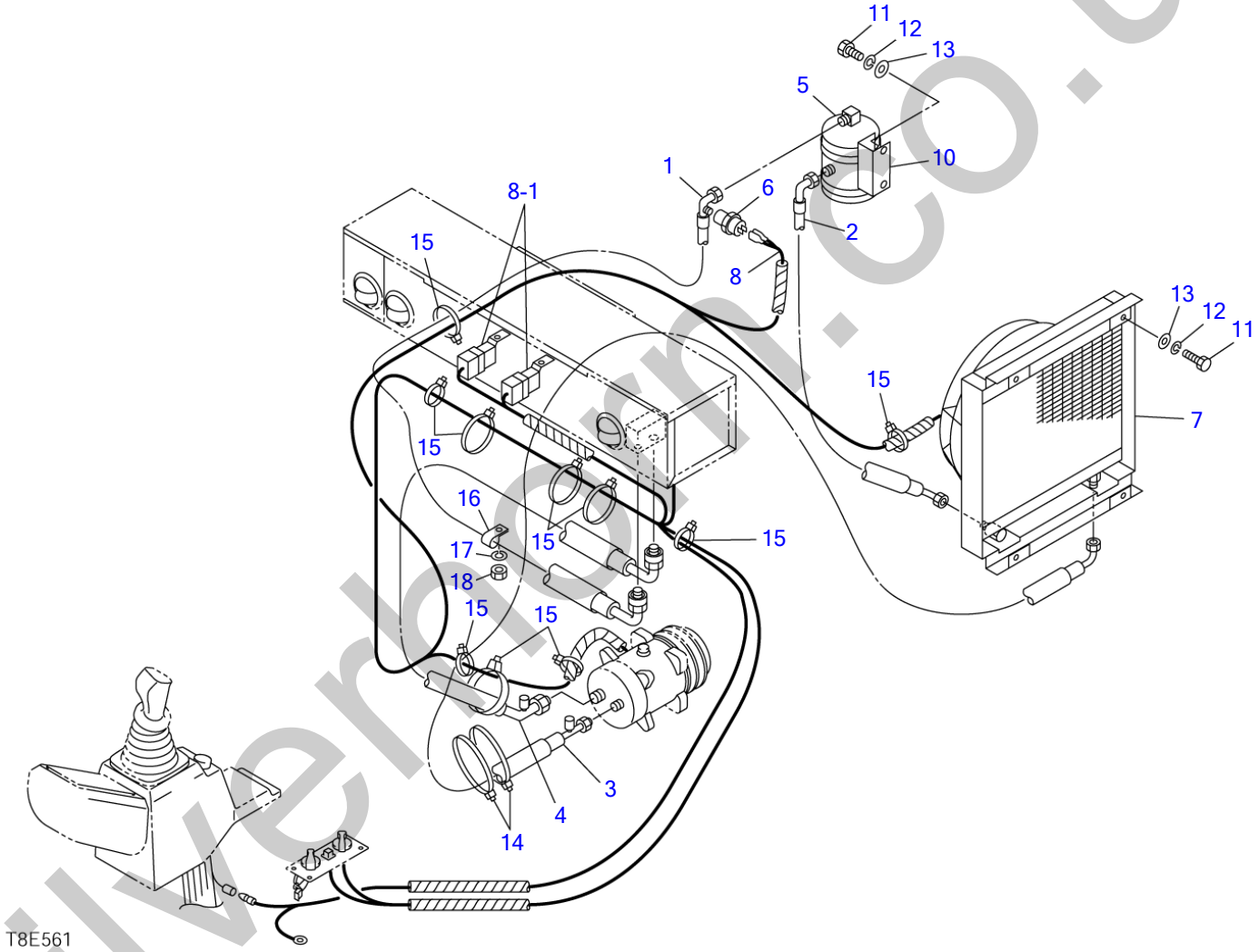

silverform.co.uk

AIR CONDITIONER (2/5) (condenser)

Item	Part number	Description	Q'ty	Chan.	Serial No.	Serv.	Remarks
0	0664600200	CONDENSER ASSY	1				
1	1911508431	・HOSE ASSY	1				
	1911505601	・・O-RING	1				
2	1911508432	・HOSE ASSY	1				
	1911505601	・・O-RING	1				
3	1911505943	・HOSE ASSY	1				
	1911505602	・・O-RING	1				
4	1911508424	・HOSE ASSY	1				
	1911505603	・・O-RING	1				
5	1911508311	・DRYER	1				
6	1911505514	・SWITCH, pressure	1				
7	1911506080	・CONDENSER ASSY	1				see page (4/5)
8	1911508410	・HARNESS, wiring	1				
8-1	1911506041	・・RELAY	2				
10	0880465610	・BRACKET	1				
11	1100040820	・BOLT	6				
12	1140020008	・WASHER, spring	6				
13	1141110008	・WASHER	6				
14	1652201008	・BAND	4				
15	1652231250	・BAND	10				
16	1711900071	・CLAMP	1				
17	1140020010	・WASHER, spring	1				
18	1130040010	・NUT	1				
	U1e130						

silverhorn.co.uk

AIR CONDITIONER (3/5) (air conditioner unit)

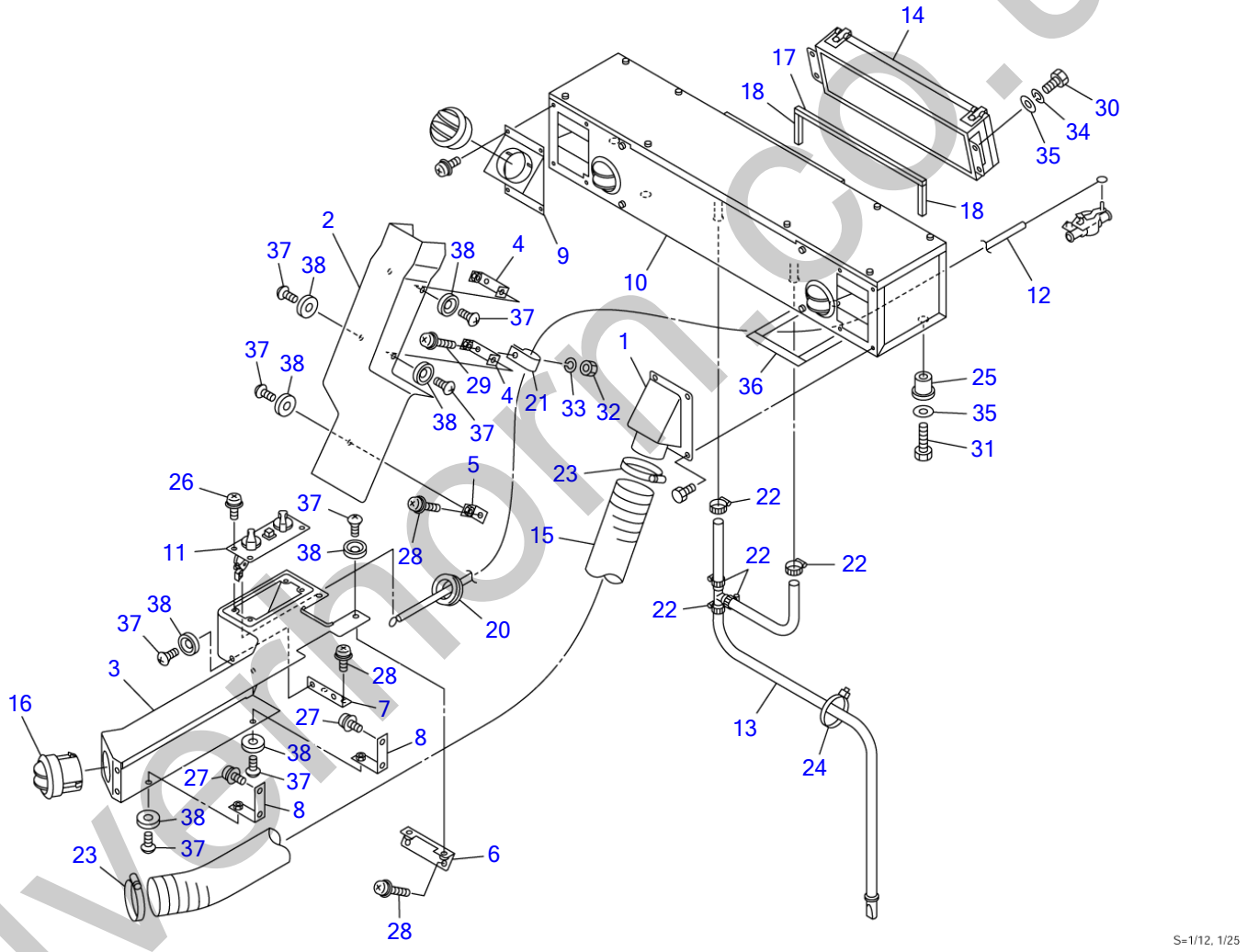

silverthorn.co.uk

AIR CONDITIONER (3/5) (air conditioner unit)

Item	Part number	Description	Q'ty	Chan.	Serial No.	Serv.	Remarks
0	0664600300	UNIT ASSY, air conditioner	1			M	
1	0664601310	・ADAPTOR	1				
2	0664601320	・COVER	1				
3	0664601330	・COVER	1				
4	0664600340	・BRACKET	2				
5	0664600350	・BRACKET	1				
6	0694600360	・BRACKET	1			M	
7	0664600370	・BRACKET	1				
8	0694600380	・BRACKET	2			M	
9	1911505920	・ADAPTOR	1				
10	1911506090	・UNIT, air conditioner	1				see page (4/5)
11	1911506020	・PANEL ASSY	1				see page (5/5)
12	1911506006	・CABLE, control	1				
13	1911506030	・TUBE ASSY	1				
14	1911506050	・BOX	1				see page (5/5)
15	1911508559	・HOSE	1				
16	1911506060	・LOUVER	1				
17	0881464370	・URETHANE	1				
18	0881464380	・URETHANE	2				
19	1653916005	・TRIM	1				sold by the meter
20	1652053600	・GROMMET	1				
21	0007300010	・CLAMP	1				
22	1911500500	・BAND	5				
23	1533700076	・BAND	2				
24	1652231250	・BAND	1				
25	1652520008	・GROMMET	4				
26	1111810610	・SCREW	4				
27	1150420610	・SCREW	4				
28	1150420614	・SCREW	8				
29	1150420625	・SCREW	1				
30	1100040816	・BOLT	4				
31	1100040830	・BOLT	4				
32	1130040006	・NUT	1				
33	1140020006	・WASHER, spring	1				
34	1140020008	・WASHER, spring	4				
35	1141110008	・WASHER	8				
36	1654313013	・SPONGE	4				sold by the meter
37	1120790614	・SCREW	11			M	
38	1652900016	・WASHER	11			M	
	U1e141						

silverhorn.co.uk

AIR CONDITIONER (4/5)

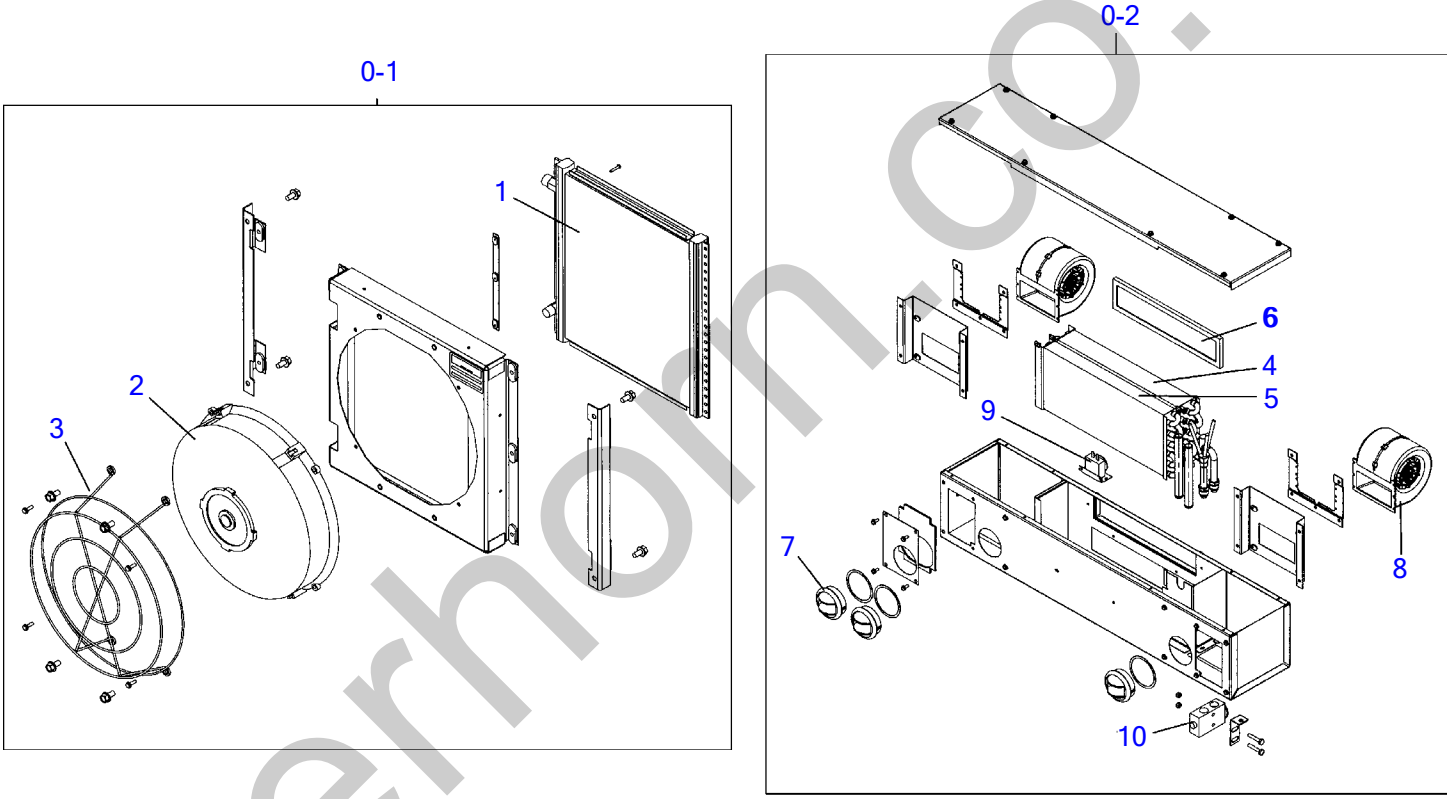

T8E401

S=free

silverhorn.co.uk

AIR CONDITIONER (4/5)

Item	Part number	Description	Q'ty	Chan.	Serial No.	Serv.	Remarks
0-1	1911506080	CONDENSER ASSY	1				
1	1911505503	・CONDENSER	1				
2	1911506083	・MOTOR	1				
3	1911505505	・GURD	1				
0-2	1911506090	UNIT, air conditioner	1				
4	1911506091	・CORE	1				
5	1911506092	・CORE	1				
6	1911506095	・FILTER	1				
7	1911506012	・LOUVER	2				
8	1911506096	・MOTOR	2				
9	1911505421	・THERMOSTAT	1				
10	1911505422	・VALVE	1				
11	1911506089	・HARNESS ASSY, wiring	1				not shown
	T8e401						

silverhorn.co.uk

AIR CONDITIONER (5/5)

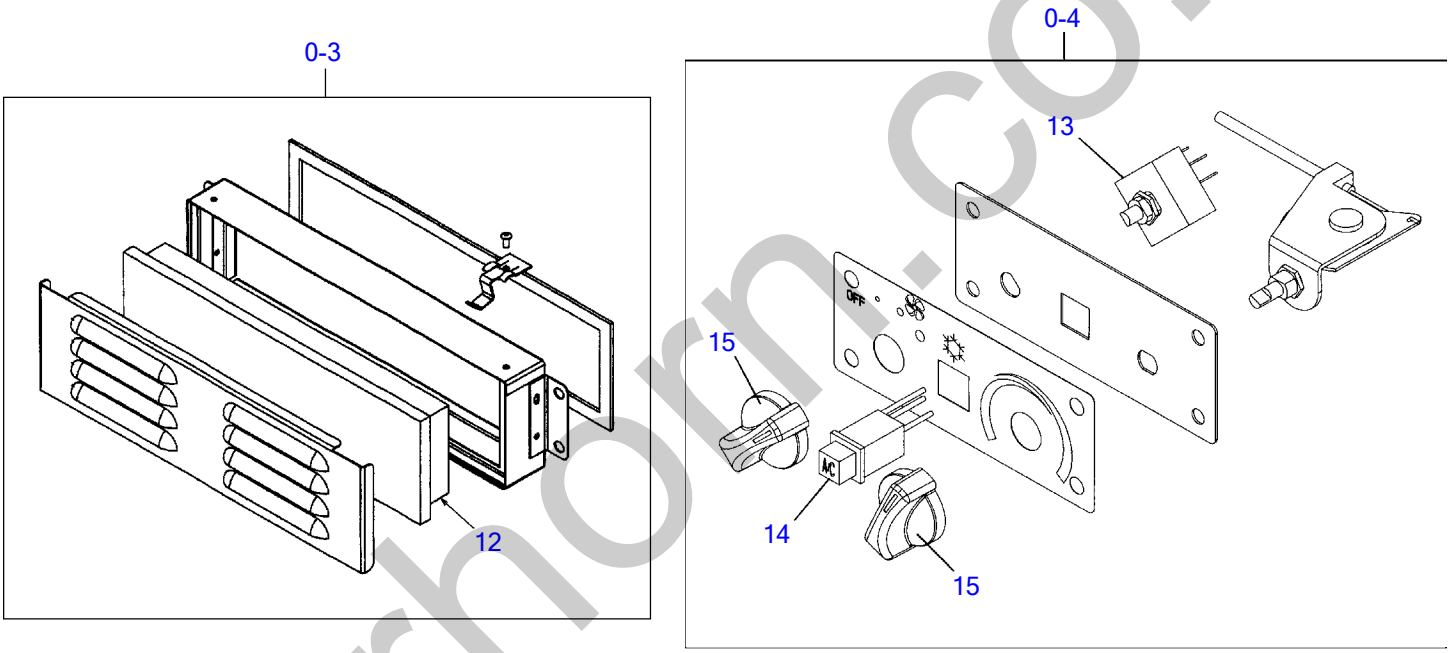

T8E410

S=free

silverhorn.co.uk

AIR CONDITIONER (5/5)

Item	Part number	Description	Q'ty	Chan.	Serial No.	Serv.	Remarks
0-3	1911506050	BOX	1				
12	1911506052	・FILTER	1				
0-4	1911506020	PANEL ASSY	1				
13	1911506027	・SWITCH	1				
14	1911505767	・SWITCH	1				
15	1911505763	・KNOB	2				
	T8e410						

silverhorn.co.uk

ARM

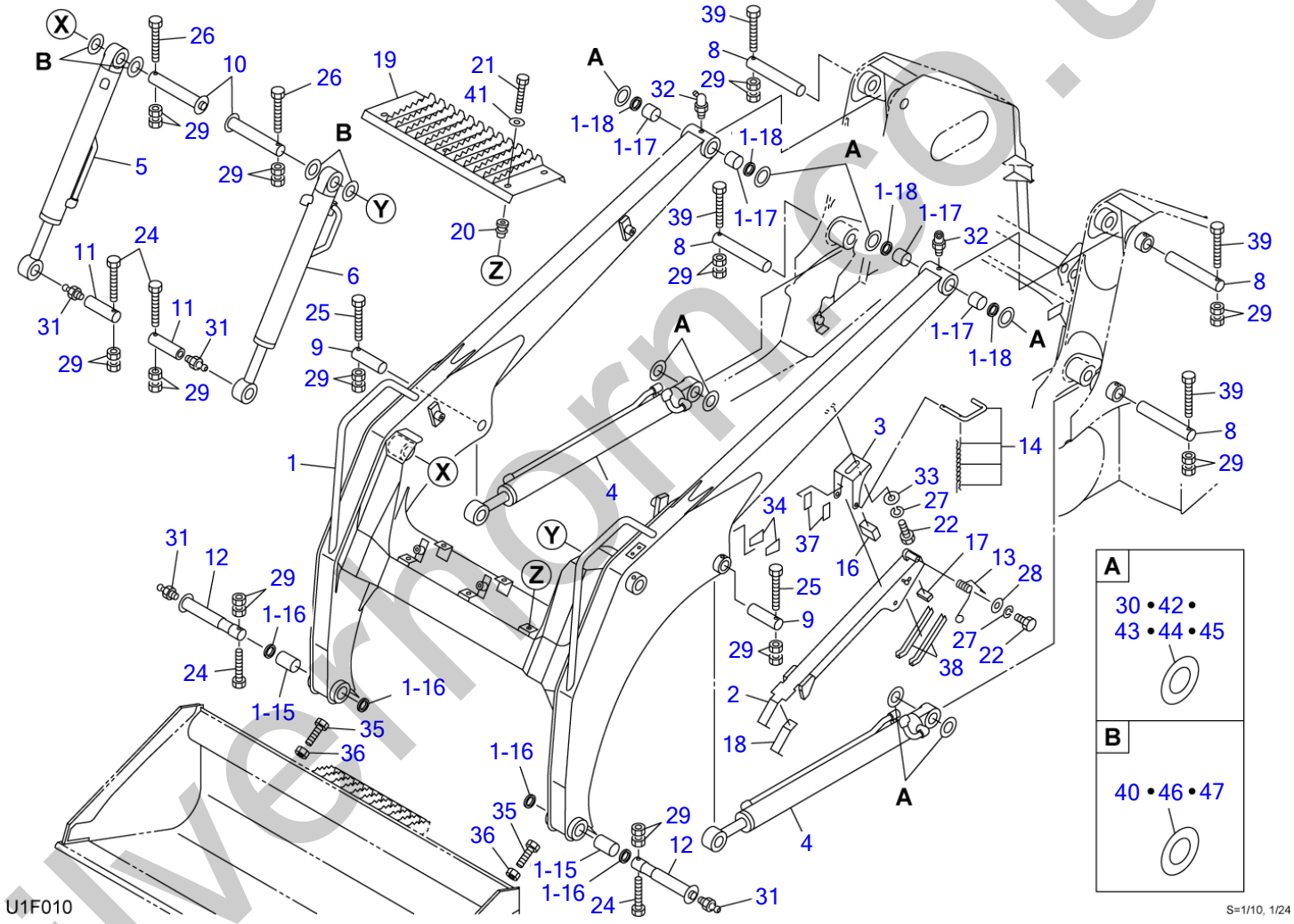

silvermorn.co.uk

ARM

Item	Part number	Description	Q'ty	Chan.	Serial No.	Serv.	Remarks
		ARM ASSY					
1	0666000100	ARM	1				
1-15	0002400066	・BUSHING	2				
1-16	1432200035	・SEAL, dust	4				
1-17	0002400060	・BUSHING	4				
1-18	1432200040	・SEAL, dust	4				
2	0880606550	LOCK	1				
3	0881604650	BRACKET	1				
4	1900081800	CYLINDER, arm	2				
5	1900081300	CYLINDER, bucket (R.H.)	1				
6	1900081400	CYLINDER, bucket (L.H.)	1				
8	0011503240	PIN	4				
9	0001603125	PIN	2				
10	0001090002	PIN	2				
11	0001672004	PIN	2				
12	0001323506	PIN	2				
13	0007000114	SPRING	1				
14	0881604670	PIN	1				
16	0881604580	RUBBER	1				
17	0881602017	RUBBER	1				
18	0880606018	RUBBER	1				
19	0880606800	STEP	1				
20	1652520008	BAND	6				
21	1100040830	BOLT	6				
22	1100040816	BOLT	3				
24	1103041070	BOLT	4				
25	1103041080	BOLT	2				
26	1103041090	BOLT	2				
27	1140020008	WASHER, spring	3				
28	0003608252	WASHER	1				
29	1130240010	NUT	24				
30	0003600176	SHIM	AR				t=1.0mm
31	1560001000	FITTING, grease	4				
32	1560000321	FITTING, grease	2				
33	1141110008	WASHER	6				
34	0880606034	RUBBER	2				
35	0881962656	BOLT	2				
36	0881604035	NUT	2				
37	0881604036	RUBBER	2				
38	1654629020	TRIM	2				sold by the meter
39	1103041095	BOLT	4				
40	0003600163	SHIM	AR				t=1.0mm
41	0003608003	WASHER	6				
42	0003600035	SHIM	AR				t=0.2mm
43	0003600036	SHIM	AR				t=0.5mm
44	0003600188	SHIM	AR				t=3.2mm
45	0003600189	SHIM	AR				t=4.5mm
46	0003600051	SHIM	AR				t=0.2mm
47	0003600052	SHIM	AR				t=0.5mm
	U1f010						

silvermorn.co.uk

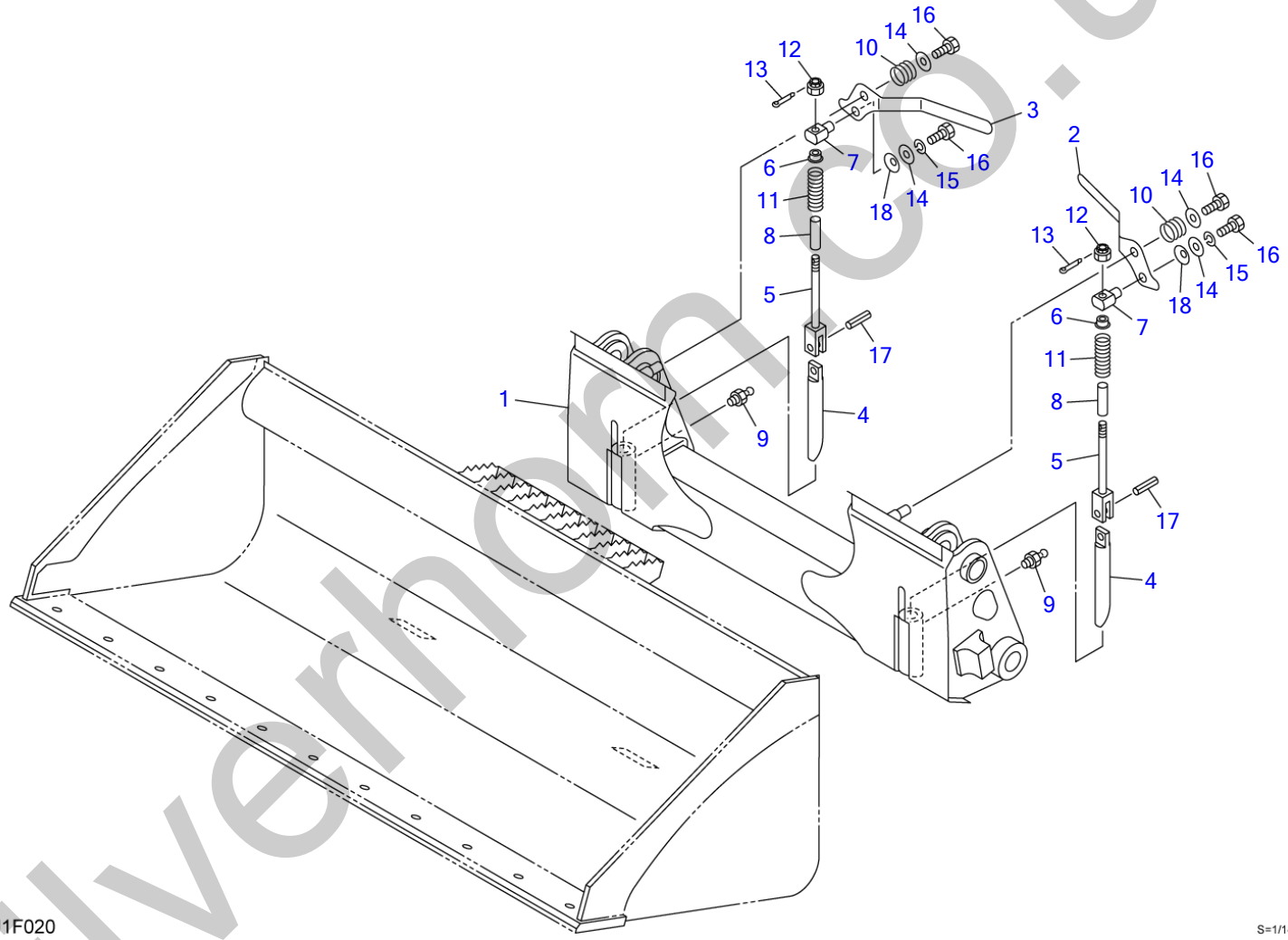

silverhom.co.uk

QUICK ATTACHMENT

Item	Part number	Description	Q'ty	Chan.	Serial No.	Serv.	Remarks
0	0666102000	ATTACHMENT ASSY, quick (for EU)	1				
	0666103000	ATTACHMENT ASSY, quick (for US)	1				
1	0666100100	・BRACKET	1				for EU
	0666100200	・BRACKET	1				for US
2	0881612040	・LEVER(L.H.)	1				
3	0881612050	・LEVER(R.H.)	1				
4	0881612150	・PIN	2				
5	0881612060	・YOKE	2				
6	0881612070	・WASHER	2				
7	0880612070	・PIN	2				
8	0881612160	・PIPE	2				
9	1560001000	・FITTING, grease	2				
10	0007000016	・SPRING	2				
11	0007000119	・SPRING	2				
12	1132630012	・NUT	2				
13	1210013225	・PIN, split	2				
14	0003600025	・WASHER	4				
15	1140120010	・WASHER, spring	2				
16	1100041020	・BOLT	4				
17	1213001250	・PIN, spring	2				
18	1225120018	・WASHER, conical	2				
	U1f020						

silverhorn.co.uk

QUICK ATTACHMENT (1/2) (hydraulic type)

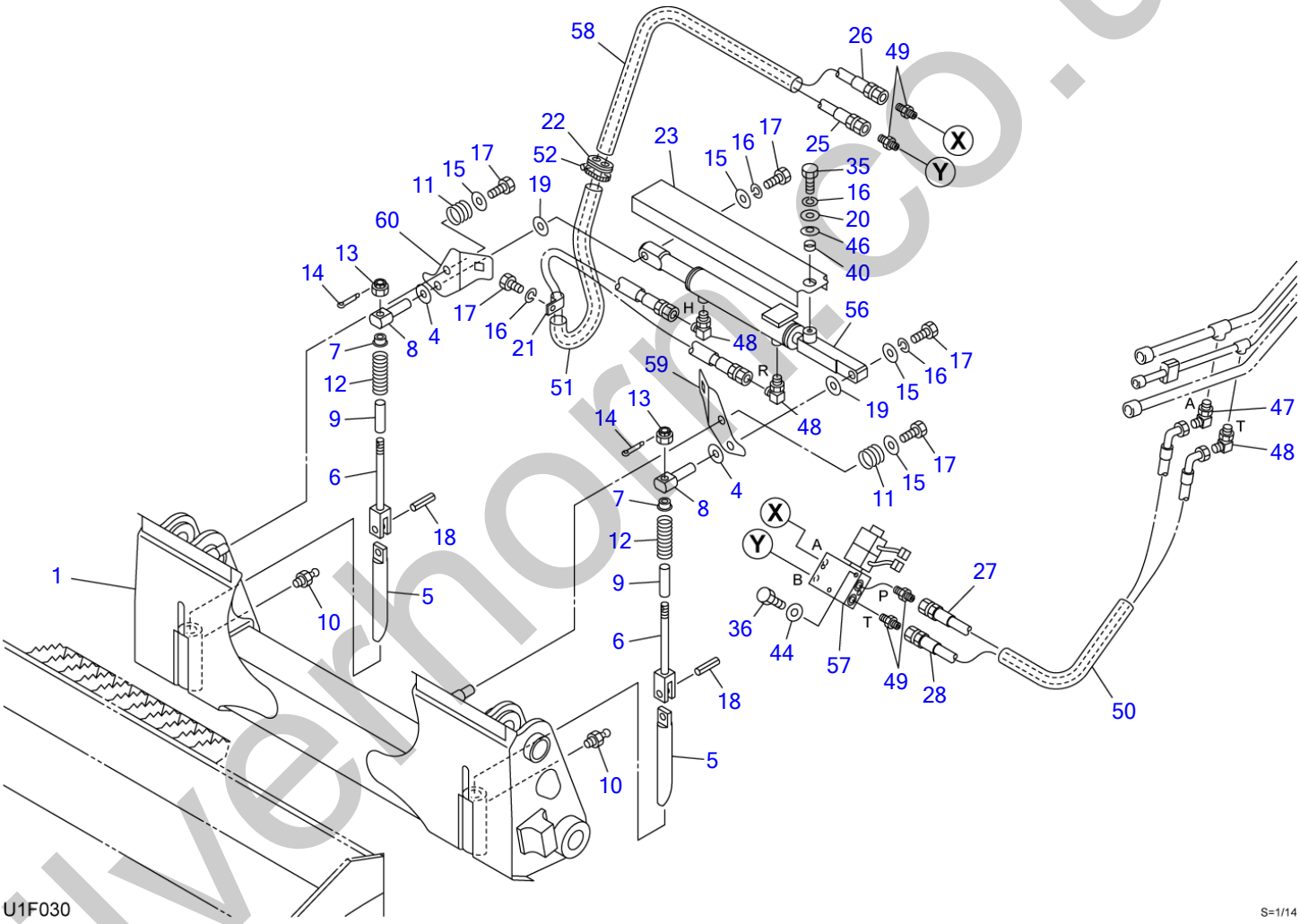

silvernorm.co.uk

QUICK ATTACHMENT (1/2) (hydraulic type)

Item	Part number	Description	Q'ty	Chan.	Serial No.	Serv.	Remarks
0	0666101000	ATTACHMENT ASSY, quick (for EU)	1				
	0666101500	ATTACHMENT ASSY, quick (for US)	1				
1	0666100100	・BRACKET	1				for US
	0666100200	・BRACKET	1				for EU
4	1225120018	・WASHER, conical	2				
5	0881612150	・PIN	2				
6	0881612060	・YOKE	2				
7	0881612070	・WASHER	2				
8	0666101080	・PIN	2				
9	0881612160	・PIPE	2				
10	1560001000	・FITTING, grease	2				
11	0007000016	・SPRING	2				
12	0007000119	・SPRING	2				
13	1132630012	・NUT	2				
14	1210013225	・PIN, split	2				
15	0003600025	・WASHER	4				
16	1140120010	・WASHER, spring	4				
17	1100041020	・BOLT	5				
18	1213001250	・PIN, spring	2				
19	0003600034	・WASHER	2				
20	0003610002	・WASHER	1				
21	0007300001	・CLAMP	1				
22	0097210300	・GUARD	1				
23	0666101230	・COVER	1				
25	0666101250	・HOSE ASSY	1				18019-00170
26	0666101260	・HOSE ASSY	1				18019-00200
27	0880617270	・HOSE ASSY	1				18015-01100
28	0880617280	・HOSE ASSY	1				18010-22095
35	1100041016	・BOLT	1				
36	1100040850	・BOLT	2				
40	0003600228	・COLLAR	1				
44	1141110008	・WASHER	2				
46	1225121018	・WASHER, conical	1				
47	1512375004	・ELBOW	1				
	1420010110	・・O-RING	1				
48	1515012040	・ELBOW	3				
	1420010110	・・O-RING	1				
49	1515600200	・ADAPTOR	4				
	1420010110	・・O-RING	1				
50	1531335085	・PROTECTOR	1				sold by the meter
51	1531516075	・PROTECTOR	1				sold by the meter
52	1533811065	・BAND	1				
56	1900100700	・CYLINDER, quick	1				
57	1901752000	・VALVE, solenoid	1				
58	1531335065	・PROTECTOR	1				sold by the meter
59	0666101590	・PLATE (L.H.)	1				
60	0666101600	・PLATE (R.H.)	1				
	U1f031						

silverthorn.co.uk

QUICK ATTACHMENT (2/2) (hydraulic type)

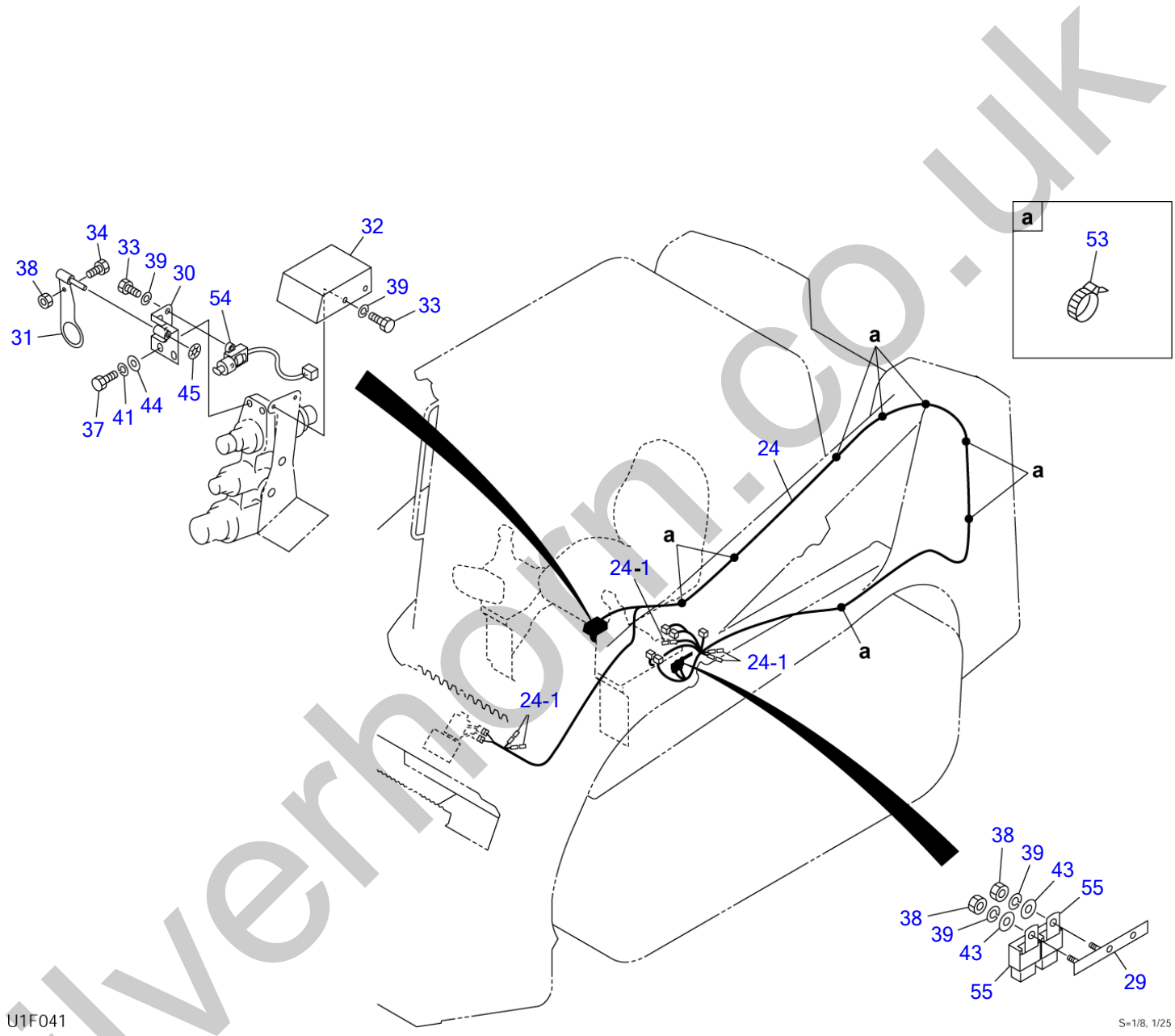

silverhorn.co.uk

QUICK ATTACHMENT (2/2) (hydraulic type)

Item	Part number	Description	Q'ty	Chan.	Serial No.	Serv.	Remarks
0	0666101000	ATTACHMENT ASSY, quick (for EU)	1				
	0666101500	ATTACHMENT ASSY, quick (for US)	1				
24	0666101240	・HARNESS, wiring	1				
24-1	1730500008	・・DIODE (3A yellow)	5				
29	0666100290	・BRACKET	1				
30	0880616970	・PLATE	1				
31	0880616980	・PLATE	1				
32	0880616990	・COVER	1				
33	1100040612	・BOLT	4				
34	1100040620	・BOLT	1				
37	1111840518	・BOLT	2				
38	1130040006	・NUT	3				
39	1140020006	・WASHER, spring	6				
41	1140020008	・WASHER, spring	2				
43	1141110006	・WASHER	2				
44	1141110008	・WASHER	2				
45	1224100009	・NUT	1				
53	1652201008	・BAND	12				
54	1700000043	・SWITCH	1				
55	1711900042	・RELAY	2				
	U1f042						

silverhorn.co.uk

BUCKET

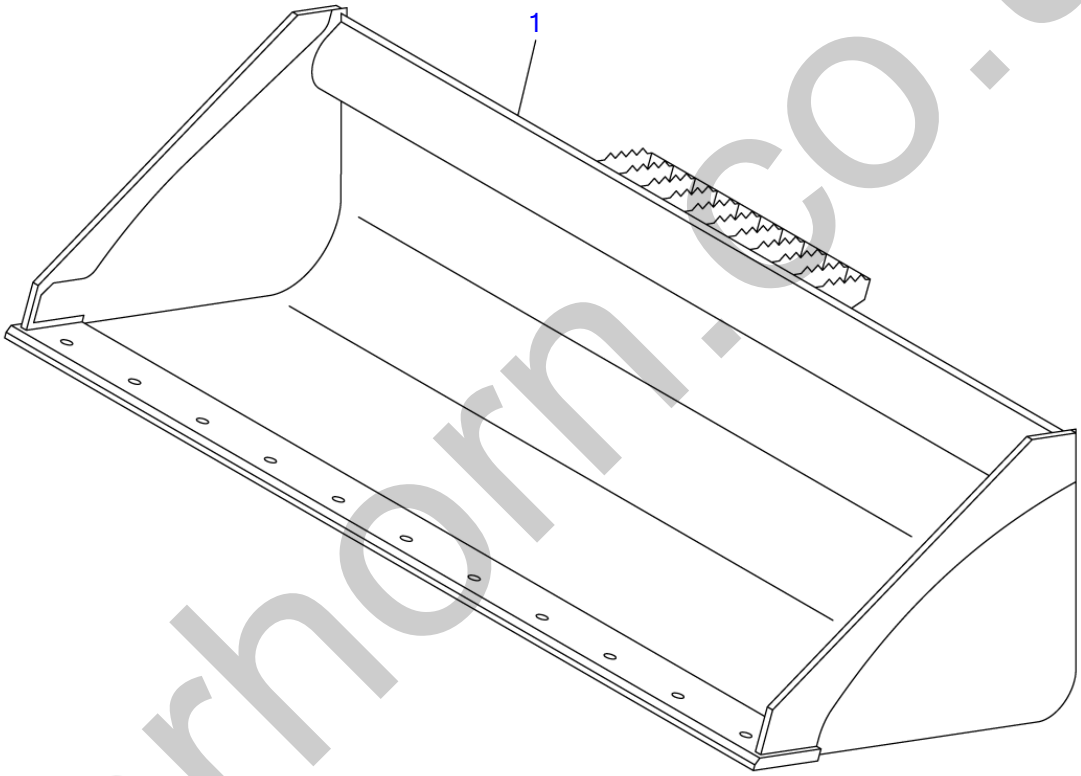

T8F030

S=1/12

silverhorn.co.uk

BUCKET

Item	Part number	Description	Q'ty	Chan.	Serial No.	Serv.	Remarks
		BUCKET ASSY (for EU)					
		BUCKET ASSY (for US)					
1	0880624100	BUCKET (for EU)	1				
	0880624600	BUCKET (for US)	1				
	T8f031						

silverhorn.co.uk

PIPING; ARM (1/2)

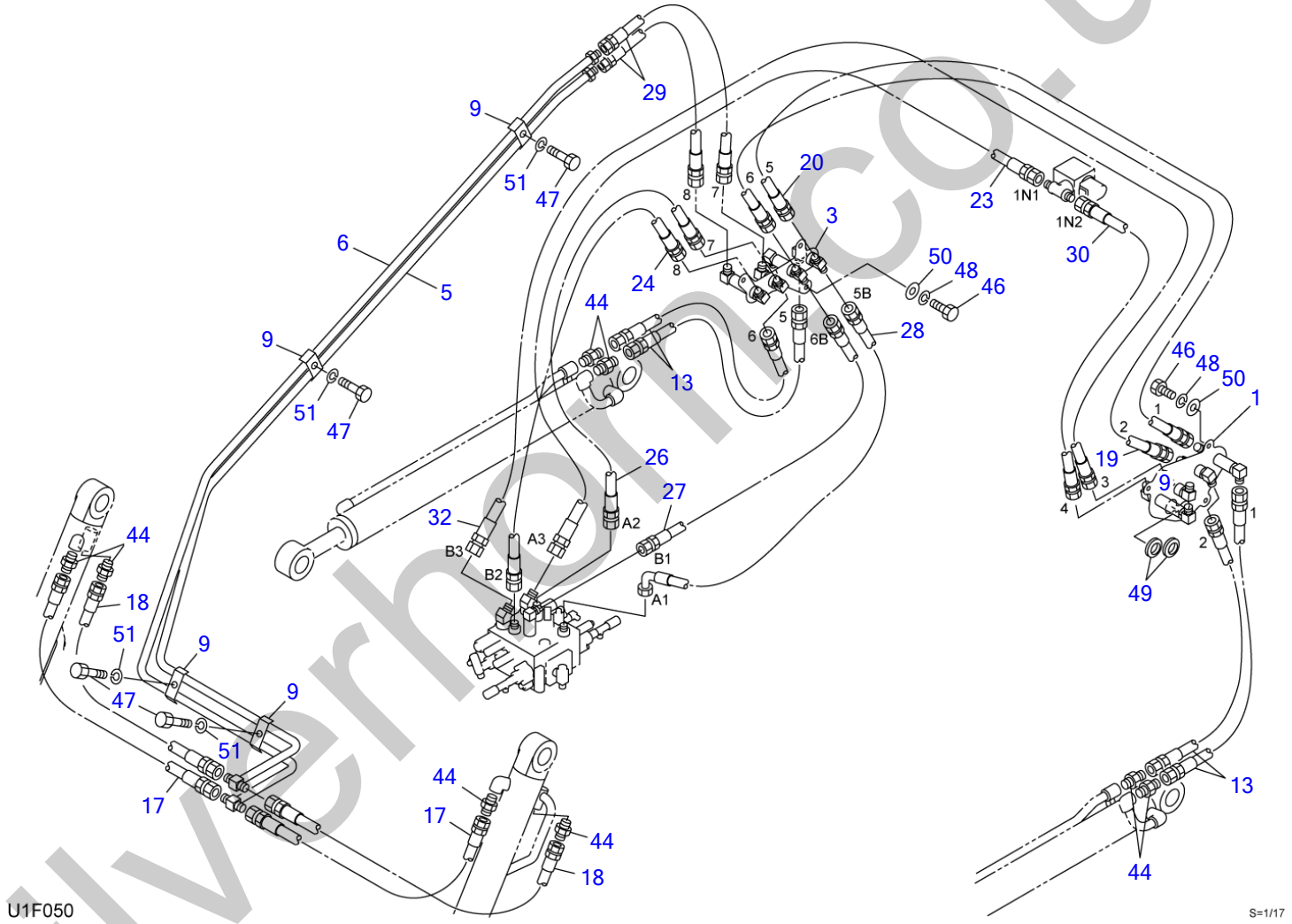

silverhorn.co.uk

PIPING; ARM (1/2)

Item	Part number	Description	Q'ty	Chan.	Serial No.	Serv.	Remarks
		PIPING ASSY					
		PIPING ASSY (with coupler)					
		PIPING ASSY (hydraulic attachment type)					
		PIPING ASSY (for US)					
1	0667301010	BRACKET (L.H.)	1				
3	0667301030	BRACKET (R.H.)	1				
5	0880736050	PIPE	1				
6	0880736060	PIPE	1				
9	0880736090	CLAMP	4				
13	1801520050	HOSE ASSY	4				
17	0880737170	HOSE ASSY	2				18015-20060
18	0880737180	HOSE ASSY	2				18015-20064
19	0667300190	HOSE ASSY	1				18015-20120
20	0667300200	HOSE ASSY	1				18015-20120
23	0667301230	HOSE ASSY	1				18015-40047
24	0667300240	HOSE ASSY	1				18015-40054
26	0667301260	HOSE ASSY	1				18015-40047
27	0667300270	HOSE ASSY	1				18015-40079
28	0667300280	HOSE ASSY	1				18015-41086
29	0880737500	HOSE ASSY	2				18015-40068
30	0880737300	HOSE ASSY	1				18015-40064
32	0667300320	HOSE ASSY	1				18017-40130
44	1515600201	ADAPTOR	8				
	1420010140	・O-RING	1				
46	1100040816	BOLT	6				
47	1100041025	BOLT	4				
48	1140020008	WASHER, spring	6				
49	1652061035	BUSHING	2				
50	1141110008	WASHER	6				
51	1140020010	WASHER, spring	4				
	U1f051						

silverhorn.co.uk

PIPING; ARM (2/2)

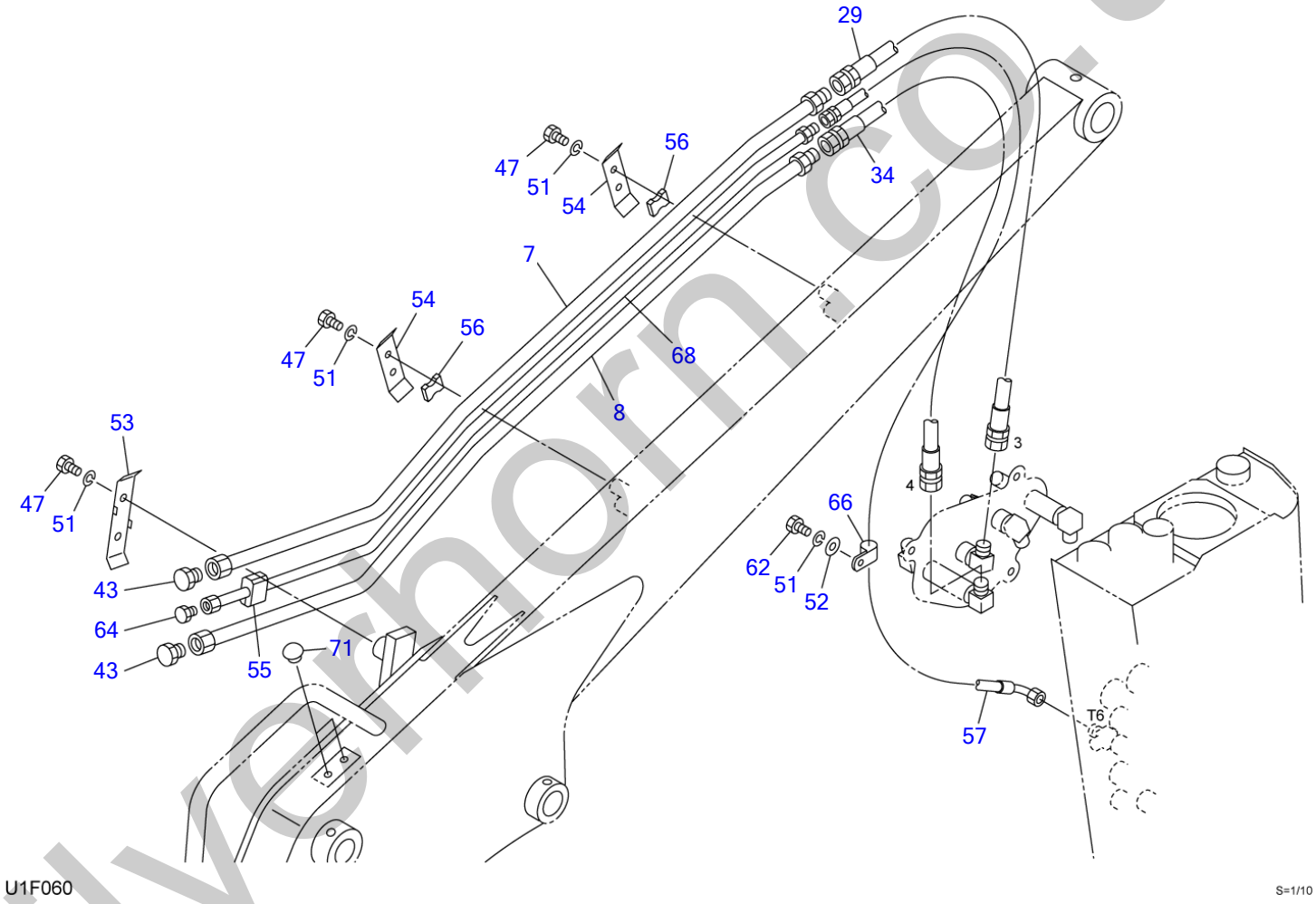

silvernorn.co.uk

PIPING; ARM (2/2)

Item	Part number	Description	Q'ty	Chan.	Serial No.	Serv.	Remarks
		PIPING ASSY					
7	0880738110	PIPE	1				
8	0880738120	PIPE	1				
29	0880737500	HOSE ASSY	1				18015-40068
34	0880738080	HOSE ASSY	1				18015-40070
43	1501750004	PLUG	2				
	1420010180	・O-RING	1				
47	1100041025	BOLT	6				
51	1140020010	WASHER, spring	7				
52	1141110010	WASHER	1				
53	0881733550	CLAMP	1				
54	0880738130	CLAMP	2				
55	0880738140	RUBBER	1				
56	0880738150	RUBBER	2				
57	0667301570	HOSE ASSY	1				18017-21128
62	1100041016	BOLT	1				
64	1501750003	PLUG	1				
	1420010140	・O-RING	1				
66	1711900071	CLAMP	1				
68	0880738100	PIPE	1				
71	1652533018	CAP	2				
	U1f061						

silverhorn.co.uk

PIPING; ARM (2/2) (with coupler, hydraulic attachment type)

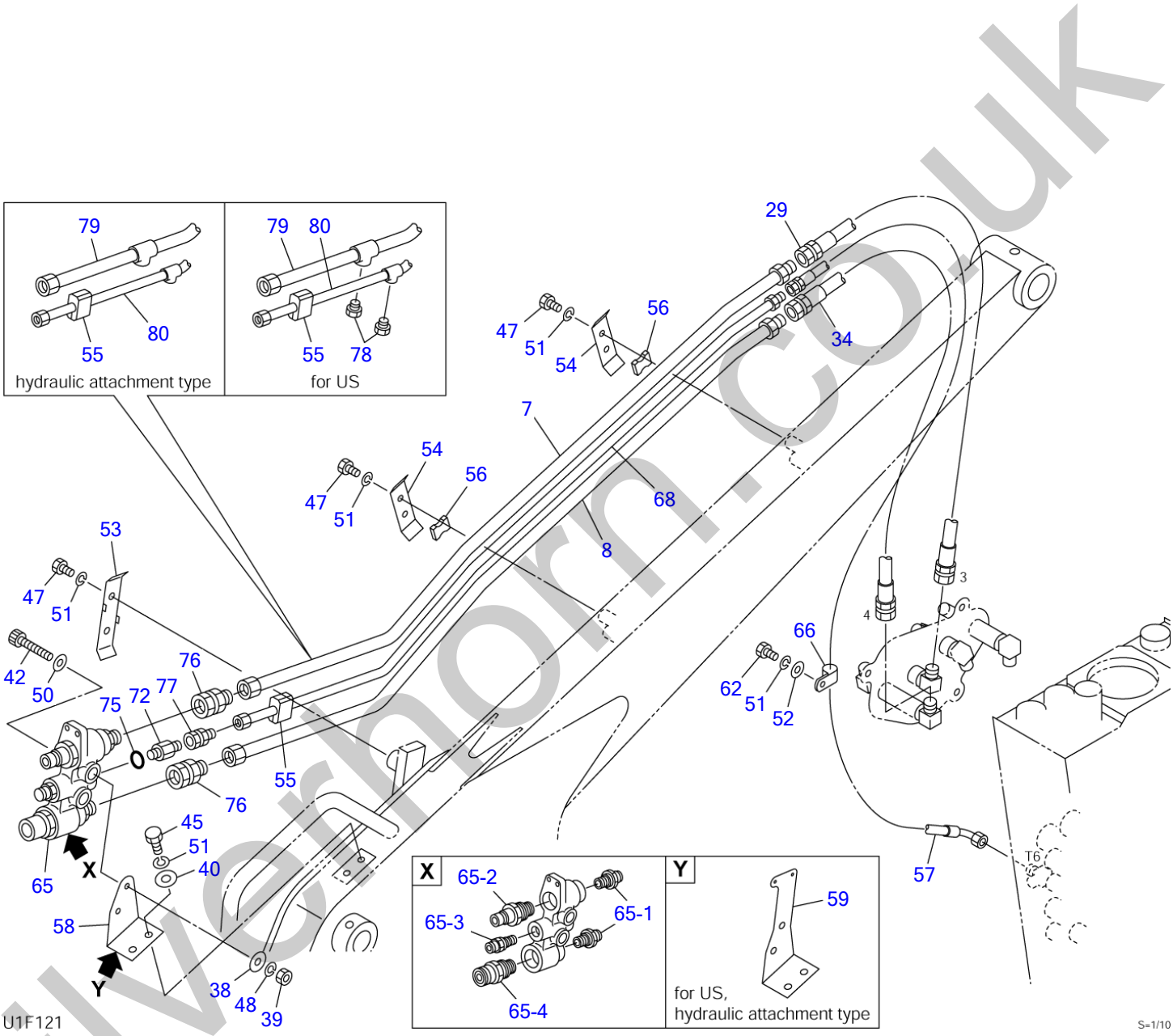

silvernorn.co.uk

PIPING; ARM (2/2) (with coupler, hydraulic attachment type)

Item	Part number	Description	Q'ty	Chan.	Serial No.	Serv.	Remarks
		PIPING ASSY (with coupler) PIPING ASSY (hydraulic attachment type) PIPING ASSY (for US)					
7	0880738110	PIPE	1				with coupler
8	0880738120	PIPE	1				
29	0880737500	HOSE ASSY	1				18015-40068
34	0880738080	HOSE ASSY	1				18015-40070
38	0003608252	WASHER	2				
39	1130040008	NUT	2				
40	0003600020	WASHER	2				
42	1110040865	SCREW, cap	2				
45	1100041020	BOLT	2				
47	1100041025	BOLT	6				
48	1140020008	WASHER, spring	2				
50	1141110008	WASHER	2				
51	1140020010	WASHER, spring	9				
52	1141110010	WASHER	1				
53	0881733550	CLAMP	1				
54	0880738130	CLAMP	2				
55	0880738140	RUBBER	1				
56	0880738150	RUBBER	2				
57	0667301570	HOSE ASSY	1				18017-21128
58	0880738160	BRACKET	1				with coupler
59	0667300590	BRACKET	1				hydraulic attachment type, for US
62	1100041016	BOLT	1				
65	1901747000	COUPLER, block	1				
65-1	1901747001	・ADAPTOR	2				
65-2	1901747002	・ADAPTOR	1				
65-3	1901747003	・ADAPTOR	1				
65-4	1901747004	・ADAPTOR	1				
66	1711900071	CLAMP	1				
68	0880738100	PIPE	1				with coupler
72	0007203017	NIPPLE	1				
	1420310906	・O-RING	1				
75	1420310906	O-RING	1				
76	0007236045	ADAPTOR	2				
77	1511410003	ADAPTOR	1				
	1420010140	・O-RING	1				
78	1501750002	PLUG	2			M	for US
	1420010110	・O-RING	1			M	for US
79	0667303790	PIPE	1				hydraulic attachment type, for US
80	0667303800	PIPE	1				hydraulic attachment type, for US
	U1f121						

silverthorn.co.uk

PIPING; ARM (for GEHL & MUSTANG)

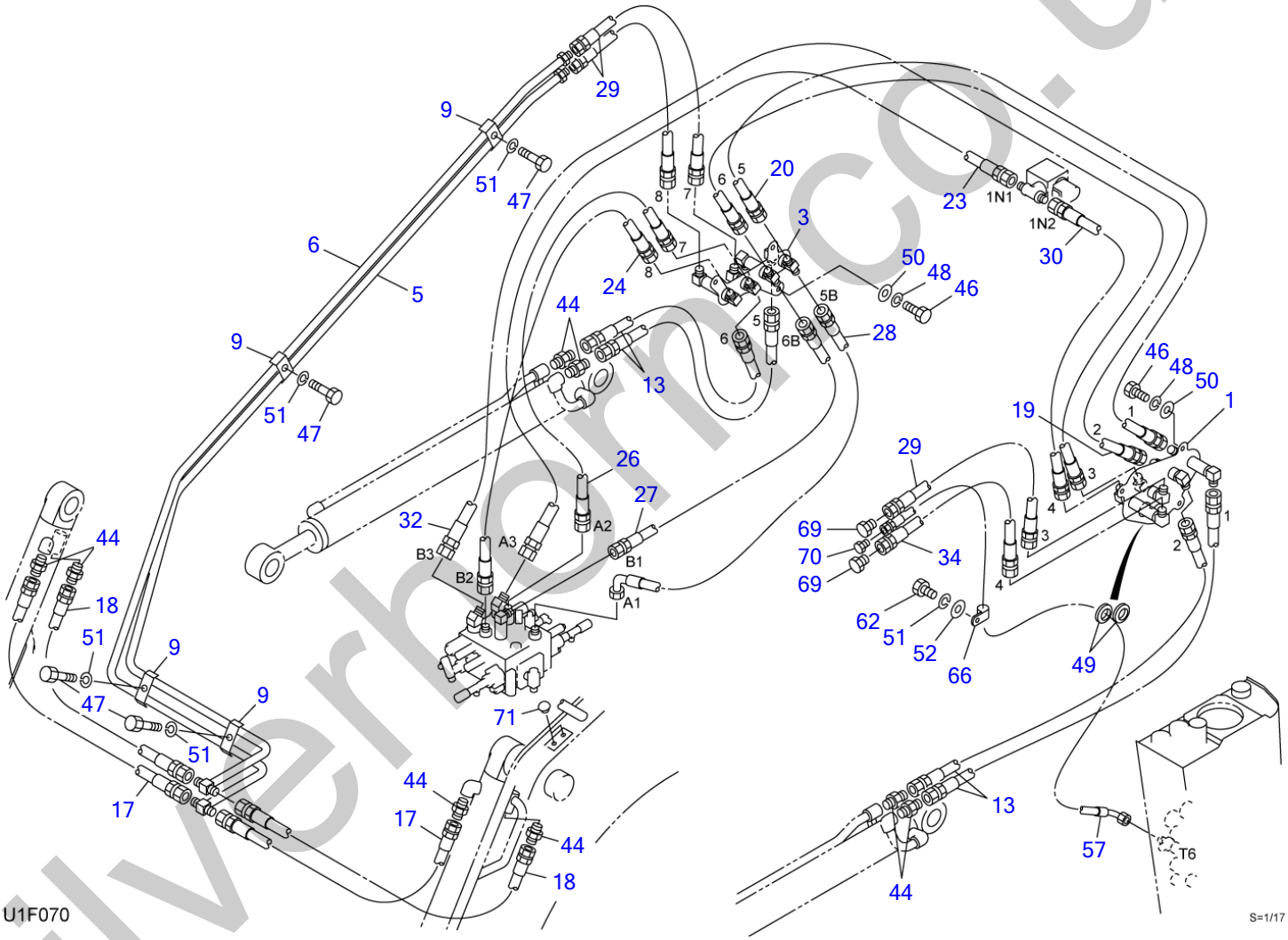

silverhorn.co.uk

PIPING; ARM (for GEHL & MUSTANG)

Item	Part number	Description	Q'ty	Chan.	Serial No.	Serv.	Remarks
		PIPING ASSY					
1	0667301010	BRACKET(L.H.)	1				
3	0667301030	BRACKET(R.H.)	1				
5	0880736050	PIPE	1				
6	0880736060	PIPE	1				
9	0880736090	CLAMP	4				
13	1801520050	HOSE ASSY	4				
17	0880737170	HOSE ASSY	2				18015-20060
18	0880737180	HOSE ASSY	2				18015-20064
19	0667300190	HOSE ASSY	1				18015-20120
20	0667300200	HOSE ASSY	1				18015-20120
23	0667301230	HOSE ASSY	1				18015-40047
24	0667300240	HOSE ASSY	1				18015-40054
26	0667301260	HOSE ASSY	1				18015-40047
27	0667300270	HOSE ASSY	1				18015-40079
28	0667300280	HOSE ASSY	1				18015-41086
29	0880737500	HOSE ASSY	3				18015-40068
30	0880737300	HOSE ASSY	1				18015-40064
32	0667300320	HOSE ASSY	1				18017-40130
34	0880738080	HOSE ASSY	1				18015-40070
44	1515600201	ADAPTOR	8				
	1420010140	・O-RING	1				
46	1100040816	BOLT	6				
47	1100041025	BOLT	4				
48	1140020008	WASHER, spring	6				
49	1652061035	BUSHING	2				
50	1141110008	WASHER	6				
51	1140020010	WASHER, spring	5				
52	1141110010	WASHER	1				
57	0667301570	HOSE ASSY	1				18017-21128
62	1100041016	BOLT	1				
66	1711900071	CLAMP	1				
69	1513940004	PLUG	2				
70	1513940003	PLUG	1				
71	1652533018	CAP	2				
	U1f071						

silverhorn.co.uk

PIPING; ARM (1/2) (high flow)

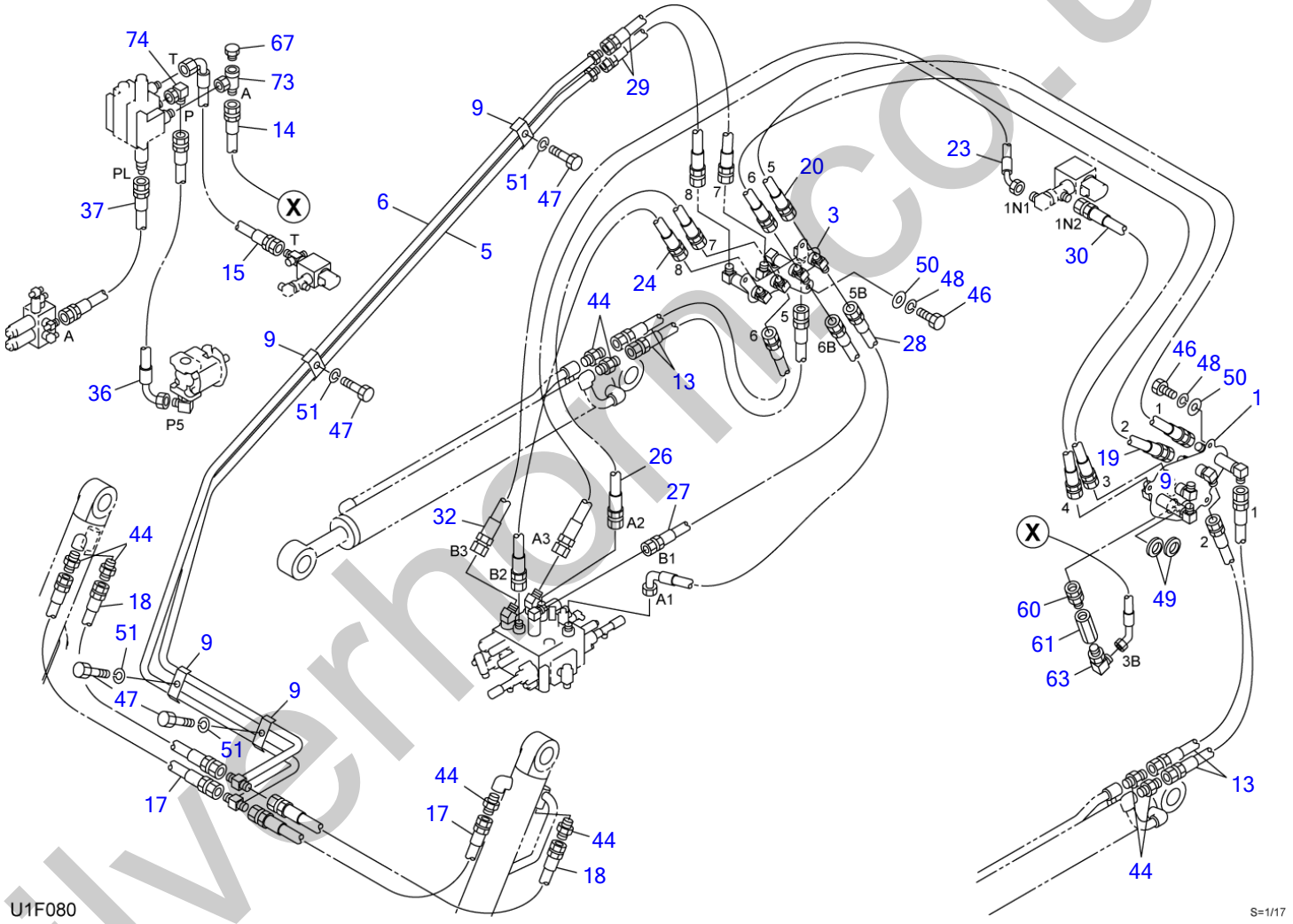

silverhorn.co.uk

PIPING; ARM (1/2) (high flow)

Item	Part number	Description	Q'ty	Chan.	Serial No.	Serv.	Remarks
		PIPING ASSY					
		PIPING ASSY (with coupler)					
		PIPING ASSY (hydraulic attachment type)					
		PIPING ASSY (for US)					
1	0667305010	BRACKET(L.H.)	1				
3	0667301030	BRACKET(R.H.)	1				
5	0880736050	PIPE	1				
6	0880736060	PIPE	1				
9	0880736090	CLAMP	4				
13	1801520050	HOSE ASSY	4				
14	0667305140	HOSE ASSY	1				18017-77188
15	0880735170	HOSE ASSY	1				
17	0880737170	HOSE ASSY	2				18015-20060
18	0880737180	HOSE ASSY	2				18015-20064
19	0667300190	HOSE ASSY	1				18015-20120
20	0667300200	HOSE ASSY	1				18015-20120
23	0667305230	HOSE ASSY	1				18015-47051
24	0667300240	HOSE ASSY	1				18015-40054
26	0667301260	HOSE ASSY	1				18015-40047
27	0667300270	HOSE ASSY	1				18015-40079
28	0667300280	HOSE ASSY	1				18015-41086
29	0880737500	HOSE ASSY	2				18015-40068
30	0667300300	HOSE ASSY	1				18015-50070
32	0667300320	HOSE ASSY	1				18017-40130
36	0667300360	HOSE ASSY	1				18017-71130
37	0667305370	HOSE ASSY	1				18010-22096
44	1515600201	ADAPTOR	8				
	1420010140	・O-RING	1				
46	1100040816	BOLT	6				
47	1100041025	BOLT	4				
48	1140020008	WASHER, spring	6				
49	1652061035	BUSHING	2				
50	1141110008	WASHER	6				
51	1140020010	WASHER, spring	4				
60	0007236041	ADAPTOR	1				
	1420010180	・O-RING	1				
61	1901743200	VALVE, check	1				
63	1515010042	ELBOW	1				
	1420010180	・O-RING	1				
67	1501750002	PLUG	1				
	1420010110	・O-RING	1				
73	1513390044	TEE	1				
74	1513390016	ELBOW	1				
	U1f081						

silverthorn.co.uk

PIPING; ARM (2/2) (high flow)

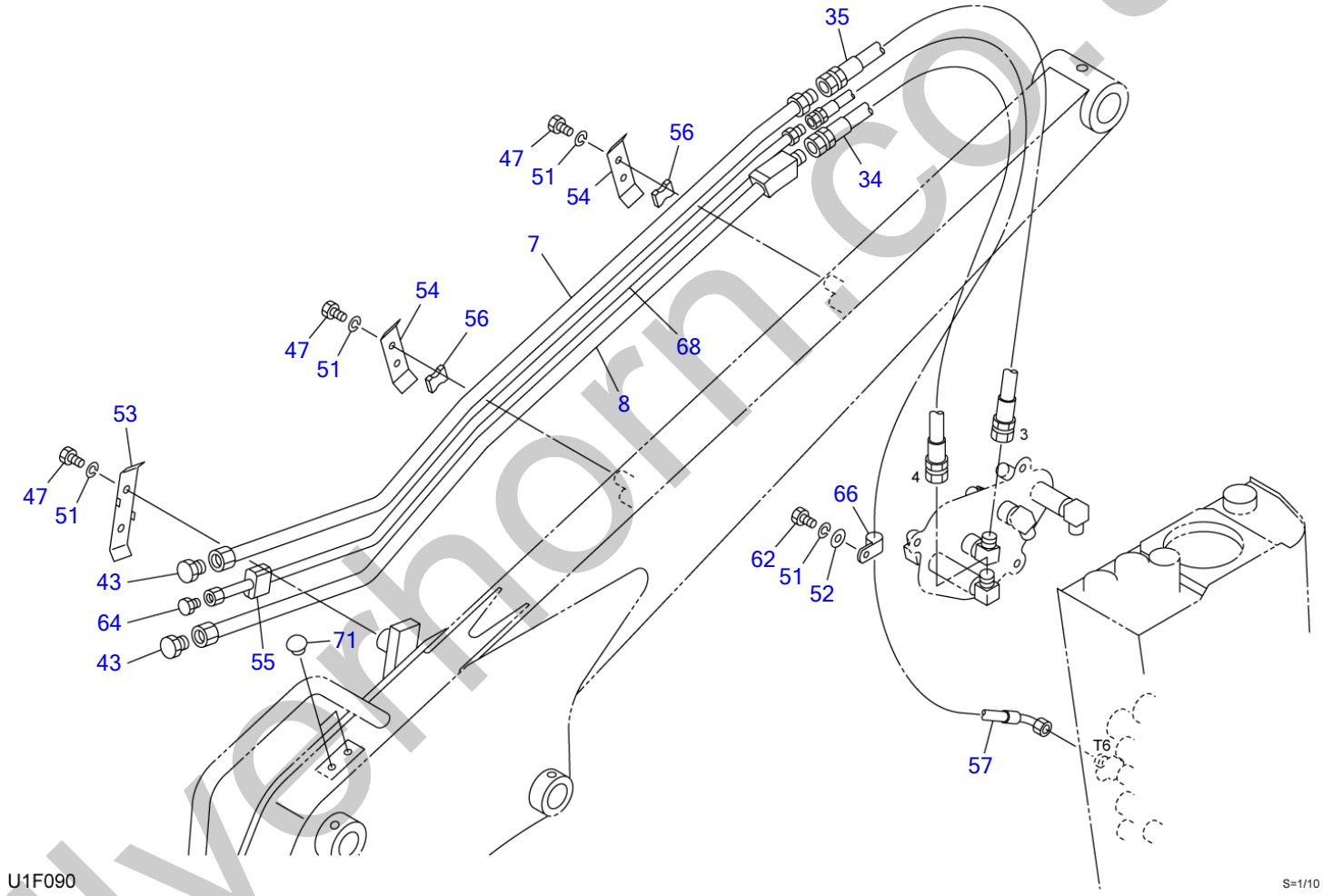

silvernorn.co.uk

PIPING; ARM (2/2) (high flow)

Item	Part number	Description	Q'ty	Chan.	Serial No.	Serv.	Remarks
		PIPING ASSY					
7	0667305070	PIPE	1				
8	0667300080	PIPE	1				
34	0880737930	HOSE ASSY	1				18015-30072
35	0880737940	HOSE ASSY	1				18015-30072
43	1501750006	PLUG	2				
	1420010240	・O-RING	1				
47	1100041025	BOLT	6				
51	1140020010	WASHER, spring	7				
52	1141110010	WASHER	1				
53	0881733550	CLAMP	1				
54	0880738130	CLAMP	2				
55	0880738140	RUBBER	1				
56	0880738150	RUBBER	2				
57	0667301570	HOSE ASSY	1				18017-21128
62	1100041016	BOLT	1				
64	1501750003	PLUG	1				
	1420010140	・O-RING	1				
66	1711900071	CLAMP	1				
68	0880738100	PIPE	1				
71	1652533018	CAP	2				
	U1f091						

silverhorn.co.uk

PIPING; ARM (2/2) (high flow, with coupler, hydraulic attachment type)

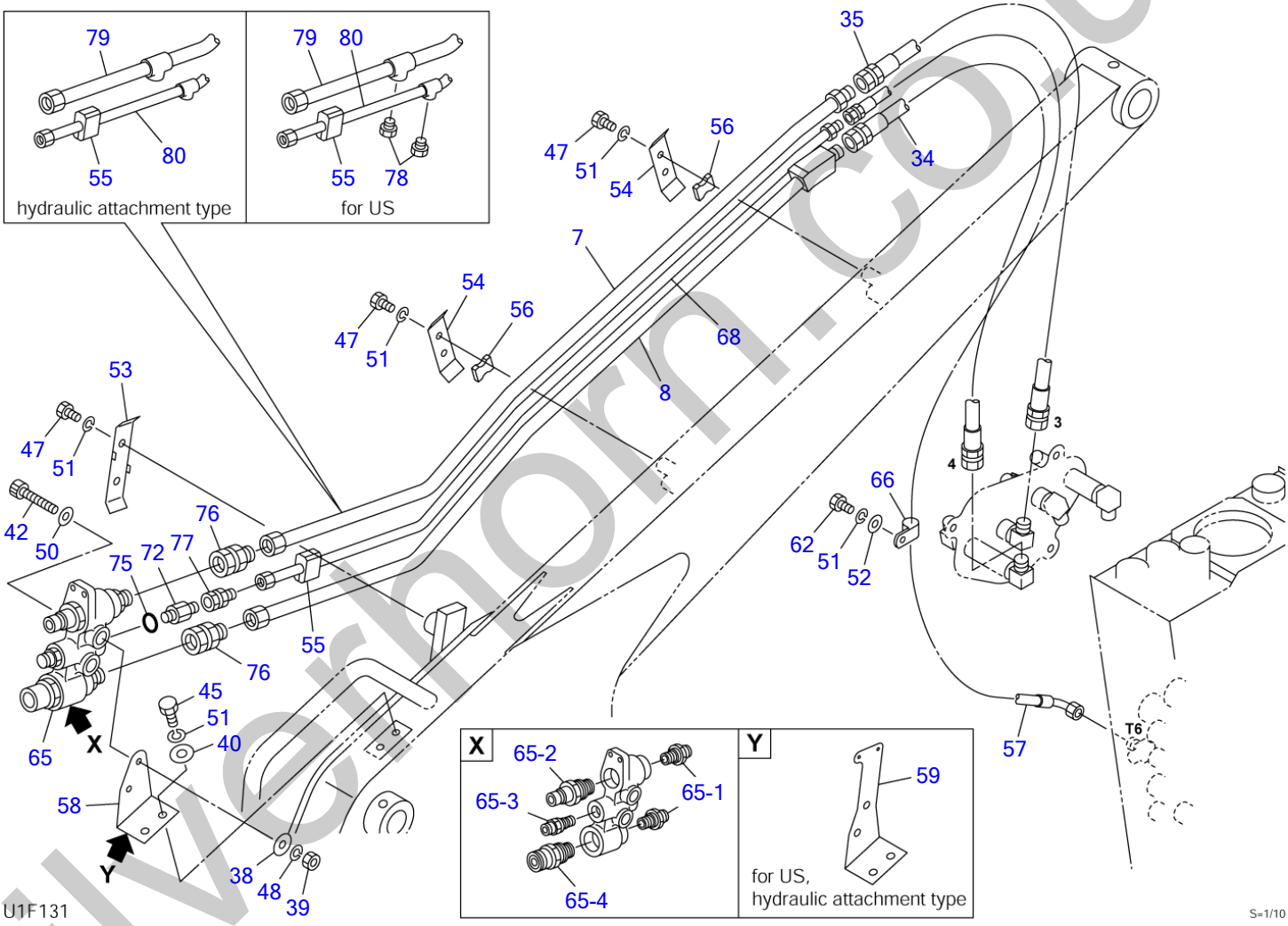

silvernorn.co.uk

PIPING; ARM (2/2) (high flow, with coupler, hydraulic attachment type)

Item	Part number	Description	Q'ty	Chan.	Serial No.	Serv.	Remarks
		PIPING ASSY (with coupler) PIPING ASSY (hydraulic attachment type) PIPING ASSY (for US)					
7	0667305070	PIPE	1				with coupler
8	0667300080	PIPE	1				
34	0880737930	HOSE ASSY	1				18015-30072
35	0880737940	HOSE ASSY	1				18015-30072
38	0003608252	WASHER	2				
39	1130040008	NUT	2				
40	0003600020	WASHER	2				
42	1110040865	SCREW, cap	2				
45	1100041020	BOLT	2				
47	1100041025	BOLT	6				
48	1140020008	WASHER, spring	2				
50	1141110008	WASHER	2				
51	1140020010	WASHER, spring	9				
52	1141110010	WASHER	1				
53	0881733550	CLAMP	1				
54	0880738130	CLAMP	2				
55	0880738140	RUBBER	1				
56	0880738150	RUBBER	2				
57	0667301570	HOSE ASSY	1				18017-21128
58	0880738160	BRACKET	1				with coupler
59	0667300590	BRACKET	1				hydraulic attachment type, for US
62	1100041016	BOLT	1				
65	1901747000	COUPLER, block	1				
65-1	1901747001	・ADAPTOR	2				
65-2	1901747002	・ADAPTOR	1				
65-3	1901747003	・ADAPTOR	1				
65-4	1901747004	・ADAPTOR	1				
66	1711900071	CLAMP	1				
68	0880738100	PIPE	1				with coupler
72	0007203017	NIPPLE	1				
	1420310906	・O-RING	1				
75	1420310906	O-RING	1				
76	0007236044	ADAPTOR	2				
77	1511410003	ADAPTOR	1				
	1420010140	・O-RING	1				
78	1501750002	PLUG	2			M	for US
	1420010110	・O-RING	1			M	for US
79	0667300070	PIPE	1				hydraulic attachment type, for US
80	0667303800	PIPE	1				hydraulic attachment type, for US
	U1f131						

silverthorn.co.uk

PIPING; ARM (1/2) (high flow, for GEHL & MUSTANG)

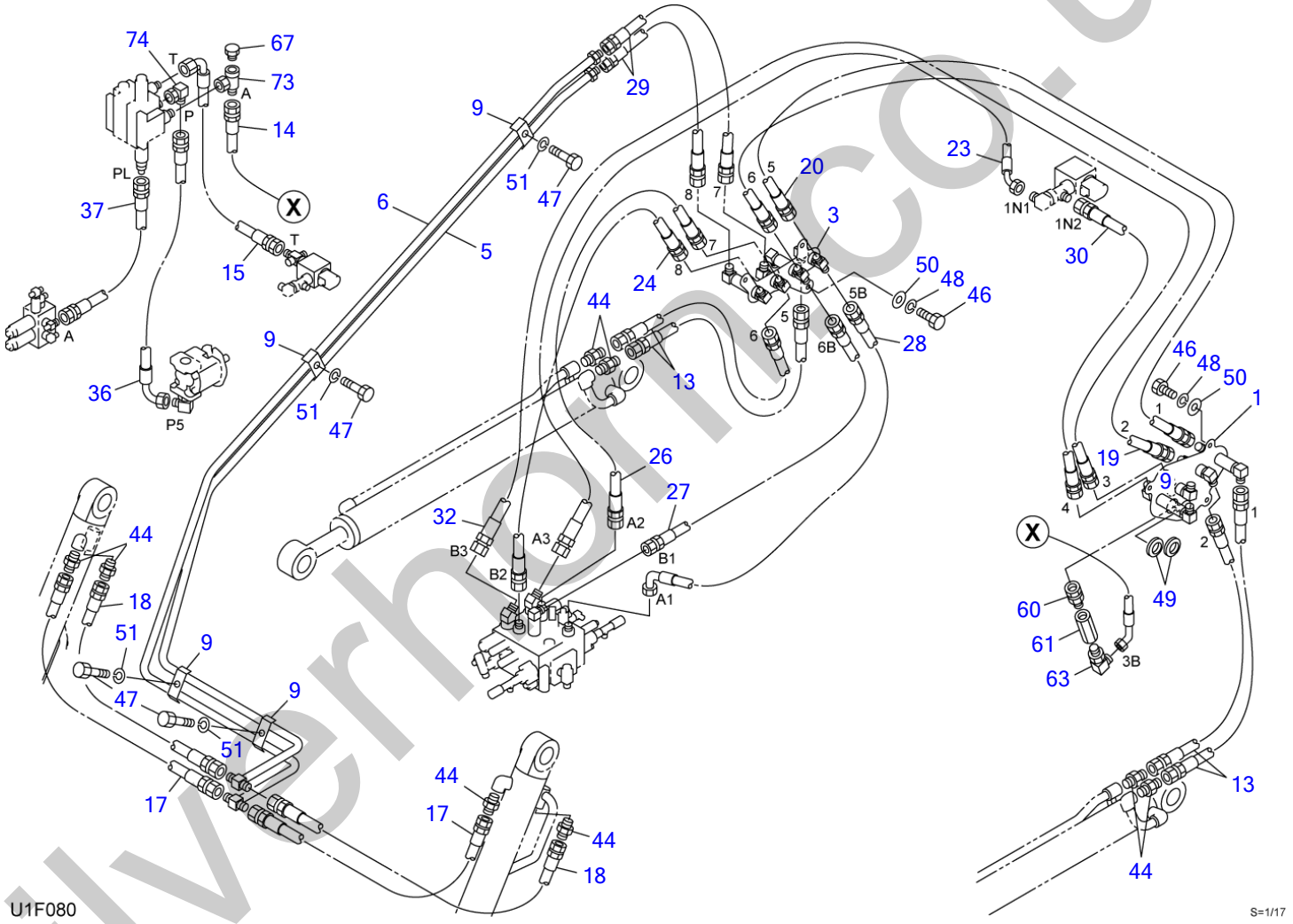

silverhorn.co.uk

PIPING; ARM (1/2) (high flow, for GEHL & MUSTANG)

Item	Part number	Description	Q'ty	Chan.	Serial No.	Serv.	Remarks
		PIPING ASSY					
1	0667305010	BRACKET(L.H.)	1				
3	0667301030	BRACKET(R.H.)	1				
5	0880736050	PIPE	1				
6	0880736060	PIPE	1				
9	0880736090	CLAMP	4				
13	1801520050	HOSE ASSY	4				
14	0667305140	HOSE ASSY	1				18017-77188
15	0880735170	HOSE ASSY	1				
17	0880737170	HOSE ASSY	2				18015-20060
18	0880737180	HOSE ASSY	2				18015-20064
19	0667300190	HOSE ASSY	1				18015-20120
20	0667300200	HOSE ASSY	1				18015-20120
23	0667305230	HOSE ASSY	1				18015-47051
24	0667300240	HOSE ASSY	1				18015-40054
26	0667301260	HOSE ASSY	1				18015-40047
27	0667300270	HOSE ASSY	1				18015-40079
28	0667300280	HOSE ASSY	1				18015-41086
29	0880737500	HOSE ASSY	2				18015-40068
30	0667300300	HOSE ASSY	1				18015-50070
32	0667300320	HOSE ASSY	1				18017-40130
36	0667300360	HOSE ASSY	1				18017-71130
37	0667305370	HOSE ASSY	1				18010-22096
44	1515600201	ADAPTOR	8				
	1420010140	・O-RING	1				
46	1100040816	BOLT	6				
47	1100041025	BOLT	4				
48	1140020008	WASHER, spring	6				
49	1652061035	BUSHING	2				
50	1141110008	WASHER	6				
51	1140020010	WASHER, spring	4				
60	0007236041	ADAPTOR	1				
	1420010180	・O-RING	1				
61	1901743200	VALVE, check	1				
63	1515010042	ELBOW	1				
	1420010180	・O-RING	1				
67	1501750002	PLUG	1				
	1420010110	・O-RING	1				
73	1513390044	TEE	1				
74	1513390016	ELBOW	1				
	U1f101						

silverhorn.co.uk

PIPING; ARM (2/2) (high flow, for GEHL & MUSTANG)

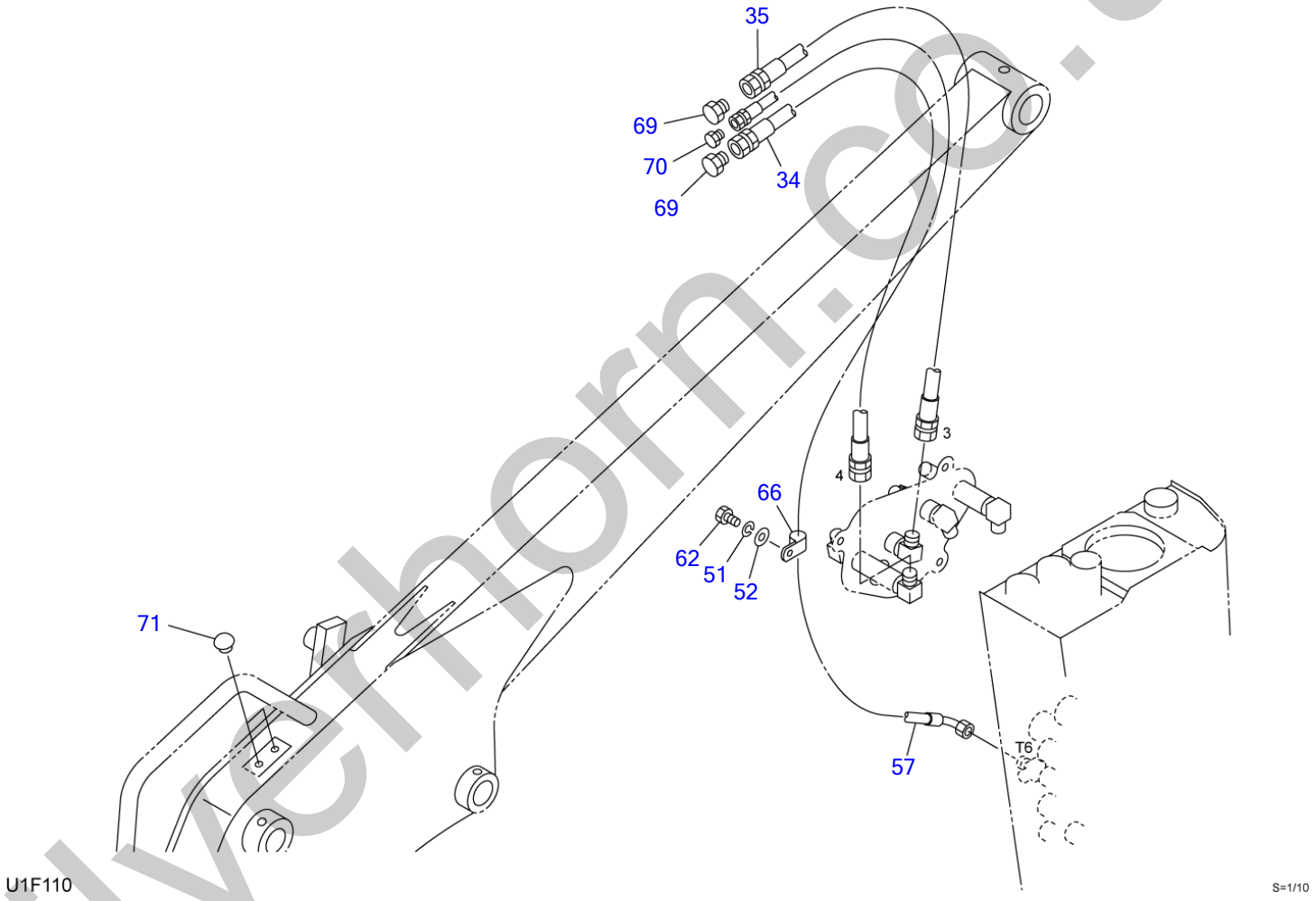

silverhorn.co.uk

PIPING; ARM (2/2) (high flow, for GEHL & MUSTANG)

Item	Part number	Description	Q'ty	Chan.	Serial No.	Serv.	Remarks
		PIPING ASSY					
34	0880737930	HOSE ASSY	1				18015-30072
35	0880737940	HOSE ASSY	1				18015-30072
51	1140020010	WASHER, spring	1				
52	1141110010	WASHER	1				
57	0667301570	HOSE ASSY	1				18017-21128
62	1100041016	BOLT	1				
66	1711900071	CLAMP	1				
69	1513940006	PLUG	2				
70	1513940003	PLUG	1				
71	1652533018	CAP	2				
	U1f111						

silverhorn.co.uk

DECAL (canopy)

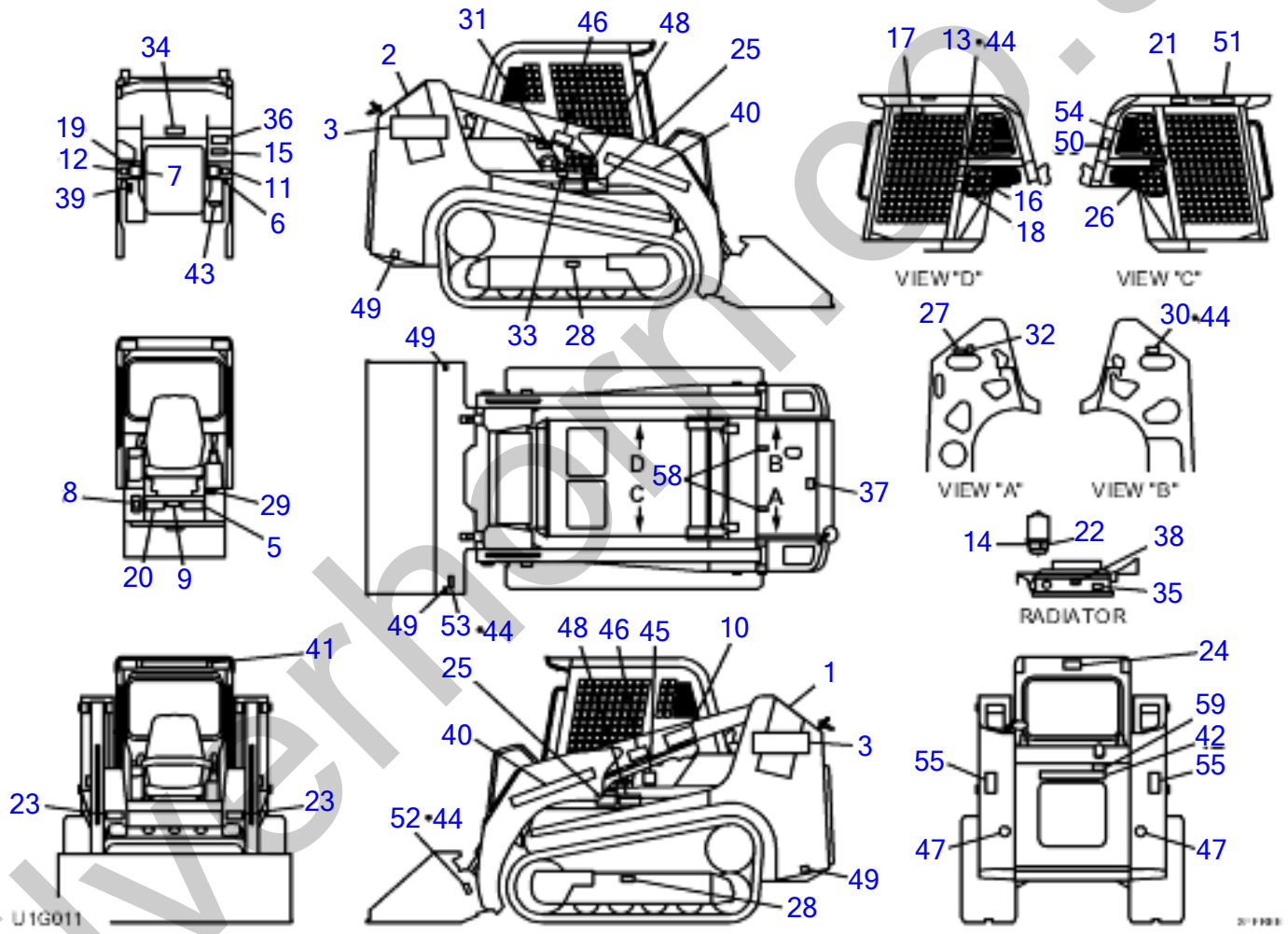

silverhorse.co.uk

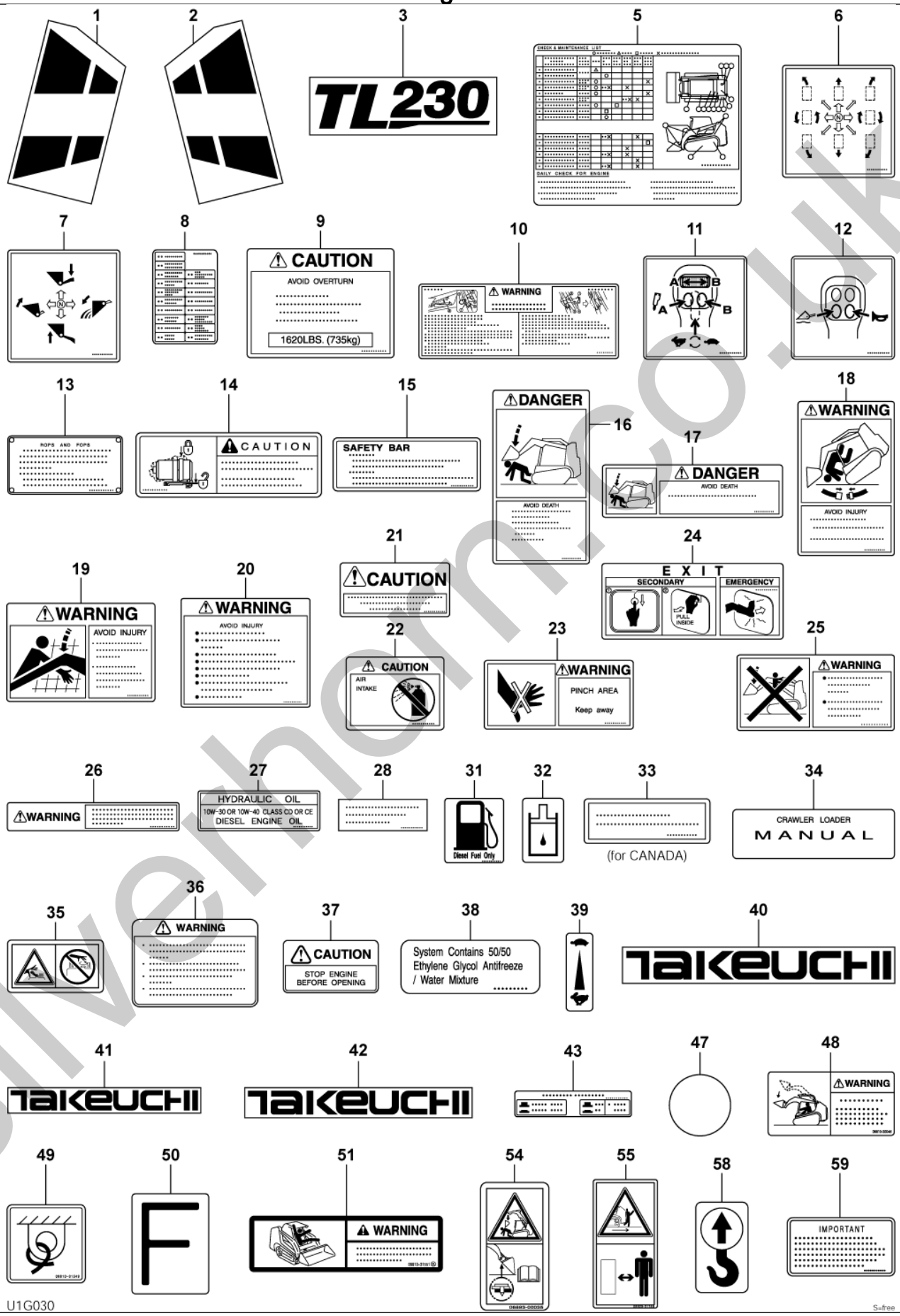

silverhorn.co.uk

DECAL (canopy)

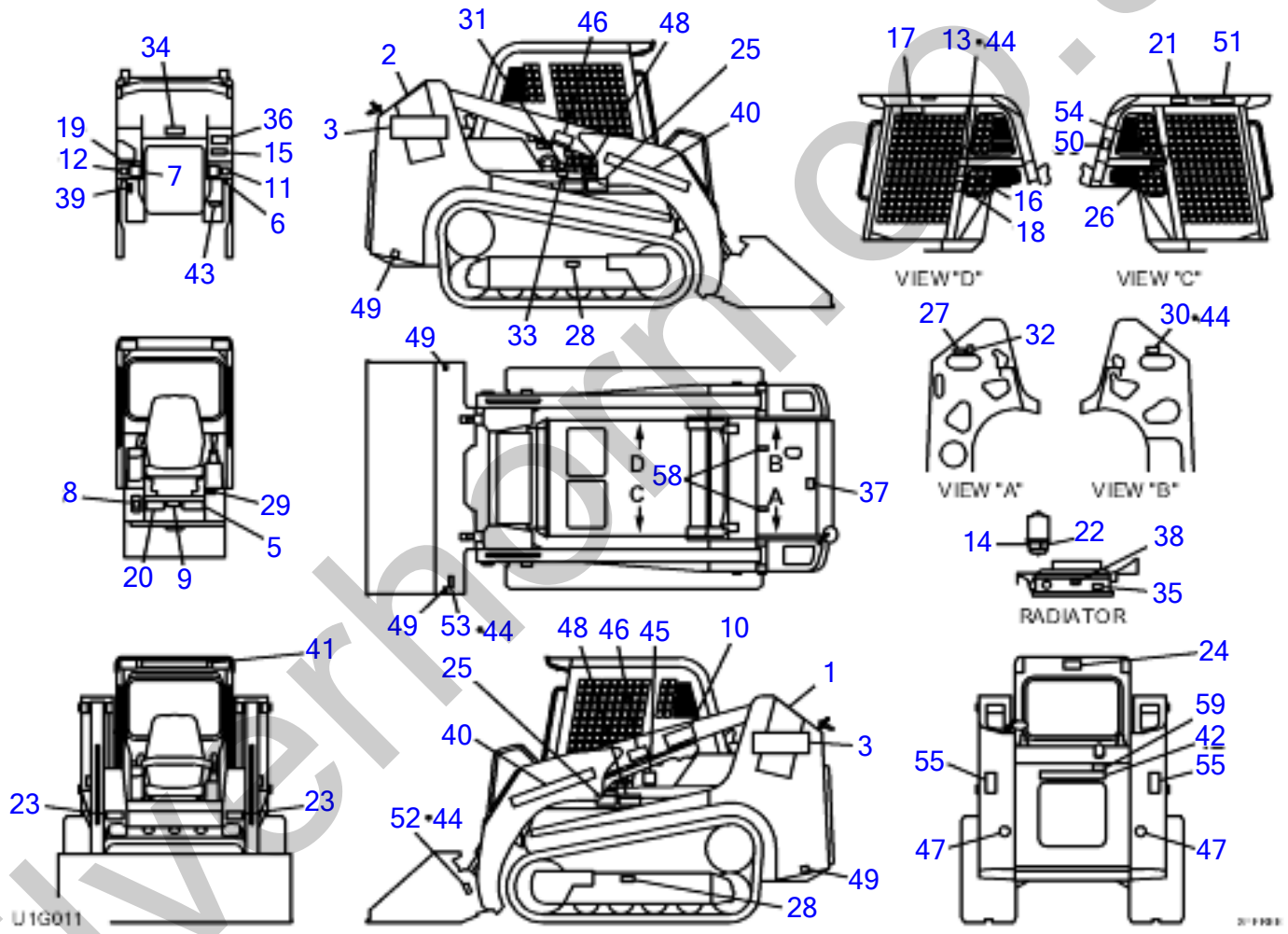

silverhorse.co.uk

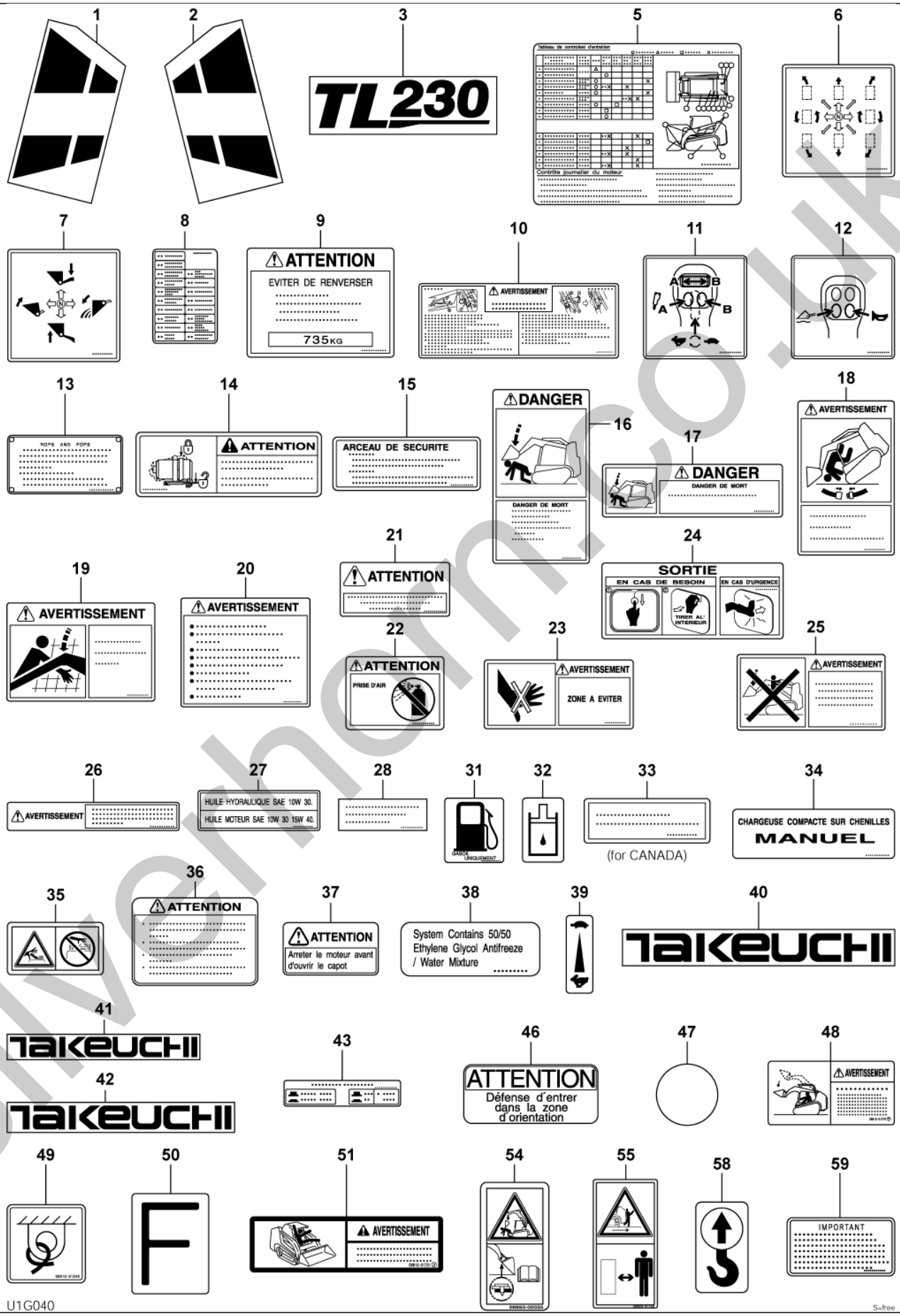

silverhorn.co.uk

DECAL (canopy)

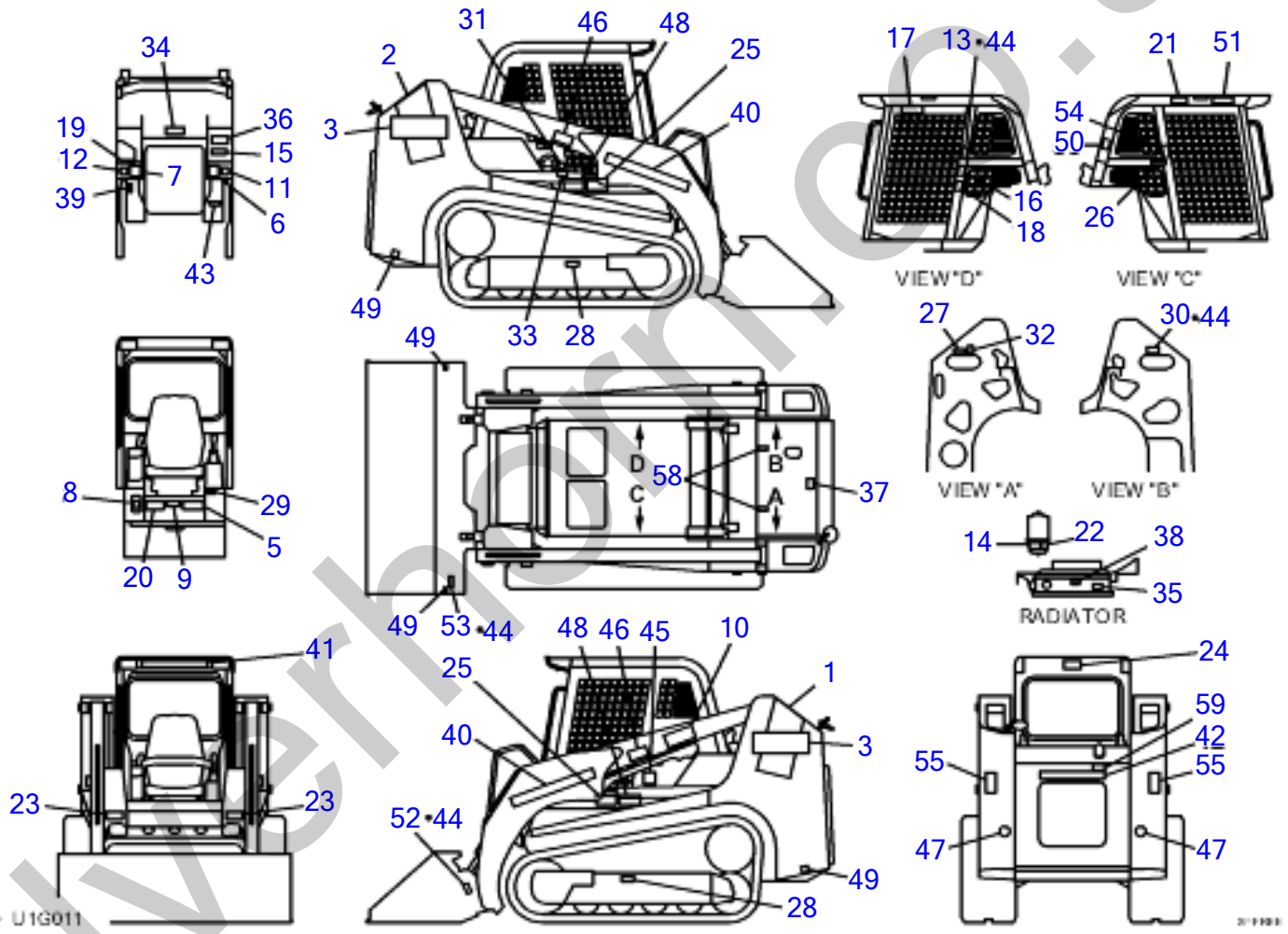

silverhorse.co.uk

DECAL (canopy)

Item	Part number	Description	Q'ty	Chan.	Serial No.	Serv.	Remarks
0	0669300000	DECAL SET (English, for E.U.)	1			M	
	0669302700	DECAL SET (CANADA; English)	1			M	
	0669302800	DECAL SET (CANADA; French)	1			M	
1	0669300001	・DECAL	1			M	
2	0669300002	・DECAL	1			M	
3	0669300003	・DECAL	2			M	
5	0669300005	・DECAL (English)	1			M	
	0669300105	・DECAL (French)	1			M	
6	0669300006	・DECAL	1			M	
7	0669300007	・DECAL	1			M	
8	0669300008	・DECAL (English, Dutch)	1			M	
	0669300108	・DECAL (French)	1			M	
9	0880038009	・DECAL (English)	1			M	
	0880038209	・DECAL (French)	1			M	
10	0881030110	・DECAL (English)	1			M	
	0881030260	・DECAL (French)	1			M	
11	0882030006	・DECAL	1			M	
12	0882030007	・DECAL	1			M	
13	X **********	・DECAL	1			M	
14	0669300014	・DECAL (English, Dutch)	1			M	
	0669300114	・DECAL (French)	1			M	
15	0880031001	・DECAL (English)	1			M	
	0880038607	・DECAL (French)	1			M	
16	0880030009	・DECAL (English)	1			M	
	0880038609	・DECAL (French)	1			M	
17	0880030010	・DECAL (English)	1			M	
	0880038610	・DECAL (French)	1			M	
18	0880030011	・DECAL (English)	1			M	
	0880038611	・DECAL (French)	1			M	
19	0880031003	・DECAL (English)	1			M	
	0880038612	・DECAL (French)	1			M	
20	0881030020	・DECAL (English)	1			M	
	0880038613	・DECAL (French)	1			M	
21	0880030015	・DECAL (English)	1			M	
	0880038615	・DECAL (French)	1			M	
22	0880030016	・DECAL (English)	1			M	
	0880038616	・DECAL (French)	1			M	
23	0880030017	・DECAL (English)	2			M	
	0880038617	・DECAL (French)	2			M	
24	0880031018	・DECAL (English)	1			M	
	0880038618	・DECAL (French)	1			M	
25	0880031005	・DECAL (English)	2			M	
	0880038620	・DECAL (French)	2			M	
26	0881030026	・DECAL (English)	1			M	
	0880038621	・DECAL (French)	1			M	
27	0880031017	・DECAL (English)	1			M	
	0880038623	・DECAL (French)	1			M	
28	0149362200	・DECAL (English)	2			M	
	0880038624	・DECAL (French)	2			M	
29	X **********	・DECAL	1			M	
30	X **********	・DECAL	1			M	
31	0359306600	・DECAL (English)	1			M	
	0339375460	・DECAL (French)	1			M	
32	0359306700	・DECAL	1			M	
33	0669300033	・DECAL (CANADA)	1			M	
34	0880031016	・DECAL (English)	1			M	
	0880038634	・DECAL (French)	1			M	
35	0882031135	・DECAL (English)	1			M	
36	0359313700	・DECAL (English)	1			M	
	0359315700	・DECAL (French)	1			M	
37	0359307400	・DECAL (English)	1			M	
	0359315400	・DECAL (French)	1			M	
38	0359313900	・DECAL	1			M	
39	0359317200	・DECAL	1			M	
40	0008500060	・DECAL	2			M	
41	0008500140	・DECAL	1			M	
42	0008500050	・DECAL	1			M	
43	0881030043	・DECAL (English)	1			M	

silverthorn.co.uk

DECAL (canopy)

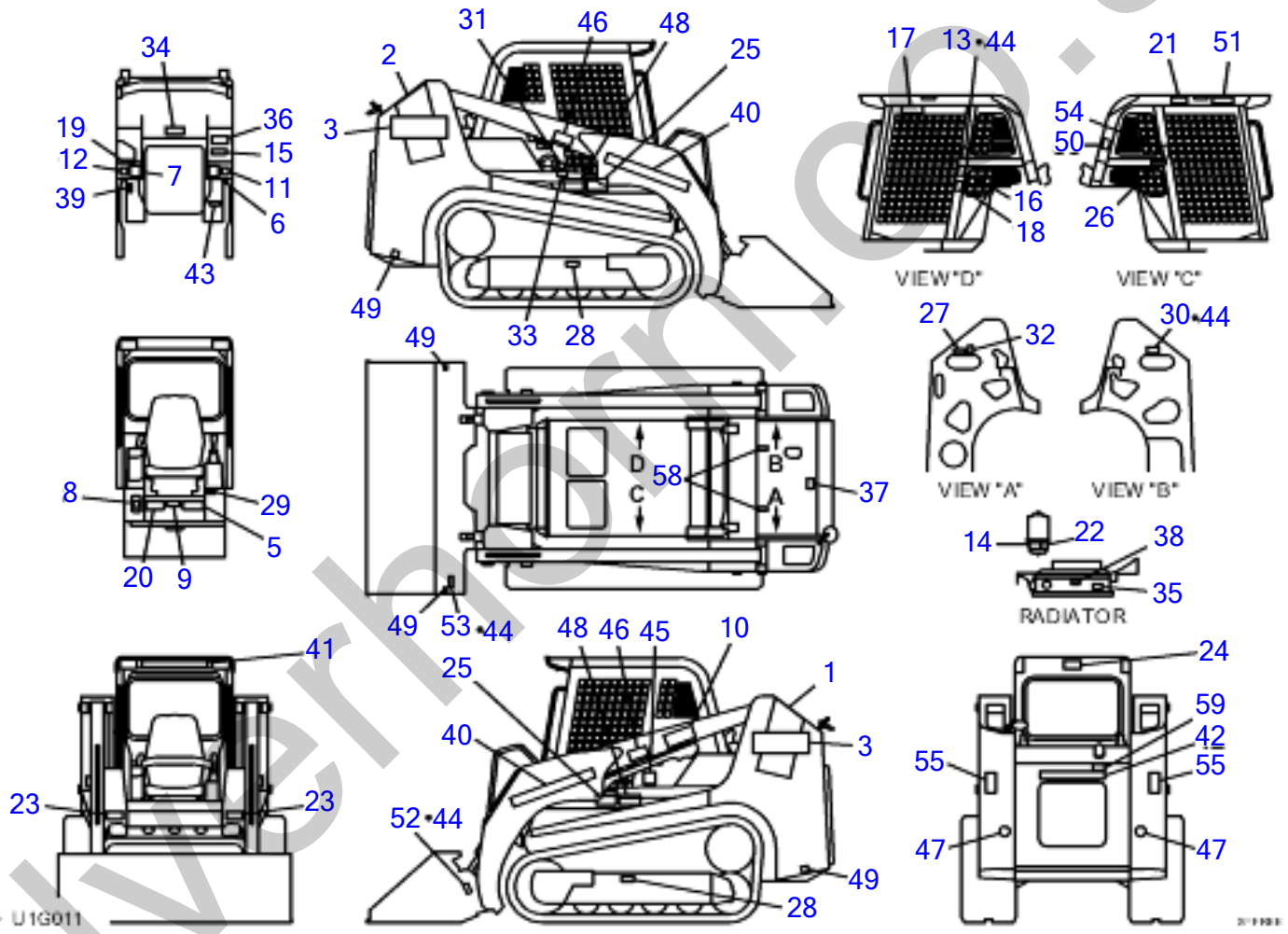

silverhorse.co.uk

DECAL (canopy)

Item	Part number	Description	Q'ty	Chan.	Serial No.	Serv.	Remarks
43	0881030243	・DECAL (French)	1			M	
44	X **********	・SCREW	16			M	
45	X **********	・DECAL	1			M	
46	0359309100	・DECAL (French)	2			M	
47	0874030360	・DECAL	2			M	
48	0881030046	・DECAL (English)	2			M	
48	0881031747	・DECAL (French)	2			M	
49	0881031549	・DECAL	4			M	
50	0399300400	・DECAL	1			M	
51	0881031551	・DECAL (English)	1			M	
51	0881031751	・DECAL (French)	1			M	
52	X **********	・DECAL	1			M	
53	X **********	・DECAL	1			M	
54	0689300035	・DECAL	1			M	
55	0882031159	・DECAL	2			M	
58	0399300500	・DECAL	2			M	
59	0339376240	・DECAL (English)	1			M	
59	0339379440	・DECAL (French)	1			M	
	U1g011						

silverhorn.co.uk

DECAL (canopy) (U.S. TAKEUCHI)

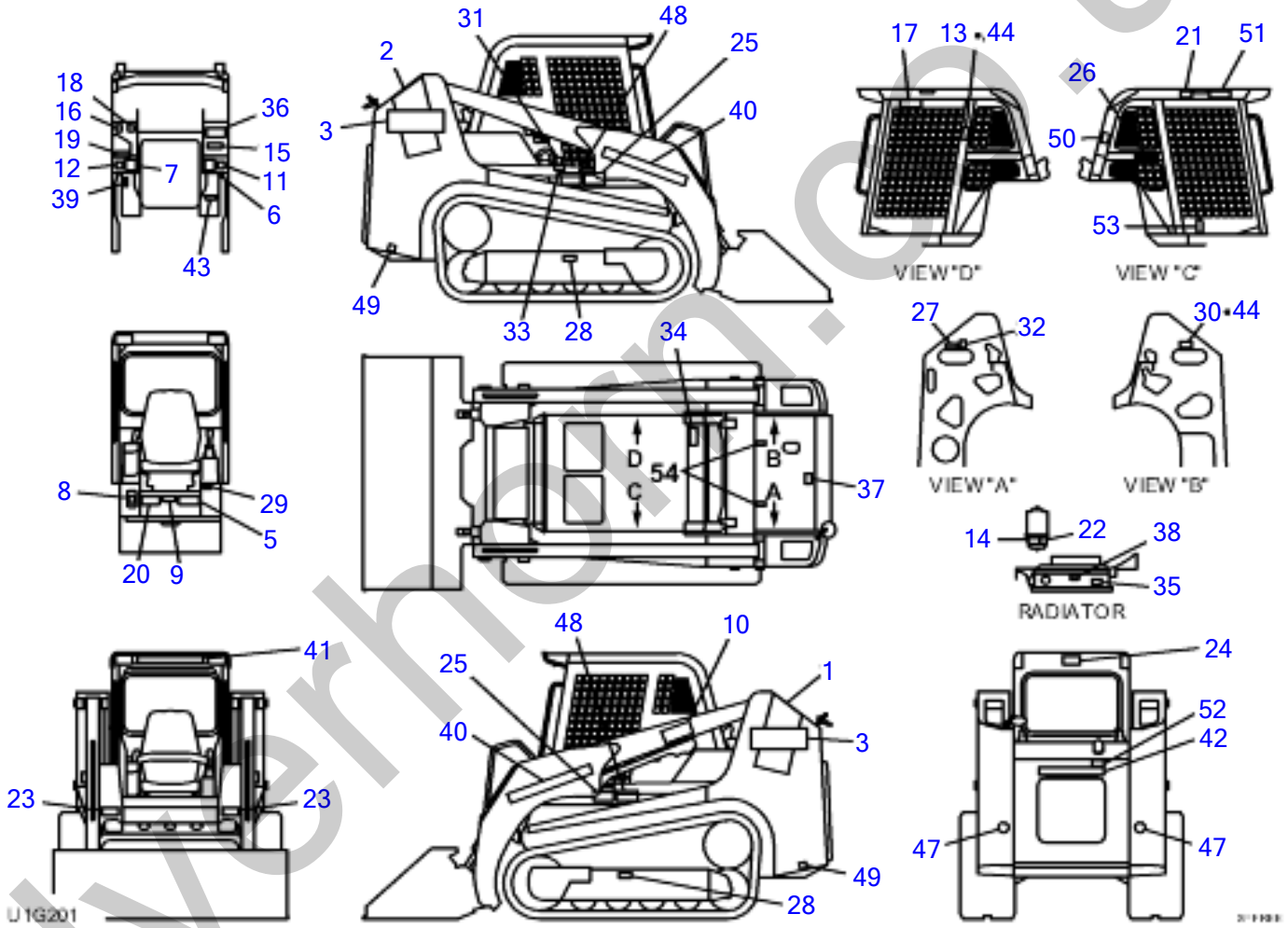

silverhorn.co.uk

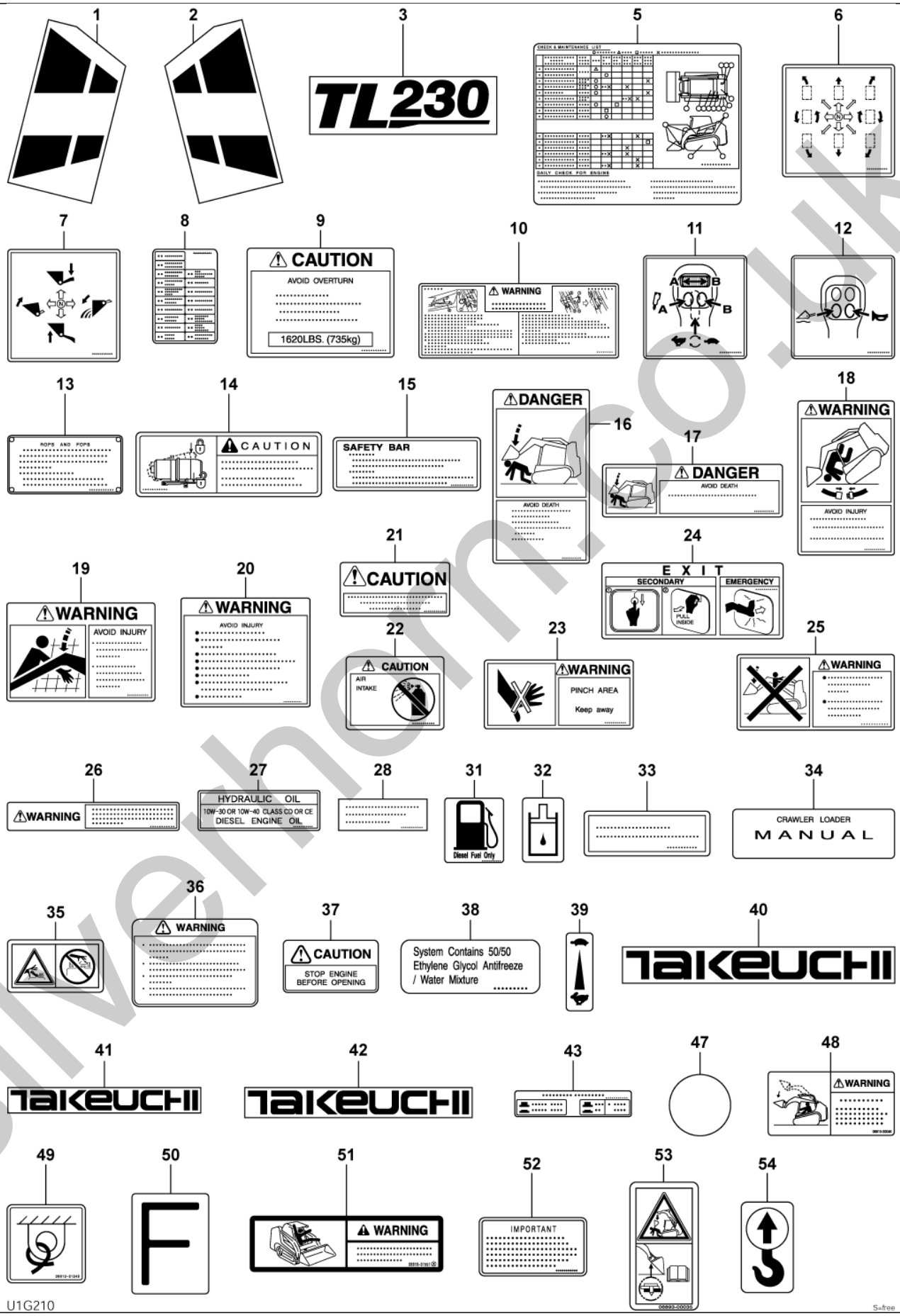

silverhorn.co.uk

DECAL (canopy) (U.S. TAKEUCHI)

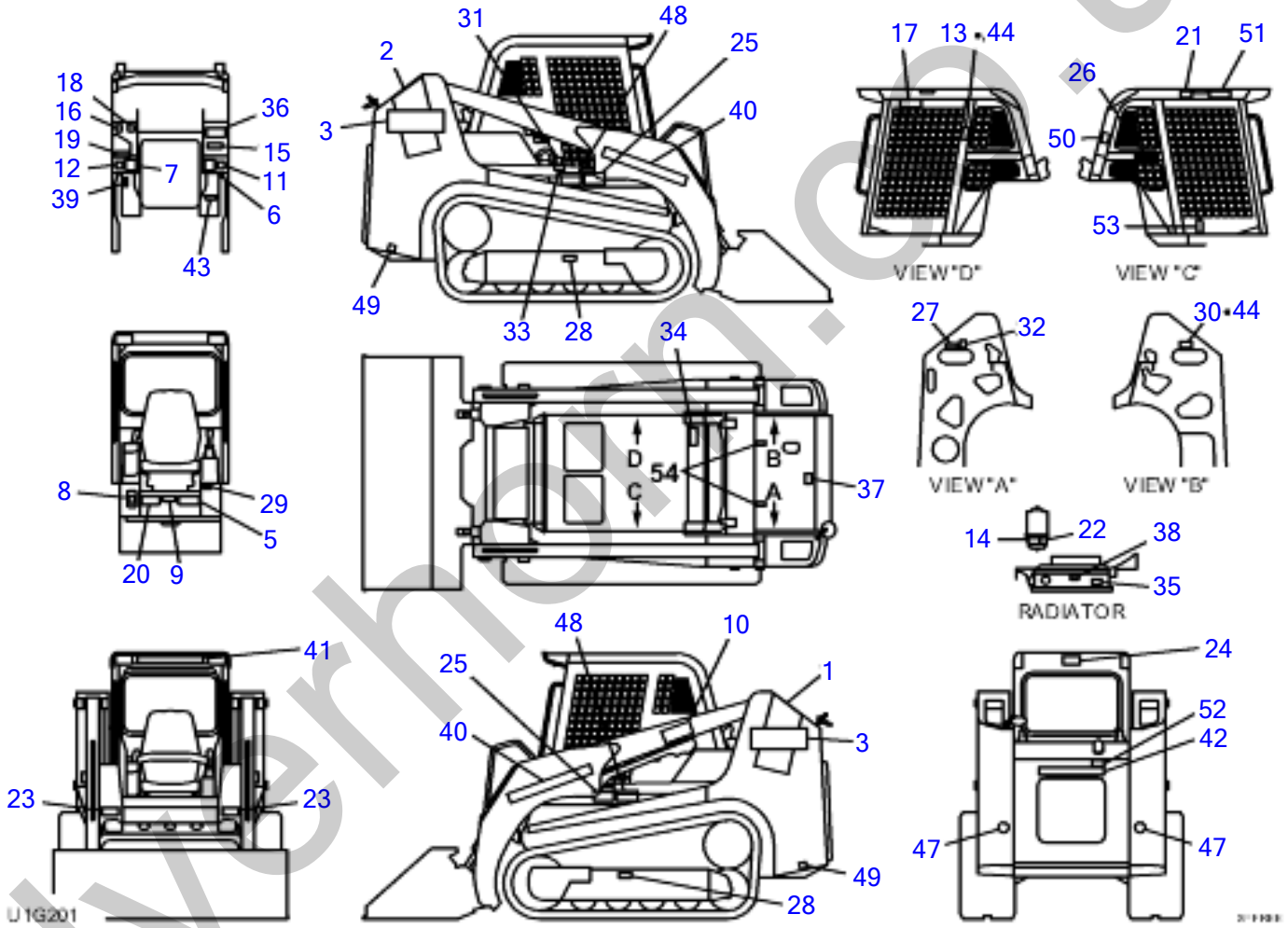

silverhorn.co.uk

DECAL (canopy) (U.S. TAKEUCHI)

Item		Part number	Description	Q'ty	Chan.	Serial No.	Serv.	Remarks
0		0669300800	DECAL SET (U.S. TAKEUCHI)	1			M	
1		0669300001	・DECAL	1			M	
2		0669300002	・DECAL	1			M	
3		0669300003	・DECAL	2			M	
5		0669300005	・DECAL	1			M	
6		0669300006	・DECAL	1			M	
7		0669300007	・DECAL	1			M	
8		0669300008	・DECAL	1			M	
9		0880038009	・DECAL	1			M	
10		0881030110	・DECAL	1			M	
11		0882030006	・DECAL	1			M	
12		0882030007	・DECAL	1			M	
13	X	**********	・DECAL	1			M	
14		0669300814	・DECAL	1			M	
15		0880031001	・DECAL	1			M	
16		0880030009	・DECAL	1			M	
17		0880030010	・DECAL	1			M	
18		0880030011	・DECAL	1			M	
19		0880031003	・DECAL	1			M	
20		0881030020	・DECAL	1			M	
21		0880030015	・DECAL	1			M	
22		0880030016	・DECAL	1			M	
23		0880030017	・DECAL	2			M	
24		0880031018	・DECAL	1			M	
25		0880031005	・DECAL	2			M	
26		0881030026	・DECAL	1			M	
27		0880031017	・DECAL	1			M	
28		0149362200	・DECAL	2			M	
29	X	**********	・DECAL	1			M	
30	X	**********	・DECAL	1			M	
31		0359306600	・DECAL	1			M	
32		0359306700	・DECAL	1			M	
33		0669300033	・DECAL	1			M	
34		0880031016	・DECAL	1			M	
35		0882031135	・DECAL	1			M	
36		0359313700	・DECAL	1			M	
37		0359307400	・DECAL	1			M	
38		0359313900	・DECAL	1			M	
39		0359317200	・DECAL	1			M	
40		0008500060	・DECAL	2			M	
41		0008500140	・DECAL	1			M	
42		0008500050	・DECAL	1			M	
43		0881030043	・DECAL	1			M	
44	X	**********	・SCREW	8			M	
47		0874030360	・DECAL	2			M	
48		0881030046	・DECAL	2			M	
49		0881031549	・DECAL	2			M	
50		0399300400	・DECAL	1			M	
51		0881031551	・DECAL	1			M	
52		0339376240	・DECAL	1			M	
53		0689300035	・DECAL	1			M	
54		0399300500	・DECAL	2			M	
		U1g201						

silverthorn.co.uk

DECAL (canopy) (for GEHL & MUSTANG)

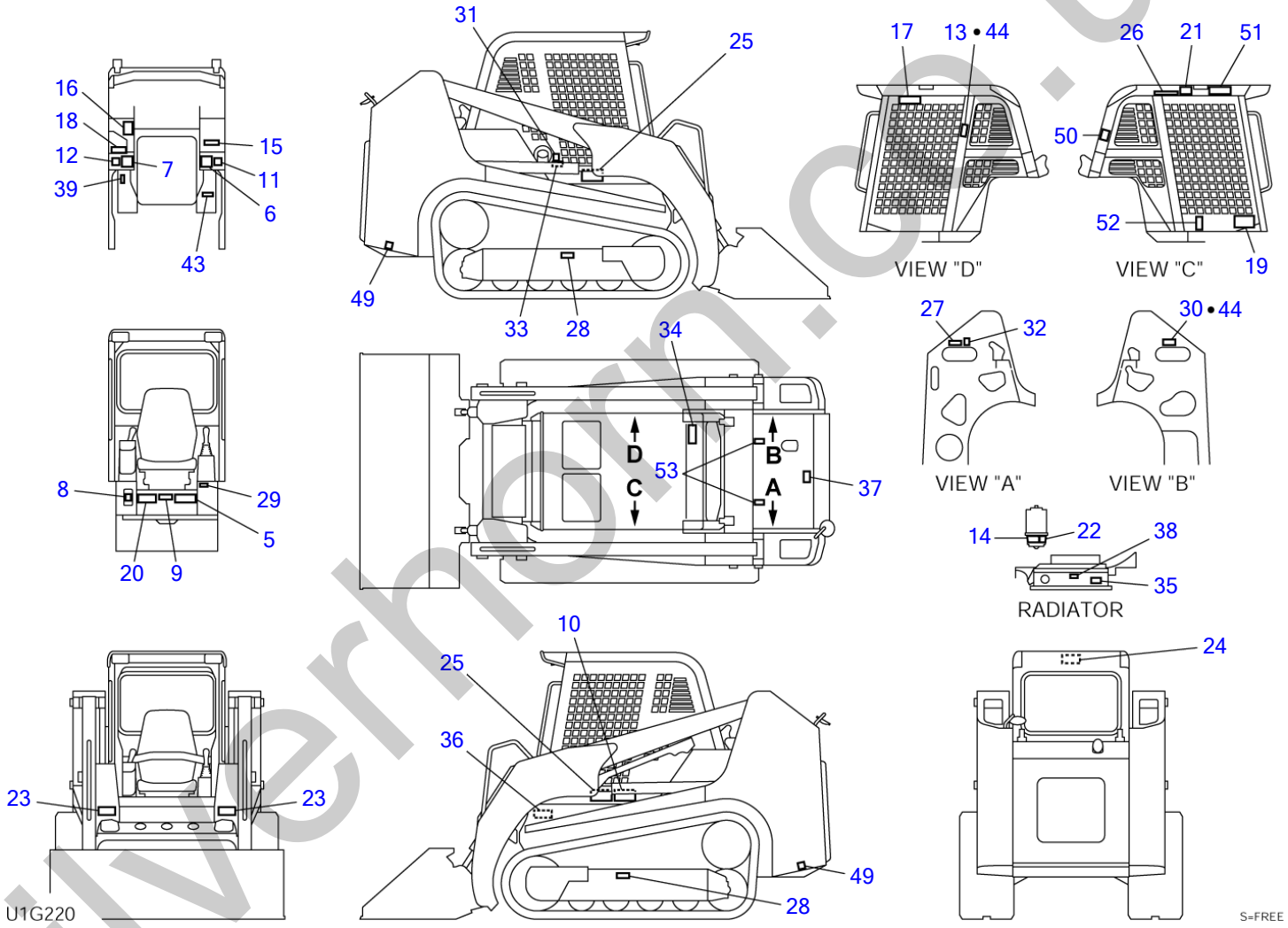

silverhorn.co.uk

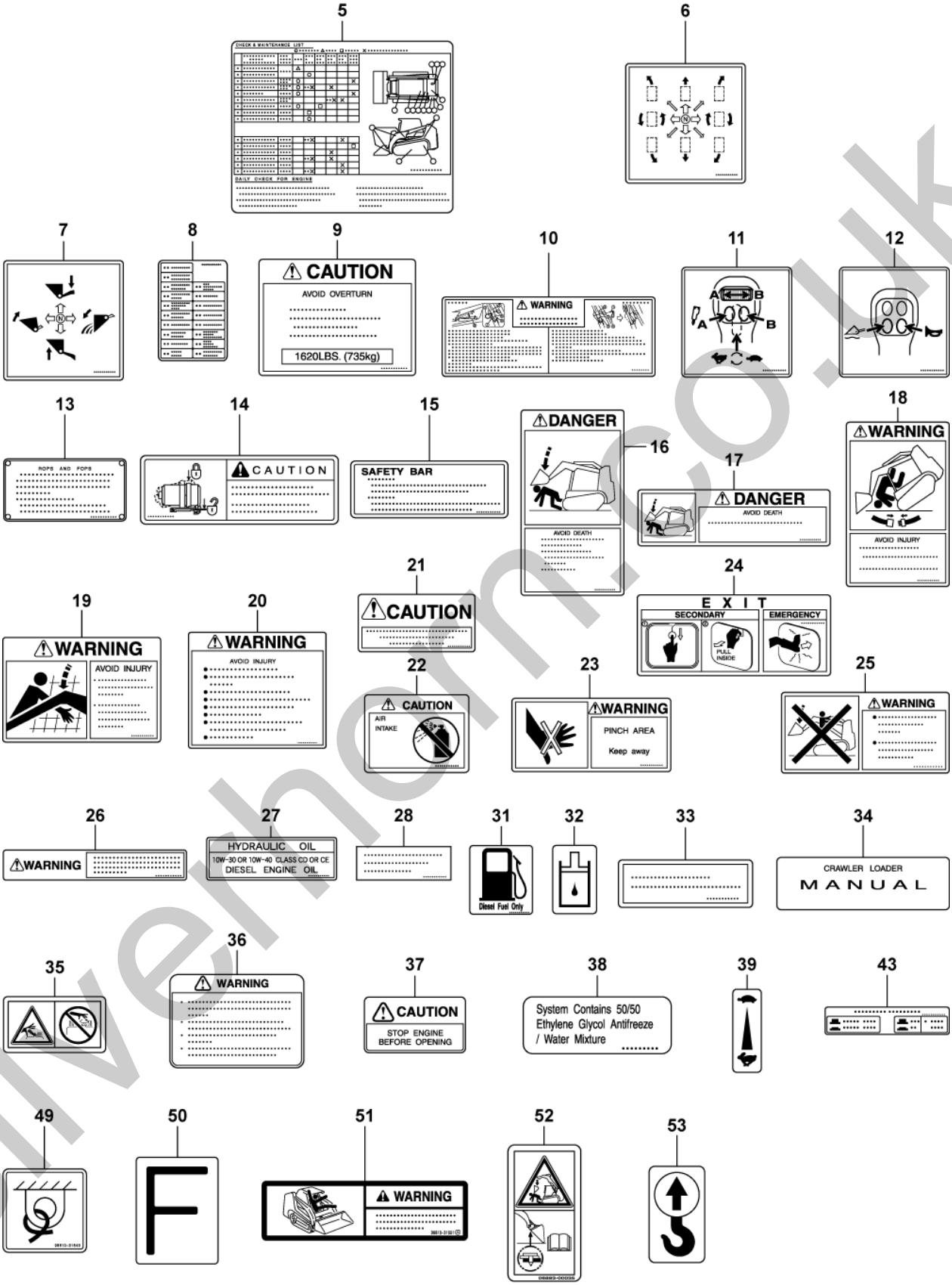

silverhorn.co.uk

DECAL (canopy) (for GEHL & MUSTANG)

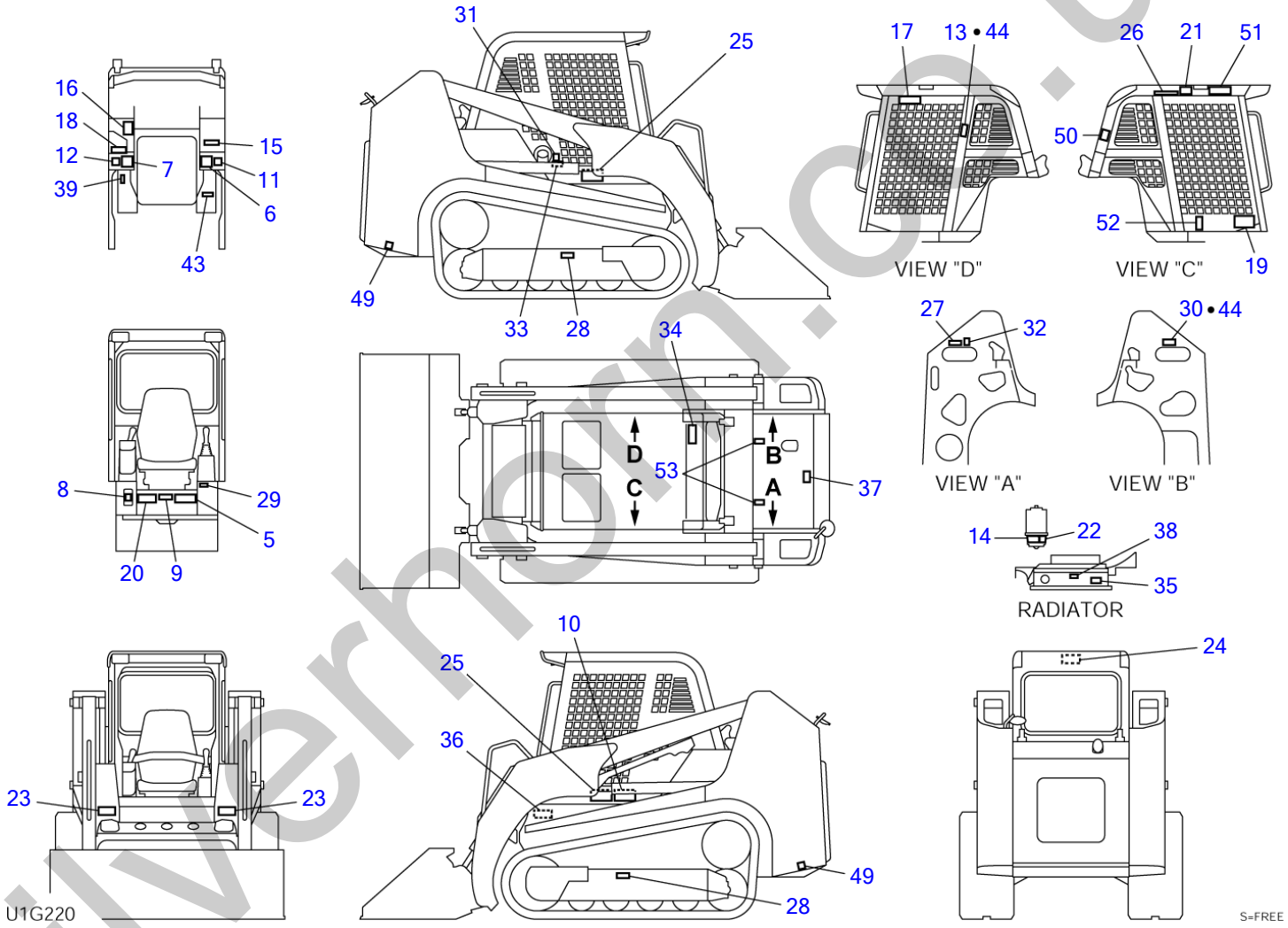

silverhorn.co.uk

DECAL (canopy) (for GEHL & MUSTANG)

Item	Part number	Description	Q'ty	Chan.	Serial No.	Serv.	Remarks
0	0669300600	DECAL SET (GEHL & MUSTANG)	1			M	
5	0669300005	・DECAL	1			M	
6	0669300006	・DECAL	1			M	
7	0669300007	・DECAL	1			M	
8	0669300008	・DECAL	1			M	
9	0880038009	・DECAL	1			M	
10	0881030110	・DECAL	1			M	
11	0882030006	・DECAL	1			M	
12	0882030007	・DECAL	1			M	
13	X **********	・DECAL	1			M	
14	0669300014	・DECAL	1			M	
15	0880031001	・DECAL	1			M	
16	0880030009	・DECAL	1			M	
17	0880030010	・DECAL	1			M	
18	0880030011	・DECAL	1			M	
19	0880031003	・DECAL	1			M	
20	0881030020	・DECAL	1			M	
21	0880030015	・DECAL	1			M	
22	0880030016	・DECAL	1			M	
23	0880030017	・DECAL	2			M	
24	0880031018	・DECAL	1			M	
25	0880031005	・DECAL	2			M	
26	0881030026	・DECAL	1			M	
27	0880031017	・DECAL	1			M	
28	0149362200	・DECAL	2			M	
29	X **********	・DECAL	1			M	
30	X **********	・DECAL	1			M	
31	0359306600	・DECAL	1			M	
32	0359306700	・DECAL	1			M	
33	0669300033	・DECAL	1			M	
34	0880031016	・DECAL	1			M	
35	0882031135	・DECAL	1			M	
36	0359313700	・DECAL	1			M	
37	0359307400	・DECAL	1			M	
38	0359313900	・DECAL	1			M	
39	0359317200	・DECAL	1			M	
43	0881030043	・DECAL	1			M	
44	X **********	・SCREW	8			M	
49	0881031549	・DECAL	2			M	
50	0399300400	・DECAL	1			M	
51	0881031551	・DECAL	1			M	
52	0689300035	・DECAL	1			M	
53	0399300500	・DECAL	2			M	
	U1g220						

silverthorn.co.uk

DECAL (cab)

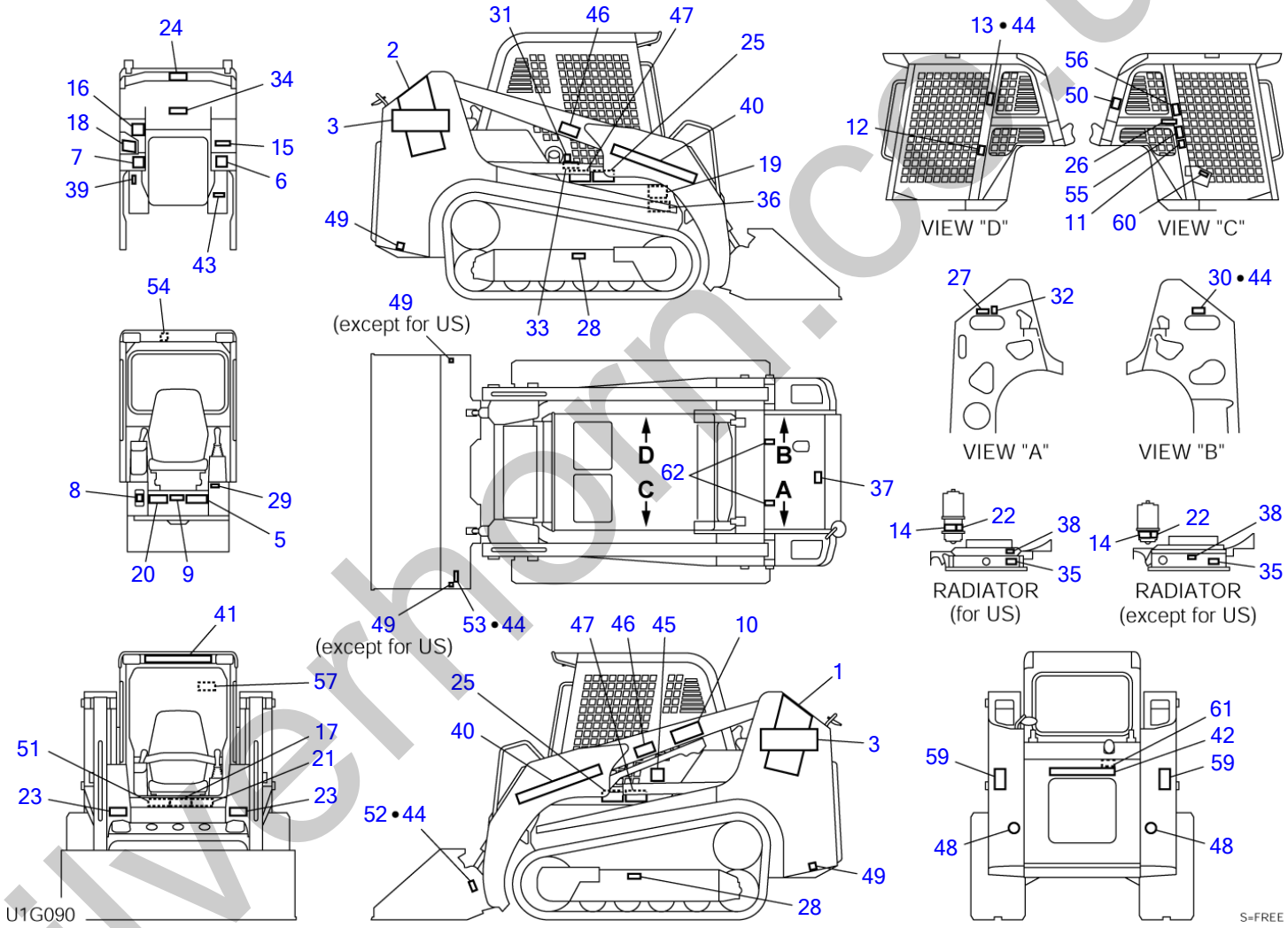

silverhorn.co.uk

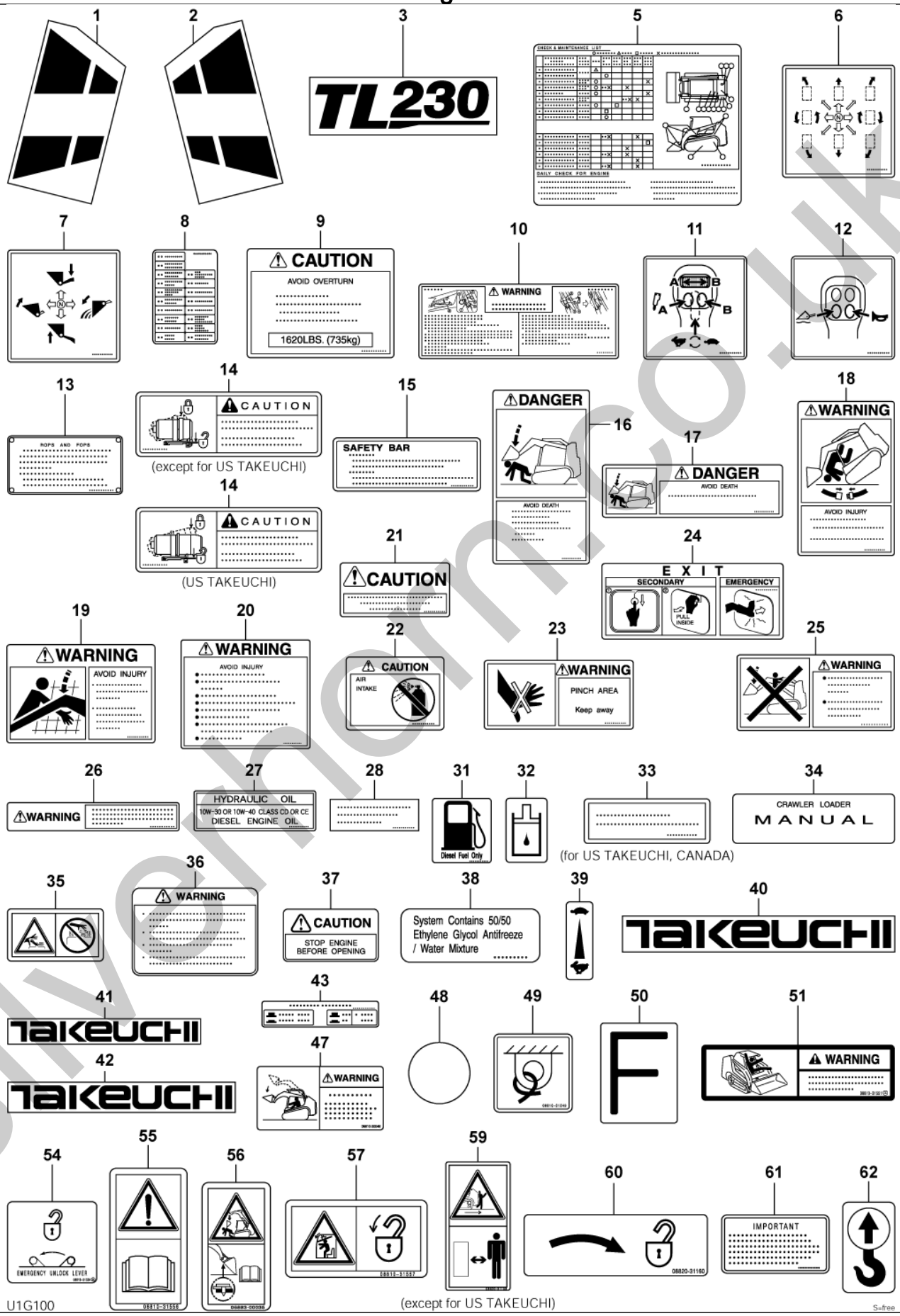

silverhorn.co.uk

DECAL (cab)

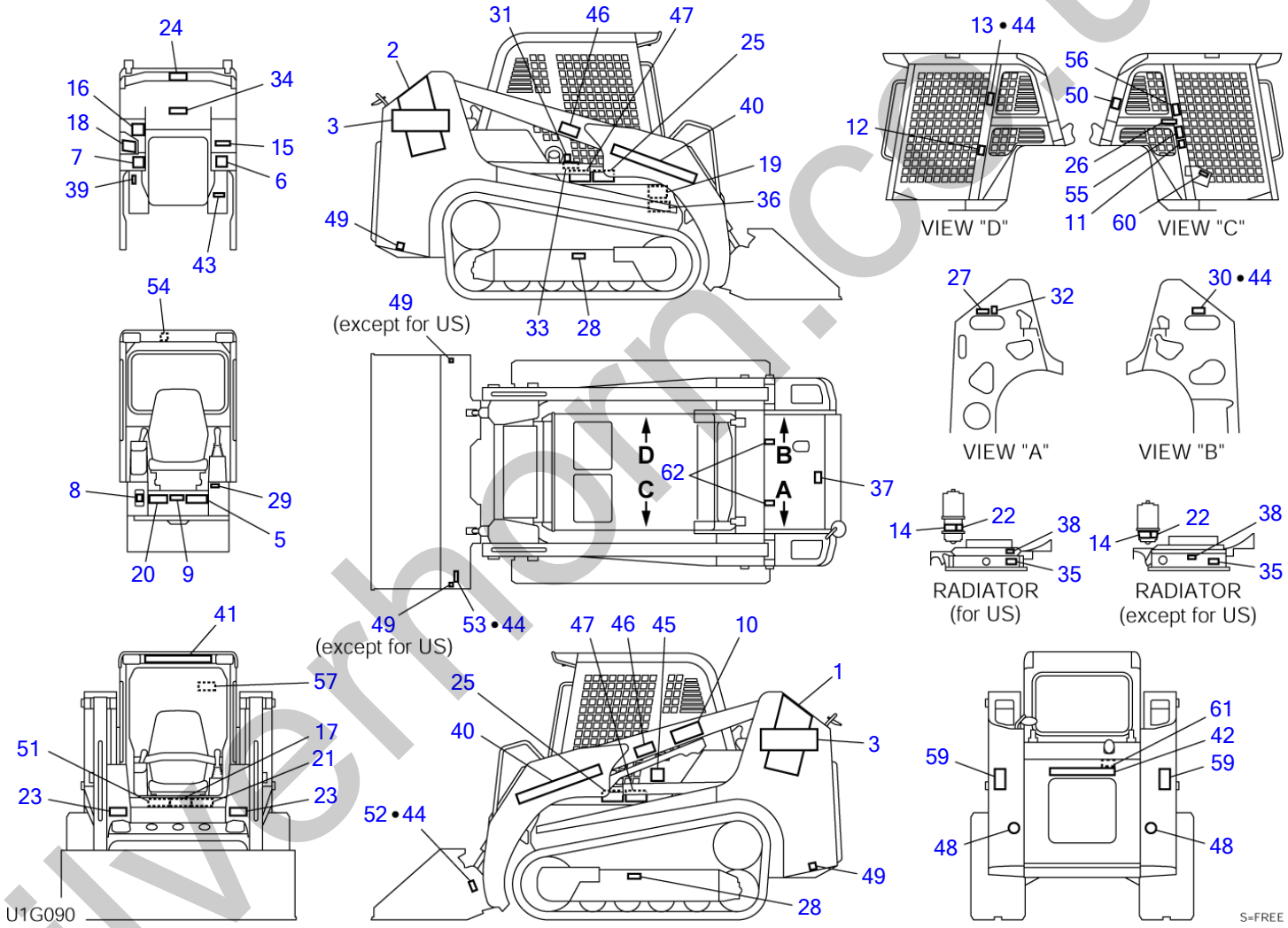

silverhorn.co.uk

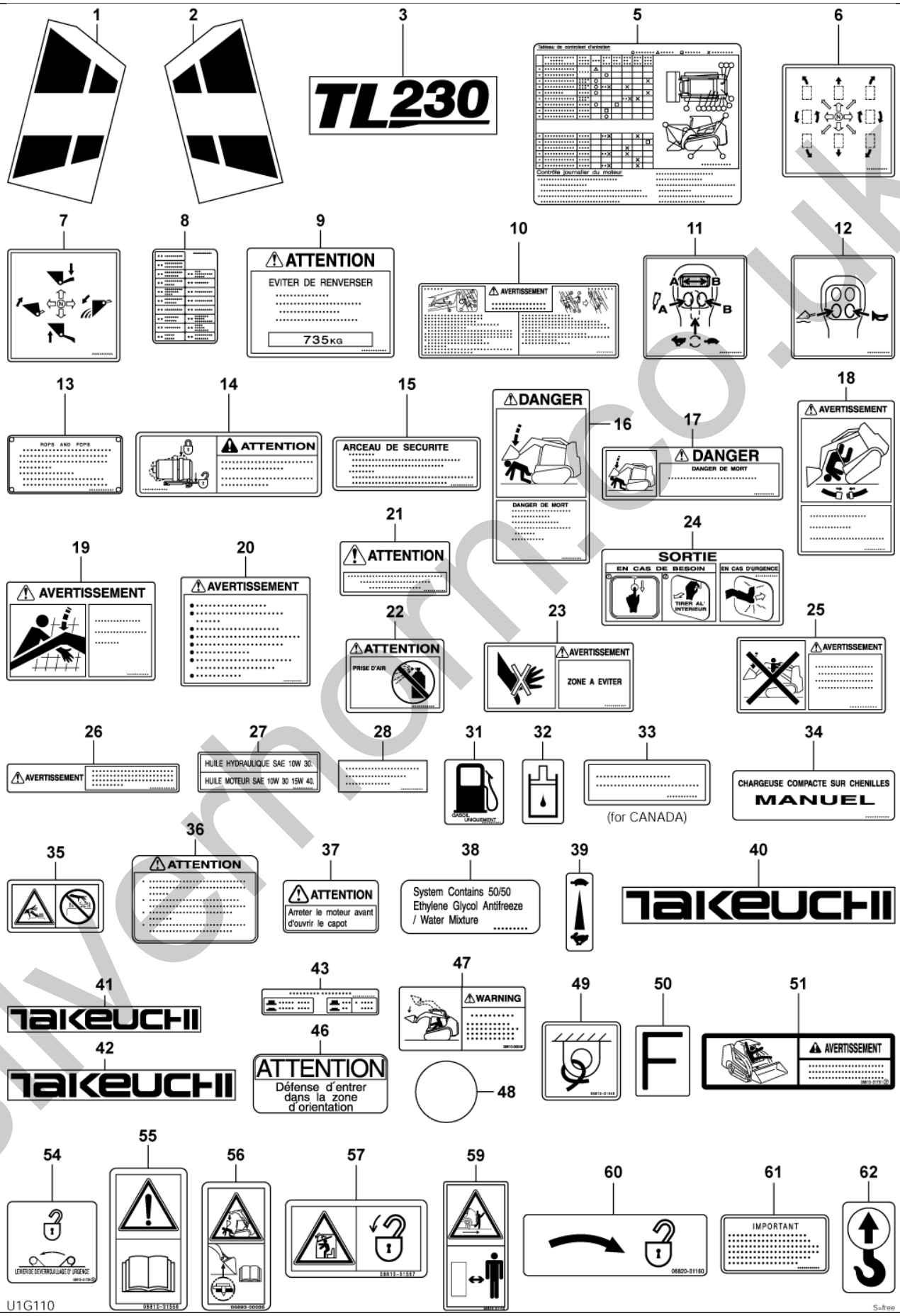

silverhorn.co.uk

DECAL (cab)

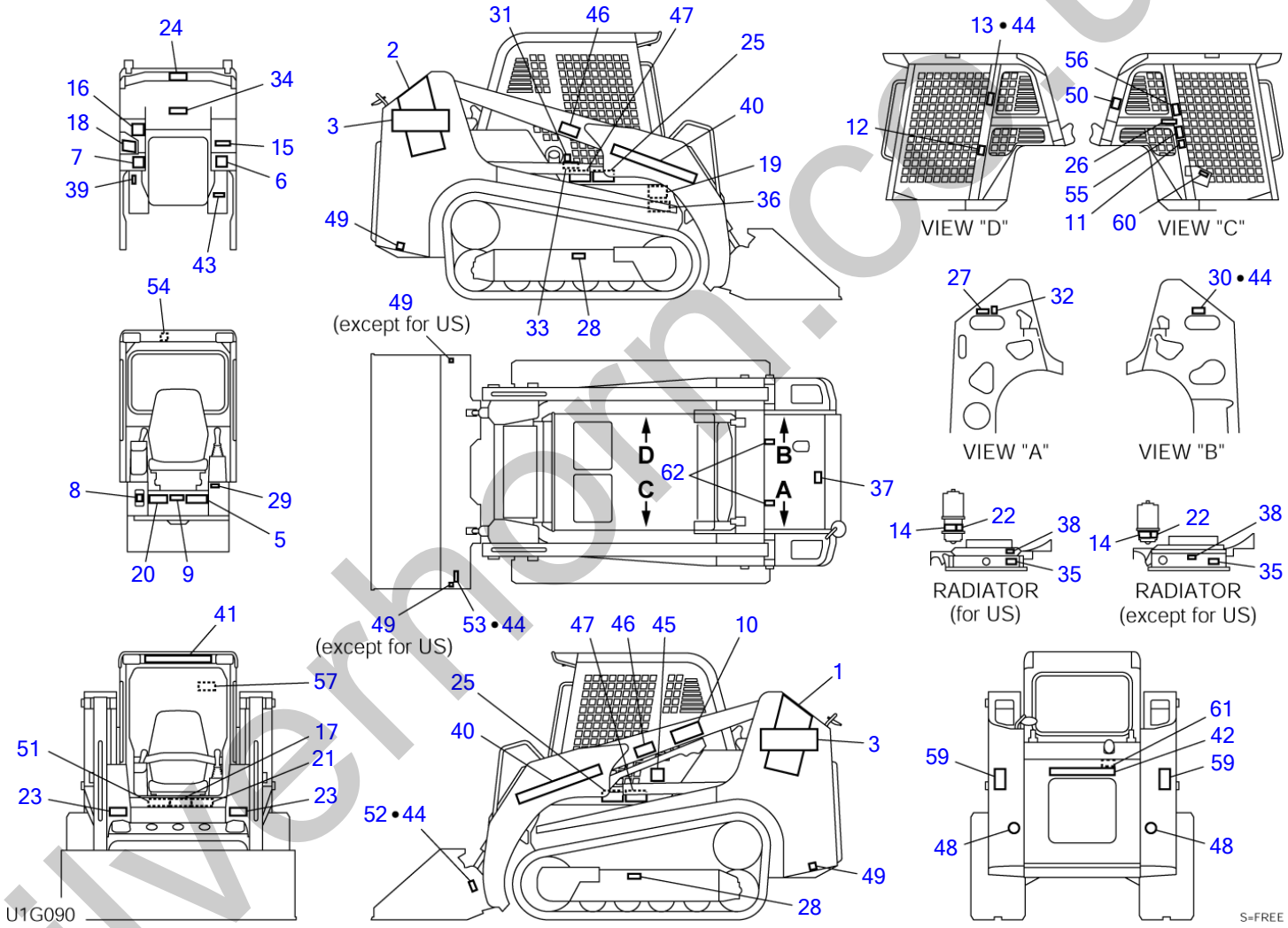

silverhorn.co.uk

DECAL (cab)

Item	Part number	Description	Q'ty	Chan.	Serial No.	Serv.	Remarks
0	0669300900	DECAL SET (English, for U.S.)	1			M	
	0669302900	DECAL SET (CANADA; English)	1			M	
	0669303000	DECAL SET (CANADA; French)	1			M	
1	0669300001	・DECAL	1			M	
2	0669300002	・DECAL	1			M	
3	0669300003	・DECAL	2			M	
5	0669300005	・DECAL (English)	1			M	
	0669300105	・DECAL (French)	1			M	
6	0669300006	・DECAL	1			M	
7	0669300007	・DECAL	1			M	
8	0669300008	・DECAL (English, Dutch)	1			M	
	0669300108	・DECAL (French)	1			M	
9	0880038009	・DECAL (English)	1			M	
	0880038209	・DECAL (French)	1			M	
10	0881030110	・DECAL (English)	1			M	
	0881030260	・DECAL (French)	1			M	
	0881030360	・DECAL (Italian)	1			M	
11	0882030006	・DECAL	1			M	
12	0882030007	・DECAL	1			M	
13	X **********	・DECAL	1			M	
14	0669300814	・DECAL (U.S. TAKEUCHI)	1			M	
	0669300014	・DECAL (English, Dutch)	1			M	except for US
	0669300114	・DECAL (French)	1			M	
15	0880031001	・DECAL (English)	1			M	
	0880038607	・DECAL (French)	1			M	
16	0880030009	・DECAL (English)	1			M	
	0880038609	・DECAL (French)	1			M	
17	0880030010	・DECAL (English)	1			M	
	0880038610	・DECAL (French)	1			M	
18	0880030011	・DECAL (English)	1			M	
	0880038611	・DECAL (French)	1			M	
19	0880031003	・DECAL (English)	1			M	
	0880038612	・DECAL (French)	1			M	
20	0881030020	・DECAL (English)	1			M	
	0880038613	・DECAL (French)	1			M	
21	0880030015	・DECAL (English)	1			M	
	0880038615	・DECAL (French)	1			M	
22	0880030016	・DECAL (English)	1			M	
	0880038616	・DECAL (French)	1			M	
23	0880030017	・DECAL (English)	2			M	
	0880038617	・DECAL (French)	2			M	
24	0880031018	・DECAL (English)	1			M	
	0880038618	・DECAL (French)	1			M	
25	0880031005	・DECAL (English)	2			M	
	0880038620	・DECAL (French)	2			M	
26	0881030026	・DECAL (English)	1			M	
	0880038621	・DECAL (French)	1			M	
27	0880031017	・DECAL (English)	1			M	
	0880038623	・DECAL (French)	1			M	
28	0149362200	・DECAL (English)	2			M	
	0880038624	・DECAL (French)	2			M	
29	X **********	・DECAL	1			M	
30	X **********	・DECAL	1			M	
31	0359306600	・DECAL (English)	1			M	
	0339375460	・DECAL (French)	1			M	
32	0359306700	・DECAL	1			M	
33	0669300033	・DECAL (U.S. TAKEUCHI, CANADA)	1			M	
34	0880031016	・DECAL (English)	1			M	
	0880038634	・DECAL (French)	1			M	
35	0882031135	・DECAL (English)	1			M	
36	0359313700	・DECAL (English)	1			M	
	0359315700	・DECAL (French)	1			M	
37	0359307400	・DECAL (English)	1			M	
	0359315400	・DECAL (French)	1			M	
38	0359313900	・DECAL	1			M	
39	0359317200	・DECAL	1			M	
40	0008500060	・DECAL	2			M	
41	0008500140	・DECAL	1			M	

silverthorn.co.uk

DECAL (cab)

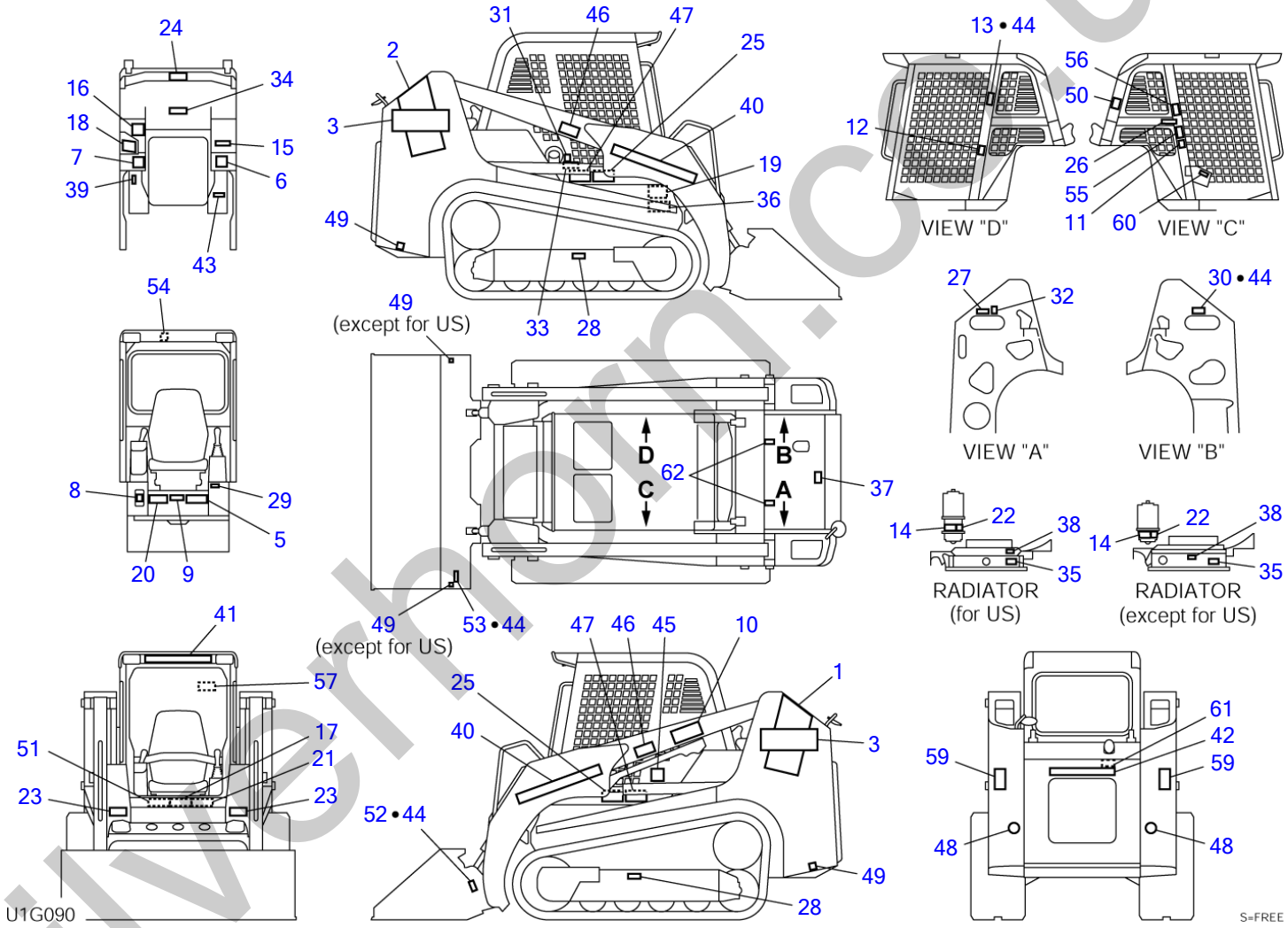

silverhorn.co.uk

DECAL (cab)

Item	Part number	Description	Q'ty	Chan.	Serial No.	Serv.	Remarks
42	0008500050	・DECAL	1			M	
43	0881030043	・DECAL (English)	1			M	
43	0881030243	・DECAL (French)	1			M	
44	X **********	・SCREW	16			M	
45	X **********	・DECAL	1			M	
46	0359309100	・DECAL (French)	2			M	
47	0881030046	・DECAL (English)	2			M	
47	0881031747	・DECAL (French)	2			M	
48	0874030360	・DECAL	2			M	
49	0881031549	・DECAL	4			M	
50	0399300400	・DECAL	1			M	
51	0881031551	・DECAL (English)	1			M	
51	0881031751	・DECAL (French)	1			M	
52	X **********	・DECAL	1			M	except for US
53	X **********	・DECAL	1			M	except for US
54	0881031554	・DECAL (English)	1			M	
54	0881031754	・DECAL (French)	1			M	
55	0881031556	・DECAL	1			M	
56	0689300035	・DECAL	1			M	
57	0881031557	・DECAL	1			M	
59	0882031159	・DECAL	2			M	except for US
60	0882031160	・DECAL	1			M	
61	0339376240	・DECAL (English)	1			M	
61	0339379440	・DECAL (French)	1			M	
62	0399300500	・DECAL	2			M	
	U1g091						

silverhorn.co.uk

DECAL (cab) (high flow)

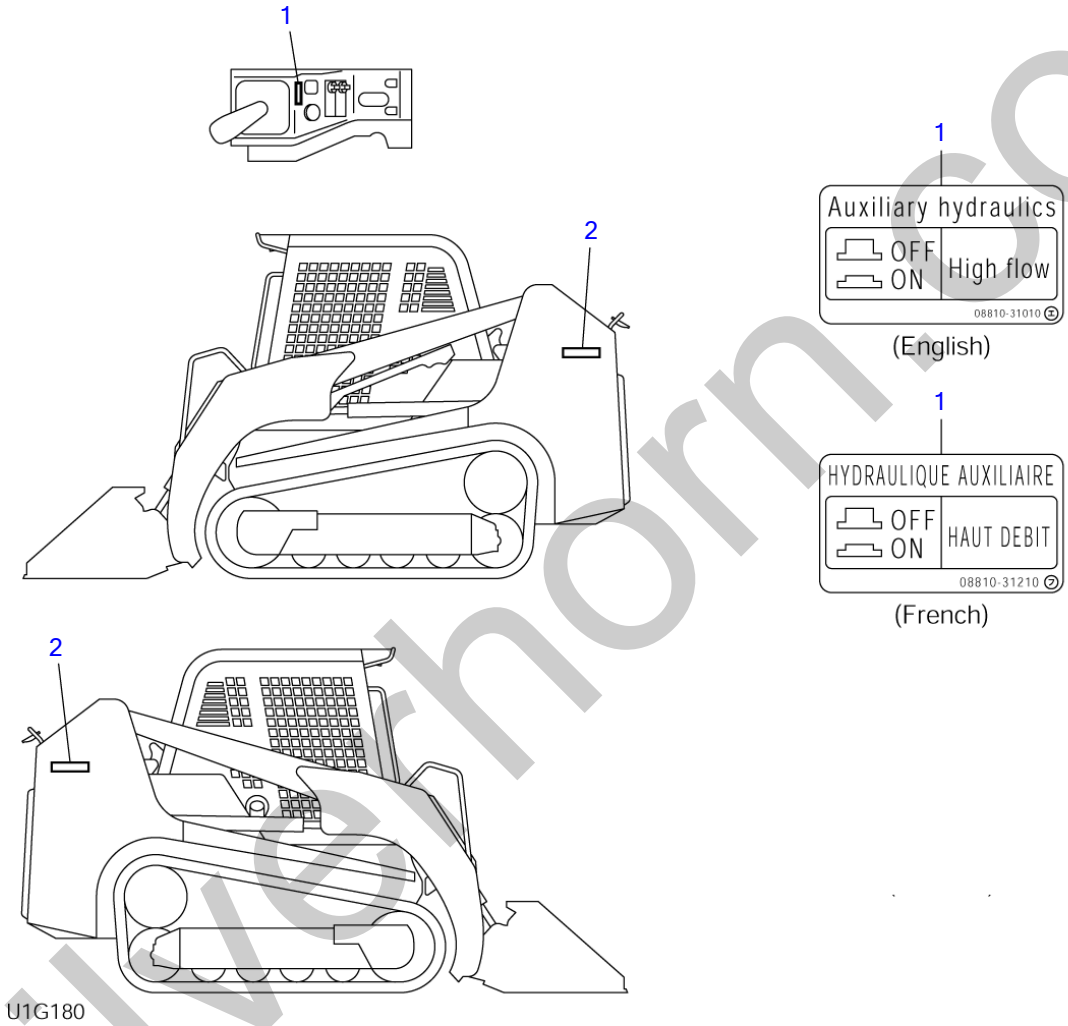

silverhorn.co.uk

DECAL (cab) (high flow)

Item	Part number	Description	Q'ty	Chan.	Serial No.	Serv.	Remarks
0	**0669302000**	DECAL SET (English)	1			M	
	0669302100	DECAL SET (French)	1			M	
1	**0881031010**	DECAL (English)	1			M	
	0881031210	DECAL (French)	1			M	
2	**0669302002**	DECAL	2			M	
	U1g180						

silverhorn.co.uk

DECAL (cab) (high flow, for GEHL & MUSTANG)

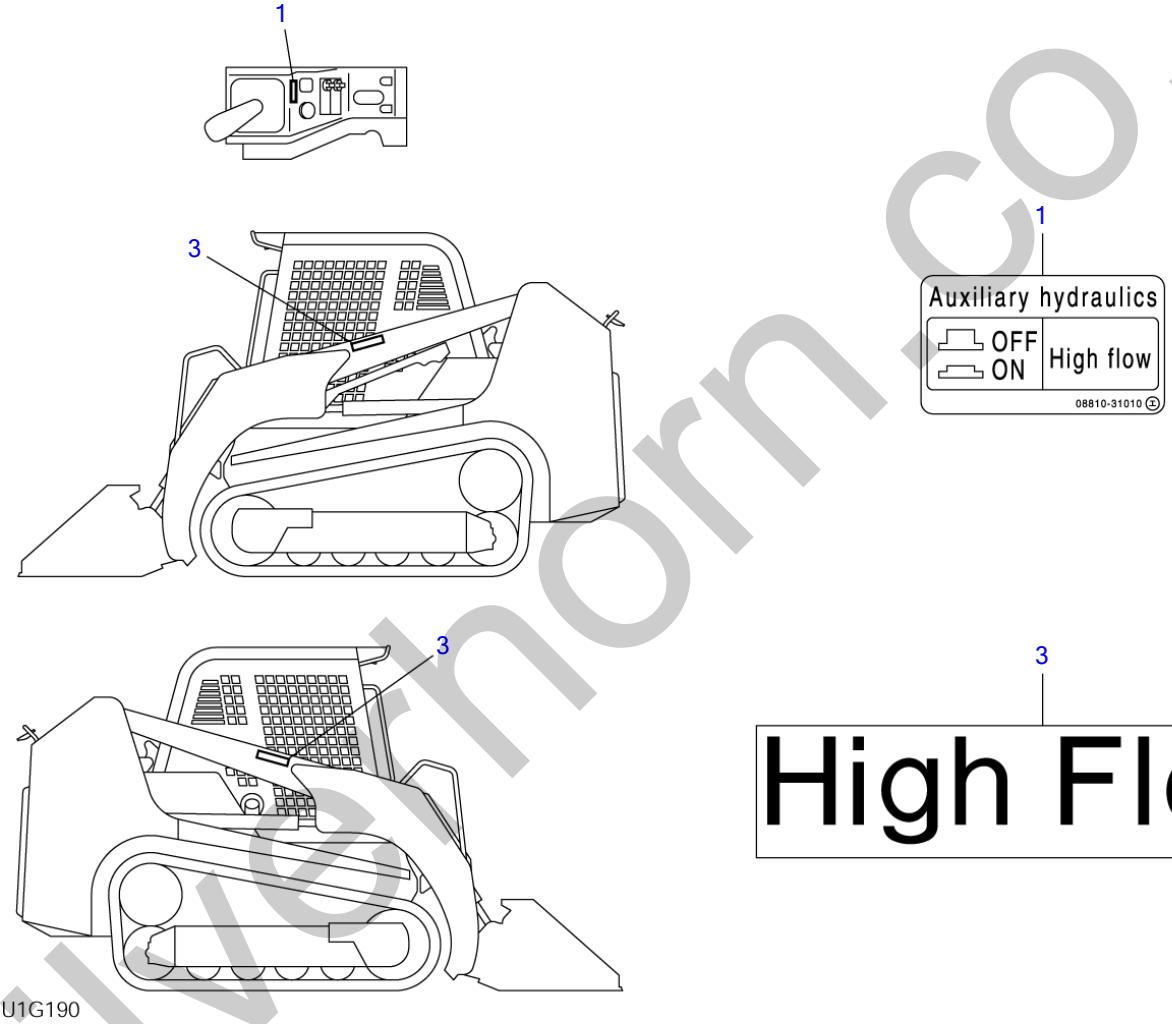

silverhorn.co.uk

DECAL (cab) (high flow, for GEHL & MUSTANG)

Item	Part number	Description	Q'ty	Chan.	Serial No.	Serv.	Remarks
0	**0669302600**	DECAL SET (GEHL & MUSTANG)	1			M	
1	**0881031010**	・DECAL (English)	1			M	
2	**0881031030**	・DECAL	2			M	
	U1g190						

silverhorn.co.uk

TOOL

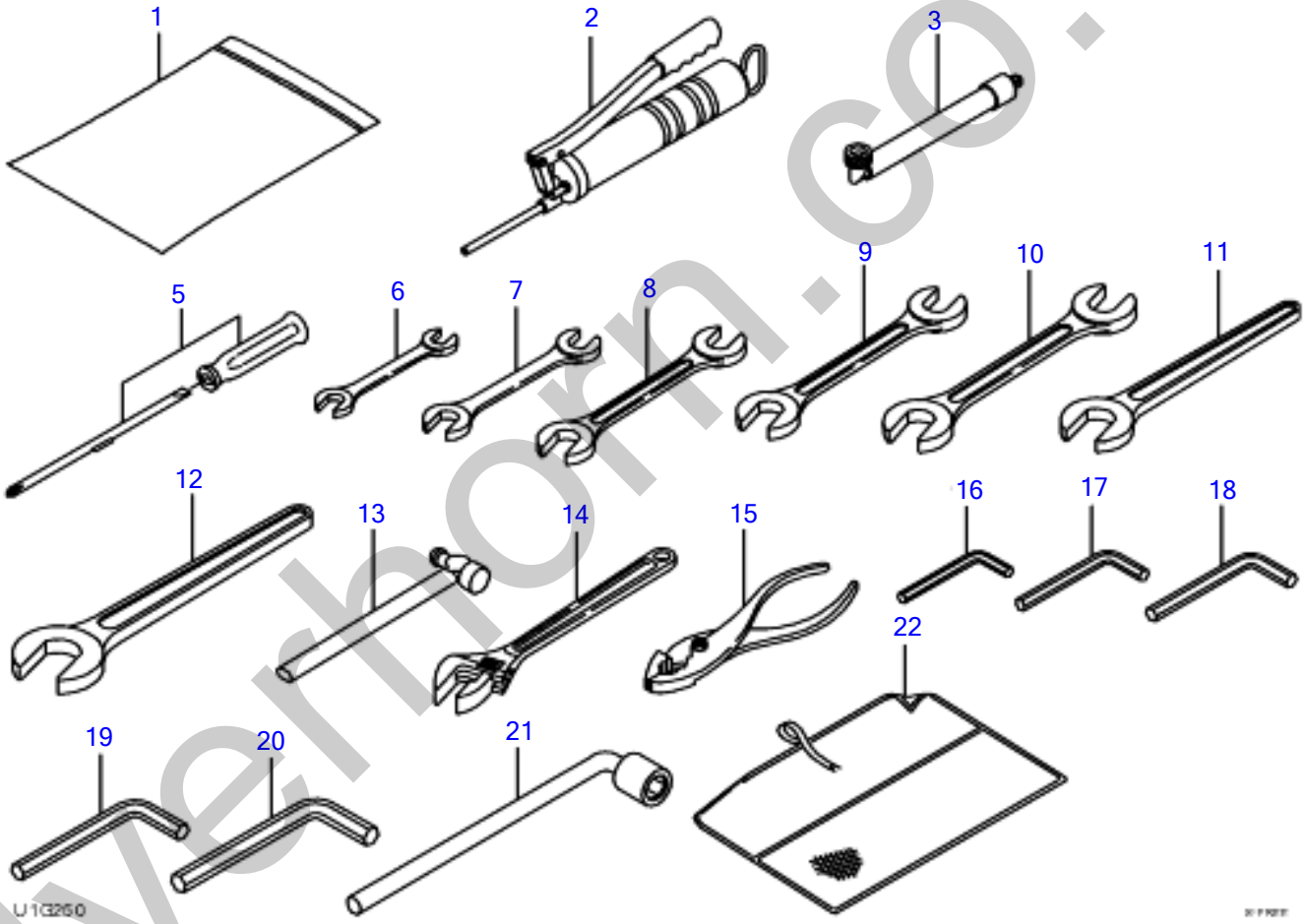

silverhorn.co.uk

TOOL

Item	Part number	Description	Q'ty	Chan.	Serial No.	Serv.	Remarks
		TOOL SET					
1	1691900001	CASE	1				
2	1691060600	GREASE GUN	1				
3	1554512601	TUBE	1				
0-1	0699200060	TOOL SET	1				
5	1690220205	* SCREW DRIVER	1				
6	1690001012	* SPANNER	1				
7	1690001113	* SPANNER	1				
8	1690001417	* SPANNER	1				
9	1690001922	* SPANNER	1				
10	1690002427	* SPANNER	1				
11	1690100030	* SPANNER	1				
12	1690100041	* SPANNER	1				
13	1690300330	* HAMMER	1				
14	1690400250	* MONKEY WRENCH	1				
15	1690500200	* PLIER	1				
16	1690600500	* HEX WRENCH	1				
17	1690600600	* HEX WRENCH	1				
18	1690600800	* HEX WRENCH	1				
19	1690601000	* HEX WRENCH	1				
20	1690601400	* HEX WRENCH	1				
21	1690830019	* HEX WRENCH	1				
22	1691400001	* TOOL CASE	1				
	U1G250						

silverhorn.co.uk

PAINTED COLOR

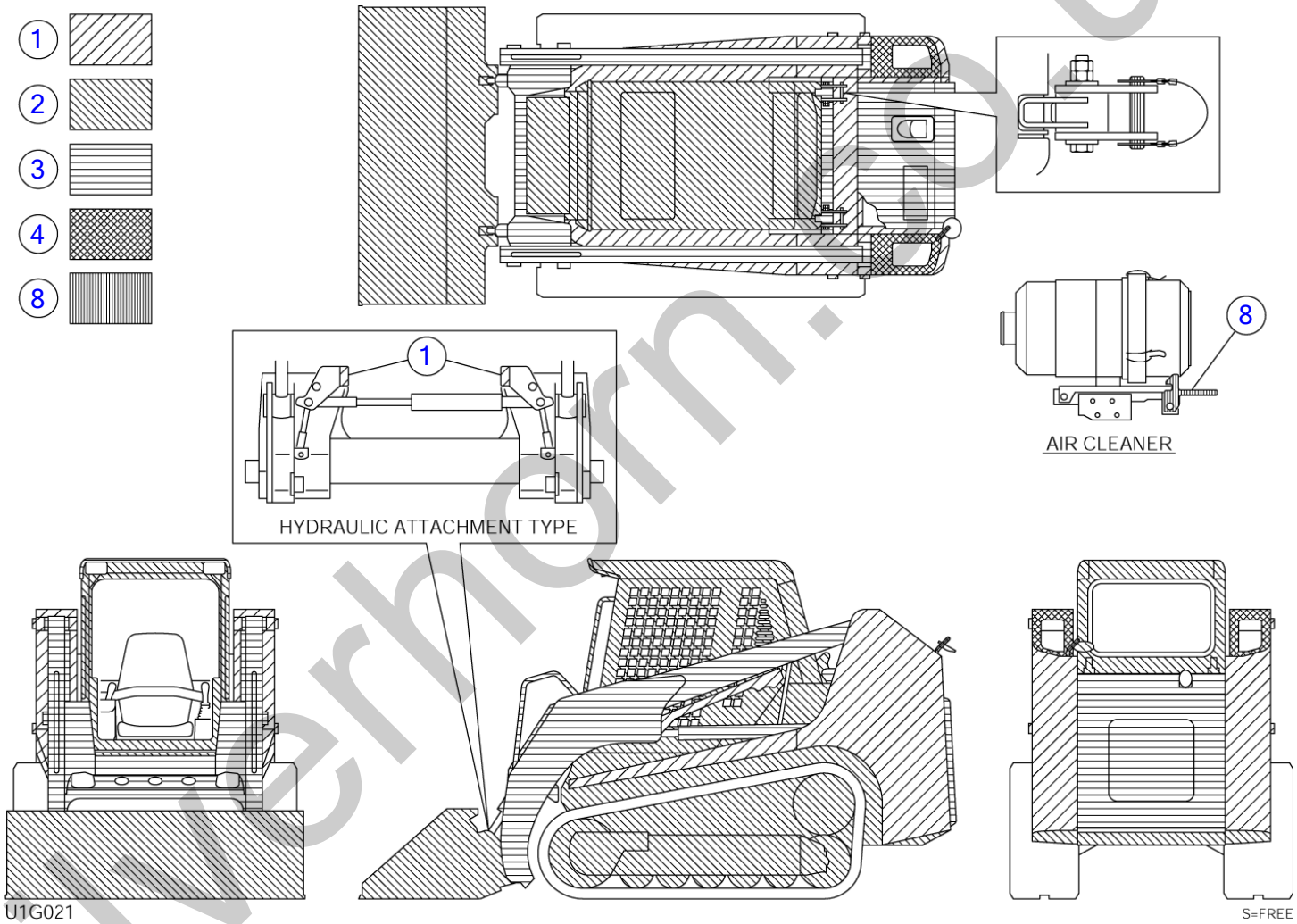

silverhorn.co.uk

PAINTED COLOR

Item	Part number	Description	Q'ty	Chan.	Serial No.	Serv.	Remarks
		PAINTED COLOR					
1	1919060105	RED	1				
	1919069105	RED	1				spray
2	1919060144	GRAY	1				
	1919069144	GRAY	1				spray
3	1919060142	LIGHT GRAY	1				
	1919069142	LIGHT GRAY	1				spray
4	1919060103	BLACK	1				
	1919069103	BLACK	1				spray
8	1919069175	YELLOW	1				spray
	U1g021						

silverhorn.co.uk

PAINTED COLOR (for GEHL & MUSTANG)

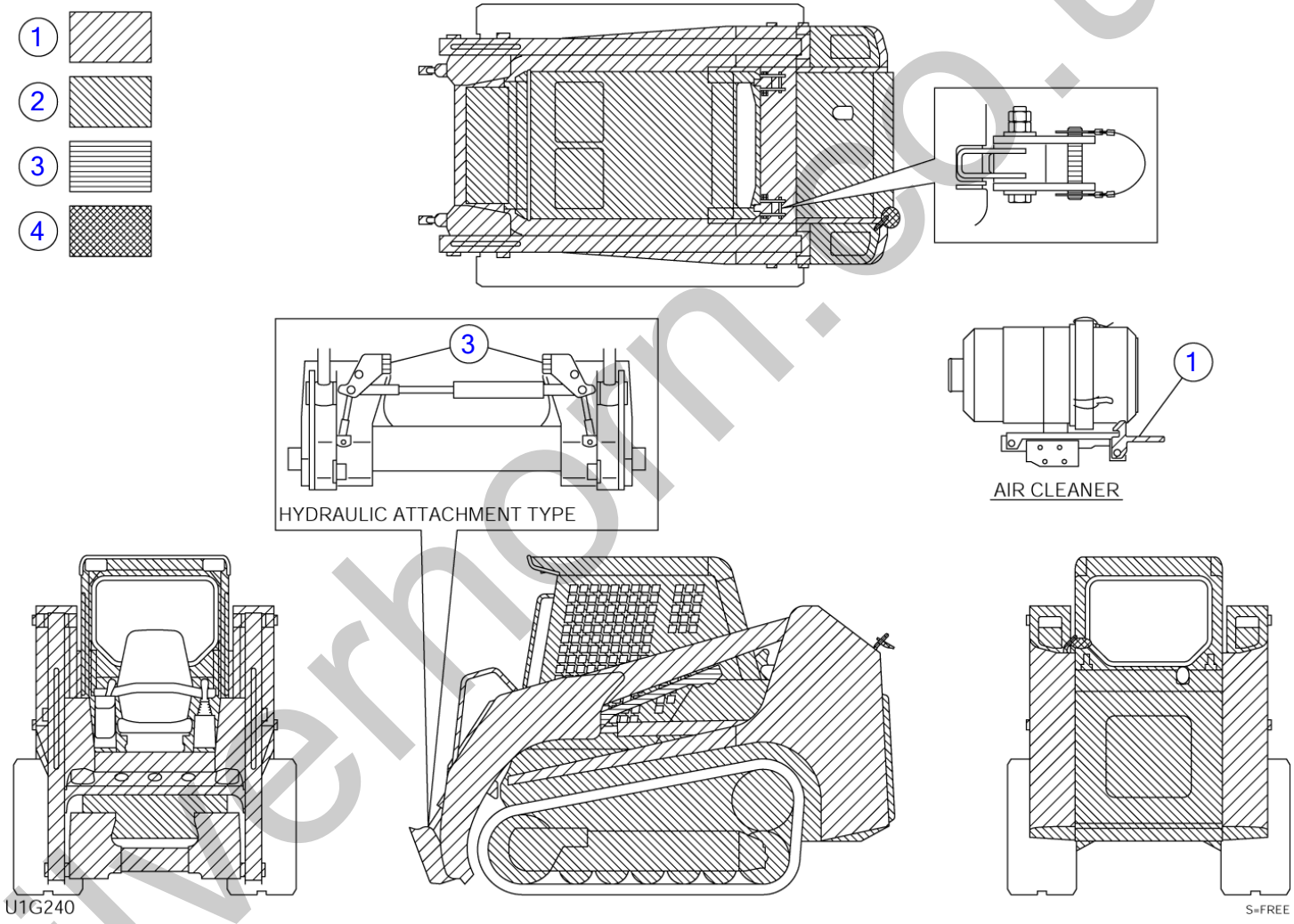

silverhorn.co.uk

PAINTED COLOR (for GEHL & MUSTANG)

Item	Part number	Description	Q'ty	Chan.	Serial No.	Serv.	Remarks
		PAINTED COLOR					
1	1919060177	GEHL YELLOW	1			M	
	1919069177	GEHL YELLOW	1			M	spray
2	1919060180	GEHL GRAY	1			M	
	1919069180	GEHL GRAY	1			M	spray
3	1919060105	RED	1			M	
	1919069105	RED	1			M	spray
4	1919060103	BLACK	1			M	
	1919069103	BLACK	1			M	spray
	U1G240						

silverhorn.co.uk

CONTROL VALVE

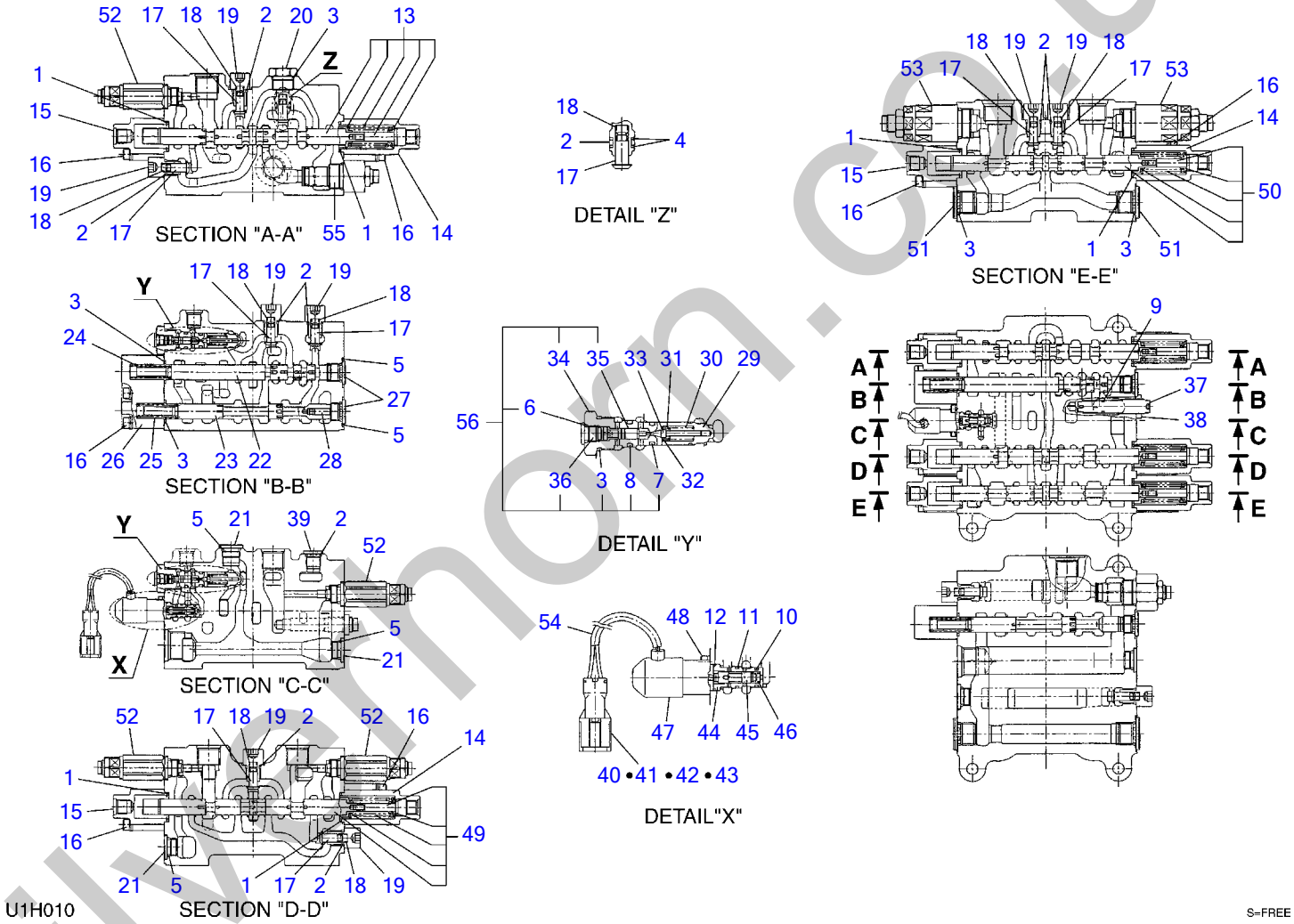

silvermorn.co.uk

CONTROL VALVE

Item	Part number	Description	Q'ty	Chan.	Serial No.	Serv.	Remarks
0	1901045200	・・VALVE ASSY, control	1			M	
0-1	1901045299	・・KIT, seal	1			M	
1	X 1420300119	・・O-RING	6			M	
2	X 1420010110	・・O-RING	10			M	
3	X 1420010180	・・O-RING	7			M	
4	X 1421020110	・・RING, back-up	2			M	
5	X 1420010140	・・O-RING	5			M	
6	X 1420010080	・・O-RING	2			M	
7	X 1420010101	・・O-RING	2			M	
8	X 1420010120	・・O-RING	2			M	
9	X 1420010090	・・O-RING	1			M	
10	X 1420500100	・・O-RING	1			M	
11	X 1420500112	・・O-RING	1			M	
12	X 1420500140	・・O-RING	1			M	
13	1901045298	・・SPOOL ASSY	1			M	
14	1901045205	・・COVER	3			M	
15	1901045206	・・COVER	3			M	
16	1110540645	・・BOLT, sems	16			M	
17	1901039426	・・VALVE	9			M	
18	1901039456	・・SPRING	9			M	
19	1901045210	・・PLUG	8			M	
20	1901045212	・・PLUG	1			M	
21	1901030672	・・PLUG	3			M	
22	1901045217	・・SPOOL	1			M	
23	1901045218	・・SPOOL	1			M	
24	1901045219	・・SPRING	1			M	
25	1901045220	・・SPRING	1			M	
26	1901045221	・・HOLDER	1			M	
27	1901045222	・・PLUG	1			M	
28	1901045223	・・PISTON	1			M	
29	1901045224	・・VALVE, check	2			M	
30	1901045225	・・SPRING	2			M	
31	1901045226	・・HOLDER	2			M	
32	1221000009	・・RING, snap	2			M	
33	1901045228	・・VALVE	2			M	
34	1901045229	・・GUIDE	2			M	
35	1901045230	・・PISTON	2			M	
36	1901045232	・・PLUG	2			M	
37	1901045235	・・SLEEVE	1			M	
38	1901045237	・・NUT	1			M	
39	1901024795	・・PLUG	1			M	
40	1901045239	・・ADAPTOR	1			M	
41	1901045240	・・TERMINAL	2			M	
42	1901045241	・・SEAL	2			M	
43	1901045242	・・HOLDER	1			M	
44	1901045243	・・SOCKET	1			M	
45	1901045244	・・SPOOL	1			M	
46	1901045245	・・SPRING	1			M	
47	1901045249	・・SOLENOID	1			M	
48	1110040408	・・BOLT	2			M	
49	1901045297	・・SPOOL ASSY	1			M	
50	1901045296	・・SPOOL ASSY	1			M	
51	1901045253	・・PLUG	2			M	
52	1901045254	・・VALVE, relief	4			M	
	1420010180	・・・O-RING	1			M	
53	1901045255	・・VALVE, relief	2			M	
	1420300119	・・・O-RING	1			M	
54	1901045256	・・TUBE	1			M	
55	1901045202	・・VALVE, relief	1			M	
56	1901045295	・・GUIDE, piston	1			M	
	U1h010						

silverhorn.co.uk

CONTROL VALVE (high flow)

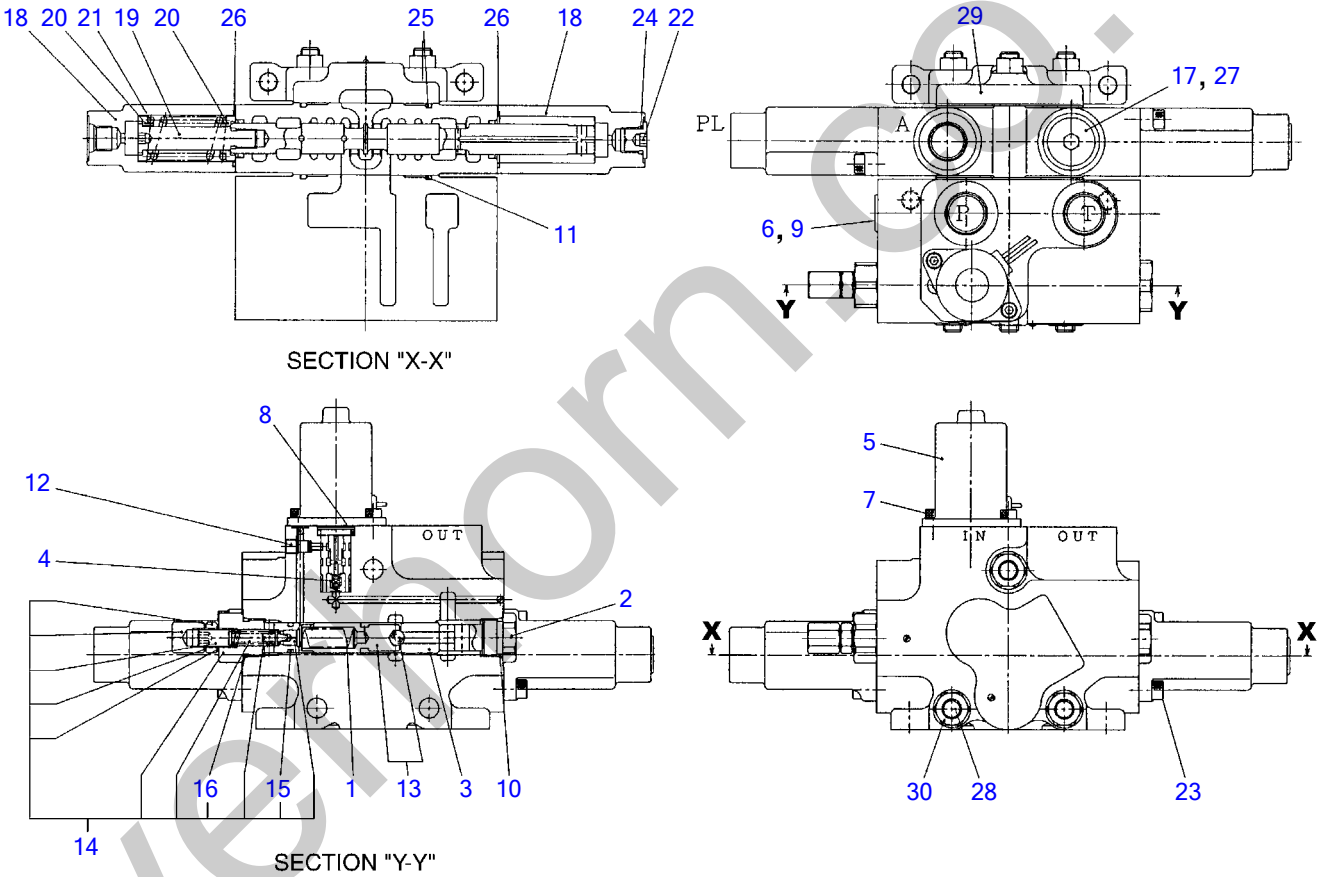

T7H260

S=free

silvermorn.co.uk

CONTROL VALVE (high flow)

Item	Part number	Description	Q'ty	Chan.	Serial No.	Serv.	Remarks
0	1901039500	VALVE ASSY, control	1				
0-1	1901039511	・BLOCK ASSY, solenoid	1				
1	1901039556	・・SPRING	1				
2	1901039513	・・PLUG	1				
3	1901039526	・・HOLDER, spring	1				
4	1901039557	・・SPRING	1				
5	1901039525	・・SOLENOID	1				
6	1901720720	・・PLUG	1				
7	1110040510	・・SCREW, cap	2				
8	1420000160	・・O-RING	1				
9	1420010110	・・O-RING	1				
10	1420010160	・・O-RING	1				
11	1420110650	・・O-RING	1				
12	1501810000	・・PLUG	1				
13	1901039527	・・PLUNGER	1				
14	1901039521	・・VALVE.relief	1				
15	1420010120	・・・O-RING	1				
16	1420010160	・・・O-RING	1				
0-2	1901039510	・BLOCK ASSY	1				
17	1513500008	・・PLUG	1				
18	1901038166	・・COVER	2				
19	1901038131	・・END, spool	1				
20	1901035151	・・HOLDER, spring	2				
21	1901038157	・・SPRING	1				
22	1901720720	・・PLUG	1				
23	1110020620	・・SCREW, cap	4				
24	1420010110	・・O-RING	1				
25	1420110650	・・O-RING	1				
26	1420310023	・・O-RING	2				
27	1420310908	・・O-RING	1				
28	1901039507	・ROD, tie	3				
29	1901039504	・HOUSING, inlet	1				
30	1130050010	・NUT	6				
	T7h260						

silverhorn.co.uk

PILOT VALVE (R.H.)

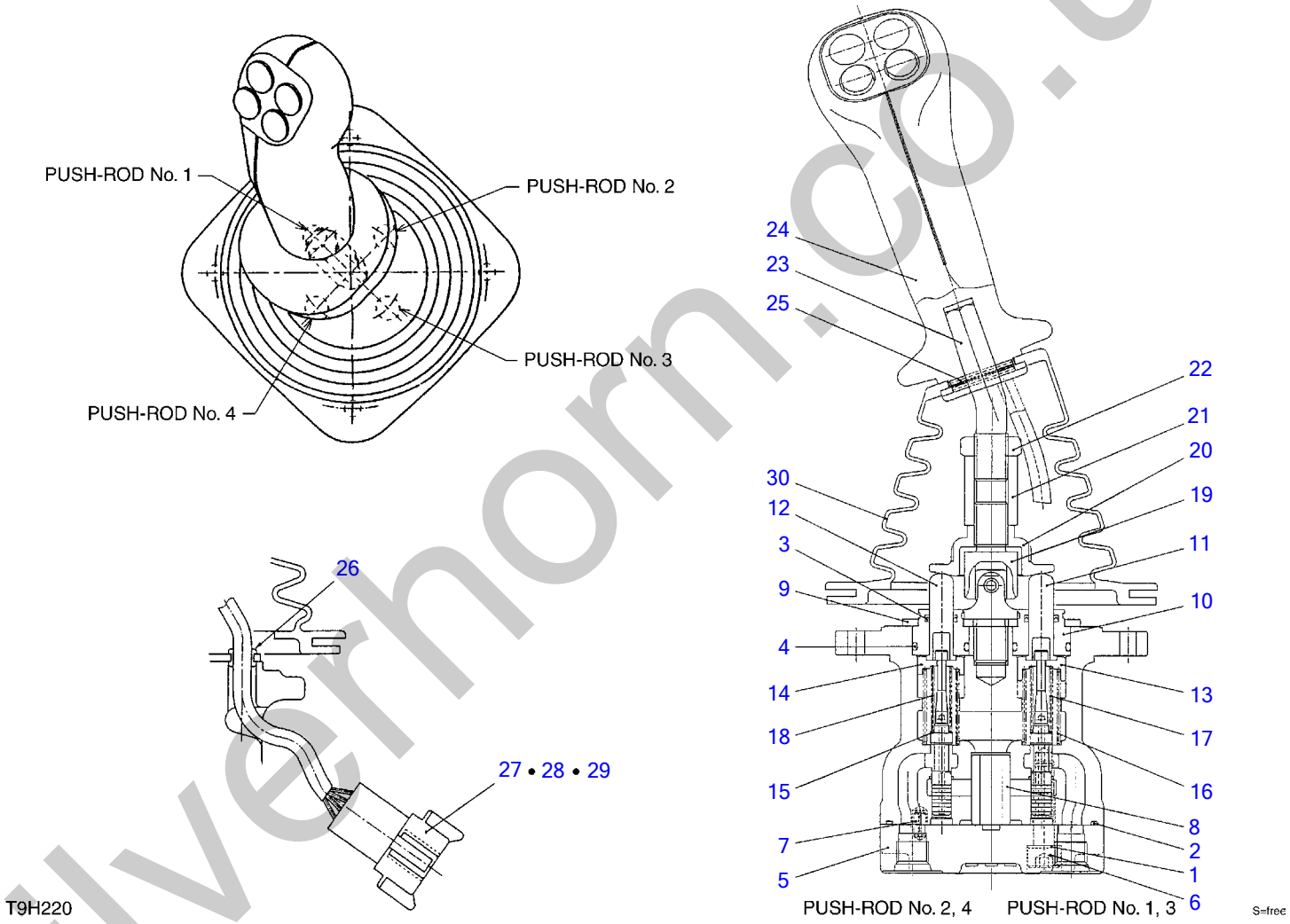

silverhorn.co.uk

PILOT VALVE (R.H.)

Item	Part number		Description	Q'ty	Chan.	Serial No.	Serv.	Remarks
0		1901749800	VALVE ASSY, pilot	1				right
0-1		1901749599	・KIT, seal	1				
1	X	1901715103	・・WASHER	2				
2	X	1420510850	・・O-RING	1				
3	X	1901710914	・・SEAL	4				
4	X	1420010200	・・O-RING	4				
5		1901749511	・PLATE	1				
6		1110020835	・SCREW, cap	2				
7		1213000510	・PIN, spring	1				
8		1901743606	・BUSHING	1				
9		1901749551	・PLATE	1				
10		1901710912	・PLUG	4				
11		1901719011	・ROD	2				
12		1901719012	・ROD	2				
13		1901743614	・HOLDER	2				
14		1901743615	・HOLDER	2				
15		1901710917	・WASHER	4				
16		1901749521	・SPRING	4				
17		1901749541	・SPRING	2				
18		1901749542	・SPRING	2				
19		1901720232	・JOINT	1				
20		1901743620	・PLATE	1				
21		1901710922	・NUT	1				
22		1901719025	・NUT	1				
23		1901741526	・LEVER	1				
24		1901741210	・HANDLE	1				
25		1213000528	・PIN, spring	1				
26		1901735630	・BUSHING	1				
27		1901740446	・RECEPTACLE	1				
28		1901740447	・WEDGE	1				
29		1901741263	・PLUG	3				
30		1901735632	・BOOT	1				
		T9h220						

silverhorn.co.uk

PILOT VALVE (L.H.)

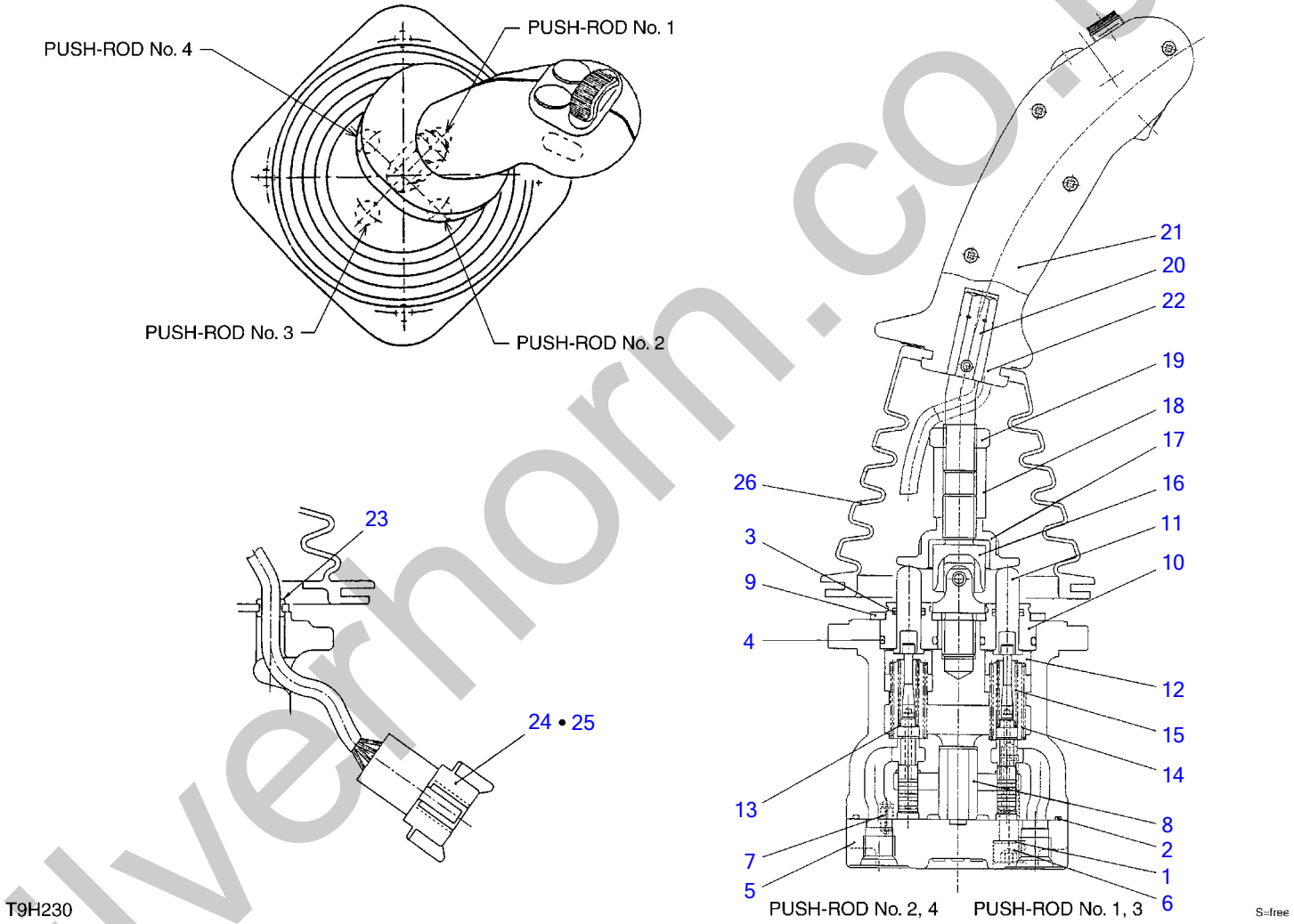

silverhorn.co.uk

PILOT VALVE (L.H.)

Item	Part number	Description	Q'ty	Chan.	Serial No.	Serv.	Remarks
0	1901749700	VALVE ASSY, pilot	1				left
0-1	1901749599	・KIT, seal	1				
1	X 1901715103	・・WASHER	2				
2	X 1420510850	・・O-RING	1				
3	X 1901710914	・・SEAL	4				
4	X 1420010200	・・O-RING	4				
5	1901749511	・PLATE	1				
6	1110020835	・SCREW, cap	2				
7	1213000510	・PIN, spring	1				
8	1901743606	・BUSHING	1				
9	1901749551	・PLATE	1				
10	1901710912	・PLUG	4				
11	1901719011	・ROD	4				
12	1901743614	・HOLDER	4				
13	1901710917	・WASHER	4				
14	1901749521	・SPRING	4				
15	1901749641	・SPRING	4				
16	1901720232	・JOINT	1				
17	1901743620	・PLATE	1				
18	1901710922	・NUT	1				
19	1901719025	・NUT	1				
20	1901739923	・LEVER	1				
21	1901740410	・HANDLE	1				
22	1213000528	・PIN, spring	1				
23	1901735630	・BUSHING	1				
24	1901740446	・RECEPTACLE	1				
25	1901740447	・WEDGE	1				
26	1901735632	・BOOT	1				
	T9h230						

silverhorn.co.uk

HANDLE (with slide switch)

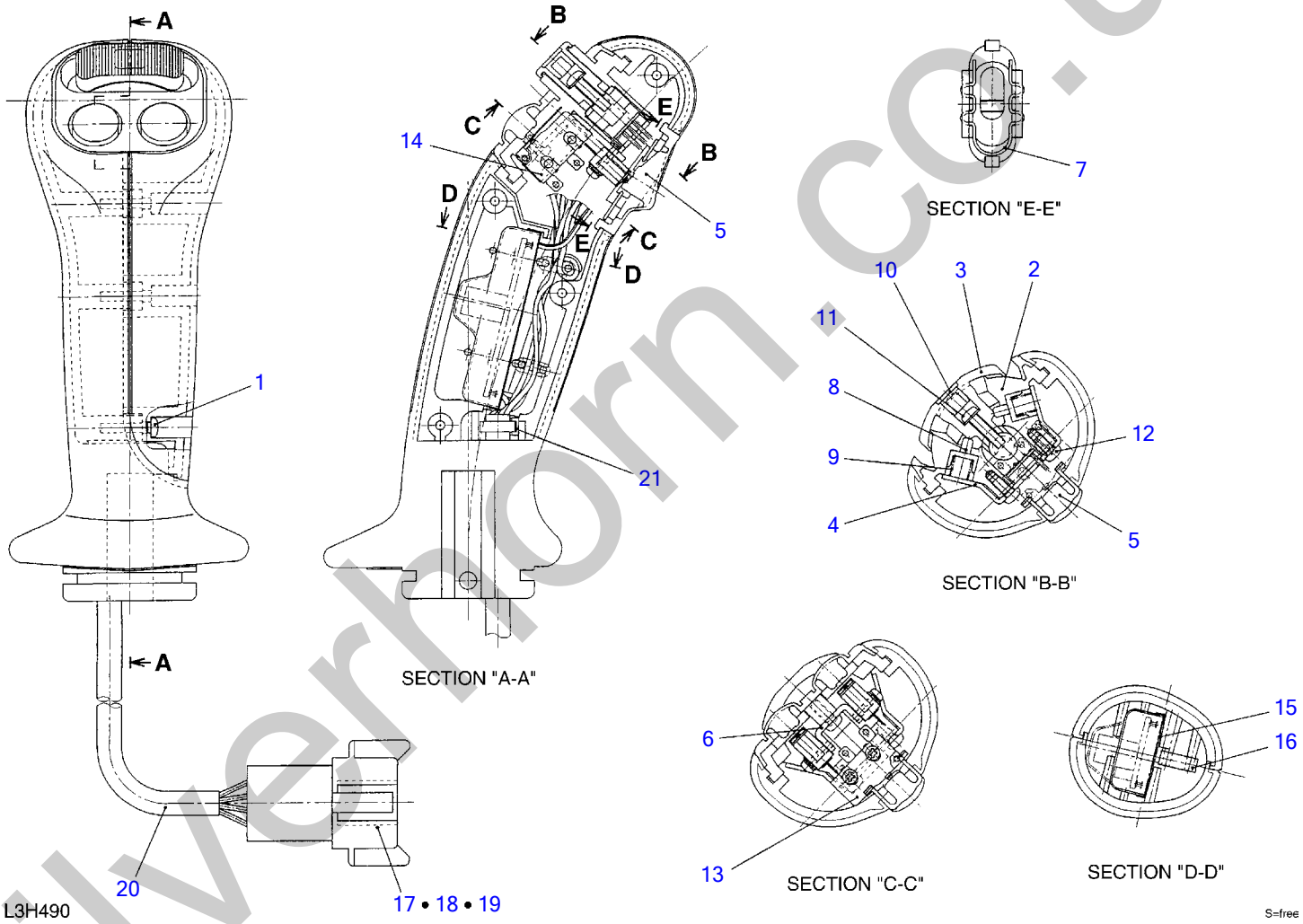

silverhorn.co.uk

HANDLE (with slide switch)

Item	Part number	Description	Q'ty	Chan.	Serial No.	Serv.	Remarks
0	1901740410	HANDLE ASSY	1				
1	1122400312	・SCREW	4				
2	1901740417	・CASE	1				
3	1901740418	・CAM	1				
4	1901740401	・PLATE	1				
5	1901740402	・BUTTON	1				
6	1901740403	・BRACKET	1				
7	1901740404	・CLIP	1				
8	1901740405	・PISTON	2				
9	1901740406	・SPRING	2				
10	1901740407	・CAP	1				
11	1150010312	・SCREW	1				
12	1122400306	・SCREW	3				
13	1901740408	・SWITCH	1				
14	1901740409	・SWITCH	2				
15	1901740411	・COVER	1				
16	1901740412	・CAP	2				
17	1901740446	・RECEPTACLE	1				
18	1901740447	・WEDGE	1				
19	1901740413	・PIN	8				
20	1901740414	・PROTECTOR	1				
21	1901740415	・BAND	1				
	L3h490						

silverhorn.co.uk

HANDLE (with 3 switch)

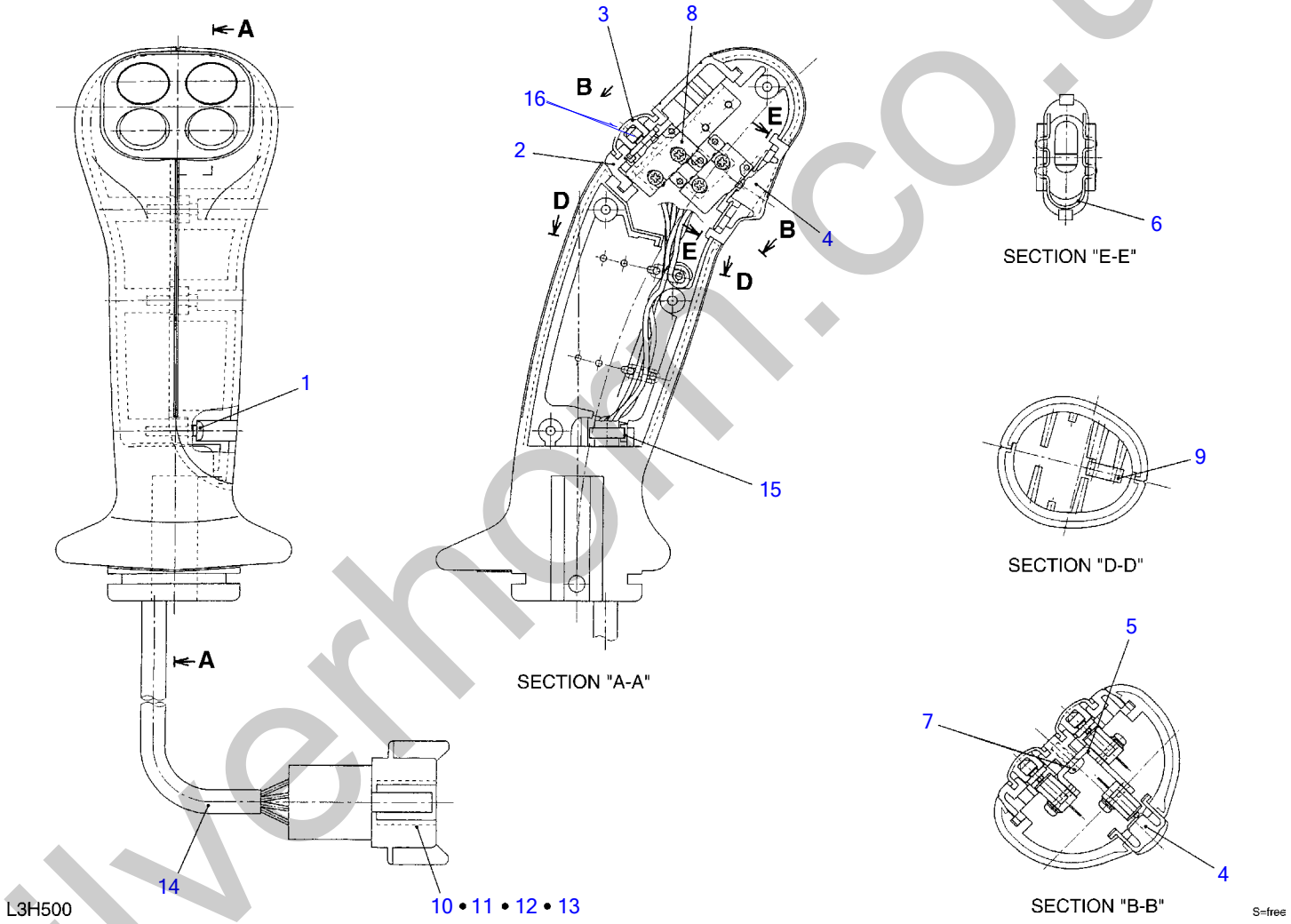

silverhorn.co.uk

HANDLE (with 3 switch)

Item	Part number	Description	Q'ty	Chan.	Serial No.	Serv.	Remarks
0	1901741210	HANDLE ASSY	1				
1	1122400312	・SCREW	4				
2	1901741211	・CASE	1				
3	1901741216	・BUTTON	2				
4	1901740402	・BUTTON	1				
5	1901741218	・BRACKET	1				
6	1901740404	・CLIP	1				
7	1122400306	・SCREW	2				
8	1901740408	・SWITCH	3				
9	1901740412	・CAP	2				
10	1901740446	・RECEPTACLE	1				
11	1901740447	・WEDGE	1				
12	1901740413	・PIN	5				
13	1901741263	・PIN, BLANKING	3				
14	1901740414	・PROTECTOR	1				
15	1901740415	・BAND	1				
16	1901741312	* RETAINER	2				
	L3h501						

silverhorn.co.uk

PILOT VALVE (R.H.) (multi-functional grip type)

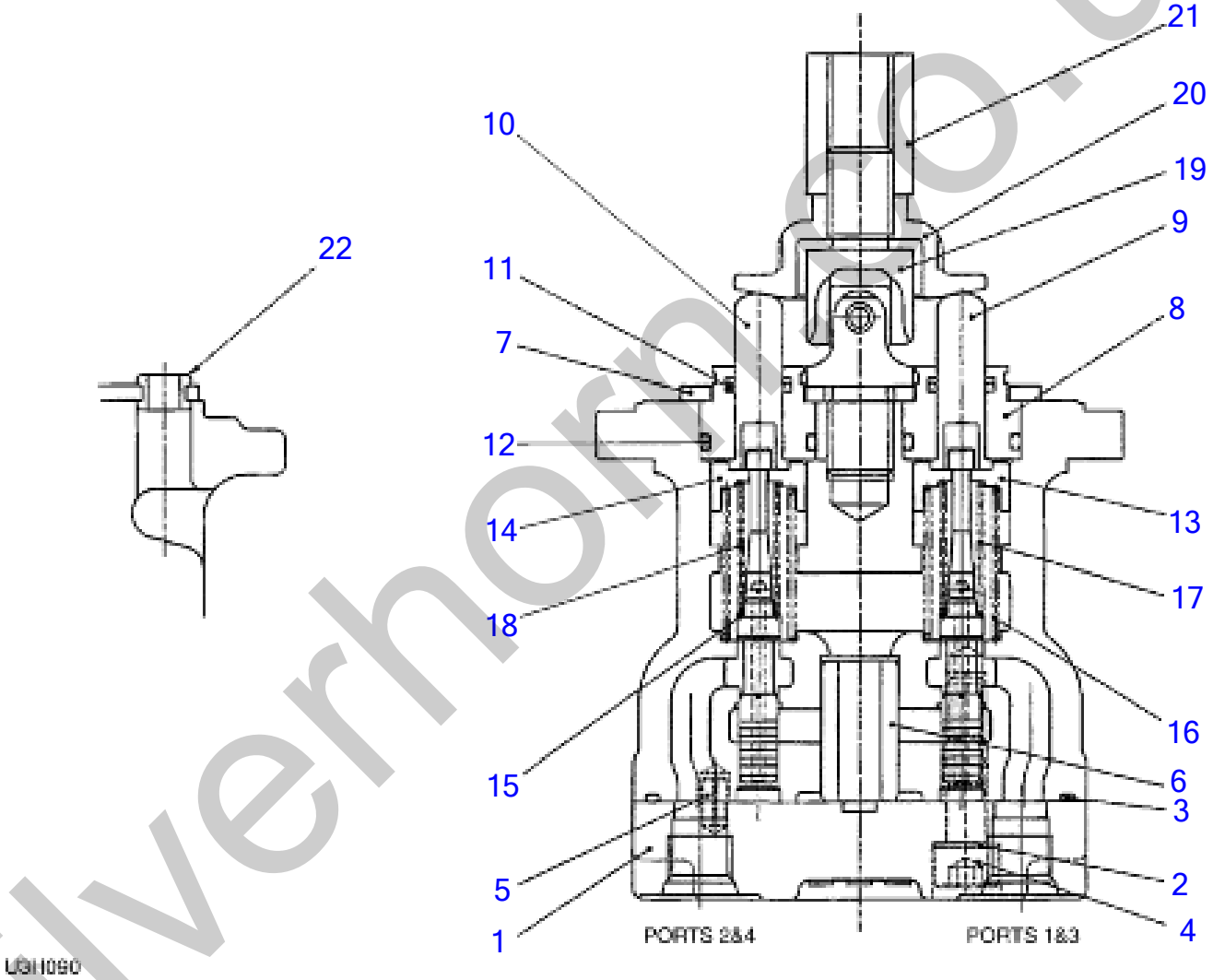

silverhorse.co.uk

PILOT VALVE (R.H.) (multi-functional grip type)

Item	Part number	Description	Q'ty	Chan.	Serial No.	Serv.	Remarks
0	1901754000	VALVE ASSY, pilot	1				Right
1	1901749511	・PLATE	1				
2	1901715103	・WASHER	2				
3	1420510850	・O-RING	1				
4	1110020835	・SCREW, cap	2				
5	1213000510	・PIN, spring	1				
6	1901743606	・BUSHING	1				
7	1901749551	・PLATE	1				
8	1901710912	・PLUG	4				
9	1901719011	・ROD	2				
10	1901719012	・ROD	2				
11	1901710914	・SEAL	4				
12	1420010200	・O-RING	4				
13	1901743614	・HOLDER	2				
14	1901743615	・HOLDER	2				
15	1901710917	・WASHER	4				
16	1901749521	・SPRING	4				
17	1901749541	・SPRING	2				
18	1901749542	・SPRING	2				
19	1901720232	・JOINT	1				
20	1901743620	・PLATE	1				
21	1901710922	・NUT	1				
22	1901735630	・BUSHING	1				
	U3h090						

silverhorn.co.uk

PILOT VALVE (L.H.) (multi-functional grip type)

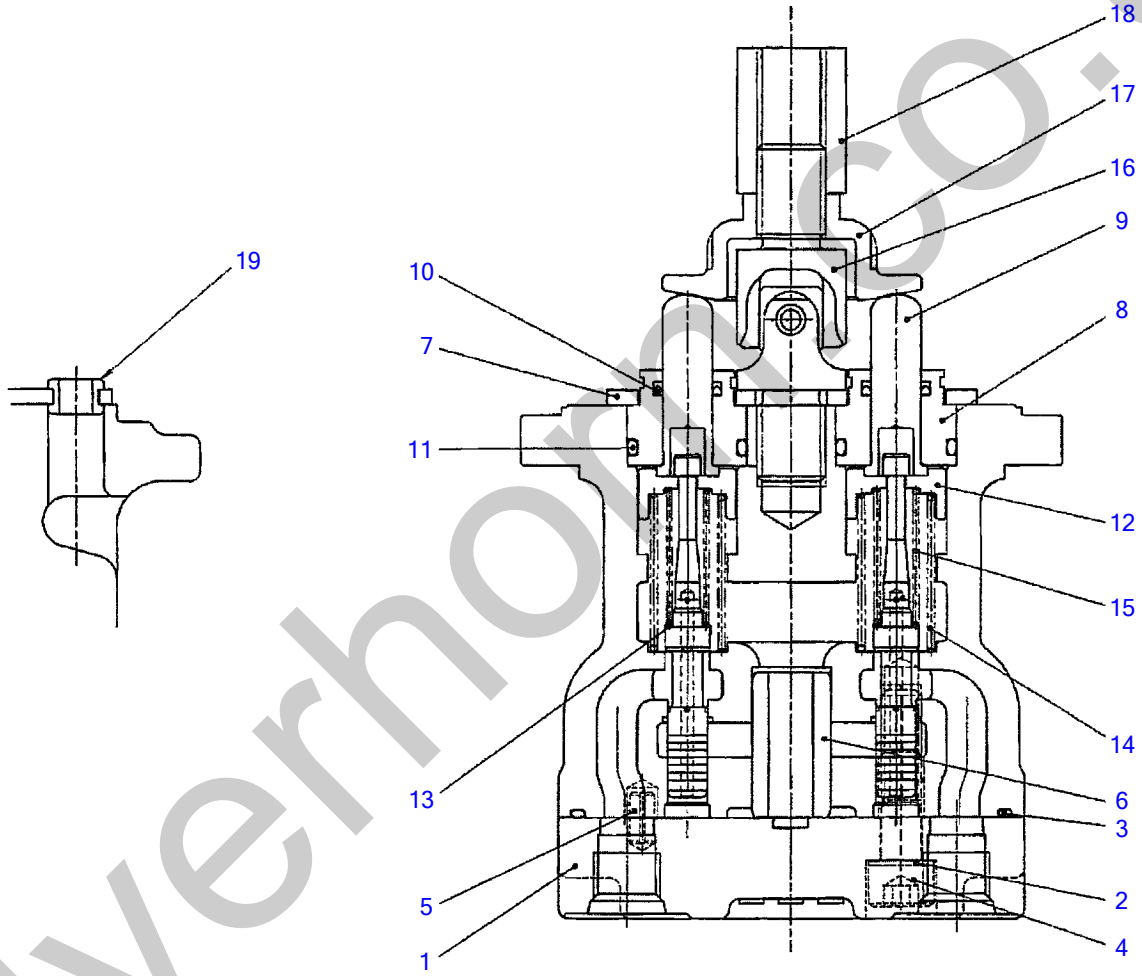

U1h030

S=FREE

silverhomco.uk

PILOT VALVE (L.H.) (multi-functional grip type)

Item	Part number	Description	Q'ty	Chan.	Serial No.	Serv.	Remarks
0	1901753900	VALVE ASSY, pilot	1			M	Left
1	1901749511	・PLATE	1			M	
2	1901715103	・WASHER	2			M	
3	1420510850	・O-RING	1			M	
4	1110040835	・SCREW, cap	2			M	
5	1213000510	・PIN, spring	1			M	
6	1901743606	・BUSHING	1			M	
7	1901749551	・PLATE	1			M	
8	1901710912	・PLUG	4			M	
9	1901719011	・ROD	4			M	
10	1901710914	・SEAL	4			M	
11	1420010200	・O-RING	4			M	
12	1901743614	・HOLDER	4			M	
13	1901710917	・WASHER	4			M	
14	1901749521	・SPRING	4			M	
15	1901749641	・SPRING	4			M	
16	1901720232	・JOINT	1			M	
17	1901743620	・PLATE	1			M	
18	1901710922	・NUT	1			M	
19	1901735630	・BUSHING	1			M	
	U1h030						

silverhorn.co.uk

HANDLE (multi-functional grip type, with slide switch)

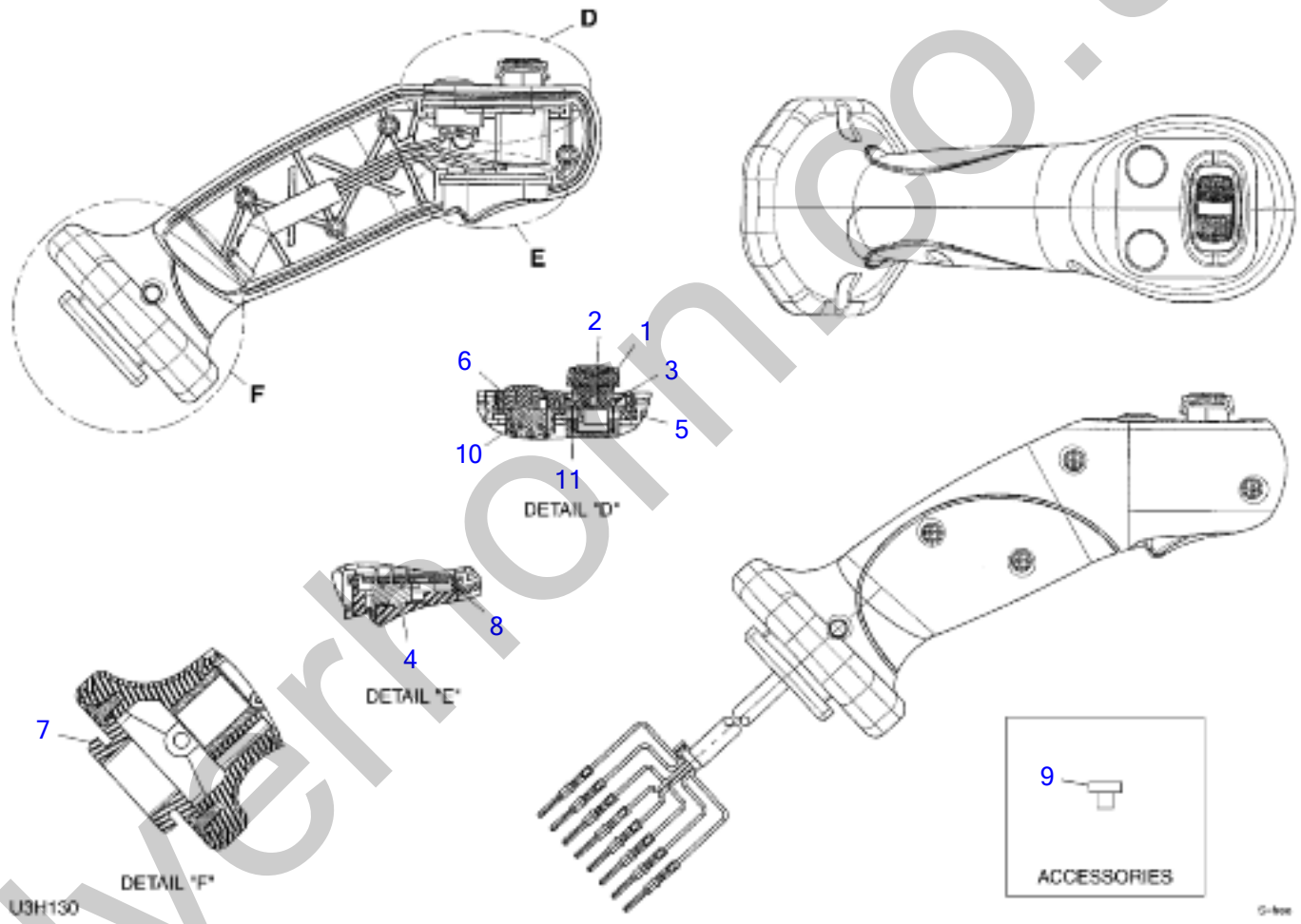

silverhomco.uk

HANDLE (multi-functional grip type, with slide switch)

Item	Part number	Description	Q'ty	Chan.	Serial No.	Serv.	Remarks
0	1650205500	HANDLE ASSY	1			M	
1	1650205508	・BAR, slide	1			M	
2	1650205509	・COVER, slide bar	1			M	
3	1650205510	・COVER, rubber	1			M	
4	1650205610	・COVER, switch	1			M	
5	1650205505	・PLATE, switch	1			M	
6	1650205506	・SPACER	1			M	
7	1650205507	・COVER, lower	1			M	
8	1650205511	・PLATE, switch	1			M	
9	1650205516	・PIN, blanking	1			M	
10	1650205520	・SWITCH, micro	2			M	
11	1650205522	・SWITCH, proportional control	1			M	
	U3h130						

silverhorn.co.uk

HANDLE (multi-functional grip type, with 5 switch)

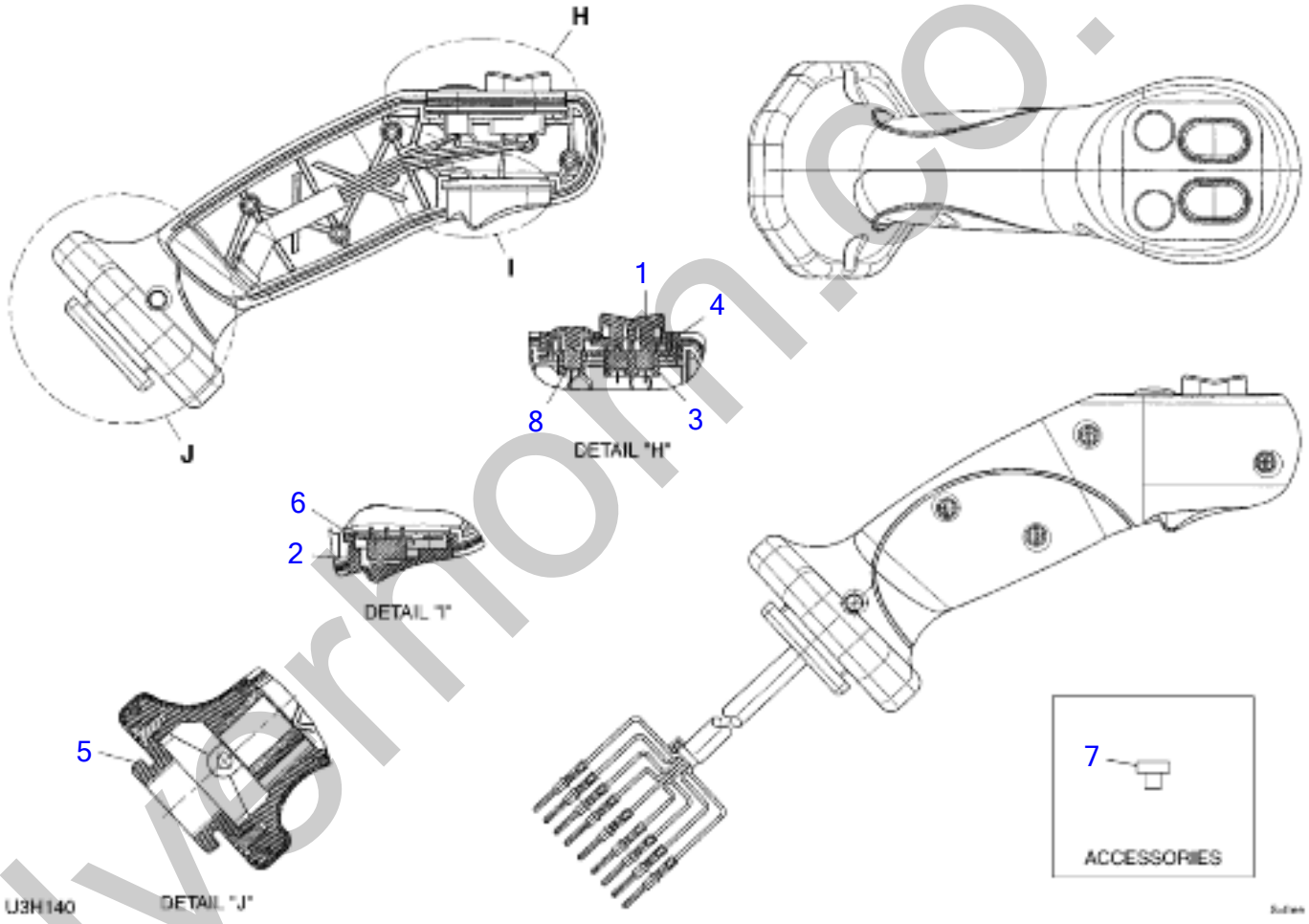

silvermoon.co.uk

HANDLE (multi-functional grip type, with 5 switch)

Item	Part number	Description	Q'ty	Chan.	Serial No.	Serv.	Remarks
0	1650205600	HANDLE ASSY	1			M	
1	1650205608	・COVER, rubber	1			M	
2	1650205610	・COVER, switch	1			M	
3	1650205605	・PLATE, switch	1			M	
4	1650205606	・SPACER	1			M	
5	1650205507	・COVER, lower	1			M	
6	1650205511	・PLATE, switch	1			M	
7	1650205516	・PIN, blanking	1			M	
8	1650205521	・SWITCH, micro	6			M	
	U3h140						

silverhorn.co.uk

SUB VALVE

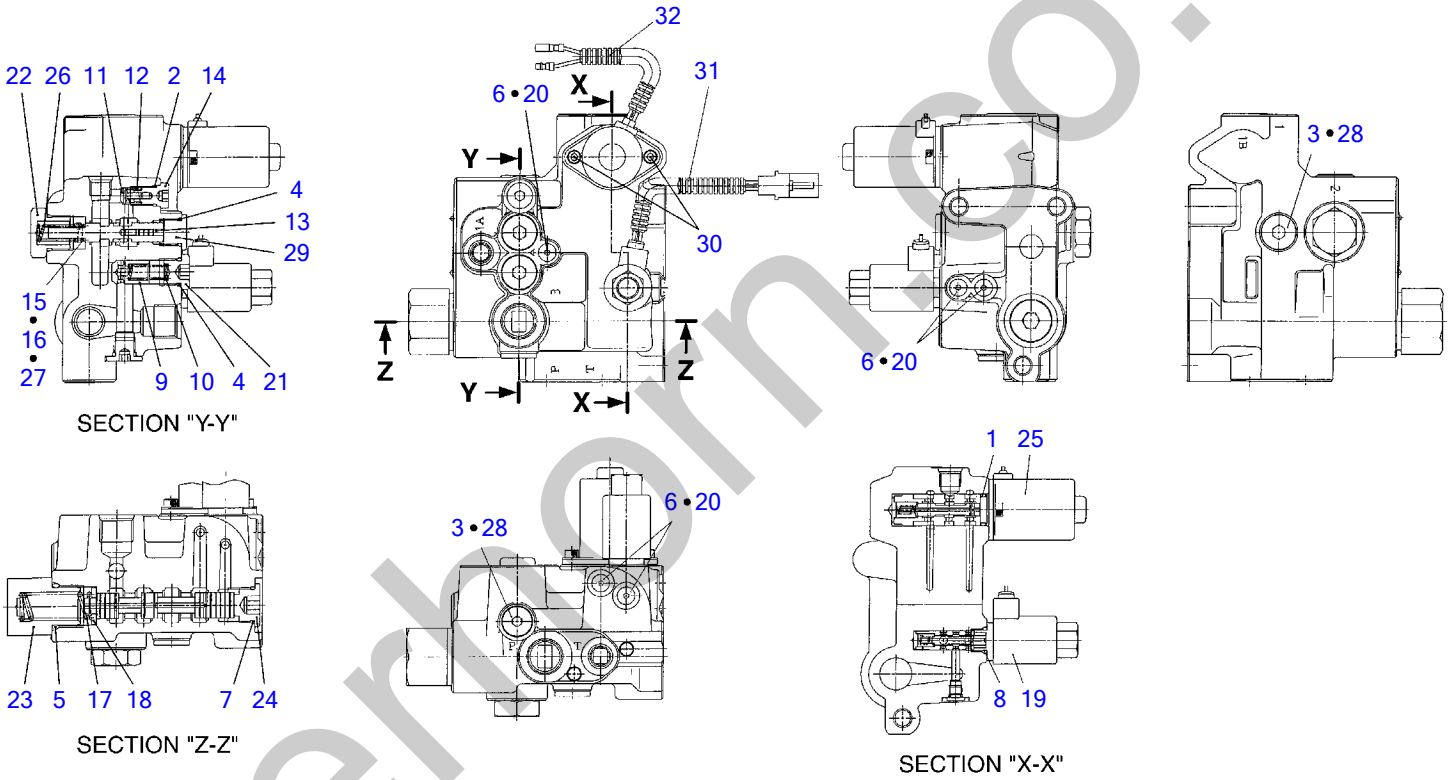

T3H010

S=FREE

silverthorn.co.uk

SUB VALVE

Item	Part number	Description	Q'ty	Chan.	Serial No.	Serv.	Remarks
0	1901748100	VALVE, sub	1				
0-1	1901748199	・KIT, seal	1				
1	X 1420010160	・・O-RING	1				
2	X 1420010100	・・O-RING	1				
3	X 1420010110	・・O-RING	2				
4	X 1420010140	・・O-RING	2				
5	X 1420010240	・・O-RING	1				
6	X 1420310902	・・O-RING	5				
7	X 1420310910	・・O-RING	1				
8	X 1420000125	・・O-RING	1				
9	1901731901	・POPPET	1				
10	1901731903	・SPRING	1				
11	1901035426	・PLUNGER	1				
12	1901004357	・SPRING	1				
13	1901730412	・PISTON	1				
14	1901035471	・PLUG	1				
15	1901729709	・SHIM	1				t=0.1mm
16	1901729710	・SHIM	1				t=0.2mm
17	1901731911	・SPRING	1				
18	1901731912	・WASHER	1				
19	1901748114	・SOLENOID	1				
20	1901748119	・PLUG	5				
21	1901748126	・PLUG	1				
22	1901748127	・PLUG	1				
23	1901748128	・PLUG	1				
24	1901748129	・PLUG	1				
25	1901748130	・SOLENOID	1				
26	1901748131	・SPRING	1				
27	1901748132	・SHIM	1				t=0.1mm
28	1901738312	・PLUG	2				
29	1501750002	・PLUG	1				
	1420010110	・・O-RING	1				
30	1110040512	・SCREW, cap	2				
31	1901044619	・TUBE	1				
32	1901748828	・TUBE	1				
	T3h010						

silverhorn.co.uk

SOLENOID VALVE; 1 BLOCK

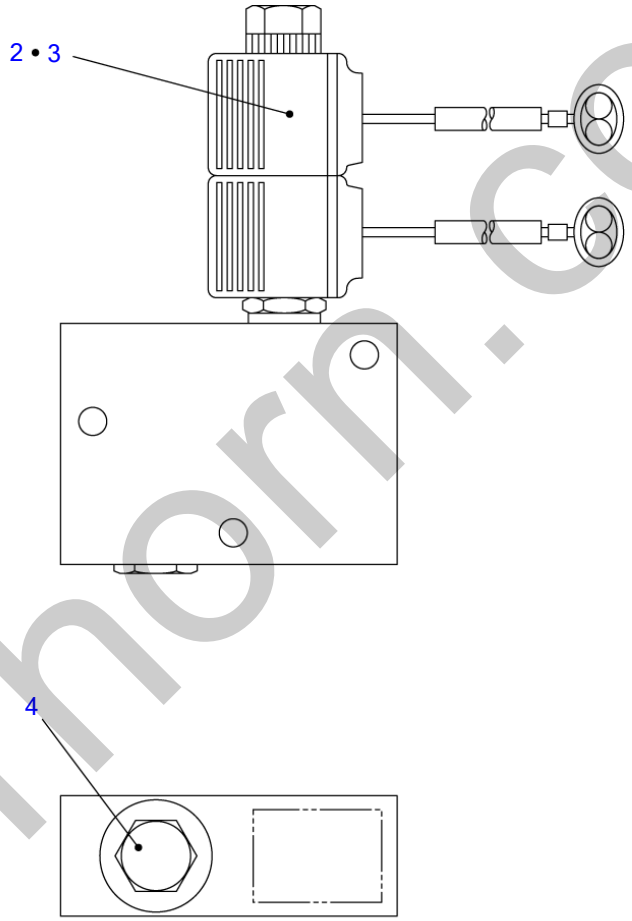

U1H020

S=FREE

silverhorn.co.uk

SOLENOID VALVE; 1 BLOCK

Item	Part number	Description	Q'ty	Chan.	Serial No.	Serv.	Remarks
0	**1901752000**	VALVE ASSY, solenoid	1				
2	**1901752002**	・VALVE, solenoid	1				
3	**1901752003**	・COIL	2				
4	**1901741704**	・PLUG	1				
	U1h020						

silverhorn.co.uk

ELECTRICAL PROPORTION VALVE

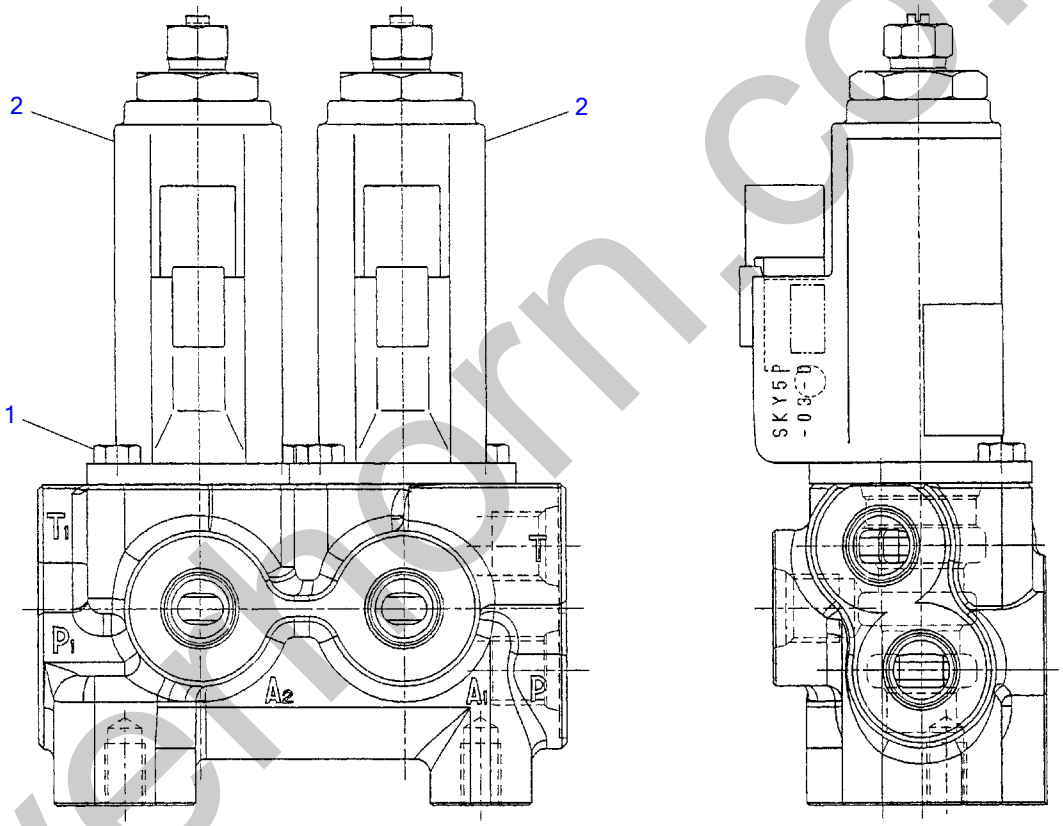

J3H020

S=free

silverthorn.co.uk

ELECTRICAL PROPORTION VALVE

Item	Part number	Description	Q'ty	Chan.	Serial No.	Serv.	Remarks
0	**1901752100**	VALVE ASSY, proportional	1				
1	**1110050512**	・BOLT	4				
2	**1901752103**	・VALVE, proportional	2				
	J3h020						

silverhorn.co.uk

ARM CYLINDER

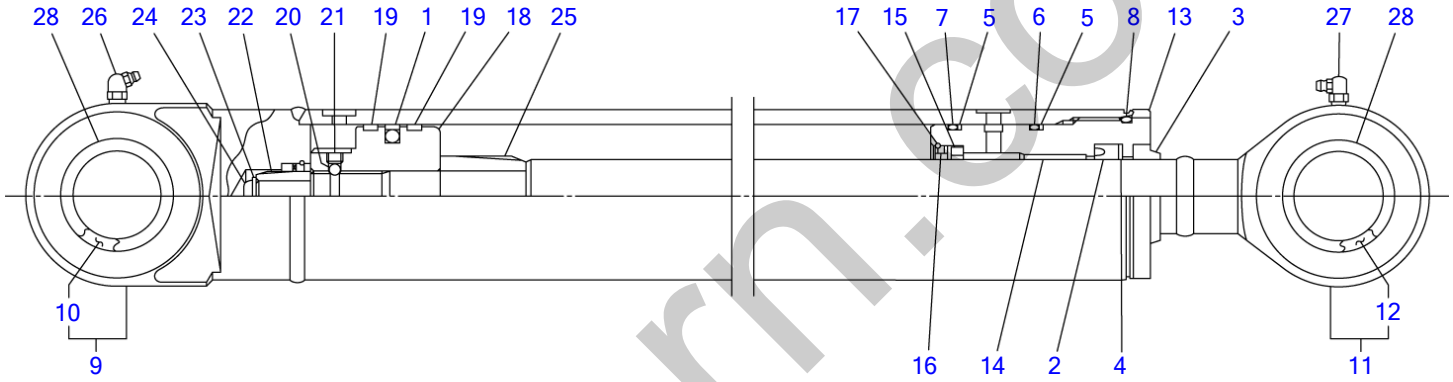

T8H040

S=FREE

silverhorn.co.uk

ARM CYLINDER

Item	Part number	Description	Q'ty	Chan.	Serial No.	Serv.	Remarks
0	1900081800	CYLINDER ASSY	2				arm
0-1	1900081899	・KIT, seal	1				
1	X 1900048232	・・PACKING, piston	1				
2	X 1410540508	・・PACKING, rod	1				
3	X 1900073033	・・SEAL, dust	1				
4	X 1411250402	・・RING, back-up	1				
5	X 1421130600	・・RING, back-up	2				
6	X 1420110600	・・O-RING	1				
7	X 1420110550	・・O-RING	1				
8	X 1420110650	・・O-RING	1				
9	1900081898	・TUBE ASSY (L.H.)	1				
10	1900015720	・・BUSHING	1				
11	1900081897	・ROD ASSY, piston	1				
12	1900015720	・・BUSHING	1				
13	1900058103	・COVER, rod	1				
14	1333004030	・BUSHING	1				
15	1900052016	・RING, cushion	1				
16	1900052015	・SPACER	1				
17	1900052026	・STOPPER	1				
18	1900058106	・PISTON	1				
19	1900064226	・RING, wear	2				
20	1390010250	・BALL, steel	1				
21	1121040608	・SET-SCREW	1				
22	1900081805	・CUSHION, rod	1				
23	1141190012	・WASHER	1				
24	1900081829	・BOLT	1				
25	1900081825	・CUSHION, rod	1				
26	1560001675	・FITTING, grease	1				
27	1560001900	・FITTING, grease	1				
28	1432200040	・SEAL, dust	4				
	T8h040						

silverhorn.co.uk

BUCKET CYLINDER

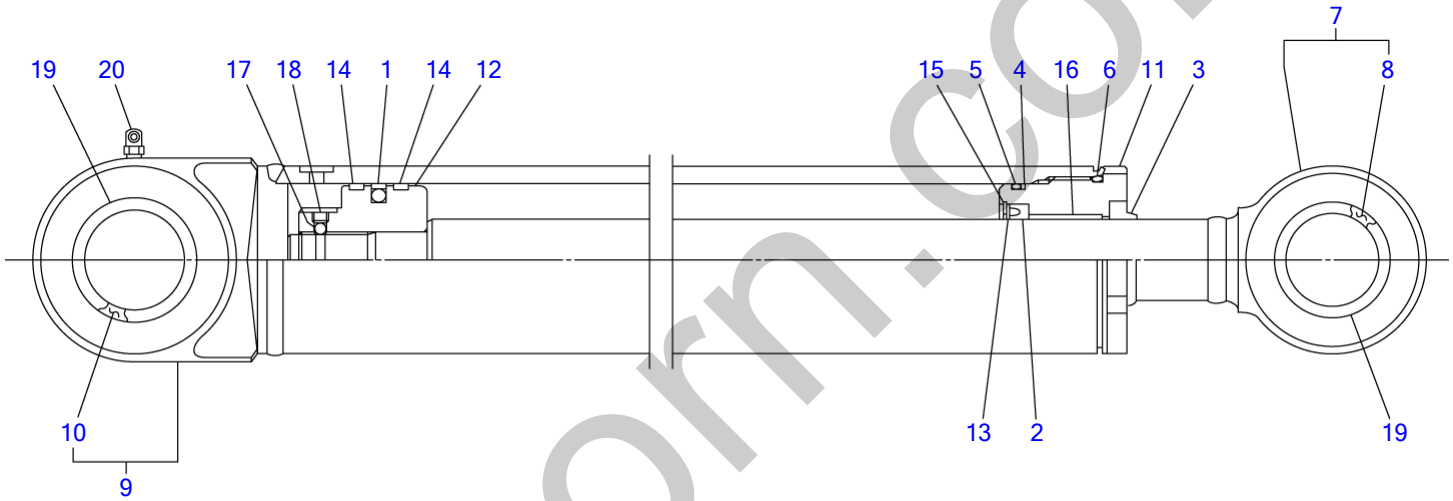

T8H050

S=free

silverhorn.co.uk

BUCKET CYLINDER

Item	Part number	Description	Q'ty	Chan.	Serial No.	Serv.	Remarks
0	1900081300	CYLINDER ASSY (R.H.)	1				bucket
	1900081400	CYLINDER ASSY (L.H.)	1				bucket
0-1	1900081399	・KIT, seal	1				
1	X 1900048232	・・PACKING, piston	1				
2	X 1900051631	・・PACKING, rod	1				
3	X 1900073533	・・SEAL, dust	1				
4	X 1421130600	・・RING, back-up	1				
5	X 1420110600	・・O-RING	1				
6	X 1420110650	・・O-RING	1				
7	1900081397	・ROD ASSY, piston	1				
8	1900020302	・・BUSHING	1				
9	1900081398	・TUBE ASSY (R.H.)	1				
	1900081498	・TUBE ASSY (L.H.)	1				
10	1900058202	・・BUSHING	1				
11	1900054403	・COVER, rod	1				
12	1900051606	・PISTON	1				
13	1900054408	・HOLDER, rod packing	1				
14	1900064226	・RING, wear	2				
15	1221000050	・RING, snap	1				
16	1333003525	・BUSHING	1				
17	1390010250	・BALL, steel	1				
18	1121040607	・SET-SCREW	1				
19	1432200035	・SEAL, dust	4				
20	1560001900	・FITTING, grease	1				
	T8h050						

silverhorn.co.uk

ATTACHMENT CYLINDER

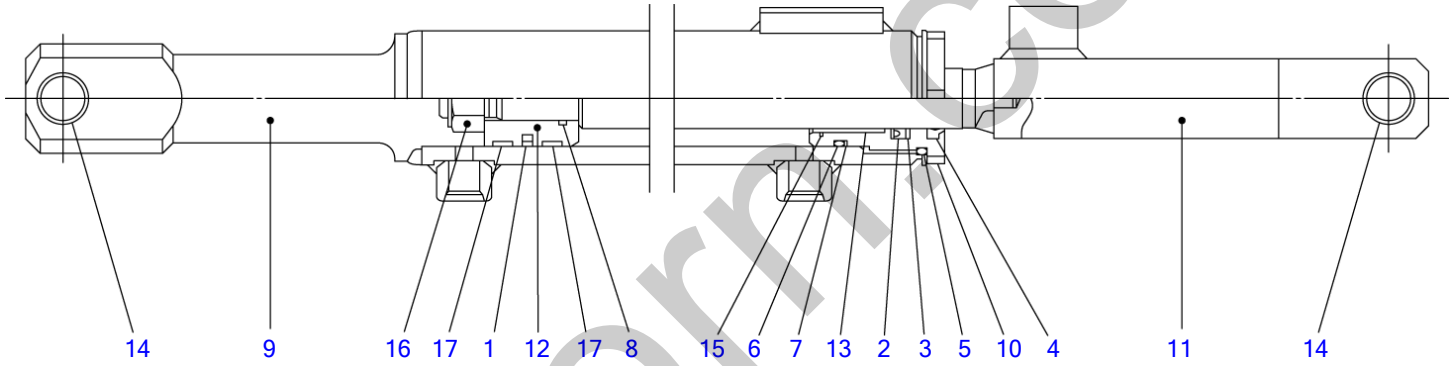

U1H050

S=FREE

silverhorn.co.uk

ATTACHMENT CYLINDER

Item	Part number	Description	Q'ty	Chan.	Serial No.	Serv.	Remarks
	1900100700	CYLINDER ASSY	1				attachment
0-1	1900100799	・KIT, seal	1				
1	X 1410200400	・・PACKING, piston	1				
2	X 1411140250	・・PACKING, rod	1				
3	X 1411233252	・・RING, back-up	1				
4	X 1411110250	・・SEAL, dust	1				
5	X 1420110400	・・O-RING	1				
6	X 1420110350	・・O-RING	1				
7	X 1421130350	・・RING, back-up	1				
8	X 1420010180	・・O-RING	1				
9	1900100707	・TUBE ASSY	1				
10	1900100706	・COVER, rod	1				
11	1900100701	・ROD ASSY, piston	1				
12	1900100705	・PISTON	1				
13	1333002525	・BUSHING	1				
14	1333001830	・BUSHING	2				
15	1225620029	・RING, snap	1				
16	1132711016	・NUT	1				
17	1410810400	・RING, wear	2				
	U1h050						

silverhorn.co.uk

TRAVEL MOTOR (1/3) (reduction sec.)

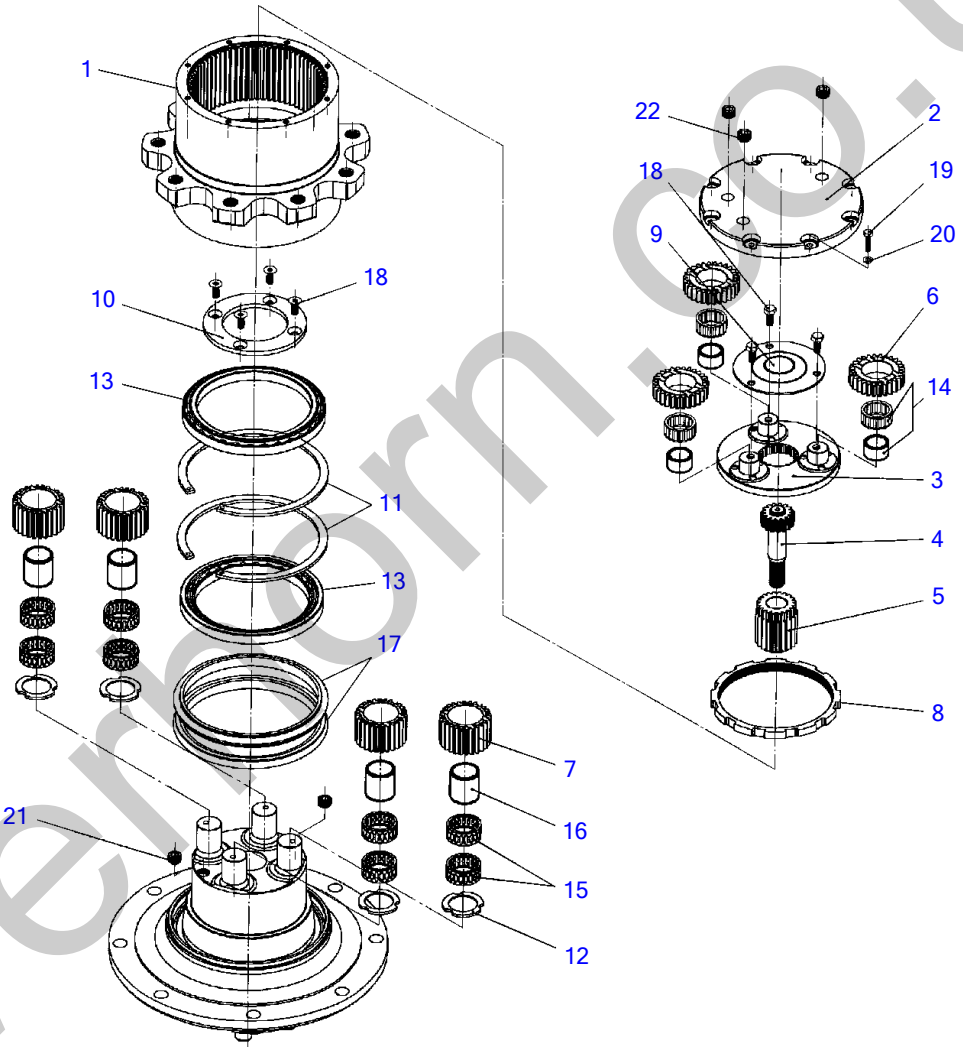

U0H020

S=free

silverhorn.co.uk

TRAVEL MOTOR (1/3) (reduction sec.)

Item	Part number	Description	Q'ty	Chan.	Serial No.	Serv.	Remarks
0	1903126600	MOTOR ASSY, travel	2			M	
0-1	X **********	・GEAR, reduction	1			M	
1	1912908702	・・GEAR, ring	1			M	
2	1912908003	・・COVER	1			M	
3	1912908704	・・CARRIER	1			M	
4	1912908005	・・GEAR	1			M	
5	1912908006	・・GEAR	1			M	
6	1912908007	・・GEAR	3			M	
7	1912908008	・・GEAR	4			M	
8	1912908009	・・NUT	1			M	
9	1912908010	・・PLATE KIT, stopper	1			M	
10	1912908711	・・PLAT, stopper	1			M	
11	1912908012	・・RING, snap	2			M	
12	1912908013	・・WASHER	4			M	
13	1912908014	・・BEARING	2			M	
14	1912908015	・・BEARING	3			M	
15	1912908016	・・BEARING	8			M	
16	1912908017	・・LACE, inner	4			M	
17	1912908018	・・SEAL KIT, floating	1			M	
18	1912908019	・・BOLT	7			M	
19	1100050625	・・BOLT	8			M	
20	1140020006	・・WASHER, spring	8			M	
21	1501810003	・・PLUG	2			M	
22	1912908023	・・PLUG	3			M	
	U1h060						

silverhorn.co.uk

TRAVEL MOTOR (2/3) (motor sec.)

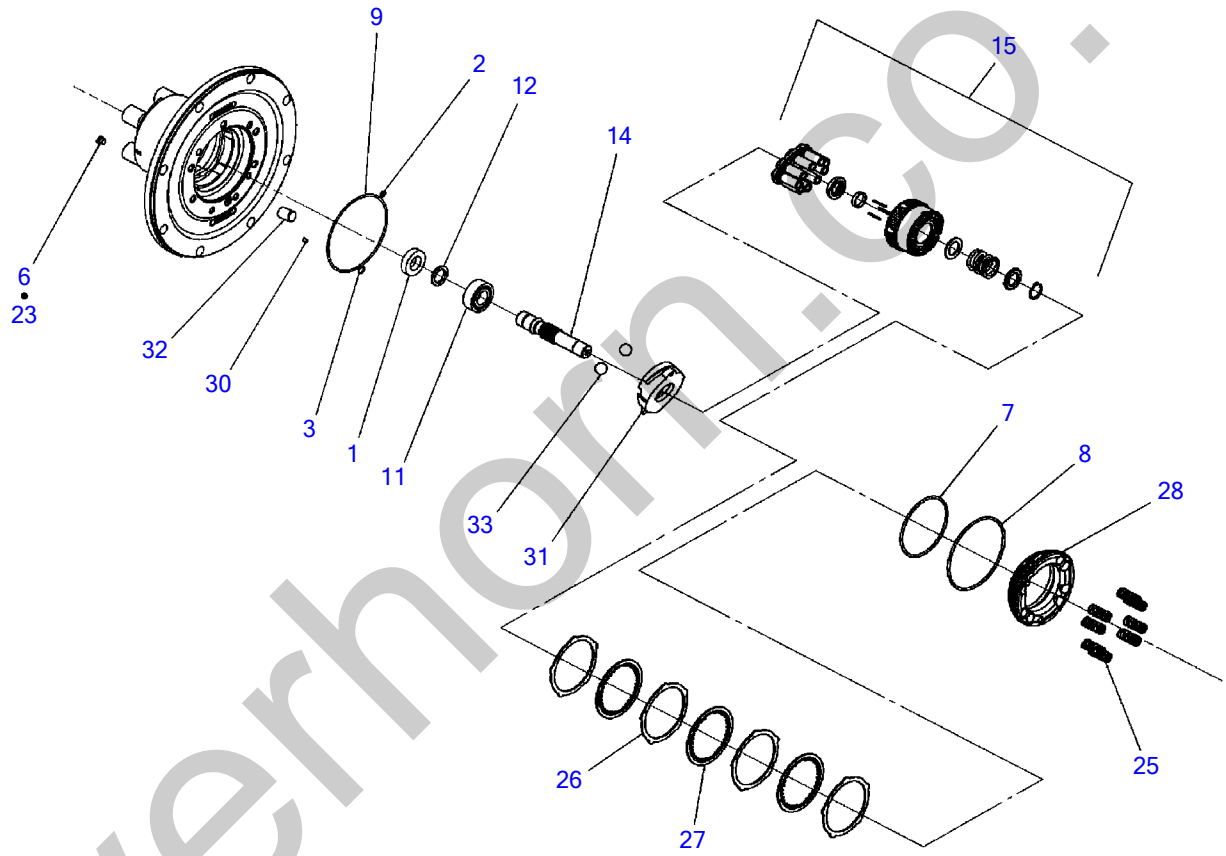

T8H150

S=free

silverhorn.co.uk

TRAVEL MOTOR (2/3) (motor sec.)

Item		Part number	Description	Q'ty	Chan.	Serial No.	Serv.	Remarks
0		1903126600	MOTOR ASSY, travel	2			M	
0-2	X	**********	・MOTOR ASSY (19039-08800)	1			M	incl. (3/3)
0-3		1903907198	・・KIT, seal	1			M	
1	X	1903907105	・・・SEAL, oil	1			M	
2	X	1420010090	・・・O-RING	1			M	
3	X	1420010110	・・・O-RING	1			M	
6	X	1420300903	・・・O-RING	1			M	
7	X	1420310244	・・・O-RING	1			M	
8	X	1420310250	・・・O-RING	1			M	
9	X	1420111350	・・・O-RING	1			M	
11		1903907102	・・BEARING	1			M	
12		1220000025	・・RING, snap	1			M	
14		1903907107	・・SHAFT	1			M	
15		1903907110	・・CYLINDER BLOCK KIT	1			M	
23		1903906427	・・PLUG	1			M	
25		1903907128	・・SPRING	8			M	
26		1903907129	・・PLATE	4			M	
27		1903907130	・・PLATE	3			M	
28		1903907131	・・PISTON, brake	1			M	
30		1903908036	・・ORIFICE	1			M	
31		1903908838	・・PLATE, swash	1			M	
32		1903907138	・・PISTON	1			M	
33		1390011600	・・BALL, steel	2			M	
		U1h070						

silverhorn.co.uk

TRAVEL MOTOR (3/3) (valve sec.)

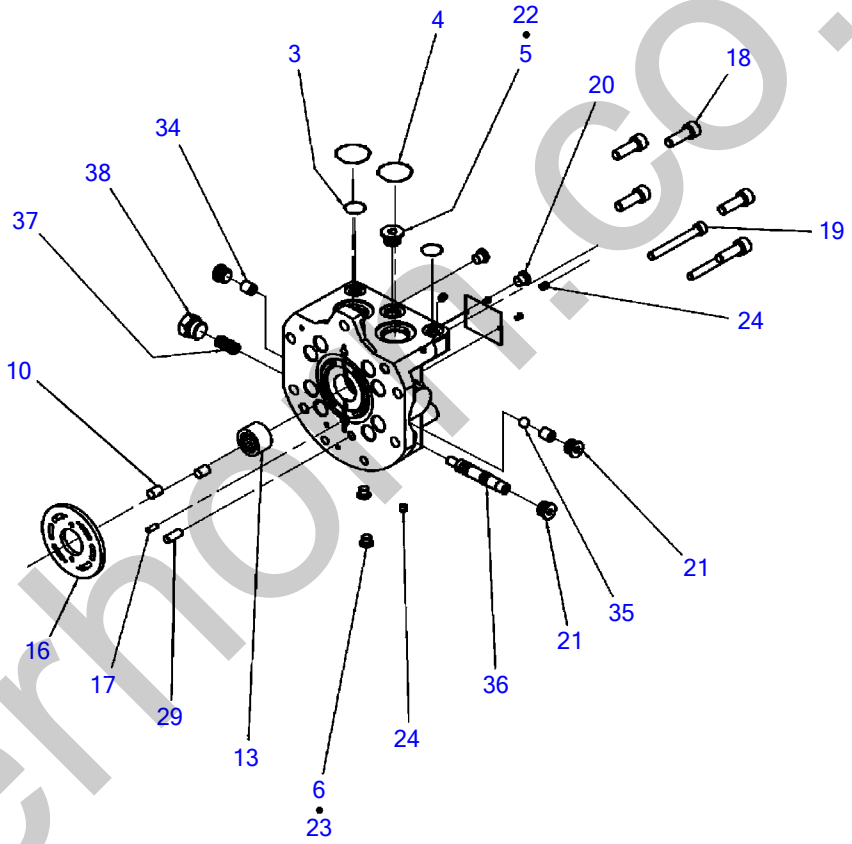

T8H160

S=free

silverhorn.co.uk

TRAVEL MOTOR (3/3) (valve sec.)

Item	Part number	Description	Q'ty	Chan.	Serial No.	Serv.	Remarks
0	1903126600	MOTOR ASSY, travel	2			M	
0-2	X **********	・MOTOR ASSY (19039-08800)	1			M	incl. (2/3)
3	1420010110	・・O-RING	2			M	
4	1420010224	・・O-RING	4			M	
5	1420010140	・・O-RING	1			M	
6	1420300903	・・O-RING	2			M	
10	1902006702	・・PIN	2			M	
13	1903907106	・・BEARING	1			M	
16	1903907111	・・PLATE	1			M	
17	1902007411	・・PIN	1			M	
18	1110021030	・・SCREW, cap	5			M	
19	1110020870	・・SCREW, cap	2			M	
20	1903007626	・・PLUG ASSY	2			M	
21	1901810214	・・PLUG	3			M	
22	1903907123	・・PLUG	1			M	
23	1903906427	・・PLUG	2			M	
24	1903906827	・・PLUG	3			M	
29	1903906832	・・PIN	1			M	
34	1903906840	・・PLUG	2			M	
35	1390010600	・・BALL, steel	1			M	
36	1903906842	・・SPOOL	1			M	
37	1903906843	・・SPRING	1			M	
38	1903007636	・・PLUG ASSY	1			M	
	U1h080						

silverhorn.co.uk

HYDRAULIC PUMP (1/4)

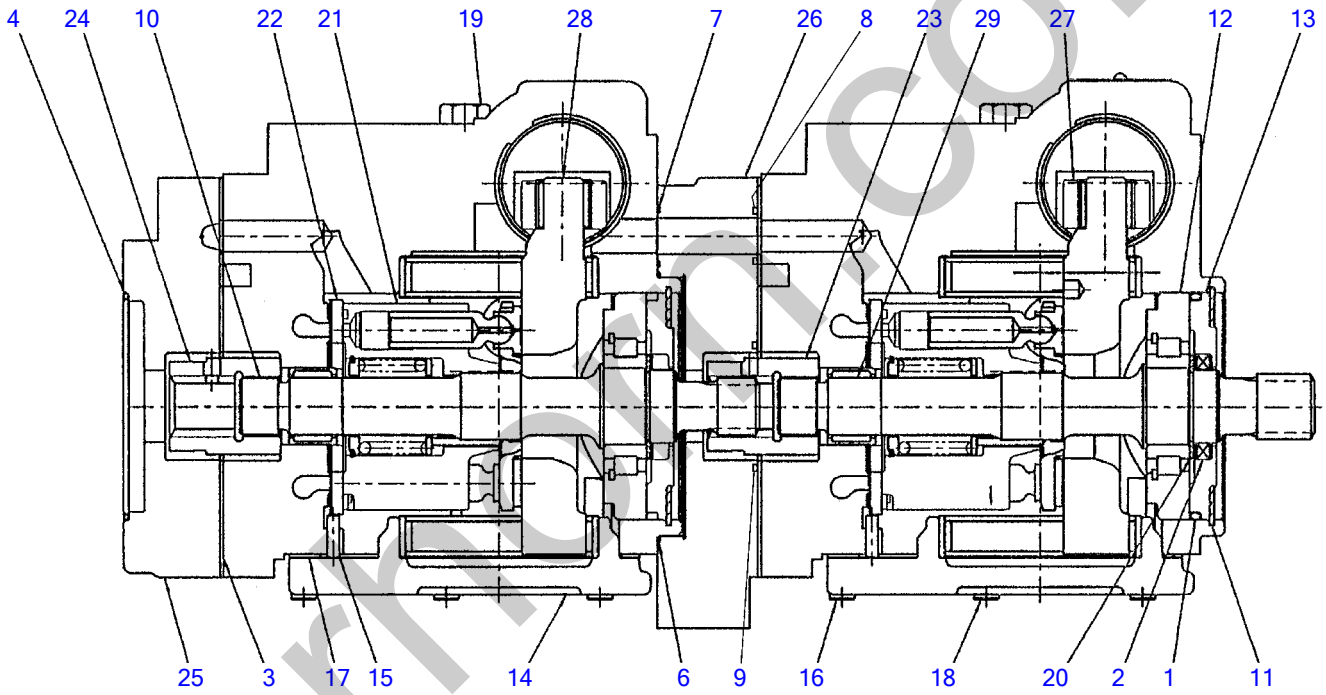

U1H090

S=FREE

silvermoon.co.uk

HYDRAULIC PUMP (1/4)

Item	Part number		Description	Q'ty	Chan.	Serial No.	Serv.	Remarks
0		1902020200	PUMP, hydraulic	1				
0-1		1902020299	・KIT, seal	1				
1	X	1902016507	・・O-RING	1				
2	X	1902016508	・・SEAL, lip	1				
3	X	1902020357	・・GASKET	1				
4	X	1420300152	・・O-RING	1				
6	X	1902016566	・・O-RING	1				
7	X	1902016565	・・O-RING	1				
8	X	1902019270	・・O-RING	1				
9	X	1902019285	・・O-RING	1				
10		1902017404	・SHAFT (13T)	1				
11		1902016505	・RING, retaining	2				
12		1902016506	・BEARING	2				
13		1902017409	・SEAL, carrier	2				
14		1902017412	・COVER ASSY	2				
15		1902017413	・PIN	2				
16		1110020620	・SCREW, cap	4				
17		1902020215	・GASKET	2				
18		1110020630	・SCREW, cap	8				
19		1902019215	・PLUG ASSY	4				
20		1902016520	・RING, retaining	2				
21		1902017428	・KIT, cylinder block	2				
22		1902017429	・PLATE, valve	2				
23		1902016557	・COUPLING	1				
24		1902016558	・COUPLING	1				
25		1902017449	・ADAPTOR, A pat	1				
26		1902019271	・ADAPTOR, B pat	1				
27		1902017401	・BEARING	2				
28		1902017402	・PLATE, swash	2				
29		1902017403	・SHAFT (15T)	1				
		U1h090						

silverhorn.co.uk

HYDRAULIC PUMP (2/4)

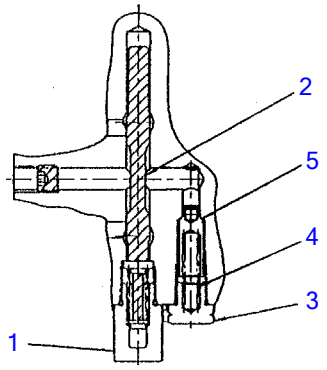

SECTION "C-C"

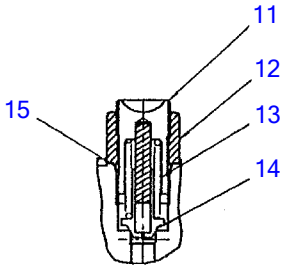

SECTION "E-E"

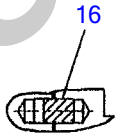

SECTION "L-L"

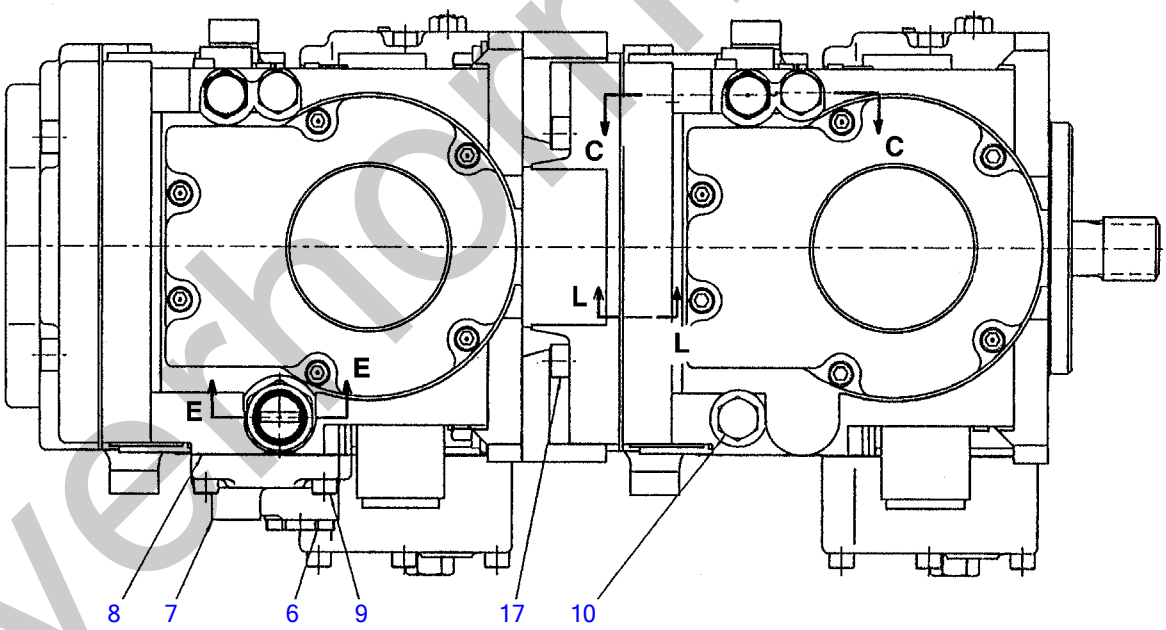

T8H100

S=FREE

silverhorn.co.uk

HYDRAULIC PUMP (2/4)

Item	Part number	Description	Q'ty	Chan.	Serial No.	Serv.	Remarks
0	1902020200	PUMP, hydraulic	1				
1	1902017430	・PLUG ASSY	2				
2	1902020244	・SPOOL ASSY	2				
3	1902017432	・PLUG ASSY	2				
4	1902017433	・SPRING	2				
5	1902017434	・POPPET	2				
6	1902006725	・PLUG	1				
7	1902017436	・ADAPTOR	1				
8	1902016548	・GASKET	1				
9	1110040830	・SCREW, cap	7				
10	1902019215	・PLUG ASSY	1				
11	1902016551	・PLUG ASSY	1				
12	1902016552	・NUT	1				
13	1902016553	・SPRING	1				
14	1902016554	・POPPET	1				
15	1902018812	・O-RING	1				
16	1902006702	・PIN	4				
17	1902020358	・SCREW, cap	8				
	U1h100						

silverhorn.co.uk

HYDRAULIC PUMP (3/4)

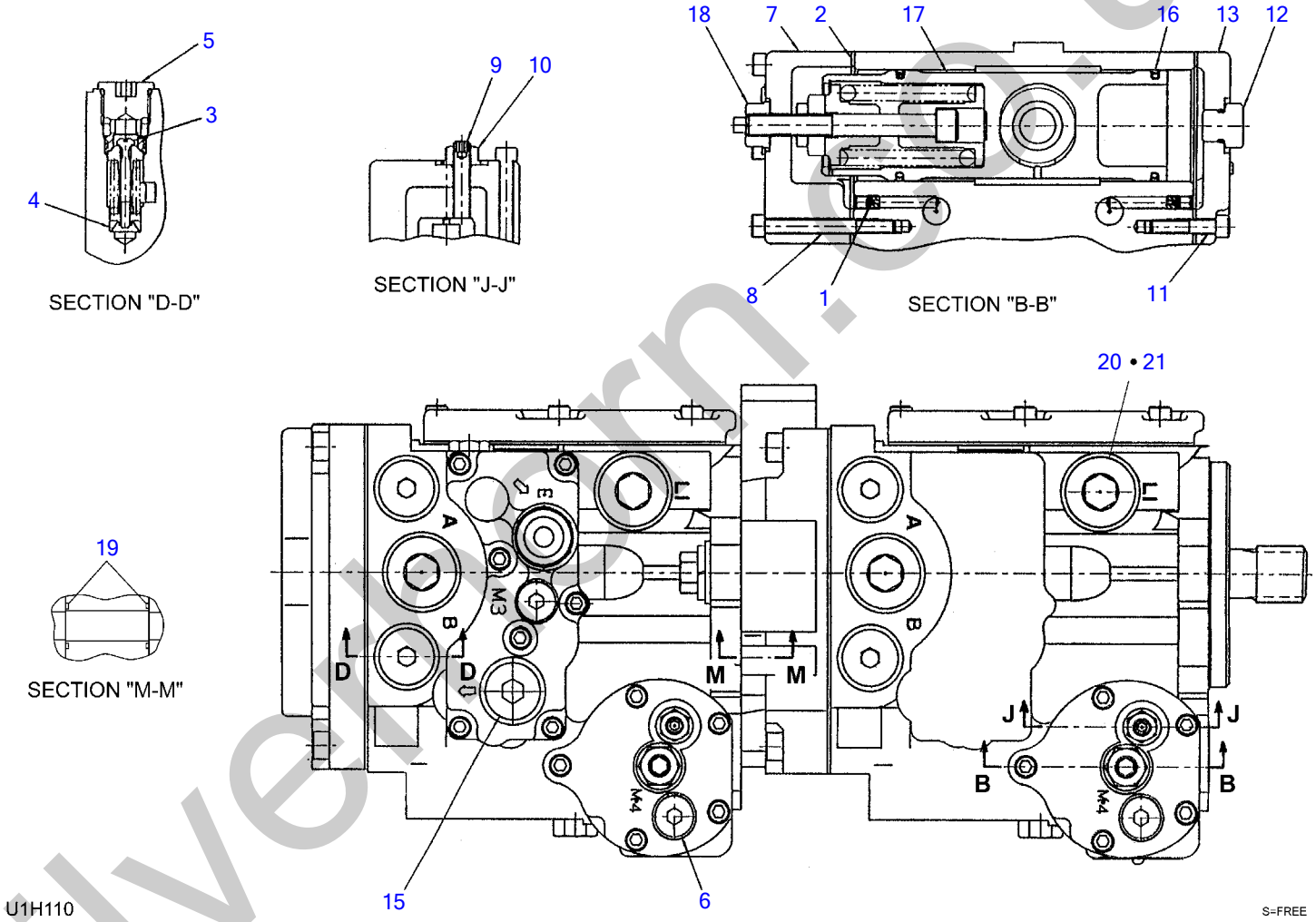

silverhern.co.uk

HYDRAULIC PUMP (3/4)

Item	Part number	Description	Q'ty	Chan.	Serial No.	Serv.	Remarks
0	1902020200	PUMP, hydraulic	1				
1	1902016511	・ORIFICE	4				
2	1902020216	・GASKET	4				
3	1902019229	・VALVE	4				
4	1902020736	・SPRING	4				
5	1902018817	・PLUG ASSY	4				
6	1902019215	・PLUG ASSY	2				
7	1902017424	・COVER	2				
8	1110040660	・SCREW, cap	10				
9	1902017425	・SCREW	2				
10	1902017119	・NUT, seal	2				
11	1110040630	・SCREW, cap	10				
12	1902017410	・PLUG ASSY	2				
13	1902020234	・COVER	2				
15	1902006768	・PLUG	1				
16	1902016555	・RING, back-up	2				
17	1902017444	・PISTON ASSY	2				
18	1902017729	・NUT, seal	2				
19	1902016564	・O-RING	2				
20	1902007412	・PLUG	4				
21	1902020223	・O-RING	4				
	U1h110						

silverhorn.co.uk

HYDRAULIC PUMP (4/4)

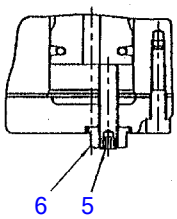

SECTION "K-K"

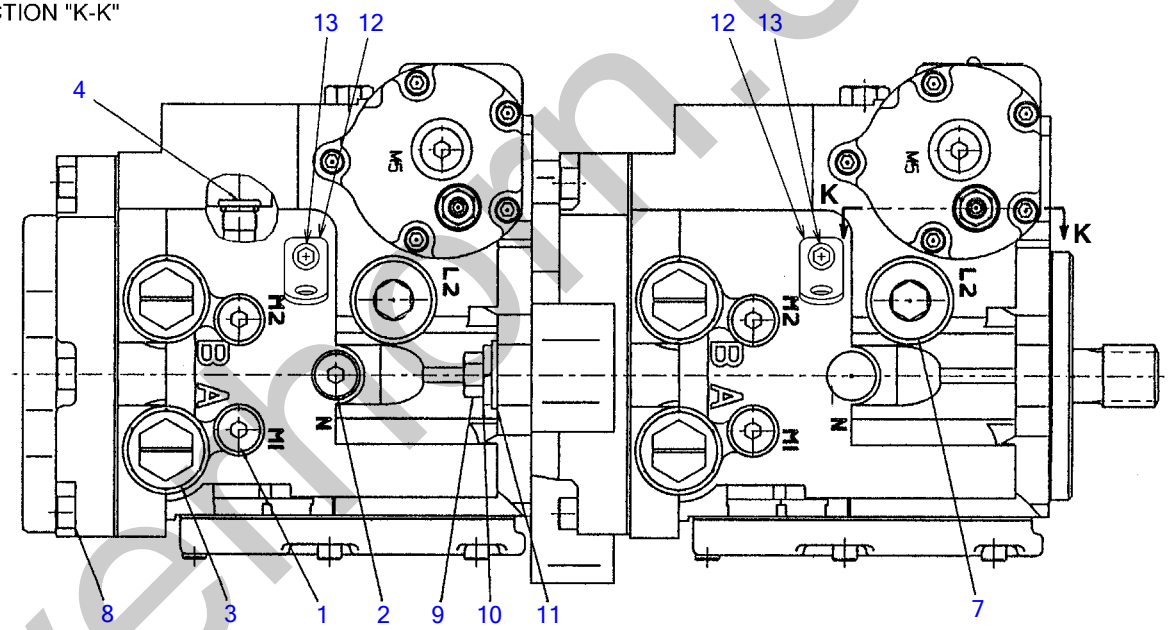

T8H121

S=FREE

silvermoon.co.uk

HYDRAULIC PUMP (4/4)

Item	Part number	Description	Q'ty	Chan.	Serial No.	Serv.	Remarks
0	1902020200	PUMP, hydraulic	1				
1	1902019215	・PLUG ASSY	4				
2	1902019215	・PLUG ASSY	1				
3	1902007451	・PLUG ASSY	4				
4	1902019215	・PLUG ASSY	2				
5	1902017425	・SCREW	2				
6	1902017719	・NUT, seal	2				
7	1902007412	・PLUG	2				
8	1902020358	・SCREW, cap	7				
9	1902010035	・BOLT	2				
10	1902016567	・WASHER spring	2				
11	1902010037	・WASHER	2				
12	1902020297	・PLATE	2				
13	1902020298	・BOLT	2				
	U1h120						

silverhorn.co.uk

GEAR PUMP

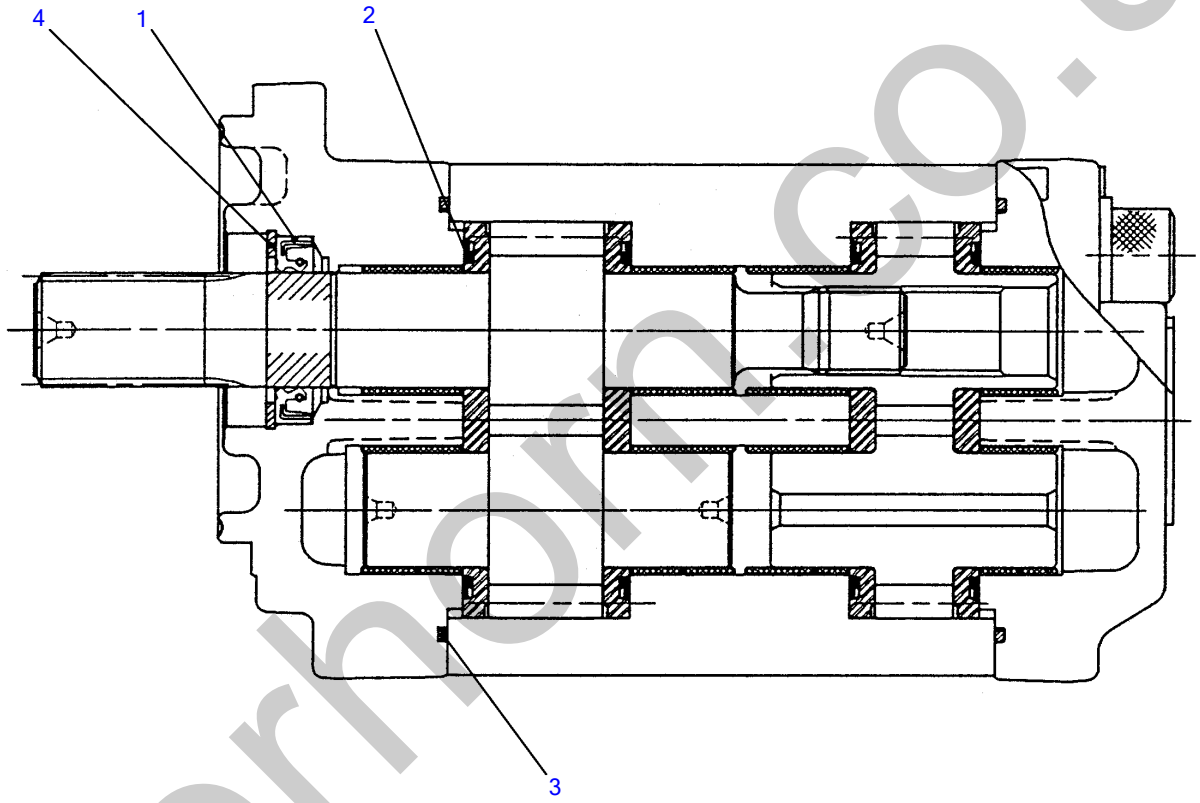

T8H130

S=FREE

silverhorn.co.uk

GEAR PUMP

Item	Part number	Description	Q'ty	Chan.	Serial No.	Serv.	Remarks
0	1902017900	PUMP ASSY, gear	1				
0-1	1902017999	・KIT, seal	1				
1	X 1902017618	・・SEAL, oil	1				
2	X 1902017950	・・GASKET	4				
3	X 1902018151	・・GASKET	2				
4	X 1221000036	・・RING, snap	1				
	T8h130						

silverhorn.co.uk

GEAR PUMP (high flow)

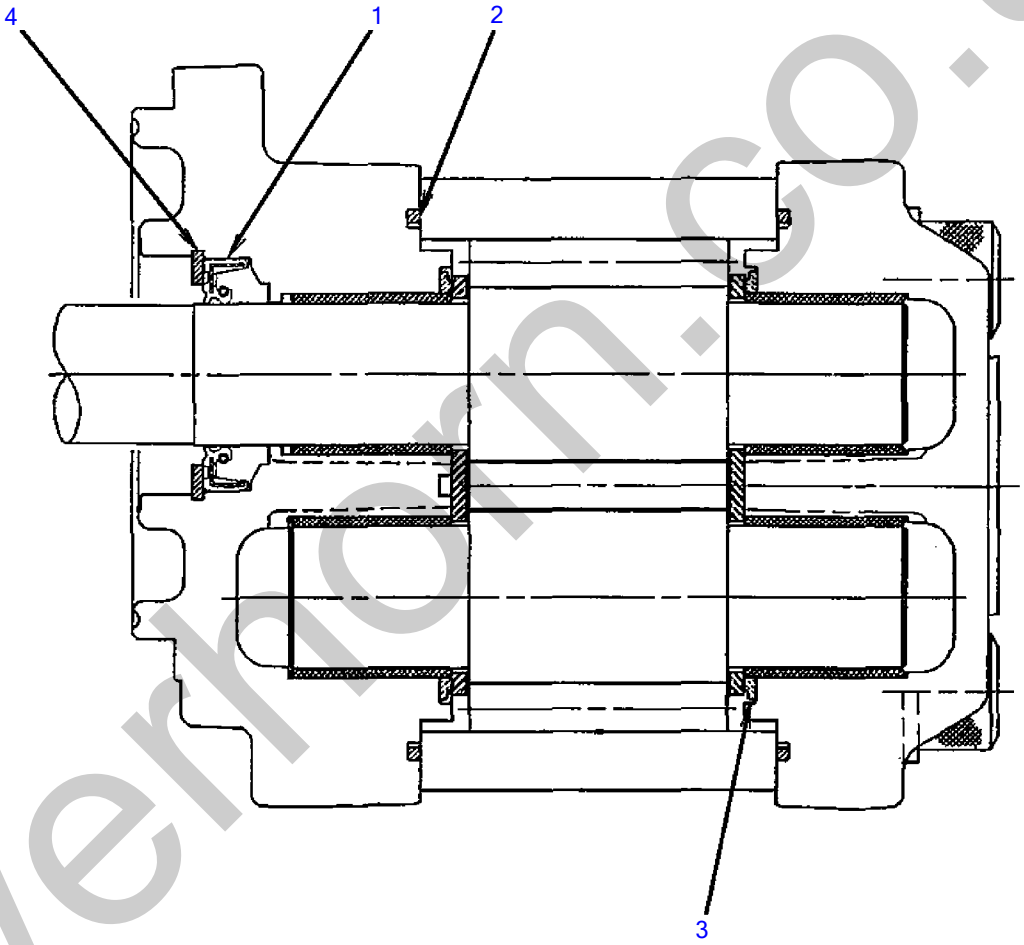

T8H170

S=free

silverhorn.co.uk

GEAR PUMP (high flow)

Item	Part number	Description	Q'ty	Chan.	Serial No.	Serv.	Remarks
0	1902021100	PUMP ASSY, gear	1				
0-1	1902021199	・KIT, seal	1				
1	X 1902017618	・・SEAL, oil	1				
2	X 1902018151	・・GASKET	2				
3	X 1902018150	・・GASKET	2				
4	X 1221000036	・・RING, snap	1				
	T8h170						

silverhorn.co.uk

PARTS MANUAL

TL230

Serial No. 223000001~

BU1Z004(P-TL230BAC)

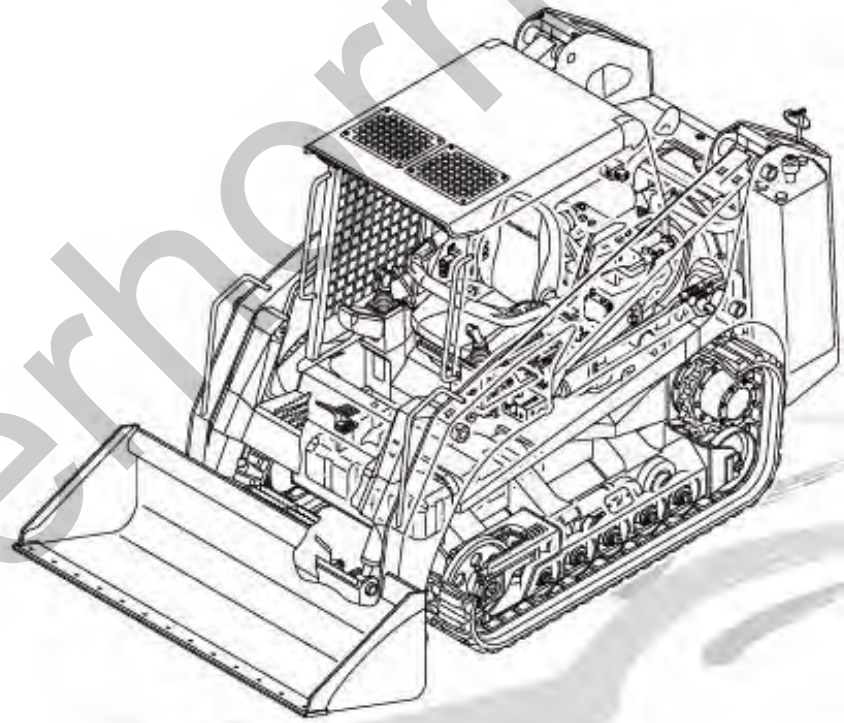

CRAWLER LOADER

TAKEUCHI

silverhorn.co.uk

Recommended Stock List

Item	Part number	Description	Q'ty	Chan.	Serial No.	Serv.	Remarks
		Recommended Stock List					
	1551101001	Hydraulic Filter Line	2				
	Y129939-12630	Inner Air Filter	2				
	Y129939-12621	Outer Air Filter	2				
	Y129150-35160	Engine Oil Filter	2				
	Y129004-55801	Fuel Filter	3				
	K28839901	250 Hour Filter Kit	1				
	K28839902	Annual Filter Kit	1				
	1900081399	Bucket Cylinder Seal Kit	2				
	1900081699	Arm Cylinder Seal Kit	2				
	1432500560	Floating Seal (2 pieces = 1 seal)	2				
	1432500640	Floating Seal (2 pieces = 1 seal)	2				
	1400402835	Oil Seal	2				
	1422010500	O-Ring P-45	2				
	1421020500	Backup Ring	2				
	1515600200	Adaptor	2				
	1501750002	Plug	2				
	1914200230	Tooth	10				
	1914200023	Lock	10				
	1914202300	Adaptor	10				
	0880612070	Pin	2				
	0007000070	Spring TL Series	2				
	1213001250	Spring Pin M12 X 50	1				
	0007000119	Spring	2				
	0881612040	LH Lever	2				
	0881512050	RH Lever	2				
	0881612060	Yoke	2				
	0881512150	Pin	2				
	0001323506	Pin	2				
	0001672004	Pin	2				
	0880612060	Washer	2				
	0880604910	Stopper	2				
	0880825650	Door Striker	1				
	1914061410	Rubber Track	2				
	0880168210	Sprocket	2				
	1552100500	Fuel Cap	1				
	1700100052	Starter Switch	1				
	1703006902	Bulb	1				
	1700100019	Key (qty 1 = 2 keys)	2				
	1703006605	Bulb	2				
	Y129940-42320	Fan Belt	1				
	1700000010	Light Switch	1				
	1919060104	Red Aerosol Paint	2				
	1919060139	Light Gray Aerosol Paint	2				
	1919060140	Medium Gray Aerosol Paint (070)	2				
	1560001000	Straight Grease Fitting	10				
	1560001675	Grease Fitting 45 degree	6				
	1560001900	Grease Fitting 90 degree	6				
	0664001370	Upper Radiator Hose	1				
	0880408030	Lower Radiator Hose	1				

silverthorn.co.uk

Item	Part number	Description	Q'ty	Chan.	Serial No.	Serv.	Remarks
		TL230 Manuals					
	LTL2300001SP	Operators Manual TL1220/TL230/TL240/TL250 AU1S000 Spanish	1				
	LTL2300001	Operators Manual TL220/TL230/TL240/TL250 AU1E004	1				
	LTL23000003	Parts Manual TL230 BU1Z003 Interim Tier 4	1				
	LTL23000004	Service Manual TL230 CU1E001	1				

silverhorn.co.uk

PREFACE

1. This parts catalog is the 1st edition of 4TNV98-ZNTBL for Takeuchi Mfg. Co., Ltd.

Pub.No. : 000Y00D9780

Published : September,2007

2. Model name

Engine model	Vehicle		Vehicle made by
	Products	Model name	
4TNV98-ZNTBL	Track Loader	TL230	Takeuchi Mfg. Co., Ltd.

silverhorn.co.uk

Part No

ENGINE
4TNV98-ZNTBL
2008.7.11

silverhorn.co.uk

How to read this Parts Catalog.

1.Parts mentioned in Parts Catalog may not necessarily be standard equipping parts
2.Parts change may be made without prior notice.
3.Form of this Parts Catalog.

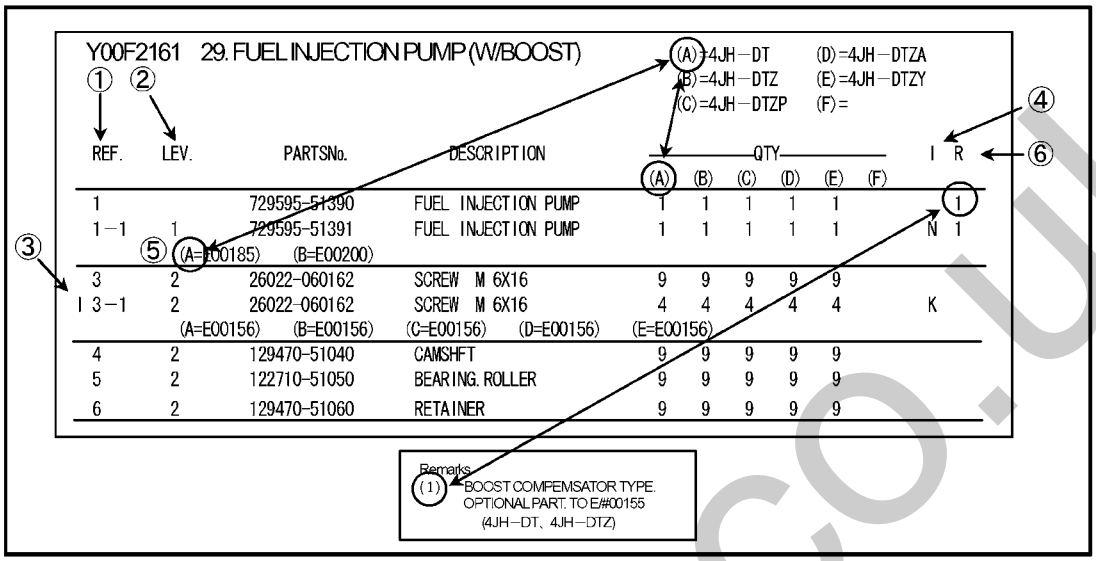

①Ref. No,

The Ref. No, in the list may not be in accordance with the Ref. No, on illustration.

(Ex.) illustration No, List heed No,

1 1 (Before change) → 1 − 1 (After change)

When interchangeable symbol N, and k, illustrations for the new parts are sometimes omitted.

②Lev. (Level)

Indication and Meaning of Level

Level Hereunder is given the relation among the number of number (1,2,3) the level and the nominal parent-child relationship.

1 ----- Parent parts (Assembly parts)
2 ----- Child parts included in " 1 " (Semi-Assembly parts, component parts of Assembly parts.)
3 ----- Child parts included in " 2 ", Grand-child parts in terms of " 1 ".
(Component parts of Semi-Assembly parts.)

Note) A parts of non-sale parts are illustrated but not listed.

③Change Mark

Change Mark " I " is given to the part for which a design change was made at this time.
The design change was not shown in the last published Parts Catalog.

④Interchangeability Mark

In the case where a part change took place, one of the following interchangeability marks is indicated for that part

Symbol	Interchangeability	Contents note
N	Old ← ○ × → New	New Part is interchangeable for Old Part but not interchangeable conversely.
Q	Old ← × ○ → New	New Part is not interchangeable for Old Part but interchangeable conversely.
R	Old ← ○ ○ → New	New Part is interchangeable for Old Part and vice versa.
S	Old ← × × → New	New Part is not interchangeable for Old Part and vice versa.
W		Part newly added.
Z		Part discontinued.
F		Not interchangeable single part but interchangeable by set of the related parts.
K		Changed only in quantity used.

⑤Effective Machine No,

When a part is changed, Effective Machine No, of a Model for which the part is applicable is indication
In each column of (A)-(F).

Product Symbol	Product No,	Product Symbol	Product No,
C	Clutch No, Compressor No,	M	Machine No,
D	Drive No,	T	Tractor No,
E	Engine No,	Note 1)※	Date

Note 1) Date may follow the symbol in some cases.(Ex.) ※1996.01
Note 2) As far as engine models shown by " XXX " are concerned, the modification of the parts could not be Predicted or the engine models themselves could not be identified.
Note 3) (A=E/#00185) means that the design change on the part has been effective for the model at the, column (A) (in the case, for 4JH-DT) on and from E/#(Engine Serial Number) 00185

⑥Remarks Mark

Figures or alphabets (Symbols) are entered in the remark column.
The comments (remarks) on the pertinent parts are indicated in the lower part of the list by the same symbols a those stated above.

silverhorn.co.uk

CYLINDER BLOCK

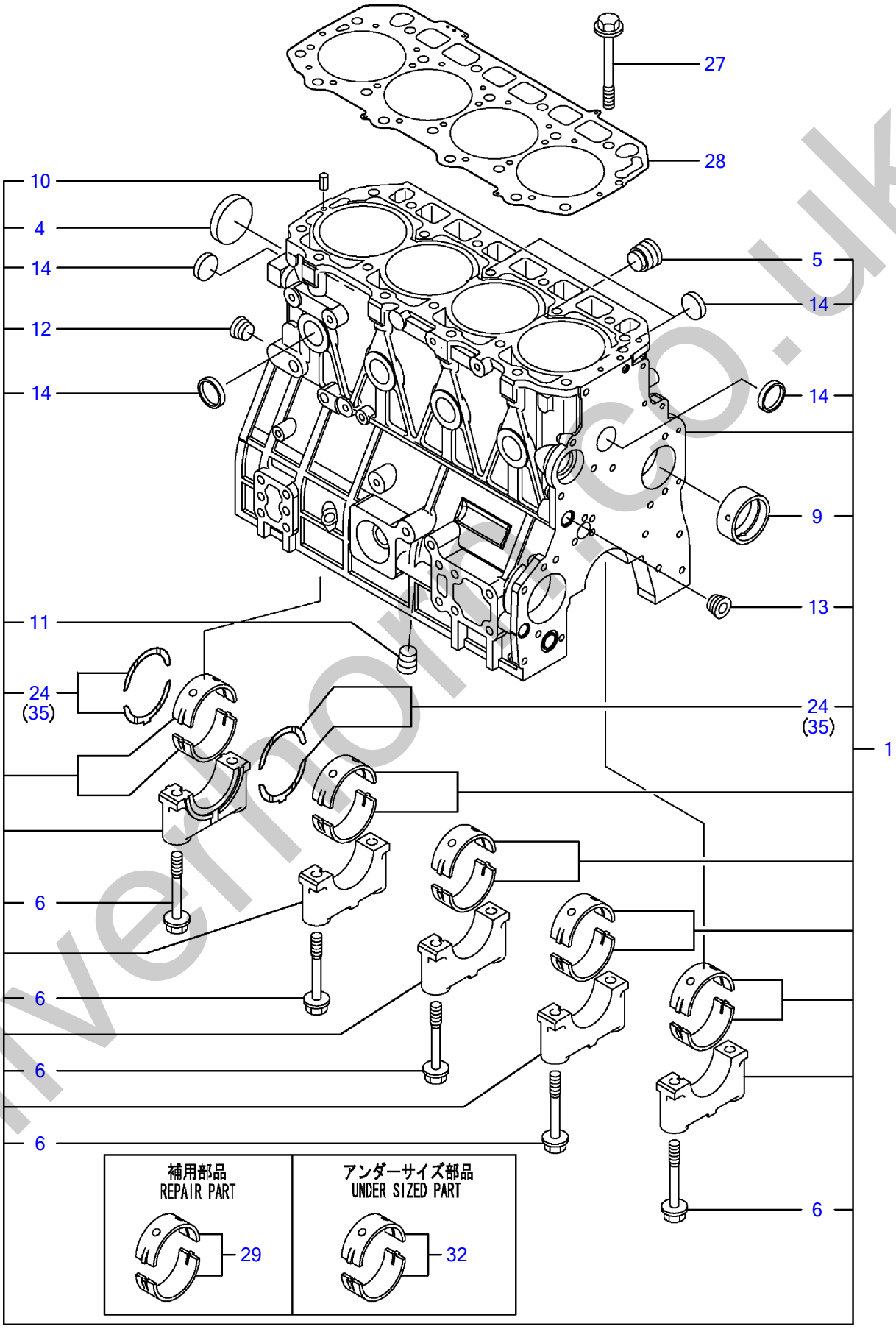

silvermoor.co.uk

Engine for TL230 4TNV98-ZNTBL

CYLINDER BLOCK

Item	Part No	Description	Qty
1	Y729927-01560	BLOCK ASSY, CYLINDER	1
4	Y129900-01250	・PLUG 55	1
5	Y171051-01921	・PLUG	1
6	Y129900-02020	・BOLT, METAL CAP	10
9	Y129900-02410	・BUSH, CAMSHAFT	1
10	Y22351-060012	・SPRING PIN 6X12	2
11	Y23876-030000	・PLUG PT3/8,SCREW	1
12	Y23876-030000	・PLUG PT3/8,SCREW	1
13	Y23876-030000	・PLUG PT3/8,SCREW	1
14	Y27241-300000	・PLUG 30	8
24	Y129900-02931	・BEARING ASSY, THRUST	2
27	Y129900-01200	BOLT, HEAD	18
28	Y129907-01331	GASKET,CYLINDER HEAD	1
29	Y729900-02801	MAIN BEARING SET	5
32	Y129900-02341	MAIN BEARING US=0.25	5
35	Y129900-02941	BEARING,THRUST .25OS	2

silverhorn.co.uk

GEAR HOUSING

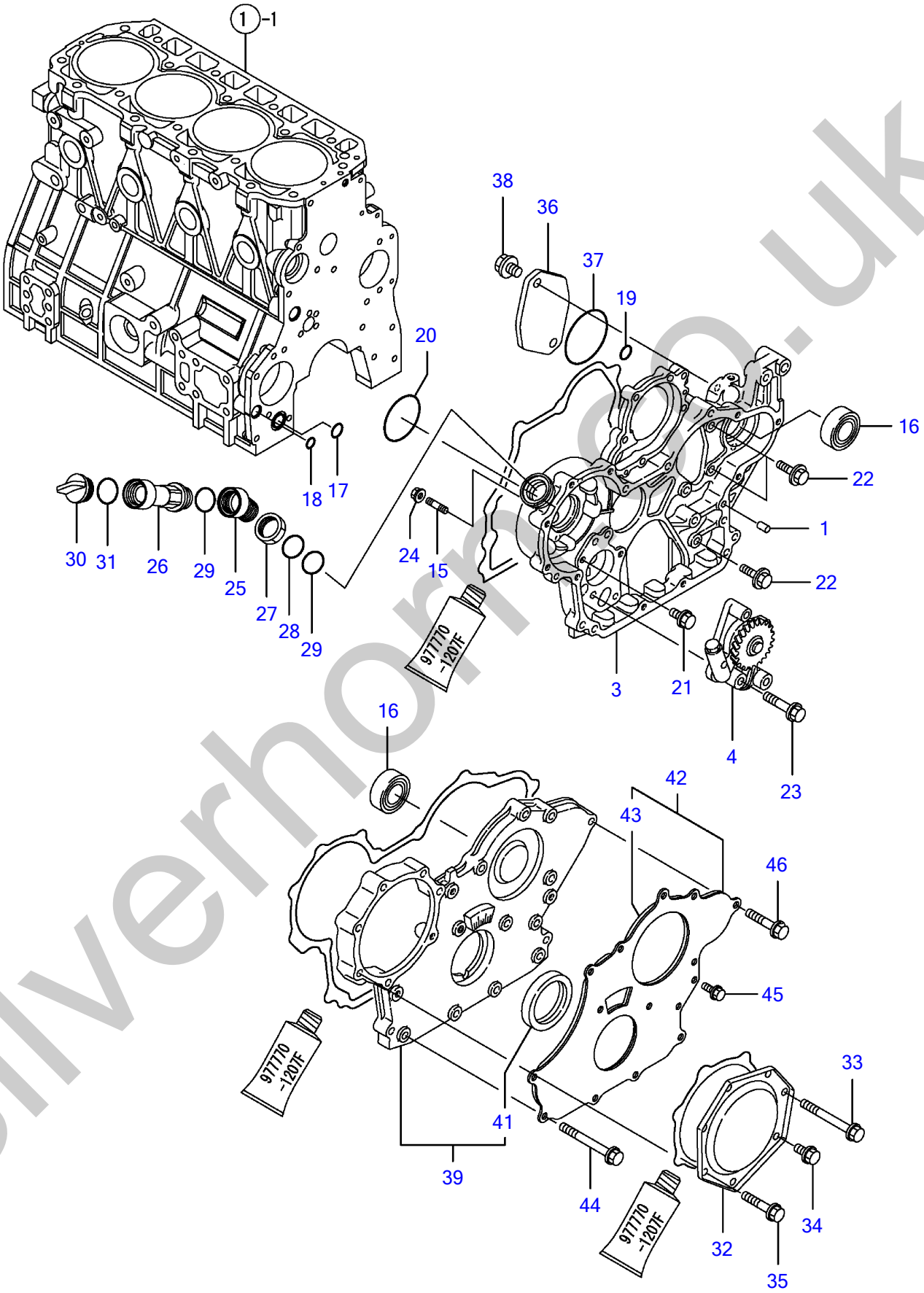

silverhorse.co.uk

GEAR HOUSING

Item	Part No	Description	Qty
1	Y129100-01580	PARALLEL PIN 8X16	4
3	Y129962-01500	CASE, GEAR	1
4	Y129900-32001	PUMP ASSY, LUB.OIL	1
15	Y26216-100302	STUD BOLT	4
16	Y129900-26250	BALL BEARING	2
17	Y129900-32030	O-RING P20	1
18	Y129900-32040	O-RING P14	1
19	Y24311-000070	O-RING 1A P-7.0	1
20	Y24351-030750	PACKING, 3075	1
21	Y26106-080162	BOLT M 8X 16 PLATED	1
22	Y26106-080202	BOLT M 8X 20 PLATED	3
23	Y26106-080452	BOLT M 8X 45 PLATED	3
24	Y26306-100002	NUT	4
25	Y119225-11740	ADAPTOR, OIL FILLER	1
26	Y121027-11743	PIPE	1
27	Y119225-11750	NUT, OIL FILLER	1
28	Y24311-000300	O-RING 1A P-30.0	1
29	Y24311-000320	O-RING 1A P-32.0	2
30	Y124160-01751	COVER,FILLER	1
31	Y24311-000320	O-RING 1A P-32.0	1
32	Y129900-01740	COVER, F.I. PUMP	1
33	Y129001-91810	BOLT M8X70, AUTO	1
34	Y26106-080162	BOLT M 8X 16 PLATED	1
35	Y26106-080402	BOLT M 8X 40 PLATED	5
36	Y121023-26070	COVER, HO-P	1
37	Y24321-000850	O-RING 1A G-85.0	1
38	Y26106-100202	BOLT M10X 20 PLATED	2
39	Y729906-01550	HOUSING ASSY,COVER,G	1
41	Y129916-01800	・SEAL, OIL	1
42	Y129900-01850	COVER ASSY	1
43	Y129900-01870	・SPONGE	1
44	Y129001-91810	BOLT M8X70, AUTO	6
45	Y26106-080162	BOLT M 8X 16 PLATED	3
46	Y26106-080402	BOLT M 8X 40 PLATED	5

silverhorn.co.uk

FLYWHEEL HOUSING & OIL SUMP

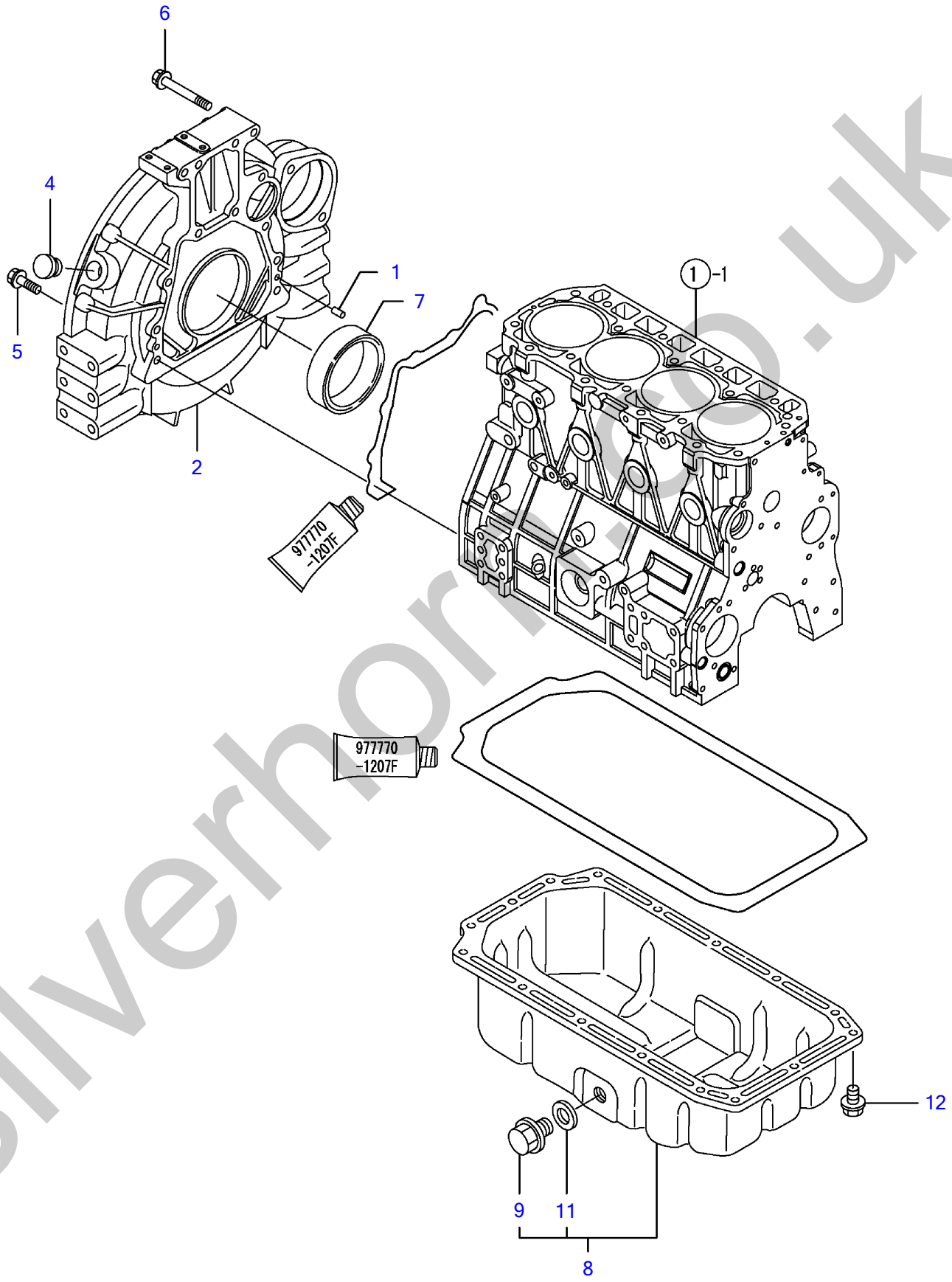

silverhorntec.co.uk

FLYWHEEL HOUSING & OIL SUMP

Item	Part No	Description	Qty
1	Y129100-01580	PARALLEL PIN 8X16	2
2	Y129953-01620	HOUSING, FLYWHEEL	1
4	Y119620-01750	CAP, FLYWHEEL COVER	1
5	Y26206-100352	BOLT M10X 35 PLATED	9
6	Y26206-100702	BOLT M10X 70 PLATED	4
7	Y129916-01790	SEAL, OIL	1
8	Y129902-01710	SUMP ASSY, OIL	1
9	Y119640-01640	・DRAIN PLUG M22	1
11	Y22190-220002	・SEAL WASHER 22S	1
12	Y26106-080122	BOLT M 8X 12 PLATED	16

silverhorn.co.uk

CYLINDER HEAD & BONNET

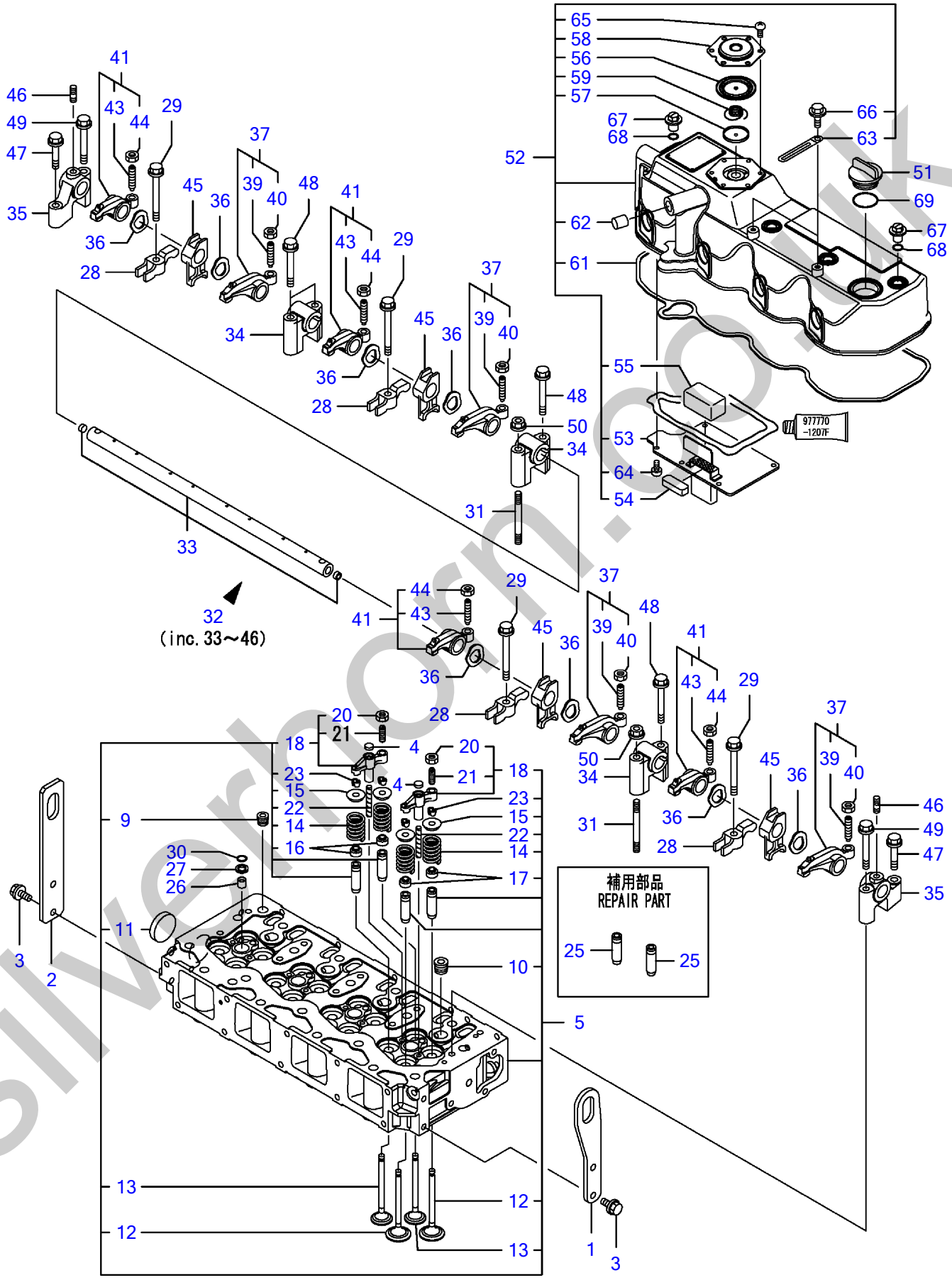

silverhorn.co.uk

Engine for TL230 4TNV98-ZNTBL

CYLINDER HEAD & BONNET

Item	Part No	Description	Qty
1	Y129907-07900	LIFTER, ENGINE	1
2	Y129944-07910	LIFTER, ENGINE	1
3	Y26106-080162	BOLT M 8X 16 PLATED	4
4	Y123907-11550	SEAT A,VALVE BRIDGE	8
5	Y129927-11700	HEAD ASSY, CYLINDER	1
9	Y23876-020000	・PLUG PT1/4,SCREW	1
10	Y23876-030000	・PLUG PT3/8,SCREW	4
11	Y27241-400000	・PLUG 40	1
12	Y129907-11100	・VALVE(INT	8
13	Y129907-11110	・VALVE(EXH	8
14	Y129907-11120	・VALVE SPRING	16
15	Y119620-11180	・RETAINER, SPRING	16
16	Y119803-11340	・SEAL, VALVE STEM(EXH	8
17	Y124160-11340	・SEAL, VALVE STEM(INT	8
18	Y129907-11510	・BRIDGE ASSY,VALVE	8
20	Y129150-11750	・・NUT M8XP1.0	8
21	Y123907-11830	・・SCRWE,VALVE BRIDGE	8
22	Y123907-11820	・GUIDE,VALVE BRIDGE	8
23	Y27310-070001	・COTTER ASSY	16
25	Y129907-11800	GUIDE, VALVE	16
26	Y119802-11870	PROTECTOR, NOZZLE	4
27	Y119625-11880	SEAT, NOZZLE	4
28	Y129907-11910	RETAINER,F.I.VALVE	4
29	Y129907-11950	FLANGE BOLT,RETAINER	4
30	Y24311-000120	O-RING 1A P 12.0	4
31	Y119593-11301	BOLT 8X80	2
32	Y129907-11341	SUPPORT CMP	1
33	Y129907-11250	・SHAFT,ROCKER ARM	1
34	Y129907-11260	・SUPPORT A	3
35	Y129907-11270	・SUPPORT B	2
36	Y123907-11280	・WAVE WASHER	8
37	Y129907-11650	・ARM ASSY, ROCKER	4
39	Y129150-11230	・・SCREW, VALVE	4
40	Y129150-11750	・・NUT M8XP1.0	4
41	Y129907-11660	・ARM ASSY, ROCKER	4
43	Y129150-11230	・・SCREW, VALVE	4
44	Y129150-11750	・・NUT M8XP1.0	4
45	Y129907-11920	・PEDESTAL,RETAINER	4
46	Y26226-080222	・STUD M 8X 22 PLATED	2
47	Y26106-080402	BOLT M 8X 40 PLATED	2
48	Y26106-080602	BOLT M 8X 60 PLATED	4
49	Y26106-080602	BOLT M 8X 60 PLATED	2
50	Y26306-080002	NUT	2
51	Y124160-01751	COVER,FILLER	1
52	Y129927-11320	BONNET ASSY	1
53	Y129907-03011	・BAFFLE PLATE	1
54	Y129907-03061	・BAFFLE	1
55	Y129907-03070	・BAFFLE	1
56	Y123907-03100	・DIAPHRAGM,BREATHER	1
57	Y123907-03110	・CENTER PLATE	1
58	Y123907-03120	・PLATE,BREATHER	1
59	Y123907-03140	・SPRING, DIAPHRAGM	1
61	Y129933-11310	・GASKET, BONNET	1
62	Y119640-61400	・PLUG	1
63	Y175339-79700	・CLIP	2
64	Y22857-500100	・SCREW 5X10,TAPPING	6
65	Y22857-500100	・SCREW 5X10,TAPPING	6
66	Y26106-060122	・BOLT M 6X 12 PLATED	2
67	Y124160-11360	KNOB	4
68	Y24311-000120	O-RING 1A P 12.0	4

simonorn.co.uk

CYLINDER HEAD & BONNET

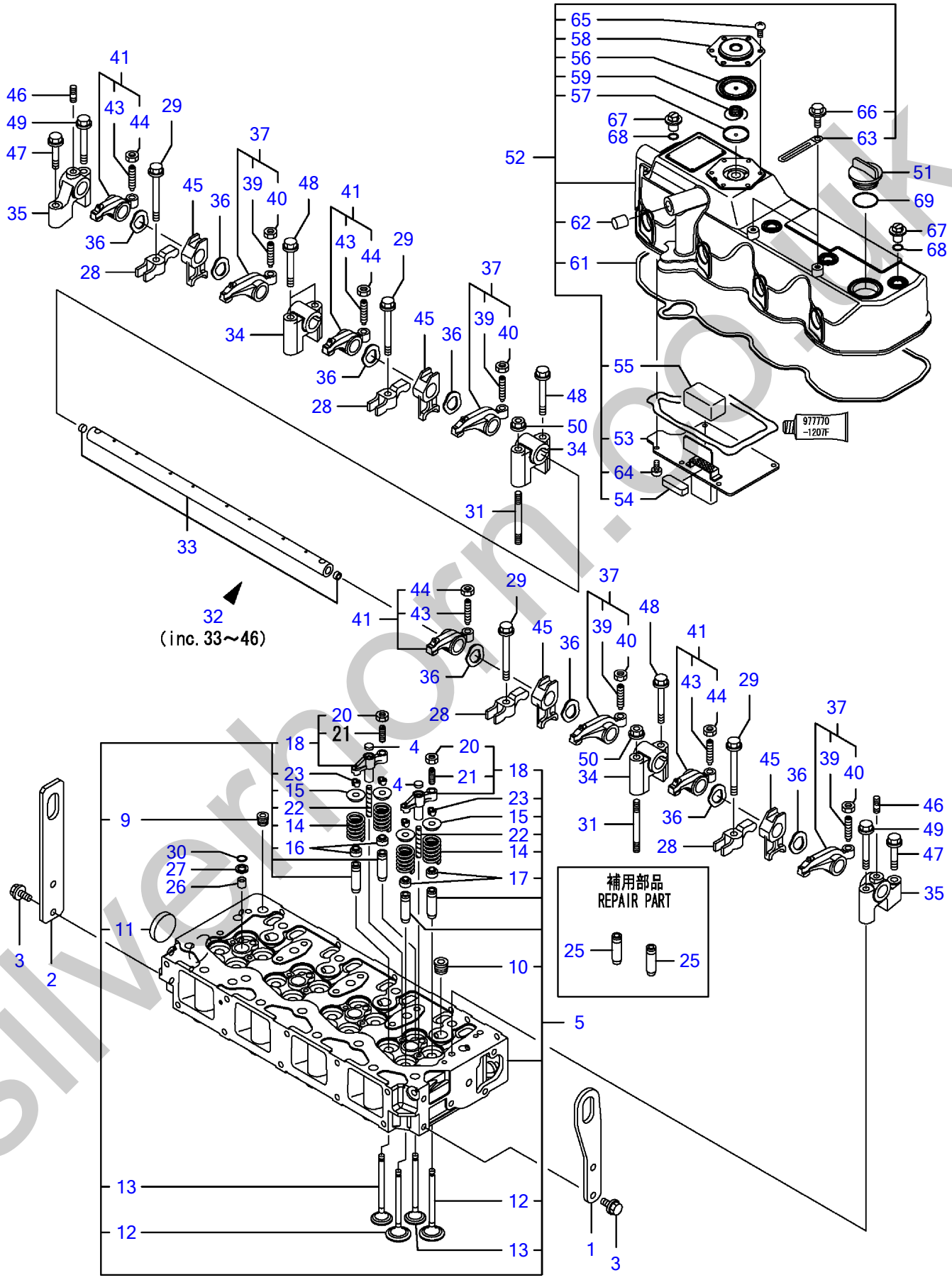

silverhorn.co.uk

CYLINDER HEAD & BONNET

Item	Part No	Description	Qty
69	Y24311-000320	O-RING 1A P-32.0	1

silverhorn.co.uk

SUCTION MANIFOLD & AIR CLEANER

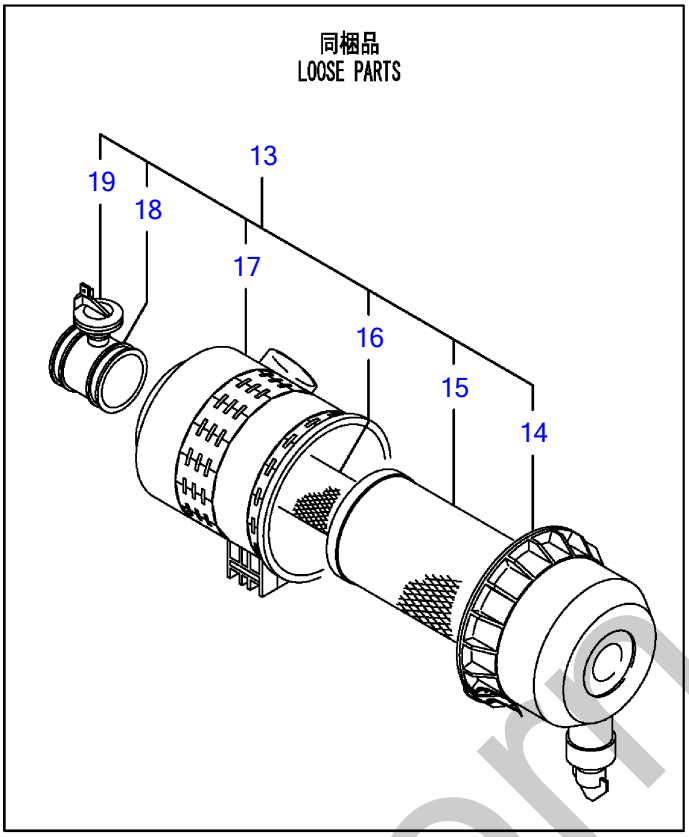

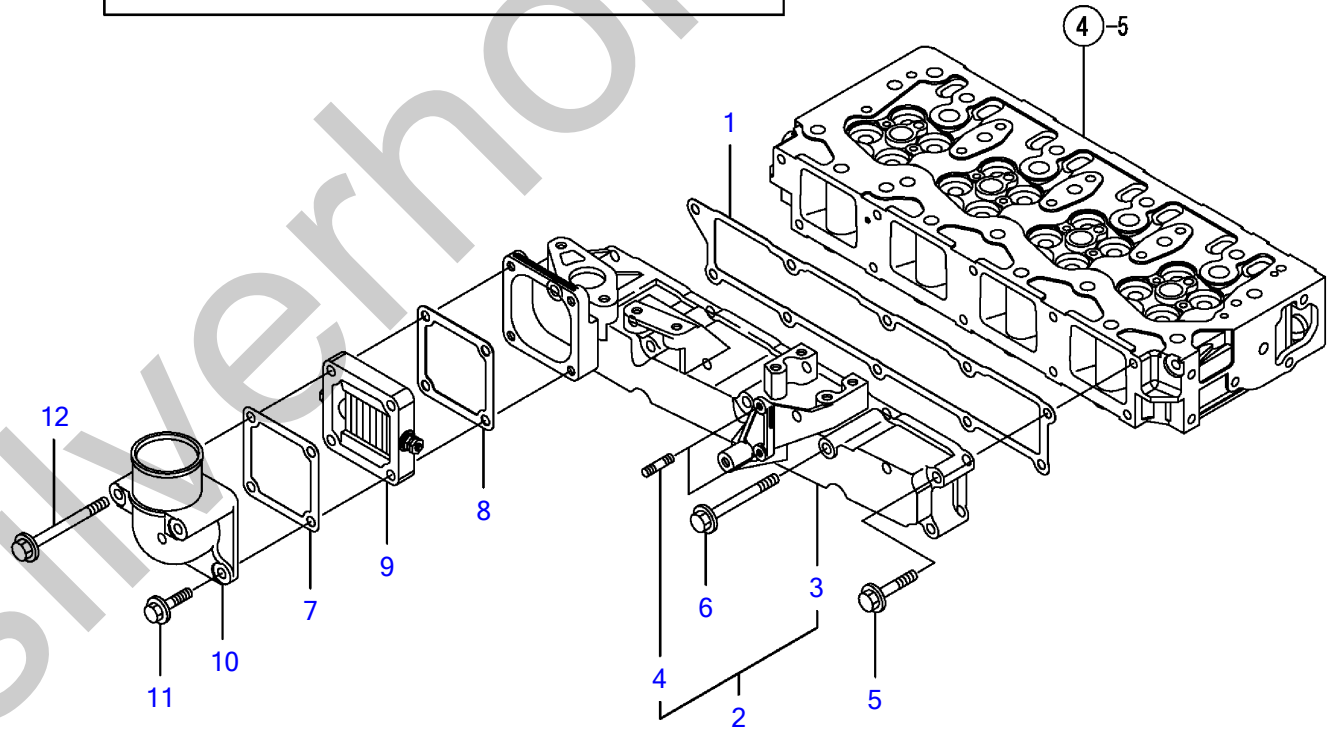

silverhorn.co.uk

SUCTION MANIFOLD & AIR CLEANER

Item	Part No	Description	Qty
1	Y129907-12110	PACKING(INT.MANIFOLD	1
2	Y129927-12150	MANIFOLD CMP,INTAKE	1
3	Y129927-12100	・MANIFOLD,INTAKE	1
4	Y26216-060202	・STUD M 6X 20 PLATED	2
5	Y26106-080452	BOLT M 8X 45 PLATED	6
6	Y26106-080802	BOLT M 8X 80 PLATED	4
7	Y119129-77020	GASKET	1
8	Y121850-77021	GASKET, (NON-ASB.)	1
9	Y119005-77050	HEATER, AIR	1
10	Y119129-77520	BEND	1
11	Y26106-080402	BOLT M 8X 40 PLATED	2
12	Y26106-080902	BOLT M 8X 90 PLATED	2
13	Y129939-12510	CLEANER ASSY, AIR	1
14	Y129939-12610	・HOUSING BOTTOM	1
15	Y129939-12620	・MAIN ELEMENT	1
16	Y129939-12630	・SECONDARY ELEMENT	1
17	Y129939-12640	・BLACKET	1
18	Y129939-12650	・CONNECTINNG SOCKET	1
19	Y129948-12660	・SERVICE SWITCH	1

silverhorn.co.uk

EXHAUST MANIFOLD & SILENCER

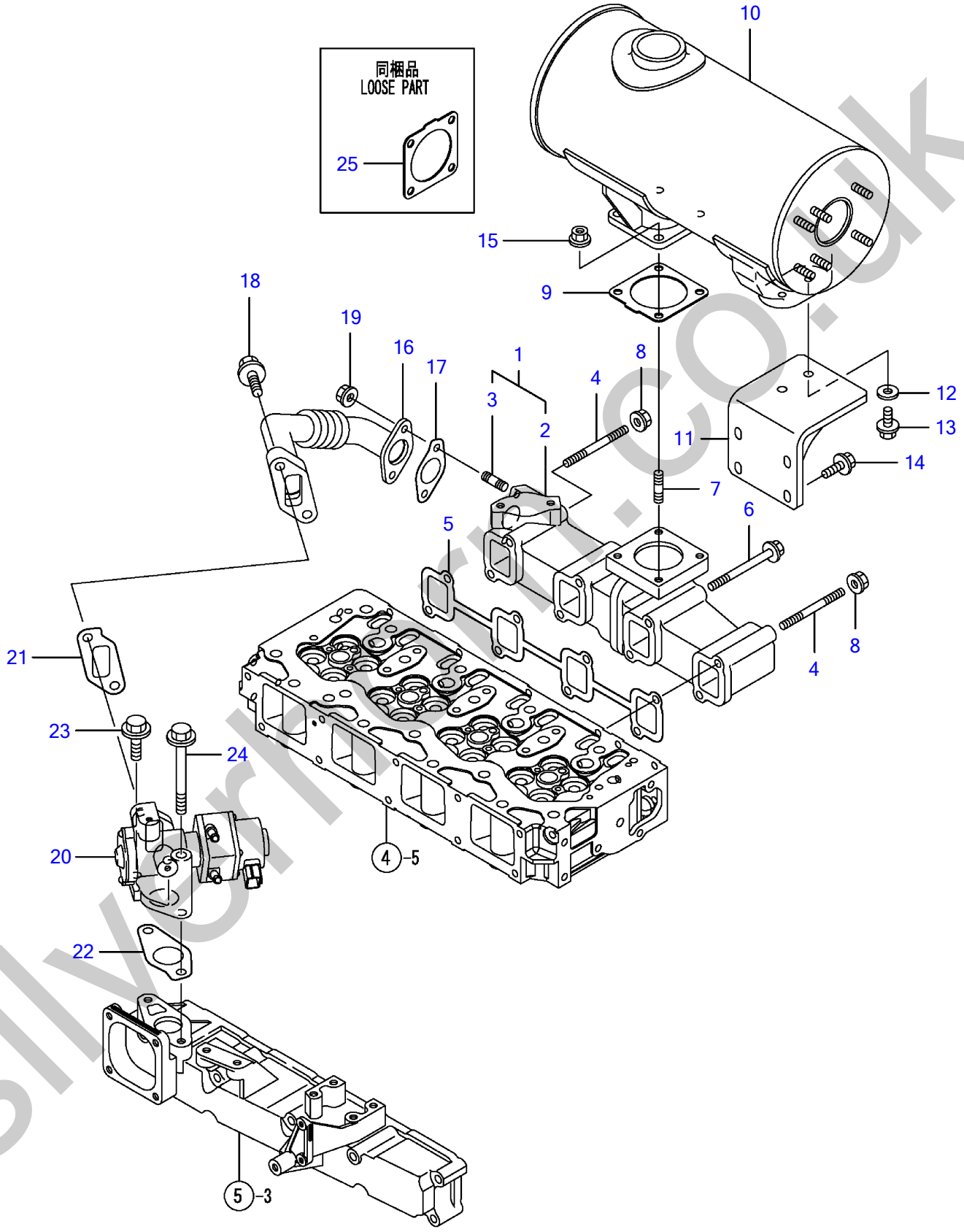

silverhurst.co.uk

Engine for TL230 4TNV98-ZNTBL

EXHAUST MANIFOLD & SILENCER

Item	Part No	Description	Qty
1	Y129927-13150	MANIFOLD ASSY,EXH	1
2	Y129927-13100	・MANIFOLD,EXHAUST	1
3	Y129418-18320	・STUD BOLT M8X20	2
4	Y129263-13210	BOLT, M8X100	2
5	Y129900-13251	GASKET	1
6	Y119802-13680	BOLT, M8X90	6
7	Y119131-18320	BOLT M 8X 22	4
8	Y26306-080002	NUT	2
9	Y129930-13201	GASKET, SILENCER	1
10	Y129944-13520	SILENCER	1
11	Y129944-13660	STAY, SILENCER	1
12	Y22157-080000	WASHER 8	2
13	Y26106-080162	BOLT M 8X 16 PLATED	2
14	Y26106-080202	BOLT M 8X 20 PLATED	4
15	Y26306-080002	NUT	4
16	Y129927-13800	PIPE(EGR CMP	1
17	Y129927-13810	GASKET, EGR PIPE	1
18	Y26106-100302	BOLT M10X 30 PLATED	2
19	Y26306-080002	NUT	2
20	Y129927-13900	EGR VALVE	1
21	Y129927-13910	GASKET(EGR-V IN	1
22	Y129927-13920	GASKET(EGR-V OUT	1
23	Y26106-100302	BOLT M10X 30 PLATED	1
24	Y26106-100952	BOLT M10X 95 PLATED	1
25	Y129930-13201	GASKET, SILENCER	1

silverhorn.co.uk

CAMSHAFT & DRIVING GEAR

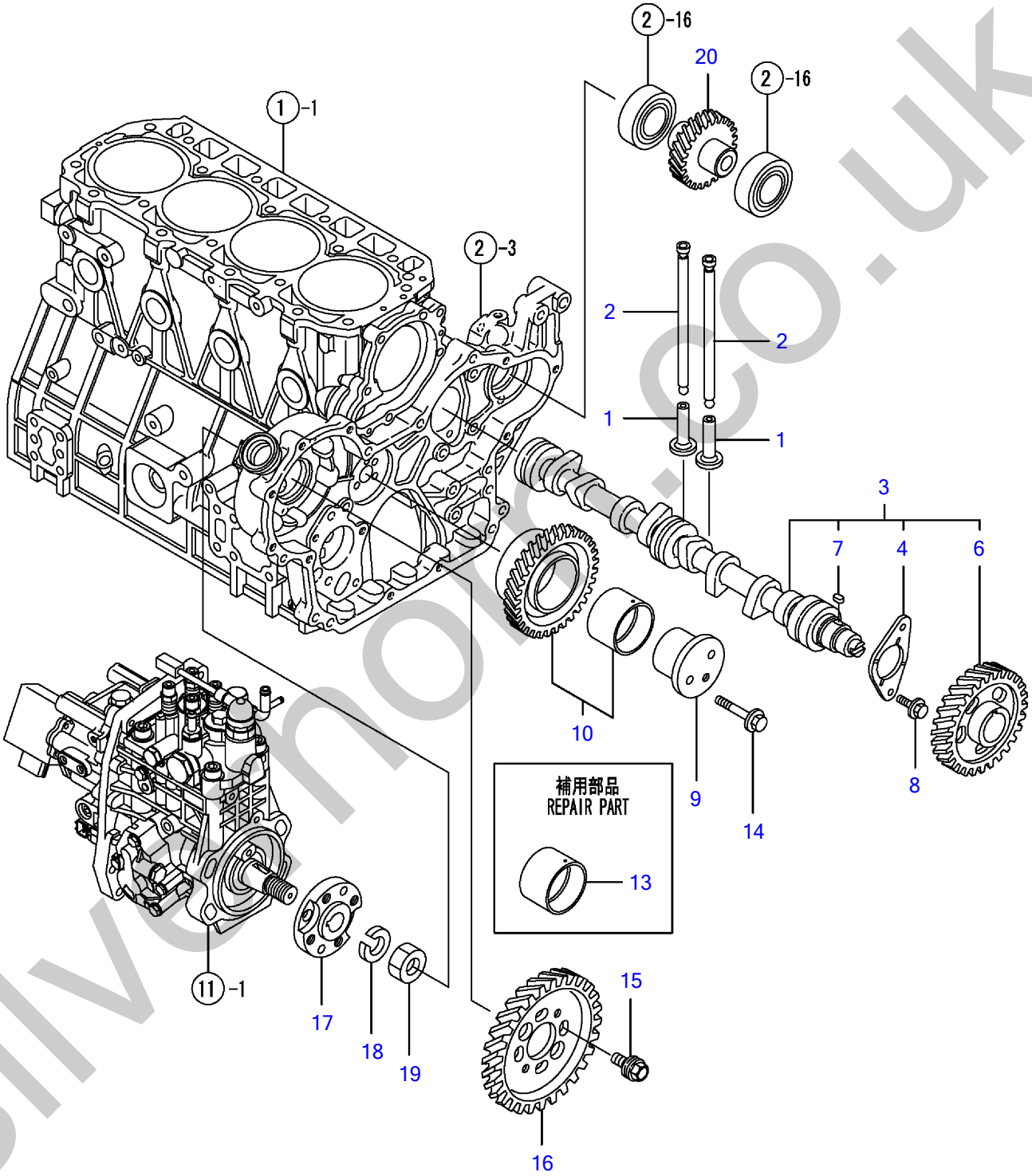

silvermoto.co.uk

CAMSHAFT & DRIVING GEAR

Item	Part No	Description	Qty
1	Y129150-14200	TAPPET	8
2	Y129907-14400	PUSH ROD	8
3	Y129908-14590	CAMSHAFT ASSY	1
4	Y129150-02450	・METAL,THRUST(CAM	1
6	Y129900-14110	・GEAR, CAMSHAFT	1
7	Y22512-070140	・KEY 7X 14	1
8	Y26106-080162	BOLT M 8X 16 PLATED	2
9	Y123900-25060	SHAFT(GEAR,IDLE	1
10	Y129900-25110	GEAR ASSY, IDLE	1
13	Y129150-25920	BUSH, IDLE GEAR	1
14	Y26106-080552	BOLT M 8X 55 PLATED	3
15	Y129953-25300	BOLT	4
16	Y129907-25900	GEAR,F.I.PUMP	1
17	Y158563-51150	FLANGE	1
18	Y22217-180000	SPRING WASHER 18	1
19	Y26776-180002	NUT M18,LOCK	1
20	Y129900-26020	GEAR ASSY, HYDR.PUMP	1

silverhorn.co.uk

CRANKSHAFT & PISTON

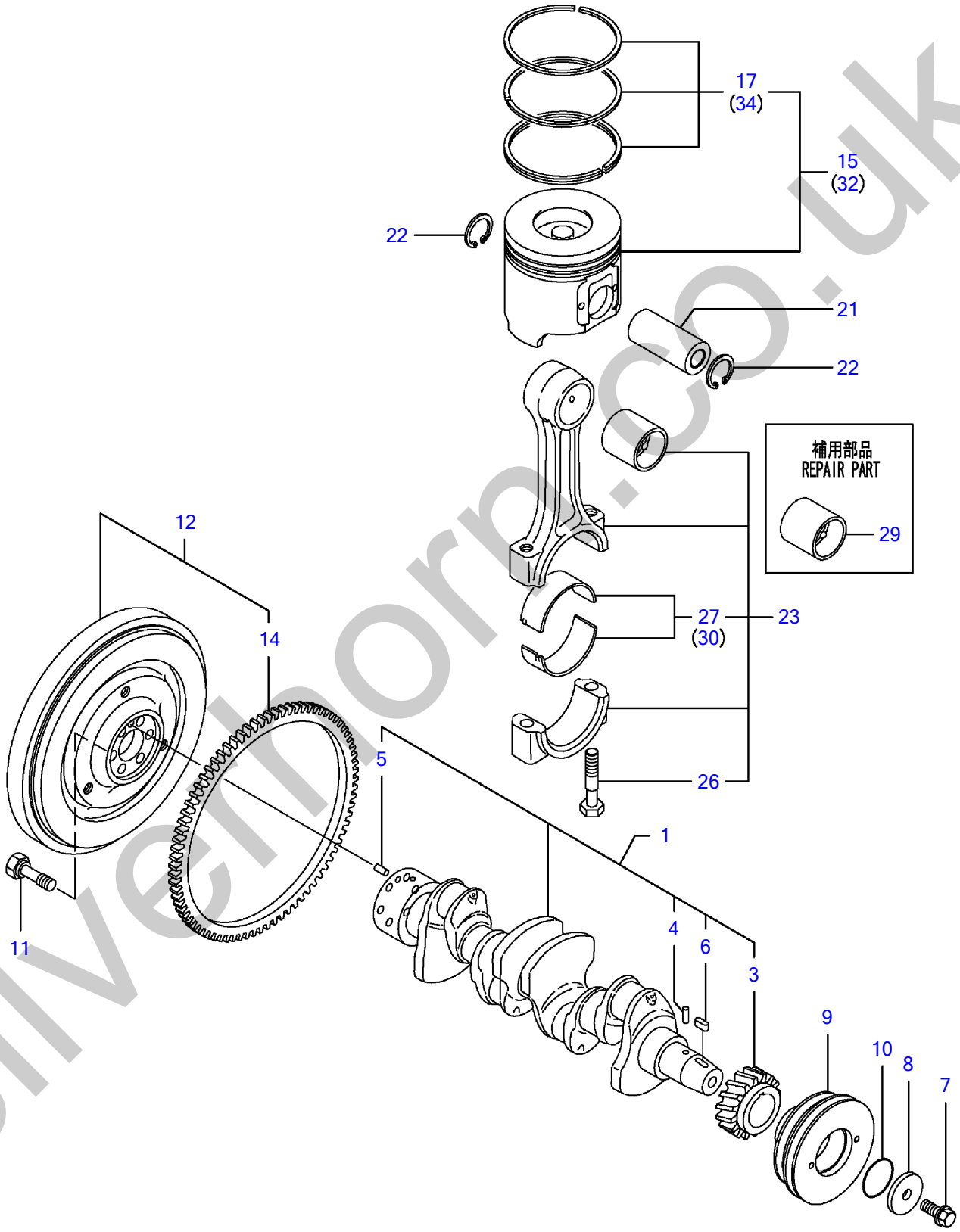

silverthorn.co.uk

CRANKSHAFT & PISTON

Item	Part No	Description	Qty
1	Y129902-21050	CRANKSHAFT COMP	1
3	Y129900-21220	・GEAR, CRANKSHAFT	1
4	Y121850-21290	・PARALLEL PIN	1
5	Y121850-21920	・PARALLEL PIN 10X22	1
6	Y22512-070140	・KEY 7X 14	1
7	Y129916-21610	BOLT, V-PULLEY	1
8	Y129960-21640	WASHER	1
9	Y129916-21680	V-PULLEY, CRANKSHAFT	1
10	Y24341-000530	O-RING 1A S-53.0	1
11	Y121850-21130	BOLT, FLYWHEEL	6
12	Y129953-21570	FLYWHEEL ASSY	1
14	Y129900-21600	・GEAR, RING	1
15	Y129927-22080	PISTON ASSY	4
17	Y129927-22050	・RING SET, PISTON	4
21	Y120130-22301	PIN, PISTON	4
22	Y22252-000300	CIRCLIP 30	8
23	Y129900-23001	ROD ASSY, CONNECTING	4
26	Y129900-23200	・BOLT, ROD	8
27	Y129900-23601	・METAL ASSY, CRANKPIN	4
29	Y129900-23911	BUSH, PISTON PIN	4
30	Y129900-23611	BEARING,PIN U.S=0.25	4
32	Y729927-22900	PISTON W/RING,0.25OS	4
34	Y729927-22950	・RING SET, 0.25OS	4

silverhorn.co.uk

LUB.OIL SYSTEM

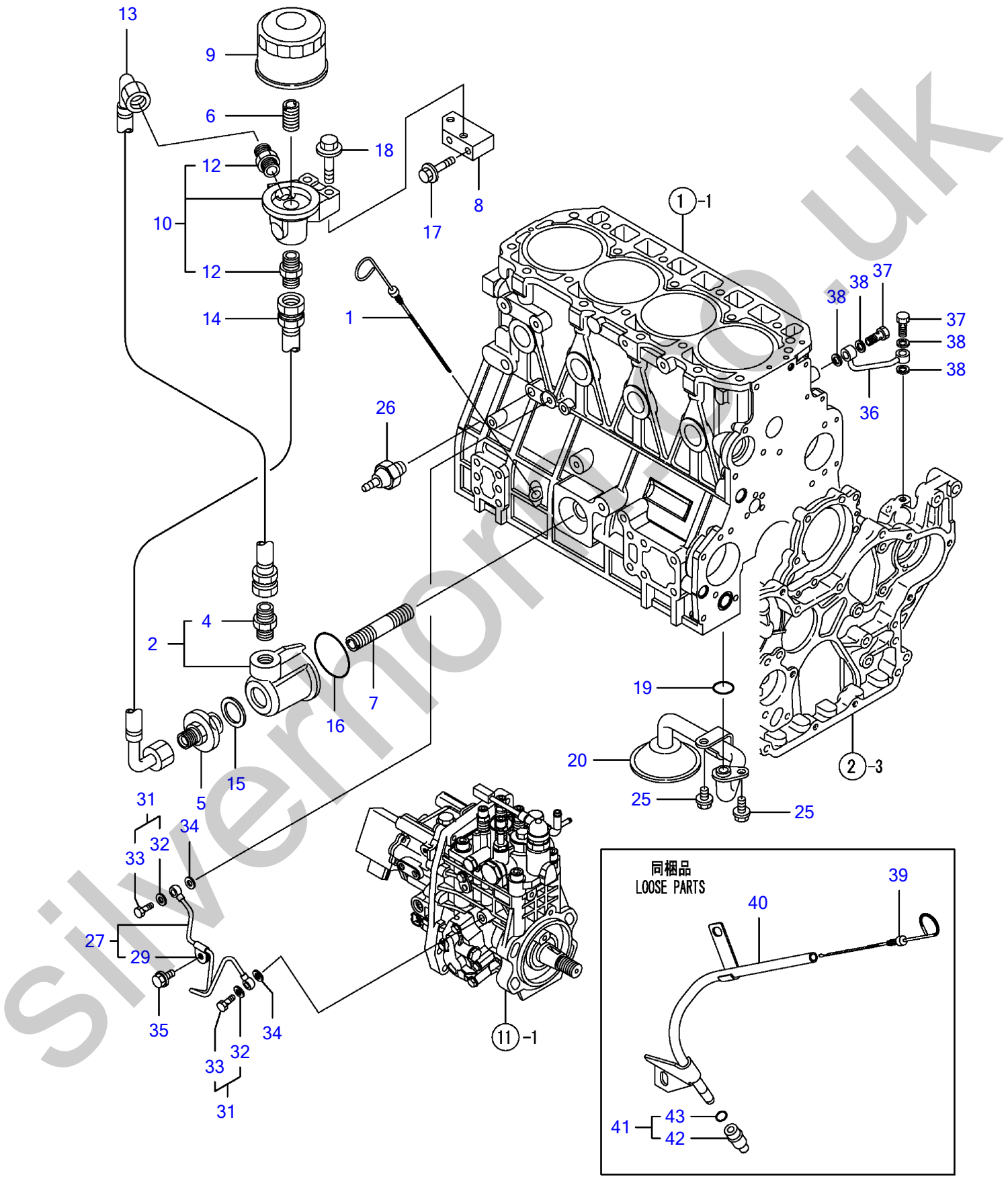

silvermoor.co.uk

Engine for TL230 4TNV98-ZNTBL

LUB.OIL SYSTEM

Item	Part No	Description	Qty
1	Y129907-34801	DIPSTICK	1
2	Y129944-35110	CASE ASSY, LUB.OIL	1
4	Y129953-39500	・ADAPTER	1
5	Y129953-35110	COVER	1
6	Y119000-35140	STUD, LUB.OIL FILTER	1
7	Y129970-35140	STUD, LUB.OIL FILTER	1
8	Y129944-35150	SPACER(LO,FILTER	1
9	Y129150-35160	FILTER 80X80L	1
10	Y129944-35210	BRACKET ASSY, LUB.OI	1
12	Y129953-39500	・ADAPTER	2
13	Y129944-39101	PIPE, LUB.OIL	1
14	Y129953-39101	PIPE, LUB.OIL	1
15	Y22190-300002	SEAL WASHER 30S	1
16	Y24321-000600	O-RING 1A G-60.0	1
17	Y26106-080502	BOLT M 8X 50 PLATED	2
18	Y26106-100452	BOLT M10X 45 PLATED	2
19	Y129900-32030	O-RING P20	1
20	Y129900-35000	PIPE ASSY, LUB. OIL	1
25	Y26106-080122	BOLT M 8X 12 PLATED	2
26	Y114250-39450	SWITCH,(0.5KG)L.O.	1
27	Y129927-39060	PIPE ASSY, LUB.OIL	1
29	Y123907-39500	・SUPPORT,PIPE	1
31	Y129005-59830	BOLT ASSY, JOINT	2
32	Y22190-080002	・SEAL WASHER 8S	2
33	Y23857-030000	・JOINT BOLT 3	2
34	Y22190-080002	SEAL WASHER 8S	2
35	Y26106-080122	BOLT M 8X 12 PLATED	1
36	Y129930-39050	PIPE	1
37	Y105010-39140	BOLT, PIPE JOINT	2
38	Y22190-080002	SEAL WASHER 8S	4
39	Y129951-34801	DIPSTICK	1
40	Y129939-34810	GUIDE, DIPSTICK	1
41	Y129939-34820	GUIDE,LO GAUGE,CMP	1
42	Y119260-34810	・GUIDE, DIPSTICK	1
43	Y24311-240100	・O-RING 1A P-10A	1

silverhorn.co.uk

COOLING WATER SYSTEM

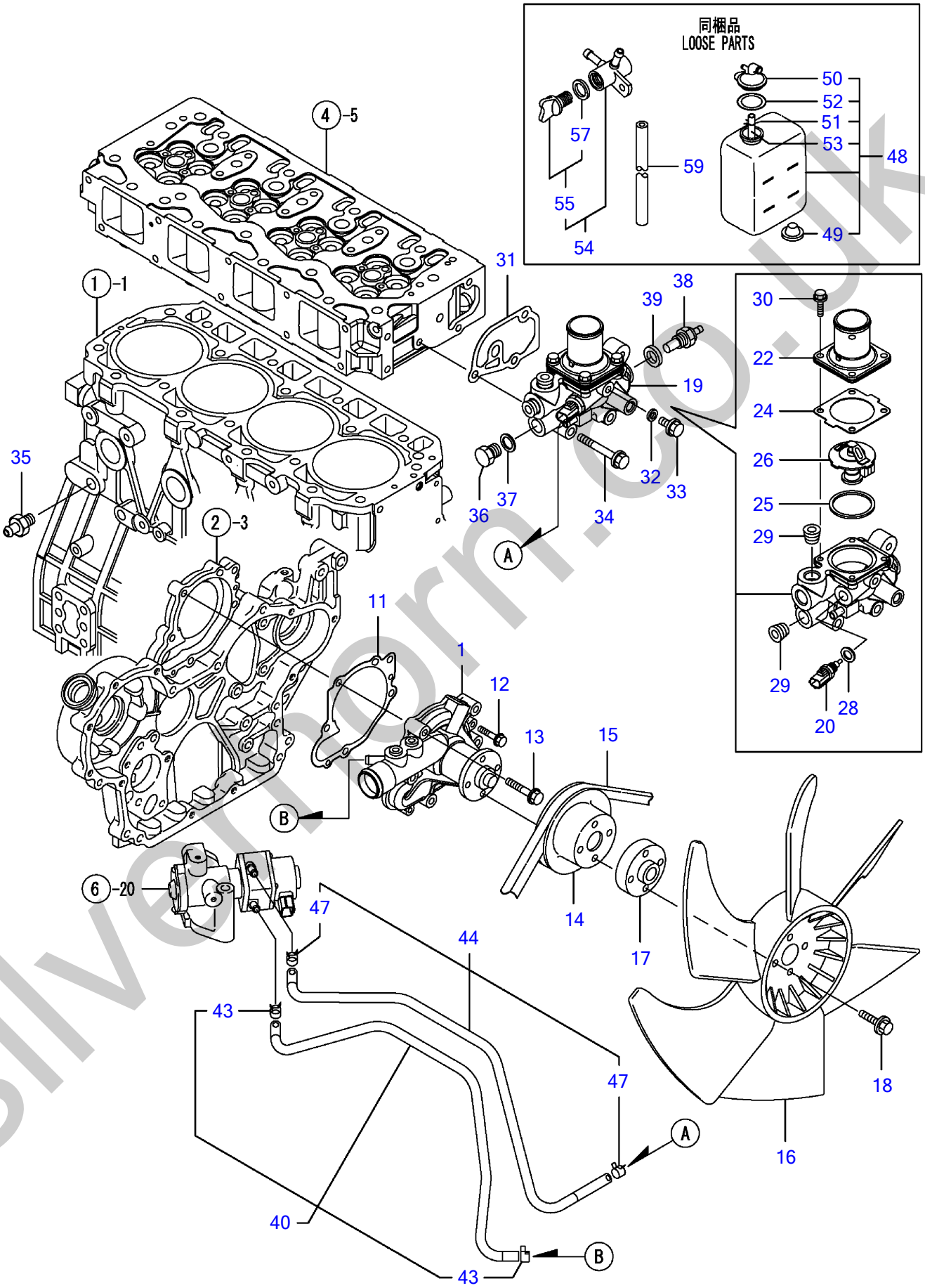

silvertorn.co.uk

COOLING WATER SYSTEM

Item	Part No	Description	Qty
1	Y129927-42000	PUMP ASSY,WATER	1
11	Y129900-42020	GASKET, CW-P	1
12	Y26106-060302	BOLT M 6X 30 PLATED	2
13	Y26106-080552	BOLT M 8X 55 PLATED	5
14	Y129930-42450	PULLEY, C.W.PUMP	1
15	Y25152-004150	V-BELT	1
16	Y129916-44740	FAN	1
17	Y119130-44760	SPACER, FAN	1
18	Y26106-080352	BOLT M 8X 35 PLATED	4
19	Y129938-49800	CASE ASSY,THERMOSTAT	1
20	Y129927-44900	・THERMOMETER	1
22	Y129916-49530	・COVER, THERMOSTAT	1
24	Y121850-49540	・GASKET, THERMOSTAT	1
25	Y121850-49550	・GASKET, THERMOSTAT	1
26	Y121850-49800	・THERMOSTAT	1
28	Y22190-120002	・SEAL WASHER 12	1
29	Y23875-030000	・PLUG PT3/8,STEEL	2
30	Y26106-060202	・BOLT M 6X 20 PLATED	4
31	Y129900-49870	GASKET, CASE	1
32	Y23414-080000	GASKET 8, ROUND	1
33	Y26106-080122	BOLT M 8X 12 PLATED	1
34	Y26106-080602	BOLT M 8X 60 PLATED	3
35	Y121550-49111	JOINT PT1/4	1
36	Y121450-42450	PLUG M16	1
37	Y124465-44950	GASKET 16	1
38	Y119266-49350	SENSOR, THERMO.	1
39	Y129150-49360	GASKET 10	1
40	Y129927-49610	PIPE ASSY, WATER A	1
43	Y23080-012000	・CLAMP 12	2
44	Y129927-49620	PIPE ASSY, WATER B	1
47	Y23080-012000	・CLAMP 12	2
48	Y129466-44510	SUBTANK	1
49	Y121468-44540	・PLUG, SUB-TANK	1
50	Y121450-44531	・CAP	1
51	Y124450-44560	・CLAMP	1
52	Y121470-44581	・GASKET	1
53	Y121267-44590	・PIPE	1
54	Y129150-49100	COCK ASSY, 3-WAY	1
55	Y129150-49080	・COCK, DRAIN	1
57	Y119629-49080	・・GASKET	1
59	Y105840-59100	PIPE	1

silverhorn.co.uk

FUEL INJECTION PUMP

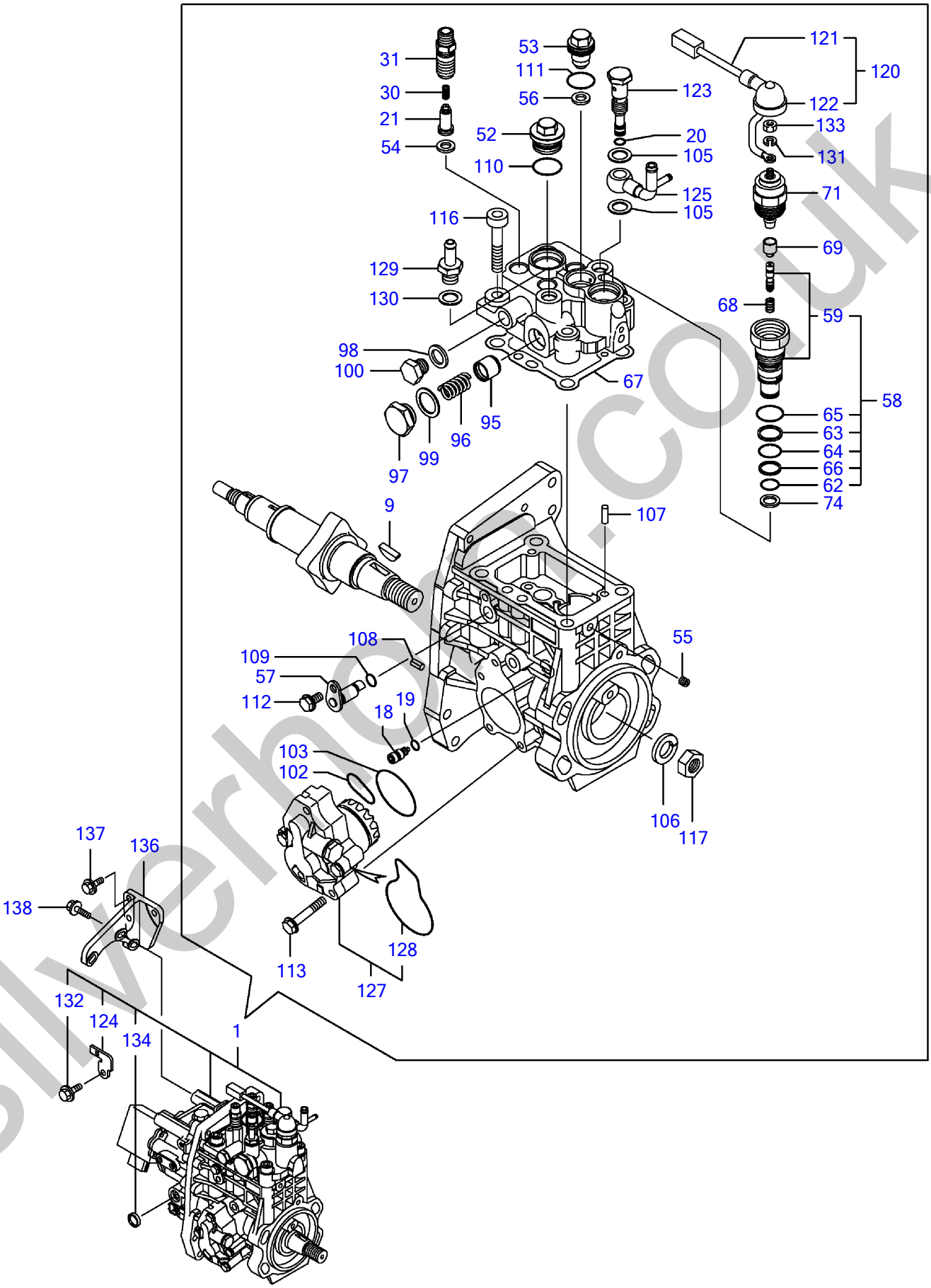

silverhoe.co.uk

Engine for TL230 4TNV98-ZNTBL

FUEL INJECTION PUMP

Item	Part No	Description	Qty
1	Y729939-51300	INJECTON PUMP ASSY	1
9	Y144626-51090	· KEY 5X19	1
18	Y158600-51270	· STOPPER	1
19	Y158563-51281	· O-RING	1
20	Y158563-51281	· O-RING	1
21	Y129927-51300	· VALVE ASSY, DILEVERY	4
30	Y158563-51330	· SPRING	4
31	Y129927-51340	· HOLDER,DELIVERY	4
52	Y158601-51550	· PLUG	1
53	Y129907-51560	· PLUG	1
54	Y158552-51570	· PK(BARREL PLUG	4
55	Y158557-51570	· PLUG	1
56	Y129906-51580	· PACKING, PLUG	1
57	Y158552-51580	· LIFTER	1
58	Y129657-51590	· TIMER SET	1
59	Y129657-51600	· · TIMER CMP	1
62	Y158553-51670	· · O-RING, 1011	1
63	Y119802-51680	· · BACKUP RING	1
64	Y119802-51690	· · O RING	1
65	Y24356-010200	· · PACKING, 1020	1
66	Y24372-000150	· · RING, BACKUP T2 P 15	1
67	Y158560-51600	· PACKING, HEAD	1
68	Y119852-51630	· SPRING,TIMER	1
69	Y119852-51640	· CAP,TIMER	1
71	Y119852-51650	· VALVE,SOLENOIDE	1
74	Y158553-51680	· PACKING,TIMER	1
95	Y158601-51770	· PISTON	1
96	Y158552-51781	· DAMPER ASSY	1
97	Y158601-51790	· PLUG	1
98	Y22190-120002	· SEAL WASHER 12	1
99	Y22190-180002	· SEAL WASHER 18	1
100	Y23887-120002	· PLUG M12,HEX.	1
102	Y158552-52310	· O-RING	1
103	Y158552-52400	· O-RING 4E S42	1
105	Y22190-120002	· SEAL WASHER 12	2
106	Y22217-180000	· SPRING WASHER 18	1
107	Y22312-050140	· PARALLEL PIN 5X14	2
108	Y22351-050010	· SPRING PIN 5X10	2
109	Y24311-000070	· O-RING 1A P-7.0	1
110	Y24356-010200	· PACKING, 1020	1
111	Y24356-020210	· O RING	1
112	Y26106-060102	· BOLT 6X 10 PLATED	1
113	Y26106-060352	· BOLT M 6X 35 PLATED	4
116	Y26450-100452	· BOLT M10X 45	4
117	Y26776-180002	· NUT M18,LOCK	1
120	Y129927-51650	· HARNESS CMP	1
121	Y129927-51660	· · HARNESS ,CSD	1
122	Y129263-77941	· · CAP,RUBBER	1
123	Y158601-51650	· JOINT	1
124	Y129927-51670	· BRACKET ,CSD	1
125	Y158552-51670	· JOINT	1
127	Y158552-52100	· PUMP ASSY,FEED	1
128	Y158552-52500	· · O-RING(FEED P INNER	1
129	Y119934-59910	· JOINT,PIPE	1
130	Y22190-120002	· SEAL WASHER 12	1
131	Y22217-050000	· SPRING WASHER 5	1
132	Y26106-060122	· BOLT M 6X 12 PLATED	1
133	Y26716-050002	· NUT M 5	1
134	Y27241-160000	· PLUG 16	1
136	Y129927-51250	RETAINER(FOP	1

silverthorn.co.uk

FUEL INJECTION PUMP

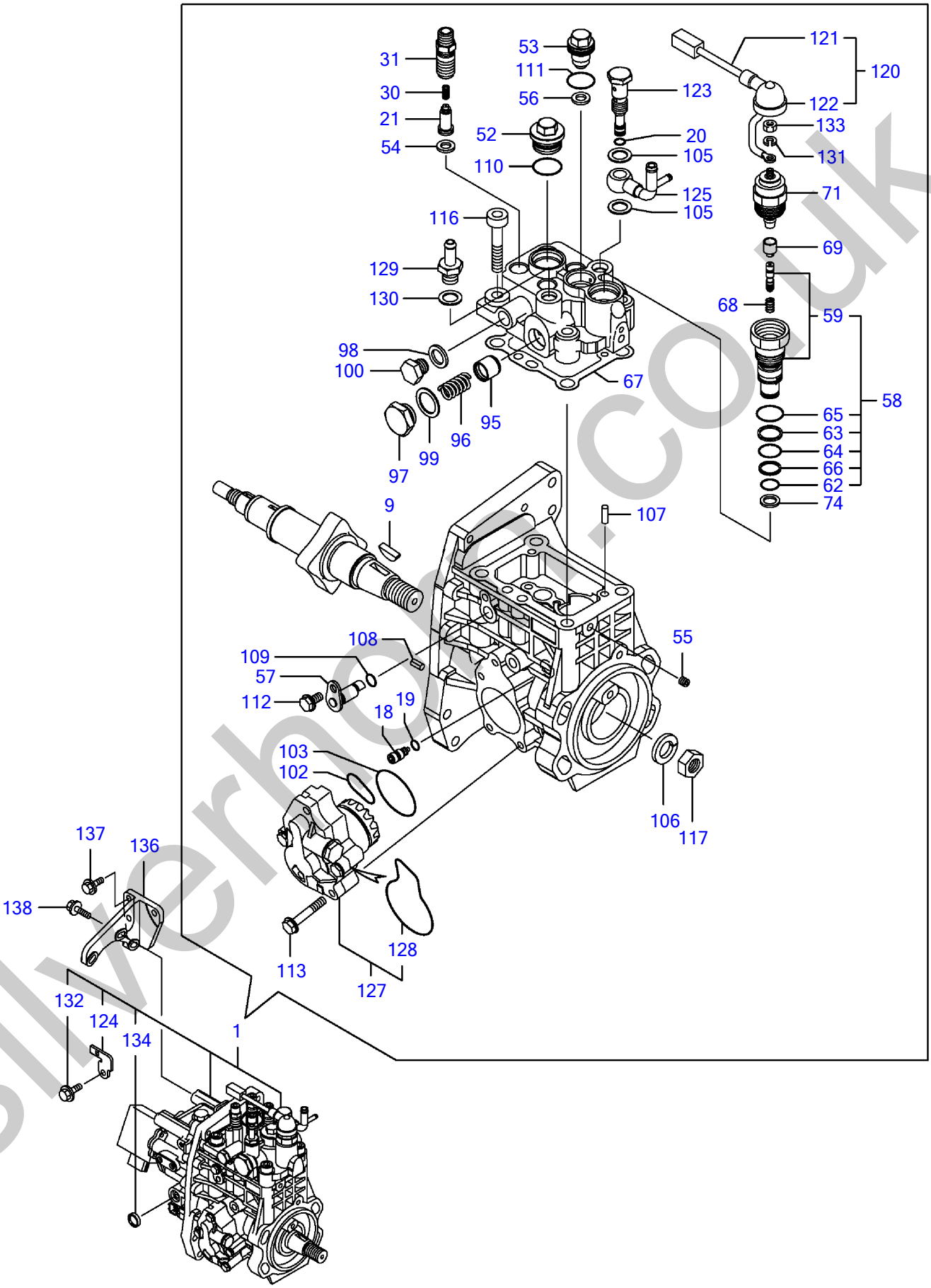

silverhoe.co.uk

FUEL INJECTION PUMP

Item	Part No	Description	Qty
137	Y26106-080202	BOLT M 8X 20 PLATED	3
138	Y26106-080302	BOLT M 8X 30 PLATED	3

silverhorn.co.uk

GOVERNOR

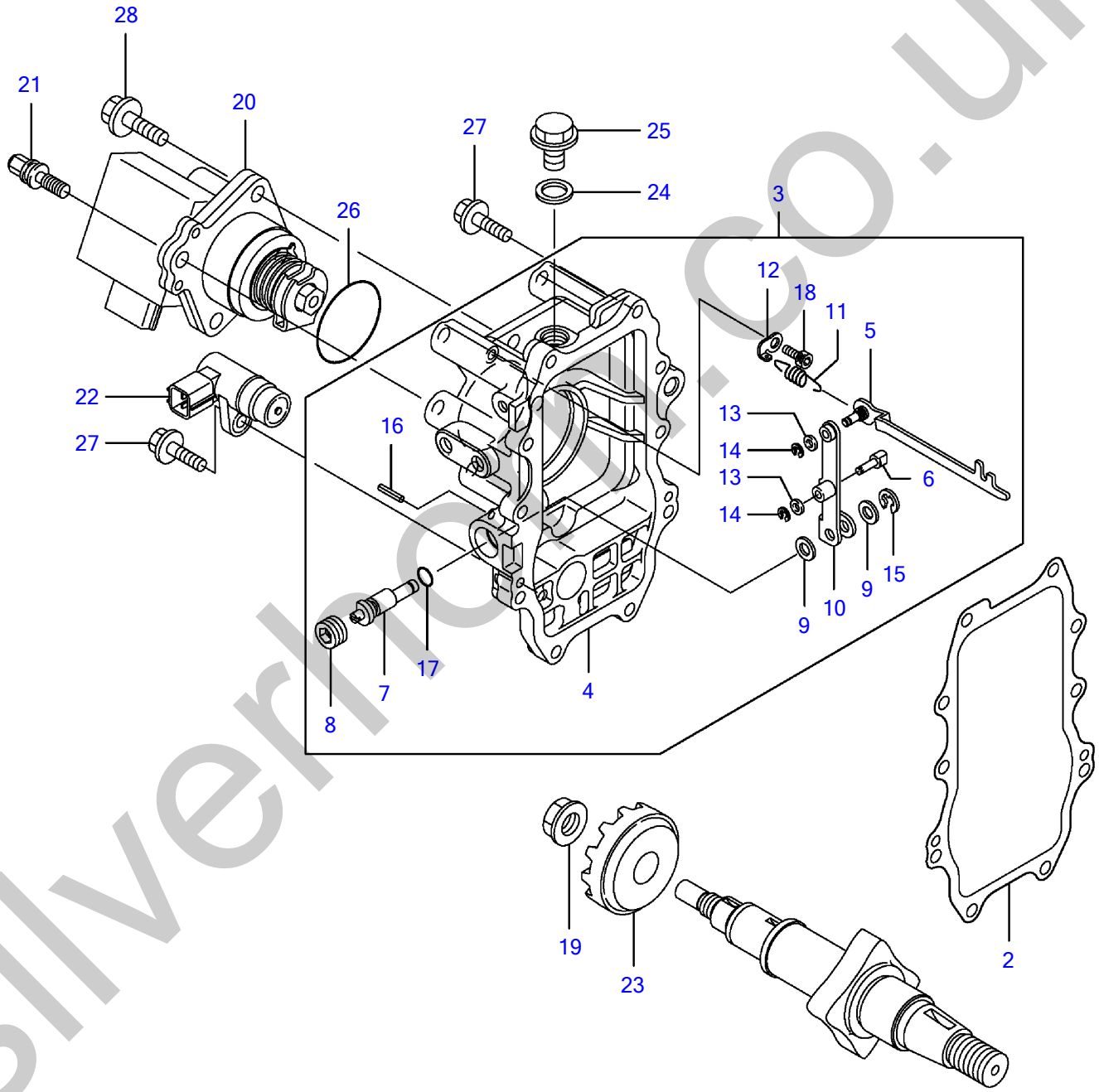

silverhorn.co.uk

GOVERNOR

Item	Part No	Description	Qty
2	Y158560-61050	PACKING, CASE	1
3	Y129927-61100	CASE ASSY, GOVERNOR	1
4	Y129927-61010	・CASE, GOVERNOR	1
5	Y129927-61121	・LINK	1
6	Y129928-61130	・PIN,GOVERNOR LEVER	1
7	Y158557-61390	・SHAFT,GOV.LEVER	1
8	Y158557-61411	・SCREW	1
9	Y158557-61480	・SPACER,GOV.LEVER	2
10	Y129927-61521	・LEVER, GOVERNOR	1
11	Y158557-61640	・SPRING	1
12	Y158557-61650	・HOOK,SPRING	1
13	Y22117-040000	・WASHER 4	2
14	Y22272-000030	・CIRCLIP E- 3	2
15	Y22272-000040	・CIRCLIP E- 4	1
16	Y22351-020010	・SPRING PIN 2X10	1
17	Y24311-000060	・O-RING 1A P-6.0	1
18	Y26450-050102	・BOLT M 5X 10	1
19	Y119660-61300	NUT, GOVERNOR WEIGHT	1
20	Y129927-61600	ACTUATOR	1
21	Y129927-61610	BOLT,ECO	1
22	Y158557-61720	SENSOR	1
23	Y158553-61780	GEAR,SENSOR	1
24	Y23414-120000	GASKET 12, ROUND	1
25	Y23887-120002	PLUG M12,HEX.	1
26	Y24341-000480	O-RING 1A S-48.0	1
27	Y26106-060252	BOLT M 6X 25 PLATED	10
28	Y26106-080252	BOLT M 8X 25 PLATED	3
29			

silverhorn.co.uk

FUEL INJECTION VALVE

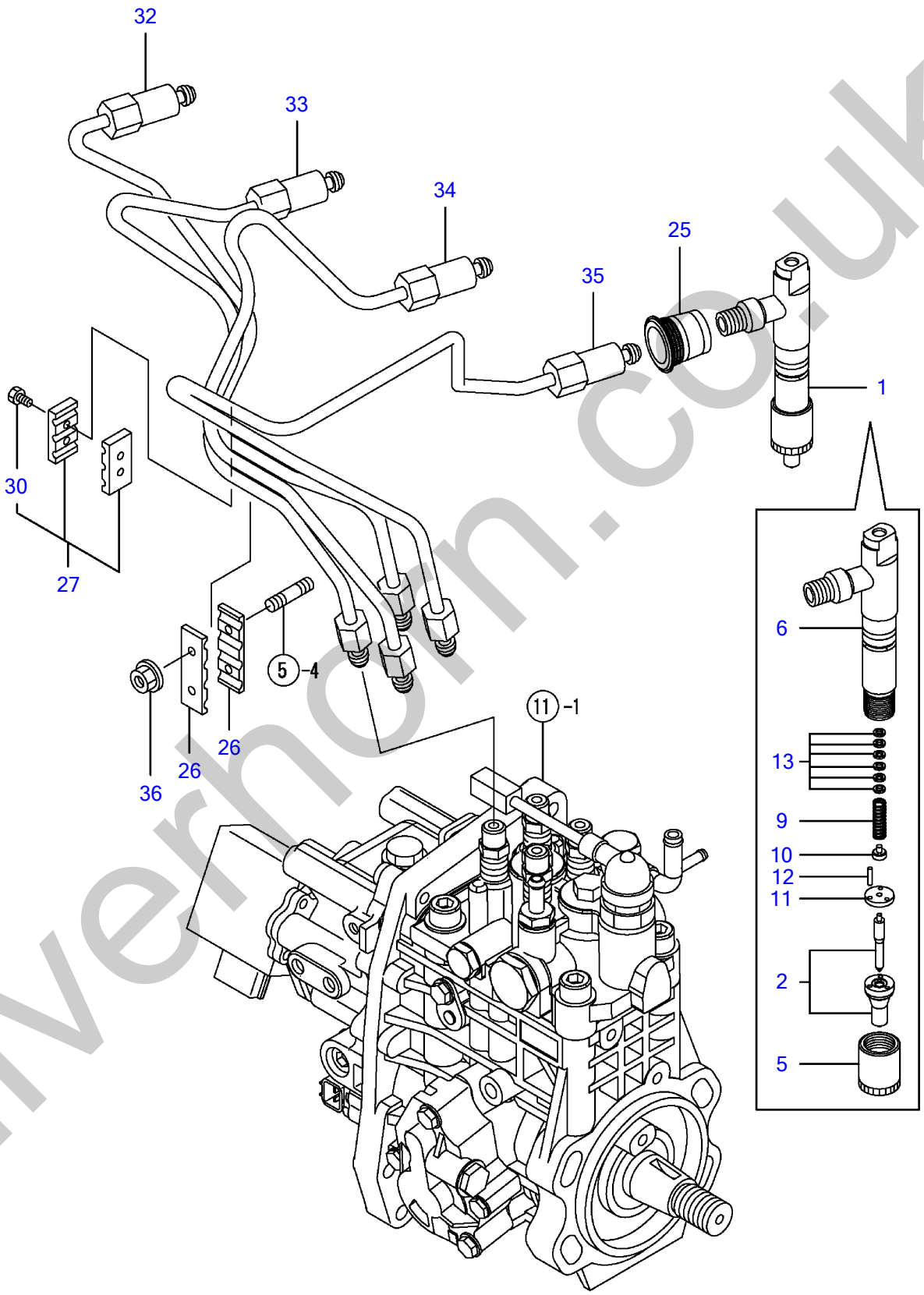

silverhorn.co.uk

FUEL INJECTION VALVE

Item	Part No	Description	Qty
1	Y729927-53100	FUEL INJECTOR(RDG	4
2	Y129927-53000	・NOZZLE ASSY	4
5	Y114250-53080	・NUT, NOZZLE CASE	4
6	Y129927-53100	・HOLDER ASSY, NOZZLE	4
9	Y114250-53120	・SPRING, NOZZLE	4
10	Y114250-53130	・SEAT, NOZZLE SPRING	4
11	Y114250-53140	・PLATE, STOP	4
12	Y114250-53210	・PIN	8
13	Y114250-53400	・SHIM PACK	4
25	Y123907-11601	PIPE SEAL	4
26	Y123472-59120	BRACKET	2
27	Y129150-59120	RETAINER, INJ. PIPE	1
30	Y129150-59131	・BOLT M4X14,HEX.SCKT.	2
32	Y129927-59810	PIPE ASSY, INJECTION	1
33	Y129927-59820	PIPE ASSY, INJECTION	1
34	Y129927-59830	PIPE ASSY, INJECTION	1
35	Y129927-59840	PIPE ASSY, INJECTION	1
36	Y26366-060002	NUT M 6	2

silverhorn.co.uk

FUEL LINE

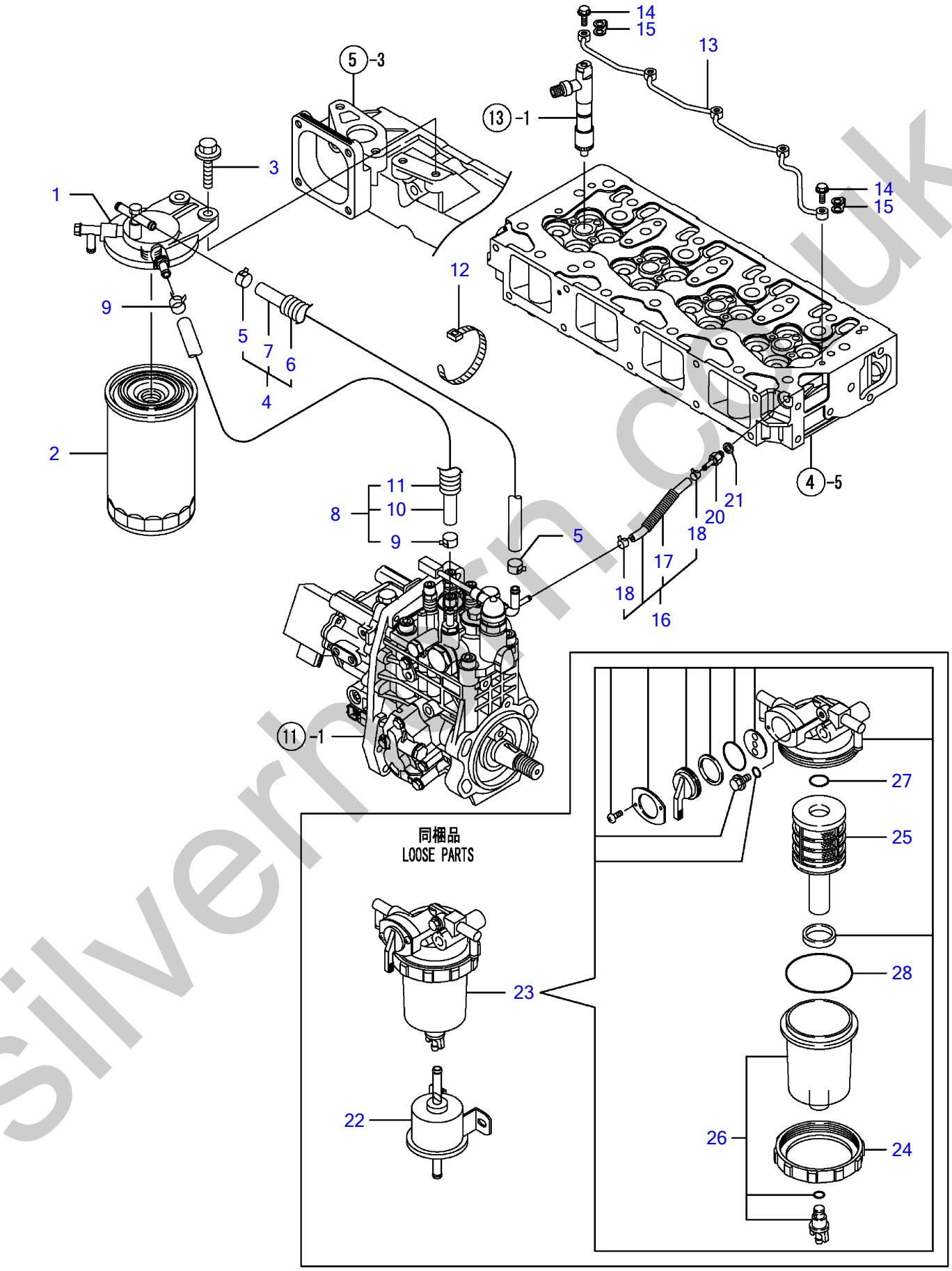

silvermarn.co.uk

FUEL LINE

Item	Part No	Description	Qty
1	Y129004-55612	BRACKET,FUEL FILTER	1
2	Y129907-55801	FILTER, FUEL OIL	1
3	Y26106-080302	BOLT M 8X 30 PLATED	2
4	Y129457-59010	PIPE ASSY, FUEL	1
5	Y124766-59050	・CLAMP 12	2
6	Y129957-59120	・PROTECTOR, FUEL PIPE	1
7	Y105025-59750	・PIPE, FUEL OIL	1
8	Y129961-59310	PIPE ASSY, FUEL	1
9	Y124766-59050	・CLAMP 12	2
10	Y129136-59110	・PIPE, FUEL OIL	1
11	Y129961-59110	・TUBE	1
12	Y121750-59890	CLAMP 140	1
13	Y129907-59140	PIPE ASSY,F.O.RETURN	1
14	Y123907-59540	JOINT BOLT M6	5
15	Y123907-59550	PACKING,FUEL RETURN	5
16	Y129927-59550	PIPE, FUEL RETURN	1
17	Y129263-49750	・CORRUGATED TUBE	1
18	Y124722-59050	・CLAMP 9	2
20	Y123907-59560	HOSE JOINT 4	1
21	Y22190-080002	SEAL WASHER 8S	1
22	Y129612-52100	FUEL PUMP	1
23	Y129906-55700	SEPARATOR ASSY	1
24	Y129100-55690	・RING, RETAINING	1
25	Y119802-55710	・ELEMENT	1
26	Y119802-55730	・CUP ASSY(SERVICE PAR	1
27	Y24311-000160	・O-RING 1A P-16.0	1
28	Y24321-000650	・O-RING 1A G-65.0	1

silverhorn.co.uk

STARTING MOTOR

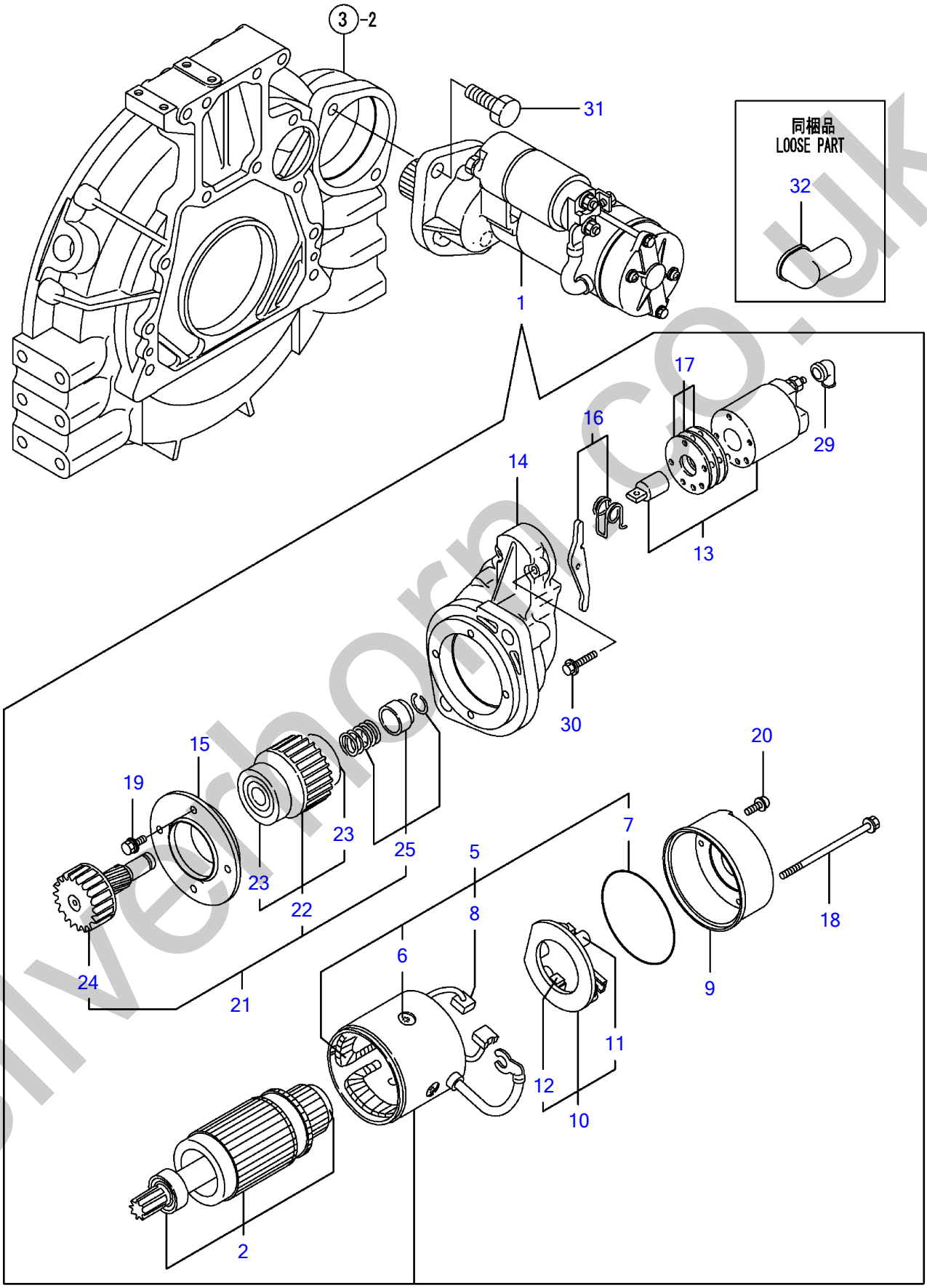

silverthorn.co.uk

STARTING MOTOR

Item	Part No	Description	Qty
1	Y129940-77010	STARTER 12V,3KW	1
2	Y129940-77100	· ARMATURE ASSY	1
5	Y129940-77130	· COIL ASSY, FIELD	1
6	Y129940-77140	· · SCREW, POLE CORE SET	4
7	Y129940-77150	· · O-RING	1
8	Y129940-77160	· · BRUSH (+)	2
9	Y129940-77170	· COVER, REAR	1
10	Y129940-77180	· HOLDER, BRUSH	1
11	Y129940-77190	· · SPRING, BRUSH	1
12	Y129940-77200	· · BRUSH (-)	2
13	Y129940-77210	· SWITCH ASSY,MAGNETIC	1
14	Y129940-77220	· HOUSING, GEARS	1
15	Y129940-77230	· RETAINER, BEARING	1
16	Y129940-77240	· SHIFT LEVER SET	1
17	Y129940-77250	· COVER ASSY, DUST	1
18	Y129940-77260	· THROUGHT BOLT	2
19	Y129940-77270	· BOLT M6X 20	4
20	Y129940-77280	· SCREW M4X 10	2
21	Y123900-77510	· PINION ASSY	1
22	Y123900-77520	· · CLUTCH ASSY	1
23	YX2240610100	· · · BALL BEARING (3	2
24	Y123900-77540	· · SHAFT, PINION	1
25	Y119131-77550	· · STOPPER KIT, PINION	1
29	Y121254-77810	· TERMINAL COVER	1
30	Y114371-79070	· BOLT M 6X 37	2
31	Y26116-120302	BOLT M12X 30 PLATED	2
32	Y124550-77030	COVER, TERMINAL	1

silverhorn.co.uk

GENERATOR

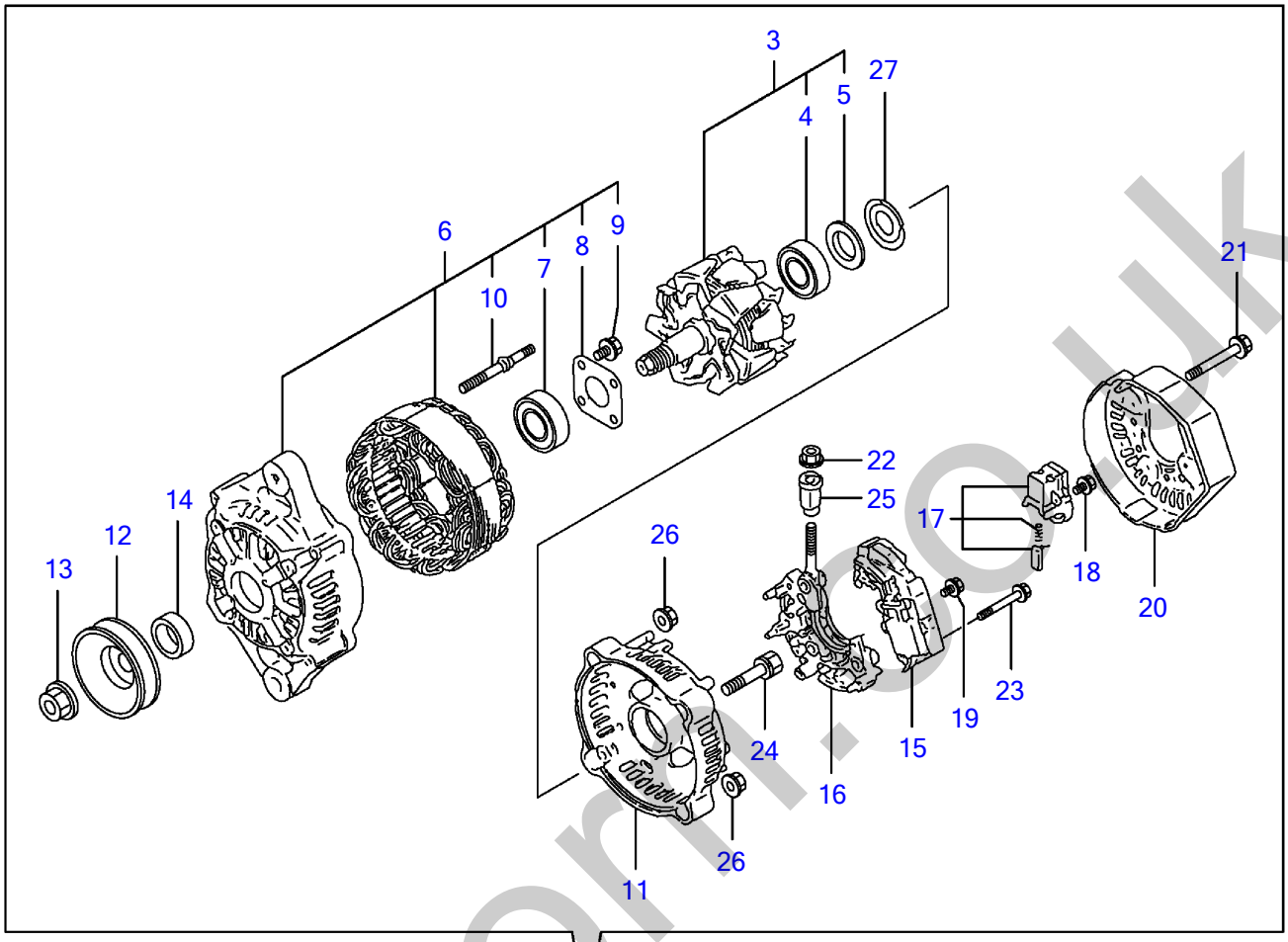

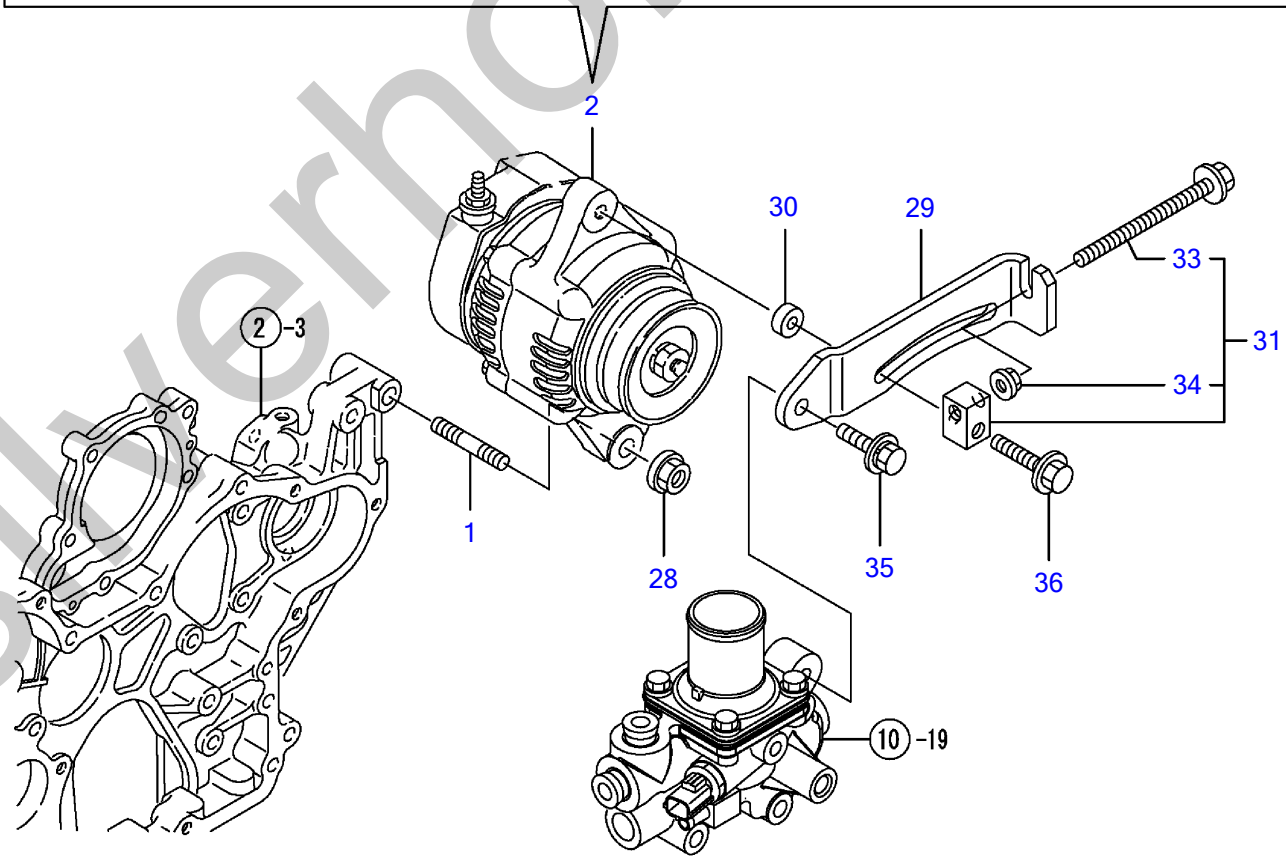

silverhorn.co.uk

GENERATOR

Item	Part No	Description	Qty
1	Y129795-01900	STUD	1
2	Y129240-77200	ALTERNATOR	1
3	Y119620-77380	· ROTOR ASSY	1
4	Y123501-79240	· · BEARING, BALL	1
5	Y119620-79250	· · COVER, BEARING	1
6	Y119620-77421	· FLAME ASSY, DRIVE	1
7	Y119620-79200	· · BALL BEARING	1
8	Y119620-79210	· · PLATE	1
9	Y119620-79220	· · SCREW	4
10	Y119620-79230	· · BOLT, STUD	2
11	Y119620-77440	· FLAME ASSY, REAR	1
12	Y119620-77461	· PULLEY	1
13	Y119620-77471	· NUT	1
14	Y119620-77490	· COLLAR	1
15	Y129240-77710	· REGULATOR	1
16	Y119620-79260	· HOLDER	1
17	Y129052-79270	· HOLDER, BRUSH	1
18	Y119620-79290	· SCREW	6
19	Y119620-79300	· SCREW	1
20	Y129240-79300	· COVER,END,RR	1
21	Y119620-79310	· BOLT	3
22	Y129240-79310	· NUT	1
23	Y119620-79320	· SCREW W/WASHER	2
24	Y119620-79330	· BOLT	2
25	Y119620-79340	· INSULATION BUSH	1
26	Y119620-79350	· NUT	2
27	Y119620-79360	· THRUST WASHER	1
28	Y26306-100002	NUT	1
29	Y129906-77300	ADJUSTER, BELT	1
30	Y121236-77340	SPACER	1
31	Y119624-77351	BROCK,GENERATOR CMP	1
33	Y26106-081004	· BOLT 8*100	1
34	Y26306-080002	· NUT	1
35	Y26014-080252	BOLT M 8X 25	1
36	Y26106-080552	BOLT M 8X 55 PLATED	1

silverhorn.co.uk

ELECTRIC PARTS

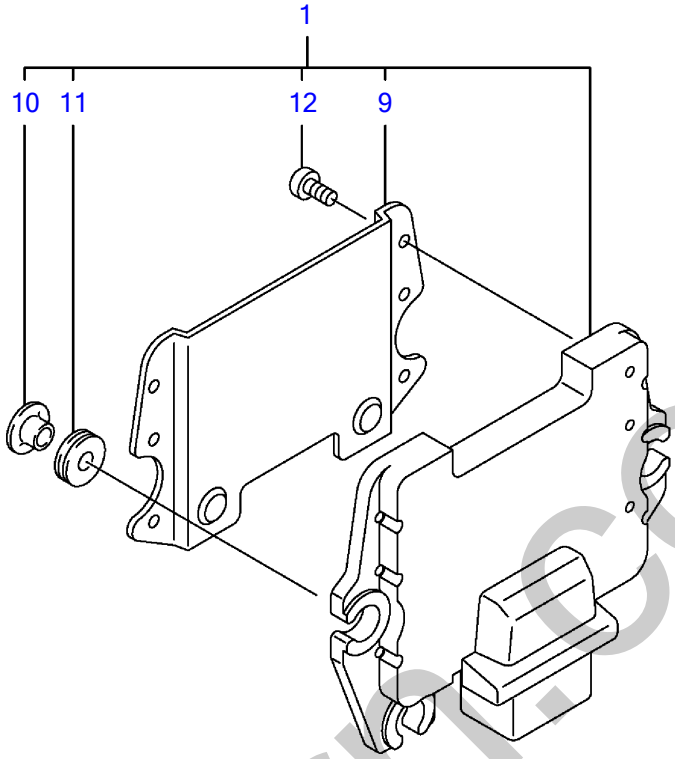

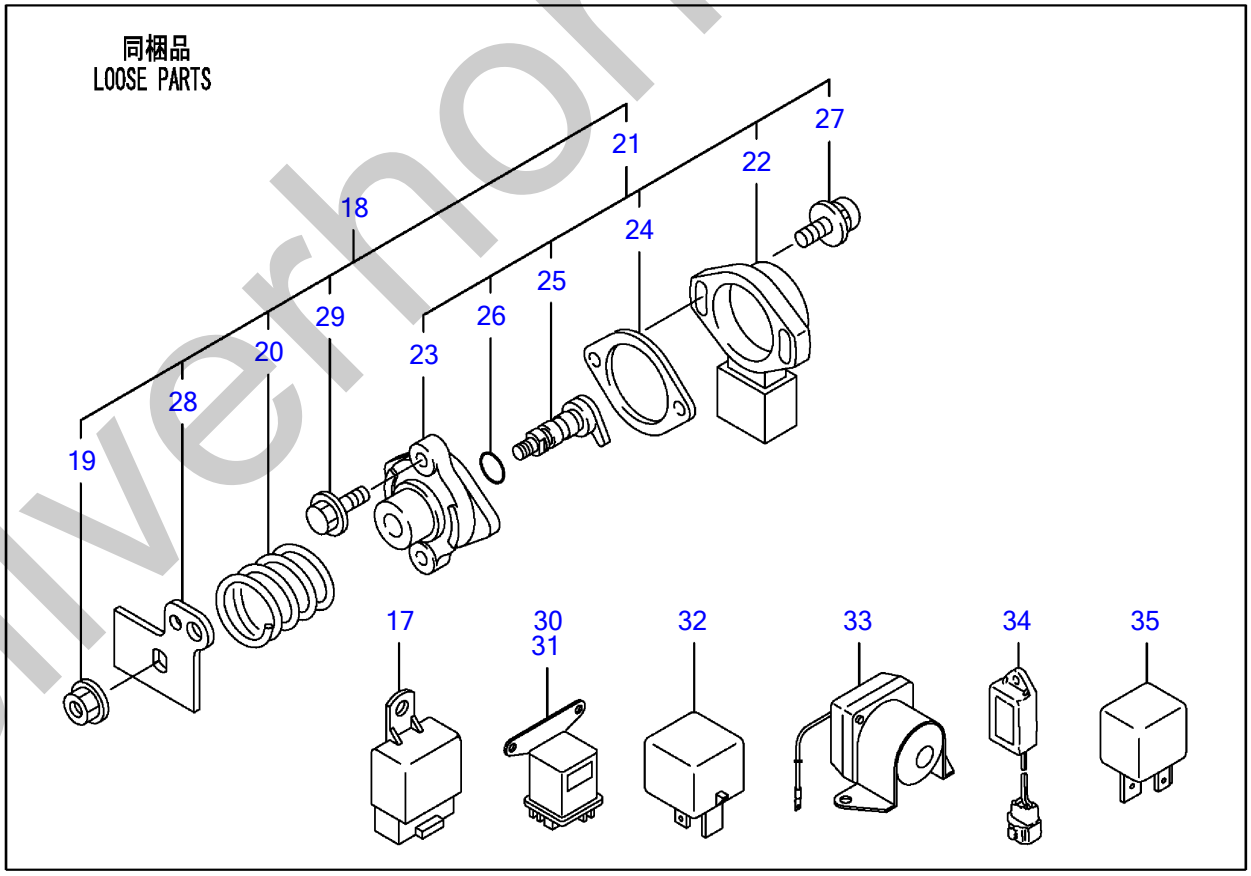

silverhorn.co.uk

ELECTRIC PARTS

Item	Part No	Description	Qty
1	Y129939-75110	ECU CMP(4TNV98-ZNTBL	1
9	Y129927-77600	・SHIELD,ECU	1
10	Y129927-77680	・COLLAR, CONTROLLER	3
11	Y119578-91351	・RUBBER, CUSHION	3
12	Y22877-500080	・SCREW, 5.0 X 8	6
17	Y198461-52950	RELAY CA,TYPE C	2
18	Y129938-77800	ACCEL SENSOR ASSY	1
19	Y194990-22130	・NUT W/WASHER 6	1
20	Y119060-61990	・SPRING, RETURN	1
21	Y129054-77800	・SENSOR ASSY, ACCEL.	1
22	Y185100-50070	・・BODY	1
23	Y129054-77811	・・SUPPORT	1
24	Y129054-77820	・・GASKET, SUPPORT	1
25	Y129054-77830	・・SHAFT ASY	1
26	Y24311-000070	・・O-RING 1A P-7.0	1
27	Y26023-040202	・・SCREW M 4X 20	2
28	Y129938-77810	・ACCEL SENSOR LEVER	1
29	Y26106-060122	・BOLT M 6X 12 PLATED	2
30	Y119646-77900	RELAY, POWER	1
31	Y119646-77900	RELAY, POWER	1
32	Y129927-77900	RELAY(ISO.90A	1
33	Y129100-77910	RELAY, MAGNETIC	1
34	Y128300-77920	TIMER	1
35	Y129927-77920	RELAY(ISO,70A	1

silverhorn.co.uk

GASKET SET

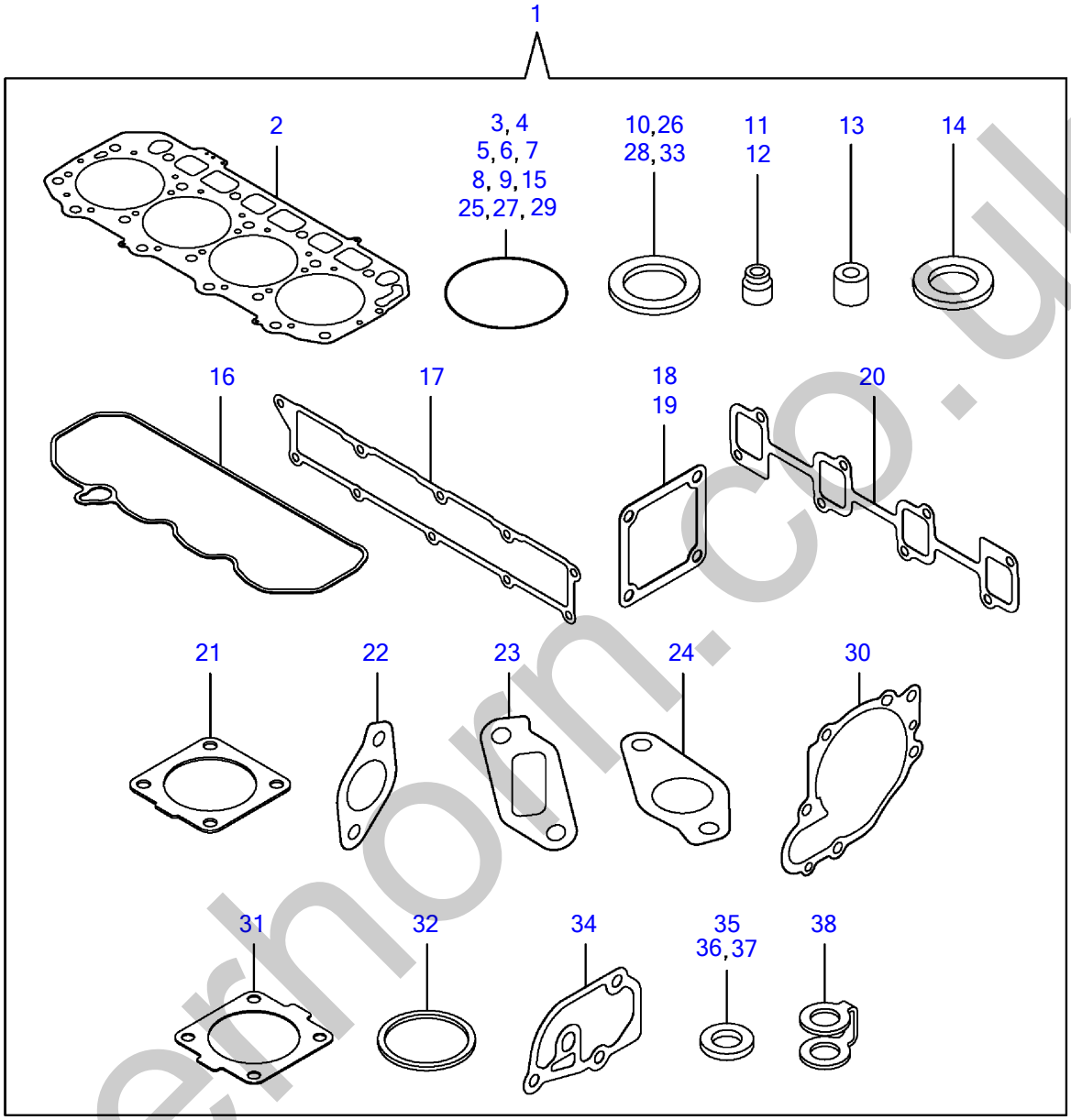

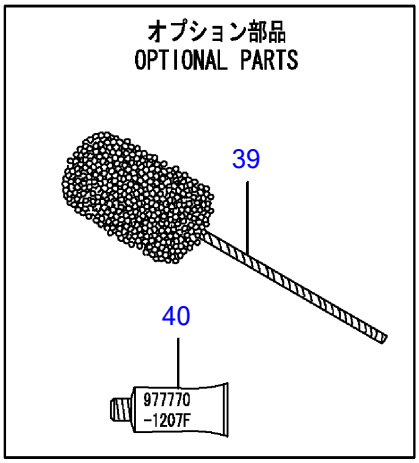

silverhorn.co.uk

GASKET SET

Item	Part No	Description	Qty
1	Y729927-92600	GASKET SET(NON-ASB.)	1
2	Y129907-01331	・GASKET,CYLINDER HEAD	1
3	Y129900-32030	・O-RING P20	2
4	Y129900-32040	・O-RING P14	1
5	Y24311-000070	・O-RING 1A P-7.0	1
6	Y24351-030750	・PACKING, 3075	1
7	Y24311-000300	・O-RING 1A P-30.0	1
8	Y24311-000320	・O-RING 1A P-32.0	4
9	Y24321-000850	・O-RING 1A G-85.0	1
10	Y22190-220002	・SEAL WASHER 22S	1
11	Y119803-11340	・SEAL, VALVE STEM(EXH	8
12	Y124160-11340	・SEAL, VALVE STEM(INT	8
13	Y119802-11870	・PROTECTOR, NOZZLE	4
14	Y119625-11880	・SEAT, NOZZLE	4
15	Y24311-000120	・O-RING 1A P 12.0	8
16	Y129933-11310	・GASKET, BONNET	1
17	Y129907-12110	・PACKING(INT.MANIFOLD	1
18	Y119129-77020	・GASKET	1
19	Y121850-77021	・GASKET, (NON-ASB.)	1
20	Y129900-13251	・GASKET	1
21	Y129930-13201	・GASKET, SILENCER	2
22	Y129927-13810	・GASKET, EGR PIPE	1
23	Y129927-13910	・GASKET(EGR-V IN	1
24	Y129927-13920	・GASKET(EGR-V OUT	1
25	Y24341-000530	・O-RING 1A S-53.0	1
26	Y22190-300002	・SEAL WASHER 30S	1
27	Y24321-000600	・O-RING 1A G-60.0	1
28	Y22190-080002	・SEAL WASHER 8S	9
29	Y24311-240100	・O-RING 1A P-10A	1
30	Y129900-42020	・GASKET, CW-P	1
31	Y121850-49540	・GASKET, THERMOSTAT	1
32	Y121850-49550	・GASKET, THERMOSTAT	1
33	Y22190-120002	・SEAL WASHER 12	1
34	Y129900-49870	・GASKET, CASE	1
35	Y23414-080000	・GASKET 8, ROUND	1
36	Y124465-44950	・GASKET 16	1
37	Y129150-49360	・GASKET 10	1
38	Y123907-59550	・PACKING,FUEL RETURN	5
39	Y129400-92450	FLEX HONE	1
40	Y977770-1207F	GASKET.LIQUID	1

silverthorn.co.uk