PARTS MANUAL

TL250

Serial No. 225000001~

BU3Z004-1(P-TL250BAB)

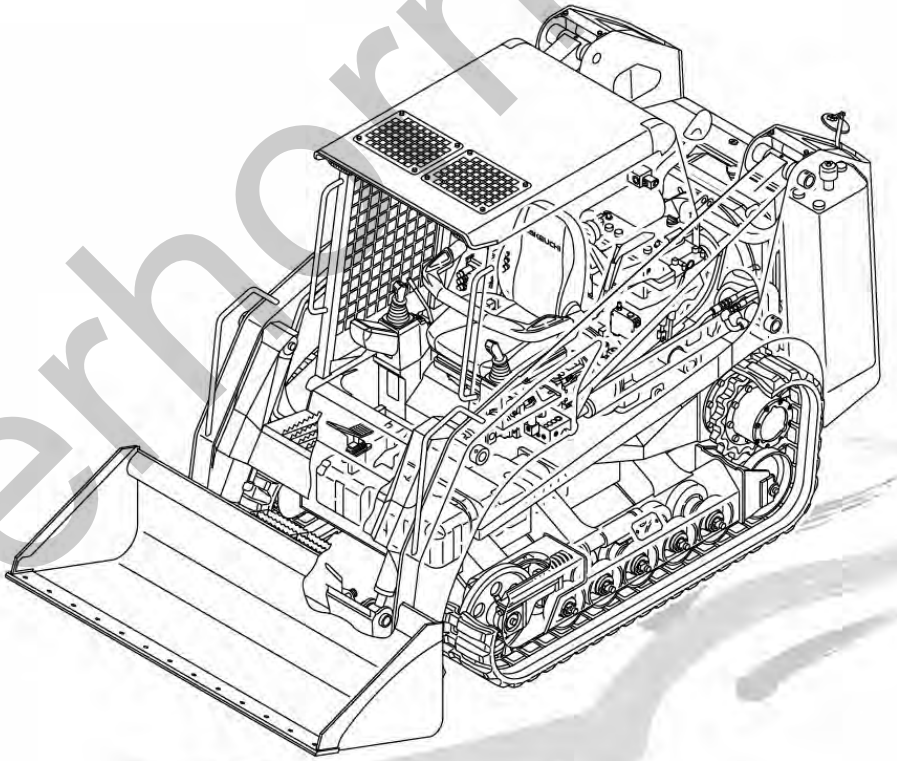

CRAWLER LOADER

TAKEUCHI

silverhorn.co.uk

silverhorn.co.uk

INDEX

Item	Part number	Description	Q'ty	Chan.	Serial No.	Serv.	Remarks
1		UNDERCARRIAGE					
2		MAIN FRAME & CONTROL LEVER					
3		ENGINE & ELECTRICAL SYSTEM					
4		HYDRAULIC PIPNG & TANK					
5		COVER & CAB					
6		ATTACHMENT					
7		DECAL & TOOL					
8		HYDRAULIC DEVICE					
10		ENGINE (V3800DI-T-E3B-TLTU-1)					
		2008.09.10					

silverhorn.co.uk

TRACK ROLLER A

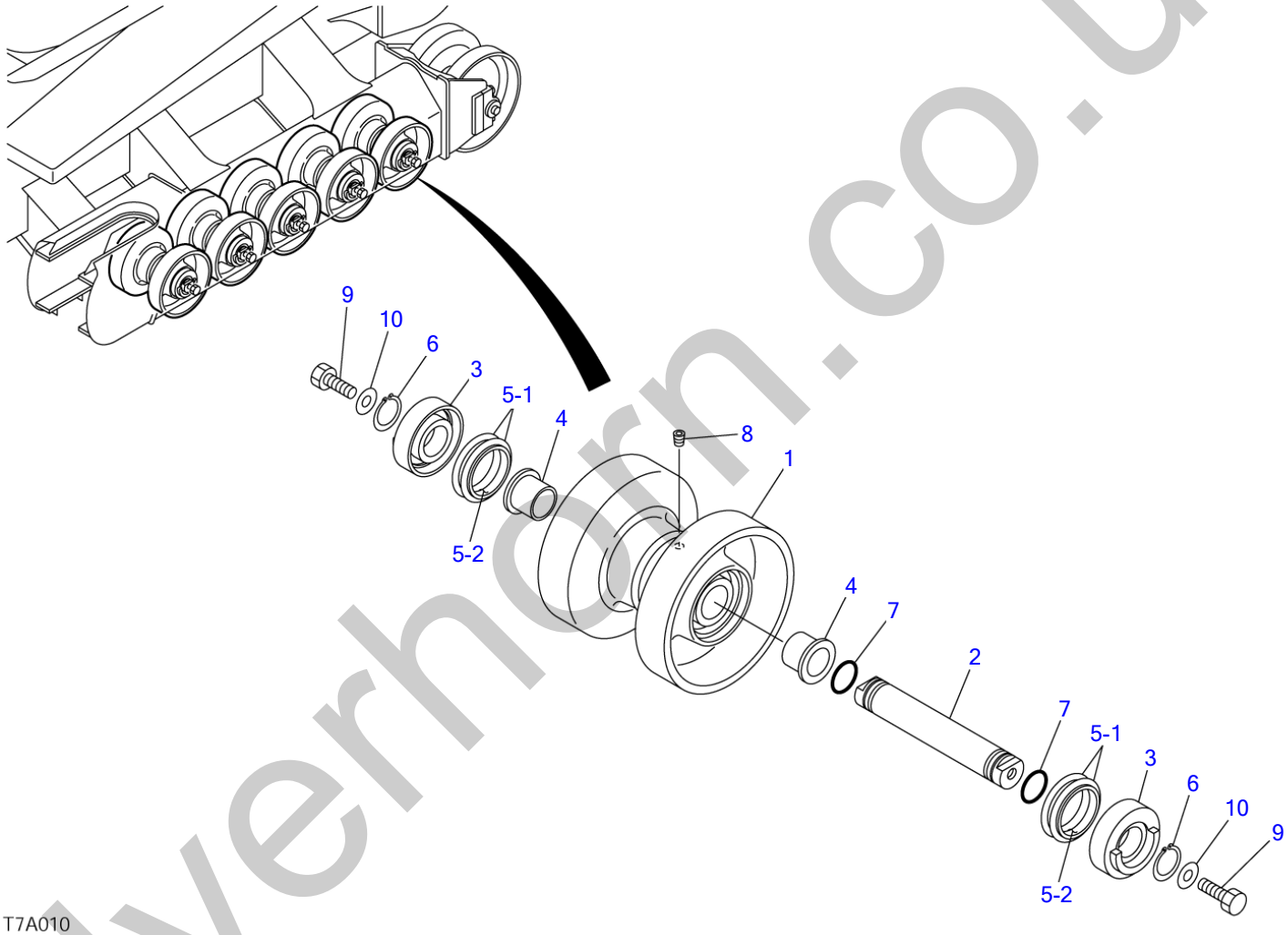

T7A010

S=1/8, 1/20

silverhorn.co.uk

TRACK ROLLER A

Item	Part number	Description	Q'ty	Chan.	Serial No.	Serv.	Remarks
		ROLLER ASSY, track					
0-1	0881130500	ROLLER SUB ASSY, track	10				
1	0881130510	・ROLLER	1				
2	0881130520	・SHAFT	1				
3	0881130530	・COVER	2				
4	1333064039	・BUSHING	2				
5	1432500640	・SEAL, floating	2				
5-1	1432500641	・・O-RING	2				
5-2	1432500642	・・RING, seal	2				
6	1220000040	・RING, snap	2				
7	1420100350	・O-RING	2				
8	1501810001	・PLUG	1				
9	1100041645	BOLT	20				
10	1141550016	WASHER	20				
	U3a020						

silverhorn.co.uk

TRACK ROLLER B

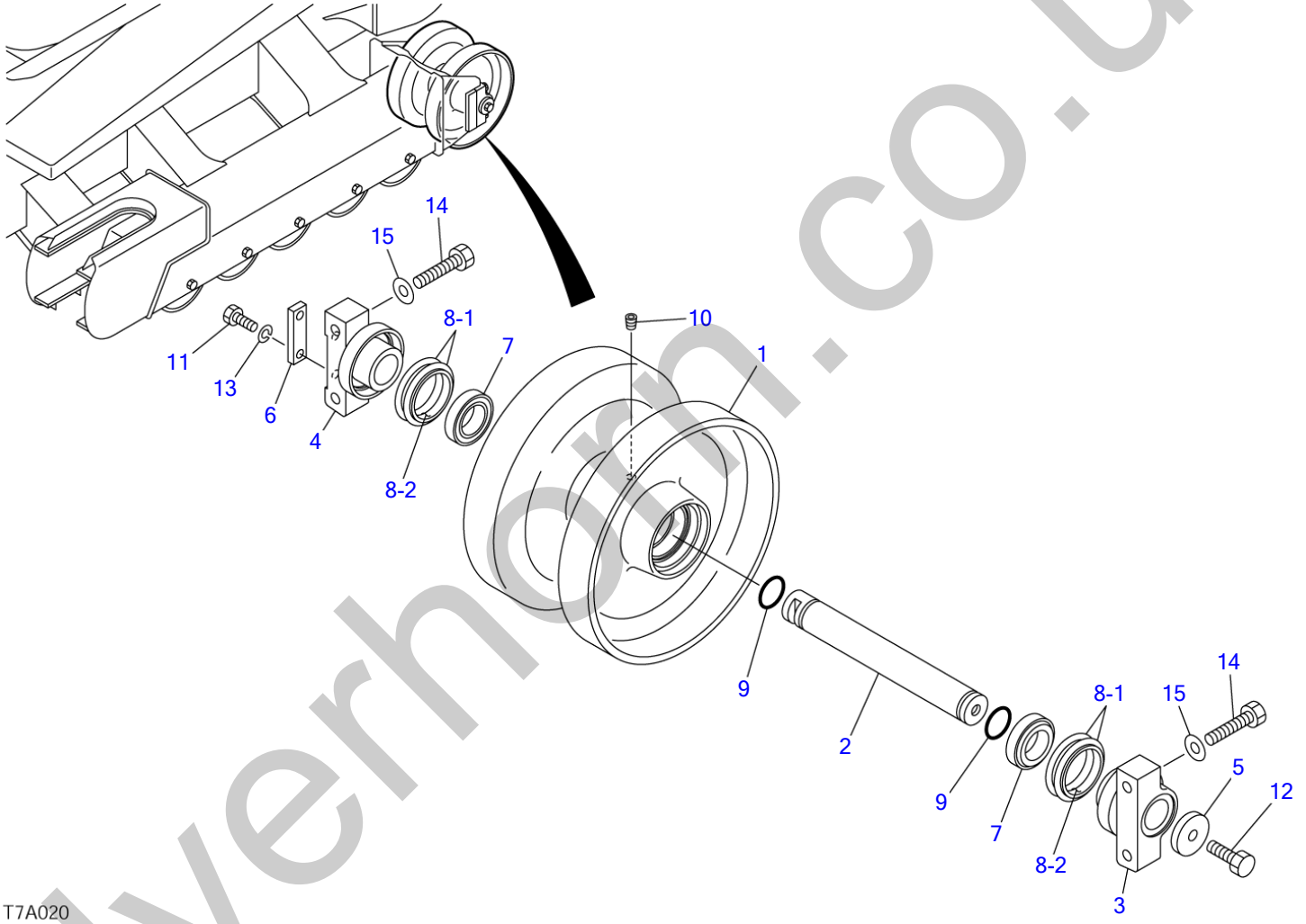

silverhorn.co.uk

TRACK ROLLER B

Item	Part number	Description	Q'ty	Chan.	Serial No.	Serv.	Remarks
		ROLLER ASSY, track					
0-1	0881131300	ROLLER SUB ASSY, track	2				
1	0881131310	・ROLLER	1				
2	0881131320	・SHAFT	1				
3	0881131330	・COVER	1				
4	0881131340	・COVER	1				
5	0881131350	・PLATE	1				
6	0881131360	・PLATE	1				
7	1305000004	・BEARING	2				
8	1432500640	・SEAL, floating	2				
8-1	1432500641	・・O-RING	2				
8-2	1432500642	・・RING, seal	2				
9	1420100350	・O-RING	2				
10	1501810001	・PLUG	1				
11	1100041030	・BOLT	2				
12	1106241440	・BOLT	1				
13	1140020010	・WASHER, spring	2				
14	1100041460	BOLT	8				
15	1141550014	WASHER	8				
	U2a040						

silverhorn.co.uk

FRONT IDLER

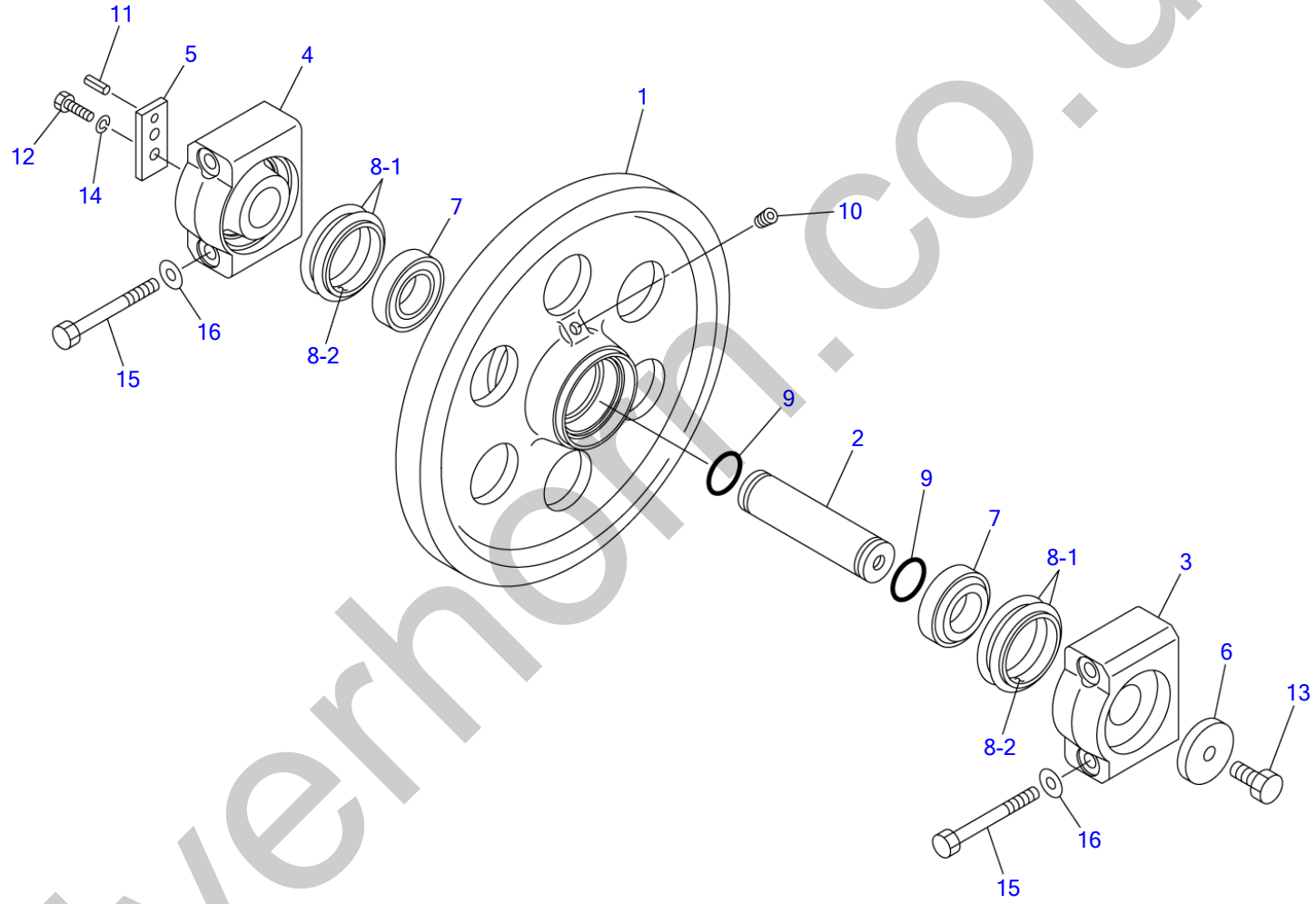

silverhorn.co.uk

FRONT IDLER

Item	Part number	Description	Q'ty	Chan.	Serial No.	Serv.	Remarks
		IDLER ASSY, front					
0-1	0881140300	IDLER SUB ASSY, front	2			M	
1	0881140310	・IDLER	1			M	
2	0881140320	・SHAFT	1			M	
3	0881140330	・COVER	1			M	
4	0881140340	・COVER	1			M	
5	0881140350	・PLATE	1			M	
6	0881140360	・PLATE	1			M	
7	1305000005	・BEARING	2			M	
8	1432500800	・SEAL, floating	2			M	
8-1	1432500801	・・O-RING	2			M	
8-2	1432500802	・・RING, seal	2			M	
9	1420100400	・O-RING	2				
10	1501810001	・PLUG	1				
11	1213001026	・PIN, spring	1			M	
12	1100041030	・BOLT	2				
13	1106041635	・BOLT	1			M	
14	1140020010	・WASHER, spring	2				
15	1101141420	BOLT	8			M	
16	1141550014	WASHER	8				
	U2a050						

silverhorn.co.uk

FRONT IDLER

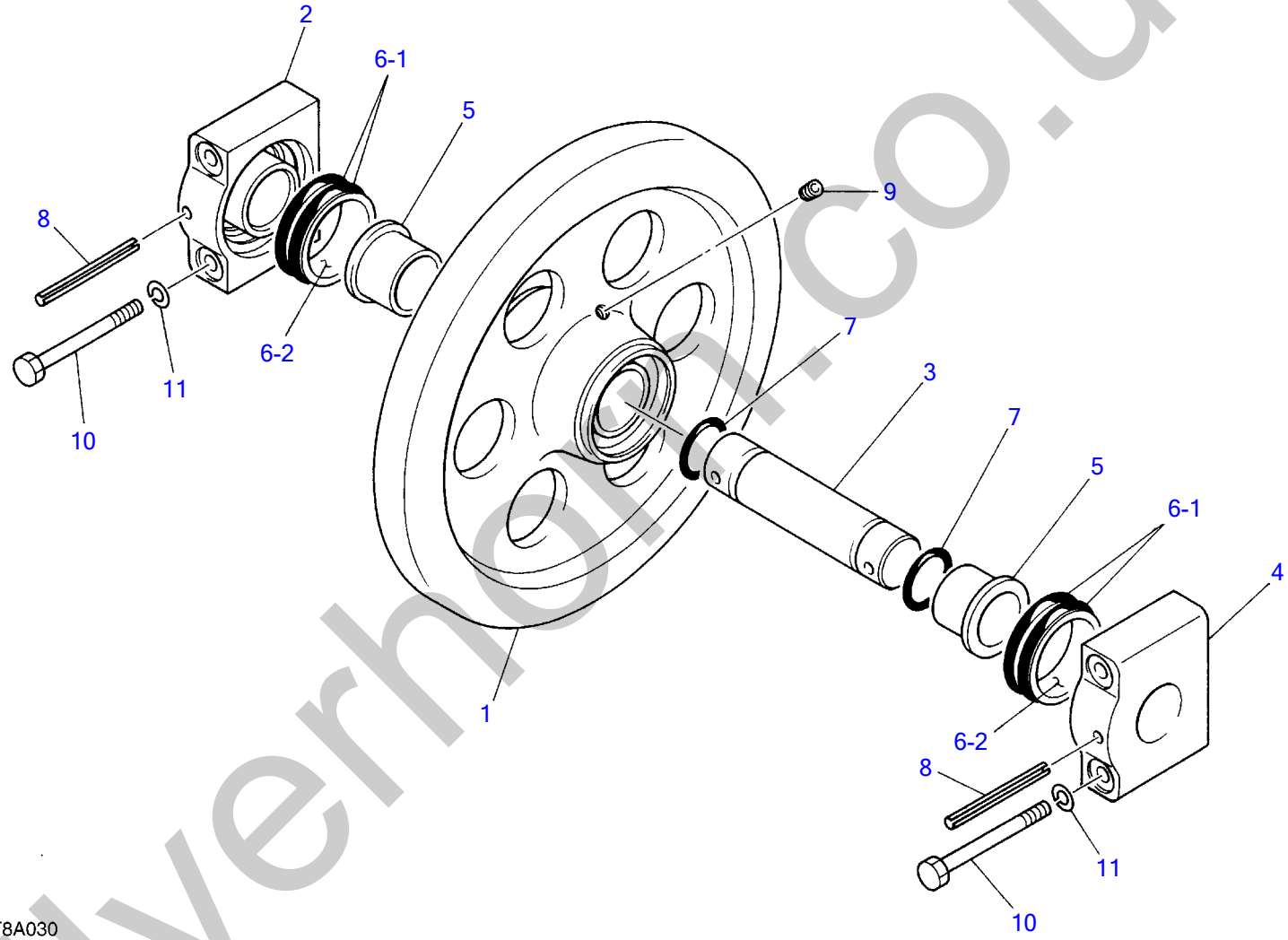

T8A030

S=1/5

silverhorn.co.uk

FRONT IDLER

Item	Part number	Description	Q'ty	Chan.	Serial No.	Serv.	Remarks
0	08801-40000	IDLER ASSY	2			M	
1	08801-40010	・IDLER	1			M	
2	08801-40020	・COVER (R.H.)	1			M	
3	08711-40030	・SHAFT	1			M	
4	08801-40030	・COVER (L.H.)	1			M	
5	13330-64540	・BUSH	2			M	
6	14325-00640	・SEAL, floating	2				
6-1	14325-00641	・・O-RING	2				
6-2	14325-00642	・・RING, seal	2				
7	14201-00400	・O-RING	2				
8	12131-01000	・PIN, spring	2			M	
9	15018-20001	・PLUG	1			M	
10	11011-41215	BOLT	8			M	
11	11400-20012	WASHER, spring	8				
	T8a031						

silverhorn.co.uk

TRACK ADJUSTER

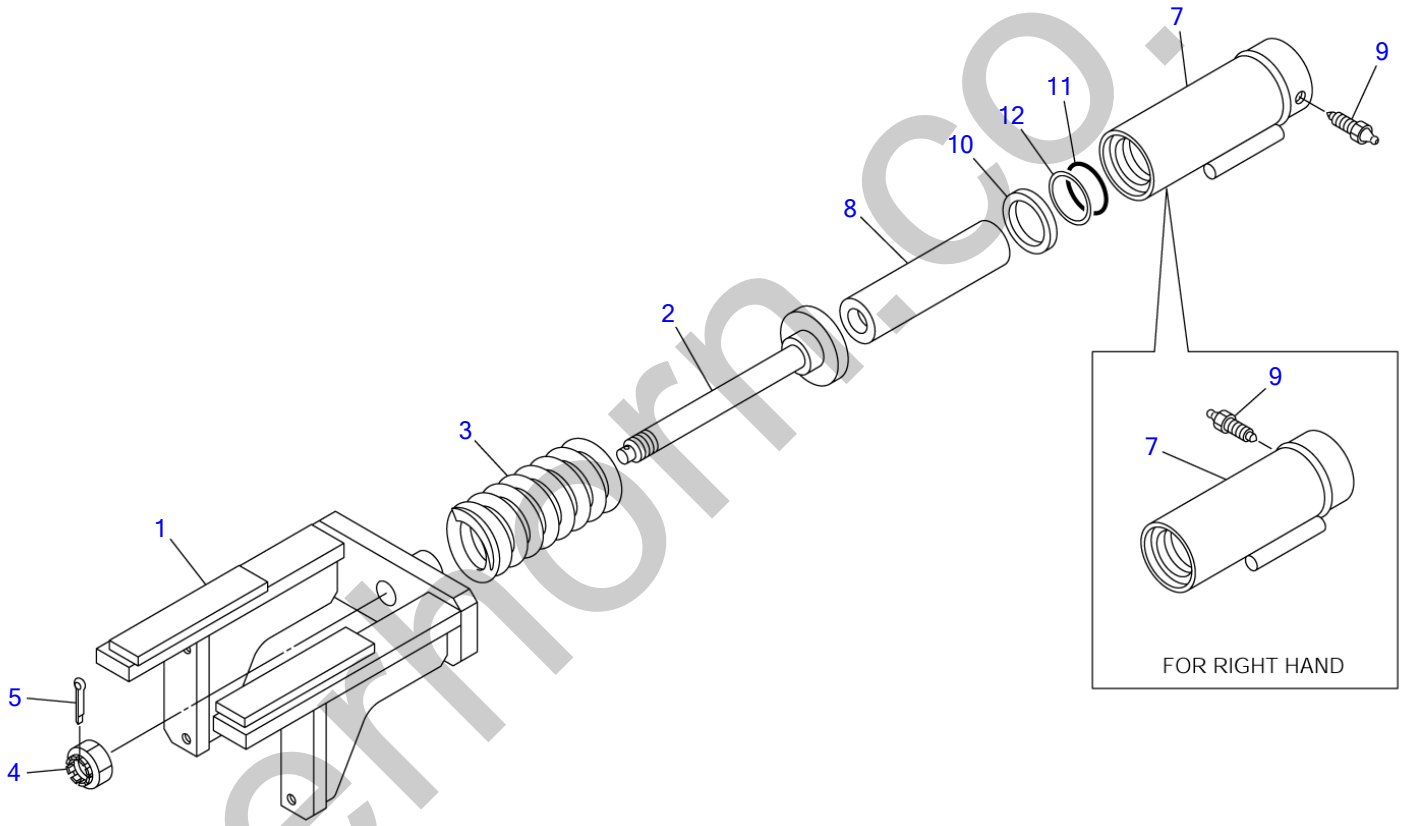

T7A042

S=1/8

silverthorn.co.uk

TRACK ADJUSTER

Item	Part number	Description	Q'ty	Chan.	Serial No.	Serv.	Remarks
	0881152000	SPRING ASSY (L.H.)	1				
	0881152500	SPRING ASSY (R.H.)	1				
1	0881151600	・YOKE	1				
2	0881151200	・ROD	1				
3	0007000002	・SPRING	1				
4	1132530027	・NUT	1				
5	1210000545	・PIN, split	1				
0-1	0881152400	・CYLINDER ASSY (L.H.)	1				
	0881152600	・CYLINDER ASSY (R.H.)	1				
7	0881152100	・・CYLINDER, grease (L.H.)	1				
	0881152300	・・CYLINDER, grease (R.H.)	1				
8	0881152200	・・PISTON	1				
9	1541300501	・・VALVE ASSY, check	1				
10	1400403203	・・SEAL, oil	1				
11	1422010600	・・O-RING	1				
12	1421020600	・・RING, back-up	1				
	U3a030						

silverhorn.co.uk

TRAVEL DEVICE

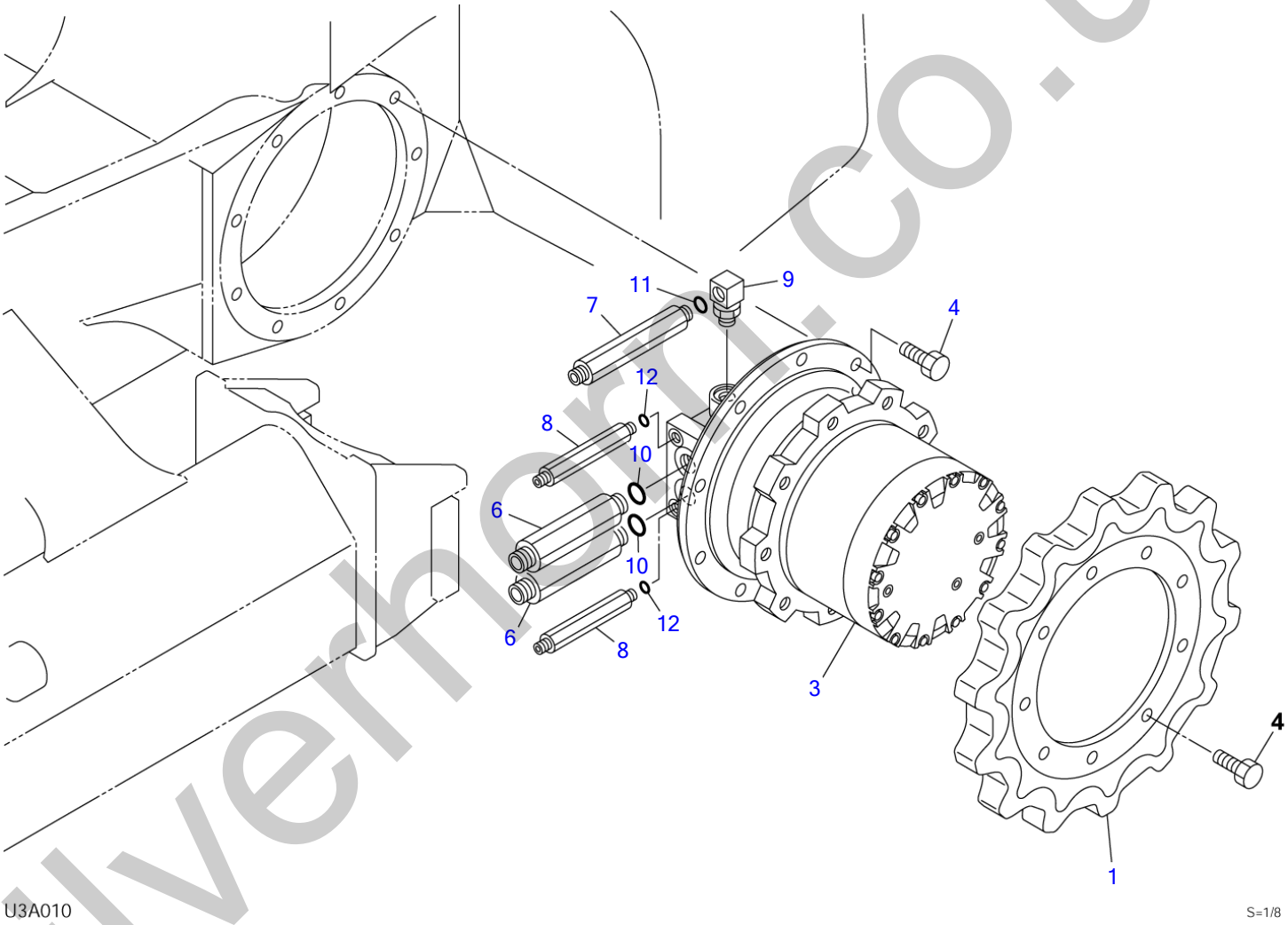

silverhorn.co.uk

TRAVEL DEVICE

Item	Part number	Description	Q'ty	Chan.	Serial No.	Serv.	Remarks
		MOTOR ASSY, travel					
1	0881160110	SPROCKET	2				
3	1903126400	MOTOR, travel	2				DAIKIN
4	1100041635	BOLT	36				
6	0881160030	ADAPTOR	4				
7	0007203081	ADAPTOR	2				
8	0007203069	ADAPTOR	4				
9	1513300020	ELBOW	2				
	1420010240	・O-RING	1				
10	1420010240	O-RING	4				
11	1420010180	O-RING	2				
12	1420010110	O-RING	4				
	U3a010						

silverhorn.co.uk

CRAWLER BELT

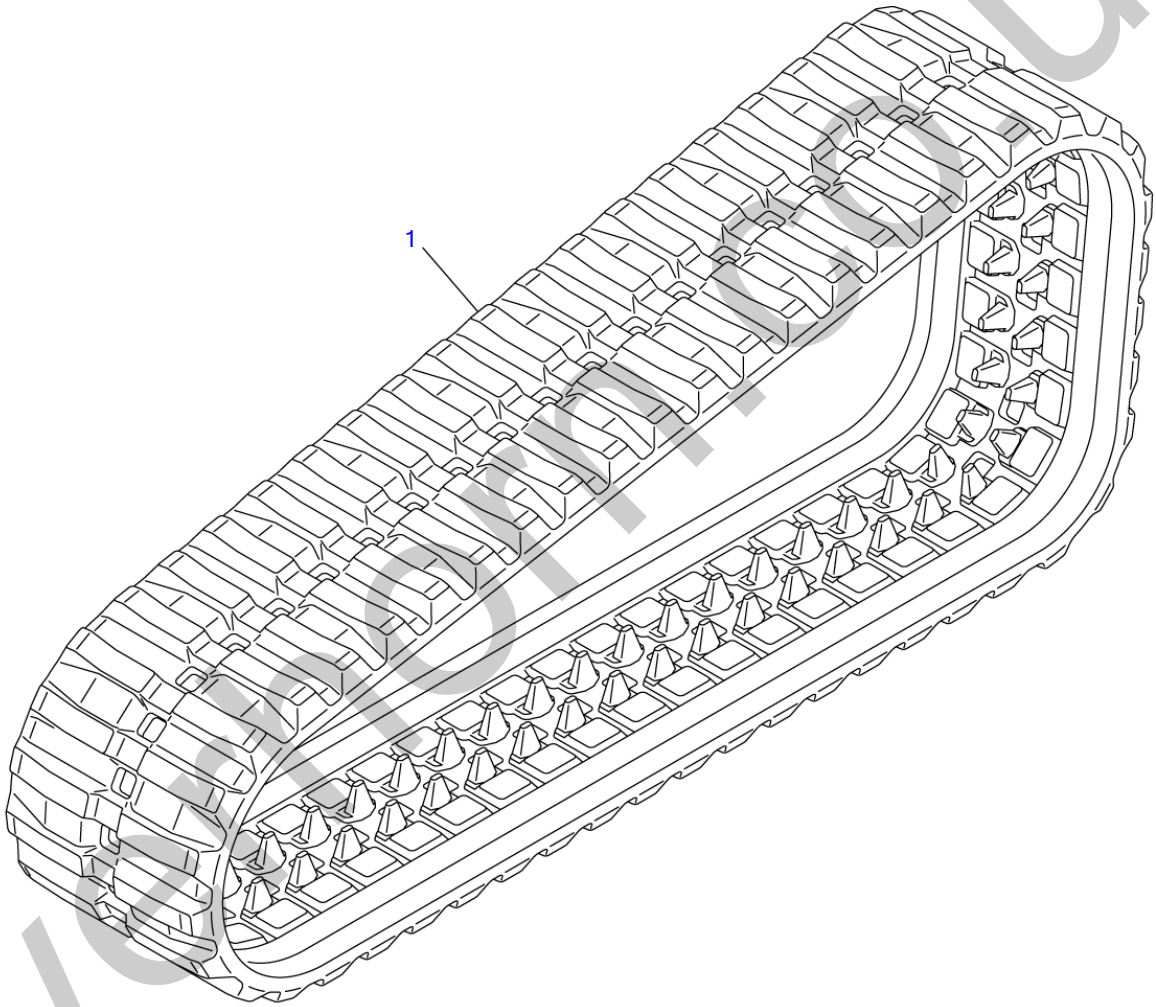

T7A060

5=1/12

silvermachinery.co.uk

CRAWLER BELT

Item	Part number	Description	Q'ty	Chan.	Serial No.	Serv.	Remarks
1	**1914099320**	BELT, rubber crawler	2				
	T7a063						

silverhorn.co.uk

CRAWLER BELT (for GEHL & MUSTANG)

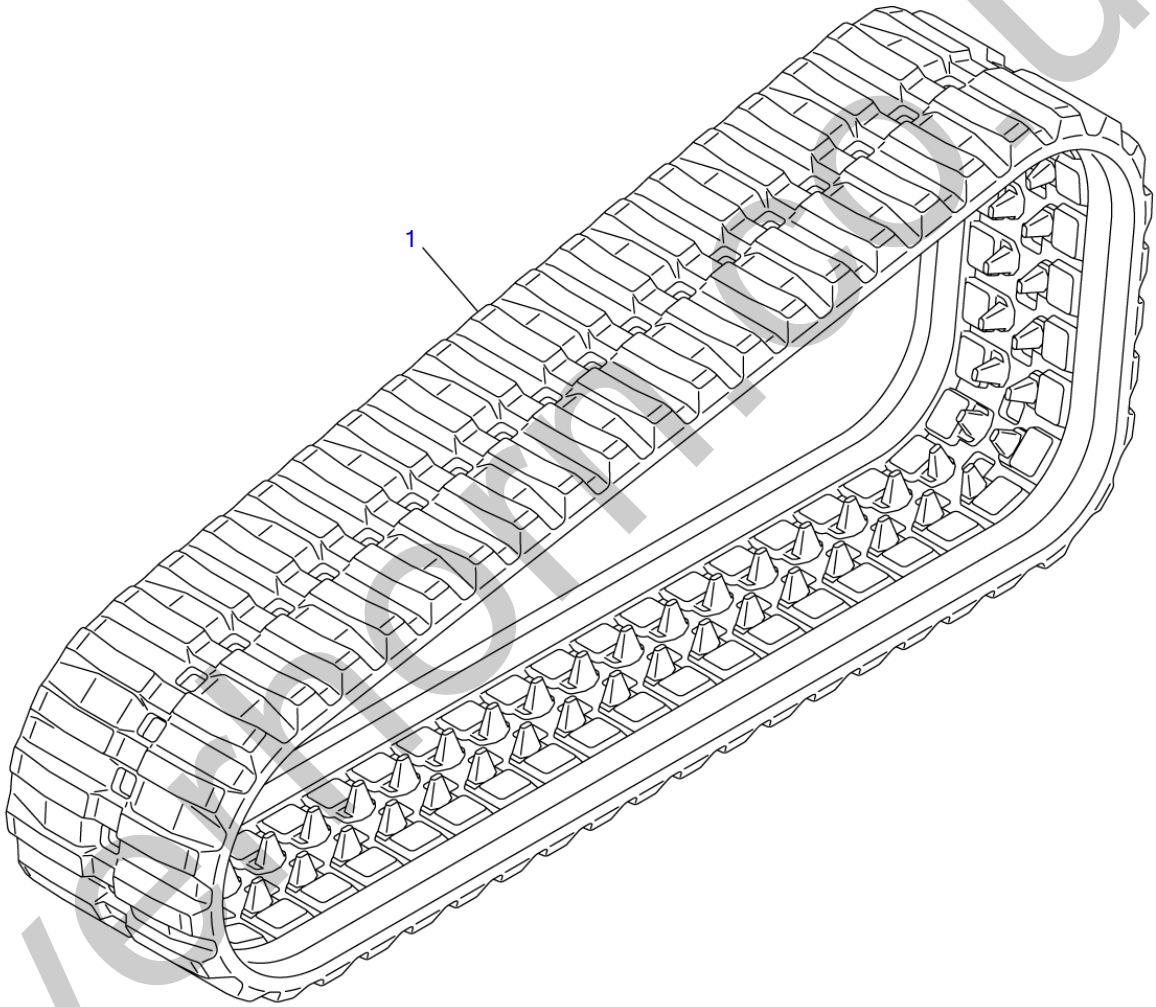

T7A060

5=1/12

silvermoor.co.uk

CRAWLER BELT (for GEHL & MUSTANG)

Item	Part number	Description	Q'ty	Chan.	Serial No.	Serv.	Remarks
1	**1914099330** **T7a090**	BELT, rubber crawler	2				

silverhorn.co.uk

FRAME (1/2)

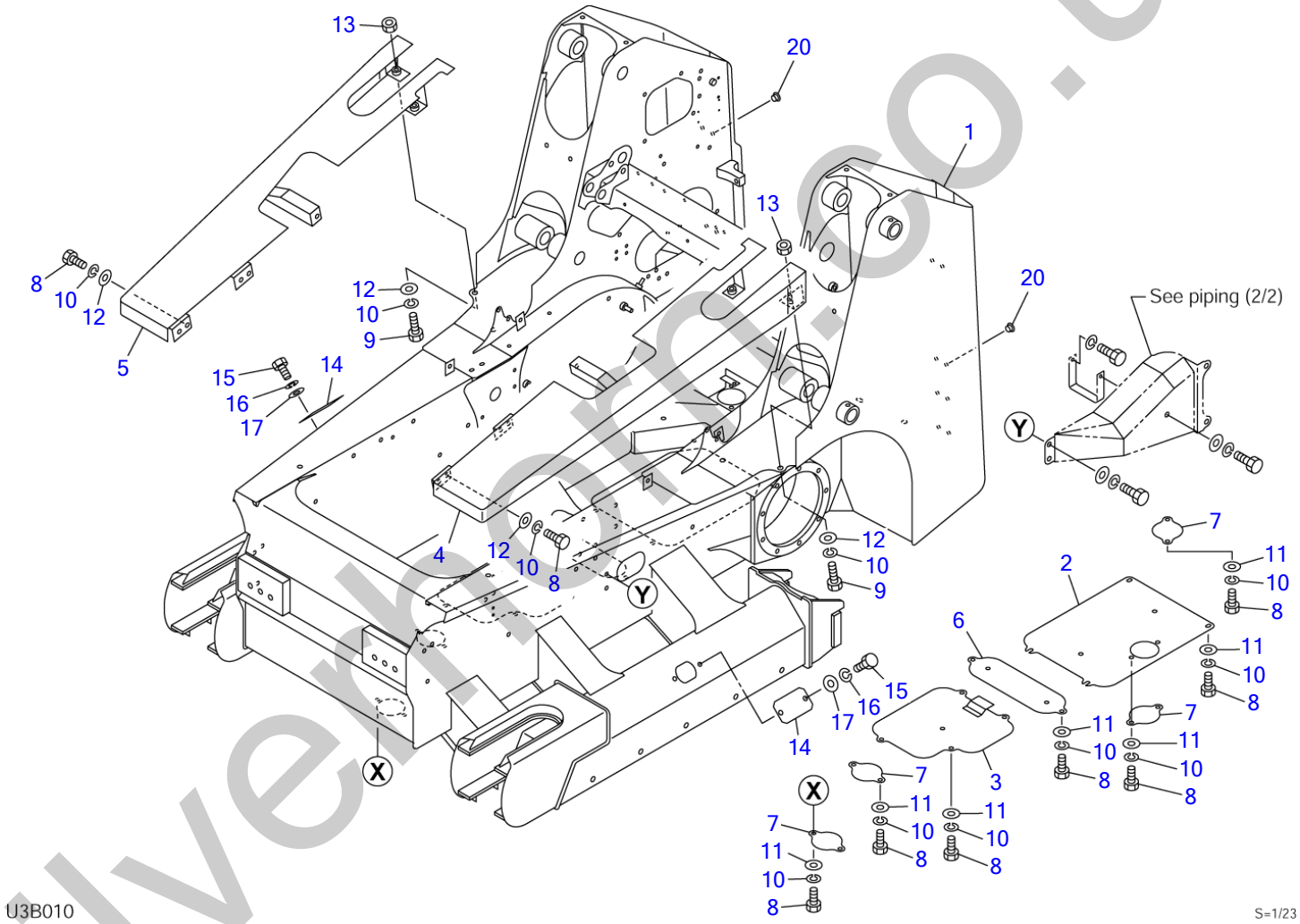

silverhorse.co.uk

FRAME (1/2)

Item	Part number	Description	Q'ty	Chan.	Serial No.	Serv.	Remarks
		FRAME ASSY					
		FRAME ASSY (for EU)					
1	X **********	FRAME	1				
2	0881306050	COVER	1			M	
3	0881302020	COVER	1				
4	0881303700	COVER (L.H.)	1				
5	0881303750	COVER (R.H.)	1				
6	0881302070	COVER	1				
7	0881302095	COVER	4				
8	1100041020	BOLT	28				
9	1100041035	BOLT	4				
10	1140020010	WASHER, spring	32				
11	1141110010	WASHER	20				
12	0003600025	WASHER	12				
13	1130040010	NUT	4				
14	0331018600	COVER	2				
15	1100040816	BOLT	4				
16	1140020008	WASHER, spring	4				
17	1141110008	WASHER	4				
20	1652533021	CAP	16			M	
	U3b010						

silverhorn.co.uk

FRAME (1/2)

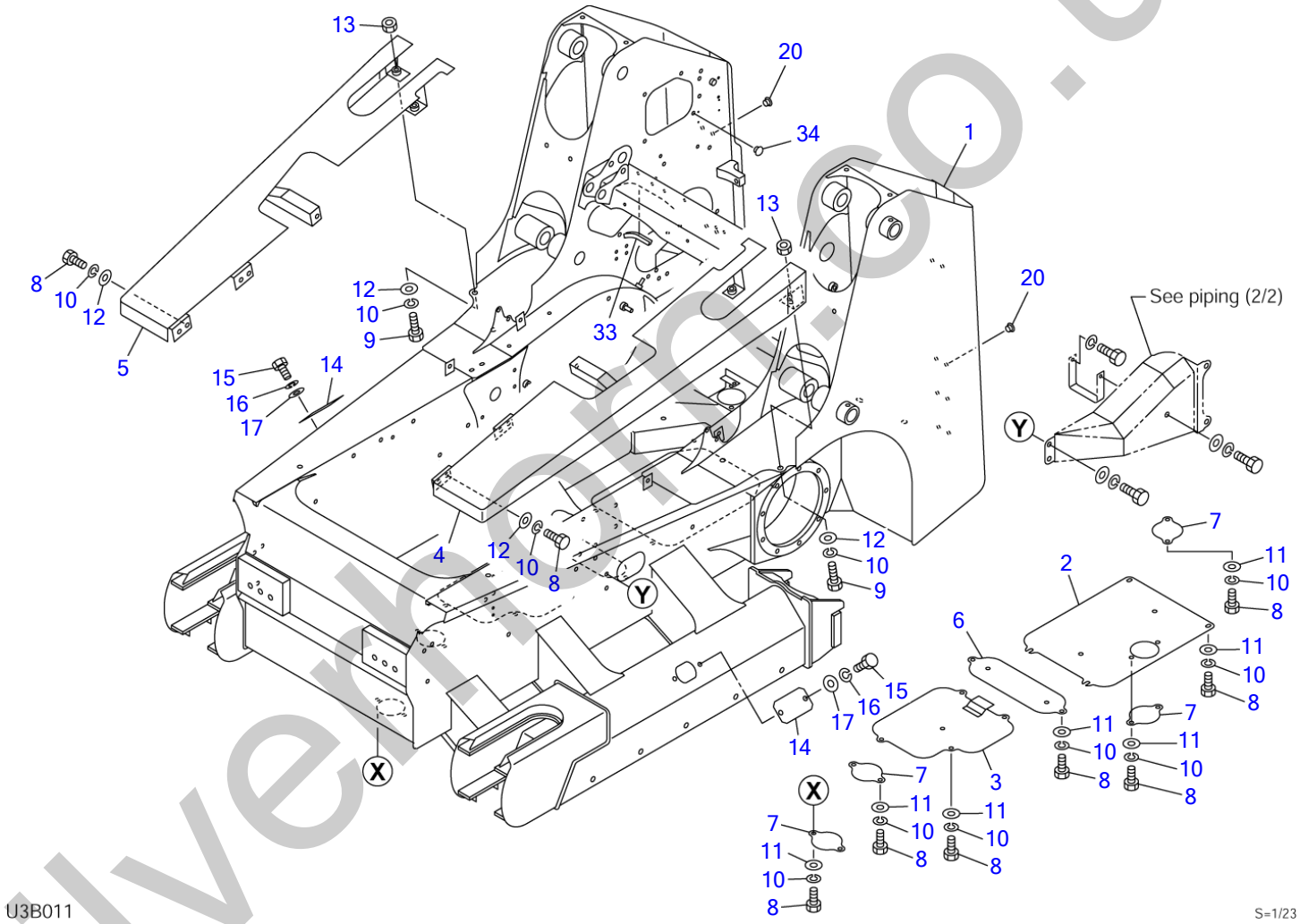

silverhorn.co.uk

FRAME (1/2)

Item	Part number	Description	Q'ty	Chan.	Serial No.	Serv.	Remarks
		FRAME ASSY					
		FRAME ASSY (for EU)					
1	X **********	FRAME	1				
2	0881306050	COVER	1				
3	0881302020	COVER	1				
4	0881303700	COVER (L.H.)	1				
5	0881303750	COVER (R.H.)	1				
6	0881302070	COVER	1				
7	0881302095	COVER	4				
8	1100041020	BOLT	28				
9	1100041035	BOLT	4				
10	1140020010	WASHER, spring	32				
11	1141110010	WASHER	20				
12	0003600025	WASHER	12				
13	1130040010	NUT	4				
14	0331018600	COVER	2				
15	1100040816	BOLT	4				
16	1140020008	WASHER, spring	4				
17	1141110008	WASHER	4				
20	1652533021	CAP	16				
33	1654624020	TRIM	1			M	sold by the meter
34	1652533017	CAP	4		225000073~	M	
	U3b011						

silverhorn.co.uk

FRAME (2/2) (for EU)

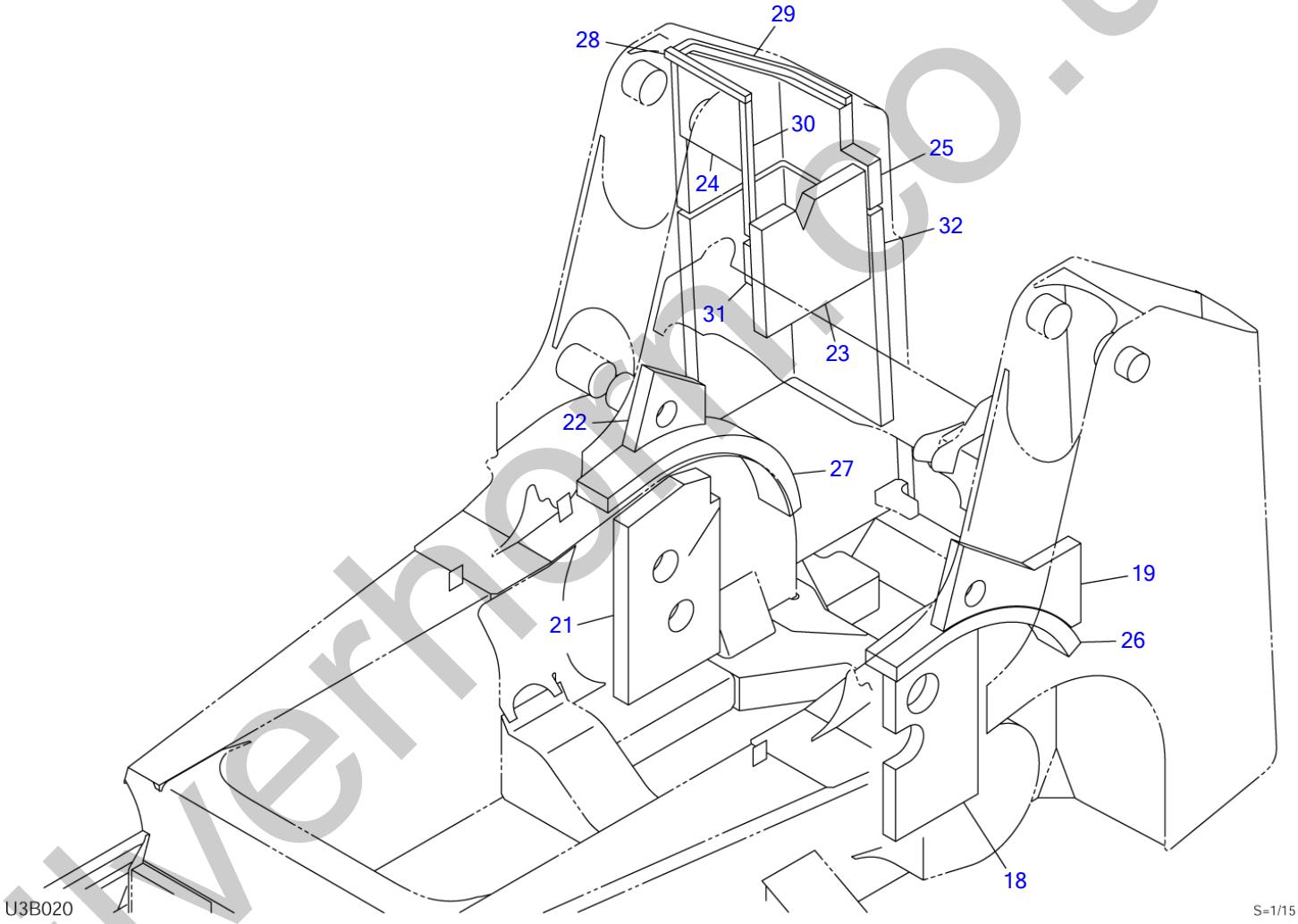

silverhorn.co.uk

FRAME (2/2) (for EU)

Item	Part number	Description	Q'ty	Chan.	Serial No.	Serv.	Remarks
		FRAME ASSY (for EU)					
18	0693001018	ABSORBENT, noise	1			M	
19	0693001019	ABSORBENT, noise	1			M	
21	0693001021	ABSORBENT, noise	1			M	
22	0693001022	ABSORBENT, noise	1			M	
23	0881304006	ABSORBENT, noise	1				
24	0881304007	ABSORBENT, noise	1				
25	0881304008	ABSORBENT, noise	1				
26	0881304009	ABSORBENT, noise	1				
27	0881304010	ABSORBENT, noise	1				
28	1654306026	SPONGE	1				sold by the meter
29	1654306080	SPONGE	1				sold by the meter
30	1654306037	SPONGE	1				sold by the meter
31	1654306010	SPONGE	1				sold by the meter
32	0881304011	ABSORBENT, noise	1				
	U3b020						

silverhorn.co.uk

FRAME (2/2) (for EU)

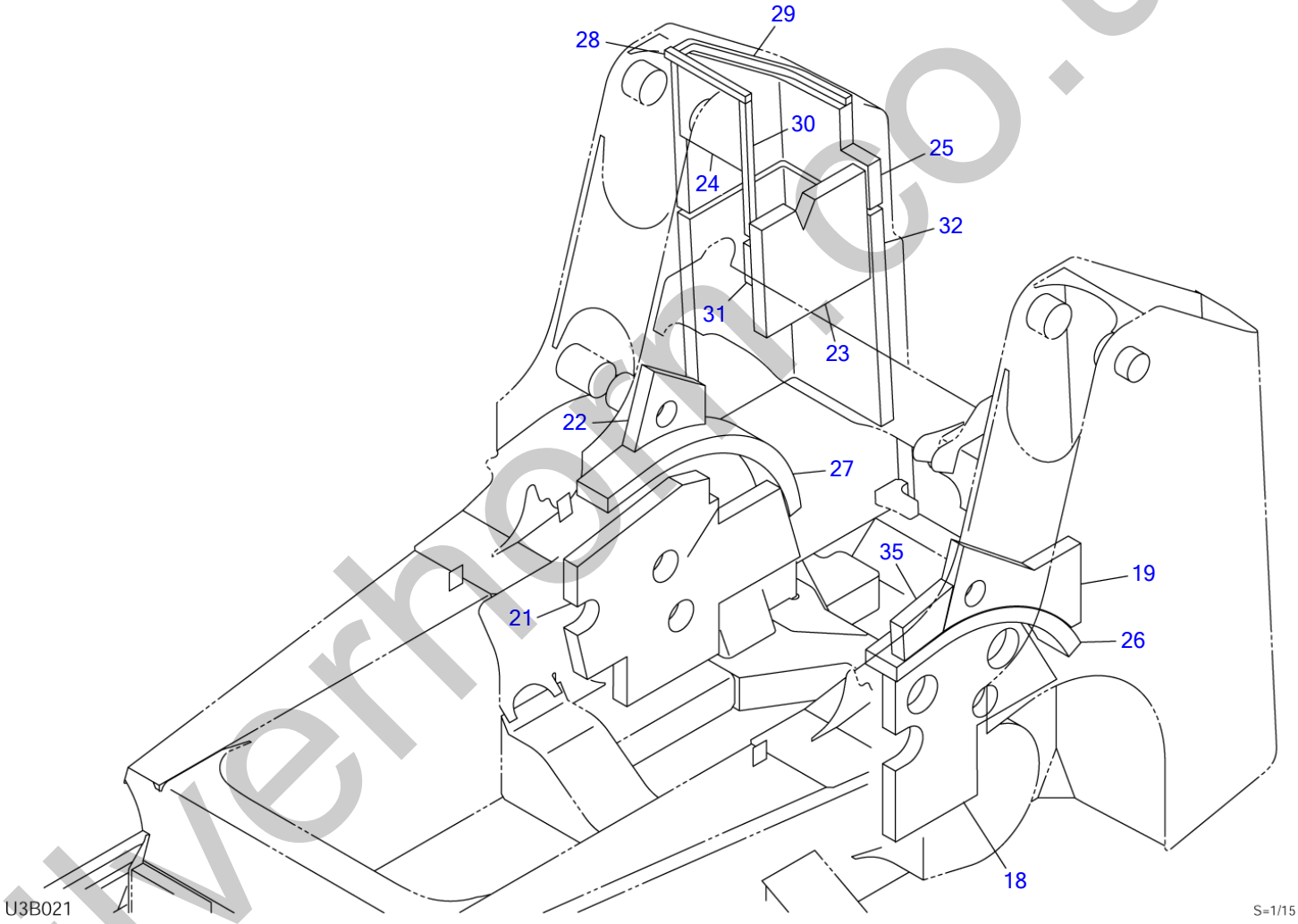

silverhorn.co.uk

FRAME (2/2) (for EU)

Item	Part number	Description	Q'ty	Chan.	Serial No.	Serv.	Remarks
		FRAME ASSY (for EU)					
18	0693001018	ABSORBENT, noise	1				
19	0693001019	ABSORBENT, noise	1				
21	0693001021	ABSORBENT, noise	1				
22	0693001022	ABSORBENT, noise	1				
23	0881304006	ABSORBENT, noise	1				
24	0881304007	ABSORBENT, noise	1				
25	0881304008	ABSORBENT, noise	1				
26	0881304009	ABSORBENT, noise	1				
27	0881304010	ABSORBENT, noise	1				
28	1654306026	SPONGE	1				sold by the meter
29	1654306080	SPONGE	1				sold by the meter
30	1654306037	SPONGE	1				sold by the meter
31	1654306010	SPONGE	1				sold by the meter
32	0881304011	ABSORBENT, noise	1				
35	0693001023	ABSORBENT, noise	1		225000009~	M	
	U3b021						

silverhorn.co.uk

ARM STOPPER

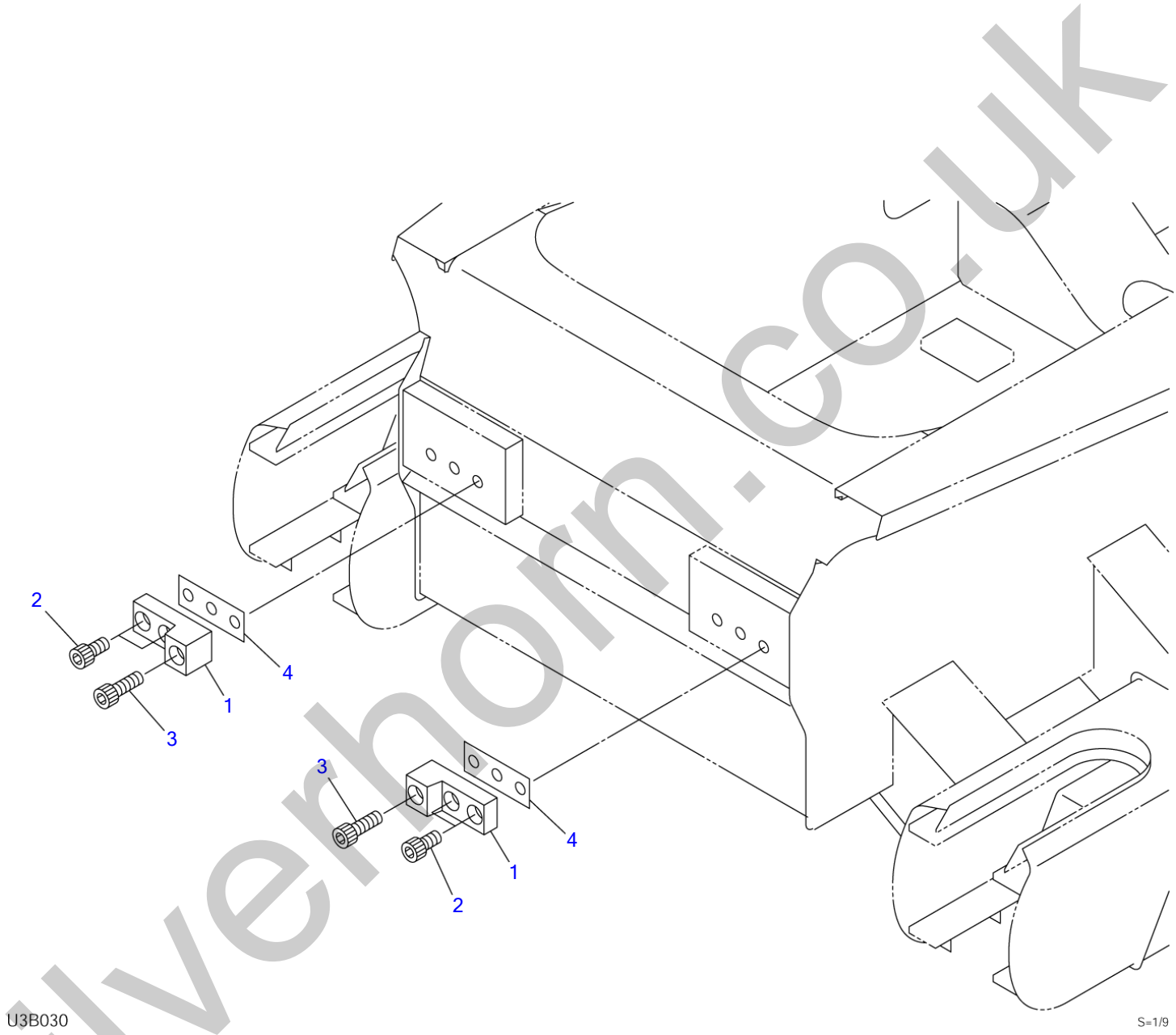

silverhorn.co.uk

ARM STOPPER

Item	Part number	Description	Q'ty	Chan.	Serial No.	Serv.	Remarks
		STOPPER ASSY, arm					
1	0881602910	STOPPER, arm	2				
2	1110042035	SCREW, cap	4				
3	1110042060	SCREW, cap	2				
4	0881602950	SHIM	AR				t=0.5mm
	0881600950	SHIM	AR				t=1.0mm
	0881602960	SHIM	AR				t=3.2mm
	T7b021						

silverhorn.co.uk

HOOK

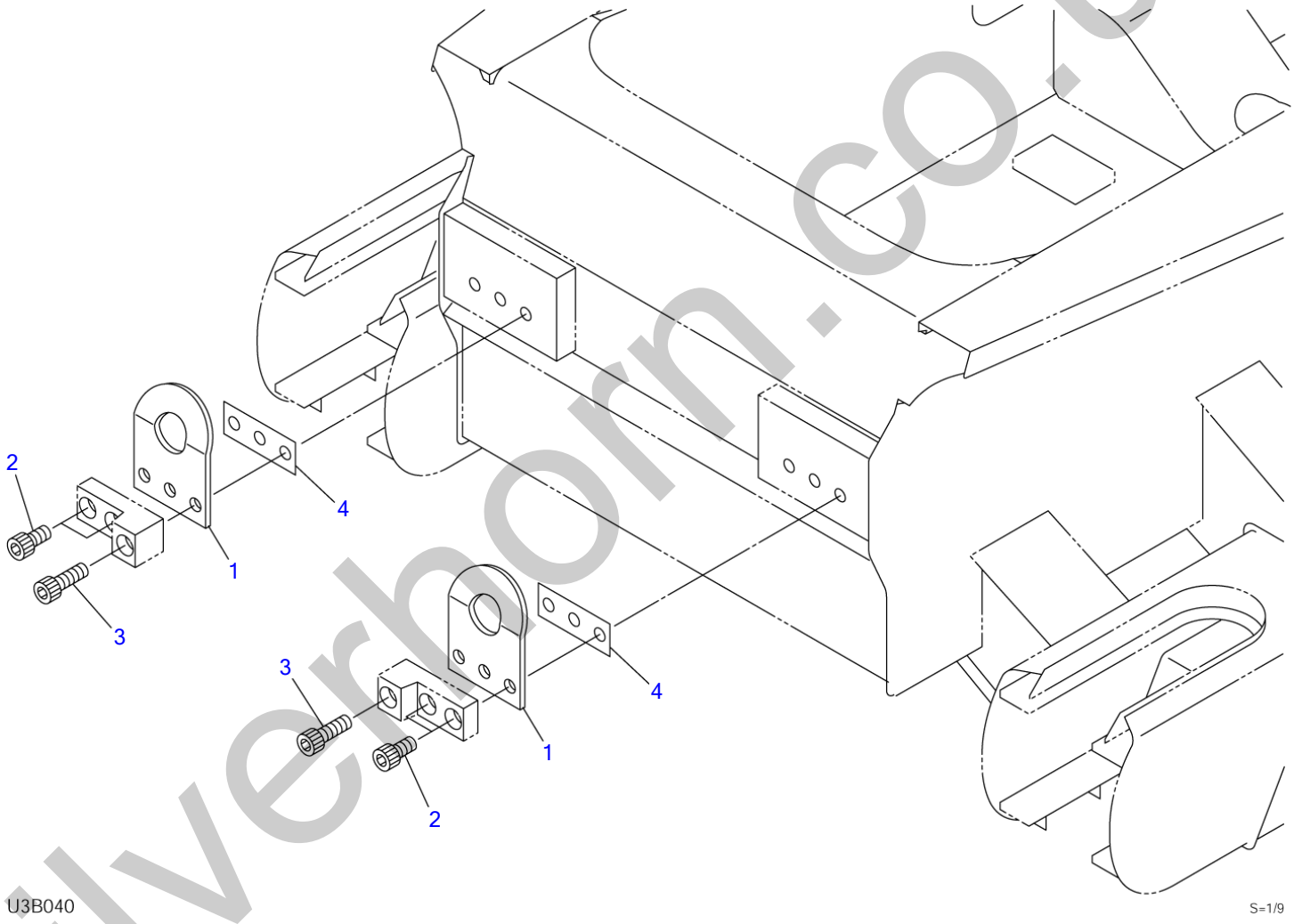

silverhorn.co.uk

HOOK

Item	Part number	Description	Q'ty	Chan.	Serial No.	Serv.	Remarks
	0881304500	HOOK ASSY	1				
1	0881304520	・HOOK	2				
2	1110042040	・SCREW, cap	4				
3	1110042070	・SCREW, cap	2				
4	0881602950	SHIM	AR				t=0.5mm
	0881600950	SHIM	AR				t=1.0mm
	0881602960	SHIM	AR				t=3.2mm
	U3b040						

silverhorn.co.uk

OPERATION LEVER & STAND

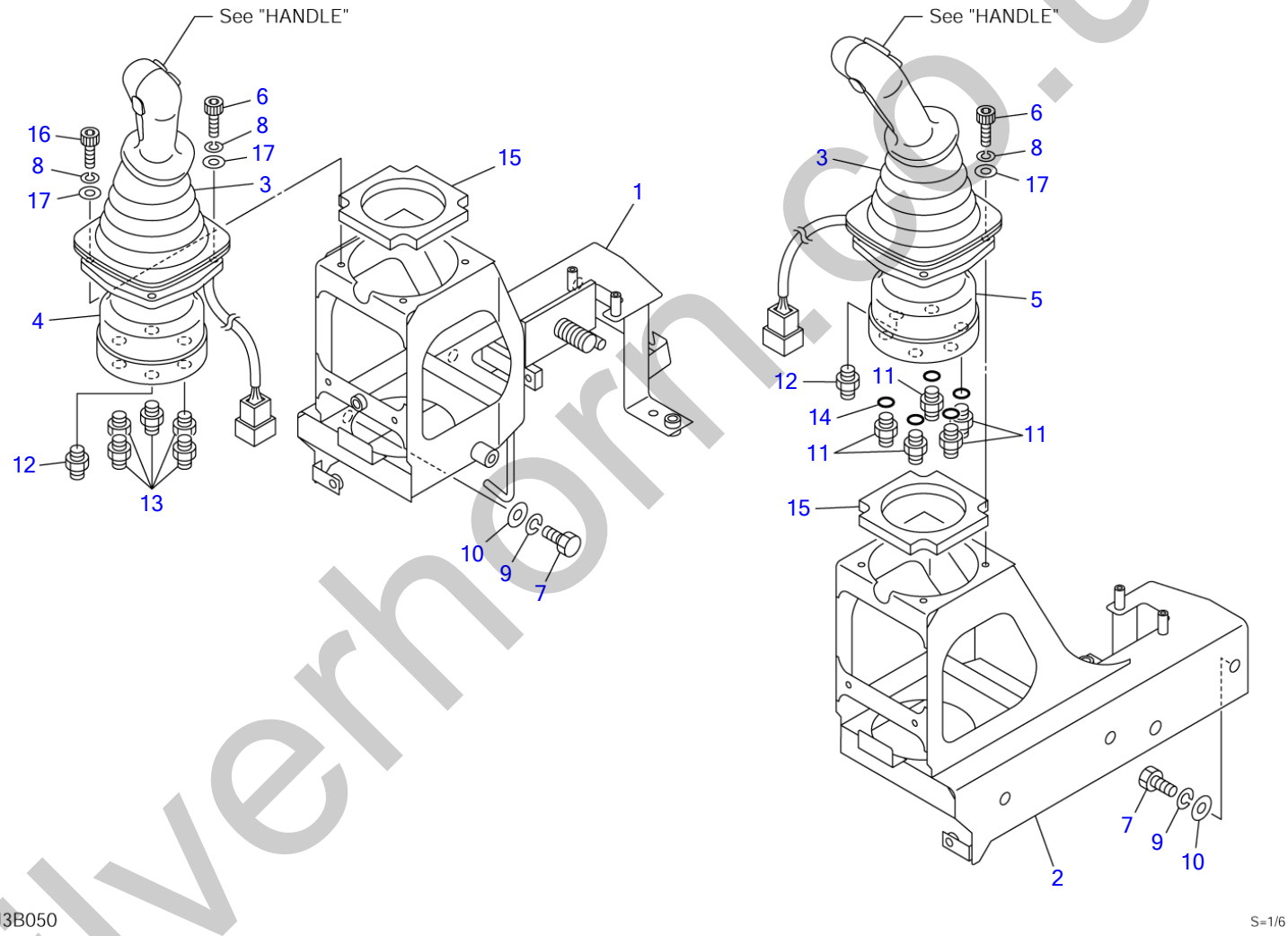

silverhorn.co.uk

OPERATION LEVER & STAND

Item	Part number	Description	Q'ty	Chan.	Serial No.	Serv.	Remarks
		VALVE ASSY					
1	0881511600	BRACKET (R.H.)	1				
2	0881511700	BRACKET (L.H.)	1				
3	0881510020	BOOT	2				
4	1901749800	VALVE, pilot (R.H.)	1			M	aluminum
5	1901749700	VALVE, pilot (L.H.)	1			M	aluminum
6	1110040620	SCREW, cap	6				
7	1100041020	BOLT	6				
8	1140420006	WASHER, spring	8				
9	1140020010	WASHER, spring	6				
10	0003600020	WASHER	6				
11	1515600571	ADAPTOR	5				
	1420010110	・O-RING	1				
12	1512370008	ADAPTOR (with filter)	2				
	1420010110	・O-RING	1				
13	1515600200	ADAPTOR	5				
	1420010110	・O-RING	1				
14	1420010110	O-RING	5				
15	0881511150	SPONGE	2				
16	1110040625	SCREW, cap	2				
17	1141110006	WASHER	8				
	U3b050						

silverhorn.co.uk

OPERATION LEVER & STAND

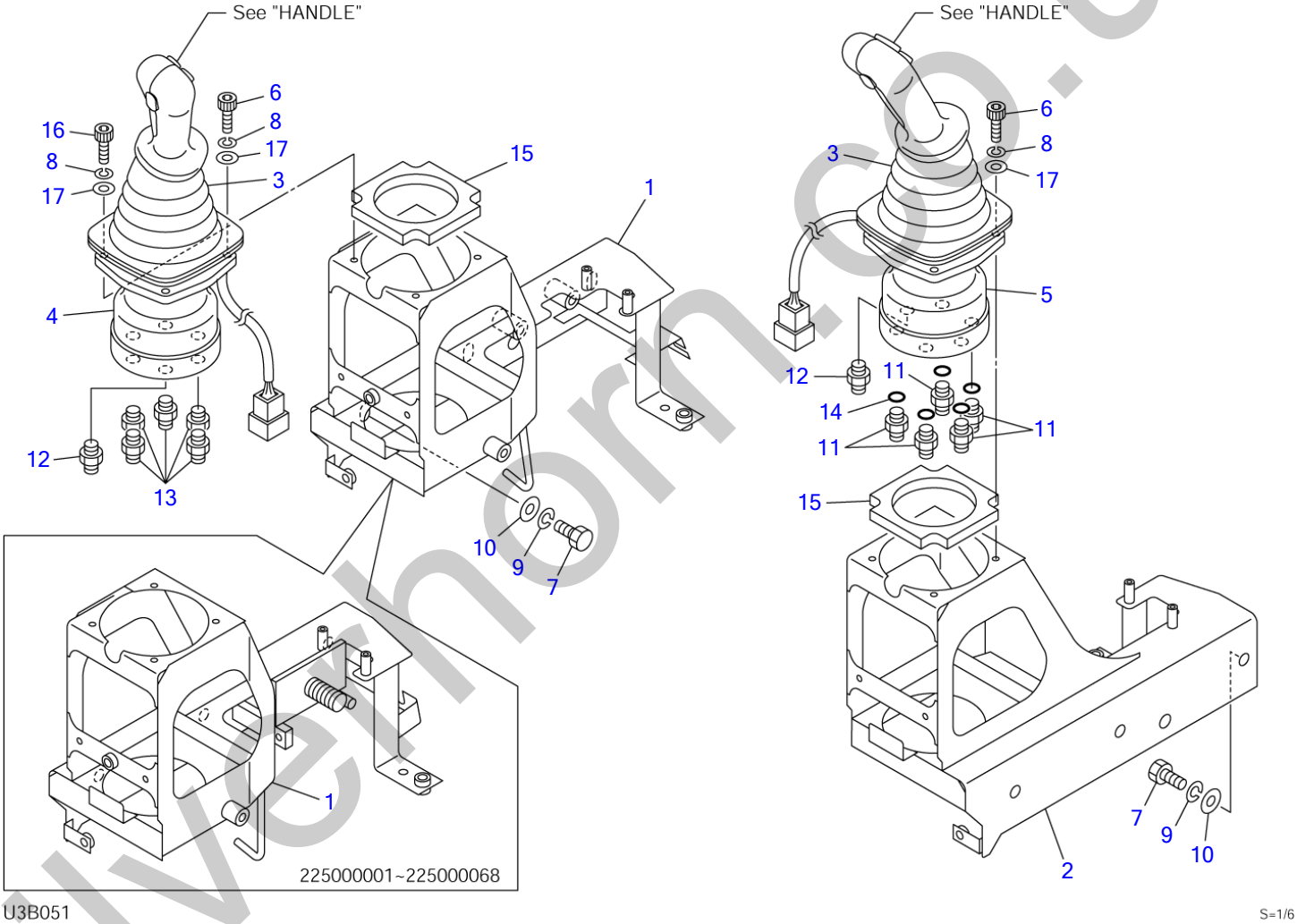

silverthorn.co.uk

OPERATION LEVER & STAND

Item	Part number	Description	Q'ty	Chan.	Serial No.	Serv.	Remarks
		VALVE ASSY					
1	0881511600	BRACKET (R.H.)	1		225000001~225000068		
	0695100100	BRACKET (R.H.)	1		225000069~	M	
2	0881511700	BRACKET (L.H.)	1				
3	0881510020	BOOT	2				
4	1901749800	VALVE, pilot (R.H.)	1				aluminum
5	1901749700	VALVE, pilot (L.H.)	1				aluminum
6	1110040620	SCREW, cap	6				
7	1100041020	BOLT	6				
8	1140420006	WASHER, spring	8				
9	1140020010	WASHER, spring	6				
10	0003600020	WASHER	6				
11	1515600571	ADAPTOR	5				
	1420010110	・O-RING	1				
12	1512370008	ADAPTOR (with filter)	2				
	1420010110	・O-RING	1				
13	1515600200	ADAPTOR	5				
	1420010110	・O-RING	1				
14	1420010110	O-RING	5				
15	0881511150	SPONGE	2				
16	1110040625	SCREW, cap	2				
17	1141110006	WASHER	8				
	U3b051						

silverhorn.co.uk

OPERATION LEVER & STAND (multi-functional grip type)

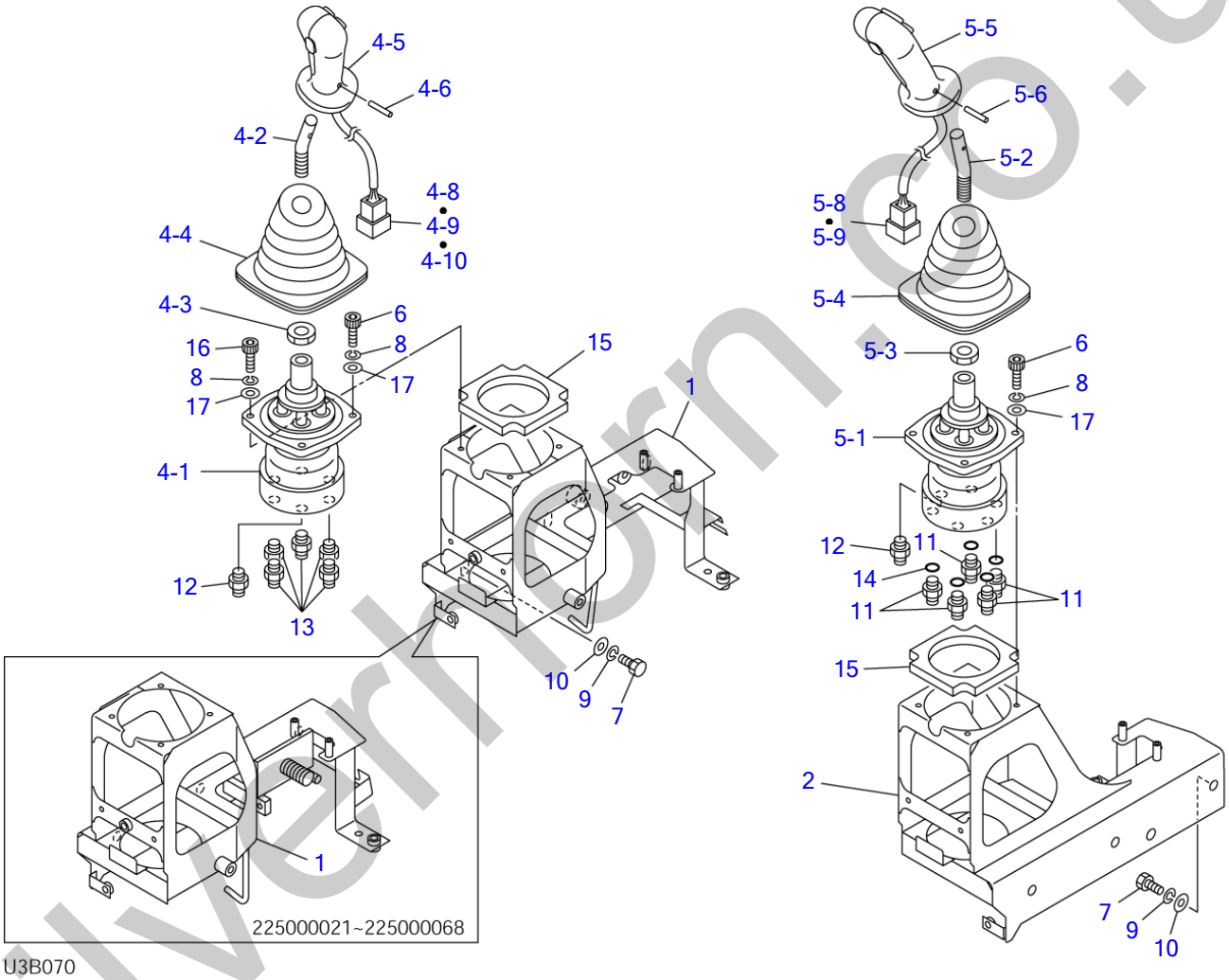

silverhorn.co.uk

OPERATION LEVER & STAND (multi-functional grip type)

Item	Part number	Description	Q'ty	Chan.	Serial No.	Serv.	Remarks
		VALVE ASSY					
1	0881511600	BRACKET (R.H.)	1		225000001~225000068		
	0695100100	BRACKET (R.H.)	1		225000069~	M	
2	0881511700	BRACKET (L.H.)	1				
4	0665101200	VALVE ASSY (R.H.)	1			M	
4-1	1901754000	・VALVE, pilot (R.H.)	1			M	
4-2	0665102120	・LEVER	1			M	
4-3	0665101203	・NUT	1			M	
4-4	0375109110	・BOOT	1			M	
4-5	1650205600	・GRIP (R.H.)	1			M	5 switch
4-6	1213000540	・PIN, spring	1			M	
4-8	0665101208	・RECEPTACLE	1			M	
4-9	0665101209	・WEDGE	1			M	
4-10	0665101210	・PLUG	3			M	
5	0665101100	VALVE ASSY (L.H.)	1			M	
5-1	1901753900	・VALVE, pilot (L.H.)	1			M	
5-2	0665101120	・LEVER	1			M	
5-3	0665101203	・NUT	1			M	
5-4	0375109110	・BOOT	1			M	
5-5	1650205500	・GRIP (L.H.)	1			M	slide switch
5-6	1213000540	・PIN, spring	1			M	
5-8	0665101108	・RECEPTACLE	1			M	
5-9	0665101109	・WEDGE	1			M	
6	1110040620	SCREW, cap	6				
7	1100041020	BOLT	6				
8	1140420006	WASHER, spring	8				
9	1140020010	WASHER, spring	6				
10	0003600020	WASHER	6				
11	1515600571	ADAPTOR	5				
12	1512370008	ADAPTOR (with filter)	2				
	1420010110	・O-RING	1				
13	1515600200	ADAPTOR	5				
	1420010110	・O-RING	1				
14	1420010110	O-RING	5				
15	0881511150	SPONGE	2				
16	1110040625	SCREW, cap	2				
17	1141110006	WASHER	8				
	U3b070						

silverhorn.co.uk

PIPING; OPERATION LEVER

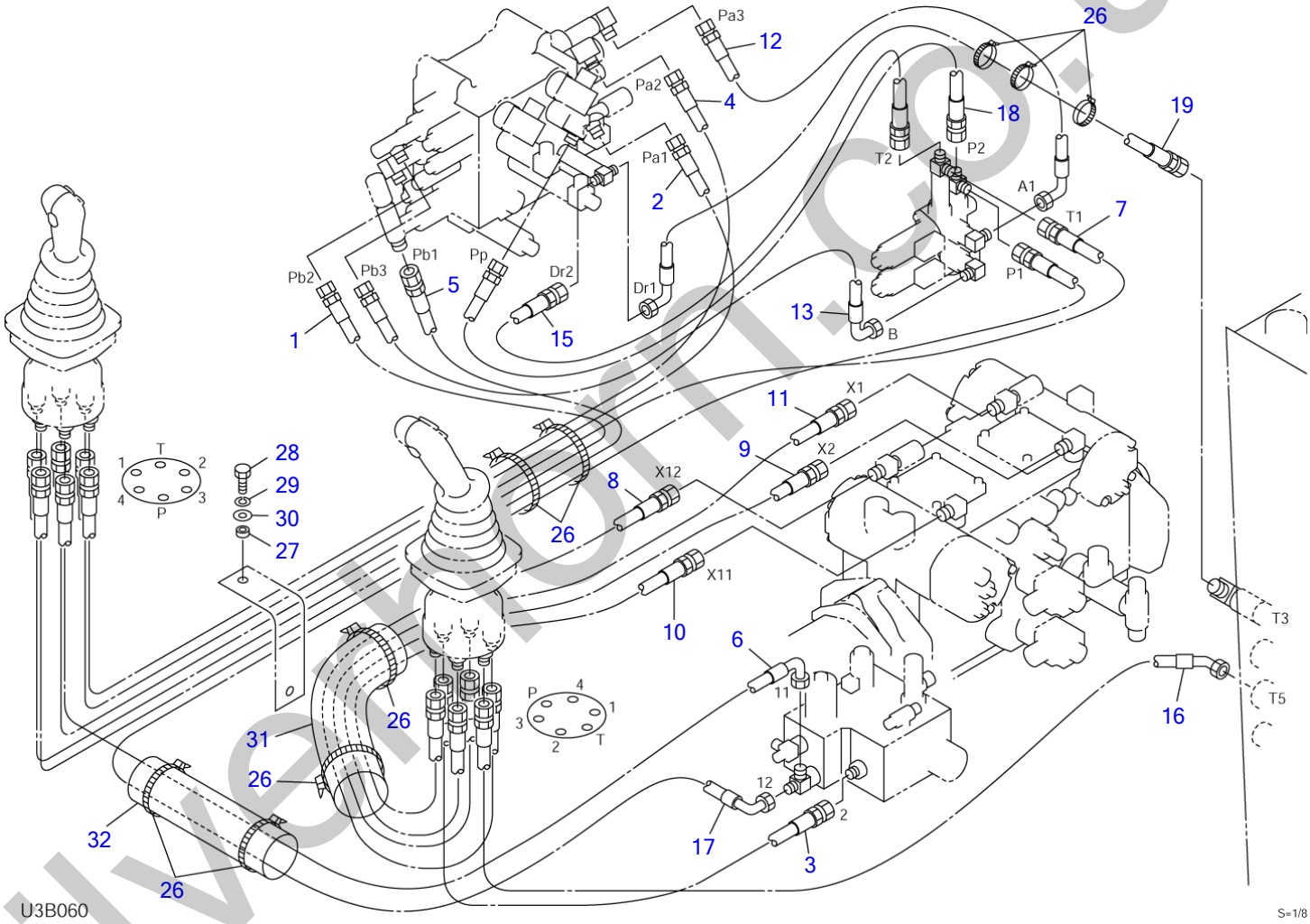

silverhorn.co.uk

PIPING; OPERATION LEVER

Item	Part number	Description	Q'ty	Chan.	Serial No.	Serv.	Remarks
		PIPING ASSY					
1	0697100010	HOSE ASSY	1			M	18010-22130
2	0697100020	HOSE ASSY	1			M	18010-22150
3	0881711030	HOSE ASSY	1				
4	0697100040	HOSE ASSY	1			M	18010-22160
5	0697100050	HOSE ASSY	1			M	18010-22120
6	0697100060	HOSE ASSY	1			M	18010-52112
7	0697101070	HOSE ASSY	1			M	18010-22114
8	0697101080	HOSE ASSY	1			M	18010-23086
9	0697101090	HOSE ASSY	1			M	18010-23108
10	0697100100	HOSE ASSY	1			M	18010-23084
11	0697101110	HOSE ASSY	1			M	18010-23100
12	0697101120	HOSE ASSY	1			M	18010-22057
13	0697101130	HOSE ASSY	1			M	18010-52040
15	0697101150	HOSE ASSY	1			M	18010-22018
16	0697101160	HOSE ASSY	1			M	18010-89200
17	0697101170	HOSE ASSY	1			M	18010-22154
18	0697101180	HOSE ASSY	1			M	18010-22033
19	0697101190	HOSE ASSY	1			M	18010-52145
26	1652241300	BAND	9				
27	0881711360	COLLAR	1				
28	1100040620	BOLT	1				
29	1140020006	WASHER, spring	1				
30	0003600043	WASHER	1				
31	1531645070	PROTECTOR	1			M	sold by the meter
32	0881712520	PROTECTOR	1				
	U3b060						

silverhorn.co.uk

PIPING; OPERATION LEVER

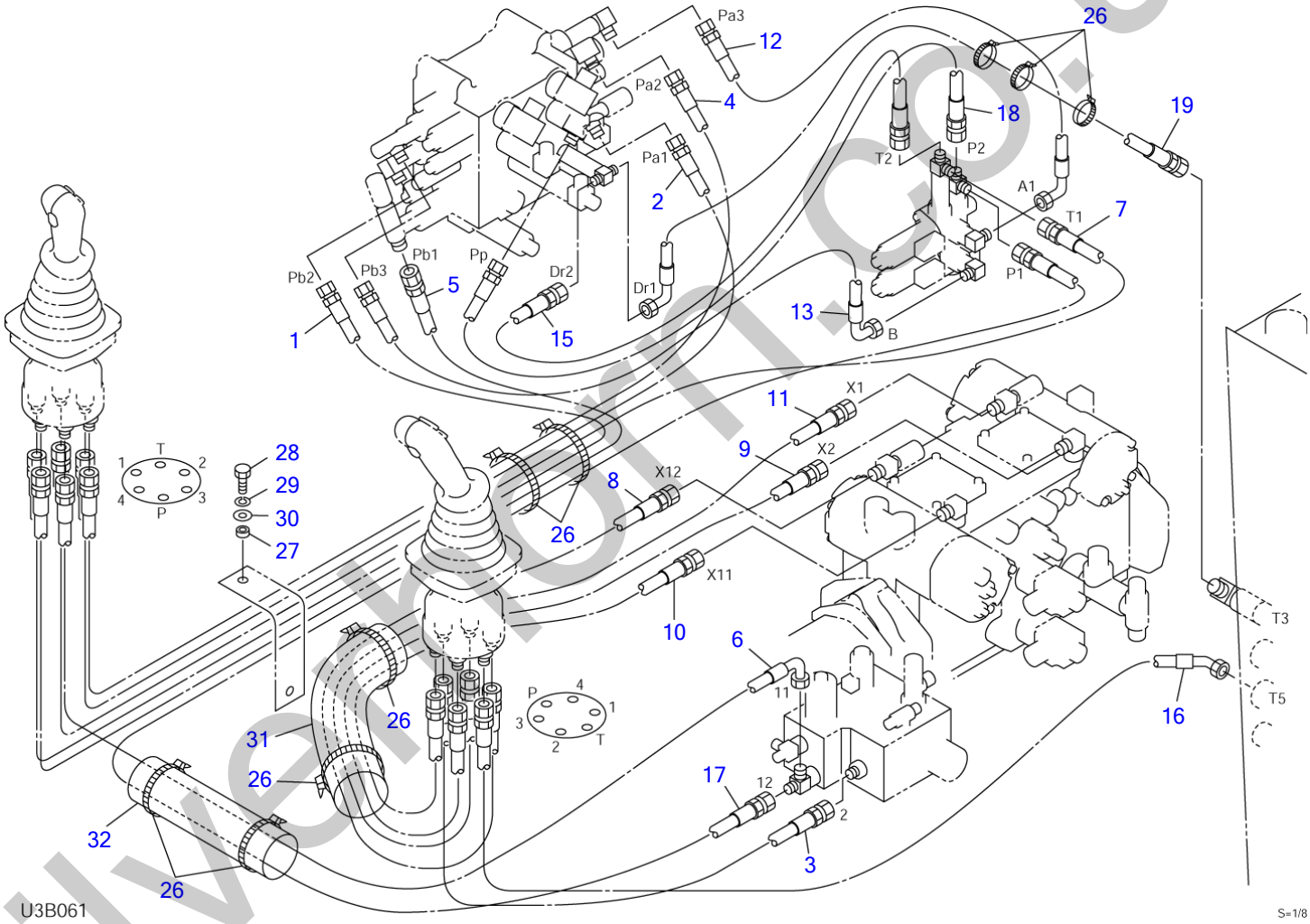

silverhorn.co.uk

PIPING; OPERATION LEVER

Item	Part number	Description	Q'ty	Chan.	Serial No.	Serv.	Remarks
		PIPING ASSY					
1	0697100010	HOSE ASSY	1				18010-22130
2	0697100020	HOSE ASSY	1				18010-22150
3	0881711030	HOSE ASSY	1				
4	0697100040	HOSE ASSY	1				18010-22160
5	0697100050	HOSE ASSY	1				18010-22120
6	0697100060	HOSE ASSY	1				18010-52112
7	0697101070	HOSE ASSY	1				18010-22114
8	0697101080	HOSE ASSY	1				18010-23086
9	0697101090	HOSE ASSY	1				18010-23108
10	0697100100	HOSE ASSY	1				18010-23084
11	0697101110	HOSE ASSY	1				18010-23100
12	0697101120	HOSE ASSY	1				18010-22057
13	0697101130	HOSE ASSY	1				18010-52040
15	0697101150	HOSE ASSY	1				18010-22033
16	0697101160	HOSE ASSY	1				18010-89200
17	0697101170	HOSE ASSY	1				18010-22160
18	0697101180	HOSE ASSY	1				18010-22033
19	0697101190	HOSE ASSY	1				18010-52155
26	1652241300	BAND	9				
27	0881711360	COLLAR	1				
28	1100040620	BOLT	1				
29	1140020006	WASHER, spring	1				
30	0003600043	WASHER	1				
31	1531645060	PROTECTOR	1			M	sold by the meter
32	0881712520	PROTECTOR	1				
	U3b061						

silverhorn.co.uk

ENGINE & ACCESSORIES (1/4)

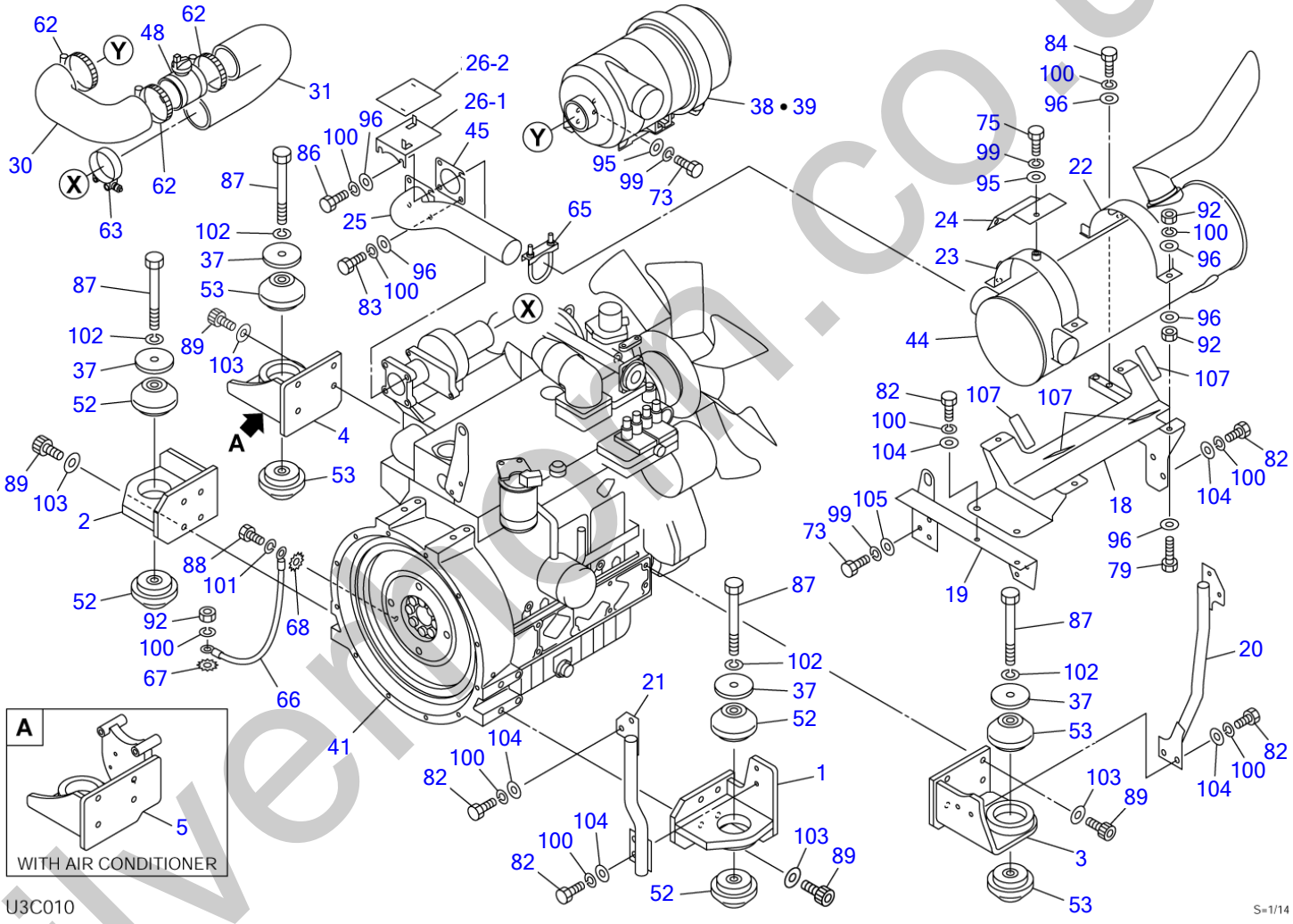

silvermoon.co.uk

ENGINE & ACCESSORIES (1/4)

Item	Part number	Description	Q'ty	Chan.	Serial No.	Serv.	Remarks
		ENGINE ASSY (for US) ENGINE ASSY (for EU) ENGINE ASSY (for US, with air conditioner) ENGINE ASSY (for EU, with air conditioner)					
1	0694002010	FOOT, engine (F.L.)	1			M	
2	0694002020	FOOT, engine (F.R.)	1			M	
3	0694002030	FOOT, engine (R.L.)	1			M	
4	0694002040	FOOT, engine (R.R.)	1			M	
5	0694002050	FOOT, engine (R.R.)	1			M	for air conditioner
18	0694002380	BRACKET	1			M	
19	0694002390	BRACKET	1			M	
20	0694002410	PIPE	1			M	
21	0694002400	PIPE	1			M	
22	0694002420	BAND	1			M	
23	0694000690	BAND	1			M	
24	0694000710	COVER	1			M	
25	0694002350	PIPE	1			M	
26	0694002360	PLATE ASSY	1			M	
26-1	0694002370	・PLATE	1			M	
26-2	0694002362	・INSULATOR	1			M	
30	0694002260	HOSE	1			M	
31	0694002270	HOSE	1			M	
37	0881400210	WASHER	4				
38	0694002300	CLEANER, air (for EU)	1			M	see page (4/4)
39	0694002450	PRECLEANER (for US)	1			M	see page (4/4)
41	1910261001	ENGINE	1			M	KUBOTA V3800DI-T
44	1911000800	SILENCER	1			M	
45	1910249022	GASKET	1			M	KUBOTA 19258-12231
48	1910261129	JOINT	1			M	
52	1651030004	RUBBER, cushion	4			M	
53	1651030010	RUBBER, cushion	4			M	
62	1533700090	BAND	3				
63	1533701300	BAND	1			M	
65	1533300063	U-BOLT	1			M	
66	1702402001	CABLE, earth	1				
67	1140330010	WASHER	1				
68	1140330012	WASHER	1			M	
73	1100040830	BOLT	7				
75	1100040816	BOLT	2				
79	1100041050	BOLT	4				
82	1100041030	BOLT	10				
83	1101041030	BOLT	2			M	
84	1101041055	BOLT	2			M	
86	1101041035	BOLT	2			M	
87	1101141640	BOLT	4				
88	1102041220	BOLT	1			M	
89	1112021230	SCREW, cap	16			M	
92	1130040010	NUT	9				
95	1141110008	WASHER	6				
96	1141110010	WASHER	18				
99	1140020008	WASHER, spring	9				
100	1140020010	WASHER, spring	21				
101	1140020012	WASHER, spring	1				
102	1140020016	WASHER, spring	4				
103	1141550012	WASHER	16				
104	0003600025	WASHER	10				
105	0003600011	WASHER	3				
107	0882402340	SHIM	AR			M	
	U3c010						

silvermorn.co.uk

ENGINE & ACCESSORIES (1/4)

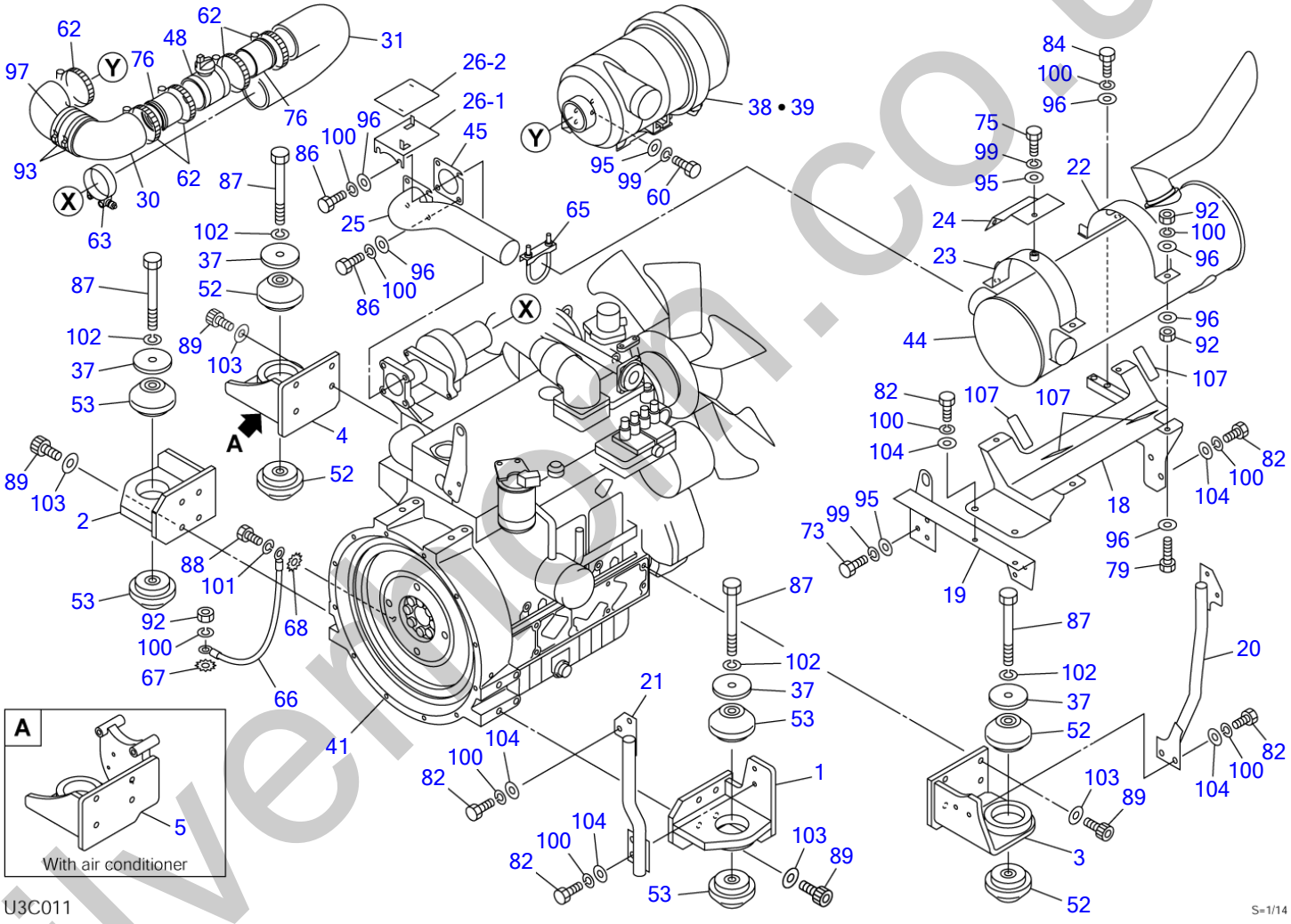

silvermoon.co.uk

ENGINE & ACCESSORIES (1/4)

Item	Part number	Description	Q'ty	Chan.	Serial No.	Serv.	Remarks
		ENGINE ASSY (for US) ENGINE ASSY (for EU) ENGINE ASSY (for US, with air conditioner) ENGINE ASSY (for EU, with air conditioner)					
1	0694002010	FOOT, engine (F.L.)	1				
2	0694002020	FOOT, engine (F.R.)	1				
3	0694002030	FOOT, engine (R.L.)	1				
4	0694002040	FOOT, engine (R.R.)	1				
5	0694002050	FOOT, engine (R.R.)	1				for air conditioner
18	0694002380	BRACKET	1				
19	0694002390	BRACKET	1				
20	0694002410	PIPE	1				
21	0694002400	PIPE	1				
22	0694002420	BAND	1				
23	0694000690	BAND	1				
24	0694000710	COVER	1				
25	0694002350	PIPE	1				
26	0694002360	PLATE ASSY	1				
26-1	0694002370	・PLATE	1				
26-2	0694002362	・INSULATOR	1				
30	0694002260	HOSE	1				
31	0694002270	HOSE	1				
37	0881400210	WASHER	4				
38	0694002300	CLEANER, air (for EU)	1				see page (4/4)
39	0694002450	PRECLEANER (for US)	1				see page (4/4)
41	1910261001	ENGINE	1				KUBOTA V3800DI-T
44	1911000800	SILENCER	1				
45	1910249022	GASKET	1				KUBOTA 19258-12231
48	1910261129	JOINT	1				
52	1651030004	RUBBER, cushion	4				
53	1651030023	RUBBER, cushion	4			M	
60	1100040820	BOLT	4				
62	1533700090	BAND	5				
63	1533701300	BAND	1				
65	1533300063	U-BOLT	1				
66	1702402001	CABLE, earth	1				
67	1140330010	WASHER	1				
68	1140330012	WASHER	1				
73	1100040830	BOLT	3				
75	1100040816	BOLT	2				
76	0684001360	PIPE	2			M	
79	1100041050	BOLT	4				
82	1100041030	BOLT	10				
84	1101041055	BOLT	2				
86	1104041035	BOLT	4			M	
87	1101141640	BOLT	4				
88	1102041220	BOLT	1				
89	1112021230	SCREW, cap	16				
92	1130040010	NUT	9				
93	1652290036	BAND	2			M	
95	1141110008	WASHER	9				
96	1141110010	WASHER	18				
97	0694001310	INSULATOR	1			M	
99	1140020008	WASHER, spring	9				
100	1140020010	WASHER, spring	21				
101	1140020012	WASHER, spring	1				
102	1140020016	WASHER, spring	4				
103	1141550012	WASHER	16				
104	0003600025	WASHER	10				
107	0882402340	SHIM	AR				
	U3c011						

silverthorn.co.uk

ENGINE & ACCESSORIES (2/4)

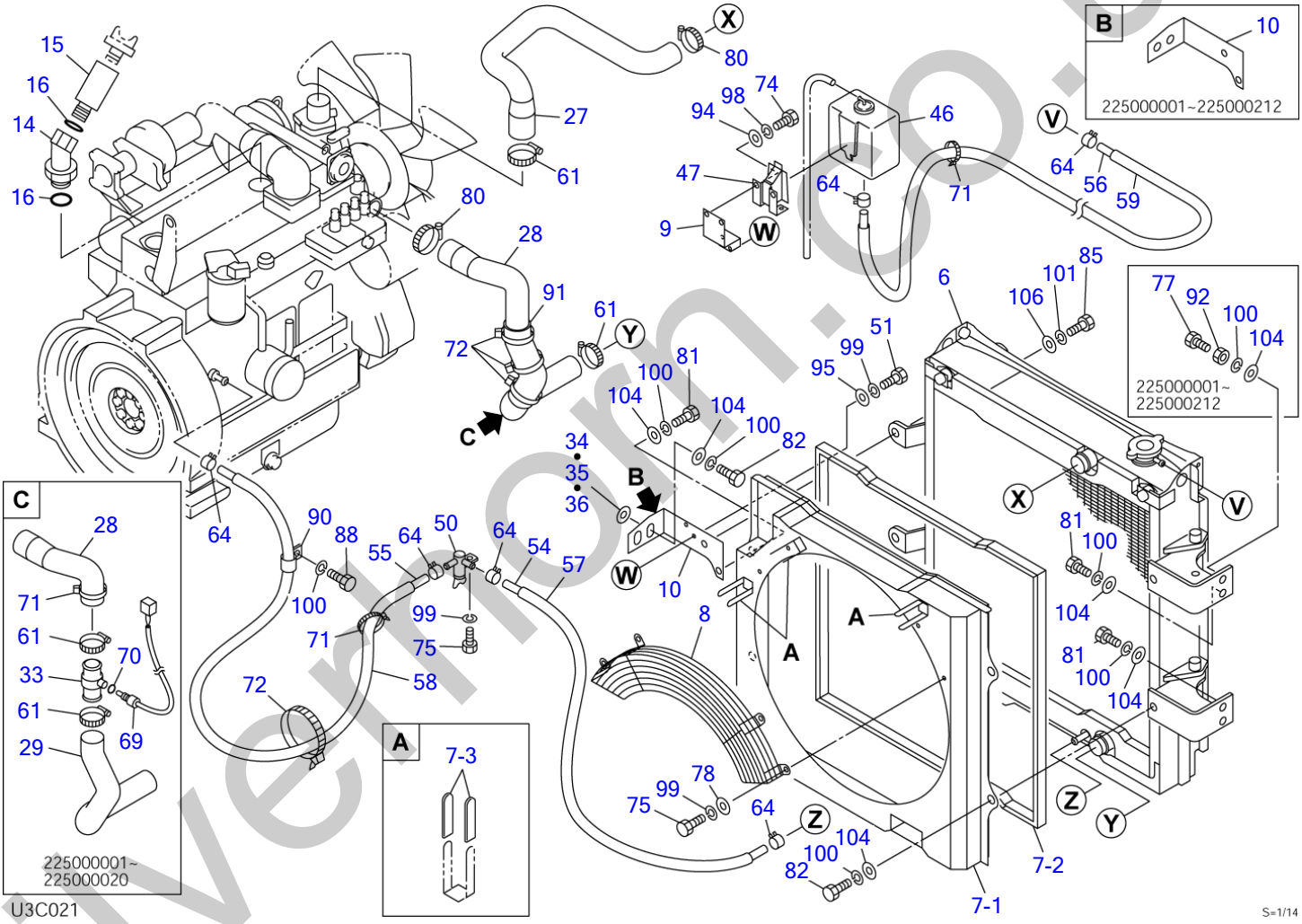

silvernorn.co.uk

ENGINE & ACCESSORIES (2/4)

Item	Part number	Description	Q'ty	Chan.	Serial No.	Serv.	Remarks
		ENGINE ASSY (for US) ENGINE ASSY (for EU) ENGINE ASSY (for US, with air conditioner) ENGINE ASSY (for EU, with air conditioner)					
6	0694002100	RADIATOR ASSY	1				see page (3/4)
7	0694002200	SHROUD ASSY	1				
7-1	0694002210	・SHROUD	1				
7-2	1654606264	・TRIM	1				sold by the meter
7-3	0872433150	・TUBE	6				
8	0694002250	GUARD	1				
9	0694001330	BRACKET	1		225000213~	M	
10	0694002190	BRACKET	2		225000001~225000212		
	0694001320	BRACKET	2	(H)	225000213~	M	
14	0694002430	PIPE	1				
15	0694002440	PIPE	1				
16	1420110300	O-RING	2				
27	0694002160	HOSE	1				
28	0694002170	HOSE	1		225000001~225000020		
	0694002150	HOSE	1		225000021~	M	
29	0694002180	HOSE	1		225000001~225000020		
33	0881402595	JOINT	1		225000001~225000020		
34	0881402470	SHIM	AR				t=1.6mm
35	0881402480	SHIM	AR				t=3.2mm
36	0881402490	SHIM	AR				t=4.5mm
46	1910249020	TANK	1				KUBOTA 15501-72404
47	1910249051	STAY	1				KUBOTA 15527-72461
50	1911900004	VALVE, drain	1			M	Y129150-49100
51	1100040825	BOLT	2				
54	1530808058	HOSE	1				sold by the meter
55	1530808152	HOSE	1				sold by the meter
56	1531407165	HOSE	1				sold by the meter
57	1531118026	PROTECTOR	2			M	sold by the meter
58	1531118073	PROTECTOR	2			M	sold by the meter
59	1531115160	PROTECTOR	1				sold by the meter
61	1533700054	BAND	2				
64	1533120012	BAND	6				
69	1700100046	SENSOR	1		225000001~225000020		
70	1420000100	O-RING	1		225000001~225000020		
71	1652241200	BAND	2				
72	1652201008	BAND	4				
74	1100040616	BOLT	2				
75	1100040816	BOLT	5				
77	1100041040	BOLT	1		225000001~225000212		
78	0003600011	WASHER	4				
80	1533700060	BAND	2				
81	1100041025	BOLT	6				
82	1100041030	BOLT	6				
85	1100041230	BOLT	2			M	
88	1102041220	BOLT	1				
90	0007300067	CLAMP	1			M	
91	0694002460	HOSE	1			M	
92	1130040010	NUT	1		225000001~225000212		
94	1141110006	WASHER	2				
95	1141110008	WASHER	2				
98	1140020006	WASHER, spring	2				
99	1140020008	WASHER, spring	7				
100	1140020010	WASHER, spring	13				
101	1140020012	WASHER, spring	2				
104	0003600025	WASHER	12				
106	0003600136	SHIM	AR				t=4.5mm
	U3c021						

silverhorn.co.uk

ENGINE & ACCESSORIES (2/4)

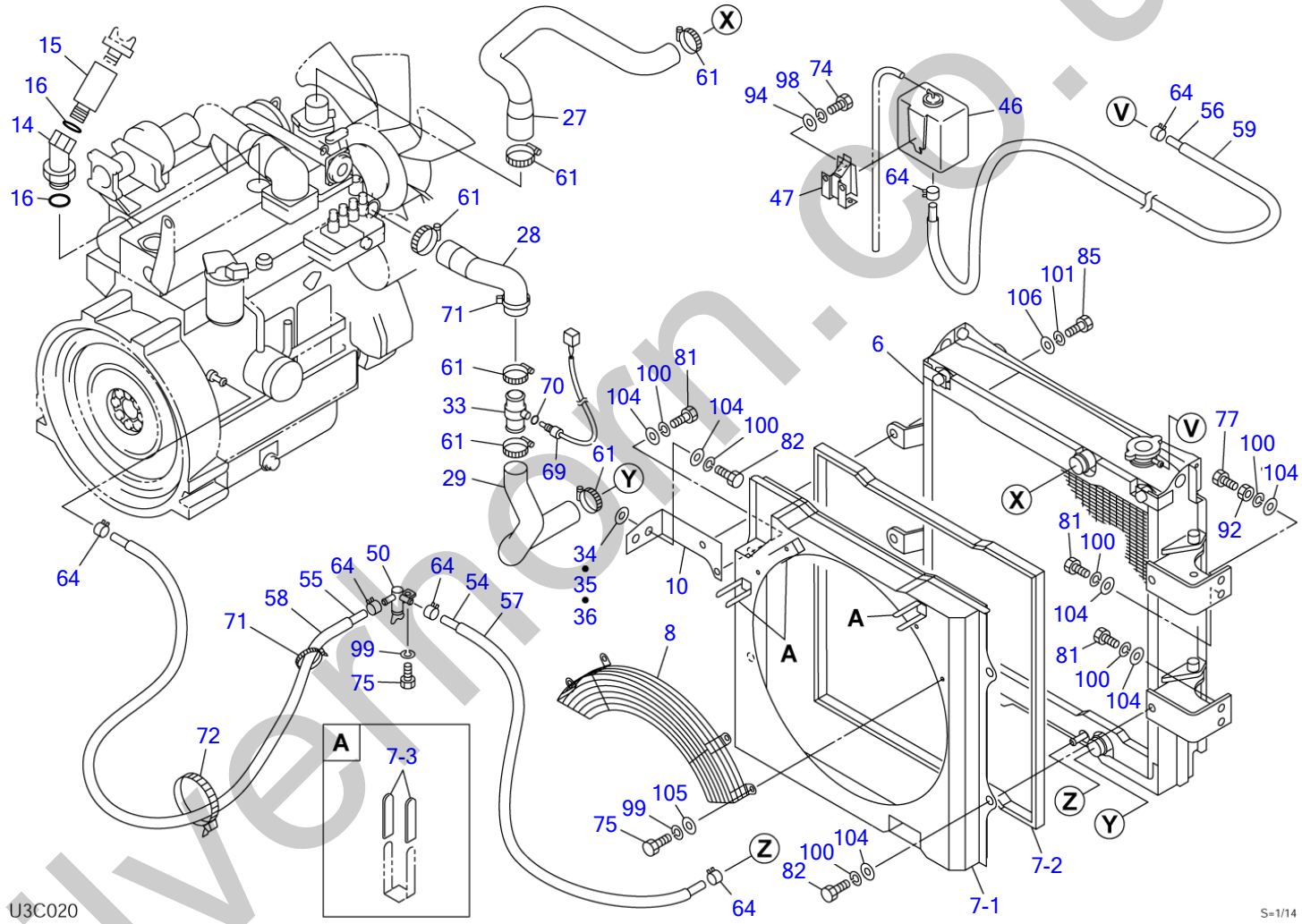

silvermarn.co.uk

ENGINE & ACCESSORIES (2/4)

Item	Part number	Description	Q'ty	Chan.	Serial No.	Serv.	Remarks
		ENGINE ASSY (for US) ENGINE ASSY (for EU) ENGINE ASSY (for US, with air conditioner) ENGINE ASSY (for EU, with air conditioner)					
6	0694002100	RADIATOR ASSY	1			M	see page (3/4)
7	0694002200	SHROUD ASSY	1			M	
7-1	0694002210	・SHROUD	1			M	
7-2	1654606264	・TRIM	1			M	sold by the meter
7-3	0872433150	・TUBE	6				
8	0694002250	GUARD	1			M	
10	0694002190	BRACKET	2			M	
14	0694002430	PIPE	1			M	
15	0694002440	PIPE	1			M	
16	1420110300	O-RING	2			M	
27	0694002160	HOSE	1			M	
28	0694002170	HOSE	1			M	
29	0694002180	HOSE	1			M	
33	0881402595	JOINT	1				
34	0881402470	SHIM	AR				t=1.6mm
35	0881402480	SHIM	AR				t=3.2mm
36	0881402490	SHIM	AR				t=4.5mm
46	1910249020	TANK	1			M	KUBOTA 15501-72404
47	1910249051	STAY	1			M	KUBOTA 15527-72461
50	1910078037	VALVE, drain	1				Y129150-49100
54	1530808058	HOSE	1				sold by the meter
55	1530808152	HOSE	1			M	sold by the meter
56	1531407165	HOSE	1			M	sold by the meter
57	1531115026	PROTECTOR	2				sold by the meter
58	1531115073	PROTECTOR	2			M	sold by the meter
59	1531115160	PROTECTOR	1				sold by the meter
61	1533700054	BAND	6				
64	1533120012	BAND	6				
69	1700100046	SENSOR	1				
70	1420000100	O-RING	1				
71	1652241200	BAND	2				
72	1652241400	BAND	1				
74	1100040616	BOLT	2				
75	1100040816	BOLT	5				
77	1100041040	BOLT	1			M	
81	1100041025	BOLT	5				
82	1100041030	BOLT	6				
85	1100041235	BOLT	2				
92	1130040010	NUT	1				
94	1141110006	WASHER	2				
98	1140020006	WASHER, spring	2				
99	1140020008	WASHER, spring	5				
100	1140020010	WASHER, spring	12				
101	1140020012	WASHER, spring	2				
104	0003600025	WASHER	12				
105	0003600011	WASHER	4				
106	0003600136	SHIM	AR				t=4.5mm
	U3c020						

silvethorn.co.uk

ENGINE & ACCESSORIES (3/4)

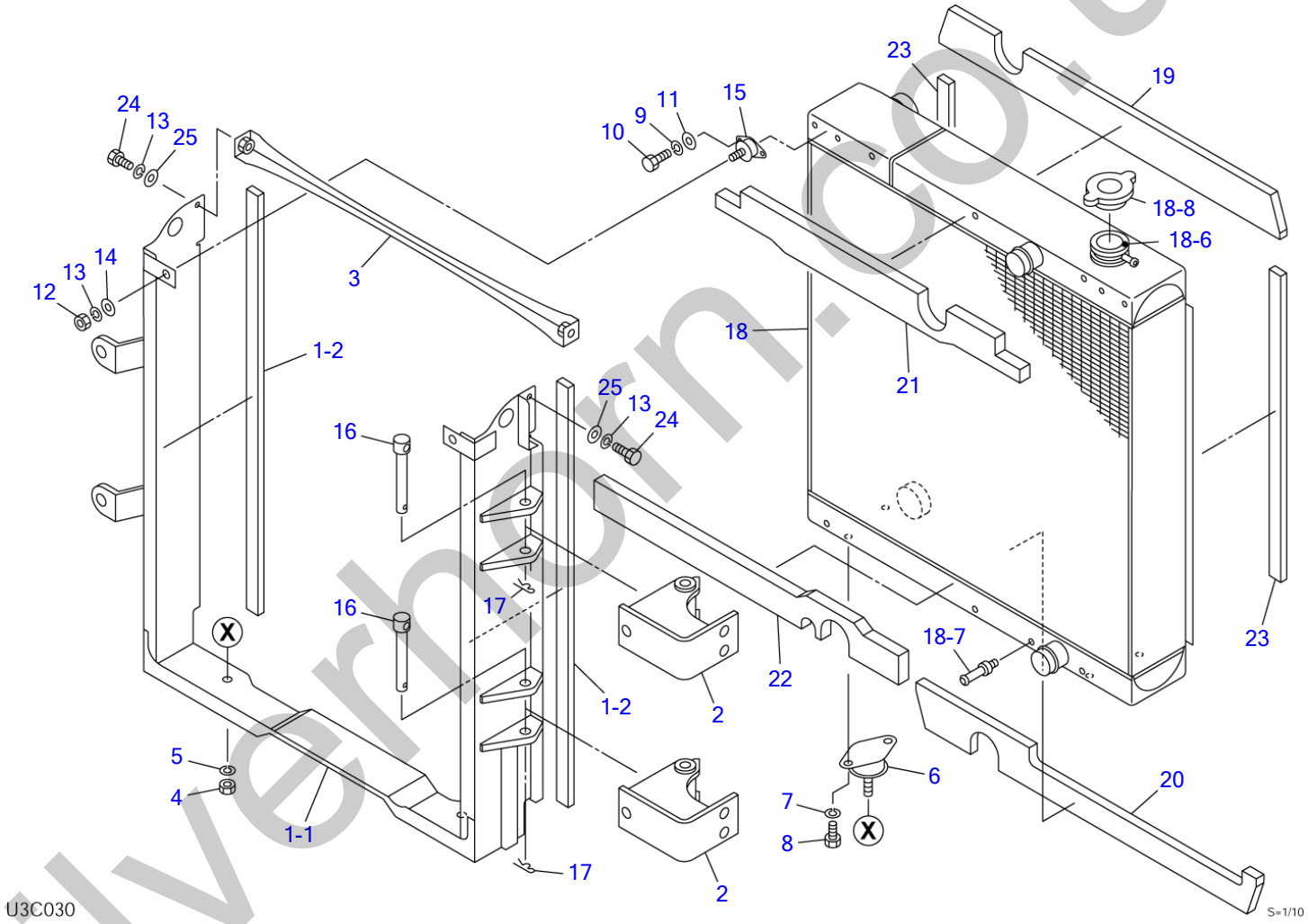

silverhorn.co.uk

ENGINE & ACCESSORIES (3/4)

Item	Part number	Description	Q'ty	Chan.	Serial No.	Serv.	Remarks
0-1	0694002100	RADIATOR ASSY					
1	0694002110	・FRAME ASSY	1				
1-1	0694002120	・・FRAME	1				
1-2	1654343076	・・SPONGE	2				sold by the meter
2	0694000410	・HINGE	2				
3	0694000450	・STAY	1				
4	1130040012	・NUT	2				
5	1140020012	・WASHER, spring	2				
6	0880408580	・RUBBER, cushion	2				
7	1140020010	・WASHER, spring	4				
8	1100041016	・BOLT	4				
9	1140020006	・WASHER, spring	4				
10	1100040612	・BOLT	4				
11	1141110006	・WASHER	4				
12	1130040008	・NUT	2				
13	1140020008	・WASHER, spring	4				
14	0003608252	・WASHER	2				
15	1651021030	・RUBBER, cushion	2				
16	0881402180	・PIN	2				
17	1214000016	・PIN, snap	2				
18	1911300350	・RADIATOR & COOLER, oil	1				
18-6	1911300076	・・FITTING, hose	1				
18-7	1911300077	・・NIPPLE	1				
18-8	1911300078	・・CAP, radiator	1				
19	0694000480	・SPONGE	1				
20	0694000490	・SPONGE	1				
21	0694002130	・SPONGE	1				
22	0694002140	・SPONGE	1				
23	1654344060	・SPONGE	2			M	sold by the meter
24	1100040820	・BOLT	2				
25	1141110008	・WASHER	2				
	U3c031						

silverhorn.co.uk

ENGINE & ACCESSORIES (4/4)

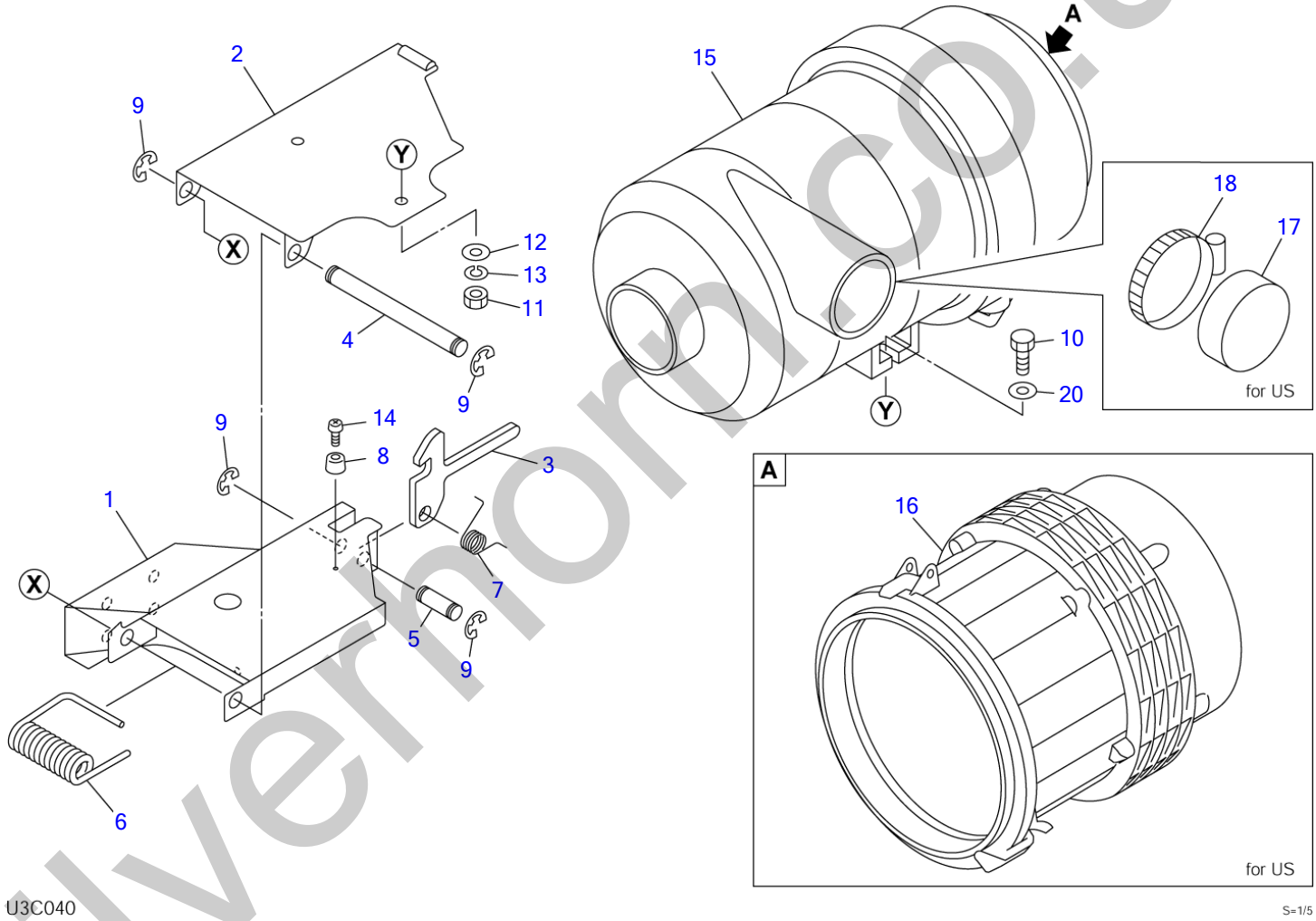

silverhorn.co.uk

ENGINE & ACCESSORIES (4/4)

Item	Part number	Description	Q'ty	Chan.	Serial No.	Serv.	Remarks
0-2	0694002300	CLEANER ASSY, air (for EU)	1				
	0694002450	PRECLEANER ASSY (for US)	1				
1	0694002310	・BRACKET	1				
2	0694001220	・PLATE	1				
3	0664001250	・PLATE	1				
4	0664000704	・PIN	1				
5	0664000705	・PIN	1				
6	0664000706	・SPRING	1				
7	0664000707	・SPRING	1				
8	1652111610	・RUBBER	1				
9	1224010010	・RING, retaining	4				
10	1100240830	・BOLT	2				
11	1130040008	・NUT	2				
12	0003608252	・WASHER	2				
13	1140020008	・WASHER, spring	2				
14	1120530308	・SCREW	1				
15	1910261007	・CLEANER, air	1				
16	1911240210	・PRECLEANER	1				for US
17	1911240230	・CAP	1				for US
18	1911240240	・BAND	1				for US
20	1141110008	・WASHER	2				
	U3c040						

silverhorn.co.uk

ENGINE & ACCESSORIES (1/4) (for GEHL & MUSTANG)

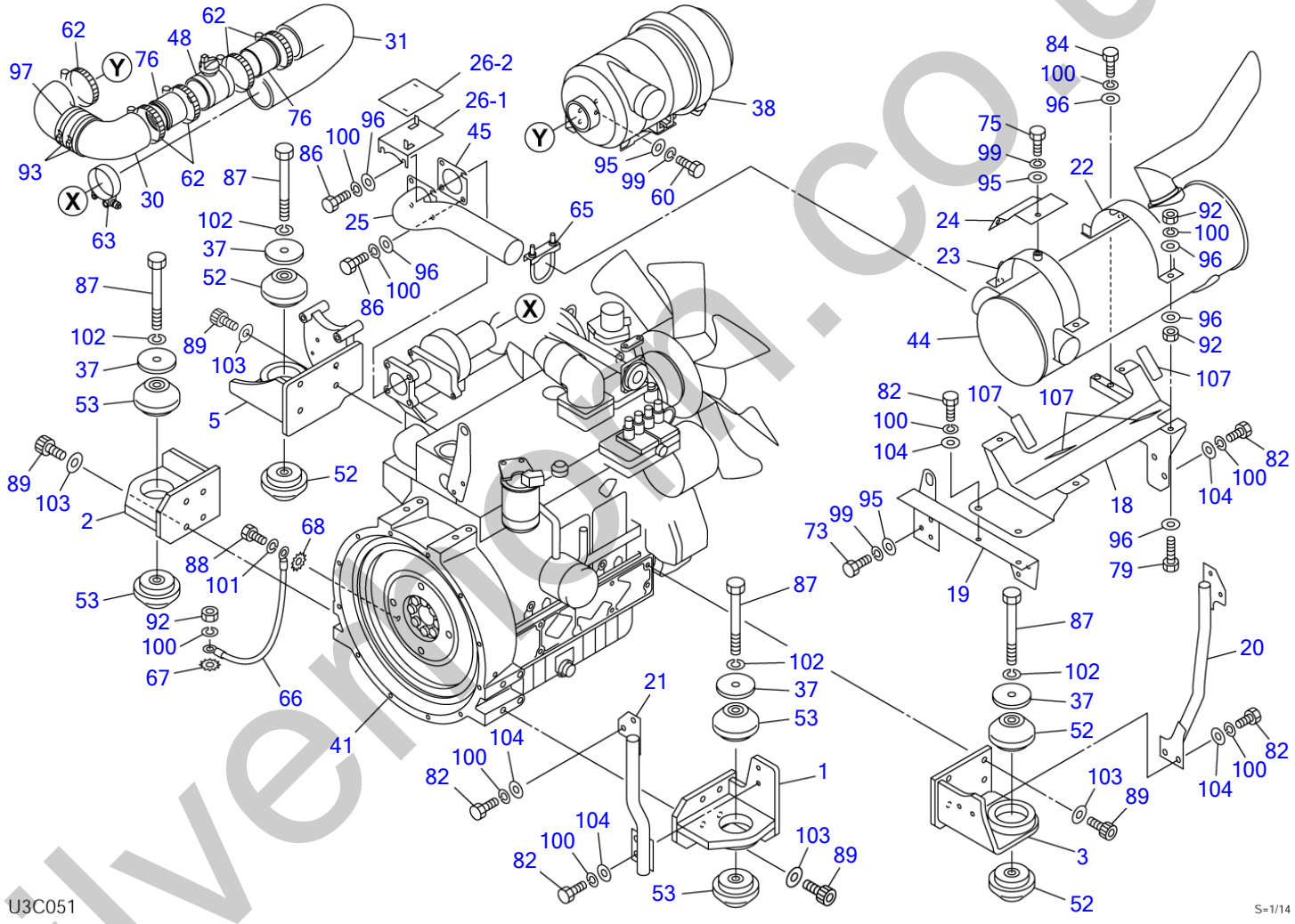

silvermoon.co.uk

ENGINE & ACCESSORIES (1/4) (for GEHL & MUSTANG)

Item	Part number	Description	Q'ty	Chan.	Serial No.	Serv.	Remarks
		ENGINE ASSY					
1	0694002010	FOOT, engine (F.L.)	1				
2	0694002020	FOOT, engine (F.R.)	1				
3	0694002030	FOOT, engine (R.L.)	1				
5	0694002050	FOOT, engine (R.R.)	1				
18	0694002380	BRACKET	1				
19	0694002390	BRACKET	1				
20	0694002410	PIPE	1				
21	0694002400	PIPE	1				
22	0694002420	BAND	1				
23	0694000690	BAND	1				
24	0694000710	COVER	1				
25	0694002350	PIPE	1				
26	0694002360	PLATE ASSY	1				
26-1	0694002370	・PLATE	1				
26-2	0694002362	・INSULATOR	1				
30	0694002260	HOSE	1				
31	0694002270	HOSE	1				
37	0881400210	WASHER	4				
38	0694002300	CLEANER, air	1				see page (4/4)
41	1910261001	ENGINE	1				KUBOTA V3800DI-T
44	1911000800	SILENCER	1				
45	1910249022	GASKET	1				KUBOTA 19258-12231
48	1910261129	JOINT	1				
52	1651030004	RUBBER, cushion	4				
53	1651030023	RUBBER, cushion	4			M	
60	1100040820	BOLT	4				
62	1533700090	BAND	5				
63	1533701300	BAND	1				
65	1533300063	U-BOLT	1				
66	1702402001	CABLE, earth	1				
67	1140330010	WASHER	1				
68	1140330012	WASHER	1				
73	1100040830	BOLT	3				
75	1100040816	BOLT	2				
76	0684001360	PIPE	2			M	
79	1100041050	BOLT	4				
82	1100041030	BOLT	10				
84	1101041055	BOLT	2				
86	1104041035	BOLT	4			M	
87	1101141640	BOLT	4				
88	1102041220	BOLT	1				
89	1112021230	SCREW, cap	16				
92	1130040010	NUT	9				
93	1652290036	BAND	2			M	
95	1141110008	WASHER	9				
96	1141110010	WASHER	18				
97	0694001310	INSULATOR	1			M	
99	1140020008	WASHER, spring	9				
100	1140020010	WASHER, spring	21				
101	1140020012	WASHER, spring	1				
102	1140020016	WASHER, spring	4				
103	1141550012	WASHER	16				
104	0003600025	WASHER	10				
107	0882402340	SHIM	AR				
	U3c051						

silvethorn.co.uk

ENGINE & ACCESSORIES (1/4) (for GEHL & MUSTANG)

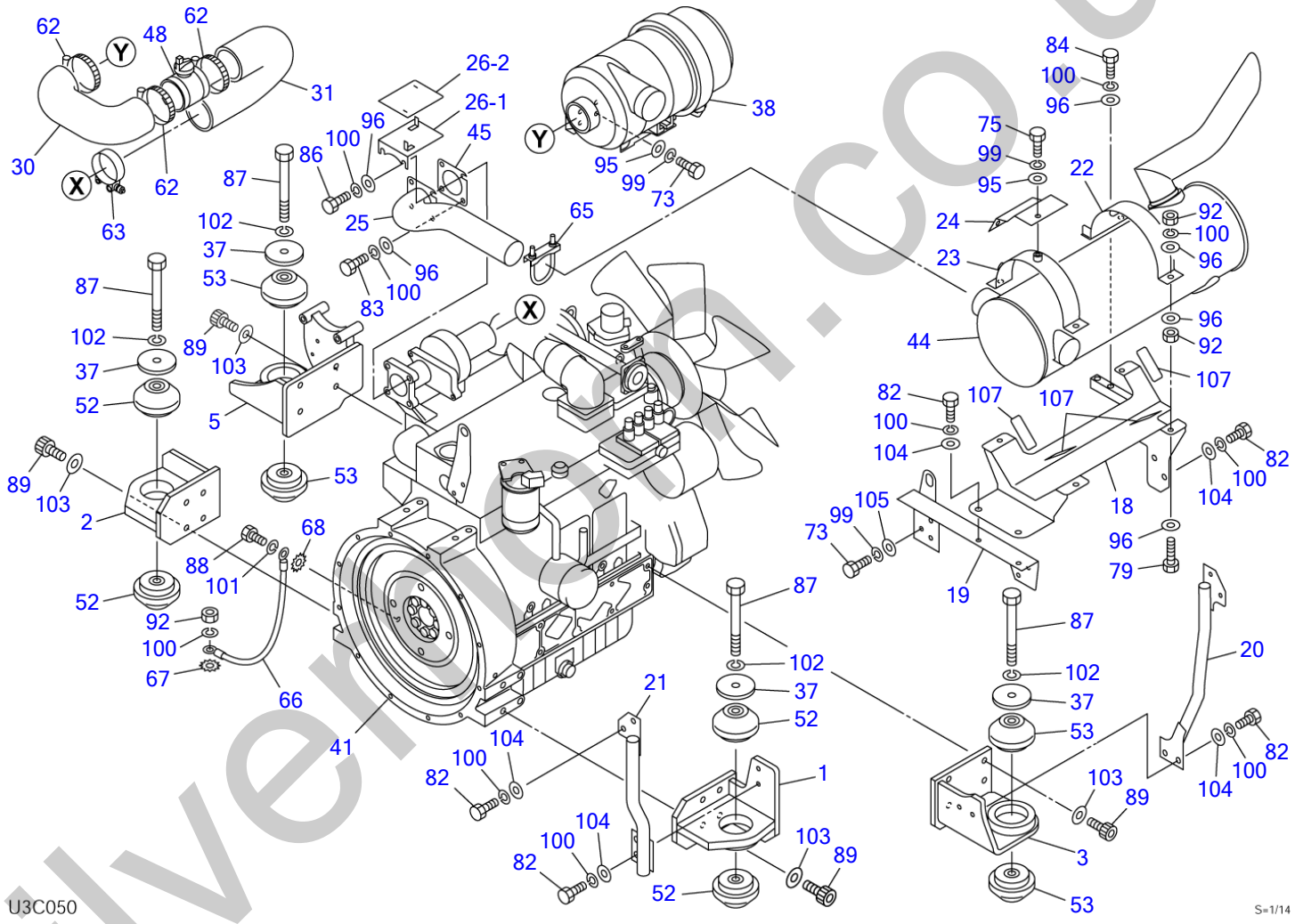

silvermoon.co.uk

ENGINE & ACCESSORIES (1/4) (for GEHL & MUSTANG)

Item	Part number	Description	Q'ty	Chan.	Serial No.	Serv.	Remarks
		ENGINE ASSY					
1	0694002010	FOOT, engine (F.L.)	1			M	
2	0694002020	FOOT, engine (F.R.)	1			M	
3	0694002030	FOOT, engine (R.L.)	1			M	
5	0694002050	FOOT, engine (R.R.)	1			M	
18	0694002380	BRACKET	1			M	
19	0694002390	BRACKET	1			M	
20	0694002410	PIPE	1			M	
21	0694002400	PIPE	1			M	
22	0694002420	BAND	1			M	
23	0694000690	BAND	1			M	
24	0694000710	COVER	1			M	
25	0694002350	PIPE	1			M	
26	0694002360	PLATE ASSY	1			M	
26-1	0694002370	・PLATE	1			M	
26-2	0694002362	・INSULATOR	1			M	
30	0694002260	HOSE	1			M	
31	0694002270	HOSE	1			M	
37	0881400210	WASHER	4				
38	0694002300	CLEANER, air	1			M	see page (4/4)
41	1910261001	ENGINE	1			M	KUBOTA V3800DI-T
44	1911000800	SILENCER	1			M	
45	1910249022	GASKET	1			M	KUBOTA 19258-12231
48	1910261129	JOINT	1			M	
52	1651030004	RUBBER, cushion	4			M	
53	1651030010	RUBBER, cushion	4			M	
62	1533700090	BAND	3				
63	1533701300	BAND	1			M	
65	1533300063	U-BOLT	1			M	
66	1702402001	CABLE, earth	1				
67	1140330010	WASHER	1				
68	1140330012	WASHER	1			M	
73	1100040830	BOLT	7				
75	1100040816	BOLT	2				
79	1100041050	BOLT	4				
82	1100041030	BOLT	10				
83	1101041030	BOLT	2			M	
84	1101041055	BOLT	2			M	
86	1101041035	BOLT	2			M	
87	1101141640	BOLT	4				
88	1102041220	BOLT	1			M	
89	1112021230	SCREW, cap	16			M	
92	1130040010	NUT	9				
95	1141110008	WASHER	6				
96	1141110010	WASHER	18				
99	1140020008	WASHER, spring	9				
100	1140020010	WASHER, spring	21				
101	1140020012	WASHER, spring	1				
102	1140020016	WASHER, spring	4				
103	1141550012	WASHER	16				
104	0003600025	WASHER	10				
105	0003600011	WASHER	3				
107	0882402340	SHIM	AR			M	
	U3c050						

silverthorn.co.uk

ENGINE & ACCESSORIES (2/4) (for GEHL & MUSTANG)

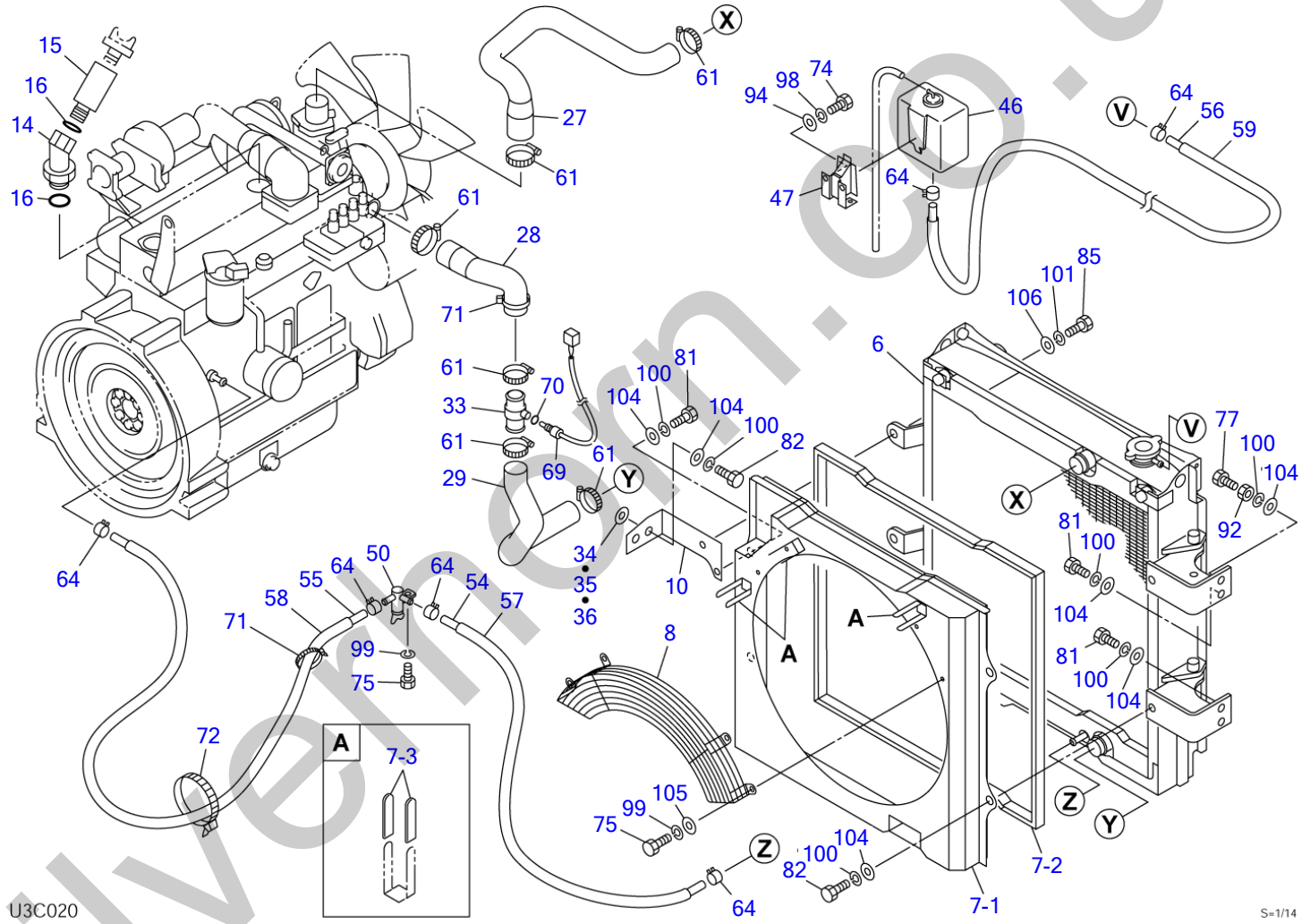

silvermarn.co.uk

ENGINE & ACCESSORIES (2/4) (for GEHL & MUSTANG)

Item	Part number	Description	Q'ty	Chan.	Serial No.	Serv.	Remarks
		ENGINE ASSY					
6	0694002100	RADIATOR ASSY	1			M	see page (3/4)
7	0694002200	SHROUD ASSY	1			M	
7-1	0694002210	・SHROUD	1			M	
7-2	1654606264	・TRIM	1			M	sold by the meter
7-3	0872433150	・TUBE	6				
8	0694002250	GUARD	1			M	
10	0694002190	BRACKET	2			M	
14	0694002430	PIPE	1			M	
15	0694002440	PIPE	1			M	
16	1420110300	O-RING	2			M	
27	0694002160	HOSE	1			M	
28	0694002170	HOSE	1			M	
29	0694002180	HOSE	1			M	
33	0881402595	JOINT	1				
34	0881402470	SHIM	AR				t=1.6mm
35	0881402480	SHIM	AR				t=3.2mm
36	0881402490	SHIM	AR				t=4.5mm
46	1910249020	TANK	1			M	KUBOTA 15501-72404
47	1910249051	STAY	1			M	KUBOTA 15527-72461
50	1910078037	VALVE, drain	1				Y129150-49100
54	1530808058	HOSE	1				sold by the meter
55	1530808152	HOSE	1			M	sold by the meter
56	1531407165	HOSE	1			M	sold by the meter
57	1531115026	PROTECTOR	2				sold by the meter
58	1531115073	PROTECTOR	2			M	sold by the meter
59	1531115160	PROTECTOR	1				sold by the meter
61	1533700054	BAND	6				
64	1533120012	BAND	6				
69	1700100046	SENSOR	1				
70	1420000100	O-RING	1				
71	1652241200	BAND	2				
72	1652241400	BAND	1				
74	1100040616	BOLT	2				
75	1100040816	BOLT	5				
77	1100041040	BOLT	1			M	
81	1100041025	BOLT	5				
82	1100041030	BOLT	6				
85	1100041235	BOLT	2				
92	1130040010	NUT	1				
94	1141110006	WASHER	2				
98	1140020006	WASHER, spring	2				
99	1140020008	WASHER, spring	5				
100	1140020010	WASHER, spring	12				
101	1140020012	WASHER, spring	2				
104	0003600025	WASHER	12				
105	0003600011	WASHER	4				
106	0003600136	SHIM	AR				t=4.5mm
	U3c060						

silvethorn.co.uk

ENGINE & ACCESSORIES (2/4) (for GEHL & MUSTANG)

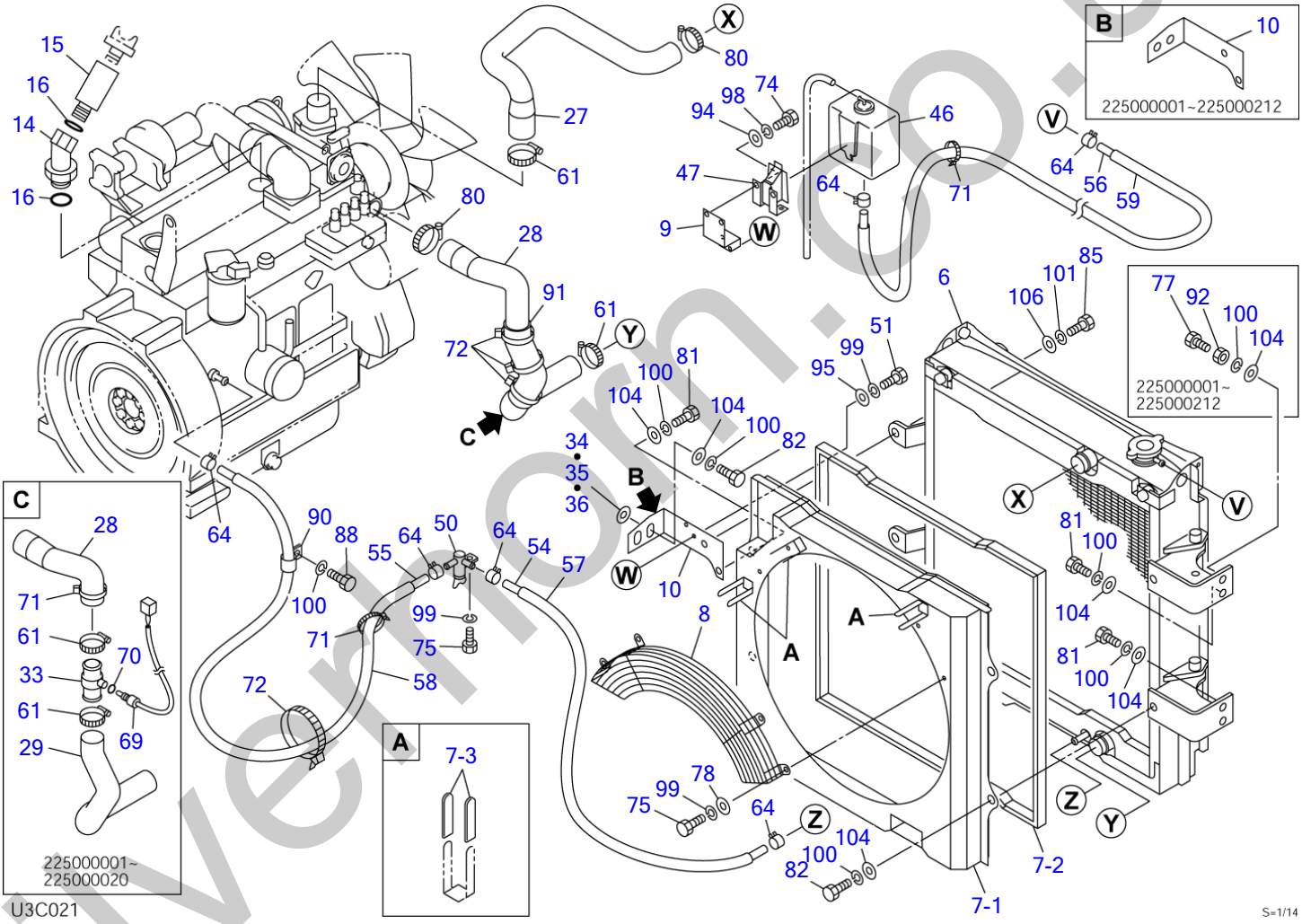

silvernorn.co.uk

ENGINE & ACCESSORIES (2/4) (for GEHL & MUSTANG)

Item	Part number	Description	Q'ty	Chan.	Serial No.	Serv.	Remarks
		ENGINE ASSY					
6	0694002100	RADIATOR ASSY	1				see page (3/4)
7	0694002200	SHROUD ASSY	1				
7-1	0694002210	・SHROUD	1				
7-2	1654606264	・TRIM	1				sold by the meter
7-3	0872433150	・TUBE	6				
8	0694002250	GUARD	1				
9	0694001330	BRACKET	1		225000213~	M	
10	0694002190	BRACKET	2		225000001~225000212		
	0694001320	BRACKET	2	(H)	225000213~	M	
14	0694002430	PIPE	1				
15	0694002440	PIPE	1				
16	1420110300	O-RING	2				
27	0694002160	HOSE	1				
28	0694002170	HOSE	1		225000001~225000020		
	0694002150	HOSE	1		225000021~	M	
29	0694002180	HOSE	1		225000001~225000020		
33	0881402595	JOINT	1		225000001~225000020		
34	0881402470	SHIM	AR				t=1.6mm
35	0881402480	SHIM	AR				t=3.2mm
36	0881402490	SHIM	AR				t=4.5mm
46	1910249020	TANK	1				KUBOTA 15501-72404
47	1910249051	STAY	1				KUBOTA 15527-72461
50	1911900004	VALVE, drain	1			M	Y129150-49100
51	1100040825	BOLT	2				
54	1530808058	HOSE	1				sold by the meter
55	1530808152	HOSE	1				sold by the meter
56	1531407165	HOSE	1				sold by the meter
57	1531118026	PROTECTOR	2			M	sold by the meter
58	1531118073	PROTECTOR	2			M	sold by the meter
59	1531115160	PROTECTOR	1				sold by the meter
61	1533700054	BAND	2				
64	1533120012	BAND	6				
69	1700100046	SENSOR	1		225000001~225000020		
70	1420000100	O-RING	1		225000001~225000020		
71	1652241200	BAND	2				
72	1652201008	BAND	4				
74	1100040616	BOLT	2				
75	1100040816	BOLT	5				
77	1100041040	BOLT	1		225000001~225000212		
78	0003600011	WASHER	4				
80	1533700060	BAND	2				
81	1100041025	BOLT	6				
82	1100041030	BOLT	6				
85	1100041230	BOLT	2			M	
88	1102041220	BOLT	1				
90	0007300067	CLAMP	1			M	
91	0694002460	HOSE	1			M	
92	1130040010	NUT	1		225000001~225000212		
94	1141110006	WASHER	2				
95	1141110008	WASHER	2				
98	1140020006	WASHER, spring	2				
99	1140020008	WASHER, spring	7				
100	1140020010	WASHER, spring	13				
101	1140020012	WASHER, spring	2				
104	0003600025	WASHER	12				
106	0003600136	SHIM	AR				t=4.5mm
	U3c061						

silvethorn.co.uk

ENGINE & ACCESSORIES (3/4) (for GEHL & MUSTANG)

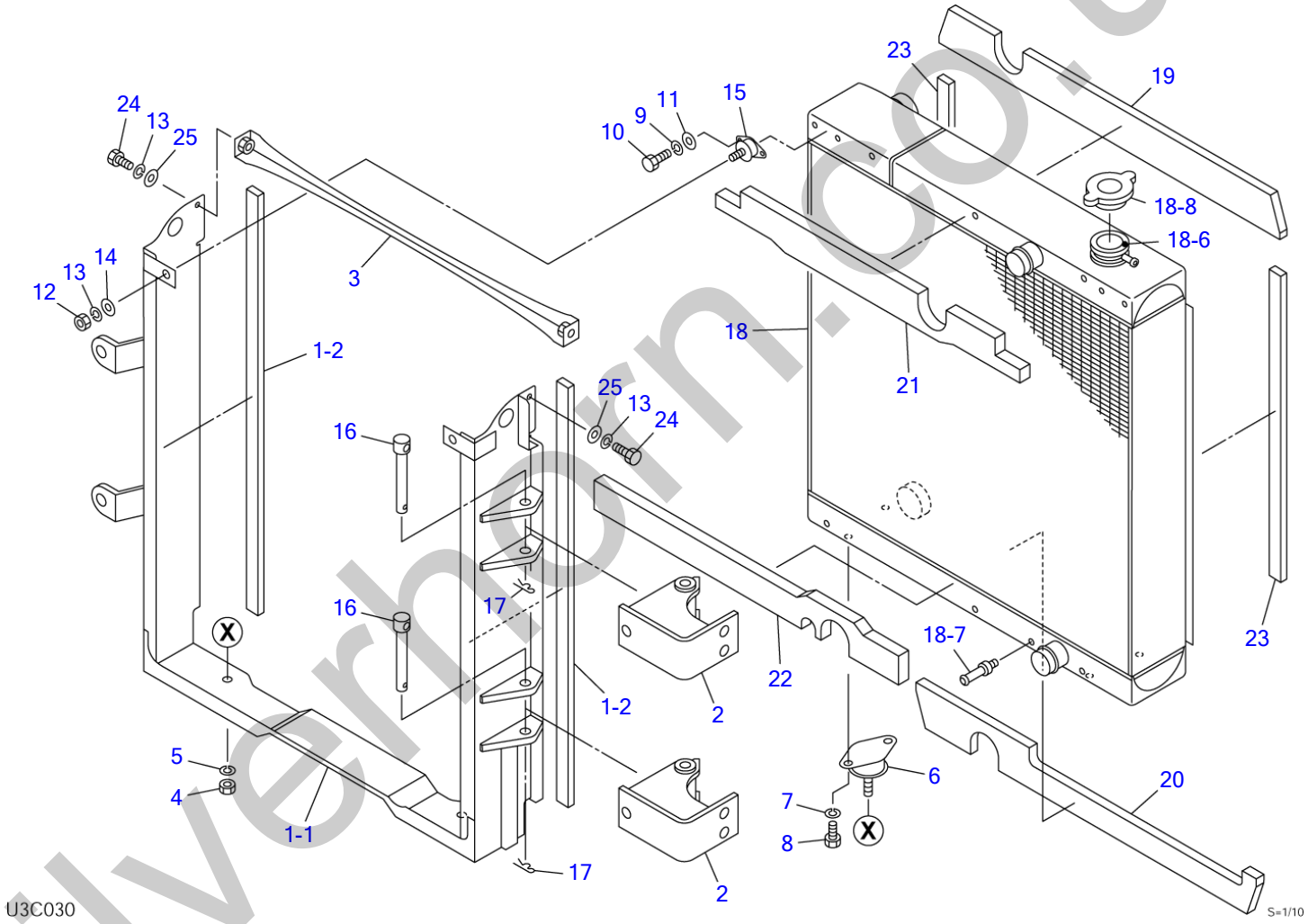

silverhorn.co.uk

ENGINE & ACCESSORIES (3/4) (for GEHL & MUSTANG)

Item	Part number	Description	Q'ty	Chan.	Serial No.	Serv.	Remarks
0-1	0694002100	RADIATOR ASSY					
1	0694002110	・FRAME ASSY	1				
1-1	0694002120	・・FRAME	1				
1-2	1654343076	・・SPONGE	2				sold by the meter
2	0694000410	・HINGE	2				
3	0694000450	・STAY	1				
4	1130040012	・NUT	2				
5	1140020012	・WASHER, spring	2				
6	0880408580	・RUBBER, cushion	2				
7	1140020010	・WASHER, spring	4				
8	1100041016	・BOLT	4				
9	1140020006	・WASHER, spring	4				
10	1100040612	・BOLT	4				
11	1141110006	・WASHER	4				
12	1130040008	・NUT	2				
13	1140020008	・WASHER, spring	4				
14	0003608252	・WASHER	2				
15	1651021030	・RUBBER, cushion	2				
16	0881402180	・PIN	2				
17	1214000016	・PIN, snap	2				
18	1911300350	・RADIATOR & COOLER, oil	1				
18-6	1911300076	・・FITTING, hose	1				
18-7	1911300077	・・NIPPLE	1				
18-8	1911300078	・・CAP, radiator	1				
19	0694000480	・SPONGE	1				
20	0694000490	・SPONGE	1				
21	0694002130	・SPONGE	1				
22	0694002140	・SPONGE	1				
23	1654344060	・SPONGE	2			M	sold by the meter
24	1100040820	・BOLT	2				
25	1141110008	・WASHER	2				
	U3c031						

silverhorn.co.uk

ENGINE & ACCESSORIES (4/4) (for GEHL & MUSTANG)

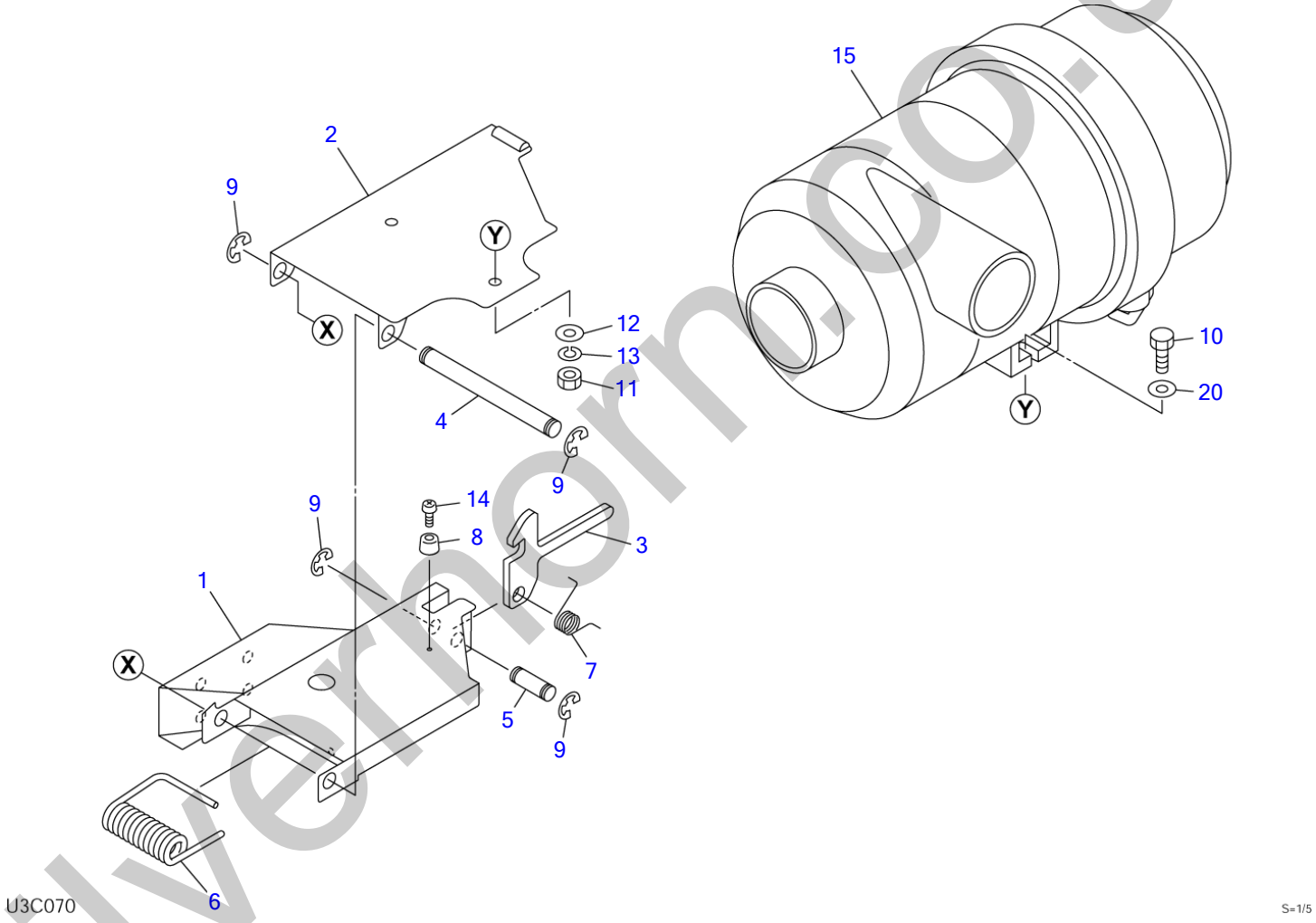

silverhorse.co.uk

ENGINE & ACCESSORIES (4/4) (for GEHL & MUSTANG)

Item	Part number	Description	Q'ty	Chan.	Serial No.	Serv.	Remarks
0-2	0694002300	CLEANER ASSY, air	1				
1	0694002310	・BRACKET	1				
2	0694001220	・PLATE	1				
3	0664001250	・PLATE	1				
4	0664000704	・PIN	1				
5	0664000705	・PIN	1				
6	0664000706	・SPRING	1				
7	0664000707	・SPRING	1				
8	1652111610	・RUBBER	1				
9	1224010010	・RING, retaining	4				
10	1100240830	・BOLT	2				
11	1130040008	・NUT	2				
12	0003608252	・WASHER	2				
13	1140020008	・WASHER, spring	2				
14	1120530308	・SCREW	1				
15	1910261007	・CLEANER, air	1				
20	1141110008	・WASHER	2				
	U3c070						

silverhorn.co.uk

DRAIN PLUG

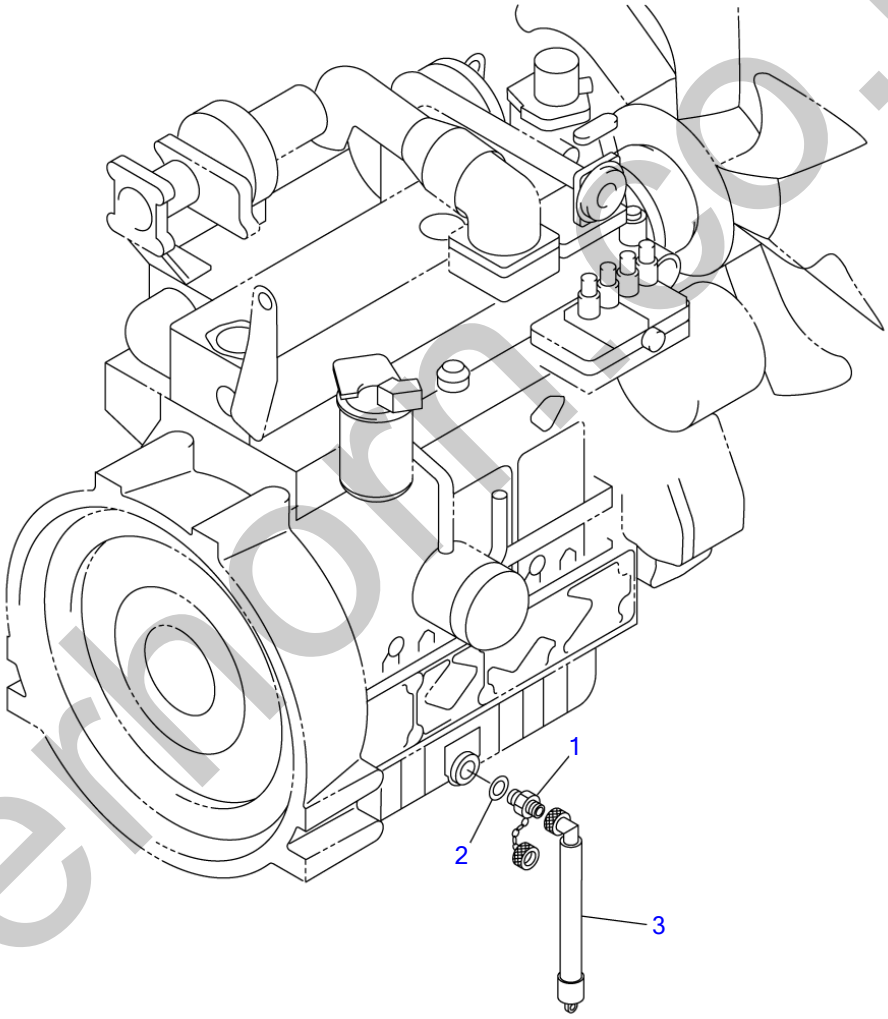

U3C080

S=1/8

silverloom.co.uk

DRAIN PLUG

Item	Part number	Description	Q'ty	Chan.	Serial No.	Serv.	Remarks
		PLUG ASSY, drain					
1	1554502250	PLUG	1				
2	1432122302	WASHER	1				
3	1554512601	TUBE	1				
	T8c031						

silverhorn.co.uk

CONTROL BOX; R.H. (225000001-225000074)

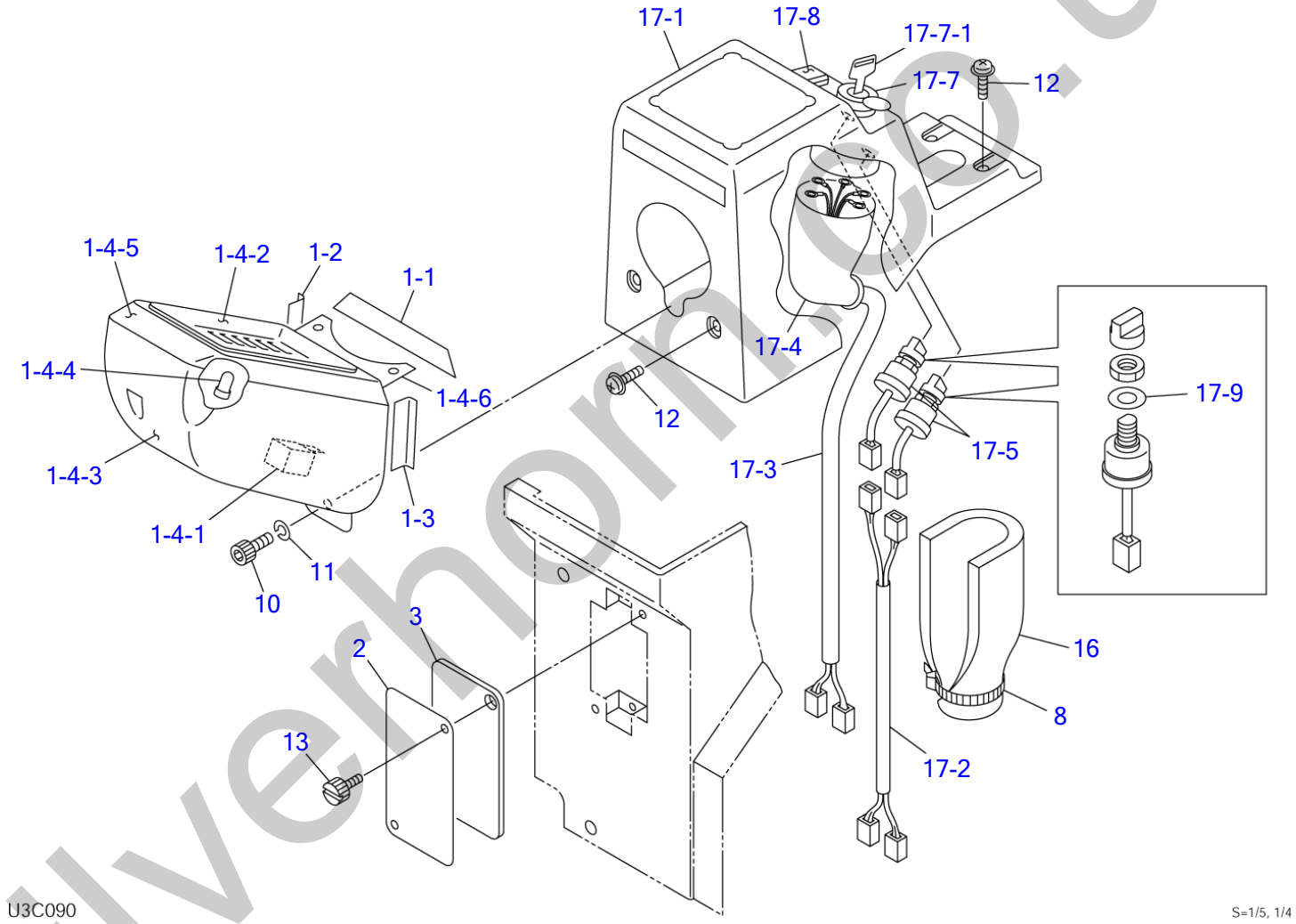

silverhorn.co.uk

CONTROL BOX; R.H. (225000001-225000074)

Item	Part number	Description	Q'ty	Chan.	Serial No.	Serv.	Remarks
		COVER ASSY (R.H.)					
1	0881430910	GAUGE ASSY, cluster	1				
1-1	0881430901	・ABSORBENT, noise	1				
1-2	0881430902	・ABSORBENT, noise	1				
1-3	0881430903	・ABSORBENT, noise	1				
1-4	1730140920	・GAUGE, cluster	1				
1-4-1	1730140691	・・RELAY	1				12V
1-4-2	1730140782	・・GLASS	1				
1-4-3	1730140785	・・COVER	1				
1-4-4	1730140696	・・BULB	10				14V, 1.4W
1-4-5	1730140788	・・VISOR	1				
1-4-6	1730140694	・・BRACKET	1				
2	0881430802	COVER	1				
3	0881430803	INSULATOR	1				
8	1652231250	BAND	1				
10	1110020820	SCREW, cap	1				
11	1140090008	WASHER, spring	1				
12	1150420614	SCREW	4				
13	1652711698	SCREW	2				
16	0881430805	INSULATOR	1				
17	0882430100	COVER ASSY, sub (R.H.)	1				
17-1	0881430870	・COVER (R.H.)	1				
17-2	0881430880	・HARNESS, wiring	1				
17-3	0881430960	・HARNESS, wiring	1				
17-4	0870431821	・COVER	1				
17-5	1700000010	・SWITCH, lamp	2				
17-7	1700100052	・SWITCH, starter	1				
17-7-1	1700100019	・KEY	1				
17-8	1700550024	・ORNAMENT	1				
17-9	1141810012	・WASHER	2				
	U3c090						

silverhorn.co.uk

CONTROL BOX; R.H. (high flow; 225000001-225000074)

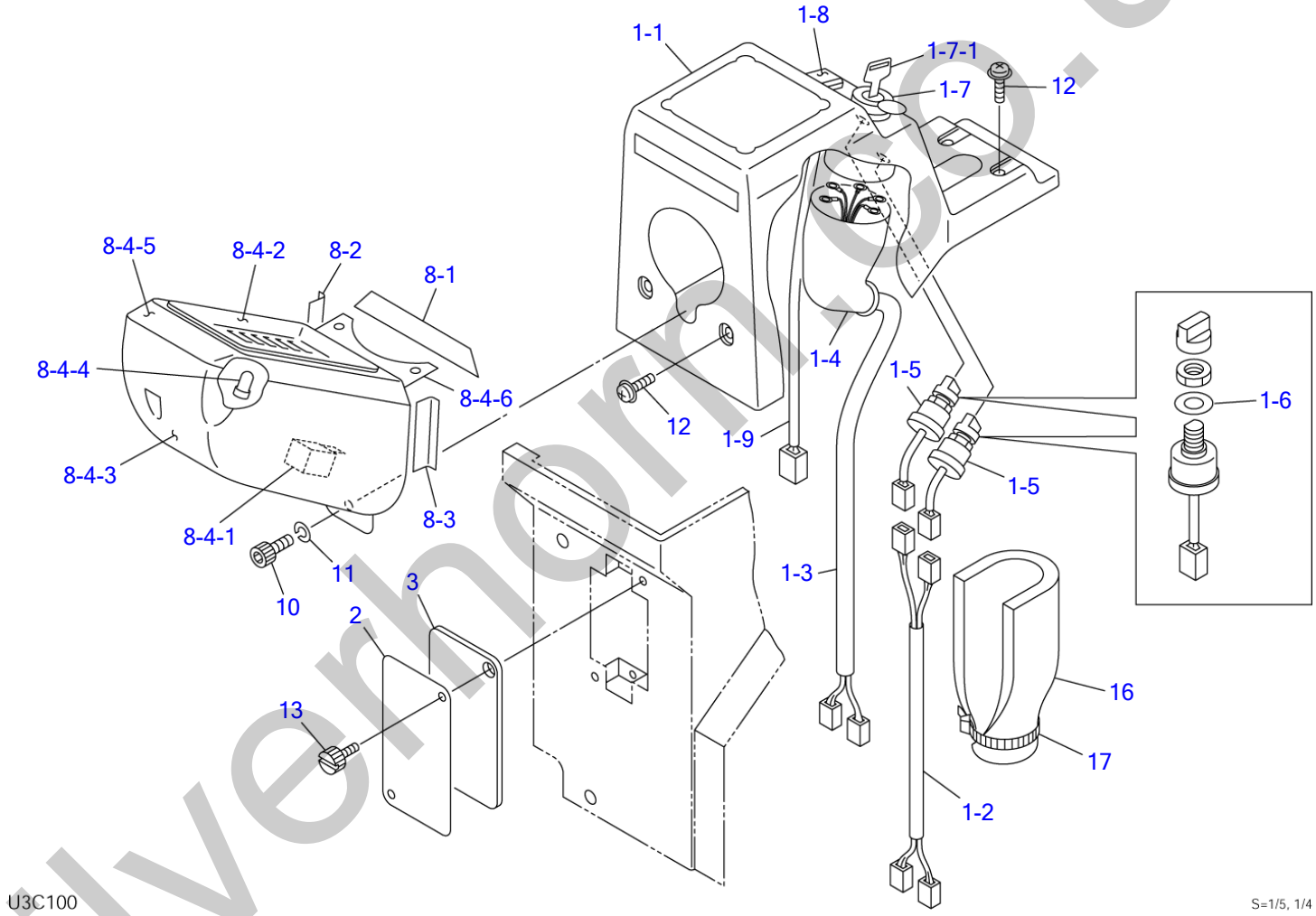

silverhorn.co.uk

CONTROL BOX; R.H. (high flow; 225000001-225000074)

Item	Part number	Description	Q'ty	Chan.	Serial No.	Serv.	Remarks
		COVER ASSY (R.H.)					
1	0881430950	COVER ASSY	1				
1-1	0881430870	・COVER (R.H.)	1				
1-2	0881430880	・HARNESS, wiring	1				
1-3	0881430960	・HARNESS, wiring	1				
1-4	0870431821	・COVER	1				
1-5	1700000010	・SWITCH, lamp	2				
1-6	1141810012	・WASHER	2				
1-7	1700100052	・SWITCH, starter	1				
1-7-1	1700100019	・KEY	1				
1-8	1700000034	・SWITCH	1				
1-9	0881430970	・HARNESS, wiring	1				
2	0881430802	COVER	1				
3	0881430803	INSULATOR	1				
8	0881430910	GAUGE ASSY, cluster	1				
8-1	0881430901	・ABSORBENT, noise	1				
8-2	0881430902	・ABSORBENT, noise	1				
8-3	0881430903	・ABSORBENT, noise	1				
8-4	1730140920	・GAUGE, cluster	1				
8-4-1	1730140691	・・RELAY	1				12V
8-4-2	1730140782	・・GLASS	1				
8-4-3	1730140785	・・COVER	1				
8-4-4	1730140696	・・BULB	10				14V, 1.4W
8-4-5	1730140788	・・VISOR	1				
8-4-6	1730140694	・・BRACKET	1				
10	1110020820	SCREW, cap	1				
11	1140090008	WASHER, spring	1				
12	1150420614	SCREW, sems	4				
13	1652711698	SCREW	2				
16	0881430805	INSULATOR	1				
17	1652231250	BAND	1				
	U3c100						

silverhorn.co.uk

CONTROL BOX; R.H. (for GEHL & MUSTANG; 225000001-225000080)

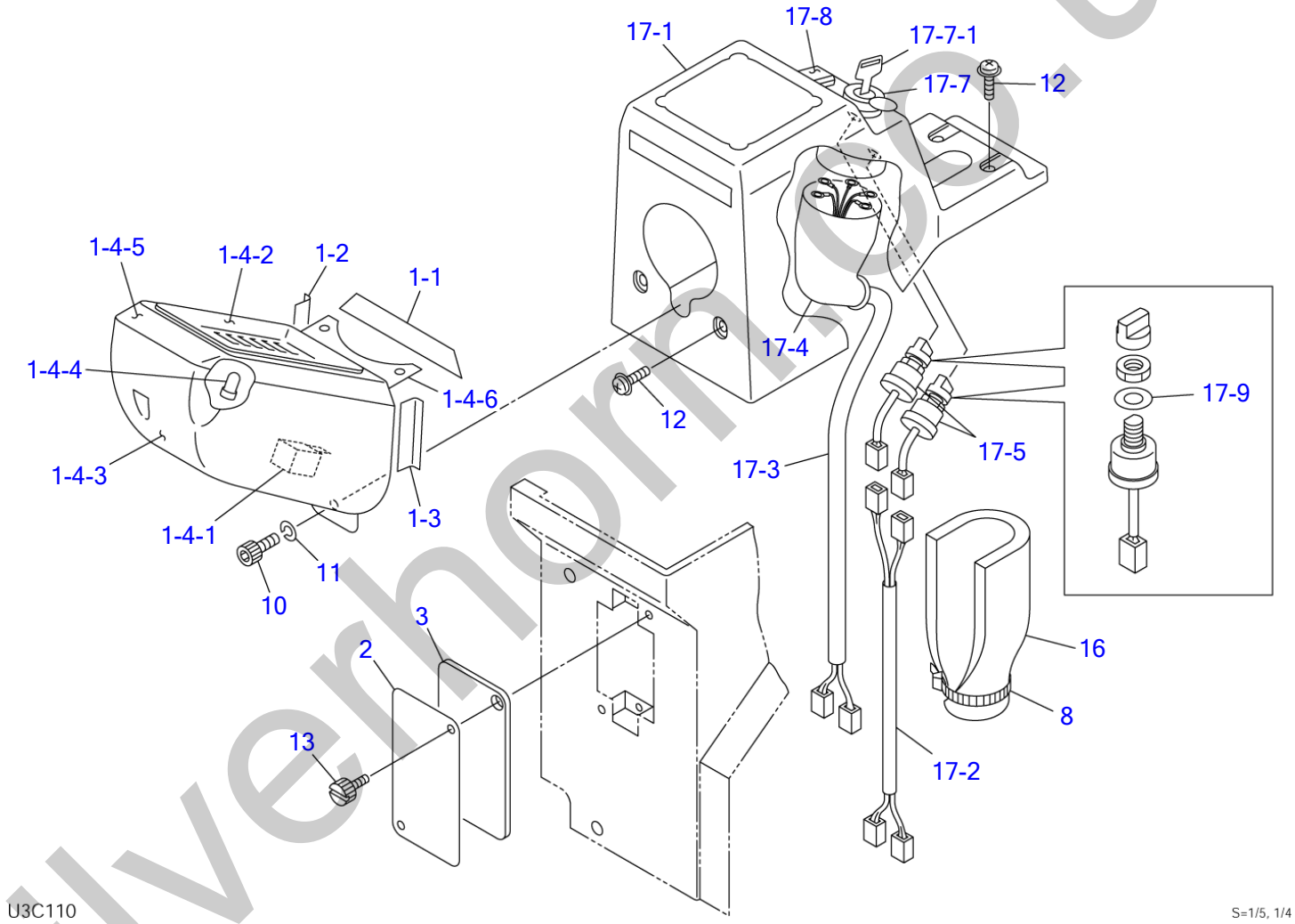

silverhorn.co.uk

CONTROL BOX; R.H. (for GEHL & MUSTANG; 225000001-225000080)

Item	Part number	Description	Q'ty	Chan.	Serial No.	Serv.	Remarks
		COVER ASSY (R.H.)					
1	0881431120	GAUGE ASSY, cluster	1				
1-1	0881430901	・ABSORBENT, noise	1				
1-2	0881430902	・ABSORBENT, noise	1				
1-3	0881430903	・ABSORBENT, noise	1				
1-4	1730140930	・GAUGE, cluster	1				
1-4-1	1730140691	・・RELAY	1				12V
1-4-2	1730140782	・・GLASS	1				
1-4-3	1730140785	・・COVER	1				
1-4-4	1730140696	・・BULB	10				14V, 1.4W
1-4-5	1730140788	・・VISOR	1				
1-4-6	1730140694	・・BRACKET	1				
2	0881430802	COVER	1				
3	0881430803	INSULATOR	1				
8	1652231250	BAND	1				
10	1110020820	SCREW, cap	1				
11	1140090008	WASHER, spring	1				
12	1150420614	SCREW	4				
13	1652711698	SCREW	2				
16	0881430805	INSULATOR	1				
17	0882430100	COVER ASSY, sub (R.H.)	1				
17-1	0881430870	・COVER (R.H.)	1				
17-2	0881430880	・HARNESS, wiring	1				
17-3	0881430960	・HARNESS, wiring	1				
17-4	0870431821	・COVER	1				
17-5	1700000010	・SWITCH, lamp	2				
17-7	1700100052	・SWITCH, starter	1				
17-7-1	1700100019	・KEY	1				
17-8	1700550024	・ORNAMENT	1				
17-9	1141810012	・WASHER	2				
	U3c110						

silverhorn.co.uk

CONTROL BOX; R.H. (high flow, for GEHL & MUSTANG; 225000001-225000080)

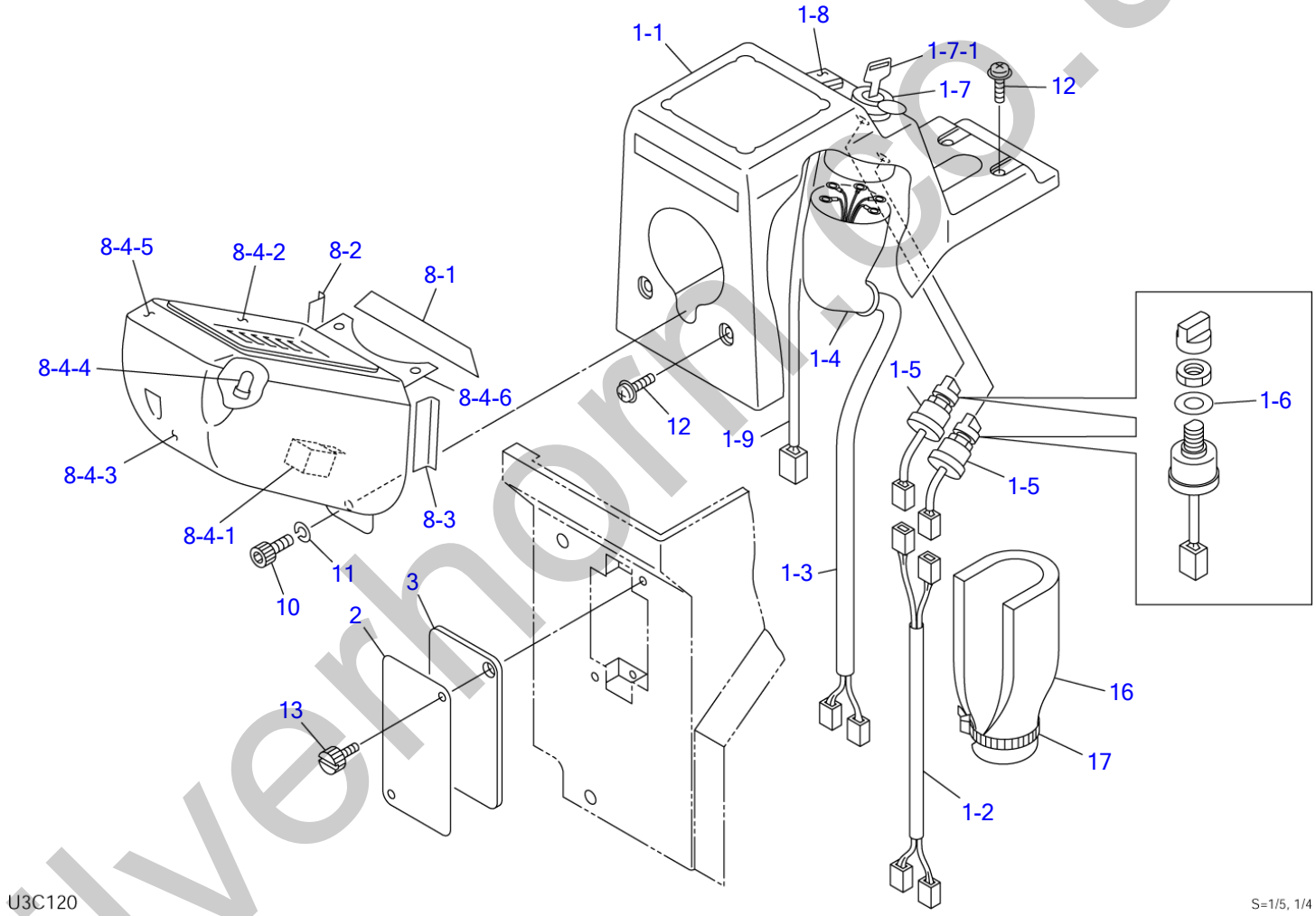

silverhorn.co.uk

CONTROL BOX; R.H. (high flow, for GEHL & MUSTANG; 225000001-225000080)

Item	Part number	Description	Q'ty	Chan.	Serial No.	Serv.	Remarks
		COVER ASSY (R.H.) (for GEHL & MUSTANG)					
1	0881430950	COVER ASSY	1				
1-1	0881430870	・COVER (R.H.)	1				
1-2	0881430880	・HARNESS, wiring	1				
1-3	0881430960	・HARNESS, wiring	1				
1-4	0870431821	・COVER	1				
1-5	1700000010	・SWITCH, lamp	2				
1-6	1141810012	・WASHER	2				
1-7	1700100052	・SWITCH, starter	1				
1-7-1	1700100019	・KEY	1				
1-8	1700000034	・SWITCH	1				
1-9	0881430970	・HARNESS, wiring	1				
2	0881430802	COVER	1				
3	0881430803	INSULATOR	1				
8	0881431120	GAUGE ASSY, cluster	1				
8-1	0881430901	・ABSORBENT, noise	1				
8-2	0881430902	・ABSORBENT, noise	1				
8-3	0881430903	・ABSORBENT, noise	1				
8-4	1730140930	・GAUGE, cluster	1				
8-4-1	1730140691	・・RELAY	1				12V
8-4-2	1730140782	・・GLASS	1				
8-4-3	1730140785	・・COVER	1				
8-4-4	1730140696	・・BULB	10				14V, 1.4W
8-4-5	1730140788	・・VISOR	1				
8-4-6	1730140694	・・BRACKET	1				
10	1110020820	SCREW, cap	1				
11	1140090008	WASHER, spring	1				
12	1150420614	SCREW, sems	4				
13	1652711698	SCREW	2				
16	0881430805	INSULATOR	1				
17	1652231250	BAND	1				
	U3c120						

silverhorn.co.uk

CONTROL BOX; R.H. (225000075-)

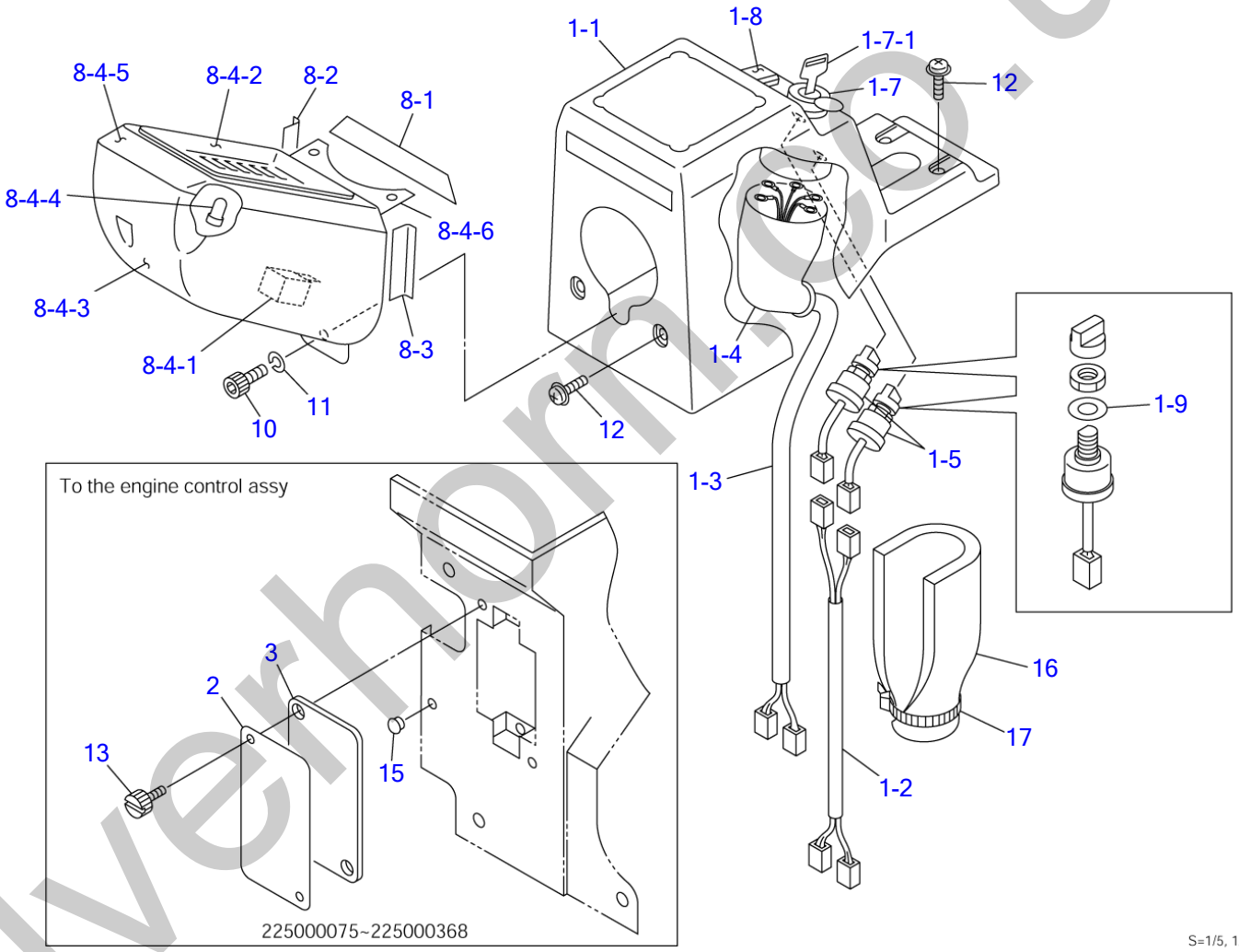

silverhorn.co.uk

CONTROL BOX; R.H. (225000075-)

Item	Part number	Description	Q'ty	Chan.	Serial No.	Serv.	Remarks
		COVER ASSY (R.H.)					
1	0882430100	COVER ASSY, sub (R.H.)	1				
1-1	0881430870	・COVER (R.H.)	1				
1-2	0881430880	・HARNESS, wiring	1				
1-3	0881430960	・HARNESS, wiring	1				
1-4	0870431821	・COVER	1				
1-5	1700000010	・SWITCH, lamp	2				
1-7	1700100052	・SWITCH, starter	1				
1-7-1	1700100019	・KEY	1				
1-8	1700550024	・ORNAMENT	1				
1-9	1141810012	・WASHER	2				
2	0881430802	COVER	1		225000075~225000368		
3	0881430803	INSULATOR	1		225000075~225000140		
	0664300020	INSULATOR	1		225000141~225000368	M	
8	0664301010	GAUGE ASSY, cluster	1			M	
8-1	0881430901	・ABSORBENT, noise	1				
8-2	0881430902	・ABSORBENT, noise	1				
8-3	0881430903	・ABSORBENT, noise	1				
8-4	1730142110	・GAUGE, cluster	1			M	
8-4-1	1730140691	・・RELAY	1				12V
8-4-2	1730140782	・・GLASS	1				
8-4-3	1730140785	・・COVER	1				
8-4-4	1730140696	・・BULB	8				14V, 1.4W
8-4-5	1730140788	・・VISOR	1				
8-4-6	1730140694	・・BRACKET	1				
10	1110020820	SCREW, cap	1				
11	1140090008	WASHER, spring	1				
12	1150420614	SCREW	4				
13	1652711698	SCREW	2		225000075~225000368		
15	1652533015	CAP	1		225000141~225000368		
16	0881430805	INSULATOR	1				
17	1652231250	BAND	1				
	U3c270						

silverhorn.co.uk

CONTROL BOX; R.H. (high flow; 225000075-)

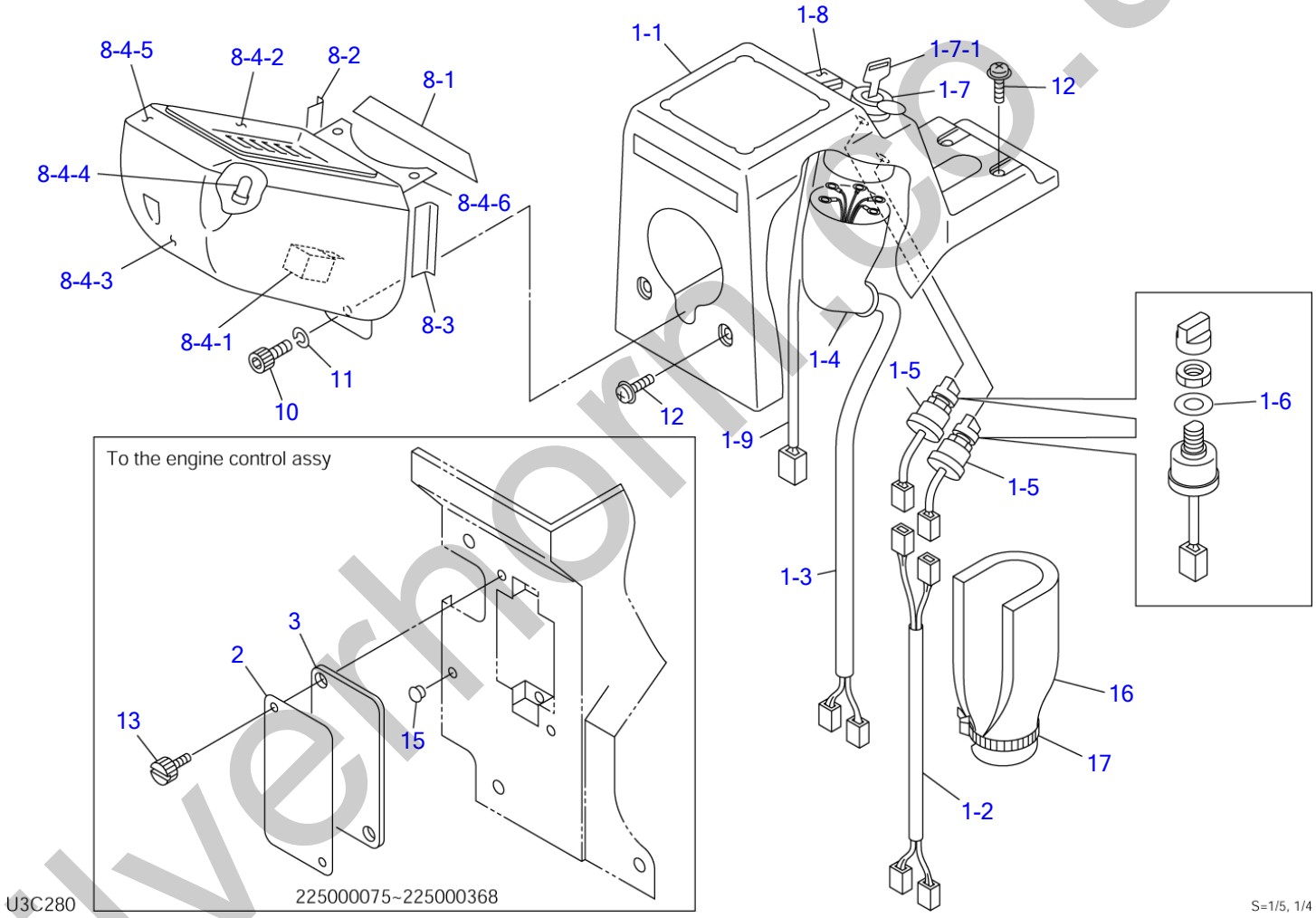

silverhorn.co.uk

CONTROL BOX; R.H. (high flow; 225000075-)

Item	Part number	Description	Q'ty	Chan.	Serial No.	Serv.	Remarks
		COVER ASSY (R.H.)					
1	0881430950	COVER ASSY	1				
1-1	0881430870	・COVER (R.H.)	1				
1-2	0881430880	・HARNESS, wiring	1				
1-3	0881430960	・HARNESS, wiring	1				
1-4	0870431821	・COVER	1				
1-5	1700000010	・SWITCH, lamp	2				
1-6	1141810012	・WASHER	2				
1-7	1700100052	・SWITCH, starter	1				
1-7-1	1700100019	・KEY	1				
1-8	1700000034	・SWITCH	1				
1-9	0881430970	・HARNESS, wiring	1				
2	0881430802	COVER	1		225000075~225000368		
3	0881430803	INSULATOR	1		225000075~225000140		
	0664300020	INSULATOR	1		225000141~225000368	M	
8	0664301010	GAUGE ASSY, cluster	1			M	
8-1	0881430901	・ABSORBENT, noise	1				
8-2	0881430902	・ABSORBENT, noise	1				
8-3	0881430903	・ABSORBENT, noise	1				
8-4	1730142110	・GAUGE, cluster	1			M	
8-4-1	1730140691	・・RELAY	1				12V
8-4-2	1730140782	・・GLASS	1				
8-4-3	1730140785	・・COVER	1				
8-4-4	1730140696	・・BULB	8				14V, 1.4W
8-4-5	1730140788	・・VISOR	1				
8-4-6	1730140694	・・BRACKET	1				
10	1110020820	SCREW, cap	1				
11	1140090008	WASHER, spring	1				
12	1150420614	SCREW, sems	4				
13	1652711698	SCREW	2		225000075~225000368		
15	1652533015	CAP	1		225000141~225000368		
16	0881430805	INSULATOR	1				
17	1652231250	BAND	1				
	U3c280						

silverhorn.co.uk

CONTROL BOX; L.H. (hydraulic attachment type)

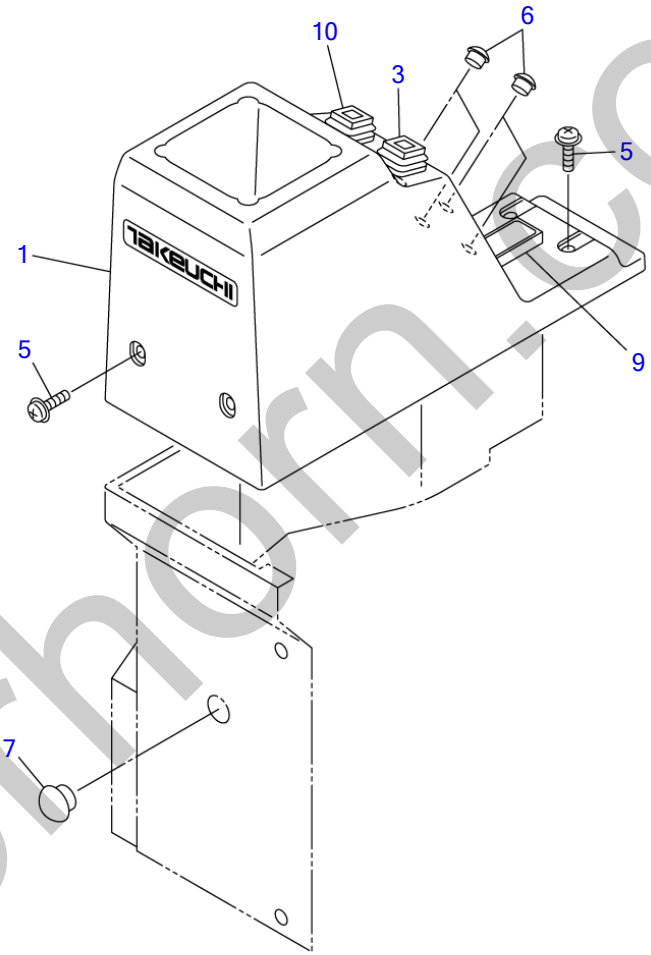

U1C080

S=1/5

silverhorn.co.uk

CONTROL BOX; L.H. (hydraulic attachment type)

Item	Part number	Description	Q'ty	Chan.	Serial No.	Serv.	Remarks
		COVER ASSY (L.H.)					
1	**0664300010**	COVER (L.H.)	1			M	
3	**1700000034**	SWITCH	1				
5	**1150420614**	SCREW	4				
6	**1652533019**	CAP	4				
7	**1652533023**	CAP	1				
9	**1700008080**	SWITCH	1			M	
10	**1700000035**	SWITCH	1				
	U1c080						

silverhorn.co.uk

ENGINE CONTROL

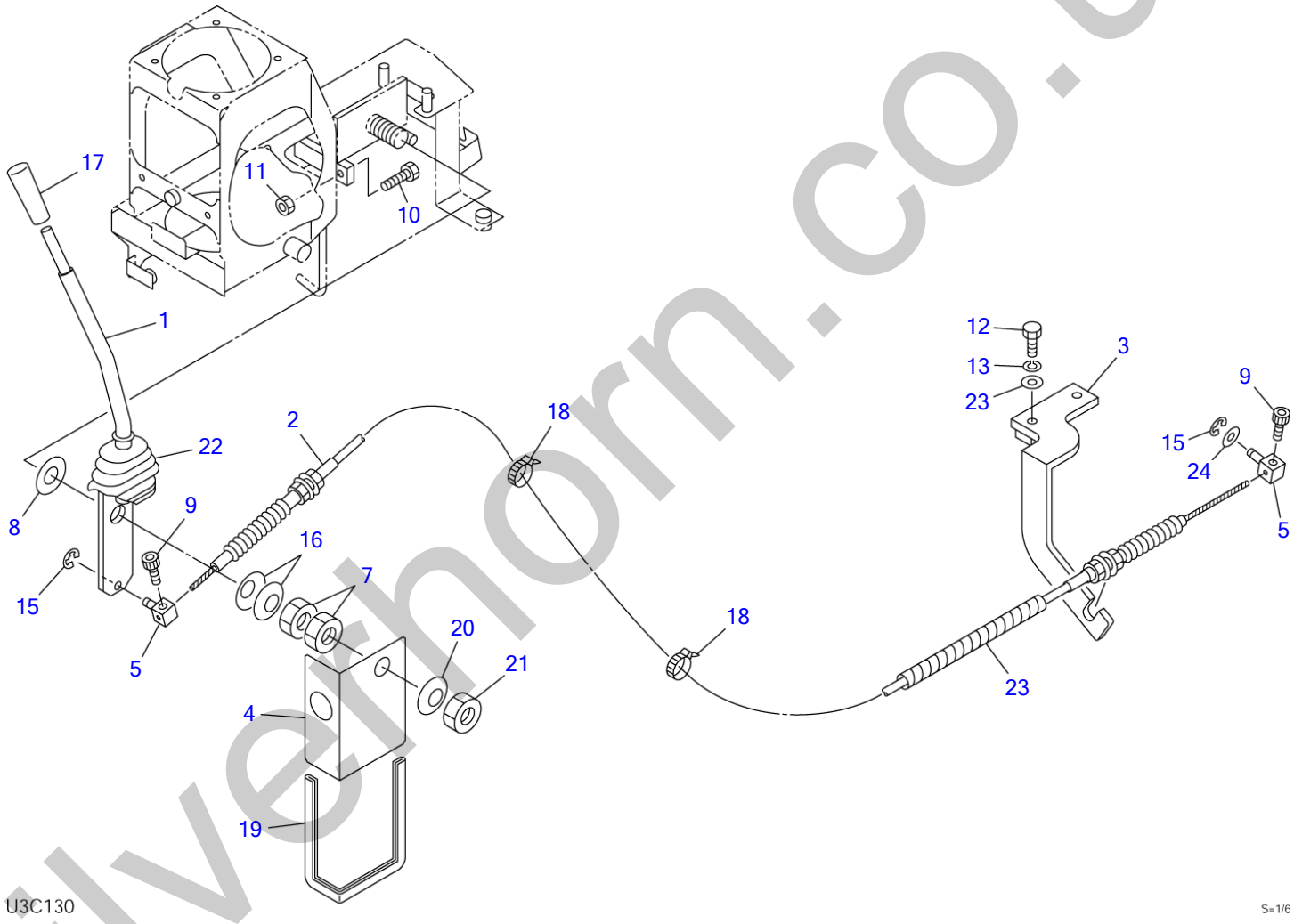

silverhorn.co.uk

ENGINE CONTROL

Item	Part number	Description	Q'ty	Chan.	Serial No.	Serv.	Remarks
	0694101000	CONTROL ASSY, engine	1			M	
1	0881412010	LEVER	1				
2	0694101010	WIRE	1			M	
3	0694101020	BRACKET	1			M	
4	0881412040	COVER	1				
5	0007900020	PIN	2				
7	0064111700	NUT	2				
8	1141550018	WASHER	1				
9	1110040510	SCREW, cap	2				
10	1100040830	BOLT	1				
11	1130040008	NUT	1				
12	1101041030	BOLT	2			M	
13	1140020010	WASHER, spring	2				
15	1224010006	RING, retaining	2				
16	1225110018	WASHER, conical	2				
17	1650132050	GRIP	1				
18	1652231250	BAND	2				
19	1653916037	TRIM	1				sold by the meter
20	1225000018	WASHER	1				
21	1130640018	NUT	1				
22	0334120100	BOOT	1				
23	1141110010	WASHER, spring	2				
24	1141110008	WASHER	1				
	U3c130						

silverhorn.co.uk

CONTROL BOX; R.H. (for GEHL & MUSTANG; 225000081-)

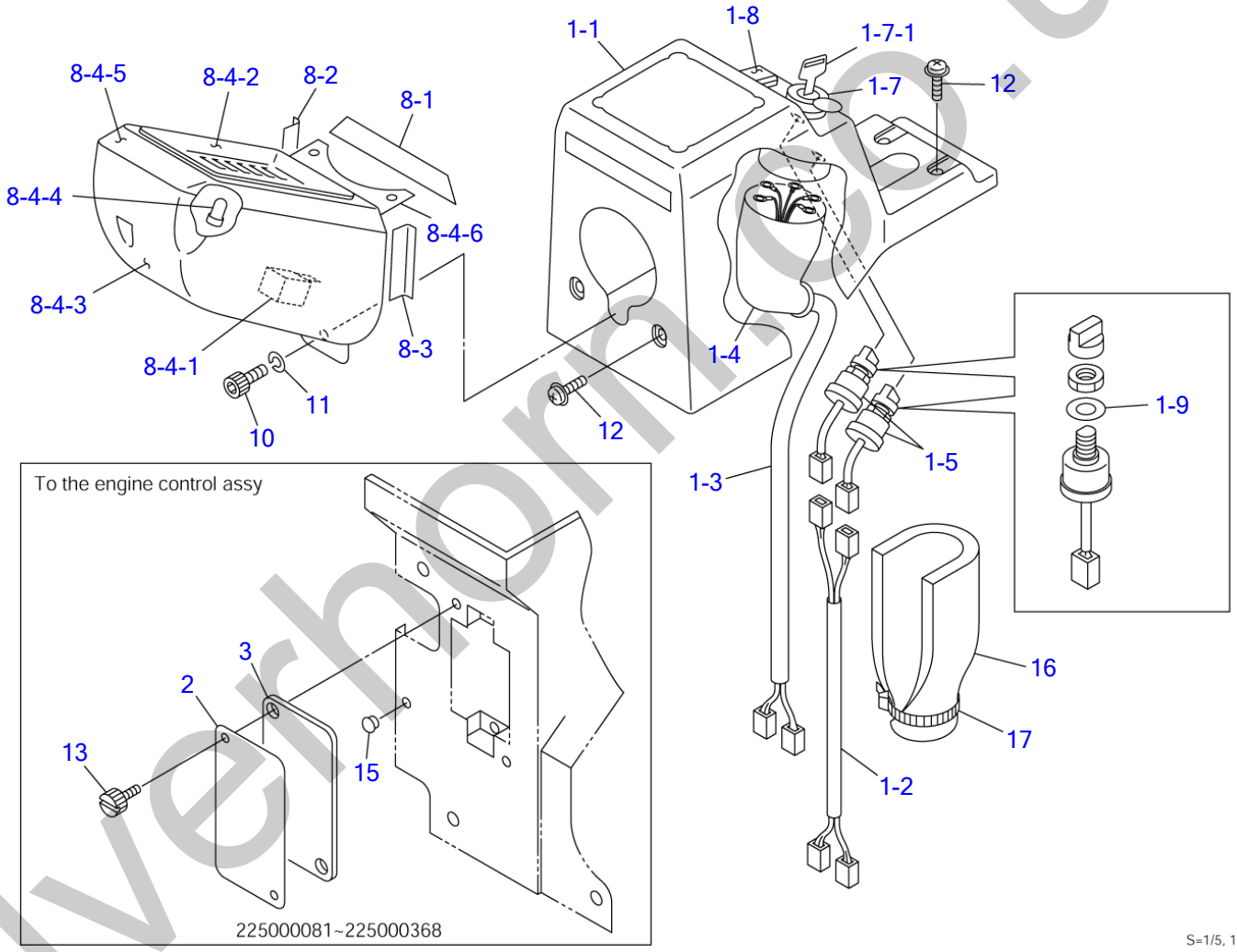

silverhorn.co.uk

CONTROL BOX; R.H. (for GEHL & MUSTANG; 225000081-)

Item	Part number	Description	Q'ty	Chan.	Serial No.	Serv.	Remarks
		COVER ASSY (R.H.)					
1	0882430100	COVER ASSY, sub (R.H.)	1				
1-1	0881430870	・COVER (R.H.)	1				
1-2	0881430880	・HARNESS, wiring	1				
1-3	0881430960	・HARNESS, wiring	1				
1-4	0870431821	・COVER	1				
1-5	1700000010	・SWITCH, lamp	2				
1-7	1700100052	・SWITCH, starter	1				
1-7-1	1700100019	・KEY	1				
1-8	1700550024	・ORNAMENT	1				
1-9	1141810012	・WASHER	2				
2	0881430802	COVER	1		225000081~225000368		
3	0881430803	INSULATOR	1		225000081~225000140		
	0664300020	INSULATOR	1		225000141~225000368	M	
8	0664301510	GAUGE ASSY, cluster	1			M	
8-1	0881430901	・ABSORBENT, noise	1				
8-2	0881430902	・ABSORBENT, noise	1				
8-3	0881430903	・ABSORBENT, noise	1				
8-4	1730142130	・GAUGE, cluster	1			M	
8-4-1	1730140691	・・RELAY	1				12V
8-4-2	1730140782	・・GLASS	1				
8-4-3	1730140785	・・COVER	1				
8-4-4	1730140696	・・BULB	8				14V, 1.4W
8-4-5	1730140788	・・VISOR	1				
8-4-6	1730140694	・・BRACKET	1				
10	1110020820	SCREW, cap	1				
11	1140090008	WASHER, spring	1				
12	1150420614	SCREW	4				
13	1652711698	SCREW	2		225000081~225000368		
15	1652533015	CAP	1		225000141~225000368		
16	0881430805	INSULATOR	1				
17	1652231250	BAND	1				
	U3c290						

silverhorn.co.uk

ELECTRICAL (1/2)

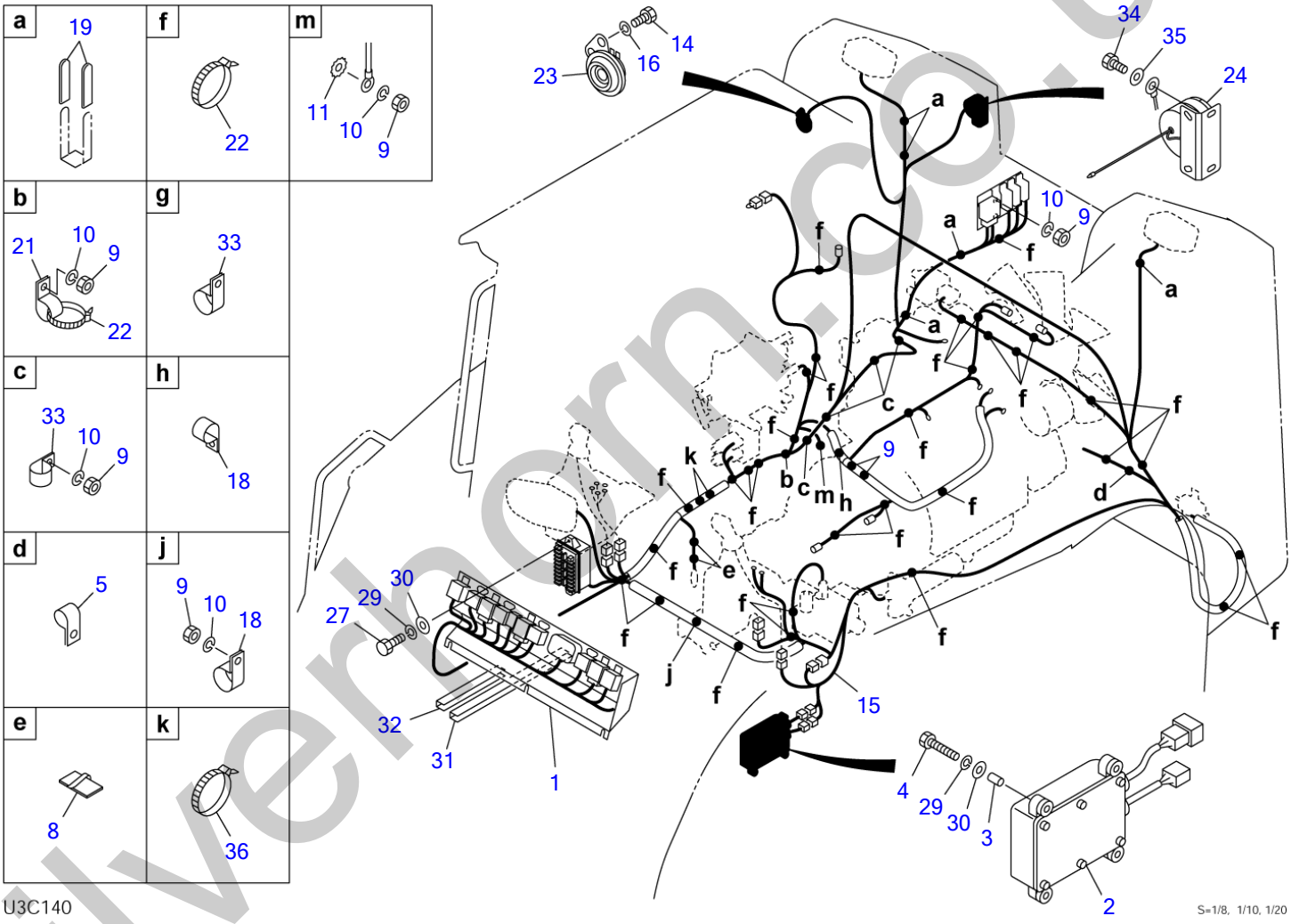

silvernorn.co.uk

ELECTRICAL (1/2)

Item	Part number	Description	Q'ty	Chan.	Serial No.	Serv.	Remarks
		ELECTRICAL ASSY					
1	0694200300	UNIT ASSY, relay	1			M	see page (2/2)
2	1730140730	CONTROLLER	1			M	
3	1531007002	HOSE	4			M	sold by the meter
4	1100040630	BOLT	4			M	
5	1711900076	CLAMP	1				
8	1711900074	CLAMP	2				
9	1130040010	NUT	9				
10	1140020010	WASHER, spring	9				
11	1140330010	WASHER	1				
14	1100040816	BOLT	2				
15	0664201250	HARNESS, wiring	1			M	
16	1140020008	WASHER, spring	2				
18	1711900072	CLAMP	4				
19	0872433150	TUBE	12				
21	0007300003	CLAMP	1				
22	1652231250	BAND	30				
23	1703500612	HORN	1				
24	1703700013	BUZZER	1				
27	1100040616	BOLT	2				
29	1140020006	WASHER, spring	6				
30	1141110006	WASHER	6				
31	1654606048	TRIM	1				sold by the meter
32	1653916013	TRIM	1				sold by the meter
33	1711900071	CLAMP	6				
34	1100040610	BOLT	2				
35	0003600110	WASHER	2				
36	1652201007	BAND	2				
	U3c140						

silverhorn.co.uk

CONTROL BOX; R.H. (high flow, for GEHL & MUSTANG; 225000081-)

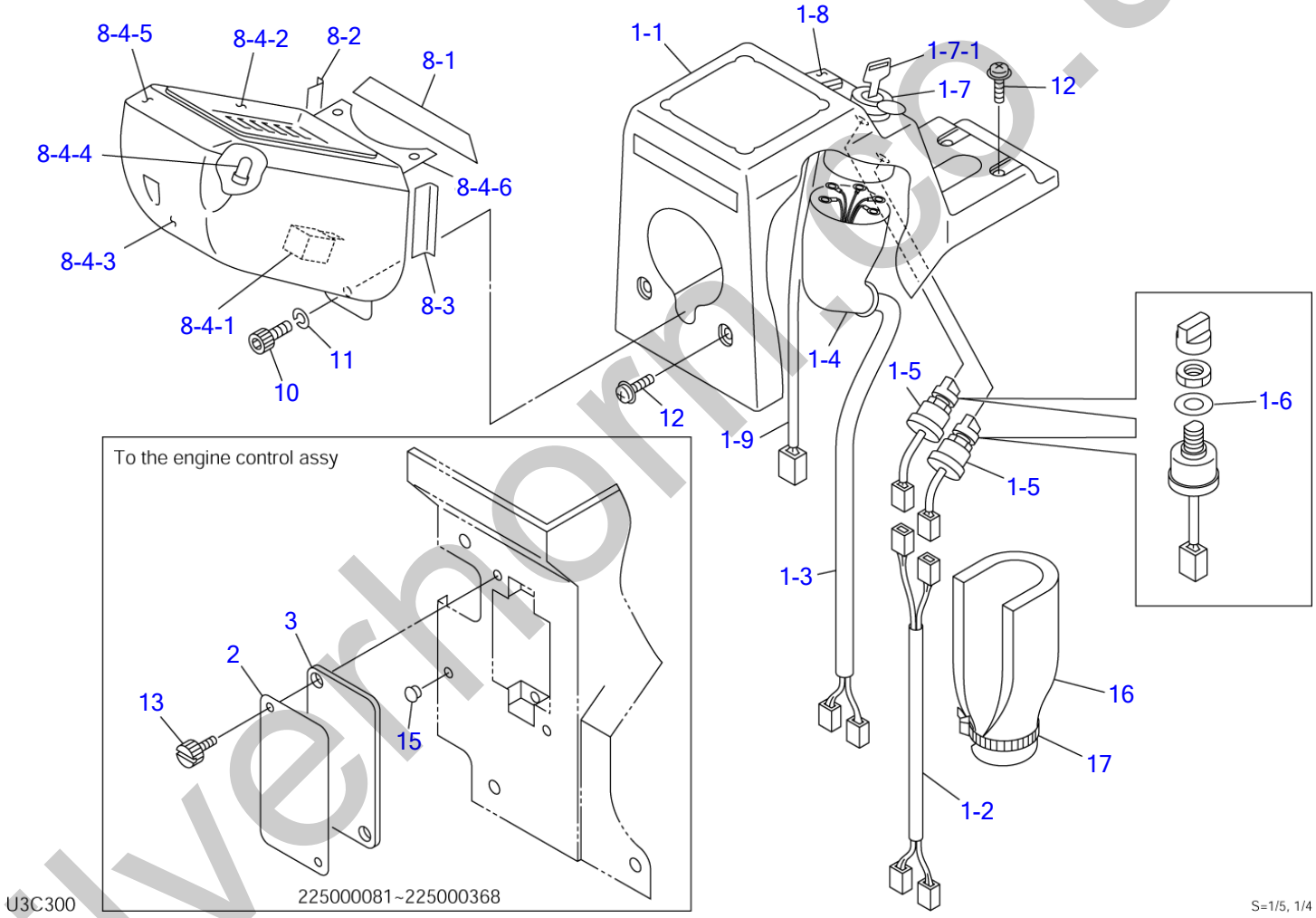

silverhorn.co.uk

CONTROL BOX; R.H. (high flow, for GEHL & MUSTANG; 225000081-)

Item	Part number	Description	Q'ty	Chan.	Serial No.	Serv.	Remarks
		COVER ASSY (R.H.)					
1	0881430950	COVER ASSY	1				
1-1	0881430870	・COVER (R.H.)	1				
1-2	0881430880	・HARNESS, wiring	1				
1-3	0881430960	・HARNESS, wiring	1				
1-4	0870431821	・COVER	1				
1-5	1700000010	・SWITCH, lamp	2				
1-6	1141810012	・WASHER	2				
1-7	1700100052	・SWITCH, starter	1				
1-7-1	1700100019	・KEY	1				
1-8	1700000034	・SWITCH	1				
1-9	0881430970	・HARNESS, wiring	1				
2	0881430802	COVER	1		225000081~225000368		
3	0881430803	INSULATOR	1		225000081~225000140		
	0664300020	INSULATOR	1		225000141~225000368	M	
8	0664301510	GAUGE ASSY, cluster	1			M	
8-1	0881430901	・ABSORBENT, noise	1				
8-2	0881430902	・ABSORBENT, noise	1				
8-3	0881430903	・ABSORBENT, noise	1				
8-4	1730142130	・GAUGE, cluster	1			M	
8-4-1	1730140691	・・RELAY	1				12V
8-4-2	1730140782	・・GLASS	1				
8-4-3	1730140785	・・COVER	1				
8-4-4	1730140696	・・BULB	8				14V, 1.4W
8-4-5	1730140788	・・VISOR	1				
8-4-6	1730140694	・・BRACKET	1				
10	1110020820	SCREW, cap	1				
11	1140090008	WASHER, spring	1				
12	1150420614	SCREW, sems	4				
13	1652711698	SCREW	2		225000081~225000368		
15	1652533015	CAP	1		225000141~225000368		
16	0881430805	INSULATOR	1				
17	1652231250	BAND	1				
	U3c300						

silverhorn.co.uk

CONTROL BOX; R.H. (for EU; 225000141-225000368)

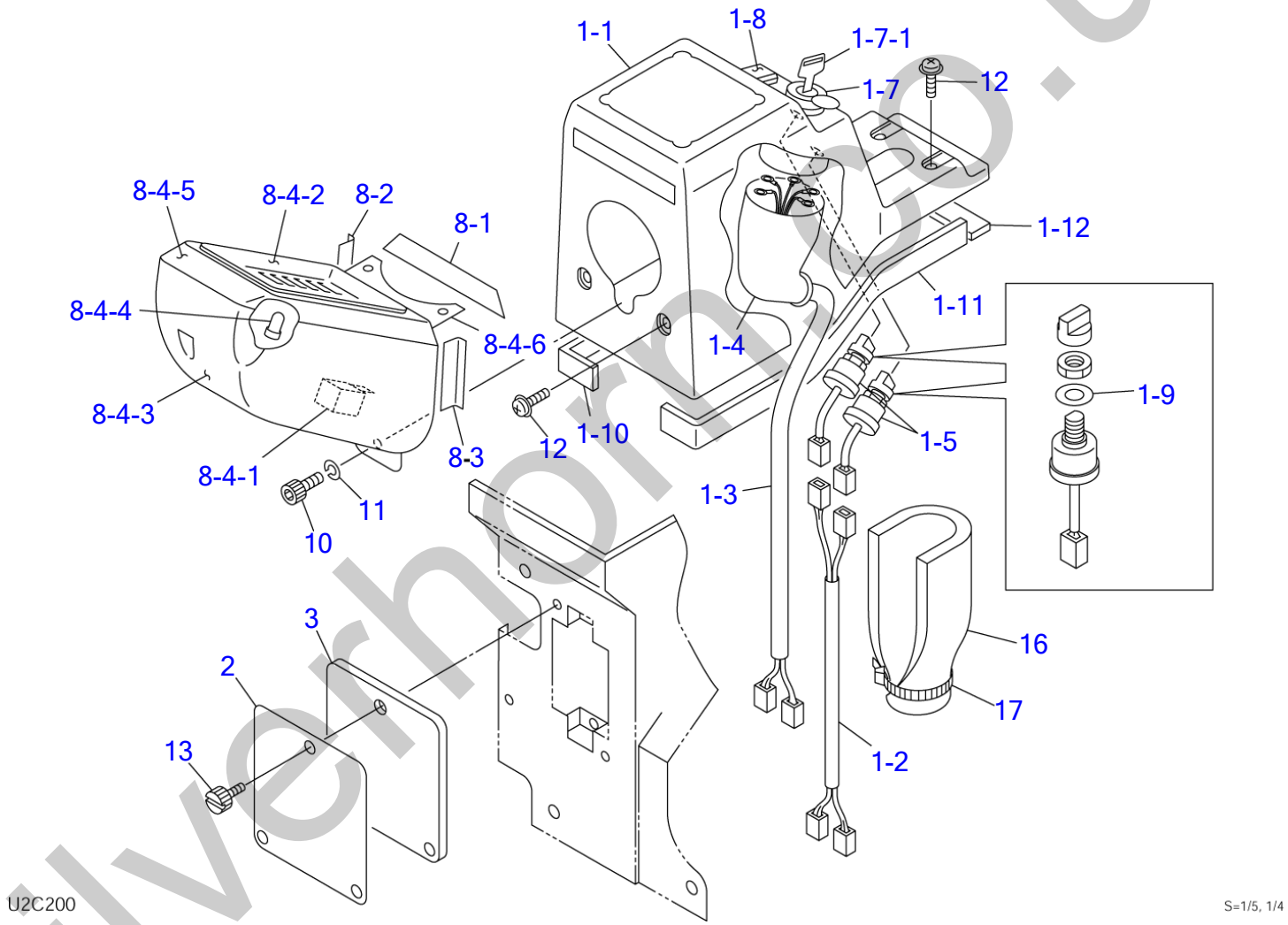

silverhorn.co.uk

CONTROL BOX; R.H. (for EU; 225000141-225000368)

Item	Part number	Description	Q'ty	Chan.	Serial No.	Serv.	Remarks
		COVER ASSY (R.H.)					
1	0664301850	COVER ASSY, sub (R.H.)	1			M	
1-1	0881430870	・COVER (R.H.)	1				
1-2	0881430880	・HARNESS, wiring	1				
1-3	0881430960	・HARNESS, wiring	1				
1-4	0870431821	・COVER	1				
1-5	1700000010	・SWITCH, lamp	2				
1-7	1700100052	・SWITCH, starter	1				
1-7-1	1700100019	・KEY	1				
1-8	1700550024	・ORNAMENT	1				
1-9	1141810012	・WASHER	2				
1-10	1654354038	・SPONGE	1			M	sold by the meter
1-11	1654354039	・SPONGE	1			M	sold by the meter
1-12	1654354010	・SPONGE	1			M	sold by the meter
2	0664300040	COVER	1			M	
3	0664300030	INSULATOR	1			M	
8	0664301010	GAUGE ASSY, cluster	1			M	
8-1	0881430901	・ABSORBENT, noise	1				
8-2	0881430902	・ABSORBENT, noise	1				
8-3	0881430903	・ABSORBENT, noise	1				
8-4	1730142110	・GAUGE, cluster	1			M	
8-4-1	1730140691	・・RELAY	1				12V
8-4-2	1730140782	・・GLASS	1				
8-4-3	1730140785	・・COVER	1				
8-4-4	1730140696	・・BULB	8				14V, 1.4W
8-4-5	1730140788	・・VISOR	1				
8-4-6	1730140694	・・BRACKET	1				
10	1110020820	SCREW, cap	1				
11	1140090008	WASHER, spring	1				
12	1150420614	SCREW	4				
13	1652711698	SCREW	3				
16	0881430805	INSULATOR	1				
17	1652231250	BAND	1				
	U2c200						

silverhorn.co.uk

ELECTRICAL (2/2)

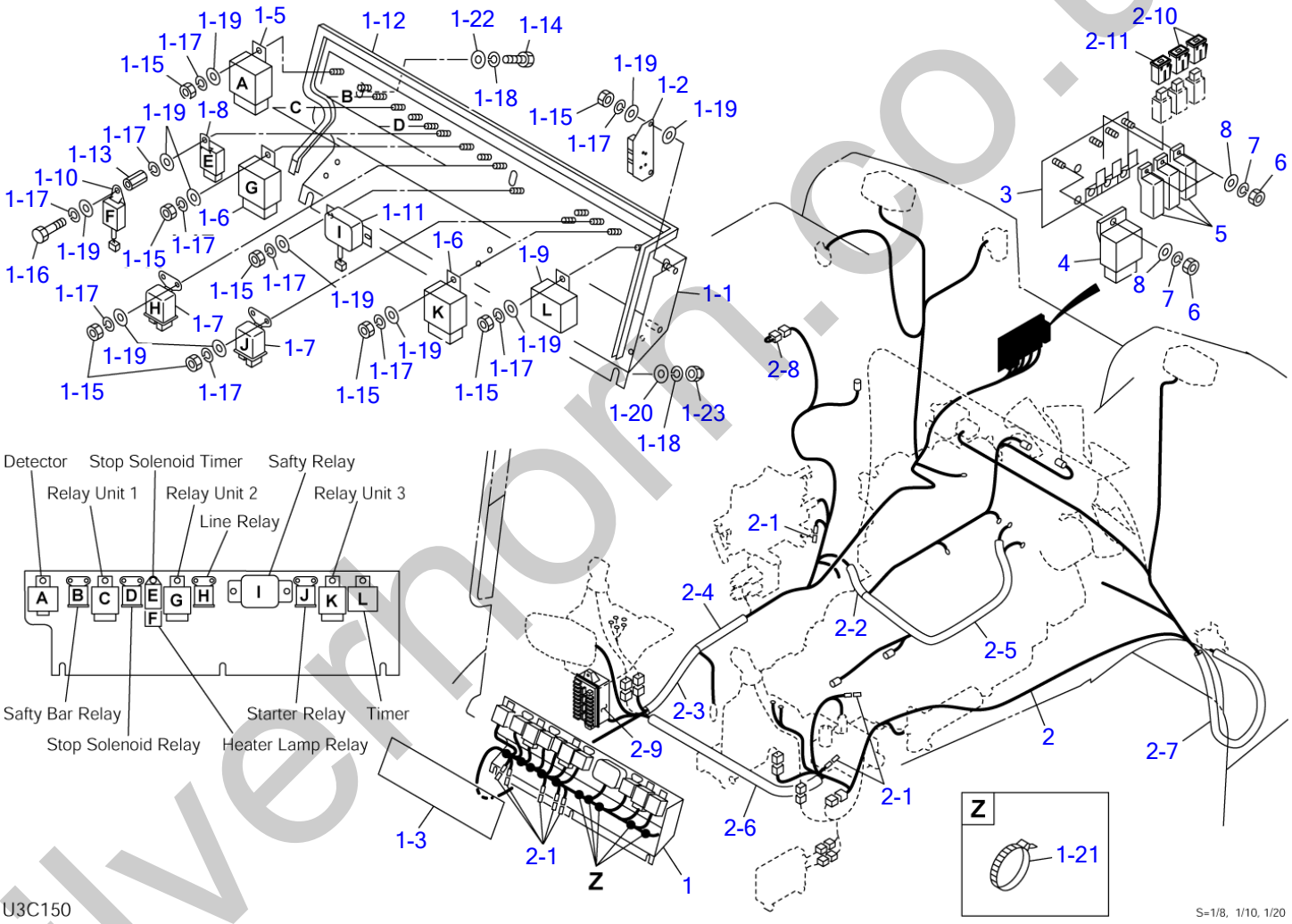

silvermorn.co.uk

ELECTRICAL (2/2)

Item	Part number	Description	Q'ty	Chan.	Serial No.	Serv.	Remarks
0-1	0694200300	UNIT ASSY, relay	1			M	
1	0694200350	・RELAY UNIT	1			M	
1-1	0694200360	・・BOX	1			M	
1-2	0664201320	・・RESISTOR	1			M	
1-3	0881423120	・・RUBBER	1				
1-5	1711900131	・・DETECTOR	1				
1-6	1711900062	・・RELAY	3				
1-7	1711900099	・・RELAY	4			M	
1-8	1711900042	・・RELAY	1				
1-9	1711900140	・・UNIT, timer (30sec)	1			M	
1-10	1910078118	・・TIMER	1			M	KUBOTA 1G386-60241
1-11	1910078106	・・RELAY, safety	1			M	KUBOTA 1G373-60212
1-12	1654606099	・・TRIM	1			M	sold by the meter
1-13	1134830620	・・NUT	1			M	
1-14	1100040816	・・BOLT	3				
1-15	1130040006	・・NUT	17				
1-16	1100040614	・・BOLT	1			M	
1-17	1140020006	・・WASHER, spring	19				
1-18	1140020008	・・WASHER, spring	6				
1-19	1141110006	・・WASHER	21				
1-20	1141110008	・・WASHER	3				
1-21	1652231250	・・BAND	9				
1-22	0003608252	・・WASHER	3				
1-23	1134230008	・・NUT	3				
2	0694200150	・HARNESS, wiring	1			M	
2-1	1730500008	・・DIODE (3A yellow)	8				
2-2	1531325033	・・PROTECTOR	1				sold by the meter
2-3	1531325040	・・PROTECTOR	1				sold by the meter
2-4	1531325070	・・PROTECTOR	1				sold by the meter
2-5	1531315080	・・PROTECTOR	1				sold by the meter
2-6	1531325080	・・PROTECTOR	1				sold by the meter
2-7	1531315085	・・PROTECTOR	1			M	sold by the meter
2-8	0394221010	・・CONNECTOR, short	1			M	
2-9	1701200002	・・BOX, fuse	1				V72774A-0100
2-10	1701330045	・・LINK, fusible	2				
2-11	1701330065	・・LINK, fusible	1				
3	0694200370	・BRACKET	1			M	
4	1910078107	・CONTROLLER	1			M	KUBOTA 5H618-41351
5	1700100038	・COVER	3				
6	1130040006	・NUT	4				
7	1140020006	・WASHER, spring	4				
8	0003600110	・WASHER	4				
	U3c150						

silverhorn.co.uk

CONTROL BOX; R.H. (high flow, for EU; 225000141-225000368)

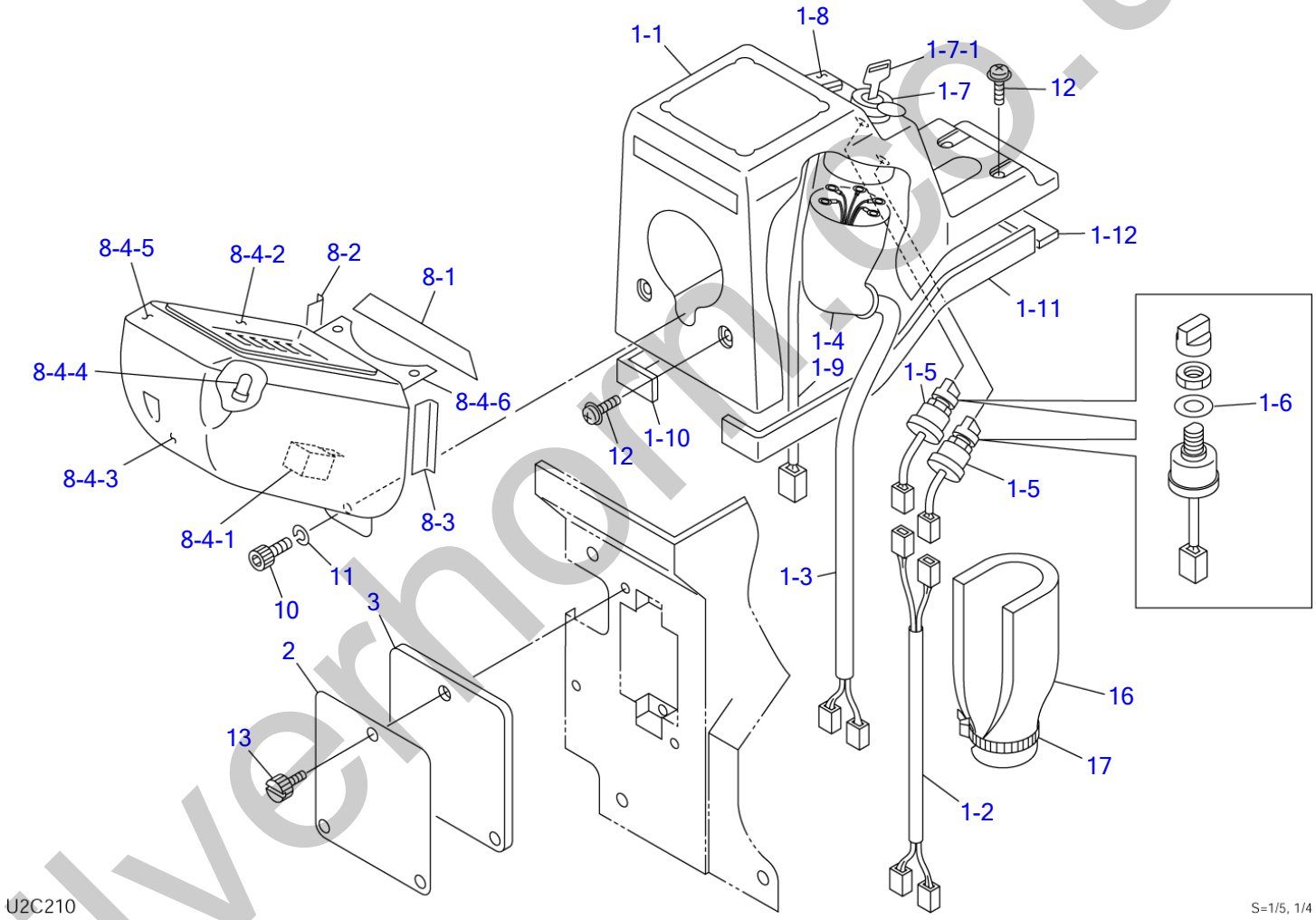

silverhorn.co.uk

CONTROL BOX; R.H. (high flow, for EU; 225000141-225000368)

Item	Part number	Description	Q'ty	Chan.	Serial No.	Serv.	Remarks
		COVER ASSY (R.H.)					
1	0664301950	COVER ASSY	1			M	
1-1	0881430870	・COVER (R.H.)	1				
1-2	0881430880	・HARNESS, wiring	1				
1-3	0881430960	・HARNESS, wiring	1				
1-4	0870431821	・COVER	1				
1-5	1700000010	・SWITCH, lamp	2				
1-6	1141810012	・WASHER	2				
1-7	1700100052	・SWITCH, starter	1				
1-7-1	1700100019	・KEY	1				
1-8	1700000034	・SWITCH	1				
1-9	0881430970	・HARNESS, wiring	1				
1-10	1654354038	・SPONGE	1			M	sold by the meter
1-11	1654354039	・SPONGE	1			M	sold by the meter
1-12	1654354010	・SPONGE	1			M	sold by the meter
2	0664300040	COVER	1			M	
3	0664300030	INSULATOR	1			M	
8	0664301010	GAUGE ASSY, cluster	1			M	
8-1	0881430901	・ABSORBENT, noise	1				
8-2	0881430902	・ABSORBENT, noise	1				
8-3	0881430903	・ABSORBENT, noise	1				
8-4	1730142110	・GAUGE, cluster	1			M	
8-4-1	1730140691	・・RELAY	1				12V
8-4-2	1730140782	・・GLASS	1				
8-4-3	1730140785	・・COVER	1				
8-4-4	1730140696	・・BULB	8				14V, 1.4W
8-4-5	1730140788	・・VISOR	1				
8-4-6	1730140694	・・BRACKET	1				
10	1110020820	SCREW, cap	1				
11	1140090008	WASHER, spring	1				
12	1150420614	SCREW, sems	4				
13	1652711698	SCREW	3				
16	0881430805	INSULATOR	1				
17	1652231250	BAND	1				
	U2c210						

silverhorn.co.uk

CONTROL BOX; L.H.

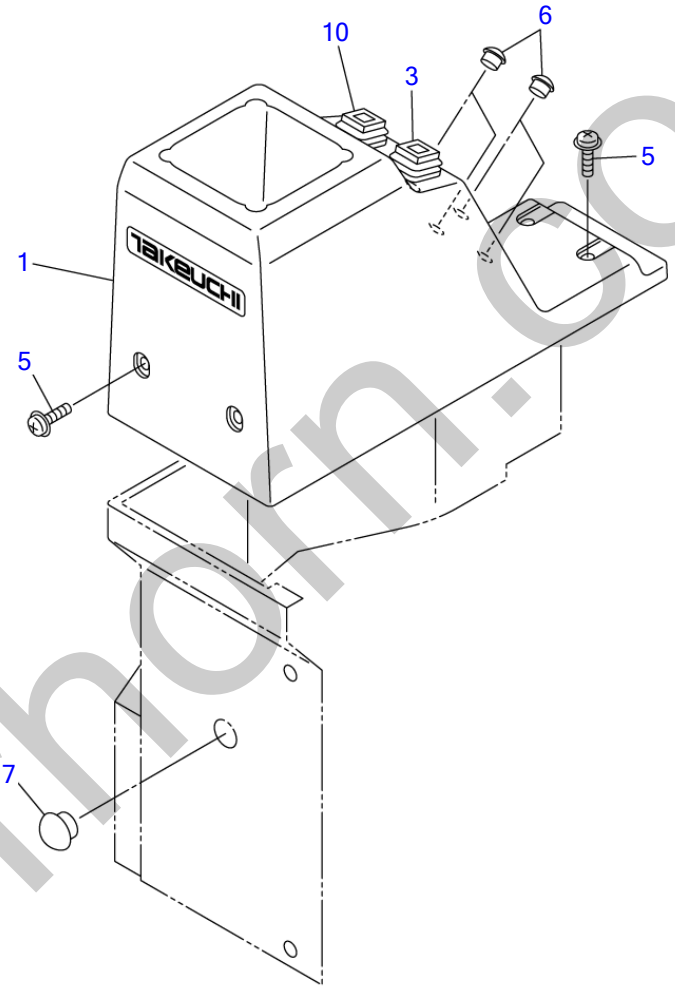

T7C040

S=1/5

silverhorn.co.uk

CONTROL BOX; L.H.

Item	Part number	Description	Q'ty	Chan.	Serial No.	Serv.	Remarks
		COVER ASSY (L.H.)					
1	0881430770	COVER (L.H.)	1				
3	1700000034	SWITCH	1				
5	1150420614	SCREW, sems	4				
6	1652533019	CAP	4				
7	1652533023	CAP	1				
10	1700000035	SWITCH	1				
	T7c041						

silverhorn.co.uk

CONTROL BOX; L.H. (hydraulic quick hitch type)

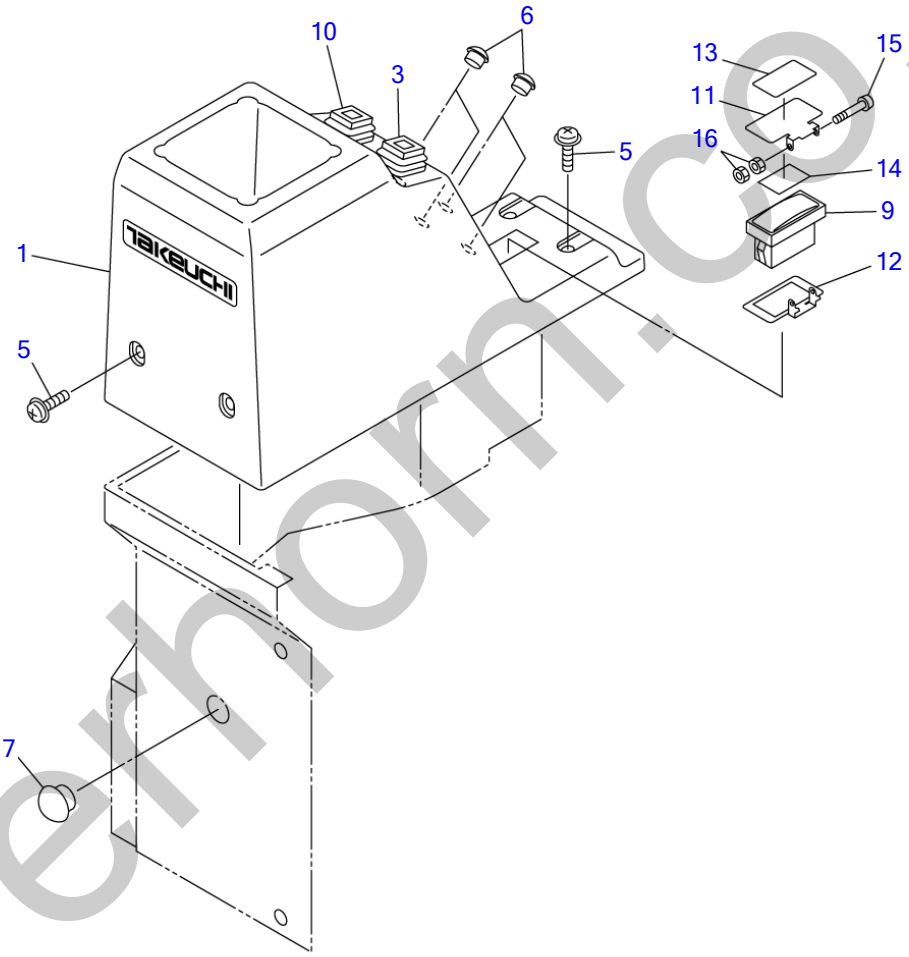

U1C081

S=1/5

silverhorn.co.uk

CONTROL BOX; L.H. (hydraulic quick hitch type)

Item	Part number	Description	Q'ty	Chan.	Serial No.	Serv.	Remarks
		COVER ASSY (L.H.)					
1	**0664300010**	COVER (L.H.)	1				
3	**1700000034**	SWITCH	1				
5	**1150420614**	SCREW	4				
6	**1652533019**	CAP	4				
7	**1652533023**	CAP	1				
9	**1700008080**	SWITCH	1				
10	**1700000035**	SWITCH	1				
11	**0664300110**	COVER	1		225000021~	M	
12	**0664300120**	COVER	1		225000021~	M	
13	**0664300130**	DECAL	1		225000021~	M	
14	**0664300140**	RUBBER	1		225000021~	M	
15	**1120530330**	SCREW	1		225000021~	M	
16	**1130040003**	NUT	2		225000021~	M	
	U3c250						

silverhorn.co.uk

ENGINE CONTROL (225000001-225000068)

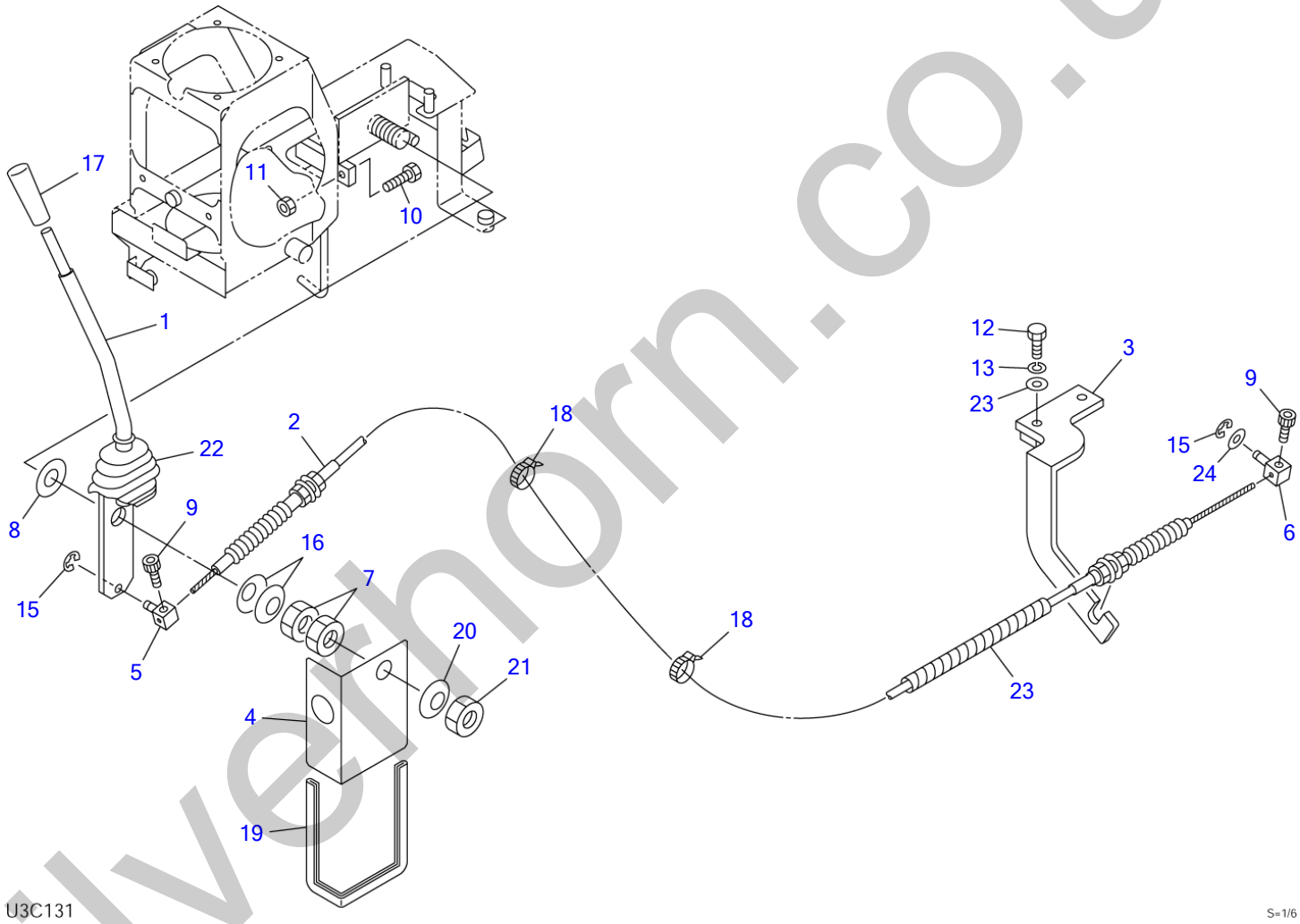

silverhorn.co.uk

ENGINE CONTROL (225000001-225000068)

Item	Part number	Description	Q'ty	Chan.	Serial No.	Serv.	Remarks
		CONTROL ASSY, engine					
1	0881412010	LEVER	1				
2	0694101010	WIRE	1				
3	0694101120	BRACKET	1			M	
4	0881412040	COVER	1				
5	0007900020	PIN	1				
6	0007900067	PIN	1			M	
7	0064111700	NUT	2				
8	1141550018	WASHER	1				
9	1110040510	SCREW, cap	2				
10	1100040830	BOLT	1				
11	1130040008	NUT	1				
12	1101041030	BOLT	2				
13	1140020010	WASHER, spring	2				
15	1224010006	RING, retaining	2				
16	1225110018	WASHER, conical	2				
17	1650132050	GRIP	1				
18	1652231250	BAND	2				
19	1653916037	TRIM	1				sold by the meter
20	1225000018	WASHER	1				
21	1130640018	NUT	1				
22	0334120100	BOOT	1				
23	1141110010	WASHER, spring	2				
24	1141110008	WASHER	1				
	U3c131						

silverhorn.co.uk

ENGINE CONTROL (225000069-)

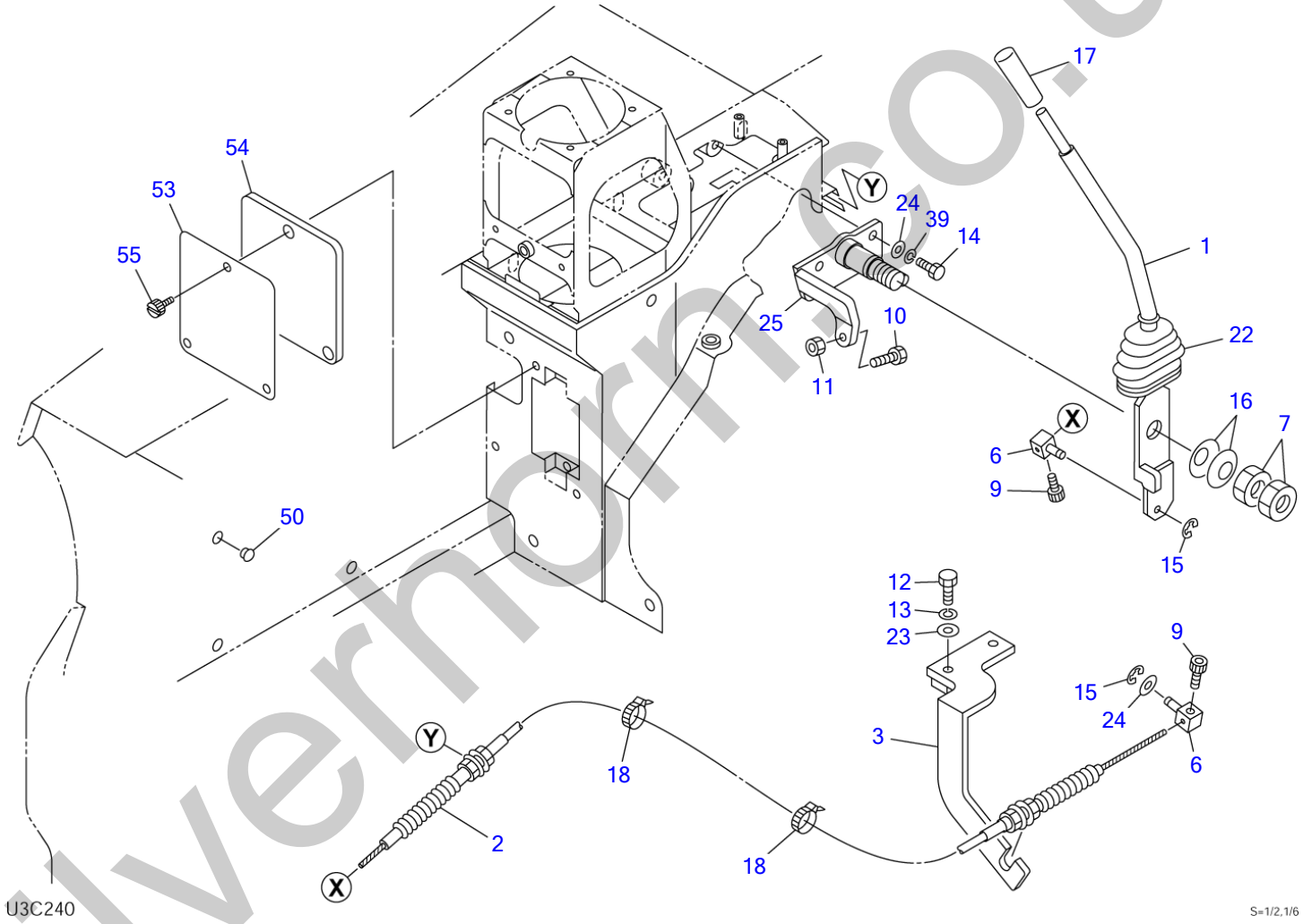

silvermorn.co.uk

ENGINE CONTROL (225000069-)

Item	Part number	Description	Q'ty	Chan.	Serial No.	Serv.	Remarks
		CONTROL ASSY, engine					
1	0694101210	LEVER	1			M	
2	0694101010	WIRE	1				
3	0694101120	BRACKET	1			M	
6	0007900067	PIN	2			M	
7	0064111700	NUT	2				
9	1110040510	SCREW, cap	2				
10	1100240840	BOLT	1			M	
11	1130040008	NUT	1				
12	1101041030	BOLT	2				
13	1140020010	WASHER, spring	2				
14	1100040820	BOLT	2				
15	1224010006	RING, retaining	2				
16	1225110018	WASHER, conical	2				
17	1650132050	GRIP	1				
18	1652231250	BAND	2				
22	0334120100	BOOT	1				
23	1141110010	WASHER	2				
24	1141110008	WASHER	3				
25	0684100620	LEVER	1			M	
39	1140020008	WASHER, spring	2				
50	1652533017	CAP	3			M	
53	0664300040	COVER	1		225000369~	M	
54	0664300030	INSULATOR	1		225000369~	M	
55	1652711698	SCREW	3		225000369~		
	U3c240						

silverhorn.co.uk

ENGINE CONTROL (throttle pedal type)

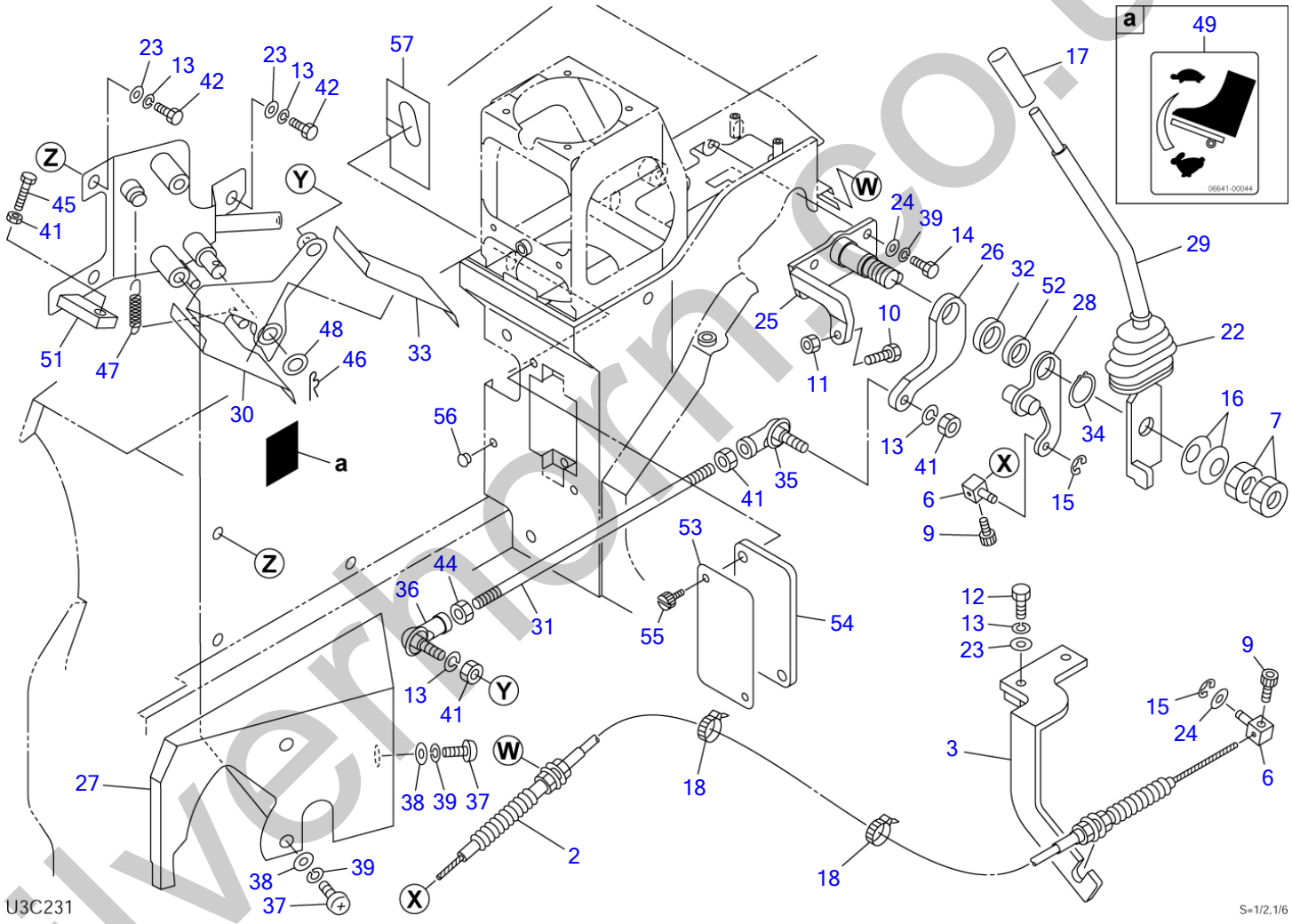

silvermorn.co.uk

ENGINE CONTROL (throttle pedal type)

Item	Part number	Description	Q'ty	Chan.	Serial No.	Serv.	Remarks
		CONTROL ASSY, engine					
2	0694101010	WIRE	1				
3	0694101120	BRACKET	1			M	
6	0007900067	PIN	2			M	
7	0064111700	NUT	2				
9	1110040510	SCREW, cap	2				
10	1100240840	BOLT	1			M	
11	1130040008	NUT	1				
12	1101041030	BOLT	2				
13	1140020010	WASHER, spring	7				
14	1100040820	BOLT	2				
15	1224010006	RING, retaining	2				
16	1225110018	WASHER, conical	2				
17	1650132050	GRIP	1				
18	1652231250	BAND	2				
22	0334120100	BOOT	1				
23	1141110010	WASHER	5				
24	1141110008	WASHER	3				
25	0684100620	LEVER	1			M	
26	0694102030	PLATE	1			M	
27	0664100650	COVER	1			M	
28	0684100630	PLATE	1			M	
29	0684100640	LEVER	1			M	
30	0694102020	PEDAL	1		225000069~225000308	M	
	0684100650	PEDAL	1	(H)	225000309~	M	
31	0005010305	ROD	1			M	
32	0684100660	COLLAR	1			M	
33	0684100670	SHEET	1			M	
34	1220000022	RING, retaining	1			M	
35	1340000100	END, rod	1			M	
36	1340000105	END, rod	1			M	
37	1120940816	SCREW	3			M	
38	0003608252	WASHER	3				
39	1140020008	WASHER, spring	5				
41	1130040010	NUT	4				
42	1100041020	BOLT	3				
44	1131540010	NUT	1			M	
45	1100241040	BOLT	1			M	
46	1214000014	PIN, snap	1			M	
47	0007000074	SPRING	1			M	
48	1141110014	WASHER	1			M	
49	0664100044	DECAL	1			M	
51	0664100710	FRAME	1			M	
52	0003600248	WASHER	1		225000309~	M	
53	0881430802	COVER	1		225000369~		
54	0664300020	INSULATOR	1		225000369~	M	
55	1652711698	SCREW	2		225000369~		
56	1652533015	CAP	1		225000369~		
57	0694101304	SHEET	1		225000393~	M	
	U3c231						

silverhorn.co.uk

ELECTRICAL (1/2) (225000001-225000020)

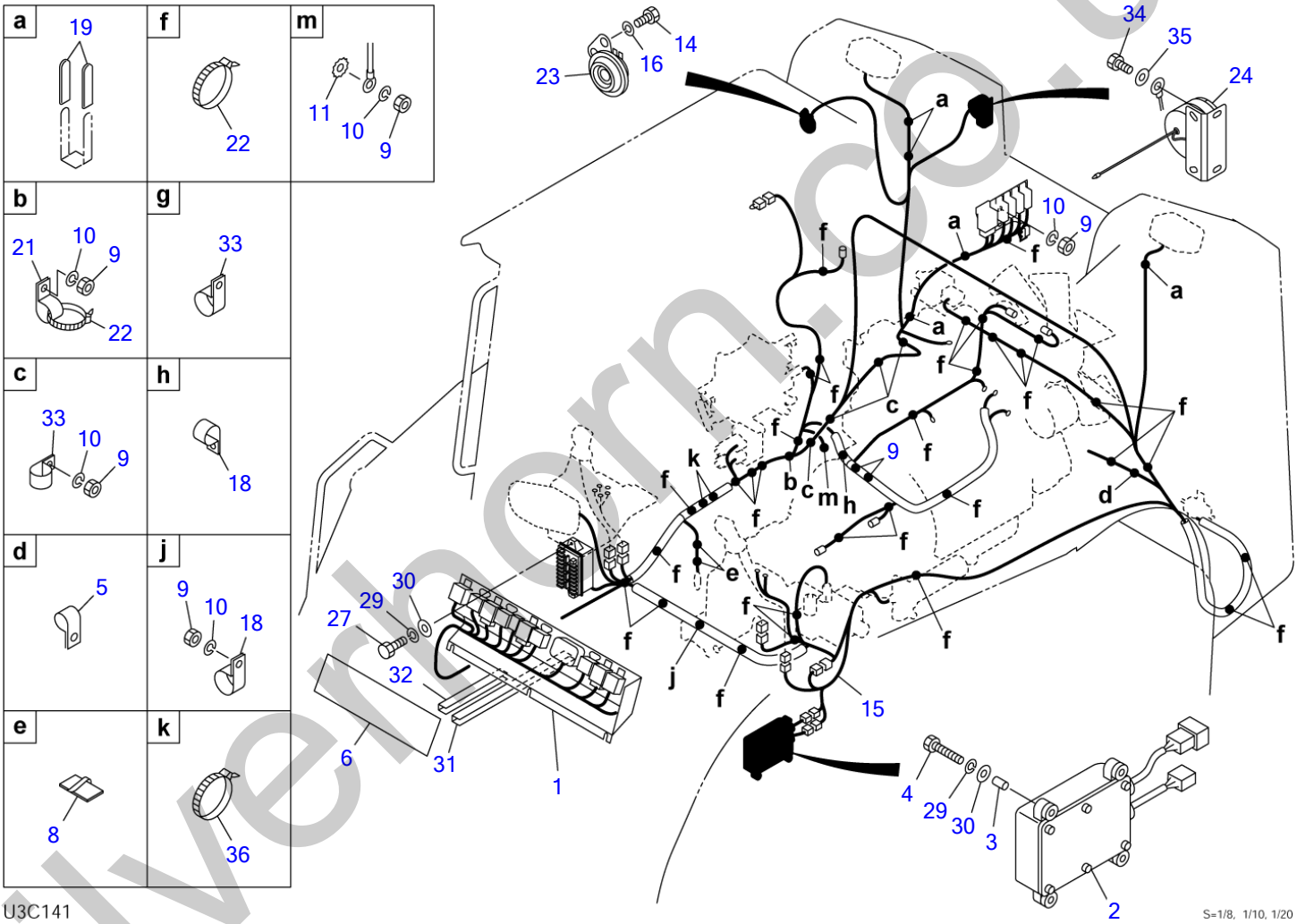

silvernorn.co.uk

ELECTRICAL (1/2) (225000001-225000020)

Item	Part number	Description	Q'ty	Chan.	Serial No.	Serv.	Remarks
		ELECTRICAL ASSY					
1	0694200300	UNIT ASSY, relay	1				see page (2/2)
2	1730140730	CONTROLLER	1				
3	1531007002	HOSE	4				sold by the meter
4	1100040630	BOLT	4				
5	1711900076	CLAMP	1				
6	0881423120	RUBBER	1				
8	1711900074	CLAMP	2				
9	1130040010	NUT	9				
10	1140020010	WASHER, spring	9				
11	1140330010	WASHER	1				
14	1100040816	BOLT	2				
15	0664201250	HARNESS, wiring	1				
16	1140020008	WASHER, spring	2				
18	1711900072	CLAMP	4				
19	0872433150	TUBE	12				
21	0007300003	CLAMP	1				
22	1652231250	BAND	30				
23	1703500612	HORN	1				
24	1703700013	BUZZER	1				
27	1100040616	BOLT	2				
29	1140020006	WASHER, spring	6				
30	1141110006	WASHER	6				
31	1654606048	TRIM	1				sold by the meter
32	1653916013	TRIM	1				sold by the meter
33	1711900071	CLAMP	6				
34	1100040610	BOLT	2				
35	0003600110	WASHER	2				
36	1652201007	BAND	2				
	U3c141						

silverhorn.co.uk

ELECTRICAL (2/2) (225000001-225000020)

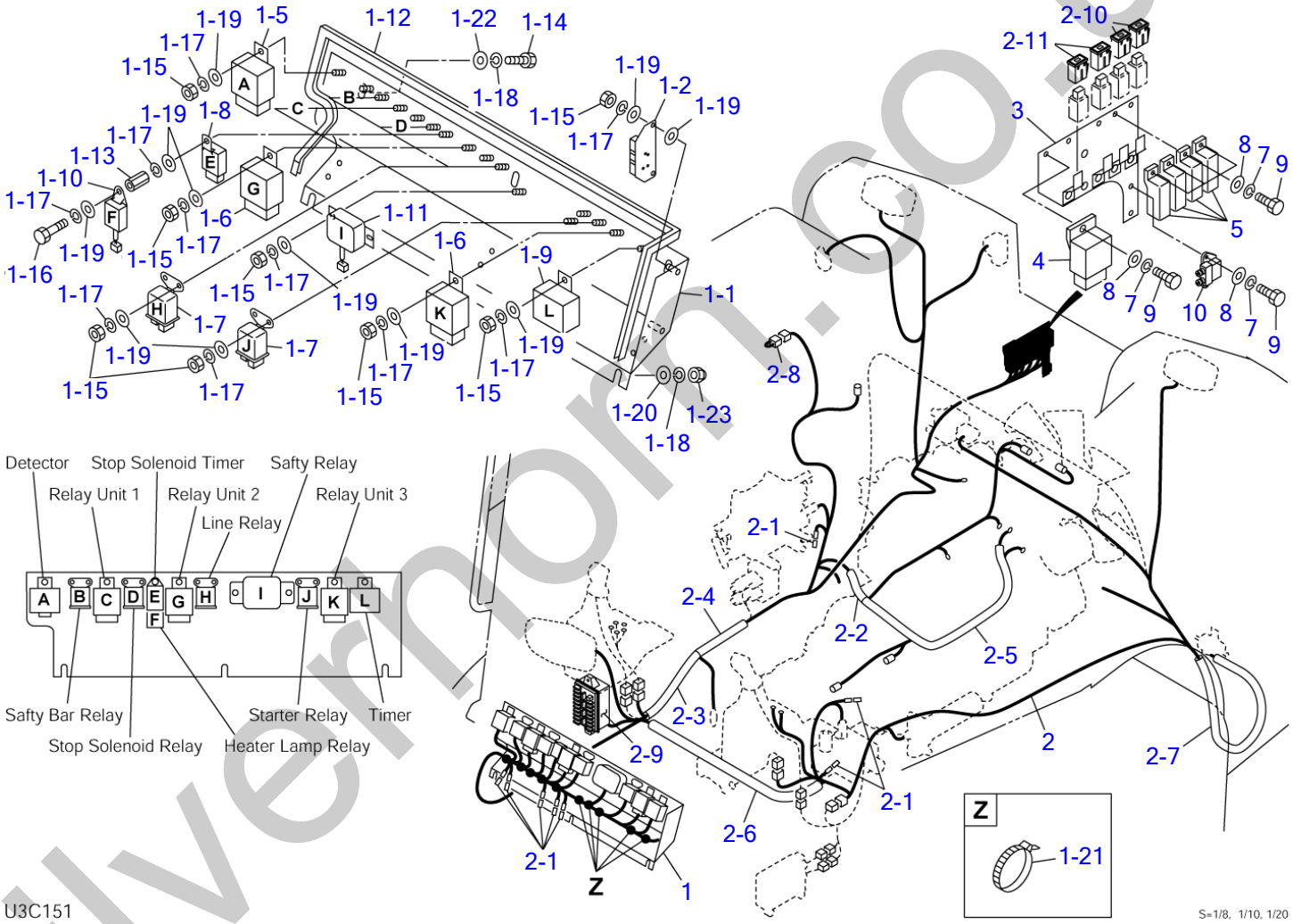

silvermorn.co.uk

ELECTRICAL (2/2) (225000001-225000020)

Item	Part number	Description	Q'ty	Chan.	Serial No.	Serv.	Remarks
0-1	0694200300	UNIT ASSY, relay	1				
1	0694200350	・RELAY UNIT	1				
1-1	0694200360	・・BOX	1				
1-2	0664201320	・・RESISTOR	1				
1-5	1711900131	・・DETECTOR	1				
1-6	1711900062	・・RELAY	3				
1-7	1711900099	・・RELAY	4				
1-8	1711900042	・・RELAY	1				
1-9	1711900140	・・UNIT, timer (30sec)	1				
1-10	1910078118	・・TIMER	1				KUBOTA 1G386-60241
1-11	1910078106	・・RELAY, safety	1				KUBOTA 1G373-60212
1-12	1654606116	・・TRIM	1			M	sold by the meter
1-13	1134830620	・・NUT	1				
1-14	1100040816	・・BOLT	3				
1-15	1130040006	・・NUT	17				
1-16	1100040614	・・BOLT	1				
1-17	1140020006	・・WASHER, spring	19				
1-18	1140020008	・・WASHER, spring	6				
1-19	1141110006	・・WASHER	21				
1-20	1141110008	・・WASHER	3				
1-21	1652231250	・・BAND	9				
1-22	0003608252	・・WASHER	3				
1-23	1134230008	・・NUT	3				
2	0694200150	・HARNESS, wiring	1				
2-1	1730500008	・・DIODE (3A yellow)	8				
2-2	1531325033	・・PROTECTOR	1				sold by the meter
2-3	1531325040	・・PROTECTOR	1				sold by the meter
2-4	1531325070	・・PROTECTOR	1				sold by the meter
2-5	1531315080	・・PROTECTOR	1				sold by the meter
2-6	1531325080	・・PROTECTOR	1				sold by the meter
2-7	1531315085	・・PROTECTOR	1				sold by the meter
2-8	0394221010	・・CONNECTOR, short	1				
2-9	1701200002	・・BOX, fuse	1				V72774A-0100
2-10	1701330045	・・LINK, fusible	2				
2-11	1701330065	・・LINK, fusible	2				
3	0694200380	・BRACKET	1			M	
4	1910078107	・CONTROLLER	1				KUBOTA 5H618-41351
5	1700100038	・COVER	4				
7	1140020006	・WASHER, spring	7				
8	0003600110	・WASHER	7				
9	1100040620	・BOLT	7				
10	1910078116	・RELAY	1				
	U3c151					M	

silverthorn.co.uk

ELECTRICAL (1/2) (225000021-)

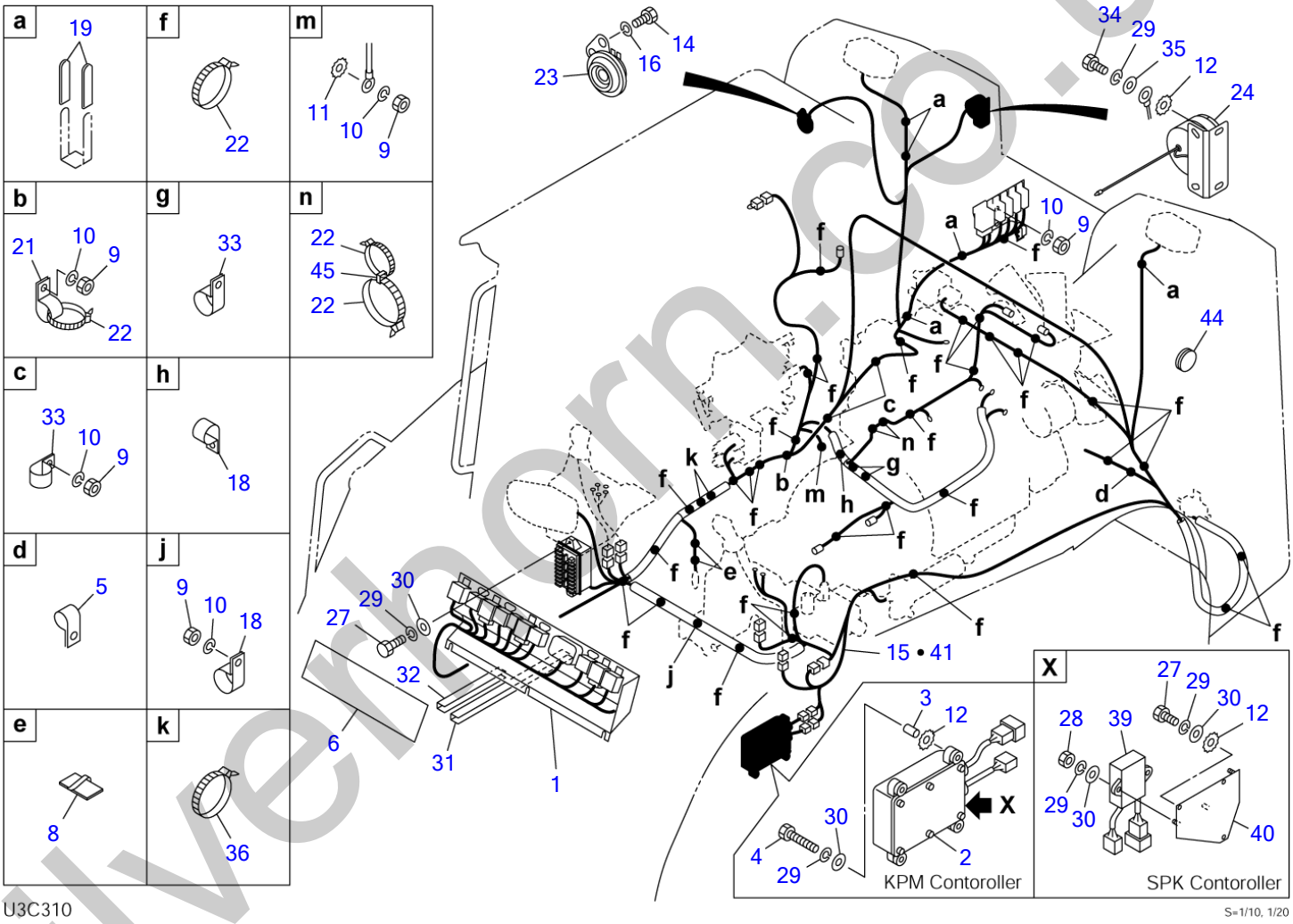

silverhorn.co.uk

ELECTRICAL (1/2) (225000021-)

Item	Part number	Description	Q'ty	Chan.	Serial No.	Serv.	Remarks
		ELECTRICAL ASSY (KPM Controller type)					
		ELECTRICAL ASSY (SPK Controller type)					
1	0694202100	UNIT ASSY, relay	1			M	see page (2/2)
2	1730140730	CONTROLLER	1				KPM Controller type
3	1531007002	HOSE (KPM Controller type)	4				sold by the meter
4	1100040630	BOLT	4				KPM Controller type
5	1711900076	CLAMP	1				
6	0881423120	RUBBER	1				
8	1711900074	CLAMP	2				
9	1130040010	NUT	9				
10	1140020010	WASHER, spring	9				
11	1140330010	WASHER	1				
12	1140330006	WASHER	2			M	
14	1100040816	BOLT	2				
15	0664201250	HARNESS, wiring	1				KPM Controller type
16	1140020008	WASHER, spring	2				
18	1711900072	CLAMP	2				
19	0872433150	TUBE	12				
21	0007300003	CLAMP	1				
22	1652231250	BAND	35				
23	1703500712	HORN	1			M	
24	1703700013	BUZZER	1				
27	1100040616	BOLT	2				KPM Controller type
	1100040616	BOLT	5				SPK Controller type
28	1130040006	NUT	2				SPK Controller type
29	1140020006	WASHER, spring	8				KPM Controller type
	1140020006	WASHER, spring	9				SPK Controller type
30	1141110006	WASHER	6				KPM Controller type
	1141110006	WASHER	7				SPK Controller type
31	1654606048	TRIM	1				sold by the meter
32	1653916013	TRIM	1				sold by the meter
33	1711900071	CLAMP	4				
34	1100040612	BOLT	2				
35	0003600110	WASHER	2				
36	1652201007	BAND	2				
39	1730142090	CONTROLLER	1			M	SPK Controller type
40	0654203510	BRACKET	1			M	SPK Controller type
41	0664202400	HARNESS, wiring	1			M	SPK Controller type
44	1652060051	BUSHING	1			M	
45	1652200010	BAND	2			M	
	U3c310						

silverthorn.co.uk

ELECTRICAL (2/2) (225000021-)

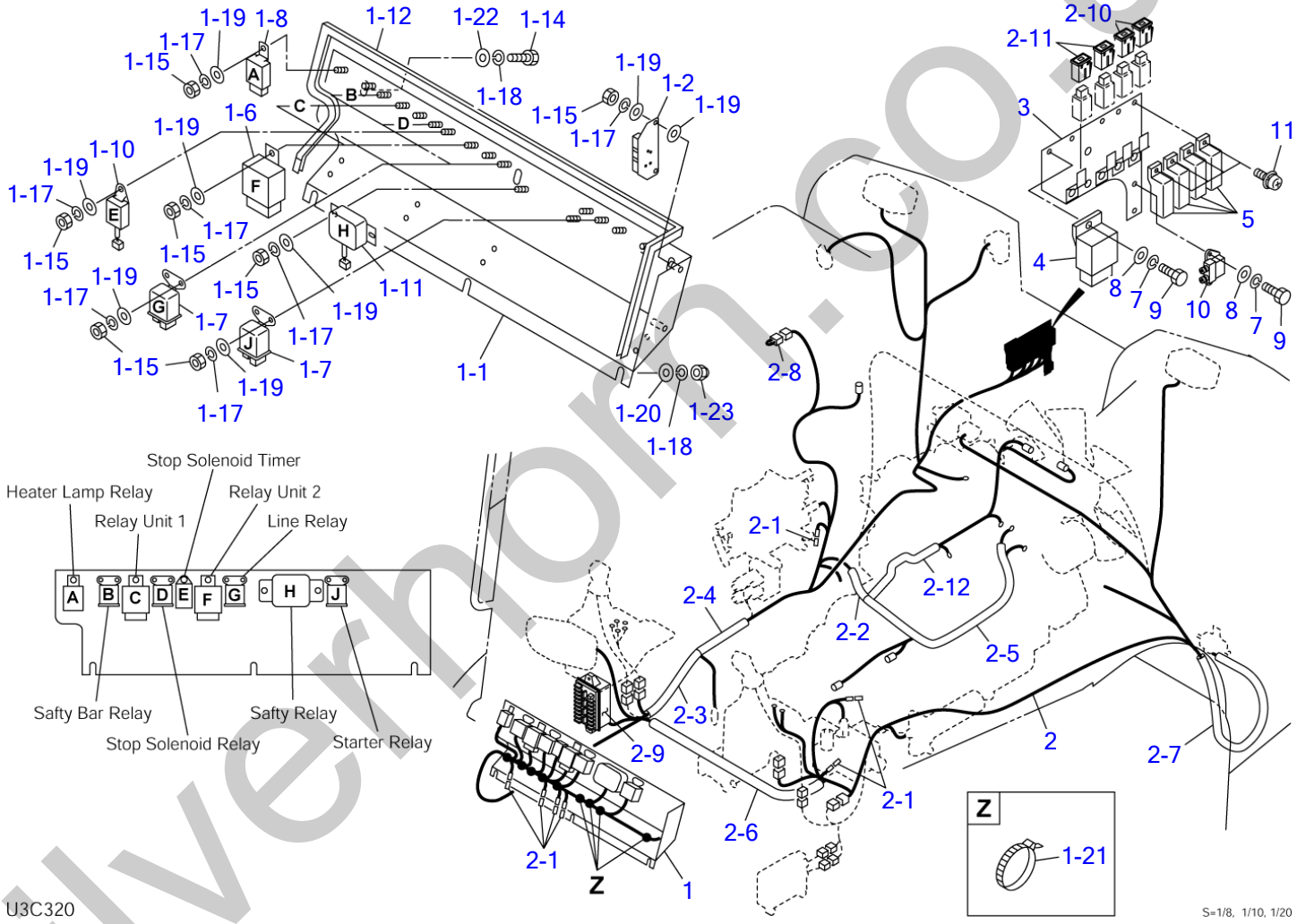

silverthorn.co.uk

ELECTRICAL (2/2) (225000021-)

Item	Part number	Description	Q'ty	Chan.	Serial No.	Serv.	Remarks
0-1	0694202100	UNIT ASSY, relay	1			M	
1	0694202300	・RELAY UNIT	1			M	
1-1	0694200360	・・BOX	1				
1-2	0694202320	・・RESISTOR	1			M	
1-6	1711900062	・・RELAY	3				
1-7	1711900099	・・RELAY	4				
1-8	1711900042	・・RELAY	1				
1-10	1910078118	・・TIMER	1				KUBOTA 1G386-60241
1-11	1910078106	・・RELAY, safety	1				KUBOTA 1G373-60212
1-12	1654606116	・・TRIM	1			M	sold by the meter
1-14	1100040816	・・BOLT	3				
1-15	1130040006	・・NUT	17				
1-17	1140020006	・・WASHER, spring	19				
1-18	1140020008	・・WASHER, spring	6				
1-19	1141110006	・・WASHER	21				
1-20	1141110008	・・WASHER	3				
1-21	1652231250	・・BAND	9				
1-22	0003608252	・・WASHER	3				
1-23	1134230008	・・NUT	3				
2	0694202200	・HARNESS, wiring	1			M	
2-1	1730500008	・・DIODE (3A yellow)	7				
2-2	1531325033	・・PROTECTOR	1				sold by the meter
2-3	1531325040	・・PROTECTOR	1				sold by the meter
2-4	1531325070	・・PROTECTOR	1				sold by the meter
2-5	1531315080	・・PROTECTOR	1				sold by the meter
2-6	1531325080	・・PROTECTOR	1				sold by the meter
2-7	1531315085	・・PROTECTOR	1				sold by the meter
2-8	0394221010	・・CONNECTOR, short	1				
2-9	1701200002	・・BOX, fuse	1				V72774A-0100
2-10	1701330045	・・LINK, fusible	2				
2-11	1701330065	・・LINK, fusible	2				
2-12	1531315035	・・PROTECTOR	1			M	sold by the meter
3	0694200380	・BRACKET	1			M	
4	1910078107	・CONTROLLER	1				KUBOTA 5H618-41351
5	1700100038	・COVER	3				
7	1140020006	・WASHER, spring	3				
8	0003600110	・WASHER	3				
9	1100040612	・BOLT	3				
10	1910078116	・RELAY	1			M	
11	1150420612	・SCREW	4				
	U3c320						

silverhorn.co.uk

ELECTRICAL (multi-functional grip type; 225000021-225000332)

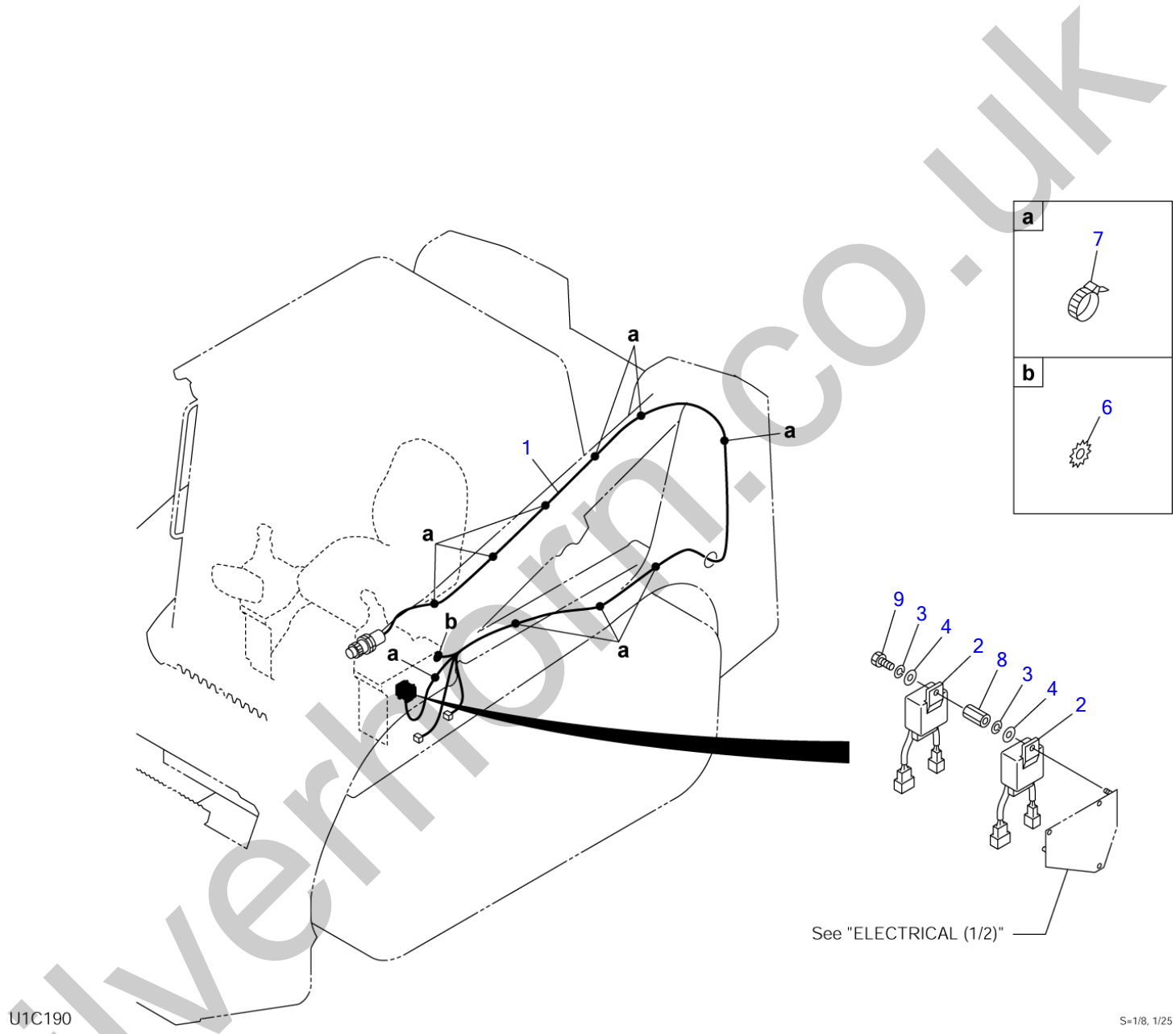

silverhorn.co.uk

ELECTRICAL (multi-functional grip type; 225000021-225000332)

Item	Part number	Description	Q'ty	Chan.	Serial No.	Serv.	Remarks
		ELECTRICAL ASSY, grip switch					
1	**0654202530**	HARNESS, wiring	1			M	
2	**1711900062**	RELAY	2				
3	**1140020006**	WASHER, spring	2				
4	**1141110006**	WASHER	2				
6	**1140330010**	WASHER	1				
7	**1652231250**	BAND	11				
8	**1134830635**	NUT	1			M	
9	**1100040616**	BOLT	1				
	U1c190						

silverhorn.co.uk

ELECTRICAL (multi-functional grip type; 225000333-)

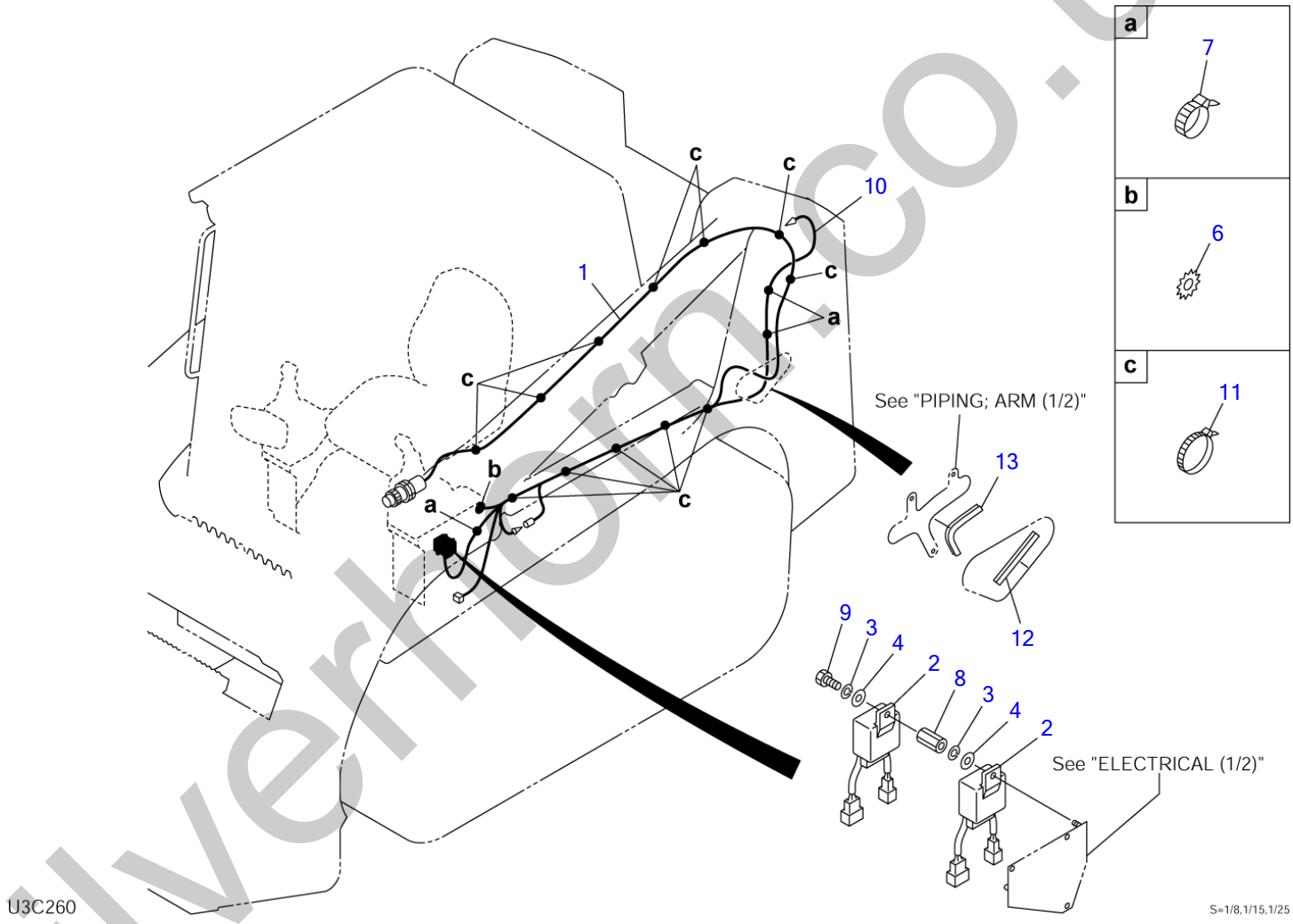

silverhorn.co.uk

ELECTRICAL (multi-functional grip type; 225000333-)

Item	Part number	Description	Q'ty	Chan.	Serial No.	Serv.	Remarks
		ELECTRICAL ASSY, grip switch					
1	0654202530	HARNESS, wiring	1			M	
2	1711900062	RELAY	2				
3	1140020006	WASHER, spring	2				
4	1141110006	WASHER	2				
6	1140330010	WASHER	1				
7	1652231250	BAND	2				
8	1134830635	NUT	1			M	
9	1100040616	BOLT	1				
10	0664201230	HARNESS, wiring	1			M	
11	1652201008	BAND	13				
12	1654624010	TRIM	1			M	sold by the meter
13	1654624020	TRIM	1			M	sold by the meter
	U3c260						

silverhorn.co.uk

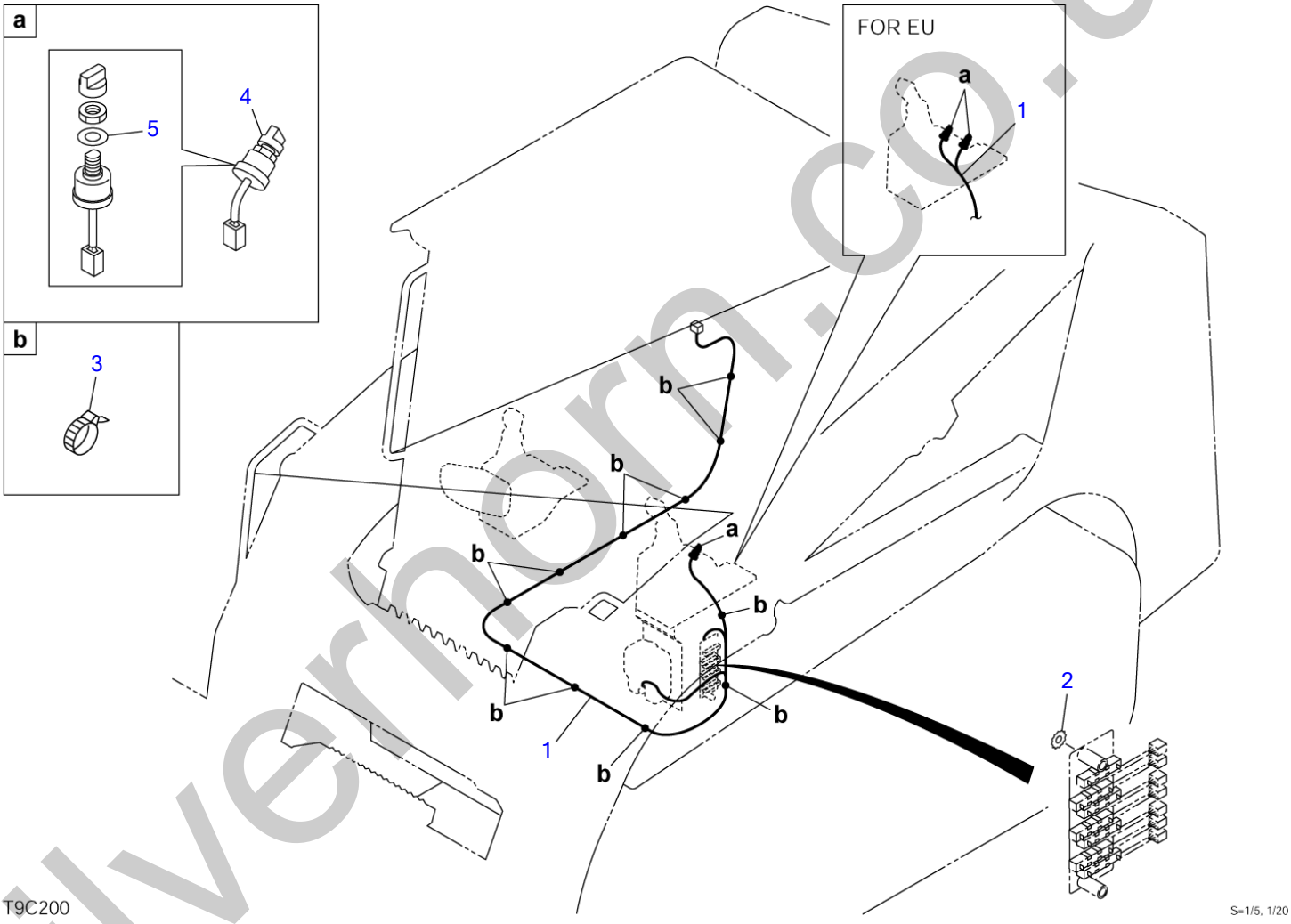

silverhorn.co.uk

ELECTRICAL (cab)

Item	Part number	Description	Q'ty	Chan.	Serial No.	Serv.	Remarks
		ELECTRICAL ASSY					
		ELECTRICAL ASSY (for EU)					
1	0880427810	HARNESS, wiring	1				
	0882421410	HARNESS, wiring	1				for EU
2	1140330010	WASHER	1				
3	1652231250	BAND	10				
4	1704300007	SWITCH, wiper	1				
	1704300007	SWITCH, wiper	2				for EU
5	1141810012	WASHER	1				
	1141810012	WASHER	2				for EU
	U3c220						

silverhorn.co.uk

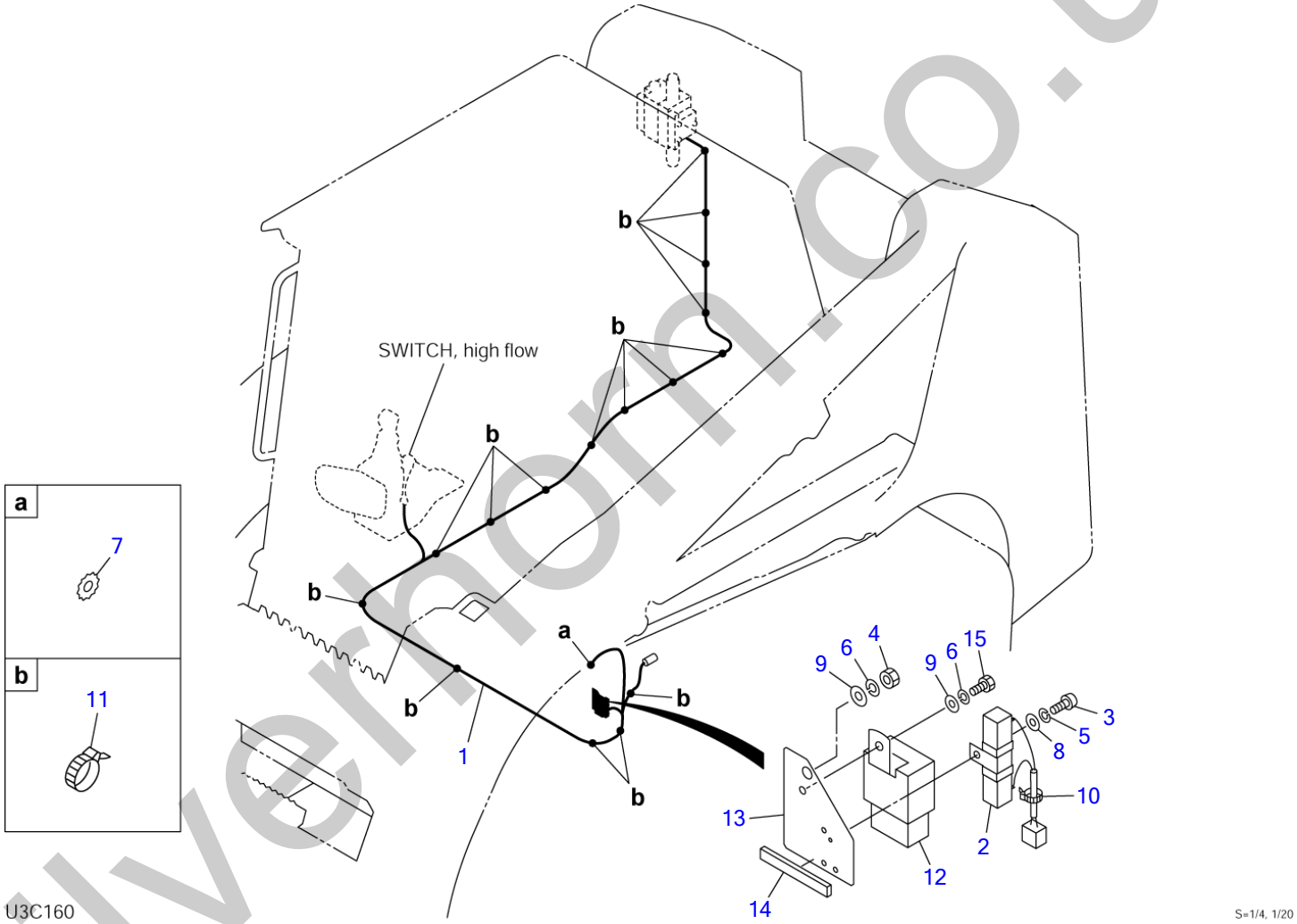

silvernorm.co.uk

ELECTRICAL (high flow)

Item	Part number	Description	Q'ty	Chan.	Serial No.	Serv.	Remarks
		ELECTRICAL ASSY					
1	0694200510	HARNESS, wiring	1				
1-1	1730500008	・DIODE (3A yellow)	1				
2	0881421710	RESISTOR	1				
3	1120530306	SCREW	1				
4	1130040006	NUT	1				
5	1140020003	WASHER, spring	1				
6	1140020006	WASHER, spring	2				
7	1140330010	WASHER	1				
8	1141110003	WASHER	1				
9	1141110006	WASHER	2				
10	1652200003	BAND	1				
11	1652231250	BAND	16				
12	1711900042	RELAY	1				
13	0694200520	BRACKET	1				
14	1654301006	SPONGE	1				sold by the meter
15	1100040610	BOLT	1				
	U3c160						

silverhorn.co.uk

BATTERY

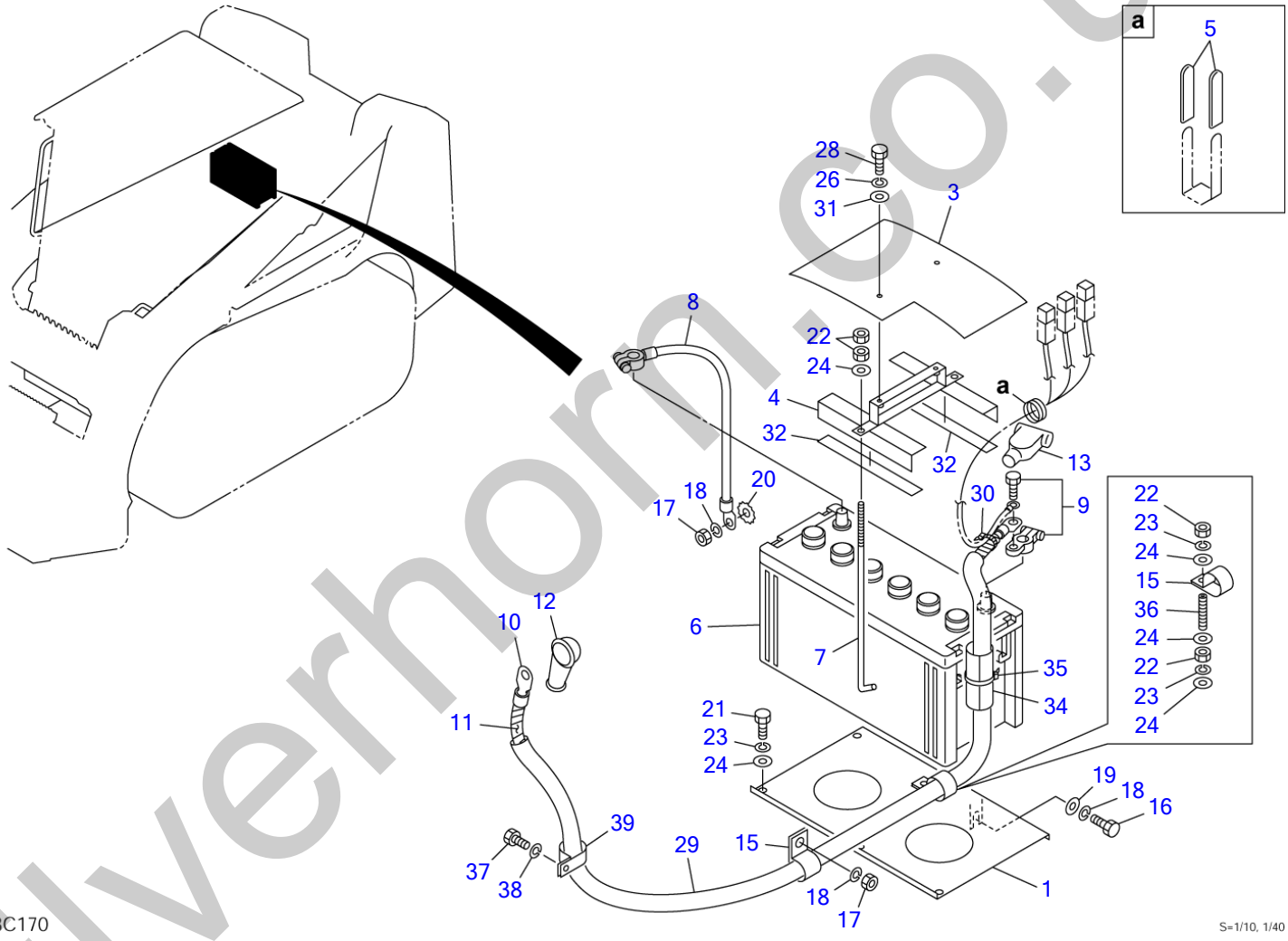

silverhorn.co.uk

BATTERY

Item	Part number	Description	Q'ty	Chan.	Serial No.	Serv.	Remarks
		BATTERY ASSY					
1	0881442010	PLATE	1				
3	0880442001	SHEET	1				
4	0881441040	BRACKET	1				
5	0872433150	TUBE	8				
6	1702053141	BATTERY	1				
7	1702108245	BOLT	2				
8	1702260030	CABLE, earth	1				
9	1702330000	TERMINAL	1				
10	1702560140	CABLE, battery	1				
11	1703221532	PROTECTOR	1				sold by the meter
12	1702901283	CAP	1				
13	1702920080	COVER	1				
15	1711900072	CLAMP	2				
16	1100041016	BOLT	1				
17	1130040010	NUT	2				
18	1140020010	WASHER, spring	3				
19	1141110010	WASHER	1				
20	1140330010	WASHER	1				
21	1100040816	BOLT	2				
22	1130040008	NUT	6				
23	1140020008	WASHER, spring	4				
24	1141110008	WASHER	7				
26	1140020006	WASHER, spring	2				
28	1100040616	BOLT	2				
29	1531325130	PROTECTOR	1				sold by the meter
30	1652231140	BAND	1				
31	0003606202	WASHER	2				
32	0880442050	PLATE, rubber	2				
34	0881442001	PROTECTOR	1				
35	1652231250	BAND	1				
36	1121040850	SET-SCREW	1				
37	1102041220	BOLT	1				
38	1140020012	WASHER, spring	1				
39	1711900122	CLAMP	1				
	U3c170						

silverhorn.co.uk

REAR LAMP

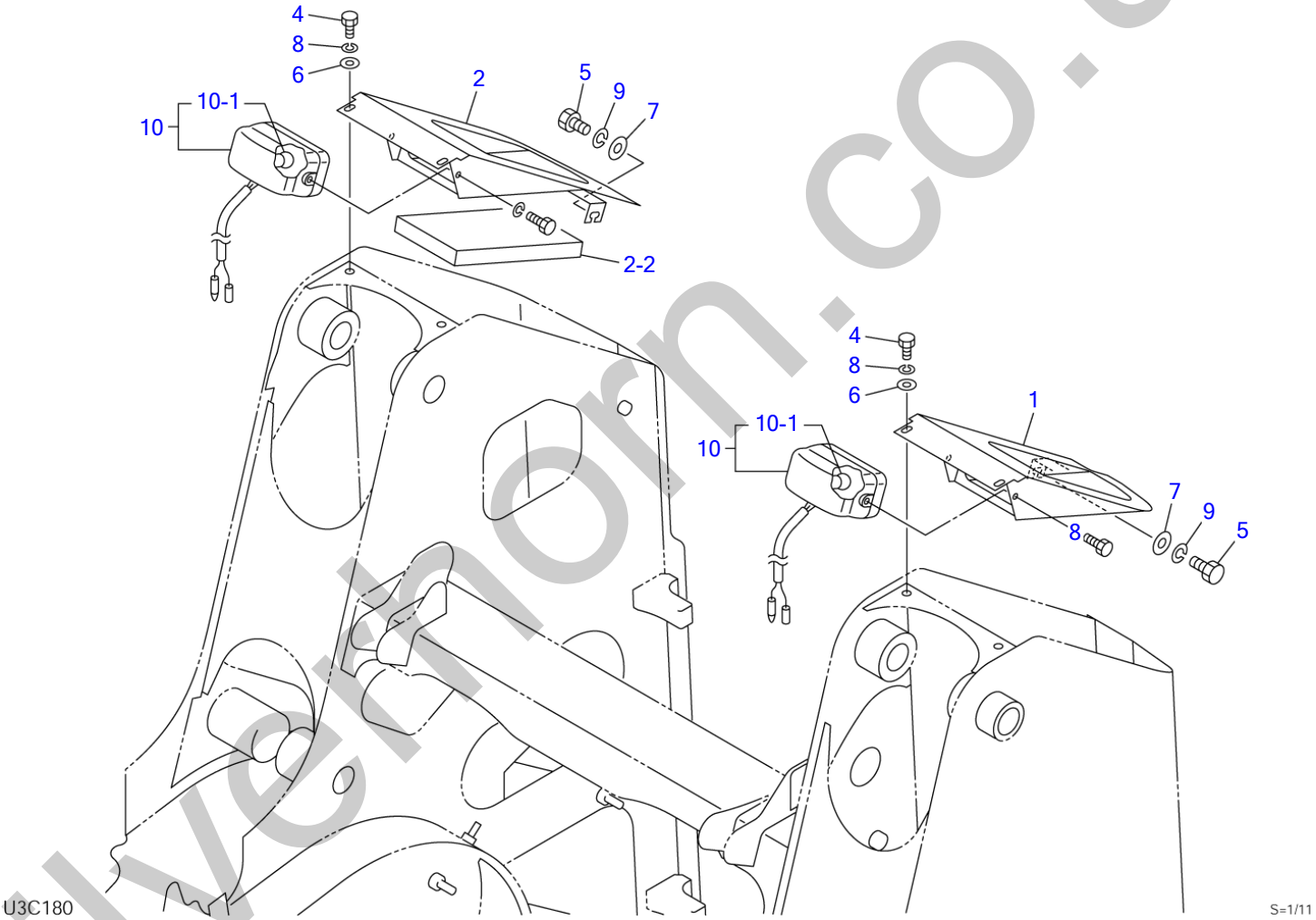

silverthorn.co.uk

REAR LAMP

Item	Part number	Description	Q'ty	Chan.	Serial No.	Serv.	Remarks
		LAMP ASSY, rear					
		LAMP ASSY, rear (for EC)					
1	0881491100	COVER (L.H.)	1				
2	0881491200	COVER (R.H.)	1				
	0881493200	COVER (R.H.) (for EC)	1				
2-2	0881493202	・ABSORBENT, noise	1				for EU
4	1100040816	BOLT	4				
5	1100041016	BOLT	2				
6	0003608252	WASHER	4				
7	1141110010	WASHER	2				
8	1140020008	WASHER, spring	4				
9	1140020010	WASHER, spring	2				
10	1703006900	LAMP	2				
10-1	1703006902	・BULB	1				12V, 55W
	T7c091						

silverhorn.co.uk

MAINTENANCE LIGHT SOCKET

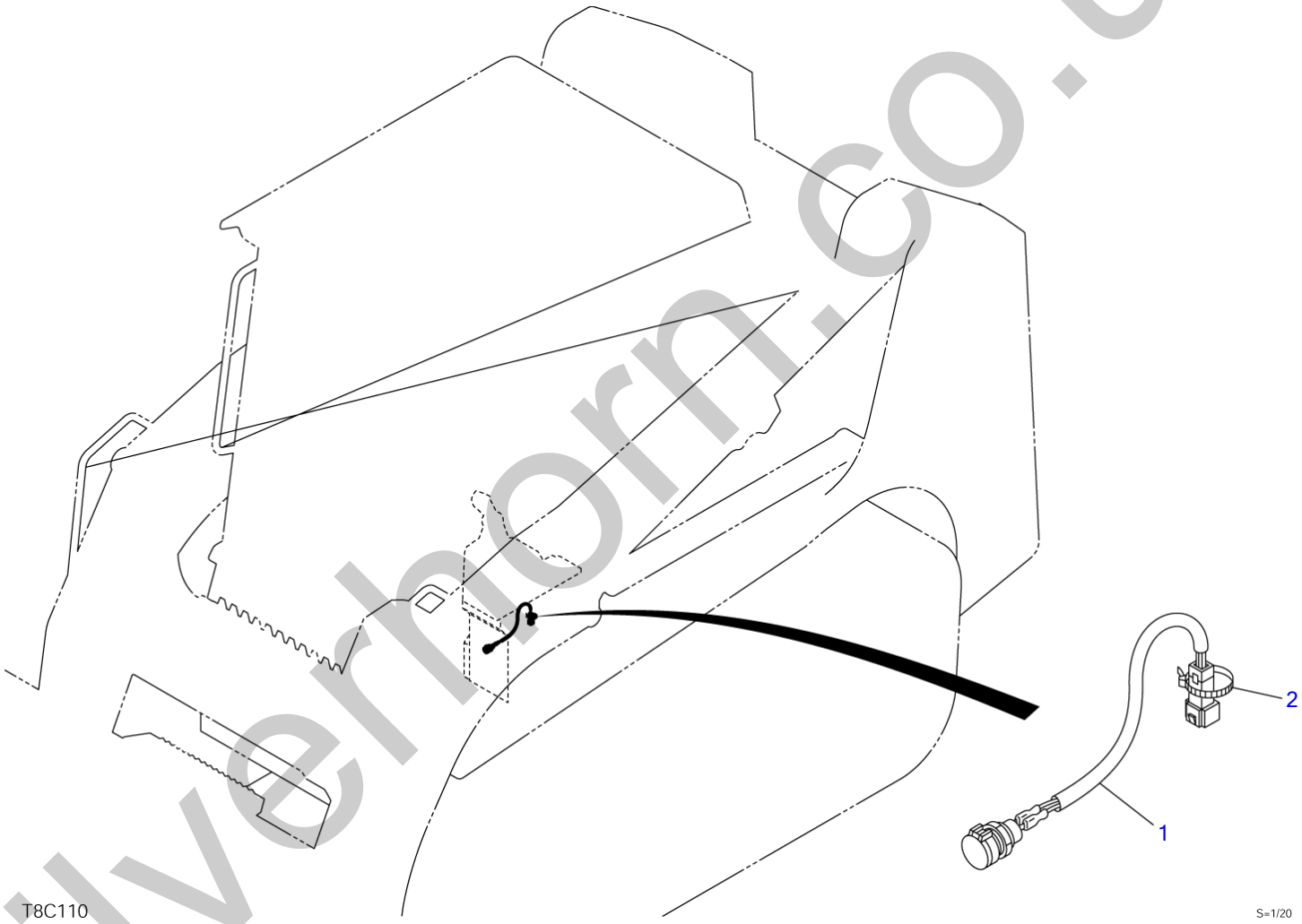

silverhorn.co.uk

MAINTENANCE LIGHT SOCKET

Item	Part number	Description	Q'ty	Chan.	Serial No.	Serv.	Remarks
		SOCKET ASSY, maintenance light					
1	**0394203100**	SOCKET ASSY	1				
2	**1652231250**	BAND	1				
	T8c110						

silverhorn.co.uk

WINDOW WASHER

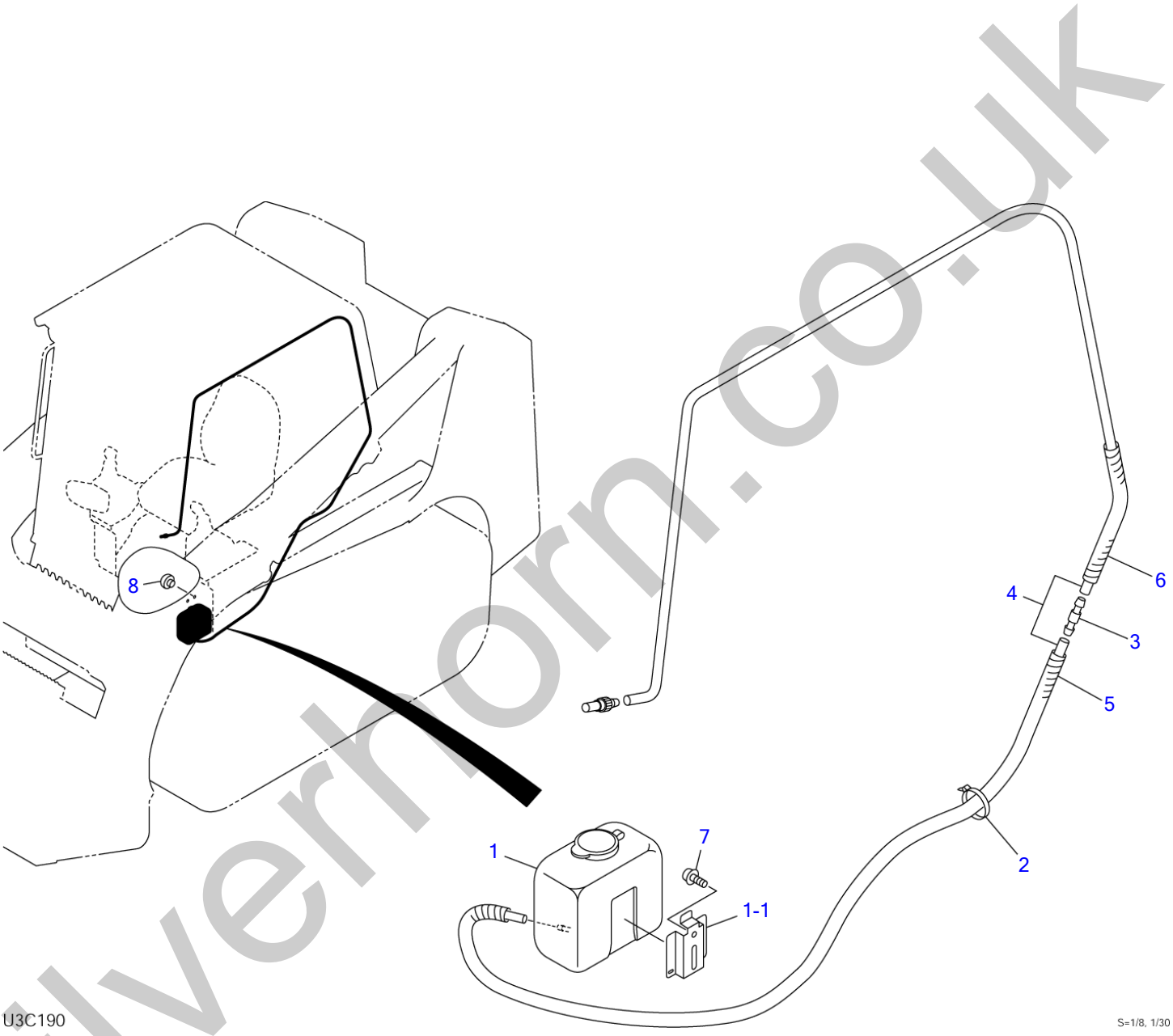

silverhorn.co.uk

WINDOW WASHER

Item	Part number	Description	Q'ty	Chan.	Serial No.	Serv.	Remarks
		WASHER ASSY, window					
1	1711910290	TANK	1				
1-1	1711910291	・BRACKET	1				
2	1652231140	BAND	1				
3	1711910014	JOINT	1				
4	1711919150	HOSE	1				sold by the meter
5	1703220750	PROTECTOR	1				sold by the meter
6	1703210725	PROTECTOR	1				sold by the meter
7	1150410612	SCREW	2				
8	1652533015	CAP	2				
	U3c190						

silverhorn.co.uk

WINDOW WASHER (for EU)

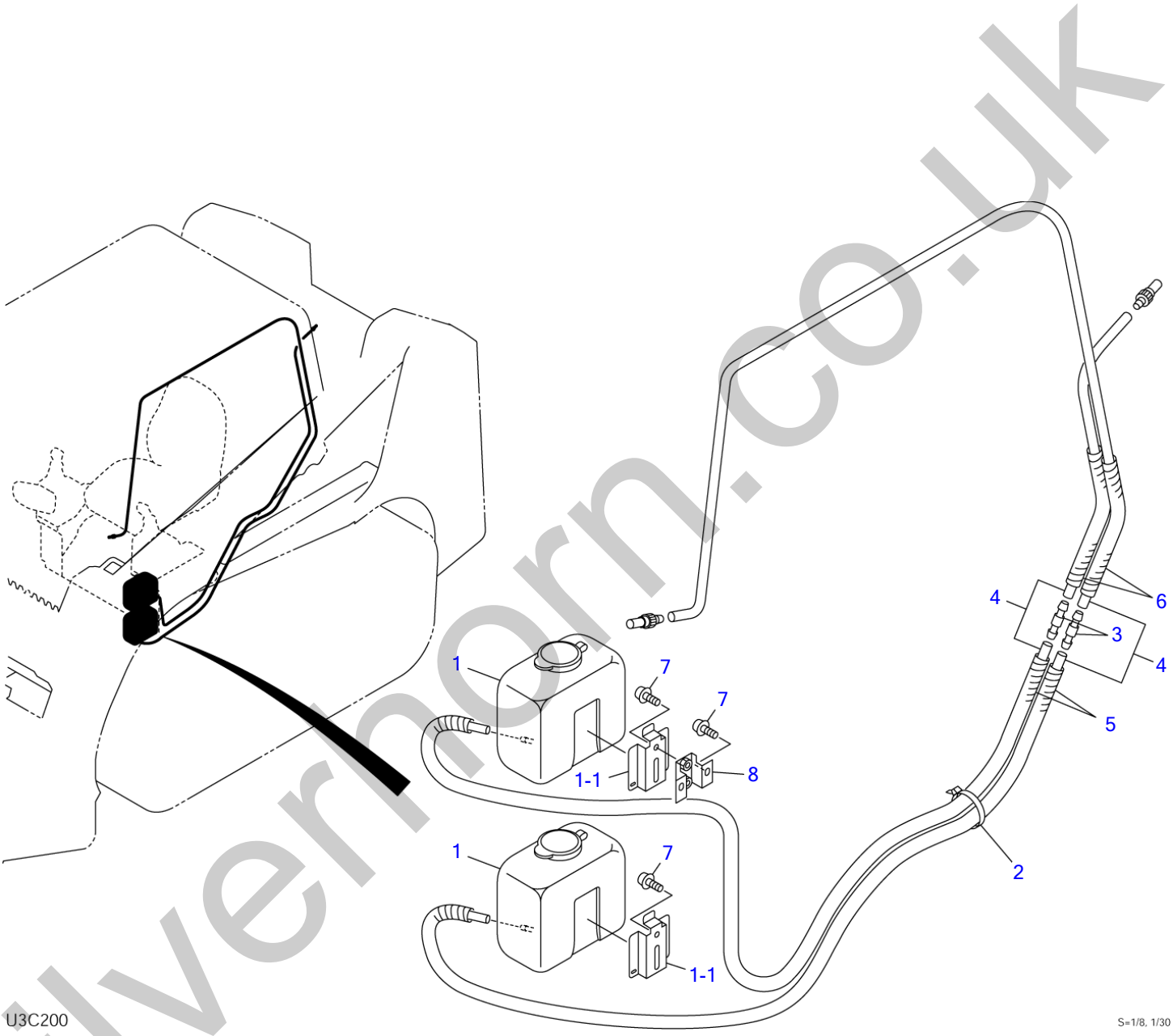

silverhorn.co.uk

WINDOW WASHER (for EU)

Item	Part number	Description	Q'ty	Chan.	Serial No.	Serv.	Remarks
		WASHER ASSY, window					
1	1711910290	TANK	2				
1-1	1711910291	・BRACKET	2				
2	1652231140	BAND	1				
3	1711910014	JOINT	2				
4	1711919150	HOSE	2				sold by the meter
5	1703220750	PROTECTOR	2				sold by the meter
6	1703210725	PROTECTOR	2				sold by the meter
7	1150410612	SCREW	6				
8	0668900180	BRACKET	1				
	U3c200						

silverhorn.co.uk

RADIO

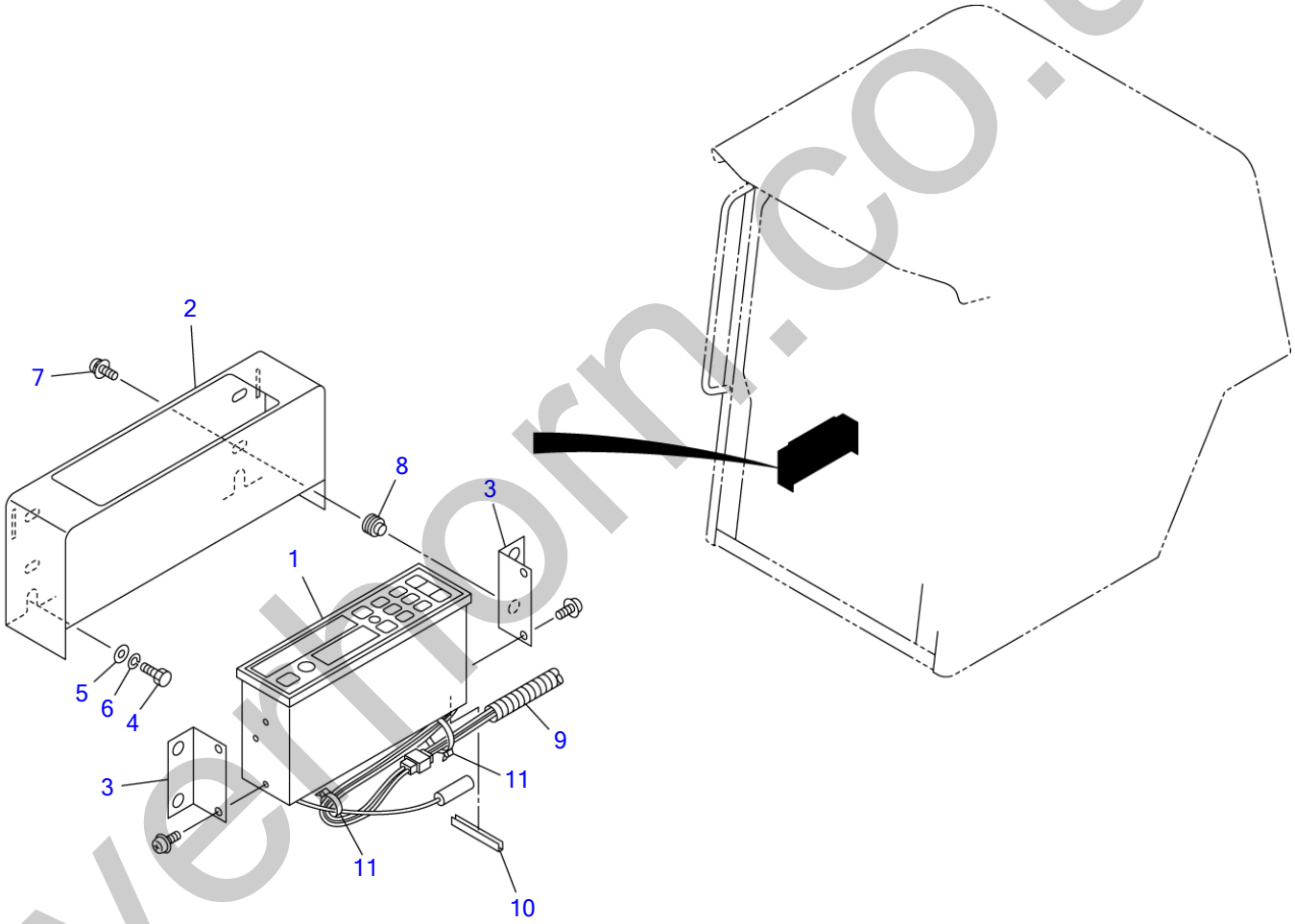

U3C210

S=1/5, 1/20

silverthorn.co.uk

RADIO

Item	Part number	Description	Q'ty	Chan.	Serial No.	Serv.	Remarks
		RADIO ASSY (for Europe, Asia, Oceania)					
		RADIO ASSY (for America)					
		RADIO ASSY (for Japan)					
1	1705004660	RADIO (for Europe, Asia, Oceania)	1				
	1705004670	RADIO (for America)	1				
	1705004680	RADIO (for Japan)	1				
2	0694700025	CASE	1				
3	0694700030	BRACKET	2				
4	1100040816	BOLT	2				
5	1141110008	WASHER	2				
6	1140020008	WASHER, spring	2				
7	1150410520	SCREW	4				
8	1652520005	RUBBER, cushion	4				
9	1703252240	TUBE	1				
10	1653916005	TRIM	1				sold by the meter
11	1652201003	BAND	2				
	U3c210						

silverhorn.co.uk

VALVE & ACCESSORIES (1/2)

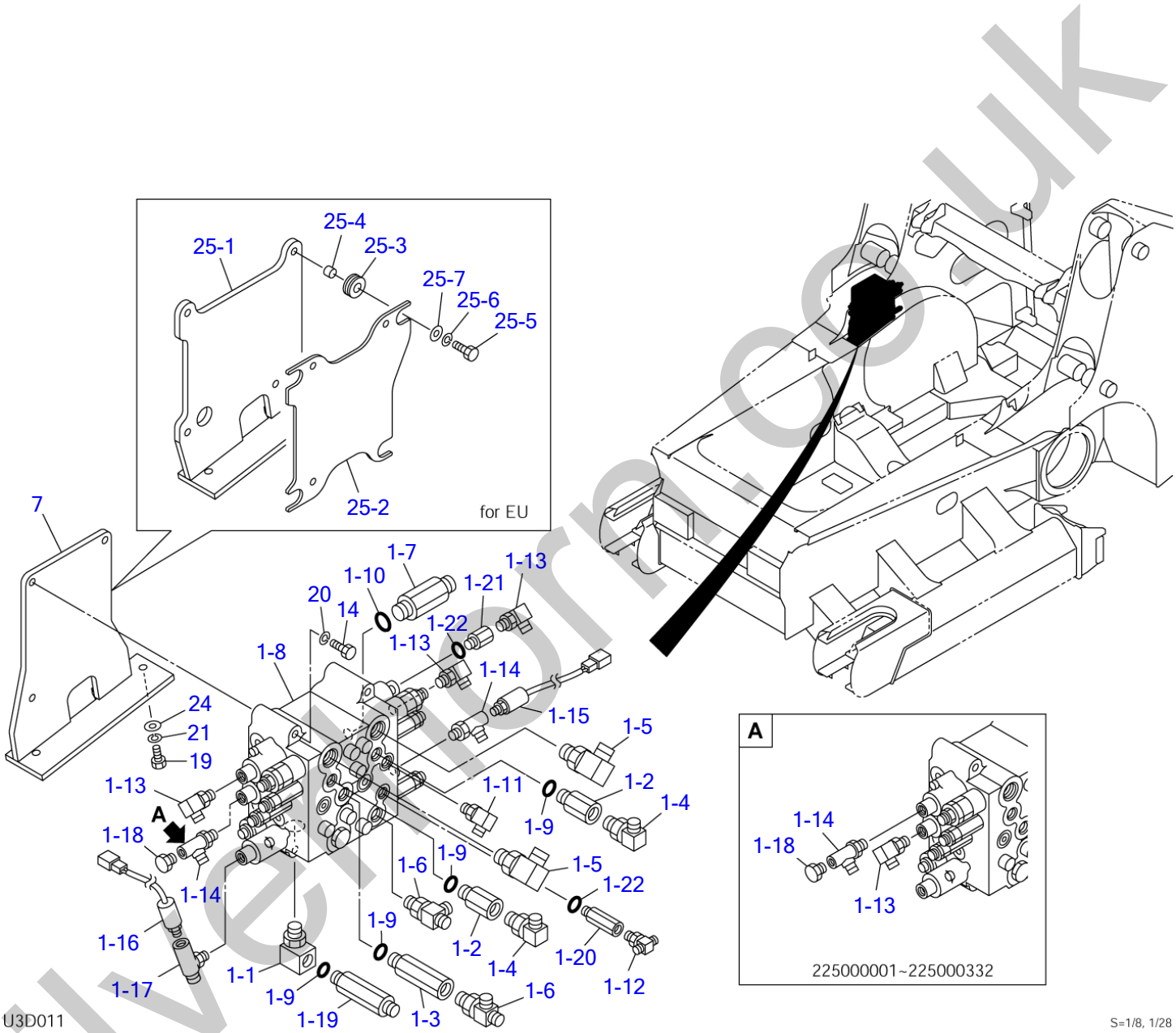

silverthorn.co.uk

VALVE & ACCESSORIES (1/2)

Item	Part number	Description	Q'ty	Chan.	Serial No.	Serv.	Remarks
		VALVE ASSY, control					
		VALVE ASSY, control (high flow)					
		VALVE ASSY, control (for EU)					
		VALVE ASSY, control (for EU, high flow)					
1	0695001010	VALVE ASSY, control	1				
1-1	1513300016	ELBOW	1				
	1420010180	・O-RING	1				
1-2	0007213011	BUSHING	2				
1-3	0007213013	BUSHING	1				
1-4	1515010042	ELBOW	2				
	1420010180	・O-RING	1				
1-5	1515010052	ELBOW	2				
	1420010240	・O-RING	1				
1-6	1512373005	TEE	2				
	1420010180	・O-RING	1				
1-7	0007203082	ADAPTOR	1				
1-8	1901045100	VALVE, control	1				
1-9	1420010180	O-RING	4				
1-10	1420010240	O-RING	1				
1-11	1512375004	ELBOW	1				
	1420010110	・O-RING	1				
1-12	1512370010	TEE	1				
	1420010110	・O-RING	1				
1-13	1515010040	ELBOW	3				
	1420010110	・O-RING	1				
1-14	1512340001	TEE	2				
	1420010110	・O-RING	1				
1-15	1700100041	SWITCH, pressure	1				
	1420010110	・O-RING	1				
1-16	1700100060	SWITCH, pressure	1				
	1420010110	・O-RING	1				
1-17	1513390029	TEE	1				
	1420010110	・O-RING	1				
1-18	1501750002	PLUG	1				
	1420010110	・O-RING	1				
1-19	0007203056	ADAPTOR	1				
1-20	0007213032	BUSHING	1				
1-21	0007213042	BUSHING	1				
1-22	1420010110	O-RING	2				
7	0695001070	BRACKET	1				except for EU
14	1100040885	BOLT	3				
19	1100041030	BOLT	2				
20	1140020008	WASHER, spring	3				
21	1140020010	WASHER, spring	2				
24	0003600020	WASHER	2				
25	0695001100	BRACKET ASSY (for EU)	1				
25-1	0695001110	・BRACKET	1				for EU
25-2	0665001320	・PLATE	1				for EU
25-3	0882502130	・CUSHION	4				for EU
25-4	0882502140	・PIPE	4				for EU
25-5	1100040825	・BOLT	4				for EU
25-6	1140020008	・WASHER, spring	4				for EU
25-7	0003609003	・WASHER	4				for EU
	U3d011						

silverthorn.co.uk

VALVE & ACCESSORIES (1/2)

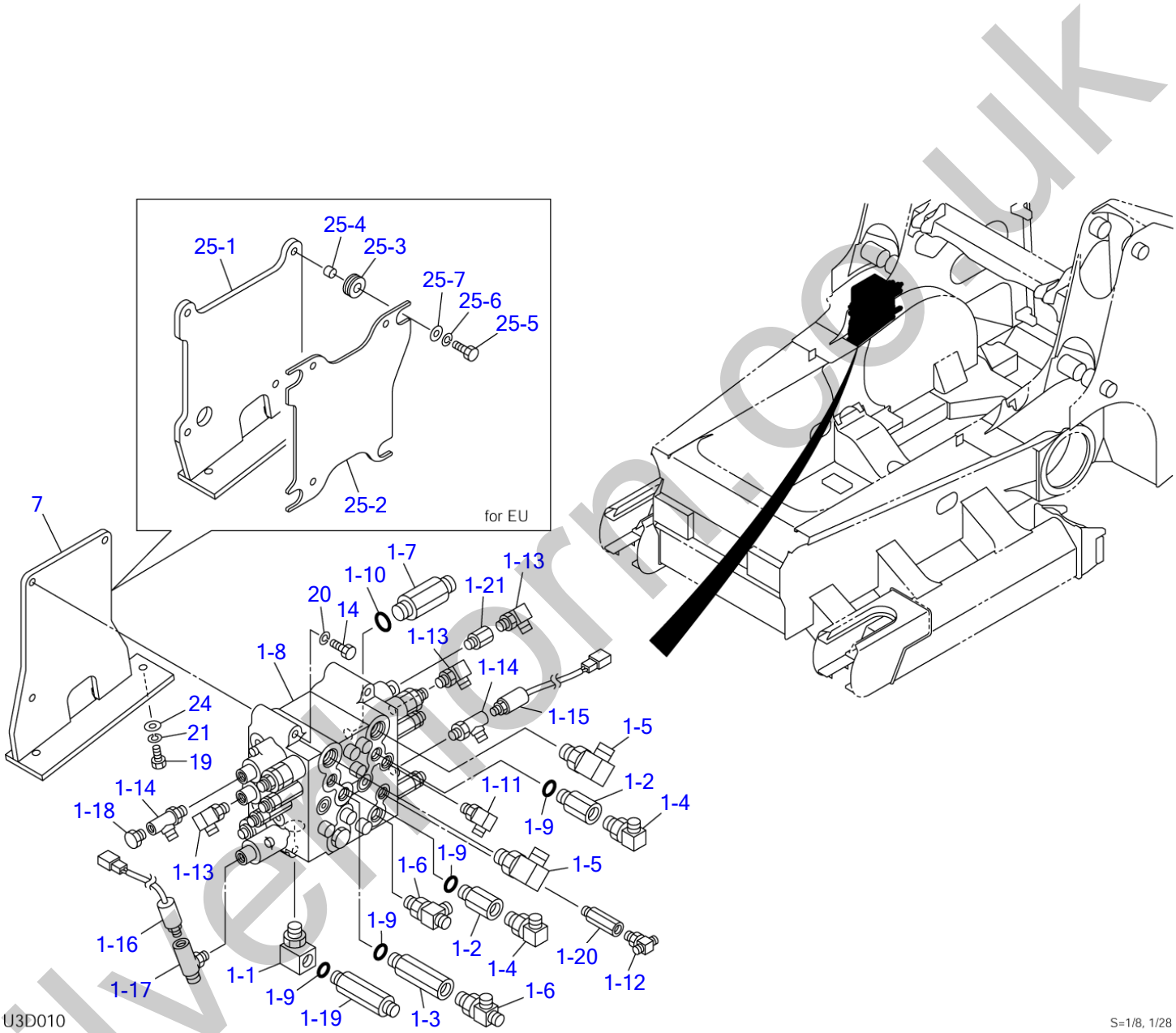

silverthorn.co.uk

VALVE & ACCESSORIES (1/2)

Item	Part number	Description	Q'ty	Chan.	Serial No.	Serv.	Remarks
		VALVE ASSY, control					
		VALVE ASSY, control (high flow)					
		VALVE ASSY, control (for EU)					
		VALVE ASSY, control (for EU, high flow)					
1	0695001010	VALVE ASSY, control	1			M	
1-1	1513300016	・ELBOW	1				
	1420010180	・・O-RING	1				
1-2	0007213011	・BUSHING	2			M	
1-3	0007213013	・BUSHING	1			M	
1-4	1515010042	・ELBOW	2				
	1420010180	・・O-RING	1				
1-5	1515010052	・ELBOW	2				
	1420010240	・・O-RING	1				
1-6	1512373005	・TEE	2			M	
	1420010180	・・O-RING	1				
1-7	0007203082	・ADAPTOR	1			M	
1-8	1901045100	・VALVE, control	1			M	
1-9	1420010180	・O-RING	4				
1-10	1420010240	・O-RING	1				
1-11	1512375004	・ELBOW	1			M	
	1420010110	・・O-RING	1				
1-12	1512370010	・TEE	1				
	1420010110	・・O-RING	1				
1-13	1515010040	・ELBOW	3				
	1420010110	・・O-RING	1				
1-14	1512340001	・TEE	2				
	1420010110	・・O-RING	1				
1-15	1700100041	・SWITCH, pressure	1			M	
	1420010110	・・O-RING	1				
1-16	1700100060	・SWITCH, pressure	1			M	
	1420010110	・・O-RING	1				
1-17	1513390029	・TEE	1				
	1420010110	・・O-RING	1				
1-18	1501750002	・PLUG	1				
	1420010110	・・O-RING	1				
1-19	0007203056	・ADAPTOR	1			M	
1-20	0007213032	・BUSHING	1			M	
1-21	0007213042	・BUSHING	1			M	
7	0695001070	BRACKET	1			M	except for EU
14	1100040885	BOLT	3			M	
19	1100041030	BOLT	2				
20	1140020008	WASHER, spring	3				
21	1140020010	WASHER, spring	2				
24	0003600020	WASHER	2				
25	0695001100	BRACKET ASSY (for EU)	1			M	
25-1	0695001110	・BRACKET	1			M	for EU
25-2	0665001320	・PLATE	1			M	for EU
25-3	0882502130	・CUSHION	4				for EU
25-4	0882502140	・PIPE	4				for EU
25-5	1100040825	・BOLT	4				for EU
25-6	1140020008	・WASHER, spring	4				for EU
25-7	0003609003	・WASHER	4				for EU
	U3d010						

silverthorn.co.uk

VALVE & ACCESSORIES (2/2)

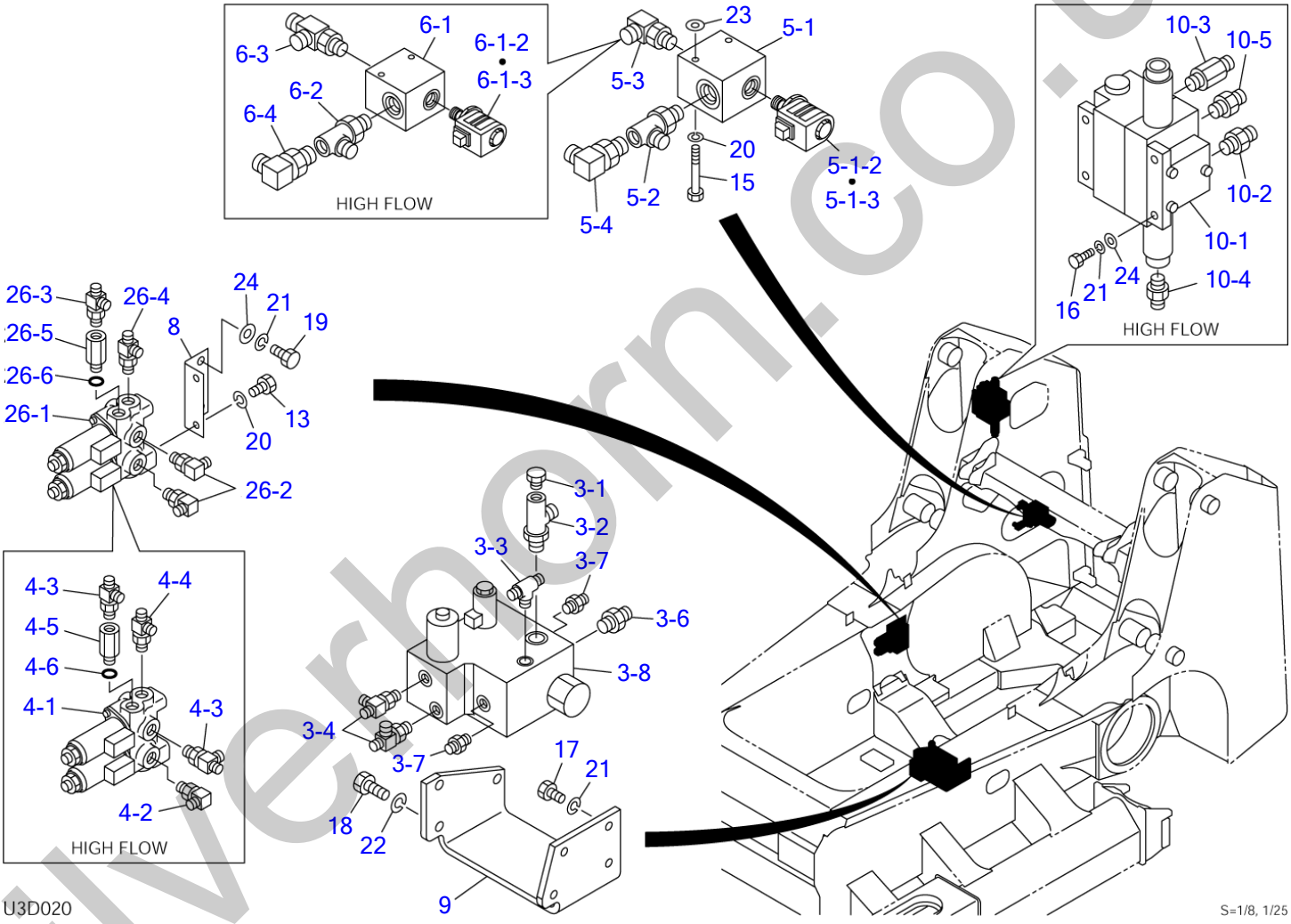

silverhorn.co.uk

VALVE & ACCESSORIES (2/2)

Item	Part number	Description	Q'ty	Chan.	Serial No.	Serv.	Remarks
		VALVE ASSY, control					
		VALVE ASSY, control (high flow)					
		VALVE ASSY, control (for EU)					
		VALVE ASSY, control (for EU, high flow)					
3	X **********	VALVE SUB ASSY	1				
3-1	1501750002	・PLUG	1				
	1420010110	・・O-RING	1				
3-2	1512340004	・TEE	1				
	1420010180	・・O-RING	1				
3-3	1512370010	・TEE	1				
	1420010110	・・O-RING	1				
3-4	1512370011	・TEE	2				
	1420010110	・・O-RING	1				
3-6	1515600202	・ADAPTOR	1				
	1420010180	・・O-RING	1				
3-7	1515600200	・ADAPTOR	2				
	1420010110	・・O-RING	1				
3-8	1901748100	・VALVE, sub	1				
4	X **********	VALVE SUB ASSY (high flow)	1				
4-1	1901752100	・VALVE, proportional control	1				high flow
4-2	1515012040	・ELBOW	1				high flow
	1420010110	・・O-RING	1				high flow
4-3	1512370011	・TEE	2				high flow
	1420010110	・・O-RING	1				high flow
4-4	1512370003	・TEE	1				high flow
	1420010110	・・O-RING	1				high flow
4-5	0007213028	・BUSHING	1				high flow
	1420010110	・・O-RING	1				high flow
4-6	1420010110	・O-RING	1				high flow
5	X **********	VALVE ASSY, solenoid	1				
5-1	1901753600	・VALVE, solenoid	1				
5-1-2	1901753602	・・SOLENOID	1				
5-1-3	1901753603	・・COIL	1				
5-2	1512340019	・TEE	1				
	1420010240	・・O-RING	1				
5-3	1515010133	・ELBOW	1				
	1420010240	・・O-RING	1				
5-4	1515010042	・ELBOW	1				
	1420010240	・・O-RING	1				
6	X **********	VALVE ASSY, solenoid (high flow)	1				
6-1	1901753600	・VALVE, solenoid	1				high flow
6-1-2	1901753602	・・SOLENOID	1				high flow
6-1-3	1901753603	・・COIL	1				high flow
6-2	1512340019	・TEE	1				high flow
	1420010240	・・O-RING	1				high flow
6-3	0695000063	・TEE	1				high flow
6-4	1515010042	・ELBOW	1				high flow
	1420010240	・・O-RING	1				
8	0882500100	BRACKET	1				
9	0665001090	BRACKET	1				
10	X **********	VALVE SUB ASSY (high flow)	1				
10-1	1901039500	・VALVE, control	1				high flow
10-2	0007203007	・ADAPTOR	1				high flow
	1420310908	・・O-RING	1				high flow
10-3	0007203058	・ADAPTOR	1				high flow
	1420010180	・・O-RING	1				high flow
10-4	1515600200	・ADAPTOR	1				high flow
	1420010110	・・O-RING	1				high flow
10-5	1515600202	・ADAPTOR	1				high flow
	1420010180	・・O-RING	1				high flow
13	1100040816	BOLT	2				
15	1100040870	BOLT	2				
16	1101041025	BOLT	3				high flow
17	1100041020	BOLT	4				
18	1100041225	BOLT	3				
19	1100041030	BOLT	2				
20	1140020008	WASHER, spring	4				
21	1140020010	WASHER, spring	6				

silverthorn.co.uk

VALVE & ACCESSORIES (2/2)

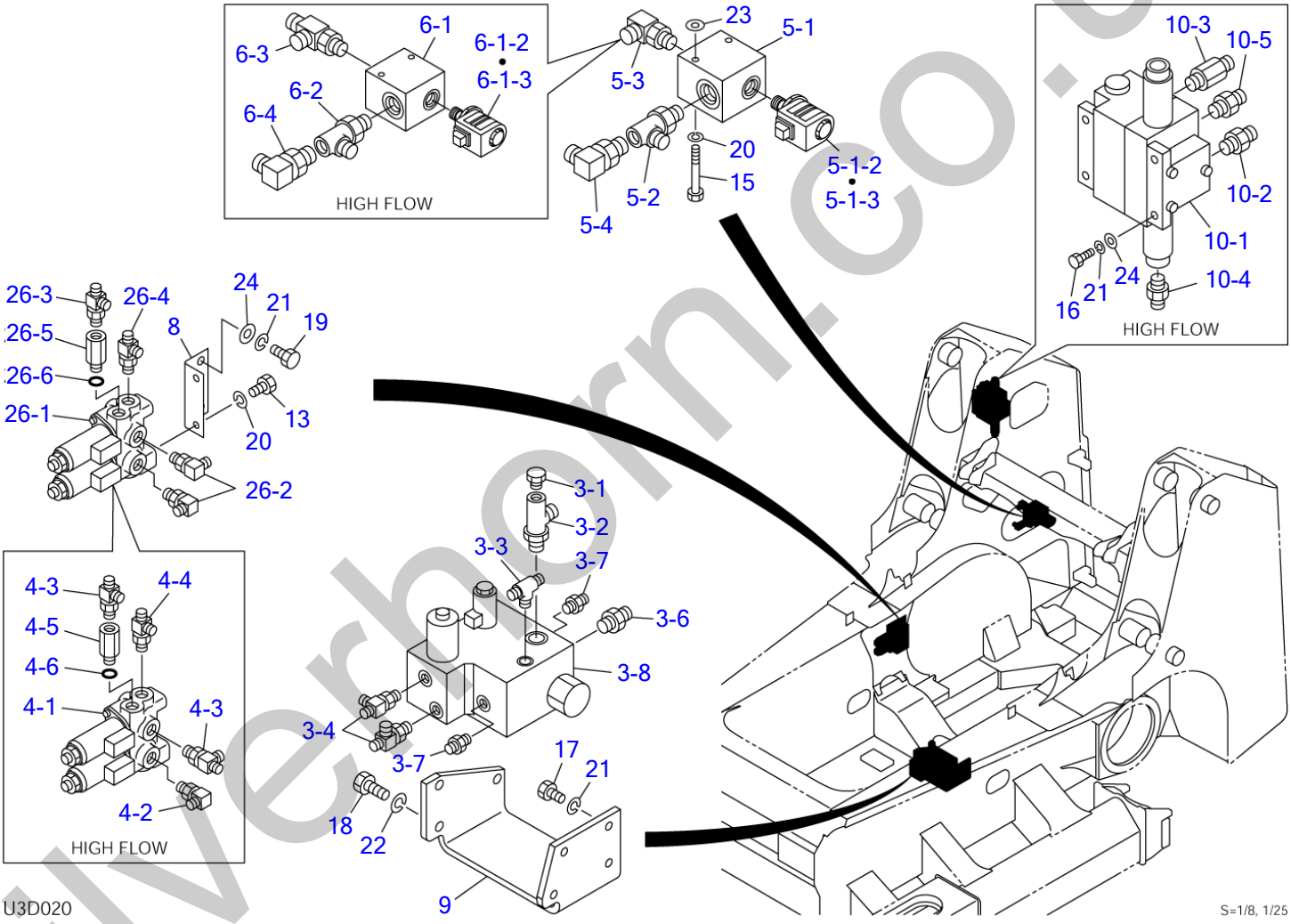

silverhorn.co.uk

VALVE & ACCESSORIES (2/2)

Item	Part number	Description	Q'ty	Chan.	Serial No.	Serv.	Remarks
21	1140020010	WASHER, spring	9				high flow
22	1140020012	WASHER, spring	3				
23	1141110008	WASHER	2				
24	0003600020	WASHER	5				
26	X **********	VALVE SUB ASSY	1				
26-1	1901752100	・VALVE, proportional control	1				
26-2	1515012040	・ELBOW	2				
26-2	1420010110	・・O-RING	1				
26-3	1512370011	・TEE	1				
26-3	1420010110	・・O-RING	1				
26-4	1512370003	・TEE	1				
26-4	1420010110	・・O-RING	1				
26-5	0007213028	・BUSHING	1				
26-5	1420010110	・・O-RING	1				
26-6	1420010110	・O-RING	1				
	U3d021						

silverhorn.co.uk

PIPING (1/2)

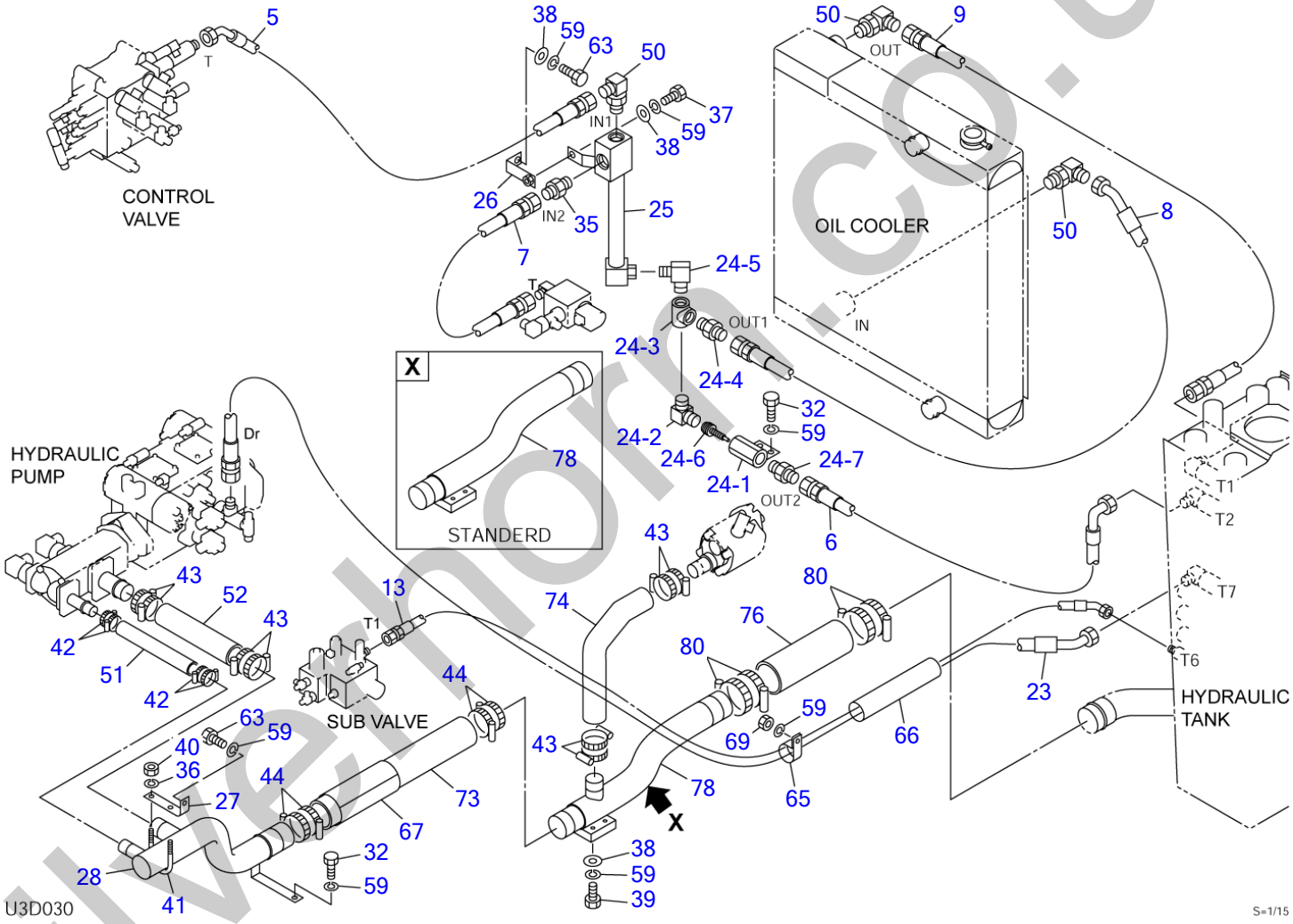

silverthorn.co.uk

PIPING (1/2)

Item	Part number	Description	Q'ty	Chan.	Serial No.	Serv.	Remarks
		PIPING ASSY					
		PIPING ASSY (for EU)					
		PIPING ASSY (high flow)					
		PIPING ASSY (for EU) (high flow)					
5	0697001050	HOSE ASSY	1				
6	0697001060	HOSE ASSY	1				18010-56124
7	0697001070	HOSE ASSY	1				
8	0697000080	HOSE ASSY	1				
9	0697001090	HOSE ASSY	1				
13	0697001130	HOSE ASSY	1				18010-79135
23	0697001230	HOSE ASSY	1				
24	0697001240	MANIFOLD ASSY	1				
24-1	0667001241	・JOINT	1				
24-2	0881700242	・ELBOW	1				
24-3	1508210010	・TEE	1				
24-4	1511050010	・ADAPTOR	1				
24-5	1511150010	・ELBOW	1				
24-6	1540140830	・VALVE, check	1				
24-7	1515600203	・ADAPTOR	1				
	1420010240	・・O-RING	1				
25	0697001250	PIPE	1				
26	0697001260	BRACKET	1				
27	0881701270	PLATE	1				
28	0697000290	PIPE	1				
32	1100041016	BOLT	3				
35	1515600204	ADAPTOR	1				
	1420010290	・O-RING	1				
36	1140020008	WASHER, spring	2				
37	1100041030	BOLT	1				
38	0003600025	WASHER	4				
39	1100041035	BOLT	2				
40	1130020008	NUT	2				
41	1533201014	U-BOLT	1				
42	1533700041	BAND	4				
43	1533700060	BAND	4				
	1533700060	BAND	8				high flow
44	1533700080	BAND	4				
50	1515010044	ELBOW	3				
	1420010290	・O-RING	1				
51	0881701510	HOSE	1				
52	0881701520	HOSE	1				
59	1140020010	WASHER, spring	9				
63	1100041020	BOLT	2				
65	0007300030	CLAMP	1				
66	1531350025	PROTECTOR	1			M	sold by the meter
67	0881701670	PROTECTOR	1				
69	1130040010	NUT	1				
73	0697001730	HOSE	1				
74	0697000740	HOSE	1				high flow
76	0697001760	HOSE	1				
78	0697001780	PIPE	1				
	0697003780	PIPE	1				high flow
80	1533700090	BAND	4				
	U3d031						

silverthorn.co.uk

PIPING (2/2)

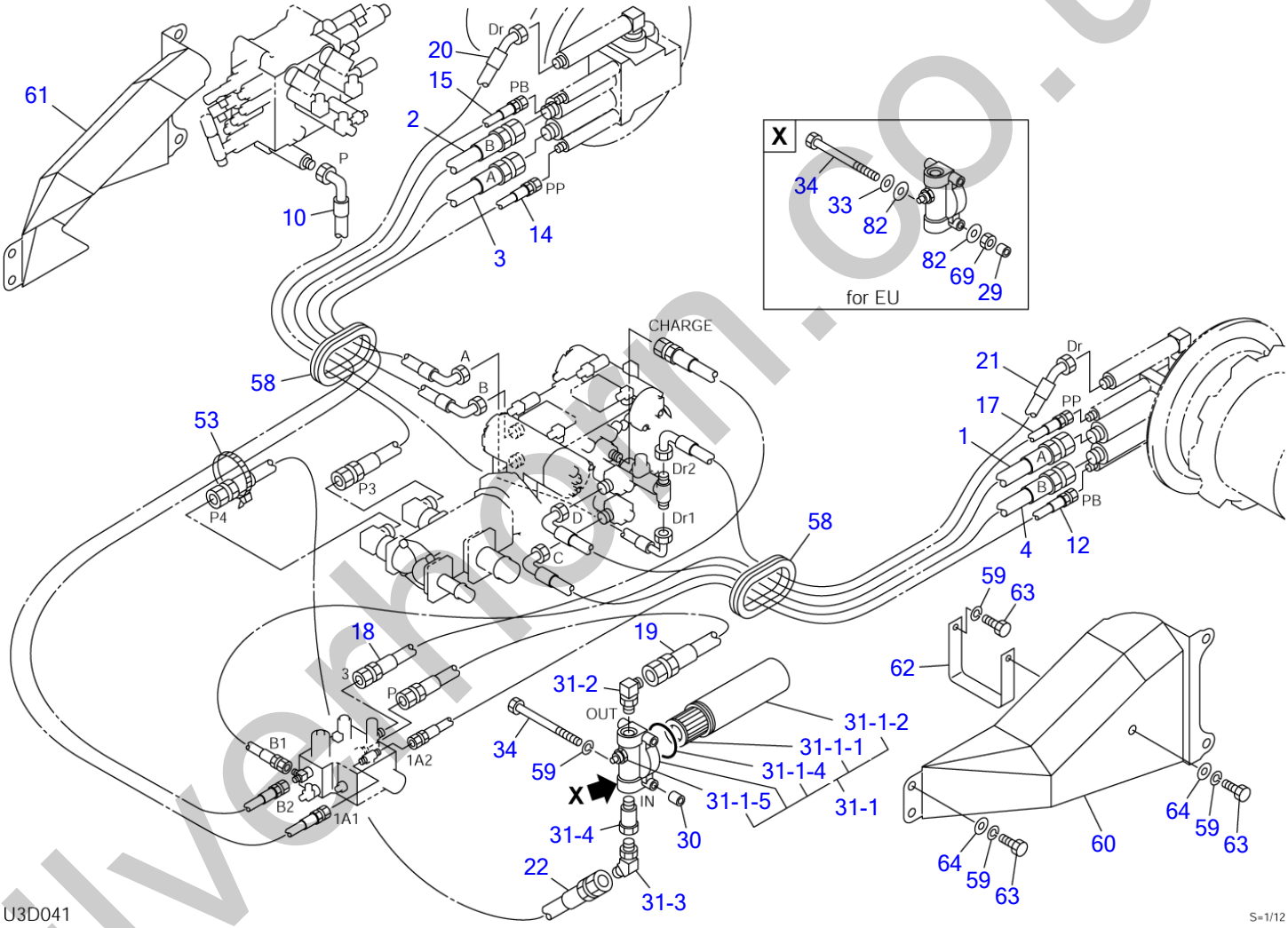

silverhorn.co.uk

PIPING (2/2)

Item	Part number	Description	Q'ty	Chan.	Serial No.	Serv.	Remarks
		PIPING ASSY					
		PIPING ASSY (for EU)					
		PIPING ASSY (high flow)					
		PIPING ASSY (for EU) (high flow)					
1	0697001010	HOSE ASSY	1				19349-56740
2	0697001020	HOSE ASSY	1				
3	0697001030	HOSE ASSY	1				
4	0697001040	HOSE ASSY	1				19349-56750
10	0697001100	HOSE ASSY	1				18015-71100
12	0881701120	HOSE ASSY	1				
14	0881701140	HOSE ASSY	1				
15	0881701150	HOSE ASSY	1				
17	0881701170	HOSE ASSY	1				
18	0697001180	HOSE ASSY	1				18010-24040
19	0697001190	HOSE ASSY	1				18010-24054
20	0697001200	HOSE ASSY	1				
21	0697001210	HOSE ASSY	1				
22	0881701220	HOSE ASSY	1				
29	0881704710	SPACER	2				for EU
30	0881700290	SPACER	2				
31	X **********	FILTER ASSY	1				
31-1	1551102500	・FILTER	1				
31-1-1	1551101001	・・ELEMENT	1				
31-1-2	1551101003	・・CASE	1				
31-1-4	1420100600	・・O-RING	1				
31-1-5	1551102505	・・SWITCH, pressure	1				
31-2	1515010042	・ELBOW	1				
	1420010180	・・O-RING	1				
31-3	1515100112	・ELBOW	1				
	1420010180	・・O-RING	1				
31-4	0007213055	・BUSHING	1				
33	1141110010	WASHER	2				for EU
34	1100141015	BOLT	2				
53	1652241300	BAND	1				
58	0697001580	GROMMET	2				
59	1140020010	WASHER, spring	14				
	1140020010	WASHER, spring	12				for EU
60	0881701600	COVER (L.H.)	1				
61	0881701610	COVER (R.H.)	1				
62	0881701620	PLATE	2				
63	1100041020	BOLT	12				
64	0003600020	WASHER	10				
69	1130040010	NUT	2				for EU
82	0882702480	RUBBER	4				for EU
	U3d041						

silverform.co.uk

PIPING (2/2)

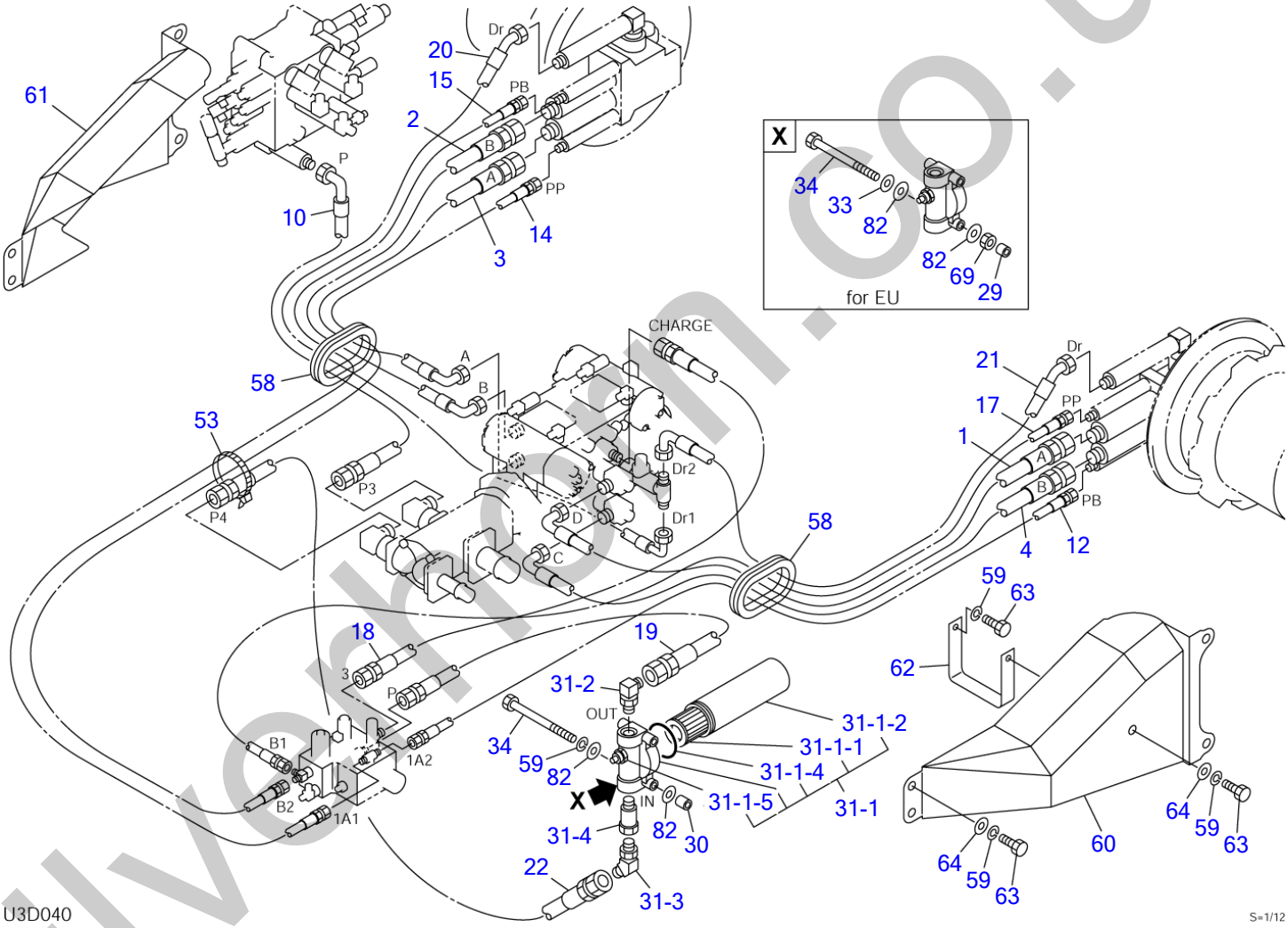

silverhorn.co.uk

PIPING (2/2)

Item	Part number	Description	Q'ty	Chan.	Serial No.	Serv.	Remarks
		PIPING ASSY					
		PIPING ASSY (for EU)					
		PIPING ASSY (high flow)					
		PIPING ASSY (for EU) (high flow)					
1	0697001010	HOSE ASSY	1			M	19349-56740
2	0697001020	HOSE ASSY	1			M	
3	0697001030	HOSE ASSY	1			M	
4	0697001040	HOSE ASSY	1			M	19349-56750
10	0697001100	HOSE ASSY	1			M	18015-71100
12	0881701120	HOSE ASSY	1				
14	0881701140	HOSE ASSY	1				
15	0881701150	HOSE ASSY	1				
17	0881701170	HOSE ASSY	1				
18	0697001180	HOSE ASSY	1			M	18010-24040
19	0697001190	HOSE ASSY	1			M	18010-24054
20	0697001200	HOSE ASSY	1			M	
21	0697001210	HOSE ASSY	1			M	
22	0881701220	HOSE ASSY	1				
29	0881704710	SPACER	2				for EU
30	0881700290	SPACER	2				
31	X **********	FILTER ASSY	1				
31-1	1551102500	・FILTER	1				
31-1-1	1551101001	・・ELEMENT	1				
31-1-2	1551101003	・・CASE	1				
31-1-4	1420100600	・・O-RING	1				
31-1-5	1551102505	・・SWITCH, pressure	1				
31-2	1515010042	・ELBOW	1				
	1420010180	・・O-RING	1				
31-3	1515100112	・ELBOW	1				
	1420010180	・・O-RING	1				
31-4	0007213055	・BUSHING	1			M	
33	1141110010	WASHER	2				for EU
34	1100141015	BOLT	2				
53	1652241300	BAND	1				
58	0697001580	GROMMET	2			M	
59	1140020010	WASHER, spring	14				
	1140020010	WASHER, spring	12				for EU
60	0881701600	COVER (L.H.)	1				
61	0881701610	COVER (R.H.)	1				
62	0881701620	PLATE	2				
63	1100041020	BOLT	12				
64	0003600020	WASHER	10				
69	1130040010	NUT	2				for EU
82	0882702480	RUBBER	4				
	U3d040						

silverthorn.co.uk

PUMP DRIVE

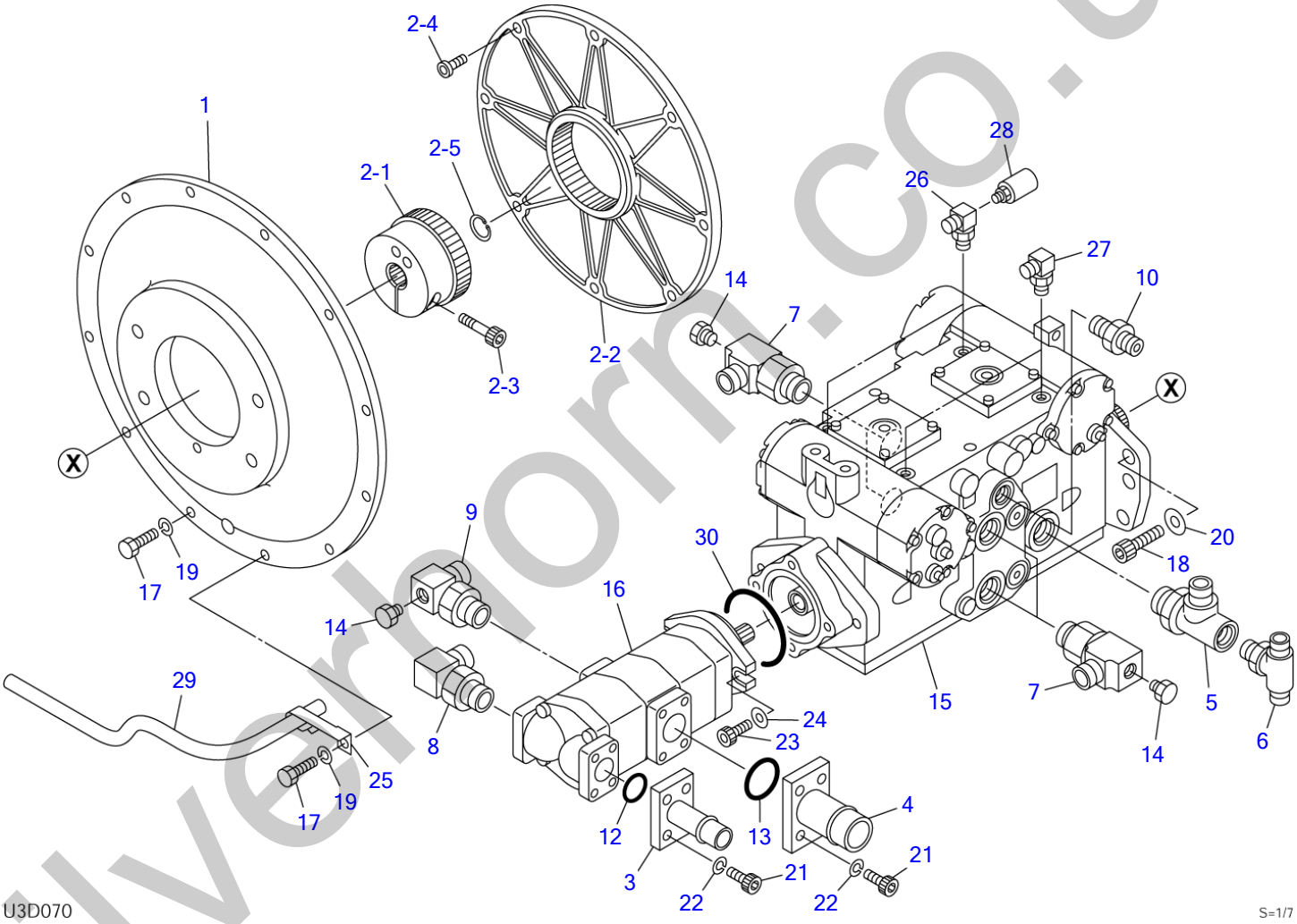

silverhorn.co.uk

PUMP DRIVE

Item	Part number	Description	Q'ty	Chan.	Serial No.	Serv.	Remarks
		PUMP ASSY					
1	0695201100	HOUSING	1				
2	1607000110	COUPLING ASSY	1				
2-1	1607000111	・HUB	1				
2-2	1607000112	・FLANGE	1				
2-3	1110021235	・SCREW, cap	1				
2-4	1110021035	・BOLT	8				
2-5	1221000028	・RING, snap	1				
3	0881521100	FLANGE	1				
4	0881521250	FLANGE	1				
5	0881520700	TEE	1				
	1420310912	・O-RING	1				
6	1512374011	TEE	1				
	1420010240	・O-RING	1				
7	0695201010	TEE	4				
8	1515010052	ELBOW	1				
	1420010240	・O-RING	1				
9	1512350004	ELBOW	1				
10	1515600212	ADAPTOR	1				
	1420010910	・O-RING	1				
12	1420100300	O-RING	1				
13	1420100400	O-RING	1				
14	1501750002	PLUG	5				
	1420010110	・O-RING	1				
15	1902023100	PUMP, hydraulic	1				
16	1902023700	PUMP, gear	1				
17	1100041030	BOLT	12				
18	1111041645	SCREW, cap	4				
19	1140020010	WASHER, spring	12				
20	0003900075	WASHER	4			M	
21	1111041025	SCREW, cap	8				
22	1140420010	WASHER, spring	8				
23	1102240632	SCREW, cap	2				
24	0003900039	WASHER	2				
25	0881521010	CLAMP	1				
26	1512330005	ELBOW	2				
	1420310906	・O-RING	1				
27	1512375006	ELBOW	2				
	1420310906	・O-RING	1				
28	1700100015	SWITCH, pressure	2				
29	1531010067	HOSE	1				sold by the meter
30	1420360152	O-RING	1				
	U3d071						

silverthorn.co.uk

GEAR PUMP DRIVE (high flow)

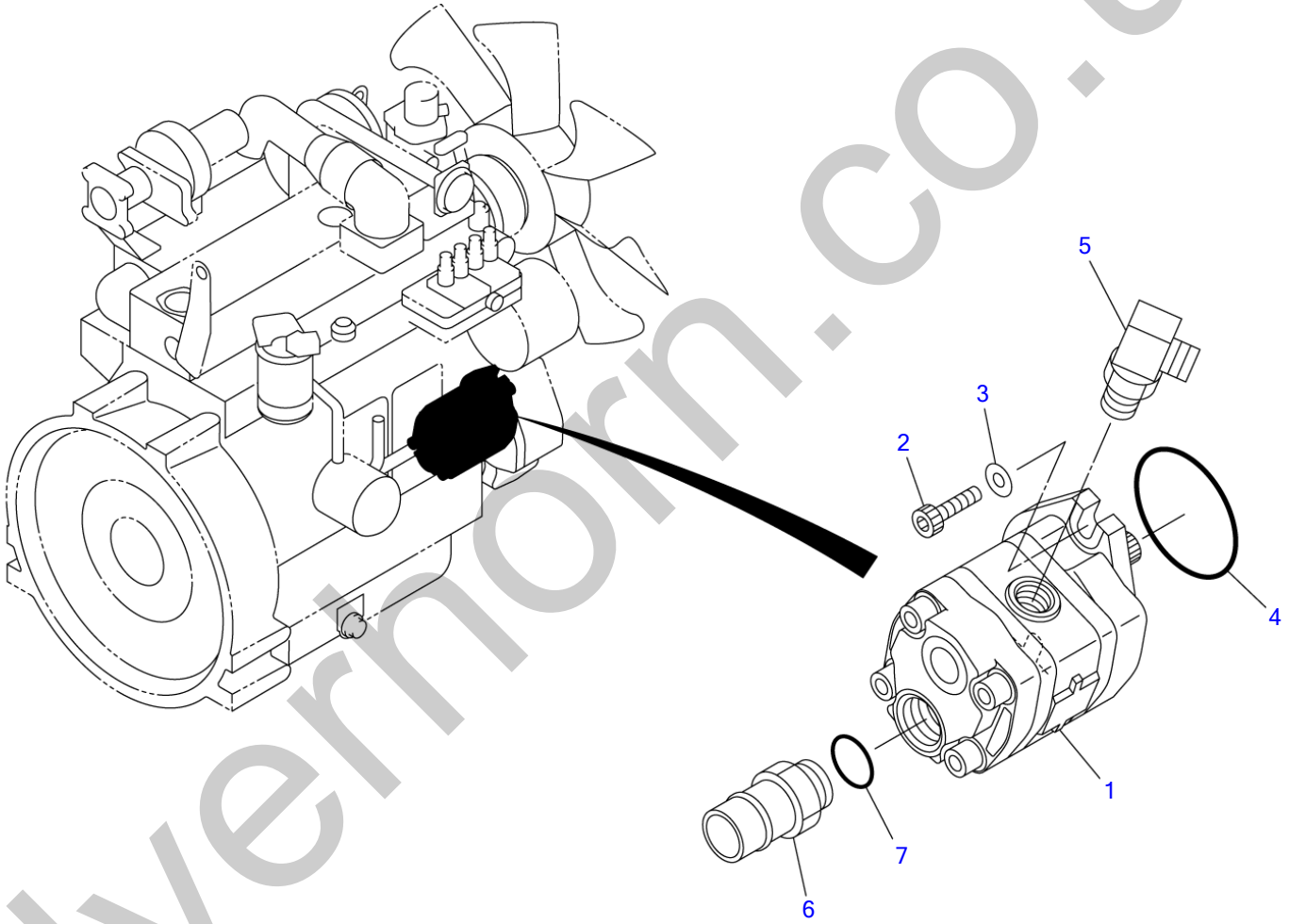

U3D080

S=1/4, 1/10

silvernorn.co.uk

GEAR PUMP DRIVE (high flow)

Item	Part number	Description	Q'ty	Chan.	Serial No.	Serv.	Remarks
		PUMP ASSY, gear					
1	1902023800	PUMP, gear	1				
2	1111041025	SCREW, cap	2				
3	1141550010	WASHER	2				
4	1420110850	O-RING	1				
5	1515010042	ELBOW	1				
	1420010180	▪ O-RING	1				
6	0007224016	FLANGE	1				
7	1420010290	O-RING	1				
	U3d080						

silverhorn.co.uk

HYDRAULIC TANK

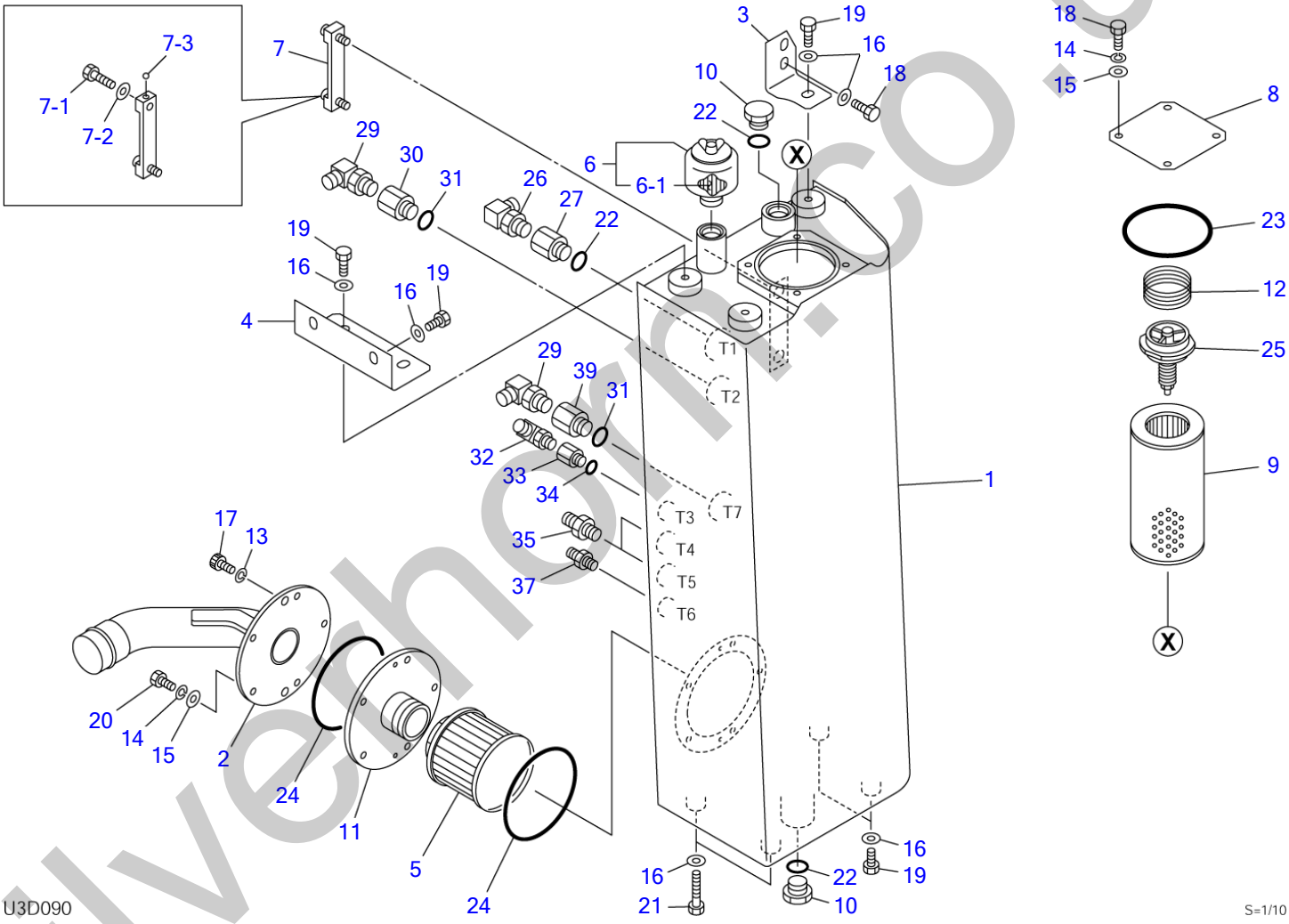

silvernorm.co.uk

HYDRAULIC TANK

Item	Part number	Description	Q'ty	Chan.	Serial No.	Serv.	Remarks
		TANK ASSY, hydraulic					
1	0698001100	TANK, hydraulic	1				
2	0698000200	FLANGE	1				
3	0698000250	BRACKET	1				
4	0881803200	BRACKET	1				
5	1550020150	STRAINER	1				
6	1552000800	BREATHER, air	1				
6-1	1552000830	・ELEMENT	1				
7	1553020612	GAUGE	1				
7-1	1553021650	・BOLT	2				
7-2	1553022650	・PACKING	2				
7-3	1553020603	・FLOAT	1				
8	0658000600	PLATE	1				
9	1551102600	FILTER	1				
10	0007256006	PLUG	2				
11	0881802400	FLANGE	1				
12	0007000031	SPRING	1				
13	1140020006	WASHER, spring	2				
14	1140020010	WASHER, spring	9				
15	1141110010	WASHER	9				
16	0003600025	WASHER	11				
17	1110040620	SCREW, cap	2				
18	1100041020	BOLT	6				
19	1100041025	BOLT	7				
20	1100041030	BOLT	5				
21	1100041060	BOLT	2				
22	1420010290	O-RING	3				
23	1420101250	O-RING	1				
24	1420101450	O-RING	2				
25	1551100300	VALVE ASSY	1				
26	1515010044	ELBOW	1				
	1420010290	・O-RING	1				
27	0007213051	BUSHING	1				
29	1515010043	ELBOW	2				
	1420010240	・O-RING	1				
30	0007213034	BUSHING	1				
31	1420010240	O-RING	2				
32	1515012040	ELBOW	1				
	1420010110	・O-RING	1				
33	0007213028	BUSHING	1				
	1420010110	・O-RING	1				
34	1420010140	O-RING	1				
35	1515600201	ADAPTOR	2				
	1420010140	・O-RING	1				
37	1515600200	ADAPTOR	1				
	1420010110	・O-RING	1				
39	0007213050	BUSHING	1				
	U3d091						

silverthorn.co.uk

FUEL TANK & FUEL PIPING

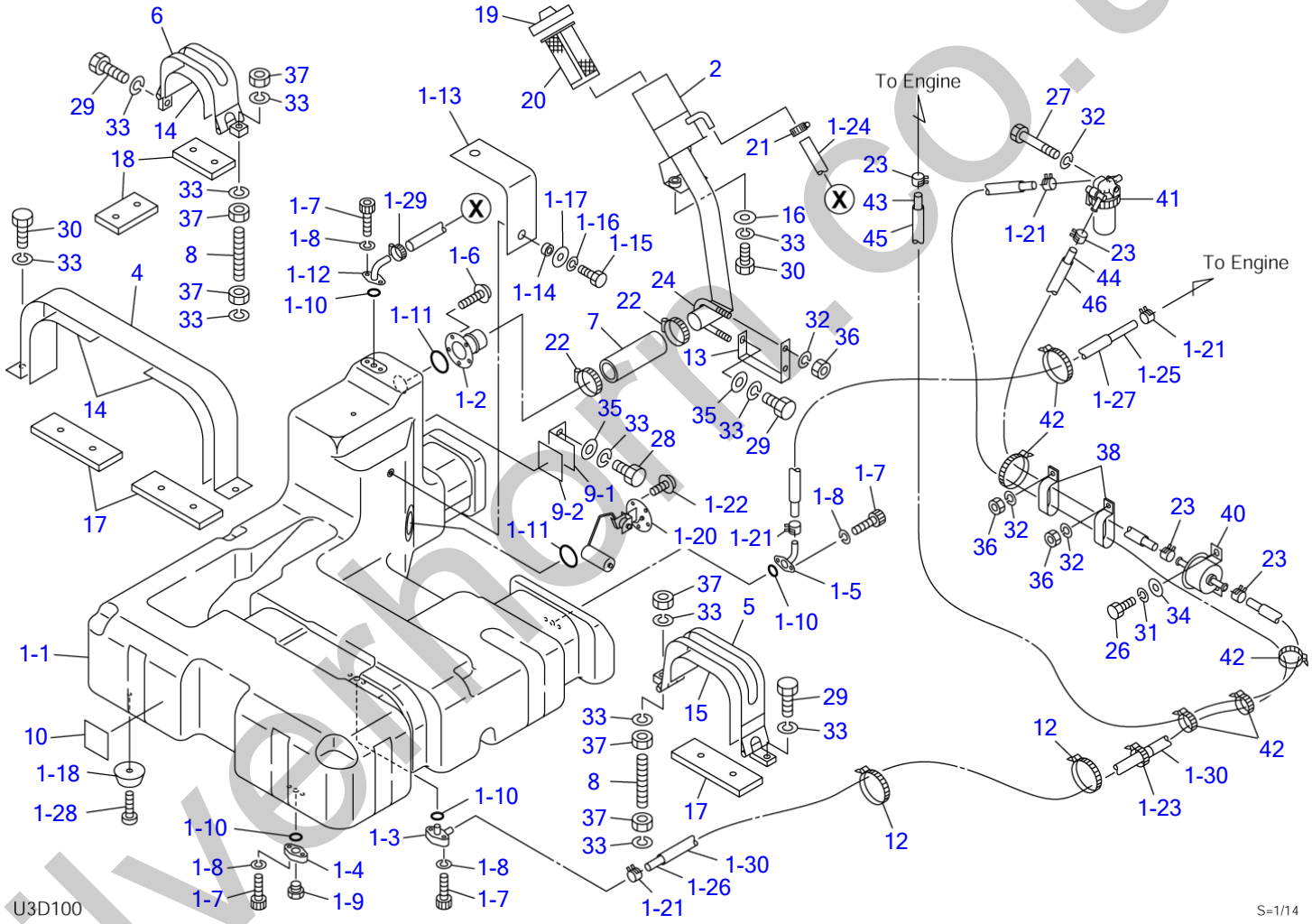

silverhorn.co.uk

FUEL TANK & FUEL PIPING

Item	Part number	Description	Q'ty	Chan.	Serial No.	Serv.	Remarks
		TANK ASSY, fuel					
1	X **********	TANK SUB ASSY, fuel	1				
1-1	0881811010	・TANK, fuel	1				
1-2	0881811090	・FLANGE	1				
1-3	0881811100	・FLANGE	1				
1-4	0881811110	・FLANGE	1				
1-5	0881811120	・FLANGE	1				
1-6	1150110516	・SCREW	5				
1-7	1110040616	・SCREW, cap	8				
1-8	1140420006	・WASHER, spring	8				
1-9	1501750002	・PLUG	1				
	1420010110	・・O-RING	1				
1-10	1420000180	・O-RING	4				
1-11	1420000450	・O-RING	2				
1-12	0881811510	・FLANGE	1				
1-13	0881711350	・BAND	1				
1-14	0881711360	・COLLAR	1				
1-15	1100040620	・BOLT	1				
1-16	1140020006	・WASHER, spring	1				
1-17	0003600043	・WASHER	1				
1-18	0881812080	・RUBBER, cushion	5				
1-20	1553202100	・SENDER, fuel	1				
1-21	1533120511	・BAND	4				
1-22	1150110510	・SCREW	5				
1-23	1652201008	・BAND	1				
1-24	0698100150	・HOSE	1			M	sold by the meter
1-25	1531207120	・HOSE	1				sold by the meter
1-26	1531207359	・HOSE	1			M	sold by the meter
1-27	1531115110	・PROTECTOR	1				sold by the meter
1-28	1120530620	・SCREW	5				
1-29	1533700019	・BAND	1				
1-30	1531115176	・PROTECTOR	2			M	sold by the meter
2	0698101200	PORT, supply	1			M	
4	0881812045	PLATE	1				
5	0881812050	BAND	1				
6	0881812060	BAND	1				
7	0698100250	HOSE	1			M	
8	0881812300	BOLT	2				
9	X **********	PLATE	1				
9-1	0880814031	・PLATE	1				
9-2	0880814170	・RUBBER	1				
10	0880814170	RUBBER	1				
12	1652241400	BAND	2				
13	0881811130	PLATE	1				
14	0881812140	RUBBER	3				
15	0881812150	RUBBER	1				
16	0003600025	WASHER	2				
17	0881811170	RUBBER	3				
18	0881811180	RUBBER	2				
19	1552100500	CAP	1				
20	1552100320	STRAINER	1				
21	1533700019	BAND	1				
22	1533700060	CLIP	2				
23	1533120011	BAND	4				
24	1533201012	U-BOLT	1				
26	1100040616	BOLT	2				
27	1100040865	BOLT	1				
28	1100041020	BOLT	2				
29	1100041025	BOLT	3				
30	1100041030	BOLT	4				
31	1140020006	WASHER, spring	2				
32	1140020008	WASHER, spring	5				
33	1140020010	WASHER, spring	15				
34	1141110006	WASHER	2				
35	1141110010	WASHER	3				
36	1130040008	NUT	4				
37	1130040010	NUT	6				
38	0007300013	CLAMP	2				

silverthorn.co.uk

FUEL TANK & FUEL PIPING

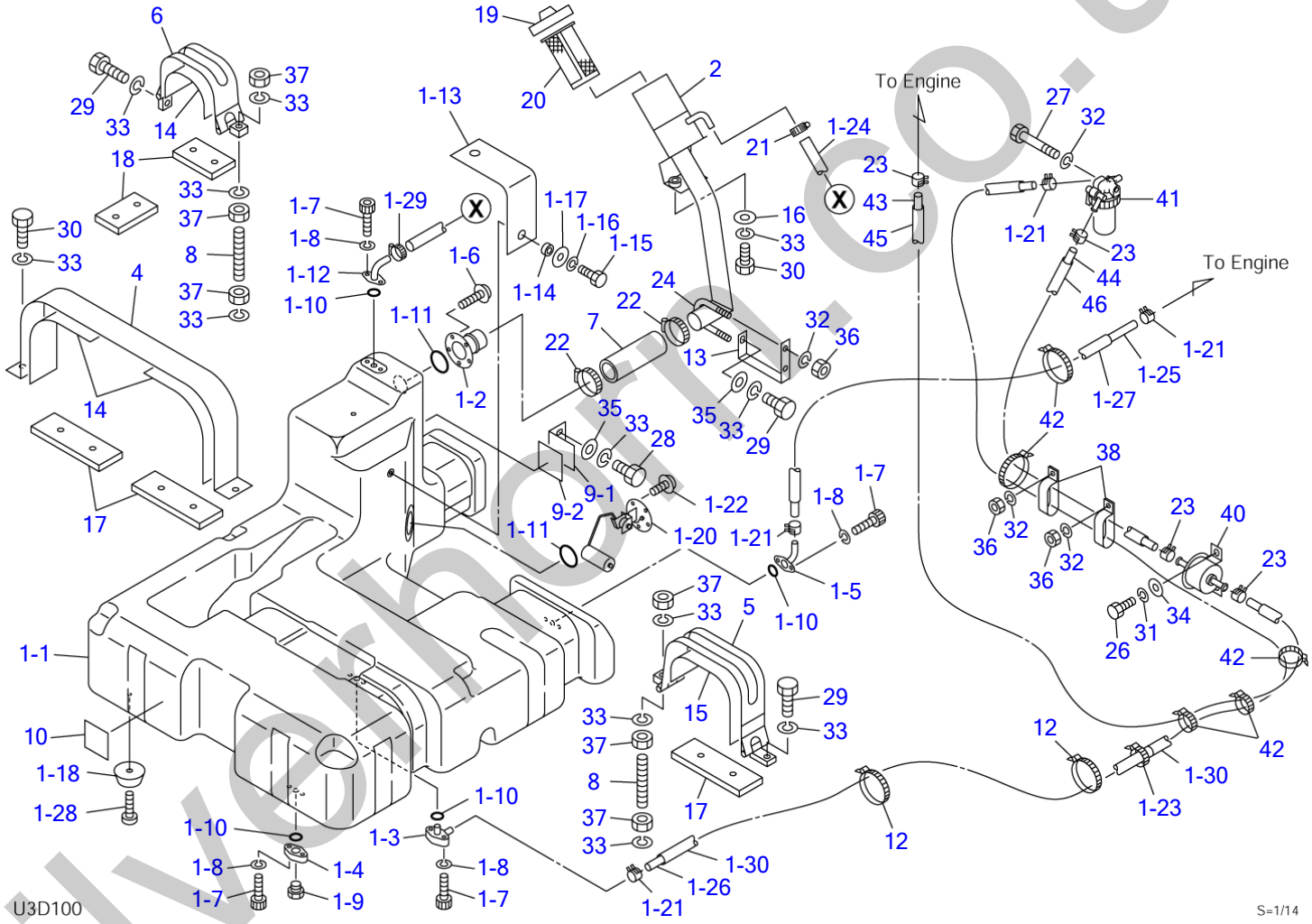

silverhorn.co.uk

FUEL TANK & FUEL PIPING

Item	Part number	Description	Q'ty	Chan.	Serial No.	Serv.	Remarks
40	**1910249034**	PUMP, feed	1			M	KUBOTA 1G938-52031
41	**1910249033**	SEPARATOR, water	1			M	KUBOTA RB101-51261
42	**1652231250**	BAND	5				
43	**1531207151**	HOSE	1			M	sold by the meter
44	**1531207087**	HOSE	1				sold by the meter
45	**1531115146**	PROTECTOR	1			M	sold by the meter
46	**1531115077**	PROTECTOR	1				sold by the meter
	U3d100						

silverhorn.co.uk

FUEL TANK & FUEL PIPING

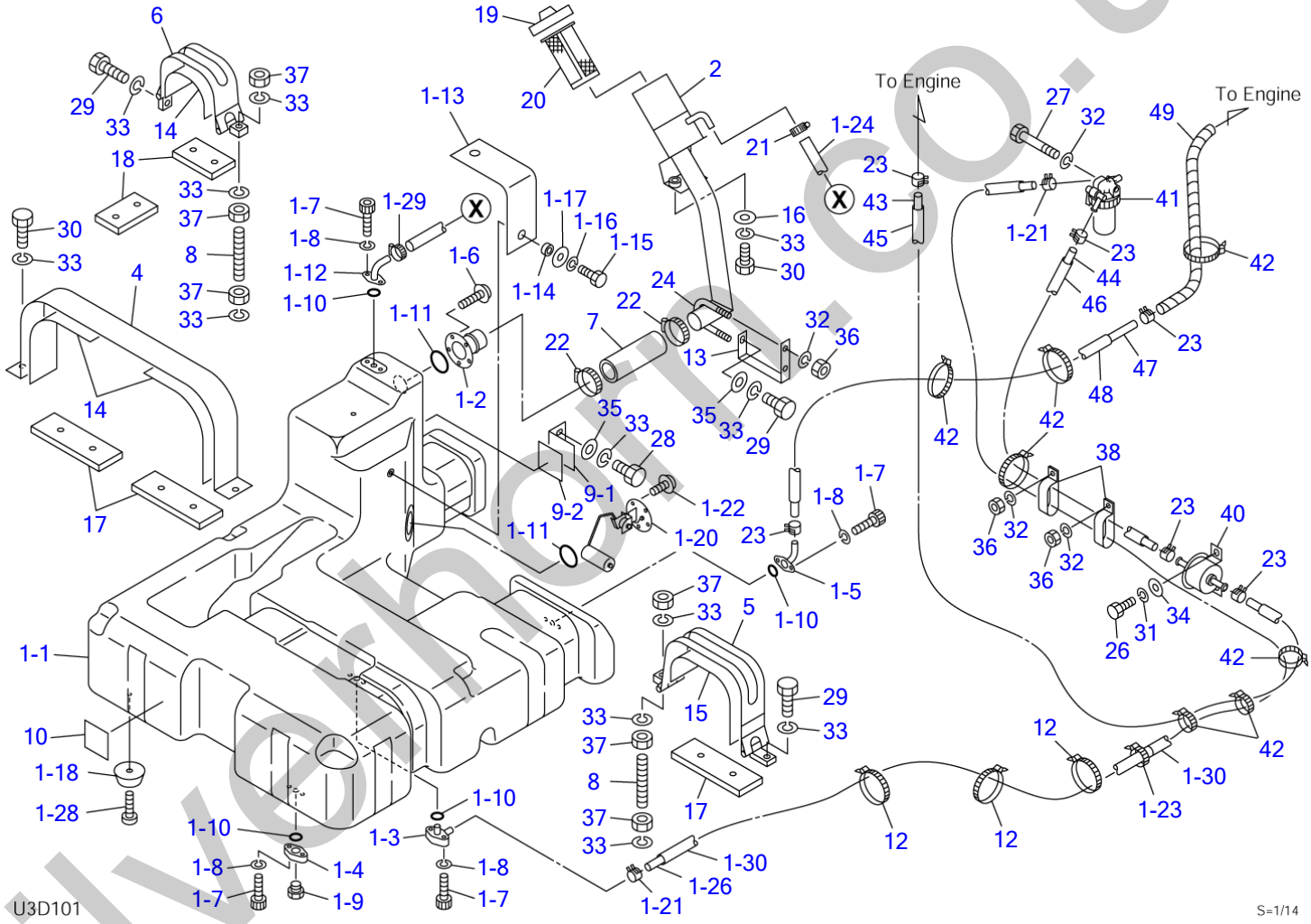

silverhorn.co.uk

FUEL TANK & FUEL PIPING

Item	Part number	Description	Q'ty	Chan.	Serial No.	Serv.	Remarks
		TANK ASSY, fuel					
1	X **********	TANK SUB ASSY, fuel	1				
1-1	0881811010	・TANK, fuel	1				
1-2	0881811090	・FLANGE	1				
1-3	0881811100	・FLANGE	1				
1-4	0881811110	・FLANGE	1				
1-5	0881811120	・FLANGE	1				
1-6	1150110516	・SCREW	5				
1-7	1110040616	・SCREW, cap	8				
1-8	1140420006	・WASHER, spring	8				
1-9	1501750002	・PLUG	1				
	1420010110	・・O-RING	1				
1-10	1420000180	・O-RING	4				
1-11	1420000450	・O-RING	2				
1-12	0881811510	・FLANGE	1				
1-13	0881711350	・BAND	1				
1-14	0881711360	・COLLAR	1				
1-15	1100040620	・BOLT	1				
1-16	1140020006	・WASHER, spring	1				
1-17	0003600043	・WASHER	1				
1-18	0881812080	・RUBBER, cushion	5				
1-20	1553202100	・SENDER, fuel	1				
1-21	1533120012	・BAND	2				
1-22	1150110510	・SCREW	5				
1-23	1652201008	・BAND	1				
1-24	0698100150	・HOSE	1				
1-26	1531207359	・HOSE	1				sold by the meter
1-28	1120530620	・SCREW	5				
1-29	1533700019	・BAND	1				
1-30	1531115176	・PROTECTOR	2				sold by the meter
2	0698101200	PORT, supply	1				
4	0881812045	PLATE	1				
5	0881812050	BAND	1				
6	0881812060	BAND	1				
7	0698100250	HOSE	1				
8	0881812300	BOLT	2				
9	X **********	PLATE	1				
9-1	0880814031	・PLATE	1				
9-2	0880814170	・RUBBER	1				
10	0880814170	RUBBER	1				
12	1652201008	BAND	3				
13	0881811130	PLATE	1				
14	0881812140	RUBBER	3				
15	0881812150	RUBBER	1				
16	0003600025	WASHER	2				
17	0881811170	RUBBER	3				
18	0881811180	RUBBER	2				
19	1552100500	CAP	1				
20	1552100320	STRAINER	1				
21	1533700019	BAND	1				
22	1533700060	CLIP	2				
23	1533120012	BAND	6				
24	1533201012	U-BOLT	1				
26	1100040616	BOLT	2				
27	1100040865	BOLT	1				
28	1100041020	BOLT	2				
29	1100041025	BOLT	3				
30	1100041030	BOLT	4				
31	1140020006	WASHER, spring	2				
32	1140020008	WASHER, spring	5				
33	1140020010	WASHER, spring	15				
34	1141110006	WASHER	2				
35	1141110010	WASHER	3				
36	1130040008	NUT	4				
37	1130040010	NUT	6				
38	0007300013	CLAMP	2				
40	1910249034	PUMP, feed	1				KUBOTA 1G938-52031
41	1910249033	SEPARATOR, water	1				KUBOTA RB101-51261

silverthorn.co.uk

FUEL TANK & FUEL PIPING

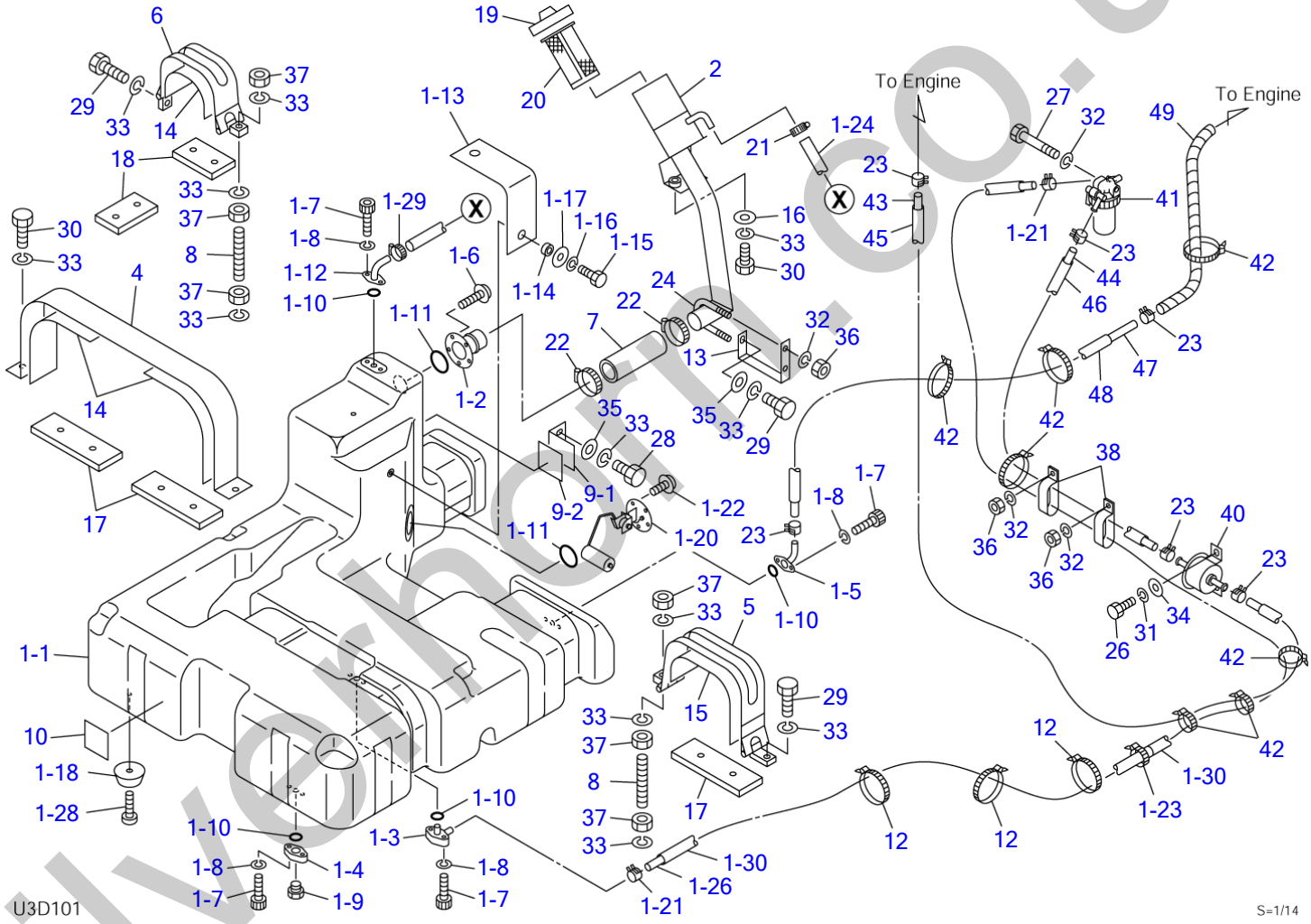

silverhorn.co.uk

FUEL TANK & FUEL PIPING

Item	Part number	Description	Q'ty	Chan.	Serial No.	Serv.	Remarks
42	**1652231250**	BAND	7				
43	**1531207151**	HOSE	1				sold by the meter
44	**1531207087**	HOSE	1				sold by the meter
45	**1531115146**	PROTECTOR	1				sold by the meter
46	**1531115077**	PROTECTOR	1				sold by the meter
47	**1531207120**	・HOSE	1				sold by the meter
48	**1531115110**	・PROTECTOR	1				sold by the meter
49	**1703211047**	PROTECTOR	1				
	U3d101						

silverhorn.co.uk

COVER (1/3)

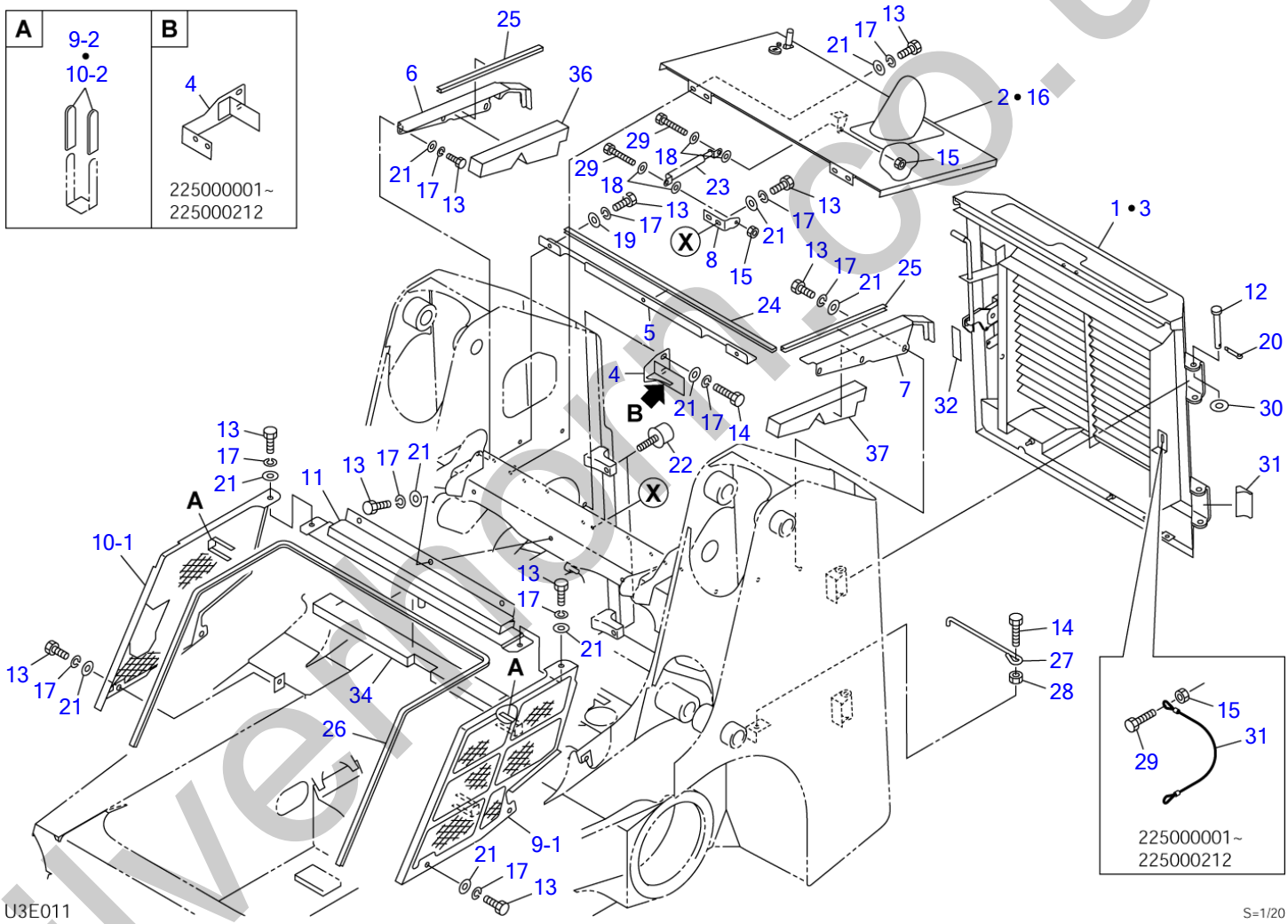

silvermoon.co.uk

COVER (1/3)

Item	Part number	Description	Q'ty	Chan.	Serial No.	Serv.	Remarks
		COVER ASSY					
		COVER ASSY (for EU)					
1	0698201100	DOOR, rear	1				see page (2/3)
2	0698201500	HOOD, engine	1				see page (3/3)
3	0698202100	DOOR, rear (for EU)	1		225000021~	M	see page (2/3)
4	0698201050	BRACKET	1		225000001~225000212		
	0698201040	BRACKET	1		225000213~	M	
5	0881823005	PLATE	1				
6	0698200800	PLATE	1				
7	0698200850	PLATE	1				
8	0881827008	PLATE	1				
9	0698201600	COVER ASSY, side (L.H.)	1				
9-1	0698201610	・COVER, side (L.H.)	1				
9-2	0872433150	・TUBE	4				
10	0698201700	COVER ASSY, side (R.H.)	1				
10-1	0698201710	・COVER, side (R.H.)	1				
10-2	0872433150	・TUBE	2				
11	0881827980	・COVER, center	1		225000001~225000212		
	0698202700	・COVER, center	1	(H)	225000213~	M	
12	0881822020	PIN	2				
13	1100041020	BOLT	24				
14	1100041030	BOLT	3				
15	1130040008	NUT	2				
16	0698202600	HOOD, engine (for EU)	1		225000021~	M	see page (3/3)
17	1140020010	WASHER, spring	26				
18	1141110008	WASHER	4				
19	1141110010	WASHER	3				
20	1210010425	PIN, split	2				
21	0003600025	WASHER	23				
22	1651101050	STOPPER	2				
23	1653900057	SPRING, gas	1				
24	1654623090	TRIM	1				sold by the meter
25	1654623045	TRIM	2				sold by the meter
26	1654520290	TRIM	1				sold by the meter
27	0658200110	ROD	1				
28	1130040010	NUT	1				
29	1100040825	BOLT	2				
30	1141110016	WASHER	2				
31	1929900437	ROPE	1		225000001~225000212		
	0658200015	RUBBER	1		225000213~	M	
32	0881823034	RUBBER	1				
34	0698200830	ABSORBENT, noise	1		225000021~225000212	M	for EU
	0698200900	ABSORBENT, noise	1	(H)	225000213~	M	for EU
36	0881829350	ABSORBENT, noise	1				for EU
37	0881829360	ABSORBENT, noise	1				for EU
	U3e011						

silverhorn.co.uk

COVER (1/3)

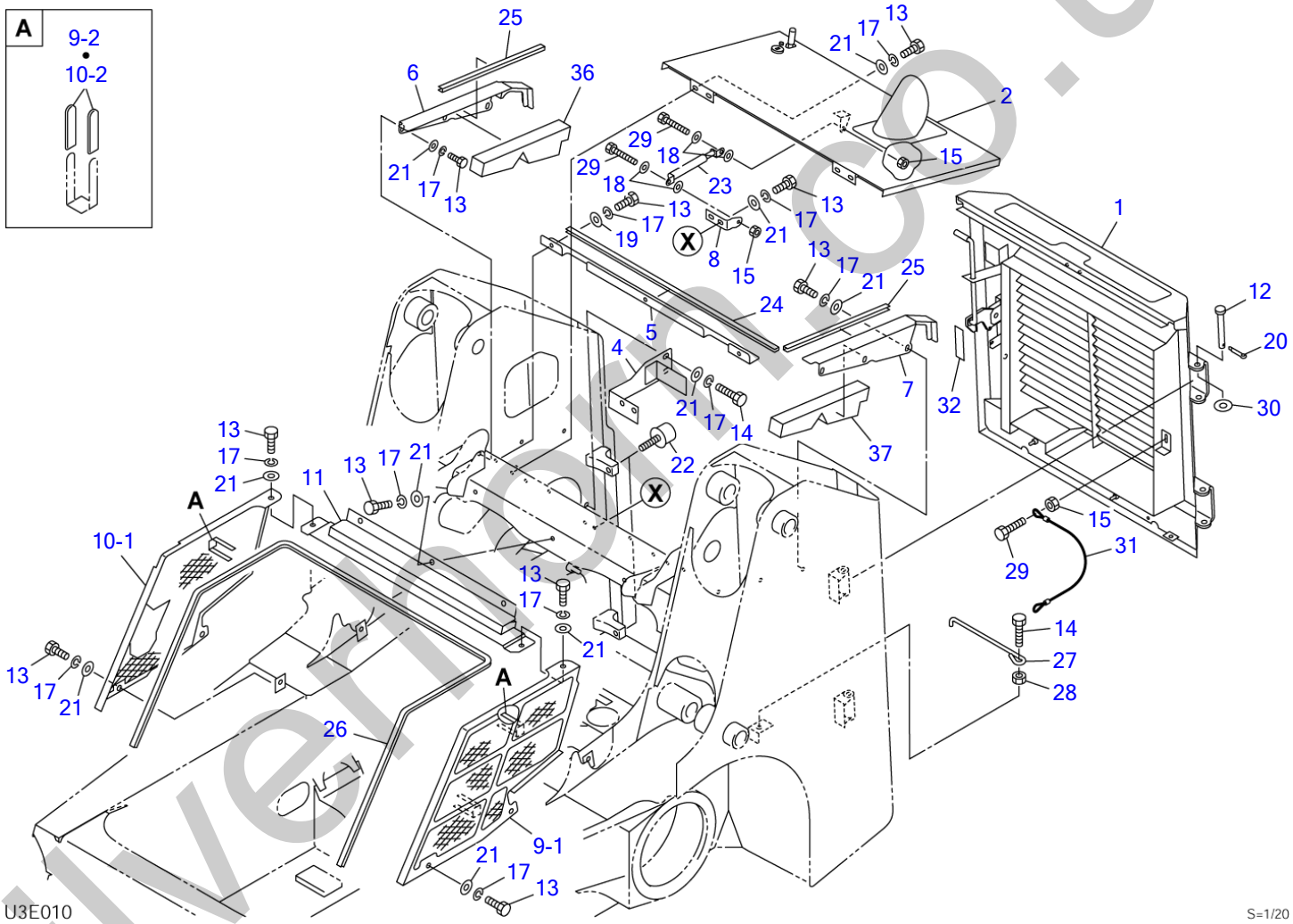

silvermoon.co.uk

COVER (1/3)

Item	Part number	Description	Q'ty	Chan.	Serial No.	Serv.	Remarks
		COVER ASSY					
1	0698201100	DOOR, rear	1			M	see page (2/3)
2	0698201500	HOOD, engine	1			M	see page (3/3)
4	0698201050	BRACKET	1			M	
5	0881823005	PLATE	1				
6	0698200800	PLATE	1			M	
7	0698200850	PLATE	1			M	
8	0881827008	PLATE	1				
9	0698201600	COVER ASSY, side (L.H.)	1			M	
9-1	0698201610	・COVER, side (L.H.)	1			M	
9-2	0872433150	・TUBE	4				
10	0698201700	COVER ASSY, side (R.H.)	1			M	
10-1	0698201710	・COVER, side (R.H.)	1			M	
10-2	0872433150	・TUBE	2				
11	0881827980	・COVER, center	1				
12	0881822020	PIN	2				
13	1100041020	BOLT	24				
14	1100041030	BOLT	3				
15	1130040008	NUT	3				
17	1140020010	WASHER, spring	26				
18	1141110008	WASHER	4				
19	1141110010	WASHER	3				
20	1210010425	PIN, split	2				
21	0003600025	WASHER	23				
22	1651101050	STOPPER	2				
23	1653900057	SPRING, gas	1				
24	1654623090	TRIM	1				sold by the meter
25	1654623045	TRIM	2				sold by the meter
26	1654520290	TRIM	1				sold by the meter
27	0658200110	ROD	1			M	
28	1130040010	NUT	1				
29	1100040825	BOLT	3				
30	1141110016	WASHER	2				
31	1929900437	ROPE	1				
32	0881823034	RUBBER	1				
36	0881829350	ABSORBENT, noise	1				
37	0881829360	ABSORBENT, noise	1				
	U3e010						

silverhorn.co.uk

COVER (2/3) (rear door)

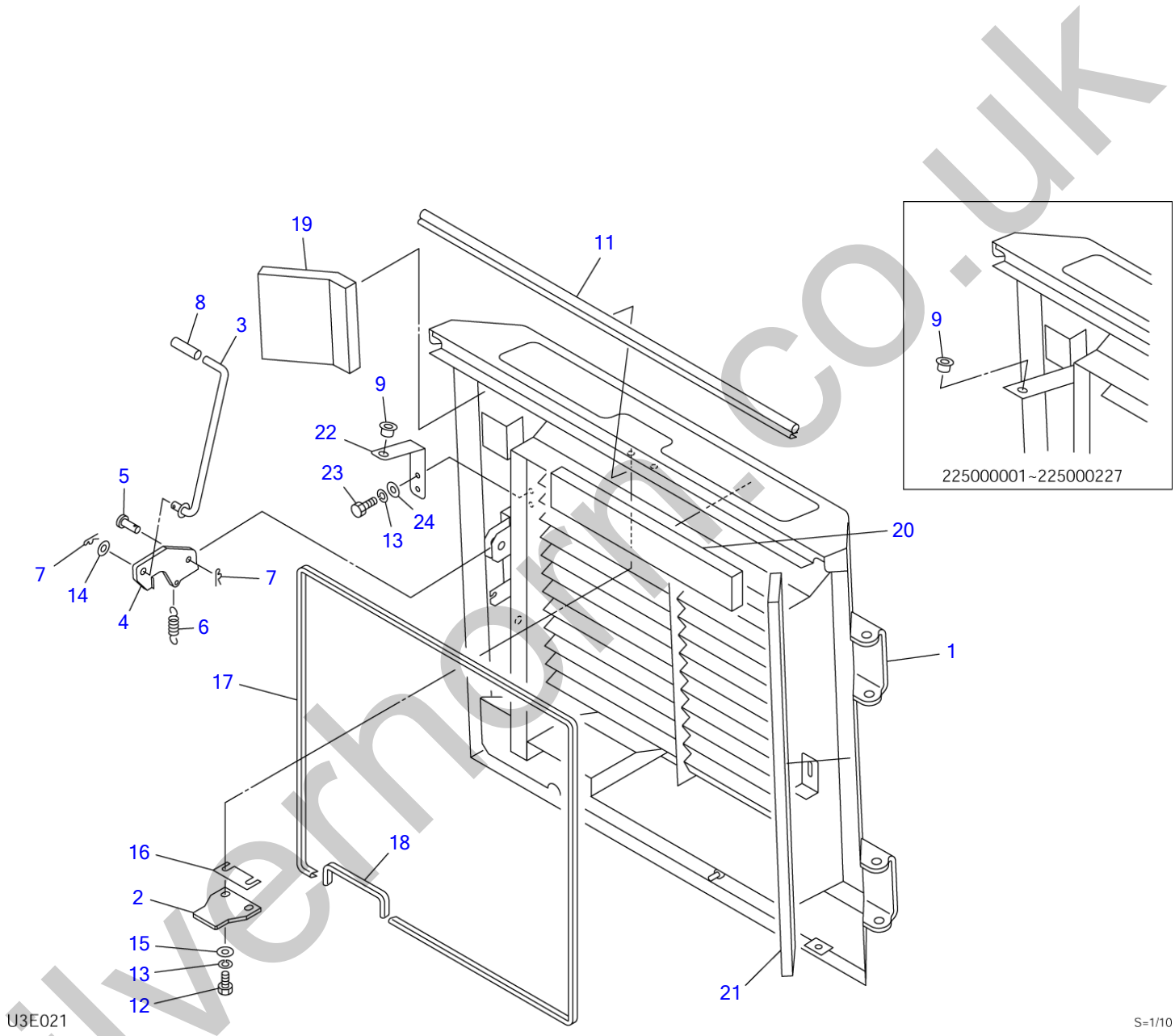

silverhorn.co.uk

COVER (2/3) (rear door)

Item	Part number	Description	Q'ty	Chan.	Serial No.	Serv.	Remarks
0-1	0698201100	DOOR ASSY, rear	1				
	0698202100	DOOR ASSY, rear (for EU)	1			M	
1	0698201200	・DOOR, rear	1				
2	0880825650	・STRIKER	1				
3	0881829150	・ROD	1				
4	0668201540	・PLATE	1			M	
5	0004015002	・PIN	1				
6	0007000112	・SPRING	1				
7	1214000012	・PIN, snap	2				
8	1650202300	・CAP	1				
9	1652615200	・BUSHING	1				
11	1654605088	・TRIM	1				sold by the meter
12	1100040825	・BOLT	2				
13	1140020008	・WASHER, spring	4				
14	1141110012	・WASHER	1				
15	0003608252	・WASHER	2				
16	0003900037	・SPACER	AR				t=4.5mm
17	1654606247	・TRIM	1				sold by the meter
18	1654606021	・TRIM	1			M	sold by the meter
19	0698200880	・ABSORBENT, noise	1		225000021~	M	for EU
20	0698200860	・ABSORBENT, noise	1		225000021~	M	for EU
21	0698200870	・ABSORBENT, noise	1		225000021~	M	for EU
22	0698201122	・PLATE	1		225000228~	M	
23	1100040820	・BOLT	2		225000228~		
24	1141110008	・WASHER	2		225000228~		
	U3e021						

silverhorn.co.uk

COVER (2/3) (rear door)

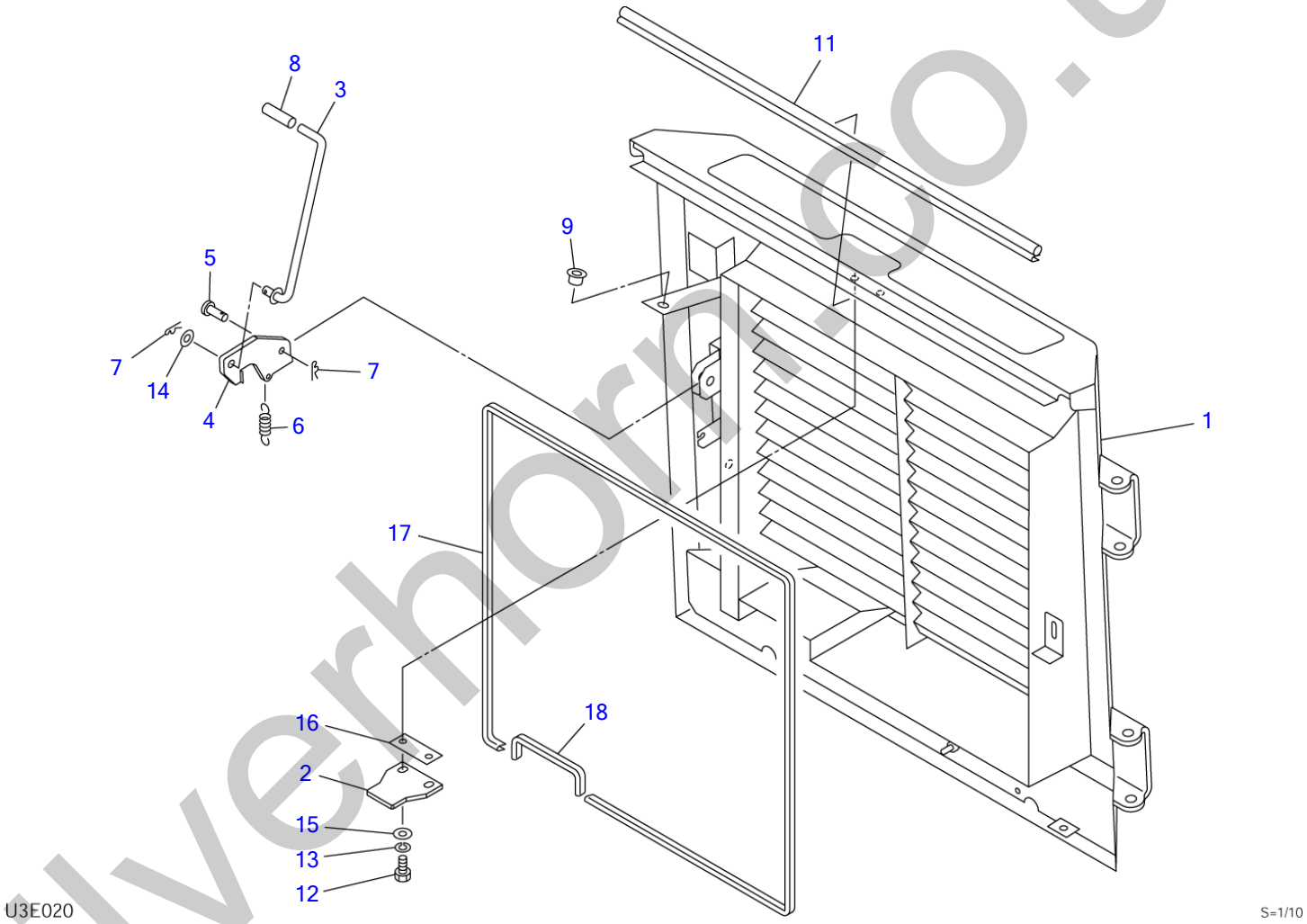

silverhorn.co.uk

COVER (2/3) (rear door)

Item	Part number	Description	Q'ty	Chan.	Serial No.	Serv.	Remarks
0-1	0698201100	DOOR ASSY, rear	1			M	
1	0698201200	・DOOR, rear	1			M	
2	0880825650	・STRIKER	1				
3	0881829150	・ROD	1				
4	0880826160	・PLATE	1				
5	0004015002	・PIN	1				
6	0007000112	・SPRING	1				
7	1214000012	・PIN, snap	2				
8	1650202300	・CAP	1				
9	1652615200	・BUSHING	1				
11	1654605088	・TRIM	1				sold by the meter
12	1100040825	・BOLT	2				
13	1140020008	・WASHER, spring	2				
14	1141110012	・WASHER	1				
15	0003608252	・WASHER	2				
16	0003900037	・SPACER	AR				t=4.5mm
17	1654606247	・TRIM	1			M	sold by the meter
18	1654606014	・TRIM	1			M	sold by the meter
	U3e020						

silverhorn.co.uk

COVER (3/3) (engine hood)

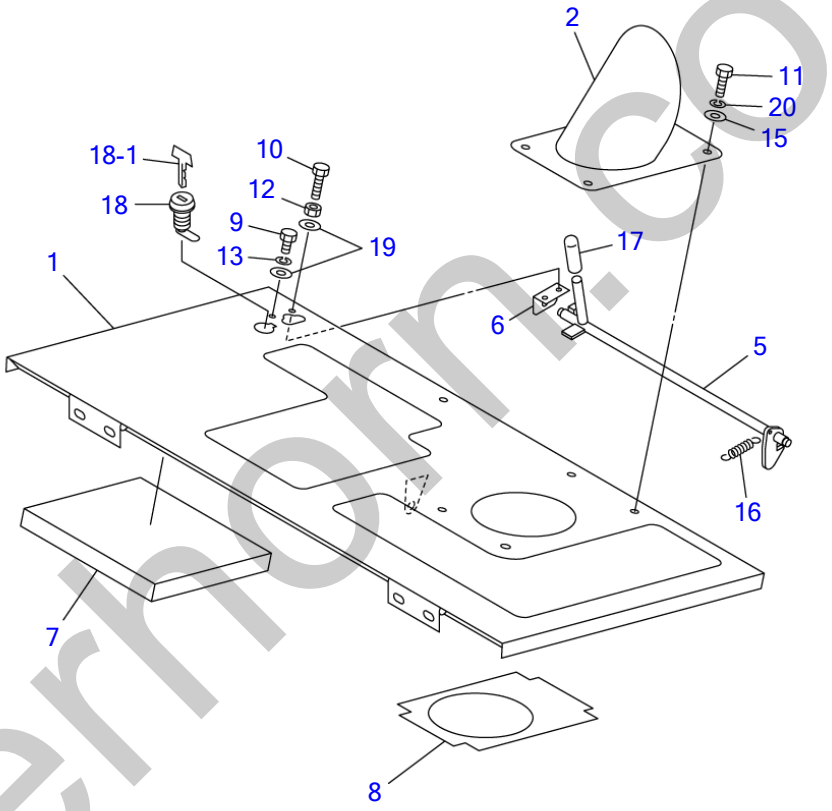

U1E030

S=1/10

silverhorn.co.uk

COVER (3/3) (engine hood)

Item	Part number	Description	Q'ty	Chan.	Serial No.	Serv.	Remarks
0-2	0698201500	HOOD ASSY, engine	1			M	
1	0698201550	・HOOD, engine	1			M	
2	0698201520	・NOZZLE	1			M	
5	0880823660	・LEVER	1				
6	0880820080	・ANGLE	1				
7	0698201570	・ABSORBENT, noise	1			M	
8	0688201570	・INSULATOR	1			M	
9	1100040612	・BOLT	1				
10	1100040620	・BOLT	1				
11	1100040816	・BOLT	4				
12	1130040006	・NUT	1				
13	1140020006	・WASHER, spring	1				
15	0003608252	・WASHER	4				
16	0007000070	・SPRING	1				
17	1650202300	・CAP	1				
18	1653601395	・LOCK	1				
18-1	1700100019	・KEY	1				
19	1141110006	・WASHER	2				
20	1140020008	・WASHER, spring	4				
	U3e030						

silverhorn.co.uk

COVER (3/3) (engine hood)

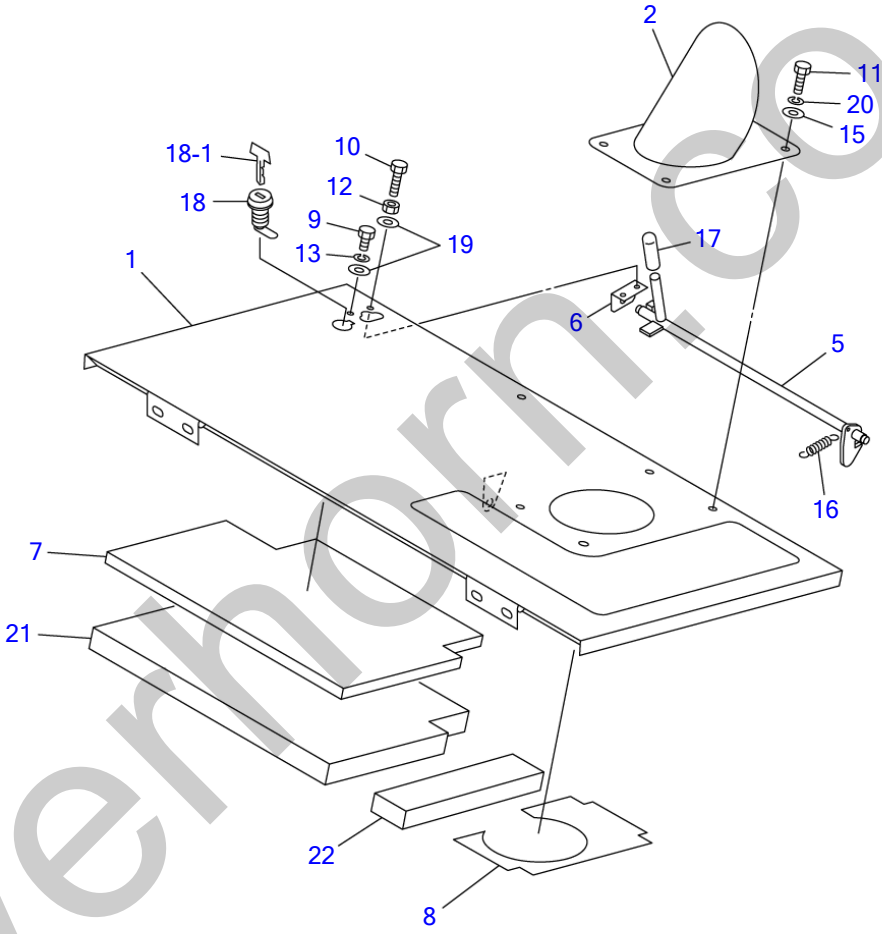

U1E031

S=1/10

silverhorn.co.uk

COVER (3/3) (engine hood)

Item	Part number	Description	Q'ty	Chan.	Serial No.	Serv.	Remarks
0-2	0698201500	HOOD ASSY, engine	1				
	0698202600	HOOD ASSY, engine (for EU)	1			M	
1	0698201550	・HOOD, engine	1				
2	0698201530	・PIPE	1			M	
5	0880823660	・LEVER	1				
6	0880820080	・ANGLE	1				
7	0698201580	・ABSORBENT, noise	1			M	
8	0698201590	・INSULATOR	1			M	
9	1100040612	・BOLT	1				
10	1100040620	・BOLT	1				
11	1100040816	・BOLT	4				
12	1130040006	・NUT	1				
13	1140020006	・WASHER, spring	1				
15	0003608252	・WASHER	4				
16	0007000070	・SPRING	1				
17	1650202300	・CAP	1				
18	1653601395	・LOCK	1				
18-1	1700100019	・KEY	1				
19	1141110006	・WASHER	2				
20	1140020008	・WASHER, spring	4				
21	0698200910	・ABSORBENT, noise	1		225000021~	M	for EU
22	0698200890	・ABSORBENT, noise	1		225000021~	M	for EU
	U3e031						

silverhorn.co.uk

FLOOR FRAME

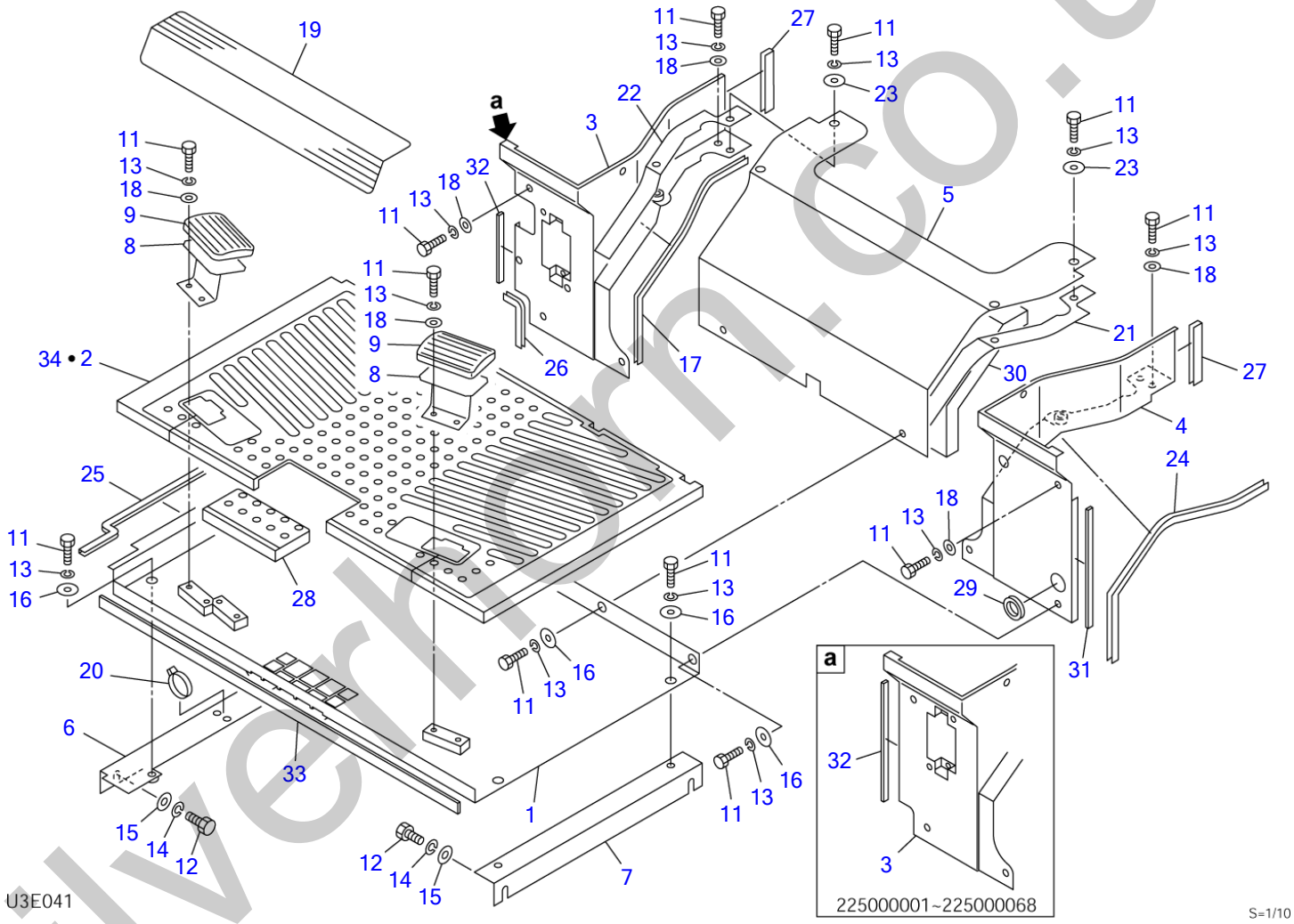

silverhorn.co.uk

FLOOR FRAME

Item	Part number	Description	Q'ty	Chan.	Serial No.	Serv.	Remarks
		FLOOR ASSY FLOOR ASSY (throttle pedal type)					
1	0693500010	PLATE	1				
2	0693500020	MAT, floor	1				
3	0693500050	COVER (R.H.)	1		225000001~225000014		
	0693500060	COVER (R.H.)	1	(H)	225000015~225000068	M	
	0693502010	COVER (R.H.)	1		225000069~	M	
4	0693500040	COVER (L.H.)	1				
5	0880354650	COVER	1				
6	0881351500	STAY	1				
7	0881351010	STAY	1				
8	0563219700	REST, foot	2				
9	0563218500	COVER	2				
11	1100040820	BOLT	22				
12	1100041016	BOLT	4				
13	1140020008	WASHER, spring	22				
14	1140020010	WASHER, spring	4				
15	1141110010	WASHER	4				
16	0003608252	WASHER	8				
17	1653916036	TRIM	1		225000015~	M	sold by the meter
18	1141110008	WASHER	10				
19	0880821355	SHEET	1				
20	1652231250	BAND	1				
21	0880353526	SPONGE	1				
22	0880353527	SPONGE	1				
23	0003608003	WASHER	4				
24	1653916043	TRIM	1				sold by the meter
25	1654606048	TRIM	1				sold by the meter
26	1653916007	TRIM	1				sold by the meter
27	1654623009	TRIM	2				sold by the meter
28	0881353080	MAT	1				
29	1652053600	GROMMET	1				
30	0881351020	ABSORBENT, noise	1				
31	1654355022	SPONGE	1				sold by the meter
32	1654355018	SPONGE	1		225000001~225000068		sold by the meter
	1654355012	SPONGE	1		225000069~	M	sold by the meter
33	1654354077	SPONGE	1				sold by the meter
34	0693500030	MAT, floor	1		225000069~	M	throttle pedal type
	U3e041						

silverhorn.co.uk

FLOOR FRAME

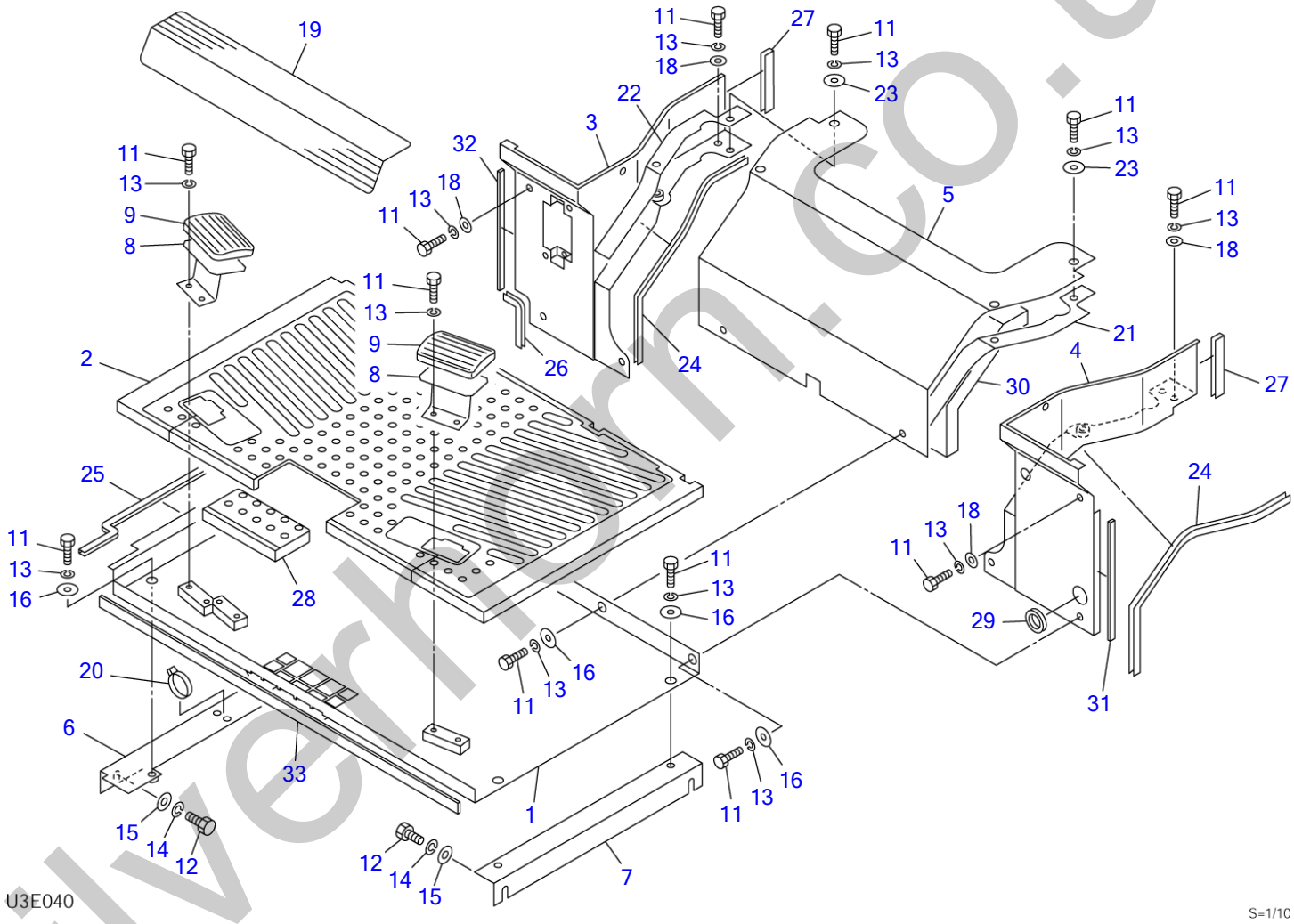

silverhorn.co.uk

FLOOR FRAME

Item	Part number	Description	Q'ty	Chan.	Serial No.	Serv.	Remarks
		FLOOR ASSY					
1	0693500010	PLATE	1			M	
2	0693500020	MAT, floor	1			M	
3	0693500050	COVER (R.H.)	1			M	
4	0693500040	COVER (L.H.)	1			M	
5	0880354650	COVER	1				
6	0881351500	STAY	1				
7	0881351010	STAY	1				
8	0563219700	REST, foot	2				
9	0563218500	COVER	2				
11	1100040820	BOLT	22				
12	1100041016	BOLT	4				
13	1140020008	WASHER, spring	22				
14	1140020010	WASHER, spring	4				
15	1141110010	WASHER	4				
16	0003608252	WASHER	8				
18	1141110008	WASHER	6				
19	0880821355	SHEET	1				
20	1652231250	BAND	1				
21	0880353526	SPONGE	1				
22	0880353527	SPONGE	1				
23	0003608003	WASHER	4				
24	1653916043	TRIM	2				sold by the meter
25	1654606048	TRIM	1				sold by the meter
26	1653916007	TRIM	1				sold by the meter
27	1654623009	TRIM	2			M	sold by the meter
28	0881353080	MAT	1				
29	1652053600	GROMMET	1				
30	0881351020	ABSORBENT, noise	1				
31	1654355022	SPONGE	1				sold by the meter
32	1654355018	SPONGE	1				sold by the meter
33	1654354077	SPONGE	1				sold by the meter
	U3e040						

silverhorn.co.uk

SEAT (1/2)

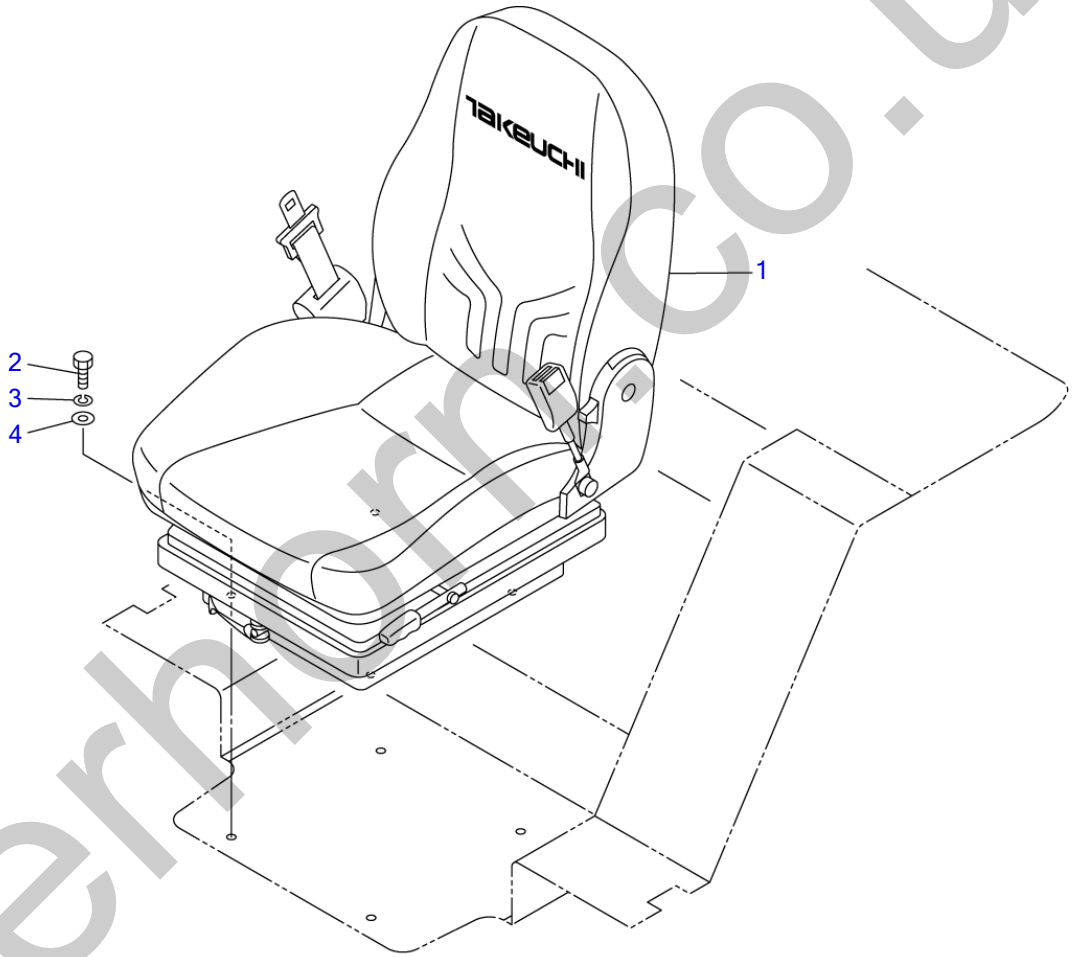

T7E050

S=1/10

silverhorn.co.uk

SEAT (1/2)

Item	Part number	Description	Q'ty	Chan.	Serial No.	Serv.	Remarks
		SEAT ASSY					
1	**1914100079**	SEAT	1				see page (2/2)
2	**1100040820**	BOLT	4				
3	**1140020008**	WASHER, spring	4				
4	**1141110008**	WASHER	4				
	T7e051						

silverhorn.co.uk

SEAT (2/2)

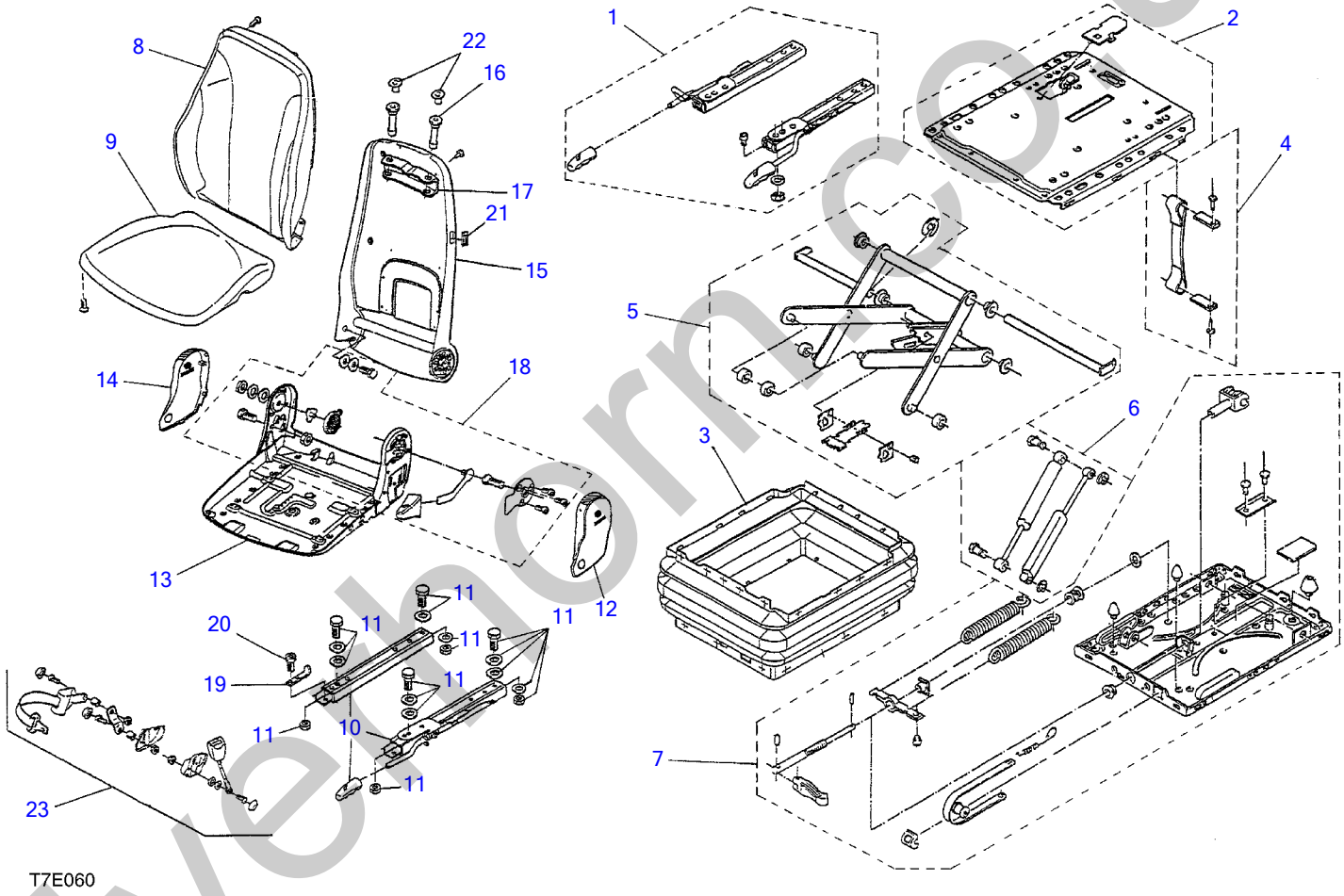

silverthorn.co.uk

SEAT (2/2)

Item	Part number	Description	Q'ty	Chan.	Serial No.	Serv.	Remarks
0	1914100079	SEAT ASSY	1				PVC
1	1914101072	・RAIL ASSY	1				
2	1914102072	・PLATE ASSY	1				
3	1914103072	・BOOT	1				
4	1914104072	・ANGLE ASSY	1				
5	1914105072	・LINK ASSY	1				
6	1914106072	・DAMPER ASSY	1				
7	1914107072	・SPRING ASSY	1				
8	1914108072	・TRIM	1				
9	1914109072	・TRIM	1				
10	1914110072	・RAIL ASSY	1				
11	1914111072	・BOLT ASSY	1				
12	1914112072	・COVER (L.H.)	1				
13	1914113072	・FRAME	1				
14	1914114072	・COVER (R.H.)	1				
15	1914115072	・FRAME	1				
16	1914116072	・GUIDE	2				
17	1914117072	・BRACKET	1				
18	1914118072	・JOINT ASSY	1				
19	1914119072	・PLATE	1				
20	1914120072	・SCREW, cap	1				
21	1914121072	・PLATE	1				
22	1914122072	・PLUG	2				
23	1914123072	・BELT ASSY, seat	1				
	T7e060						

silverhorn.co.uk

SEAT (1/2) (for GEHL & MUSTANG)

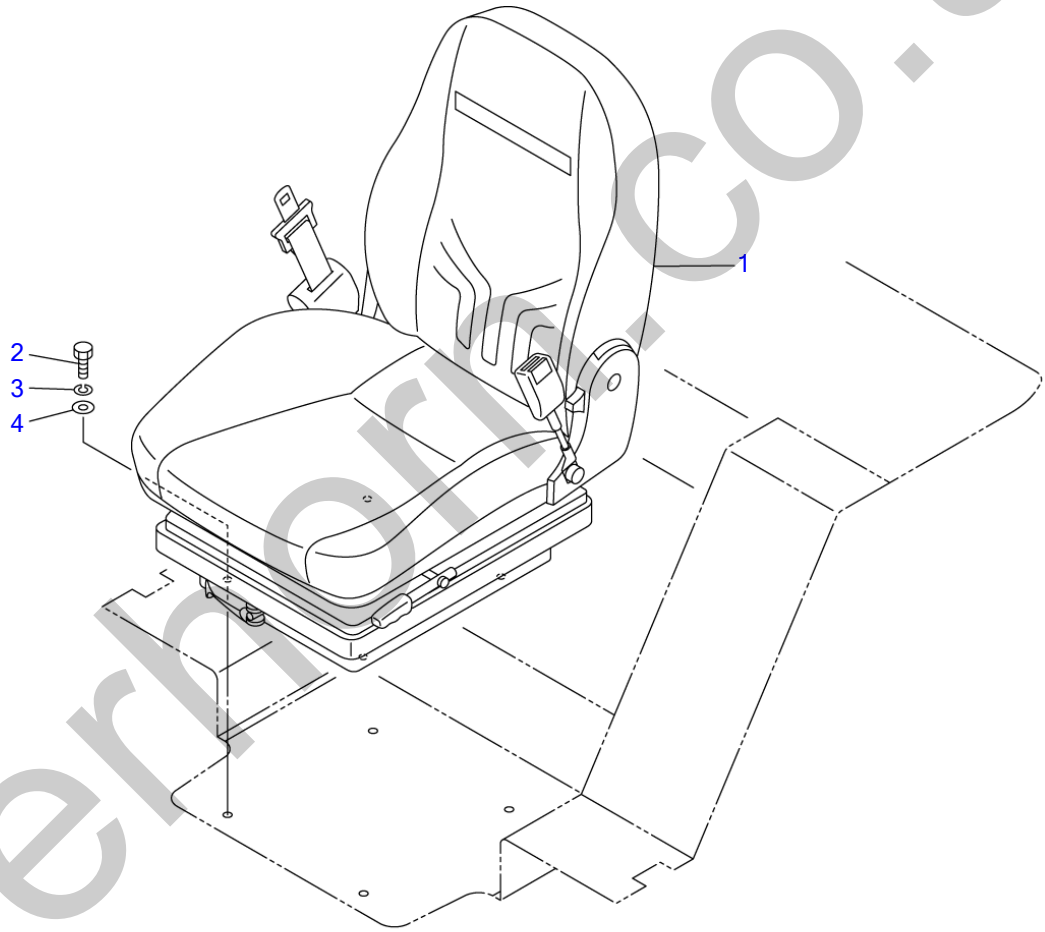

T7E170

S=1/10

silverhorn.co.uk

SEAT (1/2) (for GEHL & MUSTANG)

Item	Part number	Description	Q'ty	Chan.	Serial No.	Serv.	Remarks
		SEAT ASSY (for GEHL & MUSTANG)					
1	**1914100090**	SEAT	1				see page (2/2)
2	**1100040820**	BOLT	4				
3	**1140020008**	WASHER, spring	4				
4	**1141110008**	WASHER	4				
	T7e170						

silverhorn.co.uk

SEAT (2/2) (for GEHL & MUSTANG)

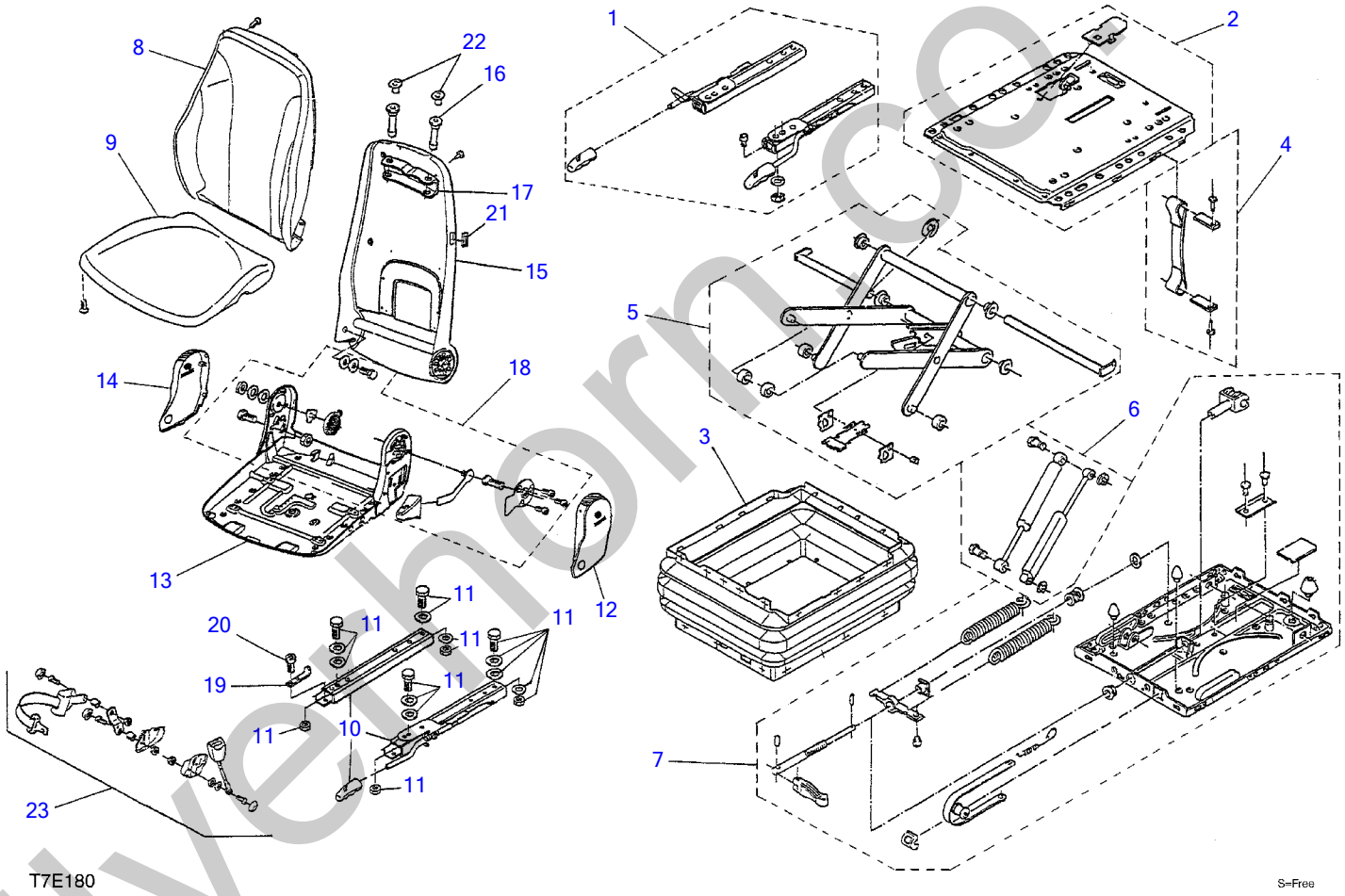

silverhorn.co.uk

SEAT (2/2) (for GEHL & MUSTANG)

Item	Part number	Description	Q'ty	Chan.	Serial No.	Serv.	Remarks
0	1914100090	SEAT ASSY (for GEHL & MUSTANG)	1				PVC
1	1914101072	・RAIL ASSY	1				
2	1914102072	・PLATE ASSY	1				
3	1914103072	・BOOT	1				
4	1914104072	・ANGLE ASSY	1				
5	1914105072	・LINK ASSY	1				
6	1914106072	・DAMPER ASSY	1				
7	1914107072	・SPRING ASSY	1				
8	1914108089	・TRIM	1				
9	1914109072	・TRIM	1				
10	1914110072	・RAIL ASSY	1				
11	1914111072	・BOLT ASSY	1				
12	1914112072	・COVER (L.H.)	1				
13	1914113072	・FRAME	1				
14	1914114072	・COVER (R.H.)	1				
15	1914115072	・FRAME	1				
16	1914116072	・GUIDE	2				
17	1914117072	・BRACKET	1				
18	1914118072	・JOINT ASSY	1				
19	1914119072	・PLATE	1				
20	1914120072	・SCREW, cap	1				
21	1914121072	・PLATE	1				
22	1914122072	・PLUG	2				
23	1914123072	・BELT ASSY, seat	1				
	T7e180						

silverhorn.co.uk

SEAT SWITCH (225000001-225000140)

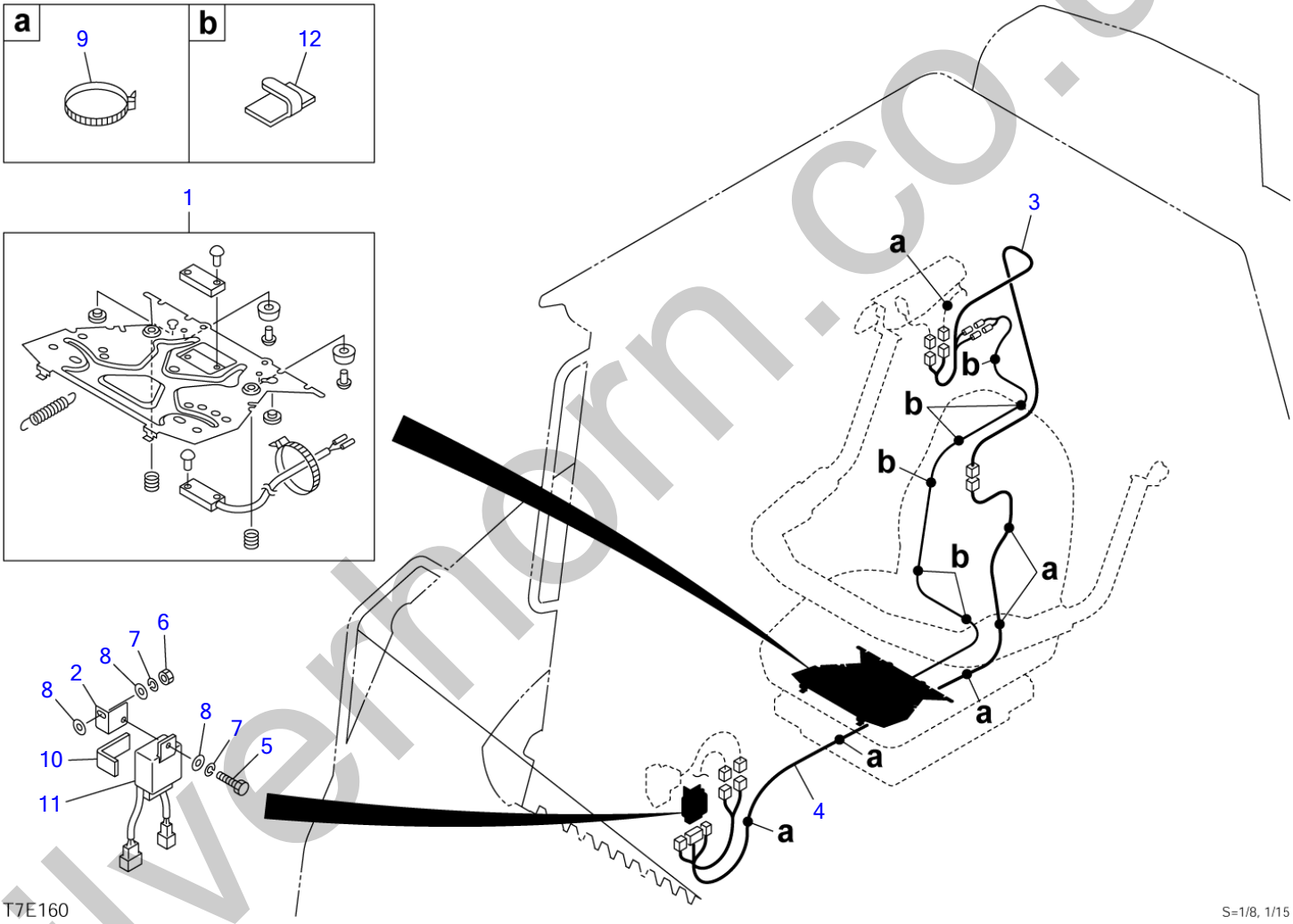

silverhorn.co.uk

SEAT SWITCH (225000001-225000140)

Item	Part number	Description	Q'ty	Chan.	Serial No.	Serv.	Remarks
	0881341500	SWITCH ASSY, seat	1				
1	1914100086	・SWITCH KIT, seat	1				
2	0881422530	・BRACKET	1				
3	0881422540	・HARNESS, wiring	1				
4	0881422550	・HARNESS, wiring	1				
5	1100040620	・BOLT	1				
6	1130040006	・NUT	1				
7	1140020006	・WASHER, spring	2				
8	1141110006	・WASHER	3				
9	1652231250	・BAND	6				
10	1654310007	・SPONGE	1				sold by the meter
11	1711900062	・RELAY	1				
12	1711900075	・STICKER, wire	6				
	T7e160						

silverhorn.co.uk

SEAT SWITCH (225000141-)

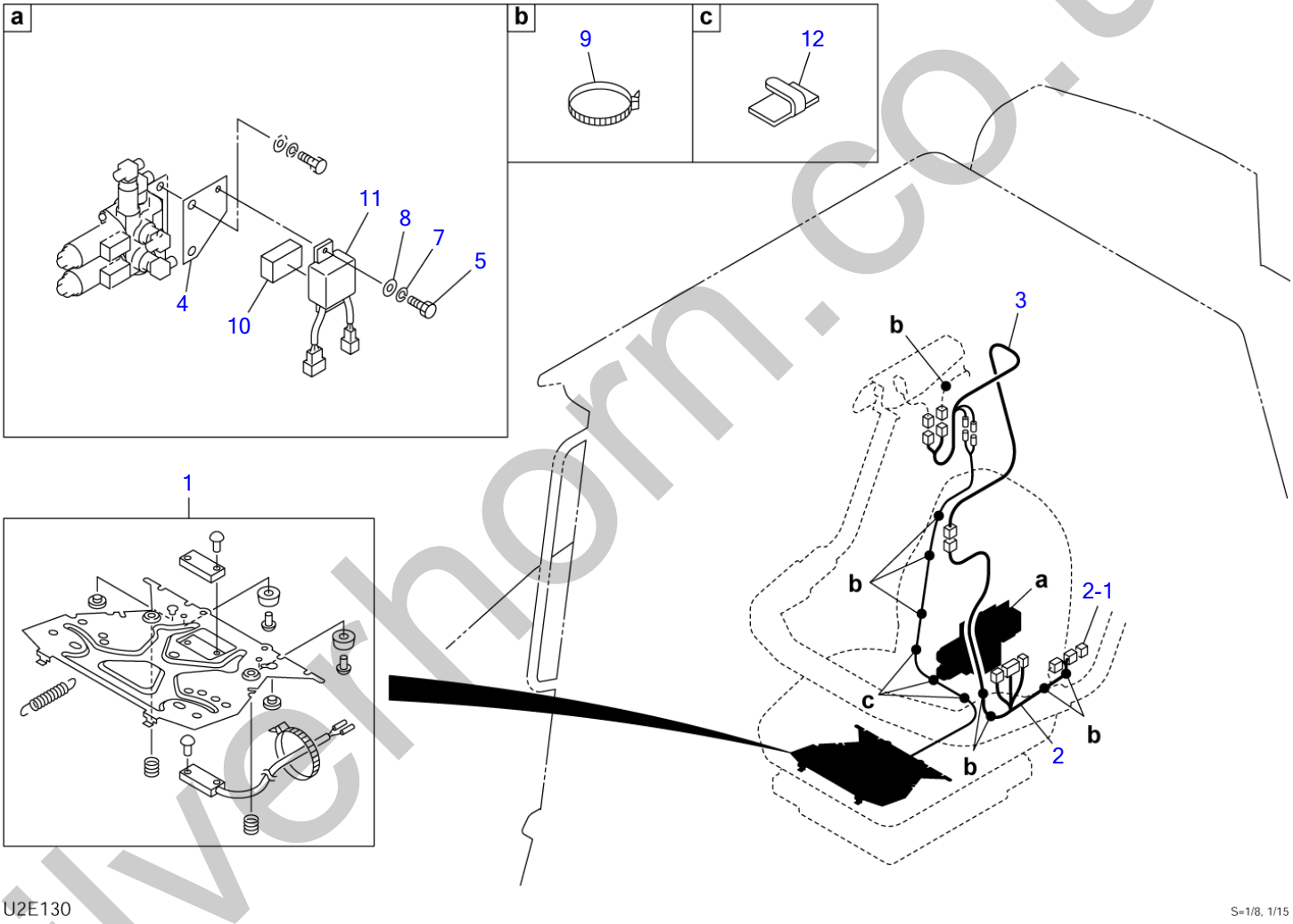

silverhorn.co.uk

SEAT SWITCH (225000141-)

Item	Part number	Description	Q'ty	Chan.	Serial No.	Serv.	Remarks
0	0663400000	SWITCH ASSY, seat	1			M	
1	1914100086	・SWITCH KIT, seat	1				
2	0663400010	・HARNESS, wiring	1			M	
2-1	0394221010	・・CONNECTOR, short	1				
3	0881422540	・HARNESS, wiring	1				
4	0663400020	・BRACKET	1			M	
5	1100040616	・BOLT	1				
7	1140020006	・WASHER, spring	1				
8	1141110006	・WASHER	1				
9	1652231250	・BAND	8				
10	1654301005	・SPONGE	1			M	sold by the meter
11	1711900062	・RELAY	1				
12	1711900074	・STICKER	3				
	U2e130						

silverhorn.co.uk

SAFETY BAR

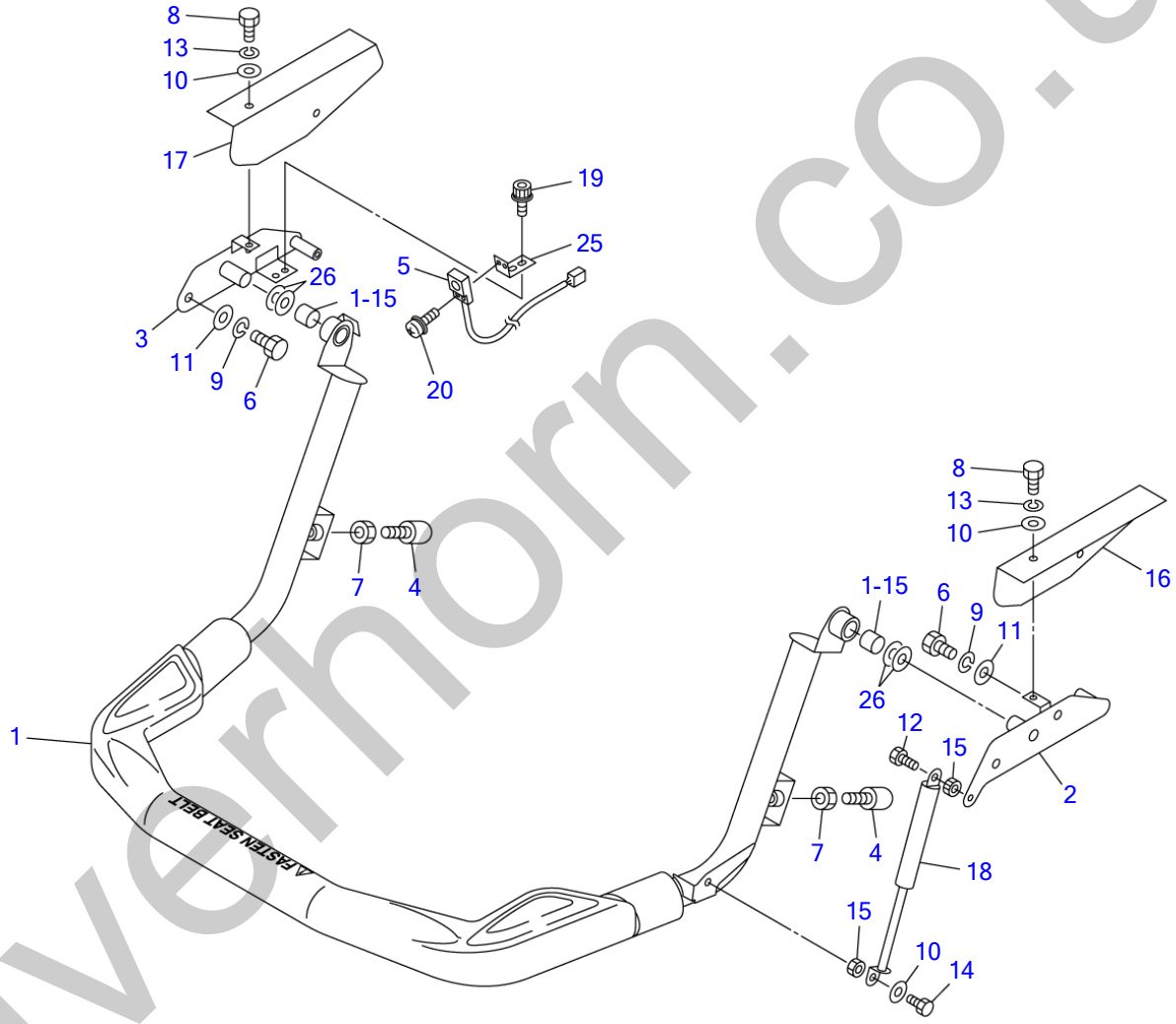

silverhorn.co.uk

SAFETY BAR

Item	Part number	Description	Q'ty	Chan.	Serial No.	Serv.	Remarks
		BAR ASSY, safety					
1	0881463100	BAR, safety	1				
1-15	1333002020	・BUSHING	2				
2	0881463010	BRACKET (L.H.)	1				
3	0881463020	BRACKET (R.H.)	1				
4	1651101224	STOPPER	2				
5	1700009010	SWITCH	1				
6	1100041020	BOLT	4				
7	1130040012	NUT	2				
8	1100040816	BOLT	4				
9	1140020010	WASHER, spring	4				
10	1141110008	WASHER	5				
11	1141110010	WASHER	4				
12	1100040820	BOLT	1				
13	1140020008	WASHER, spring	4				
14	1100240825	BOLT	1				
15	1130040008	NUT	2				
16	0881463030	COVER (L.H.)	1				
17	0881463040	COVER (R.H.)	1				
18	1653900057	SPRING, gas	1				
19	1110540512	SCREW, cap	2				
20	1150410312	SCREW	2				
25	0881463050	PLATE	1				
26	0093208300	WASHER	4				
	U3e050						

silverhorn.co.uk

SAFETY BAR (for GEHL & MUSTANG)

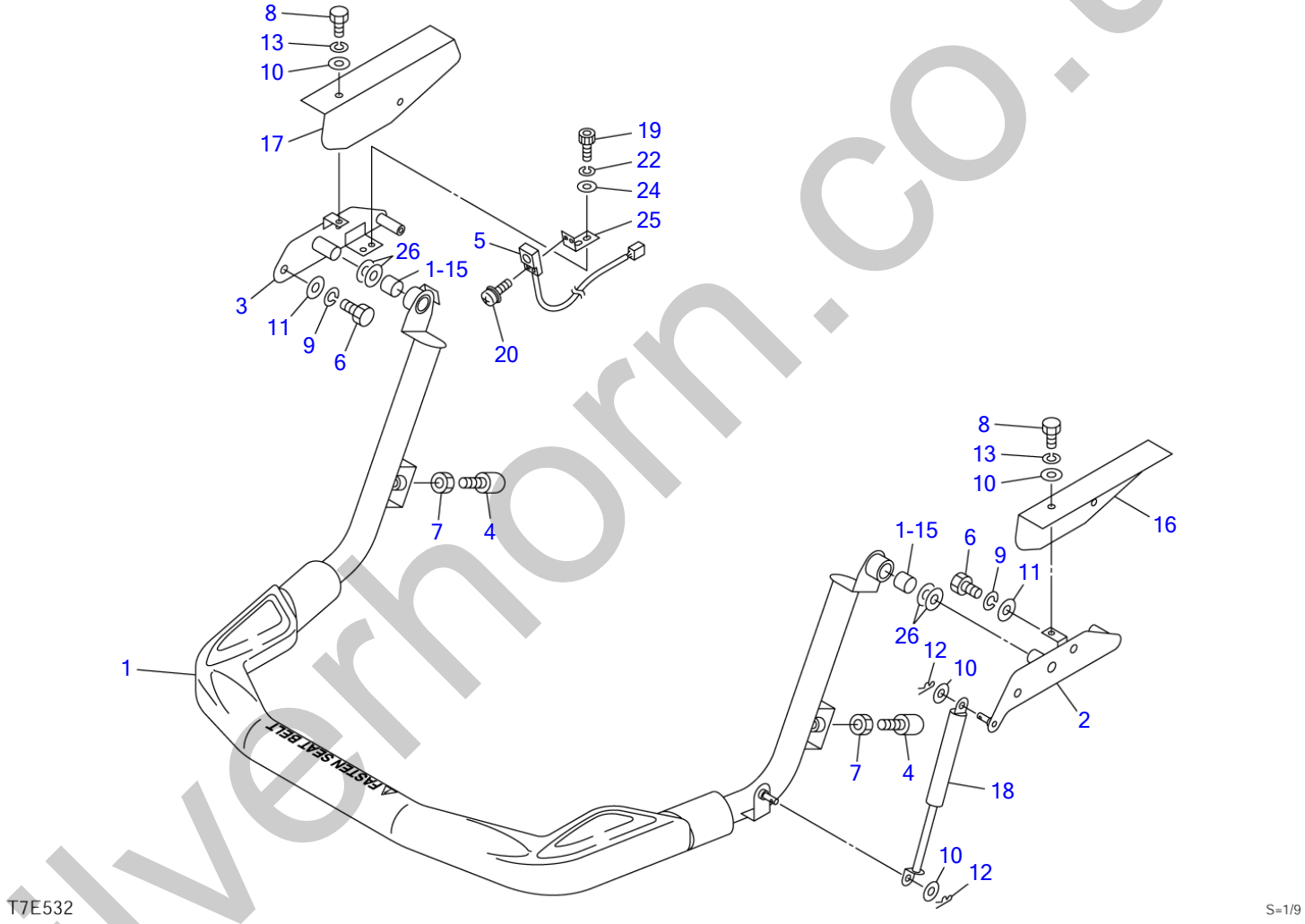

silverhorn.co.uk

SAFETY BAR (for GEHL & MUSTANG)

Item	Part number	Description	Q'ty	Chan.	Serial No.	Serv.	Remarks
		BAR ASSY, safety (for GEHL & MUSTANG)					
1	0881463100	BAR, safety	1				
1-15	1333002020	・BUSHING	2				
2	0881461090	BRACKET (L.H.)	1				
3	0881461040	BRACKET (R.H.)	1				
4	1651101224	STOPPER	2				
5	1700009010	SWITCH	1				
6	1100041020	BOLT	4				
7	1130040012	NUT	2				
8	1100040816	BOLT	4				
9	1140020010	WASHER, spring	4				
10	1141110008	WASHER	7				
11	1141110010	WASHER	4				
12	1214000008	PIN, snap	2				
13	1140020008	WASHER, spring	4				
16	0881461070	COVER (L.H.)	1				
17	0881461071	COVER (R.H.)	1				
18	1653900057	SPRING, gas	1				
19	1110540512	SCREW, cap	2				
20	1150410312	SCREW	2				
22	1140020005	WASHER, spring	2				
24	1141110005	WASHER	2				
25	0881461025	PLATE	1				
26	0093208300	WASHER	4				
	T7e532						

silverhorn.co.uk

CANOPY MOUNT

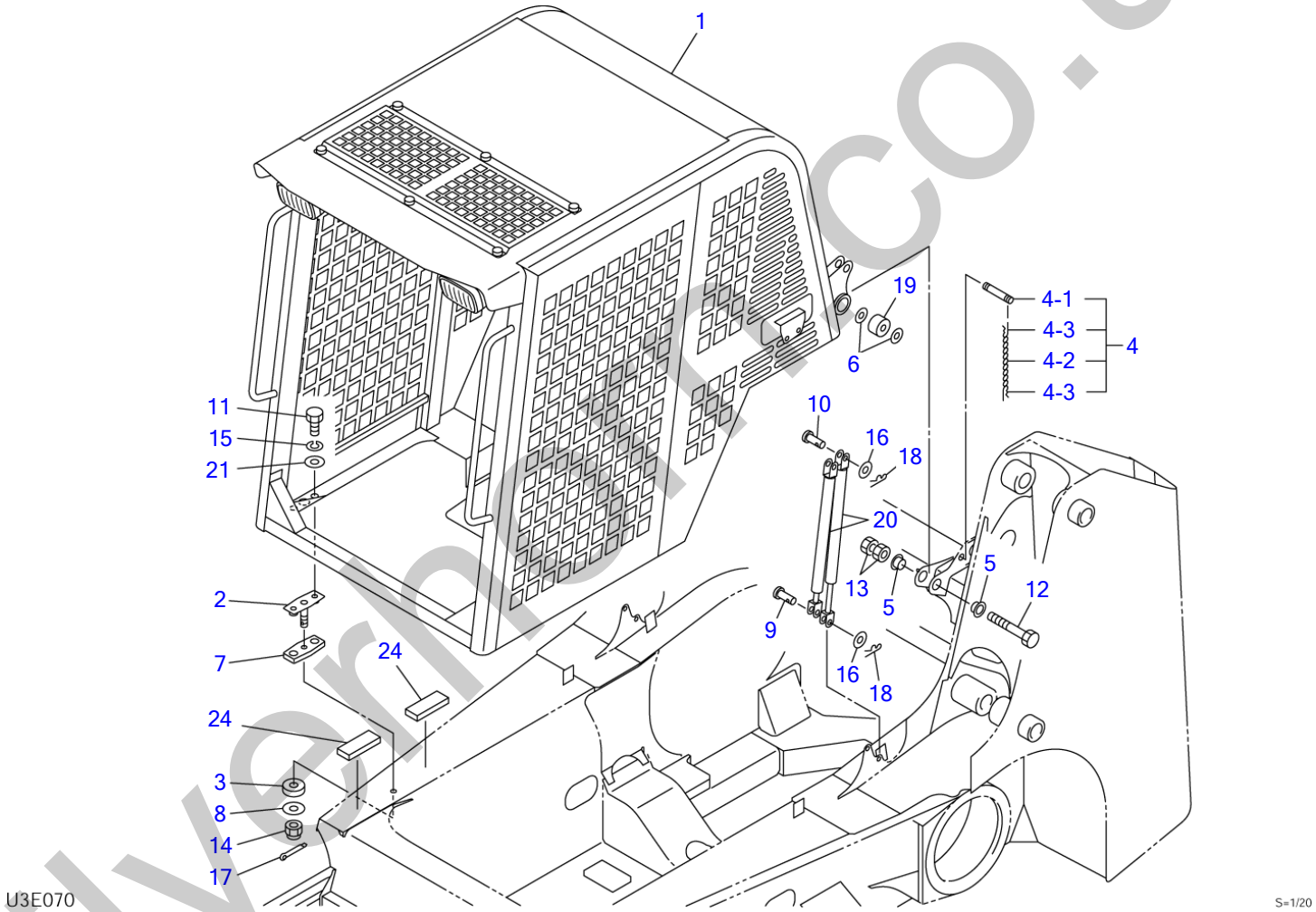

silvermoto.co.uk

CANOPY MOUNT

Item	Part number	Description	Q'ty	Chan.	Serial No.	Serv.	Remarks
		CANOPY MOUNT (for US)					
		CANOPY MOUNT (for EU)					
1	0881844300	CANOPY	1		225000001~225000020		for US
	0698401000	CANOPY	1		225000021~	M	for US
	0881844600	CANOPY	1				for EU
2	0881842030	BOLT ASSY	2				
3	0881842050	RUBBER, cushion	2				
4	0881841060	PIN ASSY	1				
4-1	0881841061	・PIN	1				
4-2	1652735886	・CHAIN	1				
4-3	1214000016	・PIN, snap	2				
5	0881840008	COLLAR	4				
6	0880840070	WASHER	4				
7	0881842040	RUBBER, cushion	2				
8	0003900044	WASHER	2				
9	0343503200	PIN	4				
10	0004010025	PIN	4				
11	1100041225	BOLT	4				
12	1100141610	BOLT	2				
13	1130040016	NUT	4				
14	1132080016	NUT	2				
15	1140020012	WASHER, spring	4				
16	1141110010	WASHER	8				
17	1210010432	PIN, split	2				
18	1214000008	PIN, snap	8				
19	1651005030	RUBBER, cushion	2				
20	1653900047	SPRING, gas	4				
21	0003600165	WASHER	4				
24	1654306008	SPONGE (for US)	4		225000001~225000020		sold by the meter
	1654306008	SPONGE (for EU)	4				sold by the meter
	U3e071						

silverhorn.co.uk

CANOPY (1/3) (for US; 225000001-225000020)

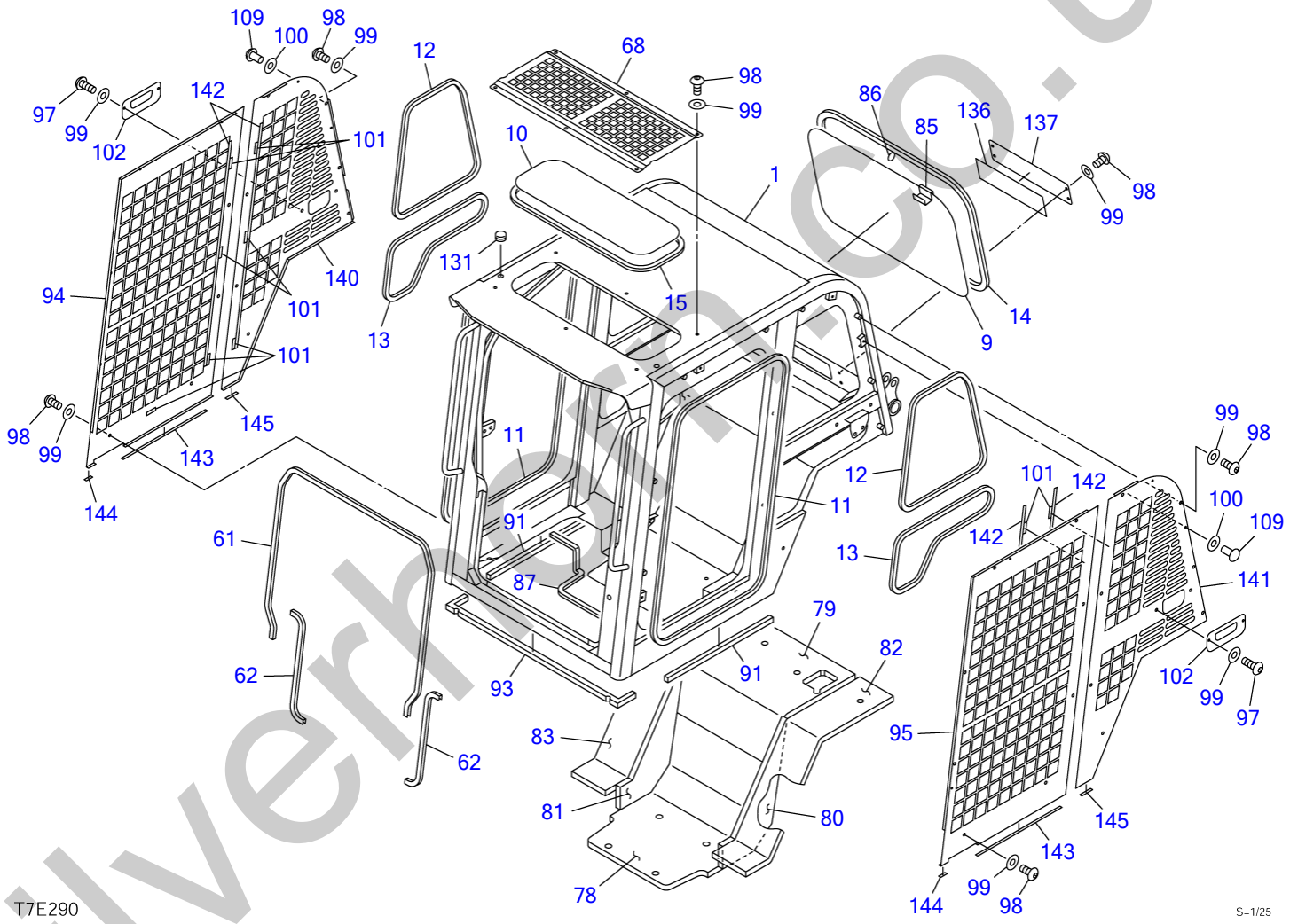

silverhern.co.uk

CANOPY (1/3) (for US; 225000001-225000020)

Item	Part number	Description	Q'ty	Chan.	Serial No.	Serv.	Remarks
0	0881844300	CANOPY ASSY	1				
1	0881861200	・CANOPY	1				
9	0880865103	・GLASS	1				
10	0880865104	・GLASS	1				
11	1653916320	・TRIM	2				sold by the meter
12	1653916175	・TRIM	2				sold by the meter
13	1653916147	・TRIM	2				sold by the meter
14	1654231273	・H-RUBBER	1				sold by the meter
15	1654231195	・H-RUBBER	1				sold by the meter
61	1654630240	・TRIM	1				sold by the meter
62	1654630060	・TRIM	2				sold by the meter
68	0880865129	・GUARD	1				
78	0881842010	・ABSORBENT, noise	1				
79	0881861104	・ABSORBENT, noise	1				
80	0880865134	・ABSORBENT, noise	1				
81	0880865135	・ABSORBENT, noise	1				
82	0881861105	・ABSORBENT, noise	1				
83	0881861106	・ABSORBENT, noise	1				
85	0880865138	・GRIP	1				
86	0880865139	・RING	1				
87	1654623130	・TRIM	1				sold by the meter
91	0880865140	・SEAL	2				
93	0880865141	・SEAL	1				
94	0881861107	・GUARD	1				
95	0881861108	・GUARD	1				
97	1120990820	・BOLT	4				
98	1120990816	・BOLT	40				
99	1654011705	・WASHER	44				
100	0880865144	・WASHER	8				
101	0880865145	・PLATE	14				
102	0881861109	・COVER	2				
109	0880865150	・RIVET	8				
131	1653303010	・CAP	2				
136	0880845301	・PACKING	1				
137	0880845302	・PLATE	1				
140	0881861110	・GUARD	1				
141	0881861111	・GUARD	1				
142	0880845303	・PLATE	4				
143	0880845304	・PLATE	2				
144	0880845305	・PLATE	2				
145	0880845306	・PLATE	2				
	T7e291						

silverthorn.co.uk

CANOPY (2/3) (for US; 225000001-225000020)

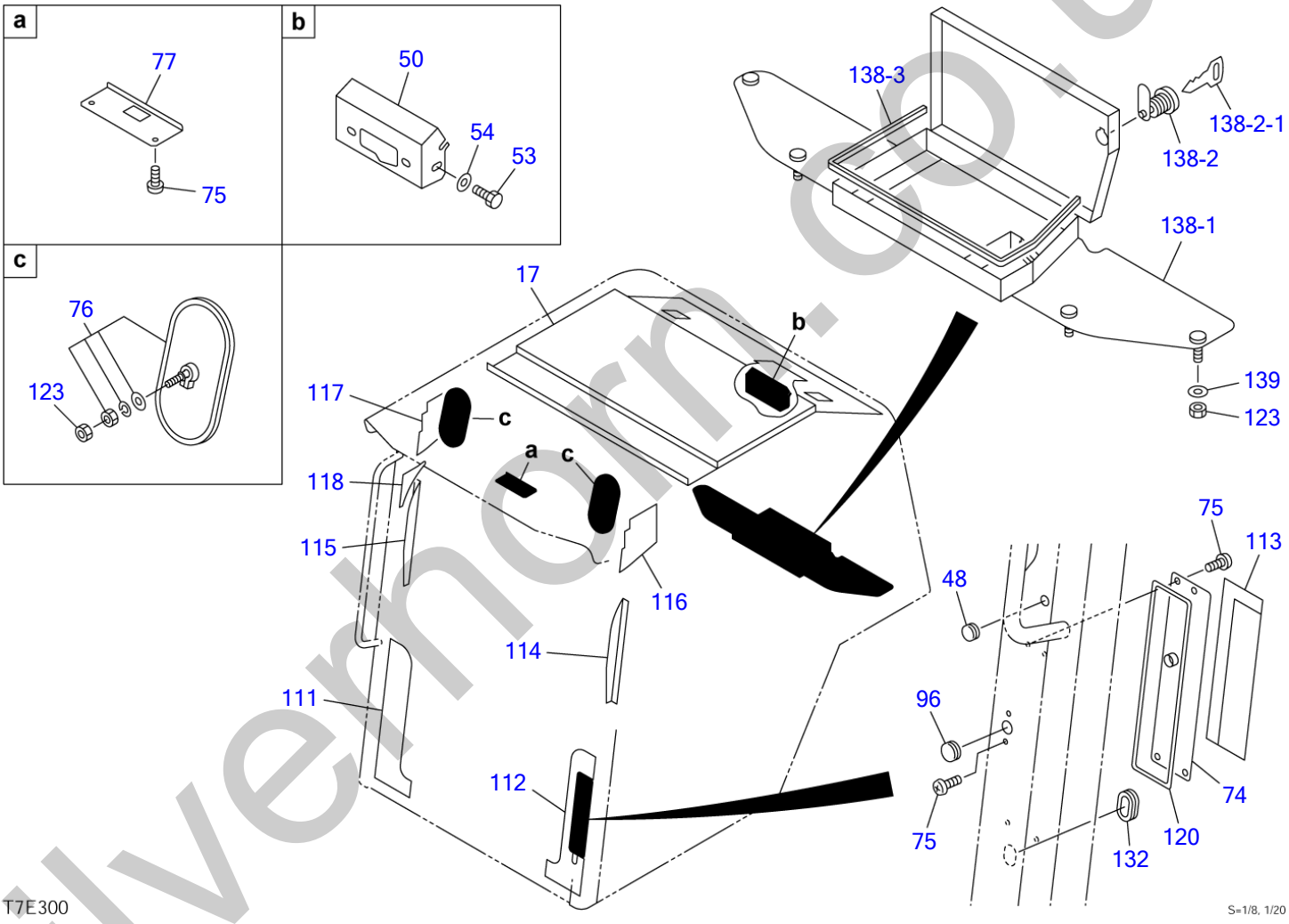

silvernorm.co.uk

CANOPY (2/3) (for US; 225000001-225000020)

Item	Part number	Description	Q'ty	Chan.	Serial No.	Serv.	Remarks
0	0881844300	CANOPY ASSY	1				
17	0881861103	・ABSORBENT, noise	1				
48	1654011703	・CAP	1				
50	0880865121	・BRACKET	1				
53	1100090820	・BOLT	3				
54	1654011705	・WASHER	3				
74	0880865130	・COVER	1				
75	1150420512	・SCREW	8				
76	0880865131	・MIRROR, rearview	2				
77	0880865132	・COVER	1				
96	1654011704	・CAP	1				
111	0880865151	・ABSORBENT, noise	1				
112	0880865152	・ABSORBENT, noise	1				
113	0880865153	・ABSORBENT, noise	1				
114	0880865154	・ABSORBENT, noise	1				
115	0880865155	・ABSORBENT, noise	1				
116	0880865156	・ABSORBENT, noise	1				
117	0880865157	・ABSORBENT, noise	1				
118	0880865158	・ABSORBENT, noise	1				
120	0880865159	・SEAL	1				
123	1130040008	・NUT	6				
132	1654011701	・GROMMET	1				
138	0880845320	・CASE ASSY	1				
138-1	0880845321	・・CASE	1				
138-2	1653601395	・・LOCK	1				
138-2-1	1700100019	・・KEY	1				
138-3	1653916058	・・TRIM	1				sold by the meter
139	1141550008	・WASHER	4				
	T7e301						

silverhorn.co.uk

CANOPY (3/3) (for US; 225000001-225000020)

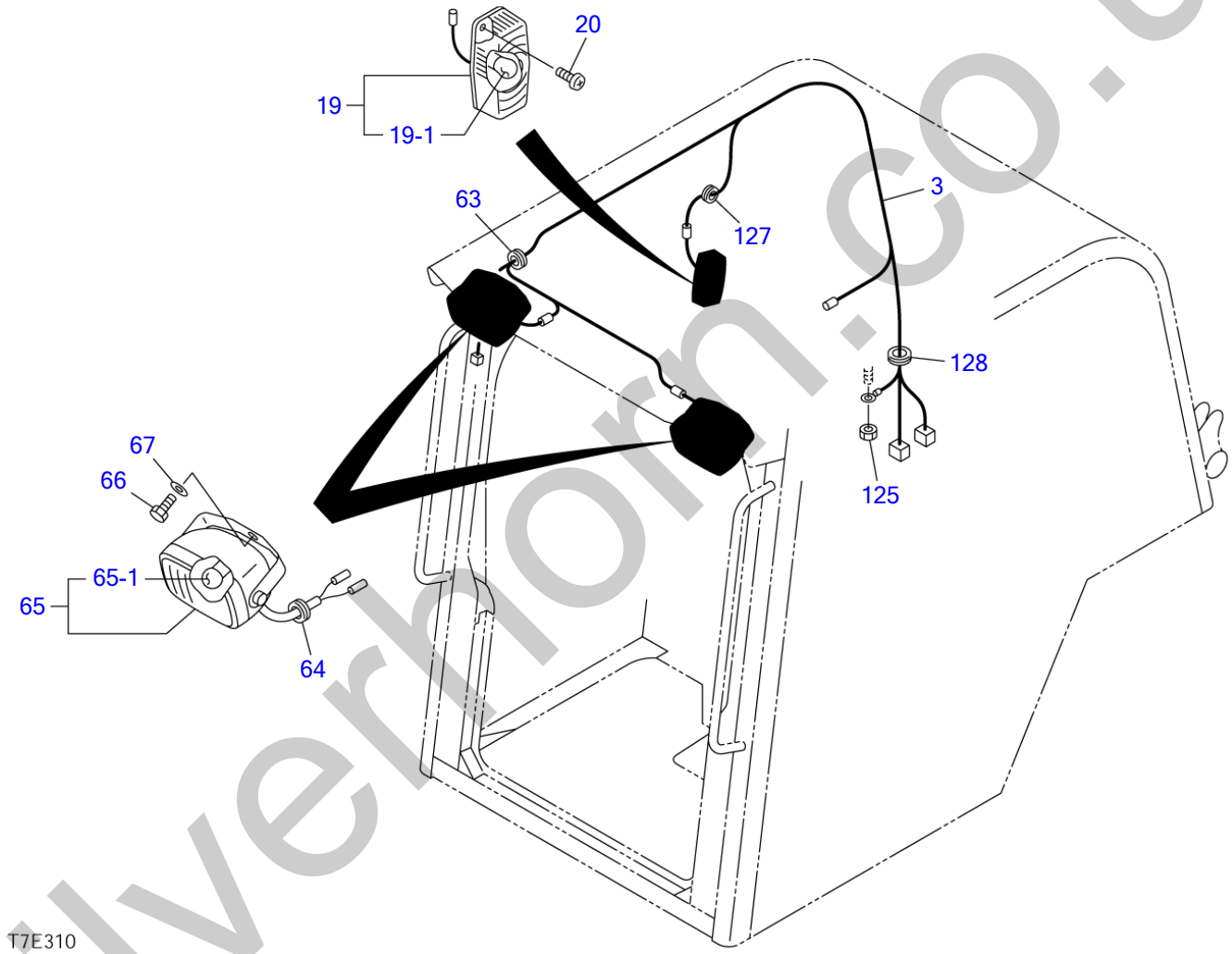

silverhorn.co.uk

CANOPY (3/3) (for US; 225000001-225000020)

Item	Part number	Description	Q'ty	Chan.	Serial No.	Serv.	Remarks
0	0881844300	CANOPY ASSY	1				
3	0881861400	・HARNESS, wiring	1				
19	1703001700	・LAMP, room	1				
19-1	1703001701	・・BULB	1				
20	1150410412	・SCREW	2				
63	1652042030	・GROMMET	1				
64	1652000602	・GROMMET	2				
65	1703006600	・LAMP, ASSY	2				
65-1	1703006605	・・BULB	1				
66	1100041020	・BOLT	2				
67	1141110010	・WASHER	2				
125	1130040010	・NUT	1				
127	1654011700	・GROMMET	1				
128	1654011702	・GROMMET	1				
	T7e311						

silverhorn.co.uk

CANOPY (1/3) (for US; 225000021-)

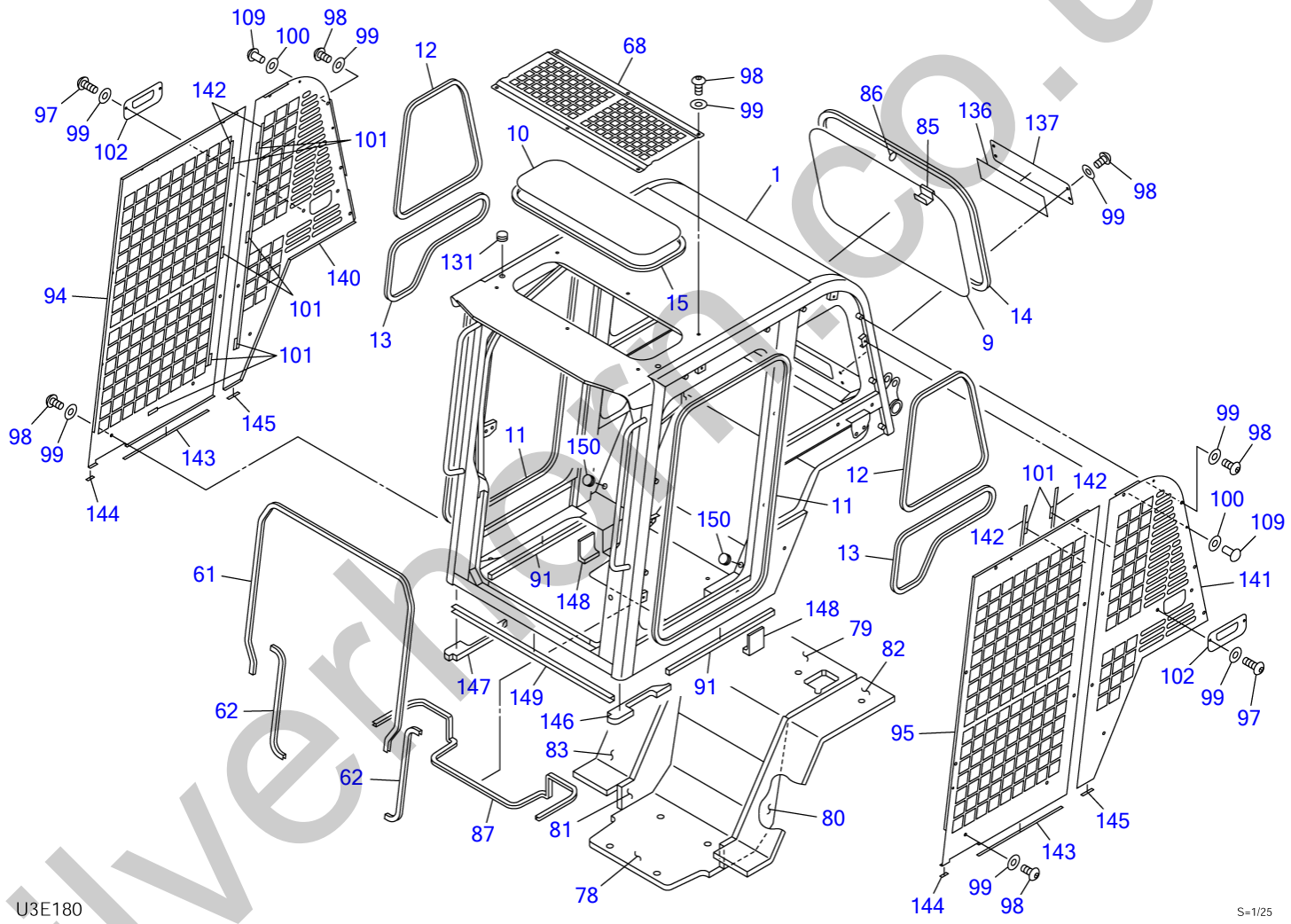

silverhorn.co.uk

CANOPY (1/3) (for US; 225000021-)

Item	Part number	Description	Q'ty	Chan.	Serial No.	Serv.	Remarks
0	0698401000	CANOPY ASSY	1			M	
1	0698401100	・CANOPY	1			M	
9	0880865103	・GLASS	1				
10	0880865104	・GLASS	1				
11	1653916320	・TRIM	2				sold by the meter
12	1653918175	・TRIM	2			M	sold by the meter
13	1653916147	・TRIM	2				sold by the meter
14	1654231273	・H-RUBBER	1				sold by the meter
15	1654231195	・H-RUBBER	1				sold by the meter
61	1654630240	・TRIM	1				sold by the meter
62	1654630060	・TRIM	2				sold by the meter
68	0880865129	・GUARD	1				
78	0881842010	・ABSORBENT, noise	1				
79	0881861104	・ABSORBENT, noise	1				
80	0880865134	・ABSORBENT, noise	1				
81	0880865135	・ABSORBENT, noise	1				
82	0881861105	・ABSORBENT, noise	1				
83	0698601003	・ABSORBENT, noise	1			M	
85	0880865138	・GRIP	1				
86	0880865139	・RING	1				
87	1654639203	・TRIM	1			M	sold by the meter
91	0880865140	・SEAL	2				
94	0881861107	・GUARD	1				
95	0881861108	・GUARD	1				
97	1120990820	・BOLT	4				
98	1120990816	・BOLT	40				
99	1654011705	・WASHER	44				
100	0880865144	・WASHER	8				
101	0880865145	・PLATE	14				
102	0881861109	・COVER	2				
109	0880865150	・RIVET	8				
131	1653303010	・CAP	2				
136	0880845301	・PACKING	1				
137	0880845302	・PLATE	1				
140	0881861110	・GUARD	1				
141	0881861111	・GUARD	1				
142	0880845303	・PLATE	4				
143	0880845304	・PLATE	2				
144	0880845305	・PLATE	2				
145	0880845306	・PLATE	2				
146	0668600240	・SPONGE	1			M	
147	0668600250	・SPONGE	1			M	
148	0668601009	・SPONGE	1			M	
149	1654605088	・RUBBER	1				sold by the meter
150	1654011966	・CAP	2			M	
	U3e180						

silverthorn.co.uk

CANOPY (2/3) (for US; 225000021-)

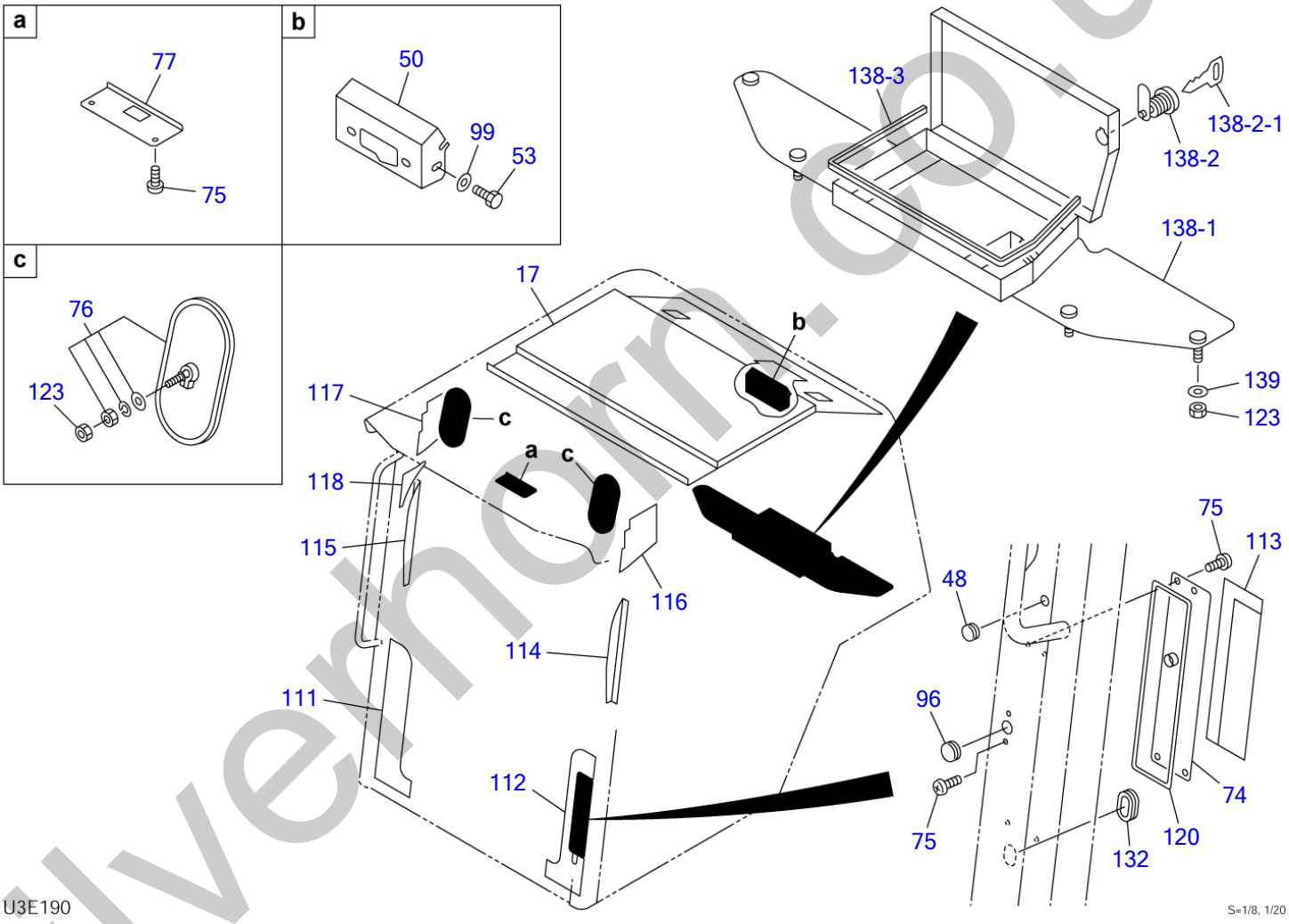

silvernorm.co.uk

CANOPY (2/3) (for US; 225000021-)

Item	Part number	Description	Q'ty	Chan.	Serial No.	Serv.	Remarks
0	0698401000	CANOPY ASSY	1			M	
17	0698601017	・ABSORBENT, noise	1			M	
48	1654011703	・CAP	1				
50	0880865121	・BRACKET	1				
53	1100090820	・BOLT	3				
74	0880865130	・COVER	1				
75	1150420512	・SCREW	8				
76	0880865131	・MIRROR, rearview	2				
77	0880865132	・COVER	1				
96	1654011704	・CAP	1				
99	1654011705	・WASHER	3				
111	0880865151	・ABSORBENT, noise	1				
112	0880865152	・ABSORBENT, noise	1				
113	0880865153	・ABSORBENT, noise	1				
114	0880865154	・ABSORBENT, noise	1				
115	0880865155	・ABSORBENT, noise	1				
116	0880865156	・ABSORBENT, noise	1				
117	0880865157	・ABSORBENT, noise	1				
118	0880865158	・ABSORBENT, noise	1				
120	0880865159	・SEAL	1				
123	1130040008	・NUT	6				
132	1654011701	・GROMMET	1				
138	0880845320	・CASE ASSY	1				
138-1	0880845321	・・CASE	1				
138-2	1653601395	・・LOCK	1				
138-2-1	1700100019	・・KEY	1				
138-3	1653916058	・・TRIM	1				sold by the meter
139	1141550008	・WASHER	4				
	U3e190						

silverhorn.co.uk

CANOPY (3/3) (for US; 225000021-)

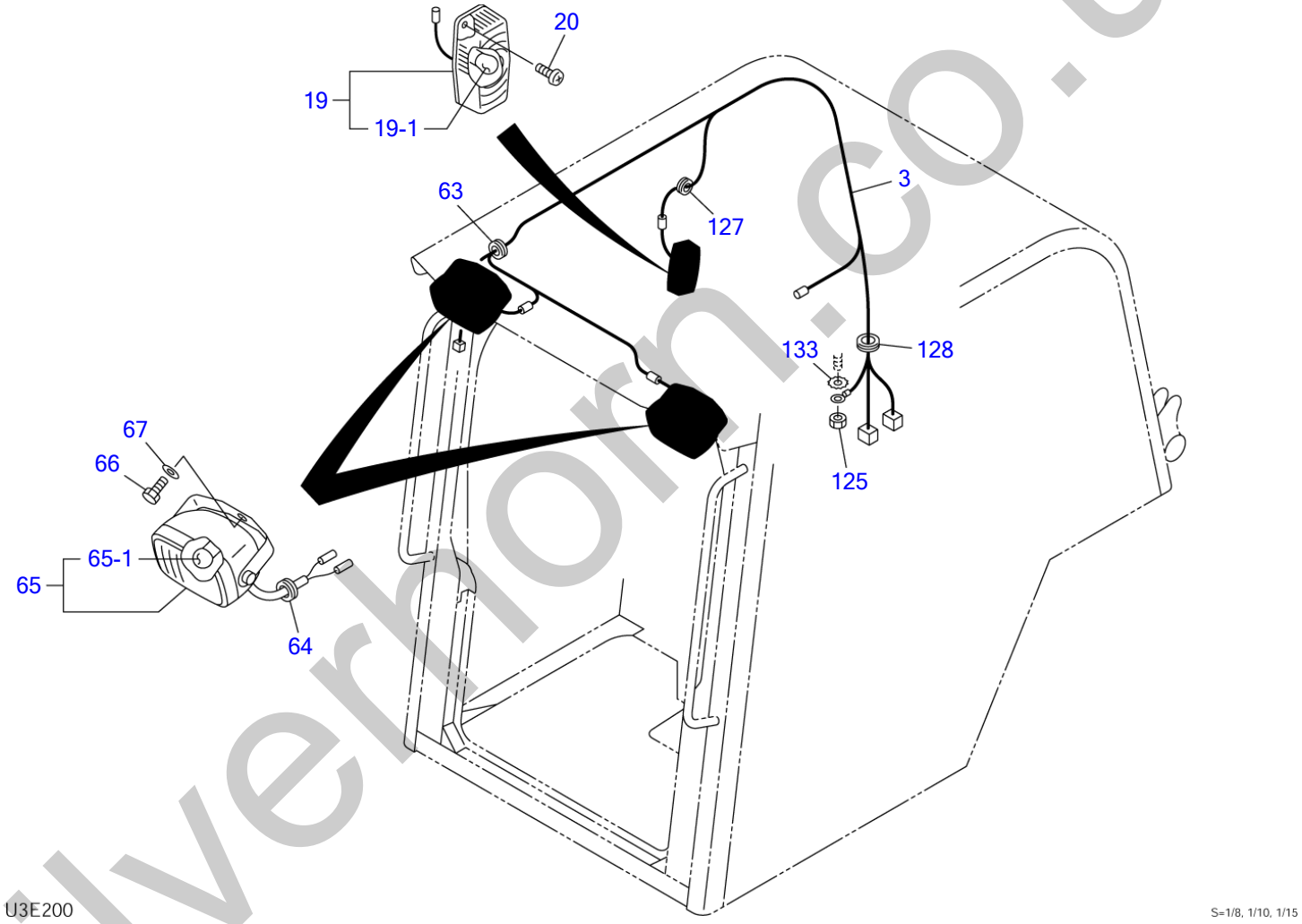

silverhorn.co.uk

CANOPY (3/3) (for US; 225000021-)

Item	Part number	Description	Q'ty	Chan.	Serial No.	Serv.	Remarks
0	0698401000	CANOPY ASSY	1			M	
3	0881861400	・HARNESS, wiring	1				
19	1703001700	・LAMP, room	1				
19-1	1703001701	・・BULB	1				
20	1150410412	・SCREW	2				
63	1652042030	・GROMMET	1				
64	1652000602	・GROMMET	2				
65	1703006600	・LAMP, ASSY	2				
65-1	1703006605	・・BULB	1				
66	1100041020	・BOLT	2				
67	1141110010	・WASHER	2				
125	1130040010	・NUT	1				
127	1654011700	・GROMMET	1				
128	1654011702	・GROMMET	1				
133	1140330010	・WASHER	1				
	U3e200						

silverhorn.co.uk

CANOPY (1/2) (for GEHL & MUSTANG)

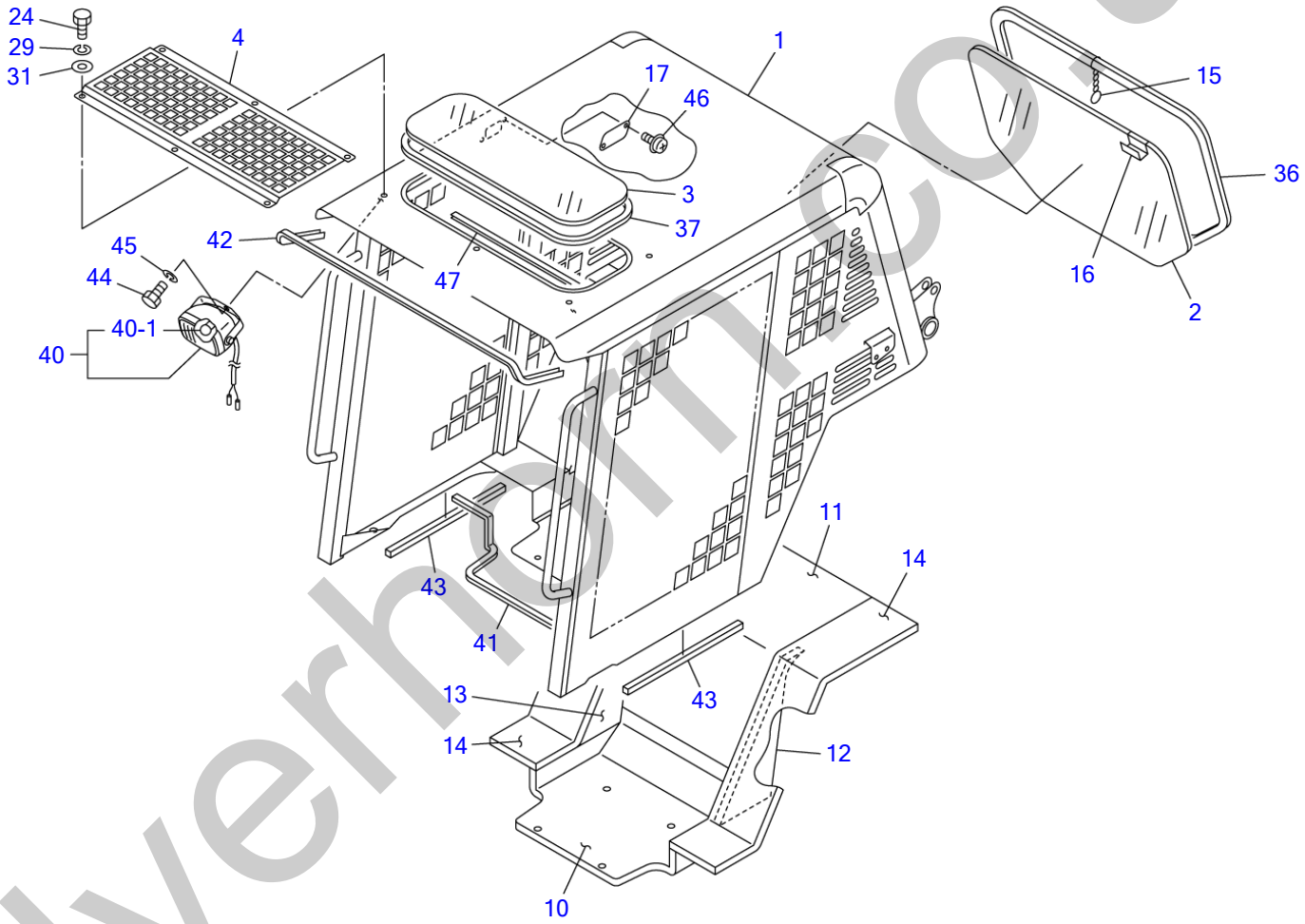

silverhorse.co.uk

CANOPY (1/2) (for GEHL & MUSTANG)

Item	Part number	Description	Q'ty	Chan.	Serial No.	Serv.	Remarks
0	0881845600	CANOPY ASSY	1				
1	0881845700	・CANOPY	1				
2	0881842002	・GLASS	1				
3	0880844003	・GLASS	1				
4	0880844004	・PLATE	1				
10	0881842010	・ABSORBENT, noise	1				
11	0881843011	・ABSORBENT, noise	1				
12	0881842012	・ABSORBENT, noise	1				
13	0881842013	・ABSORBENT, noise	1				
14	0881841014	・ABSORBENT, noise	2				
15	0880841040	・RING, pull	1				
16	0880841080	・HANDLE	1				
17	0881842017	・PLATE	1				
24	1100040816	・BOLT	6				
29	1140020008	・WASHER, spring	6				
31	1141110008	・WASHER	6				
36	1654252253	・H-RUBBER	1				sold by the meter
37	1654252200	・H-RUBBER	1				sold by the meter
40	1703006600	・LAMP ASSY	2				
40-1	1703006605	・・BULB	1				12V, 55W
41	1654623120	・TRIM	1				sold by the meter
42	1654601153	・TRIM	1				sold by the meter
43	1654350057	・SPONGE	2				sold by the meter
44	1100041020	・BOLT	2				
45	1140020010	・WASHER, spring	2				
46	1150420412	・SCREW	2				
47	1654601060	・TRIM	1				sold by the meter
	U3e110						

silverhorn.co.uk

CANOPY (1/3) (for EU)

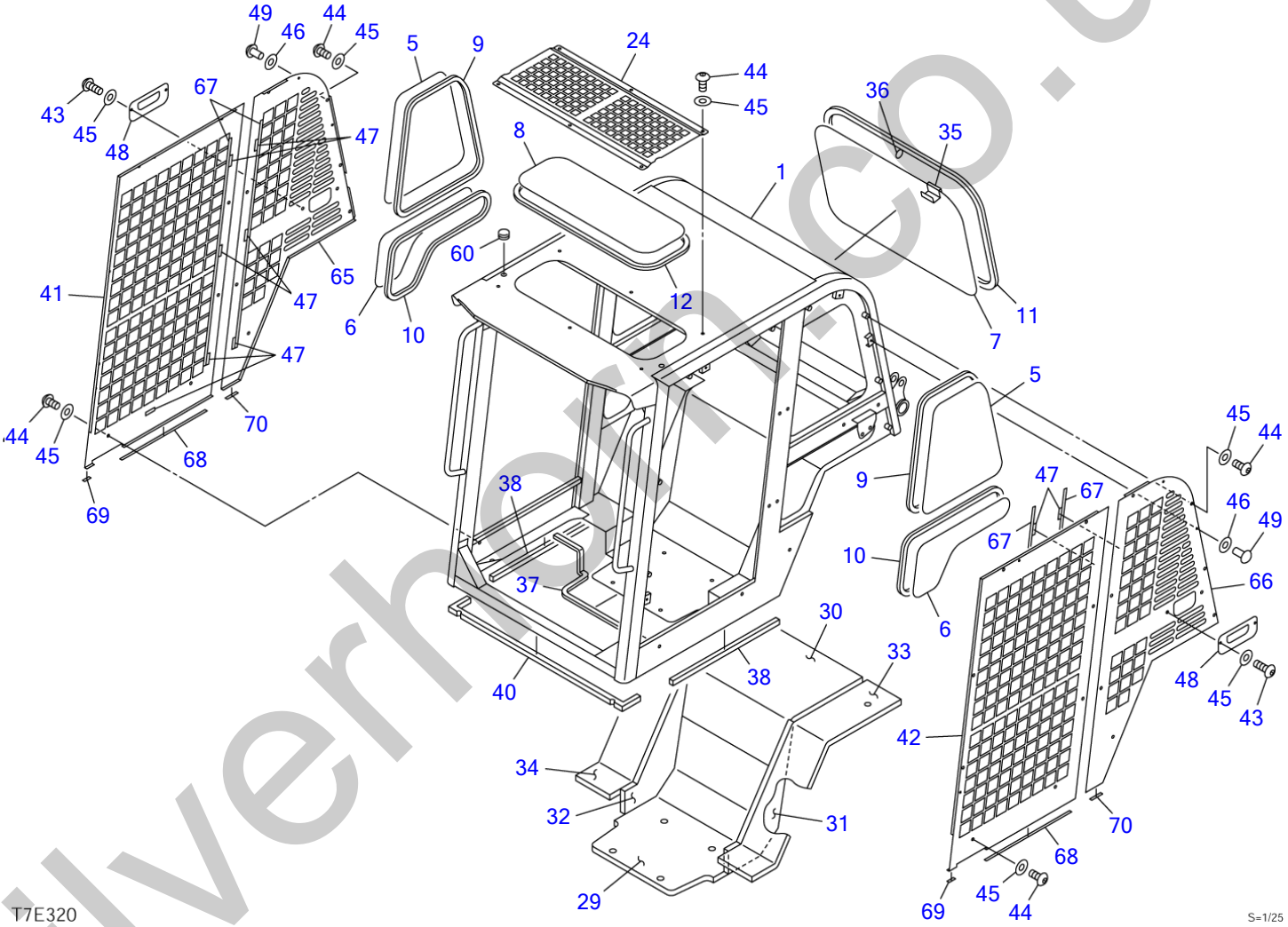

silverhorn.co.uk

CANOPY (1/3) (for EU)

Item	Part number	Description	Q'ty	Chan.	Serial No.	Serv.	Remarks
0	0881844600	CANOPY ASSY	1				
1	0881844700	・CANOPY	1				
5	0881861101	・GLASS	2				
6	0881861102	・GLASS	2				
7	0880865103	・GLASS	1				
8	0880865104	・GLASS	1				
9	1654231175	・H-RUBBER	2				sold by the meter
10	1654231147	・H-RUBBER	2				sold by the meter
11	1654231273	・H-RUBBER	1				sold by the meter
12	1654231195	・H-RUBBER	1				sold by the meter
24	0880865129	・GUARD	1				
29	0881842010	・ABSORBENT, noise	1				
30	0881845605	・ABSORBENT, noise	1				
31	0880865134	・ABSORBENT, noise	1				
32	0880865135	・ABSORBENT, noise	1				
33	0881861105	・ABSORBENT, noise	1				
34	0881861106	・ABSORBENT, noise	1				
35	0880865138	・GRIP	1				
36	0880865139	・RING	1				
37	1654623130	・TRIM	1				sold by the meter
38	0880865140	・SEAL	2				
40	0880865141	・SEAL	1				
41	0881861107	・GUARD	1				
42	0881861108	・GUARD	1				
43	1120990820	・BOLT	4				
44	1120990816	・BOLT	36				
45	1654011705	・WASHER	40				
46	0880865144	・WASHER	8				
47	0880865145	・PLATE	14				
48	0881861109	・COVER	2				
49	0880865150	・RIVET	8				
60	1653303010	・SCREW, cap	2				
65	0881861110	・GUARD	1				
66	0881861111	・GUARD	1				
67	0880845303	・PLATE	4				
68	0880845304	・PLATE	2				
69	0880845305	・PLATE	2				
70	0880845306	・PLATE	2				
	T7e321						

silverhorn.co.uk

CANOPY (2/3) (for EU)

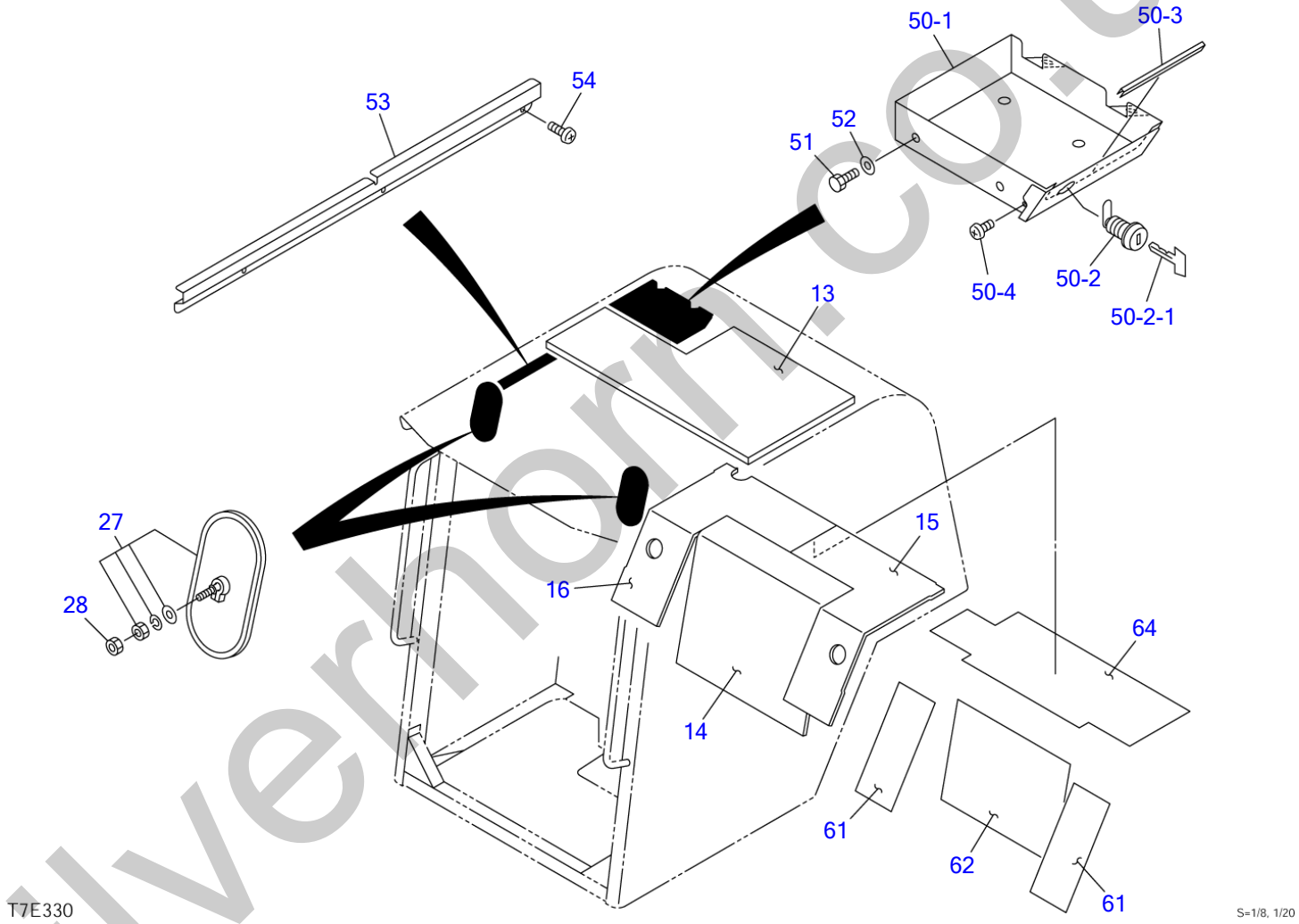

silverhorn.co.uk

CANOPY (2/3) (for EU)

Item	Part number	Description	Q'ty	Chan.	Serial No.	Serv.	Remarks
0	0881844600	CANOPY ASSY	1				
13	0881844601	・ABSORBENT, noise	1				
14	0881844602	・ABSORBENT, noise	1				
15	0881844603	・ABSORBENT, noise	1				
16	0881844604	・ABSORBENT, noise	1				
27	0880865131	・MIRROR, rearview	2				
28	1130090008	・NUT	2				
50	0880845680	・CASE ASSY	1				
50-1	0880845681	・・CASE	1				
50-2	1653601395	・・LOCK	1				
50-2-1	1700100019	・・KEY	1				
50-3	1654520014	・・TRIM	1				sold by the meter
50-4	1150420610	・・SCREW	1				
51	1100090820	・BOLT	4				
52	1654011705	・WASHER	4				
53	0880845605	・COVER	1				
54	1150420512	・SCREW	3				
61	0881843050	・ABSORBENT, noise	2				
62	0881844606	・ABSORBENT, noise	1				
64	0881844607	・ABSORBENT, noise	1				
	T7e331						

silverhorn.co.uk

CANOPY (2/2) (for GEHL & MUSTANG)

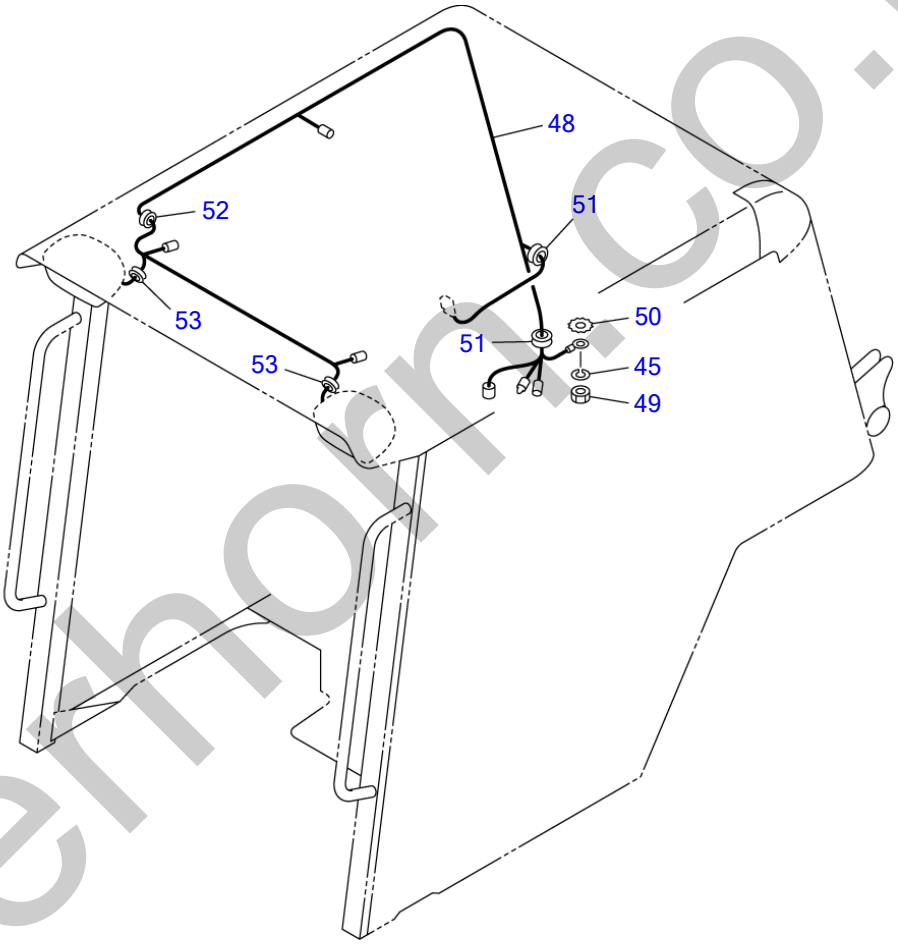

T7E550

S=1/15

silverhorn.co.uk

CANOPY (2/2) (for GEHL & MUSTANG)

Item	Part number	Description	Q'ty	Chan.	Serial No.	Serv.	Remarks
0	0881845600	CANOPY ASSY	1				
45	1140020010	・WASHER, spring	1				
48	0881842060	・HARNESS, wiring	1				
49	1130040010	・NUT	1				
50	1140330010	・WASHER	1				
51	1652052800	・GROMMET	3				
52	1652053600	・GROMMET	1				
53	1652040930	・GROMMET	2				
	U3e120						

silverhorn.co.uk

CANOPY (3/3) (for EU)

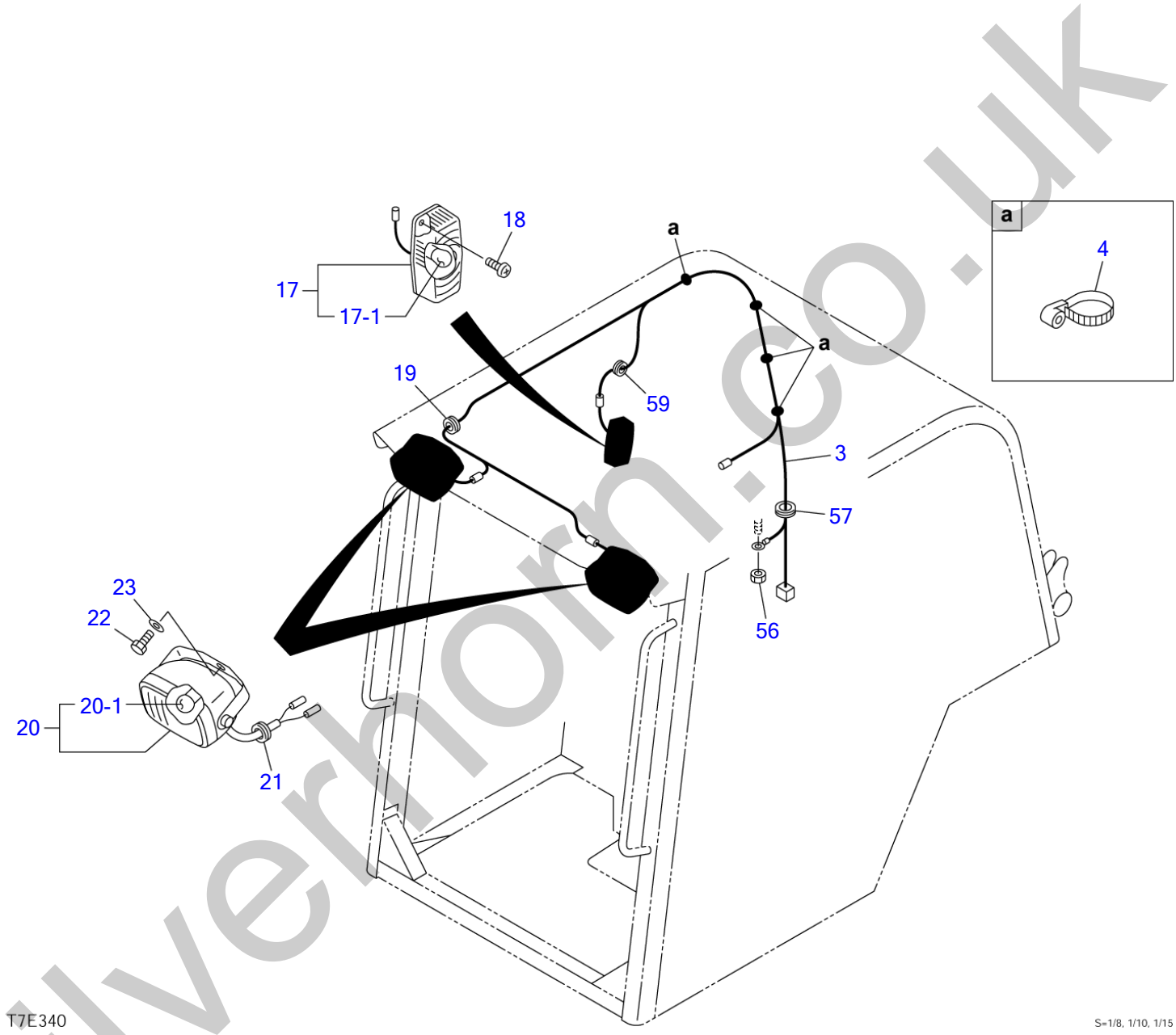

silverhorn.co.uk

CANOPY (3/3) (for EU)

Item	Part number	Description	Q'ty	Chan.	Serial No.	Serv.	Remarks
0	0881844600	CANOPY ASSY	1				
3	0881844670	・HARNESS, wiring	1				
4	1652221050	・CLIP	4				
17	1703001700	・LAMP, room	1				
17-1	1703001701	・・BULB	1				
18	1150410412	・SCREW	2				
19	1652042030	・GROMMET	1				
20	1703006600	・LAMP, ASSY	2				
20-1	1703006605	・・BULB	1				
21	1652000602	・GROMMET	2				
22	1100041020	・BOLT	2				
23	1141110010	・WASHER	2				
56	1130040010	・NUT	1				
57	1654011702	・GROMMET	1				
59	1654011700	・GROMMET	1				
	T7e341						

silverhorn.co.uk

CANOPY MOUNT (for GEHL & MUSTANG)

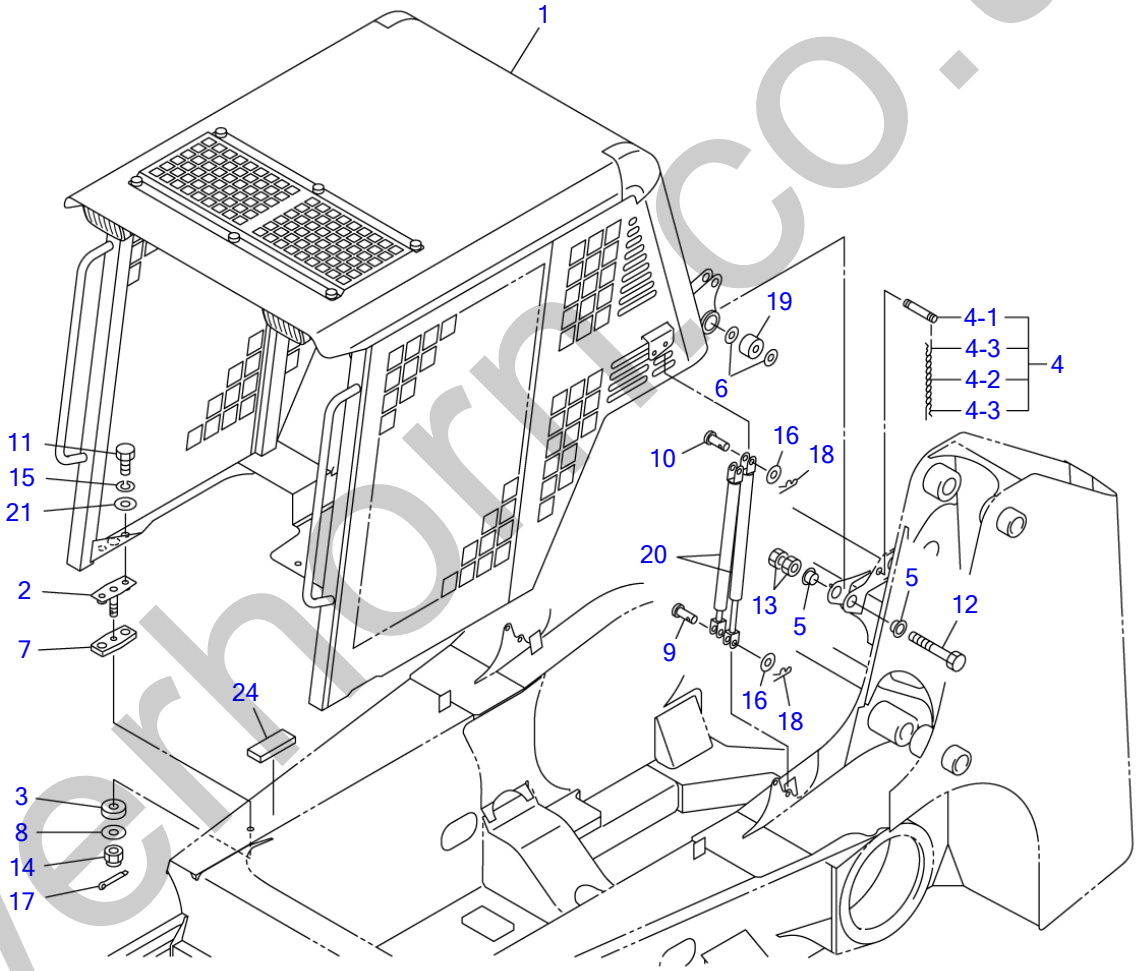

U3E100

S=1/20

silverhorn.co.uk

CANOPY MOUNT (for GEHL & MUSTANG)

Item	Part number	Description	Q'ty	Chan.	Serial No.	Serv.	Remarks
		CANOPY MOUNT (for GEHL & MUSTANG)					
1	0881845600	CANOPY ASSY	1				
2	0881842030	BOLT ASSY	2				
3	0881842050	RUBBER, cushion	2				
4	0881841060	PIN ASSY	1				
4-1	0881841061	・PIN	1				
4-2	1652735886	・CHAIN	1				
4-3	1214000016	・PIN, snap	2				
5	0881840008	COLLAR	4				
6	0880840070	WASHER	4				
7	0881842040	RUBBER, cushion	2				
8	0003900044	WASHER	2				
9	0343503200	PIN	4				
10	0004010025	PIN	4				
11	1100041225	BOLT	4				
12	1100141610	BOLT	2				
13	1130040016	NUT	4				
14	1132080016	NUT	2				
15	1140020012	WASHER, spring	4				
16	1141110010	WASHER	8				
17	1210010432	PIN, split	2				
18	1214000008	PIN, snap	8				
19	1651005030	RUBBER, cushion	2				
20	1653900043	SPRING, gas	4				
21	0003600165	WASHER	4				
24	1654306008	SPONGE	2				sold by the meter
	U3e100						

silverhorn.co.uk

CANOPY (1/2) (for GEHL & MUSTANG)

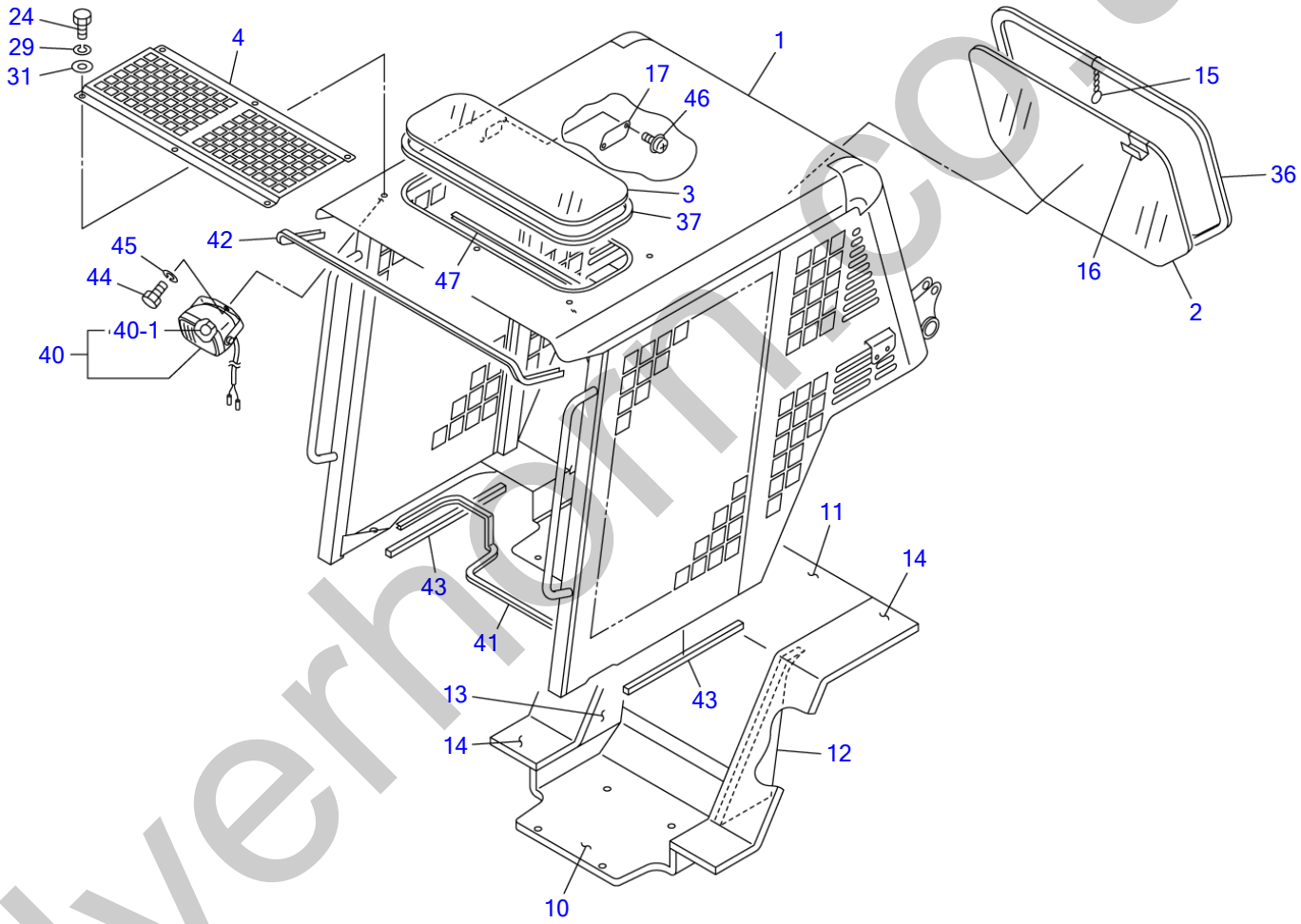

silverhorse.co.uk

CANOPY (1/2) (for GEHL & MUSTANG)

Item	Part number	Description	Q'ty	Chan.	Serial No.	Serv.	Remarks
0	0881845600	CANOPY ASSY	1				
1	0881845700	・CANOPY	1				
2	0881842002	・GLASS	1				
3	0880844003	・GLASS	1				
4	0880844004	・PLATE	1				
10	0881842010	・ABSORBENT, noise	1				
11	0881843011	・ABSORBENT, noise	1				
12	0881842012	・ABSORBENT, noise	1				
13	0881842013	・ABSORBENT, noise	1				
14	0881841014	・ABSORBENT, noise	2				
15	0880841040	・RING, pull	1				
16	0880841080	・HANDLE	1				
17	0881842017	・PLATE	1				
24	1100040816	・BOLT	6				
29	1140020008	・WASHER, spring	6				
31	1141110008	・WASHER	6				
36	1654252253	・H-RUBBER	1				sold by the meter
37	1654252200	・H-RUBBER	1				sold by the meter
40	1703006600	・LAMP ASSY	2				
40-1	1703006605	・・BULB	1				12V, 55W
41	1654639134	・TRIM	1			M	sold by the meter
42	1654601153	・TRIM	1				sold by the meter
43	1654350057	・SPONGE	2				sold by the meter
44	1100041020	・BOLT	2				
45	1140020010	・WASHER, spring	2				
46	1150420412	・SCREW	2				
47	1654601060	・TRIM	1				sold by the meter
	U3e111						

silverhorn.co.uk

CANOPY (2/2) (for GEHL & MUSTANG)

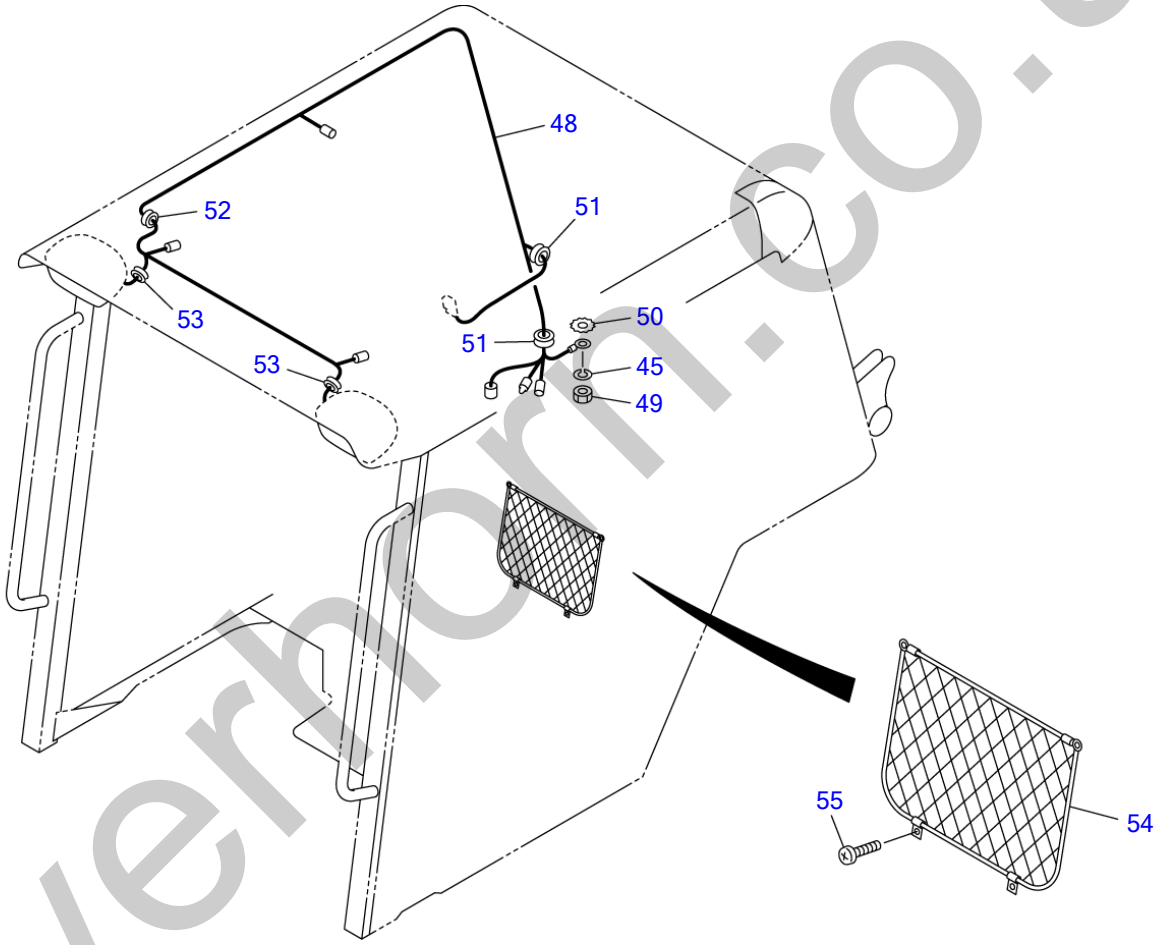

U3E120

S=1/8,1/15

silverhorn.co.uk

CANOPY (2/2) (for GEHL & MUSTANG)

Item	Part number	Description	Q'ty	Chan.	Serial No.	Serv.	Remarks
0	0881845600	CANOPY ASSY	1				
45	1140020010	・WASHER, spring	1				
48	0881842060	・HARNESS, wiring	1				
49	1130040010	・NUT	1				
50	1140330010	・WASHER	1				
51	1652052800	・GROMMET	3				
52	1652053600	・GROMMET	1				
53	1652040930	・GROMMET	2				
54	1653691350	・POCKET	1			M	
55	1150010514	・SCREW	4			M	
	U3e121						

silverhorn.co.uk

CAB MOUNT

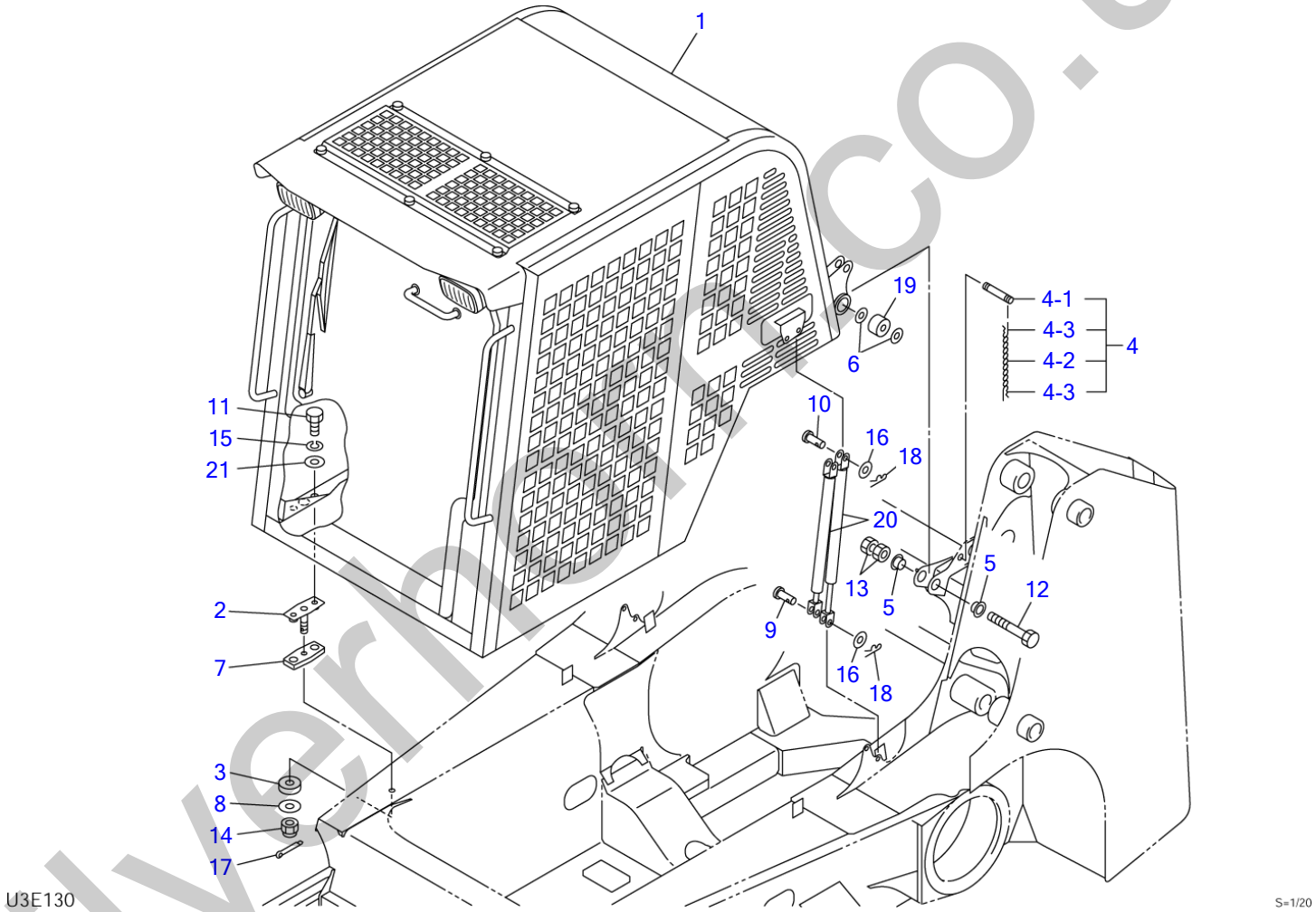

silvermoto.co.uk

CAB MOUNT

Item	Part number	Description	Q'ty	Chan.	Serial No.	Serv.	Remarks
		CAB MOUNT					
		CAB MOUNT (for EU)					
1	0698601000	CAB	1				
	0698602000	CAB (for EU)	1				
2	0881842030	BOLT ASSY	2				
3	0881842050	RUBBER, cushion	2				
4	0881841060	PIN ASSY	1				
4-1	0881841061	・PIN	1				
4-2	1652735886	・CHAIN	1				
4-3	1214000016	・PIN, snap	2				
5	0881840008	COLLAR	4				
6	0880840070	WASHER	4				
7	0881842040	RUBBER, cushion	2				
8	0003900044	WASHER	2				
9	0343503200	PIN	4				
10	0004010025	PIN	4				
11	1100041225	BOLT	4				
12	1100141610	BOLT	2				
13	1130040016	NUT	4				
14	1132080016	NUT	2				
15	1140020012	WASHER, spring	4				
16	1141110010	WASHER	8				
17	1210010432	PIN, split	2				
18	1214000008	PIN, snap	8				
19	1651005030	RUBBER, cushion	2				
20	1653900059	SPRING, gas	4				
21	0003600165	WASHER	4				
	U3e130						

silverhorn.co.uk

AIR CONDITIONER (1/5) (compressor)

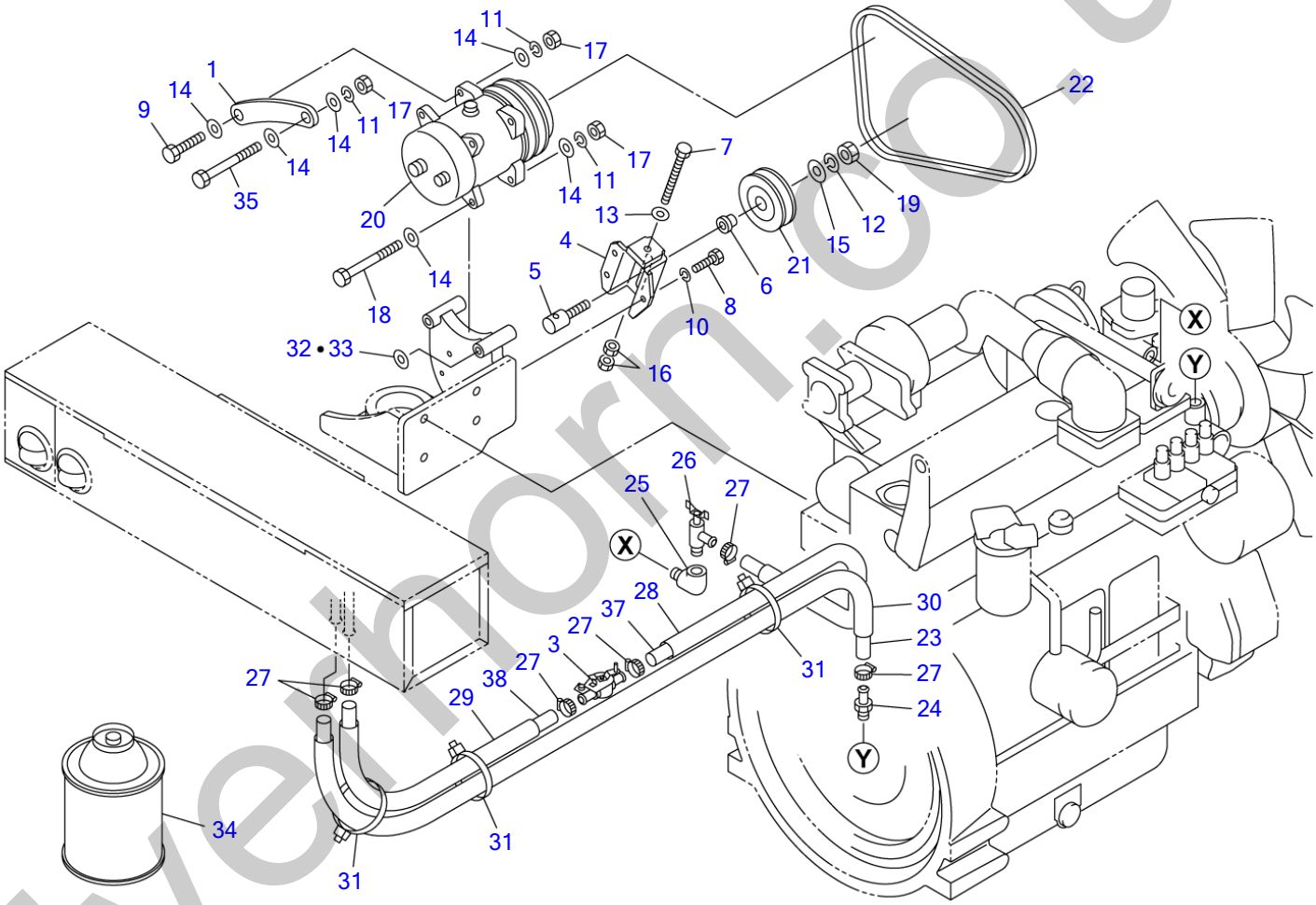

silverhorn.co.uk

AIR CONDITIONER (1/5) (compressor)

Item	Part number	Description	Q'ty	Chan.	Serial No.	Serv.	Remarks
0	0694601100	COMPRESSOR ASSY	1			M	
1	0694600120	・SUPPORT	1			M	
3	1911506008	・VALVE	1				
4	0564618790	・BRACKET	1				
5	0564619210	・SHAFT	1				
6	0564619240	・COLLAR	1				
7	1100440810	・BOLT	1				
8	1100040825	・BOLT	3				
9	1100041035	・BOLT	1				
10	1140020008	・WASHER, spring	3				
11	1140020010	・WASHER, spring	4				
12	1140020012	・WASHER, spring	1				
13	1141110008	・WASHER	1				
14	1141110010	・WASHER	8				
15	1141550012	・WASHER	1				
16	1130040008	・NUT	2				
17	1130040010	・NUT	4				
18	1100141005	・BOLT	2				
19	1130040012	・NUT	1				
20	1911506010	・COMPRESSOR	1				
21	1911505700	・PULLEY	1				
22	1911509911	・V-BELT	1			M	
23	1911511820	・HOSE	1			M	sold by the meter
24	0007224009	・ADAPTOR	1				
25	1501986526	・ELBOW	1				
26	1911502100	・VALVE	1			M	
27	1911500500	・BAND	6				
28	1531325035	・PROTECTOR	1				sold by the meter
29	1531325055	・PROTECTOR	1				sold by the meter
30	1531325110	・PROTECTOR	1				sold by the meter
31	1652201007	・BAND	3				
32	0003600222	・SHIM	AR				t=0.2mm
33	0003600223	・SHIM	AR				t=0.3mm
34	1919055000	・GAS, coolant	8				100g
35	1100041095	・BOLT	1			M	
37	1911501845	・HOSE	1			M	sold by the meter
38	1911501865	・HOSE	1			M	sold by the meter
	U3e150						

silverhorn.co.uk

CAB (1/6)

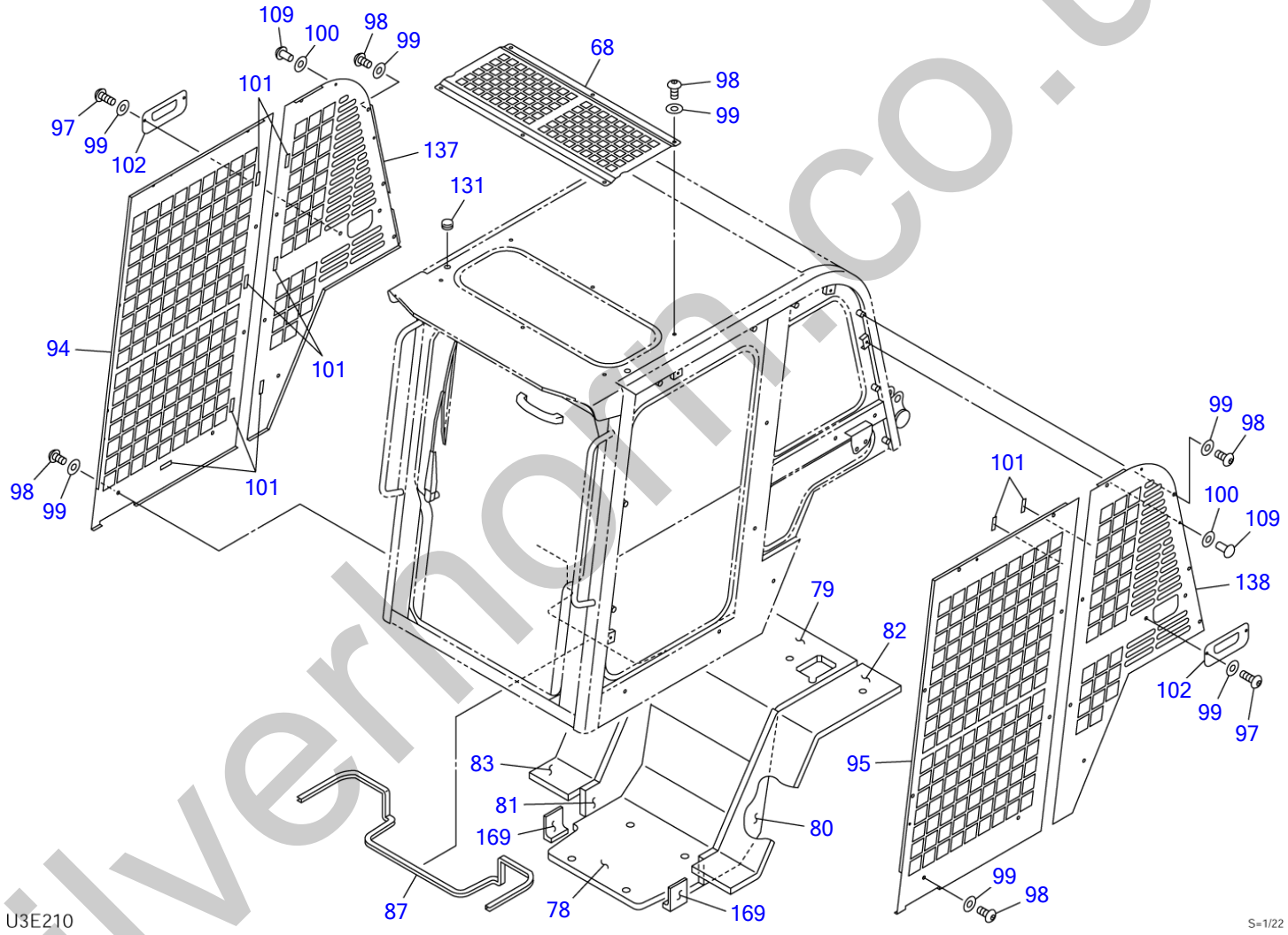

silverhorn.co.uk

CAB (1/6)

Item	Part number	Description	Q'ty	Chan.	Serial No.	Serv.	Remarks
0	0698601000	CAB ASSY	1				
	0698602000	CAB ASSY (for EU)	1				
68	0880865129	・GUARD	1				
78	0881842010	・ABSORBENT, noise	1				
79	0881861104	・ABSORBENT, noise	1				
80	0880865134	・ABSORBENT, noise	1				
81	0880865135	・ABSORBENT, noise	1				
82	0881861105	・ABSORBENT, noise	1				
83	0698601003	・ABSORBENT, noise	1			M	
87	1654639203	・TRIM	1			M	sold by the meter
94	0881861107	・GUARD	1				
95	0881861108	・GUARD	1				
97	1120990820	・SCREW	4				
98	1120990816	・SCREW	36				
99	1654011705	・WASHER	40				
100	0880865144	・WASHER	8				
101	0880865145	・PLATE	14				
102	0881861109	・COVER	2				
109	0880865150	・RIVET	8				
131	1653303010	・CAP	2				
137	0881861110	・GUARD	1				
138	0881861111	・GUARD	1				
169	0668601009	・SPONGE	2			M	
	U3e210						

silverhorn.co.uk

AIR CONDITIONER (3/5) (air conditioner unit)

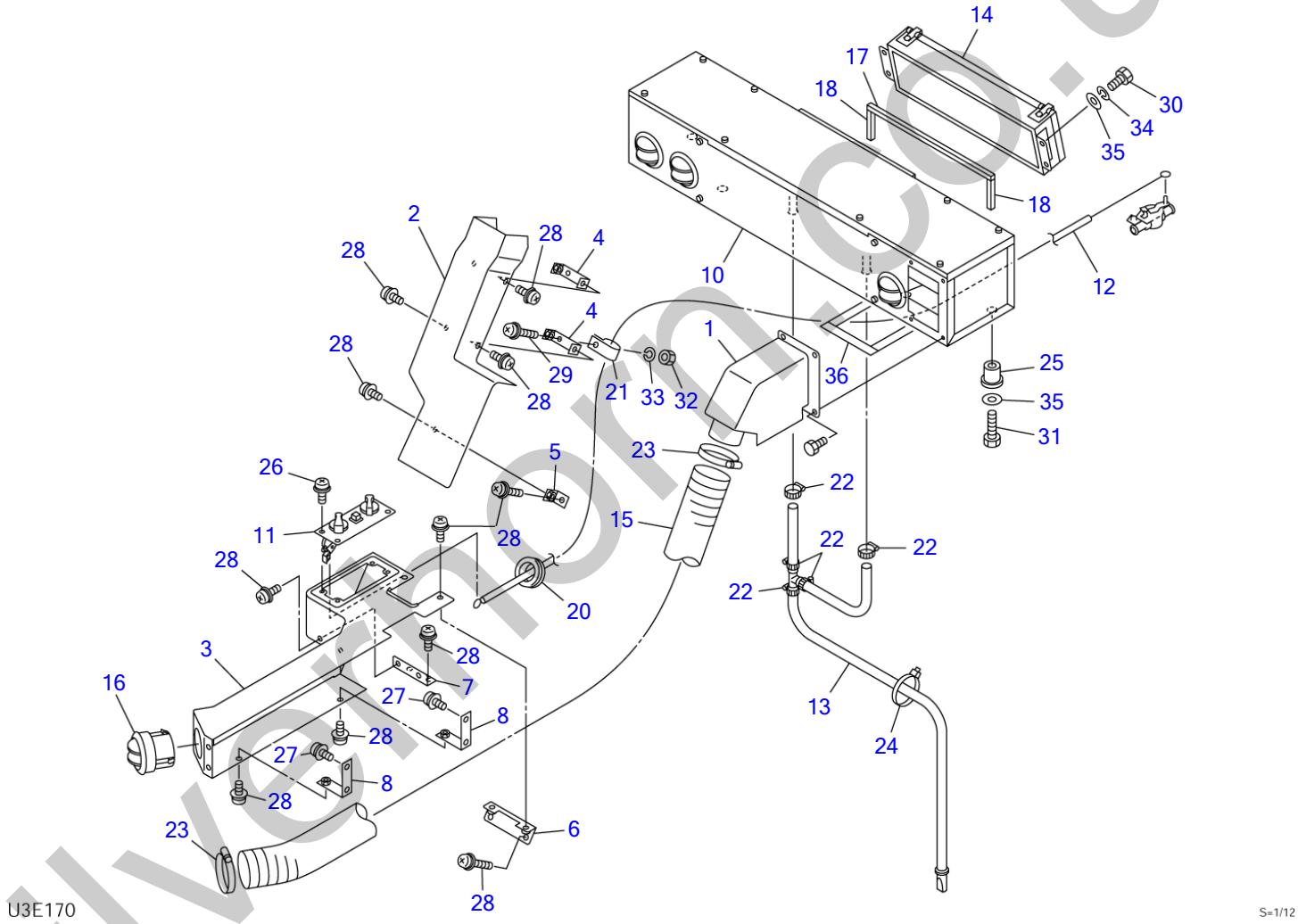

silvermorn.co.uk

AIR CONDITIONER (3/5) (air conditioner unit)

Item	Part number	Description	Q'ty	Chan.	Serial No.	Serv.	Remarks
0	0694601300	UNIT ASSY, air conditioner	1			M	
1	0694601310	・ADAPTOR	1			M	
2	0664601320	・COVER	1			M	
3	0664601330	・COVER	1			M	
4	0664600340	・BRACKET	2			M	
5	0664600350	・BRACKET	1			M	
6	0694600360	・BRACKET	1			M	
7	0664600370	・BRACKET	1			M	
8	0694600380	・BRACKET	2			M	
10	1911506090	・UNIT, air conditioner	1				see page (4/5)
11	1911506020	・PANEL ASSY	1				see page (5/5)
12	1911506006	・CABLE, control	1				
13	1911506030	・TUBE ASSY	1				
14	1911506050	・BOX	1				see page (5/5)
15	1911508559	・HOSE	1				
16	1911506060	・LOUVER	1				
17	0881464370	・URETHANE	1				
18	0881464380	・URETHANE	2				
20	1652053600	・GROMMET	1				
21	0007300010	・CLAMP	1				
22	1911500500	・BAND	5				
23	1533700076	・BAND	2				
24	1652231250	・BAND	1				
25	1652520008	・GROMMET	4				
26	1111810610	・SCREW	4			M	
27	1150420610	・SCREW	4				
28	1150420614	・SCREW	19				
29	1150420625	・SCREW	1				
30	1100040816	・BOLT	4				
31	1100040830	・BOLT	4				
32	1130040006	・NUT	1				
33	1140020006	・WASHER, spring	1				
34	1140020008	・WASHER, spring	4				
35	1141110008	・WASHER	8				
36	1654313013	・SPONGE	4				sold by the meter
	U3e170						

silverhorn.co.uk

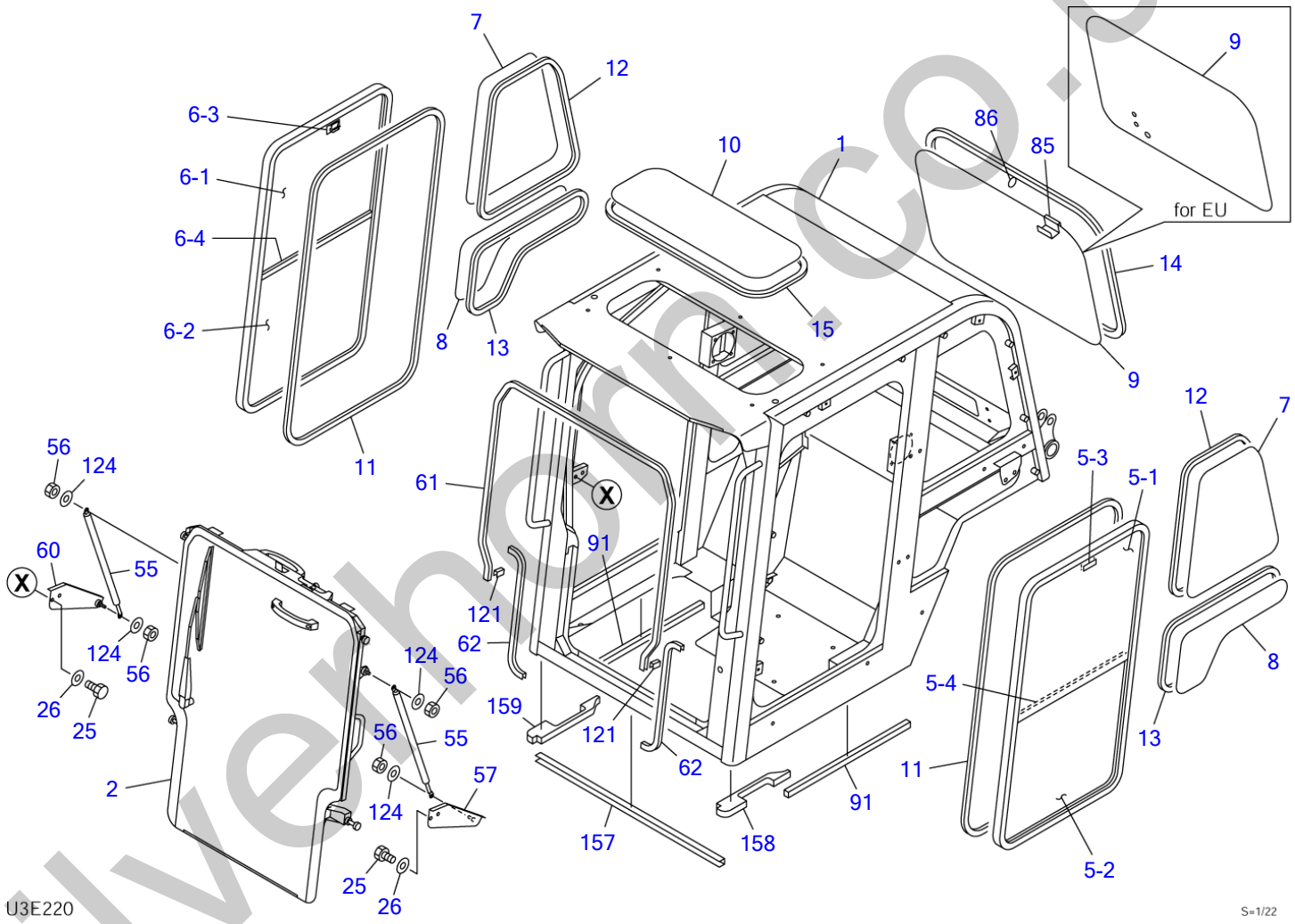

silverhorn.co.uk

CAB (2/6)

Item	Part number	Description	Q'ty	Chan.	Serial No.	Serv.	Remarks
0	0698601000	CAB ASSY	1				
	0698602000	CAB ASSY (for EU)	1				
1	X **********	・CAB	1				
2	0668601200	・DOOR ASSY, front	1			M	see page (6/6)
5	0880865420	・SIDE SASH ASSY (L.H.)	1			M	
5-1	0880865422	・・GLASS	1			M	
5-2	0880865423	・・GLASS	1			M	
5-3	0880865424	・・LOCK ASSY	1			M	
5-4	0880865427	・・STRIP, weather	1			M	
6	0880865430	・SIDE SASH ASSY (R.H.)	1			M	
6-1	0880865422	・・GLASS	1			M	
6-2	0880865423	・・GLASS	1			M	
6-3	0880865424	・・LOCK ASSY	1			M	
6-4	0880865437	・・STRIP, weather	1			M	
7	0881861101	・GLASS	2				
8	0881861102	・GLASS	2				
9	0880865103	・GLASS	1				
	0882861109	・GLASS	1			M	for EU
10	0880865104	・GLASS	1				
11	1654253320	・H-RUBBER	2			M	sold by the meter
12	1654231175	・H-RUBBER	2				sold by the meter
13	1654231147	・H-RUBBER	2				sold by the meter
14	1654231265	・H-RUBBER	1			M	sold by the meter
	1654253265	・H-RUBBER (for EU)	1			M	sold by the meter
15	1654231195	・H-RUBBER	1				sold by the meter
25	1100091020	・BOLT	4			M	
26	1654011706	・WASHER	4			M	
55	0880865124	・SPRING, gas	2			M	
56	1134090006	・NUT	4			M	
57	0880865125	・BRACKET	1			M	
60	0880865126	・BRACKET	1			M	
61	1654630240	・TRIM	1				sold by the meter
62	1654630060	・TRIM	2				sold by the meter
85	0880865138	・GRIP	1				
	0882861185	・GRIP	1			M	for EU
86	0880865139	・RING	1				
91	0880865140	・SEAL	2				
121	1654619003	・SEAL	2			M	sold by the meter
124	1141190008	・WASHER	4			M	
157	1654605088	・RUBBER	1				sold by the meter
158	0668600240	・SEAL	1			M	
159	0668600250	・SEAL	1			M	
	U3e220						

silverhorn.co.uk

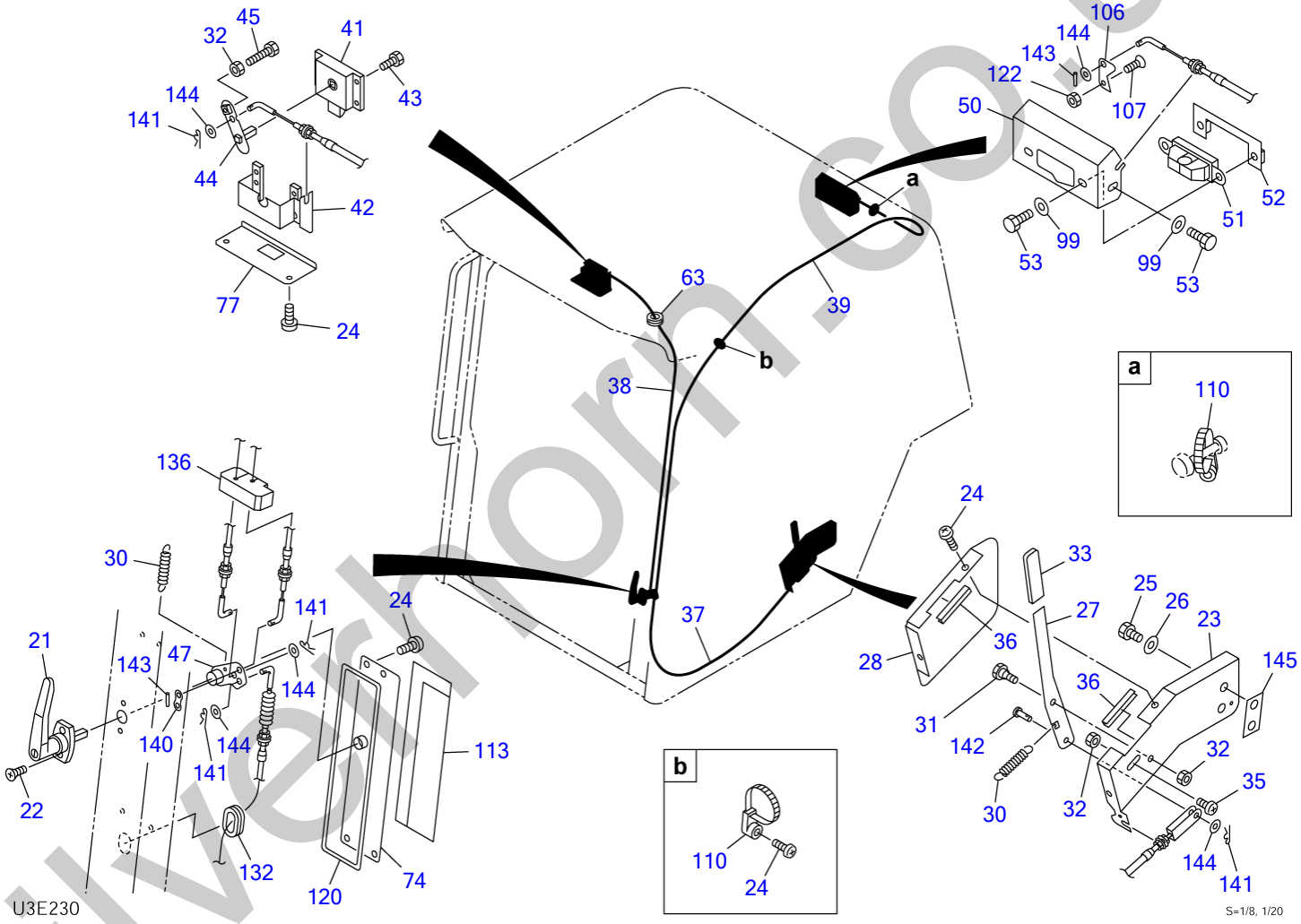

silvernorn.co.uk

CAB (3/6)

Item	Part number	Description	Q'ty	Chan.	Serial No.	Serv.	Remarks
0	0698601000	CAB ASSY	1				
	0698602000	CAB ASSY (for EU)	1				
21	1654011500	・HANDLE	1			M	
22	1120690520	・SCREW	2			M	
23	0880865161	・BRACKET	1			M	
24	1150420512	・SCREW	9				
25	1100091020	・BOLT	2			M	
26	1654011706	・WASHER	2			M	
27	0880865162	・LEVER	1			M	
28	0880865110	・COVER	1			M	
30	0880865112	・SPRING	2			M	
31	1654010800	・PIN	1			M	
32	1131242006	・NUT	2			M	
33	0438601760	・COVER	1			M	
35	1150410612	・BOLT, sems	1				
36	1653916005	・TRIM	2				sold by the meter
37	0880865163	・CABLE	1			M	
38	0880865164	・CABLE	1			M	
39	0880865165	・CABLE	1			M	
41	1654011740	・LATCH	1			M	
42	0880865118	・PLATE	1			M	
43	1100090616	・BOLT	4			M	
44	0880865166	・PLATE	1			M	
45	1100240630	・BOLT	1			M	
47	0880865167	・PLATE	1			M	
50	0880865121	・BRACKET	1				
51	1653384630	・LOCK	1			M	
52	0880865123	・PLATE	1			M	
53	1100090820	・BOLT	5				
63	1652042030	・GROMMET	1				
74	0880865130	・COVER	1				
77	0880865132	・COVER	1				
99	1654011705	・WASHER	5				
106	0880865171	・BRACKET	1			M	
107	1120630512	・SCREW	1			M	
110	1652221050	・BAND	2				
113	0880865153	・ABSORBENT, noise	1				
120	0880865159	・SEAL	1				
122	1131242005	・NUT	1			M	
132	1654011701	・GROMMET	1				
136	0880865160	・PACKING	2			M	
140	0880865168	・PLATE	1			M	
141	1214000006	・PIN, snap	4			M	
142	0880865170	・PIN	1			M	
143	1210002012	・PIN	2			M	
144	1654011711	・WASHER	4			M	
145	0880865169	・SHIM	1			M	
	U3e230						

silverthorn.co.uk

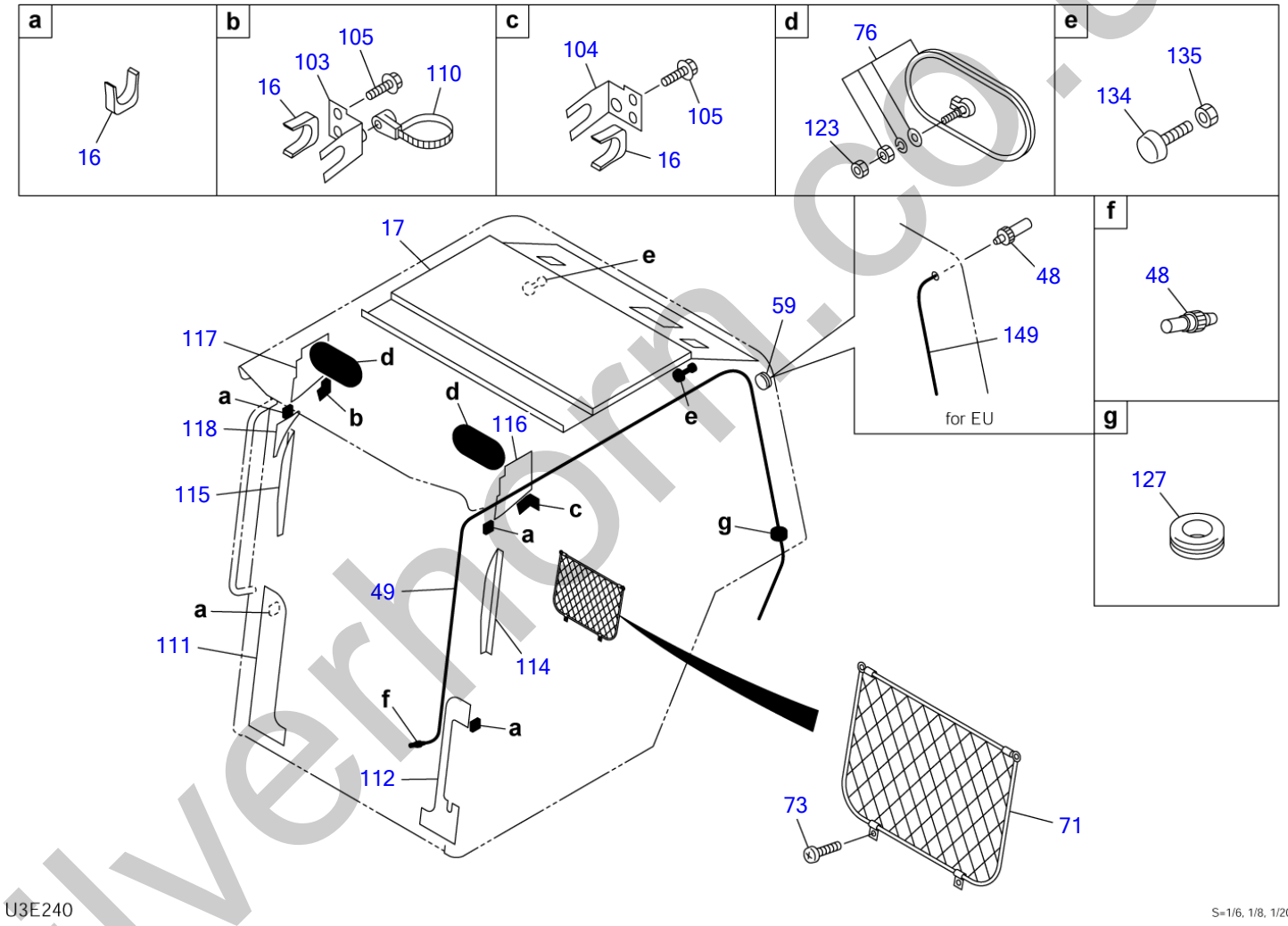

U3E240

S=1/6, 1/8, 1/20

silverhorn.co.uk

CAB (4/6)

Item	Part number	Description	Q'ty	Chan.	Serial No.	Serv.	Remarks
0	0698601000	CAB ASSY	1				
	0698602000	CAB ASSY (for EU)	1				
16	0880865105	・STOPPER	6			M	
17	0698601017	・ABSORBENT, noise	1			M	
48	1711910040	・PIPE	1			M	
	1711910040	・PIPE	2			M	for EU
49	1711919300	・HOSE	1			M	sold by the meter
59	1654011703	・CAP	1				for US
71	1654010600	・POCKET	1			M	
73	1150410416	・SCREW	4			M	
76	0880865131	・MIRROR, rearview	2				
103	0880865147	・BRACKET	1			M	
104	0880865148	・BRACKET	1			M	
105	1100090620	・BOLT	4			M	
110	1652221050	・BAND	1				
111	0880865151	・ABSORBENT, noise	1				
112	0880865152	・ABSORBENT, noise	1				
114	0880865154	・ABSORBENT, noise	1				
115	0880865155	・ABSORBENT, noise	1				
116	0880865156	・ABSORBENT, noise	1				
117	0880865157	・ABSORBENT, noise	1				
118	0880865158	・ABSORBENT, noise	1				
123	1130040008	・NUT	2				
127	1654011700	・GROMMET	1				
134	1651101042	・STOPPER	2			M	
135	1130090010	・NUT	2			M	
149	1711919135	・HOSE (for EU)	1			M	sold by the meter
	U3e240						

silverhorn.co.uk

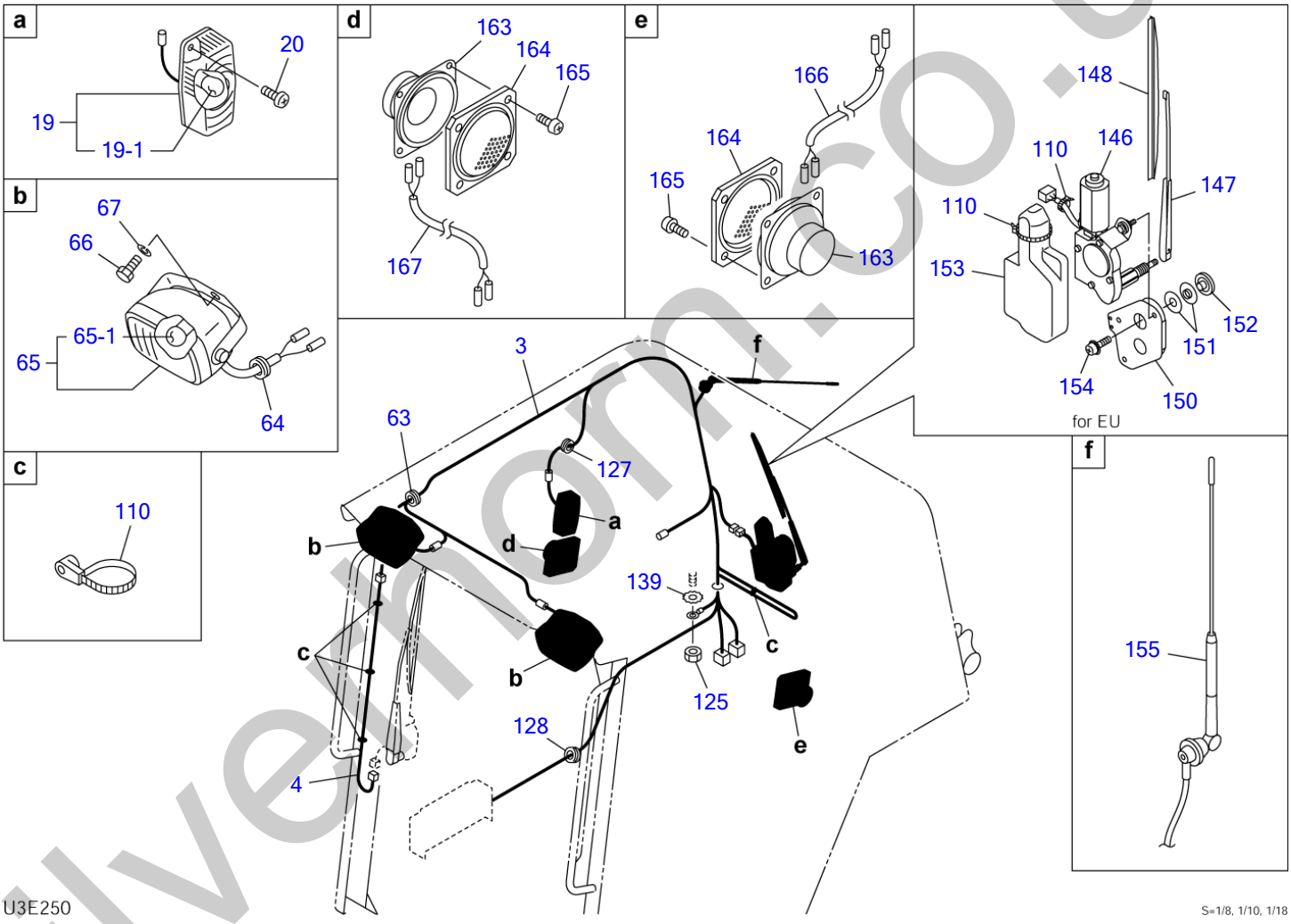

silverthorn.co.uk

CAB (5/6)

Item	Part number	Description	Q'ty	Chan.	Serial No.	Serv.	Remarks
0	0698601000	CAB ASSY	1				
	0698602000	CAB ASSY (for EU)	1				
3	0698601010	・HARNESS, wiring	1			M	
4	0880865410	・HARNESS, wiring	1			M	
19	1703001700	・LAMP, room	1				
19-1	1703001701	・・BULB	1				
20	1150410412	・SCREW	2				
63	1652042030	・GROMMET	1				
64	1652000602	・GROMMET	2				
65	1703006600	・LAMP, ASSY	2				
65-1	1703006605	・・BULB	1				
66	1100041020	・BOLT	2				
67	1654011900	・WASHER	2			M	
110	1652221050	・BAND	4				
	1652221050	・BAND	6				for EU
125	1130040010	・NUT	1				
127	1654011700	・GROMMET	2				
128	1652053600	・GROMMET	1				
139	1140330010	・WASHER	1				
146	1704051212	・MOTOR, wiper	1			M	for EU
147	1704120300	・ARM, wiper	1			M	for EU
148	1704201330	・BLADE	1			M	for EU
150	0882861250	・BRACKET	1			M	for EU
151	0880865314	・PACKING	4			M	for EU
152	0880865313	・NUT	2			M	for EU
153	1704400001	・COVER	1			M	for EU
154	1150420616	・SCREW	2			M	for EU
155	1705003460	・ANTENNA	1			M	
163	1705003500	・SPEAKER	2			M	
164	1705003550	・GRILLE	2			M	
165	1150120412	・SCREW	8			M	
166	0698601006	・HARNESS, wiring	1			M	
167	0698601007	・HARNESS, wiring	1			M	
	U3e250						

silverhorn.co.uk

CAB (6/6) (front door)

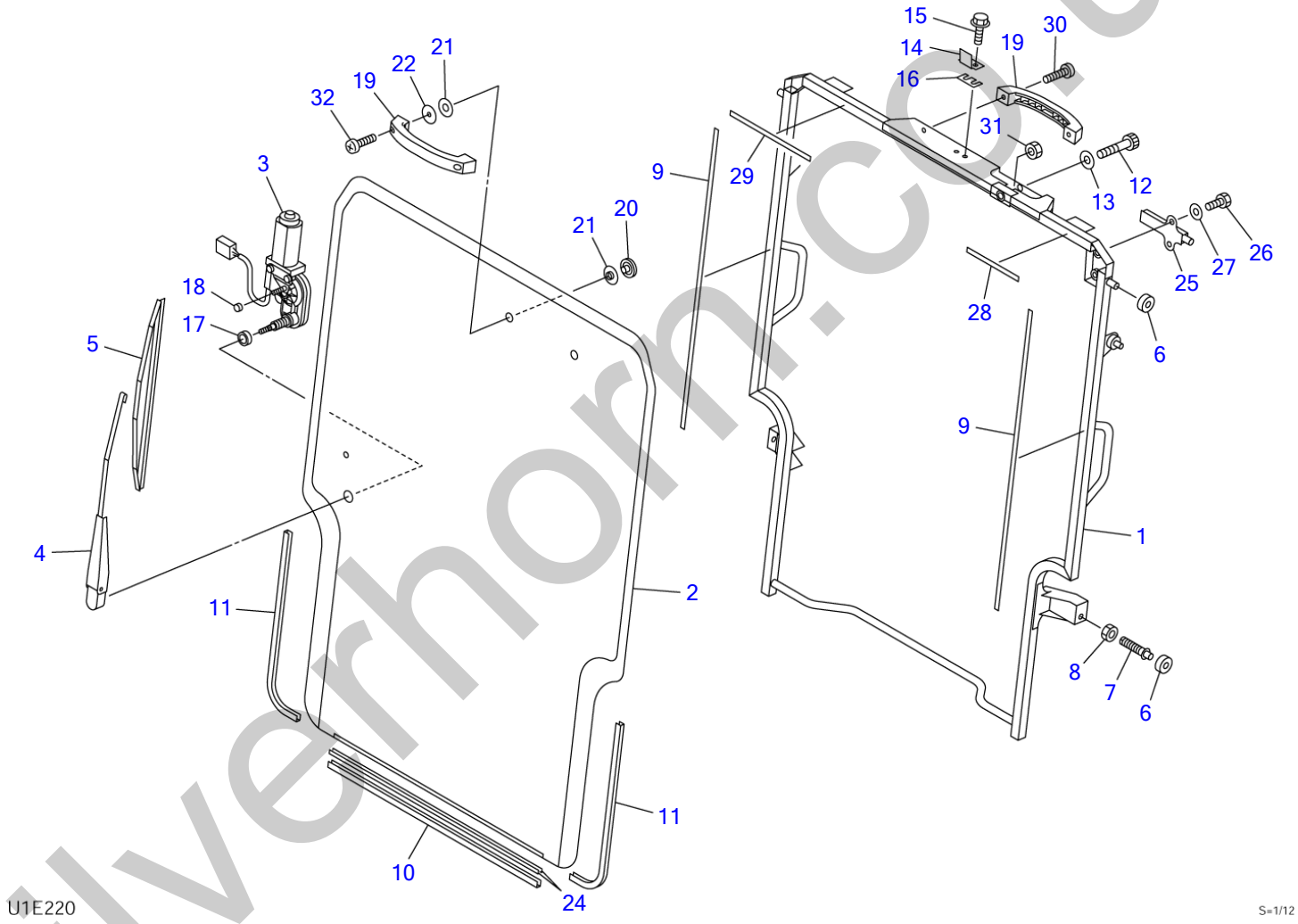

silverhorn.co.uk

CAB (6/6) (front door)

Item	Part number	Description	Q'ty	Chan.	Serial No.	Serv.	Remarks
0	0668601200	・・DOOR ASSY, front	1			M	
1	0668601210	・・DOOR, front	1			M	
2	0880865301	・・GLASS	1			M	
3	0880865302	・・MOTOR, wiper	1			M	
4	0880865303	・・ARM, wiper	1			M	
5	0880865304	・・BLADE	1			M	
6	0880865305	・・ROLLER	4			M	
7	0880865306	・・BOLT	2			M	
8	1130040012	・・NUT	2				
9	1654615210	・・DAM	2			M	sold by the meter
10	1654631054	・・SEAL	1			M	sold by the meter
11	1653916045	・・TRIM	2			M	sold by the meter
12	0880865307	・・BOLT	1			M	
13	1654011707	・・WASHER	1			M	
14	0880865308	・・PLATE	1			M	
15	1100090620	・・BOLT	2			M	
16	0880865309	・・SHIM	4			M	
17	0880865310	・・COLLAR	1			M	
18	0880865311	・・COLLAR	1			M	
19	0880865312	・・HANDLE	2			M	
20	0880865313	・・NUT	2			M	
21	0880865314	・・PACKING	4			M	
22	0880865315	・・WASHER	2			M	
24	0880865316	・・SHEET	2			M	
25	0880865317	・・LATCH	1			M	
26	1100090820	・・BOLT	2				
27	1654011705	・・WASHER	2				
28	1654615013	・・DAM	1			M	sold by the meter
29	1654615020	・・DAM	1			M	sold by the meter
30	1150420620	・・SCREW	2			M	
31	1130190012	・・NUT	1			M	
32	1150410620	・・SCREW	2			M	
	U1e220						

silverhorn.co.uk

CAB KIT (1/5) (for US; 225000021-)

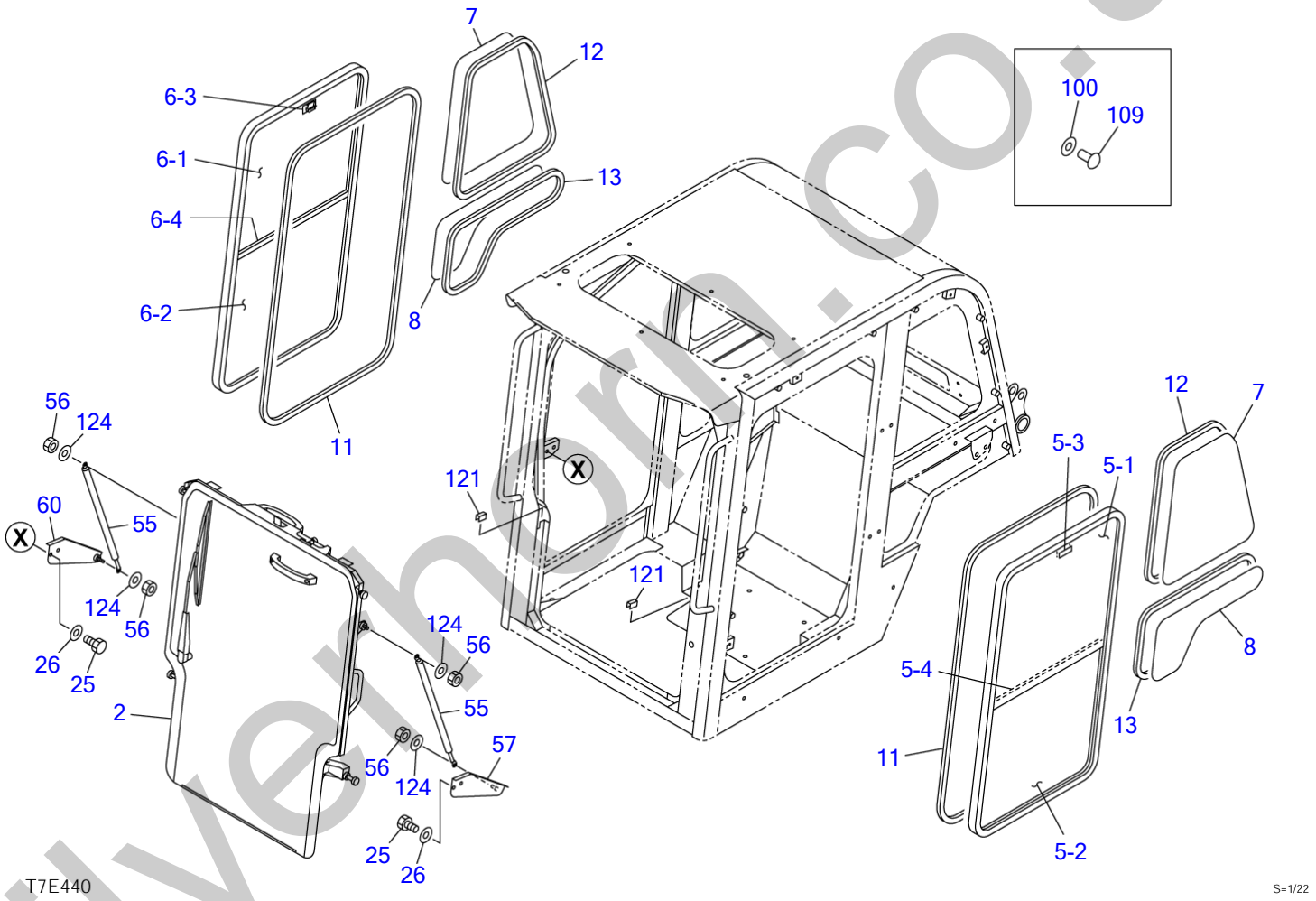

silverthorn.co.uk

CAB KIT (1/5) (for US; 225000021-)

Item	Part number	Description	Q'ty	Chan.	Serial No.	Serv.	Remarks
0	0881861800	CAB KIT	1			M	
0-1	0881861900	・SUB CAB KIT (1/5)~(4/5)	1			M	
2	0880865300	・・DOOR ASSY, front	1			M	see page (2/5)
5	0880865420	・・SIDE SASH ASSY (L.H.)	1			M	
5-1	0880865422	・・・GLASS	1			M	
5-2	0880865423	・・・GLASS	1			M	
5-3	0880865424	・・・LOCK ASSY	1			M	
5-4	0880865427	・・・STRIP, weather	1			M	
6	0880865430	・・SIDE SASH ASSY (R.H.)	1			M	
6-1	0880865422	・・・GLASS	1			M	
6-2	0880865423	・・・GLASS	1			M	
6-3	0880865424	・・・LOCK ASSY	1			M	
6-4	0880865437	・・・STRIP, weather	1			M	
7	0881861101	・・GLASS	2				
8	0881861102	・・GLASS	2				
11	1654253320	・・H-RUBBER	2			M	sold by the meter
12	1654231175	・・H-RUBBER	2				sold by the meter
13	1654231147	・・H-RUBBER	2				sold by the meter
25	1100091020	・・BOLT	4			M	
26	1654011706	・・WASHER	4			M	
55	0880865124	・・SPRING, gas	2			M	
56	1134090006	・・NUT	4			M	
57	0880865125	・・BRACKET	1			M	
60	0880865126	・・BRACKET	1			M	
100	0880865144	・・WASHER	8				
109	0880865150	・・RIVET	8				
121	1654619003	・・SEAL	2			M	sold by the meter
124	1141190008	・・WASHER	4			M	
	U3e270						

silverhorn.co.uk

CAB KIT (2/5) (for US, front door; 225000021-)

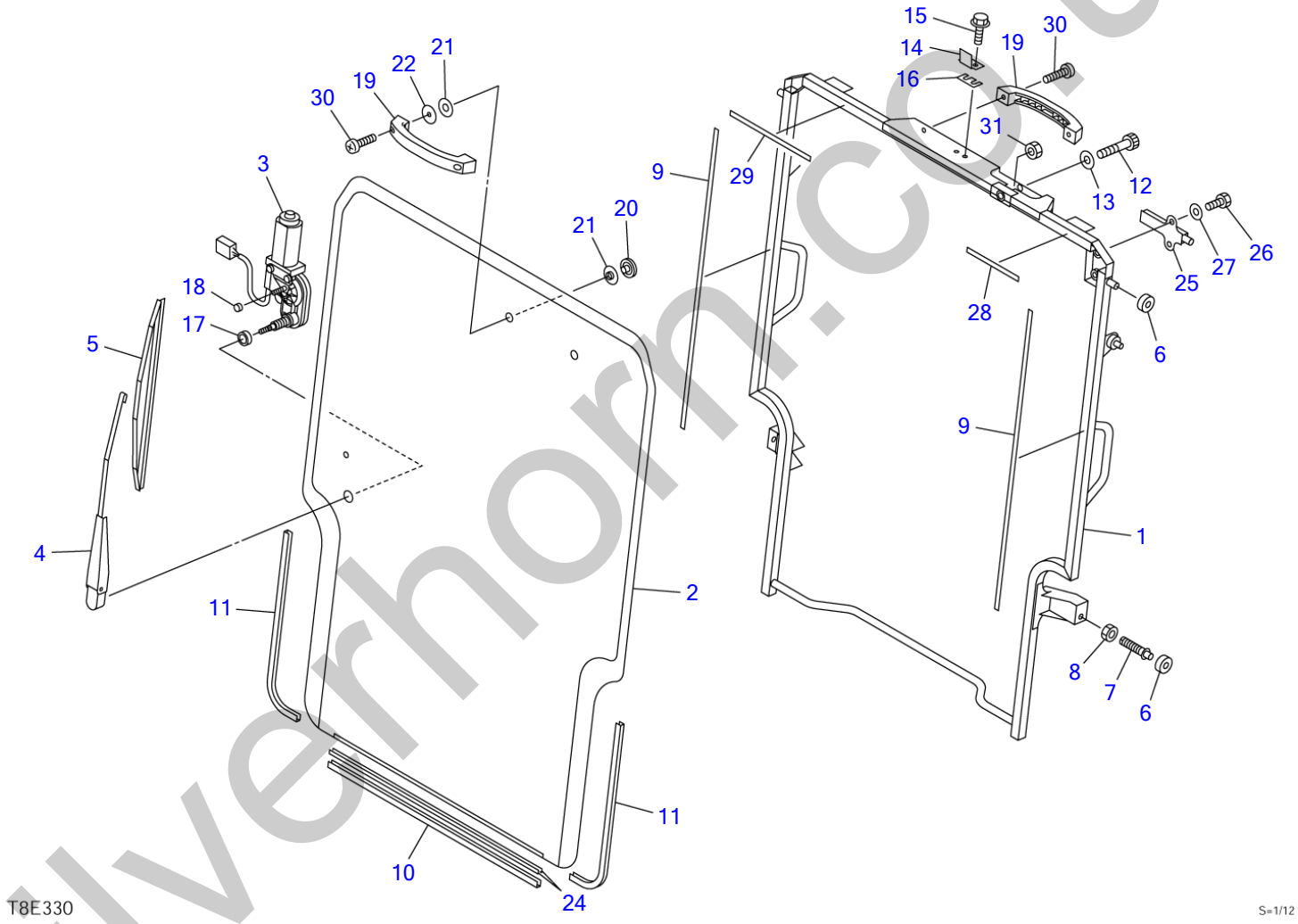

silverhorn.co.uk

CAB KIT (2/5) (for US, front door; 225000021-)

Item	Part number	Description	Q'ty	Chan.	Serial No.	Serv.	Remarks
0	0881861800	CAB KIT	1			M	
0-1	0881861900	・SUB CAB KIT (1/5)~(4/5)	1			M	
0-2	0880865300	・・DOOR ASSY, front	1			M	
1	0880865340	・・・DOOR, front	1			M	
2	0880865301	・・・GLASS	1			M	
3	0880865302	・・・MOTOR, wiper	1			M	
4	0880865303	・・・ARM, wiper	1			M	
5	0880865304	・・・BLADE	1			M	
6	0880865305	・・・ROLLER	4			M	
7	0880865306	・・・BOLT	2			M	
8	1130040012	・・・NUT	2				
9	1654615210	・・・DAM	2			M	sold by the meter
10	1654631054	・・・SEAL	1			M	sold by the meter
11	1653916045	・・・TRIM	2			M	sold by the meter
12	0880865307	・・・BOLT	1			M	
13	1654011707	・・・WASHER	1			M	
14	0880865308	・・・PLATE	1			M	
15	1100090620	・・・BOLT	2			M	
16	0880865309	・・・SHIM	4			M	
17	0880865310	・・・COLLAR	1			M	
18	0880865311	・・・COLLAR	1			M	
19	0880865312	・・・HANDLE	2			M	
20	0880865313	・・・NUT	2			M	
21	0880865314	・・・GROMMET	4			M	
22	0880865315	・・・WASHER	2			M	
24	0880865316	・・・SHEET	2			M	
25	0880865317	・・・LATCH	1			M	
26	1100090820	・・・BOLT	2				
27	1654011705	・・・WASHER	2				
28	1654615013	・・・DAM	1			M	sold by the meter
29	1654615020	・・・DAM	1			M	sold by the meter
30	1150420620	・・・SCREW	4			M	
31	1130190012	・・・NUT	1			M	
	U3e280						

silverhorn.co.uk

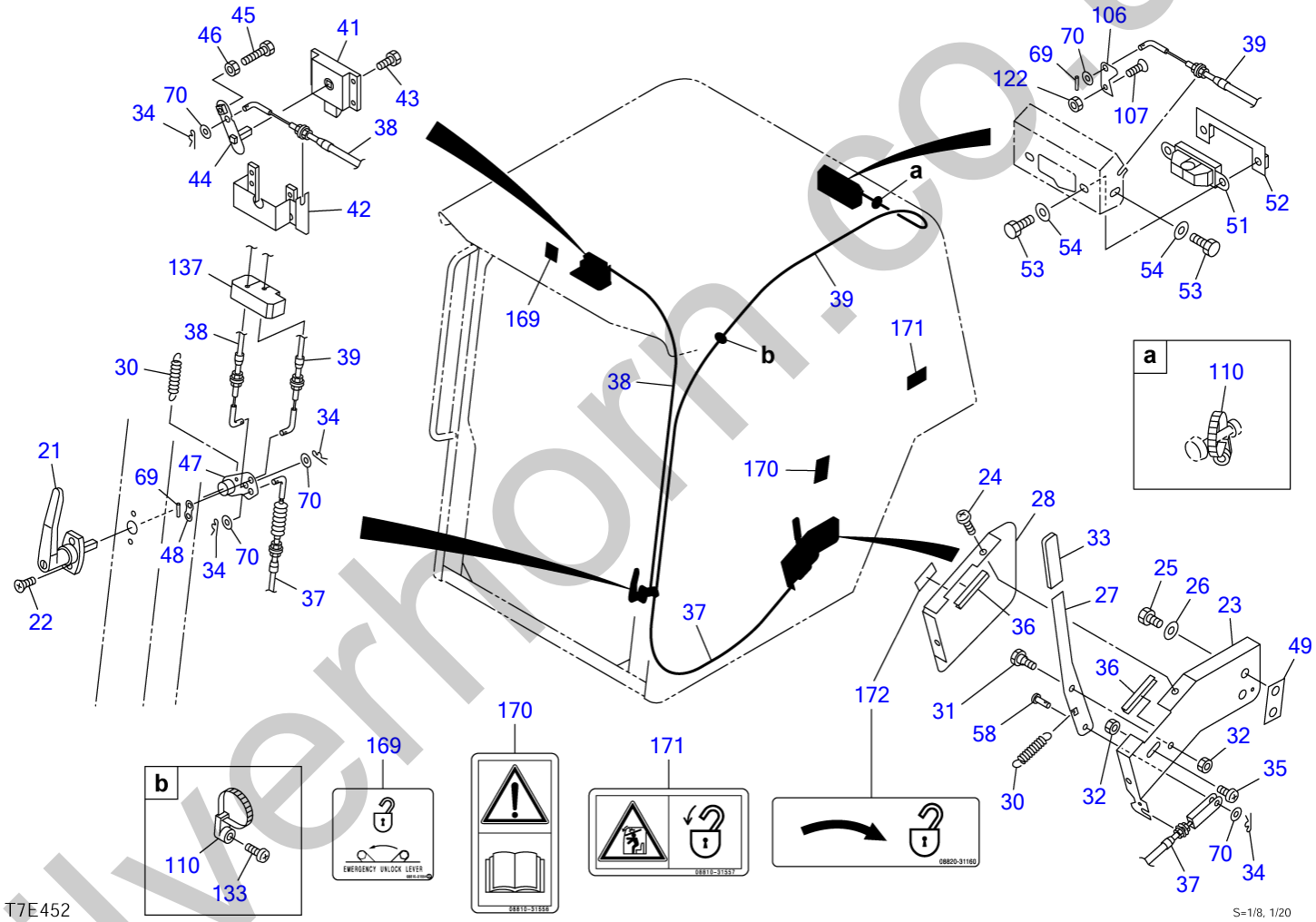

silverhorn.co.uk

CAB KIT (3/5) (for US; 225000021-)

Item	Part number	Description	Q'ty	Chan.	Serial No.	Serv.	Remarks
0	0881861800	CAB KIT	1			M	
0-1	0881861900	・SUB CAB KIT (1/5)~(4/5)	1			M	
21	1654011500	・・HANDLE	1			M	
22	1120690520	・・SCREW	2			M	
23	0880865161	・・BRACKET	1			M	
24	1150420512	・・SCREW	2				
25	1100091020	・・BOLT	2			M	
26	1654011706	・・WASHER	2			M	
27	0880865162	・・LEVER	1			M	
28	0880865110	・・COVER	1			M	
30	0880865112	・・SPRING	2			M	
31	1654010800	・・PIN	1			M	
32	1131242006	・・NUT	2			M	
33	0438601760	・・COVER	1			M	
34	1214000006	・・PIN, snap	4			M	
35	1150410612	・・BOLT, sems	1				
36	1653916005	・・TRIM	2				sold by the meter
37	0880865163	・・CABLE	1			M	
38	0880865164	・・CABLE	1			M	
39	0880865165	・・CABLE	1			M	
41	1654011740	・・LATCH	1			M	
42	0880865118	・・PLATE	1			M	
43	1100090616	・・BOLT	4			M	
44	0880865166	・・PLATE	1			M	
45	1100240630	・・BOLT	1			M	
46	1131242006	・・NUT	1			M	
47	0880865167	・・PLATE	1			M	
48	0880865168	・・PLATE	1			M	
49	0880865169	・・SHIM	1			M	
51	1653384630	・・LOCK	1			M	
52	0880865123	・・PLATE	1			M	
53	1100090820	・・BOLT	2				
54	1654011705	・・WASHER	2				
58	0880865170	・・PIN	1			M	
69	1211000212	・・PIN	2			M	
70	1654011711	・・WASHER	4			M	
106	0880865171	・・BRACKET	1			M	
107	1120630512	・・SCREW	1			M	
110	1652221050	・・BAND	2				
122	1131242005	・・NUT	1			M	
133	1150420512	・・SCREW	1				
137	0880865160	・・PACKING	2			M	
169	0881031554	・・DECAL	1			M	
170	0881031556	・・DECAL	1			M	
171	0881031557	・・DECAL	1			M	
172	0882031160	・・DECAL	1			M	
	U3e290					M	

silverhorn.co.uk

CAB KIT (4/5) (for US; 225000021-)

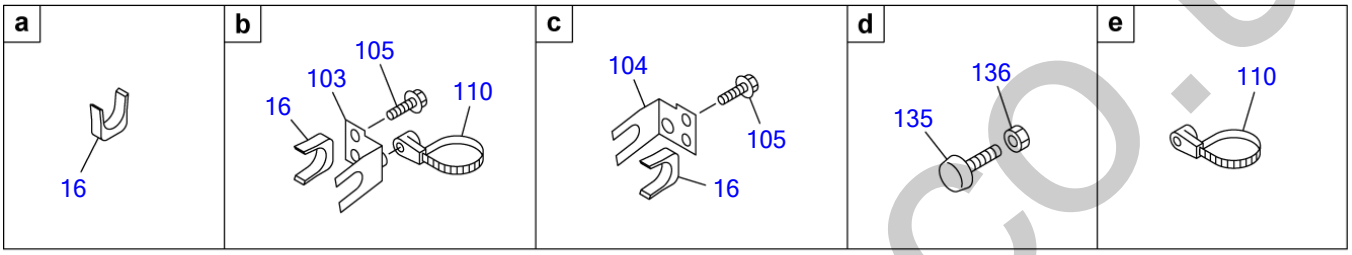

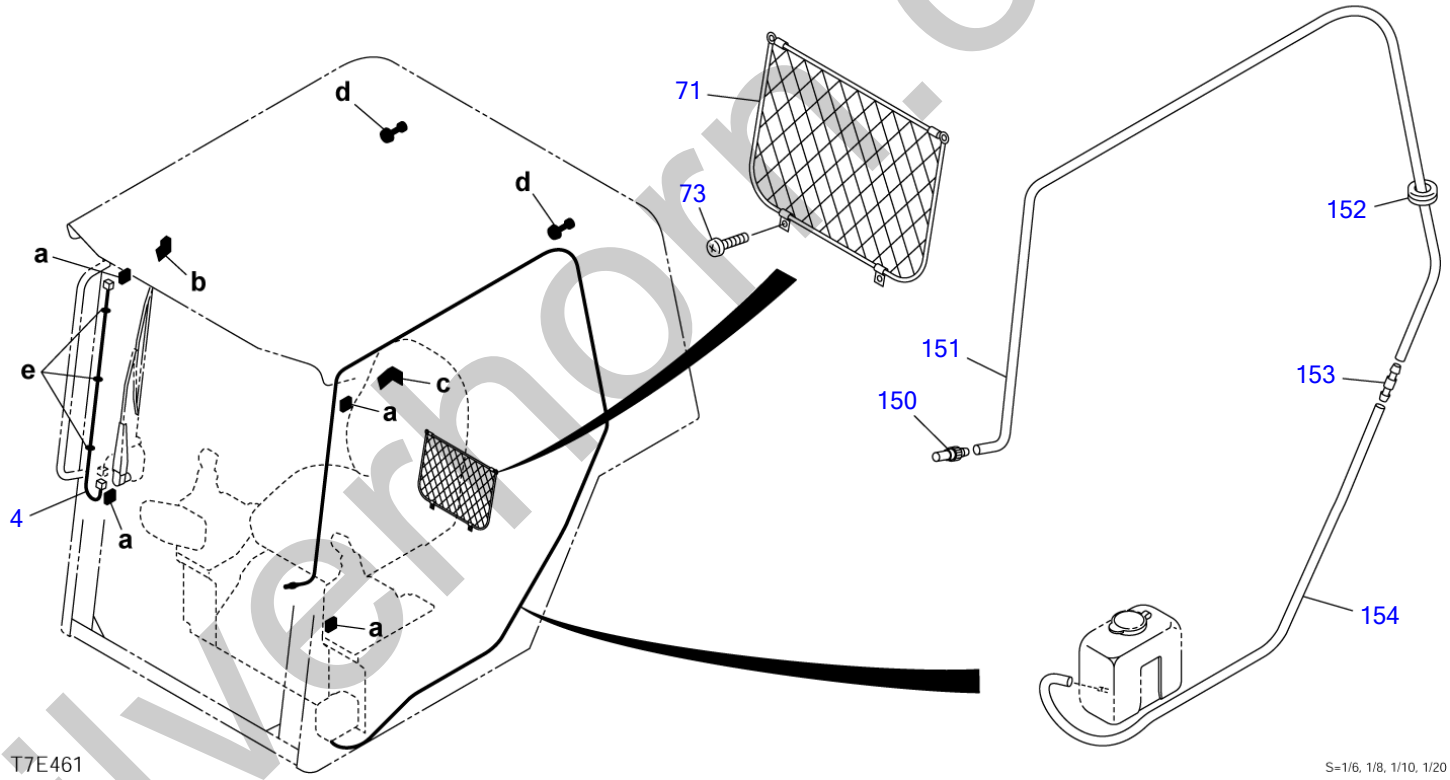

silverhorn.co.uk

CAB KIT (4/5) (for US; 225000021-)

Item	Part number	Description	Q'ty	Chan.	Serial No.	Serv.	Remarks
0	0881861800	CAB KIT	1				
0-1	0881861900	・SUB CAB KIT (1/5)~(4/5)	1			M	
4	0880865410	・・HARNESS, wiring	1			M	
16	0880865105	・・STOPPER	6			M	
71	1654010600	・・POCKET	1			M	
73	1150410416	・・SCREW	4			M	
103	0880865147	・・BRACKET	1			M	
104	0880865148	・・BRACKET	1			M	
105	1100090620	・・BOLT	4			M	
110	1652221050	・・BAND	4				
135	1651101042	・・STOPPER	2			M	
136	1130090010	・・NUT	2			M	
150	1711910040	・・NOZZLE	1			M	
151	1711919300	・・HOSE	1			M	sold by the meter
152	1654011700	・・GROMMET	1				
153	1711910014	・・JOINT	1				
154	1711919150	・・HOSE	1				sold by the meter
	U3e300						

silverhorn.co.uk

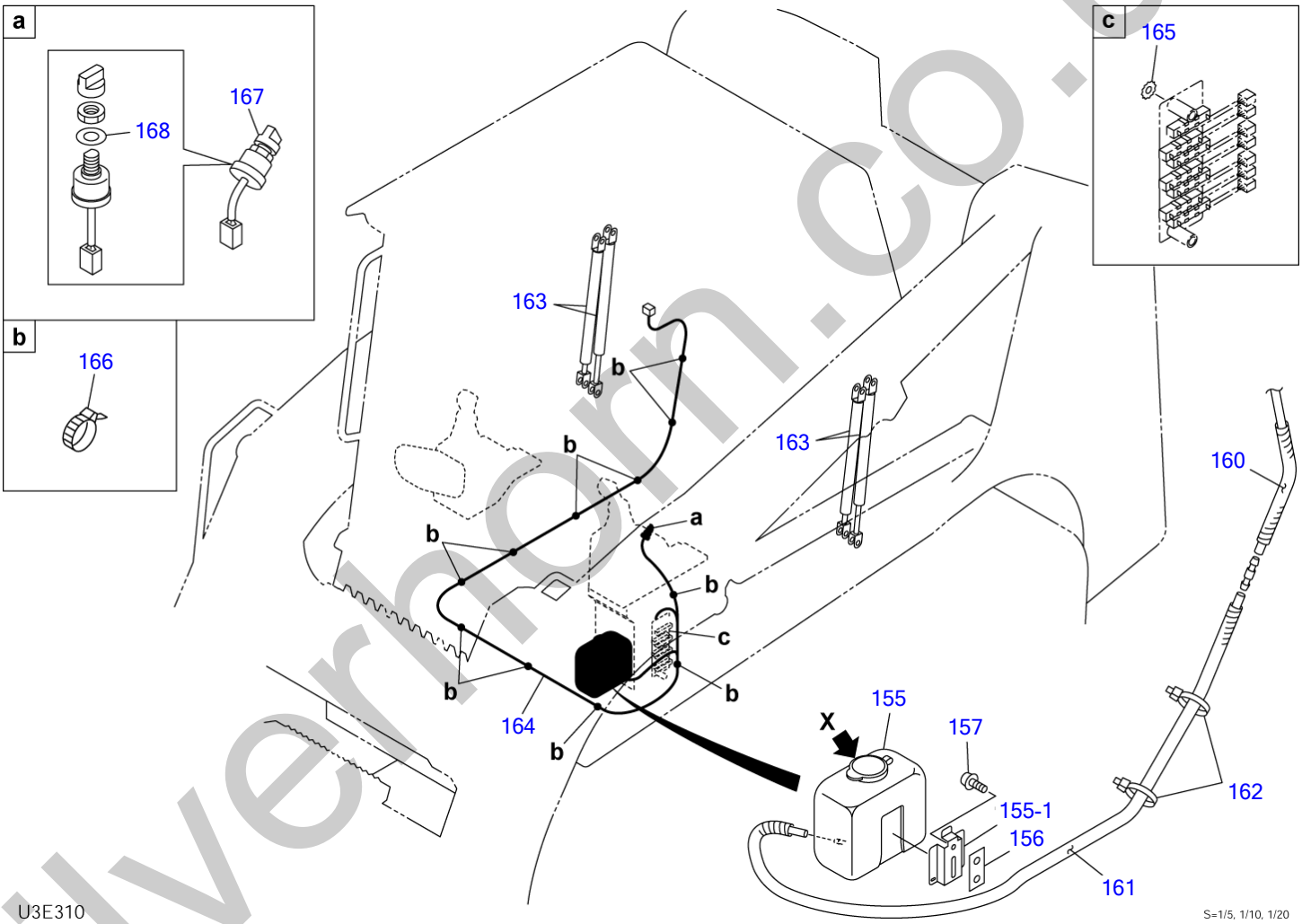

silverhorn.co.uk

CAB KIT (5/5) (for US; 225000021-)

Item	Part number	Description	Q'ty	Chan.	Serial No.	Serv.	Remarks
0	0881861800	CAB KIT	1			M	
155	1711910290	・TANK	1				
155-1	1711910291	・・BRACKET	1				
156	0003900027	・SPACER	1			M	
157	1150410616	・SCREW	2			M	
160	1703210770	・PROTECTOR	1			M	sold by the meter
161	1703220750	・PROTECTOR	1				sold by the meter
162	1652231140	・BAND	2				
163	1653900059	・SPRING, gas	4				
164	0880427810	・HARNESS, wiring	1				
165	1140330010	・WASHER	1				
166	1652231250	・BAND	10				
167	1704300007	・SWITCH, wiper	1				
168	1141810012	・WASHER	1				
	U3e310						

silverhorn.co.uk

REAR MIRROR

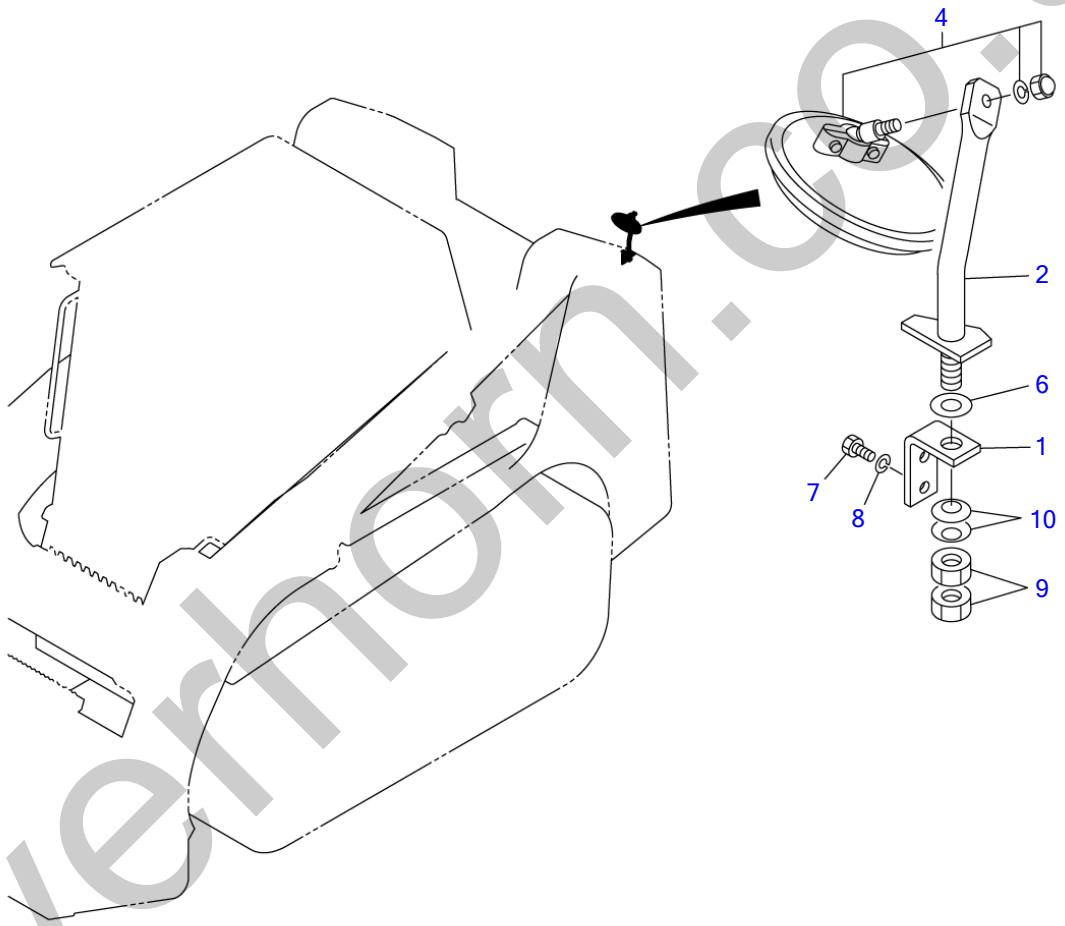

U3E140

S=1/5, 1/30

silverhorn.co.uk

REAR MIRROR

Item	Part number	Description	Q'ty	Chan.	Serial No.	Serv.	Remarks
		MIRROR ASSY, rear					
1	0881870010	BRACKET	1				
2	0881871200	STAY	1				
4	1656500130	MIRROR	1				
6	1141210014	WASHER	1				
7	1100040816	BOLT	2				
8	1140020008	WASHER, spring	2				
9	1130640014	NUT	2				
10	1225110014	WASHER, conical	2				
	U3e140						

silverhorn.co.uk

REARVIEW MIRROR

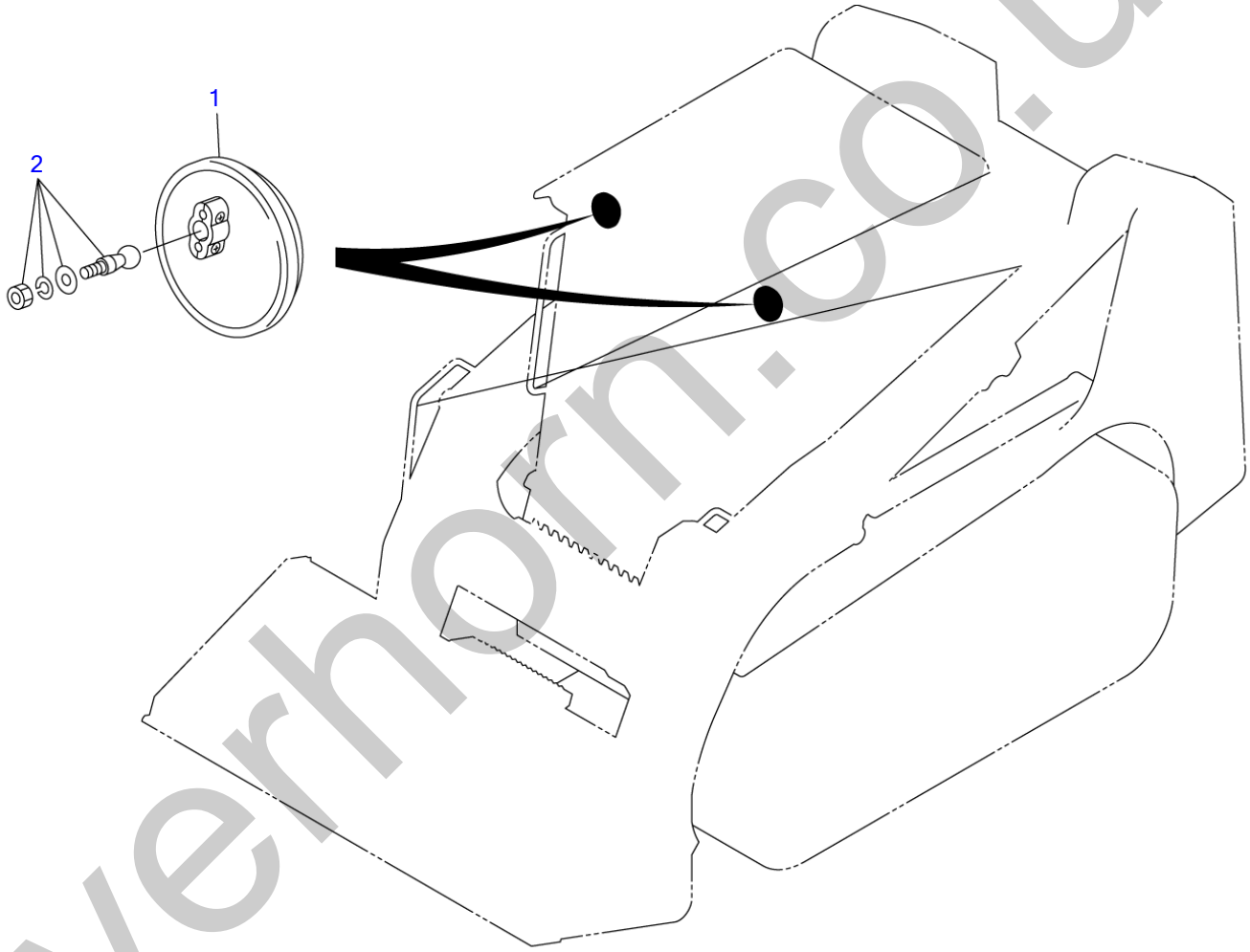

T7E100

S=1/5, 1/25

silverhorn.co.uk

REARVIEW MIRROR

Item	Part number	Description	Q'ty	Chan.	Serial No.	Serv.	Remarks
		MIRROR ASSY, rearview (for GEHL & MUSTANG)					
1	**1656500110**	MIRROR	2				
2	**1654006000**	PIVOT	2				
	T7e560						

silverhorn.co.uk

MANUAL STORAGE

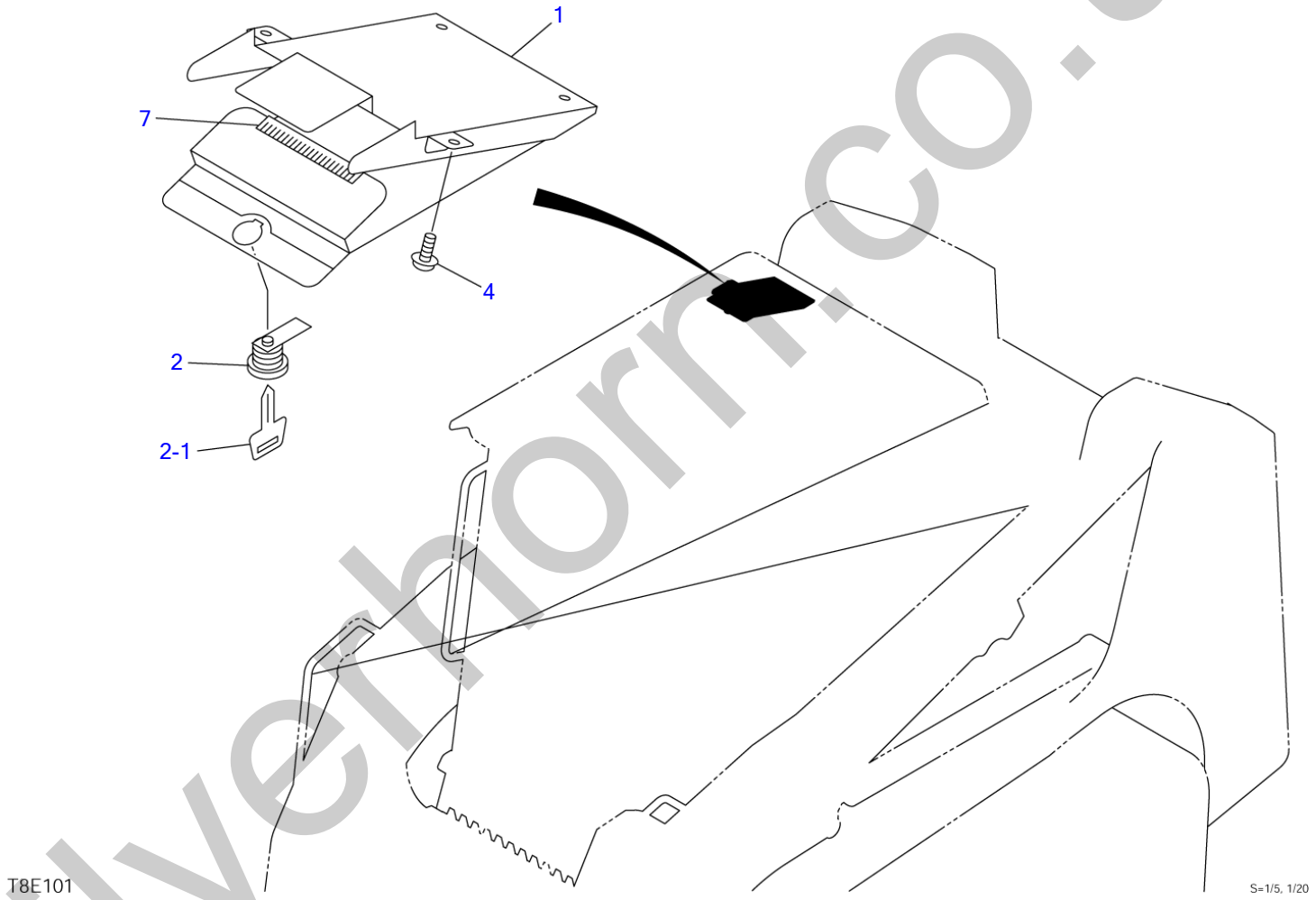

silverhorn.co.uk

MANUAL STORAGE

Item	Part number	Description	Q'ty	Chan.	Serial No.	Serv.	Remarks
		MANUAL STORAGE					
1	0881841510	BOX	1				
2	1653601395	LOCK	1				
2-1	1700100019	KEY	1				
4	1150420612	SCREW	4				
7	1654605010	RUBBER, sash	1				sold by the meter
	T8e101						

silverhorn.co.uk

AIR CONDITIONER (1/5) (compressor)

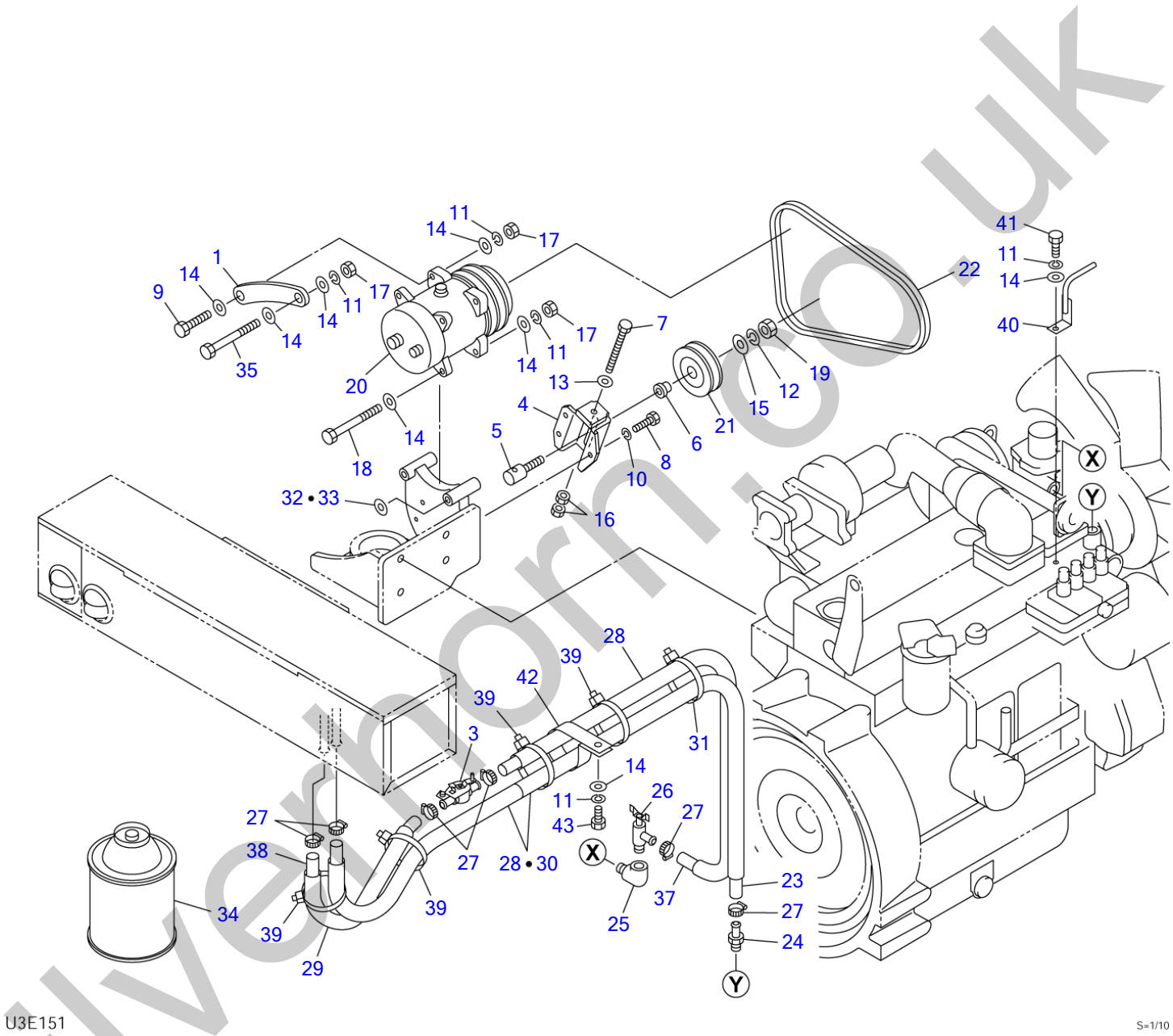

silvermorn.co.uk

AIR CONDITIONER (1/5) (compressor)

Item	Part number	Description	Q'ty	Chan.	Serial No.	Serv.	Remarks
0	0694601100	COMPRESSOR ASSY	1				
1	0694600120	・SUPPORT	1				
3	1911506008	・VALVE	1				
4	0564618790	・BRACKET	1				
5	0564619210	・SHAFT	1				
6	0564619240	・COLLAR	1				
7	1100440810	・BOLT	1				
8	1100040825	・BOLT	3				
9	1100041035	・BOLT	1				
10	1140020008	・WASHER, spring	3				
11	1140020010	・WASHER, spring	6				
12	1140020012	・WASHER, spring	1				
13	1141110008	・WASHER	1				
14	1141110010	・WASHER	10				
15	1141550012	・WASHER	1				
16	1130040008	・NUT	2				
17	1130040010	・NUT	4				
18	1100141005	・BOLT	2				
19	1130040012	・NUT	1				
20	1911506010	・COMPRESSOR	1				
21	1911505700	・PULLEY	1				
22	1911509911	・V-BELT	1				
23	1911511820	・HOSE	1		225000001~225000020		sold by the meter
	1911511805	・HOSE	1		225000021~225000212	M	sold by the meter
	1911501890	・HOSE	1	(H)	225000213~	M	sold by the meter
24	0007224009	・ADAPTOR	1				
25	1501986526	・ELBOW	1				
26	1911502100	・VALVE	1				
27	1911500500	・BAND	6				
28	1531325035	・PROTECTOR	3				sold by the meter
29	1531325055	・PROTECTOR	1		225000001~225000020		sold by the meter
	1531325045	・PROTECTOR	1		225000021~225000212	M	sold by the meter
	1531325025	・PROTECTOR	1	(H)	225000213~	M	sold by the meter
30	1531325110	・PROTECTOR	1		225000001~225000020		sold by the meter
	1531325095	・PROTECTOR	1		225000021~225000212	M	sold by the meter
31	1652201007	・BAND	1				
32	0003600222	・SHIM	AR				t=0.2mm
33	0003600223	・SHIM	AR				t=0.3mm
34	1919055000	・GAS, coolant	8				100g
35	1100041095	・BOLT	1				
37	1911501845	・HOSE	1				sold by the meter
38	1911501865	・HOSE	1		225000001~225000020		sold by the meter
	1911501855	・HOSE	1		225000021~225000212	M	sold by the meter
	1911501835	・HOSE	1	(H)	225000213~	M	sold by the meter
39	1652201008	・BAND	4		225000021~		
40	0694601110	・BRACKET	1		225000021~	M	
41	1101041055	・BOLT	1		225000021~		
42	0007300030	・CLAMP	1		225000213~		
43	1100041020	・BOLT	1		225000213~		
	U3e151						

silverthorn.co.uk

AIR CONDITIONER (2/5) (condenser)

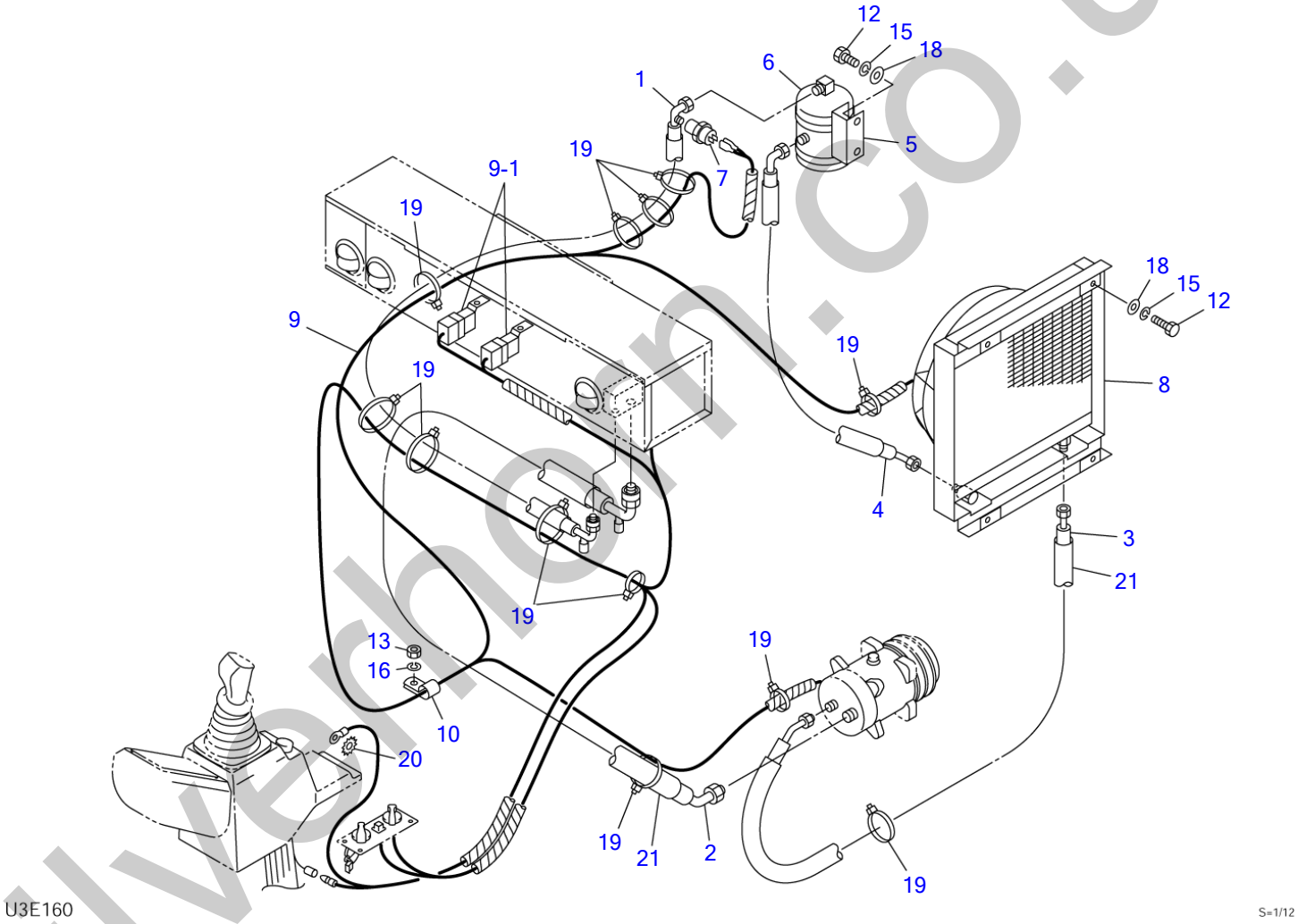

silverhorn.co.uk

AIR CONDITIONER (2/5) (condenser)

Item	Part number	Description	Q'ty	Chan.	Serial No.	Serv.	Remarks
0	0694601200	CONDENSER ASSY	1				
1	1911509901	・HOSE ASSY	1				
	1911505601	・・O-RING	1				RD-5-4017-011
2	1911509902	・HOSE ASSY	1				
	1911505603	・・O-RING	1				RD-5-4017-015
3	1911506003	・HOSE ASSY	1				
	1911505602	・・O-RING	1				RD-5-4017-013
4	1911508432	・HOSE ASSY	1				
	1911505601	・・O-RING	1				RD-5-4017-011
5	0880465610	・BRACKET	1				
6	1911508311	・DRYER	1				
7	1911505514	・SWITCH	1				
8	1911506080	・CONDENSER ASSY	1				see page (4/5)
9	1911509910	・HARNESS, wiring	1				
9-1	1911506041	・・RELAY	2				
10	1711900076	・CLAMP	1				
12	1100040825	・BOLT	6				
13	1130040010	・NUT	1				
15	1140020008	・WASHER, spring	6				
16	1140020010	・WASHER, spring	1				
18	1141110008	・WASHER	6				
19	1652231250	・BAND	12				
20	1140330010	・WASHER	1				
21	1531335100	・PROTECTOR	2				sold by the meter
	U3e160						

silverhorn.co.uk

AIR CONDITIONER (3/5) (air conditioner unit)

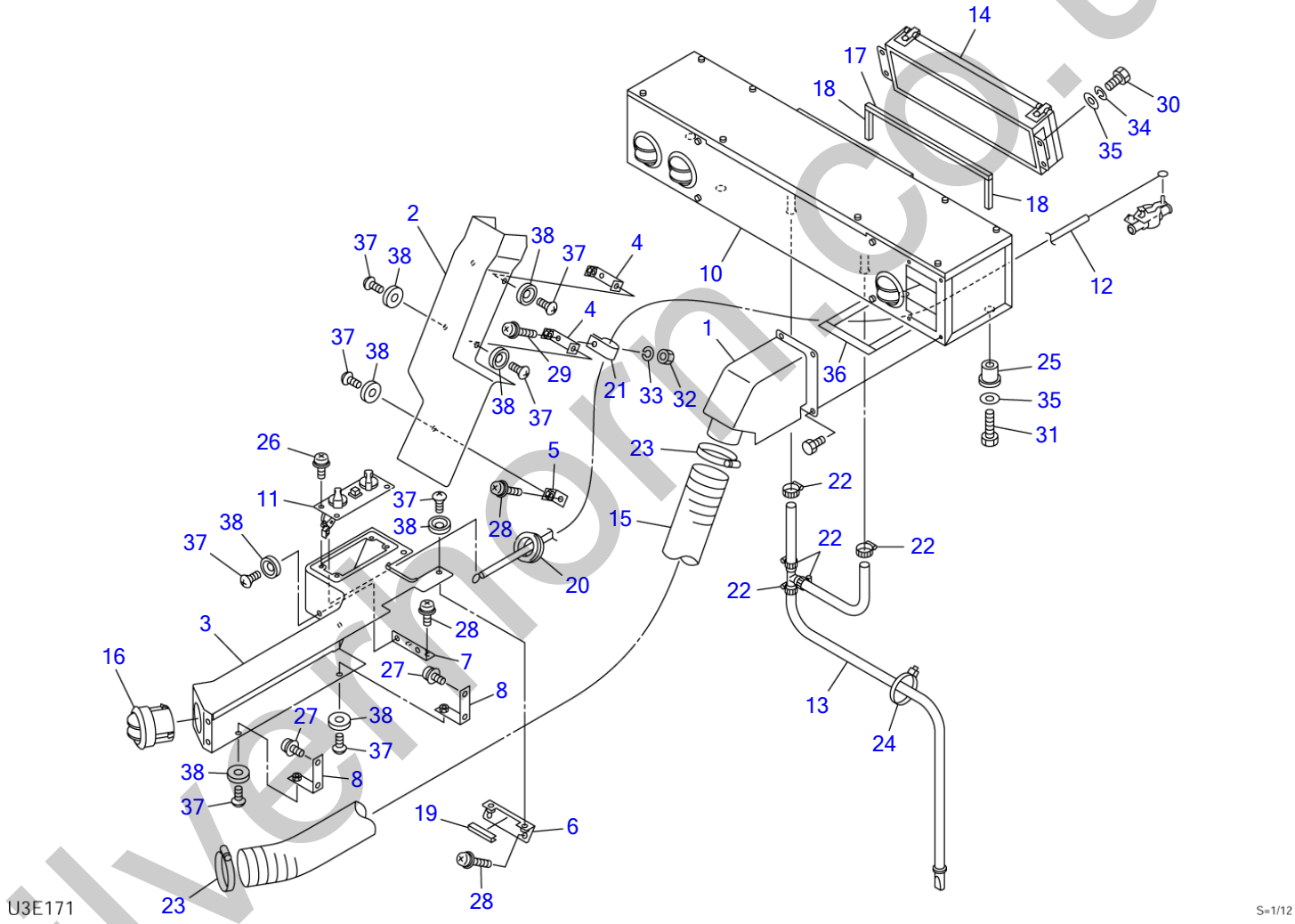

silvermorn.co.uk

AIR CONDITIONER (3/5) (air conditioner unit)

Item	Part number	Description	Q'ty	Chan.	Serial No.	Serv.	Remarks
0	0694601300	UNIT ASSY, air conditioner	1				
1	0694601310	・ADAPTOR	1				
2	0664601320	・COVER	1				
3	0664601330	・COVER	1				
4	0664600340	・BRACKET	2				
5	0664600350	・BRACKET	1				
6	0694600360	・BRACKET	1				
7	0664600370	・BRACKET	1				
8	0694600380	・BRACKET	2				
10	1911506090	・UNIT, air conditioner	1				see page (4/5)
11	1911506020	・PANEL ASSY	1				see page (5/5)
12	1911506006	・CABLE, control	1				
13	1911506030	・TUBE ASSY	1				
14	1911506050	・BOX	1				see page (5/5)
15	1911508559	・HOSE	1				
16	1911506060	・LOUVER	1				
17	0881464370	・URETHANE	1				
18	0881464380	・URETHANE	2				
19	1653916005	・TRIM	1				sold by the meter
20	1652053600	・GROMMET	1				
21	0007300010	・CLAMP	1				
22	1911500500	・BAND	5				
23	1533700076	・BAND	2				
24	1652231250	・BAND	1				
25	1652520008	・GROMMET	4				
26	1111810610	・SCREW	4				
27	1150420610	・SCREW	4				
28	1150420614	・SCREW	8				
29	1150420625	・SCREW	1				
30	1100040816	・BOLT	4				
31	1100040830	・BOLT	4				
32	1130040006	・NUT	1				
33	1140020006	・WASHER, spring	1				
34	1140020008	・WASHER, spring	4				
35	1141110008	・WASHER	8				
36	1654313013	・SPONGE	4				sold by the meter
37	1120790614	・SCREW	11			M	
38	1652900016	・WASHER	11			M	
	U3e171						

silverhorn.co.uk

AIR CONDITIONER (4/5)

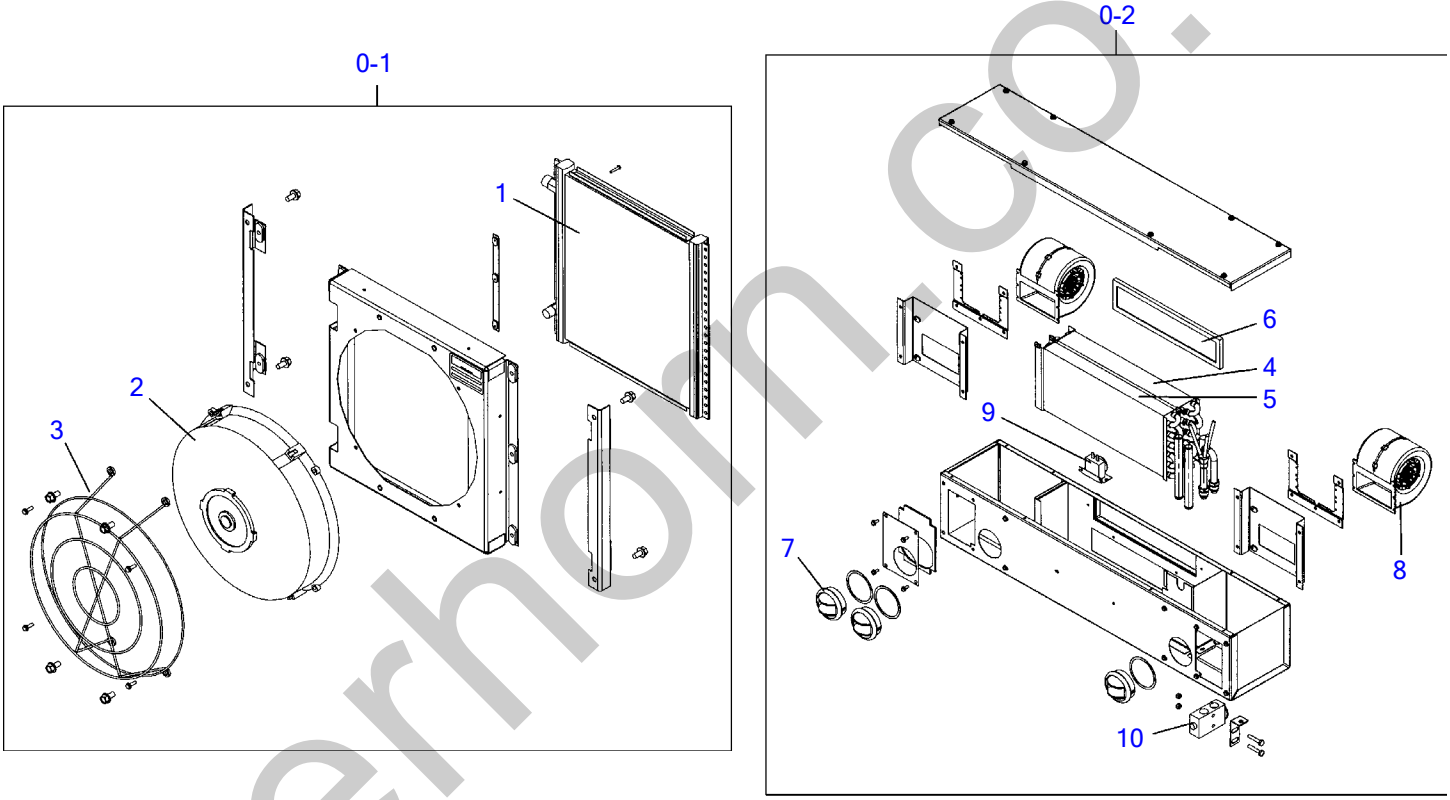

T8E401

S=free

silverhorn.co.uk

AIR CONDITIONER (4/5)

Item	Part number	Description	Q'ty	Chan.	Serial No.	Serv.	Remarks
0-1	1911506080	CONDENSER ASSY	1				
1	1911505503	・CONDENSER	1				
2	1911506083	・MOTOR	1				
3	1911505505	・GUARD	1				
0-2	1911506090	UNIT, air conditioner	1				
4	1911506091	・CORE	1				
5	1911506092	・CORE	1				
6	1911506095	・FILTER	1				
7	1911506012	・LOUVER	2				
8	1911506096	・MOTOR	2				
9	1911505421	・THERMOSTAT	1				
10	1911505422	・VALVE	1				
11	1911506089	・HARNESS ASSY, wiring	1				not shown
	T8e401						

silverhorn.co.uk

AIR CONDITIONER (5/5)

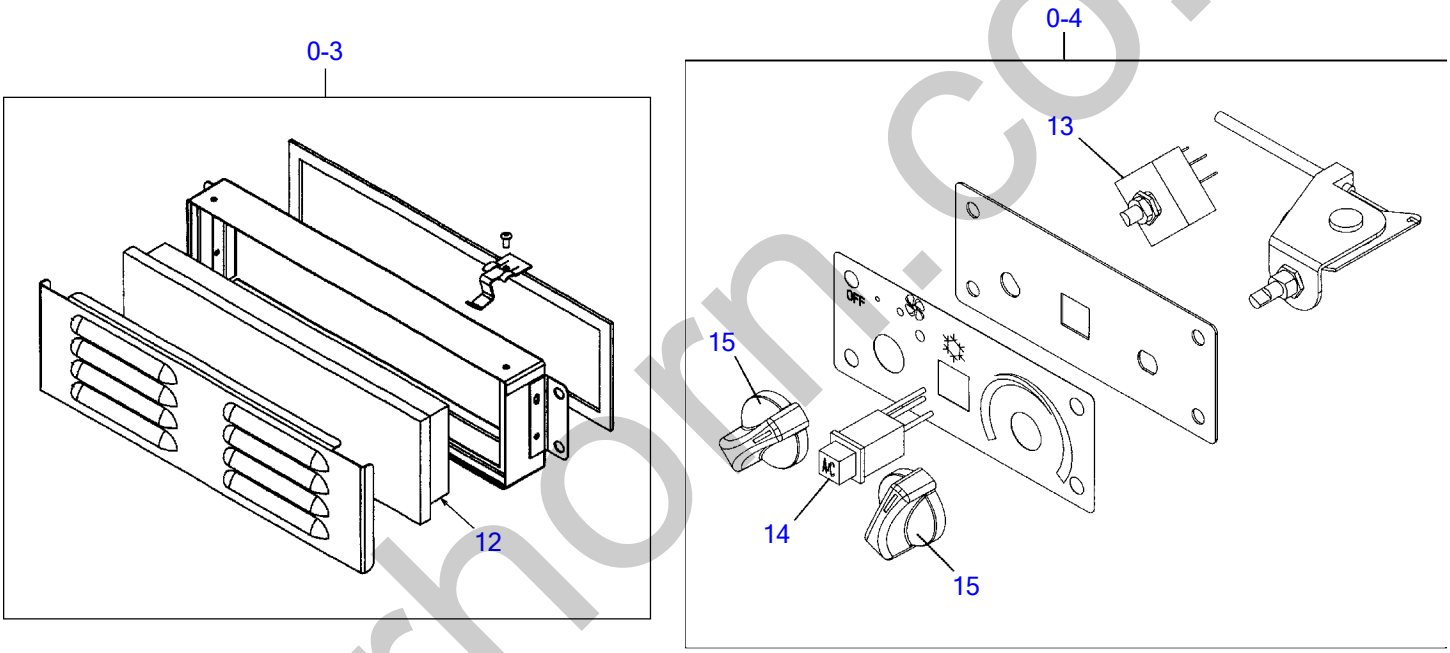

T8E410

S=free

silverhorn.co.uk

AIR CONDITIONER (5/5)

Item	Part number	Description	Q'ty	Chan.	Serial No.	Serv.	Remarks
0-3	1911506050	BOX	1				
12	1911506052	・FILTER	1				
0-4	1911506020	PANEL ASSY	1				
13	1911506027	・SWITCH	1				
14	1911505767	・SWITCH	1				
15	1911505763	・KNOB	2				
	T8e410						

silverhorn.co.uk

ARM

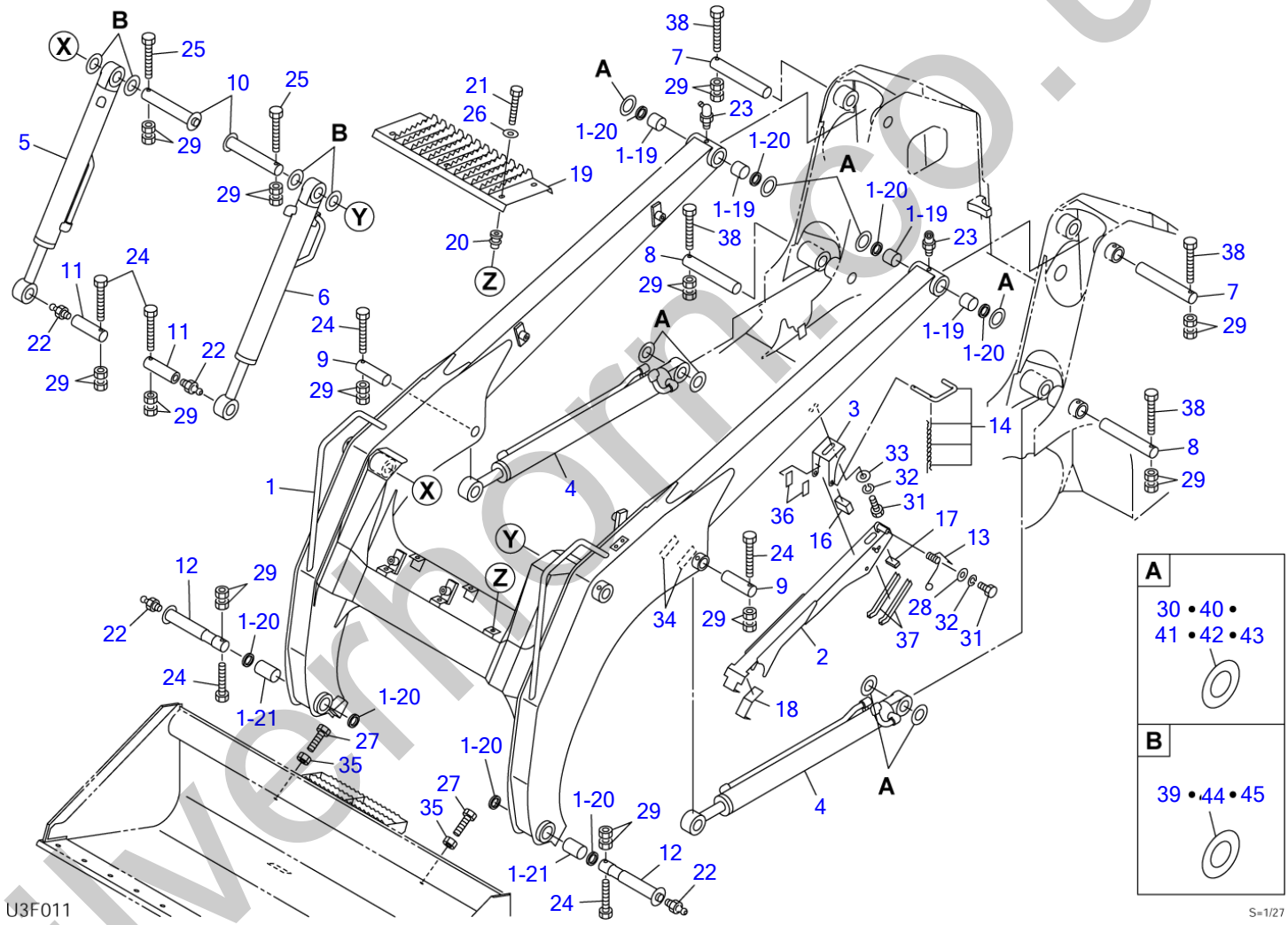

silvermorn.co.uk

ARM

Item	Part number	Description	Q'ty	Chan.	Serial No.	Serv.	Remarks
		ARM ASSY					
1	0696000100	ARM	1				
1-19	0002400040	・BUSHING	4				
1-20	1432200045	・SEAL, dust	8				
1-21	0002400065	・BUSHING	2				
2	0881604750	LOCK, arm	1				
3	0881604650	BRACKET	1				
4	1900080700	CYLINDER, arm	2				
5	1900079700	CYLINDER, bucket	1				
6	1900079800	CYLINDER, bucket	1				
7	0011504310	PIN	2				
8	0001604290	PIN	2				
9	0001604145	PIN	2				
10	0001090001	PIN	2				
11	0001674002	PIN	2				
12	0001324501	PIN	2				
13	0007000114	SPRING	1				
14	0881604670	PIN	1				
16	0881604580	RUBBER	1				
17	0881604017	RUBBER	1				
18	0881603018	RUBBER	1				
19	0881603800	STEP	1				
20	1652520008	BAND	6				
21	1100040830	BOLT	6				
22	1560001000	FITTING, grease	4				
23	1560000321	FITTING, grease	2				
24	1103041085	BOLT	6				
25	1103141005	BOLT	2				
26	0003608003	WASHER	6				
27	0881962656	BOLT	2				
28	0003608252	WASHER	1				
29	1130240010	NUT	24				
30	0003600172	SHIM	AR				t=1.0mm
31	1100040816	BOLT	3				
32	1140020008	WASHER, spring	3				
33	1141110008	WASHER	2				
34	0880606034	RUBBER	2				
35	0881604035	NUT	2				
36	0881604036	PLATE, rubber	2				
37	1654629020	TRIM	2				sold by the meter
38	1103141010	BOLT	4				
39	0003600161	SHIM	AR				t=1.0mm
40	0003600171	SHIM	AR				t=0.2mm
41	0003600091	SHIM	AR				t=0.5mm
42	0003600184	SHIM	AR				t=3.2mm
43	0003600185	SHIM	AR				t=4.5mm
44	0003600055	SHIM	AR				t=0.2mm
45	0003600056	SHIM	AR				t=0.5mm
	U3f011						

silvermorn.co.uk

ARM

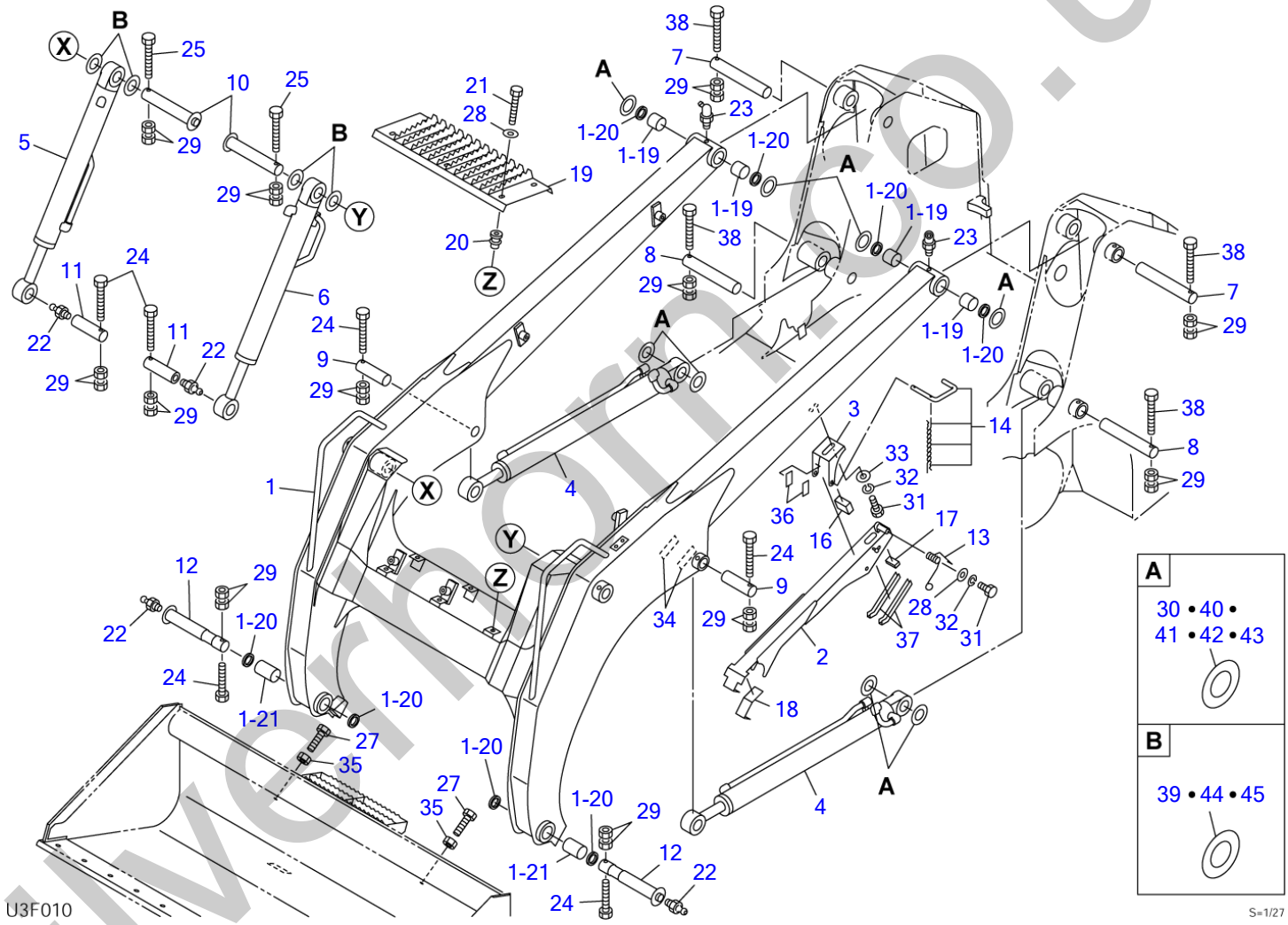

silvermorn.co.uk

ARM

Item	Part number	Description	Q'ty	Chan.	Serial No.	Serv.	Remarks
		ARM ASSY					
1	0696000100	ARM	1			M	
1-19	0002400040	・BUSHING	4				
1-20	1432200045	・SEAL, dust	8				
1-21	0002400065	・BUSHING	2				
2	0881604750	LOCK, arm	1				
3	0881604650	BRACKET	1				
4	1900080700	CYLINDER, arm	2				
5	1900079700	CYLINDER, bucket	1				
6	1900079800	CYLINDER, bucket	1				
7	0011504310	PIN	2			M	
8	0001604290	PIN	2				
9	0001604145	PIN	2				
10	0001090001	PIN	2				
11	0001674002	PIN	2				
12	0001324501	PIN	2				
13	0007000114	SPRING	1				
14	0881604670	PIN	1				
16	0881604580	RUBBER	1				
17	0881604017	RUBBER	1				
18	0881603018	RUBBER	1				
19	0881603800	STEP	1				
20	1652520008	BAND	6				
21	1100040830	BOLT	6				
22	1560001000	FITTING, grease	4				
23	1560000321	FITTING, grease	2				
24	1103041085	BOLT	6				
25	1103141005	BOLT	2				
27	0881962656	BOLT	2				
28	0003608252	WASHER	7				
29	1130240010	NUT	24				
30	0003600172	SHIM	AR				t=1.0mm
31	1100040816	BOLT	3				
32	1140020008	WASHER, spring	3				
33	1141110008	WASHER	2				
34	0880606034	RUBBER	2				
35	0881604035	NUT	2				
36	0881604036	PLATE, rubber	2				
37	1654629020	TRIM	2				sold by the meter
38	1103141010	BOLT	4				
39	0003600161	SHIM	AR				t=1.0mm
40	0003600171	SHIM	AR				t=0.2mm
41	0003600091	SHIM	AR				t=0.5mm
42	0003600184	SHIM	AR				t=3.2mm
43	0003600185	SHIM	AR				t=4.5mm
44	0003600055	SHIM	AR				t=0.2mm
45	0003600056	SHIM	AR				t=0.5mm
	U3f010						

silvermorn.co.uk

QUICK HITCH

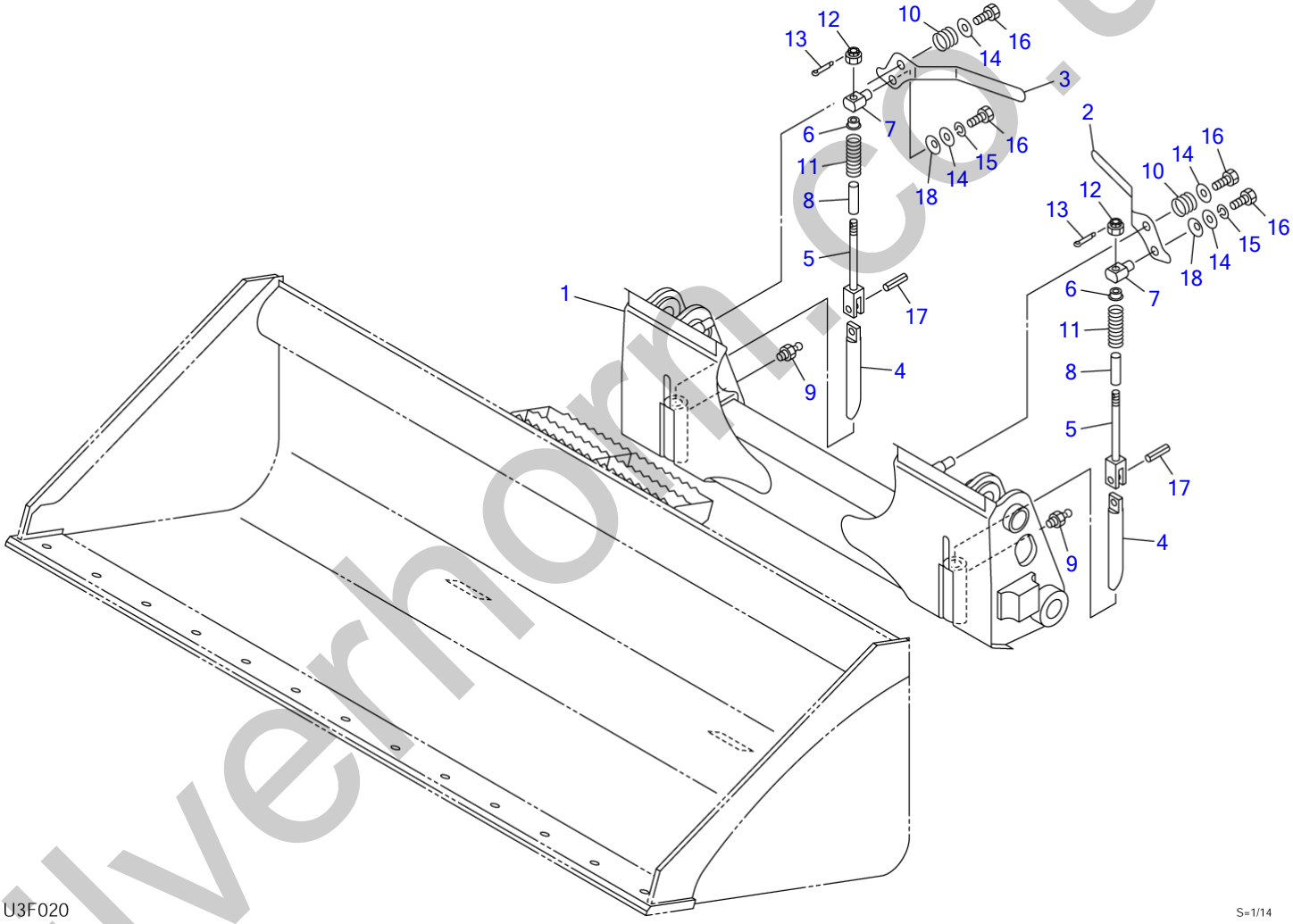

silverhorn.co.uk

QUICK HITCH

Item	Part number	Description	Q'ty	Chan.	Serial No.	Serv.	Remarks
	0696100000	HITCH ASSY, quick (for EU)	1				
	0696101000	HITCH ASSY, quick (for US)	1				
1	0696100100	・BRACKET	1				for EU
	0696100200	・BRACKET	1				for US
2	0881612040	・LEVER (L.H.)	1				
3	0881612050	・LEVER (R.H.)	1				
4	0881612150	・PIN	2				
5	0881612060	・YOKE	2				
6	0881612070	・WASHER	2				
7	0880612070	・PIN	2				
8	0881612160	・PIPE	2				
9	1560001000	・FITTING, grease	2				
10	0007000016	・SPRING	2				
11	0007000119	・SPRING	2				
12	1132630012	・NUT	2				
13	1210013225	・PIN, split	2				
14	0003600025	・WASHER	4				
15	1140120010	・WASHER, spring	2				
16	1100041020	・BOLT	4				
17	1213001250	・PIN, spring	2				
18	1225120018	・WASHER, conical	2				
	U3f021						

silverhorn.co.uk

QUICK HITCH (1/2) (hydraulic type)

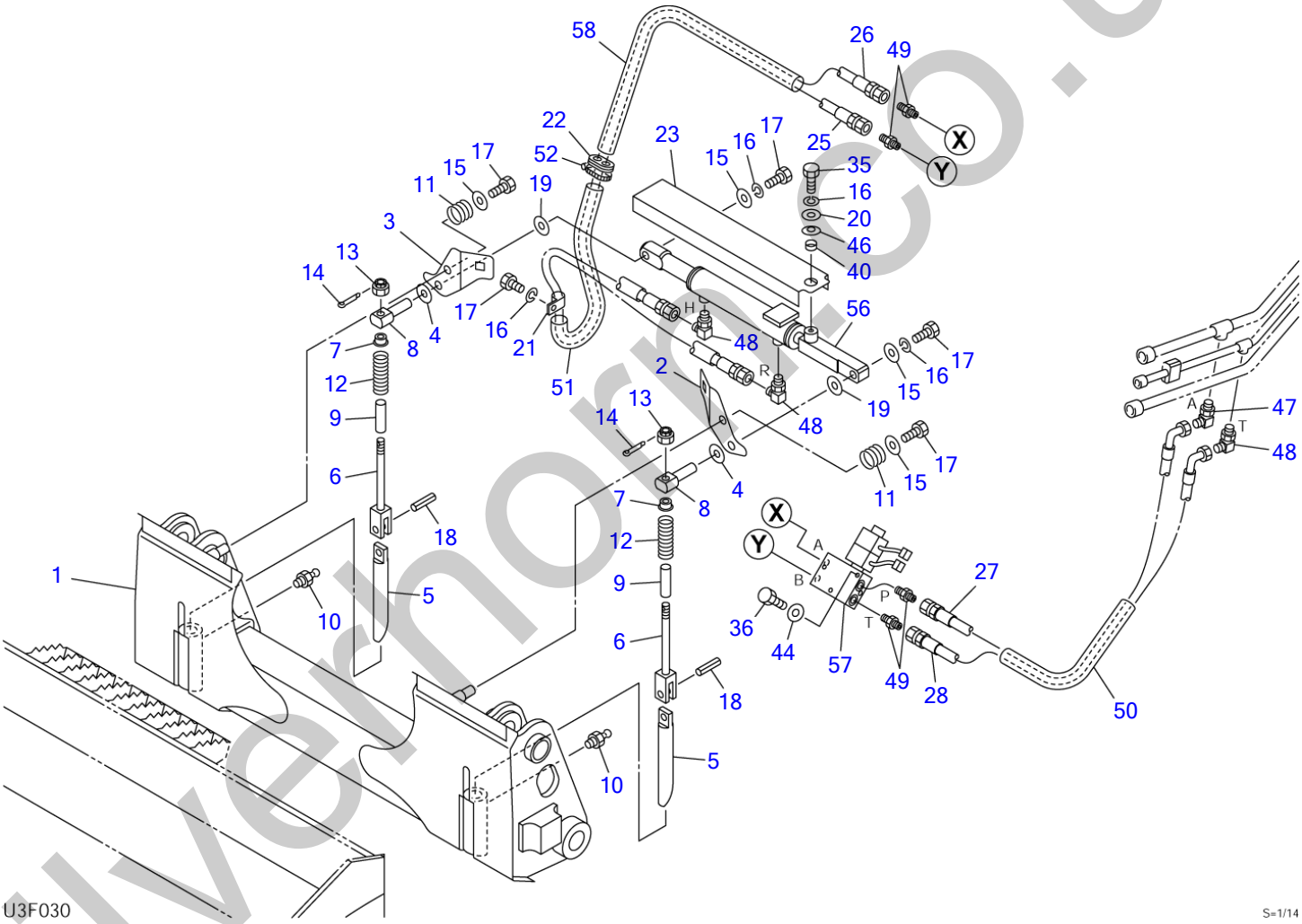

silvernorm.co.uk

QUICK HITCH (1/2) (hydraulic type)

Item	Part number	Description	Q'ty	Chan.	Serial No.	Serv.	Remarks
0	0696102000	HITCH ASSY, quick (for EU)	1				
	0696103000	HITCH ASSY, quick (for US)	1				
1	0696100100	・BRACKET	1				for EU
	0696100200	・BRACKET	1				for US
2	0666101590	・PLATE (L.H.)	1				
3	0666101600	・PLATE (R.H.)	1				
4	1225120018	・WASHER, conical	2				
5	0881612150	・PIN	2				
6	0881612060	・YOKE	2				
7	0881612070	・WASHER	2				
8	0666101080	・PIN	2				
9	0881612160	・PIPE	2				
10	1560001000	・FITTING, grease	2				
11	0007000016	・SPRING	2				
12	0007000119	・SPRING	2				
13	1132630012	・NUT	2				
14	1210013225	・PIN, split	2				
15	0003600025	・WASHER	4				
16	1140120010	・WASHER, spring	5				
17	1100041020	・BOLT	5				
18	1213001250	・PIN, spring	2				
19	0003600034	・WASHER	2				
20	0003610002	・WASHER	1				
21	0007300001	・CLAMP	1				
22	0097210300	・GUARD	1				
23	0666101230	・COVER	1				
25	0696102250	・HOSE ASSY	1			M	18019-00173
26	0696102260	・HOSE ASSY	1			M	18019-00203
27	0696102270	・HOSE ASSY	1			M	18015-01095
28	0696102280	・HOSE ASSY	1			M	18010-22090
35	1100041016	・BOLT	1				
36	1100040850	・BOLT	2				
40	0003600228	・COLLAR	1				
44	1141110008	・WASHER	2				
46	1225121018	・WASHER, conical	1				
47	1512375004	・ELBOW	1				
	1420010110	・・O-RING	1				
48	1515012040	・ELBOW	3				
	1420010110	・・O-RING	1				
49	1515600200	・ADAPTOR	4				
	1420010110	・・O-RING	1				
50	1531335070	・PROTECTOR	1				sold by the meter
51	1531520070	・PROTECTOR	1				sold by the meter
52	1533811065	・BAND	1				
56	1900100700	・CYLINDER, quick	1				
57	1901752000	・VALVE, solenoid	1				
58	1531335065	・PROTECTOR	1				sold by the meter
	U3f031						

silverthorn.co.uk

QUICK ATTACHMENT (2/2) (hydraulic type)

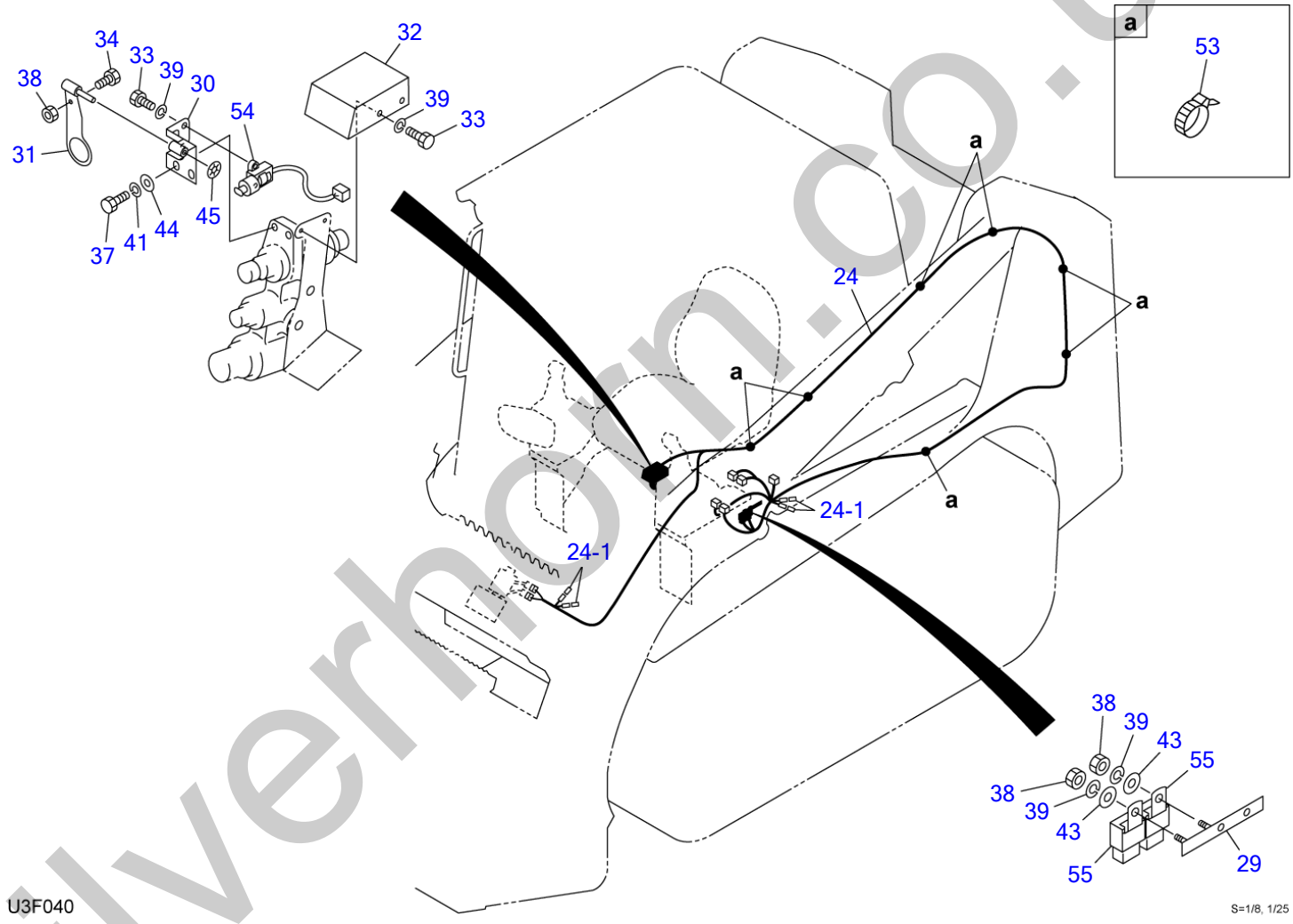

silverhorn.co.uk

QUICK ATTACHMENT (2/2) (hydraulic type)

Item	Part number	Description	Q'ty	Chan.	Serial No.	Serv.	Remarks
0	0696102000	ATTACHMENT ASSY, quick (for EU)	1			M	
	0696103000	ATTACHMENT ASSY, quick (for US)	1			M	
24	0666101240	・HARNESS, wiring	1			M	
24-1	1730500008	・・DIODE (3A yellow)	4				
29	0666100290	・BRACKET	1			M	
30	0666101300	・PLATE	1			M	
31	0666101310	・PLATE	1			M	
32	0666101320	・COVER	1			M	
33	1100040612	・BOLT	4				
34	1100040620	・BOLT	1				
37	1111840518	・BOLT	2			M	
38	1130040006	・NUT	3				
39	1140020006	・WASHER, spring	6				
41	1140020008	・WASHER, spring	2				
43	1141110006	・WASHER	2				
44	1141110008	・WASHER	2				
45	1224100009	・NUT	1			M	
53	1652241200	・BAND	7				
54	1700000043	・SWITCH	1			M	
55	1711900042	・RELAY	2				
	U3f040						

silverhorn.co.uk

QUICK HITCH (2/2) (hydraulic type)

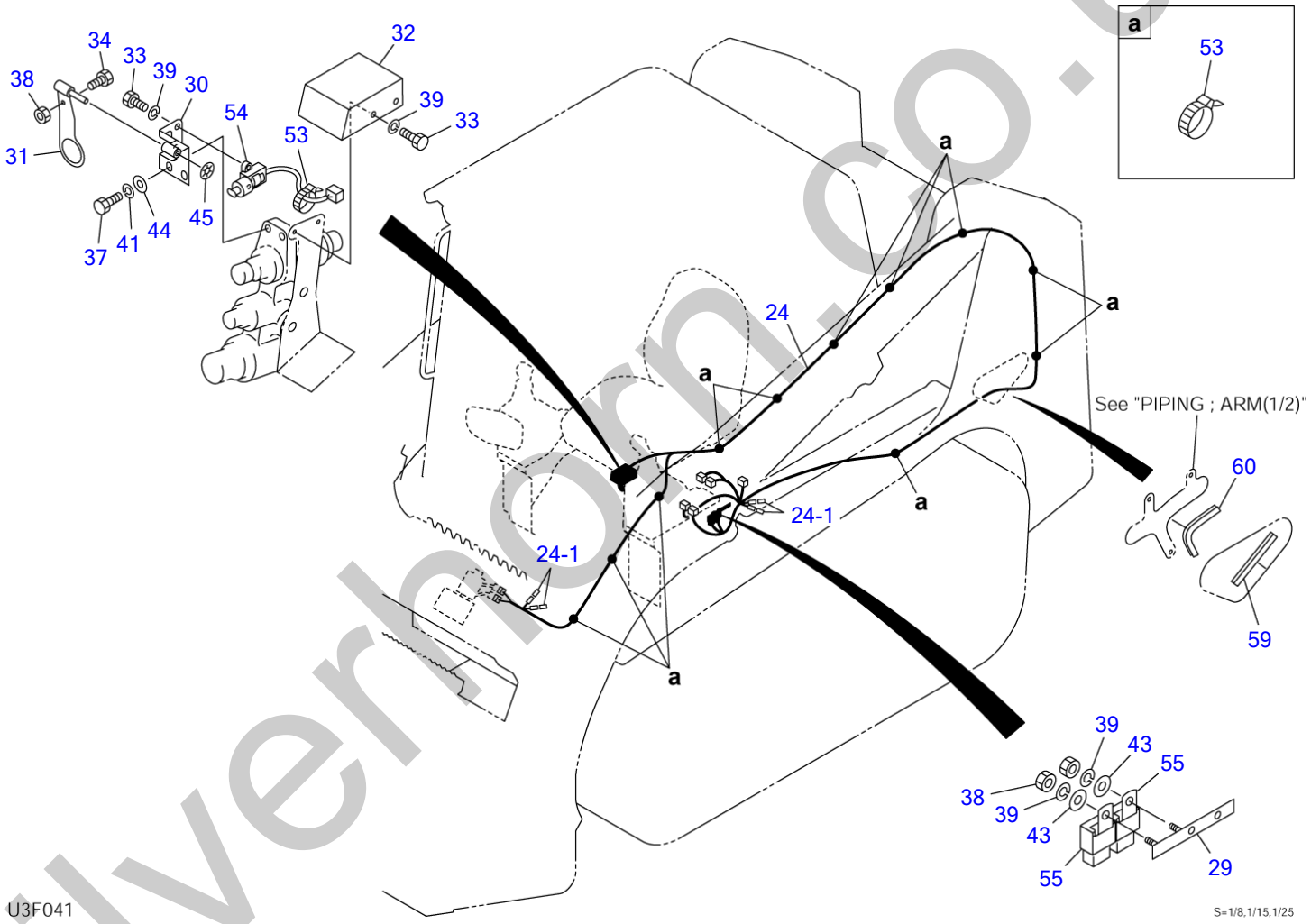

silverhorn.co.uk

QUICK HITCH (2/2) (hydraulic type)

Item	Part number	Description	Q'ty	Chan.	Serial No.	Serv.	Remarks
0	0696102000	HITCH ASSY, quick (for EU)	1				
	0696103000	HITCH ASSY, quick (for US)	1				
24	0666101240	・HARNESS, wiring	1				
24-1	1730500008	・・DIODE (3A yellow)	4				
29	0666100290	・BRACKET	1				
30	0666101300	・PLATE	1				
31	0666101310	・PLATE	1				
32	0666101320	・COVER	1				
33	1100040612	・BOLT	4				
34	1100040620	・BOLT	1				
37	1111840518	・BOLT	2				
38	1130040006	・NUT	3				
39	1140020006	・WASHER, spring	6				
41	1140020008	・WASHER, spring	2				
43	1141110006	・WASHER	2				
44	1141110008	・WASHER	2				
45	1224100009	・NUT	1				
53	1652201008	・BAND	12				
54	1700000043	・SWITCH	1				
55	1711900042	・RELAY	2				
59	1654624010	・TRIM	1			M	sold by the meter
60	1654624020	・TRIM	1			M	sold by the meter
	U3f041						

silverhorn.co.uk

BUCKET

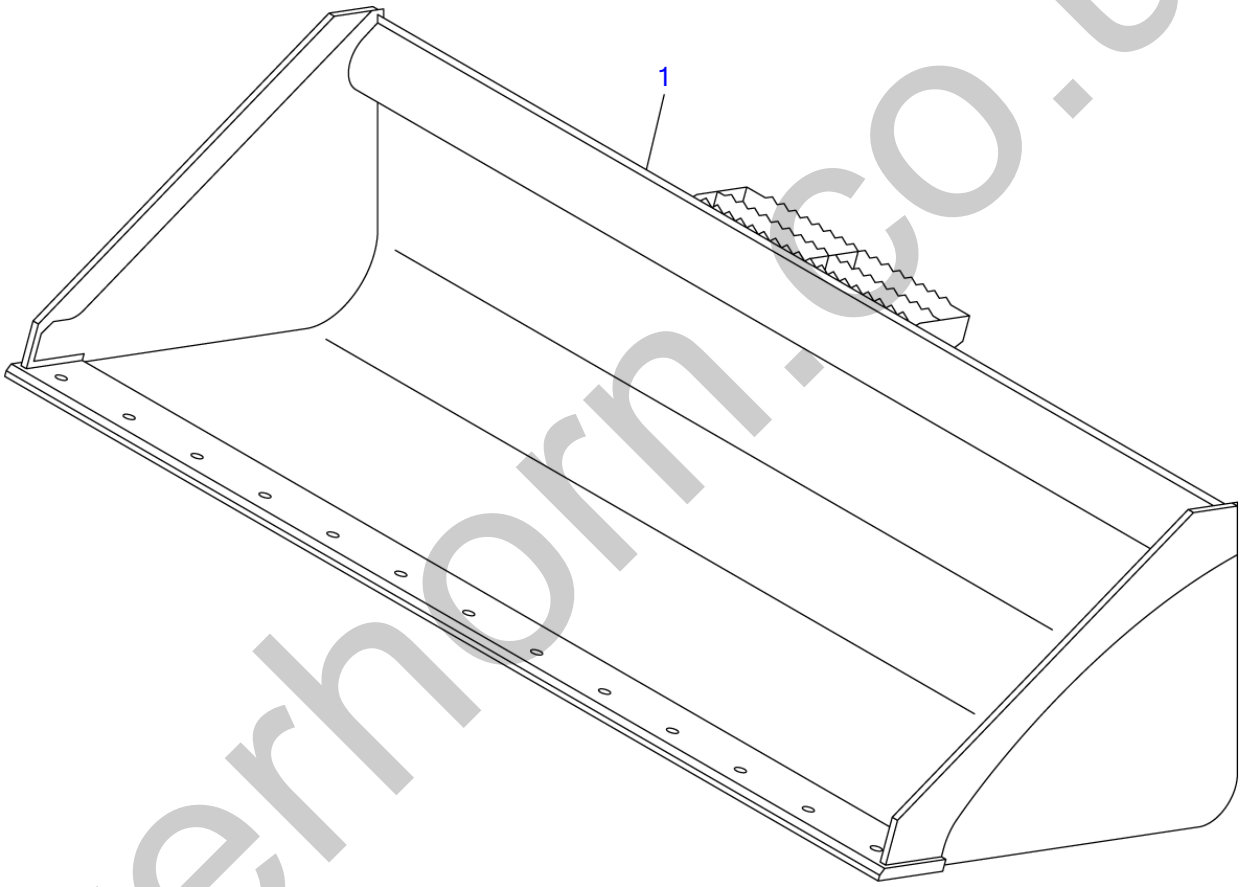

T7F030

S=1/12

silverhorn.co.uk

BUCKET

Item	Part number	Description	Q'ty	Chan.	Serial No.	Serv.	Remarks
		BUCKET ASSY (for EU)					
		BUCKET ASSY (for US)					
1	0881622600	BUCKET	1				for EU
	0881623100	BUCKET	1				for US
	T7f031						

silverhorn.co.uk

PIPING; ARM (1/2)

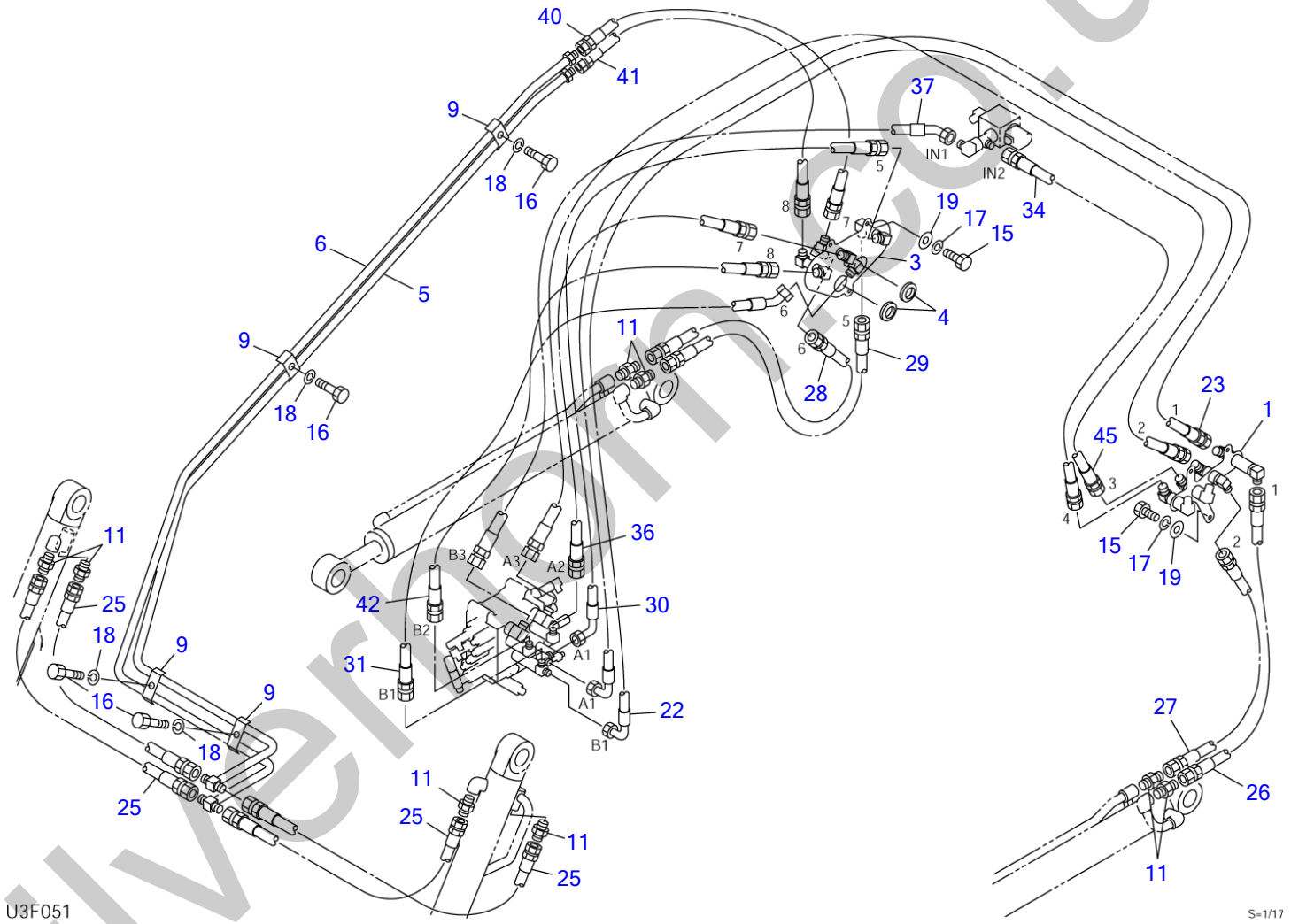

silverhorn.co.uk

PIPING; ARM (1/2)

Item	Part number	Description	Q'ty	Chan.	Serial No.	Serv.	Remarks
		PIPING ASSY					
		PIPING ASSY (with coupler)					
		PIPING ASSY (hydraulic quick hitch type)					
		PIPING ASSY (for US)					
1	0697302100	BRACKET (L.H.)	1				
3	0697301150	BRACKET (R.H.)	1				
4	1652061045	BUSHING	2				
5	0881731350	PIPE	1				
6	0881731450	PIPE	1				
9	0567320800	CLAMP	4				
11	1515600202	ADAPTOR	8				
	1420010180	・O-RING	1				
15	1100040820	BOLT	6				
16	1100041020	BOLT	4				
17	1140020008	WASHER, spring	6				
18	1140020010	WASHER, spring	4				
19	1141110008	WASHER	6				
22	0697301220	HOSE ASSY	1				18015-41142
23	0697301230	HOSE ASSY	1				18015-41145
25	0881731025	HOSE ASSY	4				
26	0697301260	HOSE ASSY	1				18015-40064
27	0697301270	HOSE ASSY	1				18015-40067
28	0697301280	HOSE ASSY	1				18015-40067
29	0697301290	HOSE ASSY	1				18015-40064
30	0697301300	HOSE ASSY	1				18015-41073
31	0697301310	HOSE ASSY	1				18015-47074
34	0697301340	HOSE ASSY	1				
36	0697301360	HOSE ASSY	1				18015-70059
37	0697301370	HOSE ASSY	1				18015-77040
40	0697301400	HOSE ASSY	1				18015-70073
41	0697300410	HOSE ASSY	1				18015-70073
42	0697301420	HOSE ASSY	1				18015-70058
45	0697301450	HOSE ASSY	1				18015-70124
	U3f051						

silverhorn.co.uk

PIPING; ARM (1/2)

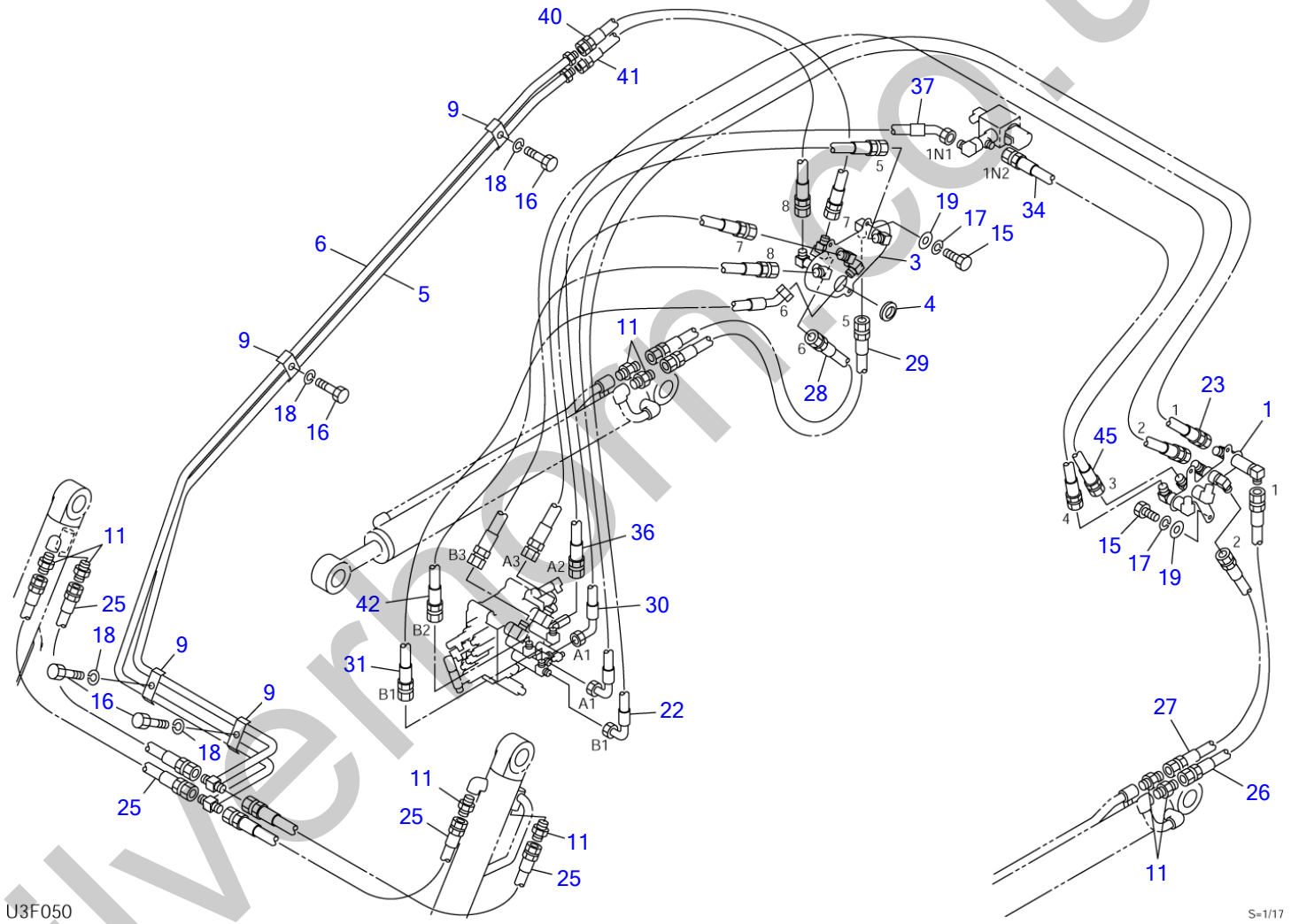

silverhorn.co.uk

PIPING; ARM (1/2)

Item	Part number	Description	Q'ty	Chan.	Serial No.	Serv.	Remarks
		PIPING ASSY					
		PIPING ASSY (with coupler)					
		PIPING ASSY (hydraulic attachment type)					
		PIPING ASSY (for US)					
1	0697302100	BRACKET (L.H.)	1			M	
3	0697301150	BRACKET (R.H.)	1			M	
4	1652061045	BUSHING	1			M	
5	0881731350	PIPE	1				
6	0881731450	PIPE	1				
9	0567320800	CLAMP	4				
11	1515600202	ADAPTOR	8				
	1420010180	▪ O-RING	1				
15	1100040820	BOLT	6				
16	1100041020	BOLT	4				
17	1140020008	WASHER, spring	6				
18	1140020010	WASHER, spring	4				
19	1141110008	WASHER	6				
22	0697301220	HOSE ASSY	1			M	18015-41142
23	0697301230	HOSE ASSY	1			M	18015-41145
25	0881731025	HOSE ASSY	4				
26	0697301260	HOSE ASSY	1			M	18015-40064
27	0697301270	HOSE ASSY	1			M	18015-40067
28	0697301280	HOSE ASSY	1			M	18015-40067
29	0697301290	HOSE ASSY	1			M	18015-40064
30	0697301300	HOSE ASSY	1			M	18015-41073
31	0697301310	HOSE ASSY	1			M	18015-47074
34	0697301340	HOSE ASSY	1			M	18015-70068
36	0697301360	HOSE ASSY	1			M	18015-70059
37	0697301370	HOSE ASSY	1			M	18015-77040
40	0697301400	HOSE ASSY	1			M	18015-70073
41	0697300410	HOSE ASSY	1			M	18015-70073
42	0697301420	HOSE ASSY	1			M	18015-70058
45	0697301450	HOSE ASSY	1			M	18015-70124
	U3f050						

silverhorn.co.uk

PIPING; ARM (2/2)

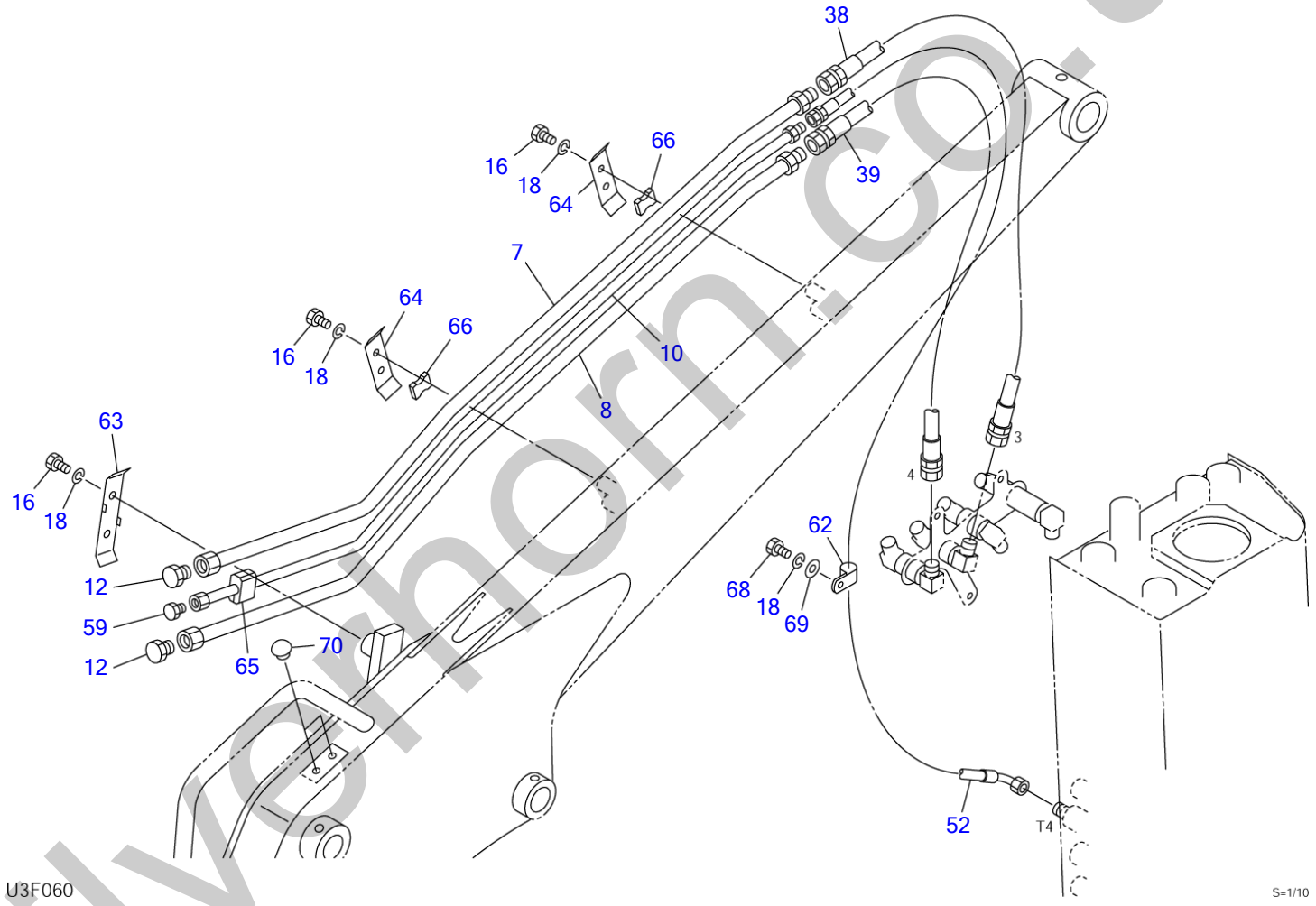

silverhorn.co.uk

PIPING; ARM (2/2)

Item	Part number	Description	Q'ty	Chan.	Serial No.	Serv.	Remarks
		PIPING ASSY					
7	0881737510	PIPE	1				
8	0881737520	PIPE	1				
10	0881737530	PIPE	1				
12	1501750006	PLUG	2				
	1420010240	・O-RING	1				
16	1100041020	BOLT	6				
18	1140020010	WASHER, spring	7				
38	0881733038	HOSE ASSY	1				
39	0881731039	HOSE ASSY	1				
52	0697301520	HOSE ASSY	1				18010-53118
59	1501750003	PLUG	1				
	1420010140	・O-RING	1				
62	0007300001	CLAMP	1				
63	0881733550	CLAMP	1				
64	0881733570	CLAMP	2				
65	0881733590	RUBBER	1				
66	0881733600	RUBBER	2				
68	1100041016	BOLT	1				
69	1141110010	WASHER	1				
70	1652533018	CAP	2				
	U3f061						

silverhorn.co.uk

PIPING; ARM (2/2) (with coupler, hydraulic quick hitch type)

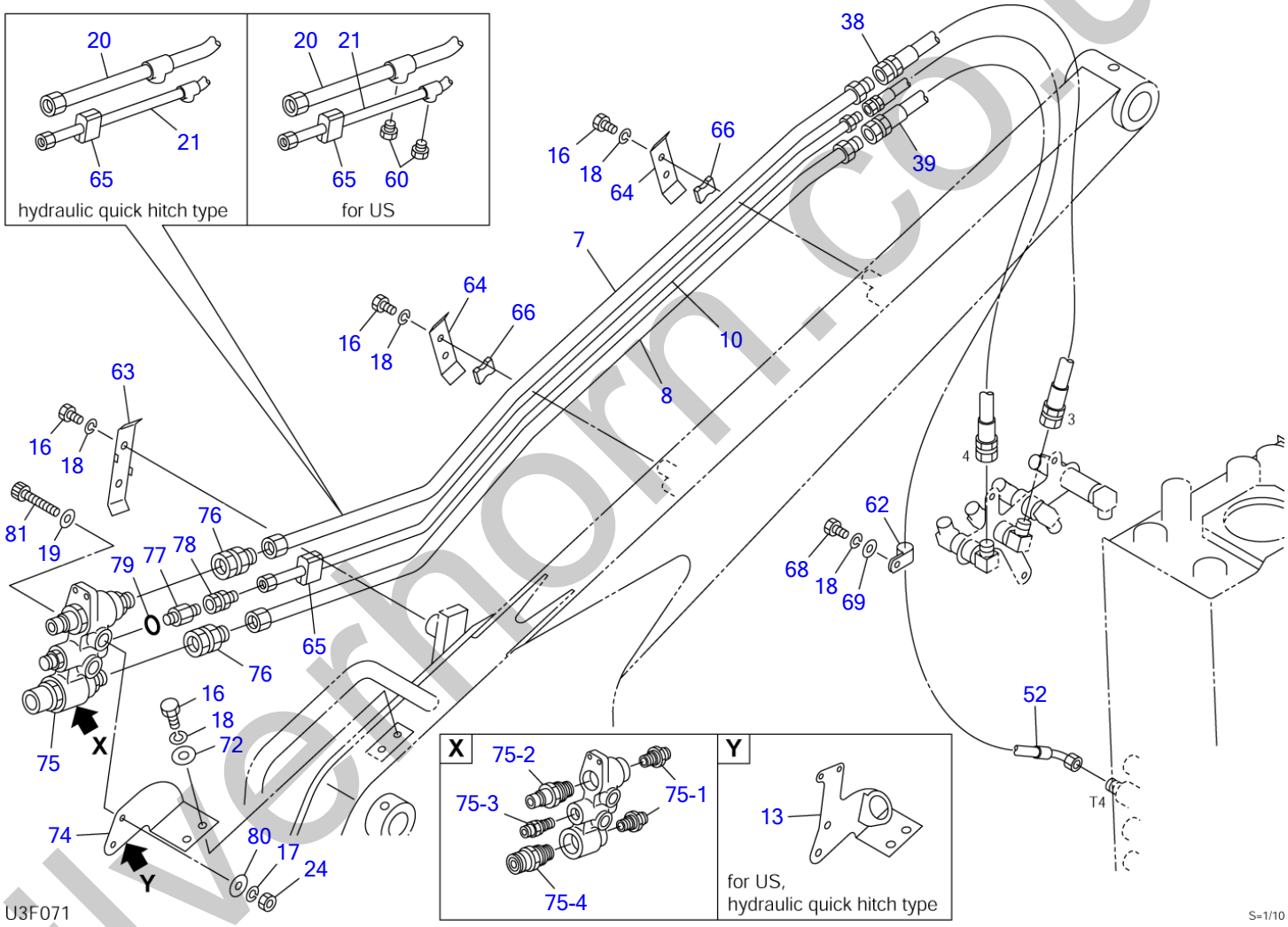

silvernorn.co.uk

PIPING; ARM (2/2) (with coupler, hydraulic quick hitch type)

Item	Part number	Description	Q'ty	Chan.	Serial No.	Serv.	Remarks
		PIPING ASSY (with coupler) PIPING ASSY (hydraulic quick hitch type) PIPING ASSY (for US)					
7	0881737510	PIPE	1				with coupler
8	0881737520	PIPE	1				
10	0881737530	PIPE	1				with coupler
13	0697300130	BRACKET	1				hydraulic quick hitch type, for US
16	1100041020	BOLT	8				
17	1140020008	WASHER, spring	2				
18	1140020010	WASHER, spring	9				
19	1141110008	WASHER	2				
20	0697303200	PIPE	1				hydraulic quick hitch type, for US
21	0697303210	PIPE	1				hydraulic quick hitch type, for US
24	1130040008	NUT	2				
38	0881733038	HOSE ASSY	1				
39	0881731039	HOSE ASSY	1				
52	0697301520	HOSE ASSY	1				18010-53118
60	1501750002	PLUG	2				for US
	1420010110	・O-RING	1				
62	0007300001	CLAMP	1				
63	0881733550	CLAMP	1				
64	0881733570	CLAMP	2				
65	0881733590	RUBBER	1				
66	0881733600	RUBBER	2				
68	1100041016	BOLT	1				
69	1141110010	WASHER	1				
72	0003600020	WASHER	2				
74	0881733530	BRACKET	1				with coupler
75	1901747000	COUPLER, block	1				
75-1	1901747001	・ADAPTOR	2				
75-2	1901747002	・ADAPTOR	1				
75-3	1901747003	・ADAPTOR	1				
75-4	1901747004	・ADAPTOR	1				
76	0007236044	ADAPTOR	2				
77	0007203017	NIPPLE	1				
	1420310906	・O-RING	1				
78	1511410003	ADAPTOR	1				
	1420010140	・O-RING	1				
79	1420310906	O-RING	1				
80	0003608252	WASHER	2				
81	1110040865	SCREW, cap	2				
	U3f071						

silverthorn.co.uk

PIPING; ARM (2/2) (with coupler, hydraulic attachment type)

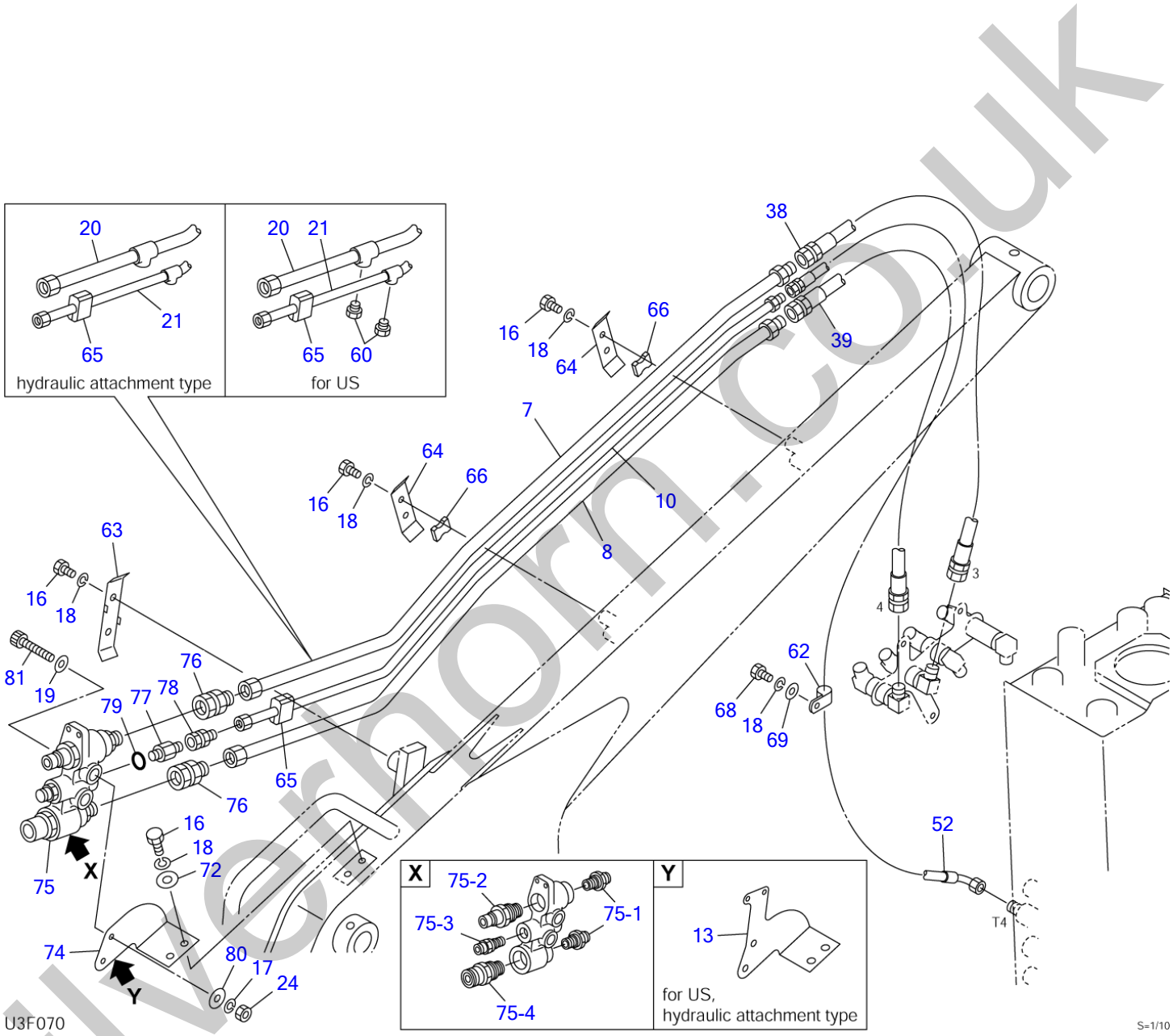

silvernorn.co.uk

PIPING; ARM (2/2) (with coupler, hydraulic attachment type)

Item	Part number	Description	Q'ty	Chan.	Serial No.	Serv.	Remarks
		PIPING ASSY (with coupler) PIPING ASSY (hydraulic attachment type) PIPING ASSY (for US)					
7	0881737510	PIPE	1				with coupler
8	0881737520	PIPE	1				
10	0881737530	PIPE	1				with coupler
13	0697300130	BRACKET	1			M	hydraulic attachment type, for US
16	1100041020	BOLT	8				
17	1140020008	WASHER, spring	2				
18	1140020010	WASHER, spring	9				
19	1141110008	WASHER	2				
20	0697303200	PIPE	1			M	hydraulic attachment type, for US
21	0697303210	PIPE	1			M	hydraulic attachment type, for US
24	1130040008	NUT	2				
38	0881733038	HOSE ASSY	1				
39	0881731039	HOSE ASSY	1				
52	0697301520	HOSE ASSY	1			M	18010-53106
60	1501750002	PLUG	2				for US
	1420010110	・O-RING	1				
62	0007300001	CLAMP	1				
63	0881733550	CLAMP	1				
64	0881733570	CLAMP	2				
65	0881733590	RUBBER	1				
66	0881733600	RUBBER	2				
68	1100041016	BOLT	1				
69	1141110010	WASHER	1				
72	0003600020	WASHER	2				
74	0881733530	BRACKET	1				with coupler
75	1901747000	COUPLER, block	1				
75-1	1901747001	・ADAPTOR	2				
75-2	1901747002	・ADAPTOR	1				
75-3	1901747003	・ADAPTOR	1				
75-4	1901747004	・ADAPTOR	1				
76	0007236044	ADAPTOR	2				
77	0007203017	NIPPLE	1				
	1420310906	・O-RING	1				
78	1511410003	ADAPTOR	1				
	1420010140	・O-RING	1				
79	1420310906	O-RING	1				
80	0003608252	WASHER	2				
81	1110040865	SCREW, cap	2				
	U3f070						

silverthorn.co.uk

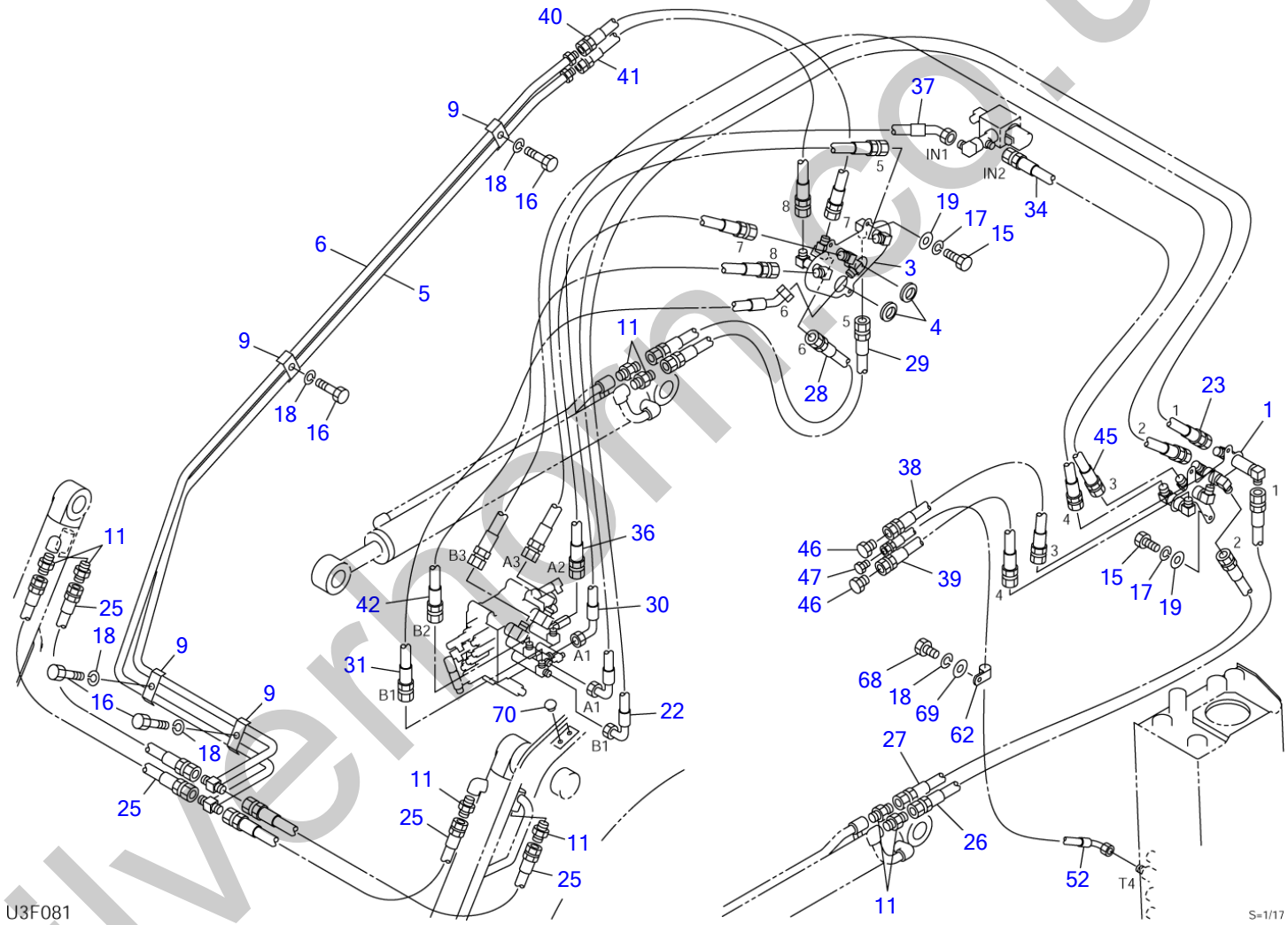

silverhorn.co.uk

PIPING; ARM (for GEHL & MUSTANG)

Item	Part number	Description	Q'ty	Chan.	Serial No.	Serv.	Remarks
		PIPING ASSY (for GEHL & MUSTANG)					
1	0697302100	BRACKET (L.H.)	1				
3	0697301150	BRACKET (R.H.)	1				
4	1652061045	BUSHING	2				
5	0881731350	PIPE	1				
6	0881731450	PIPE	1				
9	0567320800	CLAMP	4				
11	1515600202	ADAPTOR	8				
	1420010180	・O-RING	1				
15	1100040820	BOLT	6				
16	1100041020	BOLT	4				
17	1140020008	WASHER, spring	6				
18	1140020010	WASHER, spring	5				
19	1141110008	WASHER	6				
22	0697301220	HOSE ASSY	1				18015-41142
23	0697301230	HOSE ASSY	1				18015-41145
25	0881731025	HOSE ASSY	4				
26	0697301260	HOSE ASSY	1				18015-40064
27	0697301270	HOSE ASSY	1				18015-40067
28	0697301280	HOSE ASSY	1				18015-40067
29	0697301290	HOSE ASSY	1				18015-40064
30	0697301300	HOSE ASSY	1				18015-41073
31	0697301310	HOSE ASSY	1				18015-47074
34	0697301340	HOSE ASSY	1				
36	0697301360	HOSE ASSY	1				18015-70059
37	0697301370	HOSE ASSY	1				18015-77040
38	0881733038	HOSE ASSY	1				
39	0881731039	HOSE ASSY	1				
40	0697301400	HOSE ASSY	1				18015-70073
41	0697300410	HOSE ASSY	1				18015-70073
42	0697301420	HOSE ASSY	1				18015-70058
45	0697301450	HOSE ASSY	1				18015-70124
46	1513940004	PLUG	2				
47	1513940003	PLUG	1				
52	0697301520	HOSE ASSY	1				18010-53118
62	0007300001	CLAMP	1				
68	1100041016	BOLT	1				
69	1141110010	WASHER	1				
70	1652533018	CAP	2				
	U3f081						

silverhorn.co.uk

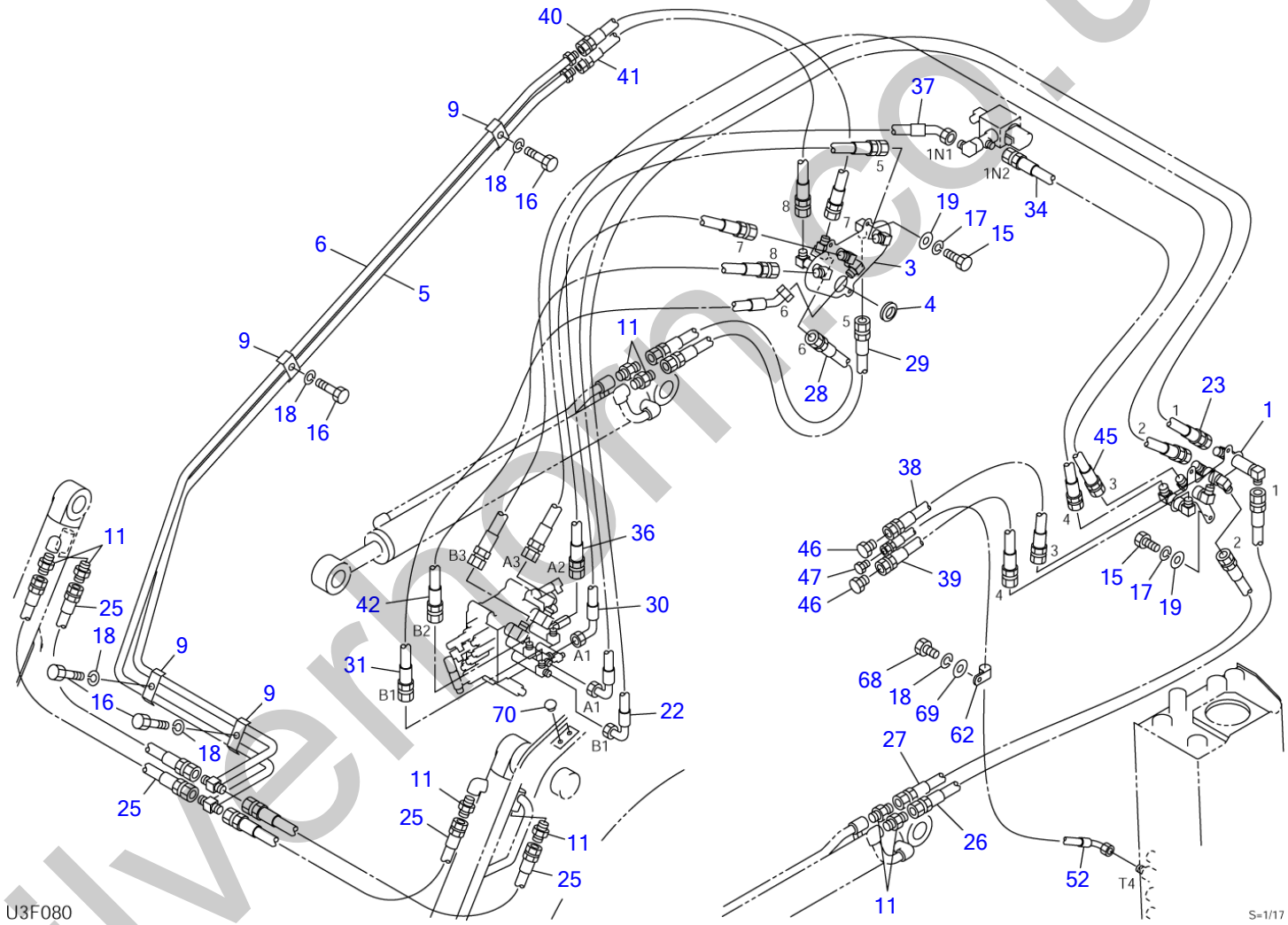

silverhorn.co.uk

PIPING; ARM (for GEHL & MUSTANG)

Item	Part number	Description	Q'ty	Chan.	Serial No.	Serv.	Remarks
		PIPING ASSY (for GEHL & MUSTANG)					
1	0697302100	BRACKET (L.H.)	1			M	
3	0697301150	BRACKET (R.H.)	1			M	
4	1652061045	BUSHING	1			M	
5	0881731350	PIPE	1				
6	0881731450	PIPE	1				
9	0567320800	CLAMP	4				
11	1515600202	ADAPTOR	8				
	1420010180	・O-RING	1				
15	1100040820	BOLT	6				
16	1100041020	BOLT	4				
17	1140020008	WASHER, spring	6				
18	1140020010	WASHER, spring	5				
19	1141110008	WASHER	6				
22	0697301220	HOSE ASSY	1			M	18015-41142
23	0697301230	HOSE ASSY	1			M	18015-41145
25	0881731025	HOSE ASSY	4				
26	0697301260	HOSE ASSY	1			M	18015-40064
27	0697301270	HOSE ASSY	1			M	18015-40067
28	0697301280	HOSE ASSY	1			M	18015-40067
29	0697301290	HOSE ASSY	1			M	18015-40064
30	0697301300	HOSE ASSY	1			M	18015-41073
31	0697301310	HOSE ASSY	1			M	18015-47074
34	0697301340	HOSE ASSY	1			M	18015-70068
36	0697301360	HOSE ASSY	1			M	18015-70059
37	0697301370	HOSE ASSY	1			M	18015-77040
38	0881733038	HOSE ASSY	1				
39	0881731039	HOSE ASSY	1				
40	0697301400	HOSE ASSY	1			M	18015-70073
41	0697300410	HOSE ASSY	1			M	18015-70073
42	0697301420	HOSE ASSY	1			M	18015-70058
45	0697301450	HOSE ASSY	1			M	18015-70124
46	1513940004	PLUG	2				
47	1513940003	PLUG	1				
52	0697301520	HOSE ASSY	1			M	18010-53106
62	0007300001	CLAMP	1				
68	1100041016	BOLT	1				
69	1141110010	WASHER	1				
70	1652533018	CAP	2				
	U3f080						

silverhorn.co.uk

PIPING; ARM (1/2) (high flow)

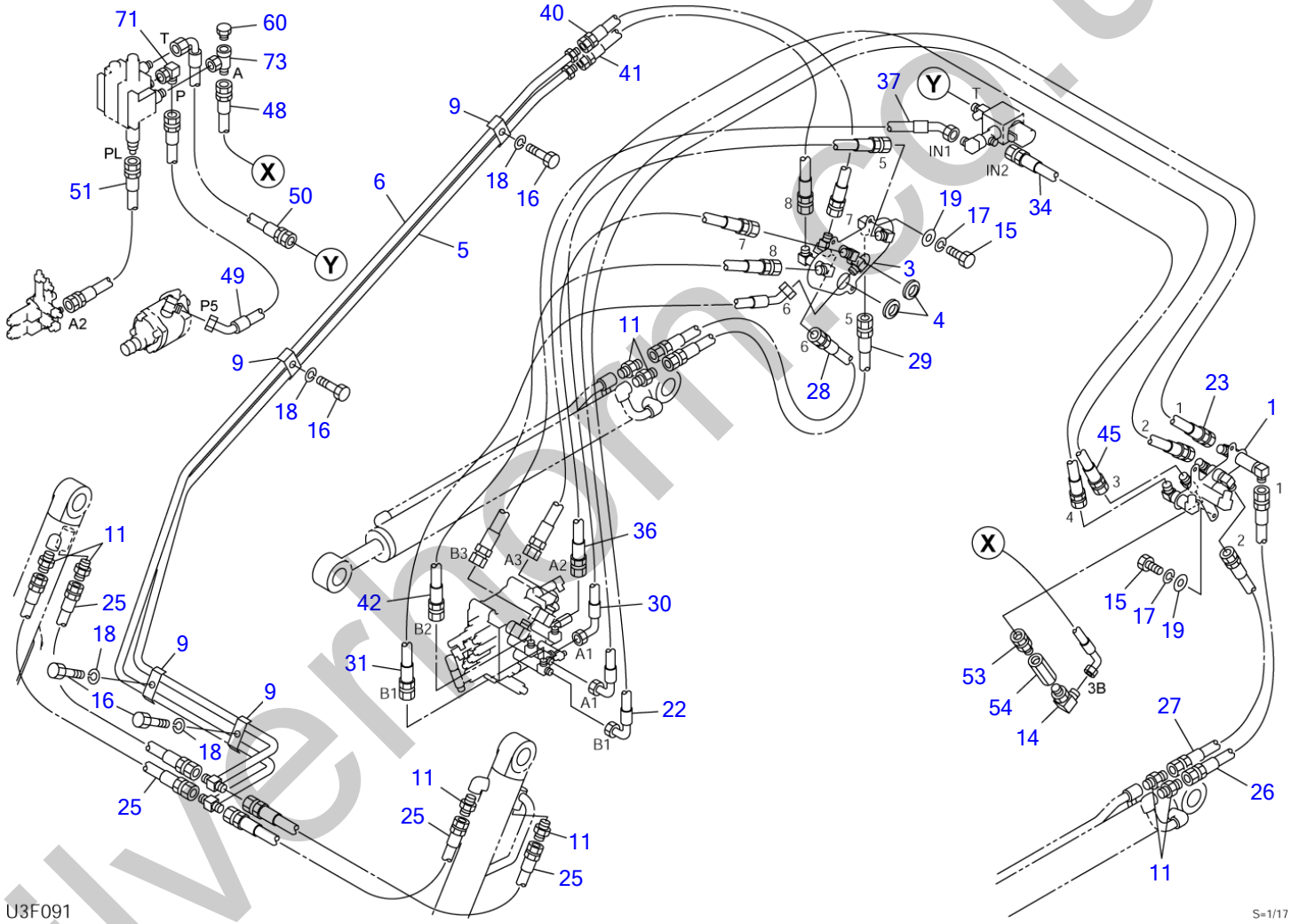

silverhorn.co.uk

PIPING; ARM (1/2) (high flow)

Item	Part number	Description	Q'ty	Chan.	Serial No.	Serv.	Remarks
		PIPING ASSY					
		PIPING ASSY (with coupler)					
		PIPING ASSY (hydraulic quick hitch type)					
		PIPING ASSY (for US)					
1	0697305100	BRACKET (L.H.)	1				
3	0697301150	BRACKET (R.H.)	1				
4	1652061045	BUSHING	2				
5	0881731350	PIPE	1				
6	0881731450	PIPE	1				
9	0567320800	CLAMP	4				
11	1515600202	ADAPTOR	8				
	1420010180	・O-RING	1				
14	1515010042	ELBOW	1				
	1420010180	・O-RING	1				
15	1100040820	BOLT	6				
16	1100041020	BOLT	4				
17	1140020008	WASHER, spring	6				
18	1140020010	WASHER, spring	4				
19	1141110008	WASHER	6				
22	0697301220	HOSE ASSY	1				18015-41142
23	0697301230	HOSE ASSY	1				18015-41145
25	0881731025	HOSE ASSY	4				
26	0697301260	HOSE ASSY	1				18015-40064
27	0697301270	HOSE ASSY	1				18015-40067
28	0697301280	HOSE ASSY	1				18015-40067
29	0697301290	HOSE ASSY	1				18015-40064
30	0697301300	HOSE ASSY	1				18015-41073
31	0697301310	HOSE ASSY	1				18015-47074
34	0697305340	HOSE ASSY	1				18015-50070
36	0697301360	HOSE ASSY	1				18015-70059
37	0697301370	HOSE ASSY	1				18015-77040
40	0697301400	HOSE ASSY	1				18015-70073
41	0697300410	HOSE ASSY	1				18015-70073
42	0697301420	HOSE ASSY	1				18015-70058
45	0697301450	HOSE ASSY	1				18015-70124
48	0697305480	HOSE ASSY	1				18015-71183
49	0697305490	HOSE ASSY	1				18015-77235
50	0881735500	HOSE ASSY	1				
51	0697305510	HOSE ASSY	1				18010-52145
53	0007236041	ADAPTOR	1				
	1420010180	・O-RING	1				
54	1901743200	VALVE, check	1				
60	1501750002	PLUG	1				
	1420010110	・O-RING	1				
71	1513390016	ELBOW	1				
73	1513390044	TEE	1				
	U3f091						

silverthorn.co.uk

PIPING; ARM (1/2) (high flow)

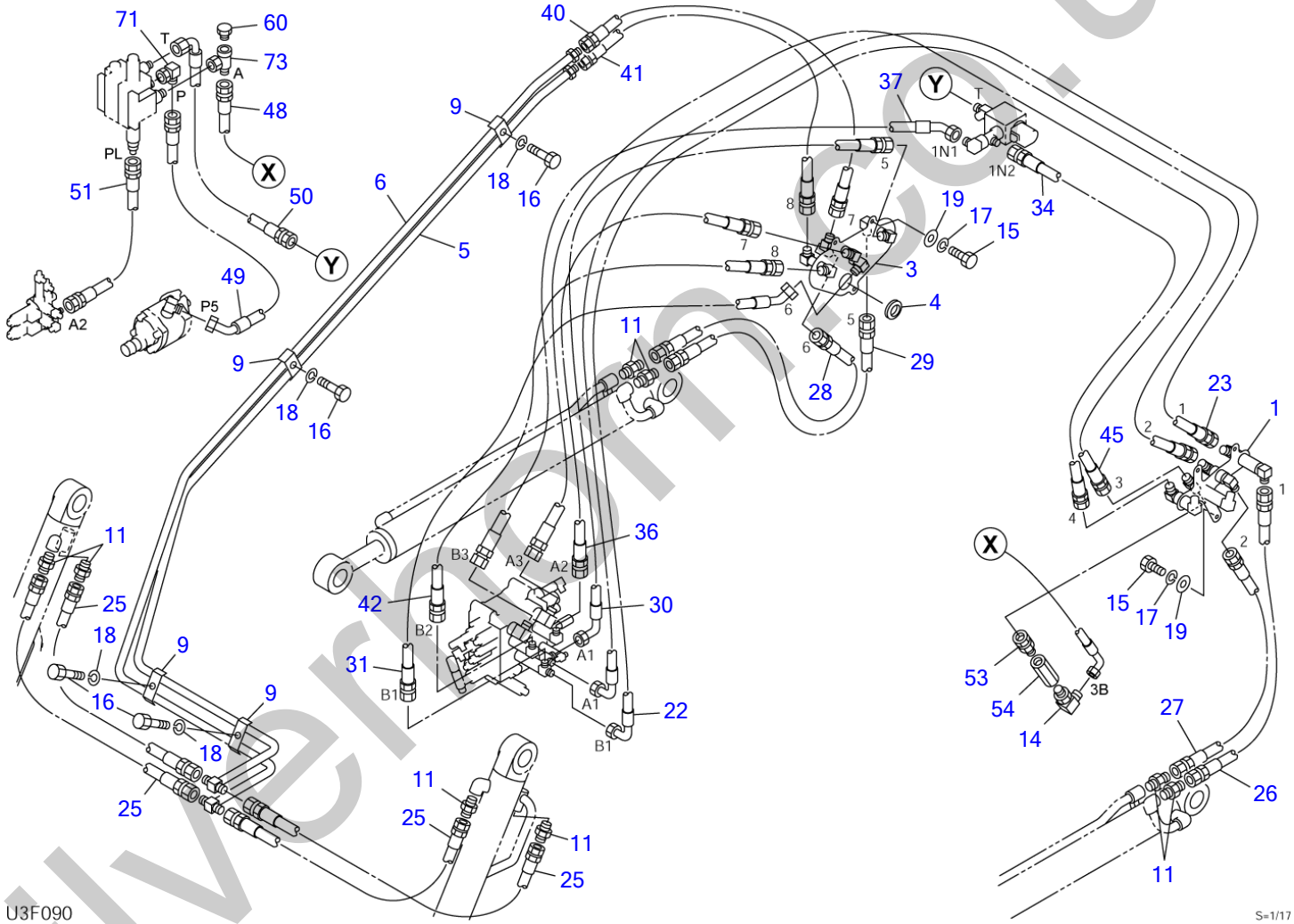

silverhorn.co.uk

PIPING; ARM (1/2) (high flow)

Item	Part number	Description	Q'ty	Chan.	Serial No.	Serv.	Remarks
		PIPING ASSY					
		PIPING ASSY (with coupler)					
		PIPING ASSY (hydraulic attachment type)					
		PIPING ASSY (for US)					
1	0697305100	BRACKET (L.H.)	1			M	
3	0697301150	BRACKET (R.H.)	1			M	
4	1652061045	BUSHING	1			M	
5	0881731350	PIPE	1				
6	0881731450	PIPE	1				
9	0567320800	CLAMP	4				
11	1515600202	ADAPTOR	8				
	1420010180	・O-RING	1				
14	1515010042	ELBOW	1				
	1420010180	・O-RING	1				
15	1100040820	BOLT	6				
16	1100041020	BOLT	4				
17	1140020008	WASHER, spring	6				
18	1140020010	WASHER, spring	4				
19	1141110008	WASHER	6				
22	0697301220	HOSE ASSY	1			M	18015-41142
23	0697301230	HOSE ASSY	1			M	18015-41145
25	0881731025	HOSE ASSY	4				
26	0697301260	HOSE ASSY	1			M	18015-40064
27	0697301270	HOSE ASSY	1			M	18015-40067
28	0697301280	HOSE ASSY	1			M	18015-40067
29	0697301290	HOSE ASSY	1			M	18015-40064
30	0697301300	HOSE ASSY	1			M	18015-41073
31	0697301310	HOSE ASSY	1			M	18015-47074
34	0697305340	HOSE ASSY	1			M	18015-50070
36	0697301360	HOSE ASSY	1			M	18015-70059
37	0697301370	HOSE ASSY	1			M	18015-77040
40	0697301400	HOSE ASSY	1			M	18015-70073
41	0697300410	HOSE ASSY	1			M	18015-70073
42	0697301420	HOSE ASSY	1			M	18015-70058
45	0697301450	HOSE ASSY	1			M	18015-70124
48	0697305480	HOSE ASSY	1			M	18015-71183
49	0697305490	HOSE ASSY	1			M	18015-77235
50	0881735500	HOSE ASSY	1				
51	0697305510	HOSE ASSY	1			M	18010-52145
53	0007236041	ADAPTOR	1				
	1420010180	・O-RING	1				
54	1901743200	VALVE, check	1				
60	1501750002	PLUG	1				
	1420010110	・O-RING	1				
71	1513390016	ELBOW	1			M	
73	1513390044	TEE	1				
	U3f090						

silverthorn.co.uk

PIPING; ARM (2/2) (high flow)

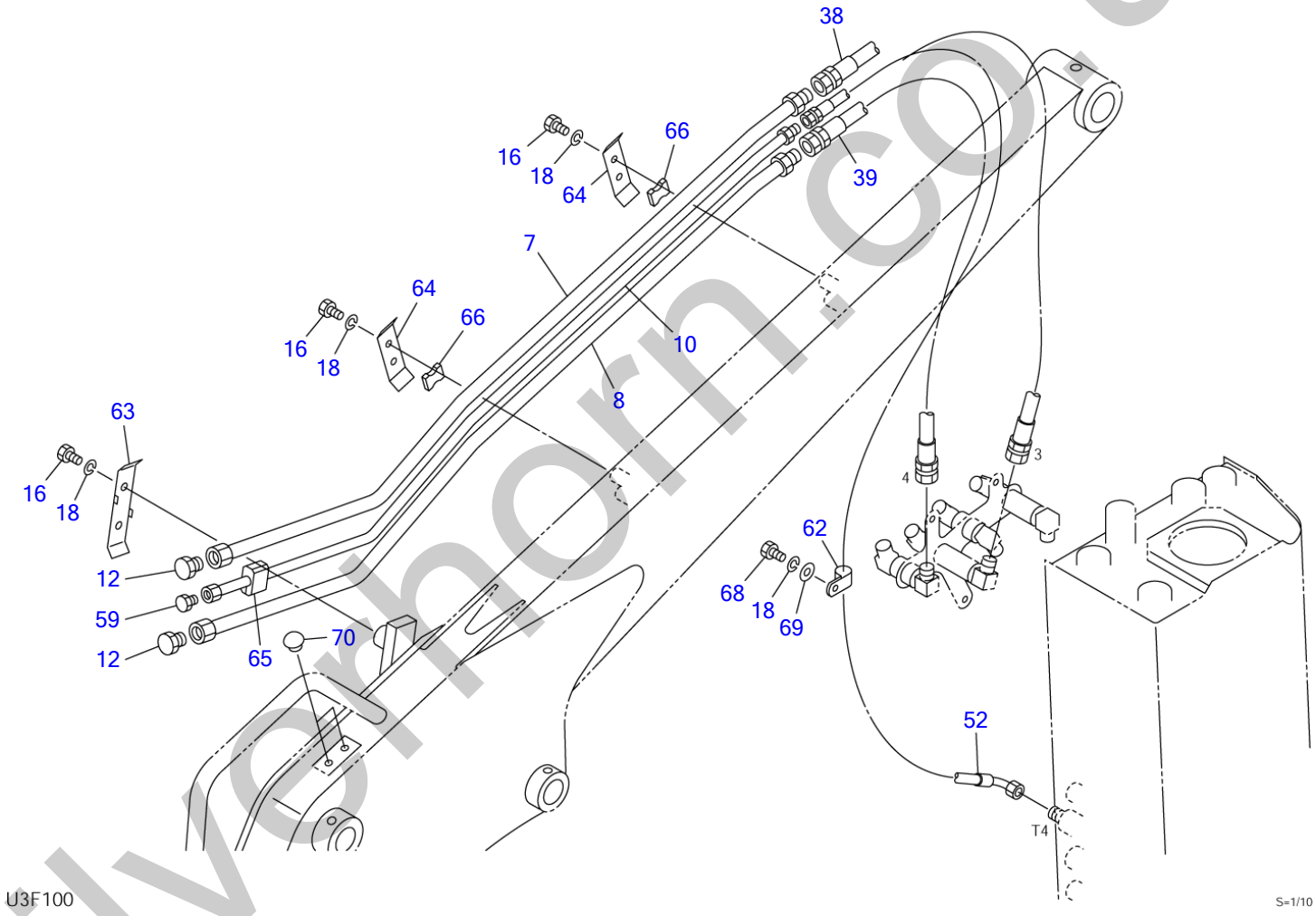

silverhorn.co.uk

PIPING; ARM (2/2) (high flow)

Item	Part number	Description	Q'ty	Chan.	Serial No.	Serv.	Remarks
		PIPING ASSY					
7	0697300610	PIPE	1				
8	0697300620	PIPE	1				
10	0881737530	PIPE	1				
12	1501750006	PLUG	2				
	1420010240	・O-RING	1				
16	1100041020	BOLT	6				
18	1140020010	WASHER, spring	7				
38	0881735380	HOSE ASSY	1				18015-50076
39	0881738050	HOSE ASSY	1				18015-50080
52	0697301520	HOSE ASSY	1				18010-53118
59	1501750003	PLUG	1				
	1420010140	・O-RING	1				
62	0007300001	CLAMP	1				
63	0881733550	CLAMP	1				
64	0881733570	CLAMP	2				
65	0881733590	RUBBER	1				
66	0881733600	RUBBER	2				
68	1100041016	BOLT	1				
69	1141110010	WASHER	1				
70	1652533018	CAP	2				
	U3f101						

silverhorn.co.uk

PIPING; ARM (2/2) (high flow, with coupler, hydraulic quick hitch type)

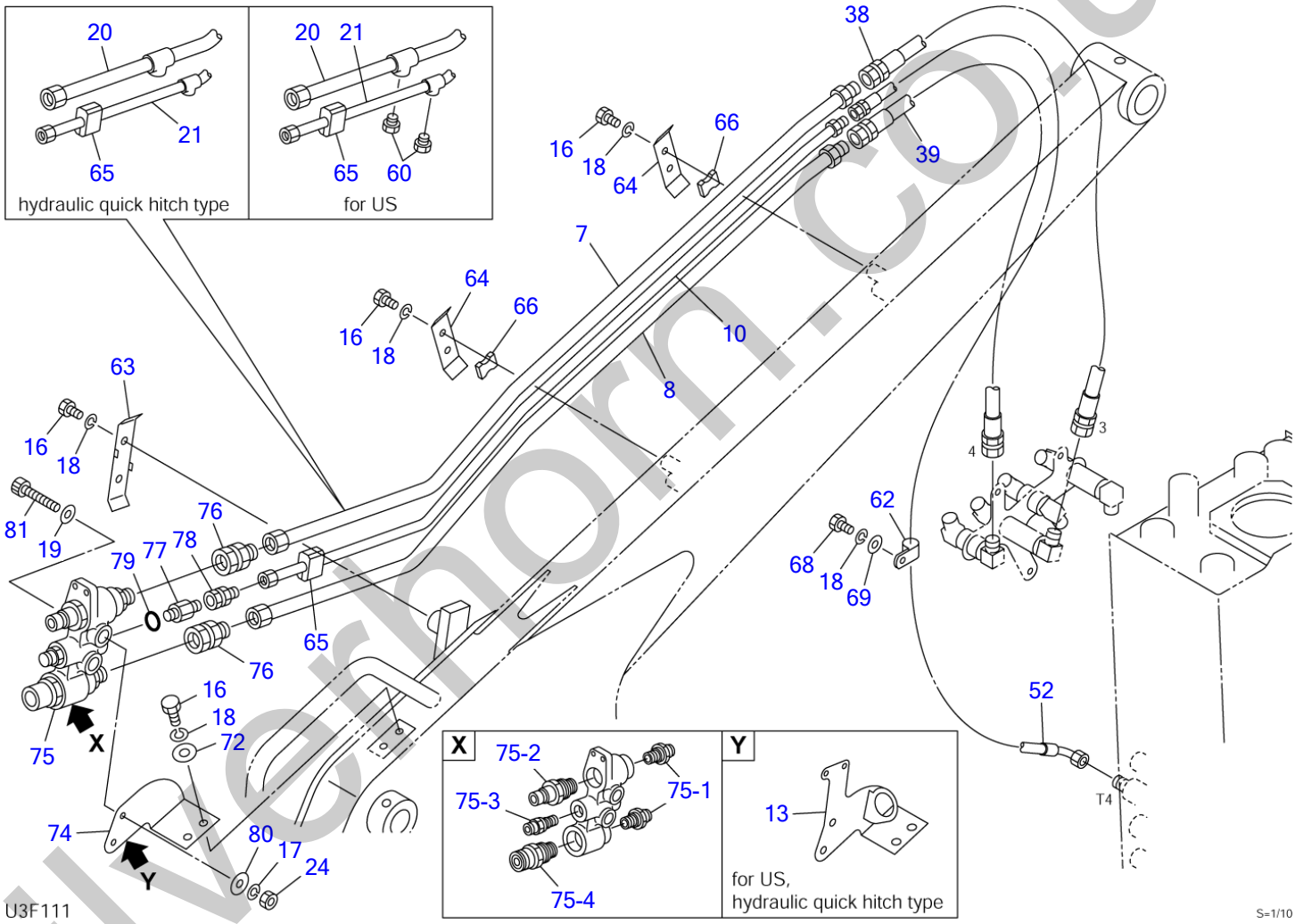

silvernorn.co.uk

PIPING; ARM (2/2) (high flow, with coupler, hydraulic quick hitch type)

Item	Part number	Description	Q'ty	Chan.	Serial No.	Serv.	Remarks
		PIPING ASSY (with coupler) PIPING ASSY (hydraulic quick hitch type) PIPING ASSY (for US)					
7	0697300610	PIPE	1				with coupler
8	0697300620	PIPE	1				
10	0881737530	PIPE	1				with coupler
13	0697300130	BRACKET	1				hydraulic quick hitch type, for US
16	1100041020	BOLT	8				
17	1140020008	WASHER, spring	2				
18	1140020010	WASHER, spring	9				
19	1141110008	WASHER	2				
20	0697307200	PIPE	1				hydraulic quick hitch type, for US
21	0697303210	PIPE	1				hydraulic quick hitch type, for US
24	1130040008	NUT	2				
38	0881735380	HOSE ASSY	1				18015-50076
39	0881738050	HOSE ASSY	1				18015-50080
52	0697301520	HOSE ASSY	1				18010-53118
60	1501750002	PLUG	2				for US
	1420010110	・O-RING	1				
62	0007300001	CLAMP	1				
63	0881733550	CLAMP	1				
64	0881733570	CLAMP	2				
65	0881733590	RUBBER	1				
66	0881733600	RUBBER	2				
68	1100041016	BOLT	1				
69	1141110010	WASHER	1				
72	0003600020	WASHER	2				
74	0881733530	BRACKET	1				with coupler
75	1901747000	COUPLER, block	1				
75-1	1901747001	・ADAPTOR	2				
75-2	1901747002	・ADAPTOR	1				
75-3	1901747003	・ADAPTOR	1				
75-4	1901747004	・ADAPTOR	1				
76	0007236044	ADAPTOR	2				
77	0007203017	NIPPLE	1				
	1420310906	・O-RING	1				
78	1511410003	ADAPTOR	1				
	1420010140	・O-RING	1				
79	1420310906	O-RING	1				
80	0003608252	WASHER	2				
81	1110040865	SCREW, cap	2				
	U3f111						

silverthorn.co.uk

PIPING; ARM (2/2) (high flow, with coupler, hydraulic attachment type)

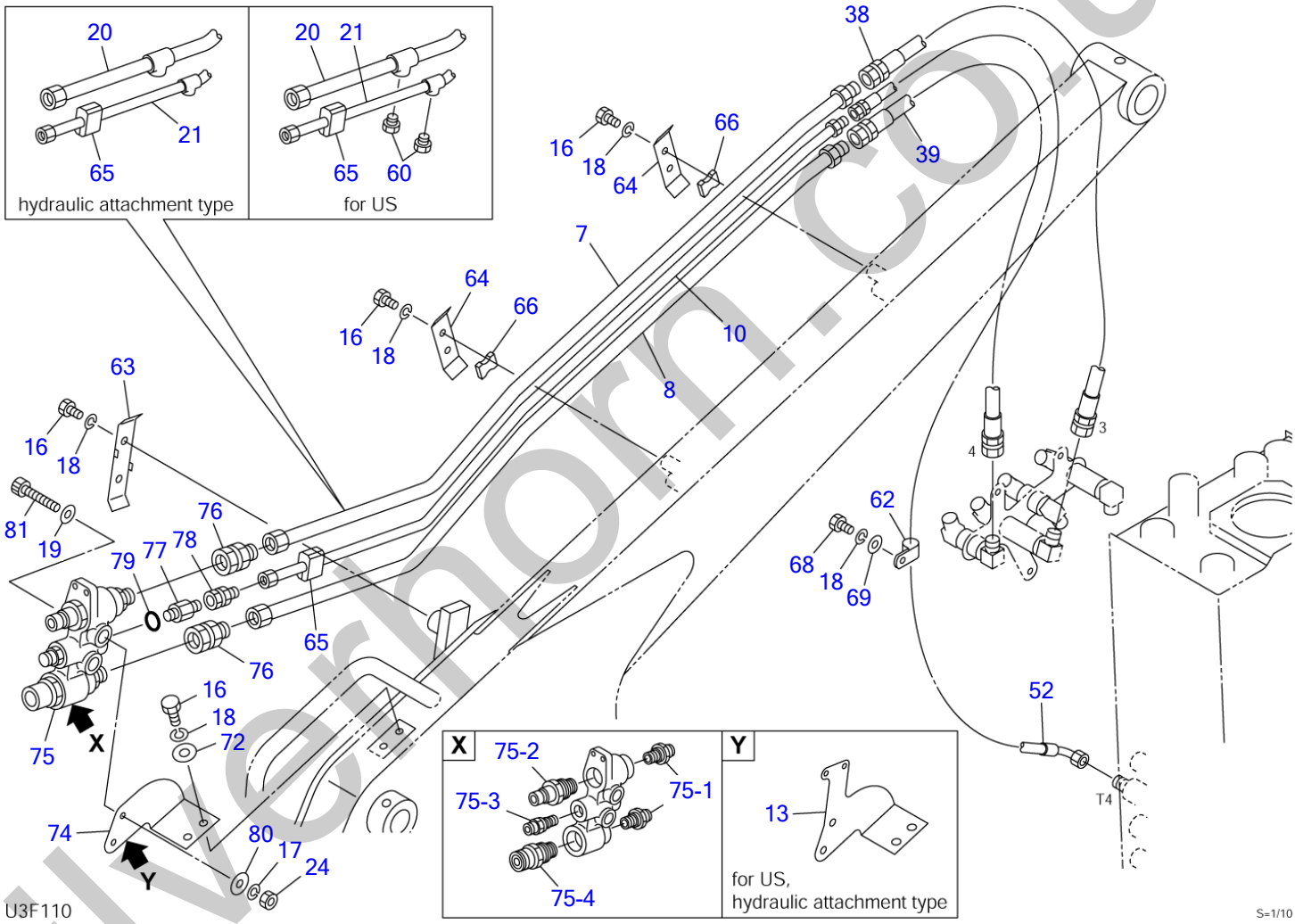

silvernorn.co.uk

PIPING; ARM (2/2) (high flow, with coupler, hydraulic attachment type)

Item	Part number	Description	Q'ty	Chan.	Serial No.	Serv.	Remarks
		PIPING ASSY (with coupler) PIPING ASSY (hydraulic attachment type) PIPING ASSY (for US)					
7	0697300610	PIPE	1			M	with coupler
8	0697300620	PIPE	1			M	
10	0881737530	PIPE	1				with coupler
13	0697300130	BRACKET	1			M	hydraulic attachment type, for US
16	1100041020	BOLT	8				
17	1140020008	WASHER, spring	2				
18	1140020010	WASHER, spring	9				
19	1141110008	WASHER	2				
20	0697307200	PIPE	1			M	hydraulic attachment type, for US
21	0697303210	PIPE	1			M	hydraulic attachment type, for US
24	1130040008	NUT	2				
38	0881735380	HOSE ASSY	1				18015-50076
39	0881738050	HOSE ASSY	1				18015-50080
52	0697301520	HOSE ASSY	1			M	18010-53106
60	1501750002	PLUG	2				for US
	1420010110	・O-RING	1				
62	0007300001	CLAMP	1				
63	0881733550	CLAMP	1				
64	0881733570	CLAMP	2				
65	0881733590	RUBBER	1				
66	0881733600	RUBBER	2				
68	1100041016	BOLT	1				
69	1141110010	WASHER	1				
72	0003600020	WASHER	2				
74	0881733530	BRACKET	1				with coupler
75	1901747000	COUPLER, block	1				
75-1	1901747001	・ADAPTOR	2				
75-2	1901747002	・ADAPTOR	1				
75-3	1901747003	・ADAPTOR	1				
75-4	1901747004	・ADAPTOR	1				
76	0007236044	ADAPTOR	2				
77	0007203017	NIPPLE	1				
	1420310906	・O-RING	1				
78	1511410003	ADAPTOR	1				
	1420010140	・O-RING	1				
79	1420310906	O-RING	1				
80	0003608252	WASHER	2				
81	1110040865	SCREW, cap	2				
	U3f110						

silverthorn.co.uk

PIPING; ARM (1/2) (high flow, for GEHL & MUSTANG)

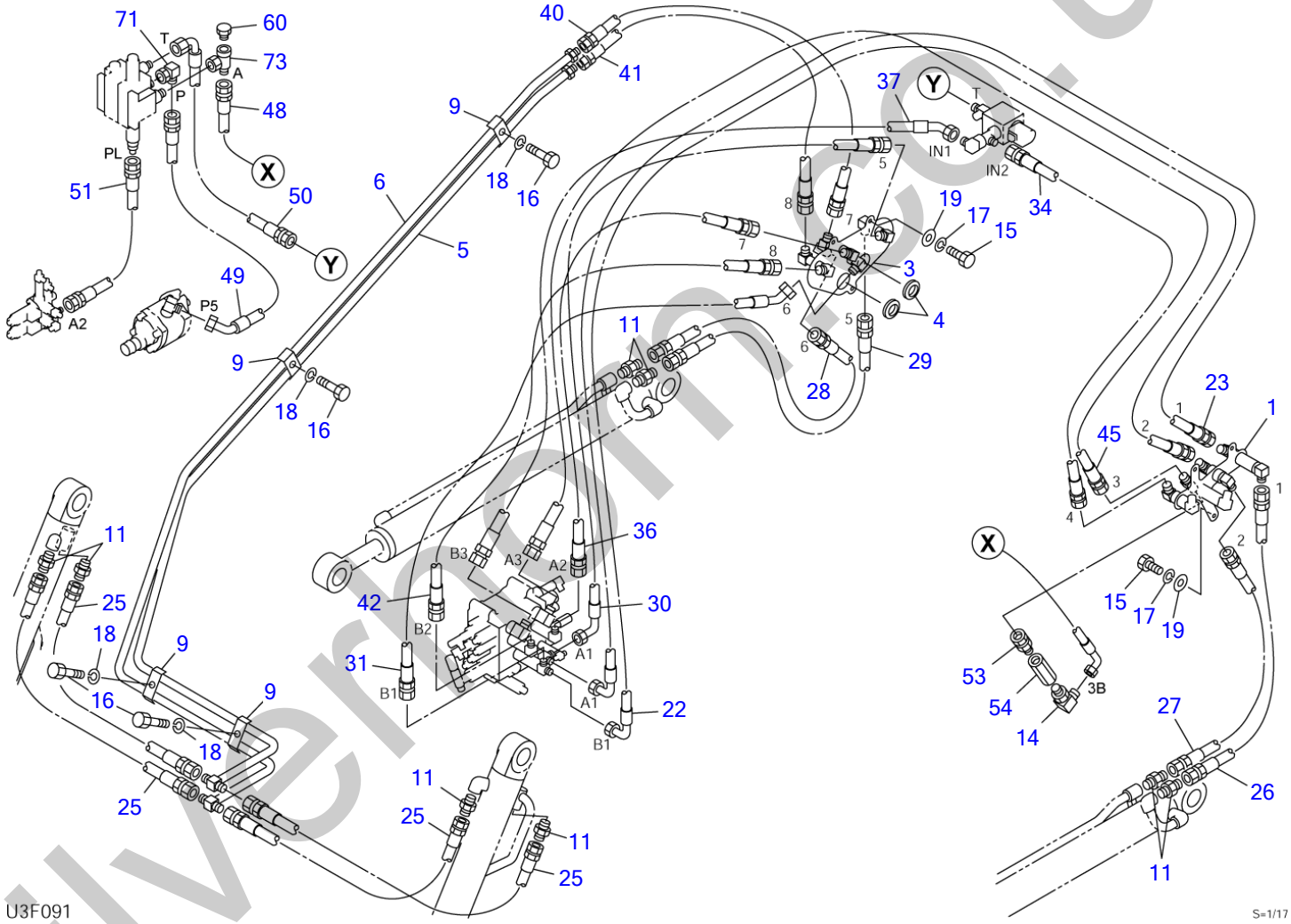

silvermoore.uk

PIPING; ARM (1/2) (high flow, for GEHL & MUSTANG)

Item	Part number	Description	Q'ty	Chan.	Serial No.	Serv.	Remarks
		PIPING ASSY (for GEHL & MUSTANG)					
1	0697305100	BRACKET (L.H.)	1				
3	0697301150	BRACKET (R.H.)	1				
4	1652061045	BUSHING	2				
5	0881731350	PIPE	1				
6	0881731450	PIPE	1				
9	0567320800	CLAMP	4				
11	1515600202	ADAPTOR	8				
	1420010180	・O-RING	1				
14	1515010042	ELBOW	1				
	1420010180	・O-RING	1				
15	1100040820	BOLT	6				
16	1100041020	BOLT	4				
17	1140020008	WASHER, spring	6				
18	1140020010	WASHER, spring	4				
19	1141110008	WASHER	6				
22	0697301220	HOSE ASSY	1				18015-41142
23	0697301230	HOSE ASSY	1				18015-41145
25	0881731025	HOSE ASSY	4				
26	0697301260	HOSE ASSY	1				18015-40064
27	0697301270	HOSE ASSY	1				18015-40067
28	0697301280	HOSE ASSY	1				18015-40067
29	0697301290	HOSE ASSY	1				18015-40064
30	0697301300	HOSE ASSY	1				18015-41073
31	0697301310	HOSE ASSY	1				18015-47074
34	0697305340	HOSE ASSY	1				18015-50070
36	0697301360	HOSE ASSY	1				18015-70059
37	0697301370	HOSE ASSY	1				18015-77040
40	0697301400	HOSE ASSY	1				18015-70073
41	0697300410	HOSE ASSY	1				18015-70073
42	0697301420	HOSE ASSY	1				18015-70058
45	0697301450	HOSE ASSY	1				18015-70124
48	0697305480	HOSE ASSY	1				18015-71183
49	0697305490	HOSE ASSY	1				18015-77235
50	0881735500	HOSE ASSY	1				
51	0697305510	HOSE ASSY	1				18010-52145
53	0007236041	ADAPTOR	1				
	1420010180	・O-RING	1				
54	1901743200	VALVE, check	1				
60	1501750002	PLUG	1				
	1420010110	・O-RING	1				
71	1513390016	ELBOW	1				
73	1513390044	TEE	1				
	U3f121						

silverthorn.co.uk

PIPING; ARM (1/2) (high flow, for GEHL & MUSTANG)

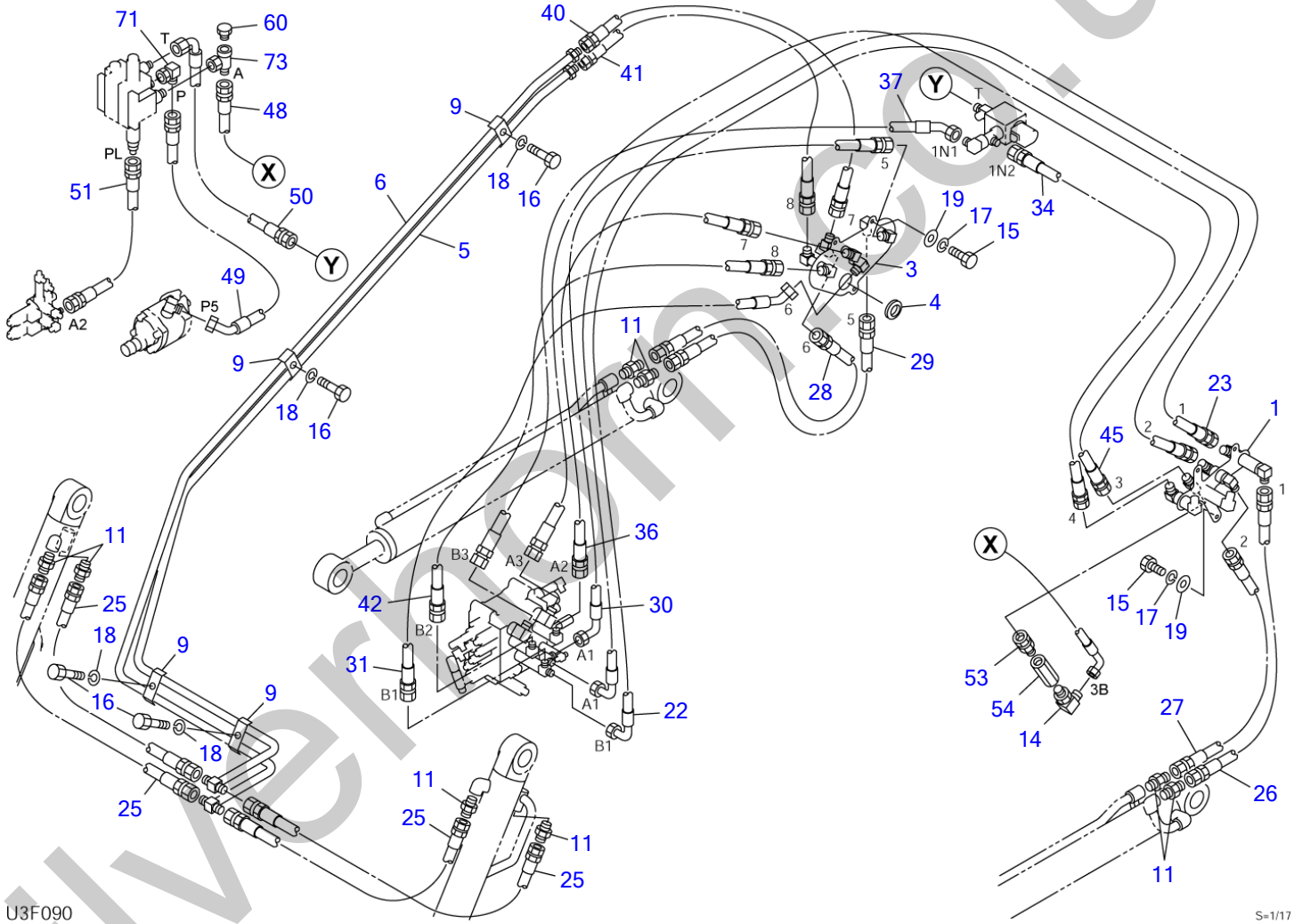

silvermoonce.uk

PIPING; ARM (1/2) (high flow, for GEHL & MUSTANG)

Item	Part number	Description	Q'ty	Chan.	Serial No.	Serv.	Remarks
		PIPING ASSY (for GEHL & MUSTANG)					
1	0697305100	BRACKET (L.H.)	1			M	
3	0697301150	BRACKET (R.H.)	1			M	
4	1652061045	BUSHING	1			M	
5	0881731350	PIPE	1				
6	0881731450	PIPE	1				
9	0567320800	CLAMP	4				
11	1515600202	ADAPTOR	8				
	1420010180	・O-RING	1				
14	1515010042	ELBOW	1				
	1420010180	・O-RING	1				
15	1100040820	BOLT	6				
16	1100041020	BOLT	4				
17	1140020008	WASHER, spring	6				
18	1140020010	WASHER, spring	4				
19	1141110008	WASHER	6				
22	0697301220	HOSE ASSY	1			M	18015-41142
23	0697301230	HOSE ASSY	1			M	18015-41145
25	0881731025	HOSE ASSY	4				
26	0697301260	HOSE ASSY	1			M	18015-40064
27	0697301270	HOSE ASSY	1			M	18015-40067
28	0697301280	HOSE ASSY	1			M	18015-40067
29	0697301290	HOSE ASSY	1			M	18015-40064
30	0697301300	HOSE ASSY	1			M	18015-41073
31	0697301310	HOSE ASSY	1			M	18015-47074
34	0697305340	HOSE ASSY	1			M	18015-50070
36	0697301360	HOSE ASSY	1			M	18015-70059
37	0697301370	HOSE ASSY	1			M	18015-77040
40	0697301400	HOSE ASSY	1			M	18015-70073
41	0697300410	HOSE ASSY	1			M	18015-70073
42	0697301420	HOSE ASSY	1			M	18015-70058
45	0697301450	HOSE ASSY	1			M	18015-70124
48	0697305480	HOSE ASSY	1			M	18015-71183
49	0697305490	HOSE ASSY	1			M	18015-77235
50	0881735500	HOSE ASSY	1				
51	0697305510	HOSE ASSY	1			M	18010-52145
53	0007236041	ADAPTOR	1				
	1420010180	・O-RING	1				
54	1901743200	VALVE, check	1				
60	1501750002	PLUG	1				
	1420010110	・O-RING	1				
71	1513390016	ELBOW	1			M	
73	1513390044	TEE	1				
	U3f120						

silverthorn.co.uk

PIPING; ARM (2/2) (high flow, for GEHL & MUSTANG)

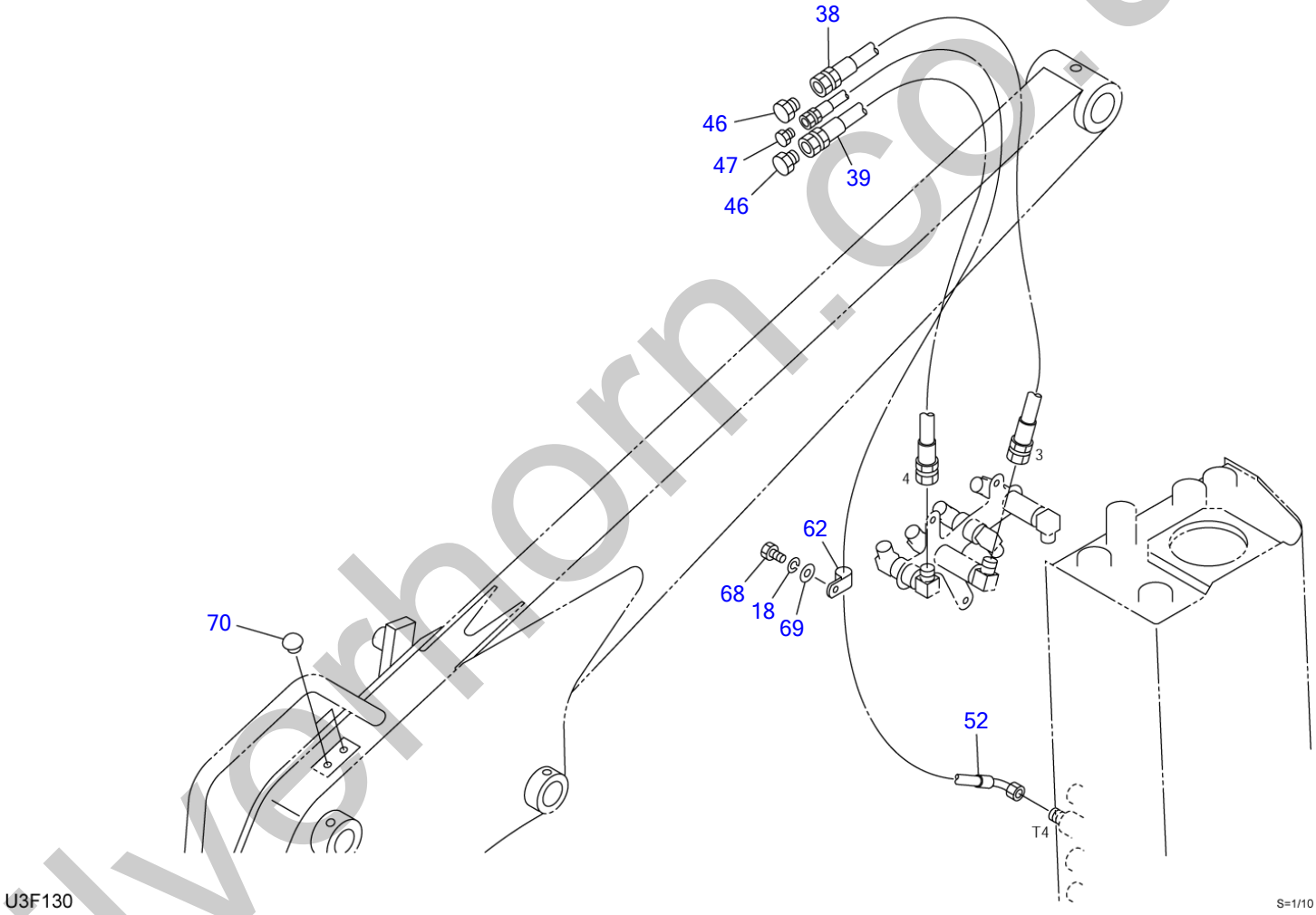

silverhorn.co.uk

PIPING; ARM (2/2) (high flow, for GEHL & MUSTANG)

Item	Part number	Description	Q'ty	Chan.	Serial No.	Serv.	Remarks
		PIPING ASSY (for GEHL & MUSTANG)					
18	1140020010	WASHER, spring	1				
38	0881735380	HOSE ASSY	1				18015-50076
39	0881738050	HOSE ASSY	1				18015-50080
46	1513940006	PLUG	2				
47	1513940003	PLUG	1				
52	0697301520	HOSE ASSY	1				18010-53118
62	0007300001	CLAMP	1				
68	1100041016	BOLT	1				
69	1141110010	WASHER	1				
70	1652533018	CAP	2				
	U3f131						

silverhorn.co.uk

DECAL (canopy)

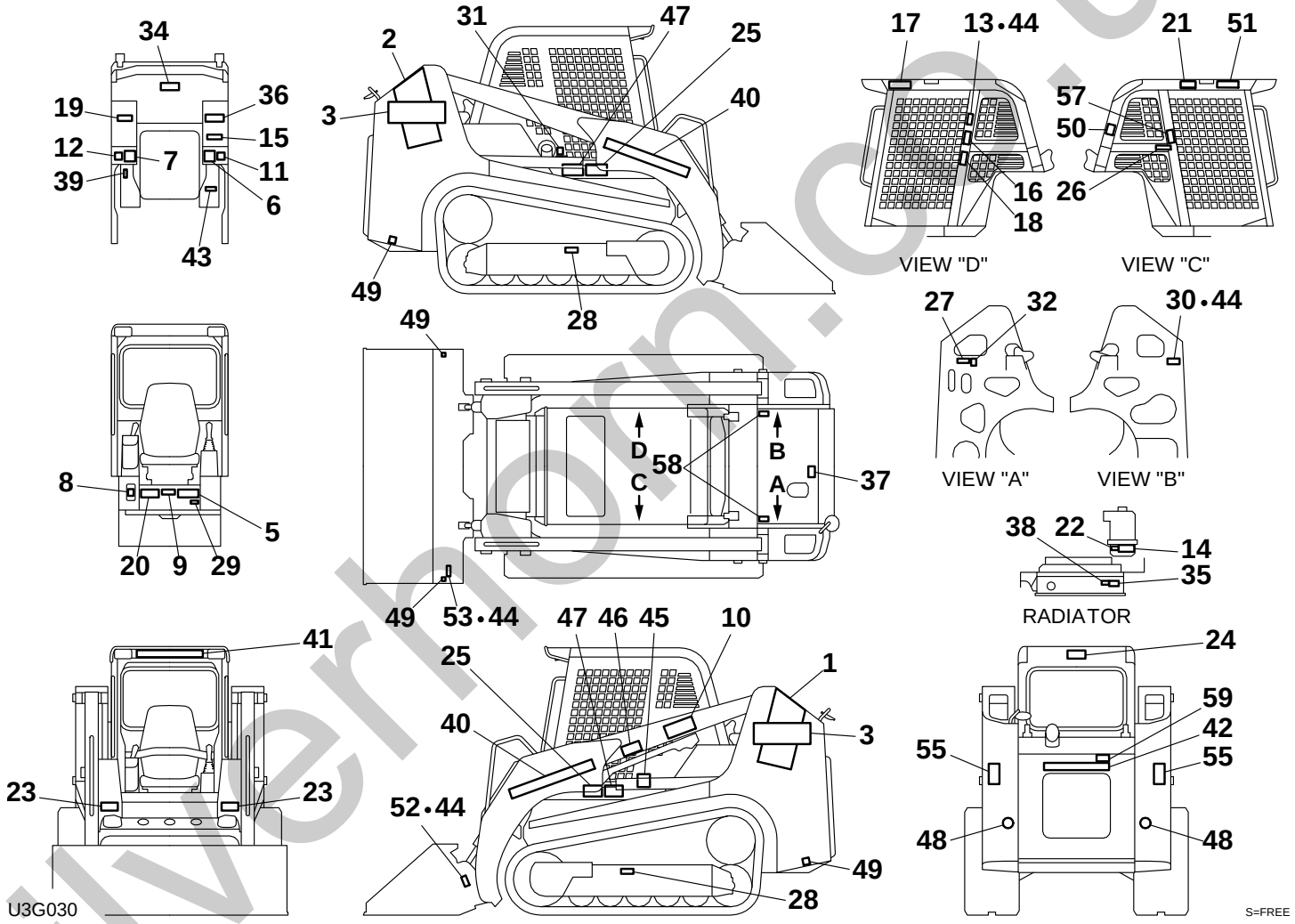

silverhorn.co.uk

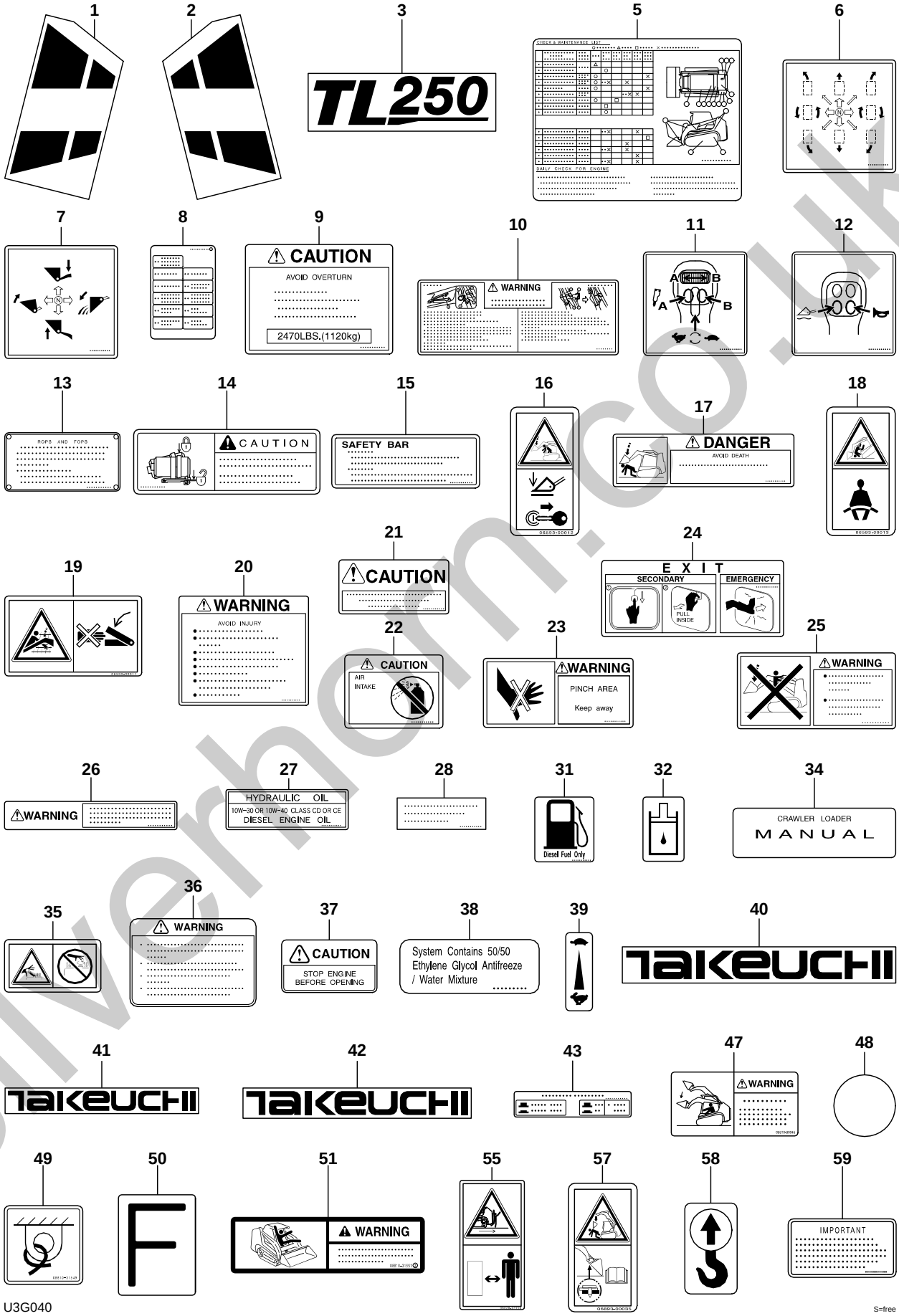

U3G040

S=free

silverhorn.co.uk

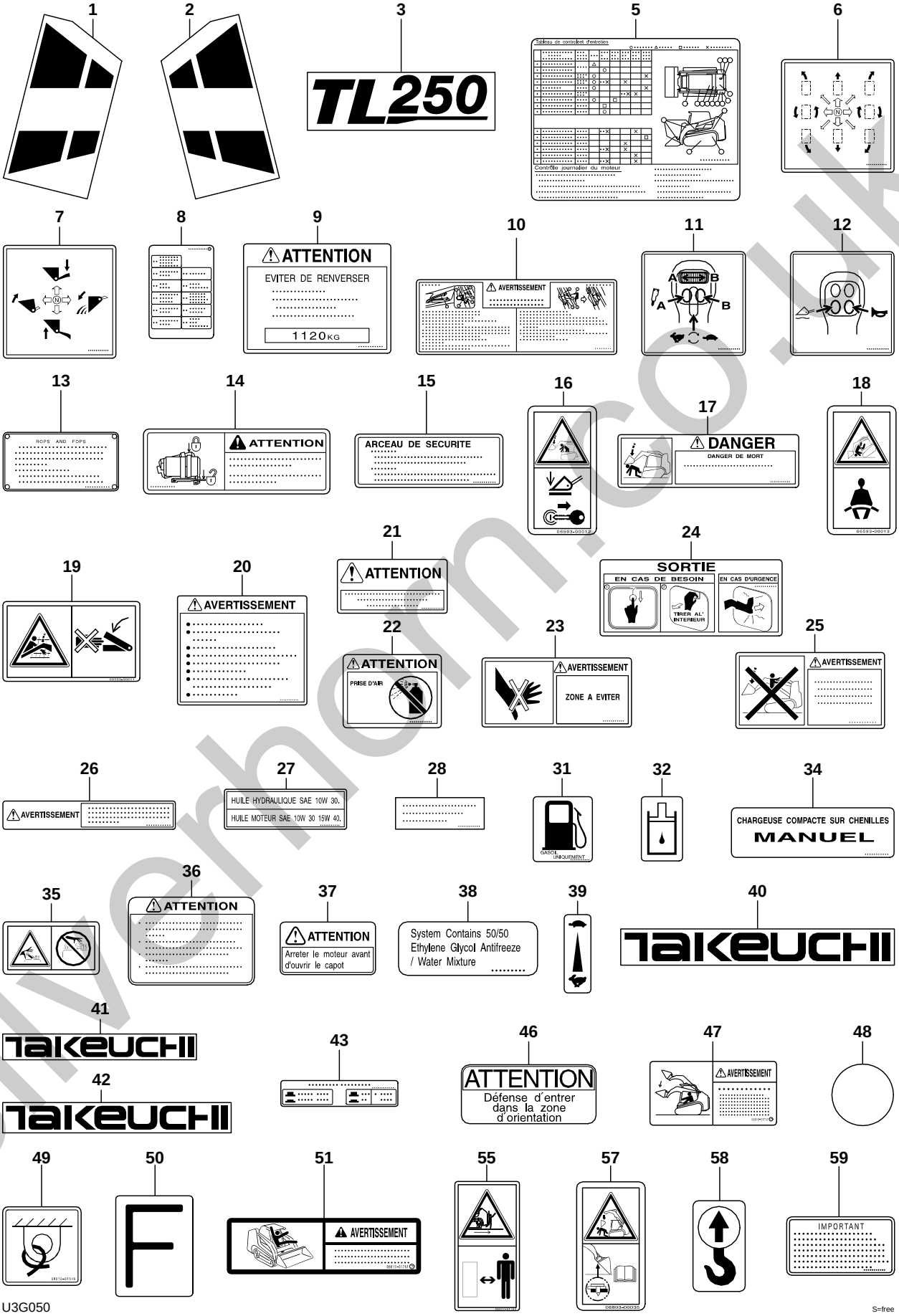

U3G050

S=free

silverhorn.co.uk

TL250 Book No. BU3Z004 S/N 225000001-
Italian

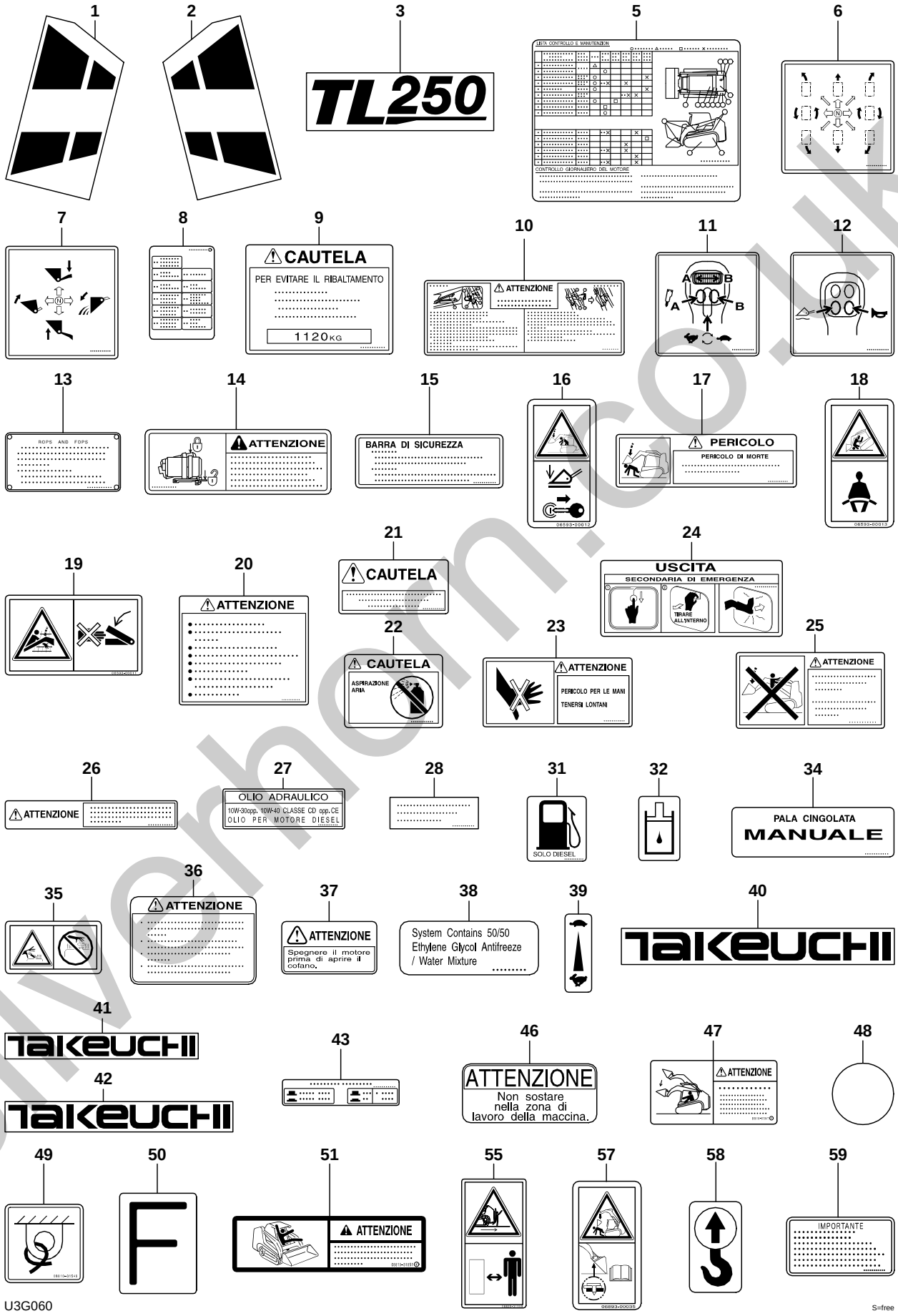

U3G060

S=free

silverhorn.co.uk

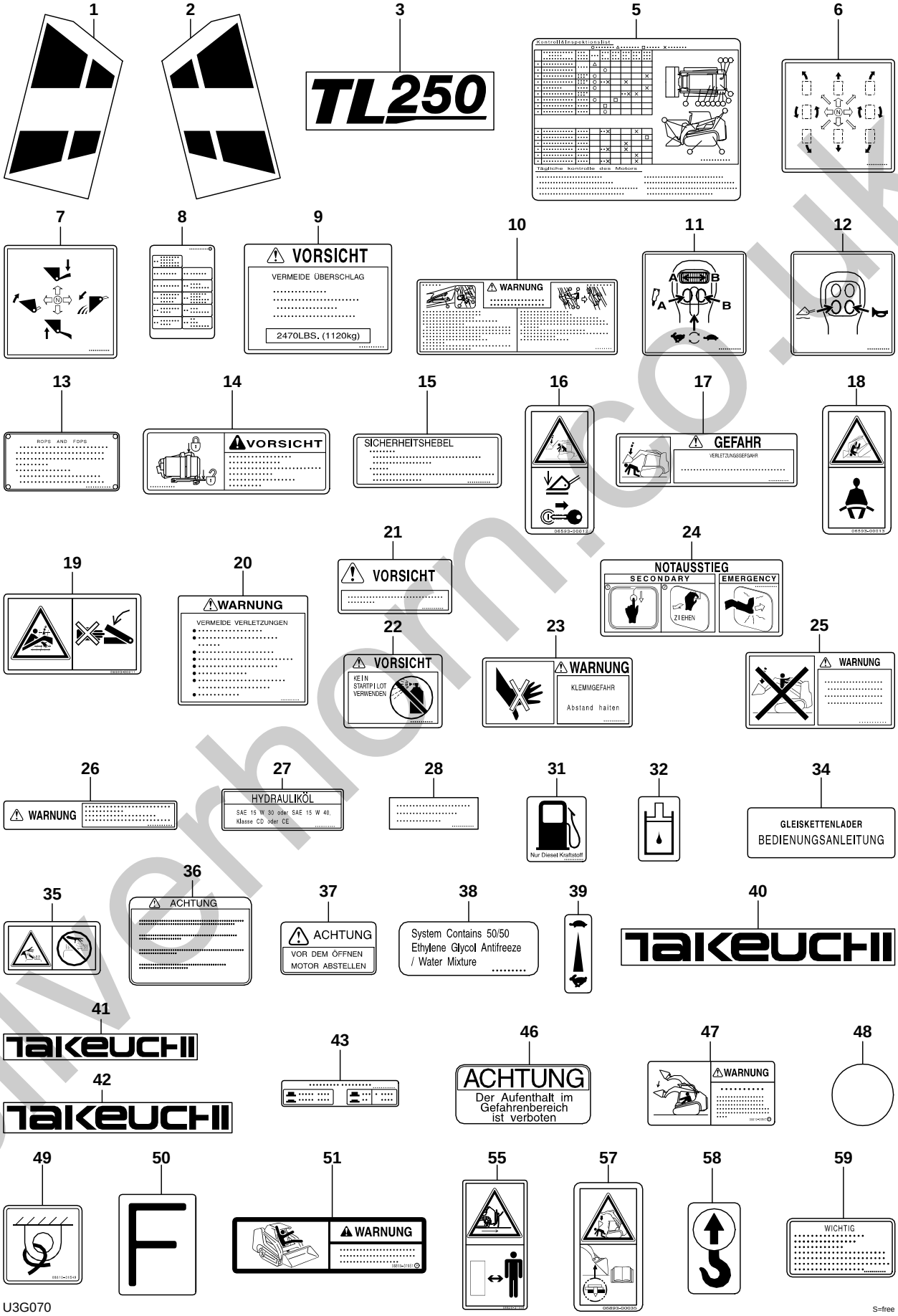

U3G070

S=free

silverhorn.co.uk

1

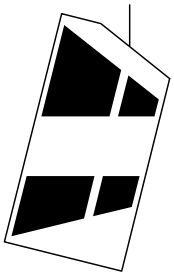

2

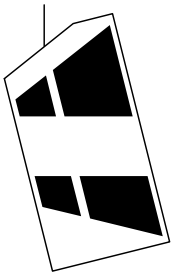

3

6

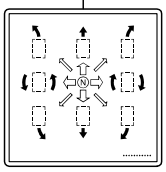

7

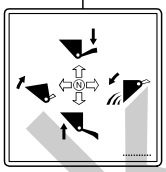

8

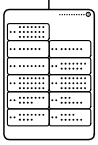

11

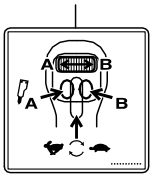

12

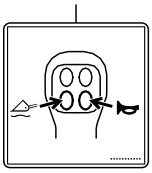

13

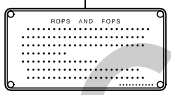

14

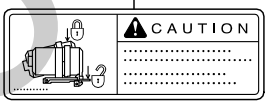

32

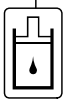

35

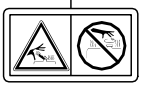

38

System Contains 50/50
Ethylene Glycol Antifreeze
/ Water Mixture .....

39

40

41

42

48

49

50

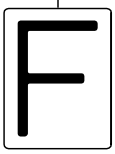

55

57

58

silverhorn.co.uk

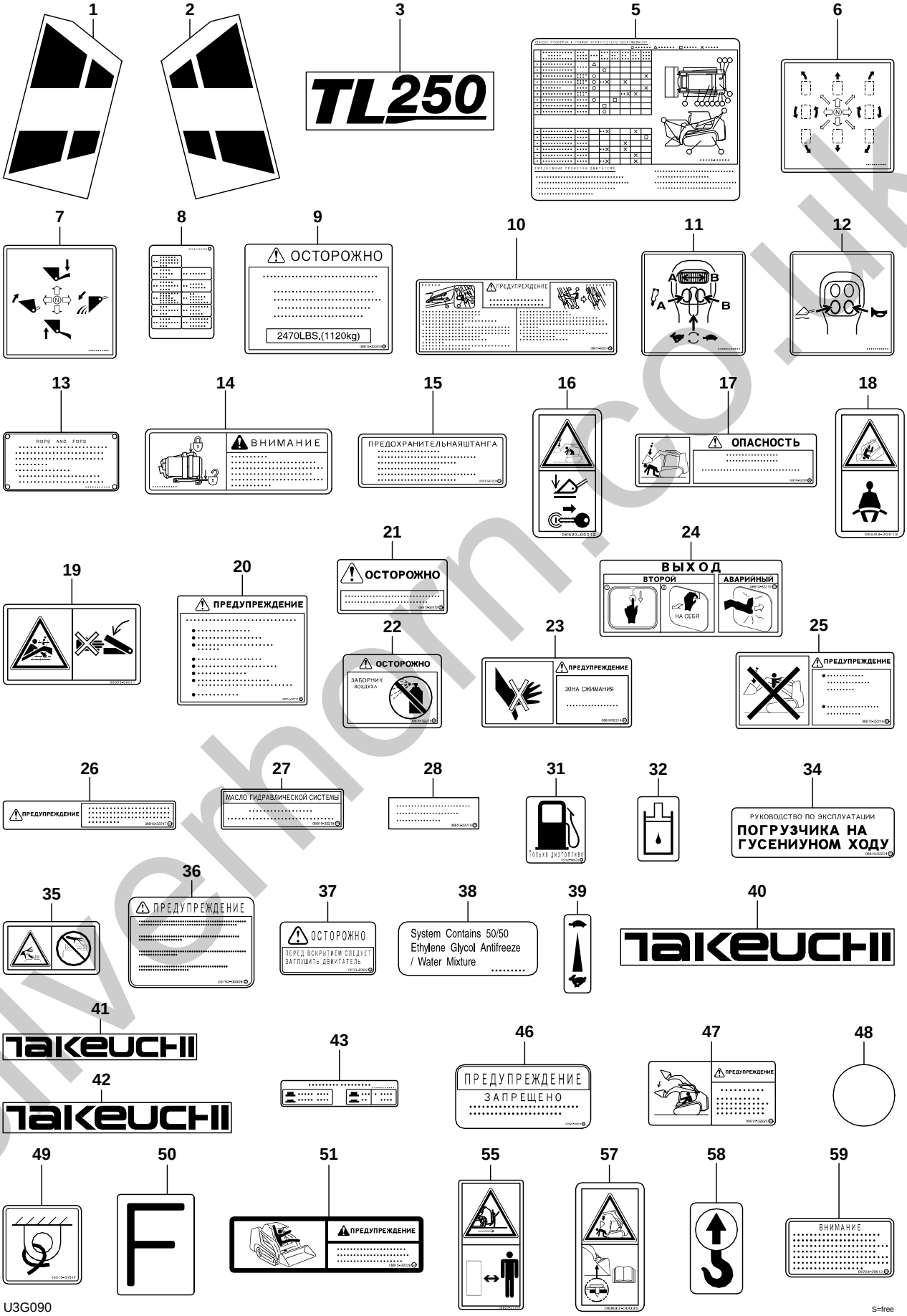

U3G090

S=free

silverhorn.co.uk

silverhorn.co.uk

DECAL (canopy)

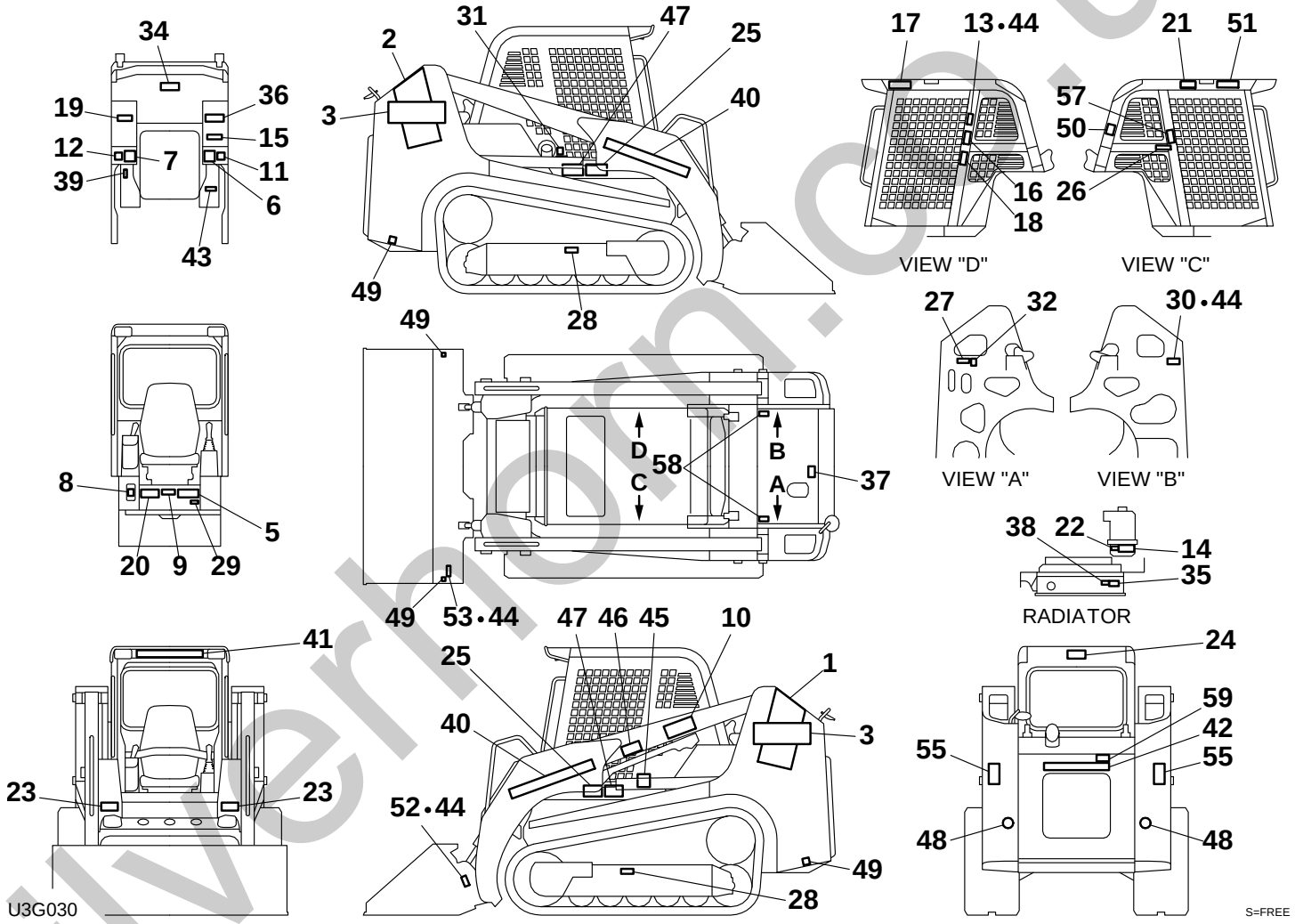

silverhorn.co.uk

DECAL (canopy)

Item	Part number	Description	Q'ty	Chan.	Serial No.	Serv.	Remarks
0	0699300000	DECAL SET (English)	1			M	
	0699300100	DECAL SET (French)	1			M	
	0699300200	DECAL SET (Italian)	1			M	
	0699300300	DECAL SET (German)	1			M	
	0699300400	DECAL SET (Dutch)	1			M	
	0699300500	DECAL SET (Russian)	1			M	
1	0699300001	・DECAL	1			M	
2	0699300002	・DECAL	1			M	
3	0699300003	・DECAL	2			M	
5	0669300005	・DECAL (English)	1			M	
	0669300105	・DECAL (French)	1			M	
	0669300205	・DECAL (Italian)	1			M	
	0669300305	・DECAL (German)	1			M	
	0669300505	・DECAL (Russian)	1			M	
6	0669300006	・DECAL	1			M	
7	0669300007	・DECAL	1			M	
8	0699300008	・DECAL (English, Dutch)	1			M	
	0699300108	・DECAL (French)	1			M	
	0699300208	・DECAL (Italian)	1			M	
	0699300308	・DECAL (German)	1			M	
	0699300508	・DECAL (Russian)	1			M	
9	0881030009	・DECAL (English)	1			M	
	0881030209	・DECAL (French)	1			M	
	0881030309	・DECAL (Italian)	1			M	
	0881030509	・DECAL (German)	1			M	
	0881032203	・DECAL (Russian)	1			M	
10	0881030110	・DECAL (English)	1			M	
	0881030260	・DECAL (French)	1			M	
	0881030360	・DECAL (Italian)	1			M	
	0881030560	・DECAL (German)	1			M	
	0881032204	・DECAL (Russian)	1			M	
11	0882030006	・DECAL	1			M	
12	0882030007	・DECAL	1			M	
13	X **********	・DECAL	1				
14	0669300014	・DECAL (English, Dutch)	1			M	
	0669300114	・DECAL (French)	1			M	
	0669300214	・DECAL (Italian)	1			M	
	0669300314	・DECAL (German)	1			M	
	0669300514	・DECAL (Russian)	1			M	
15	0880031001	・DECAL (English)	1			M	
	0880038607	・DECAL (French)	1			M	
	0881030315	・DECAL (Italian)	1			M	
	0880034007	・DECAL (German)	1			M	
	0881032206	・DECAL (Russian)	1			M	
16	0659300012	・DECAL	1			M	
17	0880030010	・DECAL (English)	1			M	
	0880038610	・DECAL (French)	1			M	
	0881030317	・DECAL (Italian)	1			M	
	0880034010	・DECAL (German)	1			M	
	0881032208	・DECAL (Russian)	1			M	
18	0659300013	・DECAL	1			M	
19	0659300011	・DECAL	1			M	
20	0881030020	・DECAL (English)	1			M	
	0880038613	・DECAL (French)	1			M	
	0881030320	・DECAL (Italian)	1			M	
	0881030520	・DECAL (German)	1			M	
	0881032211	・DECAL (Russian)	1			M	
21	0880030015	・DECAL (English)	1			M	
	0880038615	・DECAL (French)	1			M	
	0881030321	・DECAL (Italian)	1			M	
	0880034015	・DECAL (German)	1			M	
	0881032212	・DECAL (Russian)	1			M	
22	0880030016	・DECAL (English)	1			M	
	0880038616	・DECAL (French)	1			M	
	0881030322	・DECAL (Italian)	1			M	
	0880034016	・DECAL (German)	1			M	
	0881032213	・DECAL (Russian)	1			M	
23	0880030017	・DECAL (English)	2			M	

silverthorn.co.uk

DECAL (canopy)

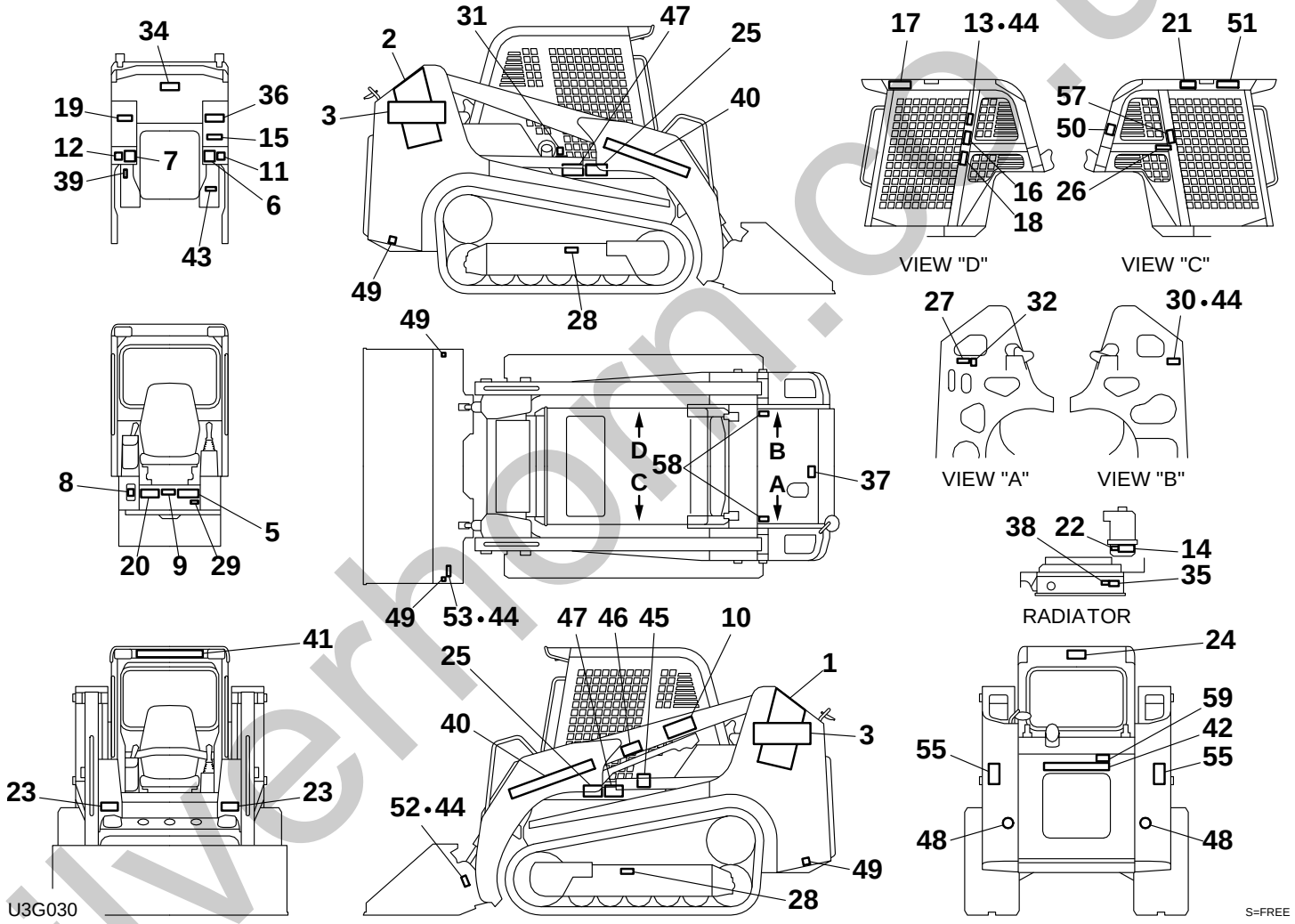

silverhorn.co.uk

DECAL (canopy)

Item	Part number	Description	Q'ty	Chan.	Serial No.	Serv.	Remarks
23	0880038617	・DECAL (French)	2			M	
23	0881030323	・DECAL (Italian)	2			M	
23	0880034017	・DECAL (German)	2			M	
23	0881032214	・DECAL (Russian)	2			M	
24	0880031018	・DECAL (English)	1			M	
24	0880038618	・DECAL (French)	1			M	
24	0881030324	・DECAL (Italian)	1			M	
24	0880034018	・DECAL (German)	1			M	
24	0881032215	・DECAL (Russian)	1			M	
25	0880031005	・DECAL (English)	2			M	
25	0880038620	・DECAL (French)	2			M	
25	0881030325	・DECAL (Italian)	2			M	
25	0880034019	・DECAL (German)	2			M	
25	0881032216	・DECAL (Russian)	2			M	
26	0881030026	・DECAL (English)	1			M	
26	0880038621	・DECAL (French)	1			M	
26	0881030326	・DECAL (Italian)	1			M	
26	0881030526	・DECAL (German)	1			M	
26	0881032217	・DECAL (Russian)	1			M	
27	0880031017	・DECAL (English)	1			M	
27	0880038623	・DECAL (French)	1			M	
27	0881030327	・DECAL (Italian)	1			M	
27	0880034022	・DECAL (German)	1			M	
27	0881032218	・DECAL (Russian)	1			M	
28	0149362200	・DECAL (English)	2			M	
28	0880038624	・DECAL (French)	2			M	
28	0881030328	・DECAL (Italian)	2			M	
28	0880034023	・DECAL (German)	2			M	
28	0881032219	・DECAL (Russian)	2			M	
29	X **********	・DECAL	1				
30	X **********	・DECAL	1				
31	0359306600	・DECAL (English)	1			M	
31	0339375460	・DECAL (French)	1			M	
31	0339375660	・DECAL (Italian)	1			M	
31	0339375260	・DECAL (German)	1			M	
31	0579300603	・DECAL (Russian)	1			M	
32	0359306700	・DECAL	1			M	
34	0880031016	・DECAL (English)	1			M	
34	0880038634	・DECAL (French)	1			M	
34	0881030334	・DECAL (Italian)	1			M	
34	0880034027	・DECAL (German)	1			M	
34	0881032221	・DECAL (Russian)	1			M	
35	0882031135	・DECAL	1			M	
36	0359313700	・DECAL (English)	1			M	
36	0359315700	・DECAL (French)	1			M	
36	0359316700	・DECAL (Italian)	1			M	
36	0359314700	・DECAL (German)	1			M	
36	0579300606	・DECAL (Russian)	1			M	
37	0359307400	・DECAL (English)	1			M	
37	0359315400	・DECAL (French)	1			M	
37	0359316400	・DECAL (Italian)	1			M	
37	0359314400	・DECAL (German)	1			M	
37	0579300602	・DECAL (Russian)	1			M	
38	0359313900	・DECAL	1			M	
39	0359317200	・DECAL	1			M	
40	0008500073	・DECAL	2			M	
41	0008500140	・DECAL	1			M	
42	0008500050	・DECAL	1			M	
43	0881030043	・DECAL (English)	1			M	
43	0881030243	・DECAL (French)	1			M	
43	0881030343	・DECAL (Italian)	1			M	
43	0881030543	・DECAL (German)	1			M	
43	0881032224	・DECAL (Russian)	1			M	
44	X **********	・SCREW	16				
45	X **********	・DECAL	1				except for Russian
46	0359309100	・DECAL (French)	1			M	
46	0359310100	・DECAL (Italian)	1			M	
46	0359308100	・DECAL (German)	1			M	

silverthorn.co.uk

DECAL (canopy)

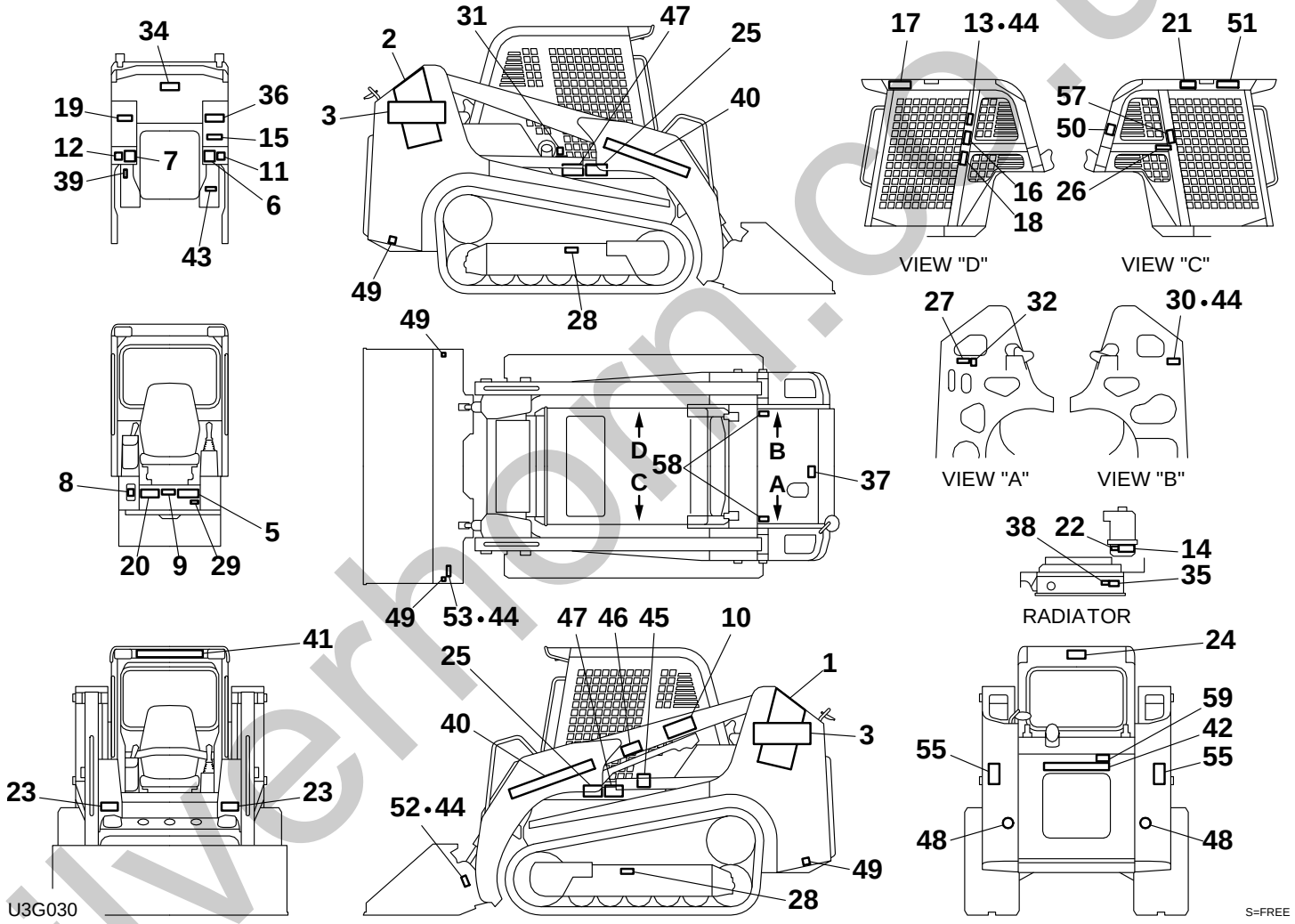

silverhorn.co.uk

DECAL (canopy)

Item	Part number	Description	Q'ty	Chan.	Serial No.	Serv.	Remarks
46	0399356001	・DECAL (Russian)	1			M	
47	0881030046	・DECAL (English)	2			M	
47	0881031747	・DECAL (French)	2			M	
47	0881031847	・DECAL (Italian)	2			M	
47	0881031947	・DECAL (German)	2			M	
47	0881032225	・DECAL (Russian)	2			M	
48	0874030360	・DECAL	2			M	
49	0881031549	・DECAL	4			M	
50	0399300400	・DECAL	1			M	
51	0881031551	・DECAL (English)	1			M	
51	0881031751	・DECAL (French)	1			M	
51	0881031851	・DECAL (Italian)	1			M	
51	0881031951	・DECAL (German)	1			M	
51	0881032226	・DECAL (Russian)	1			M	
52	X **********	・DECAL	1				
53	X **********	・DECAL	1				
55	0882031159	・DECAL	2			M	
57	0689300035	・DECAL	1			M	
58	0399300500	・DECAL	2			M	
59	0339376240	・DECAL (English)	1			M	
59	0339379440	・DECAL (French)	1			M	
59	0339379540	・DECAL (Italian)	1			M	
59	0339376340	・DECAL (German)	1			M	
59	0579300613	・DECAL (Russian)	1			M	
	U3g030						

silverhorn.co.uk

PAINTED COLOR

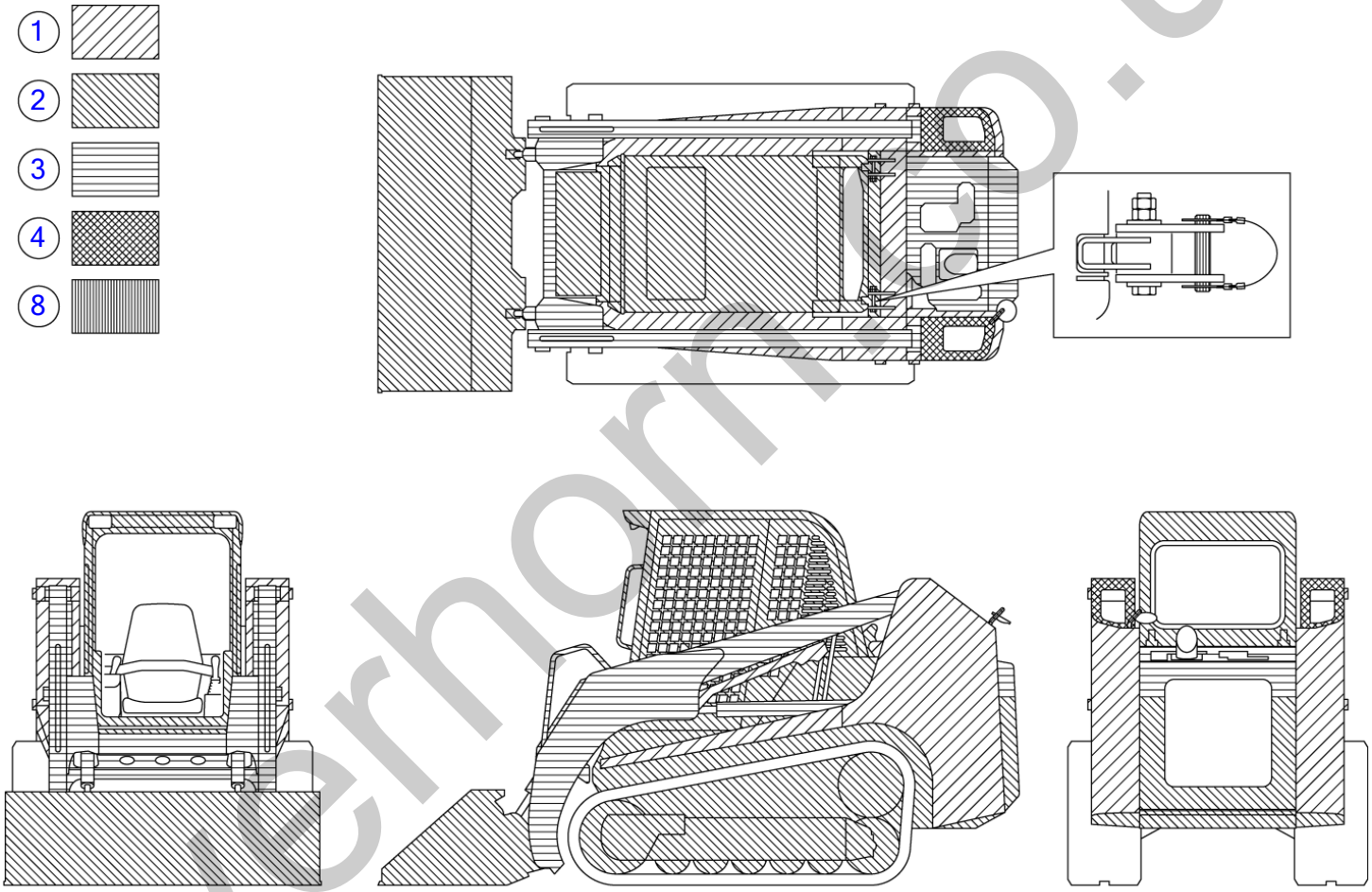

U3G020

S=FREE

silverhorse.co.uk

PAINTED COLOR

Item	Part number	Description	Q'ty	Chan.	Serial No.	Serv.	Remarks
		PAINTED COLOR					
1	1919060105	RED	1				
	1919069105	RED	1				spray
2	1919060144	GRAY	1				
	1919069144	GRAY	1				spray
3	1919060142	LIGHT GRAY	1				
	1919069142	LIGHT GRAY	1				spray
4	1919060103	BLACK	1				
	1919069103	BLACK	1				spray
8	1919069175	YELLOW	1				spray
	U3g020						

silverhorn.co.uk

DECAL (canopy) (for US TAKEUCHI)

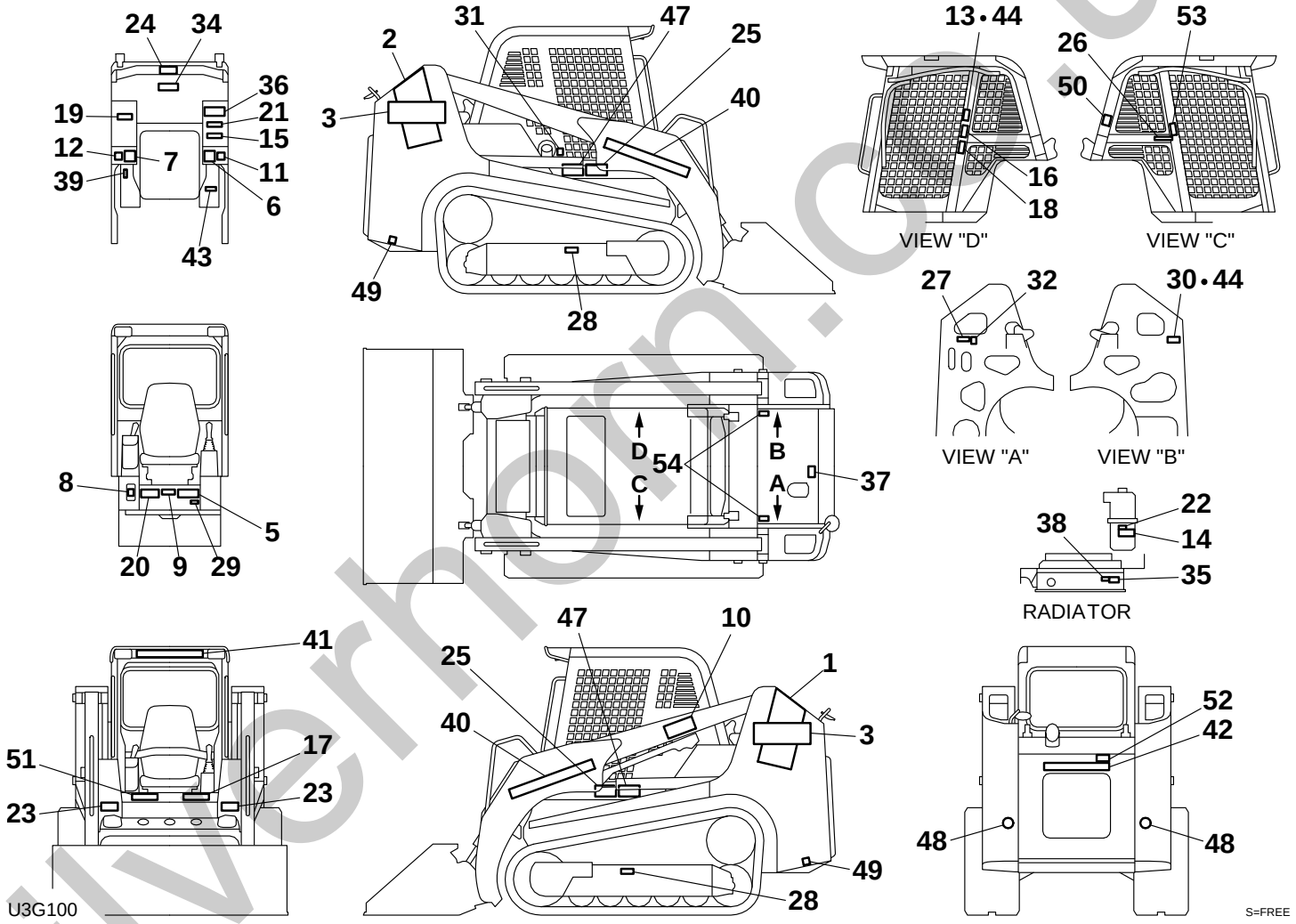

silverhorn.co.uk

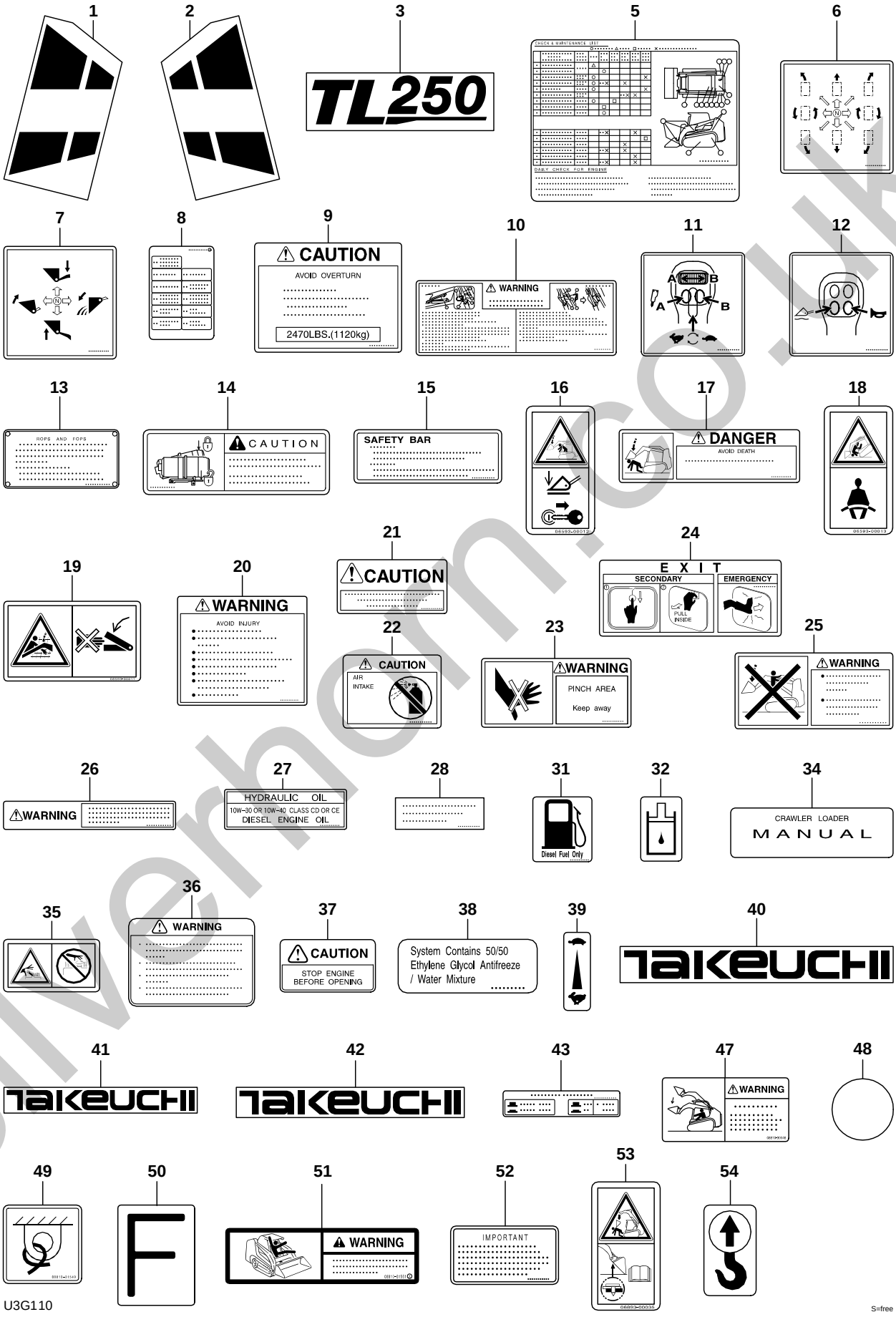

U3G110

S=free

silverhorn.co.uk

DECAL (canopy) (for US TAKEUCHI)

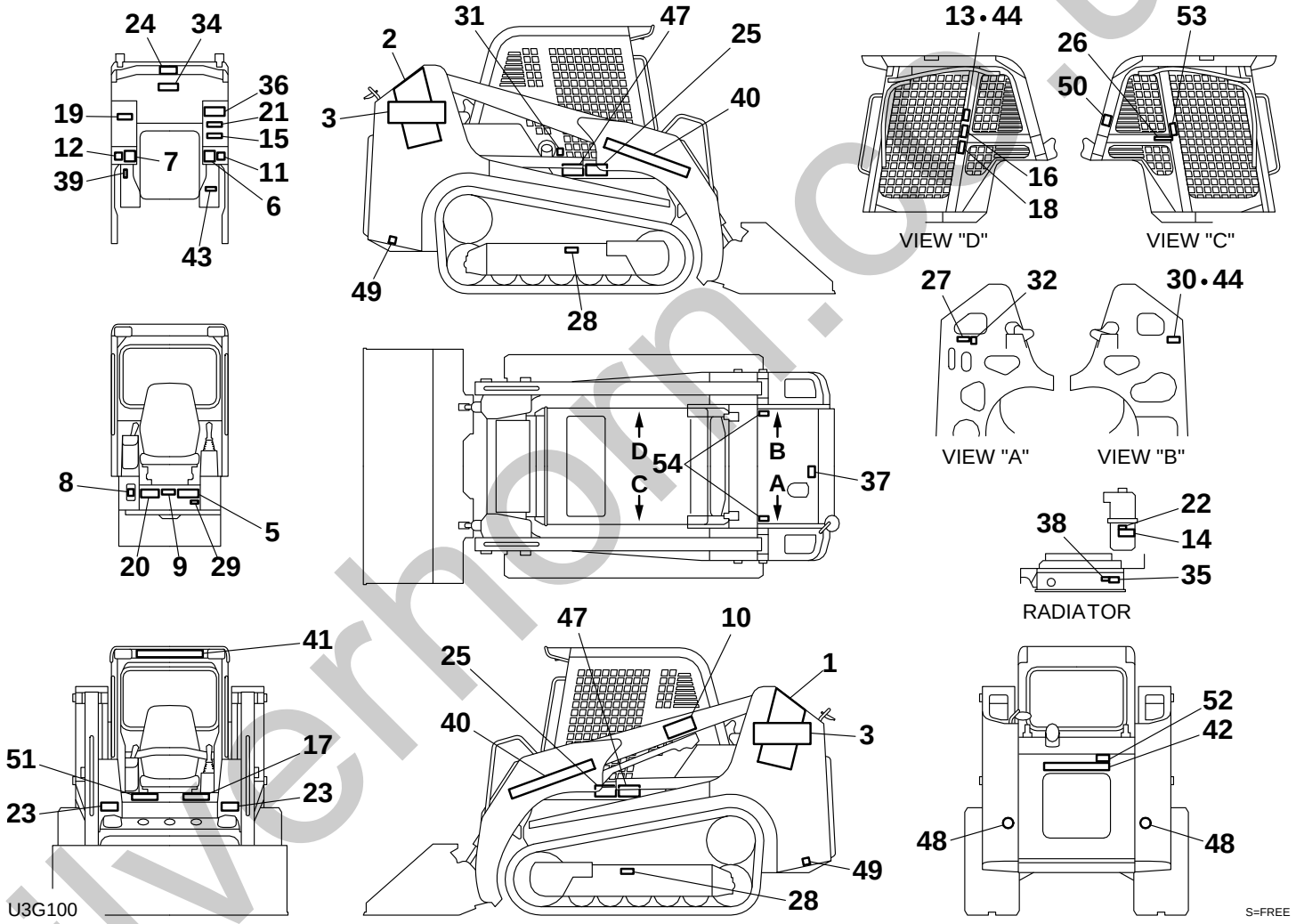

silverhorn.co.uk

DECAL (canopy) (for US TAKEUCHI)

Item		Part number	Description	Q'ty	Chan.	Serial No.	Serv.	Remarks
0		0699300800	DECAL SET (U.S. TAKEUCHI)	1			M	
1		0699300001	・DECAL	1			M	
2		0699300002	・DECAL	1			M	
3		0699300003	・DECAL	2			M	
5		0669300005	・DECAL	1			M	
6		0669300006	・DECAL	1			M	
7		0669300007	・DECAL	1			M	
8		0699300008	・DECAL	1			M	
9		0881030009	・DECAL	1			M	
10		0881030110	・DECAL	1			M	
11		0882030006	・DECAL	1			M	
12		0882030007	・DECAL	1			M	
13	X	**********	・DECAL	1				
14		0669300814	・DECAL	1			M	
15		0880031001	・DECAL	1			M	
16		0659300012	・DECAL	1			M	
17		0880030010	・DECAL	1			M	
18		0659300013	・DECAL	1			M	
19		0659300011	・DECAL	1			M	
20		0881030020	・DECAL	1			M	
21		0880030015	・DECAL	1			M	
22		0880030016	・DECAL	1			M	
23		0880030017	・DECAL	2			M	
24		0880031018	・DECAL	1			M	
25		0880031005	・DECAL	2			M	
26		0881030026	・DECAL	1			M	
27		0880031017	・DECAL	1			M	
28		0149362200	・DECAL	2			M	
29	X	**********	・DECAL	1				
30	X	**********	・DECAL	1				
31		0359306600	・DECAL	1			M	
32		0359306700	・DECAL	1			M	
34		0880031016	・DECAL	1			M	
35		0882031135	・DECAL	1			M	
36		0359313700	・DECAL	1			M	
37		0359307400	・DECAL	1			M	
38		0359313900	・DECAL	1			M	
39		0359317200	・DECAL	1			M	
40		0008500073	・DECAL	2			M	
41		0008500140	・DECAL	1			M	
42		0008500050	・DECAL	1			M	
43		0881030043	・DECAL	1			M	
44	X	**********	・SCREW	8				
47		0881030046	・DECAL	2			M	
48		0874030360	・DECAL	2			M	
49		0881031549	・DECAL	2			M	
50		0399300400	・DECAL	1			M	
51		0881031551	・DECAL	1			M	
52		0339376240	・DECAL	1			M	
53		0689300035	・DECAL	1			M	
54		0399300500	・DECAL	2			M	
		U3g100						

silverthorn.co.uk

DECAL (canopy) (for GEHL & MUSTANG)

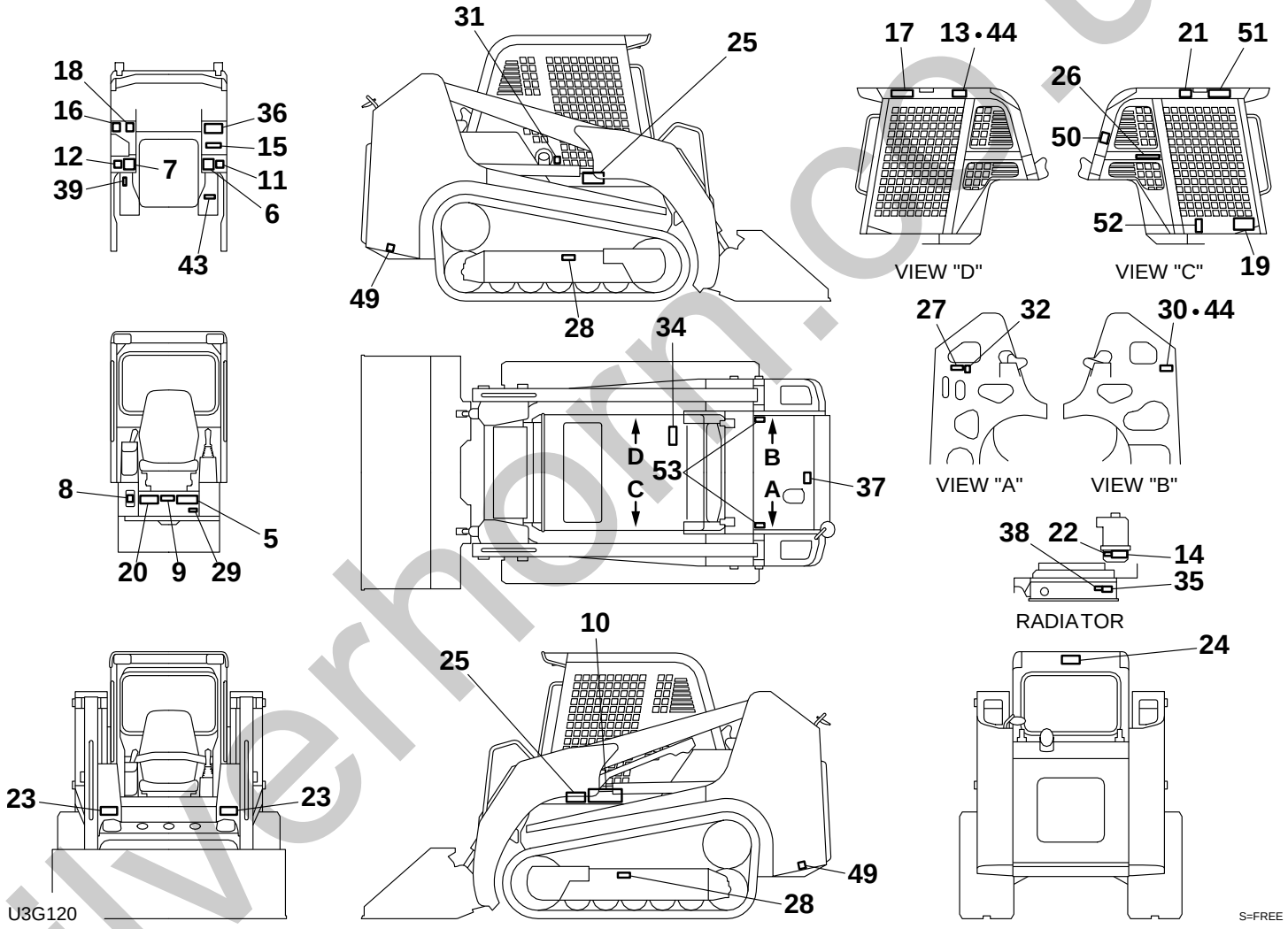

silverhorn.co.uk

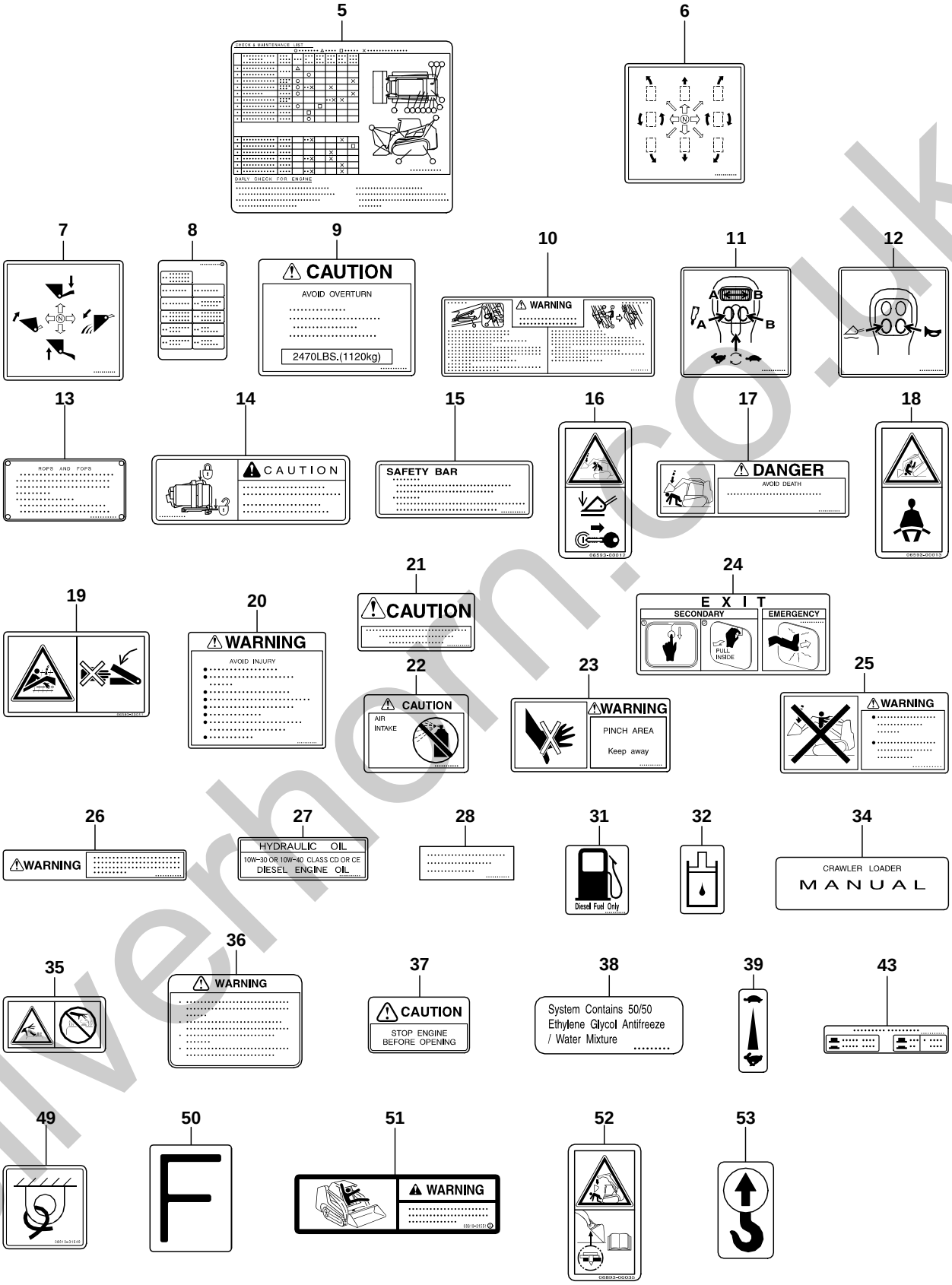

silverhorn.co.uk

DECAL (canopy) (for GEHL & MUSTANG)

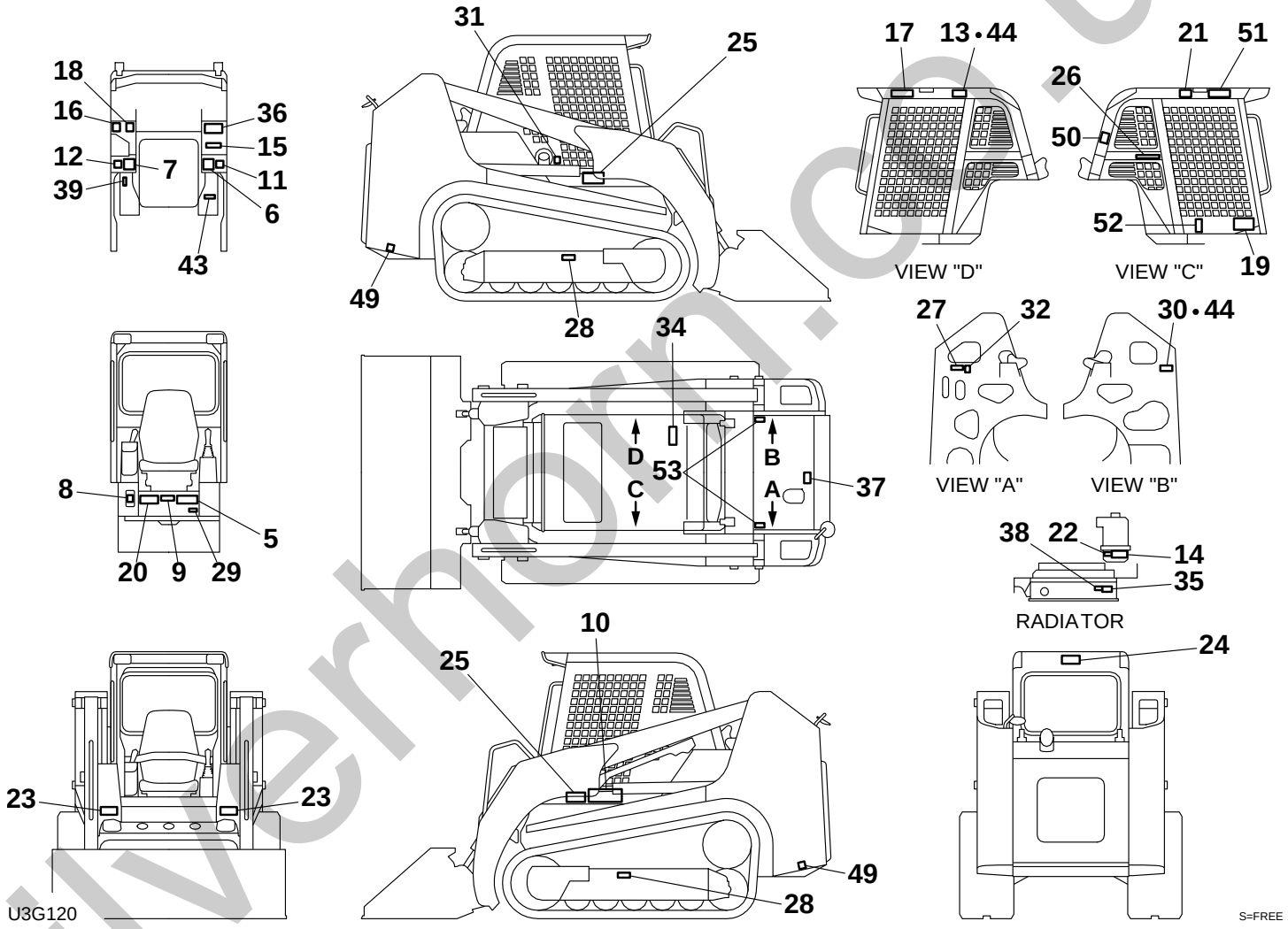

silverhorn.co.uk

DECAL (canopy) (for GEHL & MUSTANG)

Item	Part number	Description	Q'ty	Chan.	Serial No.	Serv.	Remarks
0	0699300600	DECAL SET (GEHL & MUSTANG)	1			M	
5	0669300005	・DECAL	1			M	
6	0669300006	・DECAL	1			M	
7	0669300007	・DECAL	1			M	
8	0699300008	・DECAL	1			M	
9	0881030009	・DECAL	1			M	
10	0881030110	・DECAL	1			M	
11	0882030006	・DECAL	1			M	
12	0882030007	・DECAL	1			M	
13	X **********	・DECAL	1				
14	0669300014	・DECAL	1			M	
15	0880031001	・DECAL	1			M	
16	0659300012	・DECAL	1			M	
17	0880030010	・DECAL	1			M	
18	0659300013	・DECAL	1			M	
19	0659300011	・DECAL	1			M	
20	0881030020	・DECAL	1			M	
21	0880030015	・DECAL	1			M	
22	0880030016	・DECAL	1			M	
23	0880030017	・DECAL	2			M	
24	0880031018	・DECAL	1			M	
25	0880031005	・DECAL	2			M	
26	0881030026	・DECAL	1			M	
27	0880031017	・DECAL	1			M	
28	0149362200	・DECAL	2			M	
29	X **********	・DECAL	1				
30	X **********	・DECAL	1				
31	0359306600	・DECAL	1			M	
32	0359306700	・DECAL	1			M	
34	0880031016	・DECAL	1			M	
35	0882031135	・DECAL	1			M	
36	0359313700	・DECAL	1			M	
37	0359307400	・DECAL	1			M	
38	0359313900	・DECAL	1			M	
39	0359317200	・DECAL	1			M	
43	0881030043	・DECAL	1			M	
44	X **********	・SCREW	8				
49	0881031549	・DECAL	2			M	
50	0399300400	・DECAL	1			M	
51	0881031551	・DECAL	1			M	
52	0689300035	・DECAL	1			M	
53	0399300500	・DECAL	2			M	
	U3g120						

silverthorn.co.uk

DECAL (cab)

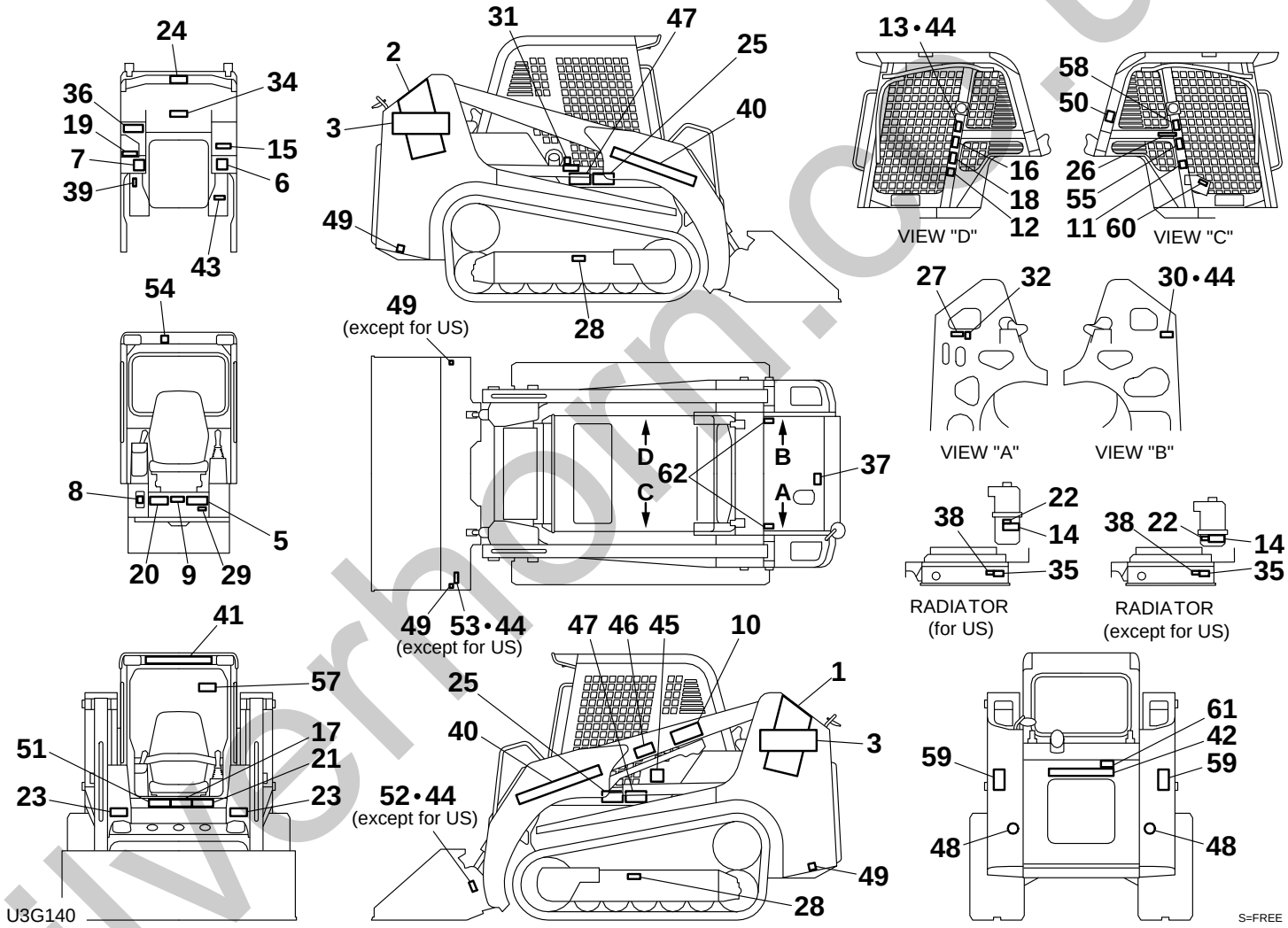

silverhorn.co.uk

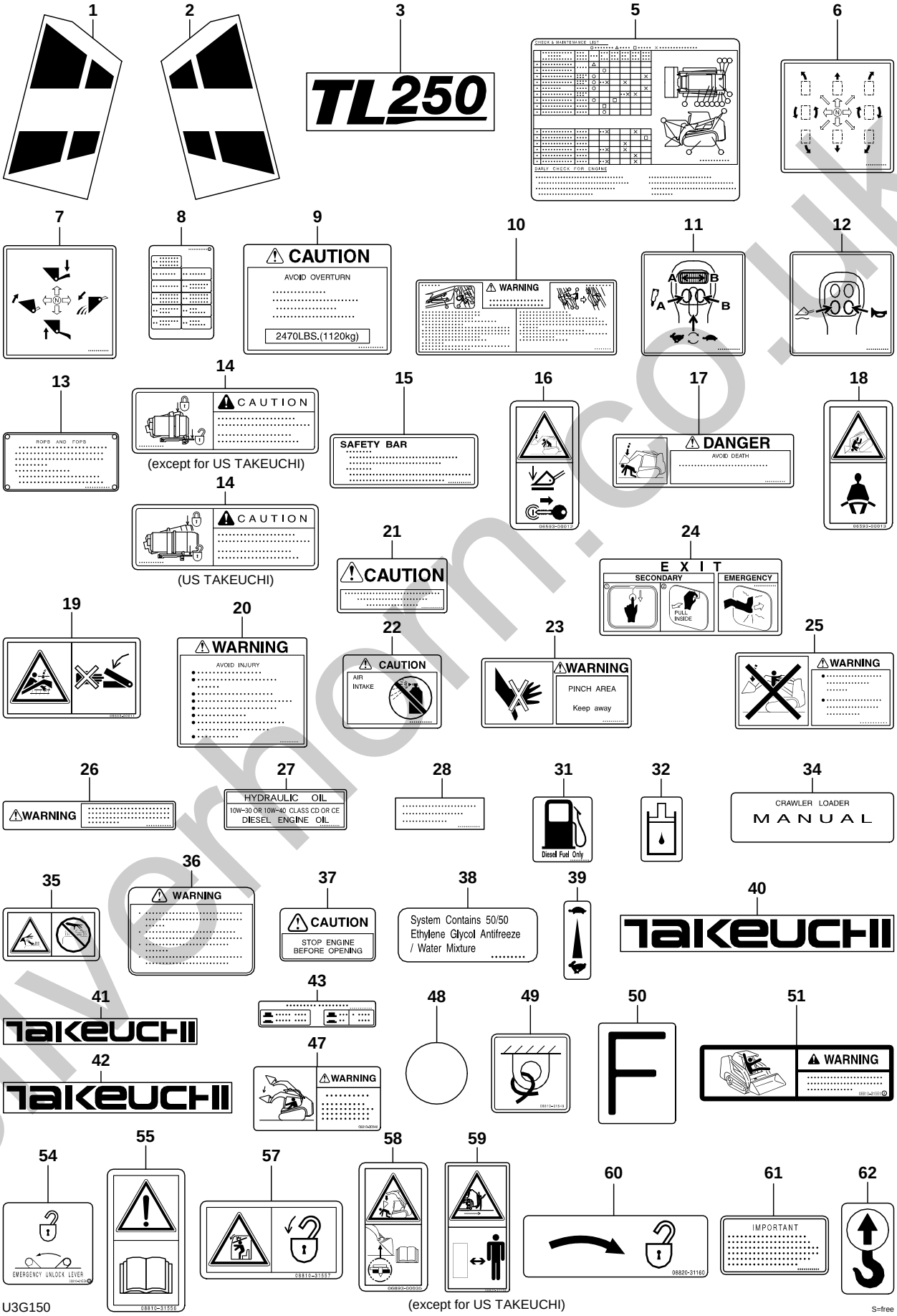

silverhorn.co.uk

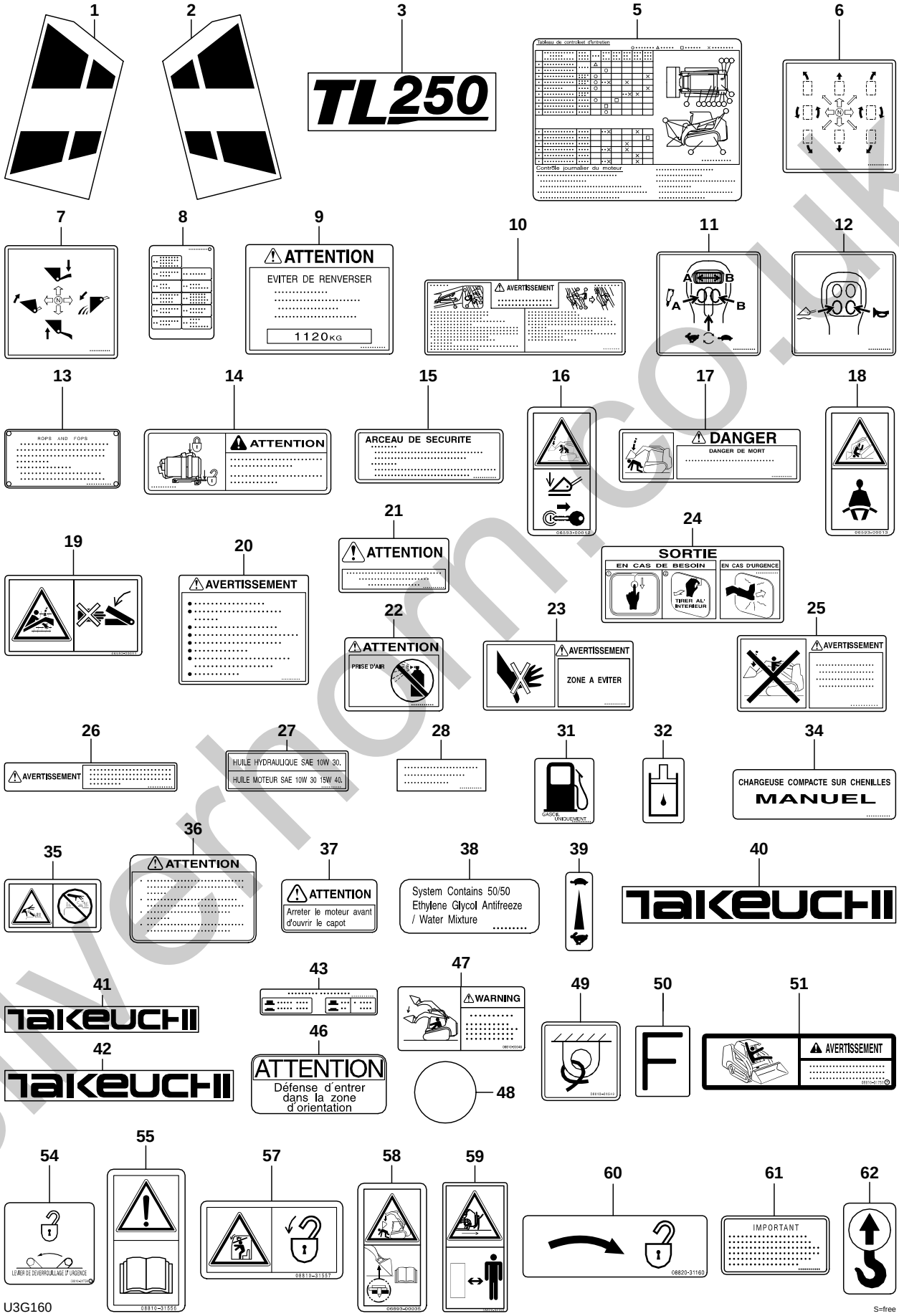

silverhorn.co.uk

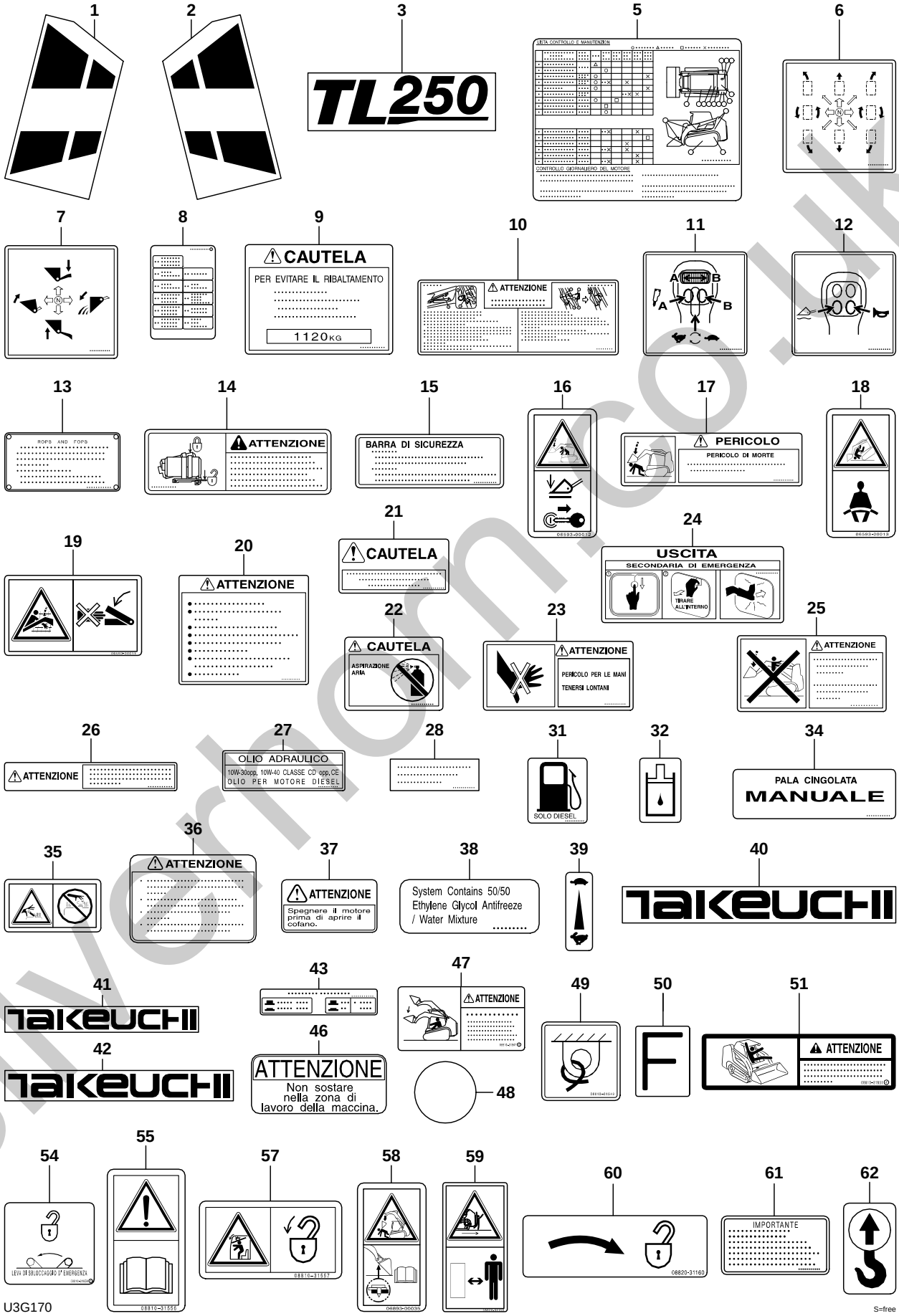

silverhorn.co.uk

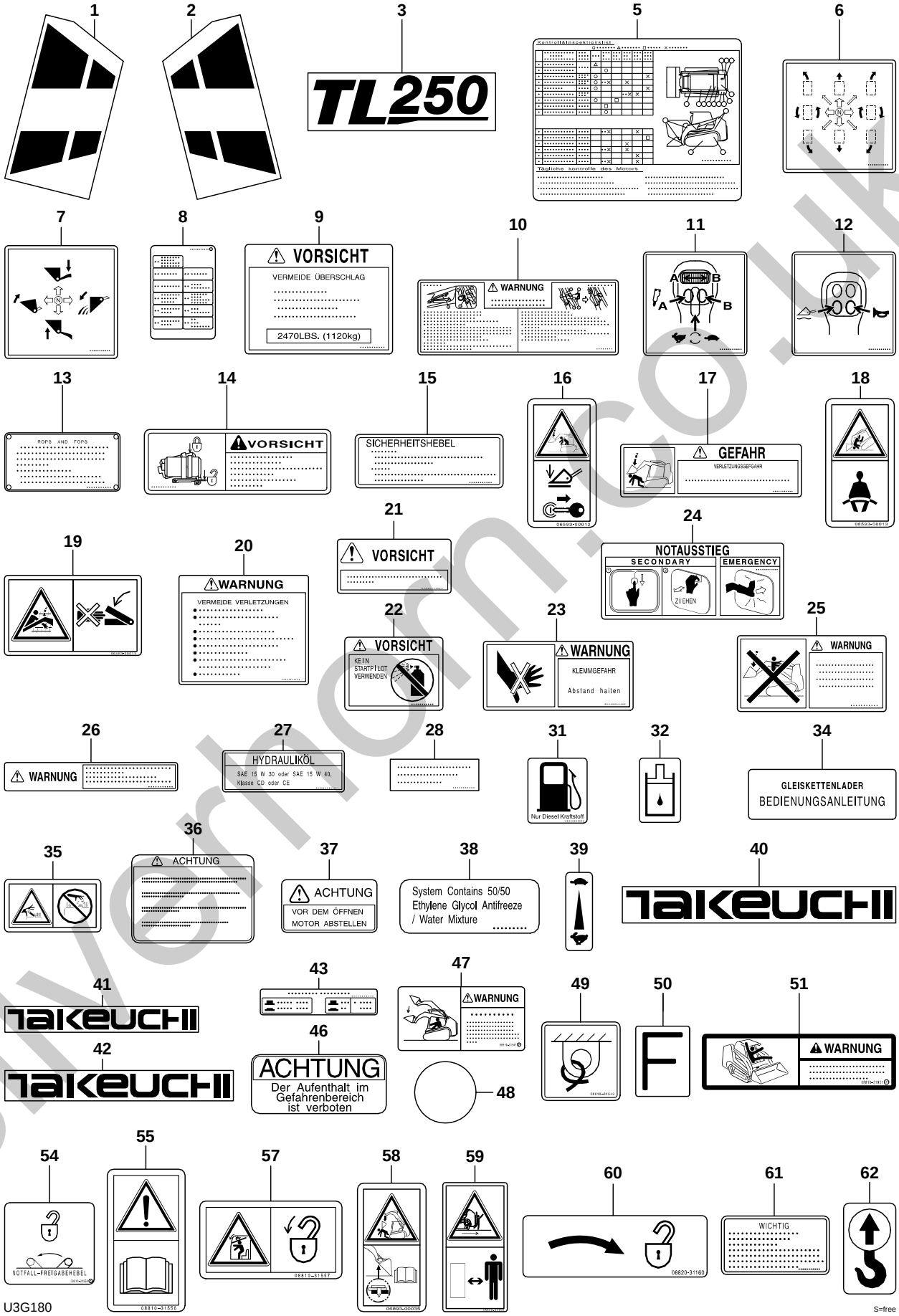

silverthorn.co.uk

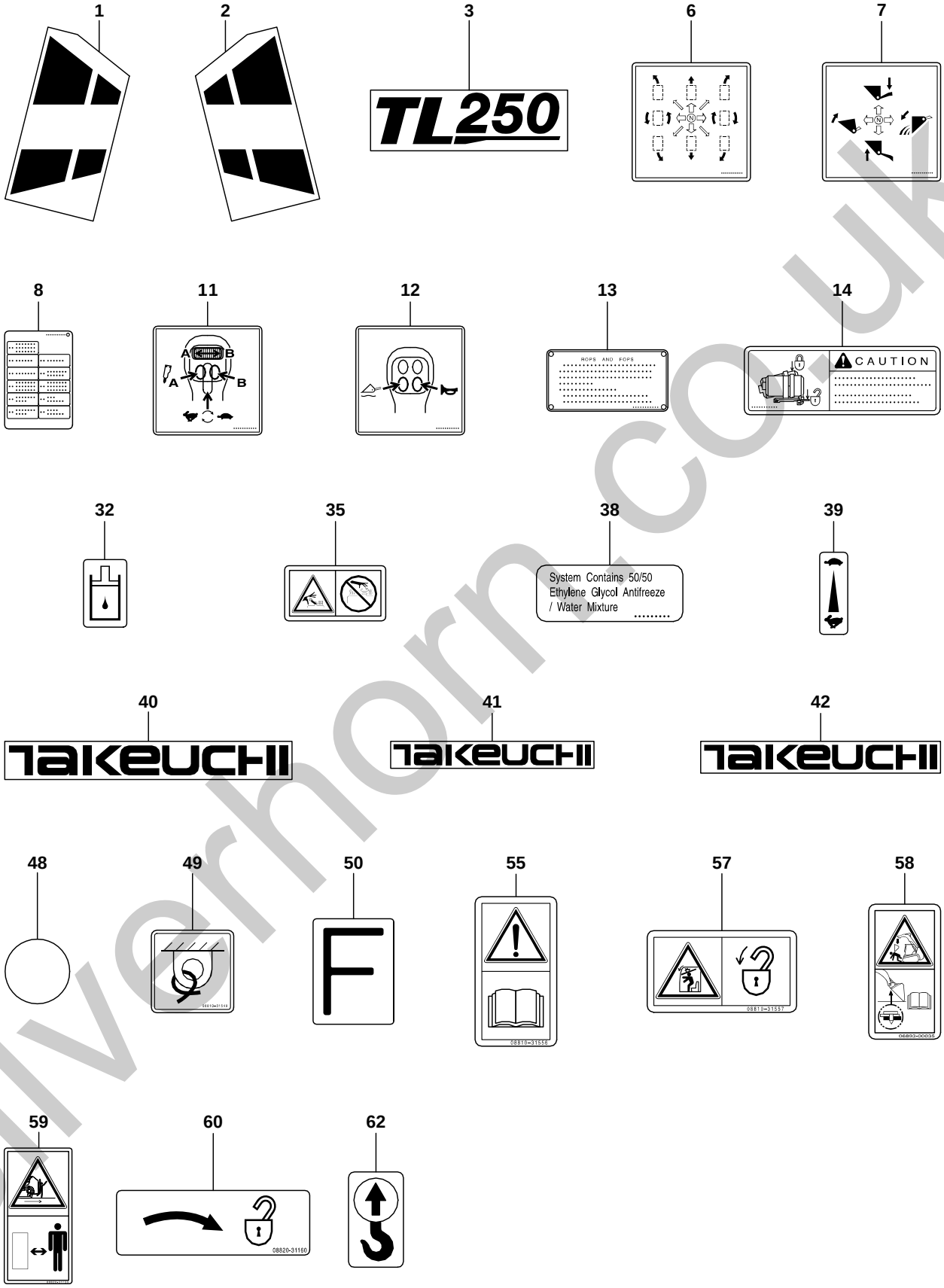

silverhorn.co.uk

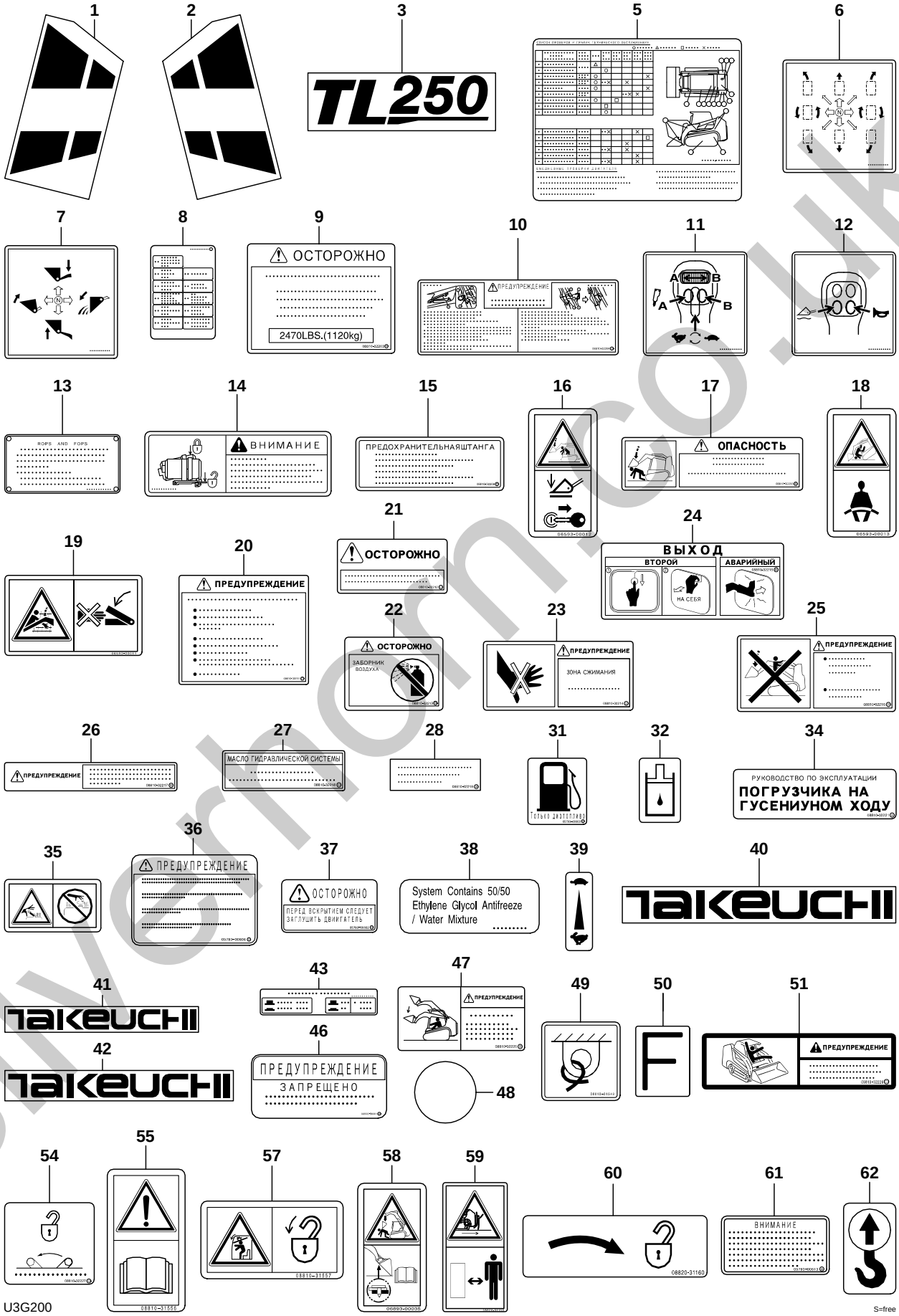

silverhorn.co.uk

silverhorn.co.uk

DECAL (cab)

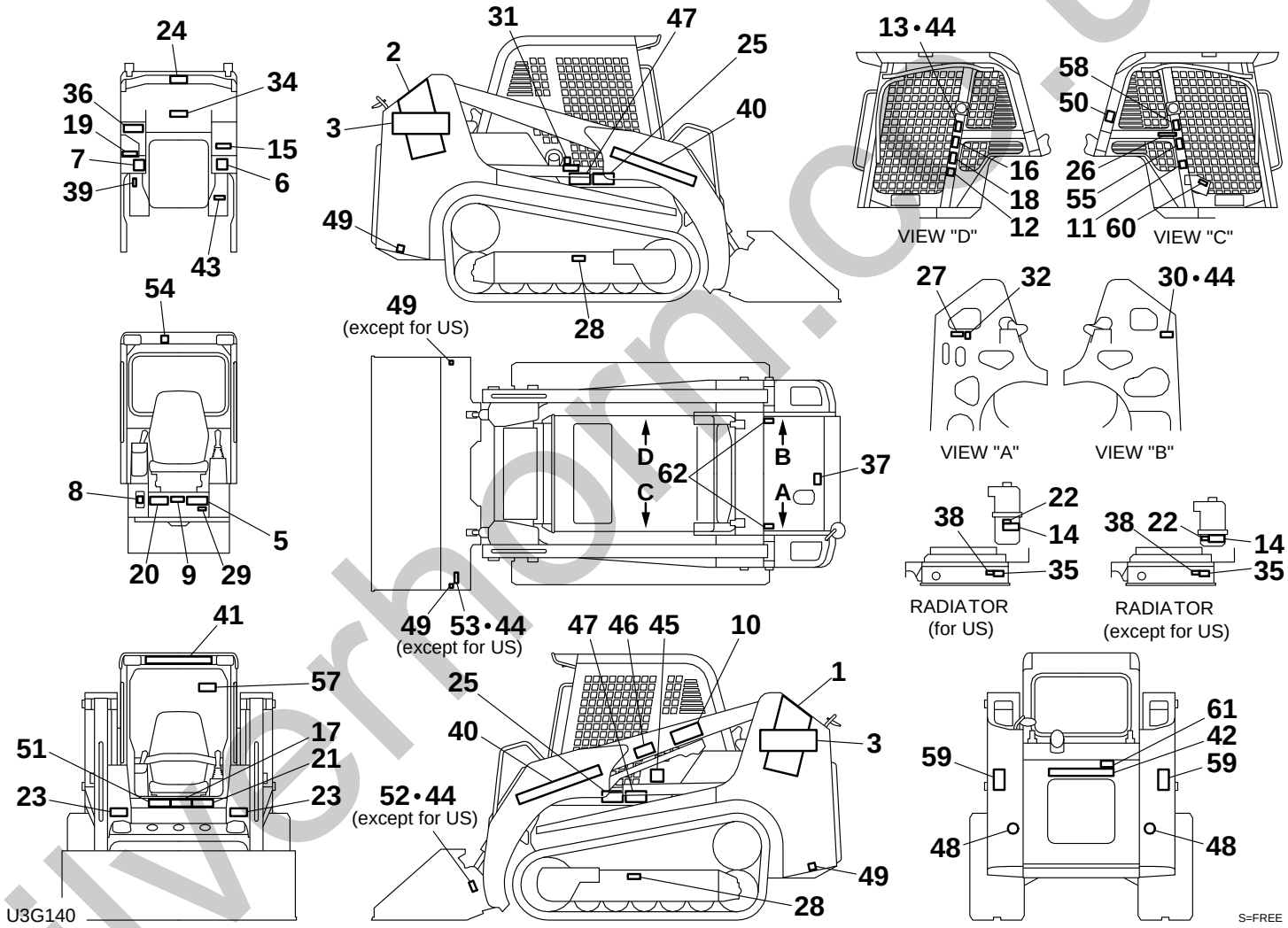

silverhorn.co.uk

DECAL (cab)

Item	Part number	Description	Q'ty	Chan.	Serial No.	Serv.	Remarks
0	0699300900	DECAL SET (English, for U.S.)	1			M	
	0699301000	DECAL SET (English, for E.U.)	1			M	
	0699301100	DECAL SET (French)	1			M	
	0699301200	DECAL SET (Italian)	1			M	
	0699301300	DECAL SET (German)	1			M	
	0699301400	DECAL SET (Dutch)	1			M	
	0699301500	DECAL SET (Russian)	1			M	
1	0699300001	・DECAL	1			M	
2	0699300002	・DECAL	1			M	
3	0699300003	・DECAL	2			M	
5	0669300005	・DECAL (English)	1			M	
	0669300105	・DECAL (French)	1			M	
	0669300205	・DECAL (Italian)	1			M	
	0669300305	・DECAL (German)	1			M	
	0669300505	・DECAL (Russian)	1			M	
6	0669300006	・DECAL	1			M	
7	0669300007	・DECAL	1			M	
8	0699300008	・DECAL (English, Dutch)	1			M	
	0699300108	・DECAL (French)	1			M	
	0699300208	・DECAL (Italian)	1			M	
	0699300308	・DECAL (German)	1			M	
	0699300508	・DECAL (Russian)	1			M	
9	0881030009	・DECAL (English)	1			M	
	0881030209	・DECAL (French)	1			M	
	0881030309	・DECAL (Italian)	1			M	
	0881030509	・DECAL (German)	1			M	
	0881032203	・DECAL (Russian)	1			M	
10	0881030110	・DECAL (English)	1			M	
	0881030260	・DECAL (French)	1			M	
	0881030360	・DECAL (Italian)	1			M	
	0881030560	・DECAL (German)	1			M	
	0881032204	・DECAL (Russian)	1			M	
11	0882030006	・DECAL	1			M	
12	0882030007	・DECAL	1			M	
13	X **********	・DECAL	1				
14	0669300814	・DECAL (U.S. TAKEUCHI)	1			M	
	0669300014	・DECAL (English, Dutch)	1			M	except for U.S.
	0669300114	・DECAL (French)	1			M	
	0669300214	・DECAL (Italian)	1			M	
	0669300314	・DECAL (German)	1			M	
	0669300514	・DECAL (Russian)	1			M	
15	0880031001	・DECAL (English)	1			M	
	0880038607	・DECAL (French)	1			M	
	0881030315	・DECAL (Italian)	1			M	
	0880034007	・DECAL (German)	1			M	
	0881032206	・DECAL (Russian)	1			M	
16	0659300012	・DECAL	1			M	
17	0880030010	・DECAL (English)	1			M	
	0880038610	・DECAL (French)	1			M	
	0881030317	・DECAL (Italian)	1			M	
	0880034010	・DECAL (German)	1			M	
	0881032208	・DECAL (Russian)	1			M	
18	0659300013	・DECAL	1			M	
19	0659300011	・DECAL	1			M	
20	0881030020	・DECAL (English)	1			M	
	0880038613	・DECAL (French)	1			M	
	0881030320	・DECAL (Italian)	1			M	
	0881030520	・DECAL (German)	1			M	
	0881032211	・DECAL (Russian)	1			M	
21	0880030015	・DECAL (English)	1			M	
	0880038615	・DECAL (French)	1			M	
	0881030321	・DECAL (Italian)	1			M	
	0880034015	・DECAL (German)	1			M	
	0881032212	・DECAL (Russian)	1			M	
22	0880030016	・DECAL (English)	1			M	
	0880038616	・DECAL (French)	1			M	
	0881030322	・DECAL (Italian)	1			M	
	0880034016	・DECAL (German)	1			M	

silverthorn.co.uk

DECAL (cab)

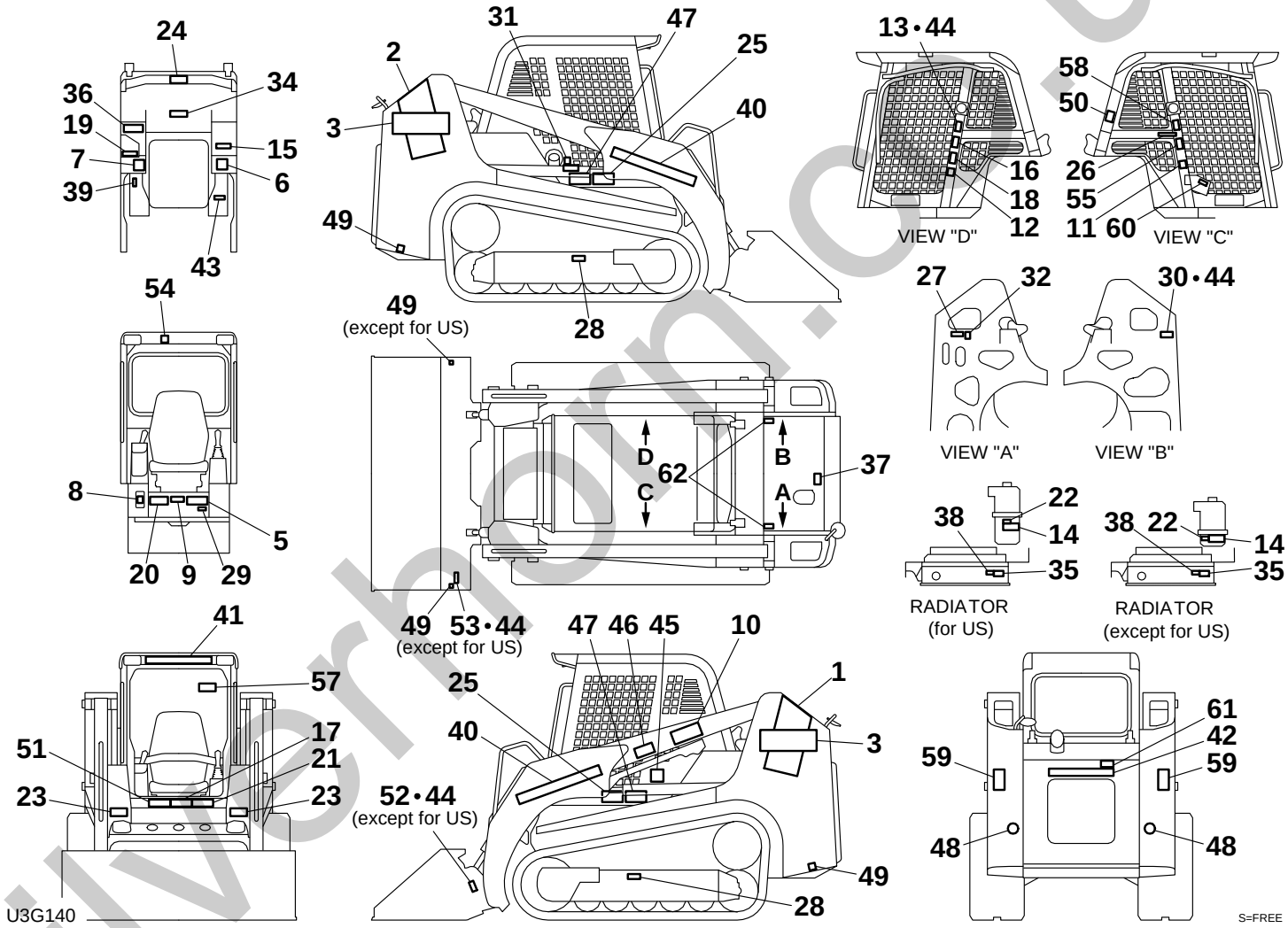

silverhorn.co.uk

DECAL (cab)

Item	Part number	Description	Q'ty	Chan.	Serial No.	Serv.	Remarks
22	0881032213	・DECAL (Russian)	1			M	
23	0880030017	・DECAL (English)	2			M	
23	0880038617	・DECAL (French)	2			M	
23	0881030323	・DECAL (Italian)	2			M	
23	0880034017	・DECAL (German)	2			M	
23	0881032214	・DECAL (Russian)	2			M	
24	0880031018	・DECAL (English)	1			M	
24	0880038618	・DECAL (French)	1			M	
24	0881030324	・DECAL (Italian)	1			M	
24	0880034018	・DECAL (German)	1			M	
24	0881032215	・DECAL (Russian)	1			M	
25	0880031005	・DECAL (English)	2			M	
25	0880038620	・DECAL (French)	2			M	
25	0881030325	・DECAL (Italian)	2			M	
25	0880034019	・DECAL (German)	2			M	
25	0881032216	・DECAL (Russian)	2			M	
26	0881030026	・DECAL (English)	1			M	
26	0880038621	・DECAL (French)	1			M	
26	0881030326	・DECAL (Italian)	1			M	
26	0881030526	・DECAL (German)	1			M	
26	0881032217	・DECAL (Russian)	1			M	
27	0880031017	・DECAL (English)	1			M	
27	0880038623	・DECAL (French)	1			M	
27	0881030327	・DECAL (Italian)	1			M	
27	0880034022	・DECAL (German)	1			M	
27	0881032218	・DECAL (Russian)	1			M	
28	0149362200	・DECAL (English)	2			M	
28	0880038624	・DECAL (French)	2			M	
28	0881030328	・DECAL (Italian)	2			M	
28	0880034023	・DECAL (German)	2			M	
28	0881032219	・DECAL (Russian)	2			M	
29	X **********	・DECAL	1				
30	X **********	・DECAL	1				
31	0359306600	・DECAL (English)	1			M	
31	0339375460	・DECAL (French)	1			M	
31	0339375660	・DECAL (Italian)	1			M	
31	0339375260	・DECAL (German)	1			M	
31	0579300603	・DECAL (Russian)	1			M	
32	0359306700	・DECAL	1			M	
34	0880031016	・DECAL (English)	1			M	
34	0880038634	・DECAL (French)	1			M	
34	0881030334	・DECAL (Italian)	1			M	
34	0880034027	・DECAL (German)	1			M	
34	0881032221	・DECAL (Russian)	1			M	
35	0882031135	・DECAL (English)	1			M	
36	0359313700	・DECAL (English)	1			M	
36	0359315700	・DECAL (French)	1			M	
36	0359316700	・DECAL (Italian)	1			M	
36	0359314700	・DECAL (German)	1			M	
36	0579300606	・DECAL (Russian)	1			M	
37	0359307400	・DECAL (English)	1			M	
37	0359315400	・DECAL (French)	1			M	
37	0359316400	・DECAL (Italian)	1			M	
37	0359314400	・DECAL (German)	1			M	
37	0579300602	・DECAL (Russian)	1			M	
38	0359313900	・DECAL	1			M	
39	0359317200	・DECAL	1			M	
40	0008500073	・DECAL	2			M	
41	0008500140	・DECAL	1			M	
42	0008500050	・DECAL	1			M	
43	0881030043	・DECAL (English)	1			M	
43	0881030243	・DECAL (French)	1			M	
43	0881030343	・DECAL (Italian)	1			M	
43	0881030543	・DECAL (German)	1			M	
43	0881032224	・DECAL (Russian)	1			M	
44	X **********	・SCREW	16				
45	X **********	・DECAL	1				except for U.S., Russian
46	0359309100	・DECAL (French)	1			M	

silverthorn.co.uk

DECAL (cab)

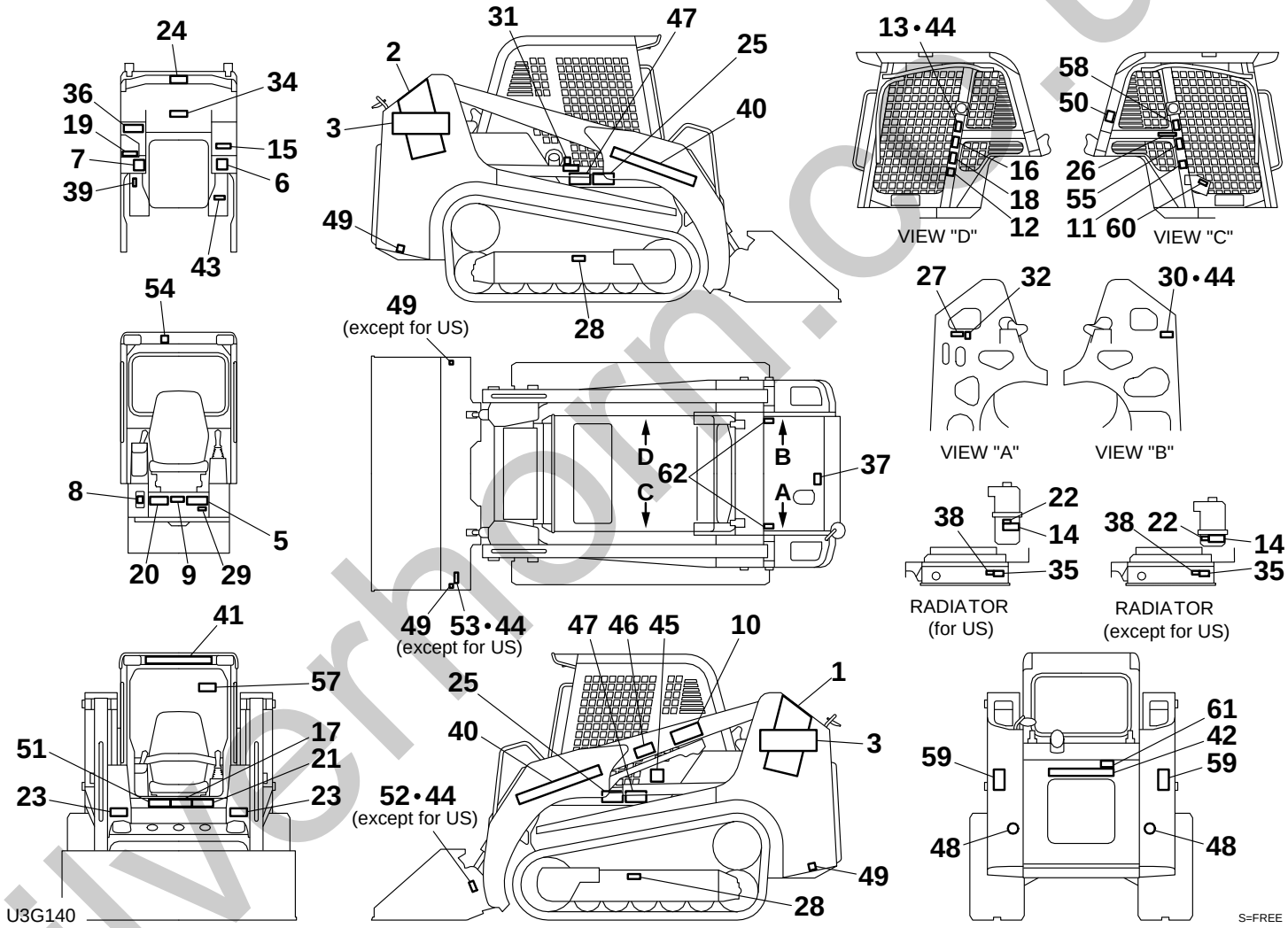

silverhorn.co.uk

DECAL (cab)

Item	Part number	Description	Q'ty	Chan.	Serial No.	Serv.	Remarks
46	0359310100	・DECAL (Italian)	1			M	
46	0359308100	・DECAL (German)	1			M	
46	0399356001	・DECAL (Russian)	1			M	
47	0881030046	・DECAL (English)	2			M	
47	0881031747	・DECAL (French)	2			M	
47	0881031847	・DECAL (Italian)	2			M	
47	0881031947	・DECAL (German)	2			M	
47	0881032225	・DECAL (Russian)	2			M	
48	0874030360	・DECAL	2			M	
49	0881031549	・DECAL	4			M	
50	0399300400	・DECAL	1			M	
51	0881031551	・DECAL (English)	1			M	
51	0881031751	・DECAL (French)	1			M	
51	0881031851	・DECAL (Italian)	1			M	
51	0881031951	・DECAL (German)	1			M	
51	0881032226	・DECAL (Russian)	1			M	
52	X **********	・DECAL	1				except for U.S.
53	X **********	・DECAL	1				except for U.S.
54	0881031554	・DECAL (English)	1			M	
54	0881031754	・DECAL (French)	1			M	
54	0881031854	・DECAL (Italian)	1			M	
54	0881031954	・DECAL (German)	1			M	
54	0881032227	・DECAL (Russian)	1			M	
55	0881031556	・DECAL	1			M	
57	0881031557	・DECAL	1			M	
58	0689300035	・DECAL	1			M	
59	0882031159	・DECAL	2			M	except for U.S.
60	0882031160	・DECAL	1			M	
61	0339376240	・DECAL (English)	1			M	
61	0339379440	・DECAL (French)	1			M	
61	0339379540	・DECAL (Italian)	1			M	
61	0339376340	・DECAL (German)	1			M	
61	0579300613	・DECAL (Russian)	1			M	
62	0399300500	・DECAL	2			M	
	U3g140						

silverhorn.co.uk

DECAL (cab) (for Japan)

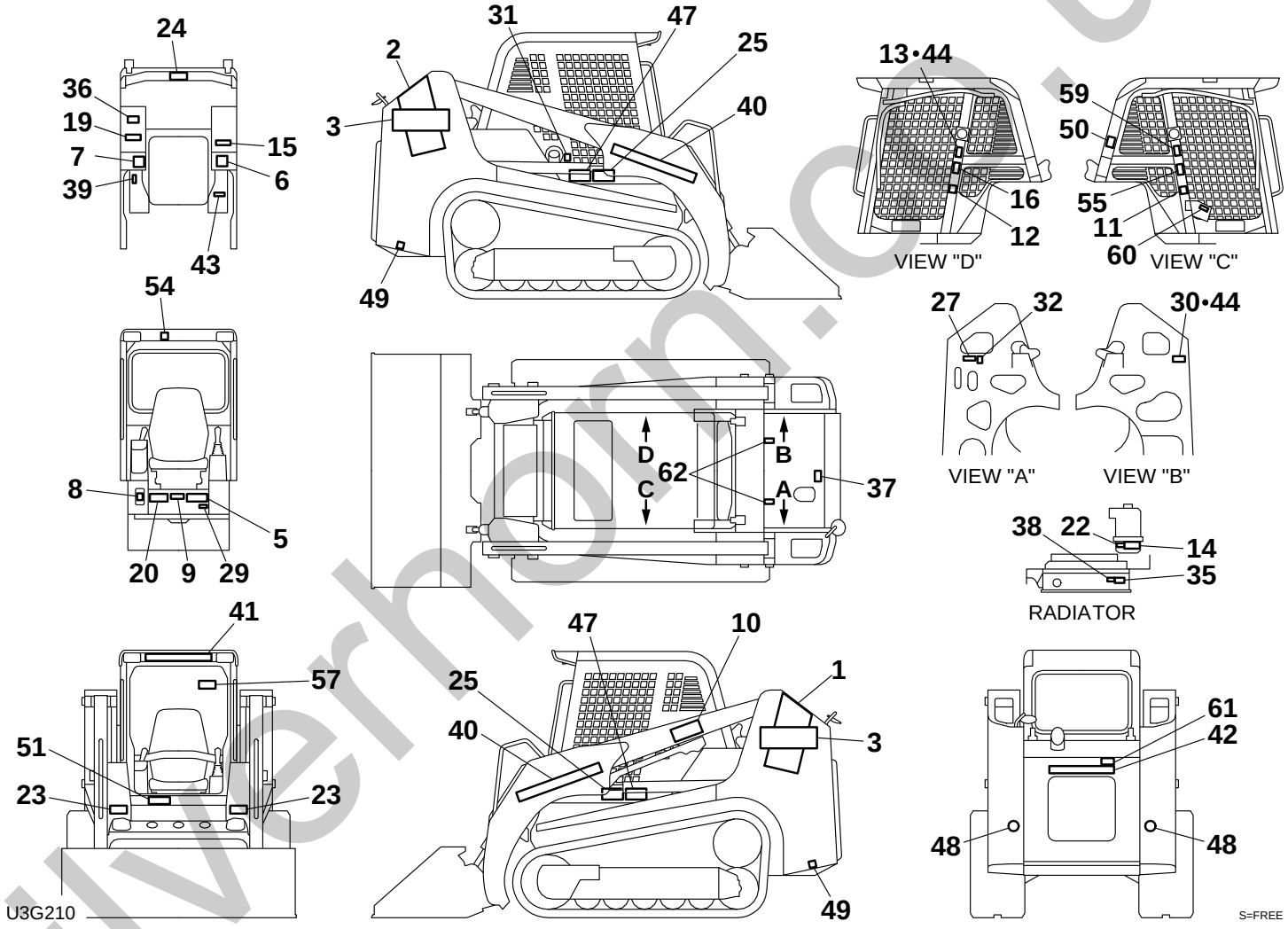

silverhorn.co.uk

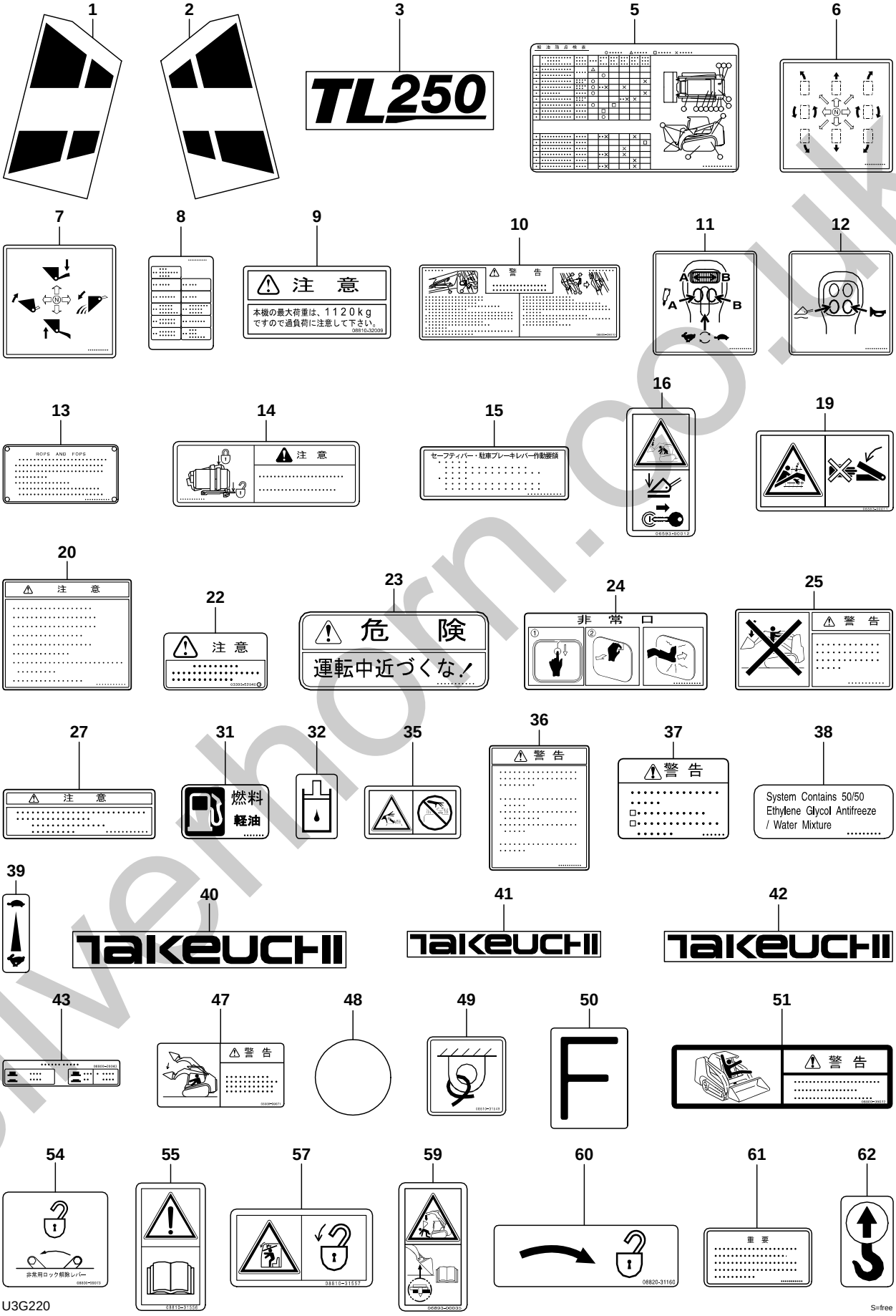

U3G220

S=free

silverhorn.co.uk

DECAL (cab) (for Japan)

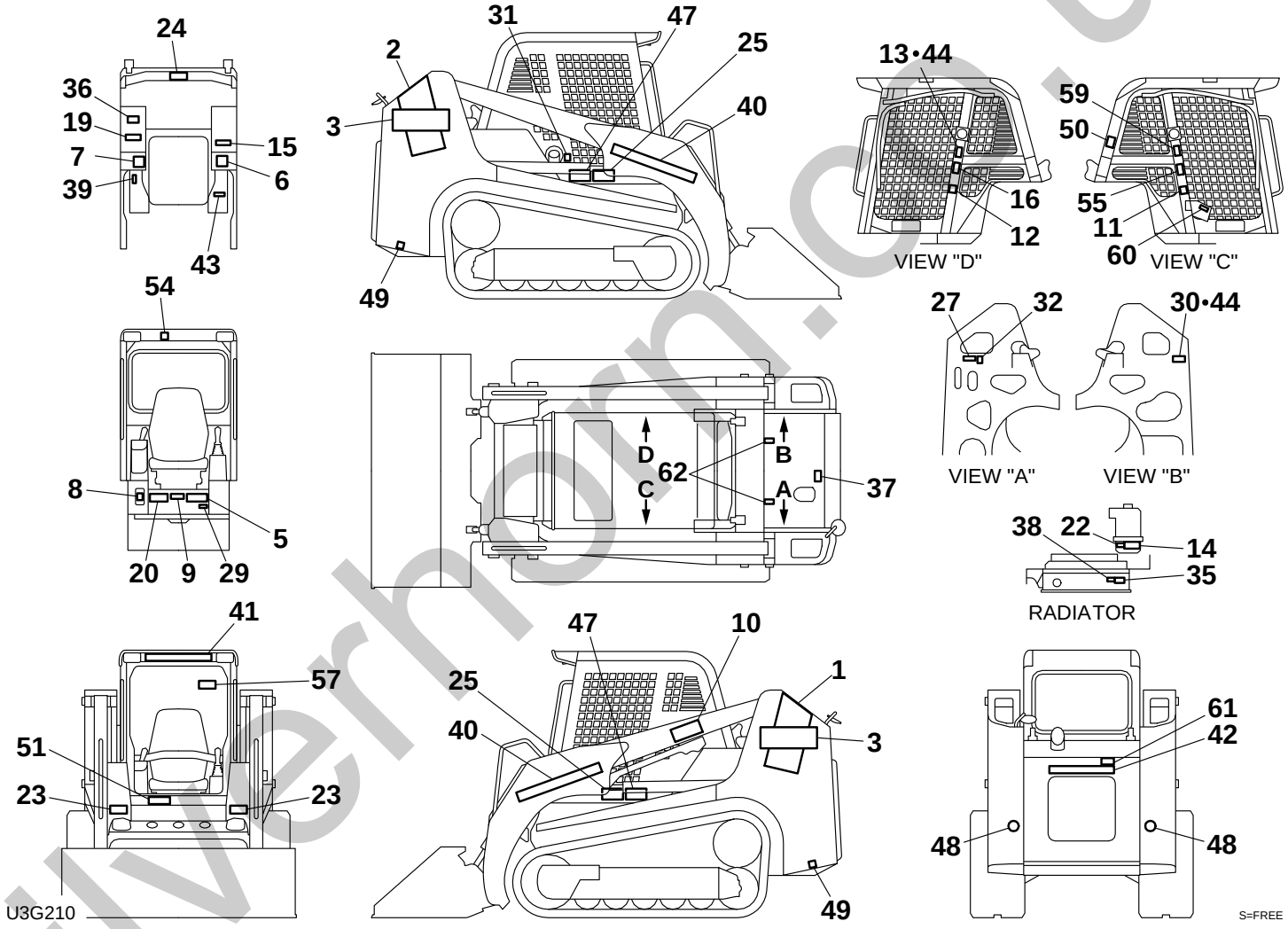

silverhorn.co.uk

DECAL (cab) (for Japan)

Item	Part number	Description	Q'ty	Chan.	Serial No.	Serv.	Remarks
0	0699301600	DECAL SET	1			M	
1	0699300001	・DECAL	1			M	
2	0699300002	・DECAL	1			M	
3	0699300003	・DECAL	2			M	
5	0669301605	・DECAL	1			M	
6	0669300006	・DECAL	1			M	
7	0669300007	・DECAL	1			M	
8	0699301608	・DECAL	1			M	
9	0881032009	・DECAL	1			M	
10	0880039010	・DECAL	1			M	
11	0882030006	・DECAL	1			M	
12	0882030007	・DECAL	1			M	
13	X **********	・DECAL	1				
14	0669301614	・DECAL	1			M	
15	0880033018	・DECAL	1			M	
16	0659300012	・DECAL	1			M	
19	0659300011	・DECAL	1			M	
20	0880033009	・DECAL	1			M	
22	0339352040	・DECAL	1			M	
23	0880033007	・DECAL	2			M	
24	0880033015	・DECAL	1			M	
25	0880033012	・DECAL	2			M	
27	0880033019	・DECAL	1			M	
29	X **********	・DECAL	1				
30	X **********	・DECAL	1				
31	0871082240	・DECAL	1			M	
32	0359306700	・DECAL	1			M	
35	0882031135	・DECAL	1			M	
36	0880033010	・DECAL	1			M	
37	0871082120	・DECAL	1			M	
38	0359313900	・DECAL	1			M	
39	0359317200	・DECAL	1			M	
40	0008500073	・DECAL	2			M	
41	0008500140	・DECAL	1			M	
42	0008500050	・DECAL	1			M	
43	0880039043	・DECAL	1			M	
44	X **********	・SCREW	8				
47	0880039071	・DECAL	2			M	
48	0874030360	・DECAL	2			M	
49	0881031549	・DECAL	2			M	
50	0399300400	・DECAL	1			M	
51	0880039072	・DECAL	1			M	
54	0880039073	・DECAL	1			M	
55	0881031556	・DECAL	1			M	
57	0881031557	・DECAL	1			M	
59	0689300035	・DECAL	1			M	
60	0882031160	・DECAL	1			M	
61	0339377640	・DECAL	1			M	
62	0399300500	・DECAL	2			M	
	U3g210						

silverhorn.co.uk

DECAL (high flow)

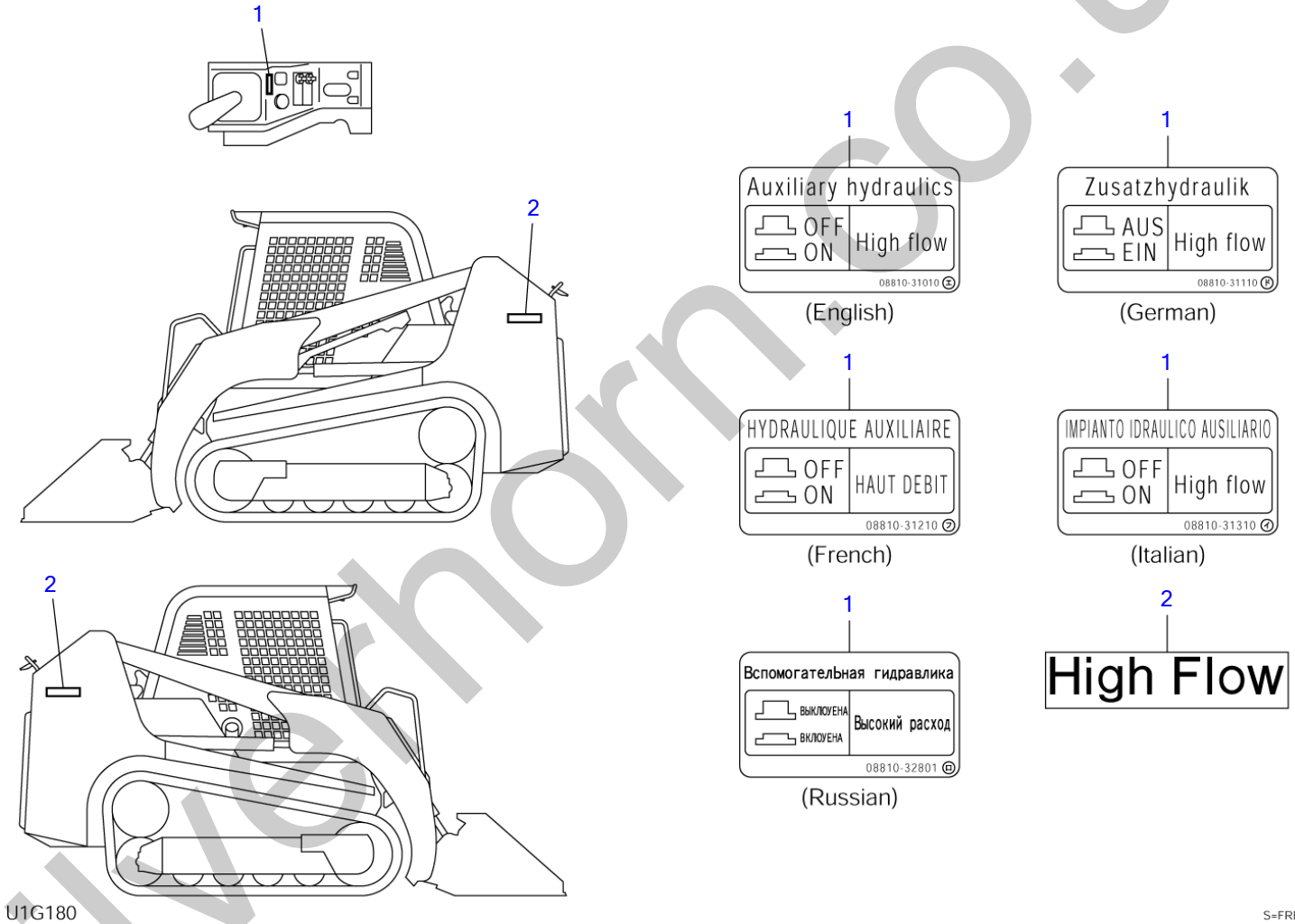

silverhorn.co.uk

DECAL (high flow)

Item	Part number	Description	Q'ty	Chan.	Serial No.	Serv.	Remarks
0	0699302000	DECAL SET (English)	1			M	
	0699302100	DECAL SET (French)	1			M	
	0699302200	DECAL SET (Italian)	1			M	
	0699302300	DECAL SET (German)	1			M	
	0699302400	DECAL SET (Dutch)	1			M	
	0699302500	DECAL SET (Russian)	1			M	
1	0881031010	・DECAL (English)	1			M	
	0881031110	・DECAL (German)	1			M	
	0881031210	・DECAL (French)	1			M	
	0881031310	・DECAL (Italian)	1			M	
	0881032801	・DECAL (Russian)	1			M	
2	0669302002	・DECAL	2			M	
	U3g230					M	

silverhorn.co.uk

DECAL (high flow, for GEHL & MUSTANG)

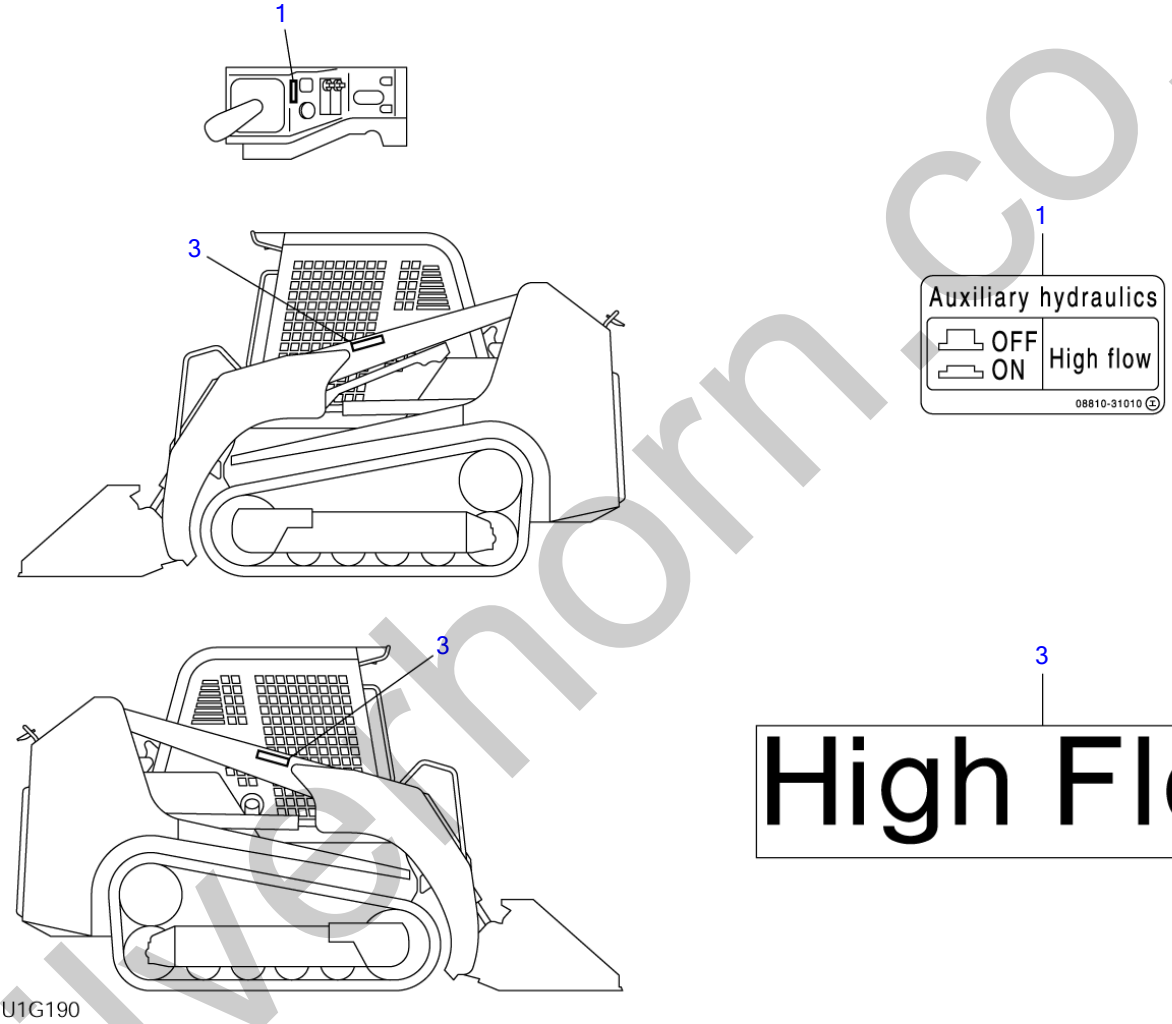

silverhorn.co.uk

DECAL (high flow, for GEHL & MUSTANG)

Item	Part number	Description	Q'ty	Chan.	Serial No.	Serv.	Remarks
0	**0699302600**	DECAL SET (GEHL & MUSTANG)	1				
1	**0881031010**	・DECAL (English)	1			M	
3	**0881031030**	・DECAL	2			M	
	U3g240						

silverhorn.co.uk

TOOL & ACCESSORIES

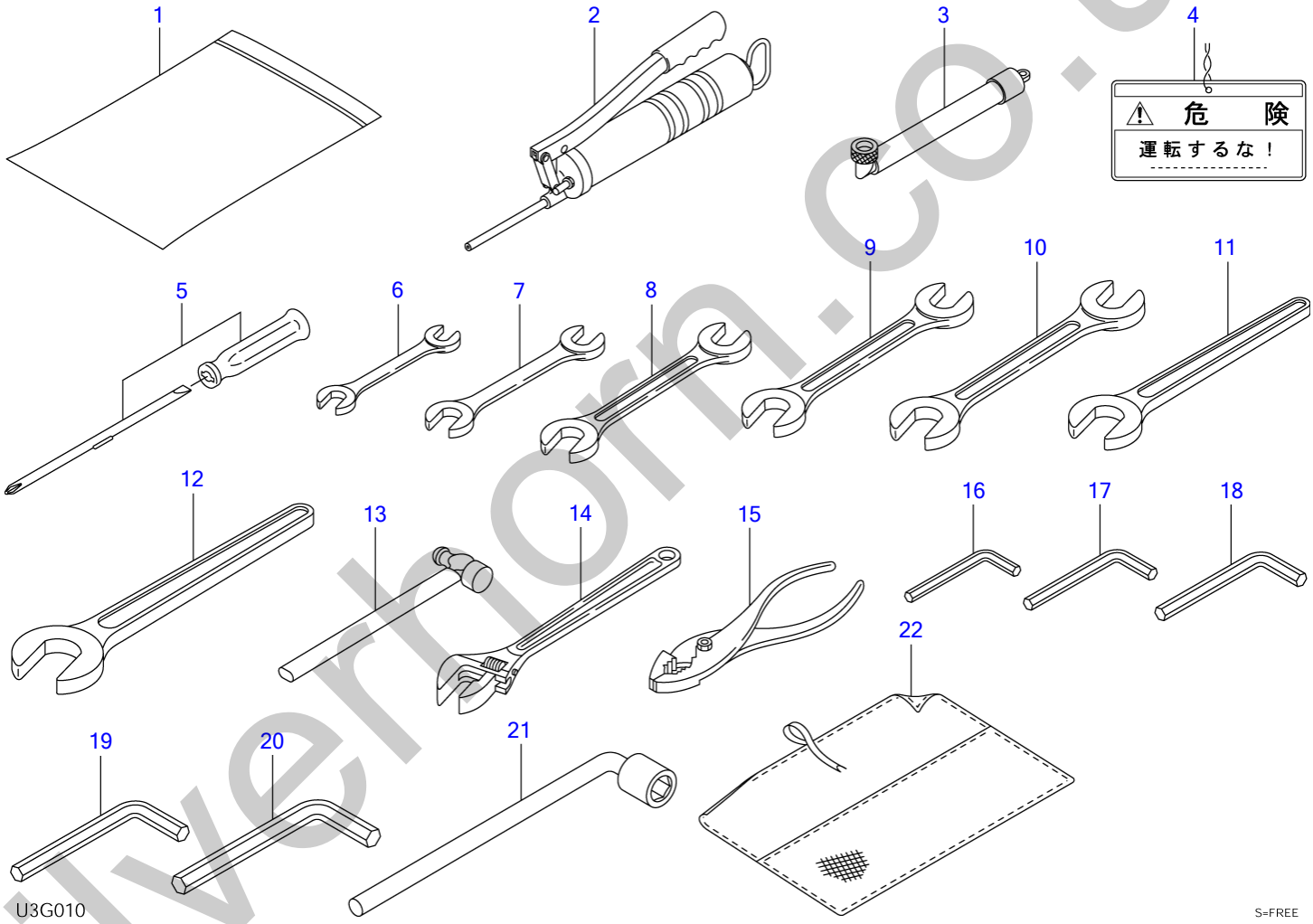

silverhorn.co.uk

TOOL & ACCESSORIES

Item	Part number	Description	Q'ty	Chan.	Serial No.	Serv.	Remarks
		TOOL SET (for Japan)	1				
		TOOL SET	1				
1	1691900001	CASE	1				
2	1691060600	GUN, grease	1				
	1691010800	GUN, grease	1				for JAPAN
3	1554512601	TUBE	1				
4	0359325160	PLATE	1				for JAPAN
0-1	0699200060	SUB TOOL SET	1				
5	1690220205	・SCREWDRIVER	1				
6	1690001012	・SPANNER	1				
7	1690001113	・SPANNER	1				
8	1690001417	・SPANNER	1				
9	1690001922	・SPANNER	1				
10	1690002427	・SPANNER	1				
11	1690100030	・SPANNER	1				
12	1690100041	・SPANNER	1				
13	1690300330	・HAMMER	1				
14	1690400250	・WRENCH, monkey	1				
15	1690500200	・PLIERS	1				
16	1690600500	・WRENCH, hex	1				
17	1690600600	・WRENCH, hex	1				
18	1690600800	・WRENCH, hex	1				
19	1690601000	・WRENCH, hex	1				
20	1690601400	・WRENCH, hex	1				
21	1690830019	・WRENCH, hex	1				
22	1691400001	・CASE, tool	1				
	U3g010						

silverhorn.co.uk

PAINTED COLOR

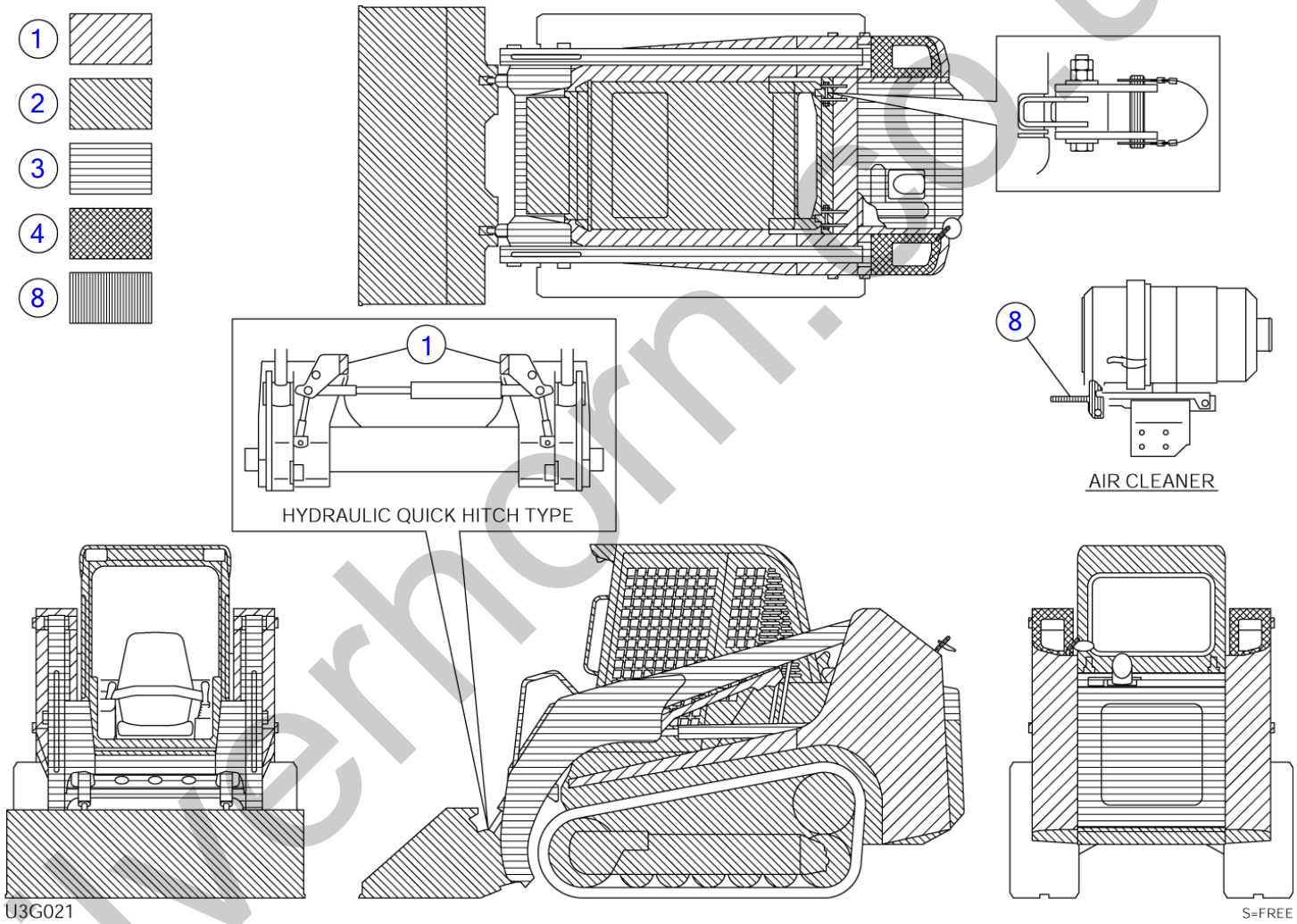

silverhorn.co.uk

PAINTED COLOR

Item	Part number	Description	Q'ty	Chan.	Serial No.	Serv.	Remarks
		PAINTED COLOR					
1	1919060105	RED	1				
	1919069105	RED	1				spray
2	1919060144	GRAY	1				
	1919069144	GRAY	1				spray
3	1919060142	LIGHT GRAY	1				
	1919069142	LIGHT GRAY	1				spray
4	1919060103	BLACK	1				
	1919069103	BLACK	1				spray
8	1919069175	YELLOW	1				spray
	U3g021					M	

silverhorn.co.uk

PAINTED COLOR (for GEHL & MUSTANG)

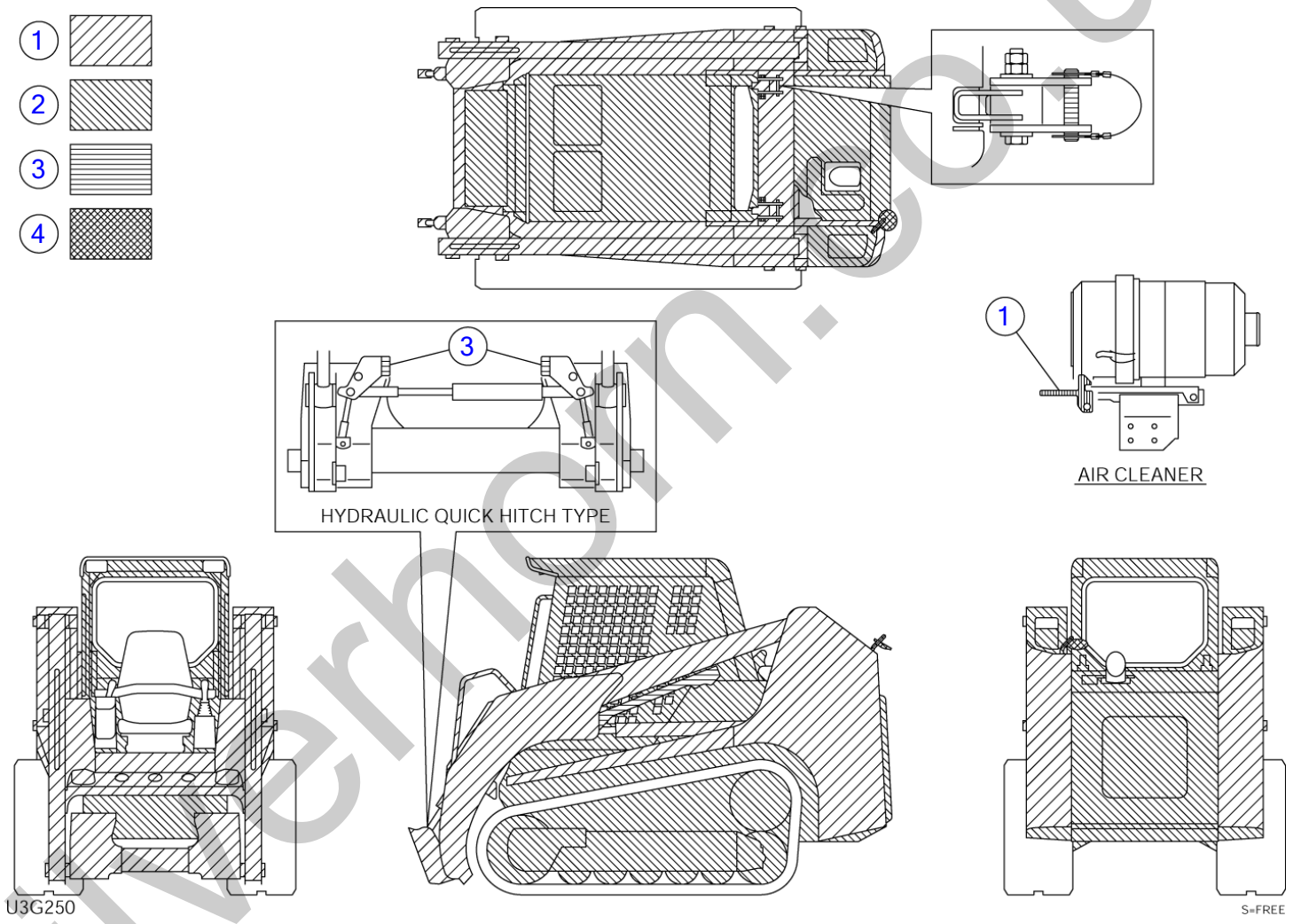

silverhorn.co.uk

PAINTED COLOR (for GEHL & MUSTANG)

Item	Part number	Description	Q'ty	Chan.	Serial No.	Serv.	Remarks
		PAINTED COLOR					
1	1919060177	GEHL YELLOW	1			M	
	1919069177	GEHL YELLOW	1			M	spray
2	1919060180	GEHL GRAY	1			M	
	1919069180	GEHL GRAY	1			M	spray
3	1919060105	RED	1				
	1919069105	RED	1				spray
4	1919060103	BLACK	1				
	1919069103	BLACK	1				spray
	U3G250						

silverhorn.co.uk

CONTROL VALVE

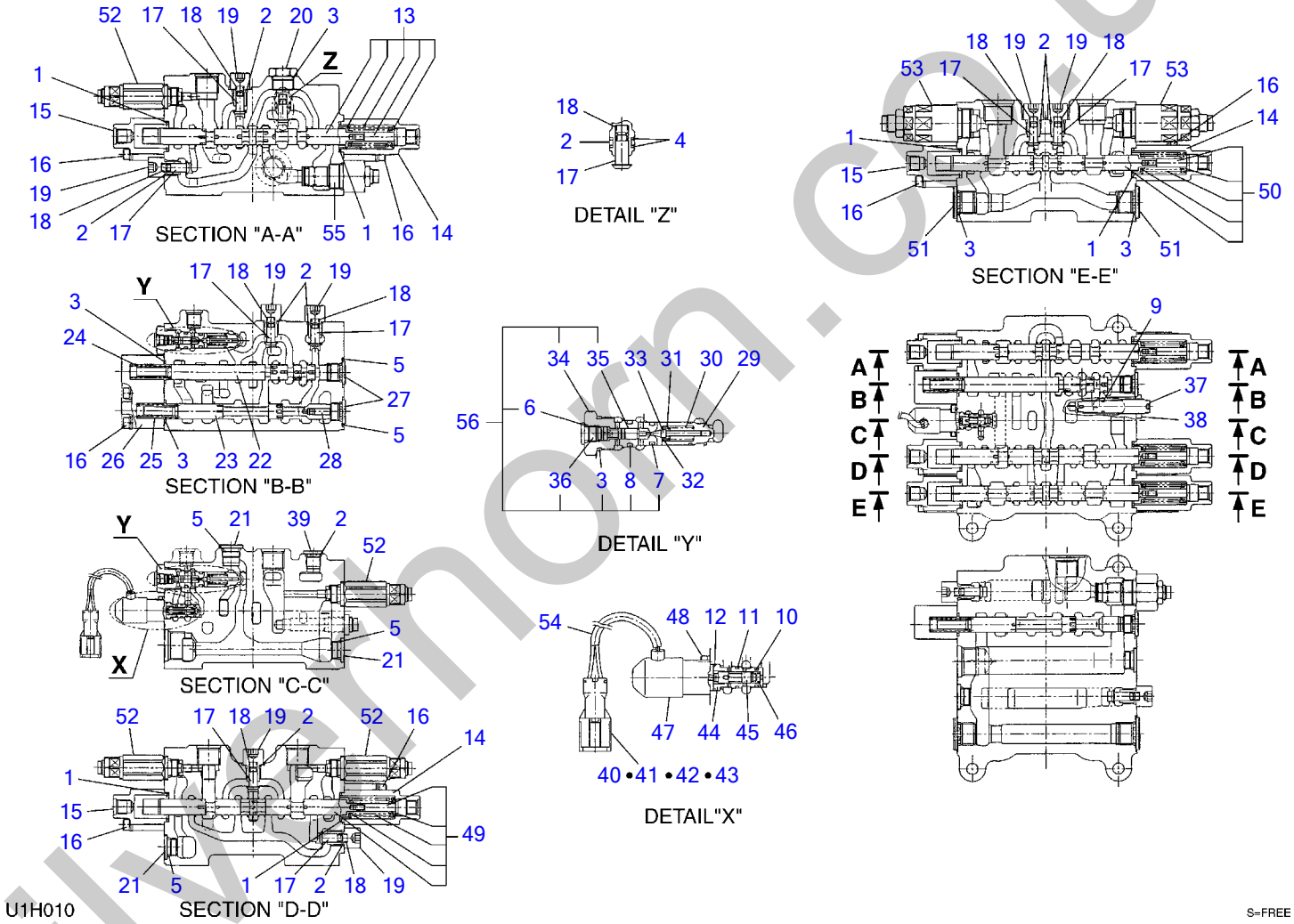

silvermorn.co.uk

CONTROL VALVE

Item	Part number	Description	Q'ty	Chan.	Serial No.	Serv.	Remarks
0	1901045100	・・VALVE ASSY, control	1				
0-1	1901045299	・・KIT, seal	1			M	
1	X 1420300119	・・O-RING	6			M	
2	X 1420010110	・・O-RING	10				
3	X 1420010180	・・O-RING	7				
4	X 1421020110	・・RING, back-up	2			M	
5	X 1420010140	・・O-RING	5				
6	X 1420010080	・・O-RING	2			M	
7	X 1420010101	・・O-RING	2			M	
8	X 1420010120	・・O-RING	2			M	
9	X 1420010090	・・O-RING	1				
10	X 1420500100	・・O-RING	1			M	
11	X 1420500112	・・O-RING	1			M	
12	X 1420500140	・・O-RING	1			M	
13	1901047096	・・SPOOL ASSY	1			M	
14	1901045205	・・COVER	3			M	
15	1901045206	・・COVER	3			M	
16	1110540645	・・BOLT, sems	16			M	
17	1901039426	・・VALVE	9			M	
18	1901039456	・・SPRING	9			M	
19	1901045210	・・PLUG	8			M	
20	1901045212	・・PLUG	1			M	
21	1901030672	・・PLUG	3			M	
22	1901045217	・・SPOOL	1			M	
23	1901045218	・・SPOOL	1			M	
24	1901045219	・・SPRING	1			M	
25	1901045220	・・SPRING	1			M	
26	1901045221	・・HOLDER	1			M	
27	1901045222	・・PLUG	2			M	
28	1901045223	・・PISTON	1			M	
29	1901045224	・・VALVE, check	2			M	
30	1901045225	・・SPRING	2			M	
31	1901045226	・・HOLDER	2			M	
32	1221000009	・・RING, snap	2			M	
33	1901045228	・・VALVE	2			M	
34	1901045229	・・GUIDE	2			M	
35	1901045230	・・PISTON	2			M	
36	1901045232	・・PLUG	2			M	
37	1901045235	・・SLEEVE	1			M	
38	1901045237	・・NUT	1			M	
39	1901024795	・・PLUG	1			M	
40	1901045239	・・ADAPTOR	1			M	
41	1901045240	・・TERMINAL	2			M	
42	1901045241	・・SEAL	2			M	
43	1901045242	・・HOLDER	1			M	
44	1901045243	・・SOCKET	1			M	
45	1901045244	・・SPOOL	1			M	
46	1901045245	・・SPRING	1			M	
47	1901045249	・・SOLENOID	1			M	
48	1110040408	・・BOLT	2			M	
49	1901045297	・・SPOOL ASSY	1			M	
50	1901045296	・・SPOOL ASSY	1			M	
51	1901045253	・・PLUG	2			M	
52	1901045254	・・VALVE, relief	4			M	
	1420300119	・・・O-RING	1			M	
53	1901047055	・・VALVE, relief	2			M	
	1420300119	・・・O-RING	1			M	
54	1901045256	・・TUBE	1			M	
55	1901047098	・・VALVE, relief	1			M	
56	1901045295	・・GUIDE, piston	1			M	
	U3h080						

silverhorn.co.uk

CONTROL VALVE (high flow)

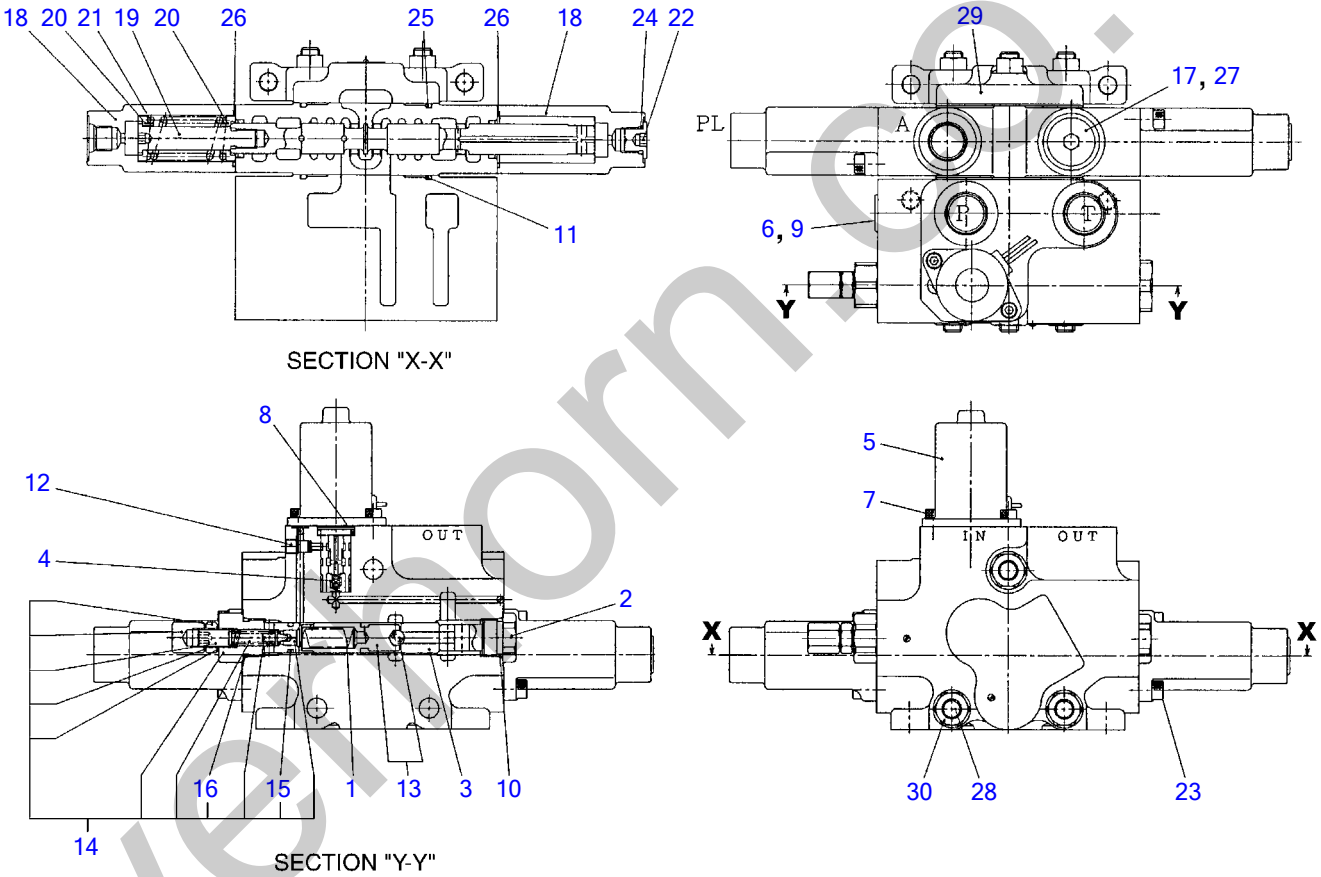

T7H260

S=free

silvermorn.co.uk

CONTROL VALVE (high flow)

Item	Part number	Description	Q'ty	Chan.	Serial No.	Serv.	Remarks
0	1901039500	VALVE ASSY, control	1				
0-1	1901039511	・BLOCK ASSY, solenoid	1				
1	1901039556	・・SPRING	1				
2	1901039513	・・PLUG	1				
3	1901039526	・・HOLDER, spring	1				
4	1901039557	・・SPRING	1				
5	1901039525	・・SOLENOID	1				
6	1901720720	・・PLUG	1				
7	1110040510	・・SCREW, cap	2				
8	1420000160	・・O-RING	1				
9	1420010110	・・O-RING	1				
10	1420010160	・・O-RING	1				
11	1420110650	・・O-RING	1				
12	1501810000	・・PLUG	1				
13	1901039527	・・PLUNGER	1				
14	1901039521	・・VALVE, relief	1				
15	1420010120	・・・O-RING	1				
16	1420010160	・・・O-RING	1				
0-2	1901039510	・BLOCK ASSY	1				
17	1513500008	・・PLUG	1				
18	1901038166	・・COVER	2				
19	1901038131	・・END, spool	1				
20	1901035151	・・HOLDER, spring	2				
21	1901038157	・・SPRING	1				
22	1901720720	・・PLUG	1				
23	1110020620	・・SCREW, cap	4				
24	1420010110	・・O-RING	1				
25	1420110650	・・O-RING	1				
26	1420310023	・・O-RING	2				
27	1420310908	・・O-RING	1				
28	1901039507	・ROD, tie	3				
29	1901039504	・HOUSING, inlet	1				
30	1130050010	・NUT	6				
	T7h260						

silverhorn.co.uk

PILOT VALVE (R.H.)

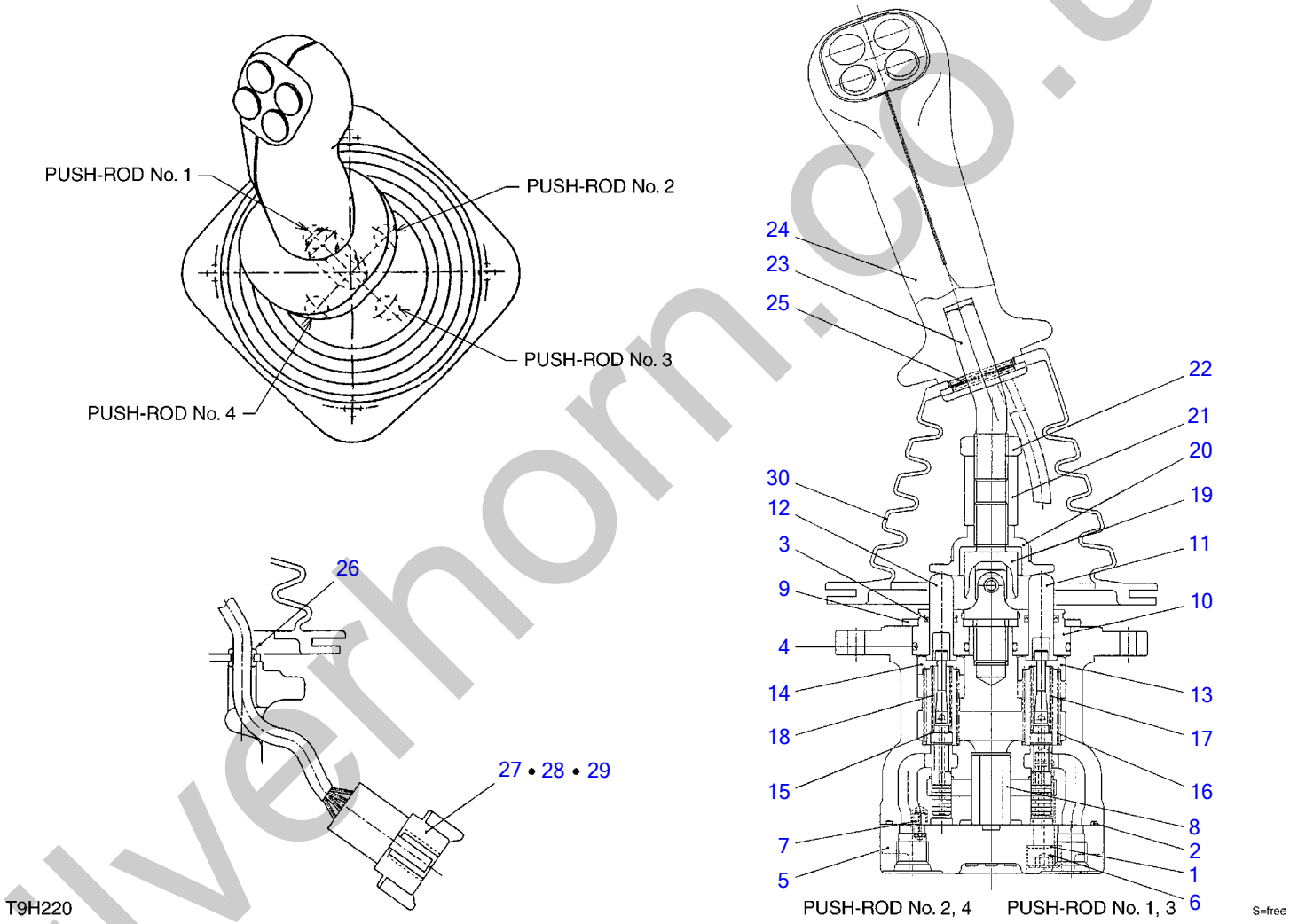

silverhorn.co.uk

PILOT VALVE (R.H.)

Item	Part number	Description	Q'ty	Chan.	Serial No.	Serv.	Remarks
0	1901749800	VALVE ASSY, pilot	1				Right
0-1	1901749599	・KIT, seal	1				
1	X 1901715103	・・WASHER	2				
2	X 1420510850	・・O-RING	1				
3	X 1901710914	・・SEAL	4				
4	X 1420010200	・・O-RING	4				
5	1901749511	・PLATE	1				
6	1110020835	・SCREW, cap	2				
7	1213000510	・PIN, spring	1				
8	1901743606	・BUSHING	1				
9	1901749551	・PLATE	1				
10	1901710912	・PLUG	4				
11	1901719011	・ROD	2				
12	1901719012	・ROD	2				
13	1901743614	・HOLDER	2				
14	1901743615	・HOLDER	2				
15	1901710917	・WASHER	4				
16	1901749521	・SPRING	4				
17	1901749541	・SPRING	2				
18	1901749542	・SPRING	2				
19	1901720232	・JOINT	1				
20	1901743620	・PLATE	1				
21	1901710922	・NUT	1				
22	1901719025	・NUT	1				
23	1901741526	・LEVER	1				
24	1901741210	・HANDLE	1				
25	1213000528	・PIN, spring	1				
26	1901735630	・BUSHING	1				
27	1901740446	・RECEPTACLE	1				
28	1901740447	・WEDGE	1				
29	1901741263	・PLUG	3				
30	1901735632	・BOOT	1				
	T9h220						

silverhorn.co.uk

PILOT VALVE (L.H.)

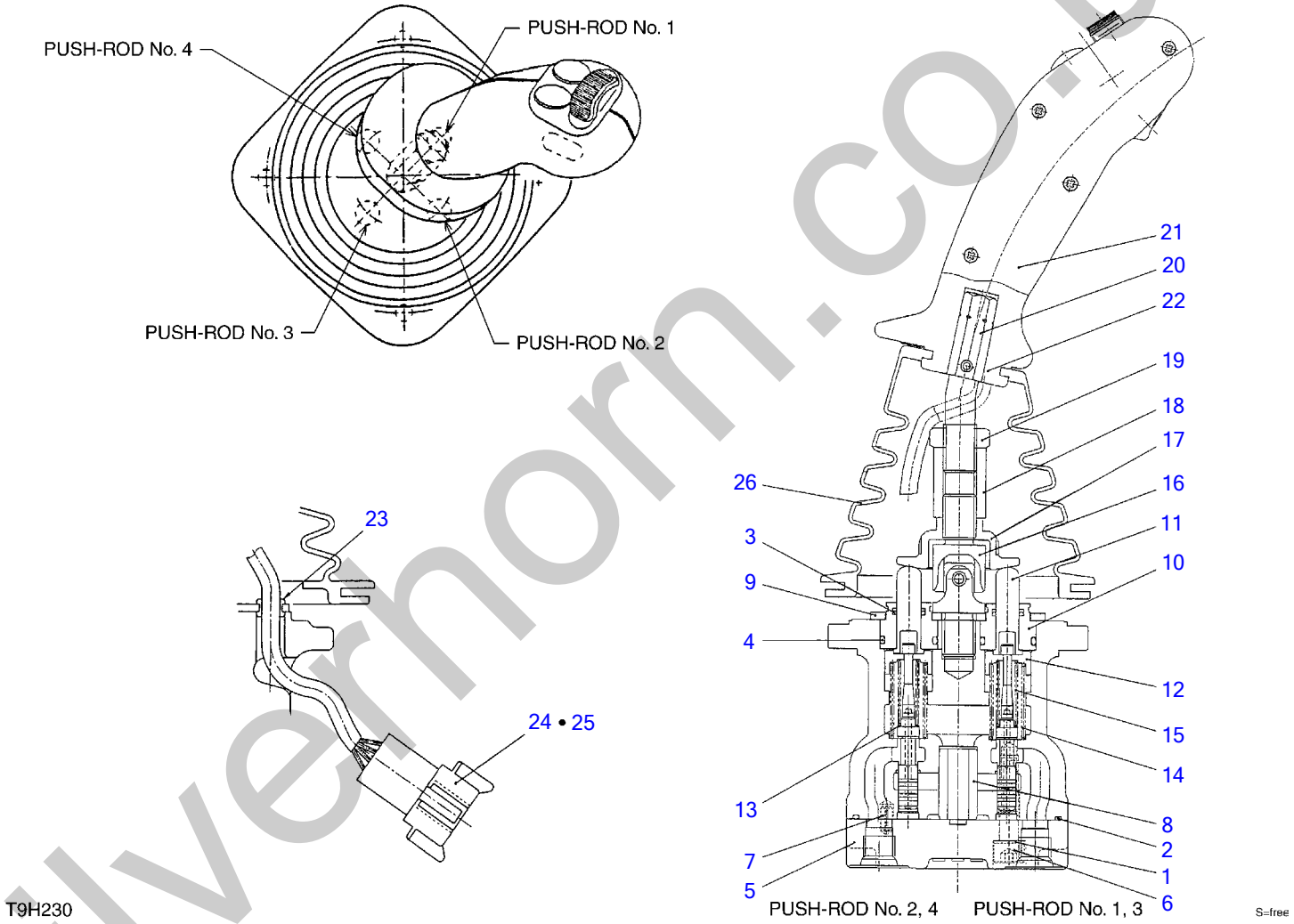

silverhorn.co.uk

PILOT VALVE (L.H.)

Item	Part number	Description	Q'ty	Chan.	Serial No.	Serv.	Remarks
0	1901749700	VALVE ASSY, pilot	1				Left
0-1	1901749599	・KIT, seal	1				
1	X 1901715103	・・WASHER	2				
2	X 1420510850	・・O-RING	1				
3	X 1901710914	・・SEAL	4				
4	X 1420010200	・・O-RING	4				
5	1901749511	・PLATE	1				
6	1110020835	・SCREW, cap	2				
7	1213000510	・PIN, spring	1				
8	1901743606	・BUSHING	1				
9	1901749551	・PLATE	1				
10	1901710912	・PLUG	4				
11	1901719011	・ROD	4				
12	1901743614	・HOLDER	4				
13	1901710917	・WASHER	4				
14	1901749521	・SPRING	4				
15	1901749641	・SPRING	4				
16	1901720232	・JOINT	1				
17	1901743620	・PLATE	1				
18	1901710922	・NUT	1				
19	1901719025	・NUT	1				
20	1901739923	・LEVER	1				
21	1901740410	・HANDLE	1				
22	1213000528	・PIN, spring	1				
23	1901735630	・BUSHING	1				
24	1901740446	・RECEPTACLE	1				
25	1901740447	・WEDGE	1				
26	1901735632	・BOOT	1				
	T9h230						

silverhorn.co.uk

HANDLE (with slide switch)

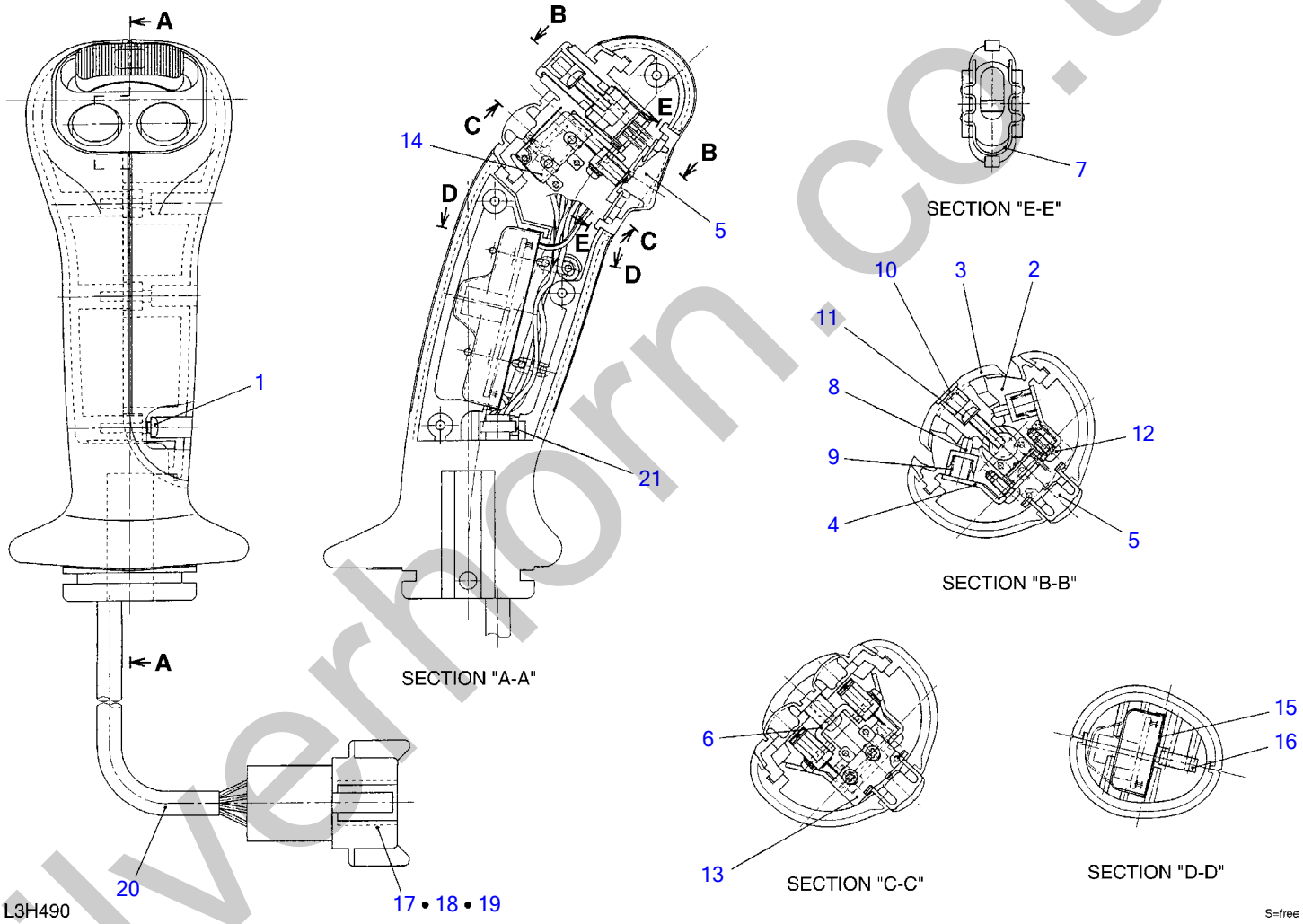

silverhorn.co.uk

HANDLE (with slide switch)

Item	Part number	Description	Q'ty	Chan.	Serial No.	Serv.	Remarks
0	1901740410	HANDLE ASSY	1				
1	1122400312	・SCREW	4				
2	1901740417	・CASE	1				
3	1901740418	・CAM	1				
4	1901740401	・PLATE	1				
5	1901740402	・BUTTON	1				
6	1901740403	・BRACKET	1				
7	1901740404	・CLIP	1				
8	1901740405	・PISTON	2				
9	1901740406	・SPRING	2				
10	1901740407	・CAP	1				
11	1150010312	・SCREW	1				
12	1122400306	・SCREW	3				
13	1901740408	・SWITCH	1				
14	1901740409	・SWITCH	2				
15	1901740411	・COVER	1				
16	1901740412	・CAP	2				
17	1901740446	・RECEPTACLE	1				
18	1901740447	・WEDGE	1				
19	1901740413	・PIN	8				
20	1901740414	・PROTECTOR	1				
21	1901740415	・BAND	1				
	L3h490						

silverhorn.co.uk

HANDLE (with 3 switch)

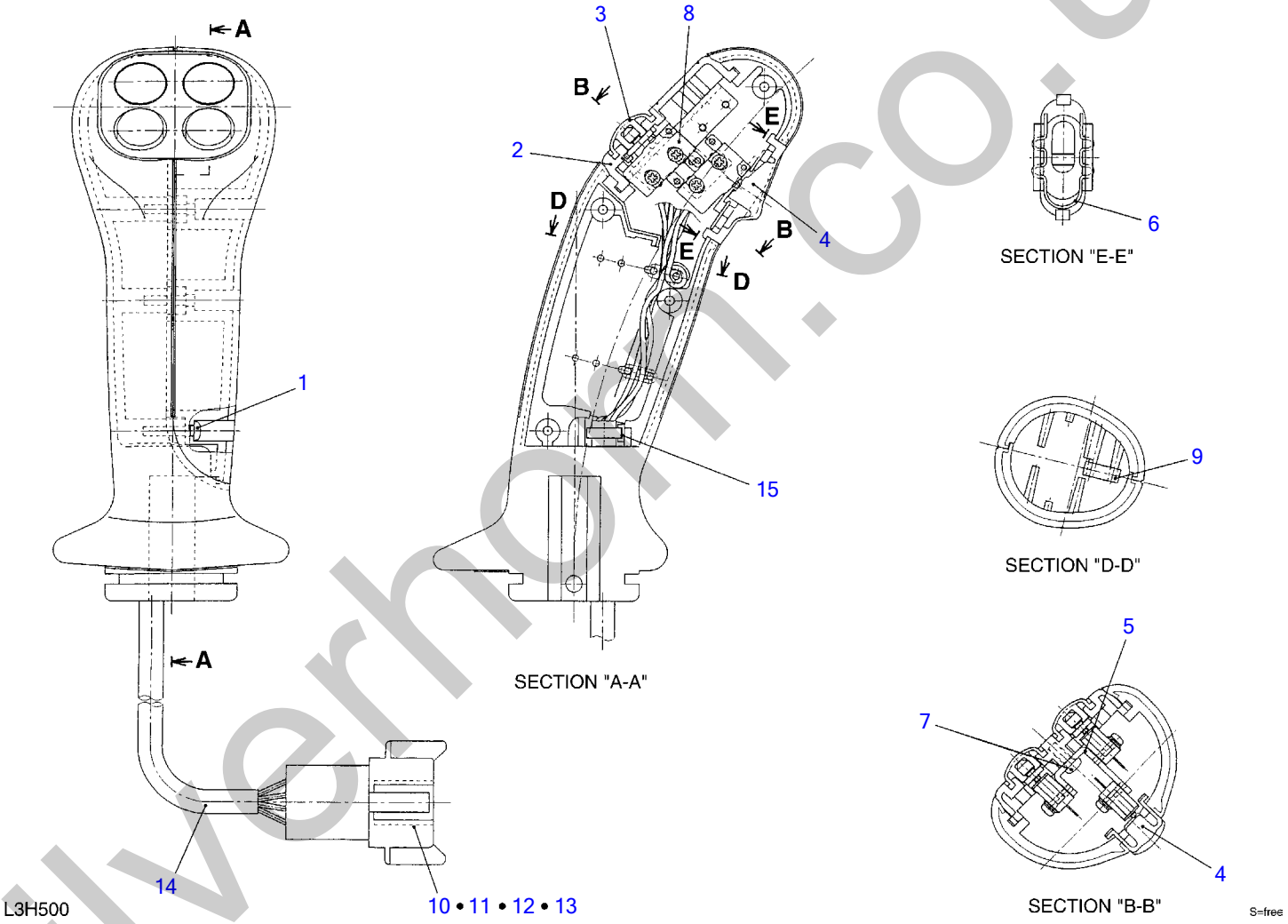

silverhorn.co.uk

HANDLE (with 3 switch)

Item	Part number	Description	Q'ty	Chan.	Serial No.	Serv.	Remarks
0	1901741210	HANDLE ASSY	1				
1	1122400312	・SCREW	4				
2	1901741211	・CASE	1				
3	1901741216	・BUTTON	2				
4	1901740402	・BUTTON	1				
5	1901741218	・BRACKET	1				
6	1901740404	・CLIP	1				
7	1122400306	・SCREW	2				
8	1901740408	・SWITCH	3				
9	1901740412	・CAP	2				
10	1901740446	・RECEPTACLE	1				
11	1901740447	・WEDGE	1				
12	1901740413	・PIN	5				
13	1901741263	・PIN, BLANKING	3				
14	1901740414	・PROTECTOR	1				
15	1901740415	・BAND	1				
	L3h500						

silverhorn.co.uk

PILOT VALVE (R.H.) (multi-functional grip type)

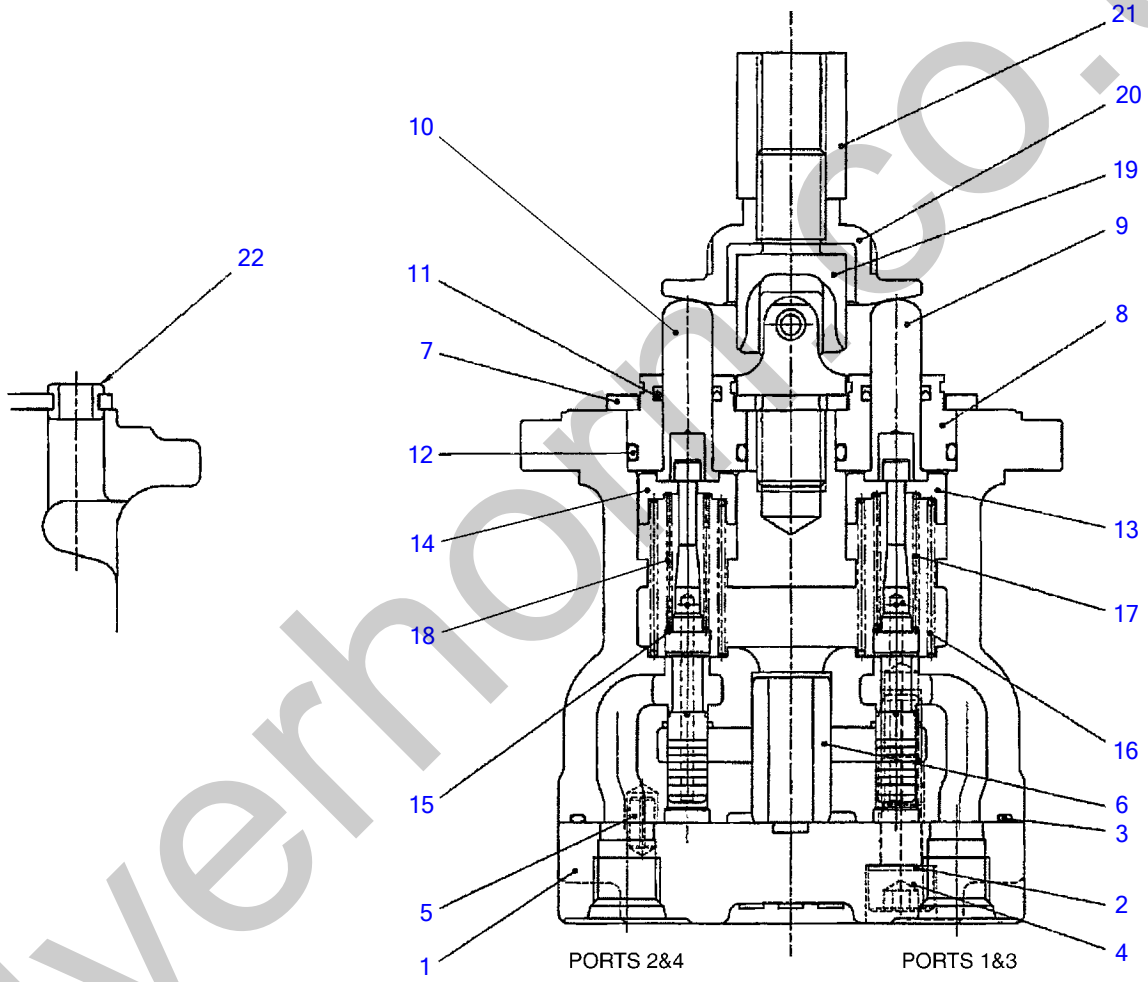

U3H090

S=FREE

silverhomco.uk

PILOT VALVE (R.H.) (multi-functional grip type)

Item	Part number	Description	Q'ty	Chan.	Serial No.	Serv.	Remarks
0	1901754000	VALVE ASSY, pilot	1				Right
1	1901749511	・PLATE	1				
2	1901715103	・WASHER	2				
3	1420510850	・O-RING	1				
4	1110020835	・SCREW, cap	2				
5	1213000510	・PIN, spring	1				
6	1901743606	・BUSHING	1				
7	1901749551	・PLATE	1				
8	1901710912	・PLUG	4				
9	1901719011	・ROD	2				
10	1901719012	・ROD	2				
11	1901710914	・SEAL	4				
12	1420010200	・O-RING	4				
13	1901743614	・HOLDER	2				
14	1901743615	・HOLDER	2				
15	1901710917	・WASHER	4				
16	1901749521	・SPRING	4				
17	1901749541	・SPRING	2				
18	1901749542	・SPRING	2				
19	1901720232	・JOINT	1				
20	1901743620	・PLATE	1				
21	1901710922	・NUT	1				
22	1901735630	・BUSHING	1				
	U3h090						

silverhorn.co.uk

PILOT VALVE (L.H.) (multi-functional grip type)

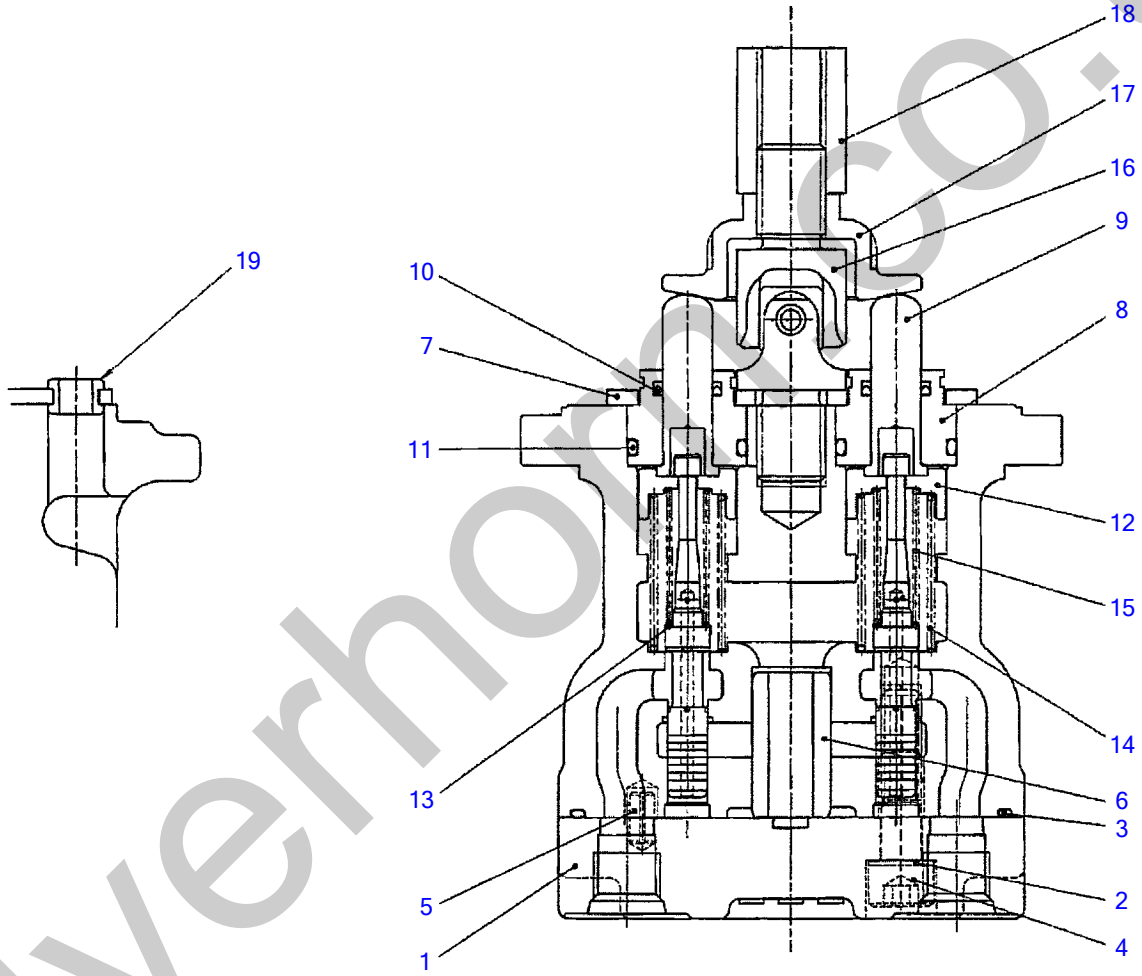

U1h030

S=FREE

silverhomco.uk

PILOT VALVE (L.H.) (multi-functional grip type)

Item	Part number	Description	Q'ty	Chan.	Serial No.	Serv.	Remarks
0	1901753900	VALVE ASSY, pilot	1			M	Left
1	1901749511	・PLATE	1				
2	1901715103	・WASHER	2				
3	1420510850	・O-RING	1				
4	1110040835	・SCREW, cap	2			M	
5	1213000510	・PIN, spring	1				
6	1901743606	・BUSHING	1				
7	1901749551	・PLATE	1				
8	1901710912	・PLUG	4				
9	1901719011	・ROD	4				
10	1901710914	・SEAL	4				
11	1420010200	・O-RING	4				
12	1901743614	・HOLDER	4				
13	1901710917	・WASHER	4				
14	1901749521	・SPRING	4				
15	1901749641	・SPRING	4				
16	1901720232	・JOINT	1				
17	1901743620	・PLATE	1				
18	1901710922	・NUT	1				
19	1901735630	・BUSHING	1				
	U1h030						

silverhorn.co.uk

HANDLE (multi-functional grip type, with slide switch)

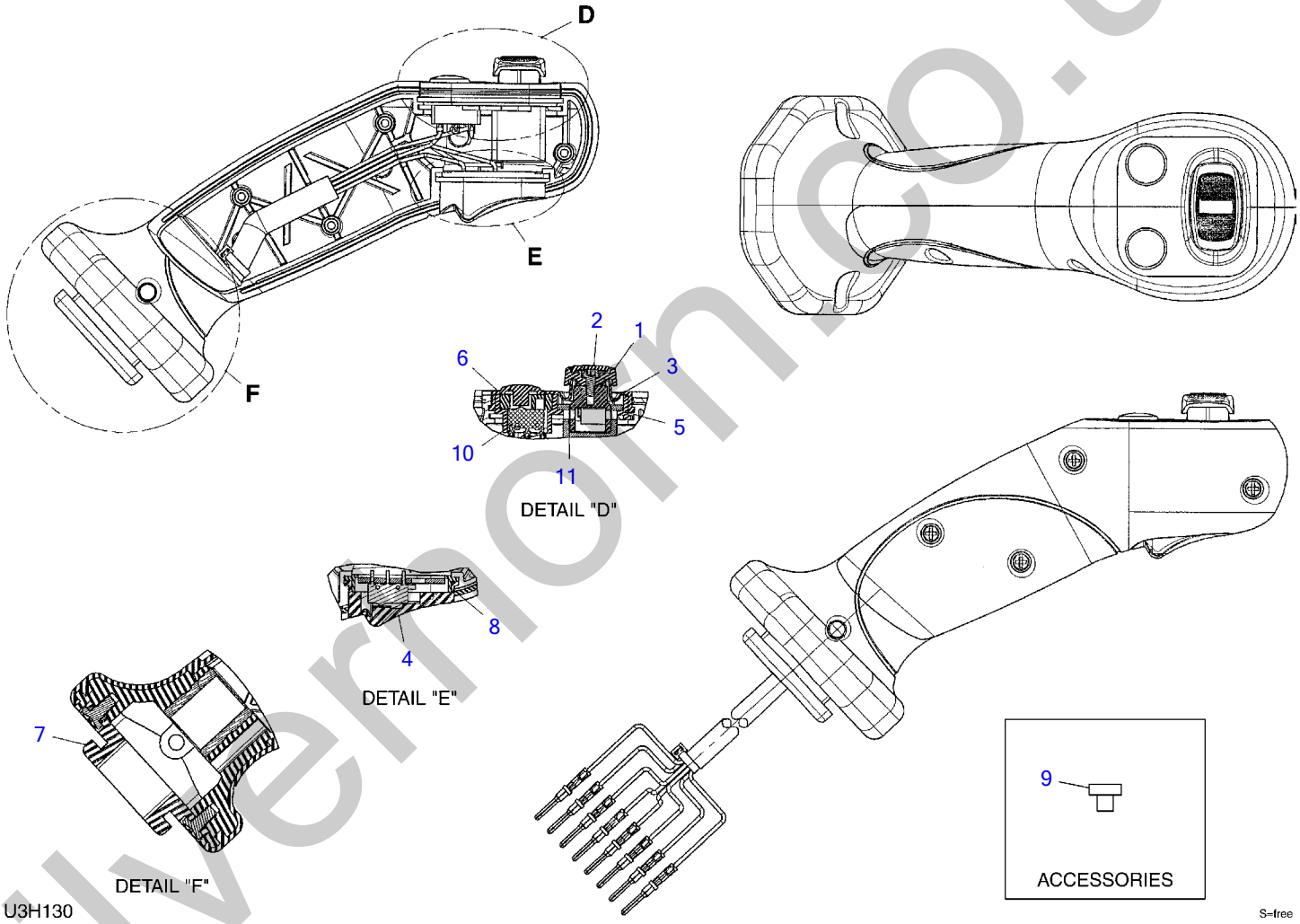

silvermoncs.co.uk

HANDLE (multi-functional grip type, with slide switch)

Item	Part number	Description	Q'ty	Chan.	Serial No.	Serv.	Remarks
0	1650205500	HANDLE ASSY	1			M	
1	1650205508	・BAR, slide	1			M	
2	1650205509	・COVER, slide bar	1			M	
3	1650205510	・COVER, rubber	1			M	
4	1650205610	・COVER, switch	1			M	
5	1650205505	・PLATE, switch	1			M	
6	1650205506	・SPACER	1			M	
7	1650205507	・COVER, lower	1			M	
8	1650205511	・PLATE, switch	1			M	
9	1650205516	・PIN, blanking	1			M	
10	1650205520	・SWITCH, micro	2			M	
11	1650205522	・SWITCH, proportional control	1			M	
	U3h130						

silverhorn.co.uk

HANDLE (multi-functional grip type, with 5 switch)

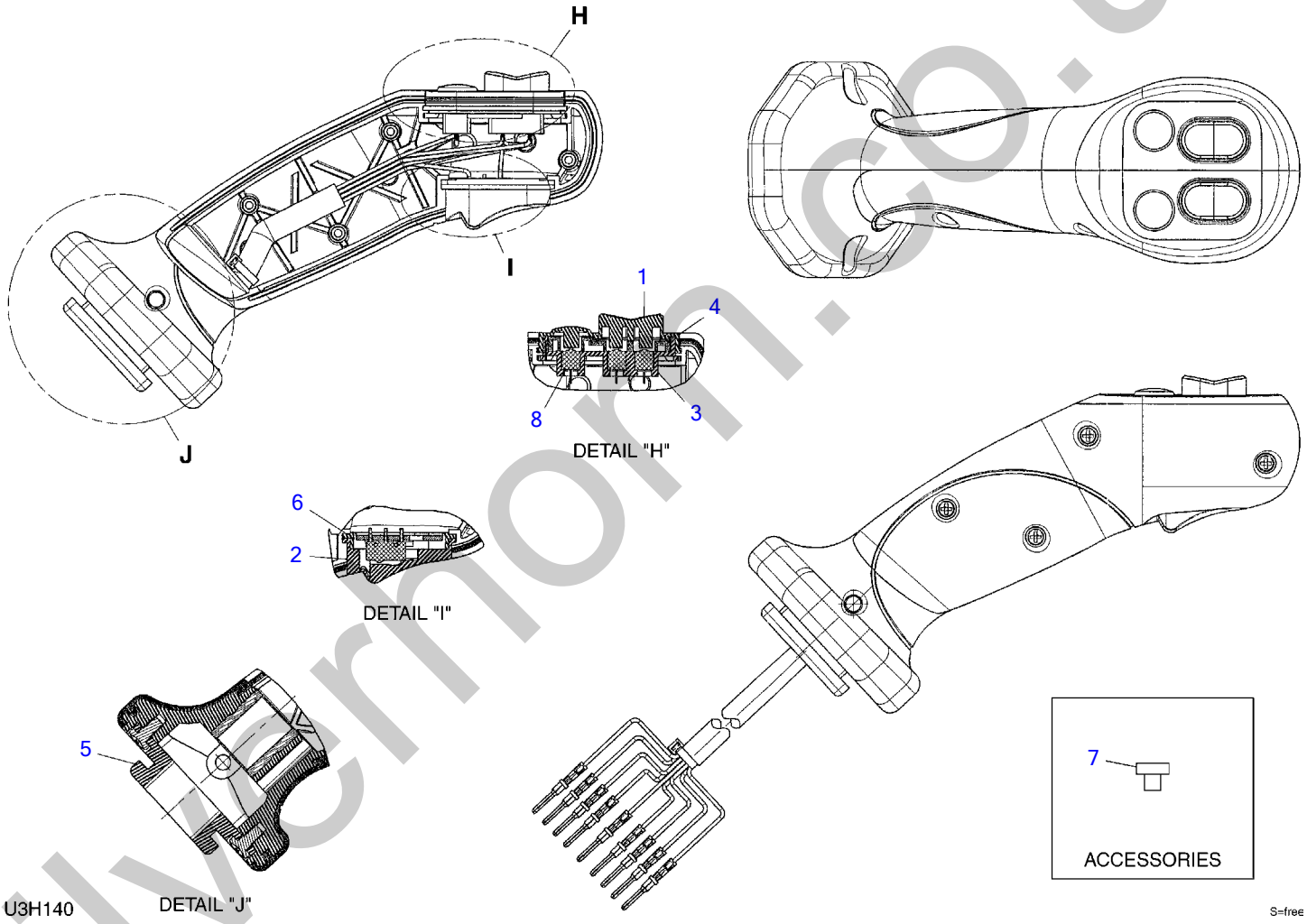

silvernorn.co.uk

HANDLE (multi-functional grip type, with 5 switch)

Item	Part number	Description	Q'ty	Chan.	Serial No.	Serv.	Remarks
0	1650205600	HANDLE ASSY	1			M	
1	1650205608	・COVER, rubber	1			M	
2	1650205610	・COVER, switch	1			M	
3	1650205605	・PLATE, switch	1			M	
4	1650205606	・SPACER	1			M	
5	1650205507	・COVER, lower	1			M	
6	1650205511	・PLATE, switch	1			M	
7	1650205516	・PIN, blanking	1			M	
8	1650205521	・SWITCH, micro	6			M	
	U3h140						

silverhorn.co.uk

SUB VALVE

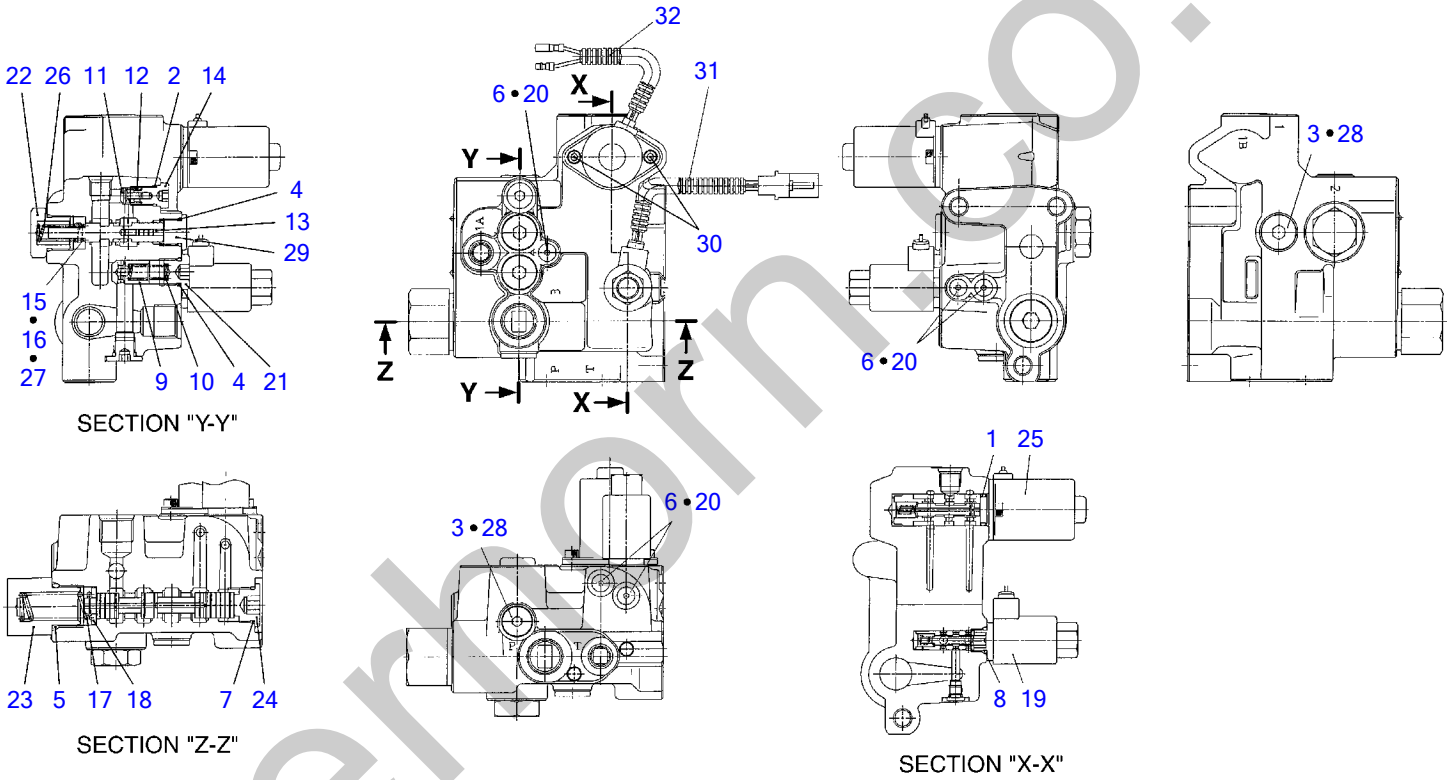

T3H010

S=FREE

silverthorn.co.uk

SUB VALVE

Item	Part number	Description	Q'ty	Chan.	Serial No.	Serv.	Remarks
0	1901748100	VALVE, sub	1				
0-1	1901748199	・KIT, seal	1				
1	X 1420010160	・・O-RING	1				
2	X 1420010100	・・O-RING	1				
3	X 1420010110	・・O-RING	2				
4	X 1420010140	・・O-RING	2				
5	X 1420010240	・・O-RING	1				
6	X 1420310902	・・O-RING	5				
7	X 1420310910	・・O-RING	1				
8	X 1420000125	・・O-RING	1				
9	1901731901	・POPPET	1				
10	1901731903	・SPRING	1				
11	1901035426	・PLUNGER	1				
12	1901004357	・SPRING	1				
13	1901730412	・PISTON	1				
14	1901035471	・PLUG	1				
15	1901729709	・SHIM	1				t=0.1mm
16	1901729710	・SHIM	1				t=0.2mm
17	1901731911	・SPRING	1				
18	1901731912	・WASHER	1				
19	1901748114	・SOLENOID	1				
20	1901748119	・PLUG	5				
21	1901748126	・PLUG	1				
22	1901748127	・PLUG	1				
23	1901748128	・PLUG	1				
24	1901748129	・PLUG	1				
25	1901748130	・SOLENOID	1				
26	1901748131	・SPRING	1				
27	1901748132	・SHIM	1				t=0.1mm
28	1901738312	・PLUG	2				
29	1501750002	・PLUG	1				
	1420010110	・・O-RING	1				
30	1110040512	・SCREW, cap	2				
31	1901044619	・TUBE	1				
32	1901748828	・TUBE	1				
	T3h010						

silverhorn.co.uk

SOLENOID VALVE; 1 BLOCK

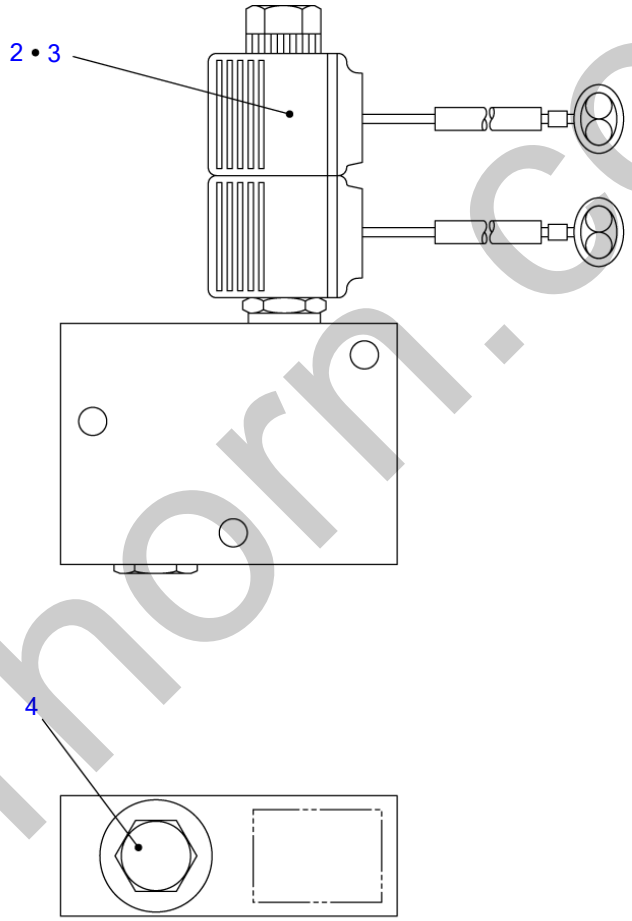

U1H020

S=FREE

silverhorn.co.uk

SOLENOID VALVE; 1 BLOCK

Item	Part number	Description	Q'ty	Chan.	Serial No.	Serv.	Remarks
0	**1901752000**	VALVE ASSY, solenoid	1				
2	**1901752002**	・VALVE, solenoid	1				
3	**1901752003**	・COIL	2				
4	**1901741704**	・PLUG	1				
	U1h020						

silverhorn.co.uk

ELECTRICAL PROPORTION VALVE

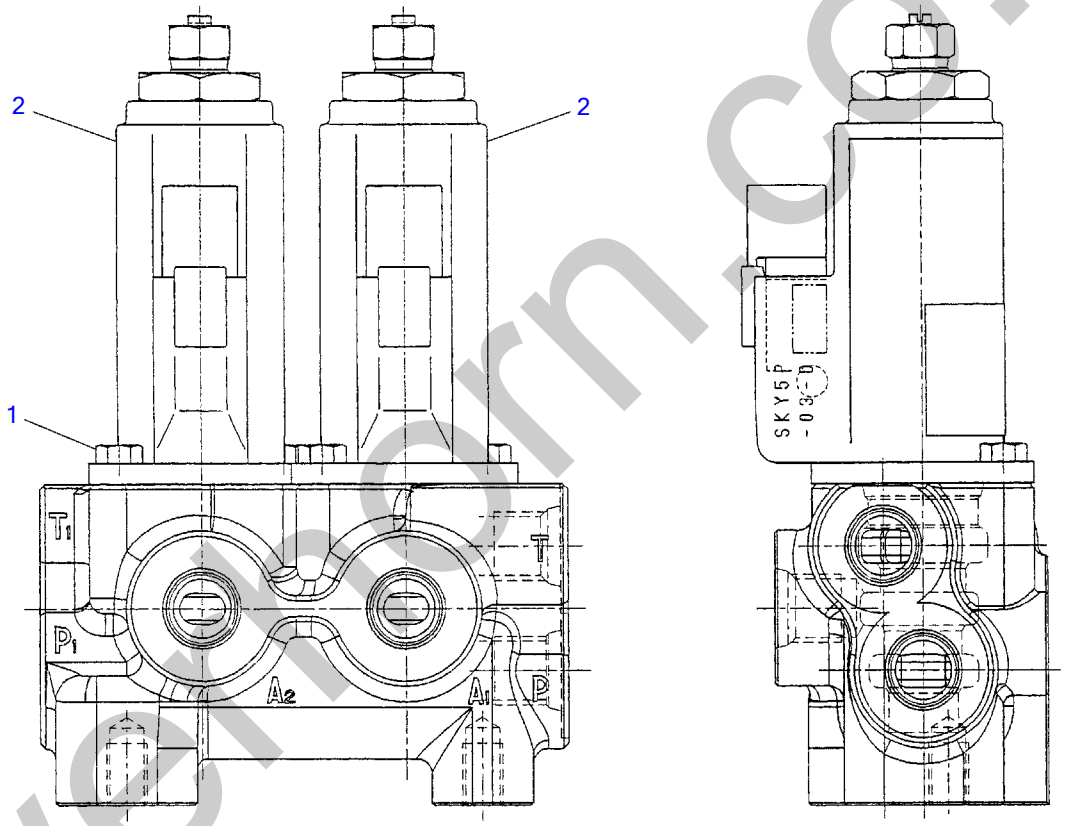

J3H020

S=free

silvermorn.co.uk

ELECTRICAL PROPORTION VALVE

Item	Part number	Description	Q'ty	Chan.	Serial No.	Serv.	Remarks
0	**1901752100**	VALVE ASSY, proportional	1				
1	**1110050512**	・BOLT	4				
2	**1901752103**	・VALVE, proportional	2				
	J3h020						

silverhorn.co.uk

ARM CYLINDER

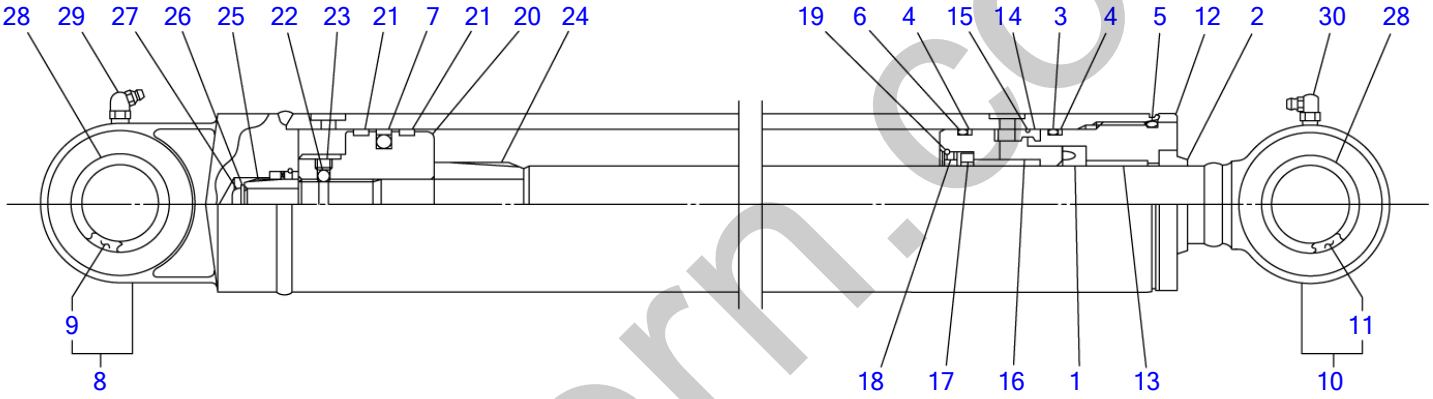

T7H101

S=FREE

silverhorn.co.uk

ARM CYLINDER

Item	Part number	Description	Q'ty	Chan.	Serial No.	Serv.	Remarks
0	1900080700	CYLINDER ASSY	2				lift arm
0-1	1900079699	・KIT, seal	1				
1	X 1410545609	・・PACKING, rod	1				
2	X 1900075133	・・SEAL, dust	1				
3	X 1420110700	・・O-RING	1				
4	X 1421130700	・・RING, back-up	2				
5	X 1420110750	・・O-RING	1				
6	X 1420110650	・・O-RING	1				
7	X 1900050333	・・PACKING, piston	1				
8	1900080798	・TUBE ASSY (L.H.)	1				
9	1900045602	・・BUSHING	1				
10	1900080797	・ROD ASSY, piston	1				
11	1900045602	・・BUSHING	1				
12	1900059803	・COVER, rod	1				
13	1333004530	・BUSHING	1				
14	1900059826	・CONNECTOR	1				
15	1900059827	・STOPPER	1				
16	1900059804	・RETAINER	1				
17	1900050216	・RING, cushion	1				
18	1900049415	・SPACER	1				
19	1900049426	・STOPPER	1				
20	1900059806	・PISTON	1				
21	1900050332	・RING, wear	2				
22	1390020250	・BALL, steel	1				
23	1121050608	・SET-SCREW	1				
24	1900060205	・BEARING, cushion	1				
25	1900080705	・BEARING, cushion	1				
26	1900064428	・WASHER	1				
27	1900064429	・BOLT	1				
28	1432200045	・SEAL, dust	4				
29	1560001675	・FITTING, grease	1				
30	1560001900	・FITTING, grease	1				
	T7h101						

silverhorn.co.uk

BUCKET CYLINDER

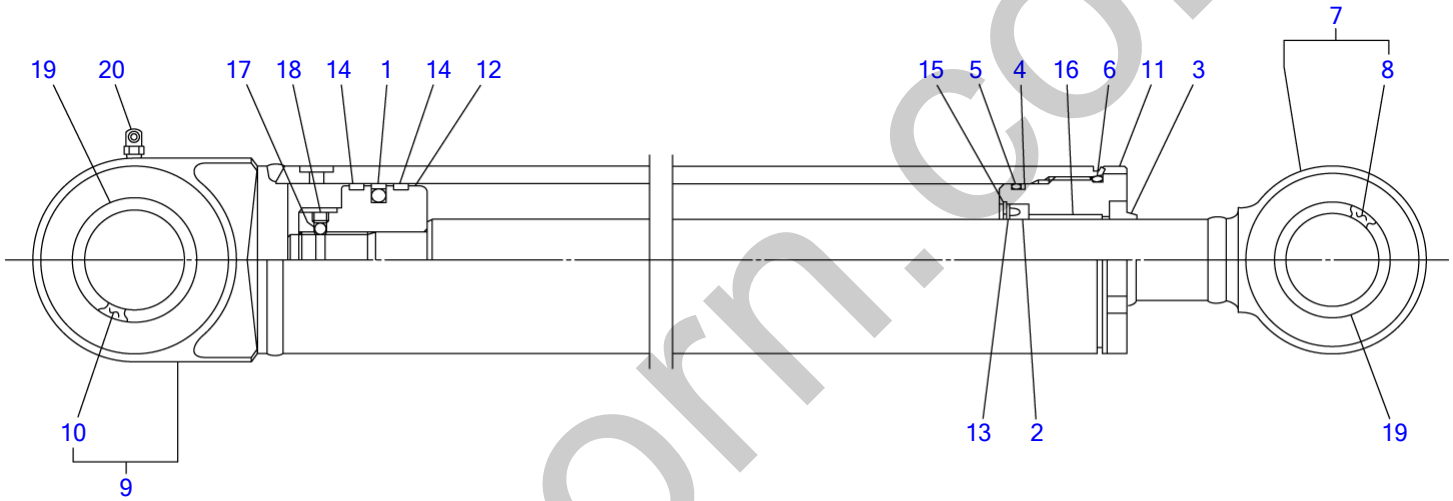

T8H050

S=free

silverhorn.co.uk

BUCKET CYLINDER

Item	Part number	Description	Q'ty	Chan.	Serial No.	Serv.	Remarks
0	1900079700	CYLINDER ASSY (R.H.)	1				bucket
	1900079800	CYLINDER ASSY (L.H.)	1				bucket
0-1	1900079799	・KIT, seal	1				
1	X 1900050333	・・PACKING, piston	1				
2	X 1900005612	・・PACKING, rod	1				
3	X 1900073033	・・SEAL, dust	1				
4	X 1421130700	・・RING, back-up	1				
5	X 1420110700	・・O-RING	1				
6	X 1420110750	・・O-RING	1				
7	1900079797	・ROD ASSY, piston	1				
8	1900015502	・・BUSHING	1				
9	1900079798	・TUBE ASSY (R.H.)	1				
	1900079898	・TUBE ASSY (L.H.)	1				
10	1900015502	・・BUSHING	1				
11	1900054303	・COVER, rod	1				
12	1900054306	・PISTON	1				
13	1900013508	・HOLDER, rod packing	1				
14	1900050332	・RING, wear	2				
15	1221000060	・RING, snap	1				
16	1333004030	・BUSHING	1				
17	1390020250	・BALL, steel	1				
18	1121050608	・SET-SCREW	1				
19	1432200045	・SEAL, dust	4				
20	1560001900	・FITTING, grease	1				
	T7h111						

silverhorn.co.uk

QUICK HITCH CYLINDER

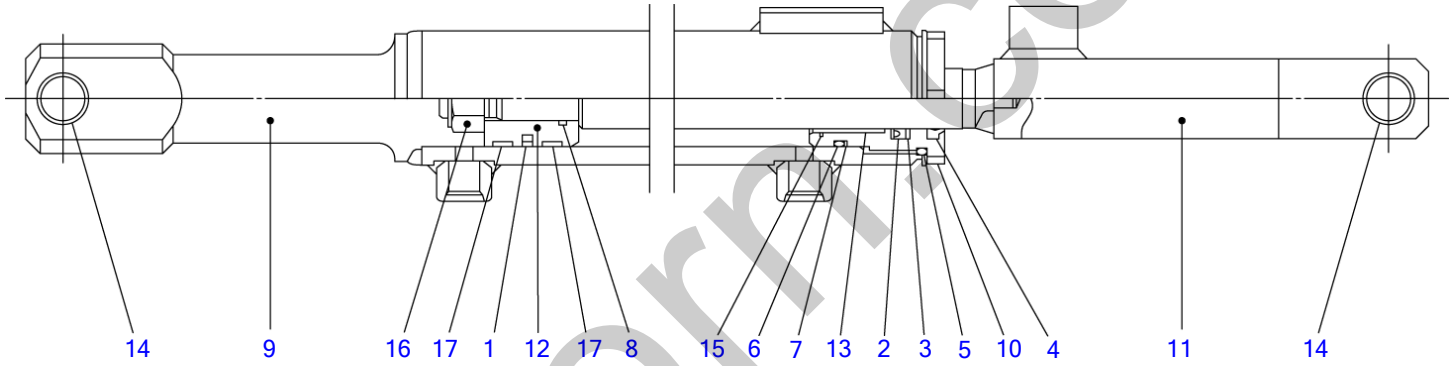

U1H050

S=FREE

silverhorn.co.uk

QUICK HITCH CYLINDER

Item	Part number	Description	Q'ty	Chan.	Serial No.	Serv.	Remarks
	1900100700	CYLINDER ASSY	1				quick hitch
0-1	1900100799	・KIT, seal	1				
1	X 1410200400	・・PACKING, piston	1				
2	X 1411140250	・・PACKING, rod	1				
3	X 1411233252	・・RING, back-up	1				
4	X 1411110250	・・SEAL, dust	1				
5	X 1420110400	・・O-RING	1				
6	X 1420110350	・・O-RING	1				
7	X 1421130350	・・RING, back-up	1				
8	X 1420010180	・・O-RING	1				
9	1900100707	・TUBE ASSY	1				
10	1900100706	・COVER, rod	1				
11	1900100701	・ROD ASSY, piston	1				
12	1900100705	・PISTON	1				
13	1333002525	・BUSHING	1				
14	1333001830	・BUSHING	2				
15	1225620029	・RING, snap	1				
16	1132711016	・NUT	1				
17	1410810400	・RING, wear	2				
	U1h050						

silverhorn.co.uk

TRAVEL MOTOR (1/3) (reduction sec.)

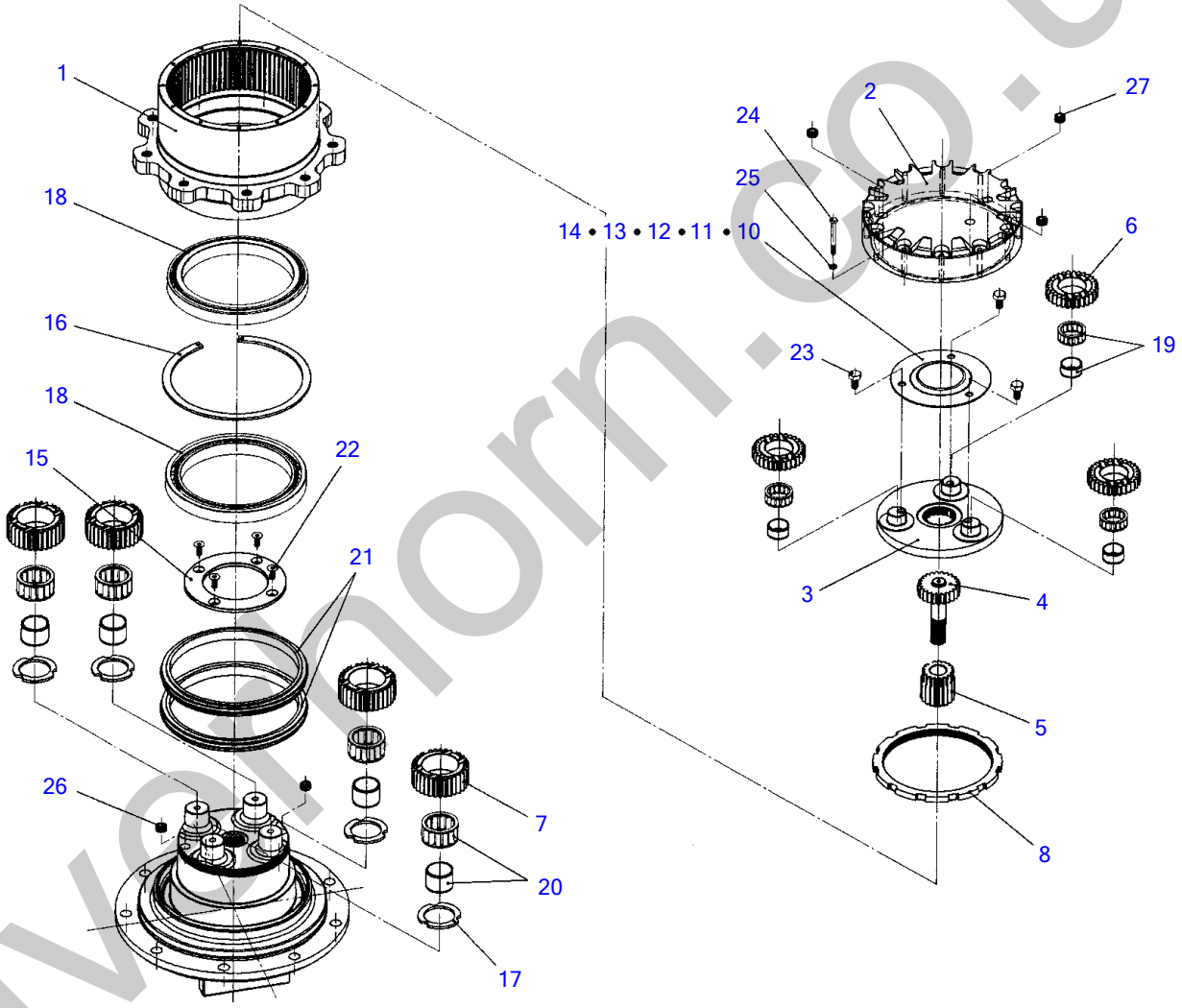

silvernorn.co.uk

TRAVEL MOTOR (1/3) (reduction sec.)

Item	Part number	Description	Q'ty	Chan.	Serial No.	Serv.	Remarks
0	1903126400	MOTOR ASSY, travel	1				
0-1	X **********	・GEAR, reduction	1				
1	1912907801	・・GEAR, ring	1				
2	1912907802	・・COVER	1				
3	1912907803	・・CARRIER	1				
4	1912907804	・・GEAR	1				
5	1912907805	・・GEAR	1				
6	1912907806	・・GEAR	3				
7	1912907807	・・GEAR	4				
8	1912907809	・・NUT	1				
9	1912907810	・・PLATE KIT, stopper	1				
10	1912907811	・・・PLAT, stopper	1				t=6.4mm
11	1912907812	・・・PLAT, stopper	1				t=6.8mm
12	1912907813	・・・PLAT, stopper	1				t=6.8mm
13	1912907814	・・・PLAT, stopper	1				t=7.0mm
14	1912907815	・・・PLAT, stopper	1				t=7.2mm
15	1912907818	・・PLAT, stopper	1				
16	1912907819	・・RING, snap	1				
17	1912907820	・・WASHER	4				
18	1912907821	・・BEARING	2				
19	1912907822	・・BEARING	3				
20	1912907824	・・BEARING	4				
21	1912907826	・・SEAL KIT, floating	1				
22	1912907827	・・SCREW, cap	4				
23	1912907828	・・BOLT	3				
24	1100040625	・・BOLT	12				
25	1141120006	・・WASHER	12				
26	1501810003	・・PLUG	2				
27	1912907830	・・PLUG	3				
	U3h010						

silverhorn.co.uk

TRAVEL MOTOR (2/3) (motor sec.)

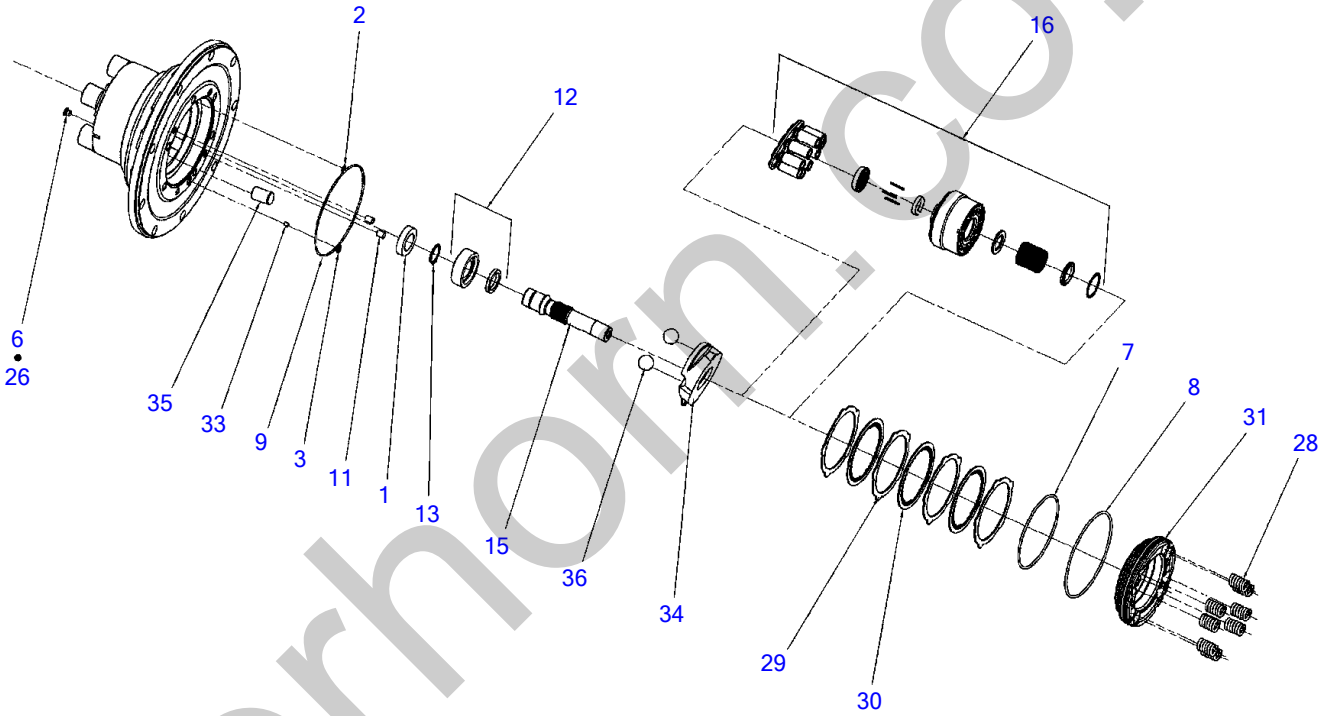

T7H291

S=free

silverhorn.co.uk

TRAVEL MOTOR (2/3) (motor sec.)

Item		Part number	Description	Q'ty	Chan.	Serial No.	Serv.	Remarks
0		1903126400	MOTOR ASSY, travel	1				
0-2	X	**********	・MOTOR ASSY (19039-08400)	1				incl. (3/3)
0-3		1903906898	・・KIT, seal	1				
1	X	1903906406	・・・SEAL, oil	1				
2	X	1420010090	・・・O-RING	1				
3	X	1420010110	・・・O-RING	1				
6	X	1420310903	・・・O-RING	1				
7	X	1420300250	・・・O-RING	1				
8	X	1420300257	・・・O-RING	1				
9	X	1420300164	・・・O-RING	1				
11		1902006702	・・PIN	2				
12		1903906803	・・BEARING	1				
13		1220000030	・・RING, snap	1				
15		1903906807	・・SHAFT	1				
16		1903906810	・・CYLINDER BLOCK KIT	1				
26		1501750003	・・PLUG	1				
		1420010140	・・・O-RING	1				
28		1903906828	・・SPRING	8				
29		1903906829	・・PLATE	4				
30		1903906830	・・PLATE	3				
31		1903906831	・・PISTON, brake	1				
33		1903908036	・・ORIFICE	1				
34		1903908437	・・PLATE, swash	1				
35		1903906838	・・PISTON	1				
36		1390021600	・・BALL, steel	2				
		U3h020						

silverhorn.co.uk

TRAVEL MOTOR (3/3) (valve sec.)

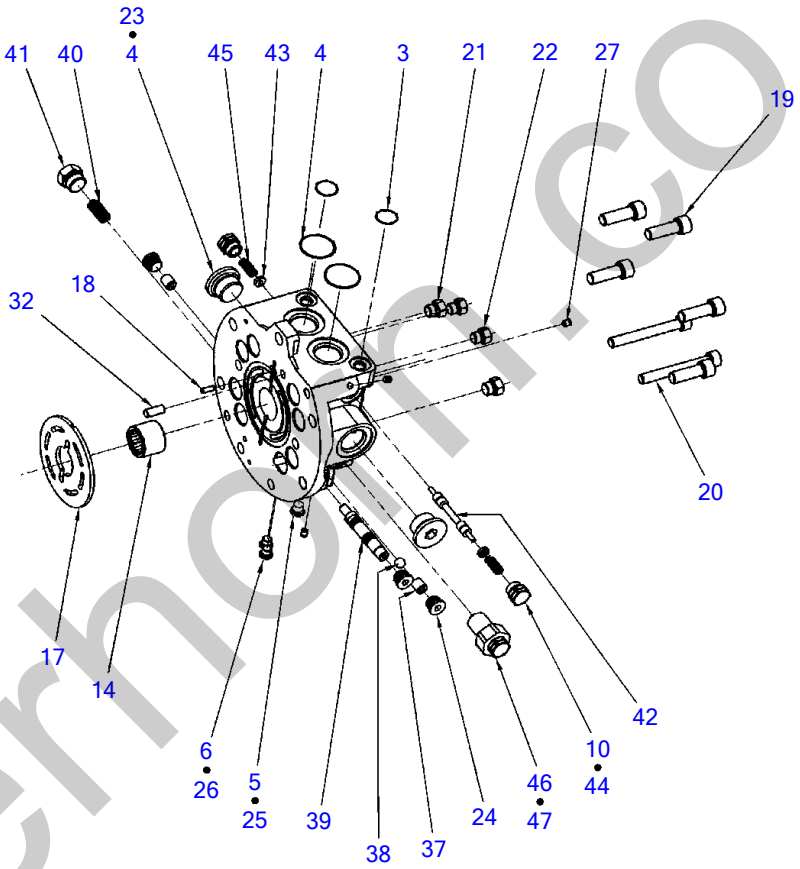

T7H300

S=free

silverhorn.co.uk

TRAVEL MOTOR (3/3) (valve sec.)

Item	Part number	Description	Q'ty	Chan.	Serial No.	Serv.	Remarks
0	1903126400	MOTOR ASSY, travel	1				
0-2	X **********	・MOTOR ASSY (19039-08400)	1				incl. (2/3)
3	1420010110	・・O-RING	2				
4	1420010224	・・O-RING	1				
5	1420310904	・・O-RING	1				
6	1420310903	・・O-RING	2				
10	1420310906	・・O-RING	2				
14	1903908406	・・BEARING	1				
17	1903908411	・・PLATE	1				
18	1902007411	・・PIN	1				
19	1110041235	・・SCREW, cap	5				
20	1110041080	・・SCREW, cap	2				
21	1902007455	・・PLUG ASSY	2				
	1420310906	・・・O-RING	1				
22	1903007626	・・PLUG ASSY	2				
	1420310904	・・・O-RING	1				
23	1903908620	・・PLUG	2				
24	1901810214	・・PLUG	3				
	1420310906	・・・O-RING	1				
25	1902010033	・・PLUG	1				
26	1501750003	・・PLUG	2				
	1420010140	・・・O-RING	1				
27	1903906827	・・PLUG	3				
32	1903906832	・・PIN	1				
37	1903906840	・・PLUG	2				
38	1390020600	・・BALL, steel	1				
39	1903906842	・・SPOOL	1				
40	1903906843	・・SPRING	1				
41	1903007636	・・PLUG ASSY	1				
	1420310908	・・・O-RING	1				
42	1901810212	・・SPOOL	1				
43	1901810211	・・GUIDE	2				
44	1901810202	・・PLUG	2				
45	1901810203	・・SPRING	2				
46	1903908450	・・VALVE, relief	1				
47	1903906851	・・SPRING	1				
	U3h030						

silverhorn.co.uk

HYDRAULIC PUMP (1/5)

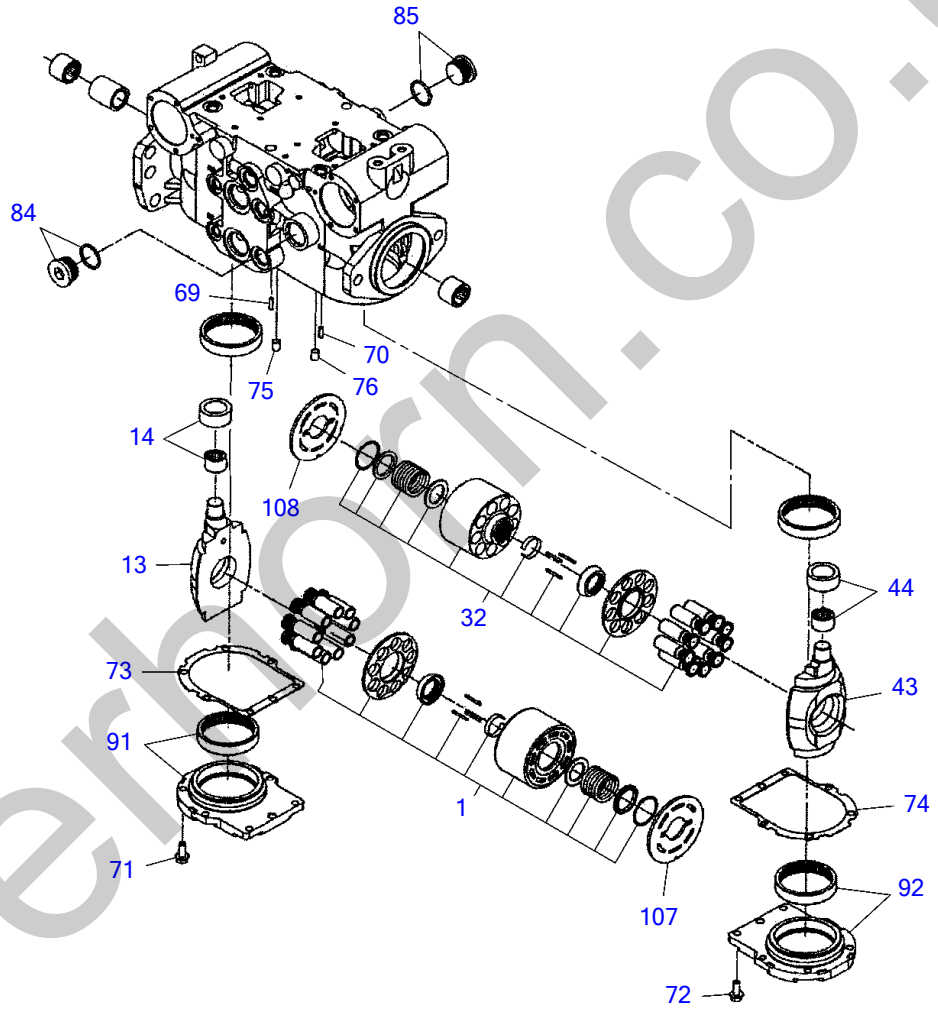

silverhorn.co.uk

HYDRAULIC PUMP (1/5)

Item	Part number	Description	Q'ty	Chan.	Serial No.	Serv.	Remarks
0	1902023100	PUMP, hydraulic	1				
1	1902023101	・BLOCK KIT, cylinder	1				
13	1902023203	・PLATE, swash	1				
14	1902017701	・BEARING ASSY	1				
32	1902023101	・BLOCK KIT, cylinder	1				
43	1902023203	・PLATE, swash	1				
44	1902023209	・BEARING ASSY	1				
69	1902018809	・PIN	1				
70	1902018809	・PIN	1				
71	1902020746	・SCREW	6				
72	1902020746	・SCREW	6				
73	1902020721	・GASKET	1				
74	1902020721	・GASKET	1				
75	1902006702	・PIN	1				
76	1902006702	・PIN	1				
84	1902017724	・PLUG ASSY	1				
85	1902017724	・PLUG ASSY	1				
91	1902020723	・COVER ASSY	1				
92	1902020723	・COVER ASSY	1				
107	1902017725	・PLATE	1				
108	1902020714	・PLATE	1				
	U3h040						

silverhorn.co.uk

HYDRAULIC PUMP (2/5)

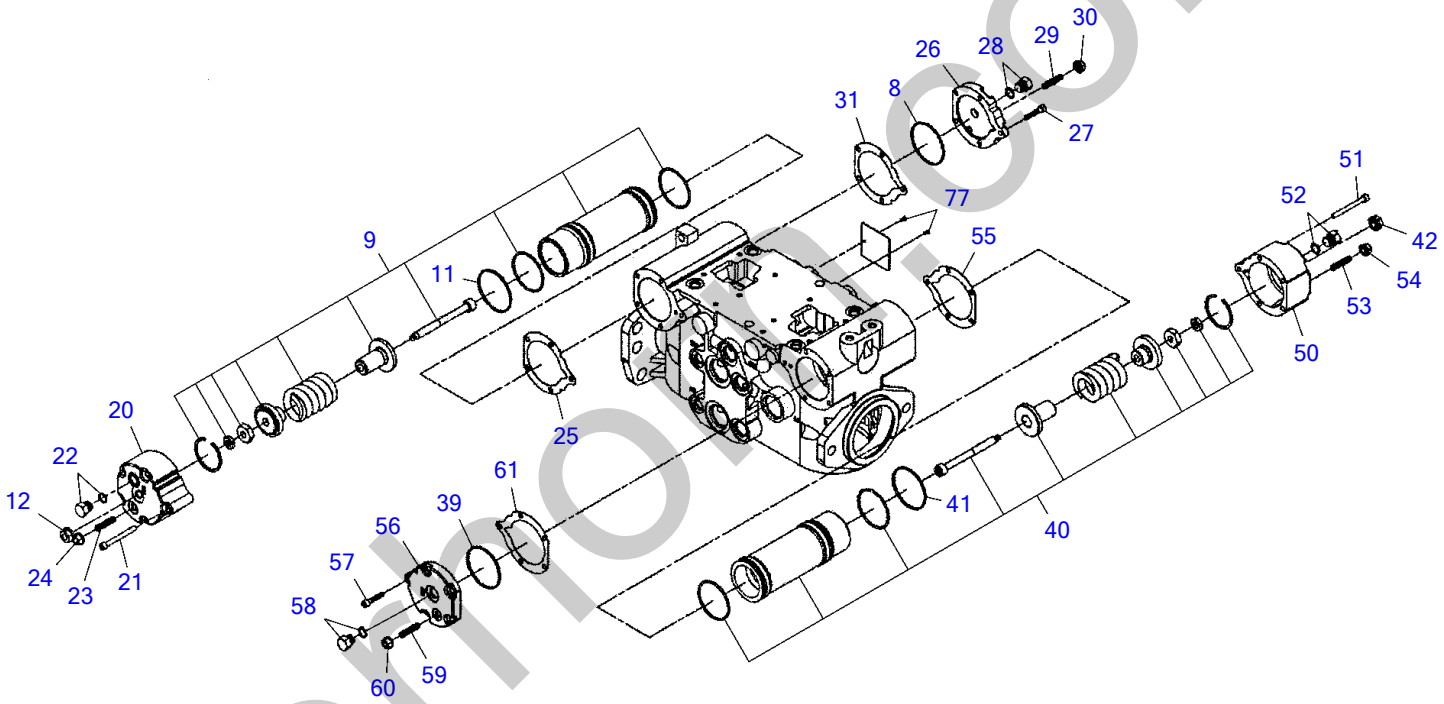

U2H050

S=free

silverhorn.co.uk

HYDRAULIC PUMP (2/5)

Item	Part number	Description	Q'ty	Chan.	Serial No.	Serv.	Remarks
0	1902023100	PUMP, hydraulic	1				
8	1902017727	・RING, back-up	1				
9	1902023201	・PISTON ASSY	1				
11	1902017727	・RING, back-up	1				
12	1902018825	・NUT	1				
20	1902018818	・COVER	1				
21	1110040660	・SCREW, cap	5				
22	1902016531	・PLUG ASSY	1				
23	1902017425	・SCREW	1				
24	1902020751	・NUT	1				
25	1902017713	・GASKET	1				
26	1902018820	・COVER	1				
27	1110040630	・SCREW, cap	5				
28	1902016531	・PLUG ASSY	1				
29	1902017425	・SCREW	1				
30	1902020751	・NUT	1				
31	1902017713	・GASKET	1				
39	1902017727	・RING, back-up	1				
40	1902023207	・PISTON ASSY	1				
41	1902017727	・RING, back-up	1				
42	1902018825	・NUT	1				
50	1902018818	・COVER	1				
51	1110040660	・SCREW, cap	5				
52	1902016531	・PLUG ASSY	1				
53	1902017425	・SCREW	1				
54	1902020751	・NUT	1				
55	1902017713	・GASKET	1				
56	1902018820	・COVER	1				
57	1110040630	・SCREW, cap	5				
58	1902016531	・PLUG ASSY	1				
59	1902017425	・SCREW	1				
60	1902020751	・NUT	1				
61	1902017713	・GASKET	1				
77	1903906468	・RIVET	2				
	U3h050						

silverhorn.co.uk

HYDRAULIC PUMP (3/5)

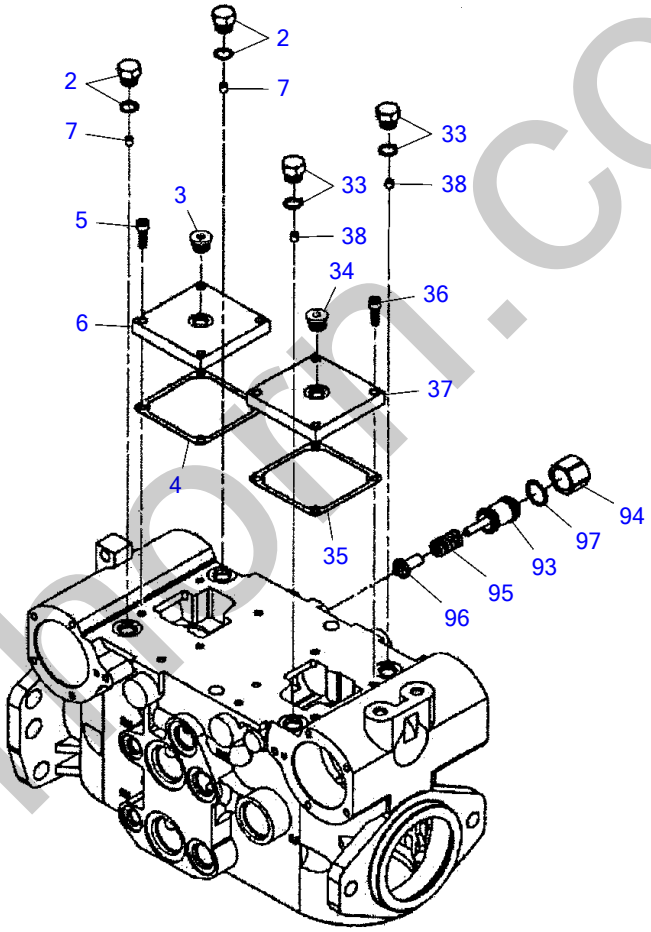

U2H060

S=free

silverhorn.co.uk

HYDRAULIC PUMP (3/5)

Item	Part number	Description	Q'ty	Chan.	Serial No.	Serv.	Remarks
0	1902023100	PUMP, hydraulic	1				
2	1902016531	・PLUG ASSY	2				
3	1902010033	・PLUG ASSY	1				
4	1902020733	・GASKET	1				
5	1110040620	・SCREW, cap	4				
6	1902023220	・COVER	1				
7	1902018807	・ORIFICE	1				
33	1902016531	・PLUG ASSY	2				
34	1902010033	・PLUG ASSY	1				
35	1902020733	・GASKET	1				
36	1110040620	・SCREW, cap	4				
37	1902023220	・COVER	1				
38	1902018807	・ORIFICE	1				
93	1902017736	・ADJUSTER	1				
94	1902016552	・NUT	1				
95	1902016553	・SPRING	1				
96	1902016554	・POPPET	1				
97	1902018812	・O-RING	1				
	U3h060						

silverhorn.co.uk

HYDRAULIC PUMP (4/5)

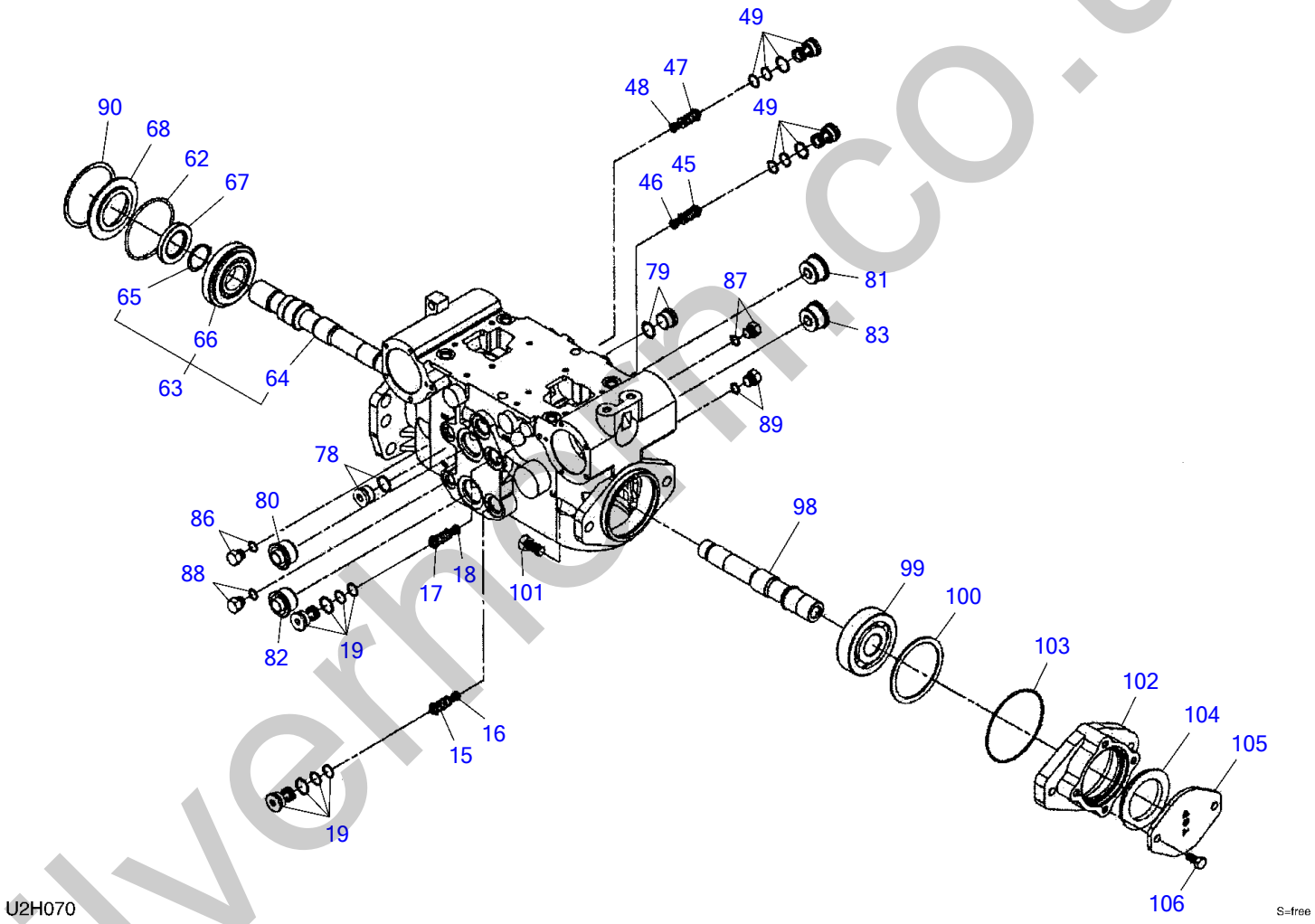

silverhorn.co.uk

HYDRAULIC PUMP (4/5)

Item	Part number	Description	Q'ty	Chan.	Serial No.	Serv.	Remarks
0	1902023100	PUMP, hydraulic	1				
15	1902023204	・SCR VALVE ASSY, A (FRONT)	1				
16	1902020736	・SPRING	1				
17	1902023205	・SCR VALVE ASSY, B (FRONT)	1				
18	1902020736	・SPRING	1				
19	1902017716	・PLUG ASSY	2				
45	1902023210	・SCR VALVE ASSY, C (REAR)	1				
46	1902020736	・SPRING	1				
47	1902023211	・SCR VALVE ASSY, D (REAR)	1				
48	1902020736	・SPRING	1				
49	1902017716	・PLUG ASSY	2				
62	1902016507	・O-RING	1				
63	1902020712	・SHAFT ASSY	1				
64	1902023212	・SHAFT	1				
65	1902017704	・RING, snap	1				
66	1902023213	・BEARING ASSY	1				
67	1902017707	・SEAL, oil	1				
68	1902023214	・SEAL, carrier	1				
78	1912003106	・PLUG	1				
79	1912003106	・PLUG	1				
80	1902019129	・PLUG	1				
81	1902019129	・PLUG	1				
82	1902019129	・PLUG	1				
83	1902019129	・PLUG	1				
86	1902016531	・PLUG ASSY	1				
87	1902016531	・PLUG ASSY	1				
88	1902016531	・PLUG ASSY	1				
89	1902016531	・PLUG ASSY	1				
90	1902016520	・RING, snap	1				
98	1902023215	・SHAFT	1				
99	1902023216	・BEARING ASSY	1				
100	1902020761	・RING, snap	1				
101	1902016572	・SCREW, cap	2				
102	1902023217	・ADAPTER	1				
103	1901023218	・O-RING	1				
104	1902017735	・SEAL	1				
105	1902023219	・PLATE	1				
106	1902009365	・SCREW, cap	2				
	U3h070						

silverhorn.co.uk

HYDRAULIC PUMP (5/5)

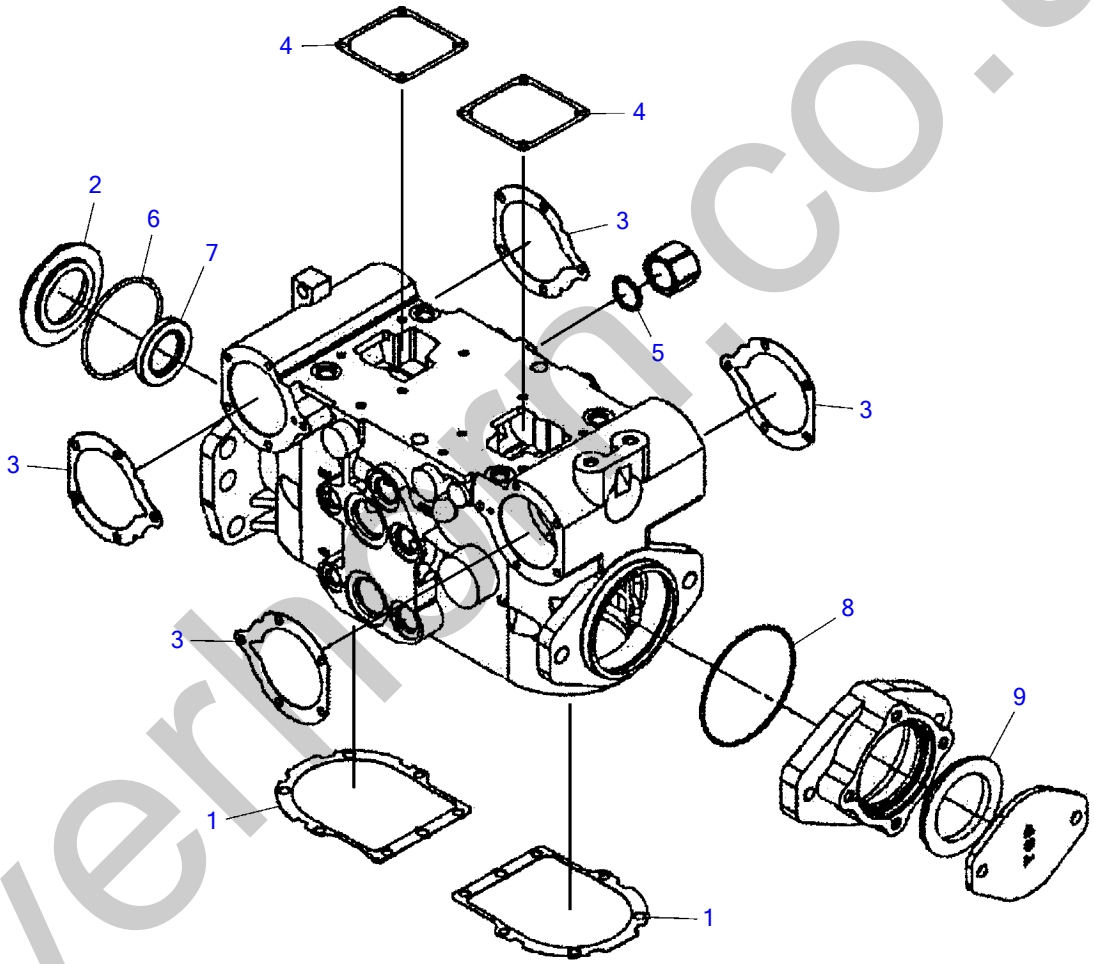

U2H110

S=FREE

silverhorn.co.uk

HYDRAULIC PUMP (5/5)

Item	Part number	Description	Q'ty	Chan.	Serial No.	Serv.	Remarks
0	1902023100	PUMP, hydraulic	1				
0-1	1902023199	・KIT, seal	1			M	
1	X 1902020721	・・GASKET	2			M	
2	X 1902023214	・・SEAL, carrier	1			M	
3	X 1902017713	・・GASKET	4			M	
4	X 1902020733	・・GASKET	2			M	
5	X 1902018812	・・O-RING	1			M	
6	X 1902016507	・・O-RING	1			M	
7	X 1902017707	・・SEAL, oil	1			M	
8	X 1901023218	・・O-RING	1			M	
9	X 1902017735	・・SEAL	1			M	
	U3h120						

silverhorn.co.uk

GEAR PUMP

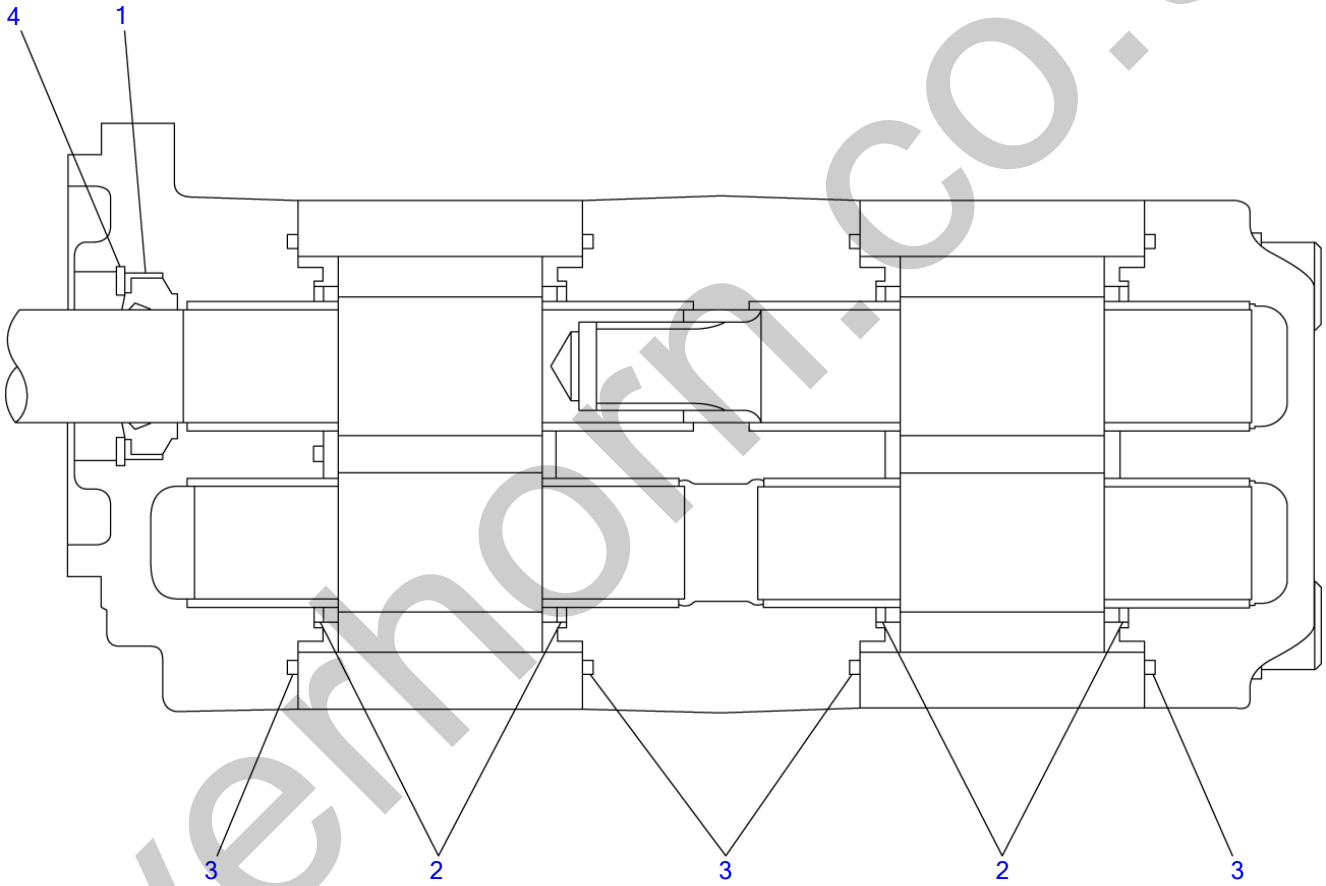

T7H200

S=free

silvermorn.co.uk

GEAR PUMP

Item	Part number	Description	Q'ty	Chan.	Serial No.	Serv.	Remarks
0	1902023700	PUMP ASSY, gear	1				
0-1	1902018199	・KIT, seal	1			M	
1	X 1902018154	・・SEAL, oil	1			M	
2	X 1902018150	・・GASKET	4			M	
3	X 1902018151	・・GASKET	4			M	
4	X 1221000036	・・RING, snap	1			M	
	U3h100						

silverhorn.co.uk

GEAR PUMP (high flow)

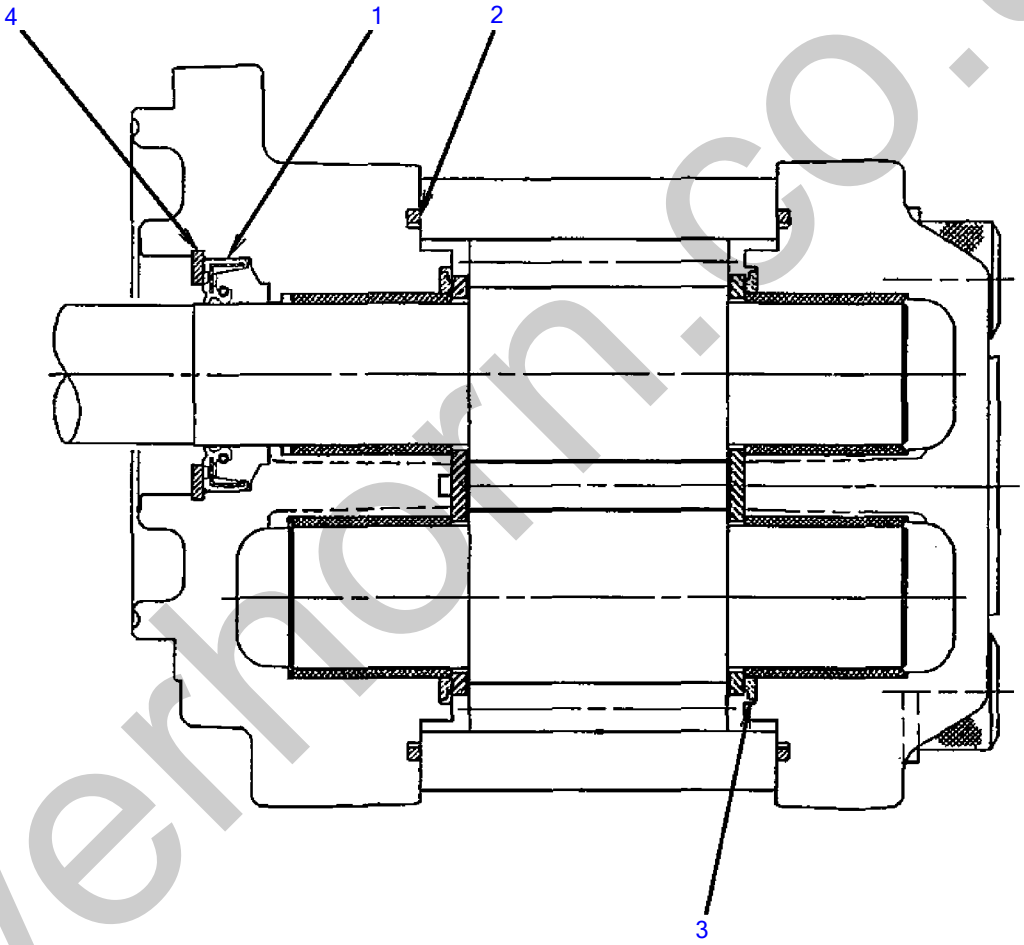

T8H170

S=free

silverhorn.co.uk

GEAR PUMP (high flow)

Item	Part number	Description	Q'ty	Chan.	Serial No.	Serv.	Remarks
0	1902023800	PUMP ASSY, gear	1				
0-1	1902021199	・KIT, seal	1			M	
1	X 1902017618	・・SEAL, oil	1			M	
2	X 1902018151	・・GASKET	2			M	
3	X 1902018150	・・GASKET	2			M	
4	X 1221000036	・・RING, snap	1			M	
	U3h110						

silverhorn.co.uk

クボタディーゼルエンジン
KUBOTA DIESEL ENGINE

純正部品表
ILLUSTRATED PARTS LIST

V3800DI-T-E3B-TLTU-1

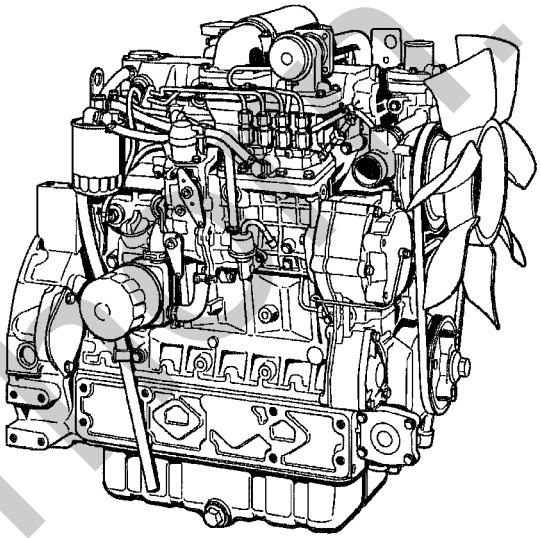

型 式 名	備 考
V3800DI-T-E3B-TLTU-1	㈱竹内製作所向, トラックローダー(TL250)搭載用

2007年10月初版
OCT.2007

部品表番号 CODE No.
07909−C1006

Kubota

silverhill.co.uk

How to read this Parts Catalog.

1. Parts mentioned in this Parts Catalog may not necessarily be standard equipping parts.
2. Parts change may be made without prior notice.
3. Form of this Parts Catalog.

Y00F2161 (1997.09.01)

Fig.29 燃料噴射ポンプ(ブーコン用)
FUEL INJECTION PUMP (W/BOOST)

A= 4JH-DT	D= 4JH-DTZA
B= 4JH-DTZ	E= 4JH-DTZY
C= 4JH-DTZP	F=

•見出 REF.No.	レベル LEV.	O	部品番号 PARTS No.	部品名	DESCRIPTION	個数 (Q'ty) A	B	C	D	E	F	I	R
1	•		729595-51390	FOポンプ ASY(ブーコンツキ	FULE INJECTION PUMP	1	1	1	1	1			1
1- 1	•		729595-51391	FOポンプ ASY(ブーコンツキ	FULE INJECTION PUMP	1	1	1	1	1			1
	(A=E/#00185)(B=E/#00200)												
3	••		26022-060162	ナベコネジ M 6X 16	SCREW M 6X 16	9	9	9	9	9			
I 3- 1	••		26022-060162	ナベコネジ M 6X 16	SCREW M 6X 16	4	4	4	4	4		K	
	(A=E/#00185)(B=E/#00200)(C=E/#00156)(D=E/#00156)(E=E/#00156)												
4	••		129470-51040	カムシャフト	CAMSHAFT	1	1	1	1	1			
5	••		122710-51050	ベアリングキローラ	BEARING, ROLLER	2	2	2	2	2			
6	••		129470-51060	ベアリングオサエ	RETAINER	1	1	1	1	1			

備考	Remarks
(1) ブーストコンペンセータ付き、4JH-DT, 4JH-DTZとも E／#00155までは、特別注文仕様とします	(1) BOOST COMPEMSATOR TYPE. OPTIONAL PART, TO E／#00155. (4JH－DT,4JH－DTZ)

① Ref. No.

The Ref. No. in the list may not be accord with the Ref. No. on illustration.

(Ex.) Illustration No. 1 — List head No. 1 (Befor change) ⟶ 1 [－1] (After change)

When interchangeable symbol N, R, and K, illustrations for new parts are sometimes omitted.

② Lev.(Level)

Indication and Meaning of Level

Level : Hereunder is given the relation among the number of dots(•),the level and the nominal parent- child relationship.

- • ……Parent parts(Assembly parts)
- •• ……Child parts included in "•" (Semi- Assembly parts,component parts of Assembly parts.)
- ••• ……Child parts included in "••", Grand- child parts in terms of "•". (Compornent parts of Semi- Assembly parts.)

Note) A parts of non- sale parts are illustlated but not listed.

③ Change Mark

Change Mark "I" is given to the part for which a desigh change was made at this time.
The design change was not shown in the last published Parts Catalog.

④ Interchangeability Mark

In the case where a part change took place,one of the following interchangeability marks is indicated for that part.

Symbol	interchangeability	Contents note
N	Old ←○ ×→ New	New Part is interchangeable for Old Part but not interchangeable conversely.
Q	Old ←× ○→ New	New Part is not interchangeable for Old Part but interchangeable conversely.
R	Old ←○ ○→ New	New Part is interchangeable for Old Part and vice versa.
S	Old ←× ×→ New	New Part is not interchangeable for Old Part and vice versa.
W		Part newly added.
Z		Part discontinued.
F		Not interchangeable single part but interchangeable by set of the related parts.
K		Changed only in quantity used.

⑤ Effective Machine No.

When a part is changed,Effective Machine No. of a Model for which the part is applicable is indication in each column of (A)- (F).

Product Symbol	Product No.	Product Symbol	Product No.
C	Clutch No. Compressor No.	M	Machine No.
D	Drive No.	T	Tractor No.
E	Engine No.	Note1) ※	Date

Note1) Date may follow the symbol in some cases. (Ex.) ※ 1996.01
Note2) As far as engine models shown by "XXX" are concerned, the modification of the parts could not be predicted or the engine models themselves could not be identified.
Note3) (A=E/#00185) means that the design change on the part has been effective for the model at the column (A)(in this case, for 4JH- DT) on and from E/#(Engine Serial Number) 00185.

⑥ Remarks Mark

Figures or alphabets (Symbols) are entered in the remark column.
The comments(remarks)on the pertinent parts are indicated in the lower part of the list by the same symbols as those stated above.

silverform.co.uk

クランクケース
CRANK CASE

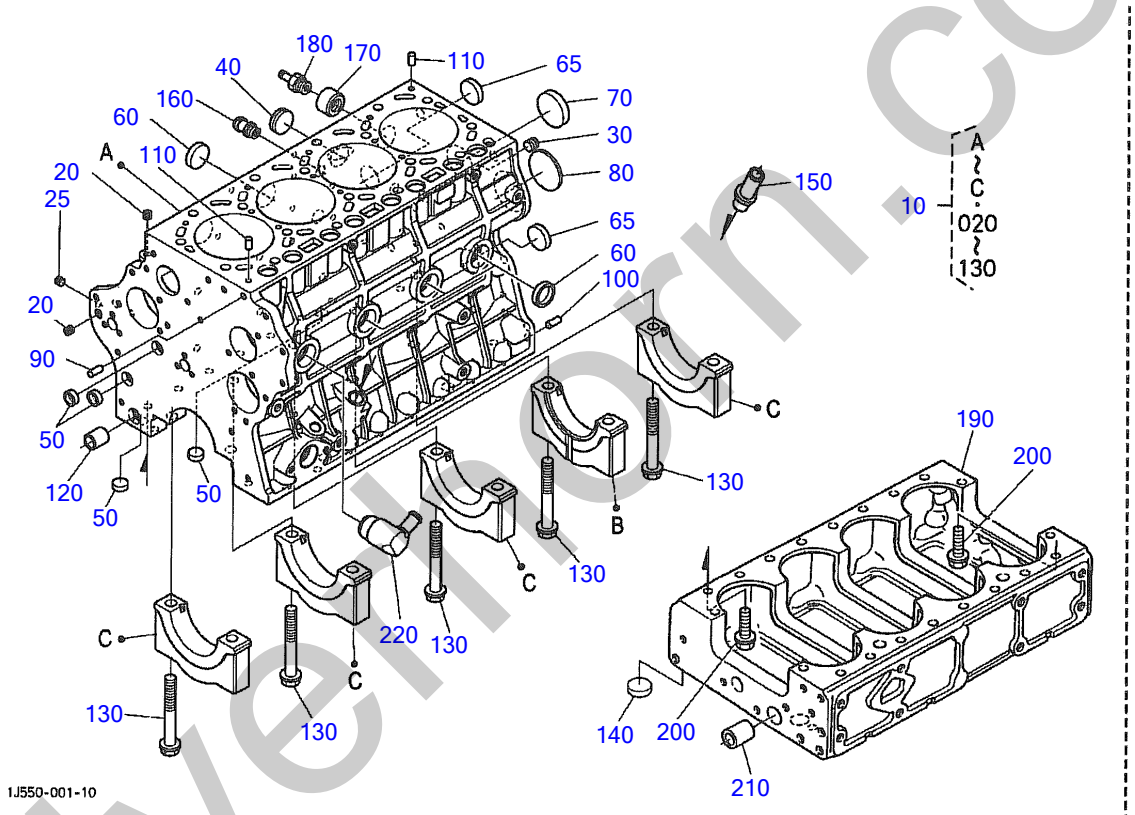

A:V3800DI-T-E3B-TLTU-1

silverthorn.co.uk

Engine for TL250 V3800DI-T-E3B-TLTU-1 (KUBOTA)

CRANKCASE

Item	Part No	Description	Qty
10	K1J550-01013	COMP.CRANKCASE	1
20	K15521-96020	PLUG	2
25	K15841-96020	PLUG	1
30	K1C010-96010	PLUG	1
40	K16683-96020	PLUG	1
50	K15261-03370	CAP,SEALING	4
60	K15221-03380	CAP,SEALING	5
65	K15221-03380	CAP,SEALING	2
70	K15221-03390	CAP,SEALING	1
80	K1C010-96160	PLUG,EXPANSION	1
90	K05012-00820	PIN,STRAIGHT	1
100	K05012-01016	PIN,STRAIGHT	4
110	K15221-33650	PIN,PIPE	2
120	K1C010-33640	PIN,GEAR CASE	1
130	K1C010-04560	BOLT,BEARING CASE	10
140	K15221-03380	CAP,SEALING	1
150	K1C040-33212	PIPE,OIL	1
160	K1C010-37114	JOINT,WATER PIPE	1
170	K1J550-71370	JOINT,PIPE	1
180	K1G377-73170	PIPE JOINT,DRAIN	1
190	K1C010-01126	CRANKCASE	1
200	K01774-51030	BOLT,FLANGE	16
210	K1C010-33650	PIN,GEAR CASE	1
220	K1J574-71362	JOINT,PIPE	1

silverhorn.co.uk

オイルパン
OIL PAN

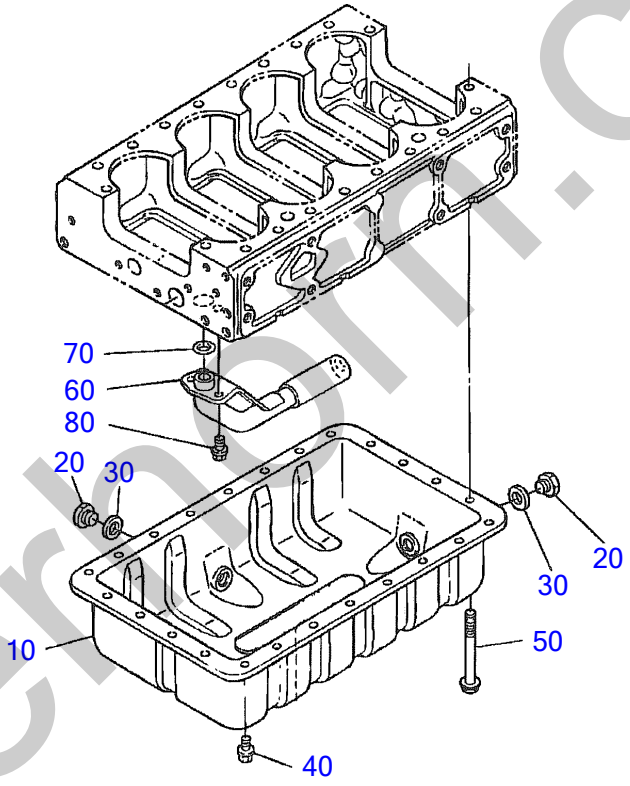

A:V3800DI-T-E3B-TLTU-1

silvernorm.co.uk

Engine for TL250 V3800DI-T-E3B-TLTU-1 (KUBOTA)

OIL PAN

Item	Part No	Description	Qty
10	K1C010-01503	COMP.OIL_PAN	1
20	K15707-33750	PLUG,DRAIN	2
30	K16265-96670	GASKET	2
40	K1C010-91100	BOLT,OIL_PAN	20
50	K01774-51004	BOLT,FLANGE	4
60	K1C010-32110	FILTER,OIL	1
70	K04814-00220	O_RING	1
80	K01754-50814	BOLT,FLANGE	2

silverhorn.co.uk

オイルゲージ
DIPSTICK AND GUIDE

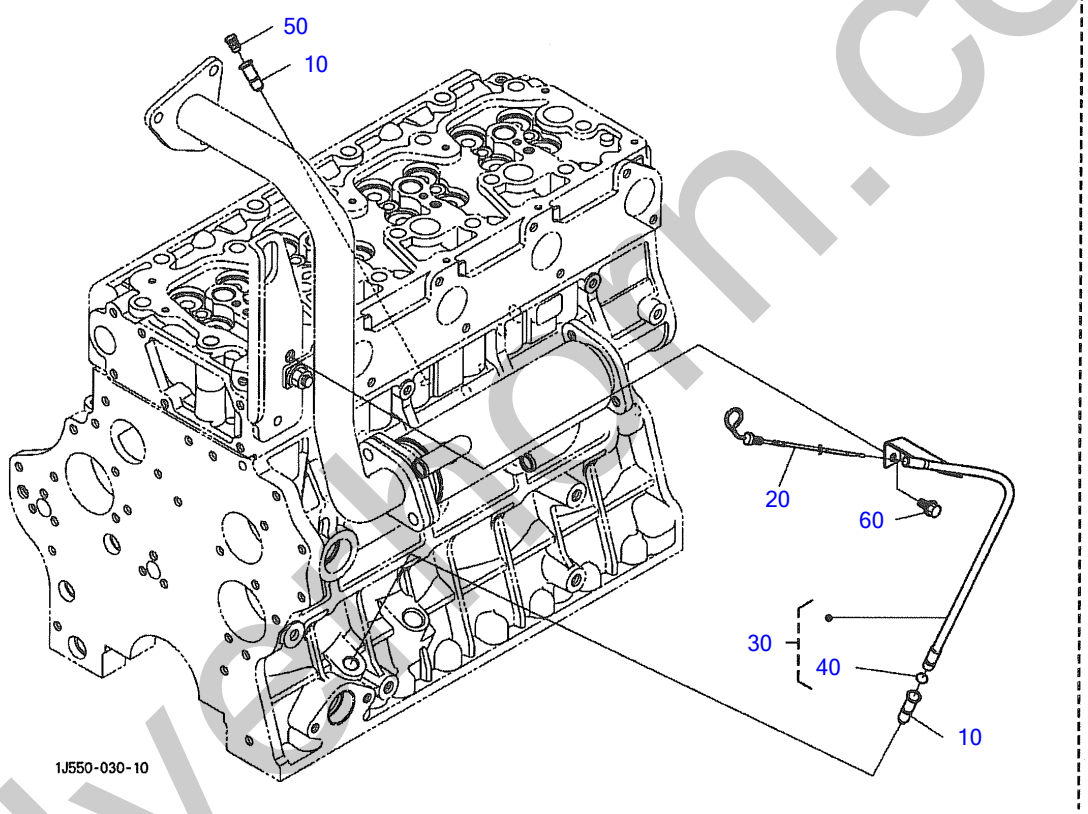

A:V3800DI-T-E3B-TLTU-1

silvermorn.co.uk

DIPSTICK AND GUIDE

Item	Part No	Description	Qty
10	K1C010-36422	GUIDE,OIL_GAUGE	2
20	K1G377-36410	GAUGE,OIL	1
30	K1G377-36500	ASSY_GUIDE,OIL_GAUGE	1
40	K04814-00090	O_RING	1
50	K1G513-36550	PLUG,OIL_GAUGE	1
60	K01754-50810	BOLT,FLANGE	1

silverhorn.co.uk

シリンダヘッド
CYLINDER HEAD

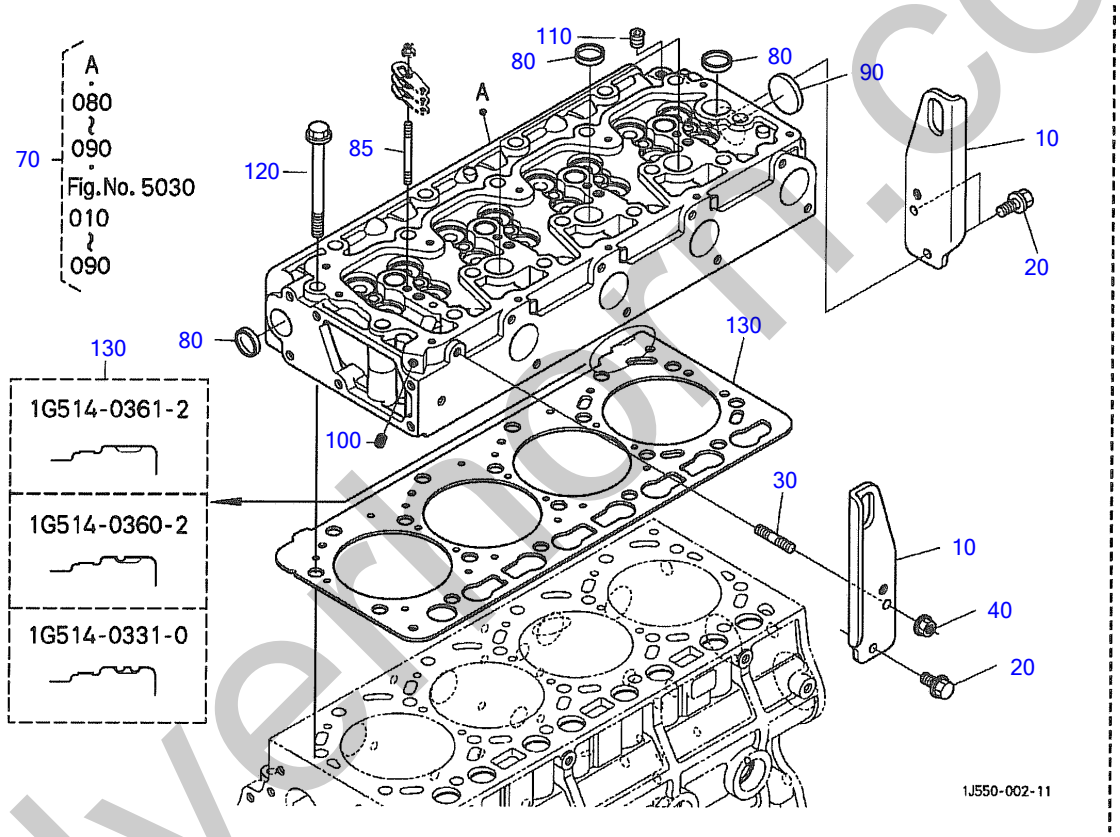

A:V3800DI-T-E3B-TLTU-1

silverthorn.co.uk

Engine for TL250 V3800DI-T-E3B-TLTU-1 (KUBOTA)

CYLINDER HEAD

Item	Part No	Description	Qty
10	K1J550-01745	HOOK,ENGINE	2
20	K01754-50814	BOLT,FLANGE	3
30	K15221-91530	ÞSTUD	1
40	K02751-50080	NUT,FLANGE	1
70	K1C020-03027	ASSY_CYLINDER_HEAD	1
80	K15221-03370	CAP,SEALING	5
85	K01513-50875	STUD	4
90	K15221-03490	CAP,SEALING	1
100	K15521-96020	PLUG	1
110	K15841-96020	PLUG	1
120	K1C010-03450	BOLT,CYLINDER_HEAD	18
130	K1G514-03310	GASKET,CYLINDER_HEAD(STD)	1
	K1G514-03602	GASKET,CYLINDER_HEAD(SELECT)	1
	K1G514-03612	GASKET,CYLINDER_HEAD(SELECT)	1

silverhorn.co.uk

インレットバルブ・エキゾーストバルブ
INLET VALVE AND EXHAUST VALVE

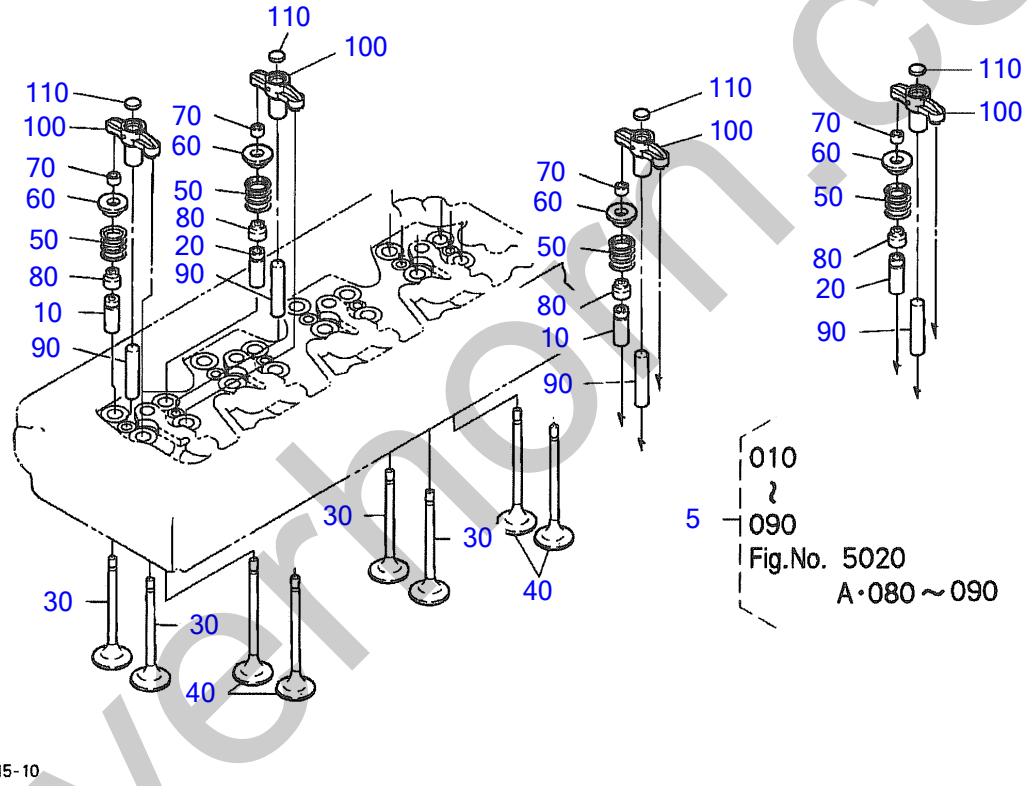

A:V3800DI-T-E3B-TLTU-1

silverhorn.co.uk

INLET VALVE AND EXHAUST VALVE

Item	Part No	Description	Qty
5	K1C020-03027	ASSY_CYLINDE_HEAD	1
10	K16261-13540	GUIDE,INLET_VALVE	8
20	K16261-13560	GUIDE,EXHAUST_VALVE	8
30	K1C020-13112	VALVE,INLET	8
40	K1C020-13122	VALVE,EXHAUST	8
50	K1C010-13240	SPRING,VALVE	16
60	K16261-13330	RETAINER,SPRING	16
70	K15261-13360	COLLET,VALVE_SPRING(SET)	16
80	K1C010-13150	SEAL,VALVE_STEM	16
90	K1C010-13482	SHAFT,VALVE	8
100	K1C020-13463	ARM,VALVE_BRIGE	8
110	K1C010-13490	PAD	8

silverhorn.co.uk

ロッカアーム軸
ROCKER ARM SHAFT

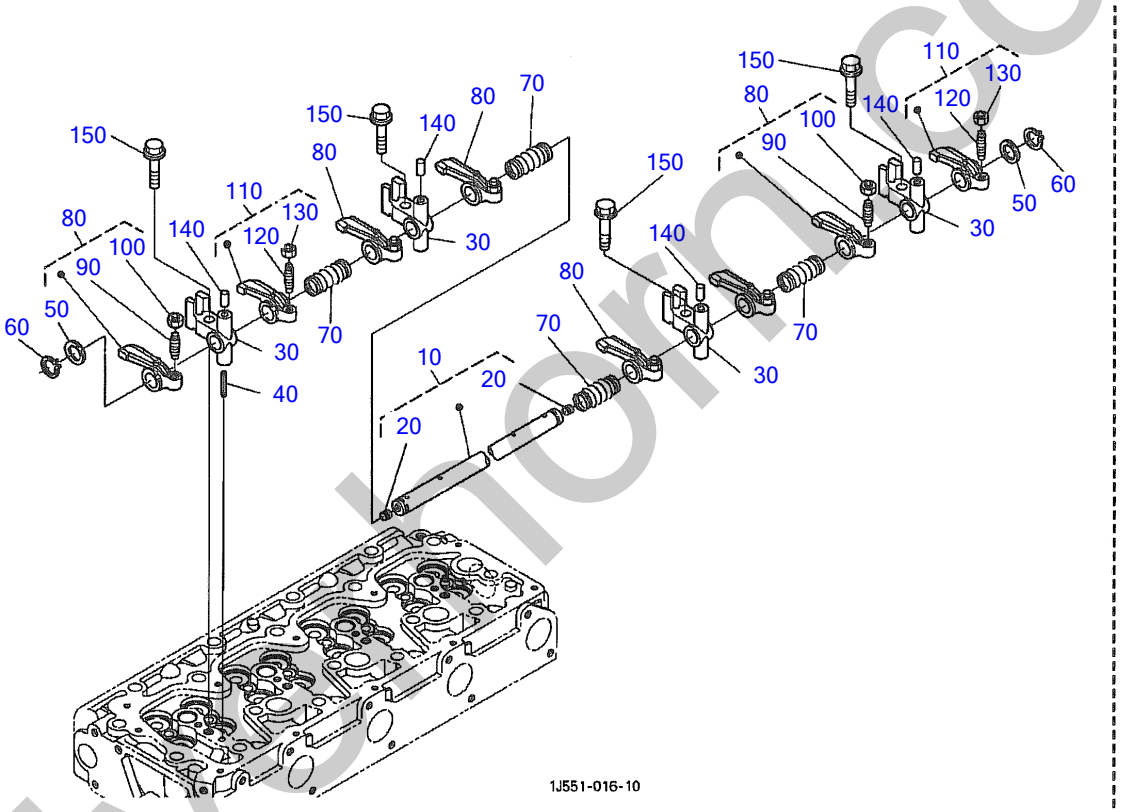

A:V3800DI-T-E3B-TLTU-1

silverthorn.co.uk

ROCKER ARM SHAFT

Item	Part No	Description	Qty
10	K1C020-14050	ASSY_SHAFT,R-ARM	1
20	K03410-50808	SCREW,SET	2
30	K1C020-14350	BRACKET,ROCKER_ARM	4
40	K05411-00528	PIN,SPRING	1
50	K1C010-14430	WASHER	2
60	K04612-00160	CIR_CLIP,EXTERNAL	2
70	K1C020-14310	SPRING,ROCKER_ARM	3
80	K1C020-14020	ASSY_ROCKER_ARM,IN.	4
90	K15521-14230	SCREW,ADJUSTING	4
100	K15021-14240	NUT	4
110	K1C020-14150	ASSY_ROCKER_ARM,EXH.	4
120	K15521-14230	SCREW,ADJUSTING	4
130	K15021-14240	NUT	4
140	K1C020-94510	PIN,STRAIGHT	4
150	K01774-51060	BOLT,FLANGE	4

silverhorn.co.uk

ヘッドカバー
HEAD COVER

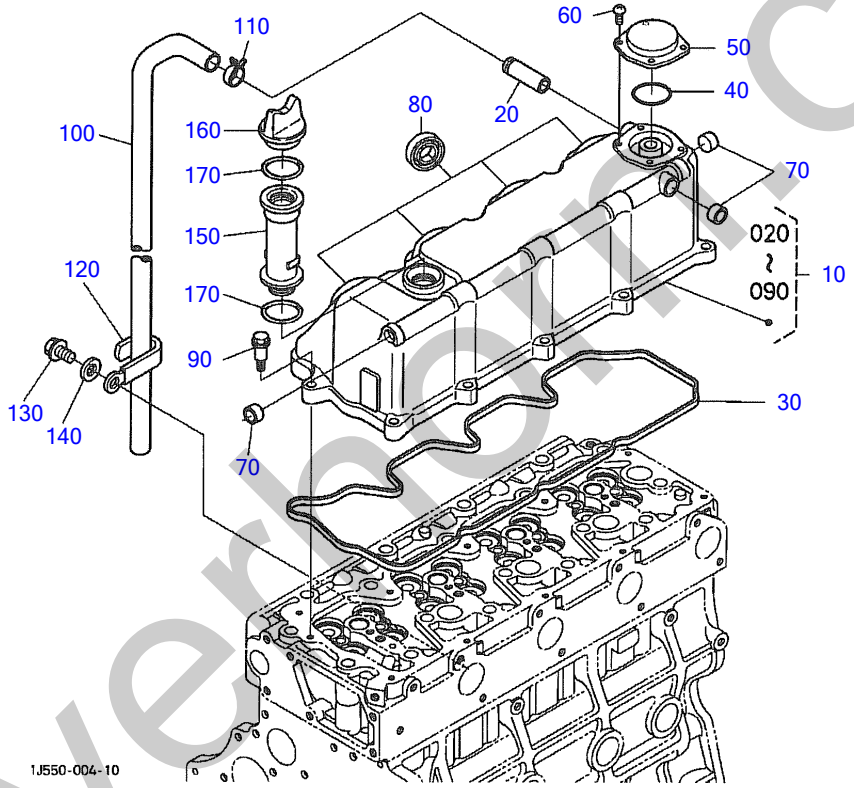

A:V3800DI-T-E3B-TLTU-1

silverhorn.co.uk

HEAD COVER

Item	Part No	Description	Qty
10	K1G377-14500	ASSY_COVER,CYL.HEAD	1
20	K16241-05550	JOINT,BREATHER_PIPE	1
30	K1C020-14520	GASKET,HEAD_COVER	1
40	K1A021-05430	O_RING,BREATHER	1
50	K1G742-05120	COVER,BREATHER	1
60	K03054-50508	SCREW,PAN-HEAD	4
70	K06311-85016	CAP,SEALING	3
80	K1C020-53810	SEAL,INJECTION PIPE	4
90	K1C010-91020	BOLT	10
100	K1C040-05510	PIPE,BREATHER	1
110	K16241-33510	BAND,PIPE	1
120	K68011-51160	CLAMP,CORD	1
130	K01774-51014	BOLT,FLANGE	1
140	K04013-60100	WASHER,PLAIN	1
150	K15951-33113	FLANGE,OIL_FILLER	1
160	K1G386-33140	PLUG,OIL_FILLER	1
170	K04817-50300	O_RING	2

silverhorn.co.uk

ギヤーケース
GEAR CASE

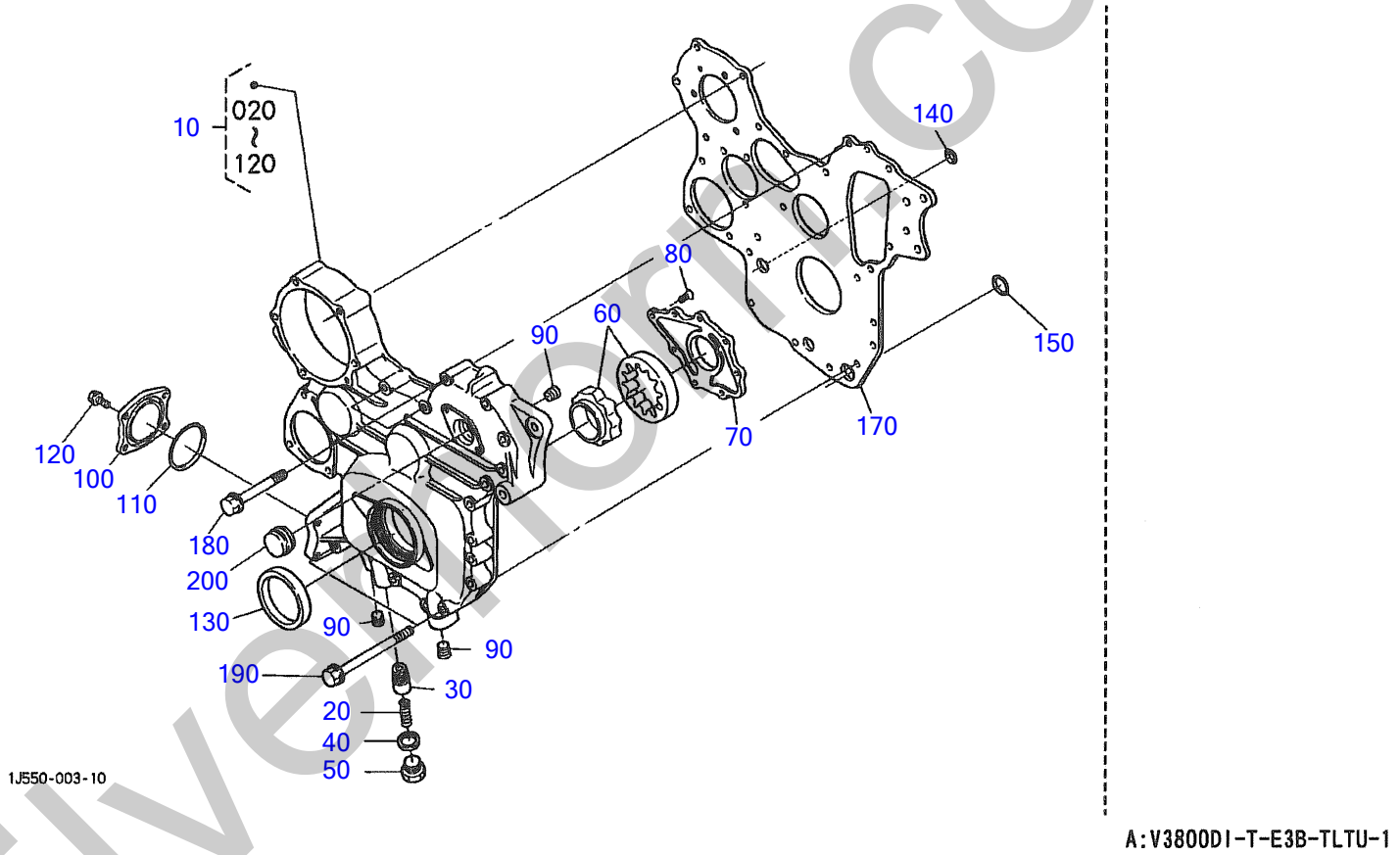

silvermoor.co.uk

GEAR CASE

Item	Part No	Description	Qty
10	K1C020-04010	ASSY_CASE,GEAR	1
20	K1C010-36950	SPRING	1
30	K1C010-36922	VALVE,RELIEF	1
40	K15451-96670	GASKET	1
50	K1C010-36960	PLUG	1
60	K1C010-35070	ASSY_ROTOR,OIL_PUMP	1
70	K1C010-35130	COVER,OIL_PUMP	1
80	K03016-50616	SCREW,CSK-HD	8
90	K1C010-96020	PLUG	3
100	K1C010-32880	COVER,OIL_FILTER	1
110	K19202-96830	O_RING	1
120	K01754-50820	BOLT,FLANGE	4
130	K1C020-04140	SEAL,OIL	1
140	K04814-00200	O_RING	1
150	K04814-00240	O_RING	1
170	K1C010-04162	PLATE,GEAR_CASE	1
180	K1C010-91030	BOLT,FLANGE	13
190	K1C010-91040	BOLT,FLANGE	2
200	K16264-83342	COVER,GEAR_CASE	1

silverhorn.co.uk

オイルフィルタ
OIL FILTER

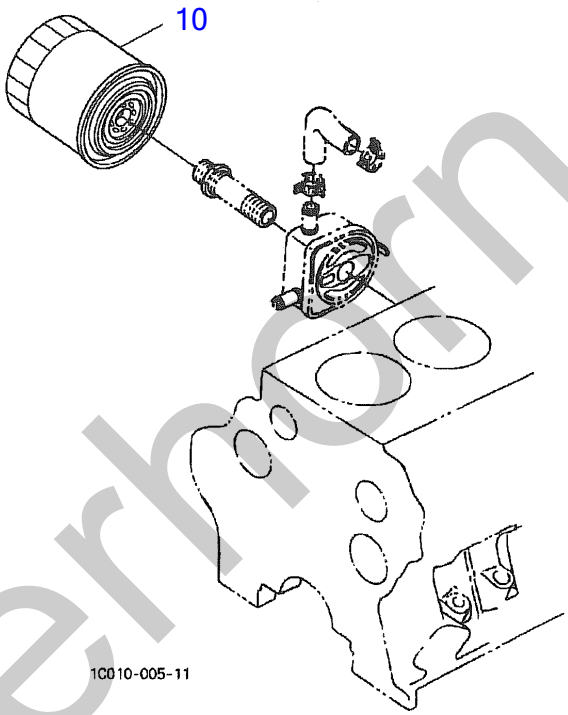

A:V3800DI-T-E3B-TLTU-1

silverhorn.co.uk

OIL FILTER

Item	Part No	Description	Qty
10	K1C020-32430	CARTRIDGE,OIL_FILTER	1

silverhorn.co.uk

メインベアリングケース
MAIN BEARING CASE

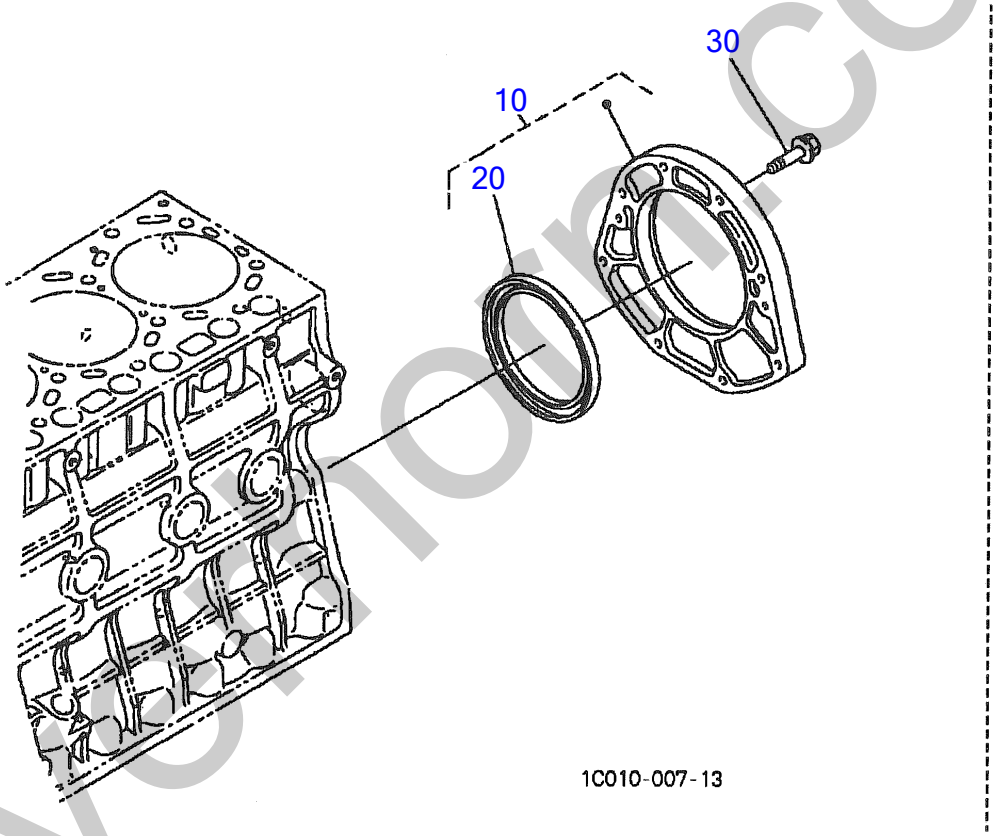

A:V3800DI-T-E3B-TLTU-1

silvermoon.co.uk

MAIN BEARING CASE

Item	Part No	Description	Qty
10	K1C010-04300	ASSY_COVER,BRG.CASE	1
20	K1C010-04460	SEAL,OIL	1
30	K01754-50830	BOLT,FLANGE	8

silverhorn.co.uk

ピストン・クランク軸
PISTON AND CRANKSHAFT

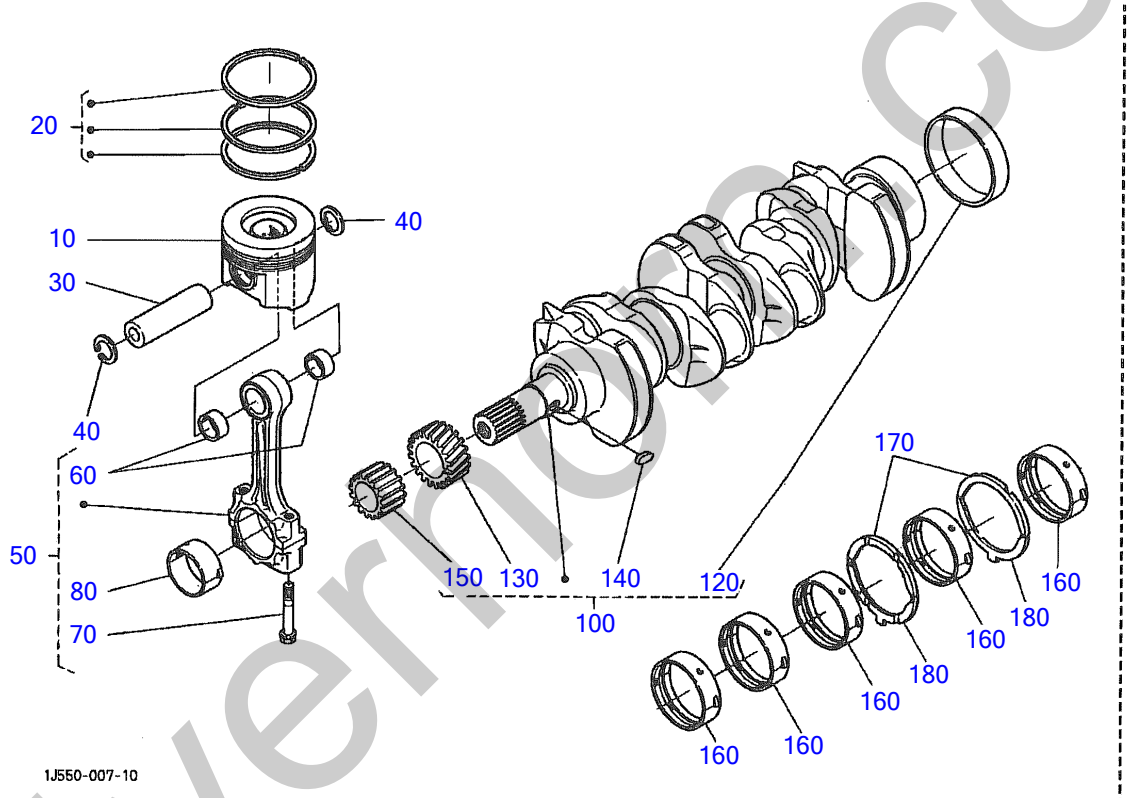

A:V3800DI-T-E3B-TLTU-1

silvermoon.co.uk

PISTON AND CRANKSHAFT

Item	Part No	Description	Qty
10	K1J550-21110	PISTON(STD)	4
	K1J550-21910	PISTON(+0.50mm)	4
20	K1G514-21050	ASS_PISTON_RING(STD)	4
	K1G514-21090	ASSY_PISTON_RING(+0.50mm)	4
30	K1C010-21310	PIN,PISTON	4
40	K04611-00300	CIR_CLIP,INTERNAL	8
50	K1G514-22013	ASSY_ROD,CONNECTING	4
60	K1C010-21980	BUSH,PISTON_PIN	8
70	K1C010-22142	BOLT,CONNECTING_ROD	8
80	K1C020-22312	METAL,CRANKPIN(L:SET)	4
	K1C020-22332	METAL,CRANKPIN(S:SET)	4
	K1C020-22962	METAL,CRANKPIN(-0.20mm:SET)	4
	K1C020-22972	METAL,CRANKPIN(-0.40mm:SET)	4
100	K1G514-23010	COMP.CRANKSHAFT	1
120	K1C010-23300	SLEEVE,CRANKSHAFT	1
130	K1C010-24112	GEAR,CRANKSHAFT	1
140	K05712-00515	KEY,FEATHER	1
150	K1C010-35630	GEAR,OIL_PUMP_DRIVE	1
160	K1C020-23470	METAL,CRANKSHAFT(STD:SET)	5
	K1C020-23910	METAL,CRANKSHAFT(-0.20mm:SET)	5
	K1C020-23920	METAL,CRANKSHAFT(-0.40mm:SET)	5
170	K1C010-23530	METAL,SIDE(STD)	2
	K1C010-23950	METAL,SIDE(+0.20mm)	2
	K1C010-23960	METAL,SIDE(+0.40mm)	2
180	K1C010-23540	METAL,SIDE(STD)	2
	K1C010-23970	METAL,SIDE(+0.20mm)	2
	K1C010-23980	METAL,SIDE(+0.40mm)	2

silverhorn.co.uk

カム軸・アイドル軸
CAMSHAFT AND IDLE GEAR SHAFT

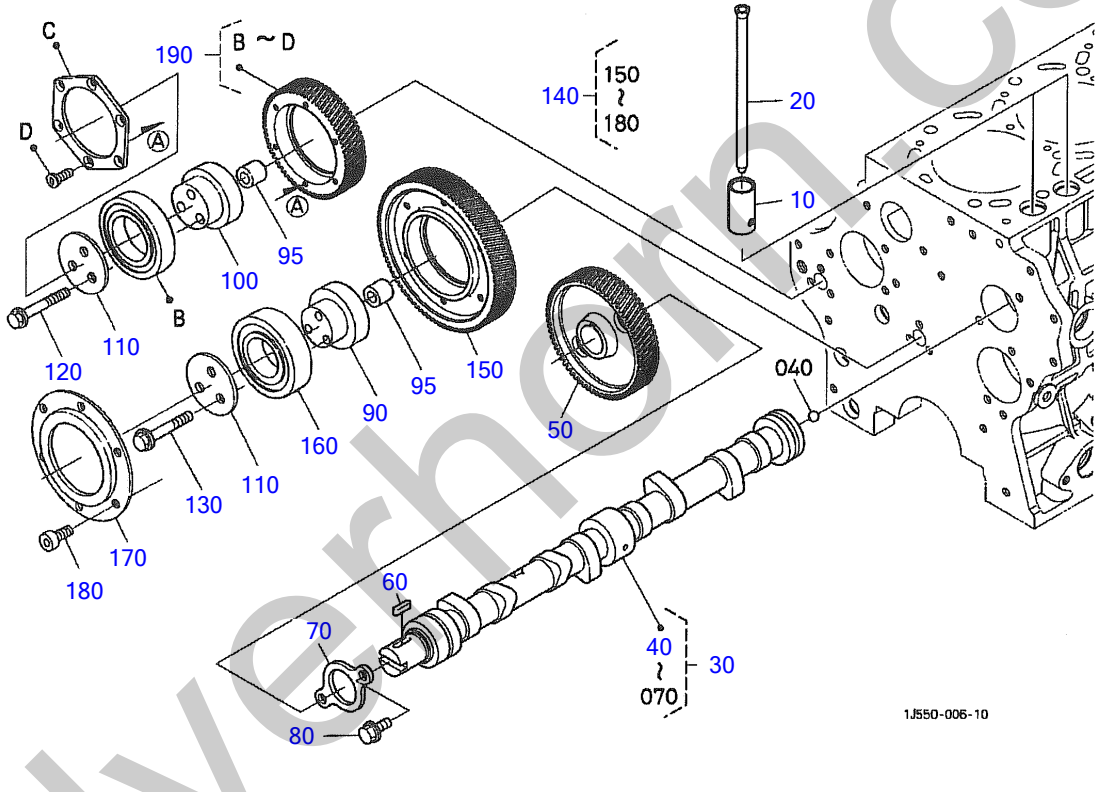

A : V3800DI-T-E3B-TLTU-1

silverhorn.co.uk

CAMSHAFT AND IDLE GEAR SHAFT

Item	Part No	Description	Qty
10	K15601-15550	TAPPET	8
20	K1C010-15110	PUSH ROD	8
30	K1C010-16012	ASSY_CAMSHAFT	1
40	K07715-01605	BALL	1
50	K1C010-16512	GEAR,CAM	1
60	K05712-00520	KEY,FEATHER	1
70	K1C010-16270	STOPPER,CAMSHAFT	1
80	K01754-50814	BOLT,FLANGE	2
90	K1K032-24250	SHAFT,IDLE_GEAR	1
95	K1C010-24520	PIN,GEAR_IDLE	2
100	K1K032-24260	SHAFT,IDLE_GEAR	1
110	K1K032-24370	COLLAR,IDL_GEAR	2
120	K01754-50850	BOLT,FLANGE	3
130	K1K012-91010	BOLT,FLANGE	3
140	K1K012-24010	COMP.GEAR,IDLE	1
150	K1K012-24210	GEAR,IDLE	1
160	K1K012-24330	BEARING,BALL	1
170	K1K012-24230	STOPPER,IDLE	1
180	K01311-10610	BOLT,HEX-SOC-HD	6
190	K1K012-24020	COMP.GEAR,IDLE	1

silverhorn.co.uk

フライホイール
FLYWHEEL

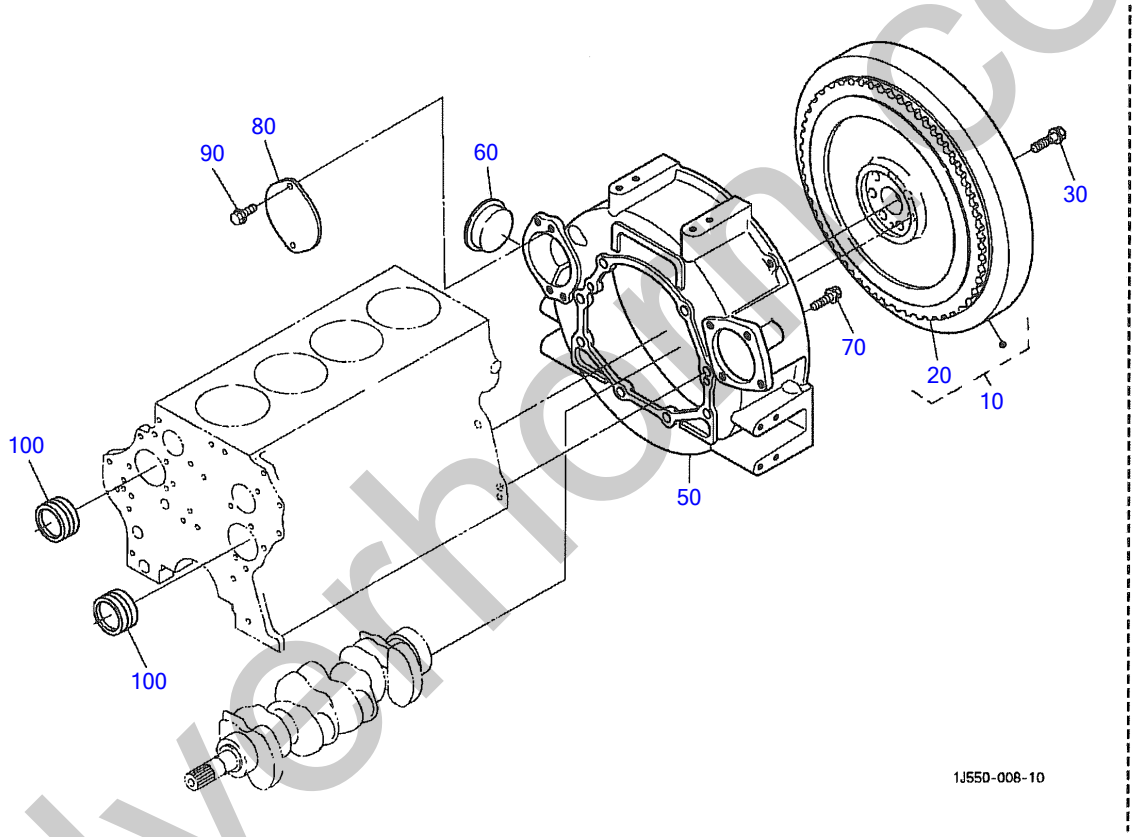

A:V3800DI-T-E3B-TLTU-1

silverhomeco.uk

FLYWHEEL

Item	Part No	Description	Qty
10	K1G371-25010	ºÝÌßCOMP.FLYWHEEL	1
20	K1G772-63820	GEAR,RING	1
30	K15471-25162	BOLT,FLYWHEEL	7
50	K1G371-04613	HOUSING,FLYWHEEL	1
60	K1C010-04680	COVER	1
70	K1G772-91030	BOLT,FLANGE	8
80	K1C010-04450	COVER,F/W_HOUSING	1
90	K01774-51018	BOLT,FLANGE	2
100	K1C020-26340	COVER,BLANCER	2

silverhorn.co.uk

燃料噴射ポンプ ユニット
INJECTION PUMP UNIT

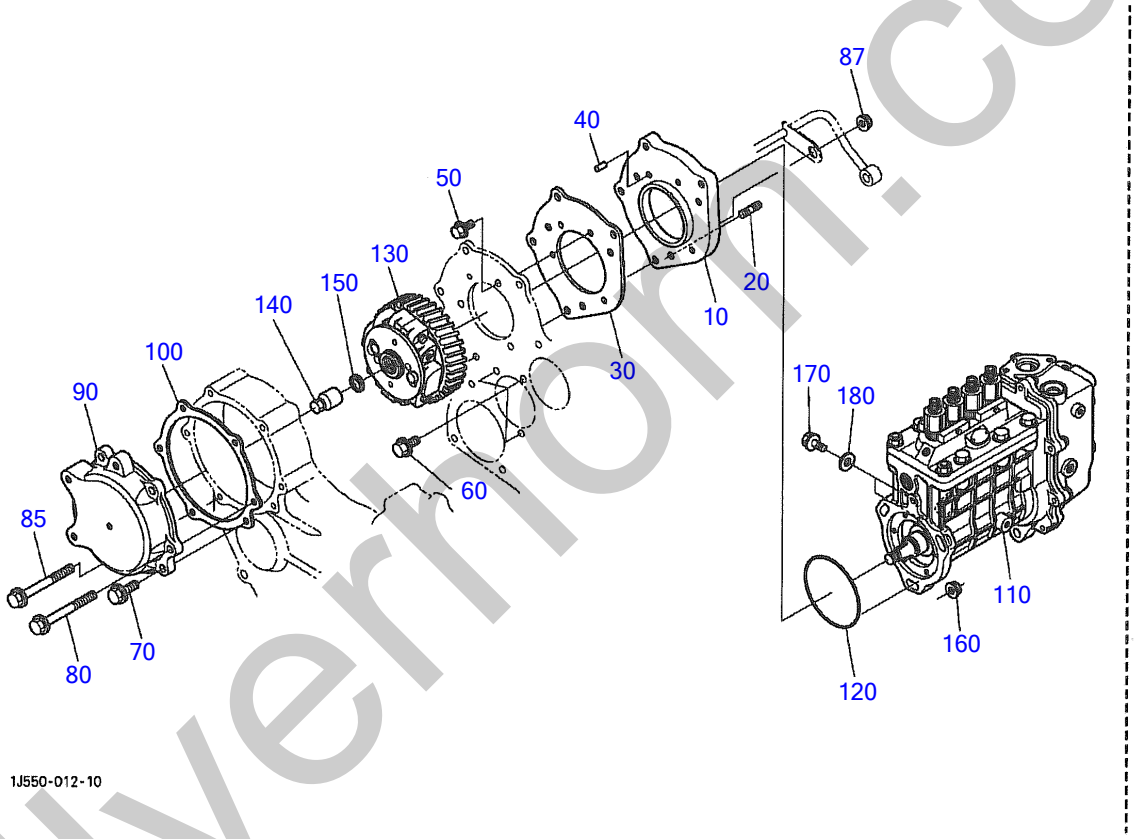

A:V3800DI-T-E3B-TLTU-1

silverhorn.co.uk

INJECTION PUMP UNIT

Item	Part No	Description	Qty
10	K1J550-51170	BASE,INJECTION_PUMP	1
20	K1C020-91490	STUD	3
30	Kk1C010-51180	GASKET,I/P_BASE	1
40	K05012-00614	PIN,STRAIGHT	1
50	K01754-50614	BOLT,FLANGE	3
60	K01754-50814	BOLT,FLANGE	3
70	K01754-50825	BOLT,FLANGE	1
80	K01754-50875	BOLT,FLANGE	4
85	K1G596-91010	BOLT,FLANGE	1
87	K02751-50080	NUT,FLANGE	1
90	K1G574-51650	COVER,INJ.PUMP	1
100	K1C010-51663	GASKET,I/P_COVER	1
110	K1K925-50050	PUMP,INJECTION_UNIT	1
120	K1J550-52130	GASKET,INJ.PUMP	1
130	K1J550-51100	ASSY_TIMER_MECHAN.	1
140	K1J550-52580	NUT	1
150	K1J550-52590	SPRING_PLATE	1
160	K02751-50080	NUT,FLANGE	3
170	K01754-50814	BOLT,FLANGE	2
180	K15021-33660	GASKET	2

silverhorn.co.uk

燃料噴射ポンプハウジング
INJECTION PUMP HOUSING

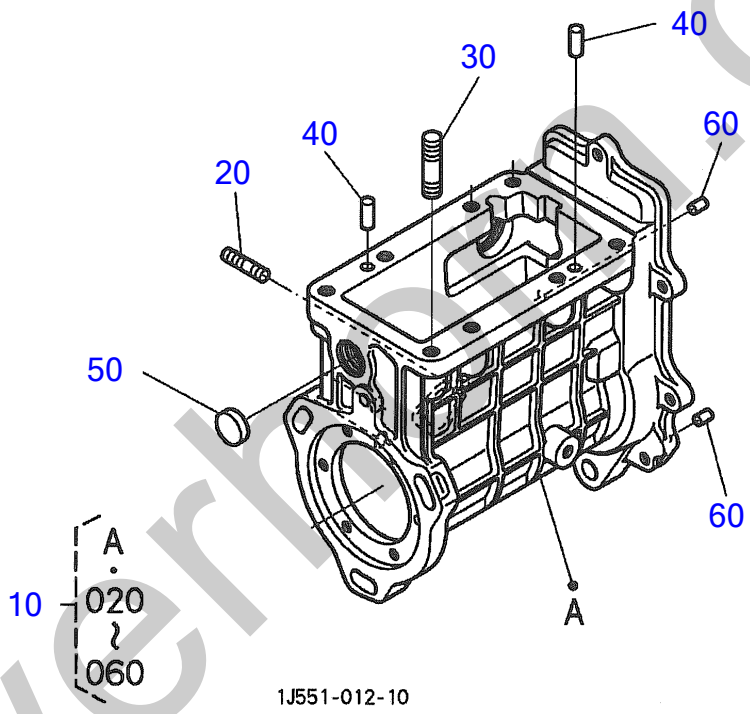

A:V3800DI-T-E3B-TLTU-1

silverhill.co.uk

INJECTION PUMP HOUSING

Item	Part No	Description	Qty
10	K1J550-50800	ASSY_HOUSING,I/P	1
20	K16245-91540	STUD	2
30	K15471-91530	STUD	3
40	K05012-00609	PIN,STRAIGHT	2
50	K1C010-55140	PLUG,I/P_HOUSING	1
60	K05012-00512	PIN,STRAIGHT	2

silverhorn.co.uk

燃料噴射ポンプ
INJECTION PUMP

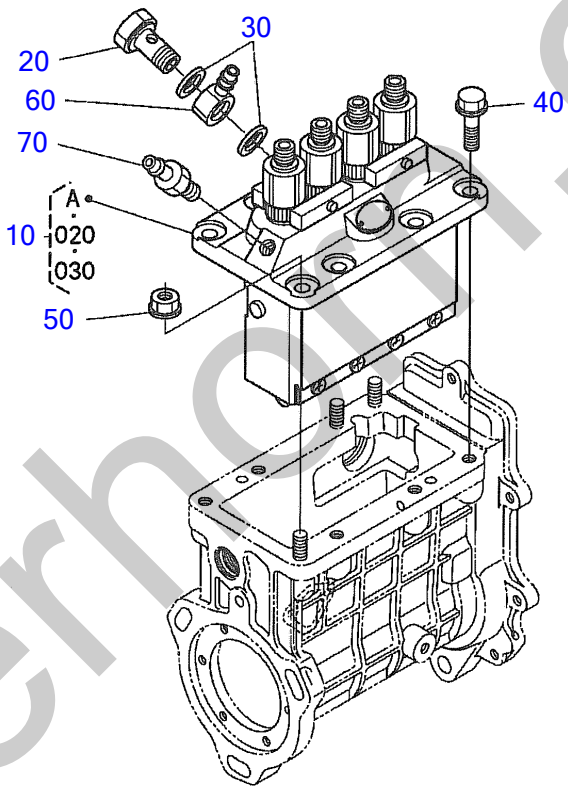

A:V3800DI-T-E3B-TLTU-1

silverhorn.co.uk

INJECTION PUMP

Item	Part No	Description	Qty
10	K1J550-51010	ASSY_PUMP,INJECTION	1
20	K1C010-51320	SCREW,HOLLOW	1
30	K15401-96650	GASKET	2
40	K01754-50825	BOLT,FLANGE	5
50	K02751-50080	NUT,FLANGE	3
60	K15401-95690	JOINT,EYE	1
70	K1C025-51350	SCREW,AIR_BREEDER	1

silverhorn.co.uk

FUEL PUMP COVER

燃料ポンプカバー
FUEL PUMP COVER

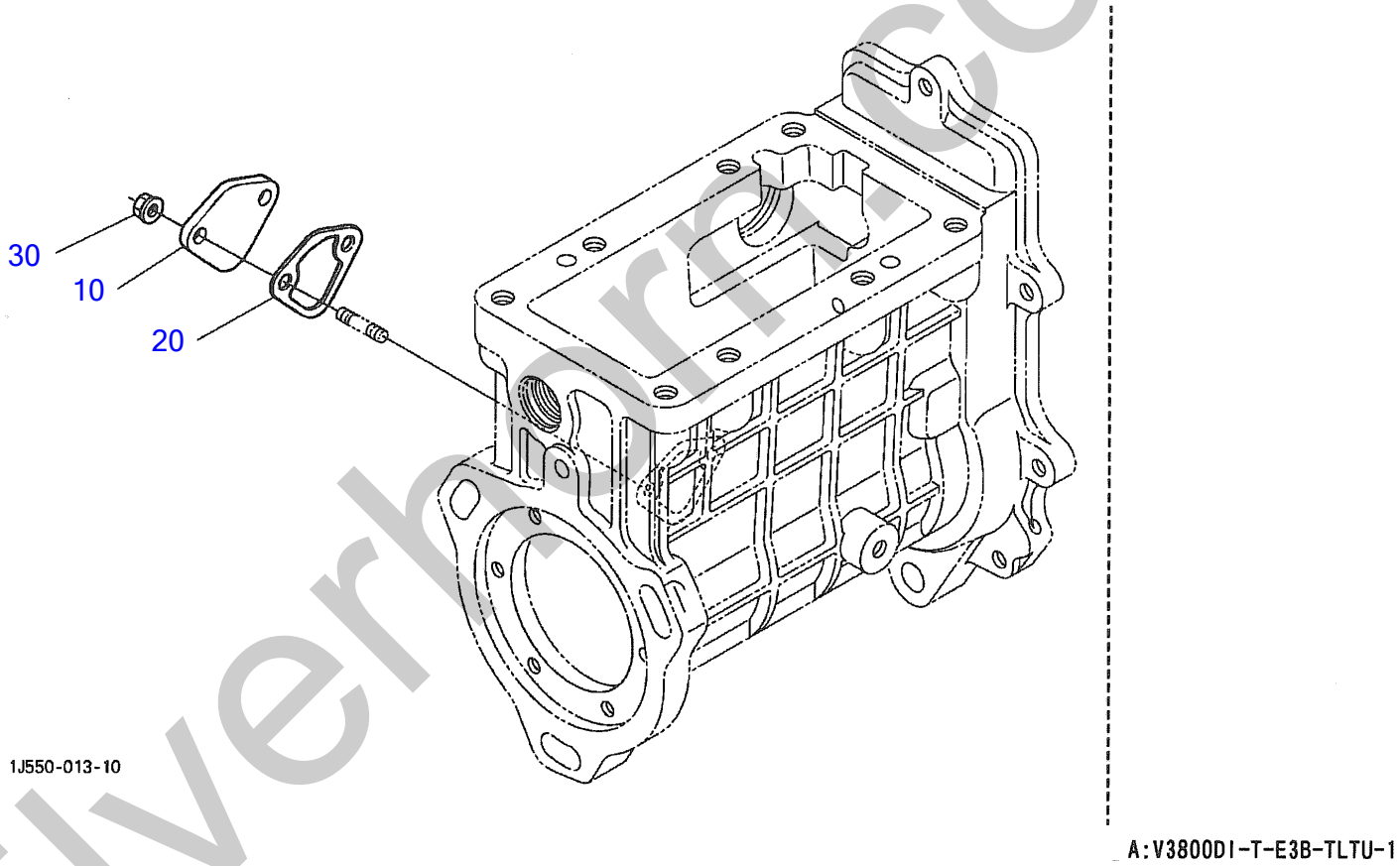

silverhorn.co.uk

FUEL PUMP COVER

Item	Part No	Description	Qty
10	K15852-52850	COVER	1
20	K16264-52140	GASKET,FUEL_PUMP	1
30	K02751-50060	NUT,FLANGE	2

silverhorn.co.uk

燃料カム軸
FUEL CAMSHAFT

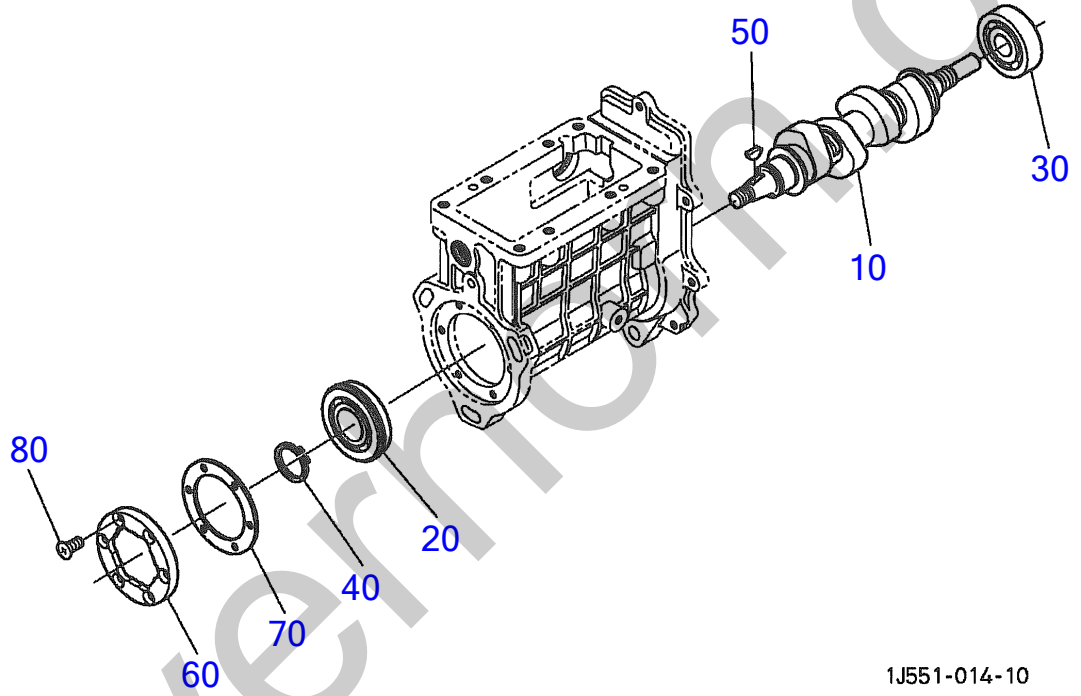

A:V3800DI-T-E3B-TLTU-1

silvermoon.co.uk

FUEL CAMSHAFT

Item	Part No	Description	Qty
10	K1J550-16170	CAMSHAFT,FUEL	1
20	K1J550-16570	BEARING,BALL	1
30	K1J550-16580	BEARING,BALL	1
40	K04612-00300	CIR_CLIP,EXTERNAL	1
50	K12331-95230	KEY,WOODRUFF	1
60	K1J550-16320	STOPPER,FUEL_C/SHAFT	1
70	K1J550-16340	SPACER	1
80	K03016-50620	SCREW,CSK-HD	6

silverhorn.co.uk

ガバナ
GOVERNOR

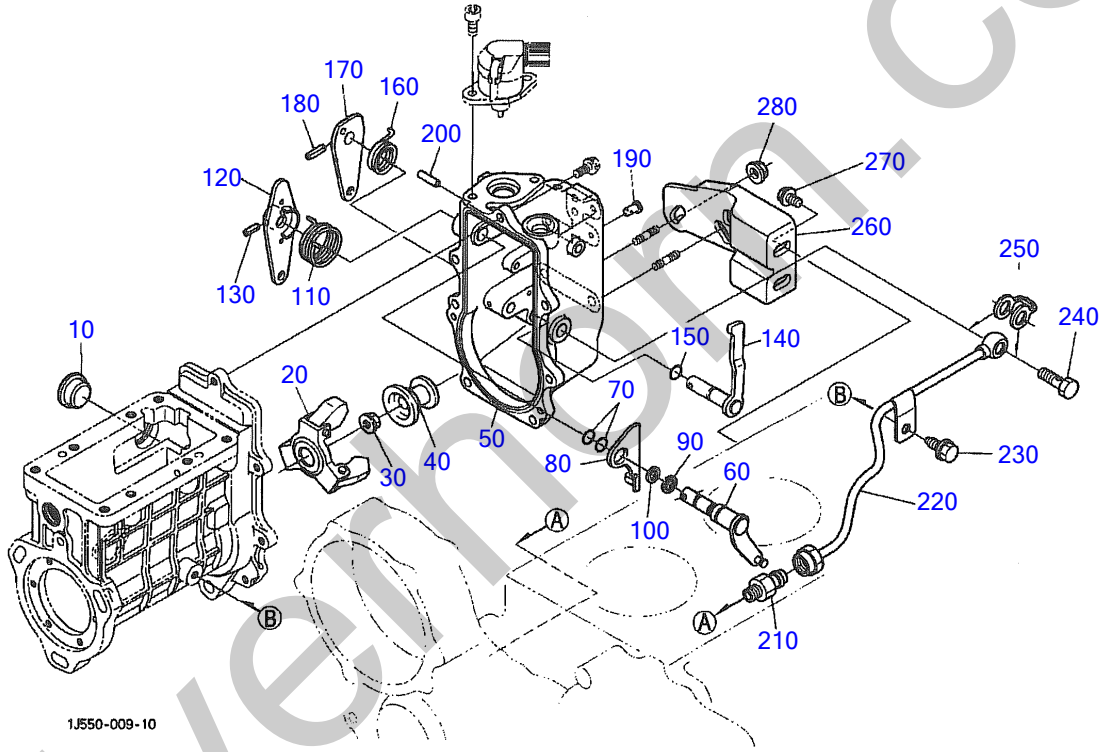

A:V3800DI-T-E3B-TLTU-1

silvermoon.co.uk

GOVERNOR

Item	Part No	Description	Qty
10	K1C010-56750	COVER,GOVERNOR_ROD	1
20	K1G527-55050	ASSY_WEIGHT,GOVERNOR	1
30	K02771-50120	NUT,FLANGE	1
40	K1C020-55453	SLEEVE,GOVERNOR	1
50	K1C011-55104	HOUSING,GOVERNOR	1
60	K1C010-56023	ASSY_LEVER(GOVERNOR)	1
70	K04814-10070	O_RING	2
80	K1C010-60153	LEVER,STOP	1
90	K04613-50120	CIR_CLIP,EXTERNAL	1
100	K15221-14430	WASHER,R-ARM.SHAFT	1
110	K1C010-57512	SPRING	1
120	K1K012-57150	LEVER,SPEED_CONTROL	1
130	K05411-00416	PIN,SPRING	1
140	K1C010-57700	ASSY_LEVER,ENG.STOP	1
150	K04814-10070	O_RING	1
160	K15471-57920	SPRING,RETURN	1
170	K1C010-57620	LEVER,ENGINE_STOP	1
180	K05411-00416	PIN,SPRING	1
190	K15221-56280	PIN,START_SPRING	1
200	K1C010-94510	PIN,STRAIGHT	1
210	K15707-33360	JOINT,UNION	1
220	K1J550-33320	ASSY_PIPE,I.P_OIL	1
230	K13901-91020	BOLT	1
240	K17371-95800	BOLT,EYE_JOINT	1
250	K1C020-96650	GASKET	1
260	K1C020-51622	BRACKET,INJ.PUMP	1
270	K01755-50814	BOLT,FLANGE	2
280	K02751-50080	NUT,FLANGE	2

silverhorn.co.uk

FORK LEVER (GOVERNOR)

フォークレバー（ガバナ）
FORK LEVER (GOVERNOR)

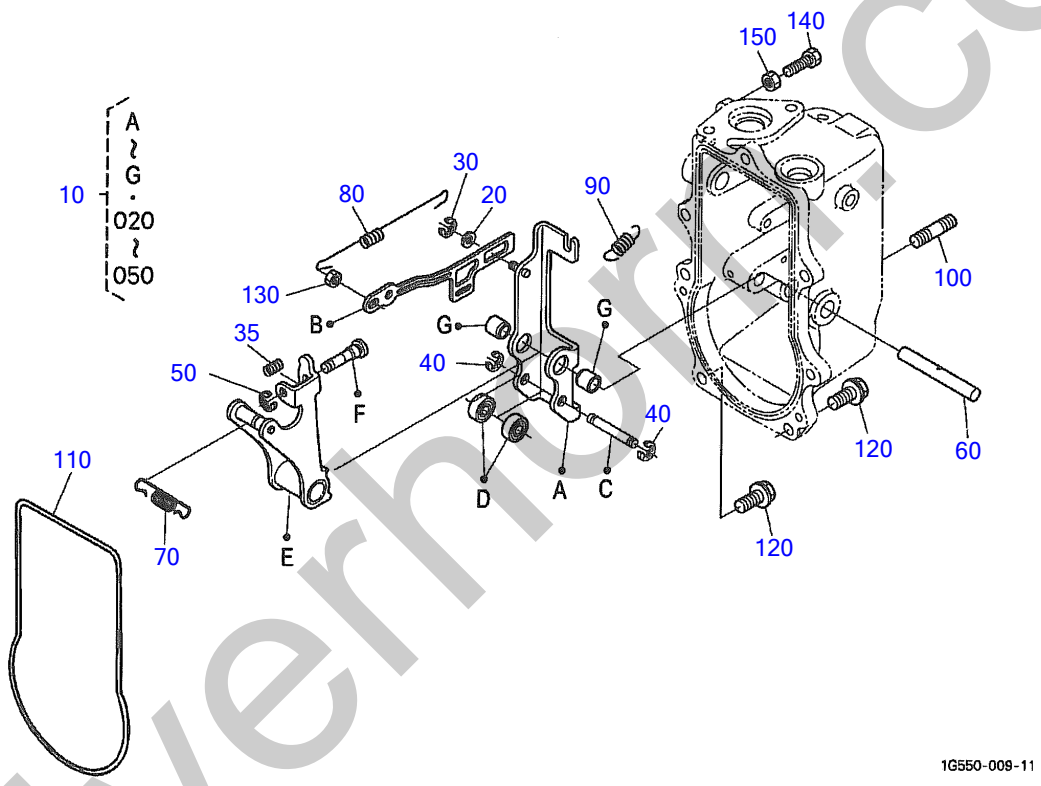

A:V3800DI-T-E3B-TLTU-1

silverhorn.co.uk

FORK LEVER (GOVERNOR)

Item	Part No	Description	Qty
10	K1J550-56030	ASSY_LEVER,FORK	1
20	K04013-60050	WASHER,PLAIN	1
30	K04613-50040	CIR_CLIP,EXTERNAL	1
35	K1G514-54230	SPRING	1
40	K04613-50050	CIR_CLIP,EXTERNAL	2
50	K04613-50030	CIR_CLIP,EXTERNAL	1
60	K1G517-56150	SHAFT,FORK_LEVER	1
70	K1G514-56412	SPRING,GOVERNOR	1
80	K1G514-56480	SPRING,START	1
90	K1C010-57920	SPRING,STOP_LEVER	1
100	K01518-50820	STUD	2
110	K1C010-55770	GASKET,GOV.HOUSING	1
120	K01754-50618	BOLT,FLANGE	7
130	K1C010-92020	NUT,LOCK	1
140	K15108-57280	STOPPER	1
150	K02056-50060	NUT	1

silverhorn.co.uk

制限調整ボルト
RESTRICTION ADJUSTING BOLT

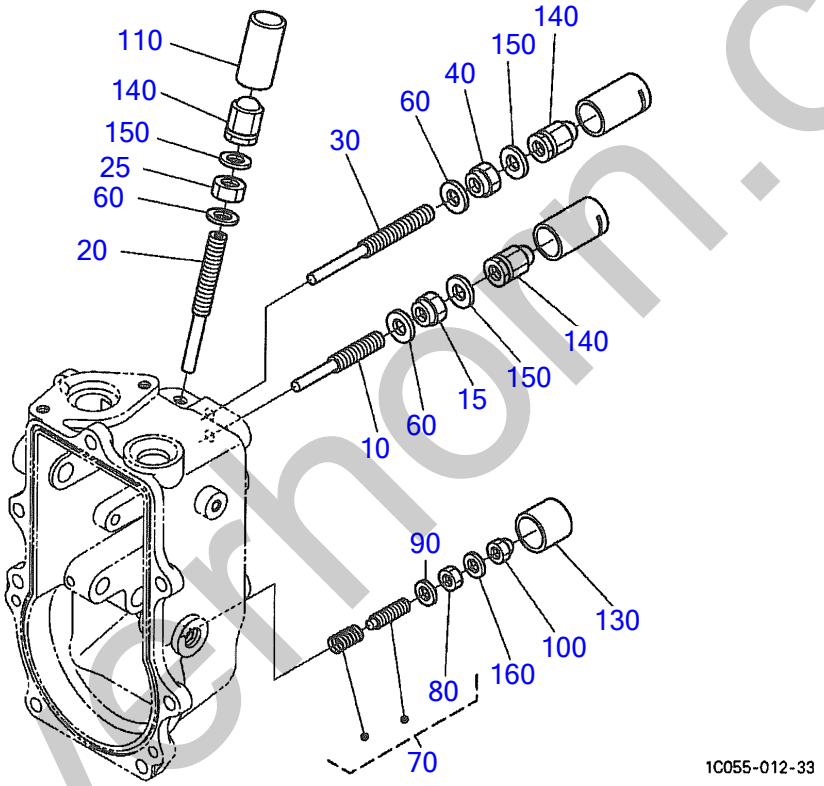

A:V3800DI-T-E3B-TLTU-1

silvernorm.co.uk

RESTRICTION ADJUSTING BOLT

Item	Part No	Description	Qty
10	K1C010-54153	BOLT,ADJUSTING	1
15	K1G031-54210	NUT,LOCK	1
20	K1C010-54120	BOLT,ADJUSTING	1
25	K15841-92020	NUT	1
30	K1C010-54120	BOLT,ADJUSTING	1
40	K1G031-54210	NUT,LOCK	1
60	K15601-96650	GASKET	3
70	K1G514-54100	ASSY_BOLT,ADJUSTMENT	1
80	K15261-92020	NUT	1
90	K15021-33660	GASKET	1
100	K15841-54220	NUT	1
110	K16221-54420	CAP	1
130	K15841-54270	CAP	1
140	K15852-92330	NUT	3
150	K15601-96650	GASKET	3
160	K15021-33660	GASKET	1

silverhorn.co.uk

燃料フィルタ
FUEL FILTER

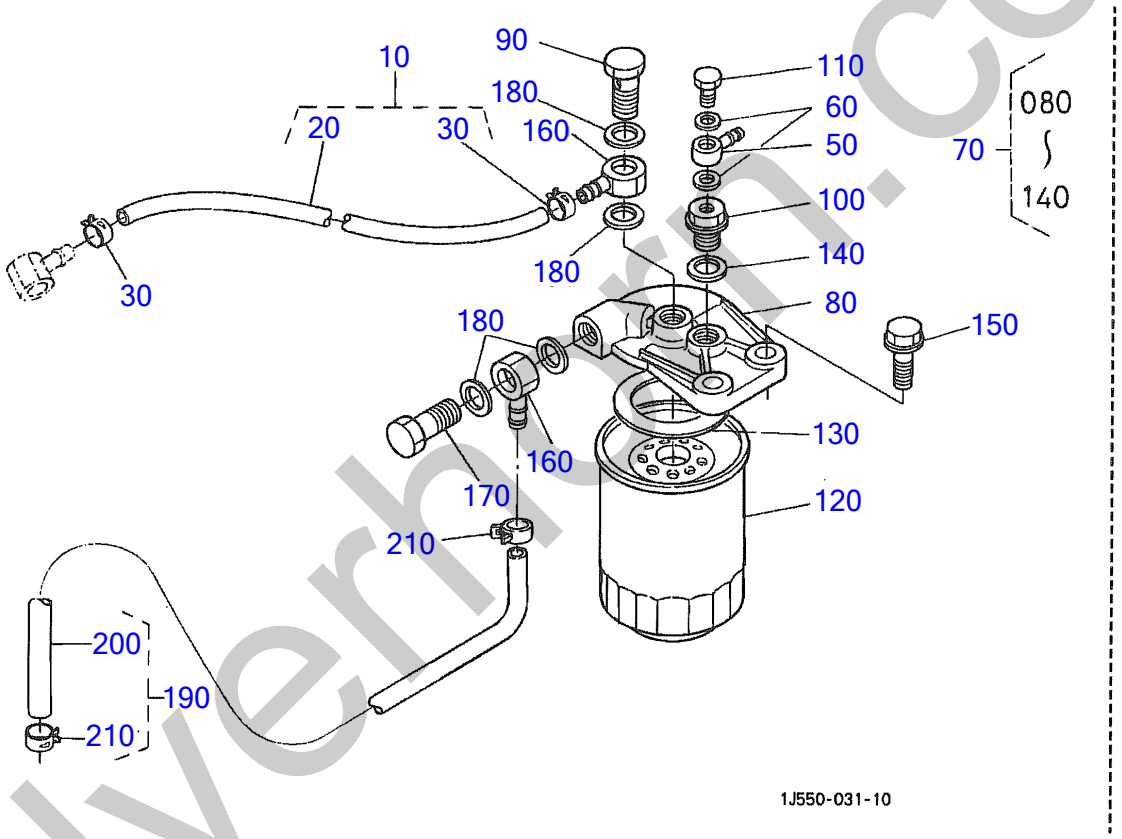

A:V3800DI-T-E3B-TLTU-1

silverhorn.co.uk

FUEL FILTER

Item	Part No	Description	Qty
10	K1C010-42012	ASSY_TUBE,FUEL	1
20	K09661-70360	TUBE,FUEL(ƒÓ7.3XƒÓ12.5X360L)	1
30	K14911-42750	CLIP,PIPE	2
50	K14117-42560	JOINT,PIPE	1
60	K15021-33660	GASKET	2
70	K1C010-43010	ASSY_FILTER,FUEL	1
80	K16541-43210	COVER	1
90	K16541-95790	BOLT,JOINT	1
100	K16551-95800	CONNECTOR	1
110	K16541-95810	CONNECTOR	1
120	K16631-43560	ELEMENT,FUEL_FILTER	1
130	K16541-43330	GASKET	1
140	K17105-33680	GASKET	1
150	K01774-51030	BOLT,FLANGE	2
160	K15401-95690	JOINT,EYE	2
170	K16541-95790	BOLT,JOINT	1
180	K17105-33680	GASKET	4
190	K1C010-42022	ASSY_TUBE,FUEL	1
200	K09661-70380	TUBE,FUEL(ƒÓ7.3XƒÓ12.5X380L)	1
210	K14911-42750	CLIP,PIPE	2

silverhorn.co.uk

セパレータ
SEPARATOR

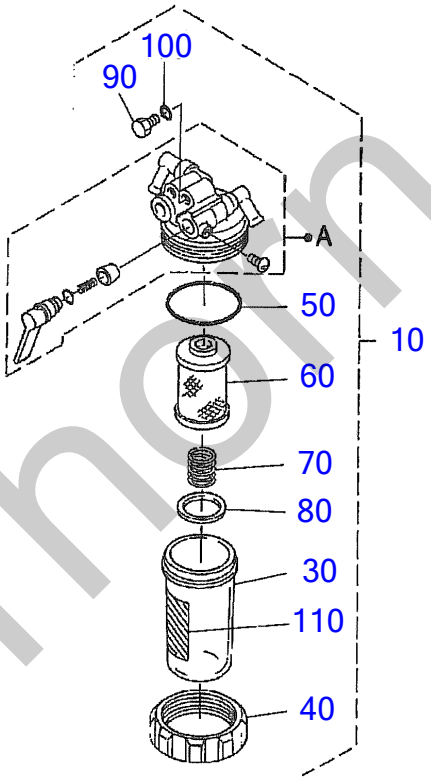

A:V3800DI-T-E3B-TLTU-1

silverhorn.co.uk

SEPARATOR

Item	Part No	Description	Qty
10	KRB101-51260	ASSY_FILTER	1
30	KRB101-51270	CUP,FILTER	1
40	K16271-43590	RING,RETAINING	1
50	K16271-43570	O_RING,FILTER_CUP	1
60	KRB101-51280	ELEMENT	1
70	K15831-43930	SPRING	1
80	K15831-43250	FLOAT	1
90	K15231-43283	SCREW,AIR_BLEEDER	1
100	K04817-00060	O_RING	1
110	K15831-87462	LABEL	1

silverhorn.co.uk

ノズルホルダ・グロープラグ
NOZZLE HOLDER AND GLOW PLUG

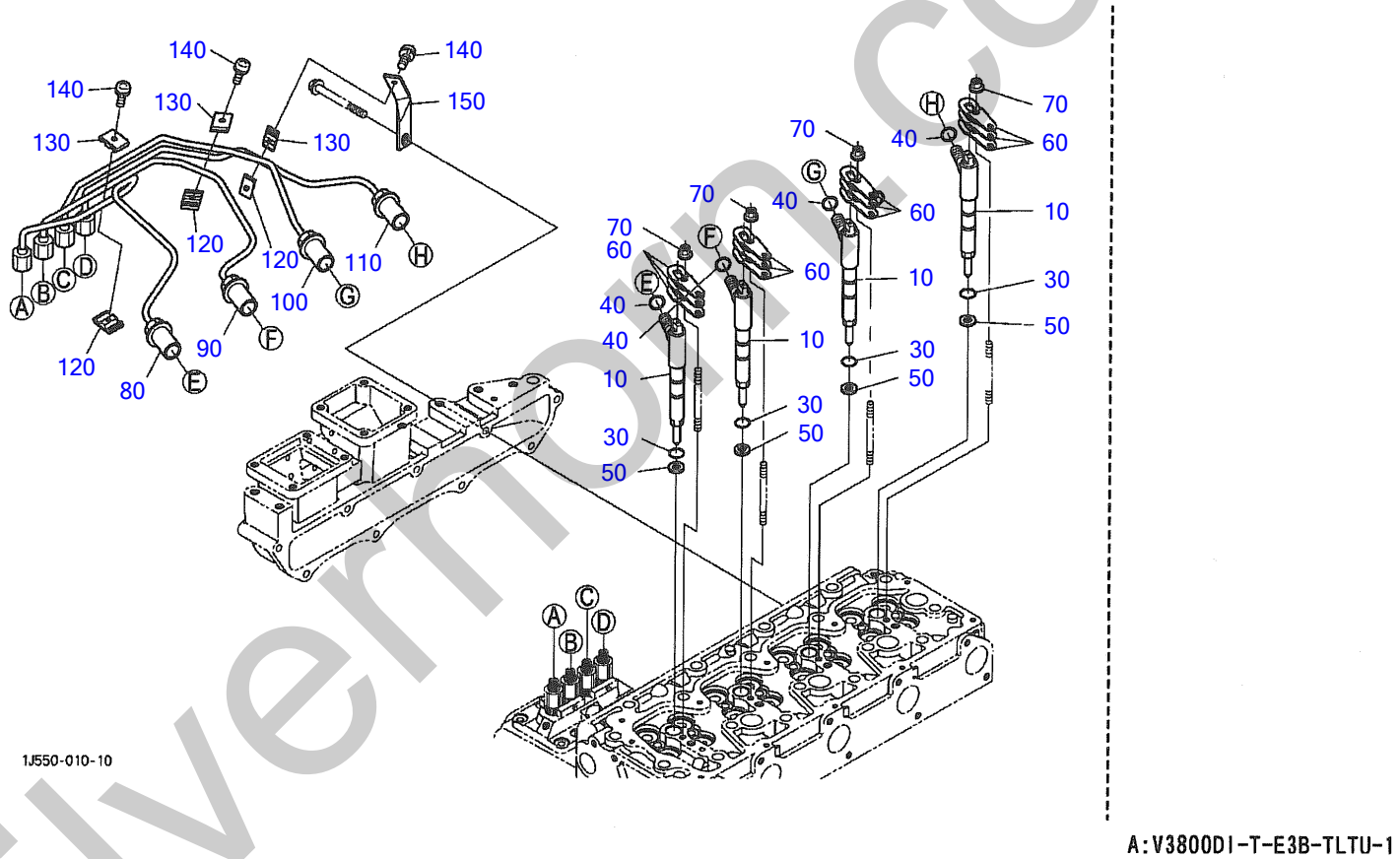

A:V3800DI-T-E3B-TLTU-1

silvermoon.co.uk

NOZZLE HOLDER AND GLOW PLUG

Item	Part No	Description	Qty
10	K1J550-53000	ASSY_HOLDER,NOZZLE	4
30	K04814-00150	O_RING	4
40	K04814-05110	O_RING	4
50	K1G796-53620	GASKET	4
60	K1C020-53450	CLAMP,INJ.NOZZLE	12
70	K02751-50080	NUT,FLANGE	4
80	K1J550-53710	PIPE,INJECTION	1
90	K1J550-53720	PIPE,INJECTION	1
100	K1J550-53730	PIPE,INJECTION	1
110	K1J550-53740	PIPE,INJECTION	1
120	K15841-53850	CLAMP,PIPE	3
130	K15841-53860	CLAMP,PIPE	3
140	K03024-50520	SCREW,WITH_WASHER	3
150	K1G527-53800	STAY,INJECTION_PIPE	1

silverhorn.co.uk

OVER FLOW PIPE

オーバフローパイプ
OVER FLOW PIPE

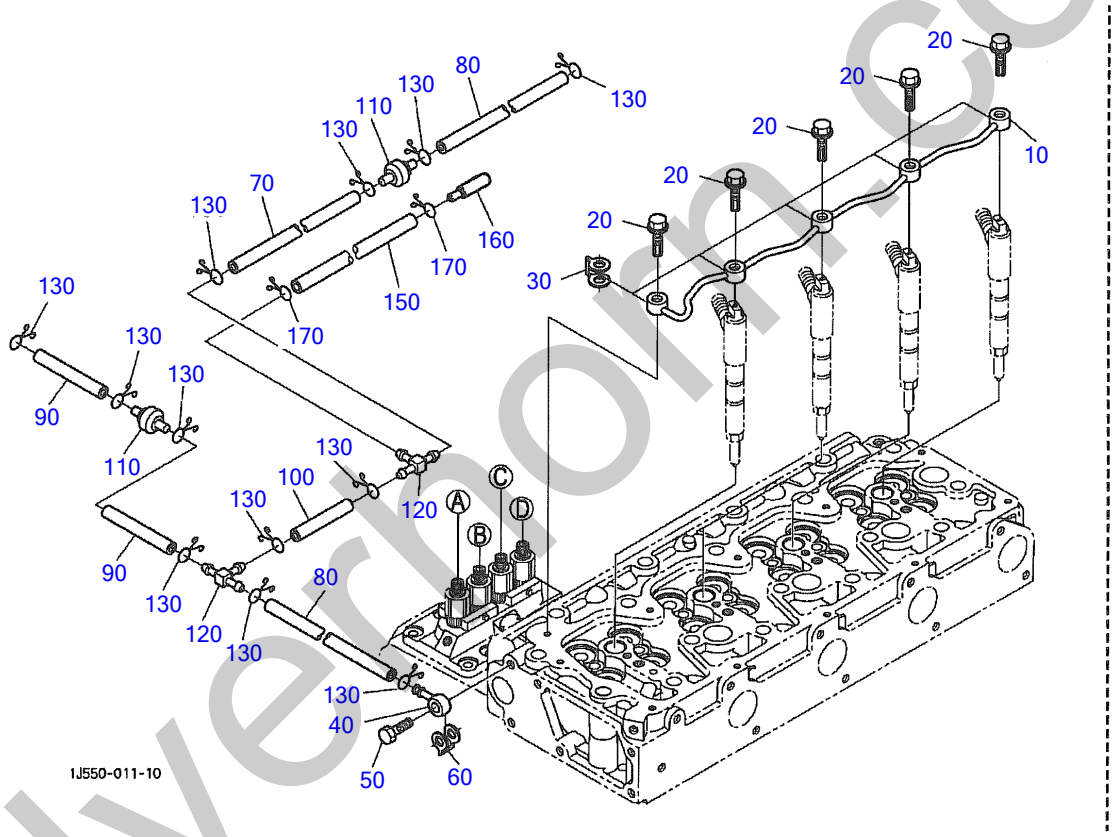

A:V3800DI-T-E3B-TLTU-1

silverhorn.co.uk

OVER FLOW PIPE

Item	Part No	Description	Qty
10	K1C020-42500	ASSY_PIPE,OVER_FLOW	1
20	K1C020-95810	BOLT,EYE_JOINT	5
30	K1C020-96730	GASKET	5
40	K14117-42560	JOINT,PIPE	1
50	K15471-95790	BOLT,EYE_JOINT	1
60	K1G772-33660	GASKET	1
70	K1G527-42110	TUBE,FUEL	1
80	K1G527-42120	TUBE,FUEL	2
90	K1G574-42140	TUBE,FUEL	2
100	K1G565-42110	TUBE,FUEL	1
110	K1C010-42460	VALVE,FUEL_CHECK	2
120	K1G065-42360	JOINT,T-PIPE	2
130	K14971-42750	CLIP,PIPE	12
150	K1G377-42110	TUBE,FUEL	1
160	K17490-42360	JOINT,PIPE	1
170	K14971-42750	CLIP,PIPE	2

silverhorn.co.uk

オルタネータ・プーリ
ALTERNATOR AND PULLEY

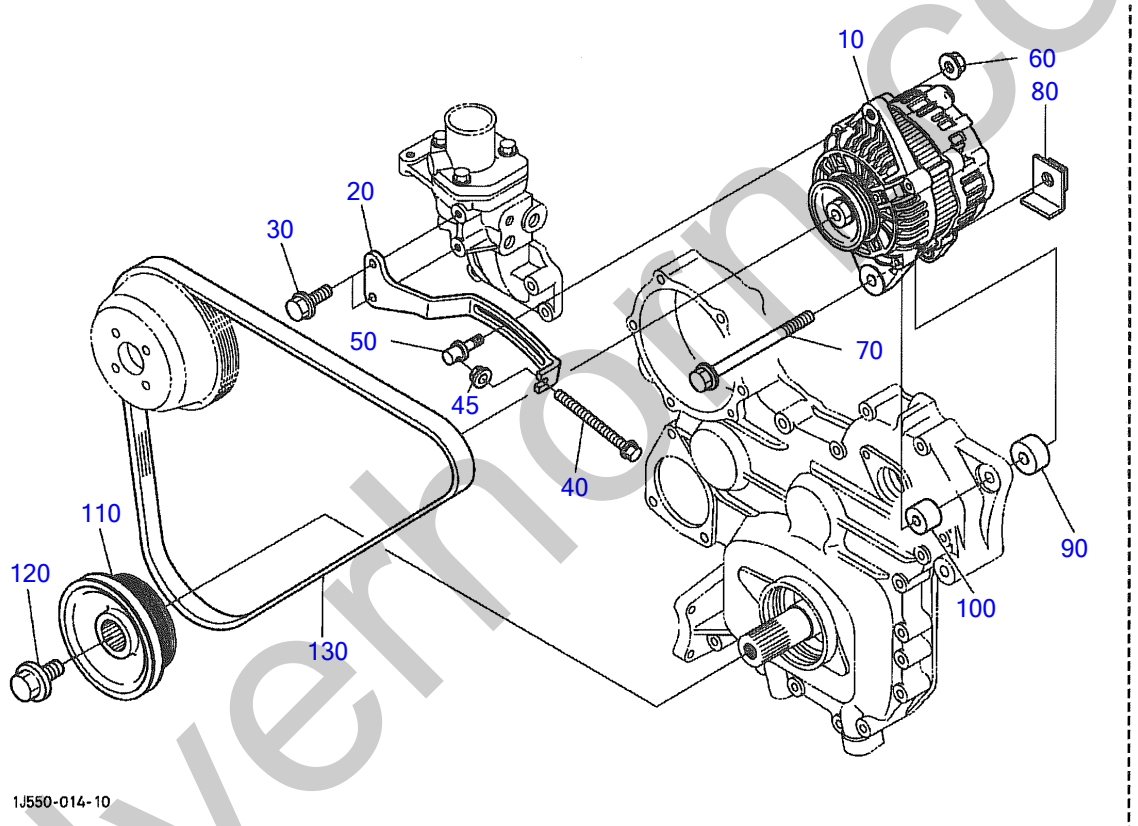

A:V3800DI-T-E3B-TLTU-1

silverhoe.co.uk

ALTERNATOR AND PULLEY

Item	Part No	Description	Qty
10	K1G377-64010	ASSY_ALTERNATOR(12V80A)	1
20	K1G377-64420	STAY,DYNAMO	1
30	K01754-50825	BOLT,FLANGE	2
40	K1G377-91010	BOLT,FLANGE	1
45	K02751-50060	NUT,FLANGE	1
50	K1G377-64410	SHAFT,DYNAMO	1
60	K02751-50080	NUT,FLANGE	1
70	K01774-51002	BOLT	1
80	K17490-64472	METAL_FITTING_DYNAMO	1
90	K1G377-64370	COLLAR,DYNAMO	1
100	K16881-64370	COLLAR	1
110	K1G377-74280	PULLEY,FAN_DRIVE	1
120	K1C010-91010	BOLT	1
130	K1G377-97010	BELT,FAN(4PK1250)	1

silverhorn.co.uk

オルタネータ分解
ALTERNATOR (COMPONENT PARTS)

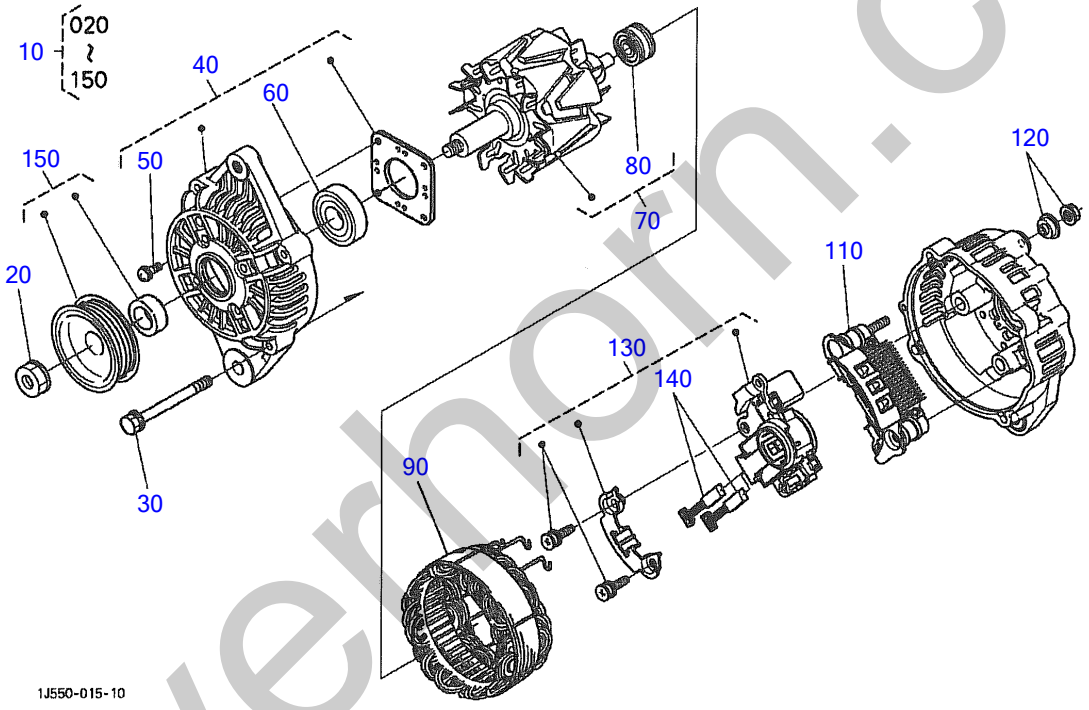

A:V3800DI-T-E3B-TLTU-1

silverhorn.co.uk

ALTERNATOR(COMPONENT PARTS)

Item	Part No	Description	Qty
10	K1G377-64010	ASSY_ALTERNATOR	1
20	K1C010-92010	NUT	1
30	K1C010-91050	SET,BOLT	1
40	K1G377-64020	ASSY_BRACKET,FRONT	1
50	K1C010-93010	SET,BOLT	1
60	K3F261-78120	BEARING	1
70	K3F261-78130	ASSY_ROTOR	1
80	K1C010-64770	BEARING	1
90	K1G377-64080	ASSY_STATOR	1
110	K1G377-64850	ASSY_RECTIFIER	1
120	K1K011-92030	SET,NUT	1
130	K1G377-64600	SET,REGULATOR	1
140	K1C010-64310	SET,BRUSH	1
150	K1G377-64110	ASSY_PULLEY	1

silverhorn.co.uk

スタータ
STARTER

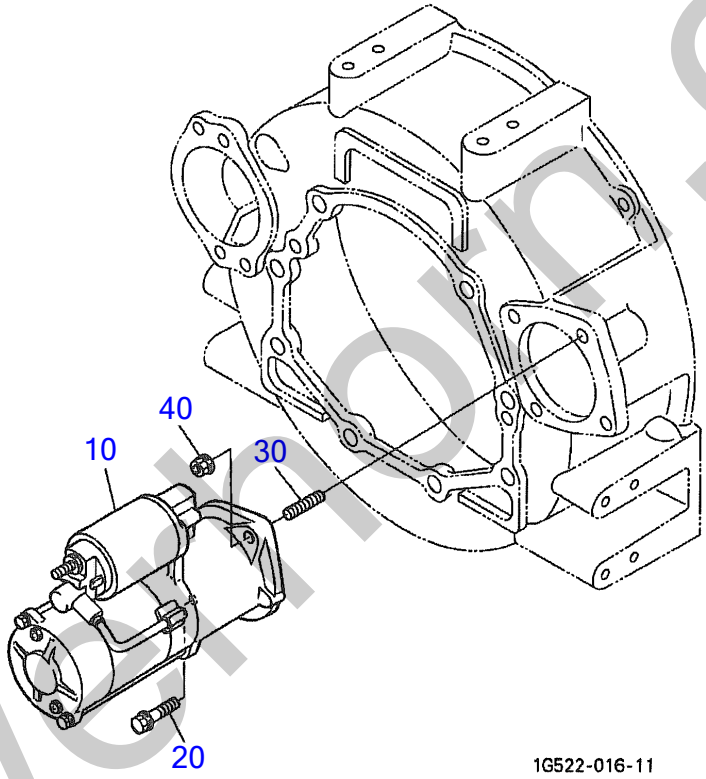

A:V3800DI-T-E3B-TLTU-1

silvermorn.co.uk

STARTER

Item	Part No	Description	Qty
10	K1K012-63010	ASSY_STARTER(12V3.0KW)	1
20	K01774-51035	BOLT,FLANGE	1
30	K01517-61030	STUD	1
40	K02771-60100	NUT,FLANGE	1

silverhorn.co.uk

スタータ分解
STARTER (COMPONENT PARTS)

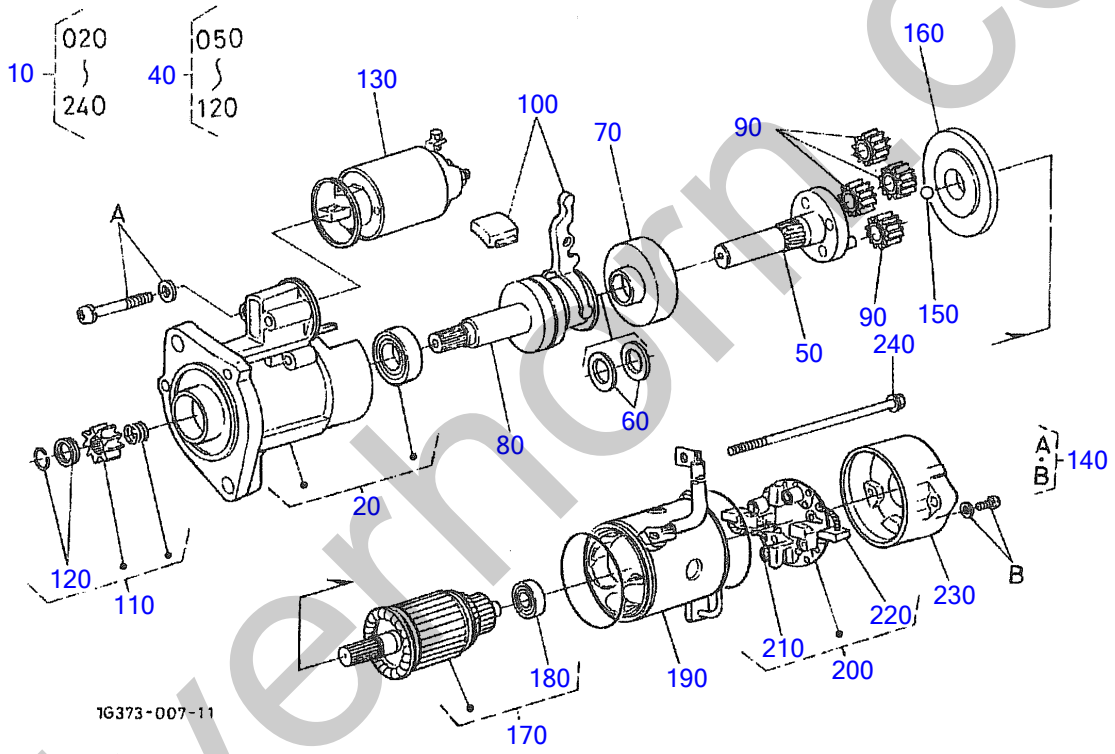

A:V3800DI-T-E3B-TLTU-1

silverhorn.co.uk

STARTER (COMPONENT PARTS)

Item	Part No	Description	Qty
10	K1K012-63010	ASSY_STARTER	1
20	K1K012-63030	ASSY_BRACKET,FRONT	1
40	K1K012-63040	ASSY_SHAFT,CLUTCH	1
50	K1K012-63210	ASSY_SHAFT,GEAR	1
60	K1C010-63410	SET,WASHER	1
70	K1C010-63260	SET,INTERNAL_GEAR	1
80	K1C010-63330	CLUTCH,OVER_RUNNING	1
90	K1C010-63270	ASSY_GEAR	4
100	K1K012-63050	ASSY_LEVER,SET	1
110	K1K012-63280	SET_PINION	1
120	K1C010-63170	SET,STOPPER	1
130	K1C010-63020	ASSY_SWITCH,MAGNETIC	1
140	K1K012-63760	SET,SCREW	1
150	K6C040-82690	BALL	1
160	K1C010-63520	SET,PACKING	1
170	K1K012-63070	ASSY_ARMATURE	1
180	K1C010-63250	BEARING	1
190	K1K012-63080	ASSY_YOKE	1
200	K1K012-63380	ASSY_HOLDER,BRUSH	1
210	K1K012-63390	BRUSH,SPRING	4
220	K1K012-63370	BRUSH	2
230	K1K012-63200	ASSY_BRACKET,REAR	1
240	K1K012-63320	SET,BOLT	1

silverhorn.co.uk

停止ソレノイド
STOP SOLENOID

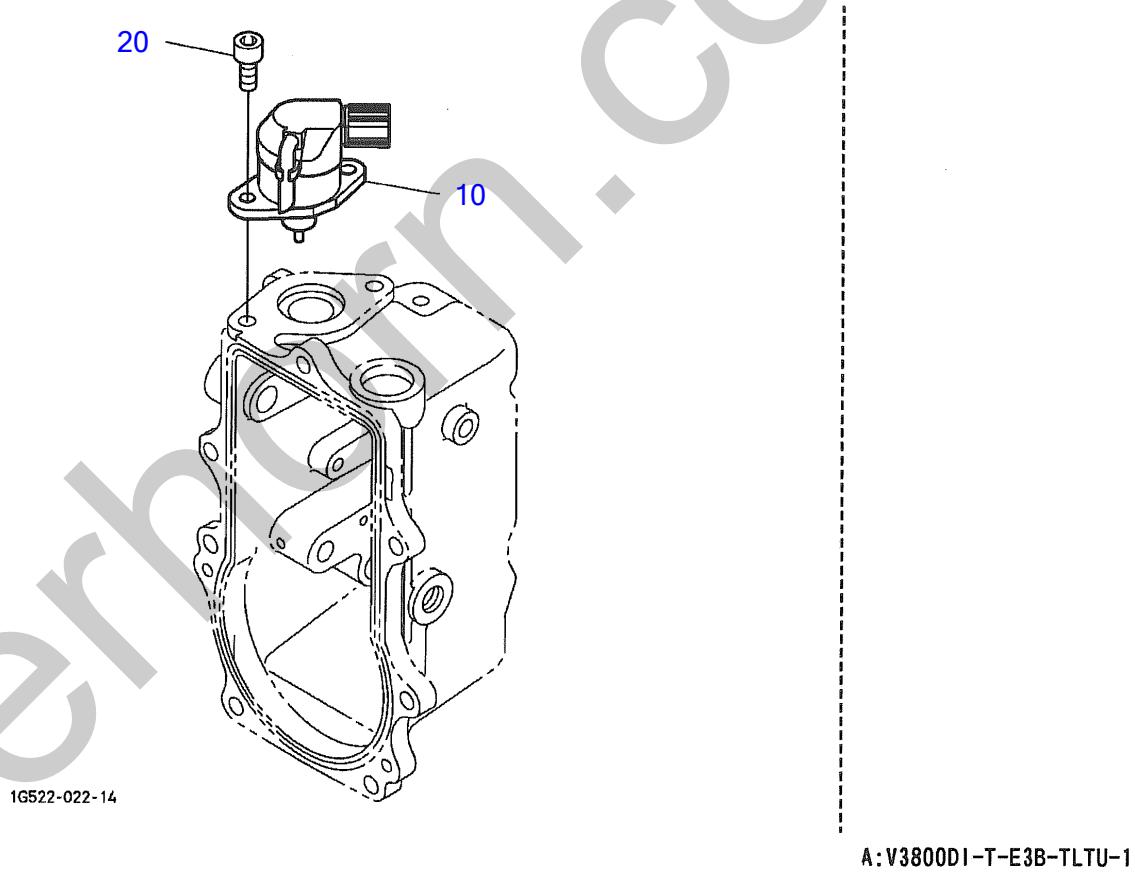

silverhorn.co.uk

STOP SOLENOID

Item	Part No	Description	Qty
10	K1C010-60015	SOLENOID,STOP	1
20	K01311-10616	BOLT,HEX-SOC-HD	2

silverhorn.co.uk

オイルスイッチ・水温センサ・プラグ
OIL SWITCH/THERMOMETER AND PLUG

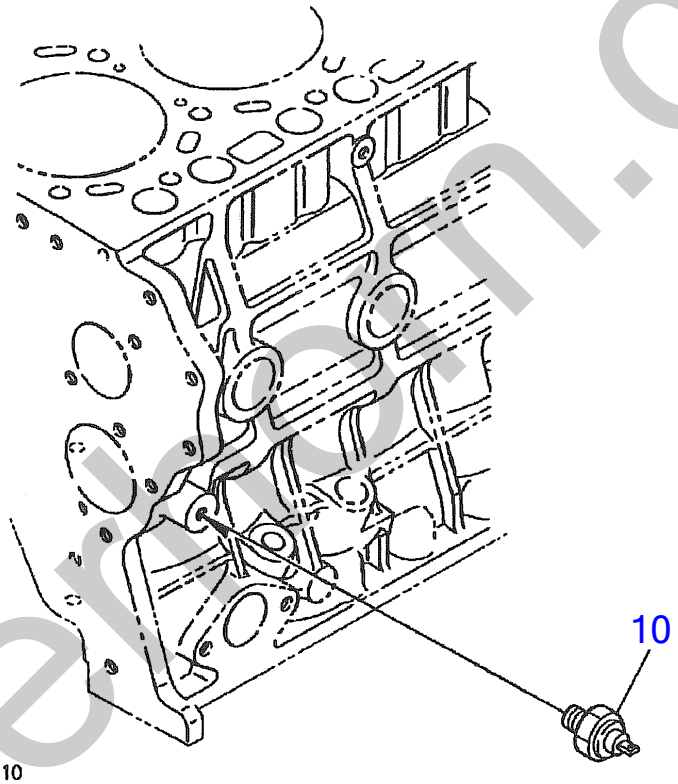

A:V3800DI-T-E3B-TLTU-1

silverton.co.uk

OIL SWITCH/THERMOMETER AND PLUG

Item	Part No	Description	Qty
10	K1A024-39010	SWITCH,OIL	1

silverhorn.co.uk

ウォータフランジ・サーモスタット
WATER FLANGE AND THERMOSTAT

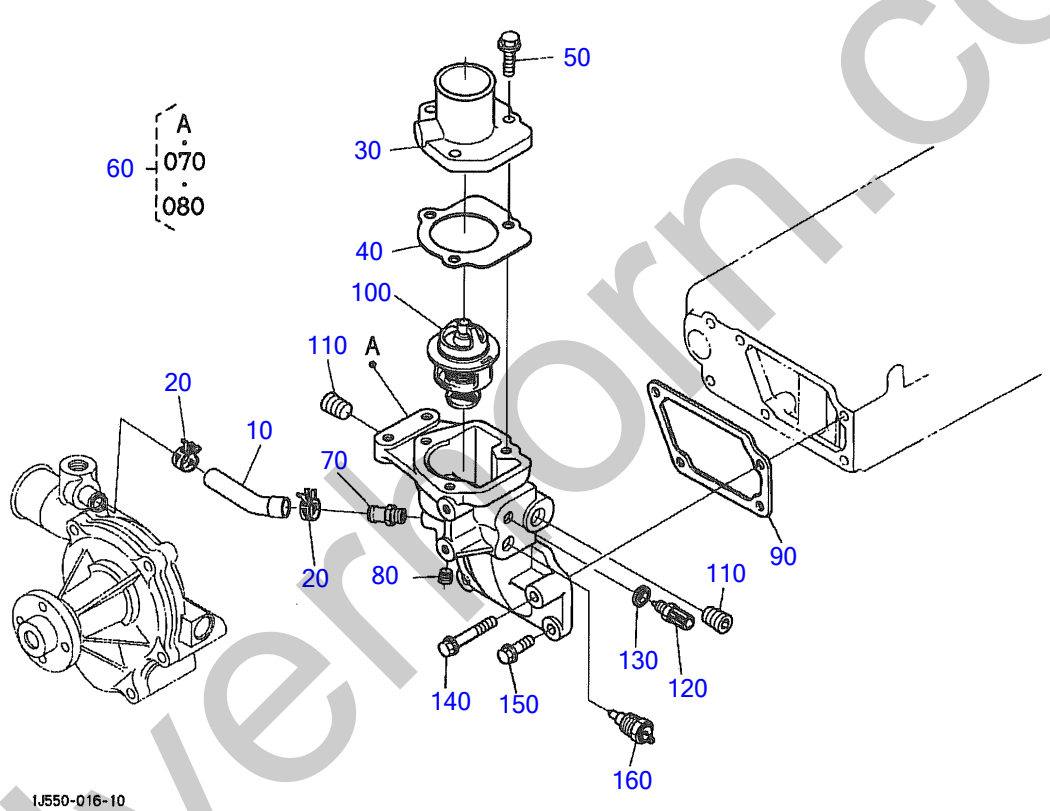

A:V3800DI-T-E3B-TLTU-1

silverhorn.co.uk

WATER FLANGE AND THERMOSTAT

Item	Part No	Description	Qty
10	K1C010-73352	PIPE,WATER_RETURN	1
20	K09318-88200	CLAMP,HOSE	2
30	K1C020-73260	COVER,THERMOSTAT	1
40	K1C020-73272	GASKET	1
50	K01754-50825	BOLT,FLANGE	3
60	K1C020-72700	COMP.FLANGE,WATER	1
70	K1C010-37114	JOINT,WATER_PIPE	1
80	K16241-96020	PLUG	1
90	K1C010-72820	GASKET,WATER_FLANGE	1
100	K1C011-73010	ASSY_THERMOSTAT	1
110	K16241-96020	PLUG	2
120	K15668-83040	SENSOR,WATER_TEMP.	1
130	K04717-01200	WASHER,WITH_RUBBER	1
140	K01754-50850	BOLT,FLANGE	1
150	K01754-50825	BOLT,FLANGE	3
160	K51601-37670	SWITCH,THERMOMETER	1

silverhorn.co.uk

ウォータポンプ
WATER PUMP

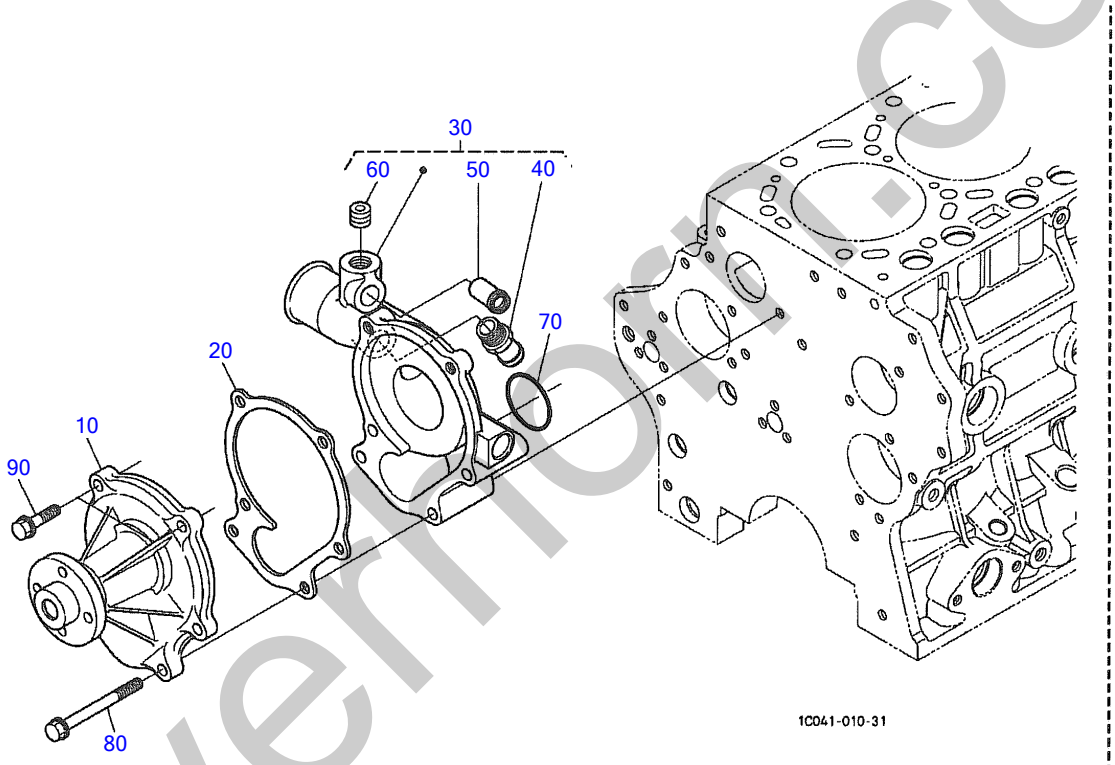

A:V3800DI-T-E3B-TLTU-1

silverfort.co.uk

WATER PUMP

Item	Part No	Description	Qty
10	K1C010-73032	ASSY_PUMP,WATER	1
20	K1C010-73430	GASKET,WATER_PUMP	1
30	K1G574-73060	ASSY_SUPPORT_W/P	1
40	K1C010-37114	JOINT,WATER_PIPE	1
50	K16241-05550	JOINT,BREATHER_PIPE	1
60	K16241-96020	PLUG	1
70	K04814-00420	O_RING	1
80	K01754-50880	BOLT,FLANGE	4
90	K01754-50830	BOLT,FLANGE	2

silverhorn.co.uk

ウォータパイプ
WATER PIPE

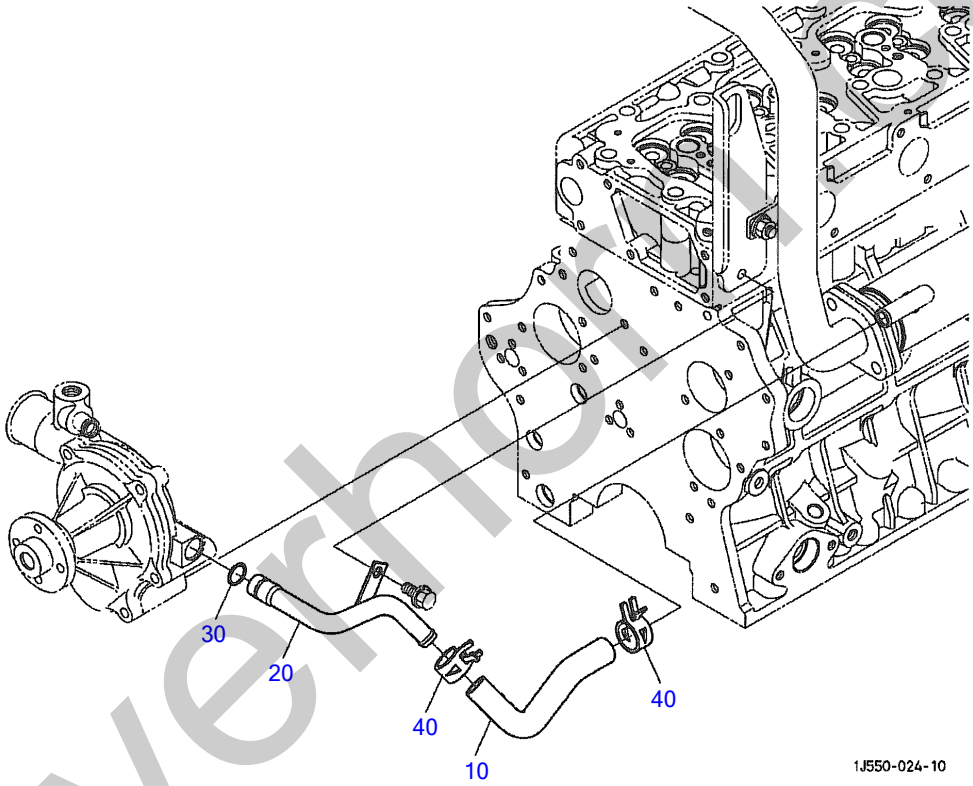

A:V3800DI-T-E3B-TLTU-1

silverhorse.co.uk

WATER PIPE

Item	Part No	Description	Qty
10	K1J574-71460	PIPE,WATER	1
20	K1J574-71470	PIPE,WATER	1
30	K04817-05150	O_RING	1
40	K09318-88200	CLAMP,HOSE	2

silverhorn.co.uk

冷却水リザーブタンク
RESERVE TANK

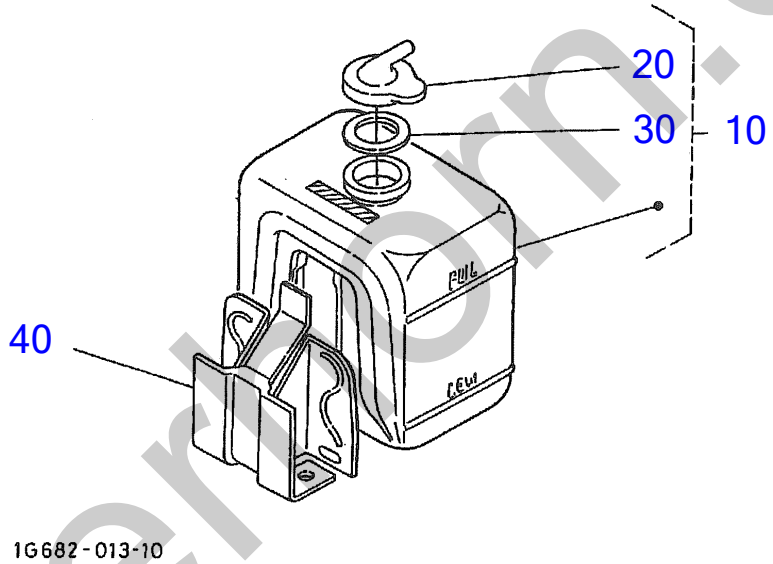

A:V3800DI-T-E3B-TLTU-1

silverthorn.co.uk

RESERVE TANK

Item	Part No	Description	Qty
10	K15527-72400	ASSY_TANK,RESERVE	1
20	K15272-72420	・CAP	1
30	K15531-72432	・GASKET	1
40	K15527-72460	STAY,RESERVE_TANK	1

silverhorn.co.uk

冷却ファン
FAN

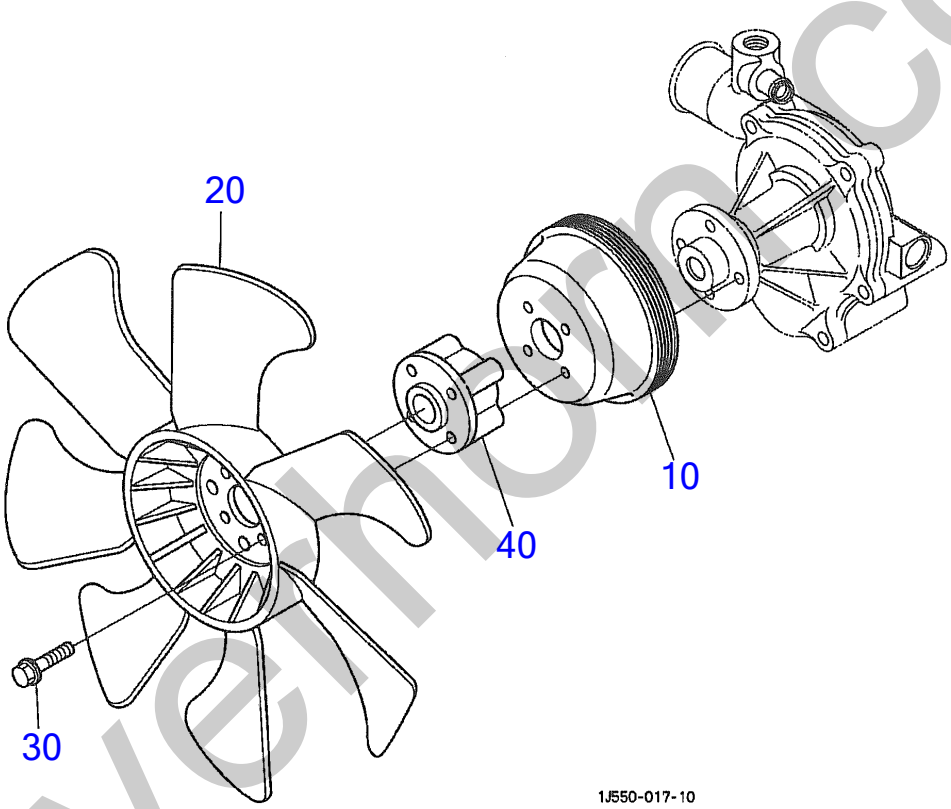

A:V3800DI-T-E3B-TLTU-1

silvermoncco.uk

FAN

Item	Part No	Description	Qty
10	K1G377-74250	PULLEY,FAN	1
20	K1G377-74110	FAN, COOLING	1
30	K01754-50880	BOLT,FLANGE	4
40	K1G377-74150	COLLAR,FAN	1

silverhorn.co.uk

吸気マニホールド
INLET MANIFOLD

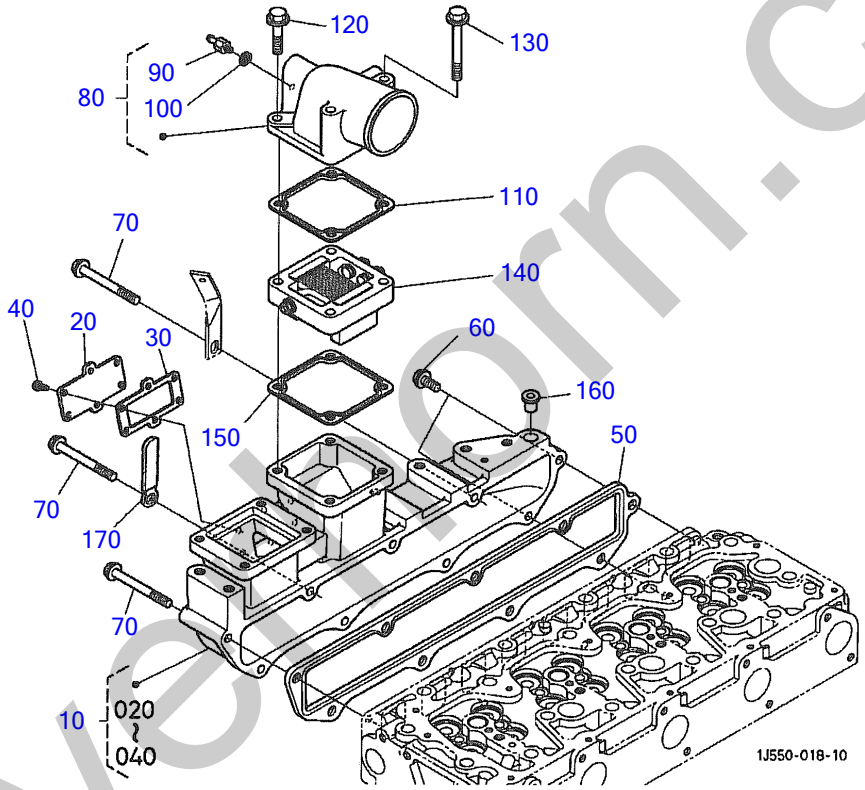

A:V3800DI-T-E3B-TLTU-1

silverthorn.co.uk

INLET MANIFOLD

Item	Part No	Description	Qty
10	K1J574-11773	ASSY_MANIFOLD,INLET	1
20	K1J574-11980	COVER,INLET	1
30	K1J574-11840	GASKET,INLET	1
40	K03057-50508	SCREW,CR-REC-BD-HD	6
50	K1C020-11820	GASKET,IN-MANIFOLD	1
60	K01754-50820	BOLT,FLANGE	6
70	K01754-50865	BOLT,FLANGE	3
80	K1J550-11812	ASSY_FLANGE,A/CLANE.	1
90	K15841-51360	SCREW,AIR_BLEEDER	1
100	K15601-96650	GASKET	1
110	K1C050-11652	GASKET,A/C_FLANGE	1
120	K01754-50845	BOLT,FLANGE	2
130	K01754-50890	BOLT,FLANGE	2
140	K1G574-65450	HEATER,INTAKE_AIR	1
150	K1C050-11652	GASKET,A/C_FLANGE	1
160	K31220-14290	PLUG	2
170	K12234-67580	CLAMP,CORD	1

silverhorn.co.uk

排気マニホールド
EXHAUST MANIFOLD

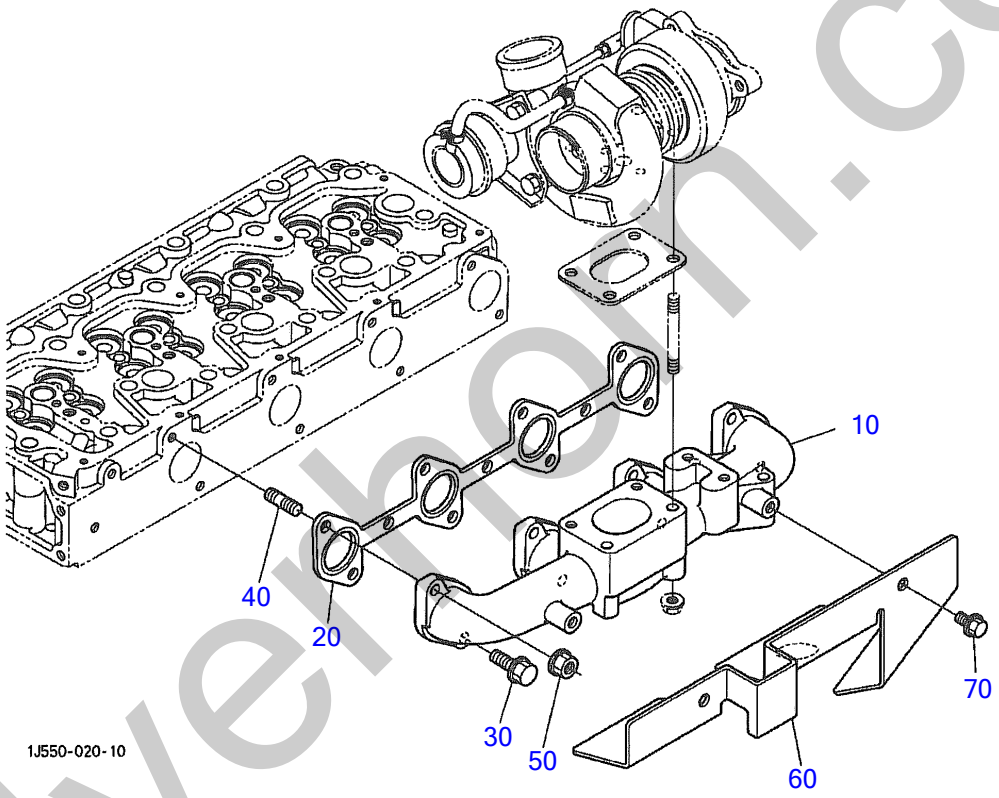

A:V3800DI-T-E3B-TLTU-1

silverhorn.co.uk

EXHAUST MANIFOLD

Item	Part No	Description	Qty
10	K1J550-12310	MANIFOLD,EXHAUST	1
20	K1C010-12352	GASKET,EX-MANIFOLD	1
30	K01754-50820	BOLT,FLANGE	4
40	K15221-91530	STUD	4
50	K02751-50080	NUT,FLANGE	4
60	K1J574-17342	COVER,EX.MANIFOLD	1
70	K01754-50810	BOLT,FLANGE	2

silverhorn.co.uk

ＥＧＲ バルブ
EGR VALVE

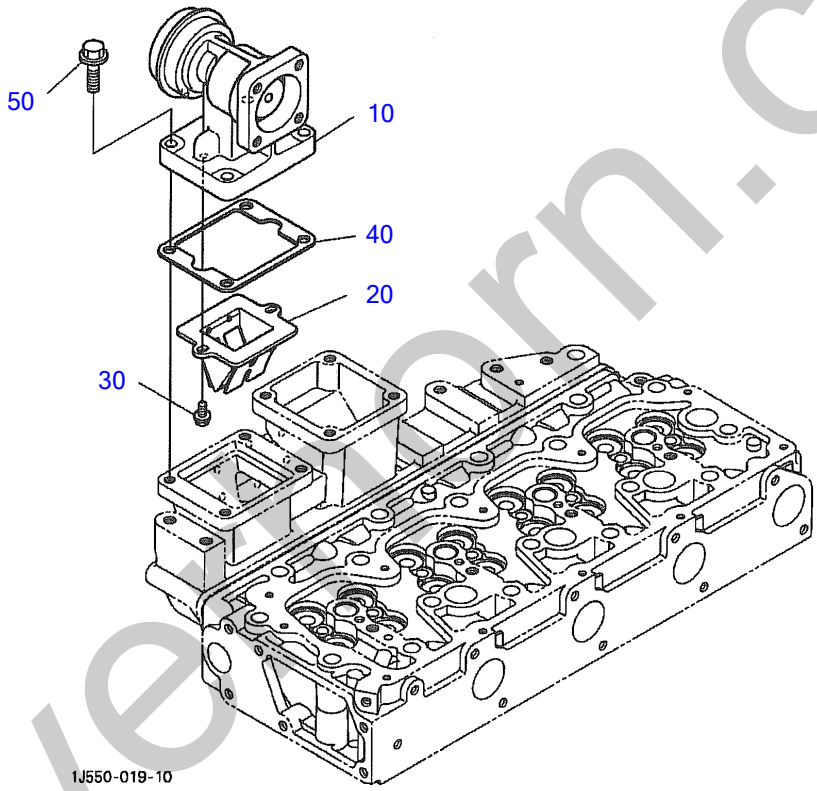

A:V3800DI-T-E3B-TLTU-1

silvermarn.co.uk

EGR VALVE

Item	Part No	Description	Qty
10	K1J550-17302	ASSY_VALVE,EGR	1
20	K1J574-13710	VALVE,LEAD	1
30	K01754-50612	BOLT,FLANGE	2
40	K1J574-17380	GASKET,INLET	1
50	K01754-50830	BOLT,FLANGE	4

silverhorn.co.uk

ＥＧＲ クーラ
EGR COOLER

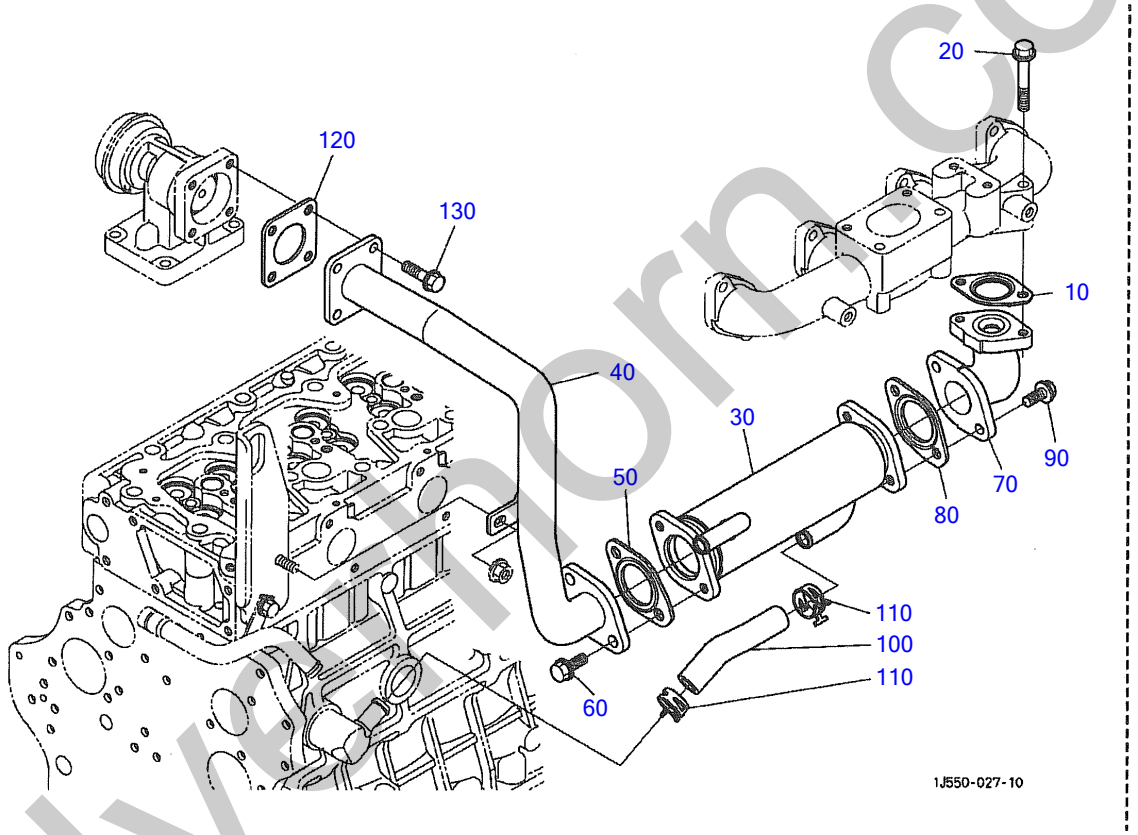

A:V3800DI-T-E3B-TLTU-1

silvanorn.co.uk

EGR COOLER

Item	Part No	Description	Qty
10	K1J574-17440	GASKET,EGR_FLANGE	1
20	K1C010-91030	BOLT,FLANGE	2
30	K1J574-71410	COMP.COOLER,EGR	1
40	K1J550-17320	COMP.PIPE,EGR	1
50	K1J574-17430	GASKET,EGR_COOLER	1
60	K01754-50820	BOLT,FLANGE	2
70	K1J551-17280	COMP.FLANGE,EGR	1
80	K1J574-17430	GASKET,EGR_COOLER	1
90	K01754-50820	BOLT,FLANGE	2
100	K1J550-71480	PIPE,WATER	1
110	K09318-88200	CLAMP,HOSE	2
120	K1J550-17410	GASKET,EGR_PIPE	1
130	K01754-50820	BOLT,FLANGE	4

silverhorn.co.uk

ブーストエアパイプ
BOOST AIR PIPE

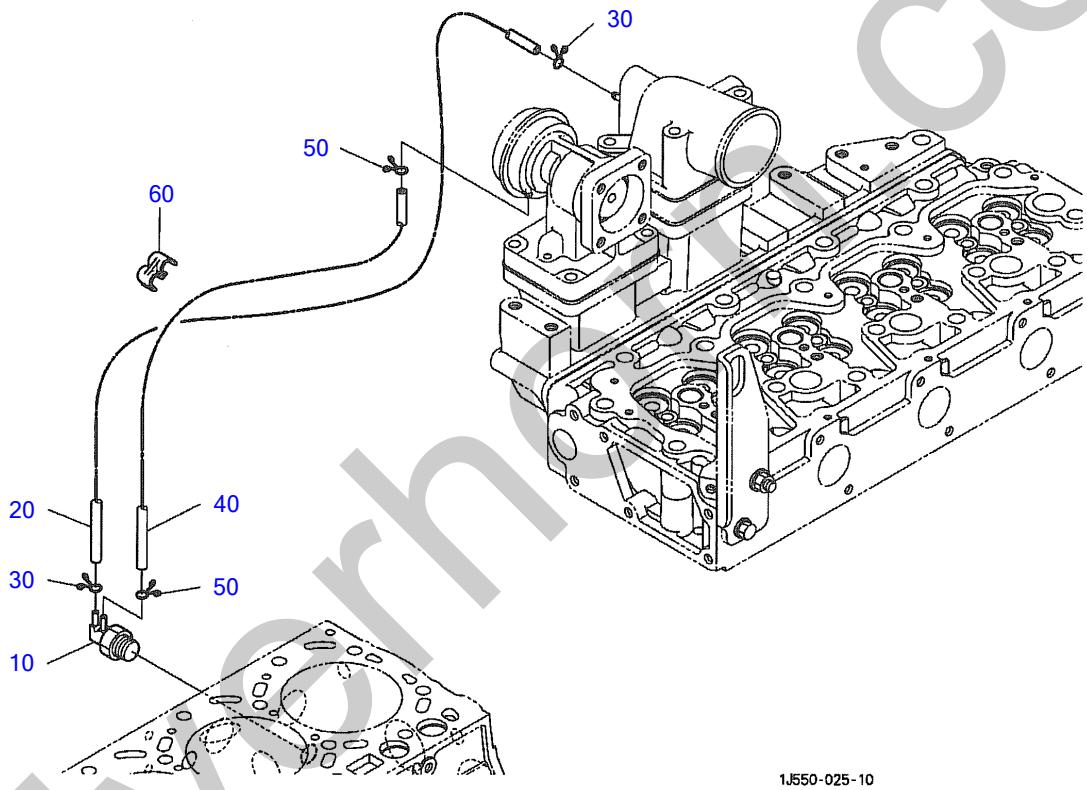

A:V3800DI-T-E3B-TLTU-1

silverhelm.co.uk

BOOST AIR PIPE

Item	Part No	Description	Qty
10	K1J860-73090	VALVE,THERMO.	1
20	K1J550-73880	TUBU,BOOST	1
30	K14971-42750	CLIP,PIPE	2
40	K1J550-73890	TUBU,BOOST	1
50	K14971-42750	CLIP,PIPE	2
60	K1C040-53870	CLAMP,PIPE	2

silverhorn.co.uk

ターボチャージャ
TURBO CHARGER

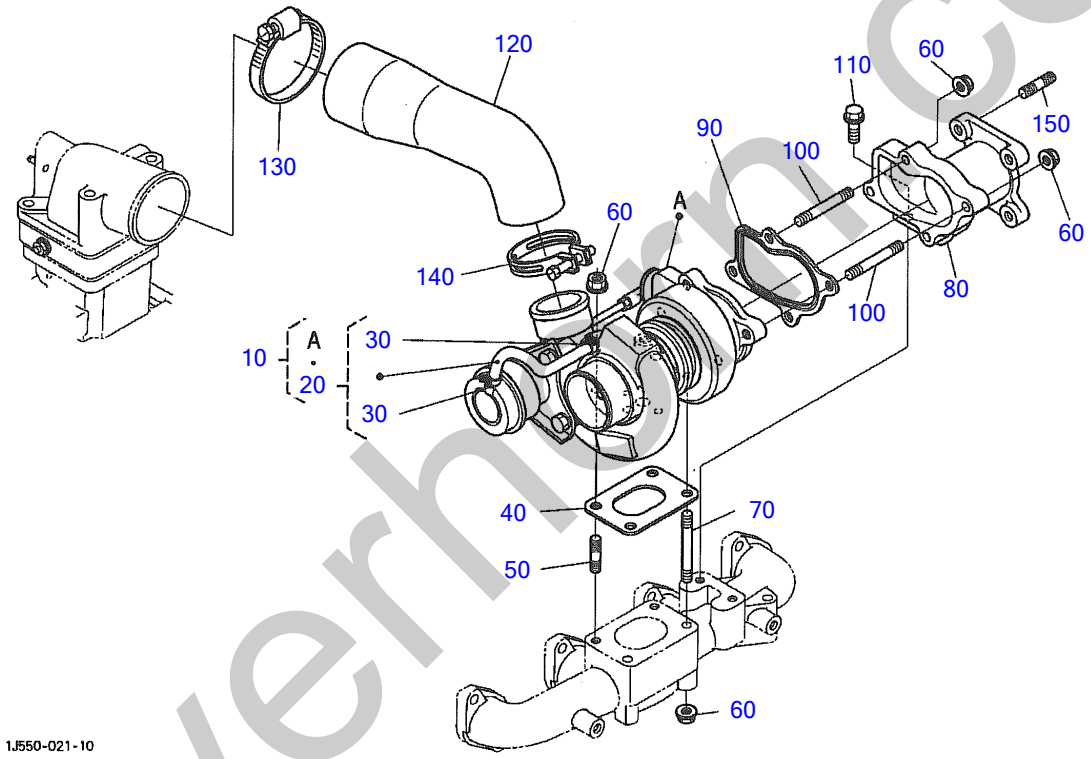

A:V3800DI-T-E3B-TLTU-1

silverhorn.co.uk

TURBO CHARGER

Item	Part No	Description	Qty
10	K1G544-17010	ASSY_TURBO_CHARGER	1
20	K1G544-17200	ASSY_HOSE	1
30	K17371-17220	CLAMP,HOSE	2
40	K1C040-17100	GASKET	1
50	K1J530-91500	STUD	2
60	K02756-50080	NUT,UBS	8
70	K1J530-91530	STUD	2
80	K1E158-12322	FLANGE,MUFFLER	1
90	K1G544-17110	GASKET	1
100	K1J530-91510	STUD	4
110	K1J530-91010	BOLT,FLANGE	2
120	K1J550-11630	HOSE,INLET	1
130	K35466-74460	BAND,PIPE	1
140	K15401-11720	BAND,PIPE	1
150	K1J530-91540	STUD	4

silverhorn.co.uk

エアークリーナ
AIR CLEANER

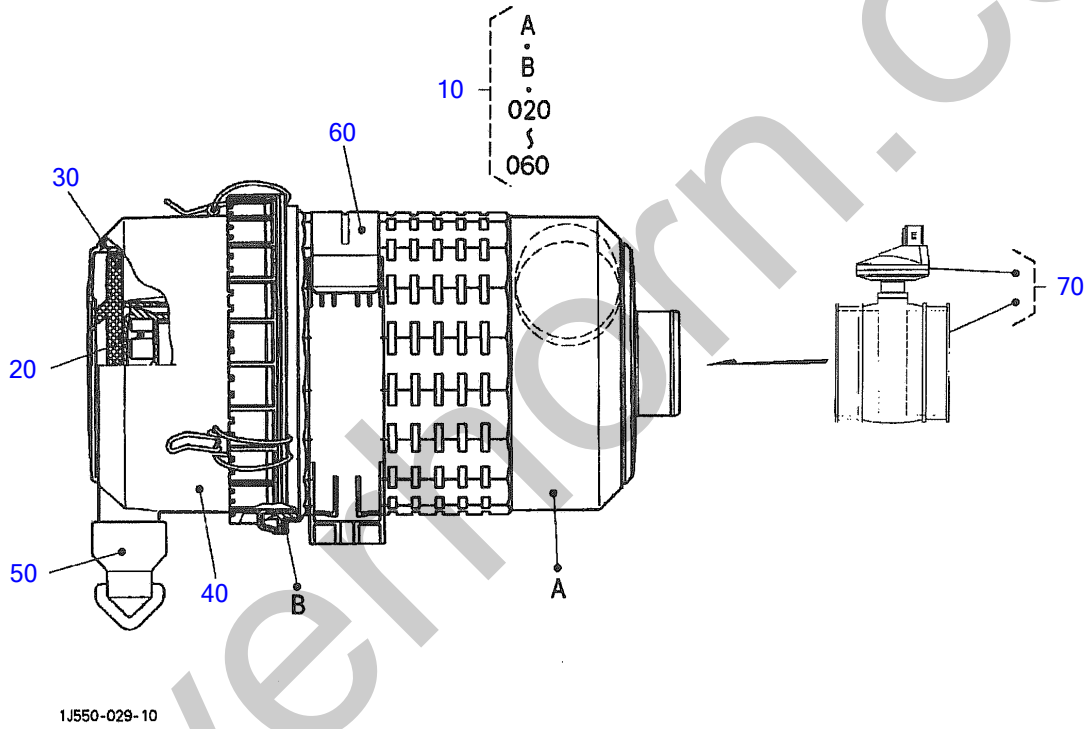

A:V3800DI-T-E3B-TLTU-1

silvermorn.co.uk

AIR CLEANER

Item	Part No	Description	Qty
10	K1G377-11010	ASSY_CLEANER,AIR	1
20	K1G377-11220	ASSY_ELEMENT,INNER	1
30	K1G377-11210	ASSY_ELEMENT,OUTER	1
40	K1G377-11160	COVER,AIR_CLEANER	1
50	K1G377-11470	VALVE	1
60	K1G377-11250	BAND,AIR_CLEANER	1
70	K1G377-10400	ASSY_HOSE,INLET	1

silverhorn.co.uk

オイルパイプ（ターボチャージャ）
OIL PIPE (TURBO CHARGER)

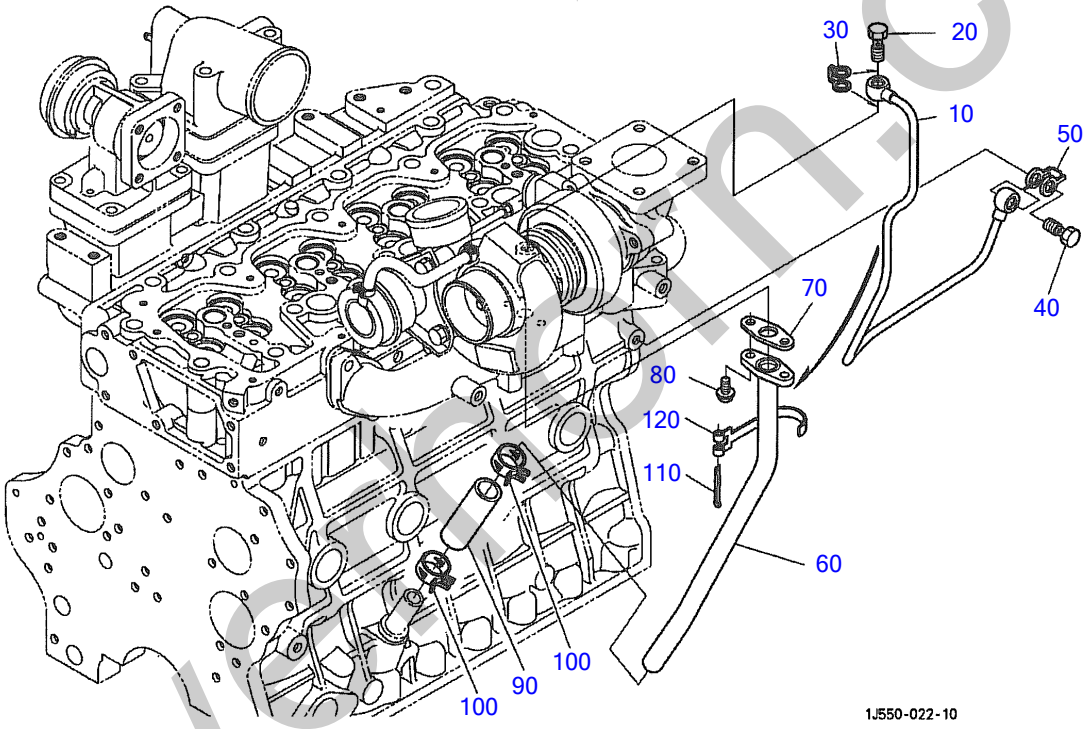

A:V3800DI-T-E3B-TLTU-1

silvermarn.co.uk

OIL PIPE (TURBO CHARGER)

Item	Part No	Description	Qty
10	K1J574-33040	COMP.PIPE,OIL	1
20	K17371-95800	BOLT,EYE_JOINT	1
30	K1C020-96650	GASKET	1
40	K15471-95790	BOLT,EYE_JOINT	1
50	K1G557-96650	GASKET	1
60	K1J574-33060	COMP.PIPE,OIL	1
70	K1C040-33670	GASKET	1
80	K01754-50612	BOLT,FLANGE	2
90	K15471-33240	PIPE,OIL	1
100	K09318-88230	CLAMP,HOSE	2
110	K33430-82760	PIN,BAND	1
120	K1A024-33520	CLAMP,PIPE	1

silverhorn.co.uk

OIL PIPE (MECHANICAL TIMER)

オイルパイプ（メカニカルタイマ）
OIL PIPE (MECHANICAL TIMER)

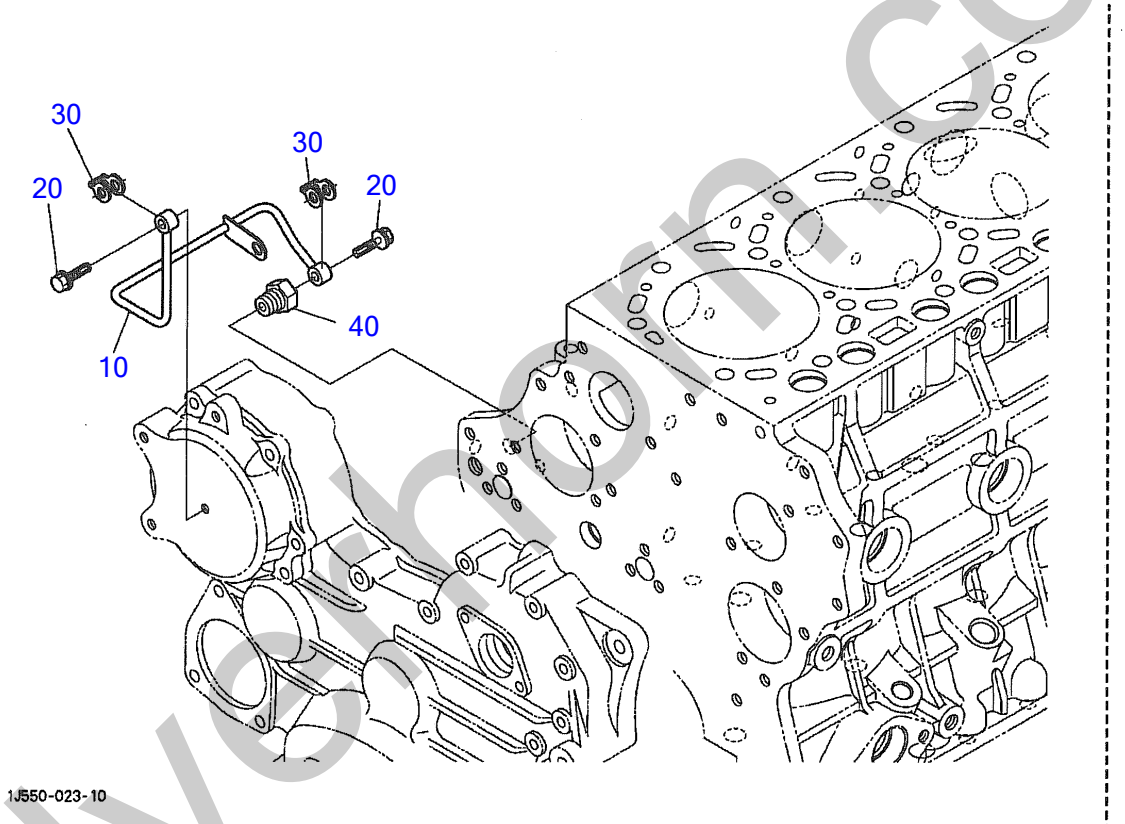

A:V3800DI-T-E3B-TLTU-1

silverthorn.co.uk

OIL PIPE (MECHANICAL TIMER)

Item	Part No	Description	Qty
10	K1G596-33313	COMP_PIPE	1
20	K1C020-95810	BOLT,EYE_JOINT	2
30	K1C020-96730	GASKET	2
40	K1G596-33280	JOINT,PIPE	1

silverhorn.co.uk

オイルクーラ
OIL COOLER

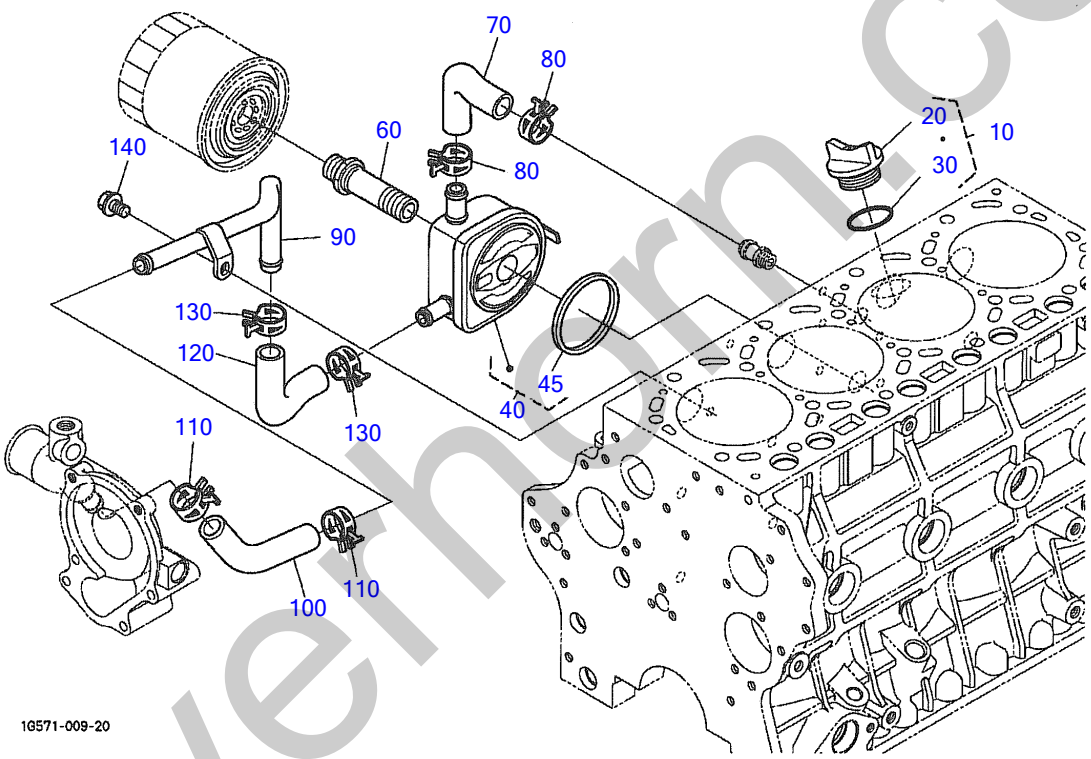

A:V3800DI-T-E3B-TLTU-1

silverhorn.co.uk

OIL COOLER

Item	Part No	Description	Qty
10	K1C010-33080	ASSY_PLUG,O/FILLER	1
20	KE9151-33140	PLUG,OIL_FILLER	1
30	K04817-50300	O_RING	1
40	K1C010-37010	ASSY_COOLER,OIL	1
45	K15484-37070	GASKET,OIL_COOLER	1
60	K1C010-32292	JOINT	1
70	K1C010-37150	PIPE,OIL_COOLER	1
80	K09318-88200	CLAMP,HOSE	2
90	K1C010-37160	PIPE,OIL_COLLER	1
100	K1C010-37172	PIPE,OIL_COLLER	1
110	K09318-88200	CLAMP,HOSE	2
120	K1C010-37182	PIPE,OIL_COLLER	1
130	K09318-88200	CLAMP,HOSE	2
140	K01754-50814	BOLT,FLANGE	1

silverhorn.co.uk

油圧ポンプ
HYDRAULIC PUMP

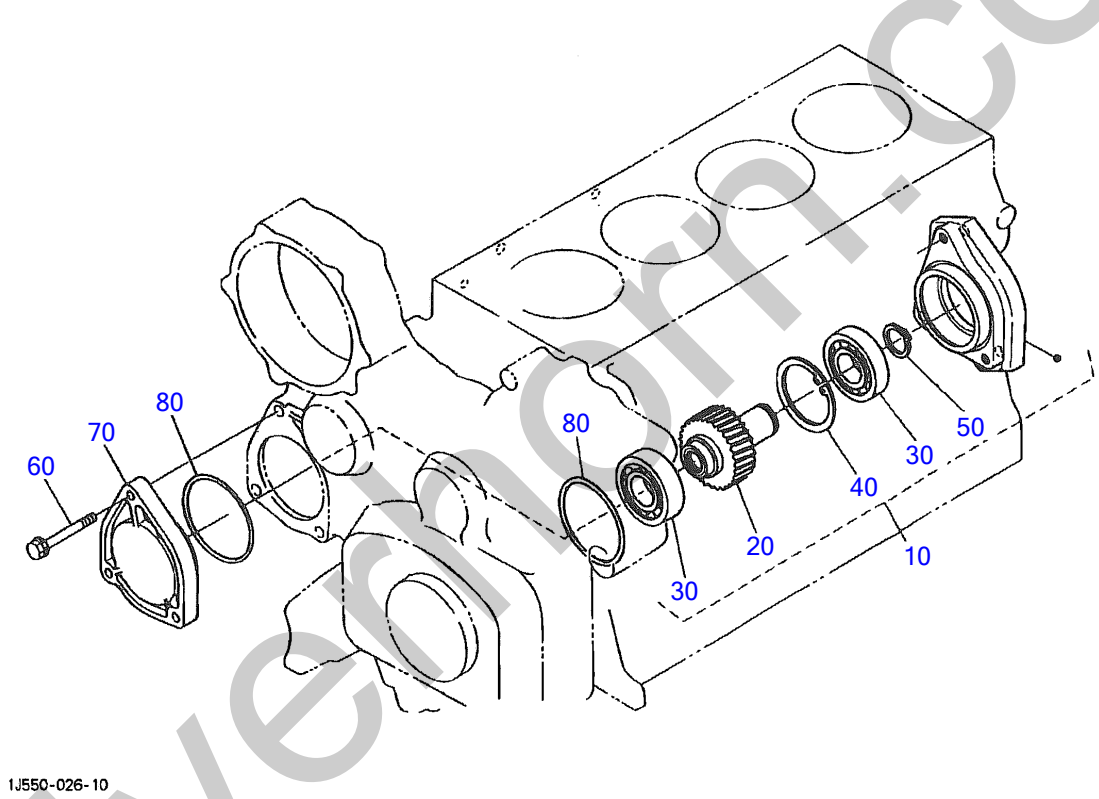

A:V3800DI-T-E3B-TLTU-1

silvernorn.co.uk

HYDRAULIC PUMP

Item	Part No	Description	Qty
10	K1G372-83060	COMP.BASE_HYD.PUMP	1
20	K1G372-83190	GEAR,HYD.PUMP_DRIVE	1
30	K08103-06206	BEARING,BALL	2
40	K04611-00620	CIR_CLIP,INTERNAL	1
50	K04612-00300	CIR_CLIP,EXTERNAL	1
60	K01754-50875	BOLT,FLANGE	3
70	K1K012-83220	COVER,HYDRAULIC_PUMP	1
80	K1C010-96960	O_RING	2

silverhorn.co.uk

付属品・サービス部品
ACCESSORIES AND SERVICE PARTS

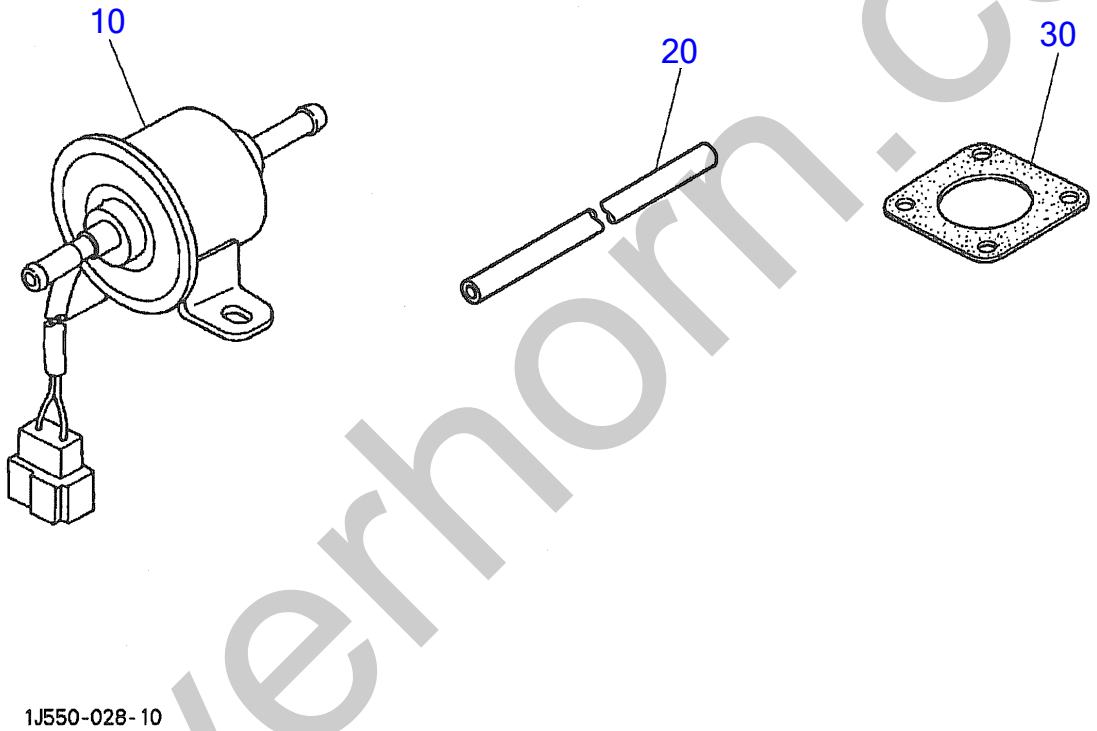

A:V3800DI-T-E3B-TLTU-1

silverhorn.co.uk

ACCESSORIES AND SERVICE PARTS

Item	Part No	Description	Qty
10	K1G938-52030	ASSY_PUMP,FUEL	1
20	K09661-70650	TUBE,FUEL(ƒÓ7.3XƒÓ12.5X650L)	1
30	K19258-12230	GASKET,MUFFLER_NA	1

silverhorn.co.uk

銘板・取扱説明書
LABEL AND OPERATOR'S MANUAL

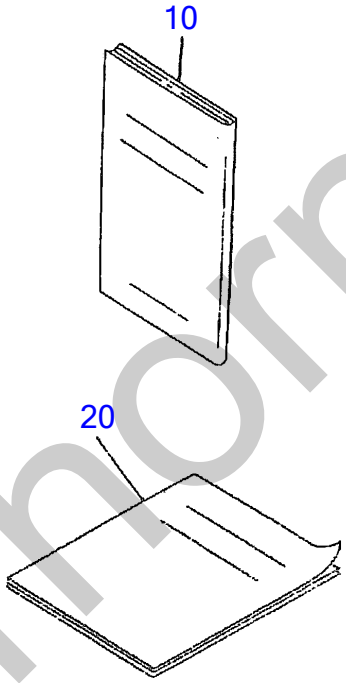

1G661-011-10

A:V3800DI-T-E3B-TLTU-1

silverhorn.co.uk

LABEL AND OPERATOR'S MANUAL

Item	Part No	Description	Qty
10	K1G521-89117	OPERATOR'S_MANUAL	1
20	K1G511-89815	STATEMENT,WARRANTY	1

silverhorn.co.uk