Parts Catalogue

Engine No.S3L2-63SGM:XXXXXX-UP
S4L2-63SGM:XXXXXX-UP

MITSUBISHI DIESEL ENGINE

S3L2-63SGM
S4L2-63SGM

for MASTERVOLT

silverhorn.co.uk

May 2006

MITSUBISHI HEAVY INDUSTRIES, LTD.

MITSUBISHI GENUINE PARTS

"MITSUBISHI GENUINE PARTS" should be used exclusively for servicing your Mitsubishi engine.

"MITSUBISHI GENUINE PARTS" are superior and reliable because they have been produced under the excellent quality-control system, and have passed the strict inspections.

Imitation parts are not reliable from the viewpoints of their material and manufacturing method which are entirely incomparable with those of genuine parts.

A large assortment of "MITSUBISHI GENUINE PARTS" is always available at any of our authorized dealers, so do your ordering at your nearest dealer by specifying "MITSUBISHI GENUINE PARTS".

silverhorn.co.uk

Pub. No. 98615-88200

GUIDE FOR USE OF PARTS CATALOGUE

This Parts Catalogue contains service parts for the following Mitsubishi S3L2 and S4L2 diesel engine.
The applicable engine type and serial number are as below:

ENGINE NAME	MODEL	USE・SPECIFICATION	APPLICABLE SERIAL NO.
S3L2	63SGM	For Generator	XXXXXX-UP
S4L2	63SGM	For Generator	XXXXXX-UP

2. When ordering parts, give the Mitsubishi dealer or distributor the following information:
   (1) Part number (or assembly number) and part name.
   (2) Quantity required
   (3) Model and serial number
   NOTE: In some cases a substitute part is furnished instead of the part ordered.

3. Indication of assembled bolts with washer
   Of the standard bolts, those with washers are identified by the symbol "B/W" in the Description column of each list. (Part Name: BOLT,W/WASHER)
   For the part numbers of the bolts and washers and those of bolts with washers, refer to the listing (beginning with the page D1) at the end of this parts catalogue. These bolts and washers should be ordered individually.

4. Indication of combination for replaceability — "G "—
   The new part to be used in combination with the other part in place of an old part is identified by the symbol "G "in the interchangeability code column of each list..
   For the parts to be combined,refer to the listing (beginning with E1) at the and of this parts catalogue.

5. For the numerical index, refer to the page beginning with C1 at the end of this parts catalogue.

6. Some illustration may have some difference from the real part shape when the illustration Shows a representation of various parts.

7. The parts and part numbers are subject to change without prior notice.

silverhorn.co.uk

SAMPLE OF PARTS CATALOGUE

GROUP NUMBER → 07-01 CRANKCASE ASSY ← GROUP NAME

Model type

Not applicable to the model of this column

Applicable to serial No. shown on cover and up if blank.

REF. -NO.		PART NO.	R/P	SEQ	CNG	PART NAME & DESCRIPTION		MODEL&QTY S3L2	MODEL&QTY S4L2		APLICABLE SERIAL NO. FROM@-	APLICABLE SERIAL NO. -@UPTO	M/R	VRD
1		32507-70010				CRANKCASE ASSY		1	1					
1	01	F2846-14000				PIN,DOWEL		1	1				A	
1	02	32507-01400				WASHER		1	1				A	
1	03	*				CAP,MAIN BEARING		6	6					
1	04	*				CAP,MAIN BEARING		1	1					
1	05	*				CRANKCASE		1	1					
2		32507-02500			C	HANGER	B10,B13	1	1			-011285		
		32507-02700	N	1		HANGER	B10,B13	1	1		011286-			V
3		32507-04100			Q	SHIM	T=0.5	·	·			@011294		
		32507-04100		1		SHIM	T=0.5	1	1		011295@			
4		F1805-10025				BOLT,W/WASHER	B/W	8	8				A	

See(8)-(a)Description codes

Quantity per unit

Part not to be supplied See(3)

See(8)-(c)Specification codes

Applicable from serial No. indicated.

High-demand part. See(11)

Applicable from 011295 (Scheduled)if suffixed with @ and sometimes differs from real serial No.

See(8)-(b)Description

Part newly changed or added.See(12)

See(2)Reference number.

See(6)Change codes.

Applicable up to 011294 (Scheduled)if prefixed with @ and sometimes differs from real serial No.

See(4)Interchangeability codes.

See(5)Sequence-of-change numbers.

Applicable up to serial No. indicated.

NOTE: Some of model designations, number of variations and serial numbers, indicated above, are quoted from other parts catalogues.
Read these items of information as those for this parts catalogue.

NOTE: For the description of each item, refer to the pages which follow.

silverthorn.co.uk

HOW TO USE THIS PARTS CATALOGUE

(to be referred to together with the former SAMPLEOF PARTS CATALOGUE)

(1)

01-00-01 CYLINDER HEAD(FOR S3L2)

- 3-

REF. -NO.		PART NO.	R/P	SENQG	PART NAME & DESCRIPTION		MODEL & QTY S3L2	S4L2		APPLICABLE SERIAL NO. FROM@-	-@UPTO	M/R	VRD
1		31B01-31041			HEAD ASSY,CYLINDER		1	•					
2		*			HEAD SUB ASSY,CYL		1	•					
2	01	MD000245			CAP,SEALING		1	•					
2	02	MF665538			CAP,SEALING		5	•					
2	03	*			SEAT,INLET VALVE		3	•					
(2)		(3)	(4)	(5)(6)	(7)	(8)		(9)		(10)		(11)	(12)

The items (1) thru (12)are as described below:

(1) Compiling system

The systems of a unit are grouped according to their location in the unit.. The groups, each identified by group number, are listed in the order by CONTENTS. Each group is preceded by an "exploded view" which clearly illustrates each part in its correct relation to the other parts in the illustration.

(2) Reference number

Abbreviated to "REF. No., "this number is used to located a part in the illustration. in cases where the reference number is of three to four figures, the first and second figures show the reference number of an assembly, and the last two figures show the numbers of its component parts.

(3) Part numbers

The part numbers shown in this parts catalogue are those assigned to genuine Mitsubishi parts.

NOTE:Parts with asterisk (*) are not supplied individually.

silverhorn.co.uk

(4) Interchangeability codes

This interchangeability codes used in this parts catalogue are as follows:

PART NO.	Code (R/P)	DESCRIPTION
A(Old) B(New)	R	B(new part) and A(old part) are mutually interchangeable
A(Old) B(New)	1	A(Old part) is not supplied.B(new part) can be substituted for A(Old part).
A(Old) B(New)	3	B(new part) can be substituted for A(old part). [A(old part) cannot be substituted for B(new part).]
A(Old) B(New)	N	B(new part) and A(old part) are not interchangeable.
A(Old) B(New)	G	B(new part) can be substituted for A(old part) in combination with other part(s). (For the parts to be combined, refer to the listing beginning with the page E1 at the end of this parts catalogue.)

(5) Sequence-of-change numbers

The parts are changed for improved quality or performance. Their changes are indicated in sequence by numerals (1. 2. 3…)

Blank : Original

1 : 1st change

2 : 2nd change

3 : 3rd change

(6) Change codes

These codes indicate the reason or purpose of changes of the parts.

A : Added part (a part entered into service)

C : Change of part number

D : Deleted part (a part applicable up to the serial no. expressed in Serial No. column)

E : Added part except above reasons

Q : Change of quantity

silverhorn.co.uk

(7) Part name

Abbreviations are sometimes used. For the abbreviations, refer to TABLE OF SYMBOLS & ABBREVIATIONS appeared in hide pages of this general information chapter.

NOTE: The location termsLH (left hand) and RH (right hand) are as these directions viewed from the flywheel side of an engine.

(8) Description & specification codes

(a) Description codes (expressed in the first part of Description column).

B／W: Assembled bolt (with washer)

KIT: Part supplied as a kit

STD: Standard part

OPT: Optional part

AR : Part used, as required or by selection or in adjusted quantity for necessity

SFN: Semi-finished part

(b) The Description codes in above paragraph (a) are followed by supplementary explanation such as dimensions (thickness, length, etc.) ,manufacturer part number, manufacturer name, etc. as occasion demands.

NOTE: Unless otherwise indicated, the dimensions are shown in millimeter and the name of unit is abbreviated.

(Examples) Thickness:T=1.00 Length:L=1000

Width:W=1500 Height:L=500

(c) Specification codes

Each specification or type of model and/or selective specifications of a unit are indicated by codes of three figures. For these codes, refer to LIST OF SPECIFICATION CODES appeared in hind pages of this general information chapter.

NOTE: Unless indicated by the specification codes, the parts may be used for the products of all specifications.

(Examples) A10:For diesel fuel

B10:With industrial electric starter

silverhorn.co.uk

(d) The parts indicated as "NOT SHOWN", such as component parts of overhaul gasket kit, are not shown in the illustration.

(9) Model & quantity

(a) Model : Model, type, specification, destination, etc. of product to which a parts catalogue applies are indicated in the title column of each variation.

(b) Quantity :Quantity of part or assembly and its component parts required for one unit of product is indicated.

NOTE:In case "AR" appears in QTY column, it is required to adjust quantity for use.

(10) Applicable serial numbers

Applicable serial numbers of engine are indicated in the "UPTO" or "FROM" column. Serial numbers with "@" are scheduled ones and sometimes differ from the real serial numbers. If the "FROM " column is blank, the part is applicable to serial number shown on this cover and up.

(11) Management rank

Parts ranked as "A" are high-demand parts. This ranking is to be referred to by dealers, and is devised to facilitate and rationalize their distribution, stocking and inventory of the parts.

(12) Parts changed or added after the last parts list that has been published are identified by "V."

silverhorn.co.uk

TABLE OF SYMBOLS & ABBREVIATIONS

SYMBOL	DESCRIPTION	
ACCEL	ACCELERATOR	
ADJ	ADJUSTING	
	(ADJUSTABLE)	
AIR-CON	AIR-CONDITIONER	
ASSY	ASSEMBLY	
ATT	ATTACHMENT	
AUTO	AUTOMATIC	
AUX	AUXILIARY	
AR	AS REQUIRED	
B/H	BACKHOE	
BATT	BATTERY	
BRG	BEARING	
B/PMP	BILGE PUMP	
BRKT	BRACKET	
BUSH	BUSHING	
CARB	CARBURETOR	
C/L	CENTERLINE	
COMPR	COMPRESSOR	
CON-ROD	CONNECTING-ROD	
C/MBR	CROSS-MEMBER	
CYL	CYLINDER	
DIA	DIAMETER	
DIFF	DIFFERENTIAL	
DISTR	DISTRIBUTOR	
DR	DRIVE	
D=	OUT DIAMETER	

SYMBOL	DESCRIPTION	
ELEC	ELECTRIC	
ENG	ENGINE	
EQUIP	EQUIPMENT	
EXH	EXHAUST	
E/TNK	EXPANSION TANK	
FITT	FITTING	
FLEX	FLEXIBLE	
FR	FRONT	
GSKT	GASKET	
GEN	GENERATOR	
GOV	GOVERNOR	
G/N	GROUP NUMBER	
H/EXCH	HEAT EXCHANGER	
HEX	HEXAGON	
HYD	HYDRAULIC	
H=	HEIGHT	
IND	INDUSTRIAL	
INJ	INJECTION	
INSTAL	INSTALLATION	
INST	INSTRUMENT	
INTLK	INTERLOCK	
JUNC	JUNCTION	
KD	KNOCKDOWN	
L.H	LEFT HAND	
LUB	LUBRICATION	
L=	LENGTH	

silverhorn.co.uk

TABLE OF SYMBOLS & ABBREVIATIONS

SYMBOL	DESCRIPTION	
MANF	MANIFOLD	
MAX	MAXIMUM	
M.L.H	MAXIMUM LIFTING HEIGHT	
MIN	MINIMUM	
MTR	MOTOR	
MTG	MOUNTING	
NO.	NUMBER	
OPT	OPTION	
O/D	OVER DRIVE	
O.S	OVERSIZE	
PTO	POWER TAKE-OFF	
P/S	POWER STEERING	
PRESS	PRESSURE	
P/N	PART NUMBER	
QTY	QUANTITY	
RAD	RADIATOR	
RE	REAR	
REG	REGULATOR	
REV	REVERSE	
R.H	RIGHT HAND	
REF.NO.	REFERENCE NUMBER	
R/N	REFERENCE NUMBER	
S/PMP	SEA WATER PUMP	
SECT	SECTION	
S/MBR	SIDEMEMBER	

SYMBOL	DESCRIPTION	
STD	STANDARD	
SUPT	SUPPORT	
SYM	SYMBOL	
SYNCH	SYNCHRONIZER	
SYS	SYSTEM	
TEMP	TEMPERATURE	
TERM	TERMINAL	
T/CONV	TORQUE-CONVERTER	
T/F	TRANSFER	
T/M	TRANSMISSION	
T/HSG	TURBINE-HOUSING	
T/C	TURBOCHARGER	
T=	THICKNESS	
U/BODY	UNDERBODY	
U.S	UNDERSIZE	
UNIV	UNIVERSAL	
VAC	VACUUM	
VENT	VENTILATOR	
W/STRIP	WEATHERSTRIP	
W/	WITH	
W/O	WITHOUT	
W/W	WOODWARD	
W/PMP	WATER PUMP	
W=	WIDTH	
Z=	NUMBER OF GEAR TEETH	

silverhorn.co.uk

TABLE OF SYMBOLS & ABBREVIATIONS

SYMBOL	DESCRIPTION		SYMBOL	DESCRIPTION	
1ST	FIRST				
2ND	SECOND				
3RD	THIRD				
4TH	FOURTH				
5TH	FIFTH				
&	AND				
@	UNCONFIRMED				
*	PART NOT TO BE SUPPLIED				

silverhorn.co.uk

CONTENTS

GROUP NO.	GROUP NAME	PAGE
	ENGINE BODY	
01-00-01	CYLINDER HEAD(FOR S3L2)	2
01-00-02	CYLINDER HEAD(FOR S4L2)	4
01-02	LIFTING EYE	6
04-01	VALVE MECHANISM	8
04-02-01	ROCKER COVER(FOR S3L2)	10
04-02-02	ROCKER COVER(FOR S4L2)	12
05	CAMSHAFT	14
07-00-01A	CRANKCASE(FOR S3L2)	16
07-00-01B	CRANKCASE(FOR S4L2)	18
07-00-02	CRANKCASE	20
07-02	DRAIN COCK & PIPE	22
09	MAIN BEARING	24
11	TIMING GEAR CASE	26
12	FLYWHEEL HOUSING	28
13	OIL PAN	30
14	ENGINE SUPPORT	32
17	PISTON	34
19	CONNECTING-ROD	36
20	CRANKSHAFT & PULLEY	38
21	FLYWHEEL	40

silverhorn.co.uk

GROUP NO.	GROUP NAME	PAGE
23	TIMING GEAR	42
	INLET & EXHAUST SYSTEM	
30	INLET SYSTEM	44
	OIL SYSTEM	
35	OIL PUMP	46
35-02	OIL STRAINER	48
36	OIL SYSTEM	50
40	OIL FILTER & GAGE	52
	FUEL SYSTEM	
43	BREATHER	54
	COOLING SYSTEM	
45	WATER PUMP	56
46	COOLING SYSTEM	58
48-02	FAN SPACER & V-BELT	60
61-00-01	FUEL SYSTEM (FOR S3L2)	62
61-00-02	FUEL SYSTEM (FOR S4L2)	64
61-00-03	NOZZLE & NOZZLE HOLDER	66
63-00-01	GOVERNOR (FOR S3L2)	68
63-00-02	GOVERNOR (FOR S4L2)	70
65-00-01	INJECTION PUMP	72
65-00-02A	INJECTION PUMP(FOR S3L2)	74
65-00-02B	INJECTION PUMP(FOR S4L2)	76
65-02	FUEL INJECTION PUMP DRIVE	78

silverhorn.co.uk

GROUP NO.	GROUP NAME	PAGE

STARTING SYSTEM

66-00-01 STARTER 80

66-00-02A STARTER(FOR S3L2) 82

66-00-02B STARTER(FOR S4L2) 84

66-02 GLOW PLUG 86

68-00-01 ALTERNATOR 88

68-00-02 ALTERNATOR(12V-50A) 90

CONTROL SYSTEM

87 ENGINE CONTROL 92

INSTRUMENT PARTS

90 INSTRUMENT 94

REPAIR PARTS

94-00-01 OVERHAUL GASKET KIT(FOR S3L2) 96

94-00-02 OVERHAUL GASKET KIT(FOR S4L2) 98

NUMERICAL PARTS INDEX C1

TABLE OF BOLT,W/WASHER D1

silverhorn.co.uk

01-00-01 CYLINDER HEAD(FOR S3L2)

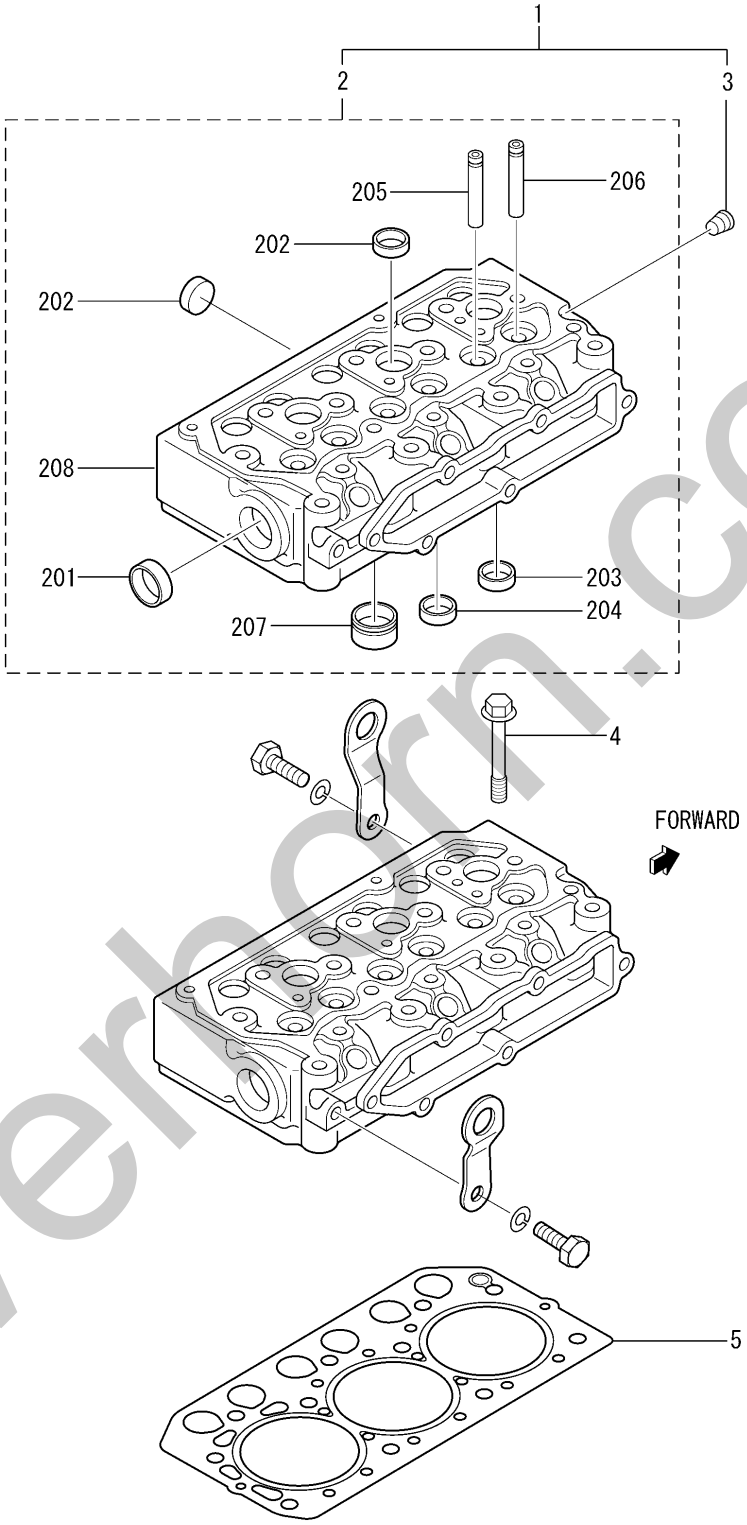

silverhorn.co.uk

REF. -NO.		PART NO.	R/P	SCENQG	PART NAME & DESCRIPTION		MODEL & QTY S3L2	S4L2		APPLICABLE SERIAL NO. FROM@-	-@UPTO	M/R	VRD
1		31B01-31041			HEAD ASSY,CYLINDER		1	·					
2		*			HEAD SUB ASSY,CYL		1	·					
2	01	MD000245			CAP,SEALING		1	·					
2	02	MF665538			CAP,SEALING		5	·					
2	03	*			SEAT,INLET VALVE		3	·					
2	04	*			SEAT,EXHAUST VALVE		3	·					
2	05	31A01-02500			GUIDE,EXHAUST VALVE		3	·					
2	06	31A01-02600			GUIDE,INLET VALVE		3	·					
2	07	31A03-01500			JET,COMBUSTION		1	·					
2	08	*			CYLINDER HEAD		3	·					
3		MS661140			PLUG,TAPERED		1	·				A	
4		31A01-11101			BOLT,CYLINDER HEAD		11	·					
5		31B01-23200			GASKET,CYLINDER HEAD		1	·				A	

silverhorn.co.uk

01-00-02 CYLINDER HEAD(FOR S4L2)

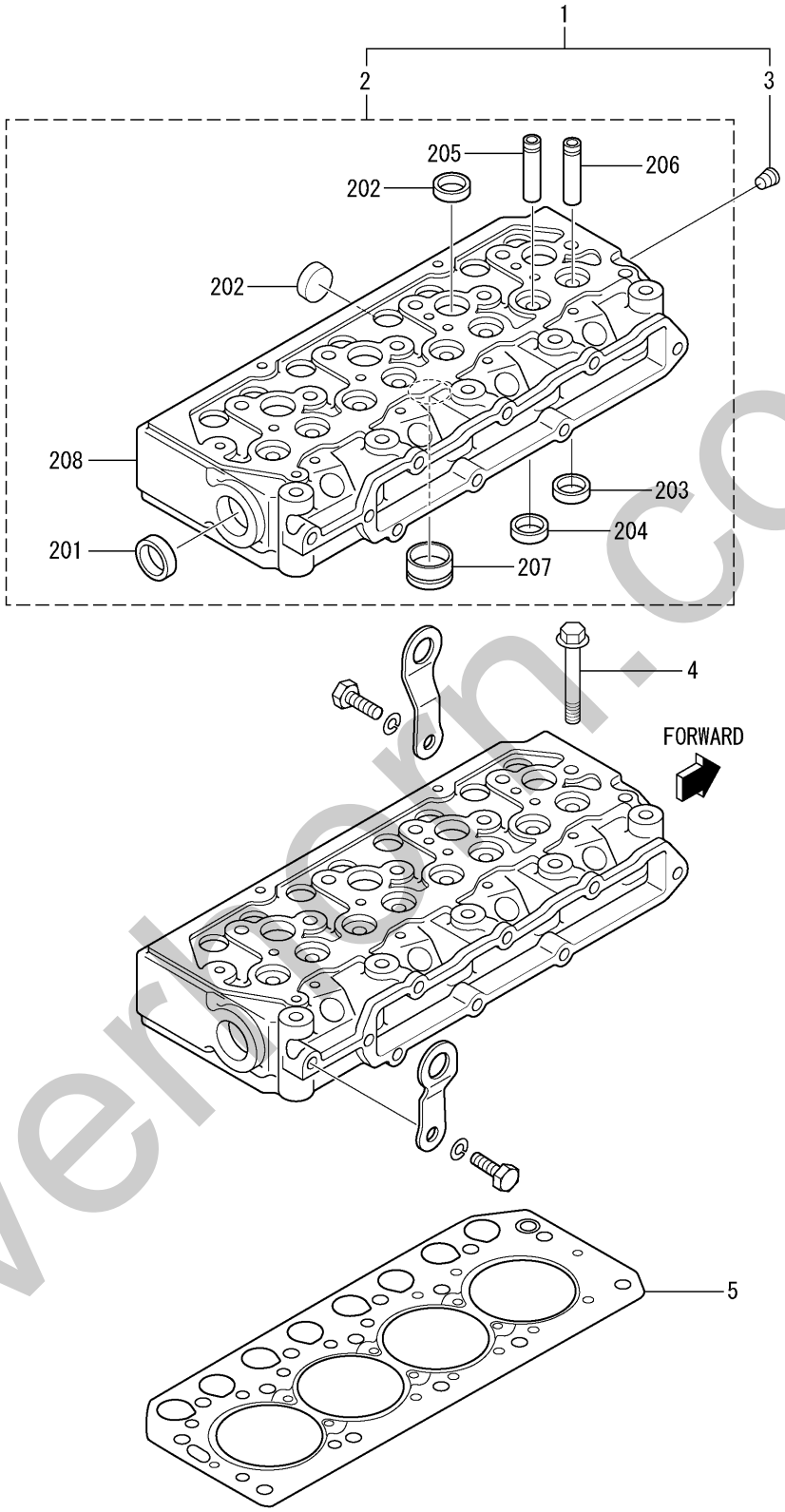

silverhorn.co.uk

REF. -NO.		PART NO.	R/P	SCENQG	PART NAME & DESCRIPTION		MODEL & QTY S3L2	S4L2		APPLICABLE SERIAL NO. FROM@-	-@UPTO	M/R	VRD
1		31A01-51041			HEAD ASSY,CYLINDER		·	1					
2		*			HEAD SUB ASSY,CYL		·	1					
2	01	MD000245			CAP,SEALING		·	1					
2	02	MF665538			CAP,SEALING		·	7					
2	03	*			SEAT,INLET VALVE		·	4					
2	04	*			SEAT,EXHAUST VALVE		·	4					
2	05	31A01-02500			GUIDE,EXHAUST VALVE		·	4					
2	06	31A01-02600			GUIDE,INLET VALVE		·	4					
2	07	31A03-01500			JET,COMBUSTION		·	1					
2	08	*			CYLINDER HEAD		·	4					
3		MS661140			PLUG,TAPERED		·	1				A	
4		31A01-11101			BOLT,CYLINDER HEAD		·	14					
5		31A01-33300			GASKET,CYLINDER HEAD		·	1				A	

silverhorn.co.uk

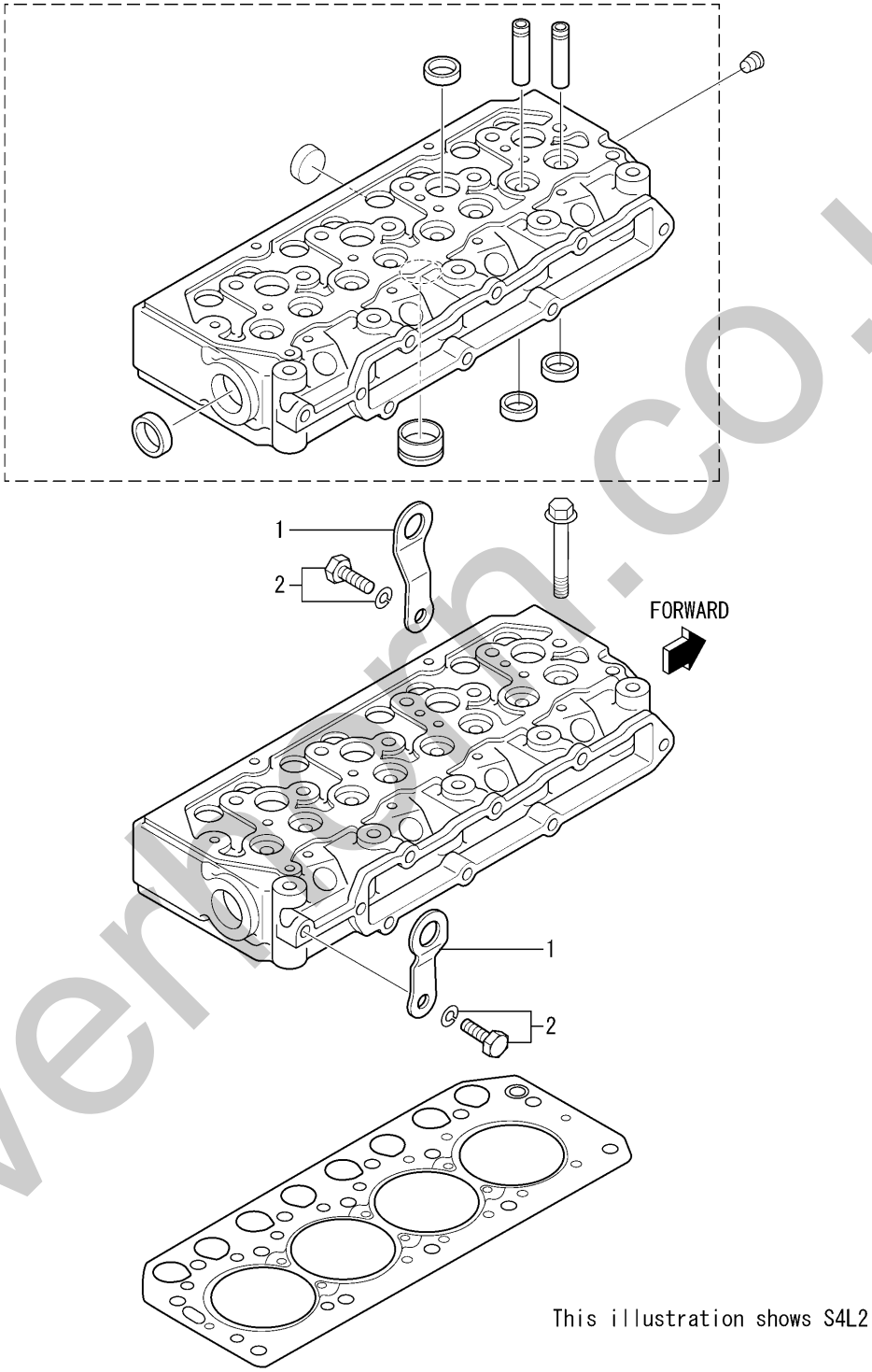

silverhorn.co.uk

REF. -NO.		PART NO.	R/P	SCENQG	PART NAME & DESCRIPTION		MODEL & QTY S3L2	S4L2		APPLICABLE SERIAL NO. FROM@-	-@UPTO	M/R	VRD
1		MM408470			HANGER,ENGINE		2	2					
2		F1805-10020			BOLT,W/WASHER	B/W	2	2				A	

silverhorn.co.uk

04-01 VALVE MECHANISM

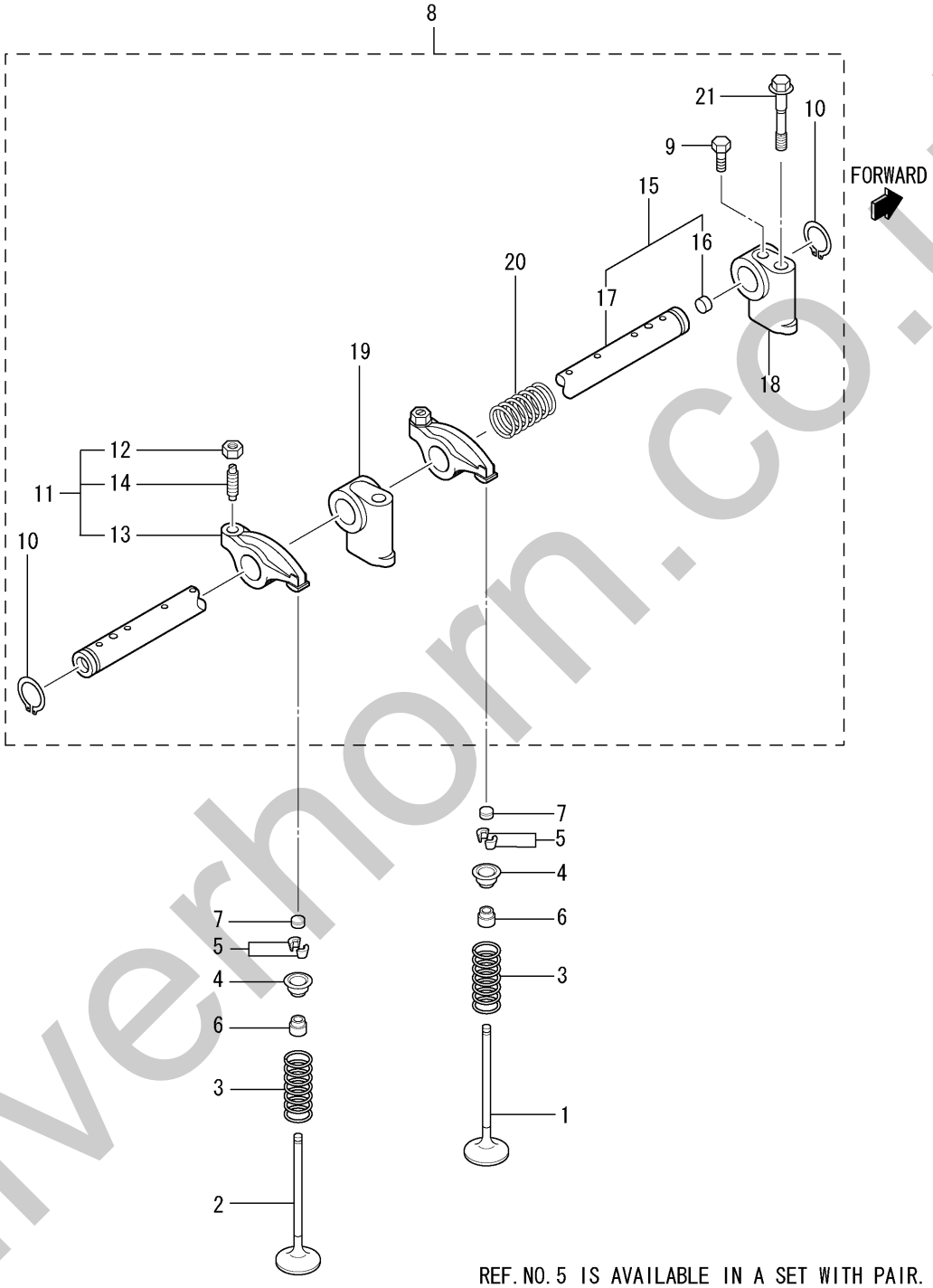

REF.NO.5 IS AVAILABLE IN A SET WITH PAIR.

silverhorn.co.uk

REF. -NO.		PART NO.	R/P	SCENQG	PART NAME & DESCRIPTION		MODEL & QTY S3L2	S4L2		APPLICABLE SERIAL NO. FROM@-	-@UPTO	M/R	VRD
1		31A04-00800			VALVE, INLET		3	·					
		31A04-40100			VALVE, INLET		·	4					
2		31A04-00900			VALVE, EXHAUST		3	·					
		31A04-30200			VALVE, EXHAUST		·	4					
3		31A04-01301			SPRING, VALVE		6	8				A	
4		MM433-30601			RETAINER, VALVE STEM		6	8					
5		MD016483			LOCK, VALVE SPRING		12	16					
6		MD115472			SEAL, VALVE STEM		6	8				A	
7		31A04-00700			CAP, VALVE STEM		6	8					
8		31B04-00014			ROCKER & SHAFT ASSY		1	·					
		31A04-30043			ROCKER & SHAFT ASSY		·	1					
9		F1035-05010			BOLT		1	1				A	
10		MF522010			RING, SNAP		2	2				A	
11		31A04-11024			ROCKER ASSY		6	8					
12		F2325-08000			NUT, JAM		6	8				A	
13		*			ROCKER, ARM		6	8					
14		32A04-02401			SCREW, ROCKER		6	8					
15		31B04-01010			SHAFT ASSY, ROCKER		1	·					
		31A04-21010			SHAFT ASSY, ROCKER		·	1					
16		MD021204			CAP, SEALING		2	2					
17		*			SHAFT, ROCKER		1	1					
18		31A04-34100			BRACKET, ROCKER SHAFT		1	1					
19		31A04-34300			BRACKET, ROCKER SHAFT		2	3					
20		32C04-04500			SPRING, ROCKER		2	3					
21		32C04-06100			BOLT, ROCKER BRACKET		3	4					

silverhorn.co.uk

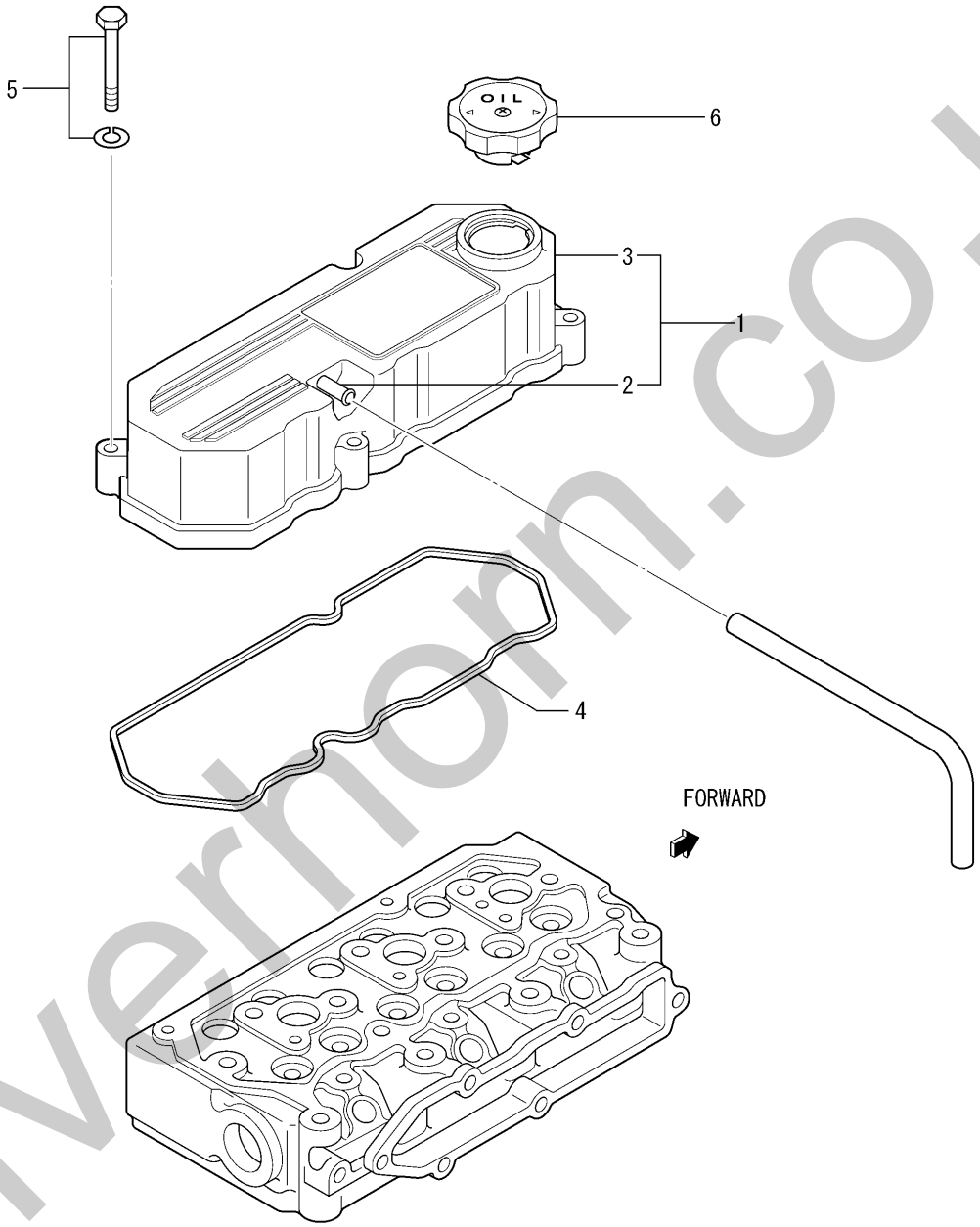

silvermorn.co.uk

REF. -NO.		PART NO.	R/P	SCENQG	PART NAME & DESCRIPTION		MODEL & QTY S3L2	S4L2		APPLICABLE SERIAL NO. FROM@-	-@UPTO	M/R	VRD
1		31B04-03011			COVER ASSY,ROCKER		1	·					
2		*			PIPE		1	·					
3		*			COVER,ROCKER		1	·					
4		31B04-13201			GASKET,ROCKER COVER		1	·				A	
5		F1805-08040			BOLT,W/WASHER	B/W	4	·				A	
6		MD008784			CAP,OIL FILLER		1	·					

silverhorn.co.uk

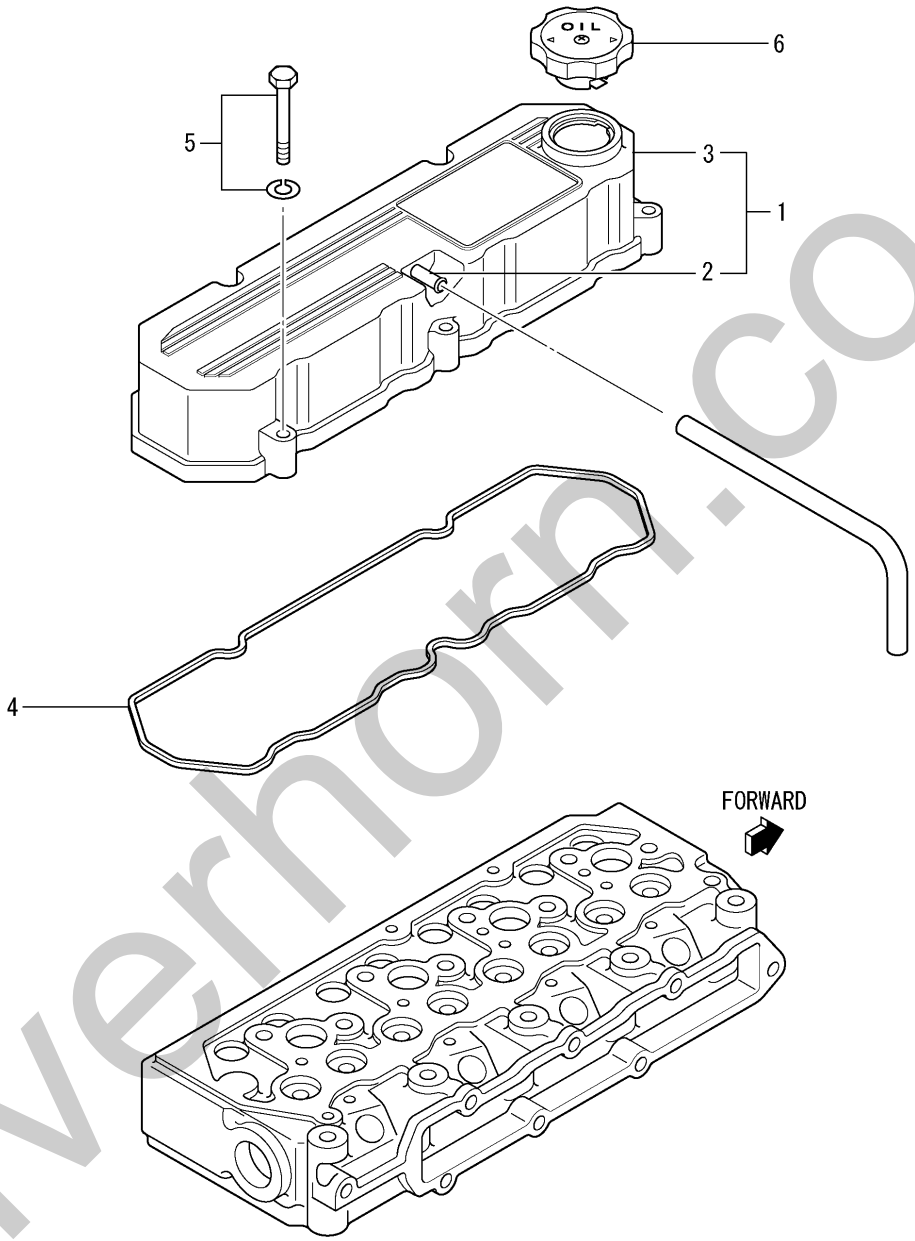

silverhorn.co.uk

REF. -NO.		PART NO.	R/P	SCENQG	PART NAME & DESCRIPTION		MODEL & QTY S3L2	S4L2		APPLICABLE SERIAL NO. FROM@-	-@UPTO	M/R	VRD
1		31A04-20032			COVER ASSY,ROCKER		·	1					
2		*			PIPE		·	1					
3		*			COVER,ROCKER		·	1					
4		31A04-33202			GASKET,ROCKER COVER		·	1				A	
5		F1805-08040			BOLT,W/WASHER	B/W	·	5				A	
6		MD008784			CAP,OIL FILLER		·	1					

silverhorn.co.uk

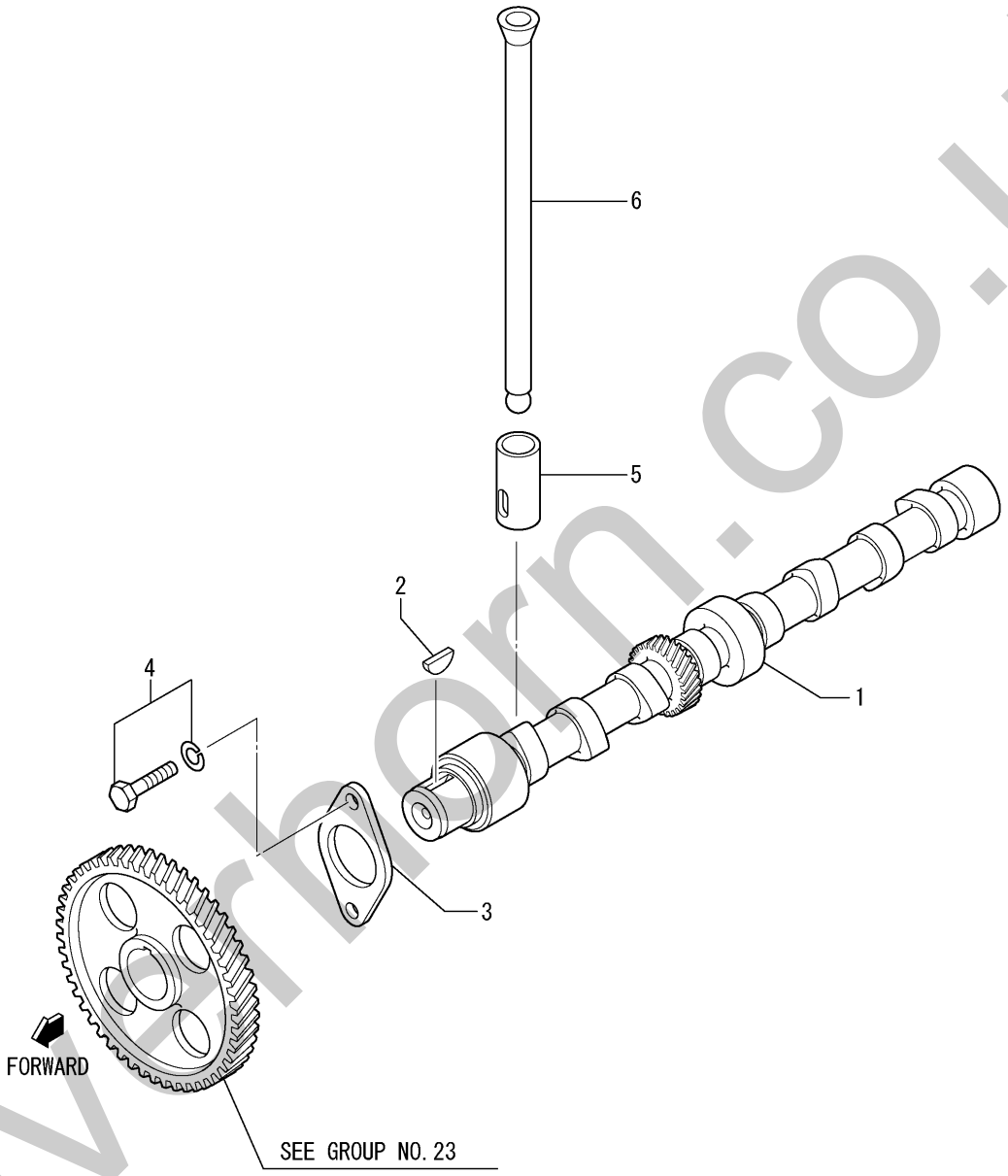

silverhorn.co.uk

REF. -NO.		PART NO.	R/P	SCENQG	PART NAME & DESCRIPTION		MODEL & QTY S3L2	S4L2		APPLICABLE SERIAL NO. FROM@-	-@UPTO	M/R	VRD
1		31B05-00103			CAMSHAFT		1	▪					
		31A05-00203			CAMSHAFT		▪	1					
2		MF476215			KEY, WOODRUFF		1	1					
3		30405-31403			PLATE, THRUST		1	1					
4		F1805-08016			BOLT, W/WASHER	B/W	2	2				A	
5		31A05-00300			TAPPET		6	8					
6		31A05-01300			ROD, PUSH		6	8					

silverhorn.co.uk

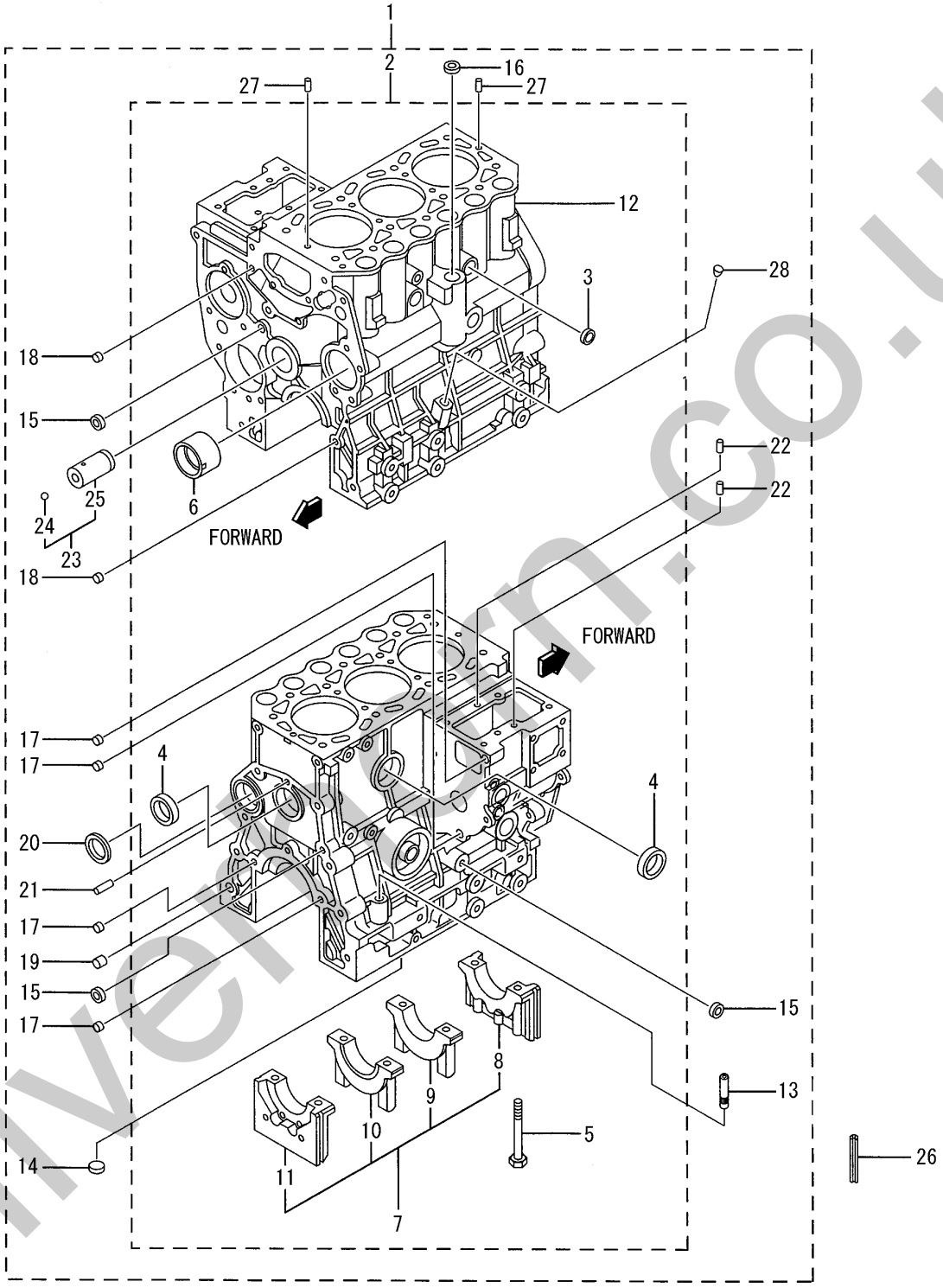

silverstream.co.uk

REF. -NO.		PART NO.	R/P	SCENQG	PART NAME & DESCRIPTION		MODEL & QTY S3L2	S4L2		APPLICABLE SERIAL NO. FROM@-	-@UPTO	M/R	VRD
1		31B07-23010			BLOCK ASSY,CYLINDER		1	·					
2		*			BLOCK SUB ASSY,CYL		1	·					
3		04826-22000			CAP,SEALING		2	·					
4		04826-23500			CAP,SEALING		2	·					
5		31A07-00801			BOLT,BEARING CAP		8	·				A	
6		31A07-03100			BUSH,CAMSHAFT		1	·					
7		*			CAP SET,BEARING		1	·					
8		*			CAP,BEARING FRONT		1	·					
9		*			CAP,BEARING NO.2		1	·					
10		*			CAP,BEARING NO.3		1	·					
11		*			CAP,BEARING REAR		1	·					
12		*			BLOCK,CYLINDER		1	·					
13		MM430613			GUIDE,OIL LEVEL GAGE		1	·					
14		MF665532			CAP,SEALING		1	·					
15		MF665533			CAP,SEALING		3	·					
16		MF665537			CAP,SEALING		1	·					
17		MS471104			BUSHING,KNOCK		4	·					
18		MS471105			BUSHING,KNOCK		2	·					
19		MS471110			BUSHING,KNOCK		1	·					
20		MF665511			PLUG,EXPANSION		1	·				A	
21		MF472404			PIN,DOWEL		1	·				A	
22		MM409645			PIN,DOWEL		2	·				A	
23		31A23-00051			SHAFT ASSY,IDLER		1	·					
24		F8000-08000			BALL,STEEL		1	·				A	
25		*			SHAFT,IDLER		1	·					
26		31A07-12200			SEAL,SIDE		4	·					
27		F2846-05000			PIN,DOWEL		2	·				A	
28		MD024256			PLUG,TAPERED		1	·				A	

silverhorn.co.uk

07-00-01B CRANKCASE(FOR S4L2)

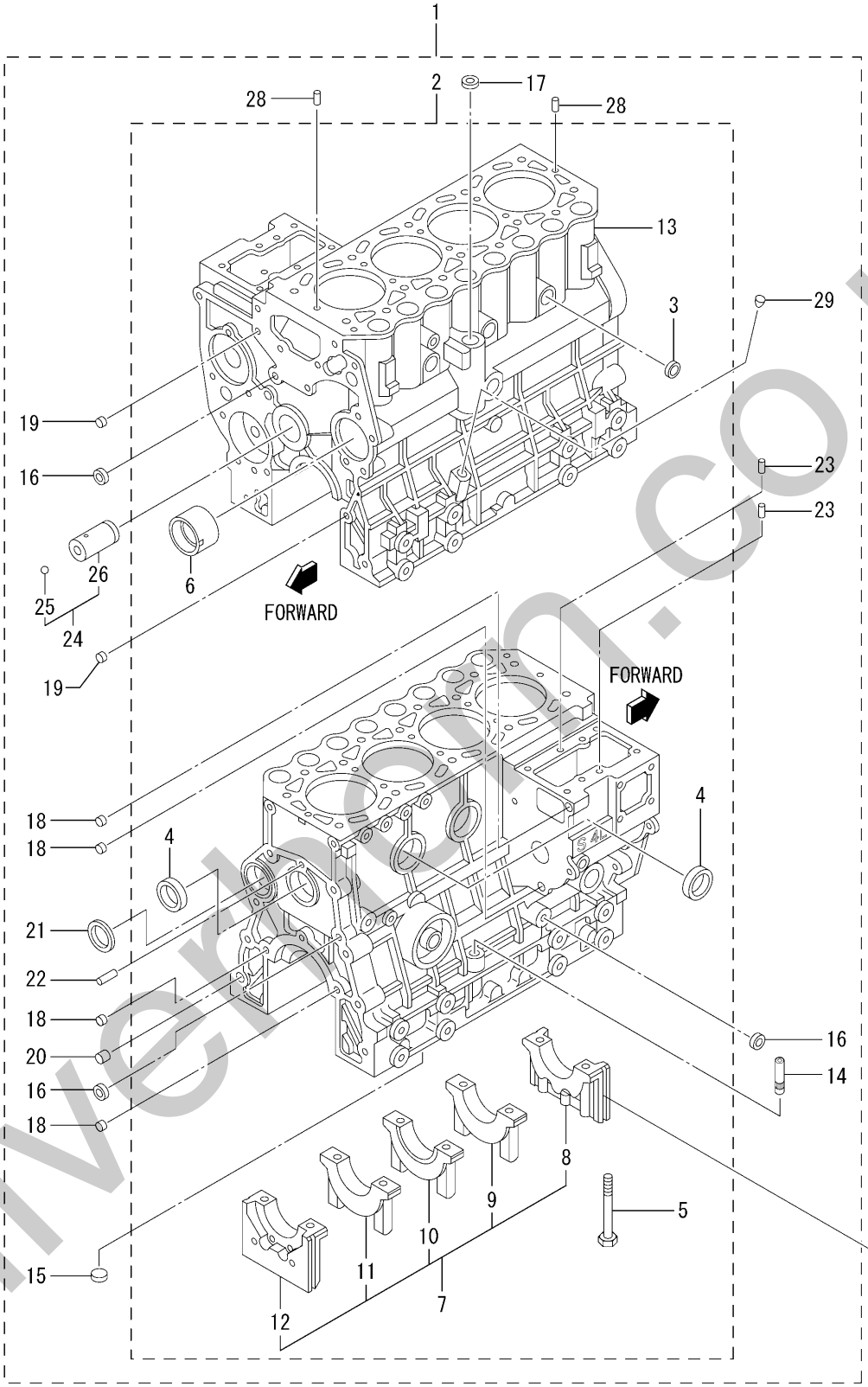

silverhorn.co.uk

REF. -NO.		PART NO.	R/P	SCENQG	PART NAME & DESCRIPTION		MODEL & QTY S3L2	S4L2		APPLICABLE SERIAL NO. FROM@-	-@UPTO	M/R	VRD
1		31A07-23020			BLOCK ASSY,CYLINDER		·	1					
2		*			BLOCK SUB ASSY,CYL		·	1					
3		04826-22000			CAP,SEALING		·	3					
4		04826-23500			CAP,SEALING		·	3					
5		31A07-00801			BOLT,BEARING CAP		·	10				A	
6		31A07-03100			BUSH,CAMSHAFT		·	1					
7		*			CAP SET,BEARING		·	1					
8		*			CAP,BEARING FRONT		·	1					
9		*			CAP,BEARING NO.2		·	1					
10		*			CAP,BEARING NO.3		·	1					
11		*			CAP,BEARING NO.4		·	1					
12		*			CAP,BEARING REAR		·	1					
13		*			BLOCK,CYLINDER		·	1					
14		MM430613			GUIDE,OIL LEVEL GAGE		·	1					
15		MF665532			CAP,SEALING		·	1					
16		MF665533			CAP,SEALING		·	3					
17		MF665537			CAP,SEALING		·	1					
18		MS471104			BUSHING,KNOCK		·	4					
19		MS471105			BUSHING,KNOCK		·	2					
20		MS471110			BUSHING,KNOCK		·	1					
21		MF665511			PLUG,EXPANSION		·	1				A	
22		MF472404			PIN,DOWEL		·	1				A	
23		MM409645			PIN,DOWEL		·	2				A	
24		31A23-00051			SHAFT ASSY,IDLER		·	1					
25		F8000-08000			BALL,STEEL		·	1				A	
26		*			SHAFT,IDLER		·	1					
27		31A07-12200			SEAL,SIDE		·	4					
28		F2846-05000			PIN,DOWEL		·	2				A	
29		MD024256			PLUG,TAPERED		·	1				A	

silverhorn.co.uk

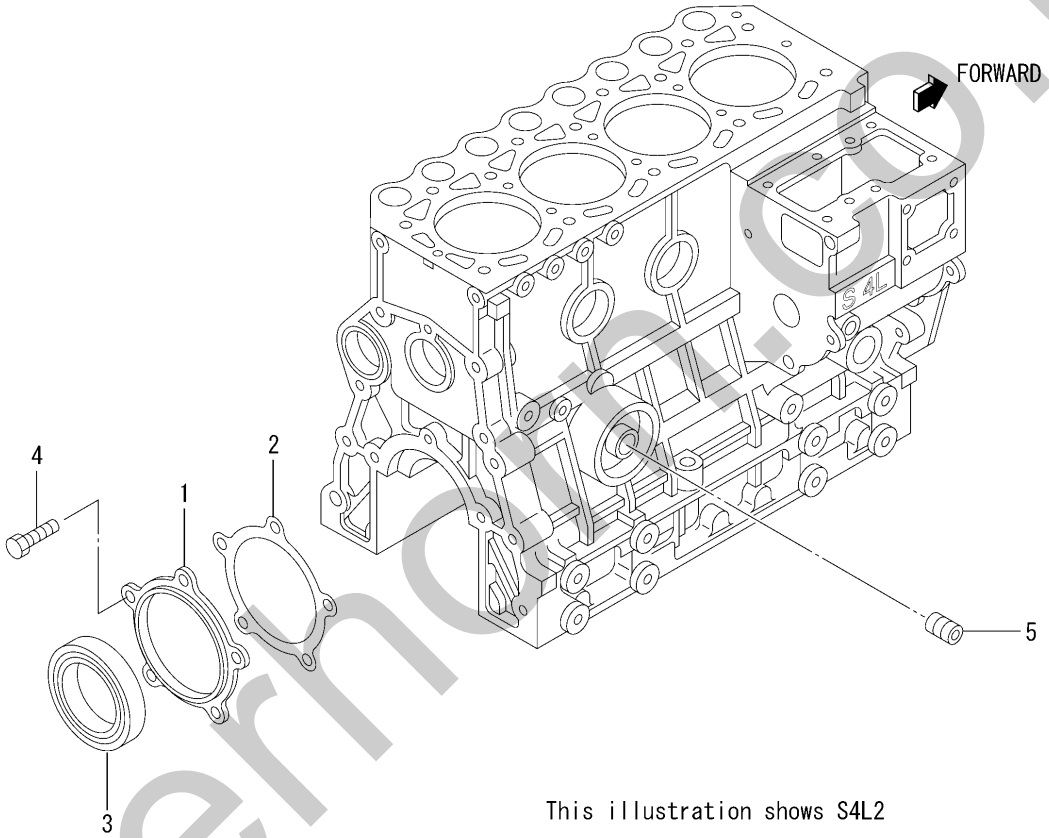

silverhill.co.uk

REF. -NO.		PART NO.	R/P	SCENQG	PART NAME & DESCRIPTION		MODEL & QTY S3L2	S4L2		APPLICABLE SERIAL NO. FROM@-	-@UPTO	M/R	VRD
1		31A07-11601			CASE,OIL SEAL		1	1					
2		31A07-11701			GASKET,OIL SEAL CASE		1	1				A	
3		31A07-02300			SEAL,OIL		1	1				A	
4		F1035-08020			BOLT		5	5				A	
5		30L07-00700			SHAFT,OIL FILTER		1	1					

silverhorn.co.uk

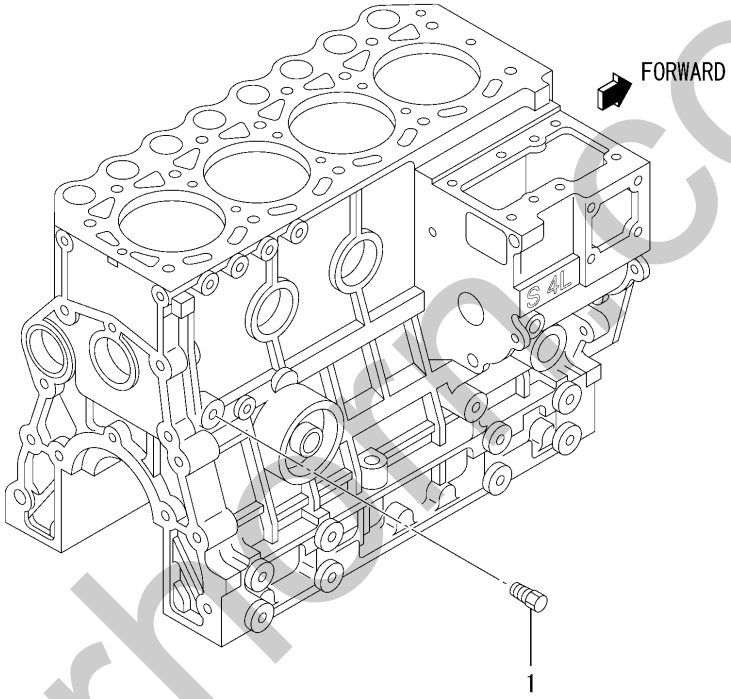

This illustration shows S4L2

silverhorn.co.uk

REF. -NO.		PART NO.	R/P	SCENQG	PART NAME & DESCRIPTION		MODEL & QTY S3L2	S4L2		APPLICABLE SERIAL NO. FROM@-	-@UPTO	M/R	VRD
1		MD000269			PLUG,TAPERED		1	1				A	

silverhorn.co.uk

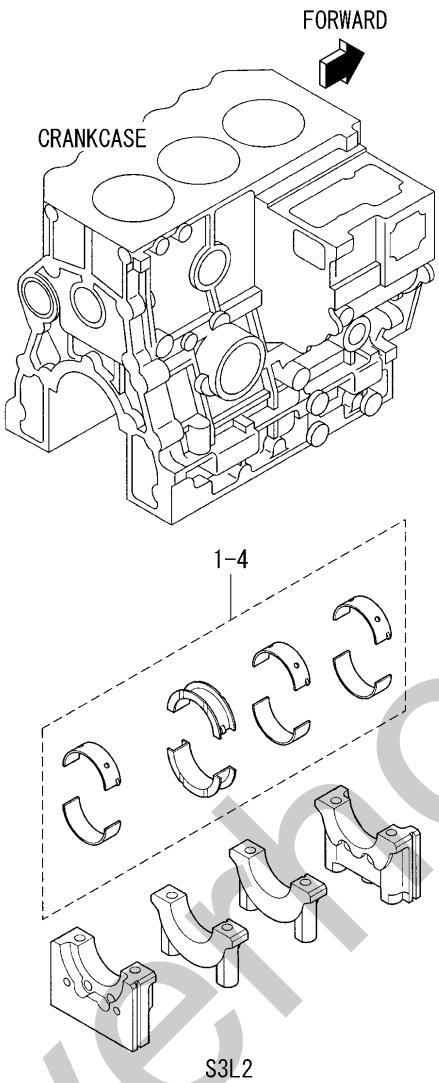

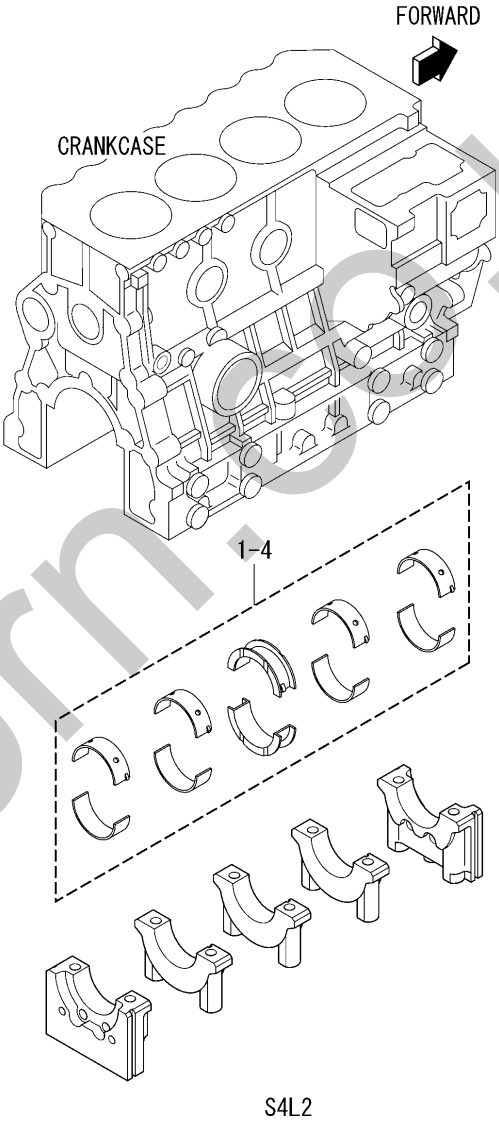

silverthorn.co.uk

REF. -NO.		PART NO.	R/P	SCENQG	PART NAME & DESCRIPTION		MODEL & QTY S3L2	S4L2		APPLICABLE SERIAL NO. FROM@-	-@UPTO	M/R	VRD
1		31A09-01010			BEARING SET,MAIN	STD	1	·				A	
		31A09-01050			BEARING SET,MAIN	STD	·	1				A	
2		31A09-01020			BEARING SET,MAIN	U.S 0.25	1	·				A	
		31A09-01060			BEARING SET,MAIN	U.S 0.25	·	1				A	
3		31A09-01030			BEARING SET,MAIN	U.S 0.50	1	·				A	
		31A09-01070			BEARING SET,MAIN	U.S 0.50	·	1				A	
4		31A09-01040			BEARING SET,MAIN	U.S 0.75	1	·				A	
		31A09-01080			BEARING SET,MAIN	U.S 0.75	·	1				A	

silverhorn.co.uk

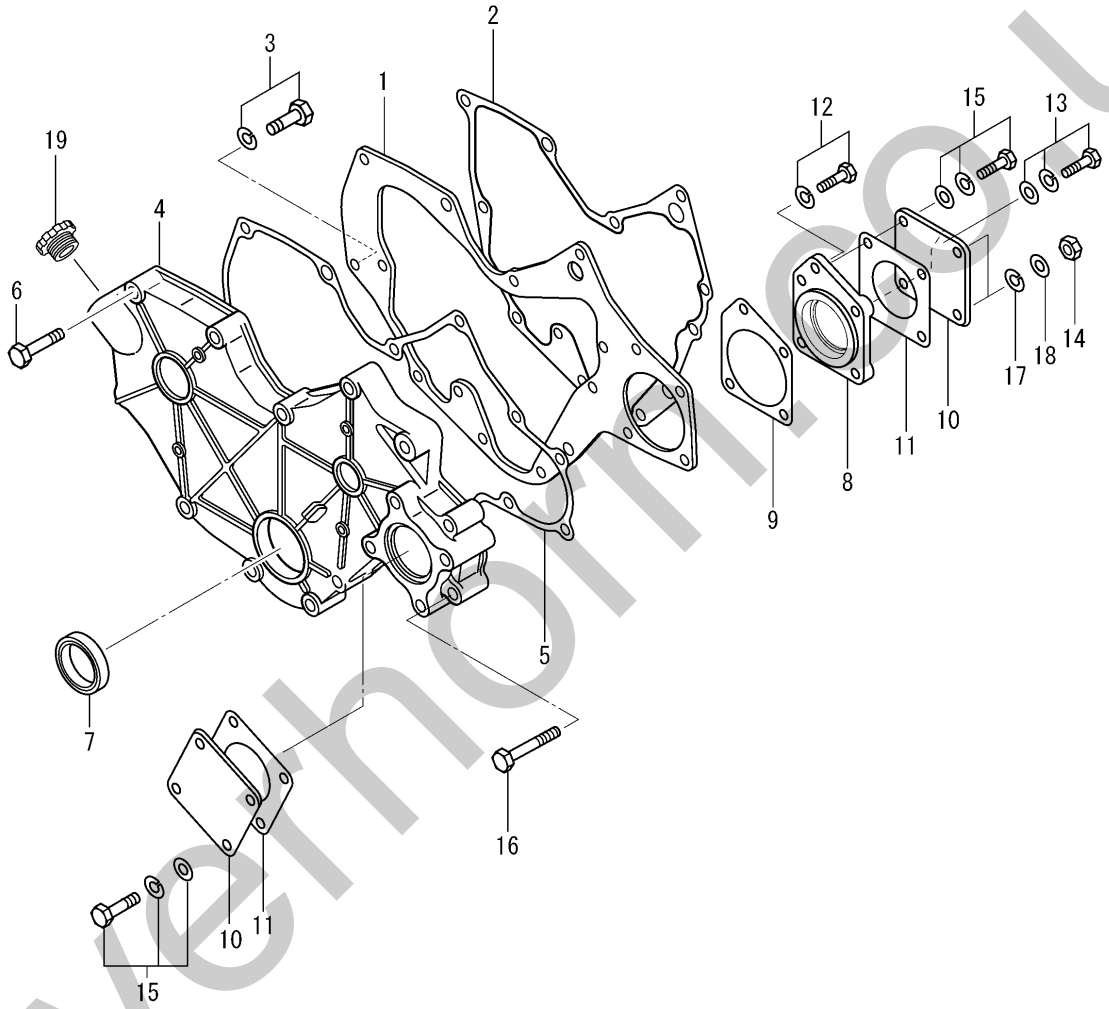

silverhorse.co.uk

REF. -NO.		PART NO.	R/P	SCENQG	PART NAME & DESCRIPTION		MODEL & QTY S3L2	S4L2		APPLICABLE SERIAL NO. FROM@-	-@UPTO	M/R	VRD
1		31A11-02100			PLATE,FRONT		1	1					
2		31A07-11901			GASKET,FRONT PLATE		1	1				A	
3		F1805-08016			BOLT,W/WASHER	B/W	5	5				A	
4		31A11-10103			CASE,GEAR		1	1					
5		31A11-11101			GASKET,GEAR CASE		1	1				A	
6		F1035-08045			BOLT		8	8				A	
7		MD008762			SEAL,OIL		1	1				A	
8		31A11-05101			HOUSING,GEAR PUMP		1	1					
9		31A11-05201			GASKET,HOUSING		1	1				A	
10		MM401205			COVER,OIL PUMP		2	2					
11		30A11-00101			GASKET,O/PUMP COVER		2	2				A	
12		F1805-08030			BOLT,W/WASHER	B/W	1	1				A	
13		F1825-08035			BOLT,W/WASHER	B/W	1	1				A	
14		F2300-08000			NUT		2	2				A	
15		F1825-08016			BOLT,W/WASHER	B/W	5	5				A	
16		F1035-08070			BOLT		2	2				A	
17		F2515-08000			WASHER,SPRING		2	2				A	
18		F2500-08000			WASHER,PLAIN		2	2				A	
19		31A42-01300			CAP,FILLER		1	1					

silverhorn.co.uk

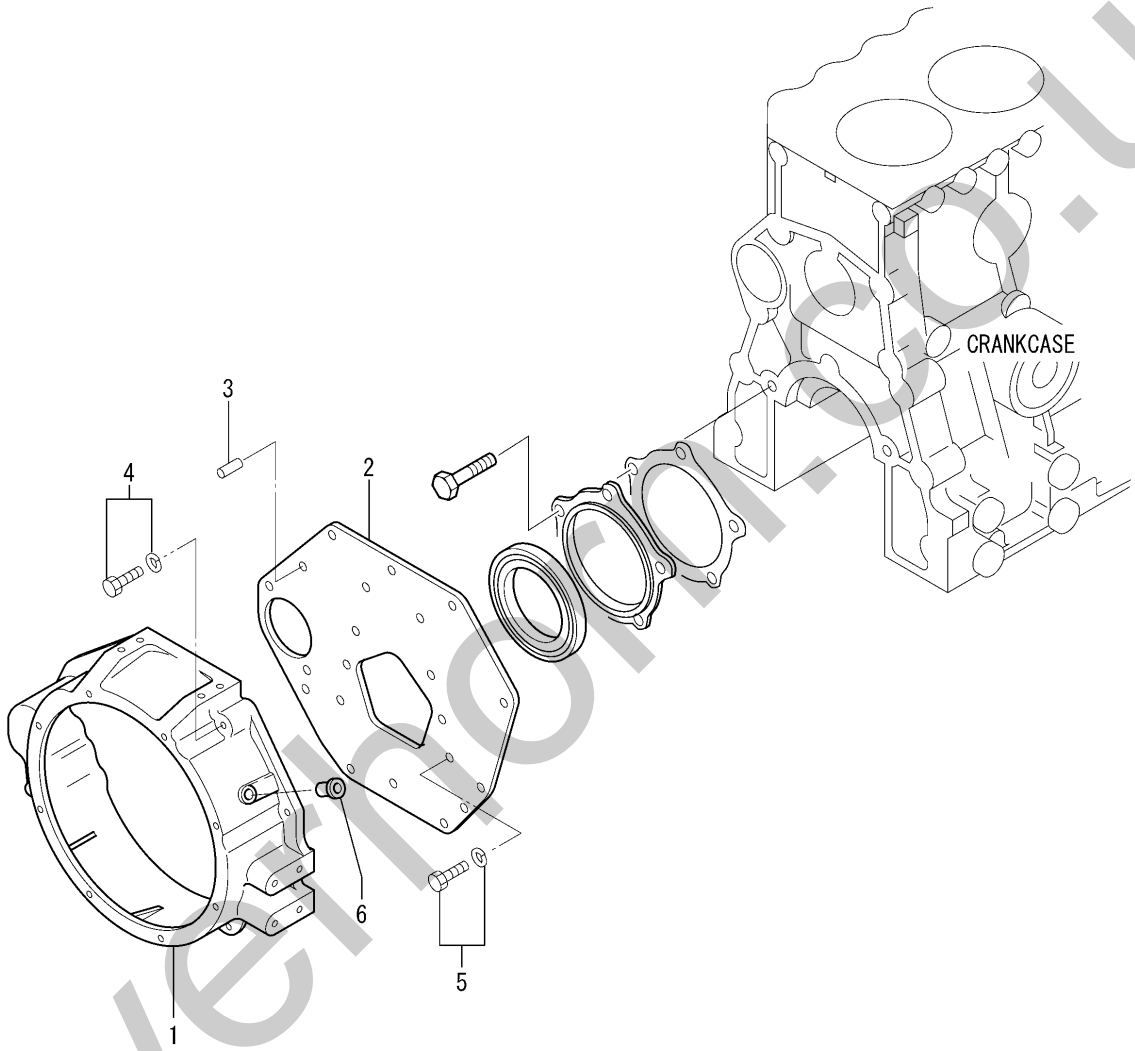

silvermoor.co.uk

REF. -NO.		PART NO.	R/P	SCENQG	PART NAME & DESCRIPTION		MODEL & QTY S3L2	S4L2		APPLICABLE SERIAL NO. FROM@-	-@UPTO	M/R	VRD
1		MM431-53801			HOUSING,FLYWHEEL		1	1					
2		31A07-04401			PLATE,REAR		1	1					
3		MM408245			PIN,KNOCK		2	2				A	
4		F1805-12050			BOLT,W/WASHER	B/W	2	2				A	
5		MF241308			BOLT,W/WASHER		13	13				A	
6		05534-16000			PLUG		1	1				A	

silverhorn.co.uk

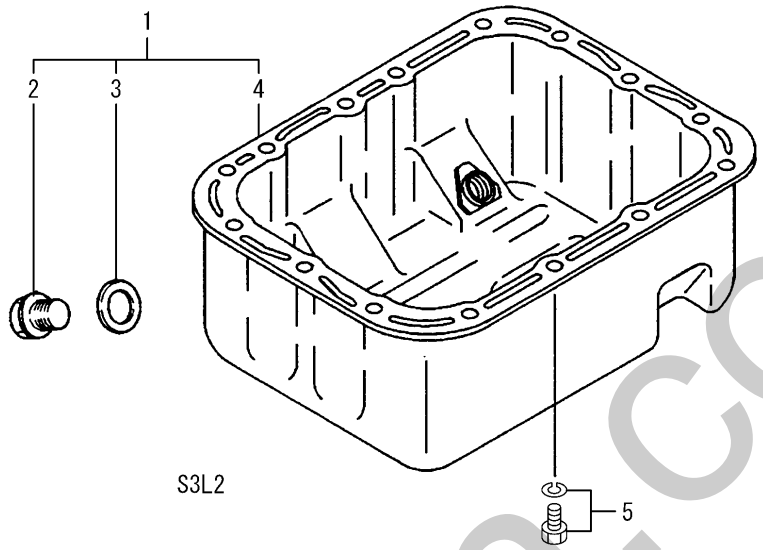

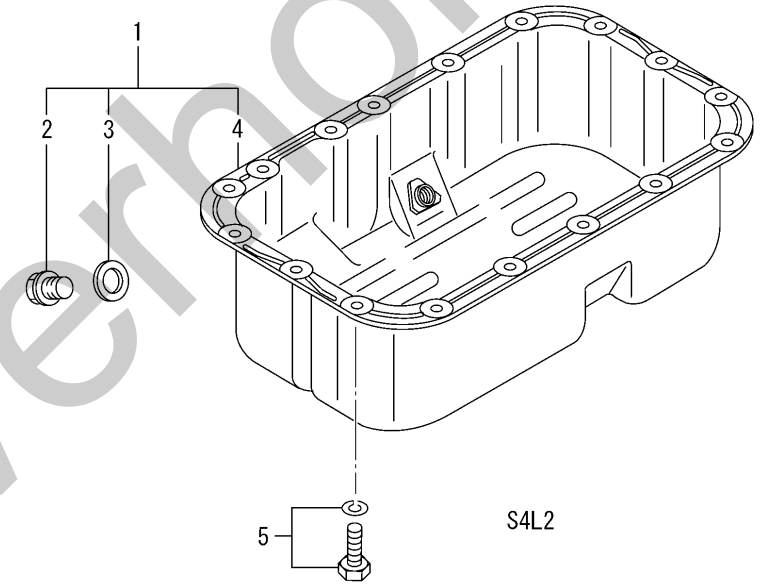

silverhorn.co.uk

REF. -NO.		PART NO.	R/P	SCENQG	PART NAME & DESCRIPTION		MODEL & QTY S3L2	S4L2		APPLICABLE SERIAL NO. FROM@-	-@UPTO	M/R	VRD
1		31B13-00013			PAN ASSY,OIL		1	・					
		31A13-01021			PAN ASSY,OIL		・	1					
2		MD050316			PLUG,OIL DRAIN		1	1				A	
3		MD050317			GASKET		1	1				A	
4		*			PAN,OIL		1	1					
5		F1805-08016			BOLT,W/WASHER	B/W	15	17				A	

silverhorn.co.uk

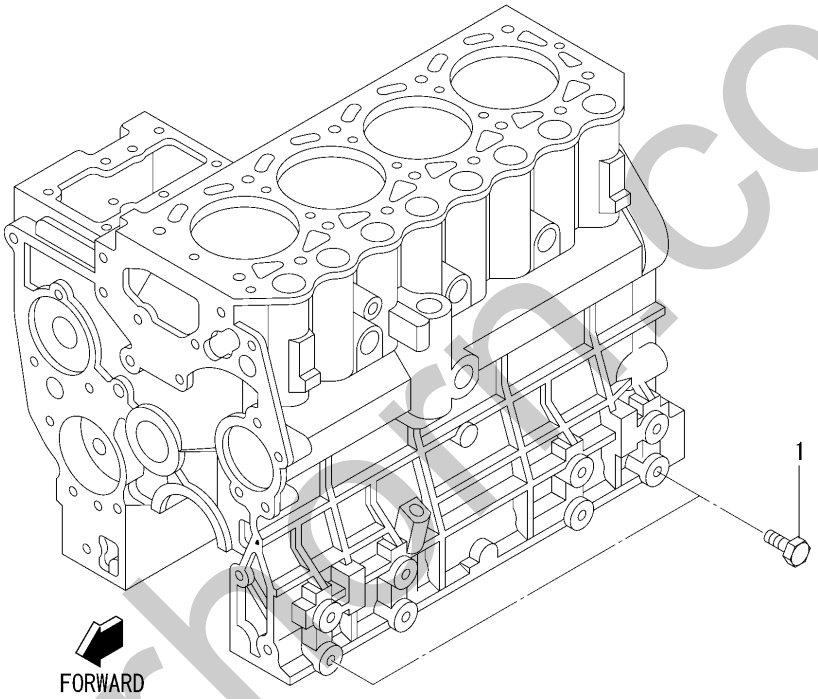

This illustration shows S4L2

silverhorn.co.uk

REF. -NO.		PART NO.	R/P	SCENQG	PART NAME & DESCRIPTION		MODEL & QTY S3L2	S4L2		APPLICABLE SERIAL NO. FROM@-	-@UPTO	M/R	VRD
1		F1035-12025			BOLT		4	4				A	

silverhorn.co.uk

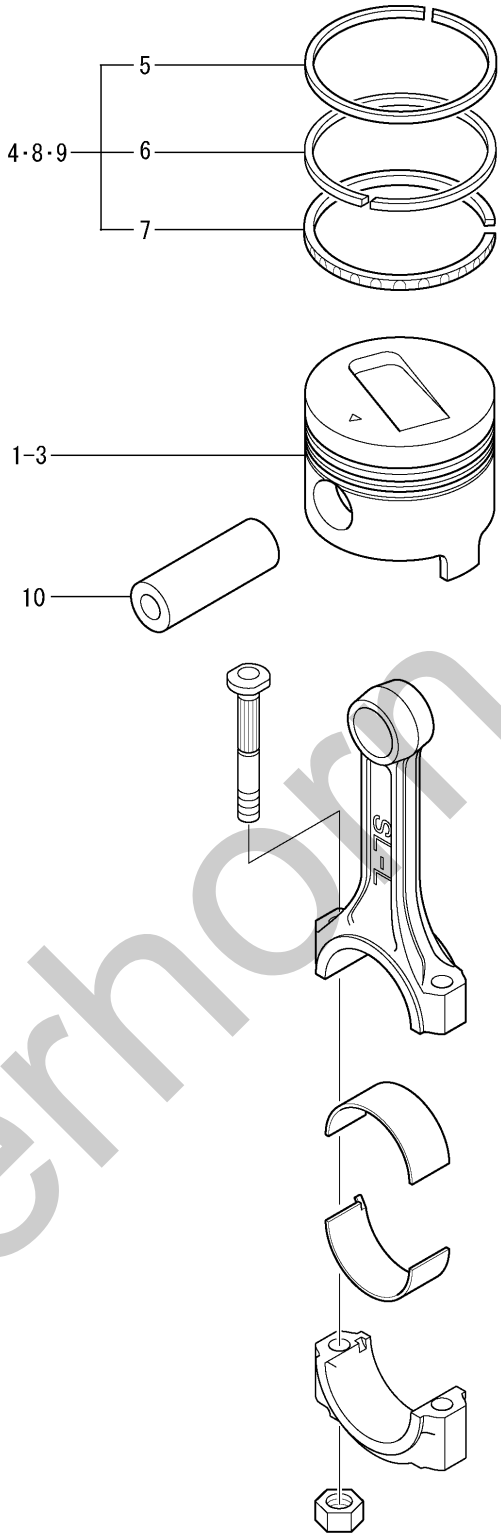

silverhorn.co.uk

REF. -NO.		PART NO.	R/P	SCENQG	PART NAME & DESCRIPTION		MODEL & QTY S3L2	S4L2		APPLICABLE SERIAL NO. FROM@-	-@UPTO	M/R	VRD
1		31A17-11100			PISTON	STD	3	4				A	
2		31A17-11200			PISTON	O.S 0.25	3	4				A	
3		31A17-11300			PISTON	O.S 0.50	3	4				A	
4		MM433921			RING SET,PISTON	STD	3	4				A	
5		*			RING,PISTON NO.1		3	4					
6		*			RING,PISTON NO.2		3	4					
7		*			RING ASSY,OIL		3	4					
8		MM433922			RING SET,PISTON	O.S 0.25	3	4				A	
9		MM433923			RING SET,PISTON	O.S 0.50	3	4				A	
10		31A17-10602			PIN,PISTON		3	4				A	

silverhorn.co.uk

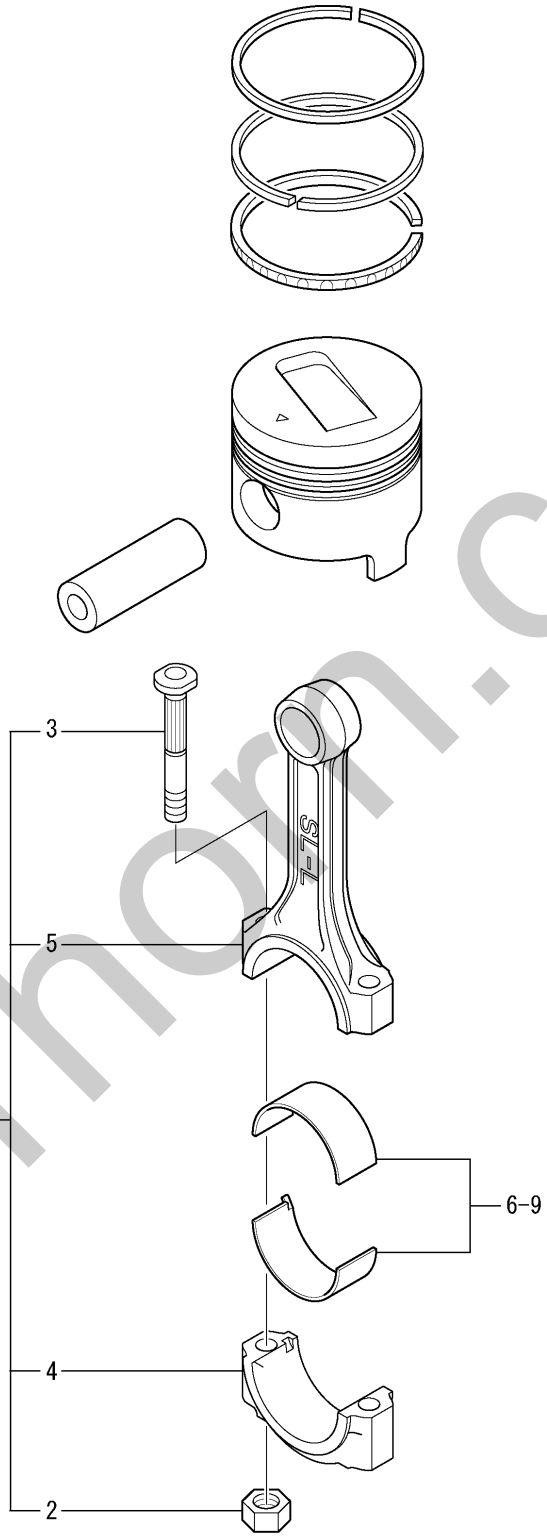

silverhorn.co.uk

REF. -NO.		PART NO.	R/P	SCENQG	PART NAME & DESCRIPTION		MODEL & QTY S3L2	S4L2		APPLICABLE SERIAL NO. FROM@-	-@UPTO	M/R	VRD
1		31B19-01023			ROD ASSY,CONNECTING		3	▪					
		31A19-01023			ROD ASSY,CONNECTING		▪	4					
2		MD006704			NUT,CONNECTING-ROD		6	8				A	
3		MD021105			BOLT,CONNECTING-ROD		6	8				A	
4		*			CAP,CONNECTING-ROD		3	4					
5		*			CONNECTING-ROD		3	4					
6		30A19-00040			BEARING SET,CON-ROD	STD	3	4				A	
7		30A19-10010			BEARING SET,CON-ROD	U.S 0.25	3	4				A	
8		30A19-10020			BEARING SET,CON-ROD	U.S 0.50	3	4				A	
9		30A19-10030			BEARING SET,CON-ROD	U.S 0.75	3	4				A	

silverhorn.co.uk

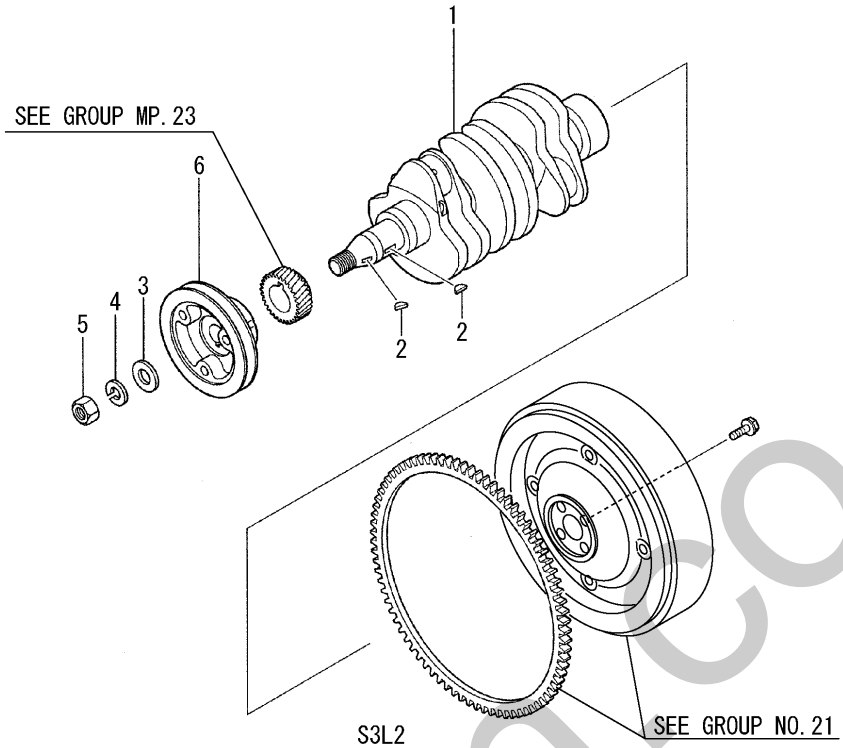

S3L2

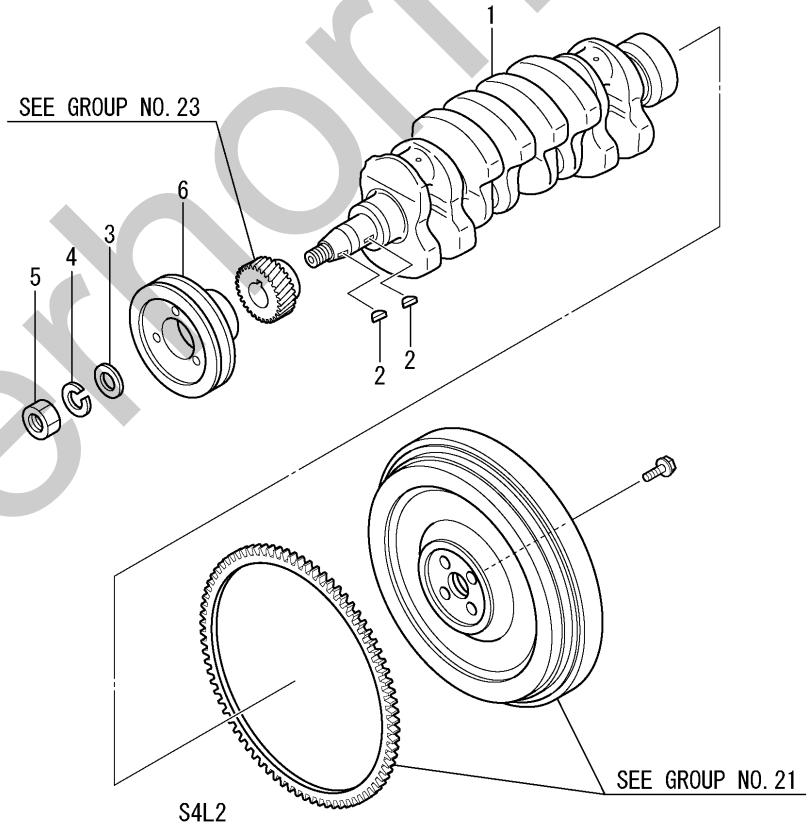

S4L2

silverhorn.co.uk

REF. -NO.		PART NO.	R/P	SCENQG	PART NAME & DESCRIPTION		MODEL & QTY S3L2	S4L2		APPLICABLE SERIAL NO. FROM@-	-@UPTO	M/R	VRD
1		31B20-00202			CRANKSHAFT		1	・					
		31A20-00200			CRANKSHAFT		・	1					
2		MF476215			KEY, WOODRUFF		2	2					
3		F2500-18000			WASHER, PLAIN		1	1				A	
4		F2515-18000			WASHER, SPRING		1	1				A	
5		F2305-18000			NUT		1	1				A	
6		31B20-02401			PULLEY, CRANKSHAFT		1	・					
		31A20-02402			PULLEY, CRANKSHAFT		・	1					

silverhorn.co.uk

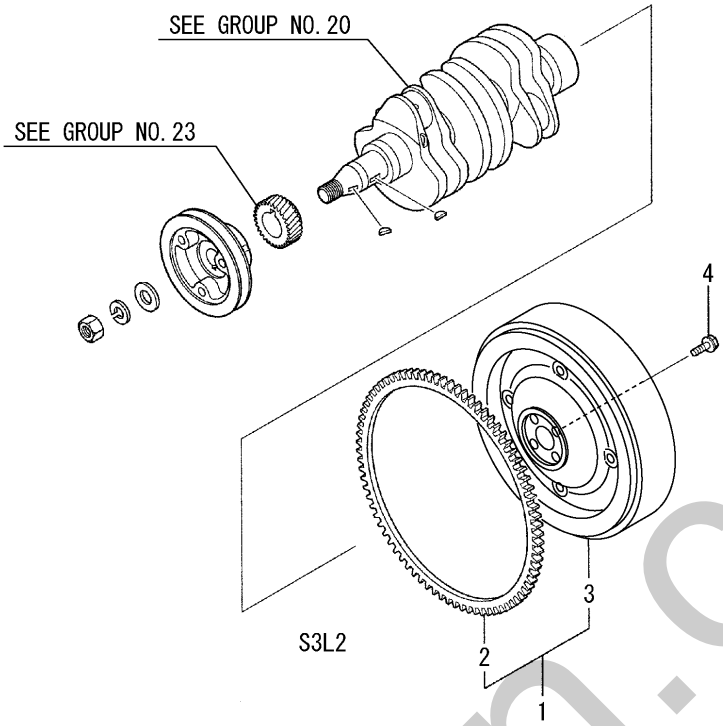

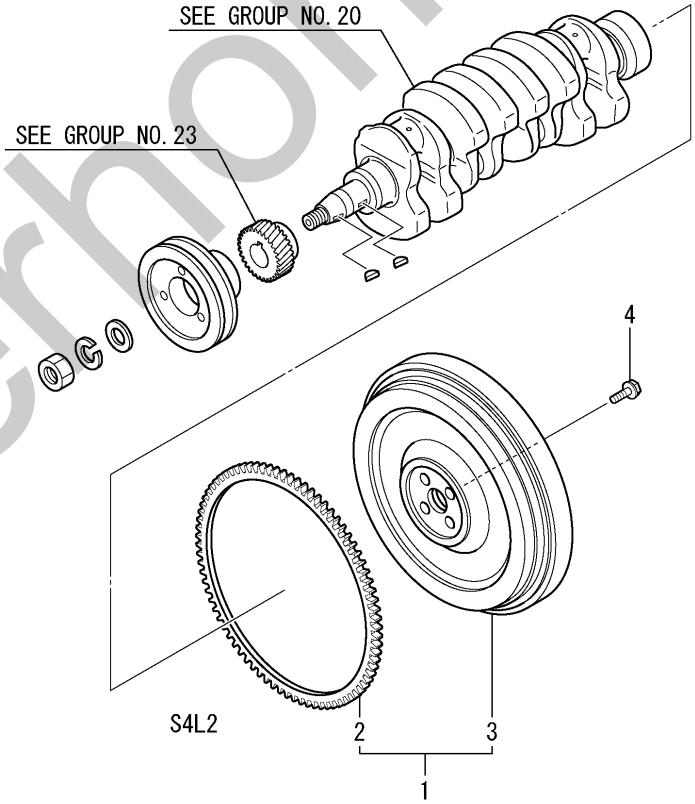

silverhorn.co.uk

REF. -NO.		PART NO.	R/P	SCENQG	PART NAME & DESCRIPTION		MODEL & QTY S3L2	S4L2		APPLICABLE SERIAL NO. FROM@-	-@UPTO	M/R	VRD
1		31B21-00090			FLYWHEEL SUB ASSY		1	▪					
		31A21-01040			FLYWHEEL SUB ASSY		▪	1					
2		MD024812			GEAR,RING	Z=120	1	1					
3		*			FLYWHEEL		1	1					
4		31A21-03800			BOLT,DRIVE PLATE		4	4				A	

silverhorn.co.uk

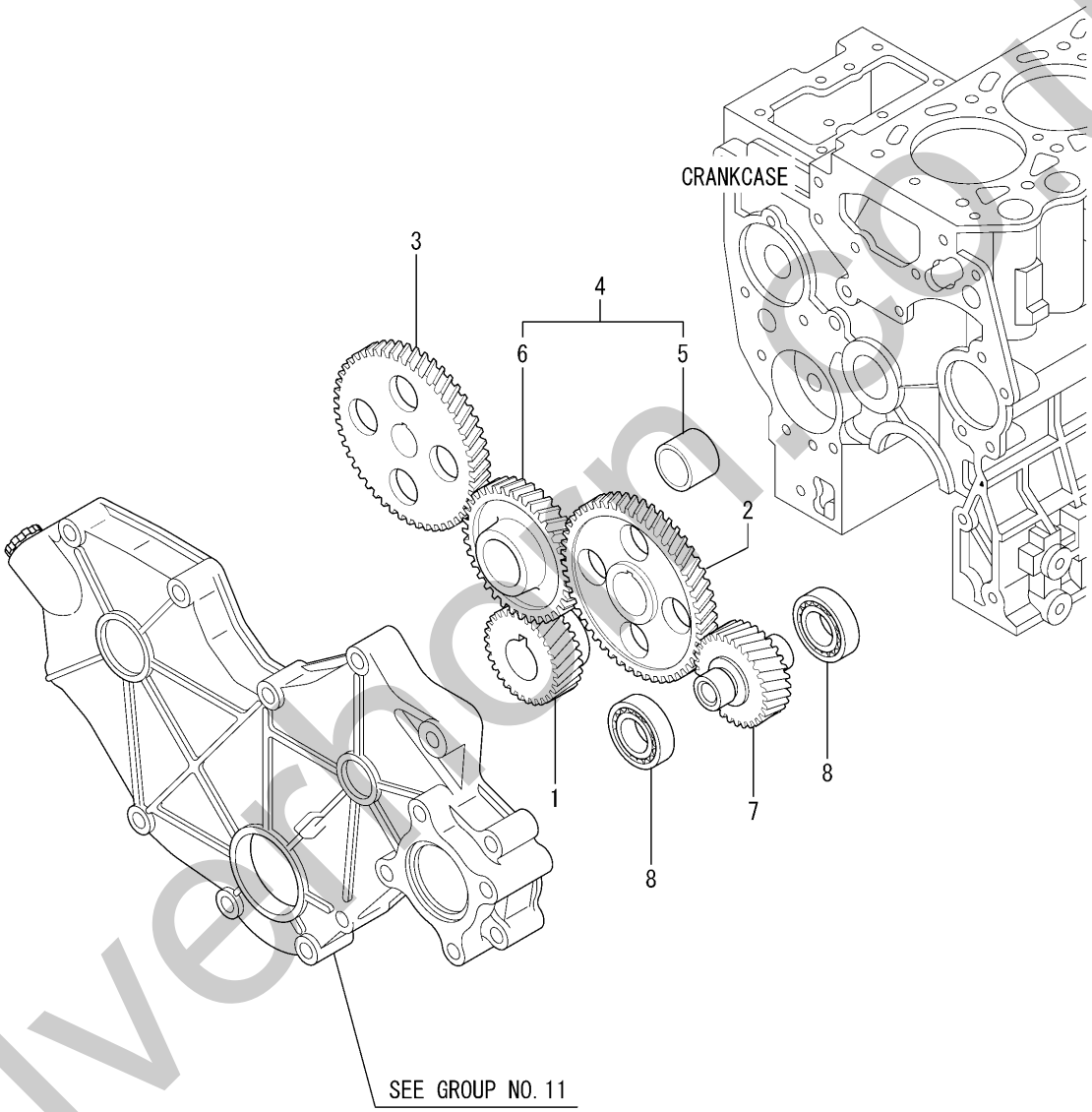

silverhorn.co.uk

REF. -NO.		PART NO.	R/P	SCENQG	PART NAME & DESCRIPTION		MODEL & QTY S3L2	S4L2		APPLICABLE SERIAL NO. FROM@-	-@UPTO	M/R	VRD
1		31A23-01302			GEAR, CRANKSHAFT	Z=28	1	1					
2		31A23-01406			GEAR, CAMSHAFT	Z=56	1	1					
3		31A23-10101			GEAR, INJECTION PUMP	Z=56	1	1					
4		31A23-01023			GEAR ASSY, IDLER	Z=39	1	1					
5		*			BUSHING, IDLER		1	1					
6		*			GEAR, IDLER		1	1					
7		31A23-01502			GEAR, PRESS OIL PUMP	Z=28	1	1					
8		MD712517			BEARING, REAR		2	2				A	

silverhorn.co.uk

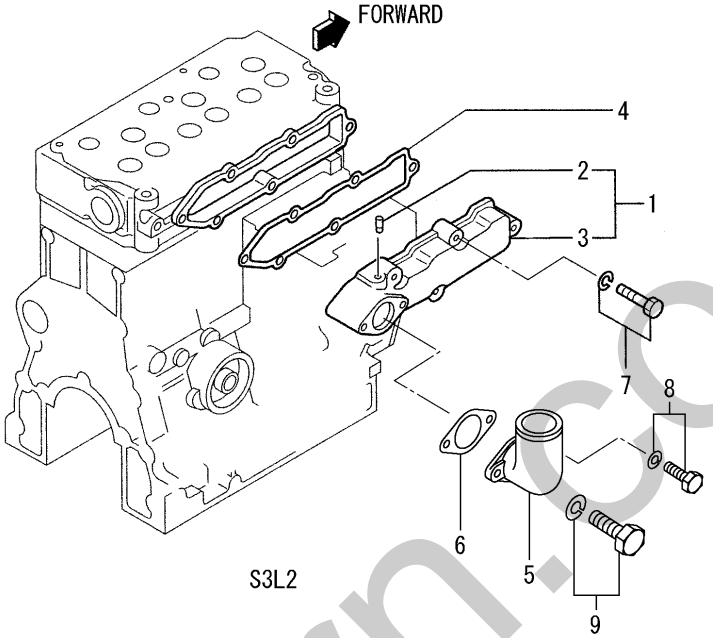

S3L2

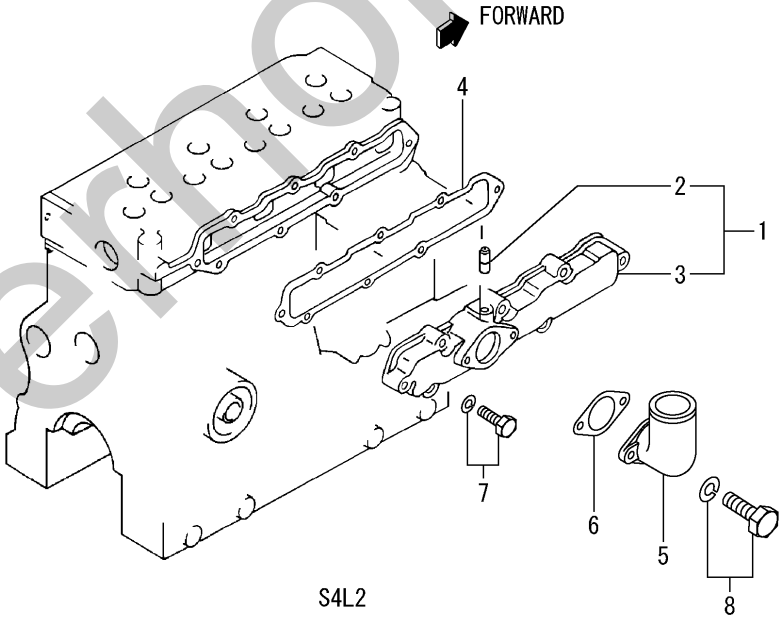

S4L2

silverhorn.co.uk

REF. -NO.		PART NO.	R/P	SCENQG	PART NAME & DESCRIPTION		MODEL & QTY S3L2	S4L2		APPLICABLE SERIAL NO. FROM@-	-@UPTO	M/R	VRD
1		31B30-10011			COVER ASSY, INLET		1	・					
		31A30-20011			COVER ASSY, INLET		・	1					
2		*			PIPE		1	1					
3		*			COVER, INLET		1	1					
4		31B30-00902			GASKET, INLET COVER		1	・				A	
		31A30-10902			GASKET, INLET COVER		・	1				A	
5		31A30-00300			PIPE, INLET		1	1					
6		31A30-00801			GASKET, INLET PIPE		1	1				A	
7		F1805-08035			BOLT, W/WASHER	B/W	5	8				A	
8		F1805-08020			BOLT, W/WASHER	B/W	1	2				A	
9		MF241266			BOLT, W/WASHER		1	・				A	

silverhorn.co.uk

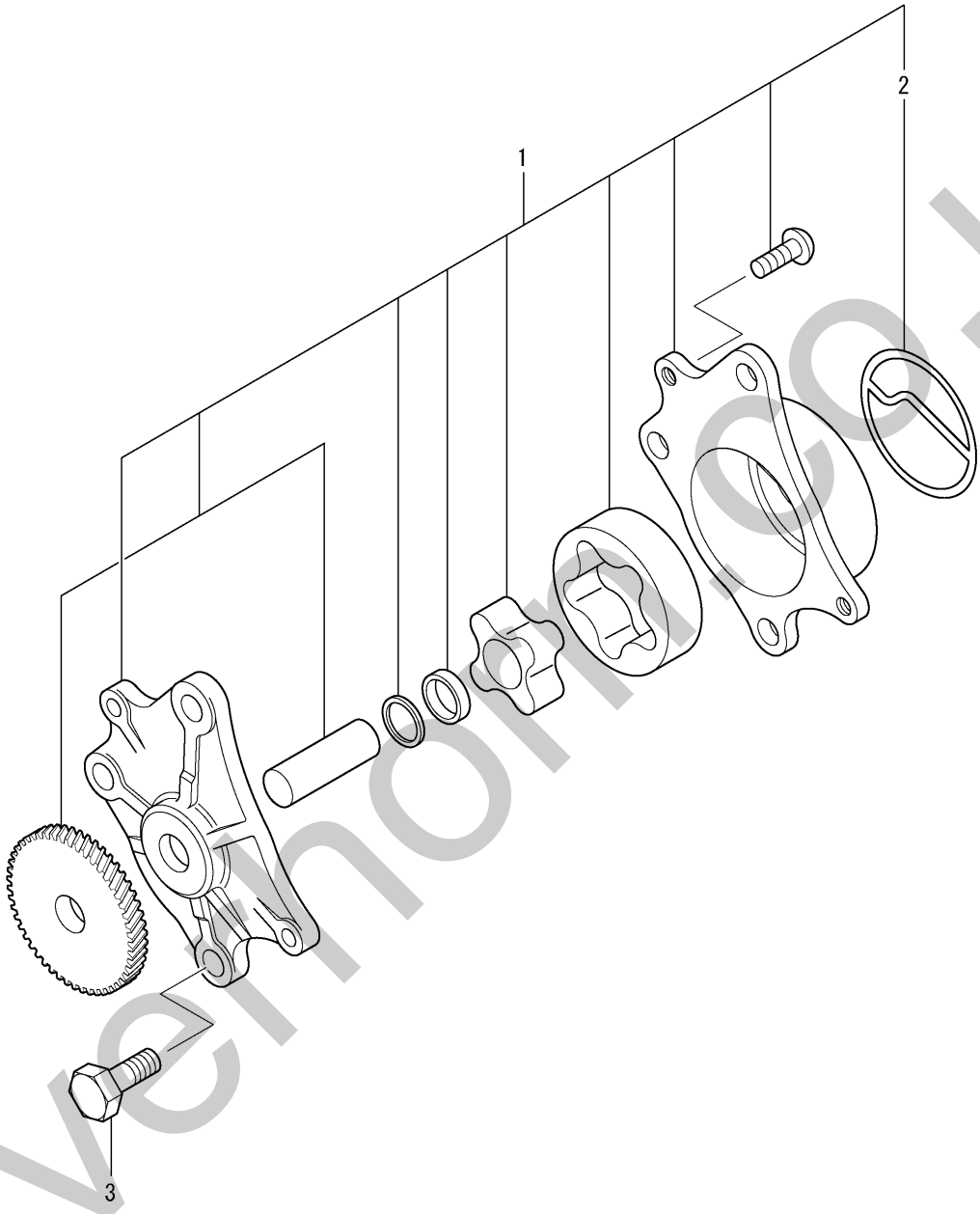

NOTE;The shaft and inner rotor and gear which are force fitted to each other are not to be supplied individually.

silverhomes.co.uk

REF. -NO.		PART NO.	R/P	SCENQG	PART NAME & DESCRIPTION		MODEL & QTY S3L2	S4L2		APPLICABLE SERIAL NO. FROM@-	-@UPTO	M/R	VRD
1		31A35-30010			PUMP ASSY,OIL		1	1					
2		31A35-02300			PACKING,BODY		1	1				A	
3		MF101256			BOLT		3	3				A	

silverhorn.co.uk

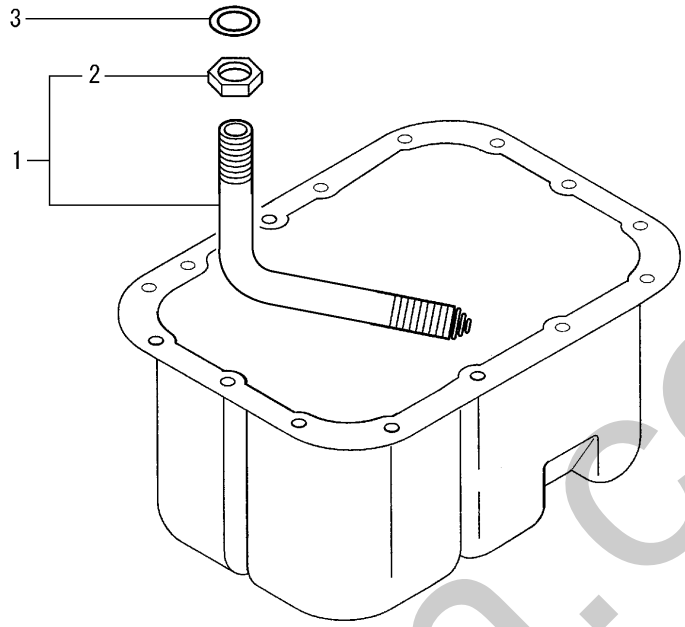

S3L2

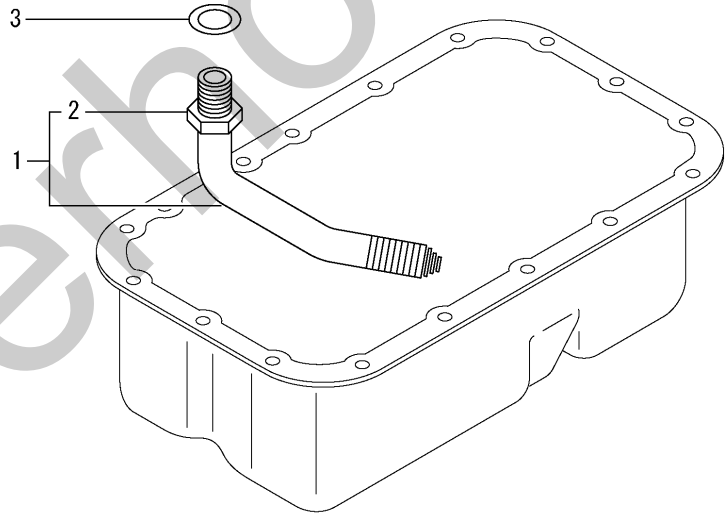

S4L2

silverhorn.co.uk

REF. -NO.		PART NO.	R/P	SCENQG	PART NAME & DESCRIPTION		MODEL & QTY S3L2	S4L2		APPLICABLE SERIAL NO. FROM@-	-@UPTO	M/R	VRD
1		31A35-05040			STRAINER ASSY		1	▪				A	
		MM430176			STRAINER ASSY		▪	1				A	
2		F2320-16000			NUT,JAM		1	1				A	
3		MF660036			GASKET		1	1				A	

silverhorn.co.uk

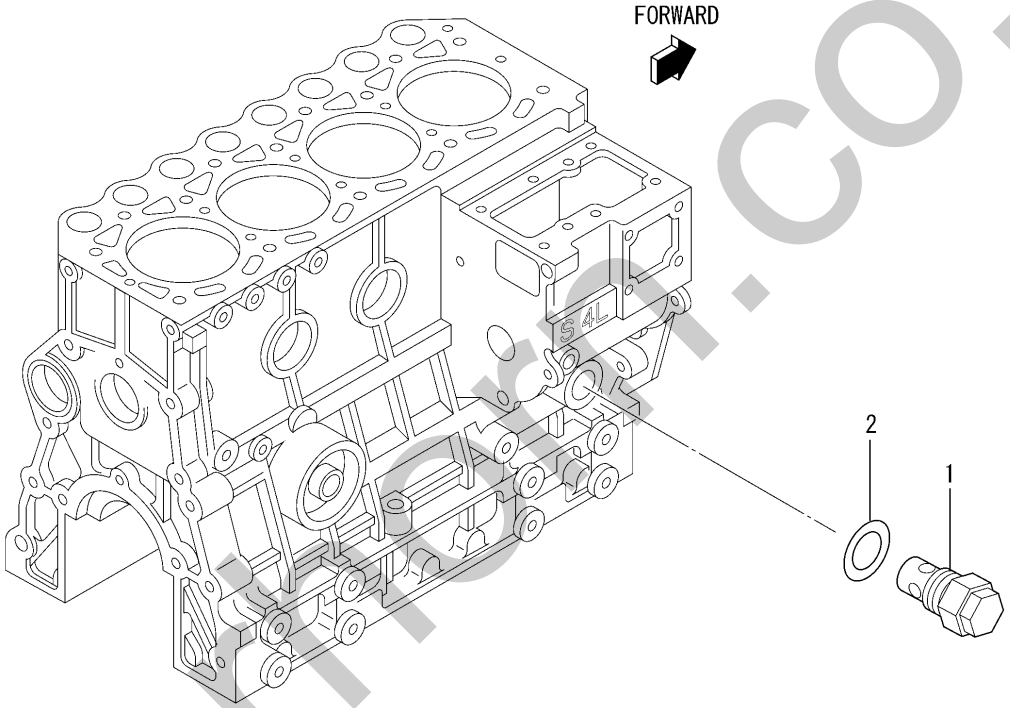

This illustration shows S4L2

silverfort.co.uk

REF. -NO.		PART NO.	R/P	SCENQG	PART NAME & DESCRIPTION		MODEL & QTY S3L2	S4L2		APPLICABLE SERIAL NO. FROM@-	-@UPTO	M/R	VRD
1		32A36-05012			VALVE ASSY,RELIEF		1	1					
2		34340-00700			GASKET		1	1				A	

silverhorn.co.uk

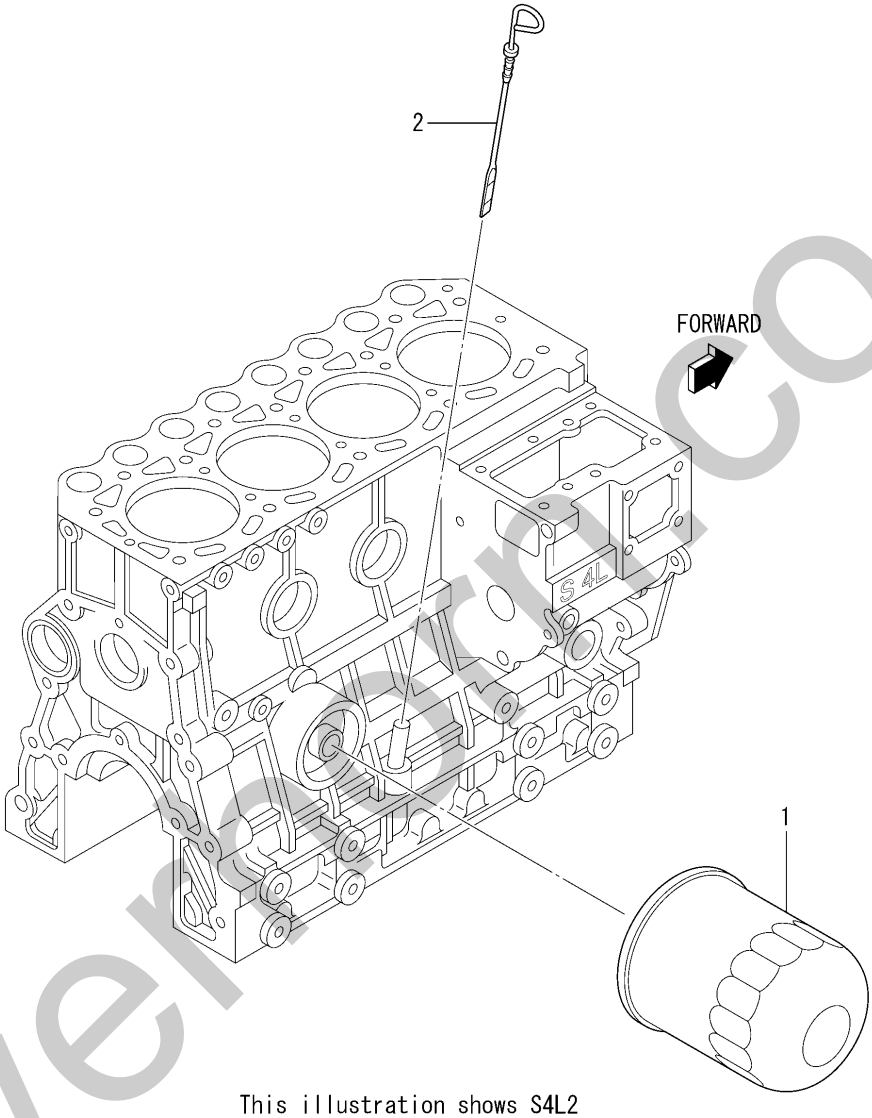

This illustration shows S4L2

silverfarm.co.uk

REF. -NO.		PART NO.	R/P	SCENQG	PART NAME & DESCRIPTION		MODEL & QTY S3L2	S4L2		APPLICABLE SERIAL NO. FROM@-	-@UPTO	M/R	VRD
1		30A40-00103			FILTER ASSY,OIL		1	1				A	
2		31A42-00300			GAGE,OIL LEVEL		1	1					

silverhorn.co.uk

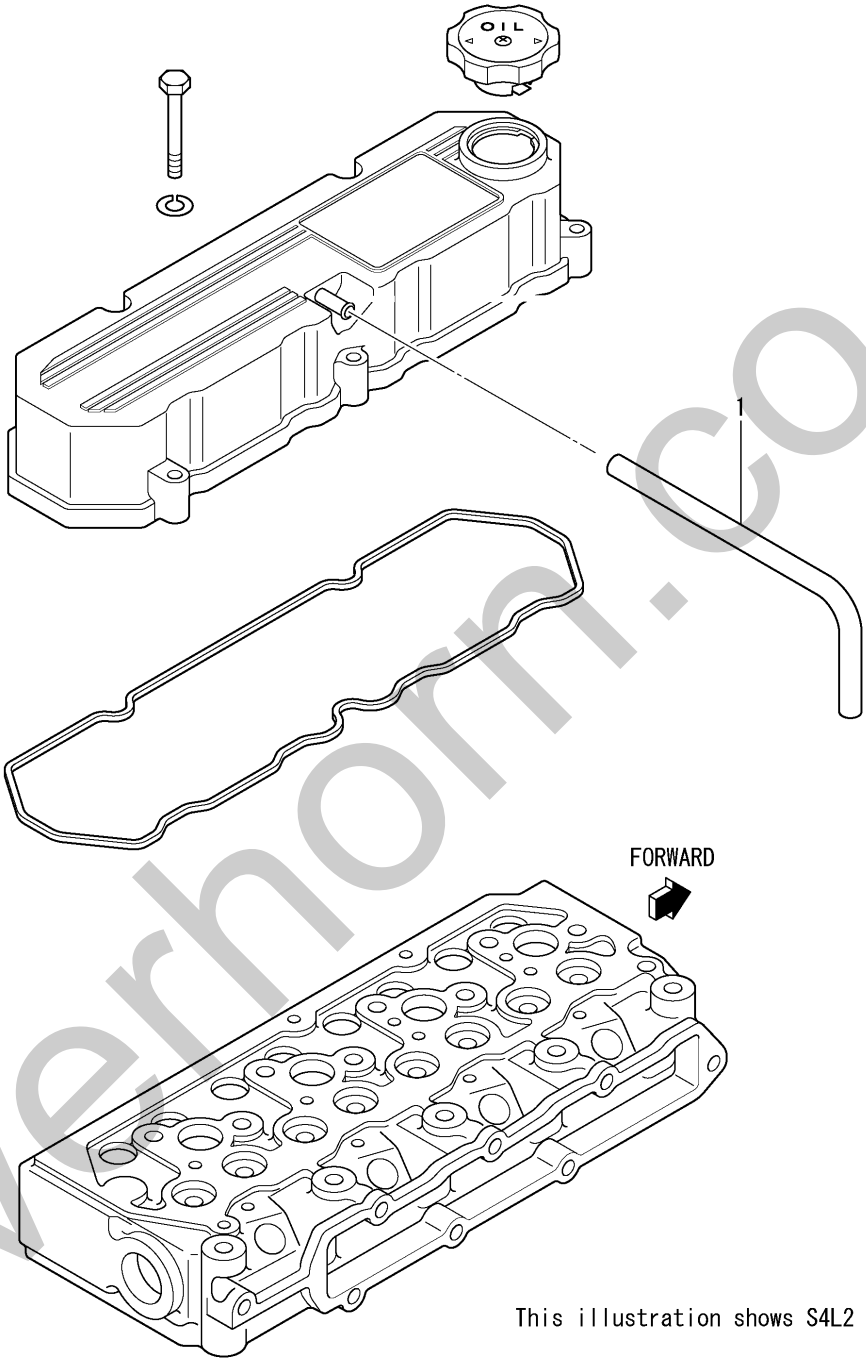

silverhorn.co.uk

REF. -NO.		PART NO.	R/P	SCENQG	PART NAME & DESCRIPTION		MODEL & QTY S3L2	S4L2		APPLICABLE SERIAL NO. FROM@-	-@UPTO	M/R	VRD
1		MM400380			HOSE, BREATHER		1	1					

silverhorn.co.uk

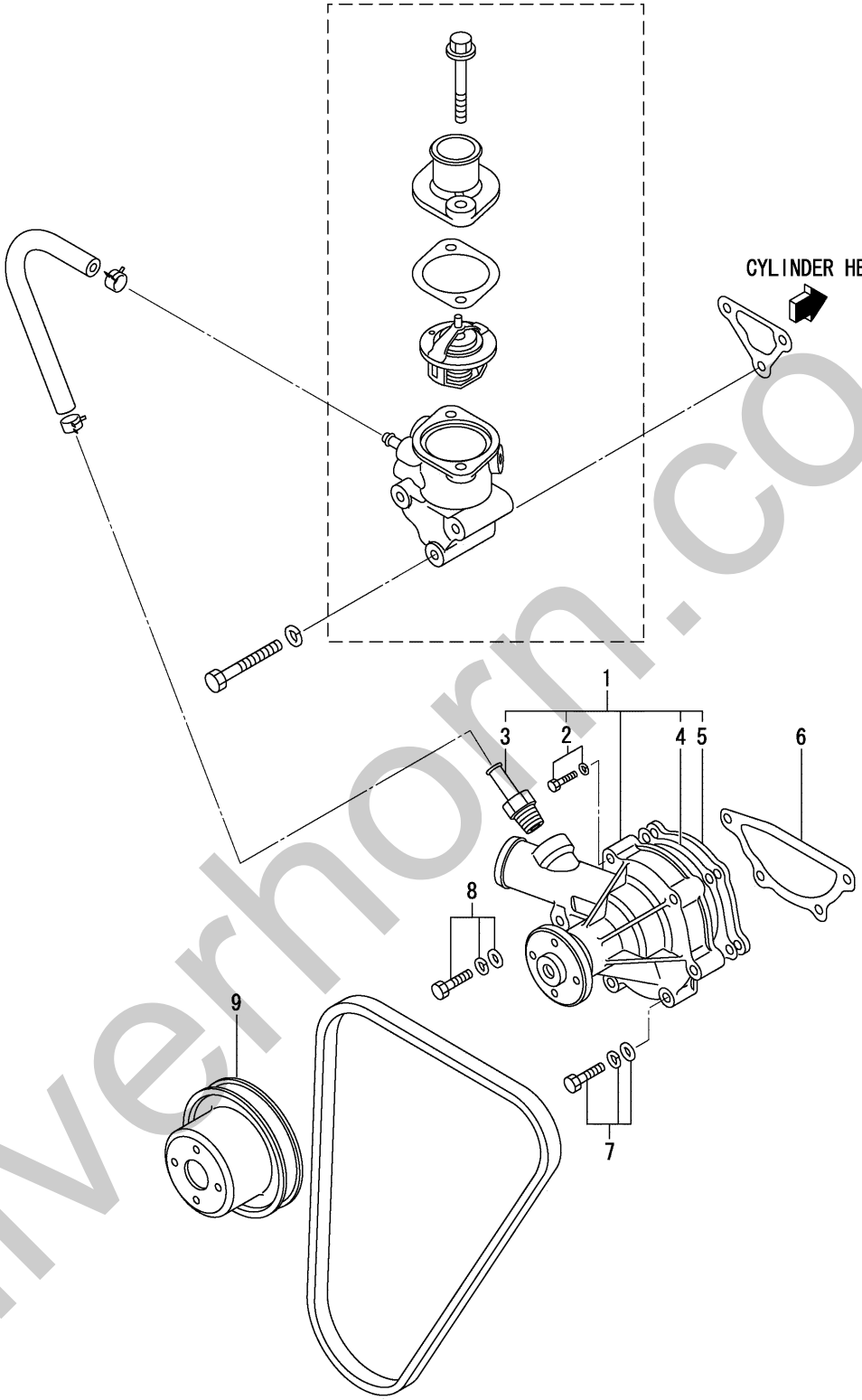

silverhorn.co.uk

REF. -NO.		PART NO.	R/P	SCENQG	PART NAME & DESCRIPTION		MODEL & QTY S3L2	S4L2		APPLICABLE SERIAL NO. FROM@-	-@UPTO	M/R	VRD
1		MM409302			PUMP ASSY,WATER		1	1					
2		F1805-06030			BOLT,W/WASHER	B/W	2	2				A	
3		MM409314			JOINT,WATER PUMP		1	1					
4		MM409326			GASKET,WATER PUMP		1	1				A	
5		MM409327			PLATE,WATER PUMP		1	1					
6		30H45-00101			GASKET,WATER PUMP		1	1				A	
7		F1825-08045			BOLT,W/WASHER	B/W	3	3				A	
8		F1825-08060			BOLT,W/WASHER	B/W	1	1				A	
9		31A45-20700			PULLEY,WATER PUMP		1	1					

silverhorn.co.uk

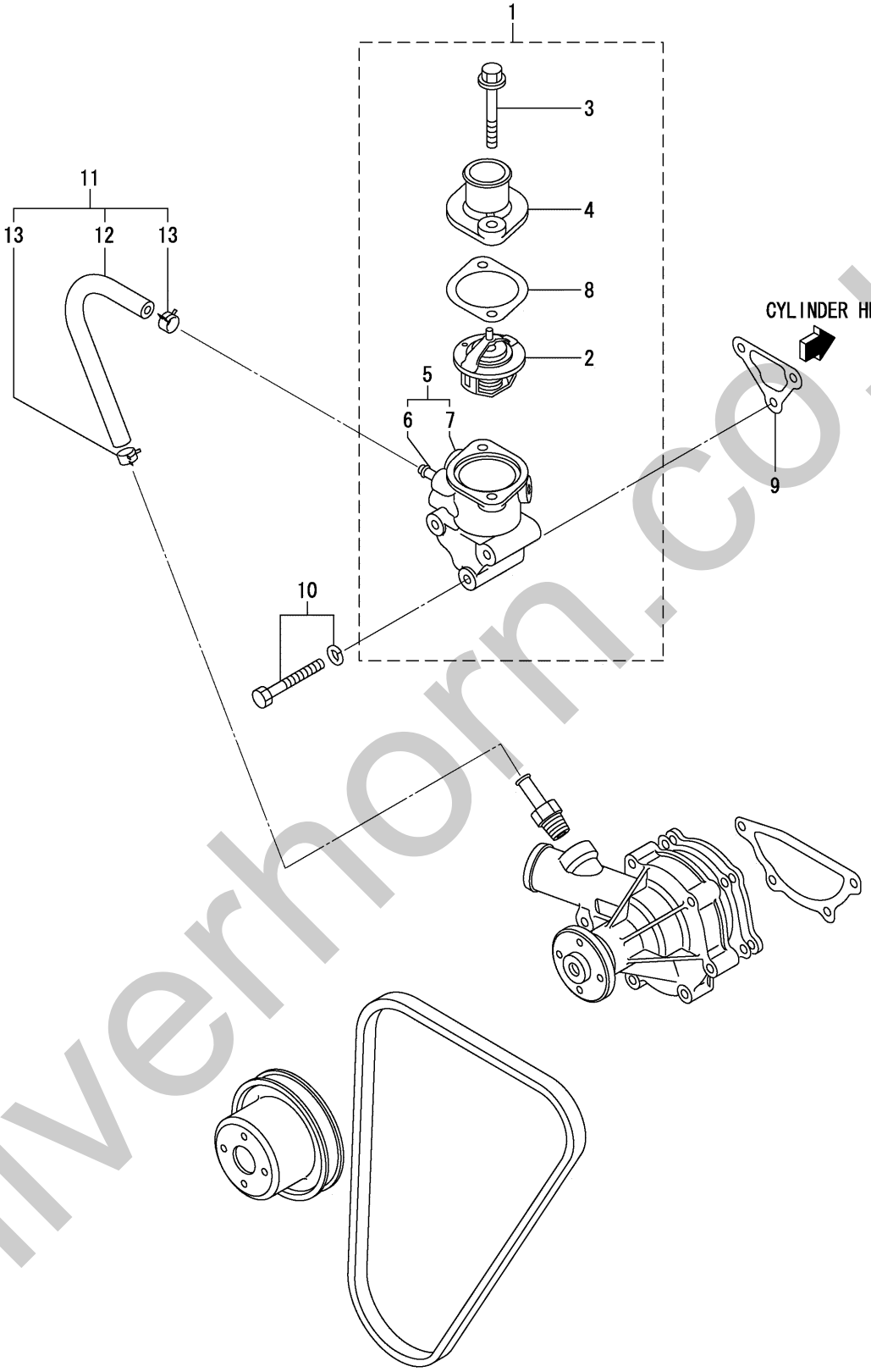

silverhorn.co.uk

REF. -NO.		PART NO.	R/P	SCENQG	PART NAME & DESCRIPTION		MODEL & QTY S3L2	S4L2		APPLICABLE SERIAL NO. FROM@-	-@UPTO	M/R	VRD
1		*			THERMOSTAT ASSY		1	1					
2		K6516441			THERMOSTAT		1	1					
3		MF140227			BOLT,FLANGE		2	2					
4		MM409-31302			COVER,THERMOSTAT		1	1					
5		31A46-00064			CASE ASSY		1	1					
6		*			PIPE,THERMOSTAT		1	1					
7		*			CASE,THERMOSTAT		1	1					
8		31A46-11200			GASKET,THERMOSTAT		1	1				A	
9		31A46-10101			GASKET,THERMO CASE		1	1				A	
10		F1805-08065			BOLT,W/WASHER	B/W	3	3				A	
11		MM413196			HOSE ASSY		1	1					
12		MS603014			HOSE,FUEL		1	1				A	
13		MS660164			CLIP,HOSE		2	2				A	

silverhorn.co.uk

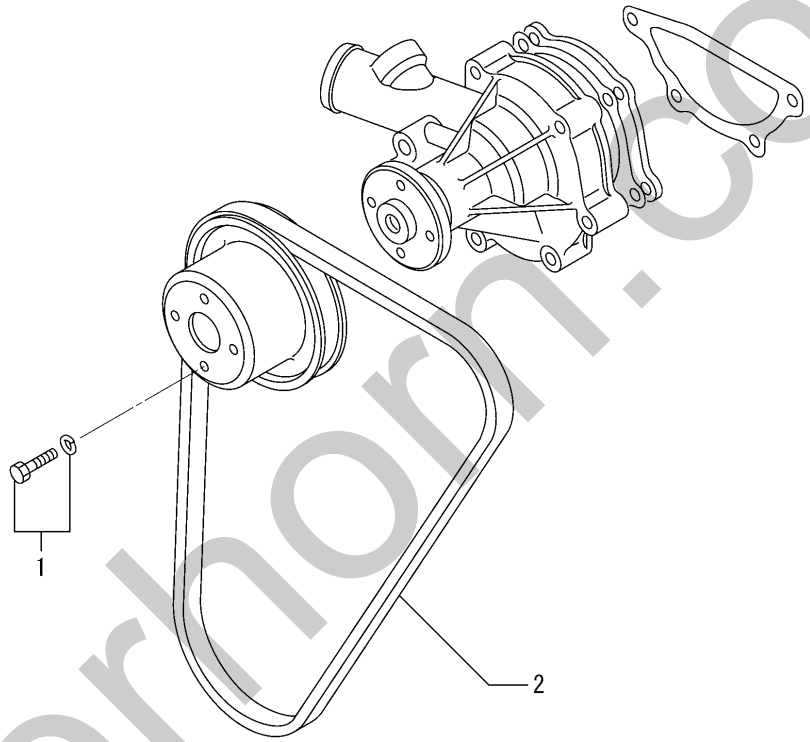

silverhorn.co.uk

REF. -NO.		PART NO.	R/P	SCENQG	PART NAME & DESCRIPTION		MODEL & QTY S3L2	S4L2		APPLICABLE SERIAL NO. FROM@-	-@UPTO	M/R	VRD
1		F1805-06012			BOLT,W/WASHER	B/W	4	4				A	
2		MD041704			V-BELT	L=970	1	1				A	

silverhorn.co.uk

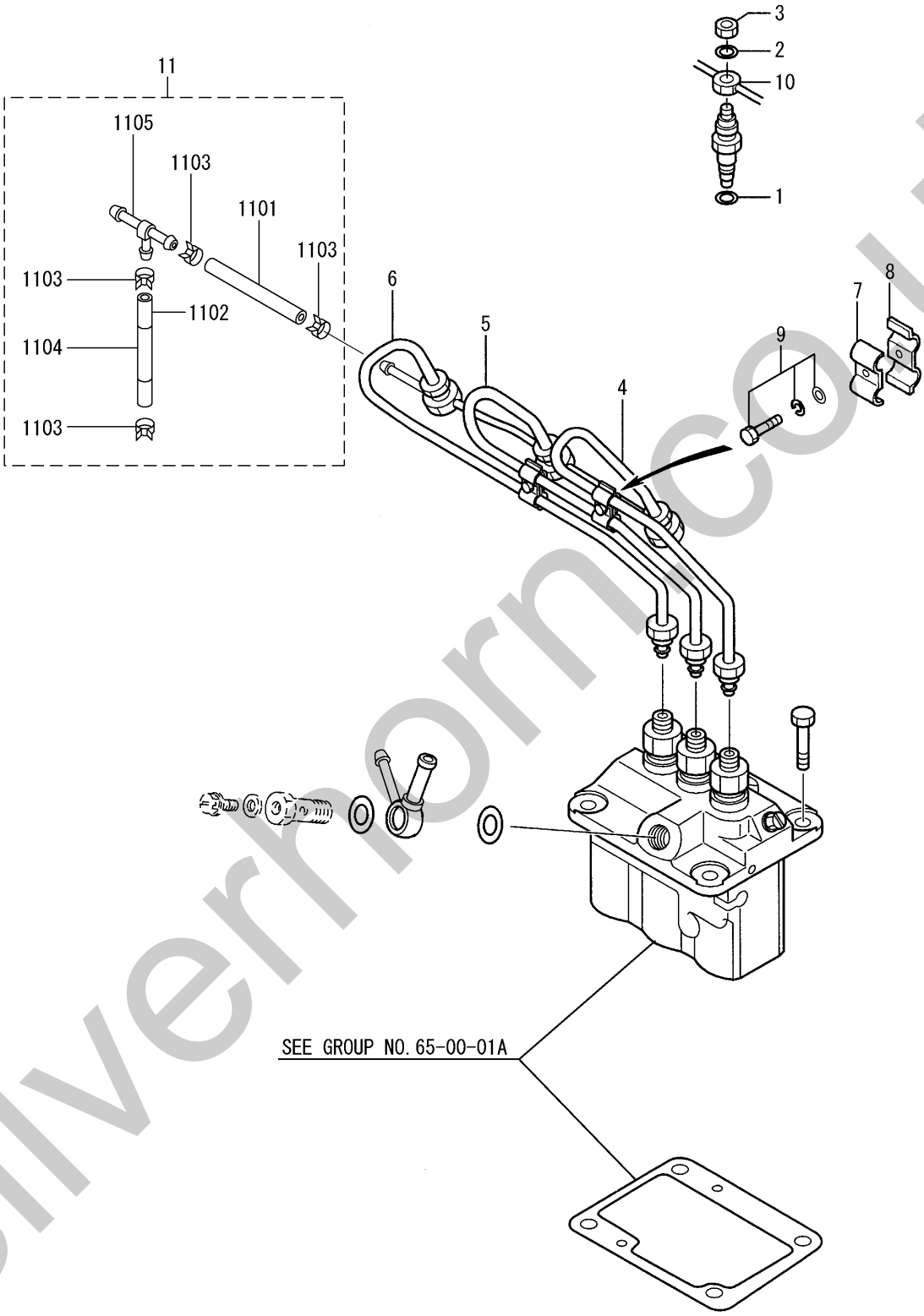

silverhorn.co.uk

REF. -NO.		PART NO.	R/P	SCENQG	PART NAME & DESCRIPTION		MODEL & QTY S3L2	S4L2		APPLICABLE SERIAL NO. FROM@-	-@UPTO	M/R	VRD
1		MD070717			GASKET,HOLDER		3	・				A	
2		MD068355			GASKET,FUEL RETURN		3	・				A	
3		MD068353			NUT		3	・				A	
4		31A61-04100			PIPE,INJECTION NO.1		1	・					
5		31A61-04200			PIPE,INJECTION NO.2		1	・					
6		31A61-04300			PIPE,INJECTION NO.3		1	・					
7		MM430703			CLAMP		2	・					
8		MM430614			CLAMP		2	・					
9		F1825-06025			BOLT,W/WASHER	B/W	2	・				A	
10		31B61-02800			PIPE,FUEL LEAK-OFF		1	・					
11		31B61-13100			HOSE ASSY,AIR VENT		1	・					
11	01	MM430131			HOSE,FUEL		1	・					
11	02	MS604032			HOSE,FUEL		1	・					
11	03	MS660169			CLIP,HOSE		4	・				A	
11	04	31A61-01200			HOSE,RUBBER		1	・				A	
11	05	31A61-01500			JOINT,THREE WAY		1	・					

silverhorn.co.uk

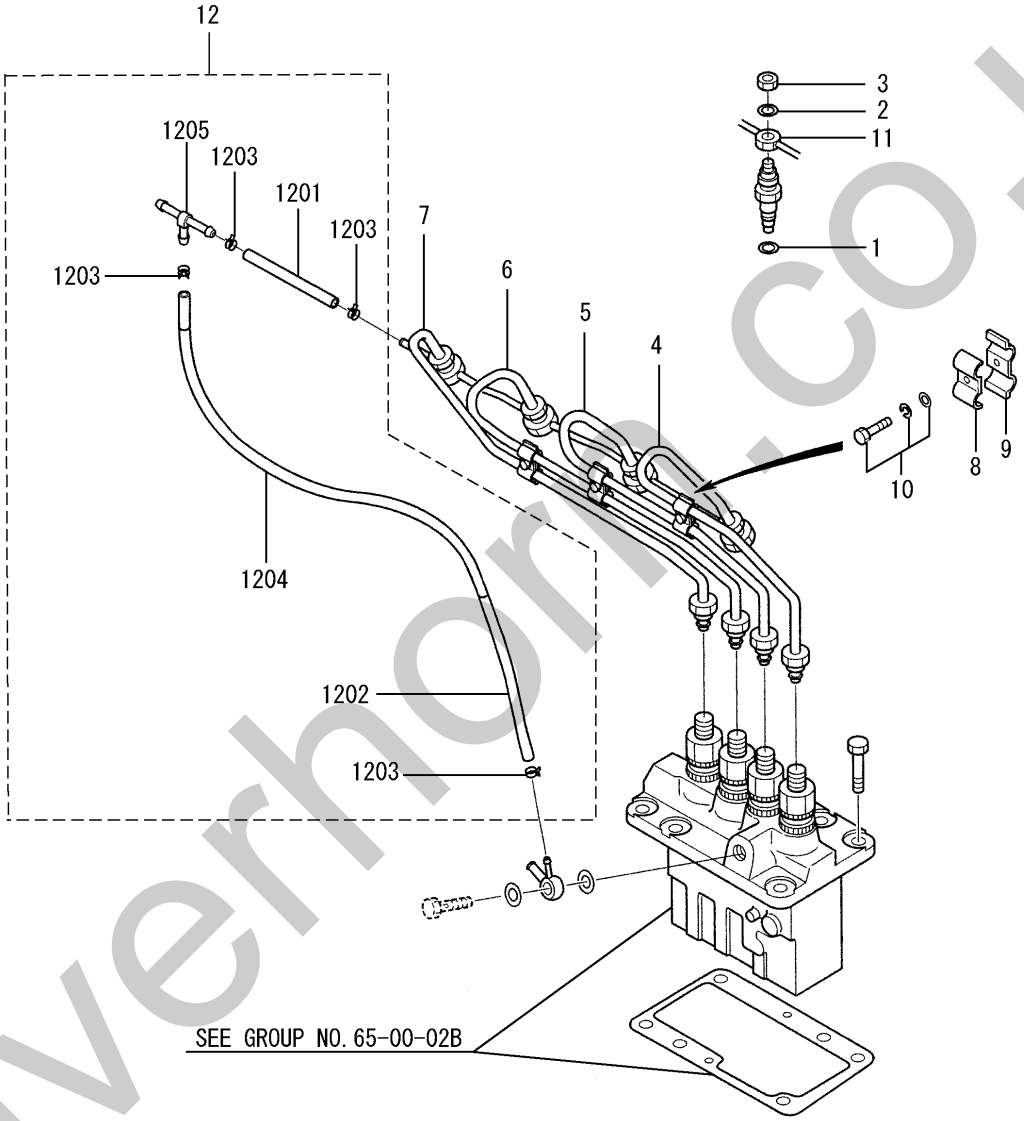

silverhorn.co.uk

REF. -NO.		PART NO.	R/P	SCENQG	PART NAME & DESCRIPTION		MODEL & QTY S3L2	S4L2		APPLICABLE SERIAL NO. FROM@-	-@UPTO	M/R	VRD
1		MD070717			GASKET,HOLDER		·	4				A	
2		MD068355			GASKET,FUEL RETURN		·	4				A	
3		MD068353			NUT		·	4				A	
4		31A61-08100			PIPE,INJECTION NO.1		·	1					
5		31A61-08200			PIPE,INJECTION NO.2		·	1					
6		31A61-08300			PIPE,INJECTION NO.3		·	1					
7		31A61-08400			PIPE,INJECTION NO.4		·	1					
8		MM430703			CLAMP		·	2					
9		MM430614			CLAMP		·	2					
10		F1825-06025			BOLT,W/WASHER	B/W	·	2				A	
11		31A61-02500			PIPE,FUEL LEAK-OFF		·	1					
12		31A61-23300			HOSE ASSY,AIR VENT		·	1					
12	01	MS604005			HOSE,FUEL		·	1					
12	02	MS604043			HOSE,FUEL		·	1					
12	03	MS660169			CLIP,HOSE		·	4				A	
12	04	31A61-01200			HOSE,RUBBER		·	1				A	
12	05	31A61-01500			JOINT,THREE WAY		·	1					

silverhorn.co.uk

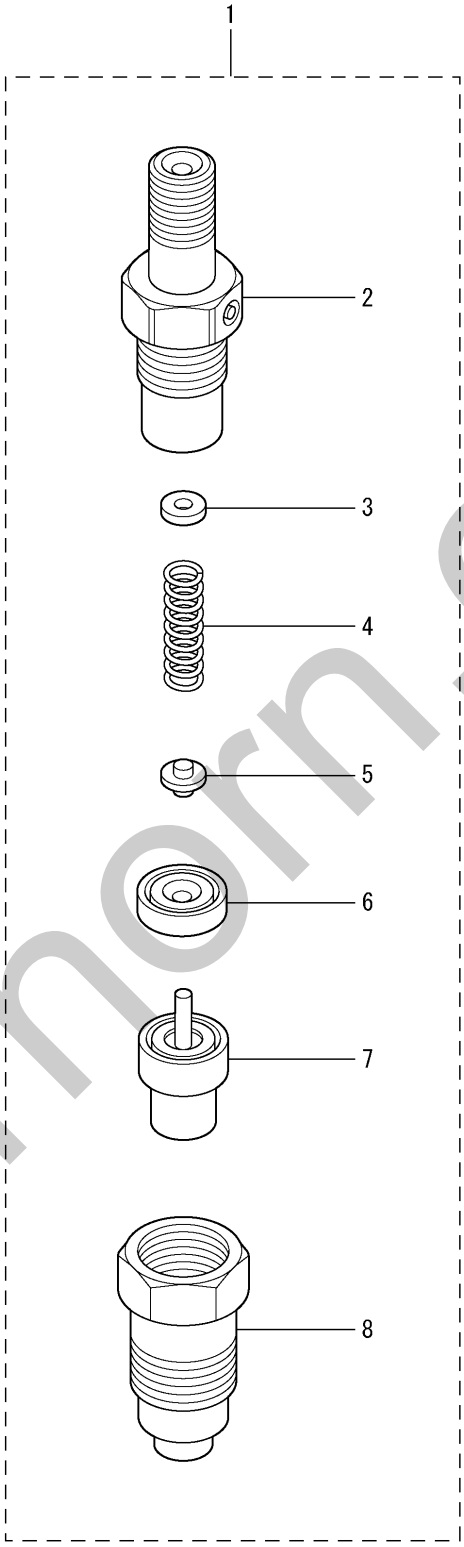

silverhorn.co.uk

REF. -NO.		PART NO.	R/P	SCENQG	PART NAME & DESCRIPTION		MODEL & QTY S3L2	S4L2		APPLICABLE SERIAL NO. FROM@-	-@UPTO	M/R	VRD
1		MM435-94101			NOZZLE & HOLDER ASSY		3	4				A	
2		09311-03840			BODY SUB ASSY		3	4					
3		09317-51810			WASHER	T=1.25	AR	AR				A	
		09317-51830			WASHER	T=1.30	AR	AR				A	
		09317-51850			WASHER	T=1.35	AR	AR				A	
		09317-51870			WASHER	T=1.40	AR	AR				A	
		09317-51890			WASHER	T=1.45	AR	AR				A	
		09317-51910			WASHER	T=1.50	AR	AR				A	
		09317-51930			WASHER	T=1.55	AR	AR				A	
		09317-51950			WASHER	T=1.60	AR	AR				A	
		09317-51970			WASHER	T=1.65	AR	AR				A	
		09317-51990			WASHER	T=1.70	AR	AR				A	
4		09312-70310			SPRING,PRESSURE		3	4				A	
5		09312-10380			PIN,PRESSURE		3	4					
6		09317-40070			PIECE,DISTANCE		3	4					
7		09340-05060			NOZZLE ASSY		3	4				A	
8		09316-41351			NUT,NOZZLE RETAINING		3	4					

silverhorn.co.uk

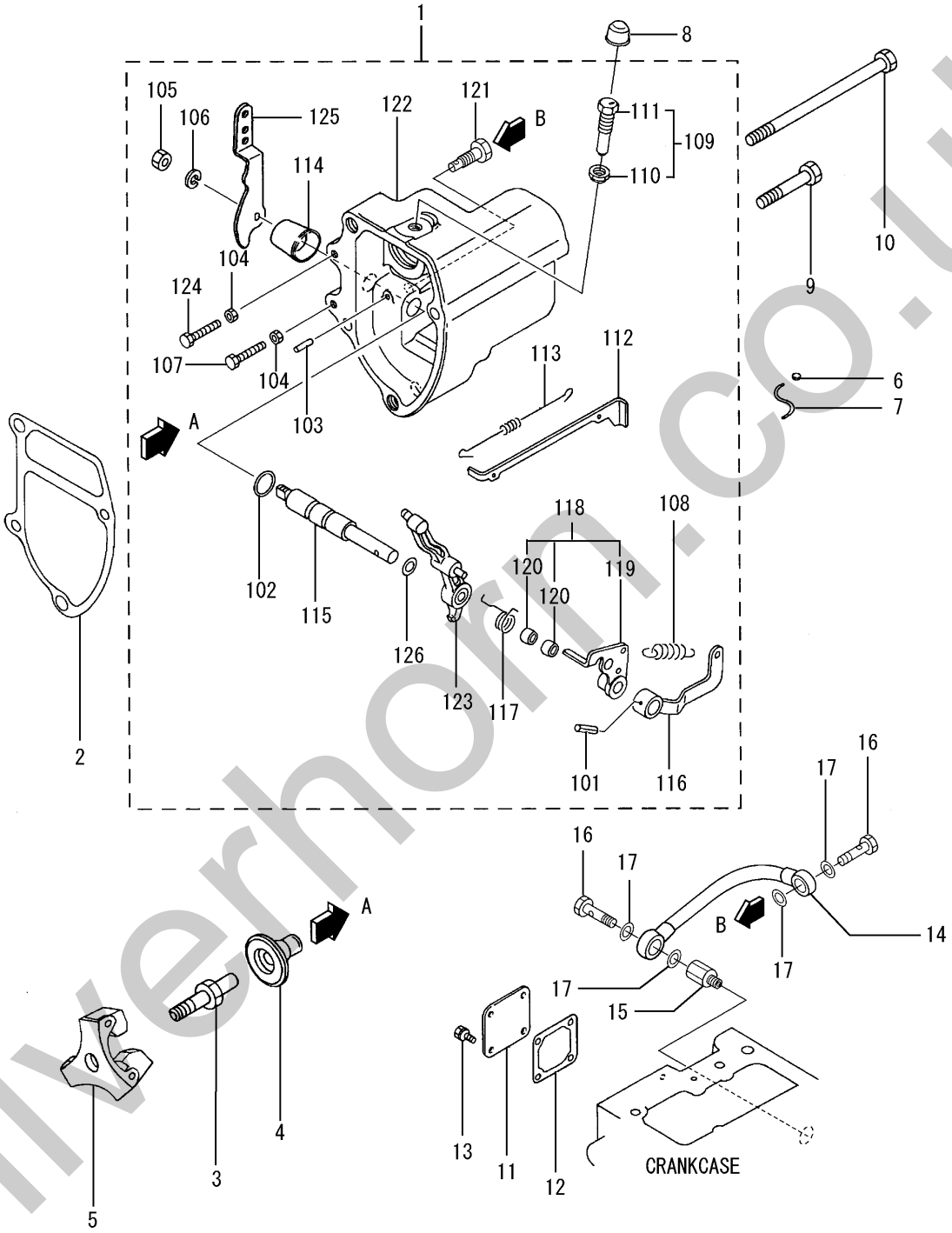

silverhorn.co.uk

REF. -NO.		PART NO.	R/P	SCENQG	PART NAME & DESCRIPTION		MODEL & QTY S3L2	S4L2		APPLICABLE SERIAL NO. FROM@-	-@UPTO	M/R	VRD
1		31B63-12080			CASE ASSY, GOVERNOR		1	·					
1	01	F2850-03020			PIN, SPRING		1	·				A	
1	02	F3150-01010			O-RING		1	·				A	
1	03	K8712630			PIN, GROOVED		1	·					
1	04	MF430004			NUT		2	·				A	
1	05	MF430725			NUT, JAM		1	·				A	
1	06	MF450405			WASHER, SPRING		1	·				A	
1	07	MM331-31701			BOLT, SPEED SET		1	·					
1	08	MM433674			SPRING, GOVERNOR		1	·				A	
1	09	*			SCREW ASSY, RACK SET		1	·				A	
1	10	30L63-00600			NUT, TORQUE SET		1	·					
1	11	31A63-05601			SCREW, RACK SET		1	·					
1	12	31B63-00400			TIE-ROD		1	·					
1	13	31B63-00500			SPRING, TIE-ROD		1	·					
1	14	31A63-01800			COVER, GOVERNOR SHAFT		1	·					
1	15	31A63-02600			SHAFT, GOVERNOR		1	·					
1	16	31A63-02700			LEVER, GOV SPRING		1	·					
1	17	31A63-05300			SPRING, START		1	·				A	
1	18	*			LEVER ASSY, TENSION		1	·					
1	19	31A63-05400			LEVER, TENSION		1	·					
1	20	MM406420			BEARING, NEEDLE		2	·				A	
1	21	31A63-07100			CONNECTOR		1	·					
1	22	31A63-07200			CASE, GOVERNOR		1	·					
1	23	31A63-07300			LEVER ASSY, GOVERNOR		1	·					
1	24	31A63-07900			BOLT, LOW IDLE SET		1	·					
1	25	31A63-11301			LEVER, SPEED CONTROL		1	·					
1	26	31A63-15200			SHIM, GOVERNOR SHAFT		1	·					
2		31A63-12201			GASKET, GOVERNOR CASE		1	·				A	
3		31A63-10305			SHAFT, SLIDING SLEEVE		1	·					
4		31A63-25101			SLEEVE, SLIDING		1	·					
5		31A63-02030			WEIGHT ASSY, GOVERNOR		1	·					
6		MK992-00001			METAL		1	·					
7		MK993-00240			WIRE		1	·					
8		31A64-00400			CAP, TORQUE SET		1	·					
9		F1035-08045			BOLT		3	·				A	
10		31A63-02300			BOLT, GOVERNOR CASE		1	·					
11		MM409150			COVER, TIE-ROD		1	·					
12		30A63-00101			GASKET, TIE-ROD COVER		1	·				A	
13		F1805-06014			BOLT, W/WASHER	B/W	4	·				A	
14		31A63-08100			PIPE, OIL		1	·					
15		31A63-06900			CONNRCTOR		1	·					
16		MF650102			BOLT, EYE		2	·				A	
17		MF660063			GASKET		4	·				A	

silvermorn.co.uk

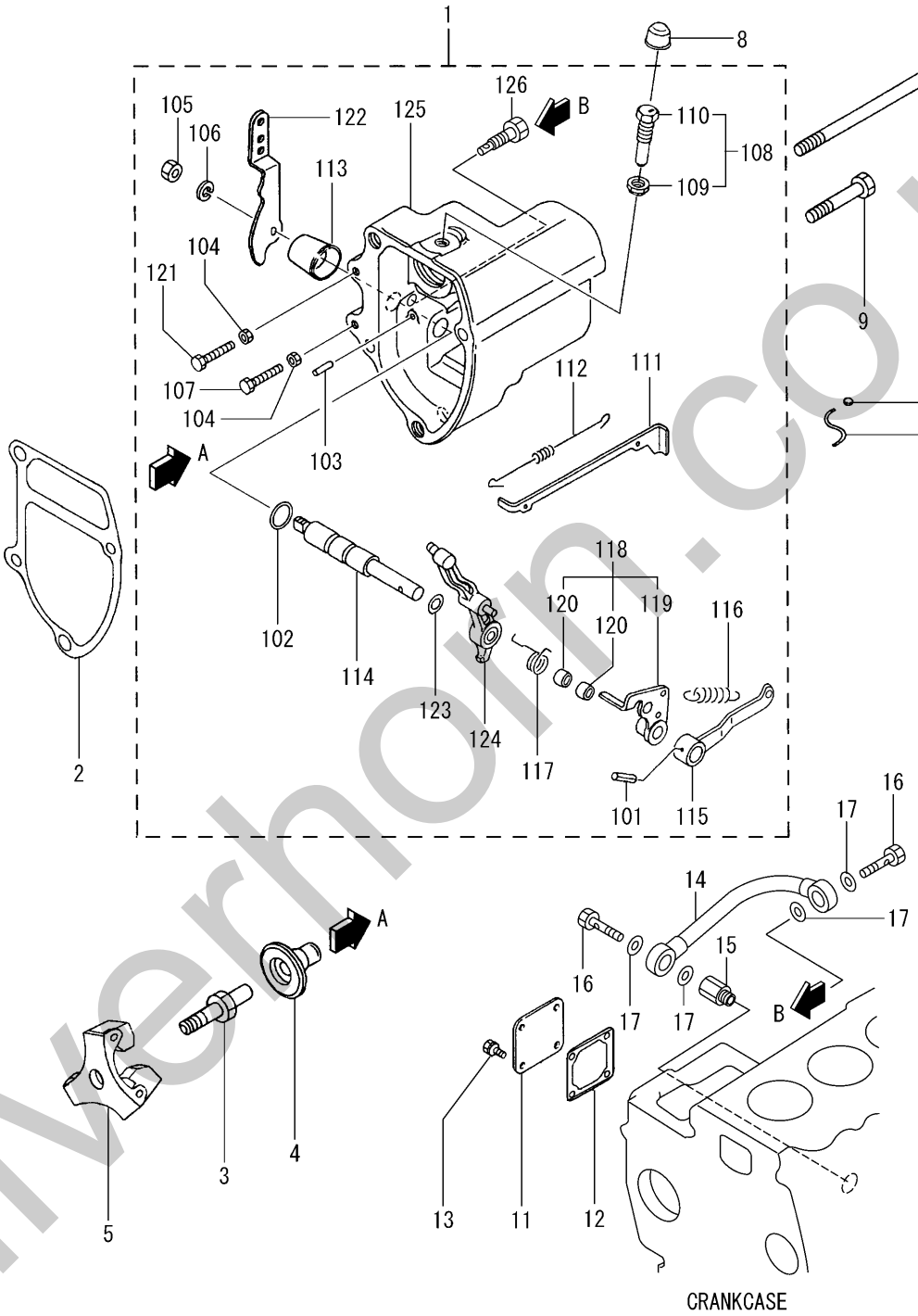

silverhorn.co.uk

REF. -NO.		PART NO.	R/P	SCENQG	PART NAME & DESCRIPTION		MODEL & QTY S3L2	S4L2		APPLICABLE SERIAL NO. FROM@-	-@UPTO	M/R	VRD
1		31A63-27091			CASE ASSY, GOVERNOR		·	1					
1	01	F2850-03020			PIN, SPRING		·	1				A	
1	02	F3150-01010			O-RING		·	1				A	
1	03	K8712630			PIN, GROOVED		·	1					
1	04	MF430004			NUT		·	2				A	
1	05	MF430725			NUT, JAM		·	1				A	
1	06	MF450405			WASHER, SPRING		·	1				A	
1	07	MM331-31701			BOLT, SPEED SET		·	1					
1	08	*			SCREW ASSY, RACK SET		·	1				A	
1	09	30L63-00600			NUT, TORQUE SET		·	1					
1	10	31A63-05601			SCREW, RACK SET		·	1					
1	11	31A63-00400			TIE-ROD		·	1					
1	12	31A63-00500			SPRING, TIE-ROD		·	1					
1	13	31A63-01800			COVER, GOVERNOR		·	1					
1	14	31A63-02600			SHAFT, GOVERNOR		·	1					
1	15	31A63-02700			LEVER, GOV SPRING		·	1					
1	16	MM433720			SPRING, GOVERNOR		·	1					
1	17	31A63-05300			SPRING, START		·	1				A	
1	18	*			LEVER ASSY, TENSION		·	1					
1	19	31A63-05400			LEVER, TENSION		·	1					
1	20	MM406420			BEARING, NEEDLE		·	2				A	
1	21	31A63-07900			BOLT, LOW IDLE SET		·	1					
1	22	31A63-11301			LEVER, SPEED		·	1					
1	23	31A63-15200			SHIM, GOVERNOR SHAFT		·	1					
1	24	31A63-07300			LEVER, GOVERNOR		·	1					
1	25	31A63-07200			CASE, GOVERNOR		·	1					
1	26	31A63-07100			CONNECTOR		·	1					
2		31A63-12201			GASKET, GOVERNOR CASE		·	1				A	
3		31A63-10305			SHAFT, SLIDING SLEEVE		·	1					
4		31A63-25101			SLEEVE, SLIDING		·	1					
5		31A63-02030			WEIGHT ASSY, GOVERNOR		·	1					
6		MK992-00001			METAL		·	1					
7		MK993-00240			WIRE		·	1					
8		31A64-00400			CAP, TORQUE SET		·	1					
9		F1035-08045			BOLT		·	3				A	
10		31A63-02300			BOLT, GOVERNOR CASE		·	1					
11		MM409150			COVER, TIE-ROD		·	1					
12		30A63-00101			GASKET, TIE-ROD COVER		·	1				A	
13		F1805-06014			BOLT, W/WASHER	B/W	·	4				A	
14		31A63-08100			PIPE, OIL		·	1					
15		31A63-06900			CONNECTOR		·	1					
16		MF650102			BOLT, EYE		·	2				A	
17		MF660063			GASKET		·	4				A	

silvermorn.co.uk

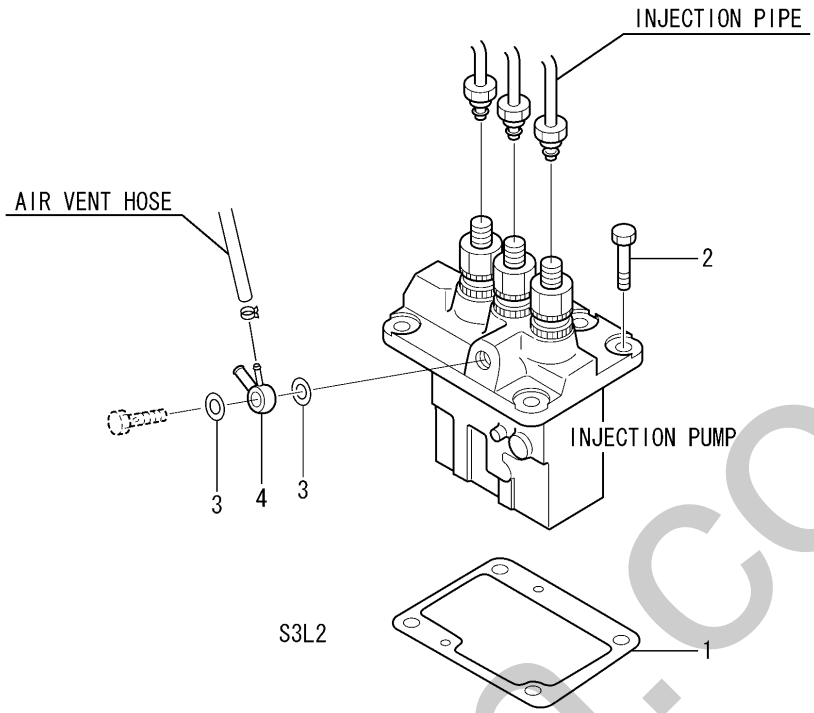

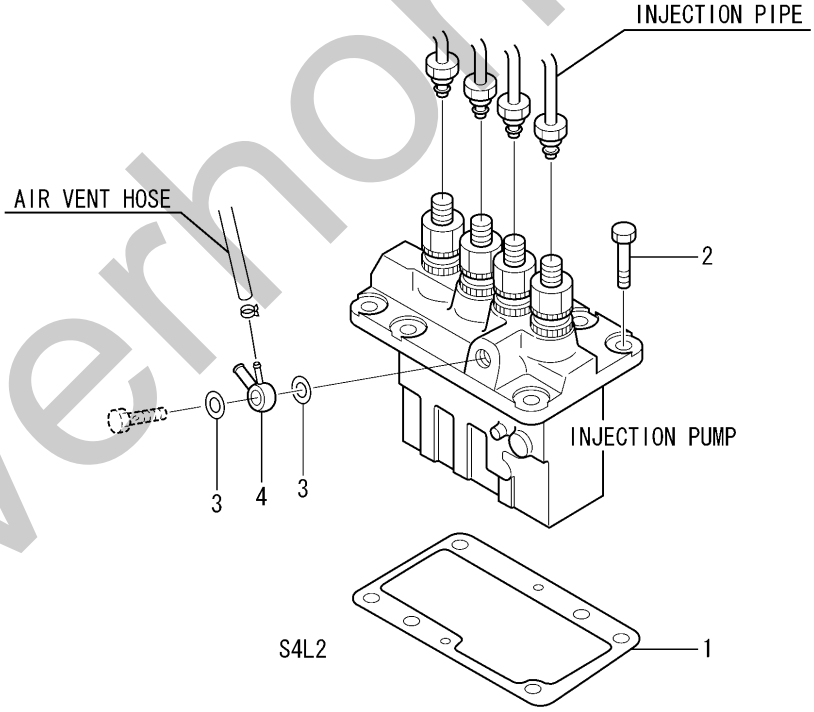

silverhorn.co.uk

REF. -NO.		PART NO.	R/P	SCENQG	PART NAME & DESCRIPTION		MODEL & QTY S3L2	S4L2		APPLICABLE SERIAL NO. FROM@-	-@UPTO	M/R	VRD
1		MM409040			SHIM	T=0.2	AR	·				A	
		MM409041			SHIM	T=0.3	AR	·				A	
		MM409042			SHIM	T=0.4	AR	·				A	
		MM409043			SHIM	T=0.5	AR	·				A	
		MM409044			SHIM	T=0.6	AR	·				A	
		MM409045			SHIM	T=0.7	AR	·				A	
		MM409046			SHIM	T=0.8	AR	·				A	
		MM409047			SHIM	T=0.9	AR	·				A	
		MM409048			SHIM	T=1.0	AR	·				A	
		MM409036			SHIM	T=0.7	·	AR				A	
		MM409037			SHIM	T=0.8	·	AR				A	
		MM409038			SHIM	T=0.9	·	AR				A	
		MM409039			SHIM	T=1.0	·	AR				A	
		MM409031			SHIM	T=0.2	·	AR				A	
2		F1035-08020			BOLT		4	6				A	
3		MK661-12000			WASHER, SEAL		2	·				A	
		MK661-14000			WASHER, SEAL		·	2				A	
4		31B65-00100			COLLAR, UNION		1	·					
		31A65-00500			COLLAR, UNION		·	1					

silverhorn.co.uk

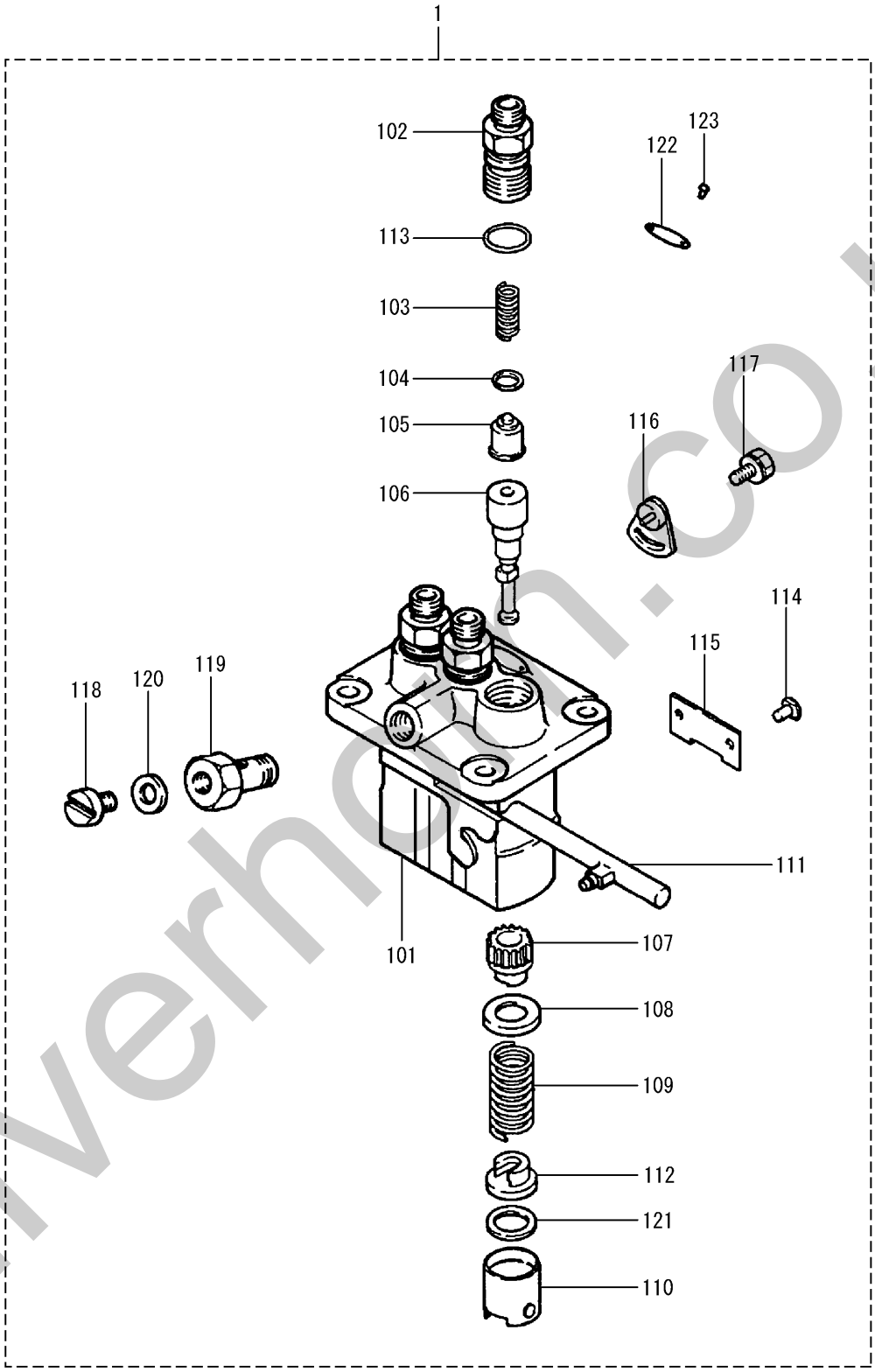

silverhelm.co.uk

REF. -NO.		PART NO.	R/P	SCENQG	PART NAME & DESCRIPTION		MODEL & QTY S3L2	S4L2		APPLICABLE SERIAL NO. FROM@-	-@UPTO	M/R	VRD
1		31B65-03030			PUMP ASSY,FUEL INJ		1	・					
1	01	09011-05110			HOUSING SUB ASSY		1	・					
1	02	09013-10520			HOLDER,DELIVERY		3	・					
1	03	09013-60540			SPRING,DELIVERY		3	・					
1	04	09013-70130			GASKET,DELIVERY		3	・					
1	05	09014-02610			VALVE SUB ASSY		3	・					
1	06	09015-05550			ELEMENT SUB ASSY		3	・					
1	07	09016-10210			SLEEVE,CONTROL		3	・					
1	08	09016-30082			SEAT,SPRING		3	・					
1	09	09016-40170			SPRING,PLUNGER		3	・				A	
1	10	09017-00170			TAPPET SUB ASSY		3	・					
1	11	09021-00470			RACK ASSY,CONTROL		1	・					
1	12	09030-10060			SEAT,SPRING		3	・					
1	13	90802-20150			O-RING		3	・				A	
1	14	09018-30050			PIN,TAPPET		3	・				A	
1	15	09046-70040			PLATE		1	・					
1	16	09006-80020			PLATE,ADJUSTING		2	・					
1	17	94904-80800			BOLT,WASHER HEAD		2	・					
1	18	09024-40180			SCREW,AIR BLEEDER		1	・					
1	19	09024-50210			SCREW,HOLLOW		1	・					
1	20	94901-81020			WASHER,PIPE UNION		1	・					
1	21	*			PLATE,TAPPET SHIM		AR	・					
1	22	09450-37240			PLATE,NAME		1	・					
1	23	94903-00030			RIVET,SERRATION		2	・				A	

silverhorn.co.uk

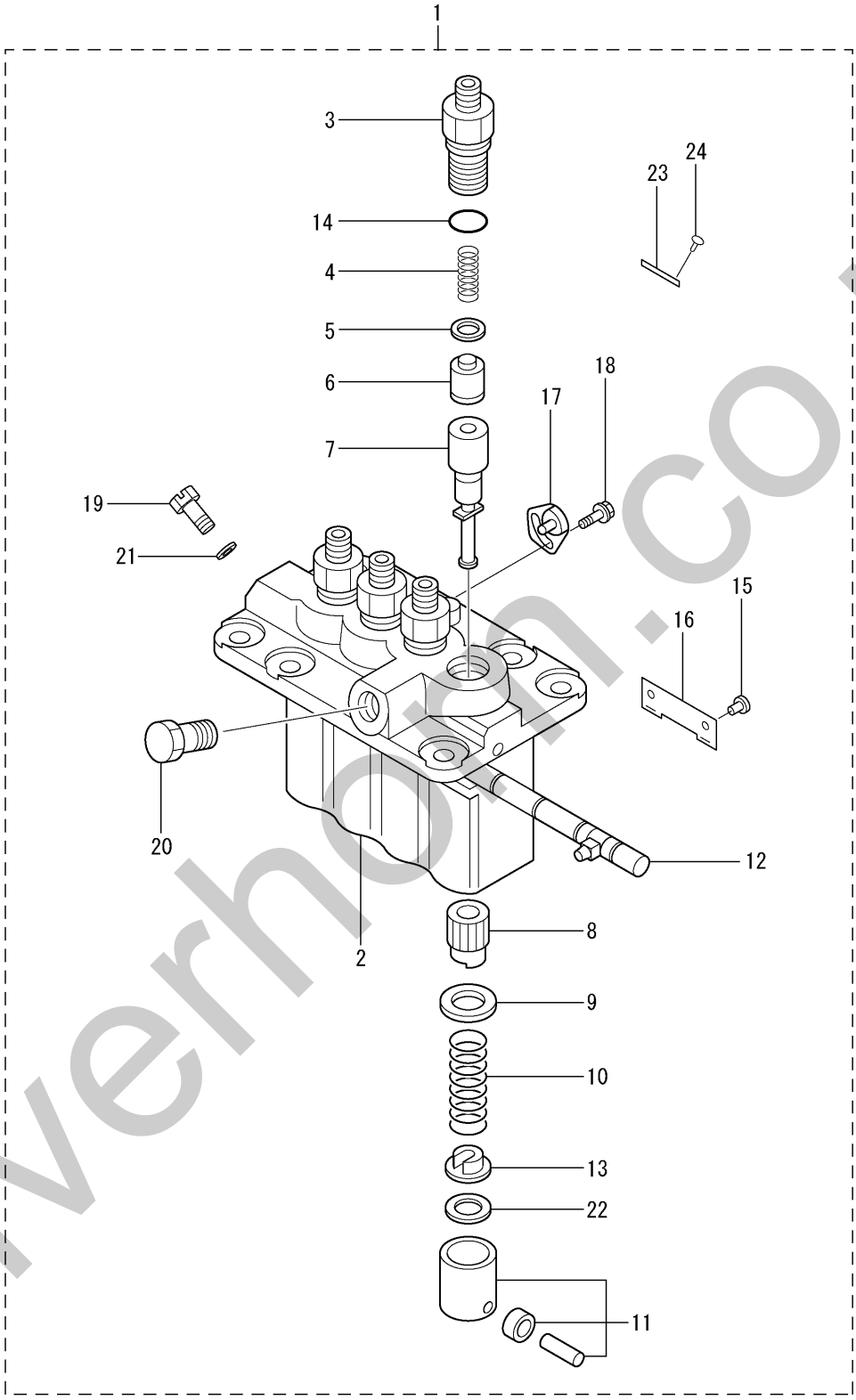

silverhorn.co.uk

REF. -NO.		PART NO.	R/P	SCENQG	PART NAME & DESCRIPTION		MODEL & QTY S3L2	S4L2		APPLICABLE SERIAL NO. FROM@-	-@UPTO	M/R	VRD
1		31A65-13050			PUMP ASSY,FUEL INJ		・	1					
2		09011-05070			HOUSING SUB ASSY		・	1					
3		09013-10520			HOLDER,DELIVERY		・	4					
4		09013-60540			SPRING,DELIVERY		・	4					
5		09013-70130			GASKET,DELIVERY		・	4				A	
6		09014-02700			VALVE SUB ASSY		・	4					
7		09015-05550			ELEMENT SUB ASSY		・	4					
8		09016-10210			SLEEVE,CONTROL		・	4					
9		09016-30082			SEAT,SPRING		・	4					
10		09016-40170			SPRING,PLUNGER		・	4					
11		09017-00170			TAPPET SUB ASSY		・	4					
12		09021-00440			RACK ASSY,CONTROL		・	1					
13		09030-10060			SEAT,SPRING		・	4					
14		90802-20150			O-RING		・	4				A	
15		09018-30050			PIN,TAPPET		・	4					
16		09046-70030			PLATE		・	2					
17		09006-80020			PLATE,ADJUSTING		・	3					
18		94904-80800			BOLT,WASHER HEAD		・	3					
19		09024-40180			SCREW,AIR BLEEDER		・	1					
20		94918-00310			SCREW,HOLLOW		・	1					
21		94901-81020			WASHER,PIPE UNION		・	1					
22		*			SHIM		・	AR					
23		09450-37400			PLATE,NAME		・	1					
24		94903-00030			RIVET,SERRATION		・	2					

silverhorn.co.uk

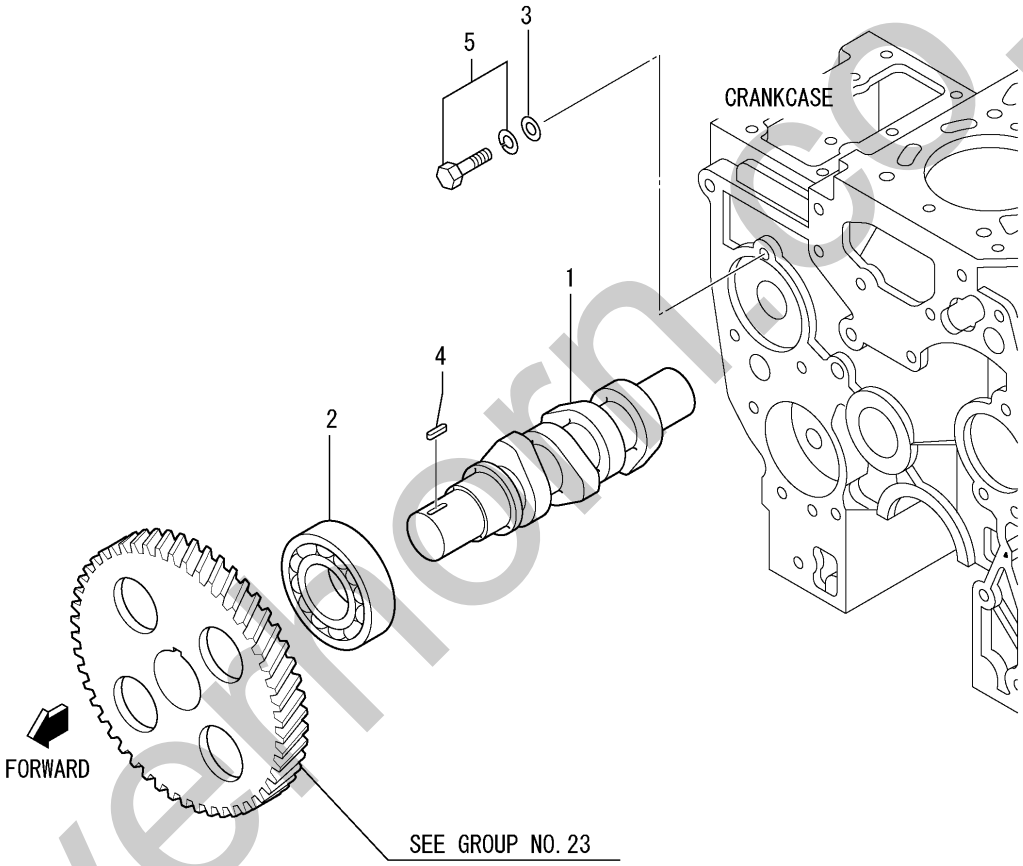

silvermorn.co.uk

REF. -NO.		PART NO.	R/P	SCENQG	PART NAME & DESCRIPTION		MODEL & QTY S3L2	S4L2		APPLICABLE SERIAL NO. FROM@-	-@UPTO	M/R	VRD
1		31B65-01200			SHAFT,FUEL INJ PUMP		1	▪					
		31A65-11200			SHAFT,FUEL INJ PUMP		▪	1					
2		MD703856			BEARING,RADIAL BALL		1	1				A	
3		MD000425			WASHER		1	1				A	
4		MF476018			KEY,SUNK		1	1					
5		F1805-08016			BOLT,W/WASHER	B/W	1	1				A	

silverhorn.co.uk

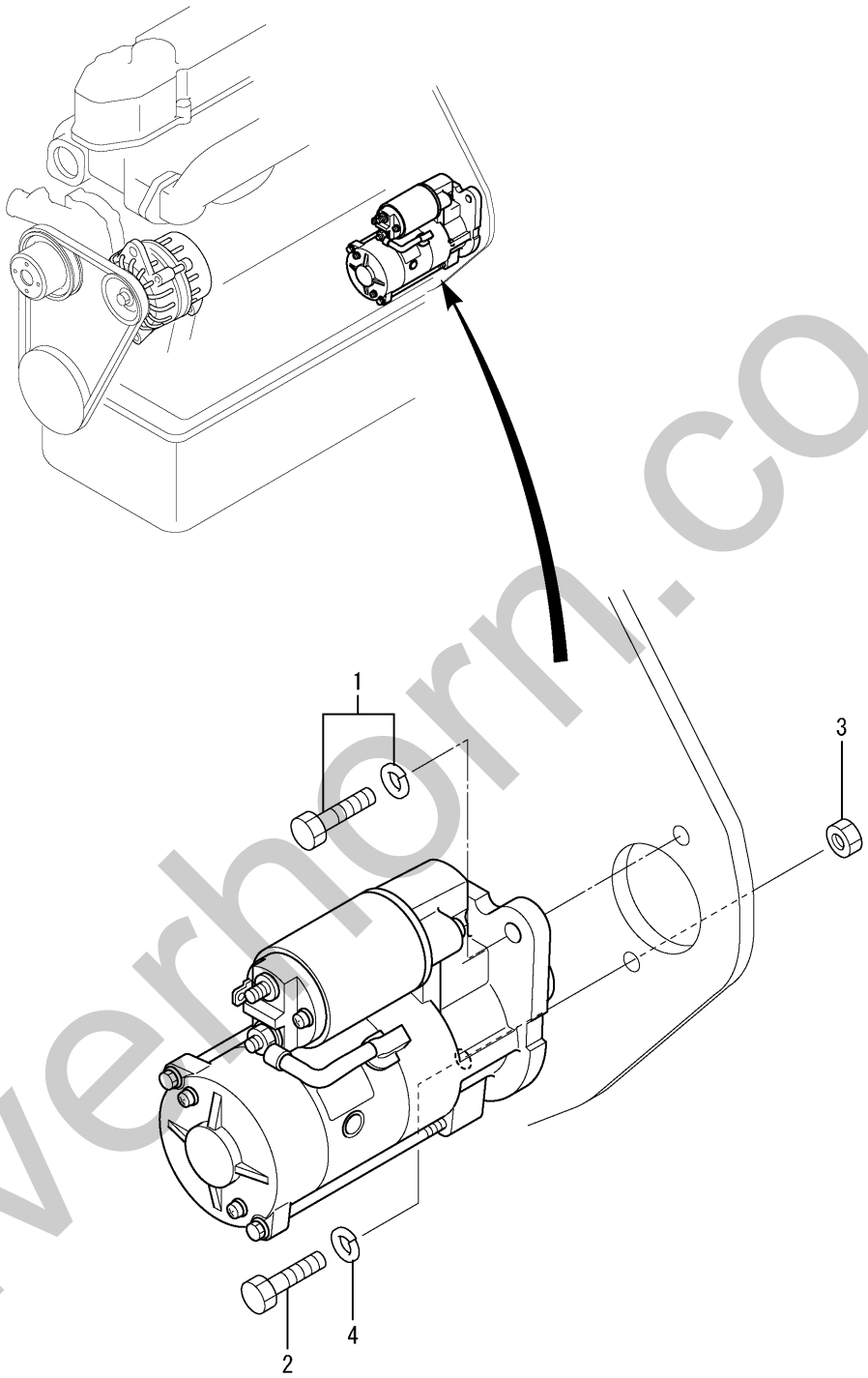

silverhorn.co.uk

REF. -NO.		PART NO.	R/P	SCENQG	PART NAME & DESCRIPTION		MODEL & QTY S3L2	S4L2		APPLICABLE SERIAL NO. FROM@-	-@UPTO	M/R	VRD
1		F1805-10025			BOLT,W/WASHER	B/W	1	1				A	
2		MM409427			BOLT,STARTER		1	1				A	
3		F2300-10000			NUT		1	1				A	
4		MF450406			WASHER,SPRING		1	1				A	

silverhorn.co.uk

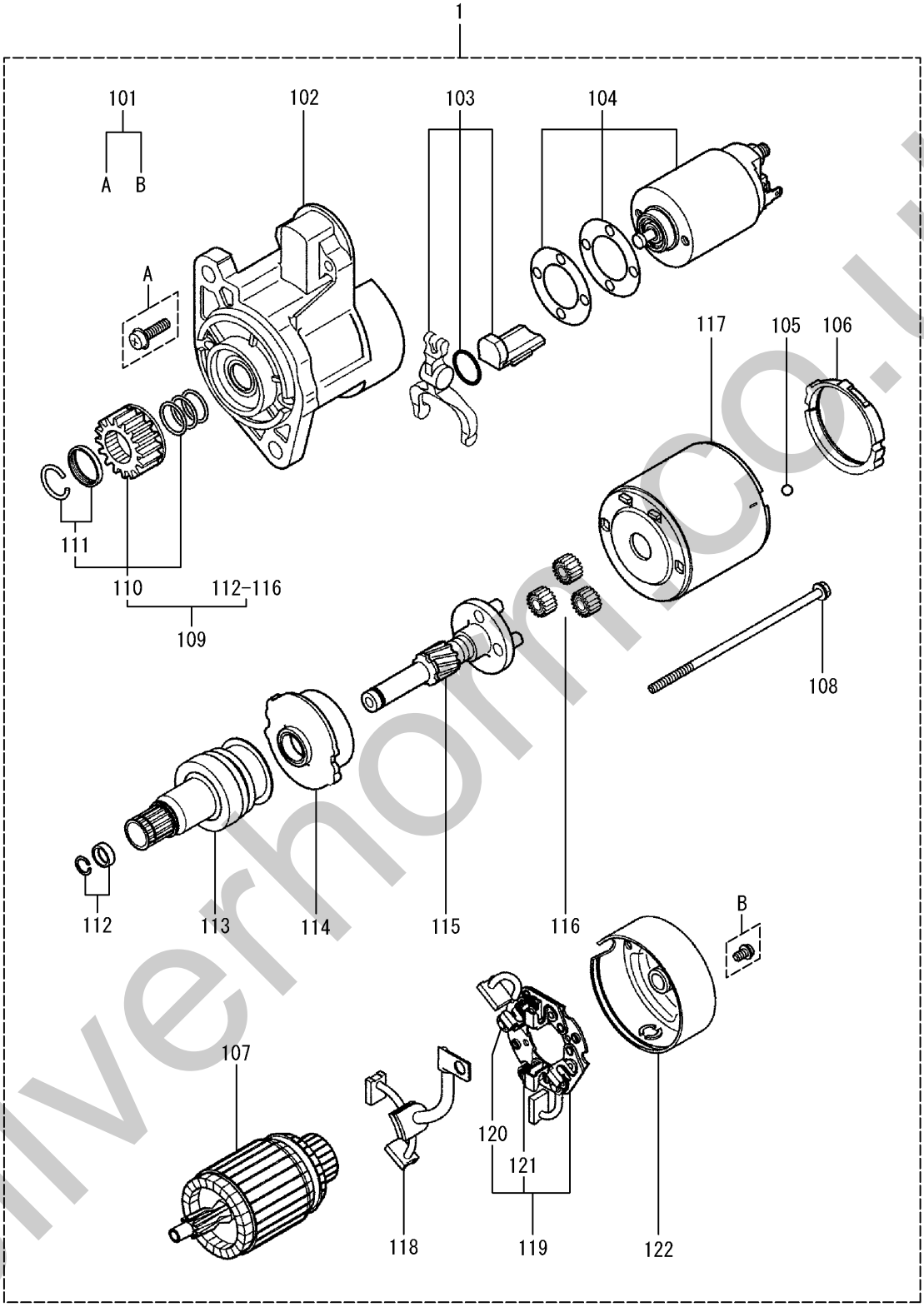

PART WITHOUT REF.NO. WON'T BE SUPPLIED.

silverhorn.co.uk

REF. -NO.		PART NO.	R/P	SCENQG	PART NAME & DESCRIPTION		MODEL & QTY S3L2	S4L2		APPLICABLE SERIAL NO. FROM@-	-@UPTO	M/R	VRD
1		31B66-00101			STARTER ASSY		1	·					
1	01	M414X-00474			SCREW SET		1	·				A	
1	02	M641X-B2371			BRACKET ASSY,FRONT		1	·					
1	03	M864X-09771			LEVER SET		1	·					
1	04	M371X-71973			SWITCH ASSY		1	·					
1	05	S409S-00008			BALL		1	·					
1	06	M578X-31771			PACKING		1	·				A	
1	07	M106X-59371			ARMATURE SET		1	·					
1	08	M981X-73275			BOLT		1	·					
1	09	M357X-92671			SHAFT ASSY,CLUTCH		1	·					
1	10	M605X-98571			PINION SET		1	·					
1	11	M385X-06171			STOPPER SET		1	·					
1	12	M385X-05371			STOPPER SET		1	·					
1	13	M191X-17971			OVER RUNNING CLUTCH		1	·					
1	14	M135X-03071			GEAR ASSY,INTERNAL		1	·					
1	15	M357X-67671			SHAFT ASSY,GEAR		1	·					
1	16	M230X-00471			GEAR ASSY		3	·					
1	17	M800X-63075			YOKE ASSY		1	·					
1	18	M647X-00571			BRUSH ASSY		1	·					
1	19	M649X-01271			HOLDER ASSY,BRUSH		1	·					
1	20	M391X-03271			SPRING,BRUSH		2	·					
1	21	M391X-03371			SPRING,BRUSH		2	·					
1	22	M642X-30773			BRACKET ASSY,REAR		1	·					

silverhorn.co.uk

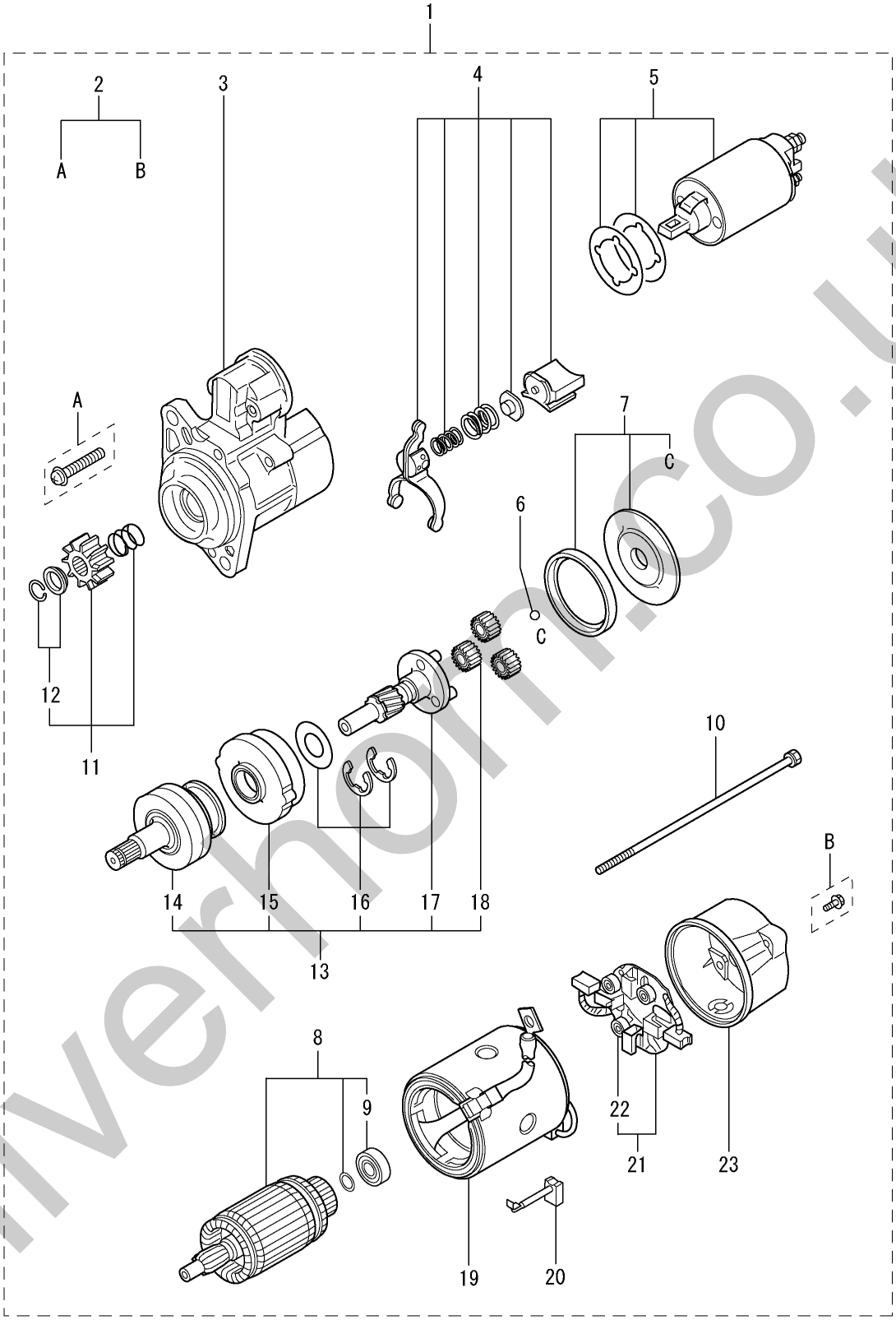

PART WITHOUT REF.NO.WON'T BE SUPPLIED

silverhorn.co.uk

REF. -NO.		PART NO.	R/P	SCENQG	PART NAME & DESCRIPTION		MODEL & QTY S3L2	S4L2		APPLICABLE SERIAL NO. FROM@-	-@UPTO	M/R	VRD
1		31A66-00102			STARTER ASSY		·	1					
2		M414X-04875			SCREW SET		·	1					
3		M641X-D2471			BRACKET ASSY,FRONT		·	1					
4		M863X-08871			LEVER ASSY,SET		·	1					
5		M372X-03271			SWITCH ASSY		·	1					
6		S409S-00008			BALL		·	1					
7		M578X-29171			PACKING SET		·	1				A	
8		M106X-43572			ARMATURE ASSY		·	1					
9		M931X-01270			BEARING		·	1				A	
10		M901X-00371			BOLT SET		·	1				A	
11		M605X-75371			PINION SET		·	1					
12		M385X-03771			STOPPER SET		·	1					
13		M357X-91974			SHAFT ASSY,CLUTCH		·	1					
14		M191X-94271			CLUTCH,OVER RUNNING		·	1					
15		M135X-01581			GEAR ASSY,INTERNAL		·	1					
16		M982X-38871			WASHER SET		·	1				A	
17		M357X-66485			SHAFT ASSY,GEAR		·	1					
18		M230X-00471			GEAR ASSY		·	3					
19		M800X-73876			YOKE ASSY		·	1					
20		M648X-40771			BRUSH		·	2				A	
21		M649X-20471			HOLDER ASSY,BRUSH		·	1					
22		M391X-04371			SPRING,BRUSH		·	4				A	
23		M642X-35771			BRACKET ASSY,REAR		·	1					

silverhorn.co.uk

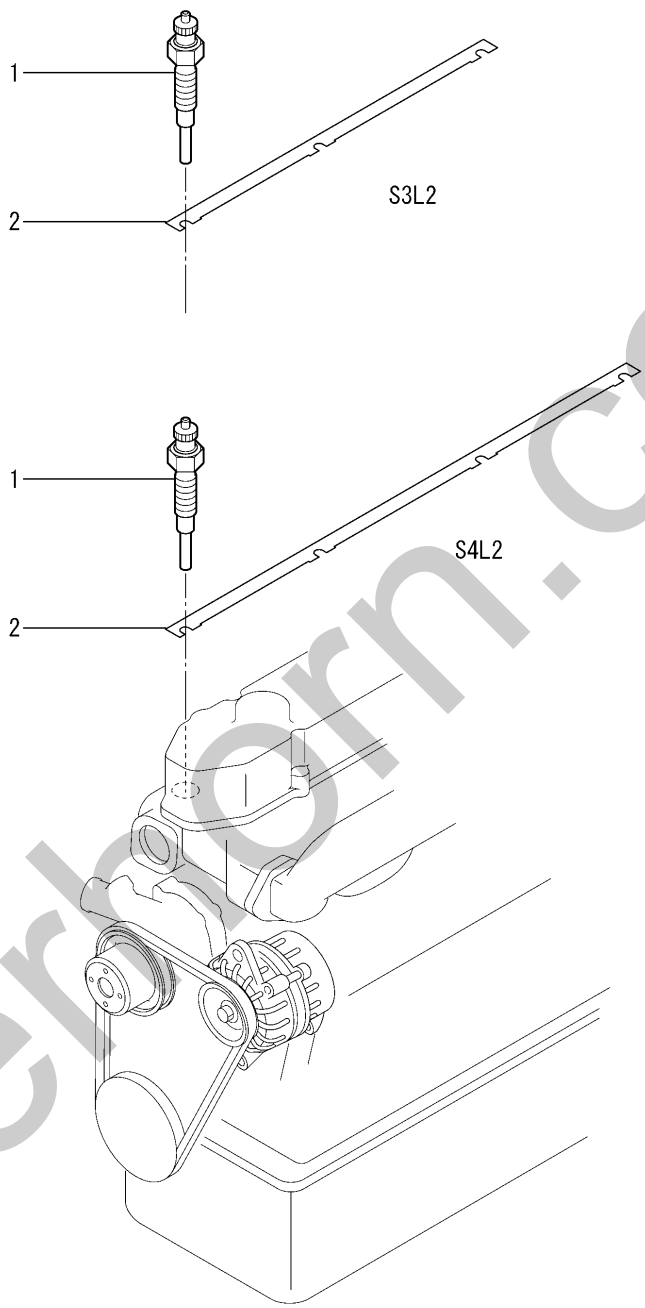

silverhorn.co.uk

REF. -NO.		PART NO.	R/P	SCENQG	PART NAME & DESCRIPTION		MODEL & QTY S3L2	S4L2		APPLICABLE SERIAL NO. FROM@-	-@UPTO	M/R	VRD
1		32A66-03100			PLUG, GLOW		3	4				A	
2		31A66-04101			PLATE, CONNECTOR		▪	1					
		31B66-04100			PLATE, CONNECTOR		1	▪					

silverhorn.co.uk

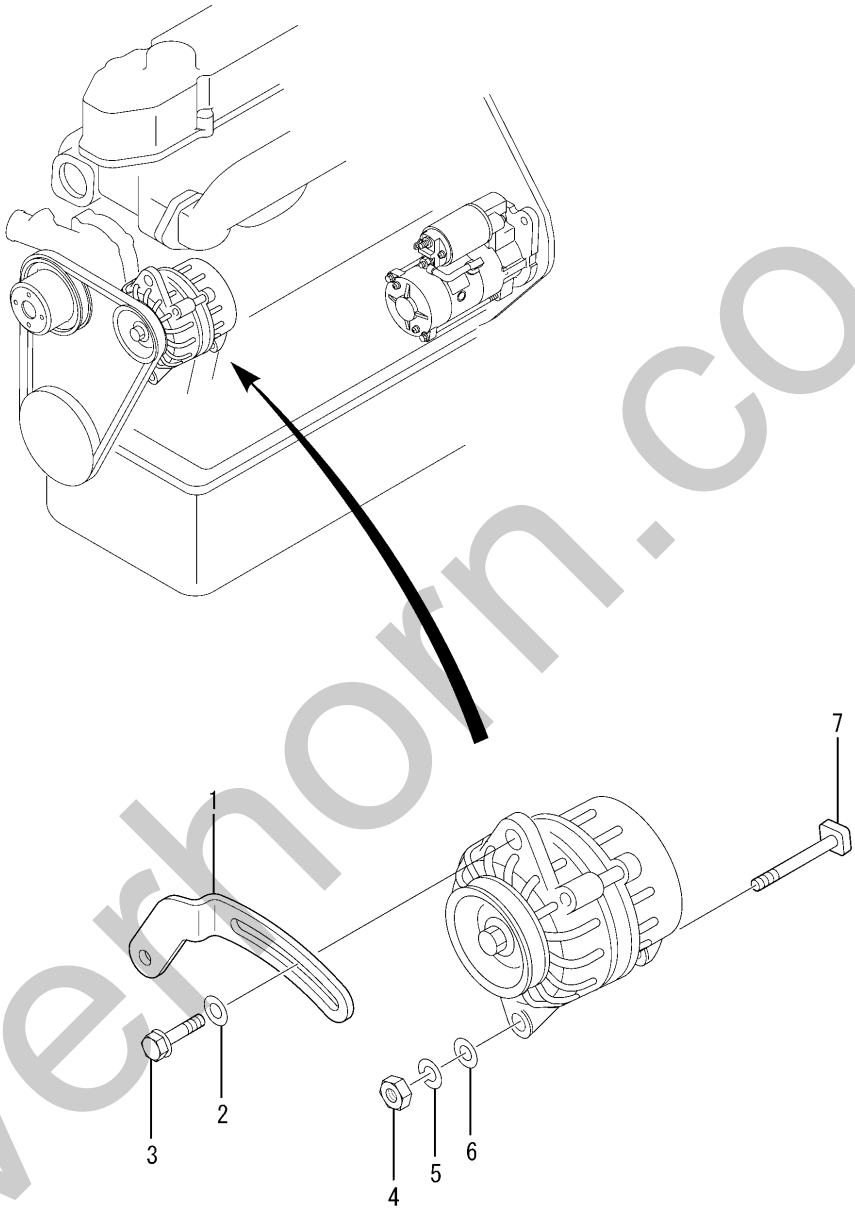

silverhorn.co.uk

REF. -NO.		PART NO.	R/P	SCENQG	PART NAME & DESCRIPTION		MODEL & QTY S3L2	S4L2		APPLICABLE SERIAL NO. FROM@-	-@UPTO	M/R	VRD
1		31A68-02100			PLATE,ADJUSTING		1	1					
2		MD001521			WASHER		1	1				A	
3		MF140026			BOLT,FLANGE		1	1					
4		MF430006			NUT		1	1				A	
5		MF450406			WASHER,SPRING		1	1				A	
6		MF450006			WASHER,PLAIN		1	1				A	
7		31A68-20300			BOLT,ALTERNATOR		1	1					

silverhorn.co.uk

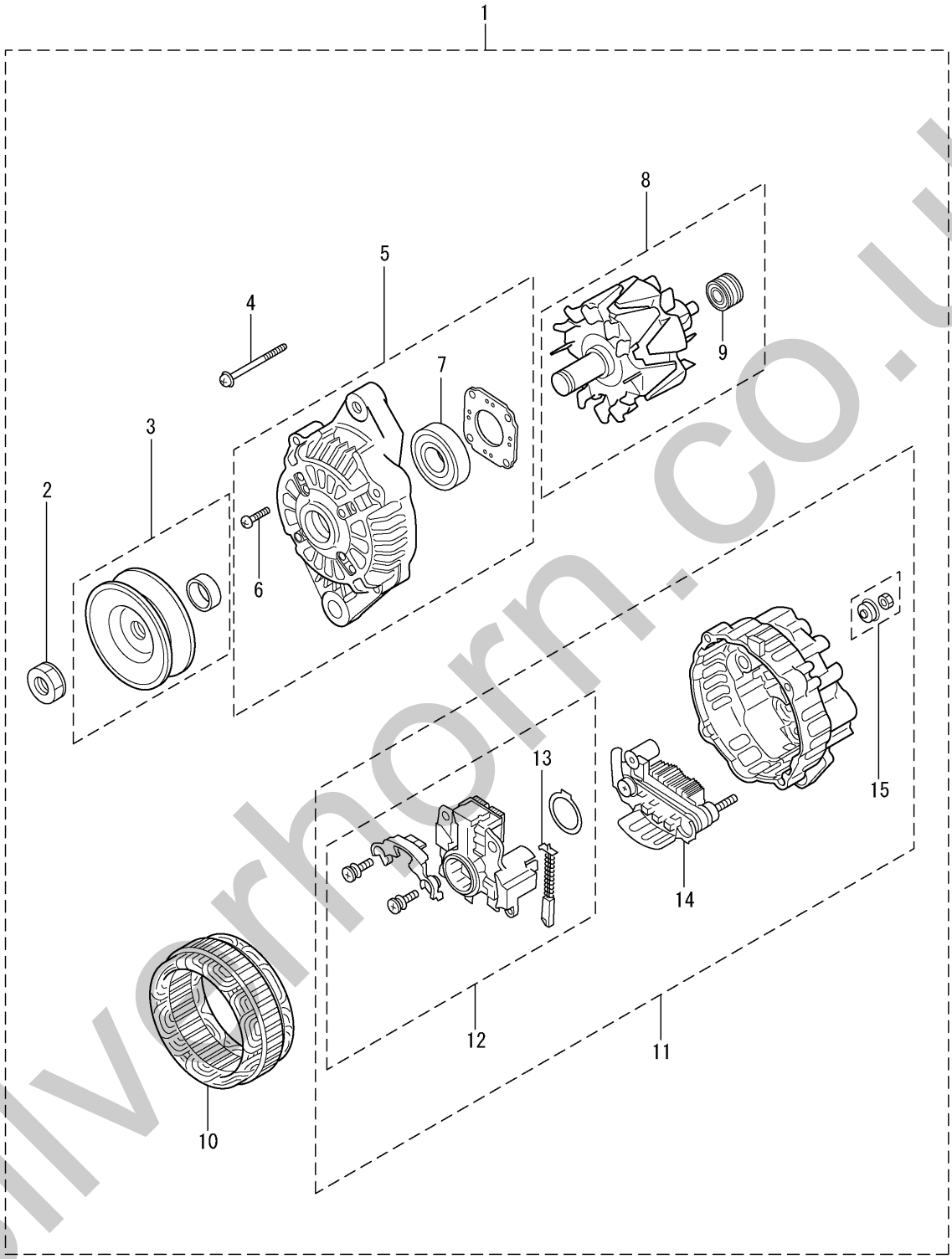

PART WITHOUT REF.NO.WON'T BE SUPPLIED.

silverhorn.co.uk

REF. -NO.		PART NO.	R/P	SCENQG	PART NAME & DESCRIPTION		MODEL & QTY S3L2	S4L2		APPLICABLE SERIAL NO. FROM@-	-@UPTO	M/R	VRD
1		31A68-00402			ALTERNATOR ASSY		1	1					
2		A981X-20771			NUT		1	1				A	
3		A628T-62170			PULLEY ASSY		1	1					
4		A414X-19271			BOLT SET		1	1					
5		A640X-67070			BRACKET ASSY,FRONT		1	1					
6		A414X-21271			SCREW SET		1	1					
7		A930X-94570			BEARING,FRONT		1	1				A	
8		A880X-83770			ROTOR ASSY		1	1					
9		S930P-63670			BEARING,REAR		1	1				A	
10		A383X-56570			STATOR ASSY		1	1					
11		A642X-A9970			BRACKET ASSY,REAR		1	1					
12		A866X-44682			REGULATOR SET		1	1					
13		A647X-50170			BRUSH SET		2	2					
14		A860T-40670			RECTIFIER ASSY		1	1					
15		A529X-07871			NUT SET		1	1				A	

silverhorn.co.uk

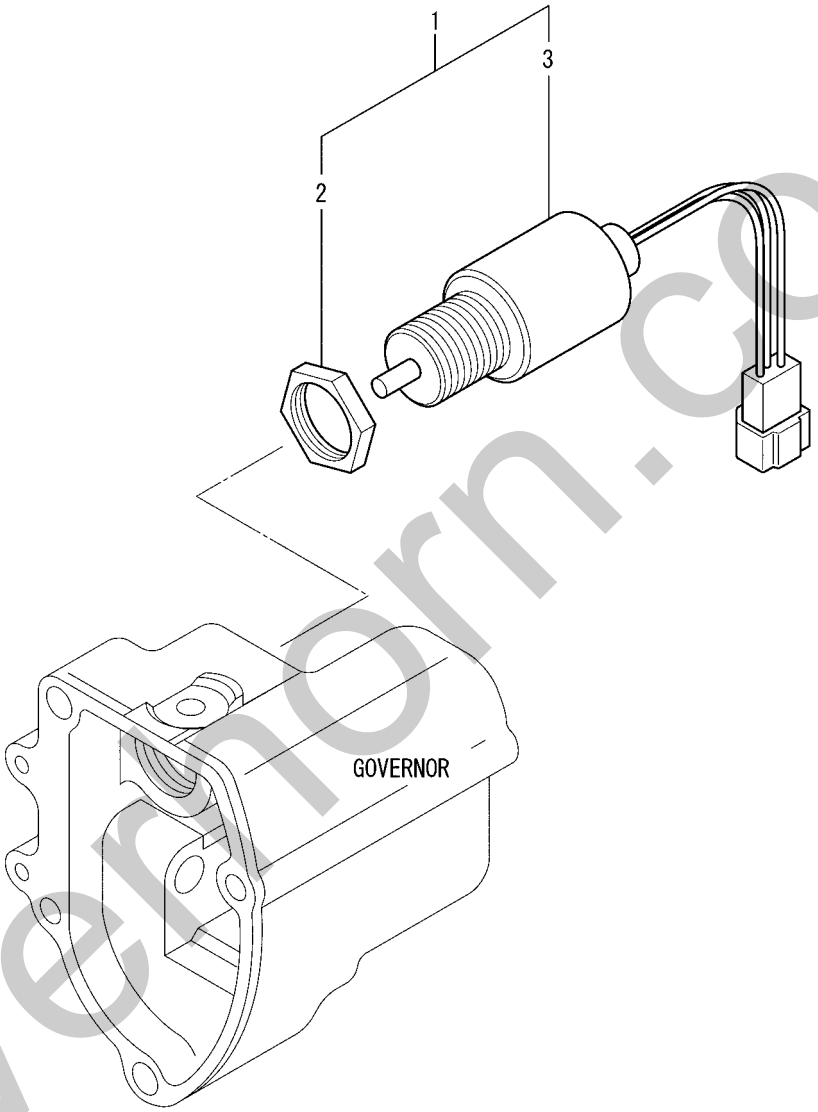

silvernorn.co.uk

REF. -NO.		PART NO.	R/P	SCENQG	PART NAME & DESCRIPTION		MODEL & QTY S3L2	S4L2		APPLICABLE SERIAL NO. FROM@-	-@UPTO	M/R	VRD
1		30A87-10042			SOLENOID & NUT SET		1	1					
2		MM409671			NUT		1	1				A	
3		30A87-20402			SOLENOID ASSY		1	1					

silverhorn.co.uk

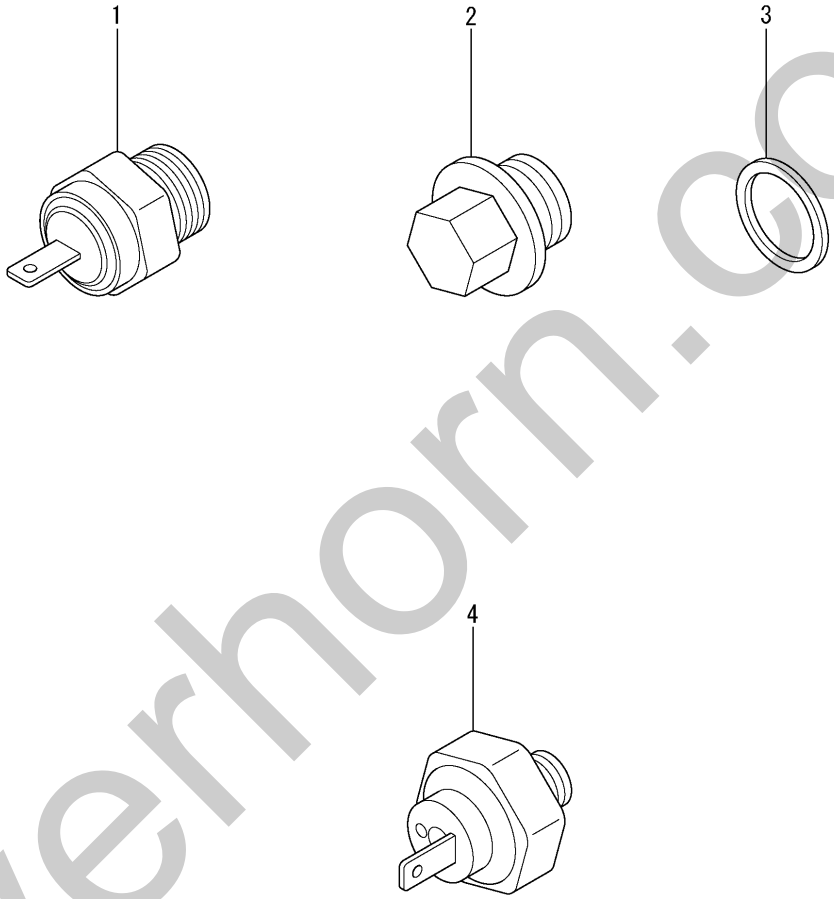

silverhorn.co.uk

REF. -NO.		PART NO.	R/P	SCENQG	PART NAME & DESCRIPTION		MODEL & QTY S3L2	S4L2		APPLICABLE SERIAL NO. FROM@-	-@UPTO	M/R	VRD
1		MM432104			SWITCH ASSY,THERMO		1	1					
2		MM316248			PLUG,DRAIN		2	2				A	
3		05946-01601			WASHER,SEALING		3	3				A	
4		31A90-10300			SWITCH,OIL PRESS		1	・					
		31A90-00300			SWITCH,OIL PRESS		・	1					

silverhorn.co.uk

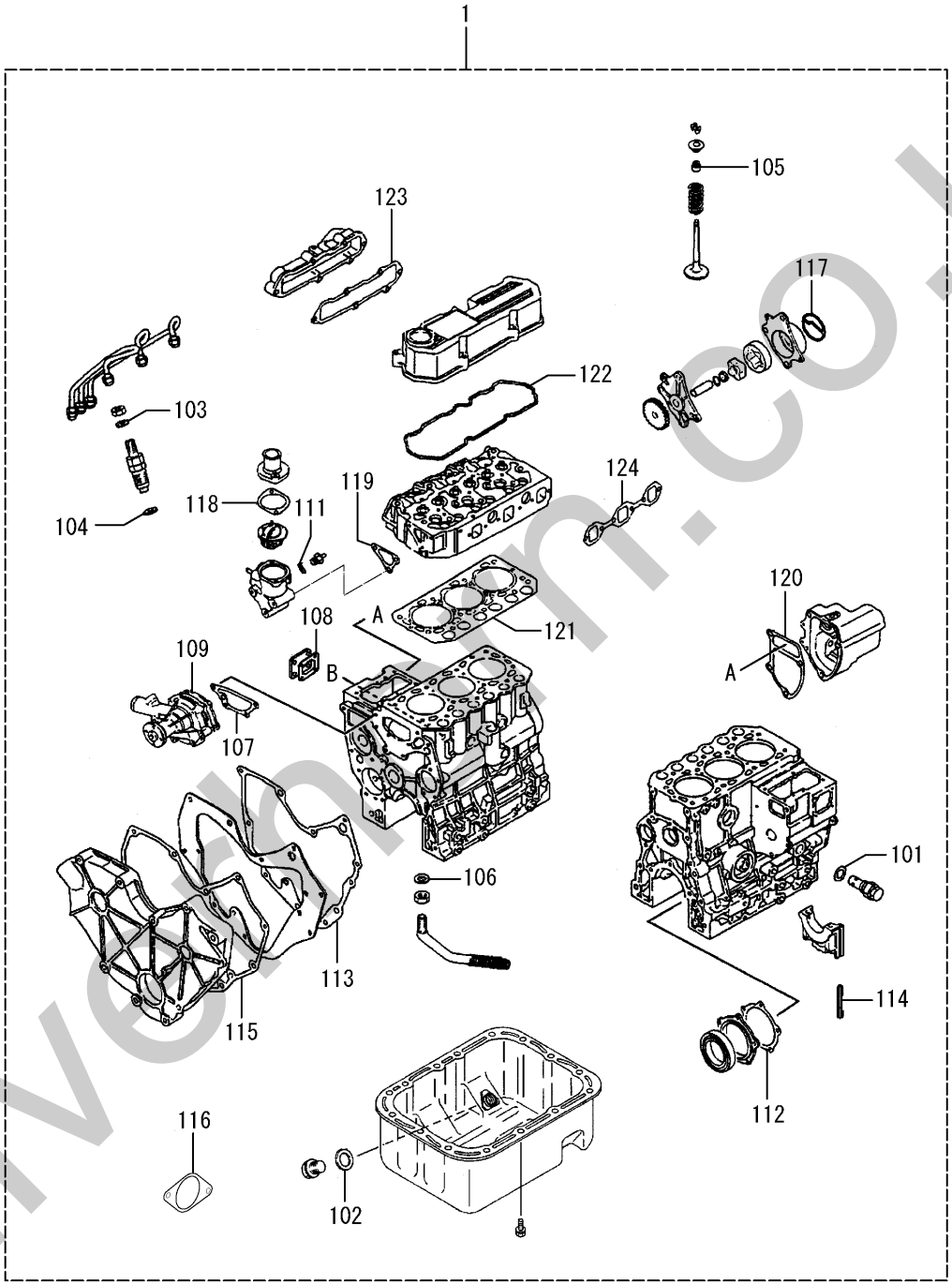

silverhm.co.uk

REF. -NO.		PART NO.	R/P	SCENQG	PART NAME & DESCRIPTION		MODEL & QTY S3L2	S4L2		APPLICABLE SERIAL NO. FROM@-	-@UPTO	M/R	VRD
1		31B94-40041			GASKET KIT,OVERHAUL		1	·					
1	01	34340-00700			GASKET		1	·				A	
1	02	MD050317			GASKET,OIL DRAIN		1	·				A	
1	03	MD068355			GASKET,FUEL RETURN		3	·				A	
1	04	MD070717			GASKET,HOLDER		3	·				A	
1	05	MD115472			SEAL,VALVE STEM		6	·				A	
1	06	MF660036			GASKET		1	·				A	
1	07	30H45-00101			GASKET,WATER PUMP		1	·				A	
1	08	30A63-00101			GASKET,TIE-ROD COVER		1	·				A	
1	09	MM409326			GASKET,WATER PUMP		1	·				A	
1	10	MM409869			O-RING	NOT SHOWN	2	·				A	
1	11	30636-25901			GASKET		2	·				A	
1	12	31A07-11701			GASKET,OIL SEAL CASE		1	·				A	
1	13	31A07-11901			GASKET,FRONT PLATE		1	·				A	
1	14	31A07-12200			SEAL,SIDE		4	·					
1	15	31A11-11200			GASKET,GEAR CASE		1	·				A	
1	16	31A30-00801			GASKET,INLET PIPE		1	·				A	
1	17	31A35-02300			PACKING,BODY		1	·				A	
1	18	31A46-01200			GASKET,THERMOSTAT		1	·				A	
1	19	31A46-10101			GASKET,THERMO CASE		1	·				A	
1	20	31A63-12201			GASKET,GOVERNOR CASE		1	·				A	
1	21	31B01-23200			GASKET,CYLINDER HEAD		1	·				A	
1	22	31B04-13201			GASKET,ROCKER COVER		1	·				A	
1	23	31B30-00902			GASKET,INLET COVER		1	·				A	
1	24	31B32-01200			GASKET,EXHAUST MANF		1	·				A	
1	25	32A91-05100			GASKET,LIQUID	NOT SHOWN	1	·					
1	26	49168-15200			GASKET	NOT SHOWN	1	·				A	

silverhorn.co.uk

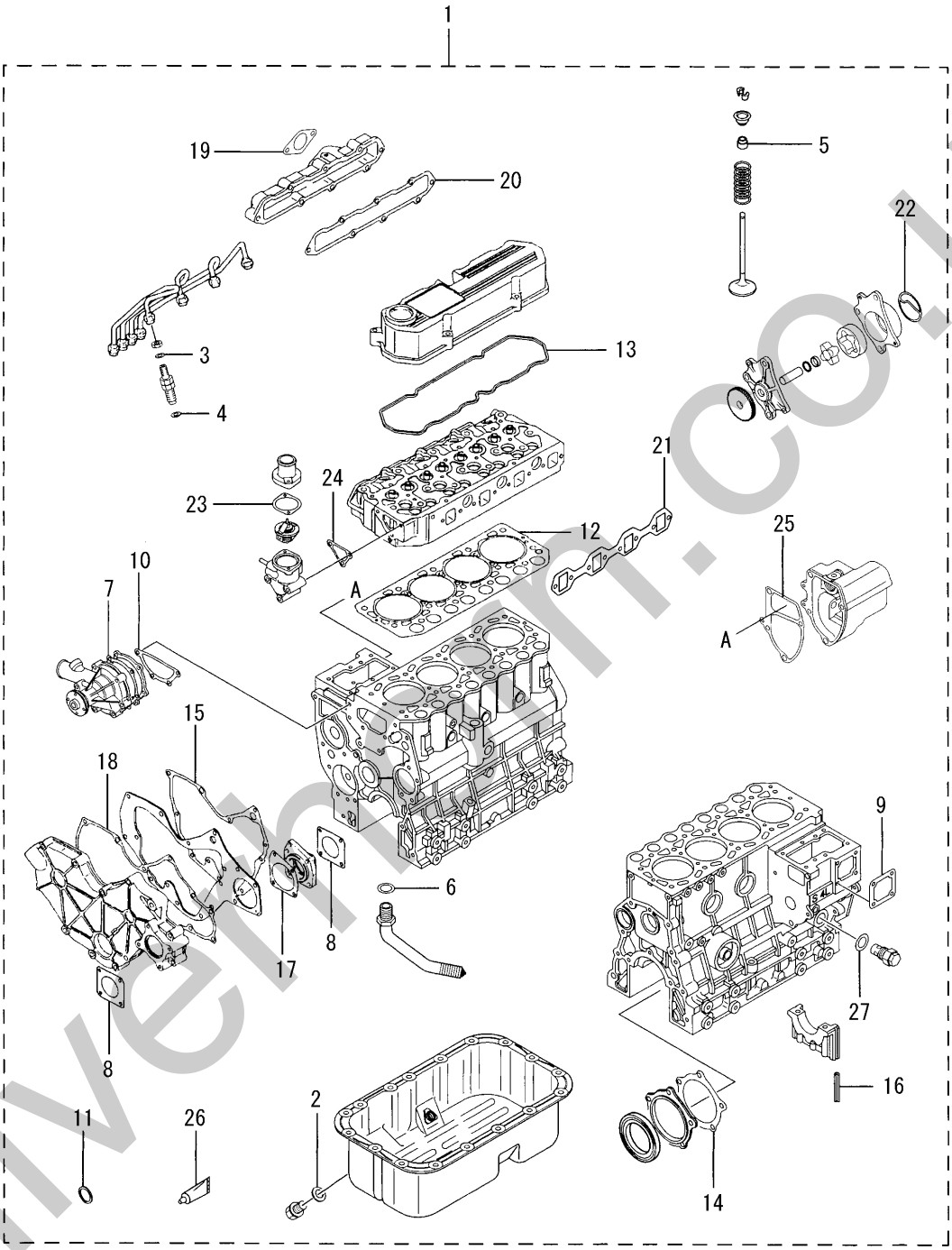

silvermm.co.uk

REF. -NO.		PART NO.	R/P	SCENQG	PART NAME & DESCRIPTION		MODEL & QTY S3L2	S4L2		APPLICABLE SERIAL NO. FROM@-	-@UPTO	M/R	VRD
1		31A94-03020			GASKET KIT,OVERHAUL		·	1					
2		MD050317			GASKET,OIL DRAIN		·	1				A	
3		MD068355			GASKET,RETURN PIPE		·	4				A	
4		MD070717			GASKET,HOLDER		·	4				A	
5		MD115472			SEAL,VALVE STEM		·	8				A	
6		MF660036			GASKET		·	1				A	
7		MM409326			GASKET,WATER PUMP		·	1				A	
8		30A11-00101			GASKET,O/PUMP COVER		·	2				A	
9		30A63-00101			GASKET,TIE-ROD COVER		·	1				A	
10		30H45-00101			GASKET,WATER PUMP		·	1				A	
11		30636-25901			GASKET		·	3				A	
12		31A01-33300			GASKET,CYLINDER HEAD		·	1				A	
13		31A04-33202			GASKET,ROCKER COVER		·	1				A	
14		31A07-11701			GASKET,OIL SEAL CASE		·	1				A	
15		31A07-11901			GASKET,FRONT PLATE		·	1				A	
16		31A07-12200			SEAL,SIDE		·	4					
17		31A11-05201			GASKET,HOUSING		·	1				A	
18		31A11-11101			GASKET,GEAR CASE		·	1				A	
19		31A30-00801			GASKET,INLET PIPE		·	1				A	
20		31A30-10902			GASKET,INLET COVER		·	1				A	
21		31A32-01200			GASKET,EXH MANIFOLD		·	1				A	
22		31A35-02300			PACKING,BODY		·	1				A	
23		31A46-01200			GASKET,THERMOSTAT		·	1				A	
24		31A46-10101			GASKET,THERMO CASE		·	1				A	
25		31A63-12201			GASKET,GOVERNOR CASE		·	1				A	
26		32A91-05100			GASKET,LIQUID		·	1					
27		34340-00700			GASKET		·	1				A	

silverhorn.co.uk

NUMERICAL PARTS INDEX

PART NO.	GRP NO.	PAGE	REF-NO.	
A383X-56570	68-00-02	91	10	
A414X-19271	68-00-02	91	4	
A414X-21271	68-00-02	91	6	
A529X-07871	68-00-02	91	15	
A628T-62170	68-00-02	91	3	
A640X-67070	68-00-02	91	5	
A642X-A9970	68-00-02	91	11	
A647X-50170	68-00-02	91	13	
A860T-40670	68-00-02	91	14	
A866X-44682	68-00-02	91	12	
A880X-83770	68-00-02	91	8	
A930X-94570	68-00-02	91	7	
A981X-20771	68-00-02	91	2	
F1035-05010	04-01	9	9	
F1035-08020	07-00-02	21	4	
F1035-08020	65-00-01	73	2	
F1035-08045	11	27	6	
F1035-08045	63-00-01	69	9	
F1035-08045	63-00-02	71	9	
F1035-08070	11	27	16	
F1035-12025	14	33	1	
F1805-06012	48-02	61	1	
F1805-06014	63-00-01	69	13	
F1805-06014	63-00-02	71	13	
F1805-06030	45	57	2	
F1805-08016	05	15	4	
F1805-08016	11	27	3	
F1805-08016	13	31	5	
F1805-08016	65-02	79	5	
F1805-08020	30	45	8	
F1805-08030	11	27	12	
F1805-08035	30	45	7	
F1805-08040	04-02-01	11	5	
F1805-08040	04-02-02	13	5	
F1805-08065	46	59	10	
F1805-10020	01-02	7	2	
F1805-10025	66-00-01	81	1	
F1805-12050	12	29	4	
F1825-06025	61-00-01	63	9	
F1825-06025	61-00-02	65	10	
F1825-08016	11	27	15	
F1825-08035	11	27	13	
F1825-08045	45	57	7	
F1825-08060	45	57	8	
F2300-08000	11	27	14	
F2300-10000	66-00-01	81	3	
F2305-18000	20	39	5	
F2320-16000	35-02	49	2	
F2325-08000	04-01	9	12	
F2500-08000	11	27	18	
F2500-18000	20	39	3	
F2515-08000	11	27	17	
F2515-18000	20	39	4	
F2846-05000	07-00-01A	17	27	
F2846-05000	07-00-01B	19	28	
F2850-03020	63-00-01	69	1	01
F2850-03020	63-00-02	71	1	01
F3150-01010	63-00-01	69	1	02
F3150-01010	63-00-02	71	1	02
F8000-08000	07-00-01A	17	24	
F8000-08000	07-00-01B	19	25	
K6516441	46	59	2	
K8712630	63-00-01	69	1	03
K8712630	63-00-02	71	1	03
M106X-43572	66-00-02B	85	8	
M106X-59371	66-00-02A	83	1	07
M135X-01581	66-00-02B	85	15	
M135X-03071	66-00-02A	83	1	14
M191X-17971	66-00-02A	83	1	13
M191X-94271	66-00-02B	85	14	
M230X-00471	66-00-02A	83	1	16
M230X-00471	66-00-02B	85	18	
M357X-66485	66-00-02B	85	17	
M357X-67671	66-00-02A	83	1	15
M357X-91974	66-00-02B	85	13	
M357X-92671	66-00-02A	83	1	09
M371X-71973	66-00-02A	83	1	04
M372X-03271	66-00-02B	85	5	
M385X-03771	66-00-02B	85	12	
M385X-05371	66-00-02A	83	1	12
M385X-06171	66-00-02A	83	1	11
M391X-03271	66-00-02A	83	1	20
M391X-03371	66-00-02A	83	1	21
M391X-04371	66-00-02B	85	22	
M414X-00474	66-00-02A	83	1	01
M414X-04875	66-00-02B	85	2	
M578X-29171	66-00-02B	85	7	
M578X-31771	66-00-02A	83	1	06
M605X-75371	66-00-02B	85	11	
M605X-98571	66-00-02A	83	1	10
M641X-B2371	66-00-02A	83	1	02
M641X-D2471	66-00-02B	85	3	
M642X-30773	66-00-02A	83	1	22
M642X-35771	66-00-02B	85	23	
M647X-00571	66-00-02A	83	1	18
M648X-40771	66-00-02B	85	20	
M649X-01271	66-00-02A	83	1	19
M649X-20471	66-00-02B	85	21	
M800X-63075	66-00-02A	83	1	17
M800X-73876	66-00-02B	85	19	
M863X-08871	66-00-02B	85	4	
M864X-09771	66-00-02A	83	1	03
M901X-00371	66-00-02B	85	10	
M931X-01270	66-00-02B	85	9	
M981X-73275	66-00-02A	83	1	08
M982X-38871	66-00-02B	85	16	
MD000245	01-00-01	3	2	01
MD000245	01-00-02	5	2	01
MD000269	07-02	23	1	
MD000425	65-02	79	3	
MD001521	68-00-01	89	2	
MD006704	19	37	2	
MD008762	11	27	7	
MD008784	04-02-01	11	6	
MD008784	04-02-02	13	6	
MD016483	04-01	9	5	
MD021105	19	37	3	
MD021204	04-01	9	16	
MD024256	07-00-01A	17	28	
MD024256	07-00-01B	19	29	
MD024812	21	41	2	
MD041704	48-02	61	2	
MD050316	13	31	2	
MD050317	13	31	3	
MD050317	94-00-01	97	1	02
MD050317	94-00-02	99	2	
MD068353	61-00-01	63	3	
MD068353	61-00-02	65	3	
MD068355	61-00-01	63	2	
MD068355	61-00-02	65	2	
MD068355	94-00-01	97	1	03
MD068355	94-00-02	99	3	
MD070717	61-00-01	63	1	
MD070717	61-00-02	65	1	
MD070717	94-00-01	97	1	04
MD070717	94-00-02	99	4	
MD115472	04-01	9	6	
MD115472	94-00-01	97	1	05
MD115472	94-00-02	99	5	
MD703856	65-02	79	2	
MD712517	23	43	8	
MF101256	35	47	3	
MF140026	68-00-01	89	3	
MF140227	46	59	3	
MF241266	30	45	9	
MF241308	12	29	5	
MF430004	63-00-01	69	1	04
MF430004	63-00-02	71	1	04
MF430006	68-00-01	89	4	
MF430725	63-00-01	69	1	05

sweetcom.co.uk

NUMERICAL PARTS INDEX

PART NO.	GRP NO.	PAGE	REF-NO.	
MF430725	63-00-02	71	1	05
MF450006	68-00-01	89	6	
MF450405	63-00-01	69	1	06
MF450405	63-00-02	71	1	06
MF450406	66-00-01	81	4	
MF450406	68-00-01	89	5	
MF472404	07-00-01A	17	21	
MF472404	07-00-01B	19	22	
MF476018	65-02	79	4	
MF476215	05	15	2	
MF476215	20	39	2	
MF522010	04-01	9	10	
MF650102	63-00-01	69	16	
MF650102	63-00-02	71	16	
MF660036	35-02	49	3	
MF660036	94-00-01	97	1	06
MF660036	94-00-02	99	6	
MF660063	63-00-01	69	17	
MF660063	63-00-02	71	17	
MF665511	07-00-01A	17	20	
MF665511	07-00-01B	19	21	
MF665532	07-00-01A	17	14	
MF665532	07-00-01B	19	15	
MF665533	07-00-01A	17	15	
MF665533	07-00-01B	19	16	
MF665537	07-00-01A	17	16	
MF665537	07-00-01B	19	17	
MF665538	01-00-01	3	2	02
MF665538	01-00-02	5	2	02
MK661-12000	65-00-01	73	3	
MK661-14000	65-00-01	73	3	
MK992-00001	63-00-01	69	6	
MK992-00001	63-00-02	71	6	
MK993-00240	63-00-01	69	7	
MK993-00240	63-00-02	71	7	
MM316248	90	95	2	
MM331-31701	63-00-01	69	1	07
MM331-31701	63-00-02	71	1	07
MM400380	43	55	1	
MM401205	11	27	10	
MM406420	63-00-01	69	1	20
MM406420	63-00-02	71	1	20
MM408245	12	29	3	
MM408470	01-02	7	1	
MM409031	65-00-01	73	1	
MM409036	65-00-01	73	1	
MM409037	65-00-01	73	1	
MM409038	65-00-01	73	1	
MM409039	65-00-01	73	1	
MM409040	65-00-01	73	1	

PART NO.	GRP NO.	PAGE	REF-NO.	
MM409041	65-00-01	73	1	
MM409042	65-00-01	73	1	
MM409043	65-00-01	73	1	
MM409044	65-00-01	73	1	
MM409045	65-00-01	73	1	
MM409046	65-00-01	73	1	
MM409047	65-00-01	73	1	
MM409048	65-00-01	73	1	
MM409150	63-00-01	69	11	
MM409150	63-00-02	71	11	
MM409302	45	57	1	
MM409-31302	46	59	4	
MM409314	45	57	3	
MM409326	45	57	4	
MM409326	94-00-01	97	1	09
MM409326	94-00-02	99	7	
MM409327	45	57	5	
MM409427	66-00-01	81	2	
MM409645	07-00-01A	17	22	
MM409645	07-00-01B	19	23	
MM409671	87	93	2	
MM409869	94-00-01	97	1	10
MM413196	46	59	11	
MM430131	61-00-01	63	11	01
MM430176	35-02	49	1	
MM430613	07-00-01A	17	13	
MM430613	07-00-01B	19	14	
MM430614	61-00-01	63	8	
MM430614	61-00-02	65	9	
MM430703	61-00-01	63	7	
MM430703	61-00-02	65	8	
MM431-53801	12	29	1	
MM432104	90	95	1	
MM433-30601	04-01	9	4	
MM433674	63-00-01	69	1	08
MM433720	63-00-02	71	1	16
MM433921	17	35	4	
MM433922	17	35	8	
MM433923	17	35	9	
MM435-94101	61-00-03	67	1	
MS471104	07-00-01A	17	17	
MS471104	07-00-01B	19	18	
MS471105	07-00-01A	17	18	
MS471105	07-00-01B	19	19	
MS471110	07-00-01A	17	19	
MS471110	07-00-01B	19	20	
MS603014	46	59	12	
MS604005	61-00-02	65	12	01
MS604032	61-00-01	63	11	02
MS604043	61-00-02	65	12	02

PART NO.	GRP NO.	PAGE	REF-NO.	
MS660164	46	59	13	
MS660169	61-00-01	63	11	03
MS660169	61-00-02	65	12	03
MS661140	01-00-01	3	3	
MS661140	01-00-02	5	3	
S409S-00008	66-00-02A	83	1	05
S409S-00008	66-00-02B	85	6	
S930P-63670	68-00-02	91	9	
04826-22000	07-00-01A	17	3	
04826-22000	07-00-01B	19	3	
04826-23500	07-00-01A	17	4	
04826-23500	07-00-01B	19	4	
05534-16000	12	29	6	
05946-01601	90	95	3	
09006-80020	65-00-02A	75	1	16
09006-80020	65-00-02B	77	17	
09011-05070	65-00-02B	77	2	
09011-05110	65-00-02A	75	1	01
09013-10520	65-00-02A	75	1	02
09013-10520	65-00-02B	77	3	
09013-60540	65-00-02A	75	1	03
09013-60540	65-00-02B	77	4	
09013-70130	65-00-02A	75	1	04
09013-70130	65-00-02B	77	5	
09014-02610	65-00-02A	75	1	05
09014-02700	65-00-02B	77	6	
09015-05550	65-00-02A	75	1	06
09015-05550	65-00-02B	77	7	
09016-10210	65-00-02A	75	1	07
09016-10210	65-00-02B	77	8	
09016-30082	65-00-02A	75	1	08
09016-30082	65-00-02B	77	9	
09016-40170	65-00-02A	75	1	09
09016-40170	65-00-02B	77	10	
09017-00170	65-00-02A	75	1	10
09017-00170	65-00-02B	77	11	
09018-30050	65-00-02A	75	1	14
09018-30050	65-00-02B	77	15	
09021-00440	65-00-02B	77	12	
09021-00470	65-00-02A	75	1	11
09024-40180	65-00-02A	75	1	18
09024-40180	65-00-02B	77	19	
09024-50210	65-00-02A	75	1	19
09030-10060	65-00-02A	75	1	12
09030-10060	65-00-02B	77	13	
09046-70030	65-00-02B	77	16	
09046-70040	65-00-02A	75	1	15
09311-03840	61-00-03	67	2	
09312-10380	61-00-03	67	5	
09312-70310	61-00-03	67	4	

silverson.co.uk

NUMERICAL PARTS INDEX

PART NO.	GRP NO.	PAGE	REF-NO.	
09316-41351	61-00-03	67	8	
09317-40070	61-00-03	67	6	
09317-51810	61-00-03	67	3	
09317-51830	61-00-03	67	3	
09317-51850	61-00-03	67	3	
09317-51870	61-00-03	67	3	
09317-51890	61-00-03	67	3	
09317-51910	61-00-03	67	3	
09317-51930	61-00-03	67	3	
09317-51950	61-00-03	67	3	
09317-51970	61-00-03	67	3	
09317-51990	61-00-03	67	3	
09340-05060	61-00-03	67	7	
09450-37240	65-00-02A	75	1	22
09450-37400	65-00-02B	77	23	
30405-31403	05	15	3	
30636-25901	94-00-01	97	1	11
30636-25901	94-00-02	99	11	
30A11-00101	11	27	11	
30A11-00101	94-00-02	99	8	
30A19-00040	19	37	6	
30A19-10010	19	37	7	
30A19-10020	19	37	8	
30A19-10030	19	37	9	
30A40-00103	40	53	1	
30A63-00101	63-00-01	69	12	
30A63-00101	63-00-02	71	12	
30A63-00101	94-00-01	97	1	08
30A63-00101	94-00-02	99	9	
30A87-10042	87	93	1	
30A87-20402	87	93	3	
30H45-00101	45	57	6	
30H45-00101	94-00-01	97	1	07
30H45-00101	94-00-02	99	10	
30L07-00700	07-00-02	21	5	
30L63-00600	63-00-01	69	1	10
30L63-00600	63-00-02	71	1	09
31A01-02500	01-00-01	3	2	05
31A01-02500	01-00-02	5	2	05
31A01-02600	01-00-01	3	2	06
31A01-02600	01-00-02	5	2	06
31A01-11101	01-00-01	3	4	
31A01-11101	01-00-02	5	4	
31A01-33300	01-00-02	5	5	
31A01-33300	94-00-02	99	12	
31A01-51041	01-00-02	5	1	
31A03-01500	01-00-01	3	2	07
31A03-01500	01-00-02	5	2	07
31A04-00700	04-01	9	7	
31A04-00800	04-01	9	1	

PART NO.	GRP NO.	PAGE	REF-NO.	
31A04-00900	04-01	9	2	
31A04-01301	04-01	9	3	
31A04-11024	04-01	9	11	
31A04-20032	04-02-02	13	1	
31A04-21010	04-01	9	15	
31A04-30043	04-01	9	8	
31A04-30200	04-01	9	2	
31A04-33202	04-02-02	13	4	
31A04-33202	94-00-02	99	13	
31A04-34100	04-01	9	18	
31A04-34300	04-01	9	19	
31A04-40100	04-01	9	1	
31A05-00203	05	15	1	
31A05-00300	05	15	5	
31A05-01300	05	15	6	
31A07-00801	07-00-01A	17	5	
31A07-00801	07-00-01B	19	5	
31A07-02300	07-00-02	21	3	
31A07-03100	07-00-01A	17	6	
31A07-03100	07-00-01B	19	6	
31A07-04401	12	29	2	
31A07-11601	07-00-02	21	1	
31A07-11701	07-00-02	21	2	
31A07-11701	94-00-01	97	1	12
31A07-11701	94-00-02	99	14	
31A07-11901	11	27	2	
31A07-11901	94-00-01	97	1	13
31A07-11901	94-00-02	99	15	
31A07-12200	07-00-01A	17	26	
31A07-12200	07-00-01B	19	27	
31A07-12200	94-00-01	97	1	14
31A07-12200	94-00-02	99	16	
31A07-23020	07-00-01B	19	1	
31A09-01010	09	25	1	
31A09-01020	09	25	2	
31A09-01030	09	25	3	
31A09-01040	09	25	4	
31A09-01050	09	25	1	
31A09-01060	09	25	2	
31A09-01070	09	25	3	
31A09-01080	09	25	4	
31A11-02100	11	27	1	
31A11-05101	11	27	8	
31A11-05201	11	27	9	
31A11-05201	94-00-02	99	17	
31A11-10103	11	27	4	
31A11-11101	11	27	5	
31A11-11101	94-00-02	99	18	
31A11-11200	94-00-01	97	1	15
31A13-01021	13	31	1	

PART NO.	GRP NO.	PAGE	REF-NO.	
31A17-10602	17	35	10	
31A17-11100	17	35	1	
31A17-11200	17	35	2	
31A17-11300	17	35	3	
31A19-01023	19	37	1	
31A20-00200	20	39	1	
31A20-02402	20	39	6	
31A21-01040	21	41	1	
31A21-03800	21	41	4	
31A23-00051	07-00-01A	17	23	
31A23-00051	07-00-01B	19	24	
31A23-01023	23	43	4	
31A23-01302	23	43	1	
31A23-01406	23	43	2	
31A23-01502	23	43	7	
31A23-10101	23	43	3	
31A30-00300	30	45	5	
31A30-00801	30	45	6	
31A30-00801	94-00-01	97	1	16
31A30-00801	94-00-02	99	19	
31A30-10902	30	45	4	
31A30-10902	94-00-02	99	20	
31A30-20011	30	45	1	
31A32-01200	94-00-02	99	21	
31A35-02300	35	47	2	
31A35-02300	94-00-01	97	1	17
31A35-02300	94-00-02	99	22	
31A35-05040	35-02	49	1	
31A35-30010	35	47	1	
31A42-00300	40	53	2	
31A42-01300	11	27	19	
31A45-20700	45	57	9	
31A46-00064	46	59	5	
31A46-01200	94-00-01	97	1	18
31A46-01200	94-00-02	99	23	
31A46-10101	46	59	9	
31A46-10101	94-00-01	97	1	19
31A46-10101	94-00-02	99	24	
31A46-11200	46	59	8	
31A61-01200	61-00-01	63	11	04
31A61-01200	61-00-02	65	12	04
31A61-01500	61-00-01	63	11	05
31A61-01500	61-00-02	65	12	05
31A61-02500	61-00-02	65	11	
31A61-04100	61-00-01	63	4	
31A61-04200	61-00-01	63	5	
31A61-04300	61-00-01	63	6	
31A61-08100	61-00-02	65	4	
31A61-08200	61-00-02	65	5	
31A61-08300	61-00-02	65	6	

sinerhom.co.uk

NUMERICAL PARTS INDEX

PART NO.	GRP NO.	PAGE	REF-NO.	
31A61-08400	61-00-02	65	7	
31A61-23300	61-00-02	65	12	
31A63-00400	63-00-02	71	1	11
31A63-00500	63-00-02	71	1	12
31A63-01800	63-00-01	69	1	14
31A63-01800	63-00-02	71	1	13
31A63-02030	63-00-01	69	5	
31A63-02030	63-00-02	71	5	
31A63-02300	63-00-01	69	10	
31A63-02300	63-00-02	71	10	
31A63-02600	63-00-01	69	1	15
31A63-02600	63-00-02	71	1	14
31A63-02700	63-00-01	69	1	16
31A63-02700	63-00-02	71	1	15
31A63-05300	63-00-01	69	1	17
31A63-05300	63-00-02	71	1	17
31A63-05400	63-00-01	69	1	19
31A63-05400	63-00-02	71	1	19
31A63-05601	63-00-01	69	1	11
31A63-05601	63-00-02	71	1	10
31A63-06900	63-00-01	69	15	
31A63-06900	63-00-02	71	15	
31A63-07100	63-00-01	69	1	21
31A63-07100	63-00-02	71	1	26
31A63-07200	63-00-01	69	1	22
31A63-07200	63-00-02	71	1	25
31A63-07300	63-00-01	69	1	23
31A63-07300	63-00-02	71	1	24
31A63-07900	63-00-01	69	1	24
31A63-07900	63-00-02	71	1	21
31A63-08100	63-00-01	69	14	
31A63-08100	63-00-02	71	14	
31A63-10305	63-00-01	69	3	
31A63-10305	63-00-02	71	3	
31A63-11301	63-00-01	69	1	25
31A63-11301	63-00-02	71	1	22
31A63-12201	63-00-01	69	2	
31A63-12201	63-00-02	71	2	
31A63-12201	94-00-01	97	1	20
31A63-12201	94-00-02	99	25	
31A63-15200	63-00-01	69	1	26
31A63-15200	63-00-02	71	1	23
31A63-25101	63-00-01	69	4	
31A63-25101	63-00-02	71	4	
31A63-27091	63-00-02	71	1	
31A64-00400	63-00-01	69	8	
31A64-00400	63-00-02	71	8	
31A65-00500	65-00-01	73	4	
31A65-11200	65-02	79	1	
31A65-13050	65-00-02B	77	1	
31A66-00102	66-00-02B	85	1	
31A66-04101	66-02	87	2	
31A68-00402	68-00-02	91	1	
31A68-02100	68-00-01	89	1	
31A68-20300	68-00-01	89	7	
31A90-00300	90	95	4	
31A90-10300	90	95	4	
31A94-03020	94-00-02	99	1	
31B01-23200	01-00-01	3	5	
31B01-23200	94-00-01	97	1	21
31B01-31041	01-00-01	3	1	
31B04-00014	04-01	9	8	
31B04-01010	04-01	9	15	
31B04-03011	04-02-01	11	1	
31B04-13201	04-02-01	11	4	
31B04-13201	94-00-01	97	1	22
31B05-00103	05	15	1	
31B07-23010	07-00-01A	17	1	
31B13-00013	13	31	1	
31B19-01023	19	37	1	
31B20-00202	20	39	1	
31B20-02401	20	39	6	
31B21-00090	21	41	1	
31B30-00902	30	45	4	
31B30-00902	94-00-01	97	1	23
31B30-10011	30	45	1	
31B32-01200	94-00-01	97	1	24
31B61-02800	61-00-01	63	10	
31B61-13100	61-00-01	63	11	
31B63-00400	63-00-01	69	1	12
31B63-00500	63-00-01	69	1	13
31B63-12080	63-00-01	69	1	
31B65-00100	65-00-01	73	4	
31B65-01200	65-02	79	1	
31B65-03030	65-00-02A	75	1	
31B66-00101	66-00-02A	83	1	
31B66-04100	66-02	87	2	
31B94-40041	94-00-01	97	1	
32A04-02401	04-01	9	14	
32A36-05012	36	51	1	
32A66-03100	66-02	87	1	
32A91-05100	94-00-01	97	1	25
32A91-05100	94-00-02	99	26	
32C04-04500	04-01	9	20	
32C04-06100	04-01	9	21	
34340-00700	36	51	2	
34340-00700	94-00-01	97	1	01
34340-00700	94-00-02	99	27	
49168-15200	94-00-01	97	1	26
90802-20150	65-00-02A	75	1	13
90802-20150	65-00-02B	77	14	
94901-81020	65-00-02A	75	1	20
94901-81020	65-00-02B	77	21	
94903-00030	65-00-02A	75	1	23
94903-00030	65-00-02B	77	24	
94904-80800	65-00-02A	75	1	17
94904-80800	65-00-02B	77	18	
94918-00310	65-00-02B	77	20	

sweepern.co.uk

TABLE OF BOLT, W/WASHER

BOLT,W/WASHER	BOLT/WASHER	BOLT,W/WASHER	BOLT/WASHER	BOLT,W/WASHER	BOLT/WASHER
F1805-06010	F1035-06010 F2515-06000	F1805-06035	F1035-06035 F2515-06000	F1805-08018	F1035-08018 F2515-08000
F1805-06012	F1035-06012 F2515-06000	F1805-06040	F1035-06040 F2515-06000	F1805-08020	F1035-08020 F2515-08000
F1805-06014	F1035-06014 F2515-06000	F1805-06045	F1035-06045 F2515-06000	F1805-08022	F1035-08022 F2515-08000
F1805-06016	F1035-06016 F2515-06000	F1805-06055	F1035-06055 F2515-06000	F1805-08025	F1035-08025 F2515-08000
F1805-06018	F1035-06018 F2515-06000	F1805-06060	F1035-06060 F2515-06000	F1805-08030	F1035-08030 F2515-08000
F1805-06020	F1035-06020 F2515-06000	F1805-08012	F1035-08012 F2515-08000	F1805-08035	F1035-08035 F2515-08000
F1805-06025	F1035-06025 F2515-06000	F1805-08014	F1035-08014 F2515-08000	F1805-08040	F1035-08040 F2515-08000
F1805-06030	F1035-06030 F2515-06000	F1805-08016	F1035-08016 F2515-08000	F1805-08045	F1035-08045 F2515-08000

silverhorn.co.uk

TABLE OF BOLT, W/WASHER

BOLT,W/WASHER	BOLT/WASHER	BOLT,W/WASHER	BOLT/WASHER	BOLT,W/WASHER	BOLT/WASHER
F1805-08050	F1035-08050 F2515-08000	F1805-10018	F1035-10018 F2515-10000	F1805-10050	F1035-10050 F2515-10000
F1805-08055	F1035-08055 F2515-08000	F1805-10020	F1035-10020 F2515-10000	F1805-10055	F1035-10055 F2515-10000
F1805-08060	F1035-08060 F2515-08000	F1805-10022	F1035-10022 F2515-10000	F1805-10060	F1035-10060 F2515-10000
F1805-08065	F1035-08065 F2515-08000	F1805-10025	F1035-10025 F2515-10000	F1805-10065	F1035-10065 F2515-10000
F1805-08070	F1035-08070 F2515-08000	F1805-10030	F1035-10030 F2515-10000	F1805-10070	F1035-10070 F2515-10000
F1805-08075	F1035-08075 F2515-08000	F1805-10035	F1035-10035 F2515-10000	F1805-10085	F1035-10085 F2515-10000
F1805-10014	F1035-10014 F2515-10000	F1805-10040	F1035-10040 F2515-10000	F1805-12016	F1035-12016 F2515-12000
F1805-10016	F1035-10016 F2515-10000	F1805-10045	F1035-10045 F2515-10000	F1805-12020	F1035-12020 F2515-12000

silverhorn.co.uk

TABLE OF BOLT, W/WASHER

BOLT,W/WASHER	BOLT/WASHER
F1805-12025	F1035-12025
	F2515-12000
F1805-12030	F1035-12030
	F2515-12000
F1805-12035	F1035-12035
	F2515-12000
F1805-12040	F1035-12040
	F2515-12000
F1805-12045	F1035-12045
	F2515-12000
F1805-12050	F1035-12050
	F2515-12000
F1805-12055	F1035-12055
	F2515-12000
F1805-12060	F1035-12060
	F2515-12000

BOLT,W/WASHER	BOLT/WASHER
F1805-12065	F1035-12065
	F2515-12000
F1805-12085	F1035-12085
	F2515-12000
F1805-14035	F1035-14035
	F2515-14000
F1805-14045	F1035-14045
	F2515-14000

BOLT,W/WASHER	BOLT/WASHER
F1825-06010	F1035-06010
	F2515-06000
	F2500-06000
F1825-06012	F1035-06012
	F2515-06000
	F2500-06000
F1825-06014	F1035-06014
	F2515-06000
	F2500-06000
F1825-06016	F1035-06016
	F2515-06000
	F2500-06000
F1825-06020	F1035-06020
	F2515-06000
	F2500-06000
F1825-06025	F1035-06025
	F2515-06000
	F2500-06000

silverhorn.co.uk

TABLE OF BOLT, W/WASHER

BOLT,W/WASHER	BOLT/WASHER	BOLT,W/WASHER	BOLT/WASHER	BOLT,W/WASHER	BOLT/WASHER
F1825-06030	F1035-06030 F2515-06000 F2500-06000	F1825-08025	F1035-08025 F2515-08000 F2500-08000	F1825-08050	F1035-08050 F2515-08000 F2500-08000
F1825-06035	F1035-06035 F2515-06000 F2500-06000	F1825-08030	F1035-08030 F2515-08000 F2500-08000	F1825-08055	F1035-08055 F2515-08000 F2500-08000
F1825-06055	F1035-06055 F2515-06000 F2500-06000	F1825-08035	F1035-08035 F2515-08000 F2500-08000	F1825-08085	F1035-08085 F2515-08000 F2500-08000
F1825-08012	F1035-08012 F2515-08000 F2500-08000	F1825-08038	F1035-08038 F2515-08000 F2500-08000	F1825-10014	F1035-10014 F2515-10000 F2500-10000
F1825-08016	F1035-08016 F2515-08000 F2500-08000	F1825-08040	F1035-08040 F2515-08000 F2500-08000	F1825-10016	F1035-10016 F2515-10000 F2500-10000
F1825-08020	F1035-08020 F2515-08000 F2500-08000	F1825-08045	F1035-08045 F2515-08000 F2500-08000	F1825-10020	F1035-10020 F2515-10000 F2500-10000

silverhorn.co.uk

TABLE OF BOLT, W/WASHER

BOLT, W/WASHER	BOLT/WASHER
F1825-10025	F1035-10025
	F2515-10000
	F2500-10000
F1825-10030	F1035-10030
	F2515-10000
	F2500-10000
F1825-10035	F1035-10035
	F2515-10000
	F2500-10000
F1825-10040	F1035-10040
	F2515-10000
	F2500-10000
F1825-10080	F1035-10080
	F2515-10000
	F2500-10000
F1825-12020	F1035-12020
	F2515-12000
	F2500-12000

BOLT, W/WASHER	BOLT/WASHER
F1825-12025	F1035-12025
	F2515-12000
	F2500-12000
F1825-12030	F1035-12030
	F2515-12000
	F2500-12000
F1825-12040	F1035-12040
	F2515-12000
	F2500-12000

BOLT, W/WASHER	BOLT/WASHER
F2005-10016	F1155-10016
	F2515-10000
F2005-10020	F1155-10020
	F2515-10000
F2005-10025	F1155-10025
	F2515-10000
F2005-10030	F1155-10030
	F2515-10000
F2005-10035	F1155-10035
	F2515-10000
F2005-10040	F1155-10040
	F2515-10000
F2005-10045	F1155-10045
	F2515-10000
F2005-10050	F1155-10050
	F2515-10000

silverhorn.co.uk

TABLE OF BOLT, W/WASHER

BOLT, W/WASHER	BOLT/WASHER
F2005-10055	F1155-10055
	F2515-10000
F2005-10060	F1155-10060
	F2515-10000
F2005-10065	F1155-10065
	F2515-10000
F2005-10070	F1155-10070
	F2515-10000
F2005-12020	F1155-12020
	F2515-12000
F2005-12025	F1155-12025
	F2515-12000
F2005-12030	F1155-12030
	F2515-12000
F2005-12035	F1155-12035
	F2515-12000

BOLT, W/WASHER	BOLT/WASHER
F2005-12040	F1155-12040
	F2515-12000
F2005-12045	F1155-12045
	F2515-12000
F2005-12050	F1155-12050
	F2515-12000
F2005-12055	F1155-12055
	F2515-12000
F2005-12065	F1155-12065
	F2515-12000

BOLT, W/WASHER	BOLT/WASHER
F2015-10020	F1155-10020
	F2515-10000
	F2500-10000
F2015-10025	F1155-10025
	F2515-10000
	F2500-10000
F2015-10030	F1155-10030
	F2515-10000
	F2500-10000
F2015-10035	F1155-10035
	F2515-10000
	F2500-10000
F2015-10040	F1155-10040
	F2515-10000
	F2500-10000
F2015-10050	F1155-10050
	F2515-10000
	F2500-10000

silverhorn.co.uk

TABLE OF BOLT, W/WASHER

BOLT,W/WASHER	BOLT/WASHER	BOLT,W/WASHER	BOLT/WASHER	BOLT,W/WASHER	BOLT/WASHER
F2015-10055	F1155-10055				
	F2515-10000				
	F2500-10000				
F2015-10060	F1155-10060				
	F2515-10000				
	F2500-10000				
F2015-12025	F1155-12025				
	F2515-12000				
	F2500-12000				
F2015-12030	F1155-12030				
	F2515-12000				
	F2500-12000				

silverhorn.co.uk

[redacted]

silverhook.co.uk

Pub.No. 98615-88200

Printed in Japan