Service Parts

Engine

Engine Models:

Mitsubishi S16R-Y1PTA
S16R-Y2PTAW/2
S16R-Y1PTAA2
Kohler D1600/1820/2000 65.4A

Generator Models:
1600–2000REOZM
1600–2000REOZMB
1600–2000REOZMD
1600–2000ROZMC

TP-6259 7/07d

silverhorn.co.uk

silverhorn.co.uk

Table of Contents

Description		Page
Introduction		5
Number System Significance		5
Illustrations		5
How to Find Part Numbers		5
Hardware References		5
Specification Number Index		6
Group 1:	Cylinder Head	9
Group 4:	Valve Mechanism and Rocker Cover	10
Group 5:	Camshaft	12
Group 7.1:	Crankcase Assembly	13
Group 7.2:	Crankcase Bearings	14
Group 7.3:	Crankcase Covers	15
Group 11:	Timing Gear Case	16
Group 13:	Oil Pan	17
Group 14:	Engine Mounting	18
Group 17:	Piston and Connecting Rod	19
Group 20:	Crankshaft, Flywheel, and Damper	20
Group 23:	Timing Gear	22
Group 25.1:	Accessory Drive, Front	23
Group 25.2:	Accessory Drive, Rear	26
Group 25.3:	Hourmeter Cover	29
Group 30.1:	Intake Tubes	30
Group 30.2:	Air Box	34
Group 32.1:	Exhaust System	35
Group 32.2:	Exhaust Elbow	39
Group 32.3:	Exhaust Cover	40
Group 33.1:	Turbocharger Mounting	43
Group 33.2:	Turbocharger	44
Group 35:	Oil Pump	46
Group 36.1:	Oil Strainer	47
Group 36.2:	Oil Thermostat	49
Group 36.3:	Oil Pipes	50
Group 39:	Oil Cooler	52
Group 40.1:	Oil Filter	53
Group 40.2:	Oil Filter Assembly	55
Group 40.3:	Bypass Filter Piping	56
Group 42:	Oil Filler and Dipstick	57
Group 43:	Breather	58
Group 45:	Water Pump	59
Group 46.1:	Thermostat and Covers	60
Group 46.2:	Cooling System	61
Group 47.1:	Radiator	64
Group 47.2:	Radiator Piping	65
Group 48:	Fan Drive	66
Group 51.1:	Intercooler Thermostat	68
Group 51.2:	Intercooler Outer Piping	69
Group 51.3:	Intercooler Inner Piping	70

silverhorn.co.uk

Description		Page
Group 53:	Intercooler Water Pump	71
Group 55:	Air Cooler	72
Group 61.1:	Fuel Injection Pump	73
Group 61.2:	Fuel Rack Control	76
Group 61.3:	Nozzle Assembly	79
Group 61.4:	Fuel Injection Lines	80
Group 61.5:	Fuel Leakoff Pipes	83
Group 61.6:	Injection Pump, Right	86
Group 61.7:	Injection Pump, Left	92
Group 61.8:	Fuel Feed Pump	98
Group 62.1:	Fuel Filter Piping	100
Group 62.2:	Fuel Filter	104
Group 63.1:	Governor Control	106
Group 63.2:	Boost Sensor	108
Group 66:	Starter	110
Group 68.1:	Alternator Mounting	111
Group 68.2:	Alternator	112
Group 71:	Turning Gear	113
Group 87:	Stop System	114
Group 94.1:	Overhaul Gasket Kit	116
Group 94.2:	Overhaul Gasket Kit	117
Group 94.3:	Oil Seal Kit	118

silverhorn.co.uk

Introduction

This manual lists engine service replacement parts for 1600-2000REOZM/ROZMC and 1600-2000REOZMB/REOZMD generator sets.

Information in this publication represents data available at the time of print. The generator set manufacturer reserves the right to change this publication and the products represented without notice and without any obligation or liability whatsoever.

This manual includes the following main sections:

Table of Contents. Lists the sections of the manual.

Introduction (and other information sections). Contains introductory material about part numbers, illustrations, and hardware.

Index. Lists the engine models and groups.

Group Parts Lists. List the part numbers of parts in the groups.

Numbering System Significance

This manual uses the following numbering systems:

Specification Number. The product identification number located on the engine nameplate. Specifications break down into groups.

Group Number. A unique number representing a parts group needed to assemble an engine function. For example, Group 1 is the Cylinder Head group.

Variation Number. A group might have several variations. Each variation performs the same function with different parts lists. For example, a 12-volt alternator and 24-volt alternator both perform the same function, but, with different parts. Each difference requires a group variation or module number.

Part Number. The part number identifies an individual assembly, subassembly, component, or accessory kit.

Illustrations

Illustrations (or exploded-view drawings) best representing the widest range of variations accompany most groups in this manual. Illustrations do not depict all details and may not show all parts. Do not use illustrations for assembly or disassembly.

How to Find Part Numbers

Use the following steps to locate a service replacement part.

1. Locate the generator set nameplate to **identify the generator set spec number**.
2. **Turn to the Specification Number Index**. The first column lists the engine model numbers. The headings identify the groups of parts that make up the engine.
3. **Identify the group** most likely to include the service part number.
4. **Find the group variation number** at the intersection of the spec number row and the group column. Note the variation number.
5. **Page forward to locate the group** identified in step 3 or find the appropriate page in the Table of Contents.
6. **Find the part on the illustration** and note the item number of the part or **find the part description in the parts list**.
7. Select **the part number that corresponds to your group variation**. The first column lists the illustration item number. Find the variation identified in the Specification Number Index in the appropriate column on the right side of the parts list table. Find the quantity used at the intersection of the item number row and the variation column. A blank space at the intersection means the variation/module does not use that part number.

Hardware References

Many common hardware items do not appear in parts manuals or will appear as common hardware entries. A common hardware entry lists the size of the hardware. For example, an item that appears as “Hardware, 3/8-16” in the text means that the piece is 3/8-16 size. Obtain common hardware locally.

Some hardware items require a specific size or some other characteristic. In that case, use the part number listed in the text.

When replacing hardware, do not substitute inferior grade hardware. Replacement hardware grade should be equal to or better than the grade of the manufacturer’s original hardware.

silvermoon.co.uk

Specification Number Index

Group Title	Cylinder Head	Valves and Rocker Cover	Camshaft	Crankcase Assembly	Crankcase Bearings	Crankcase Covers	Timing Gear Case	Oil Pan	Engine Mounting	Piston and Connecting Rod	Crankshaft and Flywheel	Timing Gear	Accessory Drive, Front	Accessory Drive, Rear
Group No.	**1**	**4**	**5**	**7.1**	**7.2**	**7.3**	**11**	**13**	**14**	**17**	**20**	**23**	**25.1**	**25.2**
	Variation Number													
Model														
1600REOZM/ROZMC														
S16R-Y1PTA	2	2	2	2	2	2	2	2	2	2	2	2	2	2
1600REOZMB/REOZMD														
S16R-Y2PTAW	3	3	3	3	3	3	3	3	2	3	3	3	3	3
1750/2000REOZMB/REOZMD														
S16R-Y2PTAW2	3	3	3	3	3	3	4	3	2	4	4	3	4	4
1820/2000REOZM/ROZMC														
S16R-Y1PTAA2	1	1	1	1	1	1	1	1	1	1	1	1	1	1

Group Title	Hourmeter Cover	Intake Tubes	Air Box	Exhaust System	Exhaust Elbow	Exhaust Cover	Turbocharger Mounting	Turbocharger	Oil Pump	Oil Strainer	Oil Thermostat	Oil Pipes	Oil Cooler	Oil Filter
Group No.	**25.3**	**30.1**	**30.2**	**32.1**	**32.2**	**32.3**	**33.1**	**33.2**	**35**	**36.1**	**36.2**	**36.3**	**39**	**40.1**
	Variation Number													
Model														
1600REOZM/ROZMC														
S16R-Y1PTA	2	2	–	2	2	2	2	2	1	2	2	2	2	2
1600REOZMB/REOZMD														
S16R-Y2PTAW	3	3	–	3	3	3	3	3	1	3	3	3	3	3
1750/2000REOZMB/REOZMD														
S16R-Y2PTAW2	3	3	–	4	3	4	4	4	1	3	3	4	3	3
1820/2000REOZM/ROZMC														
S16R-Y1PTAA2	1	1	1	1	1	1	1	1	1	1	1	1	1	1

kin.os.uen.com

Specification Number Index

Group Title	Oil Filter Assembly	Bypass Filter Piping	Oil Filler and Dipstick	Breather	Water Pump	Thermostat and Covers	Cooling System	Radiator	Radiator Piping	Fan Drive	Intercooler Thermostat	Intercooler Outer Piping	Intercooler Inner Piping	Intercooler Water Pump
Group No.	**40.2**	**40.3**	**42**	**43**	**45**	**46.1**	**46.2**	**47.1**	**47.2**	**48**	**51.1**	**51.2**	**51.3**	**53**
	Variation Number													
Model														
1600REOZM/ROZMC														
S16R–Y1PTA	2	–	1	2	1	2	2	–	–	2	–	–	–	–
1600REOZMB/REOZMD														
S16R–Y2PTAW	3	1	1	3	2	3	3	–	–	3	1	1	1	1
1750/2000REOZMB/REOZMD														
S16R–Y2PTAW2	3	1	1	3	2	3	3	–	–	3	1	1	1	1
1820/2000REOZM/ROZMC														
S16R–Y1PTAA2	1	–	1	1	1	1	1	1	1	1	–	–	–	–

Group Title	Air Cooler	Fuel Injection Pump	Fuel Rack Control	Nozzle Assembly	Fuel Injection Lines	Fuel Leakoff Pipes	Injection Pump, Right	Injection Pump, Left	Fuel Feed Pump	Fuel Filter Piping	Fuel Filter	Governor Control	Boost Sensor	Starter
Group No.	**55**	**61.1**	**61.2**	**61.3**	**61.4**	**61.5**	**61.6**	**61.7**	**61.8**	**62.1**	**62.2**	**63.1**	**63.2**	**66**
	Variation Number													
Model														
1600REOZM/ROZMC														
S16R–Y1PTA	1	2	2	2	2	2	2	2	1	2	1	2	2	1
1600REOZMB/REOZMD														
S16R–Y2PTAW	2	3	3	3	3	3	3	3	1	3	2	3	3	1
1750/2000REOZMB/REOZMD														
S16R–Y2PTAW2	3	4	3	4	4	3	4	4	2	4	3	4	3	1
1820/2000REOZM/ROZMC														
S16R–Y1PTAA2	–	1	1	1	1	1	1	1	1	1	1	1	1	1

www.pumpsmart.co.uk

Specification Number Index

Group Title	Alternator Mounting	Alternator	Turning Gear	Stop System	Overhaul Kit	Overhaul Kit	Oil Seal Kit
Group No.	**68.1**	**68.2**	**71**	**87**	**94.1**	**94.2**	**94.3**
	Variation Number						
Model							
1600REOZM/ROZMC							
S16R-Y1PTA	2	2	1	1	2	2	2
1600REOZMB/REOZMD							
S16R-Y2PTAW	3	1	1	1	TBD	TBD	TBD
1750/2000REOZMB/REOZMD							
S16R-Y2PTAW2	3	1	1	2	TBD	TBD	TBD
1820/2000REOZM/ROZMC							
S16R-Y1PTAA2	1	1	1	1	1	1	1

silverthorn.co.uk

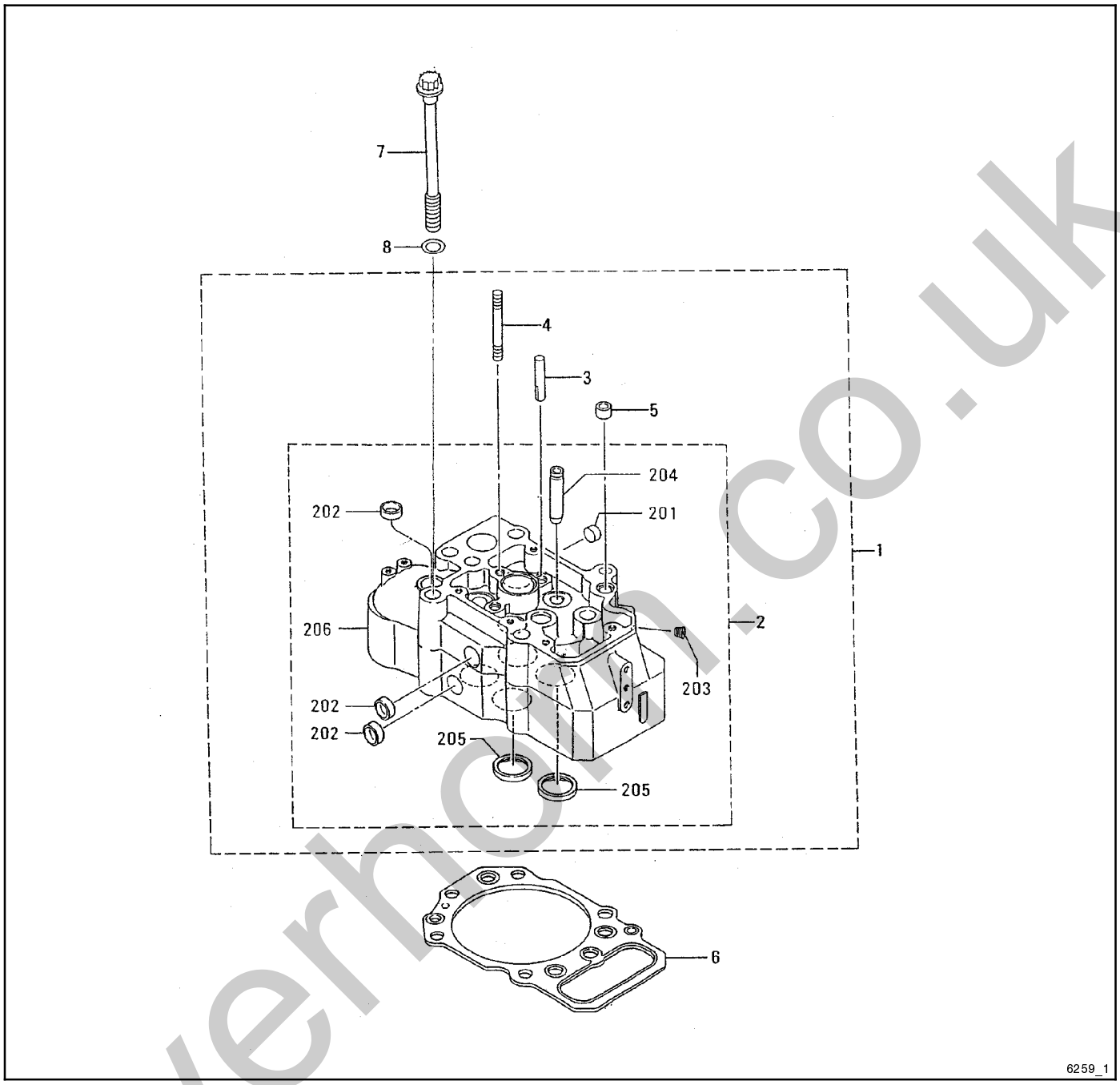

Item	Part No.	Description	Qty. Var. 1	2	3
1	GM31618	Cylinder head assembly	16		16
1	GM31263	Cylinder head assembly		16	
2	—	Not sold separately	16	16	16
201	GM14490	Cap, sealing	16	16	16
202	GM15518	Cap, sealing	112	112	112
203	GM15520	Plug, tapered	16	16	16
204	GM31806	Guide, valve	64	64	64
205	GM15602	Seat, exhaust valve	64	64	64
205	GM36996	Seat, valve, 0.3 OS	AR	AR	AR

AR As Required

Item	Part No.	Description	Qty. Var. 1	2	3
205	GM36997	Seat, valve, 0.6 OS	AR	AR	AR
206	—	Not sold separately	16	16	16
3	GM14625	Guide	32	32	32
4	GM21689	Stud	16	16	16
5	GM14916	Pin, dowel	16	16	16
6	GM21688	Gasket, cylinder head	16	16	
6	GM57186	Gasket, cylinder head			16
7	GM14917	Bolt	96	96	96
8	GM14628	Washer	96	96	96

silverhorn.co.uk

Group 4: Valve Mechanism and Rocker Cover

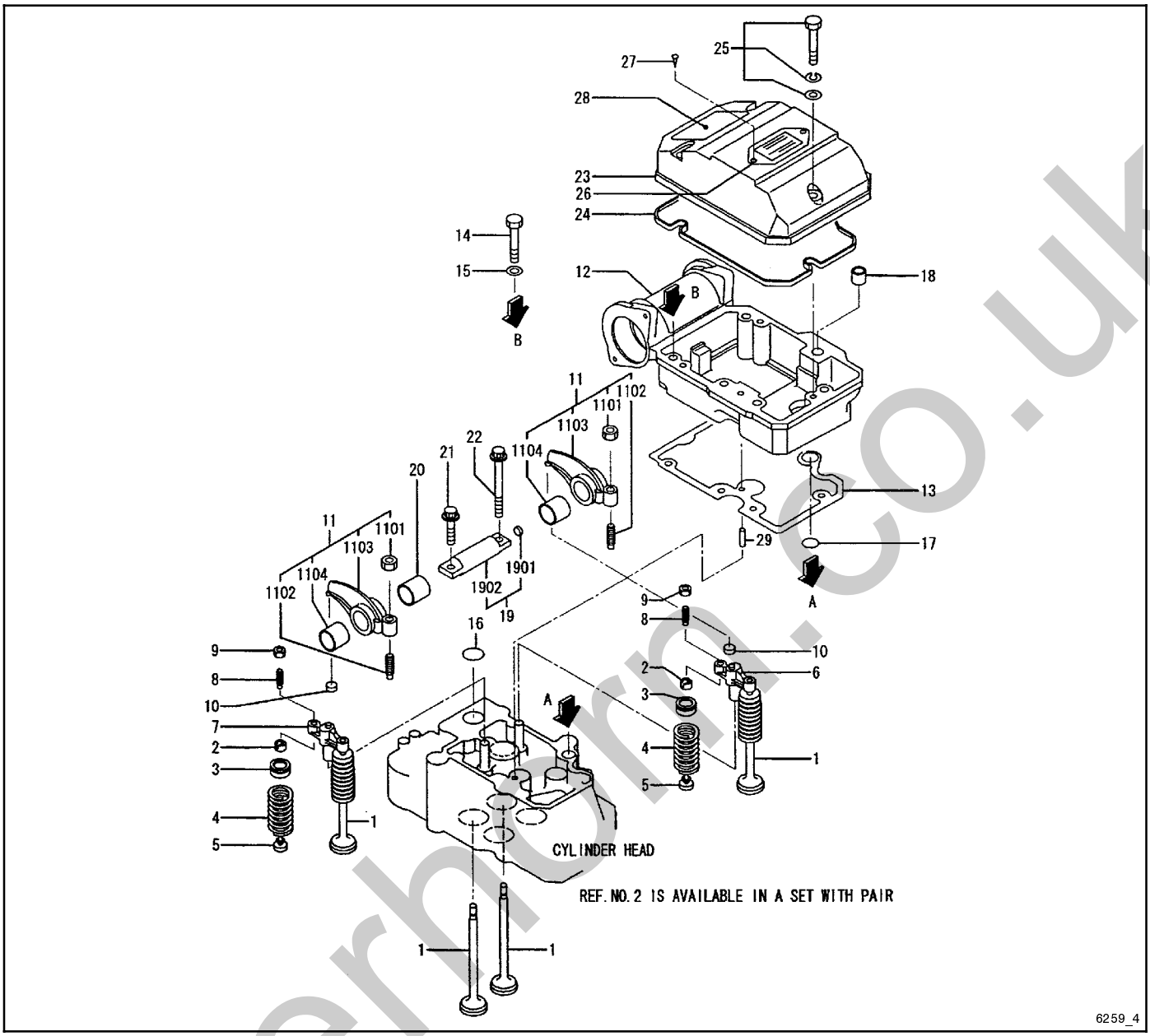

Item	Part No.	Description	Qty. Var. 1	Qty. Var. 2
1	GM21693	Valve	64	64
2	GM14570	Cotter	128	128
3	GM14918	Rotator	64	64
4	GM15606	Spring, valve	64	64
5	GM14626	Seal	64	64
6	GM15607	Bridge	16	
6	GM37190	Bridge		16
7	GM15608	Bridge	16	
7	GM36998	Bridge		16
8	GM14893	Screw	32	32
9	GM15166	Nut	32	32
10	GM14557	Cap	32	32
11	GM21691	Rocker assembly	32	32
1101	GM15167	Nut	32	32
1102	GM14892	Screw	32	32
1103	—	Not sold separately	32	32
1104	GM15615	Bushing, rocker	32	32
12	GM31266	Case, rocker	16	
12	GM36999	Case, rocker		16
13	GM31267	Packing	16	16

Item	Part No.	Description	Qty. Var. 1	Qty. Var. 2
14	GM15959	Bolt	80	80
15	GM21715	Washer, spring	80	80
16	GM31268	O-ring	16	16
17	GM21611	O-ring	16	16
18	GM14916	Pin, dowel	16	16
19	GM21694	Rocker shaft assembly	16	
19	GM37000	Rocker shaft assembly		16
1901	GM14489	Cap, sealing	16	16
1902	—	Not sold separately	16	16
20	GM15605	Spacer, rocker	16	16
21	GM16045	Bolt, flange	16	16
22	GM15609	Bolt	16	16
23	GM21692	Cover, rocker	16	16
24	GM15617	O-ring, rocker cover	16	16
25	GM22113	Bolt w/washer	48	48
26	—	Not sold separately	48	48
27	GM21588	Rivet, screw	2	2
28	GM21687	Plate, caution	1	1
29	GM15186	Pin, dowel	16	16

silverhorn.co.uk

Group 4: Valve Mechanism and Rocker Cover

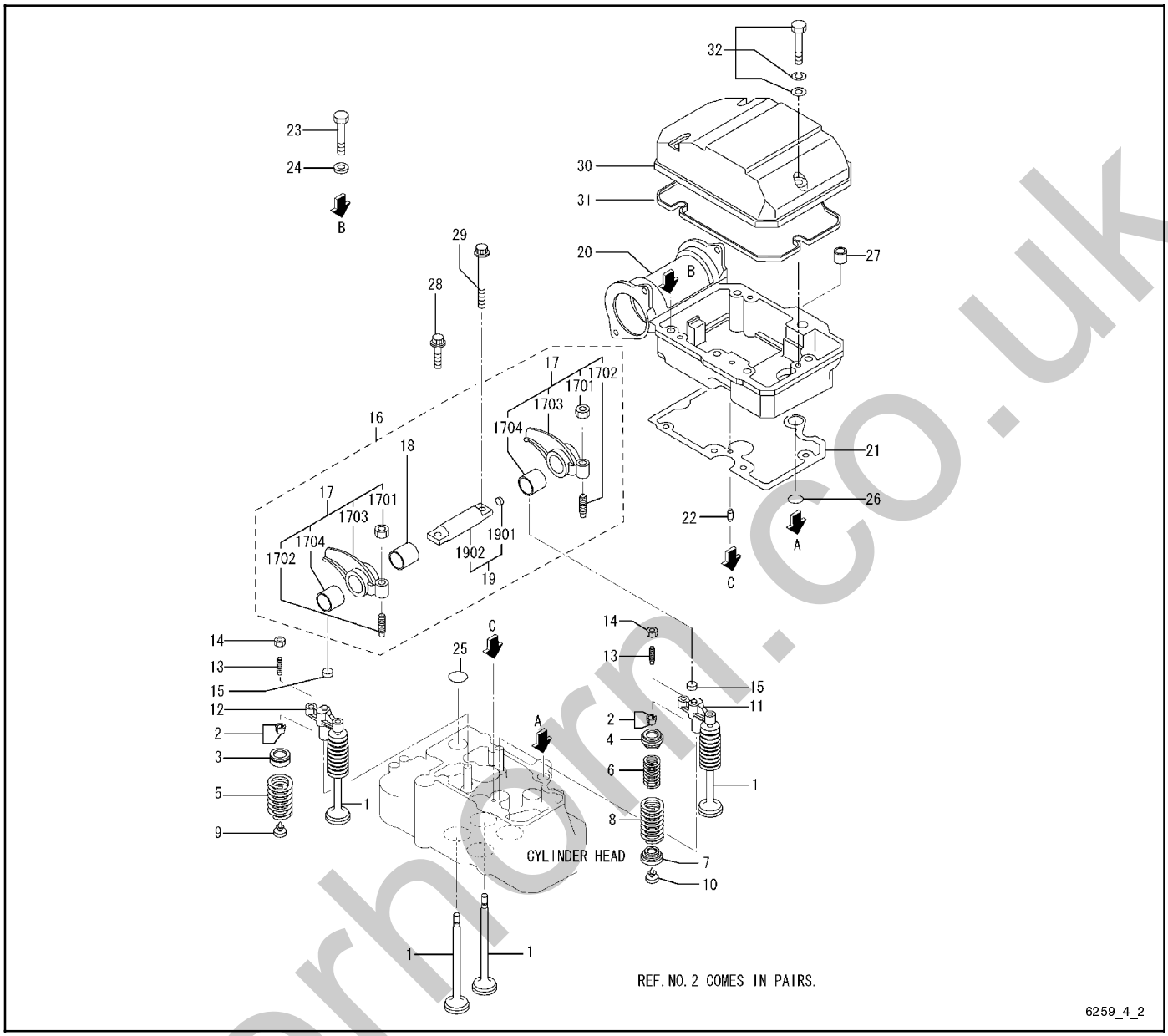

Item	Part No.	Description	Qty. Var. 3
1	GM21693	Valve	64
2	GM14570	Cotter	128
3	GM14918	Rotator	32
4	GM31272	Rotor, exhaust	32
5	GM15606	Spring, valve	32
6	GM31271	Spring, valve exhaust	32
7	GM31273	Retainer	32
8	GM37002	Spring, exhaust	32
9	GM14626	Seal	32
10	GM31269	Seal, valve stem	32
11	GM37190	Bridge, exhaust	16
12	GM36998	Bridge, inlet	16
13	GM14893	Screw	32
14	GM15166	Nut	32
15	GM14557	Cap	32
16	X	Rocker and shaft assembly	16
17	GM57606	Rocker assembly	32
1701	GM15167	Nut	32
1702	GM14892	Screw	32

Item	Part No.	Description	Qty. Var. 3
1703	X	Rocker	32
1704	GM15615	Bushing, rocker	32
18	GM57607	Spacer	16
19	GM37000	Shaft assembly, rocker	16
1901	GM14489	Cap, sealing	16
1902	X	Shaft, rocker	16
20	GM36999	Case, rocker	16
21	GM31267	Packing, rocker case	16
22	GM15186	Pin	16
23	GM15959	Bolt	80
24	GM36363	Washer	80
25	GM31268	O-ring	16
26	GM21611	O-ring	16
27	GM14916	Pin, dowel	16
28	GM16045	Bolt, flange	16
29	GM15609	Bolt	16
30	GM21692	Cover, rocker	16
31	GM15617	O-ring, rocker cover	16
32	GM22113	Bolt w/washer	48

X Part is not sold separately.

silverhorn.co.uk

Group 5: Camshaft

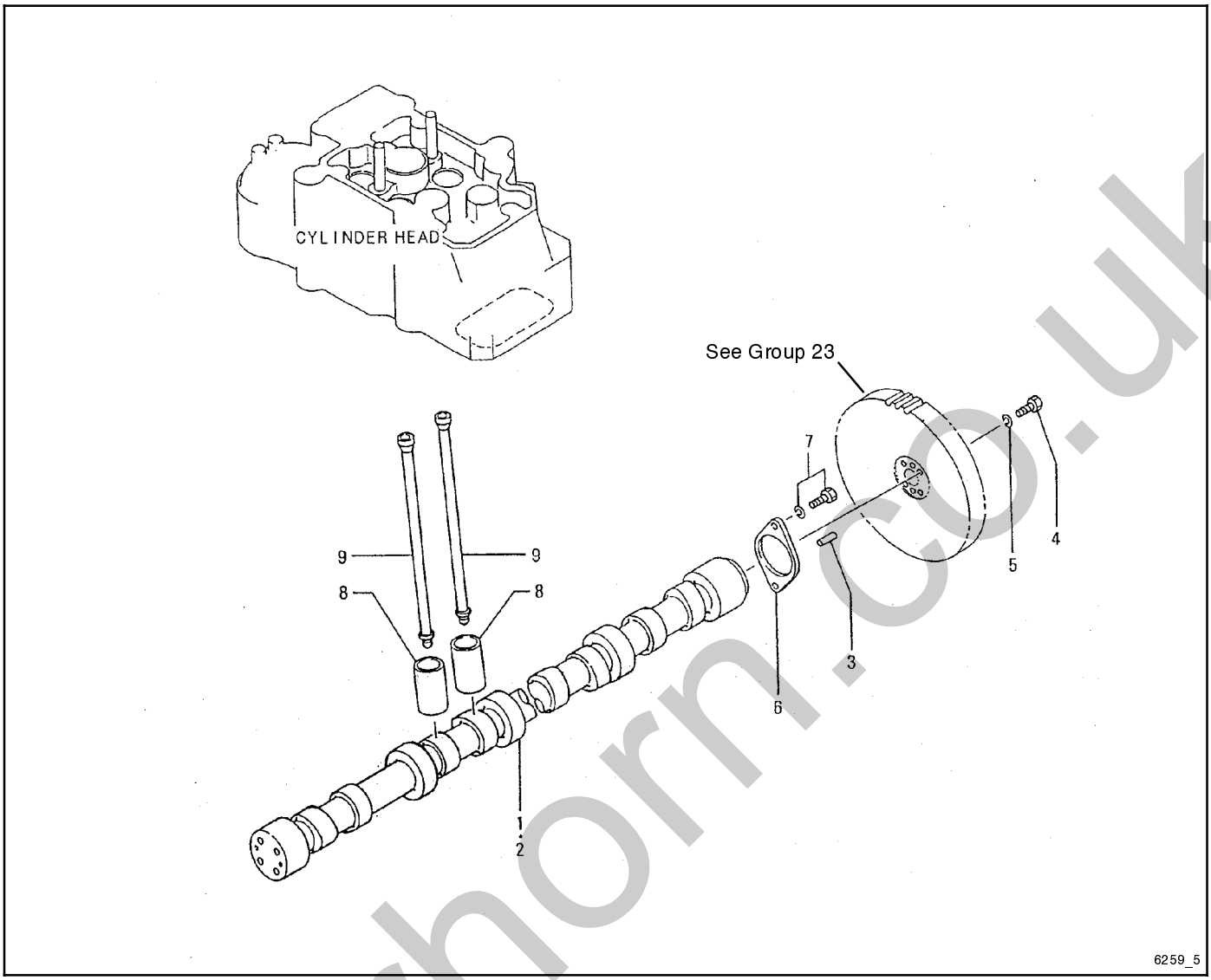

Item	Part No.	Description	Qty. Var. 1	2	3
1	GM21925	Camshaft, right side	1	1	1
2	GM21926	Camshaft, left side	1	1	1
3	GM15187	Pin	4	4	4
4	GM31619	Bolt w/washer	8	8	8
5	GM21715	Washer	8	8	
5	GM36363	Washer			8
6	GM15618	Plate, cam thrust	2	2	2
7	GM15151	Bolt	4	4	4
8	GM15621	Tappet	32	32	32
9	GM22915	Rod, push	32		
9	GM37191	Rod, push		32	
9	GM37005	Rod, push			32

silverhorn.co.uk

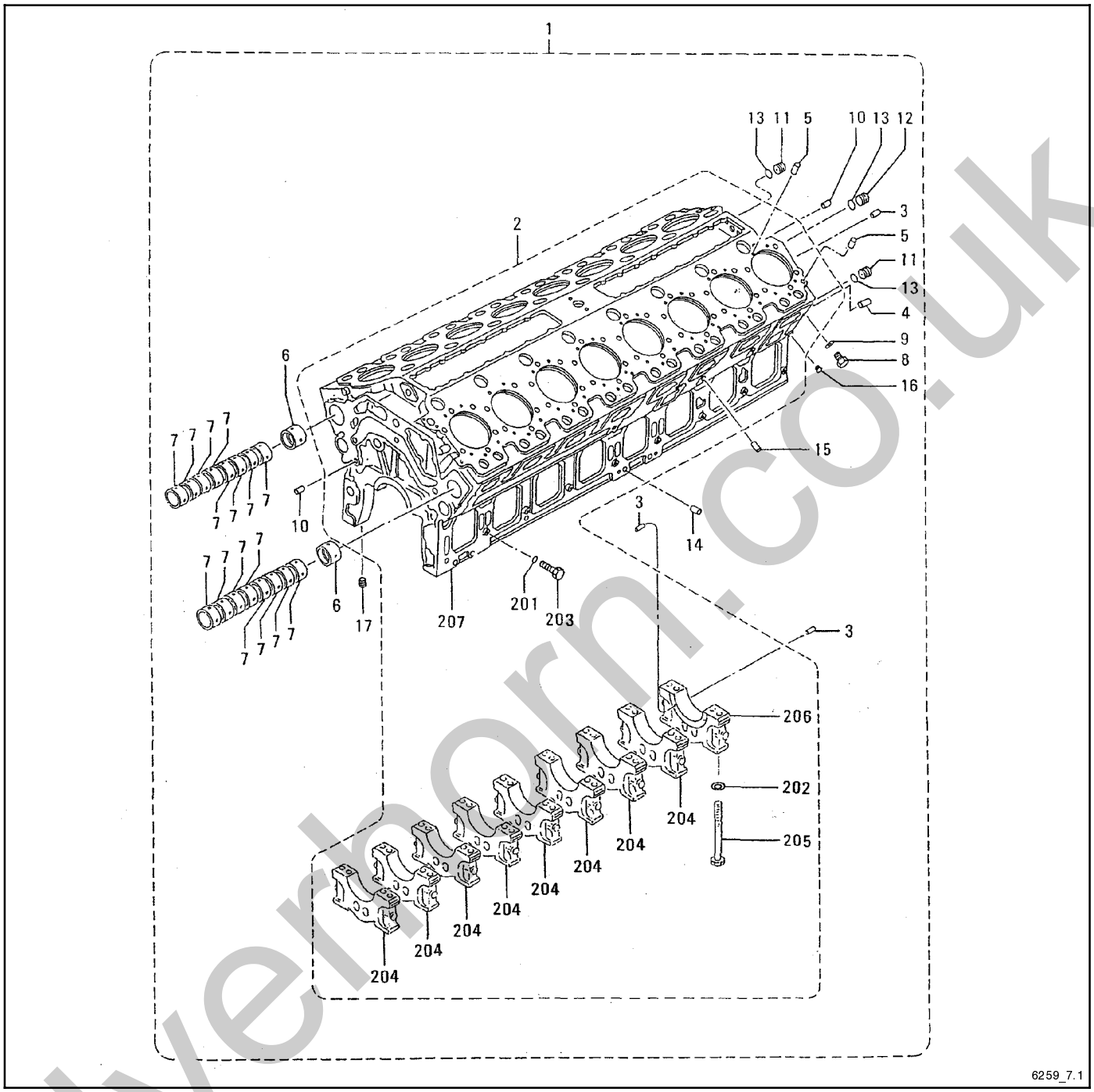

Item	Part No.	Description	Qty. Var. 1	Var. 2	Var. 3
1	GM31620	Crankcase assembly	1		
1	GM37192	Crankcase assembly		1	
1	GM57710	Crankcase assembly			1
2	—	Not sold separately	1	1	1
201	GM14508	O-ring	18	18	18
202	GM14571	Washer	36	36	36
203	GM21745	Bolt, cap side	18	18	18
204	—	Not sold separately	8	8	8
205	GM21748	Bolt, bearing cap	36	36	36
206	—	Not sold separately	1	1	1
207	—	Not sold separately	1	1	1
3	GM21746	Pin, dowel	6	6	6
4	GM22125	Pin, dowel	2		
4	GM37007	Pin, dowel		2	2

Item	Part No.	Description	Qty. Var. 1	Var. 2	Var. 3
5	GM14563	Pin, dowel	32	32	32
6	GM15625	Bushing, cam	2	2	2
7	GM15626	Bushing, cam	16	16	16
8	GM15627	Bolt set	18	18	18
9	GM14529	Washer, sealing	18	18	18
10	GM14562	Pin, dowel	4	4	4
11	GM15622	Plate, nozzle	2	2	2
12	GM14610	Plate	1	1	1
13	GM14511	O-ring	3	3	3
14	GM15190	Pin, dowel	8	8	8
15	GM15187	Pin	4	4	4
16	GM14496	Plug, tapered	2	2	2
17	GM14497	Plug, tapered	1	1	1

silverthorn.co.uk

Group 7.2: Crankcase Bearings

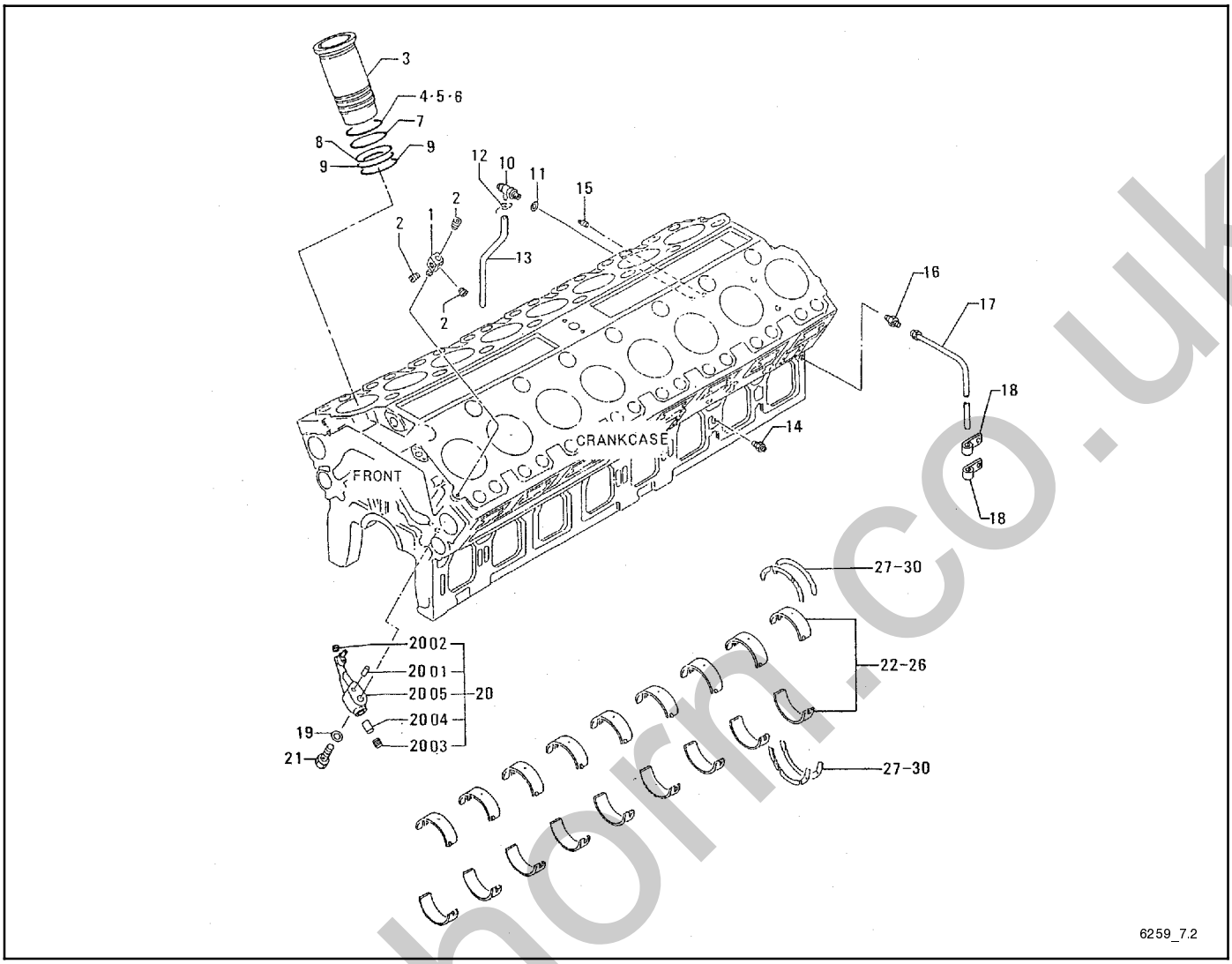

Item	Part No.	Description	Qty. Var. 1	2	3
1	GM21832	Connector	1	1	1
2	GM15246	Plug, tapered	3	3	3
3	GM31808	Liner, cylinder	16		
3	GM37008	Liner, cylinder		16	16
4	GM21695	Ring, liner, 1.00 mm	AR	AR	AR
5	GM21696	Ring, liner, 0.05 mm	AR	AR	AR
6	GM21697	Ring, liner, 0.15 mm	AR	AR	AR
7	GM15641	O-ring, liner	16	16	16
8	GM15591	O-ring, liner	16	16	16
9	GM15592	O-ring, liner	32	32	32
10	GM14622	Drain	2	2	
10	GM57191	Drain			2
11	GM14532	Washer, sealing	2	2	2
12	GM14558	Clamp	2	2	2
13	GM14620	Pipe, drain	2	2	2
14	GM16029	Connector	2	2	2
15	GM15246	Plug, tapered	1		
16	GM15230	Connector	1	1	1
17	GM22031	Pipe	1	1	1

Item	Part No.	Description	Qty. Var. 1	2	3
18	GM15082	Clip	2	2	
18	GM57611	Clip			2
19	GM14887	Washer	16	16	16
20	GM31621	Nozzle assembly	16	16	16
2001	GM22124	Pin, dowel	16	16	16
2002	GM21629	Screw, set	16	16	16
2003	GM21630	Screw, set	16	16	16
2004	GM21654	Valve, check	16	16	16
2005	—	Not sold separately	16	16	16
21	GM21747	Eyebolt	16	16	16
22	GM21751	Bearing set, standard	9	9	9
23	GM21752	Bearing set, 0.25 undersize	9	9	9
24	GM21753	Bearing set, 0.50 undersize	9	9	9
25	GM21754	Bearing set, 0.75 undersize	9	9	9
26	GM21755	Bearing set, 1.00 undersize	9	9	9
27	GM21756	Bearing, thrust, standard	4	4	4
28	GM21757	Bearing, thrust, 0.25 oversize	4	4	4
29	GM21758	Bearing, thrust, 0.50 oversize	4	4	4
30	GM21759	Bearing, thrust, 0.75 oversize	4	4	4

AR As Required

silvernorm.co.uk

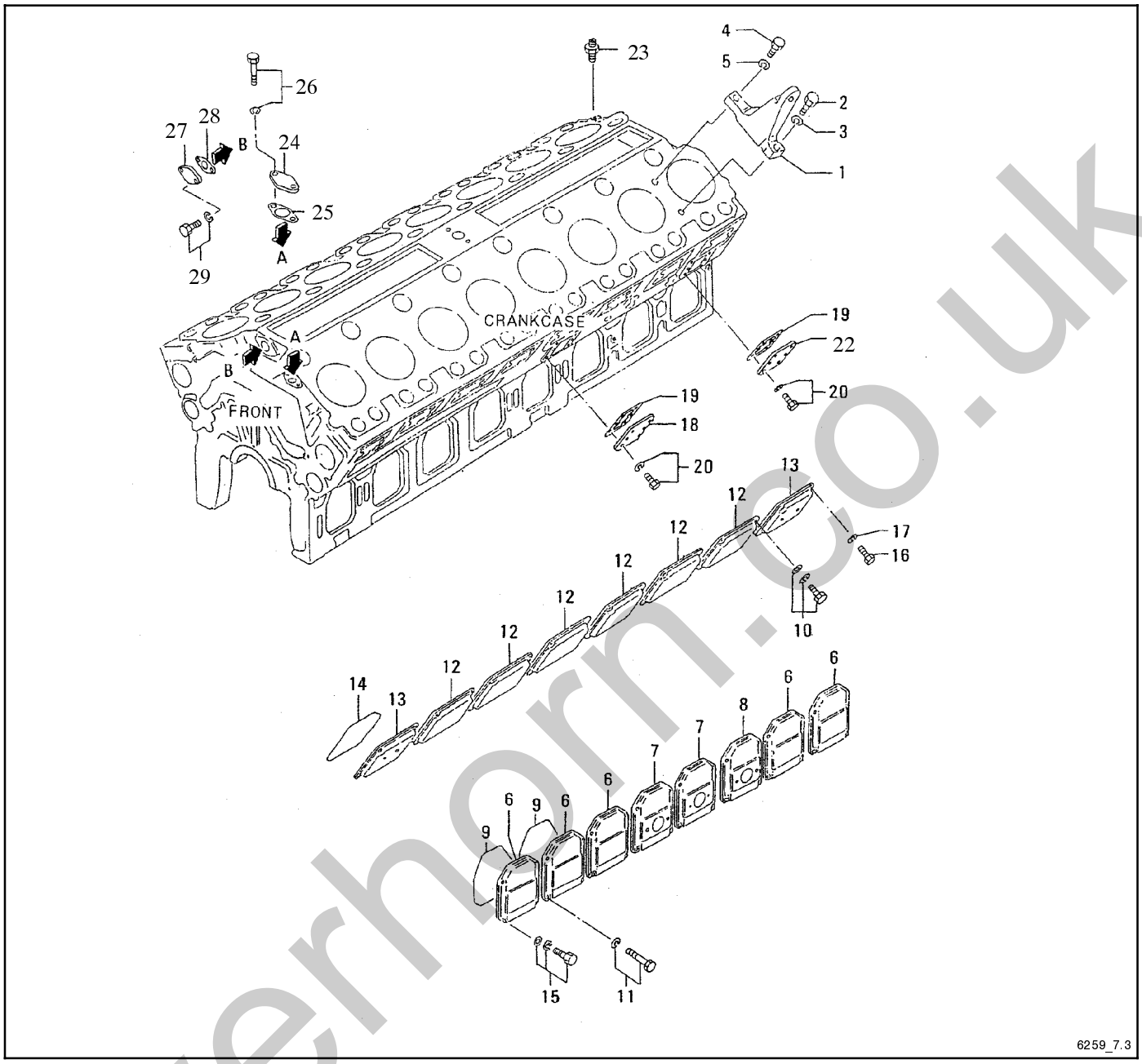

Item	Part No.	Description	Qty. Var. 1	Qty. Var. 2	Qty. Var. 3
1	GM21750	Hanger	4	4	4
2	GM15125	Bolt	4	4	4
3	GM15184	Washer, spring	4	4	4
4	GM22099	Bolt	4	4	4
5	GM22120	Washer, spring	4	4	4
6	GM21699	Cover, side	13	13	11
7	GM21700	Cover, side	2	2	4
8	GM21930	Cover, side	1	1	1
9	GM15642	O-ring	16	16	16
10	GM15157	Bolt w/washer	58	58	58
11	GM22109	Bolt w/washer	6	6	2
11	GM15180	Washer, spring			4
11	GM15118	Bolt			4
12	GM21702	Cover, cam room	13	13	13
13	GM21703	Cover, cam room	3	3	3
14	GM15643	O-ring	16	16	16
15	GM15157	Bolt w/washer	60	60	58

Item	Part No.	Description	Qty. Var. 1	Qty. Var. 2	Qty. Var. 3
16	GM15115	Bolt	4	4	4
17	GM15180	Washer, spring	4	4	4
18	GM21927	Cover	2	2	2
19	GM21929	Packing	4	4	4
20	GM15150	Bolt w/washer	24	24	24
21	GM15247	Plug, tapered	2	2	2
22	GM31622	Cover	2	2	2
23	GM16030	Connector	1	1	1
24	GM14895	Cover	2		
25	GM21667	Packing	2		
26	GM15151	Bolt w/washer	2		
27	GM21698	Cover	2		
28	GM21730	Gasket	2		
29	GM15151	Bolt w/washer	2		

silverhorn.co.uk

Group 11: Timing Gear Case

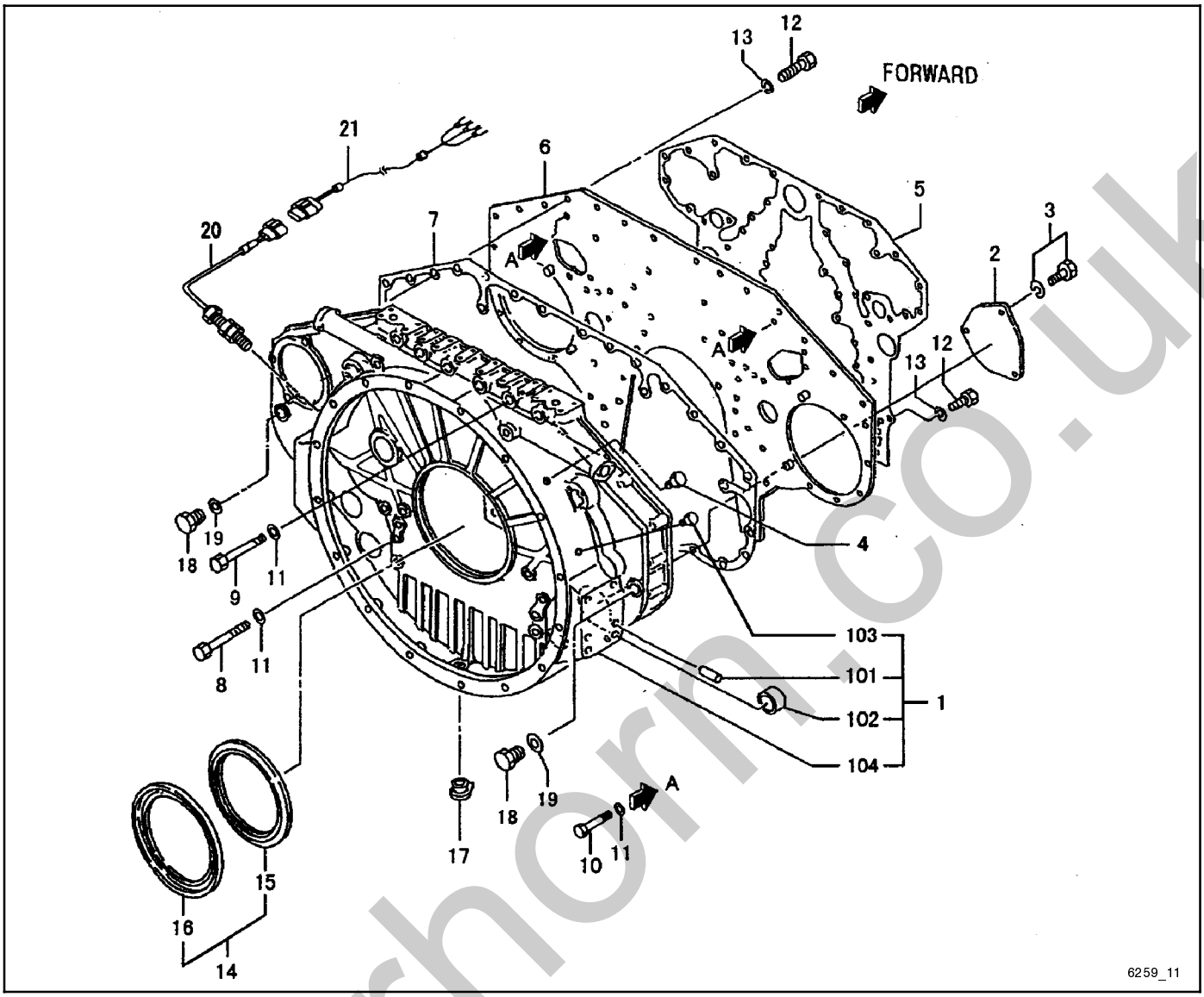

Item	Part No.	Description	Qty. Var. 1	2	3	4
1	GM21765	Timing case assembly	1			
1	GM37193	Timing case assembly		1		
1	GM57769	Timing case assembly			1	1
101	GM22123	Pin, dowel	4	4	4	4
102	GM14521	Bushing	1	1	1	1
103	GM14901	Plug	1	1	1	1
104	—	Not sold separately	1	1	1	1
2	GM21912	Cover	1	1	1	1
3	GM15149	Bolt w/washer	1	1	1	1
4	GM14901	Plug	1	1	1	1
5	GM21761	Gasket	1	1	1	1
6	GM21764	Plate, rear	1	1	1	1
7	GM21763	Gasket	1	1	1	1
8	GM21635	Bolt	10	10	10	10
9	GM21634	Bolt	6	6	6	6

Item	Part No.	Description	Qty. Var. 1	2	3	4
10	GM15123	Bolt	2	2	2	2
11	GM14559	Washer	18	18	18	18
12	GM15107	Bolt	34	34	44	44
13	GM15180	Washer, spring	34			
13	GM21715	Washer, spring		34		
13	GM36363	Washer			44	44
14	GM21760	Oil seal assembly, rear	1	1		
14	X	Oil seal assembly, rear			1	1
15	GM21683	Slinger	1	1	1	1
16	GM14958	Seal, oil	1	1	1	1
17	GM14459	Plug	1	1	1	1
18	GM15239	Plug, drain	2	2	2	2
19	GM14532	Washer, sealing	2	2	2	2
20	GM21600	Pickup	1	1		
20	—	Pickup (see Group 63)			1	1
21	GM21599	Cable, pickup	1	1	1	1
21	—	Cable, pickup (see Group 63)			1	1

X Part is not sold separately.

silverhorn.co.uk

Group 13: Oil Pan

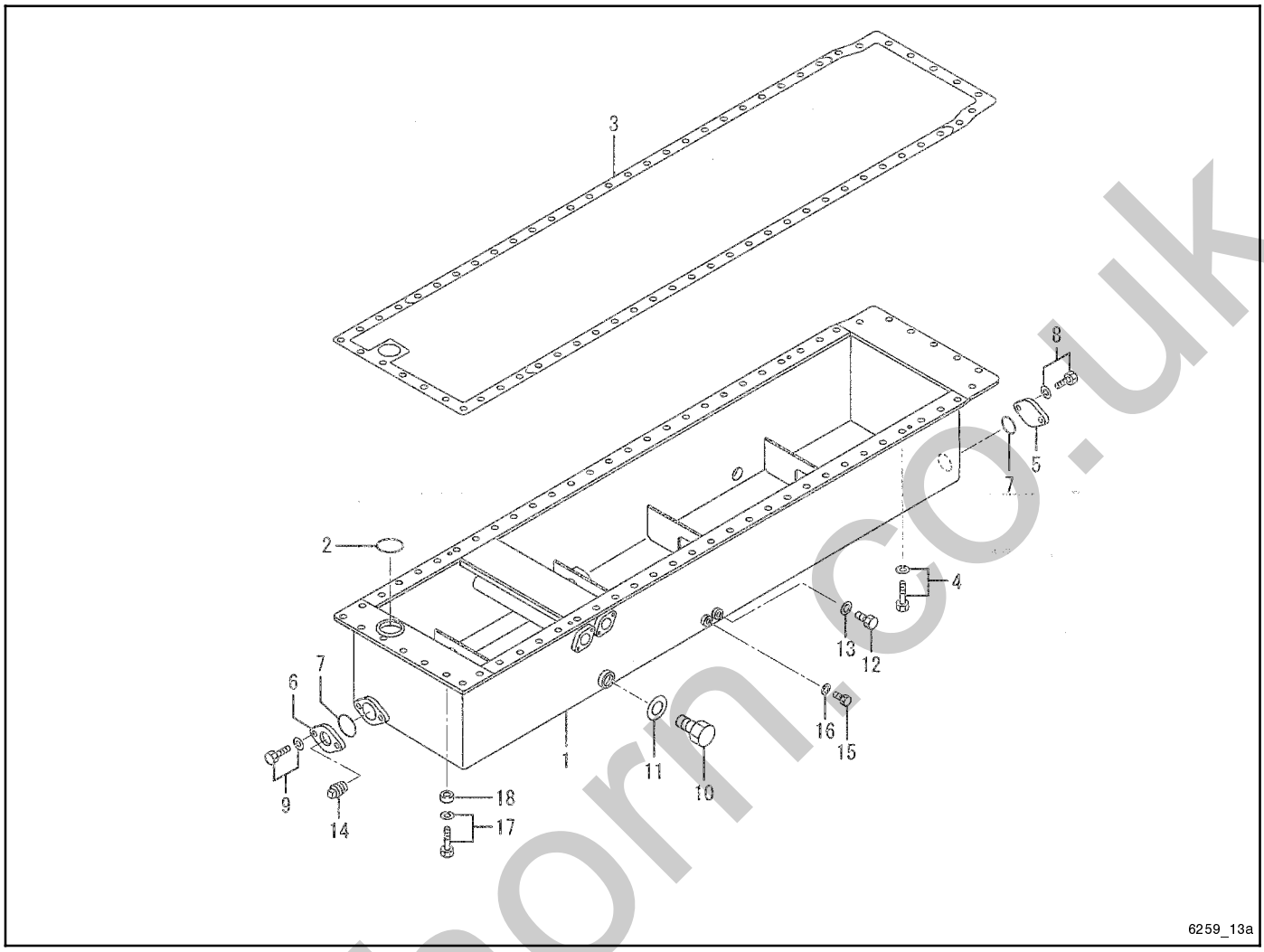

Item	Part No.	Description	Qty. Var. 1	2	3
1	GM21932	Pan, oil	1	1	1
2	GM14519	O-ring	1	1	1
3	GM21931	Packing	1	1	1
4	GM15152	Bolt w/washer	66	66	66
5	GM14627	Cover	1	1	1
6	GM22028	Flange	1	1	
6	GM57613	Flange			1
7	GM14517	O-ring	2	2	2
8	GM15150	Bolt w/washer	2	2	2
9	GM15151	Bolt w/washer	2	2	2
10	GM15241	Plug, drain	2	2	2
11	GM14534	Washer, sealing	2	2	2
12	GM15239	Plug, drain	1	1	1
13	GM14532	Washer, sealing	1	1	1
14	GM22128	Plug, tapered	1	1	1
15	GM15238	Plug, screw	1	1	1
16	GM14531	Washer, sealing	1	1	1
17	GM22109	Bolt w/washer		6	6
18	GM37013	Collar		6	6

silverhorn.co.uk

Group 14: Engine Mounting

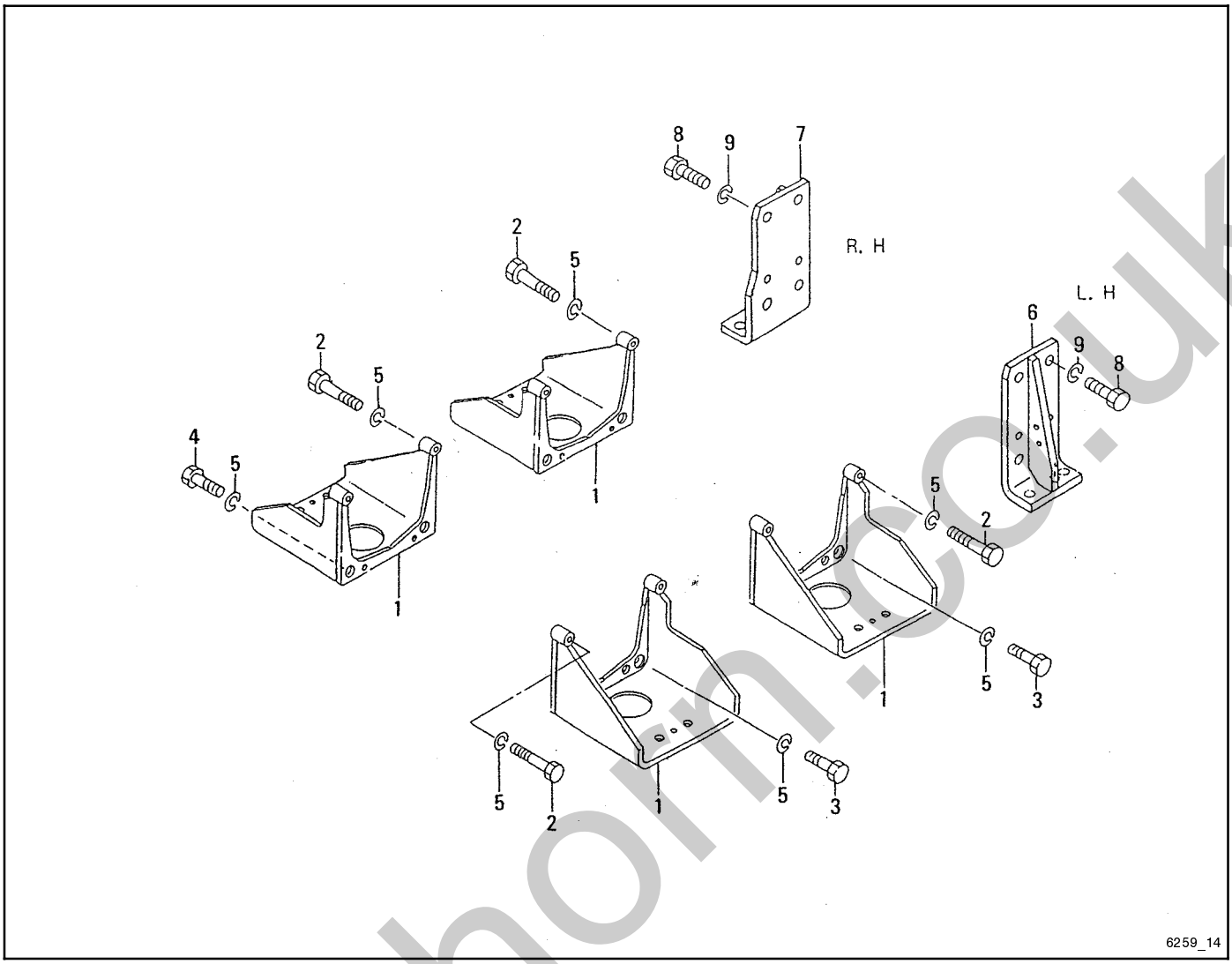

Item	Part No.	Description	Qty. Var. 1	Qty. Var. 2
1	GM21767	Bracket, mounting	4	4
2	GM22103	Bolt	8	8
3	GM22102	Bolt	7	7
4	GM22101	Bolt	1	1
5	GM15184	Washer, spring	16	16
6	GM21768	Bracket, mounting	1	
6	GM37014	Bracket, mounting		1
7	GM21766	Bracket, mounting	1	
7	GM37015	Bracket, mounting		1
8	GM22102	Bolt	8	
8	GM36369	Bolt		8
9	GM15184	Washer, spring	8	8

silverhorn.co.uk

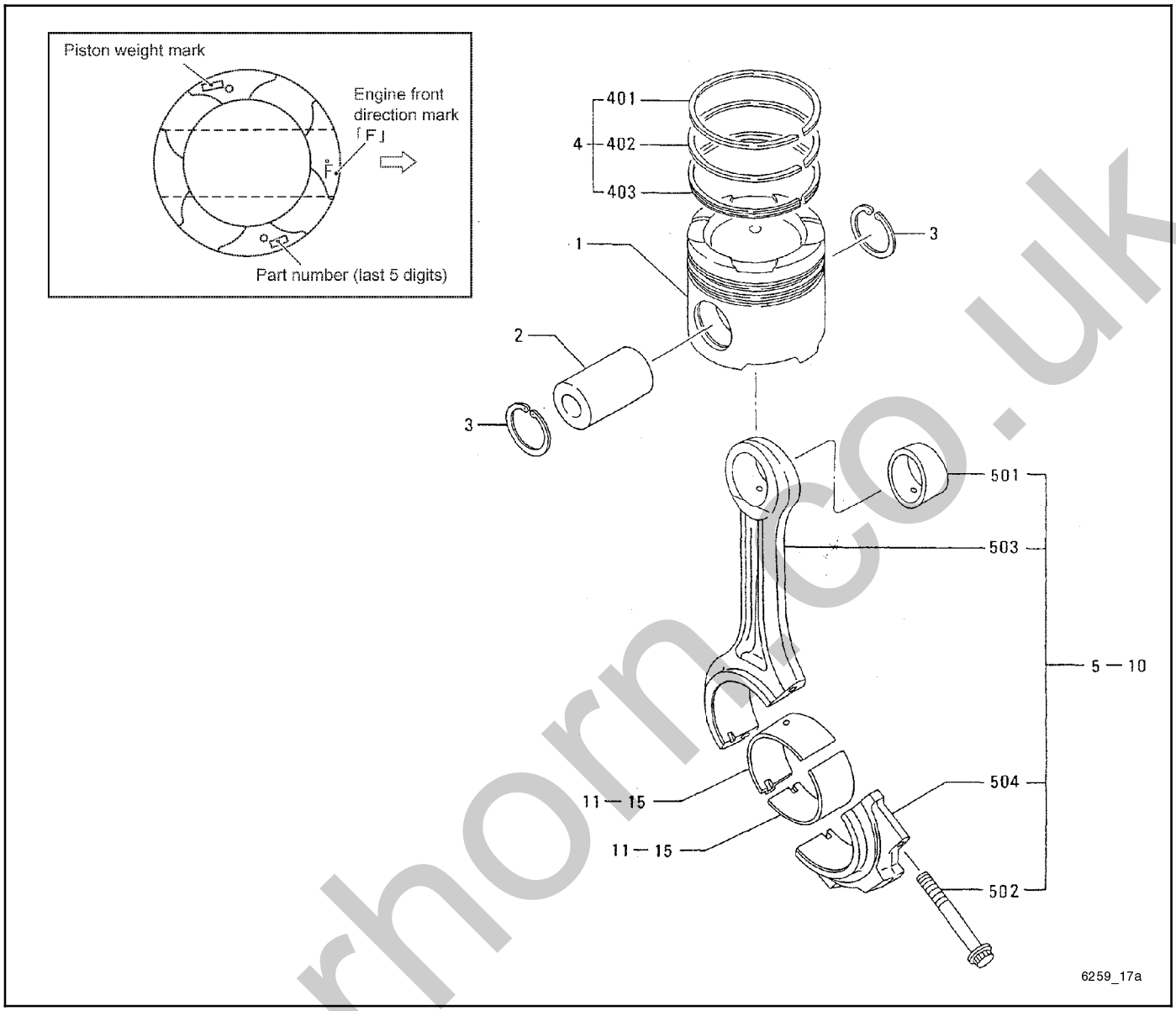

Item	Part No.	Description	Qty. Var. 1	2	3	4
1	GM31623	Piston*	16			
1	GM31307	Piston*		16		
1	GM57614	Piston*			16	16
2	GM21706	Pin, piston	16	16	16	16
3	GM16019	Ring, snap	32	32	32	32
4	GM21705	Ring set, piston	16	16	16	16
401	—	Not sold separately	16	16	16	16
402	—	Not sold separately	16	16	16	16
403	—	Not sold separately	16	16	16	16
5	GM21770	Connecting rod assy, std	16			
5	GM37194	Connecting rod assy, std		16		16
5	—	Connecting rod assy, std			16	
501	GM21707	Bushing, connecting rod	16	16	16	16
502	GM21713	Bolt, connecting rod	32	32	32	32
503	—	Not sold separately	16	16	16	16
504	—	Not sold separately	16	16	16	16
6	GM21771	Connecting rod assy, 13.75 kg	16			

Item	Part No.	Description	Qty. Var. 1	2	3	4
7	GM21772	Connecting rod assy, 13.90 kg	16			
8	GM21773	Connecting rod assy, 14.05 kg	16			
8	GM37017	Connecting rod assy, 14.05 kg		16		16
8	GM57711	Connecting rod assy, 14.05 kg			16	
9	GM21774	Connecting rod assy, 14.20 kg	16			
9	GM37018	Connecting rod assy, 14.20 kg		16		16
9	GM57712	Connecting rod assy, 14.20 kg			16	
10	GM21775	Connecting rod assy, 14.35 kg	16			
11	GM21708	Bearing, connecting rod, std	32	32	32	32
12	GM21709	Bearing, connecting rod, .25 undersized	32	32	32	32
13	GM21710	Bearing, connecting rod, 0.50 undersized	32	32	32	32
14	GM21711	Bearing, connecting rod, 0.75 undersized	32	32	32	32
15	GM21712	Bearing, connecting rod, 1.00 undersized	32	32	32	32

* Include weight when ordering. Weight is stamped on top of piston.

silverhorn.co.uk

Group 20: Crankshaft, Flywheel, and Damper

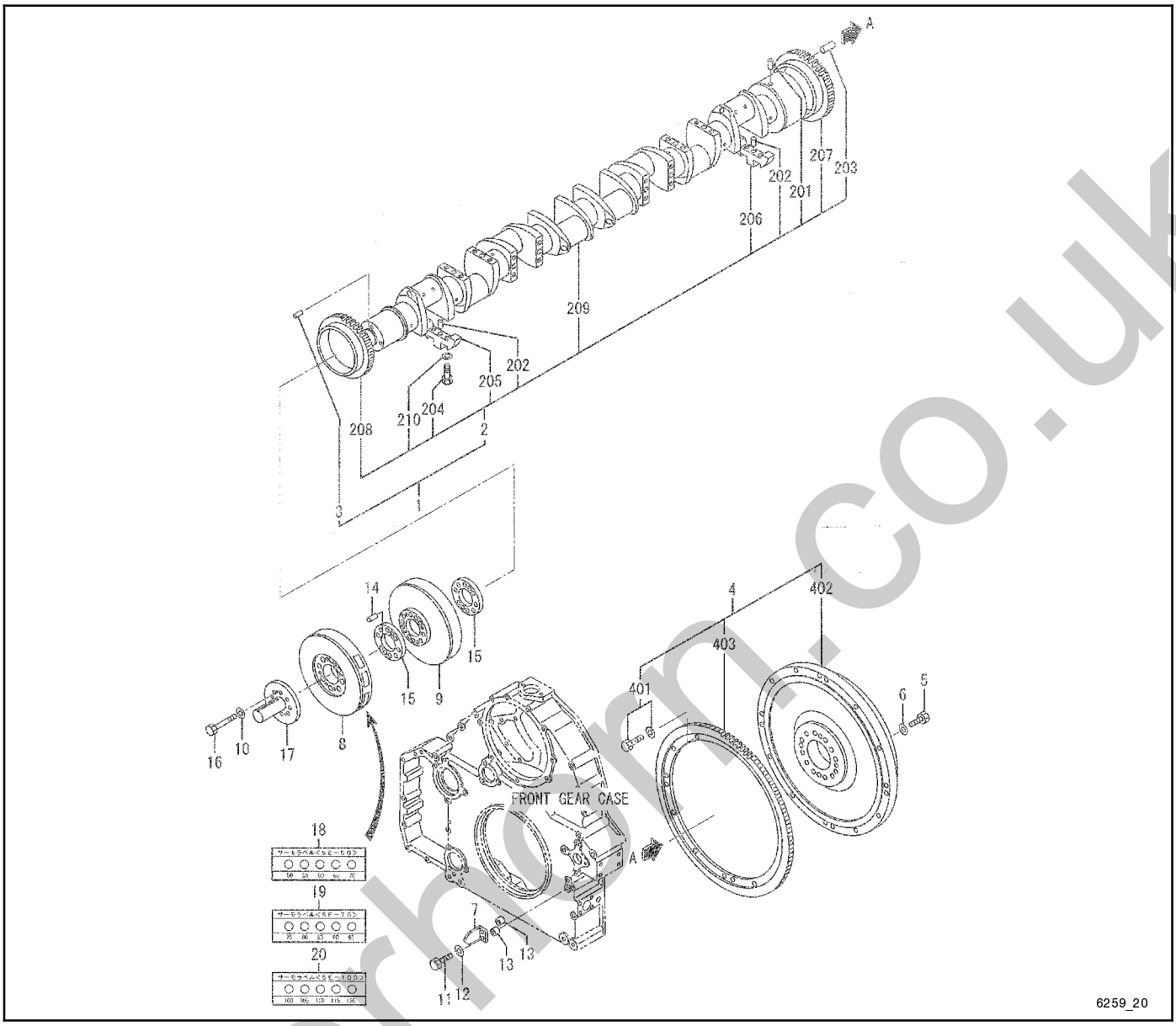

Item	Part No.	Description	Qty. Var. 1	Qty. Var. 2
1	GM21933	Crankshaft assembly	1	
1	GM37195	Crankshaft assembly		1
2	—	Crankshaft subassembly	1	1
201	GM15185	Pin, dowel	1	1
202	GM15190	Pin, dowel	16	16
203	GM21666	Pin, dowel	2	2
204	GM21684	Bolt	32	32
205	GM21685	Weight, balance	15	
205	GM37196	Weight, balance		15
206	GM21776	Weight, balance	1	
206	GM37197	Weight, balance		1
207	GM21783	Gear	1	
207	GM37020	Gear		1
208	GM14965	Gear	1	
208	GM34124	Gear		1
209	—	Not sold separately	1	1
210	GM14628	Washer	32	32
3	GM14987	Pin, dowel	2	2
4	GM21778	Flywheel assembly	1	
4	GM37021	Flywheel assembly		1

Item	Part No.	Description	Qty. Var. 1	Qty. Var. 2
401	GM15145	Bolt w/washer	12	12
402	—	Not sold separately		
403	GM21779	Gear, ring	1	
403	GM37022	Gear, ring		1
5	GM15966	Bolt	12	12
6	GM14628	Washer	12	12
7	GM14960	Pointer	1	1
8	GM21934	Damper assembly, front	1	1
9	GM14961	Damper assembly	1	1
10	GM14628	Washer	8	8
11	GM15114	Bolt	2	2
12	GM15180	Washer, spring	2	2
13	GM14993	Boss	2	2
14	GM15190	Pin, dowel	2	2
15	GM14962	Spacer, damper	2	2
16	GM14551	Bolt	8	
16	GM37198	Bolt		8
17	GM37026	Shaft		1
18	GM34135	Label set, thermo 50–70 deg. C		1
19	GM14584	Label set, thermo 75–95 deg. C		1
20	GM14585	Label set, thermo 100–120 deg. C		1

silverhorn.co.uk

Group 20: Crankshaft, Flywheel, and Damper

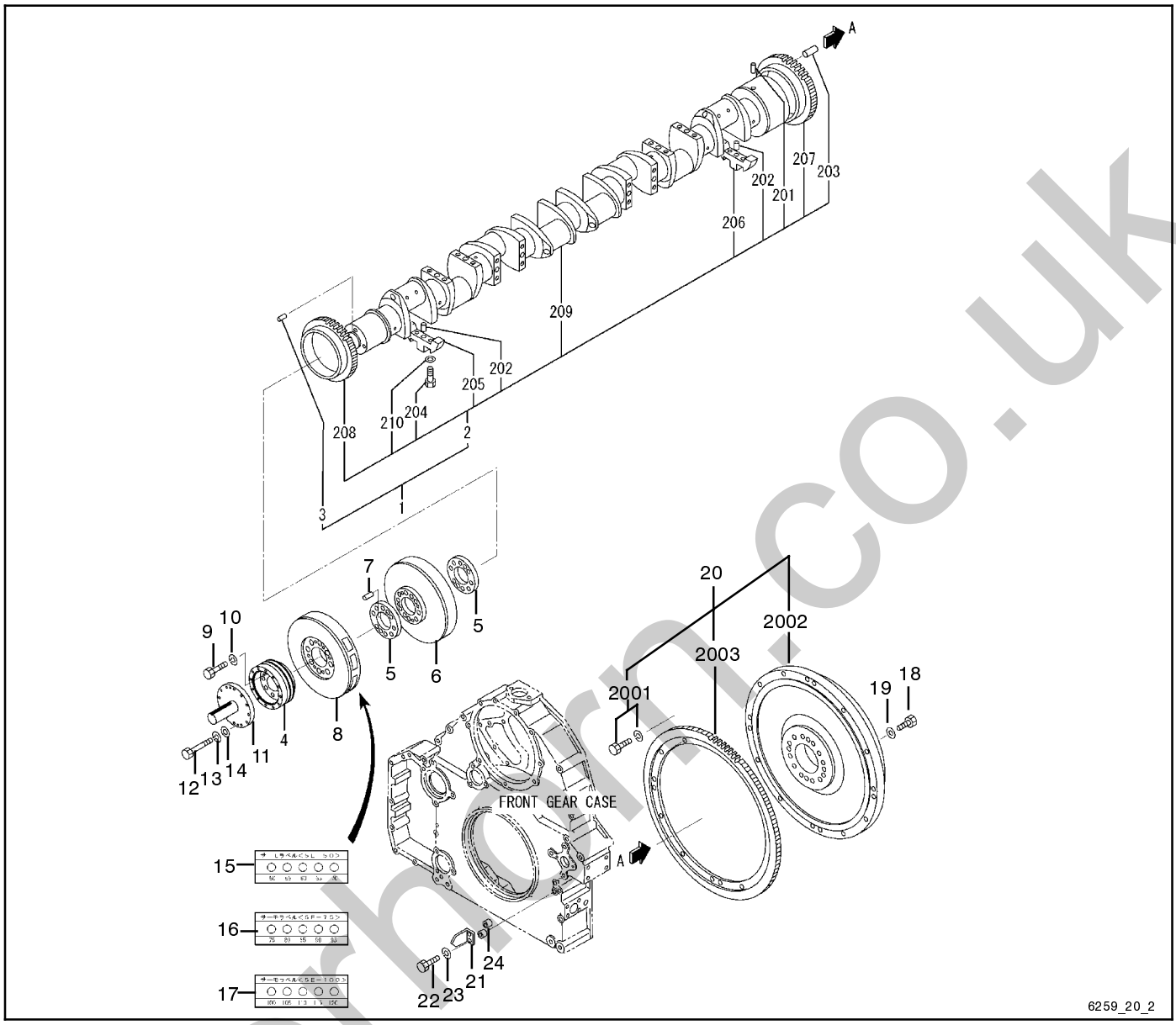

Item	Part No.	Description	Qty. Var. 3	Qty. Var. 4
1	GM37195	Crankshaft assembly	1	1
2	—	Crankshaft subassembly	1	1
201	GM15185	Pin, dowel	1	1
202	GM15190	Pin, dowel	16	16
203	GM21666	Pin, dowel	2	2
204	GM21684	Bolt	32	32
205	—	Weight, balance	15	15
206	—	Weight, balance	1	1
207	GM37020	Gear	1	1
208	GM34124	Gear	1	1
209	—	Not sold separately	1	1
210	GM14628	Washer	32	32
3	GM14987	Pin, dowel	2	2
4	GM57615	Pulley, crankshaft	1	
4	GM57770	Pulley, crankshaft		1
5	GM14962	Spacer, damper	2	2
6	GM14961	Damper assembly	1	1
7	GM15190	Pin, dowel	2	2
8	GM21934	Damper assembly, front	1	1

Item	Part No.	Description	Qty. Var. 3	Qty. Var. 4
9	GM14551	Bolt	8	8
10	GM14628	Washer		8
11	GM57771	Shaft		1
12	GM57307	Bolt		12
13	GM15180	Washer, spring		12
14	GM36363	Washer		12
15	GM57319	Label set, thermo 50–70 deg. C	1	1
16	GM57320	Label set, thermo 75–95 deg. C	1	1
17	GM57321	Label set, thermo 100–120 deg. C	1	1
18	GM15966	Bolt	12	12
19	GM14628	Washer	12	12
20	GM57616	Flywheel assembly	1	1
2001	GM15145	Bolt w/washer	12	12
2002	—	Not sold separately	1	1
2003	GM37022	Gear, ring	1	1
21	GM14960	Pointer	1	1
22	GM15114	Bolt	2	2
23	GM15180	Washer, spring	2	2
24	GM14993	Boss	2	2

silverhart.co.uk

Group 23: Timing Gear

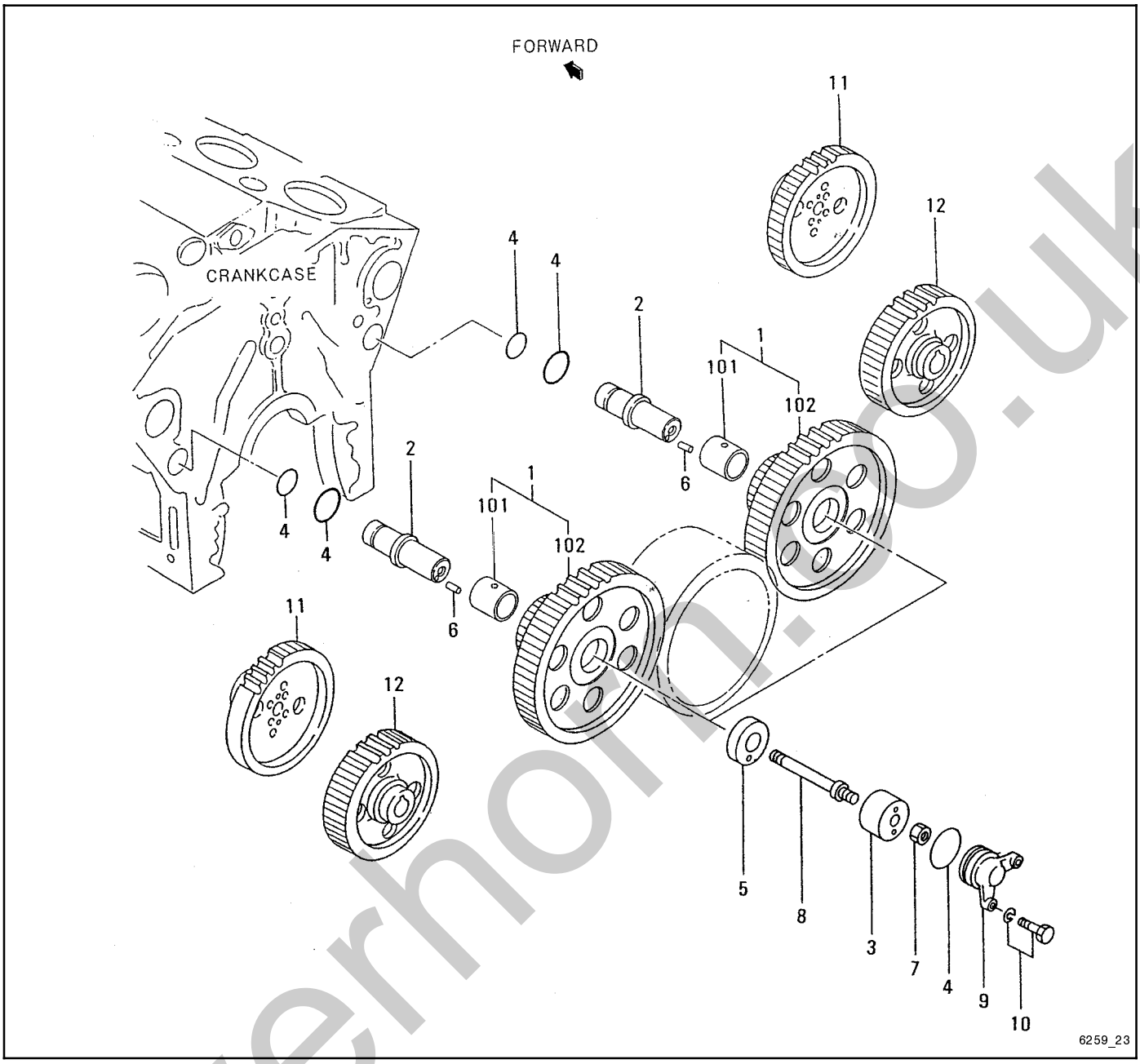

Item	Part No.	Description	Qty. Var. 1	2	3
1	GM31624	Idler gear assembly	2	2	
1	GM57618	Idler gear assembly			2
101	GM31625	Bushing	2	2	
101	GM57619	Bushing			2
102	—	Not sold separately	2	2	2
2	GM31626	Shaft, idler	2		
2	GM37027	Shaft, idler		2	
2	GM57620	Shaft, idler			2
3	GM21782	Collar	2		
3	GM37028	Collar		2	2
4	GM14517	O-ring	6	6	6

Item	Part No.	Description	Qty. Var. 1	2	3
5	GM21780	Plate, thrust	2	2	
5	GM57713	Plate, thrust			2
6	GM22125	Pin, dowel	2		
6	GM37007	Pin, dowel		2	2
7	GM31627	Nut, idler collar	2	2	2
8	GM21787	Bolt, idler	2	2	2
9	GM14963	Cover	2	2	2
10	GM15151	Bolt w/washer	4	4	4
11	GM21784	Gear, camshaft	2	2	2
12	GM21785	Gear, injection pump	2	2	2

silverhorn.co.uk

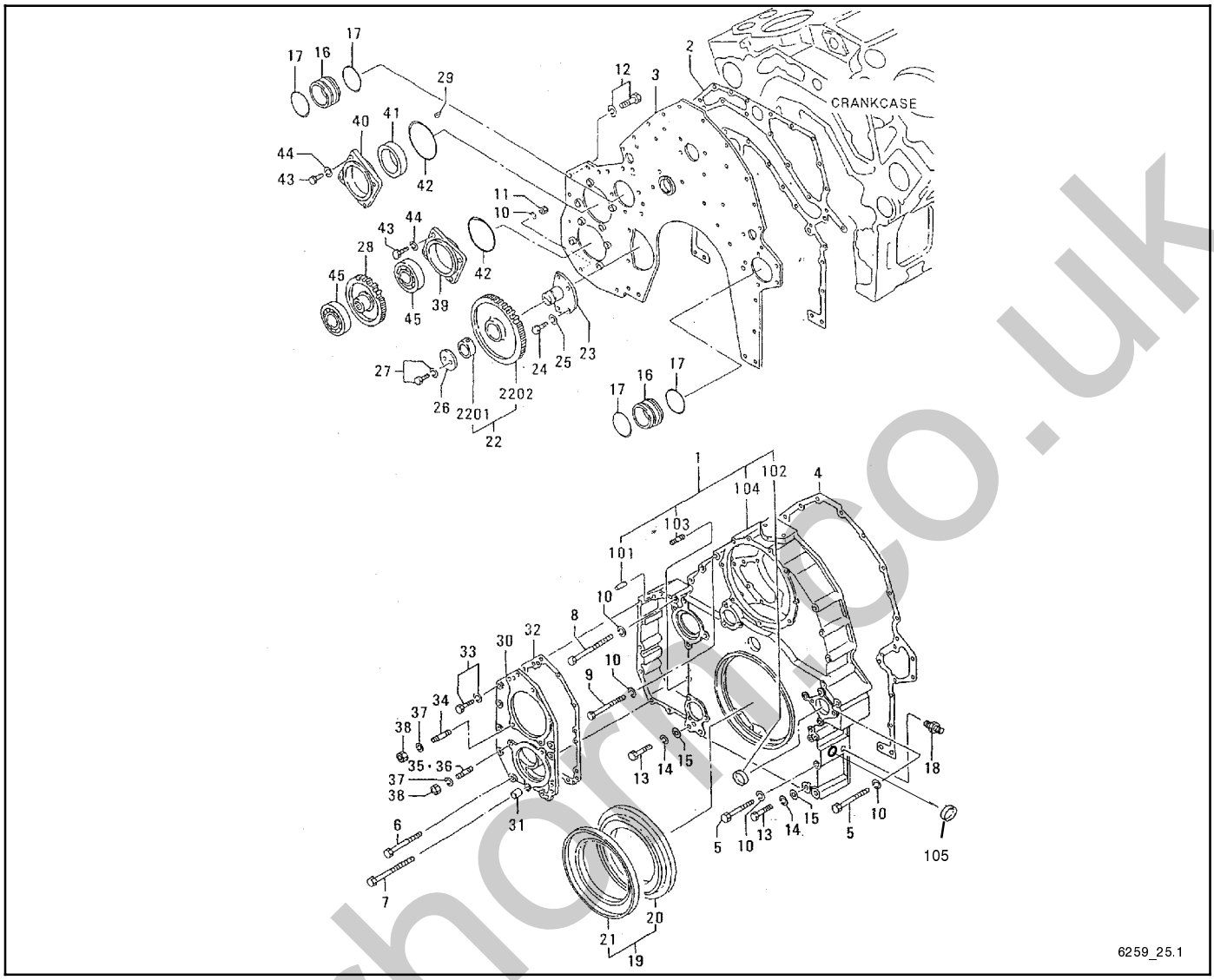

Item	Part No.	Description	Qty. Var. 1	Qty. Var. 2
1	GM21799	Gear case assembly, front	1	
1	GM37029	Gear case assembly, front		1
101	GM15187	Pin	2	2
102	GM21603	Cap, sealing	2	2
103	GM21631	Stud	2	2
104	—	Not sold separately	1	1
105	GM21602	Cap, sealing	1	1
2	GM21798	Packing	1	1
3	GM21802	Plate, front	1	1
4	GM21800	Packing	1	1
5	GM14545	Bolt	10	10
6	GM22096	Bolt	6	6
7	GM14546	Bolt	1	1
8	GM15121	Bolt	3	3
9	GM15120	Bolt	1	1
10	GM15180	Washer, spring	21	21
11	GM15167	Nut	4	4
12	GM15150	Bolt w/washer	27	27
13	GM14548	Bolt	4	4
14	GM15182	Washer, spring	4	4
15	GM21149	Washer	4	4
16	GM21865	Coupling	2	2
17	GM15205	O-ring	4	4
18	GM15230	Connector	1	1
19	GM31628	Oil seal assembly, front	1	1
20	GM21686	Slinger	1	1
21	GM14920	Seal, oil	1	1
22	GM14964	Idler gear assembly	1	1

Item	Part No.	Description	Qty. Var. 1	Qty. Var. 2
2201	GM14896	Bushing	1	1
2202	—	Not sold separately	1	1
23	GM21791	Shaft, idler	1	
23	GM37030	Shaft, idler		1
24	GM15109	Bolt	4	4
25	GM15180	Washer, spring	4	4
26	GM14568	Plate	1	1
27	GM15140	Bolt w/washer	2	2
28	GM21797	Gear, oil pump	1	
28	GM37031	Gear, oil pump		1
29	GM15192	Key, woodruff	1	1
30	GM21801	Plate	1	1
31	GM15802	Pin, dowel	1	1
32	GM21796	Packing	1	1
33	GM15152	Bolt w/washer	4	4
34	GM21631	Stud	2	2
35	GM21633	Stud	2	2
36	GM21632	Stud	2	2
37	GM15180	Washer, spring	6	6
38	GM15165	Nut	6	6
39	GM21789	Cover	1	1
40	GM21790	Cover	1	
40	GM37032	Cover		1
41	GM15195	Seal, oil	1	1
42	GM21623	O-ring	2	2
43	GM15107	Bolt	8	8
44	GM15180	Washer, spring	8	8
45	GM15259	Bearing, ball	2	2

silverhorse.co.uk

Group 25.1: Accessory Drive, Front, continued

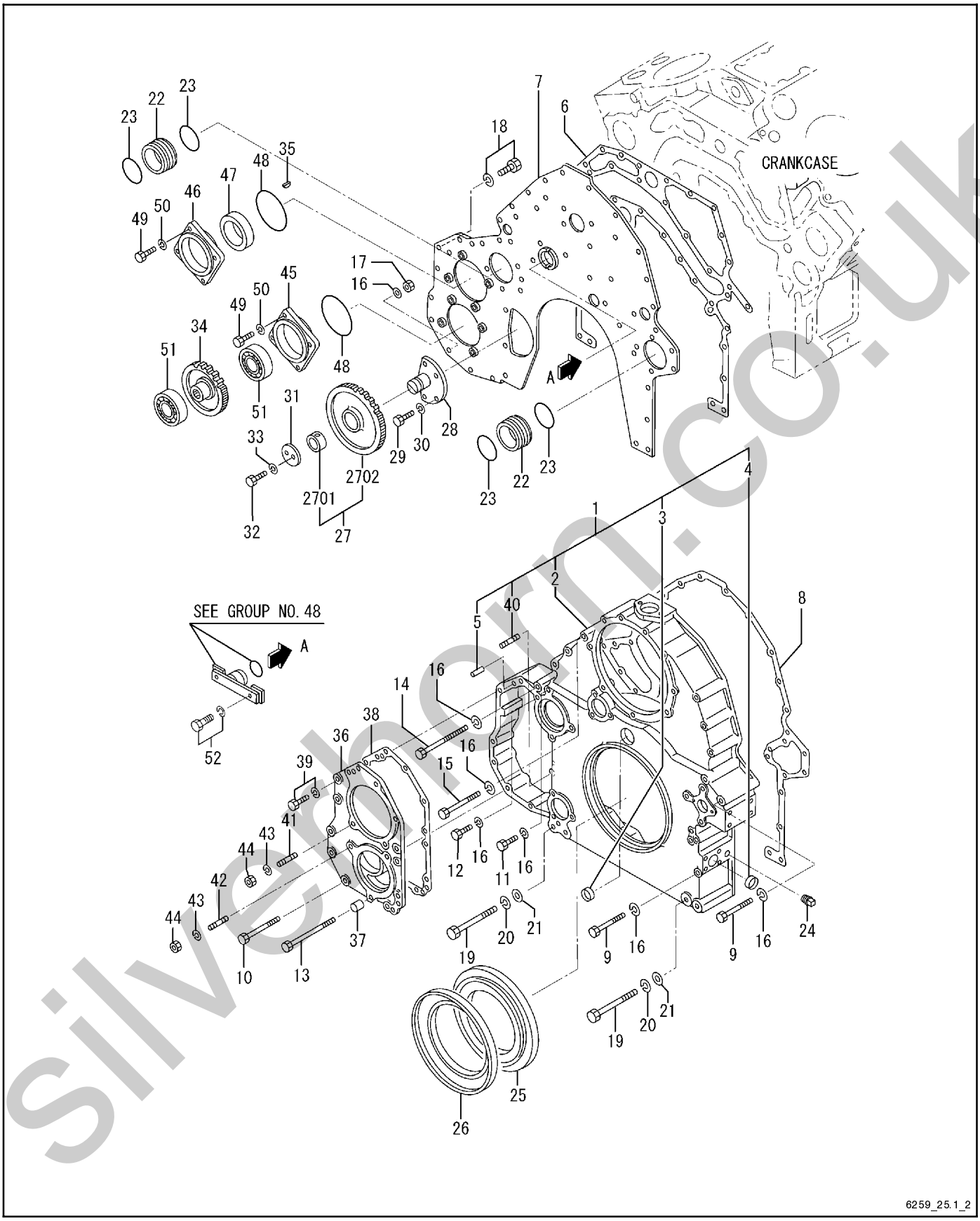

silvermern.co.uk

Group 25.1: Accessory Drive, Front, continued

Item	Part No.	Description	Qty. Var. 3	Qty. Var. 4
1	GM57648	Case assembly, front gear	1	1
2	X	Case, front gear	1	1
3	GM21603	Cap, sealing	1	1
4	GM21602	Cap, sealing	1	1
5	GM15187	Pin	2	2
6	GM21798	Packing	1	1
7	GM21802	Plate, front	1	1
8	GM21800	Packing	1	1
9	GM14545	Bolt	6	6
10	GM22096	Bolt	5	5
11	GM15110	Bolt	1	1
12	GM15113	Bolt	1	1
12	GM42348	Bolt	1	1
13	GM14546	Bolt	1	1
14	GM15121	Bolt	3	3
15	GM15120	Bolt	1	1
16	GM15180	Washer, spring	18	18
17	GM15167	Nut	4	4
18	GM15150	Bolt	27	27
19	GM14548	Bolt	4	4
20	GM22120	Washer, spring	4	4
20	GM15182	Washer, spring	4	4
21	GM21149	Washer	4	4
22	GM21865	Coupling	2	2
23	GM15205	O-ring	4	4
24	GM15246	Plug, tapered	1	
24	GM15242	Plug, tapered		1
25	GM21686	Slinger	1	1
26	GM14920	Seal, oil (part of kit GM50933)	1	1
27	GM14964	Gear assembly, idler	1	1
2701	GM14896	Bushing	1	1
2702	X	Gear, idler	1	1
28	GM37030	Shaft, idler	1	1
29	GM15109	Bolt	4	4
30	GM36363	Washer	4	4
31	GM14568	Plate	1	1
32	GM15955	Bolt	2	2
33	GM31310	Washer	2	2
34	GM37031	Gear, oil pump	1	1
35	GM15192	Key, woodruff	1	1
36	GM21801	Plate	1	1
37	GM15802	Pin, dowel	1	1
38	GM21796	Packing	1	1
39	GM15151	Bolt	4	4
40	GM21631	Stud	2	2
41	GM21633	Stud	2	2
42	GM21632	Stud	2	2
43	GM15180	Washer, spring	6	6
44	GM15165	Nut	6	6
45	GM21789	Cover	1	1
46	GM37032	Cover, bearing	1	1
47	GM15195	Seal, oil	1	1
48	GM21623	O-ring	2	2
49	GM15107	Bolt	8	8
50	GM15180	Washer, spring	8	8
51	GM15259	Bearing, ball	2	2
52	GM15979	Bolt	2	2

X Part is not sold separately.

silverhorse.co.uk

Group 25.2: Accessory Drive, Rear

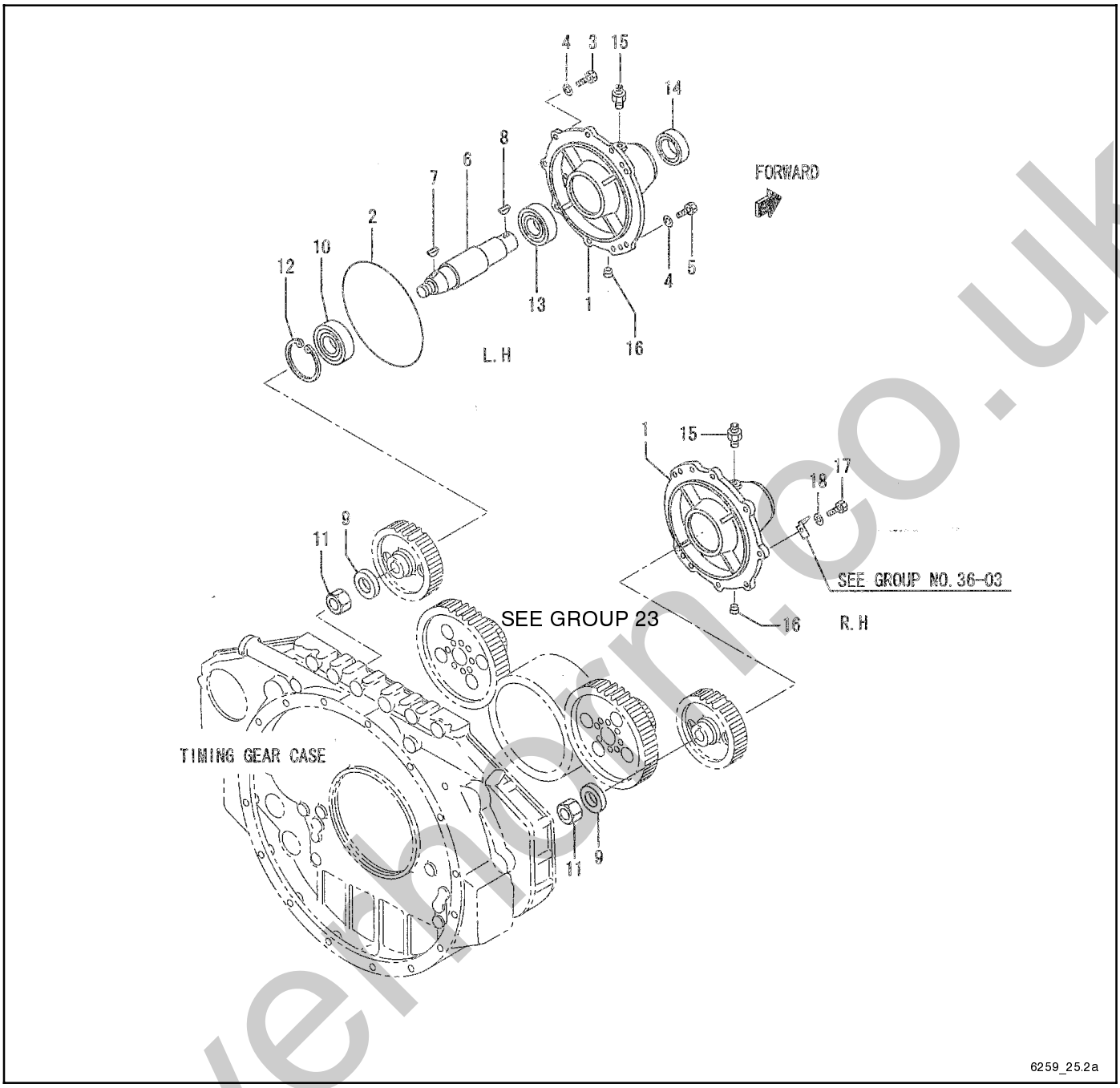

Item	Part No.	Description	Qty. Var. 1	Qty. Var. 2
1	GM15692	Case, drive	2	
1	GM37033	Case, drive		2
2	GM15686	O-ring	2	2
3	GM15111	Bolt	10	8
4	GM15180	Washer, spring	10	
4	GM21715	Washer		14
5	GM15152	Bolt	4	
5	GM15109	Bolt		4
6	GM21793	Shaft, drive	2	2
7	GM15998	Key, woodruff	2	2
8	GM15192	Key, woodruff	2	2

Item	Part No.	Description	Qty. Var. 1	Qty. Var. 2
9	GM21714	Washer	2	2
10	GM16039	Bearing, ball	2	2
11	GM22088	Nut	1	1
12	GM16021	Ring, snap	2	2
13	GM16037	Bearing, ball	2	2
14	GM14921	Seal, oil	2	
14	GM37034	Seal, oil		2
15	GM15869	Connector	1	1
16	GM14496	Plug, tapered	2	2
17	GM15112	Bolt		1
18	GM15180	Washer, spring		1

silvermorn.co.uk

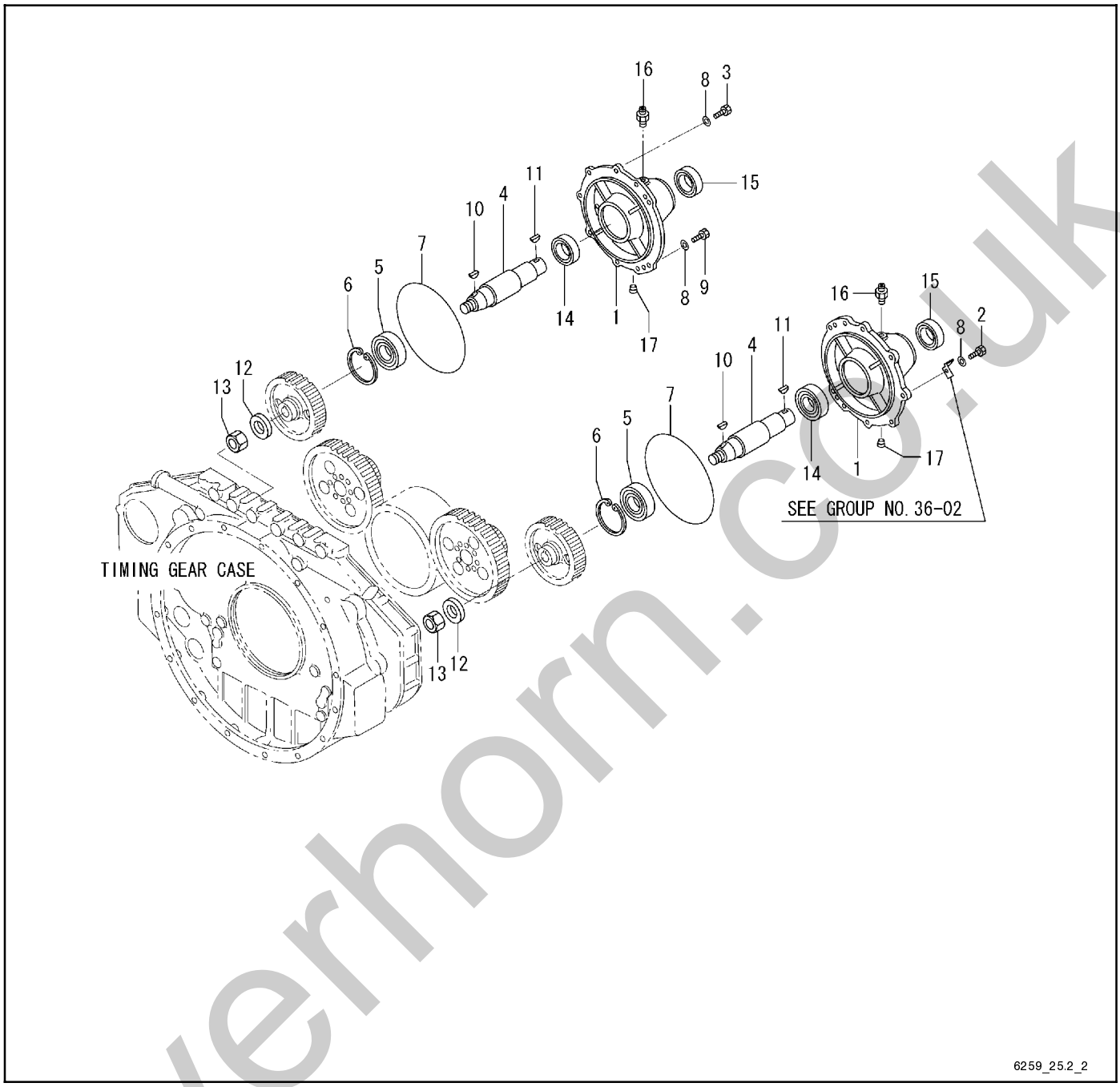

Item	Part No.	Description	Qty. Var. 3
1	GM37033	Case, drive	2
2	GM15112	Bolt	2
3	GM15111	Bolt	8
4	GM21793	Shaft, drive	2
5	GM16039	Bearing, ball	2
6	GM16021	Ring, snap	2
7	GM15686	O-ring	2
8	GM36363	Washer	14
9	GM15109	Bolt	4

Item	Part No.	Description	Qty. Var. 3
10	GM15998	Key, woodruff	2
11	GM15192	Key, woodruff	2
12	GM21714	Washer	2
13	GM22088	Nut	2
14	GM16037	Bearing, ball	2
15	GM37034	Seal, oil	2
16	GM15869	Connector	2
17	GM14496	Plug, tapered	2

silverhorn.co.uk

Group 25.2: Accessory Drive, Rear, continued

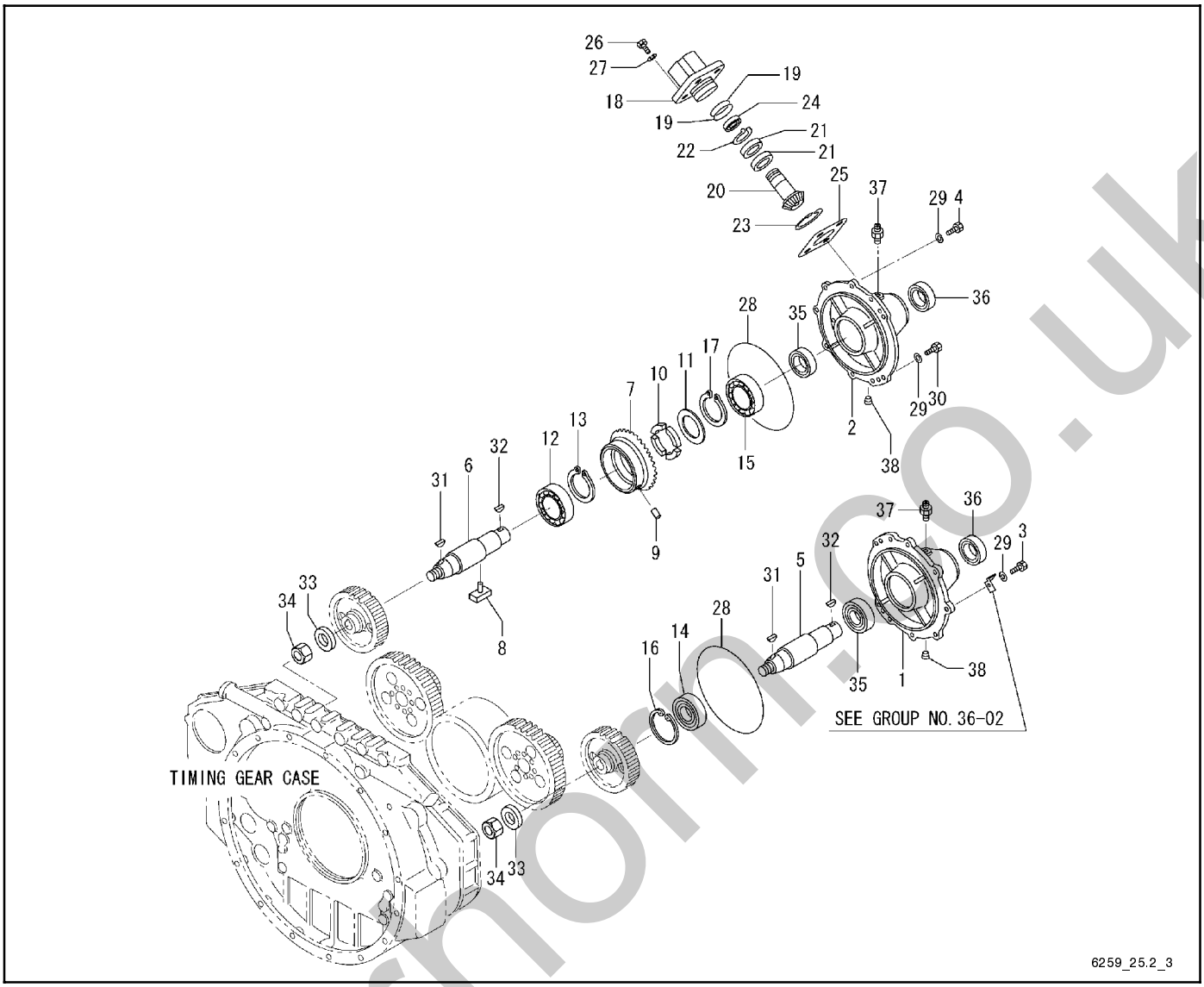

Item	Part No.	Description	Qty. Var. 4
1	GM37033	Case, drive	1
2	GM57772	Case, drive, left hand	1
3	GM15112	Bolt	1
4	GM15111	Bolt	9
5	GM21793	Shaft, drive	1
6	GM57773	Shaft, drive	1
7	GM57774	Gear, drive	1
8	GM57775	Pin, shaft	2
9	GM57776	Pin, gear	2
10	GM34145	Rubber	4
11	GM57777	Washer	1
12	GM57778	Bearing, ball	1
13	GM16016	Ring, snap	1
14	GM16039	Bearing, ball	1
15	GM34243	Bearing, ball	1
16	GM16021	Ring, snap	1
17	GM15223	Ring, snap	1
18	GM57779	Coupling	1
19	GM14517	O-ring	2
20	GM57780	Gear, driven	1
21	GM57781	Bearing, ball	2

Item	Part No.	Description	Qty. Var. 4
22	GM15217	Ring, snap	1
23	GM57782	Ring, snap	1
24	GM57783	Seal, oil	1
25	GM57784	Shim, T = 0.1	AR
25	GM57785	Shim, T = 0.3	AR
25	GM57786	Shim, T = 0.5	AR
25	GM57787	Shim, T = 1.0	AR
26	GM15955	Bolt	4
27	GM15179	Washer, spring	4
28	GM15686	O-ring	2
29	GM36363	Washer	14
30	GM15109	Bolt	4
31	GM15998	Key, woodruff	2
32	GM15192	Key, woodruff	2
33	GM21714	Washer	2
34	GM22088	Nut	2
35	GM16037	Bearing, ball	2
36	GM37034	Seal, oil	2
37	GM15869	Connector	2
38	GM14496	Plug, tapered	2

AR As Required

sivernom.co.uk

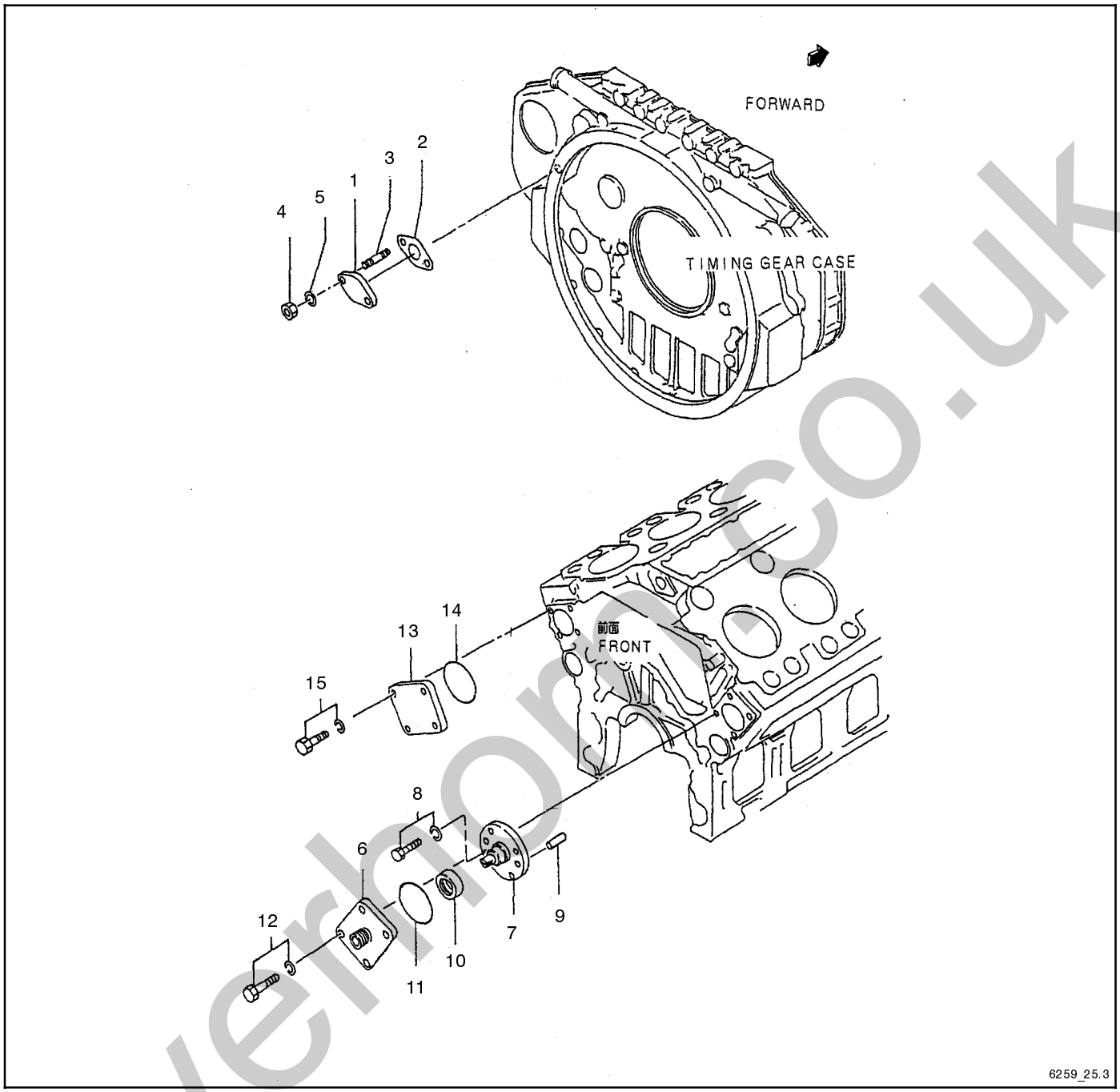

Item	Part No.	Description	Qty. Var. 1	Qty. Var. 2	Qty. Var. 3
1	GM15549	Cover	1	1	1
2	GM15550	Gasket	1		
2	GM37035	Gasket		1	1
3	GM22106	Stud	2	2	2
4	GM15163	Nut	2	2	2
5	GM15178	Washer, spring	2	2	2
6	GM21792	Case, oil seal	1	1	1
7	GM21716	Coupling	1	1	
7	GM57714	Coupling			1
8	GM15150	Bolt w/washer	2	2	2

Item	Part No.	Description	Qty. Var. 1	Qty. Var. 2	Qty. Var. 3
9	GM22121	Pin, dowel	2		
9	GM15187	Pin, dowel		2	2
10	GM15193	Seal, oil	1	1	1
11	GM21622	O-ring	1	1	1
12	GM15151	Bolt w/washer	4	4	4
13	GM21794	Cover	2	1	1
14	GM21622	O-ring	2	1	1
15	GM15151	Bolt w/washer	8	4	4

silverhomes.co.uk

Group 30.1: Intake Tubes

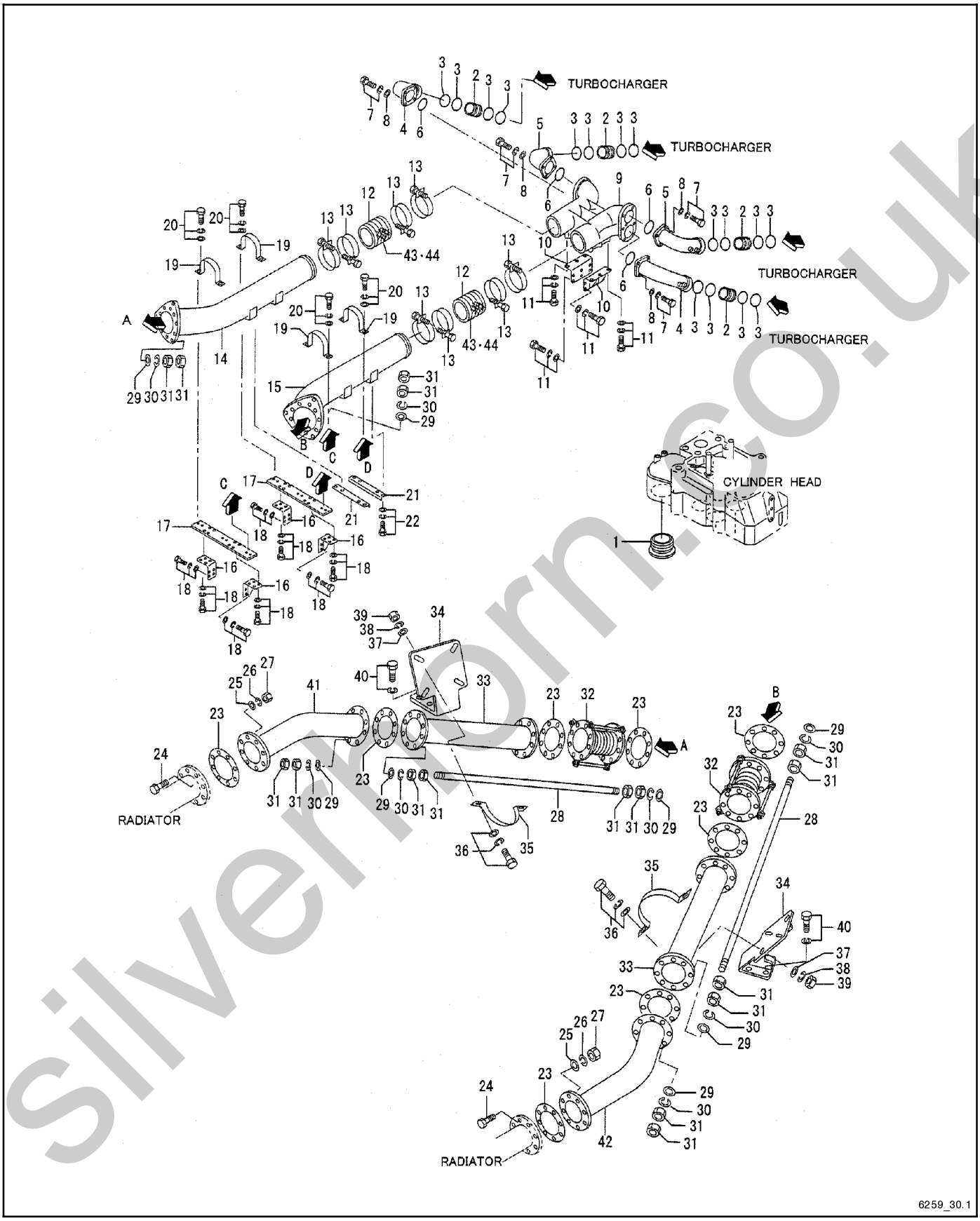

silverthorn.co.uk

Group 30.1: Intake Tubes

Item	Part No.	Description	Qty. Var. 1
1	GM15693	Packing	16
2	GM21671	Connector	4
3	GM14648	O-ring	16
4	GM21946	Duct, air, lower	2
5	GM21947	Duct, air, upper	2
6	GM21615	O-ring	4
7	GM15145	Bolt w/washer	16
8	GM15174	Washer, plain	16
9	GM21953	Duct, air	1
10	GM21941	Stay, air	2
11	GM15157	Bolt w/washer	18
12	GM21717	Hose, rubber	2
13	GM21607	Clamp	8
14	GM21948	Duct, air, right side	1
15	GM21949	Duct, air, left side	1
16	GM21942	Stay, air	4
17	GM21943	Plate, air	2
18	GM15157	Bolt w/washer	32
19	GM21137	Clamp, air duct	4
20	GM15154	Bolt w/washer	8
21	GM21940	Support, air	2
22	GM15157	Bolt w/washer	8
23	GM21146	Gasket	8
24	GM21148	Bolt	80
25	GM21149	Washer	80
26	GM22120	Washer, spring	80
27	GM15984	Nut	80
28	GM21128	Turnbuckle	6
29	GM15174	Washer, plain	24
30	GM15179	Washer, spring	24
31	GM15164	Nut	48
32	GM21141	Joint, flexible	2
33	GM21935	Duct, air	2
34	GM21139	Stay, air duct	2
35	GM21137	Clamp, air duct	2
36	GM15154	Bolt w/washer	4
37	GM15174	Washer, plain	4
38	GM15179	Washer, spring	4
39	GM15164	Nut	4
40	GM15140	Bolt w/washer	8
41	GM21936	Duct, air, right side	1
42	GM21937	Duct, air, left side	1
43	GM31629	Insulator, heat	5
44	GM14900	Wire	5

silverhorn.co.uk

Group 30.1: Intake Tubes, continued

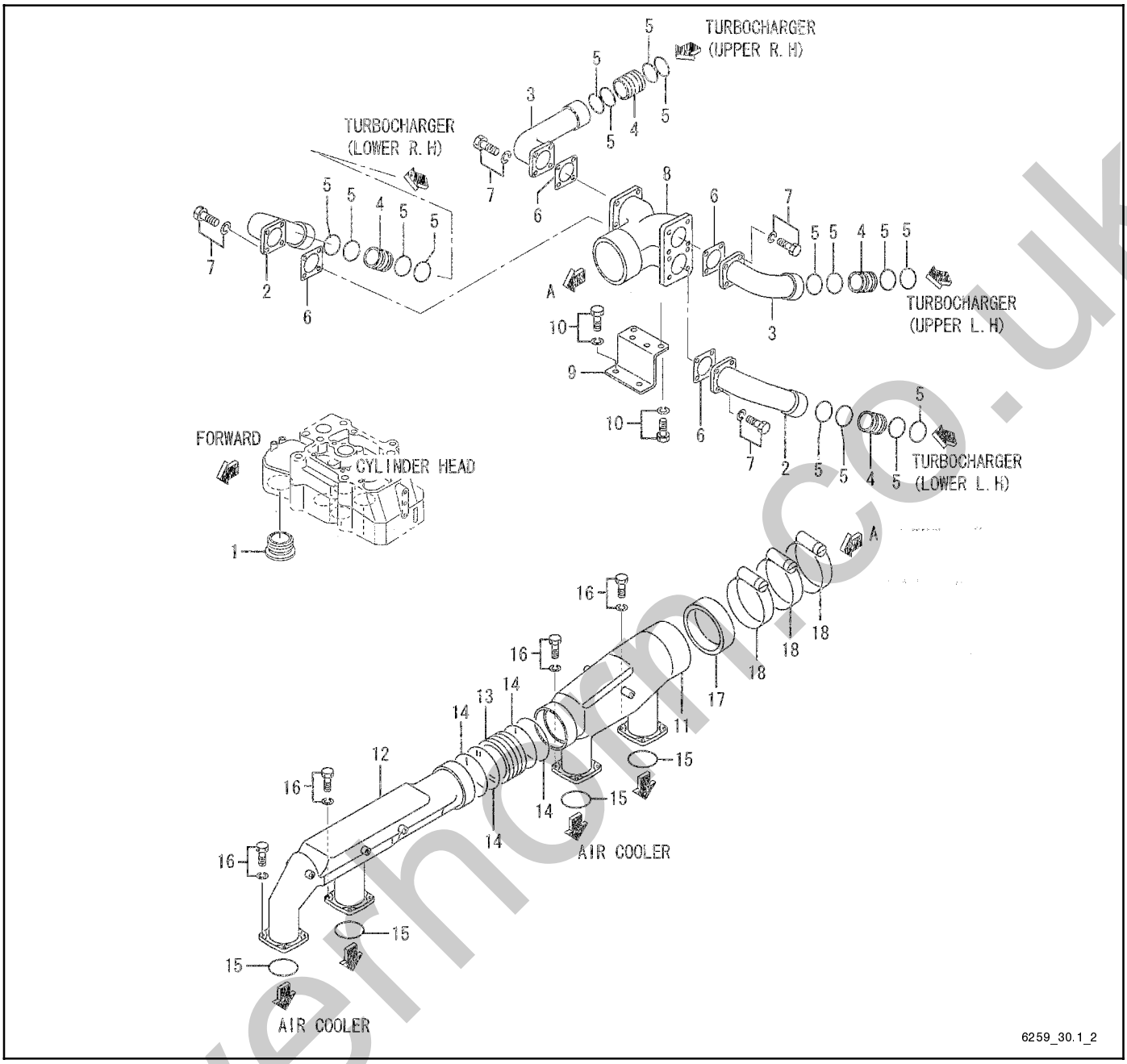

Item	Part No.	Description	Qty. Var. 2
1	GM15693	Packing	16
2	GM37199	Duct, air	2
3	GM37200	Duct, air	2
4	GM37201	Connector	4
5	GM14648	O-ring	16
6	GM37041	Packing	4
7	GM36706	Bolt, w/washer	16
8	GM37202	Duct, air	1
9	GM37203	Stay, duct	1

Item	Part No.	Description	Qty. Var. 2
10	GM15140	Bolt	4
11	GM37204	Duct, air	1
12	GM37205	Duct, air	1
13	GM37206	Connector	1
14	GM37207	O-ring	4
15	GM37208	O-ring	4
16	GM15142	Bolt w/washer	16
17	GM37209	Hose, rubber	1
18	GM37210	Clamp	3

silvermoon.co.uk

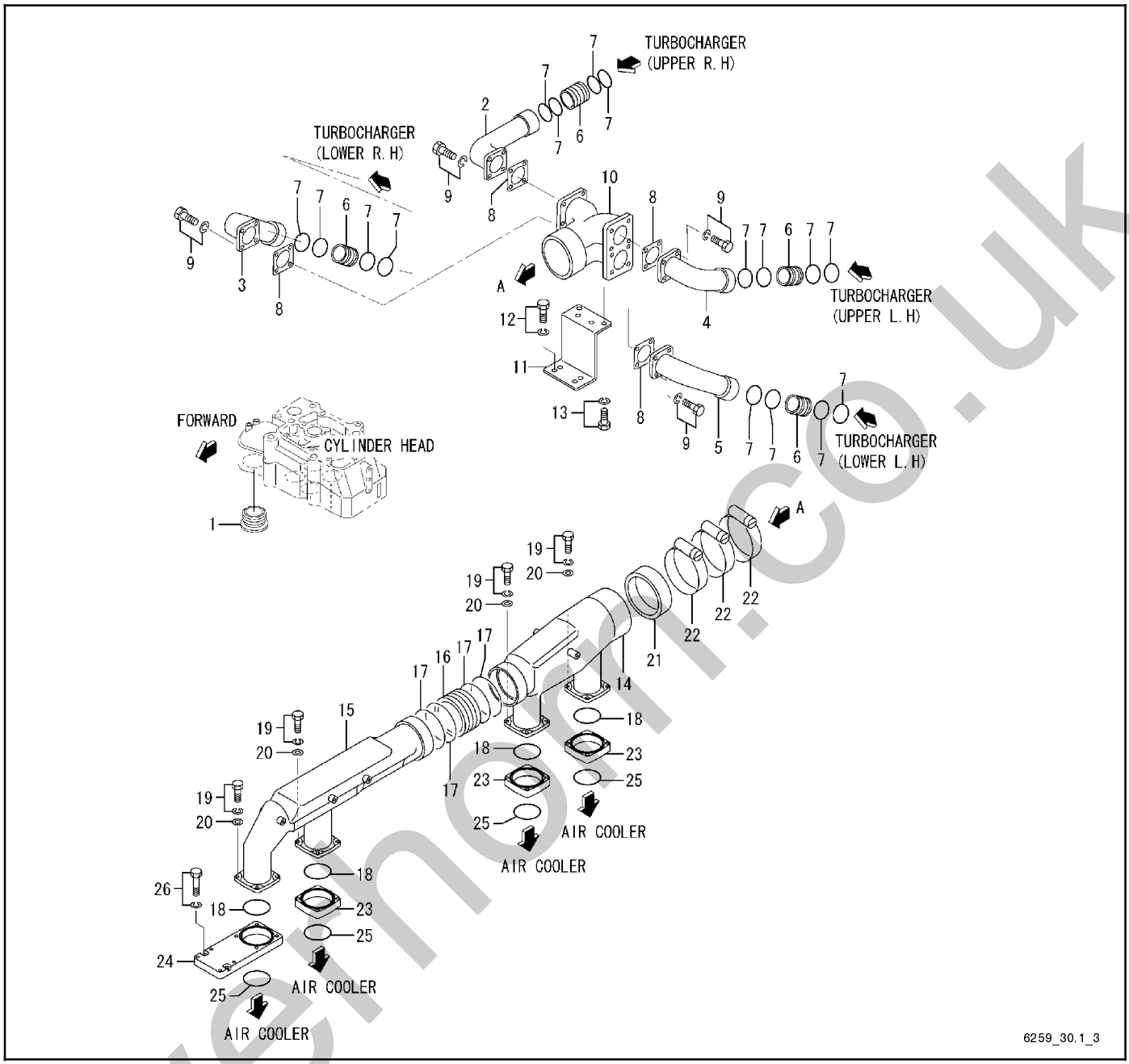

Item	Part No.	Description	Qty. Var. 3
1	GM15693	Packing	16
2	GM57715	Duct, air	1
3	GM57716	Duct, air	1
4	GM57717	Duct, air	1
5	GM57718	Duct, air	1
6	GM37201	Connector	4
7	GM14648	O-ring	16
8	GM37041	Packing	4
9	GM36706	Bolt, w/washer	16
10	GM37202	Duct, air	1
11	GM57719	Stay, duct	1
12	GM15140	Bolt	4
13	GM15158	Bolt	4

Item	Part No.	Description	Qty. Var. 3
14	GM37204	Duct, air	1
15	GM37205	Duct, air	1
16	GM37206	Connector	1
17	GM37207	O-ring	4
18	GM37208	O-ring	4
19	GM34229	Bolt w/washer	16
20	GM15174	Washer, plain	16
21	GM57720	Hose, rubber	1
22	GM37210	Clamp	3
23	GM57721	Spacer	3
24	GM57722	Spacer	1
25	GM37208	O-ring	4
26	GM15143	Bolt	4

silverhorn.co.uk

Group 30.2: Air Box

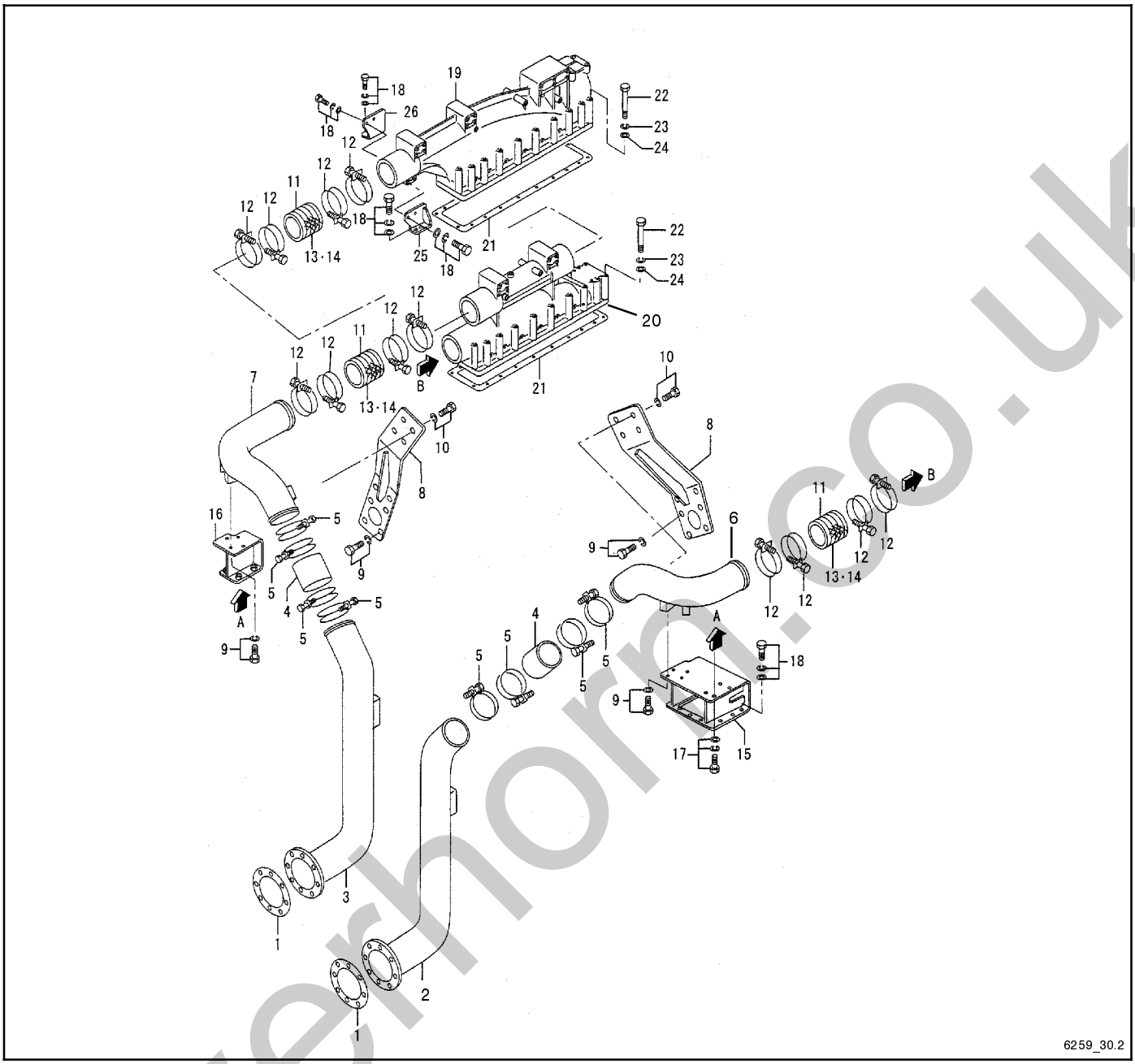

Item	Part No.	Description	Qty. Var. 1
1	GM21145	Gasket	2
2	GM21954	Duct, air, right side	1
3	GM21939	Duct, air, left side	1
4	GM21718	Hose, rubber	2
5	GM21606	Clamp	8
6	GM21955	Duct, air	1
7	GM21950	Duct, air	1
8	GM21938	Stay, air	2
9	GM15152	Bolt w/washer	16
10	GM15151	Bolt w/washer	4
11	GM31630	Hose, rubber	3
12	GM21606	Clamp	12
13	GM14890	Insulator, heat	3

Item	Part No.	Description	Qty. Var. 1
14	GM14900	Wire	3
15	GM21804	Stay, air	1
16	GM21803	Stay, air	1
17	GM22114	Bolt w/washer	8
18	GM15156	Bolt w/washer	17
19	GM21952	Box, air, rear	1
20	GM21951	Box, air, front	1
21	GM21992	Gasket	2
22	GM14541	Bolt	40
23	GM15179	Washer, spring	40
24	GM15174	Washer, plain	40
25	GM21944	Stay, air	1
26	GM21945	Stay, air	1

silverhorn.co.uk

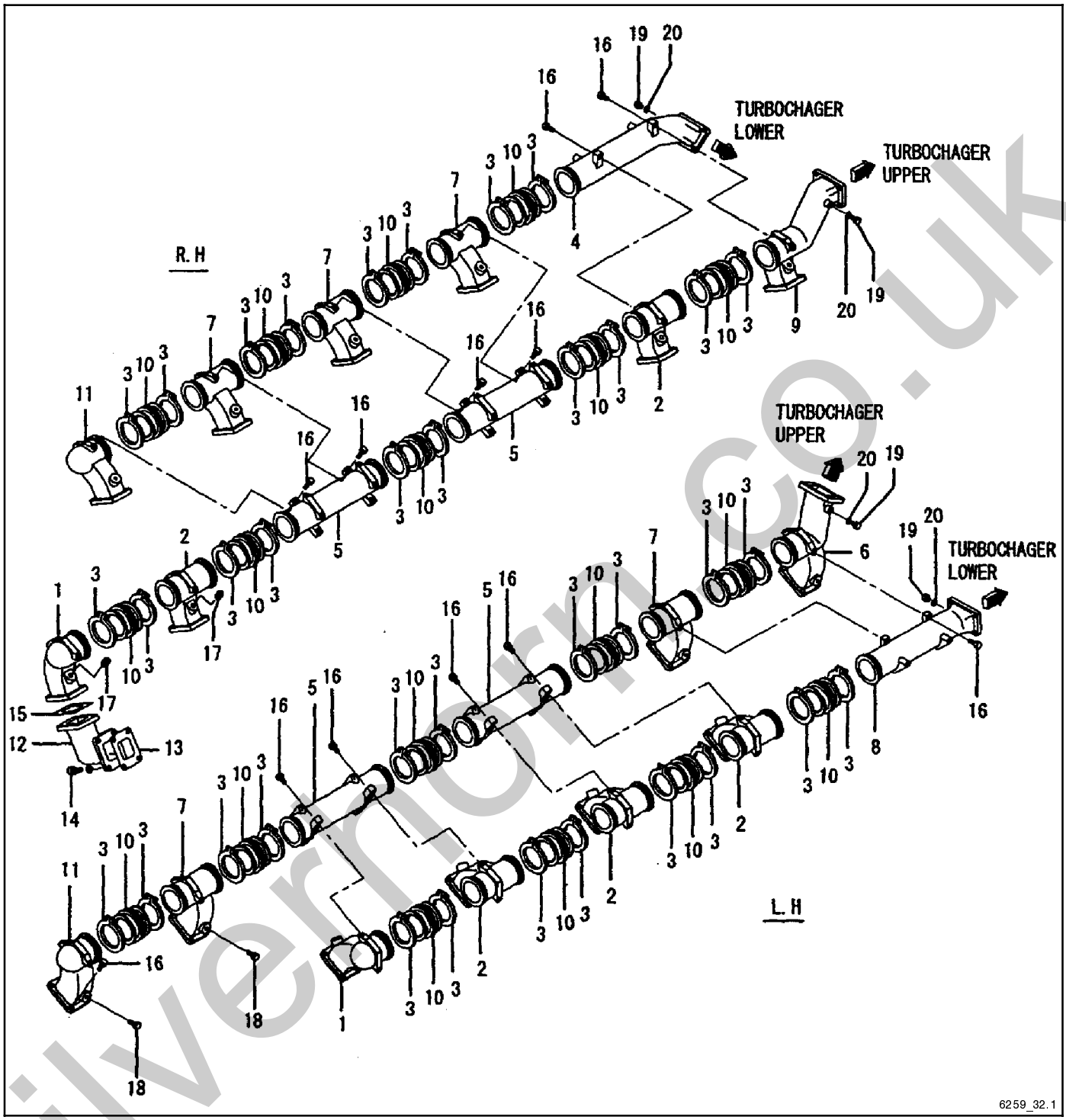

Item	Part No.	Description	Qty. Var. 1
1	GM31631	Manifold, exhaust	2
2	GM31632	Manifold, exhaust	5
3	GM31633	Clamp	36
4	GM31634	Manifold, exhaust, right lower	1
5	GM31635	Manifold, exhaust	4
6	GM31636	Manifold, exhaust, left upper	1
7	GM31637	Manifold, exhaust	5
8	GM31638	Manifold, exhaust, left lower	1
9	GM31639	Manifold, exhaust, right upper	1
10	GM31640	Joint, flexible	18

Item	Part No.	Description	Qty. Var. 1
11	GM31641	Manifold, exhaust	2
12	GM31642	Connector, exhaust	16
13	GM15700	Gasket, exhaust	16
14	GM21719	Bolt	64
15	GM31643	Gasket, exhaust	16
16	GM21658	Bolt	76
17	GM16034	Plug, tapered	16
18	GM21805	Plug, tapered	16
19	GM22026	Plug, screw	4
20	GM22025	Gasket	4

silvermorr.co.uk

Group 32.1: Exhaust System, continued

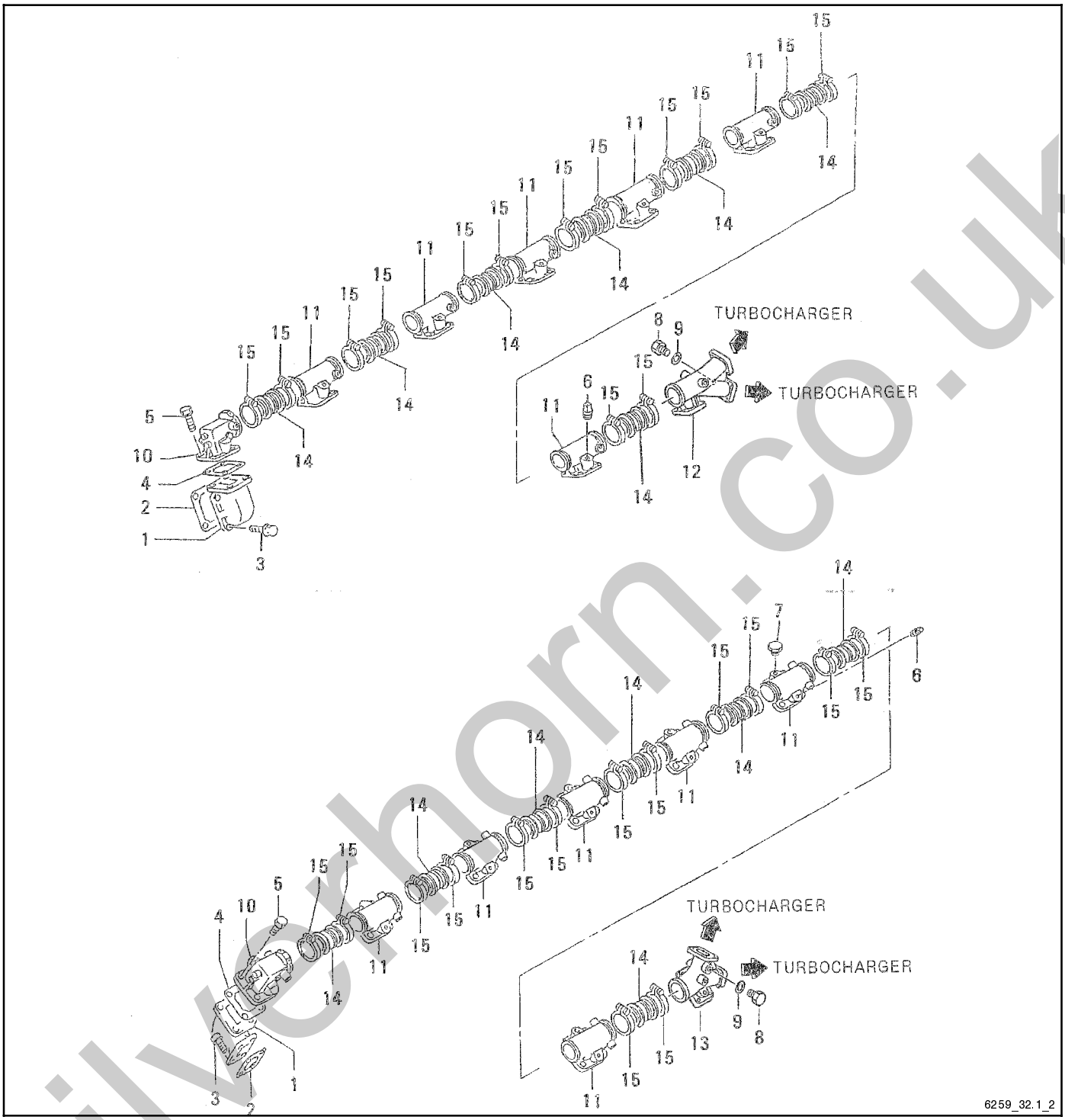

Item	Part No.	Description	Qty. Var. 2
1	GM31642	Connector, exhaust	16
2	GM15700	Gasket, exhaust	16
3	GM21719	Bolt	64
4	GM21807	Gasket, exhaust	16
5	GM21658	Bolt	64
6	GM16034	Plug, tapered	16
7	GM21805	Plug, taper	16
8	GM14994	Plug	2

Item	Part No.	Description	Qty. Var. 2
9	GM22025	Gasket	2
10	GM37211	Manifold, exhaust	2
11	GM37212	Manifold, exhaust	12
12	GM37213	Manifold, exhaust	1
13	GM37214	Manifold, exhaust	1
14	GM37215	Joint, flexible	14
15	GM37216	V-clamp	28

silverthorn.co.uk

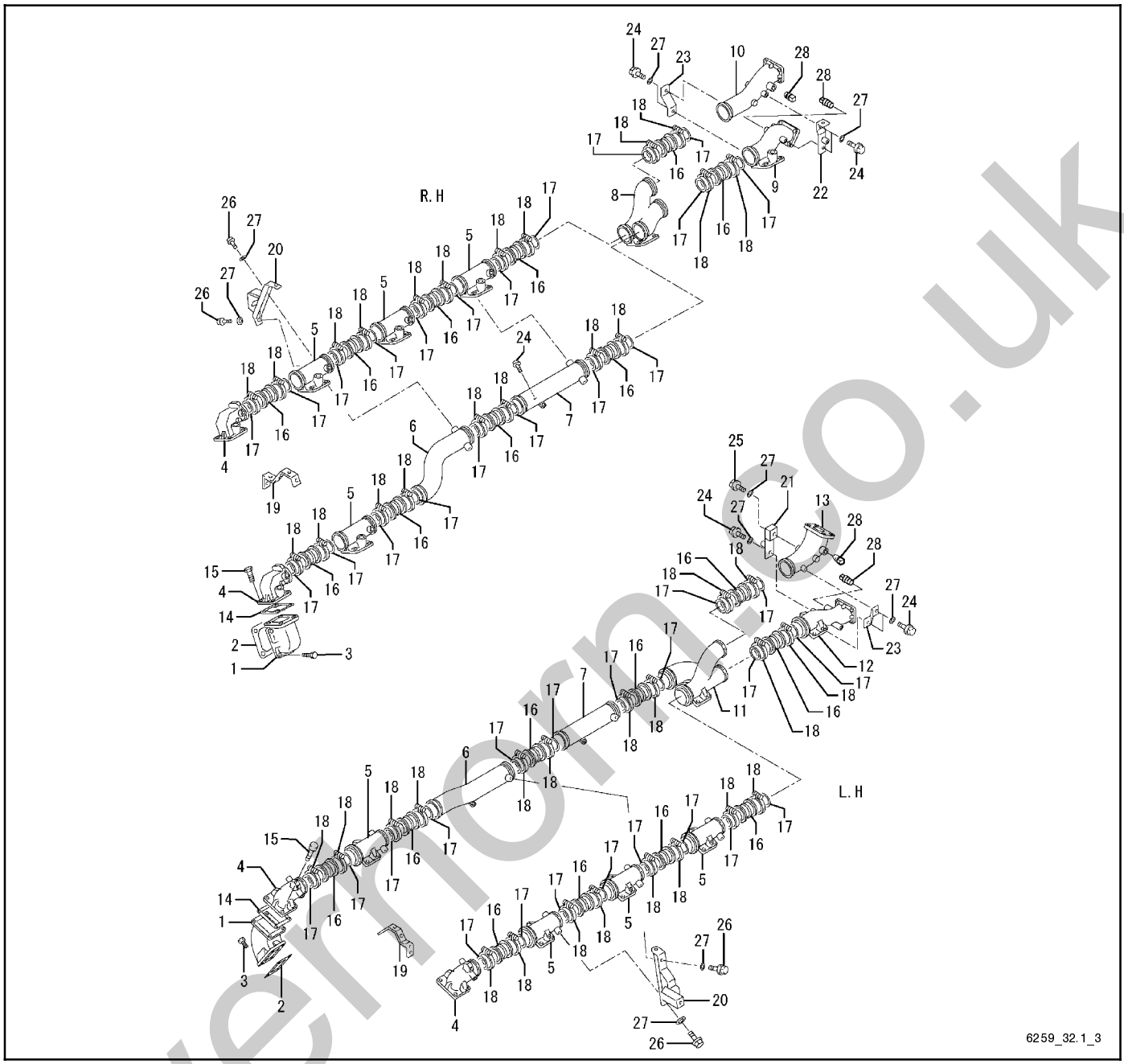

Item	Part No.	Description	Qty. Var. 3
1	GM31642	Connector, exhaust	16
2	GM57203	Gasket	16
3	GM21719	Bolt	64
4	GM37045	Manifold, exhaust	4
5	GM37046	Manifold, exhaust	8
6	GM37049	Manifold, exhaust	2
7	GM57723	Manifold, exhaust	2
8	GM57724	Manifold, exhaust	1
9	GM57725	Manifold, exhaust	1
10	GM57726	Manifold, exhaust	1
11	GM57727	Manifold, exhaust	1
12	GM57728	Manifold, exhaust	1
13	GM57729	Manifold, exhaust	1
14	GM31643	Gasket, exhaust	16
14	GM21807	Gasket, exhaust	16

Item	Part No.	Description	Qty. Var. 3
15	GM21658	Bolt	64
16	GM31326	Joint, flexible	20
17	GM14592	Gasket joint	40
18	GM15081	Coupling assembly	40
19	GM37051	Stay, manifold	2
20	GM57730	Stay, manifold	4
21	GM57731	Stay, manifold	1
22	GM57732	Stay, manifold	1
23	GM57733	Stay, manifold	2
24	GM21658	Bolt	19
25	GM14596	Bolt	1
26	GM57734	Bolt	4
27	GM31649	Washer	20
28	GM15246	Plug, tapered	4

silvermore.co.uk

Group 32.1: Exhaust System, continued

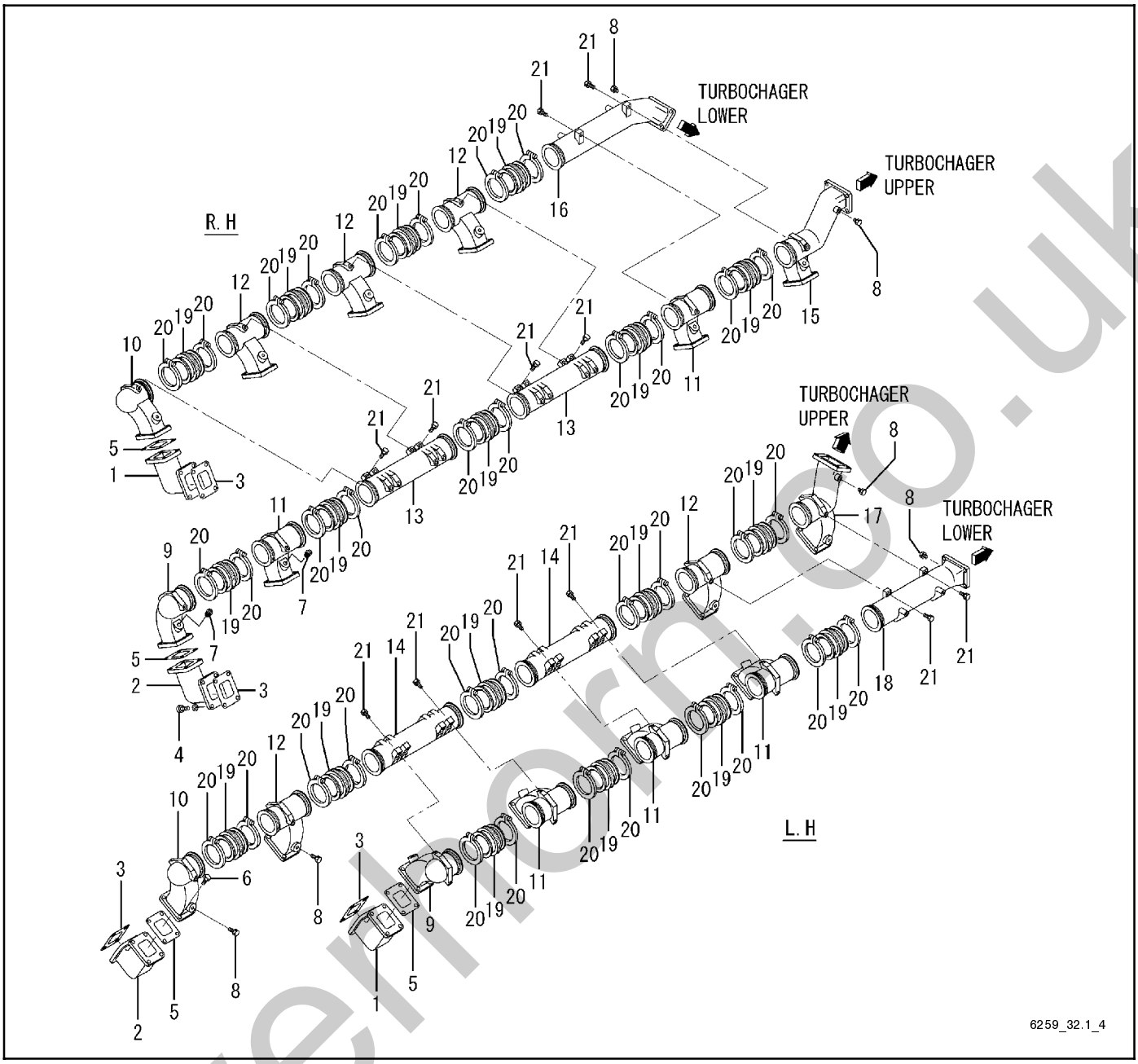

Item	Part No.	Description	Qty. Var. 4
1	GM31642	Connector, exhaust	8
2	GM57788	Connector	8
3	GM57203	Gasket, exhaust	16
4	GM21719	Bolt	64
5	GM31643	Gasket, exhaust	16
5	GM21807	Gasket, exhaust	16
6	GM21658	Bolt	64
7	GM16034	Plug, tapered	14
8	GM21805	Plug, taper	20
9	GM57789	Manifold, exhaust	2
10	GM57790	Manifold, exhaust	2

Item	Part No.	Description	Qty. Var. 4
11	GM57791	Manifold, exhaust	5
12	GM57792	Manifold, exhaust	5
13	GM57793	Manifold, exhaust	2
14	GM57794	Manifold, exhaust	2
15	GM57795	Manifold, exhaust	1
16	GM57796	Manifold, exhaust	1
17	GM57797	Manifold, exhaust	1
18	GM57798	Manifold, exhaust	1
19	GM31640	Joint, flexible	18
20	GM31633	V-clamp	36
21	GM21658	Bolt	12

silverhorn.co.uk

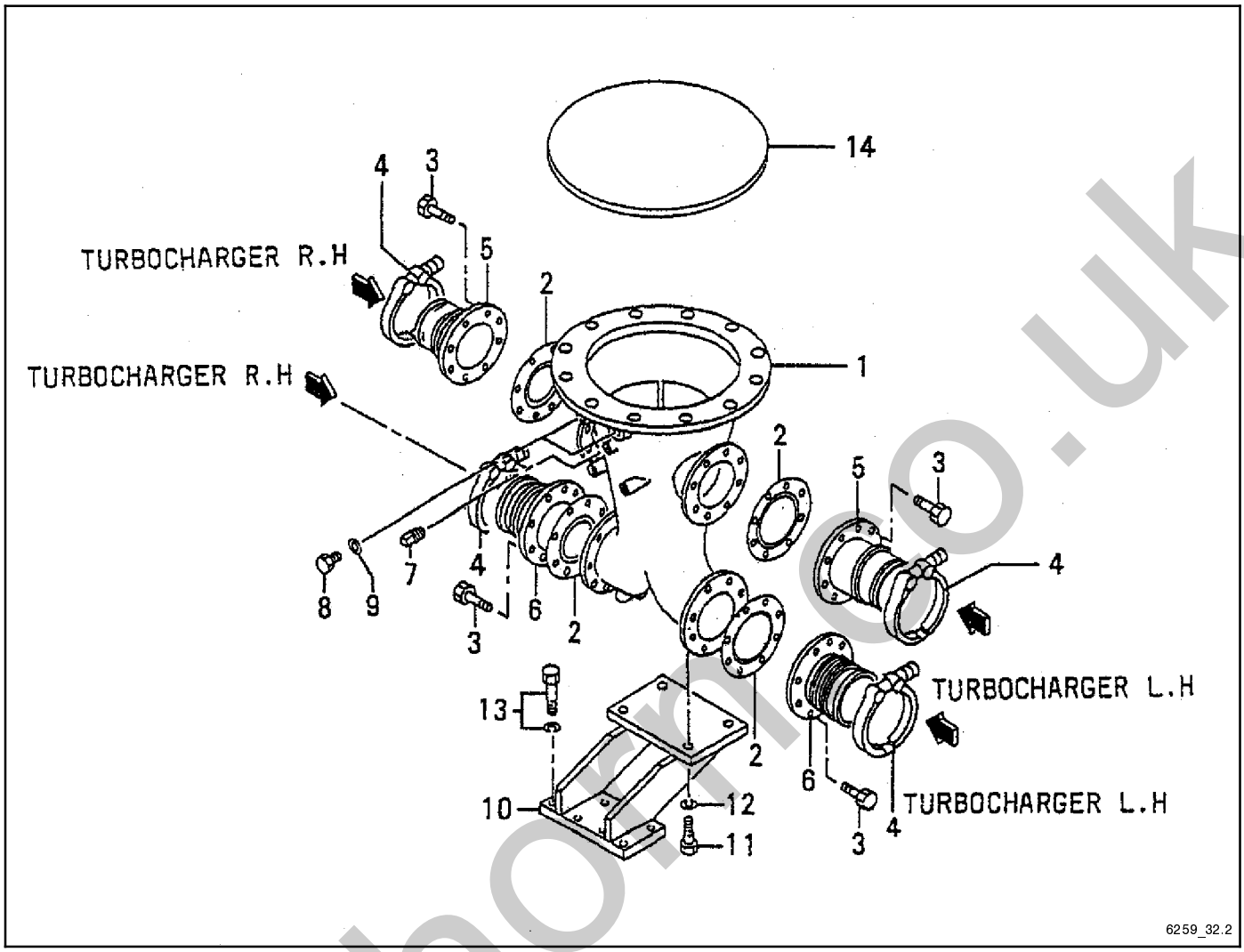

Item	Part No.	Description	Qty. Var. 1	2	3
1	GM21966	Pipe, exhaust	1	1	1
2	GM21961	Gasket, exhaust	4	4	4
3	GM21658	Bolt	32	32	32
4	GM22067	V-clamp	4		
4	GM37217	V-clamp		4	4
5	GM21962	Joint, exhaust	2	2	2
6	GM21956	Joint, bellows	2	2	2
7	GM15246	Plug, tapered	2	2	2
8	GM14994	Plug	1	2	
8	GM22026	Plug, screw			2
9	GM15229	Gasket	1	1	
9	GM22025	Gasket		2	2
10	GM21965	Bracket, pipe	1	1	1
11	GM21636	Bolt	4	4	4
12	GM15180	Washer, spring	4	4	4
13	GM15151	Bolt w/washer	8	8	
13	GM15152	Bolt w/washer			8
14	GM21958	Cover, exhaust	1	1	
14	GM57735	Cover, exhaust			1

silverhorn.co.uk

Group 32.3: Exhaust Cover

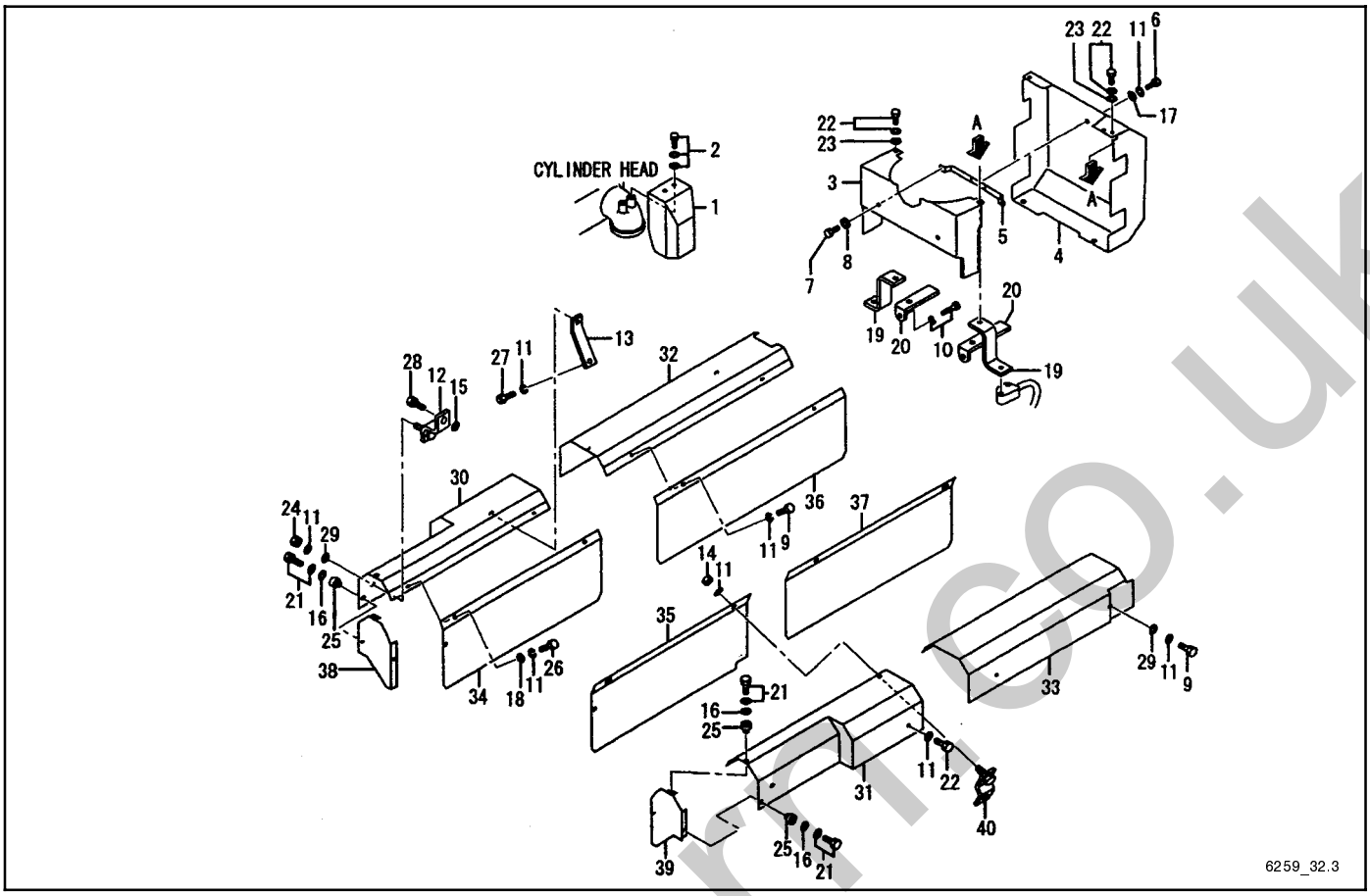

Item	Part No.	Description	Qty. Var. 1	Qty. Var. 4
1	GM15702	Insulator	16	
1	GM57799	Insulator		16
2	GM15980	Bolt w/washer	32	32
3	GM31644	Insulator, turbo, front	1	1
4	GM31645	Insulator, turbo, rear	1	1
5	GM21959	Stay	1	1
6	GM15924	Bolt	54	4
7	GM21656	Bolt	2	2
8	GM21664	Spacer	2	
9	GM14594	Bolt	14	6
10	GM31646	Bolt	2	
10	GM15140	Bolt		2
11	GM15179	Washer, spring	10	10
12	GM31647	Stay, insulator	2	2
13	GM21814	Stay, insulator	4	4
14	GM31648	Nut, lock	8	
15	GM15179	Washer, spring	38	18
16	GM15174	Washer, plain	4	4
17	GM31649	Washer	10	14
18	GM21810	Washer, insulator	4	4
19	GM21806	Stay, insulator	2	2
20	GM22081	Plate	2	2
21	GM15140	Bolt, w/washer	2	2
22	GM15140	Bolt, w/washer	4	
22	GM15139	Bolt, w/washer		4
23	GM15174	Washer, plain	4	4
24	GM15164	Nut, lock	2	

Item	Part No.	Description	Qty. Var. 1	Qty. Var. 4
24	GM31648	Nut, lock		2
25	GM31650	Spacer	6	6
26	GM31651	Bolt	4	4
27	GM31652	Bolt	6	6
28	GM21658	Bolt	12	
29	GM31653	Washer	4	4
30	GM31654	Insulator, front right	1	
30	GM57800	Insulator, front right		1
31	GM31655	Insulator, front left	1	
31	GM57801	Insulator, front left		1
32	GM31656	Insulator, rear right	1	
32	GM57802	Insulator, rear right		1
33	GM31657	Insulator, rear left	1	
33	GM57803	Insulator, rear left		1
34	GM31658	Insulator, front right	1	
34	GM57804	Insulator, front right		1
35	GM31659	Insulator, front left	1	
35	GM57805	Insulator, front left		1
36	GM31660	Insulator, rear right	1	
36	GM57806	Insulator, rear right		1
37	GM31661	Insulator, rear left	1	
37	GM57807	Insulator, rear left		1
38	GM31662	Cover, front right	1	
38	GM57808	Cover, front right		1
39	GM31663	Cover, front left	1	
39	GM57809	Cover, front left		1
40	GM21979	Stay	8	

silverhorse.co.uk

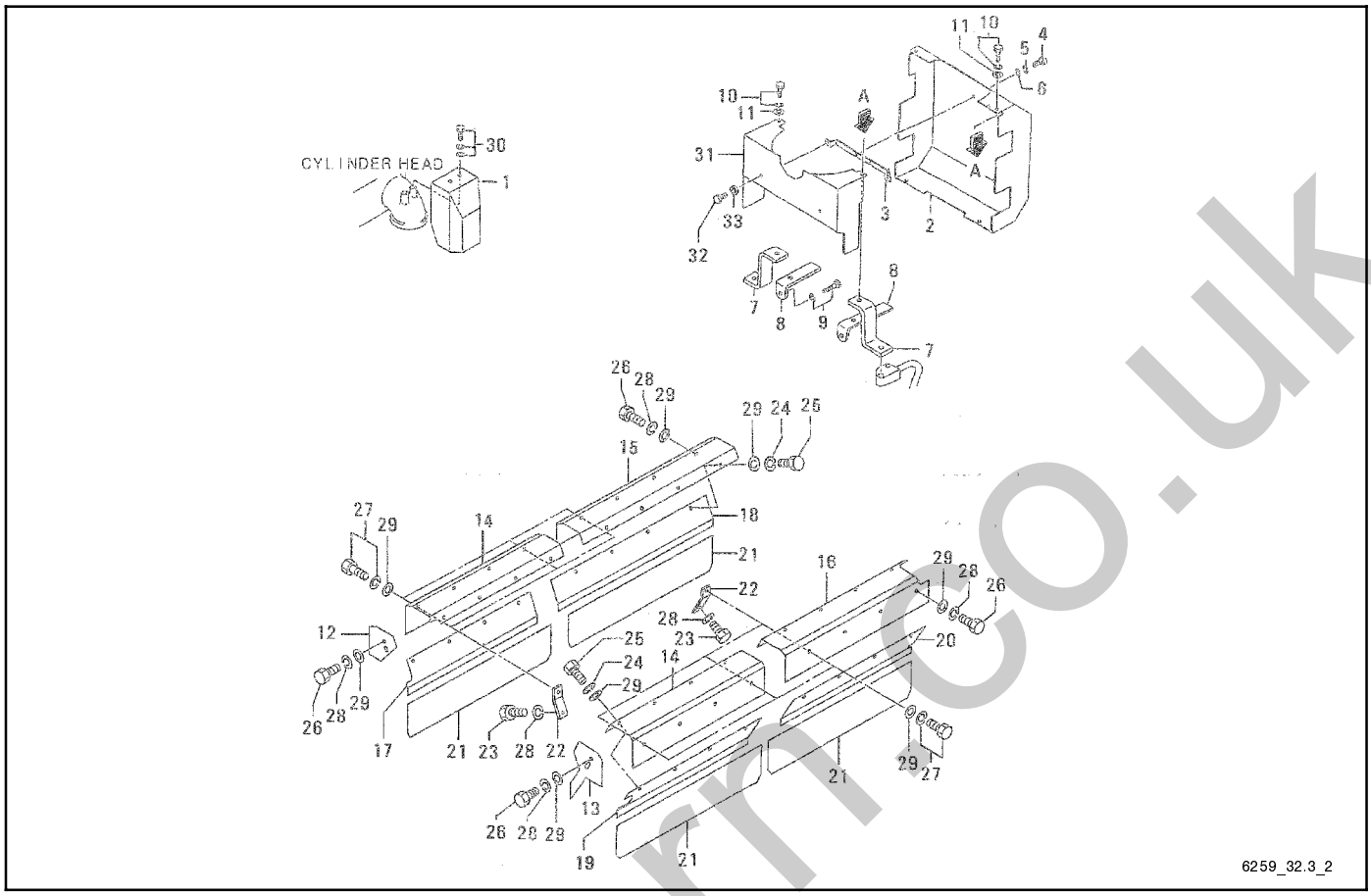

Item	Part No.	Description	Qty. Var. 2
1	GM15702	Insulator	16
2	GM21964	Insulator, turbo, rear	1
3	GM21959	Stay, insulator	1
4	GM15924	Bolt	2
5	GM15179	Washer, spring	2
6	GM15174	Washer, plain	2
7	GM21806	Stay insulator	2
8	GM22081	Plate	2
9	GM15140	Bolt w/washer	2
10	GM15139	Bolt w/washer	4
11	GM15174	Washer, plain	4
12	GM37218	Insulator	1
13	GM37219	Insulator	1
14	GM37220	Insulator	2
15	GM37221	Insulator	1
16	GM37222	Insulator	1
17	GM37223	Insulator	1

Item	Part No.	Description	Qty. Var. 2
18	GM37224	Insulator	1
19	GM37225	Insulator	1
20	GM37226	Insulator	1
21	GM37227	Insulator, long	4
22	GM21814	Stay, insulator	6
23	GM14594	Bolt	6
24	GM15179	Washer, spring	8
25	GM31652	Bolt	8
26	GM31651	Bolt	6
27	GM15140	Bolt w/washer	6
28	GM15179	Washer, spring	12
29	GM31649	Washer	20
30	GM15980	Bolt w/washer	32
31	GM21963	Insulator, turbo, front	1
32	GM21656	Bolt	2
33	GM21664	Spacer	2

silverhorn.co.uk

Group 32.3: Exhaust Cover, continued

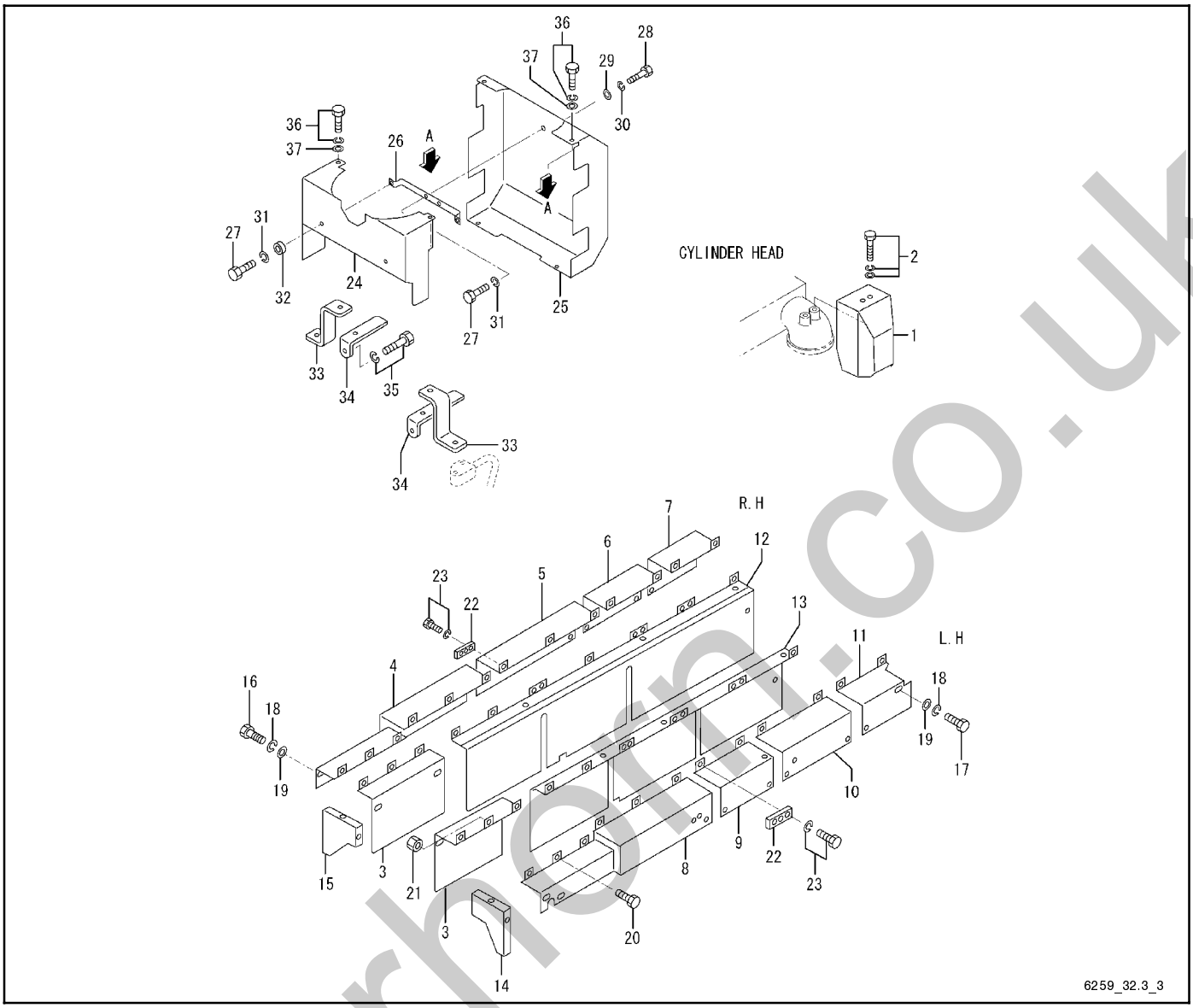

Item	Part No.	Description	Qty. Var. 3
1	X	Insulator	16
2	GM15980	Bolt	32
3	GM37060	Insulator	2
4	GM37061	Insulator	1
5	GM57736	Insulator	1
6	GM57737	Insulator	1
7	GM57738	Insulator	1
8	GM37064	Insulator	1
9	GM57739	Insulator	1
10	GM57740	Insulator	1
11	GM57741	Insulator	1
12	GM57742	Insulator	1
13	GM57743	Insulator	1
14	GM37069	Cover	1
15	GM37070	Cover	1
16	GM57744	Bolt	2
17	GM57745	Bolt	22
18	GM15179	Washer, spring	18
19	GM31649	Washer	18

Item	Part No.	Description	Qty. Var. 3
20	GM22091	Bolt	25
21	GM15164	Nut	25
22	GM37071	Plate, insulator	6
23	GM15139	Bolt w/washer	18
24	GM31644	Insulator, turbo, front	1
25	GM31645	Insulator, turbo, rear	1
26	GM21959	Stay, insulator	1
27	GM15924	Bolt	4
28	GM21656	Bolt	2
29	GM15175	Washer	2
30	GM15180	Washer, spring	2
31	GM15179	Washer, spring	6
32	GM15174	Washer, plain	4
33	GM21806	Stay insulator	2
34	GM22081	Plate	2
35	GM15140	Bolt	2
36	GM15139	Bolt w/washer	4
37	GM15174	Washer, plain	4

X Part is not sold separately.

silverhorn.co.uk

Group 33.1: Turbocharger and Mounting

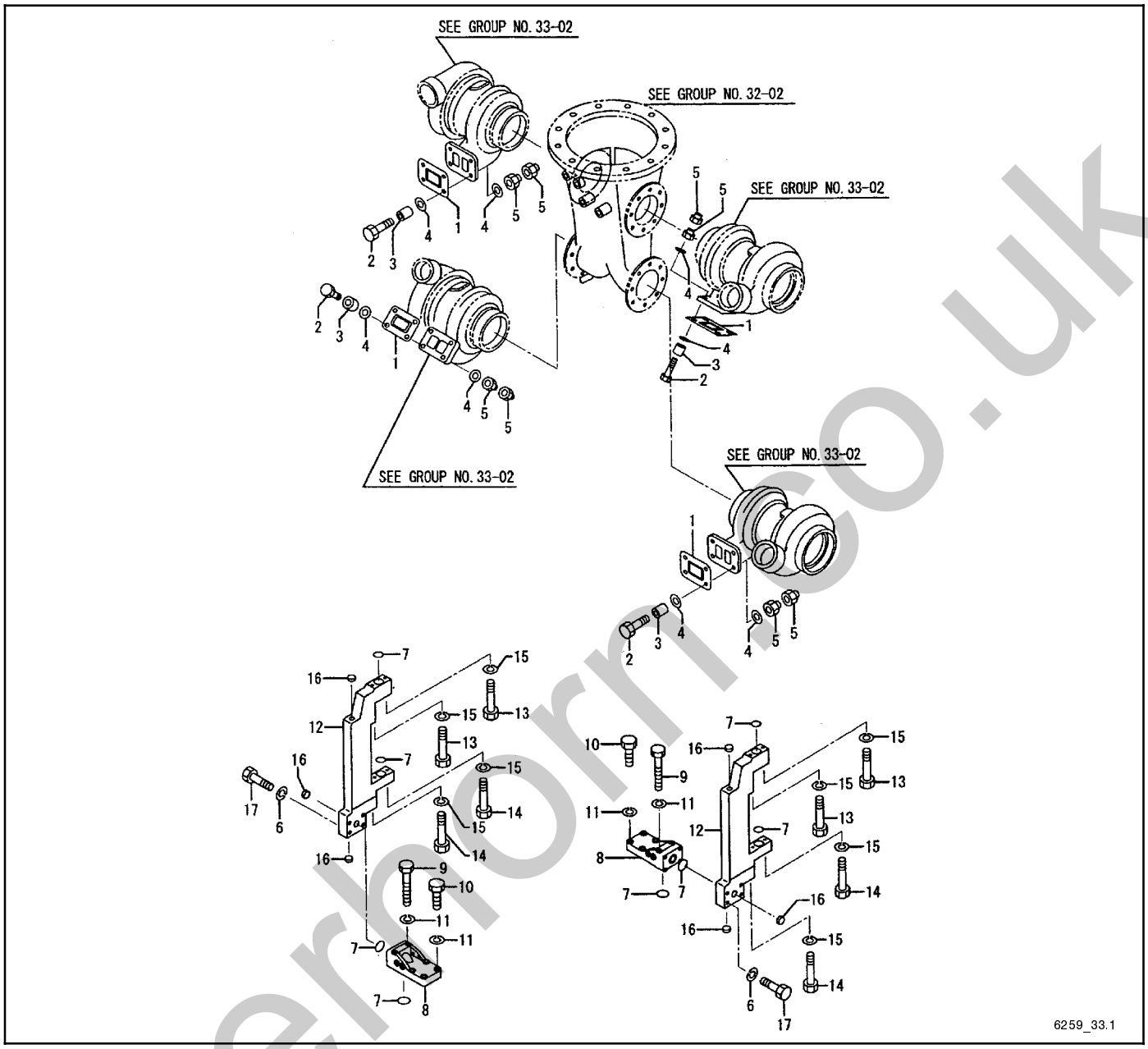

Item	Part No.	Description	Qty. Var. 1	2	3	4
1	GM21657	Gasket	4	4	4	4
2	GM14593	Bolt	16	16		12
2	GM15530	Bolt			16	
2	TBD	Bolt				4
3	GM14968	Spacer	16	16		16
4	GM14969	Washer	32			
4	GM37228	Washer		32		32
5	GM15087	Nut	32	32		32
5	GM31325	Nut, self-locking			16	
6	GM22115	Washer, spring	4			
6	GM15182	Washer, spring		8	8	8
6	GM21149	Washer, plain			8	8
7	GM14515	O-ring	4	4	8	8
8	GM21957	Bracket	2	2	2	2

Item	Part No.	Description	Qty. Var. 1	2	3	4
9	GM22095	Bolt	4	4	4	4
10	GM15112	Bolt	8	8	8	8
11	GM15180	Washer, spring	12	12	12	12
12	GM21960	Bracket, turbo	2	2		
12	GM57746	Bracket, turbo			2	2
13	GM22104	Bolt	4			
13	GM36622	Bolt		4	4	4
14	GM22105	Bolt	4	4	4	4
15	GM15179	Washer, spring	8	8	8	8
16	GM14490	Cap, sealing	2	2		2
16	GM57657	Cap, sealing			2	
17	GM22100	Bolt	8	8	8	8

silverhorn.co.uk

Group 33.2: Turbocharger

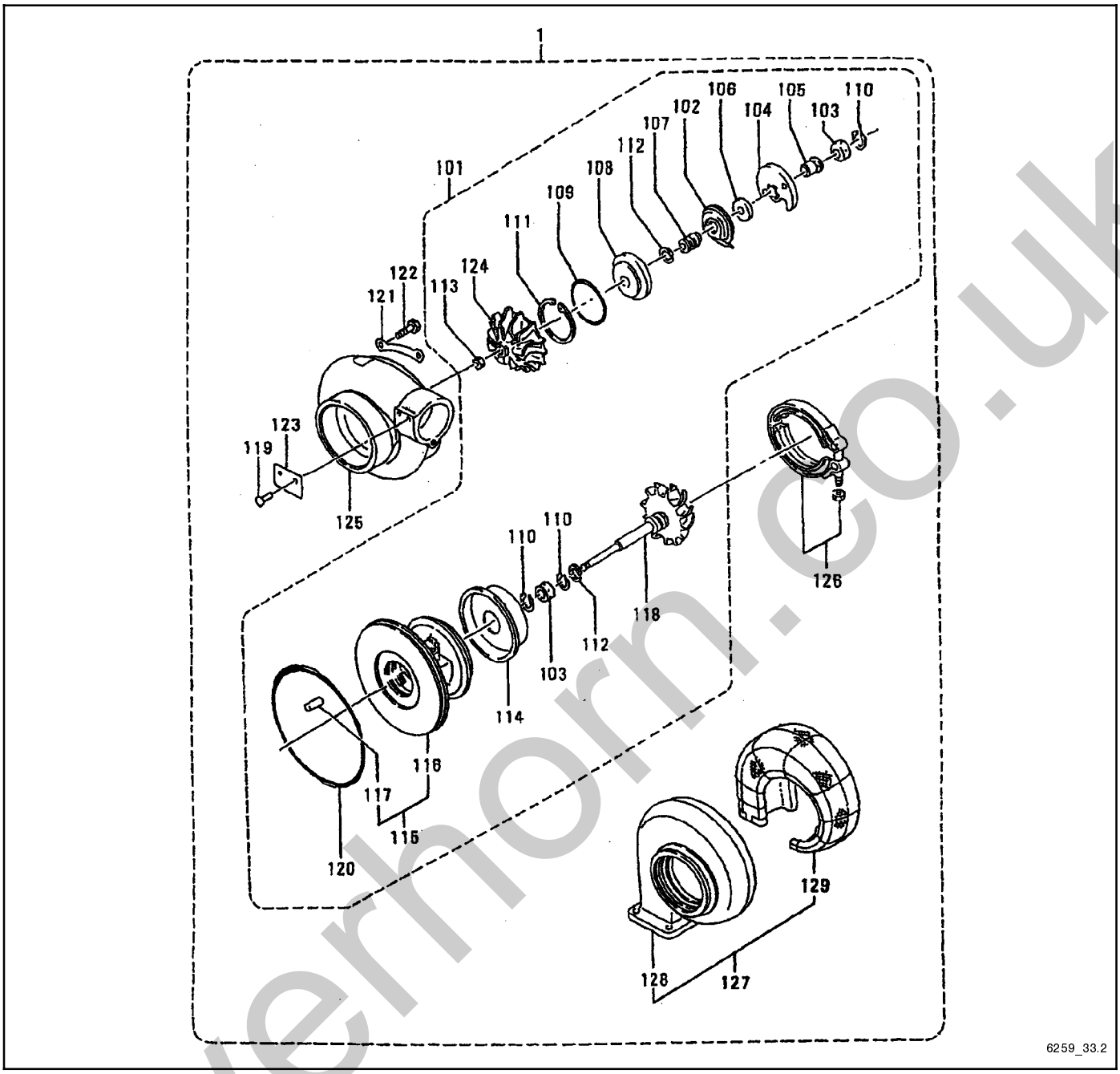

silverhorn.co.uk

Group 33.2: Turbocharger

Item	Part No.	Description	Qty. Var. 1	2	3	4
1	GM31664	Turbocharger assembly, right upper	1			
1	GM37229	Turbocharger assembly, right upper		1		
1	GM57747	Turbocharger assembly, right upper			1	
1	GM57810	Turbocharger assembly, right upper				1
1	GM31665	Turbocharger assembly, left upper	1			
1	GM37230	Turbocharger assembly, left upper		1		
1	GM57748	Turbocharger assembly, left upper			1	
1	GM57811	Turbocharger assembly, left upper				1
1	GM31666	Turbocharger assembly, right lower	1			
1	GM37231	Turbocharger assembly, right lower		1		
1	GM57749	Turbocharger assembly, right lower			1	
1	GM57812	Turbocharger assembly, right lower				1
1	GM31667	Turbocharger assembly, left lower	1			
1	GM37232	Turbocharger assembly, left lower		1		
1	GM57750	Turbocharger assembly, left lower			1	
1	GM57813	Turbocharger assembly, left lower				1
101	GM31668	Cartridge assembly, turbo	4			
101	GM36438	Cartridge assembly, turbo		4	4	4
102	GM15047	Deflector, oil	4	4	4	4
103	GM15045	Bearing	8	8	8	8
104	GM15046	Bearing, thrust	4	4	4	4
105	GM15058	Ring, thrust	4	4	4	4
106	GM15057	Ring, thrust	4	4	4	4
107	GM15055	Sleeve, slinger	4	4	4	4
108	GM15049	Insert	4	4	4	4
109	GM15050	O-ring (insert)	4	4	4	4
110	GM15048	Ring, snap	12	12	12	12
111	GM15043	Ring, snap	4	4	4	4
112	GM15052	Ring, piston	8	8	8	8
113	GM22071	Nut, lock	4	4	4	4
114	GM15072	Plate	4			
114	GM22068	Plate		4	4	4
115	GM31669	Housing, bearing	4			
115	GM22069	Housing, bearing		4	4	4
117	GM15949	Pin, spring	4	4	4	4
118	GM31670	Rotor assembly	4			
118	GM22070	Rotor assembly		4	4	4
119	GM14481	Rivet, screw	8	8	8	8
120	GM15051	O-ring	4	4	4	4
121	GM15053	Plate, lock	16	16	16	16
122	GM15054	Bolt	32	32	32	32
124	GM31836	Wheel, compressor	4			
124	GM36440	Wheel, compressor		4	4	4
125	GM31672	Cover, compressor	4			
125	GM36441	Cover, compressor		4	4	4
126	GM22067	V-clamp assembly	4	4		4
126	GM37217	V-clamp assembly			4	
127	GM31673	Turbine, housing assembly	4			
127	GM37233	Turbine, housing assembly		4		
127	—	Not sold separately			4	4
128	GM31674	Turbine, housing	4			
128	GM37234	Turbine, housing		4		4
128	GM57751	Turbine, housing			4	
129	GM31675	Lagging	4			
129	GM37235	Lagging		4		4
129	GM57752	Lagging			4	

silverhorn.co.uk

Group 35: Oil Pump

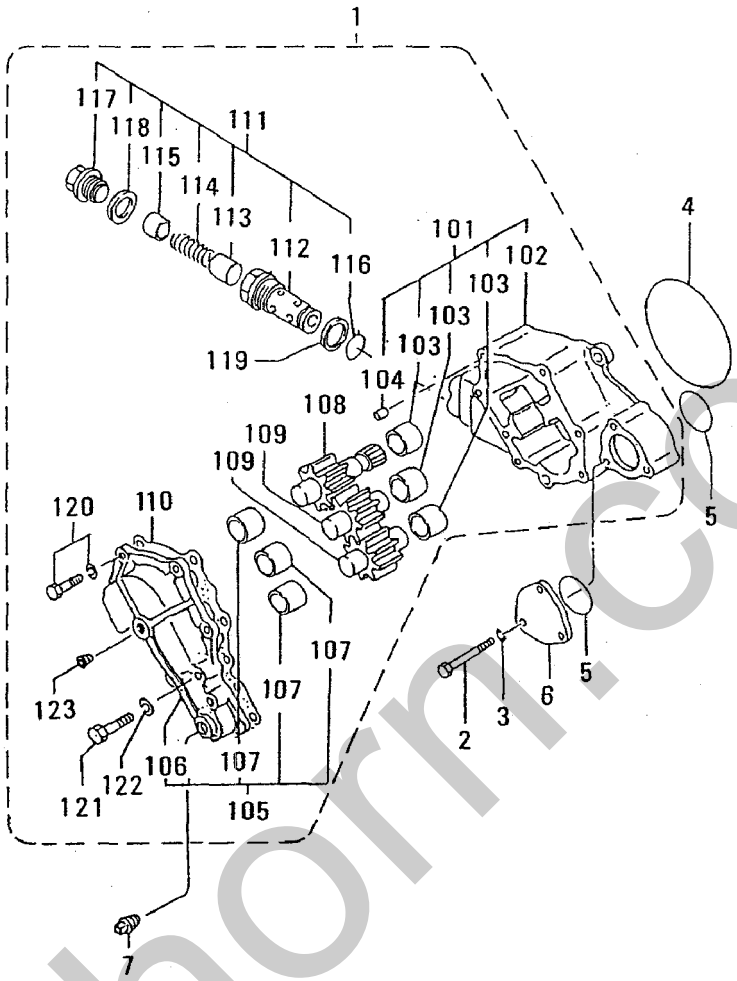

6259_35

Item	Part No.	Description	Qty. Var. 1
1	GM31676	Oil pump assembly	1
101	GM31677	Oil pump case assembly	1
102	—	Not sold separately	3
103	—	Not sold separately	3
104	—	Not sold separately	2
105	GM21823	Oil pump cover assembly	1
106	—	Not sold separately	1
107	—	Not sold separately	3
108	GM21818	Shaft and gear	1
109	GM21820	Shaft and gear	2
110	GM21819	Packing	1
111	GM21821	Valve assembly	3
112	—	Not sold separately	1
113	GM21672	Valve	3
114	GM21720	Spring	3

Item	Part No.	Description	Qty. Var. 1
115	GM21721	Stopper	3
116	GM21816	O-ring	3
117	GM21817	Plug	3
118	GM14533	Washer, sealing	3
119	GM21628	Washer, sealing	3
120	GM15143	Bolt w/washer	6
121	GM15958	Bolt	2
122	GM15179	Washer, spring	2
123	GM21605	Plug, tapered	1
2	GM22095	Bolt	3
3	GM15180	Washer, spring	3
4	GM21624	O-ring	1
5	GM14518	O-ring	2
6	GM21815	Cover, oil pump	1
7	GM22128	Plug, tapered	1

silverthorn.co.uk

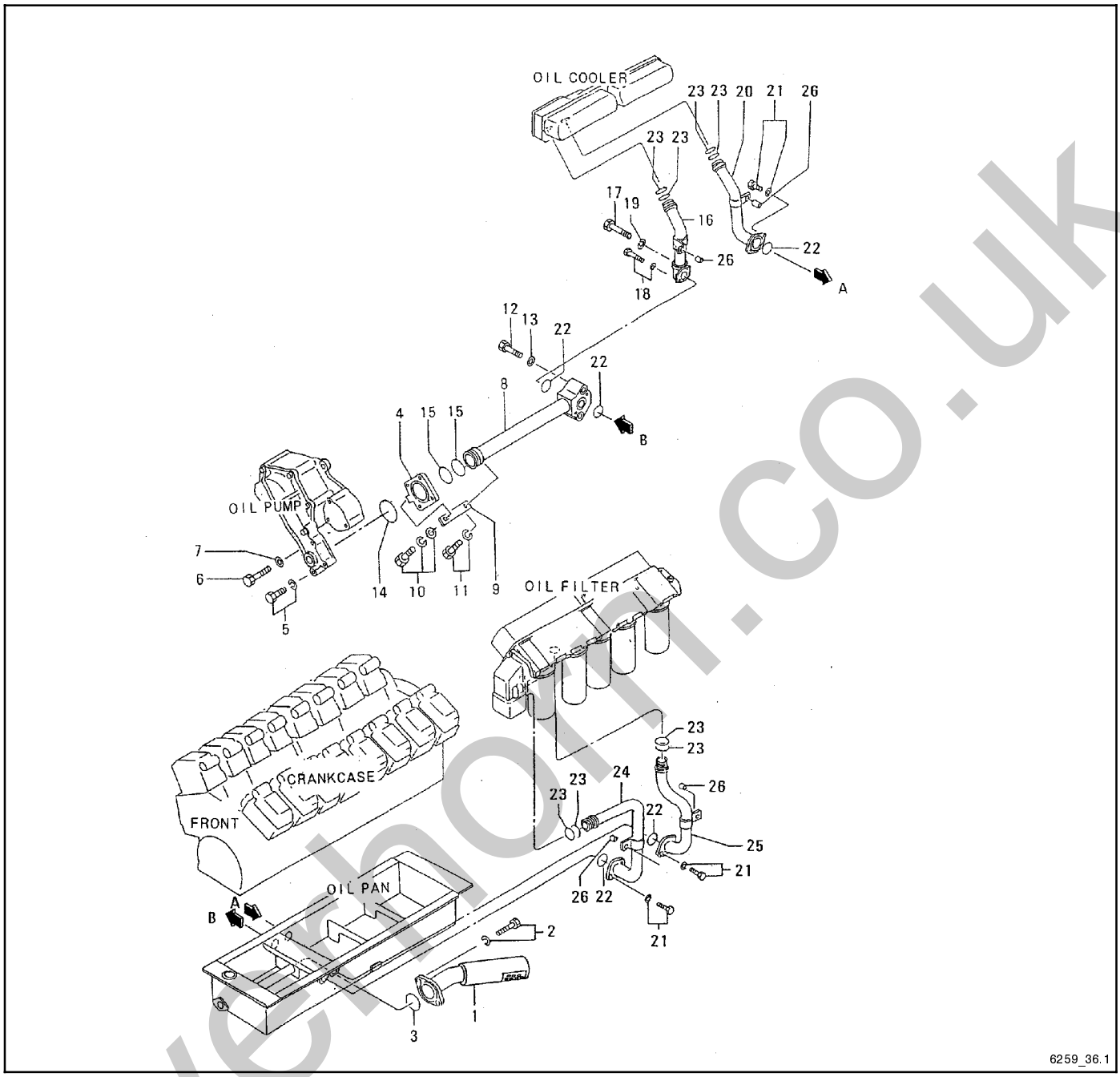

Item	Part No.	Description	Qty. Var. 1
1	GM21828	Strainer, oil	1
2	GM15151	Bolt w/washer	2
3	GM14519	O-ring	1
4	GM21827	Connector	1
5	GM15142	Bolt w/washer	2
6	GM15958	Bolt	2
7	GM15179	Washer, spring	2
8	GM21826	Pipe, oil	1
9	GM21665	Stay	1
10	GM15153	Bolt w/washer	1
11	GM15140	Bolt w/washer	1
12	GM15119	Bolt	2
13	GM15180	Washer, spring	2

Item	Part No.	Description	Qty. Var. 1
14	GM14519	O-ring	1
15	GM21620	O-ring	2
16	GM21836	Pipe, oil, right hand	1
17	GM22092	Bolt	1
18	GM15141	Bolt w/washer	1
19	GM15179	Washer, spring	1
20	GM21834	Pipe, oil	1
21	GM15141	Bolt w/washer	6
22	GM21619	O-ring	5
23	GM21616	O-ring	8
24	GM21830	Pipe, oil	1
25	GM21831	Pipe, oil	1
26	GM21825	Spacer	4

silverhorn.co.uk

Group 36.1: Oil Strainer, continued

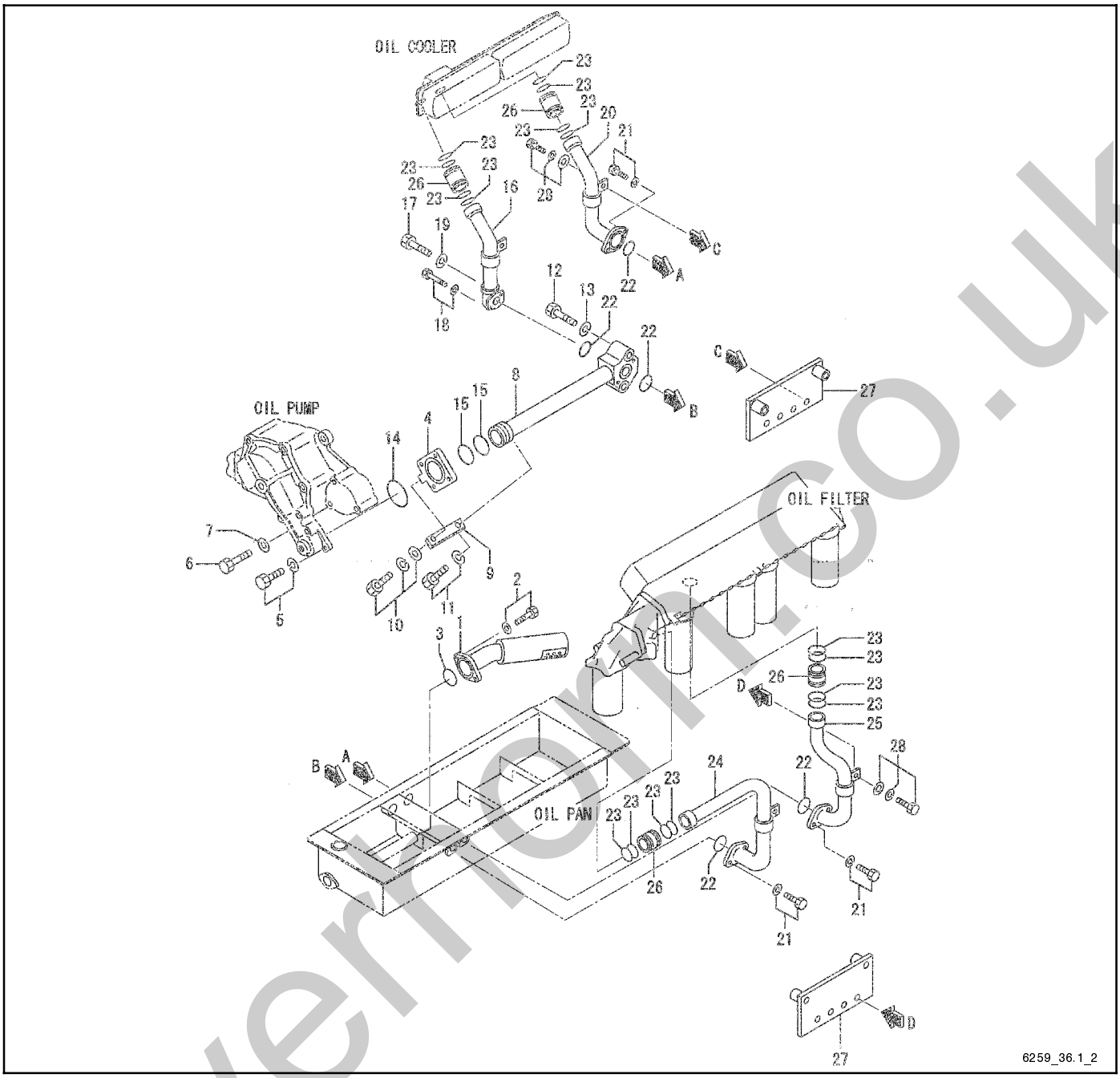

Item	Part No.	Description	Qty. Var. 2	Qty. Var. 3
1	GM21828	Strainer, oil	1	1
2	GM15151	Bolt w/washer	2	2
3	GM14519	O-ring	1	1
4	GM21827	Connector	1	1
5	GM15142	Bolt w/washer	2	2
6	GM15958	Bolt	2	2
7	GM15179	Washer, spring	2	2
8	GM21826	Pipe, oil	1	1
9	GM21665	Stay	1	1
10	GM15153	Bolt w/washer	1	1
11	GM15140	Bolt w/washer	1	1
12	GM15119	Bolt	2	2
13	GM15180	Washer, spring	2	2
14	GM14519	O-ring	1	1
15	GM21620	O-ring	2	2
16	GM37236	Pipe, oil	1	

Item	Part No.	Description	Qty. Var. 2	Qty. Var. 3
16	GM37082	Pipe. oil		1
17	GM22092	Bolt	1	1
18	GM15141	Bolt w/washer	1	1
19	GM15179	Washer, spring	1	1
20	GM37237	Pipe, oil	1	
20	GM37083	Pipe, oil		1
21	GM15141	Bolt w/washer	6	6
22	GM21619	O-ring	5	5
23	GM21616	O-ring	16	16
24	GM37238	Pipe, oil	1	
24	GM57658	Pipe, oil		1
25	GM37239	Pipe, oil	1	
25	GM37085	Pipe, oil		1
26	GM37086	Coupling	4	4
27	GM37087	Bracket, clamp	2	2
28	GM15156	Bolt w/washer	4	4

silverhorn.co.uk

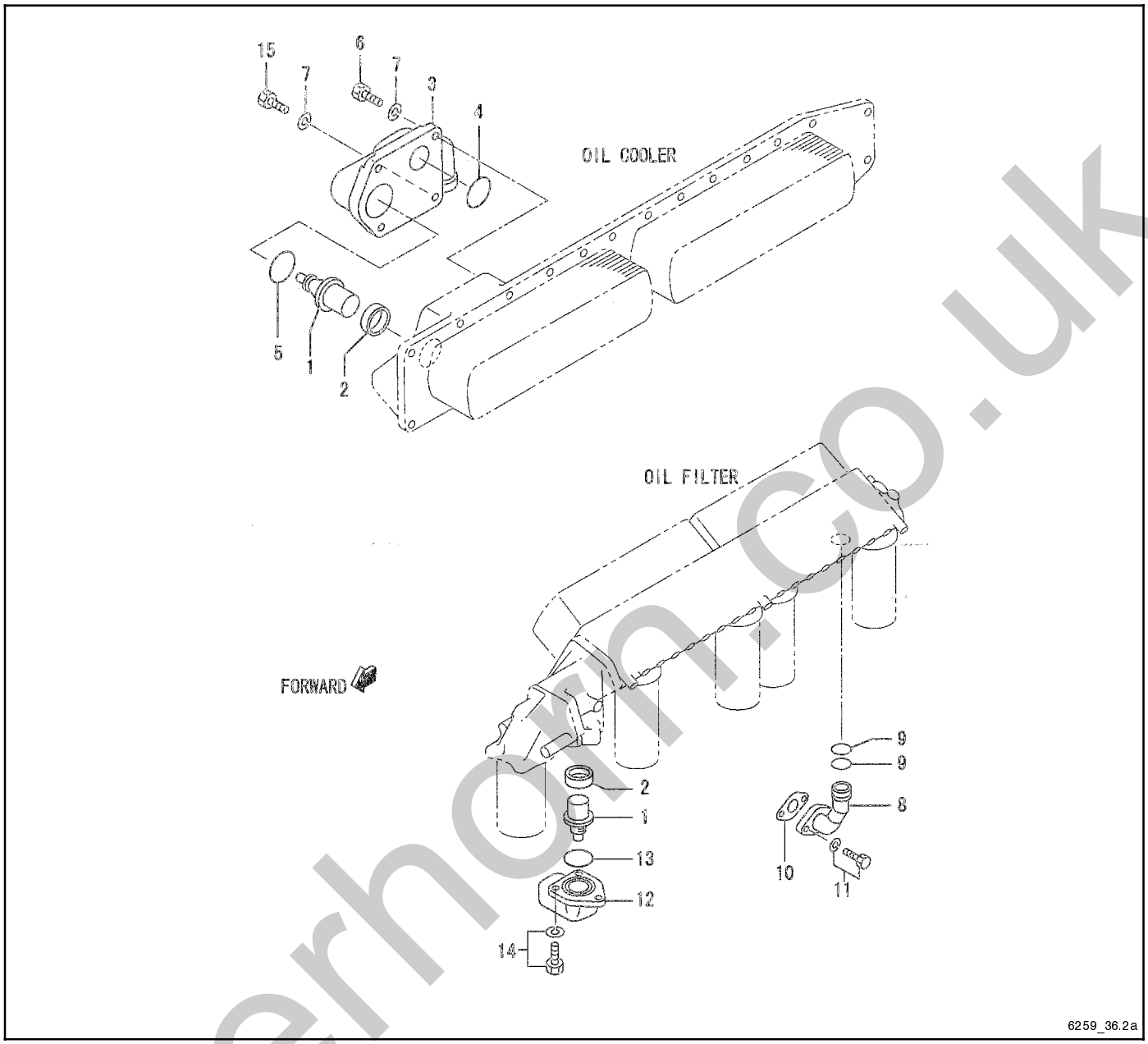

Item	Part No.	Description	Qty. Var. 1	2	3
1	GM21844	Thermostat, oil	2	2	2
2	GM21724	Seal, thermostat	2	2	2
3	GM21833	Connector, right hand	1	1	1
4	GM21617	O-ring	1	1	1
5	GM21621	O-ring	1	1	1
6	GM15120	Bolt	4	3	3
7	GM15180	Washer, spring	4	4	4
8	GM21837	Pipe, oil	1	1	
8	GM57659	Pipe, oil			1
9	GM21616	O-ring	2	2	2
10	GM21668	Gasket	1	1	1
11	GM15140	Bolt w/washer	2	2	
11	GM15141	Bolt w/washer			2
12	GM21829	Connector, left hand	1	1	
12	GM37089	Connector			1
13	GM14519	O-ring	1	1	1
14	GM15150	Bolt w/washer	3	3	3
15	GM37090	Bolt		1	1

silverhorn.co.uk

Group 36.3: Oil Pipes

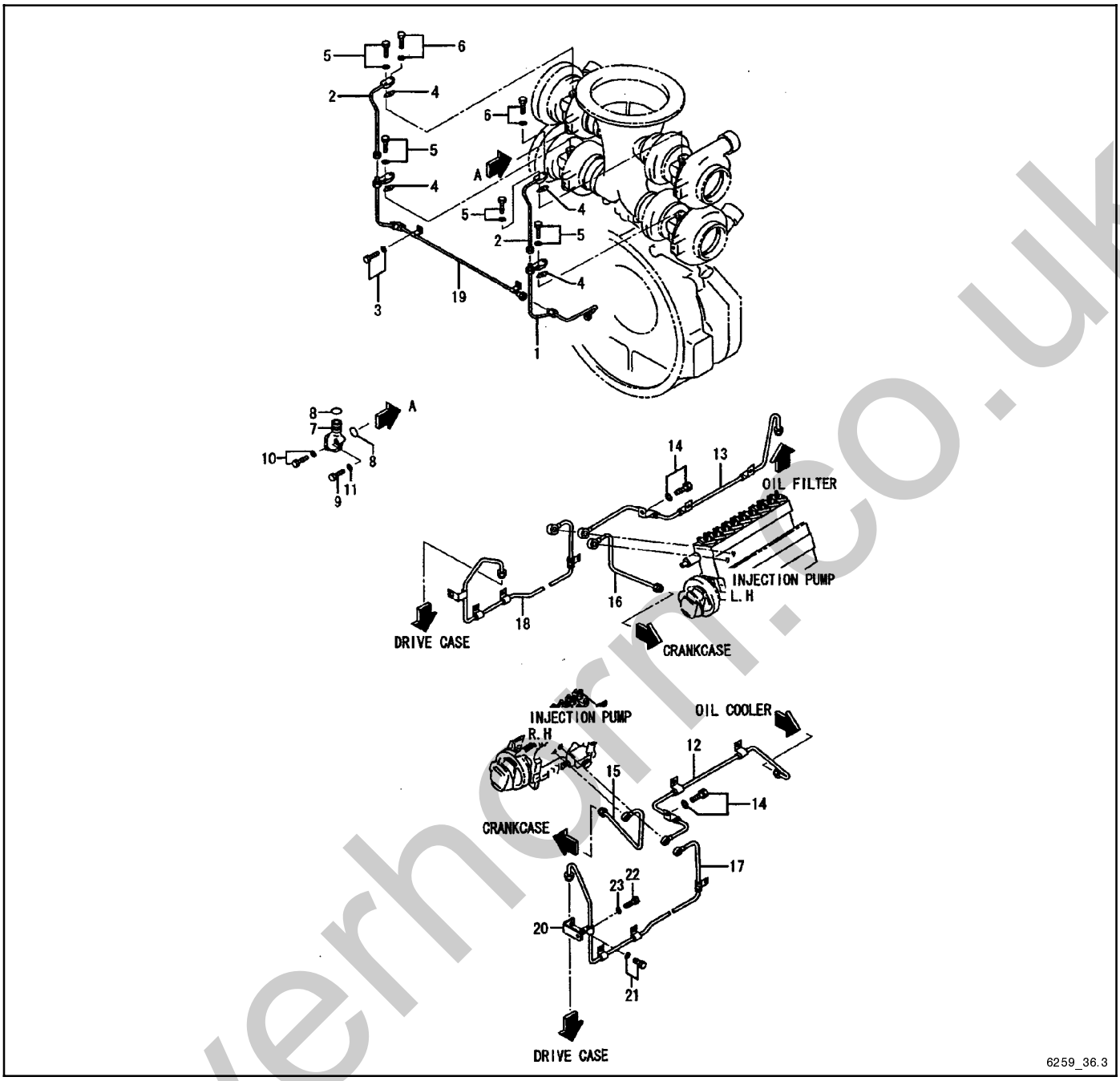

Item	Part No.	Description	Qty. Var. 1	Qty. Var. 2
1	GM21980	Pipe, oil	1	1
2	GM21982	Pipe, oil	2	2
3	GM15139	Bolt w/washer	2	2
4	GM21680	Packing	4	
4	GM34216	Packing		4
5	GM22111	Bolt w/washer	6	
5	GM15981	Bolt w/washer		6
6	GM22112	Bolt w/washer	2	
6	GM15161	Bolt w/washer		2
7	GM21983	Connector, drain	4	4
8	GM15528	O-ring	8	8
9	GM15958	Bolt	4	4
10	GM15141	Bolt w/washer	4	4
11	GM15179	Washer, spring	4	4
12	GM21984	Pipe, oil	1	1

Item	Part No.	Description	Qty. Var. 1	Qty. Var. 2
13	GM21987	Pipe, oil	1	1
14	GM15975	Bolt w/washer	2	2
15	GM21985	Pipe, drain	1	1
16	GM21986	Pipe, drain	1	1
17	GM31678	Pipe, oil	1	1
18	GM21989	Pipe, oil	1	
18	GM37240	Pipe, oil		1
19	GM21981	Pipe, oil	1	1
20	GM31679	Stay, oil pipe	1	
20	GM37100	Stay, oil pipe		1
21	GM31680	Bolt w/washer	1	1
22	GM15112	Bolt	1	
23	GM15180	Washer, spring	1	

silverhorn.co.uk

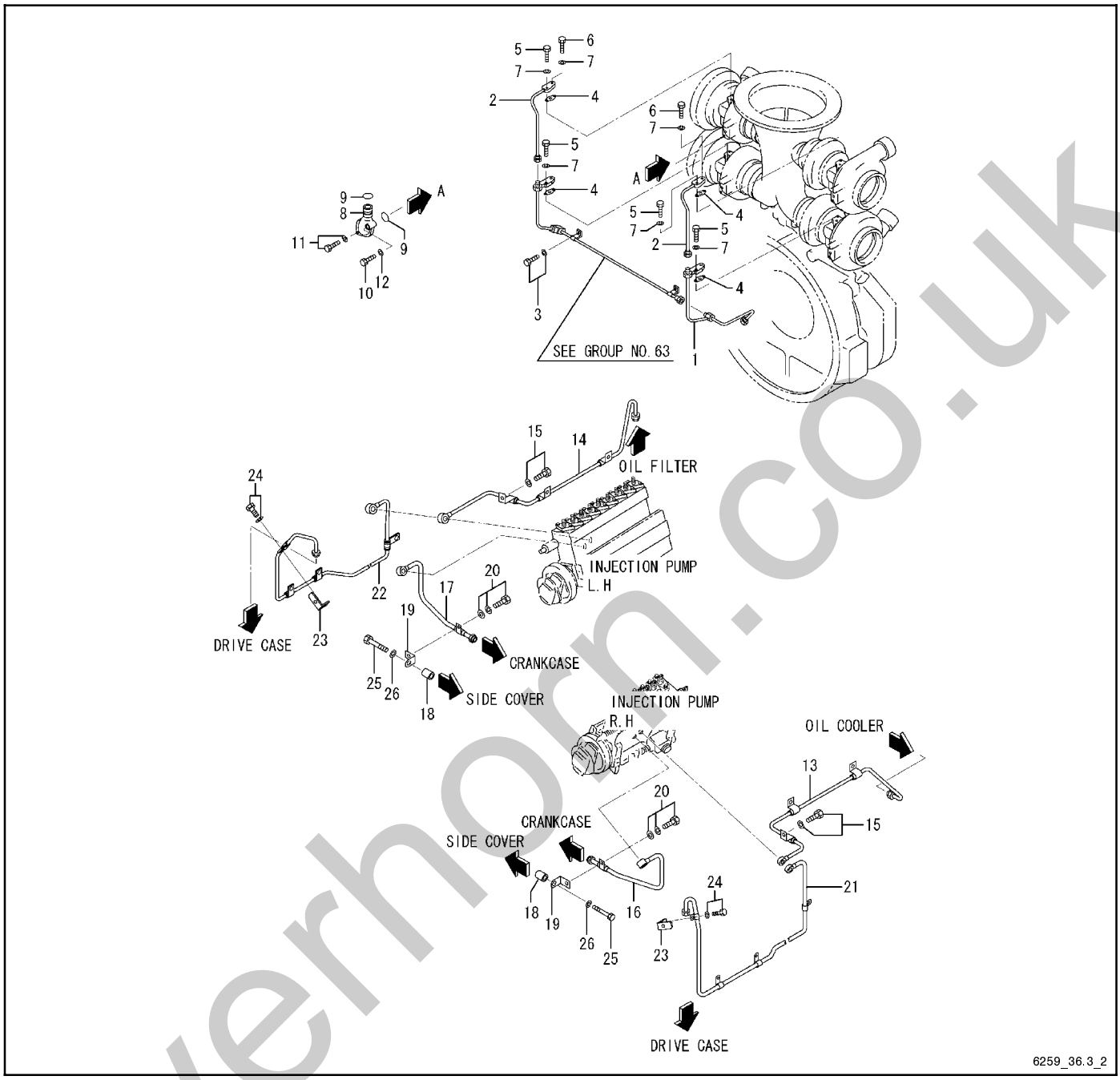

Item	Part No.	Description	Qty. Var. 3	Qty. Var. 4
1	GM21980	Pipe, oil	1	1
2	GM21982	Pipe, oil	2	2
3	GM15139	Bolt w/washer	2	2
4	GM34216	Packing	4	4
5	GM36491	Bolt	6	6
6	GM34215	Bolt	2	2
7	GM15179	Washer, spring	8	8
8	GM21983	Connector, drain	4	4
9	GM15528	O-ring	8	8
10	GM15958	Bolt	4	4
11	GM15141	Bolt w/washer	4	4
12	GM15179	Washer, spring	4	4
13	GM21984	Pipe, oil	1	1
14	GM21987	Pipe, oil	1	1
15	GM15975	Bolt w/washer	2	2

Item	Part No.	Description	Qty. Var. 3	Qty. Var. 4
16	GM57753	Pipe, drain	1	
16	GM21985	Pipe, drain		1
17	GM57754	Pipe, drain	1	
17	GM21986	Pipe, drain		1
18	GM57755	Spacer	2	
19	GM57756	Stay, drain pipe	2	
20	GM15153	Bolt w/washer	2	
21	GM31678	Pipe, oil	1	
22	GM37240	Pipe, oil	1	
22	GM57814	Pipe, oil		1
23	GM37100	Stay, oil pipe	2	1
24	GM31680	Bolt w/washer	2	1
25	GM15115	Bolt	2	
26	GM15180	Washer, spring	2	

silverhorn.co.uk

Group 39: Oil Cooler

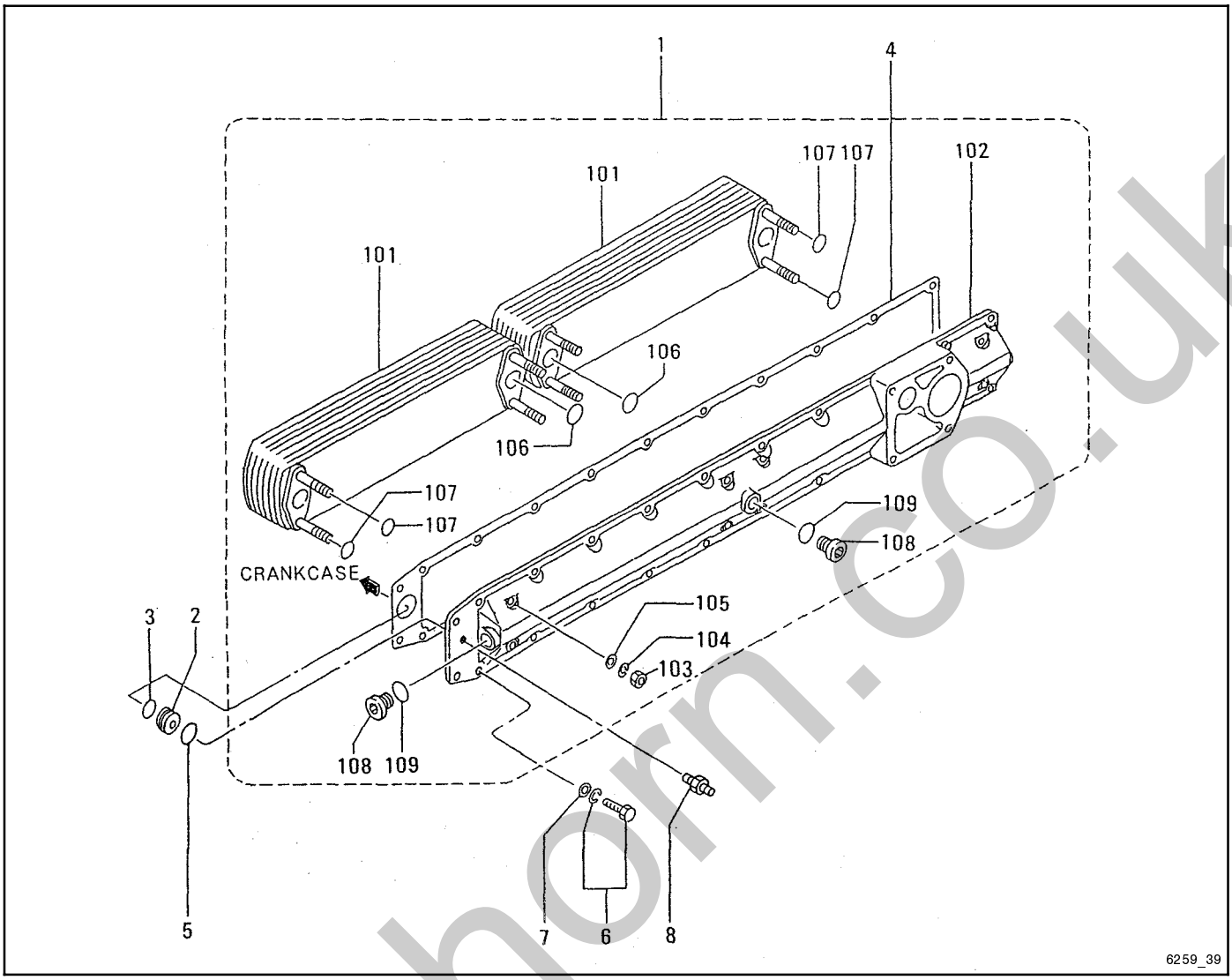

Item	Part No.	Description	Qty. Var. 1	2	3
1	GM21845	Oil cooler assembly	1		
1	GM37241	Oil cooler assembly		1	
1	GM57660	Oil cooler assembly			1
101	GM21838	Element, oil	2		
101	GM37105	Element, oil		2	
101	GM57661	Element, oil			2
102	GM21843	Cover, oil cooler	1		
102	GM37106	Cover, oil cooler		1	1
103	GM15164	Nut	8	8	
103	GM15263	Nut, flange			8
104	GM15179	Washer, spring	8	8	
105	GM15174	Washer, plain	8	8	
106	GM15266	O-ring, oil	4	4	4
107	GM15264	O-ring	8		
107	GM21610	O-ring		8	8
108	GM16042	Plug	3	3	3
109	GM15265	O-ring	3	3	3
2	GM15622	Plate, nozzle	1	1	1
3	GM14511	O-ring	1	1	1
4	GM21839	Packing, oil cooler	1	1	1
5	GM21614	O-ring	1	1	1
6	GM22114	Bolt w/washer	18	18	18
7	GM15175	Washer	18	18	
8	GM16028	Connector	1	1	1

silverhorn.co.uk

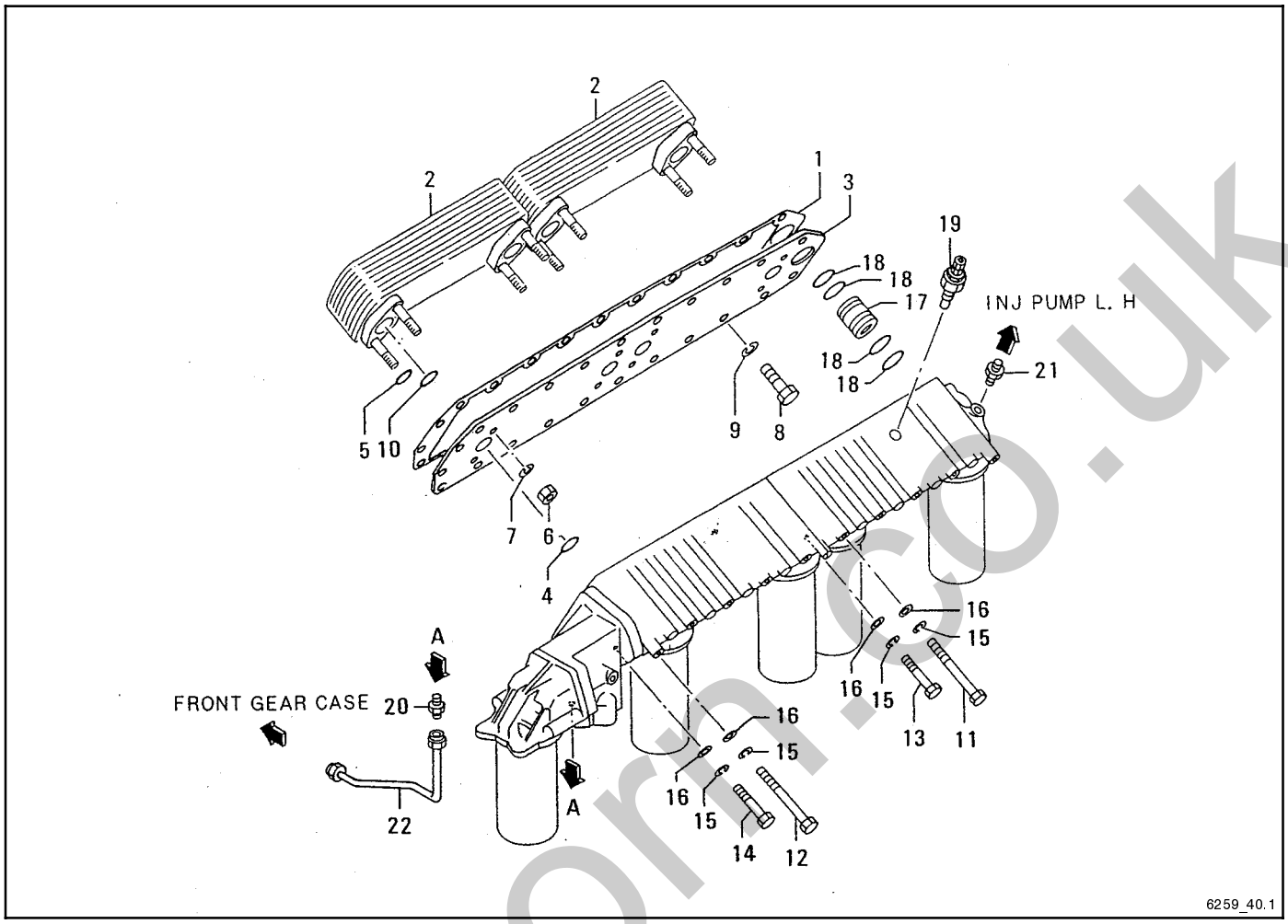

Item	Part No.	Description	Qty. Var. 1	Qty. Var. 2
1	GM31681	Gasket, oil cooler	1	1
2	GM21840	Element, oil cooler	2	
2	GM37107	Element, oil cooler		2
3	GM21842	Plate, oil cooler	1	
3	GM37108	Plate, oil cooler		1
4	GM14515	O-ring	4	4
5	GM21610	O-ring	8	8
6	GM22118	Nut, self-locking	8	8
7	GM15179	Washer, spring	8	8
8	GM15107	Bolt	3	3
9	GM15180	Washer, spring	3	3
10	GM14515	O-ring	4	4
11	GM16043	Bolt	8	8
12	GM22129	Bolt	2	2
13	GM15120	Bolt	8	8
14	GM22096	Bolt	2	2
15	GM15180	Washer, spring	20	20
16	GM15175	Washer	20	20
17	GM21846	Coupling	1	1
18	GM21616	O-ring	2	2
19	GM21722	Alarm, oil filter	1	1
20	GM15230	Connector	1	1
21	GM16027	Connector	1	1
22	GM21835	Pipe, drain	1	1

silverhorn.co.uk

Group 40.1: Oil Filter, continued

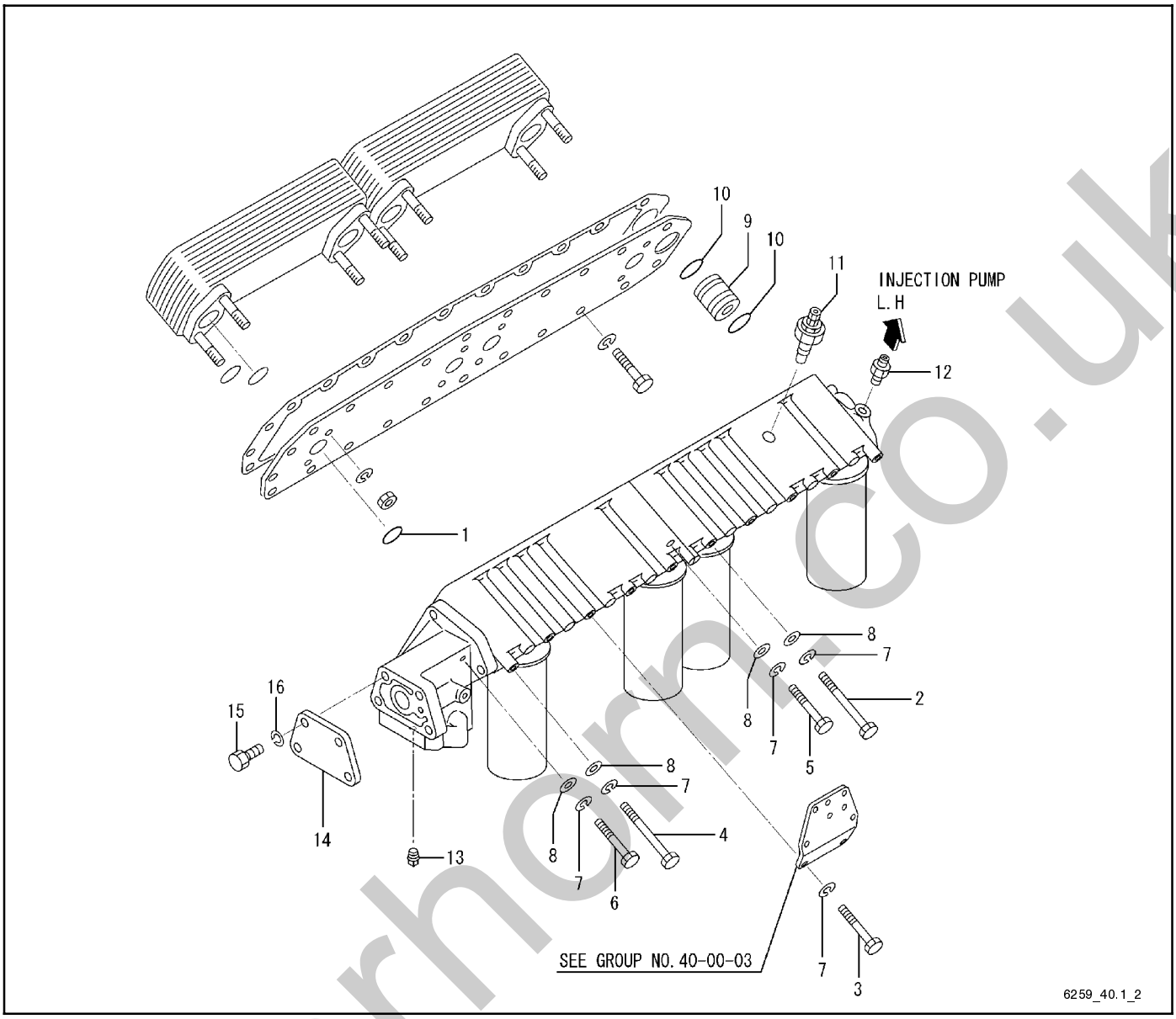

Item	Part No.	Description	Qty. Var. 3
1	GM14515	O-ring	4
2	GM16043	Bolt	6
3	GM57663	Bolt	2
4	GM22129	Bolt	2
5	GM15120	Bolt	8
6	GM22096	Bolt	2
7	GM15180	Washer, spring	20
8	GM15175	Washer	18
9	GM21846	Coupling	1
10	GM21616	O-ring	2
11	GM21722	Alarm, oil filter	1
12	GM16028	Connector	1
12	GM16027	Connector	1
13	GM15246	Plug, tapered	1
14	GM57664	Cover, filter	1
15	GM15955	Bolt	4
16	GM15179	Washer, spring	4

silverhorn.co.uk

Group 40.2: Oil Filter Assembly

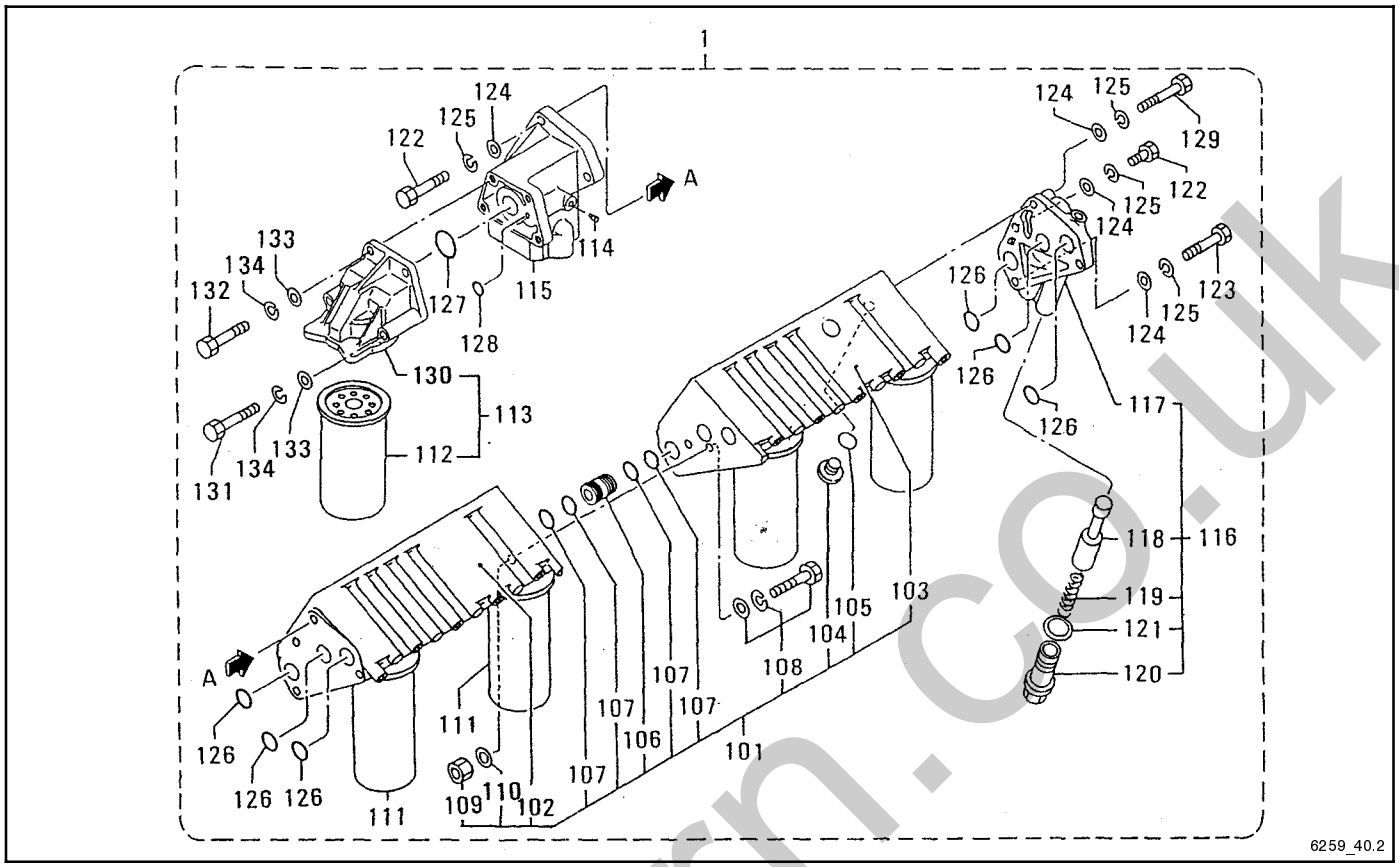

Item	Part No.	Description	Qty. Var. 1	2	3
1	GM21851	Oil filter assembly	1		
1	GM37109	Oil filter assembly		1	1
101	GM21852	Bracket assembly	1		
101	GM37110	Bracket assembly		1	1
102	—	Not sold separately	1	1	1
103	—	Not sold separately	1	1	1
104	GM21849	Plug	5		
104	GM37242	Plug		5	5
105	GM21850	O-ring	5		
105	GM37112	O-ring		5	5
106	GM21847	Coupling, filter	3	3	3
107	GM15211	O-ring	12		
107	GM21616	O-ring		12	12
108	GM22110	Bolt	2		
108	GM36646	Bolt		2	2
109	GM15163	Nut	2	2	2
110	GM15173	Washer, plain	2	4	4
111	GM13949	Filter, oil*	4		
111	GM38852	Filter, oil*	4		
111	GM13949	Filter, oil		4	
111	GM38852	Filter, oil			4
112	GM13950	Filter, oil	1	1	1
113	GM21848	Bypass filter assembly	1	1	1
114	GM15242	Plug, tapered	3	3	
115	GM21858	Adapter	1		
115	GM37113	Adapter		1	
116	GM21853	Adapter assembly	1	1	1
117	—	Not sold separately	1	1	1

Item	Part No.	Description	Qty. Var. 1	2	3
118	GM21854	Valve, oil relief	1	1	1
119	GM21855	Spring	1	1	1
120	GM21856	Cap	1	1	1
121	GM21857	Packing	1	1	1
122	GM15103	Bolt	6		
122	GM15110	Bolt		6	3
123	GM15116	Bolt	1	1	1
124	GM15175	Washer	2	2	1
125	GM15180	Washer, spring	2	2	2
126	GM16011	O-ring	6		
126	GM21617	O-ring		6	6
127	GM15211	O-ring	1		
127	GM21616	O-ring		1	
128	GM15197	O-ring	1		
128	GM34228	O-ring		1	
129	GM15119	Bolt	1	1	1
130	—	Not sold separately	1		
130	GM37114	Bracket assembly		1	
131	GM22094	Bolt	2		
131	GM37115	Bolt		2	
132	GM21147	Bolt	2		
132	GM15956	Bolt		2	
133	GM15174	Washer, plain	10	4	
134	GM15179	Washer, spring	10	4	

* Variation 1:
Engine serial number below 18080: use GM13949
Engine serial number 18080 and up: use GM38852.

silverhorn.co.uk

Group 40.3: Bypass Filter Piping

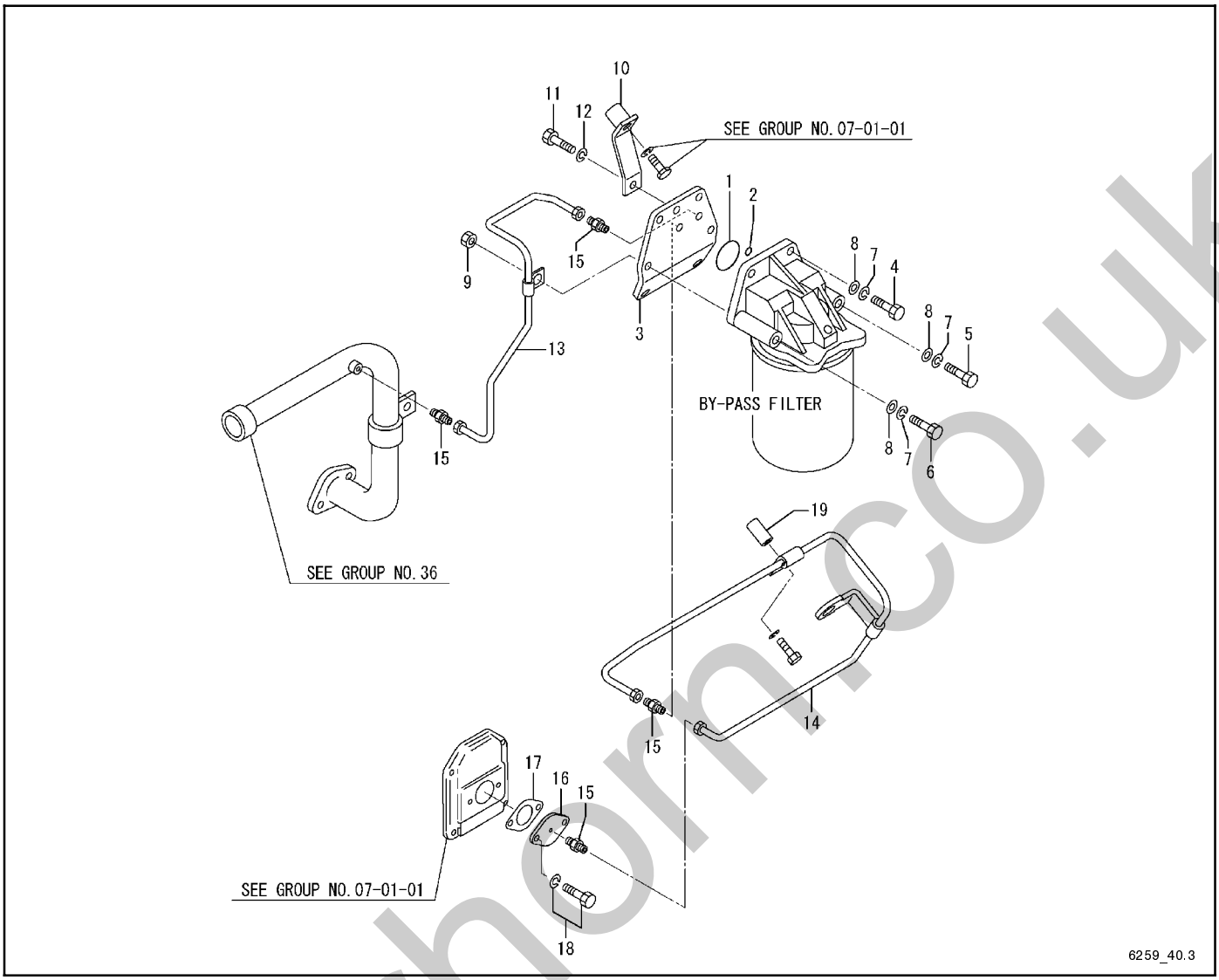

Item	Part No.	Description	Qty. Var. 1
1	GM21616	O-ring	1
2	GM34228	O-ring	1
3	GM57665	Bracket, b/p filter	1
4	GM15955	Bolt	2
5	GM22094	Bolt	1
6	GM57666	Bolt	1
7	GM15179	Washer, spring	4
8	GM15174	Washer, plain	4
9	GM15164	Nut	1
10	GM57667	Stay, bracket	1
11	GM57668	Bolt	1
12	GM15179	Washer, spring	1
13	GM57669	Pipe, oil	1
14	GM57670	Pipe, oil	1
15	GM15230	Connector	4
16	GM31321	Cover	1
17	GM21668	Gasket	1
18	GM15141	Bolt	2
19	GM57671	Spacer	1

silverhorn.co.uk

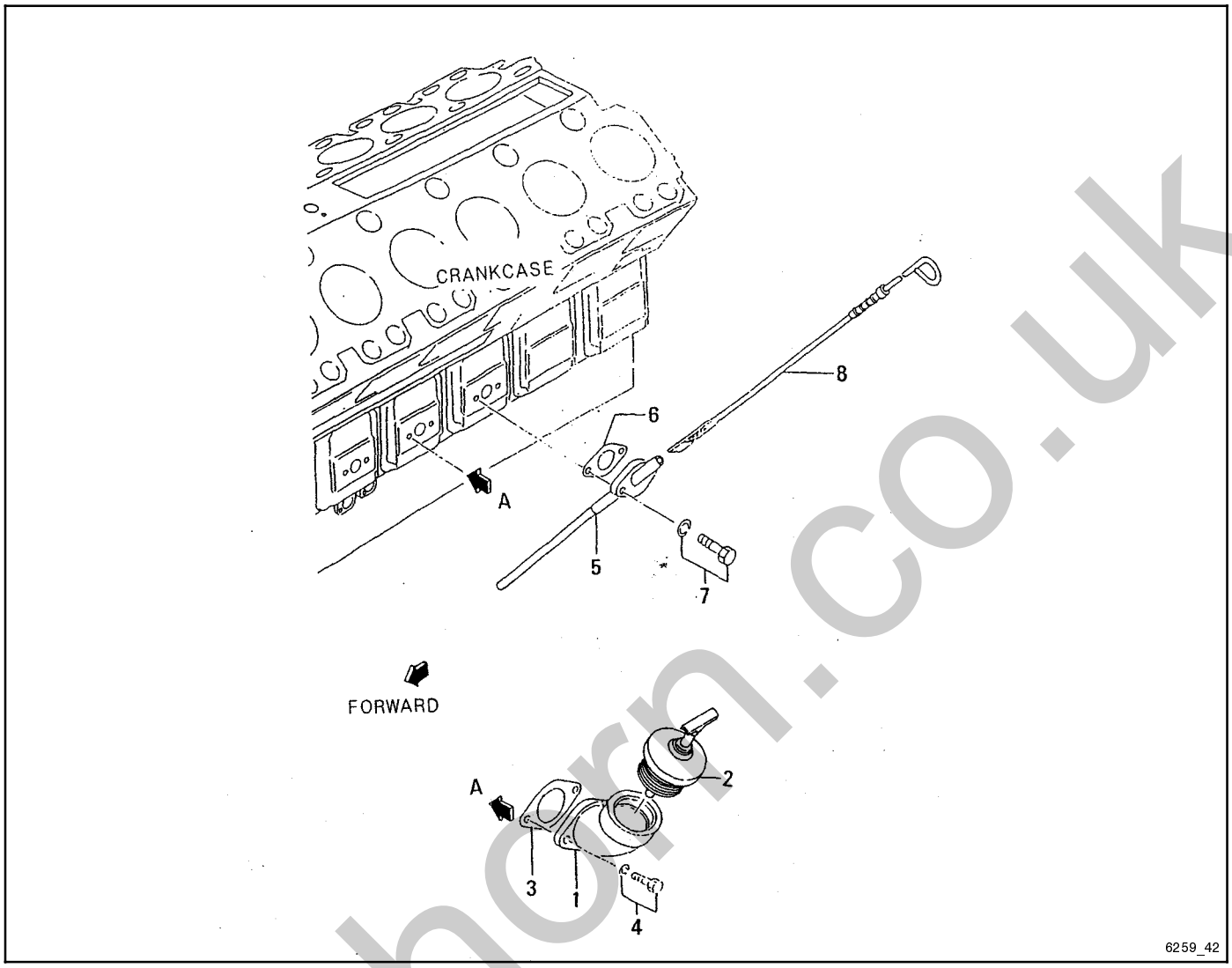

Item	Part No.	Description	Qty. Var. 1
1	GM14602	Elbow	1
2	GM14633	Cap, oil	1
3	GM21668	Gasket	1
4	GM15141	Bolt w/washer	2
5	GM31682	Guide, dipstick	1
6	GM21668	Gasket	1
7	GM15140	Bolt w/washer	2
8	GM31683	Dipstick	1

silverhorn.co.uk

Group 43: Breather

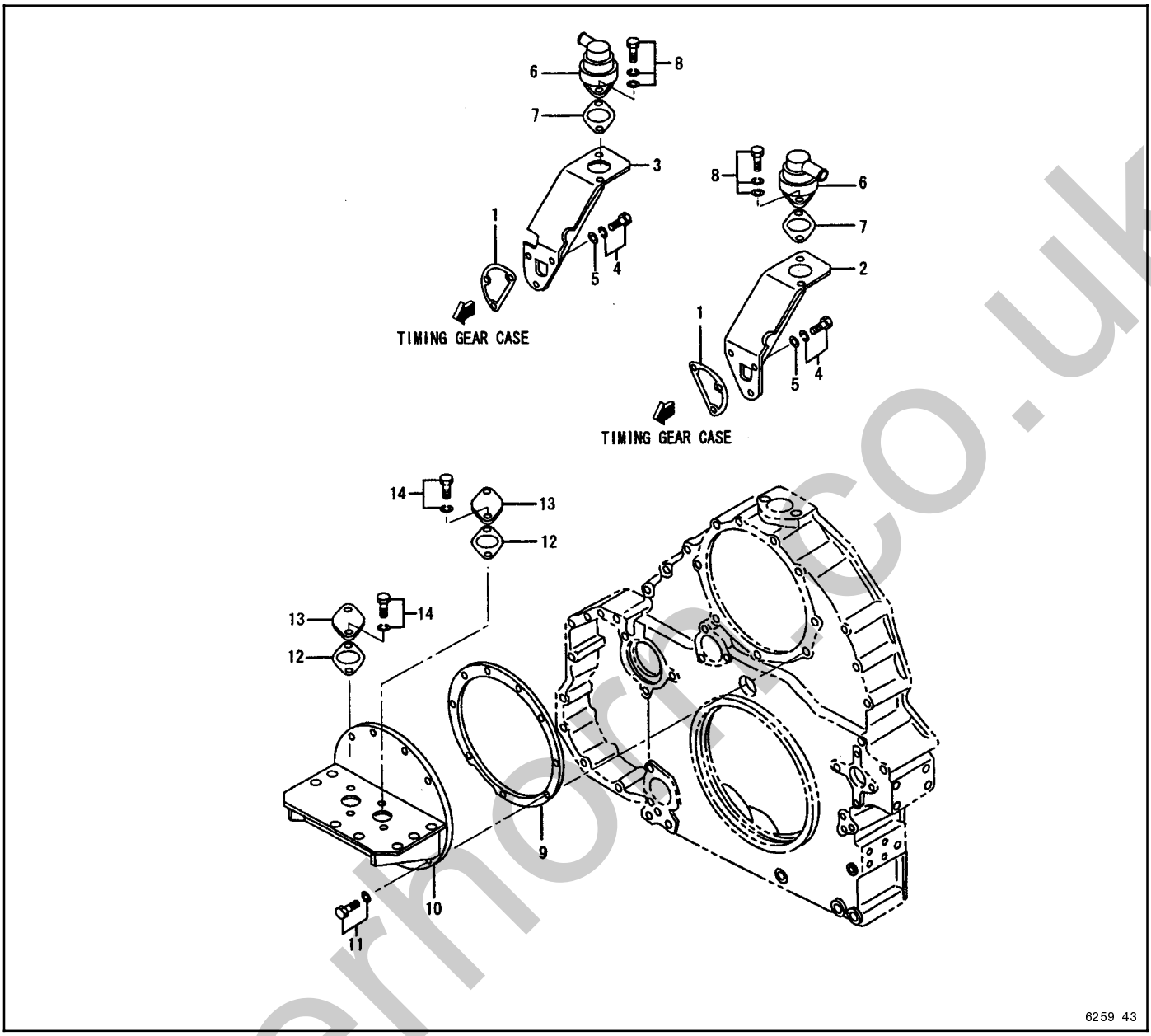

Item	Part No.	Description	Qty. Var. 1	2	3
1	GM21762	Gasket	2	2	2
2	GM21859	Pipe, breather, left side	1	1	1
3	GM21860	Pipe, breather, right side	1	1	1
4	GM15149	Bolt w/washer	6	6	6
5	GM15175	Washer	6	6	6
6	GM21681	Breather	2	2	2
7	GM22032	Packing	2		
7	GM37118	Packing		2	2
8	GM15155	Bolt w/washer	4	4	4
9	GM21862	Gasket, breather	1	1	
10	GM21861	Case, breather	1		
10	GM37119	Case		1	
11	GM15151	Bolt w/washer	9	9	
12	GM22032	Packing	2	2	
13	GM21863	Cover	2	2	
14	GM15141	Bolt w/washer	4	4	

silvermorpeco.uk

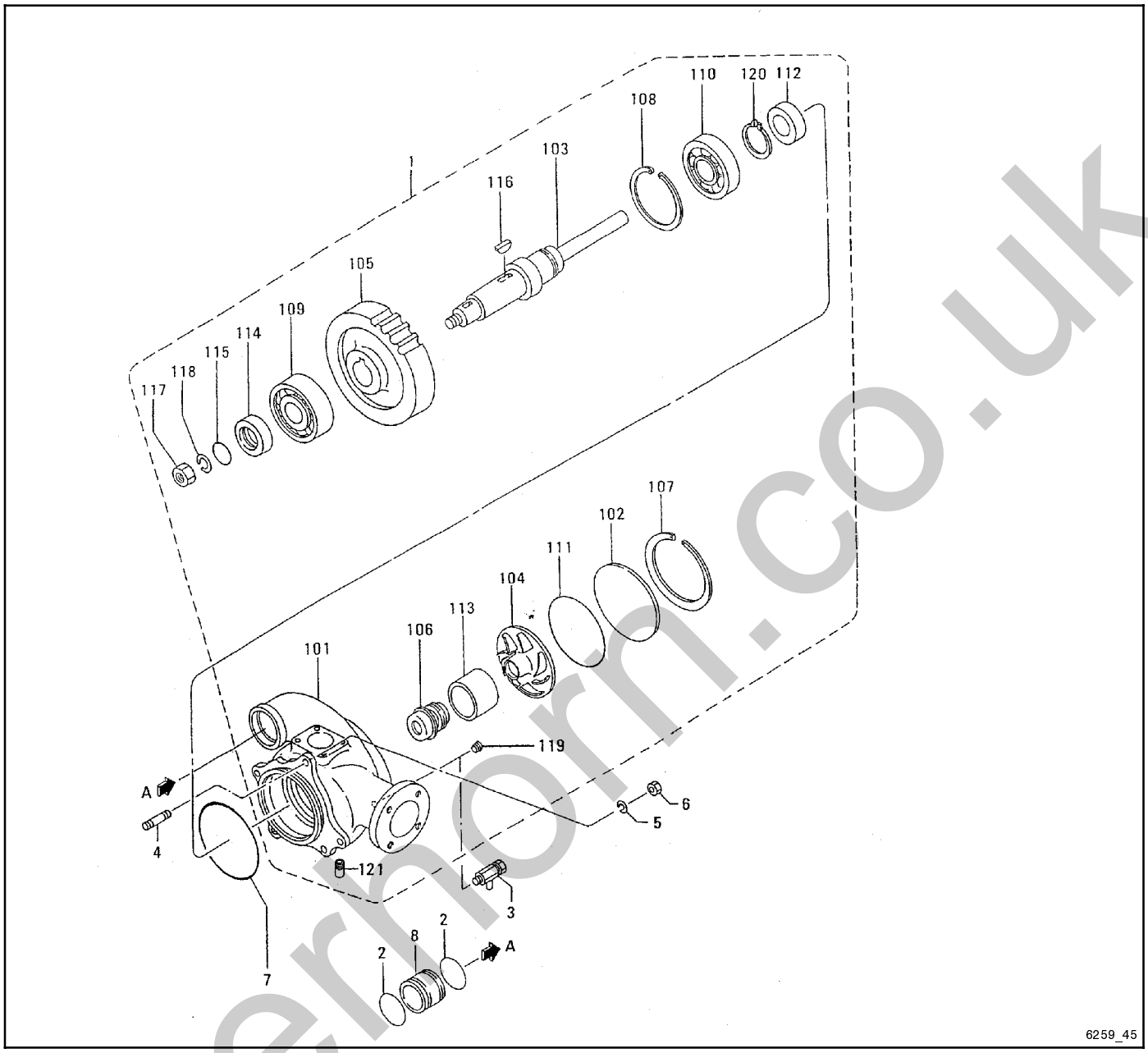

Item	Part No.	Description	Qty. Var. 1	Qty. Var. 2
1	GM31684	Water pump assembly	1	
1	GM37120	Water pump assembly		1
101	GM21584	Case, water pump	1	
101	—	Not sold separately		1
102	GM14927	Cover	1	1
103	GM14982	Shaft, water pump	1	1
104	GM14983	Impeller	1	1
105	GM14467	Gear, head	1	1
106	GM31685	Seal, unit	1	1
107	GM14928	Ring, snap	1	1
108	GM15223	Ring, snap	1	1
109	GM15259	Bearing, ball	1	1
110	GM15260	Bearing, ball	1	1
111	GM15210	O-ring	1	1
112	GM14921	Seal, oil	1	1
113	GM14980	Ring	1	1
114	GM14981	Sleeve	1	1

Item	Part No.	Description	Qty. Var. 1	Qty. Var. 2
115	GM15213	O-ring	1	1
116	GM15192	Key, woodruff	1	1
117	GM15988	Nut, jam	1	1
118	GM15995	Washer, spring	1	1
119	GM15242	Plug, tapered	1	1
120	GM15219	Ring, snap	1	1
121	GM21653	Pipe	1	
121	GM37122	Pipe		1
2	GM15208	O-ring	2	2
3	GM21660	Valve, drain	1	
3	GM57237	Valve, drain		1
4	GM14537	Stud	3	3
5	GM15180	Washer, spring	3	3
6	GM15165	Nut	3	3
7	GM21625	O-ring	1	1
8	GM14985	Coupling	1	1

silvernorn.co.uk

Group 46.1: Thermostat and Covers

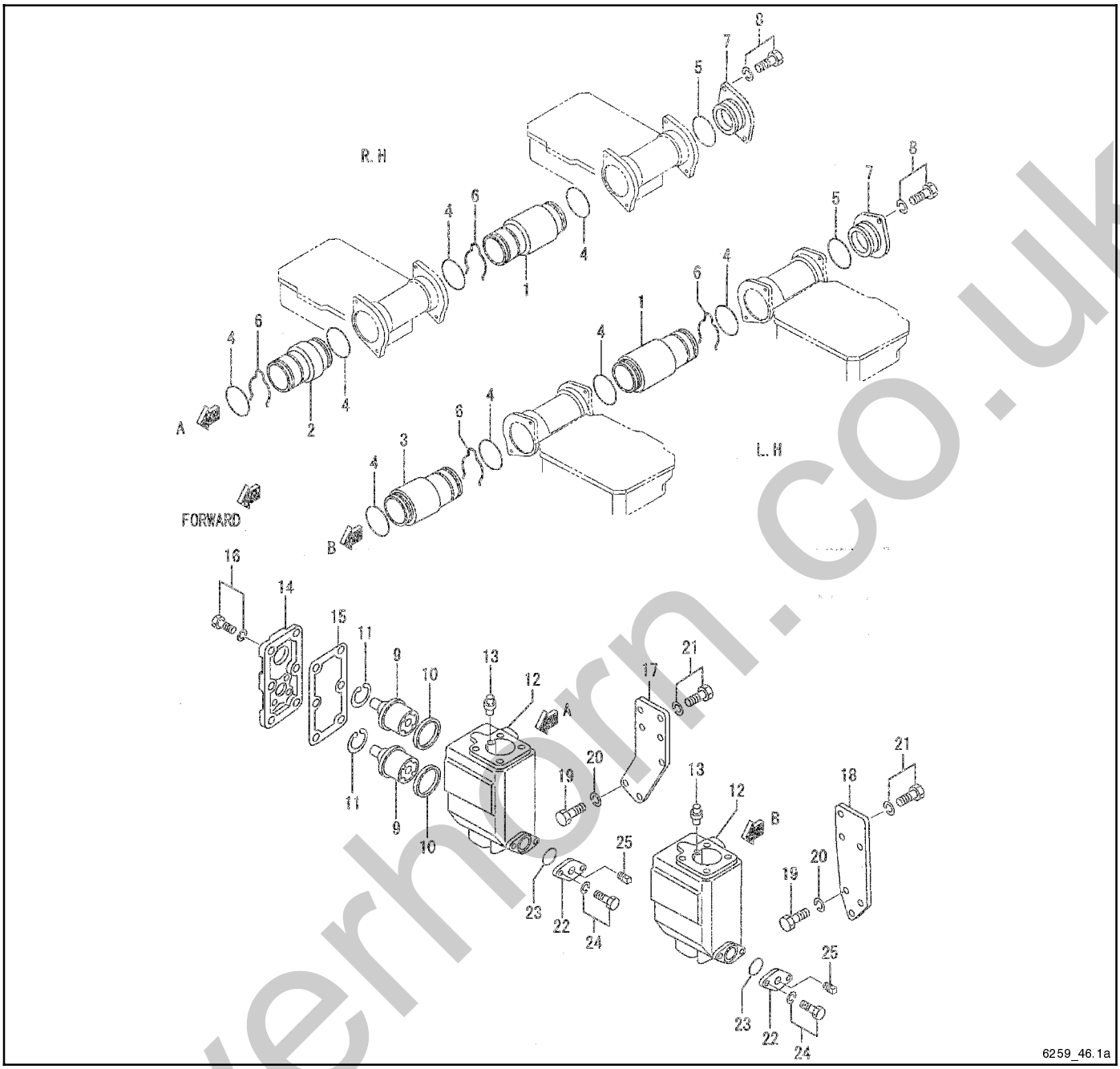

Item	Part No.	Description	Qty. Var. 1	2	3
1	GM21866	Connector	14	14	14
2	GM21867	Connector, right hand	1	1	1
3	GM21868	Connector, left hand	1	1	1
4	GM21723	O-ring	32	32	32
5	GM21723	O-ring	2		
5	GM31388	O-ring		2	2
6	GM15772	Ring, snap	16	16	16
7	GM31389	Cover	2	2	2
8	GM15140	Bolt w/washer	2	2	2
9	GM31390	Thermostat	4	4	4
10	GM15764	Seal	4	4	4
11	GM15763	Ring, snap	4	4	4
12	GM21729	Case, thermostat	2	2	2
13	GM15588	Valve	2	2	2

Item	Part No.	Description	Qty. Var. 1	2	3
14	GM21728	Cover	2	2	2
15	GM31391	Packing	2	2	2
16	GM15142	Bolt w/washer	12	12	12
17	GM21873	Bracket, thermostat	1	1	1
18	GM21874	Bracket, thermostat	1	1	
18	GM57673	Bracket, thermostat			1
19	GM15963	Bolt	6	6	6
20	GM15182	Washer, spring	6	6	6
21	GM15143	Bolt w/washer	8	8	8
22	GM21726	Cover	2		
22	GM37243	Cover		2	2
23	GM16005	O-ring	2	2	2
24	GM15142	Bolt w/washer	4	4	4
25	GM15247	Plug, tapered		2	2

silverhorn.co.uk

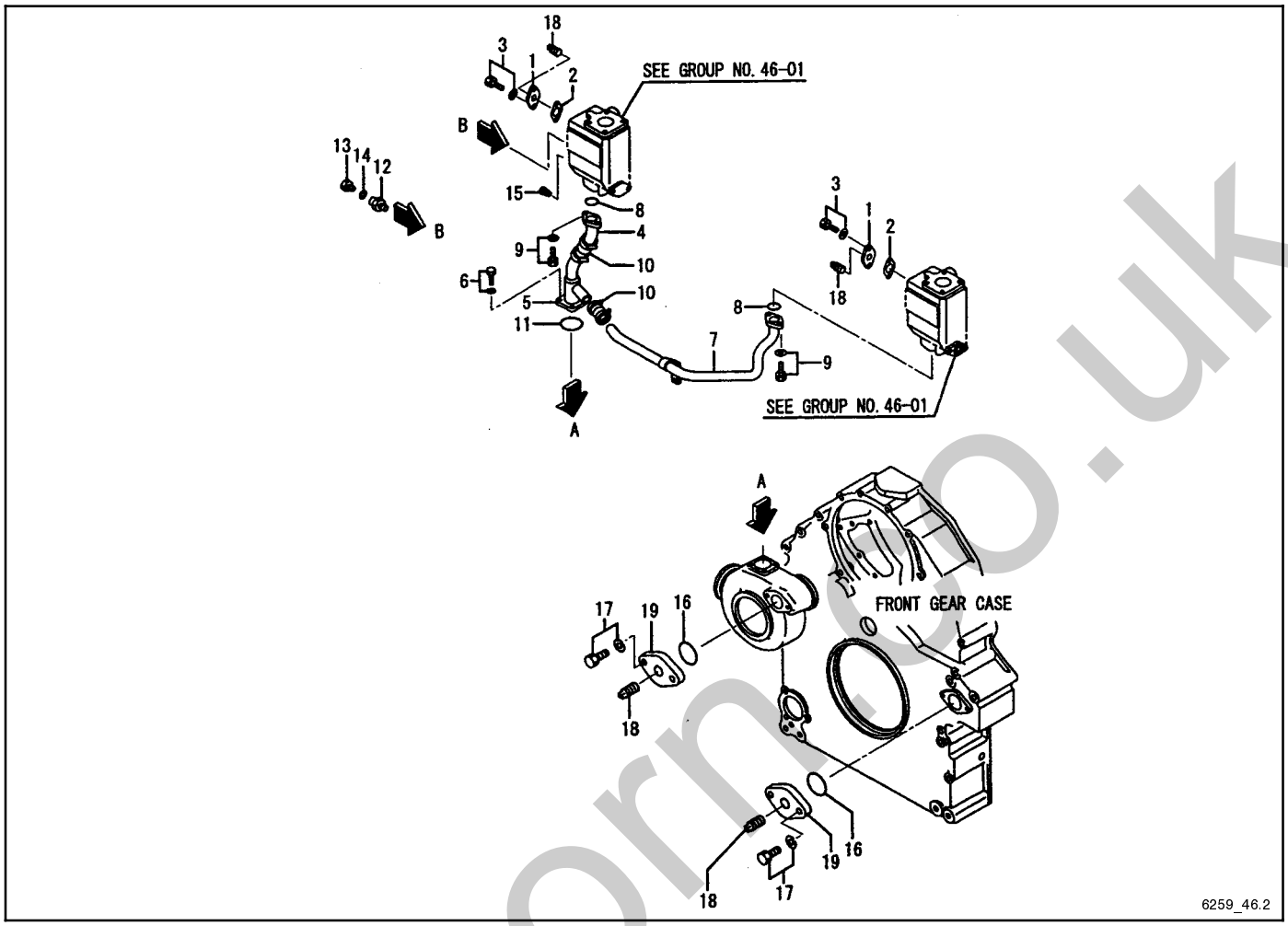

Item	Part No.	Description	Qty. Var. 1
1	GM22033	Flange	2
2	GM31397	Gasket	2
3	GM15151	Bolt w/washer	4
4	GM21875	Pipe	1
5	GM21870	Pipe	1
6	GM15141	Bolt w/washer	4
7	GM21869	Pipe, bypass	1
8	GM16005	O-ring	2
9	GM15141	Bolt w/washer	4
10	GM21604	Coupling	2
11	GM15200	O-ring	1
12	GM15857	Connector	1
13	GM15238	Plug, screw	1
14	GM14531	Washer, sealing	1
15	GM16033	Plug	6
16	GM15204	O-ring	2
17	GM22108	Bolt w/washer	4
18	GM15247	Plug, tapered	4
19	GM14471	Cover	2

silverhorne.co.uk

Group 46.2: Cooling System, continued

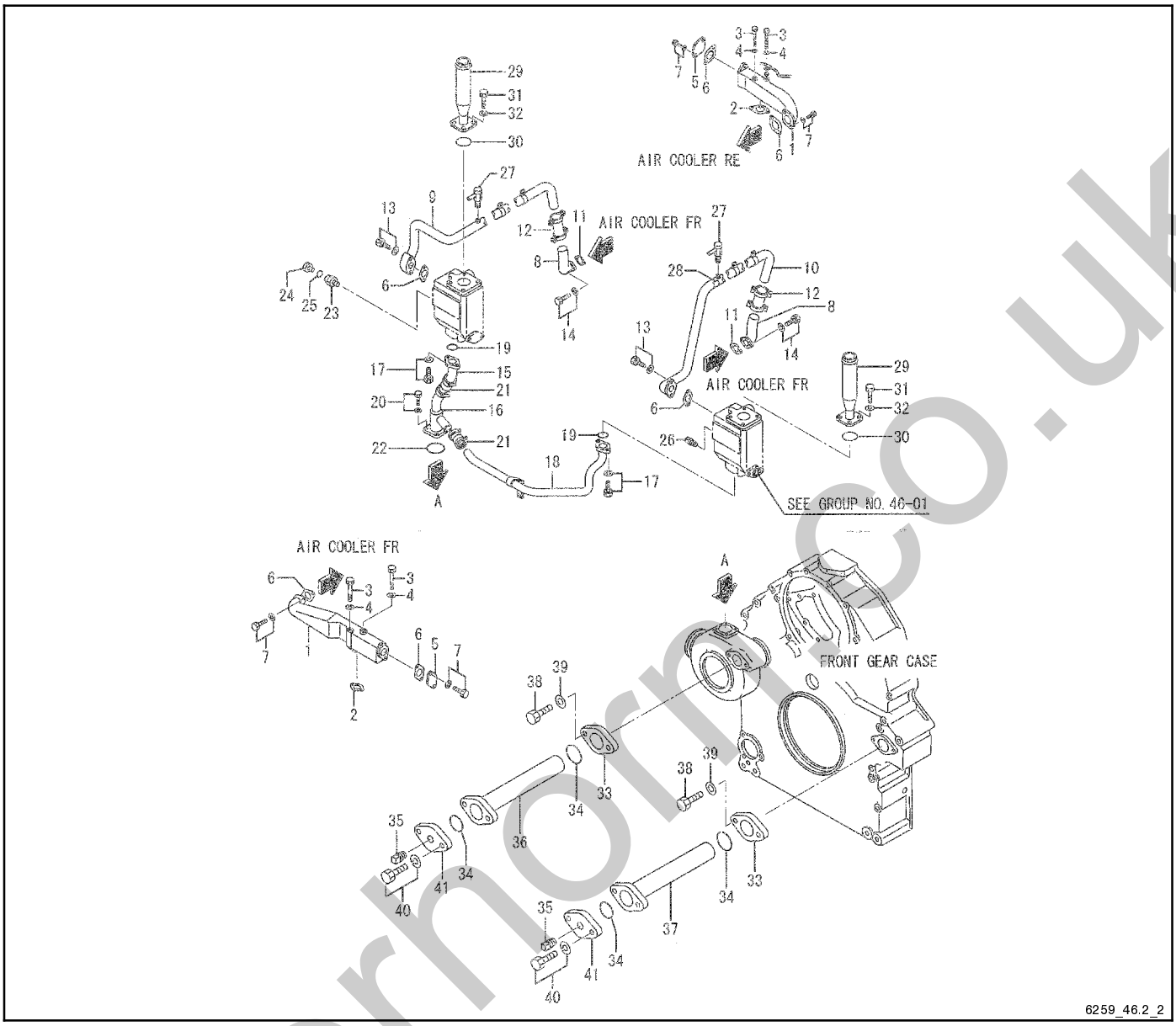

Item	Part No.	Description	Qty. Var. 2
1	GM37123	Connector, water	2
2	GM21667	Packing	2
3	GM15121	Bolt	4
4	GM15180	Washer, spring	4
5	GM14627	Cover	2
6	GM31397	Gasket	6
7	GM15151	Bolt w/washer	8
8	GM37244	Pipe, water	2
9	GM37245	Pipe, water	1
10	GM37246	Pipe, water	1
11	GM31397	Gasket	2
12	GM37247	Coupling	2
13	GM15151	Bolt w/washer	4
14	GM15140	Bolt w/washer	4
15	GM21875	Pipe	1
16	GM21870	Pipe	1
17	GM15141	Bolt w/washer	4
18	GM21869	Pipe, bypass	1
19	GM16005	O-ring	2
20	GM15141	Bolt w/washer	4
21	GM21604	Coupling	2

Item	Part No.	Description	Qty. Var. 2
22	GM15200	O-ring	1
23	GM15857	Connector	1
24	GM15238	Plug, screw	1
25	GM14531	Washer, sealing	1
26	GM16033	Plug	7
27	GM21660	Valve, drain	2
28	GM37248	Label, caution	1
29	GM37125	Pipe, water	2
30	GM15205	O-ring	2
31	GM21147	Bolt	8
32	GM15179	Washer, spring	8
33	GM14471	Cover	2
34	GM15204	O-ring	4
35	GM15247	Plug, tapered	2
36	GM21871	Connector	1
37	GM21872	Connector	1
38	GM15108	Bolt	4
39	GM15180	Washer, spring	4
40	GM15142	Bolt w/washer	4
41	GM37243	Cover	2

silvernorm.co.uk

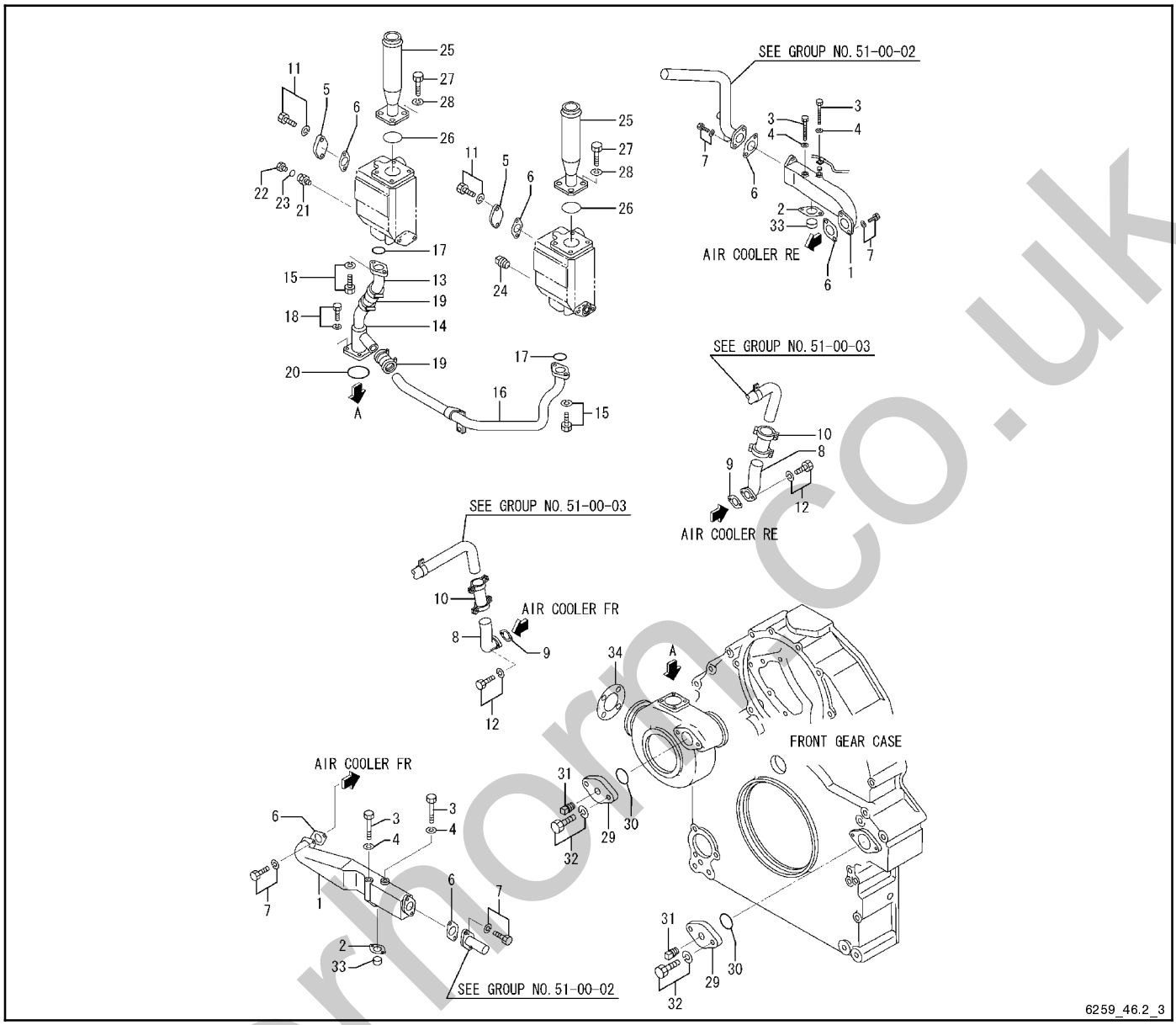

Item	Part No.	Description	Qty. Var. 3
1	GM37123	Connector, water	2
2	GM21667	Packing	2
3	GM15121	Bolt	4
4	GM15180	Washer, spring	4
5	GM14627	Cover	2
6	GM31397	Gasket	6
7	GM15151	Bolt	8
8	GM37244	Pipe, water	2
9	GM31397	Gasket	2
10	GM37247	Coupling	2
11	GM15151	Bolt	4
12	GM15140	Bolt	4
13	GM21875	Pipe	1
14	GM21870	Pipe	1
15	GM15141	Bolt	4
16	GM21869	Pipe, bypass	1
17	GM16005	O-ring	2

Item	Part No.	Description	Qty. Var. 3
18	GM15141	Bolt	4
19	GM21604	Coupling	2
20	GM15200	O-ring	1
21	GM15857	Connector	1
22	GM15238	Plug, screw	1
23	GM14531	Washer, sealing	1
24	GM16033	Plug	7
25	GM37125	Pipe, water	2
26	GM15205	O-ring	2
27	GM21147	Bolt	8
28	GM15179	Washer, spring	1
29	GM14471	Cover	2
30	GM15204	O-ring	2
31	GM15247	Plug, tapered	2
32	GM15142	Bolt w/washer	4
33	GM15519	Cap, sealing	2
34	GM34232	Packing	1

silverhorn.co.uk

Group 47.1: Radiator

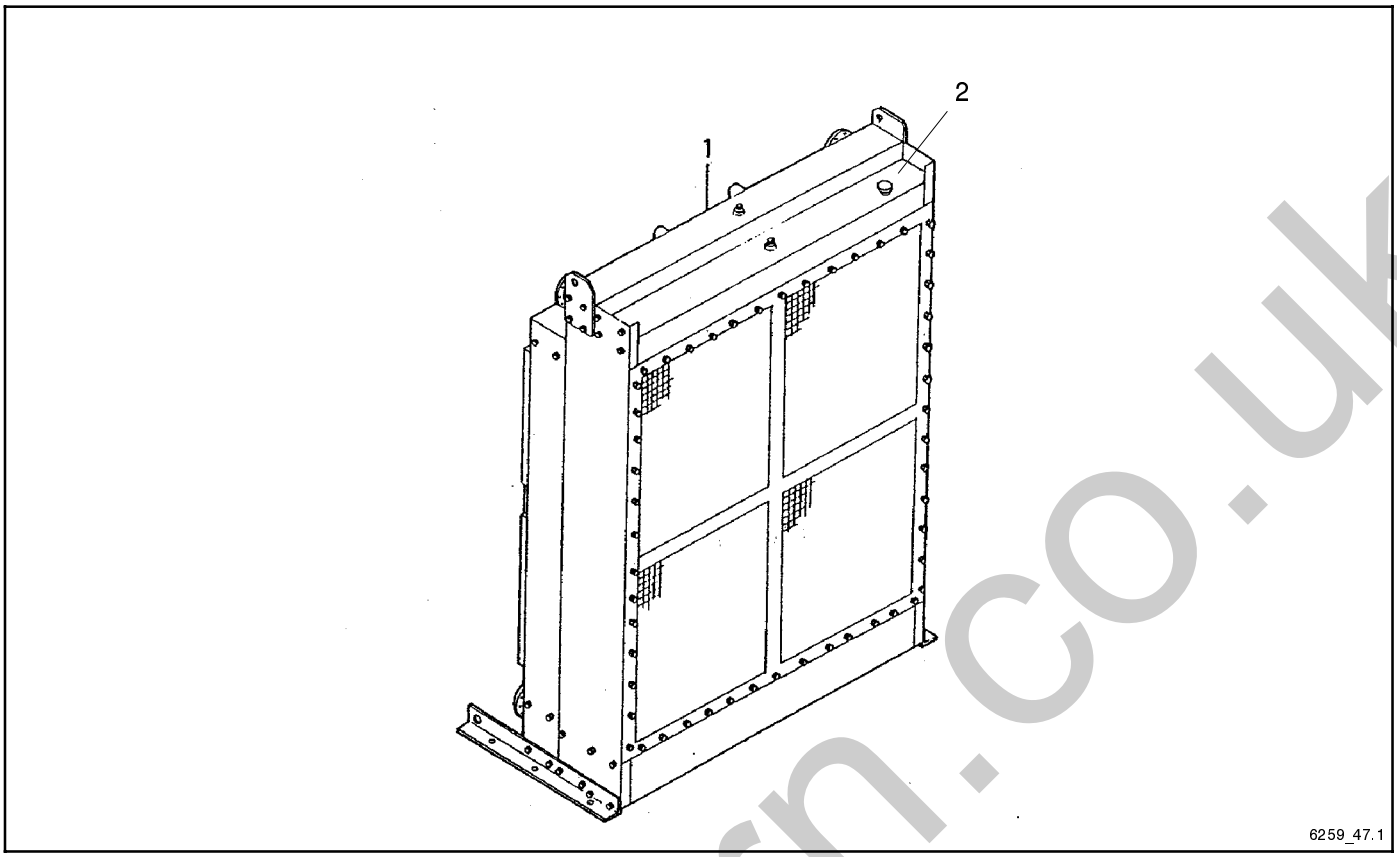

Item	Part No.	Description	Qty. Var. 1
1	GM21991	Radiator assembly	1
2	GM38421	Cap, radiator	1

silverhorn.co.uk

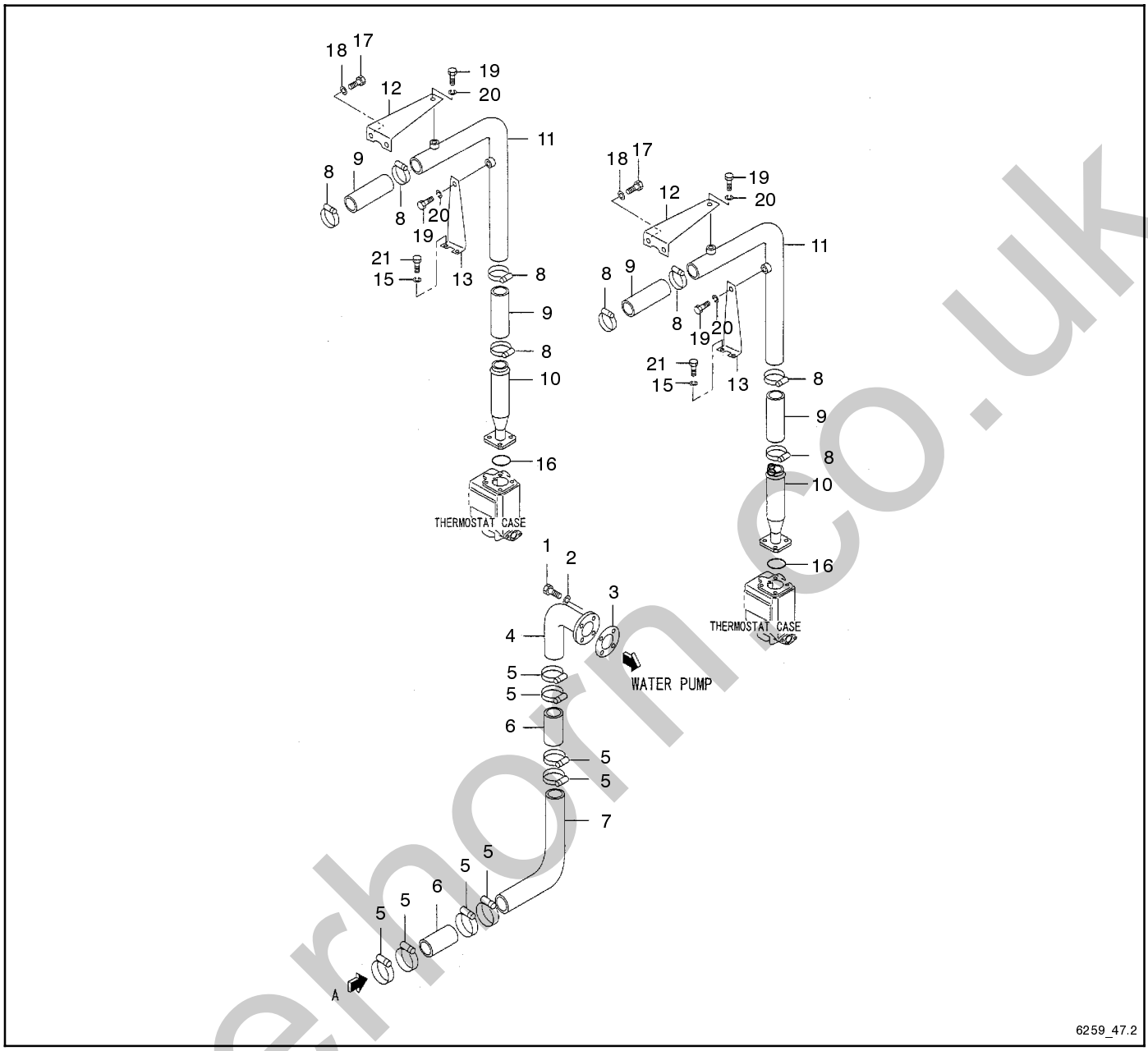

Item	Part No.	Description	Qty. Var. 1
1	GM15963	Bolt	4
2	GM15182	Washer, spring	4
3	GM21133	Gasket	1
4	GM21130	Pipe, water	1
5	GM31686	Clamp	8
6	GM21142	Hose, rubber	2
7	GM21131	Pipe, water	1
8	GM21135	Clamp	8
9	GM21150	Hose, rubber	4
10	GM22034	Pipe, water	2

Item	Part No.	Description	Qty. Var. 1
11	GM21132	Pipe, water	2
12	GM21143	Stay, pipe	2
13	GM21144	Stay, pipe	2
15	GM15179	Washer, spring	8
16	GM15205	O-ring	2
17	GM15111	Bolt	4
18	GM15180	Washer, spring	4
19	GM22091	Bolt	4
20	GM15179	Washer, spring	4
21	GM15956	Bolt	4

silverhorn.co.uk

Group 48: Fan Drive

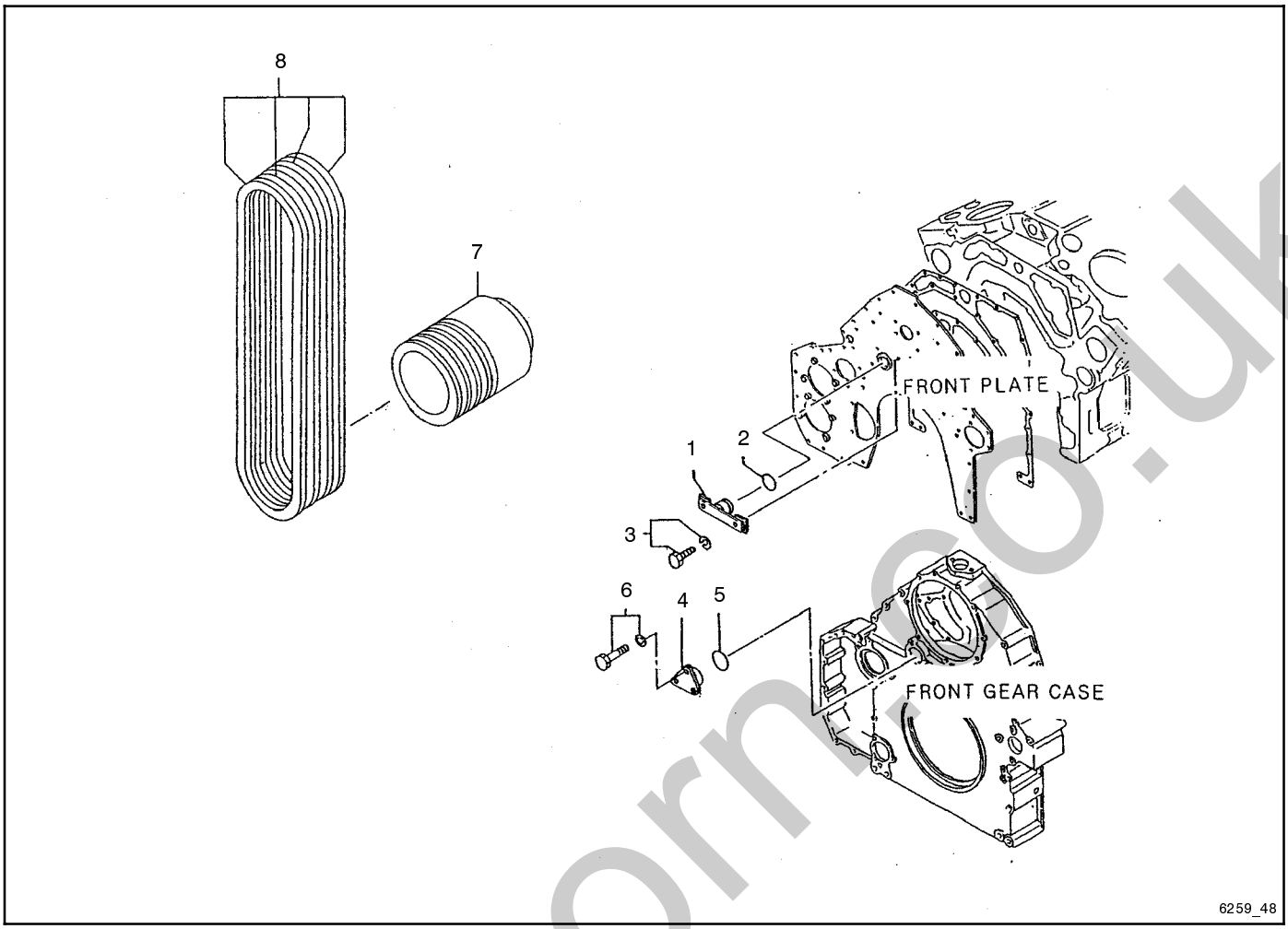

Item	Part No.	Description	Qty. Var. 1	Qty. Var. 2
1	GM21876	Plug, case	1	1
2	GM21618	O-ring	1	1
3	GM15979	Bolt w/washer	2	2
4	GM21670	Flange	1	1
5	GM14517	O-ring	1	1
6	GM15151	Bolt w/washer	3	3
7	GM21777	Pulley, crankshaft	1	
8	GM21122	V-belt, fan	1	

silverhorn.co.uk

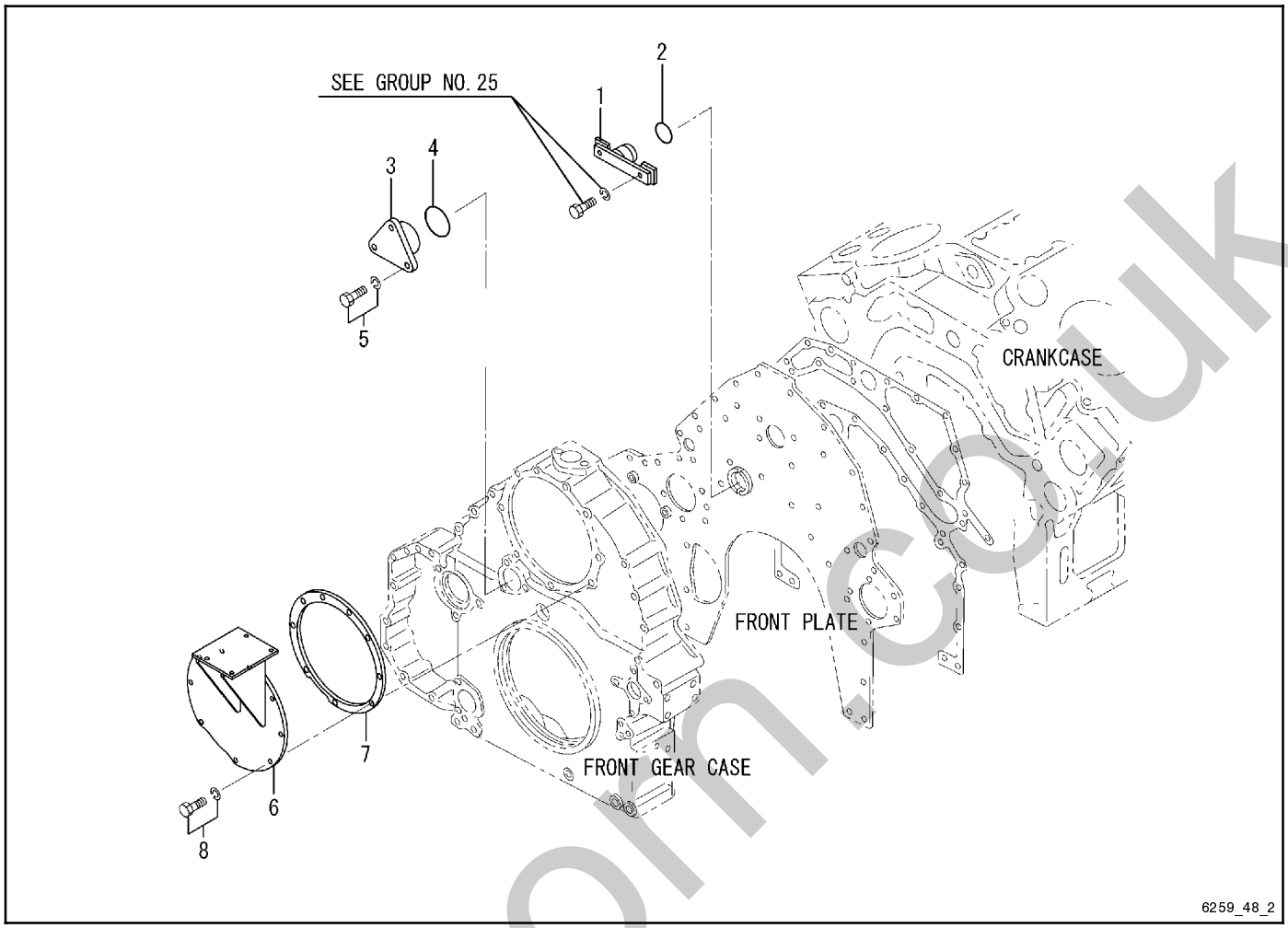

Item	Part No.	Description	Qty. Var. 3
1	GM21876	Plug, case	1
2	GM21618	O-ring	1
3	GM21670	Flange	1
4	GM14517	O-ring	1
5	GM15151	Bolt	3
6	GM57672	Bracket, thermo case	1
7	GM21862	Gasket, breather	1
8	GM15152	Bolt	9

silverhorn.co.uk

Group 51.1: Intercooler Thermostat

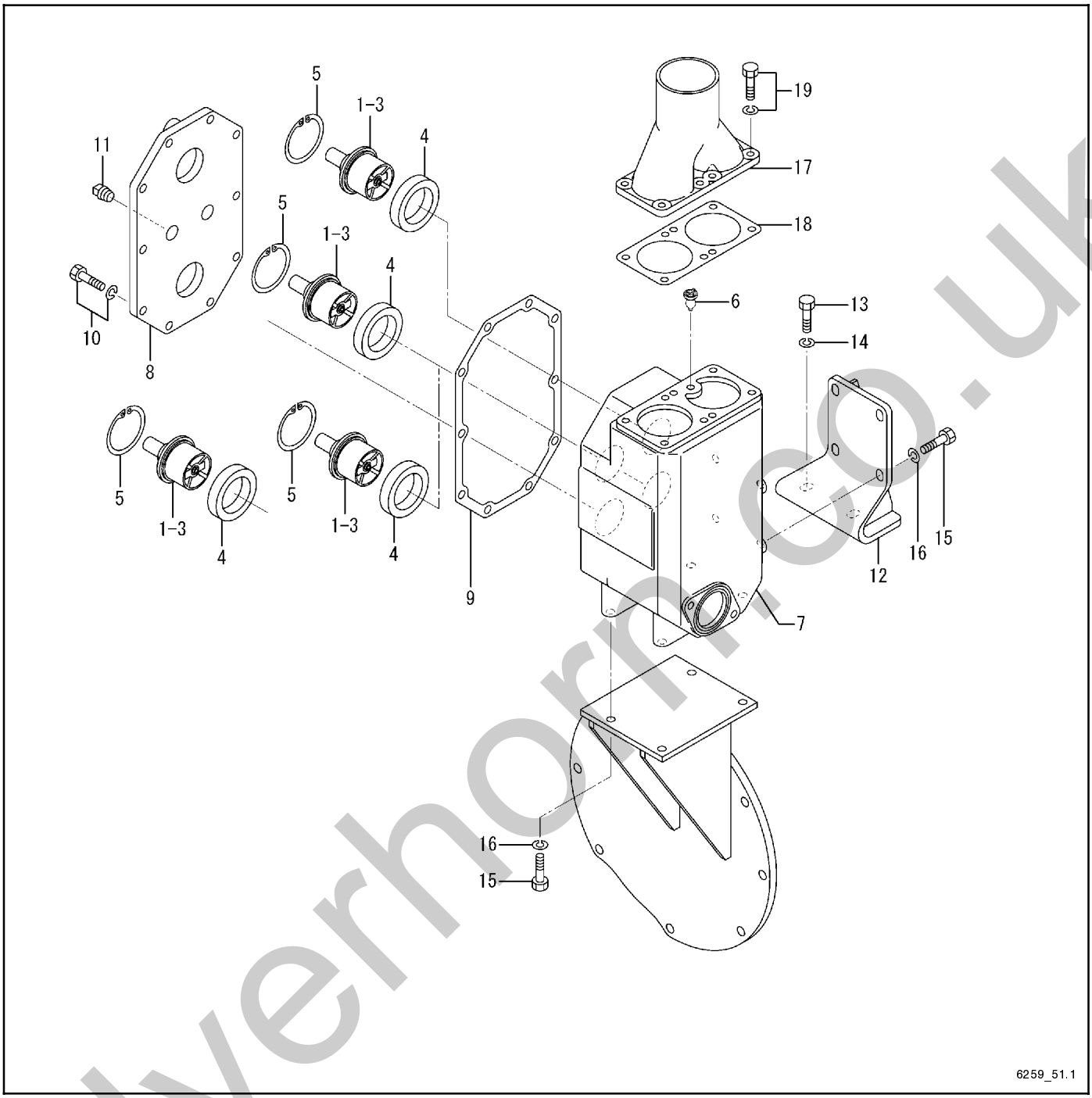

Item	Part No.	Description	Qty. Var. 1
1	GM57845	Thermostat	4
4	GM15764	Seal	4
5	GM15763	Ring, snap	4
6	GM15588	Valve	1
7	GM57846	Case, thermostat	1
8	GM57847	Cover, thermostat	1
9	GM57848	Packing, cover	1
10	GM15142	Bolt w/washer	10

Item	Part No.	Description	Qty. Var. 1
11	GM15247	Plug, tapered	2
12	GM57849	Stay, thermo case	1
13	GM15107	Bolt	2
14	GM15180	Washer, spring	2
15	GM15955	Bolt	8
16	GM15179	Washer, spring	8
17	GM34234	Cover, thermo	1
18	GM13945	Gasket, thermostat	1
19	GM15138	Bolt w/washer	8

silverhorn.co.uk

Group 51.2: Intercooler Outer Piping

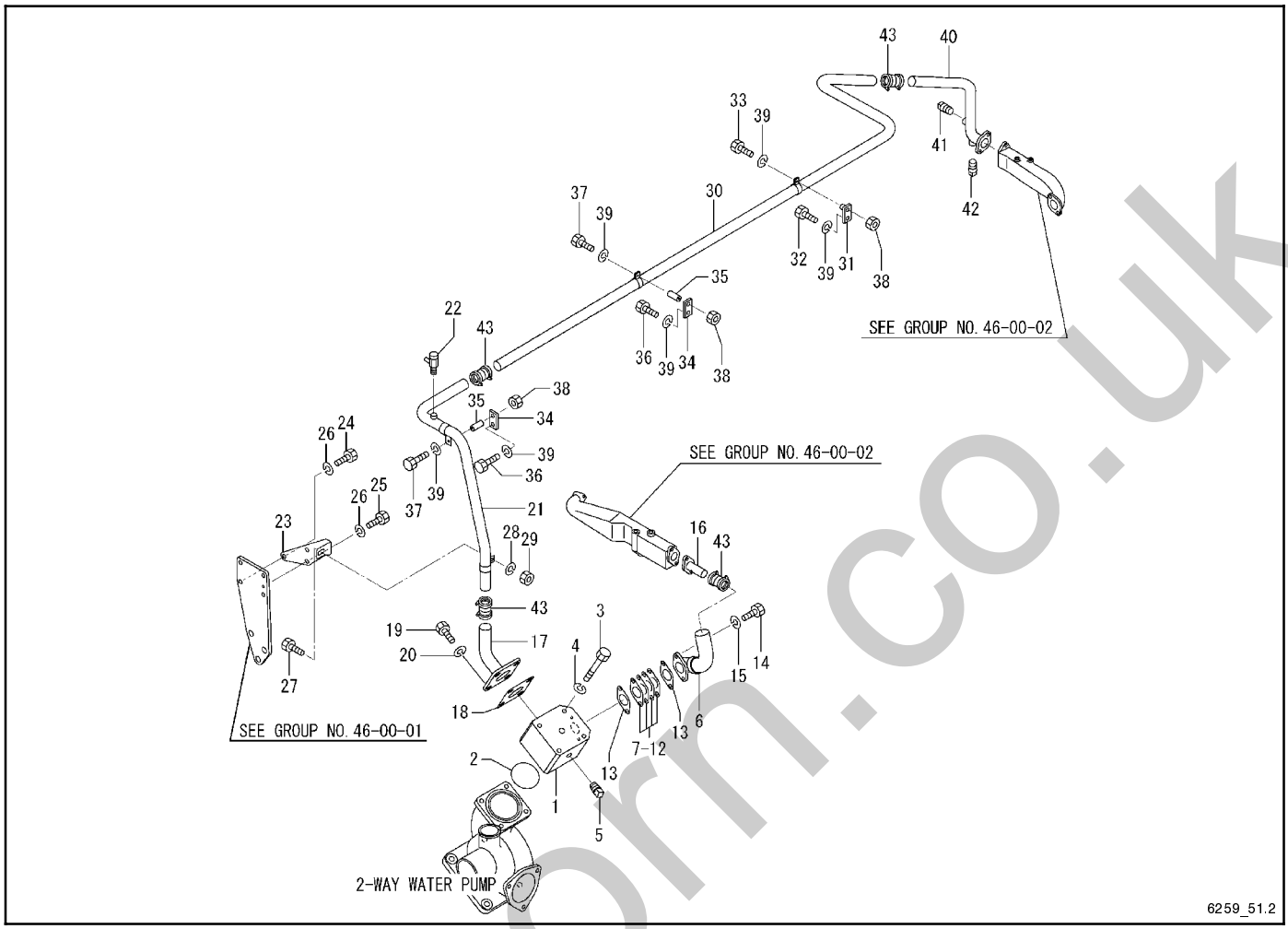

Item	Part No.	Description	Qty. Var. 1
1	GM57850	Connector, water	1
2	GM57851	O-ring	1
3	GM57852	Bolt	4
4	GM15180	Washer, spring	4
5	GM15247	Plug, tapered	2
6	GM57912	Pipe, water	1
7	GM57913	Orifice, D = 25	AR
8	GM57914	Orifice, D = 30	AR
9	GM57915	Orifice, D = 35	AR
10	GM57916	Orifice, D = 40	AR
11	GM57917	Orifice, D = 45	AR
12	GM57918	Orifice, D = 50	AR
13	GM31397	Gasket	2
14	GM15108	Bolt	2
15	GM15180	Washer, spring	2
16	GM57919	Pipe, water	1
17	GM57920	Pipe, water	1
18	GM57854	Gasket	1
19	GM15108	Bolt	4
20	GM15180	Washer, spring	4
21	GM57921	Pipe, water	1
22	GM57237	Cock, drain	1

AR As Required

Item	Part No.	Description	Qty. Var. 1
23	GM57856	Stay, pipe	1
24	GM15103	Bolt	2
25	GM15955	Bolt	1
26	GM15179	Washer, spring	3
27	GM15955	Bolt	1
28	GM15179	Washer, spring	1
29	GM15164	Nut	1
30	GM57922	Pipe, water	1
31	GM57923	Stay, clamp	1
32	GM22091	Bolt	1
33	GM15957	Bolt	1
34	GM57924	Plate	2
35	GM57671	Spacer	2
36	GM15955	Bolt	2
37	GM31430	Bolt	2
38	GM15164	Nut	3
39	GM15179	Washer, spring	6
40	GM57925	Pipe, water	1
41	GM15247	Plug, tapered	1
42	GM15246	Plug, tapered	1
43	GM37247	Coupling	4

silverhorn.co.uk

Group 51.3: Intercooler Inner Piping

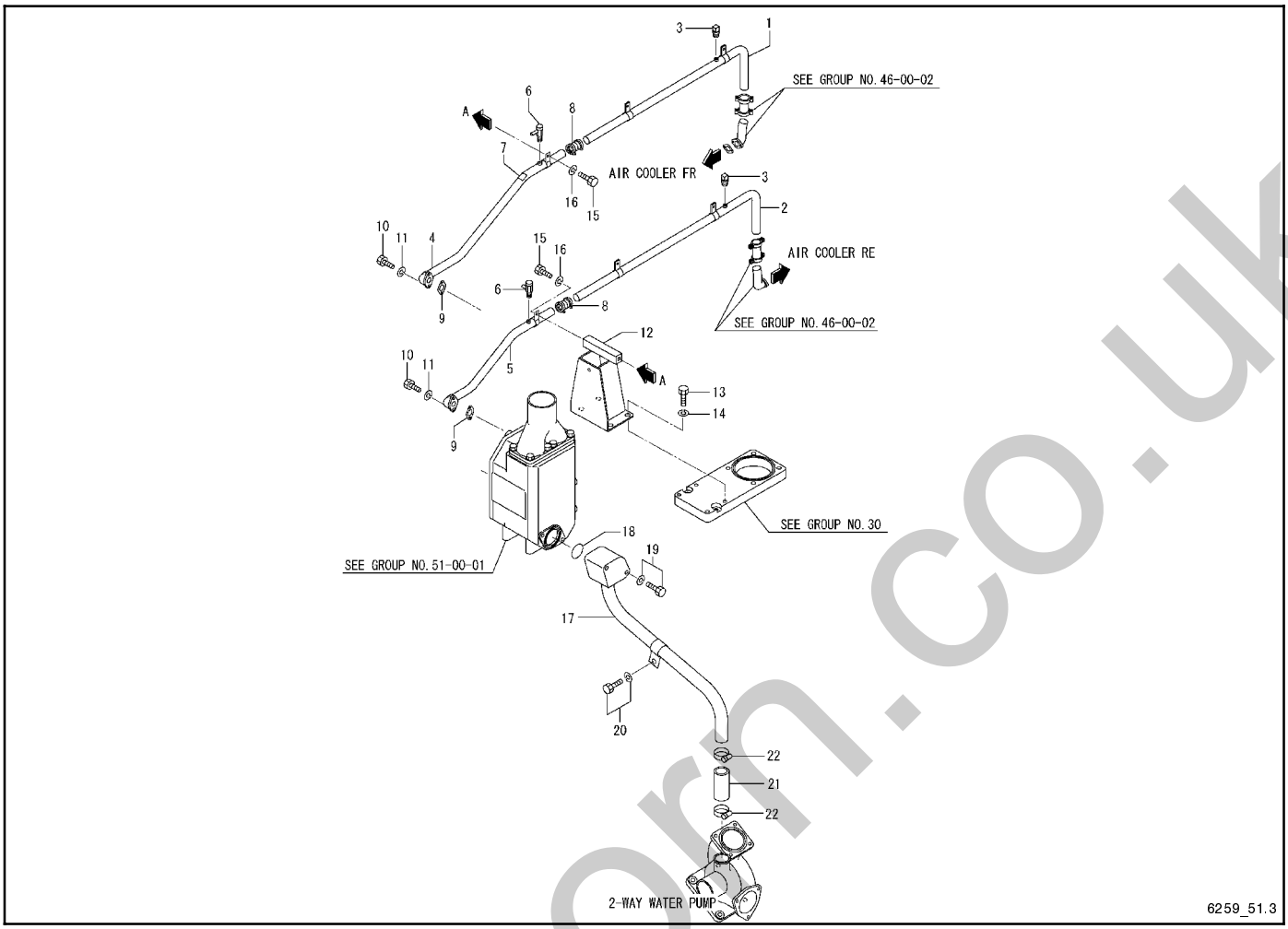

Item	Part No.	Description	Qty. Var. 1
1	GM57926	Pipe, water	1
2	GM57927	Pipe, water	1
3	GM15247	Plug, tapered	2
4	GM57928	Pipe, water	1
5	GM57929	Pipe, water	1
6	GM57237	Cock, drain	2
7	GM37248	Label, caution	1
8	GM37247	Coupling	2
9	GM31397	Gasket	2
10	GM15108	Bolt	4
11	GM15180	Washer, spring	4
12	GM57930	Stay, pipe	1
13	GM15108	Bolt	4
14	GM15180	Washer, spring	4
15	GM22091	Bolt	3
16	GM15179	Washer, spring	3
17	GM57866	Pipe, bypass	1
18	GM16005	O-ring	1
19	GM57867	Bolt, w/washer	2
20	GM15140	Bolt	1
21	GM15775	Hose	1
22	GM15522	Clamp	2

silverhorn.co.uk

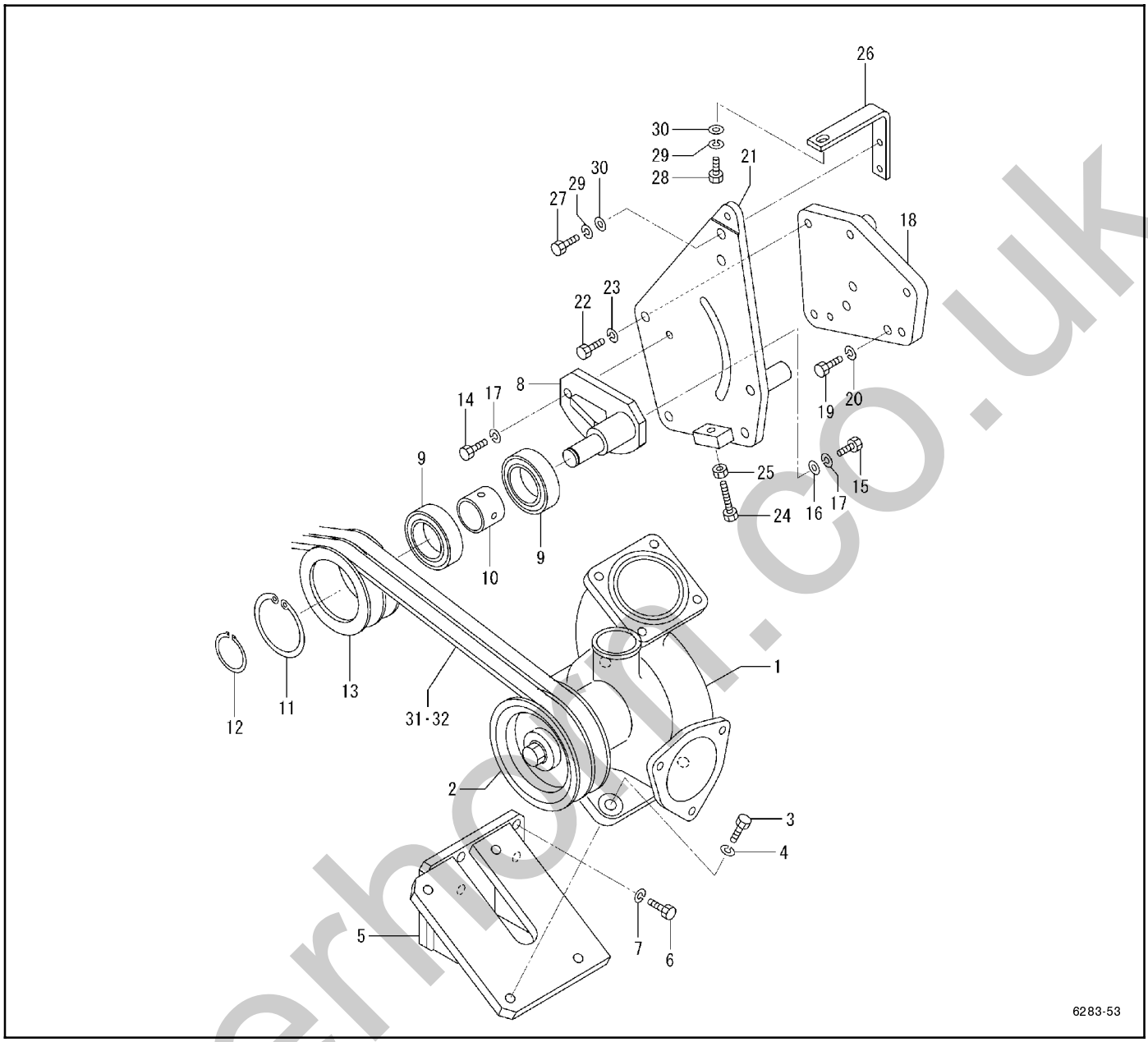

Item	Part No.	Description	Qty. Var. 1
1	GM57868	Pump assembly, water	1
2	GM57869	Pulley, water pump	1
3	GM57870	Bolt	4
4	GM15181	Washer, spring	4
5	GM57871	Bracket	1
6	GM15109	Bolt	4
7	GM15180	Washer, spring	4
8	GM57872	Bracket, tension	1
9	GM57873	Bearing, ball	2
10	GM57874	Spacer	1
11	GM57875	Ring, snap	1
12	GM57876	Ring, snap	1
13	GM57877	Pulley, tension	1
14	GM15109	Bolt	1
15	GM15112	Bolt	1
16	GM57878	Washer	1

Item	Part No.	Description	Qty. Var. 1
17	GM15180	Washer, spring	2
18	GM57879	Plate, tension	1
19	GM57663	Bolt	5
20	GM15180	Washer, spring	5
21	GM57880	Bracket, tension	1
22	GM57827	Bolt	4
23	GM15180	Washer, spring	4
24	GM57360	Bolt	1
25	GM15167	Nut	1
26	GM57881	Stay	1
27	GM21147	Bolt	2
28	GM15955	Bolt	1
29	GM15179	Washer, spring	3
30	GM15174	Washer, plain	3
31	GM55490	V-belt (L=1960)	1
32	GM55491	V-belt (L=2000)	1

silverhorn.co.uk

Group 55: Air Cooler

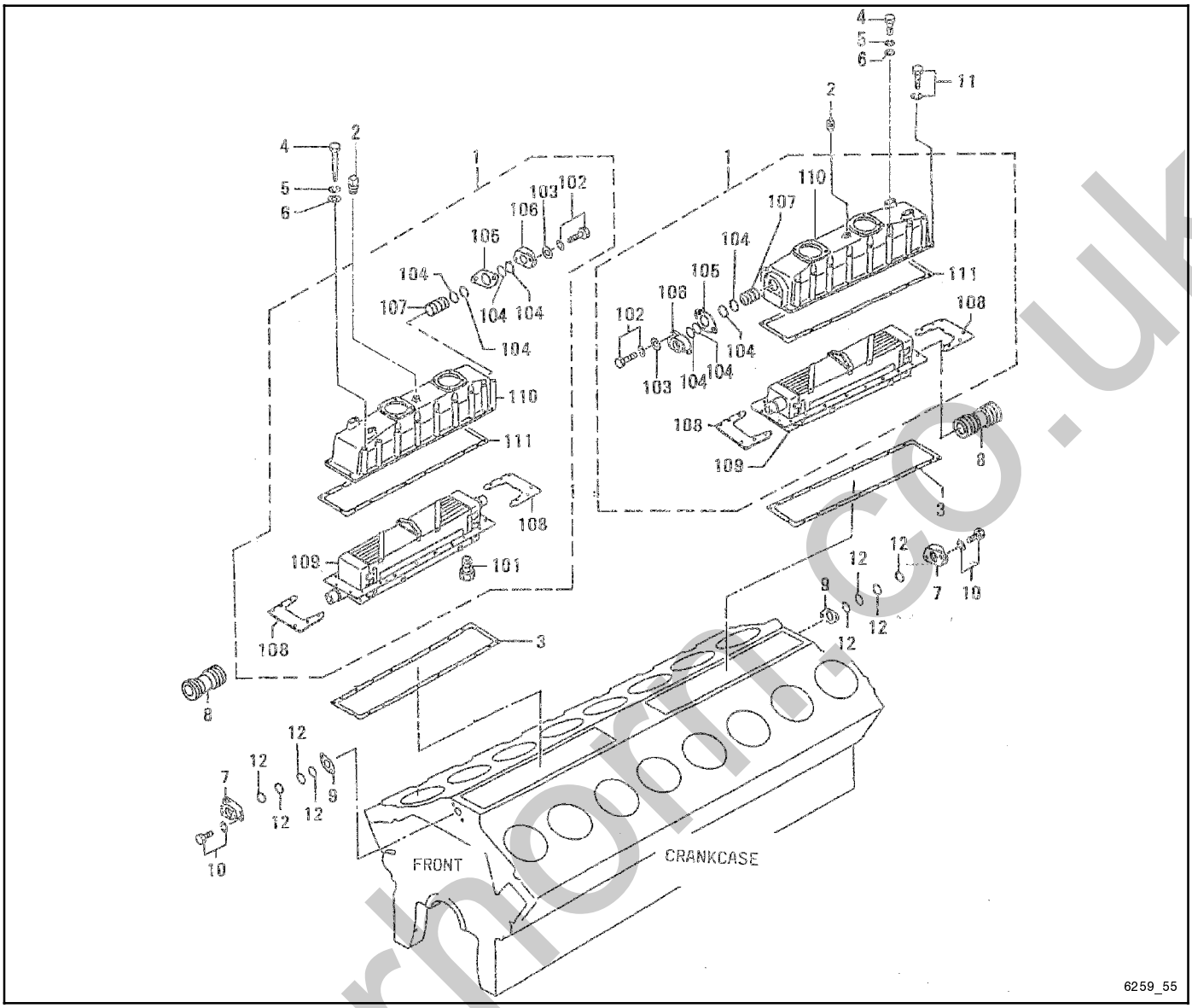

Item	Part No.	Description	Qty. Var. 1	2	3
1	GM37249	Cooler assembly, air	2		
1	—	Not sold separately		2	2
101	GM37127	Screw, machine	24	24	24
102	GM15142	Bolt w/washer	4	4	4
103	GM15174	Washer, plain	4	4	4
104	GM14513	O-ring	8	8	8
105	GM15794	Gasket	2	2	2
106	GM31408	Connector	2	2	2
107	GM37128	Pipe assembly	2	2	2
108	GM37132	Plate	4	4	4
109	GM37250	Element, air cooler	2	2	
109	GM57815	Element, air cooler			2
110	GM37251	Cover, air cooler	2	2	2
111	GM37252	Gasket	2	2	
111	GM57816	Gasket			2

Item	Part No.	Description	Qty. Var. 1	2	3
2	GM15246	Plug, tapered	2	2	2
3	GM37253	Gasket	2	2	
3	GM21992	Gasket			2
4	GM14541	Bolt	40	40	40
5	GM15179	Washer, spring	40	40	40
6	GM31649	Washer	40	40	40
7	GM31408	Connector	2	2	2
8	GM31409	Pipe, air cooler	2	2	2
9	GM21730	Gasket	2	2	2
10	GM15151	Bolt w/washer	4	4	4
11	GM15142	Bolt w/washer	4	4	4
12	GM14513	O-ring	8	8	8

silverhorn.co.uk

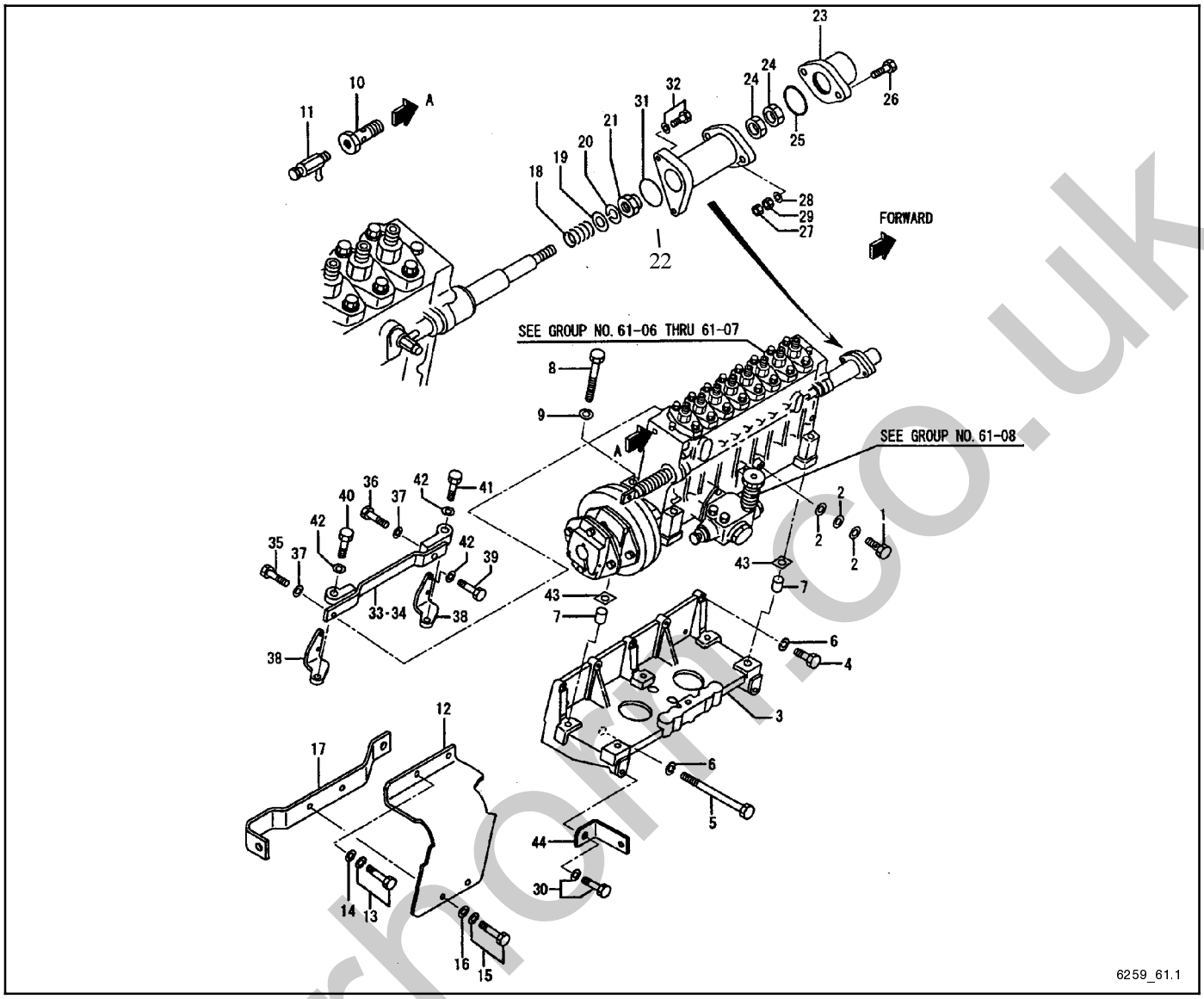

Item	Part No.	Description	Qty. Var. 1	2	3
1	GM21682	Eyebolt	2	2	2
2	GM14529	Washer, sealing	6	6	6
2	GM15803	Spacer (not shown)		2	2
3	GM31687	Bracket, injection pump	2		
3	GM37254	Bracket, injection pump		2	2
4	GM15112	Bolt	10	10	10
5	GM22096	Bolt	8	8	8
6	GM15180	Washer, spring	18	18	18
7	GM15802	Pin, dowel	4	4	4
8	GM15121	Bolt	12	12	12
9	GM15180	Washer, spring	12	12	12
10	GM15917	Eyebolt	2	2	
10	GM57685	Eyebolt			2
11	GM15552	Vent, air	2	2	2
12	GM21895	Cover, coupling	2	2	2
13	GM15149	Bolt w/washer	4	4	4
14	GM15175	Washer	4	4	4
15	GM15139	Bolt w/washer	4	4	
15	GM15141	Bolt w/washer			4
16	GM15174	Washer, plain	4	4	4
17	GM21884	Stay cover	2	2	2
18	GM21735	Spring return	2	2	2
19	GM15174	Washer, plain	2	2	2
20	GM15179	Washer, spring	2	2	2
21	GM22119	Nut, self-locking	2	2	2
22	GM31688	Case, spring	2		
22	GM31417	Case, spring		2	2

Item	Part No.	Description	Qty. Var. 1	2	3
23	GM31689	Cap, rack set	1		
23	GM37255	Cap, rack set		1	
23	GM31418	Cap, rack set			1
24	GM22116	Nut, jam	4	4	4
25	GM31419	O-ring	2	2	2
26	GM31415	Bolt	2	2	2
27	GM31416	Nut, tamperproof	2	2	2
28	GM15178	Washer, spring	2	2	2
29	GM31420	Nut, self-locking	2	2	2
30	GM15151	Bolt w/washer	1	1	1
31	GM21613	O-ring	2	2	2
32	GM15976	Bolt w/washer	4	4	4
33	GM21995	Stay	1		
33	GM37256	Stay		1	1
34	GM21996	Stay	1		
34	GM37257	Stay		1	1
35	GM15961	Bolt	3	3	3
36	GM22097	Bolt	1	1	1
37	GM15181	Washer, spring	4	4	4
38	GM21888	Stay	4		
38	GM37136	Stay		4	4
39	GM15108	Bolt	8	8	8
40	GM15110	Bolt	3	3	3
41	GM15112	Bolt	1	1	1
42	GM15180	Washer, spring	12	12	12
43	GM31690	Shim	1	1	1
44	GM21899	Stay, pipe	1	1	1

silverhom.co.uk

Group 61.1: Fuel Injection Pump, continued

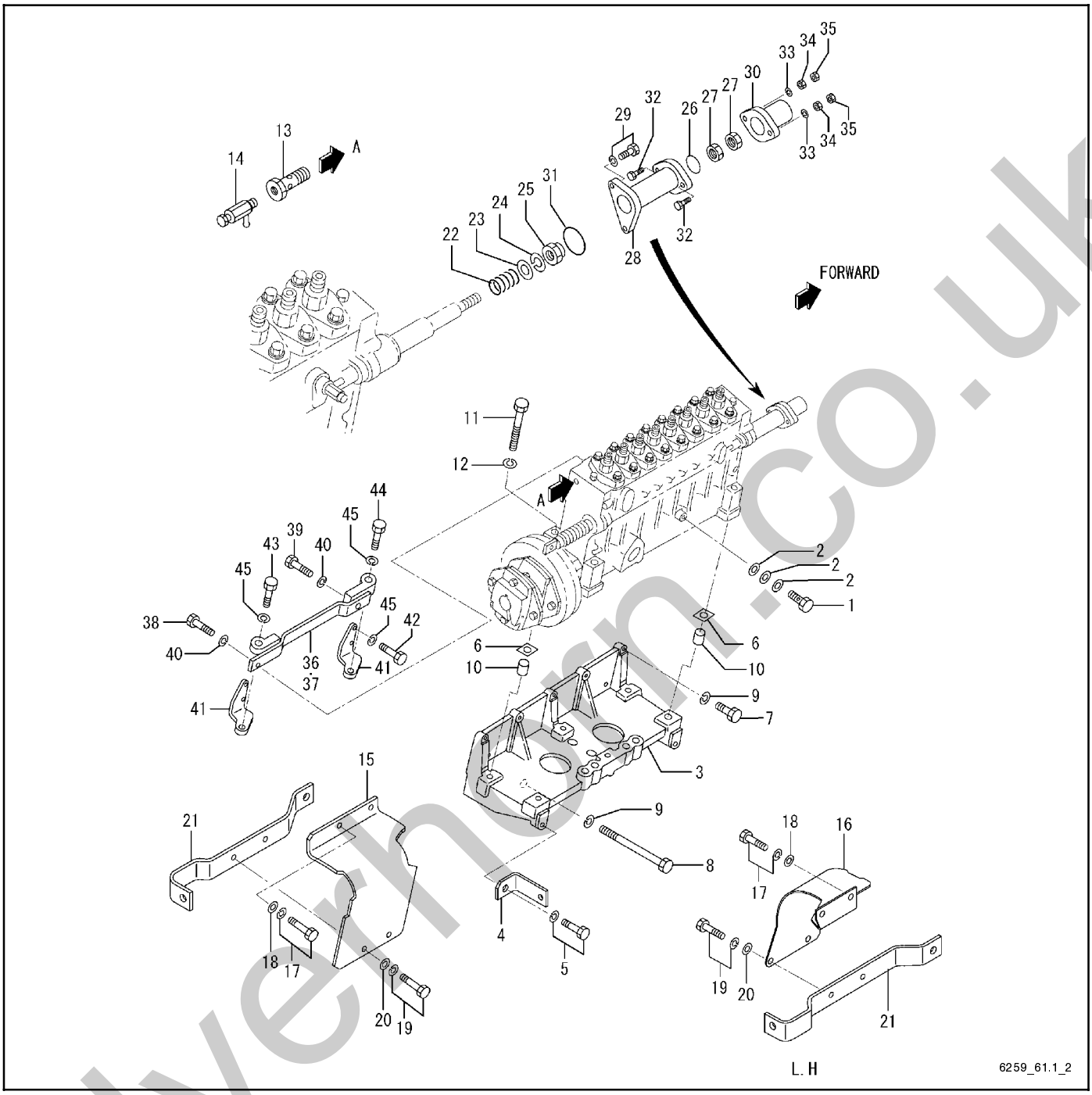

silverhorn.co.uk

Group 61.1: Fuel Injection Pump, continued

Item	Part No.	Description	Qty. Var. 4
1	GM21682	Bolt, eye	2
2	GM14529	Washer, sealing	6
3	GM37254	Bracket, injector	2
4	GM21899	Stay, pipe	1
5	GM15151	Bolt	1
6	GM31690	Shim	6
7	GM15112	Bolt	10
8	GM22096	Bolt	8
9	GM15180	Washer, spring	18
10	GM15802	Pin, dowel	4
11	GM15121	Bolt	12
12	GM15180	Washer, spring	12
13	GM57685	Bolt, eye	2
14	GM15552	Air vent	2
15	GM21895	Cover, coupling	1
16	GM57817	Cover, coupling	1
17	GM15149	Bolt w/washer	4
18	GM15175	Washer	4
19	GM15141	Bolt	4
20	GM15174	Washer, plain	4
21	GM21884	Stay cover	2
22	GM21735	Spring return	2
23	GM15174	Washer, plain	2
24	GM15179	Washer, spring	2
25	GM22119	Nut, self-locking	2
26	GM21613	O-ring	2
27	GM22116	Nut, jam	4
28	GM31417	Case, spring	2
29	GM15976	Bolt w/washer	4
30	GM31418	Cap, rack set	1
31	GM31419	O-ring	2
32	GM31415	Bolt	4
33	GM15178	Washer, spring	4
34	GM31416	Nut, tamper proof	4
35	GM31420	Nut, self-locking	4
36	GM37256	Stay, injection pump	1
37	GM37257	Stay, injection pump	1
38	GM15961	Bolt	3
39	GM22097	Bolt	1
40	GM15181	Washer, spring	4
41	GM37136	Stay, injection pump	4
42	GM15108	Bolt	8
43	GM15110	Bolt	3
44	GM15112	Bolt	1
45	GM15180	Washer, spring	12

silverhorn.co.uk

Group 61.2: Fuel Rack Control

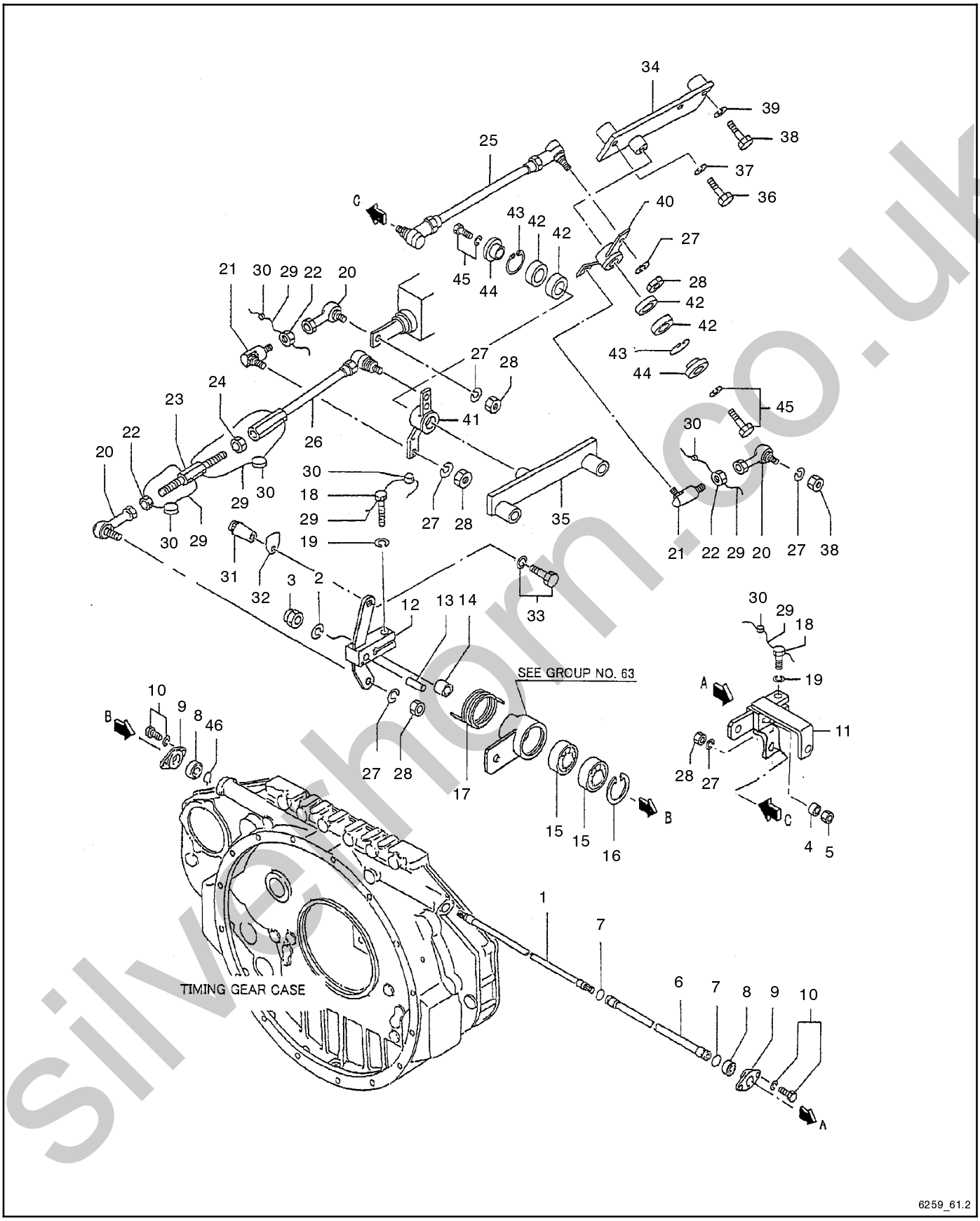

6259_61.2

silverthorn.co.uk

Group 61.2: Fuel Rack Control

Item	Part No.	Description	Qty. Var. 1	Qty. Var. 2
1	GM21889	Shaft, control	1	1
2	GM15179	Washer, spring	1	1
3	GM22119	Nut, self-locking	1	1
4	GM21907	Spacer	1	1
5	GM21908	Nut, lock	1	1
6	GM21885	Pipe	1	1
7	GM14508	O-ring	2	
7	GM34256	O-ring		2
8	GM31691	Bearing, ball	2	
8	GM36644	Bearing, ball		2
9	GM14913	Cover	2	2
10	GM15137	Bolt w/washer	4	4
11	GM21882	Lever, right hand	1	
11	GM37137	Lever, right hand		1
12	GM21894	Lever, left hand	1	
12	GM37138	Lever, left hand		1
13	GM21883	Pin, dowel	1	1
14	GM15088	Spacer	1	1
15	GM15257	Bearing, ball	2	2
16	GM15220	Ring, snap	1	1
17	GM21661	Spring	1	1
18	GM15127	Bolt	2	2
19	GM15178	Washer, spring	2	2
20	GM21676	Joint, ball	3	3
21	GM21742	Joint, ball	2	2
22	GM52476	Nut	5	5
23	GM22027	Rod	1	1
24	GM15531	Nut, lock	1	1
25	GM21892	Link, right hand	1	1
26	GM21893	Link, left hand	1	1
27	GM15178	Washer, spring	8	8
28	GM15163	Nut	6	
28	GM31420	Nut, self-locking		6
29	GM31470	Wire, seal	6	6
30	GM15001	Seal	6	6
31	GM14474	Grip	1	1
32	GM14473	Plate, caution	1	
32	GM36653	Plate, caution		1
33	GM15975	Bolt w/washer	1	1
34	GM21890	Bracket, lever, right hand	1	1
35	GM21891	Bracket, lever, left hand	1	1
36	GM21887	Bolt, lever bracket	1	1
37	GM15181	Washer, spring	2	2
38	GM15115	Bolt	2	2
39	GM15180	Washer, spring	2	2
40	GM21880	Lever, link	1	
40	GM37139	Lever, link		1
41	GM21886	Lever, link	1	1
42	GM15256	Bearing, ball	4	4
43	GM16017	Ring, snap	2	2
44	GM14608	Plate, end	2	2
45	GM15144	Bolt w/washer	2	2
46	GM22126	Ring, snap	1	1

silverhorn.co.uk

Group 61.2: Fuel Rack Control, continued

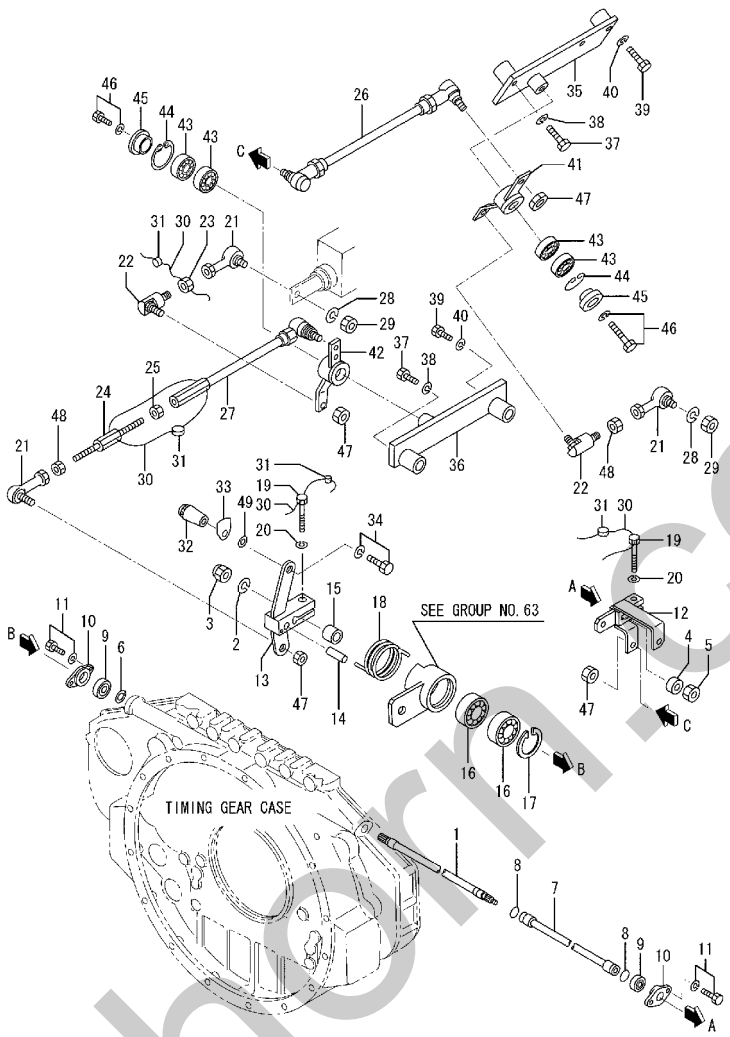

Item	Part No.	Description	Qty. Var. 3
1	GM21889	Shaft, control	1
2	GM15179	Washer, spring	1
3	GM22119	Nut, self-locking	1
4	GM21907	Spacer	1
5	GM21908	Nut, lock	1
6	GM22126	Ring, snap	1
7	GM21885	Pipe	1
8	GM34256	O-ring	2
9	GM36644	Bearing, ball	2
10	GM14913	Cover	2
11	GM15137	Bolt w/washer	4
12	GM57693	Lever, right hand	1
13	GM37138	Lever	1
14	GM21883	Pin, dowel	1
15	GM15088	Spacer	1
16	GM15257	Bearing, ball	2
17	GM15220	Ring, snap	1
18	GM21661	Spring	1
19	GM15127	Bolt	2
20	GM15178	Washer, spring	2
21	GM21676	Joint, ball	3
22	GM21742	Joint, ball	2
23	GM52476	Nut, lock	1
24	GM22027	Rod	1
25	GM15531	Nut, lock	1

Item	Part No.	Description	Qty. Var. 3
26	GM21892	Link, right hand	1
27	GM21893	Link, left hand	1
28	GM15178	Washer, spring	2
29	GM15985	Nut	2
30	GM14463	Wire, seal	4
31	GM15001	Seal	4
32	GM14474	Grip	1
33	GM36653	Plate, caution	1
34	GM15138	Bolt w/washer	1
35	GM21890	Bracket, lever, RH	1
36	GM21891	Bracket, lever, LH	1
37	GM21887	Bolt, lever bracket	2
38	GM15181	Washer, spring	2
39	GM15115	Bolt	2
40	GM15180	Washer, spring	2
41	GM57694	Lever, link	1
42	GM57695	Lever, link	1
43	GM15256	Bearing, ball	4
44	GM16017	Ring, snap	2
45	GM14608	Plate, end	2
46	GM15144	Bolt	2
47	GM31420	Nut, self-locking	6
48	GM15163	Nut	2
49	GM15173	Washer, plain	1

silverhorn.co.uk

Group 61.3: Nozzle Assembly

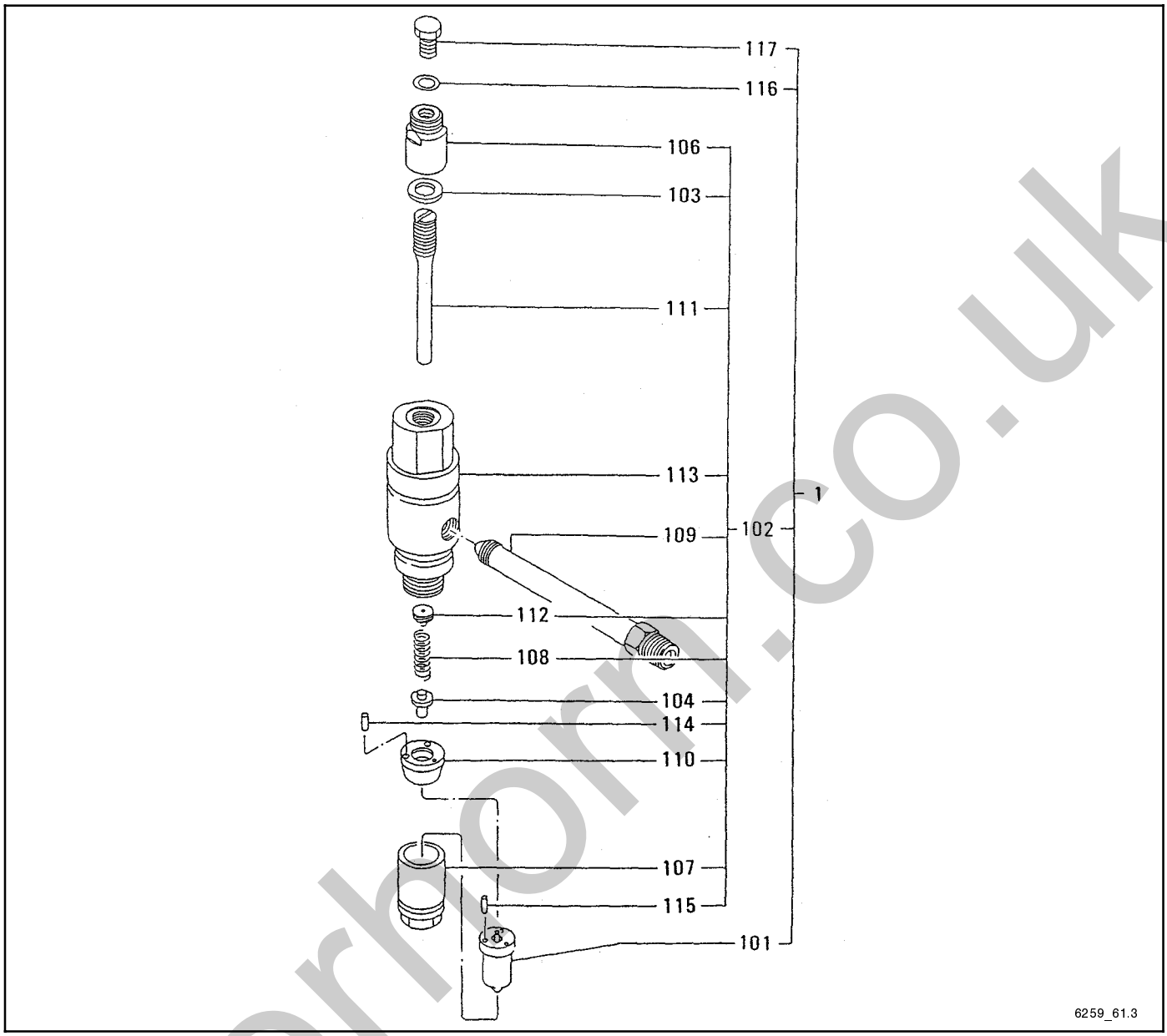

Item	Part No.	Description	Qty. Var. 1	2	3	4
1	GM31692	Nozzle assembly	16			
1	GM37258	Nozzle assembly		16		
1	GM57283	Nozzle assembly			16	
1	GM57823	Nozzle assembly				16
101	GM31693	Nozzle tip assembly	16			
101	GM37259	Nozzle tip assembly		16		16
101	GM37140	Nozzle tip assembly			16	
102	GM21732	Nozzle holder assembly	16	16		
102	GM57284	Nozzle holder assembly			16	16
103	GM14530	Washer, sealing	16	16	16	16
104	GM21734	Bearing, roller	16	16		
104	GM57285	Rod, push			16	16
106	GM15817	Nut, cap	16	16	16	16
107	GM15816	Nut, retaining	16	16		

Item	Part No.	Description	Qty. Var. 1	2	3	4
107	GM57286	Nut, retaining			16	16
108	GM15825	Spring	16	16	16	16
109	GM15827	Connector, inlet	16	16		
109	GM57287	Connector, inlet			16	16
110	GM15828	Spacer	16	16	16	16
111	GM15826	Screw	16	16	16	16
112	GM15809	Spring, seat	16	16	16	16
113	GM15829	Body, nozzle holder	16	16		
113	GM57288	Body, nozzle holder			16	16
114	GM16036	Bearing, roller	32		32	32
114	GM37260	Bearing, roller		32		
115	GM15254	Bearing, roller	32	32	32	32
116	GM14528	Washer, sealing	16	16	16	16
117	GM15569	Screw, set	16	16	16	16

silverhorn.co.uk

Group 61.4: Fuel Injection Lines

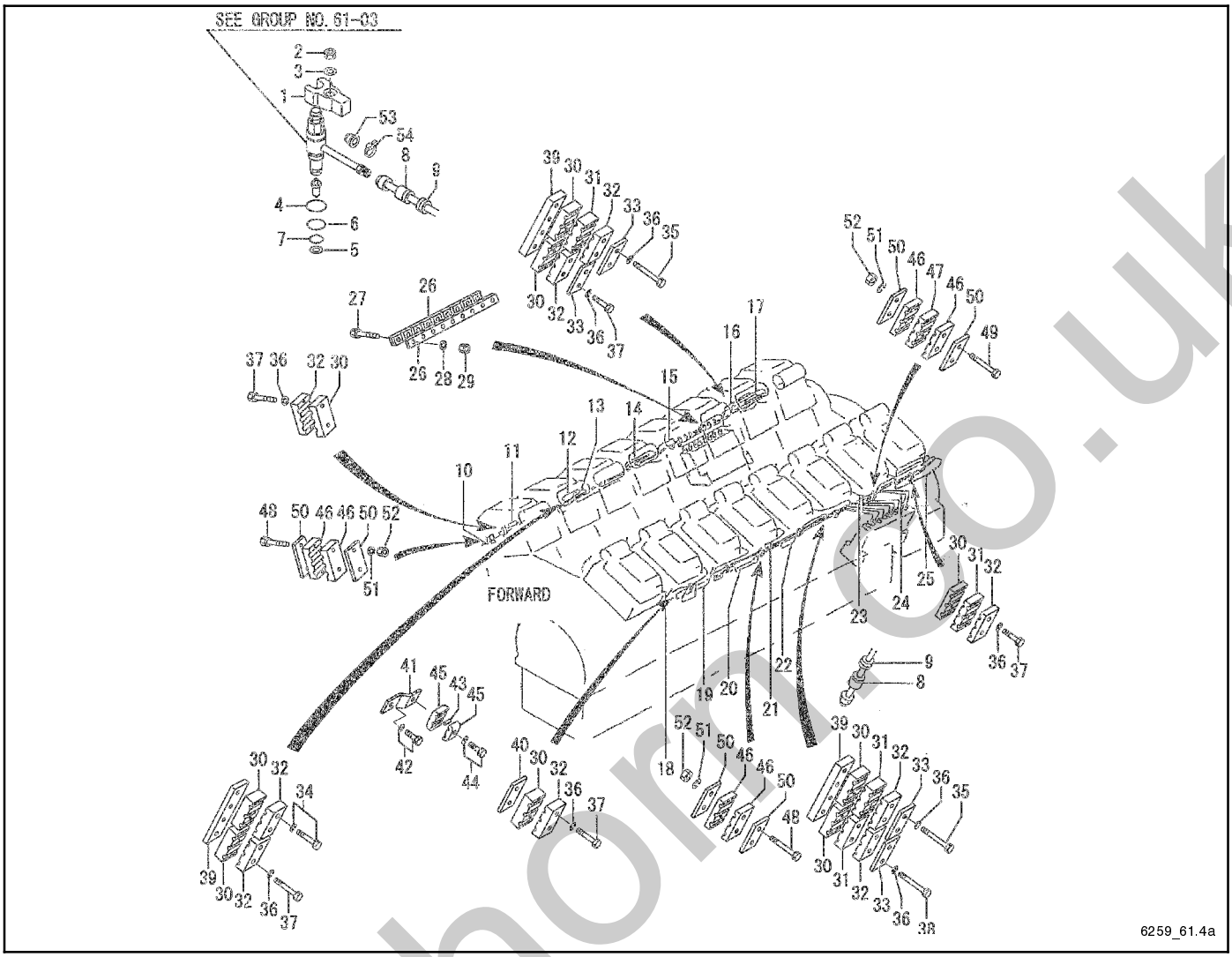

Item	Part No.	Description	Qty. Var. 1	Qty. Var. 2
1	GM21725	Gland, nozzle	16	
1	GM37141	Gland, nozzle		16
2	GM15168	Nut	16	16
3	GM21669	Washer	16	16
4	GM14512	O-ring	16	16
5	GM15818	Gasket, nozzle	16	16
6	GM14511	O-ring	16	16
7	GM21612	O-ring	16	16
8	GM15813	Cover	32	32
9	GM15814	Holder	32	32
10	GM31694	Pipe, injection, No. 1	1	1
11	GM31695	Pipe, injection, No. 2	1	1
12	GM31696	Pipe, injection, No. 3	1	1
13	GM31697	Pipe, injection, No. 4	1	1
14	GM31698	Pipe, injection, No. 5	1	1
15	GM31699	Pipe, injection, No. 6	1	1
16	GM31700	Pipe, injection, No. 7	1	1
17	GM31701	Pipe, injection, No. 8	1	1
18	GM31702	Pipe, injection, No. 9	1	1
19	GM31703	Pipe, injection, No. 10	1	1
20	GM31704	Pipe, injection, No. 11	1	1
21	GM31705	Pipe, injection, No. 12	1	1
22	GM31706	Pipe, injection, No. 13	1	1
23	GM31707	Pipe, injection, No. 14	1	1
24	GM31708	Pipe, injection, No. 15	1	1
25	GM31709	Pipe, injection, No. 16	1	1
26	GM21993	Clamp	4	4
27	GM22090	Bolt	18	18
28	GM15178	Washer, spring	18	18

Item	Part No.	Description	Qty. Var. 1	Qty. Var. 2
29	GM15163	Nut	18	18
30	GM21738	Clamp	27	
30	GM31427	Seat, pipe		27
31	GM21739	Seat	19	
31	GM31429	Seat, pipe		19
32	GM15834	Clamp, pipe	27	
32	GM31428	Seat, pipe		27
33	GM21740	Plate	27	27
34	GM15147	Bolt w/washer	2	2
35	GM15958	Bolt	22	22
36	GM15179	Washer, spring	52	52
37	GM22092	Bolt	14	14
38	GM22094	Bolt	16	16
39	GM21877	Plate	12	12
40	GM21878	Plate	3	3
41	GM21881	Pipe, injection stay	1	1
42	GM15139	Bolt w/washer	1	1
43	GM22122	Pin	1	1
44	GM15974	Bolt w/washer	1	1
45	GM22131	Clamp	2	2
46	GM15834	Clamp, pipe	20	
46	GM31428	Seat, pipe		20
47	GM21739	Seat	5	
47	GM31429	Seat, pipe		5
48	GM15957	Bolt	10	10
49	GM22093	Bolt	10	10
50	GM21740	Plate	20	20
51	GM15179	Washer, spring	18	18
52	GM15164	Nut	18	18

silverhorse.co.uk

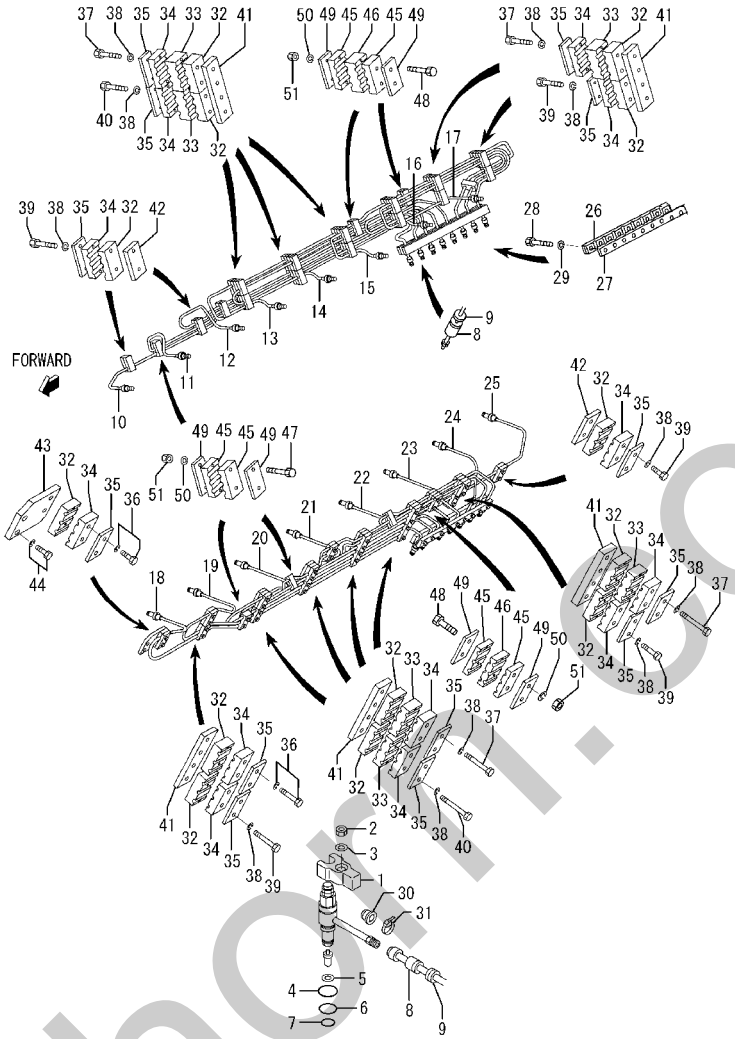

Item	Part No.	Description	Qty. Var. 3
1	GM37141	Gland, nozzle	16
2	GM15168	Nut	16
3	GM21669	Washer	16
4	GM14512	O-ring	16
5	GM15818	Gasket, nozzle	16
6	GM14511	O-ring	16
7	GM21612	O-ring	16
8	GM57280	Cover	1
9	GM15814	Holder	32
10	GM31694	Pipe, injection no. 1	1
11	GM31695	Pipe, injection no. 2	1
12	GM31696	Pipe, injection no. 3	1
13	GM31697	Pipe, injection no. 4	1
14	GM31698	Pipe, injection no. 5	1
15	GM31699	Pipe, injection no. 6	1
16	GM31700	Pipe, injection no. 7	1
17	GM31701	Pipe, injection no. 8	1
18	GM31702	Pipe, injection no. 9	1
19	GM31703	Pipe, injection no. 10	1
20	GM31704	Pipe, injection no. 11	1
21	GM31705	Pipe, injection no. 12	1
22	GM31706	Pipe, injection no. 13	1
23	GM31707	Pipe, injection no. 14	1
24	GM31708	Pipe, injection no. 15	1
25	GM31709	Pipe, injection no. 16	1
26	GM21993	Clamp	2

Item	Part No.	Description	Qty. Var. 3
27	GM57766	Clamp	2
28	GM37154	Bolt	18
29	GM15178	Washer, spring	18
30	GM31433	Bushing, injection pipe	16
31	GM31434	Band, clip	16
32	GM31427	Seat, pipe	29
33	GM31429	Seat, pipe	19
34	GM31428	Seat, pipe	29
35	GM21740	Plate	29
36	GM15147	Bolt	6
37	GM15958	Bolt	22
38	GM15179	Washer, spring	52
39	GM22092	Bolt	14
40	GM22094	Bolt	16
41	GM21877	Plate	13
42	GM21878	Plate	2
43	GM57697	Stay, injection pipe	1
44	GM15142	Bolt w/washer	2
45	GM31428	Seat, pipe	20
46	GM31429	Seat, pipe	5
47	GM15957	Bolt	10
48	GM22093	Bolt	10
49	GM21740	Plate	20
50	GM15179	Washer, spring	20
51	GM15164	Nut	20

silverhorn.co.uk

Group 61.4: Fuel Injection Lines, continued

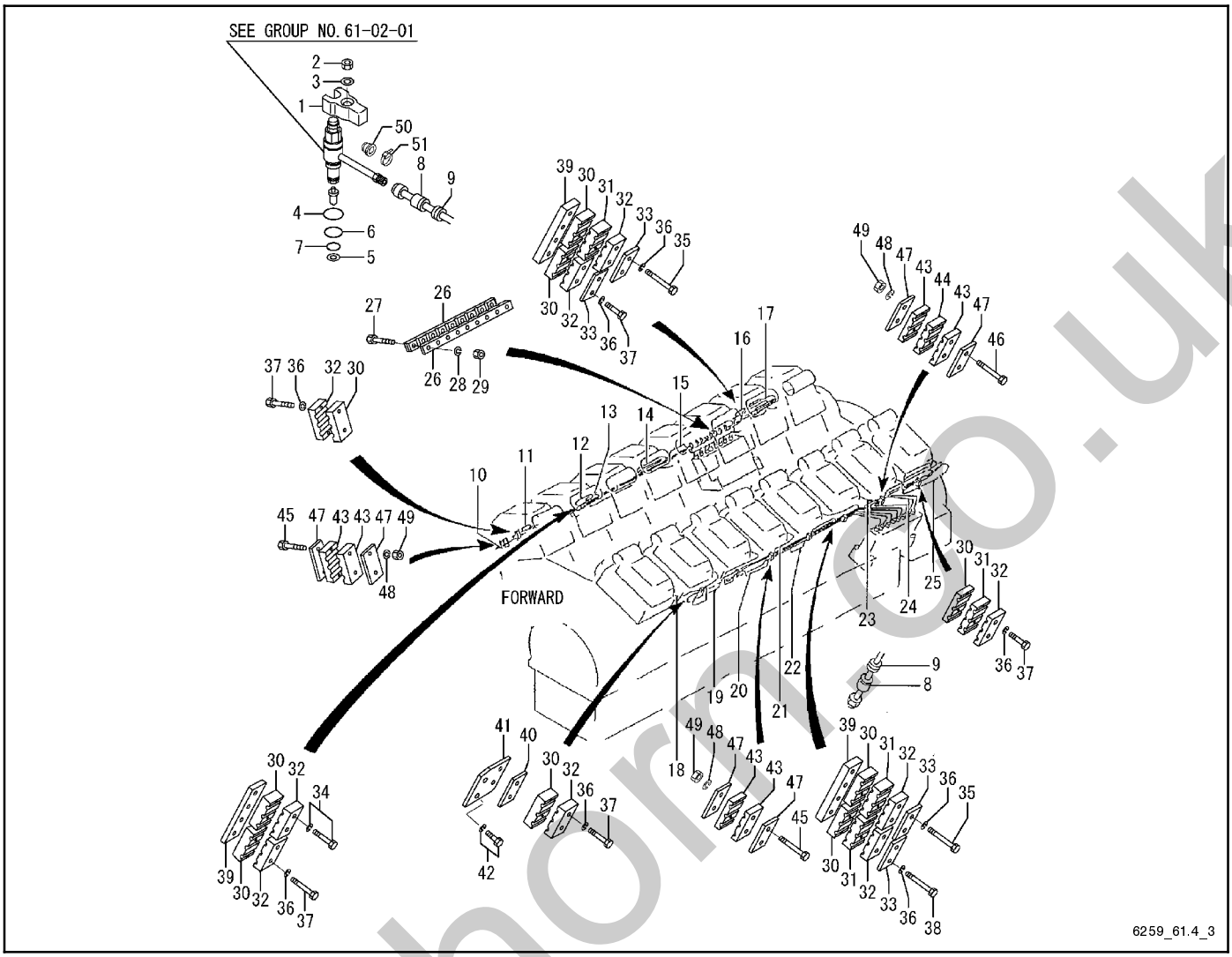

Item	Part No.	Description	Qty. Var. 4
1	GM37141	Gland, nozzle	16
2	GM15168	Nut	16
3	GM21669	Washer	16
4	GM14512	O-ring	16
5	GM15818	Gasket, nozzle	16
6	GM14511	O-ring	16
7	GM21612	O-ring	16
8	GM57280	Cover	32
9	GM15814	Holder	32
10	GM31694	Pipe, injection no. 1	1
11	GM31695	Pipe, injection no. 2	1
12	GM31696	Pipe, injection no. 3	1
13	GM31697	Pipe, injection no. 4	1
14	GM31698	Pipe, injection no. 5	1
15	GM31699	Pipe, injection no. 6	1
16	GM31700	Pipe, injection no. 7	1
17	GM31701	Pipe, injection no. 8	1
18	GM31702	Pipe, injection no. 9	1
19	GM31703	Pipe, injection no. 10	1
20	GM31704	Pipe, injection no. 11	1
21	GM31705	Pipe, injection no. 12	1
22	GM31706	Pipe, injection no. 13	1
23	GM31707	Pipe, injection no. 14	1
24	GM31708	Pipe, injection no. 15	1
25	GM31709	Pipe, injection no. 16	1
26	GM21993	Clamp	4

Item	Part No.	Description	Qty. Var. 4
27	GM22090	Bolt	18
28	GM15178	Washer, spring	18
29	GM15163	Nut	18
30	GM31427	Seat, pipe	29
31	GM31429	Seat, pipe	19
32	GM31428	Seat, pipe	29
33	GM21740	Plate	29
34	GM15147	Bolt	6
35	GM15958	Bolt	22
36	GM15179	Washer, spring	52
37	GM22092	Bolt	14
38	GM22094	Bolt	16
39	GM21877	Plate	13
40	GM21878	Plate	2
41	GM57697	Stay, injection pipe	1
42	GM15142	Bolt w/washer	2
43	GM31428	Seat, pipe	20
44	GM31429	Seat, pipe	5
45	GM15957	Bolt	10
46	GM22093	Bolt	10
47	GM21740	Plate	20
48	GM15179	Washer, spring	20
49	GM15164	Nut	20
50	GM31433	Bushing, injection pipe	16
51	GM31434	Band, clip	16

silverhorse.co.uk

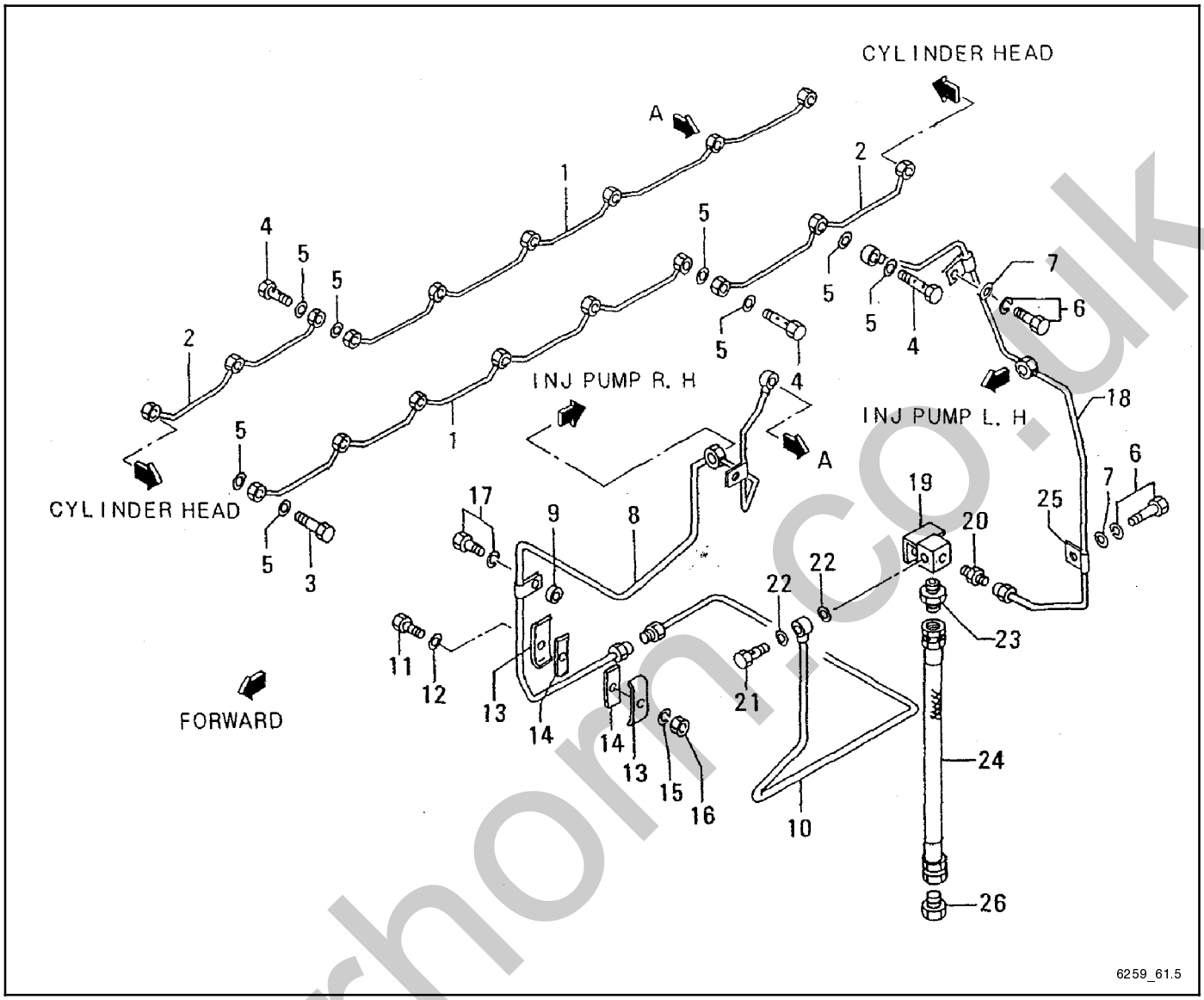

Item	Part No.	Description	Qty. Var. 1
1	GM21879	Pipe, fuel leakoff	2
2	GM21994	Pipe, fuel leakoff	2
3	GM15559	Eyebolt	12
4	GM21673	Eyebolt	4
5	GM14528	Washer, sealing	36
6	GM15139	Bolt w/washer	2
7	GM15174	Washer, plain	2
8	GM21904	Pipe, fuel	1
9	GM21825	Spacer	1
10	GM21901	Pipe, leak	1
11	GM15956	Bolt	5
12	GM15174	Washer, plain	5
13	GM15599	Clamp	10

Item	Part No.	Description	Qty. Var. 1
14	GM15600	Seat	10
15	GM15179	Washer, spring	5
16	GM15164	Nut	5
17	GM15149	Bolt w/washer	3
18	GM21902	Pipe, fuel	1
19	GM21897	Connector	1
20	GM16029	Connector	1
21	GM15234	Eyebolt	1
22	GM14530	Washer, sealing	2
23	GM22127	Connector	1
24	GM22029	Pipe	1
25	GM22130	Clip	1
26	GM21587	Connector	1

silverhorn.co.uk

Group 61.5: Fuel Leakoff Pipes, continued

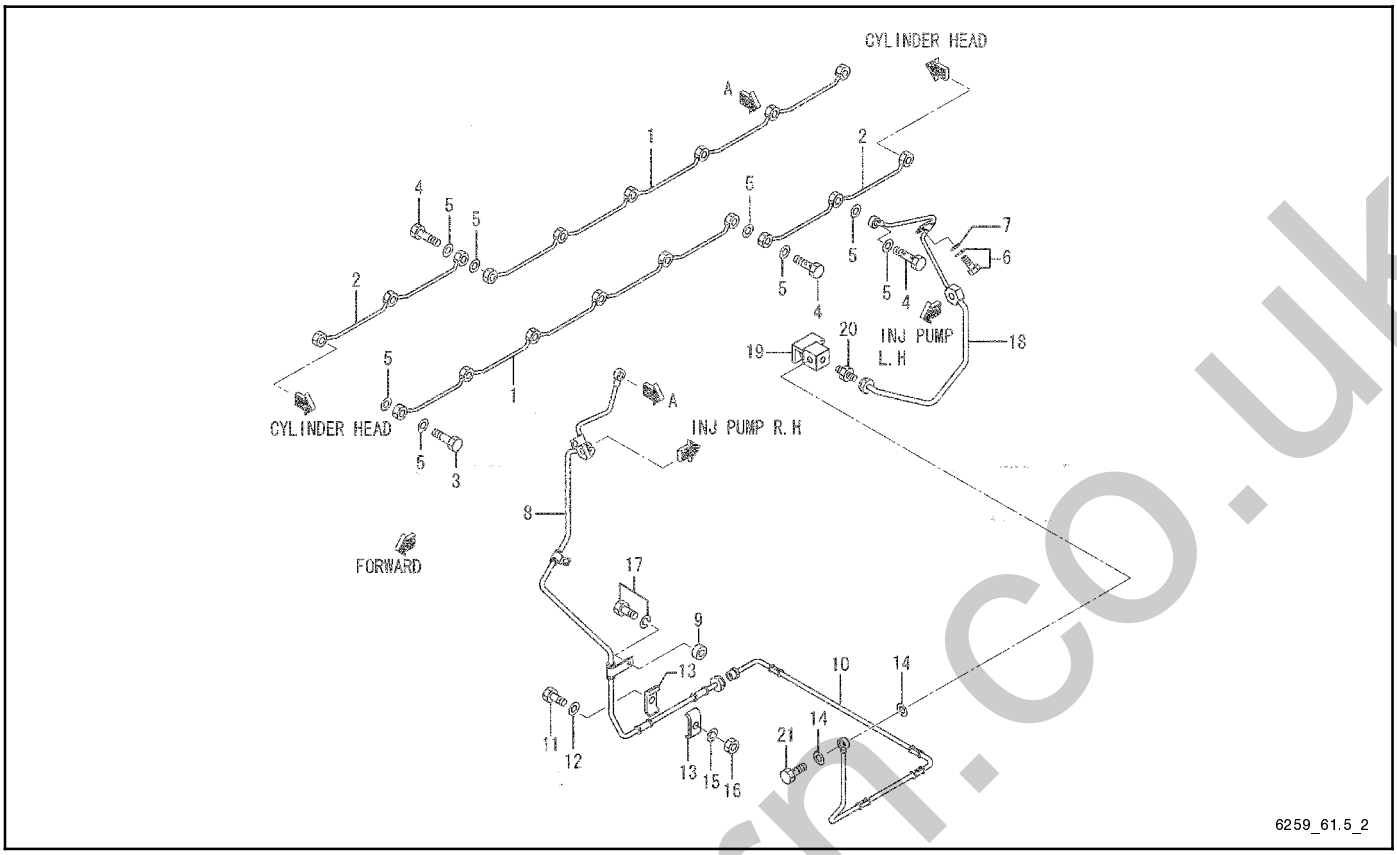

Item	Part No.	Description	Qty. Var. 2
1	GM21879	Pipe, fuel leakoff	2
2	GM21994	Pipe, fuel leakoff	2
3	GM15559	Bolt, eye	12
4	GM21673	Bolt, eye	4
5	GM14528	Washer, sealing	36
6	GM15139	Bolt w/washer	2
7	GM15174	Washer, plain	2
8	GM37157	Pipe, fuel	1
9	GM21825	Spacer	1
10	GM37158	Pipe, leak	1
11	GM15103	Bolt	6
12	GM15174	Washer, plain	5
13	GM34323	Pipe, fuel fr	12
14	GM14530	Washer, sealing	2
15	GM15179	Washer, spring	6
16	GM15164	Nut	6
17	GM15149	Bolt w/washer	3
18	GM21902	Pipe, fuel	1
19	GM21897	Connector	1
20	GM16029	Connector	1
21	GM15234	Bolt, eye	1

silverhorn.co.uk

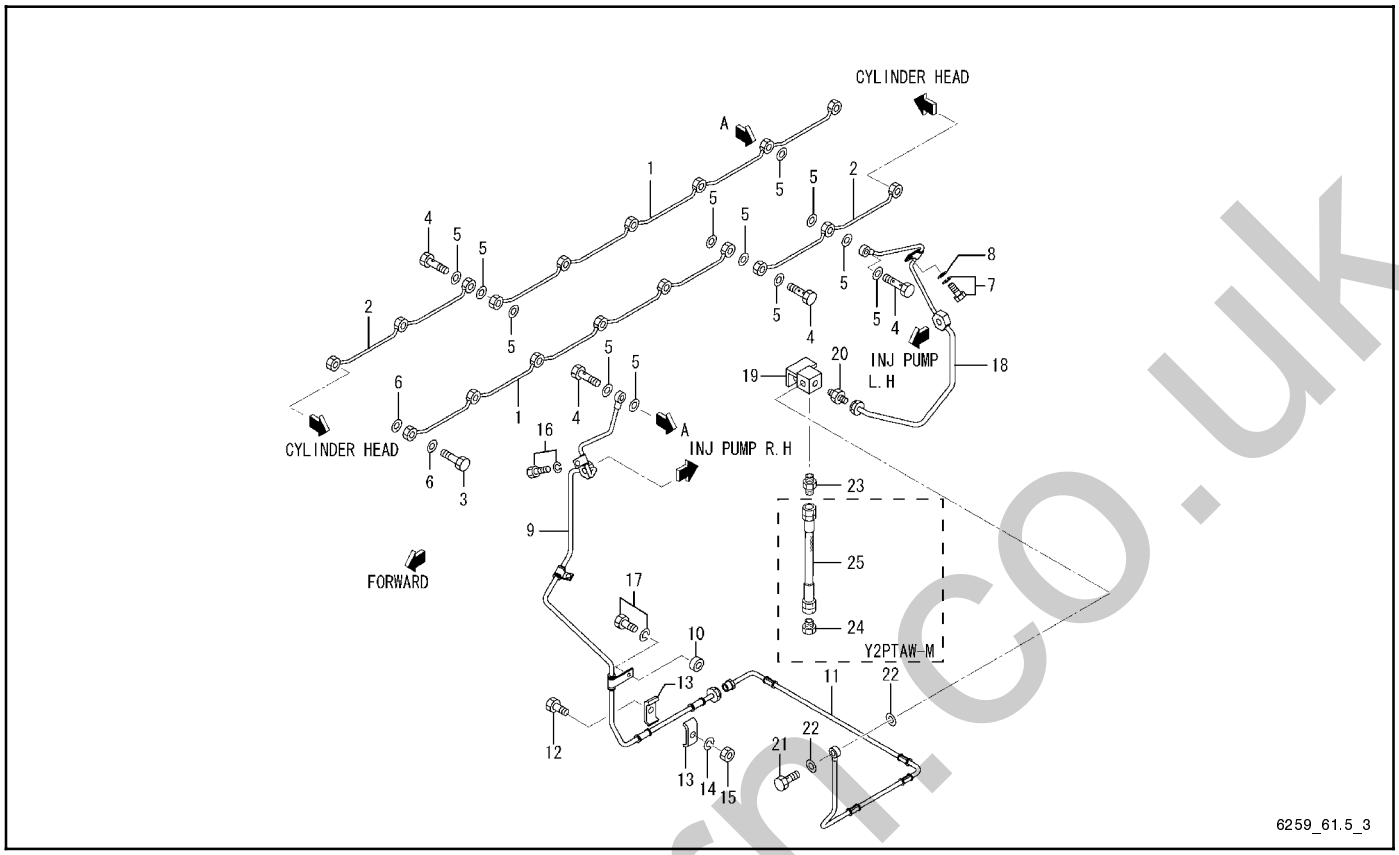

Item	Part No.	Description	Qty. Var. 3
1	GM21879	Pipe, fuel leakoff	2
2	GM21994	Pipe, fuel leakoff	2
3	GM15559	Bolt, eye	12
4	GM21673	Bolt, eye	4
5	GM57417	Washer, sealing	12
6	GM14528	Washer, sealing	24
7	GM15139	Bolt w/washer	2
8	GM15174	Washer, plain	2
9	GM37157	Pipe, fuel	1
10	GM21825	Spacer	1
11	GM37158	Pipe, leak	1
12	GM15103	Bolt	6
13	GM34323	Pipe, fuel fr	12
14	GM15179	Washer, spring	6
15	GM15164	Nut	6
16	GM15149	Bolt w/washer	1
17	GM15150	Bolt	2
18	GM21902	Pipe, fuel	1
19	GM21897	Connector	1
20	GM16029	Connector	1
21	GM15234	Bolt, eye	1
22	GM14530	Washer, sealing	2
23	GM22127	Connector	1
24	GM21587	Connector	1
25	GM22029	Pipe	1

silverhorn.co.uk

Group 61.6: Injection Pump, Right

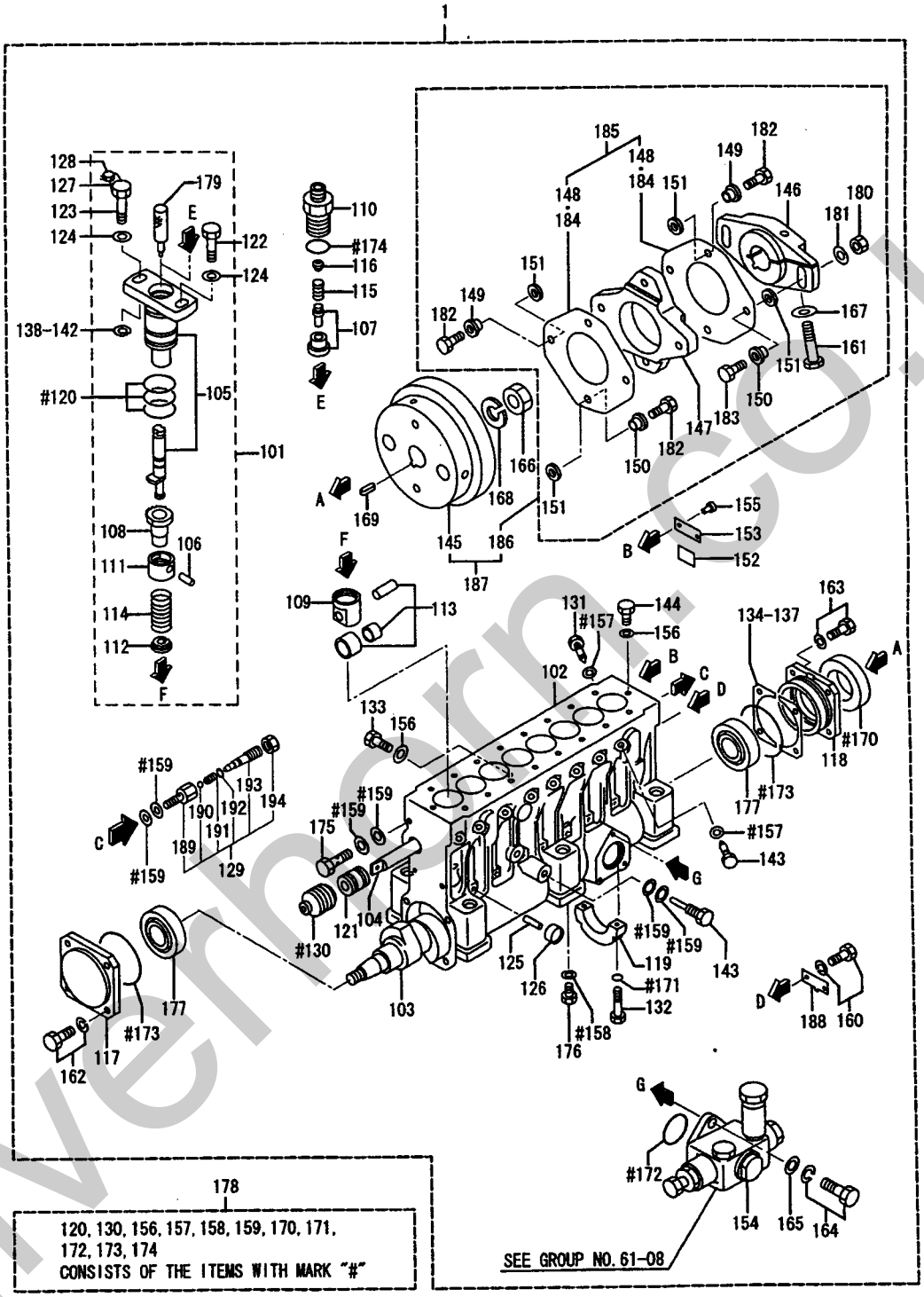

silvermorn.co.uk

Group 61.6: Injection Pump, Right

Item	Part No.	Description	Qty. Var. 1	Qty. Var. 2
1	GM31710	Pump assembly, injection	1	
1	GM37261	Pump assembly, injection		1
101	GM22065	Block, twin plunger	1	
101	GM37262	Block, twin plunger		1
102	GM31711	Case, injection pump	1	
102	GM37263	Case, injection pump		1
103	GM31712	Camshaft	1	1
104	GM22053	Rack	1	
104	GM37264	Rack		1
105	GM31713	Plunger assembly	8	
105	—	Not sold separately		8
106	—	Not sold separately	8	8
107	GM22062	Valve assembly, delivery	8	8
108	GM22042	Pinion	8	
108	GM31443	Pinion		8
109	GM15904	Tappet	8	8
110	GM22061	Holder, valve	8	8
111	GM15896	Seat	8	8
112	GM15897	Seat	8	8
113	GM22051	Tappet assembly, roller	8	
113	GM31448	Tappet assembly, roller		8
114	GM15888	Spring	8	8
115	GM21585	Spring, valve	8	8
116	GM31453	Stopper	8	8
117	GM22052	Cover, front	1	1
118	GM22041	Cover, rear	1	1
119	GM15872	Center bearing	1	1
120	GM15889	O-ring	24	24
121	GM15898	Bushing, rack	2	2
122	GM15873	Bolt, barrel	8	8
123	GM15885	Bolt, barrel	8	8
124	GM15004	Washer, barrel	16	16
125	GM15874	Pin	9	9
126	GM14489	Cap, sealing	9	9
127	GM15883	Wire	1	1
128	GM15001	Seal	1	1
129	GM31445	Valve, check	1	1
130	GM15890	Bellows	2	2
131	GM15903	Bolt, deflector	16	
131	GM31444	Bolt, deflector		16
132	GM15900	Bolt	2	2
133	GM22043	Screw, set	1	1
134	GM15891	Shim, T = 0.50 mm	1	1
135	GM15892	Shim, T = 0.10 mm	1	1
136	GM15893	Shim, T = 0.15 mm	1	1
137	GM15894	Shim, T = 0.50 mm	1	1
138	GM15875	Shim, barrel, T = 0.80 mm	1	1
139	GM15876	Shim, barrel, T = 0.90 mm	1	1
140	GM15877	Shim, barrel, T = 1.00 mm	1	1
141	GM15878	Shim, barrel, T = 1.10 mm	1	1
142	GM15879	Shim, barrel, T = 1.30 mm	1	1
143	GM31714	Bolt, eye	1	
143	GM22037	Bolt, eye		1
144	GM15882	Bolt, eye	2	2
145	GM31451	Flywheel	1	1
146	GM31715	Coupling	1	
146	GM37265	Coupling		1
147	GM31452	Coupling, cross	1	1
148	GM15908	Plate, laminate	12	12
149	GM15911	Bushing	4	4
150	GM15912	Bushing	4	4
151	GM15910	Washer, coupling	8	8
152	GM15566	Plate	4	
152	GM22045	Plate		4
154	GM15514	Pump fuel	1	1
155	GM14481	Rivet, screw	2	2
156	GM14527	Washer	3	3
157	GM14528	Washer, sealing	16	16
158	GM14529	Washer, sealing	1	1
159	GM14530	Washer, sealing	6	6
160	GM15972	Bolt w/washer	2	2
161	GM15962	Bolt	1	1
162	GM15976	Bolt w/washer	4	4
163	GM15138	Bolt w/washer	8	8
164	GM15973	Bolt w/washer	3	3
165	GM15991	Washer	3	3
166	GM15987	Nut, jam	1	1
167	GM15181	Washer, spring	1	
167	GM31440	Washer, coupling		1
168	GM14571	Washer	1	1
169	GM15998	Key, woodruff	1	1
170	GM15884	Seal	1	1
171	GM21609	O-ring	2	2
172	GM21616	O-ring	1	1
173	GM14519	O-ring	2	2
174	GM15528	O-ring	8	8
175	GM15917	Bolt, eye	1	1
176	GM15237	Plug, screw	1	1
177	GM16041	Bearing, roller	2	2
178	GM22044	Gasket kit	1	1
179	GM15921	Holder, plunger (service only)	1	1
180	GM22059	Nut, flange	2	2
181	GM22058	Washer	2	2
182	GM22060	Bolt	6	6
183	GM22057	Bolt	2	2
184	GM22045	Plate	1	1
185	GM31716	Plate kit	1	1
186	GM31454	Coupling assembly	1	
186	GM37266	Coupling assembly		1
187	GM31441	Coupling kit	1	
187	GM37267	Coupling kit		1
188	GM22038	Pointer	1	1
189	GM31447	Body, valve	1	1
190	GM15252	Ball, steel	1	1
191	GM15003	Spring, valve	1	1
192	GM14506	O-ring	1	1
193	GM31446	Screw	1	1
194	GM15171	Nut, jam	1	1

silverhorn.co.uk

Group 61.6: Injection Pump, Right, continued

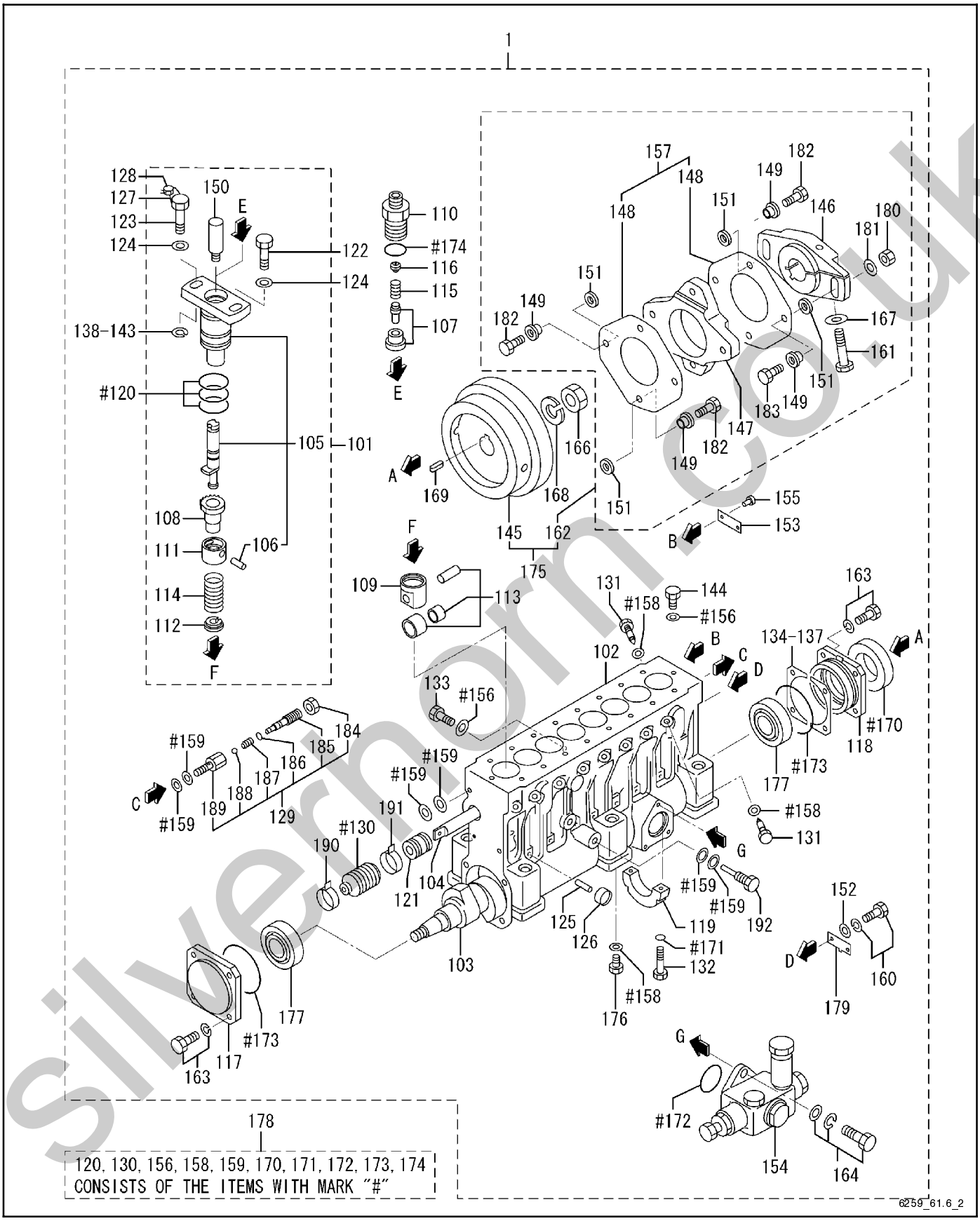

silvermorn.co.uk

Group 61.6: Injection Pump, Right, continued

Item	Part No.	Description	Qty. Var. 3
1	GM57757	Pump assembly, injection	1
101	GM57758	Block, twin plunger	1
102	TBD	Case, injection pump	1
103	GM57759	Camshaft	1
104	TBD	Rack	1
105	GM57760	Plunger assembly	8
106	GM57761	Pin, knock	8
107	X	Valve assembly, delivery	8
108	GM31443	Pinion	8
109	GM15904	Tappet	8
110	GM37164	Holder, valve	8
111	GM15896	Seat	8
112	GM15897	Seat, lower spring	8
113	GM31448	Tappet assembly, roller	8
114	GM15888	Spring	8
115	GM21585	Spring, valve	8
116	GM31453	Stopper	8
117	GM22052	Cover, front	1
118	GM22041	Cover, rear	1
119	GM15872	Center bearing	1
120	GM15889	O-ring	24
121	GM57260	Bushing, rack	2
122	GM15873	Bolt, barrel	8
123	GM15885	Bolt, barrel	8
124	GM15004	Washer, barrel	16
125	GM15874	Pin	9
126	GM14489	Cap, sealing	9
127	GM15883	Wire	1
128	GM15001	Seal	1
129	GM57262	Valve assembly, check	1
130	GM57259	Bellows	1
131	GM31444	Bolt, deflector	16
132	GM57261	Bolt, flange	2
133	GM22043	Screw, set	1
134	GM15891	Shim, T = 0.50 mm	4
135	GM15892	Shim, T = 0.10 mm	1
136	GM15893	Shim, T = 0.15 mm	1
137	GM15894	Shim, T = 0.50 mm	2
138	GM57762	Shim, barrel, T = 0.50 mm	1
139	GM57763	Shim, barrel, T = 0.60 mm	1
140	GM57688	Shim, barrel, T = 0.70 mm	1
141	GM15875	Shim, barrel, T = 0.80 mm	16
142	GM15876	Shim, barrel, T = 0.90 mm	1
143	GM15877	Shim, barrel, T = 1.00 mm	1
144	GM15882	Bolt, eye	2
145	GM57275	Flywheel	1
146	GM57266	Coupling	1

X Part is not sold separately.

Item	Part No.	Description	Qty. Var. 3
147	GM57276	Coupling, cross	1
148	GM57265	Plate, laminate	14
149	GM57268	Bushing	8
150	GM15921	Holder, plunger (service only)	8
151	GM57267	Washer, coupling	8
152	GM15991	Washer	2
153	X	Plate, q-set	1
154	GM15514	Pump fuel	1
155	GM14481	Rivet, screw	2
156	GM14527	Washer	3
157	X	Plate kit, laminate	1
158	GM14529	Washer, sealing	17
159	GM14530	Washer, sealing	6
160	GM15972	Bolt w/washer	2
161	GM15962	Bolt	1
162	GM57690	Coupling kit	1
163	GM15138	Bolt w/washer	8
164	GM31439	Bolt, w/washer	3
166	GM15987	Nut, jam	1
167	GM50474	Washer head	1
167	GM31440	Washer, coupling (use GM50474)	1
168	GM14571	Washer	1
169	GM15998	Key, woodruff	1
170	GM15884	Seal	1
171	GM21609	O-ring	2
172	GM21616	O-ring	1
173	GM14519	O-ring	2
174	GM15528	O-ring	8
175	GM57278	Coupling assembly	1
176	GM15237	Plug, screw	1
177	GM16041	Bearing, roller	2
178	GM22044	Gasket kit	1
179	GM57764	Pointer	1
180	GM57273	Nut, flange	2
181	GM57272	Washer, coupling	2
182	GM57274	Bolt, short	6
183	GM57271	Bolt, long	2
184	GM57578	Nut, self-locking	1
185	GM57264	Screw	1
186	GM57263	O-ring	1
187	GM15003	Spring, valve	1
188	GM15252	Ball, steel	1
189	GM31447	Body, valve	1
190	GM57258	Band	1
191	GM57689	Band	1
192	GM57687	Bolt, eye	1

silvermorn.co.uk

Group 61.6: Injection Pump, Right, continued

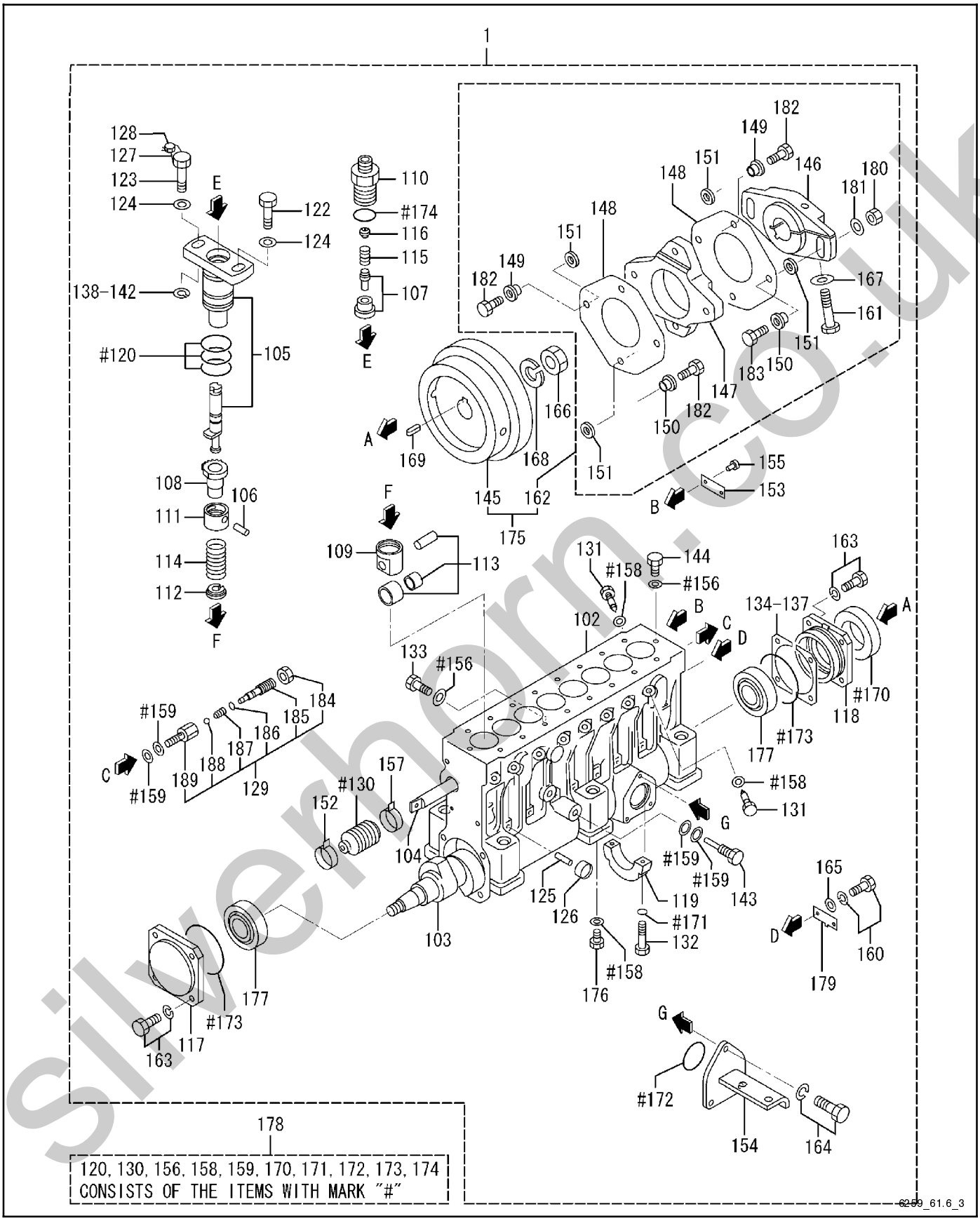

silverhorn.co.uk

Group 61.6: Injection Pump, Right, continued

Item	Part No.	Description	Qty. Var. 4
1	GM57822	Pump assembly, injection	1
102	TBD	Case, injection pump	1
103	GM57759	Camshaft	1
104	TBD	Rack	1
105	GM57760	Plunger assembly	8
106	GM57761	Pin, knock	8
107	GM57820	Valve assembly, delivery	8
108	GM31443	Pinion	8
109	GM15904	Tappet	8
110	GM37164	Holder, valve	8
111	GM15896	Seat	8
112	GM15897	Seat, lower spring	8
113	GM31448	Tappet assembly, roller	8
114	GM15888	Spring	8
115	GM21585	Spring, valve	8
116	GM31453	Stopper	8
117	GM22052	Cover, front	1
118	GM22041	Cover, rear	1
119	GM15872	Center bearing	1
120	GM15889	O-ring	24
121	GM57260	Bushing, rack	2
122	GM15873	Bolt, barrel	8
123	GM15885	Bolt, barrel	8
124	GM15004	Washer, barrel	16
125	GM15874	Pin	9
126	GM14489	Cap, sealing	9
127	GM15883	Wire	1
128	GM15001	Seal	1
129	GM57262	Valve assembly, check	1
130	GM57259	Bellows	1
131	GM31444	Bolt, deflector	16
132	GM57261	Bolt	2
133	GM22043	Screw, set	1
134	GM15891	Shim, T = 0.50 mm	AR
135	GM15892	Shim, T = 0.10 mm	AR
136	GM15893	Shim, T = 0.15 mm	AR
137	GM15894	Shim, T = 0.50 mm	AR
138	GM15875	Shim, barrel, T = 0.80 mm	AR
139	GM15876	Shim, barrel, T = 0.90 mm	AR
140	GM15877	Shim, barrel, T = 1.00 mm	AR
141	GM15878	Shim, barrel, T = 1.10 mm	AR
142	GM15879	Shim, barrel, T = 1.30 mm	AR
143	GM57687	Bolt, eye	1
144	GM15882	Bolt, eye	2
145	GM57275	Flywheel	1

Item	Part No.	Description	Qty. Var. 4
146	GM57266	Coupling	1
147	GM57276	Coupling, cross	1
148	GM57265	Plate, laminate	14
149	GM57268	Bushing	4
150	GM57268	Bushing	4
151	GM57267	Washer, coupling	8
152	GM57258	Band	1
153	X	Plate, q-set	1
154	GM57821	Bracket	1
155	GM14481	Rivet, screw	2
156	GM14527	Washer	3
157	GM57689	Band	1
158	GM14529	Washer, sealing	17
159	GM14530	Washer, sealing	4
160	GM15972	Bolt w/washer	2
161	GM15962	Bolt	1
162	GM57690	Coupling assembly	1
163	GM15138	Bolt w/washer	8
164	GM15973	Bolt	3
165	GM15991	Washer	2
166	GM15987	Nut, jam	1
167	GM50474	Washer head	1
167	GM31440	Washer, coupling (use GM50474)	1
168	GM14571	Washer	1
169	GM15998	Key, woodruff	1
170	GM15884	Seal	1
171	GM21609	O-ring	2
172	GM21616	O-ring	1
173	GM14519	O-ring	2
174	GM15528	O-ring	8
175	GM57278	Coupling kit	1
176	GM15237	Plug, screw	1
177	GM16041	Bearing, roller	2
178	GM22044	Gasket kit	1
179	GM57764	Pointer	1
180	GM57273	Nut, flange	2
181	GM57272	Washer, coupling	2
182	GM57274	Bolt, short	6
183	GM57271	Bolt, long	2
184	GM57578	Nut, self-locking	1
185	GM57264	Screw	1
186	GM57263	O-ring	1
187	GM15003	Spring, valve	1
188	GM15252	Ball, steel	1
189	GM31447	Body, valve	1

AR As Required
X Part is not sold separately.

silverhorn.co.uk

Group 61.7: Injection Pump, Left

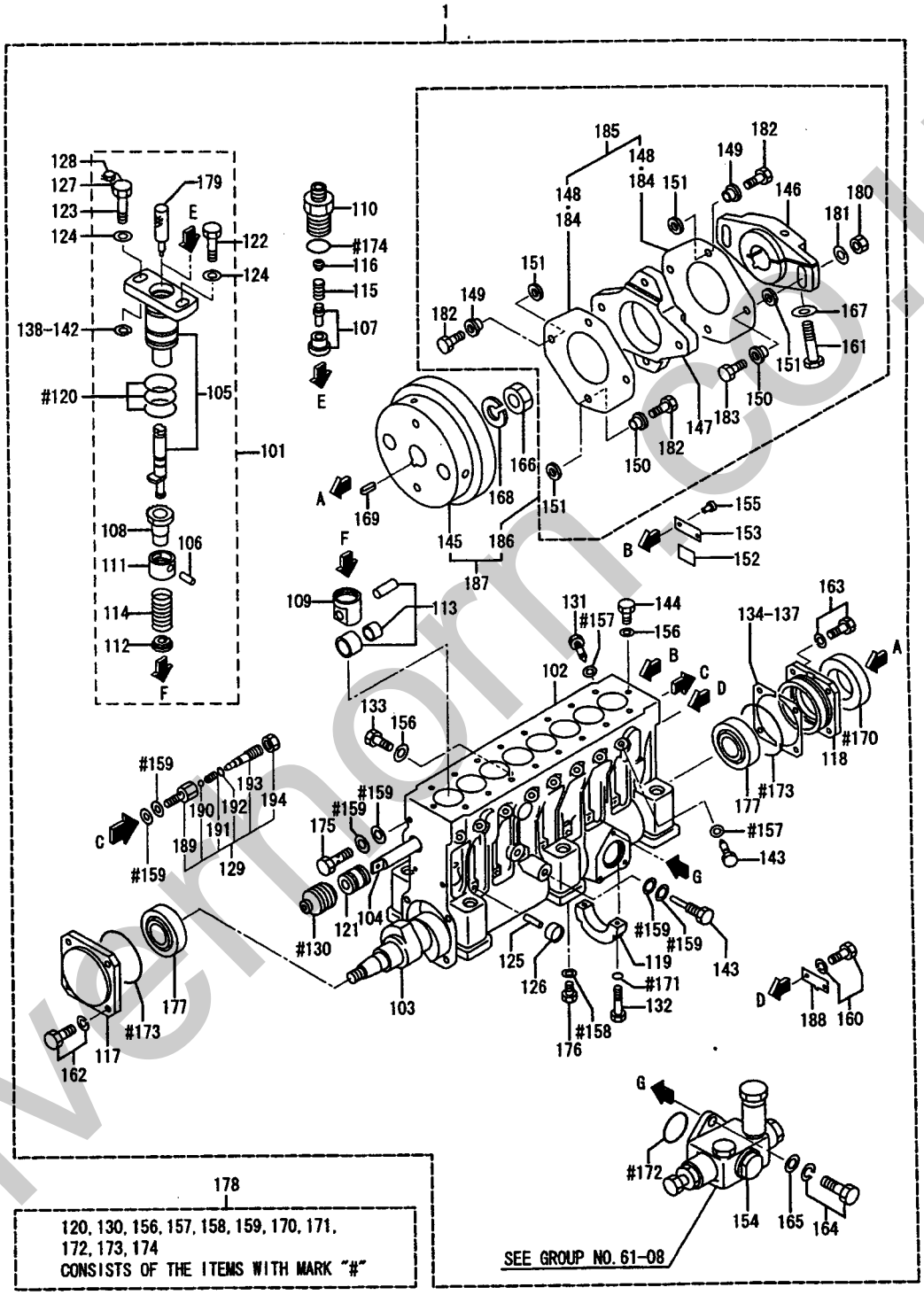

silvermorn.co.uk

Group 61.7: Injection Pump, Left, continued

Item	Part No.	Description	Qty. Var. 1	Qty. Var. 2
1	GM31717	Pump assembly, injection	1	
1	GM37268	Pump assembly, injection		1
101	GM22065	Block, twin plunger	1	
101	GM37262	Block, twin plunger		1
102	GM31711	Case, injection pump	1	
102	GM37269	Case, injection pump		1
103	GM31712	Camshaft	1	1
104	GM22053	Rack	1	
104	GM37264	Rack		1
105	GM31713	Plunger assembly	8	
105	—	Not sold separately		8
106	—	Not sold separately	8	8
107	GM22062	Valve assembly, delivery	8	8
108	GM22042	Pinion	8	
108	GM31443	Pinion		8
109	GM15904	Tappet	8	8
110	GM22061	Holder, valve	8	8
111	GM15896	Seat	8	8
112	GM15897	Seat	8	8
113	GM31448	Tappet assembly, roller	8	8
114	GM15888	Spring	8	8
115	GM21585	Spring, valve	8	8
116	GM31453	Stopper	8	8
117	GM22052	Cover, front	1	1
118	GM22041	Cover, rear	1	1
119	GM15872	Center bearing	1	1
120	GM15889	O-ring	24	24
121	GM15898	Bushing, rack	2	2
122	GM15873	Bolt, barrel	8	8
123	GM15885	Bolt, barrel	8	8
124	GM15004	Washer, barrel	16	16
125	GM15874	Pin	9	9
126	GM14489	Cap, sealing	9	9
127	GM15883	Wire	1	1
128	GM15001	Seal	1	1
129	GM31445	Valve, check	1	1
130	GM15890	Bellows	2	2
131	GM15903	Bolt, deflector	16	
131	GM31444	Bolt, deflector		16
132	GM15900	Bolt	2	2
133	GM22043	Screw, set	1	1
134	GM15891	Shim, T = 0.50 mm		
135	GM15892	Shim, T = 0.10 mm	1	1
136	GM15893	Shim, T = 0.15 mm	1	1
137	GM15894	Shim, T = 0.50 mm	1	1
138	GM15875	Shim, barrel, T = 0.80 mm	1	1
139	GM15876	Shim, barrel, T = 0.90 mm	1	1
140	GM15877	Shim, barrel, T = 1.00 mm	1	1
141	GM15878	Shim, barrel, T = 1.10 mm	1	1
142	GM15879	Shim, barrel, T = 1.30 mm	1	1
143	GM31718	Bolt, eye	1	1
144	GM15882	Bolt, eye	2	2
145	GM31451	Flywheel	1	1

Item	Part No.	Description	Qty. Var. 1	Qty. Var. 2
146	GM31715	Coupling	1	
146	GM37265	Coupling		1
147	GM31452	Coupling, cross	1	1
148	GM15908	Plate, laminate	12	12
149	GM15911	Bushing	4	4
150	GM15912	Bushing	4	4
151	GM15910	Washer, coupling	8	8
152	GM15566	Plate	4	
152	GM22045	Plate		4
154	GM15514	Pump fuel	1	1
155	GM14481	Rivet, screw	2	2
156	GM14527	Washer	3	3
157	GM14528	Washer, sealing	16	16
158	GM14529	Washer, sealing	1	1
159	GM14530	Washer, sealing	6	6
160	GM15972	Bolt w/washer	2	2
161	GM15962	Bolt	1	1
162	GM15976	Bolt w/washer	4	4
163	GM15138	Bolt w/washer	8	8
164	GM15973	Bolt w/washer	3	3
165	GM15991	Washer	3	3
166	GM15987	Nut, jam	1	1
167	GM15181	Washer, spring	1	1
168	GM14571	Washer	1	1
169	GM15998	Key, woodruff	1	1
170	GM15884	Seal	1	1
171	GM21609	O-ring	2	2
172	GM21616	O-ring	1	1
173	GM14519	O-ring	2	2
174	GM15528	O-ring	8	8
175	GM15917	Bolt, eye	1	1
176	GM15237	Plug, screw	1	1
177	GM16041	Bearing, roller	2	2
178	GM22044	Gasket kit	1	1
179	GM15921	Holder, plunger (service only)	1	1
180	GM22059	Nut, flange	2	2
181	GM31719	Washer, coupling	2	2
182	GM22060	Bolt	6	6
183	GM22057	Bolt	2	2
184	GM22045	Plate	4	4
185	GM31716	Plate kit	1	1
186	GM31454	Coupling assembly	1	
186	GM37266	Coupling assembly		1
187	GM31441	Coupling kit	1	
187	GM37267	Coupling kit		1
188	GM22038	Pointer	1	1
189	GM31447	Body, valve	1	1
190	GM15252	Ball, steel	1	1
191	GM15003	Spring, valve	1	1
192	GM14506	O-ring	1	1
193	GM31446	Screw	1	1
194	GM15171	Nut, jam	1	1

silverthorn.co.uk

Group 61.7: Injection Pump, Left, continued

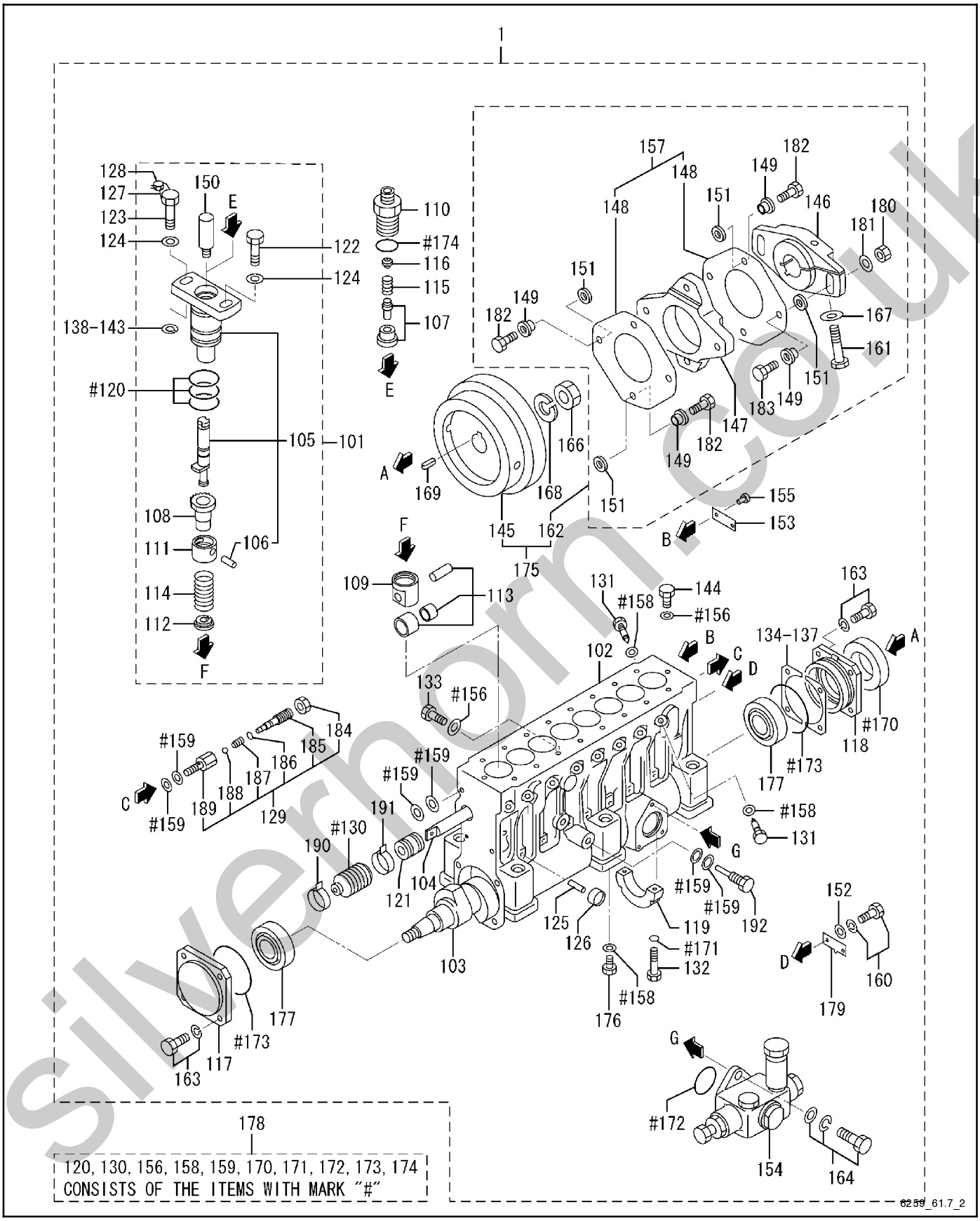

silvermorn.co.uk

Group 61.7: Injection Pump, Left, continued

Item	Part No.	Description	Qty. Var. 3
1	GM57765	Pump assembly, injection	1
101	GM57758	Block, twin plunger	1
102	TBD	Case, injection pump	1
103	GM57759	Camshaft	1
104	TBD	Rack	1
105	GM57760	Plunger assembly	8
106	GM57761	Pin, knock	8
107	X	Valve assembly, delivery	8
108	GM31443	Pinion	8
109	GM15904	Tappet	8
110	GM37164	Holder, valve	8
111	GM15896	Seat	8
112	GM15897	Seat	8
113	GM31448	Tappet assembly, roller	8
114	GM15888	Spring	8
115	GM21585	Spring, valve	8
116	GM31453	Stopper	8
117	GM22052	Cover, front	1
118	GM22041	Cover, rear	1
119	GM15872	Center bearing	1
120	GM15889	O-ring	24
121	GM57260	Bushing, rack	2
122	GM15873	Bolt, barrel	8
123	GM15885	Bolt, barrel	8
124	GM15004	Washer, barrel	16
125	GM15874	Pin	9
126	GM14489	Cap, sealing	9
127	GM15883	Wire	1
128	GM15001	Seal	1
129	GM57262	Valve assembly, check	1
130	GM57259	Bellows	1
131	GM31444	Bolt, deflector	16
132	GM57261	Bolt, flange	2
133	GM22043	Screw, set	1
134	GM15891	Shim, T = 0.50 mm	4
135	GM15892	Shim, T = 0.10 mm	1
136	GM15893	Shim, T = 0.15 mm	1
137	GM15894	Shim, T = 0.50 mm	2
138	GM57762	Shim, barrel, T = 0.50 mm	1
139	GM57763	Shim, barrel, T = 0.60 mm	1
140	GM57688	Shim, barrel, T = 0.70 mm	1
141	GM15875	Shim, barrel, T = 0.80 mm	16
142	GM15878	Shim, barrel, T = 1.10 mm	1
143	GM15877	Shim, barrel, T = 1.00 mm	1
144	GM15882	Bolt, eye	2
145	GM57275	Flywheel	1
146	GM57266	Coupling	1
147	GM57276	Coupling, cross	1
148	GM57265	Plate, laminate	14
149	GM57268	Bushing	8
150	GM15921	Holder, plunger (service only)	8
151	GM57267	Washer, coupling	8
152	GM15991	Washer	2
153	X	Plate, q-set	1
154	GM15514	Pump fuel	1
155	GM14481	Rivet, screw	2
156	GM14527	Washer	3
157	X	Plate kit, laminate	1
158	GM14529	Washer, sealing	17
159	GM14530	Washer, sealing	6
160	GM15972	Bolt w/washer	2
161	GM15962	Bolt	1
162	GM57690	Coupling kit	1
163	GM15138	Bolt w/washer	8
164	GM31439	Bolt, w/washer	3
166	GM15987	Nut, jam	1
167	GM50474	Washer head	1
167	GM31440	Washer, coupling (use GM50474)	1
168	GM14571	Washer	1
169	GM15998	Key, woodruff	1
170	GM15884	Seal	1
171	GM21609	O-ring	2
172	GM21616	O-ring	1
173	GM14519	O-ring	2
174	GM15528	O-ring	8
175	GM57692	Coupling assembly	1
176	GM15237	Plug, screw	1
177	GM16041	Bearing, roller	2
178	GM22044	Gasket kit	1
179	GM57764	Pointer	1
180	GM57273	Nut, flange	2
181	GM57272	Washer, coupling	2
182	GM57274	Bolt, short	6
183	GM57271	Bolt, long	2
184	GM57578	Nut, self-locking	1
185	GM57264	Screw	1
186	GM57263	O-ring	1
187	GM15003	Spring, valve	1
188	GM15252	Ball, steel	1
189	GM31447	Body, valve	1
190	GM57258	Band	1
191	GM57689	Band	1
192	GM57687	Bolt, eye	1

X Part is not sold separately.

silvermore.co.uk

Group 61.7: Injection Pump, Left, continued

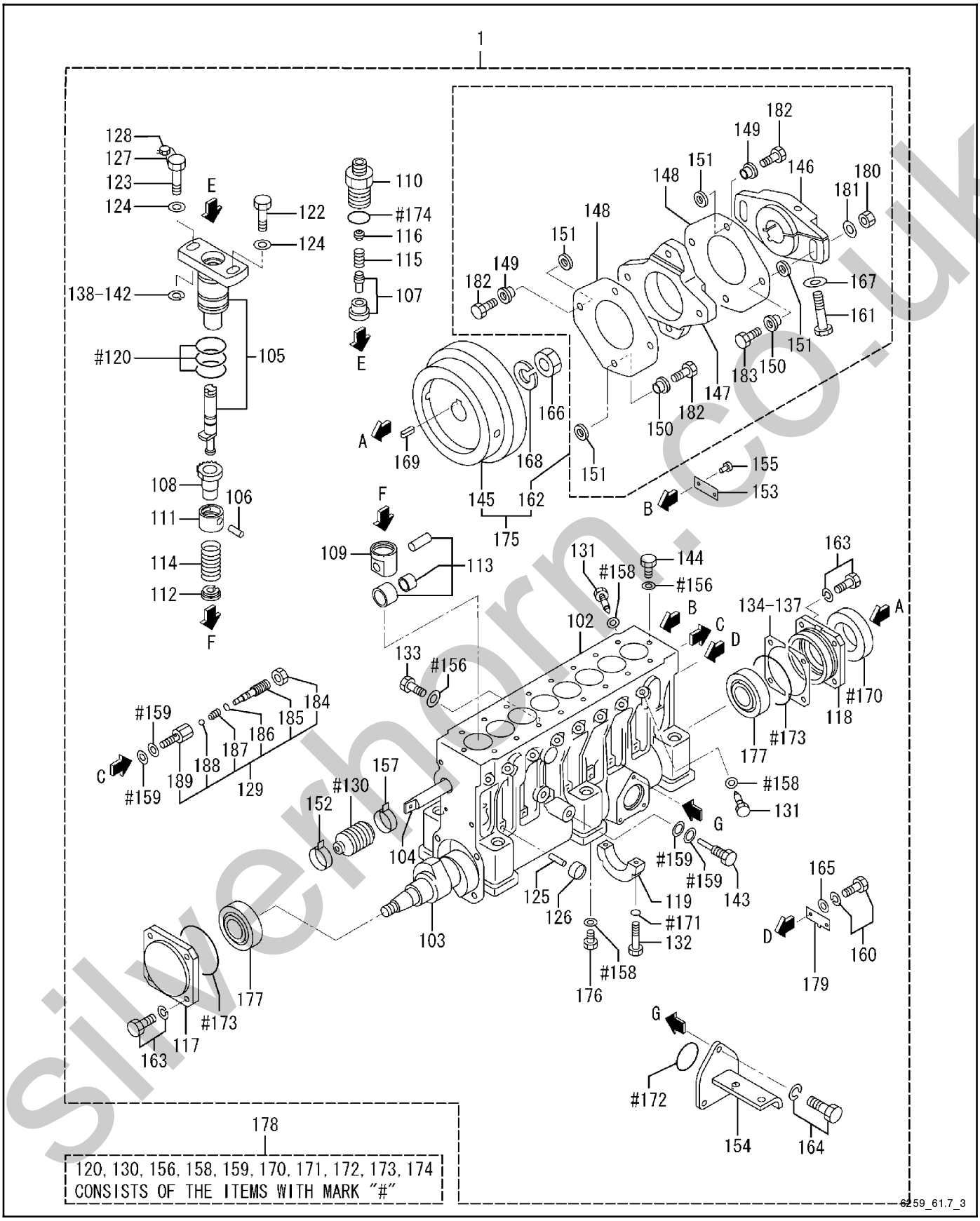

silverhorn.co.uk

Group 61.7: Injection Pump, Left, continued

Item	Part No.	Description	Qty. Var. 4
1	GM57818	Pump assembly, injection	1
102	TBD	Case, injection pump	1
103	GM31712	Camshaft	1
104	TBD	Rack	1
105	GM57760	Plunger assembly	8
106	GM57761	Pin, knock	8
107	GM57820	Valve assembly, delivery	8
108	GM31443	Pinion	8
109	GM15904	Tappet	8
110	GM37164	Holder, valve	8
111	GM15896	Seat	8
112	GM15897	Seat, lower spring	8
113	GM31448	Tappet assembly, roller	8
114	GM15888	Spring	8
115	GM21585	Spring, valve	8
116	GM31453	Stopper	8
117	GM22052	Cover, front	1
118	GM22041	Cover, rear	1
119	GM15872	Center bearing	1
120	GM15889	O-ring	24
121	GM57260	Bushing, rack	2
122	GM15873	Bolt, barrel	8
123	GM15885	Bolt, barrel	8
124	GM15004	Washer, barrel	16
125	GM15874	Pin	9
126	GM14489	Cap, sealing	9
127	GM15883	Wire	1
128	GM15001	Seal	1
129	GM57262	Valve assembly, check	1
130	GM57259	Bellows	1
131	GM31444	Bolt, deflector	16
132	GM57261	Bolt	2
133	GM22043	Screw, set	1
134	GM15891	Shim, T = 0.50 mm	AR
135	GM15892	Shim, T = 0.10 mm	AR
136	GM15893	Shim, T = 0.15 mm	AR
137	GM15894	Shim, T = 0.50 mm	AR
138	GM15875	Shim, barrel, T = 0.80 mm	AR
139	GM15876	Shim, barrel, T = 0.90 mm	AR
140	GM15877	Shim, barrel, T = 1.00 mm	AR
141	GM15878	Shim, barrel, T = 1.10 mm	AR
142	GM15879	Shim, barrel, T = 1.30 mm	AR
143	GM31714	Bolt, eye	1
144	GM15882	Bolt, eye	2
145	GM57275	Flywheel	1

Item	Part No.	Description	Qty. Var. 4
146	GM57266	Coupling	1
147	GM57276	Coupling, cross	1
148	GM57265	Plate, laminate	14
149	GM57268	Bushing	4
150	GM57268	Bushing	4
151	GM57267	Washer, coupling	8
152	GM57258	Band	1
153	X	Plate, q-set	1
154	GM57821	Bracket	1
155	GM14481	Rivet, screw	2
156	GM14527	Washer	3
157	GM57689	Band	1
158	GM14529	Washer, sealing	17
159	GM14530	Washer, sealing	4
160	GM15972	Bolt w/washer	2
161	GM15962	Bolt	1
162	GM57690	Coupling assembly	1
163	GM15138	Bolt w/washer	8
164	GM15973	Bolt	3
165	GM15991	Washer	2
166	GM15987	Nut, jam	1
167	GM50474	Washer head	1
167	GM31440	Washer, coupling (use GM50474)	1
168	GM14571	Washer	1
169	GM15998	Key, woodruff	1
170	GM15884	Seal	1
171	GM21609	O-ring	2
172	GM21616	O-ring	1
173	GM14519	O-ring	2
174	GM15528	O-ring	8
175	GM57692	Coupling kit	1
176	GM15237	Plug, screw	1
177	GM16041	Bearing, roller	2
178	GM22044	Gasket kit	1
179	GM57764	Pointer	1
180	GM57273	Nut, flange	2
181	GM57272	Washer, coupling	2
182	GM57274	Bolt, short	6
183	GM57271	Bolt, long	2
184	GM57578	Nut, self-locking	1
185	GM57264	Screw	1
186	GM57263	O-ring	1
187	GM15003	Spring, valve	1
188	GM15252	Ball, steel	1
189	GM31447	Body, valve	1

AR As Required
X Part is not sold separately.

silverhorn.co.uk

Group 61.8: Fuel Feed Pump

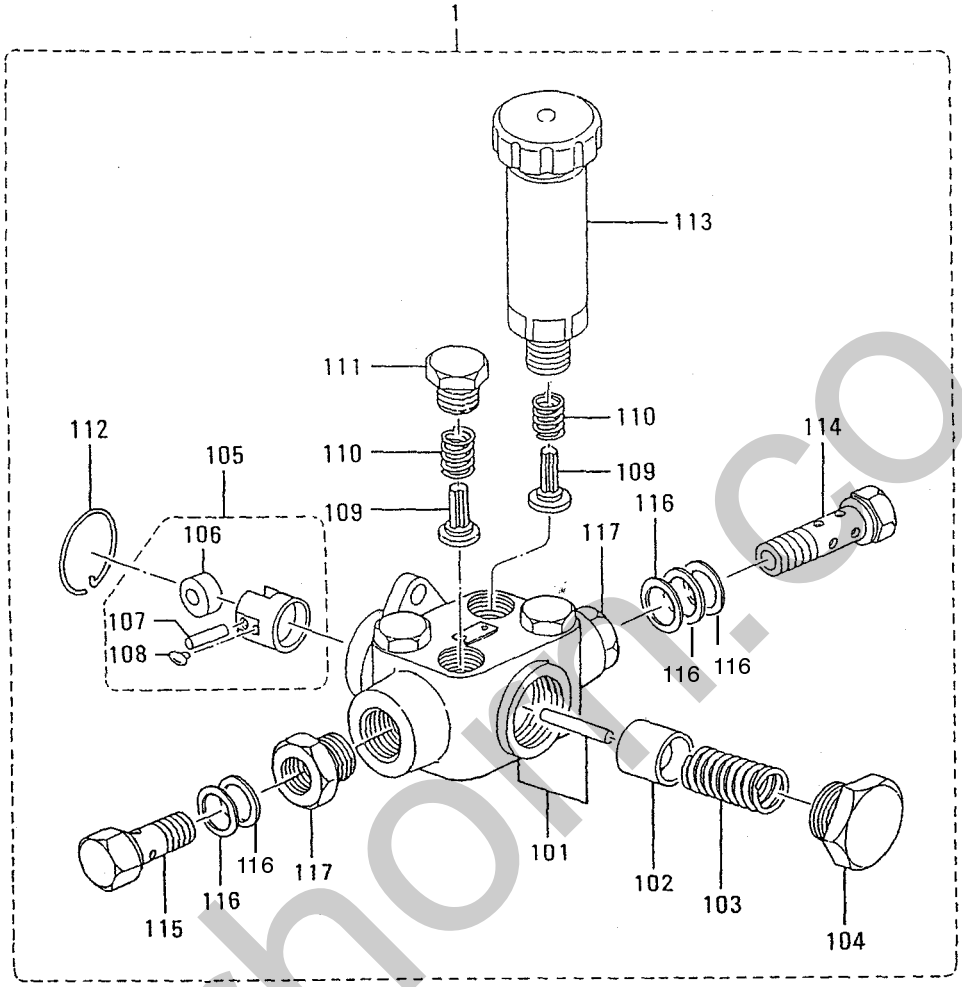

6259_61.8

Item	Part No.	Description	Qty. Var. 1
1	GM15514	Pump, fuel	1
101	GM15532	Housing	1
102	GM15533	Piston	1
103	GM15534	Spring, piston	1
104	GM15535	Plug	1
105	GM15536	Tappet assembly	1
106	GM15537	Roller	1
107	GM15538	Pin	1
108	GM15539	Guide	2
109	GM15540	Valve	4
110	GM15541	Spring	4
111	GM15542	Plug	3
112	GM15543	Ring, snap	1
113	GM15544	Pump, priming	1
114	GM15545	Eyebolt	1
115	GM15513	Eyebolt	1
116	GM14530	Washer, sealing	5
117	GM15546	Adapter	2

silverhorn.co.uk

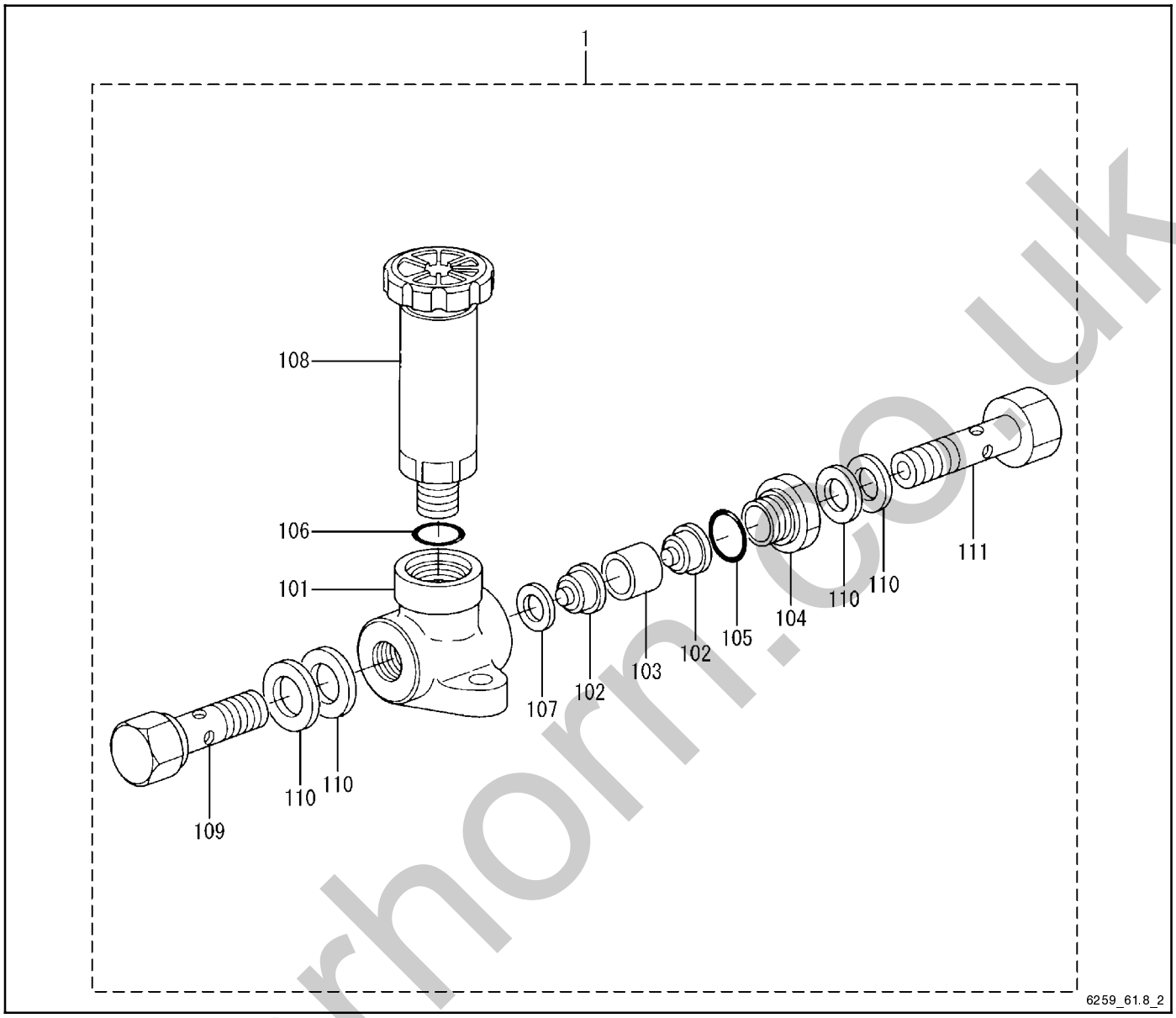

Item	Part No.	Description	Qty. Var. 2
1	GM14871	Pump, priming	2
101	GM57579	Cylinder	2
102	GM57580	Valve, check	4
103	GM57581	Bushing	2
104	GM57582	Adapter	2
105	GM57583	O-ring	2
106	GM36882	O-ring	2
107	GM57584	Gasket	2
108	GM36884	Pump, priming	2
109	GM57585	Bolt, eye	2
110	GM57586	Gasket	8
111	GM57587	Bolt, eye	2

silverhorn.co.uk

Group 62.1: Fuel Filter Piping

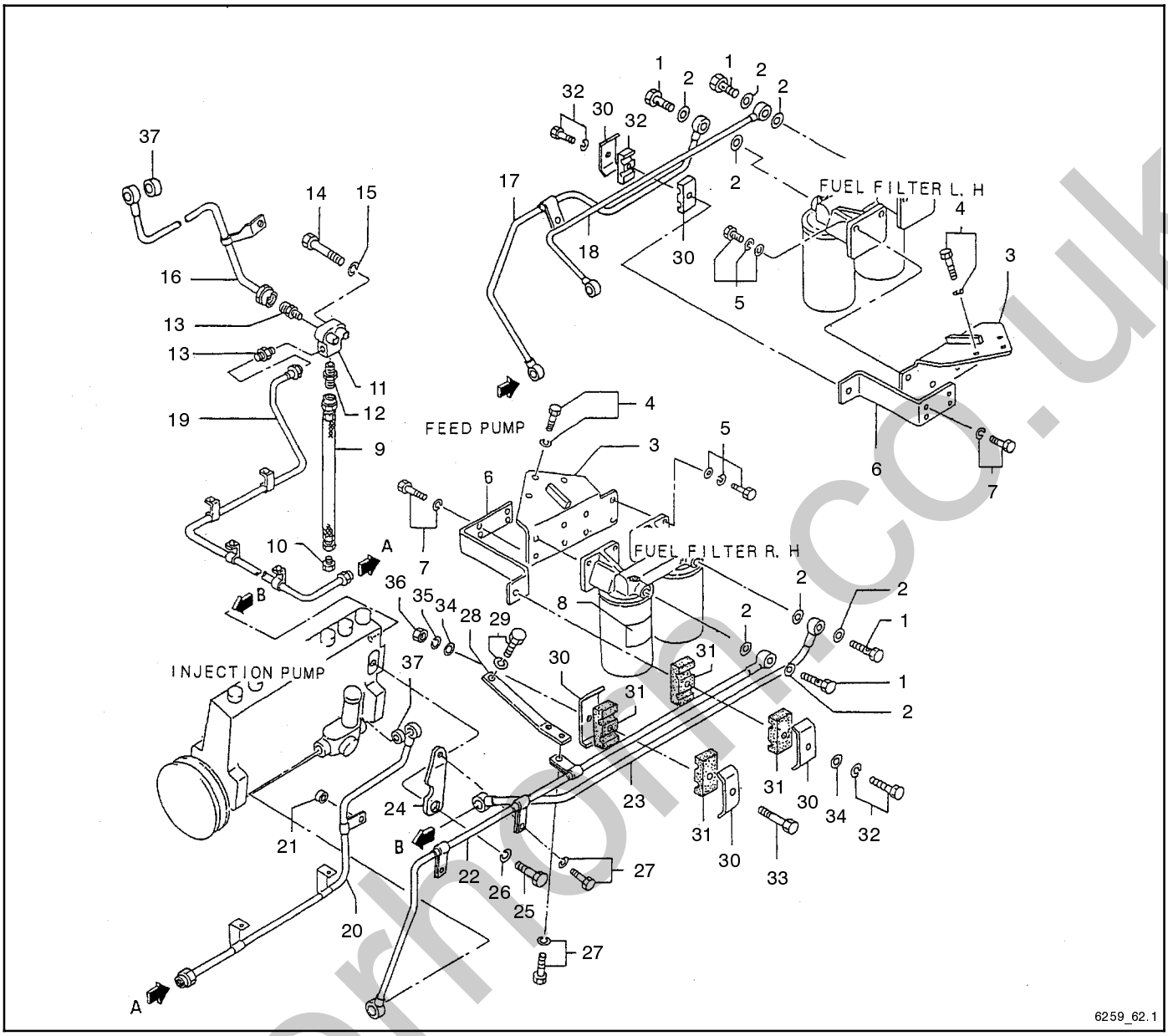

Item	Part No.	Description	Qty. Var. 1	Qty. Var. 2
1	GM15234	Eyebolt	4	4
2	GM14530	Washer, sealing	8	8
3	GM21900	Bracket, fuel filter	2	2
4	GM15151	Bolt w/washer	6	6
5	GM15154	Bolt w/washer	8	8
6	GM21898	Stay, pipe	2	
6	GM37169	Stay, pipe		2
7	GM15140	Bolt w/washer	4	4
8	GM21662	Label, caution	1	1
9	GM22029	Pipe	1	1
10	GM21587	Connector	1	1
11	GM21896	Connector	1	1
12	GM22127	Connector	1	1
13	GM16029	Connector	2	2
14	GM22095	Bolt	2	2
15	GM15180	Washer, spring	2	2
16	GM22017	Pipe, fuel	1	1
17	GM22020	Pipe, fuel	1	
17	GM37270	Pipe, fuel		1
18	GM22015	Pipe, fuel	1	
18	GM37271	Pipe, fuel		1
19	GM21905	Pipe, fuel	1	

Item	Part No.	Description	Qty. Var. 1	Qty. Var. 2
19	GM37173	Pipe, fuel		1
20	GM22018	Pipe, fuel	1	
20	GM37272	Pipe, fuel		1
21	GM21825	Spacer	1	1
22	GM22019	Pipe, fuel	1	
22	GM37273	Pipe, fuel		1
23	GM22016	Pipe, fuel	1	
23	GM37274	Pipe, fuel		1
24	GM21903	Stay, pipe	3	3
25	GM15960	Bolt	3	3
26	GM15181	Washer, spring	3	3
27	GM15139	Bolt w/washer	4	4
28	GM22014	Stay, fuel pipe	1	1
29	GM15150	Bolt w/washer	1	1
30	GM15599	Clamp	6	6
31	GM15600	Seat	8	8
32	GM15142	Bolt w/washer	2	2
33	GM15956	Bolt	2	2
34	GM15174	Washer, plain	6	6
35	GM15179	Washer, spring	2	2
36	GM15164	Nut	2	2
37	GM15803	Spacer	2	2

silverhorn.co.uk

Group 62.1: Fuel Filter Piping

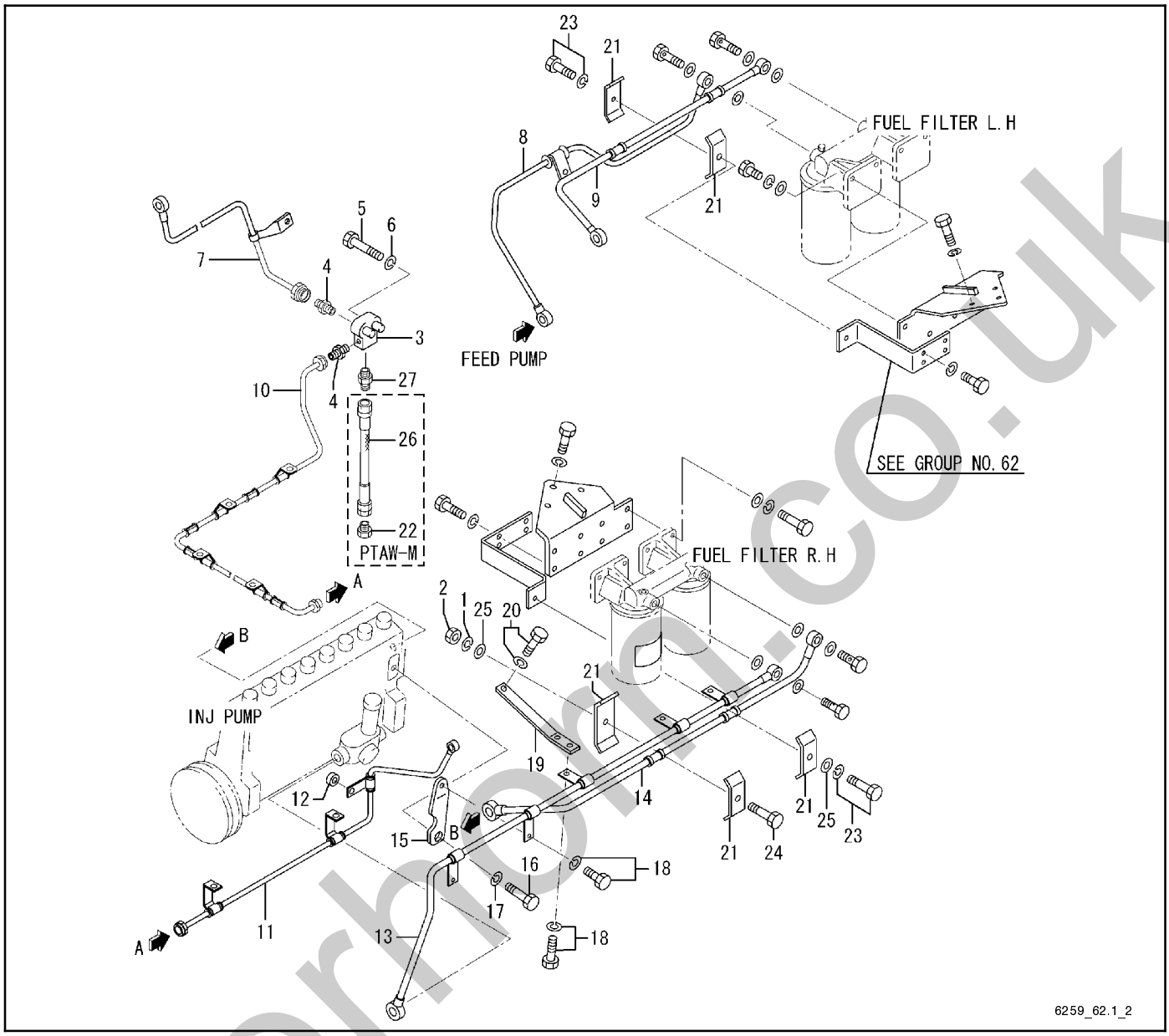

Item	Part No.	Description	Qty. Var. 3
1	GM15179	Washer, spring	2
2	GM15164	Nut	2
3	GM21896	Connector	1
4	GM16029	Connector	2
5	GM22095	Bolt	2
6	GM15180	Washer, spring	2
7	GM22017	Pipe, fuel	1
8	GM37270	Pipe, fuel	1
9	GM37271	Pipe, fuel	1
10	GM37173	Pipe, fuel	1
11	GM37272	Pipe, fuel	1
12	GM21825	Spacer	1
13	GM37273	Pipe, fuel	1
14	GM37274	Pipe, fuel	1

Item	Part No.	Description	Qty. Var. 3
15	GM21903	Stay, pipe	3
16	GM15960	Bolt	3
17	GM15181	Washer, spring	3
18	GM15139	Bolt w/washer	4
19	GM57767	Stay, fuel pipe	1
20	GM15150	Bolt	1
21	GM15599	Clamp	8
22	GM21587	Connector	1
23	GM15142	Bolt w/washer	2
24	GM15956	Bolt	2
25	GM15174	Washer, plain	6
26	GM22029	Pipe	1
27	GM22127	Connector	1

silverhorn.co.uk

Group 62.1: Fuel Filter Piping, continued

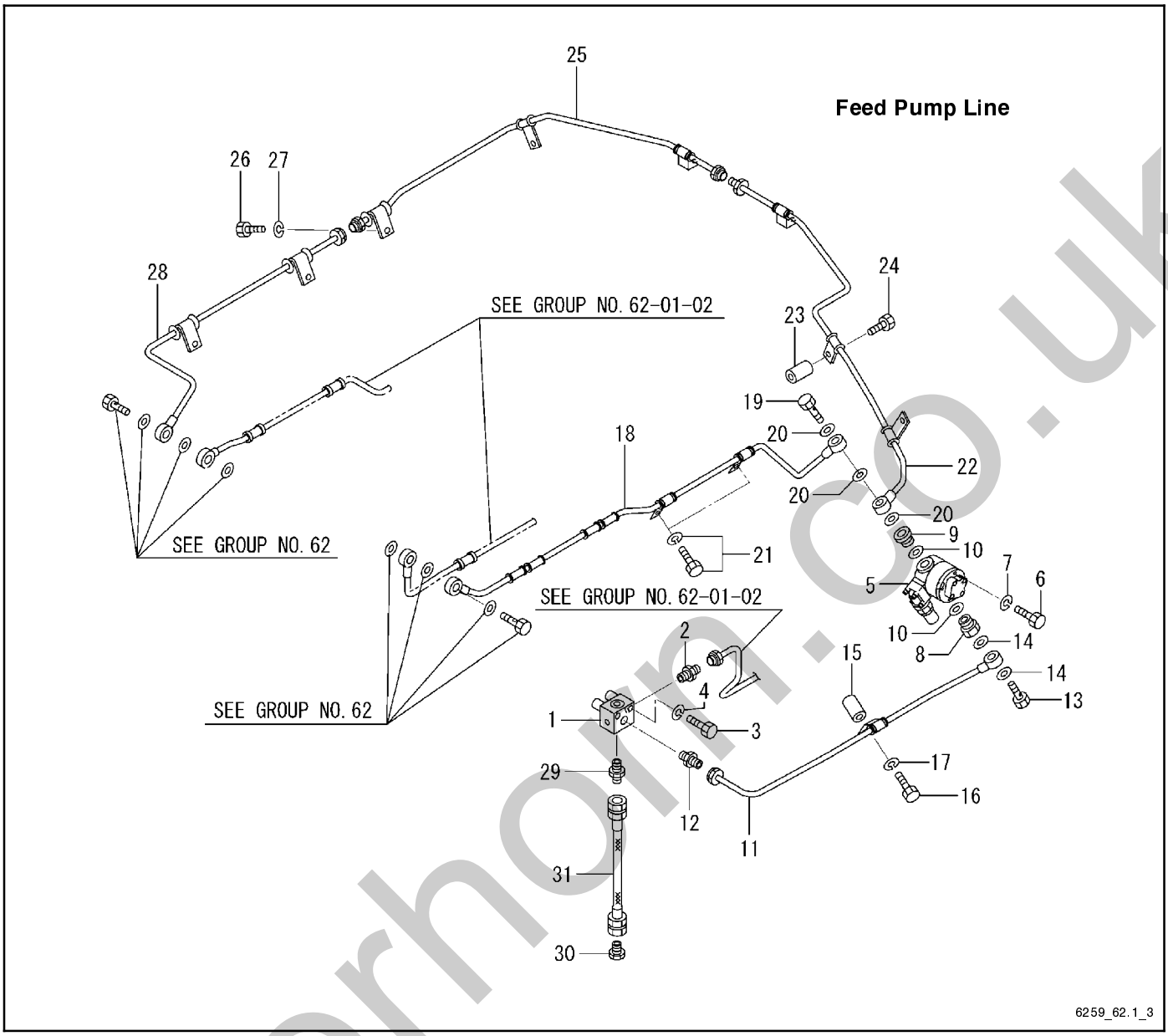

Item	Part No.	Description	Qty. Var. 4
1	GM57826	Connector, fuel	1
2	GM16029	Connector	1
3	GM57827	Bolt	2
4	GM15180	Washer, spring	2
5	GM34247	Pump, feed	1
6	GM57828	Bolt	2
7	GM15178	Washer, spring	2
8	GM14790	Connector	1
9	GM57829	Connector	1
10	GM21627	Washer, sealing	2
11	GM57830	Pipe, fuel	1
12	GM15231	Connector	1
13	GM15236	Bolt, eye	1
14	GM14532	Washer, sealing	2
15	GM57831	Pipe	1
16	GM15119	Bolt	1

Item	Part No.	Description	Qty. Var. 4
17	GM15180	Washer, spring	1
18	GM57832	Pipe, fuel	1
19	GM57833	Bolt, eye	1
20	GM14531	Washer, sealing	3
21	GM15140	Bolt	2
22	GM57834	Pipe, fuel	1
23	GM57831	Pipe	2
24	GM15112	Bolt	1
25	GM57835	Pipe, fuel	1
26	GM57836	Bolt	2
27	GM15180	Washer, spring	2
28	GM57837	Pipe, fuel	1
29	GM22127	Connector	1
30	GM21587	Connector	1
31	GM22029	Pipe	1

silverhorn.co.uk

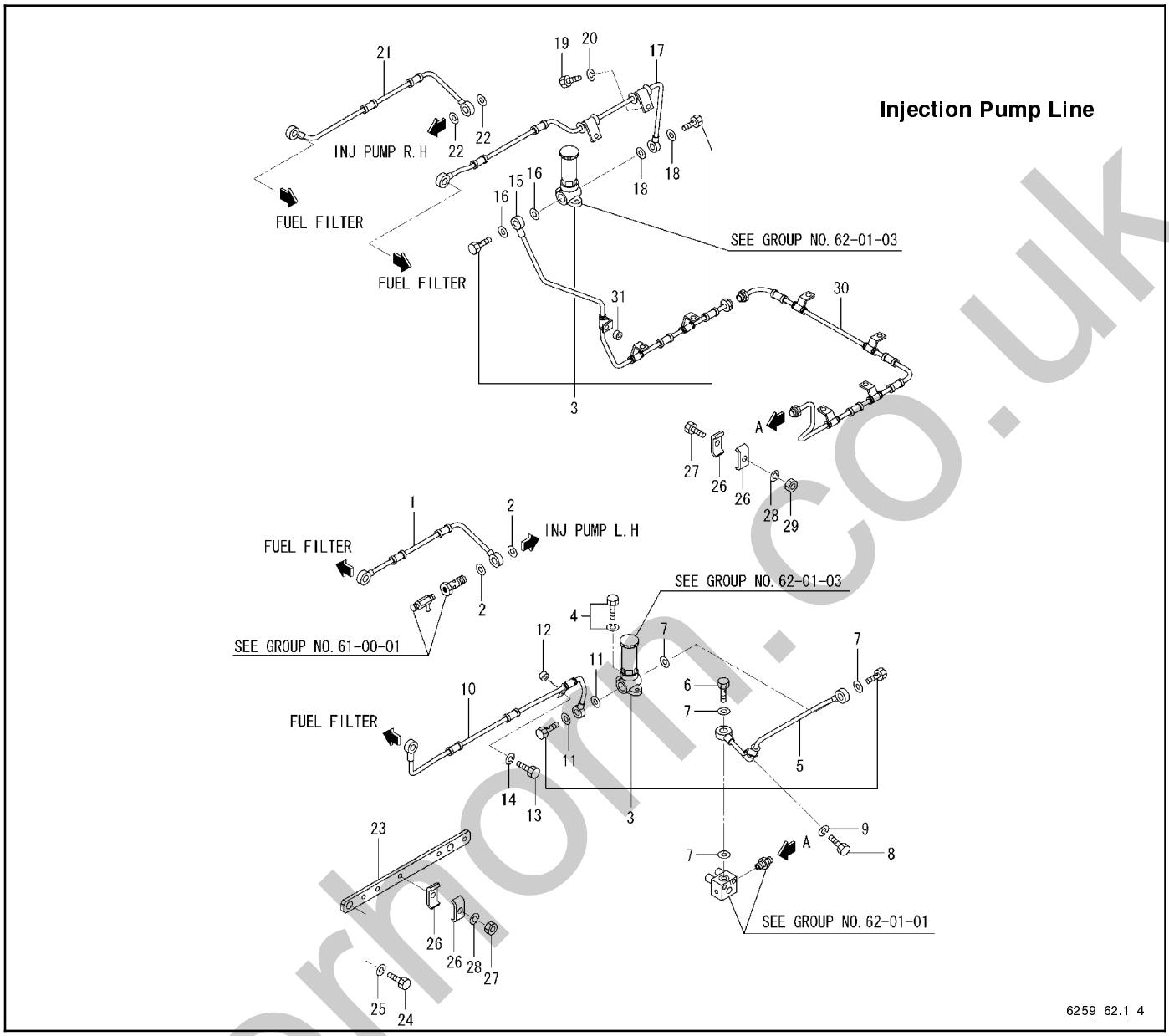

Item	Part No.	Description	Qty. Var. 4
1	GM57838	Pipe, fuel	1
2	GM14530	Washer, sealing	2
3	GM14871	Pump, priming	2
4	GM15975	Bolt w/washer	4
5	GM57839	Pipe, fuel	1
6	GM15234	Bolt, eye	1
7	GM14530	Washer, sealing	4
8	GM57836	Bolt	1
9	GM15180	Washer, spring	1
10	GM57840	Pipe, fuel	1
11	GM14530	Washer, sealing	2
12	GM57342	Spacer	1
13	GM15108	Bolt	1
14	GM15180	Washer, spring	1
15	GM57841	Pipe, fuel	1
16	GM14530	Washer, sealing	2

Item	Part No.	Description	Qty. Var. 4
17	GM57842	Pipe, fuel	1
18	GM14530	Washer, sealing	2
19	GM57836	Bolt	2
20	GM15180	Washer, spring	2
21	GM57843	Pipe, fuel	1
22	GM14530	Washer, sealing	2
23	GM57844	Stay, pipe	2
24	GM15961	Bolt	4
25	GM15181	Washer, spring	4
26	GM34323	Pipe, fuel fr	12
27	GM15957	Bolt	6
28	GM15179	Washer, spring	6
29	GM15164	Nut	4
30	GM37173	Pipe, fuel	1
31	GM21825	Spacer	1

silvermorn.co.uk

Group 62.2: Fuel Filter

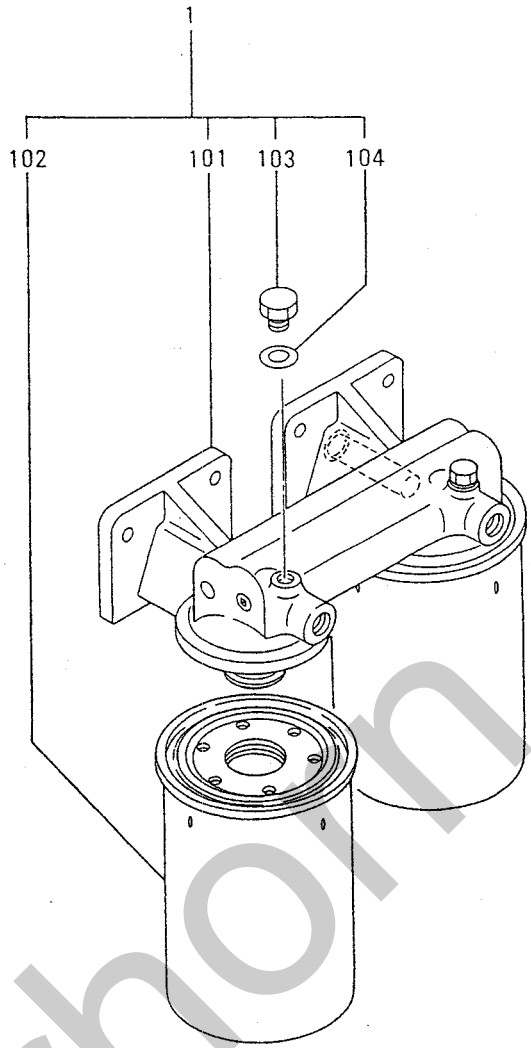

6259_62.2

Item	Part No.	Description	Qty. Var. 1
1	GM21741	Filter assembly	2
101	GM14930	Bracket assembly	2
102	GM13947	Filter, fuel	4
103	GM14609	Plug, air	4
104	GM14527	Washer	4

silverhorn.co.uk

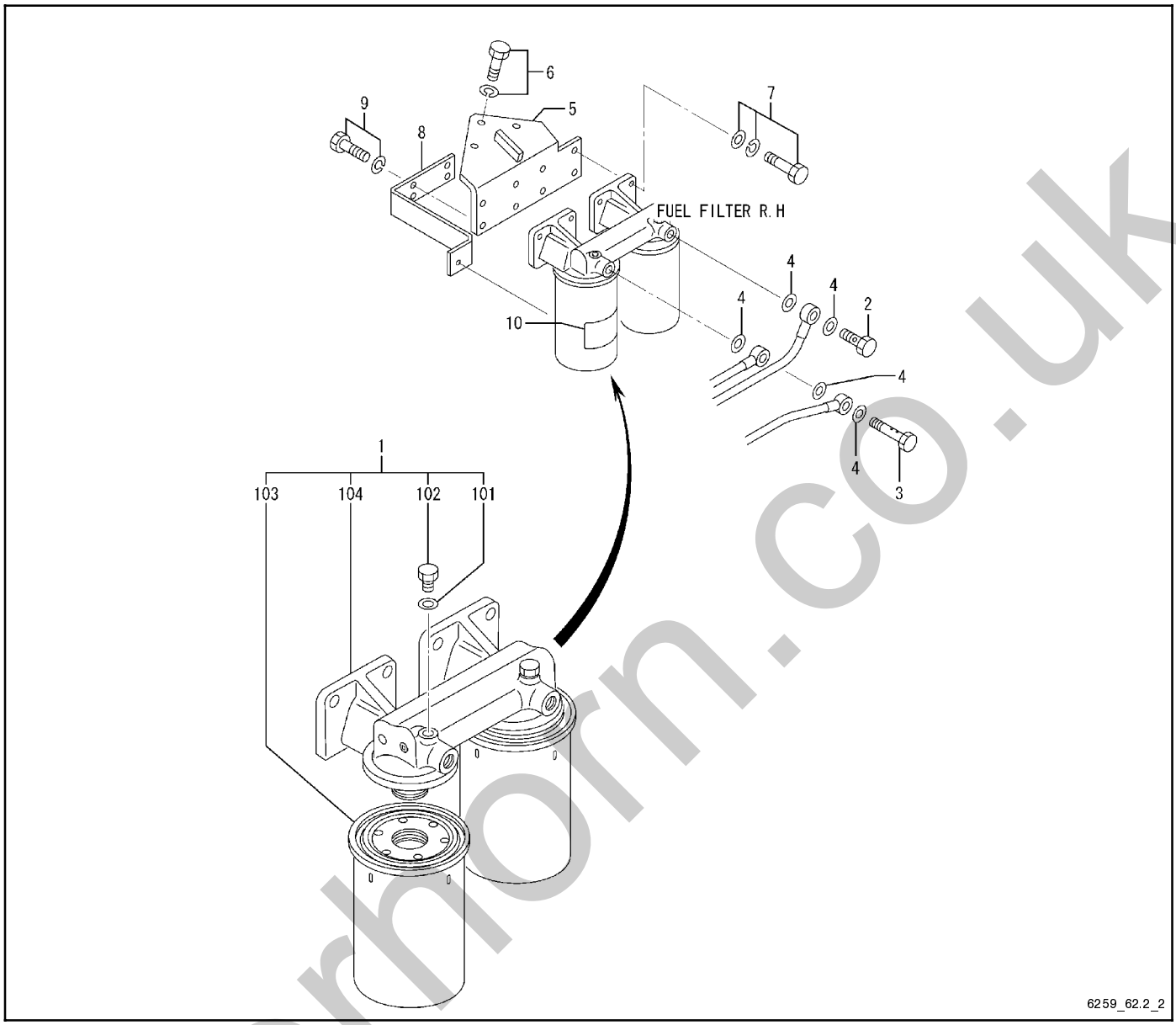

Item	Part No.	Description	Qty. Var. 2	Qty. Var. 3
1	GM21741	Filter assembly	2	2
101	GM14527	Washer	4	4
102	GM14609	Plug, air	4	4
103	GM13947	Filter, fuel	4	4
104	GM14930	Bracket assembly	2	2
2	GM15234	Bolt, eye	4	2
3	GM57824	Joint		2
4	GM14530	Washer, sealing	8	8
5	GM21900	Bracket, fuel filter	2	2
6	GM15151	Bolt	6	6
7	GM15154	Bolt	8	8
8	GM37169	Stay, pipe	2	
8	GM57825	Stay, pipe		2
9	GM15140	Bolt	4	4
10	GM21662	Label, caution	1	1

silverhorn.co.uk

Group 63.1: Governor Control

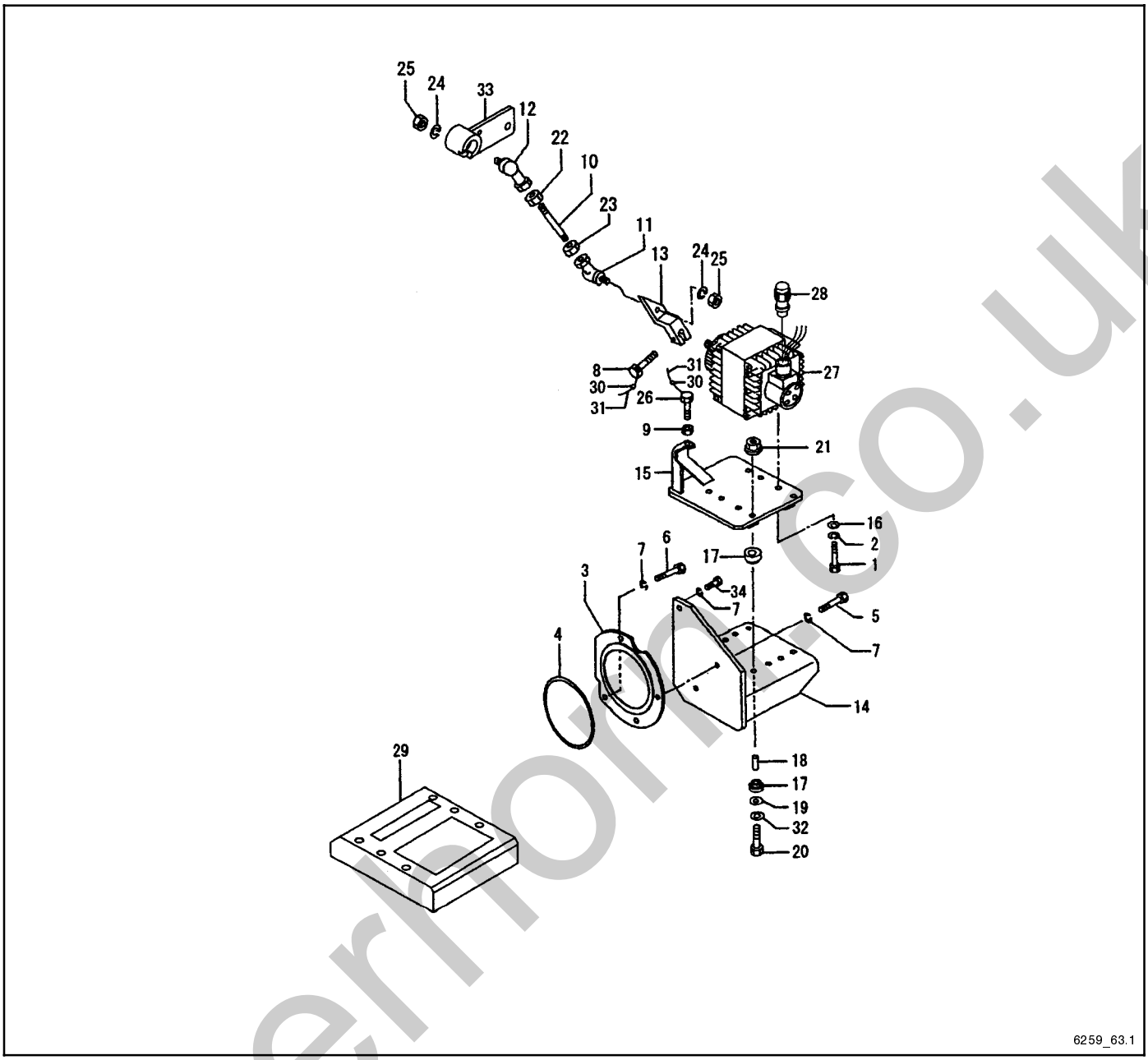

Item	Part No.	Description	Qty. Var. 1	Qty. Var. 2
1	GM21906	Bolt	4	4
2	GM15178	Washer, spring	4	4
3	GM15868	Cover	1	1
4	GM21624	O-ring	1	1
5	GM15109	Bolt	3	3
6	GM15107	Bolt	1	1
7	GM15180	Washer, spring	4	4
8	GM15127	Bolt	1	1
9	GM37275	Nut	1	1
10	GM21626	Bolt	1	1
11	GM21676	Joint, ball	1	1
12	GM21677	Joint, ball	1	1
13	GM21909	Lever, throttle	1	
13	GM37178	Lever, throttle		1
14	GM21910	Bracket, proact	1	1
15	GM21911	Plate, proact	1	1
16	GM15173	Washer, plain	4	4
17	GM21637	Mount	8	8
18	GM21674	Spacer	4	4

Item	Part No.	Description	Qty. Var. 1	Qty. Var. 2
19	GM22087	Washer	4	4
20	GM31469	Bolt, w/washer	4	
20	GM37279	Bolt, w/washer		4
21	GM21908	Nut, lock	4	4
22	GM15531	Nut, lock	2	2
23	GM15985	Nut	1	1
24	GM15178	Washer, spring	2	2
25	GM15163	Nut	2	2
26	GM31483	Bolt	1	1
27	GM31464	Actuator, proact	1	
27	GM21678	Actuator, proact		1
28	GM22021	Cap, proact	1	1
29	GM31720	Controller	1	1
30	GM15001	Seal	1	1
31	GM31470	Wire, seal	1	1
32	GM15178	Washer, spring	4	4
33	GM31721	Lever	1	
33	GM37183	Lever		1
34	GM15100	Bolt	2	2

silverhorn.co.uk

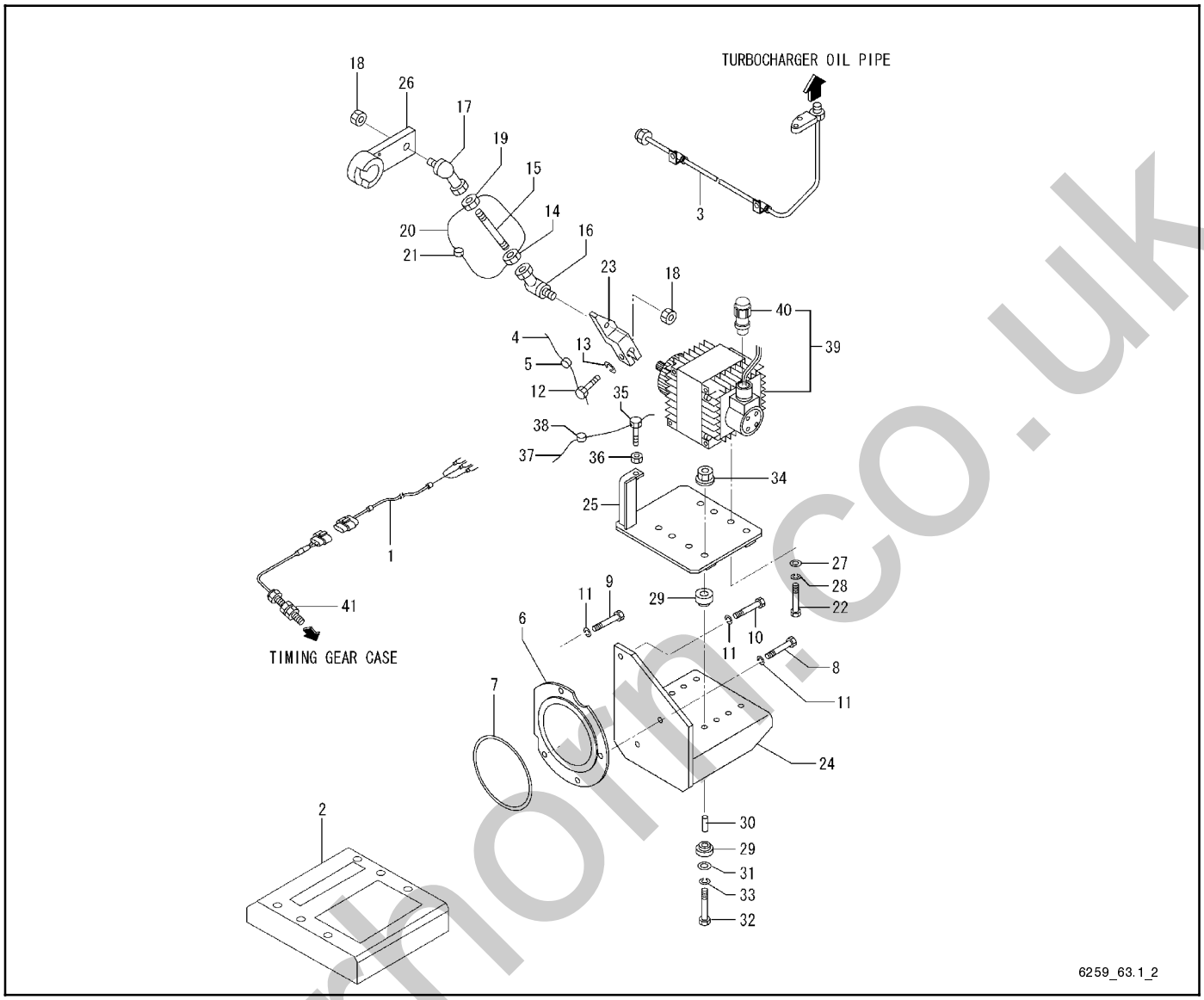

Item	Part No.	Description	Qty. Var. 3	Qty. Var. 4
1	GM21599	Cable, pickup	1	1
2	GM62222	Controller	1	1
3	GM21981	Pipe, oil	1	1
4	GM14463	Wire, seal	1	1
5	GM15001	Seal	1	1
6	GM15868	Cover	1	1
7	GM21624	O-ring	1	1
8	GM15109	Bolt	1	1
9	GM15107	Bolt	1	1
10	GM15110	Bolt	2	2
11	GM15180	Washer, spring	4	4
12	GM15127	Bolt	1	1
13	GM15178	Washer, spring	1	1
14	GM52476	Nut, lock	1	1
15	GM57698	Rod	1	
15	GM21626	Rod		1
16	GM21676	Joint, ball	1	1
17	GM21677	Joint, ball	1	1
18	GM31420	Nut, self-locking	2	2
19	GM34252	Nut, lock	1	1
20	GM14463	Wire, seal	1	1
21	GM15001	Seal	1	1

Item	Part No.	Description	Qty. Var. 3	Qty. Var. 4
22	GM21906	Bolt	4	4
23	GM57699	Lever, throttle	1	1
24	GM21910	Bracket, proact	1	1
25	GM57700	Plate, proact	1	1
26	GM37183	Lever	1	1
27	GM15173	Washer, plain	4	4
28	GM15178	Washer, spring	4	4
29	GM21637	Mount	8	8
30	GM21674	Spacer	4	4
31	GM22087	Washer	4	4
32	GM31469	Bolt	4	4
33	GM15178	Washer, spring	4	4
34	GM21908	Nut, lock	4	4
35	GM31483	Bolt	1	1
36	GM52476	Nut, lock	1	1
37	GM14463	Wire, seal	1	1
38	GM15001	Seal	1	1
39	GM31464	Actuator, proact	1	1
40	GM22021	Cap, proact	1	1
41	GM31302	Pickup, magnetic	1	1

silverthorn.co.uk

Group 63.2: Boost Sensor

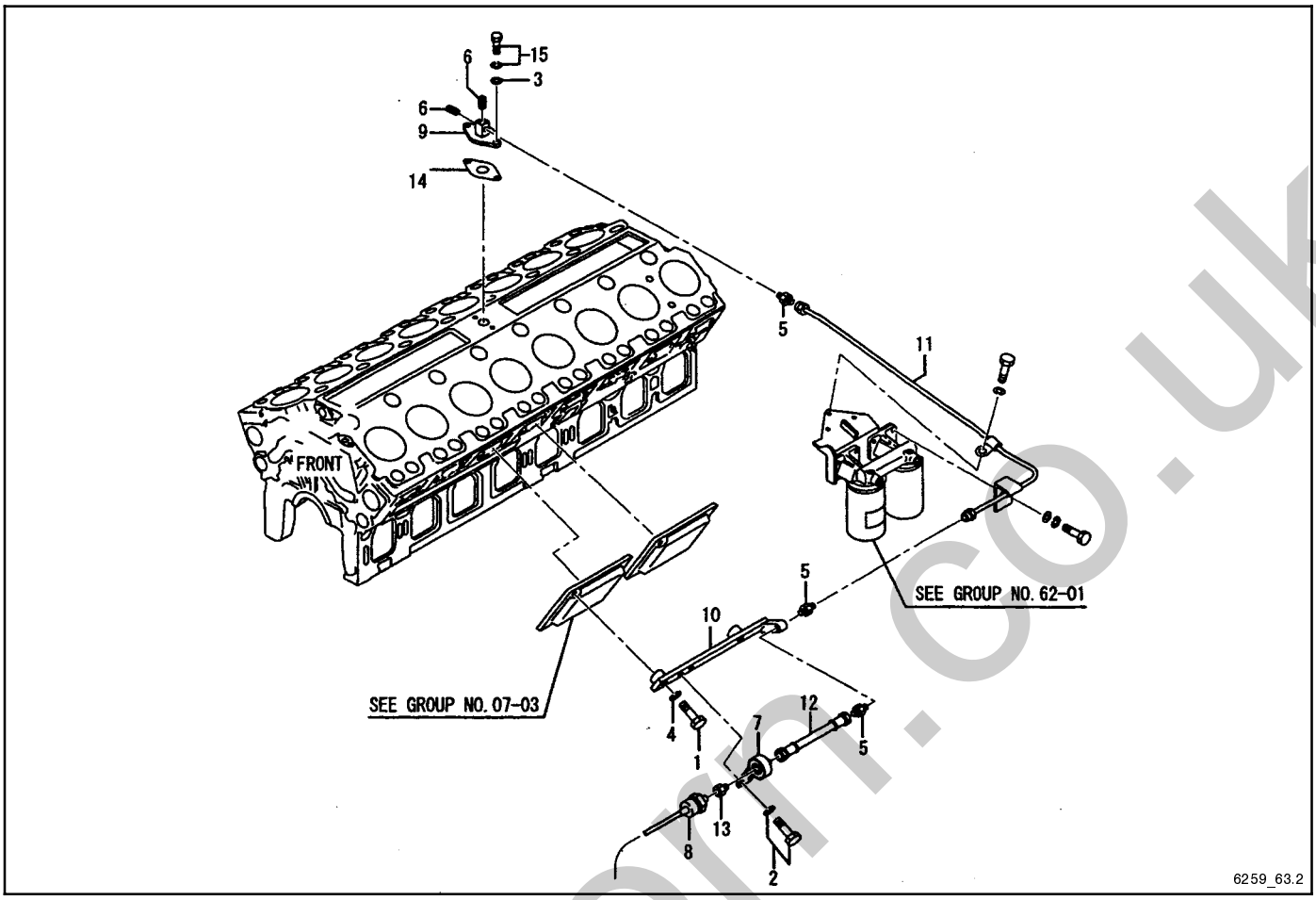

Item	Part No.	Description	Qty. Var. 1	Qty. Var. 2
1	GM15116	Bolt	2	2
2	GM15140	Bolt w/washer	2	2
3	GM15175	Washer	2	2
4	GM15180	Washer, spring	2	2
5	GM15230	Connector	3	3
6	GM15246	Plug, tapered	2	2
7	GM21655	Mount	1	1
8	GM21744	Sensor, boost	1	1
9	GM22023	Cover	1	1
10	GM31722	Bracket	1	1
11	GM31723	Pipe, boost	1	1
12	GM31724	Pipe, flexible	1	
12	GM37277	Pipe, flexible		1
13	GM22082	Connector	1	1
14	GM21730	Gasket	1	1
15	GM15150	Bolt w/washer	2	2

silverhorn.co.uk

Group 63.2: Boost Sensor

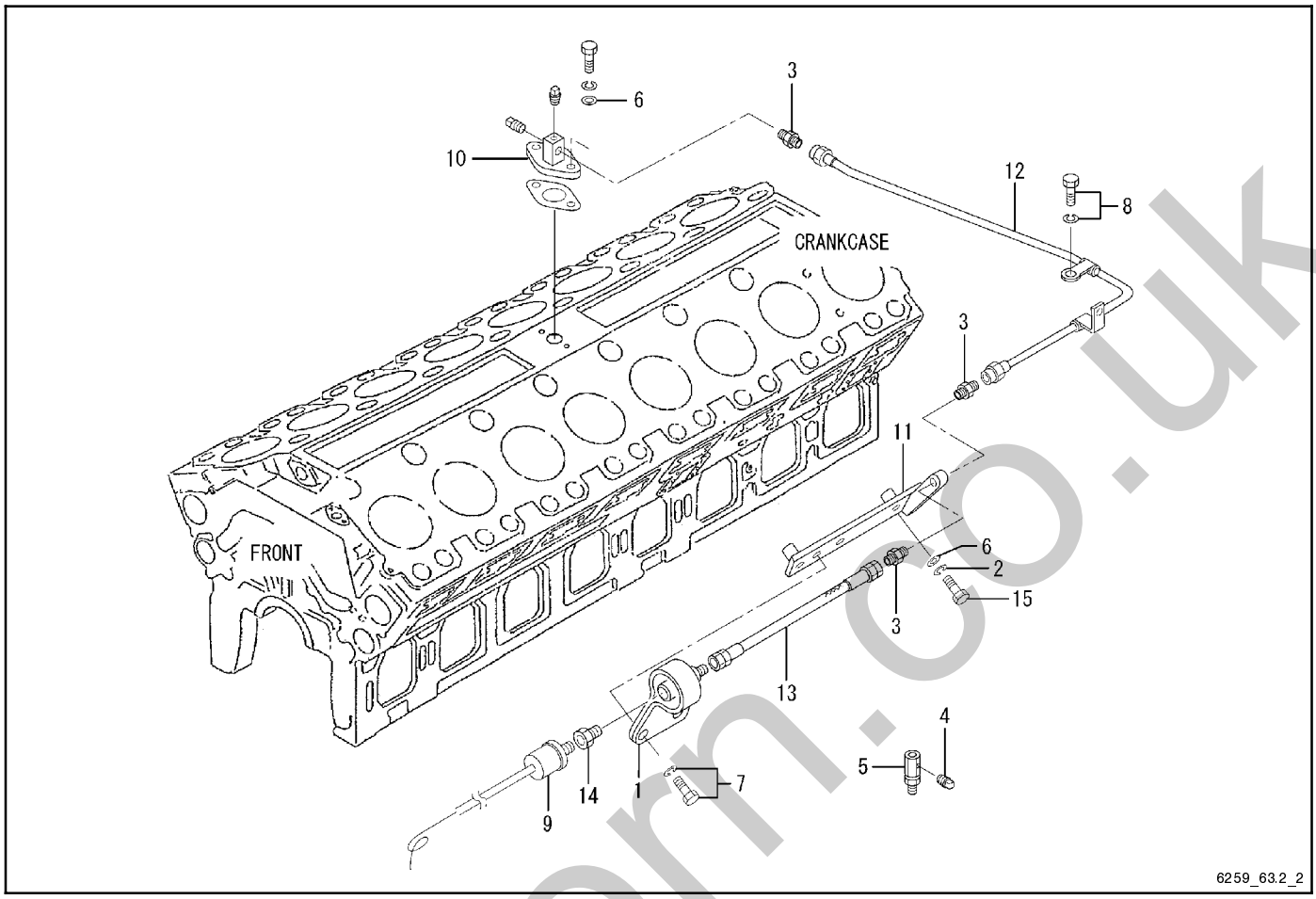

Item	Part No.	Description	Qty. Var. 3
1	GM21655	Mount	1
2	GM15180	Washer, spring	2
3	GM15230	Connector	3
4	GM15246	Plug, tapered	2
5	GM57768	Connector	2
6	GM15175	Washer	4
7	GM15140	Bolt	2
8	GM15150	Bolt	1
9	GM21744	Sensor, boost	1
10	GM22023	Cover	1
11	GM31722	Bracket, boost	1
12	GM31723	Pipe, boost	1
13	GM37277	Pipe, flexible	1
14	GM22082	Connector	1
15	GM15116	Bolt	2

silverhorn.co.uk

Group 66: Starter

Parts without items numbers are not supplied separately.

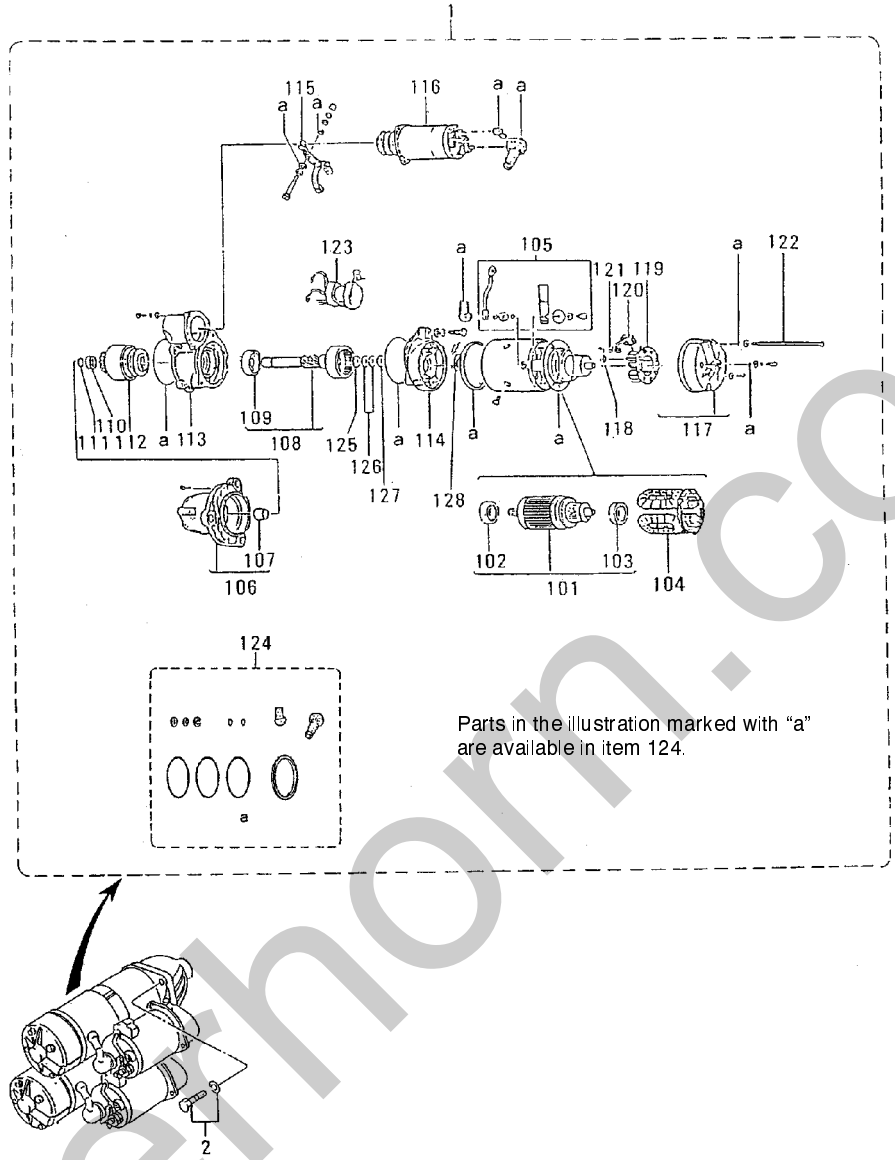

6259_66

Item	Part No.	Description	Qty. Var. 1
1	GM21913	Starter	2
2	GM15152	Bolt w/washer	6
101	GM21590	Armature	2
102	GM21641	Bearing, ball	2
103	GM21640	Bearing, ball	2
104	GM21591	Coil, field	2
105	GM22086	Terminal	2
106	GM21592	Bracket	2
107	GM22085	Metal	2
108	GM22084	Shaft	2
109	GM21639	Bearing, ball	2
110	GM21642	Stopper, pinion	2
111	GM21648	Ring, clip	2
112	GM21593	Stopper clutch assembly	2
113	GM21645	Housing	2

Item	Part No.	Description	Qty. Var. 1
114	GM21644	Bracket	2
115	GM21643	Yoke assembly	2
116	GM21601	Switch assembly	2
117	GM21594	Bracket	2
118	GM21647	Spring, brush	8
119	GM21595	Holder, brush	2
120	GM21646	Brush	8
121	GM21652	Plate	8
122	GM21589	Bolt	4
123	GM21597	Switch	2
124	GM22083	Kit, seal	2
125	GM21649	Washer	2
126	GM21650	Washer	4
127	GM21651	Washer	2
128	GM21596	Washer	4

silverhorn.co.uk

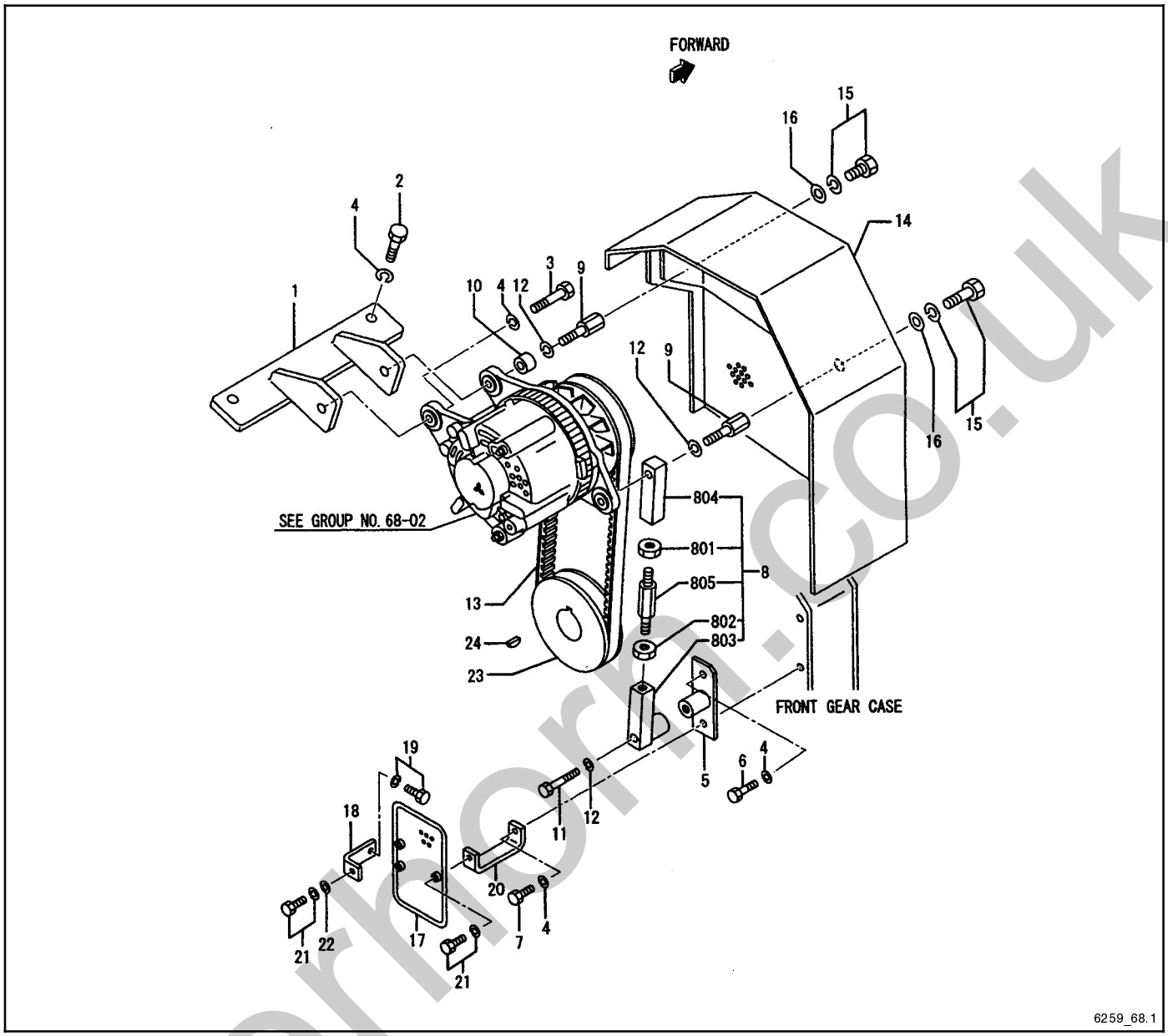

Item	Part No.	Description	Qty. Var. 1	Var. 2	Var. 3
1	GM21918	Bracket, alternator	1	1	
1	GM57701	Bracket, alternator			1
2	GM15108	Bolt	2	2	2
3	GM15109	Bolt	1	1	1
4	GM15180	Washer, spring	5	5	5
5	GM21919	Bracket, alternator	1	1	1
6	GM15109	Bolt	1	1	1
7	GM15110	Bolt	1	1	1
8	GM21743	Rod, adjusting	1		
801	GM15172	Nut	1	1	1
802	GM21638	Nut, lock	1	1	1
803	GM15851	Rod	1	1	1
804	GM14951	Rod	1	1	1
805	GM14986	Rod, adjusting	1		
805	GM34348	Rod, adjusting		1	1
9	GM14469	Bolt, alternator	2	2	
9	GM57702	Bolt, alternator			2
10	GM14468	Spacer, alternator	1	1	1

Item	Part No.	Description	Qty. Var. 1	Var. 2	Var. 3
11	GM15114	Bolt	1	1	
11	GM15118	Bolt			1
12	GM15180	Washer, spring	3	3	3
13	GM21917	V-belt, alternator	1	1	1
14	GM21920	Cover, alternator	1		
14	GM37186	Cover, alternator		1	1
15	GM15140	Bolt w/washer	2	2	2
16	GM15174	Washer, plain	2	2	2
17	GM21914	Cover, belt	1		
17	GM37187	Cover, belt		1	1
18	GM21915	Stay, cover	2	2	2
19	GM15150	Bolt w/washer	2	2	2
20	GM21916	Stay, cover	1	1	1
21	GM15139	Bolt w/washer	3	3	
21	GM15118	Bolt w/washer			3
22	GM15174	Washer, plain	2	2	2
23	GM14966	Pulley, alternator	1	1	1
24	GM15192	Key, woodruff	1	1	1

silverhorn.co.uk

Group 68.2: Alternator

Parts without items numbers are not supplied separately.

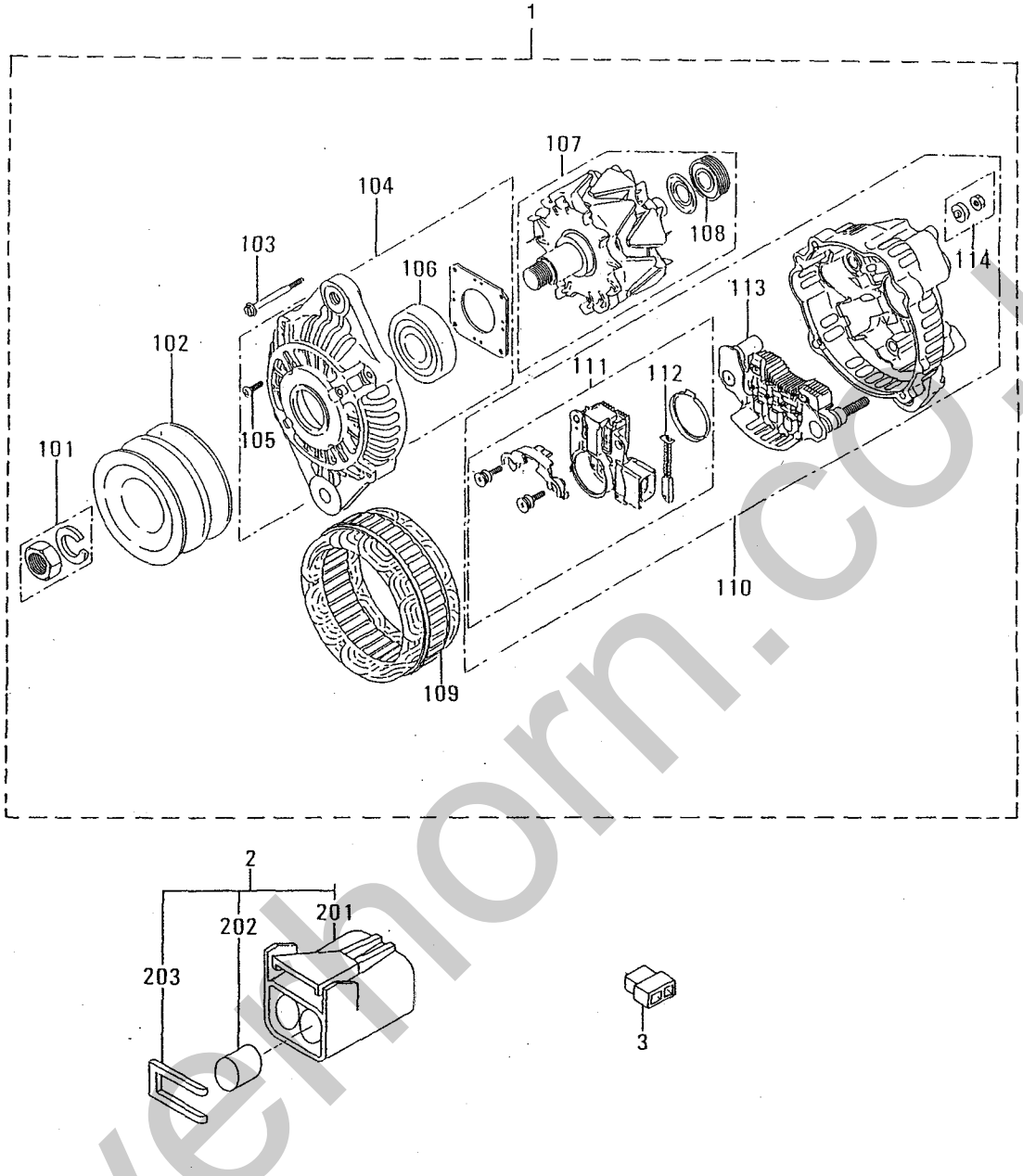

6259_68.2

Item	Part No.	Description	Qty. Var. 1	Qty. Var. 2
1	GM14483	Alternator	1	1
101	GM15092	Nut, set	1	1
102	GM15093	Pulley	1	1
103	GM15090	Screw, set	1	1
104	GM15094	Bracket	1	1
105	GM15091	Screw, set	1	1
106	GM15135	Bearing	1	1
107	GM15099	Rotor assembly	1	1
108	GM15170	Bearing	1	1
109	GM15089	Stator	1	1

Item	Part No.	Description	Qty. Var. 1	Qty. Var. 2
110	GM15095	Bracket	1	1
111	GM15098	Regulator	1	1
112	GM15096	Brush	2	2
113	GM15097	Rectifier	1	1
114	GM15952	Nut, set	1	1
2	GM14635	Connector	1	1
201	GM15574	Body, connector	1	1
202	GM15575	Plug	2	2
203	GM21675	Holder, rear	1	1
3	GM14618	Connector	1	

silverthorn.co.uk

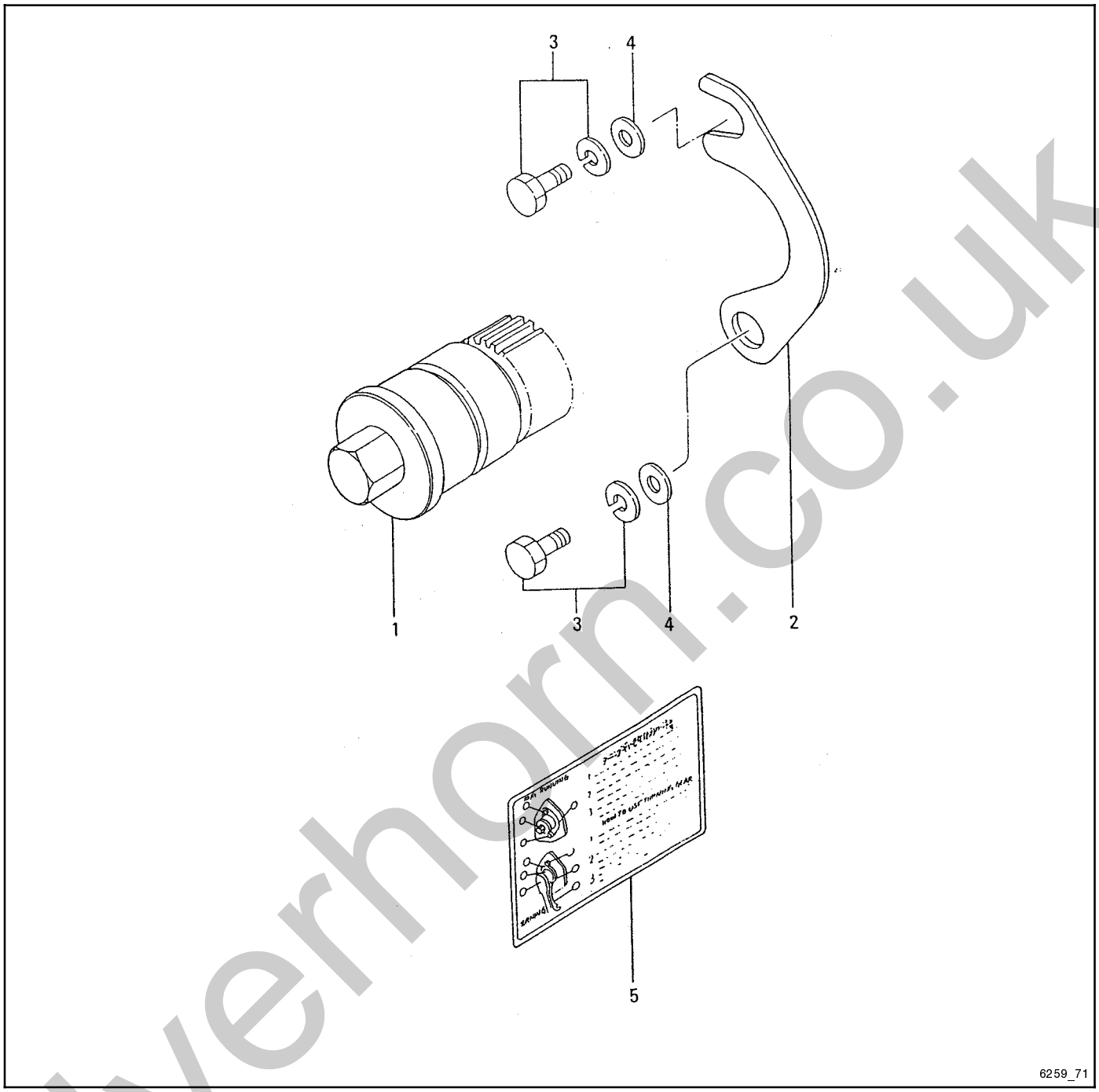

Item	Part No.	Description	Qty. Var. 1
1	GM21921	Gear, turning	1
2	GM15853	Flange	1
3	GM15149	Bolt w/washer	2
4	GM15175	Washer	2
5	GM14952	Plate, caution	1

silverhorn.co.uk

Group 87: Stop System

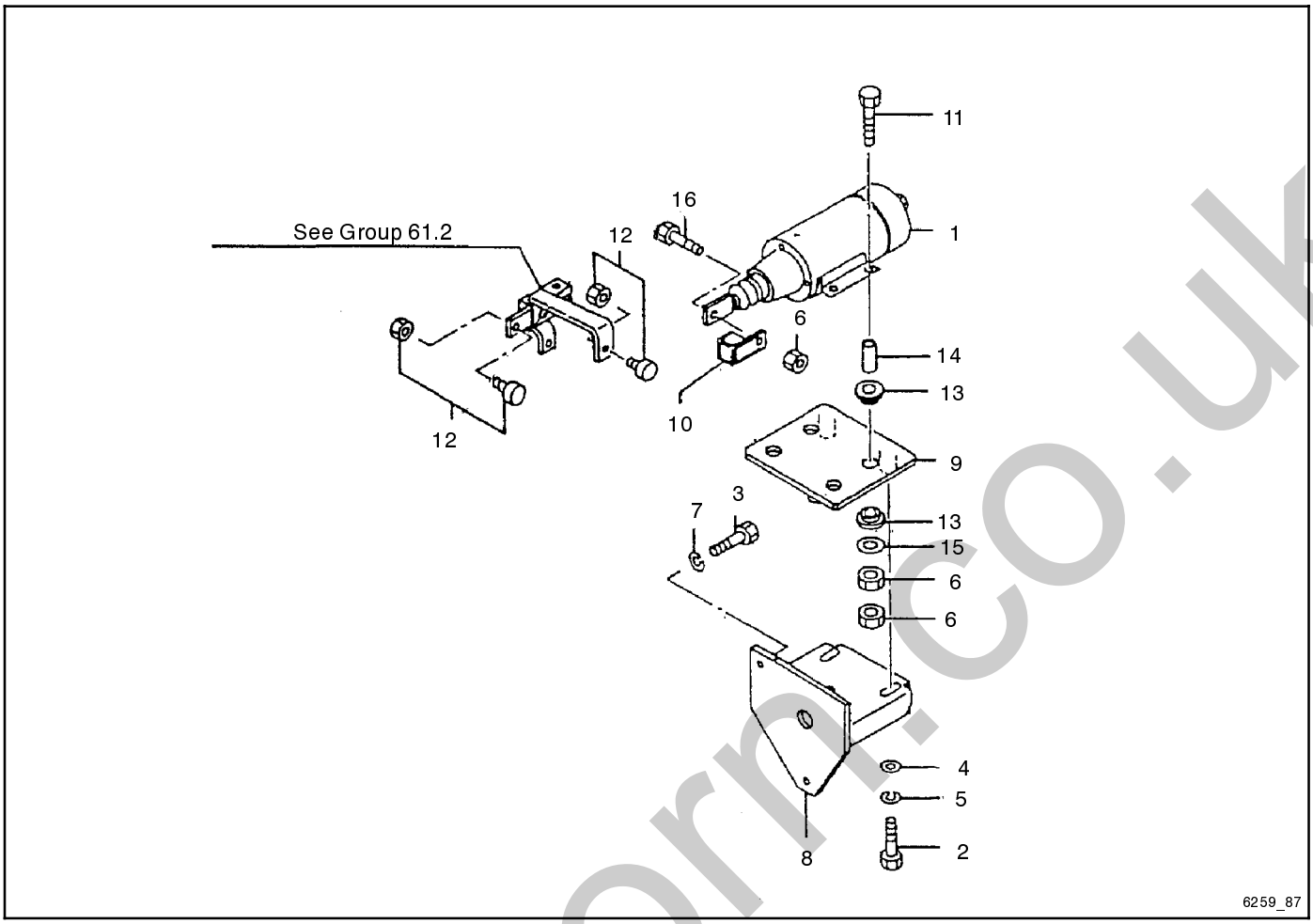

Item	Part No.	Description	Qty. Var. 1
1	GM21598	Solenoid, stop	1
2	GM15955	Bolt	3
3	GM15108	Bolt	2
4	GM15174	Washer, plain	3
5	GM15179	Washer, spring	3
6	GM15162	Nut	9
7	GM15180	Washer, spring	2
8	GM21923	Bracket	1
9	GM22035	Plate, solenoid	1
10	GM21922	Adapter	1
11	GM15101	Bolt	4
12	GM14991	Follower	2
13	GM14998	Cushion, rubber	8
14	GM14999	Spacer	4
15	GM14555	Washer	4
16	GM22089	Bolt	1

silverhorn.co.uk

Group 87: Stop System

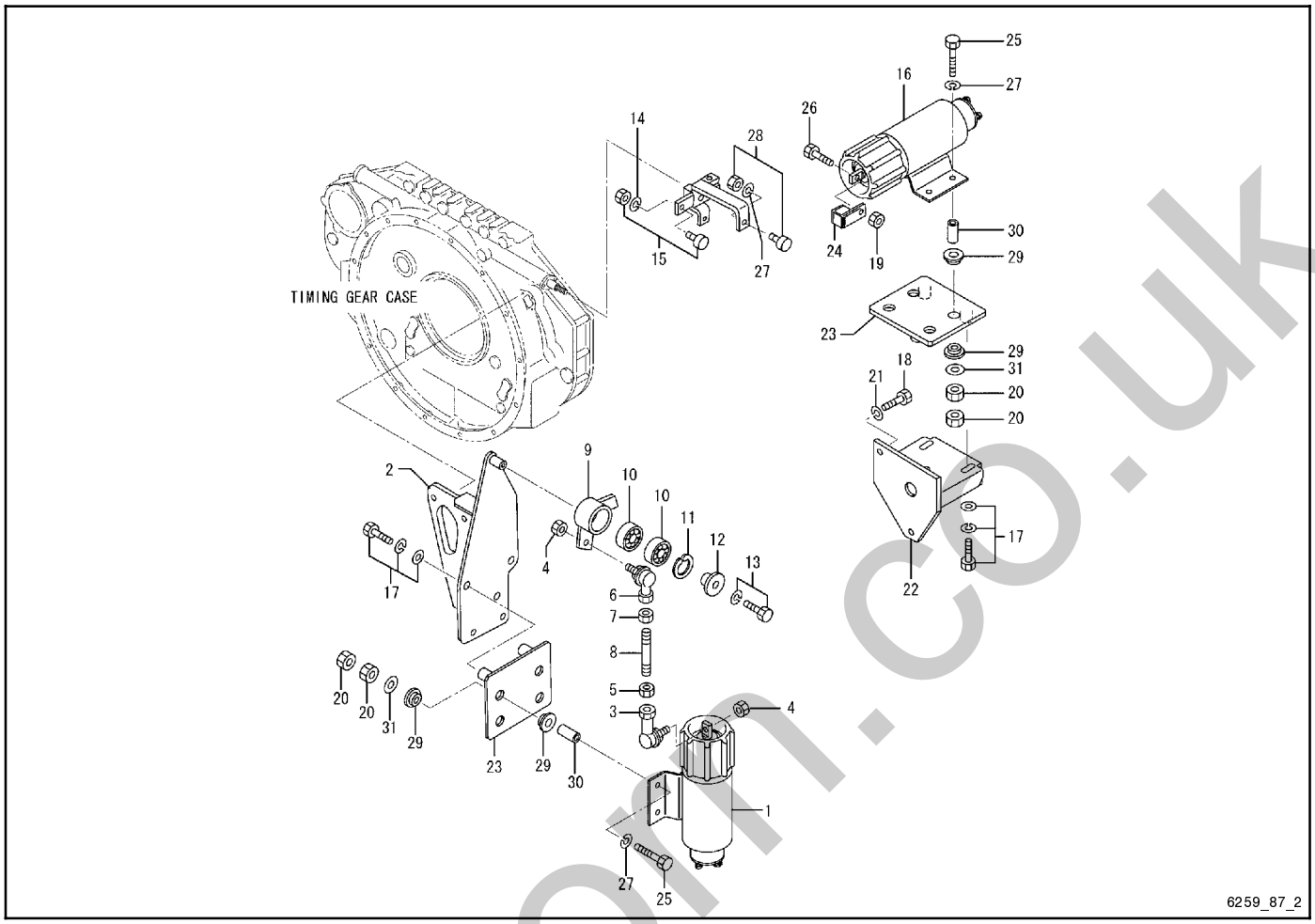

Item	Part No.	Description	Qty. Var. 2
1	GM57703	Solenoid, runoff	1
2	GM57704	Bracket	1
3	GM31499	L-joint	1
4	GM14522	Nut, lock	2
5	GM15162	Nut	1
6	GM31500	L-joint, left hand thread	1
7	GM14556	Nut	1
8	GM14523	Rod	1
9	GM57705	Lever, stop	1
10	GM15256	Bearing, ball	2
11	GM16017	Ring, snap	1
12	GM14608	Plate, end	1
13	GM15144	Bolt	1
14	GM15177	Washer, spring	1
15	GM14991	Follower	1
16	GM57706	Solenoid, runon	1
17	GM15154	Bolt	6
18	GM15108	Bolt	2
19	GM14522	Nut, lock	1
20	GM15162	Nut	16
21	GM15180	Washer, spring	2
22	GM21923	Bracket	1
23	GM22035	Plate, solenoid	2
24	GM57707	Adapter	1
25	GM15101	Bolt	8
26	GM22089	Bolt	1
27	GM15177	Washer, spring	9
28	GM14991	Follower	1
29	GM14998	Cushion, rubber	16
30	GM14999	Spacer	8
31	GM14555	Washer	8

silverhorn.co.uk

Group 94.1: Overhaul Gasket Kit

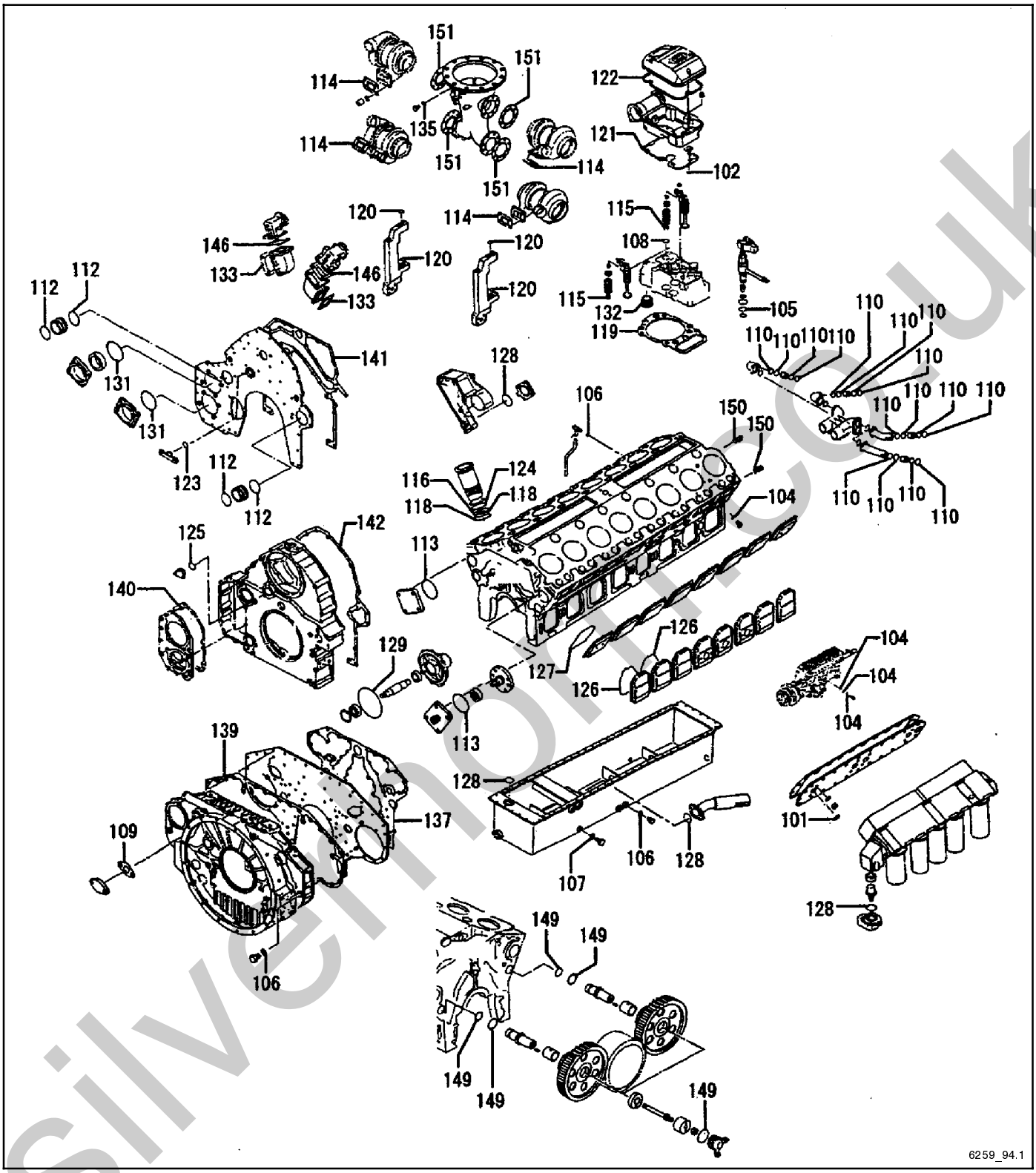

Item	Part No.	Description	Qty. Var. 1	Qty. Var. 2
1	GM31725	Gasket set (includes items 101-168)	1	
1	GM37278	Gasket set (includes items 101-168)		1

silvermoor.co.uk

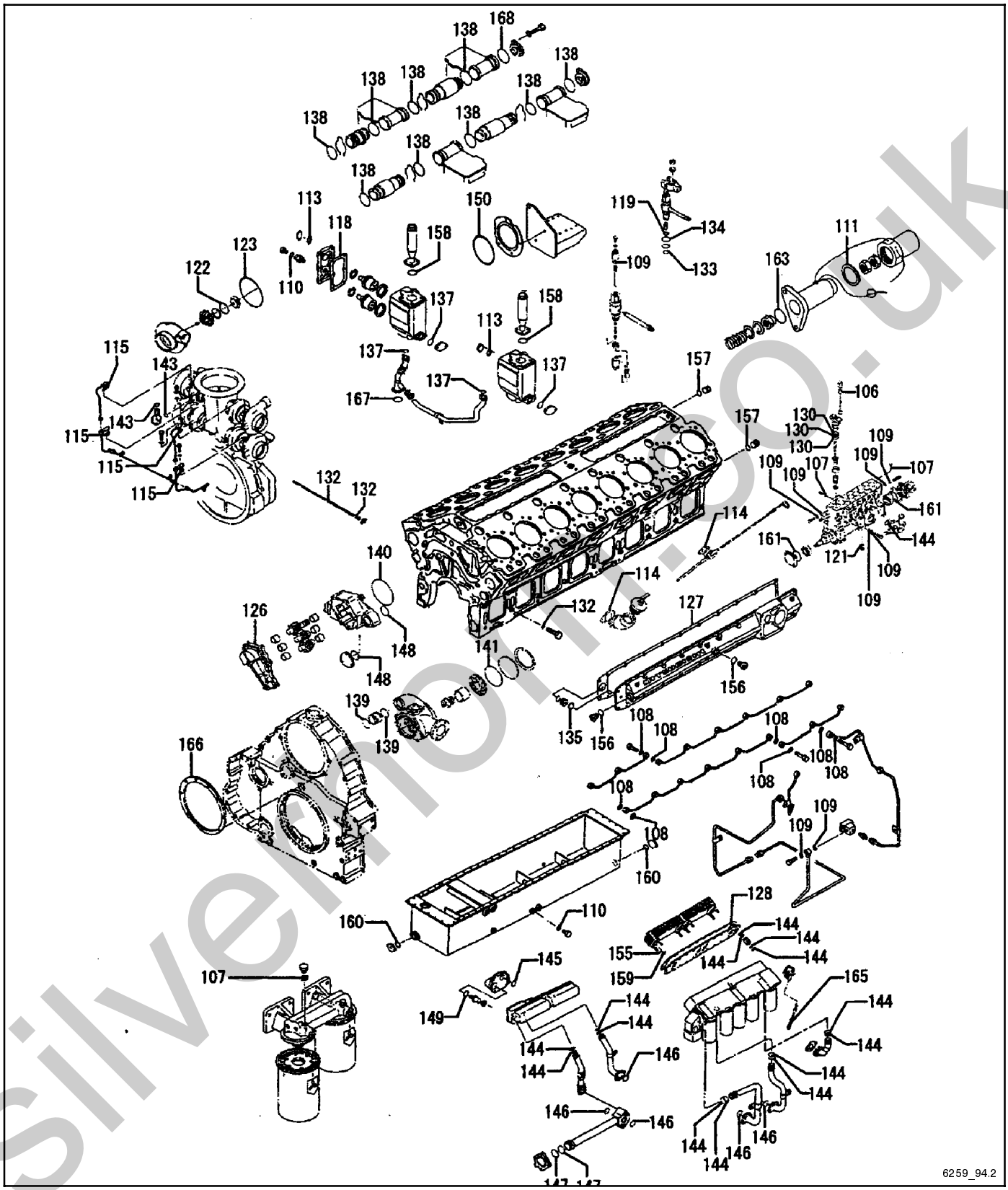

Item	Part No.	Description	Qty. Var. 1	Qty. Var. 2
1	GM31725	Gasket set (includes items 101-168)	1	
1	GM37278	Gasket set (includes items 101-168)		1

silvermoor.co.uk

Group 94.3: Oil Seal Kit

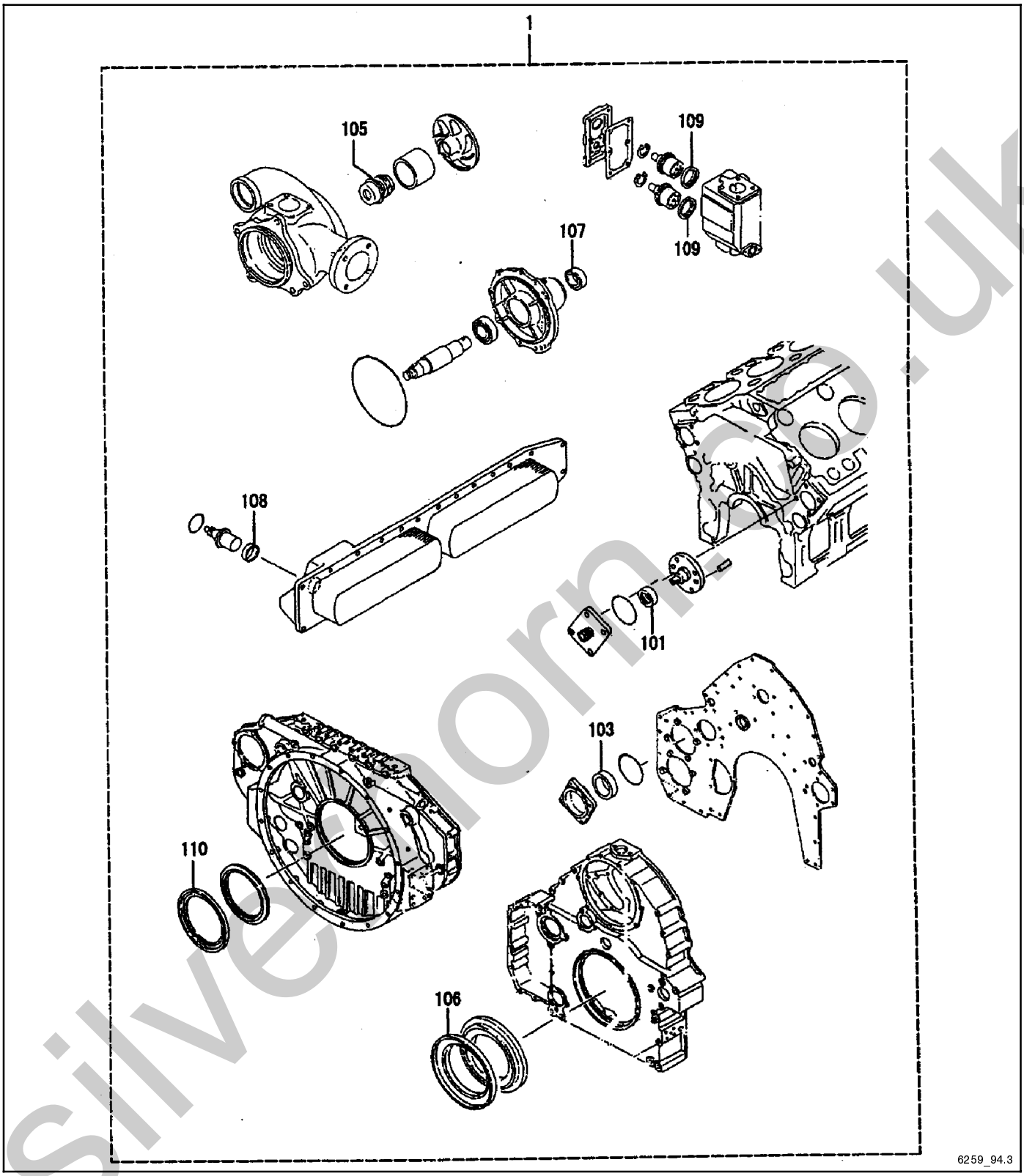

Item	Part No.	Description	Qty. Var. 1	Qty. Var. 2
1	GM31726	Kit, oil seal (includes items 101-111)	1	
1	GM37189	Kit, oil seal (includes items 101-111)		1

silvermorn.co.uk

silverhorn.co.uk

silverhorn.co.uk