PREFACE

1. This parts catalog is the 1st edition of Yanmar crawler backhoe Vio40-2 for Europe.

Pub. No. : 000Y00S4150
Published : Apr., 2001

2. Model name

SECTION	Column	Model name	Manufactured	M/#
I (Vehicle)	(A)	Vio40-2 (EP)	2001/2～	20861～
II (Engine)	(A)	3TNE88-EBVC	2001/1～	36904～

3. Your understanding is asking that this parts catalog is not a technical data manual setting forth as servicing procedures, This parts catalog is using simplified illustration.
Be sure to use Yanmar Genuine Parts in your maintenance servicing of Yanmar products.
Be careful not to use the simple parts available in the market ; otherwise their use in repairing causes such as an early breakage, for instance.

silverhorn.co.uk

1 [PAINTED COLOR LIST]

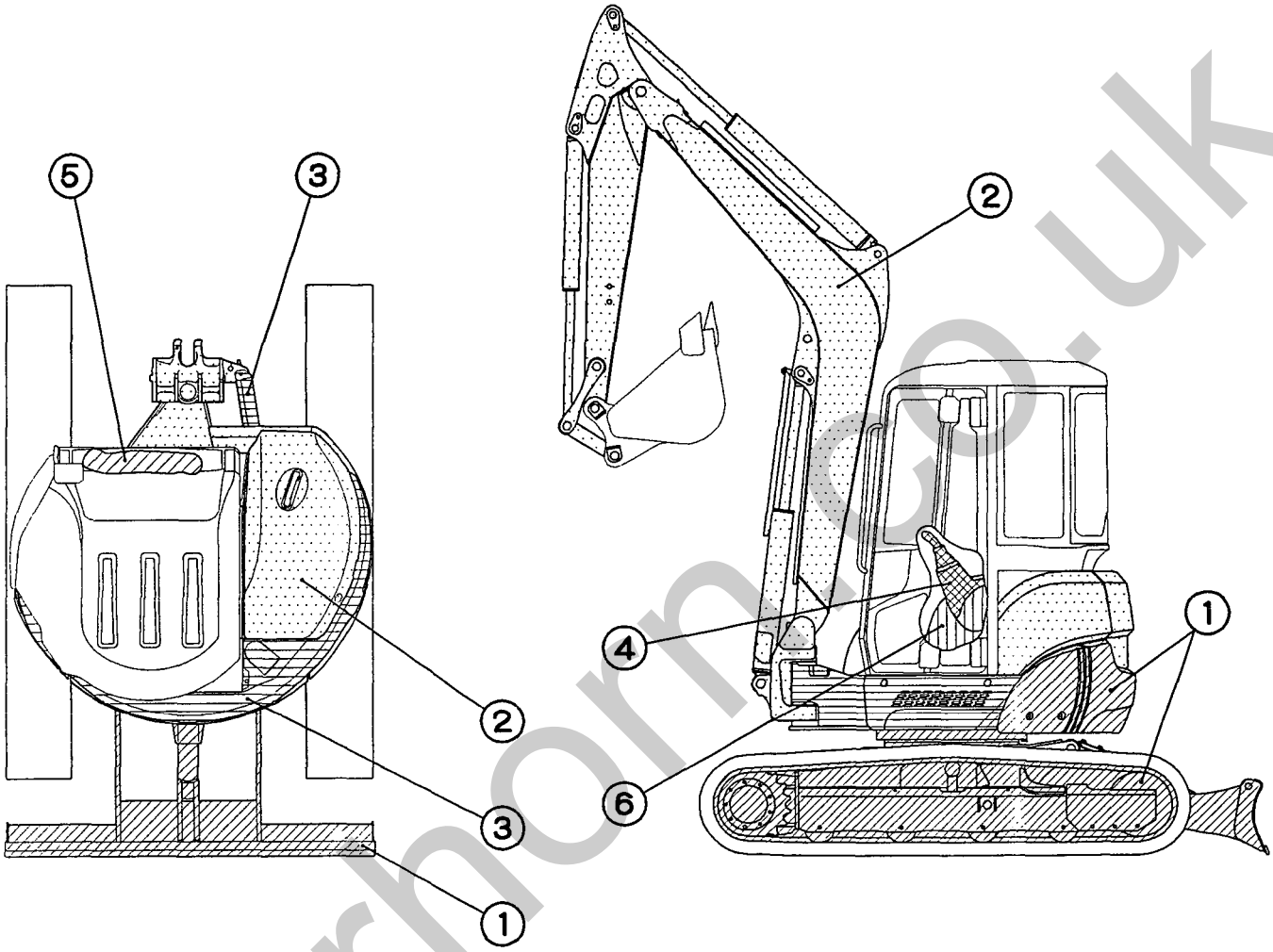

PART	DESCRIPTION	PAINTED COLOR MUNSEL No.	COLOR CODE
1		YANMAR DEEP GREEN 6.36BG2.11/1.76	82
2		YANMAR NEW PERMANENT YELLOW 5.2Y8.5/11	87
3		YANMAR NEW GRAYISH GREEN 2.9BG4.8/3.0	86
4		YANMAR DARK OLIVE GRAY 5.39Y2.92/0.78	72
5		YANMAR BLACK 4.90PB0.08/0.41	12
6		YANMAR WARM GRAY 7Y5.3/0.8	73

silverhorn.co.uk

2 [PAINT PART No.]

PART	PAINTED COLOR	PAINT PART No.		
		16ℓCAN	4ℓCAN	SPRAY
①	YANMAR DEEP GREEN	981101-09517	977620-40820	977620-30N31
②	YANMAR NEW PERMANENT YELLOW	981101-09519	977620-40870	977620-30871
③	YANMAR NEW GRAYISH GREEN	981101-09616	977620-40860	977620-30861
④	YANMAR DARK OLIVE GRAY	----------	977620-40720	TOR-90460003
⑤	YANMAR BLACK	----------	TOR-91220001	TOR-90220003
⑥	YANMAR WARM GRAY	----------	----------	TOR-90450003

3 [COLOR OF MAIN PARTS]

PART	PAINTED COLOR	MAIN PARTS
①	YANMAR DEEP GREEN	TRAVEL FRAME WEIGHT SWING CYLINDER BLADE CYLINDER BLADE
②	YANMAR NEW PERMANENT YELLOW	BONNET BOOM ARM
③	YANMAR NEW GRAYISH GREEN	TURNING FRAME CANOPY
④	YANMAR DARK OLIVE GRAY	LEVER SORT PEDAL
⑤	YANMAR BLACK	CABIN DOOR LINK STAND SIDE STEP
⑥	YANMAR WARM GRAY	OPERATION PART ENGINE RELATED PART FRAME INTERIOR PART

silverhorn.co.uk

PICTURESQUE INDEX(1)···MAIN PARTS

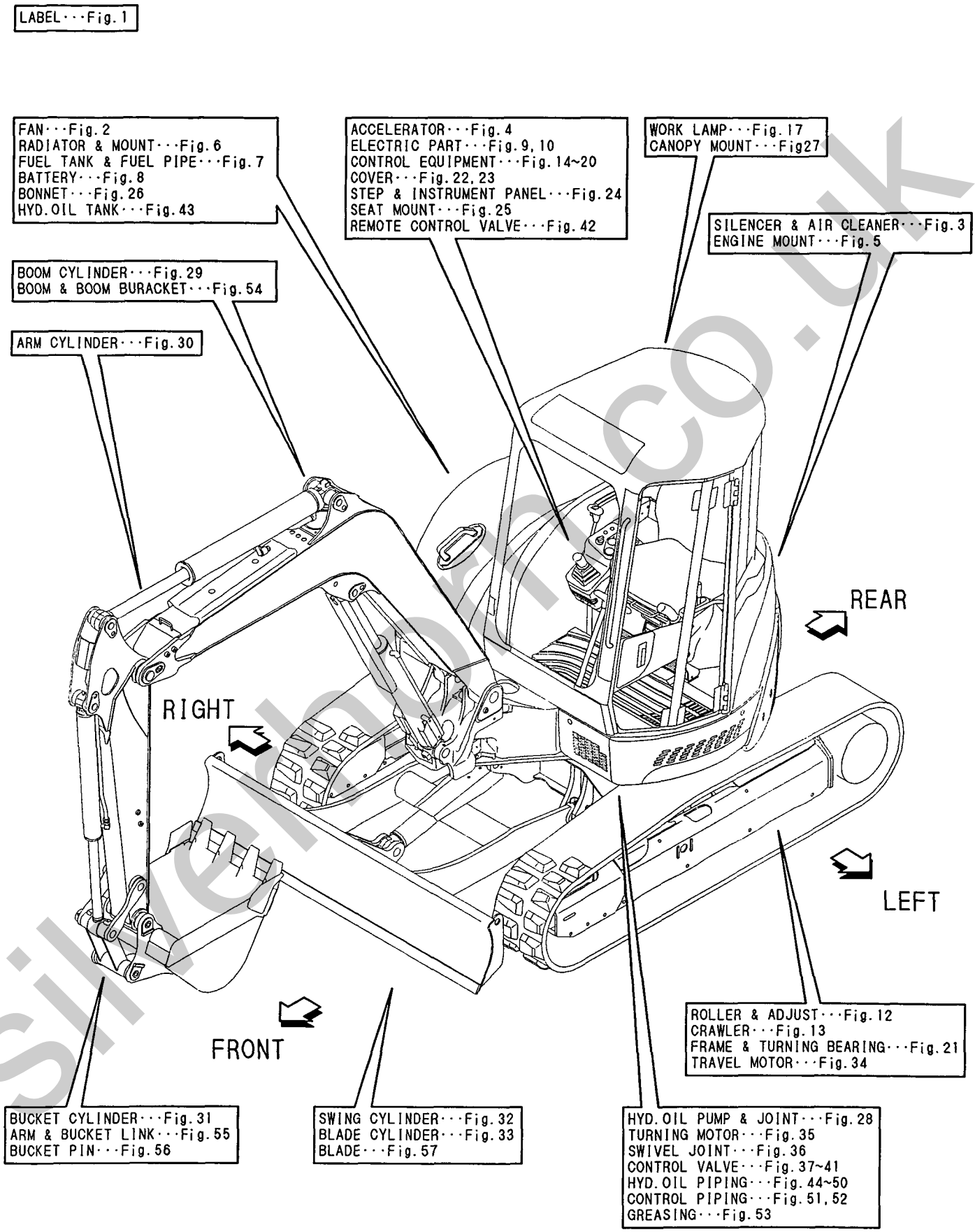

silverhoe.co.uk

PICTUREAQUE INDEX(2)···HYDRAULIC SECTION

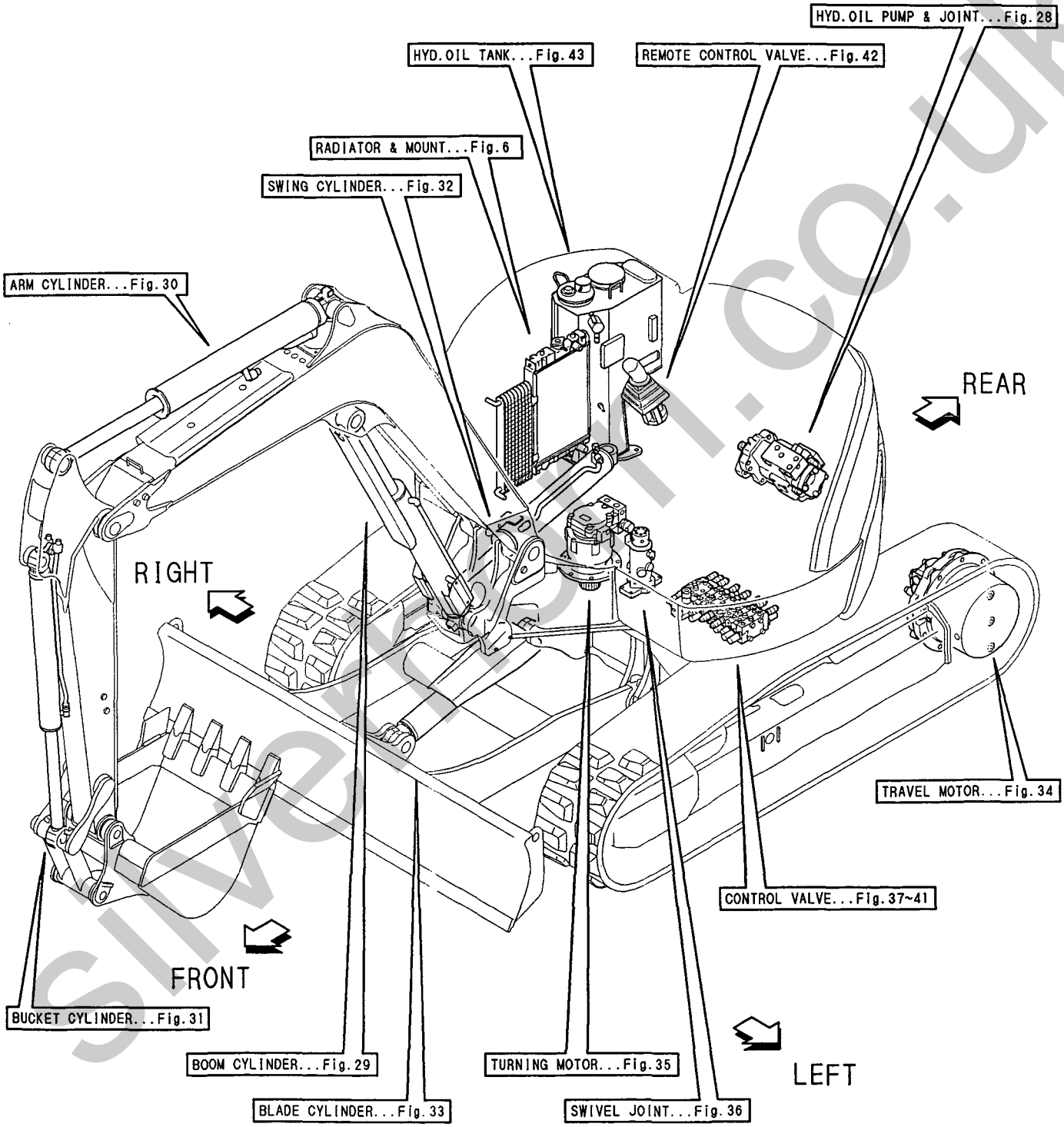

silverfern.co.uk

PICTURESQUE INDEX (3) ·····FIGURE

Fig. 1 LABEL

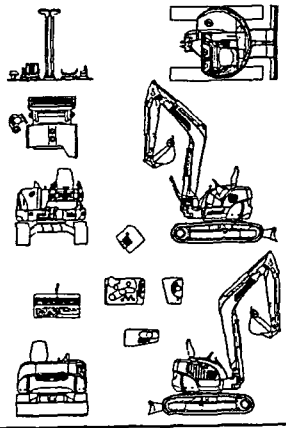

Fig. 2 FAN

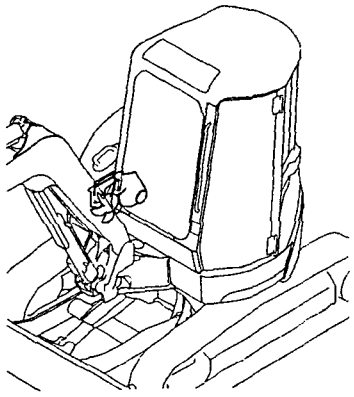

Fig. 3 SILENSER & AIR CLEANER

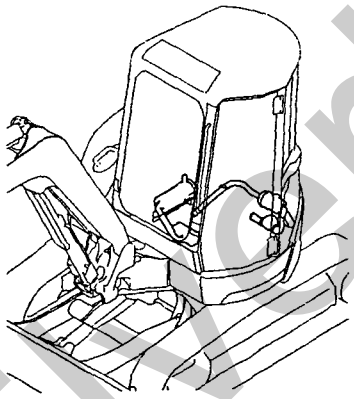

Fig. 4 ACCELERATOR

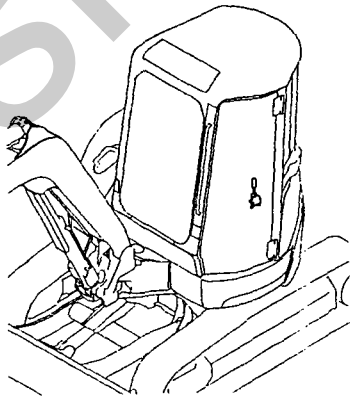

Fig. 5 ENGINE MOUNT

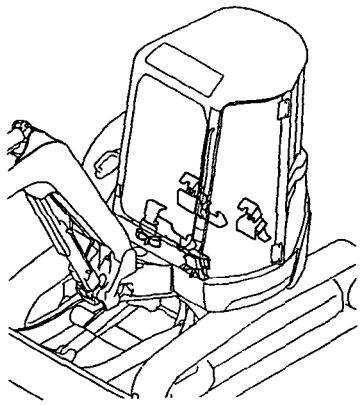

Fig. 6 RADIATOR & MOUNT

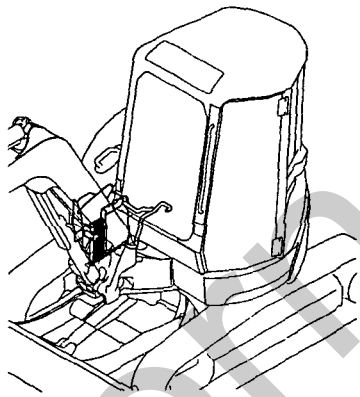

Fig. 7 FUEL TANK & FUEL PIPE

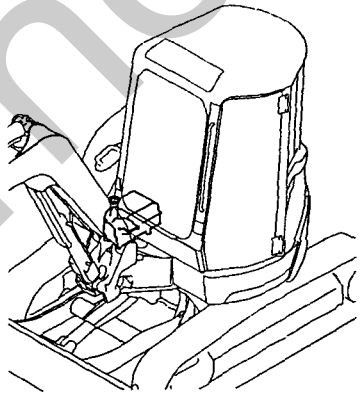

Fig. 8 BATTERY

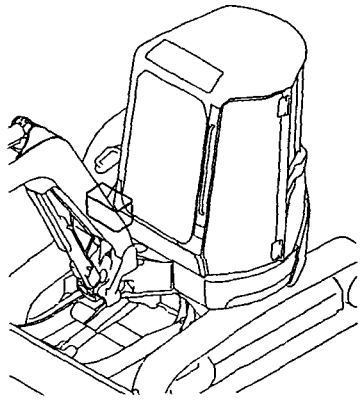

Fig. 9 ELECTRIC PART (WIRING)

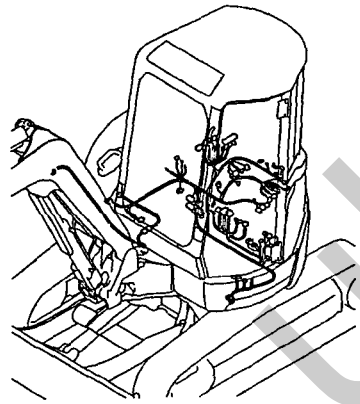

Fig. 10 ELECTRIC PART (EQUIPMENT)

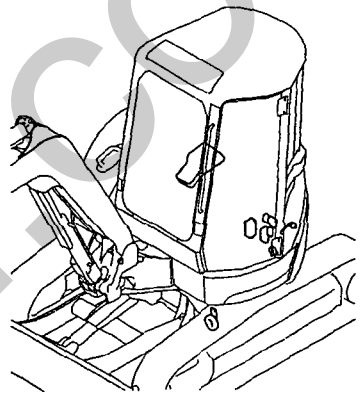

Fig. 11 WORK LAMP

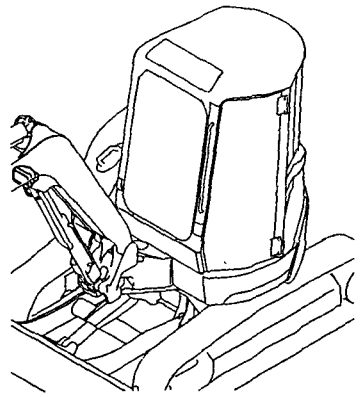

Fig. 12 ROLLER & ADJUST

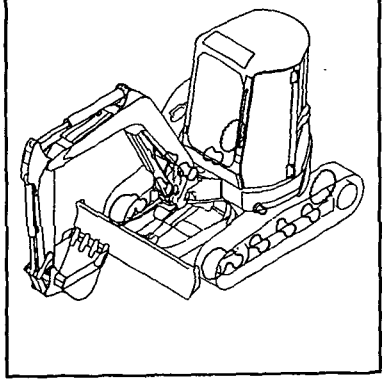

silverhorn.co.uk

silverhorn.co.uk

PICTURESQUE INDEX (3) ·····FIGURE

Fig.25 SEAT MOUNT

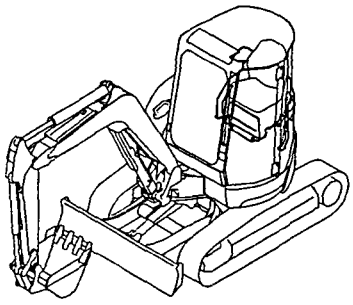

Fig.26 BONNET

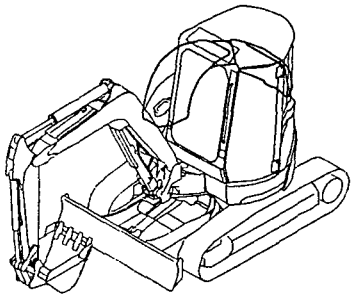

Fig.27 CANOPY MOUNT

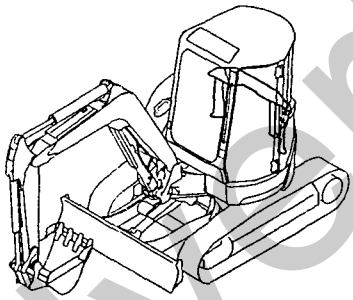

Fig.28 HYD.OIL PUMP & JOINT

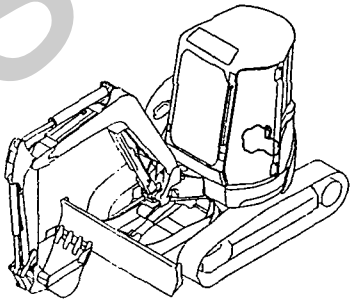

Fig.29 BOOM CYLINDER

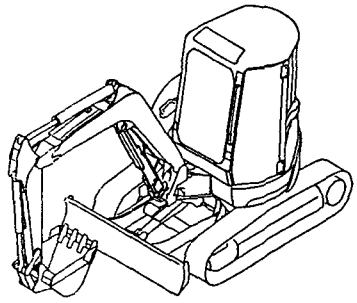

Fig.30 ARM CYLINDER

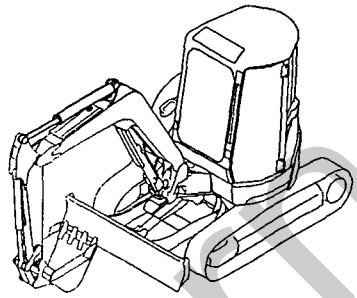

Fig.31 BUCKET CYLINDER

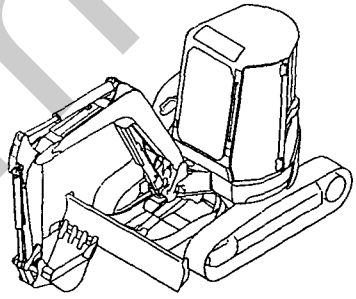

Fig.32 SWING CYLINDER

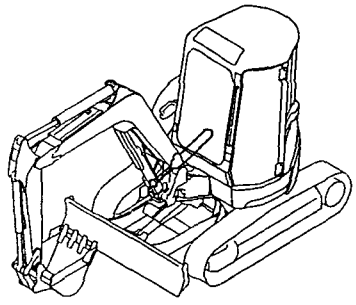

Fig.33 BLADE CYLINDER

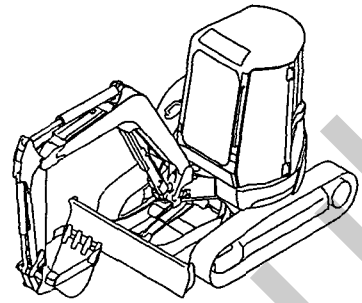

Fig.34 TRAVEL MOTOR

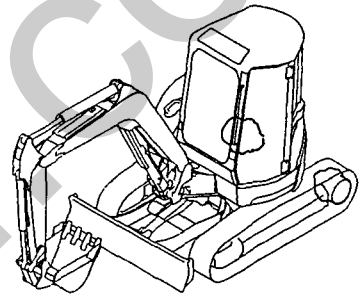

Fig.35 TURNING MOTOR

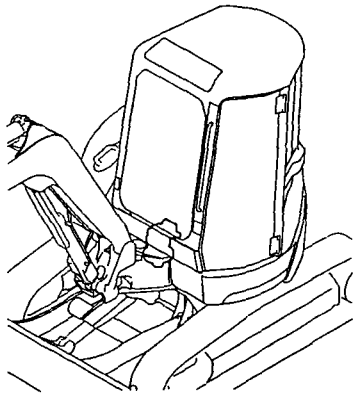

Fig.36 SWIVEL JOINT

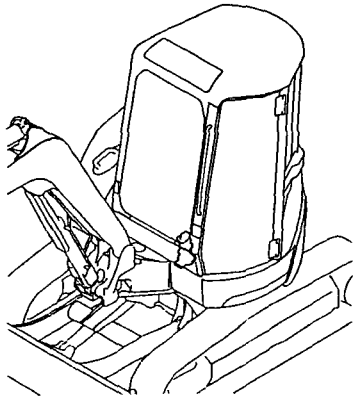

silvermorn.co.uk

PICTURESQUE INDEX (3) ·····FIGURE

Fig.37 CONTROL VALVE (P-PORT)

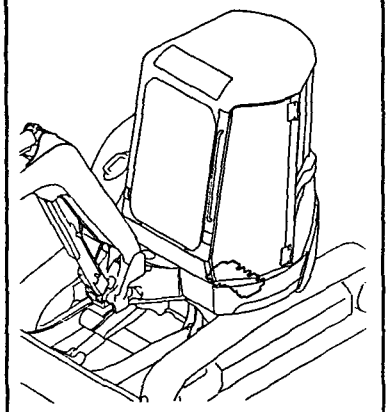

Fig.38 CONTROL VALVE (TRAVEL & P.T.O.)

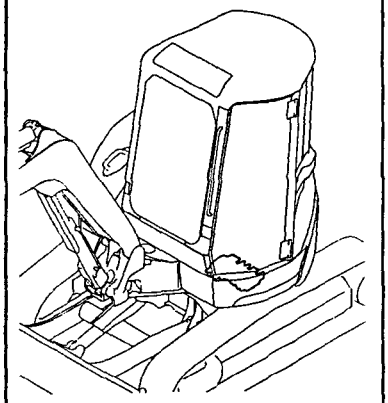

Fig.39 CONTROL VALVE (ARM & SWING)

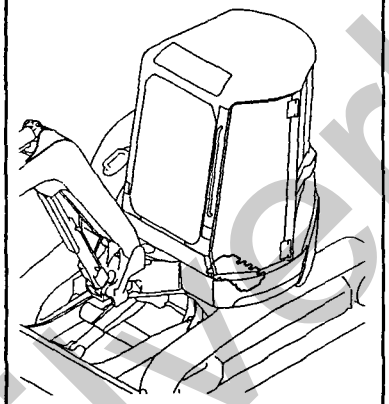

Fig.40 CONTROL VALVE (BOOM & BUCKET)

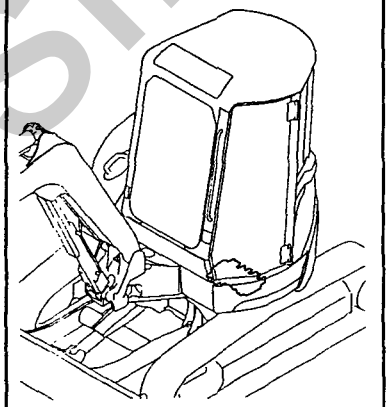

Fig.41 CONTROL VALVE (TURNING & BLADE)

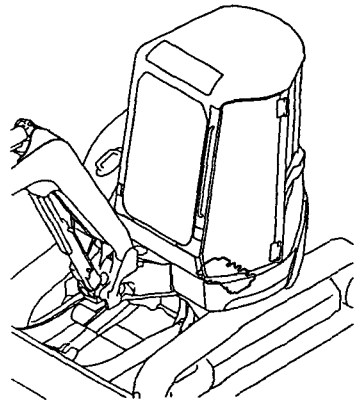

Fig.42 REMOTE CONTROL VALVE

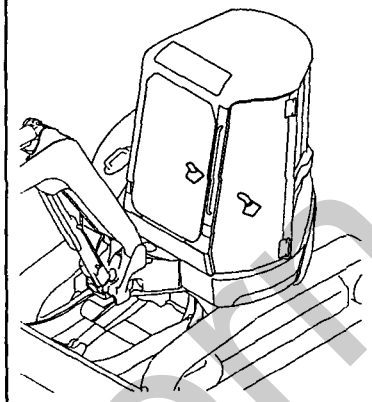

Fig.43 HYD.OIL TANK

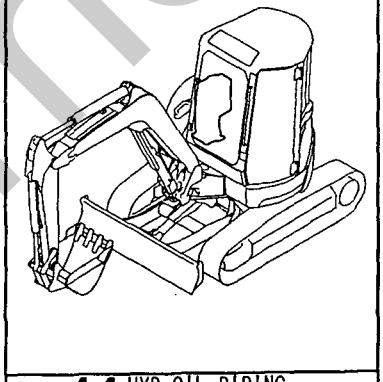

Fig.44 HYD.OIL PIPING (TANK~PUMP~VALVE)

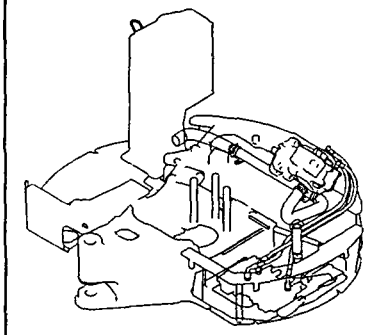

Fig.45 HYD.OIL PIPING (PUMP~VALVE~MOTOR)

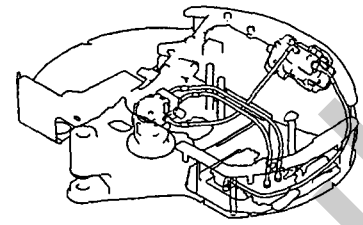

Fig.46 HYD.OIL PIPING (VALVE~SWIVEL~SWING)

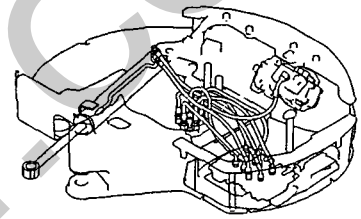

Fig.47 HYD.OIL PIPING (RETURN)

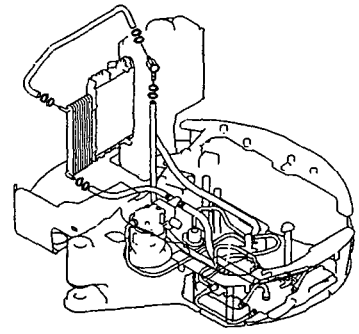

Fig.48 HYD.OIL PIPING (TRAVEL)

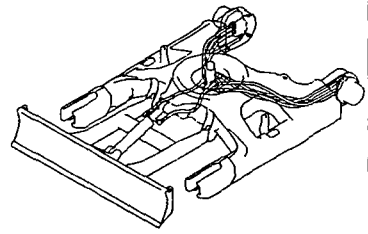

silvernorth.co.uk

PICTURESQUE INDEX (3) ·····FIGURE

Fig.49 HYD.OIL PIPING (BOOM)

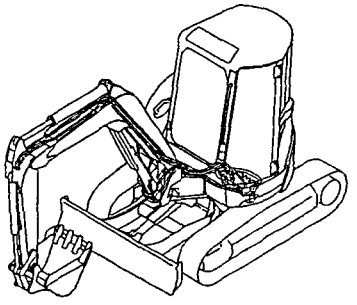

Fig.50 HYD.OIL PIPING (P.T.O.)

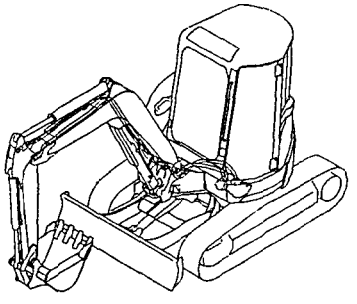

Fig.51 CONTROL PIPING (PUMP~REMO-CON. VALVE ~RETURN)

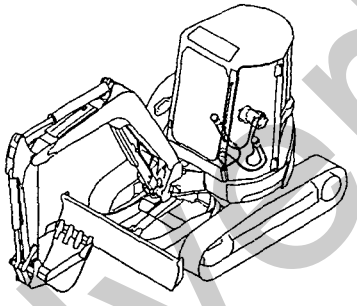

Fig.52 CONTROL PIPING (REMO-CON. VALVE ~CONTROL VALVE)

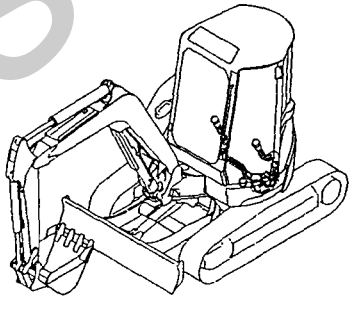

Fig.53 GREASING

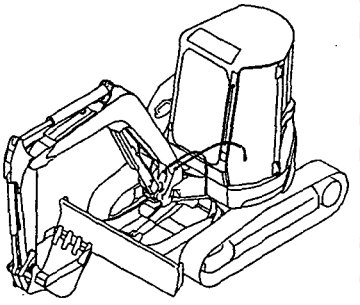

Fig.54 BOOM & BOOM BRACKET

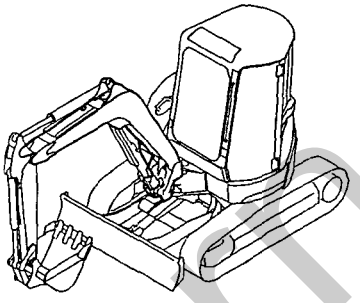

Fig.55 ARM & BUCKET LINK

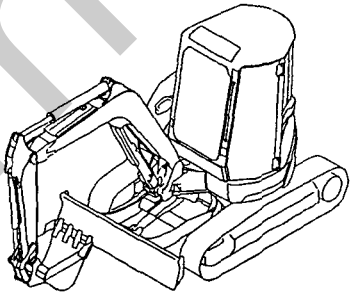

Fig.56 BUCKET PIN

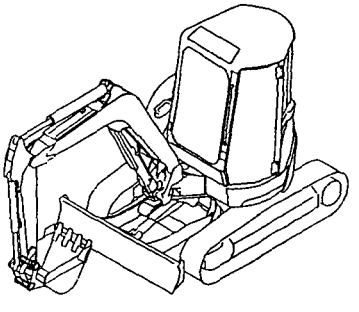

Fig.57 BLADE

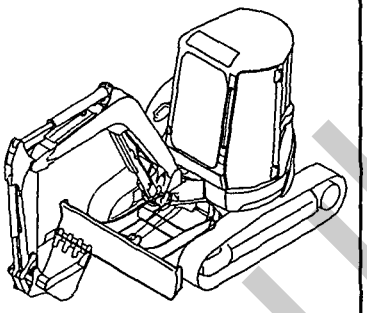

silvermoon.co.uk

Y00S4150

WIRING DIAGRAM

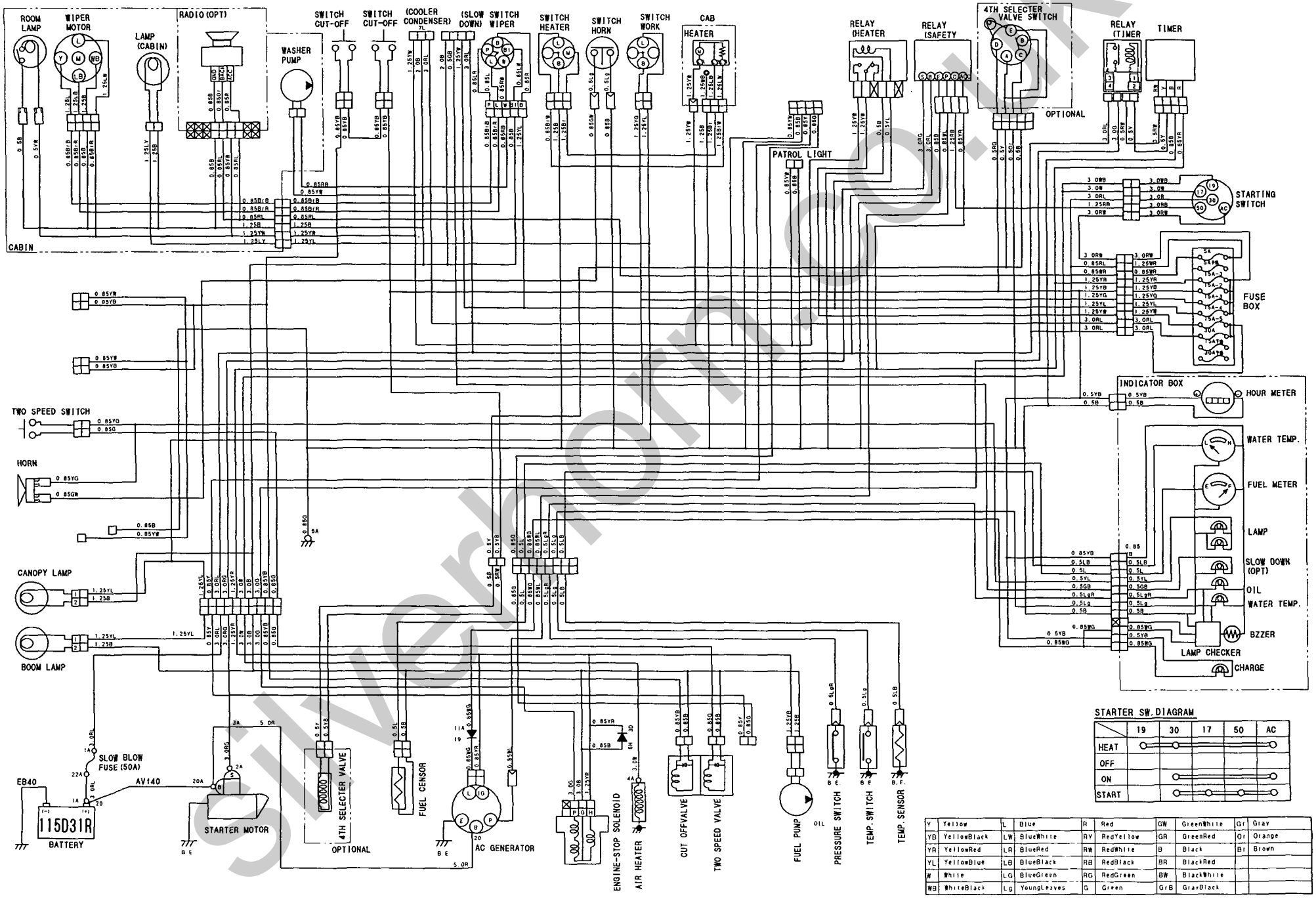

STARTER SW. DIAGRAM

	19	30	17	50	AC
HEAT					
OFF					
ON					
START					

Y	Yellow	L	Blue	R	Red	GW	GreenWhite	Gr	Gray
YB	YellowBlack	LW	BlueWhite	RY	RedYellow	GR	GreenRed	Or	Orange
YR	YellowRed	LR	BlueRed	RW	RedWhite	B	Black	Br	Brown
YL	YellowBlue	LB	BlueBlack	RB	RedBlack	BR	BlackRed		
W	White	LG	BlueGreen	RG	RedGreen	BW	BlackWhite		
WB	WhiteBlack	Lg	YoungLeaves	G	Green	GrB	GrayBlack		

silverhorn.co.uk

```
1,1,,772476-03100,,"LABEL ASSY",1,,,,,,,,,,,,,,,,,
2,2,,172475-03120,,"LABEL,VIO40",2,,,,,,,,72468013,,,,,,,,,,,I
3,2,,172460-03160,,LABEL,1,,,,,,,,,,,,,,,,,
4,2,,172183-03280,,"LABEL,LOCK",1,,,,,,,,,,,,,,,,,
5,2,,172458-03220,,"LABEL,ACCELERATOR",1,,,,,,,,,,,,,,,,,
6,2,,172165-03231,,"LABEL, P.T.O.",1,,,,,,,,,,,,,,,,,
7,2,,172458-03240,,"LABEL,LOCK",1,,,,,,,,,,,,,,,,,
8,2,,172438-03300,,LABEL,1,,,,,,,,,,,,,,,,,
9,2,,172141-03360,,"LABEL, START SWITCH",1,,,,,,,,,,,,,,,,,
10,2,,172437-03510,,"LABEL,HOOK",4,,,,,,,,,,,,,,,,,
11,2,,172171-03420,,"CAUTION PLATE ASSY",1,,,,,,,,,,,,,,,,,
14,2,,172151-03451,,"LABEL, BOOM",2,,,,,,,,,,,,,,,,,
```

silverhorn.co.uk

Fig. 1 LABEL

1 inc. 2 ~ 14

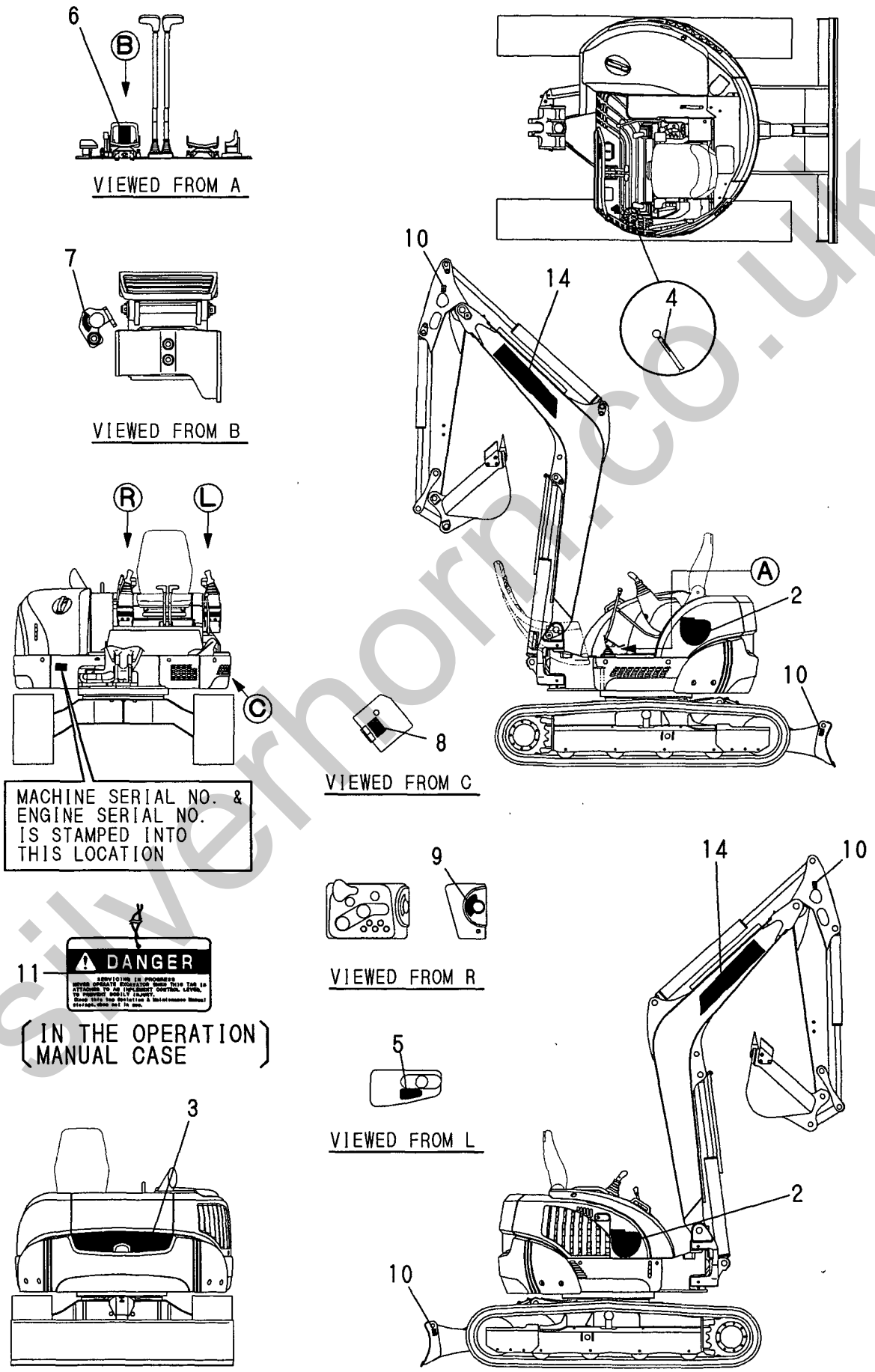

silverhorn.co.uk

```
1,1,,172460-11100-1,,"BRACKET  (YELLOW:87)",1,,,,,,,,,,,,,,,,,
1-1,1,,172460-11101-1,,"BRACKET
(YELLOW:87)",1,,,,,,S,,72460259,M/#21238,,,,,,,,,,,I
2,1,,172187-11121,,"PULLEY, TENSION",1,,,,,,,,,,,,,,,,,
3,1,,172460-11160,,SEAT,1,,,,,,,,,,,,,,,,,
3-1,1,,172460-11161,,"SEAT, FAN",1,,,,,,S,,72460259,M/#21238,,,,,,,,,,,I
4,1,,172460-11170,,SHAFT,1,,,,,,,,,,,,,,,,,
4-1,1,,172460-11171,,"SHAFT, FAN",1,,,,,,S,,72460259,M/#21238,,,,,,,,,,,I
5,1,,172460-11180,,BB6202UU,1,,,,,,,,,,,,,,,,,
6,1,,172460-11190,,SHAFT,1,,,,,,,,,,,,,,,,,
6-1,1,,172460-11191,,SHAFT,1,,,,,,F,1,72460275,M/#21534,,,,,,,,,,,I
7,2,,172460-11290,,SHAFT,1,,,,,,,,,,,,,,,,,
8,2,,172460-11600,,PULLY,1,,,,,,,,,,,,,,,,,
9,2,,172460-11710,,BOS,1,,,,,,,,,,,,,,,,,
9-1,2,,172460-11711,,BOS,1,,,,,,S,,72460275,M/#21534,,,,,,,,,,,I
10,1,,172460-11200-1,,"PULLEY   (YELLOW:87)",1,,,,,,,,,,,,,,,,,
10-1,1,,172460-11201-1,,"PULLEY
(YELLOW:87)",1,,,,,,S,,72460259,M/#21238,,,,,,,,,,,I
11,1,,172460-11240-1,,"BAR      (YELLOW:87)",1,,,,,,,,,,,,,,,,,
12,1,,172460-11260,,V-VELT,1,,,,,,,,,,,,,,,,,
13,1,,172460-11280-1,,"PULLEY   (YELLOW:87)",1,,,,,,,,,,,,,,,,,
13-1,1,,172460-11281-1,,"PULLEY
(YELLOW:87)",1,,,,,,S,,72460259,M/#21238,,,,,,,,,,,I
14,1,,172460-11350-1,,"COVER    (YELLOW:87)",1,,,,,,,,,,,,,,,,,
15,1,,172460-11610-1,,"SHAFT    (YELLOW:87)",1,,,,,,,,,,,,,,,,,
15-1,1,,172460-11611-1,,"SHAFT
(YELLOW:87)",1,,,,,,N,,72460238,M/#20904,,,,,,,,,,,I
15-2,1,,172460-11612-1,,"SHAFT
(YELLOW:87)",1,,,,,,S,,72460259,M/#21238,,,,,,,,,,,I
15-3,1,,172460-11613-1,,"SHAFT
(YELLOW:87)",1,,,,,,F,1,72460275,M/#21534,,,,,,,,,,,I
16,1,,172187-18410,,NUT,1,,,,,,,,,,,,,,,,,
17,1,,129900-44700,,FAN,1,,,,,,,,,,,,,,,,,
18,1,,172519-63240,,"BOLT  8X 16",4,,,,,,,,,,,,,,,,,
19,1,,1A6150-63730,,"BALL BEARING 6203UU",4,,,,,,,,,,,,,,,,,
19-1,1,,172460-11181,,"BALL BEARING",4,,,,,,S,,72460259,M/#21238,,,,,,,,,,,I
20,1,,172155-71200,,"COUPLING (CF-A-2",1,,,,,,,,,,,,,,,,,
21,1,,129466-96240,,SPACER,1,,,,,,,,,,,,,,,,,
22,1,,22137-100000,,"WASHER 10,POLISHED",1,,,,,,,,,,,,,,,,,
23,1,,22157-100000,,"WASHER 10",4,,,,,,,,,,,,,,,,,
24,1,,22242-000170,,"CIRCLIP   17",1,,,,,,Z,,72460259,M/#21238,,,,,,,,,,,I
25,1,,22252-000350,,"CIRCLIP   35",1,,,,,,,,,,,,,,,,,
26,1,,26013-080162,,"BOLT W/WASHER M8X16",4,,,,,,,,,,,,,,,,,
27,1,,26013-100202,,"BOLT W/WASHER M10X20",4,,,,,,,,,,,,,,,,,
28,1,,26106-100352,,"BOLT M10X 35 PLATED",1,,,,,,,,,,,,,,,,,
29,1,,26216-100302,,"STUD BOLT",3,,,,,,,,,,,,,,,,,
30,1,,26367-100002,,"NUT 10",3,,,,,,,,,,,,,,,,,
31,1,,26450-080202,,"BOLT M 8X 20",2,,,,,,,,,,,,,,,,,
31-1,1,,26450-080222,,"BOLT M 8X 22",2,,,,,,F,1,72460275,M/#21534,,,,,,,,,,,I
32,1,,26450-080202,,"BOLT M 8X 20",2,,,,,,,,,,,,,,,,,
32-1,1,,26450-080222,,"BOLT M 8X 22",2,,,,,,F,1,72460275,M/#21534,,,,,,,,,,,I
33,1,,172458-61260,,WASHER,3,,,,,,W,,72460259,M/#21238,,,,,,,,,,,I
34,1,,172460-11970,,"U-NUT M10",2,,,,,,W,,72460259,M/#21238,,,,,,,,,,,I
35,1,,22522-040130,,"WOODRUFF KEY 4X13",3,,,,,,W,,72460259,M/#21238,,,,,,,,,,,I
36,1,,26346-100002,,"U-NUT M10 PLATED",1,,,,,,W,,72460259,M/#21238,,,,,,,,,,,I
37,1,,172460-11950,,COLLAR,1,,,,,,W,,72460238,M/#20904,,,,,,,,,,,I
37-1,1,,172460-11951,,COLLAR,1,,,,,,S,,72460259,M/#21238,,,,,,,,,,,I
```

silverhorn.co.uk

P/C NEWS No:Y00S4150-3
PUBLISHED:2004/10

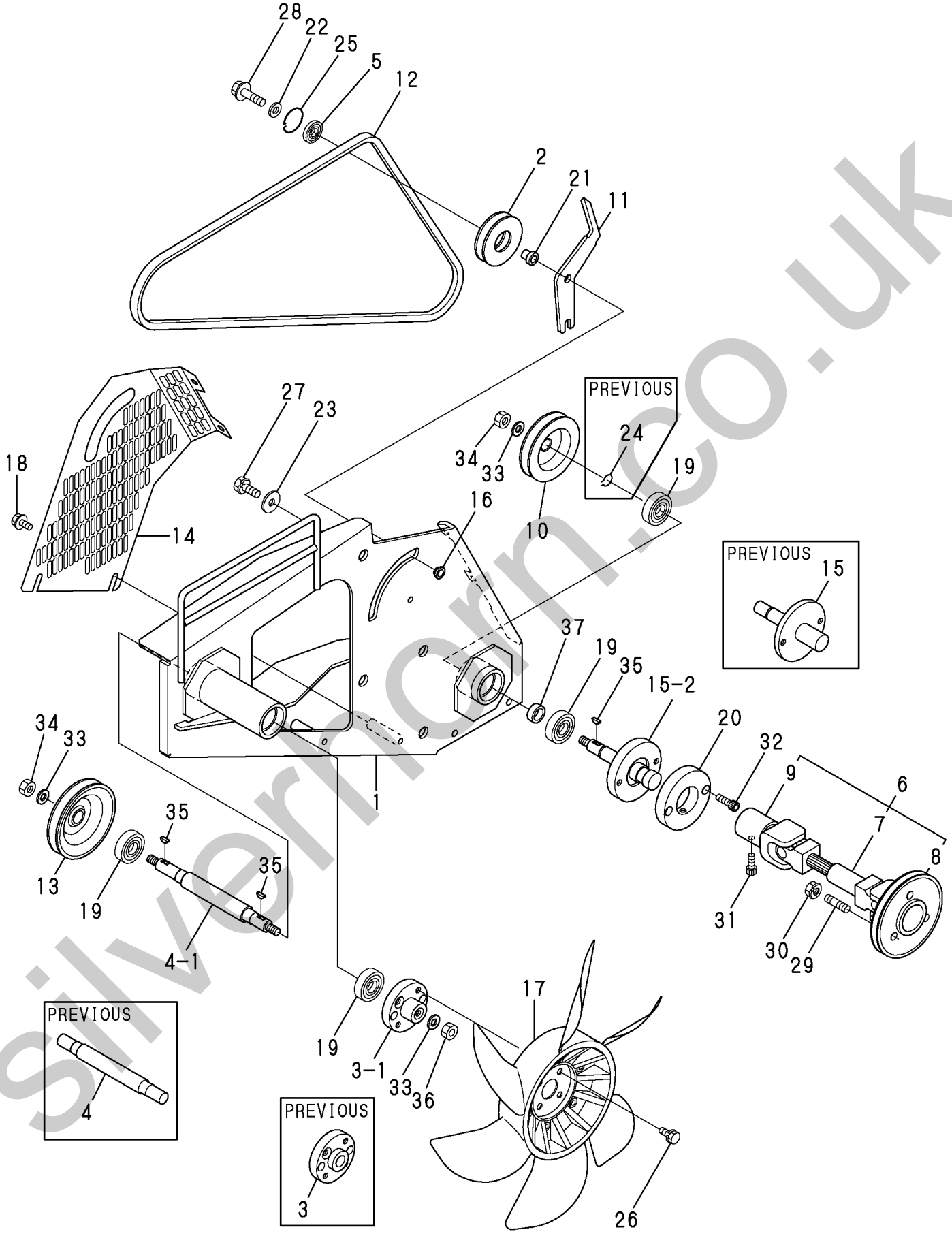

silvermorn.co.uk

```
1,1,,172460-11330,,TUBE,1,,,,,,,,,,,,,,,,
4,1,,172460-11370,,BRACKET,1,,,,,,,,,,,,,,,,
5,1,,172460-11800,,COVER,1,,,,,,,,,,,,,,,,
6,1,,124701-11911,,"GASKET, (NON-ASB.)",1,,,,,,,,,,,,,,,,
7,1,,129400-13201,,"GASKET, (NON-ASB.)",1,,,,,,,,,,,,,,,,
8,1,,129030-13591,,SILENCER,1,,,,,,,,,,,,,,,,
9,1,,26013-080162,,"BOLT W/WASHER M8X16",3,,,,,,,,,,,,,,,,
10,1,,26013-080202,,"BOLT W/WASHER M8X20",4,,,,,,,,,,,,,,,,
11,1,,26013-100202,,"BOLT W/WASHER M10X20",4,,,,,,,,,,,,,,,,
12,1,,26051-080002,,"NUT M 8",8,,,,,,,,,,,,,,,,
13,1,,172460-11500,,AIRCLANER,1,,,,,,,,,,,,,,,,
15,2,,119808-12520,,"ELEMENT, OUTER",1,,,,,,,,,,,,,,,,
16,2,,119808-12540,,"VALVE, UNLOADER",1,,,,,,,,,,,,,,,,
17,2,,119866-12540,,"BODY, AIR CLEANER",1,,,,,,,,,,,,,,,,
18,1,,172460-11510,,HOSE,1,,,,,,,,,,,,,,,,
19,1,,172460-11520,,HOSE,1,,,,,,,,,,,,,,,,
20,1,,172460-11530,,HOSE,1,,,,,,,,,,,,,,,,
21,1,,172460-11550,,"TUBE       (GRAY:73)",1,,,,,,,,,,,,,,,,
22,1,,172460-11780,,COLLAR,3,,,,,,,,,,,,,,,,
23,1,,119160-12060,,"SILENCER, INLET",1,,,,,,,,,,,,,,,,
24,1,,1A1380-58050,,"GROMMET 16X20X4.5",3,,,,,,,,,,,,,,,,
25,1,,22137-080000,,"WASHER 8, POLISHED",2,,,,,,,,,,,,,,,,
26,1,,22157-100000,,"WASHER 10",3,,,,,,,,,,,,,,,,
27,1,,23000-070000,,"CLAMP 70",4,,,,,,,,,,,,,,,,
28,1,,23000-080000,,"CLAMP 80",2,,,,,,,,,,,,,,,,
29,1,,26013-080502,,"BOLT M 8X 50",2,,,,,,,,,,,,,,,,
30,1,,26013-100252,,"BOLT W/WASHER M10X25",3,,,,,,,,,,,,,,,,
```

silverhorn.co.uk

Fig.3 SILENSER & AIR CLEANER

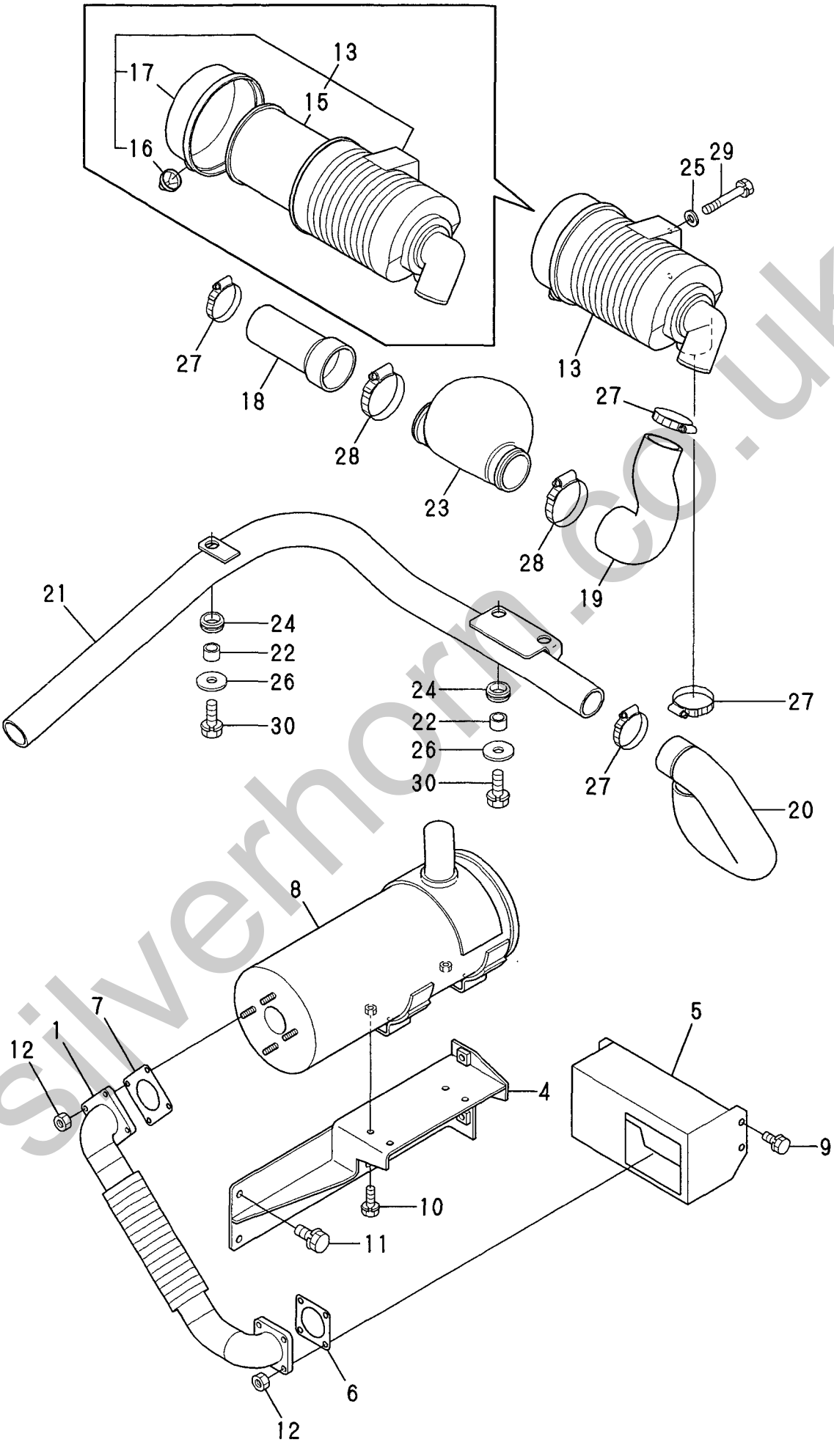

silverhorn.co.uk

```
1,1,,172458-12100,,"LEVER,ACCELERATOR",1,,,,,,,,,,,,,,,,,
2,1,,172460-12100,,"SUPPORT    (GRAY:73)",1,,,,,,,,,,,,,,,,,,
3,1,,172467-12120,,"CABLE, ACCELERATOR",1,,,,,,,,,,,,,,,,,,
4,1,,172137-12270,,"JOINT, CABLE",1,,,,,,,,,,,,,,,,,,
5,1,,172113-12522,,PIN,1,,,,,,,,,,,,,,,,,
6,1,,1C6281-52310,,"PIN 6,COME-OFF SNAP",2,,,,,,,,,,,,,,,,,,
7,1,,1A1040-56900,,"PIN  6X 17",1,,,,,,,,,,,,,,,,,
8,1,,22137-060000,,"WASHER 6, POLISHED",2,,,,,,,,,,,,,,,,,,
9,1,,26013-080202,,"BOLT W/WASHER M8X20",2,,,,,,,,,,,,,,,,,,
10,1,,26013-100252,,"BOLT W/WASHER M10X25",2,,,,,,,,,,,,,,,,,,,
```

silverhorn.co.uk

Fig.4 ACCELERATOR

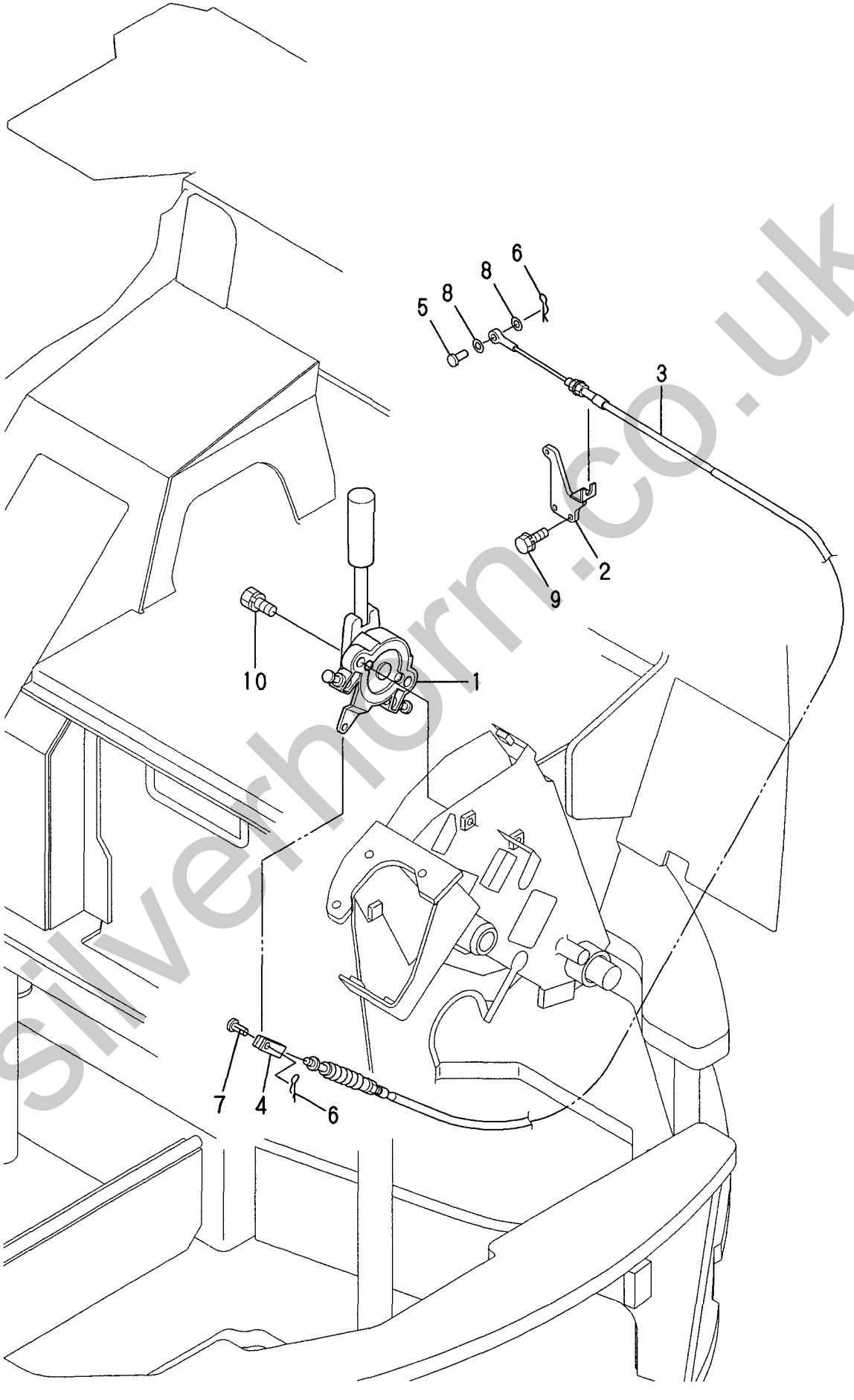

silverhorn.co.uk

```
1,1,,196420-02310,,"ABSORBER, SHOCK",4,,,,,,,,,,,,,,,,
2,1,,172146-13101-1,,"BRACKET    (GRAY:73)",1,,,,,,,,,,,,,,,,,
3,1,,172164-13100-1,,"BRACKET R  (GRAY:73)",1,,,,,,,,,,,,,,,,,
4,1,,172146-13111-1,,"BRACKET    (GRAY:73)",1,,,,,,,,,,,,,,,,,
5,1,,172164-13110-1,,"BRACKET L  (GRAY:73)",1,,,,,,,,,,,,,,,,,
6,1,,172168-13150-1,,"BRACKET    (GRAY:73)",2,,,,,,,,,,,,,,,,,
7,1,,172168-13181-1,,"BRACKET    (GRAY:73)",2,,,,,,,,,,,,,,,,,
8,1,,172162-13200,,"BOLT M10X30",10,,,,,,,,,,,,,,,,,
9,1,,172162-13200,,"BOLT M10X30",8,,,,,,,,,,,,,,,,,
10,1,,172124-13230-3,,"STOPPER, ENGINE (73)",3,,,,,,,,,,,,,,,,,,
11,1,,172137-46040,,"SEAT, SPRING",10,,,,,,,,,,,,,,,,,
12,1,,172137-46040,,"SEAT, SPRING",8,,,,,,,,,,,,,,,,,
13,1,,22217-100000,,"SPRING WASHER 10",10,,,,,,,,,,,,,,,,,
14,1,,22217-100000,,"SPRING WASHER 10",8,,,,,,,,,,,,,,,,,
15,1,,22217-120000,,"SPRING WASHER 12",8,,,,,,,,,,,,,,,,,
16,1,,26013-100252,,"BOLT W/WASHER M10X25",6,,,,,,,,,,,,,,,,,
17,1,,26013-120302,,"BOLT W/WASHER M12X30",8,,,,,,,,,,,,,,,,,
18,1,,26716-120002,,"NUT 12",8,,,,,,,,,,,,,,,,,
```

silverhorn.co.uk

Fig.5 ENGINE MOUNT

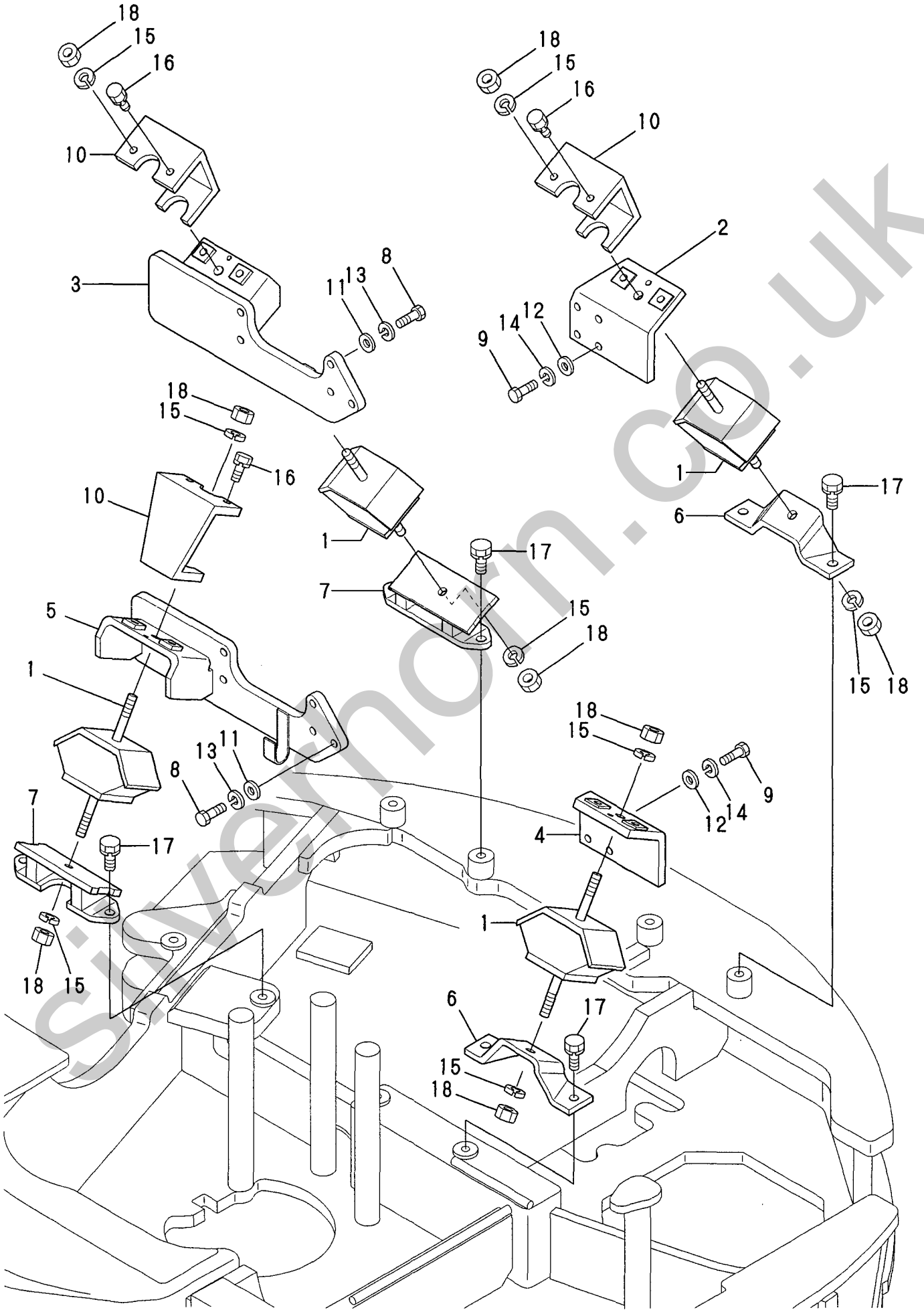

silverhorn.co.uk

```
1,1,,172460-13170,,RADIATOR,1,,,,,,,,,,,,,,,,,
2,2,,172456-13310,,"CAP ,ASSY",1,,,,,,,,,,,,,,,,,
3,1,,172460-13200,,UPPER,1,,,,,,,,,,,,,,,,,
4,1,,172444-13210,,"COCK ASSY,2-WAY",1,,,,,,,,,,,,,,,,,
5,2,,172444-13220,,BODY,1,,,,,,,,,,,,,,,,,
6,2,,121250-49121,,PLUG,1,,,,,,,,,,,,,,,,,
7,2,,24311-000160,,"O-RING 1A P-16.0",1,,,,,,,,,,,,,,,,,
8,1,,172460-13210,,"HOSE LOWER",1,,,,,,,,,,,,,,,,,
9,1,,172460-13280-1,,"PLATE    (YELLOW:87)",1,,,,,,,,,,,,,,,,,
11,2,,172422-65750,,"SEAL (A)",1,,,,,,,,,,,,,,,,,
12,1,,172460-13290-1,,"DUCT     (YELLOW:87)",1,,,,,,,,,,,,,,,,,
14,2,,172460-13710,,"EV A",1,,,,,,,,,,,,,,,,,
15,2,,172460-13720,,"EV B",1,,,,,,,,,,,,,,,,,
16,2,,172460-13730,,SPONGE,1,,,,,,,,,,,,,,,,,
17,2,,172460-13740,,SEAL,1,,,,,,,,,,,,,,,,,
18,2,,172460-13750,,SEAL,1,,,,,,,,,,,,,,,,,
19,2,,172165-66230,,"RUBBER,SEAL C",1,,,,,,,,,,,,,,,,,
20,2,,172175-65680,,SEAL,1,,,,,,,,,,,,,,,,,
21,2,,172164-66650,,"RUBBER, SEAL  95",1,,,,,,,,,,,,,,,,,
22,2,,172187-68050,,"SEAL,COVER FRONT",1,,,,,,,,,,,,,,,,,
23,2,,172989-68630,,"RUBBER,SEAL 630",1,,,,,,,,,,,,,,,,,
24,1,,172460-13420-1,,"PLATE H  (YELLOW:87)",1,,,,,,,,,,,,,,,,,
25,1,,172460-13480-1,,"PLATE M  (YELLOW:87)",1,,,,,,,,,,,,,,,,,
26,1,,172460-13760,,SEAL,1,,,,,,,,,,,,,,,,,
27,1,,172460-13770-1,,"PLATE I  (YELLOW:87)",1,,,,,,,,,,,,,,,,,
29,2,,172460-13780,,EV,2,,,,,,,,,,,,,,,,,
30,2,,172455-61580,,"RUBBER 30",1,,,,,,,,,,,,,,,,,
31,2,,172168-65790,,RUBBER,1,,,,,,,,,,,,,,,,,
32,2,,172165-66230,,"RUBBER,SEAL C",1,,,,,,,,,,,,,,,,,
33,1,,172460-13790,,"PLATE A",1,,,,,,,,,,,,,,,,,
34,1,,172460-13800,,"PALET B",1,,,,,,,,,,,,,,,,,
35,1,,172460-13820,,"PLATE D",1,,,,,,,,,,,,,,,,,
36,1,,172460-13830,,"PLATE E",3,,,,,,,,,,,,,,,,,
37,1,,172187-14430,,HOSE,1,,,,,,,,,,,,,,,,,
38,1,,172460-18900-1,,"PLATE     (GREEN:86)",1,,,,,,,,,,,,,,,,,
40,2,,172460-18920,,EV,1,,,,,,,,,,,,,,,,,
41,2,,172445-65460,,"SEAL A,SIDE COVER R",1,,,,,,,,,,,,,,,,,
42,2,,172164-66480,,"RUBBER 340, SEAL",1,,,,,,,,,,,,,,,,,
43,2,,172422-66150,,SEAL,1,,,,,,,,,,,,,,,,,
44,1,,172460-18950-1,,"COVER    (YELLOW:87)",1,,,,,,,,,,,,,,,,,
46,2,,172460-18960,,SEAL,1,,,,,,,,,,,,,,,,,
47,1,,172460-13850,,HOLDER,1,,,,,,,,,,,,,,,,,
48,1,,171064-44510,,"SUB-TANK ASSY",1,,,,,,,,,,,,,,,,,
49,2,,171064-44520,,"BODY, SUB-TANK",1,,,,,,,,,,,,,,,,,
50,2,,121450-44531,,CAP,1,,,,,,,,,,,,,,,,,
51,2,,124450-44560,,CLAMP,1,,,,,,,,,,,,,,,,,
52,2,,121470-44581,,GASKET,1,,,,,,,,,,,,,,,,,
53,2,,23065-070225,,"HOSE  7* 225",1,,,,,,,,,,,,,,,,,
54,1,,124450-44550,,"CLAMP, SUB-TANK",1,,,,,,,,,,,,,,,,,
55,1,,121256-44600-2,,"BRACKET  (YELLOW:87)",1,,,,,,,,,,,,,,,,,
56,1,,119255-44660,,RUBBER,4,,,,,,,,,,,,,,,,,
57,1,,124766-59050,,"CLAMP 12",2,,,,,,,,,,,,,,,,,
58,1,,124766-59050,,"CLAMP 12",2,,,,,,,,,,,,,,,,,
59,1,,1E6451-77620,,"PIPE,FUEL",1,,,,,,,,,,,,,,,,,
60,1,,23001-041000,,"CLIP 41,HOSE",4,,,,,,,,,,,,,,,,,
61,1,,26013-080162,,"BOLT W/WASHER M8X16",6,,,,,,,,,,,,,,,,,
62,1,,26013-080162,,"BOLT W/WASHER M8X16",2,,,,,,,,,,,,,,,,,
63,1,,26013-080162,,"BOLT W/WASHER M8X16",2,,,,,,,,,,,,,,,,,
64,1,,26013-080162,,"BOLT W/WASHER M8X16",2,,,,,,,,,,,,,,,,,
65,1,,26013-080202,,"BOLT W/WASHER M8X20",2,,,,,,,,,,,,,,,,,
66,1,,26013-100202,,"BOLT W/WASHER M10X20",4,,,,,,,,,,,,,,,,,
67,1,,26022-080162,,"SCREW M 8X 16",2,,,,,,,,,,,,,,,,,
68,1,,933168-55770,,"BAND 146",1,,,,,,,,,,,,,,,,,
```

silverhorn.co.uk

69,1,,172460-14330,,SEAL,1,,,,,,,,,,,,,,,,,

silverhorn.co.uk

Fig.6 RADIATOR & MOUNT

12inc. (12) ~ 23

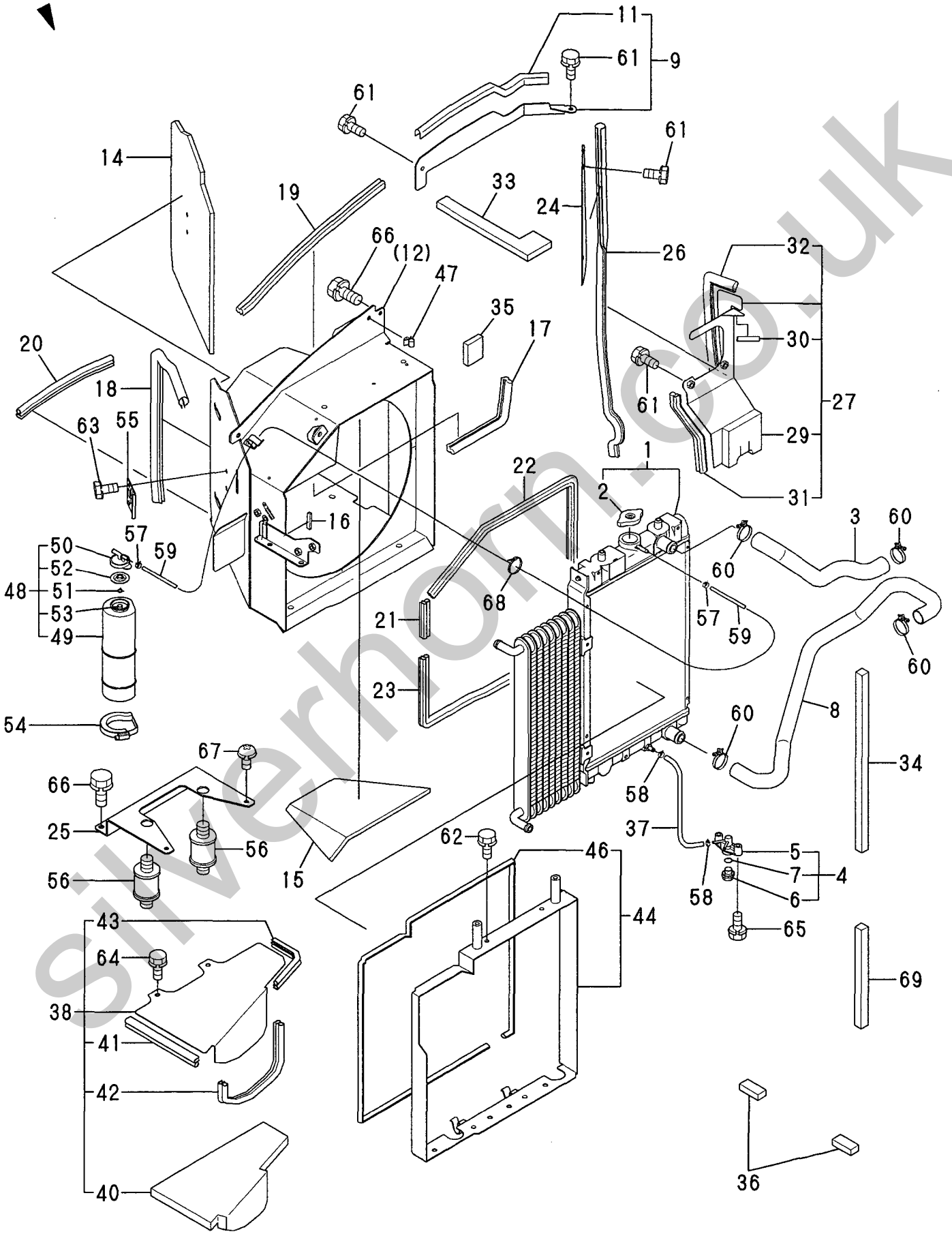

silverhorn.co.uk

```
1,1,,772460-14100-1,,"FUEL TANK(YELLOW:87)",1,,,,,,,,,,,,,,,,,
3,2,,104200-11920,,COCK,1,,,,,,,,,,,,,,,,
4,2,,172162-14200,,GASKET,1,,,,,,,,,,,,,,,,
5,2,,172460-14220,,"FUEL GAUGE",1,,,,,,,,,,,,,,,,
6,1,,172142-14421,,"HOSE, FUEL GAUGE",1,,,,,,,,,,,,,,,,
7,2,,172141-14260,,FLOAT,1,,,,,,,,,,,,,,,,
8,2,,172444-14260,,"HOSE,FUEL",1,,,,,,,,,,,,,,,,
9,2,,172458-14370,,"SOUCER,FUEL OIL",1,,,,,,,,,,,,,,,,
10,2,,172725-16380,,"GROMMET 15X20",1,,,,,,,,,,,,,,,,
11,2,,105340-55040,,"CAP, FUEL TANK",1,,,,,,,,,,,,,,,,
12,2,,101504-55101,,"STRAINER,FUEL INLET",1,,,,,,,,,,,,,,,,
13,2,,23010-014000,,"CLAMP 14",2,,,,,,,,,,,,,,,,
14,2,,23010-014000,,"CLAMP 14",1,,,,,,,,,,,,,,,,
15,2,,26557-050122,,"SCREW M 5X 12",5,,,,,,,,,,,,,,,,
16,1,,172444-14410,,HOSE,1,,,,,,,,,,,,,,,,
17,1,,22137-140000,,"WASHER 14,POLISHED",4,,,,,,,,,,,,,,,,
18,1,,22217-140000,,"SPRING WASHER 14",4,,,,,,,,,,,,,,,,
19,1,,23080-013000,,"CLAMP 13,HOSE",1,,,,,,,,,,,,,,,,
20,1,,26116-140452,,"BOLT M14X 45 PLATED",4,,,,,,,,,,,,,,,,
21,1,,172171-14300,,W-CLAMP,1,,,,,,,,,,,,,,,,
22,1,,172187-14470,,HOSE,1,,,,,,,,,,,,,,,,
23,1,,172460-14340,,HOSE,1,,,,,,,,,,,,,,,,
24,1,,172171-14610,,"HOSE 260,FUEL",1,,,,,,,,,,,,,,,,
25,1,,172164-14630,,"HOSE  400",1,,,,,,,,,,,,,,,,
26,1,,172126-16540,,"CLAMP 10X70",1,,,,,,,,,,,,,,,,
27,1,,129612-52100,,"FUEL PUMP",1,,,,,,,,,,,,,,,,
28,1,,129335-55700,,"SEPARATOR, WATER",1,,,,,,,,,,,,,,,,
29,2,,104200-55321,,"VALVE, TAPER",1,,,,,,,,,,,,,,,,
30,2,,104200-55330,,"SPRING, TAPER VALVE",1,,,,,,,,,,,,,,,,
31,2,,104200-55341,,"HANDLE, COCK",1,,,,,,,,,,,,,,,,
32,2,,124064-55510,,"BOWL, FUEL STRAINER",1,,,,,,,,,,,,,,,,
33,2,,102103-55520,,O-RING,1,,,,,,,,,,,,,,,,
34,2,,110250-55610,,"RING, RETAINING",1,,,,,,,,,,,,,,,,
35,2,,121257-55720,,"SPRING, SCREEN",1,,,,,,,,,,,,,,,,
36,2,,121257-55731,,FLOAT,1,,,,,,,,,,,,,,,,
38,2,,101720-55750,,PLUG,2,,,,,,,,,,,,,,,,
39,2,,104200-55750,,"SCREW M 4",1,,,,,,,,,,,,,,,,
40,2,,171081-55910,,SCREEN,1,,,,,,,,,,,,,,,,
41,2,,23418-060000,,"GASKET 6, NYLON",2,,,,,,,,,,,,,,,,
42,2,,24311-240100,,"O-RING 1A P-10A",1,,,,,,,,,,,,,,,,
43,1,,124766-59050,,"CLAMP 12",8,,,,,,,,,,,,,,,,
44,1,,22137-060000,,"WASHER 6, POLISHED",2,,,,,,,,,,,,,,,,
45,1,,22217-080000,,"SPRING WASHER  8",1,,,,,,,,,,,,,,,,
46,1,,26013-060162,,"BOLT M 6X 16",2,,,,,,,,,,,,,,,,
47,1,,26116-080702,,"BOLT M 8X 70 PLATED",1,,,,,,,,,,,,,,,,
```

silvernorn.co.uk

Fig. 7 FUEL TANK & FUEL PIPE

1inc. (1) ~ 15

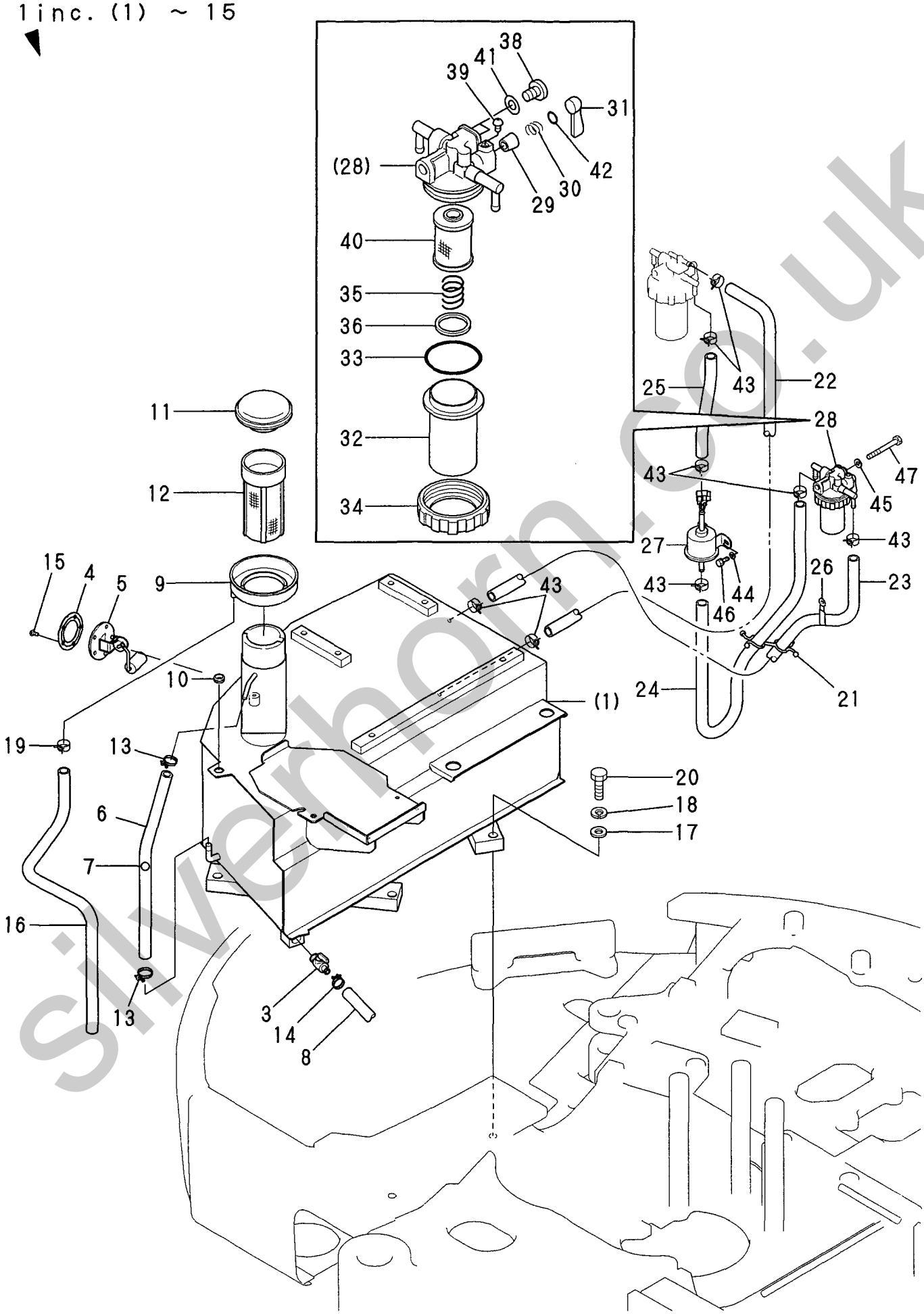

silverhorn.co.uk

```
1,1,,172460-16100,,"CORD +",1,,,,,,,,,,,,,,,,,
2,1,,172460-16110,,"CORD -",1,,,,,,,,,,,,,,,,,
3,1,,172460-16130,,BATTERY,1,,,,,,,,,,,,,,,,,
4,1,,172460-16140,,"CORD -",1,,,,,,,,72460292,,,,,,,,,,,I
5,1,,172460-16160,,COVER,1,,,,,,,,,,,,,,,,,
6,1,,172122-17190,,CLIP,2,,,,,,,,,,,,,,,,,
7,1,,22137-100000,,"WASHER 10,POLISHED",2,,,,,,,,,,,,,,,,,
8,1,,22217-080000,,"SPRING WASHER  8",1,,,,,,,,,,,,,,,,,
9,1,,26013-100162,,"BOLT M10X 16",2,,,,,,,,,,,,,,,,,
10,1,,26716-080002,,"NUT M 8",1,,,,,,,,,,,,,,,,,
11,1,,172460-16300,,"CLAMP      (GRAY:73)",1,,,,,,,,,,,,,,,,,
12,1,,172164-16370,,ROD,1,,,,,,,,,,,,,,,,,
13,1,,22137-080000,,"WASHER 8, POLISHED",1,,,,,,,,,,,,,,,,,
14,1,,26716-080002,,"NUT M 8",2,,,,,,,,,,,,,,,,,
```

silverhorn.co.uk

Fig.8 BATTERY

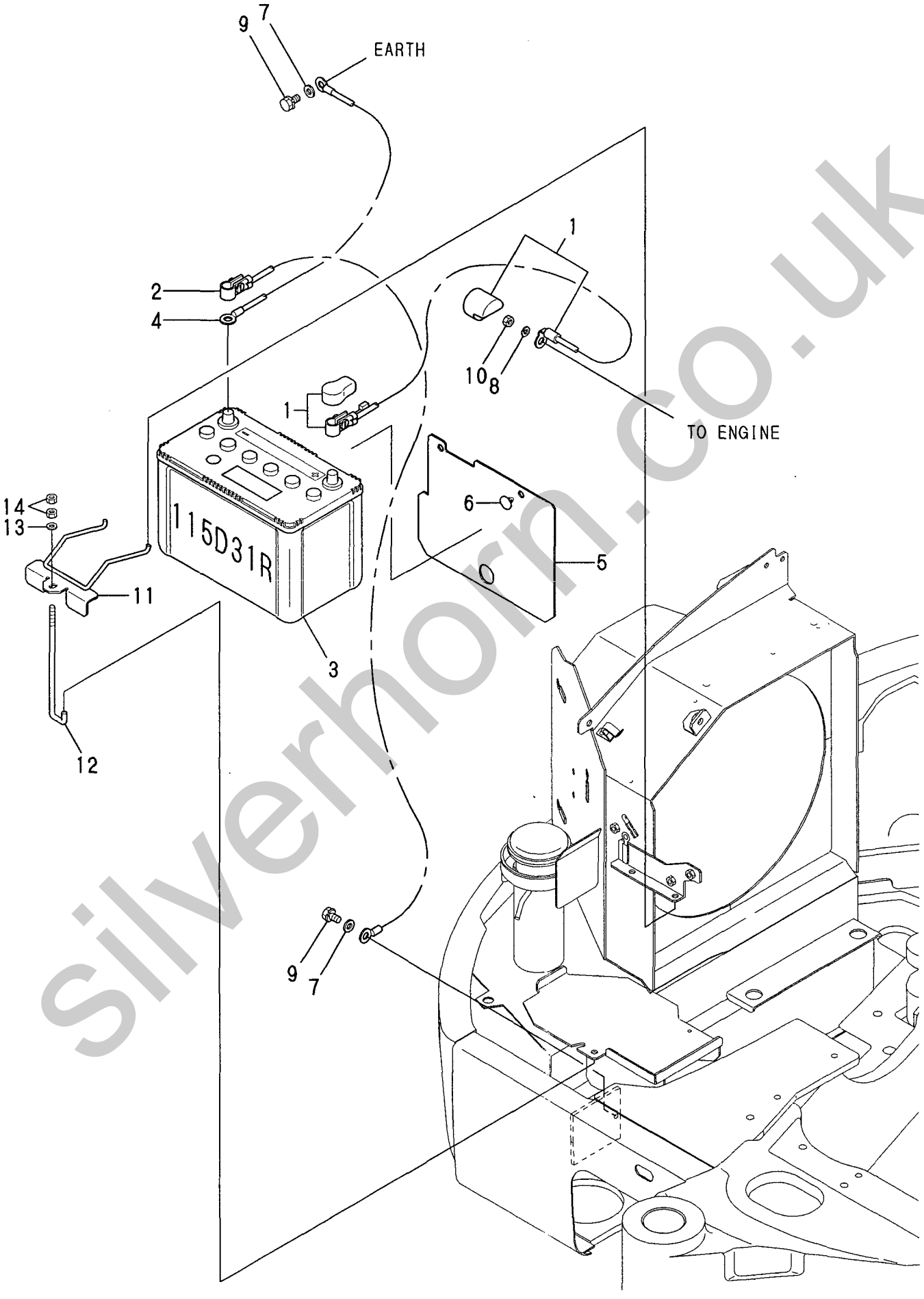

silverhorn.co.uk

```
1,1,,172460-16500,,HARNESS,1,,,,,,,,,,,,,,,,,
3,2,,172648-16600,,DIODE,2,,,,,,,,,,,,,,,,,
4,2,,172458-16550,,"HUSE,SLOW BLOW (50A",1,,,,,,,,,,,,,,,,,
5,1,,172467-16520,,"HARNESS B ASSY (US)",1,,,,,,,,,,,,,,,,,
6,1,,172460-16530,,HARNESS,1,,,,,,,,,,,,,,,,,
7,1,,22137-100000,,"WASHER 10,POLISHED",2,,,,,,,,,,,,,,,,,
8,1,,22217-050000,,"SPRING WASHER  5",1,,,,,,,,,,,,,,,,,
9,1,,22217-100000,,"SPRING WASHER 10",2,,,,,,,,,,,,,,,,,
10,1,,194202-56460,,BAND,3,,,,,,,,,,,,,,,,,
11,1,,26116-100162,,"BOLT M10X 16 PLATED",2,,,,,,,,,,,,,,,,,
12,1,,26716-050002,,"NUT M 5",1,,,,,,,,,,,,,,,,,
13,1,,933171-15801,,"WIRE, EARTH",1,,,,,,,,,,,,,,,,,
14,1,,172190-16500,,HARNESS,1,,,,,,,,,,,,,,,,,
15,1,,172183-16560,,"CLIP 400,HOSE",1,,,,,,,,,,,,,,,,,
16,1,,172187-78580,,"BAND W 397",2,,,,,,,,,,,,,,,,,
```

silverhorn.co.uk

Fig.9 ELECTRIC PART (WIRING)

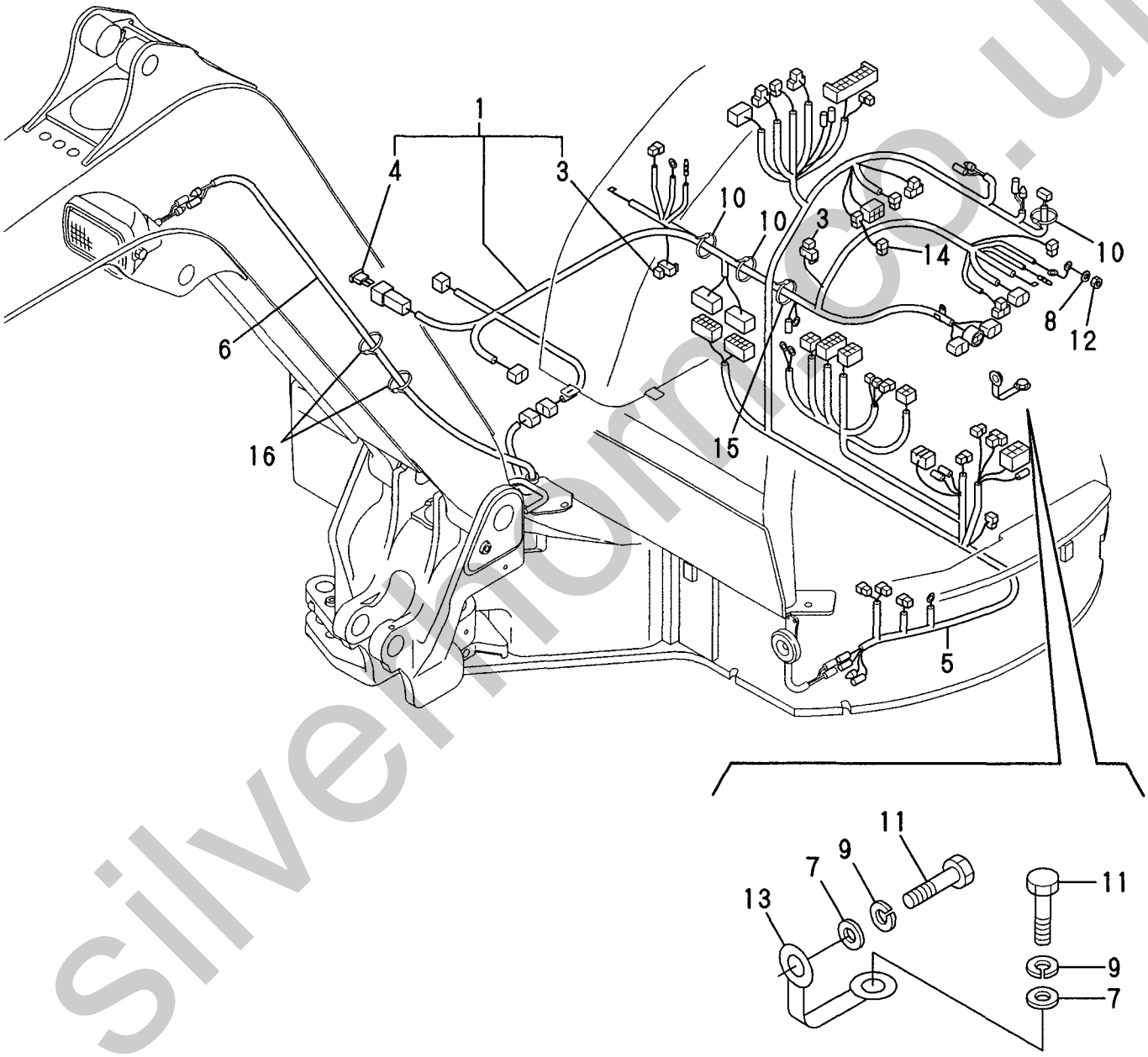

silverhomes.co.uk

```
1,1,,172187-16560,,GROMMET,1,,,,,,,,,,,,,,,,,
2,1,,172458-17100,,"SWITCH,STARTING",1,,,,,,,,,,,,,,,,,
3,2,,172187-17070,,CODE,1,,,,,,,,,,,,,,,,,
4,2,,172187-17080,,"COVER M5",3,,,,,,,,,,,,,,,,,
5,2,,172187-17090,,"COVER M4",2,,,,,,,,,,,,,,,,,
6,2,,172524-17330,,"KEY ASSY",1,,,,,,,,,,,,,,,,,
10,1,,172187-17200,,"BOX, FUSE",1,,,,,,,,,,,,,,,,,
11,2,,172175-17120,,PULLER,1,,,,,,,,,,,,,,,,,
13,2,,172187-17220,,COVER,1,,,,,,,,,,,,,,,,,
14,2,,29420-050000,,HUSE,2,,,,,,,,,,,,,,,,,
15,2,,29420-150000,,HUSE,6,,,,,,,,,,,,,,,,,
16,2,,29420-300000,,"FUSE B30",2,,,,,,,,,,,,,,,,,
17,1,,172472-17350,,"INDICATOR BOX (CABIN",1,,,,,,,,,,,,,,,,,
21,2,,172187-17290,,"SWITCH, HEATER",1,,,,,,,,,,,,,,,,,,,I
22,2,,172472-17300,,"SWITCH ASSY,WASHER",1,,,,,,,,,,,,,,,,,,,,I
30,2,,172187-17380,,"BULB,T6.5-13.5V-2W",4,,,,,,,,,,,,,,,,,
35,2,,172187-17480,,"BULB,T5-14V-2W",2,,,,,,,,,,,,,,,,,
36,1,,172458-46720,,"BOLT 8X20",1,,,,,,,,,,,,,,,,,
37,1,,194151-57100,,HORN,1,,,,,,,,,,,,,,,,,
38,1,,172165-62800,,"GROMMET 26",1,,,,,,,,,,,,,,,,,
39,1,,172519-63240,,"BOLT  8X 16",3,,,,,,,,,,,,,,,,,
40,1,,119247-77100,,"RELAY, SAFETY",1,,,,,,,,,,,,,,,,,
41,1,,129136-77200,,"RELAY, SAFETY",1,,,,,,,,,,,,,,,,,
42,1,,119650-77910,,"RELAY, GROW",1,,,,,,,,,,,,,,,,,
45,1,,129211-77920,,TIMER,1,,,,,,,,,,,,,,,,,
46,1,,22137-060000,,"WASHER 6, POLISHED",8,,,,,,,,,,,,,,,,,
47,1,,26013-060122,,"BOLT M 6X 12",2,,,,,,,,,,,,,,,,,
48,1,,26013-060122,,"BOLT M 6X 12",1,,,,,,,,,,,,,,,,,
49,1,,26013-060162,,"BOLT M 6X 16",2,,,,,,,,,,,,,,,,,
50,1,,26013-060162,,"BOLT M 6X 16",1,,,,,,,,,,,,,,,,,
51,1,,26013-060202,,"BOLT M 6X 20",2,,,,,,,,,,,,,,,,,
52,1,,26013-060202,,"BOLT M 6X 20",2,,,,,,,,,,,,,,,,,
53,1,,194464-52190,,"SWITCH, SAFETY START",1,,,,,,,,,,,,,,,,,
54,1,,26776-180002,,"NUT M18,LOCK",1,,,,,,,,,,,,,,,,,
```

silverhorn.co.uk

Fig. 10 ELECTRIC PART (EQUIPMENT)

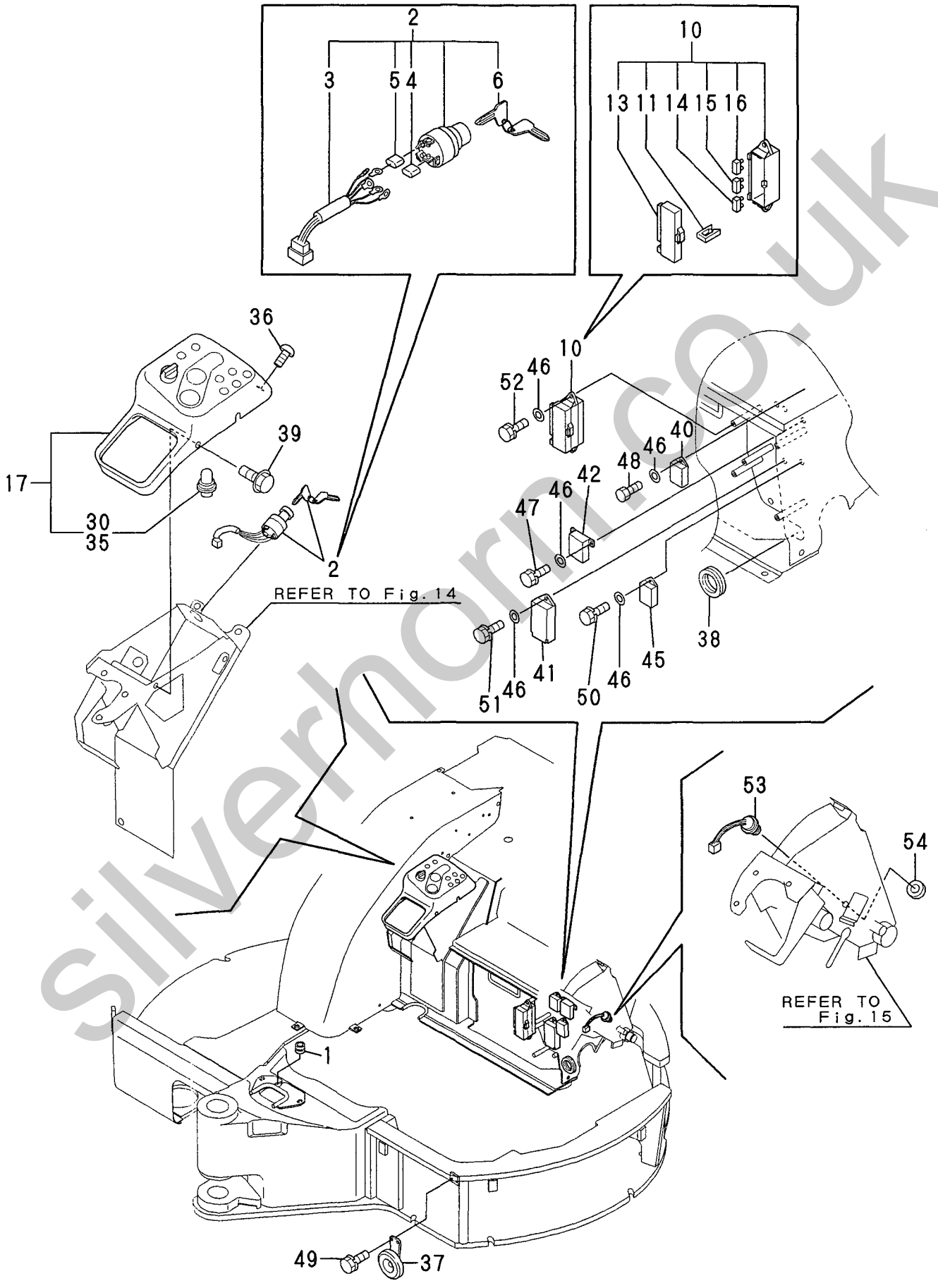

silverhorn.co.uk

```
1,1,,172458-17400,,"LAMP 150X95",1,,,,,,,,,,,,,,,,,
2,2,,172458-17420,,"BULB,12V 55W",1,,,,,,,,,,,,,,,,,
3,1,,172458-17410-1,,"STAY      (GREEN:86)",1,,,,,,,,,,,,,,,,,,
4,1,,22137-100000,,"WASHER 10,POLISHED",1,,,,,,,,,,,,,,,,,
5,1,,26013-100202,,"BOLT W/WASHER M10X20",1,,,,,,,,,,,,,,,,,,
6,1,,26706-100002,,"NUT M10",1,,,,,,,,,,,,,,,,,
```

silverhorn.co.uk

Fig. 11 WORK LAMP

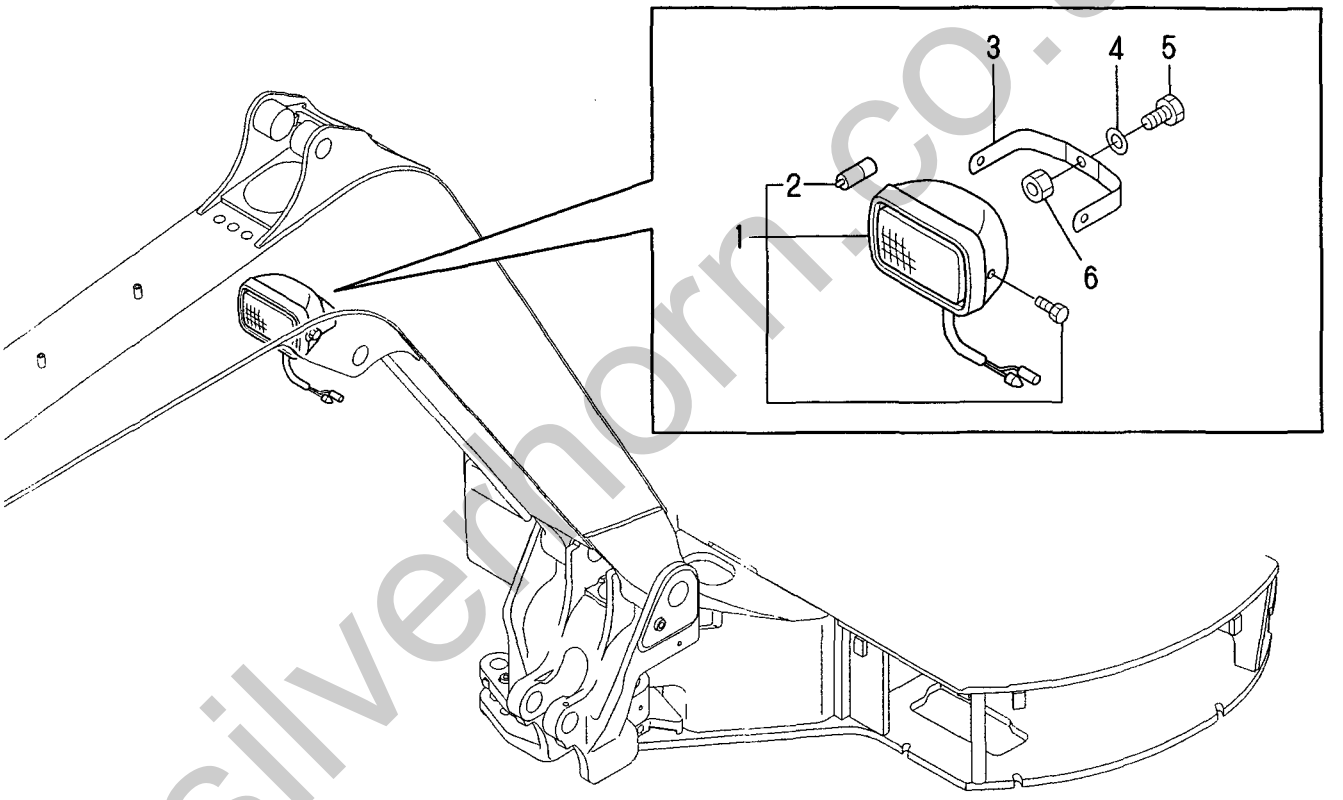

silverhorn.co.uk

```
1,1,,172455-29140,,"BOLT 14X35",18,,,,,,,,,,,,,,,,,
2,1,,172119-35010-4,,"SPROKET   (GREEN:82)",2,,,,,,,,,,,,,,,,,
3,1,,22217-140000,,"SPRING WASHER 14",18,,,,,,,,,,,,,,,,,
4,1,,772460-37100-2,,"IDLER,RUBBER(GREEN82",2,,,,,,,,,,,,,,,,,
5,2,,172460-37100-2,,"IDLER,R(344(GREEN:82",2,,,,,,,,,,,,,,,,,
7,3,,172124-37120,,"BUSH 40",4,,,,,,,,,,,,,,,,,
8,2,,172460-37120,,SEAL,4,,,,,,,,,,,,,,,,,
9,2,,172460-37130-2,,"SHAFT,IDLER(GREEN:82",2,,,,,,,,,,,,,,,,,
10,2,,172460-37150-2,,"COVER     (GREEN:82)",2,,,,,,,,,,,,,,,,,
11,2,,194630-42120,,"PLUG PT1/8",2,,,,,,,,,,,,,,,,,
12,2,,22242-000350,,"CIRCLIP   35",2,,,,,,,,,,,,,,,,,
13,2,,24321-000400,,"O-RING 1A G-40.0",2,,,,,,,,,,,,,,,,,
14,1,,772423-37320-1,,"TRACK ROLLER(GREEN82",8,,,,,,,,,,,,,,,,,
15,2,,172458-37120,,"FLOATING SEAL",16,,,,,,,,,,,,,,,,,
16,2,,172423-37300-2,,"ROLLER    (GREEN:82)",8,,,,,,,,,,,,,,,,,
18,3,,172423-37370,,BUSH,16,,,,,,,,,,,,,,,,,
19,2,,172423-37330,,SHAFT,8,,,,,,,,,,,,,,,,,
22,2,,172423-37360,,"COVER, SEAL",8,,,,,,,,,,,,,,,,,
23,2,,22242-000300,,"CIRCLIP   30",8,,,,,,,,,,,,,,,,,
24,2,,24315-000290,,"O-RING 1B P-29.0",8,,,,,,,,,,,,,,,,,
25,2,,933171-13691,,"PLUG PT1/8",8,,,,,,,,,,,,,,,,,
26,1,,172162-82980,,"BOLT M16X 35",16,,,,,,,,,,,,,,,,,
27,1,,22217-160000,,"SPRING WASHER 16",16,,,,,,,,,,,,,,,,,
28,1,,172187-37502-2,,"ROLLER, CARRIER (82)",2,,,,,,,,,,,,,,,,,
30,2,,172187-37521,,SHAFT,2,,,,,,,,,,,,,,,,,
31,2,,172187-37530,,"WASHER, CARRIER",2,,,,,,,,,,,,,,,,,
32,2,,172187-37540,,"CAP, CARRIER ROLLER",2,,,,,,,,,,,,,,,,,
33,2,,172187-37550,,SEAL,2,,,,,,,,,,,,,,,,,
34,2,,22242-000300,,"CIRCLIP   30",2,,,,,,,,,,,,,,,,,
35,2,,22252-000621,,"RING   62",2,,,,,,,,,,,,,,,,,
36,2,,24105-062064,,"BALL BEARING",4,,,,,,,,,,,,,,,,,
37,2,,933171-13691,,"PLUG PT1/8",2,,,,,,,,,,,,,,,,,
38,1,,22217-160000,,"SPRING WASHER 16",2,,,,,,,72423135,,,,,,,,,,,I
39,1,,26116-160702,,"BOLT 16* 70",2,,,,,,,,,,,,,,,,,
40,1,,26716-160002,,"NUT M16",2,,,,,,,,,,,,,,,,,
41,1,,172460-37700,,SPRING,2,,,,,,,,,,,,,,,,,
42,1,,172122-37710,,"HOLDER, ADJUSTER",2,,,,,,,,,,,,,,,,,
43,1,,172122-37752,,"ADJUST CYLINDER",2,,,,,,,,,,,,,,,,,
44,2,,172122-37782,,"ADJUST TUBE",2,,,,,,,,,,,,,,,,,
45,2,,172122-37810,,PISTON,2,,,,,,,,,,,,,,,,,
46,2,,172122-37820,,"ADJUST SEAL SET",2,,,,,,,,,,,,,,,,,
47,1,,172122-37844,,"VALVE ASSY, NIPPLE",2,,,,,,,,,,,,,,,,,
48,2,,24315-000140,,"O-RING 1B P-14.0",2,,,,,,,,,,,,,,,,,
49,2,,24761-020000,,"NIPPLE PT1/8,GREASE",2,,,,,,,,,,,,,,,,,
50,1,,26013-120402,,"BOLT M12X 40",8,,,,,,,,,,,,,,,,,
```

silvermorn.co.uk

Fig. 12 ROLLER & ADJUST

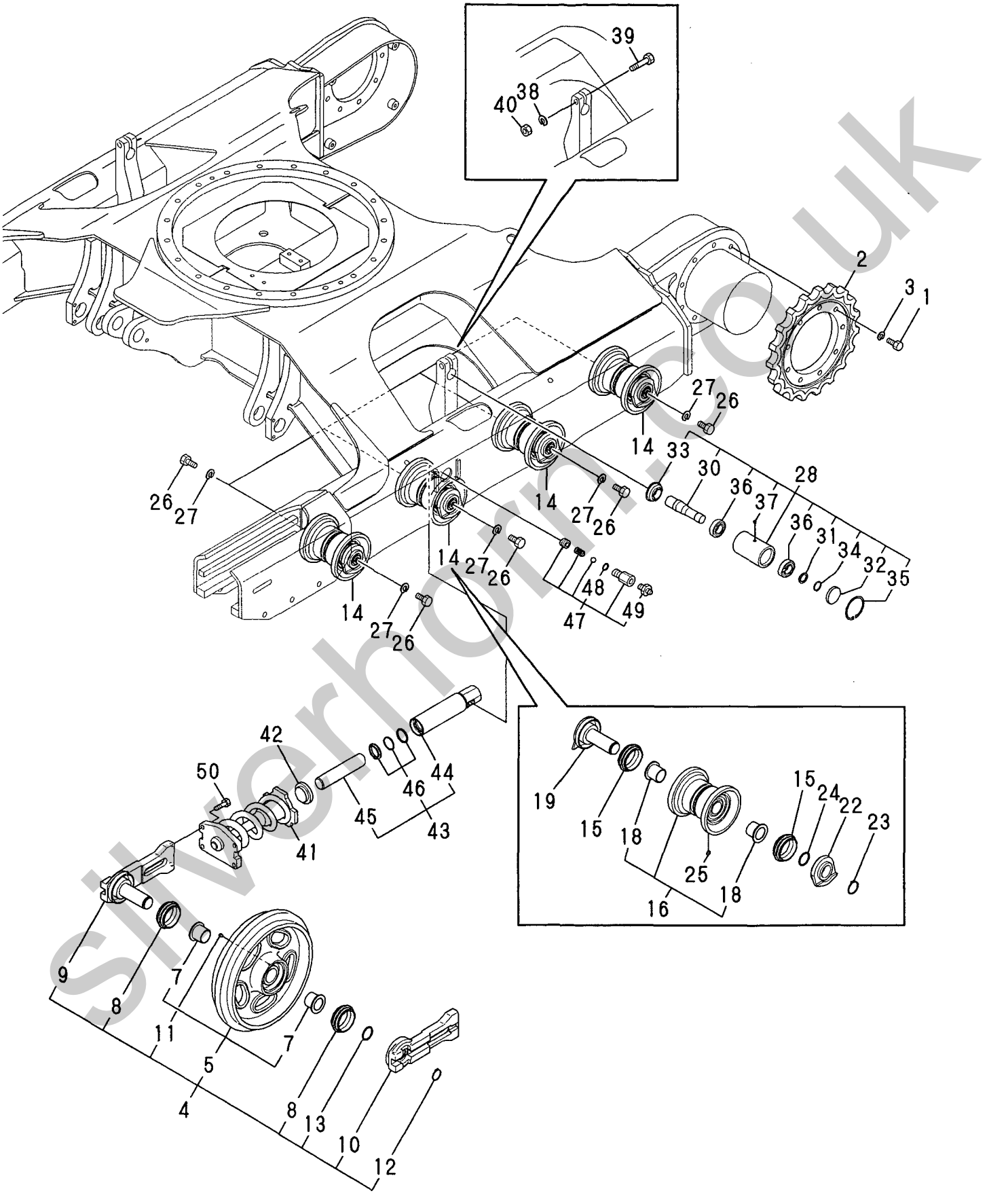

silverhorn.co.uk

1,1,,172423-38601,,"CRAWLER, RUBBER",2,,,,,,,,72476012,,,,,,,,,,,,I

silverhorn.co.uk

Fig. 13 CRAWLER

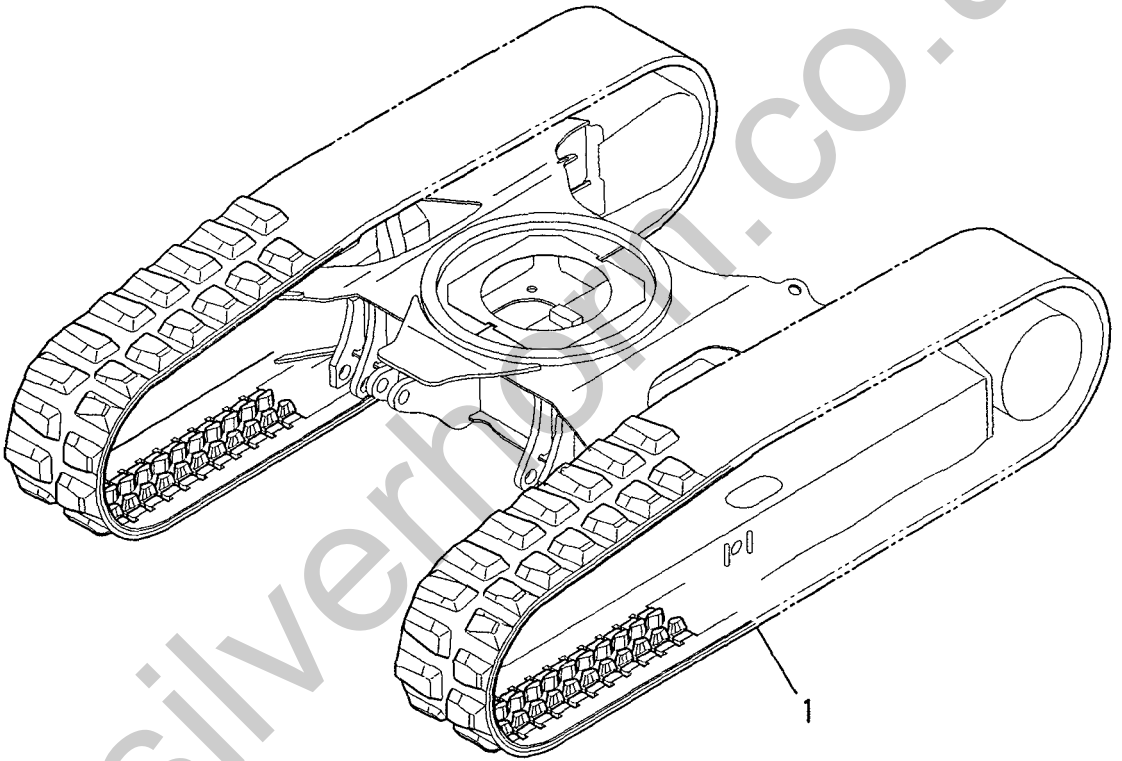

silverhorn.co.uk

```
1,1,,172468-46800,,"LEVER STAND R(GRAY73",1,,,,,,,,,,,,,,,,,
2,2,,172141-41360,,"BUSH 1415",4,,,,,,,,,,,,,,,,
3,2,,172458-46790,,"SEAL,LEVER STAND",1,,,,,,,,,,,,,,,,,
5,2,,172460-46810,,SEAL,1,,,,,,,,,,,,,,,,
6,1,,172458-46950,,"PLATE      (GRAY:73)",1,,,,,,,,,,,,,,,,,
7,1,,172455-61720,,"BOLT M 10X20",2,,,,,,,,,,,,,,,,
8,1,,26013-080162,,"BOLT W/WASHER M8X16",2,,,,,,,,,,,,,,,,,
9,1,,172472-46210,,"BRACKET ASSY,R  (73)",1,,,,,,,,,,,,,,,,,
10,1,,26013-080202,,"BOLT W/WASHER M8X20",3,,,,,,,,,,,,,,,,,
11,1,,26013-100202,,"BOLT W/WASHER M10X20",2,,,,,,,,,,,,,,,,,,
```

silverhorn.co.uk

Fig. 14 CONTROL EQUIPMENT (LOCK LEVER & STAND) RIGHT

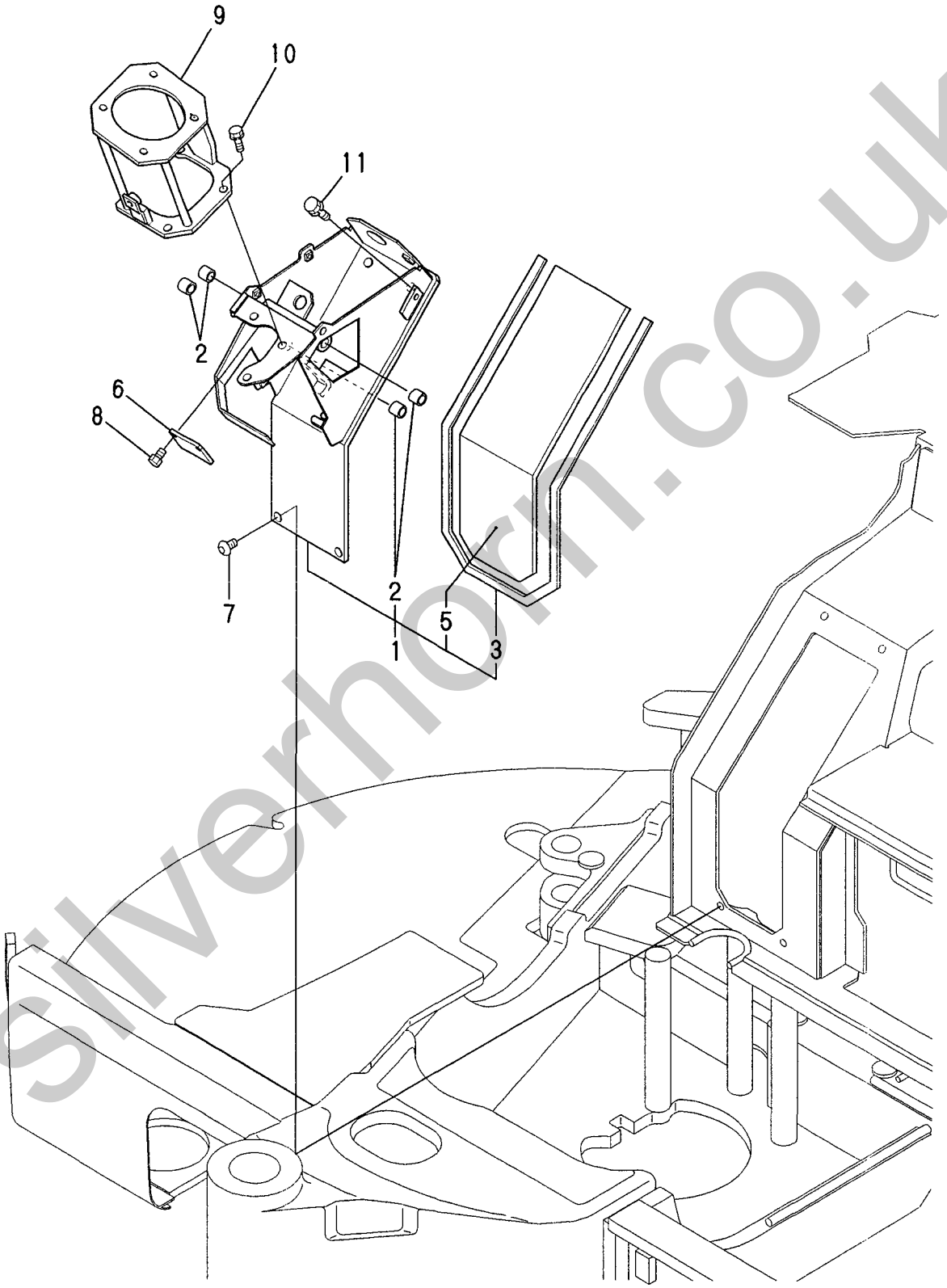

silverhorn.co.uk

```
1,1,,1D4070-23580,,"GRIP,RED ROUND",1,,,,,,,,,,,,,,,,
2,1,,172458-45850,,"GUIDE L,HOSE(GRAY:73",1,,,,,,,,,,,,,,,,,
3,1,,172124-46200,,"O-RING 27X5.7",2,,,,,,,,,,,,,,,,,
4,1,,172472-46600,,"LEVER STAND L   (73)",1,,,,,,,,,,,,,,,,,
5,2,,172141-41370,,"BUSH 2015",2,,,,,,,,,,,,,,,,,
7,2,,24550-025150,,"BUSH 25X15",2,,,,,,,,,,,,,,,,,
8,1,,172162-46690,,SPRING,1,,,,,,,,,,,,,,,,,
9,1,,172455-46890,,"SPRING,GAS",1,,,,,,,,,,,,,,,,,
10,1,,172455-46950,,"BRACKET, SWITCH",1,,,,,,,,,,,,,,,,,
11,1,,172165-47550,,BUSH,1,,,,,,,,,,,,,,,,,
12,1,,172472-47601,,"LOCK GUIDE,L(GRAY:73",1,,,,,,,,,,,,,,,,,
13,1,,172472-47620,,"LOCK LEVER L-US (72)",1,,,,,,,,,,,,,,,,,
14,1,,172458-47640,,"ROD,SPRING (GRAY:73)",1,,,,,,,,,,,,,,,,,
15,1,,172165-47980,,"SHIM 42X25.5X0.5",2,,,,,,,,,,,,,,,,,
16,1,,172165-47990,,"WASHER 25.5X42",1,,,,,,,,,,,,,,,,,
17,1,,22137-080000,,"WASHER 8, POLISHED",2,,,,,,,,,,,,,,,,,
18,1,,22137-080000,,"WASHER 8, POLISHED",2,,,,,,,,,,,,,,,,,
19,1,,22242-000250,,"CIRCLIP 25S",1,,,,,,,,,,,,,,,,,
20,1,,22272-000070,,"CIRCLIP E- 7",1,,,,,,,,,,,,,,,,,
21,1,,22351-035040,,"SPRING PIN 3.5X40",1,,,,,,,,,,,,,,,,,
22,1,,22351-060040,,"SPRING PIN 6X40",1,,,,,,,,,,,,,,,,,
23,1,,22417-200200,,"COTTER PIN 2.0X20",2,,,,,,,,,,,,,,,,,
24,1,,24311-000340,,"O-RING 1A P-34.0",2,,,,,,,,,,,,,,,,,
25,1,,24761-050000,,"NIPPLE C,GREASE",2,,,,,,,,,,,,,,,,,
26,1,,26013-080162,,"BOLT W/WASHER M8X16",2,,,,,,,,,,,,,,,,,
27,1,,26013-080202,,"BOLT W/WASHER M8X20",2,,,,,,,,,,,,,,,,,
28,1,,26013-100202,,"BOLT W/WASHER M10X20",3,,,,,,,,,,,,,,,,,
29,1,,172472-46220,,"BRACKET ASSY,L  (73)",1,,,,,,,,,,,,,,,,,
30,1,,26013-080202,,"BOLT W/WASHER M8X20",3,,,,,,,,,,,,,,,,,
31,1,,172468-64380,,"BRACKET ASSY,DAMPER",1,,,,,,,,,,,,,,,,,
32,1,,26013-100202,,"BOLT W/WASHER M10X20",2,,,,,,,,,,,,,,,,,
33,1,,172176-67150,,RUBBER,1,,,,,,,,,,,,,,,,,
```

silverhorn.co.uk

Fig. 15 CONTROL EQUIPMENT (LOCK LEVER & STAND) LEFT

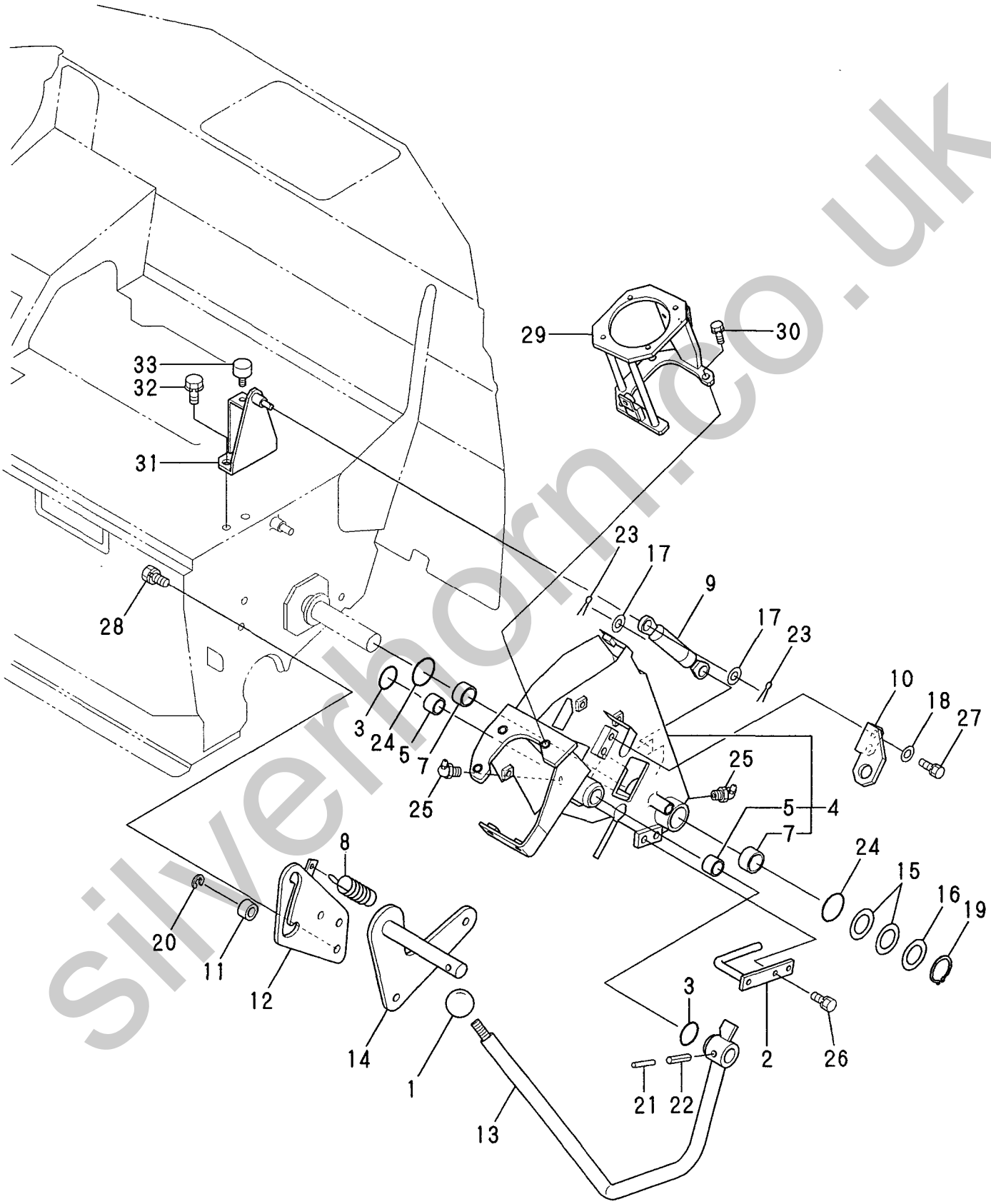

silverhorn.co.uk

```
1,1,,172141-41340,,BOOTS,2,,,,,,,,,,,,,,,,,,
2,1,,172472-45100,,"LEVER L,TRACK(GRAY72",1,,,,,,,,,,,,,,,,,,
3,2,,172141-41370,,"BUSH 2015",2,,,,,,,,,,,,,,,,,,
5,1,,933110-54100,,"PIN 4.75X14",2,,,,,,,,,,,,,,,,,,
6,1,,172187-45870,,"GRIP L, DRIVE",1,,,,,,,,,,,,,,,,,,
7,1,,172187-45880,,"GRIP R, DRIVE",1,,,,,,,,,,,,,,,,,,
8,1,,22117-040000,,"WASHER  4",2,,,,,,,,,,,,,,,,,,
9,1,,26116-100404,,"BOLT M10X 40 PLATED",2,,,,,,,,,,,,,,,,,,
10,1,,26116-100604,,"BOLT M10X 60 PLATED",2,,,,,,,,,,,,,,,,,,
11,1,,26587-040122,,"SCREW M 4X 12",2,,,,,,,,,,,,,,,,,,
12,1,,26716-100002,,"NUT 10",4,,,,,,,,,,,,,,,,,,
13,1,,172460-45180,,"BRACKET ASSY(GRAY:72",1,,,,,,,,,,,,,,,,,,
14,1,,172124-46200,,"O-RING 27X5.7",3,,,,,,,,,,,,,,,,,,
15,1,,24761-020000,,"NIPPLE PT1/8,GREASE",1,,,,,,,,,,,,,,,,,,
16,1,,26013-100252,,"BOLT W/WASHER M10X25",2,,,,,,,,,,,,,,,,,,
17,1,,172472-45400,,"LINK STAND ASSY (12)",1,,,,,,,,,,,,,,,,,,
18,1,,172458-45510,,"BRACKET,BOOT(BLACK12",1,,,,,,,,,,,,,,,,,,
19,1,,22137-080000,,"WASHER 8, POLISHED",2,,,,,,,,,,,,,,,,,,
20,1,,26013-100202,,"BOLT W/WASHER M10X20",6,,,,,,,,,,,,,,,,,,
21,1,,172458-45250,,"ROD 91 ASSY",2,,,,,,,,,,,,,,,,,,
22,1,,172122-46590,,"ELBALL 8",2,,,,,,,,,,,,,,,,,,
23,1,,22117-080000,,"WASHER  8",2,,,,,,,,,,,,,,,,,,
24,1,,22417-160160,,"COTTER PIN 1.6X16",2,,,,,,,,,,,,,,,,,,
25,1,,26051-080002,,"NUT M 8",4,,,,,,,,,,,,,,,,,,
26,1,,172472-45140,,"LEVER R,TRACK(GRAY72",1,,,,,,,,,,,,,,,,,,
27,2,,172141-41370,,"BUSH 2015",2,,,,,,,,,,,,,,,,,,
29,1,,26013-080162,,"BOLT W/WASHER M8X16",2,,,,,,,,,,,,,,,,,,
30,1,,24761-050000,,"NIPPLE C,GREASE",1,,,,,,,,,,,,,,,,,,
31,1,,172472-45550,,"PEDAL L ASSY(TRACK",1,,,,,,,,,,,,,,,,,,
32,1,,172472-45580,,"PEDAL R ASSY(TRACK",1,,,,,,,,,,,,,,,,,,
33,1,,26013-060302,,"BOLT M 6X 30",4,,,,,,,,,,,,,,,,,,
```

silverhorn.co.uk

Fig. 16 CONTROL EQUIPMENT (TRAVEL LEVER)

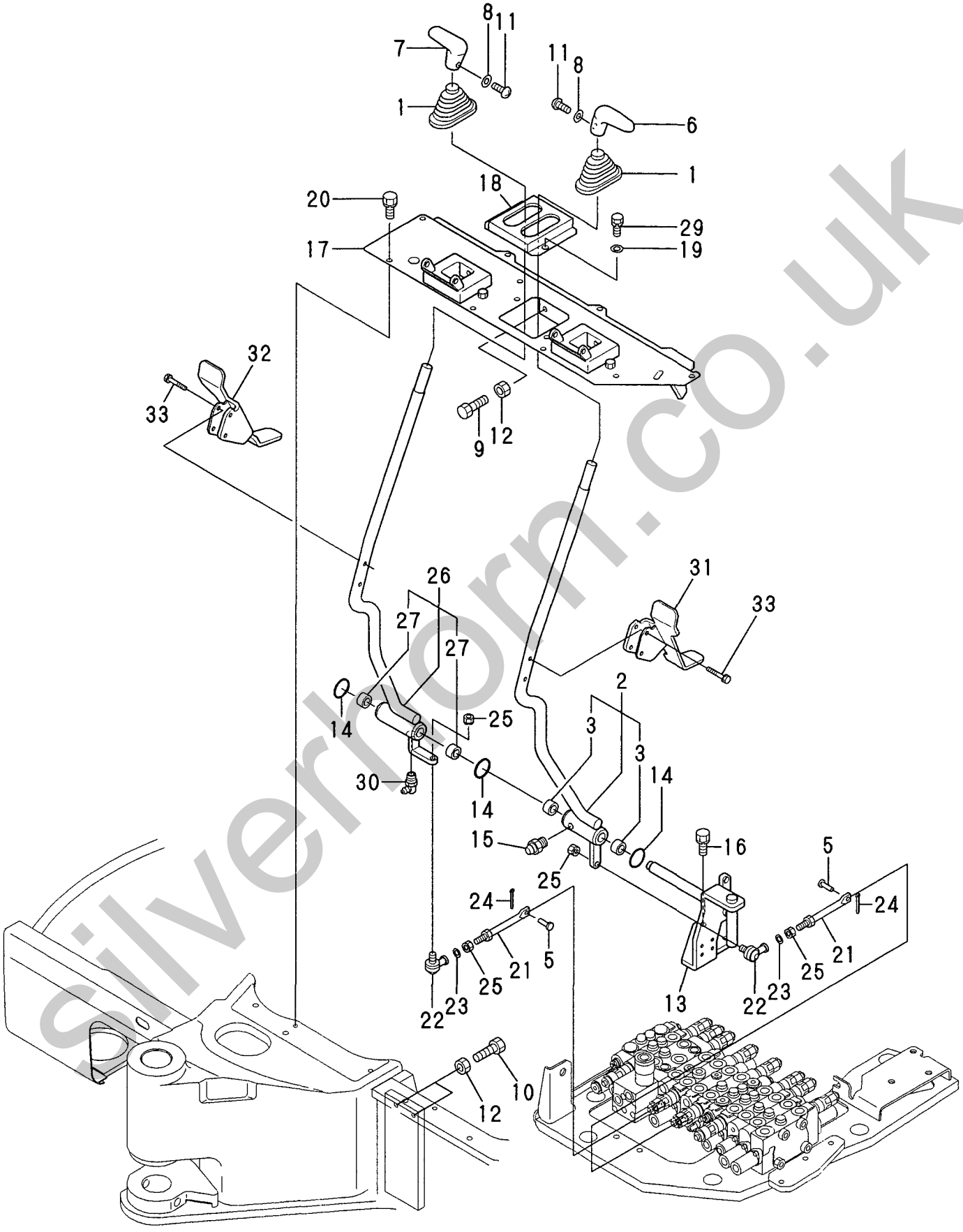

silverthorn.co.uk

```
1,1,,172472-45700,,"LEVER,BLADE(GRAY:72)",1,,,,,,,,,,,,,,,,,
2,1,,172458-45720,,"SHAFT ASSY (GRAY:72)",1,,,,,,,,,,,,,,,,,
3,1,,172164-45970,,"GRIP, BLADE",1,,,,,,,,,,,,,,,,,
4,1,,22351-030032,,"SPRING PIN 3X32",1,,,,,,,,,,,,,,,,,
5,1,,22351-050032,,"SPRING PIN 5X32",1,,,,,,,,,,,,,,,,,
6,1,,24311-000210,,"O-RING 1A P-21.0",2,,,,,,,,,,,,,,,,,
7,1,,26116-080202,,"BOLT M 8X 20 PLATED",2,,,,,,,,,,,,,,,,,,
8,1,,26716-080002,,"NUT M 8",2,,,,,,,,,,,,,,,,,
9,1,,172472-45800,,"CABLE, BLADE",1,,,,,,,,,,,,,,,,,
10,1,,22417-160160,,"COTTER PIN 1.6X16",1,,,,,,,,,,,,,,,,,,
11,1,,26051-080002,,"NUT M 8",1,,,,,,,,,,,,,,,,,
12,1,,933110-54100,,"PIN 4.75X14",1,,,,,,,,,,,,,,,,,,
```

silverhorn.co.uk

Fig. 17 CONTROL EQUIPMENT (BLADE LEVER)

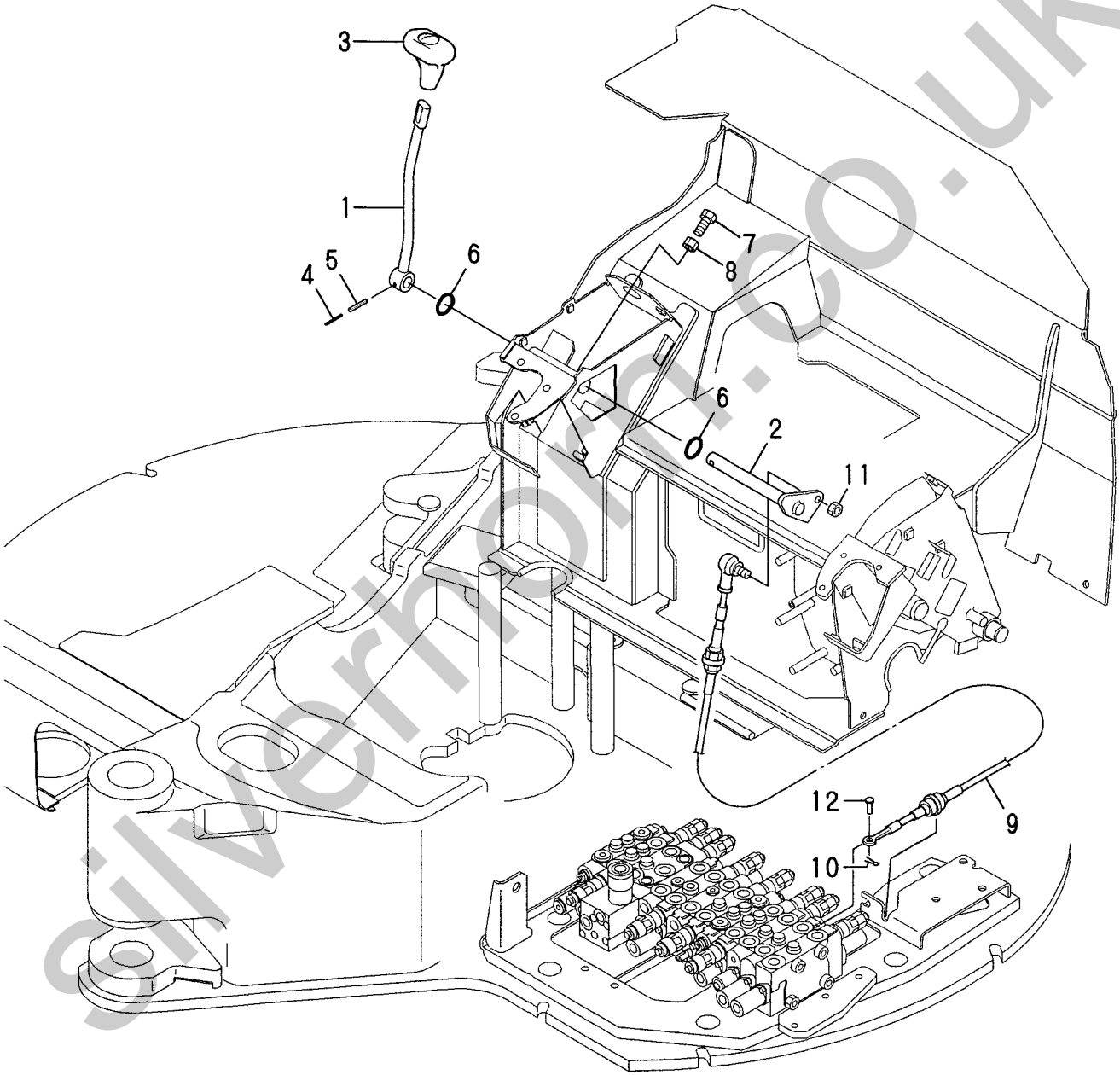

silvermoor.co.uk

```
1,1,,172458-45180,,"LINK,SWING (GRAY:72)",1,,,,,,,,,,,,,,,,,
2,2,,172141-41370,,"BUSH 2015",2,,,,,,,,,,,,,,,,,
4,1,,172458-45200,,"LINK,PEDAL (GRAY:72)",1,,,,,,,,,,,,,,,,,
5,2,,172141-41360,,"BUSH 1415",2,,,,,,,,,,,,,,,,,
7,1,,172458-45230,,"SHAFT,PEDAL(GRAY:72)",1,,,,,,,,,,,,,,,,,
8,1,,1A1040-45890,,"WASHER 10 36 4.5",1,,,,,,,,,,,,,,,,,
9,1,,172124-46200,,"O-RING 27X5.7",2,,,,,,,,,,,,,,,,,
10,1,,22217-100000,,"SPRING WASHER 10",1,,,,,,,,,,,,,,,,,
11,1,,24311-000210,,"O-RING 1A P-21.0",2,,,,,,,,,,,,,,,,,
12,1,,24761-020000,,"NIPPLE PT1/8,GREASE",1,,,,,,,,,,,,,,,,,
13,1,,24761-040000,,"NIPPLE B,GREASE",1,,,,,,,,,,,,,,,,,
14,1,,26013-080162,,"BOLT W/WASHER M8X16",2,,,,,,,,,,,,,,,,,
15,1,,26116-080254,,"BOLT M 8X 25 PLATED",2,,,,,,,,,,,,,,,,,
16,1,,26116-100202,,"BOLT M10X 20 PLATED",1,,,,,,,,,,,,,,,,,
17,1,,26716-080002,,"NUT M 8",2,,,,,,,,,,,,,,,,,
18,1,,172458-45521,,"PEDAL,SWING(GRAY:72)",1,,,,,,,,,,,,,,,,,
19,1,,172458-45540,,"COVER,PEDAL(GRAY:72)",1,,,,,,,,,,,,,,,,,
20,1,,172187-45650,,"SHAFT, PEDAL COVER",1,,,,,,,,,,,,,,,,,
21,1,,172187-45760,,"COVER PAD",1,,,,,,,,,,,,,,,,,
22,1,,172157-45990,,"BOOTS, PEDAL",1,,,,,,,,,,,,,,,,,
23,1,,172165-46340,,BOLT,2,,,,,,,,,,,,,,,,,
24,1,,22137-100000,,"WASHER 10,POLISHED",2,,,,,,,,,,,,,,,,,
25,1,,22417-250200,,"COTTER PIN 2.5X20",2,,,,,,,,,,,,,,,,,
26,1,,194200-37780,,"LS-NUT 8",1,,,,,,,,,,,,,,,,,
27,1,,172734-41300,,"LINK BALL 8L",1,,,,,,,,,,,,,,,,,
28,1,,172146-45610,,"ROD(R), LINK",1,,,,,,,,,,,,,,,,,
29,1,,172823-45940,,"ROD 130 COMP.",1,,,,,,,,,,,,,,,,,
30,1,,172122-46590,,"ELBALL 8",2,,,,,,,,,,,,,,,,,
31,1,,22117-080000,,"WASHER  8",3,,,,,,,,,,,,,,,,,
32,1,,22417-160160,,"COTTER PIN 1.6X16",1,,,,,,,,,,,,,,,,,
33,1,,26051-080002,,"NUT M 8",5,,,,,,,,,,,,,,,,,
34,1,,933110-54100,,"PIN 4.75X14",1,,,,,,,,,,,,,,,,,
```

silverhorn.co.uk

Fig. 18 CONTROL EQUIPMENT (SWING PEDAL)

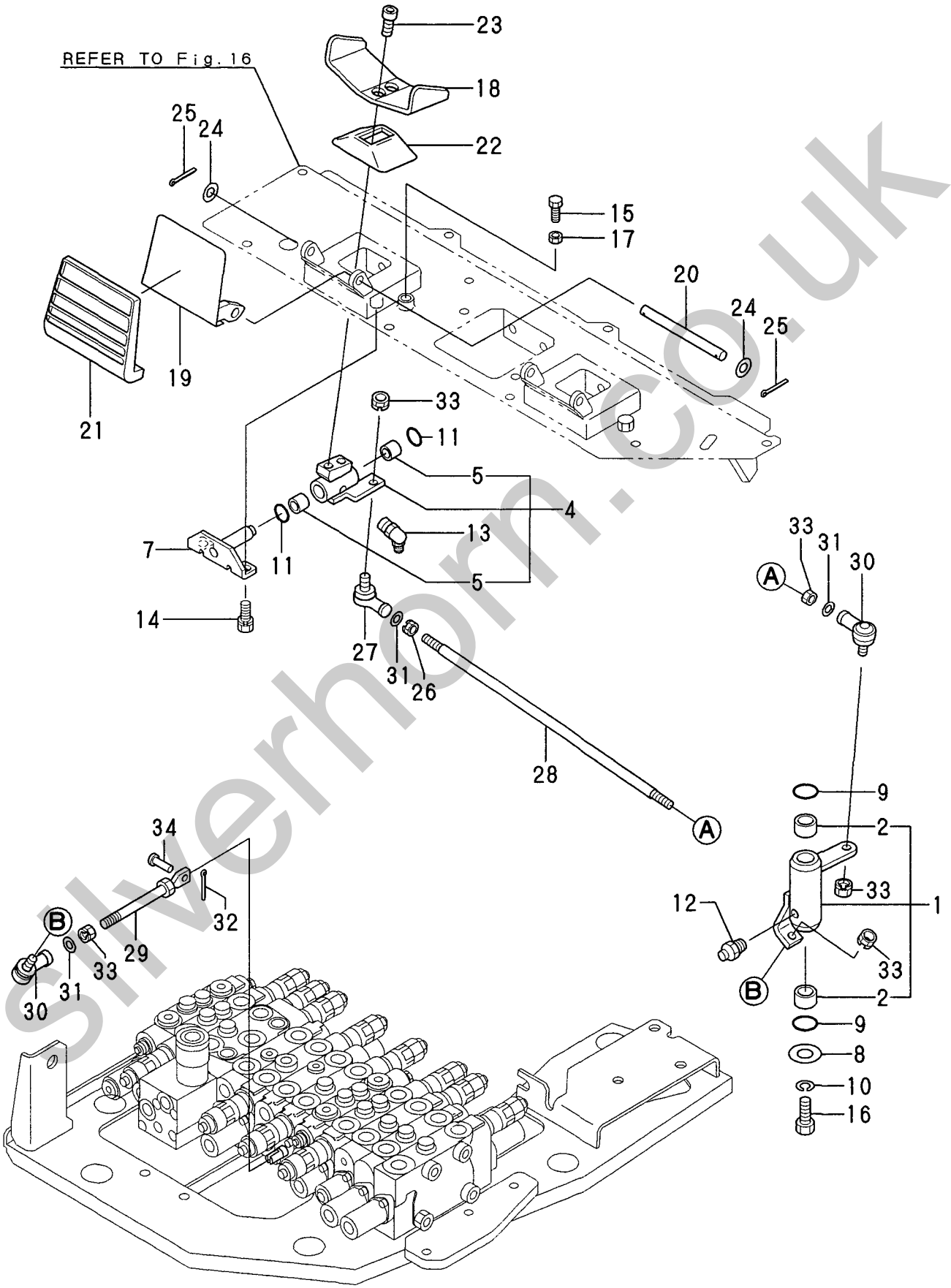

silverhorn.co.uk

```
1,1,,172162-12480,,"SPRING,RETURN",1,,,,,,,,,,,,,,,,,
2,1,,1A1040-43900,,"SPRING WASHER",1,,,,,,,,,,,,,,,,,
3,1,,172472-45900,,"PEDAL,LO-HI(GRAY:72)",1,,,,,,,,,,,,,,,,,,
4,1,,172458-45920,,"BRACKET,PEDAL(GRAY72",1,,,,,,,,,,,,,,,,,,
5,2,,172141-41360,,"BUSH 1415",2,,,,,,,,,,,,,,,,,
7,1,,172458-45950,,"PAD,PEDAL",1,,,,,,,,,,,,,,,,,
8,1,,24311-000210,,"O-RING 1A P-21.0",2,,,,,,,,,,,,,,,,,
9,1,,26013-080162,,"BOLT W/WASHER M8X16",2,,,,,,,,,,,,,,,,,
10,1,,26013-080202,,"BOLT W/WASHER M8X20",1,,,,,,,,,,,,,,,,,,
```

silverhorn.co.uk

Fig. 19 CONTROL EQUIPMENT (LOW-HIGH PEDAL)

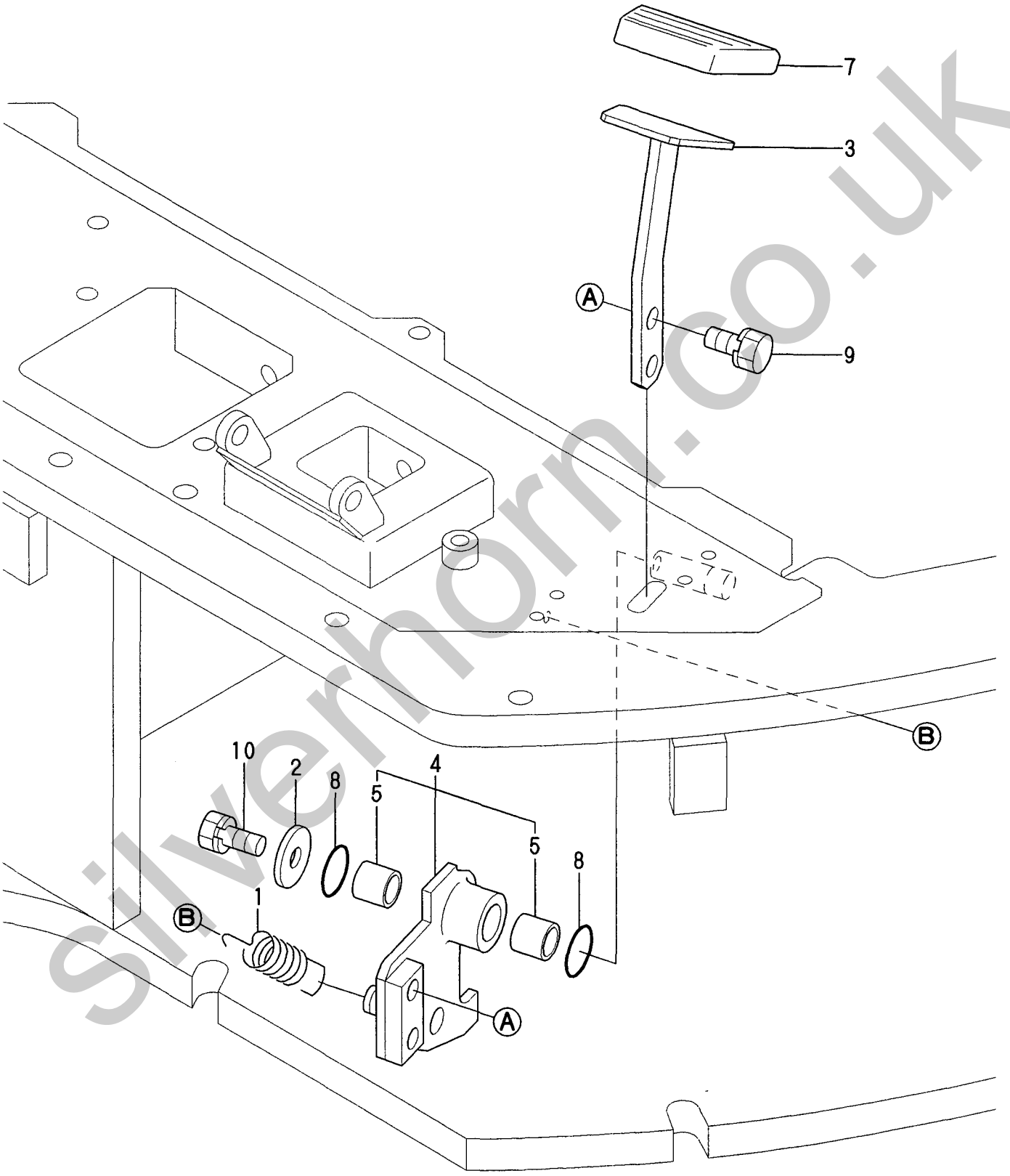

silverhorn.co.uk

```
1,1,,172068-28490,,"SPRING  8",2,,,,,,,,,,,,,,,,,
2,1,,172472-45500,,"PEDAL,P.T.O(GRAY:72)",1,,,,,,,,,,,,,,,,,
3,1,,172458-45540,,"COVER,PEDAL(GRAY:72)",1,,,,,,,,,,,,,,,,,
4,1,,172187-45760,,"COVER PAD",1,,,,,,,,,,,,,,,,,
5,1,,172472-45960,,"LOCK ASSY  (GRAY:72)",1,,,,,,,,,,,,,,,,,
6,1,,172157-45990,,"BOOTS, PEDAL",1,,,,,,,,,,,,,,,,,
7,1,,172462-46230,,"BOLT 8X10",1,,,,,,,,,,,,,,,,,
8,1,,172165-46340,,BOLT,2,,,,,,,,,,,,,,,,,
9,1,,172116-46630,,"KNOB, LOCK LEVER",1,,,,,,,,,,,,,,,,,
10,1,,22137-080000,,"WASHER 8, POLISHED",1,,,,,,,,,,,,,,,,,
11,1,,26347-080002,,"U-NUT 8",1,,,,,,,,,,,,,,,,,
12,1,,26716-080002,,"NUT M 8",2,,,,,,,,,,,,,,,,,
13,1,,26757-100002,,"LOCK NUT 10",1,,,,,,,,,,,,,,,,,
14,1,,26116-080254,,"BOLT M 8X 25 PLATED",2,,,,,,,,,,,,,,,,,
15,1,,194200-37780,,"LS-NUT 8",1,,,,,,,,,,,,,,,,,
16,1,,172734-41300,,"LINK BALL 8L",1,,,,,,,,,,,,,,,,,
17,1,,172732-42450,,ROD,1,,,,,,,,,,,,,,,,,
18,1,,172823-45000,,"ROD 54, SPOOL",1,,,,,,,,,,,,,,,,,
19,1,,172458-45230,,"SHAFT,PEDAL(GRAY:72)",1,,,,,,,,,,,,,,,,,
20,1,,172467-45300,,"LINK A ASSY",1,,,,,,,,,,,,,,,,,
21,2,,172141-41370,,"BUSH 2015",2,,,,,,,,,,,,,,,,,
23,1,,172472-45330,,"LINK B ASSY",1,,,,,,,,,,,,,,,,,
24,2,,172141-41370,,"BUSH 2015",2,,,,,,,,,,,,,,,,,
26,1,,172467-45370,,"BRACKET ASSY",1,,,,,,,,,,,,,,,,,
27,1,,1A1040-45890,,"WASHER 10 36 4.5",1,,,,,,,,,,,,,,,,,
28,1,,172124-46200,,"O-RING 27X5.7",2,,,,,,,,,,,,,,,,,
29,1,,172122-46590,,"ELBALL 8",2,,,,,,,,,,,,,,,,,
30,1,,22117-080000,,"WASHER  8",3,,,,,,,,,,,,,,,,,
31,1,,22217-100000,,"SPRING WASHER 10",1,,,,,,,,,,,,,,,,,
32,1,,22417-160160,,"COTTER PIN 1.6X16",1,,,,,,,,,,,,,,,,,
33,1,,24311-000210,,"O-RING 1A P-21.0",2,,,,,,,,,,,,,,,,,
34,1,,24761-050000,,"NIPPLE C,GREASE",1,,,,,,,,,,,,,,,,,
35,1,,26013-080162,,"BOLT W/WASHER M8X16",2,,,,,,,,,,,,,,,,,
36,1,,26013-100202,,"BOLT W/WASHER M10X20",2,,,,,,,,,,,,,,,,,
37,1,,26051-080002,,"NUT M 8",5,,,,,,,,,,,,,,,,,
38,1,,26116-100202,,"BOLT M10X 20 PLATED",1,,,,,,,,,,,,,,,,,
39,1,,933110-54100,,"PIN 4.75X14",1,,,,,,,,,,,,,,,,,
40,1,,24761-040000,,"NIPPLE B,GREASE",1,,,,,,,,,,,,,,,,,
41,1,,172187-45650,,"SHAFT, PEDAL COVER",1,,,,,,,,,,,,,,,,,
42,1,,22137-100000,,"WASHER 10,POLISHED",2,,,,,,,,,,,,,,,,,
43,1,,22417-250200,,"COTTER PIN 2.5X20",2,,,,,,,,,,,,,,,,,
```

silverhorn.co.uk

Fig.20 CONTROL EQUIPMENT (P.T.O. PEDAL)

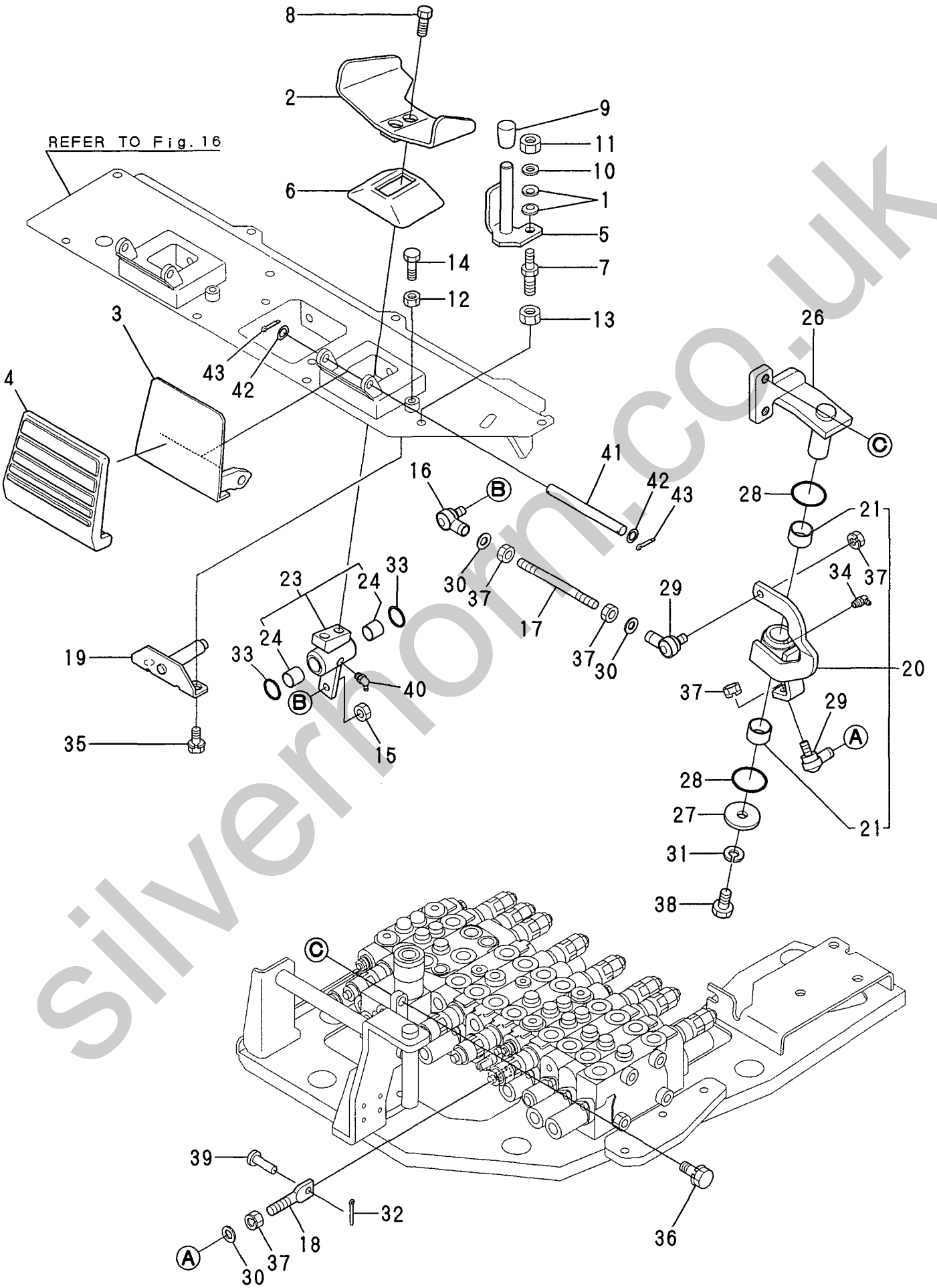

silverhorn.co.uk

```
1,1,,172460-50100-1,,"LOWER FLAME(GREEN:82",1,,,,,,,,,,,,,,,,,
2,1,,172141-50890,,GROMMET,2,,,,,,,,72460314,,,,,,,,,,,,I
3,1,,172455-57650,,"BOLT 16X90",20,,,,,,,,,,,,,,,,,
4,1,,172455-57661,,"BOLT 16X80",20,,,,,,,,,,,,,,,,,
5,1,,26116-160402,,"BOLT M16X 40 PLATED",2,,,,,,,,,,,,,,,,,
6,1,,172460-53300-1,,"WEIGHT    (GREEN:82)",1,,,,,,,,,,,,,,,,,
7,1,,172187-53320,,"WASHER 24.5X65X8",2,,,,,,,,,,,,,,,,,
8,1,,172455-53330,,"BOLT 24X140",2,,,,,,,,,,,,,,,,,
9,1,,172460-53330-1,,"BRACKET   (GREEN:86)",2,,,,,,,,,,,,,,,,,
10,1,,172460-53360-1,,"WEIGHT,SIDE L   (82)",1,,,,,,,,,,,,,,,,,
12,2,,172460-53370,,EV,1,,,,,,,,,,,,,,,,,
13,1,,172460-53380-1,,"WEIGHT,SIDE R   (82)",1,,,,,,,,,,,,,,,,,
15,2,,172460-53390,,EV,1,,,,,,,,,,,,,,,,,
16,1,,172151-53430,,GROMMET,4,,,,,,,,,,,,,,,,,
17,1,,172165-53500,,WASHER,8,,,,,,,,,,,,,,,,,
18,1,,22217-160000,,"SPRING WASHER 16",8,,,,,,,,,,,,,,,,,
19,1,,26116-160502,,"BOLT M16X 50 PLATED",2,,,,,,,,,,,,,,,,,
20,1,,26116-160702,,"BOLT 16* 70",1,,,,,,,,,,,,,,,,,
21,1,,26116-160902,,"BOLT 16* 90",3,,,,,,,,,,,,,,,,,
22,1,,172460-54100-1,,"FRAME     (GREEN:86)",1,,,,,,,,,,,,,,,,,
23,1,,172460-54600-1,,"PLATE     (GREEN:86)",1,,,,,,,,,,,,,,,,,
24,1,,26013-100252,,"BOLT W/WASHER M10X25",1,,,,,,,,,,,,,,,,,
25,1,,172445-57600,,"BEARING,TURNING",1,,,,,,,,,,,,,,,,,
26,1,,172122-57620,,"PARALLEL PIN 13X36",4,,,,,,,,,,,,,,,,,
```

silverhorn.co.uk

Fig.21 FRAME & TURNING BEARING

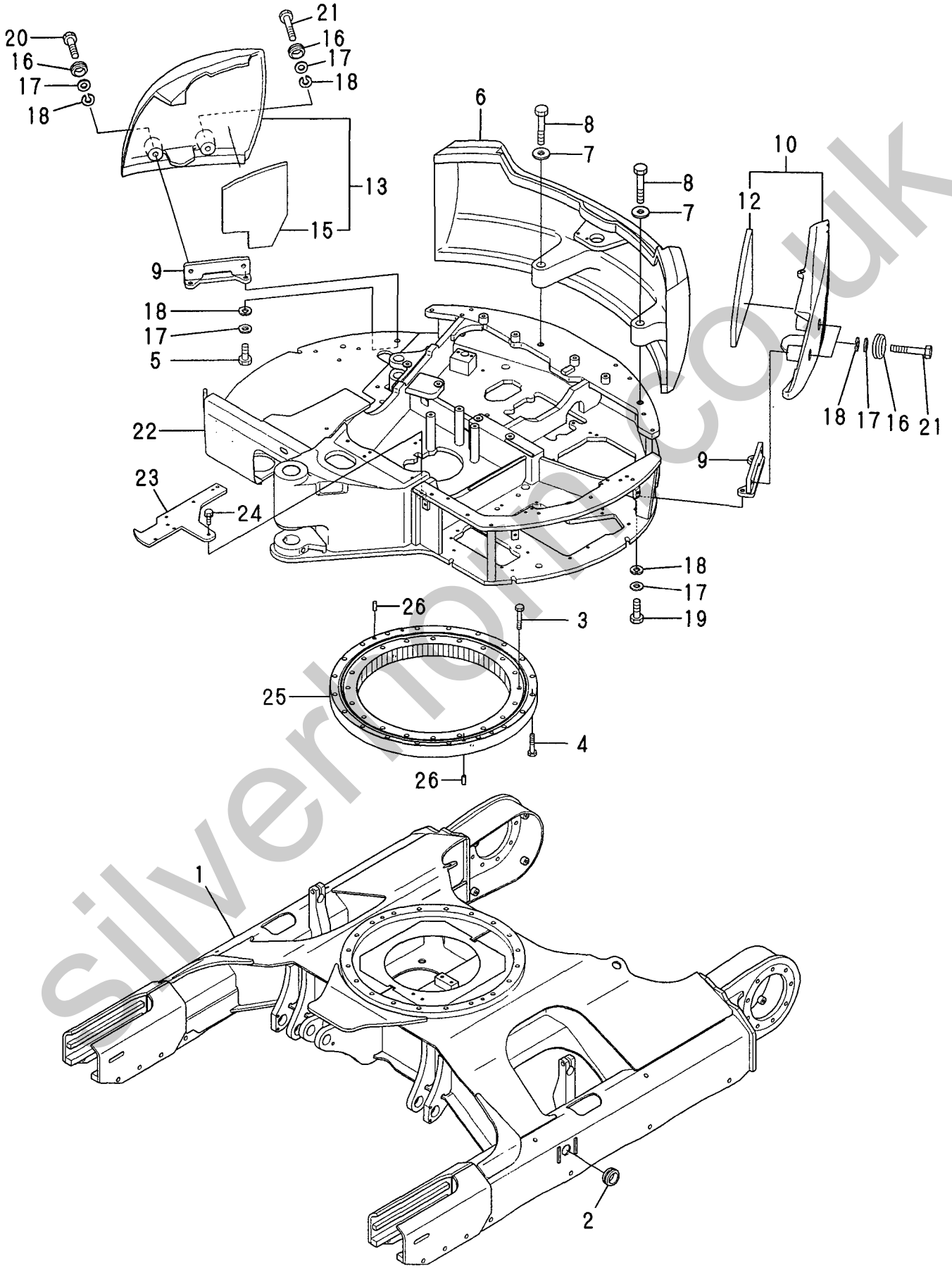

silverhorn.co.uk

```
1,1,,172460-61100-2,,"COVER     (GREEN:82)",2,,,,,,,,,,,,,,,,,
2,1,,172460-61120-1,,"COVER     (GREEN:82)",1,,,,,,,,,,,,,,,,,
3,1,,172460-61130-1,,"COVER A   (GREEN:86)",1,,,,,,,,,,,,,,,,,
4,1,,172460-61140-1,,"COVER B   (GREEN:86)",1,,,,,,,,,,,,,,,,,
5,1,,172460-61150-1,,"COVER C   (GREEN:86)",1,,,,,,,,,,,,,,,,,
6,1,,172460-61160-1,,"COVER D   (GREEN:86)",1,,,,,,,,,,,,,,,,,
7,1,,172460-61170-1,,"COVER E   (GREEN:86)",1,,,,,,,,,,,,,,,,,
8,1,,172468-61200,,"COVER,ELECTRIC  (73)",1,,,,,,,,,,,,,,,,,
9,1,,172460-61200-1,,"COVER,FRAME L   (86)",1,,,,,,,,,,,,,,,,,
11,2,,172460-61240,,EV,1,,,,,,,,,,,,,,,,,
12,2,,172460-61260,,EV,1,,,,,,,,,,,,,,,,,
13,1,,172460-61270-1,,"COVER,FRAME R   (86)",1,,,,,,,,,,,,,,,,,
14,1,,172458-61300,,"GROMMET,MULTI",1,,,,,,,,,,,,,,,,,
15,1,,172460-61320,,"COVER,MULTI",1,,,,,,,,,,,,,,,,,
17,2,,172458-61520,,EV,1,,,,,,,,724580591,,,,,,,,,,,I
18,2,,172458-61530,,"SEAL,MULTI COVER A",1,,,,,,,,,,,,,,,,,
19,2,,172458-61540,,"SEAL,MULTI COVER B",1,,,,,,,,,,,,,,,,,
20,2,,172458-61560,,"RUBBER 90",2,,,,,,,,,,,,,,,,,
21,2,,172458-61580,,"SEAL E",1,,,,,,,,,,,,,,,,,
22,2,,172458-61590,,"SEAL F",1,,,,,,,,,,,,,,,,,
23,2,,172458-61640,,"SEAL G",1,,,,,,,,,,,,,,,,,
24,2,,172168-65800,,"RUBBER,SEALE E 75",1,,,,,,,,,,,,,,,,,
25,1,,172472-61350,,"PLATE ASSY,US",1,,,,,,,,,,,,,,,,,
26,2,,172455-18640,,RUBBER,1,,,,,,,,,,,,,,,,,
28,2,,172458-61390,,EV,1,,,,,,,,72458497,,,,,,,,,,,I
29,1,,172162-61500,,RUBBER,4,,,,,,,,,,,,,,,,,
30,1,,172460-61500-1,,"COVER RR ASSY   (87)",1,,,,,,,,,,,,,,,,,
31,1,,172463-61600,,"PLUG 28X3.2",5,,,,,,,,,,,,,,,,,
32,1,,172460-61650-1,,"COVER,OIL SUMP  (86)",1,,,,,,,,,,,,,,,,,
33,1,,172460-61690,,"COVER      (GRAY:73)",1,,,,,,,,,,,,,,,,,
34,2,,172458-61650,,"SEAL,SIDE COVER",1,,,,,,,,,,,,,,,,,
36,2,,172460-61730,,EV,1,,,,,,,,,,,,,,,,,
37,2,,172460-61740,,EV,1,,,,,,,,,,,,,,,,,
38,2,,172649-65760,,"SEAL B, RUBBER",1,,,,,,,,,,,,,,,,,
39,1,,172460-61760-1,,"COVER,ENG (GREEN:86)",1,,,,,,,,,,,,,,,,,
41,2,,172460-61790,,EV,1,,,,,,,,,,,,,,,,,
42,2,,172460-61800,,EV,1,,,,,,,,,,,,,,,,,
43,2,,172187-66320,,"RUBBER 370",1,,,,,,,,,,,,,,,,,
44,1,,26014-100202,,"BOLT M10X 20",3,,,,,,,,,,,,,,,,,
45,1,,172142-62300,,"WING BOLT M10X15",1,,,,,,,,,,,,,,,,,
46,1,,26106-100162,,"BOLT M10X 16 PLATED",17,,,,,,,,,,,,,,,,,
47,1,,22157-120000,,"WASHER 12",4,,,,,,,,,,,,,,,,,
48,1,,22417-320200,,"COTTER PIN 3.2X20",1,,,,,,,,,,,,,,,,,
49,1,,26013-060122,,"BOLT M 6X 12",3,,,,,,,,,,,,,,,,,
50,1,,26013-100202,,"BOLT W/WASHER M10X20",8,,,,,,,,,,,,,,,,,
51,1,,26106-100202,,"BOLT M10X 20 PLATED",1,,,,,,,,,,,,,,,,,
52,1,,26013-100202,,"BOLT W/WASHER M10X20",1,,,,,,,,72460288,,,,,,,,,,,I
53,1,,26013-100202,,"BOLT W/WASHER M10X20",3,,,,,,,,,,,,,,,,,
54,1,,26013-100202,,"BOLT W/WASHER M10X20",2,,,,,,,,,,,,,,,,,
55,1,,26106-100162,,"BOLT M10X 16 PLATED",4,,,,,,,,,,,,,,,,,
56,1,,26106-100302,,"BOLT M10X 30 PLATED",1,,,,,,,,,,,,,,,,,
57,1,,26013-100352,,"BOLT M10X 35",5,,,,,,,,,,,,,,,,,
58,1,,26013-120302,,"BOLT W/WASHER M12X30",4,,,,,,,,,,,,,,,,,
59,1,,26014-100202,,"BOLT M10X 20",5,,,,,,,,,,,,,,,,,
60,1,,26014-100202,,"BOLT M10X 20",5,,,,,,,,,,,,,,,,,
61,1,,172458-61260,,WASHER,5,,,,,,,,,,,,,,,,,
62,1,,172126-16540,,"CLAMP 10X70",1,,,,,,,,,,,,,,,,,
63,1,,172519-65300,,RUBBER,1,,,,,,,,,,,,,,,,,
```

simonn.co.uk

Fig. 22 COVER (FRAME)

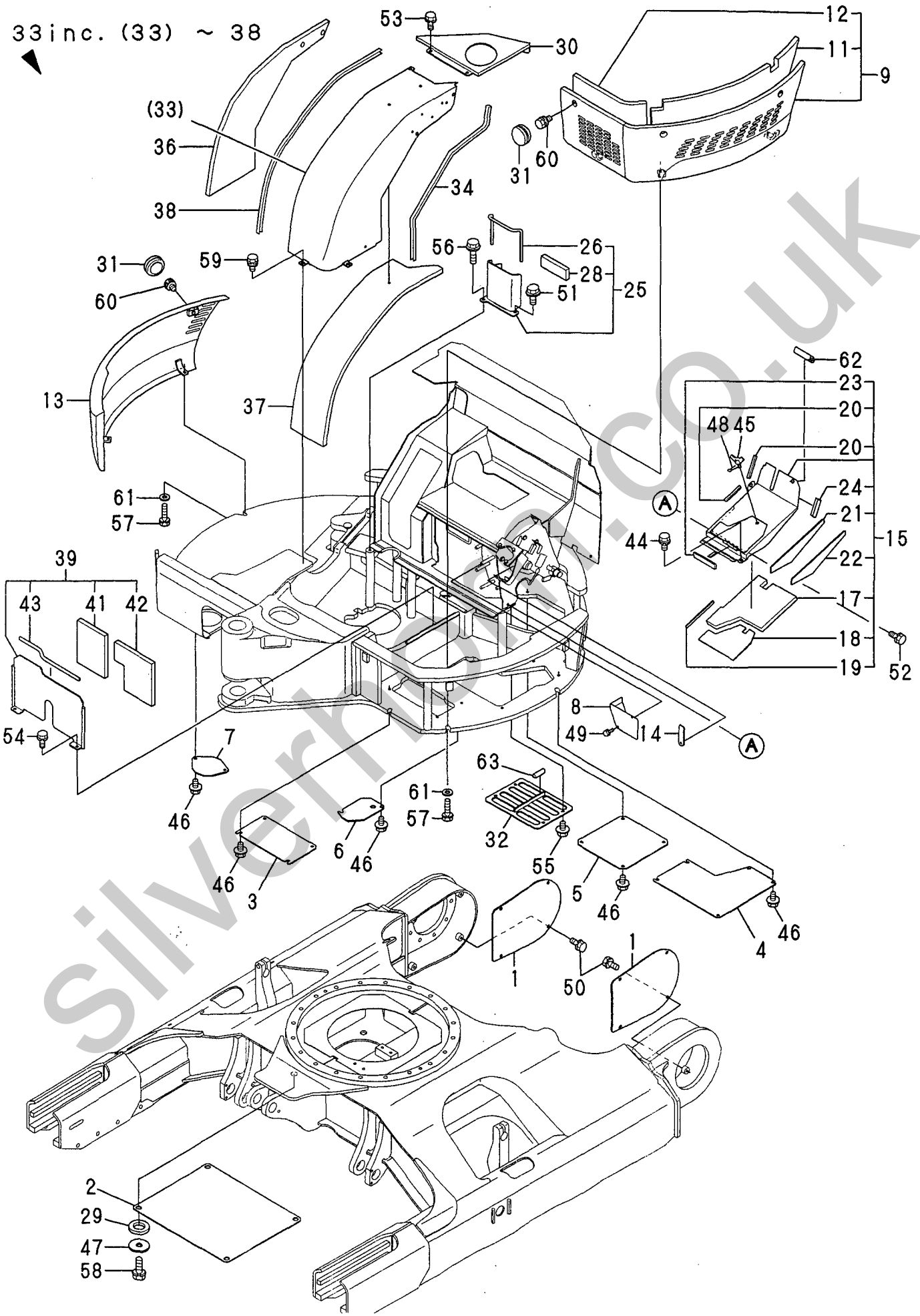

silvernail.co.uk

```
1,1,,172164-45980,,"GRIP, BONNET",1,,,,,,,,72468012,,,,,,,,,,,,I
2,1,,172458-63350,,SPOGE,1,,,,,,,,,,,,,,,,,,
3,1,,172458-61791,,"COVER ASSY, DUCT",1,,,,,,,,72468012,,,,,,,,,,,,I
4,2,,172146-61370,,"RUBBER, SEAL",1,,,,,,,,,,,,,,,,,,
6,2,,172458-61820,,"RUBBER 1150",1,,,,,,,,,,,,,,,,,,
7,2,,172444-68810,,"RUBBER,SEAL",1,,,,,,,,,,,,,,,,,,
8,1,,172460-61900-1,,"COVER L(CAB(YELLOW87",1,,,,,,,,,,,,,,,,,,
9,2,,172460-61910-1,,"COVER L(CAB(YELLOW87",1,,,,,,,,,,,,,,,,,,
10,3,,172460-61460,,SEAL,1,,,,,,,,,,,,,,,,,,
12,2,,172460-61480,,RUBBER,1,,,,,,,,,,,,,,,,,,
13,2,,172458-61510,,"RUBBER,SEAL 55",1,,,,,,,,,,,,,,,,,,
14,2,,172458-63900,,STOPPER,1,,,,,,,,,,,,,,,,,,
15,2,,172175-65870,,"SEAL (A)",1,,,,,,,,,,,,,,,,,,
16,1,,172458-63520,,"PLATE      (GRAY:73)",1,,,,,,,,,,,,,,,,,,
17,1,,172458-63540,,"COVER ASSY (GRAY:73)",1,,,,,,,,,,,,,,,,,,
18,2,,172823-61520,,"RUBBER 325, FRAME",1,,,,,,,,,,,,,,,,,,
19,2,,172162-61870,,"RUBBER 200,EDGE",1,,,,,,,,,,,,,,,,,,
21,1,,172468-61210,,"COVER      (GRAY:73)",1,,,,,,,,,,,,,,,,,,
22,1,,1A6260-64200,,CLIP,9,,,,,,,,72468012,,,,,,,,,,,,I
23,1,,1A6260-64200,,CLIP,3,,,,,,,,72468012,,,,,,,,,,,,I
24,1,,172458-64600,,"CLIP 11",3,,,,,,,,72468012,,,,,,,,,,,,I
25,1,,26013-080162,,"BOLT W/WASHER M8X16",1,,,,,,,,,,,,,,,,,,
26,1,,172458-68990,,"COVER A RB PILLER",1,,,,,,,,72468012,,,,,,,,,,,,I
27,1,,172458-69000,,"COVER B RB PILLER",1,,,,,,,,72468012,,,,,,,,,,,,I
28,1,,22137-080000,,"WASHER 8, POLISHED",1,,,,,,,,,,,,,,,,,,
29,1,,22157-100000,,"WASHER 10",4,,,,,,,,,,,,,,,,,,
30,1,,26013-080162,,"BOLT W/WASHER M8X16",2,,,,,,,,,,,,,,,,,,
31,1,,26013-080162,,"BOLT W/WASHER M8X16",2,,,,,,,,,,,,,,,,,,
32,1,,26013-080252,,"BOLT M 8X 25",1,,,,,,,,,,,,,,,,,,
33,1,,26013-100252,,"BOLT W/WASHER M10X25",4,,,,,,,,,,,,,,,,,,
34,1,,26557-080202,,"SCREW M 8X 20",2,,,,,,,,72468012,,,,,,,,,,,,I
35,1,,933160-09220,,GROMMET,1,,,,,,,,,,,,,,,,,,
36,1,,172458-64610,,"CLIP 5",3,,,,,,,,,,,,,,,,,,
37,1,,172460-61960,,"SEAL,CAB-COVER",1,,,,,,,,,,,,,,,,,,
38,1,,172458-62430,,"WASHER M8",2,,,,,,,,,,,,,,,,,,
39,1,,172519-63240,,"BOLT  8X 16",2,,,,,,,,,,,,,,,,,,
40,1,,172458-63300,,PLATE,1,,,,,,,,72468012,,,,,,,,,,,,I
41,1,,172444-17660,,CLIP,1,,,,,,,,,,,,,,,,,,
```

silvermorn.co.uk

Fig. 23 COVER (CABIN)

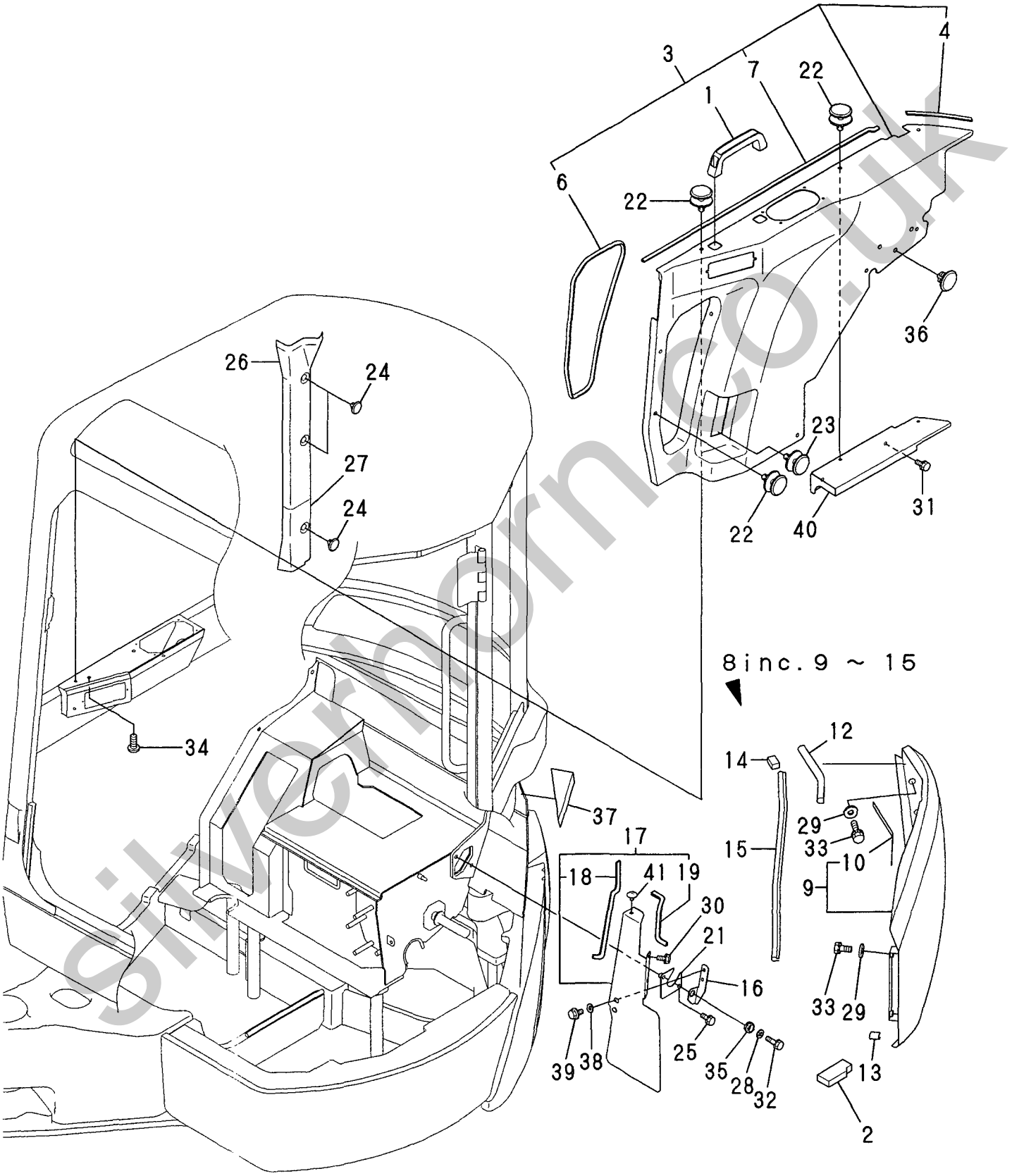

silvermorn.co.uk

```
1,1,,172472-62210,,"STEP       (GRAY:73)",1,,,,,,,,,,,,,,,,,,
3,2,,172472-62310,,SEAL,1,,,,,,,,,,,,,,,,,,
4,1,,172460-62110,,"STEP B     (GRAY:73)",1,,,,,,,,,,,,,,,,,,
5,1,,172460-62120,,SEET,1,,,,,,,,,,,,,,,,,,
6,1,,22137-100000,,"WASHER 10,POLISHED",8,,,,,,,,,,,,,,,,,,
7,1,,26013-100202,,"BOLT W/WASHER M10X20",3,,,,,,,,,,,,,,,,,,
8,1,,26013-100202,,"BOLT W/WASHER M10X20",8,,,,,,,,,,,,,,,,,,
9,1,,172458-62400,,"MAT,FLOOR A(CABIN",1,,,,,,,,,,,,,,,,,,
10,1,,172472-62600,,"FLOOR MAT B (CABIN",1,,,,,,,,,,,,,,,,,,
11,1,,172458-46720,,"BOLT 8X20",3,,,,,,,,,,,,,,,,,,
12,1,,172458-46720,,"BOLT 8X20",2,,,,,,,,,,,,,,,,,,
13,1,,172458-46720,,"BOLT 8X20",1,,,,,,,,,,,,,,,,,,
14,1,,172458-63120,,"INSTRUMENT PANEL L",1,,,,,,,,,,,,,,,,,,
15,1,,172458-63130,,"INSTRUMENT PANEL R",1,,,,,,,,,,,,,,,,,,
16,1,,172458-63140,,"INSTRUMENT PANEL R",1,,,,,,,,,,,,,,,,,,
17,1,,172519-63240,,"BOLT  8X 16",2,,,,,,,,,,,,,,,,,,
18,1,,172519-63240,,"BOLT  8X 16",1,,,,,,,,,,,,,,,,,,
19,1,,172519-63240,,"BOLT  8X 16",2,,,,,,,,,,,,,,,,,,
20,1,,172458-63100,,"INSTRUMENT PANEL L",1,,,,,,,,,,,,,,,,,,
21,1,,172458-46720,,"BOLT 8X20",2,,,,,,,,,,,,,,,,,,
22,1,,172162-62540,,"SEAL,STEP L",2,,,,,,,,,,,,,,,,,,
23,1,,172472-63210,,"COVER R,US",1,,,,,,,,,,,,,,,,,,
24,1,,172472-63220,,"COVER L,US",1,,,,,,,,,,,,,,,,,,
25,1,,172441-44320,,"ARM REST",2,,,,,,,72472038,,,,,,,,,,,I
26,1,,172472-64530,,"PLATE,ARM REST R(73)",1,,,,,,,,,,,,,,,,,,
27,1,,172472-64540,,"PLATE,ARM REST L(73)",1,,,,,,,,,,,,,,,,,,
28,1,,172165-66980,,"BOLT M 8X 25",4,,,,,,,,,,,,,,,,,,
29,1,,26577-080122,,"SCREW M 8X 12",4,,,,,,,72468012,,,,,,,,,,,I
```

silverhorn.co.uk

Fig.24 STEP & INSTRUMENT PANEL

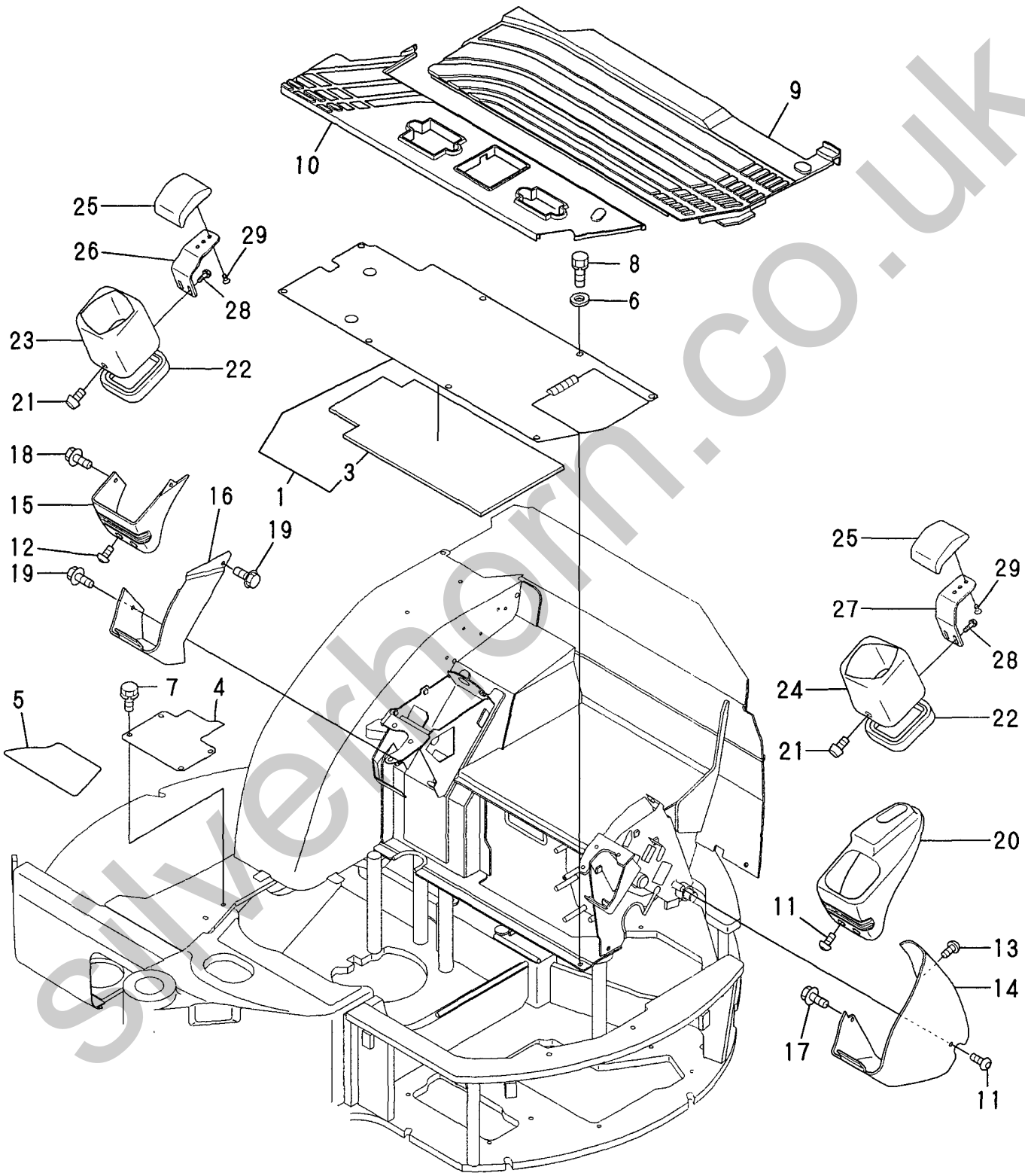

silverhorn.co.uk

```
1,1,,26013-120302,,"BOLT W/WASHER M12X30",3,,,,,,,,,,,,,,,,,
2,1,,172187-61421,,"HANDLE, LOCK",1,,,,,,,,,,,,,,,,,
3,1,,172468-64210,,"MOUNT ASSY (GRAY:73)",1,,,,,,,,,,,,,,,,,
4,1,,172458-64140,,"SEAL 560",2,,,,,,,,,,,,,,,,,
5,1,,172468-64140,,EV,1,,,,,,,,,,,,,,,,,
6,1,,172468-64150,,EV,1,,,,,,,,,,,,,,,,,
7,1,,172458-64170,,EV,1,,,,,,,,,,,,,,,,,
8,1,,172458-64180,,EV,1,,,,,,,,,,,,,,,,,
9,1,,172468-64130,,EV,1,,,,,,,,,,,,,,,,,
10,1,,26116-080162,,"BOLT 8X16",4,,,,,,,,,,,,,,,,,
11,1,,172468-64110,,EV,1,,,,,,,,,,,,,,,,,
12,1,,172460-64310,,EV,1,,,,,,,,,,,,,,,,,
13,1,,172458-64650,,EV,1,,,,,,,,,,,,,,,,,
14,1,,172458-64660,,"SEAL 95",1,,,,,,,,,,,,,,,,,
15,1,,172458-64680,,"SEAL A,SEAT MOUNT",1,,,,,,,,,,,,,,,,,
16,1,,172458-64690,,"SEAL B,SEAT MOUNT",1,,,,,,,,,,,,,,,,,
17,1,,172460-64400,,SEAL,1,,,,,,,,,,,,,,,,,
18,1,,172460-64410,,SEAL,1,,,,,,,,,,,,,,,,,
19,1,,172458-64740,,EV,1,,,,,,,,,,,,,,,,,
20,1,,172164-65730,,"RUBBER,SEAL D",1,,,,,,,,,,,,,,,,,
21,1,,172468-64120,,EV,1,,,,,,,,,,,,,,,,,
22,1,,172468-64600,,"GRILLE ASSY(GRAY:73)",1,,,,,,,,,,,,,,,,,
23,2,,172458-64050,,RUBBER,1,,,,,,,,,,,,,,,,,
24,2,,172458-64060,,EV,1,,,,,,,,,,,,,,,,,
25,2,,172468-64640,,EV,1,,,,,,,,,,,,,,,,,
26,2,,172458-64080,,"SEAL 642",1,,,,,,,,,,,,,,,,,
27,2,,172458-64090,,"SEAL 185",1,,,,,,,,,,,,,,,,,
28,2,,172468-64650,,"SEAL 150",1,,,,,,,,,,,,,,,,,
29,2,,172458-64110,,"SEAL 250",1,,,,,,,,,,,,,,,,,
31,1,,172468-64400,,"PLATE ASSY (GRAY:73)",1,,,,,,,,,,,,,,,,,
33,2,,172467-64330,,"EV,SEAT PLATE",1,,,,,,,,,,,,,,,,,
34,2,,172468-64430,,SEET,1,,,,,,,,,,,,,,,,,
35,1,,172458-64590,,"PLUG 28X3.2",1,,,,,,,,,,,,,,,,,
36,1,,26716-080002,,"NUT M 8",4,,,,,,,,,,,,,,,,,
37,1,,22217-080000,,"SPRING WASHER  8",4,,,,,,,,,,,,,,,,,
38,1,,22137-100000,,"WASHER 10,POLISHED",3,,,,,,,,,,,,,,,,,
39,1,,22137-080000,,"WASHER 8, POLISHED",4,,,,,,,,,,,,,,,,,
40,1,,26013-100202,,"BOLT W/WASHER M10X20",4,,,,,,,,,,,,,,,,,
41,1,,26013-100202,,"BOLT W/WASHER M10X20",5,,,,,,,,,,,,,,,,,
42,1,,26013-100252,,"BOLT W/WASHER M10X25",3,,,,,,,,,,,,,,,,,
43,1,,22137-100000,,"WASHER 10,POLISHED",1,,,,,,,,,,,,,,,,,
```

silverform.co.uk

Fig.25 SEAT MOUNT

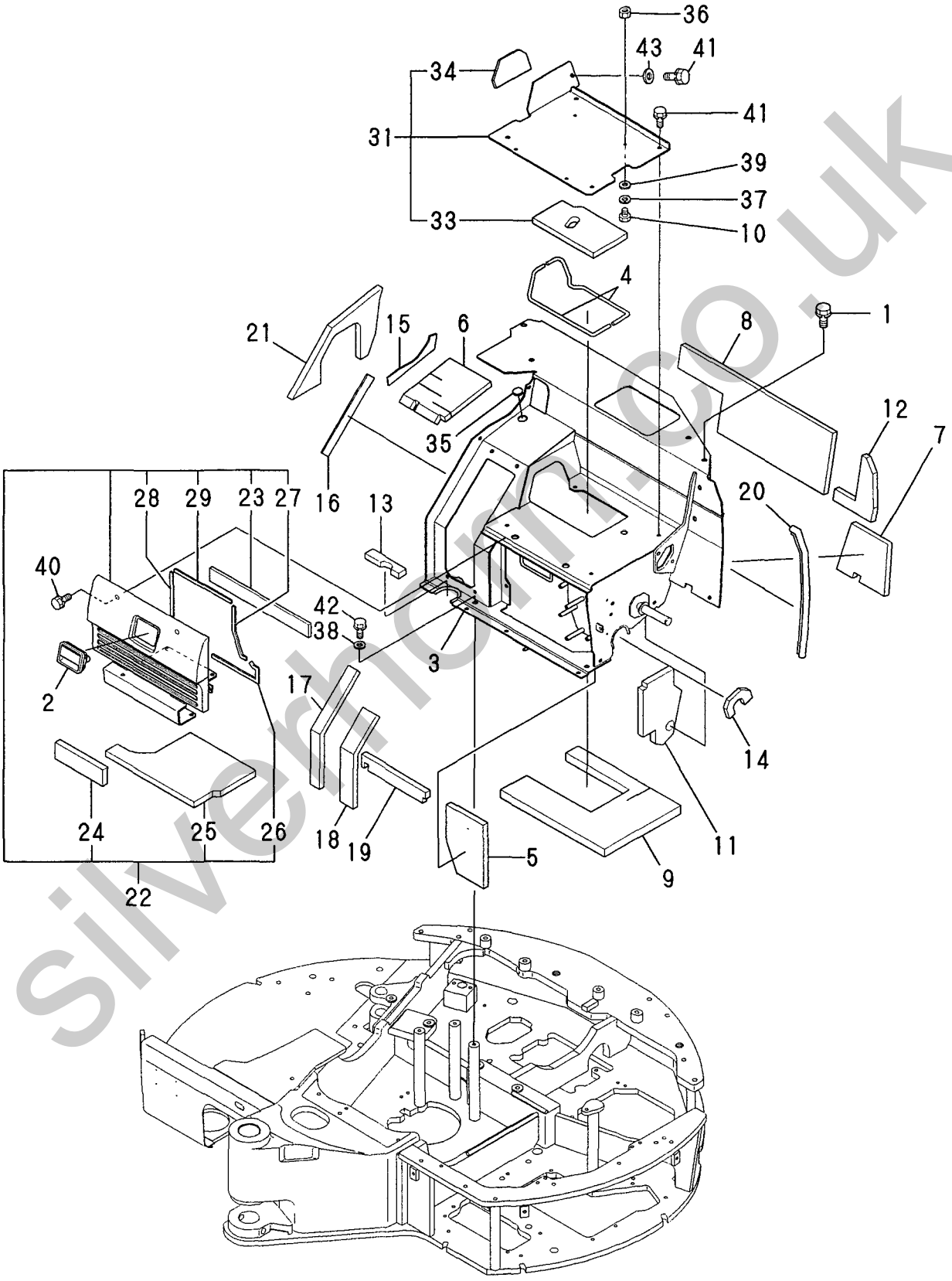

silverhorn.co.uk

```
1,1,,194145-04810,,"WASHER 10",2,,,,,,,,,,,,,,,,,
2,1,,172164-45980,,"GRIP, BONNET",1,,,,,,,,,,,,,,,,,
3,1,,172458-65020,,"BRACKET B ASSY,LOCK",1,,,,,,,,,,,,,,,,,,
4,1,,172458-65050,,SHAFT,1,,,,,,,,,,,,,,,,,
5,1,,172455-65060,,HOOK,1,,,,,,,,,,,,,,,,,
6,1,,172458-65060,,"COVER,BONNET LOCK",1,,,,,,,,,,,,,,,,,
7,1,,172460-65100-1,,"BONNET A (YELLOW:87)",1,,,,,,,,,,,,,,,,,,
9,2,,172164-19210,,"RUBBER SEAL",1,,,,,,,,,,,,,,,,,
10,2,,172460-65420,,"SEAL A",1,,,,,,,,,,,,,,,,,
11,2,,172460-65430,,"SEAL B",1,,,,,,,,,,,,,,,,,
12,2,,172649-65750,,"SEAL A, RUBBER",1,,,,,,,,,,,,,,,,,
13,1,,172444-65190,,"ROD,STOPPER",1,,,,,,,,,,,,,,,,,
14,1,,172187-65210,,"LEVER ASSY, LOCK",1,,,,,,,,,,,,,,,,,
15,1,,172455-65230,,"PLATE,KEY(YELLOW:87)",1,,,,,,,,,,,,,,,,,
16,1,,172460-65230,,"BRACKET B (BLACK:12)",1,,,,,,,,,,,,,,,,,
17,1,,172460-65260-1,,"BRACKET    (GRAY:73)",1,,,,,,,,,,,,,,,,,,
18,1,,172458-65271,,"PLATE,ROCK",1,,,,,,,,,,,,,,,,,
19,1,,172734-65270,,"SPRING, CATCH",1,,,,,,,,,,,,,,,,,
20,1,,172460-65300-1,,"BONNET R (YELLOW:87)",1,,,,,,,,,,,,,,,,,,
22,2,,172445-65620,,"SEAL A",1,,,,,,,,,,,,,,,,,
23,2,,172460-65750,,EVA,1,,,,,,,,,,,,,,,,,
24,2,,172168-65760,,RUBBER,1,,,,,,,,,,,,,,,,,
25,2,,172460-65760,,SPONGE,1,,,,,,,,,,,,,,,,,
26,2,,172460-65770,,SPONGE,1,,,,,,,,,,,,,,,,,
27,2,,172460-65780,,"EV D",1,,,,,,,,,,,,,,,,,
28,2,,172460-65790,,"EV E",1,,,,,,,,,,,,,,,,,
29,1,,172460-65370,,"BRACKET B (BLACK:12)",1,,,,,,,,,,,,,,,,,
30,1,,172460-65390,,"BRACKET C  (GRAY:73)",1,,,,,,,,,,,,,,,,,
31,1,,172460-65450,,"BRACKET R  (GRAY:73)",1,,,,,,,,,,,,,,,,,
32,1,,172124-65480,,CATCHER,1,,,,,,,,,,,,,,,,,
33,1,,172467-65490,,BONNET,1,,,,,,,,,,,,,,,,,
35,2,,172460-65730,,EV,1,,,,,,,,,,,,,,,,,
36,1,,172460-65510-1,,"HINGE ASSY(GREEN:86)",1,,,,,,,,,,,,,,,,,
37,1,,172458-65530-1,,"PLATE,LOCK(GREEN:86)",1,,,,,,,,,,,,,,,,,
38,1,,172460-65550,,BRACKET,1,,,,,,,,,,,,,,,,,
39,1,,172458-65560,,"PLATE,GUIDE",1,,,,,,,,,,,,,,,,,
40,1,,172460-65570,,ROD,1,,,,,,,,,,,,,,,,,
41,1,,26557-080202,,"SCREW M 8X 20",2,,,,,,,,,,,,,,,,,
42,1,,172460-65600,,COVER,1,,,,,,,,,,,,,,,,,
43,1,,172460-65620,,"PLATE      (GRAY:73)",1,,,,,,,,,,,,,,,,,
44,1,,172460-65660,,"BASE       (GRAY:73)",1,,,,,,,,,,,,,,,,,
45,1,,172156-65690,,"TORSION SPRING,STOPR",1,,,,,,,,,,,,,,,,,
46,1,,172455-65800,,"PLATE, LOCK",1,,,,,,,,,,,,,,,,,
47,1,,172164-66170,,"KEY ASSY, CYLINDER",1,,,,,,,,,,,,,,,,,
48,1,,172164-66170,,"KEY ASSY, CYLINDER",1,,,,,,,,,,,,,,,,,
49,1,,22137-080000,,"WASHER 8, POLISHED",1,,,,,,,,,,,,,,,,,
50,1,,22137-100000,,"WASHER 10,POLISHED",2,,,,,,,,,,,,,,,,,
51,1,,22137-100000,,"WASHER 10,POLISHED",2,,,,,,,,,,,,,,,,,
52,1,,22137-100000,,"WASHER 10,POLISHED",1,,,,,,,,,,,,,,,,,
53,1,,22137-100000,,"WASHER 10,POLISHED",2,,,,,,,,,,,,,,,,,
54,1,,22137-100000,,"WASHER 10,POLISHED",2,,,,,,,,,,,,,,,,,
55,1,,22157-080000,,"WASHER  8",2,,,,,,,,72458487,,,,,,,,,,,,I
56,1,,22157-100000,,"WASHER 10",2,,,,,,,,,,,,,,,,,
57,1,,22157-100000,,"WASHER 10",2,,,,,,,,,,,,,,,,,
58,1,,22157-100000,,"WASHER 10",3,,,,,,,,,,,,,,,,,
59,1,,22157-100000,,"WASHER 10",2,,,,,,,,,,,,,,,,,
60,1,,22417-200200,,"COTTER PIN 2.0X20",2,,,,,,,,,,,,,,,,,
61,1,,22417-200200,,"COTTER PIN 2.0X20",2,,,,,,,,,,,,,,,,,
62,1,,22417-200200,,"COTTER PIN 2.0X20",2,,,,,,,,,,,,,,,,,
63,1,,26013-100202,,"BOLT W/WASHER M10X20",2,,,,,,,,,,,,,,,,,
64,1,,26013-100202,,"BOLT W/WASHER M10X20",2,,,,,,,,,,,,,,,,,
65,1,,26013-100202,,"BOLT W/WASHER M10X20",2,,,,,,,,,,,,,,,,,
66,1,,26013-100202,,"BOLT W/WASHER M10X20",2,,,,,,,,,,,,,,,,,
```

sherman.co.uk

```
67,1,,26013-100252,,"BOLT W/WASHER M10X25",2,,,,,,,,,,,,,,,,,
68,1,,26013-100252,,"BOLT W/WASHER M10X25",2,,,,,,,,,,,,,,,,,
69,1,,26013-100252,,"BOLT W/WASHER M10X25",2,,,,,,,,,,,,,,,,,
70,1,,26013-100252,,"BOLT W/WASHER M10X25",2,,,,,,,,,,,,,,,,,
71,1,,26013-100252,,"BOLT W/WASHER M10X25",4,,,,,,,,,,,,,,,,,
72,1,,26013-100252,,"BOLT W/WASHER M10X25",2,,,,,,,,,,,,,,,,,
73,1,,26013-100252,,"BOLT W/WASHER M10X25",2,,,,,,,,,,,,,,,,,
74,1,,26014-080162,,"BOLT M 8X 16",3,,,,,,,,,,,,,,,,,
75,1,,26014-100202,,"BOLT M10X 20",4,,,,,,,,,,,,,,,,,
76,1,,26014-100202,,"BOLT M10X 20",3,,,,,,,,,,,,,,,,,
77,1,,26014-100202,,"BOLT M10X 20",2,,,,,,,,,,,,,,,,,
78,1,,26347-080002,,"U-NUT  8",1,,,,,,,,,,,,,,,,,
79,1,,26347-100002,,"U-NUT 10",2,,,,,,,,,,,,,,,,,
80,1,,172524-17330,,"KEY ASSY",2,,,,,,,,,,,,,,,,,
81,1,,172460-65840,,"SEAL,RUBBER",1,,,,,,,,,,,,,,,,,
82,1,,172460-65820,,SPONGY,1,,,,,,,,,,,,,,,,,
83,1,,172460-65830,,"RUBBER SEAL",1,,,,,,,,,,,,,,,,,
84,1,,172434-61200,,"TRIM 245",1,,,,,,,,,,,,,,,,,
```

silverhorn.co.uk

Fig.26 BONNET

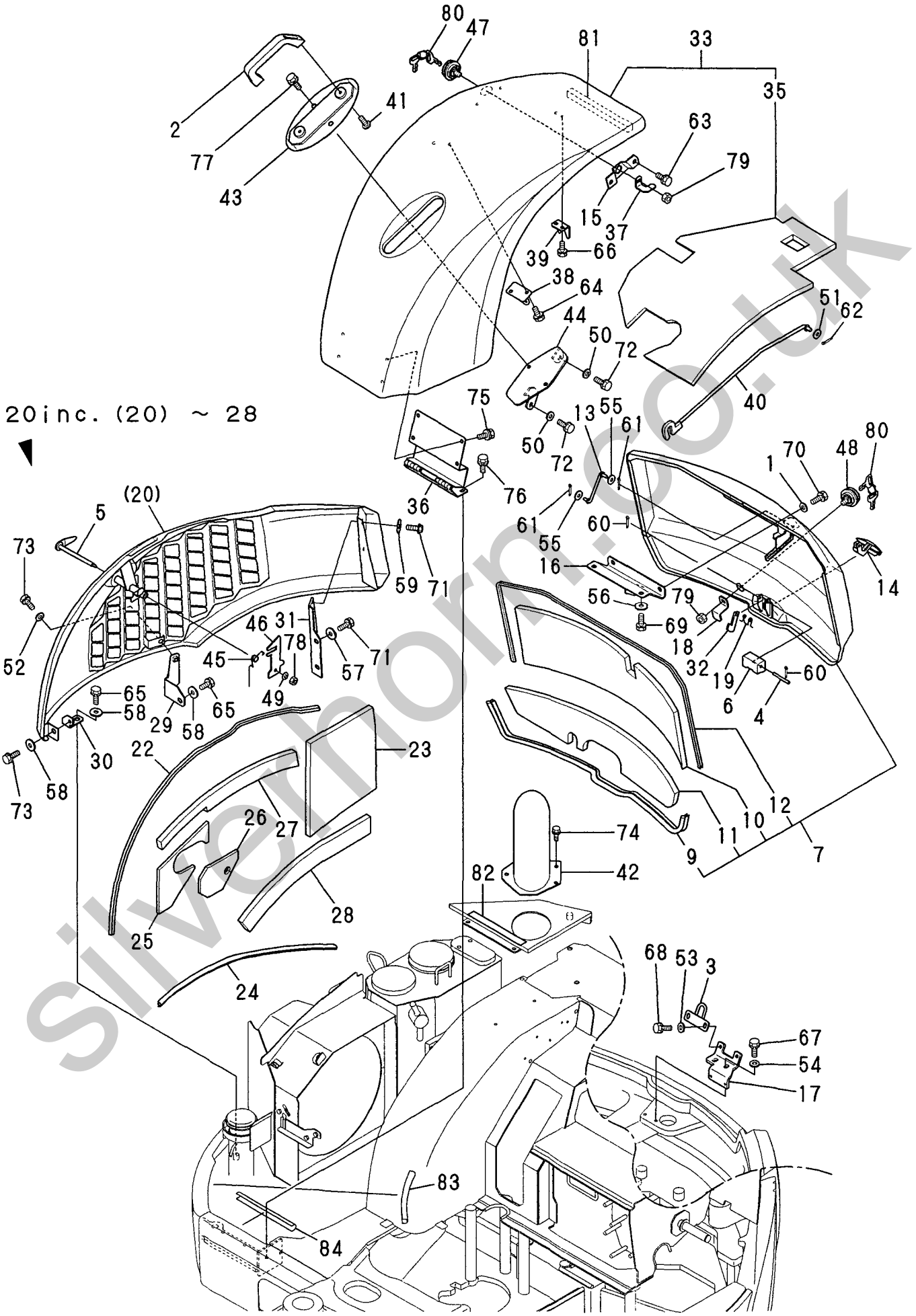

silvernorm.co.uk

```
1,1,,172460-68200,,"MOUNT A    (GRAY:73)",1,,,,,,,,,,,,,,,,,
2,1,,172460-68210,,"MOUNT B    (GRAY:73)",1,,,,,,,,,,,,,,,,,
3,1,,172460-68400,,"MOUNT C    (GRAY:73)",1,,,,,,,,,,,,,,,,,
4,1,,172460-68450,,"BRACKET    (GRAY:73)",1,,,,,,,,,,,,,,,,,
5,1,,172460-68460,,PLATE,1,,,,,,,,,,,,,,,,,
6,1,,22137-120000,,"WASHER 12,POLISHED",2,,,,,,,,,,,,,,,,,
7,1,,22137-140000,,"WASHER 14,POLISHED",4,,,,,,,,,,,,,,,,,
8,1,,22217-140000,,"SPRING WASHER 14",4,,,,,,,,,,,,,,,,,
9,1,,22217-140000,,"SPRING WASHER 14",5,,,,,,,,,,,,,,,,,
10,1,,22217-140000,,"SPRING WASHER 14",4,,,,,,,,,,,,,,,,,
11,1,,26013-120252,,"BOLT M12X 25",2,,,,,,,,,,,,,,,,,
12,1,,26116-140252,,"BOLT M14X 25 PLATED",1,,,,,,,,,,,,,,,,,
13,1,,26116-140402,,"BOLT M14X 40 PLATED",3,,,,,,,,,,,,,,,,,
14,1,,26116-140402,,"BOLT M14X 40 PLATED",5,,,,,,,,,,,,,,,,,
15,1,,26116-140502,,"BOLT M14X 50",4,,,,,,,,,,,,,,,,,
```

silverhorn.co.uk

Fig.27 CANOPY MOUNT

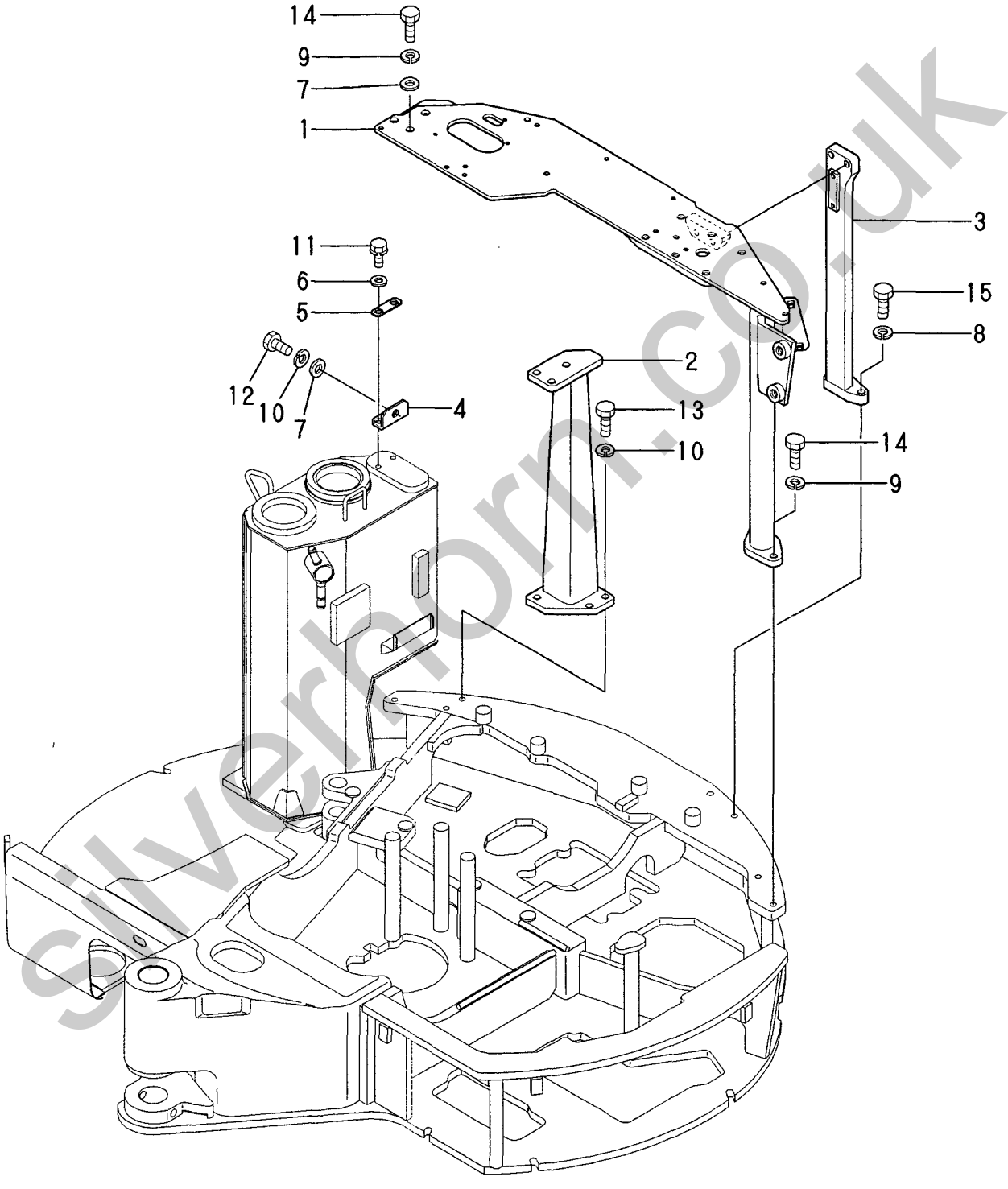

silverhorn.co.uk

```
1,1,,172168-71101-2,,"COVER, FLYWHEEL",1,,,,,,,,,,,,,,,,,,
2,1,,26013-100302,,"BOLT M10X 30",8,,,,,,,,,,,,,,,,,,
3,1,,172165-71200,,COUPLING,1,,,,,,,,,,,,,,,,,,
4,1,,26450-120402,,"BOLT M12X 40",3,,,,,,,,,,,,,,,,,,
5,1,,172460-73100,,"PUMP ASSY",1,,,,,,,,,,,,,,,,,,
5-1,1,,172460-73101,,"PUMP ASSY",1,,,,,,N,,24960034,M/#22170,,,,,,,,,,I
5-2,1,,172460-73102,,"PUMP ASSY",1,,,,,,N,,24960061,*2004.02,,,,,,,,,,I
5-3,1,,172460-73103,,"PUMP ASSY",1,,,,,,N,,24600341,*2004.06,,,,,,,,,,I
6,2,,172148-70301,,PLUG,1,,,,,,,,,,,,,,,,,,
7,2,,172122-70350,,BALL,1,,,,,,,,,,,,,,,,,,
8,2,,172460-73110,,"SEAL KIT",1,,,,,,,,,,,,,,,,,,
8-1,2,,172460-73111,,"SEAL KIT",1,,,,,,N,,24960061,*2004.02,,,,,,,,,,I
9,3,,172460-73170,,GASKET,1,,,,,,,,,,,,,,,,,,
10,3,,172460-73190,,"OIL SEAL",1,,,,,,,,,,,,,,,,,,
11,3,,172460-73400,,O-RING,1,,,,,,,,,,,,,,,,,,
12,2,,172460-73120,,"CYLINDER BLOCK KIT",1,,,,,,,,,,,,,,,,,,
12-1,2,,172460-73121,,"CYLINDER BLOCK
KIT",1,,,,,,N,,24600341,*2004.06,,,,,,,,,,I
13,2,,172460-73130,,RETAINER,1,,,,,,,,,,,,,,,,,,
14,2,,172460-73140,,PLATE,1,,,,,,,,,,,,,,,,,,
15,3,,172312-74790,,ORIFICE,1,,,,,,,,,,,,,,,,,,
16,2,,172460-73150,,SHAFT,1,,,,,,,,,,,,,,,,,,
17,2,,172460-73160,,WASHER,1,,,,,,,,,,,,,,,,,,
18,2,,172460-73180,,RING,1,,,,,,,,,,,,,,,,,,
19,2,,172460-73200,,BEARING,1,,,,,,,,,,,,,,,,,,
20,2,,172460-73210,,BUSH,2,,,,,,,,,,,,,,,,,,
21,2,,172460-73220,,STOPPER,1,,,,,,,,,,,,,,,,,,
22,2,,172460-73230,,PLATE,1,,,,,,,,,,,,,,,,,,
22-1,2,,172460-73231,,"PLATE, VALVE",1,,,,,,N,,24600341,*2004.06,,,,,,,,,,I
23,2,,172460-73240,,HOLDER,1,,,,,,,,,,,,,,,,,,
24,2,,172460-73250,,SPRING,1,,,,,,,,,,,,,,,,,,
24-1,2,,172461-73110,,SPRING,1,,,,,,N,,24600341,*2004.06,,,,,,,,,,I
25,2,,172460-73260,,SPRING,1,,,,,,,,,,,,,,,,,,
25-1,2,,172460-73440,,SPRING,1,,,,,,N,,24600341,*2004.06,,,,,,,,,,I
26,2,,172460-73270,,SEAL,1,,,,,,,,,,,,,,,,,,
26-1,2,,172461-73270,,"SEAT, SPRING",1,,,,,,N,,24960061,*2004.02,,,,,,,,,,I
27,2,,172460-73280,,PIN,1,,,,,,,,,,,,,,,,,,
28,2,,172176-73290,,"SHEET,SPRING",1,,,,,,,,,,,,,,,,,,
29,2,,172460-73290,,PIN,1,,,,,,,,,,,,,,,,,,
30,2,,172460-73330,,BEARING,1,,,,,,,,,,,,,,,,,,
31,2,,172460-73340,,STOPPER,1,,,,,,,,,,,,,,,,,,
32,2,,172460-73350,,SPRING,3,,,,,,,,,,,,,,,,,,
33,2,,172460-73360,,WASHER,1,,,,,,,,,,,,,,,,,,
34,2,,172460-73370,,PLUG,1,,,,,,,,,,,,,,,,,,
35,2,,172460-73380,,BUSH,1,,,,,,,,,,,,,,,,,,
36,2,,172460-73390,,PLATE,1,,,,,,,,,,,,,,,,,,
37,2,,172460-73410,,"GEAR PUMP",1,,,,,,,,,,,,,,,,,,
38,2,,172460-73420,,PIN,1,,,,,,,,,,,,,,,,,,
39,2,,172460-73430,,"VALVE S/A",1,,,,,,,,,,,,,,,,,,
39A,3,,172460-73900,,"SOLENOID B",1,,,,,,W,,72460311,M/#21999,,,,,,,,,,I
39B,3,,172460-73910,,"SOLENOID A",1,,,,,,W,,72460311,M/#21999,,,,,,,,,,I
39C,3,,24352-190110,,"O-RING 2 19011",2,,,,,,W,,72460311,M/#21999,,,,,,,,,,I
40,2,,172122-73480,,PIN,1,,,,,,,,,,,,,,,,,,
41,2,,172122-73480,,PIN,2,,,,,,,,,,,,,,,,,,
42,2,,172452-73480,,PLUG,6,,,,,,,,,,,,,,,,,,
43,2,,172176-73560,,SPRING,1,,,,,,,,,,,,,,,,,,
44,2,,172176-73590,,SHIM,2,,,,,,,,,,,,,,,,,,
45,2,,172176-73600,,PLUG,1,,,,,,,,,,,,,,,,,,
46,2,,172176-73690,,"BREEDER, AIR",1,,,,,,,,,,,,,,,,,,
47,2,,172176-73880,,"ROTOR ASSY,TROCHOID",1,,,,,,,,,,,,,,,,,,
48,2,,172176-73910,,"THRUST WASHER",2,,,,,,,,,,,,,,,,,,
49,2,,172176-73930,,PIN,1,,,,,,,,,,,,,,,,,,
50,2,,172176-73940,,POPPET,1,,,,,,,,,,,,,,,,,,
```

silverhorn.co.uk

51,1,,26013-120352,,"BOLT M12X 35",2,,,,,,,,,,,,,,,,,,

silverhorn.co.uk

P/C NEWS No:Y00S4150-3
PUBLISHED:2004/10

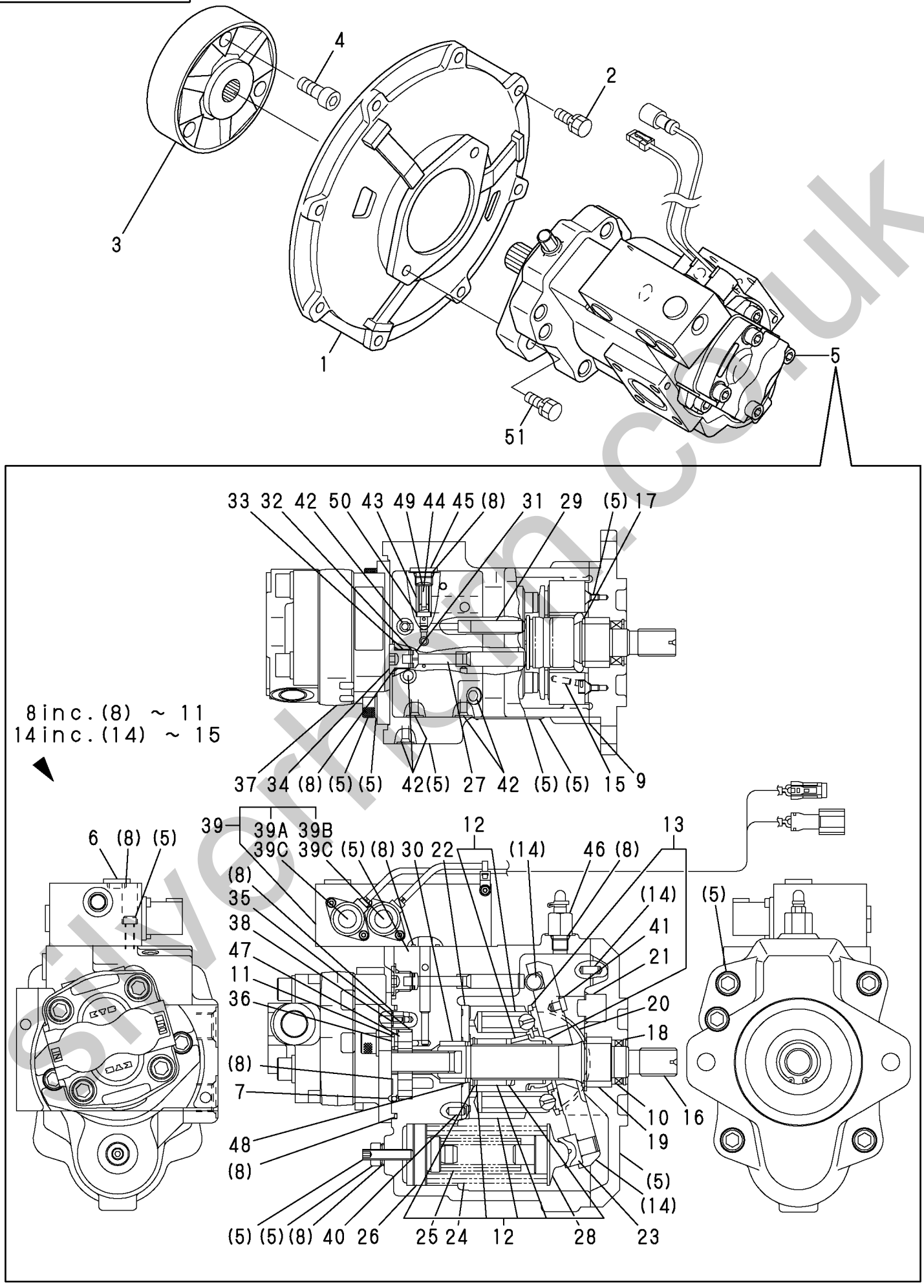

stylertron.co.uk

```
1,1,,172460-72321-1,,"CYLINDER,BOOM C (87)",1,,,,,,,,,,,,,,,,,
2,2,,172460-72010,,"SEAL SET",1,,,,,,,,,,,,,,,,,
9,2,,172460-72111-1,,"TUBE,BOOM(YELLOW:87)",1,,,,,,,,,,,,,,,,,
10,3,,172460-72180,,BUSH,1,,,,,,,,,,,,,,,,,
11,3,,172165-81760,,"SEAL 50X60X4, DUST",2,,,,,,,,,,,,,,,,,
12,2,,172460-72201,,ROD,1,,,,,,,,,,,,,,,,,
13,3,,172460-72180,,BUSH,1,,,,,,,,,,,,,,,,,
14,2,,172460-72260,,PISTON,1,,,,,,,,,,,,,,,,,
15,2,,172151-72270,,"U-NUT M39",1,,,,,,,,,,,,,,,,,
16,2,,172460-72271,,PLANGER,1,,,,,,,,,,,,,,,,,
17,2,,172460-72280,,COLLER,1,,,,,,,,,,,,,,,,,
18,2,,172460-72330,,HEAD,1,,,,,,,,,,,,,,,,,
20,3,,172151-72540,,"BUSH 50 35, ROD",1,,,,,,,,,,,,,,,,,
21,2,,172444-72430,,"LOCK WASHER",1,,,,,,,,,,,,,,,,,
22,2,,172444-72890,,"PISTON SEAL SET",1,,,,,,,,,,,,,,,,,
25,2,,24761-020000,,"NIPPLE PT1/8,GREASE",2,,,,,,,,,,,,,,,,,
26,1,,172186-72480,,"GUIDE,SLIDE",2,,,,,,,,,,,,,,,,,
27,1,,172459-72170-1,,"COVER,SLIDE(YELLOR87",1,,,,,,,,,,,,,,,,,
28,1,,172457-72230-1,,"COVER R,BOOM-CYL(87)",1,,,,,,,,,,,,,,,,,
29,1,,172457-72240-1,,"COVER L BOOM-CYL(87)",1,,,,,,,,,,,,,,,,,
30,1,,22217-100000,,"SPRING WASHER 10",1,,,,,,,,,,,,,,,,,
31,1,,22217-100000,,"SPRING WASHER 10",4,,,,,,,,,,,,,,,,,
32,1,,26116-100162,,"BOLT M10X 16 PLATED",1,,,,,,,,,,,,,,,,,
33,1,,26116-100162,,"BOLT M10X 16 PLATED",4,,,,,,,,,,,,,,,,,
34,1,,933147-03400,,"WASHER, BRAKE ARM",1,,,,,,,,,,,,,,,,,
35,1,,933168-14170,,"SPRING 16",2,,,,,,,,,,,,,,,,,
```

silverhorn.co.uk

Fig.29 BOOM CYLINDER

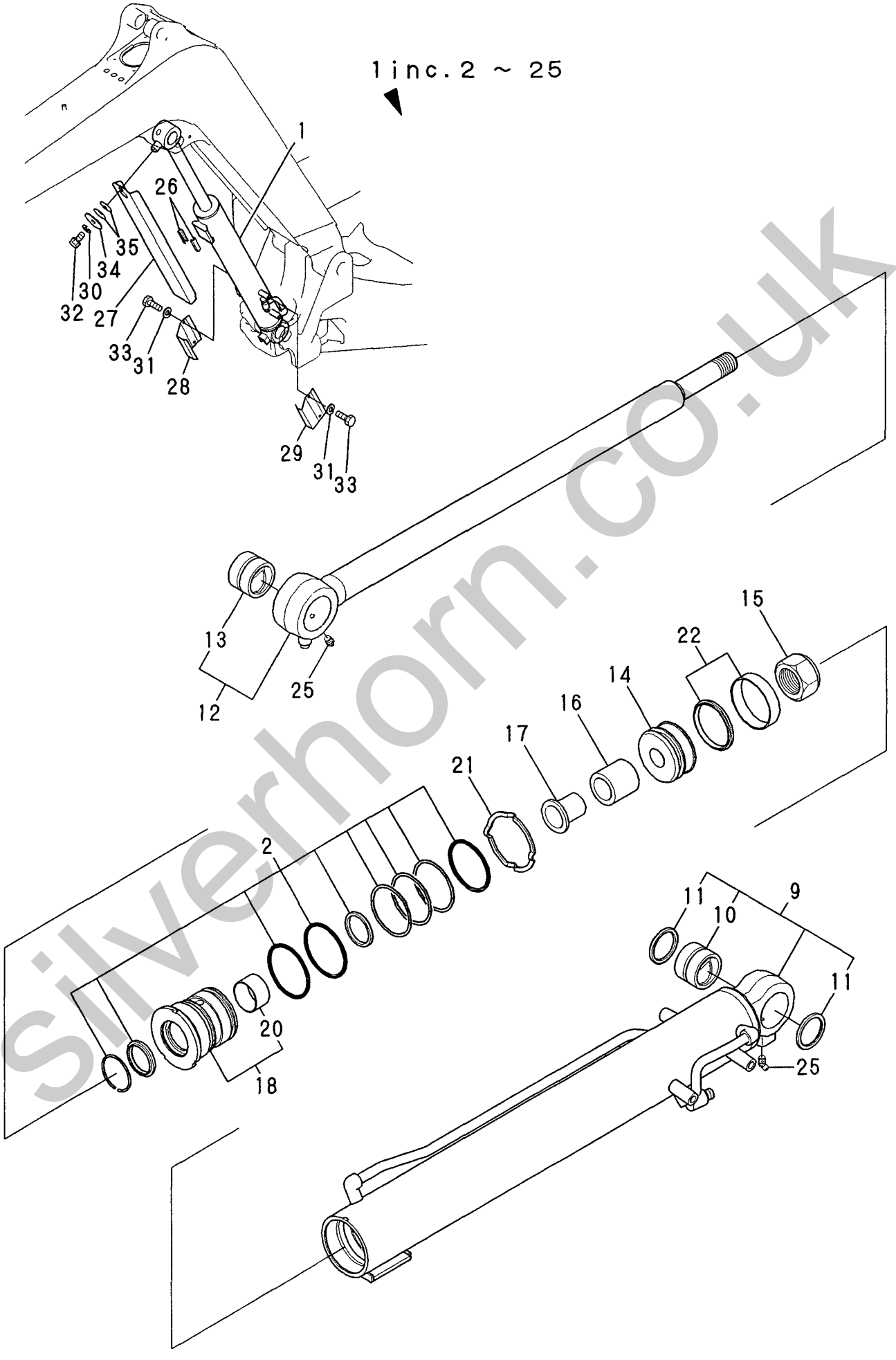

silverhorn.co.uk

```
1,1,,172460-72350-1,,"CYLINDER,ARM    (87)",1,,,,,,,,,,,,,,,,,
2,2,,172460-72020,,"SEAL SET",1,,,,,,,,,,,,,,,,,
9,2,,172460-72030,,"SEAL SET",1,,,,,,,,,,,,,,,,,
13,2,,172142-72260,,"WASHER 80 B",1,,,,,,,,,,,,,,,,,
14,2,,172460-72930,,PLUNGER,1,,,,,,,,,,,,,,,,,
15,2,,172458-72290,,"COLLAR 33 44,CUSHON",1,,,,,,,,,,,,,,,,,
16,2,,172460-72360-1,,"TUBE,ARM (YELLOW:87)",1,,,,,,,,,,,,,,,,,,
17,3,,172151-72591,,"BUSH 50X60",1,,,,,,,,,,,,,,,,,
18,2,,172460-72940,,PLUNGER,1,,,,,,,,,,,,,,,,,
19,2,,172460-72450,,"ROD,ARM",1,,,,,,,,,,,,,,,,,
20,3,,172151-72591,,"BUSH 50X60",1,,,,,,,,,,,,,,,,,
21,3,,172165-81760,,"SEAL 50X60X4, DUST",2,,,,,,,,,,,,,,,,,
22,2,,172458-72460,,"COLLAR 26 32,CUSHION",1,,,,,,,,,,,,,,,,,
23,2,,172422-72470,,PISTON,1,,,,,,,,,,,,,,,,,
24,2,,172458-72470,,"COVER,STOPPER",1,,,,,,,,,,,,,,,,,
25,2,,172460-72480,,HEAD,1,,,,,,,,,,,,,,,,,
26,3,,194300-24130,,"BUSH 45X50X30",1,,,,,,,,,,,,,,,,,
28,2,,172423-72530,,SPACER,1,,,,,,,,,,,,,,,,,
29,2,,172423-72540,,STOPPER,2,,,,,,,,,,,,,,,,,
30,2,,22242-000260,,"CIRCLIP   26",1,,,,,,,,,,,,,,,,,
31,2,,24761-040000,,"NIPPLE B,GREASE",1,,,,,,,,,,,,,,,,,
32,2,,24761-050000,,"NIPPLE C,GREASE",1,,,,,,,,,,,,,,,,,
33,2,,933111-20200,,"U-NUT M33",1,,,,,,,,,,,,,,,,,
```

silverhorn.co.uk

Fig.30 ARM CYLINDER

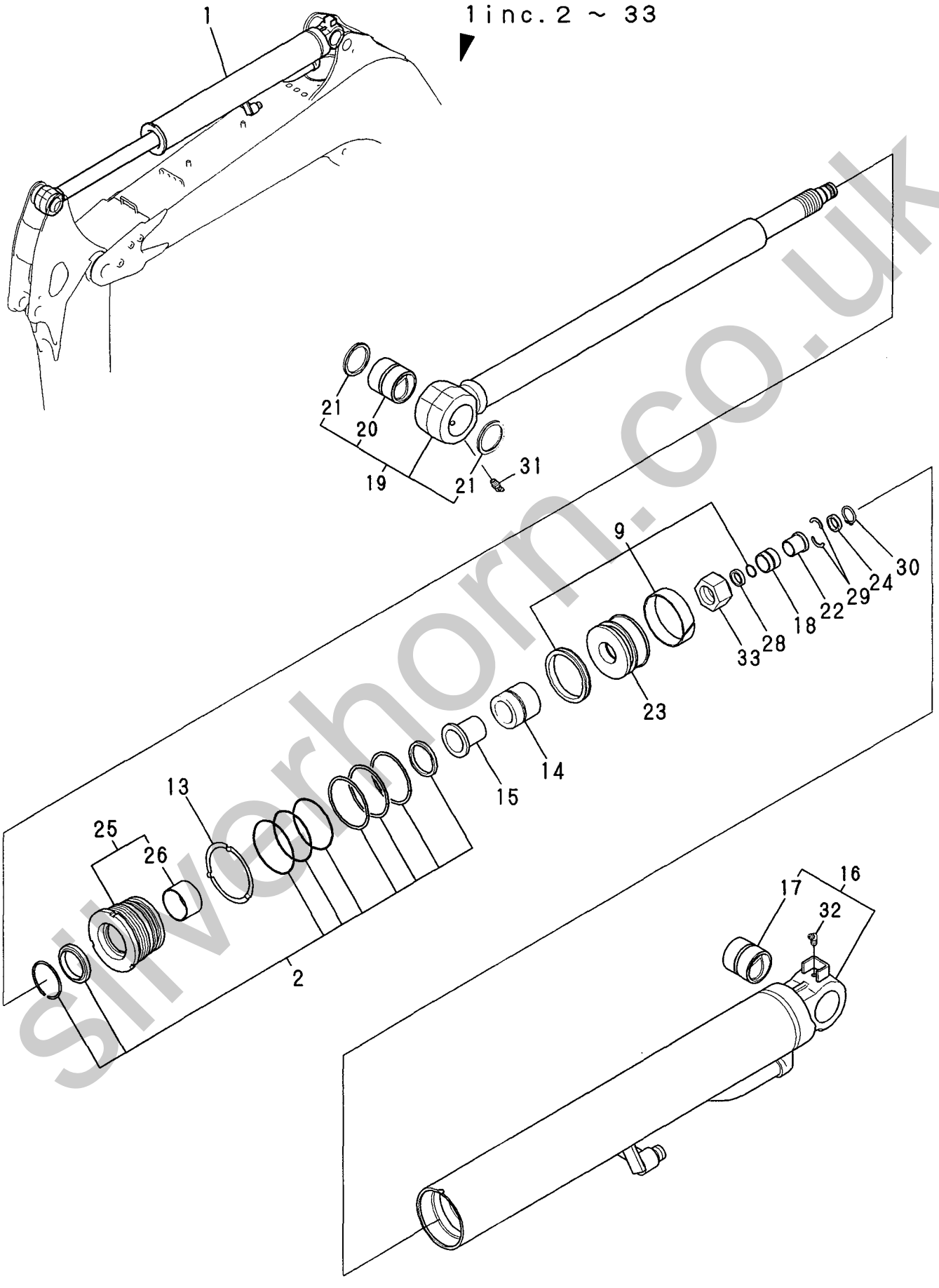

silverhorn.co.uk

```
1,1,,172460-72600-1,,"CYLINDER,BUCKET (87)",1,,,,,,,,,,,,,,,,,
2,2,,194145-04810,,"WASHER 10",2,,,,,,,,,,,,,,,,,
3,2,,172460-72060,,"SEAL SET",1,,,,,,,,,,,,,,,,,
10,2,,172460-72070,,"SEAL SET",1,,,,,,,,,,,,,,,,,
13,2,,172141-72420,,"WASHER 70, LOCK",1,,,,,,,,,,,,,,,,,
14,2,,172175-72550,,U-NUT,1,,,,,,,,,,,,,,,,,
15,2,,172460-72610-1,,"TUBE,BUCKET(YELLOW87",1,,,,,,,,,,,,,,,,,,
16,3,,172165-72320,,"BUSH 45X40",1,,,,,,,,,,,,,,,,,
17,2,,172460-72640,,"PIPE     (YELLOW:87)",1,,,,,,,,,,,,,,,,,,
18,2,,172460-72660,,"ROD,BUCKET",1,,,,,,,,,,,,,,,,,
19,3,,172151-72670,,"BUSH 45 50",1,,,,,,,,,,,,,,,,,
20,3,,172168-81410,,"SEAL 45X55X4, DUST",2,,,,,,,,,,,,,,,,,
21,2,,172460-72690,,HEAD,1,,,,,,,,,,,,,,,,,
22,3,,194300-24130,,"BUSH 45X50X30",1,,,,,,,,,,,,,,,,,
24,2,,172421-72770,,"PISTON 70 30",1,,,,,,,,,,,,,,,,,
25,2,,172460-72840,,"PIPE     (YELLOW:87)",1,,,,,,,,,,,,,,,,,,
26,2,,24761-040000,,"NIPPLE B,GREASE",2,,,,,,,,,,,,,,,,,
27,2,,26013-100202,,"BOLT W/WASHER M10X20",2,,,,,,,,,,,,,,,,,
```

silverhorn.co.uk

Fig.31 BUCKET CYLINDER

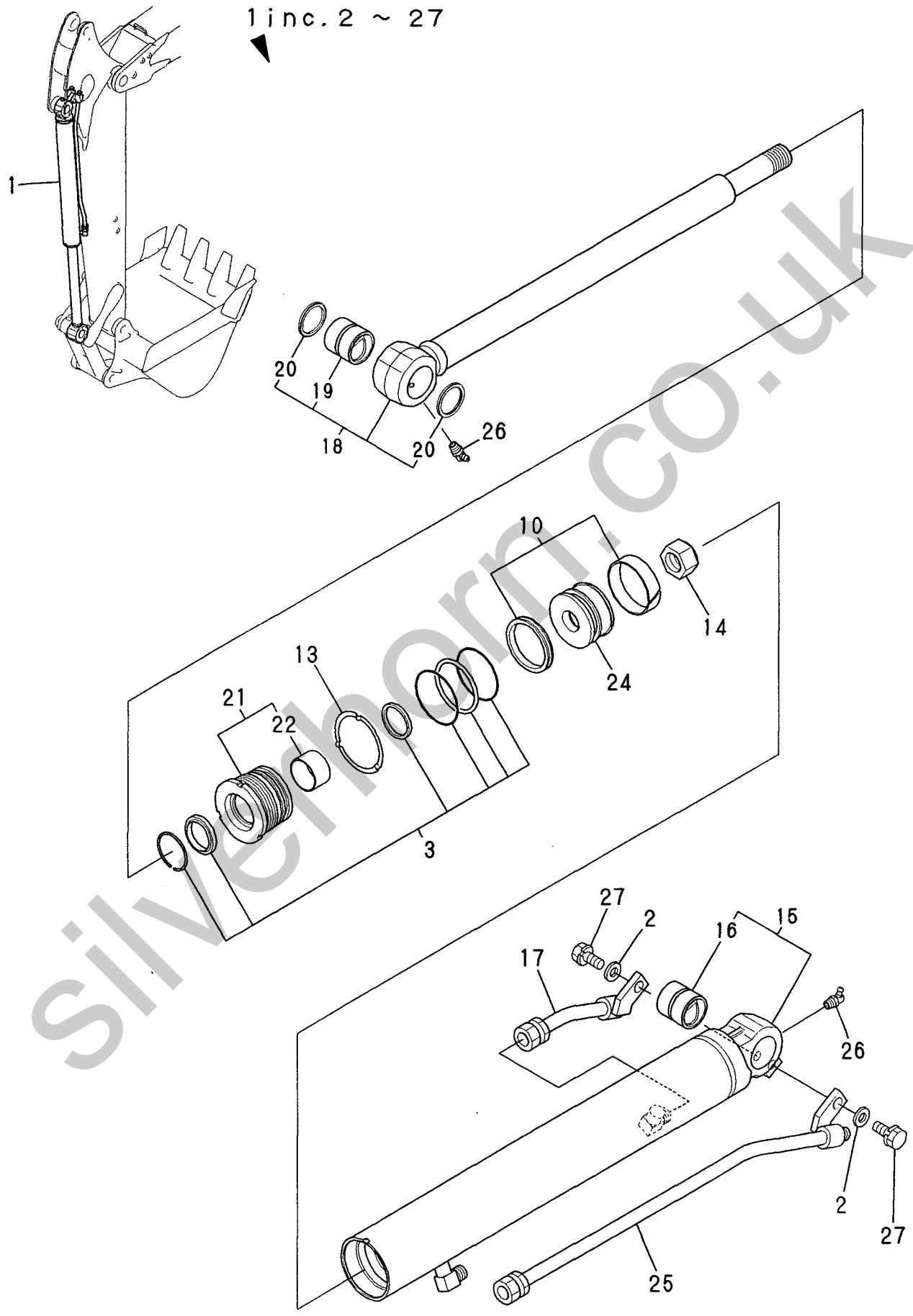

silverhorn.co.uk

```
1,1,,172460-72750-1,,"CYLINDER,SWING  (82)",1,,,,,,,,,,,,,,,,,
2,2,,172460-72040,,"SEAL SET",1,,,,,,,,,,,,,,,,,
9,2,,172460-72050,,"SEAL SET",1,,,,,,,,,,,,,,,,,
12,2,,933111-20200,,"U-NUT M33",1,,,,,,,,,,,,,,,,,
13,2,,172460-72760-1,,"TUBE,SWING(GREEN:82)",1,,,,,,,,,,,,,,,,,,
14,3,,172458-72740,,"BUSH 40X40,SO",1,,,,,,,,,,,,,,,,,
15,3,,172165-81750,,"SEAL 40X50X5, DUST",2,,,,,,,,,,,,,,,,,,
16,2,,172460-72850,,"ROD,SWING",1,,,,,,,,,,,,,,,,,
17,3,,172165-72310,,"BUSH 40X40",1,,,,,,,,,,,,,,,,,
18,3,,172165-81750,,"SEAL 40X50X5, DUST",2,,,,,,,,,,,,,,,,,,
19,2,,172151-72870,,"LOCK WASHER 90",1,,,,,,,,,,,,,,,,,
20,2,,172460-72880,,HEAD,1,,,,,,,,,,,,,,,,,
21,3,,194300-24130,,"BUSH 45X50X30",1,,,,,,,,,,,,,,,,,
23,2,,172460-72900,,PISTON,1,,,,,,,,,,,,,,,,,
24,2,,24761-050000,,"NIPPLE C,GREASE",1,,,,,,,,,,,,,,,,,
25,1,,22217-100000,,"SPRING WASHER 10",1,,,,,,,,,,,,,,,,,
26,1,,26116-100162,,"BOLT M10X 16 PLATED",1,,,,,,,,,,,,,,,,,,
27,1,,22157-100000,,"WASHER 10",1,,,,,,,,,,,,,,,,,
```

silverhorn.co.uk

Fig.32 SWING CYLINDER

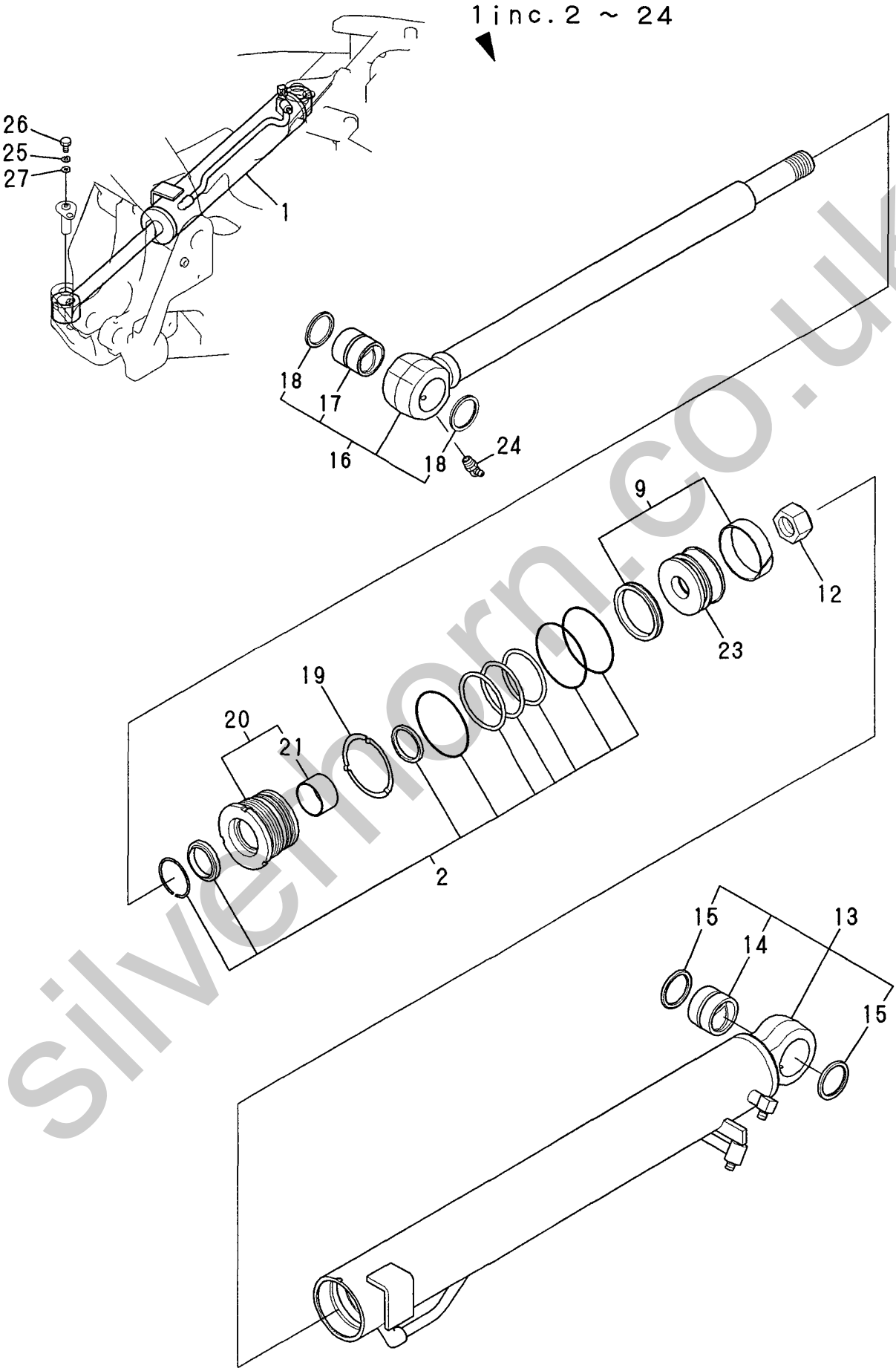

silverhorn.co.uk

```
1,1,,172423-72701-2,,"CYLINDER,BRADE  (82)",1,,,,,,,,,,,,,,,,,
2,2,,172423-72710-1,,"TUBE,BLADE(GREEN:82)",1,,,,,,,,,,,,,,,,,
3,3,,172151-72670,,"BUSH 45 50",1,,,,,,,,,,,,,,,,,
4,3,,172168-81410,,"SEAL 45X55X4, DUST",2,,,,,,,,,,,,,,,,,
5,2,,172423-72731,,"ROD ASSY, BLADE",1,,,,,,,,,,,,,,,,,
6,3,,172151-72670,,"BUSH 45 50",1,,,,,,,,,,,,,,,,,
7,3,,172168-81410,,"SEAL 45X55X4, DUST",2,,,,,,,,,,,,,,,,,
8,3,,23871-010000,,"PLUG PT1/8,SCREW",1,,,,,,,,,,,,,,,,,
9,2,,172151-71590,,"HEAD 90 50",1,,,,,,,,,,,,,,,,,
9-1,2,,172151-71591,,"HEAD ASSY 90 50",1,,,,,,S,,72491003,M/#22132,,,,,,,,,,I
10,3,,172151-72540,,"BUSH 50 35, ROD",1,,,,,,,,,,,,,,,,,
12,2,,172151-72940,,"CYLINDER KIT,
BLADE",1,,,,,,Z,,72491003,M/#22132,,,,,,,,,,I
13,2,,172151-71880,,"SEAL SET, HEAD",1,,,,,,,,,,,,,,,,,
13-1,2,,172151-71881,,"HEAD SEAL SET 90
50",1,,,,,,N,,72491003,M/#22132,,,,,,,,,,I
18,2,,933111-26700,,"RING 65, SPRING",1,,,,,,,,,,,,,,,,,
19,2,,172151-72870,,"LOCK WASHER 90",1,,,,,,,,,,,,,,,,,
20,2,,172151-71870,,"SEAL SET, PISTON",1,,,,,,,,,,,,,,,,,
20-1,2,,172460-72050,,"SEAL SET",1,,,,,,N,,72458500,M/#21891,,,,,,,,,,I
23,2,,172423-72800,,"PISTON 90",1,,,,,,,,,,,,,,,,,
24,2,,172151-72580,,"U-NUT M36",1,,,,,,,,,,,,,,,,,
25,1,,172445-72670-2,,"COVER,BLADE(GREEN:82",1,,,,,,,,,,,,,,,,,
26,1,,22137-120000,,"WASHER 12,POLISHED",2,,,,,,,,,,,,,,,,,
27,1,,26116-120252,,"BOLT M12X 25 PLATED",2,,,,,,,,,,,,,,,,,
28,1,,22217-120000,,"SPRING WASHER 12",2,,,,,,,,,,,,,,,,,
```

silverhorn.co.uk

P/C NEWS No:Y00S4150-3
PUBLISHED:2004/10

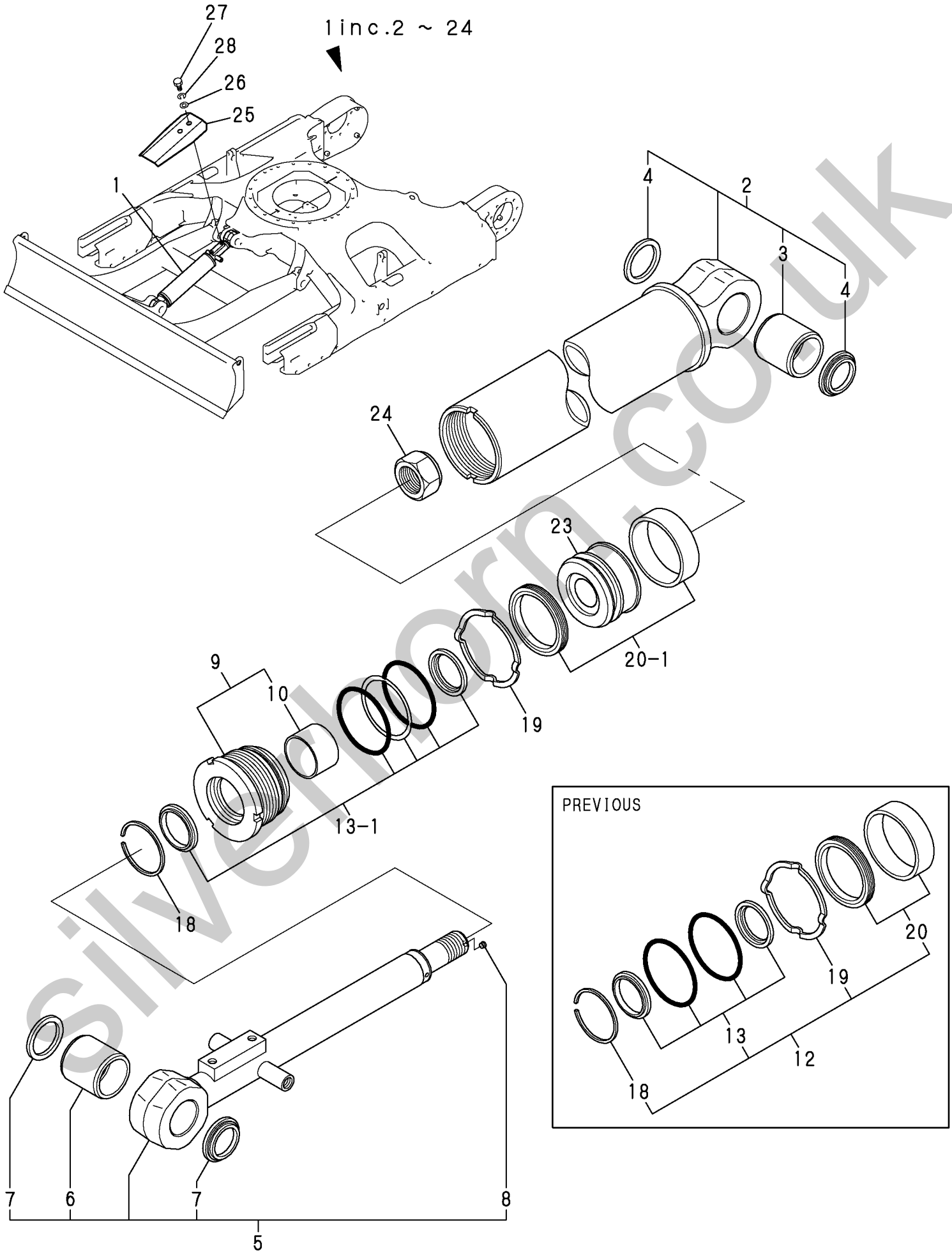

silverthorn.co.uk

```
1,1,,172460-73300,,"TRAVEL MOTOR",2,,,,,,,,,,,,,,,,,
2,2,,172147-70360,,SPRING,4,,,,,,,,,,,,,,,,,
3,2,,172147-70370,,"PLATE VALVE",2,,,,,,,,,,,,,,,,,
4,2,,172147-70390,,"BALL BEARING",2,,,,,,,,,,,,,,,,,
5,2,,172122-70410,,PIN,4,,,,,,,,,,,,,,,,,
6,2,,172122-70460,,"SPRING SEAT",4,,,,,,,,,,,,,,,,,
7,2,,172147-70500,,PLUG,6,,,,,,,,,,,,,,,,,
8,2,,172147-70520,,PLUG,2,,,,,,,,,,,,,,,,,
9,2,,172147-70540,,"HEAD BOLT, SOCKET",12,,,,,,,,,,,,,,,,,,
10,2,,172122-73470,,PIN,2,,,,,,,,,,,,,,,,,
11,2,,172423-73470,,SHAFT,2,,,,,,,,,,,,,,,,,
12,2,,172423-73480,,BEARING,2,,,,,,,,,,,,,,,,,
13,2,,172460-73500,,"REDUCTION GEAR",2,,,,,,,,,,,,,,,,,
14,3,,172124-70010,,BEARING,2,,,,,,,,,,,,,,,,,
15,3,,172124-70030,,BALL,198,,,,,,,,,,,,,,,,,
16,3,,172124-70050,,"RING NUT",2,,,,,,,,,,,,,,,,,
17,3,,172147-70070,,PLATE,2,,,,,,,,,,,,,,,,,
18,3,,172147-70090,,"SNAP RING",2,,,,,,,,,,,,,,,,,
19,3,,172141-70110,,SCREW,8,,,,,,,,,,,,,,,,,
20,3,,172147-70110,,"GEAR(A), PLANETARY",6,,,,,,,,,,,,,,,,,,
21,3,,172147-70120,,"GAUGE, W/ROLLER",6,,,,,,,,,,,,,,,,,,
22,3,,172147-70210,,WIRE,2,,,,,,,,,,,,,,,,,
23,3,,172423-73330,,PLUG,4,,,,,,,,,,,,,,,,,
24,3,,172423-73340,,GEAR,8,,,,,,,,,,,,,,,,,
25,3,,172423-73350,,BEARING,8,,,,,,,,,,,,,,,,,
26,3,,172423-73360,,LATHE,8,,,,,,,,,,,,,,,,,
27,3,,172423-73370,,WASHER,8,,,,,,,,,,,,,,,,,
28,3,,172423-73380,,GEAR,2,,,,,,,,,,,,,,,,,
29,3,,172423-73410,,LATHE,6,,,,,,,,,,,,,,,,,
30,3,,172122-73430,,PLUG,4,,,,,,,,,,,,,,,,,
31,3,,172460-73510,,HOLDER,2,,,,,,,,,,,,,,,,,
32,3,,172460-73530,,GEAR,2,,,,,,,,,,,,,,,,,
33,3,,172460-73540,,COVER,2,,,,,,,,,,,,,,,,,
34,3,,172460-73600,,"SEAL KIT",2,,,,,,,,,,,,,,,,,
35,4,,172147-70020,,SEAL,2,,,,,,,,,,,,,,,,,
36,4,,24315-000110,,"O-RING 1B P-11.0",6,,,,,,,,,,,,,,,,,
37,4,,172147-70200,,O-RING,2,,,,,,M,,,,,,,,,,,,I
37-1,4,,172423-73690,,O-RING,2,,,,,,,,,,,,,,,,,,,,I
38,3,,172460-73620,,FRAMGE,2,,,,,,,,,,,,,,,,,
40,3,,172460-73630,,PLATE,2,,,,,,,,,,,,,,,,,
44,3,,172183-73770,,PLUG,6,,,,,,,,,,,,,,,,,
45,2,,172423-73510,,BOLL,4,,,,,,,,,,,,,,,,,
46,2,,172460-73550,,PLATE,2,,,,,,,,,,,,,,,,,
47,2,,172460-73560,,SPRING,4,,,,,,,,,,,,,,,,,
48,2,,172460-73570,,CAP,4,,,,,,,,,,,,,,,,,
49,2,,172460-73580,,VALVE,2,,,,,,,,,,,,,,,,,
50,3,,172460-73520,,"HEAD BOLT",6,,,,,,,,,,,,,,,,,
51,2,,172460-73590,,PLUG,4,,,,,,,,,,,,,,,,,
52,2,,172423-73600,,SPRING,2,,,,,,,,,,,,,,,,,
53,2,,172460-73610,,"SEAL KIT",2,,,,,,,,,,,,,,,,,
54,3,,172423-73490,,"OIL SEAL",2,,,,,,,,,,,,,,,,,
55,3,,172423-73560,,O-RING,2,,,,,,,,,,,,,,,,,
56,3,,24315-000070,,"O-RING 1B P-7.0",6,,,,,,,,,,,,,,,,,
57,3,,24315-000080,,"O-RING 1B P-8.0",4,,,,,,,,,,,,,,,,,
58,3,,24315-000140,,"O-RING 1B P-14.0",8,,,,,,,,,,,,,,,,,
59,3,,24315-000290,,"O-RING 1B P-29.0",4,,,,,,,,,,,,,,,,,
60,3,,24315-000100,,"O-RING 1B P-10.0",4,,,,,,,,,,,,,,,,,
61,2,,172460-73640,,"PLATE KIT",2,,,,,,,,,,,,,,,,,
62,3,,172147-70220,,PLUG,4,,,,,,,,,,,,,,,,,
63,3,,172148-70340,,ORIFICE,8,,,,,,,,,,,,,,,,,
65,3,,172312-74790,,ORIFICE,8,,,,,,,,,,,,,,,,,
66,2,,172423-73650,,"BROCK KIT",2,,,,,,,,,,,,,,,,,
76,2,,23871-020000,,"PLUG PT1/4,SCREW",2,,,,,,,,,,,,,,,,,
```

silverform.co.uk

```
77,1,,22217-140000,,"SPRING WASHER 14",18,,,,,,,,,,,,,,,,,,
78,1,,172455-29140,,"BOLT 14X35",18,,,,,,,,,,,,,,,,,,
```

silverhorn.co.uk

P/C NEWS No:Y00S4150-2
PUBLISHED:2004/6

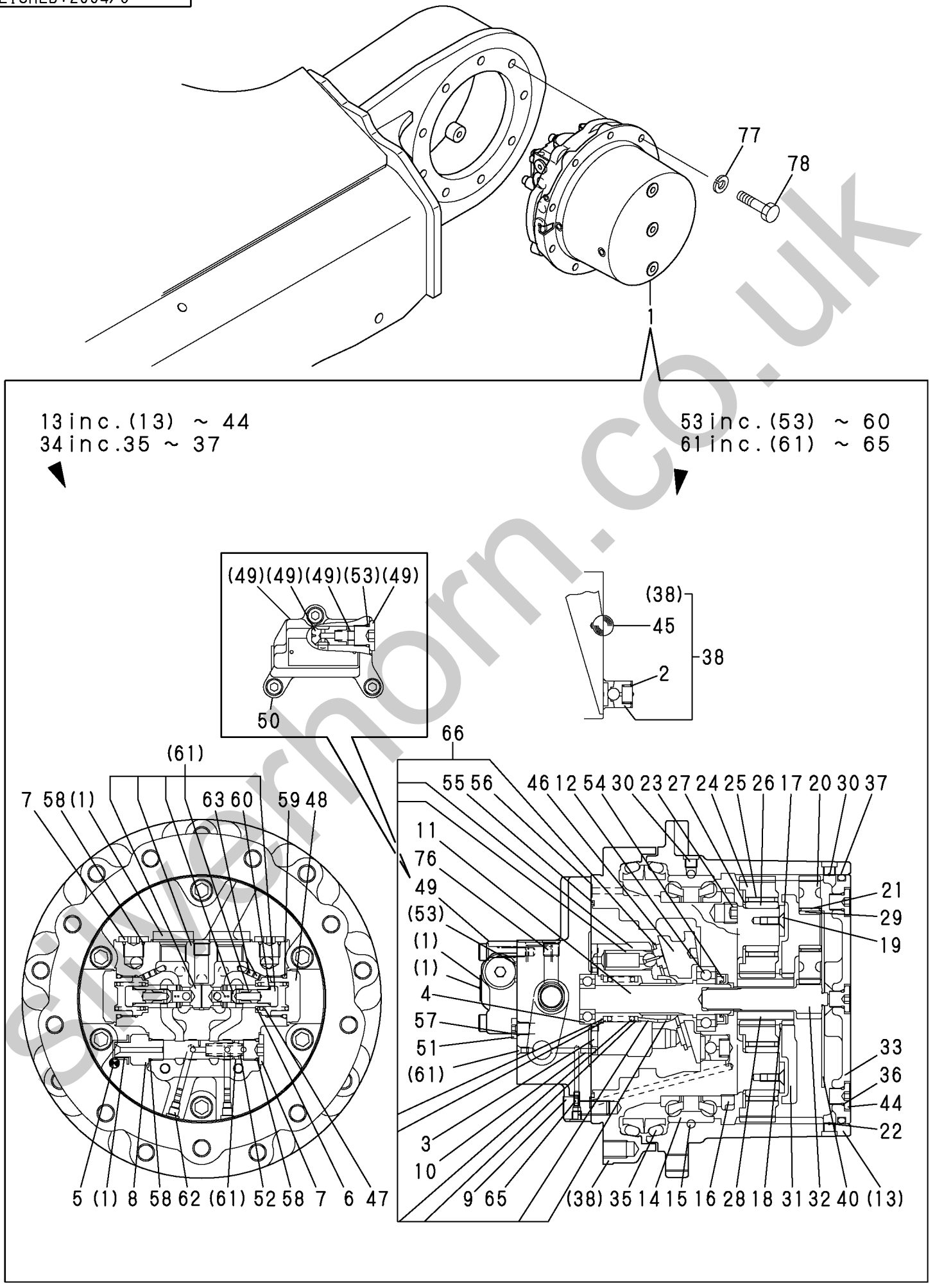

silverhorn.co.uk

```
1,1,,172460-73310,,"SWING MOTOR",1,,,,,,,,,,,,,,,,,
2,2,,172460-73700,,"REDUCTION GEAR",1,,,,,,,,,,,,,,,,,,
3,3,,172425-73410,,"CARRIER 1 KIT",1,,,,,,,,,,,,,,,,,,
4,4,,22242-000200,,"CIRCLIP   20",4,,,,,,,,,,,,,,,,,,
5,4,,22351-040020,,"SPRING PIN 4X20",4,,,,,,,,,,,,,,,,,,,
6,3,,172425-73420,,"CARRIER 2 KIT",1,,,,,,,,,,,,,,,,,,
7,4,,22242-000200,,"CIRCLIP   20",3,,,,,,,,,,,,,,,,,,
8,4,,22242-000300,,"CIRCLIP   30",1,,,,,,,,,,,,,,,,,,
9,4,,22351-040020,,"SPRING PIN 4X20",3,,,,,,,,,,,,,,,,,,,
10,3,,172460-73790,,GEAR,1,,,,,,,,,,,,,,,,,
11,3,,172425-73490,,COLLER,1,,,,,,,,,,,,,,,,,
12,3,,172425-73510,,O-RING,1,,,,,,,,,,,,,,,,,
13,3,,172425-73520,,RING,1,,,,,,,,,,,,,,,,,
14,3,,172460-73710,,PINION,1,,,,,,,,,,,,,,,,,
15,3,,26450-080252,,"BOLT M 8X 25",6,,,,,,,,,,,,,,,,,,
16,2,,172460-73720,,HYD.MOTOR,1,,,,,,,,,,,,,,,,,
17,3,,172425-73440,,"BARREL KIT",1,,,,,,,,,,,,,,,,,,
18,4,,22252-000280,,"CIRCLIP   28",1,,,,,,,,,,,,,,,,,,
19,3,,172425-73450,,"PLATE KIT",1,,,,,,,,,,,,,,,,,,
20,4,,172425-73550,,PIN,1,,,,,,,,,,,,,,,,,
21,3,,172425-73530,,FILDER,2,,,,,,,,,,,,,,,,,,
22,3,,172425-73540,,PIN,1,,,,,,,,,,,,,,,,,
23,3,,172460-73730,,"BODY H KIT",1,,,,,,,,,,,,,,,,,,
24,4,,22351-050012,,"PIN 5X12,SPRING",1,,,,,,,,,,,,,,,,,,,
25,4,,24101-062010,,"BALL BEARING",2,,,,,,,,,,,,,,,,,,
26,4,,24315-000180,,"O-RING 1B P-18.0",2,,,,,,,,,,,,,,,,,,,
27,3,,172460-73740,,"SEAL KIT",1,,,,,,,,,,,,,,,,,,
28,4,,24315-000180,,"O-RING 1B P-18.0",1,,,,,,,,,,,,,,,,,,,
29,4,,24325-001200,,"O-RING BG120.0",1,,,,,,,,,,,,,,,,,,
30,4,,24325-001000,,"O-RING 1B G-100.0",1,,,,,,,,,,,,,,,,,,,
31,4,,24325-001100,,"O-RING 1B G110",1,,,,,,,,,,,,,,,,,,
32,4,,24376-001000,,"BACKUP RING T3 G100",1,,,,,,,,,,,,,,,,,,,
33,4,,24376-001100,,"BACKUP RING T3 G110",1,,,,,,,,,,,,,,,,,,,
34,3,,24105-062044,,"BALL BEARING",1,,,,,,,,,,,,,,,,,,
35,3,,26450-080502,,"BOLT 8X50",4,,,,,,,,,,,,,,,,,,
36,3,,26450-120352,,"BOLT M12X 35",5,,,,,,,,,,,,,,,,,,
37,2,,172460-73750,,VALVE,1,,,,,,,,,,,,,,,,,
38,3,,172460-73760,,"SEAL KIT",1,,,,,,,,,,,,,,,,,
39,4,,24315-000110,,"O-RING 1B P-11.0",2,,,,,,,,,,,,,,,,,,
40,4,,24315-000180,,"O-RING 1B P-18.0",2,,,,,,,,,,,,,,,,,,
41,2,,172460-73770,,VALVE,2,,,,,,,,,,,,,,,,,
42,3,,172460-73780,,"SEAL KIT",2,,,,,,,,,,,,,,,,,,
43,4,,24315-000140,,"O-RING 1B P-14.0",2,,,,,,,,,,,,,,,,,,
44,4,,24315-000180,,"O-RING 1B P-18.0",2,,,,,,,,,,,,,,,,,,
45,4,,24315-000220,,"O-RING 1B P-22.0",2,,,,,,,,,,,,,,,,,,
46,4,,24315-000280,,"O-RING 1B P-28.0",2,,,,,,,,,,,,,,,,,,
47,4,,24372-000140,,RING,4,,,,,,,,,,,,,,,,,
48,1,,172460-73320,,BOLT,9,,,,,,,,,,,,,,,,,
```

silvernorn.co.uk

Fig.35 TURNING MOTOR

2inc.3 ~ 15
16inc.(16) ~ 36

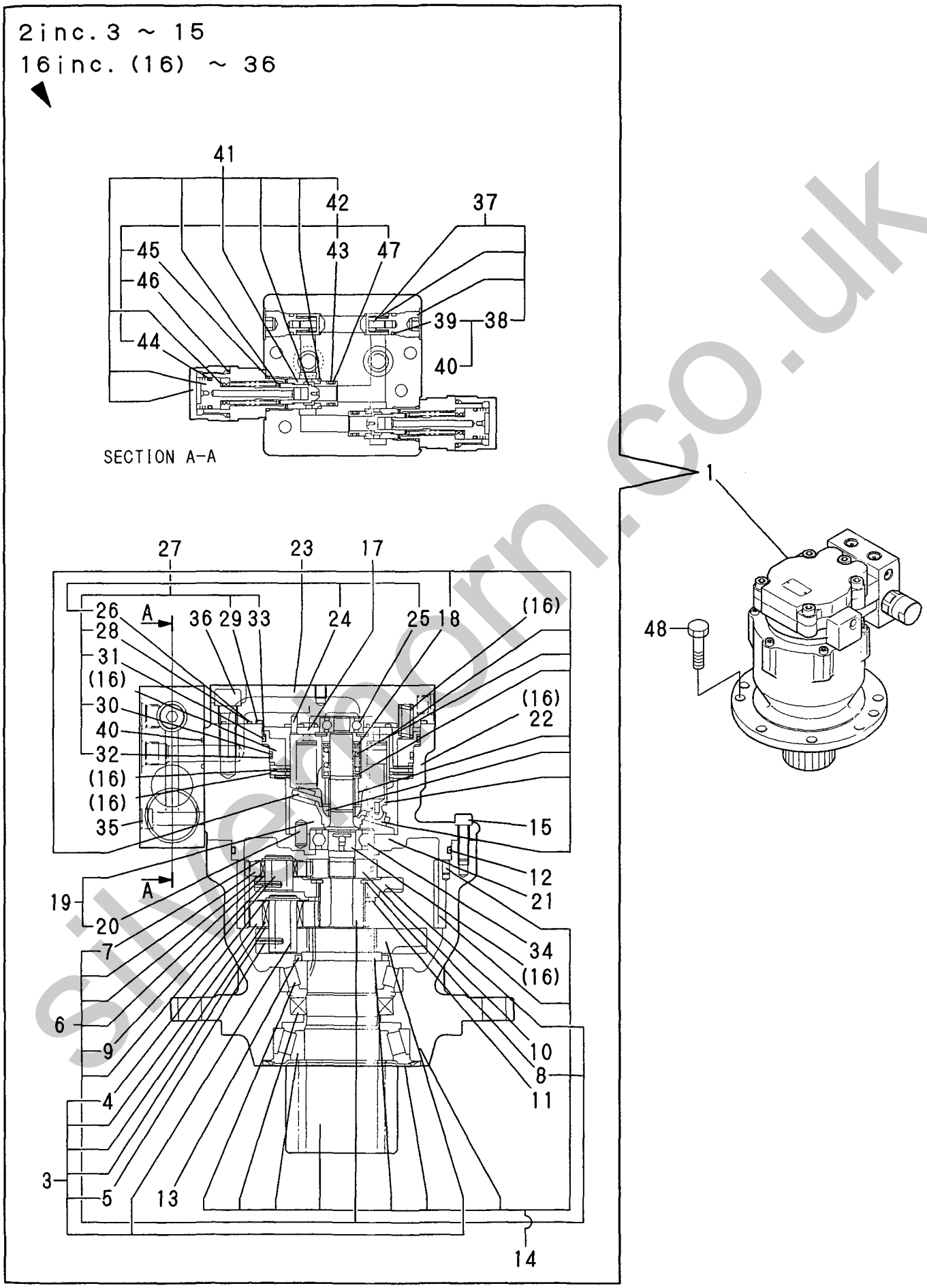

silverthorn.co.uk

```
1,1,,172444-73802,,"JOINT ASSY, SWIVEL",1,,,,,,,,,,,,,,,,,
2,2,,172444-73810,,"SHAFT, SWIVEL",1,,,,,,,,,,,,,,,,,
3,2,,172444-73840,,"FLANGE, SWIVEL",1,,,,,,,,,,,,,,,,,
4,2,,172444-73831,,"HUB, SWIVEL",1,,,,,,,,,,,,,,,,,
5,2,,172137-73860,,"SPACER, SWIVEL",1,,,,,,,,,,,,,,,,,
6,2,,172444-73880,,"SEAL KIT,SWIVEL",1,,,,,,,,,,,,,,,,,
7,3,,172142-73800,,"O-RING 55.76X5.7",1,,,,,,,,,,,,,,,,,
8,3,,172458-73820,,"SEAL, SWIVEL",7,,,,,,,,,,,,,,,,,
9,3,,172148-73870,,"RING EL, BACK UP",1,,,,,,,,,,,,,,,,,
10,3,,24311-000750,,"O-RING 1A P-75.0",1,,,,,,,,,,,,,,,,,
11,3,,24321-000700,,"O-RING 1A G70.0,NBR",1,,,,,,,,,,,,,,,,,
12,2,,22242-000451,,"CIRCLIP   45",1,,,,,,,,,,,,,,,,,
13,2,,23871-020000,,"PLUG PT1/4,SCREW",7,,,,,,,,,,,,,,,,,
14,2,,26013-100352,,"BOLT M10X 35",3,,,,,,,,,,,,,,,,,
15,1,,22217-100000,,"SPRING WASHER 10",4,,,,,,,,,,,,,,,,,
16,1,,26116-100652,,"BOLT M10X 65 PLATED",4,,,,,,,,,,,,,,,,,
```

silverhorn.co.uk

Fig.36 SWIVEL JOINT

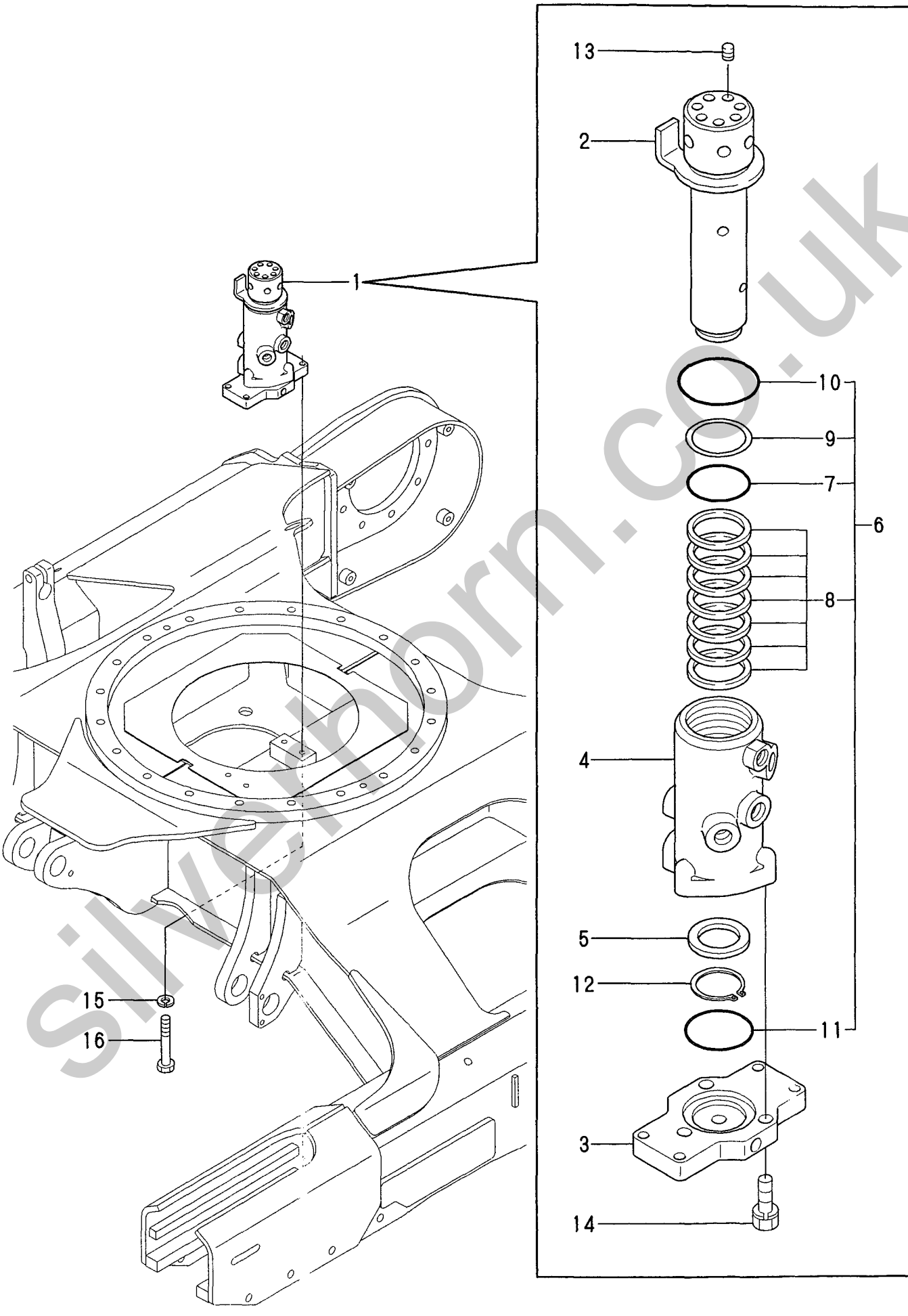

silverthorn.co.uk

```
1,1,,172475-74100,,"VALVE ASSY, CONTROL",1,,,,,,,,,,,,,,,,,
2,2,,172422-74110,,NUT,8,,,,,,,,,,,,,,,,
3,2,,172460-74140,,"INLET SECTION",1,,,,,,,,,,,,,,,,,
6,4,,172422-74220,,O-RING,2,,,,,,,,,,,,,,,,
13,4,,172460-74370,,O-RING,2,,,,,,,,,,,,,,,,
14,3,,172460-74310,,"MAIN RELIFE",2,,,,,,,,,,,,,,,,,
15,4,,172116-74150,,O-RING,2,,,,,,,,,,,,,,,,
16,2,,172460-74210,,"BOOM 2 SECTION",1,,,,,,,,,,,,,,,,,
19,4,,24315-000110,,"O-RING 1B P-11.0",1,,,,,,,,,,,,,,,,,,
23,4,,172422-74220,,O-RING,2,,,,,,,,,,,,,,,,
29,4,,172460-74370,,O-RING,1,,,,,,,,,,,,,,,,
30,3,,172460-74310,,"MAIN RELIFE",1,,,,,,,,,,,,,,,,,
31,4,,172116-74150,,O-RING,1,,,,,,,,,,,,,,,,
32,2,,172467-74130,,TIE-ROD,4,,,,,,,,,,,,,,,,
33,1,,26013-100162,,"BOLT M10X 16",3,,,,,,,,,,,,,,,,,
34,1,,172165-45490,,CUSHION,6,,,,,,,,,,,,,,,,
35,1,,172460-45601,,"PLATE      (GRAY:72)",1,,,,,,,,,,,,,,,,,
36,1,,22252-000280,,"CIRCLIP   28",6,,,,,,,,,,,,,,,,,
37,1,,26106-100352,,"BOLT M10X 35 PLATED",6,,,,,,,,,,,,,,,,,
```

silverhorn.co.uk

Fig.37 CONTROL VALVE (P PORT)

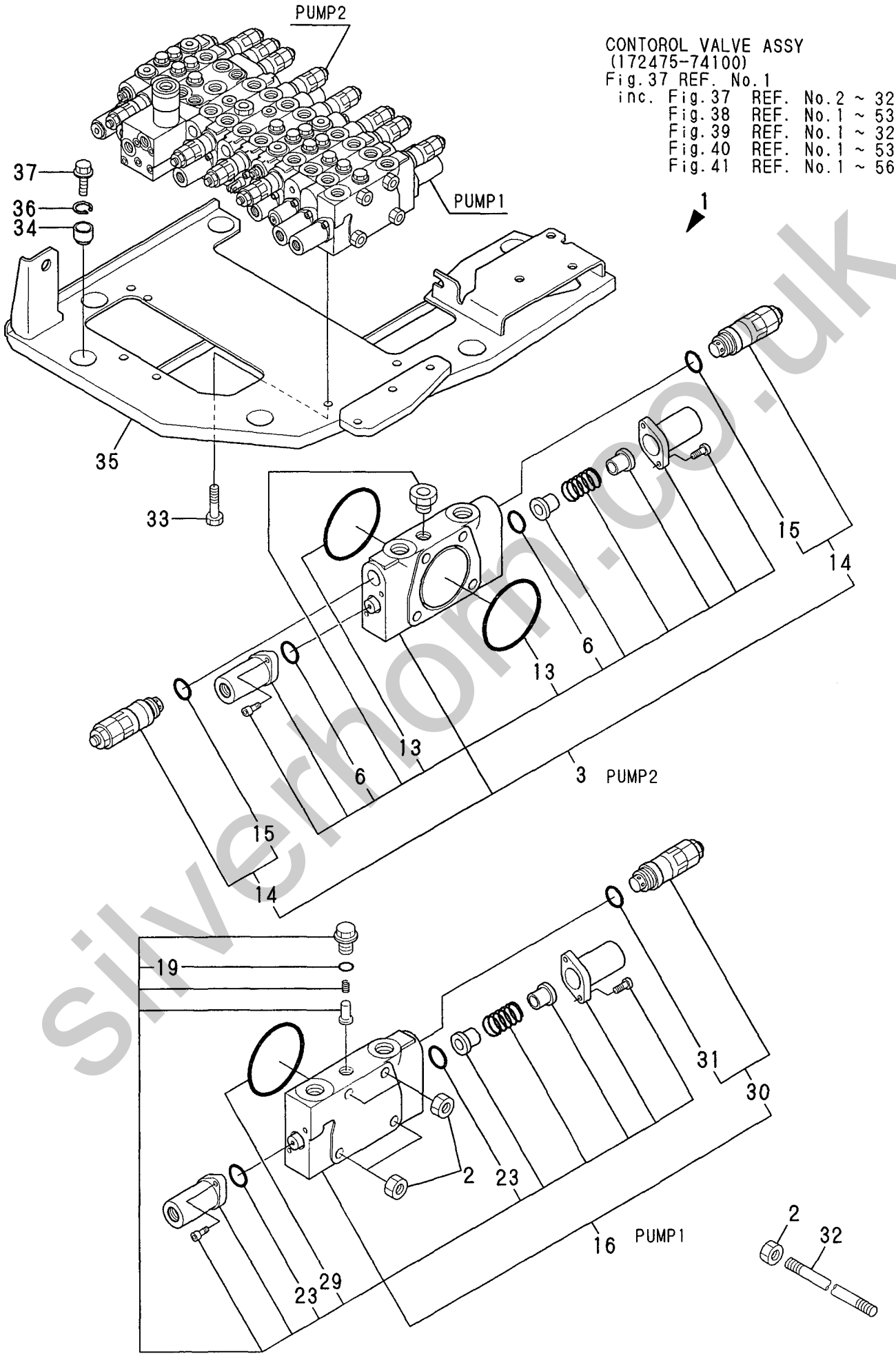

silverhorn.co.uk

```
1,2,,172460-74130,,"TRAVEL R SECTION",1,,,,,,,,,,,,,,,,,
6,3,,172614-74290,,WIPER,2,,,,,,,,,,,,,,,,,
12,3,,172422-74370,,O-RING,2,,,,,,,,,,,,,,,,,,
13,3,,172460-74370,,O-RING,1,,,,,,,,,,,,,,,,,,
15,2,,172460-74150,,"TRAVEL L SECTION",1,,,,,,,,,,,,,,,,,,
20,3,,172614-74290,,WIPER,2,,,,,,,,,,,,,,,,,
26,3,,172422-74370,,O-RING,2,,,,,,,,,,,,,,,,,,
27,3,,172460-74370,,O-RING,1,,,,,,,,,,,,,,,,,,
29,2,,172460-74170,,"P.T.O. SECTION",1,,,,,,,,,,,,,,,,,
32,4,,24315-000110,,"O-RING 1B P-11.0",2,,,,,,,,,,,,,,,,,,
33,4,,172422-74370,,O-RING,2,,,,,,,,,,,,,,,,,
34,4,,172614-74290,,WIPER,2,,,,,,,,,,,,,,,,,
44,4,,172460-74370,,O-RING,1,,,,,,,,,,,,,,,,,
45,3,,172455-74320,,"SHUTOFF VALVE",2,,,,,,,,,,,,,,,,,
48,4,,172455-74030,,O-RING,2,,,,,,,,,,,,,,,,,
51,4,,172116-74150,,O-RING,2,,,,,,,,,,,,,,,,,
52,3,,172187-74540,,PLUG,2,,,,,,,,,,,,,,,,,
53,4,,24315-000140,,"O-RING 1B P-14.0",2,,,,,,,,,,,,,,,,,
```

silverhorn.co.uk

Fig.38 CONTROL VALVE (TRAVEL & P.T.O.)

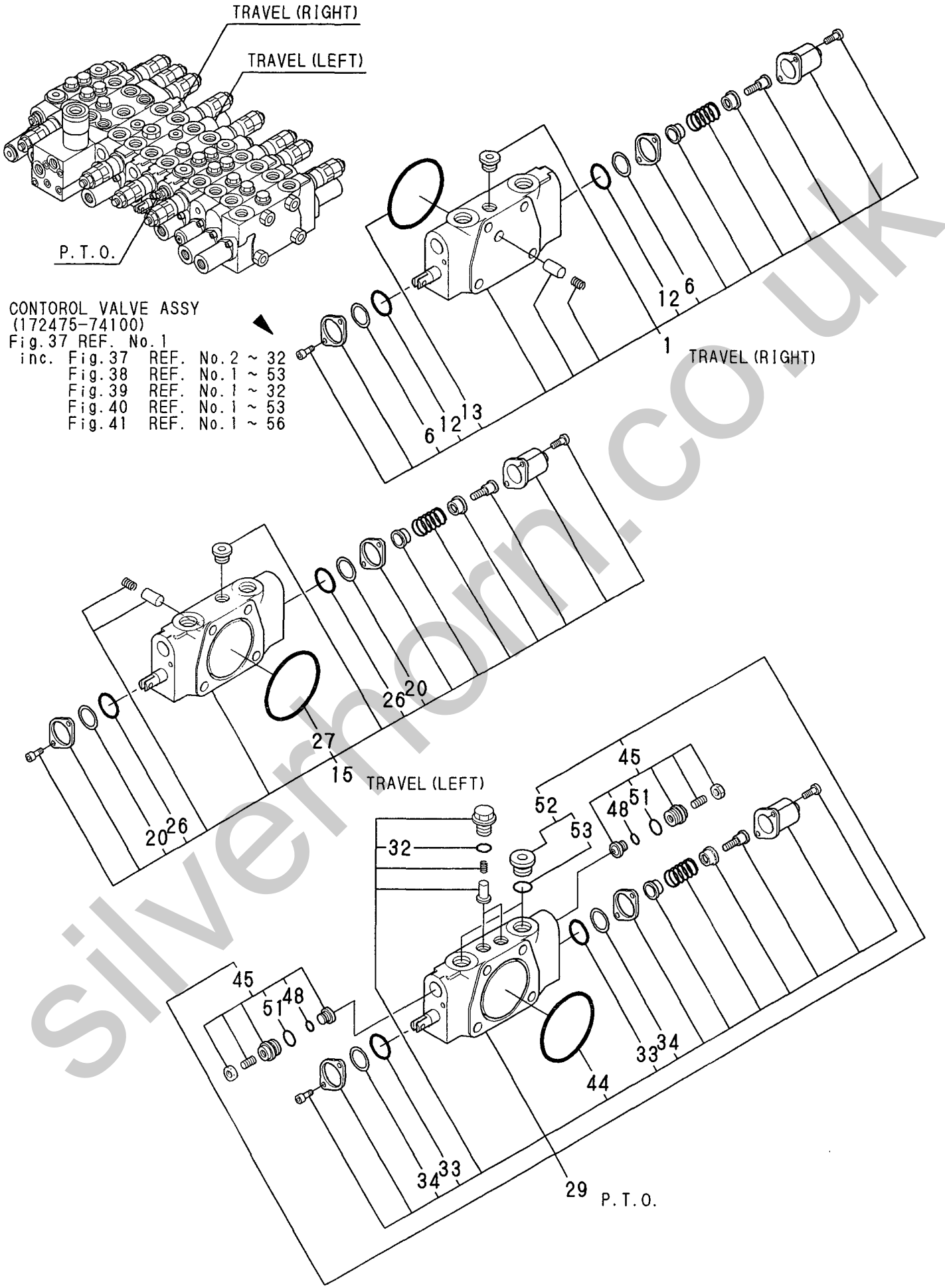

silvermorn.co.uk

```
1,2,,172460-74160,,"SWING SECTION",1,,,,,,,,724600342,,,,,,,,,,,,I
4,4,,24315-000110,,"O-RING 1B P-11.0",1,,,,,,,,,,,,,,,,,,,,
5,4,,172422-74370,,O-RING,2,,,,,,,,,,,,,,,,,,,,
6,4,,172614-74290,,WIPER,2,,,,,,,,,,,,,,,,,,,,
16,4,,172460-74370,,O-RING,1,,,,,,,,,,,,,,,,,,,,
17,3,,172460-74300,,"PORT RELIFE 250",2,,,,,,,,,,,,,,,,,,,,
18,4,,172116-74150,,O-RING,2,,,,,,,,,,,,,,,,,,,,
19,2,,172460-74180,,"ARM SECTION",1,,,,,,,,,724600342,,,,,,,,,,,,I
22,4,,24315-000110,,"O-RING 1B P-11.0",2,,,,,,,,,,,,,,,,,,,,
26,4,,172422-74220,,O-RING,2,,,,,,,,,,,,,,,,,,,,
31,3,,172460-74300,,"PORT RELIFE 250",2,,,,,,,,,724600342,,,,,,,,,,,,I
32,4,,172116-74150,,O-RING,2,,,,,,,,,,,,,,,,,,,,
```

silverhorn.co.uk

Fig.39 CONTROL VALVE (ARM & SWING)

CONTOROL VALVE ASSY
(172475-74100)
Fig.37 REF. No.1
inc. Fig.37 REF. No.2 ~ 32
Fig.38 REF. No.1 ~ 53
Fig.39 REF. No.1 ~ 32
Fig.40 REF. No.1 ~ 53
Fig.41 REF. No.1 ~ 56

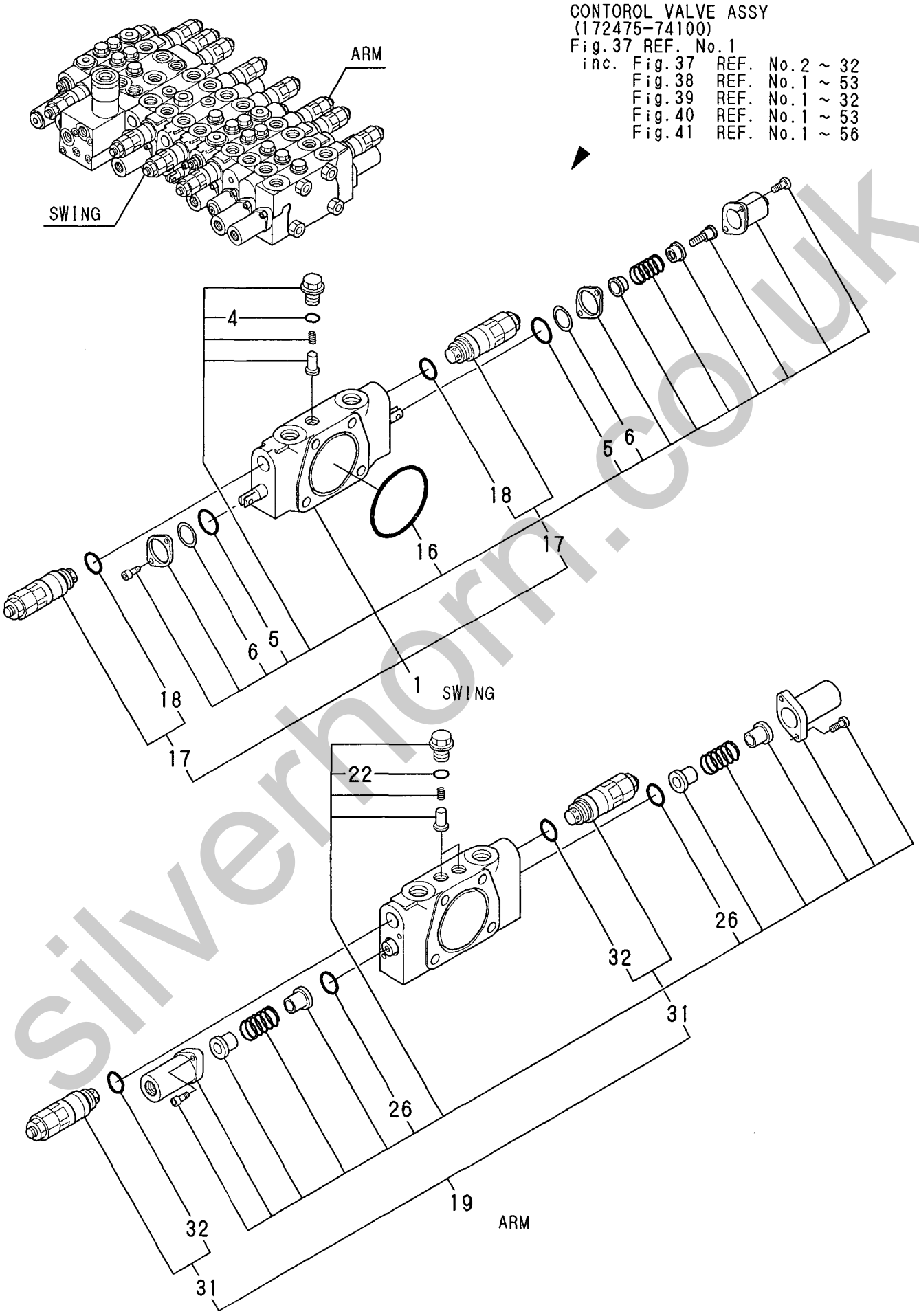

silverhorn.co.uk

```
1,2,,172475-74110,,"BUCKET SECTION",1,,,,,,,724600342,,,,,,,,,,,I
4,4,,24315-000110,,"O-RING 1B P-11.0",2,,,,,,,,,,,,,,,,,
8,4,,172422-74220,,O-RING,2,,,,,,,,,,,,,,,,,
14,4,,172460-74370,,O-RING,1,,,,,,,,,,,,,,,,,
15,3,,172460-74300,,"PORT RELIFE 250",2,,,,,,,,,,,,,,,,,
16,4,,172116-74150,,O-RING,2,,,,,,,,,,,,,,,,,
17,2,,172460-74120,,"BOOM SECTION",1,,,,,,,,724600342,,,,,,,,,,,I
19,4,,172638-73650,,RING,1,,,,,,,,,,,,,,,,,
20,4,,24315-000110,,"O-RING 1B P-11.0",2,,,,,,,,,,,,,,,,,
25,4,,172422-74220,,O-RING,2,,,,,,,,,,,,,,,,,
33,4,,172460-74500,,"BUCKUP RING",1,,,,,,,,,,,,,,,,,
34,4,,172455-74690,,PACKING,2,,,,,,,,,,,,,,,,,
40,4,,172455-74680,,"BACK UP RING",1,,,,,,,,,,,,,,,,,
41,4,,172455-74660,,PACKING,1,,,,,,,,,,,,,,,,,
42,4,,172455-74670,,PACKING,1,,,,,,,,,,,,,,,,,
45,4,,172116-74150,,O-RING,1,,,,,,,,,,,,,,,,,
51,4,,172460-74370,,O-RING,1,,,,,,,,,,,,,,,,,
52,3,,172460-74300,,"PORT RELIFE 250",2,,,,,,,,724600342,,,,,,,,,,,I
53,4,,172116-74150,,O-RING,2,,,,,,,,,,,,,,,,,
```

silverhorn.co.uk

Fig.40 CONTROL VALVE (BOOM & BUCKET)

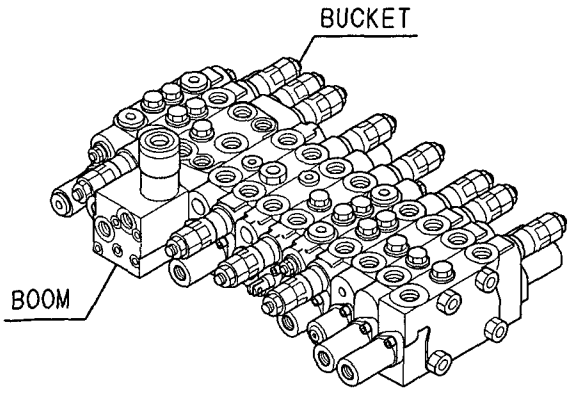

CONTOROL VALVE ASSY
(172475-74100)
Fig.37 REF. No.1
inc. Fig.37 REF. No.2 ~ 32
Fig.38 REF. No.1 ~ 53
Fig.39 REF. No.1 ~ 32
Fig.40 REF. No.1 ~ 53
Fig.41 REF. No.1 ~ 56

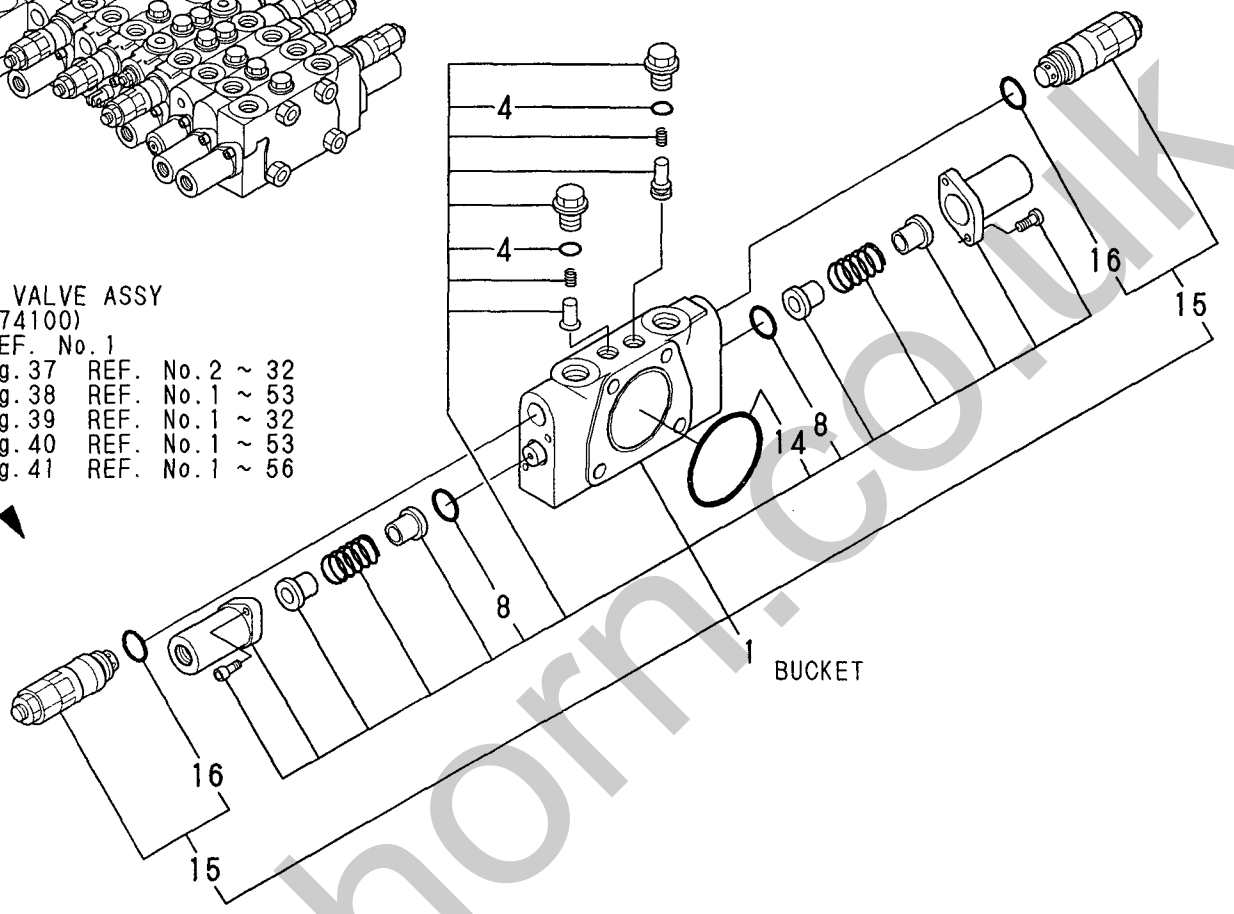

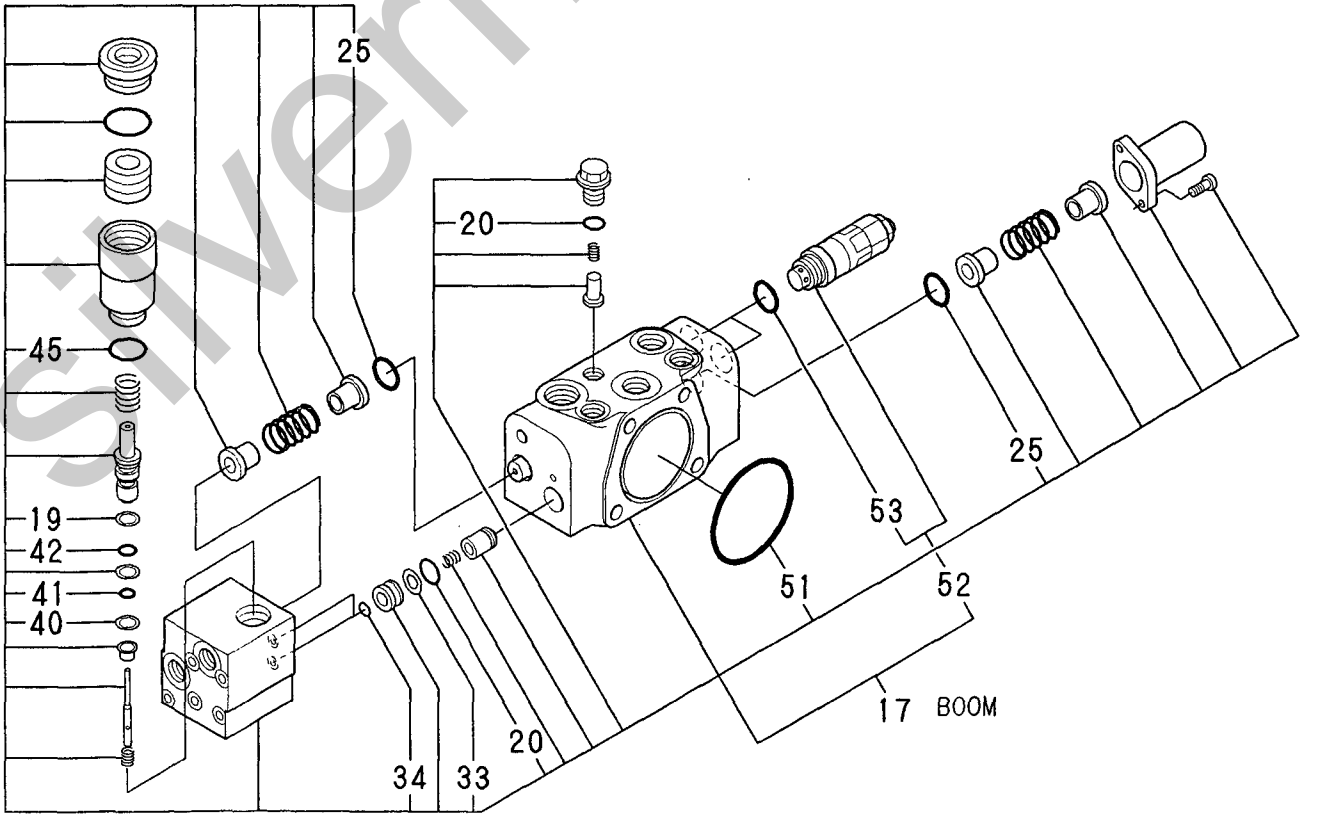

silverhorn.co.uk

```
1,2,,172460-74190,,"BLADE SECTION",1,,,,,,,,724600342,,,,,,,,,,,,I
4,4,,24315-000110,,"O-RING 1B P-11.0",1,,,,,,,,,,,,,,,,,,,,
5,4,,172422-74370,,O-RING,2,,,,,,,,,,,,,,,,,,,,
6,4,,172614-74290,,WIPER,2,,,,,,,,,,,,,,,,,,,,
16,4,,172460-74370,,O-RING,1,,,,,,,,,,,,,,,,,,,,
20,3,,172460-74320,,"PORT RELIFE 150",1,,,,,,,,724600342,,,,,,,,,,,,I
21,4,,172116-74150,,O-RING,1,,,,,,,,,,,,,,,,,,,,
22,2,,172460-74200,,"TURNING SECTION",1,,,,,,,,,,,,,,,,,,,,
24,3,,172422-74220,,O-RING,2,,,,,,,,,,,,,,,,,,,,
27,3,,172460-74370,,O-RING,1,,,,,,,,,,,,,,,,,,,,
33,3,,24315-000110,,"O-RING 1B P-11.0",1,,,,,,,,,,,,,,,,,,,,
34,2,,172467-74120,,"4TH SECTION ASSY",1,,,,,,,,,,,,,,,,,,,,
37,4,,24315-000110,,"O-RING 1B P-11.0",2,,,,,,,,,,,,,,,,,,,,
41,4,,172422-74220,,O-RING,2,,,,,,,,,,,,,,,,,,,,
47,3,,172455-74320,,"SHUTOFF VALVE",2,,,,,,,,,,,,,,,,,,,,
50,4,,172455-74030,,O-RING,2,,,,,,,,,,,,,,,,,,,,
53,4,,172116-74150,,O-RING,2,,,,,,,,,,,,,,,,,,,,
54,3,,172187-74540,,PLUG,2,,,,,,,,,,,,,,,,,,,,
55,4,,24315-000140,,"O-RING 1B P-14.0",2,,,,,,,,,,,,,,,,,,,,
56,3,,172422-74330,,PLUG,2,,,,,,,,,,,,,,,,,,,,
```

silverhorn.co.uk

Fig.41 CONTROL VALVE (TURNING & BLADE)

CONTOROL VALVE ASSY
(172475-74100)
Fig.37 REF. No.1
inc. Fig.37 REF. No.2 ~ 32
Fig.38 REF. No.1 ~ 53
Fig.39 REF. No.1 ~ 32
Fig.40 REF. No.1 ~ 53
Fig.41 REF. No.1 ~ 56

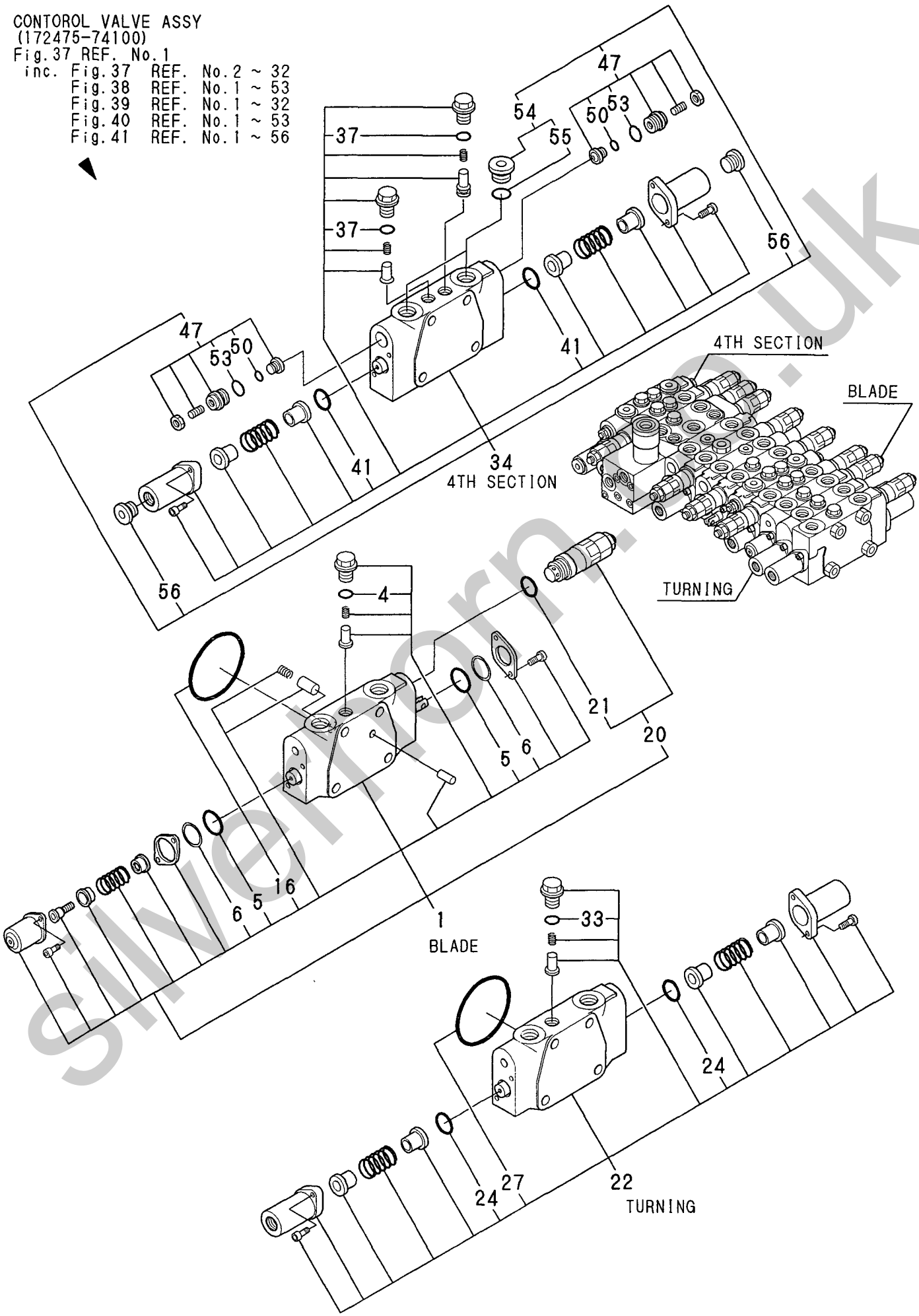

silvermorn.co.uk

```
1,1,,172463-74510,,"VALVE ASSY,R US",1,,,,,,,,,,,,,,,,,,
2,1,,172463-74520,,"VALVE ASSY,L US",1,,,,,,,,,,,,,,,,,,
3,1,,26013-060162,,"BOLT M 6X 16",8,,,,,,,,,,,,,,,,,,
```

silverhorn.co.uk

Fig.42 REMOTE CONTROL VALVE

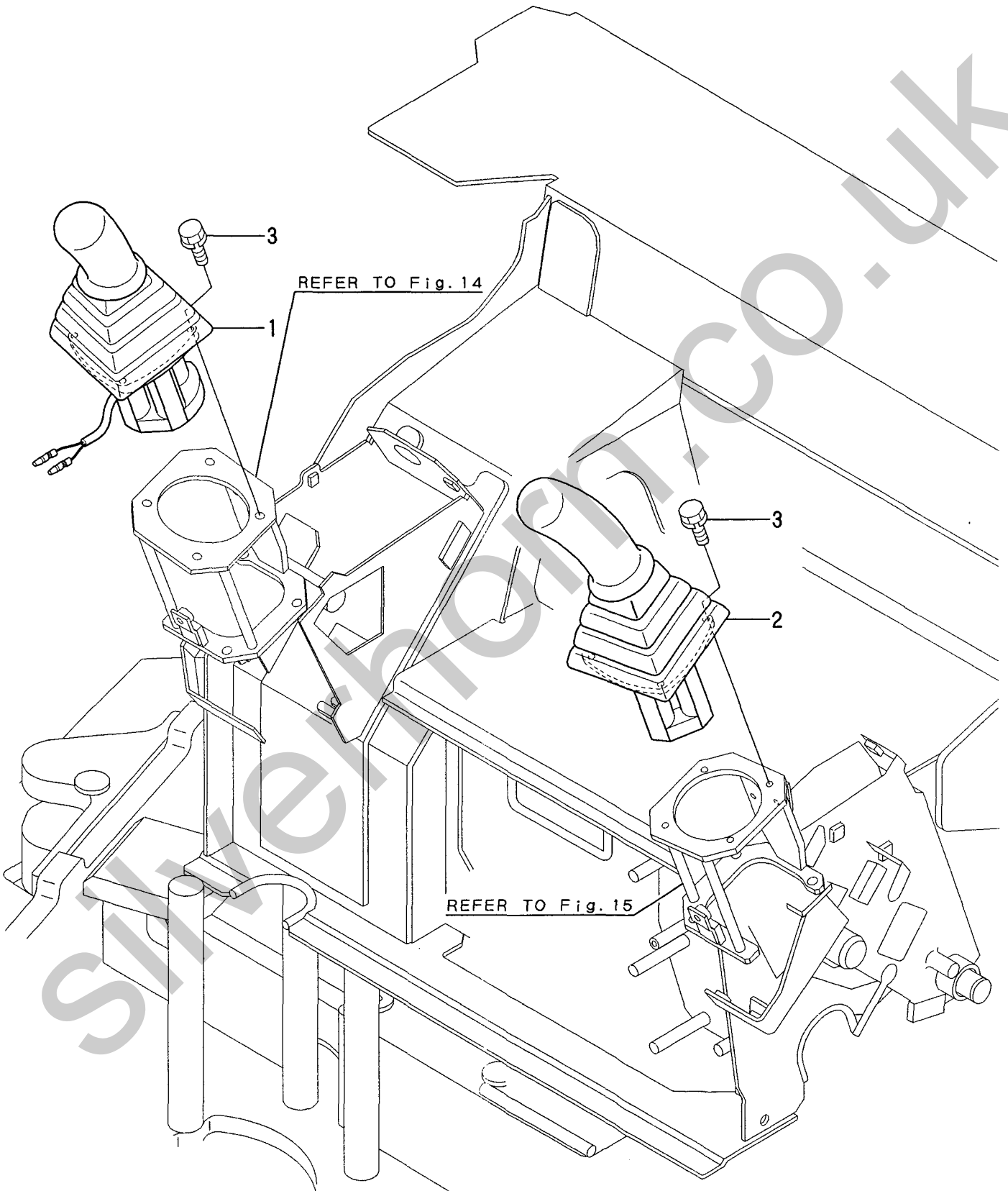

silverhorn.co.uk

```
1,1,,772460-75100-1,,"TANK,HYD.OIL(W/A)(87",1,,,,,,,,,,,,,,,,,
3,2,,124766-59050,,"CLAMP 12",1,,,,,,,,,,,,,,,,,
4,2,,172460-75290-1,,"COVER    (YELLOW:87)",1,,,,,,,,,,,,,,,,,
5,2,,172455-75320,,HOSE,1,,,,,,,,,,,,,,,,,
6,2,,172455-75330,,"DRAIN PLIG 24",1,,,,,,,,,,,,,,,,,
7,2,,172460-75410-1,,"CAP,TANK (YELLOW:87)",1,,,,,,,,,,,,,,,,,
8,2,,172165-75450,,"PLATE    (YELLOW:87)",1,,,,,,,,,,,,,,,,,
9,2,,172165-75460,,GASKET,1,,,,,,,,,,,,,,,,,
10,2,,172165-75481,,ELEMENT,1,,,,,,,,,,,,,,,,,
11,2,,172447-75600,,GAUGE,1,,,,,,,,,,,,,,,,,
12,3,,172455-75290,,"BOLT M10",2,,,,,,,,,,,,,,,,,
13,3,,172455-75300,,O-RING,4,,,,,,,,,,,,,,,,,
16,2,,172116-75850,,"PLUG     (YELLOW:87)",1,,,,,,,,,,,,,,,,,
17,2,,24311-000380,,"O-RING 1A P-38.0",1,,,,,,,,,,,,,,,,,
18,2,,24321-001050,,"O-RING 1A G-105.0",1,,,,,,,,,,,,,,,,,
19,2,,24321-001050,,"O-RING 1A G-105.0",1,,,,,,,,,,,,,,,,,
20,2,,24341-000300,,"O-RING 1A S-30.0",1,,,,,,,,,,,,,,,,,
21,2,,26013-080202,,"BOLT W/WASHER M8X20",6,,,,,,,,,,,,,,,,,
22,2,,26022-050102,,"SCREW M 5X 10",3,,,,,,,,,,,,,,,,,
23,2,,172124-73700,,"BAR,FILTER SUPPORT",1,,,,,,,,,,,,,,,,,
24,2,,172137-73700,,"FILTER, SUCTION",1,,,,,,,,,,,,,,,,,
25,2,,172175-73700,,"FILTER ASSY, RETURN",1,,,,,,,,,,,,,,,,,
26,3,,172175-73710,,ELEMENT,1,,,,,,,,,,,,,,,,,
27,3,,172141-73770,,"VALVE ASSY, BYPASS",1,,,,,,,,,,,,,,,,,
28,2,,172112-75780,,"SPRING, STRAINER",1,,,,,,,,,,,,,,,,,
29,2,,26716-100002,,"NUT 10",1,,,,,,,,,,,,,,,,,
30,2,,933152-02710,,"SPRING, SIDE CLUTCH",1,,,,,,,,,,,,,,,,,
31,1,,22137-140000,,"WASHER 14,POLISHED",4,,,,,,,,,,,,,,,,,
32,1,,22217-140000,,"SPRING WASHER 14",4,,,,,,,,,,,,,,,,,
33,1,,26116-140352,,"BOLT M14X 35 PLATED",2,,,,,,,,,,,,,,,,,
34,1,,26116-140402,,"BOLT M14X 40 PLATED",2,,,,,,,,,,,,,,,,,
```

silverhorn.co.uk

Fig.43 HYD.OIL TANK

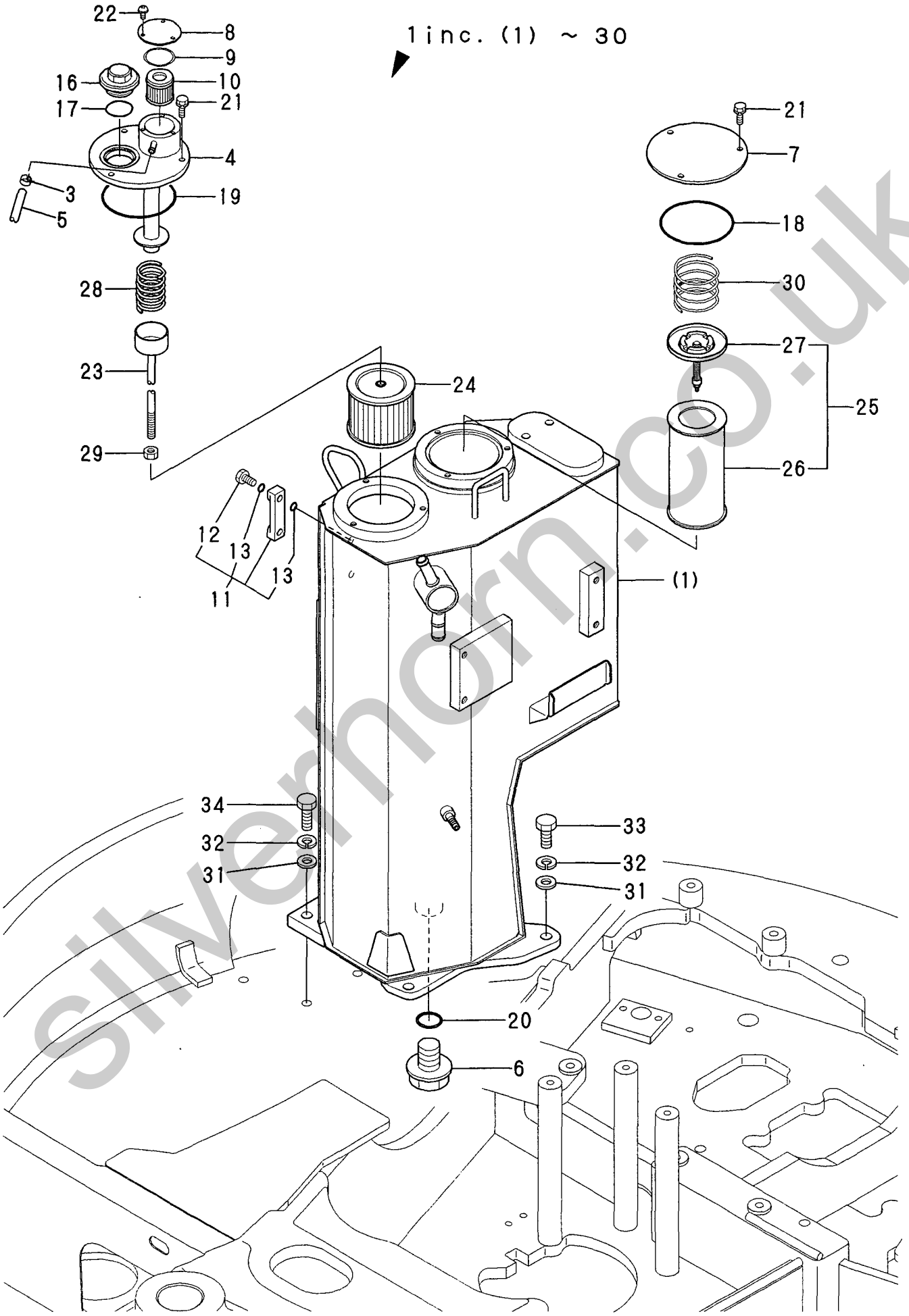

silvermorn.co.uk

```
1,1,,172168-76162,,CONNECTOR,3,,,,,,,,,,,,,,,,,
2,1,,172460-76570,,PLUG,1,,,,,,,,,,,,,,,,,
3,1,,172165-76860,,FLANGE,1,,,,,,,,,,,,,,,,,
4,1,,172460-76900,,BODY,1,,,,,,,,,,,,,,,,,
5,1,,172164-76950,,CONNECTOR,1,,,,,,,,,,,,,,,,,
6,2,,24315-000180,,"O-RING 1B P-18.0",1,,,,,,,,,,,,,,,,,
7,1,,172112-77361,,CONNECTOR,2,,,,,,,,,,,,,,,,,
8,1,,22117-120000,,"WASHER 12",4,,,,,,,,,,,,,,,,,
9,1,,23391-040000,,"JOINT RGI 1/2",1,,,,,,,,,,,,,,,,,
10,1,,24315-000140,,"O-RING 1B P-14.0",3,,,,,,,,,,,,,,,,,
11,1,,24315-000180,,"O-RING 1B P-18.0",2,,,,,,,,,,,,,,,,,
12,1,,24321-000450,,"O-RING 1A G-45.0",1,,,,,,,,,,,,,,,,,
13,1,,26013-120302,,"BOLT W/WASHER M12X30",4,,,,,,,,,,,,,,,,,
14,1,,172460-78100,,HOSE,1,,,,,,,,,,,,,,,,,
15,1,,172460-78110,,HOSE,1,,,,,,,,,,,,,,,,,
16,1,,172460-78180,,GUARD,1,,,,,,,,,,,,,,,,,
17,1,,172460-78390,,GUARD,1,,,,,,,,,,,,,,,,,
18,1,,172460-78431,,"HOSE H208BC097",1,,,,,,,,,,,,,,,,,
19,1,,172460-78440,,"HOSE H208CZ091",1,,,,,,,,,,,,,,,,,
20,1,,172460-78530,,"HOSE H208CZ092",1,,,,,,,,,,,,,,,,,
21,1,,172122-79930,,"CLAMP B",1,,,,,,,,,,,,,,,,,
22,1,,23001-070000,,CLIP,8,,,,,,,,,,,,,,,,,
23,1,,172460-76100-1,,"TUBE      (GREEN:82)",1,,,,,,,,,,,,,,,,,
24,1,,26013-100252,,"BOLT W/WASHER M10X25",2,,,,,,,,,,,,,,,,,
```

silverhorn.co.uk

Fig.44 HYD.OIL PIPING(TANK~PUMP~VALVE)

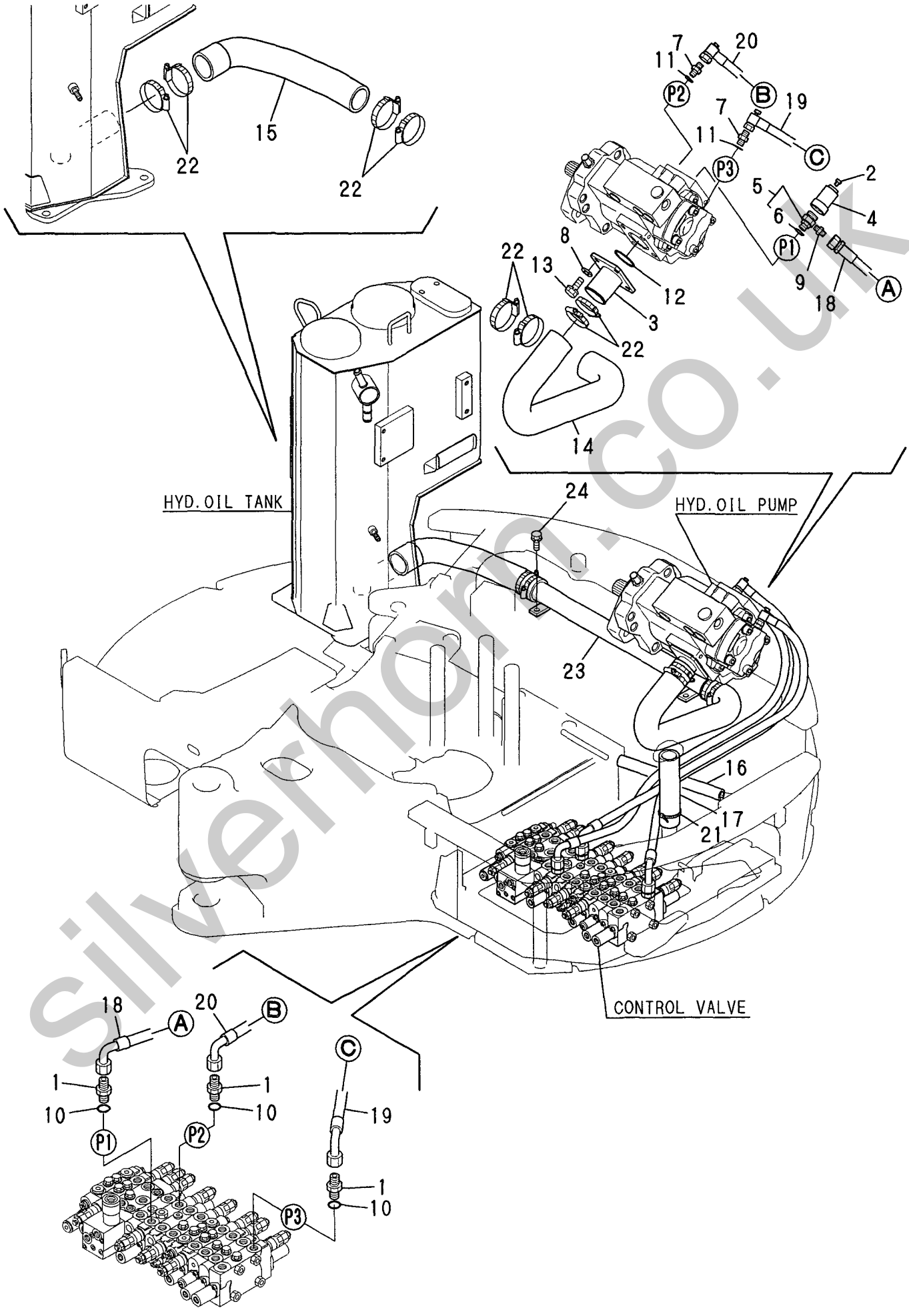

silverhorn.co.uk

```
1,1,,172730-75141,,JOINT,2,,,,,,,,,,,,,,,,,
2,1,,172116-76381,,"ADAPTER 64",1,,,,,,,,,,,,,,,,,
3,1,,172141-76180,,CONNECTOR,1,,,,,,,,,,,,,,,,,
5,2,,24315-000110,,"O-RING 1B P-11.0",1,,,,,,,,,,,,,,,,,
6,1,,172116-76381,,"ADAPTER 64",1,,,,,,,,,,,,,,,,,
7,1,,24315-000140,,"O-RING 1B P-14.0",2,,,,,,,,,,,,,,,,,
8,1,,24315-000140,,"O-RING 1B P-14.0",1,,,,,,,,,,,,,,,,,
9,1,,24315-000140,,"O-RING 1B P-14.0",1,,,,,,,,,,,,,,,,,
10,1,,172457-76100,,"ADJUSTABLE TEE",1,,,,,,,,,,,,,,,,,
11,1,,172123-76121,,"JOINT PF1/4",2,,,,,,,,,,,,,,,,,
12,1,,24315-000110,,"O-RING 1B P-11.0",2,,,,,,,,,,,,,,,,,,
13,1,,172460-78400,,"HOSE F206CE094S",1,,,,,,,,,,,,,,,,,
14,1,,172460-78410,,"HOSE F206CE090S",1,,,,,,,,,,,,,,,,,
15,1,,172460-78480,,"HOSE F403CE127",1,,,,,,,,,,,,,,,,,
16,1,,172460-78500,,"HOSE F403CE092S",1,,,,,,,,,,,,,,,,,,
```

silverhorn.co.uk

Fig.45 HYD.OIL PIPING (PUMP~VALVE~MOTOR)

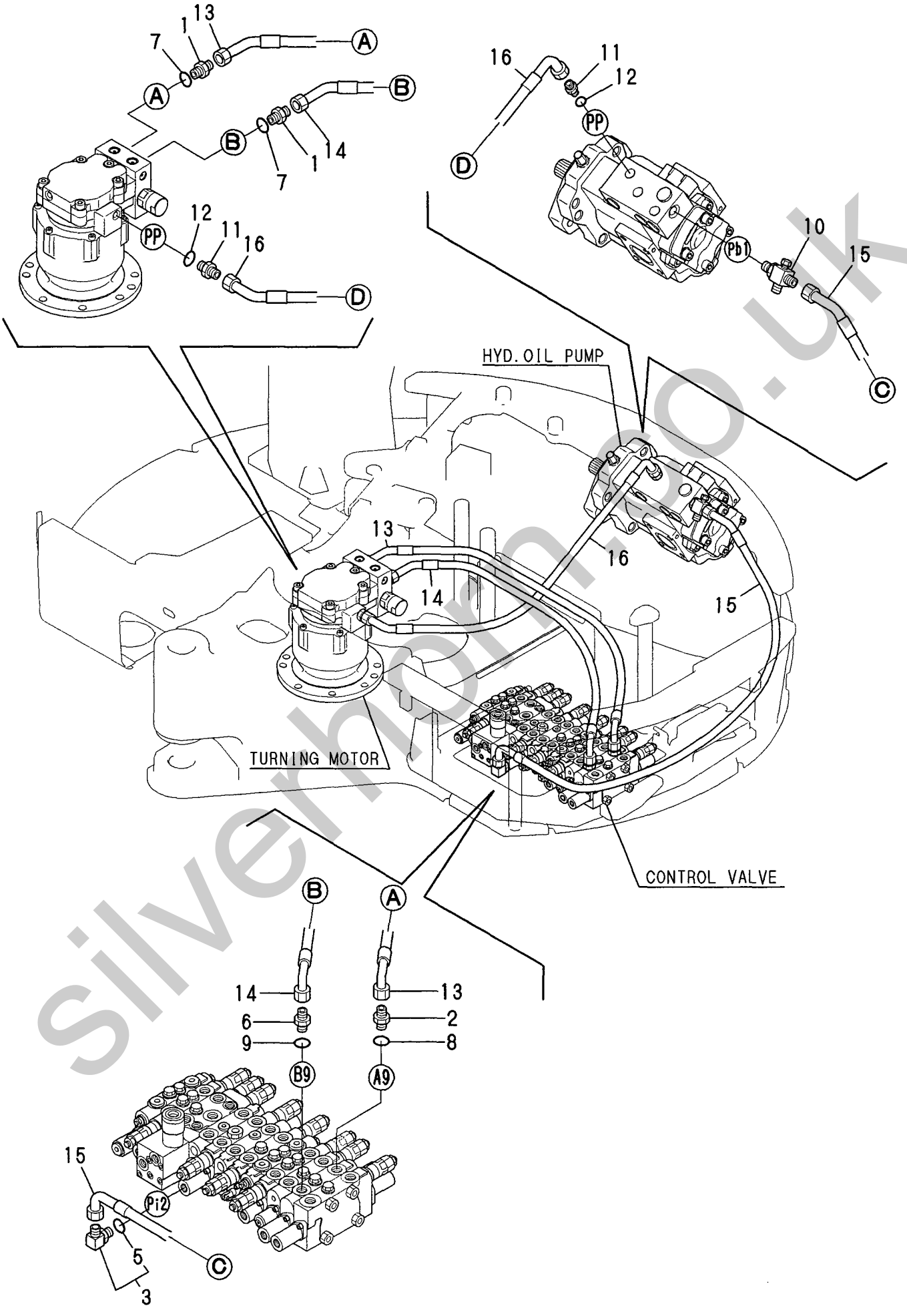

silverhorn.co.uk

```
1,1,,172730-75141,,JOINT,1,,,,,,,,,,,,,,,,
2,1,,172173-76121,,CONNECTOR,2,,,,,,,,,,,,,,,,
3,1,,172444-76140,,CONNECTOR,1,,,,,,,,,,,,,,,,
4,1,,172124-76160,,CONNECTOR,1,,,,,,,,,,,,,,,,
5,1,,172141-76180,,CONNECTOR,2,,,,,,,,,,,,,,,,
7,2,,24315-000110,,"O-RING 1B P-11.0",2,,,,,,,,,,,,,,,,
8,1,,172142-76181,,"JOINT 90-3/8 ASSY",2,,,,,,,,,,,,,,,,
9,1,,172142-76181,,"JOINT 90-3/8 ASSY",4,,,,,,,,,,,,,,,,
10,1,,172116-76381,,"ADAPTER 64",3,,,,,,,,,,,,,,,,
11,1,,24315-000140,,"O-RING 1B P-14.0",3,,,,,,,,,,,,,,,,
12,1,,24315-000140,,"O-RING 1B P-14.0",1,,,,,,,,,,,,,,,,
13,1,,24315-000140,,"O-RING 1B P-14.0",2,,,,,,,,,,,,,,,,
14,1,,172460-78150,,"HOSE F206BB073S",1,,,,,,,,,,,,,,,,
15,1,,172460-78160,,"HOSE F206BC072S",2,,,,,,,,,,,,,,,,
16,1,,172460-78170,,"HOSE F206BB071S",1,,,,,,,,,,,,,,,,
17,1,,172460-78190,,"HOSE F206BC082S",1,,,,,,,,,,,,,,,,
18,1,,172460-78200,,"HOSE F206BC088S",1,,,,,,,,,,,,,,,,
19,1,,172460-78490,,"HOSE F403BE079S",1,,,,,,,,,,,,,,,,
20,1,,172460-78560,,"HOSE F403BC115S",1,,,,,,,,,,,,,,,,
21,1,,172460-78570,,"HOSE F204BC104S",1,,,,,,,,,,,,,,,,
```

silverhorn.co.uk

Fig.46 HYD.OIL PIPING (VALVE~SWIVEL~SWING)

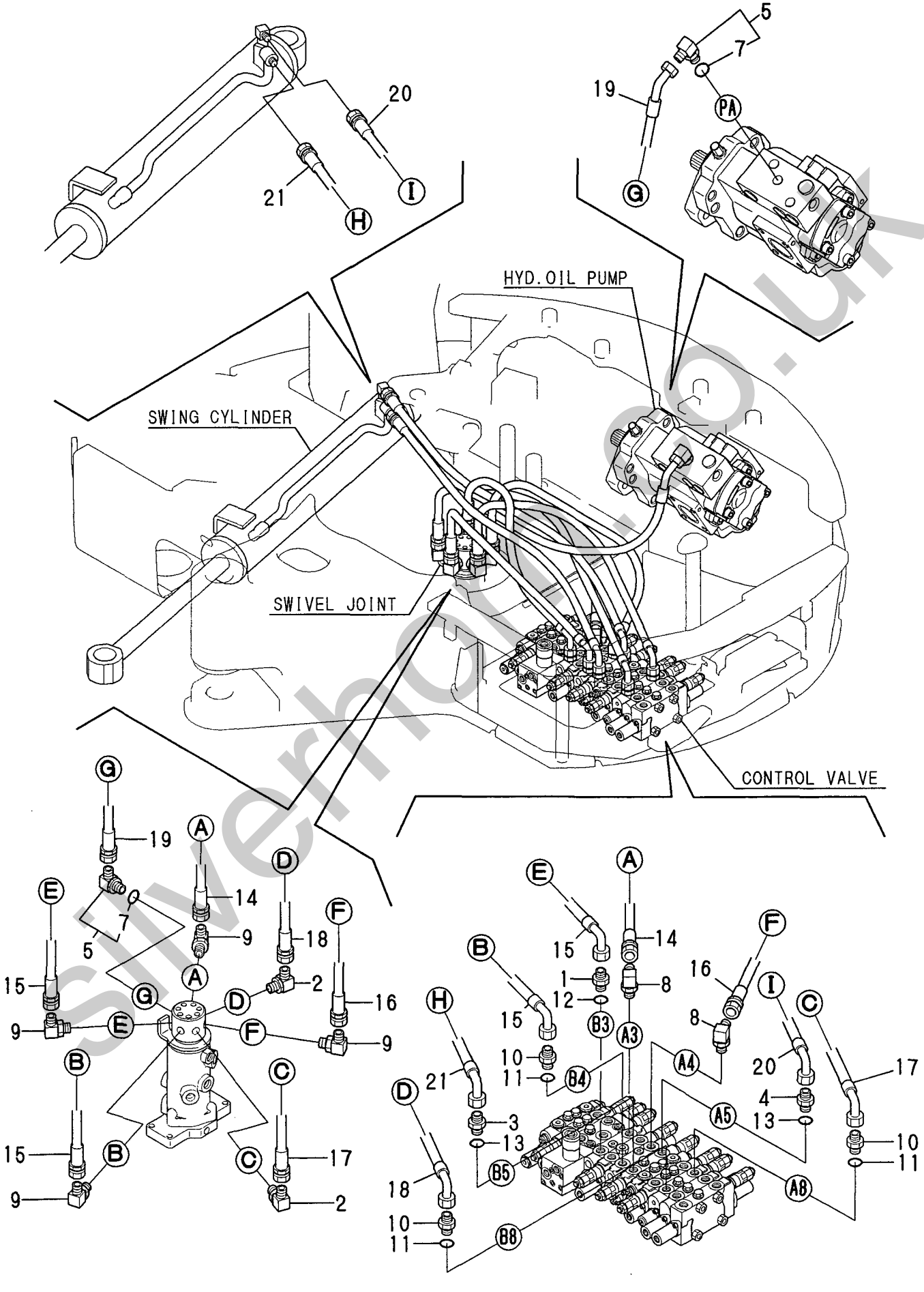

silverhoe.co.uk

```
1,1,,172123-76121,,"JOINT PF1/4",1,,,,,,,,,,,,,,,,,
2,1,,172445-76150,,"BLOCK,DRAIN",1,,,,,,,,,,,,,,,,,
3,1,,172141-76180,,CONNECTOR,2,,,,,,,,,,,,,,,,,
5,2,,24315-000110,,"O-RING 1B P-11.0",2,,,,,,,,,,,,,,,,,
6,1,,172162-76180,,"JOINT 3-1/4 COMPL.",3,,,,,,,,,,,,,,,,,
8,2,,24315-000110,,"O-RING 1B P-11.0",3,,,,,,,,,,,,,,,,,
9,1,,172141-76220,,NIPPLE,1,,,,,,,,,,,,,,,,,
10,1,,172467-76130,,CONNECTOR,1,,,,,,,,,,,,,,,,,
11,1,,23001-025000,,"HOSE CLAMP  25",14,,,,,,,,,,,,,,,,,
12,1,,172460-76230,,CONNECTOR,1,,,,,,,,,,,,,,,,,
13,2,,24315-000140,,"O-RING 1B P-14.0",1,,,,,,,,,,,,,,,,,
14,1,,172460-76240,,CONNECTOR,1,,,,,,,,,,,,,,,,,
15,1,,172164-76330,,"JOINT PF1/4-0.7",1,,,,,,,,,,,,,,,,,
16,1,,172186-76430,,NIPPLE,1,,,,,,,,,,,,,,,,,
17,1,,24315-000110,,"O-RING 1B P-11.0",2,,,,,,,,,,,,,,,,,
18,1,,24315-000180,,"O-RING 1B P-18.0",1,,,,,,,,,,,,,,,,,
19,1,,26013-100202,,"BOLT W/WASHER M10X20",2,,,,,,,,,,,,,,,,,
20,1,,172460-78300,,"HOSE G804YY036",1,,,,,,,,,,,,,,,,,
21,1,,172460-78310,,"HOSE G804YY062S",1,,,,,,,,,,,,,,,,,
22,1,,172460-78320,,"HOSE G806YY087S",1,,,,,,,,,,,,,,,,,
23,1,,172460-78330,,"HOSE G804YY062",1,,,,,,,,,,,,,,,,,
24,1,,172460-78360,,"HOSE F403CE036",1,,,,,,,,,,,,,,,,,
25,1,,172460-78370,,"HOSE F403BB049",2,,,,,,,,,,,,,,,,,
26,1,,172460-78450,,HOSE,1,,,,,,,,,,,,,,,,,
27,1,,172460-78460,,"HOSE G612CY086S",1,,,,,,,,,,,,,,,,,
28,1,,172460-78470,,HOSE,1,,,,,,,,,,,,,,,,,
29,1,,172460-78740,,HOSE,1,,,,,,,,,,,,,,,,,
30,1,,172122-79930,,"CLAMP B",2,,,,,,,,,,,,,,,,,
31,1,,23000-013000,,"CLAMP 13",4,,,,,,,,,,,,,,,,,
32,1,,23001-016000,,"HOSE CLAMP 16",2,,,,,,,,,,,,,,,,,
```

silverhorn.co.uk

Fig.47 HYD.OIL PIPING (RETURN)

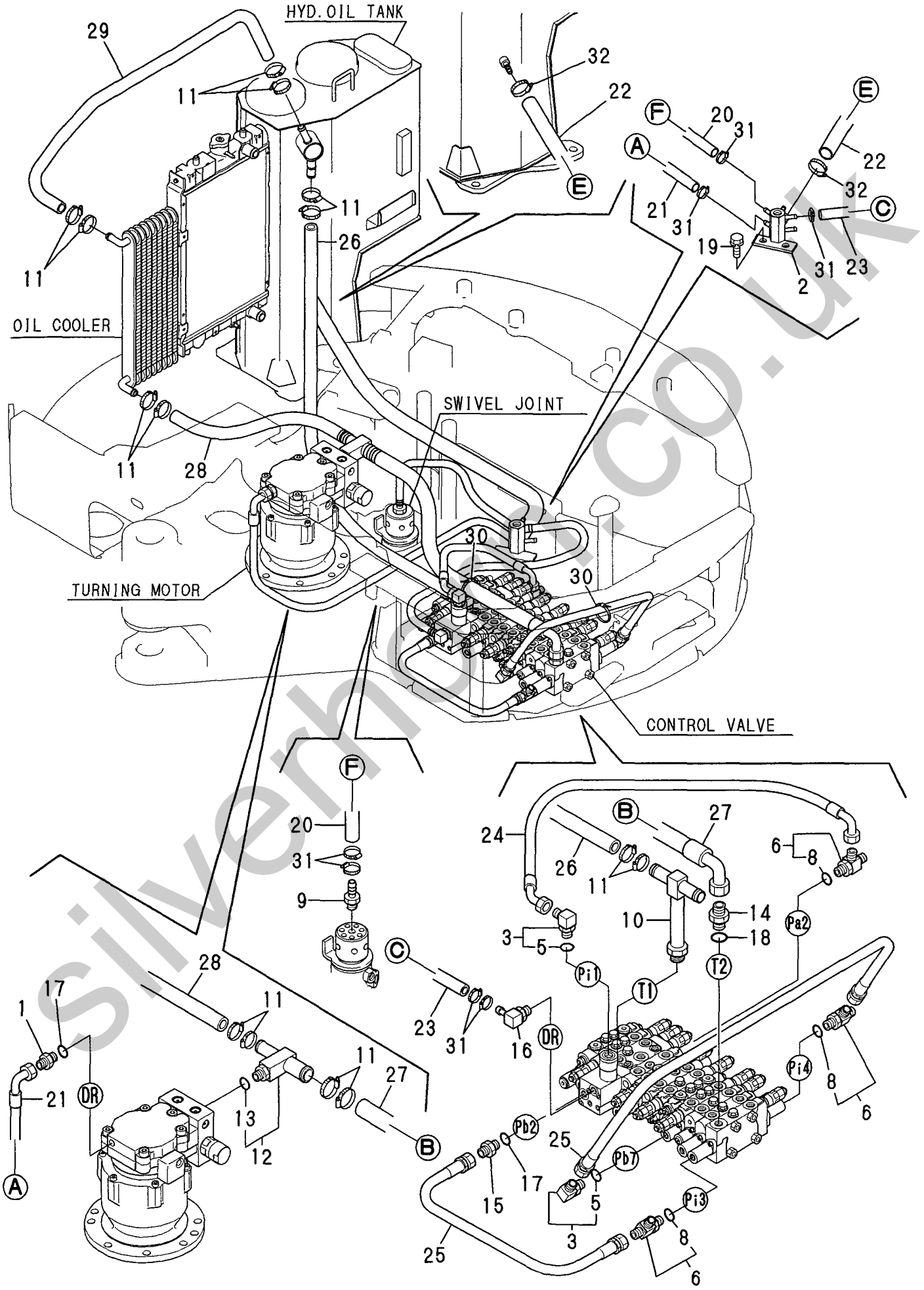

silverhill.co.uk

```
1,1,,172173-76101,,"CONNECTOR PF1/4-45",4,,,,,,,,,,,,,,,,,
2,1,,172173-76121,,CONNECTOR,2,,,,,,,,,,,,,,,,,
3,1,,172124-76160,,CONNECTOR,2,,,,,,,,,,,,,,,,,
4,1,,172644-76161,,"ADJUST ELBOW 45ß",2,,,,,,,,,,,,,,,,,
5,1,,172142-76181,,"JOINT 90-3/8 ASSY",2,,,,,,,,,,,,,,,,,
6,1,,23393-030000,,"JOINT 90RGI 3/8",2,,,,,,,,,,,,,,,,,
7,1,,24315-000140,,"O-RING 1B P-14.0",2,,,,,,,,,,,,,,,,,
8,1,,24315-000180,,"O-RING 1B P-18.0",4,,,,,,,,,,,,,,,,,
9,1,,933160-01370,,"CONNECTOR PF1/2-3/8",4,,,,,,,,,,,,,,,,,,
10,1,,172460-78120,,HOSE,4,,,,,,,,,,,,,,,,,
11,1,,172460-78140,,HOSE,2,,,,,,,,,,,,,,,,,
12,1,,172460-78540,,"HOSE P206BB080W",2,,,,,,,,,,,,,,,,,
13,1,,172422-78760,,GROMMET,2,,,,,,,,,,,,,,,,,
14,1,,172423-78430,,"HOSE P204BC142W",2,,,,,,,,,,,,,,,,,
```

silverhorn.co.uk

Fig.48 HYD.OIL PIPING(TRAVEL)

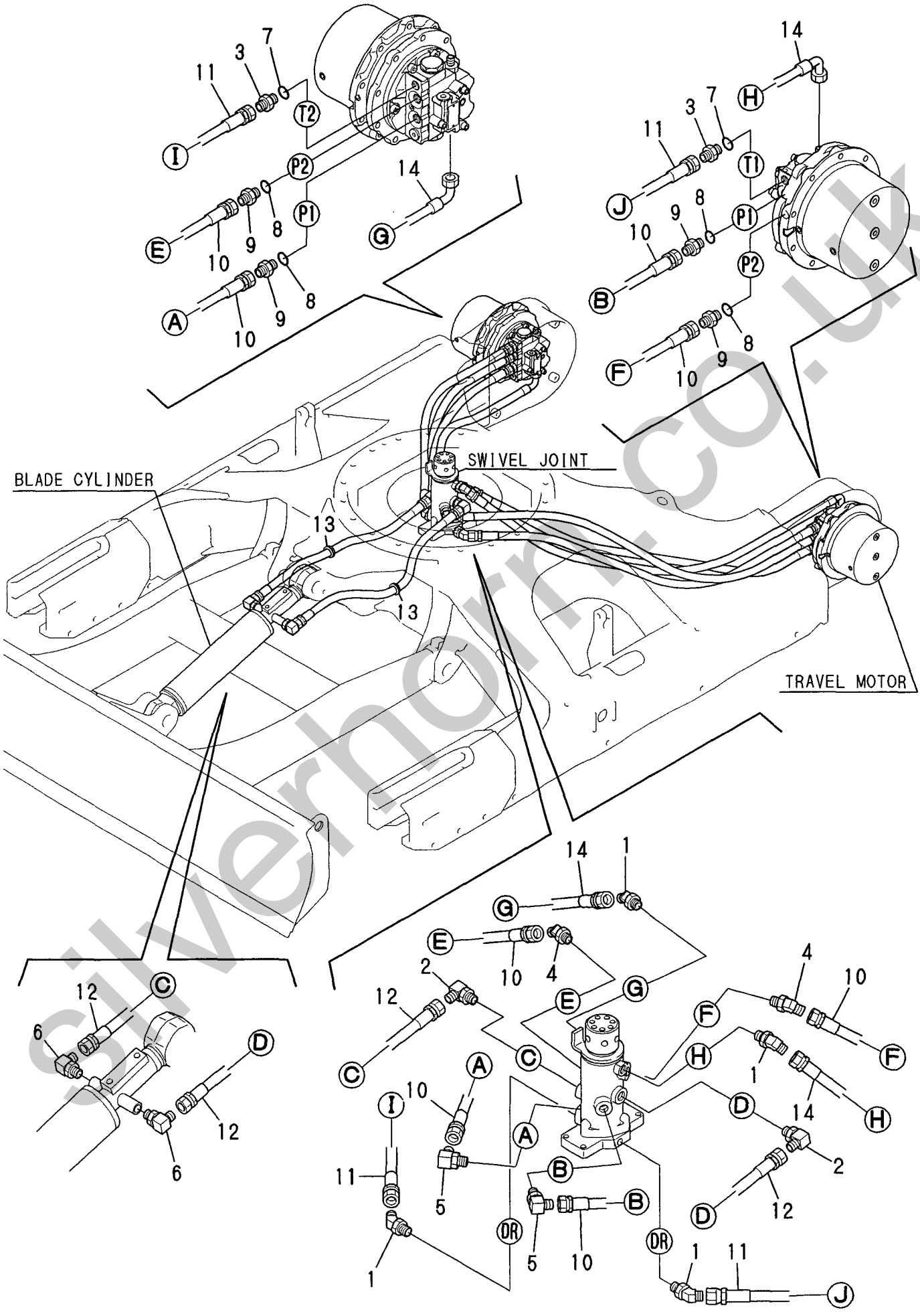

silverhorn.co.uk

```
1,1,,172730-75141,,JOINT,2,,,,,,,,,,,,,,,,,
2,1,,172460-76300,,BODY,1,,,,,,,,,,,,,,,,,
3,1,,172460-76330,,CONNECTOR,1,,,,,,,,,,,,,,,,,
4,1,,172460-76340,,CONNECTOR,1,,,,,,,,,,,,,,,,,
5,1,,172116-76381,,"ADAPTER 64",3,,,,,,,,,,,,,,,,,
6,1,,172645-76570,,"CONNECTOR 3/8X1/2",1,,,,,,,,,,,,,,,,,,
8,2,,24315-000140,,"O-RING 1B P-14.0",1,,,,,,,,,,,,,,,,,
9,1,,24315-000140,,"O-RING 1B P-14.0",5,,,,,,,,,,,,,,,,,
10,1,,26013-100162,,"BOLT M10X 16",3,,,,,,,,,,,,,,,,,
11,1,,172460-78210,,HOSE,1,,,,,,,,,,,,,,,,,
12,1,,172460-78220,,HOSE,1,,,,,,,,,,,,,,,,,
13,1,,172460-78230,,HOSE,1,,,,,,,,,,,,,,,,,
14,1,,172460-78240,,HOSE,1,,,,,,,,,,,,,,,,,
15,1,,172460-78250,,HOSE,1,,,,,,,,,,,,,,,,,
16,1,,172460-78260,,HOSE,1,,,,,,,,,,,,,,,,,
17,1,,172460-78380,,"HOSE H208CZ041",1,,,,,,,,,,,,,,,,,
18,1,,172122-79890,,"CLAMP 350",2,,,,,,,,,,,,,,,,,
19,1,,172460-78270,,HOSE,2,,,,,,,,,,,,,,,,,
20,1,,172122-79930,,"CLAMP B",1,,,,,,,,,,,,,,,,,
```

silverhorn.co.uk

Fig.49 HYD. OIL PIPING (BOOM)

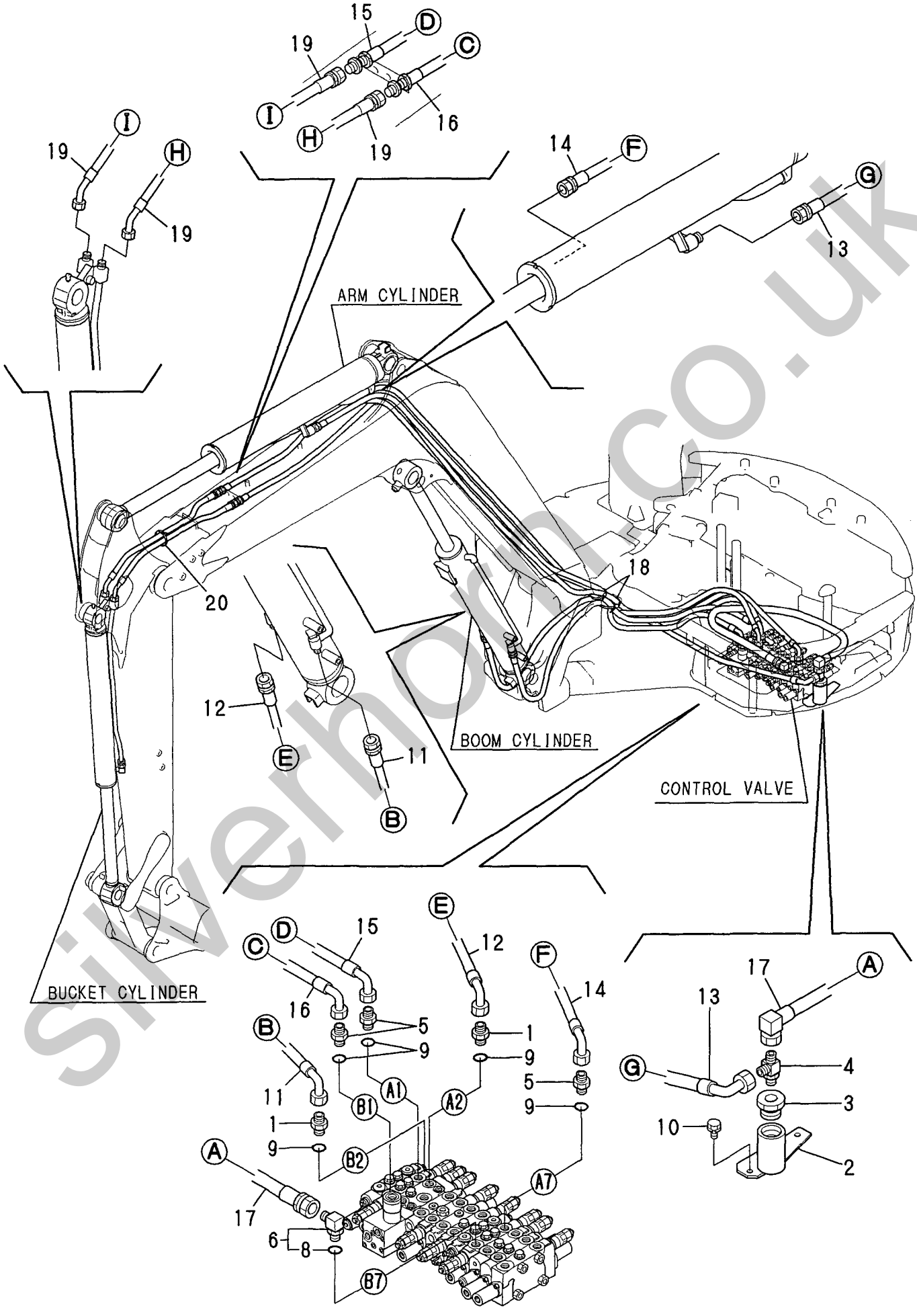

silverhorn.co.uk

```
1,1,,172460-61600,,COVER,1,,,,,,,,,,,,,,,,,
2,1,,172422-76190,,CONNECTOR,1,,,,,,,,,,,,,,,,,
3,1,,172467-76500,,"TUBE L,P.T.O.   (87)",1,,,,,,,,,,,,,,,,,
4,1,,172467-76530,,"TUBE R,P.T.O.   (87)",1,,,,,,,,,,,,,,,,,
5,1,,172460-76550,,CONNECTOR,1,,,,,,,,,,,,,,,,,
6,1,,26013-100202,,"BOLT W/WASHER M10X20",4,,,,,,,,,,,,,,,,,
7,1,,26014-100202,,"BOLT M10X 20",2,,,,,,,,,,,,,,,,,
8,1,,172467-78520,,"HOSE H112BV103",1,,,,,,,,,,,,,,,,,
9,1,,172460-78620,,HOSE,1,,,,,,,,,,,,,,,,,
10,1,,172444-17660,,CLIP,8,,,,,,,,,,,,,,,,,
11,1,,172467-79110,,"COVER ASSY,BOOM (87)",1,,,,,,,,,,,,,,,,,
13,2,,172460-79140,,RUBBER,2,,,,,,,,,,,,,,,,,
14,1,,26014-080252,,"BOLT M 8X 25",2,,,,,,,,,,,,,,,,,
15,1,,172467-76110,,"JOINT 3/4-1",1,,,,,,,,,,,,,,,,,
16,1,,172467-76120,,ELBOW,1,,,,,,,,,,,,,,,,,
17,1,,172472-76200,,"VALVE ASSY, STOP",1,,,,,,,,,,,,,,,,,
18,1,,26013-100302,,"BOLT M10X 30",2,,,,,,,,,,,,,,,,,
19,1,,172475-78510,,"HOSE H116BC450K",1,,,,,,,,,,,,,,,,,
20,1,,172467-78530,,"HOSE H612YY033S",1,,,,,,,,,,,,,,,,,
21,1,,23001-025000,,"HOSE CLAMP  25",4,,,,,,,,,,,,,,,,,
22,1,,172151-76600,,"ADAPTER PF3/4,BLIND",1,,,,,,,,,,,,,,,,,
23,1,,172151-76610,,"ADAPTER PF 1",1,,,,,,,,,,,,,,,,,
```

silverhorn.co.uk

Fig.50 HYD.OIL PIPING(P.T.O.)

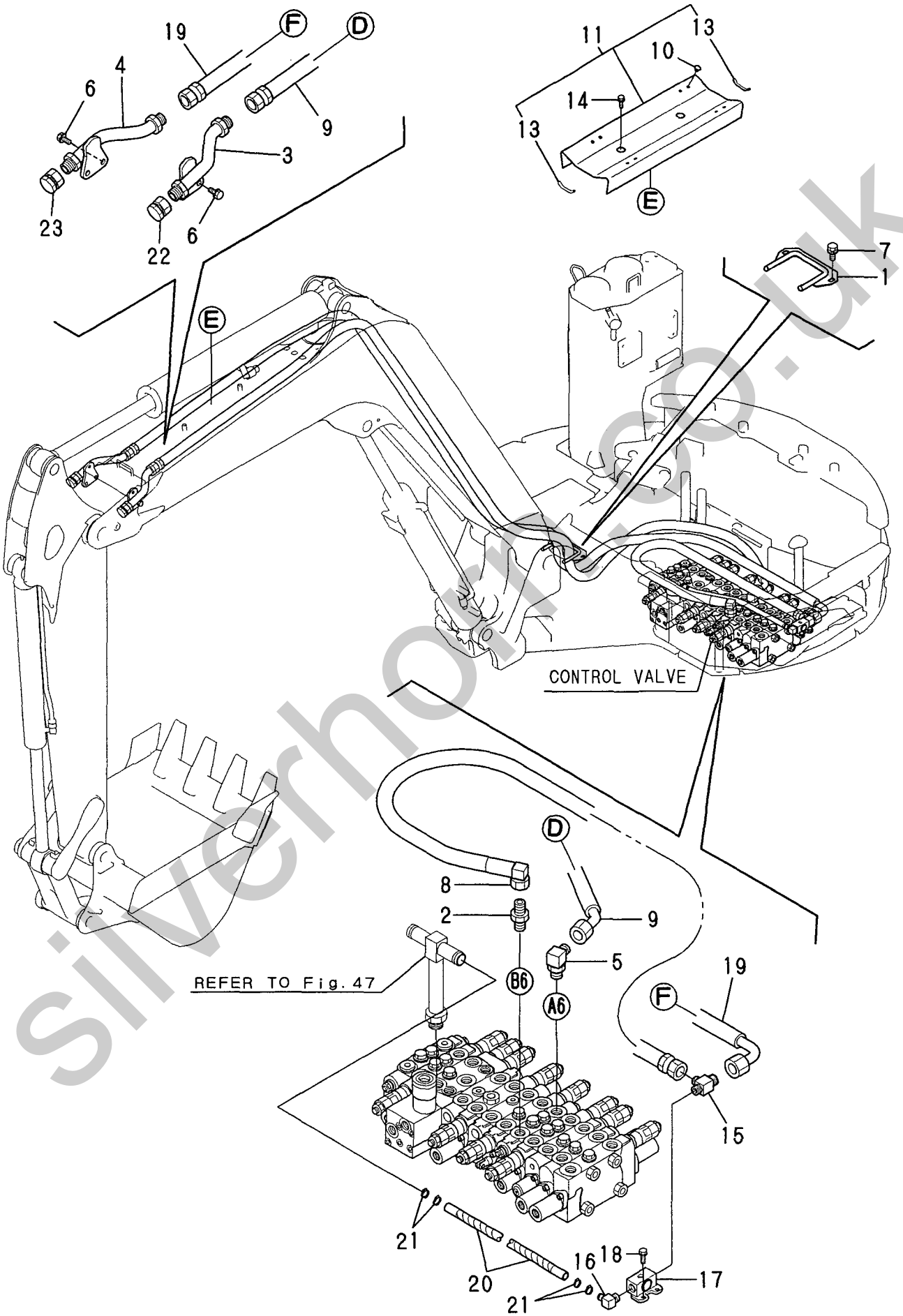

silverhorse.co.uk

```
1,1,,172123-76121,,"JOINT PF1/4",2,,,,,,,,,,,,,,,,,
2,1,,172141-76180,,CONNECTOR,1,,,,,,,,,,,,,,,,,
4,2,,24315-000110,,"O-RING 1B P-11.0",1,,,,,,,,,,,,,,,,,
5,1,,172455-76220,,"CONNECTOR PF1/4",2,,,,,,,,,,,,,,,,,
6,1,,24315-000110,,"O-RING 1B P-11.0",2,,,,,,,,,,,,,,,,,
7,1,,24315-000110,,"O-RING 1B P-11.0",2,,,,,,,,,,,,,,,,,
8,1,,23000-013000,,"CLAMP 13",2,,,,,,,,,,,,,,,,,
9,1,,172467-78180,,"HOSE G804BY091S",1,,,,,,,,,,,,,,,,,
10,1,,172467-78190,,"HOSE G804BY117S",1,,,,,,,,,,,,,,,,,
11,1,,172467-78200,,"HOSE F403BB097S",1,,,,,,,,,,,,,,,,,
12,1,,172467-78210,,"HOSE F403BE113S",1,,,,,,,,,,,,,,,,,
13,1,,172468-78150,,"HOSE F403CE076S",1,,,,,,,,,,,,,,,,,
14,1,,172437-73600,,ACCUMULATOR,1,,,,,,,,,,,,,,,,,
15,1,,172437-73630,,"STOPPER,ACCUMULATOR",1,,,,,,,,,,,,,,,,,
16,1,,172468-74200,,"BRACKET ASSY(ACC",1,,,,,,,,,,,,,,,,,
17,1,,172437-76120,,ELBOW,1,,,,,,,,,,,,,,,,,
18,1,,172437-78760,,RUBBER,1,,,,,,,,,,,,,,,,,
19,1,,23391-020000,,"JOINT RGI1/4",1,,,,,,,,,,,,,,,,,
20,1,,26013-080252,,"BOLT M 8X 25",2,,,,,,,,,,,,,,,,,
21,1,,26013-100162,,"BOLT M10X 16",3,,,,,,,,,,,,,,,,,
```

silverhorn.co.uk

Fig.51 CONTROL PIPING (PUMP~REMO.-CON.V.~RETURN)

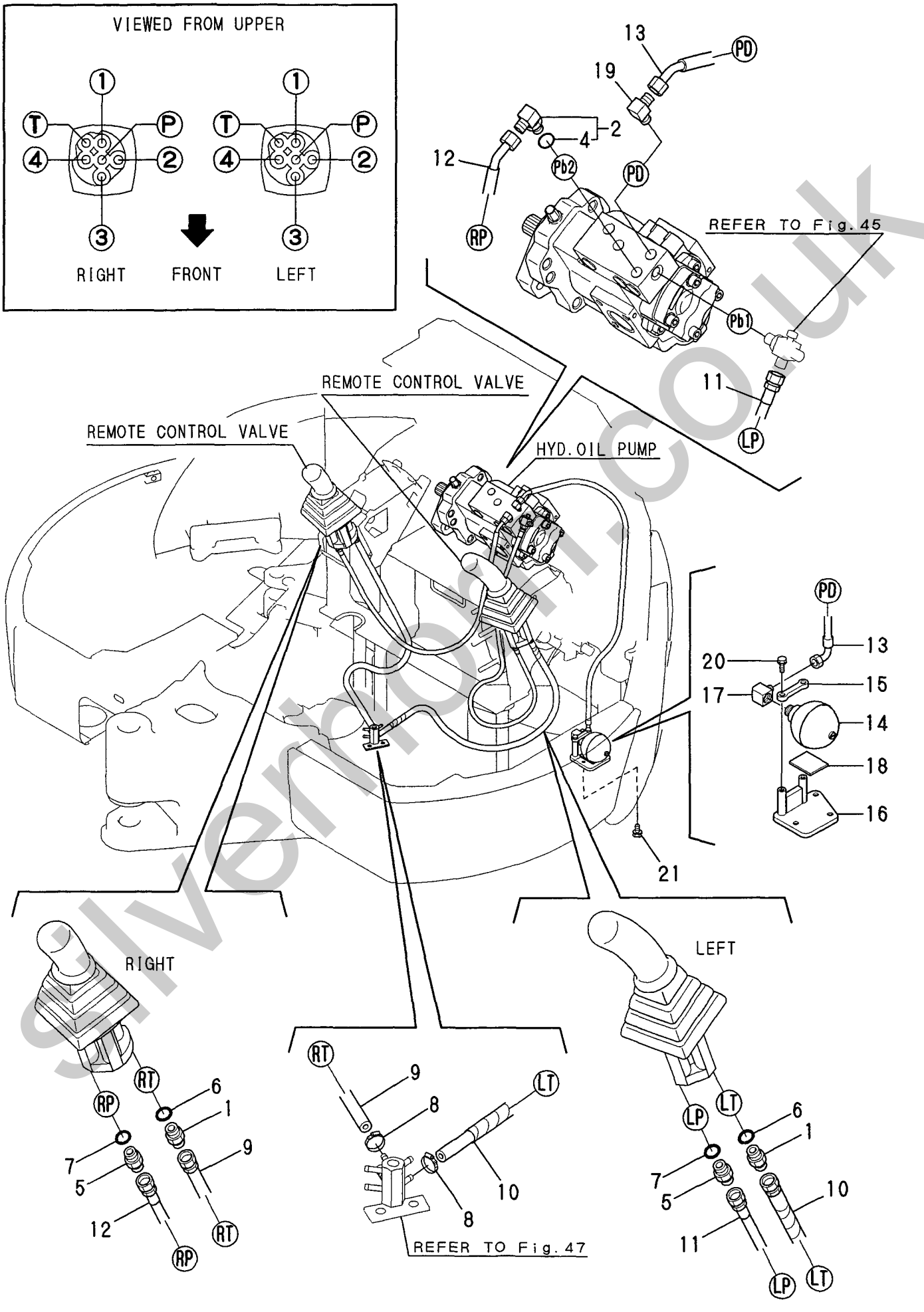

silverhorn.co.uk

```
1,1,,172123-76121,,"JOINT PF1/4",2,,,,,,,,,,,,,,,,,
2,1,,172123-76121,,"JOINT PF1/4",8,,,,,,,,,,,,,,,,,
3,1,,172141-76180,,CONNECTOR,2,,,,,,,,,,,,,,,,,
5,2,,24315-000110,,"O-RING 1B P-11.0",2,,,,,,,,,,,,,,,,,,
6,1,,172164-76330,,"JOINT PF1/4-0.7",1,,,,,,,,,,,,,,,,,
7,1,,24315-000110,,"O-RING 1B P-11.0",2,,,,,,,,,,,,,,,,,,
8,1,,24315-000110,,"O-RING 1B P-11.0",9,,,,,,,,,,,,,,,,,,
9,1,,172122-79930,,"CLAMP B",1,,,,,,,,,,,,,,,,,
10,1,,172468-78110,,"HOSE F403BB138S",1,,,,,,,,,,,,,,,,,,
11,1,,172468-78100,,"HOSE F403BE156S",1,,,,,,,,,,,,,,,,,,
12,1,,172467-78280,,"HOSE F403BB198S",1,,,,,,,,,,,,,,,,,,
13,1,,172468-78140,,"HOSE F403BB158S",1,,,,,,,,,,,,,,,,,,
14,1,,172468-78130,,"HOSE F403BB115S",1,,,,,,,,,,,,,,,,,,
15,1,,172468-78120,,"HOSE F403BB170S",1,,,,,,,,,,,,,,,,,,
16,1,,172472-78200,,"HOSE F403BB115S",1,,,,,,,,,,,,,,,,,,
17,1,,172472-78210,,"HOSE F403BC145S",1,,,,,,,,,,,,,,,,,,
18,1,,172165-79810,,SPONGE,1,,,,,,,,,,,,,,,,,
19,1,,172472-78800,,SPONGE,1,,,,,,,,,,,,,,,,,
20,1,,172122-79930,,"CLAMP B",4,,,,,,,,,,,,,,,,,,
```

silverhorn.co.uk

Fig.52 CONTROL PIPING (REMO.-CON.V.~CONTROL V.)

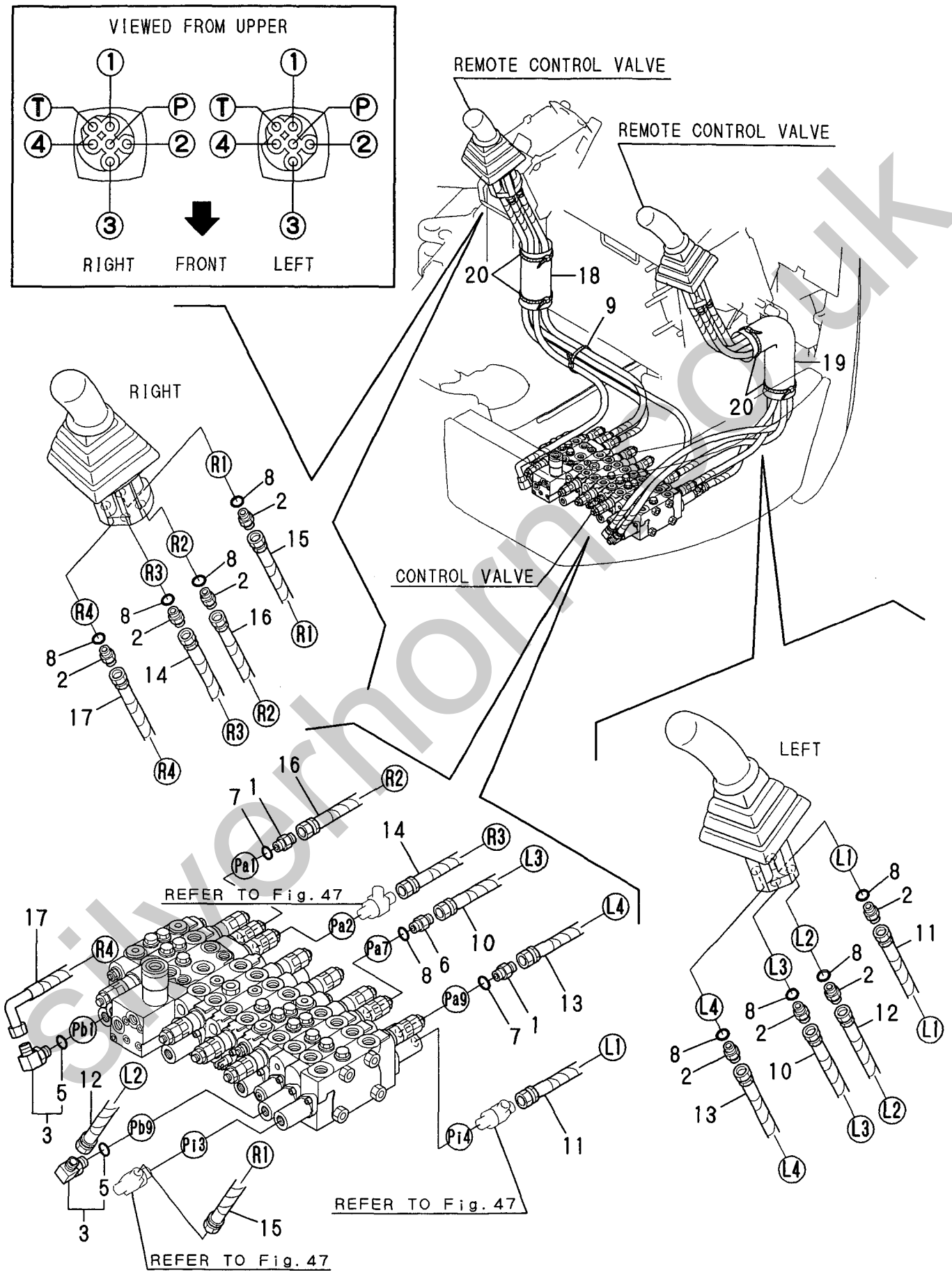

silverhorse.co.uk

```
1,1,,172141-77800,,"JOINT, GREASE",4,,,,,,,,,,,,,,,,,
2,1,,172460-77800,,"HOSE P602YY130",1,,,,,,,,,,,,,,,,,
3,1,,172187-77810,,"HOSE P602YY115",1,,,,,,,,,,,,,,,,,
4,1,,172312-77820,,"FITTING, GREASE",1,,,,,,,,,,,,,,,,,
5,1,,24761-020000,,"NIPPLE PT1/8,GREASE",2,,,,,,,,,,,,,,,,,
```

silverhorn.co.uk

Fig.53 GREASING

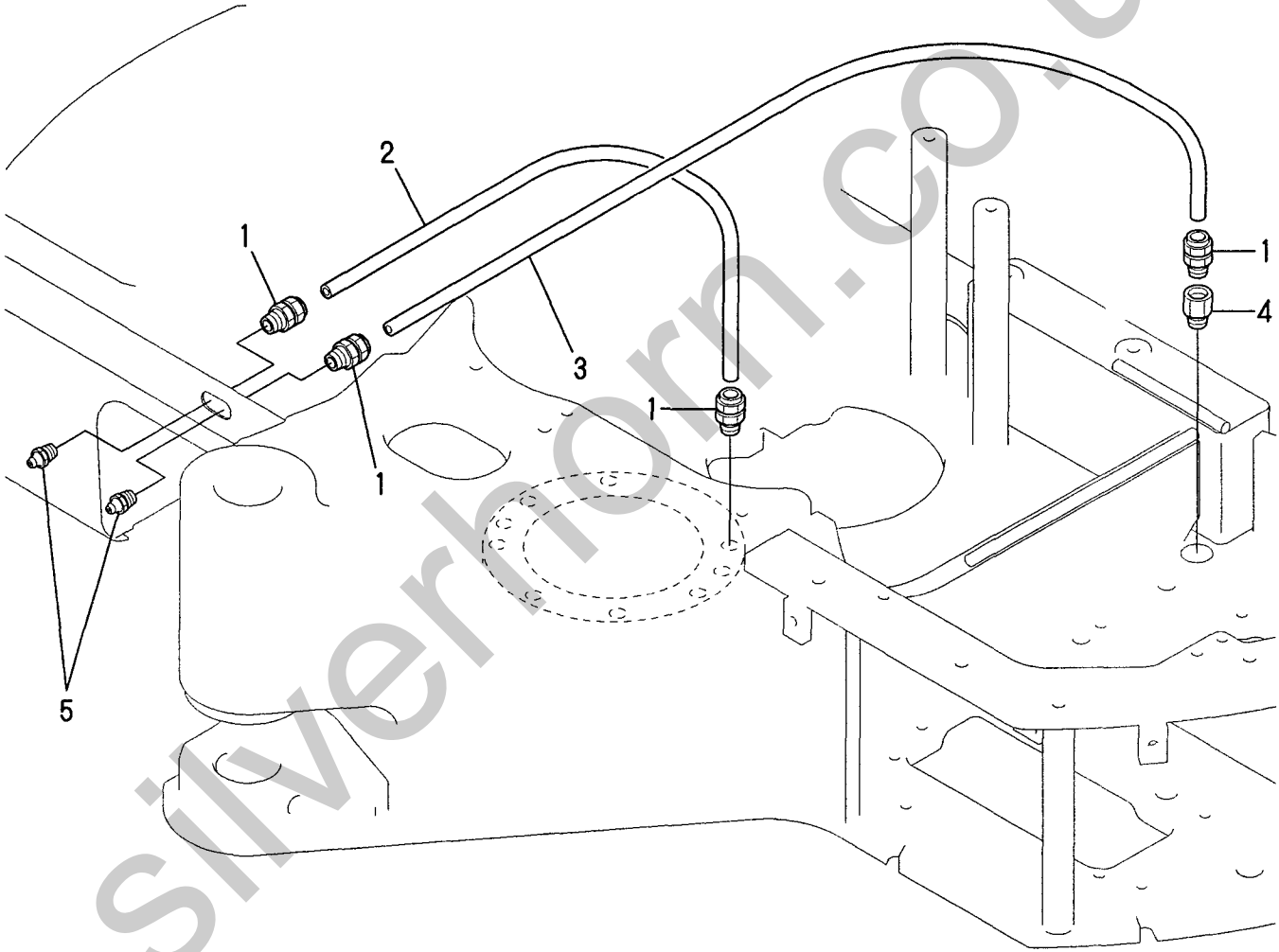

silverhorn.co.uk

```
1,1,,172460-81101-1,,"BOOM ASSY(YELLOW:87)",1,,,,,,,,,,,,,,,,,
2,2,,172162-81050,,"SEAL 60X75X6,DUST",4,,,,,,,,,,,,,,,,,
3,2,,172460-81400,,BUSH,2,,,,,,,,724600322,,,,,,,,,,,I
4,1,,172183-81160,,"TREE CLIP",4,,,,,,,,,,,,,,,,,
5,1,,172164-81670,,SPACER,2,,,,,,,,,,,,,,,,,
6,1,,172460-81710,,PIPE,1,,,,,,,,,,,,,,,,,
7,1,,172460-81740-1,,"PLATE    (YELLOW:87)",1,,,,,,,,,,,,,,,,,
8,1,,172187-81970,,WASHER,1,,,,,,,,,,,,,,,,,
9,1,,172147-82140,,WASHER,1,,,,,,,,,,,,,,,,,
10,1,,172460-82480-1,,"PIN 50X204(YELLOW:87",2,,,,,,,,,,,,,,,,,
11,1,,172460-82500-1,,"PIN 60X245(YELLOW:87",1,,,,,,,,,,,,,,,,,
12,1,,172165-82520,,"SHIM 50X85X0.5",2,,,,,,,,,,,,,,,,,
13,1,,172165-82530,,"SHIM 50X85X1.2",2,,,,,,,,,,,,,,,,,
14,1,,172165-82540,,"SHIM 50X85X1.6",2,,,,,,,,,,,,,,,,,
15,1,,22157-120000,,"WASHER 12",2,,,,,,,,,,,,,,,,,
16,1,,22217-140000,,"SPRING WASHER 14",1,,,,,,,,,,,,,,,,,
17,1,,24761-040000,,"NIPPLE B,GREASE",2,,,,,,,,,,,,,,,,,
18,1,,26013-100162,,"BOLT M10X 16",2,,,,,,,,,,,,,,,,,
19,1,,26013-120252,,"BOLT M12X 25",3,,,,,,,,,,,,,,,,,
20,1,,26116-140252,,"BOLT M14X 25 PLATED",1,,,,,,,,,,,,,,,,,
21,1,,172176-81700,,SHIM,1,,,,,,,,,,,,,,,,,
22,1,,172176-81710,,SHIM,1,,,,,,,,,,,,,,,,,
23,1,,172460-81800,,SHIM,2,,,,,,,,,,,,,,,,,
24,1,,172460-81810,,SHIM,2,,,,,,,,,,,,,,,,,
25,1,,172460-81820,,SHIM,2,,,,,,,,,,,,,,,,,
26,1,,172458-81830,,"PIN 50X136",1,,,,,,,,,,,,,,,,,
27,1,,172458-81930-1,,"PIN 40X111(YELLOW:87",1,,,,,,,,,,,,,,,,,
28,1,,172187-81970,,WASHER,2,,,,,,,,,,,,,,,,,
29,1,,172460-82300-1,,"BRACKET  (YELLOW:87)",1,,,,,,,,,,,,,,,,,
30,2,,172165-81710,,"BUSH 70X85",2,,,,,,,,,,,,,,,,,
31,2,,172165-81770,,"SEAL 70X80X6, DUST",2,,,,,,,,,,,,,,,,,
33,2,,24321-000700,,"O-RING 1A G70.0,NBR",2,,,,,,,,,,,,,,,,,
34,1,,172460-82400,,PIN,1,,,,,,,,,,,,,,,,,
35,1,,172460-82410-1,,"PIN 60X142(YELLOW:87",2,,,,,,,,,,,,,,,,,
36,1,,172460-82430,,PIN,1,,,,,,,,,,,,,,,,,
37,1,,172165-82520,,"SHIM 50X85X0.5",2,,,,,,,,,,,,,,,,,
38,1,,172165-82530,,"SHIM 50X85X1.2",2,,,,,,,,,,,,,,,,,
39,1,,172165-82540,,"SHIM 50X85X1.6",2,,,,,,,,,,,,,,,,,
40,1,,172165-82580,,"SHIM 40X75X0.5",4,,,,,,,,,,,,,,,,,
41,1,,172165-82590,,"SHIM 40X75X1.2",4,,,,,,,,,,,,,,,,,
42,1,,172165-82600,,"SHIM 40X75X1.6",4,,,,,,,,,,,,,,,,,
43,1,,172117-83970-5,,"PLATE(C),LOCK   (86)",1,,,,,,,,,,,,,,,,,
44,1,,22157-120000,,"WASHER 12",1,,,,,,,,,,,,,,,,,
45,1,,26716-160002,,"NUT M16",2,,,,,,,,,,,,,,,,,
46,1,,22217-140000,,"SPRING WASHER 14",2,,,,,,,,,,,,,,,,,
47,1,,22242-000700,,"CIRCLIP   70",1,,,,,,,,,,,,,,,,,
48,1,,24761-020000,,"NIPPLE PT1/8,GREASE",2,,,,,,,,,,,,,,,,,
49,1,,26013-100202,,"BOLT W/WASHER M10X20",2,,,,,,,,,,,,,,,,,
50,1,,26013-120252,,"BOLT M12X 25",1,,,,,,,,,,,,,,,,,
51,1,,26076-161702,,"BOLT 10.9 16X170",1,,,,,,,,,,,,,,,,,
52,1,,26116-121302,,"BOLT M12X130 PLATED",1,,,,,,,,,,,,,,,,,
53,1,,26116-140352,,"BOLT M14X 35 PLATED",2,,,,,,,,,,,,,,,,,
54,1,,26716-120002,,"NUT 12",2,,,,,,,,,,,,,,,,,
```

shearform.co.uk

Fig.54 BOOM & BOOM BRACKET

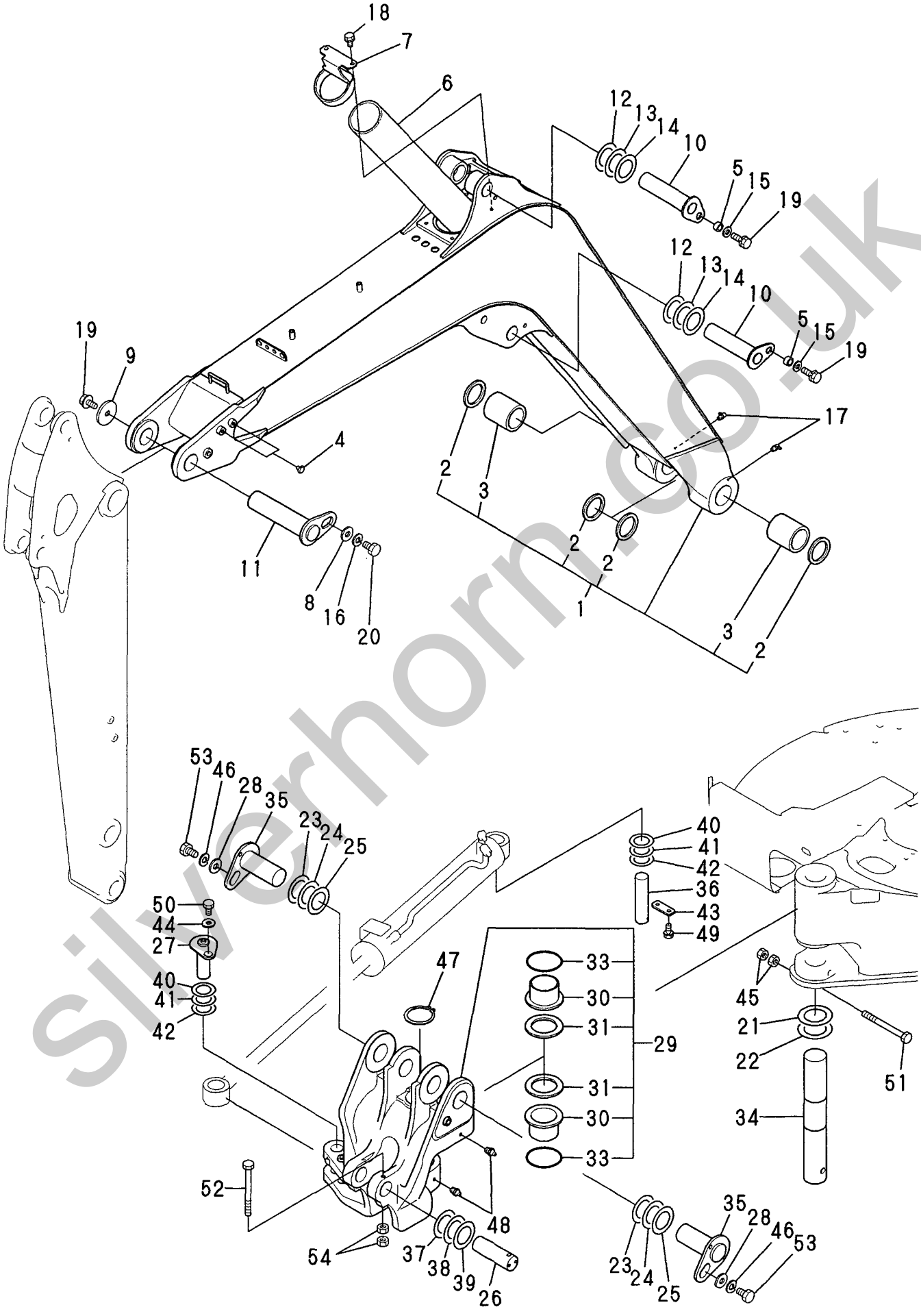

silverhorn.co.uk

```
1,1,,172183-81160,,"TREE CLIP",4,,,,,,,,,,,,,,,,,
2,1,,172125-81280,,"O-RING 81X8",2,,,,,,,,,,,,,,,,,
3,1,,172460-81500-1,,"ARM 1500 (YELLOW:87)",1,,,,,,,,,,,,,,,,,
4,2,,172162-81050,,"SEAL 60X75X6,DUST",2,,,,,,,,,,,,,,,,,
5,2,,172445-81360,,"BUSH 60X75",2,,,,,,,,724600322,,,,,,,,,,,I
6,2,,172112-83500,,"PIN BUSH 45X60",4,,,,,,,,,,,,,,,,,
7,2,,933126-44500,,"SEAL VAY45X55X4,DUST",4,,,,,,,,,,,,,,,,,
8,1,,172164-81670,,SPACER,2,,,,,,,,,,,,,,,,,
9,1,,172165-82520,,"SHIM 50X85X0.5",1,,,,,,,,,,,,,,,,,
10,1,,172460-82520-1,,"PIN 50X134(YELLOW:87",1,,,,,,,,,,,,,,,,,
11,1,,172165-82530,,"SHIM 50X85X1.2",1,,,,,,,,,,,,,,,,,
12,1,,172165-82540,,"SHIM 50X85X1.6",1,,,,,,,,,,,,,,,,,
13,1,,172460-82540-1,,"PIN 45X138(YELLOW:87",1,,,,,,,,,,,,,,,,,
14,1,,172165-82550,,"SHIM 45X1.2",1,,,,,,,,,,,,,,,,,
15,1,,172165-82560,,"SHIM 45X80X1.2",1,,,,,,,,,,,,,,,,,
16,1,,172165-82570,,"SHIM 45X80X1.6",1,,,,,,,,,,,,,,,,,
17,1,,22157-120000,,"WASHER 12",2,,,,,,,,,,,,,,,,,
18,1,,24761-040000,,"NIPPLE B,GREASE",1,,,,,,,,,,,,,,,,,
19,1,,26013-120252,,"BOLT M12X 25",2,,,,,,,,,,,,,,,,,
20,1,,172460-82350-1,,"ARM ASSY,BUCKET (87)",1,,,,,,,,,,,,,,,,,
21,1,,172460-82360-1,,"ARM,BUCKET(YELLOW:87",1,,,,,,,,,,,,,,,,,
22,1,,172460-82650,,"PIN KIT, ARM    (97)",1,,,,,,,,,,,,,,,,,
23,2,,172165-82550,,"SHIM 45X1.2",2,,,,,,,,,,,,,,,,,
24,2,,172165-82560,,"SHIM 45X80X1.2",2,,,,,,,,,,,,,,,,,
25,2,,172460-82560,,"PIN 45X217      (97)",1,,,,,,,,,,,,,,,,,
26,2,,172165-82570,,"SHIM 45X80X1.6",2,,,,,,,,,,,,,,,,,
27,2,,172460-82590,,"PIN 45X217      (97)",1,,,,,,,,,,,,,,,,,
28,2,,24761-020000,,"NIPPLE PT1/8,GREASE",1,,,,,,,,,,,,,,,,,
29,2,,26116-100802,,"BOLT M10X 80 PLATED",2,,,,,,,,,,,,,,,,,
30,2,,26716-100002,,"NUT 10",4,,,,,,,,,,,,,,,,,
31,1,,172147-84401,,"LINK,BUCKET(YELLOW87",1,,,,,,,,,,,,,,,,,
32,2,,172112-83500,,"PIN BUSH 45X60",2,,,,,,,724600322,,,,,,,,,,,I
33,2,,172112-86250,,"BUSH 45X39, PIN",2,,,,,,,,,,,,,,,,,
34,2,,933126-44500,,"SEAL VAY45X55X4,DUST",6,,,,,,,,,,,,,,,,,
35,1,,24761-020000,,"NIPPLE PT1/8,GREASE",2,,,,,,,,,,,,,,,,,
```

silverhorn.co.uk

Fig.55 ARM & BUCKET LINK

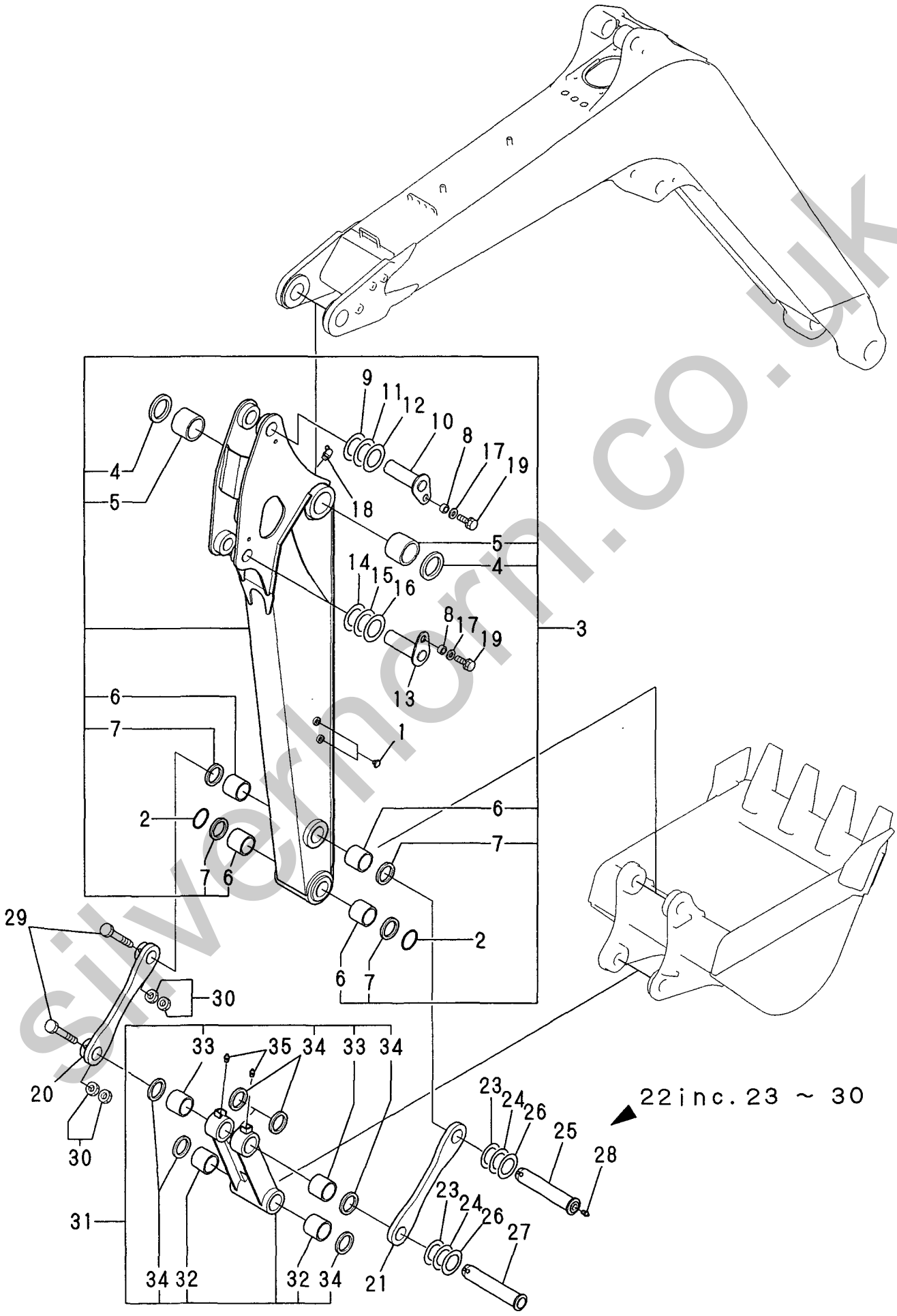

silverthorn.co.uk

```
1,1,,172176-81950-4,,"PIN KIT,BUCKET  (82)",1,,,,,,M,,,,,,,,,,,,I
1-1,1,,172176-81950-4,,"PIN KIT,BUCKET  (82)",2,,,,,,,,,,,,,,,,,,,I
2,2,,172176-81560-4,,"PIN 45X271 ASSY (82)",2,,,,,,,,,,,,,,,,,,
3,2,,172176-81640,,"COLLAR 45X60.5X22",2,,,,,,,,,,,,,,,,,,
4,2,,24761-020000,,"NIPPLE PT1/8,GREASE",2,,,,,,,,,,,,,,,,,,
5,2,,26116-100752,,"BOLT M10X 75 PLATED",2,,,,,,,,,,,,,,,,,,
6,2,,26716-100002,,"NUT 10",4,,,,,,,,,,,,,,,,,,
7,2,,172124-81930,,"SHIM 45X0.8",2,,,,,,,,,,,,,,,,,,
7-1,2,,172165-82550,,"SHIM 45X1.2",2,,,,,,R,,724580547,*2003.05,,,,,,,,,,I
8,2,,172124-81940,,"SHIM 45X1.2",2,,,,,,,,,,,,,,,,,,
8-1,2,,172165-82560,,"SHIM 45X80X1.2",2,,,,,,R,,724580547,*2003.05,,,,,,,,,,I
```

silverhorn.co.uk

P/C NEWS No.:Y00S4150-1
PUBLISHED :2004/5

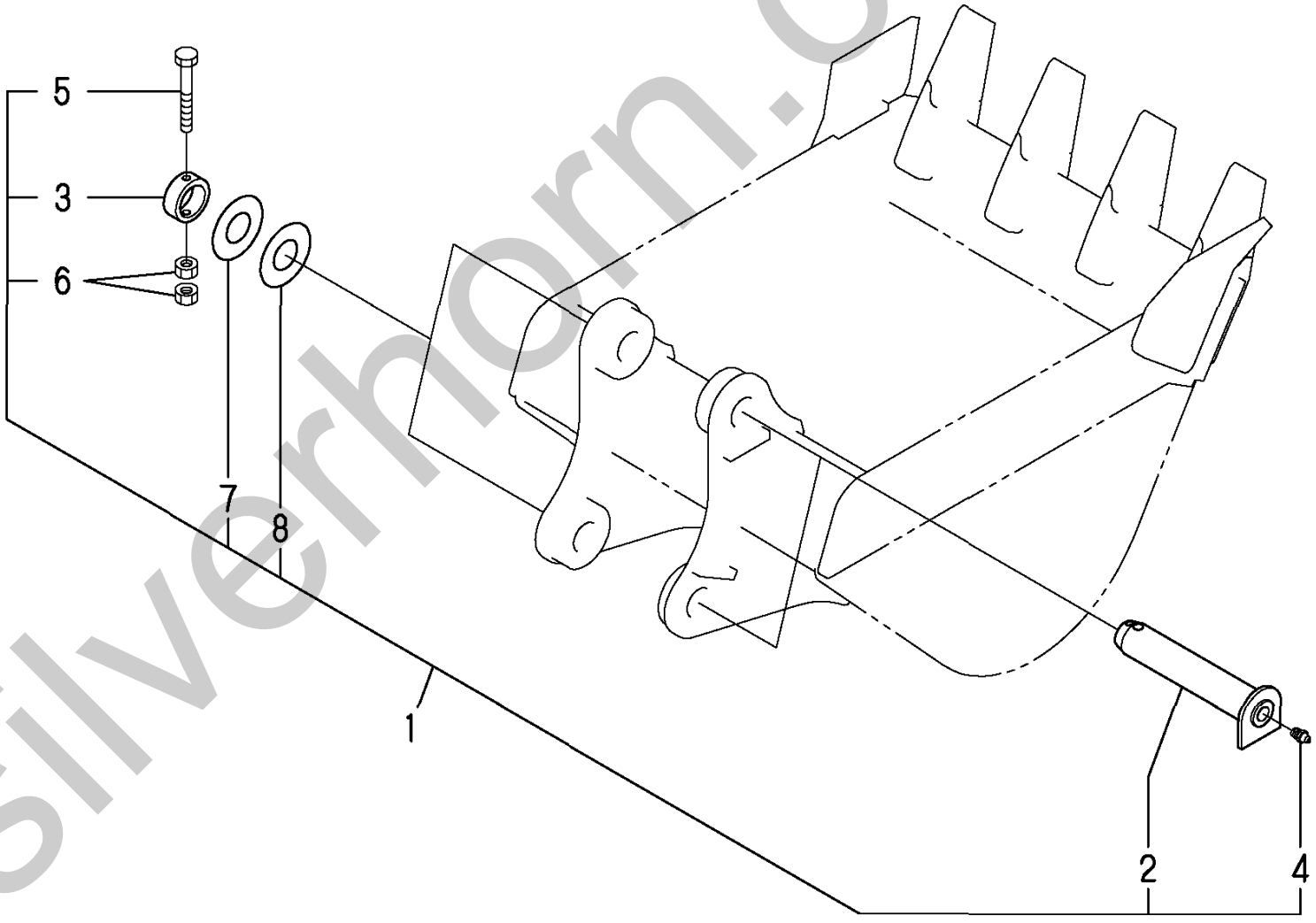

silverhorn.co.uk

```
1,1,,172164-81650-2,,"PIN 45X122(GREEN:82)",2,,,,,,,,,,,,,,,,,,
2,1,,172164-81670,,SPACER,2,,,,,,,,,,,,,,,,,
3,1,,172112-87840,,"SHIM 45X1",4,,,,,,,,,,,,,,,,,,
4,1,,172460-94100-1,,"BLADE ASSY(GREEN:82)",1,,,,,,,,,,,,,,,,,,
5,2,,172151-72670,,"BUSH 45 50",2,,,,,,,,,,,,,,,,,,
6,2,,172168-81410,,"SEAL 45X55X4, DUST",4,,,,,,,,,,,,,,,,,,
7,1,,172423-94210,,"PIN 45X120",2,,,,,,,,,,,,,,,,,,
8,1,,172124-94310-2,,"PLATE,LOCK(GREEN:82)",2,,,,,,,,,,,,,,,,,,
9,1,,22157-120000,,"WASHER 12",2,,,,,,,,,,,,,,,,,,
10,1,,24761-020000,,"NIPPLE PT1/8,GREASE",2,,,,,,,,,,,,,,,,,,
11,1,,24761-040000,,"NIPPLE B,GREASE",2,,,,,,,,,,,,,,,,,,
12,1,,26013-100252,,"BOLT W/WASHER M10X25",4,,,,,,,,,,,,,,,,,,
13,1,,26013-120302,,"BOLT W/WASHER M12X30",2,,,,,,,,,,,,,,,,,,
```

silverhorn.co.uk

Fig.57 BLADE

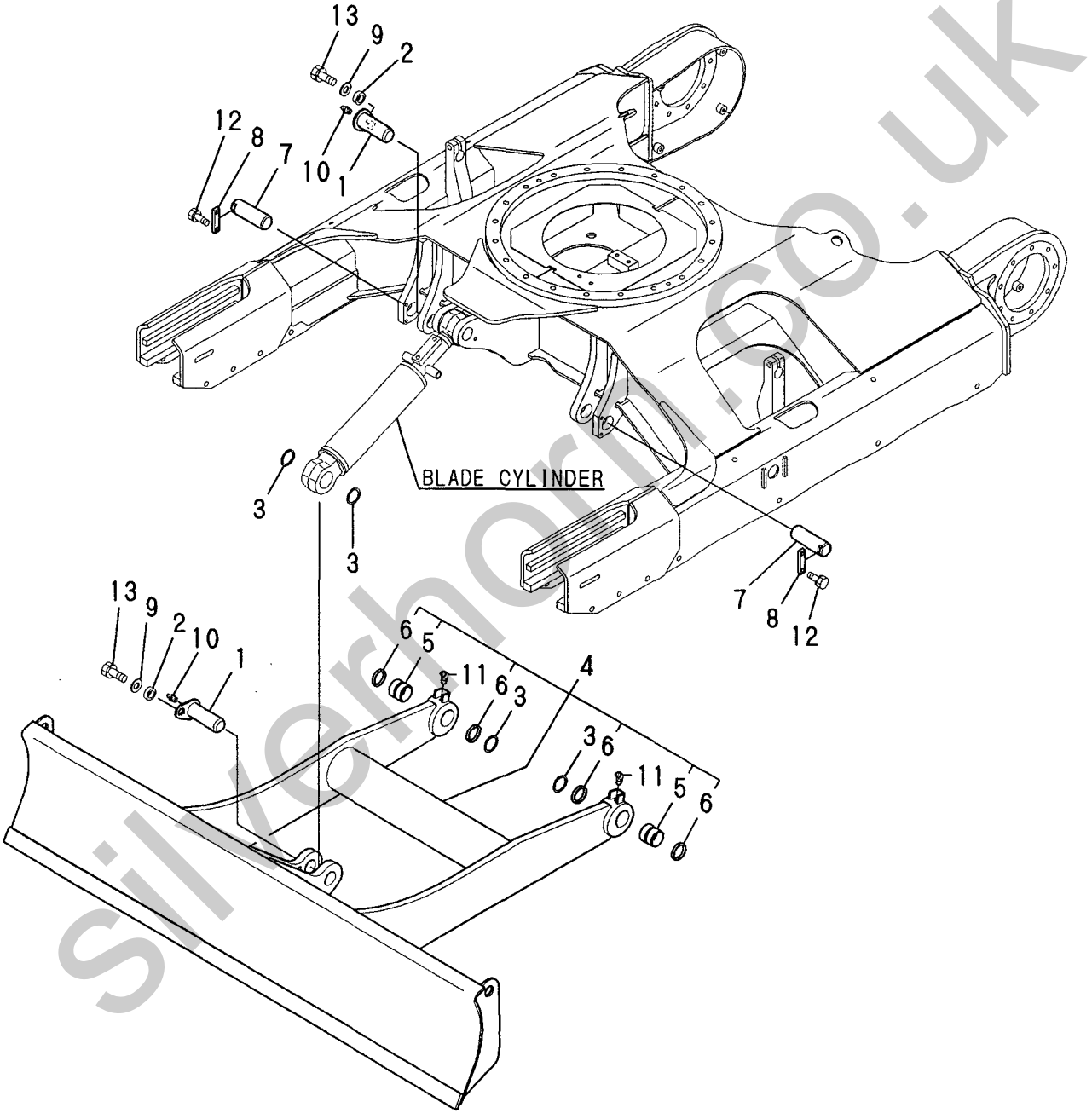

silverhorn.co.uk

Y00S4150,"Construction equipment",Excavator,VIO
[Info]
PcNo=Y00S4150
PcName=VIO40-2(EP)(B6510)
JpnUse=0
JpnSec1=Œš‹@
JpnSec2=ƒoƒbƒNƒz[
JpnSec3=VIO
JpnPreface=0
EngUse=1
EngSec1=CONSTRUCTION
EngSec2=EXCAVATOR (ViO)
EngSec3=VIO
EngPreface=1

silverhorn.co.uk

```
0,Y00S4150
1,001,,VIO40-2(EP)
2,1,,LABEL,VIO40-2(EP),,,
2,2,,FAN,VIO40-2(EP),,,
2,3,,"SILENSER & AIR CLEANER",VIO40-2(EP),,,
2,4,,ACCELERATOR,VIO40-2(EP),,,
2,5,,"ENGINE MOUNT",VIO40-2(EP),,,
2,6,,"RADIATOR & MOUNT",VIO40-2(EP),,,
2,7,,"FUEL TANK & FUEL PIPE",VIO40-2(EP),,,
2,8,,BATTERY,VIO40-2(EP),,,
2,9,,"ELECTRIC PART(WIRING)",VIO40-2(EP),,,
2,10,,"ELECTRIC PART(EQUIPMENT)",VIO40-2(EP),,,
2,11,,"WORK LAMP",VIO40-2(EP),,,
2,12,,"ROLLER & ADJUST",VIO40-2(EP),,,
2,13,,CRAWLER,VIO40-2(EP),,,
2,14,,"CONTROL EQUIPMENT(LOCK LEVER &",VIO40-2(EP),,,
2,15,,"CONTROL EQUIPMENT(LOCK LEVER &",VIO40-2(EP),,,
2,16,,"CONTROL EQUIPMENT(TRAVEL LEVER",VIO40-2(EP),,,
2,17,,"CONTROL EQUIPMENT(BLADE LEVER)",VIO40-2(EP),,,
2,18,,"CONTROL EQUIPMENT(SWING PEDAL)",VIO40-2(EP),,,
2,19,,"CONTROL EQUIPMENT(LOW-HIGH PED",VIO40-2(EP),,,
2,20,,"CONTROL EQUIPMENT(P.T.O.PEDAL)",VIO40-2(EP),,,
2,21,,"FRAME & TURNING BEARING",VIO40-2(EP),,,
2,22,,COVER(FRAME),VIO40-2(EP),,,
2,23,,COVER(CABIN),VIO40-2(EP),,,
2,24,,"STEP & INSTRUMENT PANEL",VIO40-2(EP),,,
2,25,,"SEAT MOUNT",VIO40-2(EP),,,
2,26,,BONNET,VIO40-2(EP),,,
2,27,,"CANOPY MOUNT",VIO40-2(EP),,,
2,28,,"HYD.OIL PUMP & JOINT",VIO40-2(EP),,,
2,29,,"BOOM CYLINDER",VIO40-2(EP),,,
2,30,,"ARM CYLINDER",VIO40-2(EP),,,
2,31,,"BUCKET CYLINDER",VIO40-2(EP),,,
2,32,,"SWING CYLINDER",VIO40-2(EP),,,
2,33,,"BLADE CYLINDER",VIO40-2(EP),,,
2,34,,"TRAVEL MOTOR",VIO40-2(EP),,,
2,35,,"TURNING MOTOR",VIO40-2(EP),,,
2,36,,"SWIVEL JOINT",VIO40-2(EP),,,
2,37,,"CONTROL VALVE(P PORT)",VIO40-2(EP),,,
2,38,,"CONTROL VALVE(TRAVEL & P.T.O.)",VIO40-2(EP),,,
2,39,,"CONTROL VALVE(ARM & SWING)",VIO40-2(EP),,,
2,40,,"CONTROL VALVE(BOOM & BUCKET)",VIO40-2(EP),,,
2,41,,"CONTROL VALVE(TURNING & BLADE)",VIO40-2(EP),,,
2,42,,"REMOTE CONTROL VALVE",VIO40-2(EP),,,
2,43,,"HYD.OIL TANK",VIO40-2(EP),,,
2,44,,"HYD.OIL PIPING(TANK-PUMP-VALVE",VIO40-2(EP),,,
2,45,,"HYD.OIL PIPING(PUMP-VALVE-MOTO",VIO40-2(EP),,,
2,46,,"HYD.OIL PIPING(VALVE-SWIVEL-SW",VIO40-2(EP),,,
2,47,,"HYD.OIL PIPING(RETURN)",VIO40-2(EP),,,
2,48,,"HYD.OIL PIPING(TRAVEL)",VIO40-2(EP),,,
2,49,,"HYD.OIL PIPING(BOOM)",VIO40-2(EP),,,
2,50,,"HYD.OIL PIPING(P.T.O.)",VIO40-2(EP),,,
2,51,,"CONTROL PIPING(PUMP-REMO.-CON.",VIO40-2(EP),,,
2,52,,"CONTROL PIPING(REMO.-CON.V.-C-",VIO40-2(EP),,,
2,53,,GREASING,VIO40-2(EP),,,
2,54,,"BOOM & BOOM BRACKET",VIO40-2(EP),,,
2,55,,"ARM & BUCKET LINK",VIO40-2(EP),,,
2,56,,"BUCKET PIN",VIO40-2(EP),,,
2,57,,BLADE,VIO40-2(EP),,,
```

silverthorn.co.uk