```
[Info]
PcNo=Y00B5891
PcName=3TNE82A-B1(B27-2B)
JpnUse=1
JpnSec1=ƒGƒ“ƒWƒ“
JpnSec2=—§ ¬
JpnSec3=TNE
JpnPreface=0
EngUse=1
EngSec1=ENGINE (US)
EngSec2=SMALL VERTICAL (B)
EngSec3=TNE
EngPreface=0
```

silverhorn.co.uk

```
1,1,,719813-01560,,"BLOCK ASSY, CYLINDER",1,,,,,,,,,,,,,,,,,
4,3,,124160-01910,,"PLUG PT1/4",2,,,,,,,,,,,,,,,,,
5,3,,171051-01921,,PLUG,1,,,,,,,,,,,,,,,,,
6,3,,23871-010000,,"PLUG PT1/8,SCREW",1,,,,,,,,,,,,,,,,,
7,3,,23887-120002,,"PLUG 12,HEX.",1,,,,,,,,,,,,,,,,,
7-1,3,,124160-01910,,"PLUG PT1/4",1,,,,,,S,,TE-97382,E/#17106,,,,,,,,
8,3,,27231-500000,,"PLUG 50",1,,,,,,,,,,,,,,,,,
9,3,,27241-120000,,"PLUG 12",2,,,,,,,,,,,,,,,,,
10,3,,27241-300000,,"PLUG 30",6,,,,,,,,,,,,,,,,,
11,2,,119620-02020,,BOLT,8,,,,,,,,,,,,,,,,,
12,2,,119810-02800,,"MAIN BEARING",4,,,,,,,,,,,,,,,,,
15,2,,119810-02930,,"BEARING, THRUST",1,,,,,,,,,,,,,,,,,,,I
20,2,,129795-02411,,"BUSH, CAMSHAFT",1,,,,,,,,,,,,,,,,,
21,1,,119810-01200,,"BOLT, CYL. HEAD",14,,,,,,,,,,,,,,,,,
22,1,,119812-01330,,"GASKET, HEAD",1,,,,,,,A,,,,,,,,,,
23,1,,119810-02870,,"MAIN BEARING US=0.25",4,,,,,,,1,,,,,,,,,,
26,1,,119810-02940,,"BEARING,THRUST .25OS",2,,,,,,,2,,,,,,,,,,
```

silverhorn.co.uk

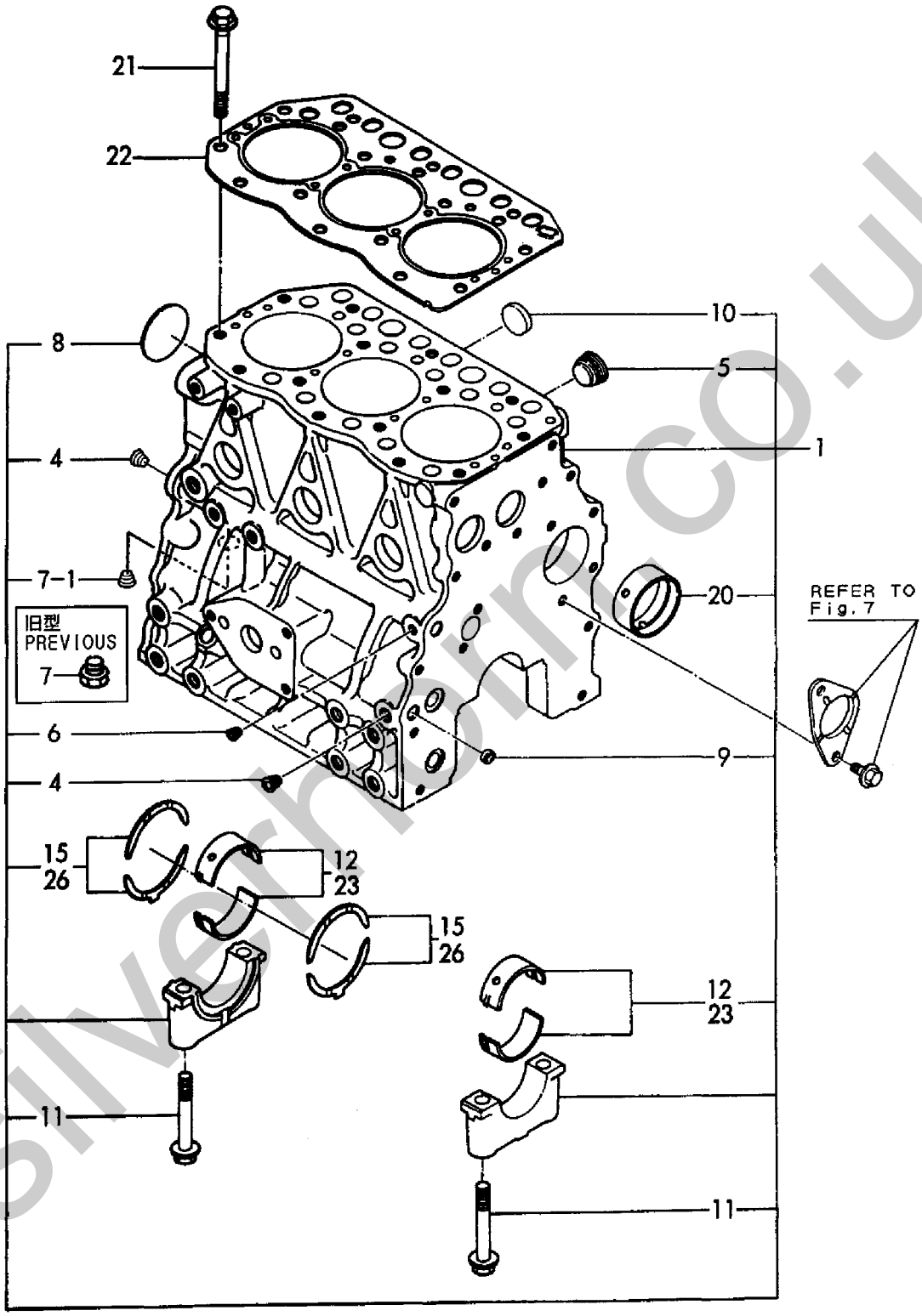

silvernorm.co.uk

```
1,1,,719810-01500,,"HOUSING ASSY, GEAR",1,,,,,,,,,,,,,,,,
3,2,,129795-01800,,"SEAL, OIL",1,,,,,,,,,,,,,,,,
4,1,,124160-01751,,"CAP, LUB.OIL SUPPLY",1,,,,,,,,,,,,,,,,
5,1,,129400-01520,,"FLANGE,GEARS HOUSING",1,,,,,,,,,,,,,,,,,
6,1,,124240-01871,,"COVER, HO-P",1,,,,,,,,,,,,,,,,
7,1,,124240-01883,,"GASKET, (NON-ASB.)",1,,,,,,,,,,,,,,,,,
8,1,,129795-01950,,"PIPE, KNOCK L=18",2,,,,,,,,,,,,,,,,,
9,1,,121850-51960,,"O-RING, F.I.PUMP",1,,,,,,,,,,,,,,,,,
10,1,,24311-000160,,"O-RING 1A P-16.0",2,,,,,,,,,,,,,,,,,
11,1,,24311-000320,,"O-RING 1A P-32.0",1,,,,,,,A,,,,,,,,,
12,1,,26106-080122,,"BOLT M 8X 12 PLATED",4,,,,,,,,,,,,,,,,,
13,1,,26106-080162,,"BOLT M 8X 16 PLATED",3,,,,,,,,,,,,,,,,,
14,1,,121450-01560,,"STUD M 8X 22",3,,,,,,,,,,,,,,,,
15,1,,26106-080452,,"BOLT M 8X 45 PLATED",6,,,,,,,,,,,,,,,,,
16,1,,26106-080552,,"BOLT M 8X 55 PLATED",3,,,,,,,,,,,,,,,,,
17,1,,26106-080852,,"BOLT M 8X 85 PLATED",4,,,,,,,,,,,,,,,,,
17-1,1,,129001-91840,,"BOLT M 8X 85 PLATED",4,,,,,,N,,,E/#44311,,,,,,,
18,1,,26366-080002,,"NUT M 8",3,,,,,,,,,,,,,,,,
19,1,,22190-080002,,"SEAL WASHER  8S",4,,,,,,,,,,,,,,,,,
20,1,,121023-01550,,"COVER, BLIND",1,,,,,,,,,,,,,,,,
21,1,,24341-000240,,"O-RING 1A S-24.0",1,,,,,,,,,,,,,,,,,
22,1,,26106-060122,,"BOLT M 6X 12 PLATED",2,,,,,,,,,,,,,,,,,
22-1,1,,26106-060162,,"BOLT M 6X 16 PLATED",2,,,,,,N,,,E/#XXX,,,,,,,
23,1,,129150-03100,,RETAINER,1,,,,,,,,,,,,,,,,
24,1,,26106-080162,,"BOLT M 8X 16 PLATED",1,,,,,,,,,,,,,,,,,
25,1,,22190-080002,,"SEAL WASHER  8S",1,,,,,,,,,,,,,,,,,
26,1,,26106-080202,,"BOLT M 8X 20 PLATED",2,,,,,,,,,,,,,,,,,
```

silverhorn.co.uk

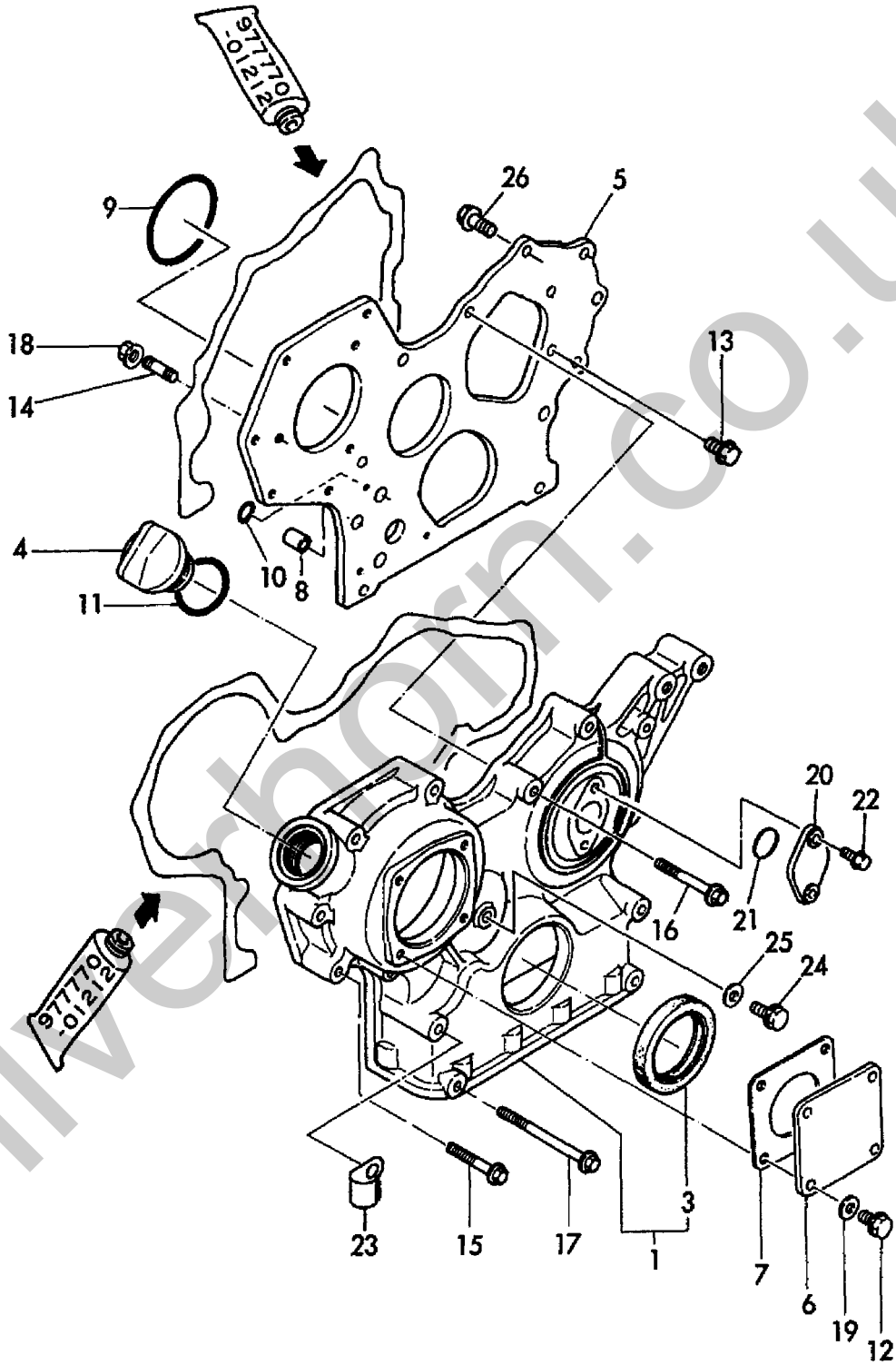

silverhorn.co.uk

```
1,1,,129100-01580,,"PARALLEL PIN 8X16",2,,,,,,,,,,,,,,,,
2,1,,171301-01600,,"HOUSING, FLYWHEEL",1,,,,,,,,,,,,,,,,
2-1,1,,129612-01600,,"HOUSING,FLYWHEEL",1,,,,,,N,,,E/#11243,,,,,,,,
3,1,,26206-100302,,"BOLT M10X30",4,,,,,,,,,,,,,,,,
4,1,,26206-100252,,"BOLT M10X25",6,,,,,,,,,,,,,,,,
5,1,,119810-01730,,"SPACER, L.O. SUMP",1,,,,,,,,,,,,,,,,
6,1,,119810-01790,,"SUMP ASSY, OIL",1,,,,,,,,,,,,,,,,
7,2,,119640-01640,,"DRAIN PLUG M22",1,,,,,,,,,,,,,,,,
9,2,,22190-220002,,"SEAL WASHER 22S",1,,,,,,,,,,,,,,,,
10,1,,26106-080162,,"BOLT M 8X 16 PLATED",6,,,,,,,,,,,,,,,,
11,1,,26106-080452,,"BOLT M 8X 45 PLATED",22,,,,,,,,,,,,,,,,
12,1,,129100-01580,,"PARALLEL PIN 8X16",2,,,,,,,,,,,,,,,,
13,1,,719810-01650,,"CASE ASSY, OIL SEAL",1,,,,,,,,,,,,,,,,
14,2,,119860-01650,,"CASE, OIL SEAL",1,,,,,,,,,,,,,,,,
15,2,,119810-01780,,"SEAL, OIL",1,,,,,,,,,,,,,,,,
16,1,,129486-01670,,"BOLT M8X30,COLLAR HD",6,,,,,,,,,,,,,,,,
17,1,,26106-080352,,"BOLT M 8X 35 PLATED",3,,,,,,,,,,,,,,,,
18,1,,119620-01750,,"CAP, FLYWHEEL COVER",1,,,,,,,,,,,,,,,,
```

silverhorn.co.uk

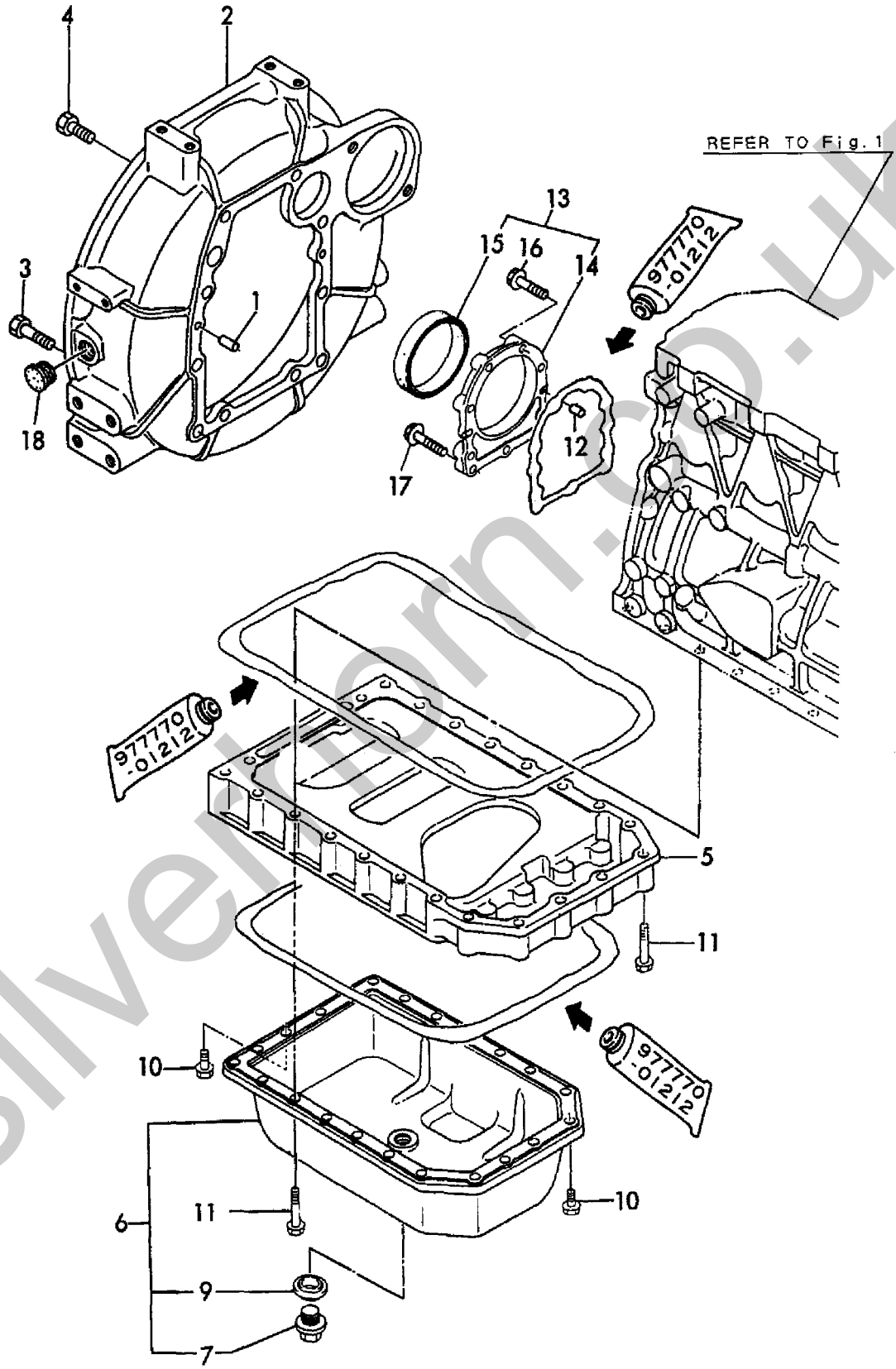

silverthorn.co.uk

```
1,1,,119812-11700,,"HEAD ASSY, CYLINDER",1,,,,,,,,,,,,,,,,
5,3,,124060-11800,,"GUIDE, VALVE",6,,,,,,,1,,,,,,,,,
6,3,,26216-060302,,"STUD M 6X 30 PLATED",6,,,,,,,,,,,,,,,,
7,3,,27241-400000,,"PLUG 40",2,,,,,,,,,,,,,,,,
8,2,,119810-11100,,"VALVE, SUCTION",3,,,,,,,,,,,,,,,,
9,2,,119810-11110,,"VALVE, EXHAUST",3,,,,,,,,,,,,,,,,
10,2,,119810-11120,,"SPRING, VALVE",6,,,,,,,,,,,,,,,,
11,2,,104211-11180,,"RETAINER, SPRING",6,,,,,,,,,,,,,,,,
12,2,,27310-070000,,"COTTER  7",6,,,,,,,,,,,,,,,,
13,2,,124160-11340,,"SEAL, VALVE STEM",3,,,,,,,,,,,,,,,,
14,2,,124950-11340,,"SEAL, VALVE STEM",3,,,,,,,,,,,,,,,,
15,2,,104211-11370,,"CAP, VALVE",6,,,,,,,,,,,,,,,,
16,2,,22351-060012,,"SPRING PIN 6X12",2,,,,,,,,,,,,,,,,
17,1,,119865-11210,,"SUPPORT ASSY, ROCKER",1,,,,,,,,,,,,,,,,
18,2,,119810-11240,,"SHAFT, ROCKER ARM",1,,,,,,,,,,,,,,,,
20,3,,27241-100000,,"PLUG 10",2,,,,,,,,,,,,,,,,
21,2,,129155-11260,,"SUPPORT, ROCKER ARM",2,,,,,,,,,,,,,,,,
22,2,,129155-11270,,"SUPPORT, ROCKER ARM",2,,,,,,,,,,,,,,,,
23,2,,129150-11280,,SPRING,3,,,,,,,,,,,,,,,,
24,2,,719810-11660,,"ARM ASSY, ROCKER",6,,,,,,,,,,,,,,,,
25,3,,129150-11230,,"SCREW, VALVE",6,,,,,,,,,,,,,,,,
27,3,,129150-11750,,"NUT M8XP1.0",6,,,,,,,,,,,,,,,,
28,2,,26226-080182,,"STUD M 8X 18 PLATED",3,,,,,,,,,,,,,,,,
29,1,,119625-11871,,"PROTECTER, NOZZLE",3,,,,,,,,,,,,,,,,
29-1,1,,119625-11870,,"PROTECTOR, NOZZLE",3,,,,,,N,,,E/#17106,,,,,,,
30,1,,119625-11880,,"SEAT, NOZZLE",3,,,,,,,,,,,,,,,,
31,1,,119625-11900,,RETAINER,3,,,,,,,,,,,,,,,,
32,1,,26106-080252,,"BOLT M 8X 25 PLATED",2,,,,,,,,,,,,,,,,
33,1,,26106-080502,,"BOLT M 8X 50 PLATED",6,,,,,,,,,,,,,,,,
34,1,,26366-060002,,"NUT M 6",6,,,,,,,,,,,,,,,,
35,1,,719810-11520,,"BONNET ASSY, HEAD",1,,,,,,,,,,,,,,,,
36,2,,124160-01751,,"CAP, LUB.OIL SUPPLY",1,,,,,,,,,,,,,,,,
38,2,,119865-11310,,"GASKET, BONNET",1,,,,,,A,,,,,,,,,
39,2,,24311-000320,,"O-RING 1A P-32.0",1,,,,,,A,,,,,,,,,
40,2,,129150-03020,,"COVER, BREATHER",1,,,,,,,,,,,,,,,,
41,2,,129150-03070,,"BAFFLE, BREATHER",1,,,,,,,,,,,,,,,,
42,2,,129150-03080,,"PLATE, SHELTER",1,,,,,,,,,,,,,,,,
43,2,,24341-000500,,"O-RING 1A S-50.0",1,,,,,,,,,,,,,,,,
44,2,,26106-080162,,"BOLT M 8X 16 PLATED",2,,,,,,,,,,,,,,,,
45,1,,124160-11360,,KNOB,3,,,,,,,,,,,,,,,,
46,1,,24311-000120,,"O-RING 1A P 12.0",3,,,,,,,,,,,,,,,,
47,1,,119856-03090,,HOSE,1,,,,,,,,,,,,,,,,
48,1,,124736-07900,,"LIFTER, ENGINE",1,,,,,,,,,,,,,,,,
49,1,,26106-080142,,"BOLT M 8X 14 PLATED",2,,,,,,,,,,,,,,,,
```

silvermorn.co.uk

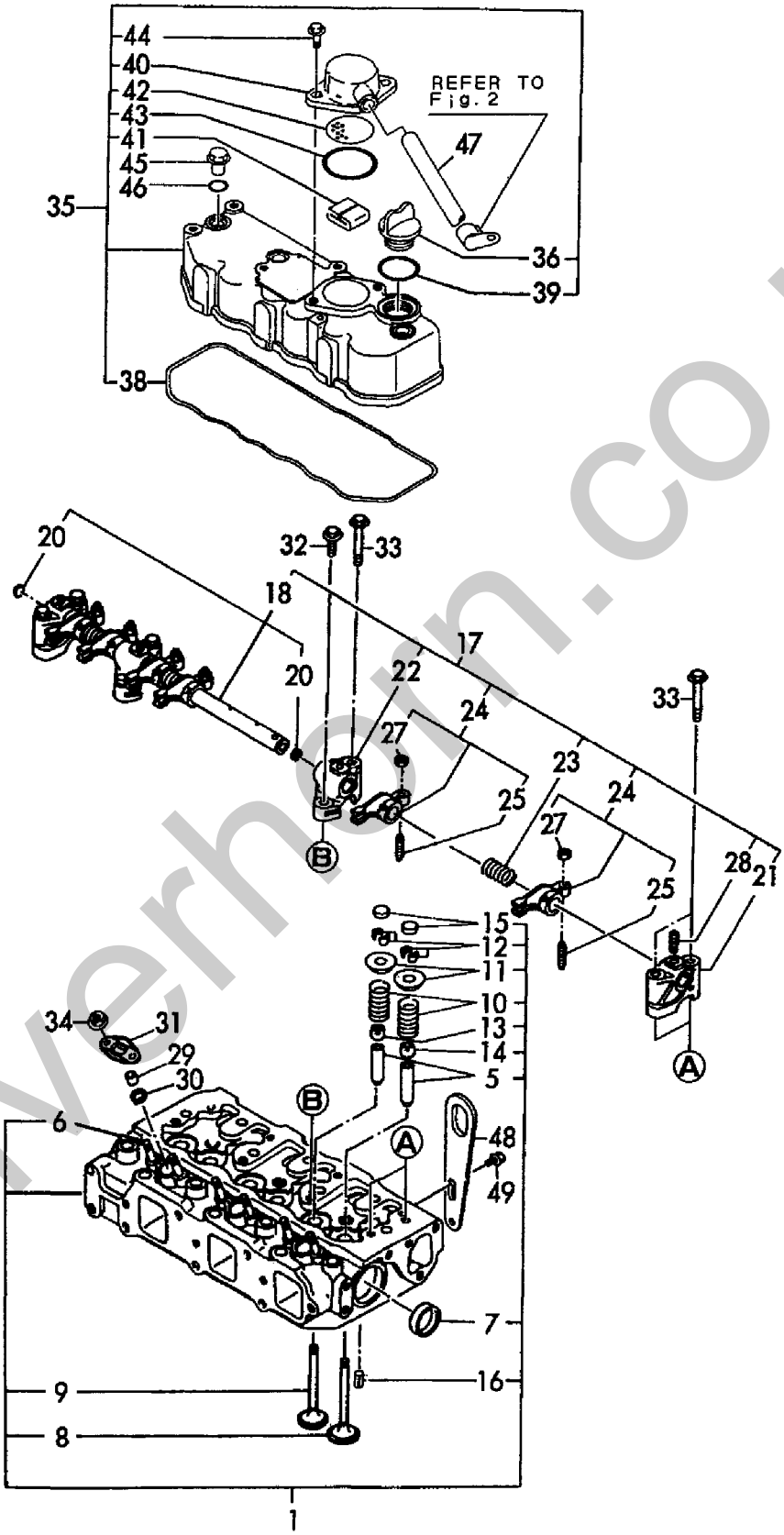

silverhorn.co.uk

```
1,1,,171301-12701,,"MANIFOLD, SUCTION",1,,,,,,,,,,,,,,,,
2,1,,119810-12111,,"GASKET, (NON-ASB.)",1,,,,,,,A,,,,,,,,,
3,1,,26106-080252,,"BOLT M 8X 25 PLATED",4,,,,,,,,,,,,,,,,
4,1,,129120-77501,,"HEATER, AIR",1,,,,,,,,,,,,,,,,
5,1,,129150-77511,,"GASKET, (NON-ASB.)",1,,,,,,,,,,,,,,,,
6,1,,26106-080352,,"BOLT M 8X 35 PLATED",4,,,,,,,,,,,,,,,,
7,1,,119812-12200,,"SILENCER, SUCTION",1,,,,,,,,,,,,,,,,
8,1,,129132-12581,,"SUPPORT ASSY,CLEANER",1,,,,,,,,,,,,,,,,
10,2,,129132-12570,,"SEAT, SUPPORT",2,,,,,,,,,,,,,,,,
11,1,,129132-12800,,BAND,1,,,,,,,,,,,,,,,,
13,2,,129132-12860,,"SHEET, RUBBER",1,,,,,,,,,,,,,,,,
14,1,,119836-12810,,"SUPPORT, AIR CLEANER",1,,,,,,,,,,,,,,,,
15,1,,23000-060000,,"CLAMP 60",2,,,,,,,,,,,,,,,,
16,1,,26106-060142,,"BOLT M 6X 14 PLATED",2,,,,,,,,,,,,,,,,
17,1,,26106-080142,,"BOLT M 8X 14 PLATED",4,,,,,,,,,,,,,,,,
18,1,,26106-080252,,"BOLT M 8X 25 PLATED",2,,,,,,,,,,,,,,,,
19,1,,129030-12500,,"AIR CLEANER ASSY",1,,,,,,,,,,,,,,,,
20,2,,121120-12531,,"PAN ASSY, DUST",1,,,,,,,,,,,,,,,,
21,2,,121120-12541,,"RETAINER, ELEMENT",1,,,,,,,,,,,,,,,,
22,2,,129150-12510,,"ELEMENT, AIR CLEANER",1,,,,,,,,,,,,,,,,
23,2,,121120-12561,,"BOLT, WING",1,,,,,,,,,,,,,,,,
24,2,,121120-12571,,"SEAL WASHER",1,,,,,,,,,,,,,,,,
```

silverhorn.co.uk

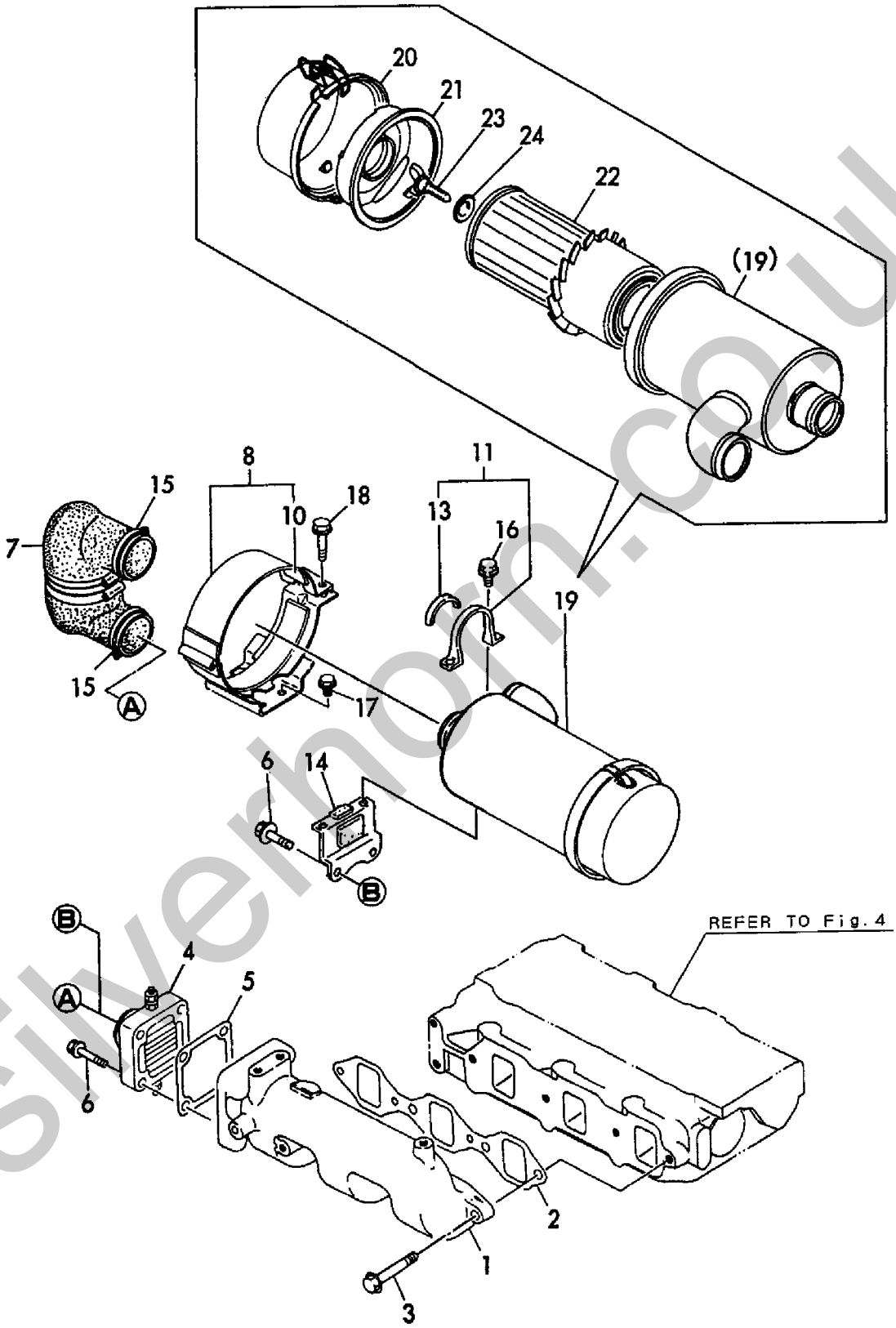

silverhorn.co.uk

```
1,1,,119813-13100,,"MANIFOLD,EXHAUST",1,,,,,,,,,,,,,,,,
2,1,,119813-13110,,"GASKET, EXH.MANIFOLD",1,,,,,,,A,,,,,,,,,
3,1,,194990-22050,,"NUT W/WASHER  8",2,,,,,,,,,,,,,,,,
3-1,1,,26366-080002,,"NUT M 8",2,,,,,,R,,,E/#44548,,,,,,,,
4,1,,26106-080602,,"BOLT M 8X 60 PLATED",4,,,,,,,,,,,,,,,,
5,1,,26216-080222,,"STUD M 8X 22 PLATED",4,,,,,,,,,,,,,,,,
5-1,1,,119131-18320,,"BOLT M 8X 22",4,,,,,,N,,,E/#16864,,,,,,,,
6,1,,26216-080602,,"STUD M 8X 60 PLATED",2,,,,,,,,,,,,,,,,
7,1,,124701-11911,,"GASKET, (NON-ASB.)",1,,,,,,,,,,,,,,,,
8,1,,119812-13500,,SILENCER,1,,,,,,,,,,,,,,,,
9,1,,119836-13650,,"STAY, SILENCER",1,,,,,,,,,,,,,,,,
10,1,,194990-22050,,"NUT W/WASHER  8",4,,,,,,,,,,,,,,,,
10-1,1,,26366-080002,,"NUT M 8",4,,,,,,R,,,E/#44548,,,,,,,,
11,1,,26014-080202,,"BOLT M 8X 20",4,,,,,,,,,,,,,,,,
```

silverhorn.co.uk

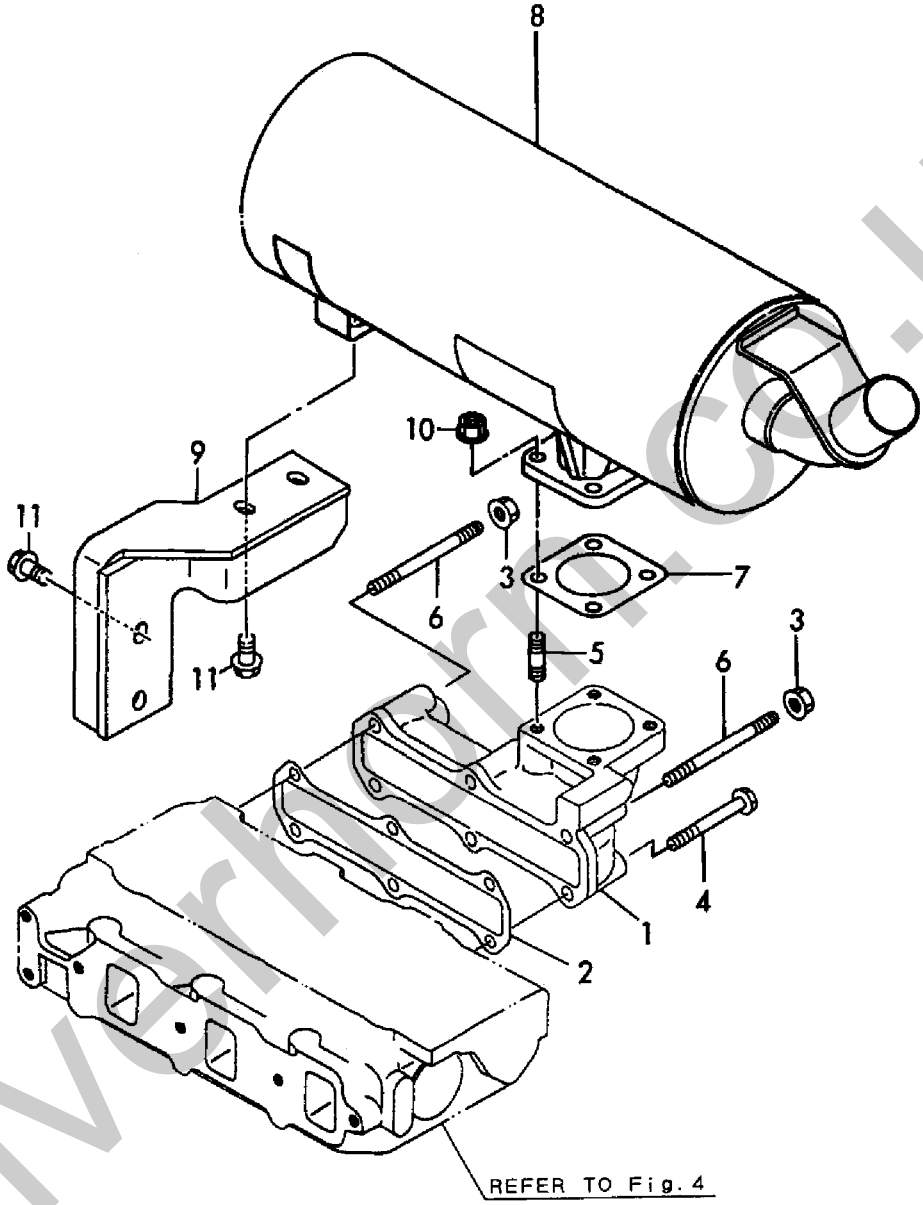

silverhorn.co.uk

```
1,1,,119810-14580,,"CAMSHAFT ASSY",1,,,,,,,,,,,,,,,,
3,2,,129150-14101,,"GEAR, CAMSHAFT",1,,,,,,,,,,,,,,,,
4,2,,22512-070140,,"KEY  7X 14",1,,,,,,,,,,,,,,,,
5,2,,129150-02450,,"METAL,THRUST",1,,,,,,,,,,,,,,,,
6,1,,129100-25061,,"SHAFT, IDLE GEAR",1,,,,,,,,,,,,,,,,
7,1,,129150-25101,,"GEAR W/BUSH",1,,,,,,,,,,,,,,,,
10,1,,26106-080452,,"BOLT M 8X 45 PLATED",2,,,,,,,,,,,,,,,,
11,1,,129150-25920,,"BUSH, IDLE GEAR",1,,,,,,,1,,,,,,,,,
12,1,,26106-080142,,"BOLT M 8X 14 PLATED",2,,,,,,,,,,,,,,,,
13,1,,129150-14200,,TAPPET,6,,,,,,,,,,,,,,,,
14,1,,119810-14400,,"ROD, PUSH",6,,,,,,,,,,,,,,,,
```

silverhorn.co.uk

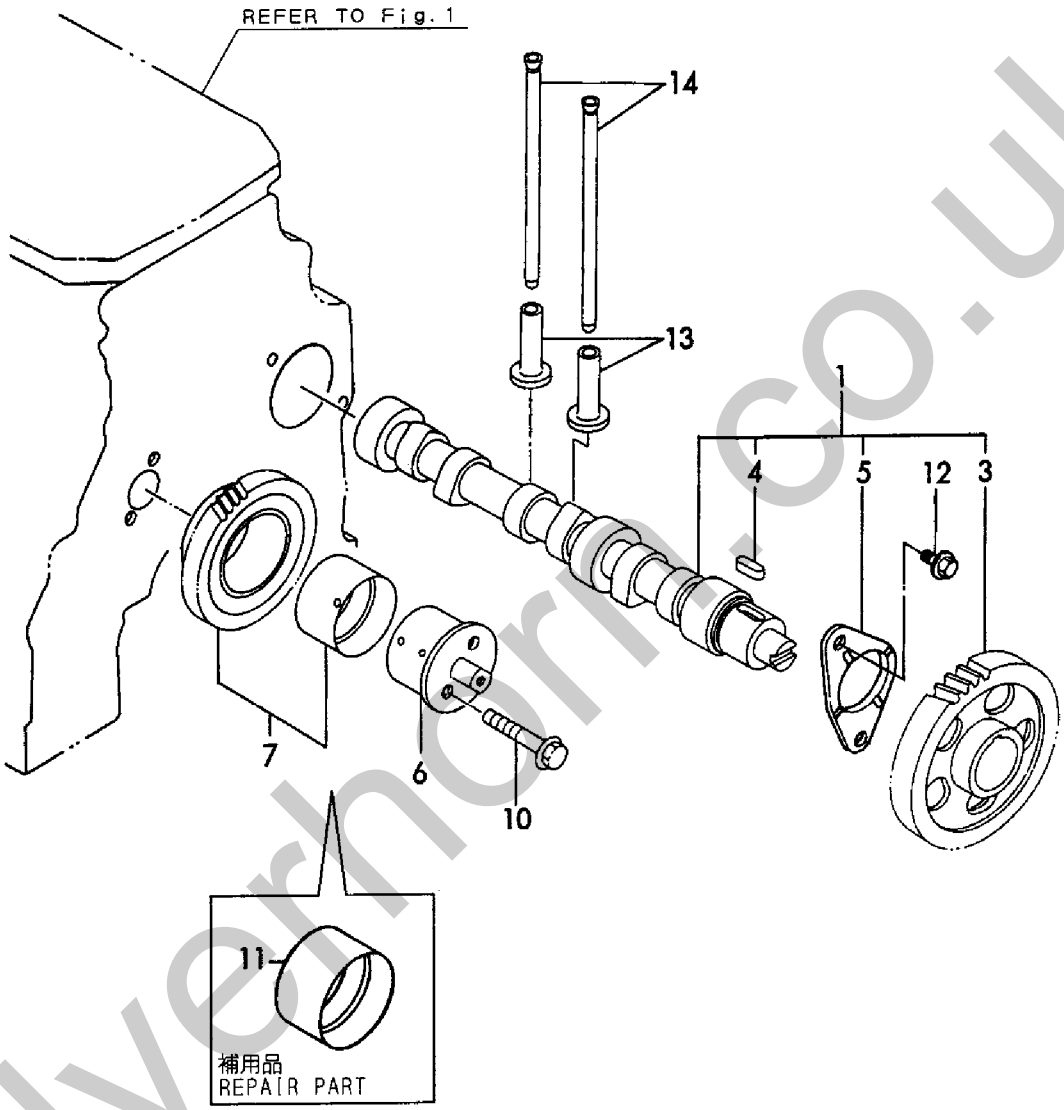

silverhorn.co.uk

```
1,1,,119813-21000,,"CRANKSHAFT ASSY",1,,,,,,,,,,,,,,,
2,2,,129100-01580,,"PARALLEL PIN 8X16",1,,,,,,,,,,,,,,,,
4,2,,129150-21200,,"GEAR, CRANKSHAFT",1,,,,,,,,,,,,,,,,
5,2,,22512-070140,,"KEY  7X 14",1,,,,,,,,,,,,,,,,
7,1,,22351-040010,,"SPRING PIN 4X10",1,,,,,,,,,,,,,,,,
8,1,,171301-21650,,"V-PULLEY, CRANKSHAFT",1,,,,,,,,,,,,,,,,,
9,1,,129795-21661,,WASHER,1,,,,,,,,,,,,,,,,
10,1,,121850-21680,,"BOLT, V-PULLEY",1,,,,,,,,,,,,,,,,
11,1,,121111-21501,,"BOLT, FLYWHEEL",6,,,,,,,,,,,,,,,,
12,1,,171325-21590,,"FLYWHEEL W/GEAR",1,,,,,,,,,,,,,,,,,
14,2,,119865-21600,,"GEAR, RING",1,,,,,,,,,,,,,,,,
15,1,,119813-22080,,"PISTON ASSY",3,,,,,,,,,,,,,,,,
17,2,,119813-22500,,"RING SET, PISTON",3,,,,,,,,,,,,,,,,,
21,1,,119813-22300,,"PIN, PISTON",3,,,,,,,,,,,,,,,,
22,1,,129792-22400,,"CIRCLIP   23",6,,,,,,,,,,,,,,,,
23,1,,719810-23100,,"ROD ASSY, CONNECTING",3,,,,,,,,,,,,,,,,,
26,2,,119810-23200,,"BOLT, CONNECTING ROD",6,,,,,,,,,,,,,,,,,
27,2,,119810-23600,,"BEARING, CRANKPIN",3,,,,,,,,,,,,,,,,,
29,1,,119810-23610,,"BEARING,PIN U.S=0.25",3,,,,,,,1,,,,,,,,,
31,1,,119810-23910,,"BUSH, PISTON PIN",3,,,,,,,2,,,,,,,,,
32,1,,119813-22900,,"PISTON W/RING OS=.25",3,,,,,,,3,,,,,,,,,
34,2,,129003-22950,,"RING SET O.S=0.25",3,,,,,,,3,,,,,,,,,
```

silverhorn.co.uk

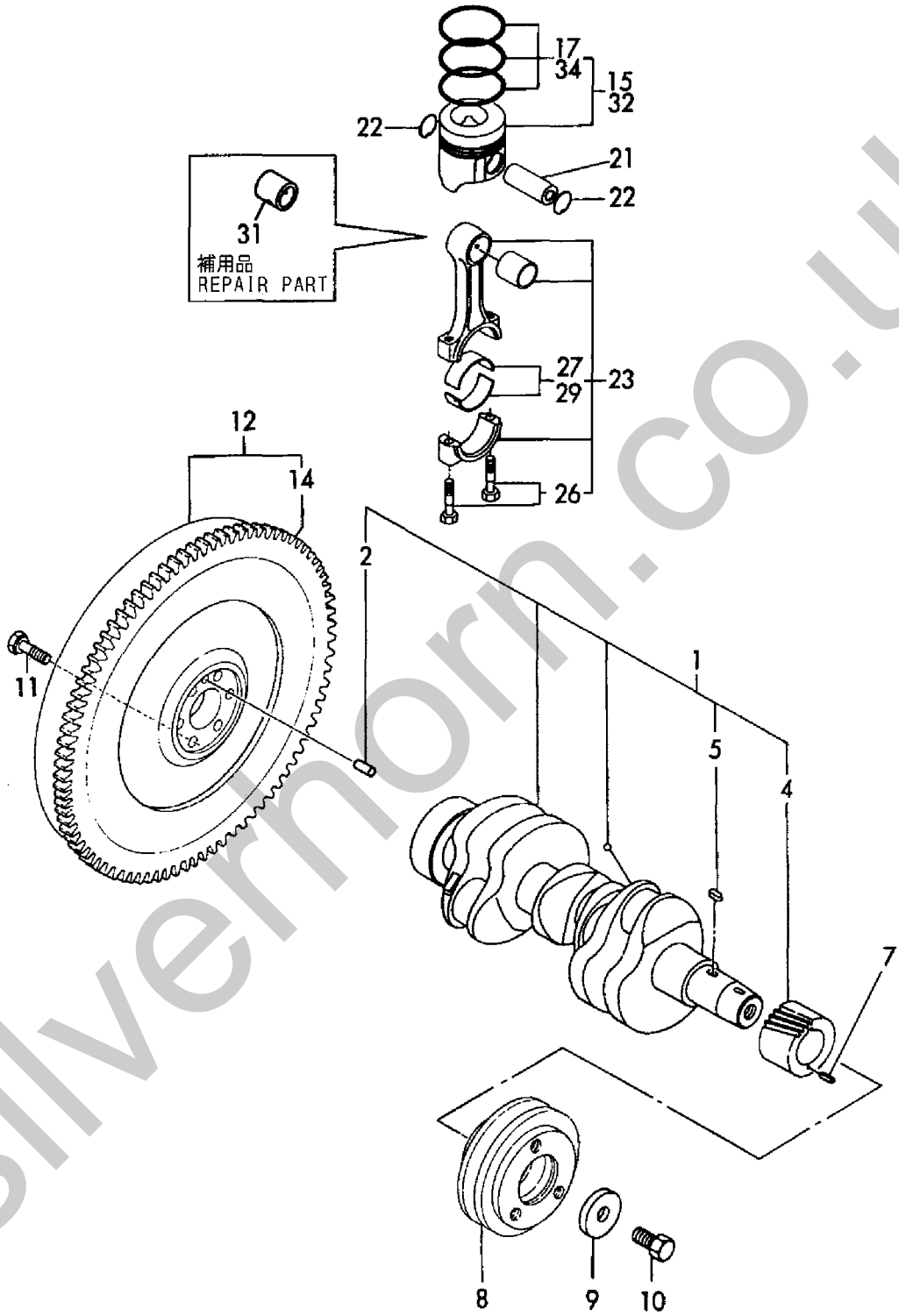

silvermorn.co.uk

```
1,1,,129001-32001,,"PUMP ASSY, LUB. OIL",1,,,,,,,,,,,,,,,,
14,1,,129150-32020,,"GASKET, L.O. PUMP",1,,,,,,,A,,,,,,,,,
15,1,,26450-060252,,"BOLT M 6X 25",4,,,,,,,,,,,,,,,,
16,1,,119812-34800,,"DIPSTIC, LUB OIL",1,,,,,,,,,,,,,,,,
17,1,,121520-34810,,"GUIDE, DIPSTICK",1,,,,,,,,,,,,,,,,
18,1,,129150-35041,,"GASKET, (NON-ASB.)",1,,,,,,,A,,,,,,,,,
19,1,,119810-35401,,"PIPE ASSY, OIL INLET",1,,,,,,,,,,,,,,,,
23,1,,26106-080352,,"BOLT M 8X 35 PLATED",2,,,,,,,,,,,,,,,,
24,1,,129150-35101,,"BRACKET, STRAINER",1,,,,,,,,,,,,,,,,
25,1,,129150-35111,,"GASKET, (NON-ASB.)",1,,,,,,,A,,,,,,,,,
26,1,,129150-35151,,"FILTER 80X80L",1,,,,,,,,,,,,,,,,
27,1,,129001-35300,,"BOLT,LUB.O. STRAINER",1,,,,,,,,,,,,,,,,
28,1,,129150-35350,,NUT,1,,,,,,,,,,,,,,,,
29,1,,24311-000160,,"O-RING 1A P-16.0",1,,,,,,,,,,,,,,,,
30,1,,26106-080202,,"BOLT M 8X 20 PLATED",3,,,,,,,,,,,,,,,,
31,1,,124160-39140,,"BOLT 10, PIPE JOINT",1,,,,,,,,,,,,,,,,
32,1,,119810-39200,,"PIPE ASSY, LUB. OIL",1,,,,,,,,,,,,,,,,
36,1,,124160-39450,,"SWITCH, OIL PRESSURE",1,,,,,,,,,,,,,,,,
37,1,,124550-59820,,"BOLT 8, PIPE JOINT",1,,,,,,,,,,,,,,,,
38,1,,22190-080002,,"SEAL WASHER  8S",2,,,,,,,,,,,,,,,,
39,1,,23414-100000,,"GASKET 10, ROUND",2,,,,,,,,,,,,,,,,
```

silverhorn.co.uk

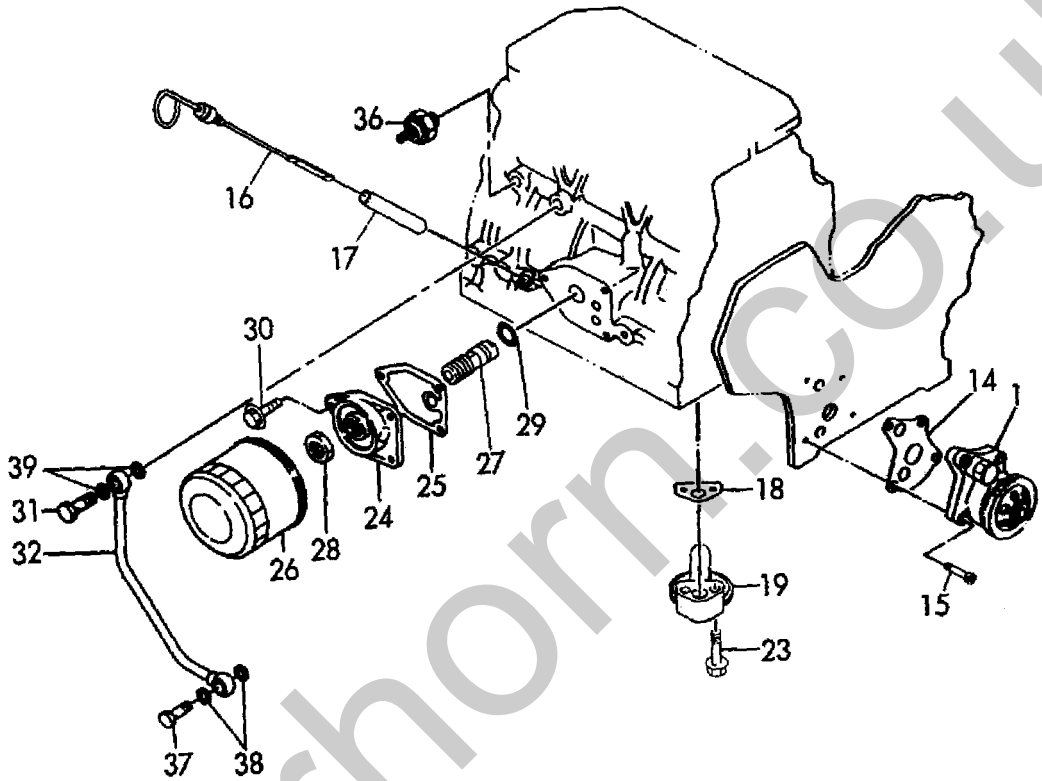

silverhorn.co.uk

```
1,1,,119810-42001,,"PUMP,C.W.(NON-ASB.)",1,,,,,,,,,,,,,,,,
11,2,,129150-42320,,O-RING,1,,,,,,,,,,,,,,,,
12,2,,23871-030000,,"PLUG PT3/8,SCREW",2,,,,,,,,,,,,,,,,
14,1,,129150-42020,,"GASKET, C.W. PUMP",1,,,,,,,A,,,,,,,,,
15,1,,26106-080352,,"BOLT M 8X 35 PLATED",1,,,,,,,,,,,,,,,,
16,1,,26106-080552,,"BOLT M 8X 55 PLATED",3,,,,,,,,,,,,,,,,
17,1,,25132-003900,,"V-BELT (A-39)",1,,,,,,,,,,,,,,,,
17-1,1,,129211-42290,,V-BELT,1,,,,,,N,,,E/#15170,,,,,,,,
18,1,,129550-42350,,V-PULLEY(D=120),1,,,,,,,,,,,,,,,,
19,1,,171340-44740,,"FAN, COOLING",1,,,,,,,,,,,,,,,,
20,1,,26106-060552,,"BOLT M 6X 55 PLATED",4,,,,,,,,,,,,,,,,
21,1,,129350-49530,,"COVER, THERMOSTAT",1,,,,,,,,,,,,,,,,
22,1,,129795-49551,,"GASKET, (NON-ASB.)",1,,,,,,,A,,,,,,,,,
23,1,,129155-49800,,THERMOSTAT,1,,,,,,,,,,,,,,,,
24,1,,129150-49811,,"GASKET, (NON-ASB.)",1,,,,,,,A,,,,,,,,,
25,1,,26106-080202,,"BOLT M 8X 20 PLATED",2,,,,,,,,,,,,,,,,
26,1,,121550-49111,,"JOINT PT1/4",1,,,,,,,,,,,,,,,,
27,1,,121450-42450,,"PLUG M16",1,,,,,,,,,,,,,,,,
28,1,,121250-44901,,"SWITCH, THERMO(110ßC",1,,,,,,,,,,,,,,,,
29,1,,124465-44950,,"GASKET 16",1,,,,,,,,,,,,,,,,
30,1,,124465-44950,,"GASKET 16",1,,,,,,,,,,,,,,,,
31,1,,119256-44760,,SPACER,1,,,,,,,,,,,,,,,,
```

silverhorn.co.uk

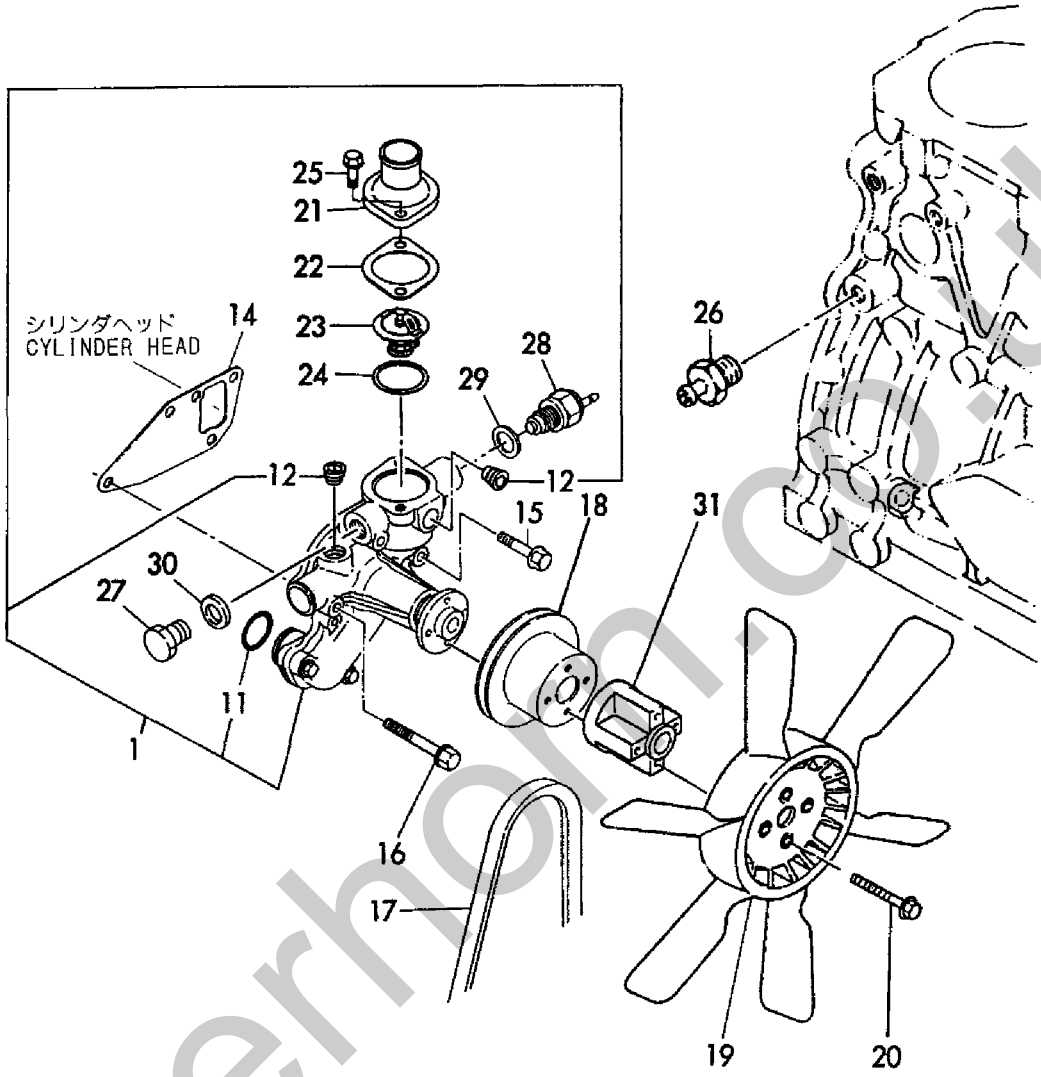

silverhorn.co.uk

```
1,1,,719824-51360,,"PUMP ASSY, F.INJECT.",1,,,,,,,1,,,,,,,,,
2,2,,22217-050000,,"SPRING WASHER  5",2,,,,,,,,,,,,,,,
4,2,,129155-51020,,"STUD, FEED PUMP",2,,,,,,,,,,,,,,,
5,2,,119810-51040,,CAMSHAFT,1,,,,,,,,,,,,,,,
6,2,,129155-51050,,"BALL BEARING, THRUST",1,,,,,,,,,,,,,,,
7,2,,129155-51060,,"CAM SHAFT SUPPORT",1,,,,,,,,,,,,,,,
8,2,,122710-51090,,KEY,1,,,,,,,,,,,,,,,
9,2,,129108-51100,,"PLUNGER W/BARREL",3,,,,,,,,,,,,,,,
12,2,,129155-51140,,"PIN, BARREL LOCKING",3,,,,,,,,,,,,,,,
13,2,,174307-51170,,"RETAINER A",3,,,,,,,,,,,,,,,
14,2,,129155-51180,,"SPRING SHOE, PLUNGER",3,,,,,,,,,,,,,,,
15,2,,124950-51190,,"SPRING, PLUNGER",3,,,,,,,,,,,,,,,
16,2,,129155-51200,,"TAPPET ASSY",3,,,,,,,,,,,,,,,
23,2,,129155-51270,,"LOCKING, TAPPET",3,,,,,,,,,,,,,,,
24,2,,129155-51280,,"O-RING S6",3,,,,,,,,,,,,,,,
25,2,,129505-51300,,"VALVE W/SEAT, DELIV.",3,,,,,,,,,,,,,,,
28,2,,129155-51320,,"SPRING, DELIV. VALVE",3,,,,,,,,,,,,,,,
29,2,,129155-51340,,"GUARD,DELIVERY VALVE",3,,,,,,,,,,,,,,,
30,2,,124550-51350,,"GASKET, DELIVERY",3,,,,,,,,,,,,,,,
31,2,,124550-51370,,"O-RING, DELIVERY",3,,,,,,,,,,,,,,,
32,2,,129155-51370,,"STOPPER, VALVE",3,,,,,,,,,,,,,,,
33,2,,129155-51380,,"LOCKING (A)",2,,,,,,,,,,,,,,,
34,2,,129155-51390,,"LOCKING (B)",2,,,,,,,,,,,,,,,
35,2,,129155-51400,,DEFLECTOR,1,,,,,,,,,,,,,,,
36,2,,129155-51410,,"CHECK BOLT,DEFLECTOR",1,,,,,,,,,,,,,,,
37,2,,129155-51420,,"PLUG  (M16)",1,,,,,,,,,,,,,,,
38,2,,129155-51450,,"SHIM SET, ADJUSTING",1,,,,,,,,,,,,,,,
43,2,,129155-51500,,"RACK, CONTROL",1,,,,,,,,,,,,,,,
44,2,,129155-51521,,"BUSH, RACK",1,,,,,,,,,,,,,,,
45,2,,129155-51530,,"SPACER, AUX. SPRING",1,,,,,,,,,,,,,,,
46,2,,129155-51540,,CIRCLIP,1,,,,,,,,,,,,,,,
47,2,,129155-51550,,"PINION, CONTROL",3,,,,,,,,,,,,,,,
48,2,,122117-51560,,"SCREW, PINION",3,,,,,,,,,,,,,,,
49,2,,174307-51560,,PINION,3,,,,,,,,,,,,,,,
50,2,,129155-51570,,"PLUG  (M12)",1,,,,,,,,,,,,,,,
51,2,,129155-51580,,O-RING,1,,,,,,,,,,,,,,,
52,2,,129155-51591,,"SPRING, RACK",1,,,,,,,,,,,,,,,
53,2,,129155-51600,,"SHIM PACK",3,,,,,,,,,,,,,,,
72,2,,129155-51700,,"COVER, LOWER",1,,,,,,,,,,,,,,,
73,2,,129155-51710,,"GASKET, LOWER COVER",1,,,,,,,,,,,,,,,
74,2,,129155-51750,,"COVER, SIDE",1,,,,,,,,,,,,,,,
75,2,,129155-51760,,"GASKET, SIDE COVER",1,,,,,,,,,,,,,,,
76,2,,129155-51790,,"LOCKING, RACK",1,,,,,,,,,,,,,,,
77,2,,129156-51910,,"LABEL, CAUTION",1,,,,,,,,,,,,,,,
78,2,,129155-51930,,"SPACER T=3.25",1,,,,,,,,,,,,,,,
79,2,,129155-51940,,"SPACER T=1.5",1,,,,,,,,,,,,,,,
80,2,,22217-060000,,"SPRING WASHER  6",2,,,,,,,,,,,,,,,
81,2,,22351-050010,,"SPRING PIN 5X10",2,,,,,,,,,,,,,,,
82,2,,24101-063034,,"BALL BEARING",1,,,,,,,,,,,,,,,
83,2,,24341-000160,,"O-RING 1A S-16.0",1,,,,,,,,,,,,,,,
84,2,,26022-050102,,"SCREW M 5X 10",8,,,,,,,,,,,,,,,
85,2,,26022-060162,,"SCREW M 6X 16",4,,,,,,,,,,,,,,,
86,2,,26116-050302,,"BOLT M 5X 30 PLATED",2,,,,,,,,,,,,,,,
87,2,,26716-060002,,"NUT 6",2,,,,,,,,,,,,,,,
88,2,,22190-160002,,"SEAL WASHER 16S",1,,,,,,,,,,,,,,,
89,2,,129155-52050,,GASKET,1,,,,,,,,,,,,,,,
90,2,,129100-52100,,"PUMP ASSY, FUEL FEED",1,,,,,,,,,,,,,,,
106,1,,129150-25900,,"GEAR, FUEL INJ. PUMP",1,,,,,,,,,,,,,,,
107,1,,22217-120000,,"SPRING WASHER",1,,,,,,,,,,,,,,,
108,1,,26716-120002,,"NUT 12",1,,,,,,,,,,,,,,,
```

silvermorn.co.uk

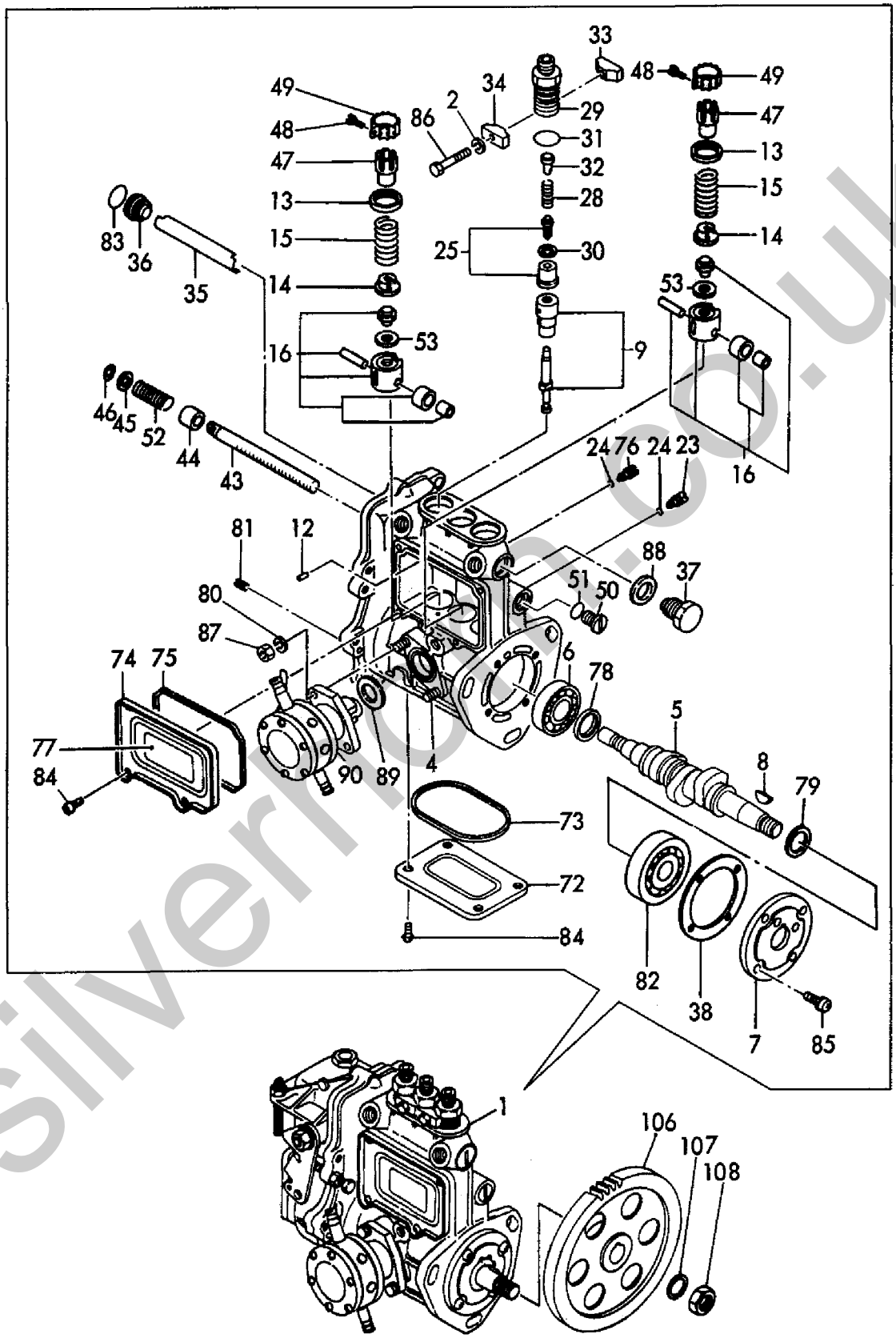

silverfox.co.uk

```
1,1,,729500-53200,,"VALVE ASSY, F.INJECT",3,,,,,,,,,,,,,,,,
2,2,,129500-53050,,"NOZZLE ASSY,F.INJECT",3,,,,,,,,,,,,,,,,
5,2,,114250-53080,,"NUT, NOZZLE CASE",3,,,,,,,,,,,,,,,,
6,2,,129100-53100,,"HOLDER ASSY, NOZZLE",3,,,,,,,,,,,,,,,,
9,2,,114250-53120,,"SPRING, NOZZLE",3,,,,,,,,,,,,,,,,
10,2,,114250-53130,,"SEAT, NOZZLE SPRING",3,,,,,,,,,,,,,,,,
11,2,,114250-53140,,"PLATE, STOP",3,,,,,,,,,,,,,,,,
12,2,,114250-53210,,PIN,6,,,,,,,,,,,,,,,,
13,2,,114250-53400,,"SHIM PACK",3,,,,,,,,,,,,,,,,
20,1,,129150-59120,,"RETAINER, INJ. PIPE",1,,,,,,,,,,,,,,,,
23,2,,129150-59131,,"BOLT M4X14,HEX.SCKT.",2,,,,,,,,,,,,,,,,
24,1,,119810-59810,,"PIPE, FUEL INJECTION",1,,,,,,,,,,,,,,,,
28,1,,119810-59820,,"PIPE, FUEL INJECTION",1,,,,,,,,,,,,,,,,
32,1,,119810-59830,,"PIPE, FUEL INJECTION",1,,,,,,,,,,,,,,,,
```

silverhorn.co.uk

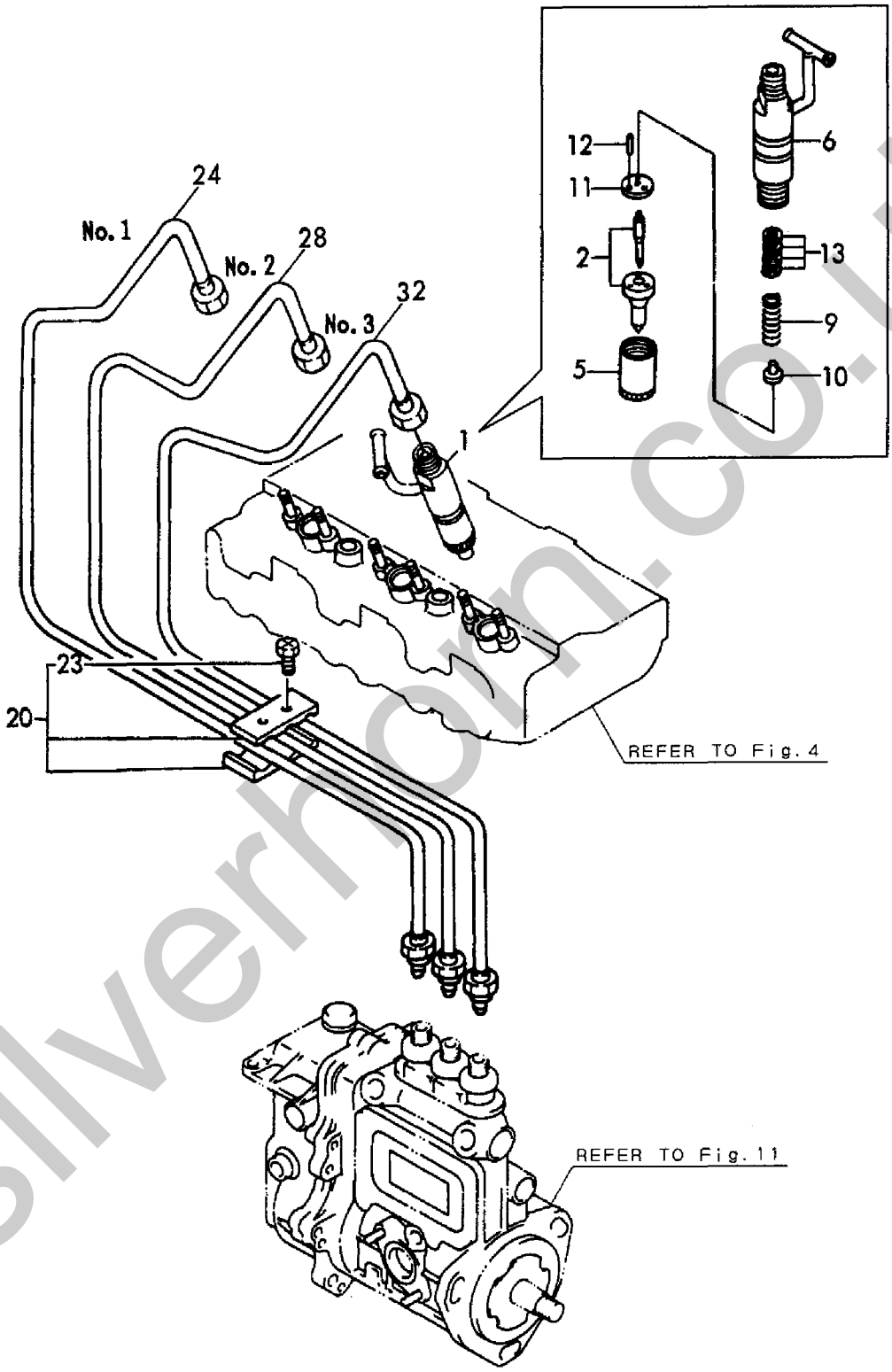

silverhorn.co.uk

```
1,1,,119833-55620,,"STRAINER ASSY, FUEL",1,,,,,,,,,,,,,,,,
2,2,,104200-55321,,"VALVE, TAPER",1,,,,,,,,,,,,,,,,
3,2,,104200-55330,,"SPRING, TAPER VALVE",1,,,,,,,,,,,,,,,,
4,2,,119810-55340,,LEVER,1,,,,,,,,,,,,,,,,
5,2,,121254-55510,,"CUP, STRAINER",1,,,,,,,,,,,,,,,,
6,2,,102103-55520,,O-RING,1,,,,,,,,,,,,,,,,
7,2,,110250-55610,,"RING, RETAINING",1,,,,,,,,,,,,,,,,
8,2,,121250-55620,,SPRING,1,,,,,,,,,,,,,,,,
9,2,,119810-55650,,ELEMENT,1,,,,,,,,,,,,,,,,
12,2,,104200-55750,,"SCREW M 4",1,,,,,,,,,,,,,,,,
13,2,,24311-240100,,"O-RING 1A P-10A",1,,,,,,,,,,,,,,,,
14,1,,26014-080852,,"BOLT M 8X 85",1,,,,,,,,,,,,,,,,
15,1,,103854-39140,,"BOLT, PIPE JOINT",1,,,,,,,,,,,,,,,,
16,1,,101304-59020,,"JOINT 12, PIPE",1,,,,,,,,,,,,,,,,
17,1,,124766-59050,,"CLAMP 12",2,,,,,Z,,E/#44670,,,,,,,
18,1,,22190-120002,,"SEAL WASHER 12",2,,,,,,,,,,,,,,,,
19,1,,129210-59040,,"PIPE ASSY, FUEL OIL",1,,,,,W,,E/#44670,,,,,,,
19B,2,,124766-59050,,"CLAMP 12",2,,,,,W,,E/#44670,,,,,,,
20,1,,129210-59130,,"PIPE ASSY, FUEL OIL",1,,,,,W,,E/#44670,,,,,,,
21,2,,124766-59050,,"CLAMP 12",2,,,,,,,,,,,,,,,,
22,1,,124066-59100,,"CLAMP  8",7,,,,,,,,,,,,,,,,
23,1,,121250-59550,,"PIPE, FUEL",2,,,,,,,,,,,,,,,,
24,1,,119840-59560,,"PIPE, FUEL RETURN",1,,,,,,,,,,,,,,,,
25,1,,119840-59570,,JOINT,1,,,,,,,,,,,,,,,,
26,1,,129150-59580,,CAP,1,,,,,,,,,,,,,,,,
27,1,,129210-59130,,"PIPE ASSY, FUEL OIL",1,,,,,W,,E/#44670,,,,,,,
27A,2,,105025-59750,,"PIPE, FUEL OIL",1,,,,,,,,,,,,,,,,
27B,2,,124766-59050,,"CLAMP 12",2,,,,,W,,E/#44670,,,,,,,
28,1,,129100-59951,,"VALVE ASSY, CHECK",1,,,,,,,,,,,,,,,,
36,1,,124766-59050,,"CLAMP 12",2,,,,,Z,,E/#44670,,,,,,,
37,1,,23414-120000,,"GASKET 12, ROUND",2,,,,,,,,,,,,,,,,
38,1,,129411-55690,,SPACER,1,,,,,,,,,,,,,,,,
```

silverhorn.co.uk

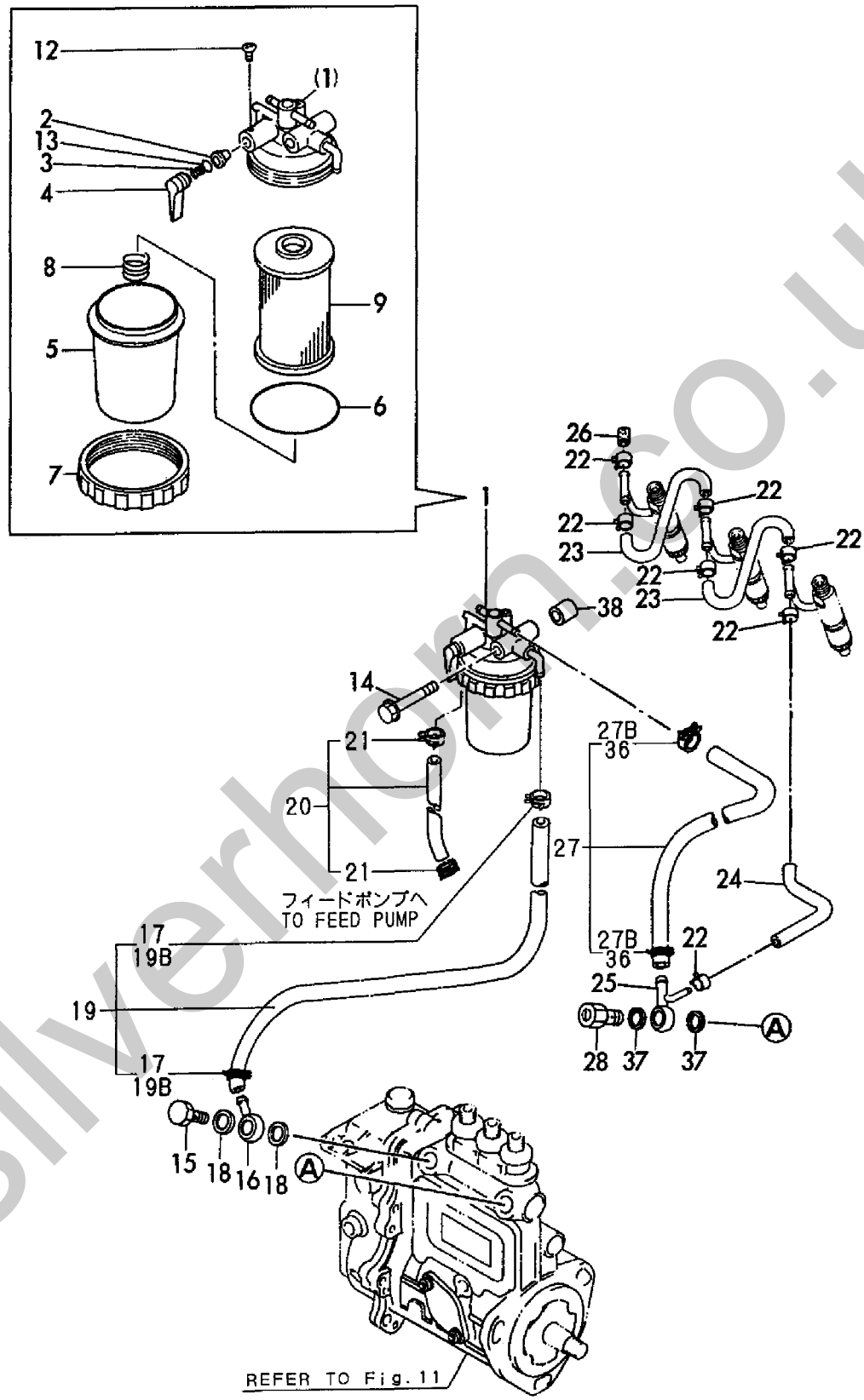

silverhorn.co.uk

```
1,2,,129155-51280,,"O-RING S6",1,,,,,,,,,,,,,,,,
2,2,,129052-61010,,"CASE, GOVERNOR",1,,,,,,,,,,,,,,,,
3,2,,129052-61050,,PACKING,1,,,,,,,,,,,,,,,,
4,2,,129052-61060,,COVER,1,,,,,,,,,,,,,,,,
5,2,,129052-61070,,PACKING,1,,,,,,,,,,,,,,,,
6,2,,129155-61120,,"LINK L=30(MARK 0",1,,,,,,,1,,,,,,,,,,
7,2,,129155-61130,,"LINK L=31(MARK 1",1,,,,,,,1,,,,,,,,,,
8,2,,129155-61140,,"LINK L=30.5(MARK 05)",1,,,,,,,1,,,,,,,,,,
9,2,,129155-61201,,"WEIGHT ASSY, GOV.",1,,,,,,,,,,,,,,,,
13,2,,129155-61341,,SLEEVE,1,,,,,,,2,,,,,,,,,,
14,2,,129155-61350,,SLEEVE,1,,,,,,,2,,,,,,,,,,
15,2,,129155-61360,,SLEEVE,1,,,,,,,2,,,,,,,,,,
16,2,,129100-61400,,"SHAFT ASSY, CONTROL",1,,,,,,,,,,,,,,,,
19,2,,129155-61430,,"SPACER, SHAFT",1,,,,,,,,,,,,,,,,
20,2,,129155-61450,,"BOLT, REVOL. LIMIT",1,,,,,,,,,,,,,,,,
21,2,,129155-61460,,"BOLT, IDLE LIMIT",1,,,,,,,,,,,,,,,,
22,2,,129155-61480,,"SPACER ASSY",2,,,,,,,,,,,,,,,,
23,2,,129052-61390,,"SHAFT, GOV. LEVER",1,,,,,,,,,,,,,,,,
24,2,,129052-61500,,"LEVER ASSY,GOVERNOR",1,,,,,,,,,,,,,,,,
25,3,,174307-51700,,"SHIM SET",2,,,,,,,,,,,,,,,,
29,3,,129052-61540,,SPRING,1,,,,,,,,,,,,,,,,
30,3,,129155-61540,,SHIFTER,1,,,,,,,,,,,,,,,,
35,3,,22272-000040,,"CIRCLIP E- 4",1,,,,,,,,,,,,,,,,
38,2,,129155-61830,,"O-RING S10",1,,,,,,,,,,,,,,,,
39,2,,119660-61901,,"RETAINER, SHAFT",1,,,,,,,,,,,,,,,,
40,2,,129155-61950,,"BOLT, WASHER BASED",1,,,,,,,,,,,,,,,,
41,2,,124550-66370,,"LOCK NUT M 6",1,,,,,,,,,,,,,,,,
42,2,,22117-040000,,"WASHER  4",1,,,,,,,,,,,,,,,,
43,2,,22190-060002,,"SEAL WASHER  6S",1,,,,,,,,,,,,,,,,
44,2,,22190-100002,,"SEAL WASHER 10S",1,,,,,,,,,,,,,,,,
45,2,,22190-120002,,"SEAL WASHER 12",2,,,,,,,,,,,,,,,,
46,2,,22287-120000,,"WASHER 12",1,,,,,,,,,,,,,,,,
47,2,,22372-040000,,"SNAP PIN  4",2,,,,,,,,,,,,,,,,
48,2,,23887-100002,,"PLUG 10",1,,,,,,,,,,,,,,,,
49,2,,24341-000280,,"O-RING 1A S-28.0",1,,,,,,,,,,,,,,,,
50,2,,26106-060102,,"BOLT M 6X 10 PLATED",1,,,,,,,,,,,,,,,,
51,2,,26106-060102,,"BOLT M 6X 10 PLATED",1,,,,,,,,,,,,,,,,
52,2,,26106-060102,,"BOLT M 6X 10 PLATED",4,,,,,,,,,,,,,,,,
53,2,,26106-060142,,"BOLT M 6X 14 PLATED",2,,,,,,,,,,,,,,,,
54,2,,26106-060202,,"BOLT M 6X 20 PLATED",6,,,,,,,,,,,,,,,,
55,2,,26756-060002,,"LOCK NUT 6",1,,,,,,,,,,,,,,,,
56,2,,26776-120002,,"LOCK NUT M12 PLATED",2,,,,,,,,,,,,,,,,
57,1,,129100-61440,,"LEVER, CONTROL",1,,,,,,,,,,,,,,,,
58,1,,129155-61470,,"BOLT, FUEL CONTROL",1,,,,,,,,,,,,,,,,
59,1,,129132-61550,,"ANGLEICH ASSY",1,,,,,,,,,,,,,,,,
63,2,,129155-61590,,NUT,1,,,,,,,,,,,,,,,,
67,1,,129100-61650,,"SPRING, FUEL CONTROL",1,,,,,,,,,,,,,,,,
68,1,,129489-61700,,"SPRING, GOVERNOR",1,,,,,,,,,,,,,,,,
69,1,,119233-77951,,SOLENOID,1,,,,,,,,,,,,,,,,
70,1,,26366-080002,,"NUT M 8",1,,,,,,,,,,,,,,,,
71,1,,26687-120002,,"CAP NUT M12",1,,,,,,,,,,,,,,,,
```

silverhorn.co.uk

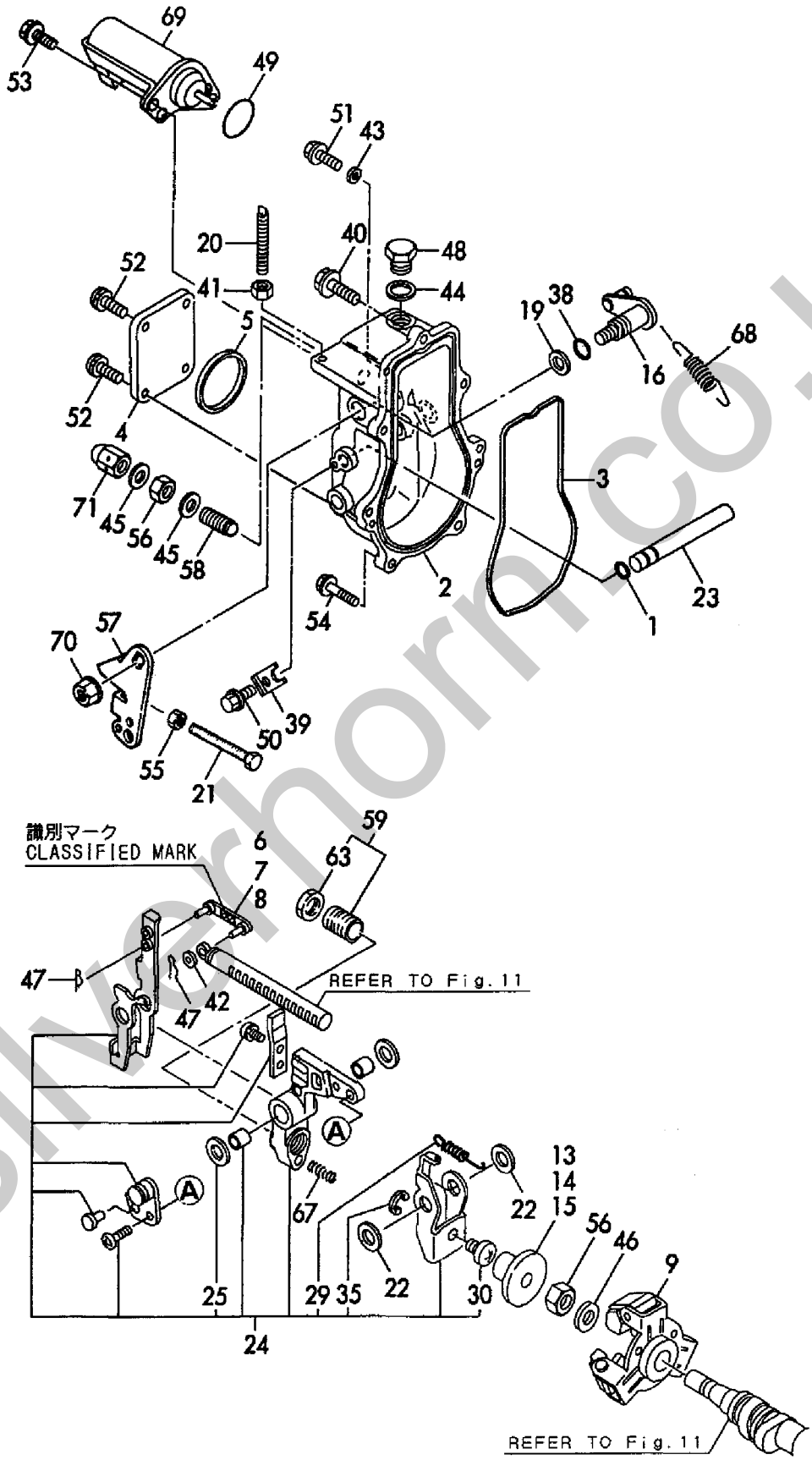

silverhorn.co.uk

```
1,1,,124976-77011,,"STARTER (S114-349A)",1,,,,,,,,,,,,,,,,
2,2,,X211451007,,"ARMATURE ASSY",1,,,,,,,,,,,,,,,,
3,3,,171008-77410,,BEARING(1),1,,,,,,,,,,,,,,,,
4,3,,171008-77420,,BEARING(2),1,,,,,,,,,,,,,,,,
5,2,,X211472106,,"COIL ASSY, FIELD",1,,,,,,,,,,,,,,,,
6,3,,171008-77450,,"SCREW, POLE CORE SET",4,,,,,,,,,,,,,,,,,,
7,3,,171008-77460,,"BRUSH (+)",2,,,,,,,,,,,,,,,,
8,2,,171008-77500,,"COVER, REAR",1,,,,,,,,,,,,,,,,
9,2,,171008-77470,,"HOLDER ASSY, BRUSH",1,,,,,,,,,,,,,,,,,
10,3,,171008-77480,,"BRUSH (-)",2,,,,,,,,,,,,,,,,
11,3,,171008-77490,,"SPRING, BRUSH",4,,,,,,,,,,,,,,,,
12,2,,X211415505,,"CLUTCH ASSY",1,,,,,,,,,,,,,,,,
13,3,,171008-77660,,"SHAFT, PINION",1,,,,,,,,,,,,,,,,
14,3,,171008-77670,,"STOPPER SET, PINION",1,,,,,,,,,,,,,,,,,
15,3,,X211425505,,"CLUTCH ASSY",1,,,,,,,,,,,,,,,,
16,4,,171008-77730,,"BALL BEARING (3)",1,,,,,,,,,,,,,,,,,
17,4,,171008-77740,,"BALL BEARING (4)",1,,,,,,,,,,,,,,,,,
18,2,,171008-77510,,"HOUSING ASSY, GEAR",1,,,,,,,,,,,,,,,,,
19,2,,X21146012,,"LEVER, SHIFT",1,,,,,,,,,,,,,,,,
20,2,,171008-55730,,"SWITCH, MAGNETIC",1,,,,,,,,,,,,,,,,,
21,2,,124195-77770,,"THROUGH BOLT",2,,,,,,,,,,,,,,,,
22,2,,171008-77571,,"DUST COVER,(NON-ASB.",1,,,,,,,,,,,,,,,,,
23,2,,26106-060322,,"BOLT M 6X 32 PLATED",2,,,,,,,,,,,,,,,,,
24,2,,26106-060402,,"BOLT M 6X 40 PLATED",3,,,,,,,,,,,,,,,,,
25,2,,X211414501,,"HOUSING, CENTER",1,,,,,,,,,,,,,,,,
26,1,,26116-120252,,"BOLT M12X 25 PLATED",2,,,,,,,,,,,,,,,,
```

silverhorn.co.uk

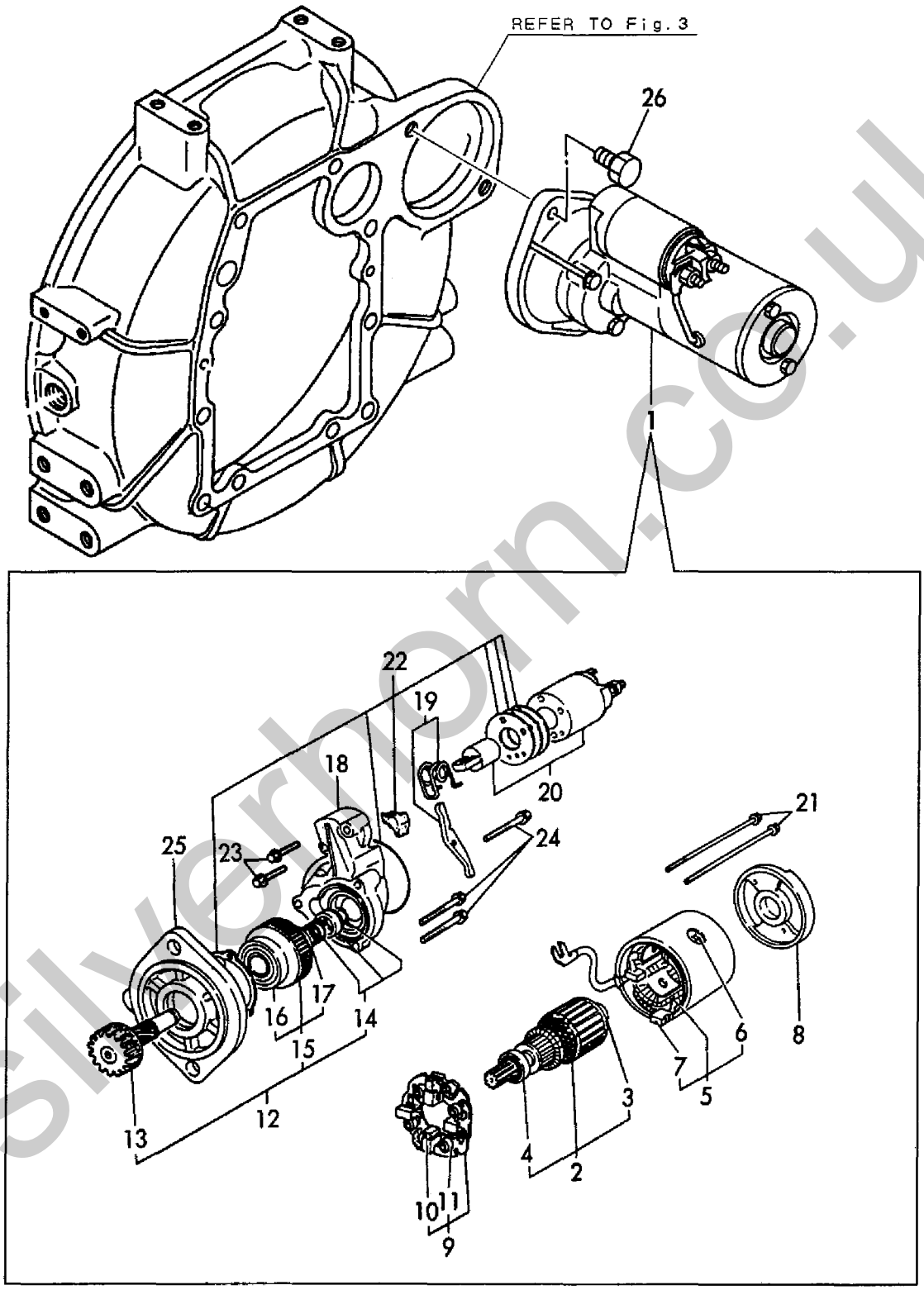

silverhorn.co.uk

```
1,1,,26106-100652,,"BOLT M10X 65 PLATED",1,,,,,,,,,,,,,,,,
1-1,1,,129795-01900,,STUD,1,,,,,,N,,,E/#15988,,,,,,,,
2,1,,129150-77202,,GENERATOR,1,,,,,,,,,,,,,,,,
3,2,,XM219230000,,"WASHER, SPRING",1,,,,,,,,,,,,,,,,
4,2,,XM329830000,,COLLAR,1,,,,,,,,,,,,,,,,
5,2,,XM860250000,,"WASHER 10",1,,,,,,,,,,,,,,,,
6,2,,XM863720000,,NUT,1,,,,,,,,,,,,,,,,
7,2,,129150-77210,,"PLATE ASSY",1,,,,,,,,,,,,,,,,
8,3,,XM069000000,,CLAMP,1,,,,,,,,,,,,,,,,
9,3,,XM081780000,,STATOR,1,,,,,,,,,,,,,,,,
10,3,,XM178780000,,COUPLER,1,,,,,,,,,,,,,,,,
12,3,,XYSPS400800,,SCREW,1,,,,,,,,,,,,,,,,
13,3,,XYSPS402400,,SCREW,2,,,,,,,,,,,,,,,,
14,3,,24107-062010,,"BALL BEARING",1,,,,,,,,,,,,,,,,
15,2,,129150-77230,,"FLYWHEEL ASSY",1,,,,,,,,,,,,,,,,
16,1,,26366-100002,,"NUT M10",1,,,,,,,,,,,,,,,,
17,1,,119867-77331,,ADJUSTER,1,,,,,,,,,,,,,,,,
18,1,,26014-080252,,"BOLT M 8X 25",1,,,,,,,,,,,,,,,,
18-1,1,,119810-77340,,BOLT,1,,,,,,N,,,E/#17106,,,,,,,,
```

silverhorn.co.uk

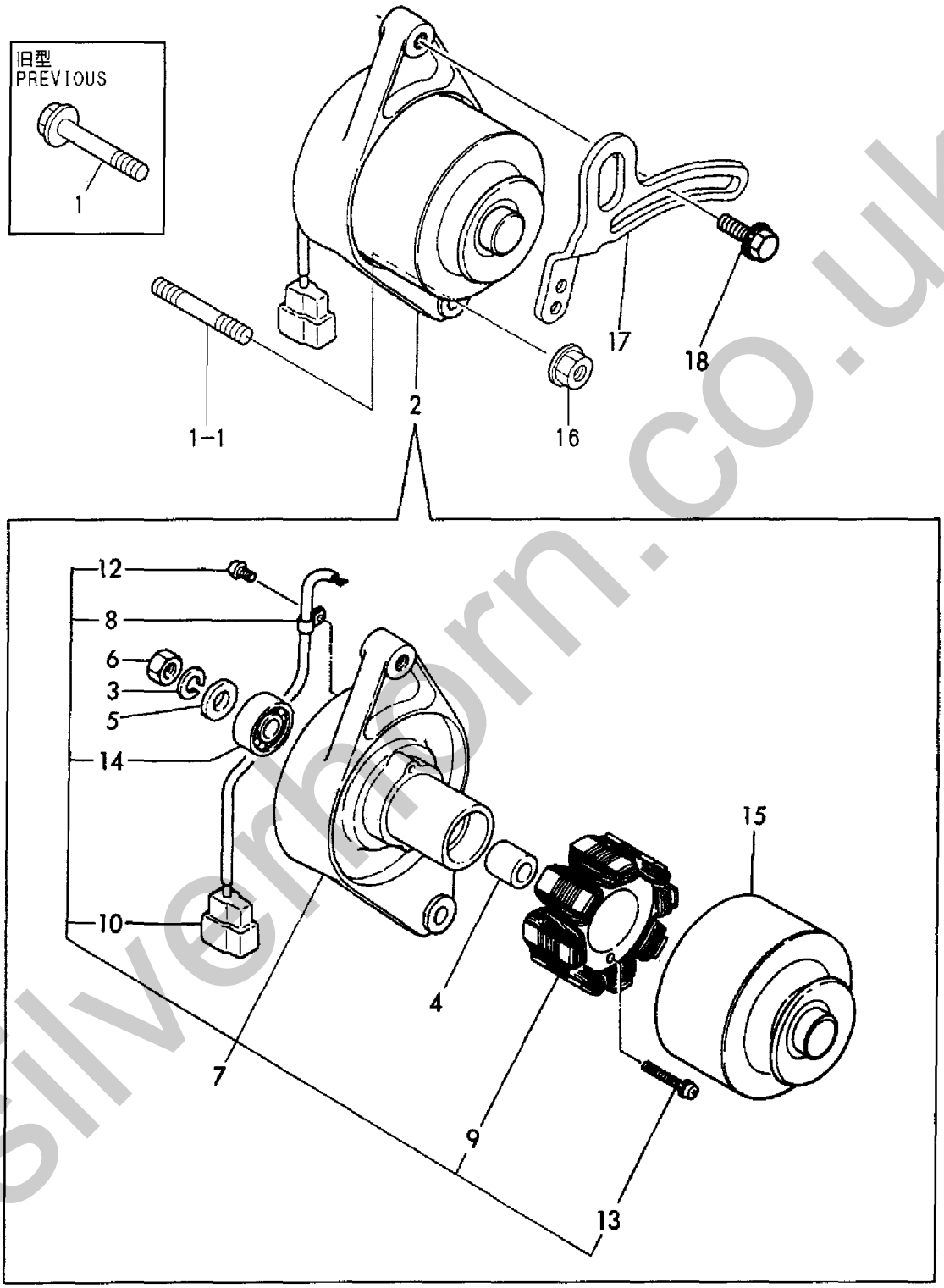

silverhorn.co.uk

```
1,1,,719813-92620,,"GASKET SET(NON-ASB.)",1,,,,,,,1,,,,,,,,,
2,2,,119812-01330,,"GASKET, HEAD",1,,,,,,,,,,,,,,,
3,2,,24311-000320,,"O-RING 1A P-32.0",2,,,,,,,,,,,,,,,
4,2,,119865-11310,,"GASKET, BONNET",1,,,,,,,,,,,,,,,
5,2,,119810-12111,,"GASKET, (NON-ASB.)",1,,,,,,,,,,,,,,,
6,2,,119813-13110,,"GASKET, EXH.MANIFOLD",1,,,,,,,,,,,,,,,,
7,2,,129150-32020,,"GASKET, L.O. PUMP",1,,,,,,,,,,,,,,,
8,2,,129150-35041,,"GASKET, (NON-ASB.)",1,,,,,,,,,,,,,,,
9,2,,129150-35111,,"GASKET, (NON-ASB.)",1,,,,,,,,,,,,,,,
10,2,,129150-42020,,"GASKET, C.W. PUMP",1,,,,,,,,,,,,,,,
11,2,,129795-49551,,"GASKET, (NON-ASB.)",1,,,,,,,,,,,,,,,
12,2,,129150-49811,,"GASKET, (NON-ASB.)",1,,,,,,,,,,,,,,,
13,1,,977770-01212,,"GASKET, LIQUID",1,,,,,,,1,,,,,,,,,
14,1,,129400-92420,,"FLEX HORN",1,,,,,,,1,,,,,,,,,
```

silverhorn.co.uk

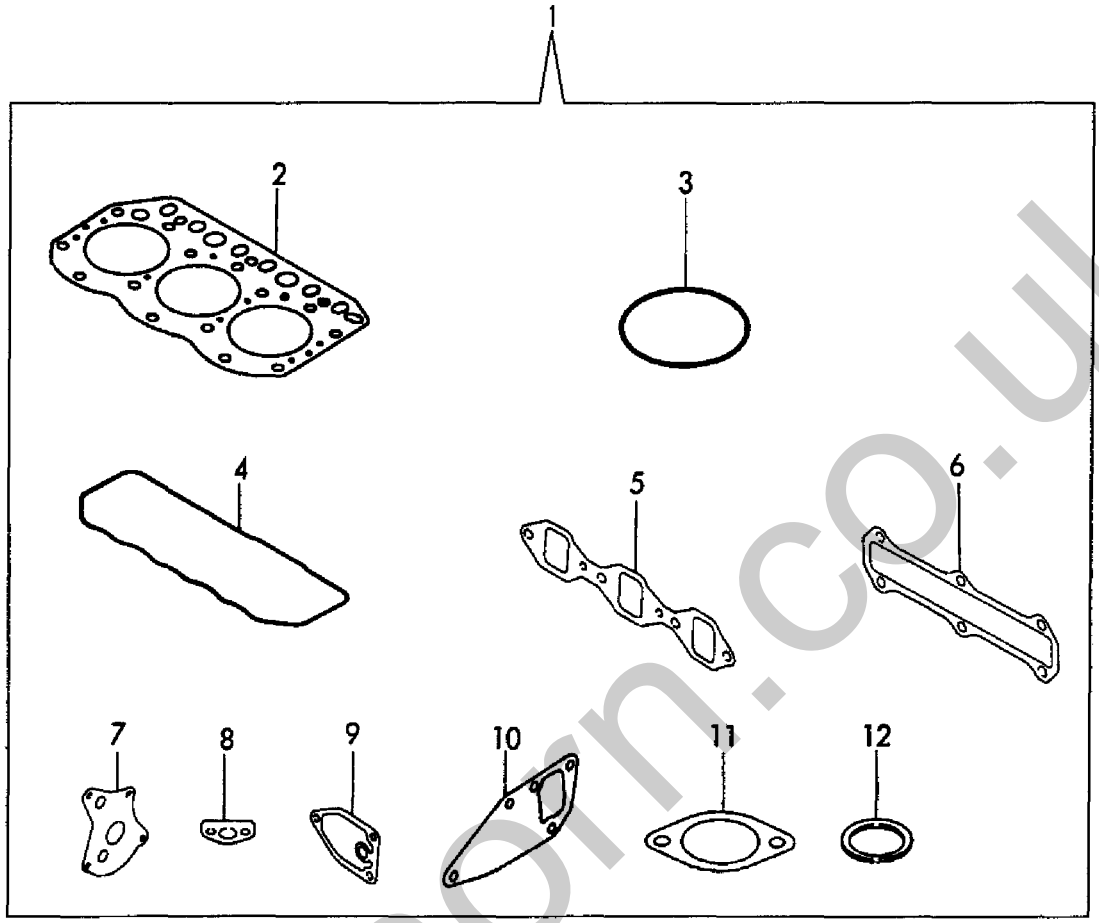

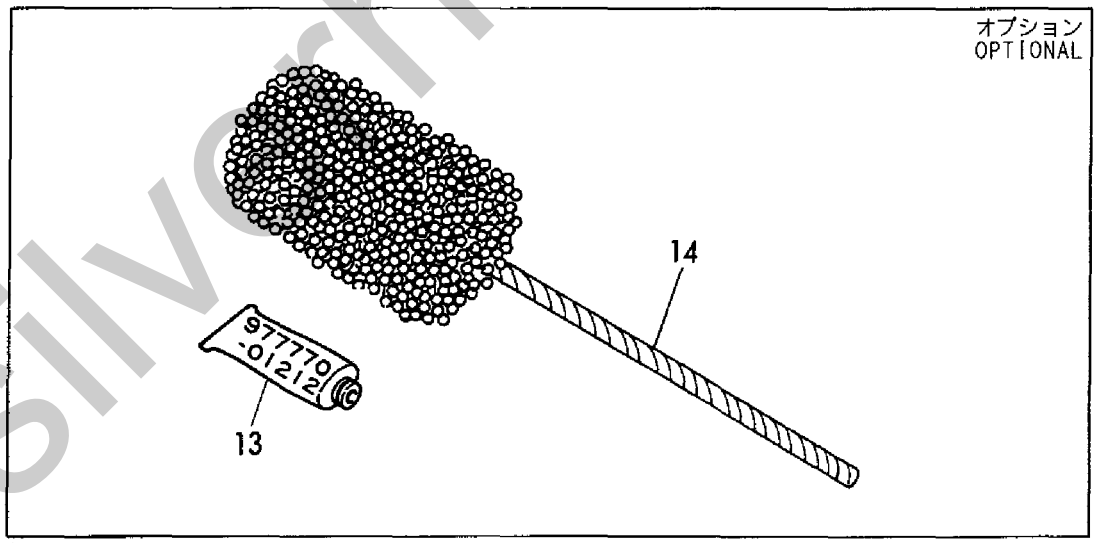

silverhorn.co.uk

```
0,Y00B5891
1,001,,"ENGINE 3TNE82A-B1"
2,1,,"CYLINDER BLOCK",3TNE82A-B1,,,
2,2,,"GEAR HOUSING",3TNE82A-B1,,,
2,3,,"FLYWHEEL HOUSING & OIL SUMP",3TNE82A-B1,,,
2,4,,"CYLINDER HEAD & BONNET",3TNE82A-B1,,,
2,5,,"SUC.MANIFOLD & AIR CLEANER",3TNE82A-B1,,,
2,6,,"EXH.MANIFOLD & SILENCER",3TNE82A-B1,,,
2,7,,"CAMSHAFT & DRIVING GEAR",3TNE82A-B1,,,
2,8,,"CRANKSHAFT & PISTON",3TNE82A-B1,,,
2,9,,"LUB. OIL SYSTEM",3TNE82A-B1,,,
2,10,,"COOLING WATER SYSTEM",3TNE82A-B1,,,
2,11,,"FUEL INJECTION PUMP",3TNE82A-B1,,,
2,12,,"FUEL INJECTION PIPE",3TNE82A-B1,,,
2,13,,"FUEL PIPE",3TNE82A-B1,,,
2,14,,GOVERNOR,3TNE82A-B1,,,
2,15,,"STARTING MOTOR",3TNE82A-B1,,,
2,16,,GENERATOR,3TNE82A-B1,,,
2,17,,"GASKET SET(OPTIONAL) & TOOL",3TNE82A-B1,,,
```

silverhorn.co.uk