```
[Info]
PcNo=Y00B7130
PcName=4TNV98-XBVB
JpnUse=0
JpnSec1=ƒGƒ“ƒWƒ“
JpnSec2=—§¬
JpnSec3=TNV
JpnPreface=0
EngUse=1
EngSec1=ENGINE
EngSec2=SMALL VERTICAL (ViO)
EngSec3=TNV
EngPreface=0
```

silverhorn.co.uk

```
1,1,,729907-01560,,"BLOCK ASSY, CYLINDER",1,,,,,,,,,,,,,,,,,
5,3,,129900-01250,,"PLUG 55",1,,,,,,,,,,,,,,,,,
6,3,,171051-01921,,PLUG,1,,,,,,,,,,,,,,,,,
7,3,,129900-02020,,"BOLT, METAL CAP",10,,,,,,,,,,,,,,,,,
10,3,,129900-02410,,"BUSH, CAMSHAFT",1,,,,,,,,,,,,,,,,,
11,3,,22351-060012,,"SPRING PIN 6X12",2,,,,,,,,,,,,,,,,,
12,3,,23876-030000,,"PLUG PT3/8,SCREW",1,,,,,,,,,,,,,,,,,
13,3,,23876-030000,,"PLUG PT3/8,SCREW",1,,,,,,,,,,,,,,,,,
14,3,,23876-030000,,"PLUG PT3/8,SCREW",1,,,,,,,,,,,,,,,,,
15,3,,27241-300000,,"PLUG, 30",8,,,,,,,,,,,,,,,,,
25,2,,729900-02800,,"MAIN BEARING SET",5,,,,,,,3,,,,,,,,,,
28,2,,129900-02930,,"BEARING ASSY, THRUST",2,,,,,,,,,,,,,,,,,
31,1,,129900-01200,,"BOLT, HEAD",18,,,,,,,,,,,,,,,,,
32,1,,129907-01331,,"GASKET,CYLINDER HEAD",1,,,,,,,,,,,,,,,,,
33,1,,129900-02340,,"MAIN BEARING US=0.25",5,,,,,,,1,,,,,,,,,,
36,1,,129900-02940,,"BEARING,THRUST .25OS",2,,,,,,,2,,,,,,,,,,
```

silverhorn.co.uk

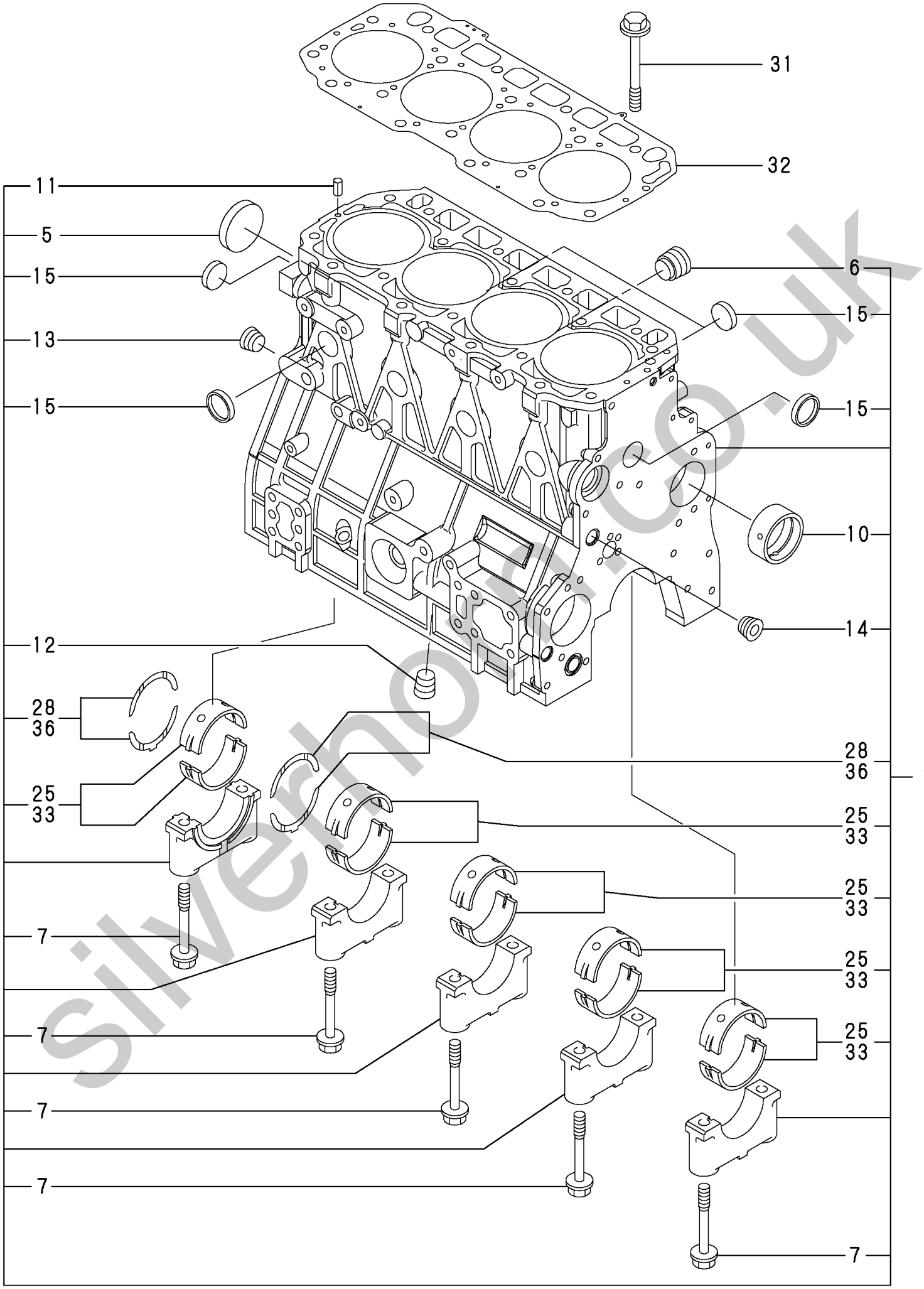

silvermoor.co.uk

```
1,1,,729907-01550,,"HOUSING ASSY,COVER,G",1,,,,,,,,,,,,,,,,,,
1-1,1,,729906-01550,,"HOUSING ASSY,COVER,G",1,,,,,,N,,TE-
04365,E/#02082,,,,,,,,,,I
4,2,,129900-01780,,"SEAL, OIL",1,,,,,,,,,,,,,,,,,,
4-1,2,,129916-01800,,"SEAL, OIL",1,,,,,,N,,TE-04365,E/#02082,,,,,,,,,,I
5,1,,129100-01580,,"PARALLEL PIN 8X16",4,,,,,,,,,,,,,,,,,,
6,1,,129951-01740,,"COVER, F.I. PUMP",1,,,,,,,,,,,,,,,,,,
8,1,,129907-01500,,"HOUSING,GEARS",1,,,,,,,,,,,,,,,,,,
10,1,,26216-100302,,"STUD BOLT",4,,,,,,,,,,,,,,,,,,
11,1,,129900-32001,,"PUMP ASSY, LUB.OIL",1,,,,,,,,,,,,,,,,,,
22,1,,129900-32030,,"O-RING P20",1,,,,,,,,,,,,,,,,,,
23,1,,129900-32040,,"O-RING P14",1,,,,,,,,,,,,,,,,,,
24,1,,129001-91810,,"BOLT M 8X 70 PLATED",6,,,,,,,,,,,,,,,,,,
25,1,,129001-91810,,"BOLT M 8X 70 PLATED",1,,,,,,,,,,,,,,,,,,
26,1,,24311-000070,,"O-RING 1A P-7.0",1,,,,,,,,,,,,,,,,,,
27,1,,24351-030750,,"PACKING,  3075",1,,,,,,,,,,,,,,,,,,
28,1,,26106-080162,,"BOLT M 8X 16 PLATED",1,,,,,,,,,,,,,,,,,,
29,1,,26106-080162,,"BOLT M 8X 16 PLATED",1,,,,,,,,,,,,,,,,,,
30,1,,26106-080202,,"BOLT M 8X 20 PLATED",3,,,,,,,,,,,,,,,,,,
31,1,,26106-080402,,"BOLT M 8X 40 PLATED",5,,,,,,,,,,,,,,,,,,
32,1,,26106-080402,,"BOLT M 8X 40 PLATED",5,,,,,,,,,,,,,,,,,,
33,1,,26106-080452,,"BOLT M 8X 45 PLATED",3,,,,,,,,,,,,,,,,,,
34,1,,26306-100002,,NUT,4,,,,,,,,,,,,,,,,,,
35,1,,124160-01751,,"COVER,FILLER",1,,,,,,,,,,,,,,,,,,
36,1,,26106-080162,,"BOLT M 8X 16 PLATED",4,,,,,,,,,,,,,,,,,,
37,1,,171031-11741,,PIPE,1,,,,,,,,,,,,,,,,,,
38,1,,24311-000320,,"O-RING 1A P-32.0",1,,,,,,,,,,,,,,,,,,
39,1,,24311-000320,,"O-RING 1A P-32.0",1,,,,,,,,,,,,,,,,,,
40,1,,124240-01871,,"COVER, HO-P",1,,,,,,,,,,,,,,,,,,
41,1,,124240-01883,,"GASKET, (NON-ASB.)",1,,,,,,,,,,,,,,,,,,
42,1,,129900-01850,,"COVER ASSY",1,,,,,,,,,,,,,,,,,,
43,2,,129900-01870,,SPONGE,1,,,,,,,,,,,,,,,,,,
44,1,,26106-080162,,"BOLT M 8X 16 PLATED",3,,,,,,,,,,,,,,,,,,
```

silverhorn.co.uk

P/C NEWS No.:Y00B7130-3
PUBLISHED :2004/10

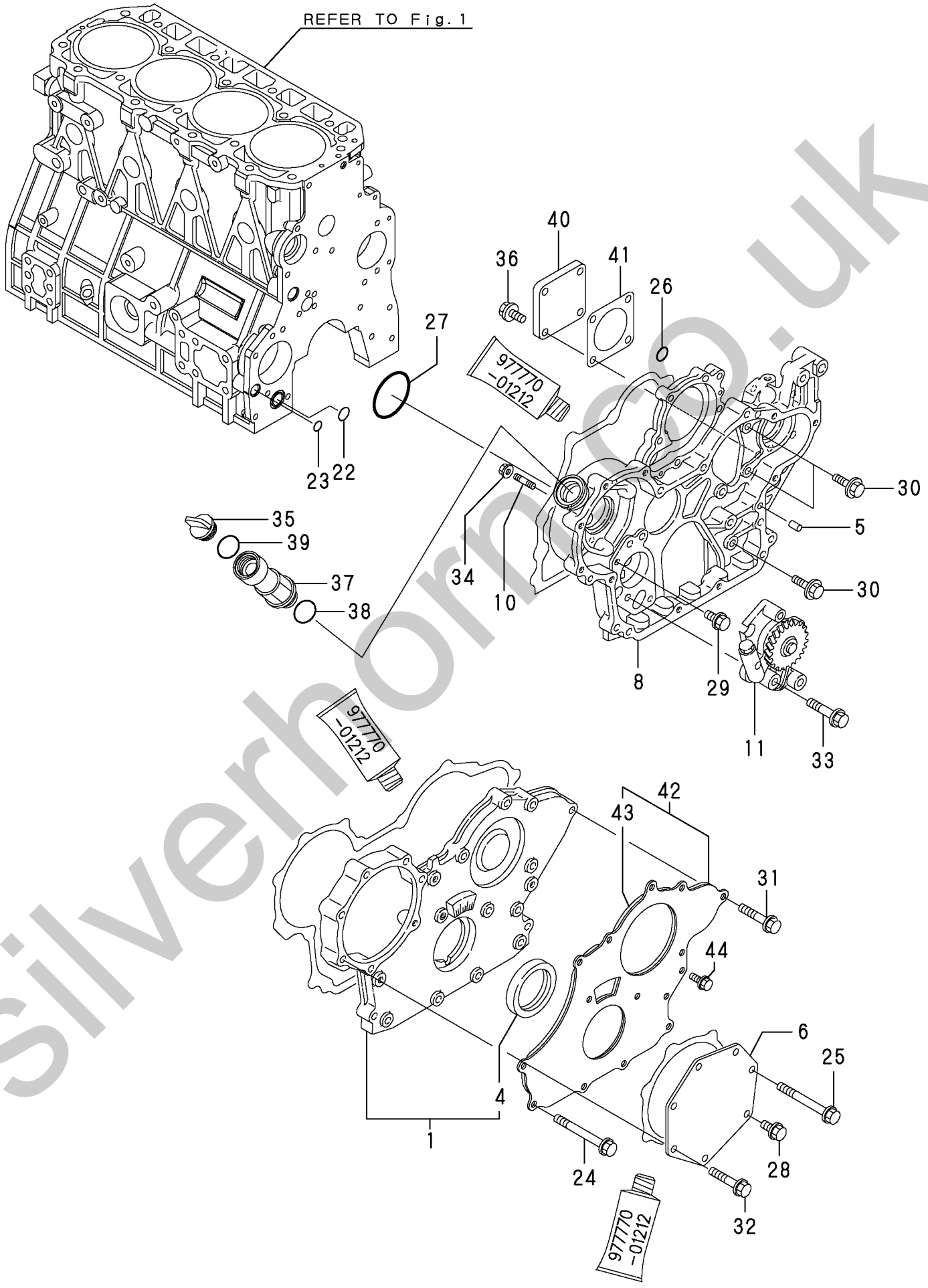


silverhorn.co.uk

```
1,1,,129100-01580,,"PARALLEL PIN 8X16",2,,,,,,,,,,,,,,,,,
2,1,,26106-080122,,"BOLT M 8X 12 PLATED",16,,,,,,,,,,,,,,,,,,
3,1,,26206-100702,,"BOLT M10X 70 PLATED",4,,,,,,,,,,,,,,,,,
4,1,,26206-100352,,"BOLT M10X 35 PLATED",9,,,,,,,,,,,,,,,,,
5,1,,124411-01780,,"SEAL HTC95,115,12",1,,,,,,,,,,,,,,,,,
6,1,,129953-01710,,"SUMP ASSY, OIL",1,,,,,,,,,,,,,,,,,
6-1,1,,129916-01710,,"PAN ASSY, LUB. OIL",1,,,,,,N,,TL-
04163,E/#04896,,,,,,,,,,,I
7,2,,119640-01640,,"DRAIN PLUG M22",1,,,,,,,,,,,,,,,,,
10,2,,22190-220002,,"SEAL WASHER 22S",1,,,,,,,,,,,,,,,,,
11,1,,129953-01620,,"HOUSING, FLYWHEEL",1,,,,,,,,,,,,,,,,,
```

silverhorn.co.uk

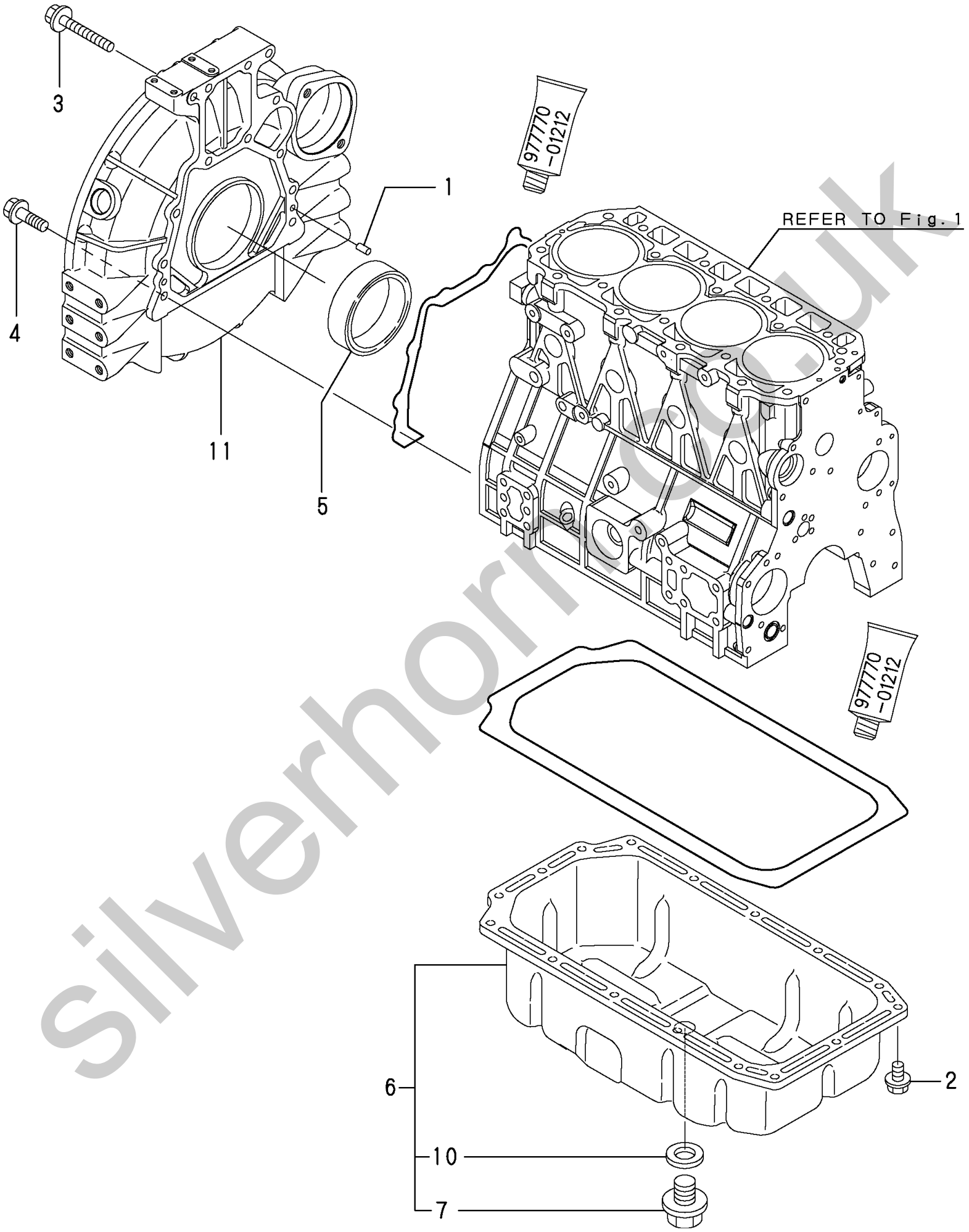


silverhorn.co.uk

```
1,1,,129910-07900,,"LIFTER, ENGINE",1,,,,,,,,,,,,,,,,,
2,1,,129907-07900,,"LIFTER, ENGINE",1,,,,,,,,,,,,,,,,,
3,1,,26106-080162,,"BOLT M 8X 16 PLATED",4,,,,,,,,,,,,,,,,,,
4,1,,123907-11550,,"SEAT A,VALVE BRIDGE",8,,,,,,,,,,,,,,,,,,
5,1,,129907-11700,,"HEAD ASSY, CYLINDER",1,,,,,,,,,,,,,,,,,,
10,2,,129907-11800,,"GUIDE, VALVE",16,,,,,,,1,,,,,,,,,,
11,2,,123907-11820,,"GUIDE,VALVE BRIDGE",8,,,,,,,,,,,,,,,,,,
12,2,,23876-020000,,"PLUG PT1/4,SCREW",1,,,,,,,,,,,,,,,,,,
13,2,,23876-030000,,"PLUG PT3/8,SCREW",4,,,,,,,,,,,,,,,,,,
14,2,,27241-400000,,"PLUG 40",1,,,,,,,,,,,,,,,,,,
15,2,,129907-11110,,VALVE(EXH,8,,,,,,,,,,,,,,,,,,
16,2,,129907-11120,,"VALVE SPRING",16,,,,,,,,,,,,,,,,,,
17,2,,119620-11180,,"RETAINER, SPRING",16,,,,,,,,,,,,,,,,,,
18,2,,124160-11340,,"SEAL, VALVE STEM",8,,,,,,,,,,,,,,,,,,
19,2,,124950-11340,,"SEAL, VALVE STEM",8,,,,,,,,,,,,,,,,,,
20,2,,129907-11510,,"BRIDGE ASSY,VALVE",8,,,,,,,,,,,,,,,,,,
22,3,,129150-11750,,"NUT M8XP1.0",8,,,,,,,,,,,,,,,,,,
23,3,,123907-11830,,"SCRWE,VALVE BRIDGE",8,,,,,,,,,,,,,,,,,,
24,2,,27310-070001,,"COTTER ASSY",16,,,,,,,,,,,,,,,,,,
25,2,,129907-11100,,VALVE(INT,8,,,,,,,,,,,,,,,,,,
26,1,,119625-11880,,"SEAT, NOZZLE",4,,,,,,,,,,,,,,,,,,
27,1,,24311-000120,,"O-RING 1A P 12.0",4,,,,,,,,,,,,,,,,,,
28,1,,119593-11301,,"BOLT  8X80",2,,,,,,,,,,,,,,,,,,
29,1,,129907-11341,,"SUPPORT CMP",1,,,,,,,,,,,,,,,,,,
30,2,,129907-11250,,"SHAFT,ROCKER ARM",1,,,,,,,,,,,,,,,,,,
31,2,,129907-11260,,"SUPPORT A",3,,,,,,,,,,,,,,,,,,
32,2,,129907-11270,,"SUPPORT B",2,,,,,,,,,,,,,,,,,,
33,2,,123907-11280,,"WAVE WASHER",8,,,,,,,,,,,,,,,,,,
34,2,,129907-11650,,"ARM ASSY, ROCKER",4,,,,,,,,,,,,,,,,,,
36,3,,129150-11230,,"SCREW, VALVE",4,,,,,,,,,,,,,,,,,,
37,3,,129150-11750,,"NUT M8XP1.0",4,,,,,,,,,,,,,,,,,,
38,2,,129907-11660,,"ARM ASSY, ROCKER",4,,,,,,,,,,,,,,,,,,
40,3,,129150-11230,,"SCREW, VALVE",4,,,,,,,,,,,,,,,,,,
41,3,,129150-11750,,"NUT M8XP1.0",4,,,,,,,,,,,,,,,,,,
42,2,,129907-11920,,"PEDESTAL,RETAINER",4,,,,,,,,,,,,,,,,,,
43,2,,26226-080222,,"STUD M 8X 22 PLATED",2,,,,,,,,,,,,,,,,,,
44,1,,26106-080402,,"BOLT M 8X 40 PLATED",2,,,,,,,,,,,,,,,,,,
45,1,,26106-080602,,"BOLT M 8X 60 PLATED",4,,,,,,,,,,,,,,,,,,
46,1,,26106-080602,,"BOLT M 8X 60 PLATED",2,,,,,,,,,,,,,,,,,,
47,1,,119802-11870,,"PROTECTOR, NOZZLE",4,,,,,,,,,,,,,,,,,,
48,1,,129907-11950,,"FLANGE BOLT,RETAINER",4,,,,,,,,,,,,,,,,,,,
49,1,,26306-080002,,NUT,2,,,,,,,,,,,,,,,,,,
50,1,,124160-01751,,"COVER,FILLER",1,,,,,,,,,,,,,,,,,,
51,1,,129907-11320,,"BONNET ASSY",1,,,,,,,,,,,,,,,,,,
52,2,,129907-03010,,"BAFFLE PLATE",1,,,,,,,,,,,,,,,,,,
53,2,,129907-03060,,BAFFLE,1,,,,,,,,,,,,,,,,,,
54,2,,129907-03070,,BAFFLE,1,,,,,,,,,,,,,,,,,,
55,2,,123907-03100,,"DIAPHRAGM,BREATHER",1,,,,,,,,,,,,,,,,,,
56,2,,123907-03110,,"CENTER PLATE",1,,,,,,,,,,,,,,,,,,
57,2,,123907-03120,,"PLATE,BREATHER",1,,,,,,,,,,,,,,,,,,
58,2,,123907-03140,,"SPRING, DIAPHRAGM",1,,,,,,,,,,,,,,,,,,
61,2,,129907-11310,,"PACKING,BONNET",1,,,,,,,,,,,,,,,,,,
62,2,,119640-61400,,PLUG,1,,,,,,,,,,,,,,,,,,
63,2,,22857-500100,,"SCREW 5X10,TAPPING",6,,,,,,,,,,,,,,,,,,
64,2,,22857-500100,,"SCREW 5X10,TAPPING",6,,,,,,,,,,,,,,,,,,
65,1,,124160-11360,,KNOB,4,,,,,,,,,,,,,,,,,,
66,1,,24311-000120,,"O-RING 1A P 12.0",4,,,,,,,,,,,,,,,,,,
67,1,,24311-000320,,"O-RING 1A P-32.0",1,,,,,,,,,,,,,,,,,,
68,1,,129907-11910,,"RETAINER,F.I.VALVE",4,,,,,,,,,,,,,,,,,,
```

silverorn.co.uk

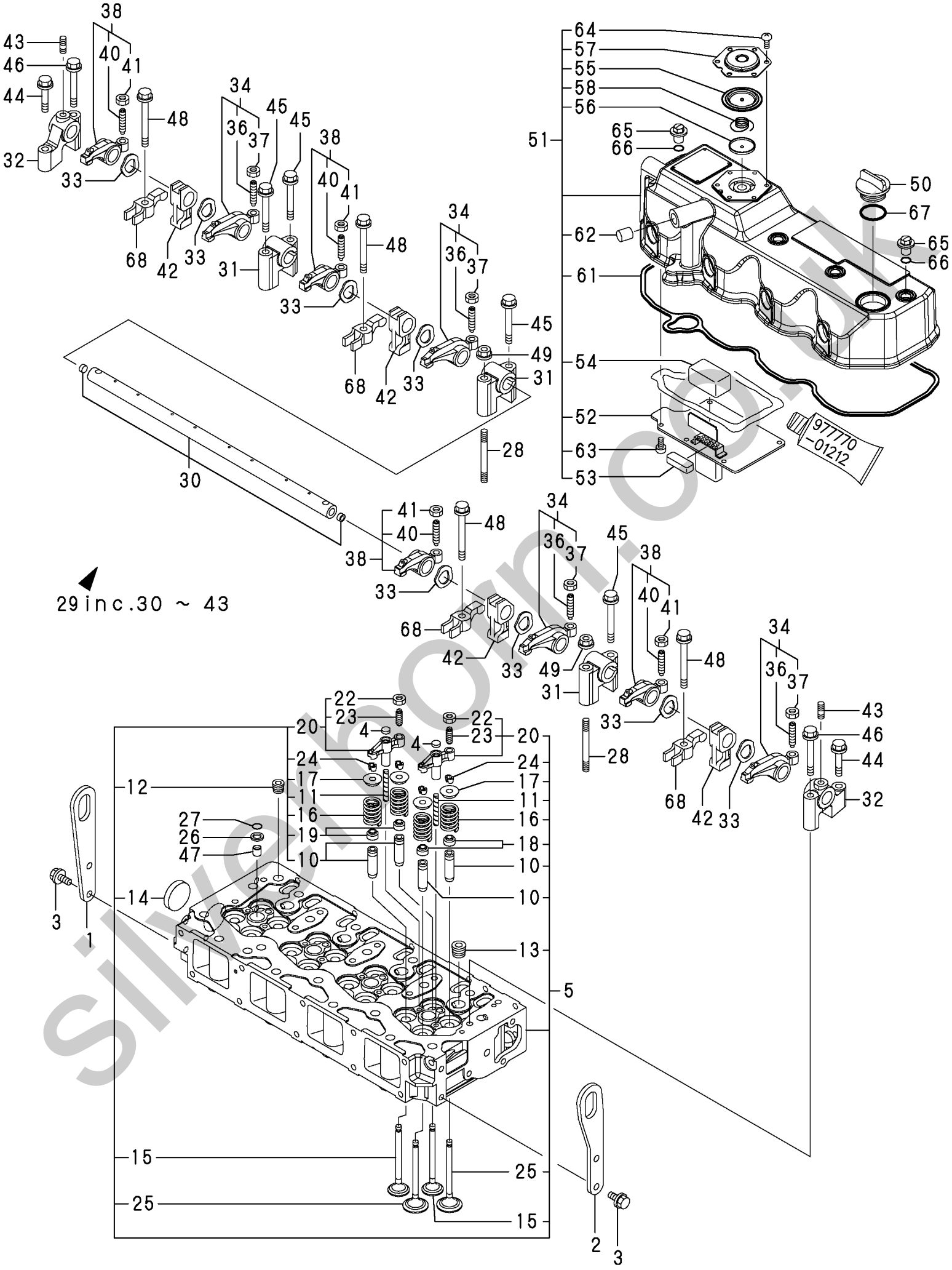


silverhorn.co.uk

```
1,1,,129907-12100,,"MANIFOLD,AIR INTAKE",1,,,,,,,,,,,,,,,,,,
2,1,,129907-12110,,PACKING(INT.MANIFOLD,1,,,,,,,,,,,,,,,,,,
3,1,,26106-080552,,"BOLT M 8X 55 PLATED",9,,,,,,,,,,,,,,,,,,
4,1,,26106-080852,,"BOLT M 8X 85 PLATED",1,,,,,,,,,,,,,,,,,,
5,1,,121850-77021,,"GASKET, (NON-ASB.)",1,,,,,,,,,,,,,,,,,,
6,1,,129915-77050,,"AIR HEATER",1,,,,,,,,,,,,,,,,,,
7,1,,26106-080552,,"BOLT M 8X 55 PLATED",4,,,,,,,,,,,,,,,,,,
8,1,,119129-77020,,GASKET,1,,,,,,,,,,,,,,,,,,
9,1,,119005-77050,,"HEATER, AIR",1,,,,,,,,,,,,,,,,,,
```

silverhorn.co.uk

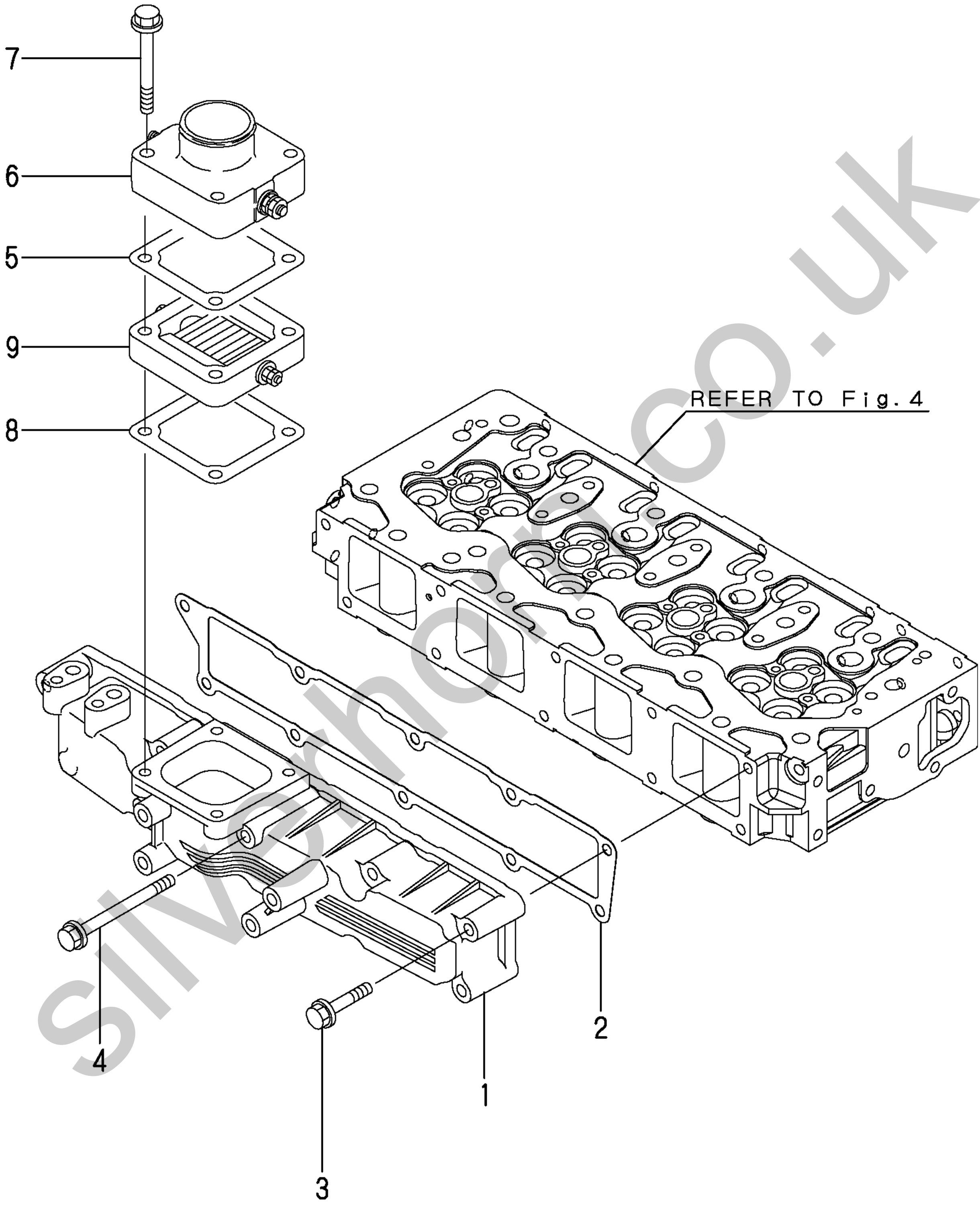


silverhorse.co.uk

```
1,1,,129900-13200,,"MANIFOLD, EXHAUST",1,,,,,,,,,,,,,,,,,
2,1,,129900-13251,,GASKET,1,,,,,,,,,,,,,,,,,
3,1,,123900-13630,,"BOLT 8X80",6,,,,,,,,,,,,,,,,,
4,1,,119131-18320,,"BOLT M 8X 22",4,,,,,,,,,,,,,,,,,
5,1,,129400-13201,,"GASKET, (NON-ASB.)",1,,,,,,,,,,,,,,,,,
6,1,,123900-13610,,"STUD BOLT M 8X 80",2,,,,,,,,,,,,,,,,,
7,1,,26306-080002,,NUT,2,,,,,,,,,,,,,,,,,
8,1,,129953-13580,,SILENCER,1,,,,,,,,,,,,,,,,,
9,1,,129908-13650,,"STAY, SILENCER",1,,,,,,,,,,,,,,,,,
10,1,,26106-080162,,"BOLT M 8X 16 PLATED",2,,,,,,,,,,,,,,,,,
11,1,,26106-080202,,"BOLT M 8X 20 PLATED",2,,,,,,,,,,,,,,,,,
12,1,,26306-080002,,NUT,4,,,,,,,,,,,,,,,,,
```

silverhorn.co.uk

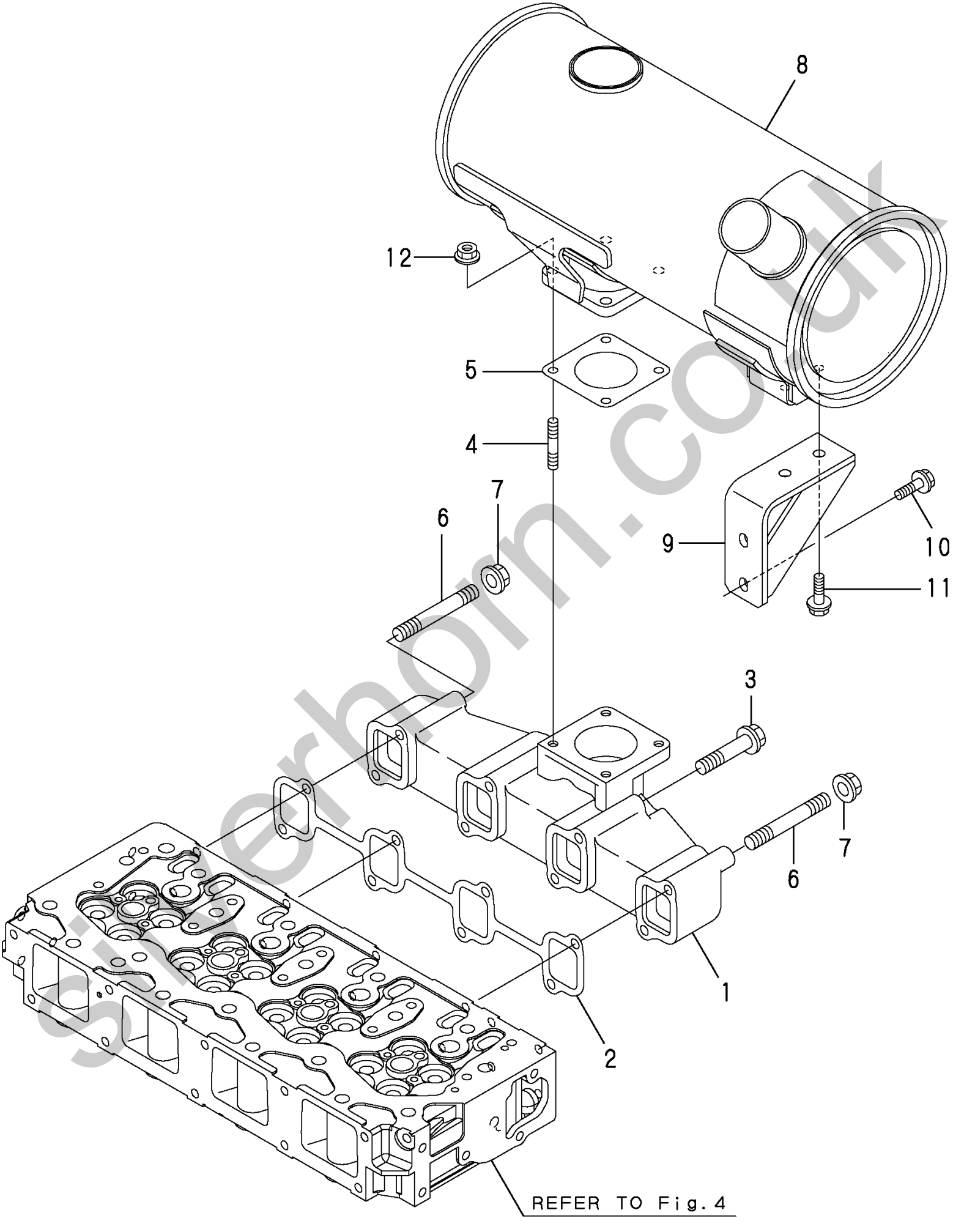


silverhorn.co.uk

```
1,1,,129150-14200,,TAPPET,8,,,,,,,,,,,,,,,,,
2,1,,129907-14400,,"PUSH ROD",8,,,,,,,,,,,,,,,,,
3,1,,129907-14581,,"CAMSHFT  ASSY",1,,,,,,,,,,,,,,,,,
4,2,,129150-02450,,"METAL,THRUST(CAM",1,,,,,,,,,,,,,,,,,
7,2,,129900-14100,,"GEAR, CAMSHAFT",1,,,,,,,,,,,,,,,,,
8,2,,22512-070140,,"KEY  7X 14",1,,,,,,,,,,,,,,,,,
9,1,,26106-080162,,"BOLT M 8X 16 PLATED",2,,,,,,,,,,,,,,,,,,
10,1,,123900-25060,,"SHAFT(GEAR,IDLE",1,,,,,,,,,,,,,,,,,
11,1,,129900-25100,,"GEAR ASSY, IDLE",1,,,,,,,,,,,,,,,,,
14,2,,129150-25920,,"BUSH, IDLE GEAR",1,,,,,,,1,,,,,,,,,,
15,1,,26106-080552,,"BOLT M 8X 55 PLATED",3,,,,,,,,,,,,,,,,,,
16,1,,129953-25300,,BOLT,4,,,,,,,,,,,,,,,,,
17,1,,123907-25909,,"GEAR,F.I.PUMP",1,,,,,,,,,,,,,,,,,
18,1,,158563-51150,,FLANGE,1,,,,,,,,,,,,,,,,,
19,1,,22217-180000,,"SPRING WASHER 18",1,,,,,,,,,,,,,,,,,,
20,1,,26776-180002,,"NUT M18,LOCK",1,,,,,,,,,,,,,,,,,,
```

silverhorn.co.uk

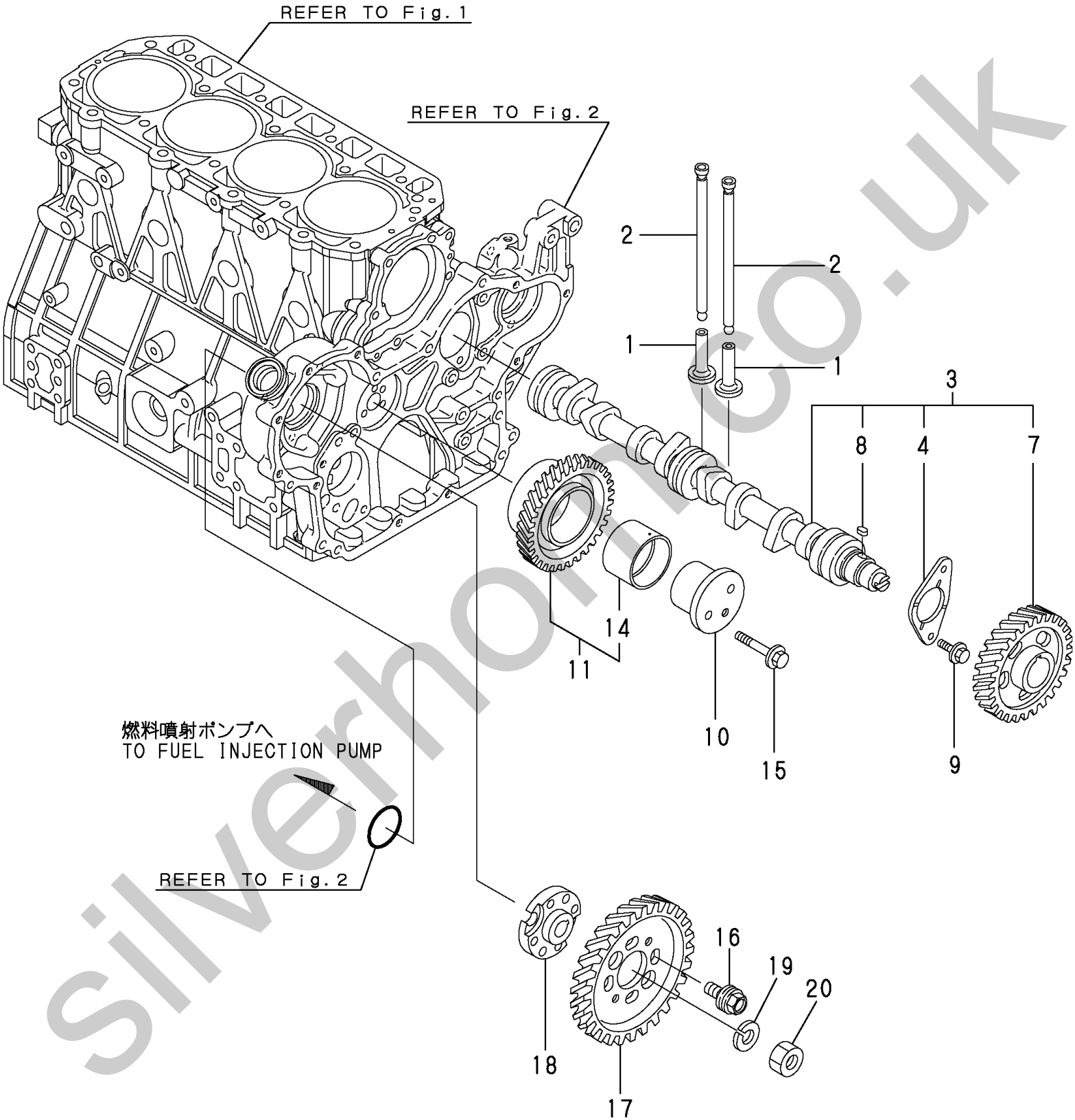


silverhorn.co.uk

```
1,1,,129902-21000,,"CRANKSHAFT COMP",1,,,,,,,,,,,,,,,,,
4,2,,129900-21200,,"GEAR, CRANKSHAFT",1,,,,,,,,,,,,,,,,,
5,2,,121850-21290,,"PARALLEL PIN",1,,,,,,,,,,,,,,,,,
6,2,,121850-21920,,"PARALLEL PIN 10X22",1,,,,,,,,,,,,,,,,,,
7,2,,22512-070140,,"KEY  7X 14",1,,,,,,,,,,,,,,,,,
8,1,,129960-21640,,WASHER,1,,,,,,,,,,,,,,,,,
9,1,,129953-21610,,V-PULLEY,1,,,,,,,,,,,,,,,,,
10,1,,121850-21680,,"BOLT, V-PULLEY",1,,,,,,,,,,,,,,,,,
11,1,,24341-000530,,"O-RING 1A S-53.0",1,,,,,,,,,,,,,,,,,,
12,1,,121850-21130,,"BOLT, FLYWHEEL",6,,,,,,,,,,,,,,,,,
13,1,,129953-21581,,"FLYWHEEL ASSY",1,,,,,,,,,,,,,,,,,
15,2,,129900-21600,,"GEAR, RING",1,,,,,,,,,,,,,,,,,
16,1,,129907-22090,,"PISTON W/RING",4,,,,,,,,,,,,,,,,,
18,2,,129907-22050,,"RING SET, PISTON",4,,,,,,,,,,,,,,,,,,
22,1,,120130-22301,,"PIN, PISTON",4,,,,,,,,,,,,,,,,,
23,1,,22252-000300,,"CIRCLIP   30",8,,,,,,,,,,,,,,,,,
24,1,,129900-23000,,"ROD ASSY, CONNECTING",4,,,,,,,,,,,,,,,,,,
28,2,,129900-23910,,"BUSH, PISTON PIN",4,,,,,,,1,,,,,,,,,,
29,2,,129900-23200,,"BOLT, ROD",8,,,,,,,,,,,,,,,,,
30,2,,129900-23600,,"METAL ASSY, CRANKPIN",4,,,,,,,,,,,,,,,,,
32,1,,129900-23610,,"BEARING,PIN U.S=0.25",4,,,,,,,2,,,,,,,,,,
34,1,,729907-22910,,"PISTON W/RING O.S=25",4,,,,,,,3,,,,,,,,,,
36,2,,729907-22950,,"RING SET O.S=0.25",4,,,,,,,3,,,,,,,,,,
```

silverhorn.co.uk

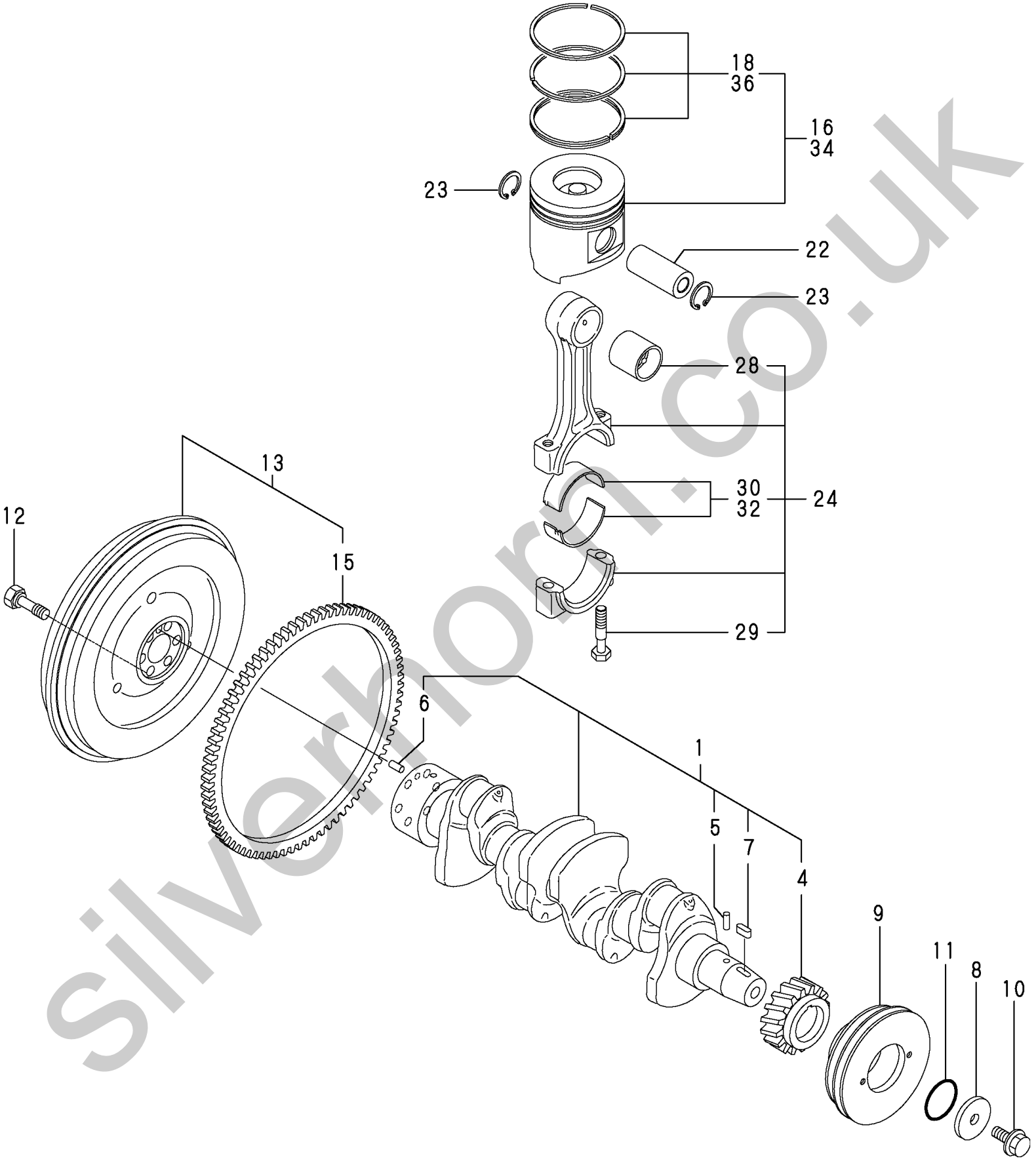


silverhorn.co.uk

```
1,1,,129900-34800,,DIPSTICK,1,,,,,,,,,,,,,,,,,,
1-1,1,,129953-34800,,DIPSTICK,1,,,,,,N,,TL-04163,E/#04896,,,,,,,,,,I
2,1,,121520-34810,,"GUIDE, DIPSTICK",1,,,,,,,,,,,,,,,,,,
3,1,,119000-35140,,"STUD, LUB.OIL FILTER",1,,,,,,,,,,,,,,,,,,
4,1,,119005-35150,,"FILTER 80X100L",1,,,,,,,,,,,,,,,,,,
5,1,,129900-32030,,"O-RING P20",1,,,,,,,,,,,,,,,,,,
6,1,,129900-35000,,"PIPE ASSY, LUB. OIL",1,,,,,,,,,,,,,,,,,,
6-1,1,,129953-35000,,"PIPE ASY,L.OIL INLET",1,,,,,,N,,TL-
04163,E/#04896,,,,,,,,,,I
11,1,,26106-080122,,"BOLT M 8X 12 PLATED",2,,,,,,,,,,,,,,,,,,
11-1,1,,26106-080122,,"BOLT M 8X 12 PLATED",1,,,,,,K,,TL-
04163,E/#04896,,,,,,,,,,I
11A,1,,26106-080162,,"BOLT M 8X 16 PLATED",1,,,,,,W,,TL-
04163,E/#04896,,,,,,,,,,I
12,1,,114250-39450,,"SWITCH,(0.5KG)L.O.",1,,,,,,,,,,,,,,,,,,
13,1,,129907-39061,,"PIPE ASSY, LUB. OIL",1,,,,,,,,,,,,,,,,,,
15,2,,123907-39500,,"SUPPORT,PIPE",1,,,,,,,,,,,,,,,,,,
17,1,,129005-59830,,"BOLT ASSY, JOINT",2,,,,,,,,,,,,,,,,,,
18,2,,22190-080002,,"SEAL WASHER  8S",2,,,,,,,,,,,,,,,,,,
19,2,,23857-030000,,"JOINT BOLT  3",2,,,,,,,,,,,,,,,,,,
20,1,,22190-080002,,"SEAL WASHER  8S",2,,,,,,,,,,,,,,,,,,
21,1,,26106-080122,,"BOLT M 8X 12 PLATED",1,,,,,,,,,,,,,,,,,,
22,1,,22190-080002,,"SEAL WASHER  8S",2,,,,,,,,,,,,,,,,,,
23,1,,26106-080122,,"BOLT M 8X 12 PLATED",2,,,,,,,,,,,,,,,,,,
```

silverhorn.co.uk

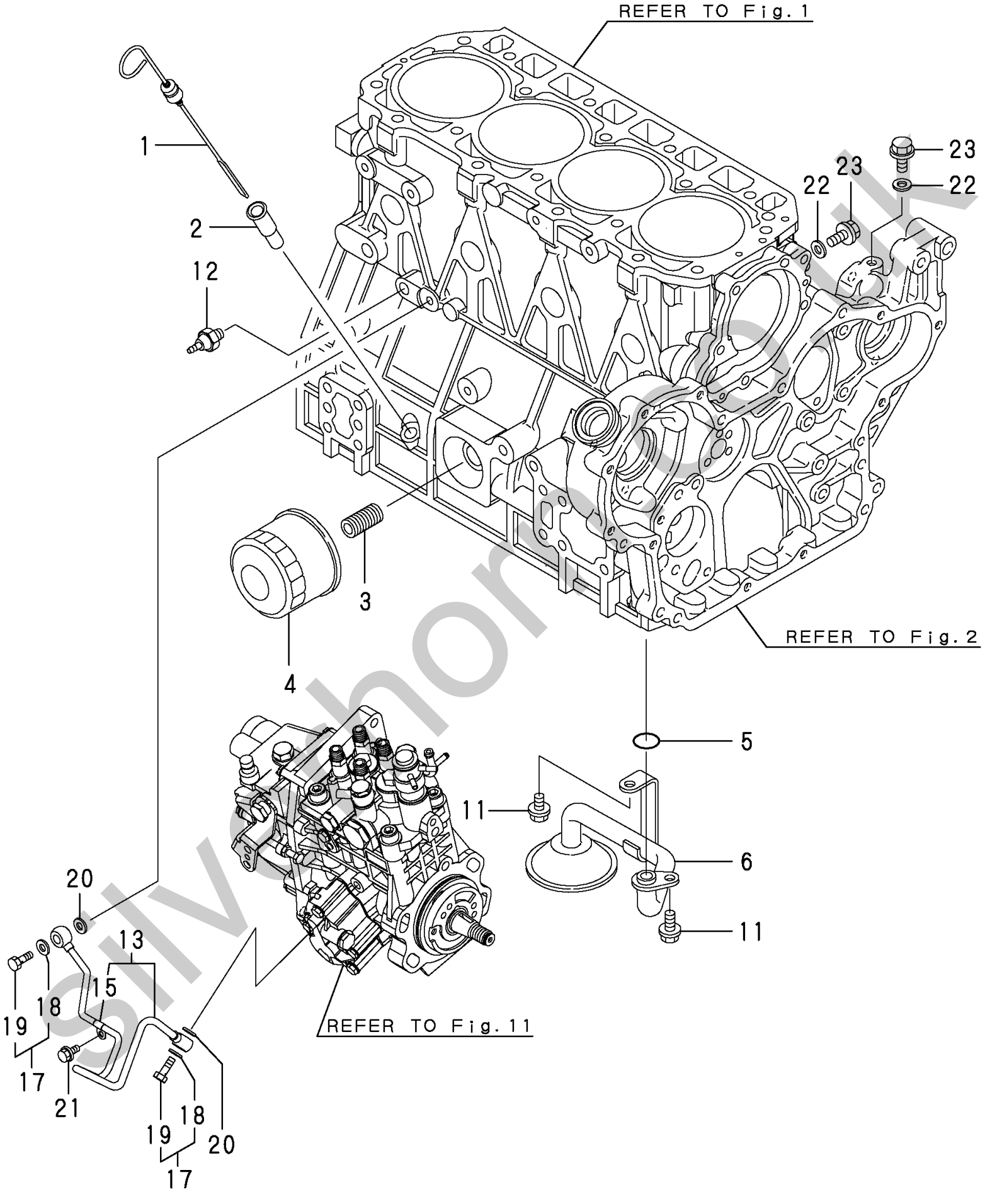

silverthorne.co.uk

```
1,1,,129907-42000,,"PUMP ASSY, WATER",1,,,,,,,,,,,,,,,,,
11,1,,129900-42020,,"GASKET, CW-P",1,,,,,,,,,,,,,,,,,
12,1,,26106-060302,,"BOLT M 6X 30 PLATED",2,,,,,,,,,,,,,,,,,,
13,1,,26106-080552,,"BOLT M 8X 55 PLATED",5,,,,,,,,,,,,,,,,,,
14,1,,25132-004200,,"V-BELT,LOW-EDGE A42",1,,,,,,,,,,,,,,,,,,
15,1,,129900-42461,,PULLEY,1,,,,,,,,,,,,,,,,,
16,1,,129900-44700,,FAN,1,,,,,,,,,,,,,,,,,
17,1,,119130-44760,,"SPACER, FAN",1,,,,,,,,,,,,,,,,,
18,1,,26106-080302,,"BOLT M 8X 30 PLATED",4,,,,,,,,,,,,,,,,,,
19,1,,129907-49800,,"CASE ASSY,THERMOSTAT",1,,,,,,,,,,,,,,,,,,,
20,2,,129916-49530,,"COVER, THERMOSTAT",1,,,,,,,,,,,,,,,,,
21,2,,121850-49540,,"GASKET, THERMOSTAT",1,,,,,,,,,,,,,,,,,,
22,2,,121850-49550,,"GASKET, THERMOSTAT",1,,,,,,,,,,,,,,,,,,
23,2,,129907-49730,,"PIPE ASSY, INJECTION",1,,,,,,,,,,,,,,,,,,
24,2,,121850-49810,,THERMOSTAT,1,,,,,,,,,,,,,,,,,
26,2,,105582-59150,,"BOLT, PIPE JOINT",1,,,,,,,,,,,,,,,,,,
27,2,,23387-040800,,"JOINT 4- 8",1,,,,,,,,,,,,,,,,,
28,2,,23414-080000,,"GASKET 8, ROUND",2,,,,,,,,,,,,,,,,,
29,2,,23875-030000,,"PLUG PT3/8,STEEL",2,,,,,,,,,,,,,,,,,
30,2,,26106-060122,,"BOLT M 6X 12 PLATED",2,,,,,,,,,,,,,,,,,,
31,2,,26106-060202,,"BOLT M 6X 20 PLATED",4,,,,,,,,,,,,,,,,,,
32,1,,129150-49360,,"GASKET 10",1,,,,,,,,,,,,,,,,,
33,1,,129900-49870,,"GASKET, CASE",1,,,,,,,,,,,,,,,,,,
34,1,,23414-080000,,"GASKET 8, ROUND",1,,,,,,,,,,,,,,,,,
35,1,,26106-080122,,"BOLT M 8X 12 PLATED",1,,,,,,,,,,,,,,,,,,
36,1,,26106-080602,,"BOLT M 8X 60 PLATED",3,,,,,,,,,,,,,,,,,
37,1,,171056-49351,,SENSER,1,,,,,,,,,,,,,,,,,
38,1,,121250-44901,,"SWITCH, THERMO(110ßC",1,,,,,,,,,,,,,,,,,,
39,1,,124465-44950,,"GASKET 16",1,,,,,,,,,,,,,,,,,
40,1,,171056-49120,,"PLUG, DRAIN",1,,,,,,,,,,,,,,,,,
41,1,,129907-49610,,"HOSE A ASSY,WATER",1,,,,,,,,,,,,,,,,,,
42,2,,129907-49710,,"PIPE A,COOLING WATER",1,,,,,,,,,,,,,,,,,,
43,2,,129907-49750,,"PROTECTOR, PIPE 10.7",1,,,,,,,,,,,,,,,,,,
44,2,,124722-59050,,"CLAMP  9",2,,,,,,,,,,,,,,,,,
45,1,,129907-49620,,"HOSE B ASSY,WATER",1,,,,,,,,,,,,,,,,,,
46,2,,129907-49720,,"PIPE B,COOLING WATER",1,,,,,,,,,,,,,,,,,,
47,2,,124722-59050,,"CLAMP  9",2,,,,,,,,,,,,,,,,,
```

silvermorn.co.uk

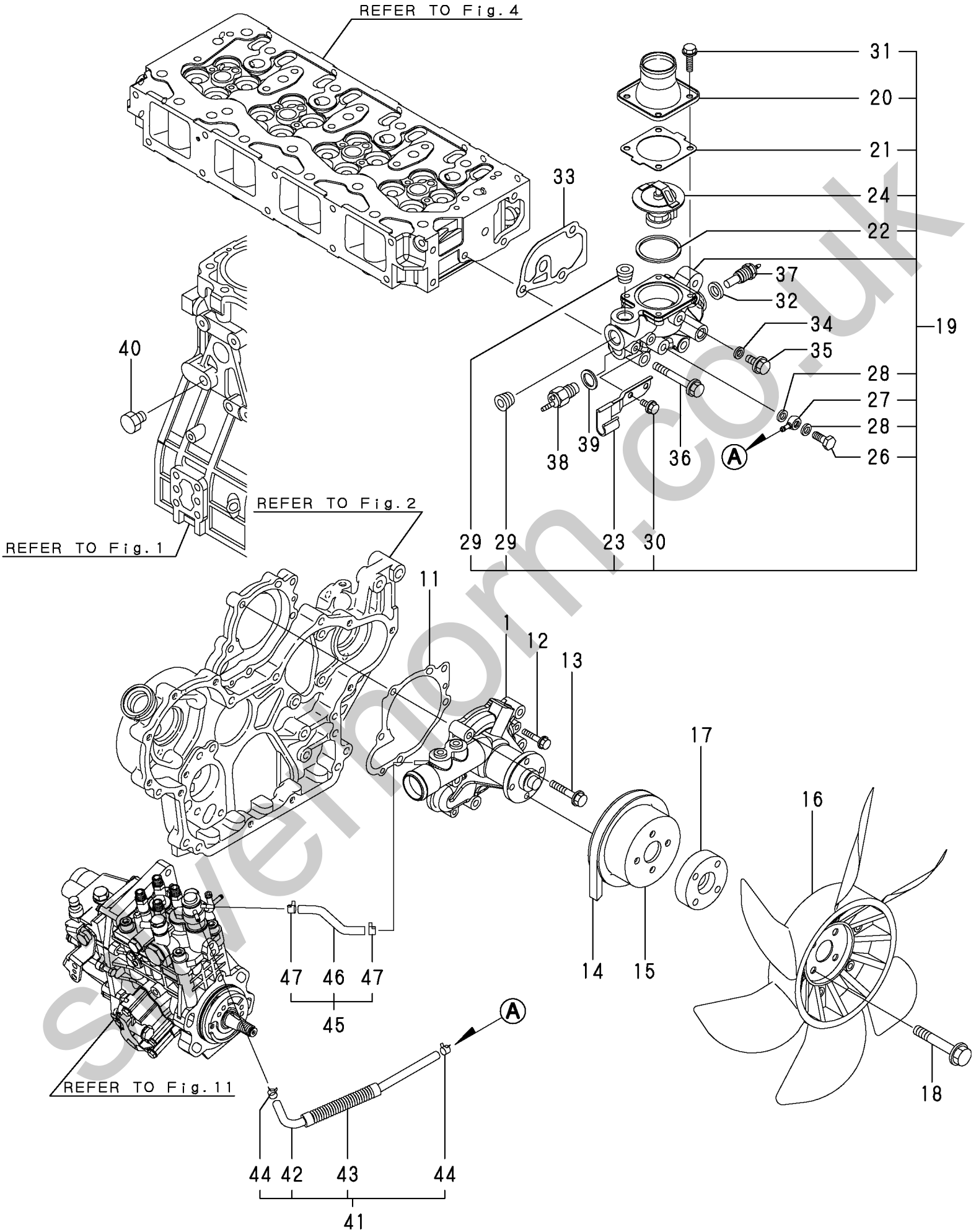


sverlmorn.co.uk

```
1,1,,129907-01950,,"RETAINER,MP4",1,,,,,,,,,,,,,,,,,
2,1,,129907-01960,,"RETAINER,MP4",1,,,,,,,,,,,,,,,,,
3,1,,729940-51330,,"PUMP ASSY, F.INJECT",1,,,,,,,,,,,,,,,,,
226,1,,26106-080162,,"BOLT M 8X 16 PLATED",2,,,,,,,,,,,,,,,,,,
227,1,,26106-080222,,"BOLT M 8X 22 PLATED",2,,,,,,,,,,,,,,,,,,
228,1,,26106-080222,,"BOLT M 8X 22 PLATED",1,,,,,,,,,,,,,,,,,,
229,1,,26106-100202,,"BOLT M10X 20 PLATED",1,,,,,,,,,,,,,,,,,,
```

silverhorn.co.uk

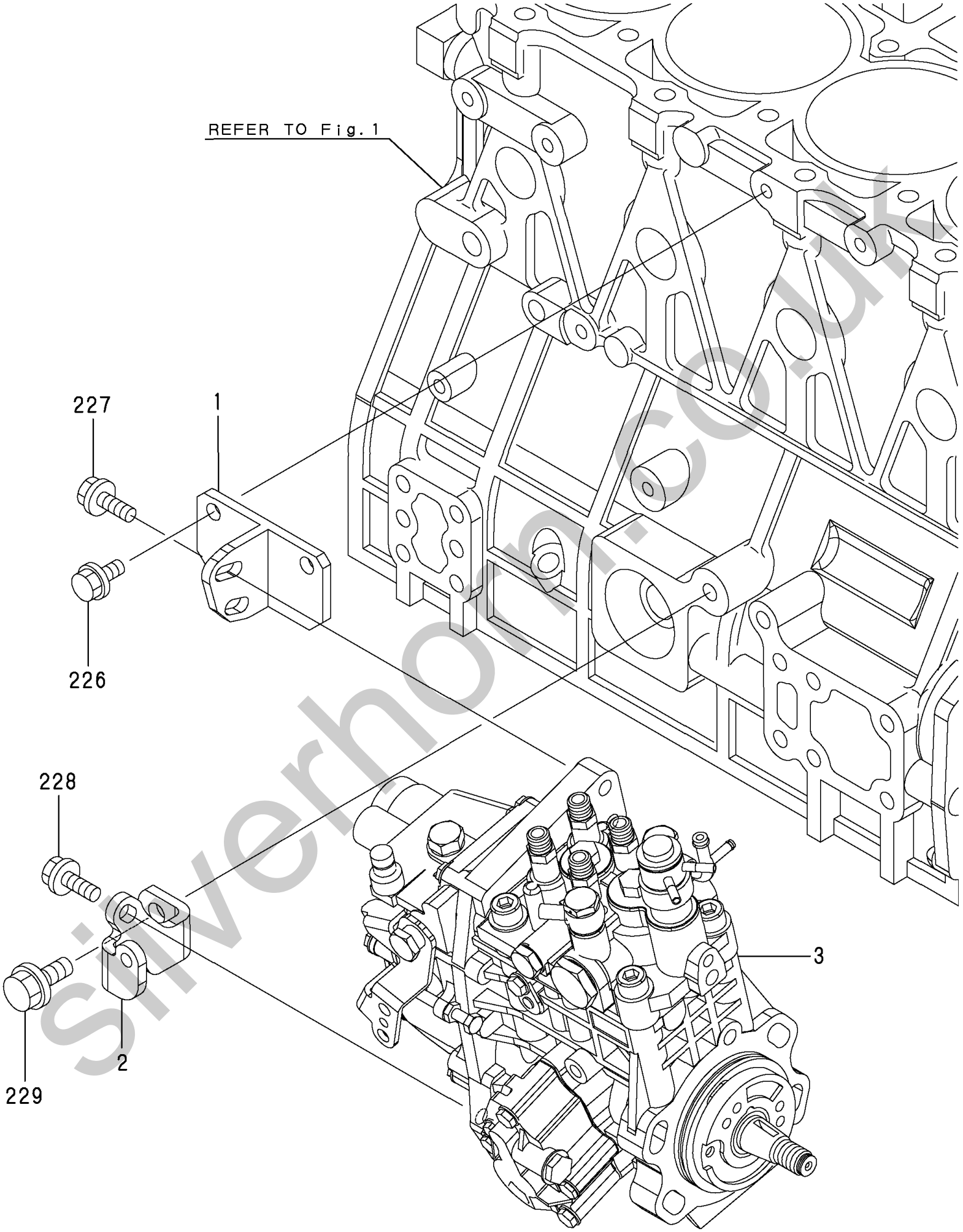

silverhorn.co.uk

```
1,1,,729907-53100,,"VALVE ASSY, F.INJECT",4,,,,,,,,,,,,,,,,,
2,2,,129907-53000,,"NOZZLE ASSY",4,,,,,,,,,,,,,,,,,
5,2,,114250-53080,,"NUT, NOZZLE CASE",4,,,,,,,,,,,,,,,,,
6,2,,129907-53100,,"HOLDER ASSY, NOZZLE",4,,,,,,,,,,,,,,,,,
9,2,,114250-53120,,"SPRING, NOZZLE",4,,,,,,,,,,,,,,,,,
10,2,,114250-53130,,"SEAT, NOZZLE SPRING",4,,,,,,,,,,,,,,,,,
11,2,,114250-53140,,"PLATE, STOP",4,,,,,,,,,,,,,,,,,
12,2,,114250-53210,,PIN,8,,,,,,,,,,,,,,,,,
13,2,,114250-53400,,"SHIM PACK",4,,,,,,,,,,,,,,,,,
25,1,,123907-11601,,"PIPE SEAL",4,,,,,,,,,,,,,,,,,
26,1,,122780-59100,,RETAINER,2,,,,,,,,,,,,,,,,,
27,1,,119305-59120,,RETAINER,1,,,,,,,,,,,,,,,,,
30,2,,129150-59131,,"BOLT M4X14,HEX.SCKT.",1,,,,,,,,,,,,,,,,,
31,1,,129550-59120,,RETAINER,1,,,,,,,,,,,,,,,,,
34,2,,129150-59131,,"BOLT M4X14,HEX.SCKT.",2,,,,,,,,,,,,,,,,,
35,1,,129907-59710,,"PIPE ASSY, INJECTION",1,,,,,,,,,,,,,,,,,
37,1,,129907-59810,,"PIPE ASSY, INJECTION",1,,,,,,,,,,,,,,,,,
38,1,,129907-59820,,"PIPE ASSY, INJECTION",1,,,,,,,,,,,,,,,,,
39,1,,129907-59830,,"PIPE ASSY, INJECTION",1,,,,,,,,,,,,,,,,,
40,1,,129907-59840,,"PIPE ASSY, INJECTION",1,,,,,,,,,,,,,,,,,
41,1,,26106-060162,,"BOLT M 6X 16 PLATED",2,,,,,,,,,,,,,,,,,
42,1,,26106-080182,,"BOLT M 8X 18 PLATED",1,,,,,,,,,,,,,,,,,
```

silverhorn.co.uk

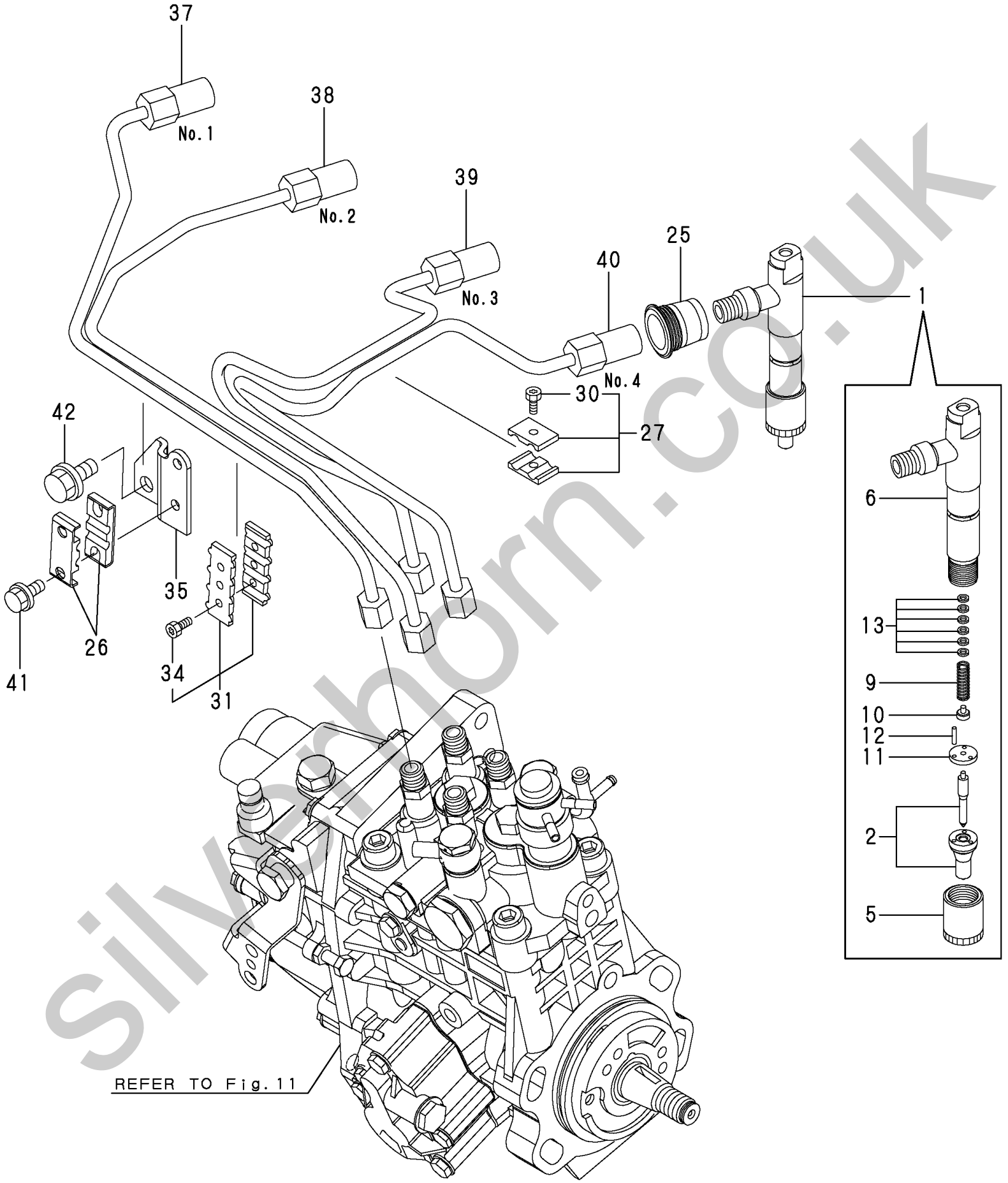


silvermorn.co.uk

```
1,1,,129004-55610,,"BRACKET, FILTER",1,,,,,,,,,,,,,,,,,
2,1,,123907-55800,,"FILTER, FUEL OIL",1,,,,,,,,,,,,,,,,,
2-1,1,,129907-55800,,"FILTER, FUEL OIL",1,,,,,,N,,TE-04429,E/#04255,,,,,,,,,,I
3,1,,26106-080302,,"BOLT M 8X 30 PLATED",2,,,,,,,,,,,,,,,,,
4,1,,129457-59010,,"PIPE ASSY, FUEL",1,,,,,,,,,,,,,,,,,
5,2,,124766-59050,,"CLAMP 12",2,,,,,,,,,,,,,,,,,
6,2,,129957-59120,,"PROTECTOR, FUEL PIPE",1,,,,,,,,,,,,,,,,,
7,2,,105025-59750,,"PIPE, FUEL OIL",1,,,,,,,,,,,,,,,,,
8,1,,129907-59140,,"PIPE ASSY,F.O.RETURN",1,,,,,,,,,,,,,,,,,
9,1,,123907-59540,,"JOINT BOLT M6",5,,,,,,,,,,,,,,,,,
10,1,,123907-59550,,"PACKING,FUEL RETURN",5,,,,,,,,,,,,,,,,,
11,1,,129486-59551,,"PIPE, FUEL RETURN",1,,,,,,,,,,,,,,,,,
12,2,,124722-59050,,"CLAMP  9",2,,,,,,,,,,,,,,,,,
14,1,,123907-59560,,"HOSE JOINT 4",1,,,,,,,,,,,,,,,,,
15,1,,22190-080002,,"SEAL WASHER  8S",1,,,,,,,,,,,,,,,,,
16,1,,129981-59010,,"PIPE ASSY, FUEL",1,,,,,,,,,,,,,,,,,
17,2,,124766-59050,,"CLAMP 12",2,,,,,,,,,,,,,,,,,
18,2,,129950-59221,,TUBE,1,,,,,,,,,,,,,,,,,
19,2,,129980-59510,,"PIPE, FUEL OIL",1,,,,,,,,,,,,,,,,,
20,1,,121750-59890,,"CLAMP 140",1,,,,,,,,,,,,,,,,,
```

silverhorn.co.uk

P/C NEWS No.:Y00B7130-3
PUBLISHED :2004/10

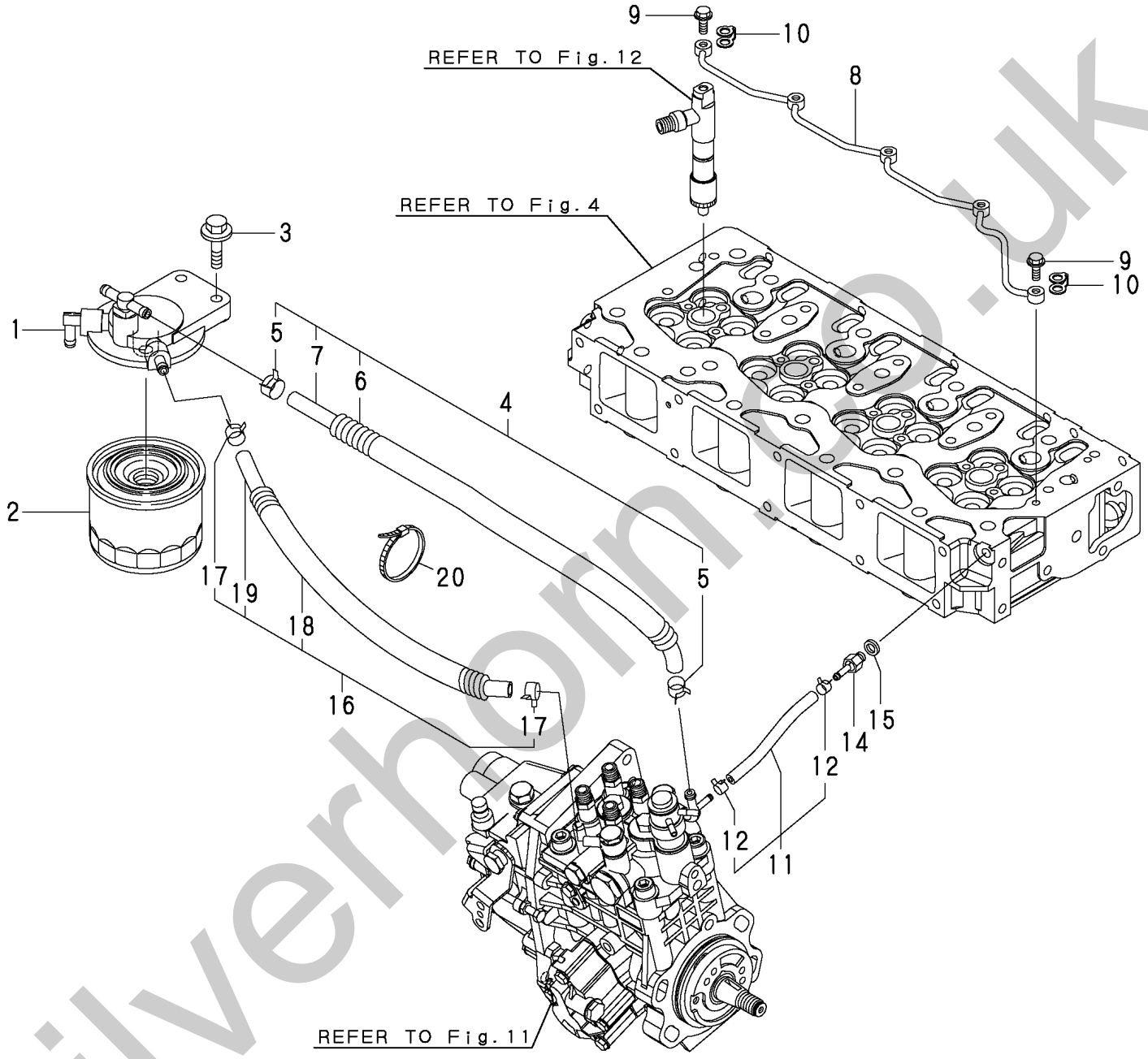


silverhorn.co.uk

```
1,1,,129940-77010,,"STARTER 12V,3KW",1,,,,,,,,,,,,,,,,,
2,2,,129940-77100,,"ARMATURE ASSY",1,,,,,,,,,,,,,,,,,
5,2,,129940-77130,,"COIL ASSY, FIELD",1,,,,,,,,,,,,,,,,,
6,2,,129940-77140,,"SCREW, POLE CORE SET",4,,,,,,,,,,,,,,,,,,
7,2,,129940-77150,,O-RING,1,,,,,,,,,,,,,,,,,
8,2,,129940-77160,,"BRUSH (+)",2,,,,,,,,,,,,,,,,,
9,2,,129940-77170,,"COVER, REAR",1,,,,,,,,,,,,,,,,,
10,2,,129940-77180,,"HOLDER, BRUSH",1,,,,,,,,,,,,,,,,,
11,3,,129940-77200,,"BRUSH (-)",2,,,,,,,,,,,,,,,,,
12,3,,129940-77190,,"SPRING, BRUSH",1,,,,,,,,,,,,,,,,,
13,2,,123900-77510,,"PINION ASSY",1,,,,,,,,,,,,,,,,,
14,3,,123900-77520,,"CLUTCH ASSY",1,,,,,,,,,,,,,,,,,
15,4,,X2240610100,,"BALL BEARING (3",2,,,,,,,,,,,,,,,,,
16,3,,123900-77540,,"SHAFT, PINION",1,,,,,,,,,,,,,,,,,
17,2,,119131-77550,,"STOPPER KIT, PINION",1,,,,,,,,,,,,,,,,,
18,2,,129940-77210,,"SWITCH ASSY,MAGNETIC",1,,,,,,,,,,,,,,,,,,
19,2,,129940-77230,,"RETAINER, BEARING",1,,,,,,,,,,,,,,,,,
20,2,,129940-77240,,"SHIFT LEVER SET",1,,,,,,,,,,,,,,,,,
21,2,,129940-77260,,"THROUGHT BOLT",2,,,,,,,,,,,,,,,,,
22,2,,129940-77250,,"COVER ASSY, DUST",1,,,,,,,,,,,,,,,,,
23,2,,129940-77220,,"HOUSING, GEARS",1,,,,,,,,,,,,,,,,,
24,2,,121254-77810,,"TERMINAL COVER",1,,,,,,,,,,,,,,,,,
25,2,,129940-77270,,"BOLT M6X 20",4,,,,,,,,,,,,,,,,,
26,2,,114371-79070,,"BOLT M 6X 37",2,,,,,,,,,,,,,,,,,
27,2,,129940-77280,,"SCREW M4X 10",2,,,,,,,,,,,,,,,,,
28,1,,26116-120302,,"BOLT M12X 30 PLATED",2,,,,,,,,,,,,,,,,,
```

silverhorn.co.uk

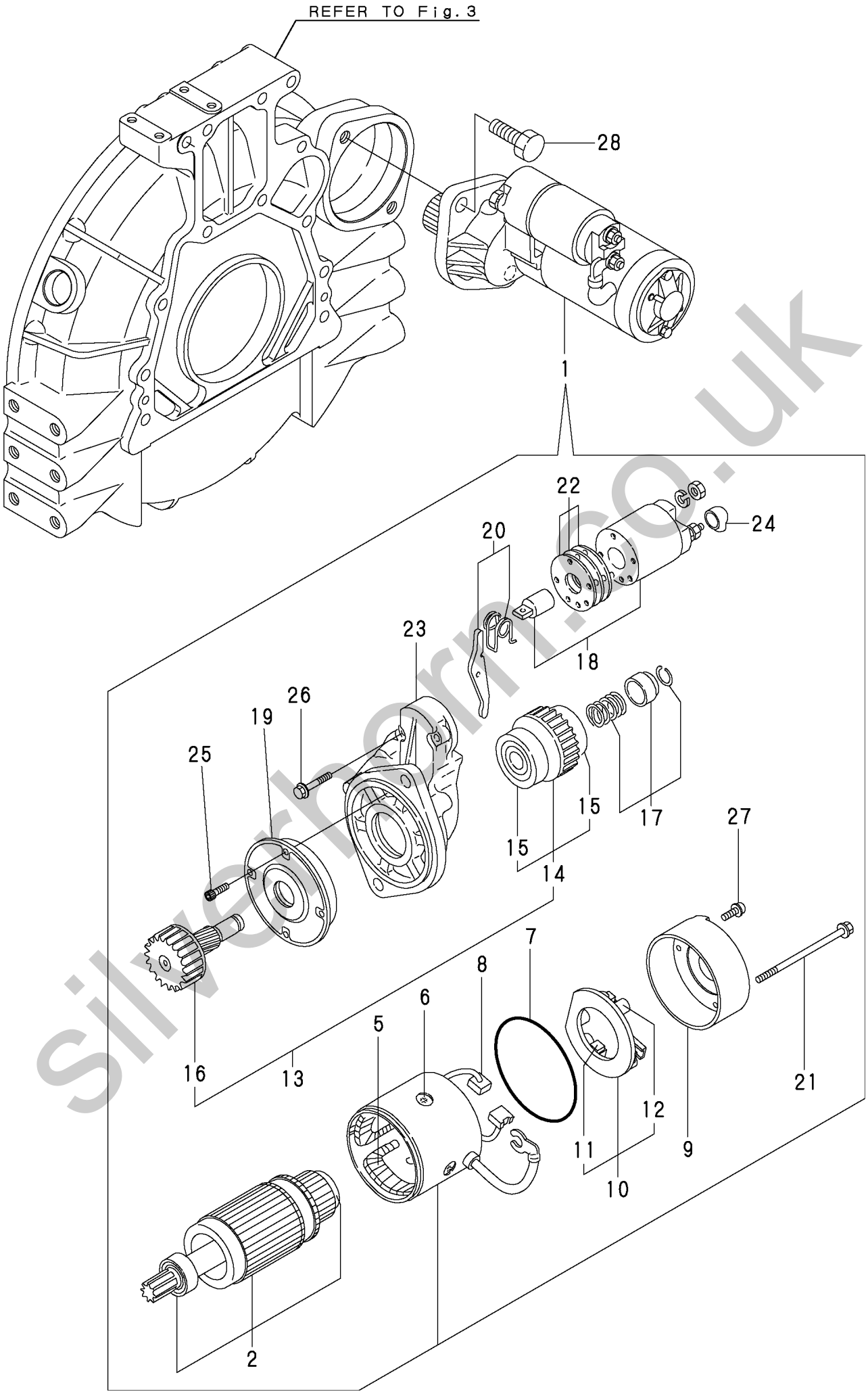

silverhorn.co.uk

```
1,1,,129900-77330,,"AJUSTER, BELT",1,,,,,,,,,,,,,,,,,
2,1,,129423-77200,,GENERATOR,1,,,,,,,,,,,,,,,,,
3,2,,X9490561001,,NUT,1,,,,,,,,,,,,,,,,,
4,2,,119620-77380,,"ROTOR ASSY",1,,,,,,,,,,,,,,,,,
5,3,,119620-79240,,"BALL BEARING",1,,,,,,,,,,,,,,,,,
6,3,,119620-79250,,"COVER, BEARING",1,,,,,,,,,,,,,,,,,
7,3,,119620-79360,,"THRUST WASHER",1,,,,,,,,,,,,,,,,,
8,2,,119620-77421,,"FLAME ASSY, DRIVE",1,,,,,,,,,,,,,,,,,
9,3,,119620-79200,,"BALL BEARING",1,,,,,,,,,,,,,,,,,
10,3,,119620-79210,,PLATE,1,,,,,,,,,,,,,,,,,
11,3,,119620-79220,,SCREW,4,,,,,,,,,,,,,,,,,
12,3,,119620-79230,,"BOLT, STUD",2,,,,,,,,,,,,,,,,,
13,2,,119620-77440,,"FLAME ASSY, REAR",1,,,,,,,,,,,,,,,,,
14,2,,129423-77450,,COVER,1,,,,,,,,,,,,,,,,,
15,2,,119620-77461,,PULLEY,1,,,,,,,,,,,,,,,,,
16,2,,119620-77471,,NUT,1,,,,,,,,,,,,,,,,,
17,2,,129423-77710,,"REGULATOR ASSY",1,,,,,,,,,,,,,,,,,
18,2,,119620-79260,,HOLDER,1,,,,,,,,,,,,,,,,,
19,2,,119620-79270,,"HOLDER, BRUSH",1,,,,,,,,,,,,,,,,,
20,3,,119620-77480,,"BRUSH ASSY",2,,,,,,,,,,,,,,,,,
21,3,,119620-79280,,SPRING,2,,,,,,,,,,,,,,,,,
22,2,,119620-79290,,SCREW,1,,,,,,,,,,,,,,,,,
23,2,,119620-79300,,SCREW,1,,,,,,,,,,,,,,,,,
24,2,,119620-79310,,BOLT,3,,,,,,,,,,,,,,,,,
25,2,,119620-79320,,"SCREW W/WASHER",2,,,,,,,,,,,,,,,,,
26,2,,119620-79330,,BOLT,2,,,,,,,,,,,,,,,,,
27,2,,119620-79340,,"INSULATION BUSH",1,,,,,,,,,,,,,,,,,
28,2,,119620-79350,,NUT,2,,,,,,,,,,,,,,,,,
29,2,,119620-77490,,COLLAR,1,,,,,,,,,,,,,,,,,
30,2,,119620-79360,,"THRUST WASHER",1,,,,,,,,,,,,,,,,,
31,1,,26306-100002,,NUT,1,,,,,,,,,,,,,,,,,
32,1,,129795-01900,,STUD,1,,,,,,,,,,,,,,,,,
33,1,,26014-080252,,"BOLT M 8X 25",1,,,,,,,,,,,,,,,,,
34,1,,119810-77340,,BOLT,1,,,,,,,,,,,,,,,,,
```

silverhorn.co.uk

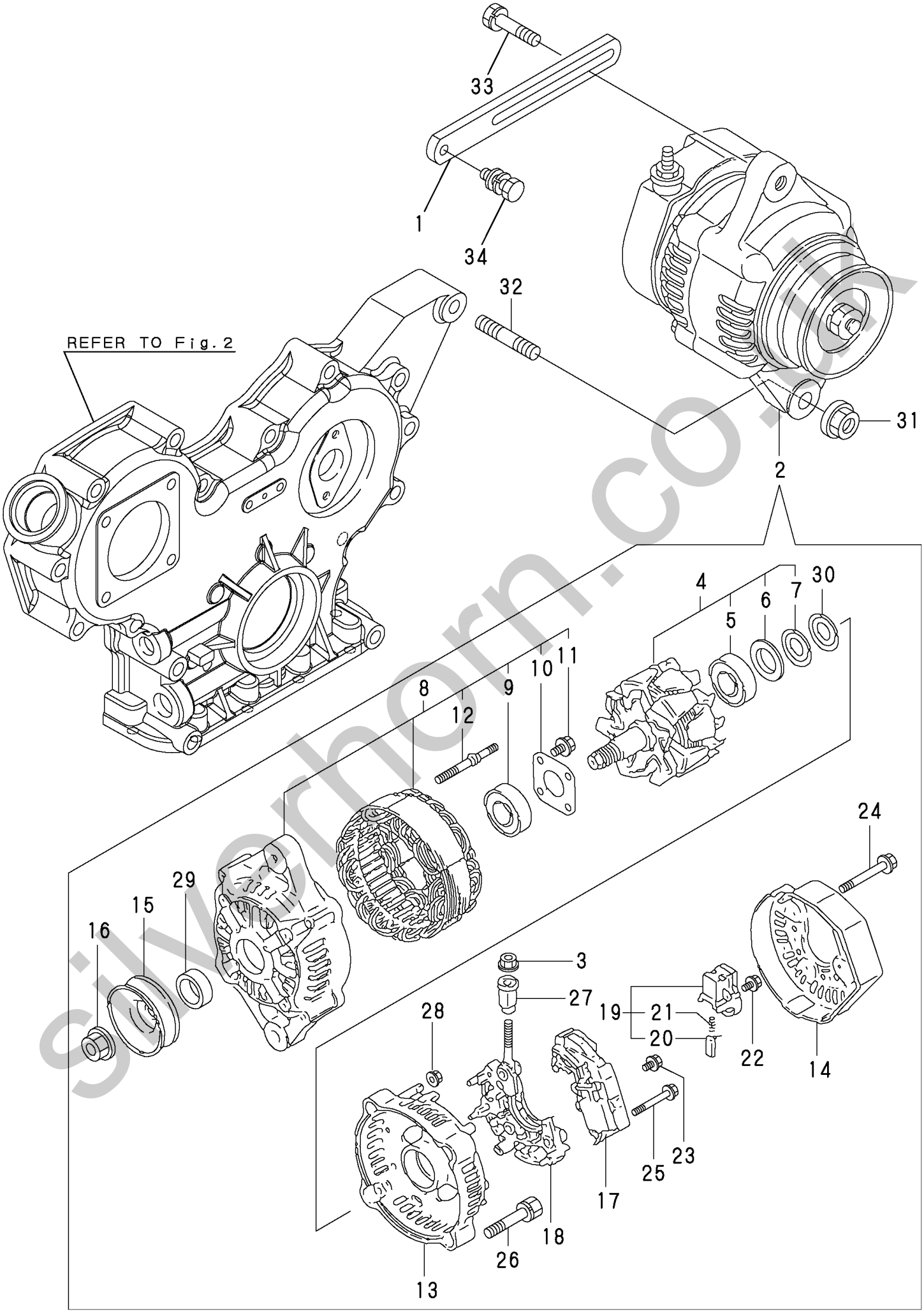

silverhorn.co.uk

```
1,1,,729907-92660,,"GASKET SET(NON-ASB.)",1,,,,,,,1,,,,,,,,,,
2,2,,24311-000150,,"O-RING 1A P-15.0",1,,,,,,,,,,,,,,,,
3,2,,123907-59550,,"PACKING,FUEL RETURN",5,,,,,,,,,,,,,,,,
4,2,,129907-01330,,"GASKET,CYLINDER HEAD",1,,,,,,,,,,,,,,,,
5,2,,124160-11340,,"SEAL, VALVE STEM",8,,,,,,,,,,,,,,,,
6,2,,119802-11870,,"PROTECTOR, NOZZLE",4,,,,,,,,,,,,,,,,
7,2,,119625-11880,,"SEAT, NOZZLE",4,,,,,,,,,,,,,,,,
8,2,,129907-11310,,"PACKING,BONNET",1,,,,,,,,,,,,,,,,
9,2,,129907-12110,,PACKING(INT.MANIFOLD,1,,,,,,,,,,,,,,,,
10,2,,129900-13251,,GASKET,1,,,,,,,,,,,,,,,,
11,2,,129930-13200,,"GASKET, SILENCER",1,,,,,,,,,,,,,,,,
12,2,,124950-11340,,"SEAL, VALVE STEM",8,,,,,,,,,,,,,,,,
13,2,,129900-32030,,"O-RING P20",2,,,,,,,,,,,,,,,,
14,2,,129900-32040,,"O-RING P14",1,,,,,,,,,,,,,,,,
15,2,,129900-42020,,"GASKET, CW-P",1,,,,,,,,,,,,,,,,
16,2,,129900-49870,,"GASKET, CASE",1,,,,,,,,,,,,,,,,
17,2,,121850-49550,,"GASKET, THERMOSTAT",1,,,,,,,,,,,,,,,,
18,2,,121850-77021,,"GASKET, (NON-ASB.)",1,,,,,,,,,,,,,,,,
19,2,,121850-49540,,"GASKET, THERMOSTAT",1,,,,,,,,,,,,,,,,
20,2,,23414-080000,,"GASKET 8, ROUND",3,,,,,,,,,,,,,,,,
21,2,,124465-44950,,"GASKET 16",2,,,,,,,,,,,,,,,,
22,2,,24311-000070,,"O-RING 1A P-7.0",1,,,,,,,,,,,,,,,,
23,2,,24311-000120,,"O-RING 1A P 12.0",8,,,,,,,,,,,,,,,,
24,2,,24311-000320,,"O-RING 1A P-32.0",3,,,,,,,,,,,,,,,,
25,2,,22190-080002,,"SEAL WASHER  8S",7,,,,,,,,,,,,,,,,
26,2,,24341-000530,,"O-RING 1A S-53.0",1,,,,,,,,,,,,,,,,
27,2,,24351-030750,,"PACKING,  3075",1,,,,,,,,,,,,,,,,
28,2,,124240-01883,,"GASKET, (NON-ASB.)",1,,,,,,,,,,,,,,,,
29,2,,22190-220002,,"SEAL WASHER 22S",1,,,,,,,,,,,,,,,,
30,2,,129150-49360,,"GASKET 10",1,,,,,,,,,,,,,,,,
31,1,,129400-92450,,"FLEX HONE",1,,,,,,,1,,,,,,,,,,
32,1,,977770-01212,,"GASKET, LIQUID",1,,,,,,,1,,,,,,,,,,
```

silverhorn.co.uk

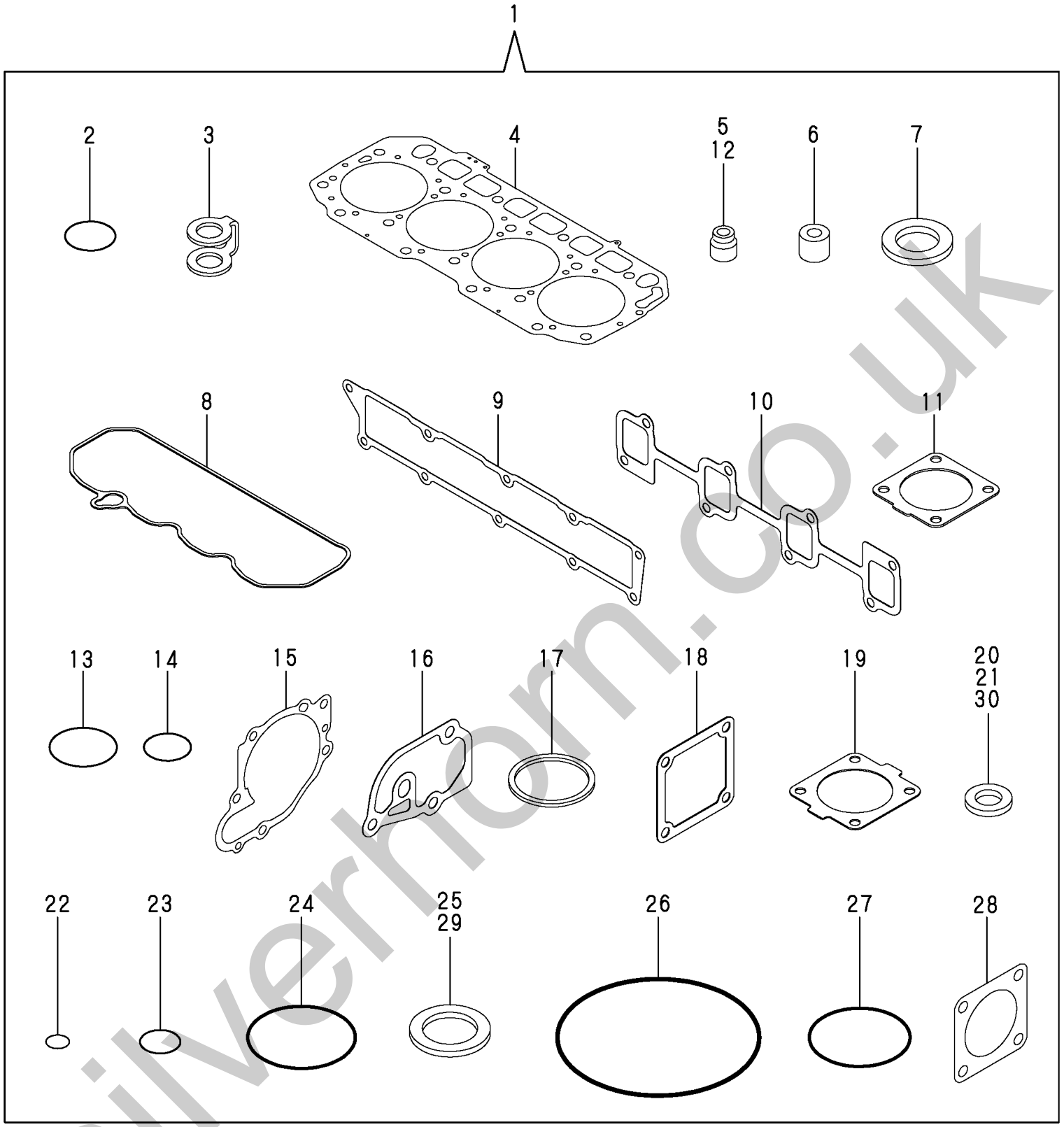


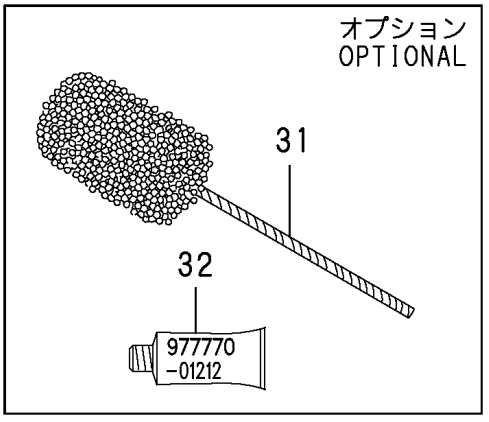


silverhorn.co.uk

```
0,Y00B7130
1,001,,"ENGINE SECTION (4TNV98-XBVB)"
2,1,,"CYLINDER BLOCK",4TNV98-XBVB,,,
2,2,,"GEAR HOUSING",4TNV98-XBVB,,,
2,3,,"FLYWHEEL HOUSING & OIL SUMP",4TNV98-XBVB,,,
2,4,,"CYLINDER HEAD & BONNET",4TNV98-XBVB,,,
2,5,,"SUCTION MANIFOLD",4TNV98-XBVB,,,
2,6,,"EXHAUST MANIFOLD",4TNV98-XBVB,,,
2,7,,"CAMSHAFT & DRIVING GEAR",4TNV98-XBVB,,,
2,8,,"CRANKSHAFT & PISTON",4TNV98-XBVB,,,
2,9,,"LUB.OIL SYSTEM",4TNV98-XBVB,,,
2,10,,"COOLING WATER SYSTEM",4TNV98-XBVB,,,
2,11,,"FUEL INJECTION PUMP",4TNV98-XBVB,,,
2,12,,"FUEL INJECTION VALVE",4TNV98-XBVB,,,
2,13,,"FUEL LINE",4TNV98-XBVB,,,
2,14,,"STARTING MOTOR",4TNV98-XBVB,,,
2,15,,GENERATOR,4TNV98-XBVB,,,
2,16,,"GASKET SET & TOOLS",4TNV98-XBVB,,,
```

silverhorn.co.uk