PE12200VD2－01

PARTS LIST

RUBBER CRAWLER CARRIER

MST-2200VD

Serial No. 222411 and up

silverhorn.co.uk

MOROOKA

PARTS LIST

RUBBER CRAWLER CARRIER

MST-2200VD

Serial No. 222411 and up

silvermoor.co.uk

FOREWORD

Thank you for purchasing this Morooka Rubber Crawler Carrier.
When ordering a part, please specify the model serial number, the engine serial number and the reading of the hourmeter.

READING FOR PARTS LIST

For complete understanding, the parts list is written as follows.

Fig. Number	Figure numbers are not continuous.
Description	“・” is put in front of the name of an assembly component and the item is entered next to the assembly. If part marked with “・” is an assembly, its component is part marked with “・・”.
Quantity	The number of pieces per set used for assembly is specified. For assembly or part group components, the number of pieces per assembly is specified.
Serial number	The engine or machine serial number in which the part is used.
Codes	The codes and part number specified in the “Part No.” and “Part name” columns represent the following: □ The part specified in the line above is applicable instead of this part. ☆ Supplied as a set rather than singly.

silverhorn.co.uk

CONTENTS

ITEM	FIG. No.	PAGE
FORWARD	—	A – 2
CONTENTS	—	0 – 1
ENGINE RELATED PARTS (ENGINE MOUNTING PARTS AND RADIATOR)	101	1 – 2
ENGINE RELATED PARTS (MAIN PUMP AND MOUNTING PARTS)	105	1 – 4
ENGINE RELATED PARTS (AIR INTAKE SYSTEM)	111	1 – 6
ENGINE RELATED PARTS (EXHAUST SYSTEM)	115	1 – 8
FUEL TANK AND FUEL PIPING	121	1 –10
FRAME RELATED PARTS (1/4) (RADIATOR COVER AND FRONT GRILL)	201	1 –12
FRAME RELATED PARTS (2/4) (UNDER COVER AND STEP)	202	1 –14
FRAME RELATED PARTS (3/4) (ENGINE BONNET)	203	1 –16
FRAME RELATED PARTS (4/4) (BATTERY BOX)	204	1 –20
CAB RELATED PARTS (CAB MOUNTING PARTS)	211	1 –22
CAB RELATED PARTS (WINDOW WASHER)	213	1 –24
CAB (1/6) (WIPER MOTOR AND SPEAKER)	221	1 –26
CAB (2/6) (L.H. AND REAR SIDE WINDOWS AND HANDRAIL)	222	1 –28
CAB (3/6) (CAB DOOR)	223	1 –30
CAB (4/6) (FRONT WINDOW)	224	1 –34
CAB (5/6) (R.H. SIDE WINDOW AND ROOF)	225	1 –38
CAB (6/6) (DOOR CATCH)	226	1 –40
CAB INNER PARTS (FLOOR PLATE AND FLOOR PARTS)	231	1 –42
CAB INNER PARTS (CONSOLE AND COVER)	233	1 –44
CAB INNER PARTS (CAB R.H. SIDE COVER)	235	1 –46
CAB INNER PARTS (OPERATOR'S SEAT)	241	1 –48
CAB INNER PARTS (OPERATOR'S SEAT STAND)	243	1 –50
AIR CONDITIONER RELATED PARTS (1/5) (A/C UNIT AND MOUNTING)	251	1 –52
AIR CONDITIONER RELATED PARTS (2/5) (AIR COMPRESSOR AND MOUNTING)	252	1 –54
AIR CONDITIONER RELATED PARTS (3/5) (A/C CONDENSER AND MOUNTING)	253	1 –56
AIR CONDITIONER RELATED PARTS (4/5) (A/C PIPING)	254	1 –58
AIR CONDITIONER RELATED PARTS (5/5) (CAR HEATER PIPING)	255	1 –60
CAB INNER PARTS (REAR BOX)	261	1 –62
CAB INNER PARTS (AIR DUCT)	263	1 –64
UNDER CARRIAGE RELATED PARTS (TRAVEL MOTOR AND IDLER)	301	1 –66
UNDER CARRIAGE RELATED PARTS (CARRIER ROLLER)	311	1 –68
UNDER CARRIAGE RELATED PARTS (TRACK ROLLER)	321	1 –70
STEERING CONTROL SYSTEM	401	1 –72
DUMP CONTROL SYSTEM	421	1 –74

silvermorn.co.uk

ITEM	FIG. No.	PAGE
HYDRAULIC PIPING (CONTROL VALVE AND DUMP CYLINDER LINE)	501	1 -76
HYDRAULIC PIPING (MAIN PUMP CHARGE LINE)	502	1 -78
HYDRAULIC PIPING (HST MAIN LINE)	503	1 -80
HYDRAULIC PIPING (PARKING BRAKE AND H-L SPEED VALVE LINE)	504	1 -82
HYDRAULIC PIPING (OIL COOLER AND DRAIN LINE)	505	1 -84
HYDRAULIC PIPING (MAIN PUMP DRAIN LINE)	506	1 -86
HYDRAULIC OIL TANK	551	1 -88
HYDRAULIC OIL FILTER	555	1 -90
OIL COOLER RELATED PARTS	561	1 -92
DUMP BODY RELATED PARTS	601	1 -94
ELECTRICAL SYSTEM (INSTRUMENT PANEL)	701	1 -96
ELECTRICAL SYSTEM (EACH SWITCHES AND RADIO)	703	1 -98
ELECTRICAL SYSTEM (WIRING HARNESS AND LAMPS)	711	1 -100
ELECTRICAL SYSTEM (RELAY AND FUSE BOX)	713	1 -102
ELECTRICAL SYSTEM (BATTERY AND BATTERY RELAY)	715	1 -106
MARKS AND PLATES (JAPANESE)	801	1 -108
MARKS AND PLATES (ENGLISH)	811	1 -110
TOOLS	901	1 -112
NUMERICAL INDEX	—	9 - 1

silverhorn.co.uk

MST-2200VD

silverhorn.co.uk

FIG.101 ENGINE RELATED PARTS
(ENGINE MOUNTING PARTS AND RADIATOR)

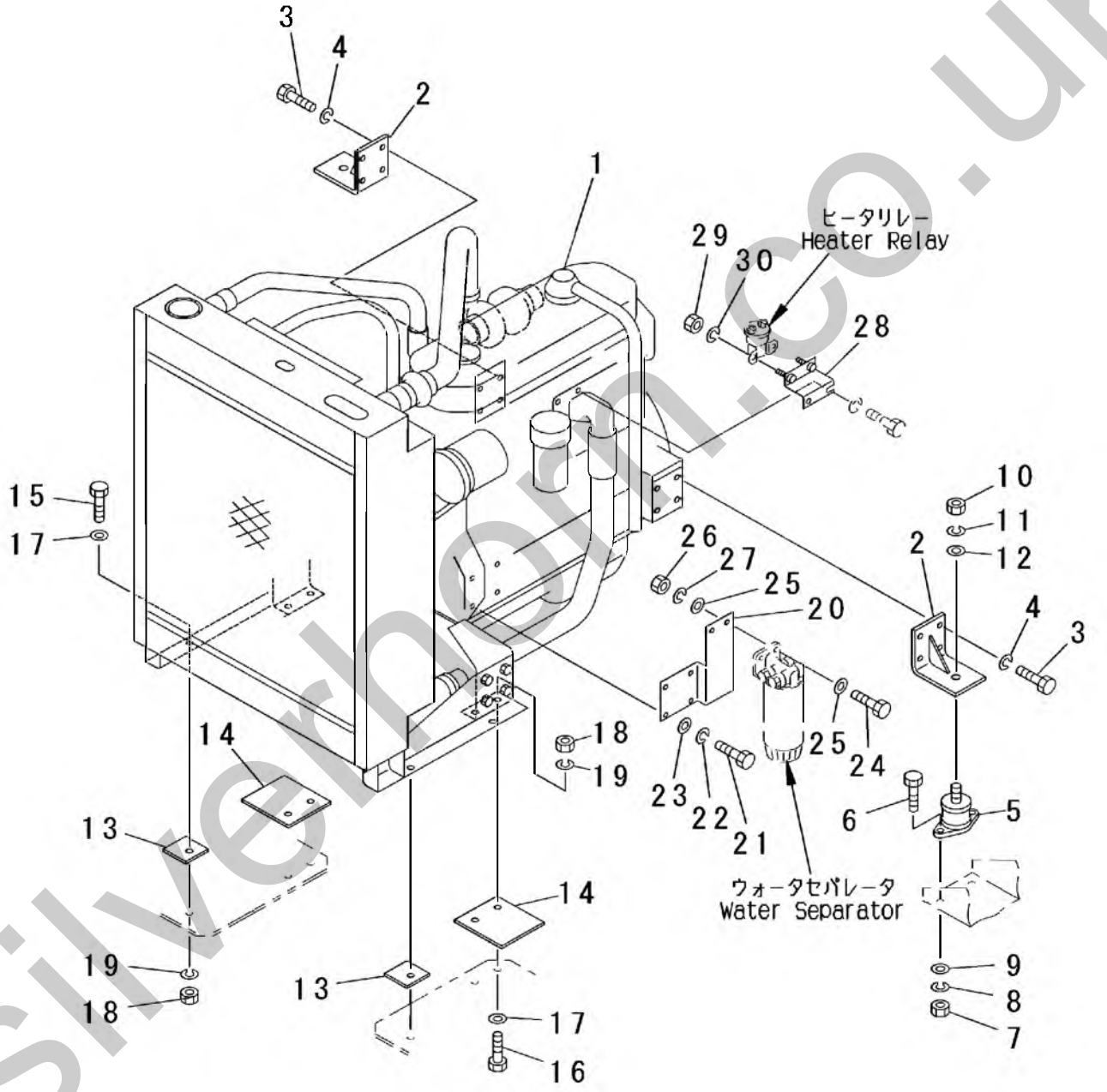

PV92925

silverhorn.co.uk

FIG.101

INDEX	PART NO.	DESCRIPTION	Q'TY	SERIAL NO.
1	1-46100-0200	ENGINE ASS'Y	1	222411 ～
		(CATERPILLAR 3126B-C2)		
2	1-46110-2110	BRACKET	2	222411 ～
3	0-1000-31640	BOLT (M16X40)	8	222411 ～
4	0-1100-31640	SPRING WASHER (M16)	8	222411 ～
5	1-39110-1210	CUSHION (EB4013)	2	222411 ～
6	0-1000-31235	BOLT (M12X35)	4	222411 ～
7	0-1200-31210	NUT (M12)	4	222411 ～
8	0-1100-31230	SPRING WASHER (M12)	4	222411 ～
9	0-1140-31232	HARD WASHER (M12)	4	222411 ～
10	0-1200-31613	NUT (M16)	2	222411 ～
11	0-1100-31640	SPRING WASHER (M16)	2	222411 ～
12	0-1140-31645	HARD WASHER (M16)	2	222411 ～
13	1-46110-2210	RUBBER CUSHION	2	222411 ～
14	1-46110-2220	RUBBER CUSHION	2	222411 ～
15	0-1000-31665	BOLT (M16X65)	2	222411 ～
16	0-1000-31660	BOLT (M16X60)	4	222411 ～
17	0-1140-31645	HARD WASHER (M16)	6	222411 ～
18	0-1200-31613	NUT (M16)	6	222411 ～
19	0-1100-31640	SPRING WASHER (M16)	6	222411 ～
20	1-46110-2310	WATER SEPARATOR BRACKET	1	222411 ～
21	0-1000-31420	BOLT (M14X20)	4	222411 ～
22	0-1100-31435	SPRING WASHER (M14)	4	222411 ～
23	0-1140-31445	HARD WASHER (M14)	4	222411 ～
24	0-1000-01035	BOLT (M10X35)	2	222411 ～
25	0-1120-01020	PLANE WASHER (M10)	4	222411 ～
26	0-1200-01008	NUT (M10)	2	222411 ～
27	0-1100-01025	SPRING WASHER (M10)	2	222411 ～
28	1-46110-2320	HEATER RELAY BRACKET	1	222411 ～
29	0-1200-00605	NUT (M6)	2	222411 ～
30	0-1100-00615	SPRING WASHER (M6)	2	222411 ～

silverthorn.co.uk

FIG.105 ENGINE RELATED PARTS (MAIN PUMP AND MOUNTING PARTS)

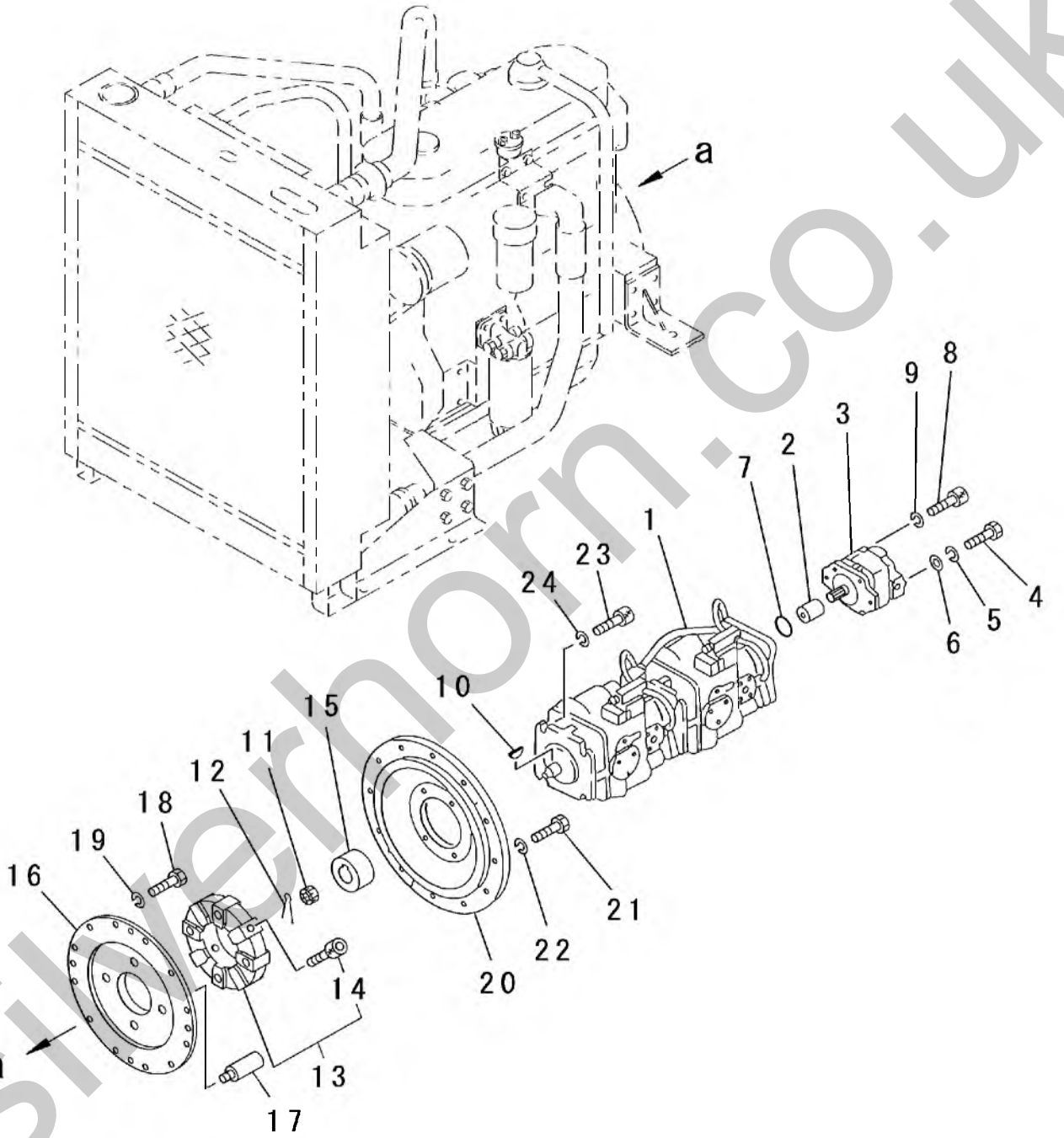

PV92926

silverhorn.co.uk

FIG.105

INDEX	PART NO.	DESCRIPTION	Q'TY	SERIAL NO.
1	1-41610-0010	MAIN PUMP ASS'Y (PV2424)	1	222411 ～
2	1-39610-1310	･COUPLING	1	222411 ～
3	1-41610-0020	･GEAR PUMP ASS'Y	1	222411 ～
4	0-1021-31620	･･SOCKET HEAD BOLT (M16X120)	2	222411 ～
5	0-1100-01640	･･SPRING WASHER (M16)	2	222411 ～
6	0-1120-01632	･･PLANE WASHER (M16)	2	222411 ～
7	0-2051-01826	･O-RING	1	222411 ～
8	0-1020-31240	･SOCKET HEAD BOLT (12X40)	4	222411 ～
9	0-1100-01230	･SPRING WASHER (M12)	4	222411 ～
10	1-39610-1110	･KEY	1	222411 ～
11	1-39610-1120	･NUT	1	222411 ～
12	1-39610-1130	･COTTER PIN	1	222411 ～
13	1-39160-1110	COUPLING	1	222411 ～
14	1-39160-1120	･BOLT	4	222411 ～
15	1-27160-1131	BOSS	1	222411 ～
16	1-27160-1141	CENTER PLATE	1	222411 ～
17	1-39160-1160	BOLT	4	222411 ～
18	0-1500-00730	BOLT (UNC7/16X30)	8	222411 ～
19	0-1100-01230	SPRING WASHER (M12)	8	222411 ～
20	1-41160-1151	COVER	1	222411 ～
21	0-1000-31235	BOLT (M12X35)	12	222411 ～
22	0-1100-01230	SPRING WASHER (M12)	12	222411 ～
23	0-1000-32055	BOLT (M20X55)	4	222411 ～
24	0-1100-02051	SPRING WASHER (M20)	4	222411 ～

silverhorn.co.uk

FIG.111 ENGINE RELATED PARTS (AIR INTAKE SYSTEM)

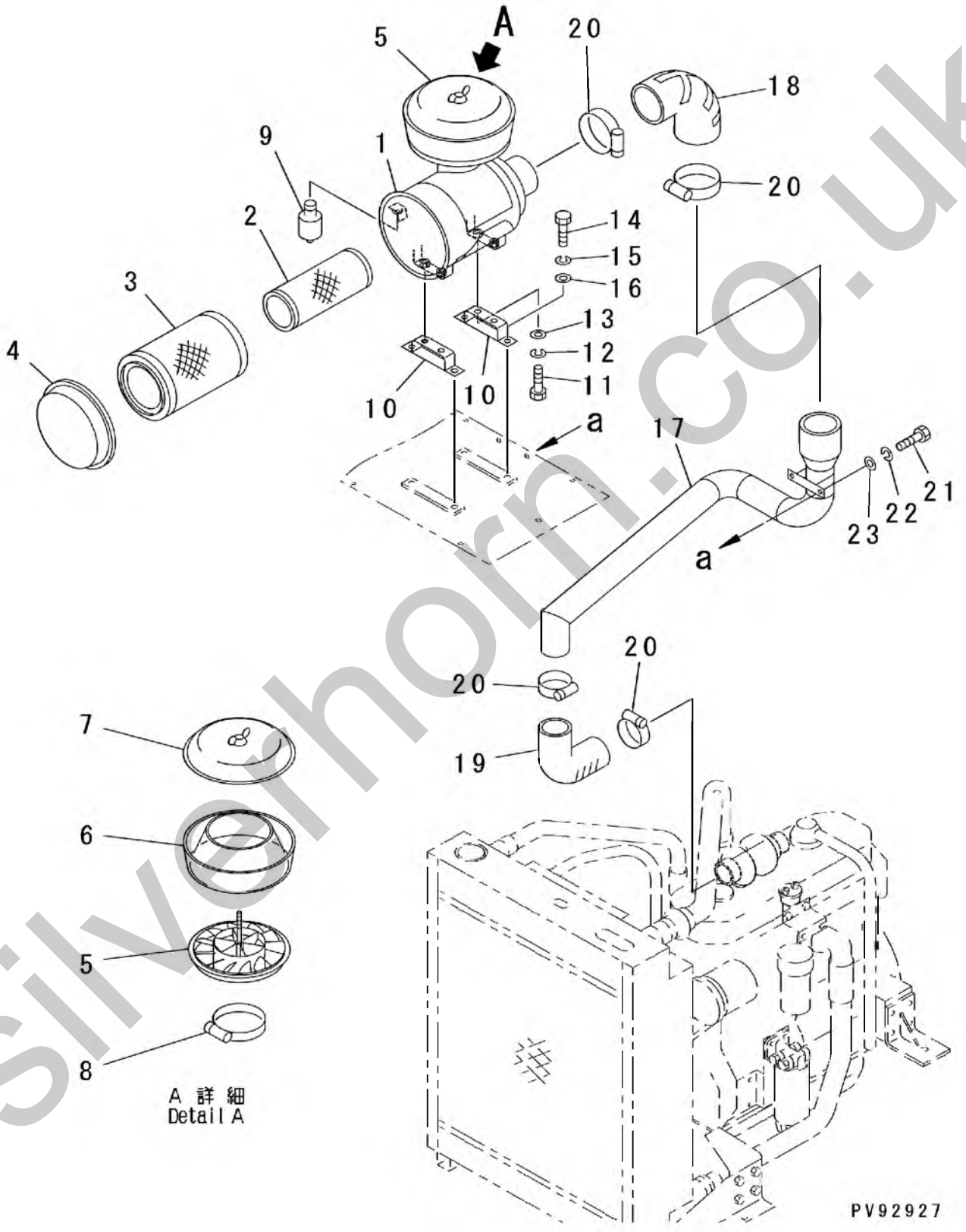

silverhorn.co.uk

FIG.111

INDEX	PART NO.	DESCRIPTION	Q'TY	SERIAL NO.
	1-46120-0020	AIR CLEANER ASS'Y	1	222411 ～
1	1-46120-2110	・AIR CLEANER BODY	1	222411 ～
2	(☆1-46120-2120)	・INNER ELEMENT	1	222411 ～
3	1-46120-2130	・OUTER ELEMENT	1	222411 ～
4	1-46120-2140	・COVER	1	222411 ～
	1-46120-2200	・HOOD ASS'Y	1	222411 ～
5	1-46120-2210	・・HOOD BASE	1	222411 ～
6	1-46120-2220	・・HOOD	1	222411 ～
7	1-46120-2230	・・COVER	1	222411 ～
8	1-46120-2240	・・CLAMP	1	222411 ～
9	1-46120-2150	・DUST INDICATOR	1	222411 ～
10	1-46120-2510	BRACKET	2	222411 ～
11	0-1000-00820	BOLT (M8X20)	4	222411 ～
12	0-1100-00820	SPRING WASHER (M8)	4	222411 ～
13	0-1120-00816	PLANE WASHER (M8)	4	222411 ～
14	0-1000-01016	BOLT (M10X16)	4	222411 ～
15	0-1100-01025	SPRING WASHER (M10)	4	222411 ～
16	0-1100-01020	PLANE WASHER (M10)	4	222411 ～
17	1-46120-2310	PIPE	1	222411 ～
18	1-46120-2320	JOINT HOSE	1	222411 ～
19	1-46120-2330	JOINT HOSE	1	222411 ～
20	0-2700-00140	CLAMP (JUBILY 6)	4	222411 ～
21	0-1000-01016	BOLT (M10X16)	2	222411 ～
22	0-1100-01025	SPRING WASHER (M10)	2	222411 ～
23	0-1100-01020	PLANE WASHER (M10)	2	222411 ～

silverthorn.co.uk

FIG.115 ENGINE RELATED PARTS (EXHAUST SYSTEM)

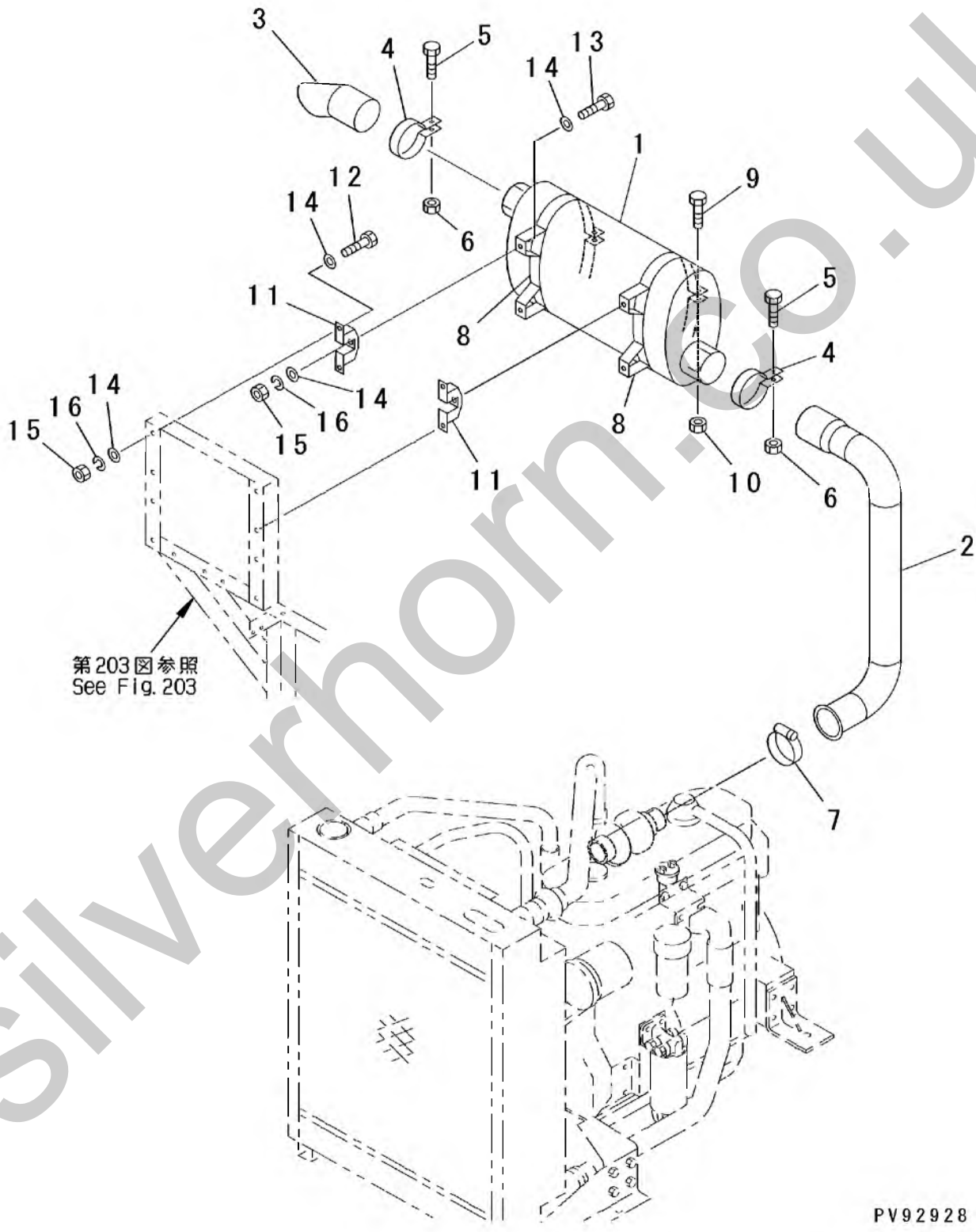

silverhorn.co.uk

FIG.115

INDEX	PART NO.	DESCRIPTION	Q'TY	SERIAL NO.
1	8-12130-1110	EXHAUST MUFFLER	1	222411 ~
2	1-46130-2120	EXHAUST PIPE	1	222411 ~
3	8-12130-1130	TAIL PIPE	1	222411 ~
4	8-12130-1150	CLAMP	2	222411 ~
5	8-12130-1170	BOLT (M10X45)	2	222411 ~
6	8-12130-1180	NUT (M10)	2	222411 ~
7	8-12130-1160	CLAMP	1	222411 ~
8	8-12130-1140	CLAMP	2	222411 ~
9	0-1000-31040	BOLT (M10X40)	2	222411 ~
10	0-1200-31008	NUT (M10)	2	222411 ~
11	1-33130-1180	SUPPORT	4	222411 ~
12	0-1000-00830	BOLT (M8X30)	8	222411 ~
13	0-1000-00825	BOLT (M8X25)	4	222411 ~
14	0-1120-00816	PLANE WASHER (M8)	24	222411 ~
15	0-1200-00806	NUT (M8)	12	222411 ~
16	0-1100-00820	SPRING WASHER (M8)	12	222411 ~

silverhorn.co.uk

FIG.121 FUEL TANK AND FUEL PIPING

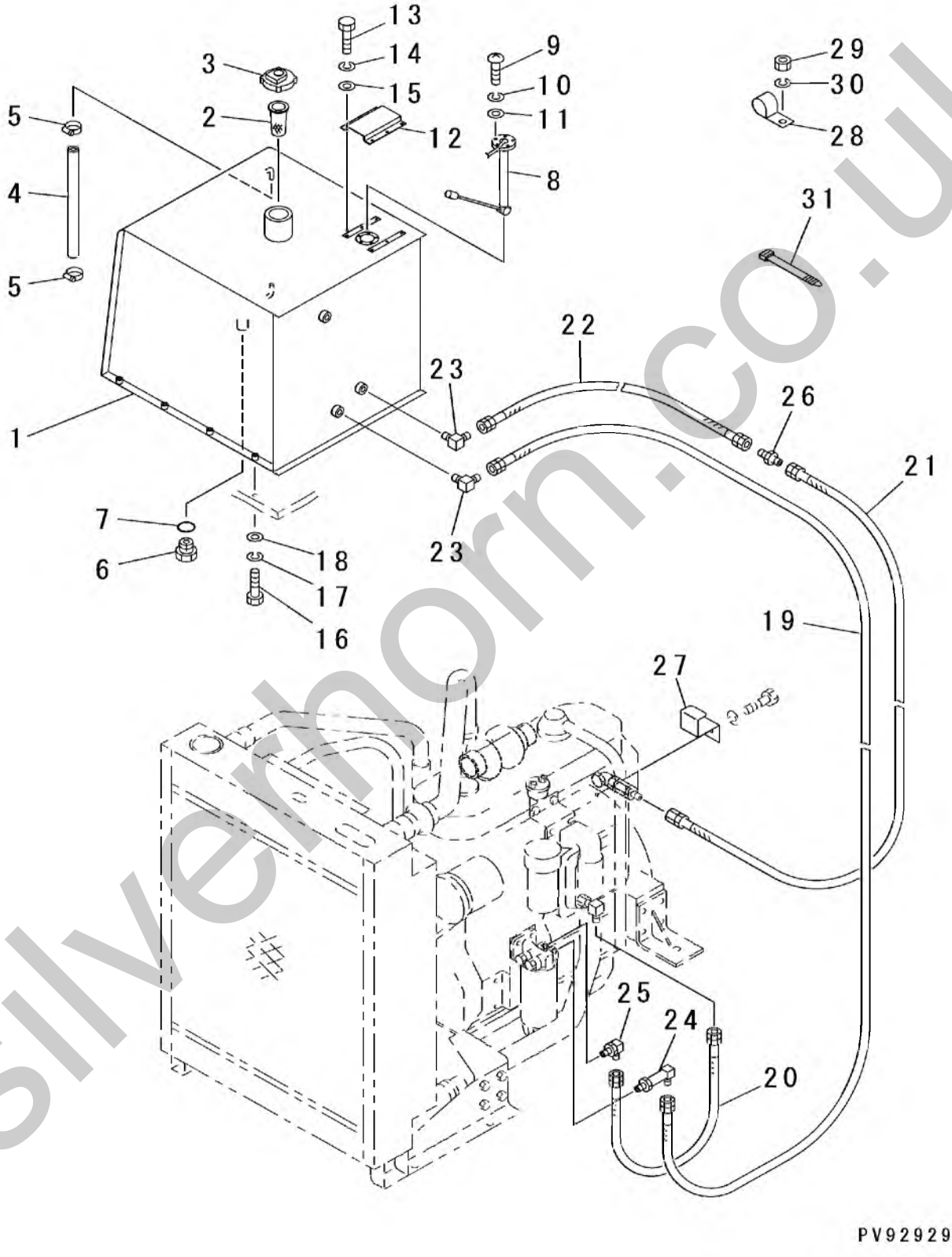

silverhorn.co.uk

FIG.121

INDEX	PART NO.	DESCRIPTION	Q'TY	SERIAL NO.
	1-41150-0010	FUEL TANK ASS'Y	1	222411 ～
1	1-41150-1110	・FUEL TANK	1	222411 ～
2	1-51150-1130	・STRAINER	1	222411 ～
3	1-51150-1140	・CAP (WITH KEY)	1	222411 ～
	1-51150-1180	・・KEY	1	222411 ～
4	0-2150-01045	FUEL LEVEL TUBE	1	222411 ～
5	0-2700-00012	CLAMP (JUBILY 000)	2	222411 ～
6	1-31150-1150	DRAIN BOLT	1	222411 ～
7	0-2010-02418	O-RING	1	222411 ～
8	1-32210-1180	FUEL LEVEL SENSOR	1	222411 ～
9	0-1300-00410	SCREW (4X10)	5	222411 ～
10	0-1100-00410	SPRING WASHER (M4)	5	222411 ～
11	0-1130-00408	PLANE WASHER (M4)	5	222411 ～
12	1-48150-1130	COVER	1	222411 ～
13	0-1000-00610	BOLT (M6X10)	6	222411 ～
14	0-1100-00615	SPRING WASHER (M6)	6	222411 ～
15	0-1120-00616	PLANE WASHER (M6)	6	222411 ～
16	0-1000-01020	BOLT (M10X20)	8	222411 ～
17	0-1100-01025	SPRING WASHER (M10)	8	222411 ～
18	0-1120-01020	PLANE WASHER (M10)	8	222411 ～
19	1-46150-2210	FUEL SUPPLY HOSE (φ3/8)	1	222411 ～
20	1-46150-2220	FUEL FILTER HOSE (φ3/8)	1	222411 ～
21	1-46150-2230	FUEL RETURN HOSE (φ3/8)	1	222411 ～
22	1-46150-2240	FUEL RETURN HOSE (φ3/8)	1	222411 ～
23	0-4300-00203	ELBOW (PT1/4XPF3/8)	2	222411 ～
24	0-4321-01203	ELBOW (UNF3/4XPF3/8)	1	222411 ～
	0-2040-02217	・O-RING (908)	1	222411 ～
25	0-4326-01203	ELBOW (UNF3/4XPF3/8)	1	222411 ～
	0-2040-02217	・O-RING (908)	1	222411 ～
26	0-4211-00303	NIPPLE (PF3/8XPF3/8)	1	222411 ～
27	1-46150-2310	HOSE CLAMP BRACKET	2	222411 ～
28	0-2720-02506	CLIP	2	222411 ～
29	0-1200-00605	NUT (M6)	2	222411 ～
30	0-1100-00615	SPRING WASHER (M6)	2	222411 ～
31	0-2800-00202	STRAP BAND	AR	222411 ～
	0-2800-00383	STRAP BAND	AR	222411 ～

silverhorn.co.uk

FIG.201 FRAME RELATED PARTS (1/4) (RADIATOR COVER AND FRONT GRILLE)

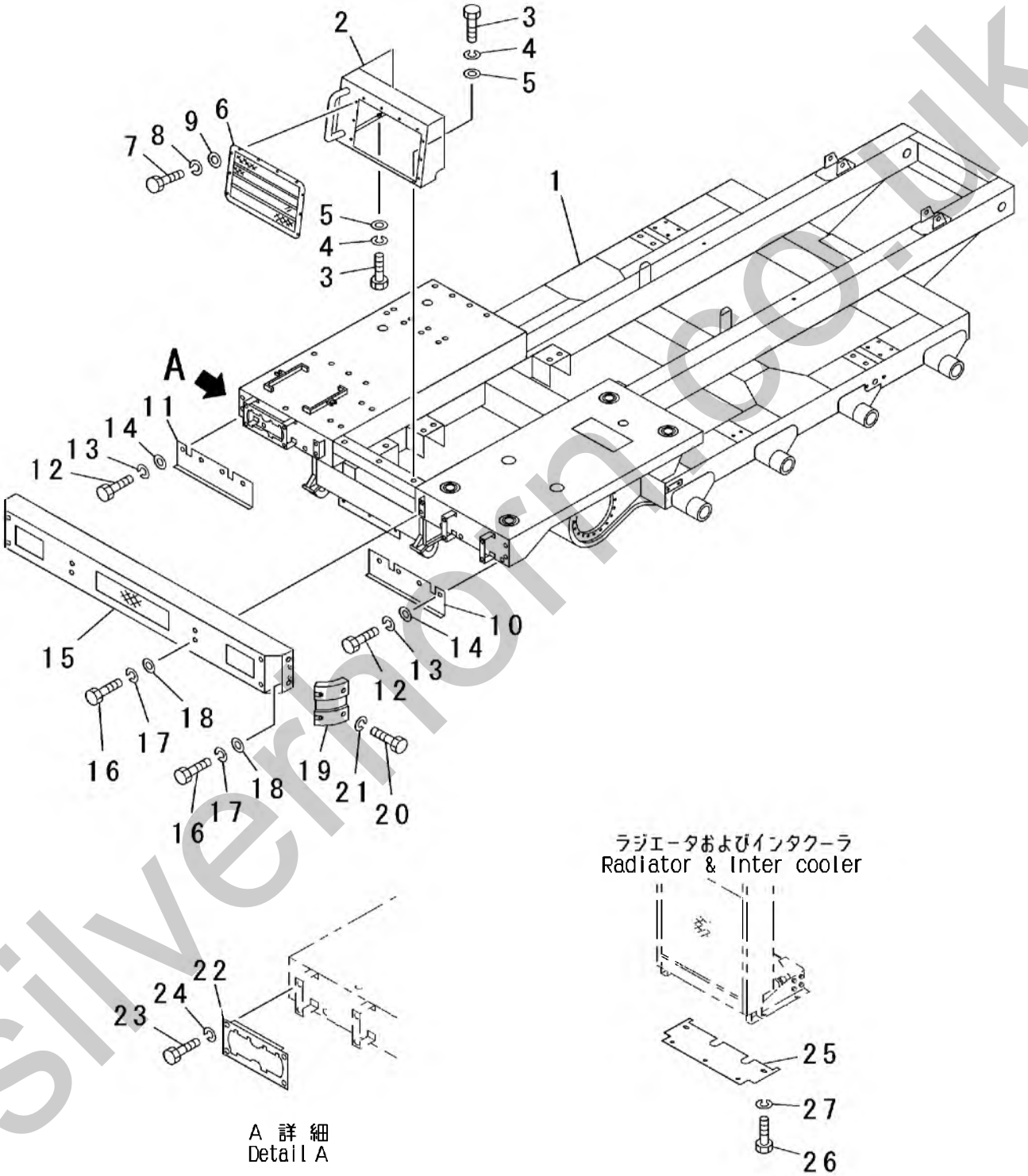

silvermorn.co.uk

FIG.201

INDEX	PART NO.	DESCRIPTION	Q'TY	SERIAL NO.
1	1-46510-2110	MAIN FRAME	1	222411 ~
2	1-41520-1430	RADIATOR COVER	1	222411 ~
3	0-1000-01025	BOLT (M10X25)	5	222411 ~
4	0-1100-01025	SPRING WASHER (M10)	5	222411 ~
5	0-1120-01020	PLANE WASHER (M10)	5	222411 ~
6	1-32520-1181	FRONT GRILLE	1	222411 ~
7	0-1000-01020	BOLT (M10X20)	10	222411 ~
8	0-1100-01025	SPRING WASHER (M10)	10	222411 ~
9	0-1120-01020	PLANE WASHER (M10)	10	222411 ~
10	1-41520-1570	L.H. SIDE COVER	1	222411 ~
11	1-41520-1580	R.H. SIDE COVER	1	222411 ~
12	0-1000-01020	BOLT (M10X20)	8	222411 ~
13	0-1100-01025	SPRING WASHER (M10)	8	222411 ~
14	0-1120-01020	PLANE WASHER (M10)	8	222411 ~
15	1-41520-1540	FRONT BUMPER	1	222411 ~
16	0-1000-01230	BOLT (M12X30)	8	222411 ~
17	0-1100-01230	SPRING WASHER (M12)	8	222411 ~
18	0-1120-01223	PLANE WASHER (M12)	8	222411 ~
19	1-41520-1830	CUSHION	2	222411 ~
20	0-1000-01245	BOLT (M12X45)	8	222411 ~
21	0-1100-01230	SPRING WASHER (M12)	8	222411 ~
22	1-41520-1520	HEAD LAMP BRACKET	2	222411 ~
23	0-1000-00820	BOLT (M8X20)	8	222411 ~
24	0-1100-00820	SPRING WASHER (M8)	8	222411 ~
25	1-46520-2210	RADIATOR COVER	1	222411 ~
26	0-1000-01220	BOLT (M12X20)	5	222411 ~
27	0-1100-01230	SPRING WASHER (M12)	5	222411 ~

silverthorn.co.uk

FIG.202 FRAME RELATED PARTS (2/4) (UNDER COVER AND STEP)

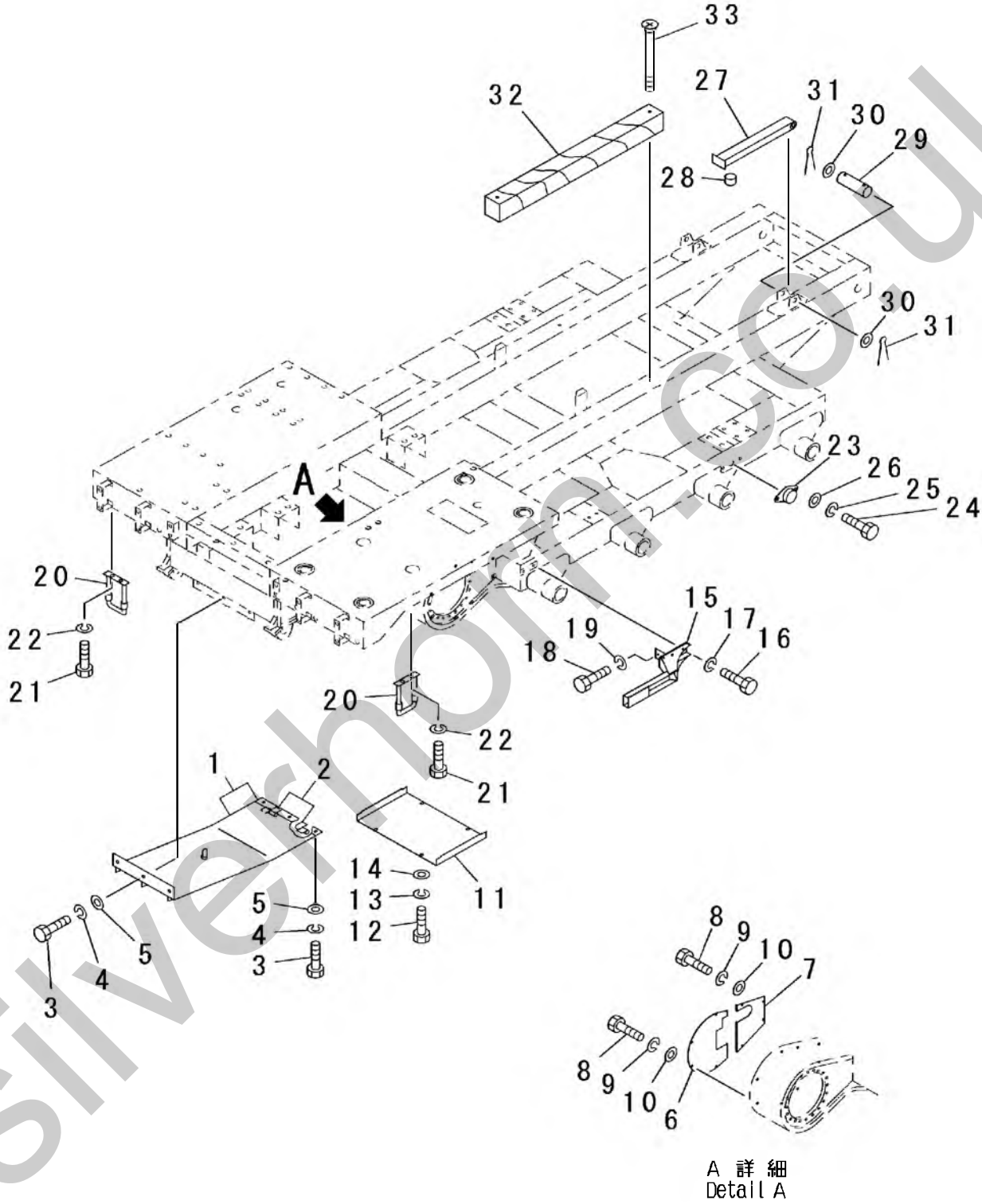

PV92931

silverhorn.co.uk

FIG.202

INDEX	PART NO.	DESCRIPTION	Q'TY	SERIAL NO.
1	1-41520-1680	UNDER COVER	1	222411 ～
2	1-41520-1820	・HINGE (WELDED)	2	222411 ～
3	0-1000-01025	BOLT (M10X25)	6	222411 ～
4	0-1100-01025	SPRING WASHER (M10)	6	222411 ～
5	0-1120-01020	PLANE WASHER (M10)	6	222411 ～
6	1-41520-1720	L.H. SIDE TRAVEL MOTOR COVER	1	222411 ～
	1-41520-1710	R.H. SIDE TRAVEL MOTOR COVER	1	222411 ～
7	1-41520-1740	L.H. SIDE TRAVEL MOTOR COVER	1	222411 ～
	1-41520-1730	R.H. SIDE TRAVEL MOTOR COVER	1	222411 ～
8	0-1000-01020	BOLT (M10X20)	16	222411 ～
9	0-1100-01025	SPRING WASHER (M10)	16	222411 ～
10	0-1120-01020	PLANE WASHER (M10)	16	222411 ～
11	1-41520-1780	AIR CONDITIONER COVER	1	222411 ～
12	0-1000-01020	BOLT (M10X20)	4	222411 ～
13	0-1100-01025	SPRING WASHER (M10)	4	222411 ～
14	0-1120-01020	PLANE WASHER (M10)	4	222411 ～
15	1-41520-2040	STEP	1	222411 ～
16	0-1000-31025	BOLT (M10X25)	2	222411 ～
17	0-1100-31025	SPRING WASHER (M10)	2	222411 ～
18	0-1000-31230	BOLT (M12X30)	2	222411 ～
19	0-1100-31230	SPRING WASHER (M12)	2	222411 ～
20	1-48520-1420	STEP	2	222411 ～
21	0-1000-01025	BOLT (M10X25)	4	222411 ～
22	0-1100-01025	SPRING WASHER (M10)	4	222411 ～
23	1-11510-1210	CAP	2	222411 ～
24	0-1000-00616	BOLT (M6X16)	4	222411 ～
25	0-1100-00615	SPRING WASHER (M6)	4	222411 ～
26	0-1120-00616	PLANE WASHER (M6)	4	222411 ～
27	1-32710-1621	SAFETY BAR	2	222411 ～
28	1-32710-1650	CUSHION	2	222411 ～
29	1-32710-1630	PIN	2	222411 ～
30	0-1120-02032	PLANE WASHER (M20)	4	222411 ～
31	0-3220-00532	COTTER PIN (5X32)	4	222411 ～
32	1-32510-1310	CUSHION BLOCK	2	222411 ～
33	0-1311-01020	BOLT (M10X120)	4	222411 ～

silverhorn.co.uk

FIG.203 FRAME RELATED PARTS (3/4) (ENGINE BONNET)

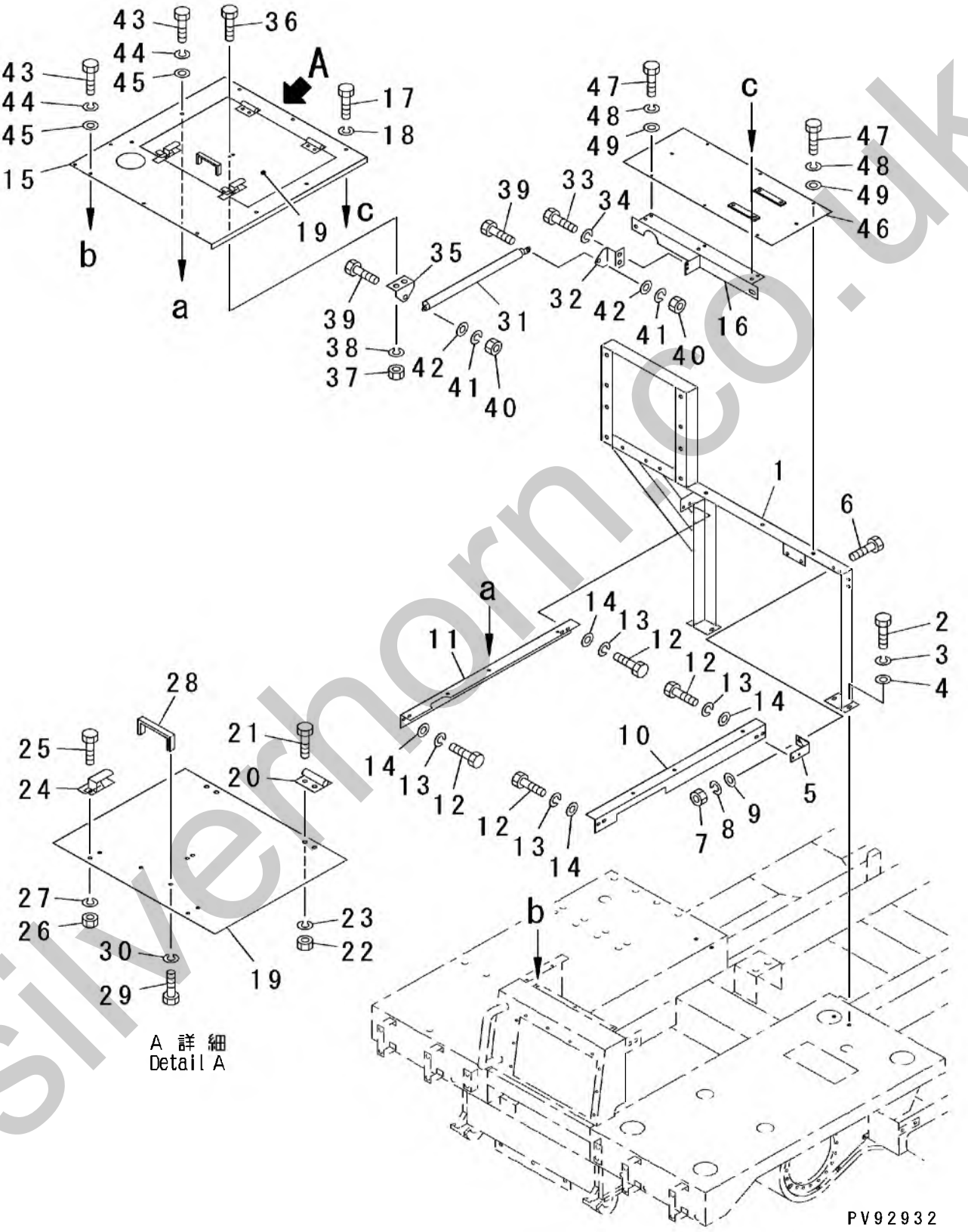

silverhorn.co.uk

FIG.203

INDEX	PART NO.	DESCRIPTION	Q'TY	SERIAL NO.
1	1-46520-2410	REAR SUPPORT	1	222411 ～
2	0-1000-01230	BOLT (M12X30)	4	222411 ～
3	0-1100-01230	SPRING WASHER (M12)	4	222411 ～
4	0-1120-01223	PLANE WASHER (M12)	4	222411 ～
5	1-41520-1510	SUPPORT	1	222411 ～
6	0-1000-01235	BOLT (M12X35)	2	222411 ～
7	0-1200-01210	NUT (M12)	2	222411 ～
8	0-1100-01230	SPRING WASHER (M12)	2	222411 ～
9	0-1120-01223	PLANE WASHER (M12)	2	222411 ～
10	1-46520-2490	L.H. SIDE BRACKET	1	222411 ～
11	1-46520-2480	R.H. SIDE BRACKET	1	222411 ～
12	0-1000-01225	BOLT (M12X25)	8	222411 ～
13	0-1100-01230	SPRING WASHER (M12)	8	222411 ～
14	0-1120-01223	PLANE WASHER (M12)	8	222411 ～
	1-46520-2470	BONNET ASS'Y	1	222411 ～
15	1-46520-2450	・BONNET	1	222411 ～
16	1-46520-2440	・BRACKET	1	222411 ～
17	0-1000-01025	・BOLT (M10X25)	3	222411 ～
18	0-1100-01025	・SPRING WASHER (M10)	3	222411 ～
19	1-46520-2460	・COVER	1	222411 ～
20	1-41520-1860	・HINGE	2	222411 ～
21	0-1000-00516	・BOLT (M5X16)	4	222411 ～
22	0-1200-00504	・NUT (M5)	4	222411 ～
23	0-1100-00513	・SPRING WASHER (M5)	4	222411 ～
24	1-29520-1521	・CATCHER	2	222411 ～
25	0-1000-00616	・BOLT (M6X16)	4	222411 ～
26	0-1200-00605	・NUT (M6)	4	222411 ～
27	0-1100-00615	・SPRING WASHER (M6)	4	222411 ～
28	1-41520-1380	・HANDLE	1	222411 ～
29	0-1000-00610	・BOLT (M6X10)	2	222411 ～
30	0-1100-00615	・SPRING WASHER (M6)	2	222411 ～
31	1-41520-1670	・DAMPER	1	222411 ～
32	1-41520-1360	・BRACKET	1	222411 ～
33	0-1000-00612	・BOLT (M6X12)	2	222411 ～
34	0-1100-00615	・SPRING WASHER (M6)	2	222411 ～
35	1-41520-1350	・BRACKET	1	222411 ～
36	0-1000-00616	・BOLT (M6X16)	2	222411 ～
37	0-1200-00605	・NUT (M6)	2	222411 ～
38	0-1100-00615	・SPRING WASHER (M6)	2	222411 ～
39	1-41520-1370	・BOLT	2	222411 ～

silverhorn.co.uk

FIG.203 FRAME RELATED PARTS (3/4) (ENGINE BONNET)

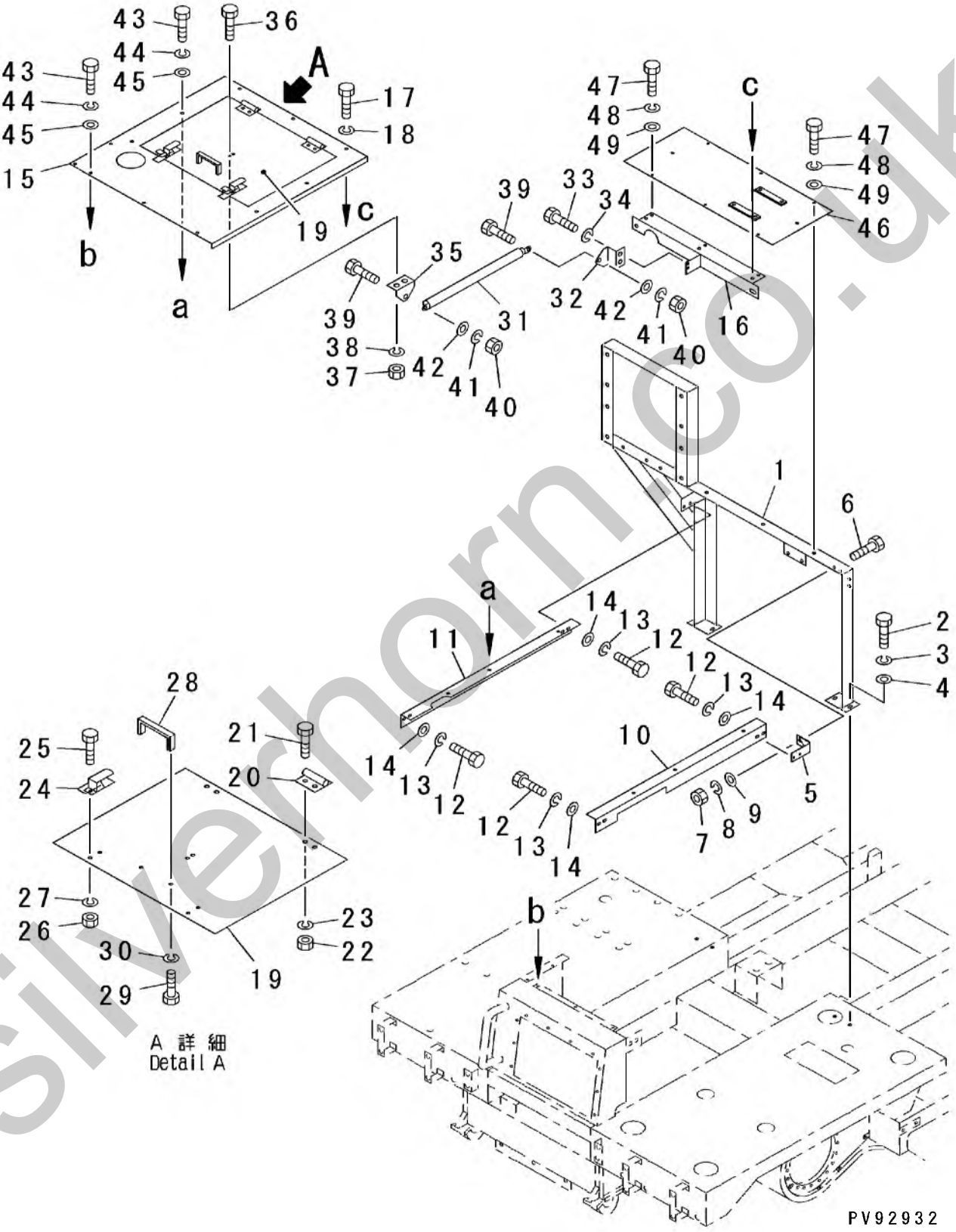

silverhorn.co.uk

FIG.203

INDEX	PART NO.	DESCRIPTION	Q'TY	SERIAL NO.
40	0-1200-00806	・NUT (M8)	2	222411 ～
41	0-1100-00820	・SPRING WASHER (M8)	2	222411 ～
42	0-1120-00816	・PLANE WASHER (M8)	2	222411 ～
43	0-1000-01025	BOLT (M10X25)	9	222411 ～
44	0-1100-01025	SPRING WASHER (M10)	9	222411 ～
45	0-1120-01020	PLANE WASHER (M10)	9	222411 ～
46	1-46520-2160	AIR CLEANER SUPPORT	1	222411 ～
47	0-1000-01020	BOLT (M10X20)	6	222411 ～
48	0-1100-01025	SPRING WASHER (M10)	6	222411 ～
49	0-1120-01020	PLANE WASHER (M10)	6	222411 ～

silverhorn.co.uk

FIG.204 FRAME RELATED PARTS (4/4) (BATTERY BOX)

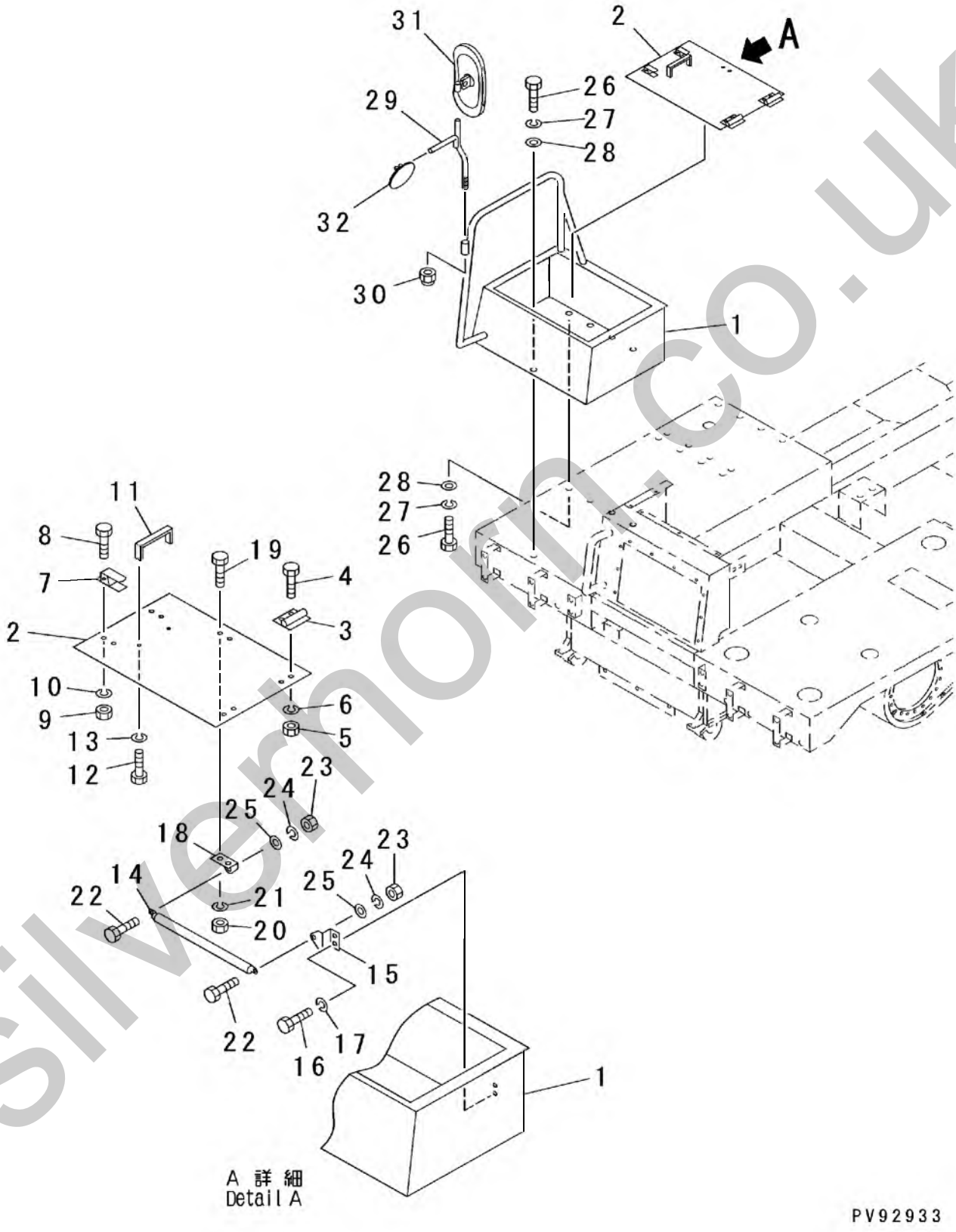

silvermoon.co.uk

FIG.204

INDEX	PART NO.	DESCRIPTION	Q'TY	SERIAL NO.
	1-41520-1410	BATTERY BOX ASS'Y	1	222411 ～
1	1-41520-1310	・BATTERY BOX	1	222411 ～
2	1-41520-1330	・BATTERY BOX COVER	1	222411 ～
3	1-41520-1860	・HINGE	2	222411 ～
4	0-1000-00516	・BOLT (M5X16)	4	222411 ～
5	0-1200-00504	・NUT (M5)	4	222411 ～
6	0-1100-00513	・SPRING WASHER (M5)	4	222411 ～
7	1-29520-1520	・CATCHER	2	222411 ～
8	0-1000-00516	・BOLT (M5X16)	4	222411 ～
9	0-1200-00504	・NUT (M5)	4	222411 ～
10	0-1100-00513	・SPRING WASHER (M5)	4	222411 ～
11	1-41520-1380	・HANDLE	1	222411 ～
12	0-1000-00610	・BOLT (M6X10)	2	222411 ～
13	0-1100-00615	・SPRING WASHER (M6)	2	222411 ～
14	1-41520-1340	・DAMPER	1	222411 ～
15	1-41520-1360	・BRACKET	1	222411 ～
16	0-1000-00612	・BOLT (M6X12)	2	222411 ～
17	0-1100-00615	・SPRING WASHER (M6)	2	222411 ～
18	1-41520-1350	・BRACKET	1	222411 ～
19	0-1000-00616	・BOLT (M6X16)	2	222411 ～
20	0-1200-00605	・NUT (M6)	2	222411 ～
21	0-1100-00615	・SPRING WASHER (M6)	2	222411 ～
22	1-41520-1370	・BOLT	2	222411 ～
23	0-1200-00806	・NUT (M8)	2	222411 ～
24	0-1100-00820	・SPRING WASHER (M8)	2	222411 ～
25	0-1120-00816	・PLANE WASHER (M8)	2	222411 ～
26	0-1000-01020	BOLT (M10X20)	5	222411 ～
27	0-1100-01025	SPRING WASHER (M10)	5	222411 ～
28	0-1120-01020	PLANE WASHER (M10)	5	222411 ～
29	1-46520-2510	MIRROR STAY	1	222411 ～
30	1-41520-1850	U-NUT	1	222411 ～
31	1-46520-2520	REAR VIEW MIRROR	1	222411 ～
32	1-18520-1290	UNDER MIRROR	1	222411 ～

silverhorn.co.uk

FIG.211 CAB RELATED PARTS (CAB MOUNTING PARTS)

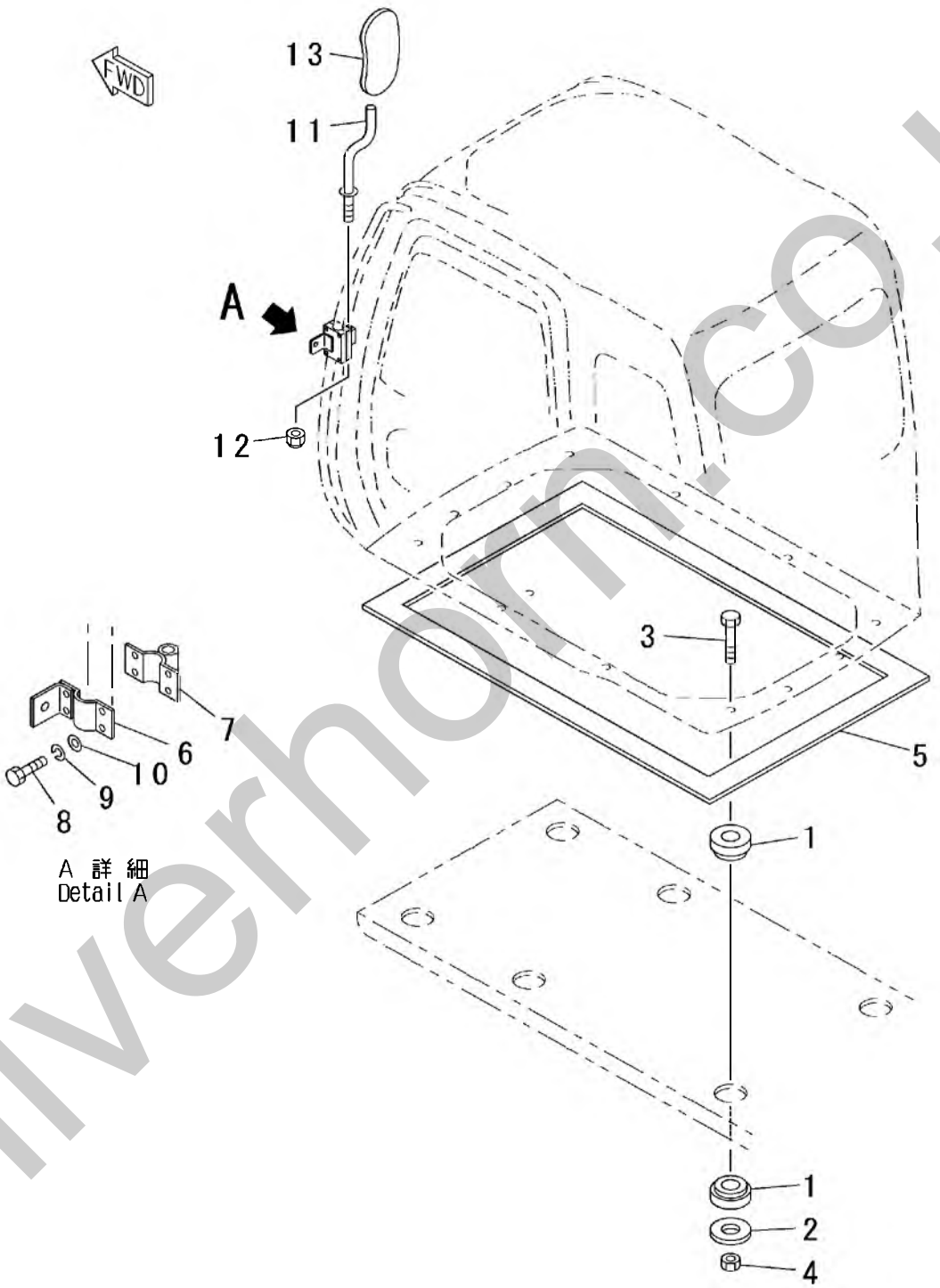

PV92934

silverhorn.co.uk

FIG.204

INDEX	PART NO.	DESCRIPTION	Q'TY	SERIAL NO.
	1-41520-1410	BATTERY BOX ASS'Y	1	222411 ~
1	1-41520-1310	·BATTERY BOX	1	222411 ~
2	1-41520-1330	·BATTERY BOX COVER	1	222411 ~
3	1-41520-1860	·HINGE	2	222411 ~
4	0-1000-00516	·BOLT (M5X16)	4	222411 ~
5	0-1200-00504	·NUT (M5)	4	222411 ~
6	0-1100-00513	·SPRING WASHER (M5)	4	222411 ~
7	1-29520-1520	·CATCHER	2	222411 ~
8	0-1000-00516	·BOLT (M5X16)	4	222411 ~
9	0-1200-00504	·NUT (M5)	4	222411 ~
10	0-1100-00513	·SPRING WASHER (M5)	4	222411 ~
11	1-41520-1380	·HANDLE	1	222411 ~
12	0-1000-00610	·BOLT (M6X10)	2	222411 ~
13	0-1100-00615	·SPRING WASHER (M6)	2	222411 ~
14	1-41520-1340	·DAMPER	1	222411 ~
15	1-41520-1360	·BRACKET	1	222411 ~
16	0-1000-00612	·BOLT (M6X12)	2	222411 ~
17	0-1100-00615	·SPRING WASHER (M6)	2	222411 ~
18	1-41520-1350	·BRACKET	1	222411 ~
19	0-1000-00616	·BOLT (M6X16)	2	222411 ~
20	0-1200-00605	·NUT (M6)	2	222411 ~
21	0-1100-00615	·SPRING WASHER (M6)	2	222411 ~
22	1-41520-1370	·BOLT	2	222411 ~
23	0-1200-00806	·NUT (M8)	2	222411 ~
24	0-1100-00820	·SPRING WASHER (M8)	2	222411 ~
25	0-1120-00816	·PLANE WASHER (M8)	2	222411 ~
26	0-1000-01020	BOLT (M10X20)	5	222411 ~
27	0-1100-01025	SPRING WASHER (M10)	5	222411 ~
28	0-1120-01020	PLANE WASHER (M10)	5	222411 ~
29	1-46520-2510	MIRROR STAY	1	222411 ~
30	1-41520-1850	U-NUT	1	222411 ~
31	1-46520-2520	REAR VIEW MIRROR	1	222411 ~
32	1-18520-1290	UNDER MIRROR	1	222411 ~

silverhorn.co.uk

FIG.213 CAB RELATED PARTS (WINDOW WASHER)

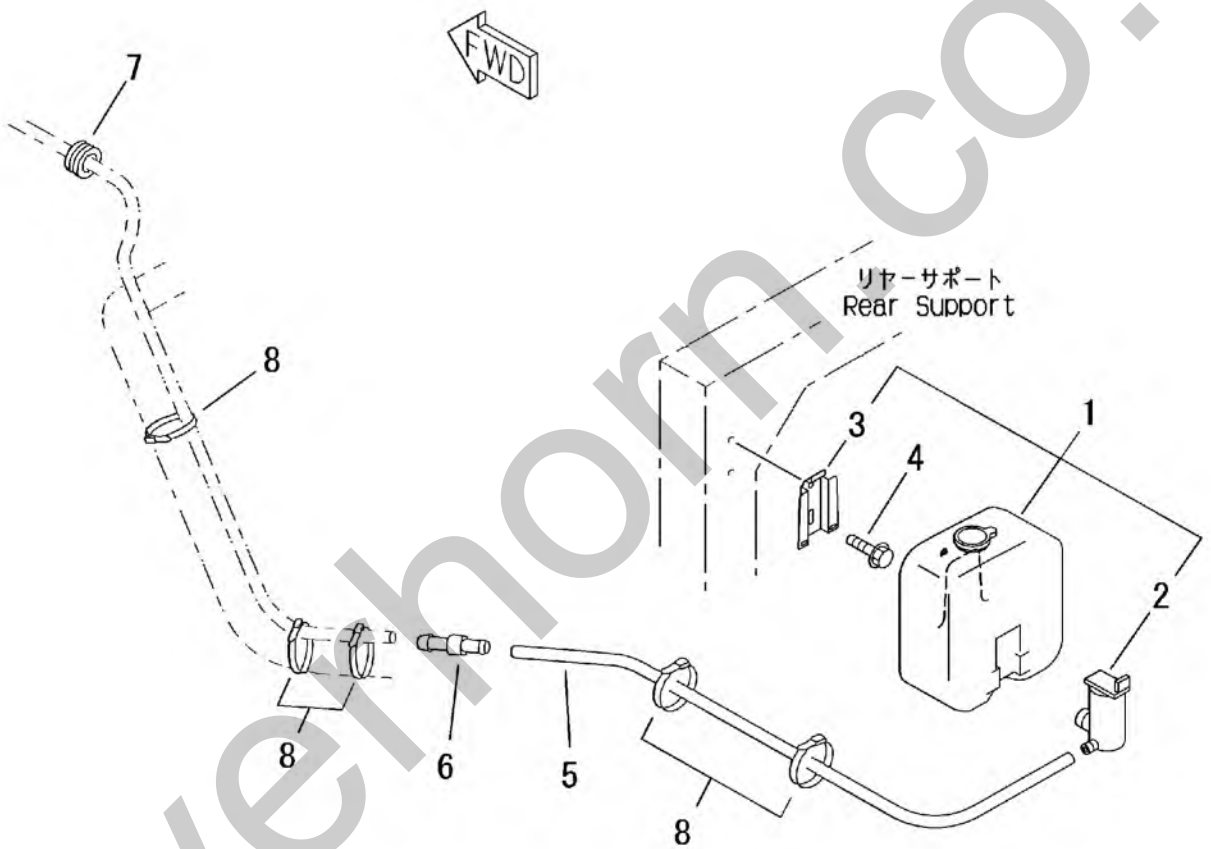

PV92306

silverhorn.co.uk

FIG.213

INDEX	PART NO.	DESCRIPTION	Q'TY	SERIAL NO.
	HC4333185	WINDOW WASHER TANK ASS'Y	1	222411 ～
1	HC4369472	・TANK	1	222411 ～
2	HC4326095	・MOTOR	1	222411 ～
3	HC4338974	・BRACKET	1	222411 ～
4	0-1050-00616	FLANGE BOLT (M6X16)	2	222411 ～
5	HC4285388	VINYL HOSE	1	222411 ～
6	HC4254237	JOINT	1	222411 ～
7	HC94-2817	RUBBER BUSHING	1	222411 ～
8	HC4055312	BAND CLIP	5	222411 ～

silverhorn.co.uk

FIG.221 CAB (1/6) (WIPER MOTOR AND SPEAKER)

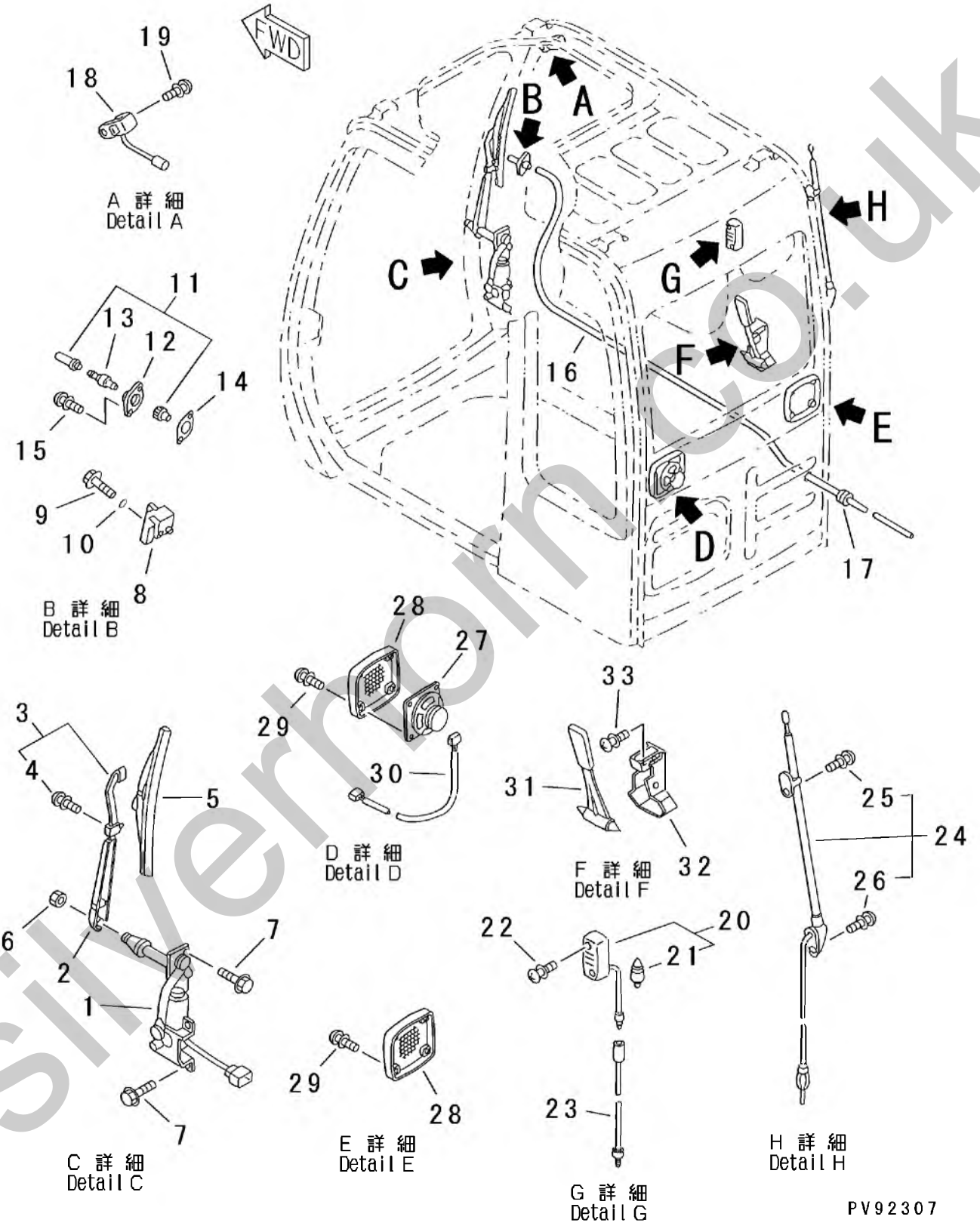

silverhorn.co.uk

FIG.221

INDEX	PART NO.	DESCRIPTION	Q'TY	SERIAL NO.
1	HC4369540	WIPER MOTOR ASS'Y	1	222411 ~
2	HC4369541	WIPER ARM	1	222411 ~
3	HC4370903	ARM STOPPER	1	222411 ~
4	HC4382863	·SEMS SCREW	2	222411 ~
5	HC4369542	WIPER BLADE	1	222411 ~
6	HCM500807	NUT (M8)	1	222411 ~
7	HCJ020816	SEMS BOLT (M8X16)	5	222411 ~
8	HC4369543	WIPER STAND	1	222411 ~
9	HC4372218	SEMS BOLT	1	222411 ~
10	HC4092111	O-RING	1	222411 ~
11	HC4367485	WATER NOZZLE	1	222411 ~
12	HC4367486	ADAPTER	1	222411 ~
13	HC4367481	CHECK VALVE	1	222411 ~
14	HC4369544	PACKING	1	222411 ~
15	HC4372608	SEMS SCREW	2	222411 ~
16	HC4369549	HOSE	1	222411 ~
17	HC4287903	RUBBER BUSHING	2	222411 ~
18	1-41210-2350	LIMIT SWITCH	1	222411 ~
19	HCJ460510	SEMS SCREW (M5X10)	1	222411 ~
20	HC4187082	ROOM LAMP	1	222411 ~
21	HC4187083	·BULB	1	222411 ~
22	HCJ460514	SEMS SCREW (M5X14)	2	222411 ~
23	HC4369546	WIRING HARNESS	1	222411 ~
24	HC4280527	ANTENNA	1	222411 ~
25	HC4210412	·SCREW	1	222411 ~
26	HC4210413	·SCREW	1	222411 ~
27	HC4361302	SPEAKER	1	222411 ~
28	HC4364504	SPEAKER GRILLE	2	222411 ~
29	HC4372608	SEMS SCREW	8	222411 ~
30	HC4369547	WIRING HARNESS	1	222411 ~
31	HC4362700	HAMMER	1	222411 ~
32	HC2038764	BRACKET	1	222411 ~
33	HCJ460516	SEMS SCREW (M5X16)	2	222411 ~

silverhorn.co.uk

FIG.222 CAB (2/6) (L.H. SIDE, REAR SIDE WINDOW AND HANDRAIL)

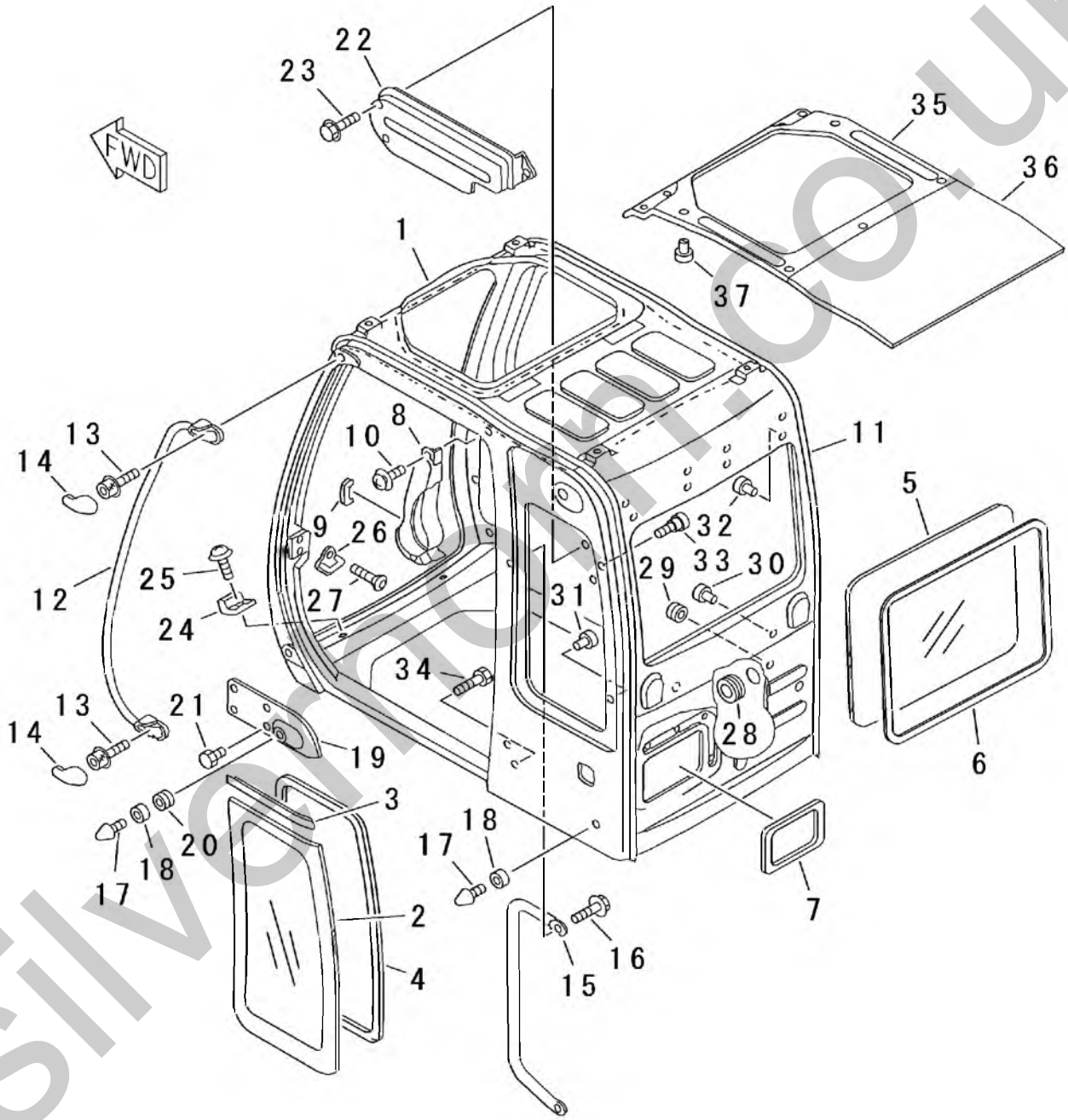

PV92308

silvermtn.co.uk

FIG.222

INDEX	PART NO.	DESCRIPTION	Q'TY	SERIAL NO.
1	HC4369550	CAB	1	222411 ～
2	HC4369556	L.H. SIDE WINDOW GLASS	1	222411 ～
3	HC4369559	RUBBER SEAL	1	222411 ～
4	HC4400079	RUBBER SEAL	1	222411 ～
5	HC4369555	REAR SIDE WINDOW GLASS	1	222411 ～
6	HC4369554	RUBBER SEAL	1	222411 ～
7	HC4369585	RUBBER SEAL	1	222411 ～
8	HC4369565	COVER	1	222411 ～
9	HC4369566	RUBBER SEAL	1	222411 ～
10	HCJ680614	SEMS SCREW (M6X14)	3	222411 ～
11	HC4369574	RUBBER SEAL	1	222411 ～
12	HC4369571	HANDRAIL	1	222411 ～
13	HC4369573	SOCKET HEAD BOLT	2	222411 ～
14	HC4369572	COVER	2	222411 ～
15	HC4369625	HANDRAIL	1	222411 ～
16	HC4372219	SEMS BOLT	2	222411 ～
17	HC4204586	STOPPER	2	222411 ～
18	HC4369561	SPACER	2	222411 ～
19	HC4369557	PANEL	1	222411 ～
20	HC4372089	RUBBER BUSHING	1	222411 ～
21	HC4369659	CLIP	4	222411 ～
22	HC4369567	COVER	1	222411 ～
23	HC4372222	SEMS BOLT	3	222411 ～
24	HC4369675	RUBBER SHEET	2	222411 ～
25	HCJ680614	SEMS SCREW (M6X14)	2	222411 ～
26	HC4369627	STRIKER	1	222411 ～
27	HC4320163	SCREW	2	222411 ～
28	HC4369568	RUBBER BUSHING	1	222411 ～
29	HC4369569	RUBBER BUSHING	1	222411 ～
30	HC4372087	RUBBER STOPPER	2	222411 ～
31	HC4369626	RUBBER BUSHING	1	222411 ～
32	HC4372088	CLIP	8	222411 ～
33	HC4295573	HOOK	1	222411 ～
34	HC4320150	BOLT	1	222411 ～
35	HC4369552	SHEET	1	222411 ～
36	HC4369551	SHEET	1	222411 ～
37	HC4369614	CLIP	12	222411 ～

silverthorn.co.uk

FIG.223 CAB (3/6) (CAB DOOR)

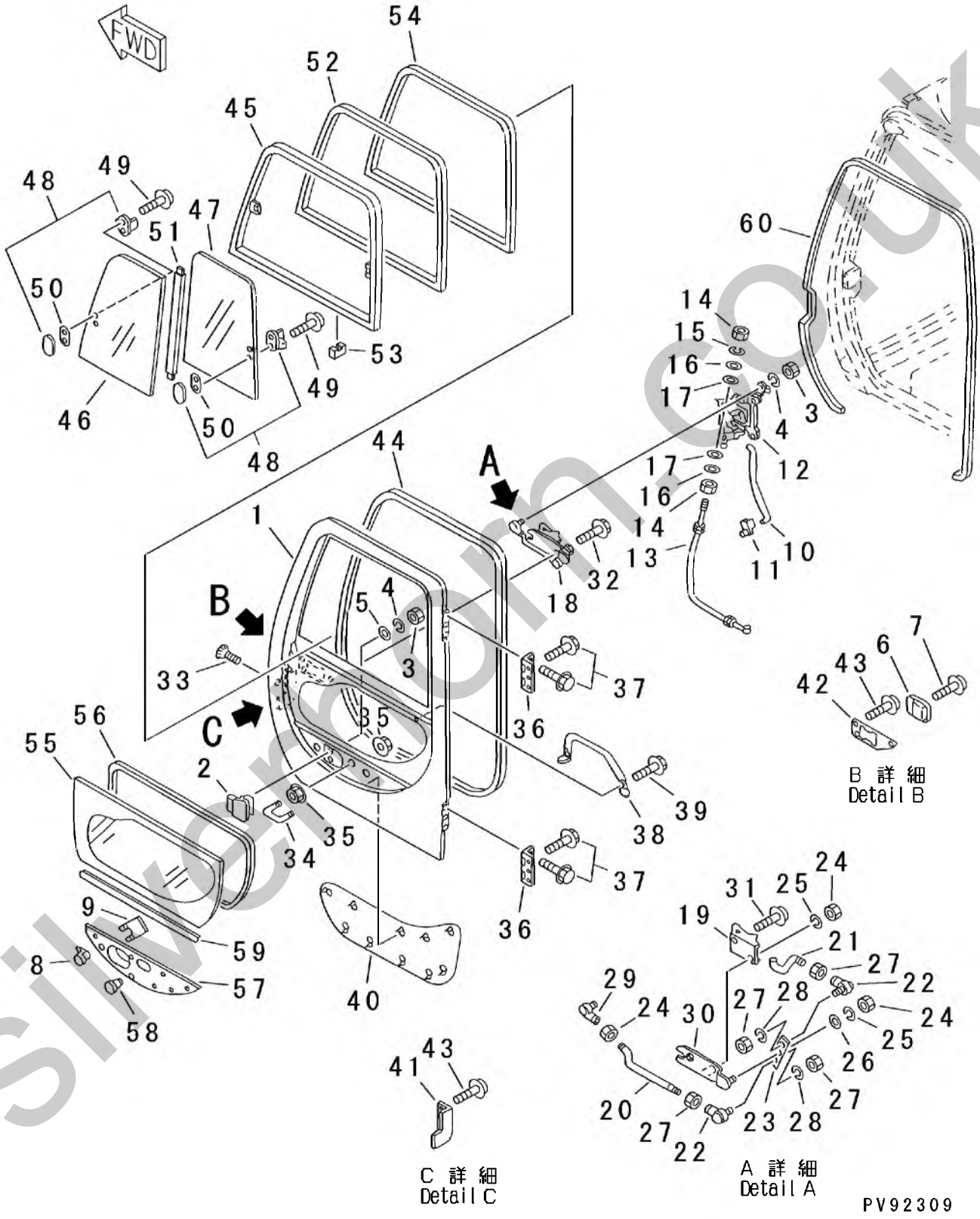

silverhorn.co.uk

FIG.223

INDEX	PART NO.	DESCRIPTION	Q'TY	SERIAL NO.
	HC4369629	DOOR ASS'Y	1	222411 ～
1	HC4369630	･DOOR	1	222411 ～
2	HC4369645	･OUTER HANDLE	1	222411 ～
3	HCM500605	･NUT	3	222411 ～
4	HCA590906	･SPRING WASHER	3	222411 ～
5	HCA590106	･PLANE WASHER	2	222411 ～
6	HC4369633	･COVER	1	222411 ～
7	HCJ660512	･SEMS SCREW (M5X12)	1	222411 ～
8	HC4362135	･DOOR LOCK	1	222411 ～
9	HC4372091	･CLIP	1	222411 ～
10	HC4369643	･ROD	1	222411 ～
11	HC4372092	･HOLDER	1	222411 ～
12	HC4369631	･DOOR LOCK	1	222411 ～
13	HC4369642	･WIRE	1	222411 ～
14	HCM500504	･NUT	2	222411 ～
15	HCA590905	･SPRING WASHER	1	222411 ～
16	HCA590105	･PLANE WASHER	2	222411 ～
17	HCA590108	･PLANE WASHER	2	222411 ～
18	HC4369634	･INNER HANDLE ASS'Y	1	222411 ～
19	HC4369635	･･LEVER	1	222411 ～
20	HC4369636	･･ROD	1	222411 ～
21	HC4369637	･･ROD	1	222411 ～
22	HC4369638	･･BALL JOINT	2	222411 ～
23	HC4369639	･･PLATE	1	222411 ～
24	HC4372215	･･NUT	3	222411 ～
25	HCA590906	･･SPRING WASHER	2	222411 ～
26	HCA590106	･･PLANE WASHER	1	222411 ～
27	HC4372216	･･NUT	4	222411 ～
28	HCA590904	･･SPRING WASHER	2	222411 ～
29	HC4369640	･･BALL JOINT	1	222411 ～
30	HC4369641	･･LEVER BRACKET	1	222411 ～
31	HCJ450614	･･SEMS SCREW (M6X14)	1	222411 ～
32	HCJ680616	･SEMS SCREW (M6X16)	2	222411 ～
33	HC4382885	･SEMS SCREW	3	222411 ～
34	HC4369661	･U-BOLT	1	222411 ～
35	HC4295662	･NUT	4	222411 ～
36	HC4369648	･DOOR HINGE	2	222411 ～
37	HC4372261	･SEMS BOLT	12	222411 ～
38	HC4369646	･HANDRAIL	1	222411 ～
39	HC4372225	･SEMS BOLT	2	222411 ～

silverhorn.co.uk

FIG.223 CAB (3/6) (CAB DOOR)

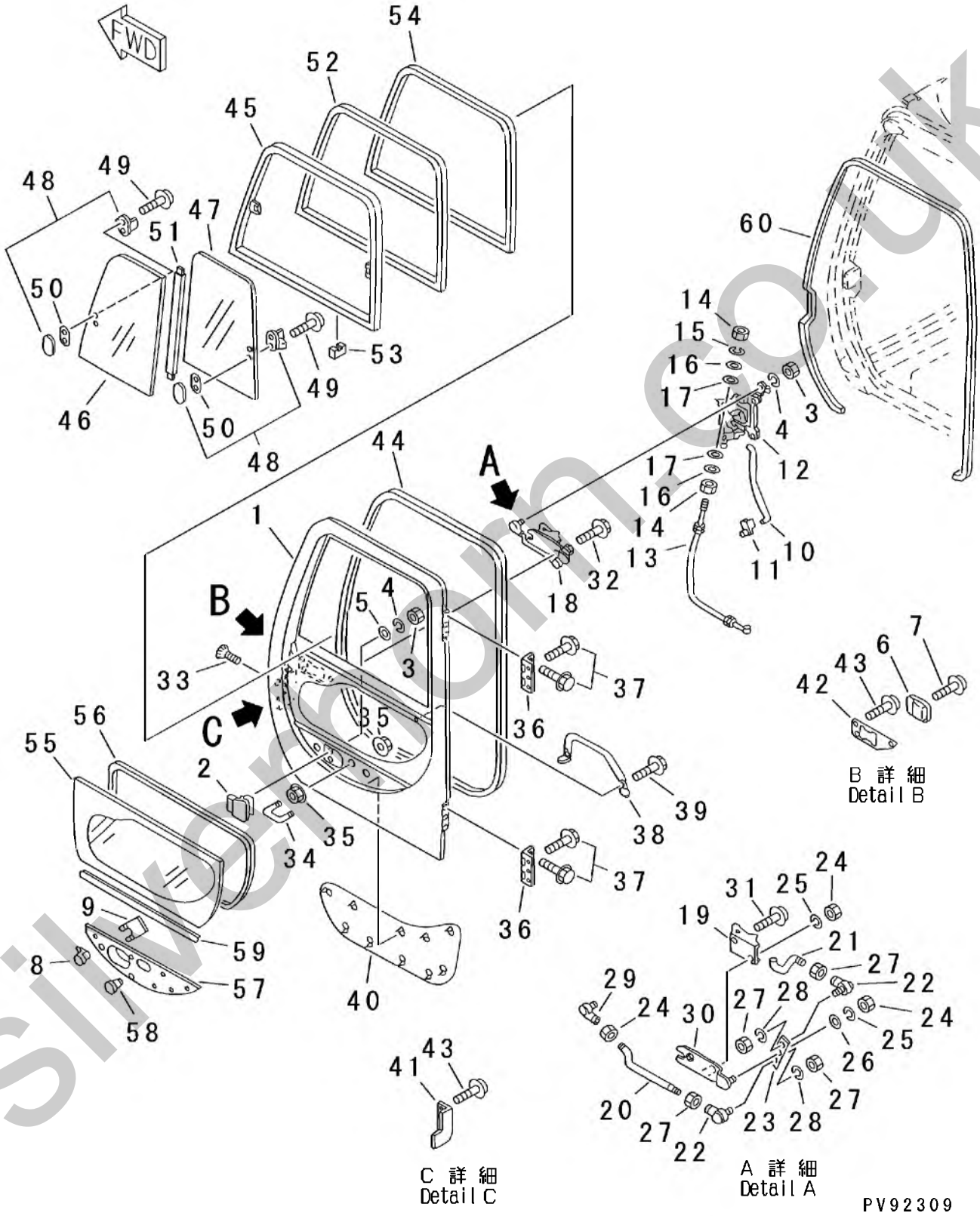

silverhorn.co.uk

FIG.223

INDEX	PART NO.	DESCRIPTION	Q'TY	SERIAL NO.
40	HC4369647	･SHEET	1	222411 ～
41	HC4369632	･COVER	1	222411 ～
42	HC4369644	･COVER	1	222411 ～
43	HCJ680510	･SEMS SCREW (M5X10)	5	222411 ～
44	HC4369662	･WEATHER STRIP	1	222411 ～
	HC4379639	･SASH ASS'Y	1	222411 ～
45	HC4398091	･･SASH	1	222411 ～
46	HC4398017	･･FRONT SIDE GLASS	1	222411 ～
47	HC4398018	･･REAR SIDE GLASS	1	222411 ～
48	HC4369653	･･LOCK	2	222411 ～
49	HCJ680410	･･SEMS SCREW (M4X10)	4	222411 ～
50	HC4372093	･･SPACER	2	222411 ～
51	HC4398016	･･SEAL	1	222411 ～
52	HC4398019	･･SASH	1	222411 ～
53	HC4147896	･･SPACER	8	222411 ～
54	HC4369656	･RUBBER SEAL	1	222411 ～
55	HC4369657	･LOWER SIDE GLASS	1	222411 ～
56	HC4400087	･RUBBER SEAL	1	222411 ～
57	HC4369658	･PANEL	1	222411 ～
58	HC4369659	･CLIP	7	222411 ～
59	HC4369660	･RUBBER SEAL	1	222411 ～
60	HC4369663	RUBBER SEAL	1	222411 ～

silverhorn.co.uk

FIG.224 CAB (4/6) (FRONT SIDE WINDOW)

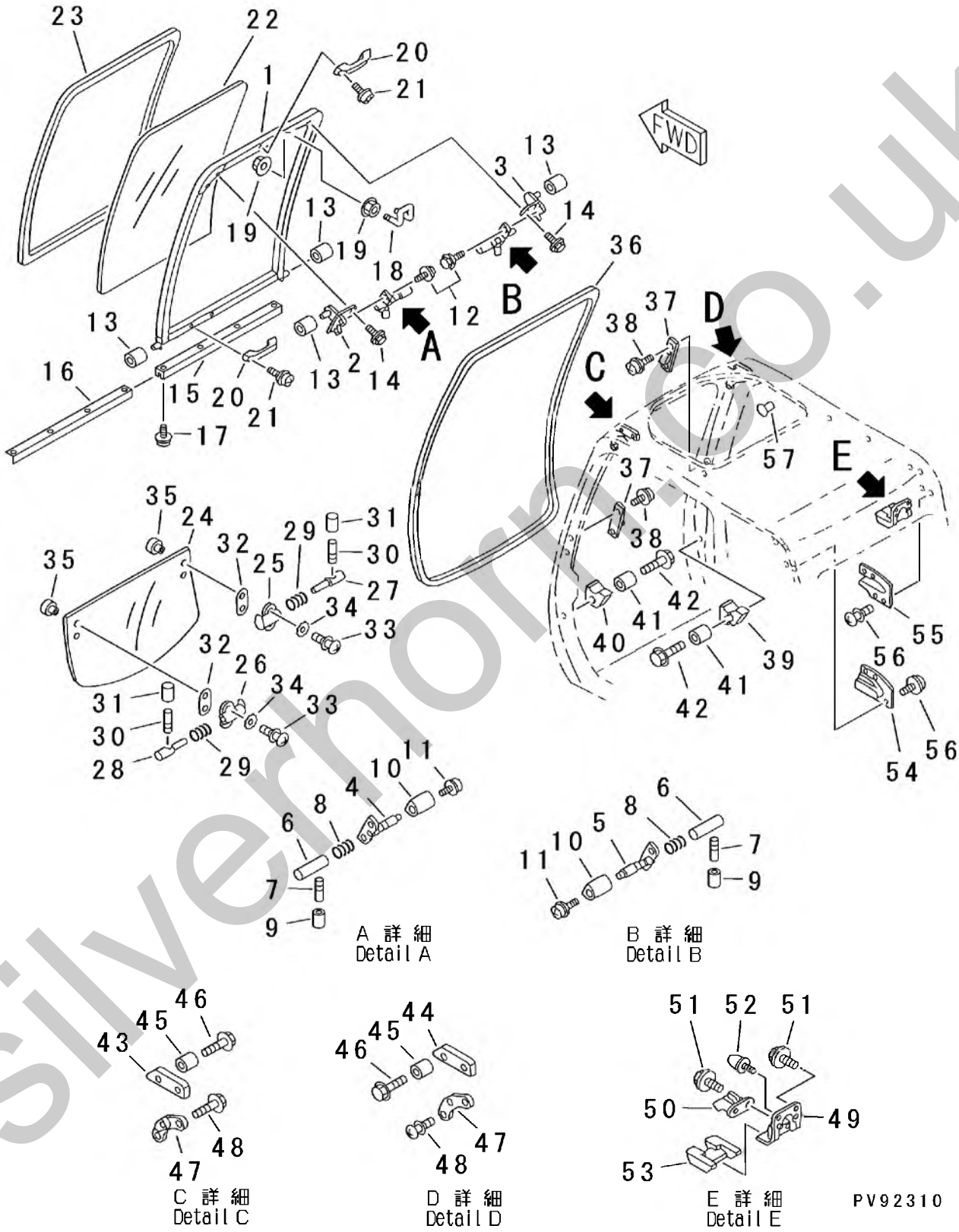

silvermore.co.uk

FIG.224

INDEX	PART NO.	DESCRIPTION	Q'TY	SERIAL NO.
	HC4369595	FRONT SIDE WINDOW ASS'Y	1	222411 ～
1	HC4369596	・FRONT SIDE WINDOW FRAME	1	222411 ～
2	HC4369604	・BRACKET	1	222411 ～
3	HC4369603	・BRACKET	1	222411 ～
4	HC4369602	・CASE	1	222411 ～
5	HC4369598	・CASE	1	222411 ～
6	HC4369599	・SHAFT	2	222411 ～
7	HC4295480	・LEVER	2	222411 ～
8	HC494918	・SPRING	2	222411 ～
9	HC4295876	・COVER	2	222411 ～
10	HC4369600	・COVER	2	222411 ～
11	HCJ680514	・SEMS SCREW (M5X14)	2	222411 ～
12	HC4372225	・SEMS BOLT	4	222411 ～
13	HC4369606	・ROLLER	4	222411 ～
14	HC4372226	・SEMS BOLT	4	222411 ～
15	HC4369607	・RUBBER SHEET	1	222411 ～
16	HC4369608	・PLATE	1	222411 ～
17	HC4372214	・TAPPING SCREW	4	222411 ～
18	HC4369605	・STRIKER	1	222411 ～
19	HC4295662	・NUT	4	222411 ～
20	HC4204579	・HANDLE	2	222411 ～
21	HCJ460616	・SEMS SCREW (M6X16)	4	222411 ～
22	HC4369609	FRONT SIDE WINDOW GLASS	1	222411 ～
23	HC4369610	RUBBER SEAL	1	222411 ～
	HC4369587	LOWER SIDE WINDOW ASS'Y	1	222411 ～
24	HC4369588	・LOWER SIDE WINDOW GLASS	1	222411 ～
25	HC4369590	・LATCH	1	222411 ～
26	HC4369593	・LATCH	1	222411 ～
27	HC4369591	・SHAFT	1	222411 ～
28	HC4204547	・PIN	1	222411 ～
29	HC494918	・SPRING	2	222411 ～
30	HC4295480	・LEVER	2	222411 ～
31	HC4295876	・COVER	2	222411 ～
32	HC4369594	・PACKING	2	222411 ～
33	HC4372213	・SCREW	4	222411 ～
34	HC4372561	・PLANE WASHER	4	222411 ～
35	HC4369674	・RETAINER	4	222411 ～
36	HC4369586	RUBBER SEAL	1	222411 ～
37	HC4369578	STOPPER	4	222411 ～
38	HC4372211	SEMS SCREW	12	222411 ～

silvermorn.co.uk

FIG.224 CAB (4/6) (FRONT SIDE WINDOW)

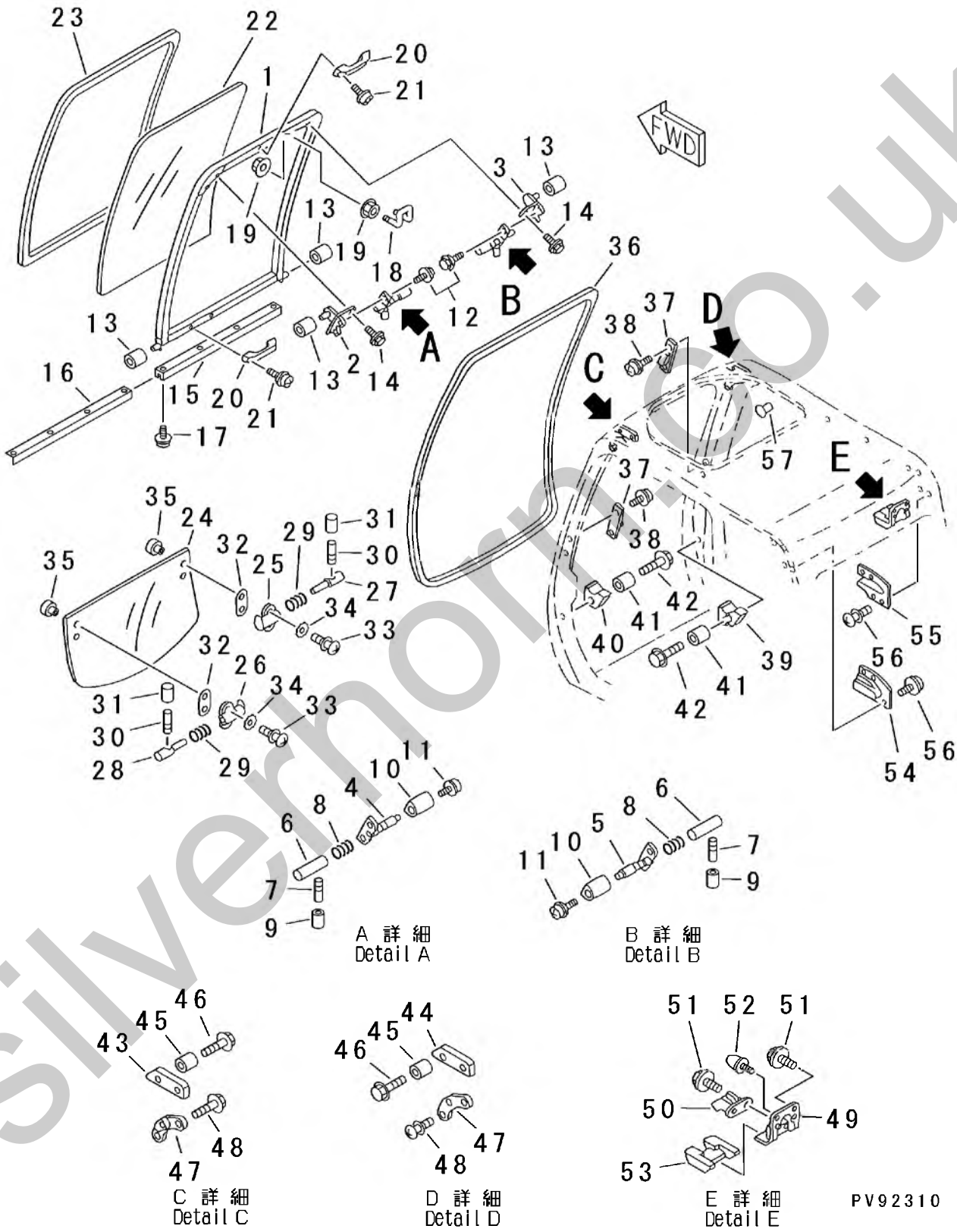

silvermore.co.uk

FIG.224

INDEX	PART NO.	DESCRIPTION	Q'TY	SERIAL NO.
39	HC4369575	R.H. SIDE STOPPER	1	222411 ～
40	HC4369576	L.H. SIDE STOPPER	1	222411 ～
41	HC4369577	ROLLER	2	222411 ～
42	HC4372221	SEMS BOLT	2	222411 ～
43	HC4369581	L.H. SIDE STOPPER	1	222411 ～
44	HC4369580	R.H. SIDE STOPPER	1	222411 ～
45	HC4369582	ROLLER	4	222411 ～
46	HC4372224	SEMS BOLT	4	222411 ～
47	HC4369579	GUIDE	2	222411 ～
48	HC4372210	SEMS SCREW	4	222411 ～
49	HC4369564	BRACKET	1	222411 ～
50	HC4369562	LOCK	1	222411 ～
51	HC4372222	SEMS BOLT	6	222411 ～
52	HC4204586	STOPPER	1	222411 ～
53	HC4369563	COVER	1	222411 ～
54	HC4369584	L.H. SIDE COVER	1	222411 ～
55	HC4369583	R.H. SIDE COVER	1	222411 ～
56	HCJ680614	SEMS SCREW (M6X14)	8	222411 ～
57	HC4372088	CLIP	10	222411 ～

silverhorn.co.uk

FIG.225 CAB (5/6) (R.H. SIDE WINDOW AND ROOF)

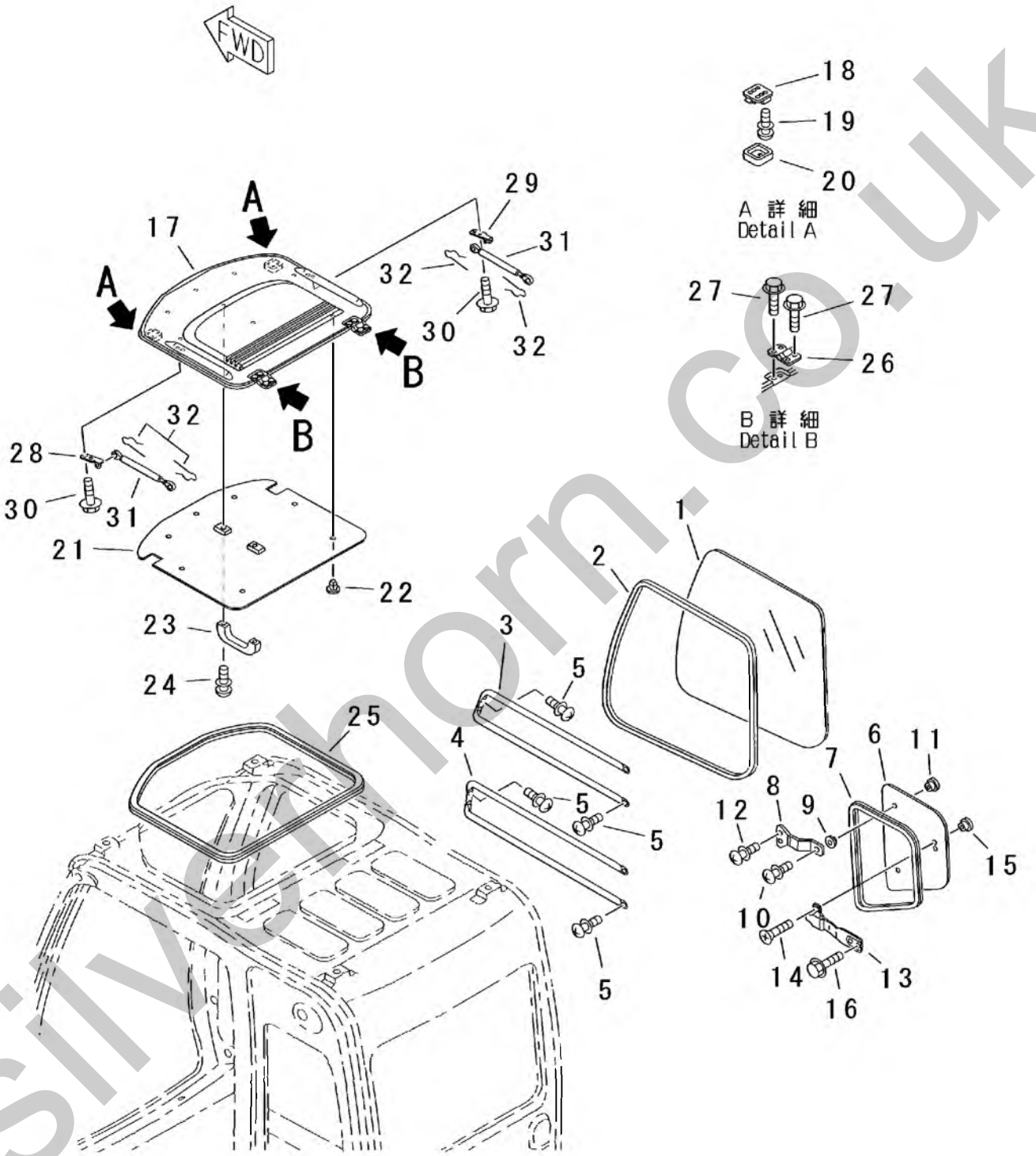

silverhorn.co.uk

FIG.225

INDEX	PART NO.	DESCRIPTION	Q'TY	SERIAL NO.
1	HC4369664	R.H. FRONT SIDE WINDOW GLASS	1	222411 ~
2	HC4369665	RUBBER SEAL	1	222411 ~
3	HC4369666	GUARD	1	222411 ~
4	HC4369667	GUARD	1	222411 ~
5	HC4372212	SEMS BOLT	8	222411 ~
6	HC4369668	R.H. REAR SIDE WINDOW GLASS	1	222411 ~
7	HC4369669	RUBBER SEAL	1	222411 ~
8	HC4369670	SPRING	2	222411 ~
9	HC4369671	PACKING	2	222411 ~
10	HCJ680516	SEMS SCREW (M5X16)	2	222411 ~
11	HC4369674	RETAINER	2	222411 ~
12	HCJ680614	SEMS SCREW (M6X14)	4	222411 ~
13	HC4369672	LOCK	1	222411 ~
14	HC4372213	SCREW	2	222411 ~
15	HC4369674	RETAINER	2	222411 ~
16	HC4372223	SEMS BOLT	2	222411 ~
	HC4369611	ROOF ASS'Y	1	222411 ~
17	HC4369612	・ROOF	1	222411 ~
18	HC4369615	・LOCK	2	222411 ~
19	HCJ460514	・SEMS SCREW (M5X14)	8	222411 ~
20	HC4369616	・COVER	2	222411 ~
21	HC4369613	・SHEET	1	222411 ~
22	HC4369614	・CLIP	7	222411 ~
23	HC4204579	・HANDLE	1	222411 ~
24	HCJ460616	・SEMS SCREW (M6X16)	2	222411 ~
25	HC4369553	RUBBER SEAL	2	222411 ~
26	HC4369620	HINGE	2	222411 ~
27	HC4372220	SEMS BOLT	8	222411 ~
28	HC4369618	L.H. SIDE BRACKET	1	222411 ~
29	HC4369617	R.H. SIDE BRACKET	1	222411 ~
30	HC4372222	SEMS BOLT	4	222411 ~
31	HC4369619	SPRING	2	222411 ~
32	HC4022697	SNAP PIN	4	222411 ~

silverthorn.co.uk

FIG.226 CAB (6/6) (DOOR CATCH)

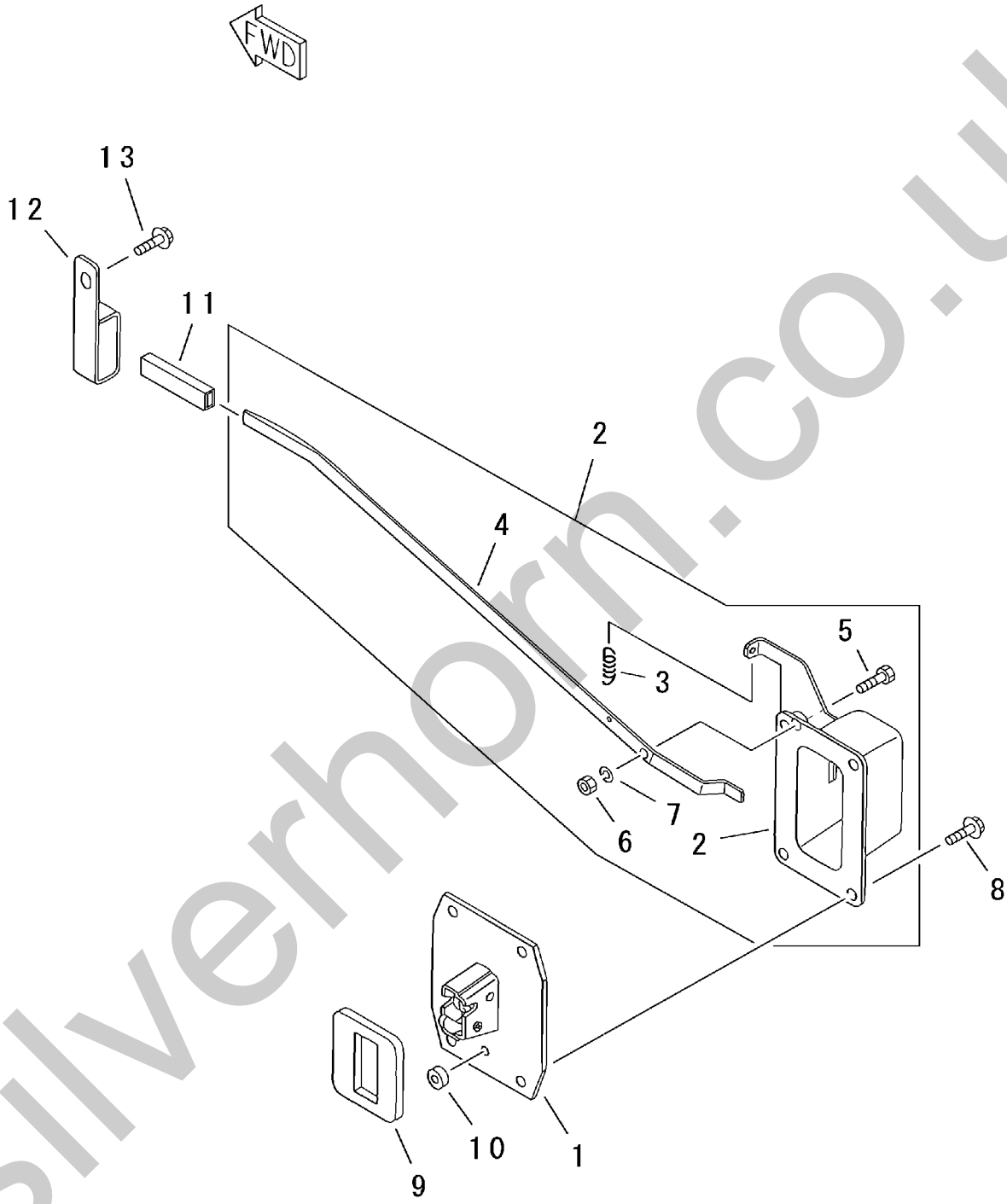

PV92312

silverhorn.co.uk

FIG.226

INDEX	PART NO.	DESCRIPTION	Q'TY	SERIAL NO.
	HC4369621	DOOR CATCH ASS'Y	1	222411 ～
1	HC4372094	･DOOR CATCH	1	222411 ～
	HC4369622	･CASE ASS'Y	1	222411 ～
2	HC4372095	･･CASE	1	222411 ～
3	HC4208103	･･SPRING	1	222411 ～
4	HC4369623	･･LEVER	1	222411 ～
5	HC4372209	･･PIN	1	222411 ～
6	HCM500605	･･NUT	1	222411 ～
7	HCA590906	･･SPRING RETAINER	1	222411 ～
8	HCJ010820	･SEMS BOLT (M8X20)	4	222411 ～
9	HC4204590	･RUBBER SHEET	1	222411 ～
10	HC4204591	･RUBBER SEAL	1	222411 ～
11	HC4089012	･CAP	1	222411 ～
12	HC4369624	STOPPER	1	222411 ～
13	HC4372222	SEMS BOLT	1	222411 ～

silverhorn.co.uk

FIG.231 CAB INNER PARTS (FLOOR PLATE AND FLOOR PARTS)

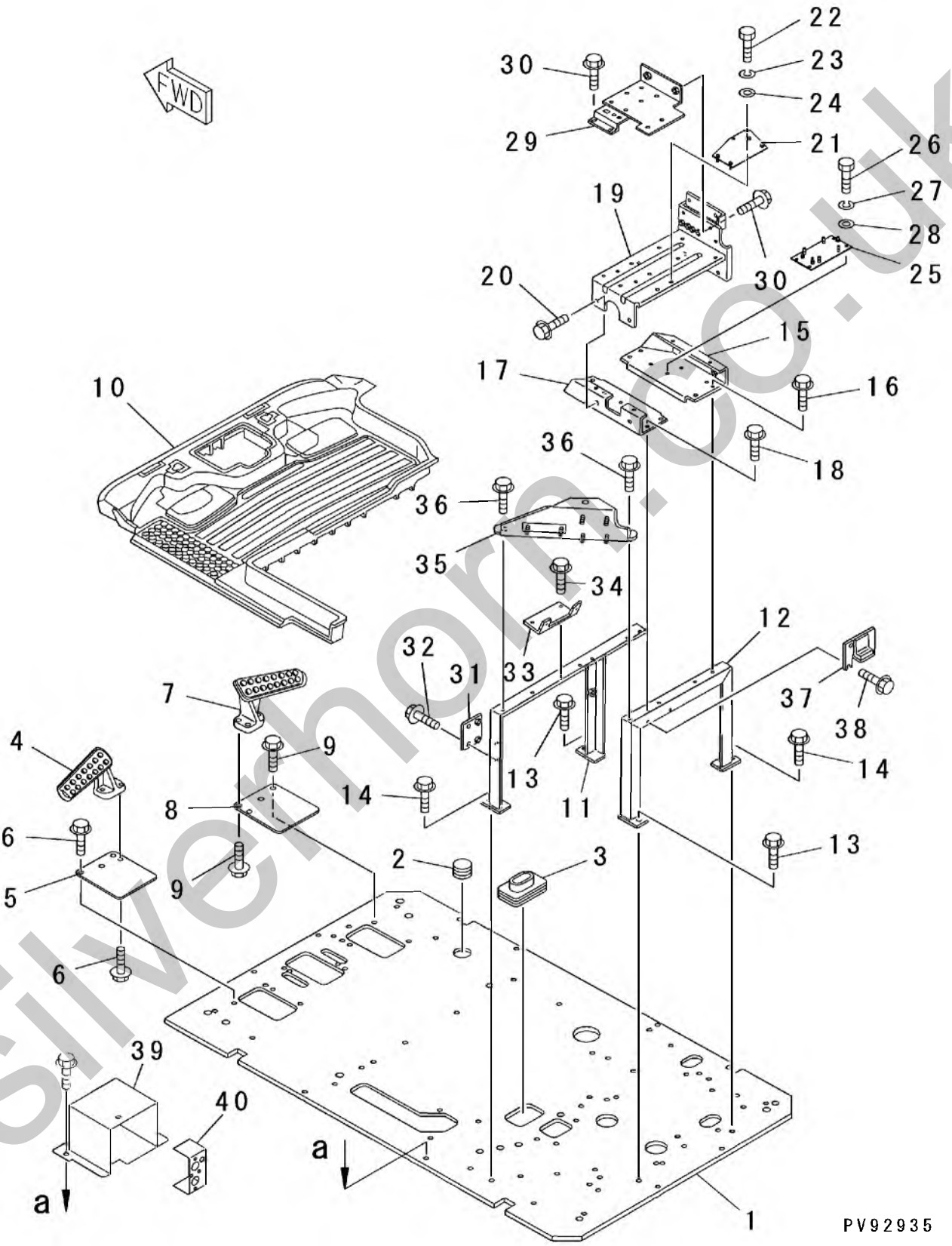

silverthorn.co.uk

FIG.231

INDEX	PART NO.	DESCRIPTION	Q'TY	SERIAL NO.
1	HC6014634	FLOOR PLATE	1	222411 ～
2	HC4288445	BUSHING	1	222411 ～
3	HC4351011	RUBBER BUSHING	1	222411 ～
4	HC1015477	L.H. SIDE FOOT REST	1	222411 ～
5	HC3052543	L.H. SIDE COVER	1	222411 ～
6	HCJ011035	SEMS BOLT (M10X35)	4	222411 ～
7	HC1015478	R.H. SIDE FOOT REST	1	222411 ～
8	HC3052543	R.H. SIDE COVER	1	222411 ～
9	HCJ011035	SEMS BOLT (M10X35)	4	222411 ～
10	HC0002043	FLOOR MAT	1	222411 ～
11	HC7029266	SUPPORT	1	222411 ～
12	HC7029267	SUPPORT	1	222411 ～
13	HCJ011025	SEMS BOLT (M10X25)	2	222411 ～
14	HCJ021030	SEMS BOLT (M10X30)	2	222411 ～
15	HC8060883	BRACKET	1	222411 ～
16	HCJ020820	SEMS BOLT (M8X20)	4	222411 ～
17	HC8060884	BRACKET	1	222411 ～
18	HCJ020820	SEMS BOLT (M8X20)	4	222411 ～
19	HC7029268	BRACKET	1	222411 ～
20	HCJ020820	SEMS BOLT (M8X20)	4	222411 ～
21	1-41210-2040	SLOPE SENSOR BRACKET	1	222411 ～
22	0-1000-00620	BOLT (M6X20)	2	222411 ～
23	0-1100-00615	SPRING WASHER (M6)	2	222411 ～
24	0-1120-00616	PLANE WASHER (M6)	2	222411 ～
25	1-41210-2030	RELAY BRACKET	1	222411 ～
26	0-1000-00616	BOLT (M6X16)	4	222411 ～
27	0-1100-00615	SPRING WASHER (M6)	4	222411 ～
28	0-1120-00616	PLANE WASHER (M6)	4	222411 ～
29	HC8065588	BRACKET	1	222411 ～
30	HCJ020820	SEMS BOLT (M8X20)	4	222411 ～
31	HC9743487	BRACKET	1	222411 ～
32	HCJ020820	SEMS BOLT (M8X20)	2	222411 ～
33	1-41210-2020	BRACKET	1	222411 ～
34	HCJ020820	SEMS BOLT (M8X20)	2	222411 ～
35	1-41210-2060	BRACKET	1	222411 ～
36	HCJ020820	SEMS BOLT (M8X20)	2	222411 ～
37	HC8061717	BRACKET	1	222411 ～
38	HCJ020820	SEMS BOLT (M8X20)	2	222411 ～
39	1-46210-2510	ENGINE MAIN MONITOR BRACKET	1	222411 ～
40	1-46210-2520	MOUNTING BRACKET	1	222411 ～

silverhorn.co.uk

FIG.233 CAB INNER PARTS (CONSOLE AND COVER)

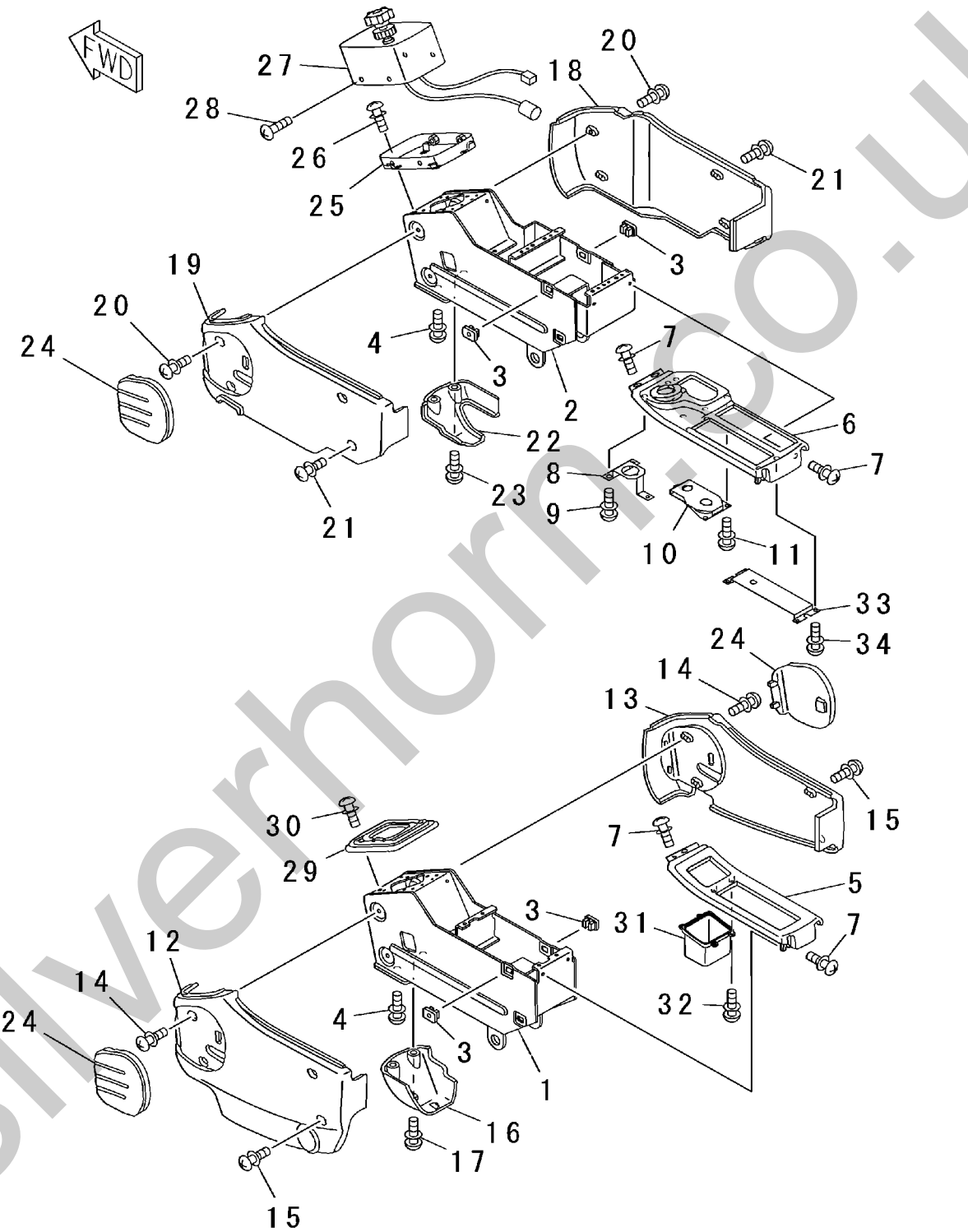

silverhorn.co.uk

FIG.233

INDEX	PART NO.	DESCRIPTION	Q'TY	SERIAL NO.
1	HC6014737	L.H. SIDE STAND	1	222411 ~
2	HC6014741	R.H. SIDE STAND	1	222411 ~
3	HC4351255	CLIP	8	222411 ~
4	HCJ011030	SEMS BOLT (M10X30)	4	222411 ~
5	HC1021354	L.H. SIDE FRAME	1	222411 ~
6	HC5004653	R.H. SIDE FRAME	1	222411 ~
7	HCJ680616	SEMS BOLT (M6X16)	8	222411 ~
8	1-41210-1240	STARTER SWITCH BRACKET	1	222411 ~
9	HCJ460512	SEMS BOLT (M5X12)	3	222411 ~
10	1-41210-2010	COMBINATION LAMP SWITCH	1	222411 ~
11	HCJ460512	SEMS BOLT (M5X12)	3	222411 ~
12	HC1021345	L.H. SIDE STAND OUTER COVER	1	222411 ~
13	HC1021346	L.H. SIDE STAND INNER COVER	1	222411 ~
14	HCJ680616	SEMS BOLT (M6X16)	4	222411 ~
15	HC4361802	TAPPING SCREW	4	222411 ~
16	HC3072629	COVER	1	222411 ~
17	HCJ680616	SEMS BOLT (M6X16)	2	222411 ~
18	HC1021350	R.H. SIDE STAND OUTER COVER	1	222411 ~
19	HC1021349	R.H. SIDE STAND INNER COVER	1	222411 ~
20	HCJ680616	SEMS BOLT (M6X16)	4	222411 ~
21	HC4361802	TAPPING SCREW	4	222411 ~
22	HC3072613	COVER	1	222411 ~
23	HCJ680616	SEMS BOLT (M6X16)	2	222411 ~
24	HC4351277	PAD	3	222411 ~
25	1-46210-2550	BRACKET	1	222411 ~
26	0-1305-00616	SEMS SCREW (M6X16)	4	222411 ~
27	1-46210-2560	ENGINE SPEED DIAL CASE	1	222411 ~
28	0-1320-00610	SCREW (M6X10)	4	222411 ~
29	HC2037689	COVER	1	222411 ~
30	HCJ460635	SEMS BOLT (M6X35)	4	222411 ~
31	HC3072699	POCKET	1	222411 ~
32	HC4361800	TAPPING SCREW	4	222411 ~
33	1-41210-1250	WIPER SWITCH BRACKET	1	222411 ~
34	HC4361800	TAPPING SCREW	4	222411 ~

silverhorn.co.uk

FIG.235 CAB INNER PARTS (CAB R.H. SIDE COVER)

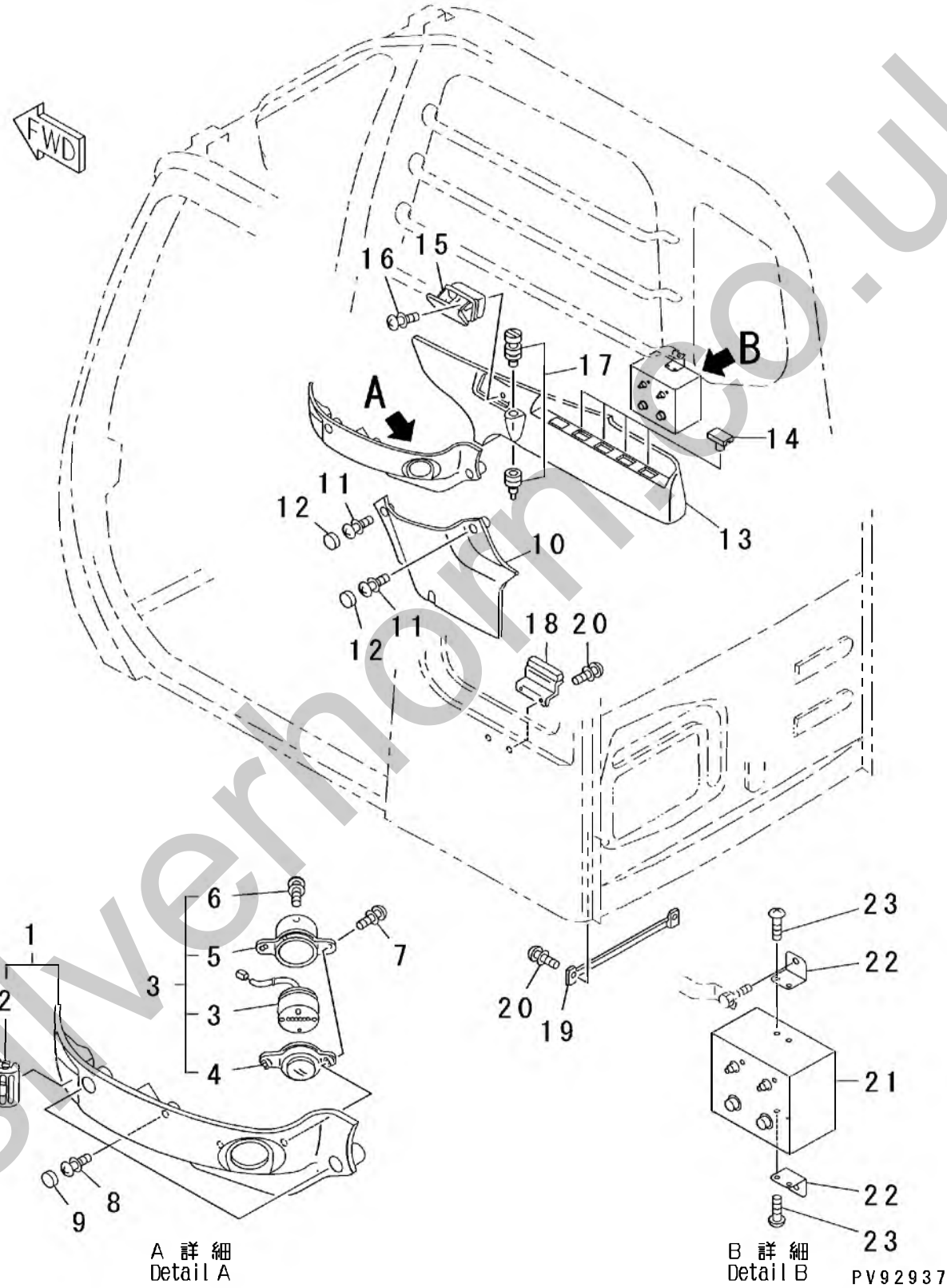

silverhorn.co.uk

FIG.235

INDEX	PART NO.	DESCRIPTION	Q'TY	SERIAL NO.
	HC4350245	COVER ASS'Y	1	222411 ~
1	HC4370316	·COVER	1	222411 ~
2	HC4370317	··LOUVER	1	222411 ~
	1-41210-2340	·HOURMETER ASS'Y	1	222411 ~
3	HC4370313	··HOURMETER	1	222411 ~
4	HC4370314	··GLASS	1	222411 ~
5	HC4370315	··CASE	1	222411 ~
6	HC4349998	··SCREW	3	222411 ~
7	HC4297101	·SCREW	2	222411 ~
8	HCJ460616	SEMS BOLT (M6X16)	3	222411 ~
9	HC4350779	CAP	3	222411 ~
10	HC4350246	COVER	1	222411 ~
11	HCJ460616	SEMS BOLT (M6X16)	2	222411 ~
12	HC4350779	CAP	2	222411 ~
13	HC4350247	COVER	1	222411 ~
14	HC4350778	CAP	5	222411 ~
15	HC4350398	ASHTRAY	1	222411 ~
16	HCJ460614	SEMS BOLT (M6X14)	1	222411 ~
17	HC4357862	CIGARETTE LIGHTER	1	222411 ~
18	HC8064900	BRACKET	1	222411 ~
19	HC3074721	BRACKET	1	222411 ~
20	HCJ460616	SEMS BOLT (M6X16)	4	222411 ~
21	1-46210-2570	ENGINE WARNING LAMP BOX	1	222411 ~
22	1-46210-2580	MOUNTING BRACKET	2	222411 ~
23	0-1320-00610	SCREW (M6X10)	4	222411 ~

silvermorn.co.uk

FIG.241 CAB INNER PARTS (OPERATOR'S SEAT)

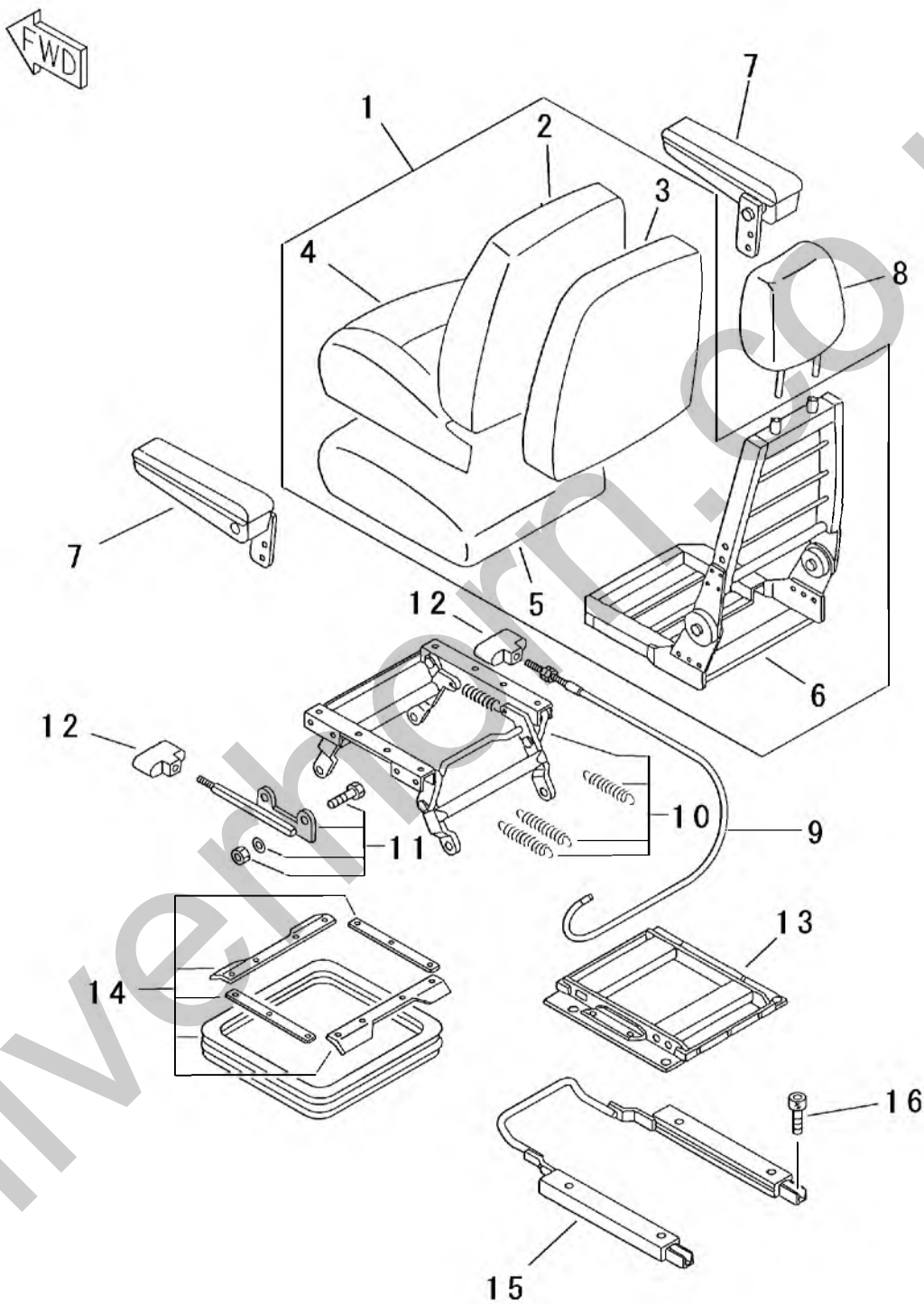

PV92316

silverhorn.co.uk

FIG.241

INDEX	PART NO.	DESCRIPTION	Q'TY	SERIAL NO.
	HC4342226	OPERATOR'S SEAT ASS'Y	1	222411 ～
1	HC4373465	･SEAT ASS'Y	1	222411 ～
2	HC4370193	･･COVER	1	222411 ～
3	HC4370194	･･PAD	1	222411 ～
4	HC4370195	･･COVER	1	222411 ～
5	HC4370196	･･PAD	1	222411 ～
6	HC4370197	･･FRAME	1	222411 ～
7	HC4370201	･ARM REST SET	1	222411 ～
8	HC4370207	･HEAD REST	1	222411 ～
9	HC4370198	･CABLE	1	222411 ～
10	HC4370199	･SPRING ASS'Y	1	222411 ～
11	HC4370200	･LATCH ASS'Y	1	222411 ～
12	HC4370204	･HANDLE SET	1	222411 ～
13	HC4370203	･FRAME	1	222411 ～
14	HC4370206	･COVER SET	1	222411 ～
15	HC4370202	･SLIDER	1	222411 ～
16	HCM340816	SOCKET HEAD BOLT (M8X16)	4	222411 ～

silverhorn.co.uk

FIG.243 CAB INNER PARTS (OPERATOR'S SEAT STAND)

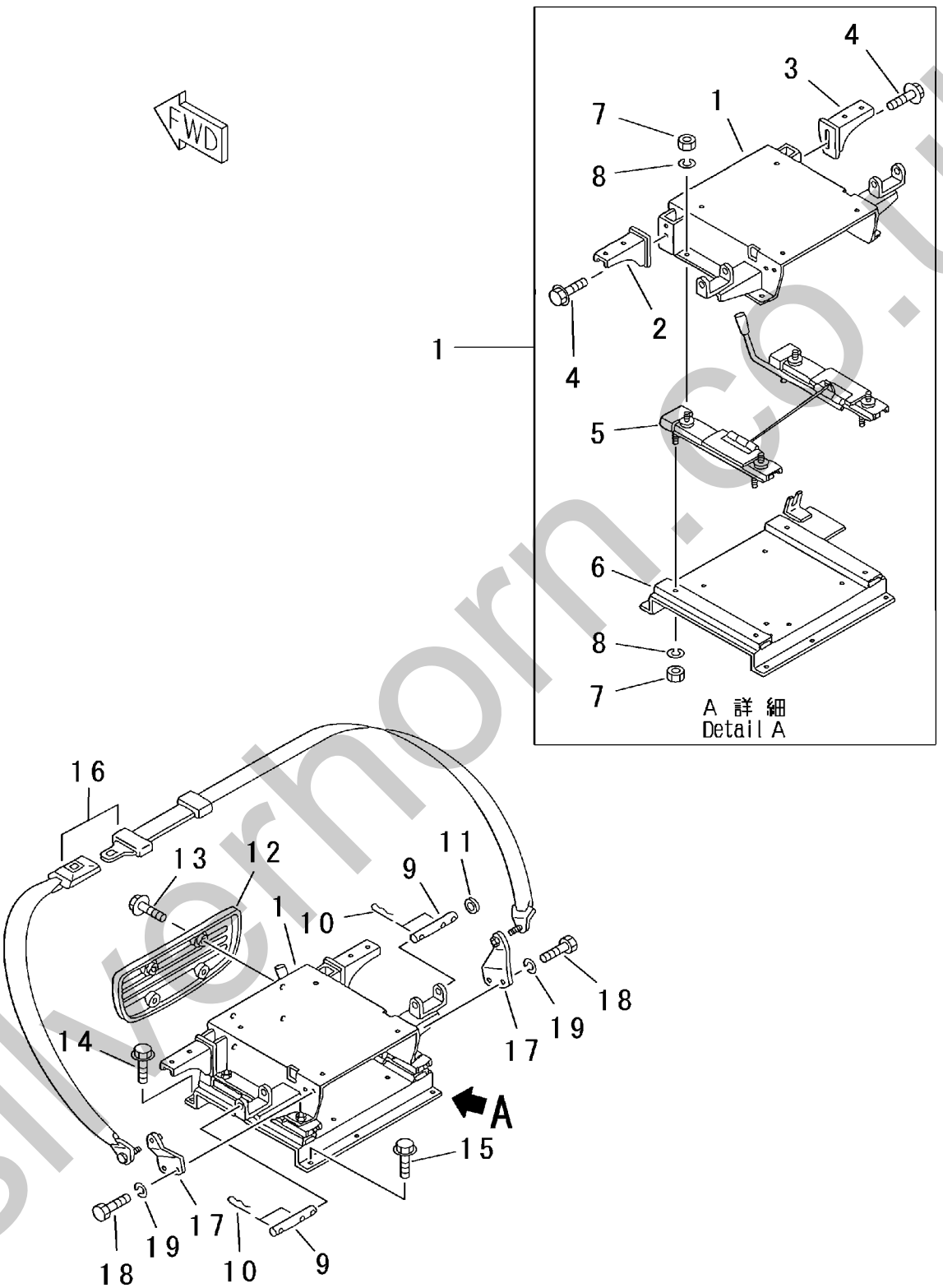

silvermorn.co.uk

FIG.243

INDEX	PART NO.	DESCRIPTION	Q'TY	SERIAL NO.
	HC9136715	CARRIER ASS'Y	1	222411 ~
1	HC7029352	・CARRIER	1	222411 ~
2	HC8061123	・L.H. SIDE BRACKET	1	222411 ~
3	HC8061563	・R.H. SIDE BRACKET	1	222411 ~
4	HCJ021025	・SEMS BOLT (M10X25)	4	222411 ~
5	HC4345311	・SLIDER	1	222411 ~
6	HC8061040	・STAND	1	222411 ~
7	HCJ952010	・NUT	8	222411 ~
8	HCA590910	・SPRING WASHER	8	222411 ~
9	HC4341890	PIN	2	222411 ~
10	HC4372109	SNAP PIN	5	222411 ~
11	HC4018545	WASHER	1	222411 ~
12	HC3072610	COVER	1	222411 ~
13	HCJ680625	SEMS SCREW (M6X25)	4	222411 ~
14	HCJ011025	SEMS BOLT (M10X25)	4	222411 ~
15	HCJ021025	SEMS BOLT (M10X25)	3	222411 ~
16	HC4319875	SEAT BELT	1	222411 ~
17	HC8065061	BRACKET	2	222411 ~
18	HC4235232	BOLT	4	222411 ~
19	HCJ219167	SPRING WASHER	4	222411 ~

silverhorn.co.uk

FIG.251 AIR CONDITIONER RELATED PARTS (1/5)
(AIR CONDITIONER UNIT AND MOUNTING)

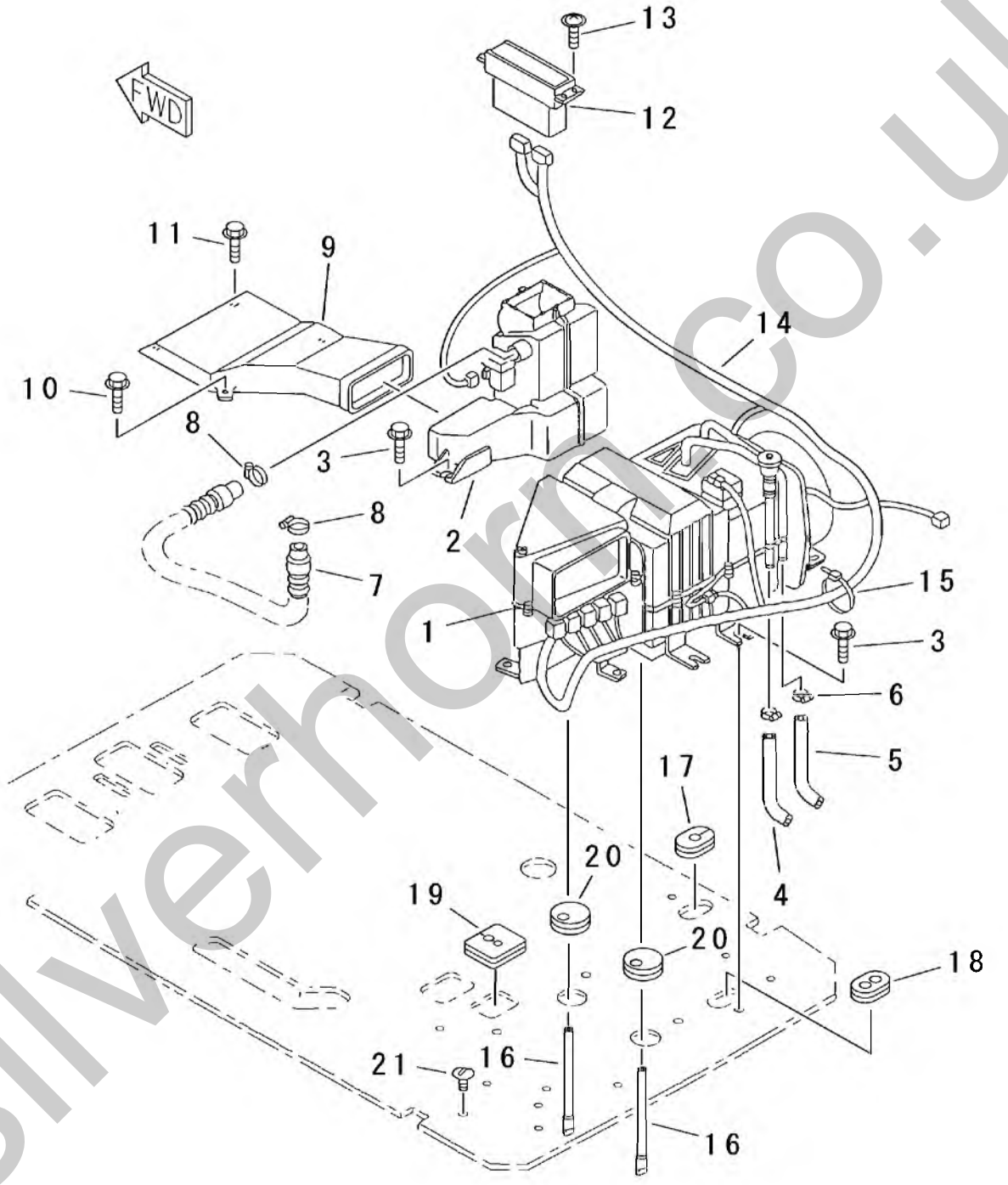

PV92318

silverhorn.co.uk

FIG.251

INDEX	PART NO.	DESCRIPTION	Q'TY	SERIAL NO.
1	HC4361104	AIR CONDITIONER UNIT	1	222411 ~
2	HC4361107	BOX	1	222411 ~
3	HCJ021025	SEMS BOLT (M10X25)	11	222411 ~
4	HC4366623	WATER HOSE	1	222411 ~
5	HC4344638	WATER HOSE	1	222411 ~
6	HC4514699	CLAMP	2	222411 ~
7	HC4377169	HOSE	1	222411 ~
8	HC4011675	CLAMP	2	222411 ~
9	HC4350243	DUCT	1	222411 ~
10	HCJ020820	SEMS BOLT (M8X20)	2	222411 ~
11	HCJ050820	SEMS BOLT (M8X20)	2	222411 ~
12	HC4361106	AIR CONDITIONER CONTROLLER	1	222411 ~
13	HCJ460514	SEMS SCREW (M5X14)	4	222411 ~
14	HC2038806	WIRING HARNESS	1	222411 ~
15	HC4055312	CLIP	6	222411 ~
16	HC4251896	HOSE	2	222411 ~
17	HC4379359	GROMMET	1	222411 ~
18	HC4276794	GROMMET	1	222411 ~
19	HC4351009	GROMMET	1	222411 ~
20	HC4361147	GROMMET	2	222411 ~
21	HC4280359	CLIP	15	222411 ~

silverhorn.co.uk

FIG.252 AIR CONDITIONER RELATED PARTS (2/5)
(AIR COMPRESSOR AND MOUNTING)

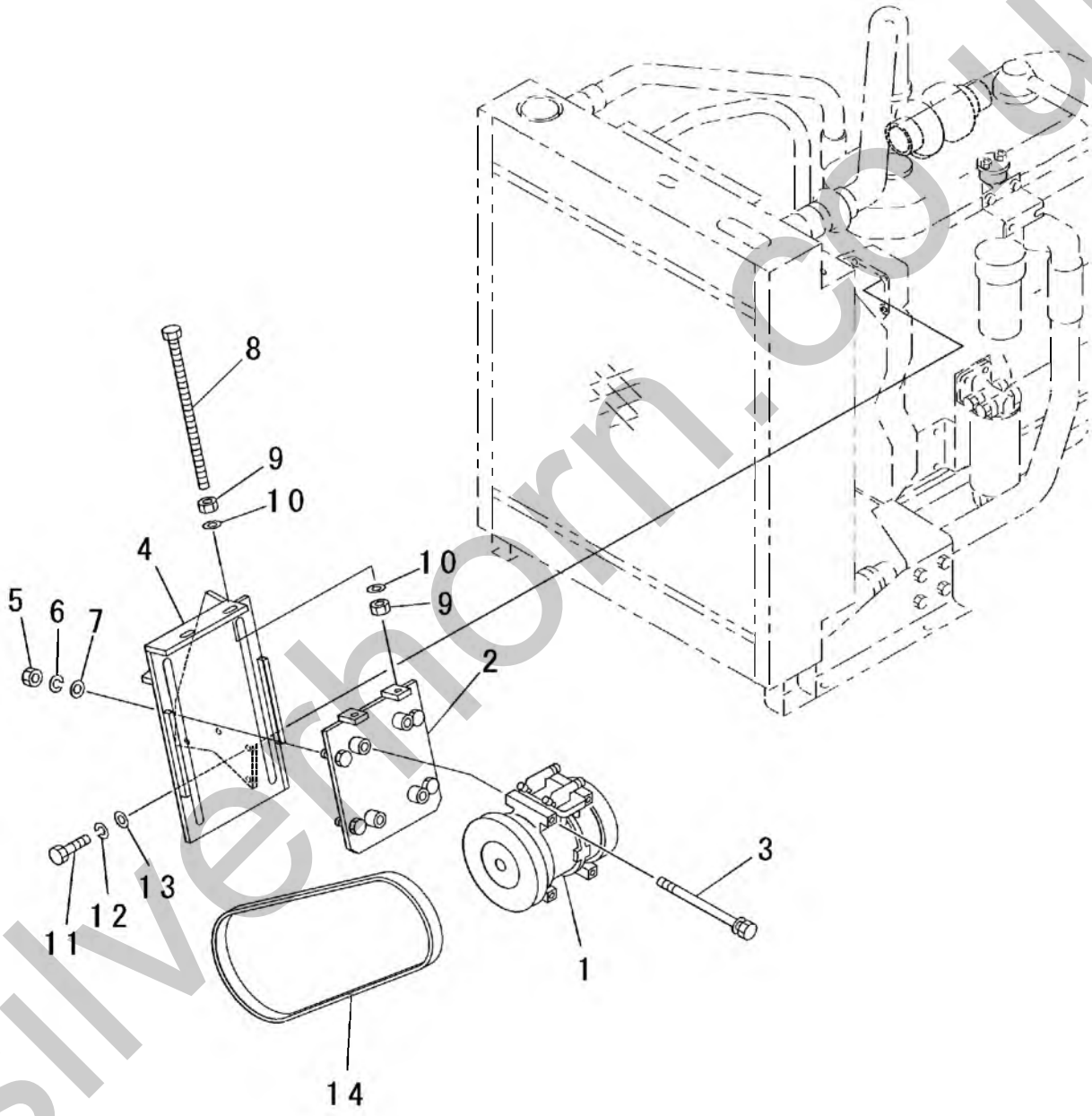

PV92938

silverhorn.co.uk

FIG.252

INDEX	PART NO.	DESCRIPTION	Q'TY	SERIAL NO.
1	ND447100-8650	AIR COMPRESSOR ASS'Y	1	222411 ~
2	ND55330-11010	BRACKET	1	222411 ~
3	ND949047-2590	BOLT (WITH WASHER)	4	222411 ~
4	1-46920-2510	BRACKET	1	222411 ~
5	0-1200-01008	NUT (M10)	4	222411 ~
6	0-1100-01025	SPRING WASHER (M10)	4	222411 ~
7	0-1120-01020	PLANE WASHER (M10)	4	222411 ~
8	ND949040-3550	ADJUSTMENT BOLT	2	222411 ~
9	0-1200-00806	NUT (M8)	4	222411 ~
10	0-1120-00816	PLANE WASHER (M8)	4	222411 ~
11	0-1000-01025	BOLT (M10X25)	4	222411 ~
12	0-1100-01025	SPRING WASHER (M10)	4	222411 ~
13	0-1120-01020	PLANE WASHER (M10)	4	222411 ~
14	1-41920-1030	V-BELT	1	222411 ~

silverhorn.co.uk

FIG.253 AIR CONDITIONER RELATED PARTS (3/5)
(A/C CONDENSER AND MOUNTING)

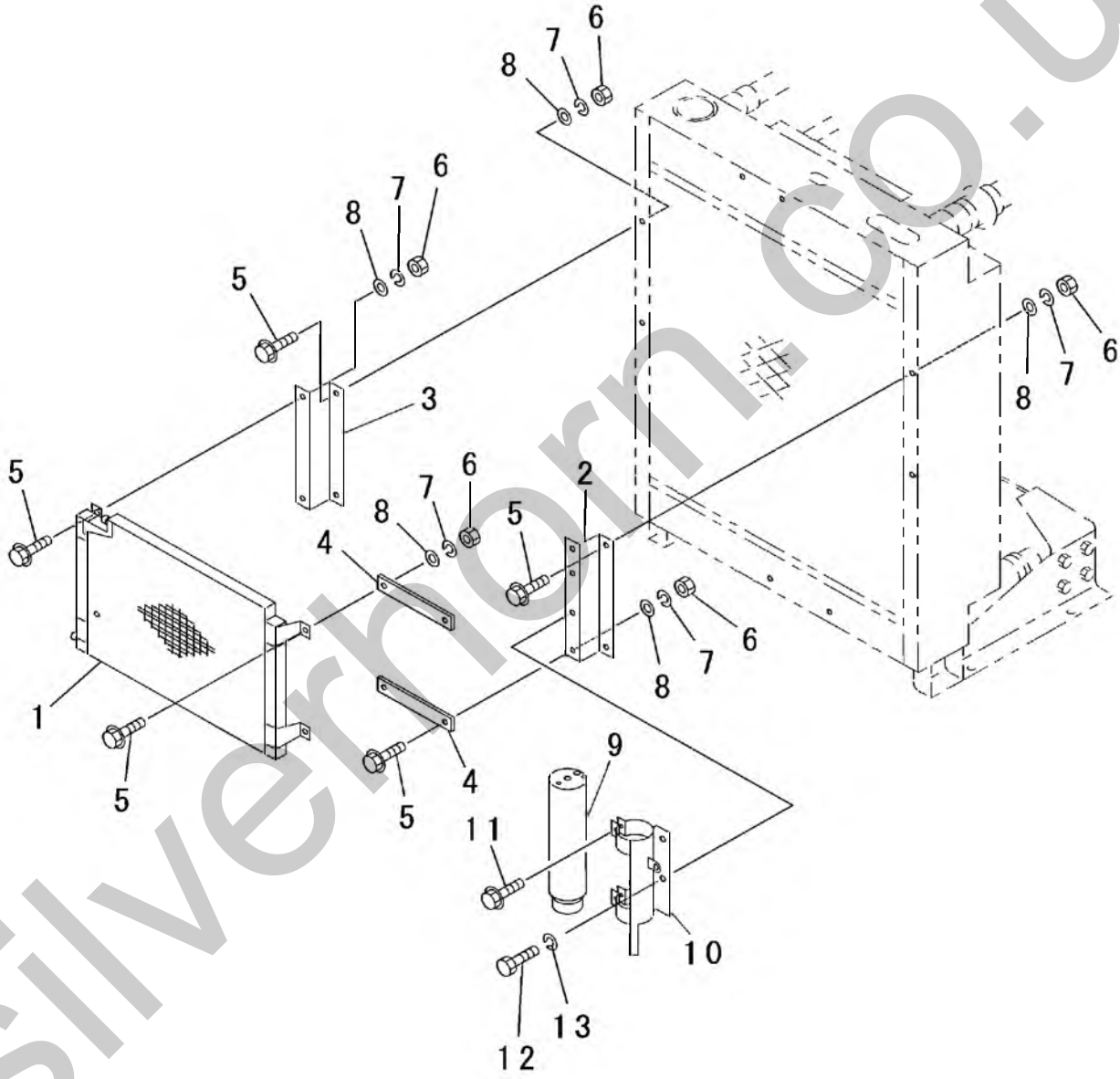

PV92939

silvermorn.co.uk

FIG.253

INDEX	PART NO.	DESCRIPTION	Q'TY	SERIAL NO.
1	ND447700-4950	CONDENSER ASS'Y	1	222411 ~
2	1-46920-2410	L.H. SIDE BRACKET	1	222411 ~
3	1-46920-2420	R.H. SIDE BRACKET	1	222411 ~
4	1-46920-2430	PLATE	2	222411 ~
5	0-1050-00820	FLANGE BOLT (M8X20)	10	222411 ~
6	0-1500-00806	NUT (M8)	10	222411 ~
7	0-1100-00820	SPRING WASHER (M8)	10	222411 ~
8	0-1120-00816	PLANE WASHER (M8)	10	222411 ~
9	ND989598-0760	RECEIVER	1	222411 ~
10	ND047890-8530	HOLDER	1	222411 ~
11	ND91478-06201	BOLT (WITH WASHER) (M6X20)	2	222411 ~
12	0-1000-01016	BOLT (M10X16)	2	222411 ~
13	0-1100-01025	SPRING WASHER (M10)	2	222411 ~

silverhorn.co.uk

FIG.254 AIR CONDITIONER RELATED PARTS (4/5) (A/C PIPING)

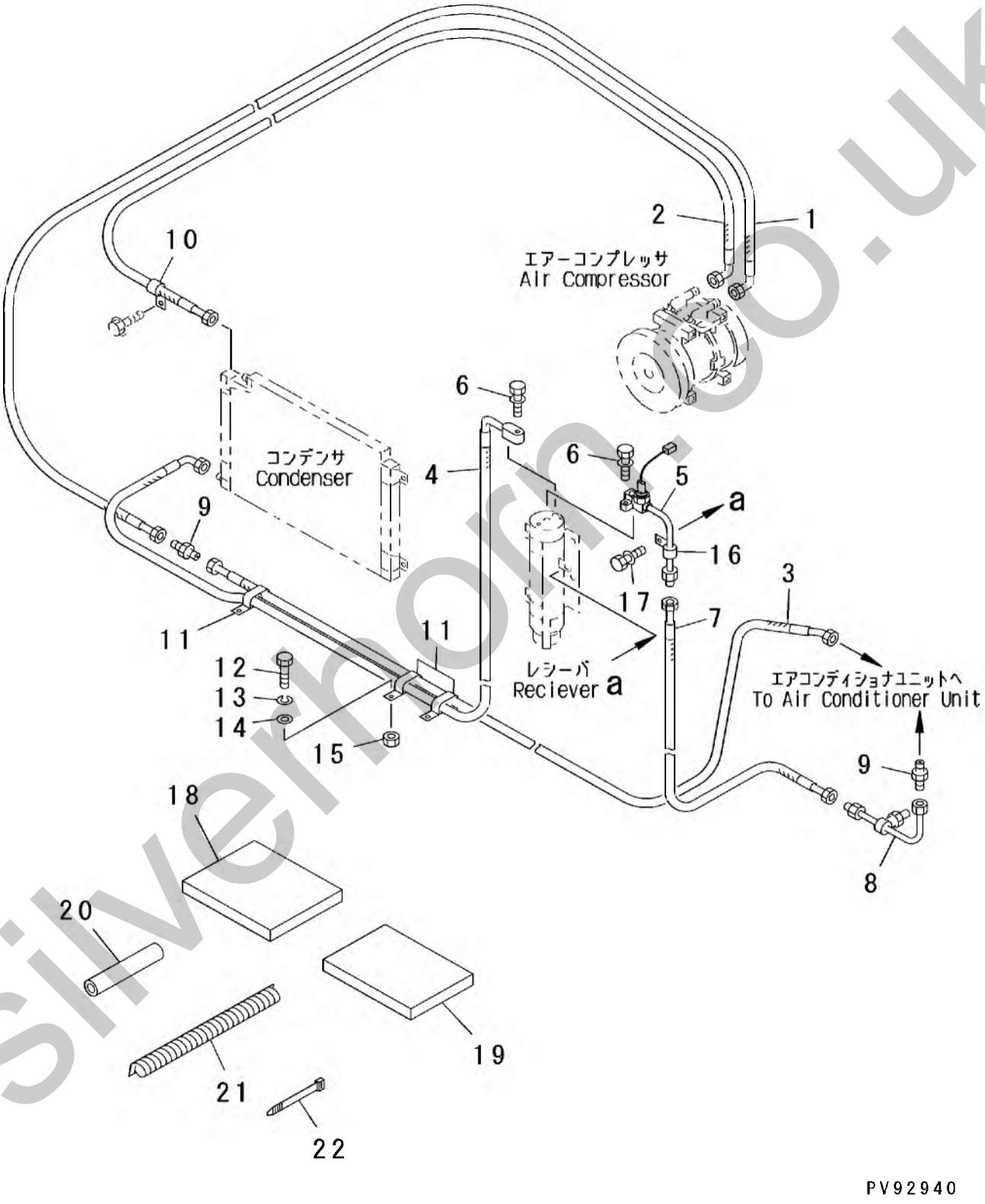

silverhorn.co.uk

FIG.254

INDEX	PART NO.	DESCRIPTION	Q'TY	SERIAL NO.
1	1-46920-2210	HOSE	1	222411 ~
2	1-46920-2220	HOSE	1	222411 ~
3	ND441420-1540	HOSE	1	222411 ~
4	ND446130-4011	HOSE	1	222411 ~
5	ND446170-6850	TUBE WITH SIGHT GAUGE	1	222411 ~
6	ND915700-6258	BOLT (WITH WASHER)	2	222411 ~
7	ND441440-0340	HOSE	1	222411 ~
8	ND446170-8040	TUBE	1	222411 ~
9	ND445012-0410	UNION	2	222411 ~
10	ND040033-2650	CLIP	1	222411 ~
11	ND146680-1020	CLIP	3	222411 ~
12	0-1070-01030	BOLT (M10X30)	3	222411 ~
13	0-1100-01025	SPRING WASHER (M10)	3	222411 ~
14	0-1120-01020	PLANE WASHER (M10)	3	222411 ~
15	0-1200-01008	NUT (M10)	3	222411 ~
16	ND146680-5780	CLIP WITH SPONGE	1	222411 ~
17	ND91478-06201	BOLT (WITH WASHER)	1	222411 ~
18	ND146649-1170	PACKING	5	222411 ~
19	ND046218-0080	INSULATOR	2	222411 ~
20	ND700906-0200	INSULATOR	4	222411 ~
21	0-2830-01520	SPIRAL TUBE	AR	222411 ~
	0-2830-02420	SPIRAL TUBE	AR	222411 ~
	0-2830-02920	SPIRAL TUBE	AR	222411 ~
22	0-2800-00202	STRAP BAND	AR	222411 ~
	0-2800-00383	STRAP BAND	AR	222411 ~

silverhorn.co.uk

FIG.255 AIR CONDITIONER RELATED PARTS (5/5) (CAR HEATER PIPING)

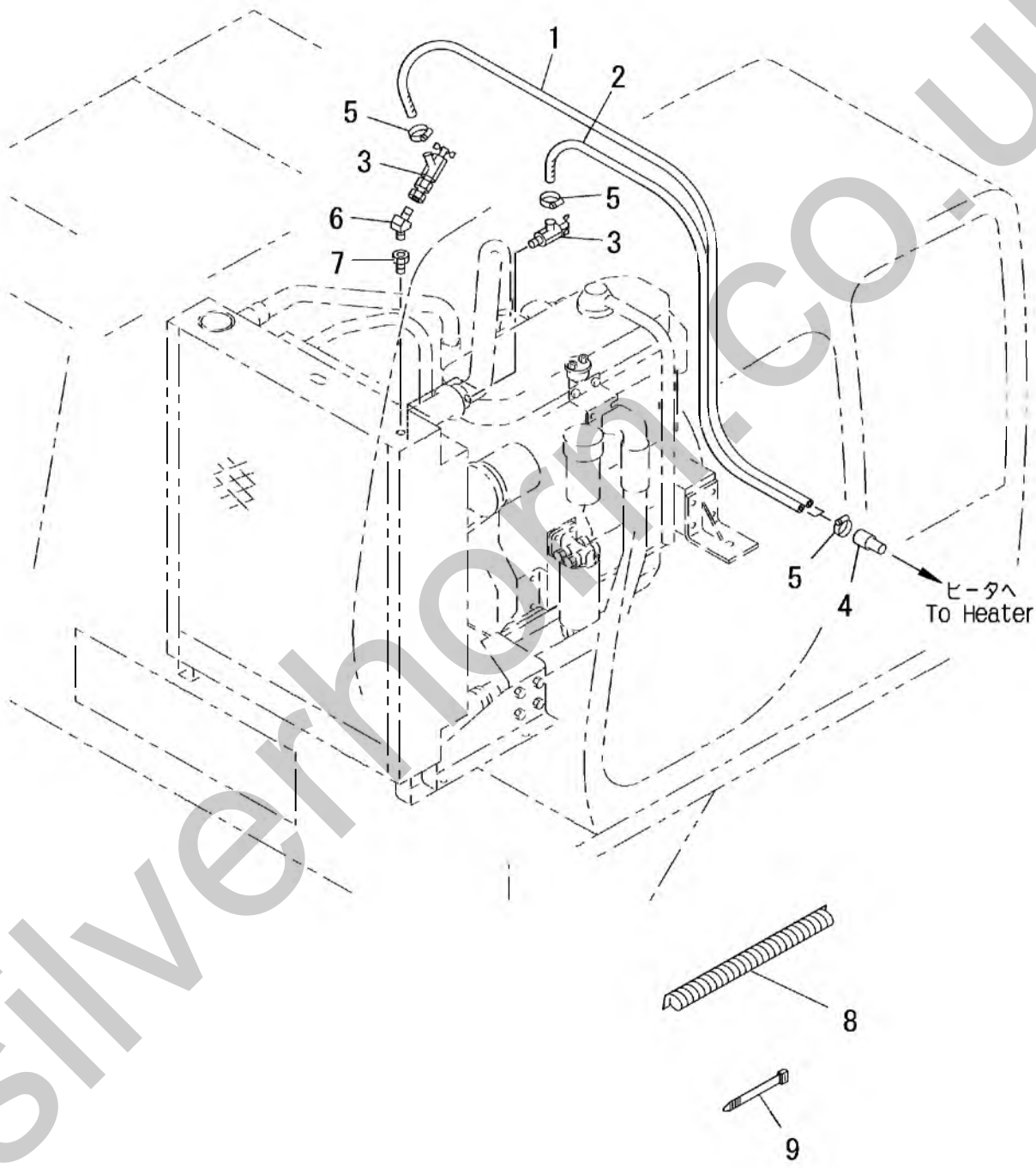

PV92941

silverhorn.co.uk

FIG.255

INDEX	PART NO.	DESCRIPTION	Q'TY	SERIAL NO.
1	1-41910-1310	RETURN HOSE	1	222411 ~
2	1-41910-1320	SUPPLY HOSE	1	222411 ~
3	1-32910-1410	VALVE	2	222411 ~
4	ND016765-0220	JOINT	2	222411 ~
5	1-32910-1330	CLAMP	4	222411 ~
6	1-46910-2350	ELBOW	1	222411 ~
7	1-46910-2360	ADAPTER	1	222411 ~
8	0-2830-01520	SPIRAL TUBE	AR	222411 ~
	0-2830-02420	SPIRAL TUBE	AR	222411 ~
	0-2830-02920	SPIRAL TUBE	AR	222411 ~
9	0-2800-00202	STRAP BAND	AR	222411 ~
	0-2800-00383	STRAP BAND	AR	222411 ~

silverhorn.co.uk

FIG.261 CAB INNER PARTS (REAR BOX)

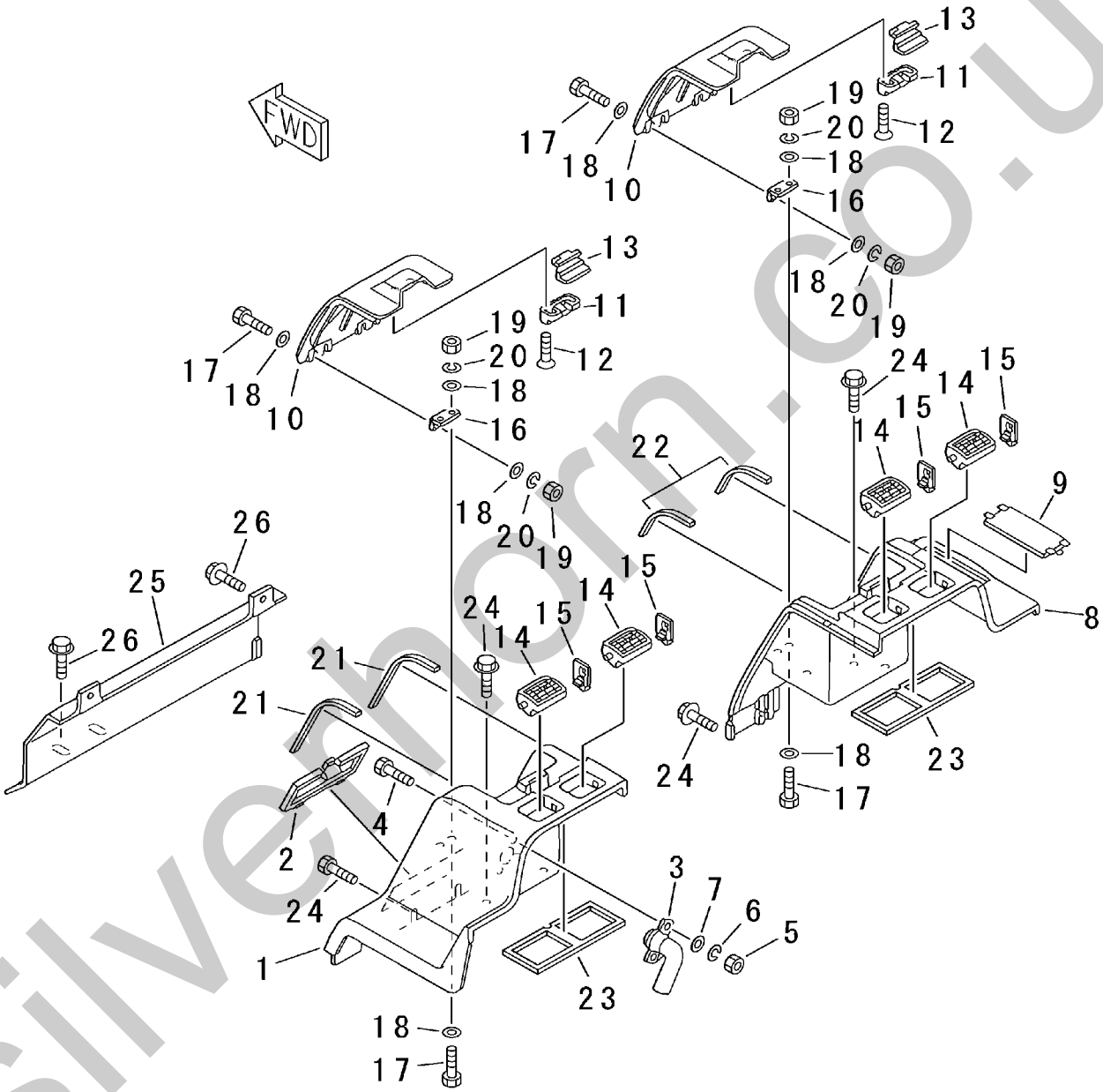

PV92324

silvermorn.co.uk

FIG.261

INDEX	PART NO.	DESCRIPTION	Q'TY	SERIAL NO.
	HC4370089	REAR BOX ASS'Y	1	222411 ～
1	HC4370823	･L.H. SIDE BOX	1	222411 ～
2	HC4370826	･FUSE BOX COVER	1	222411 ～
3	HC4370827	･DUCT	1	222411 ～
4	HC4370828	･･BOLT	2	222411 ～
5	HC4370829	･･NUT	2	222411 ～
6	HC4370830	･･SPRING WASHER	2	222411 ～
7	HC4370831	･･PLANE WASHER	1	222411 ～
8	HC4374294	･R.H. SIDE BOX	1	222411 ～
9	HC4370825	･COVER	1	222411 ～
10	HC4370832	･BOX	2	222411 ～
11	HC4370833	･COVER	2	222411 ～
12	HC4370834	･･SCREW	4	222411 ～
13	HC4370835	･LOCK	2	222411 ～
14	HC4370836	･LOUVER	4	222411 ～
15	HC4370846	･COVER	4	222411 ～
16	HC4370837	･HINGE	4	222411 ～
17	HC4370838	･･SCREW	16	222411 ～
18	HC4370841	･･PLANE WASHER	32	222411 ～
19	HC4370839	･･NUT	16	222411 ～
20	HC4370840	･･SPRING WASHER	16	222411 ～
21	HC4370842	･CUSHION	2	222411 ～
22	HC4370843	･CUSHION	2	222411 ～
23	HC4370844	･CUSHION	2	222411 ～
24	HCJ050820	SEMS BOLT (M8X20)	11	222411 ～
25	HC6014820	COVER	1	222411 ～
26	HCJ020820	SEMS BOLT (M8X20)	4	222411 ～

silverhorn.co.uk

FIG.263 CAB INNER PARTS (AIR DUCT)

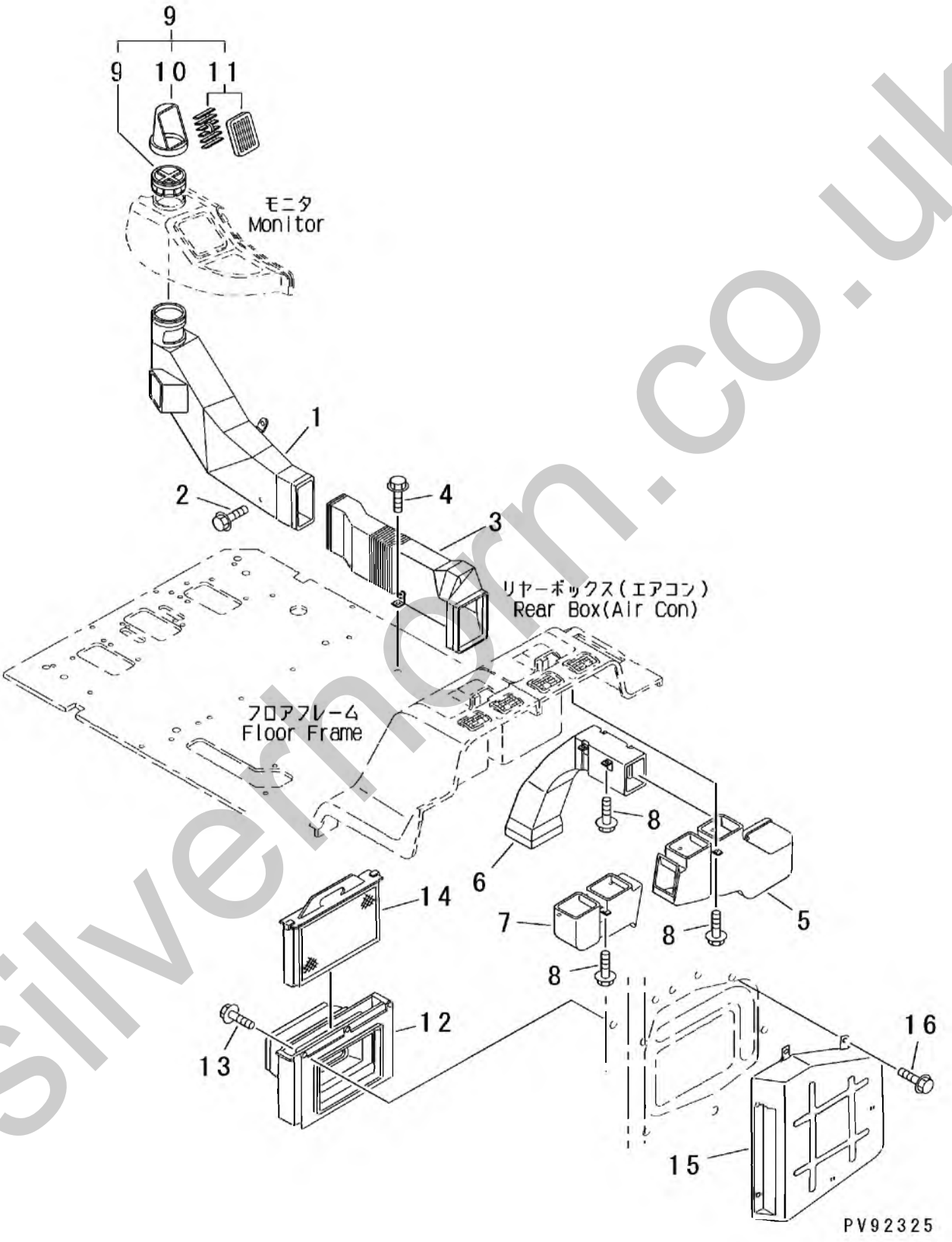

silvernorn.co.uk

FIG.263

INDEX	PART NO.	DESCRIPTION	Q'TY	SERIAL NO.
1	HC4348713	DUCT	1	222411 ～
2	HCJ460616	SEMS SCREW (M6X16)	3	222411 ～
3	HC4348714	DUCT	1	222411 ～
4	HCJ011025	SEMS BOLT (M10X25)	2	222411 ～
5	HC4350236	DUCT	1	222411 ～
6	HC4350235	DUCT	1	222411 ～
7	HC4350237	DUCT	1	222411 ～
8	HC4350265	TAPPING SCREW	10	222411 ～
	HC4350244	DUCT ASS'Y	1	222411 ～
9	HC4370572	･BASE	1	222411 ～
10	HC4370570	･CASE	1	222411 ～
11	HC4370571	･DUCT	1	222411 ～
12	HC4350238	DUCT	1	222411 ～
13	HCJ460616	SEMS SCREW (M6X16)	3	222411 ～
14	HC4350249	FILTER	1	222411 ～
15	HC4350234	DUCT	1	222411 ～
16	HCJ460616	SEMS SCREW (M6X16)	6	222411 ～

silverhorn.co.uk

FIG.301 UNDER CARRIAGE RELATED PARTS (TRAVEL MOTOR AND IDLER)

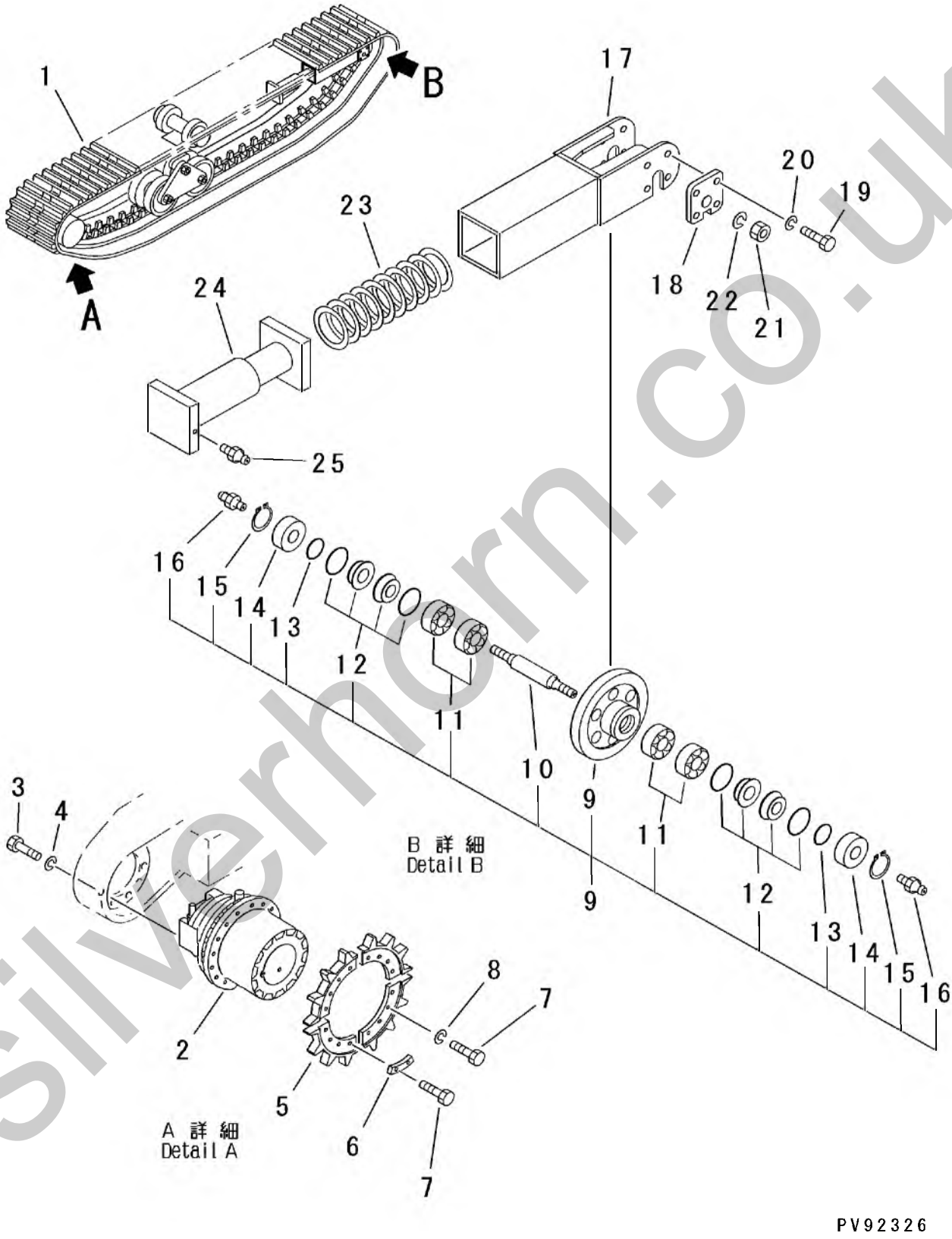

silverhorn.co.uk

FIG.301

INDEX	PART NO.	DESCRIPTION	Q'TY	SERIAL NO.
1	1-28310-1110	TRACK RUBBER	2	222411 ～
2	1-43630-0012	TRAVEL MOTOR ASS'Y (BMV25E)	2	222411 ～
3	0-1000-32060	BOLT (M20X60)	40	222411 ～
4	0-1100-02051	SPRING WASHER (M20)	40	222411 ～
5	1-28320-1121	SEGMENT TYPE SPROCKET	8	222411 ～
6	1-28320-1130	PLATE	4	222411 ～
7	0-1000-32060	BOLT (M20X60)	32	222411 ～
8	1-28320-1140	HARD WASHER (M20)	16	222411 ～
	1-18330-0012	IDLER ASS'Y	2	222411 ～
9	1-18320-1111	・IDLER	1	222411 ～
10	1-18320-1121	・SHAFT	1	222411 ～
11	0-6003-00214	・ROLLER BEARING	4	222411 ～
12	1-19330-0020	・FLOATING SEAL ASS'Y	2	222411 ～
13	0-2000-03170	・O-RING (G70)	2	222411 ～
14	1-18330-1151	・CAP	2	222411 ～
15	0-3300-02565	・SNAP RING	2	222411 ～
16	0-3400-00000	・GREASE NIPPLE (OUTER)	1	222411 ～
16A	1-18330-1170	・RELIEF FITTING (INNER)	1	222411 ～
17	1-28330-1240	SLIDE HOLDER	2	222411 ～
18	1-28330-1160	LOCK PLATE	4	222411 ～
19	0-1000-31225	BOLT (M12X25)	16	222411 ～
20	0-1100-01230	SPRING WASHER (M12)	16	222411 ～
21	0-1210-33629	NUT (M36)	4	222411 ～
22	0-1100-03690	SPRING WASHER (M36)	4	222411 ～
23	1-17330-1210	RECOIL SPRING	2	222411 ～
24	1-17330-1221	CYLINDER	2	222411 ～
25	1-11330-1230	TRACK ADJUSTMENT VALVE	2	222411 ～

silverhorn.co.uk

FIG.311 UNDER CARRIAGE RELATED PARTS (CARRIER ROLLER)

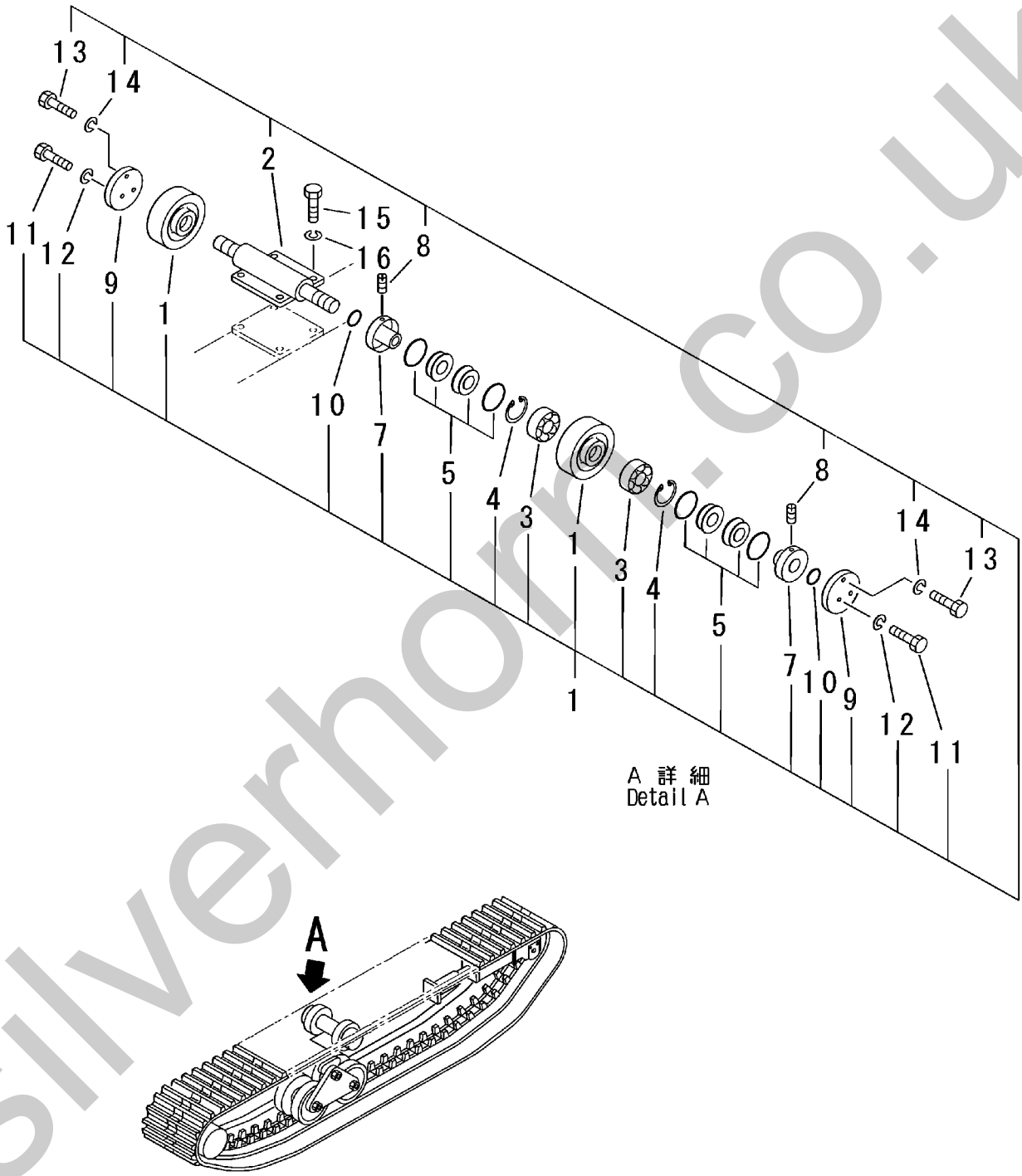

PV90664

silverhorn.co.uk

FIG.311

INDEX	PART NO.	DESCRIPTION	Q'TY	SERIAL NO.
	1-24340-0011	CARRIER ROLLER ASS'Y	4	222411 ～
1	1-23340-1111	・CARRIER ROLLER	2	222411 ～
2	1-18340-1120	・SHAFT	1	222411 ～
3	0-6000-06207	・BALL BEARING	4	222411 ～
4	0-3310-02572	・SNAP RING	4	222411 ～
5	1-11330-0020	・FLOATING SEAL ASS'Y	4	222411 ～
6	1-14340-1130	・CAP	4	222411 ～
7	0-1350-00630	・SCREW (M6X30)	4	222411 ～
8	1-11340-1140	・PLATE	2	222411 ～
9	0-2000-03135	・O-RING (G35)	4	222411 ～
10	0-1000-01025	・BOLT (M10X25)	4	222411 ～
11	0-1100-01025	・SPRING WASHER (M10)	4	222411 ～
12	0-1000-00816	・BOLT (M8X16)	2	222411 ～
13	0-1100-00820	・SPRING WASHER (M8)	2	222411 ～
14	0-1000-31225	BOLT (M12X25)	16	222411 ～
15	0-1100-01230	SPRING WASHER (M12)	16	222411 ～

silverhorn.co.uk

FIG.321 UNDER CARRIAGE RELATED PARTS (TRACK ROLLER)

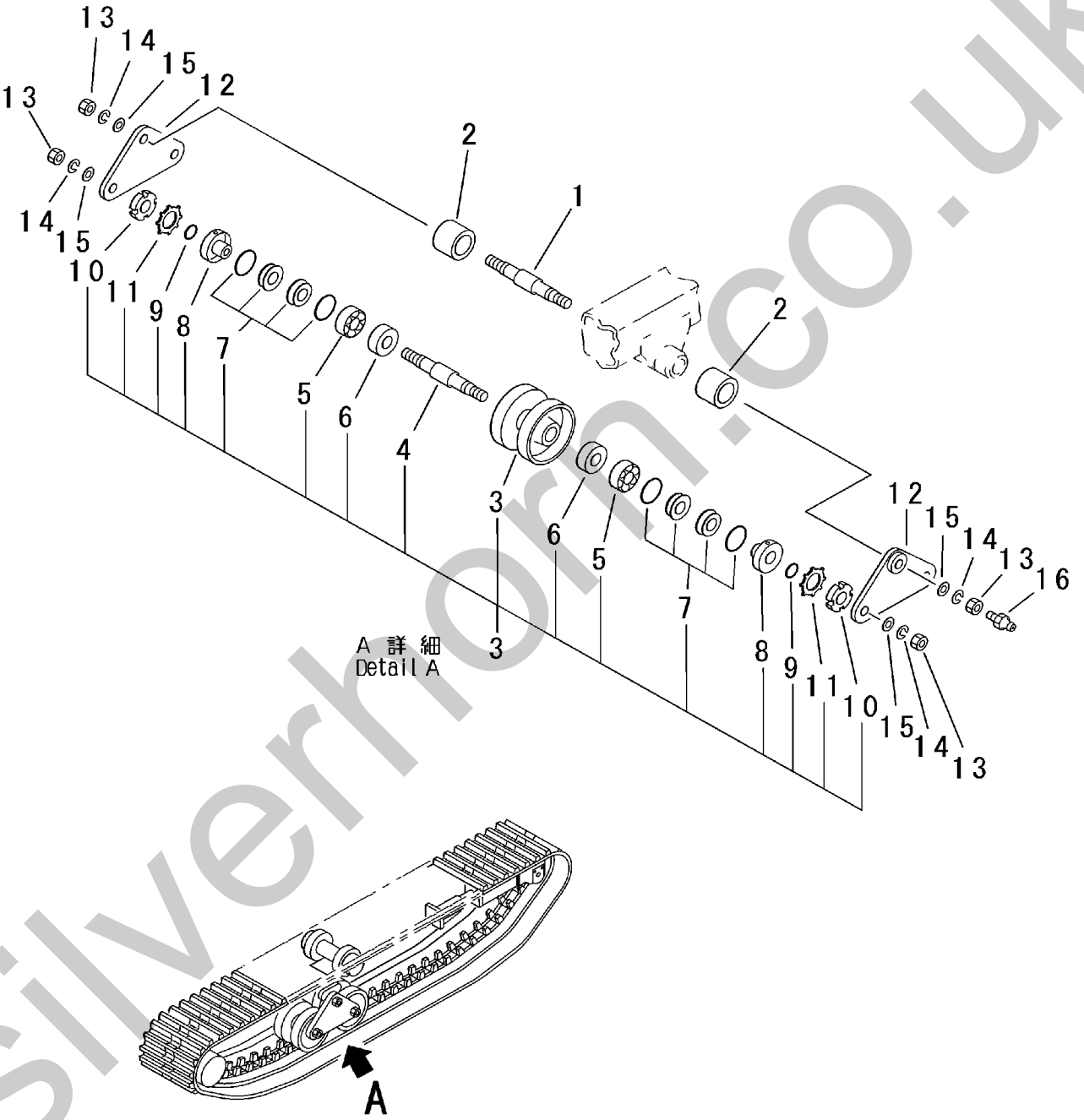

PV92327

silverhorn.co.uk

FIG.321

INDEX	PART NO.	DESCRIPTION	Q'TY	SERIAL NO.
1	1-18350-1213	PIVOT SHAFT	8	222411 ~
2	1-18350-1230	BUSHING	16	222411 ~
	1-46350-0010	TRACK ROLLER ASS'Y	16	222411 ~
3	1-18350-1110	・TRACK ROLLER	1	222411 ~
4	1-46340-1120	・SHAFT	1	222411 ~
5	0-6002-33011	・ROLLER BEARING	4	222411 ~
6	1-46340-1140	・SPACER	2	222411 ~
7	1-18330-0020	・FLOATING SEAL ASS'Y	2	222411 ~
8	1-46340-1130	・CAP	2	222411 ~
9	0-2000-03150	・O-RING (G50)	2	222411 ~
10	1-46350-1010	・RING NUT	2	222411 ~
11	1-46350-1020	・LOCK WASHER	2	222411 ~
12	1-18350-1141	PLATE	16	222411 ~
13	0-1210-33629	NUT (M36)	48	222411 ~
14	0-1100-03690	SPRING WASHER (M36)	48	222411 ~
15	1-19350-1180	HARD WASHER	48	222411 ~
16	0-3400-00000	GREASE NIPPLE	8	222411 ~

silverhorn.co.uk

FIG.401 STEERING CONTROL SYSTEM

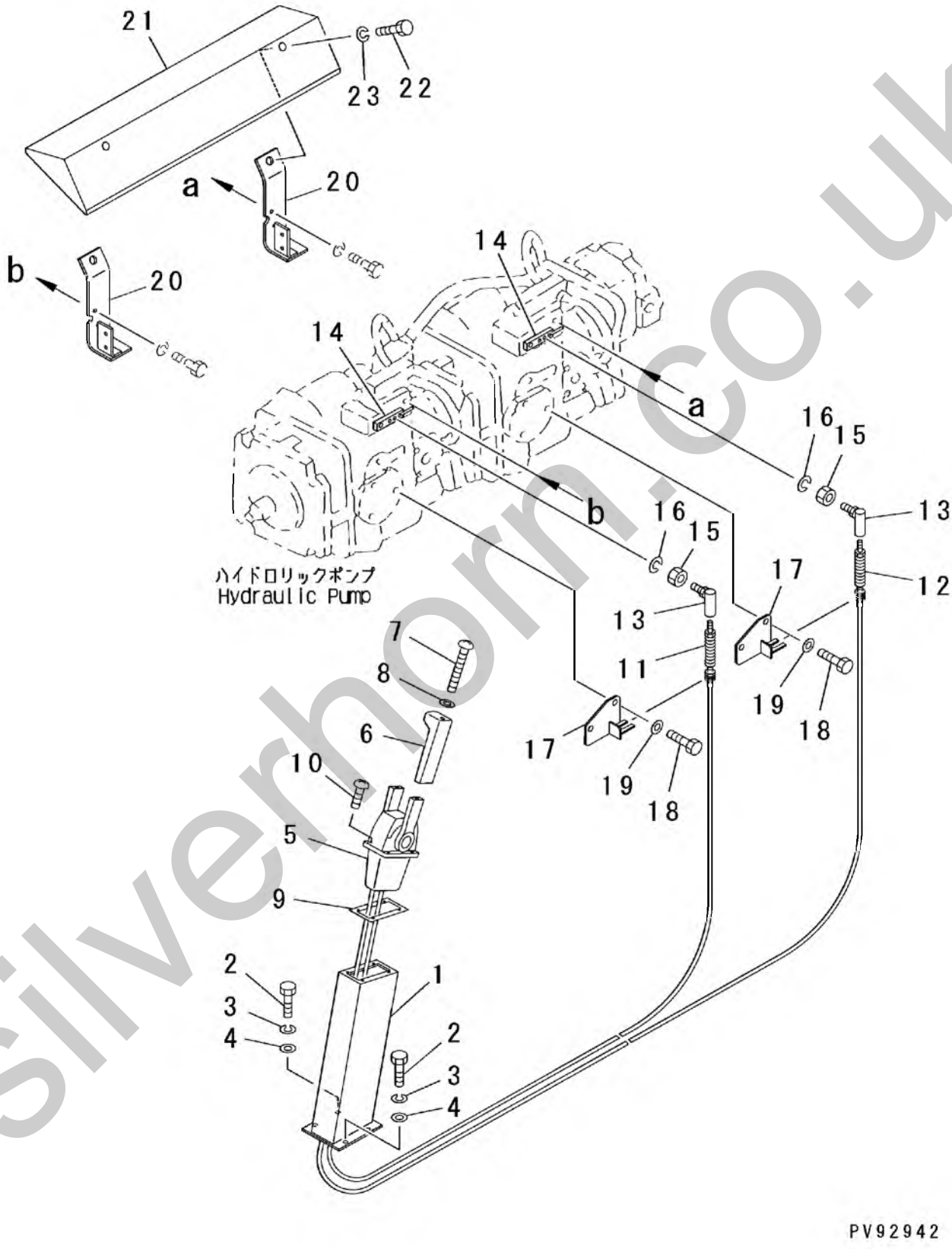

silverhorn.co.uk

FIG.401

INDEX	PART NO.	DESCRIPTION	Q'TY	SERIAL NO.
1	1-41420-1140	TRAVEL LEVER STAND	1	222411 ~
2	0-1000-01030	BOLT (M10X20)	2	222411 ~
3	0-1100-01025	SPRING WASHER (M10)	2	222411 ~
4	0-1120-01020	PLANE WASHER (M10)	2	222411 ~
5	1-41420-1240	TRAVEL CONTROL LEVER ASS'Y	1	222411 ~
6	1-41420-1250	GRIP	2	222411 ~
7	0-1301-00600	SCREW (M6X100)	2	222411 ~
8	0-1120-00616	PLANE WASHER (M6)	2	222411 ~
9	1-48420-1210	RUBBER SHEET	1	222411 ~
10	0-1300-00520	SCREW (M5X20)	4	222411 ~
11	1-41420-1180	CABLE FOR FRONT MAIN PUMP	1	222411 ~
12	1-41420-1190	CABLE FOR REAR MAIN PUMP	1	222411 ~
13	1-41420-1260	BALL JOINT ASS'Y	2	222411 ~
14	1-41420-1280	MAIN PUMP LEVER	2	222411 ~
15	0-1200-01008	NUT (M10)	2	222411 ~
16	0-1100-01025	SPRING WASHER (M10)	2	222411 ~
17	1-46420-2270	MAIN PUMP BRACKET	2	222411 ~
18	0-1000-31825	BOLT (M18X25)	4	222411 ~
19	0-1120-31832	PLANE WASHER (M18)	4	222411 ~
20	1-48420-1141	BRACKET FOR COVER	2	222411 ~
21	1-41520-1770	COVER	1	222411 ~
22	0-1000-01020	BOLT (M10X20)	2	222411 ~
23	0-1100-01025	SPRING WASHER (M10)	2	222411 ~

silverhorn.co.uk

FIG.421 DUMP CONTROL SYSTEM

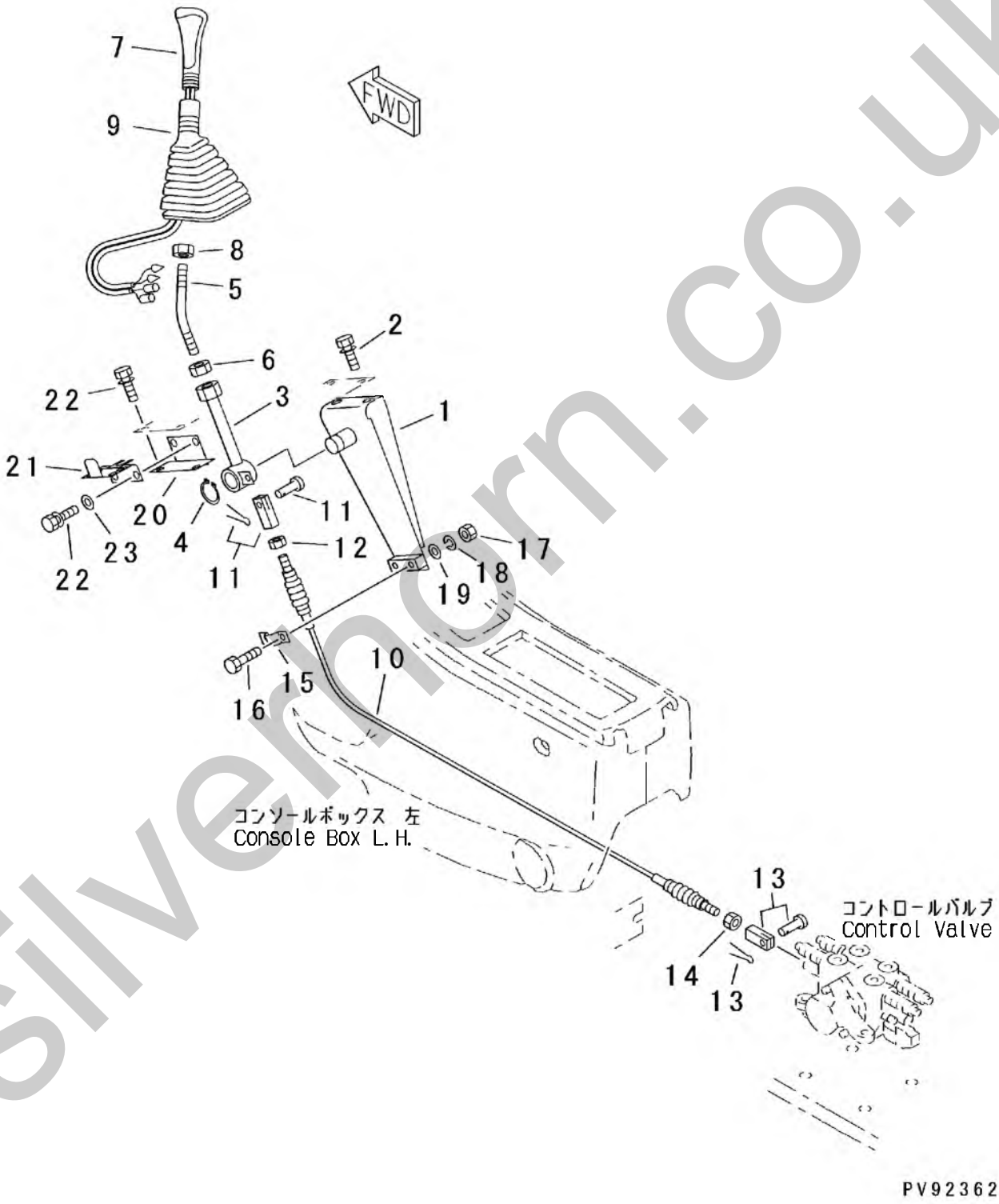

silverhorn.co.uk

FIG.421

INDEX	PART NO.	DESCRIPTION	Q'TY	SERIAL NO.
1	1-41620-1010	BRACKET	1	222411 ~
2	0-1090-01025	BOLT (WITH WASHER) (M10x25)	2	222411 ~
3	1-41620-1020	DUMP CONTROL LEVER	1	222411 ~
4	0-3300-02012	SNAP RING	1	222411 ~
5	HC4334707	DUMP CONTROL LEVER	1	222411 ~
6	0-1200-01411	NUT (M14)	1	222411 ~
7	HC2038484	GRIP (WITH HORN SWITCH)	1	222411 ~
8	0-1210-01210	NUT (M12)	1	222411 ~
9	1-41620-1060	BOOT	1	222411 ~
10	1-41620-1050	CABLE	1	222411 ~
11	1-41620-1040	YOKE ASS'Y	1	222411 ~
12	0-1200-00605	NUT (M6)	1	222411 ~
13	1-11420-1170	YOKE	1	222411 ~
14	0-1220-00805	NUT (M8)	1	222411 ~
15	1-31620-1610	CLAMP	1	222411 ~
16	0-1000-00630	BOLT (M6X30)	2	222411 ~
17	0-1200-00605	NUT (M6)	2	222411 ~
18	0-1100-00615	SPRING WASHER (M6)	2	222411 ~
19	0-1120-00616	PLANE WASHER (M6)	2	222411 ~
20	1-41620-1030	BRACKET	1	222411 ~
21	1-31620-1590	LOCK ASS'Y	1	222411 ~
22	0-1090-00610	BOLT (WITH WASHER) (M6X10)	4	222411 ~
23	0-1120-00616	PLANE WASHER (M6)	2	222411 ~

silverhorn.co.uk

FIG.501 HYDRAULIC PIPING (CONTROL VALVE AND DUMP CYLINDER LINE)

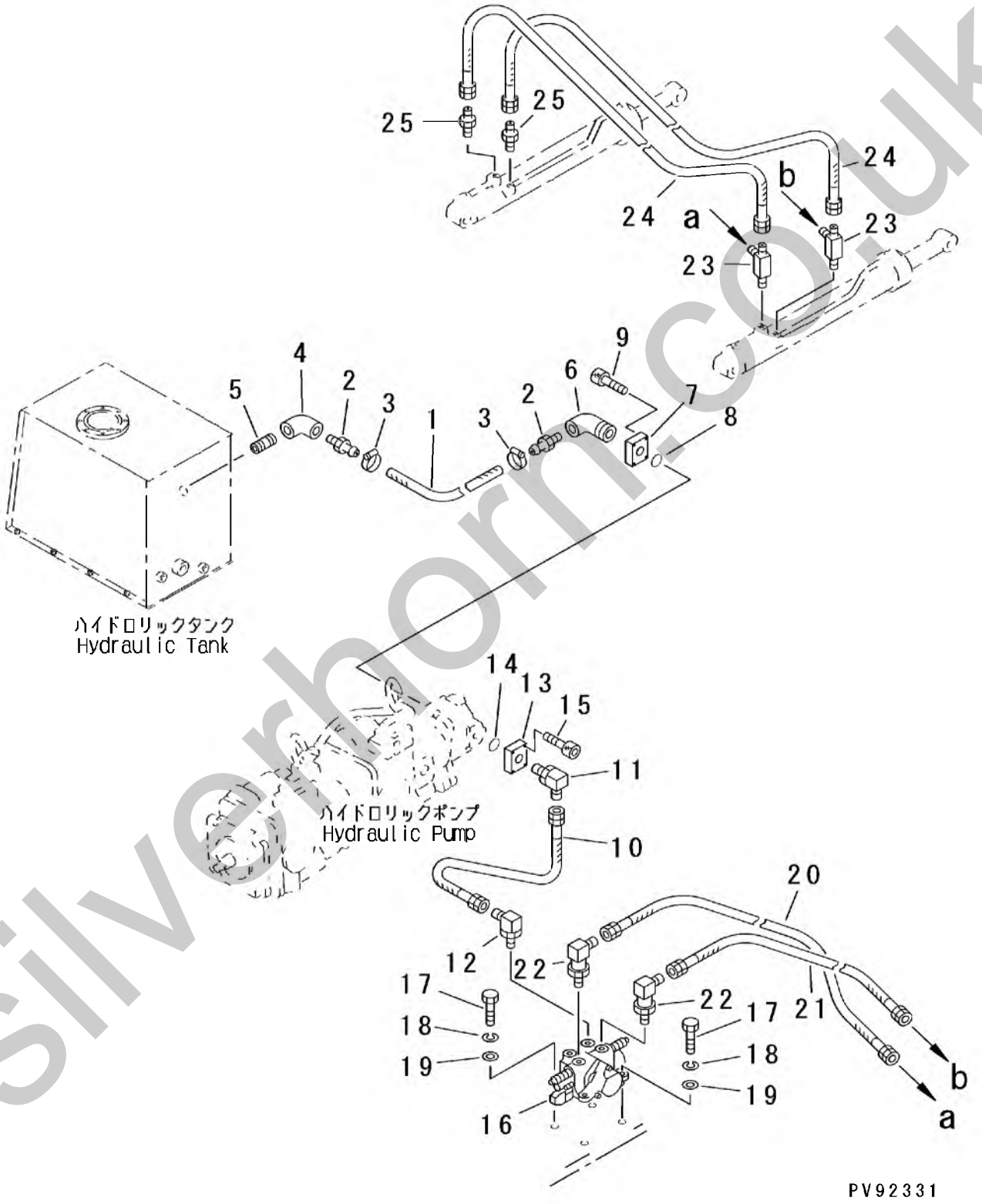

silverhorn.co.uk

FIG.501

INDEX	PART NO.	DESCRIPTION	Q'TY	SERIAL NO.
1	0-2101-01490	HOSE (1・1/2″X1900)	1	222411 ～
2	0-4220-01414	NIPPLE (PT1・1/2XSLEEVE)	2	222411 ～
3	0-2700-00060	CLAMP (JUBILY 2X)	2	222411 ～
4	0-4360-01414	ELBOW (PT1・1/2XPT1・1/2)	1	222411 ～
5	1-19670-1310	CONNECTOR (PT1・1/2XPT1・1/2)	1	222411 ～
6	0-4380-01414	ELBOW (PT1・1/2XPT1・1/2)	1	222411 ～
7	1-41620-1410	FLANGE	1	222411 ～
8	0-2000-03150	O-RING (G50)	1	222411 ～
9	0-1020-31240	SOCKET HEAD BOLT (M12X40)	4	222411 ～
10	0-2250-00650	HOSE (3/4″X500)	1	222411 ～
11	0-4320-00606	ELBOW (PT3/4XPF3/4)	1	222411 ～
	0-2010-03524	O-RING (P24)	1	222411 ～
12	0-4326-01906	ELBOW (UNF1・3/16XPF3/4)	1	222411 ～
	0-2040-03027	・O-RING (914)	1	222411 ～
13	1-13670-1410	FLANGE	1	222411 ～
14	0-2000-03135	O-RING (G35)	1	222411 ～
15	0-1020-31025	SOCKET HEAD BOLT (M10X25)	4	222411 ～
16	1-19620-0011	DUMP CONTROL VALVE ASS'Y	1	222411 ～
17	0-1000-01245	BOLT (M12X30)	4	222411 ～
18	0-1100-01230	SPRING WASHER (M12)	4	222411 ～
19	0-1120-01223	PLANE WASHER (M12)	4	222411 ～
20	0-2210-00480	HOSE (1/2″X800)	1	222411 ～
21	0-2210-00470	HOSE (1/2″X700)	1	222411 ～
22	0-4326-01904	ELBOW (UNF1・3/16XPF1/2)	2	222411 ～
	0-2040-03027	・O-RING (914)	1	222411 ～
23	0-4412-00404	TEE (PT1/2XPF1/2XPF1/2)	2	222411 ～
24	0-2210-00480	HOSE (1/2″X800)	2	222411 ～
25	0-4210-00404	NIPPLE (PT1/2XPF1/2)	2	222411 ～

silverhorn.co.uk

FIG.502 HYDRAULIC PIPING (MAIN PUMP CHARGE LINE)

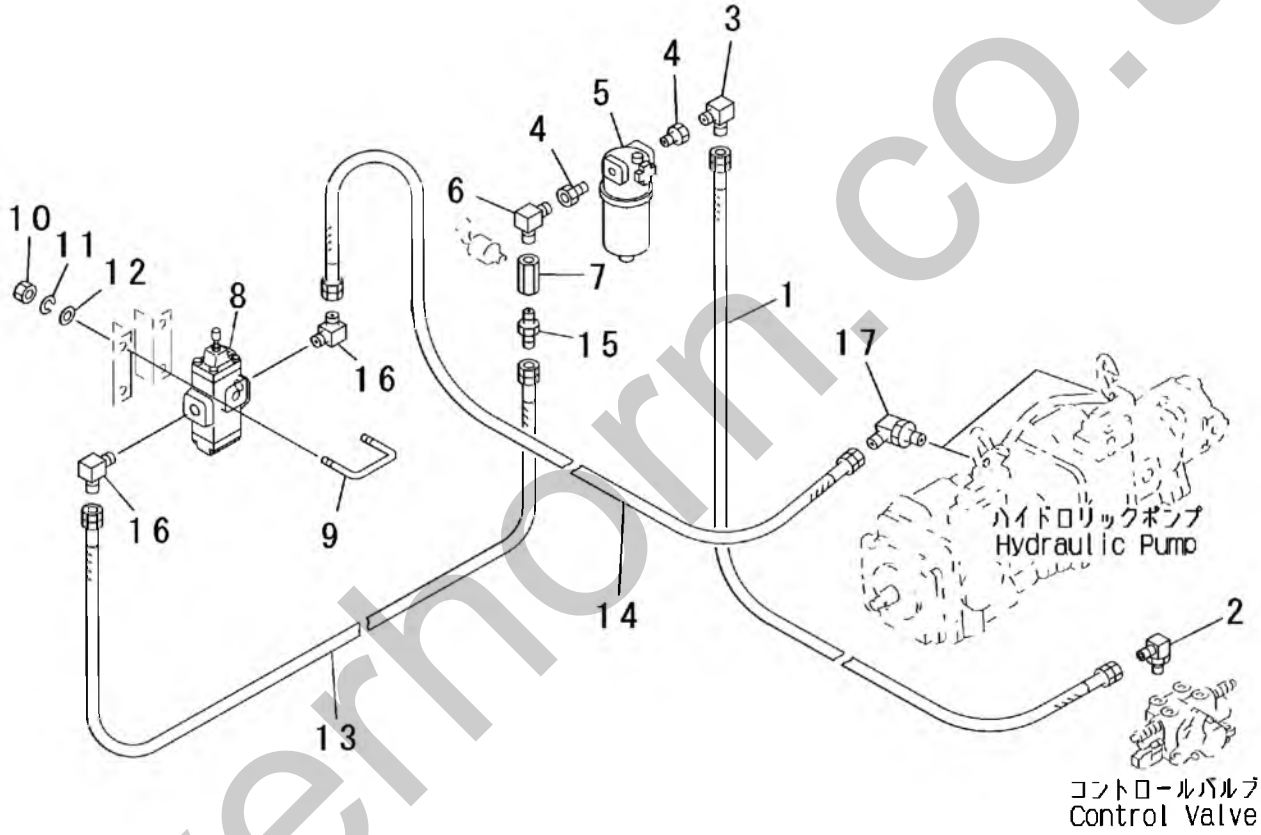

PV92943

silverhorn.co.uk

FIG.502

INDEX	PART NO.	DESCRIPTION	Q'TY	SERIAL NO.
1	0-2221-00624	HOSE (3/4"X1240)	1	222411 ~
2	0-4326-02106	ELBOW (UNF1・5/16XPF3/4)	1	222411 ~
	0-2040-03030	・O-RING (916)	1	222411 ~
3	0-4300-00606	ELBOW (PT3/4XPF3/4)	1	222411 ~
4	0-4100-01006	ADAPTER (PT1XPF3/4)	2	222411 ~
5	(1-19650-0010)	OIL FILTER ASS'Y	1	222411 ~
6	0-4301-00606	ELBOW (PT3/4XPT3/4)	1	222411 ~
7	0-4470-00602	ADAPTER (PT3/4XPF1/4)	1	222411 ~
8	1-46620-0030	CHARGE RELIEF VALVE ASS'Y	1	222411 ~
9	1-46670-2310	CLAMP	2	222411 ~
10	0-1200-01008	NUT (M10)	4	222411 ~
11	0-1100-01025	SPRING WASHER (M10)	4	222411 ~
12	0-1120-01020	PLANE WASHER (M10)	4	222411 ~
13	0-2220-00670	HOSE (3/4"X700)	1	222411 ~
14	0-2220-00680	HOSE (3/4"X800)	1	222411 ~
15	0-4210-00606	NIPPLE (PT3/4XPF3/4)	1	222411 ~
16	0-4300-00606	ELBOW (PT3/4XPF3/4)	2	222411 ~
17	0-4321-01706	ELBOW (UNF1・1/16XPF1/2)	1	222411 ~
	0-2040-03024	・O-RING (912)	1	222411 ~

silverhorn.co.uk

FIG.503 HYDRAULIC PIPING (HST MAIN LINE)

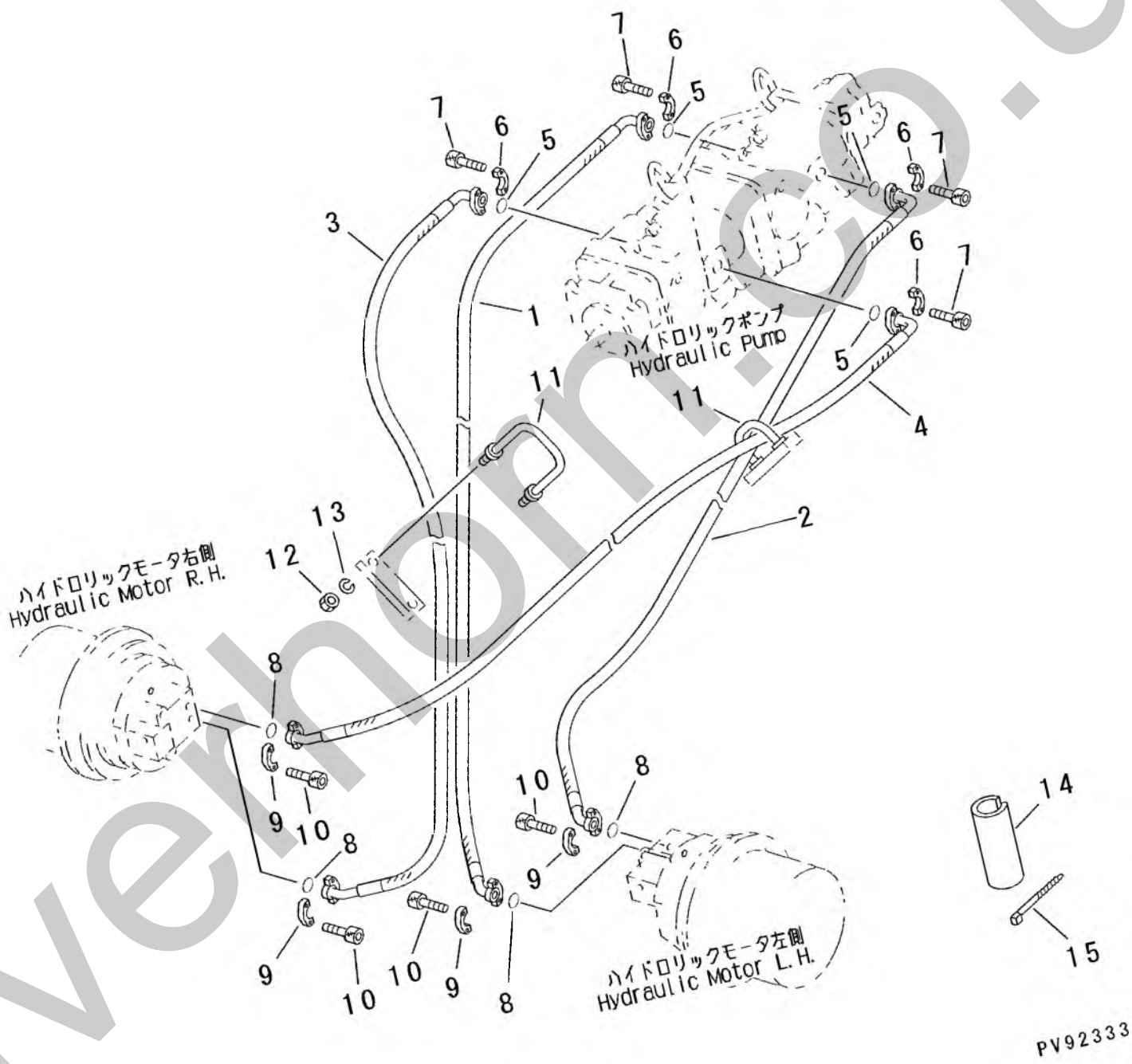

silverhorn.co.uk

FIG.503

INDEX	PART NO.	DESCRIPTION	Q'TY	SERIAL NO.
1	1-46670-2110	HOSE (1・1/4"X2200)	1	222411 ～
2	1-46670-2110	HOSE (1・1/4"X2200)	1	222411 ～
3	1-46670-2130	HOSE (1・1/4"X1700)	1	222411 ～
4	1-46670-2140	HOSE (1・1/4"X1950)	1	222411 ～
5	0-2030-03538	O-RING	4	222411 ～
6	0-2610-01267	SPLIT FLANGE	8	222411 ～
7	0-1520-30845	SOCKET HEAD BOLT (UNC1/2X45)	16	222411 ～
8	0-2030-03538	O-RING	4	222411 ～
9	0-2610-01267	SPLIT FLANGE	8	222411 ～
10	0-1520-30845	SOCKET HEAD BOLT (UNC1/2X45)	16	222411 ～
11	1-18670-1381	CLAMP	2	222411 ～
12	0-1200-01210	NUT (M12)	4	222411 ～
13	0-1100-01230	SPRING WASHER (M12)	4	222411 ～
14	0-2840-02013	RUBBER SHEET	AR	222411 ～
	0-2840-02020	RUBBER SHEET	AR	222411 ～
15	0-2800-00202	STRAP BAND	AR	222411 ～
	0-2800-00383	STRAP BAND	AR	222411 ～

silverhorn.co.uk

FIG.504 HYDRAULIC PIPING (PARKING BRAKE AND H-L SPEED VALVE LINE)

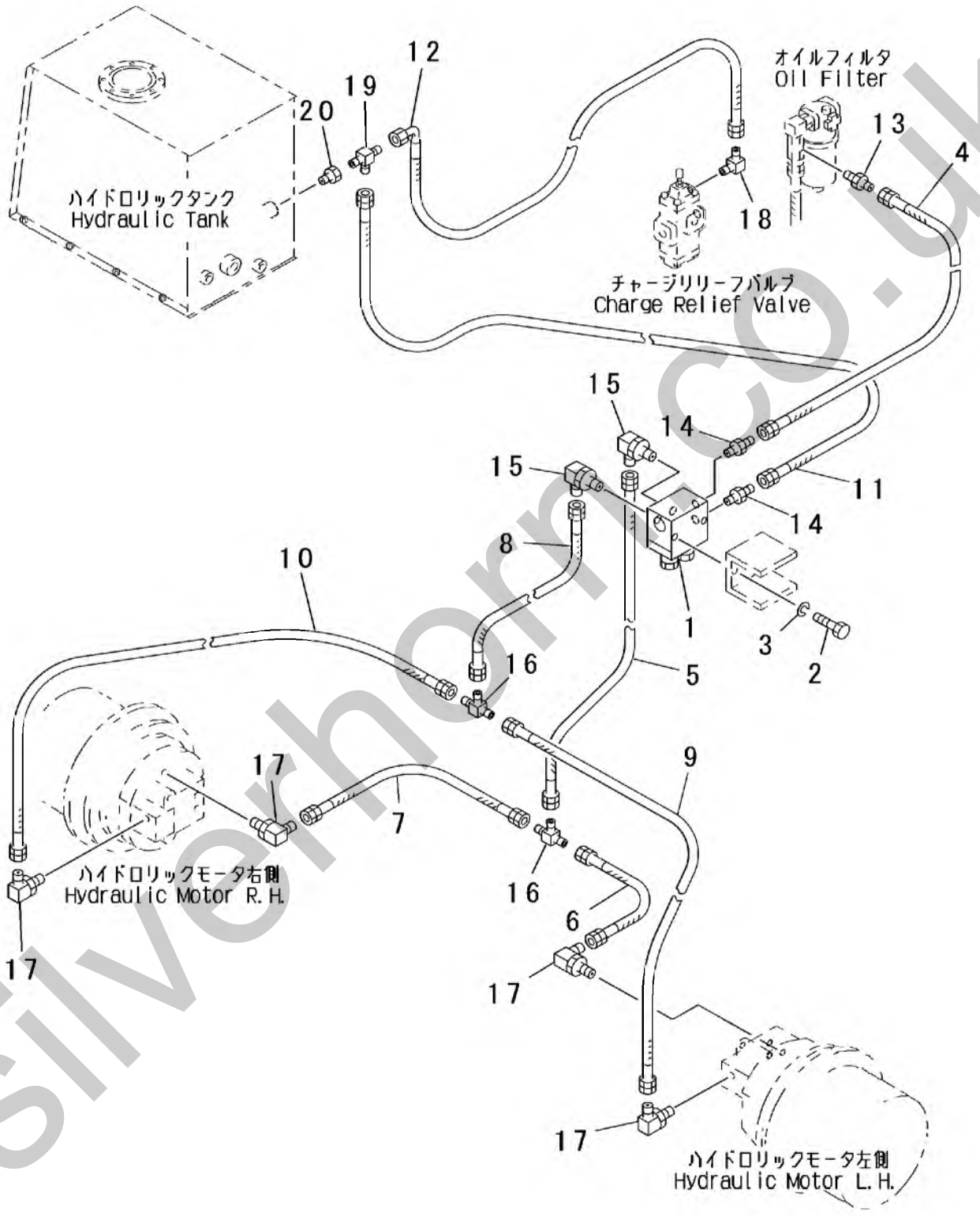

silverhorn.co.uk

FIG.504

INDEX	PART NO.	DESCRIPTION	Q'TY	SERIAL NO.
1	1-46620-0010	SOLENOID VALVE ASS'Y	1	222411 ～
		PARKING BRAKE AND H-L SPEED		
2	0-1000-00816	BOLT (M8X16)	2	222411 ～
3	0-1100-00820	SPRING WASHER (M8)	2	222411 ～
4	0-2231-00295	SUPPLY HOSE (1/4"X1950)	1	222411 ～
5	0-2230-00255	PARKING BRAKE HOSE (1/4"X550)	1	222411 ～
6	0-2230-00274	PARKING BRAKE HOSE (1/4"X740)	1	222411 ～
7	0-2231-00230	PARKING BRAKE HOSE (1/4"X1300)	1	222411 ～
8	0-2230-00255	H-L SPEED HOSE (1/4"X550)	1	222411 ～
9	0-2231-00200	H-L SPEED HOSE (1/4"X1000)	1	222411 ～
10	0-2231-00250	H-L SPEED HOSE (1/4"X1500)	1	222411 ～
11	0-2233-00210	DRAIN HOSE (1/4"X3100)	1	222411 ～
12	0-2431-00213	RELIEF VALVE DRAIN HOSE	1	222411 ～
		(1/4"X1130)		
13	0-4210-00202	NIPPLE (PT1/4XPF1/4)	2	222411 ～
14	0-4211-00202	NIPPLE (PF1/4XPF1/4)	2	222411 ～
	0-2010-02411	・O-RING (P11)	1	222411 ～
15	0-4320-00202	ELBOW (PF1/4XPF1/4)	2	222411 ～
	0-2010-02411	・O-RING (P11)	1	222411 ～
16	0-4410-00202	TEE (PF1/4XPF1/4XPF1/4)	2	222411 ～
17	0-4321-00902	ELBOW (UNF9/16XPF1/4)	4	222411 ～
	0-2040-02012	・O-RING (906)	1	222411 ～
18	0-4300-00202	ELBOW (PT1/4XPF1/4)	1	222411 ～
19	0-4411-00202	TEE (PT1/4XPF1/4XPF1/4)	1	222411 ～
20	0-4100-00402	ADAPTER (PT1/2XPT1/4)	1	222411 ～

silverhorn.co.uk

FIG.505 HYDRAULIC PIPING (OIL COOLER AND DRAIN LINE)

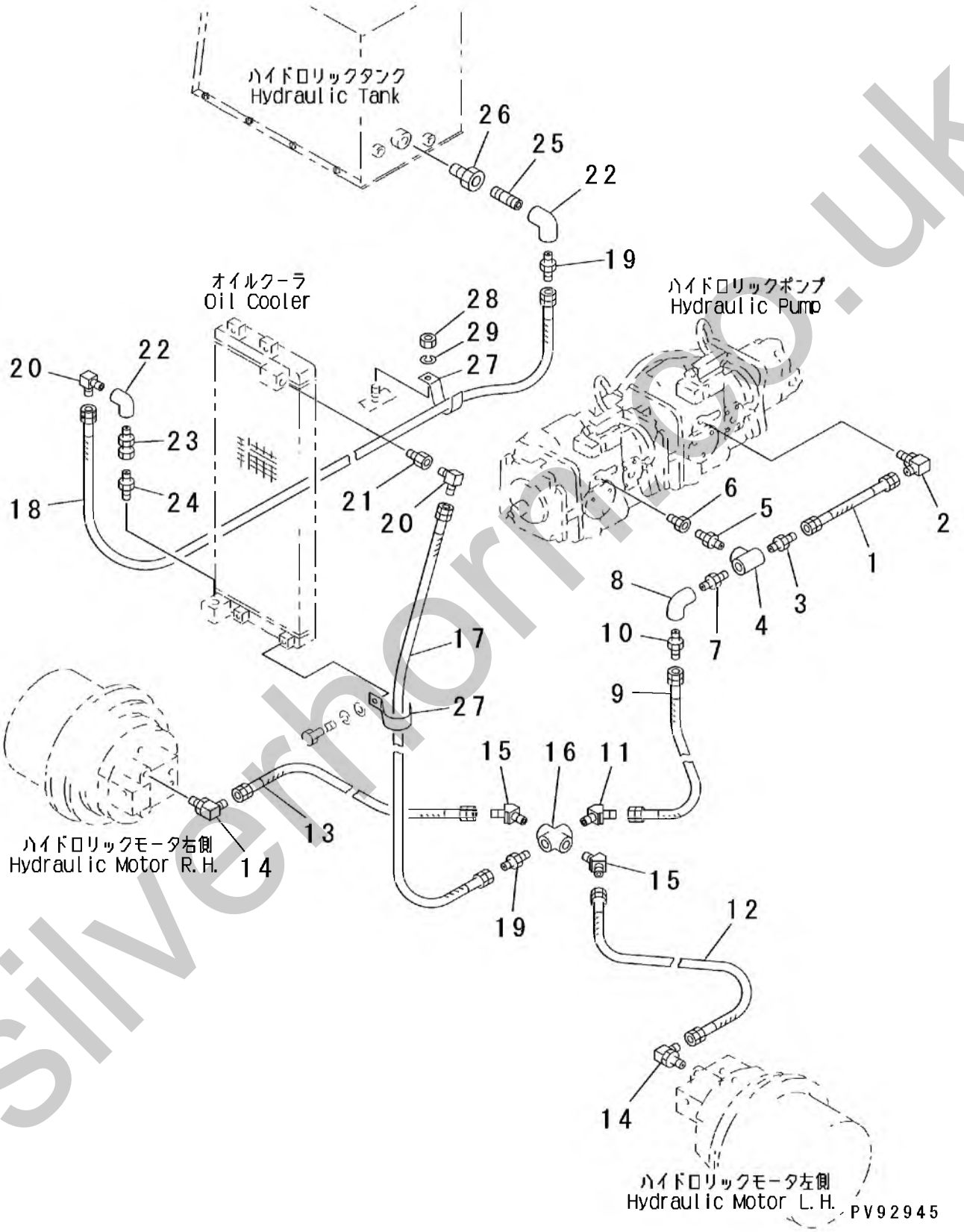

silverhorn.co.uk

FIG.505

INDEX	PART NO.	DESCRIPTION	Q'TY	SERIAL NO.
1	0-2230-00635	MAIN PUMP DRAIN HOSE (3/4"X350)	1	222411 ～
2	0-4321-01406	ELBOW (UNF7/8XPF3/4)	1	222411 ～
	0-2040-02520	・O-RING (910)	1	222411 ～
3	0-4210-01006	NIPPLE (PT1XPF3/4)	1	222411 ～
4	0-4400-01006	TEE (PT1XPT1XPT3/4)	1	222411 ～
5	0-4212-00606	NIPPLE (PT3/4XPT3/4)	1	222411 ～
6	0-4121-01406	ADAPTER (UNF7/8XPT3/4)	1	222411 ～
	0-2040-02520	・O-RING (910)	1	222411 ～
7	0-4212-01010	NIPPLE (PT1XPT1)	1	222411 ～
8	0-4360-01010	ELBOW (PT1XPT1)	1	222411 ～
9	0-2232-01020	DRAIN HOSE (1"X2200)	1	222411 ～
10	0-4210-01010	NIPPLE (PT1XPF1)	1	222411 ～
11	0-4310-01010	ELBOW (PT1XPF1)	1	222411 ～
12	0-2230-00690	TRAVEL MOTOR DRAIN HOSE (3/4"X900)	1	222411 ～
13	0-2231-00610	TRAVEL MOTOR DRAIN HOSE (3/4"X1100)	1	222411 ～
14	0-4321-01706	ELBOW (UNF1・1/16XPF3/4)	2	222411 ～
	0-2040-03024	・O-RING (912)	1	222411 ～
15	0-4310-01006	ELBOW (PT1XPF3/4)	2	222411 ～
16	0-4450-01010	クロス (PT1XPT1)	1	222411 ～
17	0-2230-01080	OIL COOLER INLET HOSE (1"X800)	1	222411 ～
18	0-2232-01020	OIL COOLER OUTLET HOSE (1"X2200	1	222411 ～
19	0-4210-01010	NIPPLE (PT1XPF1)	2	222411 ～
20	0-4300-01010	ELBOW (PT1XPF1)	2	222411 ～
21	0-4124-01710	ADAPTER (UNF1・1/16XPT1)	1	222411 ～
	0-2040-03024	・O-RING (912)	1	222411 ～
22	0-4360-01010	ELBOW (PT1XPT1)	2	222411 ～
23	0-4130-01010	ADAPTER (PT1XPF1)	1	222411 ～
24	0-4213-01710	NIPPLE (UNF1・1/16XPF1)	1	222411 ～
	0-2040-03024	・O-RING (912)	1	222411 ～
25	0-4200-01000	NIPPLE (PT1)	1	222411 ～
26	0-4100-01410	ADAPTER (PT1・1/2XPT1)	1	222411 ～
27	1-14670-1110	HOOK	2	222411 ～
28	0-1200-01008	NUT (M10)	1	222411 ～
29	0-1100-01025	SPRING WASHER (M10)	1	222411 ～

silverhorn.co.uk

FIG.506 HYDRAULIC PIPING (MAIN PUMP DRAIN LINE)

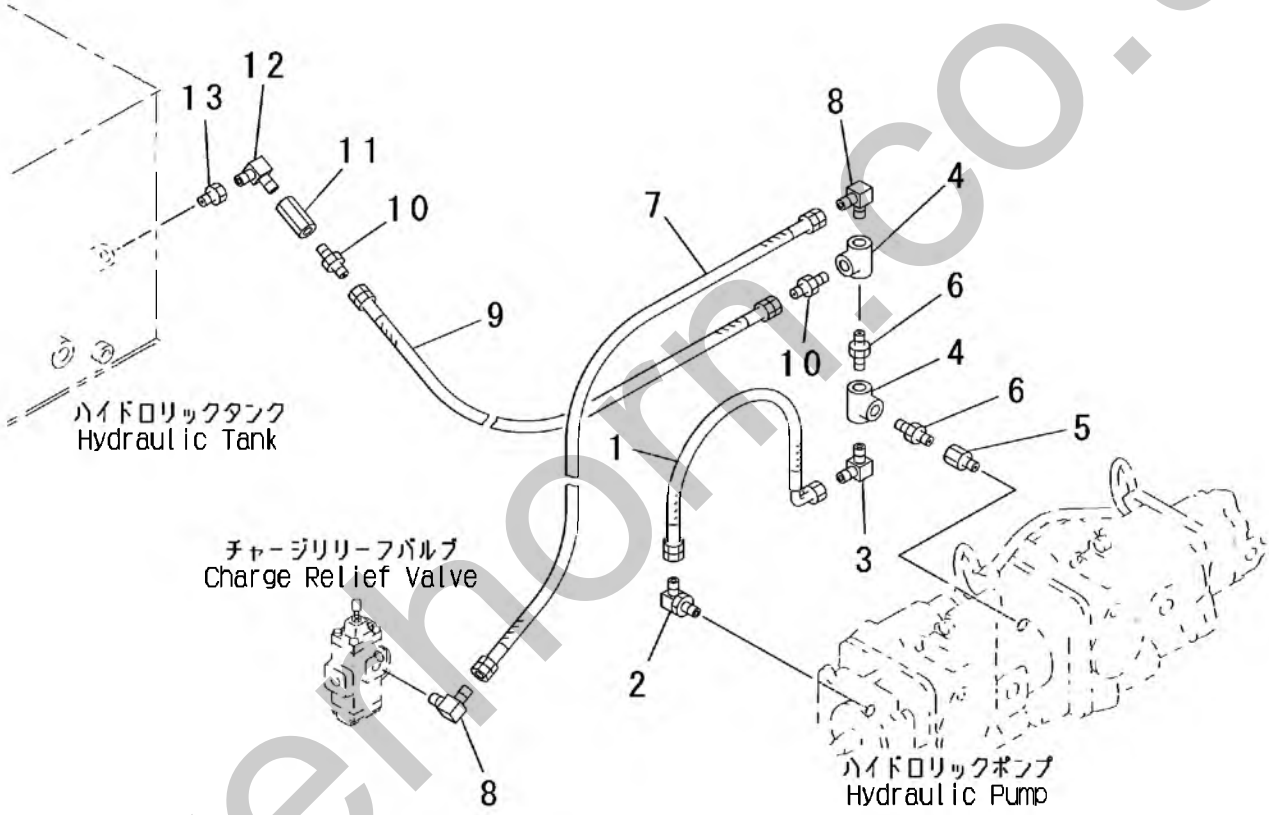

PV92946

silverhorn.co.uk

FIG.506

INDEX	PART NO.	DESCRIPTION	Q'TY	SERIAL NO.
1	0-2420-00665	DRAIN HOSE (3/4"X650)	1	222411 ~
2	0-4321-01406	ELBOW (UNF7/8XPF3/4)	1	222411 ~
	0-2040-02520	・O-RING (910)	1	222411 ~
3	0-4300-00606	ELBOW (PT3/4XPF3/4)	1	222411 ~
4	0-4400-00606	TEE (PT3/4XPT3/4XPT3/4)	2	222411 ~
5	0-4121-01406	ADAPTER (UNF7/8XPF3/4)	1	222411 ~
	0-2040-02520	・O-RING (910)	1	222411 ~
6	0-4212-00606	NIPPLE (PT3/4XPT3/4)	2	222411 ~
7	0-2230-00695	RELIEF VALVE DRAIN HOSE (3/4"X950)	1	222411 ~
8	0-4300-00606	ELBOW (PT3/4XPF3/4)	2	222411 ~
9	0-2220-00648	DRAIN HOSE (3/4"X480)	1	222411 ~
10	0-4200-00606	NIPPLE (PT3/4XPF3/4)	2	222411 ~
11	1-21670-1210	CHECK VALVE ASS'Y	1	222411 ~
12	0-4301-00606	ADAPTER (PT3/4XPT3/4)	1	222411 ~
13	0-4100-01006	ADAPTER (PT1XPT3/4)	1	222411 ~

silverhorn.co.uk

FIG.551 HYDRAULIC OIL TANK

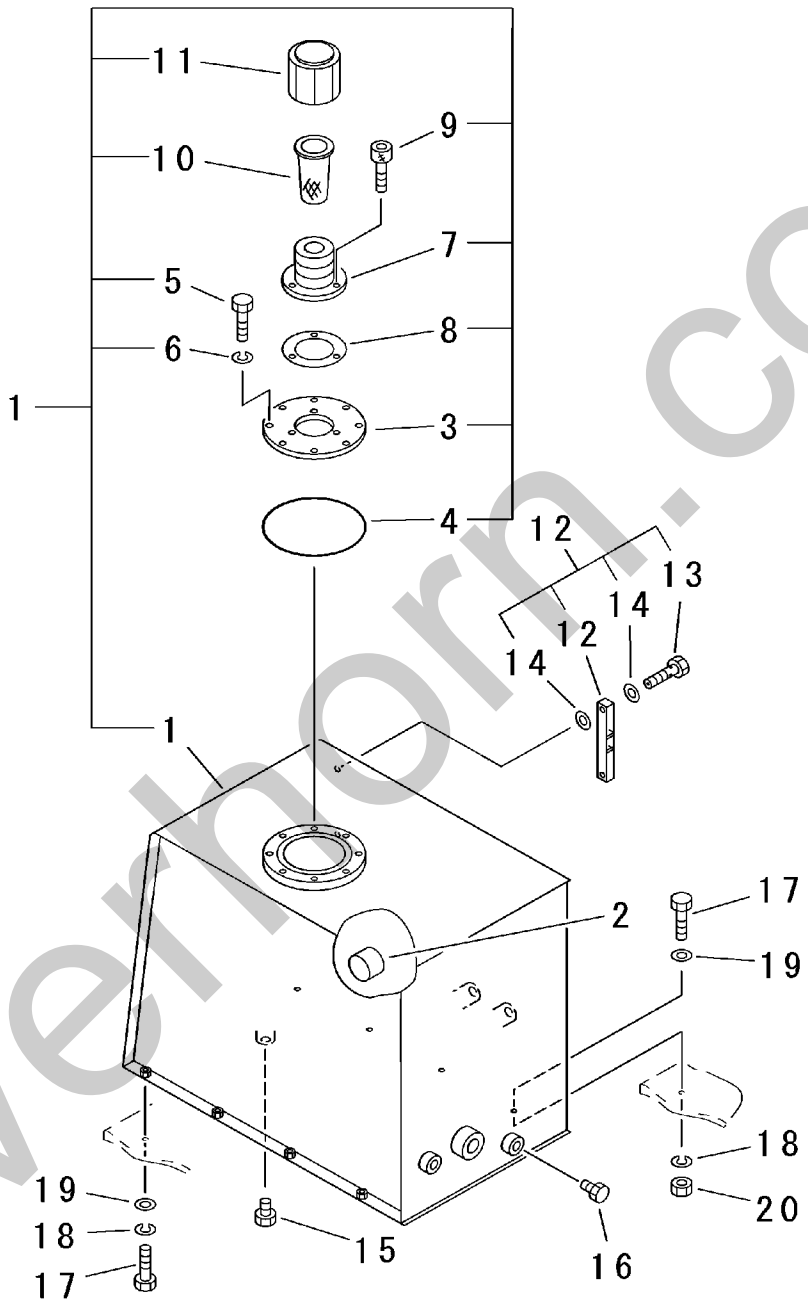

PV92337

silverhorn.co.uk

FIG.551

INDEX	PART NO.	DESCRIPTION	Q'TY	SERIAL NO.
	1-41660-1100	HYDRAULIC OIL TANK ASS'Y	1	222411 ~
1	1-41660-1110	·HYDRAULIC OIL TANK	1	222411 ~
2	1-19660-1231	·SUCTION FILTER	1	222411 ~
3	1-11660-1120	·COVER	1	222411 ~
4	1-11660-1130	·O-RING	1	222411 ~
5	0-1000-00816	·BOLT (M8X16)	8	222411 ~
6	0-1100-00820	·SPRING WASHER (M8)	8	222411 ~
7	1-11660-1140	·BREATHER	1	222411 ~
8	1-11660-1150	·GASKET	1	222411 ~
9	1-11660-1220	·BOLT	3	222411 ~
10	1-11660-1170	·STRAINER	1	222411 ~
11	1-11660-1160	·CAP	1	222411 ~
	1-11660-0020	·OIL LEVEL GAUGE ASS'Y	1	222411 ~
12	1-11660-1180	··OIL LEVEL GAUGE	1	222411 ~
13	1-11660-1190	··BOLT	2	222411 ~
14	1-11660-1210	··GASKET	4	222411 ~
15	0-4000-01000	·DRAIN PLUG (PT1)	1	222411 ~
16	0-4000-00300	·PLUG (PT3/8)	1	222411 ~
17	0-1000-01025	BOLT (M10X25)	8	222411 ~
18	0-1100-01025	SPRING WASHER (M10)	8	222411 ~
19	0-1120-01020	PLANE WASHER (M10)	8	222411 ~
20	0-1200-01008	NUT (M10)	4	222411 ~

silverhorn.co.uk

FIG.555 HYDRAULIC OIL FILTER

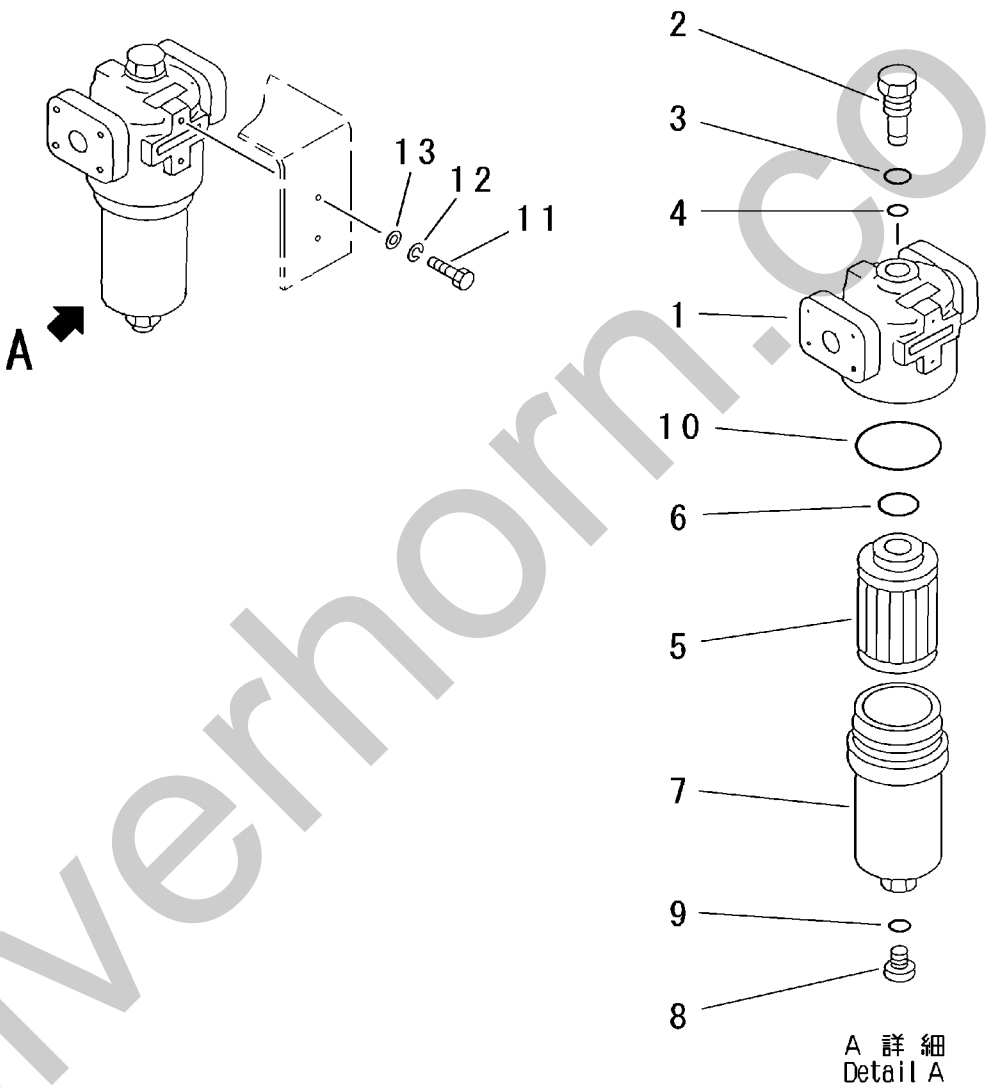

PV92338

silverhorn.co.uk

FIG.555

INDEX	PART NO.	DESCRIPTION	Q'TY	SERIAL NO.
	1-19650-0010	OIL FILTER ASS'Y	1	222411 ～
1	(☆1-19650-2110)	・BASE	1	222411 ～
2	1-11650-1160	・PLUG	1	222411 ～
3	0-2010-02418	・O-RING (P18)	1	222411 ～
4	0-2010-02414	・O-RING (P14)	1	222411 ～
5	1-19650-1120	・ELEMENT	1	222411 ～
6	0-2000-03150	・O-RING (G50)	1	222411 ～
7	1-19650-1140	・BODY	1	222411 ～
8	1-11650-1170	・PLUG	1	222411 ～
9	0-2010-02414	・O-RING (P14)	1	222411 ～
10	0-2031-03511	・O-RING	1	222411 ～
11	0-1000-01030	BOLT (M10X30)	2	222411 ～
12	0-1100-01025	SPRING WASHER (M10)	2	222411 ～
13	0-1120-01020	PLANE WASHER (M10)	2	222411 ～

silverhorn.co.uk

FIG.561 OIL COOLER RELATED PARTS

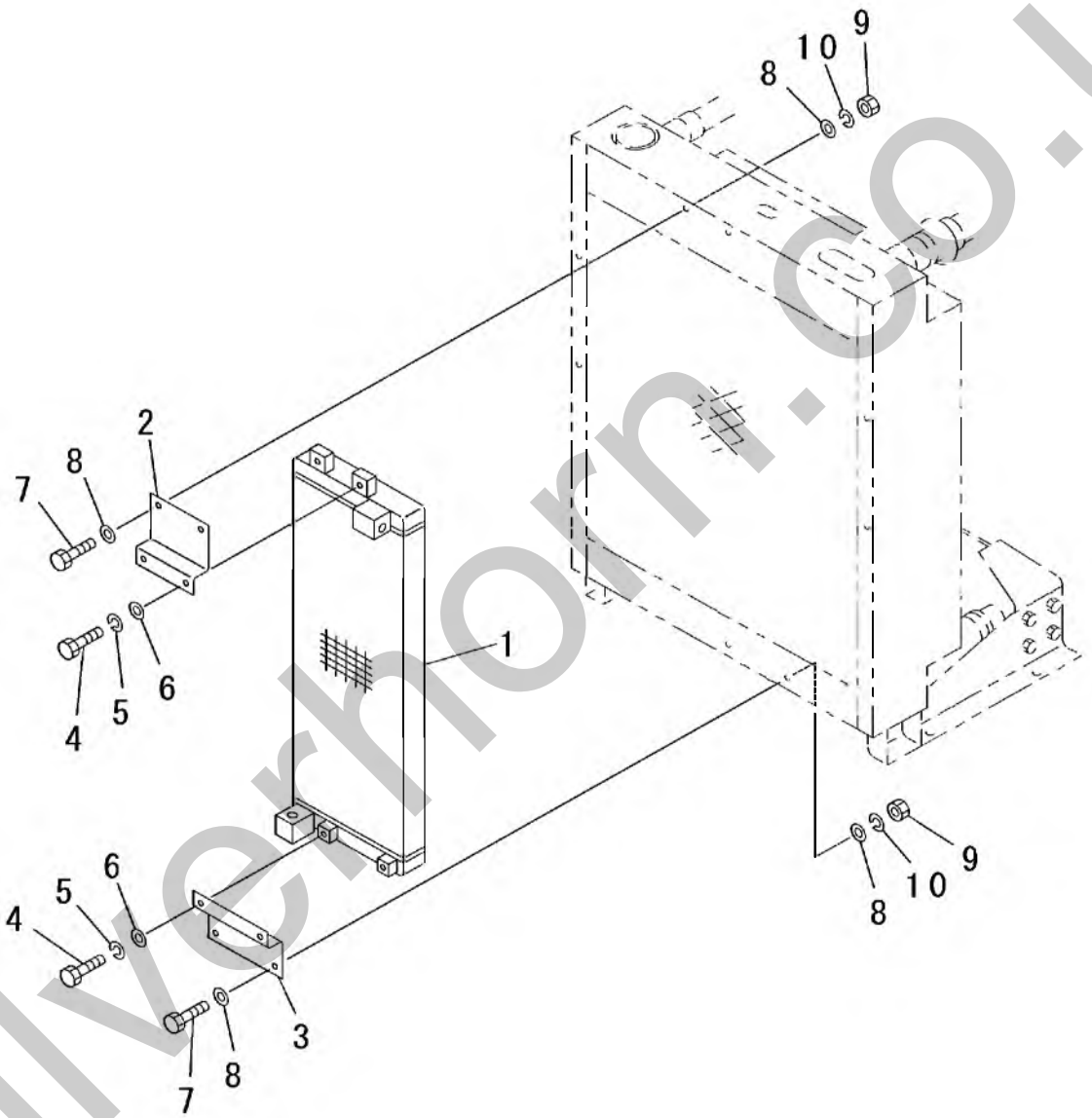

PV92947

silverhorn.co.uk

FIG.561

INDEX	PART NO.	DESCRIPTION	Q'TY	SERIAL NO.
1	1-46140-0210	OIL COOLER ASS'Y	1	222411 ~
2	1-46140-2210	UPPER SIDE BRACKET	1	222411 ~
3	1-46140-2220	LOWER SIDE BRACKET	1	222411 ~
4	0-1000-01016	BOLT (M10X16)	4	222411 ~
5	0-1100-01025	SPRING WASHER (M10)	4	222411 ~
6	0-1120-01020	PLANE WASHER (M10)	4	222411 ~
7	0-1000-01016	BOLT (M10X16)	4	222411 ~
8	0-1120-01020	PLANE WASHER (M10)	8	222411 ~
9	0-1200-01008	NUT (M10)	4	222411 ~
10	0-1100-01025	SPRING WASHER (M10)	4	222411 ~

silverhorn.co.uk

FIG.601 DUMP BODY RELATED PARTS

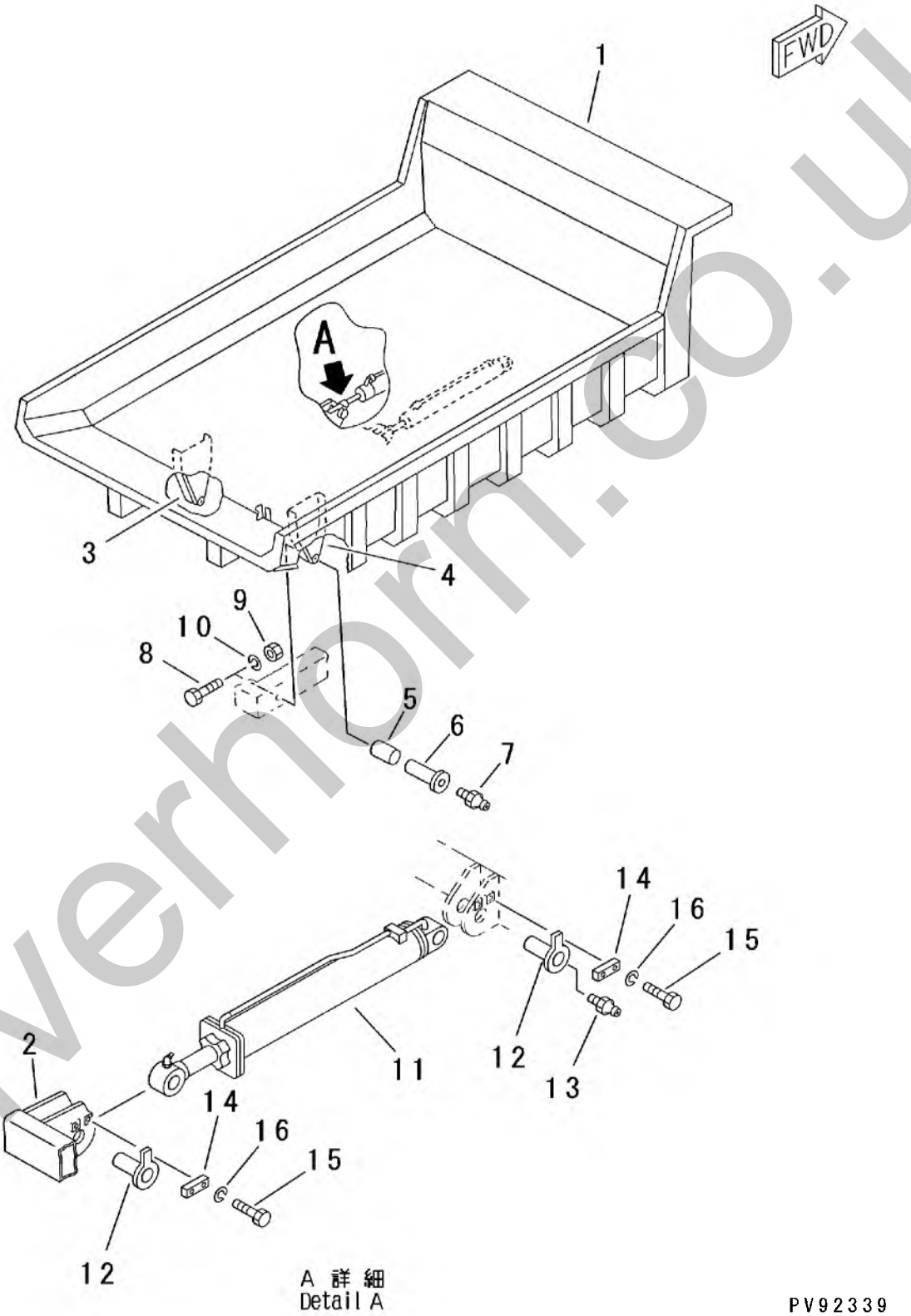

silverhorn.co.uk

FIG.601

INDEX	PART NO.	DESCRIPTION	Q'TY	SERIAL NO.
1	1-28710-1111	DUMP BODY	1	222411 ~
2	1-32710-1250	CYLINDER PIN BRACKET (WELDED)	2	222411 ~
3	1-18710-1233	L.H. SIDE HINGE PIN BRACKET (WELDED)	1	222411 ~
4	1-18710-1243	R.H. SIDE HINGE PIN BRACKET (WELDED)	1	222411 ~
5	1-41710-1360	BUSHING	2	222411 ~
6	1-18710-1312	HINGE PIN	2	222411 ~
7	0-3400-00100	GREASE NIPPLE	2	222411 ~
8	0-1001-31200	BOLT (M12X100)	2	222411 ~
9	0-1200-31210	NUT (M12)	2	222411 ~
10	0-1100-01230	SPRING WASHER (M12)	2	222411 ~
11	1-18640-0011	DUMP CYLINDER ASS'Y	2	222411 ~
12	1-41710-1320	CYLINDER PIN	4	222411 ~
13	0-3400-00100	GREASE NIPPLE	2	222411 ~
14	1-41710-1340	LOCK PLATE	4	222411 ~
15	0-1000-31225	BOLT (M12X25)	8	222411 ~
16	0-1100-01230	SPRING WASHER (M12)	8	222411 ~

silverhorn.co.uk

FIG.701 ELECTRICAL SYSTEM (INSTRUMENT PANEL)

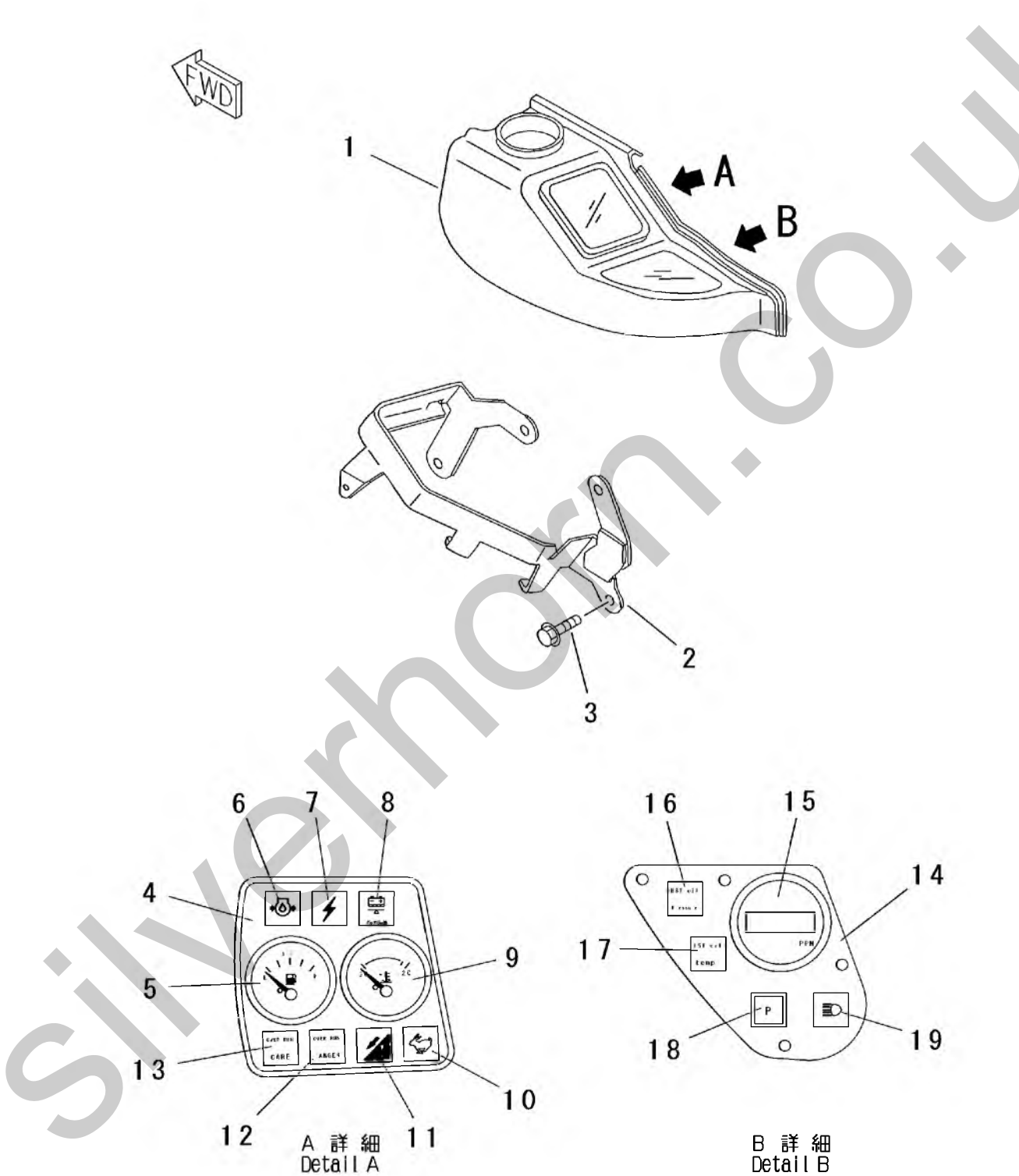

silverhorn.co.uk

FIG.701

INDEX	PART NO.	DESCRIPTION	Q'TY	SERIAL NO.
1	1-41210-2310	PANEL CASE	1	222411 ~
2	HC4370144	BRACKET	1	222411 ~
3	HCJ010816	SEMS BOLT (M8X16)	4	222411 ~
	1-41210-2110	PANEL ASS'Y	1	222411 ~
4	1-41210-2270	・PANEL BASE	1	222411 ~
5	1-29210-1170	・FUEL GAUGE	1	222411 ~
6	1-41210-2250	・ENGINE OIL PRESSURE LAMP	1	222411 ~
7	1-41210-2260	・BATTERY CHARGE LAMP	1	222411 ~
8	1-41210-2240	・ELECTROLYTE LEVEL LAMP	1	222411 ~
9	0-5210-70024	・ENGINE WATER TEMP. GAUGE	1	222411 ~
10	1-41210-2210	・HIGH SPEED TRAVEL LAMP	1	222411 ~
11	1-29210-1160	・SLOPE TRAVEL WARNING LAMP	1	222411 ~
12	1-12210-1230	・OVER-RUN DANGER LAMP	1	222411 ~
13	1-12210-1220	・OVER-RUN CARE LAMP	1	222411 ~
14	1-41210-2280	・PANEL BASE	1	222411 ~
15	1-41210-2130	・TACHOMETER	1	222411 ~
16	1-41210-2230	・HST OIL PRESSURE LAMP	1	222411 ~
17	0-5190-02403	・HST OIL TEMP. LAMP	1	222411 ~
18	0-5180-02403	・PARKING BRAKE LAMP	1	222411 ~
19	1-41210-2220	・HIGH BEAM LAMP	1	222411 ~

silverhorn.co.uk

FIG.703 ELECTRICAL SYSTEM (EACH SWITCHES AND RADIO)

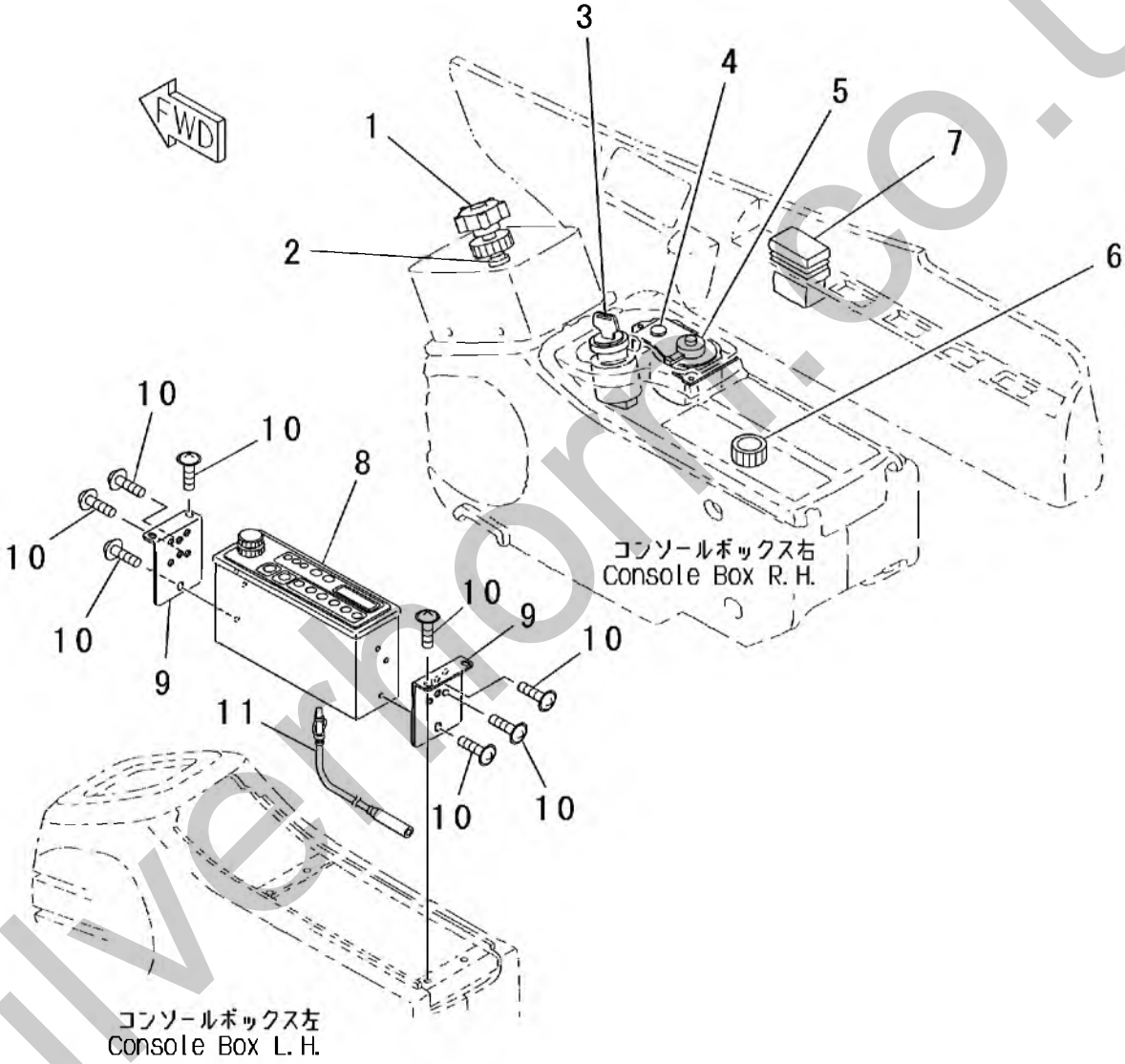

PV92948

silverhorn.co.uk

FIG.703

INDEX	PART NO.	DESCRIPTION	Q'TY	SERIAL NO.
1	1-46210-2410	ENGINE SPEED CONTROL DIAL	1	222411 ～
2	0-5430-02400	H-L SPEED SWITCH	1	222411 ～
3	1-46210-2210	STARTING SWITCH	1	222411 ～
	1-46210-2220	・KEY	1	222411 ～
4	0-2820-03008	GROMMET (φ30)	1	222411 ～
5	1-29210-1150	COMBINATION SWITCH	1	222411 ～
6	1-41210-2140	WIPER SWITCH	1	222411 ～
7	HC4352947	PARKING BRAKE SWITCH	1	222411 ～
8	HC4339837	RADIO	1	222411 ～
9	HC4341706	BRACKET	2	222411 ～
10	HCJ460510	SEMS SCREW (M5X10)	10	222411 ～
11	HC4102096	FEEDER	1	222411 ～

silverhorn.co.uk

FIG.711 ELECTRICAL SYSTEM (WIRING HARNESS AND LAMPS)

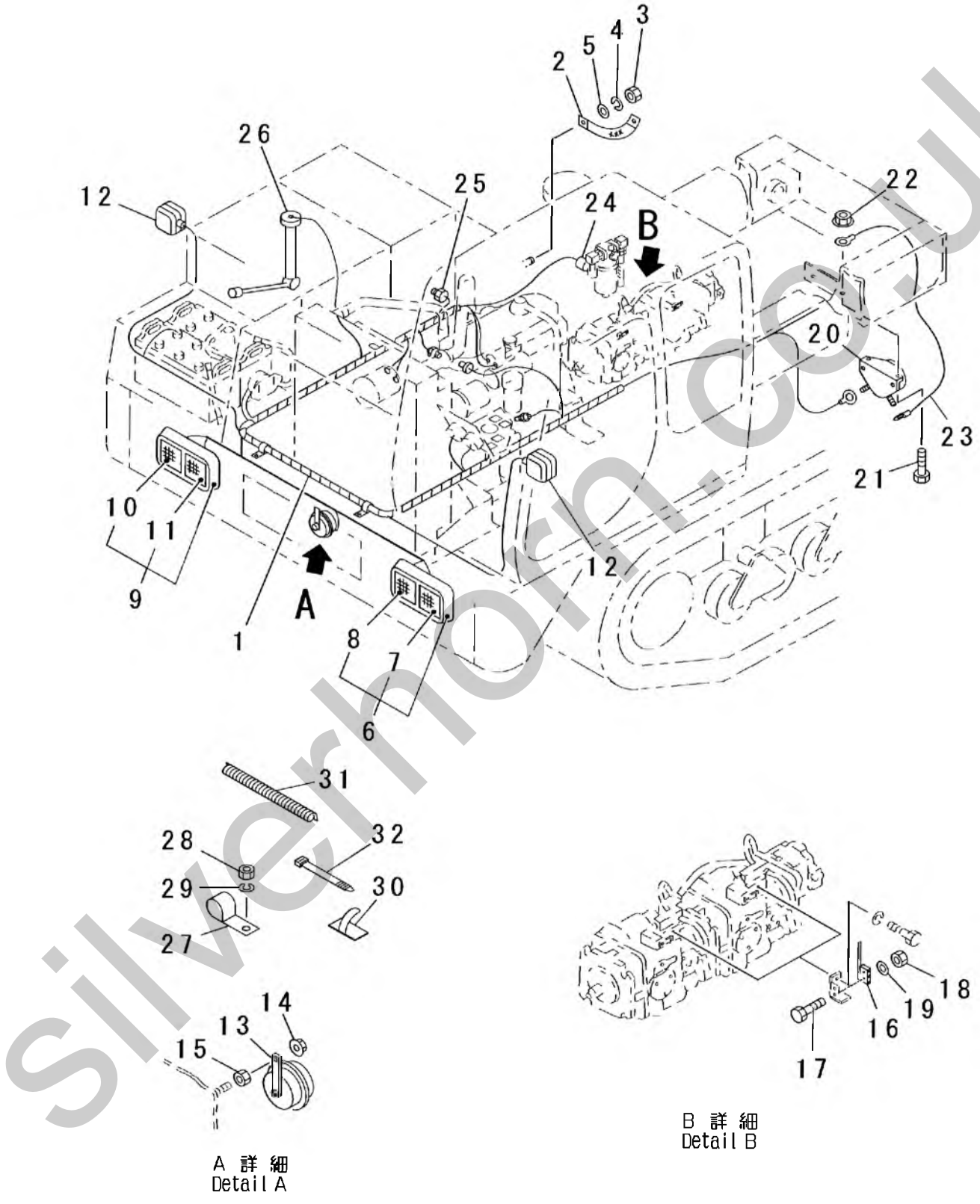

silverhorn.co.uk

FIG.711

INDEX	PART NO.	DESCRIPTION	Q'TY	SERIAL NO.
1	1-46210-2310	MAIN WIRING HARNESS	1	222411 ~
2	1-12210-1430	GROUND CONNECTION WIRE	1	222411 ~
3	0-1200-01008	NUT (M10)	1	222411 ~
4	0-1100-01025	SPRING WASHER (M10)	1	222411 ~
5	0-1120-01020	PLANE WASHER (M10)	1	222411 ~
6	1-21210-1210	L.H. SIDE HEAD LAMP ASS'Y	1	222411 ~
7	1-21210-1230	・OUTER BULB	1	222411 ~
8	1-21210-1240	・INNER BULB	1	222411 ~
9	1-21210-1220	R.H. SIDE HEAD LAMP ASS'Y	1	222411 ~
10	1-21210-1230	・OUTER BULB	1	222411 ~
11	1-21210-1240	・INNER BULB	1	222411 ~
12	0-5120-02400	TURN SIGNAL LAMP ASS'Y	2	222411 ~
13	0-5600-02401	HORN	1	222411 ~
14	0-1260-00808	FLANGE NUT (M8)	1	222411 ~
15	0-1200-00806	NUT (M8)	1	222411 ~
16	1-32210-1560	BACK-UP BUZZER SWITCH	2	222411 ~
17	0-1000-00430	BOLT (M4X30)	4	222411 ~
18	0-1200-00403	NUT (M4)	4	222411 ~
19	0-1130-00408	PLANE WASHER (M4)	4	222411 ~
20	1-46210-1510	BACK-UP BUZZER	1	222411 ~
21	0-1300-00620	SCREW (M6X20)	2	222411 ~
22	0-1260-00606	FLANGE NUT (M6)	2	222411 ~
23	1-46210-1420	WIRING HARNESS	1	222411 ~
24	1-29210-1550	HST OIL PRESSURE SWITCH	1	222411 ~
25	1-12210-1600	HST OIL TEMP. UNIT	1	222411 ~
26	(1-32210-1180)	FUEL LEVEL SENSOR	1	222411 ~
27	0-2720-02506	CLIP	AR	222411 ~
	0-2720-01206	CLIP	AR	222411 ~
28	0-1200-00605	NUT (M6)	AR	222411 ~
29	0-1100-00615	SPRING WASHER (M6)	AR	222411 ~
30	0-2750-00000	CLIP	AR	222411 ~
31	0-2830-01520	SPIRAL TUBE	AR	222411 ~
	0-2830-02420	SPIRAL TUBE	AR	222411 ~
	0-2830-02920	SPIRAL TUBE	AR	222411 ~
32	0-2800-00202	STRAP BAND	AR	222411 ~
	0-2800-00383	STRAP BAND	AR	222411 ~

silverhorn.co.uk

FIG.713 ELECTRICAL SYSTEM (RELAY AND FUSE BOX)

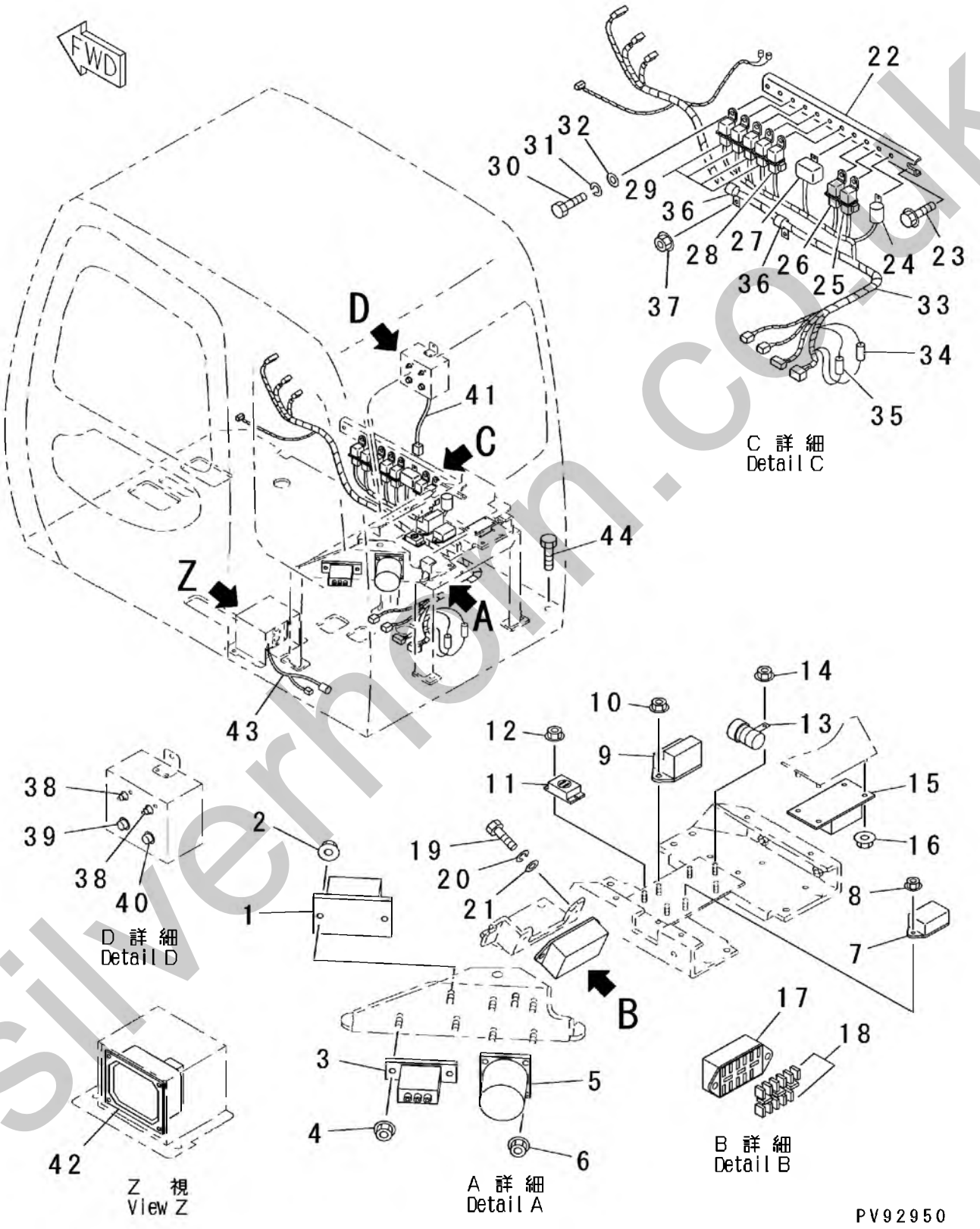

silverhorn.co.uk

FIG.713

INDEX	PART NO.	DESCRIPTION	Q'TY	SERIAL NO.
1	1-39210-1360	HIGH SPEED UNIT	1	222411 ～
2	0-1260-00404	FLANGE NUT (M4)	2	222411 ～
3	1-12210-1600	HST OIL TEMP. UNIT	1	222411 ～
4	0-1260-00505	FLANGE NUT (M5)	2	222411 ～
5	1-41210-2120	TACHOMETER UNIT	1	222411 ～
6	0-1260-00505	FLANGE NUT (M5)	4	222411 ～
7	1-41210-1321	EMERGENCY RELAY ASS'Y	1	222411 ～
8	0-1260-00606	FLANGE NUT (M6)	2	222411 ～
9	1-41210-1311	SAFETY RELAY ASS'Y	1	222411 ～
10	0-1260-00606	FLANGE NUT (M6)	2	222411 ～
11	1-46210-1520	PARKING BRAKE BUZZER	1	222411 ～
12	0-1260-00404	FLANGE NUT (M4)	1	222411 ～
13	1-43210-1520	OVER-RUN BUZZER	1	222411 ～
14	0-1260-00808	FLANGE NUT (M8)	1	222411 ～
15	1-29210-1310	SLOPE WARNING BOX	1	222411 ～
16	0-1260-00606	FLANGE NUT (M6)	4	222411 ～
17	1-41210-2150	FUSE BOX ASS'Y	1	222411 ～
18	0-5060-00015	BLADE FUSE (15A)	14	222411 ～
19	0-1000-00616	BOLT (M6X16)	2	222411 ～
20	0-1100-00615	SPRING WASHER (M6)	2	222411 ～
21	0-1120-00616	PLANE WASHER (M6)	2	222411 ～
22	HC8061543	RELAY BRACKET	1	222411 ～
23	HCJ020816	SEMS BOLT (M8X16)	2	222411 ～
24	0-5520-02400	FLASHER RELAY ASS'Y	1	222411 ～
25	0-5530-02440	ELECTROLYTE LEVEL RELAY	1	222411 ～
26	1-32210-1510	PARKING BRAKE RELAY	1	222411 ～
27	1-29210-1530	ELECTROLYTE LEVEL UNIT	1	222411 ～
28	1-32210-1510	WIPER STOP RELAY	1	222411 ～
29	1-41210-2160	WIPER RELAY	4	222411 ～
30	0-1000-00616	BOLT (M6X16)	9	222411 ～
31	0-1100-00615	SPRING WASHER (M6)	9	222411 ～
32	0-1120-00616	PLANE WASHER (M6)	9	222411 ～
33	1-41210-2370	WIRING HARNESS	1	222411 ～
34	0-5050-00040	FUSE (40A)	1	222411 ～
35	0-5050-00010	FUSE (10A)	1	222411 ～
36	1-41210-2380	CLIP	2	222411 ～
37	0-1260-00606	FLANGE NUT (M6)	2	222411 ～
38	1-46210-2710	CIRCUIT BREAKER	2	222411 ～
39	1-46210-2720	ENGINE START WARNING LAMP	1	222411 ～
40	1-46210-2730	ENGINE START CAUTION LAMP	1	222411 ～

silverhorn.co.uk

FIG.713 ELECTRICAL SYSTEM (RELAY AND FUSE BOX)

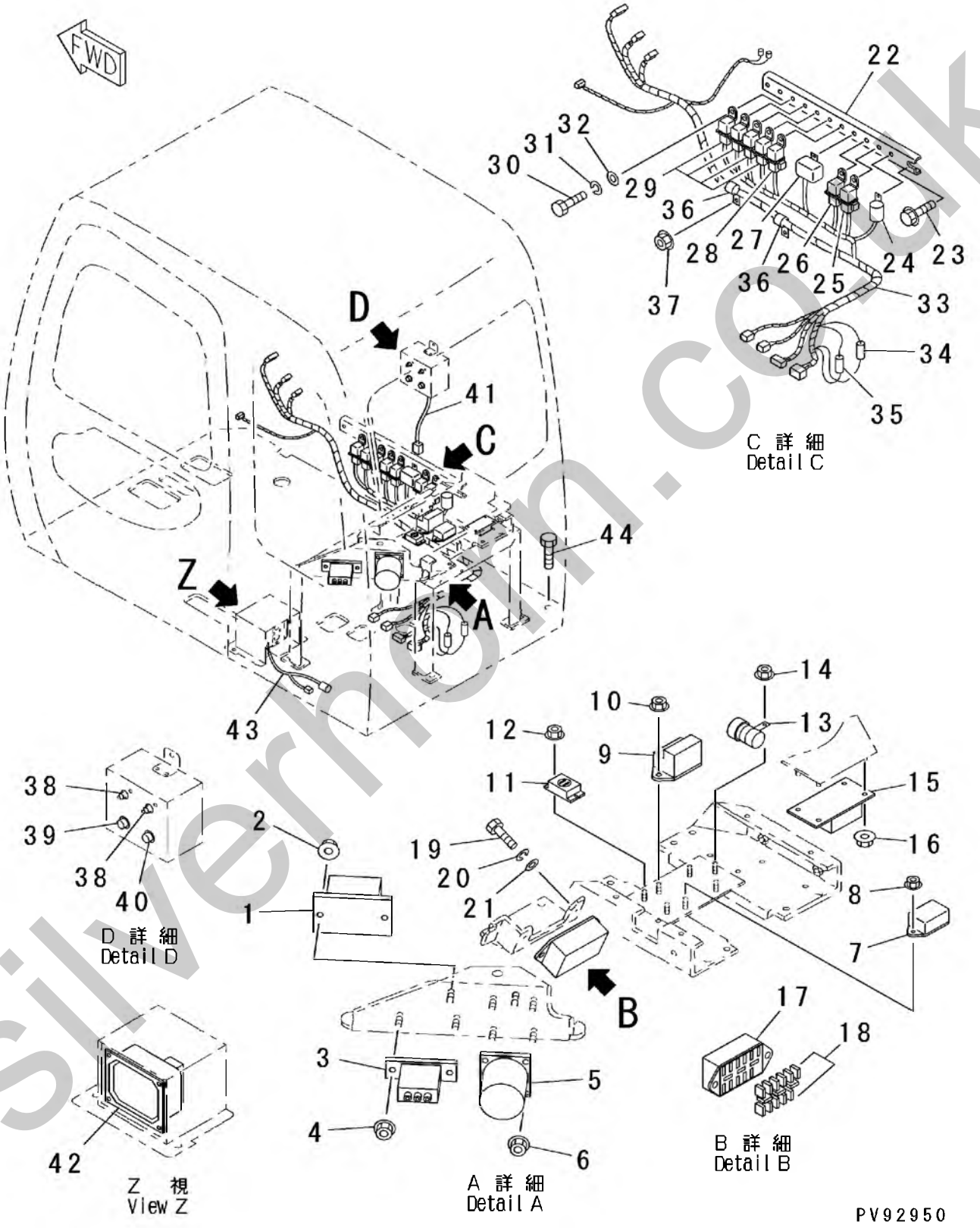

silverhorn.co.uk

FIG.713

INDEX	PART NO.	DESCRIPTION	Q'TY	SERIAL NO.
41	1-46210-2750	WIRING HARNESS	1	222411 ～
42	1-46210-2600	ENGINE MAIN MONITOR ASS'Y	1	222411 ～
43	1-46210-2650	WIRING HARNESS	1	222411 ～
44	0-1001-31830	BOLT (M18X130)	2	222411 ～

silverhorn.co.uk

FIG.715 ELECTRICAL SYSTEM (BATTERY AND BATTERY RELAY)

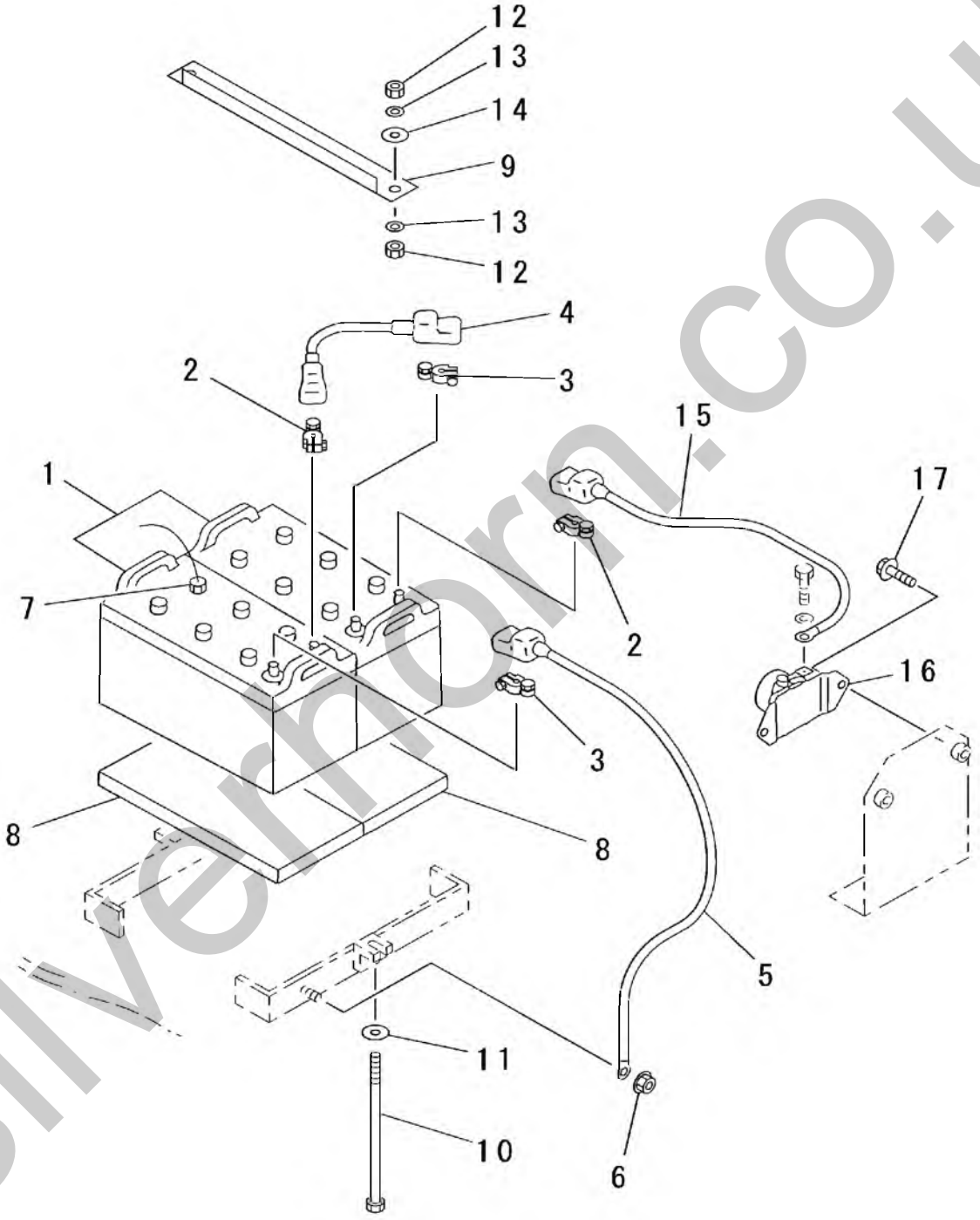

PV92951

silvermorn.co.uk

FIG.715

INDEX	PART NO.	DESCRIPTION	Q'TY	SERIAL NO.
1	0-5000-01300	BATTERY (130F51) (12V,120AH)	2	222411 ~
2	0-5010-00000	TERMINAL (+)	2	222411 ~
3	0-5011-00000	TERMINAL (-)	2	222411 ~
4	1-12210-1440	BATTERY CABLE	1	222411 ~
5	1-12210-1420	GROUND CONNECTION CABLE	1	222411 ~
6	0-1260-01010	FLANGE NUT (M10)	1	222411 ~
7	1-30210-1520	ELECTROLYTE LEVEL SENSOR	1	222411 ~
8	1-17210-1310	BOARD	2	222411 ~
9	1-46210-1340	HOLDER	1	222411 ~
10	1-46210-1350	ROD	2	222411 ~
11	0-1120-01020	PLANE WASHER (M10)	2	222411 ~
12	0-1220-01006	NUT (M10)	4	222411 ~
13	0-1120-01020	PLANE WASHER (M10)	4	222411 ~
14	0-1160-01032	PLANE WASHER (M10)	2	222411 ~
15	1-29210-1420	BATTERY CABLE	1	222411 ~
16	1-41210-1510	BATTERY RELAY	1	222411 ~
17	0-1050-00820	FLANGE BOLT (M8X20)	2	222411 ~

silverhorn.co.uk

FIG.801 MARKS AND PLATES (JAPANESE)

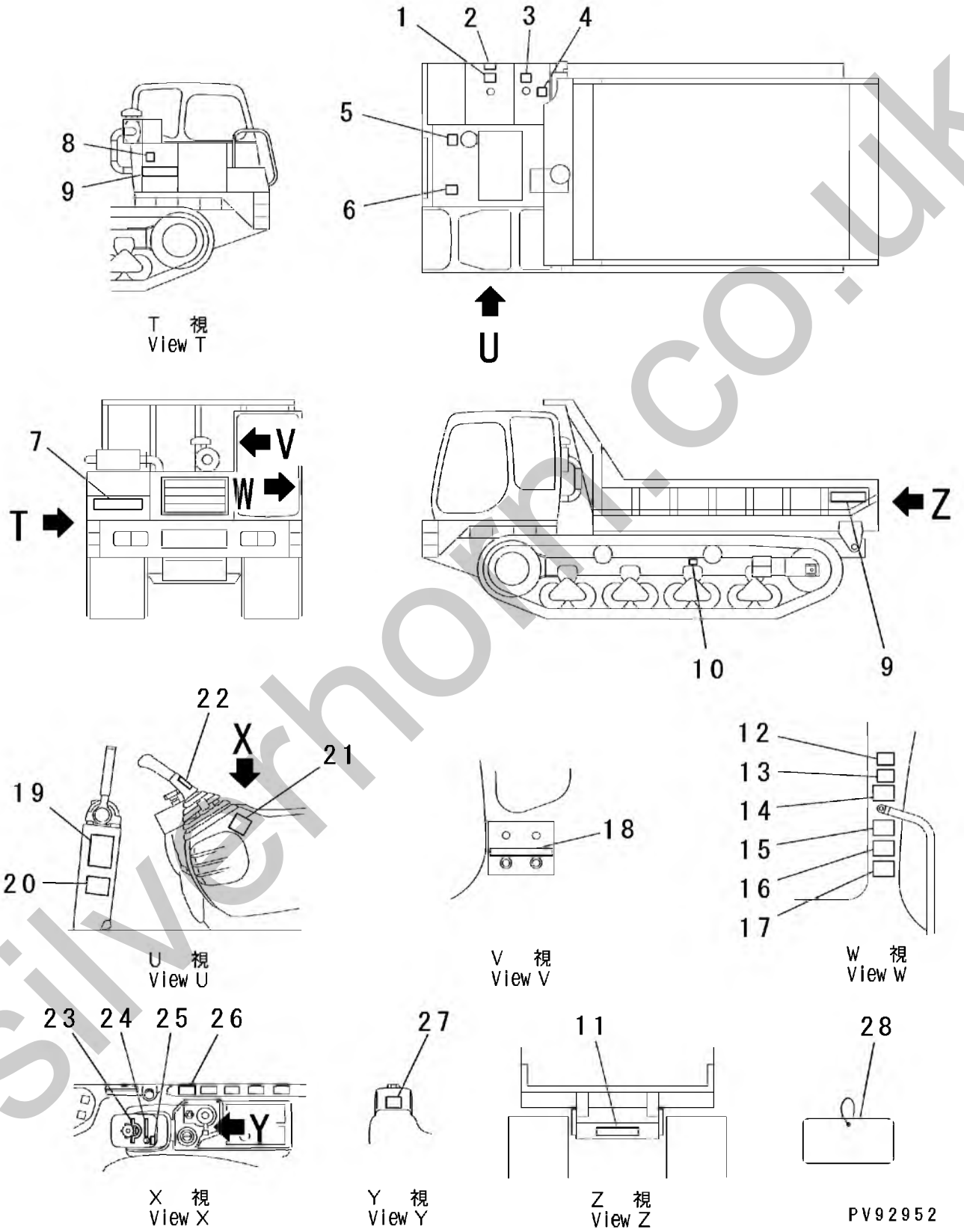

silverhorn.co.uk

FIG.801

INDEX	PART NO.	DESCRIPTION	Q'TY	SERIAL NO.
1	1-12020-1090	DANGER PLATE (DIESEL FUEL)	1	222411 ~
2	1-12020-1190	CAUTION PLATE (FUEL)	1	222411 ~
3	1-12020-1030	CAUTION PLATE (HYDRAULIC OIL)	1	222411 ~
4	1-12020-1020	WARNING PLATE (MUFFLER)	1	222411 ~
5	1-12020-1130	WARNING PLATE (FAN AND PULLEY)	1	222411 ~
6	1-12020-1120	WARNING PLATE (RADIATOR)	1	222411 ~
7	0-7110-00000	MARK PLATE (MOROOKA)	2	222411 ~
8	1-12020-1150	DANGER PLATE (RUBBER CRAWLER)	1	222411 ~
9	0-7120-02202	MARK PLATE (MST-2200VD)	2	222411 ~
10	1-12020-1140	WARNING PLATE	2	222411 ~
		(TRACK ADJUSTMENT VALVE)		
11	0-7131-00000	MARK PLATE (10000kg)	1	222411 ~
12	1-12020-1050	CAUTION PLATE (WARM-UP)	1	222411 ~
13	1-12020-1040	WARNING PLATE (SEAT BELT)	1	222411 ~
14	1-12020-1070	WARNING PLATE	1	222411 ~
		(STARTING AND TRAVELING)		
15	1-12020-1081	WARNING PLATE (SLOPE TRAVELING)	1	222411 ~
16	1-12020-1060	WARNING PLATE	1	222411 ~
		(OPERATING AND MAINTENANCE)		
17	1-12020-1180	CAUTION PLATE	1	222411 ~
		(PERIODICAL REPLACEMENT PARTS)		
18	1-46010-2410	OPERATING PLATE	1	222411 ~
		(ENGINE STARTING)		
19	1-46010-2120	NAME PLATE (SPECIFICATION)	1	222411 ~
20	0-7010-02200	NAME PLATE (SERIAL NO.)	1	222411 ~
21	1-12020-1160	OPERATING PLATE	1	222411 ~
		(DUMP LEVER LOCK)		
22	1-41010-1430	OPERATING PLATE (DUMP LEVER)	1	222411 ~
23	1-46010-2430	OPERATING PLATE	1	222411 ~
		(ENGINE SPEED CONTROL DIAL)		
24	1-46010-2440	NAME PLATE (THROTTLE)	1	222411 ~
25	1-46010-2450	NAME PLATE (H-L SPEED SWITCH)	1	222411 ~
26	1-41010-1440	OPERATING PLATE (PARKING BRAKE)	1	222411 ~
27	1-46010-2420	OPERATING PLATE	1	222411 ~
		(ENGINE STARTING)		
28	1-12020-1010	TAG (DO NOT OPERATE)	1	222411 ~

silverhorn.co.uk

FIG.811 MARKS AND PLATES (ENGLISH)

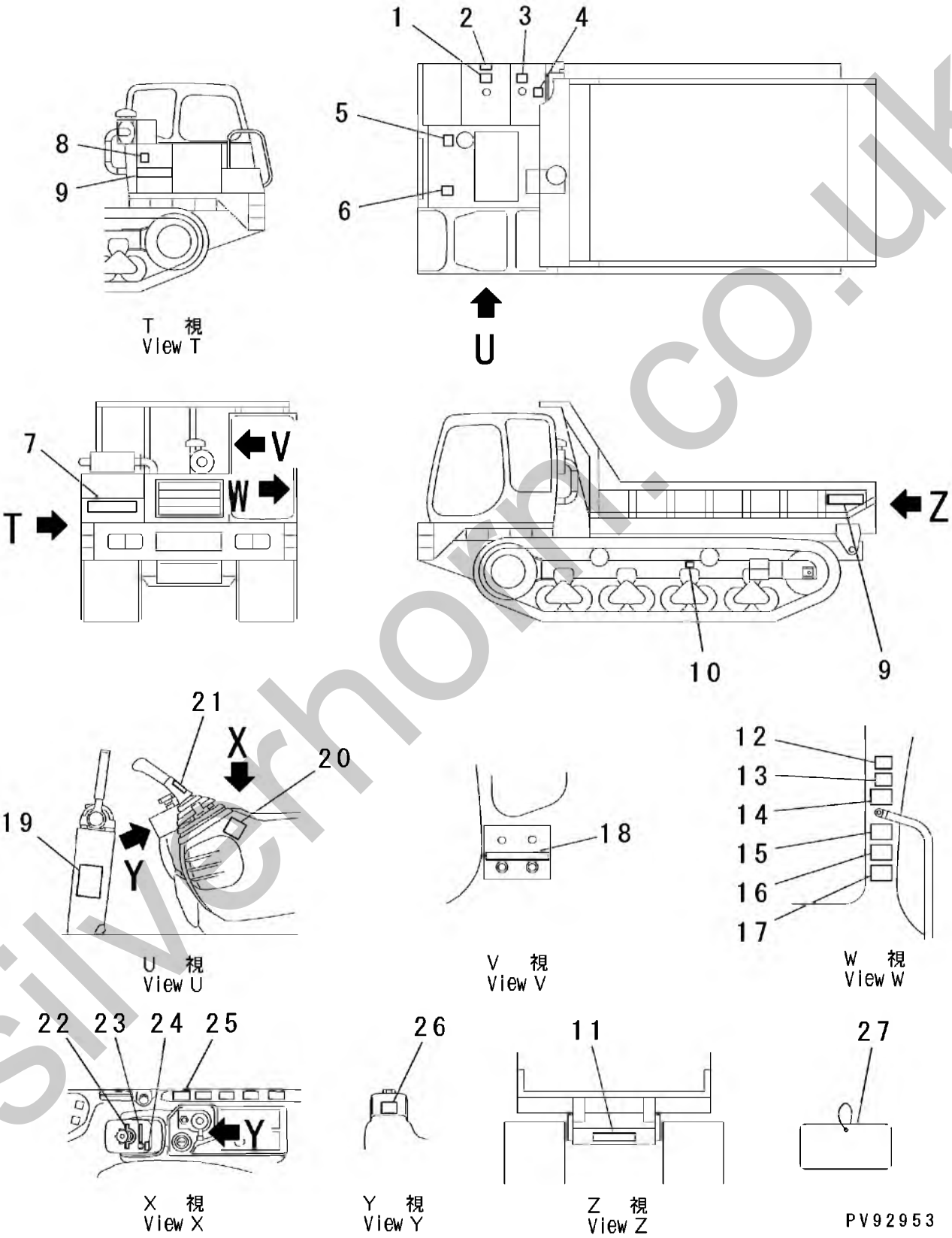

silverhorn.co.uk

FIG.811

INDEX	PART NO.	DESCRIPTION	Q'TY	SERIAL NO.
1	1-41010-1280	DANGER PLATE (DIESEL FUEL)	1	222411 ~
2	1-12020-1310	CAUTION PLATE FUEL	1	222411 ~
3	1-41010-1250	CAUTION PLATE HYDRAULIC OIL	1	222411 ~
4	1-41010-1220	WARNING PLATE (MUFFLER)	1	222411 ~
5	1-41010-1260	WARNING PLATE (FAN AND PULLEY)	1	222411 ~
6	1-41010-1300	WARNING PLATE RADIATOR	1	222411 ~
7	0-7110-00000	NAME PLATE MOROOKA	2	222411 ~
8	1-41010-1240	DANGER PLATE (RUBBER CRAWLER)	1	222411 ~
9	0-7120-02202	NAME PLATE (MST-2200VD)	2	222411 ~
10	1-41010-1270	WARNING PLATE	2	222411 ~
		(TRACK ADJUSTMENT VALVE)		
11	0-7131-10000	NAME PLATE (10000kg)	1	222411 ~
12	1-41010-1230	CAUTION PLATE (WARM-UP)	1	222411 ~
13	1-41010-1310	WARNING PLATE (SEAT BELT)	1	222411 ~
14	1-41010-1320	WARNING PLATE	1	222411 ~
		(STARTING AND TRAVELING)		
15	1-41010-1290	WARNING PLATE (SLOPE TRAVELING)	1	222411 ~
16	1-41010-1330	WARNING PLATE	1	222411 ~
		(OPERATING AND MAINTENANCE)		
17	1-12020-1210	CAUTION PLATE	1	222411 ~
		(PERIODICAL REPLACEMENT PARTS)		
18	1-46010-2510	OPERATING PLATE	1	222411 ~
		(ENGINE STARTING)		
19	0-7010-12200	NAME PLATE (SERIAL NO.)	1	222411 ~
20	1-41010-1350	OPERATING PLATE	1	222411 ~
		(DUMP LEVER LOCK)		
21	1-41010-1490	OPERATING PLATE (DUMP LEVER)	1	222411 ~
22	1-46010-2530	OPERATING PLATE	1	222411 ~
		(ENGINE SPEED CONTROL DIAL)		
23	1-46010-2540	NAME PLATE (THROTTLE)	1	222411 ~
24	1-46010-2550	NAME PLATE (H-L SPEED SWITCH)	1	222411 ~
25	1-41010-1470	OPERATING PLATE (PARKING BRAKE)	1	222411 ~
26	1-46010-2520	OPERATING PLATE	1	222411 ~
		(ENGINE STARTING)		
27	1-41010-1210	TAG (DO NOT OPERATE)	1	222411 ~

silverhorn.co.uk

FIG.901 TOOLS

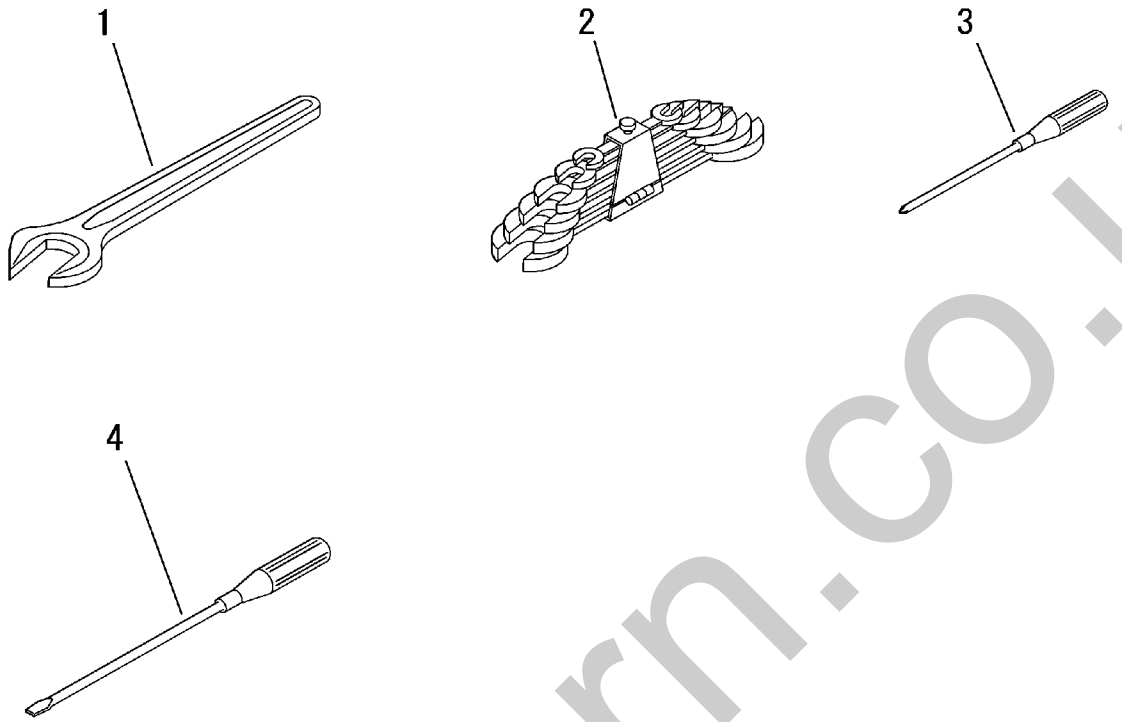

PV92346

silverhorn.co.uk

FIG.901

INDEX	PART NO.	DESCRIPTION	Q'TY	SERIAL NO.
1	0-9105-05500	WRENCH (55)	1	222411 ~
2	0-9100-00000	WRENCH SET	1	222411 ~
	0-9100-00709	·WRENCH (7X9)	1	222411 ~
	0-9100-00810	·WRENCH (8X10)	1	222411 ~
	0-9100-01113	·WRENCH (11X13)	1	222411 ~
	0-9100-01214	·WRENCH (12X14)	1	222411 ~
	0-9100-01719	·WRENCH (17X19)	1	222411 ~
	0-9100-02224	·WRENCH (22X24)	1	222411 ~
3	0-9210-00150	SCREW DRIVER (+)	1	222411 ~
4	0-9200-00200	SCREW DRIVER (-)	1	222411 ~

silverhorn.co.uk

silverhorn.co.uk

品番順索引表

NUMERICAL INDEX

silverhorn.co.uk

PARTS No.	FIG. No.	INDEX
0-1000-00430	711	17
0-1000-00516	203	21
0-1000-00516	204	04
0-1000-00516	204	08
0-1000-00610	121	13
0-1000-00610	203	29
0-1000-00610	204	12
0-1000-00612	203	33
0-1000-00612	204	16
0-1000-00616	202	24
0-1000-00616	203	25
0-1000-00616	203	36
0-1000-00616	204	19
0-1000-00616	231	26
0-1000-00616	713	19
0-1000-00616	713	30
0-1000-00620	231	22
0-1000-00630	421	16
0-1000-00816	311	12
0-1000-00816	504	02
0-1000-00816	551	05
0-1000-00820	111	11
0-1000-00820	201	23
0-1000-00825	115	13
0-1000-00825	211	08
0-1000-00830	115	12
0-1000-01016	111	14
0-1000-01016	111	21
0-1000-01016	253	12
0-1000-01016	561	04
0-1000-01016	561	07
0-1000-01020	121	16
0-1000-01020	201	07
0-1000-01020	201	12
0-1000-01020	202	08
0-1000-01020	202	12
0-1000-01020	203	47
0-1000-01020	204	26
0-1000-01020	401	22
0-1000-01025	201	03
0-1000-01025	202	03
0-1000-01025	202	21
0-1000-01025	203	17
0-1000-01025	203	43
0-1000-01025	252	11
0-1000-01025	311	10
0-1000-01025	551	17
0-1000-01030	401	02
0-1000-01030	555	11
0-1000-01035	101	24

PARTS No.	FIG. No.	INDEX
0-1000-01220	201	26
0-1000-01225	203	12
0-1000-01230	201	16
0-1000-01230	203	02
0-1000-01235	203	06
0-1000-01245	201	20
0-1000-01245	501	17
0-1000-31025	202	16
0-1000-31040	115	09
0-1000-31225	301	19
0-1000-31225	311	14
0-1000-31225	601	15
0-1000-31230	202	18
0-1000-31235	101	06
0-1000-31235	105	21
0-1000-31420	101	21
0-1000-31640	101	03
0-1000-31660	101	16
0-1000-31665	101	15
0-1000-31825	401	18
0-1000-32055	105	23
0-1000-32060	301	03
0-1000-32060	301	07
0-1001-01630	211	03
0-1001-31200	601	08
0-1001-31830	713	44
0-1020-31025	501	15
0-1020-31240	105	08
0-1020-31240	501	09
0-1021-31620	105	04
0-1050-00616	213	04
0-1050-00820	253	05
0-1050-00820	715	17
0-1070-01030	254	12
0-1090-00610	421	22
0-1090-01025	421	02
0-1100-00410	121	10
0-1100-00513	203	23
0-1100-00513	204	06
0-1100-00513	204	10
0-1100-00615	101	30
0-1100-00615	121	14
0-1100-00615	121	30
0-1100-00615	202	25
0-1100-00615	203	27
0-1100-00615	203	30
0-1100-00615	203	34
0-1100-00615	203	38
0-1100-00615	204	13
0-1100-00615	204	17

silverhorn.co.uk

PARTS No.	FIG. No.	INDEX
0-1100-00615	204	21
0-1100-00615	231	23
0-1100-00615	231	27
0-1100-00615	421	18
0-1100-00615	711	29
0-1100-00615	713	20
0-1100-00615	713	31
0-1100-00820	111	12
0-1100-00820	115	16
0-1100-00820	201	24
0-1100-00820	203	41
0-1100-00820	204	24
0-1100-00820	211	09
0-1100-00820	253	07
0-1100-00820	311	13
0-1100-00820	504	03
0-1100-00820	551	06
0-1100-01020	111	16
0-1100-01020	111	23
0-1100-01025	101	27
0-1100-01025	111	15
0-1100-01025	111	22
0-1100-01025	121	17
0-1100-01025	201	04
0-1100-01025	201	08
0-1100-01025	201	13
0-1100-01025	202	04
0-1100-01025	202	09
0-1100-01025	202	13
0-1100-01025	202	22
0-1100-01025	203	18
0-1100-01025	203	44
0-1100-01025	203	48
0-1100-01025	204	27
0-1100-01025	252	06
0-1100-01025	252	12
0-1100-01025	253	13
0-1100-01025	254	13
0-1100-01025	311	11
0-1100-01025	401	03
0-1100-01025	401	16
0-1100-01025	401	23
0-1100-01025	502	11
0-1100-01025	505	29
0-1100-01025	551	18
0-1100-01025	555	12
0-1100-01025	561	05
0-1100-01025	561	10
0-1100-01025	711	04
0-1100-01230	105	09

PARTS No.	FIG. No.	INDEX
0-1100-01230	105	19
0-1100-01230	105	22
0-1100-01230	201	17
0-1100-01230	201	21
0-1100-01230	201	27
0-1100-01230	203	03
0-1100-01230	203	08
0-1100-01230	203	13
0-1100-01230	301	20
0-1100-01230	311	15
0-1100-01230	501	18
0-1100-01230	503	13
0-1100-01230	601	10
0-1100-01230	601	16
0-1100-01640	105	05
0-1100-02051	105	24
0-1100-02051	301	04
0-1100-03690	301	22
0-1100-03690	321	14
0-1100-31025	202	17
0-1100-31230	101	08
0-1100-31230	202	19
0-1100-31435	101	22
0-1100-31640	101	04
0-1100-31640	101	11
0-1100-31640	101	19
0-1120-00616	121	15
0-1120-00616	202	26
0-1120-00616	231	24
0-1120-00616	231	28
0-1120-00616	401	08
0-1120-00616	421	19
0-1120-00616	421	23
0-1120-00616	713	21
0-1120-00616	713	32
0-1120-00816	111	13
0-1120-00816	115	14
0-1120-00816	203	42
0-1120-00816	204	25
0-1120-00816	211	10
0-1120-00816	252	10
0-1120-00816	253	08
0-1120-01020	101	25
0-1120-01020	121	18
0-1120-01020	201	05
0-1120-01020	201	09
0-1120-01020	201	14
0-1120-01020	202	05
0-1120-01020	202	10
0-1120-01020	202	14

silverhorn.co.uk

PARTS No.	FIG. No.	INDEX
0-1120-01020	203	45
0-1120-01020	203	49
0-1120-01020	204	28
0-1120-01020	252	07
0-1120-01020	252	13
0-1120-01020	254	14
0-1120-01020	401	04
0-1120-01020	502	12
0-1120-01020	551	19
0-1120-01020	555	13
0-1120-01020	561	06
0-1120-01020	561	08
0-1120-01020	711	05
0-1120-01020	715	11
0-1120-01020	715	13
0-1120-01223	201	18
0-1120-01223	203	04
0-1120-01223	203	09
0-1120-01223	203	14
0-1120-01223	501	19
0-1120-01632	105	06
0-1120-02032	202	30
0-1120-31832	401	19
0-1130-00408	121	11
0-1130-00408	711	19
0-1140-31232	101	09
0-1140-31445	101	23
0-1140-31645	101	12
0-1140-31645	101	17
0-1160-01032	715	14
0-1200-00403	711	18
0-1200-00504	203	22
0-1200-00504	204	05
0-1200-00504	204	09
0-1200-00605	101	29
0-1200-00605	121	29
0-1200-00605	203	26
0-1200-00605	203	37
0-1200-00605	204	20
0-1200-00605	421	12
0-1200-00605	421	17
0-1200-00605	711	28
0-1200-00806	115	15
0-1200-00806	203	40
0-1200-00806	204	23
0-1200-00806	252	09
0-1200-00806	711	15
0-1200-01008	101	26
0-1200-01008	252	05
0-1200-01008	254	15

PARTS No.	FIG. No.	INDEX
0-1200-01008	401	15
0-1200-01008	502	10
0-1200-01008	505	28
0-1200-01008	551	20
0-1200-01008	561	09
0-1200-01008	711	03
0-1200-01210	203	07
0-1200-01210	503	12
0-1200-01411	421	06
0-1200-01613	211	04
0-1200-31008	115	10
0-1200-31210	101	07
0-1200-31210	601	09
0-1200-31613	101	10
0-1200-31613	101	18
0-1210-01210	421	08
0-1210-33629	301	21
0-1210-33629	321	13
0-1220-00805	421	14
0-1220-01006	715	12
0-1260-00404	713	02
0-1260-00404	713	12
0-1260-00505	713	04
0-1260-00505	713	06
0-1260-00606	711	22
0-1260-00606	713	08
0-1260-00606	713	10
0-1260-00606	713	16
0-1260-00606	713	37
0-1260-00808	711	14
0-1260-00808	713	14
0-1260-01010	715	06
0-1300-00410	121	09
0-1300-00520	401	10
0-1300-00620	711	21
0-1301-00600	401	07
0-1305-00616	233	26
0-1311-01020	202	33
0-1320-00610	233	28
0-1320-00610	235	23
0-1350-00630	311	07
0-1500-00730	105	18
0-1500-00806	253	06
0-1520-30845	503	07
0-1520-30845	503	10
0-2000-03135	311	09
0-2000-03135	501	14
0-2000-03150	321	09
0-2000-03150	501	08
0-2000-03150	555	06

silverhorn.co.uk

PARTS No.	FIG. No.	INDEX
0-2000-03170	301	13
0-2010-02411	504	14
0-2010-02411	504	15
0-2010-02414	555	04
0-2010-02414	555	09
0-2010-02418	121	07
0-2010-02418	555	03
0-2010-03524	501	11
0-2030-03538	503	05
0-2030-03538	503	08
0-2031-03511	555	10
0-2040-02012	504	17
0-2040-02217	121	24
0-2040-02217	121	25
0-2040-02520	505	02
0-2040-02520	505	06
0-2040-02520	506	02
0-2040-02520	506	05
0-2040-03024	502	17
0-2040-03024	505	14
0-2040-03024	505	21
0-2040-03024	505	24
0-2040-03027	501	12
0-2040-03027	501	22
0-2040-03030	502	02
0-2051-01826	105	07
0-2101-01490	501	01
0-2150-01045	121	04
0-2210-00470	501	21
0-2210-00480	501	20
0-2210-00480	501	24
0-2220-00648	506	09
0-2220-00670	502	13
0-2220-00680	502	14
0-2221-00624	502	01
0-2230-00255	504	05
0-2230-00255	504	08
0-2230-00274	504	06
0-2230-00635	505	01
0-2230-00690	505	12
0-2230-00695	506	07
0-2230-01080	505	17
0-2231-00200	504	09
0-2231-00230	504	07
0-2231-00250	504	10
0-2231-00295	504	04
0-2231-00610	505	13
0-2232-01020	505	09
0-2232-01020	505	18
0-2233-00210	504	11

PARTS No.	FIG. No.	INDEX
0-2250-00650	501	10
0-2420-00665	506	01
0-2431-00213	504	12
0-2610-01267	503	06
0-2610-01267	503	09
0-2700-00012	121	05
0-2700-00060	501	03
0-2700-00140	111	20
0-2720-01206	711	27
0-2720-02506	121	28
0-2720-02506	711	27
0-2750-00000	711	30
0-2800-00202	121	31
0-2800-00202	254	22
0-2800-00202	255	09
0-2800-00202	503	15
0-2800-00202	711	32
0-2800-00383	121	31
0-2800-00383	254	22
0-2800-00383	255	09
0-2800-00383	503	15
0-2800-00383	711	32
0-2820-03008	703	04
0-2830-01520	254	21
0-2830-01520	255	08
0-2830-01520	711	31
0-2830-02420	254	21
0-2830-02420	255	08
0-2830-02420	711	31
0-2830-02920	254	21
0-2830-02920	255	08
0-2830-02920	711	31
0-2840-02013	503	14
0-2840-02020	503	14
0-3220-00532	202	31
0-3300-02012	421	04
0-3300-02565	301	15
0-3310-02572	311	04
0-3400-00000	301	16
0-3400-00000	321	16
0-3400-00100	601	07
0-3400-00100	601	13
0-4000-00300	551	16
0-4000-01000	551	15
0-4100-00402	504	20
0-4100-01006	502	04
0-4100-01006	506	13
0-4100-01410	505	26
0-4121-01406	505	06
0-4121-01406	506	05

silverhorn.co.uk

PARTS No.	FIG. No.	INDEX
0-4124-01710	505	21
0-4130-01010	505	23
0-4200-00606	506	10
0-4200-01000	505	25
0-4210-00202	504	13
0-4210-00404	501	25
0-4210-00606	502	15
0-4210-01006	505	03
0-4210-01010	505	10
0-4210-01010	505	19
0-4211-00202	504	14
0-4211-00303	121	26
0-4212-00606	505	05
0-4212-00606	506	06
0-4212-01010	505	07
0-4213-01710	505	24
0-4220-01414	501	02
0-4300-00202	504	18
0-4300-00203	121	23
0-4300-00606	502	03
0-4300-00606	502	16
0-4300-00606	506	03
0-4300-00606	506	08
0-4300-01010	505	20
0-4301-00606	502	06
0-4301-00606	506	12
0-4310-01006	505	15
0-4310-01010	505	11
0-4320-00202	504	15
0-4320-00606	501	11
0-4321-00902	504	17
0-4321-01203	121	24
0-4321-01406	505	02
0-4321-01406	506	02
0-4321-01706	502	17
0-4321-01706	505	14
0-4326-01203	121	25
0-4326-01904	501	22
0-4326-01906	501	12
0-4326-02106	502	02
0-4360-01010	505	08
0-4360-01010	505	22
0-4360-01414	501	04
0-4380-01414	501	06
0-4400-00606	506	04
0-4400-01006	505	04
0-4410-00202	504	16
0-4411-00202	504	19
0-4412-00404	501	23
0-4450-01010	505	16

PARTS No.	FIG. No.	INDEX
0-4470-00602	502	07
0-5000-01300	715	01
0-5010-00000	715	02
0-5011-00000	715	03
0-5050-00010	713	35
0-5050-00040	713	34
0-5060-00015	713	18
0-5120-02400	711	12
0-5180-02403	701	18
0-5190-02403	701	17
0-5210-70024	701	09
0-5430-02400	703	02
0-5520-02400	713	24
0-5530-02440	713	25
0-5600-02401	711	13
0-6000-06207	311	03
0-6002-33011	321	05
0-6003-00214	301	11
0-7010-02200	801	20
0-7010-12200	811	19
0-7110-00000	801	07
0-7110-00000	811	07
0-7120-02202	801	09
0-7120-02202	811	09
0-7131-00000	801	11
0-7131-10000	811	11
0-9100-00000	901	02
0-9100-00709	901	02
0-9100-00810	901	02
0-9100-01113	901	02
0-9100-01214	901	02
0-9100-01719	901	02
0-9100-02224	901	02
0-9105-05500	901	01
0-9200-00200	901	04
0-9210-00150	901	03
1-11330-0020	311	05
1-11330-1230	301	25
1-11340-1140	311	08
1-11420-1170	421	13
1-11510-1210	202	23
1-11650-1160	555	02
1-11650-1170	555	08
1-11660-0020	551	12
1-11660-1120	551	03
1-11660-1130	551	04
1-11660-1140	551	07
1-11660-1150	551	08
1-11660-1160	551	11
1-11660-1170	551	10

silverhorn.co.uk

PARTS No.	FIG. No.	INDEX
1-11660-1180	551	12
1-11660-1190	551	13
1-11660-1210	551	14
1-11660-1220	551	09
1-12020-1010	801	28
1-12020-1020	801	04
1-12020-1030	801	03
1-12020-1040	801	13
1-12020-1050	801	12
1-12020-1060	801	16
1-12020-1070	801	14
1-12020-1081	801	15
1-12020-1090	801	01
1-12020-1120	801	06
1-12020-1130	801	05
1-12020-1140	801	10
1-12020-1150	801	08
1-12020-1160	801	21
1-12020-1180	801	17
1-12020-1190	801	02
1-12020-1210	811	17
1-12020-1310	811	02
1-12210-1220	701	13
1-12210-1230	701	12
1-12210-1420	715	05
1-12210-1430	711	02
1-12210-1440	715	04
1-12210-1600	711	25
1-12210-1600	713	03
1-13670-1410	501	13
1-14340-1130	311	06
1-14670-1110	505	27
1-17210-1310	715	08
1-17330-1210	301	23
1-17330-1221	301	24
1-18320-1111	301	09
1-18320-1121	301	10
1-18330-0012	301	08
1-18330-0020	321	07
1-18330-1151	301	14
1-18330-1170	301	16A
1-18340-1120	311	02
1-18350-1110	321	03
1-18350-1141	321	12
1-18350-1213	321	01
1-18350-1230	321	02
1-18520-1290	204	32
1-18640-0011	601	11
1-18670-1381	503	11
1-18710-1233	601	03

PARTS No.	FIG. No.	INDEX
1-18710-1243	601	04
1-18710-1312	601	06
1-19330-0020	301	12
1-19350-1180	321	15
1-19620-0011	501	16
1-19650-0010	502	05
1-19650-0010	555	01
1-19650-1120	555	05
1-19650-1140	555	07
1-19650-2110	555	01
1-19660-1231	551	02
1-19670-1310	501	05
1-21210-1210	711	06
1-21210-1220	711	09
1-21210-1230	711	07
1-21210-1230	711	10
1-21210-1240	711	08
1-21210-1240	711	11
1-21670-1210	506	11
1-23340-1111	311	01
1-24340-0011	311	01
1-27160-1131	105	15
1-27160-1141	105	16
1-28310-1110	301	01
1-28320-1121	301	05
1-28320-1130	301	06
1-28320-1140	301	08
1-28330-1160	301	18
1-28330-1240	301	17
1-28710-1111	601	01
1-29210-1150	703	05
1-29210-1160	701	11
1-29210-1170	701	05
1-29210-1310	713	15
1-29210-1420	715	15
1-29210-1530	713	27
1-29210-1550	711	24
1-29520-1520	204	07
1-29520-1521	203	24
1-30210-1520	715	07
1-31150-1150	121	06
1-31620-1590	421	21
1-31620-1610	421	15
1-32210-1180	121	08
1-32210-1180	711	26
1-32210-1510	713	26
1-32210-1510	713	28
1-32210-1560	711	16
1-32510-1310	202	32
1-32520-1181	201	06

silverhorn.co.uk

PARTS No.	FIG. No.	INDEX
1-32710-1250	601	02
1-32710-1621	202	27
1-32710-1630	202	29
1-32710-1650	202	28
1-32910-1330	255	05
1-32910-1410	255	03
1-33130-1180	115	11
1-39110-1210	101	05
1-39160-1110	105	13
1-39160-1120	105	14
1-39160-1160	105	17
1-39210-1360	713	01
1-39610-1110	105	10
1-39610-1120	105	11
1-39610-1130	105	12
1-39610-1310	105	02
1-41010-1210	811	27
1-41010-1220	811	04
1-41010-1230	811	12
1-41010-1240	811	08
1-41010-1250	811	03
1-41010-1260	811	05
1-41010-1270	811	10
1-41010-1280	811	01
1-41010-1290	811	15
1-41010-1300	811	06
1-41010-1310	811	13
1-41010-1320	811	14
1-41010-1330	811	16
1-41010-1350	811	20
1-41010-1430	801	22
1-41010-1440	801	26
1-41010-1470	811	25
1-41010-1490	811	21
1-41150-0010	121	01
1-41150-1110	121	01
1-41160-1151	105	20
1-41210-1240	233	08
1-41210-1250	233	33
1-41210-1311	713	09
1-41210-1321	713	07
1-41210-1510	715	16
1-41210-2010	233	10
1-41210-2020	231	33
1-41210-2030	231	25
1-41210-2040	231	21
1-41210-2060	231	35
1-41210-2110	701	04
1-41210-2120	713	05
1-41210-2130	701	15

PARTS No.	FIG. No.	INDEX
1-41210-2140	703	06
1-41210-2150	713	17
1-41210-2160	713	29
1-41210-2210	701	10
1-41210-2220	701	19
1-41210-2230	701	16
1-41210-2240	701	08
1-41210-2250	701	06
1-41210-2260	701	07
1-41210-2270	701	04
1-41210-2280	701	14
1-41210-2310	701	01
1-41210-2340	235	03
1-41210-2350	221	18
1-41210-2370	713	33
1-41210-2380	713	36
1-41420-1140	401	01
1-41420-1180	401	11
1-41420-1190	401	12
1-41420-1240	401	05
1-41420-1250	401	06
1-41420-1260	401	13
1-41420-1280	401	14
1-41520-1310	204	01
1-41520-1330	204	02
1-41520-1340	204	14
1-41520-1350	203	35
1-41520-1350	204	18
1-41520-1360	203	32
1-41520-1360	204	15
1-41520-1370	203	39
1-41520-1370	204	22
1-41520-1380	203	28
1-41520-1380	204	11
1-41520-1410	204	01
1-41520-1430	201	02
1-41520-1510	203	05
1-41520-1520	201	22
1-41520-1540	201	15
1-41520-1570	201	10
1-41520-1580	201	11
1-41520-1670	203	31
1-41520-1680	202	01
1-41520-1710	202	06
1-41520-1720	202	06
1-41520-1730	202	07
1-41520-1740	202	07
1-41520-1770	401	21
1-41520-1780	202	11
1-41520-1820	202	02

silverhorn.co.uk

PARTS No.	FIG. No.	INDEX
1-41520-1830	201	19
1-41520-1850	204	30
1-41520-1850	211	12
1-41520-1860	203	20
1-41520-1860	204	03
1-41520-2040	202	15
1-41530-1010	211	05
1-41610-0010	105	01
1-41610-0020	105	03
1-41620-1010	421	01
1-41620-1020	421	03
1-41620-1030	421	20
1-41620-1040	421	11
1-41620-1050	421	10
1-41620-1060	421	09
1-41620-1410	501	07
1-41660-1100	551	01
1-41660-1110	551	01
1-41710-1320	601	12
1-41710-1340	601	14
1-41710-1360	601	05
1-41910-1310	255	01
1-41910-1320	255	02
1-41920-1030	252	14
1-43210-1520	713	13
1-43630-0012	301	02
1-46010-2120	801	19
1-46010-2410	801	18
1-46010-2420	801	27
1-46010-2430	801	23
1-46010-2440	801	24
1-46010-2450	801	25
1-46010-2510	811	18
1-46010-2520	811	26
1-46010-2530	811	22
1-46010-2540	811	23
1-46010-2550	811	24
1-46100-0200	101	01
1-46110-2110	101	02
1-46110-2210	101	13
1-46110-2220	101	14
1-46110-2310	101	20
1-46110-2320	101	28
1-46120-0020	111	01
1-46120-2110	111	01
1-46120-2120	111	02
1-46120-2130	111	03
1-46120-2140	111	04
1-46120-2150	111	09
1-46120-2200	111	05

PARTS No.	FIG. No.	INDEX
1-46120-2210	111	05
1-46120-2220	111	06
1-46120-2230	111	07
1-46120-2240	111	08
1-46120-2310	111	17
1-46120-2320	111	18
1-46120-2330	111	19
1-46120-2510	111	10
1-46130-2120	115	02
1-46140-0210	561	01
1-46140-2210	561	02
1-46140-2220	561	03
1-46150-2210	121	19
1-46150-2220	121	20
1-46150-2230	121	21
1-46150-2240	121	22
1-46150-2310	121	27
1-46210-1340	715	09
1-46210-1350	715	10
1-46210-1420	711	23
1-46210-1510	711	20
1-46210-1520	713	11
1-46210-2210	703	03
1-46210-2220	703	03
1-46210-2310	711	01
1-46210-2410	703	01
1-46210-2510	231	39
1-46210-2520	231	40
1-46210-2550	233	25
1-46210-2560	233	27
1-46210-2570	235	21
1-46210-2580	235	22
1-46210-2600	713	42
1-46210-2650	713	43
1-46210-2710	713	38
1-46210-2720	713	39
1-46210-2730	713	40
1-46210-2750	713	41
1-46340-1120	321	04
1-46340-1130	321	08
1-46340-1140	321	06
1-46350-0010	321	03
1-46350-1010	321	10
1-46350-1020	321	11
1-46420-2270	401	17
1-46510-2110	201	01
1-46520-2160	203	46
1-46520-2210	201	25
1-46520-2410	203	01
1-46520-2440	203	16

silverhorn.co.uk

PARTS No.	FIG. No.	INDEX
1-46520-2450	203	15
1-46520-2460	203	19
1-46520-2470	203	15
1-46520-2480	203	11
1-46520-2490	203	10
1-46520-2510	204	29
1-46520-2520	204	31
1-46520-2520	211	13
1-46520-2610	211	11
1-46620-0010	504	01
1-46620-0030	502	08
1-46670-2110	503	01
1-46670-2110	503	02
1-46670-2130	503	03
1-46670-2140	503	04
1-46670-2310	502	09
1-46910-2350	255	06
1-46910-2360	255	07
1-46920-2210	254	01
1-46920-2220	254	02
1-46920-2410	253	02
1-46920-2420	253	03
1-46920-2430	253	04
1-46920-2510	252	04
1-48150-1130	121	12
1-48420-1141	401	20
1-48420-1210	401	09
1-48520-1420	202	20
1-51150-1130	121	02
1-51150-1140	121	03
1-51150-1180	121	03
1-51530-1110	211	01
1-51530-1120	211	02
1-55520-1410	211	06
1-55520-1420	211	07
8-12130-1110	115	01
8-12130-1130	115	03
8-12130-1140	115	08
8-12130-1150	115	04
8-12130-1160	115	07
8-12130-1170	115	05
8-12130-1180	115	06
HC0002043	231	10
HC1015477	231	04
HC1015478	231	07
HC1021345	233	12
HC1021346	233	13
HC1021349	233	19
HC1021350	233	18
HC1021354	233	05

PARTS No.	FIG. No.	INDEX
HC2037689	233	29
HC2038484	421	07
HC2038764	221	32
HC2038806	251	14
HC3052543	231	05
HC3052543	231	08
HC3072610	243	12
HC3072613	233	22
HC3072629	233	16
HC3072699	233	31
HC3074721	235	19
HC4011675	251	08
HC4018545	243	11
HC4022697	225	32
HC4055312	213	08
HC4055312	251	15
HC4089012	226	11
HC4092111	221	10
HC4102096	703	11
HC4147896	223	53
HC4187082	221	20
HC4187083	221	21
HC4204547	224	28
HC4204579	224	20
HC4204579	225	23
HC4204586	222	17
HC4204586	224	52
HC4204590	226	09
HC4204591	226	10
HC4208103	226	03
HC4210412	221	25
HC4210413	221	26
HC4235232	243	18
HC4251896	251	16
HC4254237	213	06
HC4276794	251	18
HC4280359	251	21
HC4280527	221	24
HC4285388	213	05
HC4287903	221	17
HC4288445	231	02
HC4295480	224	07
HC4295480	224	30
HC4295573	222	33
HC4295662	223	35
HC4295662	224	19
HC4295876	224	09
HC4295876	224	31
HC4297101	235	07
HC4319875	243	16

silverhorn.co.uk

PARTS No.	FIG. No.	INDEX
HC4320150	222	34
HC4320163	222	27
HC4326095	213	02
HC4333185	213	01
HC4334707	421	05
HC4338974	213	03
HC4339837	703	08
HC4341706	703	09
HC4341890	243	09
HC4342226	241	01
HC4344638	251	05
HC4345311	243	05
HC4348713	263	01
HC4348714	263	03
HC4349998	235	06
HC4350234	263	15
HC4350235	263	06
HC4350236	263	05
HC4350237	263	07
HC4350238	263	12
HC4350243	251	09
HC4350244	263	09
HC4350245	235	01
HC4350246	235	10
HC4350247	235	13
HC4350249	263	14
HC4350265	263	08
HC4350398	235	15
HC4350778	235	14
HC4350779	235	09
HC4350779	235	12
HC4351009	251	19
HC4351011	231	03
HC4351255	233	03
HC4351277	233	24
HC4352947	703	07
HC4357862	235	17
HC4361104	251	01
HC4361106	251	12
HC4361107	251	02
HC4361147	251	20
HC4361302	221	27
HC4361800	233	32
HC4361800	233	34
HC4361802	233	15
HC4361802	233	21
HC4362135	223	08
HC4362700	221	31
HC4364504	221	28
HC4366623	251	04

PARTS No.	FIG. No.	INDEX
HC4367481	221	13
HC4367485	221	11
HC4367486	221	12
HC4369472	213	01
HC4369540	221	01
HC4369541	221	02
HC4369542	221	05
HC4369543	221	08
HC4369544	221	14
HC4369546	221	23
HC4369547	221	30
HC4369549	221	16
HC4369550	222	01
HC4369551	222	36
HC4369552	222	35
HC4369553	225	25
HC4369554	222	06
HC4369555	222	05
HC4369556	222	02
HC4369557	222	19
HC4369559	222	03
HC4369561	222	18
HC4369562	224	50
HC4369563	224	53
HC4369564	224	49
HC4369565	222	08
HC4369566	222	09
HC4369567	222	22
HC4369568	222	28
HC4369569	222	29
HC4369571	222	12
HC4369572	222	14
HC4369573	222	13
HC4369574	222	11
HC4369575	224	39
HC4369576	224	40
HC4369577	224	41
HC4369578	224	37
HC4369579	224	47
HC4369580	224	44
HC4369581	224	43
HC4369582	224	45
HC4369583	224	55
HC4369584	224	54
HC4369585	222	07
HC4369586	224	36
HC4369587	224	24
HC4369588	224	24
HC4369590	224	25
HC4369591	224	27

silvernorn.co.uk

PARTS No.	FIG. No.	INDEX
HC4369593	224	26
HC4369594	224	32
HC4369595	224	01
HC4369596	224	01
HC4369598	224	05
HC4369599	224	06
HC4369600	224	10
HC4369602	224	04
HC4369603	224	03
HC4369604	224	02
HC4369605	224	18
HC4369606	224	13
HC4369607	224	15
HC4369608	224	16
HC4369609	224	22
HC4369610	224	23
HC4369611	225	17
HC4369612	225	17
HC4369613	225	21
HC4369614	222	37
HC4369614	225	22
HC4369615	225	18
HC4369616	225	20
HC4369617	225	29
HC4369618	225	28
HC4369619	225	31
HC4369620	225	26
HC4369621	226	01
HC4369622	226	02
HC4369623	226	04
HC4369624	226	12
HC4369625	222	15
HC4369626	222	31
HC4369627	222	26
HC4369629	223	01
HC4369630	223	01
HC4369631	223	12
HC4369632	223	41
HC4369633	223	06
HC4369634	223	18
HC4369635	223	19
HC4369636	223	20
HC4369637	223	21
HC4369638	223	22
HC4369639	223	23
HC4369640	223	29
HC4369641	223	30
HC4369642	223	13
HC4369643	223	10
HC4369644	223	42

PARTS No.	FIG. No.	INDEX
HC4369645	223	02
HC4369646	223	38
HC4369647	223	40
HC4369648	223	36
HC4369653	223	48
HC4369656	223	54
HC4369657	223	55
HC4369658	223	57
HC4369659	222	21
HC4369659	223	58
HC4369660	223	59
HC4369661	223	34
HC4369662	223	44
HC4369663	223	60
HC4369664	225	01
HC4369665	225	02
HC4369666	225	03
HC4369667	225	04
HC4369668	225	06
HC4369669	225	07
HC4369670	225	08
HC4369671	225	09
HC4369672	225	13
HC4369674	224	35
HC4369674	225	11
HC4369674	225	15
HC4369675	222	24
HC4370089	261	01
HC4370144	701	02
HC4370193	241	02
HC4370194	241	03
HC4370195	241	04
HC4370196	241	05
HC4370197	241	06
HC4370198	241	09
HC4370199	241	10
HC4370200	241	11
HC4370201	241	07
HC4370202	241	15
HC4370203	241	13
HC4370204	241	12
HC4370206	241	14
HC4370207	241	08
HC4370313	235	03
HC4370314	235	04
HC4370315	235	05
HC4370316	235	01
HC4370317	235	02
HC4370570	263	10
HC4370571	263	11

silverhorn.co.uk

PARTS No.	FIG. No.	INDEX
HC4370572	263	09
HC4370823	261	01
HC4370825	261	09
HC4370826	261	02
HC4370827	261	03
HC4370828	261	04
HC4370829	261	05
HC4370830	261	06
HC4370831	261	07
HC4370832	261	10
HC4370833	261	11
HC4370834	261	12
HC4370835	261	13
HC4370836	261	14
HC4370837	261	16
HC4370838	261	17
HC4370839	261	19
HC4370840	261	20
HC4370841	261	18
HC4370842	261	21
HC4370843	261	22
HC4370844	261	23
HC4370846	261	15
HC4370903	221	03
HC4372087	222	30
HC4372088	222	32
HC4372088	224	57
HC4372089	222	20
HC4372091	223	09
HC4372092	223	11
HC4372093	223	50
HC4372094	226	01
HC4372095	226	02
HC4372109	243	10
HC4372209	226	05
HC4372210	224	48
HC4372211	224	38
HC4372212	225	05
HC4372213	224	33
HC4372213	225	14
HC4372214	224	17
HC4372215	223	24
HC4372216	223	27
HC4372218	221	09
HC4372219	222	16
HC4372220	225	27
HC4372221	224	42
HC4372222	222	23
HC4372222	224	51
HC4372222	225	30

PARTS No.	FIG. No.	INDEX
HC4372222	226	13
HC4372223	225	16
HC4372224	224	46
HC4372225	223	39
HC4372225	224	12
HC4372226	224	14
HC4372261	223	37
HC4372561	224	34
HC4372608	221	15
HC4372608	221	29
HC4373465	241	01
HC4374294	261	08
HC4377169	251	07
HC4379359	251	17
HC4379639	223	45
HC4382863	221	04
HC4382885	223	33
HC4398016	223	51
HC4398017	223	46
HC4398018	223	47
HC4398019	223	52
HC4398091	223	45
HC4400079	222	04
HC4400087	223	56
HC4514699	251	06
HC494918	224	08
HC494918	224	29
HC5004653	233	06
HC6014634	231	01
HC6014737	233	01
HC6014741	233	02
HC6014820	261	25
HC7029266	231	11
HC7029267	231	12
HC7029268	231	19
HC7029352	243	01
HC8060883	231	15
HC8060884	231	17
HC8061040	243	06
HC8061123	243	02
HC8061543	713	22
HC8061563	243	03
HC8061717	231	37
HC8064900	235	18
HC8065061	243	17
HC8065588	231	29
HC9136715	243	01
HC94-2817	213	07
HC9743487	231	31
HCA590105	223	16

silvernorn.co.uk

PARTS No.	FIG. No.	INDEX
HCA590106	223	05
HCA590106	223	26
HCA590108	223	17
HCA590904	223	28
HCA590905	223	15
HCA590906	223	04
HCA590906	223	25
HCA590906	226	07
HCA590910	243	08
HCJ010816	701	03
HCJ010820	226	08
HCJ011025	231	13
HCJ011025	243	14
HCJ011025	263	04
HCJ011030	233	04
HCJ011035	231	06
HCJ011035	231	09
HCJ020816	221	07
HCJ020816	713	23
HCJ020820	231	16
HCJ020820	231	18
HCJ020820	231	20
HCJ020820	231	30
HCJ020820	231	32
HCJ020820	231	34
HCJ020820	231	36
HCJ020820	231	38
HCJ020820	251	10
HCJ020820	261	26
HCJ021025	243	04
HCJ021025	243	15
HCJ021025	251	03
HCJ021030	231	14
HCJ050820	251	11
HCJ050820	261	24
HCJ219167	243	19
HCJ450614	223	31
HCJ460510	221	19
HCJ460510	703	10
HCJ460512	233	09
HCJ460512	233	11
HCJ460514	221	22
HCJ460514	225	19
HCJ460514	251	13
HCJ460516	221	33
HCJ460614	235	16
HCJ460616	224	21
HCJ460616	225	24
HCJ460616	235	08
HCJ460616	235	11

PARTS No.	FIG. No.	INDEX
HCJ460616	235	20
HCJ460616	263	02
HCJ460616	263	13
HCJ460616	263	16
HCJ460635	233	30
HCJ660512	223	07
HCJ680410	223	49
HCJ680510	223	43
HCJ680514	224	11
HCJ680516	225	10
HCJ680614	222	10
HCJ680614	222	25
HCJ680614	224	56
HCJ680614	225	12
HCJ680616	223	32
HCJ680616	233	07
HCJ680616	233	14
HCJ680616	233	17
HCJ680616	233	20
HCJ680616	233	23
HCJ680625	243	13
HCJ952010	243	07
HCM340816	241	16
HCM500504	223	14
HCM500605	223	03
HCM500605	226	06
HCM500807	221	06
ND016765-0220	255	04
ND040033-2650	254	10
ND046218-0080	254	19
ND047890-8530	253	10
ND146649-1170	254	18
ND146680-1020	254	11
ND146680-5780	254	16
ND441420-1540	254	03
ND441440-0340	254	07
ND445012-0410	254	09
ND446130-4011	254	04
ND446170-6850	254	05
ND446170-8040	254	08
ND447100-8650	252	01
ND447700-4950	253	01
ND55330-11010	252	02
ND700906-0200	254	20
ND91478-06201	253	11
ND91478-06201	254	17
ND915700-6258	254	06
ND949040-3550	252	08
ND949047-2590	252	03
ND989598-0760	253	09

silverhorn.co.uk

RUBBER CRAWLER CARRIER MST−2200VD PARTS LIST

Document No.PE12200VD2-01
First edition: November 30 2006

Issued by Morooka Co., Ltd.
358 Shoubeisindencho, Ryugasaki,
Ibaraki 301-0034,
Japan

No part of this manual can be reproduced in any from without permission

silverhorn.co.uk

RUBBER CRAWLER CARRIER MST−2200VD PARTS LIST

Document No.PE12200VD2-01
First edition: November 30 2006

Issued by Morooka Co., Ltd.
358 Shoubeisindencho, Ryugasaki,
Ibaraki 301-0034,
Japan

No part of this manual can be reproduced in any from without permission

silverhorn.co.uk

MOROOKA CO., LTD.

silverhorn.co.uk