Instructions for Parts Books

The heading at the top of the page will be the same for the picture of the parts at it is for the page with the part numbers.

Definition of column headings on part number pages:

REF.No → The number referring to the part on the picture page of the parts book.

Part No. → The number assigned to this part at the time of printing the parts book.

Description → Description of part.

Q'ty → Quantity of part used on that page.

S.No. → Serial number range of the equipment that this part will fit.

>= Your serial number should be greater than or equal to the number shown.
<= Your serial number should be lesser than or equal to the serial number shown.

I/C → Interchangeability of part shown.

↔ The part shown will work for the older and later serial number.
The part shown is not interchangeable with the other serial number.
← new for old
→ old for new

Remarks → Notes about this particular part. Sometimes this may say except [FR] or [CA]

Note about Country Codes:

The parts books we use in the United States of America may also contain information about a part that would be different in another country. It is important that you are aware of the country codes in some instances.

Symbol Country
A United States of America
CA Canada
FR France
GR Greece
PO Portugal
AU Australia

If the remark column says for example EXCEPT [FR] this part works in all countries except France.
That means it will work here in the USA.

Excavators & Wheel Loaders

Country symbols sometimes used:
KCL - Kubota Canada Ltd
KTA - Kubota Tractor Australia
KTC - Kubota Tractor Corp. (USA)

silverhorn.co.uk

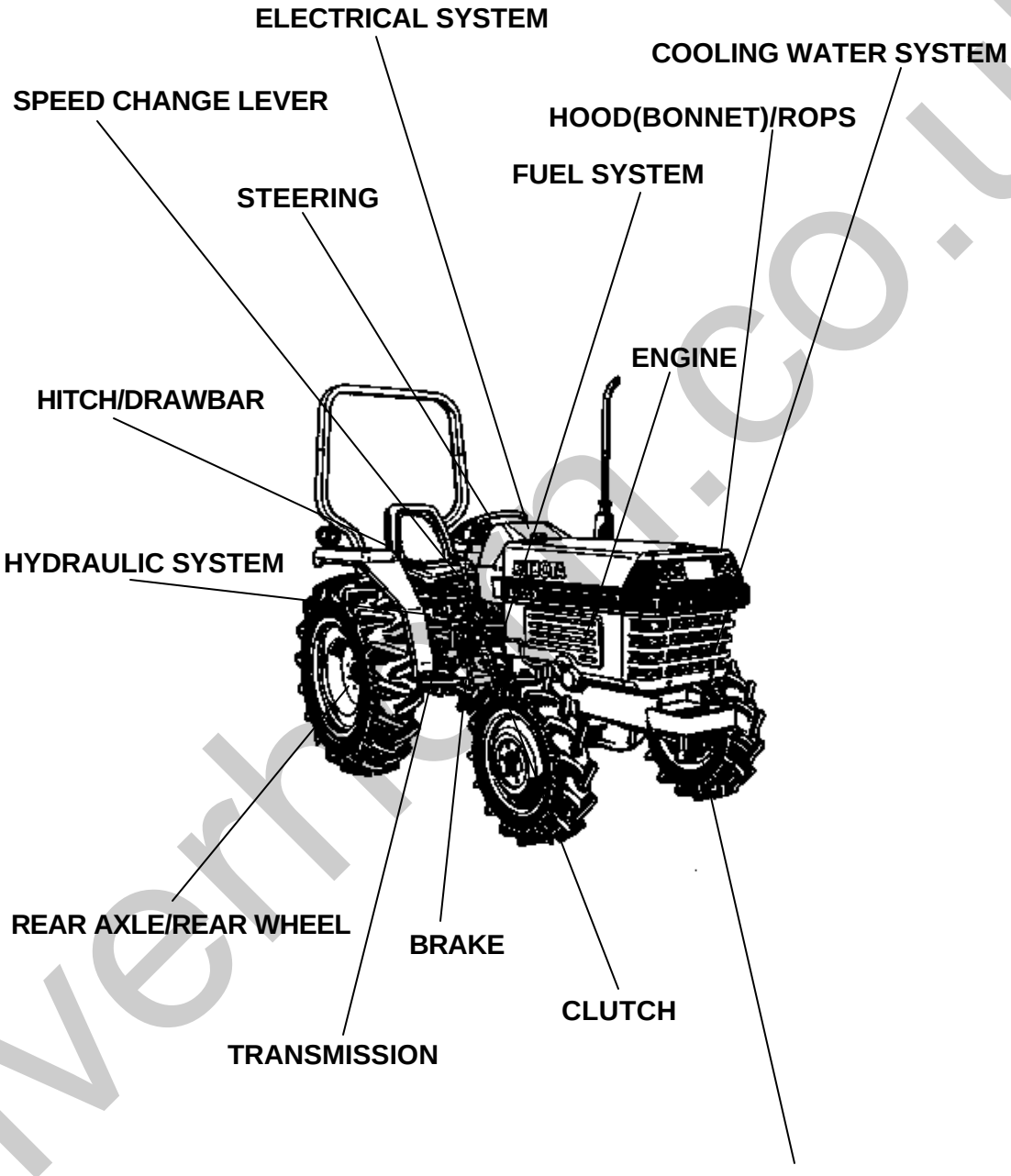

LABELS
ACCESSORIES

silverhill.co.uk

Item	Part No.	Description	Book
ENGINE	01T001	CRANKCASE	100K0362
	01T002	OIL PAN	100K0362
	01T003	PISTON/CRANKSHAFT	100K0362
	01T004	MAIN BEARING CASE	100K0362
	01T005	FLYWHEEL	100K0362
	01T006	CYLINDER HEAD	100K0362
	01T007	VALVE AND ROCKER ARM	100K0362
	01T008	NOZZLE HOLDER/GLOW PLUG	100K0362
	01T009	NOZZLE HOLDER [COMPONENT PARTS]	100K0362
	01T010	CYLINDER HEAD COVER	100K0362
	01T011	INLET MANIFOLD	100K0362
	02T012	AIR CLEANER	100K0362
	01T013	EXHAUST MANIFOLD	100K0362
	02T01401	MUFFLER	100K0362
	02T01402	UNDER MUFFLER [OPTION]	100K0362
	01T015	CAMSHAFT	100K0362
	01T016	GEAR CASE	100K0362
	01T017	WATER PUMP	100K0362
	01T018	WATER FLANGE AND THERMOSTAT	100K0362
	01T019	FUEL CAMSHAFT	100K0362
	01T020	INJECTION PUMP	100K0362
	01T021	INJECTION PUMP [COMPONENT PARTS]	100K0362
	01T022	ENGINE STOP LEVER	100K0362
	01T023	SPEED CONTROL PLATE	100K0362
	01T024	GOVERNOR	100K0362
	01T025	UPPER GASKET KIT	100K0362
	01T026	LOWER GASKET KIT	100K0362
	02T027	STOP ROD	100K0362
	02T028	HAND ACCELERATOR LEVER	100K0362
FUEL SYSTEM	02T02901	FUEL TANK	100K0362
	02T030	FUEL FILTER/FUEL PIPE	100K0362
COOLING WATER SYSTEM	02T031	FAN	100K0362
	02T032	WATER PIPE	100K0362
	02T033	RADIATOR	100K0362
	02T03401	SHUTTER [MANUAL STRG.]	100K0362
ELECTRICAL SYSTEM	02T035	ALTERNATOR	100K0362
	02T036	ALTERNATOR [COMPONENT PARTS]	100K0362
	02T037	STARTER	100K0362
	02T038	STARTER [COMPONENT PARTS]	100K0362
	02T039	BATTERY	100K0362
	02T040	SWITCH	100K0362
	02T041	LIGHT	100K0362
	02T042	METER	100K0362
	02T04301	ELECTRICAL WIRING	100K0362
CLUTCH	02T044	CLUTCH	100K0362
	02T045	CLUTCH LEVER	100K0362
	02T046	CLUTCH PEDAL	100K0362
	02T047	CLUTCH HOUSING	100K0362
TRANSMISSION	02T048	TRANSMISSION CASE	100K0362
	02T049	MAIN SHAFT	100K0362
	02T050	COUNTERSHAFT	100K0362
	02T051	PTO COUNTERSHAFT	100K0362

silverhorn.co.uk

Item	Part No.	Description	Book
TRANSMISSION	02T052	REVERSE SHAFT	100K0362
SPEED CHANGE LEVER	02T053	MAIN GEAR SHIFT LEVER	100K0362
	02T054	PTO GEAR SHIFT LEVER	100K0362
	02T055	MAIN GEAR SHIFT FORK	100K0362
	02T056	PTO GEAR SHIFT FORK	100K0362
	02T057	RANGE GEAR SHIFT FORK AND LEVER	100K0362
REAR AXLE/REAR WHEEL	02T058	SPIRAL BEVEL PINION	100K0362
	02T059	REAR DIFFERENTIAL	100K0362
	02T060	DIFFERENTIAL LOCK PEDAL	100K0362
	02T061	REAR AXLE	100K0362
	02T06201	REAR WHEEL (9.5-24)	100K0362
	02T06202	REAR WHEEL (11.2-24)	100K0362
	02T06203	REAR WHEEL (13.6-16)	100K0362
	02T06204	REAR WHEEL (355/80-D20)	100K0362
BRAKE	02T06301	BRAKE	100K0362
	02T064	BRAKE PEDAL	100K0362
	02T065	PARKING BRAKE LEVER	100K0362
FRONT AXLE/FRONT WHEEL/CHASSIS	02T066	FRONT AXLE	100K0362
	02T067	KNUCKLE SHAFT	100K0362
	02T06801	FRONT WHEEL (4.00-15)	100K0362
	02T06802	FRONT WHEEL (5.00-15)	100K0362
	02T06803	FRONT WHEEL (23X8.50-12)	100K0362
	02T06804	FRONT WHEEL (25X8.50-14)	100K0362
	02T069	FRONT AXLE FRAME	100K0362
STEERING	02T080	STEERING LINKAGE (DRAG LINK)	100K0362
	02T081	STEERING LINKAGE (TIE ROD)	100K0362
	02T08401	MANUAL STEERING AND HANDLE (MS)	100K0362
	02T08501	MANUAL STEERING [COMPONENT PARTS]	100K0362
HYDRAULIC SYSTEM	02T08601	HYDRAULIC PUMP	100K0362
	02T08701	HYDRAULIC PUMP [COMPONENT PARTS]	100K0362
	02T08801	HYDRAULIC OIL LINE	100K0362
	02T090	CONTROL VALVE	100K0362
	02T09101	CONTROL VALVE (POSITION CONTROL) [COMPONENT PARTS]	100K0362
	02T09102	CONTROL VALVE (DRAFT) [OPTION] [COMPONENT PARTS]	100K0362
	02T092	DRAFT CONTROL VALVE [OPTION]	100K0362
	02T093	DRAFT CONTROL VALVE [OPTION] [COMPONENT PARTS]	100K0362
	02T094	HYDRAULIC CYLINDER	100K0362
	02T095	CYLINDER FRONT COVER	100K0362
	02T096	LIFT ARM	100K0362
	02T097	FEED BACK LEVER	100K0362
	02T098	POSITION CONTROL LEVER	100K0362
	02T099	3-POINT LINKAGE 1 (LOWER LINK/TOP LINK)	100K0362
	02T100	3-POINT LINKAGE 2 (LIFT ROD)	100K0362
	02T101	TOP LINK BRACKET/LOWER LINK HOLDER	100K0362
	02T102	TOP LINK BRACKET (WITH DRAFT CONTROL) [OPTION]	100K0362
HITCH/DRAWBAR	02T103	DRAWBAR/HITCH	100K0362
	02T104	PTO SHAFT PROTECTOR	100K0362

silverhorn.co.uk

Item	Part No.	Description	Book
HOOD(BONNET)/ROPS	02T105	FRONT GRILLE	100K0362
	02T106	HOOD (BONNET)	100K0362
	02T107	HOOD (SIDE COVER)	100K0362
	02T108	REAR HOOD (BONNET)	100K0362
	02T109	FENDER	100K0362
	02T110	FENDER SUPPORT	100K0362
	02T111	SEAT	100K0362
	02T112	STEP	100K0362
	02T113	ROPS	100K0362
LABELS	02T114	LABEL 1	100K0362
	02T115	LABEL 2	100K0362
ACCESSORIES	02T116	ACCESSORIES AND SERVICE PARTS	100K0362

silverhorn.co.uk

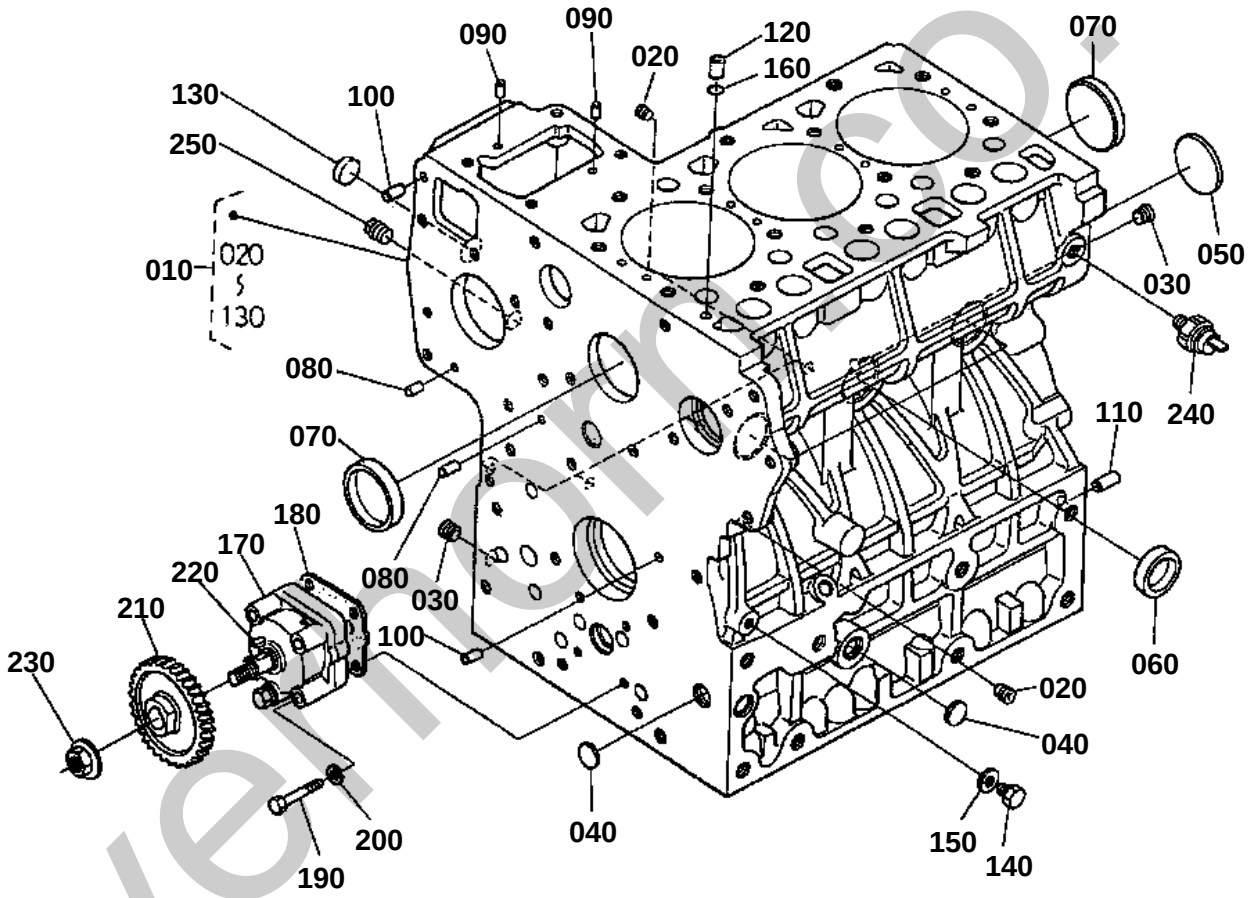

16417-008-10

silvermoto.co.uk

CRANKCASE

↔ Interchangeable; ≠ not interchangeable; ← new for old; → old for new

REF.No	Part No.	Description	Q'ty	S.No.	I/C	REMARKS	Weight (kgf)	Weight (lb)
010	16417-01010	COMP.CRANKCASE	1				48.5	106.7
020	15521-96020	PLUG	5				0.003	0.0066
030	15521-96030	PLUG	2				0.007	0.0154
040	17391-96160	PLUG EXPANSION	3				0.003	0.0066
050	06311-75045	PLUG EXPANSION	1				0.026	0.0572
060	15221-03380	CAP SEALING	5				0.017	0.0374
070	16111-03390	CAP SEALING	2				0.027	0.0594
080	05012-00408	PIN STRAIGHT	2				0.001	0.0022
090	05012-00609	PIN STRAIGHT	2				0.003	0.0066
100	05012-00612	PIN STRAIGHT	2				0.003	0.0066
110	05012-01018	PIN STRAIGHT	1				0.012	0.0264
120	15221-33650	PIN PIPE	1				0.004	0.0088
130	06311-85020	CAP SEALING	1				0.002	0.0044
140	15221-33610	PLUG	1				0.009	0.0198
150	15021-33660	GASKET	1				0.001	0.0022
160	15221-33700	O RING	1				0.001	0.0022
170	15471-35010	ASSY PUMP OIL	1				0	0
180	15296-35150	GASKET OIL PUMP	1				0	0
180	1A021-35150	GASKET OIL PUMP	1		«		0.001	0.0022
190	01053-50650	BOLT	4				0.011	0.0242
200	04512-60060	WASHER SPRING	4				0.001	0.0022
210	19202-35660	GEAR OIL PUMP DRIVE	1				0.23	0.506
220	05712-00410	KEY FEATHER	1				0.001	0.0022
230	15221-35682	NUT FLANGE	1				0.014	0.0308
240	15531-39010	SWITCH OIL	1				0.032	0.0704
250	06312-10020	PLUG	1				0.016	0.0352

silverhorn.co.uk

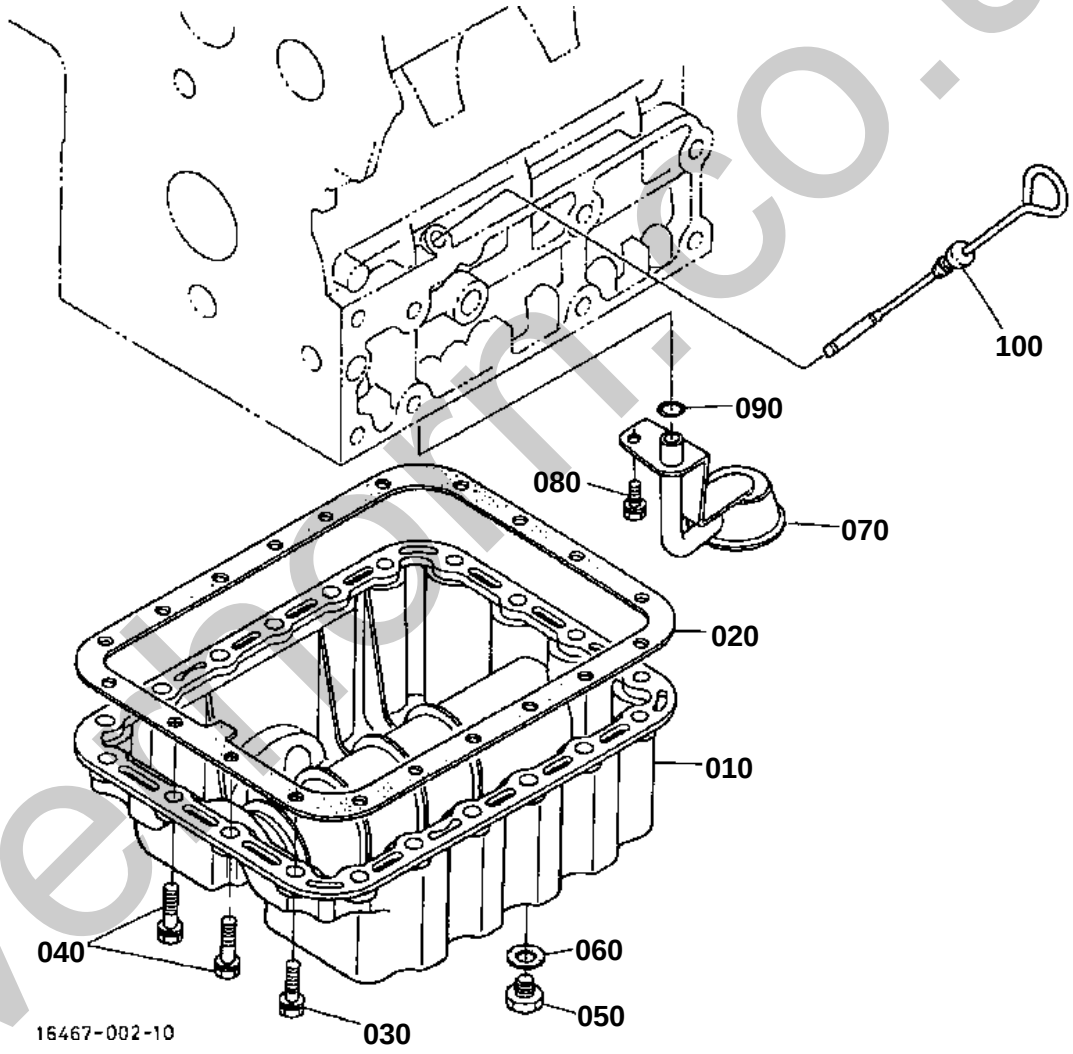

silverhorn.co.uk

OIL PAN

↔ Interchangeable; ≠ not interchangeable; ← new for old; → old for new

REF.No	Part No.	Description	Q'ty	S.No.	I/C	REMARKS	Weight (kgf)	Weight (lb)
010	15521-01610	OIL PAN	1				2.8	6.16
020	17326-01620	GASKET OIL PAN	1				0	0
020	1A021-01620	GASKET OIL PAN	1		«		0.014	0.0308
030	01133-51028	BOLT	18				0.027	0.0594
040	01133-51025	BOLT	2				0.023	0.0506
050	15261-33750	PLUG	2				0.034	0.0748
060	15109-33660	GASKET	2				0.001	0.0022
060	6C090-59860	GASKET	2		«		0	0
070	16427-32110	FILTER OIL	1				0.2	0.44
080	01123-60814	BOLT	1				0.01	0.022
090	04811-00160	O RING	1				0	0
100	16427-36410	GAUGE OIL	1				0.035	0.077

silverhorn.co.uk

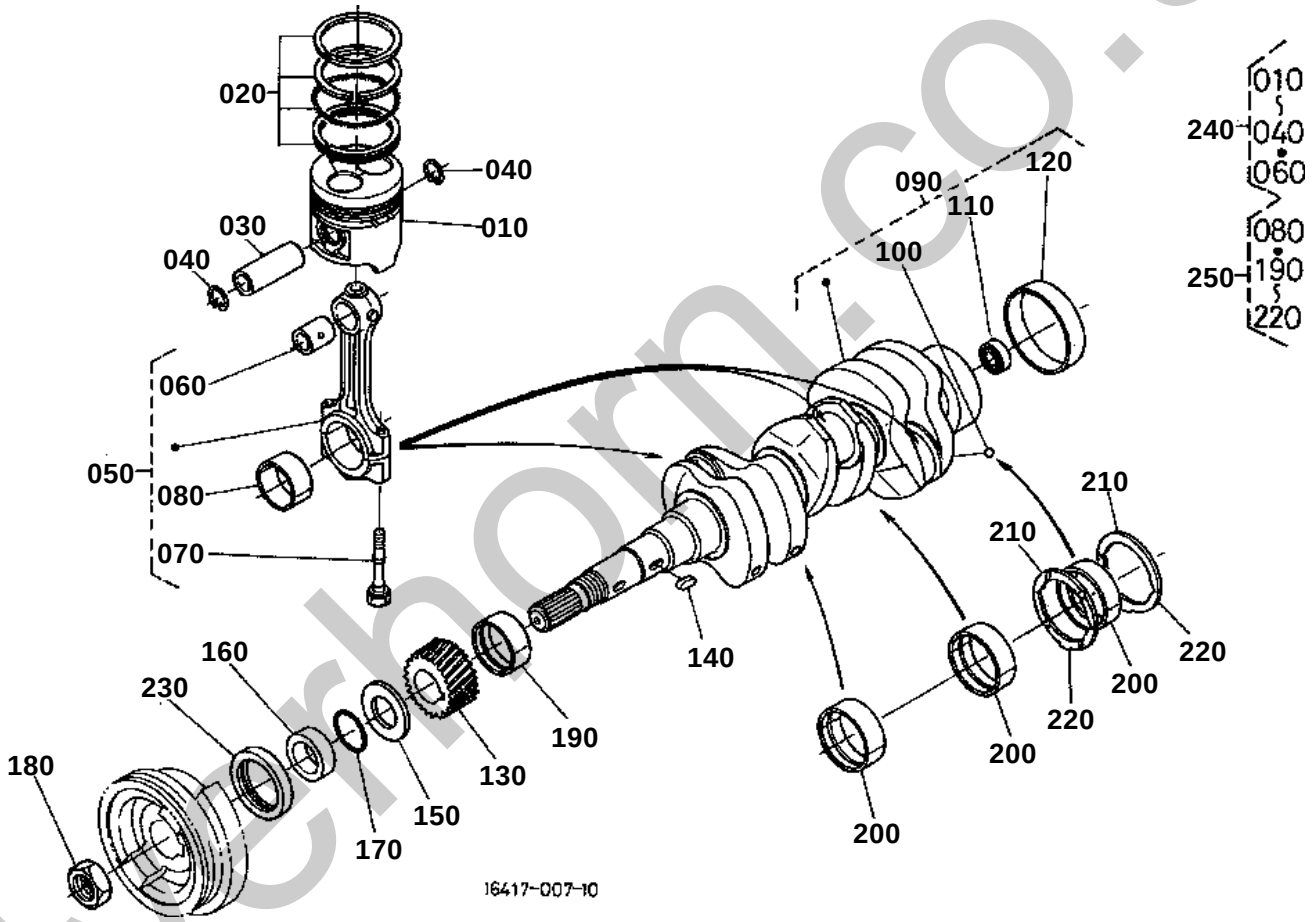

silverhorn.co.uk

Kubota

PISTON/CRANKSHAFT

↔ Interchangeable; ≠ not interchangeable; ← new for old; → old for new

REF.No	Part No.	Description	Q'ty	S.No.	I/C	REMARKS	Weight (kgf)	Weight (lb)
010	16427-21110	PISTON	3			STD	0.5	1.1
010	16427-21910	PISTON	3			+0.50mm	0.5	1.1
020	16427-21050	ASSY PISTON RING	3			STD	0.055	0.121
020	16427-21090	ASSY PISTON RING	3			+0.50mm	0.06	0.132
030	14901-21310	PIN PISTON	3				0.17	0.374
040	14109-21330	CLIP PISTON PIN	6				0.001	0.0022
050	17311-22010	ASSY CONNECTING ROD	3				0.885	1.947
060	17331-21980	BUSH PISTON PIN	3				0.025	0.055
070	15521-22142	BOLT CONNECTING ROD	3				0.026	0.0572
080	17311-22310	METAL CRANKPIN	3			STD	0.045	0.099
080	17331-22970	METAL CRANKPIN	3			-0.20mm	0.05	0.11
080	17331-22980	METAL CRANKPIN	3			-0.40mm	0.045	0.099
090	16467-23010	COMP.CRANKSHAFT	1				13	28.6
100	07715-00401	BALL	3				0.001	0.0022
110	08121-06002	BEARING BALL	1				0.03	0.066
120	19202-23280	SLEEVE CRANKSHAFT	1				0.09	0.198
130	15471-24110	GEAR CRANK	1				0.375	0.825
140	05712-00720	KEY FEATHER	1				0.008	0.0176
150	15471-23312	SLINGER OIL	1				0.008	0.0176
160	19202-23250	COLLAR CRANKSHAFT	1				0.065	0.143
170	04811-10300	O RING	1				0.001	0.0022
180	15221-23360	NUT CRANKSHAFT	1				0.11	0.242
190	17311-23470	METAL CRANKSHAFT	1	<=10081		STD	0	0
190	17311-23472	METAL CRANKSHAFT	1	>=10082	¬	STD	0.06	0.132
190	17311-23910	METAL CRANKSHAFT	1			-0.20mm	0.05	0.11
190	17311-23920	METAL CRANKSHAFT	1			-0.40mm	0.06	0.132
200	17311-23480	METAL CRANKSHAFT	3			STD	0.045	0.099
200	17311-23930	METAL CRANKSHAFT	3			-0.20mm	0.05	0.11
200	17311-23940	METAL CRANKSHAFT	3			-0.40mm	0.06	0.132
210	15521-23530	METAL SIDE	2			STD	0.01	0.022
210	15221-23950	METAL SIDE	2			+0.20mm	0	0
210	15221-23960	METAL SIDE	2			+0.40mm	0	0
220	19202-23540	METAL SIDE	2			STD	0.01	0.022
220	19202-23970	METAL SIDE	2			+0.20mm	0.01	0.022
220	19202-23980	METAL SIDE	2			+0.40mm	0.01	0.022
230	19202-04140	SEAL OIL	1				0.015	0.033
240	07916-27660	KIT PISTON-RING	3			STD	0.72	1.584
240	07916-27670	KIT PISTON-RING	3			+0.50mm	0.84	1.848
250	07916-28070	KIT METAL ENGINE	1			STD	0.35	0.77
250	07916-28720	KIT METAL ENGINE	1	<=10081		-0.20mm	0	0
250	07916-28722	KIT METAL ENGINE	1	>=10082	¬	-0.20mm	0.44	0.968
250	07916-28730	KIT METAL ENGINE	1	<=10081		-0.40mm	0	0
250	07916-28732	KIT METAL ENGINE	1	>=10082	¬	-0.40mm	0.44	0.968

silverthorn.co.uk

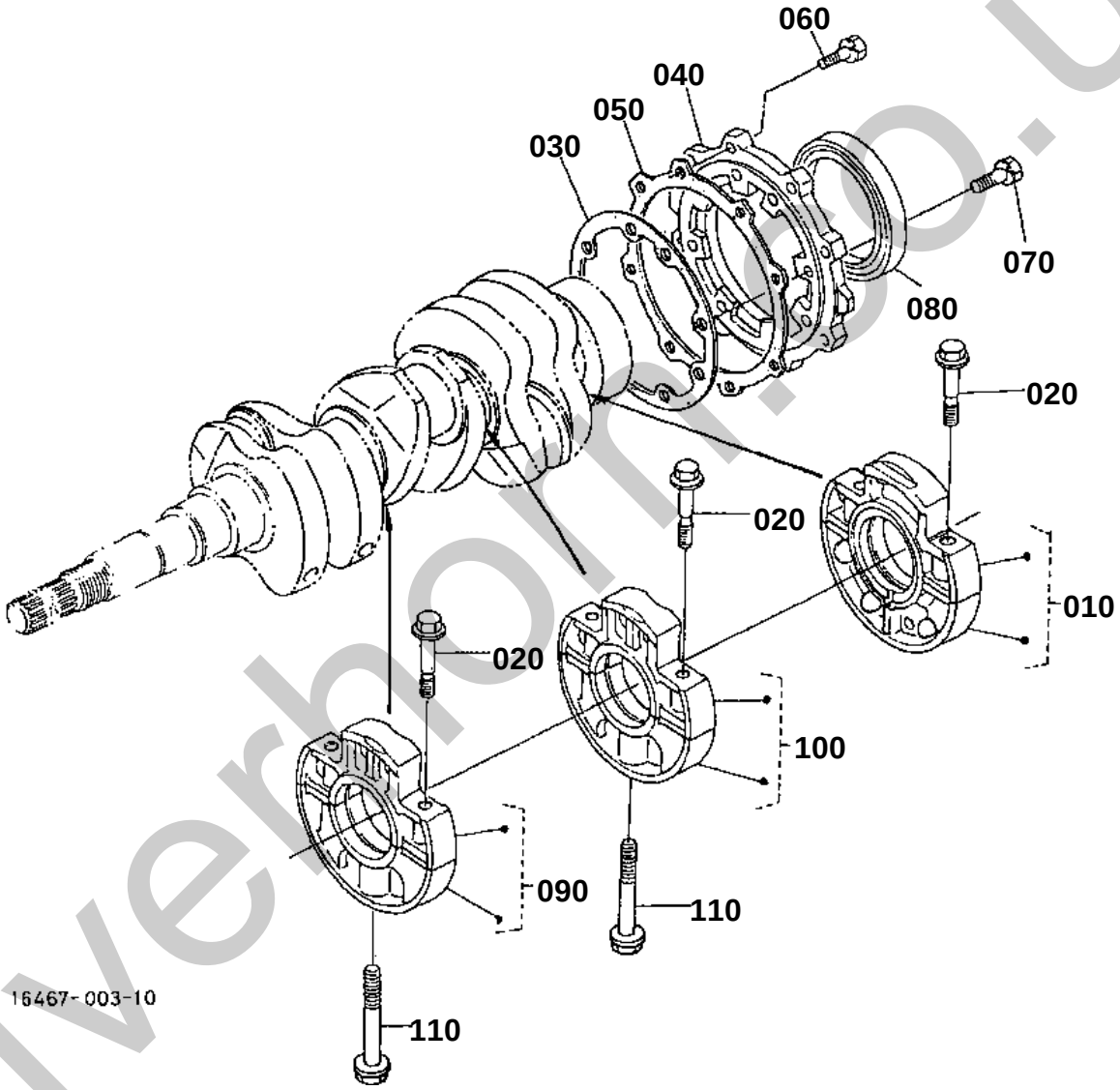

silverhorn.co.uk

MAIN BEARING CASE

↔ Interchangeable; ≠ not interchangeable; ← new for old; → old for new

REF.No	Part No.	Description	Q'ty	S.No.	I/C	REMARKS	Weight (kgf)	Weight (lb)
010	19013-04090	ASSY CASE MAIN BRG.	1				0	0
020	19013-04540	BOLT BEARING CASE	6				0.038	0.0836
030	19077-04360	GASKET BEARING CASE	1				0.004	0.0088
040	19013-04813	COVER BEARING CASE	1				0.41	0.902
050	17118-04830	GASKET BRG.CASE COV.	1				0	0
060	01123-50825	BOLT	8				0.013	0.0286
070	01123-50828	BOLT	8				0.014	0.0308
080	19202-04460	SEAL OIL	1				0.055	0.121
090	19013-04040	ASSY CASE MAIN BRG.	1				0	0
100	19013-04050	ASSY CASE MAIN BRG.	1				0	0
110	15601-04560	BOLT BEARING CASE	2				0.06	0.132

silverhorn.co.uk

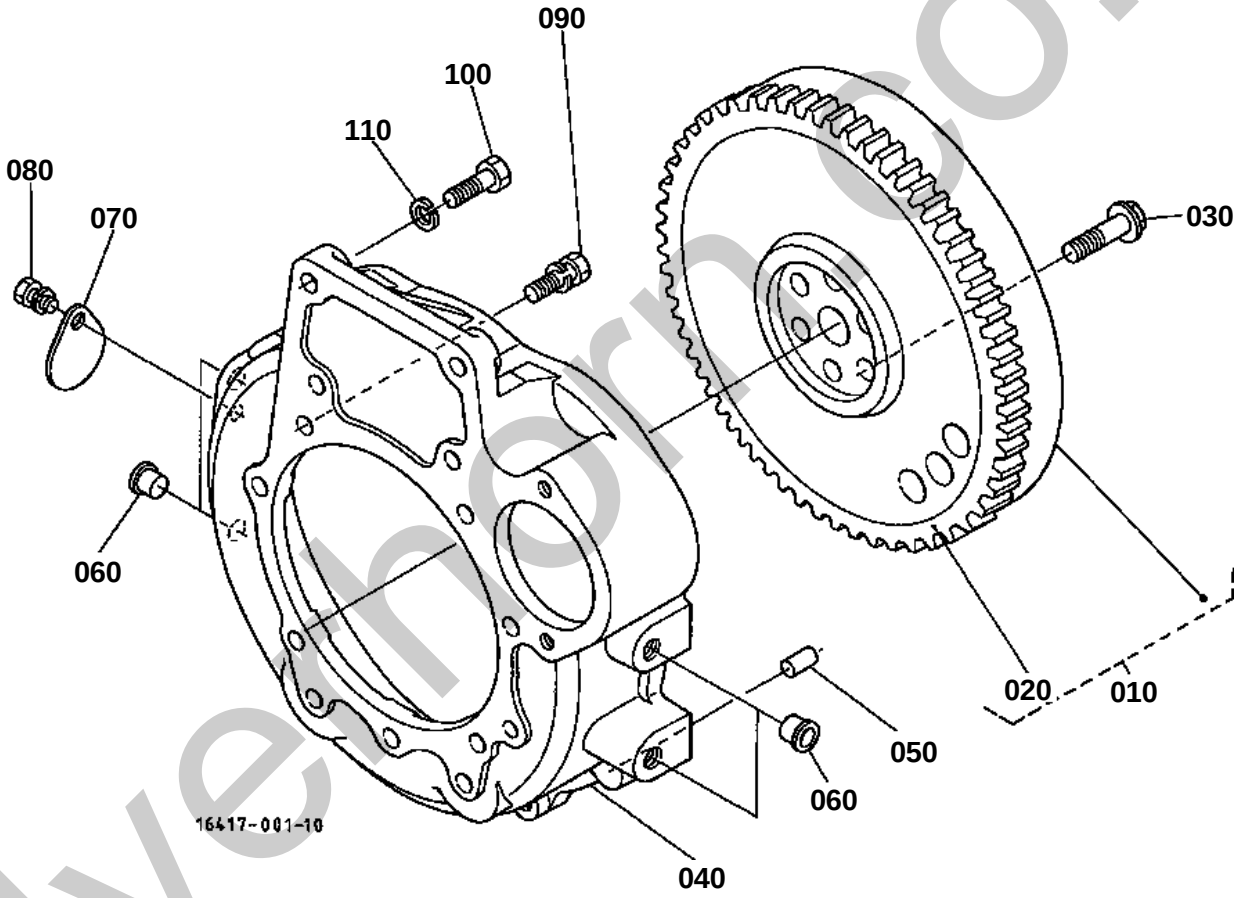

silverhorn.co.uk

FLYWHEEL

↔ Interchangeable; ≠ not interchangeable; ← new for old; → old for new

REF.No	Part No.	Description	Q'ty	S.No.	I/C	REMARKS	Weight (kgf)	Weight (lb)
010	16417-25010	COMP.FLYWHEEL	1				15.5	34.1
020	15221-63820	GEAR RING	1				1.2	2.64
030	15321-25163	BOLT FLYWHEEL	6				0.05	0.11
040	16417-04600	HOUSING FLYWHEEL	1				9.03	19.866
050	05012-01018	PIN STRAIGHT	2				0.012	0.0264
060	31220-14290	PLUG	4				0.002	0.0044
070	31220-14170	COVER	1				0.014	0.0308
080	01153-50812	BOLT	1				0.008	0.0176
090	04512-60080	WASHER SPRING	1				0.002	0.0044
100	16427-91010	BOLT	11				0.004	0.0088
110	01073-51240	BOLT	2				0.049	0.1078
120	04512-60120	WASHER SPRING	2				0.005	0.011

silverhorn.co.uk

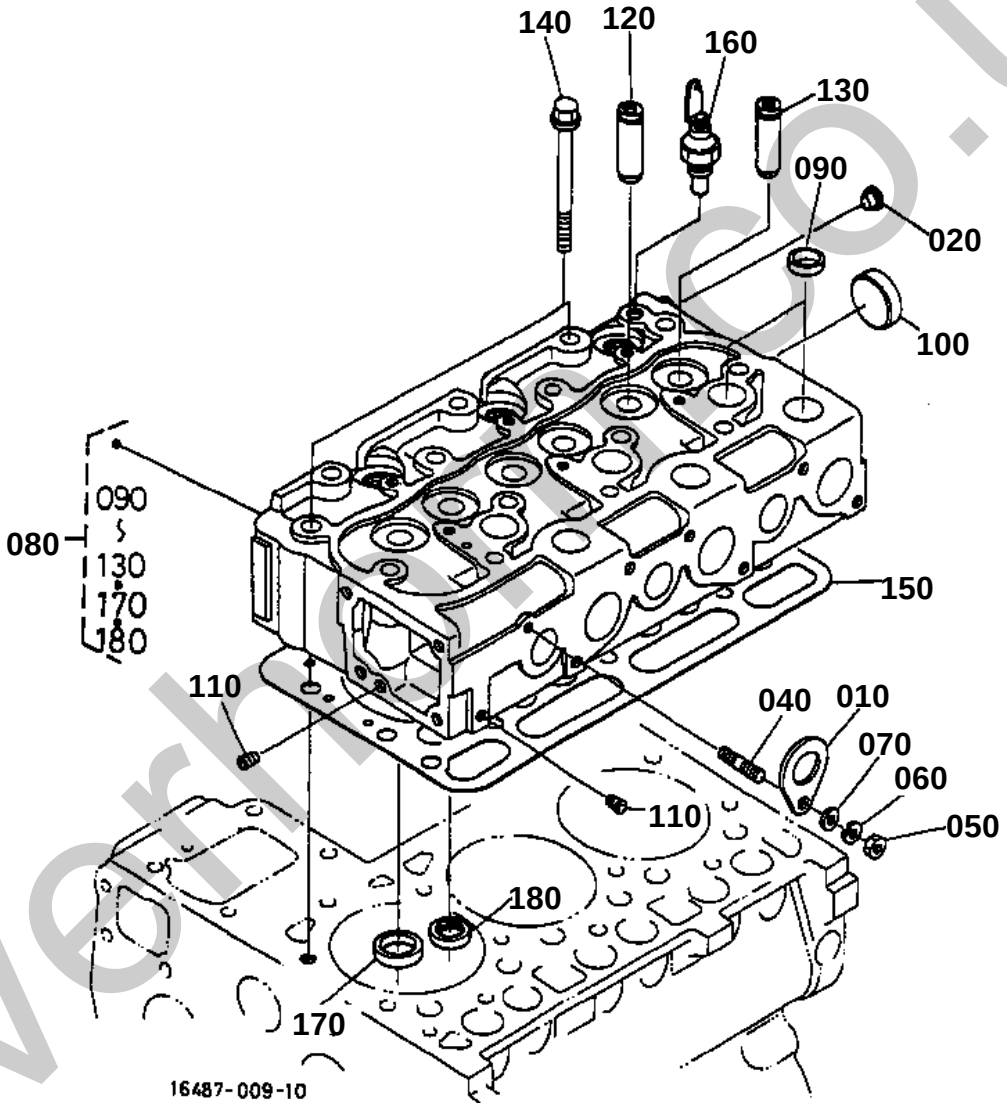

silverhomes.co.uk

CYLINDER HEAD

↔ Interchangeable; ≠ not interchangeable; ← new for old; → old for new

REF.No	Part No.	Description	Q'ty	S.No.	I/C	REMARKS	Weight (kgf)	Weight (lb)
010	15221-01750	HOOK ENGINE	1	<=9922			0.04	0.088
010	15221-01750	HOOK ENGINE	2	>=9923			0.04	0.088
020	09980-10075	CAP PROTECTOR	1				0.001	0.0022
030	99999-99999	BLANK	0				0	0
040	15471-91530	STUD	1				0.01	0.022
050	02156-50080	NUT	1				0.004	0.0088
060	04512-60080	WASHER SPRING	1				0.002	0.0044
070	04012-50080	WASHER PLAIN	1				0.001	0.0022
080	16427-03040	COMP.CYLINDER HEAD	1	<=9922			0	0
080	16427-03047	COMP.CYLINDER HEAD	1	>=9923			15.5	34.1
090	15221-03370	CAP SEALING	9				0.01	0.022
100	15221-03490	CAP SEALING	1				0.02	0.044
110	15261-96010	PLUG	2				0.002	0.0044
120	17321-13580	GUIDE INLET VALVE	3				0.015	0.033
130	17321-13560	GUIDE EXHAUST VALVE	3				0.02	0.044
140	19013-03450	BOLT CYLINDER HEAD	14				0.077	0.1694
150	16427-03310	CASKET CYL.HEAD	1				0.11	0.242
160	31351-32830	SENSOR THERMO	1				0.02	0.044
170	16415-13620	SEAT INLET VALVE	3				0.01	0.022
180	16415-13612	SEAT EXHAUST VALVE	3				0.01	0.022

silverhorn.co.uk

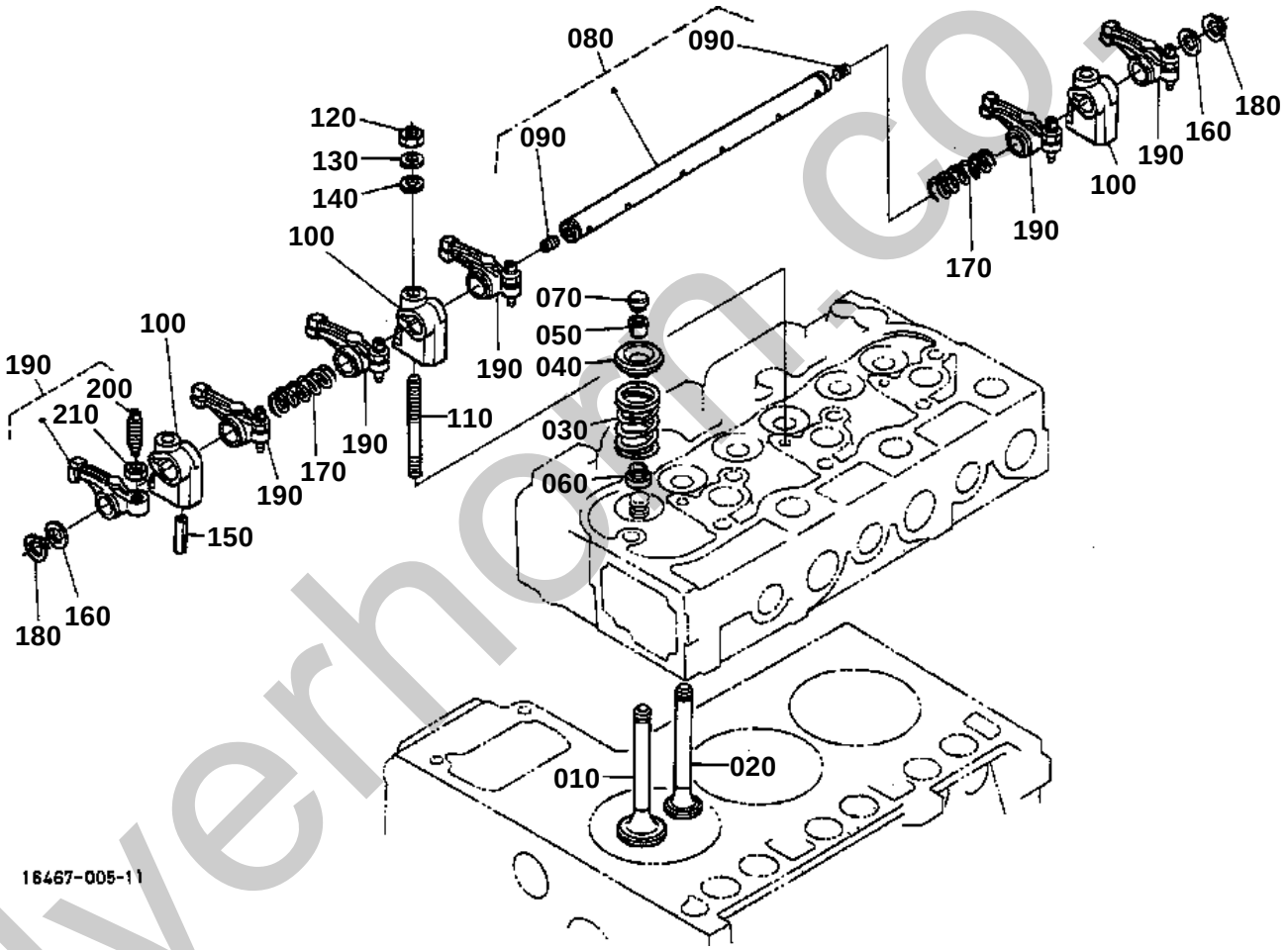

silverhorn.co.uk

VALVE AND ROCKER ARM

↔ Interchangeable; ≠ not interchangeable; ← new for old; → old for new

REF.No	Part No.	Description	Q'ty	S.No.	I/C	REMARKS	Weight (kgf)	Weight (lb)
010	16484-13110	VALVE INLET	3				0.06	0.132
020	16484-13120	VALVE EXHAUST	3				0.13	0.286
030	15221-13240	SPRING VALVE	6				0.036	0.0792
040	15221-13330	RETAINER VALVE SP.	6				0.03	0.066
050	15221-13360	COLLET VALVE SPRING	6				0	0
050	15221-13980	COLLET VALVE SPRING	6		«		0.002	0.0044
060	15221-13150	SEAL VALVE STEM	6				0.001	0.0022
070	15221-13280	CAP VALVE	6				0.006	0.0132
080	15321-14052	ASSY SHAFT R-ARM	1				0.235	0.517
090	03410-00808	SCREW SET	2				0.002	0.0044
100	15221-14350	BRACKET ROCKER ARM	3				0.044	0.0968
110	15521-91500	STUD	3				0.035	0.077
120	02156-50080	NUT	3				0.004	0.0088
130	04512-60080	WASHER SPRING	3				0.002	0.0044
140	04012-50080	WASHER PLAIN	3				0.001	0.0022
150	05411-00528	PIN SPRING	1				0.003	0.0066
160	15221-14430	WASHER R-ARM.SHAFT	2				0.002	0.0044
170	15221-14310	SPRING ROCKER ARM	2				0.005	0.011
180	04612-00140	CIRCLIP EXTERNAL	2				0.001	0.0022
190	15621-14030	ASSY ROCKER ARM	6				0.1	0.22
200	15521-14230	SCREW ADJUSTING	6				0.009	0.0198
210	15021-14240	NUT	6				0.003	0.0066

silverhorn.co.uk

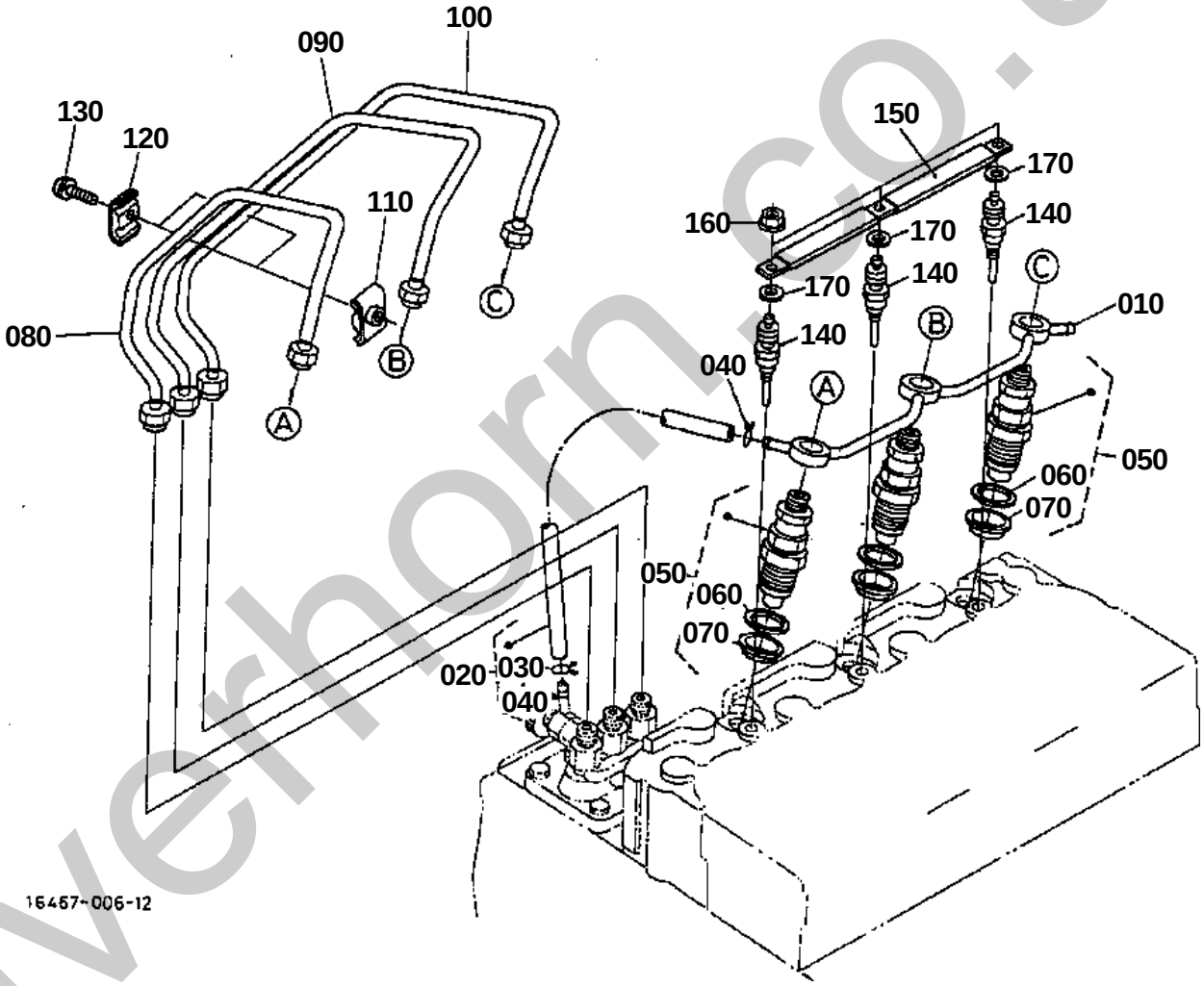

silverhorn.co.uk

NOZZLE HOLDER/GLOW PLUG

↔ Interchangeable; ≠ not interchangeable; ← new for old; → old for new

REF.No	Part No.	Description	Q'ty	S.No.	I/C	REMARKS	Weight (kgf)	Weight (lb)
010	16467-42502	ASSY PIPE OVER FLOW	1				0.045	0.099
020	17331-42500	PIPE OVER FLOW	1				0.02	0.044
030	14971-42750	CLIP PIPE	1				0.001	0.0022
040	10244-42320	CLIP PIPE	1				0.001	0.0022
050	16082-53900	KIT HOLDER NOZZLE	3				0.145	0.319
060	15841-53622	GASKET	3				0.002	0.0044
070	19077-53650	SEAL HEAT	3				0.005	0.011
080	19077-53714	PIPE INJECTION	1				0.14	0.308
090	19077-53723	PIPE INJECTION	1				0.14	0.308
100	19077-53733	PIPE INJECTION	1				0.12	0.264
110	15841-53850	CLAMP PIPE	2				0.01	0.022
120	15841-53860	CLAMP PIPE	2				0.009	0.0198
130	03024-50520	SCREW WITH WASHER	2				0.004	0.0088
140	16415-65510	PLUG GLOW	3				0.03	0.066
150	16415-65560	CORD GLOW PLUG	1				0.015	0.033
160	02761-50040	NUT FLANGE	3				0.002	0.0044
170	15241-67580	CLAMP CORD	1				0.004	0.0088
180	04013-60040	WASHER PLAIN	3	<=4420			0.002	0.0044

silverhorn.co.uk

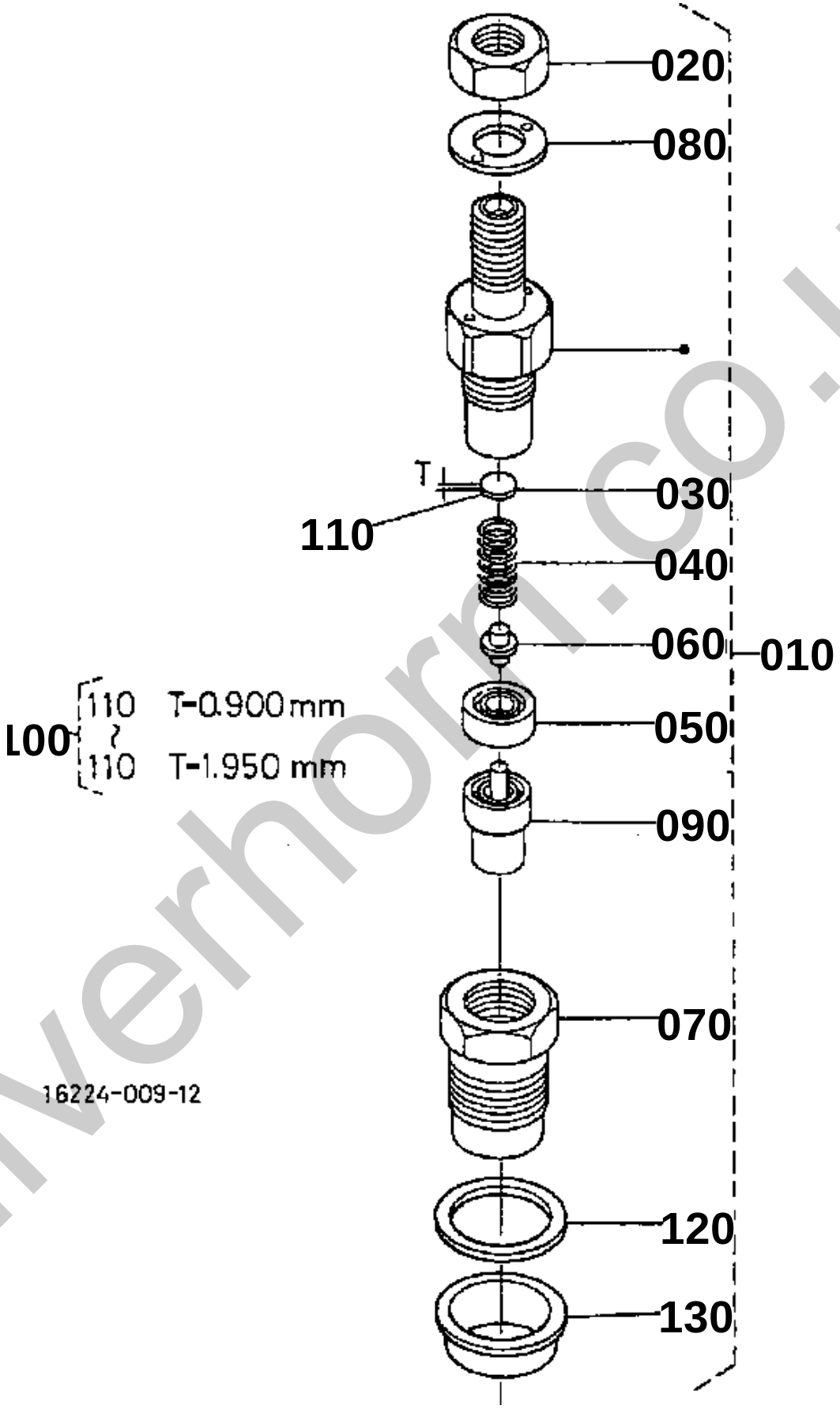

silverhorn.co.uk

↔ Interchangeable; ≠ not interchangeable; ← new for old; → old for new

REF.No	Part No.	Description	Q'ty	S.No.	I/C	REMARKS	Weight (kgf)	Weight (lb)
010	16082-53900	KIT HOLDER NOZZLE	3				0.145	0.319
020	15841-92030	NUT	3				0.005	0.011
030	15841-53230	WASHER ADJUSTING	3				0.001	0.0022
040	15841-53170	SPRING NOZZLE	3				0.004	0.0088
050	15841-53350	PIECE DISTANCE	3				0.004	0.0088
060	15841-53160	PUSH ROD	3				0.001	0.0022
070	16475-53280	NUT NOZZLE	3				0.03	0.066
080	15841-94040	WASHER	3				0.001	0.0022
090	16082-53610	PIECE NOZZLE	3				0.023	0.0506
100	15841-98100	ASSY WASHER ADJUST	3			OPTION	0.043	0.0946
110	15841-53230	WASHER ADJUSTING	3			0.900mm	0.001	0.0022
110	15841-98510	WASHER ADJUSTING	3			0.925mm	0.001	0.0022
110	15841-98520	WASHER ADJUSTING	3			0.950mm	0.001	0.0022
110	15841-98530	WASHER ADJUSTING	3			0.975mm	0.001	0.0022
110	15841-98540	WASHER ADJUSTING	3			1.000mm	0.001	0.0022
110	15841-98550	WASHER ADJUSTING	3			1.025mm	0.001	0.0022
110	15841-98560	WASHER ADJUSTING	3			1.050mm	0.001	0.0022
110	15841-98570	WASHER ADJUSTING	3			1.075mm	0.001	0.0022
110	15841-98580	WASHER ADJUSTING	3			1.100mm	0.001	0.0022
110	15841-98590	WASHER ADJUSTING	3			1.125mm	0.001	0.0022
110	15841-98600	WASHER ADJUSTING	3			1.150mm	0.001	0.0022
110	15841-98610	WASHER ADJUSTING	3			1.175mm	0.001	0.0022
110	15841-98620	WASHER ADJUSTING	3			1.200mm	0.001	0.0022
110	15841-98630	WASHER ADJUSTING	3			1.225mm	0.001	0.0022
110	15841-98640	WASHER ADJUSTING	3			1.250mm	0.001	0.0022
110	15841-98650	WASHER ADJUSTING	3			1.275mm	0.001	0.0022
110	15841-98660	WASHER ADJUSTING	3			1.300mm	0.001	0.0022
110	15841-98670	WASHER ADJUSTING	3			1.325mm	0.001	0.0022
110	15841-98680	WASHER ADJUSTING	3			1.350mm	0.001	0.0022
110	15841-98690	WASHER ADJUSTING	3			1.375mm	0.001	0.0022
110	15841-98700	WASHER ADJUSTING	3			1.400mm	0.001	0.0022
110	15841-98710	WASHER ADJUSTING	3			1.425mm	0.001	0.0022
110	15841-98720	WASHER ADJUSTING	3			1.450mm	0.001	0.0022
110	15841-98730	WASHER ADJUSTING	3			1.475mm	0.001	0.0022
110	15841-98740	WASHER ADJUSTING	3			1.500mm	0.001	0.0022
110	15841-98750	WASHER ADJUSTING	3			1.525mm	0.001	0.0022
110	15841-98760	WASHER ADJUSTING	3			1.550mm	0.001	0.0022
110	15841-98770	WASHER ADJUSTING	3			1.575mm	0.001	0.0022
110	15841-98780	WASHER ADJUSTING	3			1.600mm	0.002	0.0044
110	15841-98790	WASHER ADJUSTING	3			1.625mm	0.001	0.0022
110	15841-98800	WASHER ADJUSTING	3			1.650mm	0.001	0.0022
110	15841-98810	WASHER ADJUSTING	3			1.675mm	0.004	0.0088
110	15841-98820	WASHER ADJUSTING	3			1.700mm	0.001	0.0022
110	15841-98830	WASHER ADJUSTING	3			1.725mm	0.001	0.0022
110	15841-98840	WASHER ADJUSTING	3			1.750mm	0.001	0.0022
110	15841-98850	WASHER ADJUSTING	3			1.775mm	0.001	0.0022
110	15841-98860	WASHER ADJUSTING	3			1.800mm	0.001	0.0022
110	15841-98870	WASHER ADJUSTING	3			1.825mm	0.001	0.0022
110	15841-98880	WASHER ADJUSTING	3			1.850mm	0.001	0.0022
110	15841-98890	WASHER ADJUSTING	3			1.875mm	0.001	0.0022
110	15841-98900	WASHER ADJUSTING	3			1.900mm	0.001	0.0022

silvermorn.co.uk

↔ Interchangeable; ≠ not interchangeable; ← new for old; → old for new

REF.No	Part No.	Description	Q'ty	S.No.	I/C	REMARKS	Weight (kgf)	Weight (lb)
110	15841-98910	WASHER ADJUSTING	3			1.925mm	0.001	0.0022
110	15841-98920	WASHER ADJUSTING	3			1.950mm	0.001	0.0022
120	15841-53622	GASKET	3				0.002	0.0044
130	19077-53650	SEAL HEAT	3				0.005	0.011

silverhorn.co.uk

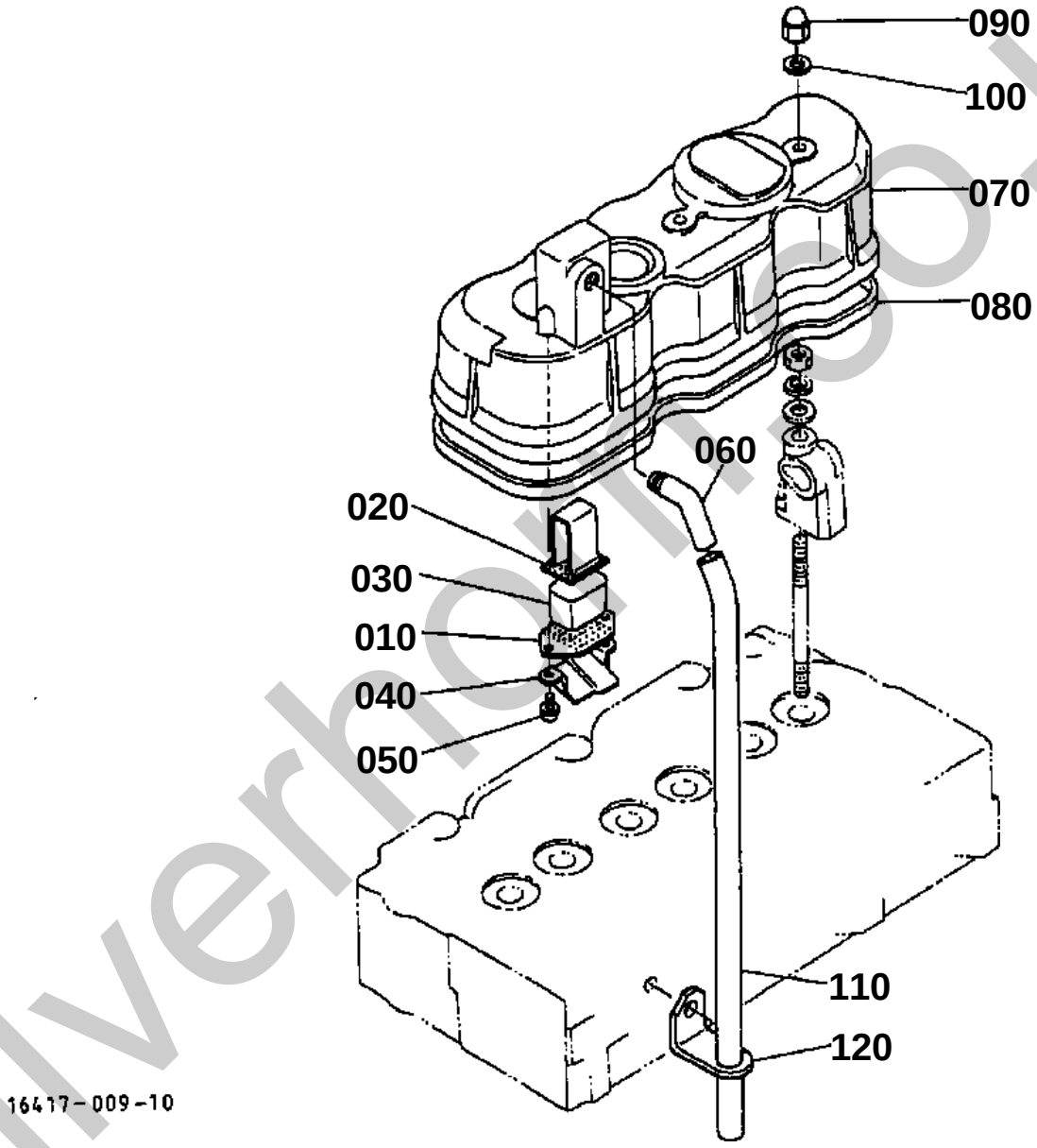

silverhoe.co.uk

CYLINDER HEAD COVER

↔ Interchangeable; ≠ not interchangeable; ← new for old; → old for new

REF.No	Part No.	Description	Q'ty	S.No.	I/C	REMARKS	Weight (kgf)	Weight (lb)
010	15521-05140	PLATE B/THER ELEMENT	1				0.005	0.011
020	15521-05150	PLATE B/THER ELEMENT	1				0.01	0.022
030	15521-05670	ELEMENT BREATHER	1				0.01	0.022
040	15521-05370	OIL SHIELD BREATHER	1				0.005	0.011
050	03034-50510	SCREW WITH WASHER	2				0.003	0.0066
060	15521-05550	JOINT BREATHER PIPE	1				0.04	0.088
070	16427-14510	COVER CYL.HEAD	1				1.13	2.486
080	15521-14520	GASKET HEAD COVER	1				0.035	0.077
090	15451-92330	NUT CAP	3				0.008	0.0176
100	15021-33660	GASKET	3				0.001	0.0022
110	15521-05510	PIPE BREATHER	1				0.075	0.165
120	15401-05580	CLAMP PIPE	1				0.02	0.044

silverhorn.co.uk

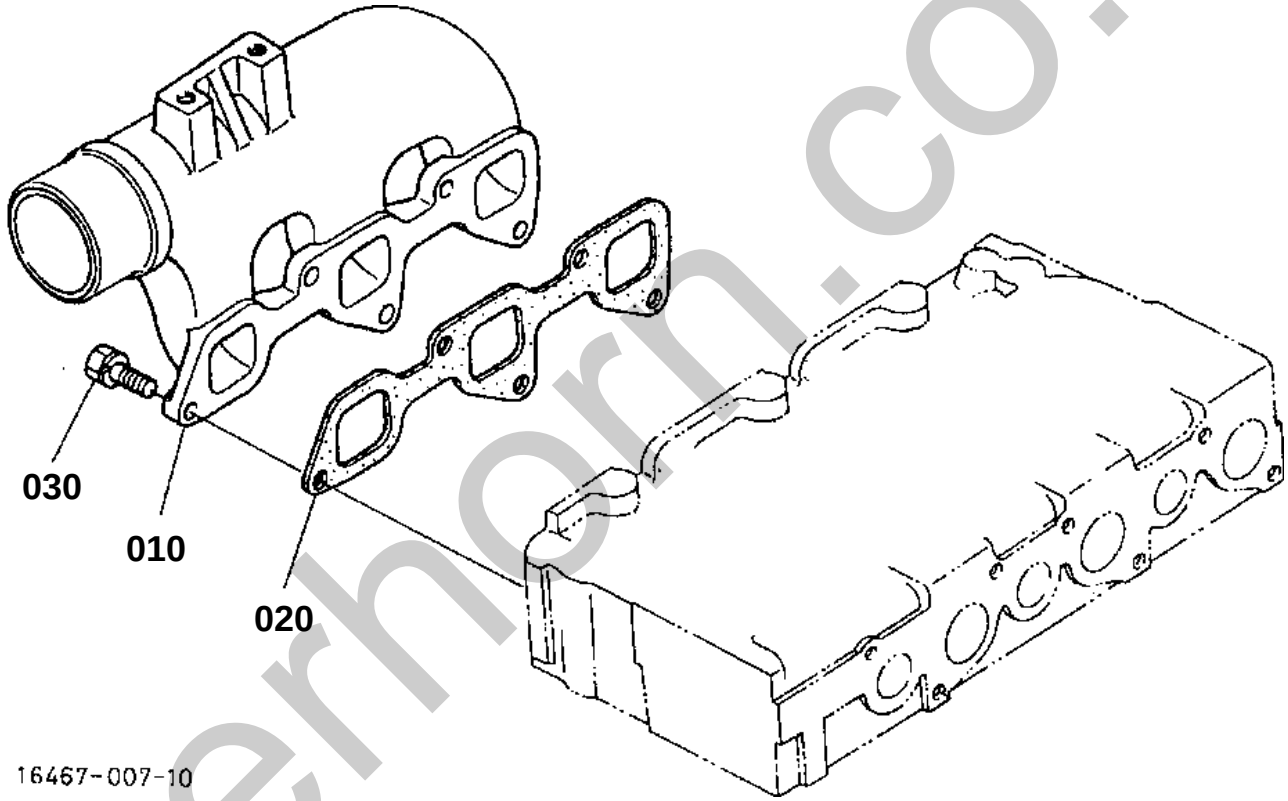

silverhorn.co.uk

INLET MANIFOLD

↔ Interchangeable; ≠ not interchangeable; ← new for old; → old for new

REF.No	Part No.	Description	Q'ty	S.No.	I/C	REMARKS	Weight (kgf)	Weight (lb)
010	16427-11760	MANIFOLD INLET	1				0.9	1.98
020	17326-11820	GASKET IN-MANIFOLD	1				0	0
030	01123-50822	BOLT	5				0.012	0.0264

silverhorn.co.uk

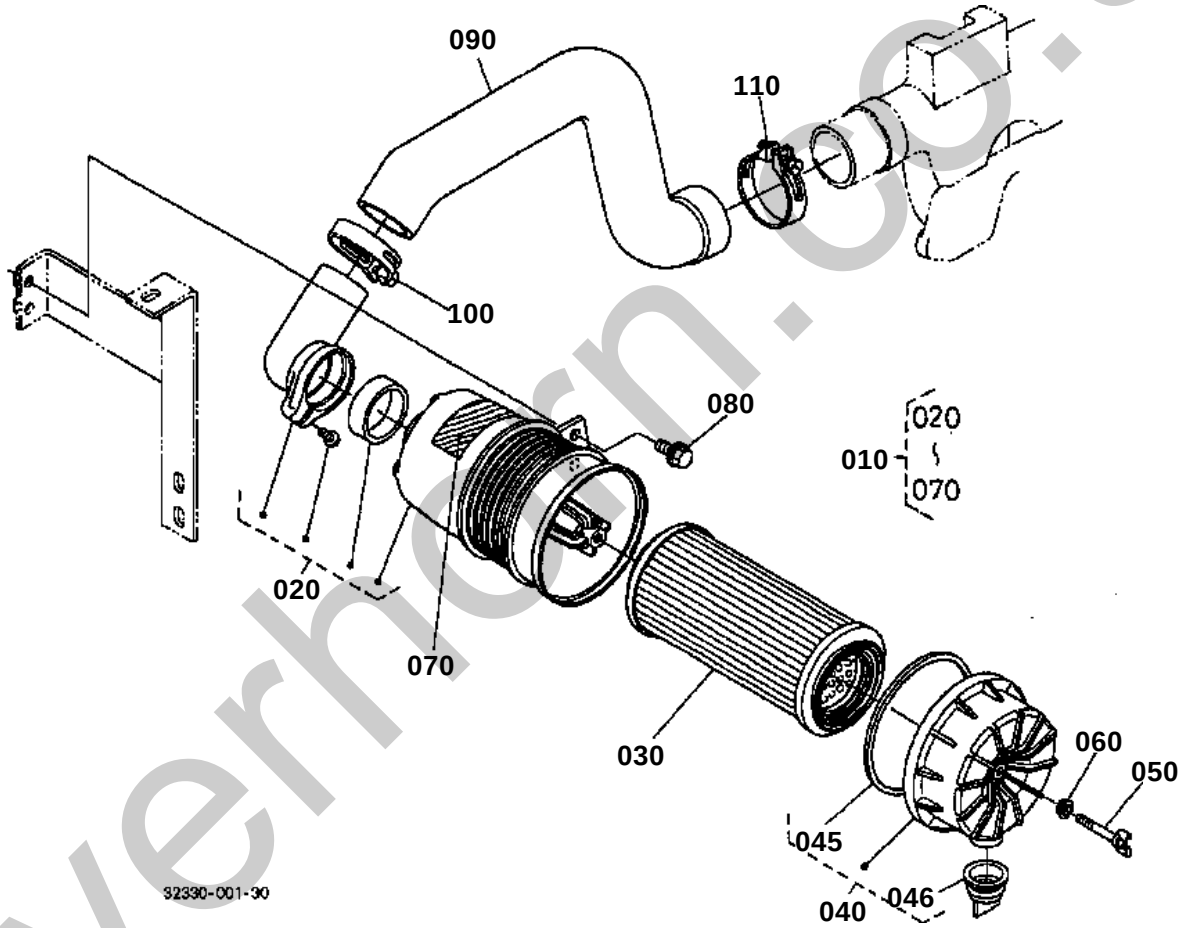

silverhorn.co.uk

AIR CLEANER

↔ Interchangeable; ≠ not interchangeable; ← new for old; → old for new

REF.No	Part No.	Description	Q'ty	S.No.	I/C	REMARKS	Weight (kgf)	Weight (lb)
010	T0070-16304	ASSY CLEANER AIR	1				1.05	2.31
020	T0070-16310	COMP.BODY A/C	1				0.49	1.078
030	T0070-16323	COMP.FILTER A/C	1				0.38	0.836
040	T0070-93173	ASSY CUP AIR CLEANER	1				0.2	0.44
045	T0070-93150	SEAL AIR CLEANER	1				0.004	0.0088
046	T0070-93160	VALVE	1				0.01	0.022
050	T0070-16342	BOLT WING	1				0.021	0.0462
060	T0070-16350	SEAL WASHER	1				0.001	0.0022
070	T0070-93180	LABEL AIR CLEANER	1				0.001	0.0022
080	01754-50816	BOLT FLANGE	2				0.011	0.0242
090	32330-16330	HOSE INLET	1				0.615	1.353
100	15401-11720	BAND PIPE	1				0.03	0.066
100	T0270-35560	CLAMP HOSE	1		«		0.035	0.077
110	31351-18110	BAND PIPE	1				0.04	0.088

silverhorn.co.uk

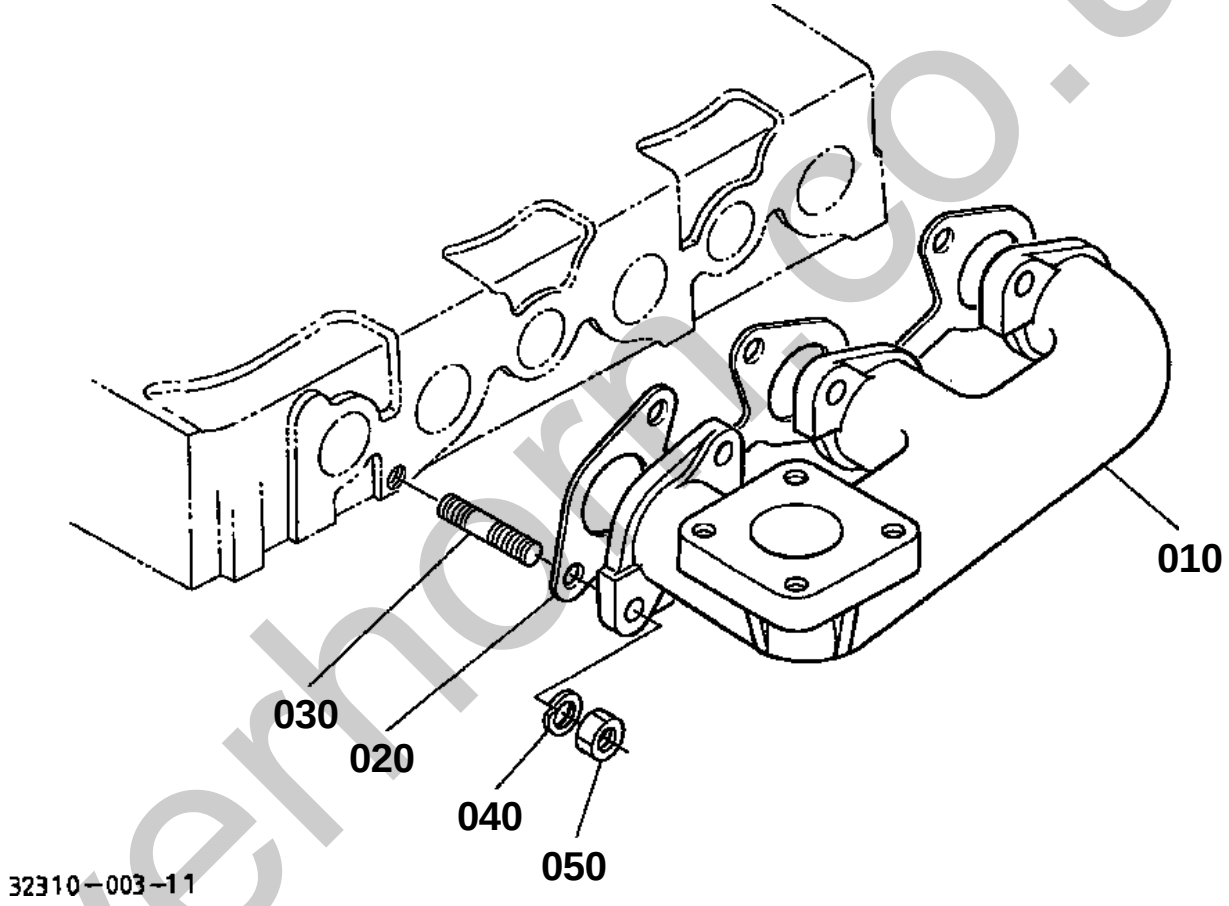

silverhorn.co.uk

EXHAUST MANIFOLD

↔ Interchangeable; ≠ not interchangeable; ← new for old; → old for new

REF.No	Part No.	Description	Q'ty	S.No.	I/C	REMARKS	Weight (kgf)	Weight (lb)
010	17367-12313	MANIFOLD EXHAUST	1				2	4.4
020	15313-12350	GASKET EX-MANIFOLD	1				0.04	0.088
020	1A021-12350	GASKET EX-MANIFOLD	1		«		0.028	0.0616
030	15221-91530	STUD	6				0.011	0.0242
040	04512-60080	WASHER SPRING	6				0.002	0.0044
050	02156-50080	NUT	6				0.004	0.0088

silverhorn.co.uk

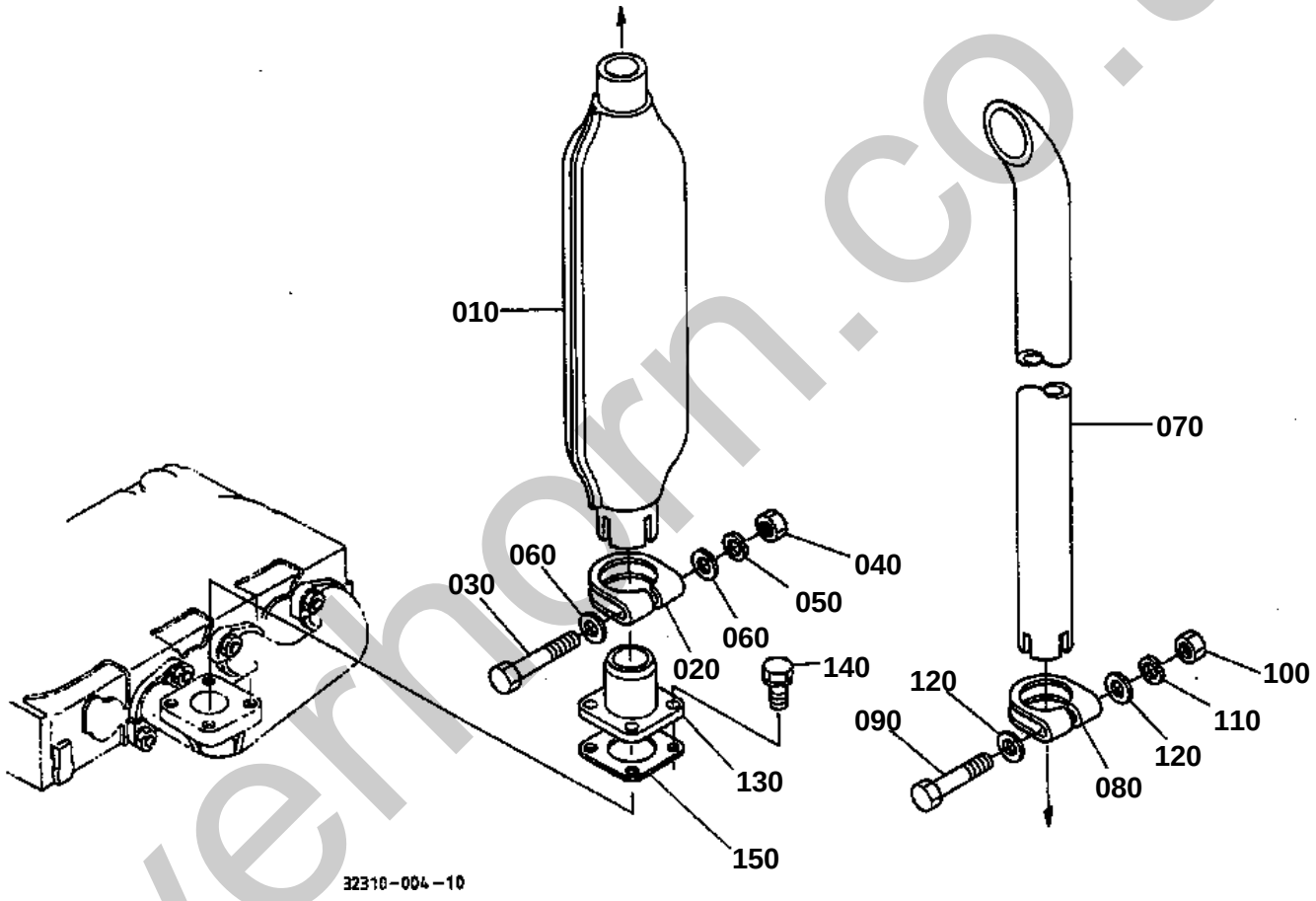

silvermorn.co.uk

MUFFLER

↔ Interchangeable; ≠ not interchangeable; ← new for old; → old for new

REF.No	Part No.	Description	Q'ty	S.No.	I/C	REMARKS	Weight (kgf)	Weight (lb)
010	15221-12116	MUFFLER	1				2.3	5.06
020	15221-12133	BAND MUFFLER	1				0.105	0.231
030	01153-50880	BOLT	1				0.03	0.066
040	02156-50080	NUT	1				0.004	0.0088
050	04512-60080	WASHER SPRING	1				0.002	0.0044
060	04012-50080	WASHER PLAIN	2				0.001	0.0022
070	34219-12410	PIPE EXHAUST	1				0.54	1.188
080	15221-12433	BAND PIPE	1				0.05	0.11
090	01153-50860	BOLT	1				0.024	0.0528
100	02156-50080	NUT	1				0.004	0.0088
110	04512-60080	WASHER SPRING	1				0.002	0.0044
120	04012-50080	WASHER PLAIN	2				0.001	0.0022
130	32400-88790	FLANGE MUFFLER	1				0.445	0.979
140	01123-50822	BOLT	4	<=30279			0.012	0.0264
140	01128-50825	BOLT	4	>=30280	¬		0.015	0.033
150	T0070-16420	GASKET MUFFLER	2				0.016	0.0352
150	17326-12230	GASKET MUFFLER	2		«		0	0

silverhorn.co.uk

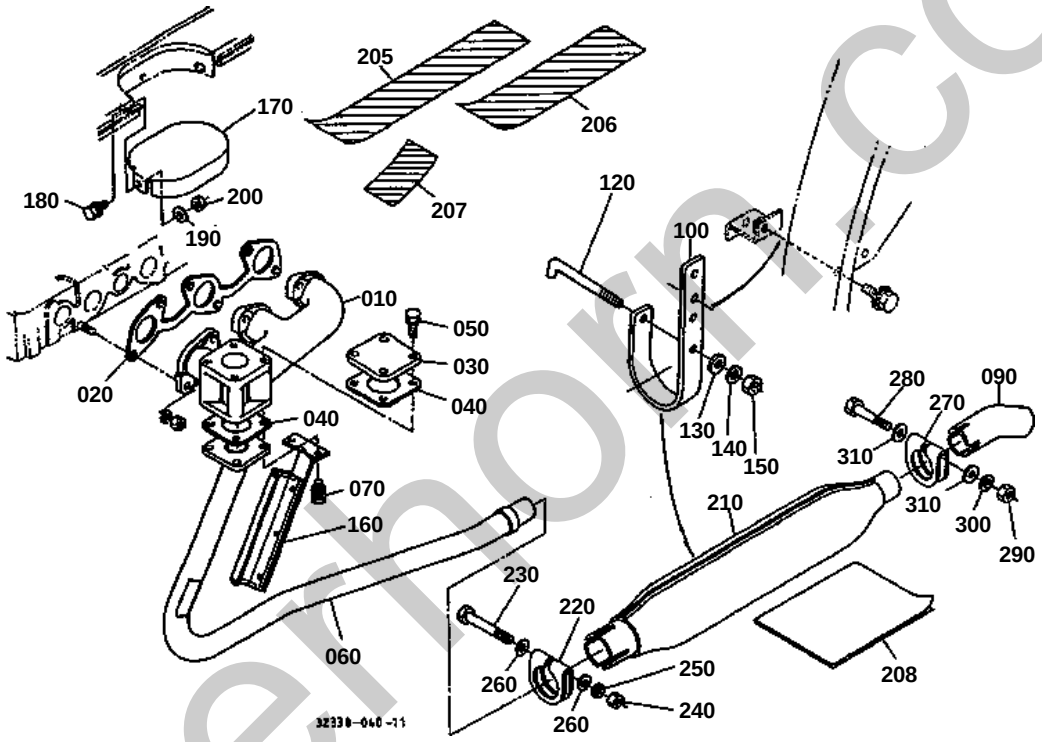

silverhorn.co.uk

UNDER MUFFLER [OPTION]

↔ Interchangeable; ≠ not interchangeable; ← new for old; → old for new

REF.No	Part No.	Description	Q'ty	S.No.	I/C	REMARKS	Weight (kgf)	Weight (lb)
010	17325-12312	MANIFOLD EXHAUST	1				3	6.6
020	15313-12350	GASKET EX-MANIFOLD	1				0.04	0.088
030	17355-92852	COVER MANIFOLD	1				0.25	0.55
040	T0070-16420	GASKET MUFFLER	2				0.016	0.0352
050	01123-50820	BOLT	4				0.011	0.0242
060	32330-62110	PIPE MUFFLER	1				2.24	4.928
070	01123-50825	BOLT	4				0.013	0.0286
080	99999-99999	BLANK	0				0	0
090	32430-62130	PIPE MUFFLER	1				0	0
100	32310-62160	SUPPORT MUFFLER	1				0.55	1.21
110	99999-99999	BLANK	0				0	0
120	35110-62170	BOLT	1				0.05	0.11
130	04013-60080	WASHER PLAIN	1				0.002	0.0044
140	04512-60080	WASHER SPRING	1				0.002	0.0044
150	02054-50080	NUT	1				0.005	0.011
160	32330-26150	COVER HEAT PROOF	1				0.38	0.836
170	35010-34130	COVER	1				0.2	0.44
180	01125-60820	BOLT	3				0.015	0.033
190	04013-60080	WASHER PLAIN	3				0.002	0.0044
200	02114-50080	NUT	3				0.005	0.011
205	32330-26160	SHEET HEAT SHIELD	1			FOR BATTERY-CORD	0.016	0.0352
206	32330-26170	SHEET HEAT SHIELD	1			FOR WIRE HARNESS	0.016	0.0352
207	32330-26180	TAPE	4			FOR SHEET	0.002	0.0044
208	32330-98210	MANUAL INSTRUCTION	1				0.01	0.022
210	15221-12116	MUFFLER	1				2.3	5.06
220	15221-12133	CLAMP MUFFLER	1				0.105	0.231
230	01153-50880	BOLT	1				0.03	0.066
240	02156-50080	NUT SELF-LOCKING	1				0.004	0.0088
250	04512-60080	WASHER SPRING	1				0.002	0.0044
260	04012-50080	WASHER PLAIN	2				0.001	0.0022
270	15221-12433	CLAMP MUFFER PIPE	1				0.05	0.11
280	01153-50860	BOLT	1				0.024	0.0528
290	02156-50080	NUT SELF-LOCKING	1				0.004	0.0088
300	04512-60080	WASHER SPRING	1				0.002	0.0044
310	04012-50080	WASHER PLAIN	1				0.001	0.0022

silvermorn.co.uk

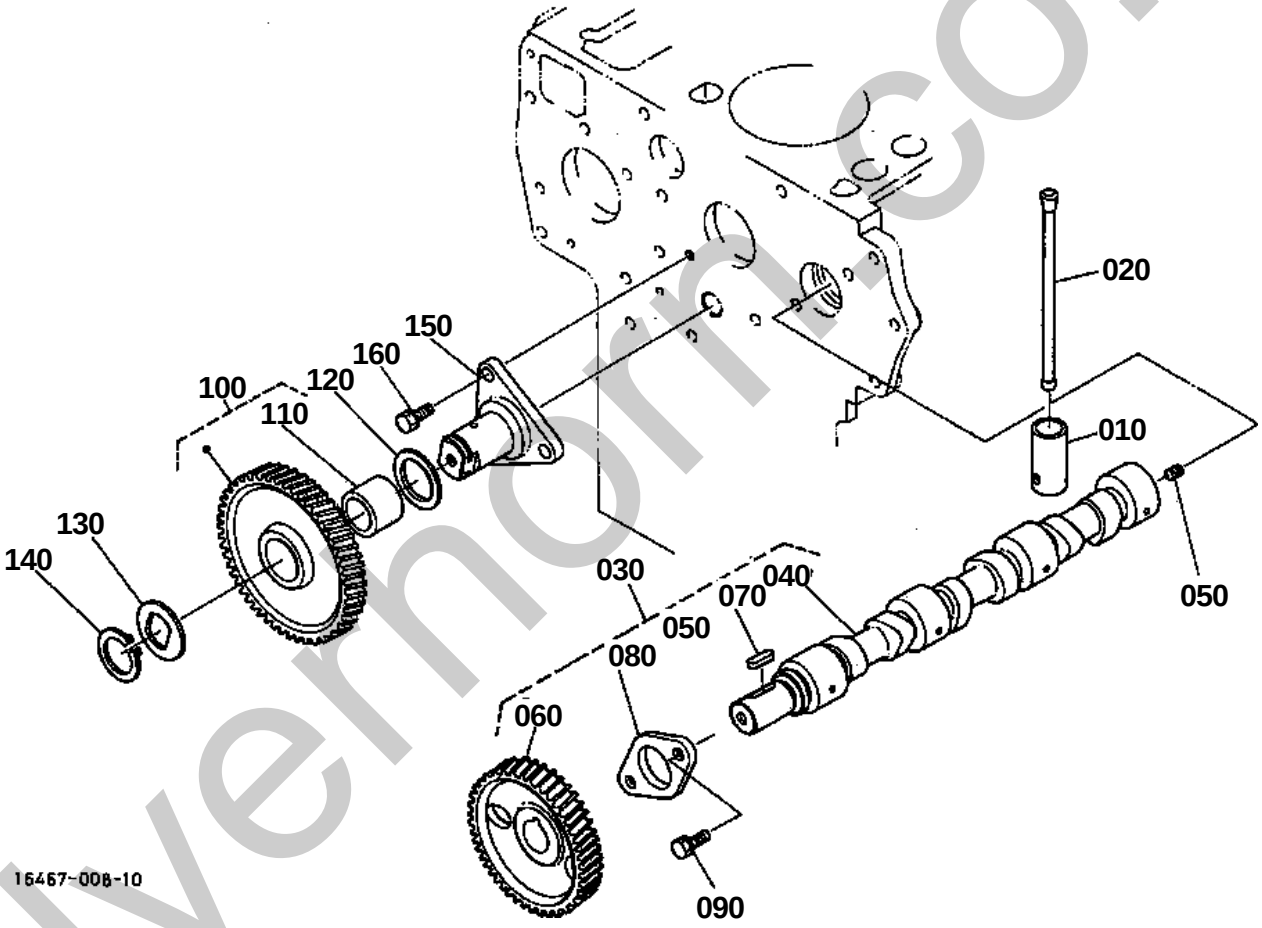

silvernorm.co.uk

CAMSHAFT

↔ Interchangeable; ≠ not interchangeable; ← new for old; → old for new

REF.No	Part No.	Description	Q'ty	S.No.	I/C	REMARKS	Weight (kgf)	Weight (lb)
010	15601-15550	TAPPET	6				0.08	0.176
020	19013-15110	PUSH ROD	6				0.05	0.11
030	17331-16010	ASSY CAMSHAFT	1				2.75	6.05
040	17331-16150	CAMSHAFT	1				1.795	3.949
050	15521-93610	SCREW SET	1				0.002	0.0044
060	15521-16510	GEAR CAM	1	<=30279			0.85	1.87
060	15521-16514	GEAR CAM	1	>=30280	¬		0	0
070	05712-00720	KEY FEATHER	1				0.008	0.0176
080	15221-16270	STOPPER CAMSHAFT	1				0.073	0.1606
090	01123-50818	BOLT	2				0.012	0.0264
100	16427-24010	COMP GEAR IDLE	1	<=30279			1.2	2.64
100	1G791-24010	COMP.GEAR IDLE	1	>=30280	¬		1.195	2.629
110	16427-24980	BUSH IDLE GEAR	1				0.07	0.154
120	16427-24360	COLLAR	1				0.02	0.044
130	16427-24370	COLLAR	1				0.02	0.044
140	15451-95400	CIRCLIP EXTERNAL	1				0.01	0.022
150	16427-24250	SHAFT IDLE GEAR	1				0.65	1.43
160	01123-50818	BOLT	3				0.012	0.0264

silverhorn.co.uk

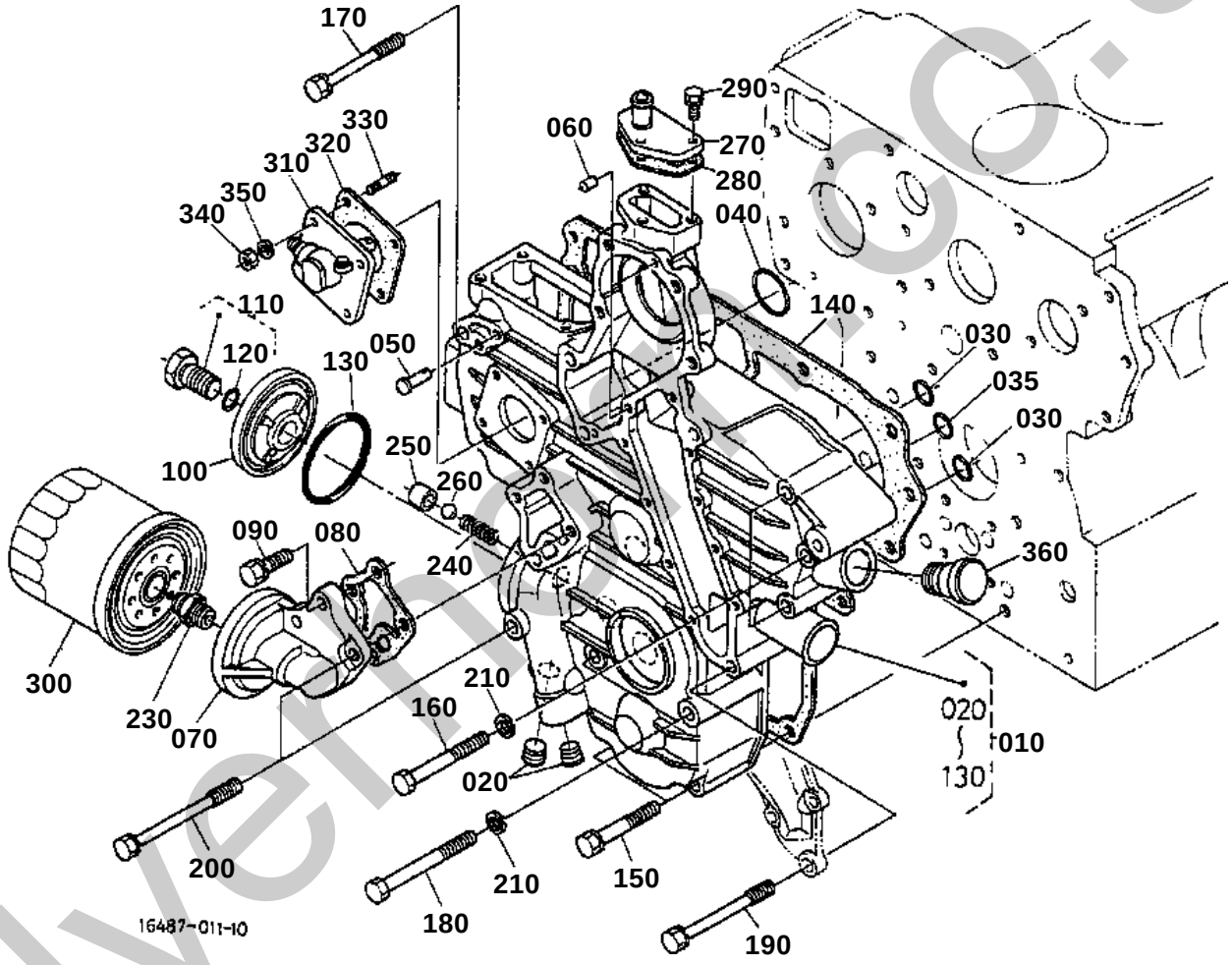

silvermach.co.uk

GEAR CASE

↔ Interchangeable; ≠ not interchangeable; ← new for old; → old for new

REF.No	Part No.	Description	Q'ty	S.No.	I/C	REMARKS	Weight (kgf)	Weight (lb)
010	16705-04032	ASSY CASE GEAR	1				4.2	9.24
020	16241-96020	PLUG	2				0.015	0.033
030	04811-00150	O RING	2				0	0
035	04811-00200	O RING	1				0	0
040	04811-00360	O RING	1				0	0
050	15221-56280	PIN START SPRING	1				0.006	0.0132
060	05012-00612	PIN STRAIGHT	2				0.003	0.0066
070	17331-32610	SUPPORT OIL FILTER	1				0.275	0.605
080	17326-32620	GASKET	1				0.005	0.011
090	01123-50825	BOLT	3				0.013	0.0286
100	17331-32880	COVER	1				0.075	0.165
110	17331-32910	COMP BOLT	1				0.07	0.154
120	04811-00150	O RING	1				0	0
130	19202-96830	O RING	1				0.01	0.022
140	17326-04132	GASKET GEAR CASE	1				0.03	0.066
150	01123-50860	BOLT	3				0.002	0.0044
160	01153-50870	BOLT	3				0.026	0.0572
170	17367-91010	BOLT	2				0.005	0.011
180	01153-50880	BOLT	2				0.03	0.066
190	17367-91020	BOLT	3				0.035	0.077
200	17367-91030	BOLT	2				0.02	0.044
210	04512-60080	WASHER SPRING	5				0.002	0.0044
220	99999-99999	BLANK	0				0	0
230	15521-32290	JOINT PIPE	1				0	0
240	15241-36950	SPRING	1				0.004	0.0088
250	15521-36930	SEAT VALVE	1				0.015	0.033
260	07715-03213	BALL	1				0.004	0.0088
270	15521-73320	FLANGE WATER RETURN	1				0.04	0.088
280	15766-73330	GASKET WATER FLANGE	1				0	0
280	1A021-73330	GASKET RETURN FLANGE	1		«		0.001	0.0022
290	01023-50620	BOLT	3				0.006	0.0132
300	17321-32430	CARTRIDGE OIL FILTER	1				0	0
310	38240-34660	ASSY GEAR CASE H/M	1				0.335	0.737
320	15296-88130	GASKET H/METER UNIT	1				0.002	0.0044
330	15221-88210	STUD	4				0.005	0.011
340	02056-50060	NUT	4				0.002	0.0044
350	04512-60060	WASHER SPRING	4				0.001	0.0022
360	16427-33140	PLUG OIL FILLER	1				0.025	0.055

silvermorn.co.uk

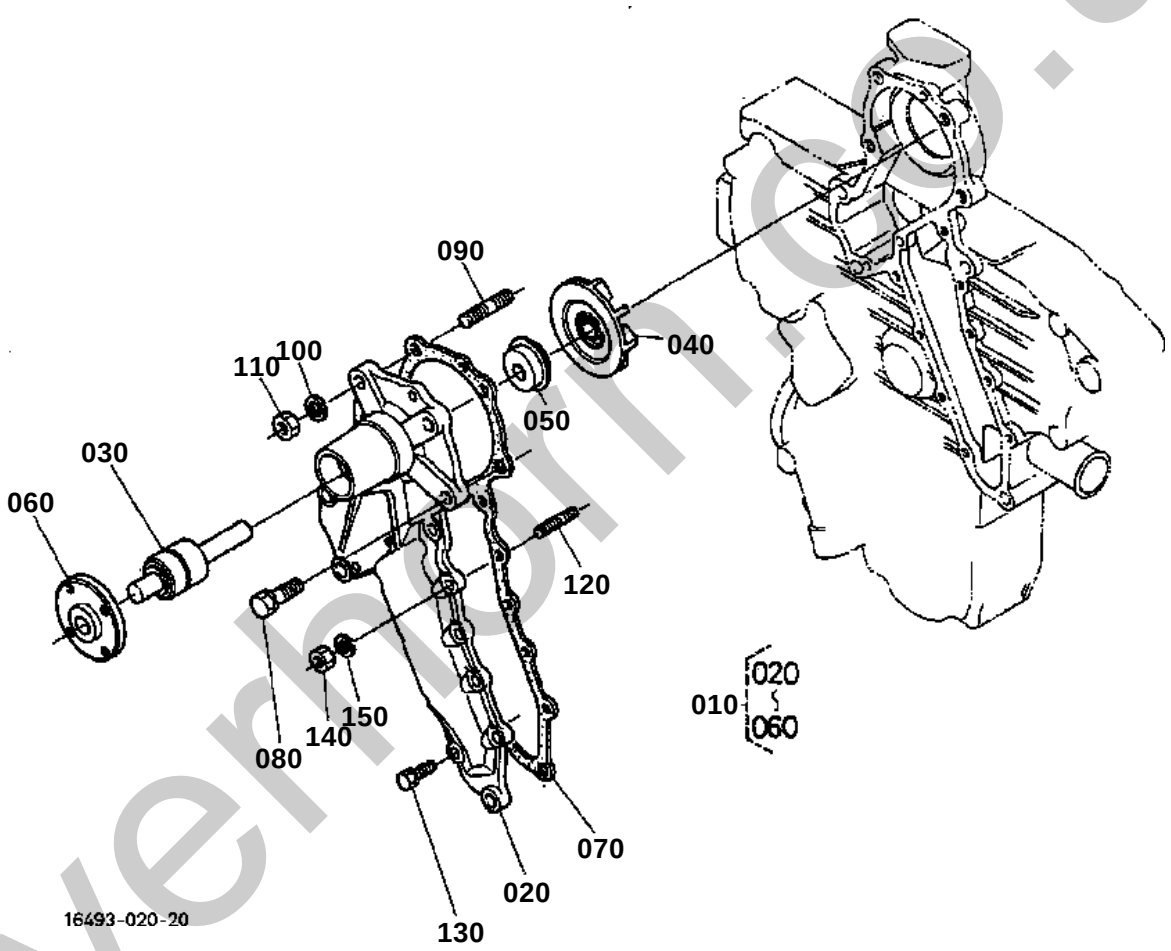

silvernorn.co.uk

WATER PUMP

↔ Interchangeable; ≠ not interchangeable; ← new for old; → old for new

REF.No	Part No.	Description	Q'ty	S.No.	I/C	REMARKS	Weight (kgf)	Weight (lb)
010	16412-73030	ASSY PUMP WATER	1	<=30279			0	0
010	1A021-73030	ASSY PUMP WATER	1	>=30280	1		1	2.2
020	17331-73410	BODY WATER PUMP	1				0.51	1.122
030	15521-73550	BEARING	1				0.235	0.517
040	16661-73510	IMPELLER	1	<=30279			0.195	0.429
040	1A021-73510	IMPELLER WATER PUMP	1	>=30280	1		0.065	0.143
050	16661-73050	ASSY SEAL MECHANICAL	1				0.025	0.055
060	15521-73520	FLANGE WATER PUMP	1				0.25	0.55
070	17326-73430	GASKET WATER PUMP	1				0	0
070	1A021-73430	GASKET WATER PUMP	1		«		0.007	0.0154
080	01123-50828	BOLT	3				0.014	0.0308
090	15521-91510	STUD	1				0.012	0.0264
100	04512-60080	WASHER SPRING	1				0.002	0.0044
110	02156-50080	NUT	1				0.004	0.0088
120	15221-88210	STUD	1				0.005	0.011
130	01023-50618	BOLT	8				0.006	0.0132
140	02056-50060	NUT	1				0.002	0.0044
150	04512-60060	WASHER SPRING	1				0.001	0.0022

silverhorn.co.uk

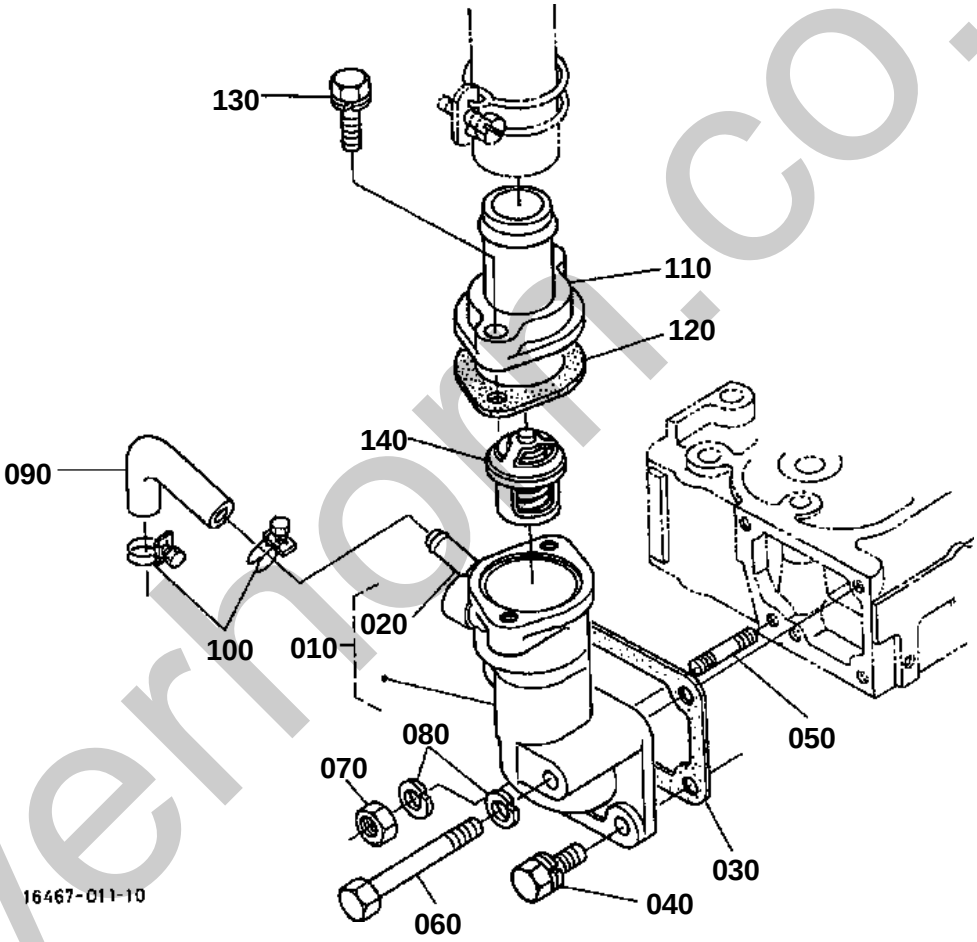

silverhorn.co.uk

WATER FLANGE AND THERMOSTAT

↔ Interchangeable; ≠ not interchangeable; ← new for old; → old for new

REF.No	Part No.	Description	Q'ty	S.No.	I/C	REMARKS	Weight (kgf)	Weight (lb)
010	17331-72703	COMP.FLANGE WATER	1				0.36	0.792
020	17331-73342	PIPE WATER RETURN	1				0.01	0.022
030	15766-72920	GASKET WATER FLANGE	1				0	0
030	1A021-72920	GASKET WATER FLANGE	1		«		0.002	0.0044
040	01123-50822	BOLT	2				0.012	0.0264
040	01123-50820	BOLT	2		«		0.011	0.0242
050	15221-91530	STUD	1				0.011	0.0242
060	01153-50870	BOLT	1				0.026	0.0572
070	02156-50080	NUT	1				0.004	0.0088
080	04512-60080	WASHER SPRING	2				0.002	0.0044
090	15521-73340	PIPE WATER RETURN	1				0.025	0.055
100	15109-73360	BAND PIPE	2				0.01	0.022
110	15321-73260	COVER THERMOSTAT	1				0.107	0.2354
120	15313-73270	GASKET THERMOSTAT	1				0	0
120	1A021-73270	GASKET THERMO.COVER	1		«		0	0
130	01123-50835	BOLT	2				0.02	0.044
140	19434-73010	ASSY THERMOSTAT	1				0	0

silverhorn.co.uk

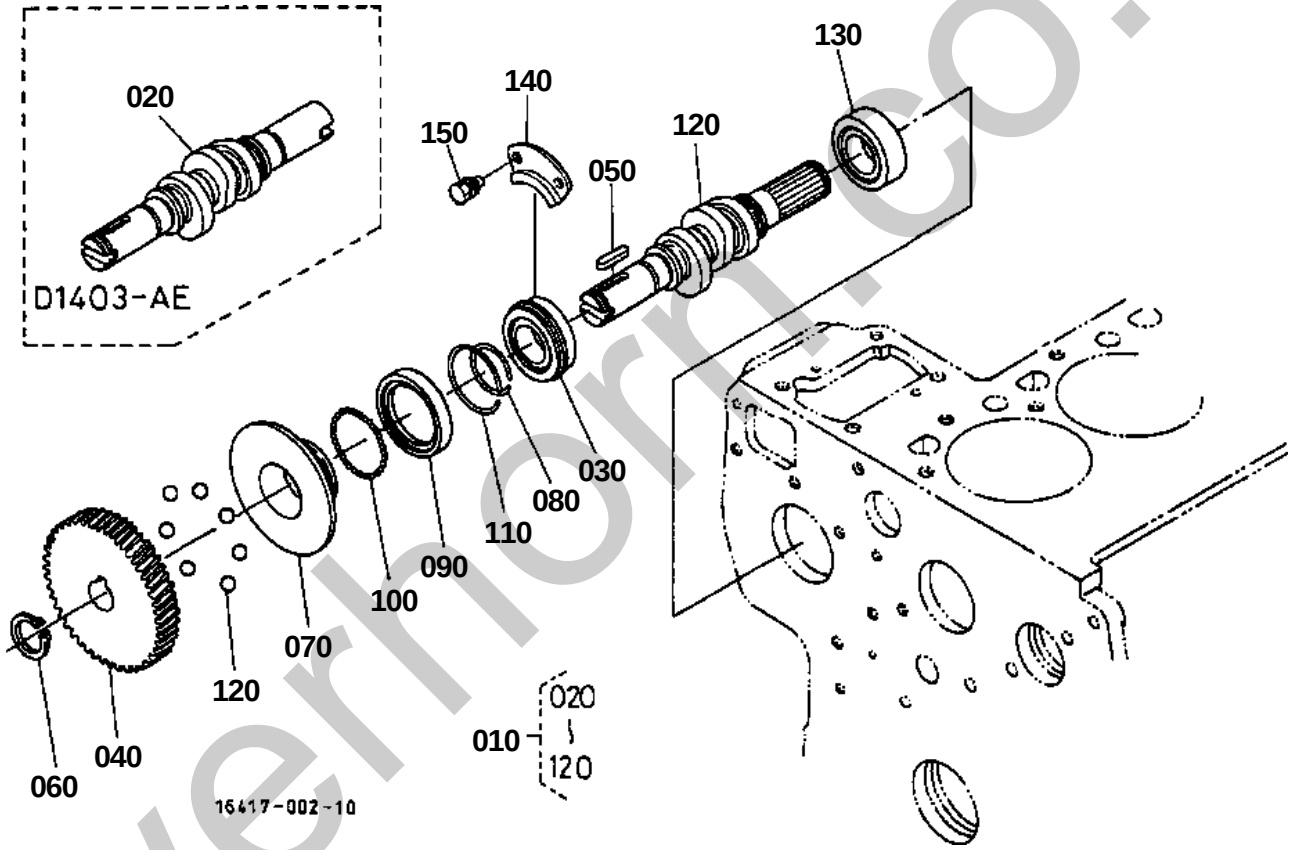

silverhorn.co.uk

FUEL CAMSHAFT

↔ Interchangeable; ≠ not interchangeable; ← new for old; → old for new

REF.No	Part No.	Description	Q'ty	S.No.	I/C	REMARKS	Weight (kgf)	Weight (lb)
010	16417-16020	ASSY CAMSHAFT FUEL	1				2.4	5.28
020	16417-16170	CAMSHAFT FUEL	1				0.98	2.156
030	08153-06205	BEARING BALL	1				0.13	0.286
040	16415-51150	GEAR INJECTION PUMP	1				1.075	2.365
050	05712-00525	KEY FEATHER	1				0.005	0.011
060	04612-00240	CIRCLIP EXTERNAL	1				0.002	0.0044
070	15611-55450	SLEEVE GOVERNOR	1				0.117	0.2574
080	15221-55470	CIR-CLIP GOV.SLEEVE	1				0.003	0.0066
090	15611-55690	CASE GOVERNOR BALL	1				0.03	0.066
100	07715-03205	BALL	39				0.001	0.0022
110	15221-55740	CIR-CLIP	1				0.002	0.0044
120	07715-00403	BALL	7				0.03	0.066
130	08103-06205	BEARING BALL	1				0.12	0.264
140	15221-16320	STOPPER FUEL.C/SHAFT	1				0.02	0.044
150	01123-60814	BOLT	2				0.01	0.022

silverhorn.co.uk

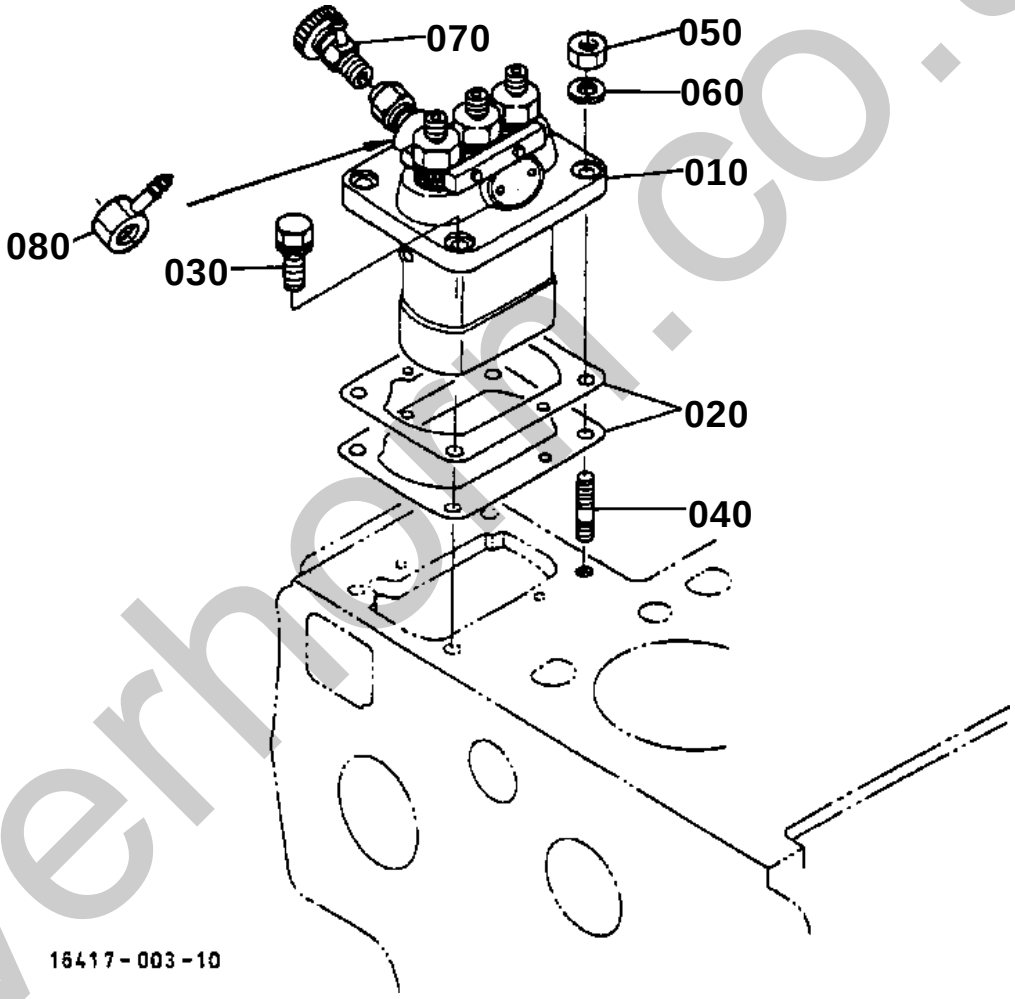

silverhorn.co.uk

↔ Interchangeable; ≠ not interchangeable; ← new for old; → old for new

REF.No	Part No.	Description	Q'ty	S.No.	I/C	REMARKS	Weight (kgf)	Weight (lb)
010	16427-51010	ASSY PUMP INJECTION	1				2.3	5.06
020	16414-52090	SHIM INJECTION	1			0.20mm	0.001	0.0022
020	16414-52110	SHIM INJECTION	1			0.25mm	0.001	0.0022
020	16414-52120	SHIM INJECTION	1			0.30mm	0.005	0.011
030	01123-50822	BOLT	2				0.012	0.0264
040	15221-91530	STUD	2				0.011	0.0242
050	02156-50080	NUT	2				0.004	0.0088
060	04512-60080	WASHER SPRING	2				0.002	0.0044
070	14311-60504	ASSY COCK JET START	1				0.034	0.0748
080	14111-42410	JOINT EYE	1				0.025	0.055

silverhorn.co.uk

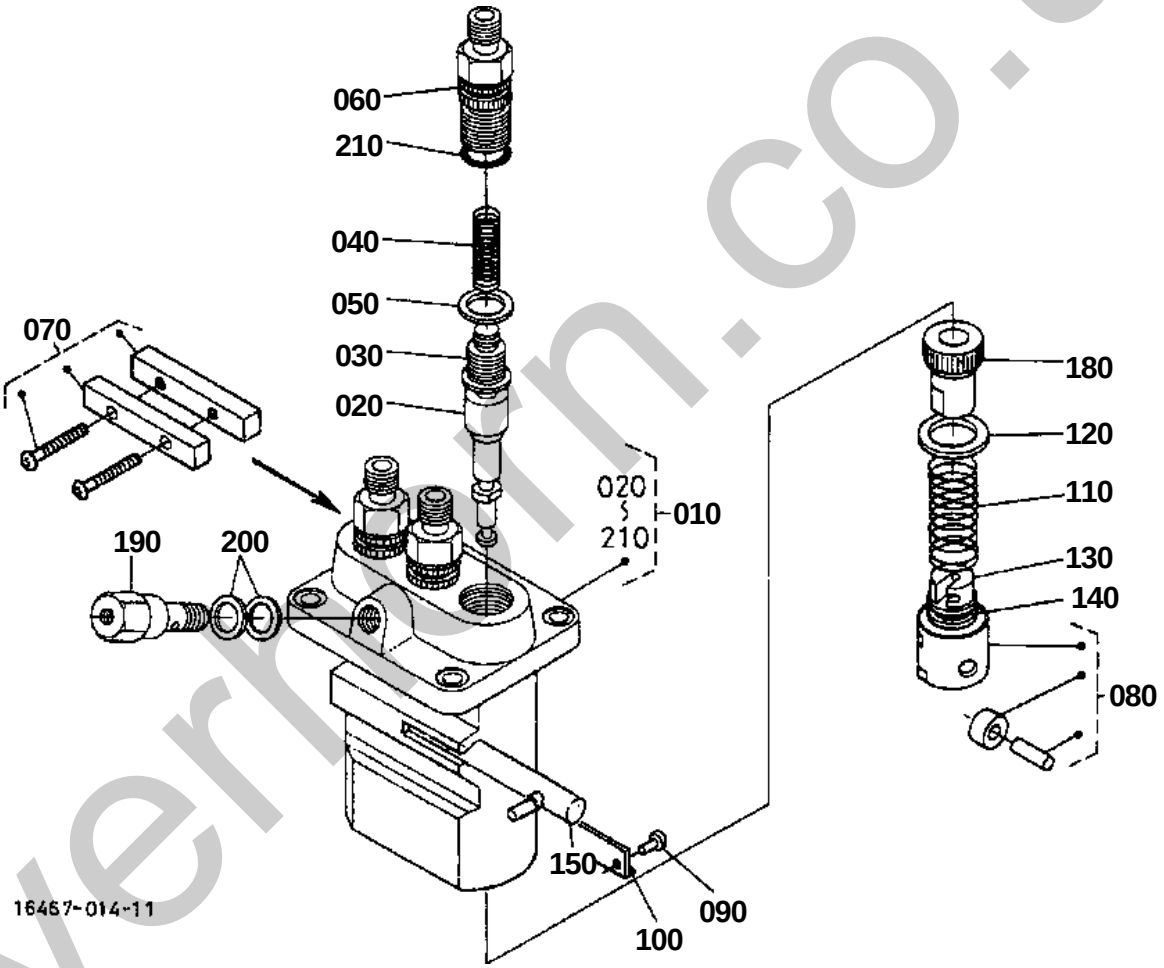

silverhorn.co.uk

↔ Interchangeable; ≠ not interchangeable; ← new for old; → old for new

REF.No	Part No.	Description	Q'ty	S.No.	I/C	REMARKS	Weight (kgf)	Weight (lb)
010	16427-51010	ASSY PUMP INJECTION	1				2.3	5.06
020	16475-51050	PLUNGER PUMP	3				0.04	0.088
030	16475-51030	VALVE DELIVERY	3				0.02	0.044
040	16475-51230	SPRING DELIV.VALVE	3				0.003	0.0066
050	11420-51240	GASKET DELIV.VALVE	3				0	0
060	16415-51220	HOLDER DELIV.VALVE	3				0.07	0.154
070	16415-51610	ASSY PLATE LOCK	1				0.1	0.22
080	15221-51070	ASSY TAPPET	3				0.039	0.0858
090	14611-51250	PIN TAPPET GUIDE	3				0.003	0.0066
100	19484-51460	PLATE	1				0.003	0.0066
110	15221-51280	SPRING PLUNGER	3				0.015	0.033
120	15221-51270	SEAT SPRING UPPER	3				0.004	0.0088
130	15221-51290	SEAT SPRING LOWER	3				0.01	0.022
140	19077-51490	SHIM	3				0.001	0.0022
150	15321-51060	RACK CONTROL	1				0.038	0.0836
160	99999-99999	BLANK	0				0	0
170	99999-99999	BLANK	0				0	0
180	15221-51382	SLEEVE CONTROL	3				0.011	0.0242
190	15521-51320	SCREW FOLLOW	1				0.035	0.077
200	15221-96650	GASKET	2				0.001	0.0022
210	14611-51200	O RING	3				0.001	0.0022

silverhorn.co.uk

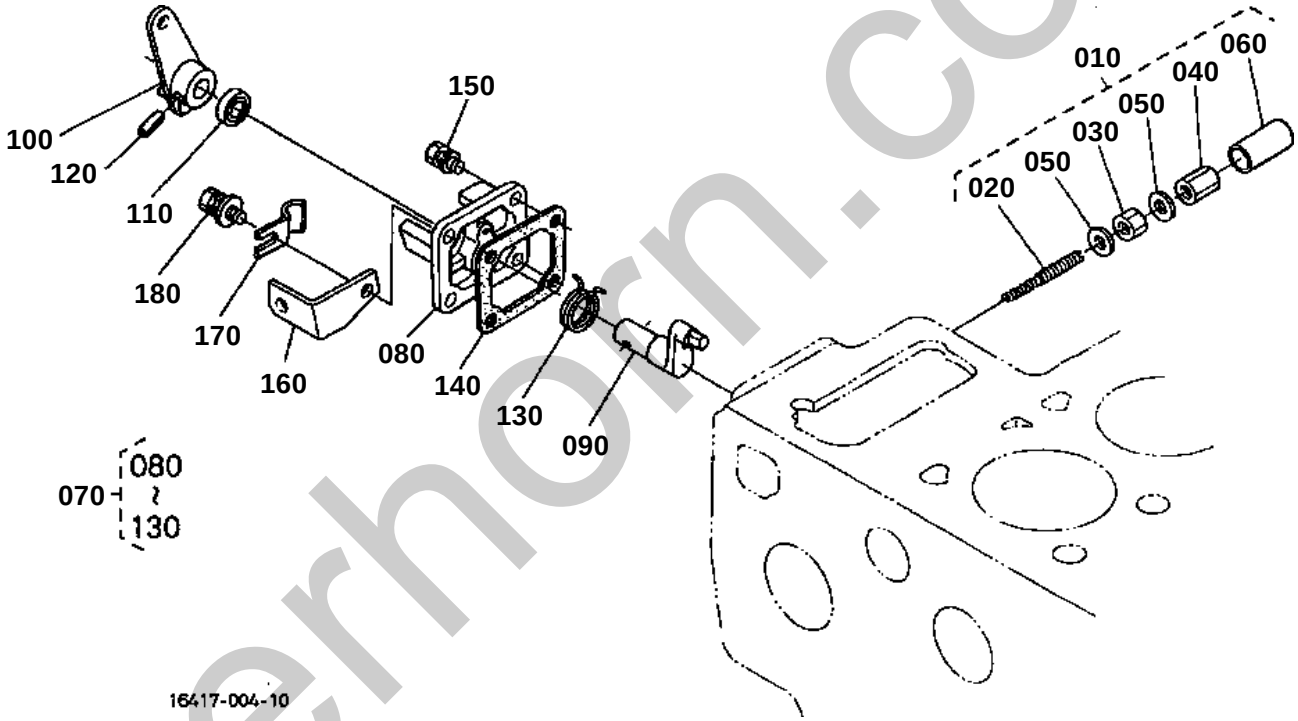

silverhorn.co.uk

ENGINE STOP LEVER

↔ Interchangeable; ≠ not interchangeable; ← new for old; → old for new

REF.No	Part No.	Description	Q'ty	S.No.	I/C	REMARKS	Weight (kgf)	Weight (lb)
010	15521-54090	APPARATUS IDLING	1				0.045	0.099
020	15521-54100	ASSY BOLT ADJUSTMENT	1				0.015	0.033
030	15401-92010	NUT	1				0.01	0.022
040	15521-92330	NUT CAP	1				0.02	0.044
050	15021-33660	GASKET	2				0.001	0.0022
060	15521-54270	CAP	1				0.003	0.0066
070	17331-57702	ASSY LEVER ENG.STOP	1				0.19	0.418
080	15471-51652	COVER INJECTION PUMP	1				0.02	0.044
090	17331-57740	SHAFT LEVER	1				0.04	0.088
100	17331-57720	LEVER ENGINE STOP	1				0.05	0.11
110	15471-57980	SEAL OIL	1				0.001	0.0022
120	05411-00420	PIN SPRING	1				0.001	0.0022
130	15471-57920	SPRING RETURN	1				0.005	0.011
140	15296-51660	GASKET PUMP COVER	1				0	0
140	1A021-51660	GASKET PUMP COVER	1		«		0.003	0.0066
150	01023-50618	BOLT	3				0.006	0.0132
160	32330-17170	SUPPORT	1				0.02	0.044
170	38430-17180	SPRING	1				0.1	0.22
180	01025-50620	BOLT	1				0.02	0.044

silverhorn.co.uk

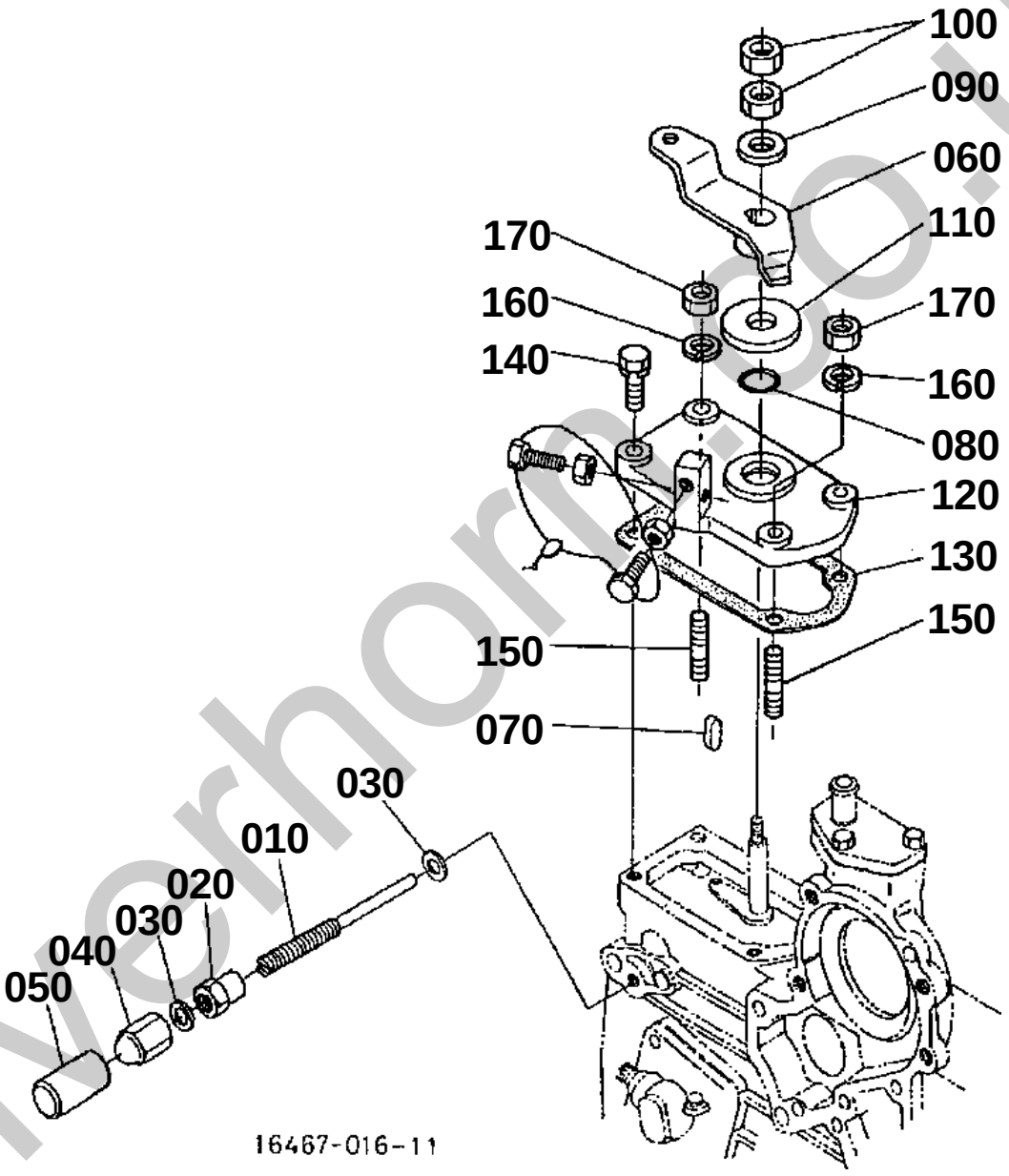

silverhorse.co.uk

SPEED CONTROL PLATE

↔ Interchangeable; ≠ not interchangeable; ← new for old; → old for new

REF.No	Part No.	Description	Q'ty	S.No.	I/C	REMARKS	Weight (kgf)	Weight (lb)
010	15601-54120	BOLT ADJUSTING	1				0.011	0.0242
020	15601-92010	NUT	1	<=4826			0	0
020	15601-92012	NUT	1	>=4827	¬		0.006	0.0132
030	15601-96650	GASKET	2				0.001	0.0022
040	15841-14620	NUT CAP	1				0.01	0.022
050	99999-99999	BLANK	0				0	0
060	15469-57150	LEVER SPEED CONTROL	1	<=9502			0.06	0.132
060	15471-57150	LEVER SPEED CONTROL	1	>=9503	¬		0.05	0.11
070	05712-00408	KEY FEATHER	1				0.001	0.0022
080	04811-00120	O RING	1				0	0
090	04013-60080	WASHER PLAIN	1				0.002	0.0044
100	02112-50080	NUT	2				0.003	0.0066
110	15521-57240	COLLAR	1				0.002	0.0044
120	15521-57115	PLATE SPEED CONTROL	1				0.1	0.22
130	15439-57210	GASKET	1				0.005	0.011
140	01023-50620	BOLT	2				0.006	0.0132
150	15221-88210	STUD	2				0.005	0.011
160	04512-60060	WASHER SPRING	2				0.001	0.0022
170	02056-50060	NUT	2				0.002	0.0044

silverhorn.co.uk

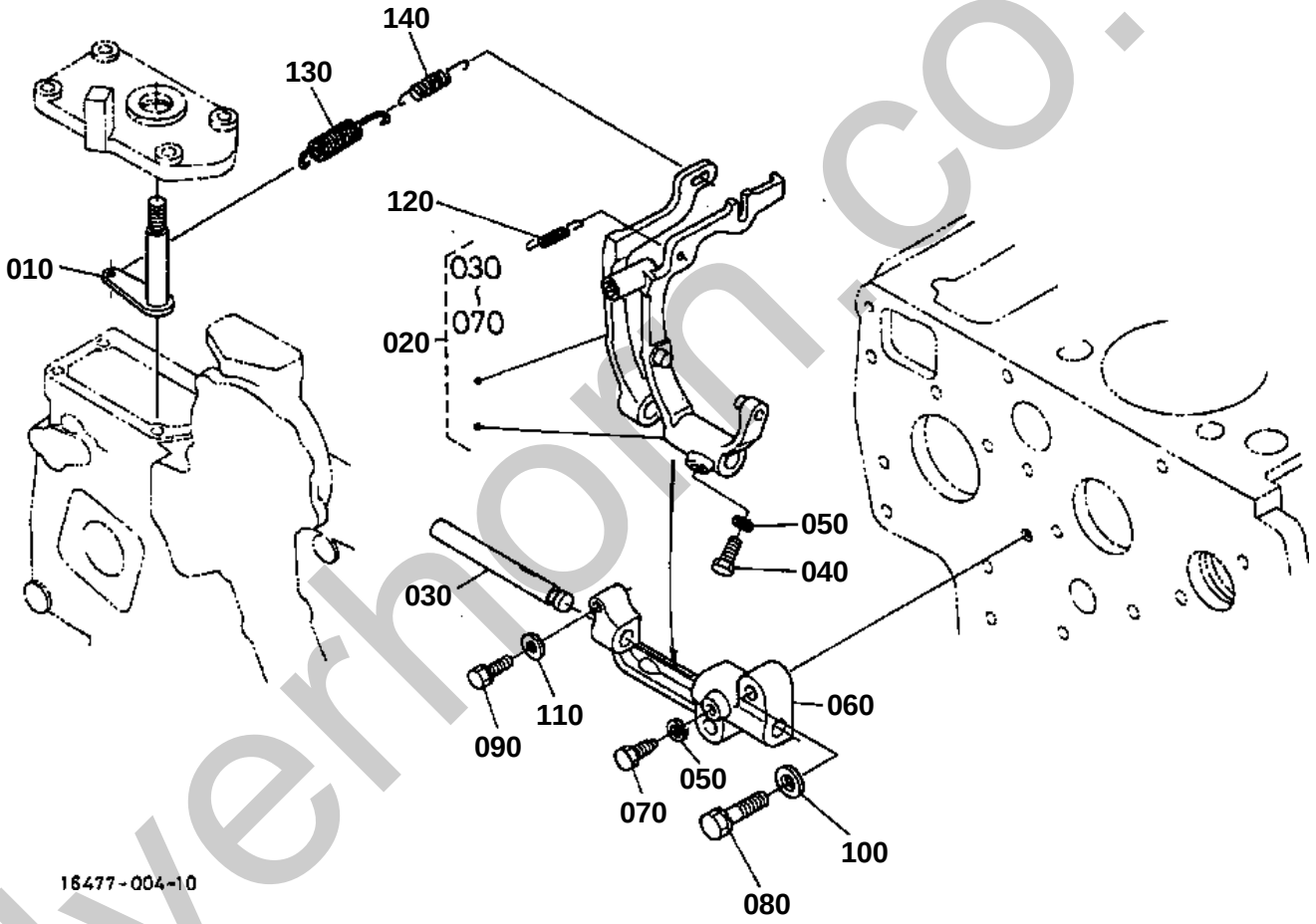

silverhorn.co.uk

GOVERNOR

↔ Interchangeable; ≠ not interchangeable; ← new for old; → old for new

REF.No	Part No.	Description	Q'ty	S.No.	I/C	REMARKS	Weight (kgf)	Weight (lb)
010	15601-56020	COMP.LEVER GOVERNOR	1				0.055	0.121
020	16417-56050	ASSY LEVER FORK	1				0.4	0.88
030	15221-56150	SHAFT FORK LEVER	1				0.1	0.22
040	15021-56240	BOLT LEVER SHAFT	1				0.005	0.011
050	04512-60060	WASHER SPRING	2				0.001	0.0022
060	15221-56230	HOLDER FORK LEVER	1				0.1	0.22
070	15221-66410	BOLT	1				0.005	0.011
080	01123-50832	BOLT	2				0.016	0.0352
090	01023-50628	BOLT	1				0.015	0.033
100	04012-50080	WASHER PLAIN	2				0.001	0.0022
110	04012-50060	WASHER PLAIN	1				0.001	0.0022
120	17241-56480	SPRING START	1				0.005	0.011
130	19077-56410	SPRING GOVERNOR	1	<=1827			0	0
130	19077-56412	SPRING GOVERNOR	1	>=1828	¬		0.01	0.022
140	16415-56420	SPRING GOVERNOR	1				0.002	0.0044

silverhorn.co.uk

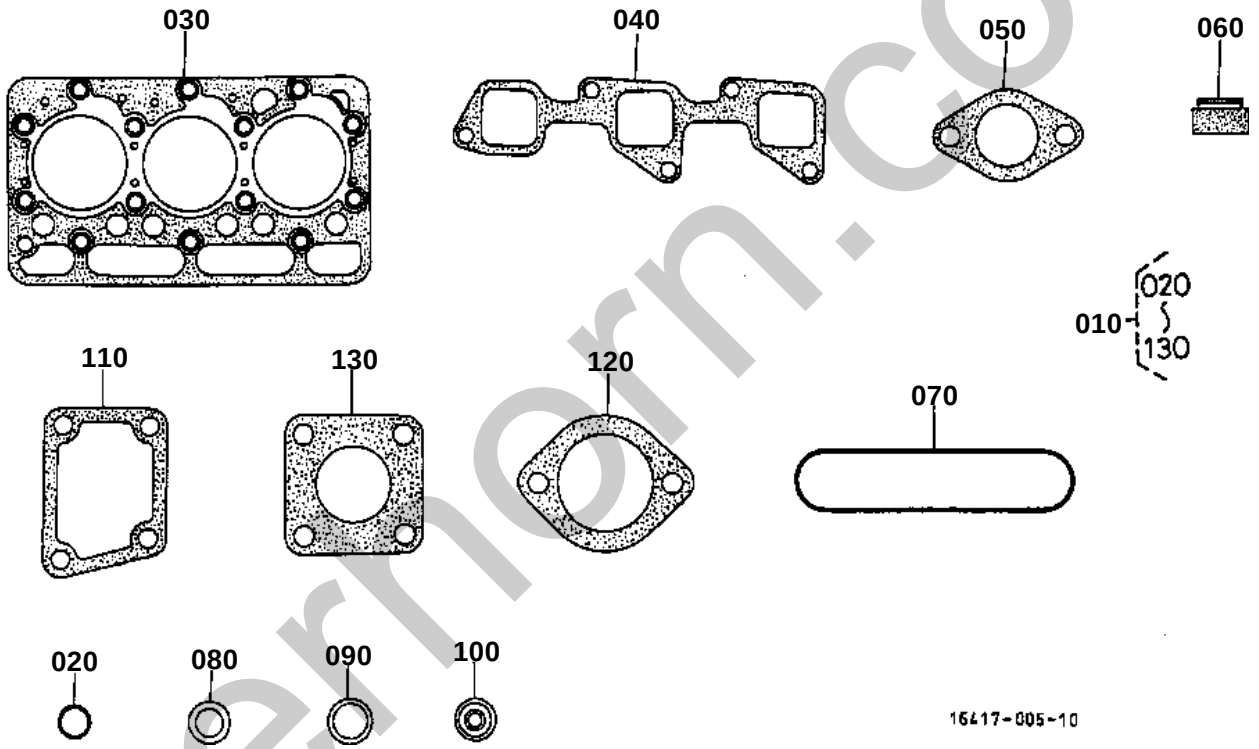

silvermorn.co.uk

UPPER GASKET KIT

↔ Interchangeable; ≠ not interchangeable; ← new for old; → old for new

REF.No	Part No.	Description	Q'ty	S.No.	I/C	REMARKS	Weight (kgf)	Weight (lb)
010	07916-28885	KIT GASKET UPPER	1				0	0
010	07916-28886	KIT GASKET UPPER	1		«		0	0
010	07916-28887	KIT GASKET UPPER	1		«		0.39	0.858
020	15221-33700	O RING	1				0.001	0.0022
030	16427-03310	CASKET CYL.HEAD	1				0.11	0.242
040	17326-11820	GASKET IN-MANIFOLD	1				0	0
050	15313-12350	GASKET EX-MANIFOLD	1				0.04	0.088
050	1A021-12350	GASKET EX-MANIFOLD	1		«		0.028	0.0616
060	15221-13150	SEAL VALVE STEM	6				0.001	0.0022
070	15521-14520	GASKET HEAD COVER	1				0.035	0.077
080	15021-33660	GASKET	3				0.001	0.0022
090	15841-53622	GASKET	3				0.002	0.0044
100	19077-53650	SEAL HEAT	3				0.005	0.011
110	15766-72920	GASKET WATER FLANGE	1				0	0
110	1A021-72920	GASKET WATER FLANGE	1		«		0.002	0.0044
120	15313-73270	GASKET THERMOSTAT	1				0	0
120	1A021-73270	GASKET THERMO.COVER	1		«		0	0
130	T0070-16420	GASKET MUFFLER	2				0.016	0.0352
130	17326-12230	GASKET MUFFLER	2		«		0	0

silverhorn.co.uk

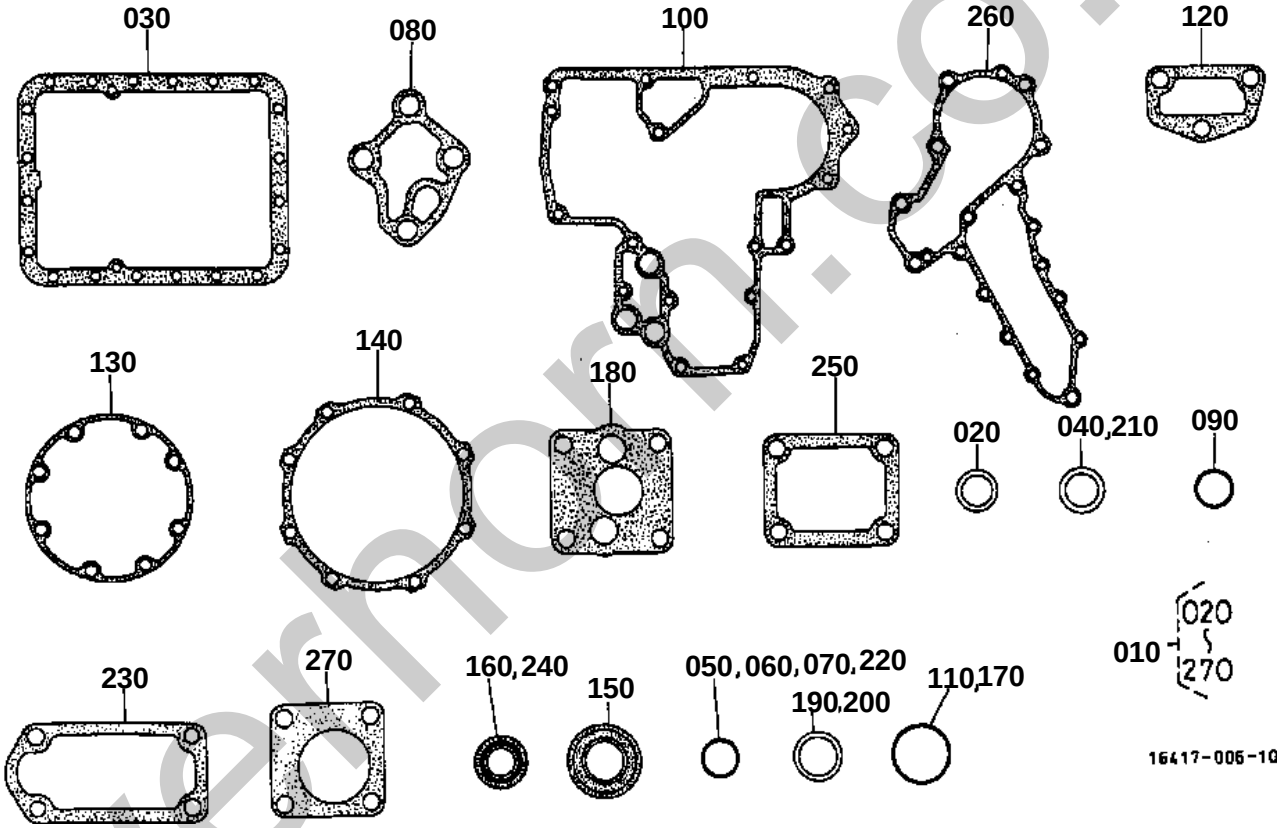

silverhorn.co.uk

LOWER GASKET KIT

↔ Interchangeable; ≠ not interchangeable; ← new for old; → old for new

REF.No	Part No.	Description	Q'ty	S.No.	I/C	REMARKS	Weight (kgf)	Weight (lb)
010	07916-28895	KIT GASKET LOWER	1				0	0
020	15021-33660	GASKET	1				0.001	0.0022
030	17326-01620	GASKET OIL PAN	1				0	0
040	15109-33660	GASKET	3				0.001	0.0022
050	04811-00160	O RING	1				0	0
060	04811-00150	O RING	3				0	0
070	04811-00200	O RING	1				0	0
080	17326-32620	GASKET	1				0.005	0.011
090	04811-00150	O RING	1				0	0
100	17326-04132	GASKET GEAR CASE	1				0.03	0.066
110	04811-00360	O RING	1				0	0
120	15766-73330	GASKET WATER FLANGE	1				0	0
130	19077-04360	GASKET BEARING CASE	1				0.004	0.0088
140	17118-04830	GASKET CASE COVER	1				0	0
150	19202-04460	SEAL OIL	1				0.055	0.121
160	19202-04140	SEAL OIL	1				0.015	0.033
170	04811-10300	O RING	1				0.001	0.0022
180	15296-35150	GASKET OIL PUMP	1				0	0
190	15221-96650	GASKET	2				0.001	0.0022
200	15601-96650	GASKET	2				0.001	0.0022
210	15021-33660	GASKET	2				0.001	0.0022
220	04811-00120	O RING	1				0	0
230	15439-57210	GASKET	1				0.005	0.011
240	15471-57980	SEAL OIL	1				0.001	0.0022
250	15296-51660	GASKET PUMP COVER	1				0	0
260	17326-73430	GASKET WATER PUMP	1				0	0
270	15296-88130	GASKET H/METER UNIT	1				0.002	0.0044

silverhorn.co.uk

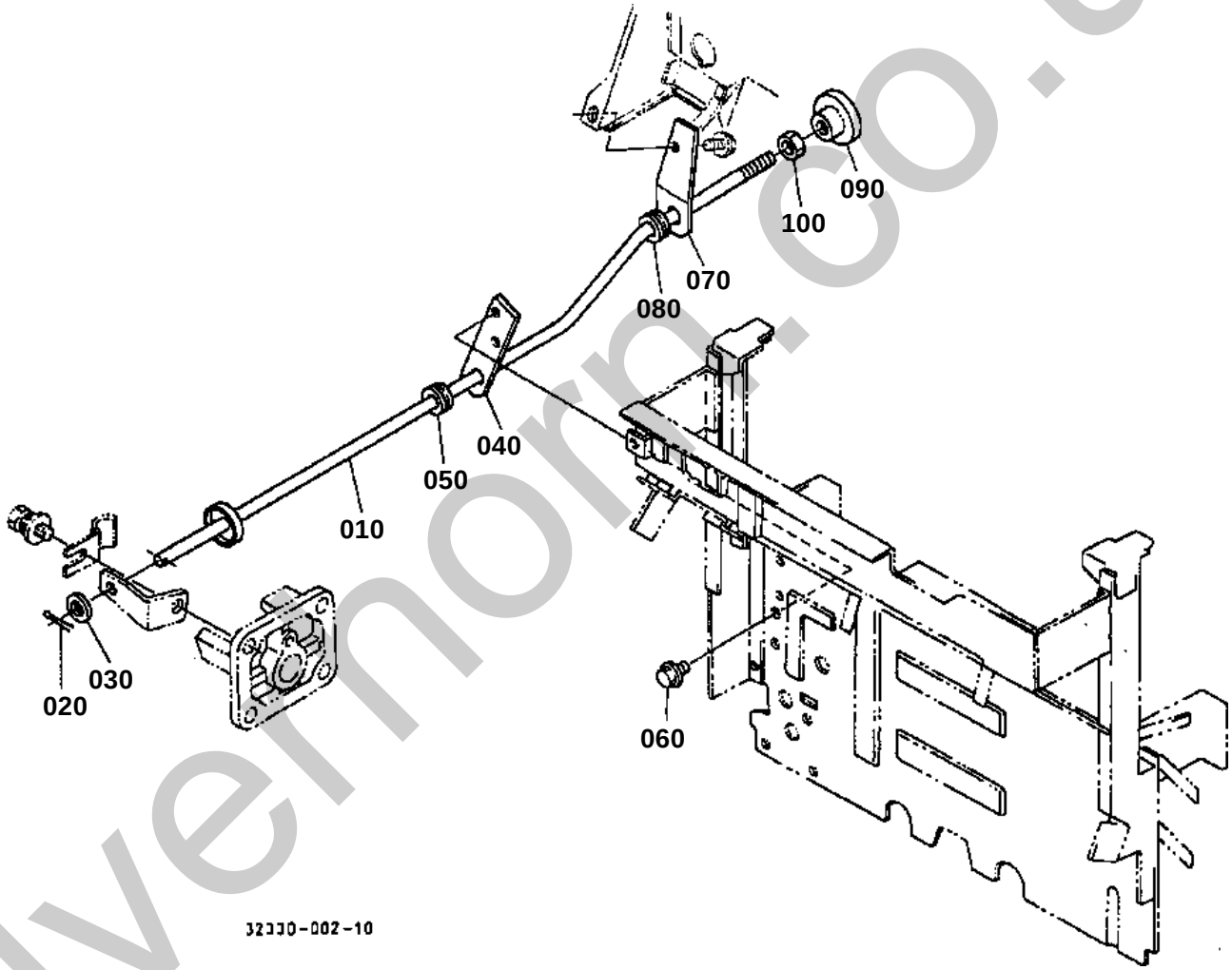

silvernorn.co.uk

STOP ROD

↔ Interchangeable; ≠ not interchangeable; ← new for old; → old for new

REF.No	Part No.	Description	Q'ty	S.No.	I/C	REMARKS	Weight (kgf)	Weight (lb)
010	32330-17153	ROD STOP	1				0.155	0.341
020	05511-50218	PIN SPLIT	1				0.001	0.0022
030	04013-60060	WASHER PLAIN	1				0.001	0.0022
040	32330-17160	SUPPORT	1				0.06	0.132
050	66591-54580	CUSHION	1				0.002	0.0044
060	01754-50812	BOLT FLANGE	2				0.01	0.022
070	32330-17190	SUPPORT	1				0.041	0.0902
080	36330-87450	RING RUBBER	1				0.001	0.0022
090	32330-17180	KNOB	1				0.009	0.0198
100	02012-60060	NUT	1				0.005	0.011

silverhorn.co.uk

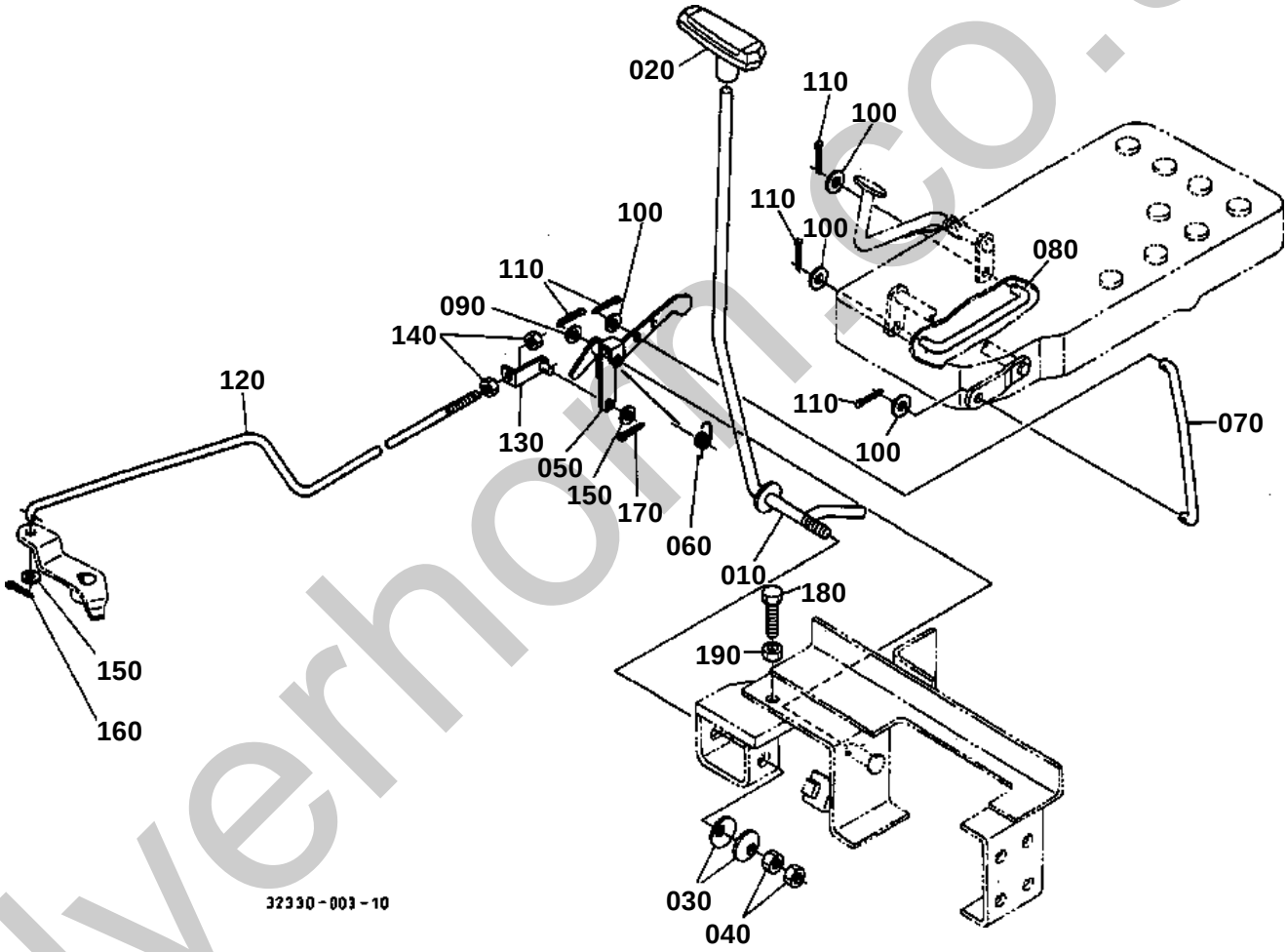

silverhorn.co.uk

HAND ACCELERATOR LEVER

↔ Interchangeable; ≠ not interchangeable; ← new for old; → old for new

REF.No	Part No.	Description	Q'ty	S.No.	I/C	REMARKS	Weight (kgf)	Weight (lb)
010	35170-17120	LEVER HAND ACCEL	1				0.345	0.759
020	3A031-10230	GRIP	1				0.019	0.0418
030	34260-17190	SPRING	2				0.002	0.0044
040	02118-50100	NUT	2				0.005	0.011
050	35170-17320	LINK ACCEL.	1				0.12	0.264
060	34150-17260	SPRING	1				0.01	0.022
070	37150-17570	ROD ACCEL.	1				0.06	0.132
080	37150-17580	ROD ACCEL.	1				0.025	0.055
090	04012-50080	WASHER PLAIN	1				0.001	0.0022
100	04012-50060	WASHER PLAIN	4				0.001	0.0022
110	05511-50212	PIN SPLIT	5				0.001	0.0022
120	32400-17360	ROD ACCEL.	1				0.145	0.319
130	34150-17390	JOINT ROD	1				0.025	0.055
140	02012-60060	NUT	2				0.005	0.011
150	04012-50060	WASHER PLAIN	2				0.001	0.0022
160	05511-50212	PIN SPLIT	1				0.001	0.0022
170	05511-51612	PIN SPLIT	1				0.001	0.0022
180	01155-50840	BOLT	1				0.02	0.044
190	02112-50080	NUT	1				0.003	0.0066

silverhorn.co.uk

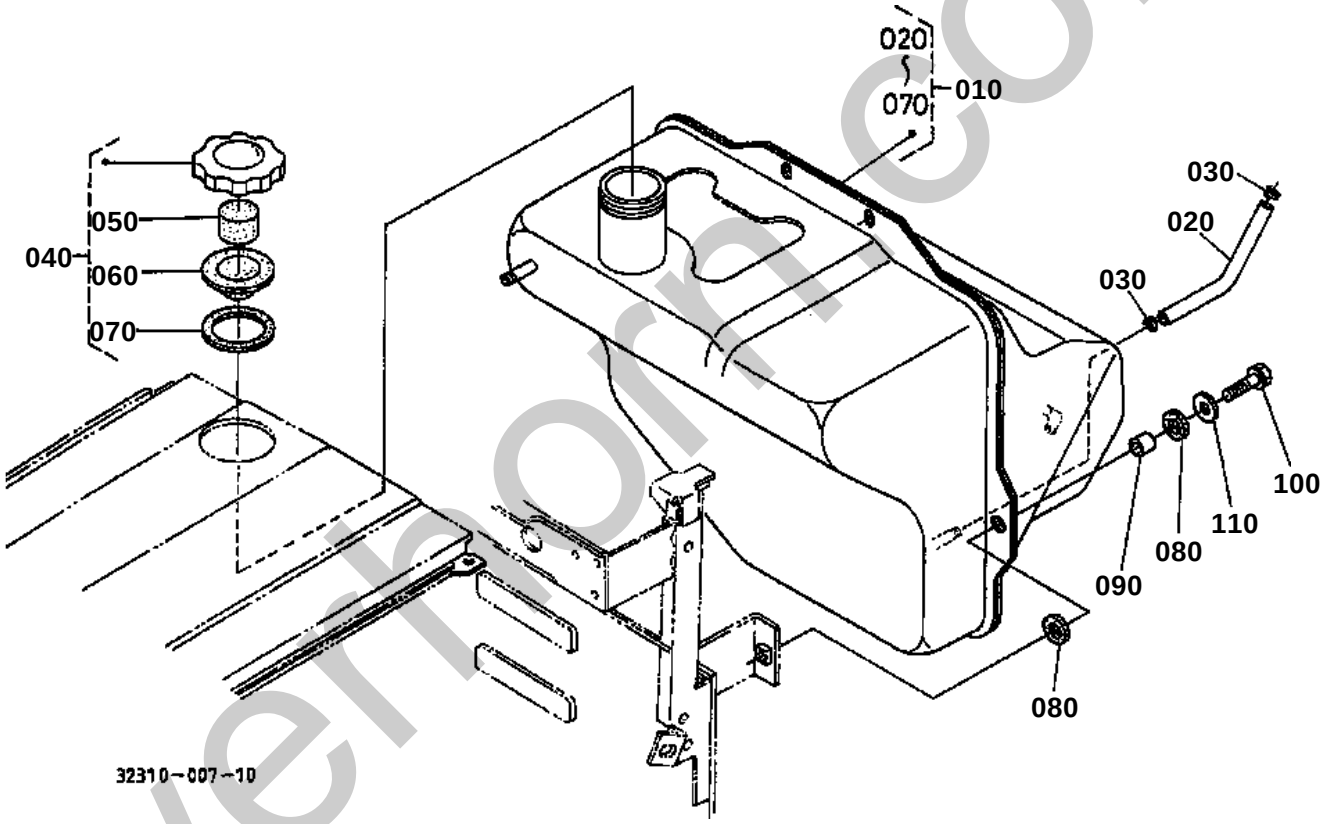

silverthorn.co.uk

FUEL TANK

↔ Interchangeable; ≠ not interchangeable; ← new for old; → old for new

REF.No	Part No.	Description	Q'ty	S.No.	I/C	REMARKS	Weight (kgf)	Weight (lb)
010	32310-35100	ASSY TANK FUEL	1				5	11
020	07935-05751	GAUGE FUEL	1				0.237	0.5214
030	10211-41770	BAND PIPE	2				0.001	0.0022
040	38240-35200	ASSY CAP FUEL TANK	1				0.06	0.132
050	34150-35240	SPONGE	1				0.001	0.0022
060	34150-35230	GASKET	1				0.01	0.022
070	34150-35180	GASKET	1				0.001	0.0022
080	37300-35120	CUSHION	4				0.003	0.0066
090	37300-35140	SPACER	2				0.006	0.0132
100	01123-50825	BOLT	2				0.013	0.0286
110	04015-60080	WASHER PLAIN	2				0.01	0.022

silverhorn.co.uk

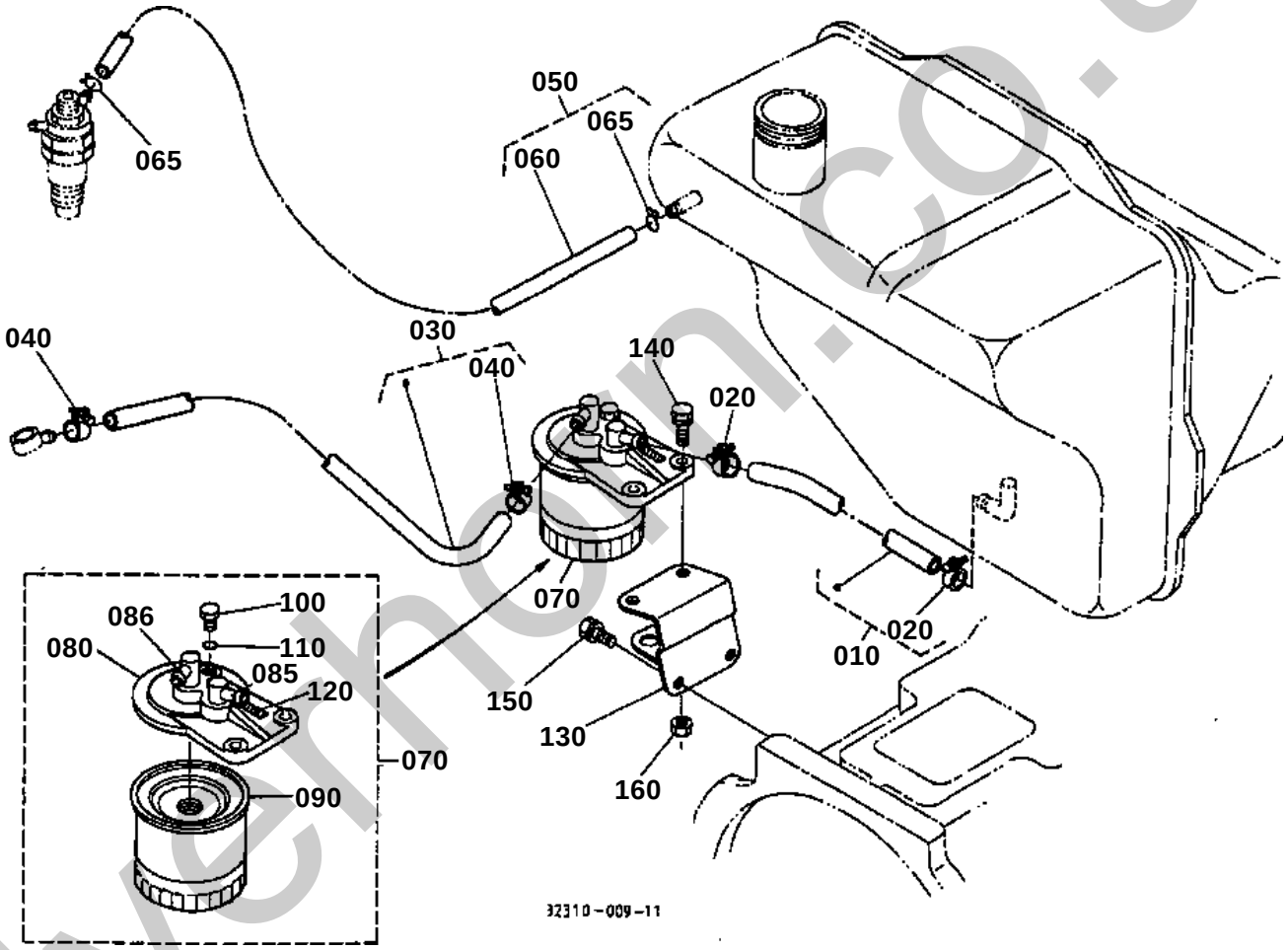

silverhorn.co.uk

FUEL FILTER/FUEL PIPE

↔ Interchangeable; ≠ not interchangeable; ← new for old; → old for new

REF.No	Part No.	Description	Q'ty	S.No.	I/C	REMARKS	Weight (kgf)	Weight (lb)
010	32400-35510	ASSY PIPE FUEL	1			MANUAL STRG.	0.035	0.077
020	14301-42750	CLIP PIPE	2				0.005	0.011
030	37260-35520	ASSY PIPE FUEL	1				0.06	0.132
040	14301-42750	CLIP PIPE	2				0.005	0.011
050	34070-42633	ASSY TUBE FUEL	1				0.025	0.055
060	09661-40400	TUBE FUEL	1				0.02	0.044
065	14971-42750	CLIP PIPE	2				0.001	0.0022
070	15291-43010	ASSY FILTER FUEL	1				0.519	1.1418
080	15221-43210	COVER FILTER	1				0.25	0.55
085	15108-43610	JOINT	1				0.02	0.044
086	15108-43780	JOINT	1				0.02	0.044
090	15221-43170	ELEMENT FILTER	1				0.31	0.682
100	19222-43280	PLUG FILTER BREATHER	1				0.01	0.022
110	15108-43290	O RING	1				0.001	0.0022
120	15291-87760	MARK FORM	1				0.005	0.011
130	37150-35810	BRACKET FILTER	1				0.3	0.66
140	01123-50822	BOLT	2				0.012	0.0264
150	01123-60816	BOLT	2				0.01	0.022
160	02114-50080	NUT	2				0.005	0.011

silverhorn.co.uk

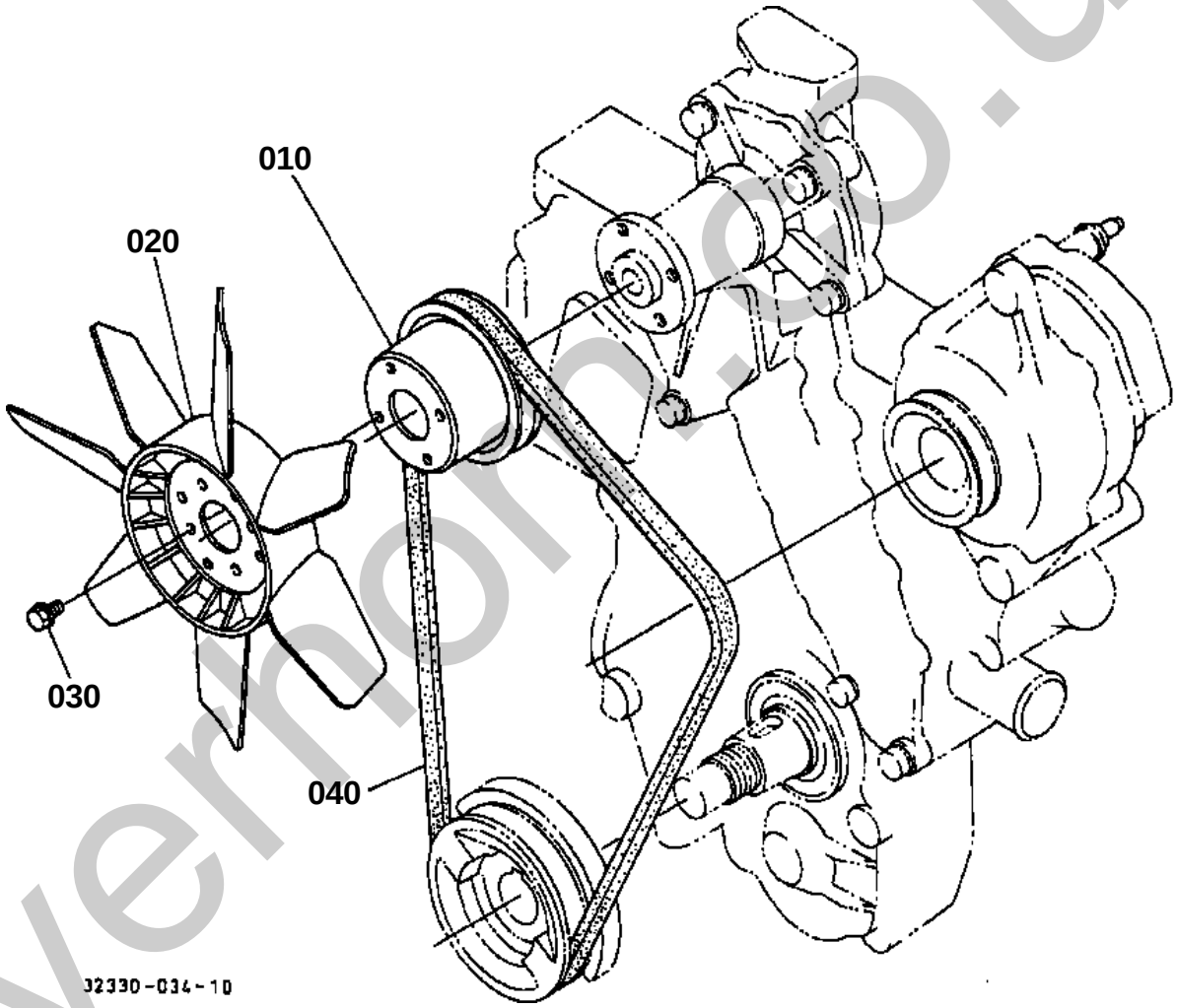

silverhorse.co.uk

FAN

↔ Interchangeable; ≠ not interchangeable; ← new for old; → old for new

REF.No	Part No.	Description	Q'ty	S.No.	I/C	REMARKS	Weight (kgf)	Weight (lb)
010	15471-74250	PULLEY FAN	1				0.3	0.66
020	15585-74110	FAN	1				0.63	1.386
030	01754-50612	BOLT FLANGE	4				0.005	0.011
040	15196-97010	V BELT A	1				0.124	0.2728

silverhorn.co.uk

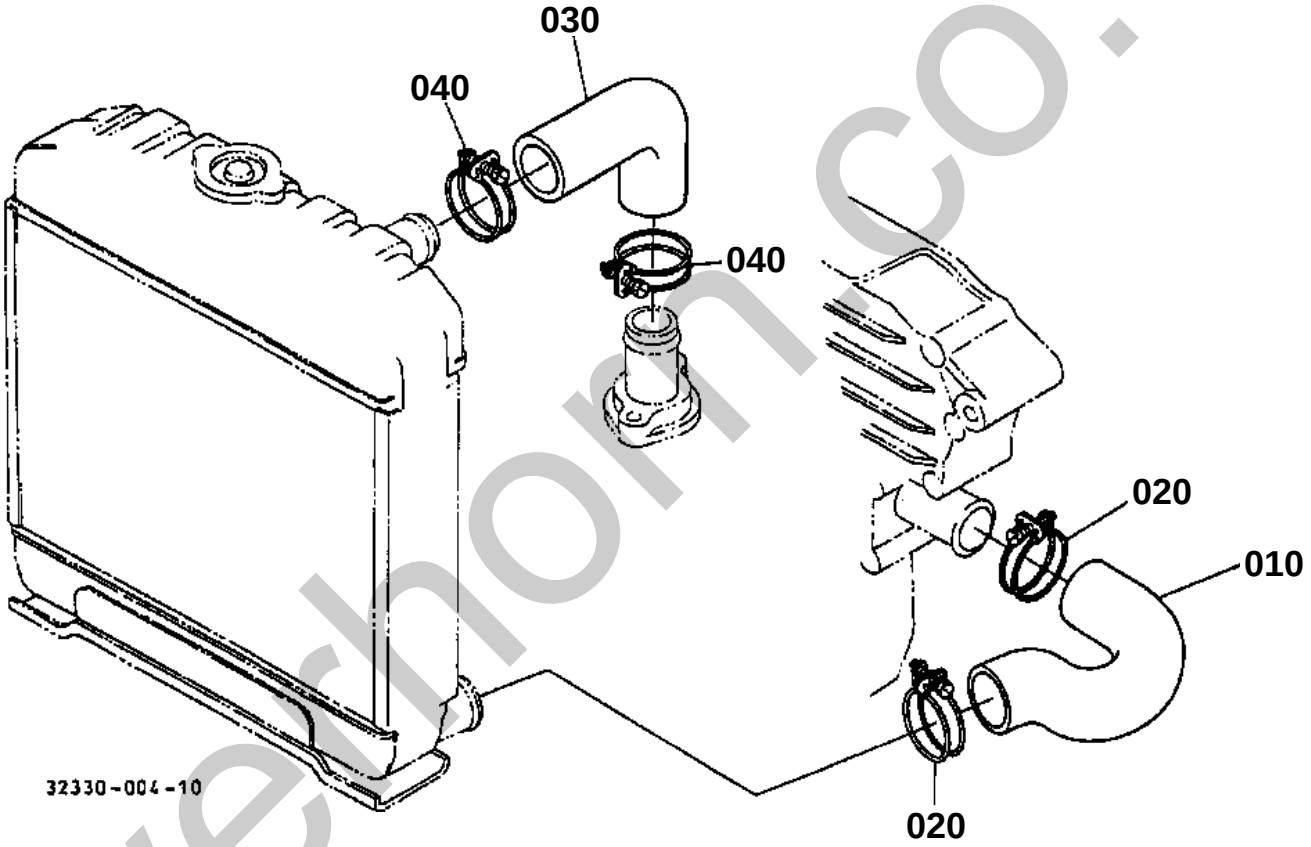

silverhorn.co.uk

WATER PIPE

↔ Interchangeable; ≠ not interchangeable; ← new for old; → old for new

REF.No	Part No.	Description	Q'ty	S.No.	I/C	REMARKS	Weight (kgf)	Weight (lb)
010	32330-88360	PIPE WATER	1				0.116	0.2552
020	15108-72870	BAND	2				0.027	0.0594
030	15321-72940	PIPE WATER	1				0.134	0.2948
040	15108-72870	BAND	2				0.027	0.0594

silverhorn.co.uk

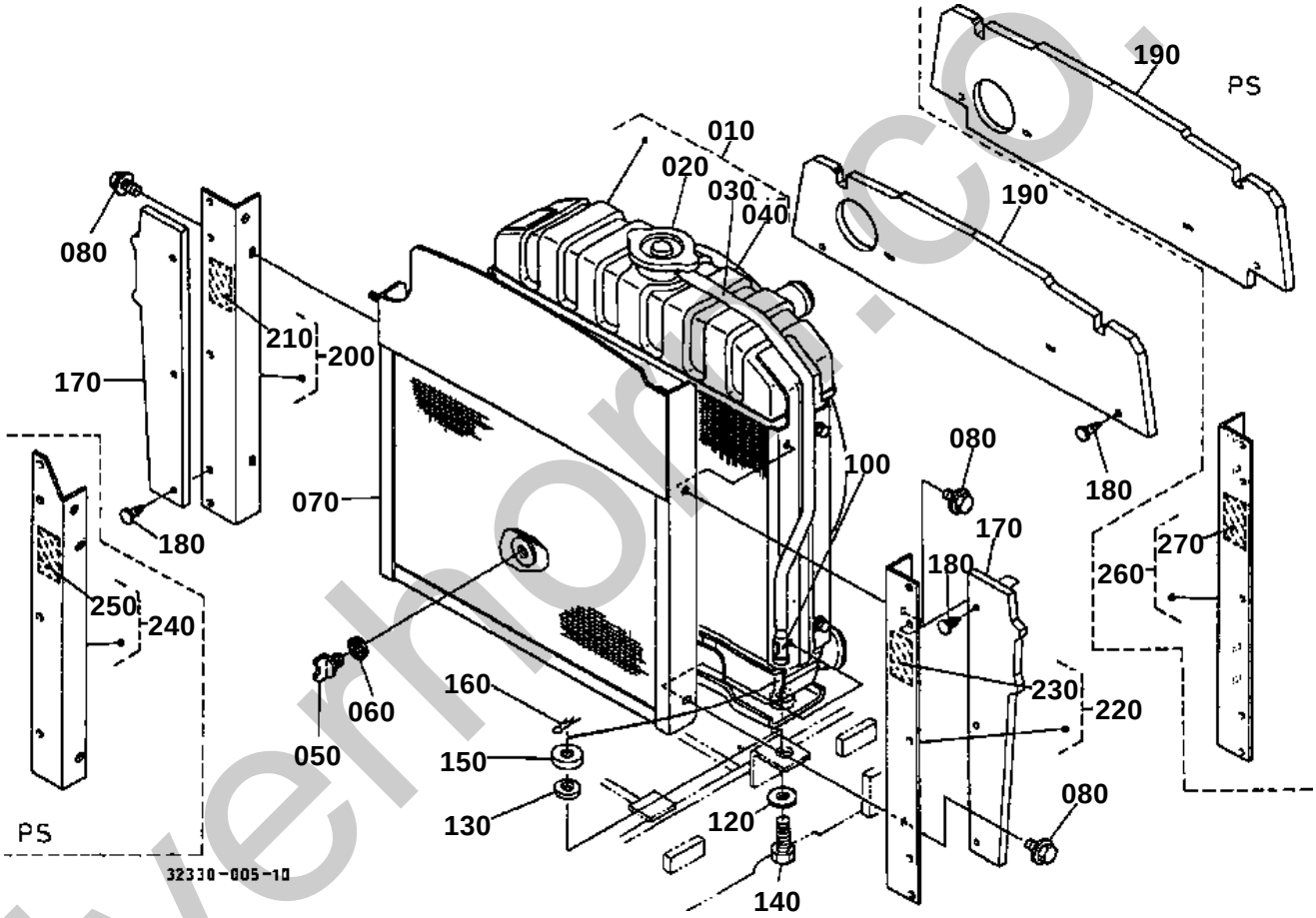

silverhorn.co.uk

RADIATOR

↔ Interchangeable; ≠ not interchangeable; ← new for old; → old for new

REF.No	Part No.	Description	Q'ty	S.No.	I/C	REMARKS	Weight (kgf)	Weight (lb)
010	15575-72060	ASSY RADIATOR	1				6	13.2
020	15101-72030	CAP RADIATOR	1				0	0
030	15371-72710	PIPE WATER OVERFLOW	1				0.048	0.1056
040	15575-72330	SHROUD FAN	1				0.73	1.606
050	31349-61420	PLUG DRAIN	1				0.01	0.022
060	04717-01700	WASHER WITH RUBBER	1				0.003	0.0066
070	32400-17720	NET RADIATOR	1				1.35	2.97
080	01754-50610	BOLT FLANGE	4				0.006	0.0132
090	99999-99999	BLANK	0				0	0
100	55411-21792	WHISTLE STEAM	1				0.01	0.022
110	99999-99999	BLANK	0				0	0
120	04015-60100	WASHER PLAIN	2				0.015	0.033
130	15111-72190	CUSHION	2				0.016	0.0352
140	35080-13310	BOLT RADIATOR	2				0.03	0.066
150	15111-72200	WASHER	2				0.013	0.0286
160	05515-61000	PIN SNAP	2				0.002	0.0044
170	32400-17790	SHUTTER	2				0.045	0.099
180	38430-29372	CLIP BUTTON	8				0.001	0.0022
190	32330-17780	SHUTTER	1			MANUAL STRG.	0.095	0.209
200	32330-17700	KIT PLATE SHUTTER RH	1			MANUAL STRG.	0.205	0.451
210	32751-49580	LABEL FAN BELT	1				0.001	0.0022
220	32330-17710	KIT PLATE SHUTTER LH	1			MANUAL STRG.	0.205	0.451
230	32751-49580	LABEL FAN BELT	1				0.001	0.0022

silverhorn.co.uk

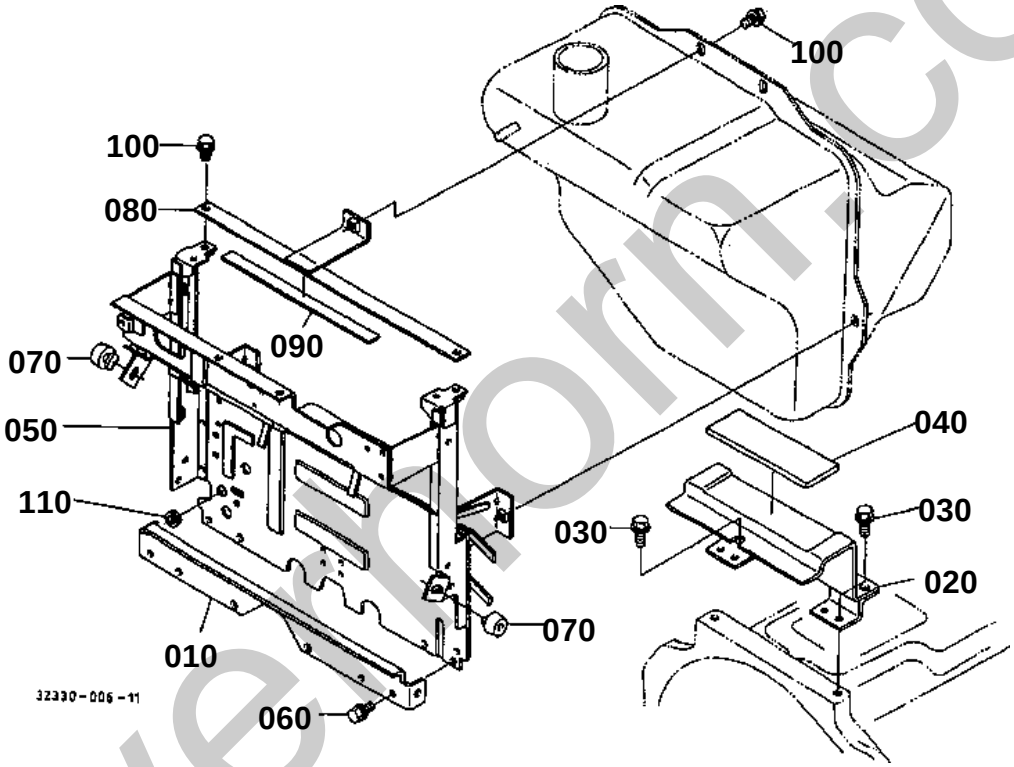

silvermorn.co.uk

↔ Interchangeable; ≠ not interchangeable; ← new for old; → old for new

REF.No	Part No.	Description	Q'ty	S.No.	I/C	REMARKS	Weight (kgf)	Weight (lb)
010	31351-35230	SUPPORT SHUTTER	1				0.345	0.759
020	32400-35260	STAY FUEL TANK	1				0.4	0.88
030	01754-50812	BOLT FLANGE	3				0.01	0.022
040	31351-35180	CUSHION TANK	1				0.04	0.088
040	31351-35183	CUSHION TANK	1		«		0.04	0.088
050	32330-45720	PLATE SHUTTER	1				6	13.2
060	01754-50812	BOLT FLANGE	4				0.01	0.022
070	30400-17980	RUBBER BLOCK	2				0.01	0.022
080	32310-35310	BAND FUEL TANK	1				0.16	0.352
090	31351-13820	CUSHION BATTERY	1				0.015	0.033
100	01754-50812	BOLT FLANGE	3				0.01	0.022
110	63611-52330	CUSHION	1				0.01	0.022

silverhorn.co.uk

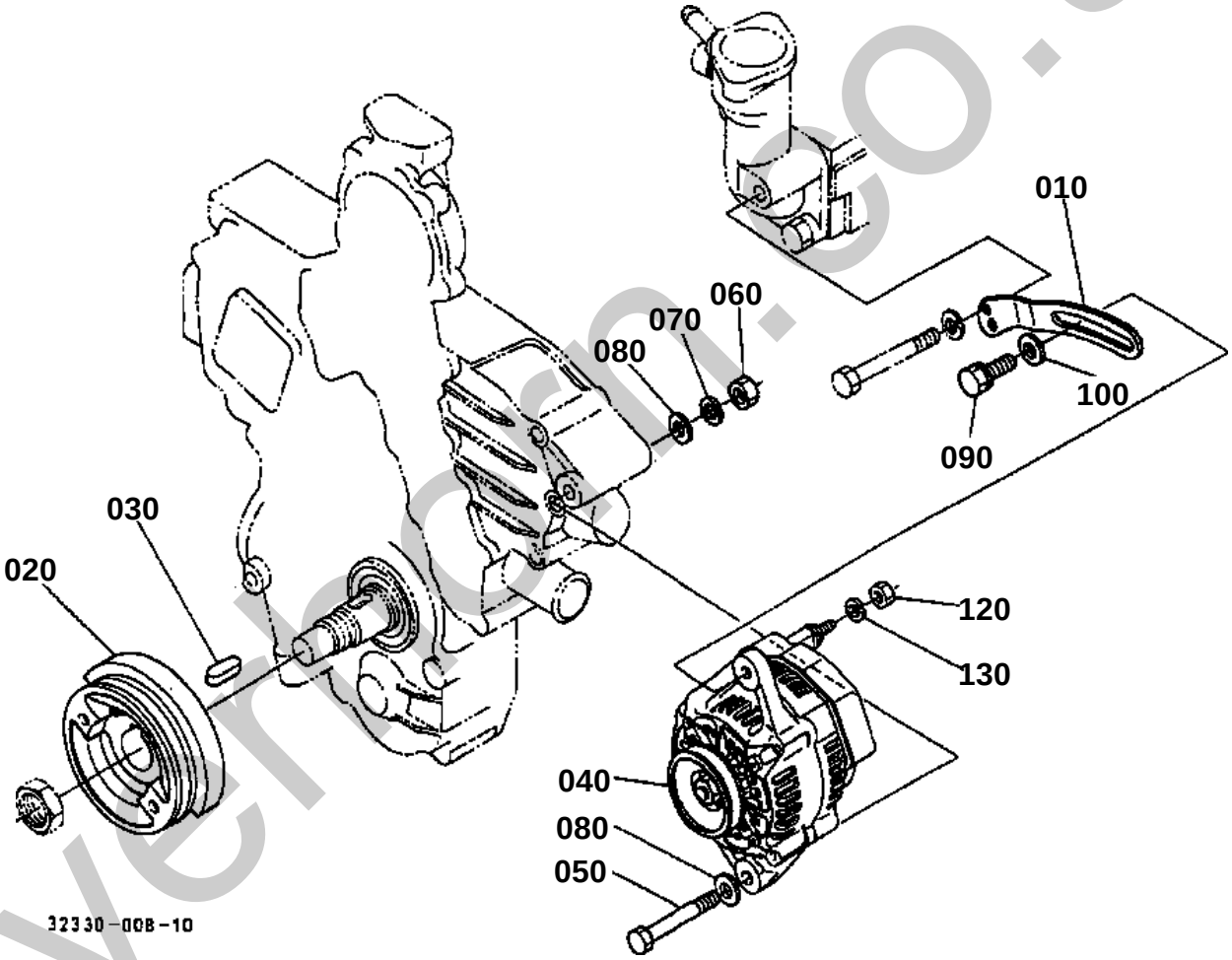

silverhorn.co.uk

ALTERNATOR

↔ Interchangeable; ≠ not interchangeable; ← new for old; → old for new

REF.No	Part No.	Description	Q'ty	S.No.	I/C	REMARKS	Weight (kgf)	Weight (lb)
010	TA040-74020	STAY DYNAMO	1				0.09	0.198
020	16417-74280	PULLEY FAN DRIVE	1				1.75	3.85
030	05712-00720	KEY FEATHER	1				0.008	0.0176
040	16427-64010	ASSY ALTERNATOR	1	<=30279			0	0
040	16427-64012	ASSY ALTERNATOR	1	>=30280	¬		2.97	6.534
050	01173-51000	BOLT	1				0.06	0.132
060	02176-50100	NUT	1				0.005	0.011
070	04512-60100	WASHER SPRING	1				0.002	0.0044
080	04013-50100	WASHER PLAIN	2				0	0
090	01123-50830	BOLT	1				0.015	0.033
100	04015-60080	WASHER PLAIN	1				0.01	0.022
110	99999-99999	BLANK	0				0	0
120	02056-50060	NUT	1				0.002	0.0044
130	04512-60060	WASHER SPRING	1				0.001	0.0022

silverhorn.co.uk

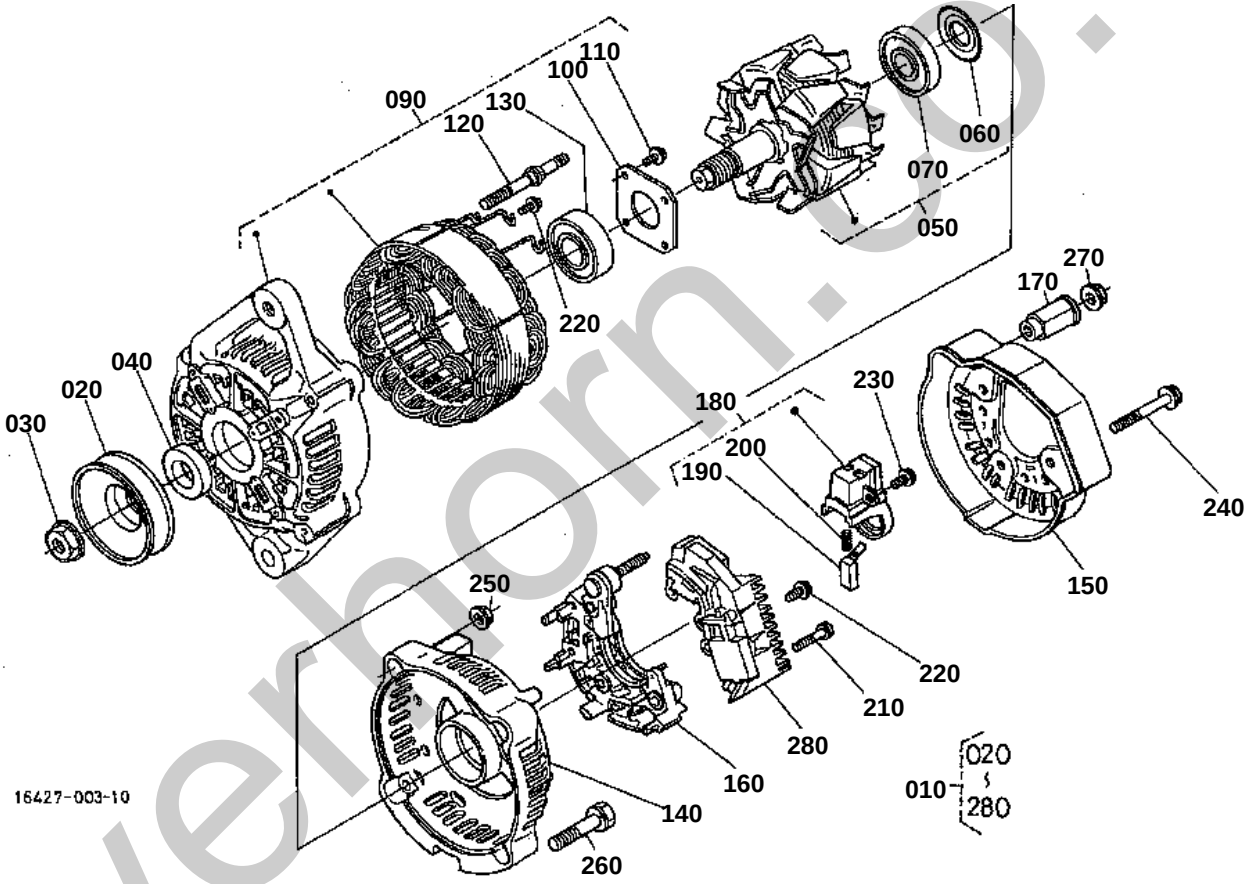

silverhorn.co.uk

↔ Interchangeable; ≠ not interchangeable; ← new for old; → old for new

REF.No	Part No.	Description	Q'ty	S.No.	I/C	REMARKS	Weight (kgf)	Weight (lb)
010	16427-64010	ASSY ALTERNATOR	1	<=30279			0	0
010	16427-64012	ASSY ALTERNATOR	1	>=30280	¬		2.97	6.534
020	16427-64110	PULLEY ALTERNATOR	1				0.2	0.44
030	15881-92010	NUT	1				0.02	0.044
040	15881-64150	COLLAR	1				0.004	0.0088
050	15881-64040	ROTOR	1	<=30279		NOT SALE	0	0
050	66436-64040	ROTOR	1	>=30280	¬		1.2	2.64
060	15881-64800	COVER BEARING	1				0.001	0.0022
070	15881-64770	BEARING BALL	1				0.04	0.088
080	99999-99999	BLANK	0				0	0
090	16427-64020	FRAME DRIVE END	1				1.17	2.574
100	15881-64710	PLATE RETAINER	1				0.01	0.022
110	15881-93010	SCREW ROUND HEAD	4				0.003	0.0066
120	15881-64260	BOLT THROUGH	2				0.01	0.022
130	15881-64780	BEARING BALL	1	<=30279			0.05	0.11
130	16652-64780	BEARING BALL	1	>=30280	1		0.05	0.11
140	16241-64060	FRAME END	1				0.2	0.44
150	16241-64230	COVER END	1	<=30279			0	0
150	16231-64230	COVER END	1	>=30280	1		0.035	0.077
160	16231-64850	ASSY RECTIFIER	1				0.18	0.396
170	16241-64900	BUSH INSULATION	1				0.007	0.0154
180	15881-64310	HOLDER BRUSH	1	<=30279			0.025	0.055
180	16652-64310	HOLDER BRUSH	1	>=30280	1		0.025	0.055
190	15881-64090	BRUSH	2				0.002	0.0044
200	15881-64330	SPRING BRUSH	2				0.002	0.0044
210	15881-93020	SCREW ROUND HEAD	2				0.005	0.011
220	15881-93030	SCREW ROUND HEAD	6				0.003	0.0066
230	15881-93040	SCREW ROUND HEAD	1				0.003	0.0066
240	15881-91040	BOLT	3				0.005	0.011
250	15881-92020	NUT	2				0.02	0.044
260	15881-91050	BOLT	2				0.01	0.022
270	14182-92030	NUT	1				0.003	0.0066
280	66436-64600	ASSY REGULATOR	1				0.08	0.176

silverhorn.co.uk

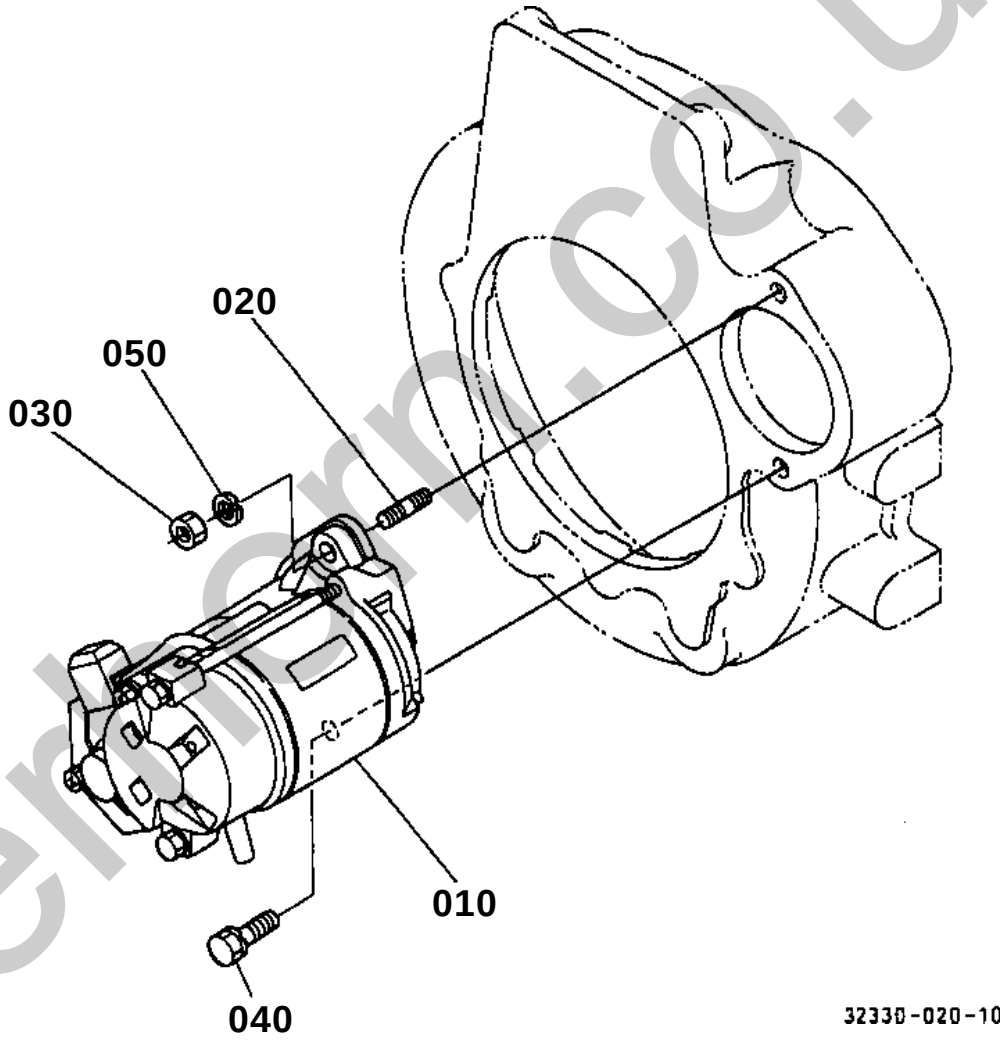

silverhorn.co.uk

↔ Interchangeable; ≠ not interchangeable; ← new for old; → old for new

REF.No	Part No.	Description	Q'ty	S.No.	I/C	REMARKS	Weight (kgf)	Weight (lb)
010	34070-16800	ASSY STARTER	1				3.4	7.48
020	01517-51028	STUD	1				0.022	0.0484
030	02176-50100	NUT	1				0.005	0.011
040	01133-51030	BOLT	1				0.025	0.055
050	04512-60100	WASHER SPRING	1				0.002	0.0044

silverhorn.co.uk

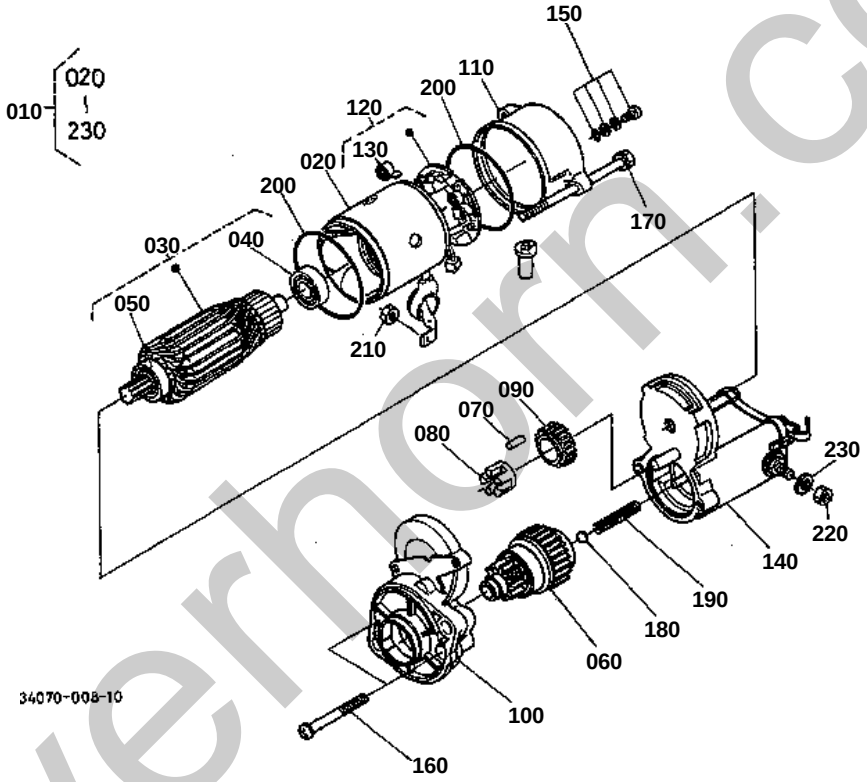

silverhorn.co.uk

↔ Interchangeable; ≠ not interchangeable; ← new for old; → old for new

REF.No	Part No.	Description	Q'ty	S.No.	I/C	REMARKS	Weight (kgf)	Weight (lb)
010	34070-16800	ASSY STARTER	1				3.4	7.48
020	11460-63080	YOKE	1				0.8	1.76
030	11460-63070	ARMATURE	1				0.05	0.11
040	11460-63530	BEARING	1				0.02	0.044
050	11460-63500	BEARING	1				0.03	0.066
060	34070-16810	ASSY CLUTCH	1				0.565	1.243
070	19212-63100	ROLLER	5				0.002	0.0044
080	11460-63110	RETAINER	1				0.01	0.022
090	11460-63270	GEAR	1				0.04	0.088
100	34070-16830	ASSY HOUSING	1				0.405	0.891
110	34070-16840	ASSY FRAME END	1				0.1	0.22
120	11470-63380	ASSY HOLDER BRUSH	1				0.3	0.66
130	11460-63390	SPRING BRUSH	4				0.01	0.022
140	34070-16850	ASSY SWITCH MAGNETIC	1				0.955	2.101
150	15511-63760	ASSY BOLT	2				0.005	0.011
160	11460-93310	BOLT	2				0.01	0.022
170	11460-63320	BOLT THROUGH	2				0.02	0.044
180	19212-97130	BALL	1				0.003	0.0066
190	11460-63120	SPRING	1				0.01	0.022
200	15511-96660	O RING	2				0.005	0.011
210	13963-92010	NUT HEXAGON	1				0.005	0.011
220	99999-99999	BLANK	0				0	0
230	16285-63570	PIPE DRAIN	1				0.005	0.011
240	16285-92010	NUT HEXAGON	1				0.005	0.011
250	11173-63130	COVER TERMINAL	1				0.007	0.0154
260	16285-98050	ASSY COVER	1			OPTION	0.048	0.1056

silverhorn.co.uk

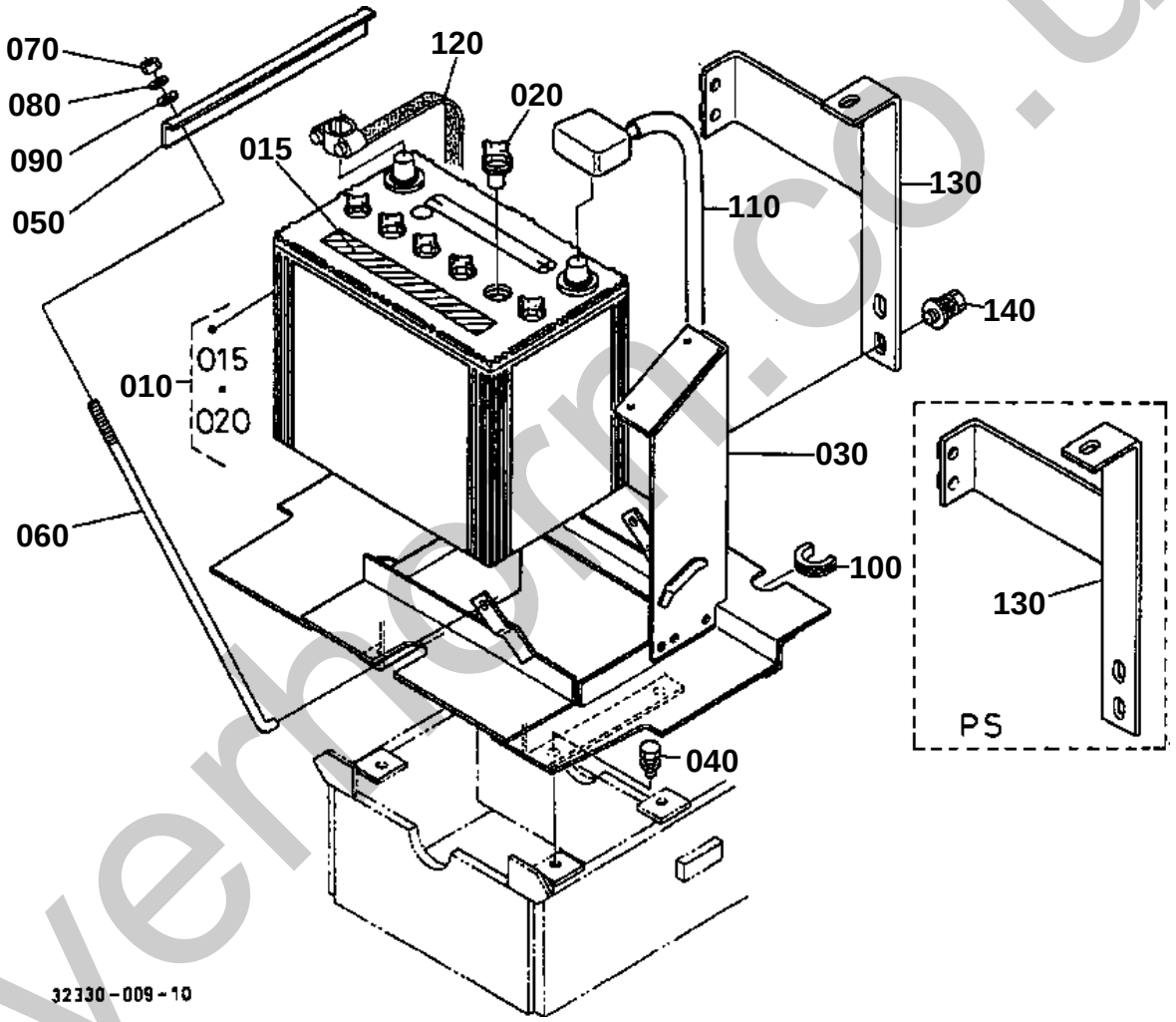

silverhorn.co.uk

BATTERY

↔ Interchangeable; ≠ not interchangeable; ← new for old; → old for new

REF.No	Part No.	Description	Q'ty	S.No.	I/C	REMARKS	Weight (kgf)	Weight (lb)
010	32310-30110	BATTERY	1				12.5	27.5
015	TA040-30150	LABEL BATTERY	1			ENGLISH	0.002	0.0044
020	TA040-30160	CAP BATTERY	6				0.01	0.022
030	32400-33210	SUPPORT BATTERY	1			MANUAL STRG.	3.4	7.48
040	01123-60816	BOLT	4				0.01	0.022
050	31351-33110	RETAINER BATTERY	1				0.11	0.242
060	34150-33290	BOLT HOOK	2				0.055	0.121
070	02014-50060	NUT	2				0.002	0.0044
080	04512-60060	WASHER SPRING	2				0.001	0.0022
090	04015-60060	WASHER PLAIN	2				0.005	0.011
100	30430-82770	CUSHION	1				0.005	0.011
110	37220-33330	CORD BATTERY	1	<=20114			0	0
110	37220-33337	CORD BATTERY	1	>=20115	¬		0.39	0.858
120	37220-33380	CORD EARTH	1				0.21	0.462
130	32330-17960	SUPPORT BONNET FRONT	1			MANUAL STRG.	1.03	2.266
140	01125-60816	BOLT	3				0.01	0.022

silverhorn.co.uk

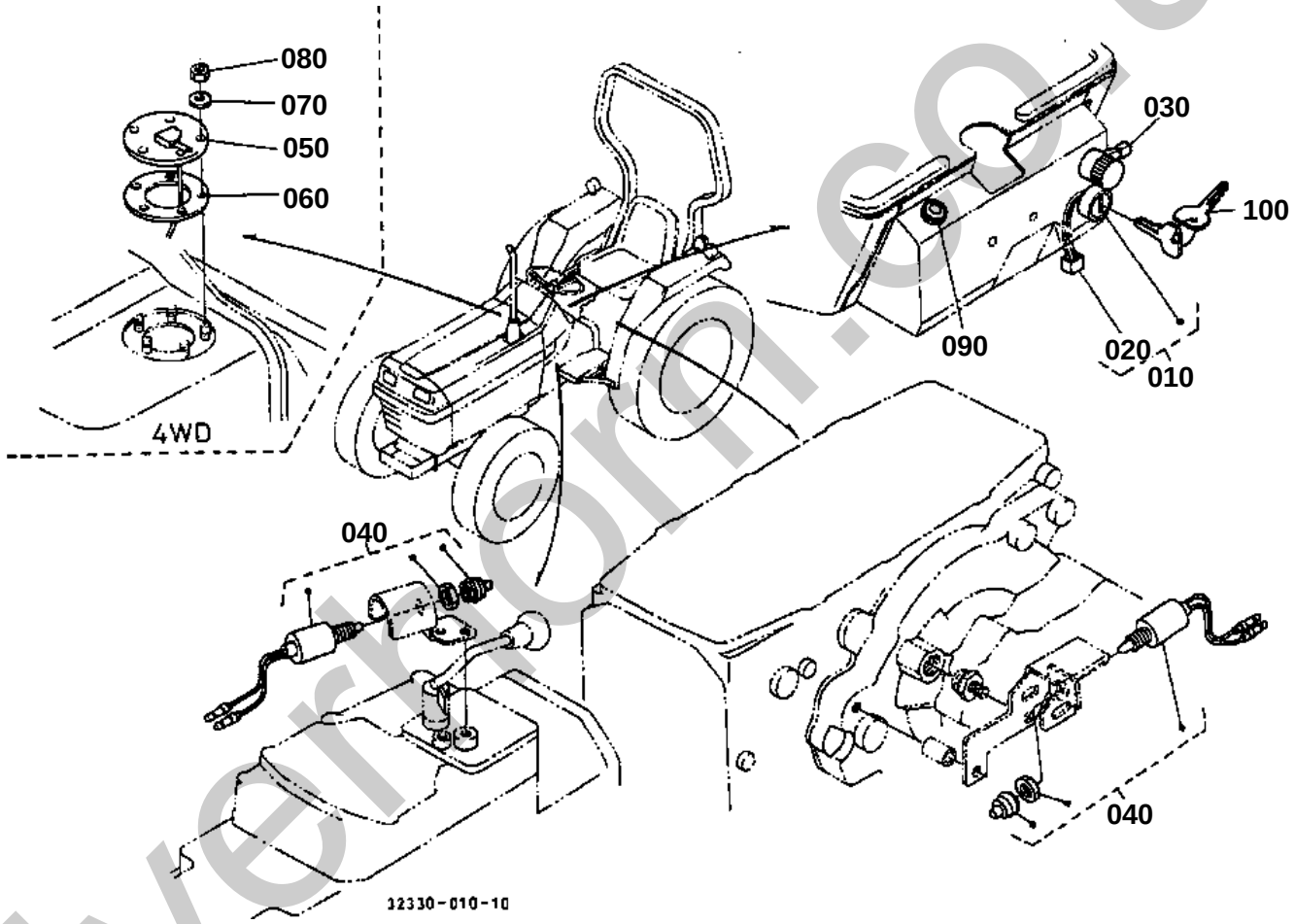

silverthorn.co.uk

SWITCH

↔ Interchangeable; ≠ not interchangeable; ← new for old; → old for new

REF.No	Part No.	Description	Q'ty	S.No.	I/C	REMARKS	Weight (kgf)	Weight (lb)
010	32430-31820	SWITCH MAIN	1				0.285	0.627
020	35080-31830	HARNESS MAIN SWITCH	1				0.02	0.044
030	31351-32100	SWITCH COMBINATION	1				0.105	0.231
040	37150-32240	SWITCH SAFETY	2				0.12	0.264
090	15521-65950	INDICATOR GLOW PLUG	1				0.065	0.143
100	35260-31852	ASSYKEY MAIN SWITCH	1				0.03	0.066

silverhorn.co.uk

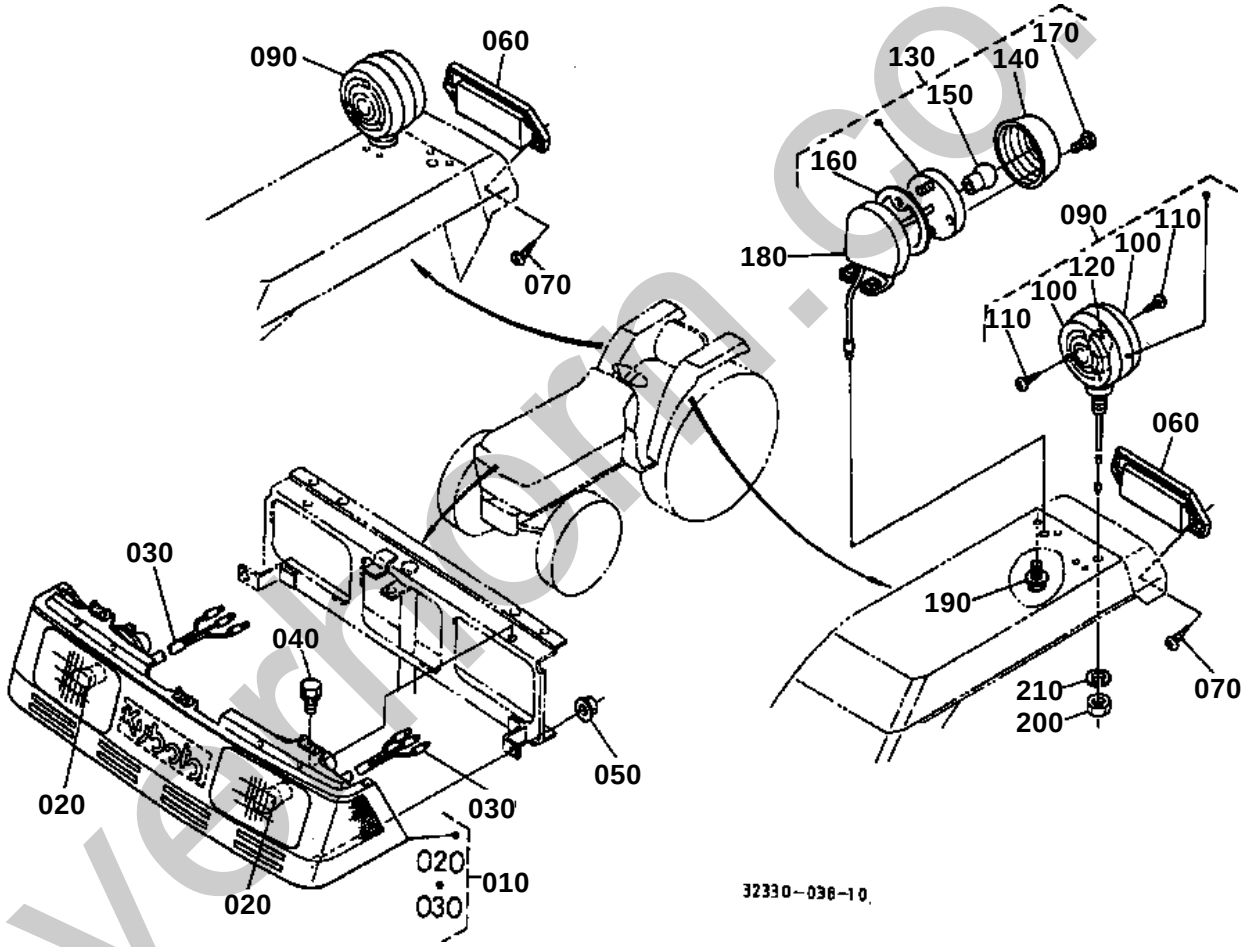

silverhorn.co.uk

LIGHT

↔ Interchangeable; ≠ not interchangeable; ← new for old; → old for new

REF.No	Part No.	Description	Q'ty	S.No.	I/C	REMARKS	Weight (kgf)	Weight (lb)
010	35080-33370	ASSY LIGHT HEAD	1				1.5	3.3
020	38430-33870	BULB	2			35W	0.023	0.0506
030	34670-93600	COMP.CORD SOCKET	2				0.065	0.143
040	01023-50612	BOLT	3				0.005	0.011
050	02751-50060	NUT FLANGE	2				0.005	0.011
060	31351-33900	ASSY REFLECTOR	2				0.088	0.1936
070	03514-50510	SCREW TAPPING	4				0.002	0.0044
080	99999-99999	BLANK	0				0	0
090	32530-33610	ASSY LIGHT HAZARD	2				0.38	0.836
100	32530-91510	LENS HAZARD LIGHT	4				0.085	0.187
110	32530-91520	SCREW TAPPING	12				0.001	0.0022
120	32530-91530	BULB LIGHT	2			27W	0.02	0.044
130	34350-34100	ASSY LIGHT TAIL	1				0.13	0.286
140	34350-34120	LENS TAIL LIGHT	1				0.05	0.11
150	34350-34140	BULB TAIL LIGHT	1			23W/8W	0.008	0.0176
160	34350-99220	GASKET LENS	1				0.01	0.022
170	03056-50335	SCREW CSK-HD	2				0.001	0.0022
180	32480-34190	HOLDER TAIL LIGHT	1				0.15	0.33
190	01754-50612	BOLT FLANGE	2				0.005	0.011
200	02114-50100	NUT	2				0.005	0.011
210	04512-60100	WASHER SPRING	2				0.002	0.0044

silverhorn.co.uk

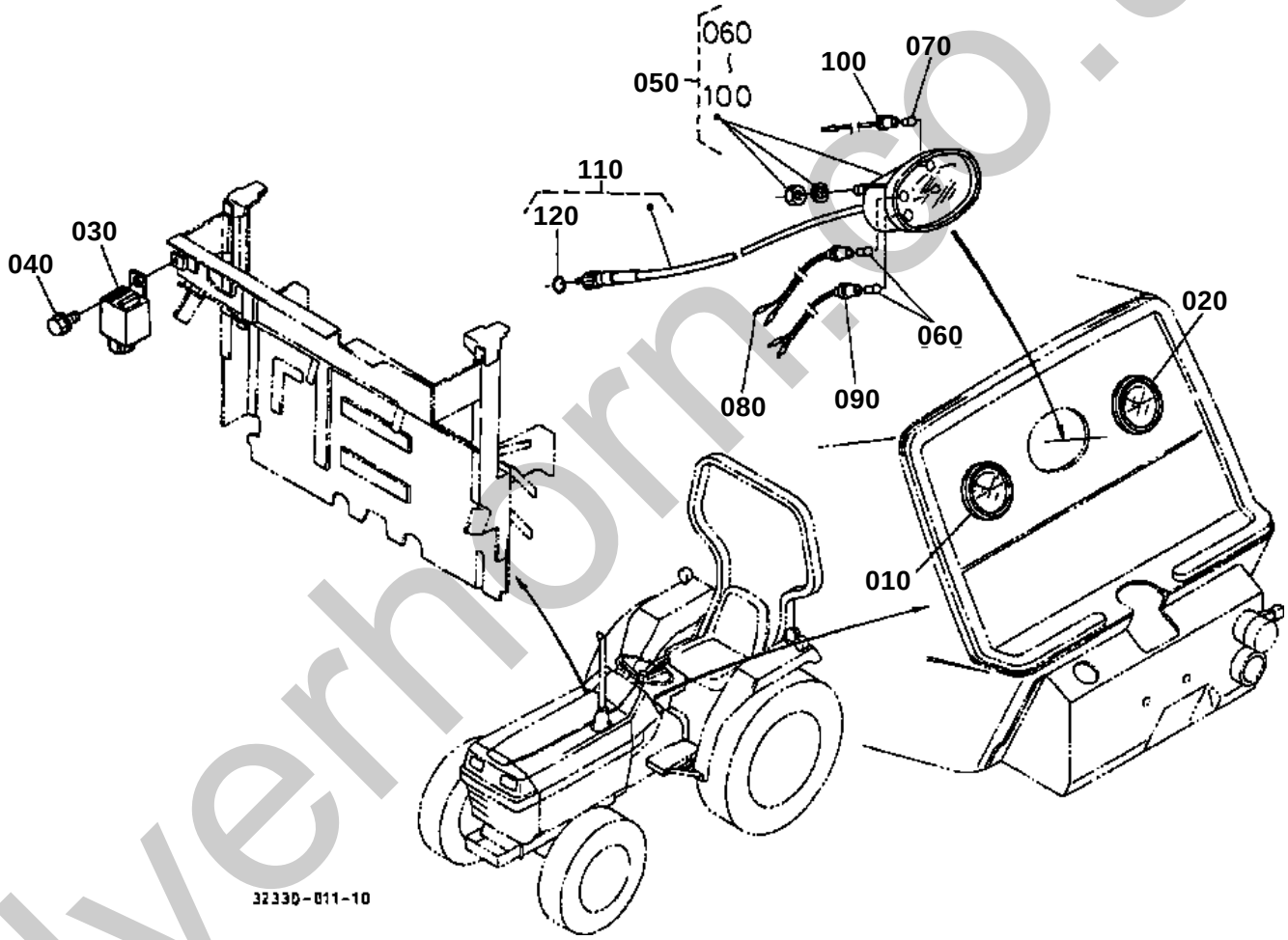

silverhorn.co.uk

↔ Interchangeable; ≠ not interchangeable; ← new for old; → old for new

REF.No	Part No.	Description	Q'ty	S.No.	I/C	REMARKS	Weight (kgf)	Weight (lb)
030	32400-33700	HAZARD UNIT	1				0.07	0.154
040	01754-50610	BOLT FLANGE	1				0.006	0.0132
050	35260-34602	METER TRACTOR	1				0.31	0.682
060	32150-31740	BULB	2				0.003	0.0066
070	34150-34620	BULB	1				0.001	0.0022
080	37150-34630	COMP.SOCKET	1				0.02	0.044
090	37150-34640	COMP.SOCKET	1				0.02	0.044
100	37150-34680	COMP.SOCKET	1				0.015	0.033
110	31341-34654	CABLE ELEXIBLE	1				0.22	0.484
120	04811-10080	O RING	1				0.001	0.0022

silverhorn.co.uk

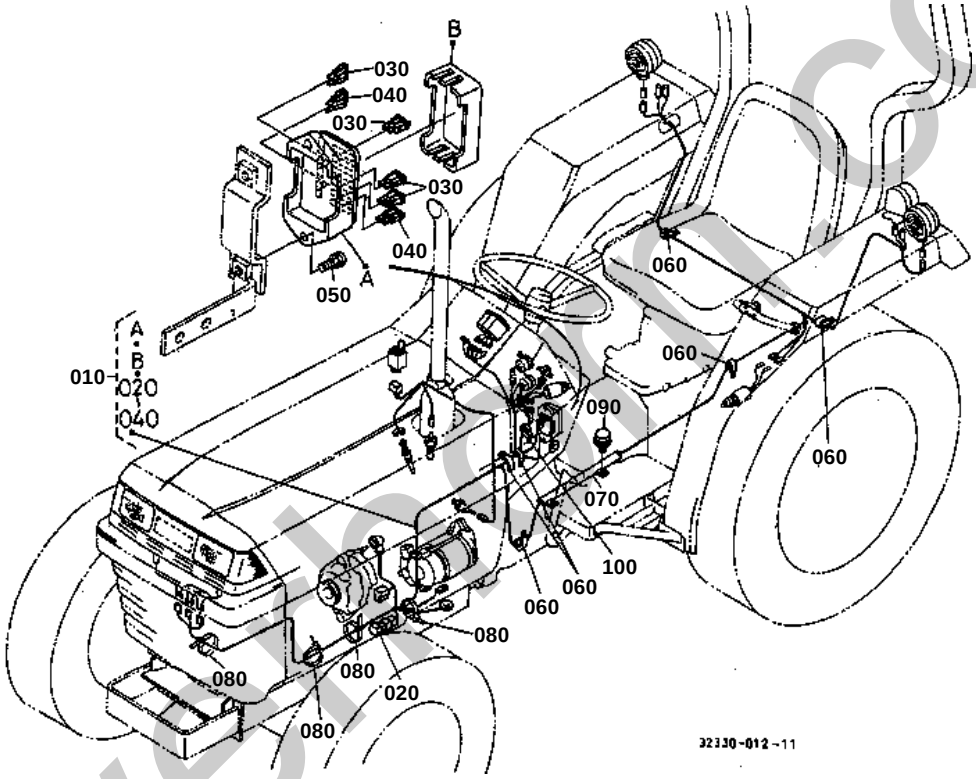

silvertractor.co.uk

↔ Interchangeable; ≠ not interchangeable; ← new for old; → old for new

REF.No	Part No.	Description	Q'ty	S.No.	I/C	REMARKS	Weight (kgf)	Weight (lb)
010	32330-30310	WIRE HARNESS	1	<=20114			0	0
010	32330-30312	WIRE HARNESS	1	>=20115	¬		0.815	1.793
020	34670-34530	FUSE SLOW BLOW	1			40A	0.003	0.0066
030	31351-33630	FUSE	4			10A	0.002	0.0044
040	31351-33640	FUSE	2			15A	0.002	0.0044
050	31391-31140	SCREW	2				0.01	0.022
060	13816-67580	CLAMP CORD	5				0.004	0.0088
070	32330-34480	RETAINER CORD	1				0.04	0.088
080	55311-41260	BAND CORD	4				0.007	0.0154
090	01754-50812	BOLT FLANGE	2				0.01	0.022
100	55311-41260	BAND CORD	1				0.007	0.0154

silverhorn.co.uk

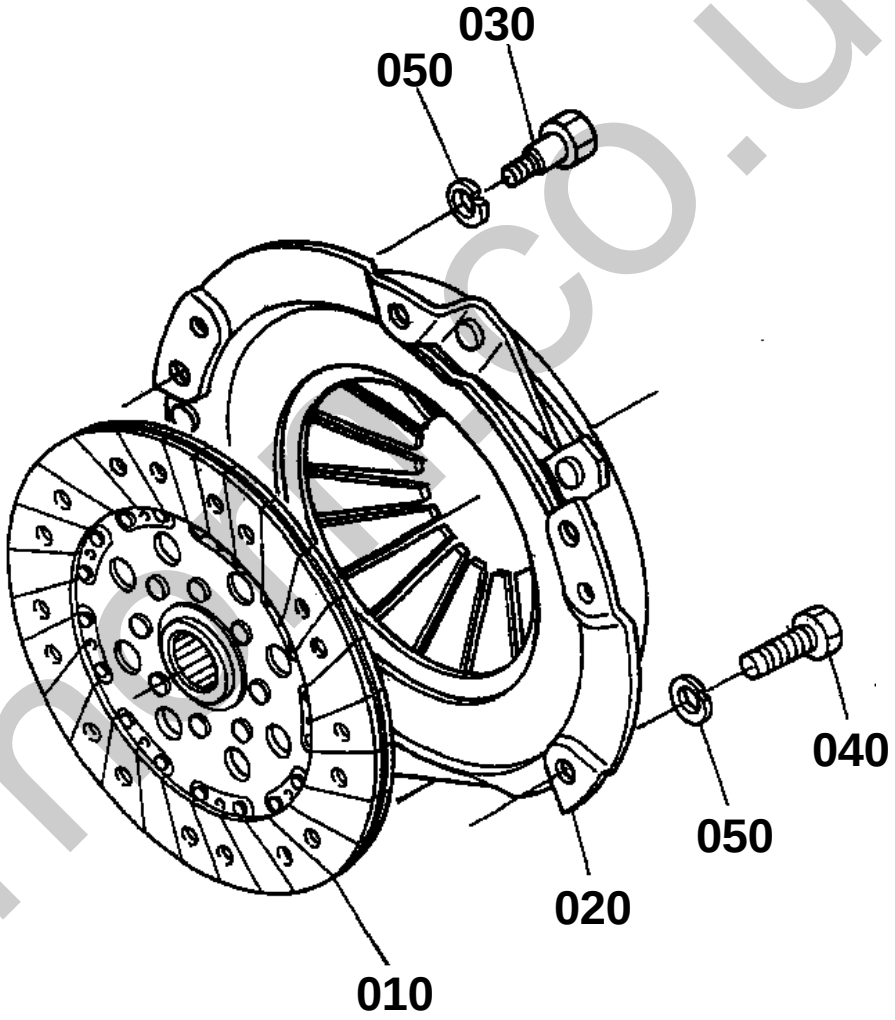

32310-026-10

silverhand.co.uk

CLUTCH

↔ Interchangeable; ≠ not interchangeable; ← new for old; → old for new

REF.No	Part No.	Description	Q'ty	S.No.	I/C	REMARKS	Weight (kgf)	Weight (lb)
010	35220-99160	ASSY DISK CLUTCH	1				0.91	2.002
020	37300-14500	ASSY PLATE PRESSURE	1				4.5	9.9
020	T1060-20160	ASSY PLATE PRESSURE	1		«		4.5	9.9
030	34220-14510	BOLT REAMER	2				0.013	0.0286
040	01153-50816	BOLT	4	<=30279			0.01	0.022
040	01123-50816	BOLT	4	>=30280			0	0
050	04512-60080	WASHER SPRING	6	<=30279			0.002	0.0044
050	04512-60080	WASHER SPRING	2	>=30280			0.002	0.0044

silverhorn.co.uk

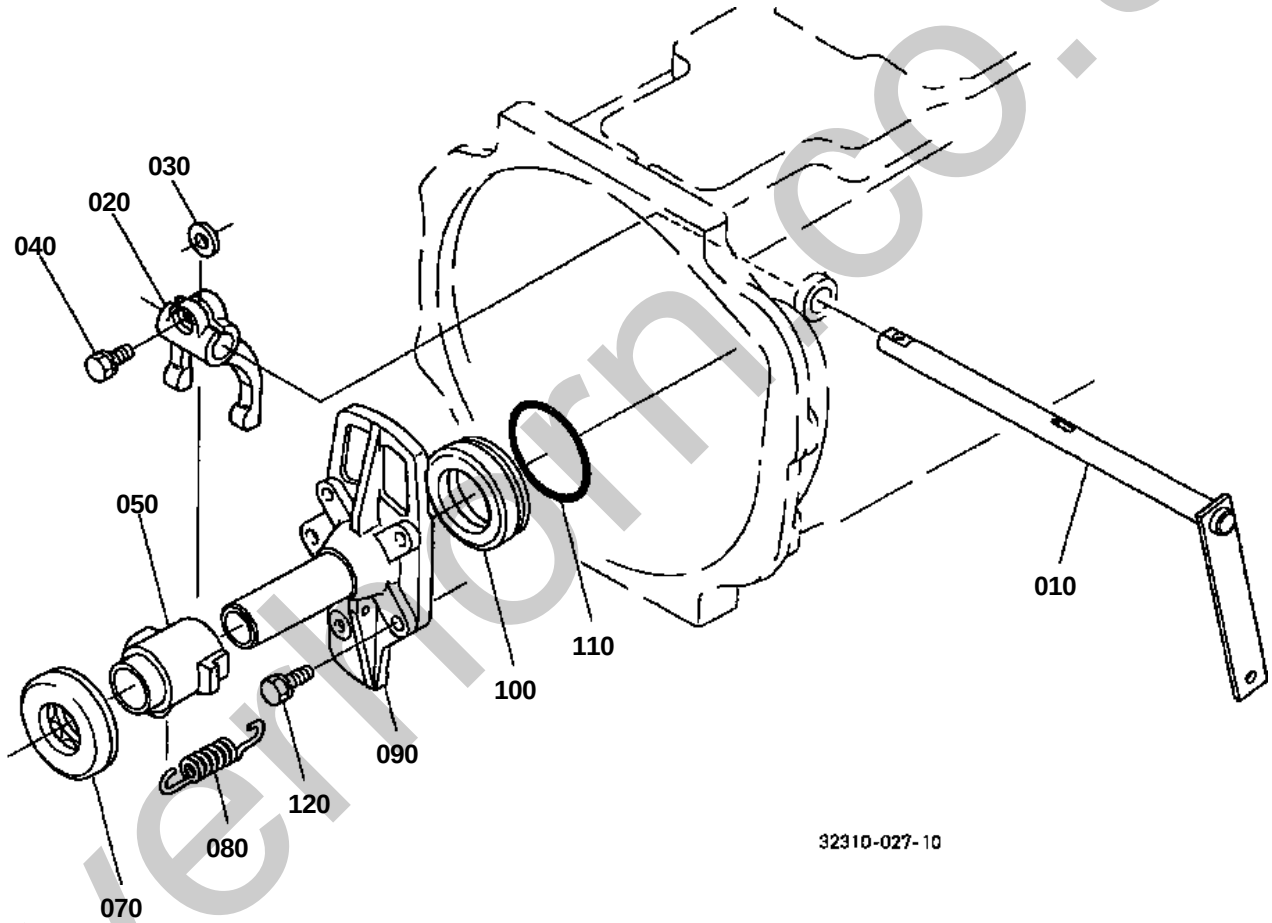

silvermorn.co.uk

CLUTCH LEVER

↔ Interchangeable; ≠ not interchangeable; ← new for old; → old for new

REF.No	Part No.	Description	Q'ty	S.No.	I/C	REMARKS	Weight (kgf)	Weight (lb)
010	37220-14712	LEVER CLUTCH	1	<=30049			0.475	1.045
010	37220-14715	LEVER CLUTCH	1	>=30050	¬	NOT SALE	0.475	1.045
020	31351-14720	FORK CLUTCH RELEASE	1	<=30279		NOT SALE	0	0
020	31351-14722	FORK CLUTCH RELEASE	1	>=30280			0.27	0.594
030	31150-14780	KEY FORK	1				0.003	0.0066
040	01123-50822	BOLT	1				0.012	0.0264
050	37220-14813	HUB CLUTCH RELEASE	1				0.43	0.946
060	99999-99999	BLANK	0				0	0
070	08490-00001	BEARING THRUST BALL	1				0.227	0.4994
080	34150-14840	SPRING	1				0.01	0.022
090	34670-25510	CASE PROPELLER SHAFT	1				0.37	0.814
100	37150-15420	SPACER	1				0.105	0.231
110	04811-50650	O RING	1				0.002	0.0044
120	01123-50830	BOLT	4				0.015	0.033

silverhorn.co.uk

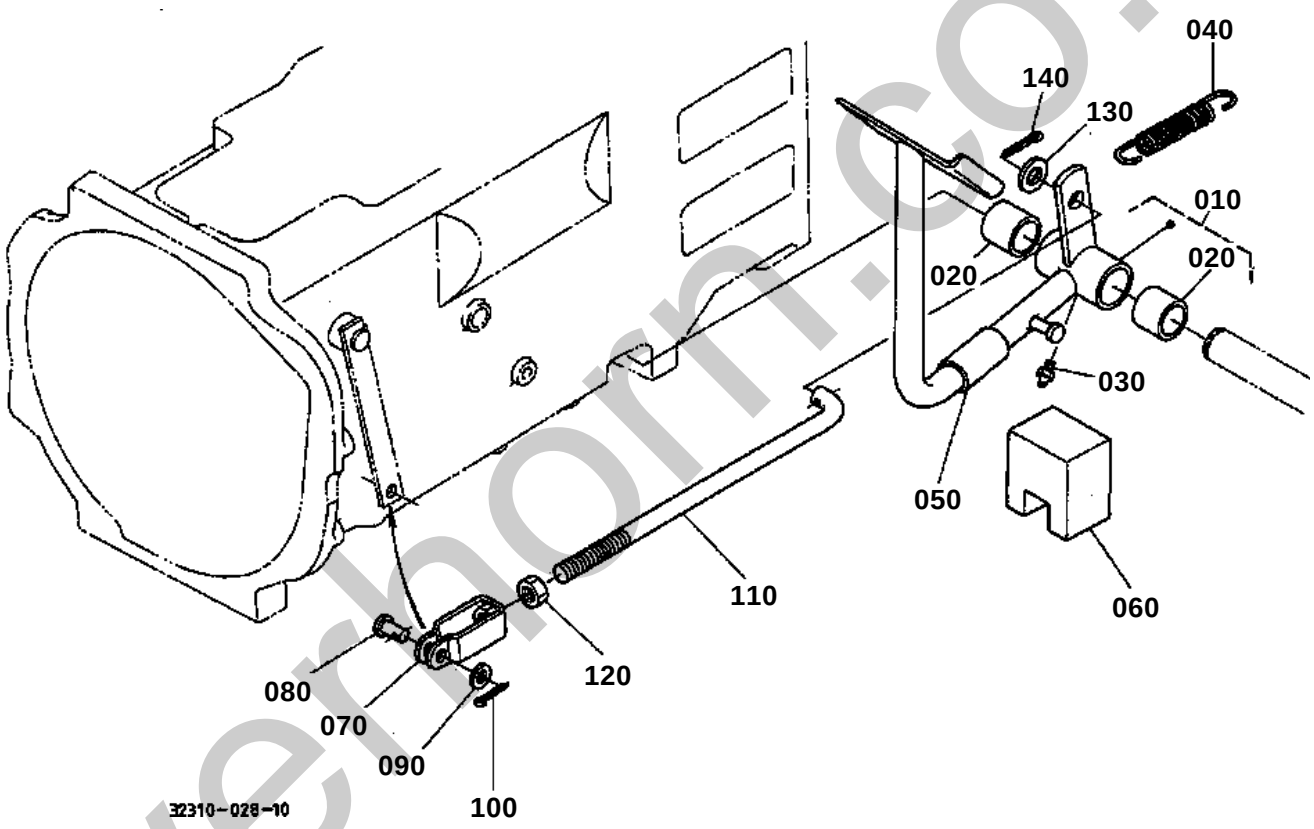

silverhorn.co.uk

CLUTCH PEDAL

↔ Interchangeable; ≠ not interchangeable; ← new for old; → old for new

REF.No	Part No.	Description	Q'ty	S.No.	I/C	REMARKS	Weight (kgf)	Weight (lb)
010	37150-15710	PEDAL CLUTCH	1				1.4	3.08
020	34150-28430	BUSH	2				0.04	0.088
030	06613-10675	NIPPLE GREASE	1				0.003	0.0066
040	37150-15840	SPRING	1				0.06	0.132
050	32400-15830	CUSHION	1				0.005	0.011
060	32240-15950	PIECE DISTANCE	1				0.045	0.099
070	34150-15630	U-JOINT	1				0.095	0.209
080	05112-50822	PIN JOINT	1				0.01	0.022
090	04012-50080	WASHER PLAIN	1				0.001	0.0022
100	05511-50220	PIN SPLIT	1				0.001	0.0022
110	34150-15640	ROD CLUTCH	1				0.195	0.429
120	02172-50120	NUT	1				0.01	0.022
130	04013-60120	WASHER PLAIN	1				0.01	0.022
140	05511-50425	PIN SPLIT	1				0.003	0.0066

silverhorn.co.uk

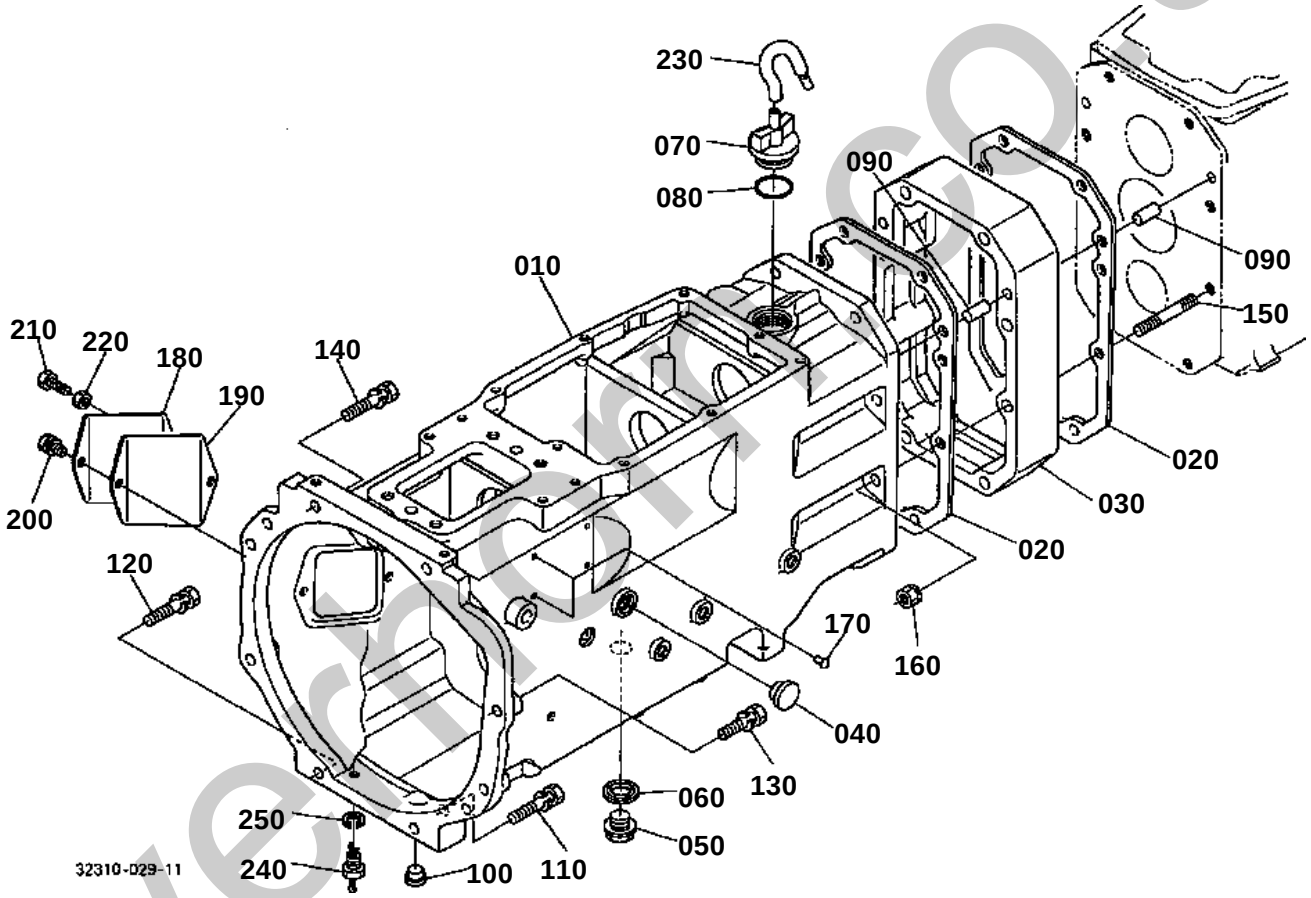

silvermoor.co.uk

CLUTCH HOUSING

↔ Interchangeable; ≠ not interchangeable; ← new for old; → old for new

REF.No	Part No.	Description	Q'ty	S.No.	I/C	REMARKS	Weight (kgf)	Weight (lb)
010	37150-14114	HOUSING CLUTCH	1	<=20756			0	0
010	37150-14115	HOUSING CLUTCH	1	>=20757	¬		0	0
010	37150-14117	HOUSING CLUTCH	1	>=30280	¬		0	0
010	37150-14118	HOUSING CLUTCH	1	>=30280	¬		0	0
010	37150-14119	HOUSING CLUTCH	1	>=30280	1		0	0
015	09980-10085	CAP	1	>=30280			0.002	0.0044
015	09980-10085	CAP	1	<=30280			0.002	0.0044
020	32448-99030	GASKET	2				0.016	0.0352
030	38240-21150	SPACER	1				3.5	7.7
040	31301-14230	GAUGE OIL	1				0.005	0.011
050	15512-96010	PLUG DRAIN	1				0.101	0.2222
060	04717-02150	WASHER WITH RUBBER	1				0.004	0.0088
070	38180-21410	PLUG	1				0.02	0.044
080	04811-50300	O RING	1				0	0
090	05012-01018	PIN STRAIGHT	4				0.012	0.0264
100	32210-27580	PLUG	6				0.001	0.0022
110	01173-51070	BOLT	1	<=30279			0.044	0.0968
110	01133-51070	BOLT WITH WASHER	1	>=30280	¬		0.047	0.1034
120	01173-51050	BOLT	1	<=30279			0.035	0.077
120	01133-51050	BOLT	1	>=30280	¬		0.035	0.077
130	01173-51040	BOLT	4	<=30279			0.028	0.0616
130	01133-51040	BOLT	4	>=30280	¬		0.03	0.066
140	01173-51042	BOLT	2	<=30279			0.03	0.066
140	01133-51042	BOLT WITH WASHER	2	>=30280	¬		0.03	0.066
150	35110-14180	STUD	8				0.06	0.132
160	37150-14190	NUT	8				0.016	0.0352
170	34152-57920	RIVET	2				0.001	0.0022
180	34150-14160	COVER HOUSING	1				0.15	0.33
190	34150-14170	GASKET HOUSING	1				0.03	0.066
200	01123-60816	BOLT	1				0.01	0.022
210	01153-50825	BOLT	1	<=30279			0.012	0.0264
210	01150-50820	BOLT	1	>=30280	¬		0.011	0.0242
220	02114-50080	NUT	1				0.005	0.011
230	38180-37140	BREATHER	1				0.01	0.022
240	32310-14270	KIT PLUG	1				0.018	0.0396
250	04512-60100	WASHER SPRING	1				0.002	0.0044

silvermorn.co.uk

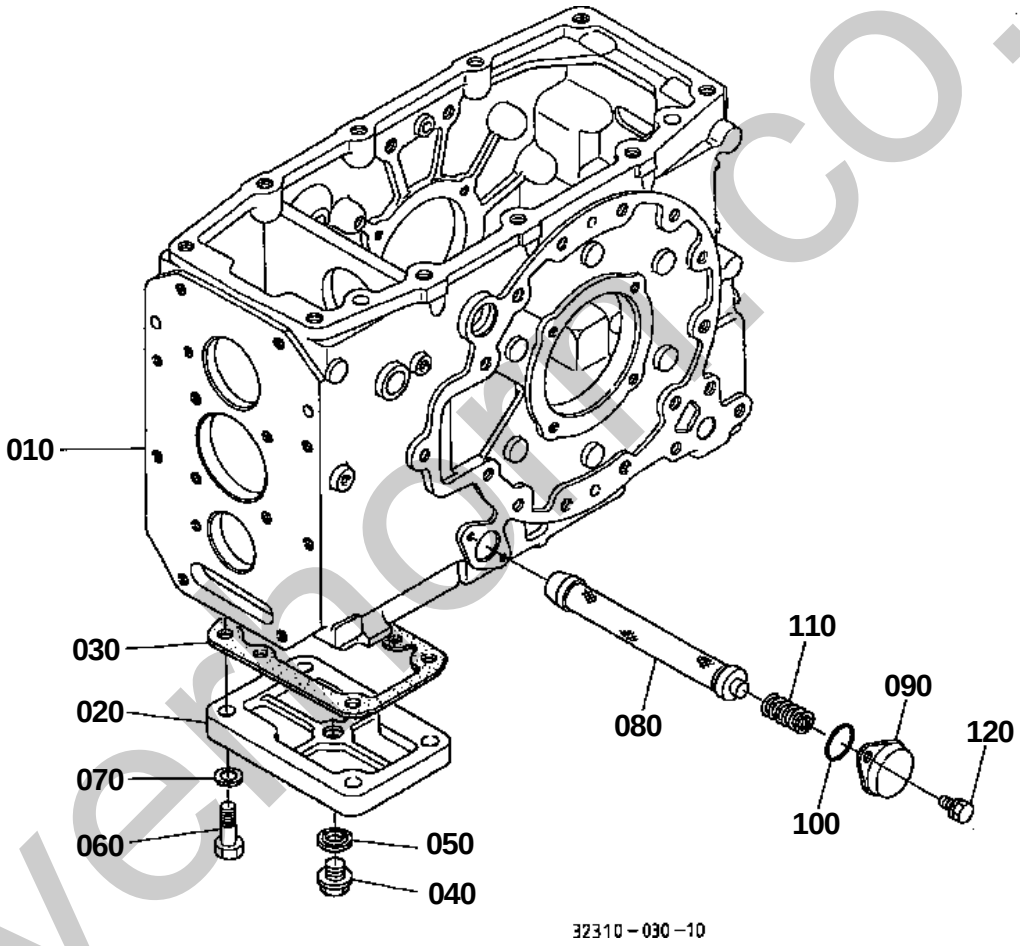

silvermoor.co.uk

TRANSMISSION CASE

↔ Interchangeable; ≠ not interchangeable; ← new for old; → old for new

REF.No	Part No.	Description	Q'ty	S.No.	I/C	REMARKS	Weight (kgf)	Weight (lb)
010	37150-21118	CASE TRANSMISSION	1				30.6	67.32
020	37150-21272	COVER	1				0.33	0.726
030	32425-21280	GASKET	1				0.01	0.022
040	06331-35012	PLUG	1				0.022	0.0484
050	04717-01200	WASHER WITH RUBBER	1				0.002	0.0044
060	01173-51235	BOLT	4				0.04	0.088
070	04512-60120	WASHER SPRING	4				0.005	0.011
080	34150-37710	FILTER OIL	1				0.1	0.22
090	37150-37720	RETAINER	1				0.03	0.066
100	04811-10320	O RING	1				0.001	0.0022
110	34150-37740	SPRING	1				0.003	0.0066
120	01123-60816	BOLT	2				0.01	0.022

silverhorn.co.uk

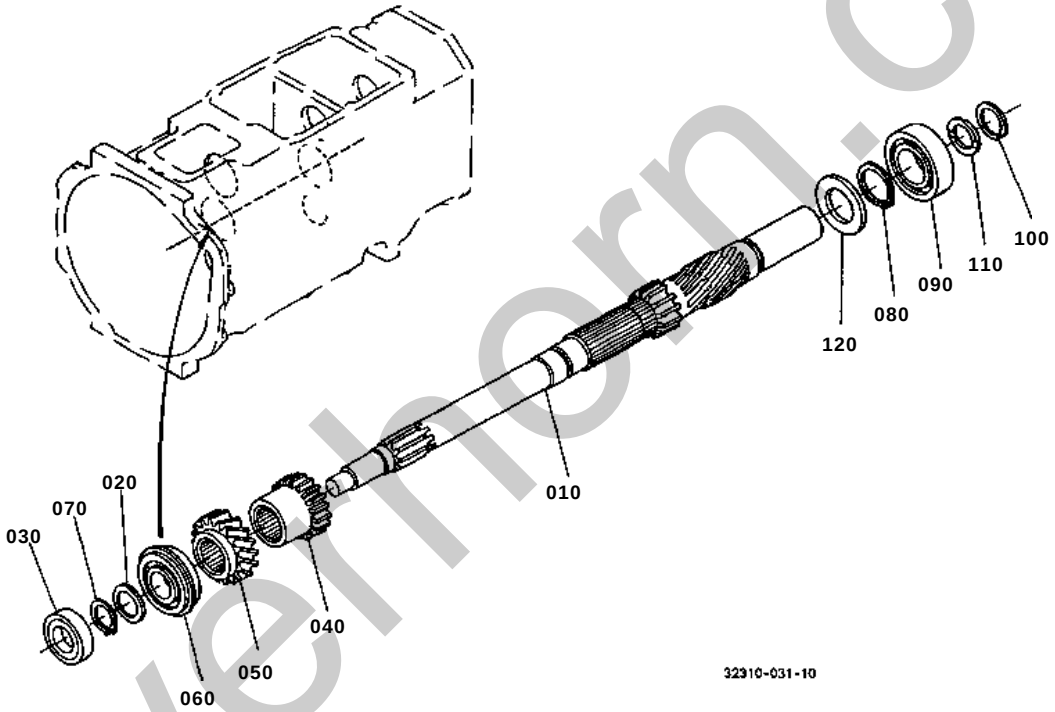

silverhorn.co.uk

MAIN SHAFT

↔ Interchangeable; ≠ not interchangeable; ← new for old; → old for new

REF.No	Part No.	Description	Q'ty	S.No.	I/C	REMARKS	Weight (kgf)	Weight (lb)
010	37150-21510	SHAFT MAIN	1				2.1	4.62
020	34150-21560	WASHER	1				0.01	0.022
030	09502-55210	SEAL OIL	1				0.025	0.055
040	37150-21520	GEAR	1			17T	0.225	0.495
050	35110-21530	GEAR	1			23T	0.355	0.781
060	08151-06305	BEARING BALL	1				0.233	0.5126
070	37150-21550	CIRCLIP EXTERNAL	1				0.06	0.132
080	04612-00300	CIRCLIP EXTERNAL	1				0.003	0.0066
090	08241-03206	BEARING BALL	1				0.302	0.6644
100	37150-21790	CIR-CLIP	1				0.001	0.0022
110	37150-21580	COLLAR	1				0.02	0.044
120	37150-21590	COLLAR	1				0.025	0.055

silverhorn.co.uk

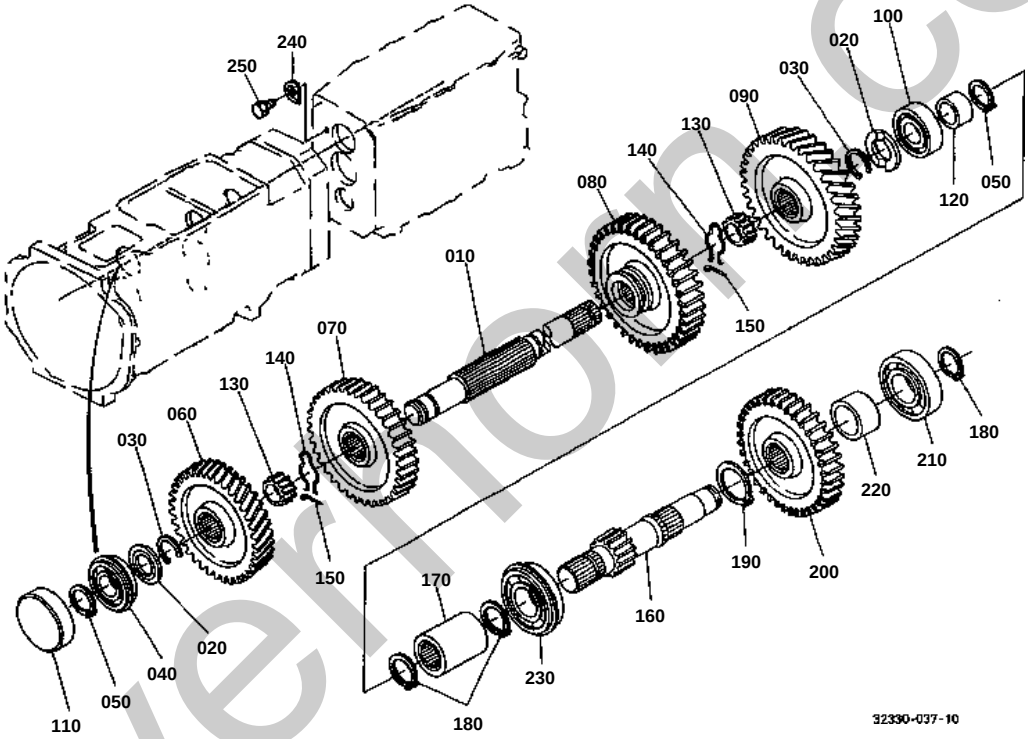

silverfoxm.co.uk

COUNTERSHAFT

↔ Interchangeable; ≠ not interchangeable; ← new for old; → old for new

REF.No	Part No.	Description	Q'ty	S.No.	I/C	REMARKS	Weight (kgf)	Weight (lb)
010	35110-21610	COUNTERSHAFT	1				1.645	3.619
020	37150-21760	COLLAR THRUST	2				0.017	0.0374
030	37150-21790	CIR-CLIP	2				0.001	0.0022
040	08151-06205	BEARING BALL	1				0.131	0.2882
050	37150-21550	CIRCLIP EXTERNAL	2				0.06	0.132
060	35110-21710	GEAR	1			32T	0.465	1.023
070	37150-21720	GEAR	1			41T	0.77	1.694
080	37150-21730	GEAR	1			45T	0.945	2.079
090	37150-21740	GEAR	1			45T	1.08	2.376
100	08101-06205	BEARING BALL	1				0.14	0.308
110	34150-21650	COVER BEARING	1				0.07	0.154
120	37150-21770	COLLAR	1				0.12	0.264
130	37150-21750	BOSS SPLINE	2				0.088	0.1936
140	35340-21782	CIR-CLIP	2				0.007	0.0154
150	35340-21792	WIRE	2				0.001	0.0022
160	35010-21910	GEAR-SHAFT	1			10T	0.73	1.606
170	35110-21680	COUPLING	1				0.343	0.7546
180	37150-21550	CIRCLIP EXTERNAL	3				0.06	0.132
190	04612-00300	CIRCLIP EXTERNAL	1				0.003	0.0066
200	35010-21920	GEAR	1			25T	0.565	1.243
210	08101-06305	BEARING BALL	1				0.23	0.506
220	31361-21940	COLLAR	1				0.01	0.022
230	08151-06305	BEARING BALL	1				0.233	0.5126
240	34150-21942	RETAINER BEARING	1				0.035	0.077
250	01123-50820	BOLT	1				0.011	0.0242

silverhorn.co.uk

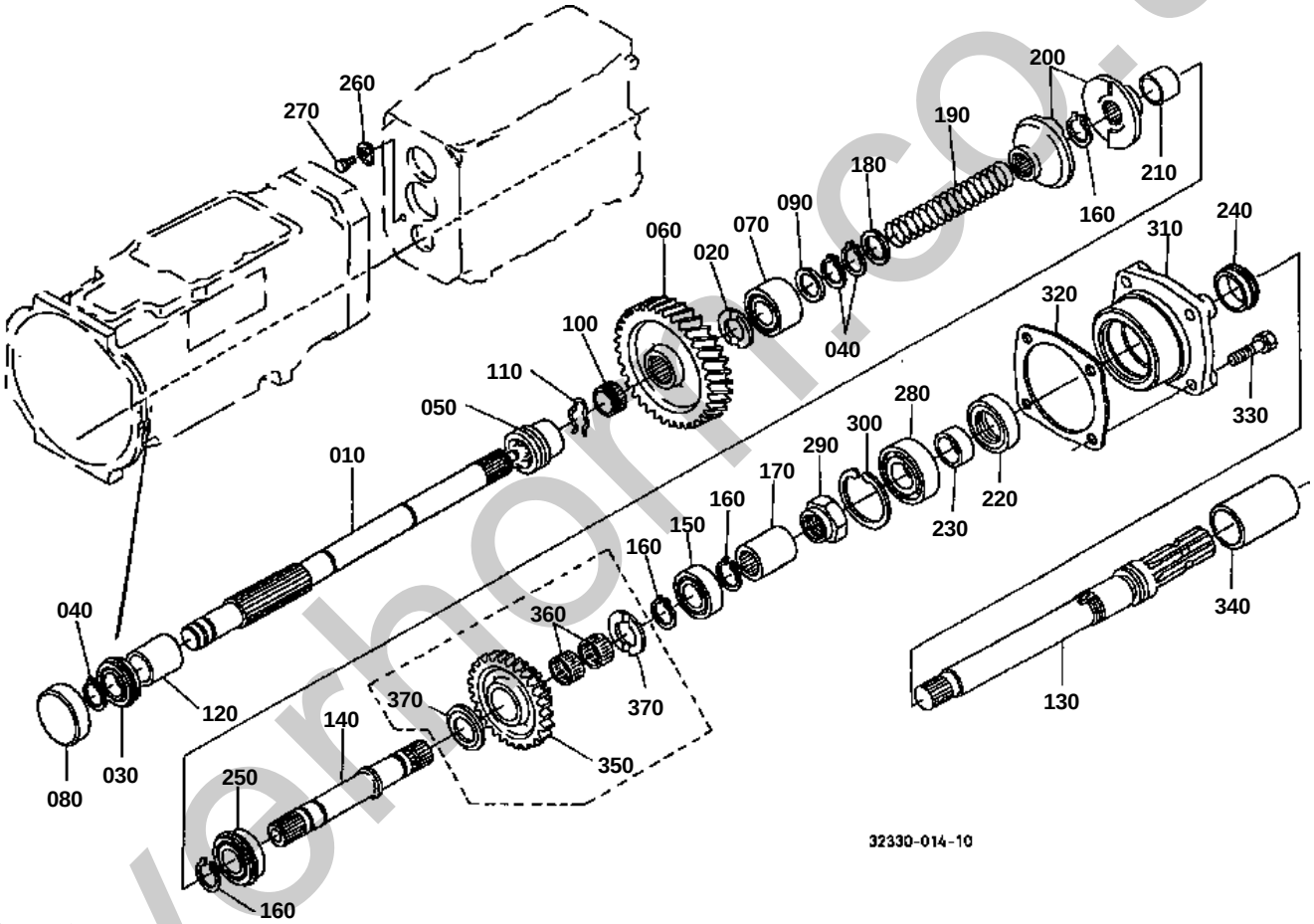

silverhorn.co.uk

PTO COUNTERSHAFT

↔ Interchangeable; ≠ not interchangeable; ← new for old; → old for new

REF.No	Part No.	Description	Q'ty	S.No.	I/C	REMARKS	Weight (kgf)	Weight (lb)
010	35170-25323	COUNTERSHAFT PTO	1				1.83	4.026
020	37150-21760	COLLAR THRUST	1				0.017	0.0374
030	08151-06205	BEARING BALL	1				0.131	0.2882
040	37150-21550	CIRCLIP EXTERNAL	3				0.06	0.132
050	32400-21730	SHIFTER	1				0.28	0.616
060	37150-21740	GEAR	1			45T	1.08	2.376
070	08241-03205	BEARING BALL	1				0	0
080	34150-21650	COVER BEARING	1				0.07	0.154
090	34150-21560	COLLAR WASHER	1				0.01	0.022
100	37150-21750	BOSS SPLINE	1				0.088	0.1936
110	35340-21782	CIR-CLIP	1				0.007	0.0154
120	35110-21750	COLLAR	1				0.089	0.1958
130	32420-25313	SHAFT PTO	1				1.94	4.268
140	35010-25210	SHAFT PTO DRIVE	1				0.72	1.584
150	08101-06205	BEARING BALL	1				0.14	0.308
160	37150-21550	CIRCLIP EXTERNAL	4				0.06	0.132
170	37150-21682	COUPLING	1				0.24	0.528
180	35200-25220	COLLAR	1				0.005	0.011
190	35200-25230	SPRING ONE-WAY	1				0.075	0.165
200	35200-25240	CAM CLUTCH	2				0.485	1.067
210	35200-25250	COLLAR	1				0.04	0.088
220	37150-25360	SEAL OIL	1				0.025	0.055
230	37300-25350	COLLAR OIL SEAL	1				0.032	0.0704
240	38240-25370	SLINGER	1				0.004	0.0088
250	08151-06205	BEARING BALL	1				0.131	0.2882
260	34150-21942	RETAINER BEARING	1				0.035	0.077
270	01123-50820	BOLT	1				0.011	0.0242
280	08101-06206	BEARING BALL	1				0.196	0.4312
290	34150-25320	NUT	1				0.03	0.066
300	04611-00620	CIR CLIP INTERNAL	1				0.011	0.0242
310	37150-25410	CASE BEARING	1				1.02	2.244
320	32448-99130	GASKET	1				0.005	0.011
330	01123-50822	BOLT	4				0.012	0.0264
340	31220-25820	CAP	1				0.055	0.121

silverhorn.co.uk

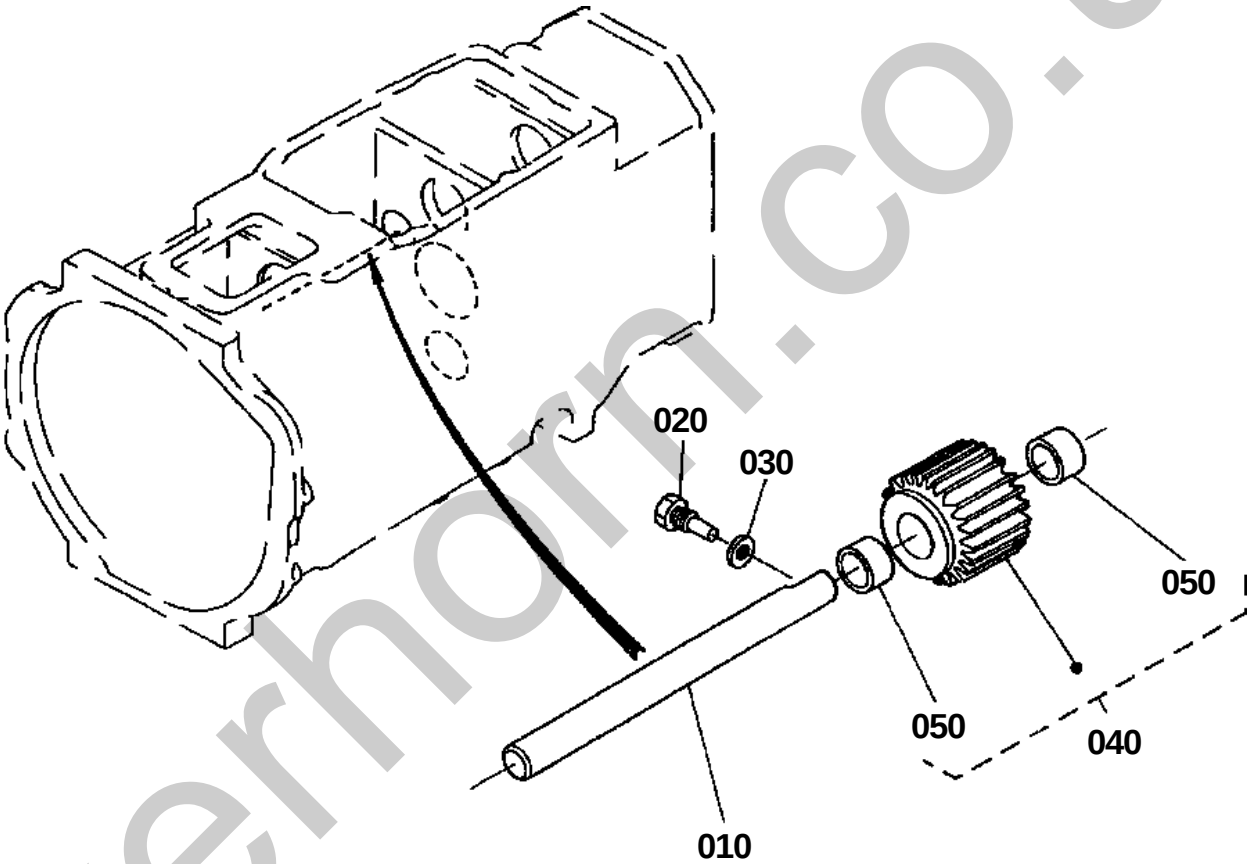

32310-035-10

silverhorn.co.uk

REVERSE SHAFT

↔ Interchangeable; ≠ not interchangeable; ← new for old; → old for new

REF.No	Part No.	Description	Q'ty	S.No.	I/C	REMARKS	Weight (kgf)	Weight (lb)
010	37150-23110	SHAFT REVERSE	1				0.455	1.001
020	37150-23120	SCREW SET	1				0.02	0.044
030	04717-00800	WASHER WITH RUBBER	1				0.001	0.0022
040	37150-23100	ASSY GEAR	1			22T	0.885	1.947
050	31220-26360	BUSH	2				0.015	0.033

silverhorn.co.uk

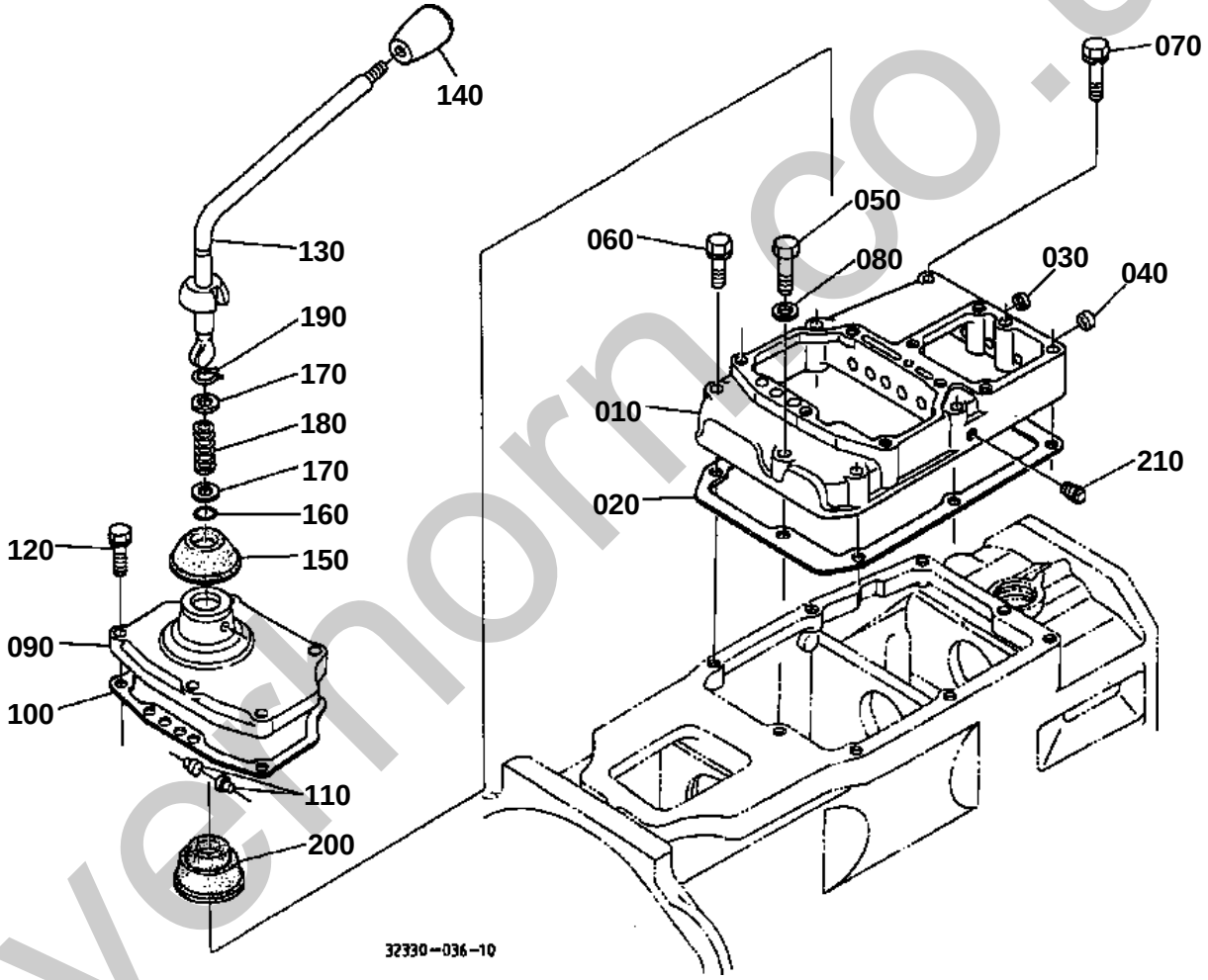

silverhorn.co.uk

MAIN GEAR SHIFT LEVER

↔ Interchangeable; ≠ not interchangeable; ← new for old; → old for new

REF.No	Part No.	Description	Q'ty	S.No.	I/C	REMARKS	Weight (kgf)	Weight (lb)
010	37150-21210	COVER SPEED CHANGE	1				1.14	2.508
020	32448-99080	GASKET	1				0.001	0.0022
030	34150-21250	PLUG	5				0.002	0.0044
040	34269-21250	PLUG	1				0	0
040	31393-75420	PLUG	1		«		0.001	0.0022
050	01153-50840	BOLT	1				0.018	0.0396
060	01123-50840	BOLT	2				0.018	0.0396
070	01123-50850	BOLT	3				0.02	0.044
080	04717-00800	WASHER WITH RUBBER	1				0.001	0.0022
090	35340-23710	BRACKET GEAR SHIFT	1				1.46	3.212
100	32448-99040	GASKET	1				0.001	0.0022
110	34150-23740	PIN SET	2				0.002	0.0044
120	01123-50832	BOLT	5				0.016	0.0352
130	34150-23810	LEVER MAIN SHIFT	1				0.43	0.946
140	TA040-15480	GRIP LEVER	1				0.053	0.1166
150	34150-23940	SHIELD LEVER	1				0.025	0.055
160	04811-00120	O RING	1				0	0
170	32240-23950	WASHER	2				0.001	0.0022
180	32240-23920	SPRING	1				0.007	0.0154
190	31220-23930	CIRCLIP EXTERNAL	1				0.001	0.0022
200	34150-23873	SHIELD	1			NOT SALE	0	0
200	T0270-23870	SHIELD	1				0.018	0.0396
210	06312-10010	PLUG	2				0.007	0.0154

silverhorn.co.uk

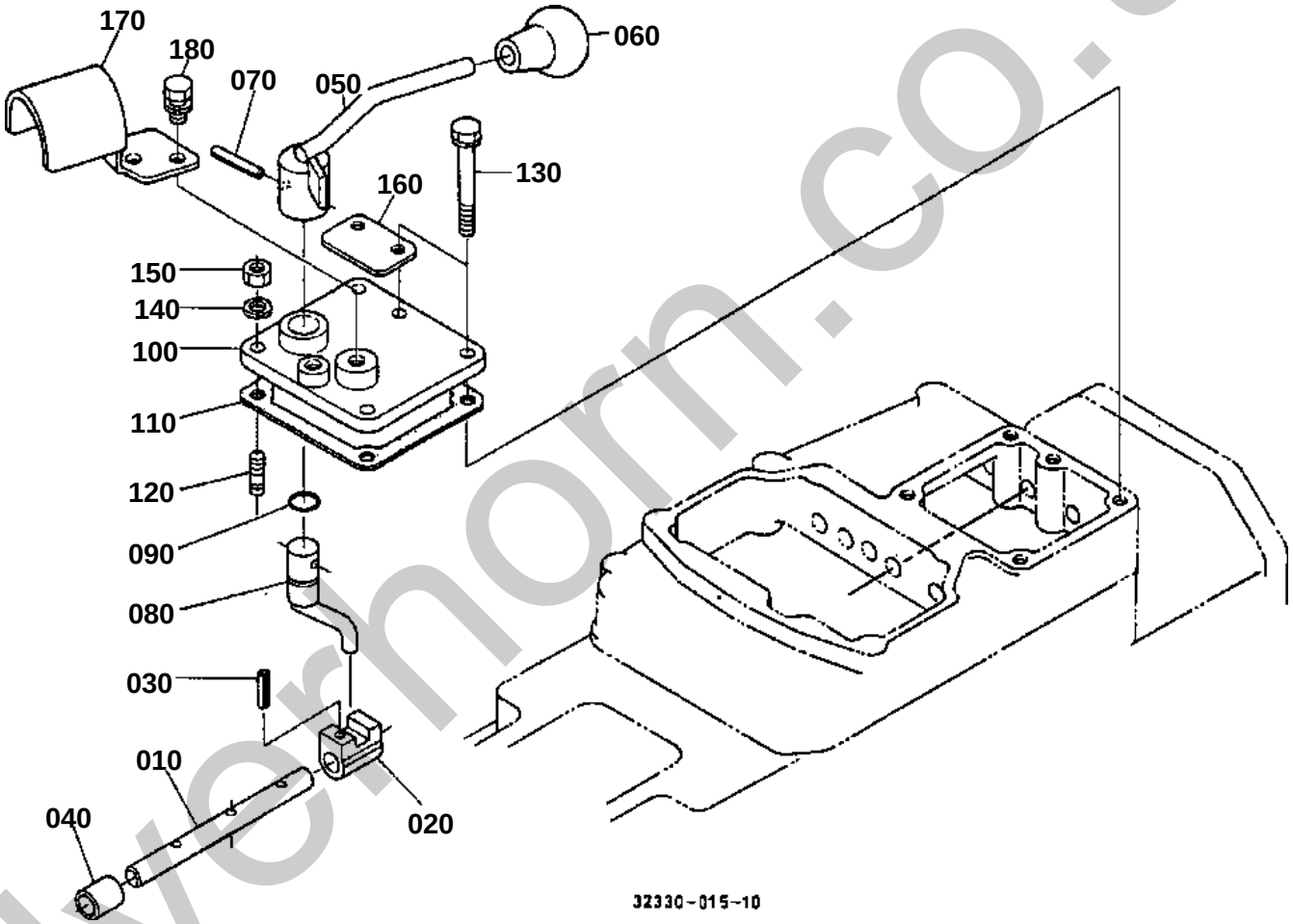

silverhorn.co.uk

PTO GEAR SHIFT LEVER

↔ Interchangeable; ≠ not interchangeable; ← new for old; → old for new

REF.No	Part No.	Description	Q'ty	S.No.	I/C	REMARKS	Weight (kgf)	Weight (lb)
010	35260-24760	ROD PTO FORK	1				0.15	0.33
020	35260-24770	HOLDER PTO S-CHANGE	1				0.048	0.1056
030	05411-00420	PIN SPRING	1				0.001	0.0022
040	32400-24780	COLLAR	1				0.018	0.0396
050	32330-24850	LEVER PTO	1				0.21	0.462
060	32751-24930	GRIP LEVER	1				0.04	0.088
070	05411-00632	PIN SPRING	1				0.004	0.0088
080	35260-24860	LEVER PTO SHIFT	1				0.105	0.231
090	04811-00150	O RING	1				0	0
100	32330-24830	COVER HOUSING	1				0.47	1.034
110	32448-99090	GASKET	1				0.001	0.0022
120	01513-50818	STUD	3				0.009	0.0198
130	01123-50865	BOLT	2				0.028	0.0616
140	04512-60080	WASHER SPRING	3				0.002	0.0044
150	02114-50080	NUT	3				0.005	0.011
160	32400-65200	PLATE PTO LABEL	1				0.02	0.044
170	32330-46210	BRACKET PTO SWITCH	1				0.185	0.407
180	01123-60814	BOLT	2				0.01	0.022

silverhorn.co.uk

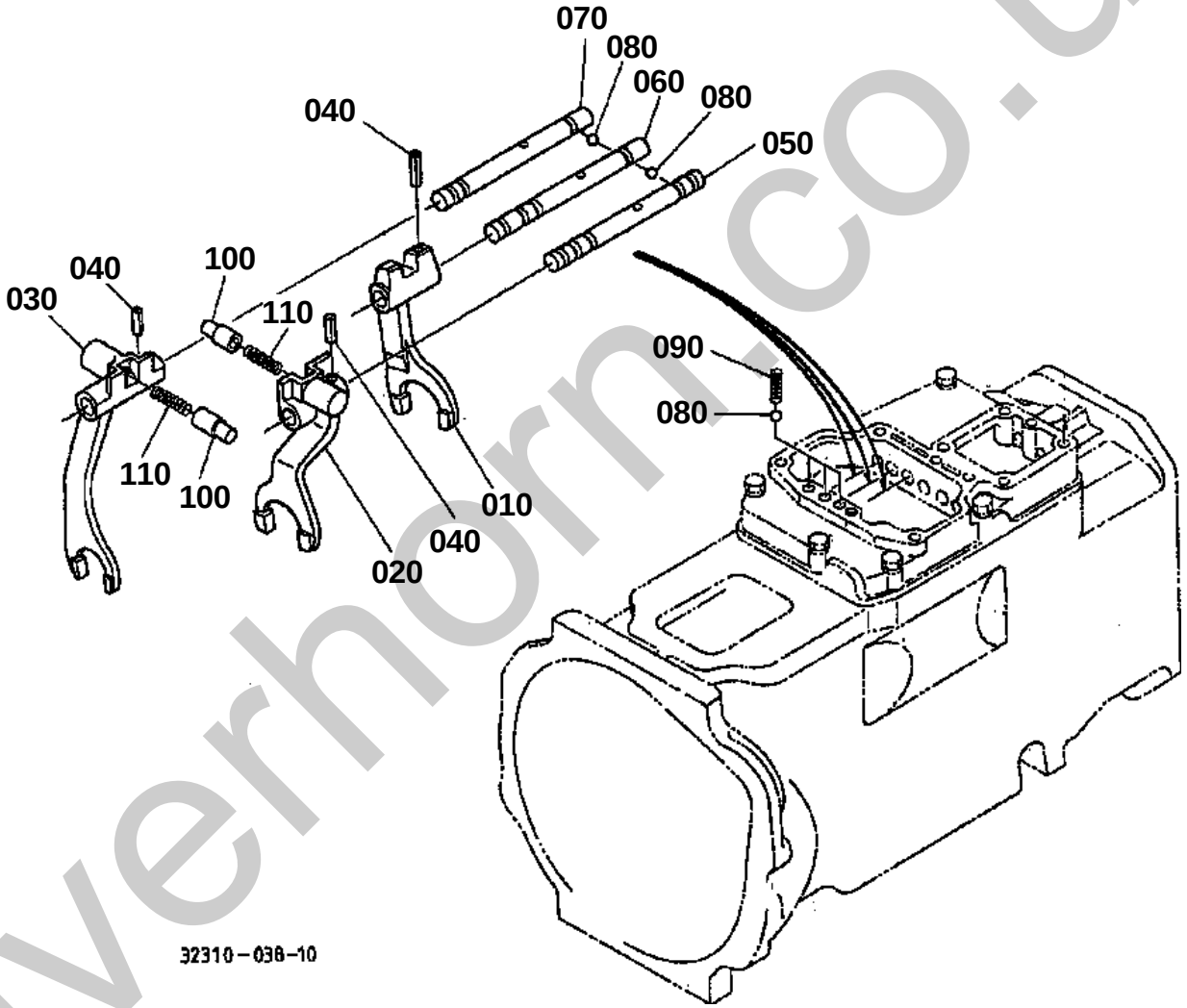

silverhorn.co.uk

MAIN GEAR SHIFT FORK

↔ Interchangeable; ≠ not interchangeable; ← new for old; → old for new

REF.No	Part No.	Description	Q'ty	S.No.	I/C	REMARKS	Weight (kgf)	Weight (lb)
010	35305-23510	FORK SHIFT	1				0.19	0.418
020	35305-23520	FORK SHIFT	1				0.28	0.616
030	35305-23530	FORK SHIFT	1	<=30279			0	0
030	35305-23532	FORK SHIFT	1	>=30280	¬		0.29	0.638
040	05411-00420	PIN SPRING	3				0.001	0.0022
050	37150-23540	ROD FORK	1				0.12	0.264
060	37150-23550	ROD FORK	1				0.12	0.264
070	37150-23570	ROD FORK	1				0.32	0.704
080	07715-01605	BALL	5				0.003	0.0066
090	62231-18530	SPRING	3				0.01	0.022
100	34150-23610	PIECE NEUTRAL	2				0.015	0.033
110	34150-23620	SPRING	2				0.003	0.0066

silverhorn.co.uk

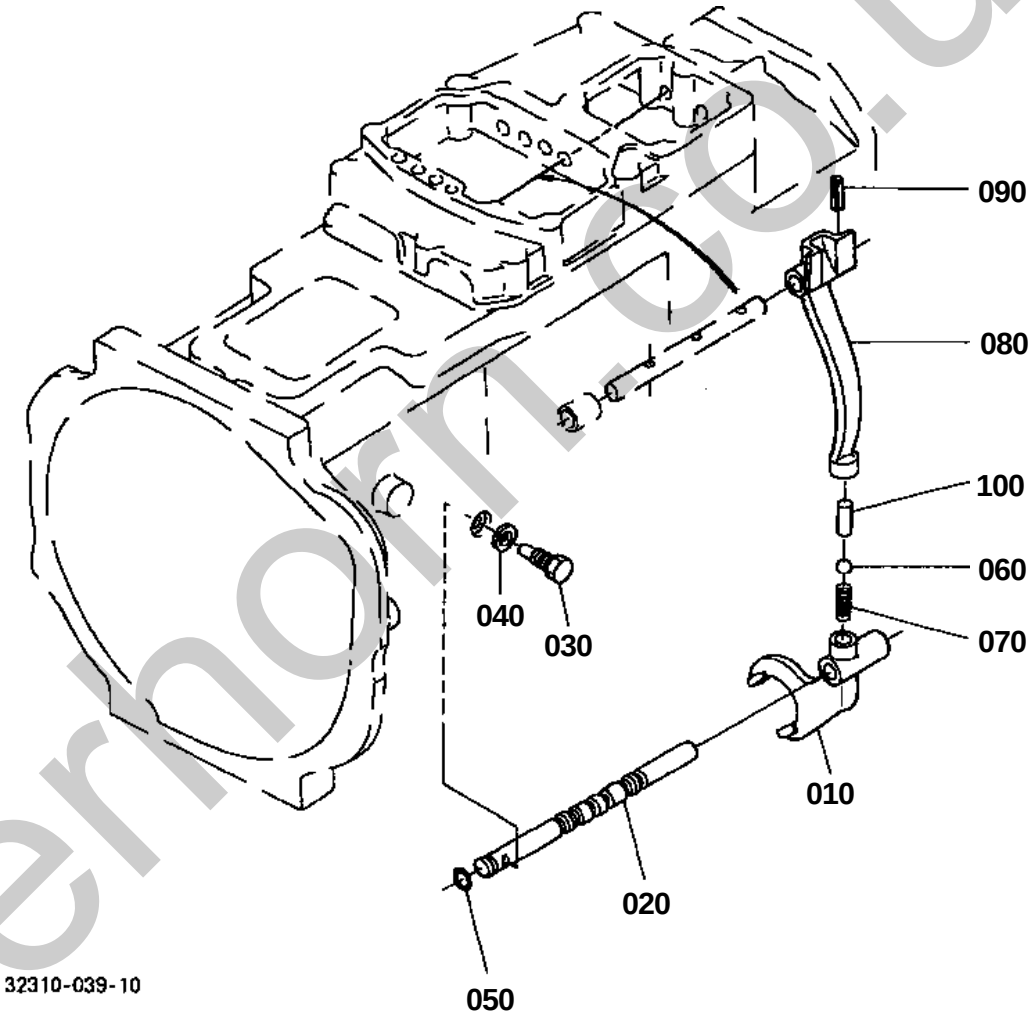

silverhorn.co.uk

PTO GEAR SHIFT FORK

↔ Interchangeable; ≠ not interchangeable; ← new for old; → old for new

REF.No	Part No.	Description	Q'ty	S.No.	I/C	REMARKS	Weight (kgf)	Weight (lb)
010	37150-24610	FORK SHIFT	1				0.21	0.462
020	37150-24630	SHAFT FORK	1				0.155	0.341
030	34150-24680	SCREW SET	1				0.015	0.033
040	04717-00800	WASHER WITH RUBBER	1				0.001	0.0022
050	04811-00090	O RING	1				0	0
060	07715-01605	BALL	1				0.003	0.0066
070	62231-18530	SPRING	1				0.01	0.022
080	35170-24710	LEVER PTO	1				0.26	0.572
090	05411-00425	PIN SPRING	1				0.001	0.0022
100	34150-24690	PIN	1				0.02	0.044

silverhorn.co.uk

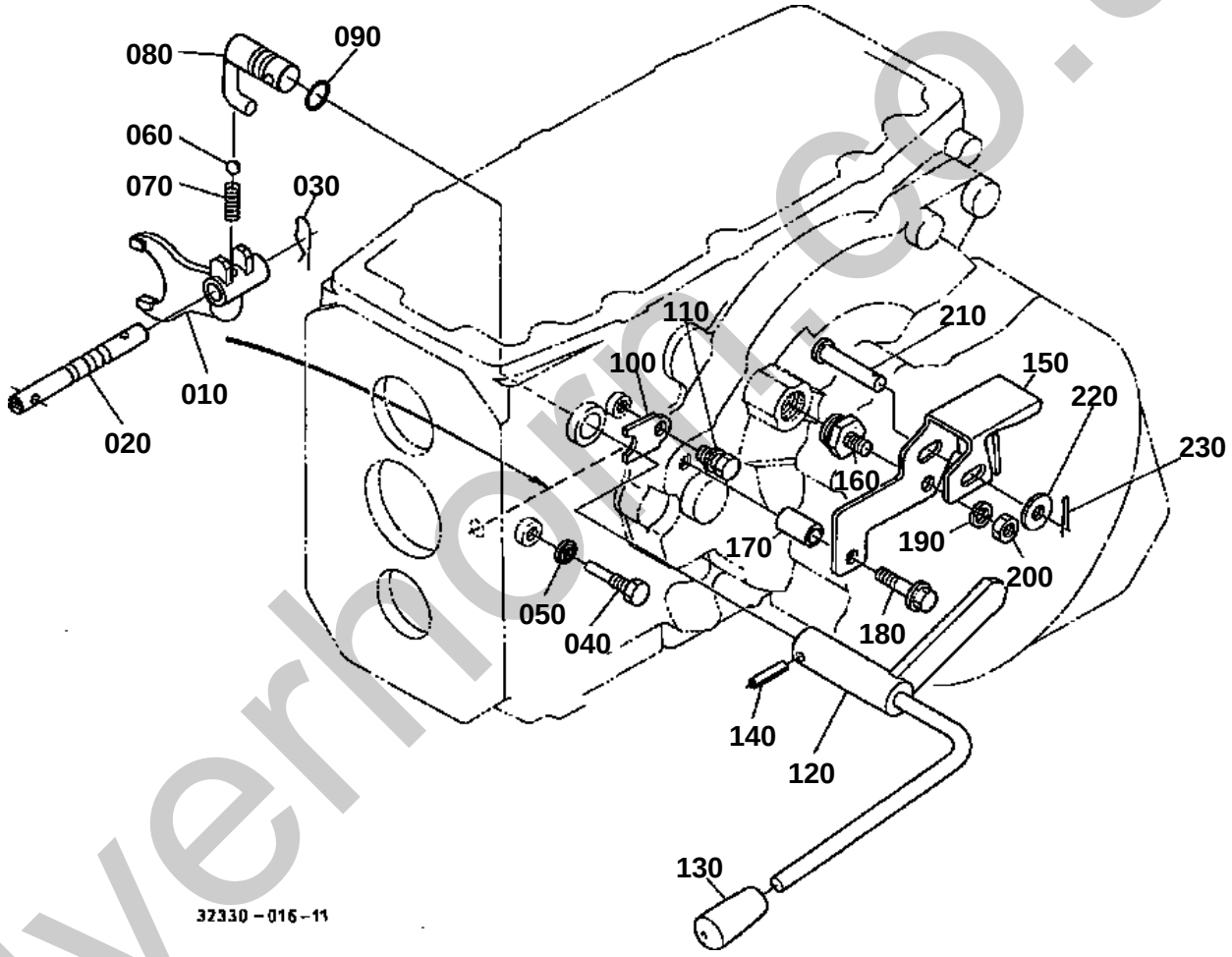

silverhorse.co.uk

150 32330-4626-0

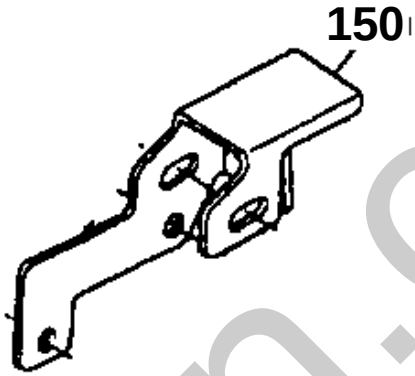

32310-812-10

silverhorn.co.uk

RANGE GEAR SHIFT FORK AND LEVER

↔ Interchangeable; ≠ not interchangeable; ← new for old; → old for new

REF.No	Part No.	Description	Q'ty	S.No.	I/C	REMARKS	Weight (kgf)	Weight (lb)
010	35000-24110	FORK RANGE SHIFT	1				0.215	0.473
020	35000-24130	SHAFT RANGE FORK	1				0.115	0.253
030	05515-61200	PIN SNAP	1				0.005	0.011
040	37150-23120	SCREW SET	1				0.02	0.044
050	04717-00800	WASHER WITH RUBBER	1				0.001	0.0022
060	07715-01605	BALL	1				0.003	0.0066
070	62231-18530	SPRING	1				0.01	0.022
080	37150-24310	LEVER SHIFT	1				0.145	0.319
080	TC020-24310	LEVER RANGE SHIFT	1		«		0	0
090	04811-00150	O RING	1				0	0
100	34150-24350	STOPPER LEVER	1				0.01	0.022
100	TC020-24350	STOPPER LEVER	1		«		0.012	0.0264
110	01123-60816	BOLT	1				0.01	0.022
120	32330-24430	LAVER RANGE SHIFT	1				0.81	1.782
130	32330-24560	GRIP LEVER	1				0.015	0.033
140	05411-00632	PIN SPRING	1				0.004	0.0088
150	32330-46260	BRACKET RANGE SWITCH	1	<=20001			0	0
150	32330-46263	BRACKET RANGE SWITCH	1	>=20002	¬		0.31	0.682
160	32330-46270	SCREW SET	1				0.067	0.1474
170	32330-46240	SPACER	1				0	0
180	01774-51040	BOLT FLANGE	1				0.025	0.055
190	04512-60100	WASHER SPRING	1				0.002	0.0044
200	02118-50100	NUT	1				0.005	0.011
210	05122-51255	PIN JOINT	1				0.051	0.1122
220	04013-60120	WASHER PLAIN	1				0.01	0.022
230	05511-50425	PIN SPLIT	1				0.003	0.0066
240	32240-34490	CLAMP CORD	1	>=30280			0.003	0.0066

silverhorn.co.uk

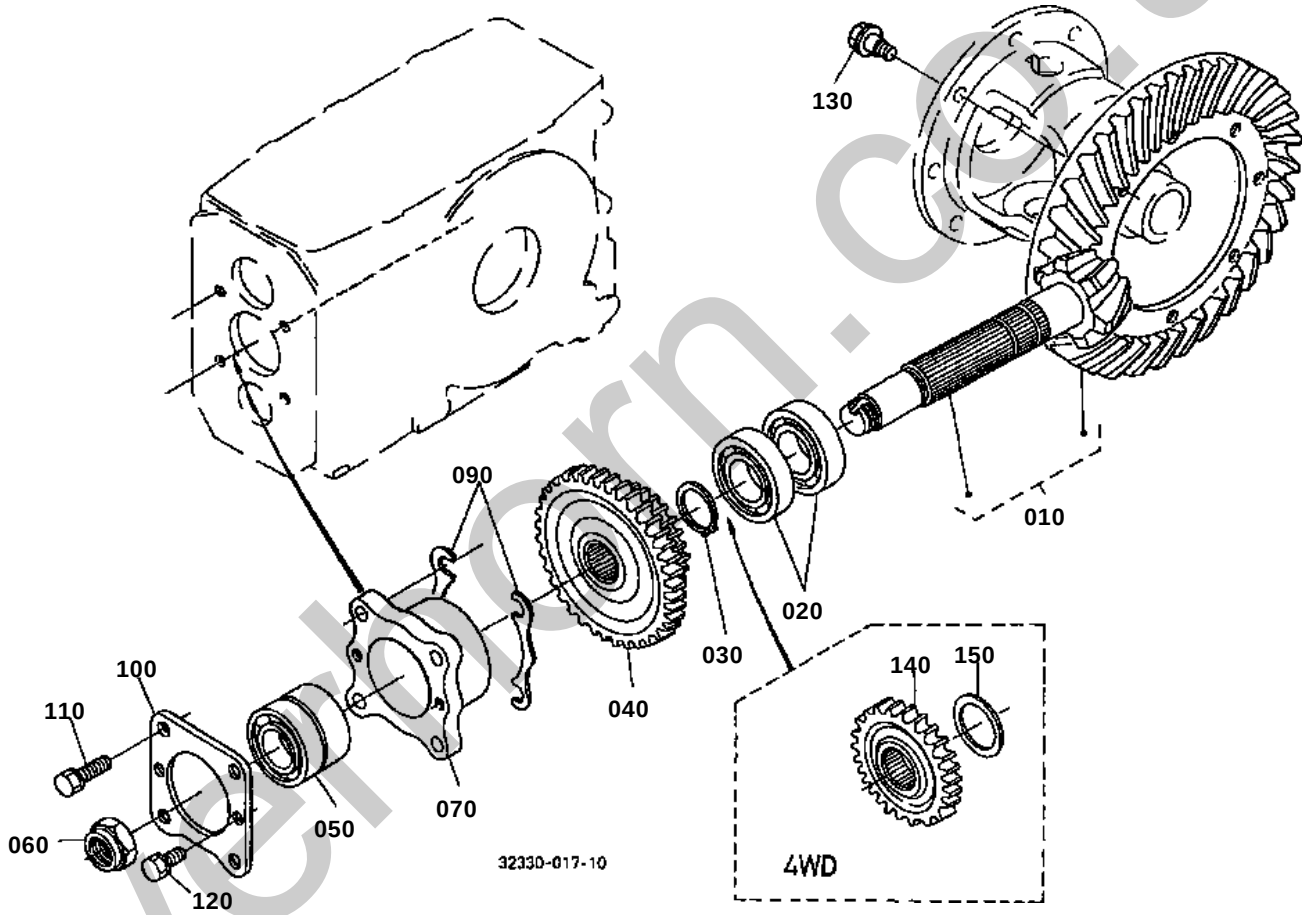

silverthorn.co.uk

SPIRAL BEVEL PINION

↔ Interchangeable; ≠ not interchangeable; ← new for old; → old for new

REF.No	Part No.	Description	Q'ty	S.No.	I/C	REMARKS	Weight (kgf)	Weight (lb)
010	35110-22100	ASSY GEAR SPIRAL	1			8-39T	5.3	11.66
020	08101-06306	BEARING BALL	2				0.335	0.737
030	04612-00300	CIRCLIP EXTERNAL	1				0.003	0.0066
040	35010-21950	GEAR	1			24-39T	1.245	2.739
050	38240-22140	BEARING TAPER-ROLLER	1				0	0
060	35260-23252	NUT	1				0.04	0.088
070	37300-22150	CASE BEARING	1				0.56	1.232
080	99999-99999	BLANK	0				0	0
090	34150-22610	SHIM	2			0.50mm	0.01	0.022
090	34150-22620	SHIM	4			0.20mm	0.005	0.011
090	34150-22630	SHIM	2			0.10mm	0.005	0.011
100	34150-22170	COVER BEARING	1				0.16	0.352
110	01133-51035	BOLT	4				0.03	0.066
120	01123-60816	BOLT	2				0.01	0.022
130	37800-43870	BOLT	8				0.026	0.0572

silverhorn.co.uk

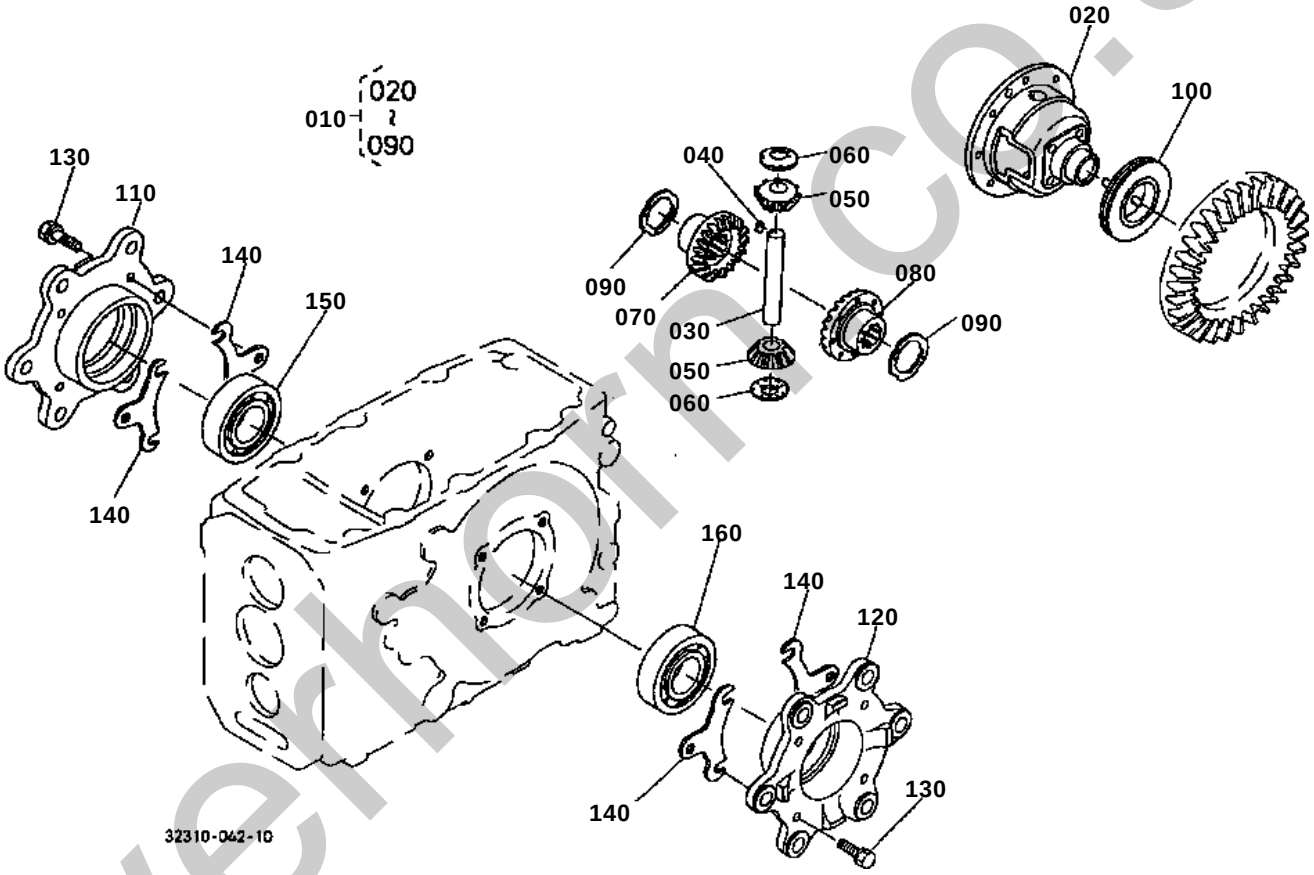

silverthorn.co.uk

REAR DIFFERENTIAL

↔ Interchangeable; ≠ not interchangeable; ← new for old; → old for new

REF.No	Part No.	Description	Q'ty	S.No.	I/C	REMARKS	Weight (kgf)	Weight (lb)
010	31331-26100	ASSY DIFFERENTIAL	1				4.4	9.68
020	31331-26510	CASE DIFFERENTIAL	1				2.7	5.94
030	31331-26340	SHAFT DIFF.PINION	1				0.3	0.66
040	31220-26280	KEY FEATHER	1				0.005	0.011
050	35430-26350	PINION DIFF.	2				0.16	0.352
060	31351-26390	WASHER DIFF.PINION	2				0.012	0.0264
070	32580-43330	GEAR DIFF.SIDE	1				0.49	1.078
080	38180-26440	GEAR DIFF.SIDE LH	1				0.61	1.342
090	31331-26470	WASHER SIDE GEAR	2			1.50mm	0.005	0.011
090	31331-26480	WASHER SIDE GEAR	2			1.60mm	0.017	0.0374
090	31331-26490	WASHER SIDE GEAR	2			1.70mm	0.02	0.044
100	34150-26615	SHIFTER DIFF.LOCK	1				0.4	0.88
110	31331-26550	CASE DIFF.BEARING RH	1				1.59	3.498
120	31331-26560	CASE DIFF.BEARING LH	1				1.9	4.18
130	01133-51030	BOLT	8				0.025	0.055
140	37150-26160	SHIM	12			0.20mm	0.005	0.011
140	37150-26170	SHIM	8			0.10mm	0.005	0.011
140	37150-26180	SHIM	4			0.50mm	0.01	0.022
150	08101-06210	BEARING BALL	1				0.45	0.99
160	08101-06208	BEARING BALL	1				0.355	0.781

silverhorn.co.uk

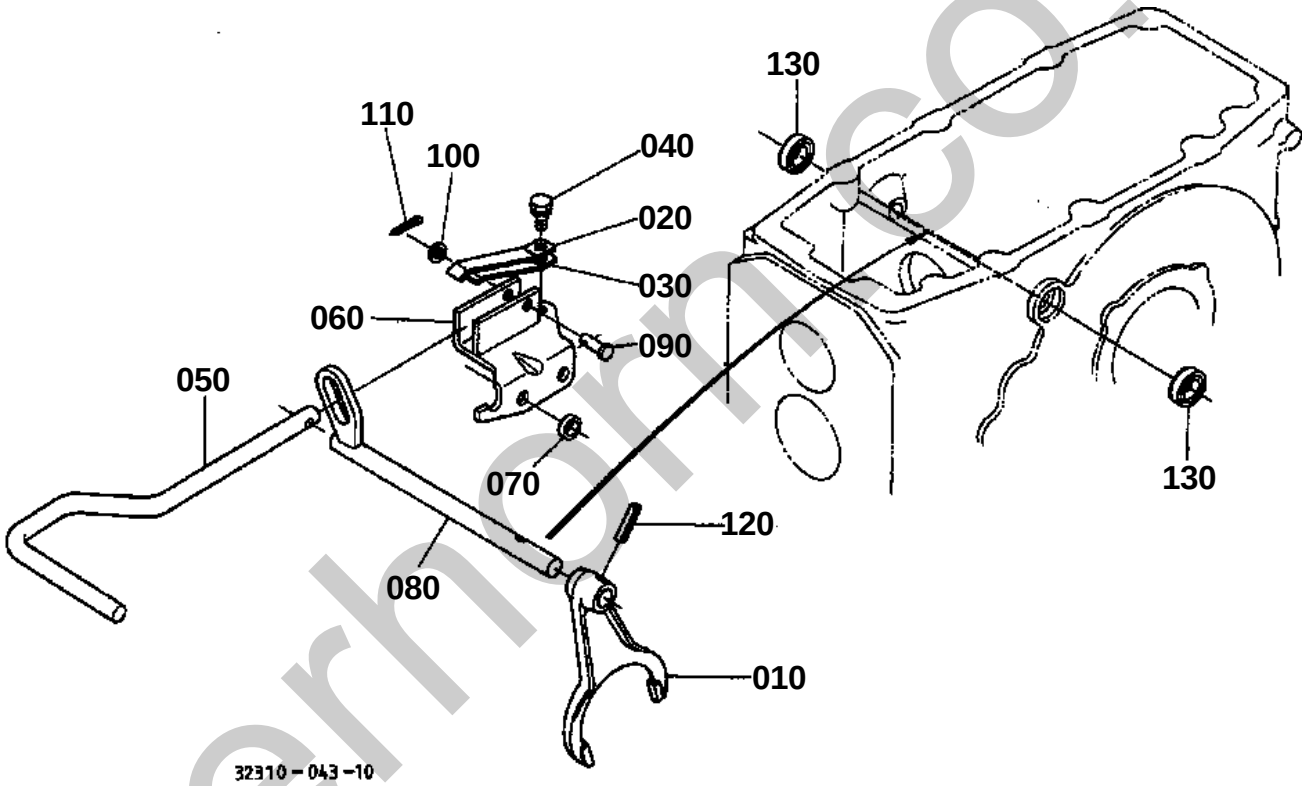

silverhorn.co.uk

DIFFERENTIAL LOCK PEDAL

↔ Interchangeable; ≠ not interchangeable; ← new for old; → old for new

REF.No	Part No.	Description	Q'ty	S.No.	I/C	REMARKS	Weight (kgf)	Weight (lb)
010	37150-26630	FORK DIFF.LOCK SHIFT	1	<=30279			0.375	0.825
010	37300-26630	FORK SHIFT	1	>=30280	1		0.43	0.946
020	37150-26643	SPRING	1				0.033	0.0726
030	37150-26660	SPRING	1				0.025	0.055
040	01123-60816	BOLT	1				0.01	0.022
040	01123-60820	BOLT	1		«		0.015	0.033
050	37300-26650	PEDAL DIFF.LOCK	1				0.635	1.397
060	32400-26670	BRACKET PEDAL	1				0.63	1.386
070	32400-26590	SPACER	2				0.025	0.055
080	35211-26680	CAM DIFF.LOCK	1				0.567	1.2474
090	05122-50835	PIN JOINT	1				0.015	0.033
100	04012-50080	WASHER PLAIN	1				0.001	0.0022
110	05511-50215	PIN SPLIT	1				0.001	0.0022
120	05411-00630	PIN SPRING	1				0.004	0.0088
130	09500-16287	SEAL OIL	2				0.01	0.022

silverhorn.co.uk

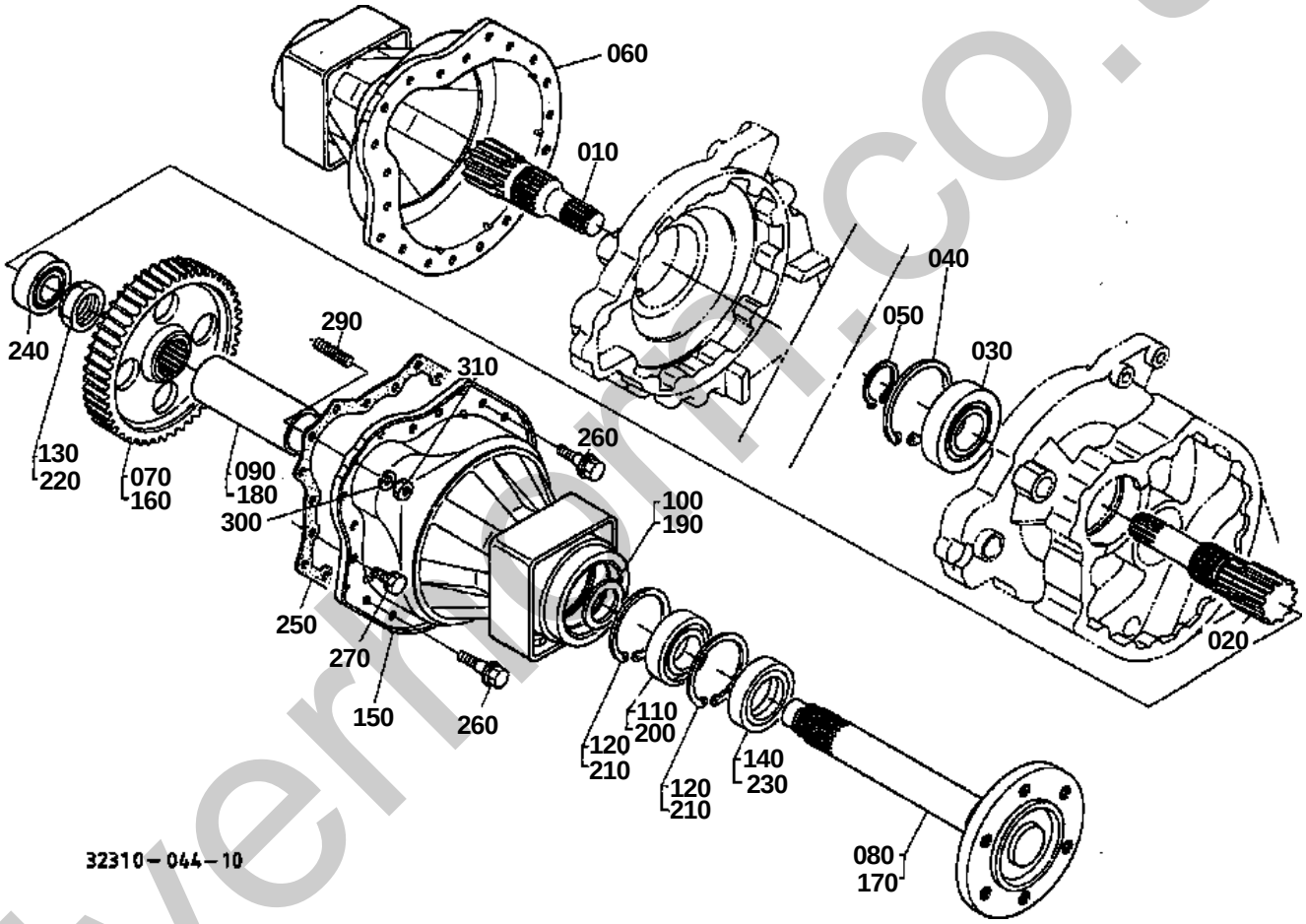

silvermine.co.uk

↔ Interchangeable; ≠ not interchangeable; ← new for old; → old for new

REF.No	Part No.	Description	Q'ty	S.No.	I/C	REMARKS	Weight (kgf)	Weight (lb)
010	31331-26713	SHAFT DIFF.GEAR RH	1				1.72	3.784
020	31331-26723	SHAFT DIFF.GEAR LH	1				1.945	4.279
030	08101-06309	BEARING BALL	2				0.82	1.804
040	04611-01000	CIR CLIP INTERNAL	2				0.042	0.0924
050	04612-00450	CIRCLIP EXTERNAL	2				0.007	0.0154
060	32400-27312	CASE AXLE RH	1	<=30279			0	0
060	32400-27313	CASE AXLE RH	1	>=30280	¬		8.8	19.36
070	31331-26832	GEAR	1			53T	4.85	10.67
080	32400-27110	AXLE REAR	1				9.15	20.13
090	32400-27140	SPACER	1				0.93	2.046
100	T0030-27160	WASHER	1				0.008	0.0176
110	08101-06209	BEARING BALL	1				0.42	0.924
120	04611-00850	CIR CLIP INTERNAL	2				0.029	0.0638
130	70650-11380	NUT	1				0.11	0.242
140	37150-27560	SEAL OIL	1				0.14	0.308
150	32400-27332	CASE AXLE LH	1	<=30279			8.9	19.58
150	32400-27333	CASE AXLE LH	1	>=30280	¬		8.9	19.58
160	31331-26832	GEAR	1			53T	4.85	10.67
170	32400-27110	AXLE REAR	1				9.15	20.13
180	32400-27140	SPACER	1				0.93	2.046
190	T0030-27160	WASHER	1				0.008	0.0176
200	08101-06209	BEARING BALL	1				0.42	0.924
210	04611-00850	CIR CLIP INTERNAL	2				0.029	0.0638
220	70650-11380	NUT	1				0.11	0.242
230	37150-27560	SEAL OIL	1				0.14	0.308
240	08101-06306	BEARING BALL	2				0.335	0.737
250	31341-27350	GASKET AXLE CASE	2	<=21462			0	0
250	32330-27350	GASKET AXLE CASE	2	>=21463	¬		0.013	0.0286
260	31351-27392	BOLT REAMER	4				0.03	0.066
270	01133-51020	BOLT	32				0.02	0.044
280	99999-99999	BLANK	0				0	0
290	01517-51016	STUD	4				0.06	0.132
300	04512-60100	WASHER SPRING	4				0.002	0.0044
310	02176-50100	NUT	4				0.005	0.011

silvermorn.co.uk

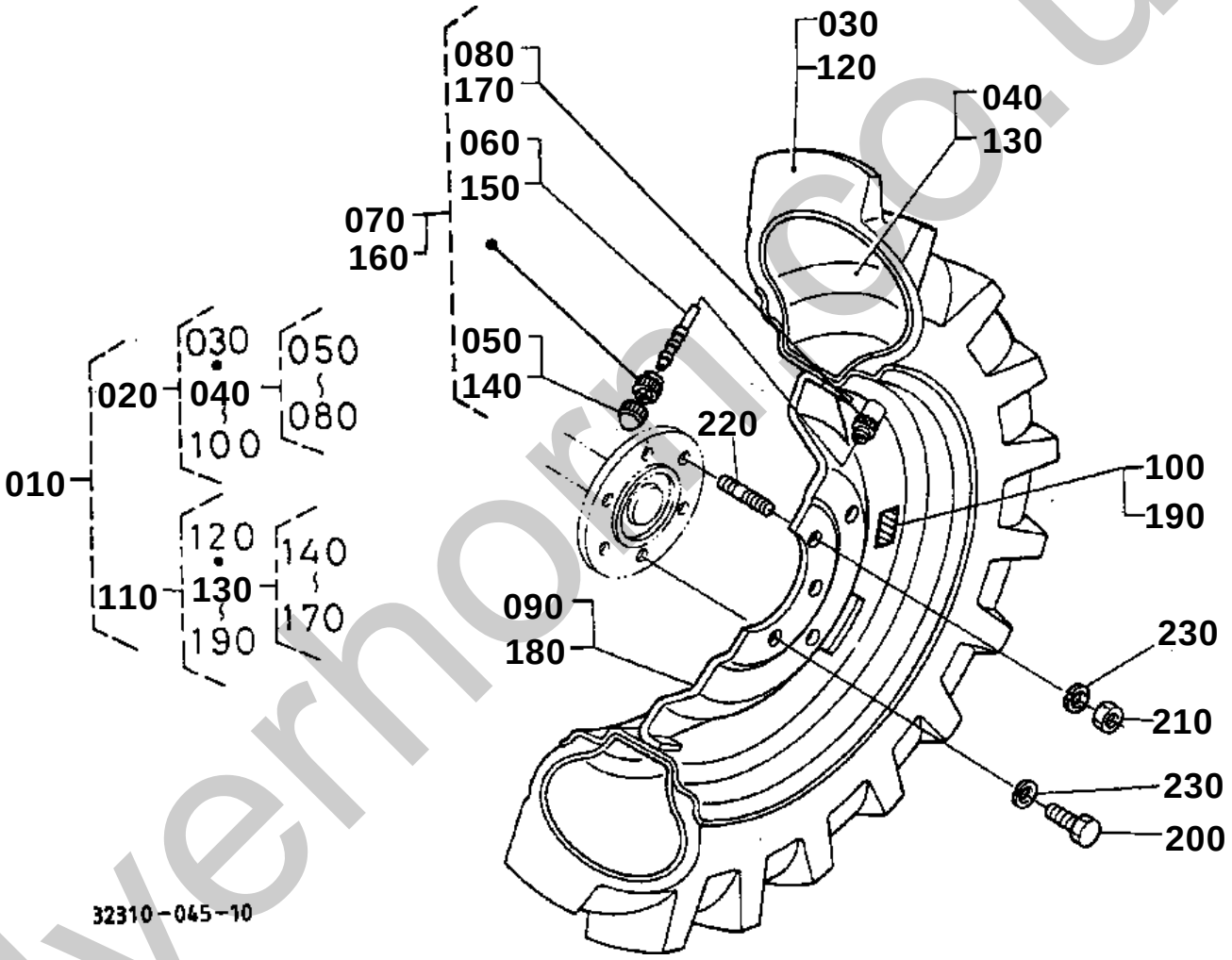

silverhorse.co.uk

↔ Interchangeable; ≠ not interchangeable; ← new for old; → old for new

REF.No	Part No.	Description	Q'ty	S.No.	I/C	REMARKS	Weight (kgf)	Weight (lb)
010	32400-27900	ASSY REAR WHEEL	1				0	0
020	32400-27910	ASSY REAR WHEEL LH	1				0	0
030	35200-27620	TIRE	1				24	52.8
040	31220-27630	TUBE	1				2.7	5.94
050	38240-11690	CAP VALVE	1				0.001	0.0022
060	32150-27740	CORE VALVE	1				0.003	0.0066
070	32150-27700	ASSY VALVE	1				0.001	0.0022
080	32270-27710	NUT RIM	1				0.006	0.0132
090	32460-27630	WHEEL	1				20.295	44.649
100	32400-27980	LABEL TIRE LH	1				0.005	0.011
110	32400-27990	ASSY REAR WHEEL RH	1				0	0
120	35200-27620	TIRE	1				24	52.8
130	31220-27630	TUBE	1				2.7	5.94
140	38240-11690	CAP VALVE	1				0.001	0.0022
150	32150-27740	CORE VALVE	1				0.003	0.0066
160	32150-27700	ASSY VALVE	1				0.001	0.0022
170	32270-27710	NUT RIM	1				0.006	0.0132
180	32460-27630	WHEEL	1				20.295	44.649
190	32400-27970	LABEL TIRE RH	1				0.005	0.011
200	01073-51630	BOLT	8				0.079	0.1738
210	02076-50160	NUT	4				0.03	0.066
220	34150-27710	STUD	4				0.062	0.1364
230	04512-60160	WASHER SPRING	12				0.01	0.022

silverhorn.co.uk

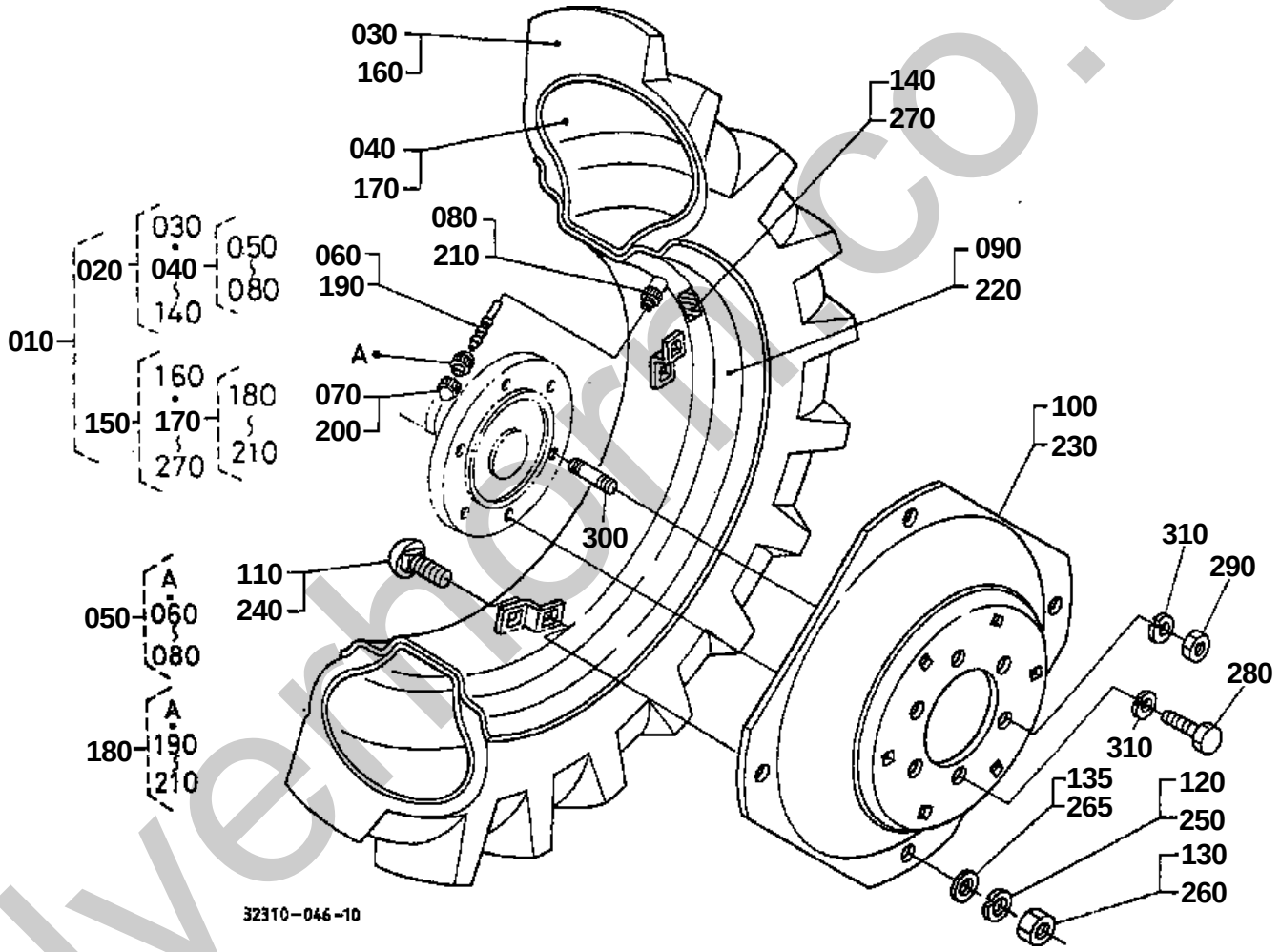

silverhorn.co.uk

↔ Interchangeable; ≠ not interchangeable; ← new for old; → old for new

REF.No	Part No.	Description	Q'ty	S.No.	I/C	REMARKS	Weight (kgf)	Weight (lb)
010	32470-27900	ASSY REAR WHEEL	1				122	268.4
020	32470-27610	ASSY REAR WHEEL LH	1				62	136.4
030	32420-27620	TIRE	1				31.5	69.3
040	32240-27630	TUBE	1				0	0
050	32150-27700	ASSY VALVE	1				0.001	0.0022
060	32150-27740	CORE VALVE	1				0.003	0.0066
070	38240-11690	CAP VALVE	1				0.001	0.0022
080	32270-27710	NUT RIM	1				0.006	0.0132
090	32470-27650	RIM	1				14.7	32.34
100	32470-27660	DISK	1				13.5	29.7
110	31220-27680	BOLT	4				0.09	0.198
120	04512-60160	WASHER SPRING	4				0.01	0.022
130	02174-50160	NUT	4				0.022	0.0484
135	04011-60160	WASHER PLAIN	4				0.01	0.022
140	32470-27680	LABEL TIRE LH	1				0.001	0.0022
150	32470-27690	ASSY REAR WHEEL RH	1				62	136.4
160	35260-27620	TIRE	1				29.05	63.91
170	32240-27630	TUBE	1				0	0
180	32150-27700	ASSY VALVE	1				0.001	0.0022
190	32150-27740	CORE VALVE	1				0.003	0.0066
200	38240-11690	CAP VALVE	1				0.001	0.0022
210	32270-27710	NUT RIM	1				0.006	0.0132
220	32470-27650	RIM	1				14.7	32.34
230	32470-27660	DISK	1				13.5	29.7
240	31220-27680	BOLT	4				0.09	0.198
250	04512-60160	WASHER SPRING	4				0.01	0.022
260	02174-50160	NUT	4				0.022	0.0484
265	04011-60160	WASHER PLAIN	4				0.01	0.022
270	32470-27670	LABEL TIRE RH	1				0.001	0.0022
280	01073-51630	BOLT	8				0.079	0.1738
290	02076-50160	NUT	4				0.03	0.066
300	34150-27710	STUD	4				0.062	0.1364
310	04512-60160	WASHER SPRING	12				0.01	0.022

silvernorm.co.uk

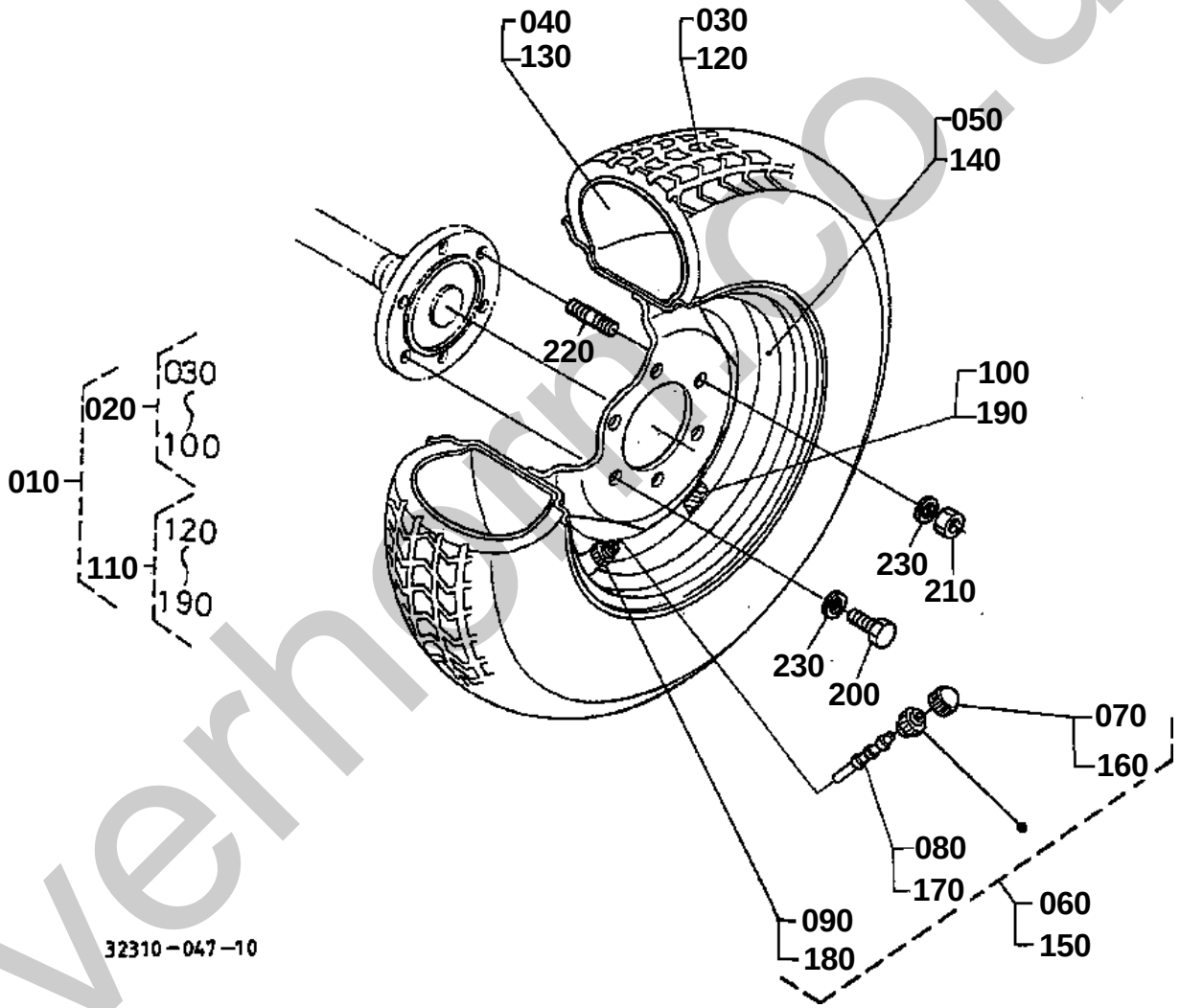

silverhorse.co.uk

↔ Interchangeable; ≠ not interchangeable; ← new for old; → old for new

REF.No	Part No.	Description	Q'ty	S.No.	I/C	REMARKS	Weight (kgf)	Weight (lb)
010	32400-27800	ASSY REAR WHEEL	1				93	204.6
020	32400-27810	ASSY REAR WHEEL LH	1				0	0
030	38450-99330	TIRE	1				20.5	45.1
040	99424-27120	TUBE	1				3.8	8.36
050	32400-27850	WHEEL	1				15.2	33.44
060	32150-27700	ASSY VALVE	1				0.001	0.0022
070	38240-11690	CAP VALVE	1				0.001	0.0022
080	32150-27740	CORE VALVE	1				0.003	0.0066
090	32270-27710	NUT RIM	1				0.006	0.0132
100	32400-27780	LABEL TIRE LH	1				0.005	0.011
110	32400-27820	ASSY REAR WHEEL	1				0	0
120	38450-99330	TIRE	1				20.5	45.1
130	99424-27120	TUBE	1				3.8	8.36
140	32400-27850	WHEEL	1				15.2	33.44
150	32150-27700	ASSY VALVE	1				0.001	0.0022
160	38240-11690	CAP VALVE	1				0.001	0.0022
170	32150-27740	CORE VALVE	1				0.003	0.0066
180	32270-27710	NUT RIM	1				0.006	0.0132
190	32400-27770	LABEL TIRE RH	1				0.005	0.011
200	01073-51630	BOLT	8				0.079	0.1738
210	02076-50160	NUT	4				0.03	0.066
220	34150-27710	STUD	4				0.062	0.1364
230	04512-60160	WASHER SPRING	12				0.01	0.022

silverhorn.co.uk

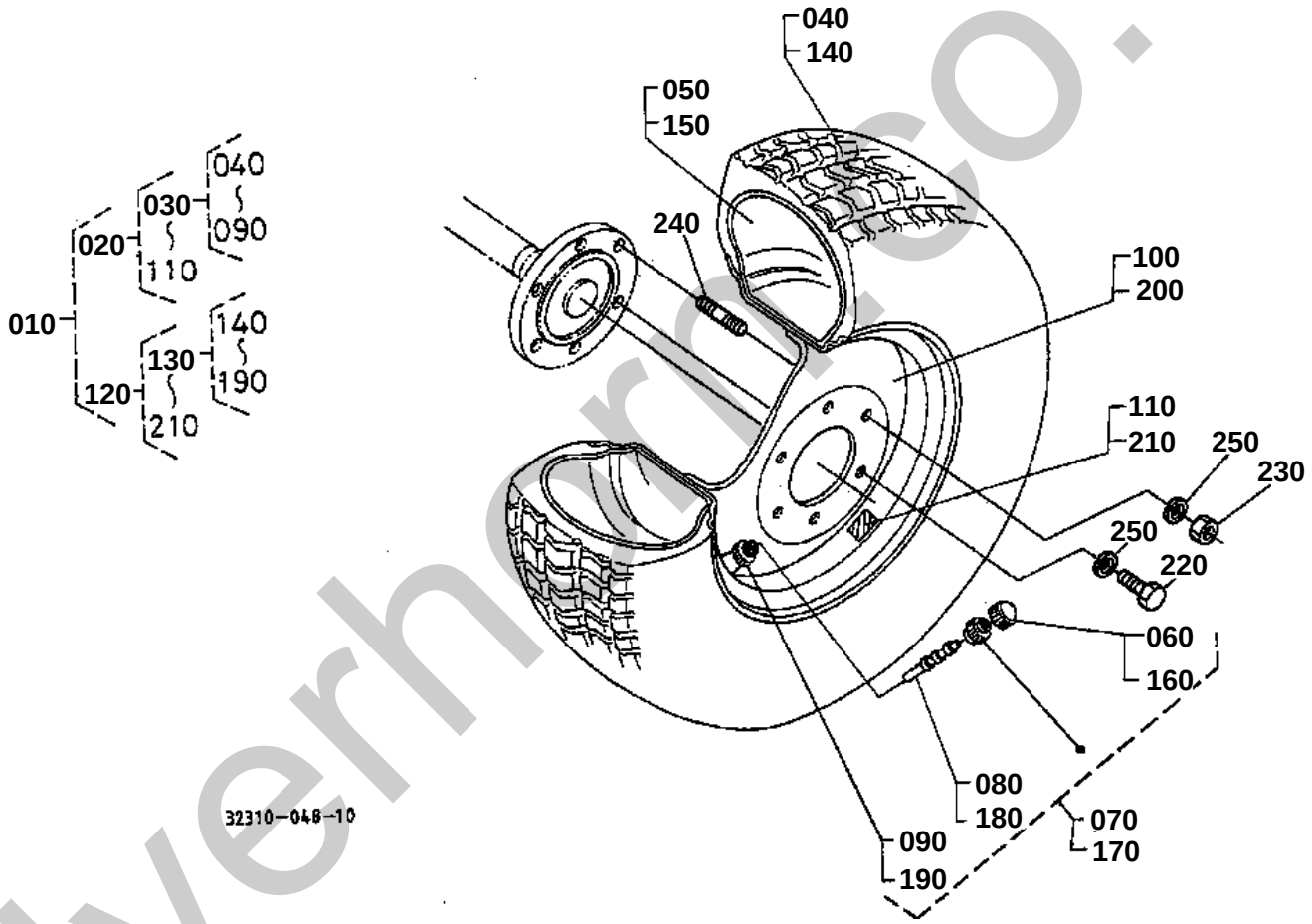

silverhorse.co.uk

REAR WHEEL (355/80-D20)

↔ Interchangeable; ≠ not interchangeable; ← new for old; → old for new

REF.No	Part No.	Description	Q'ty	S.No.	I/C	REMARKS	Weight (kgf)	Weight (lb)
010	32400-27700	ASSY REAR WHEEL	1				0	0
020	32400-27710	ASSY REAR WHEEL LH	1				0	0
030	36346-49300	ASSY TUBE TIRE	1				0	0
040	36346-49310	TIRE REAR	1				40	88
050	36346-49320	TUBE TIRE	1				6.2	13.64
060	38240-11690	CAP VALVE	1				0.001	0.0022
070	32150-27700	ASSY VALVE	1				0.001	0.0022
080	32150-27740	CORE VALVE	1				0.003	0.0066
090	32270-27710	NUT RIM	1				0.006	0.0132
100	32400-27950	WHEEL	1				0	0
110	32400-27870	LABEL TIRE LH	1				0.005	0.011
120	32400-27720	ASSY REAR WHEEL RH	1				0	0
130	36346-49300	ASSY TUBE TIRE	1				0	0
140	36346-49310	TIRE REAR	1				40	88
150	36346-49320	TUBE TIRE	1				6.2	13.64
160	38240-11690	CAP VALVE	1				0.001	0.0022
170	32150-27700	ASSY VALVE	1				0.001	0.0022
180	32150-27740	CORE VALVE	1				0.003	0.0066
190	32270-27710	NUT RIM	1				0.006	0.0132
200	32400-27950	WHEEL	1				0	0
210	32400-27880	LABEL TIRE RH	1				0.005	0.011
220	01073-51630	BOLT	8				0.079	0.1738
230	02076-50160	NUT	4				0.03	0.066
240	34150-27710	STUD	4				0.062	0.1364
250	04512-60160	WASHER SPRING	12				0.01	0.022

silverhorn.co.uk

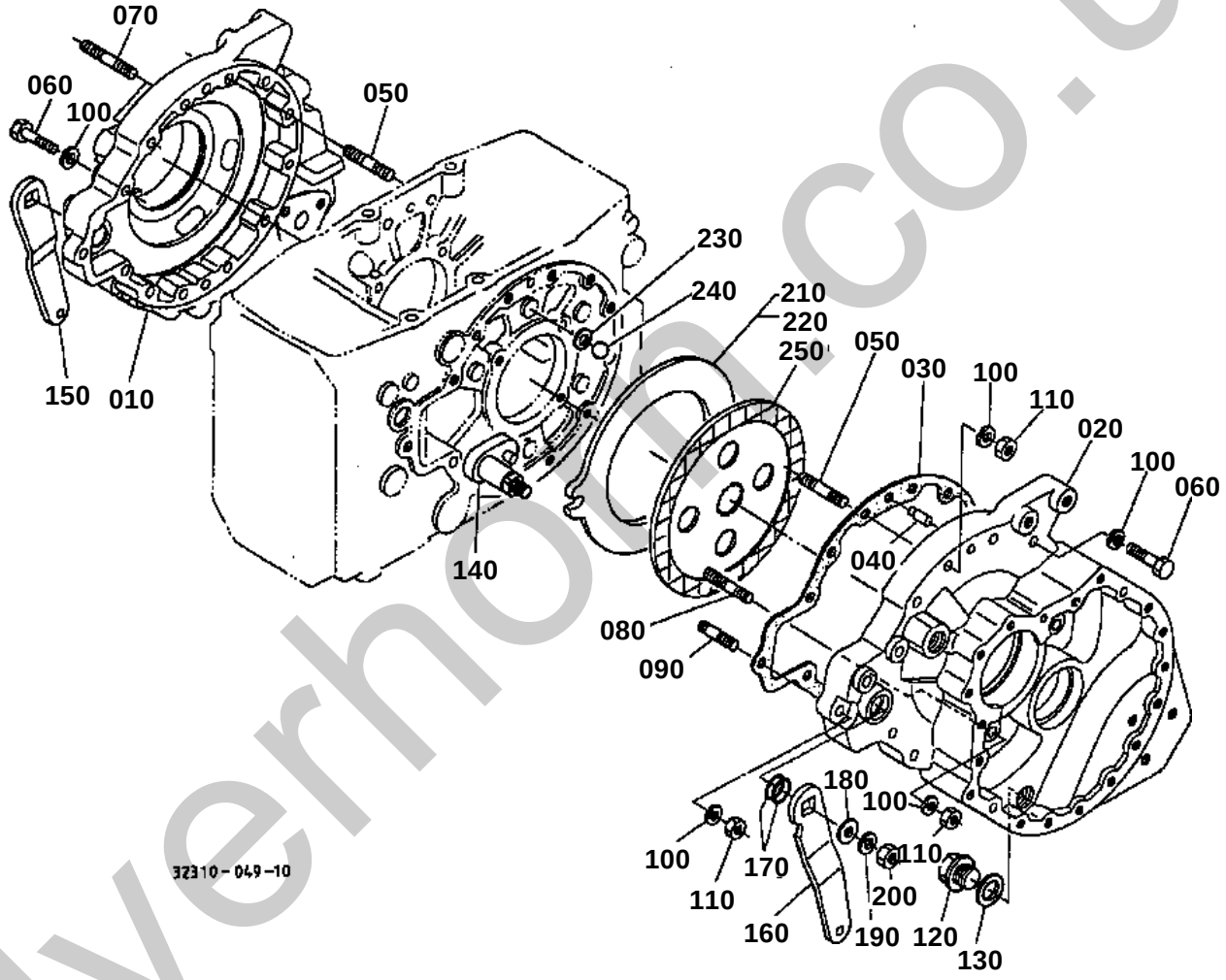

silverhorn.co.uk

↔ Interchangeable; ≠ not interchangeable; ← new for old; → old for new

REF.No	Part No.	Description	Q'ty	S.No.	I/C	REMARKS	Weight (kgf)	Weight (lb)
010	31311-28135	CASE BRAKE RH	1				15.6	34.32
020	31311-28155	CASE BRAKE LH	1				15.4	33.88
030	32425-28160	GASKET	2				0.02	0.044
040	37150-27370	PIN STRAIGHT	4				0.009	0.0198
050	31311-28170	STUD	4				0.51	1.122
060	01173-51255	BOLT	10				0.055	0.121
070	37720-27350	STUD	2				0.067	0.1474
080	01574-61255	STUD	8				0.057	0.1254
090	01574-51235	STUD	2				0	0
100	04512-60120	WASHER SPRING	26				0.005	0.011
110	02176-50120	NUT	16				0.01	0.022
120	06331-45012	PLUG	2				0.028	0.0616
130	04717-01200	WASHER WITH RUBBER	2				0.002	0.0044
140	31351-28210	CAM BRAKE	2				0.35	0.77
150	37150-28224	LEVER BRAKE CAM RH	1				0.32	0.704
160	37150-28234	LEVER BRAKE CAM LH	1				0.3	0.66
170	04811-00220	O RING	4				0	0
180	04015-60120	WASHER PLAIN	2				0.022	0.0484
190	04512-60120	WASHER SPRING	2				0.005	0.011
200	02174-50120	NUT	2				0.01	0.022
210	37150-28240	PLATE CAM LH	1				1.13	2.486
220	37150-28270	PLATE CAM RH	1				1.08	2.376
230	37150-28250	SEAT BALL	12				0.003	0.0066
240	07715-00805	BALL	12				0.016	0.0352
250	37150-28200	DISK BRAKE	2				0	0
250	T1060-28200	DISK BRAKE MAIN	2		«		0.75	1.65

silverhorn.co.uk

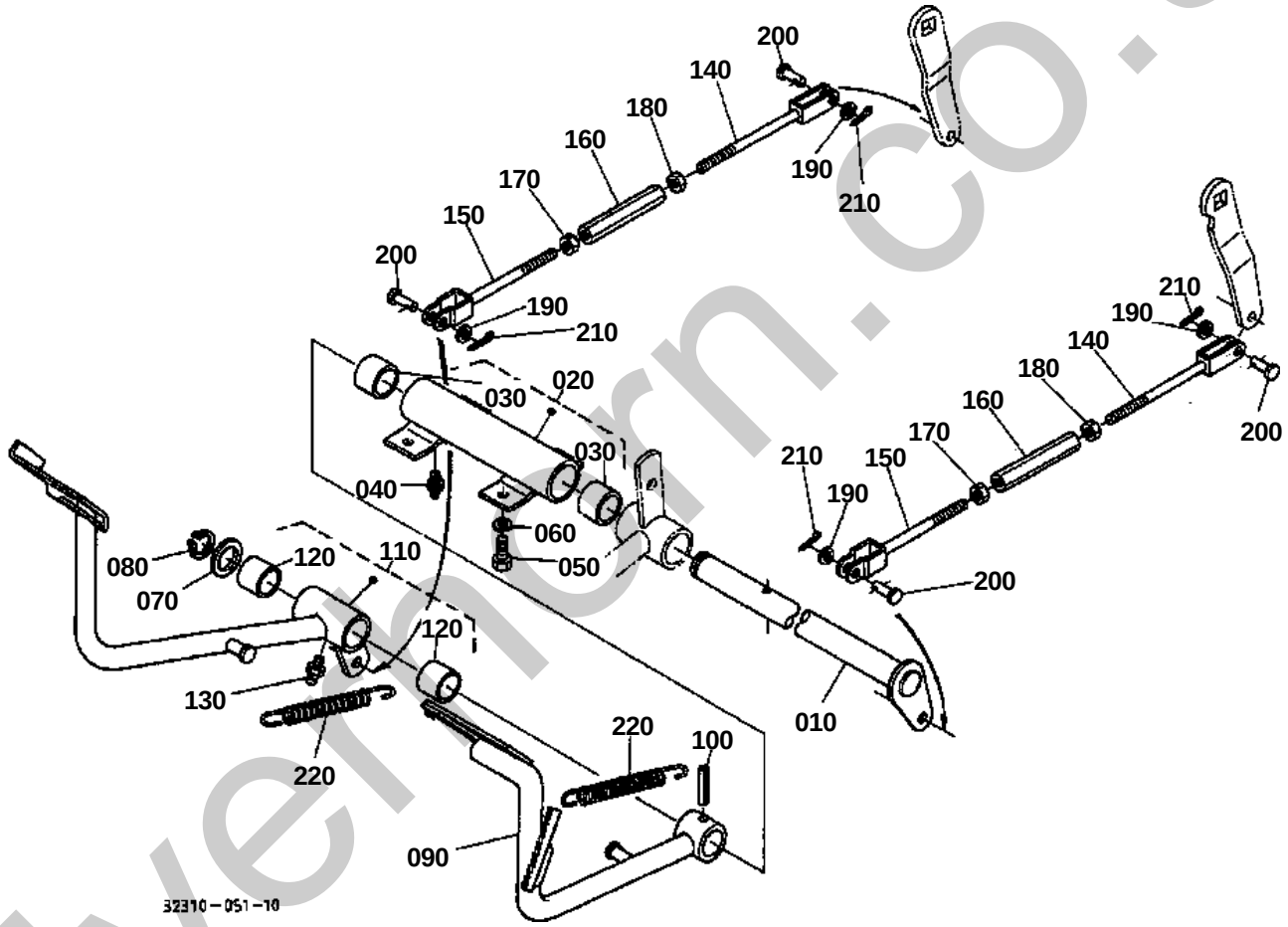

silvernorn.co.uk

BRAKE PEDAL

↔ Interchangeable; ≠ not interchangeable; ← new for old; → old for new

REF.No	Part No.	Description	Q'ty	S.No.	I/C	REMARKS	Weight (kgf)	Weight (lb)
010	37150-28410	SHAFT BRAKE PEDAL	1				1.43	3.146
020	37150-28420	SUPPORT PEDAL SHAFT	1				0.95	2.09
030	34150-28430	BUSH	2				0.04	0.088
040	06613-10675	NIPPLE GREASE	1				0.003	0.0066
050	01173-51018	BOLT	4				0.018	0.0396
060	04512-60100	WASHER SPRING	4				0.002	0.0044
070	32150-28460	COLLAR	1				0.007	0.0154
080	04612-00250	CIRCLIP EXTERNAL	1				0.002	0.0044
090	35260-28610	PEDAL BRAKE LH	1				1.36	2.992
100	05411-00840	PIN SPRING	1				0.008	0.0176
110	35260-28620	PEDAL BRAKE RH	1				1.34	2.948
120	34150-28430	BUSH	2				0.04	0.088
130	06613-10675	NIPPLE GREASE	1				0.003	0.0066
140	35110-28930	ROD BRAKE	2				0.165	0.363
150	37720-28940	ROD BRAKE	2				0.2	0.44
160	37720-28980	TURNBUCKLE	2				0.099	0.2178
170	37720-28990	NUT	2				0.008	0.0176
180	02172-50120	NUT	2				0.01	0.022
190	04012-50080	WASHER PLAIN	4				0.001	0.0022
200	05112-50822	PIN JOINT	4				0.01	0.022
210	05511-50215	PIN SPLIT	4				0.001	0.0022
220	37150-15840	SPRING	2				0.06	0.132

silverhorn.co.uk

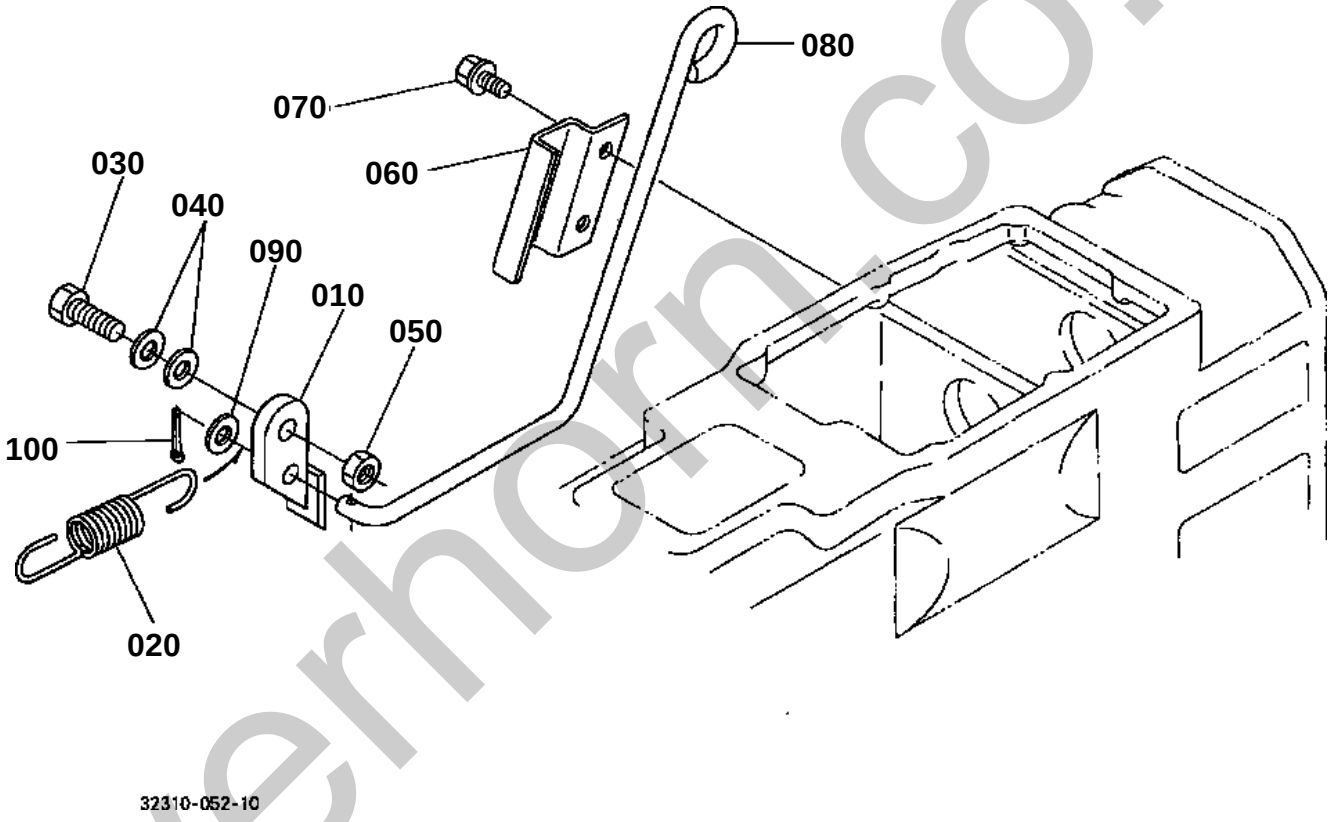

silverhorn.co.uk

PARKING BRAKE LEVER

↔ Interchangeable; ≠ not interchangeable; ← new for old; → old for new

REF.No	Part No.	Description	Q'ty	S.No.	I/C	REMARKS	Weight (kgf)	Weight (lb)
010	34150-28810	RATCHET	1				0.045	0.099
020	37150-28850	SPRING	1				0.005	0.011
030	34150-28820	BOLT	1				0.04	0.088
040	04011-50120	WASHER PLAIN	2				0.005	0.011
050	02174-50120	NUT	1				0.01	0.022
060	34150-28880	GUIDE RATCHET	1				0.04	0.088
070	01754-50812	BOLT FLANGE	2				0.01	0.022
080	34150-28870	ROD RATCHET	1	<=20001			0.09	0.198
080	32330-28870	ROD RATCHET	1	>=20002	¬		0.085	0.187
090	04012-50060	WASHER PLAIN	1				0.001	0.0022
100	05511-50212	PIN SPLIT	1				0.001	0.0022

silverhorn.co.uk

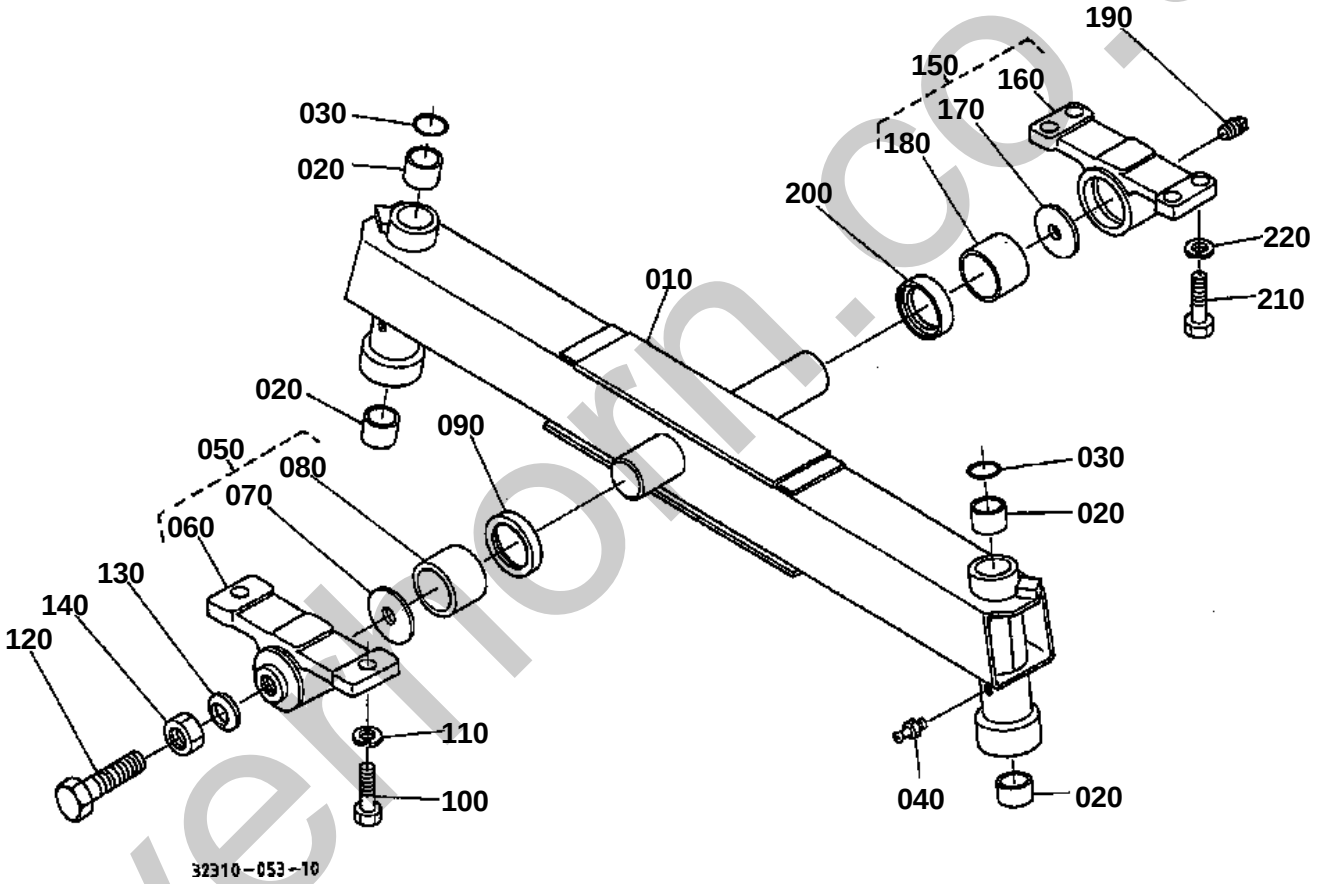

silverthorn.co.uk

FRONT AXLE

↔ Interchangeable; ≠ not interchangeable; ← new for old; → old for new

REF.No	Part No.	Description	Q'ty	S.No.	I/C	REMARKS	Weight (kgf)	Weight (lb)
010	32400-13110	AXLE FRONT	1				14.3	31.46
020	38240-13130	BUSH	4				0.015	0.033
030	38240-13140	SEAL OIL	2				0.004	0.0088
040	06613-10010	NIPPLE GREASE	2				0.006	0.0132
050	38430-13660	ASSY BRACKET	1				1.6	3.52
060	99999-99999	BLANK	0				0	0
070	38240-13430	WASHER THRUST	1				0.032	0.0704
080	08511-04025	BUSH	1				0.05	0.11
090	38240-13160	SEAL OIL	1				0.005	0.011
100	01173-51435	BOLT	2				0.056	0.1232
110	04512-60140	WASHER SPRING	2				0.008	0.0176
120	38630-44760	BOLT	1				0.08	0.176
130	38440-44750	WASHER SEAL	1				0.003	0.0066
140	02176-50160	NUT	1				0.021	0.0462
150	38240-13690	ASSY BRACKET	1				0.2	0.44
160	99999-99999	BLANK	0				0	0
170	38240-13430	WASHER THRUST	1				0.032	0.0704
180	08511-04025	BUSH	1				0.05	0.11
190	06312-10010	PLUG	1				0.007	0.0154
200	38240-13160	SEAL OIL	1				0.005	0.011
210	38240-13180	BOLT REAMER	4				0.04	0.088
220	04512-60120	WASHER SPRING	4				0.005	0.011

silverhorn.co.uk

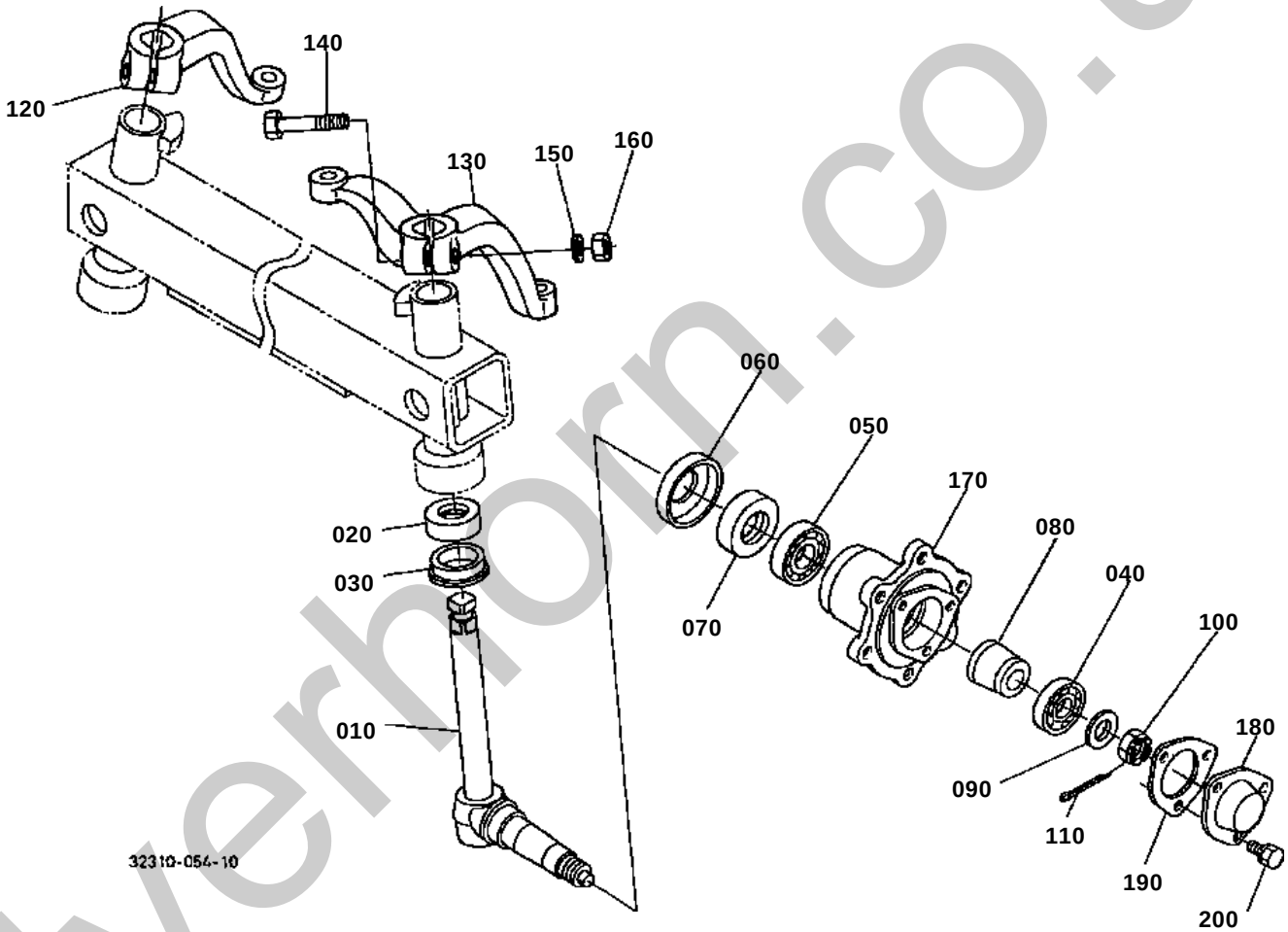

silverhorn.co.uk

KNUCKLE SHAFT

↔ Interchangeable; ≠ not interchangeable; ← new for old; → old for new

REF.No	Part No.	Description	Q'ty	S.No.	I/C	REMARKS	Weight (kgf)	Weight (lb)
010	34220-11110	COMP.SHAFT KNUCKLE	2				2.5	5.5
020	32150-11510	BEARING THRUST BALL	2				0.14	0.308
030	37300-11430	SEAL OIL	2				0.05	0.11
040	08101-06205	BEARING BALL	2				0.14	0.308
050	08101-06206	BEARING BALL	2				0.196	0.4312
060	32240-11480	COVER DUST	2				0.08	0.176
070	37300-11160	SEAL OIL	2				0.08	0.176
080	38240-11420	SPACER	2				0.205	0.451
090	04011-50200	WASHER PLAIN	2				0.015	0.033
100	02372-50200	NUT	2				0.024	0.0528
110	05511-50430	PIN SPLIT	2				0.004	0.0088
120	38240-11210	ARM KNUCKLE RH	1				1.5	3.3
130	38260-11220	ARM KNUCKLE LH	1				2.1	4.62
140	32240-11270	BOLT	2				0.066	0.1452
150	04512-60120	WASHER SPRING	2				0.005	0.011
160	02176-50120	NUT	2				0.01	0.022
170	35260-11310	HUB FRONT WHEEL	2				3.55	7.81
180	32240-11350	CAP FRONT WHEEL	2				0.065	0.143
190	32150-11360	GASKET	2	<=21392			0	0
190	32330-11360	GASKET	2	>=21393	¬		0.005	0.011
200	01123-60814	BOLT	6				0.01	0.022

silverhorn.co.uk

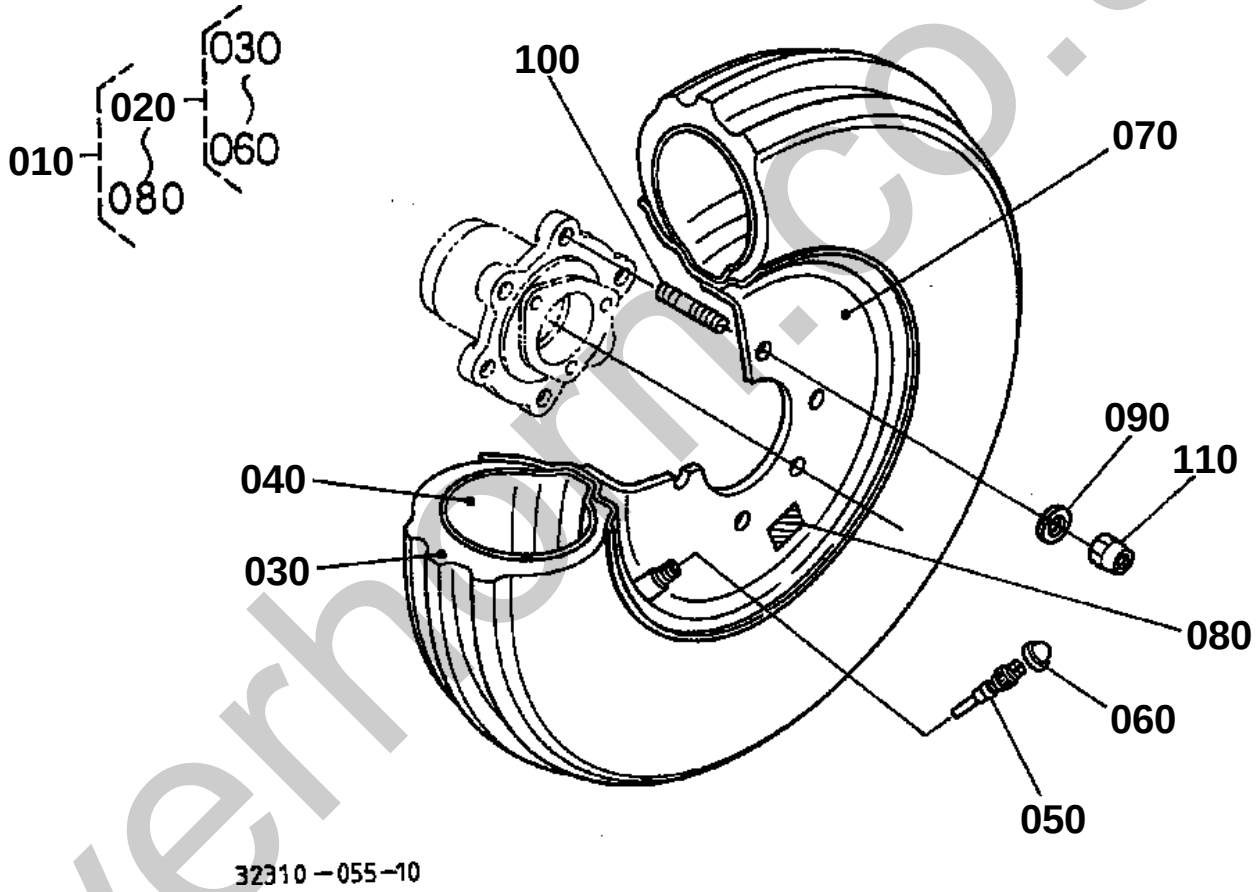

silverhorn.co.uk

FRONT WHEEL (4.00-15)

↔ Interchangeable; ≠ not interchangeable; ← new for old; → old for new

REF.No	Part No.	Description	Q'ty	S.No.	I/C	REMARKS	Weight (kgf)	Weight (lb)
010	32460-11600	ASSY FRONT WHEEL	2				0	0
020	35110-11610	ASSY TIRE	2				5	11
030	31220-11620	TIRE	2				3.5	7.7
040	31220-11630	TUBE	2				0.64	1.408
050	32150-27740	CORE VALVE	2				0.003	0.0066
060	38240-11690	CAP VALVE	2				0.001	0.0022
070	32460-11640	ASSY WHEEL	2				7.2	15.84
080	32460-11670	LABEL TIRE	4				0.001	0.0022
090	04512-60140	WASHER SPRING	12				0.008	0.0176
100	01517-51428	STUD	12				0.05	0.11
110	35340-11390	NUT	12				0.03	0.066

silverhorn.co.uk

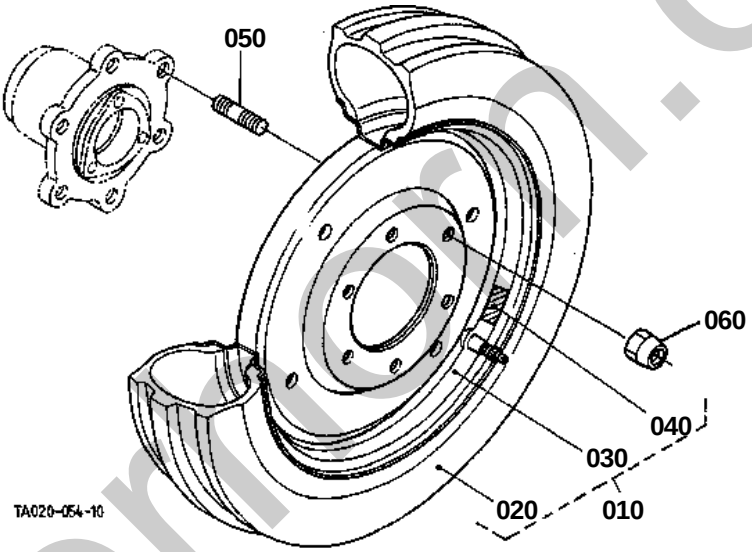

silvermorn.co.uk

FRONT WHEEL (5.00-15)

↔ Interchangeable; ≠ not interchangeable; ← new for old; → old for new

REF.No	Part No.	Description	Q'ty	S.No.	I/C	REMARKS	Weight (kgf)	Weight (lb)
010	TA020-10600	ASSY FRONT WHEEL	2			OBTAINED LOCALLY	0	0
020	TA020-00620	TIRE	2			OBTAINED LOCALLY	0	0
030	TA020-11640	WHEEL	2			OBTAINED LOCALLY	0	0
040	TA020-10650	LABEL TIRE	2			OBTAINED LOCALLY	0	0
050	01517-51428	STUD	12				0.05	0.11
060	35340-11390	NUT	12				0.03	0.066

silverhorn.co.uk

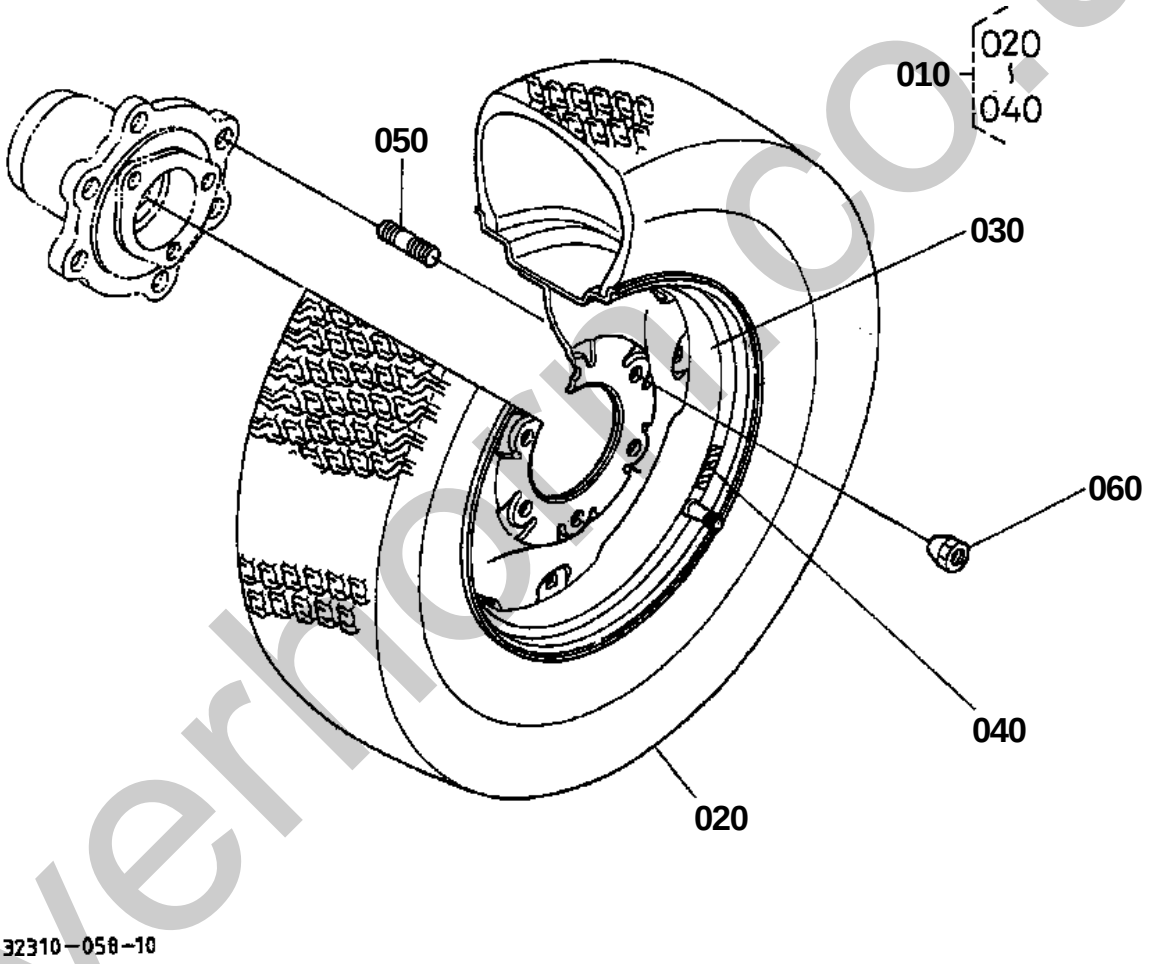

silverhorse.co.uk

FRONT WHEEL (23X8.50-12)

↔ Interchangeable; ≠ not interchangeable; ← new for old; → old for new

REF.No	Part No.	Description	Q'ty	S.No.	I/C	REMARKS	Weight (kgf)	Weight (lb)
010	35050-11900	ASSY FRONT WHEEL	2			OBTAINED LOCALLY	0	0
020	66428-57130	TIRE	2			OBTAINED LOCALLY	0	0
030	35050-11950	WHEEL	2			OBTAINED LOCALLY	0	0
040	35050-11960	LABEL TIRE	2			OBTAINED LOCALLY	0	0
050	01517-51428	STUD	12				0.05	0.11
060	35340-11390	NUT	12				0.03	0.066

silverhorn.co.uk

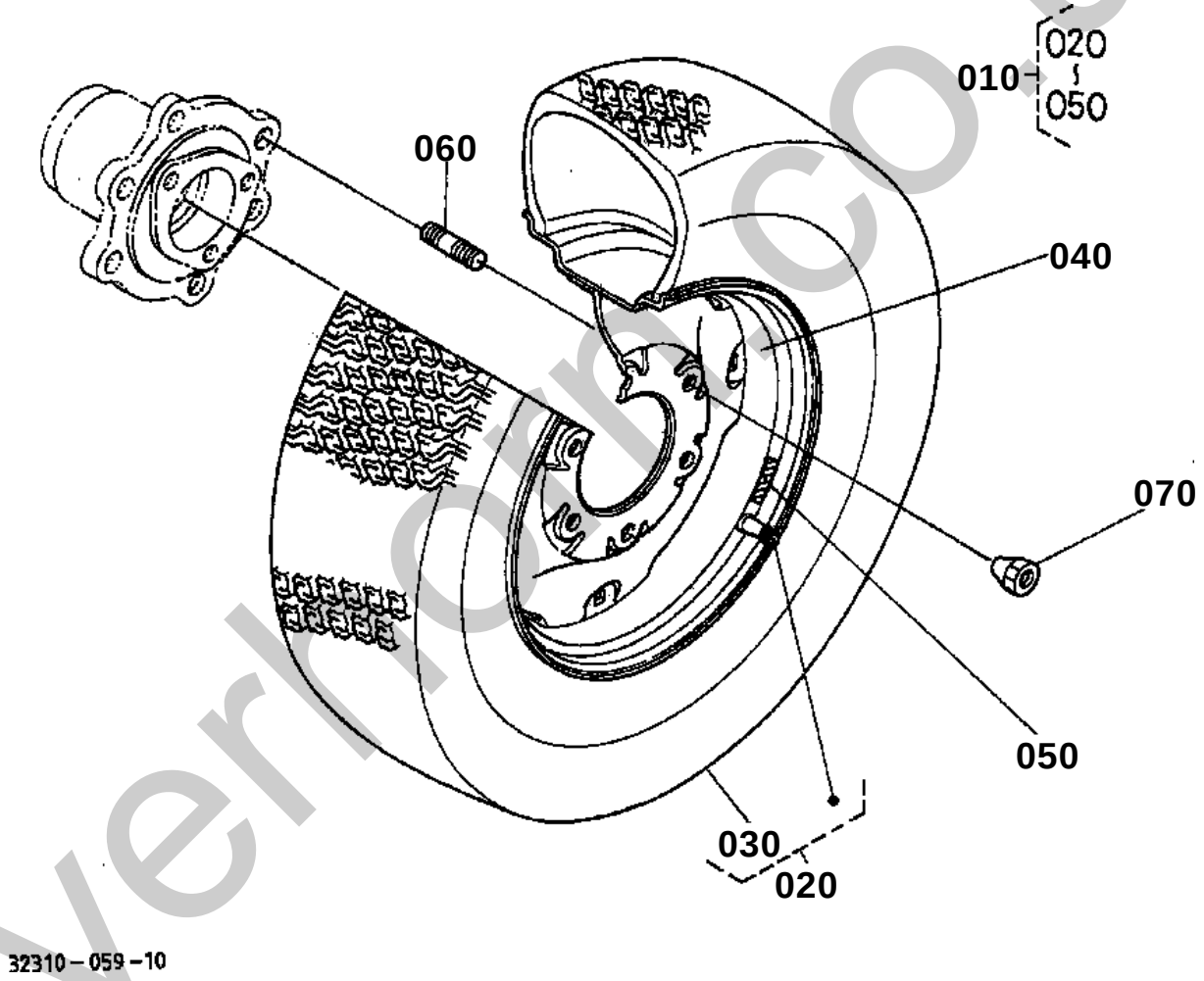

silverfarm.co.uk

FRONT WHEEL (25X8.50-14)

↔ Interchangeable; ≠ not interchangeable; ← new for old; → old for new

REF.No	Part No.	Description	Q'ty	S.No.	I/C	REMARKS	Weight (kgf)	Weight (lb)
010	35070-11600	ASSY FRONT WHEEL	2			OBTAINED LOCALLY	0	0
020	35070-11810	ASSY TIRE FRONT	2			OBTAINED LOCALLY	0	0
030	35070-11820	TIRE	2			OBTAINED LOCALLY	0	0
040	35070-11650	WHEEL	2			OBTAINED LOCALLY	0	0
050	35070-11660	LABEL TIRE	2			OBTAINED LOCALLY	0	0
060	01517-51428	STUD	12				0.05	0.11
070	35340-11390	NUT	12				0.03	0.066

silverhorn.co.uk

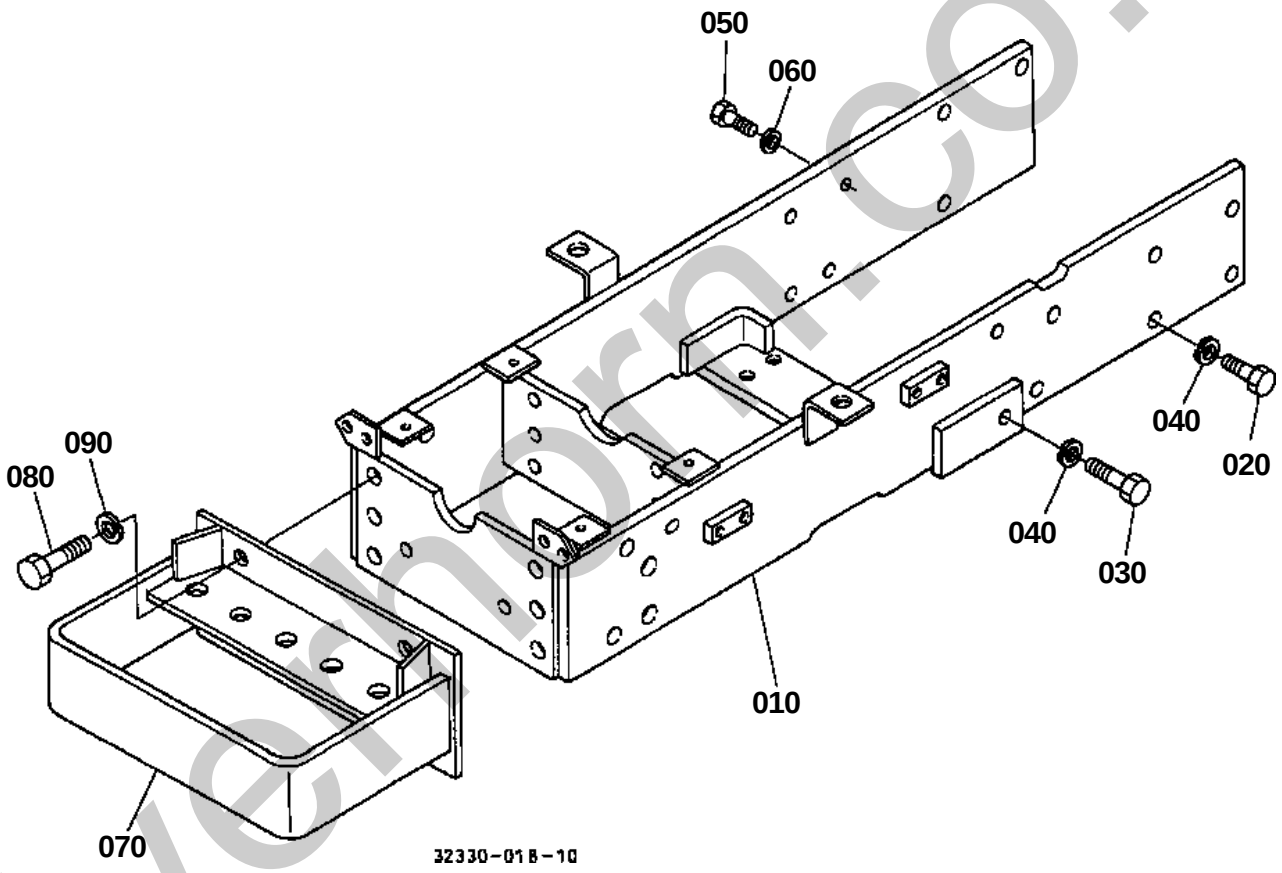

silverthorn.co.uk

FRONT AXLE FRAME

↔ Interchangeable; ≠ not interchangeable; ← new for old; → old for new

REF.No	Part No.	Description	Q'ty	S.No.	I/C	REMARKS	Weight (kgf)	Weight (lb)
010	32330-13610	FRAME FRONT AXLE	1				28	61.6
020	01176-51235	BOLT	12				0.041	0.0902
030	01176-51245	BOLT	2				0.05	0.11
040	04512-60120	WASHER SPRING	14				0.005	0.011
050	01176-51030	BOLT	1				0	0
060	04512-60100	WASHER SPRING	1				0.002	0.0044
070	32310-13810	BUMPER	1				6.05	13.31
080	01173-51435	BOLT	4				0.056	0.1232
090	04512-60140	WASHER SPRING	4				0.008	0.0176

silverhorn.co.uk

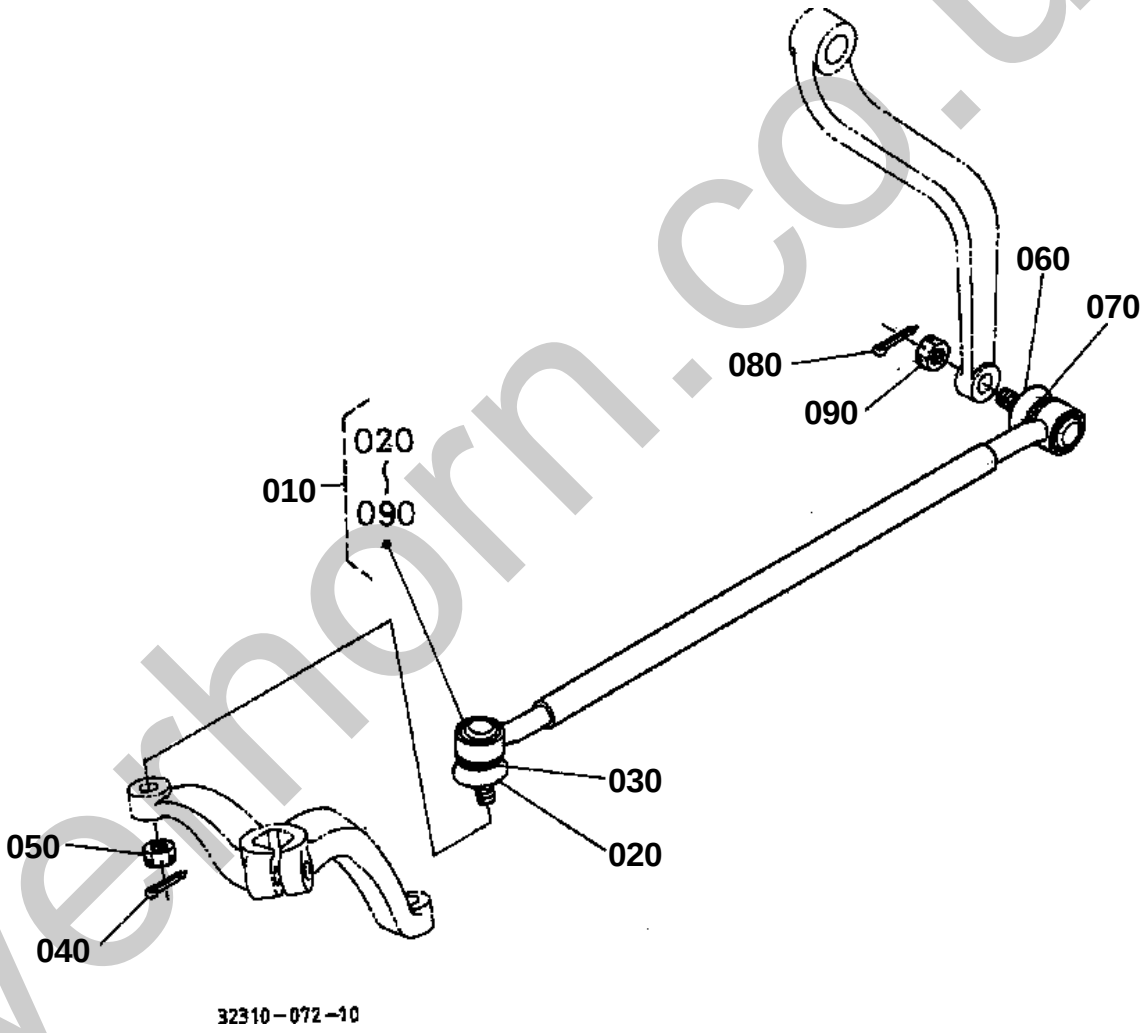

silverhorn.co.uk

STEERING LINKAGE (DRAG LINK)

↔ Interchangeable; ≠ not interchangeable; ← new for old; → old for new

REF.No	Part No.	Description	Q'ty	S.No.	I/C	REMARKS	Weight (kgf)	Weight (lb)
010	32400-12200	ASSY LINK DRAG	1				2.1	4.62
020	38240-12650	COVER DUST	1				0.01	0.022
030	38240-12660	CLIP	1				0.005	0.011
040	05511-50325	PIN SPLIT	1				0.002	0.0044
050	38240-12830	NUT	1				0.008	0.0176
060	38240-12650	COVER DUST	1				0.01	0.022
070	38240-12660	CLIP	1				0.005	0.011
080	05511-50325	PIN SPLIT	1				0.002	0.0044
090	38240-12830	NUT	1				0.008	0.0176

silverhorn.co.uk

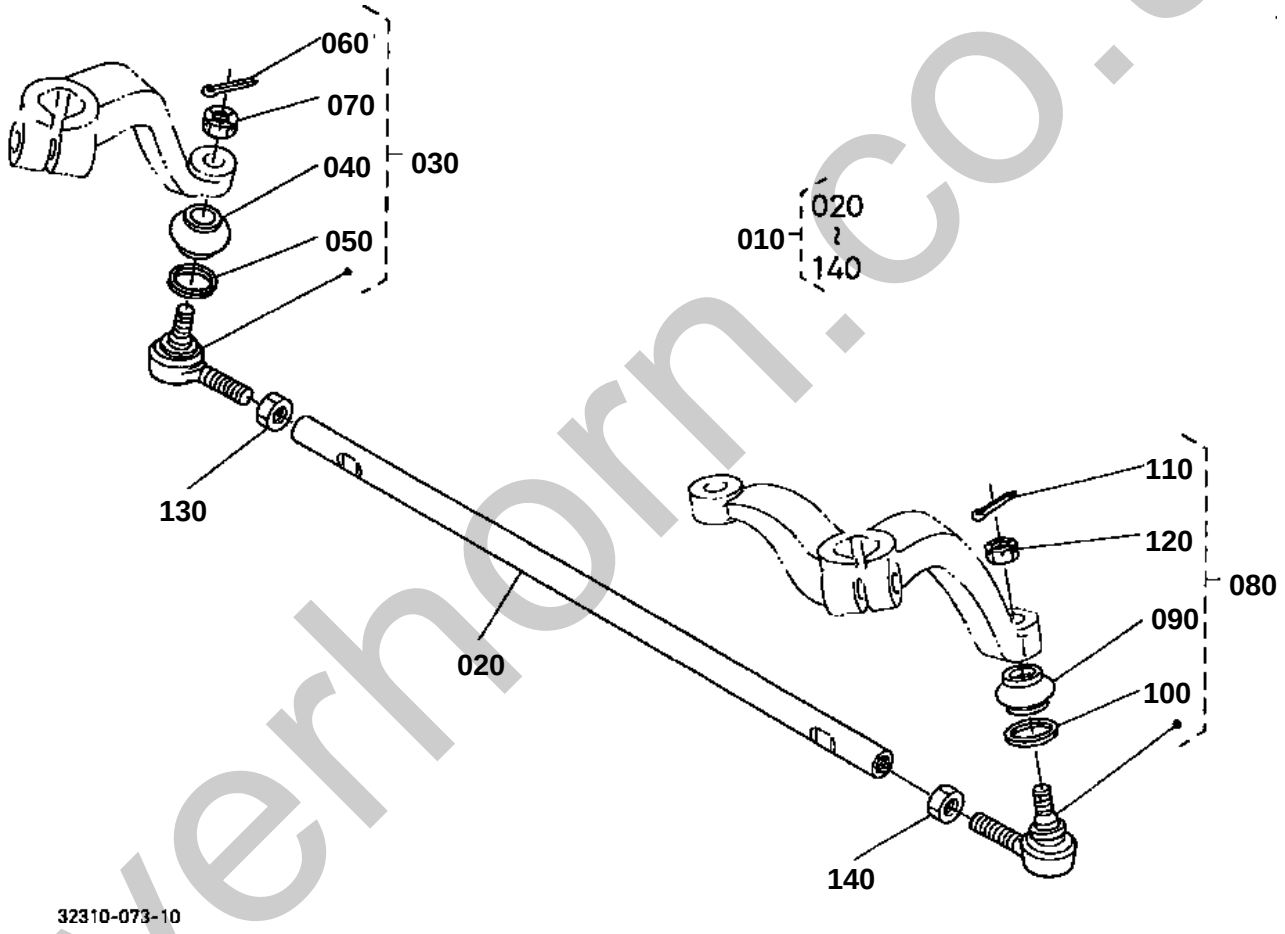

silverhorn.co.uk

STEERING LINKAGE (TIE ROD)

↔ Interchangeable; ≠ not interchangeable; ← new for old; → old for new

REF.No	Part No.	Description	Q'ty	S.No.	I/C	REMARKS	Weight (kgf)	Weight (lb)
010	32400-12400	ASSY ROD TIE	1				2.6	5.72
020	32400-12410	ROD TIE	1				1.95	4.29
030	38440-44780	ASSY END TIE ROD RH	1				0.322	0.7084
040	38240-12650	COVER DUST	1				0.01	0.022
050	38240-12660	CLIP	1				0.005	0.011
060	05511-50325	PIN SPLIT	1				0.002	0.0044
070	38240-12830	NUT	1				0.008	0.0176
080	38440-44790	ASSY END TIE ROD LH	1				0.32	0.704
090	38240-12650	COVER DUST	1				0.01	0.022
100	38240-12660	CLIP	1				0.005	0.011
110	05511-50325	PIN SPLIT	1				0.002	0.0044
120	38240-12830	NUT	1				0.008	0.0176
130	02174-50160	NUT	1				0.022	0.0484
140	32240-12280	NUT	1				0.017	0.0374

silverhorn.co.uk

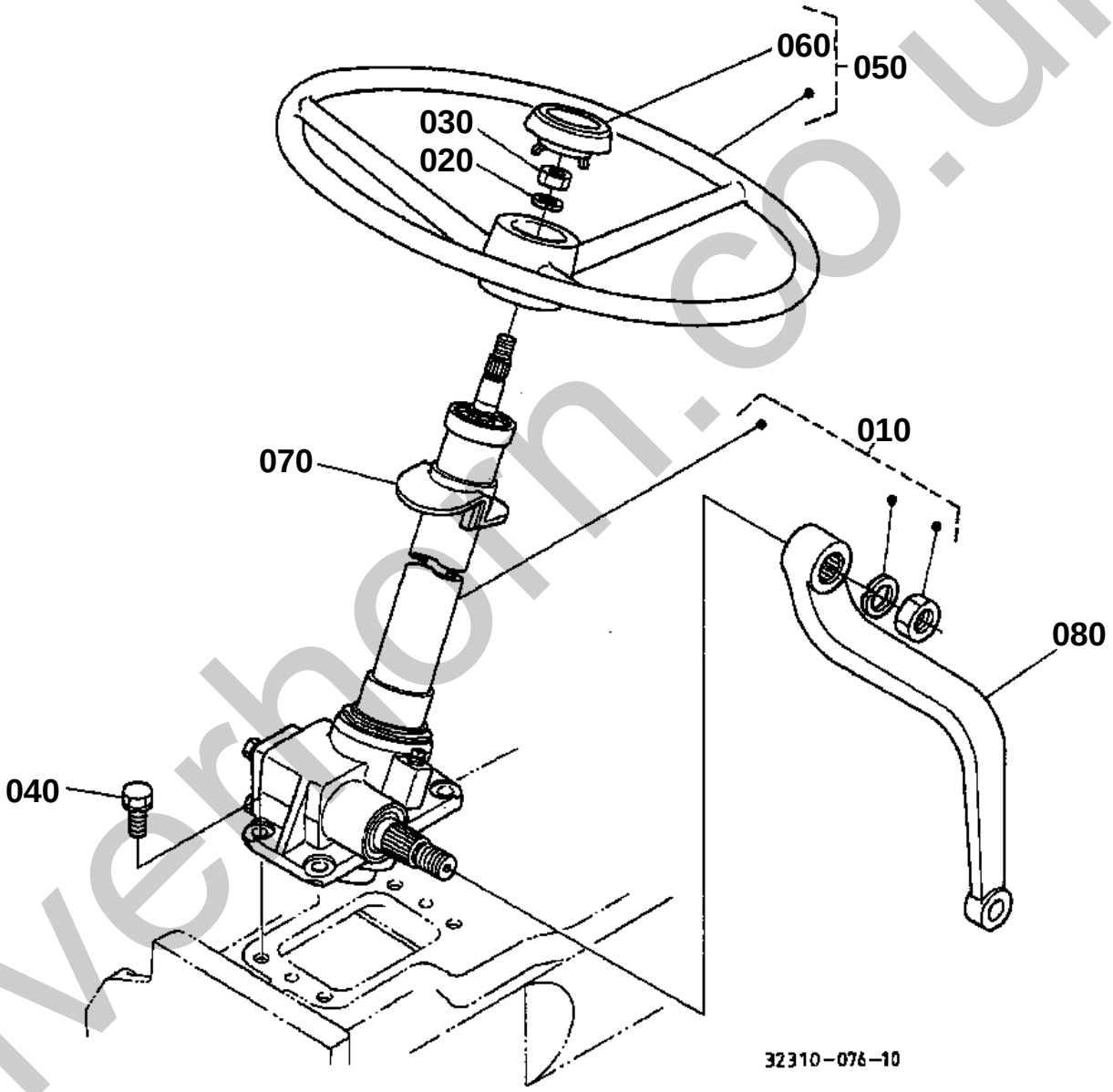

silverhorn.co.uk

↔ Interchangeable; ≠ not interchangeable; ← new for old; → old for new

REF.No	Part No.	Description	Q'ty	S.No.	I/C	REMARKS	Weight (kgf)	Weight (lb)
010	32400-16100	ASSY STEERING	1				7	15.4
020	04512-60120	WASHER SPRING	1				0.005	0.011
030	02176-50120	NUT	1				0.01	0.022
040	01133-51025	BOLT	4				0.023	0.0506
050	32400-16800	ASSY WHEEL STEERING	1				1.96	4.312
060	32400-16820	PAD STEERING	1				0.05	0.11
070	32400-16850	COVER POST	1				0.03	0.066
080	35260-43930	ARM PITMAN	1				1.19	2.618

silverhorn.co.uk

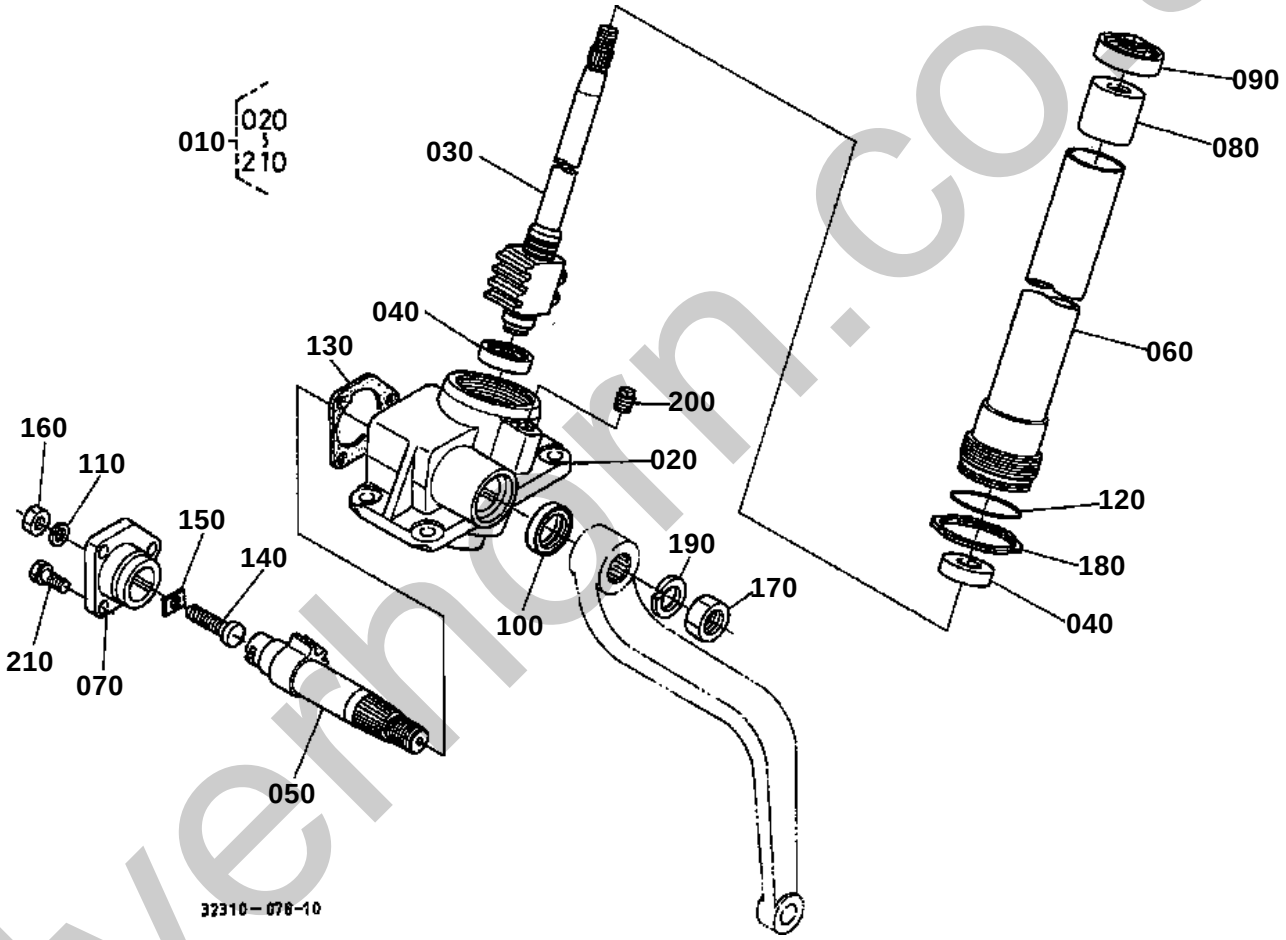

silverthorn.co.uk

↔ Interchangeable; ≠ not interchangeable; ← new for old; → old for new

REF.No	Part No.	Description	Q'ty	S.No.	I/C	REMARKS	Weight (kgf)	Weight (lb)
010	32400-16100	ASSY STEERING	1				7	15.4
020	32400-16110	CASE GEAR	1				2.5	5.5
030	35200-16200	COMP.NUT BALL	1				1.31	2.882
040	38260-16210	BEARING BALL	2				0.06	0.132
050	38180-16120	SHAFT SECTOR	1				0.7	1.54
060	38240-16300	COMP.CULUMN STEERING	1				1.21	2.662
070	34150-16410	COVER SIDE	1				0.361	0.7942
080	38240-16520	BUSH	1				0.04	0.088
090	38240-16390	SEAL OIL	1				0.03	0.066
100	09500-26387	SEAL OIL	1				0.008	0.0176
110	38430-16490	WASHER SEAL	1				0.015	0.033
120	38240-16320	O RING	1				0.002	0.0044
130	34150-16420	GASKET	1				0.001	0.0022
140	32130-16480	SCREW ADJUSTING	1				0.025	0.055
150	34150-16440	COLLAR ADJUSTING	1			1.5+0.015mm to +0.035mm	0.002	0.0044
150	34150-16450	COLLAR ADJUSTING	1			1.5+0.045mm to +0.065mm	0.002	0.0044
150	34150-16460	COLLAR ADJUSTING	1			1.5+0.075mm to +0.095mm	0.002	0.0044
150	34150-16470	COLLAR ADJUSTING	1			1.5+0.105mm to +0.125mm	0.002	0.0044
150	34150-16480	COLLAR ADJUSTING	1			1.5+0.135mm to +0.155mm	0.002	0.0044
160	02116-50100	NUT	1				0.004	0.0088
170	02172-50200	NUT	1				0.03	0.066
180	38240-16630	NUT	1				0.035	0.077
190	04512-60200	WASHER SPRING	1				0.02	0.044
200	34150-16640	PLUG	1				0.015	0.033
210	01123-50820	BOLT	3				0.011	0.0242

silverhorn.co.uk

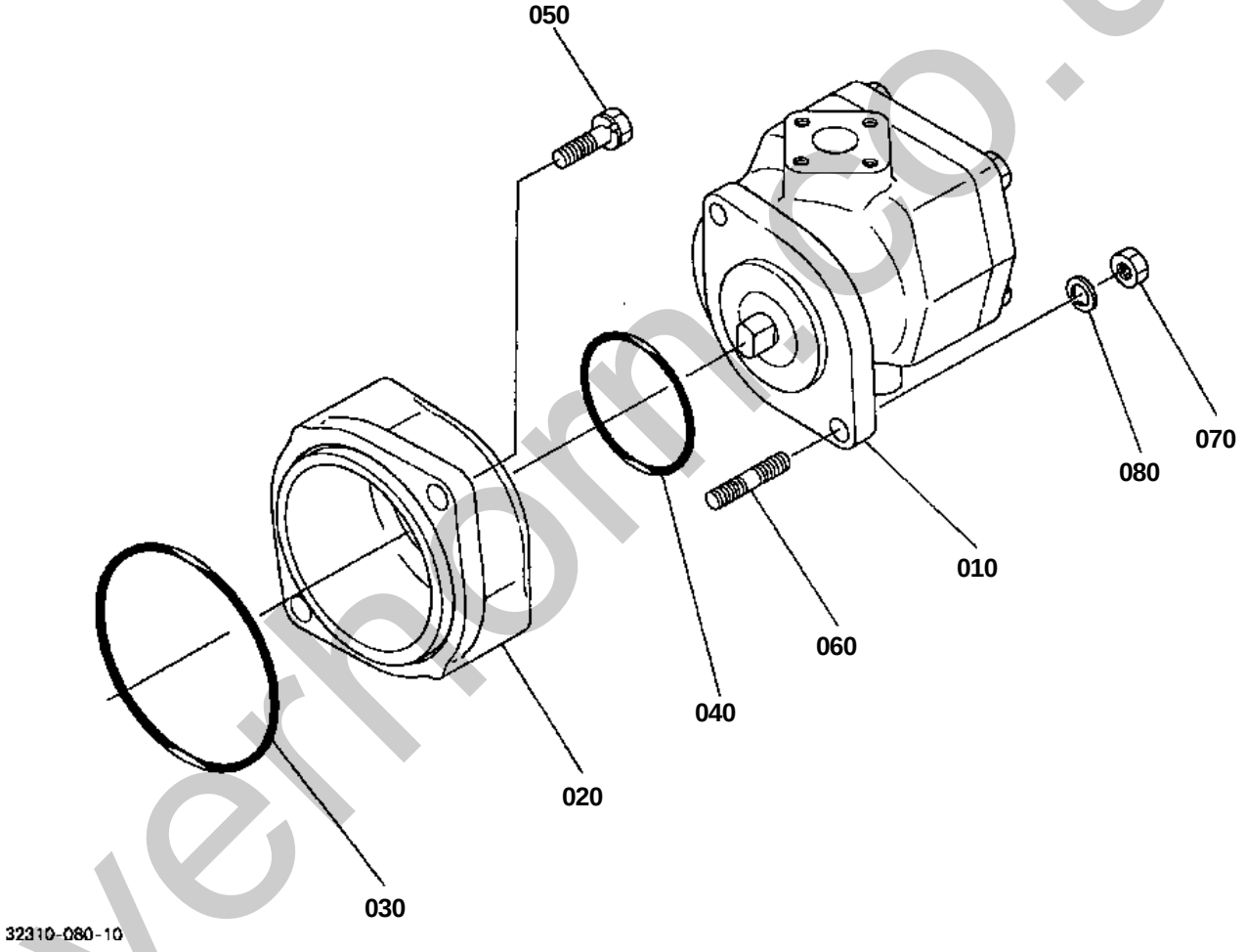

silverhome.co.uk

HYDRAULIC PUMP

↔ Interchangeable; ≠ not interchangeable; ← new for old; → old for new

REF.No	Part No.	Description	Q'ty	S.No.	I/C	REMARKS	Weight (kgf)	Weight (lb)
010	38180-76100	ASSY PUMP HYDRAULIC	1				2.1	4.62
020	38180-37850	HOLDER PUMP	1				0.25	0.55
030	04811-10850	O RING	1				0.002	0.0044
040	04811-10500	O RING	1				0.001	0.0022
050	01123-50822	BOLT	2				0.012	0.0264
060	38240-36330	STUD	2				0.008	0.0176
070	02054-50080	NUT	2				0.005	0.011
080	04512-60080	WASHER SPRING	2				0.002	0.0044

silverhorn.co.uk

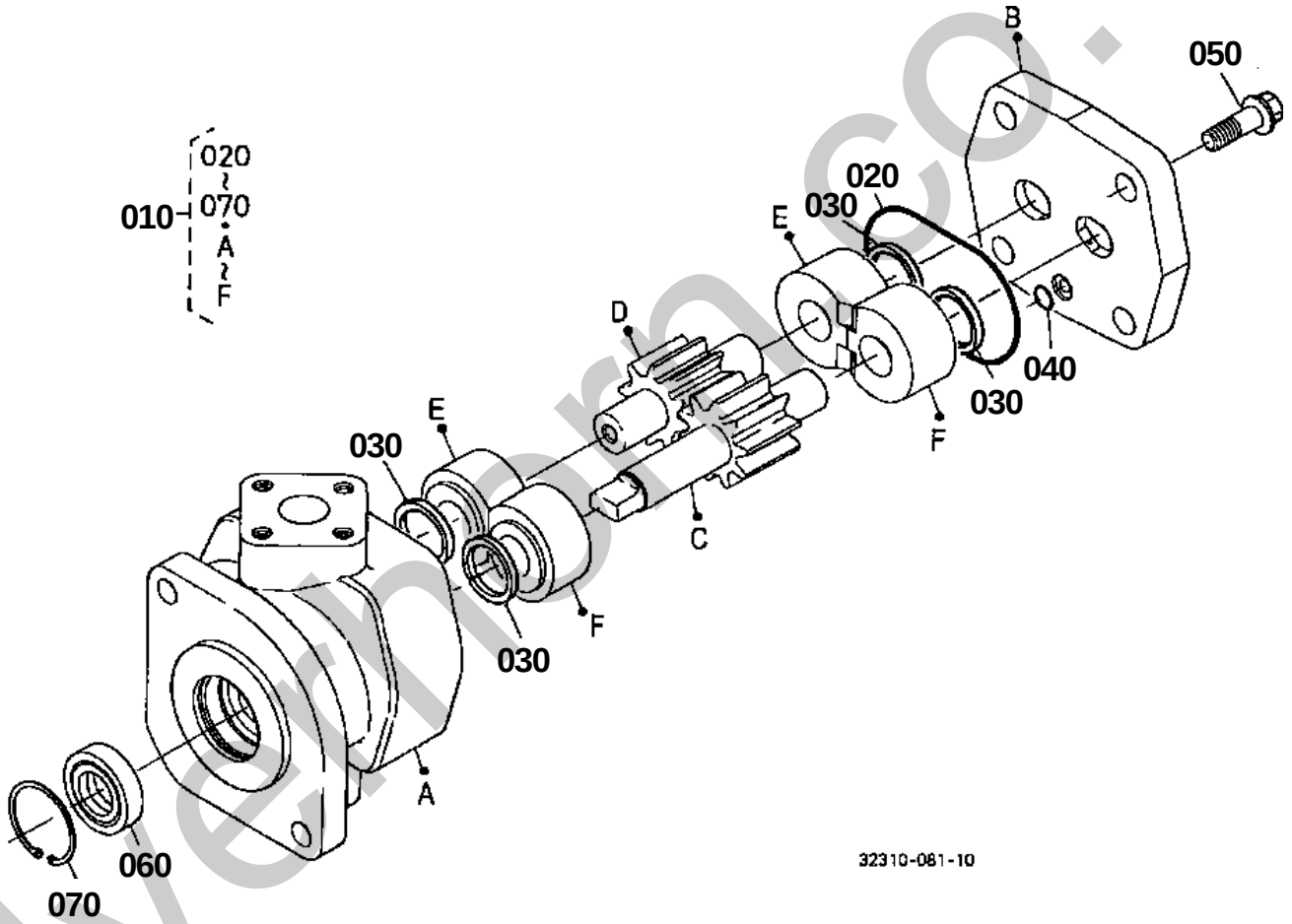

silvermarco.uk

↔ Interchangeable; ≠ not interchangeable; ← new for old; → old for new

REF.No	Part No.	Description	Q'ty	S.No.	I/C	REMARKS	Weight (kgf)	Weight (lb)
010	38180-76100	ASSY PUMP HYDRAULIC	1				2.1	4.62
020	04810-50550	O RING	1				0.002	0.0044
030	38180-76172	SQUARE RING	4				0.002	0.0044
040	04810-00050	O RING	1				0	0
050	01754-51030	BOLT FLANGE	4				0.03	0.066
060	31381-76190	SEAL OIL	1				0.007	0.0154
070	04611-00280	CIR CLIP INTERNAL	1				0.002	0.0044

silverhorn.co.uk

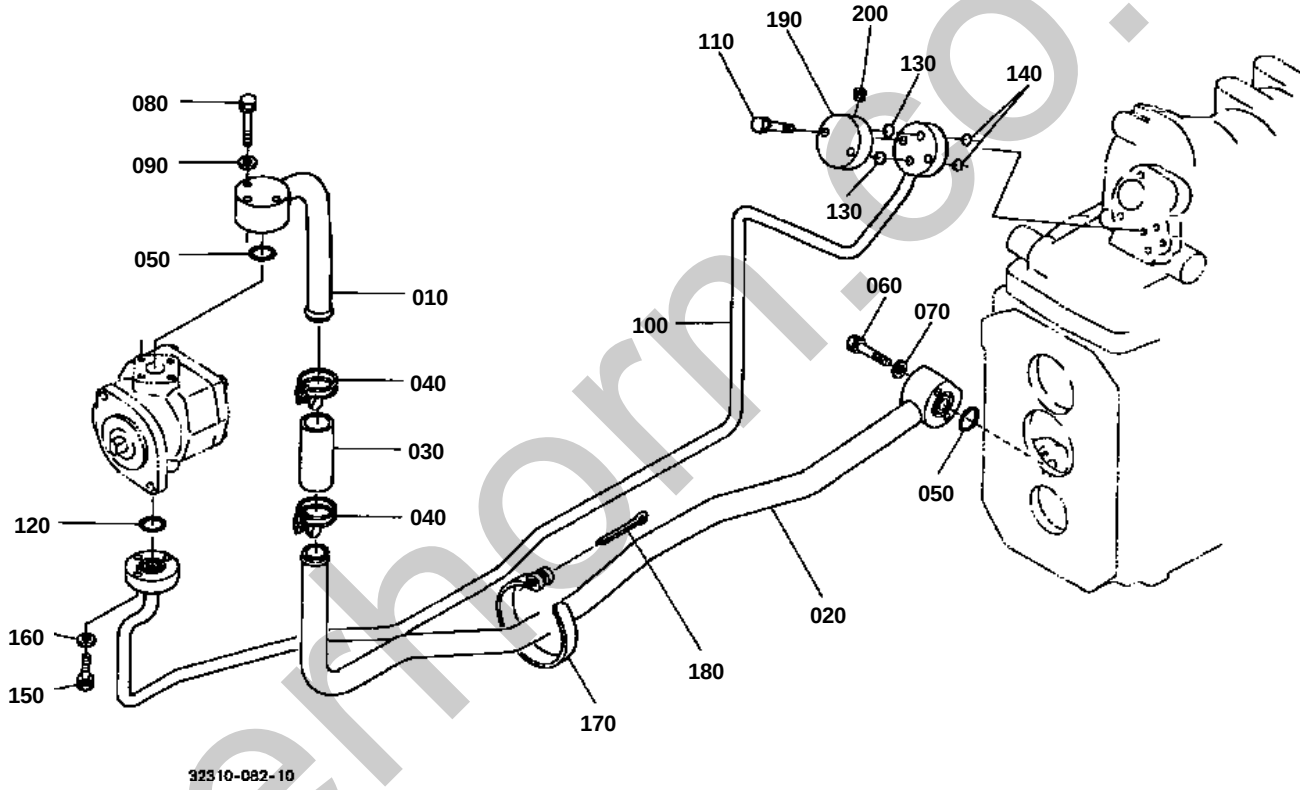

silverhorn.co.uk

HYDRAULIC OIL LINE

↔ Interchangeable; ≠ not interchangeable; ← new for old; → old for new

REF.No	Part No.	Description	Q'ty	S.No.	I/C	REMARKS	Weight (kgf)	Weight (lb)
010	32400-38120	PIPE INLET	1				0.41	0.902
020	32400-38130	PIPE INLET	1				0.95	2.09
030	37150-37770	PIPE RUBBER	1				0.035	0.077
030	32330-37780	PIPE RUBBER	1		«		0.033	0.0726
040	15261-72780	BAND	2				0.024	0.0528
050	04811-00200	O RING	2				0	0
060	01123-50850	BOLT	2				0.02	0.044
070	04013-60080	WASHER PLAIN	2				0.002	0.0044
080	01023-50645	BOLT	3				0.01	0.022
090	04013-60060	WASHER PLAIN	3				0.001	0.0022
100	32400-38210	COMP.PIPE DELIVERY	1				0.9	1.98
110	01123-50850	BOLT	2				0.02	0.044
120	04810-00200	O RING	1				0	0
130	04810-00120	O RING	2				0	0
140	04810-00100	O RING	2				0	0
150	01023-50625	BOLT	3				0.007	0.0154
160	04013-60060	WASHER PLAIN	3				0.001	0.0022
170	37150-38950	BAND PIPE	1				0.02	0.044
180	33430-82760	PIN BAND	1				0.004	0.0088
190	31351-38310	CAP	1				0.135	0.297
200	06312-10010	PLUG	1				0.007	0.0154

silverhorn.co.uk

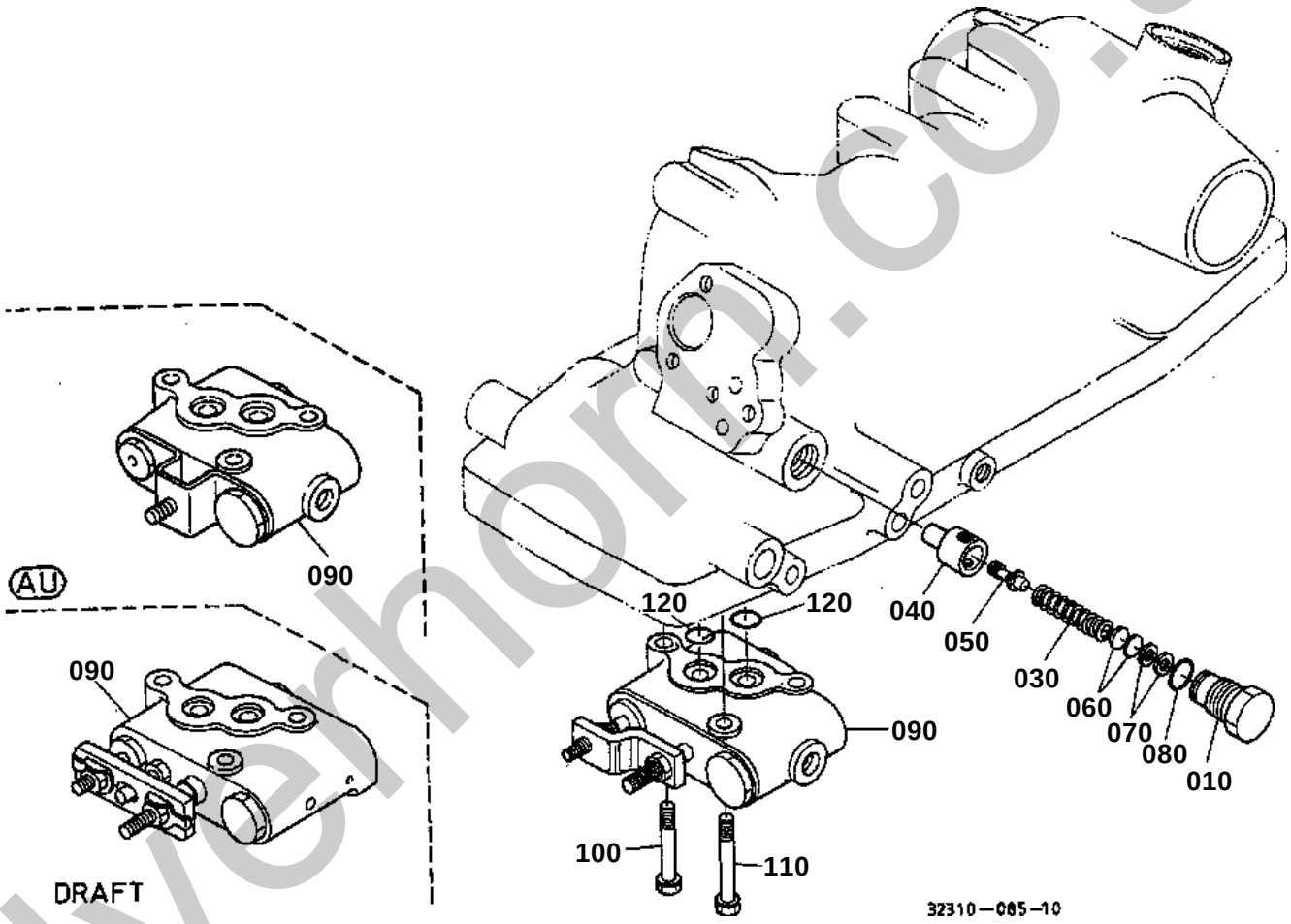

silverhorn.co.uk

CONTROL VALVE

↔ Interchangeable; ≠ not interchangeable; ← new for old; → old for new

REF.No	Part No.	Description	Q'ty	S.No.	I/C	REMARKS	Weight (kgf)	Weight (lb)
010	31351-37910	PLUG	1				0.06	0.132
020	99999-99999	BLANK	0				0	0
030	31351-37920	SPRING RELIEF	1				0.02	0.044
040	31351-37930	SEAT RELIEF VALVE	1				0.02	0.044
050	31351-37940	POPPET	1				0.005	0.011
060	31351-37950	SHIM	5			0.40mm	0.001	0.0022
060	31351-37960	SHIM	2			0.20mm	0.001	0.0022
060	31351-37970	SHIM	2			0.10mm	0.001	0.0022
070	04013-60050	WASHER PLAIN	2				0.001	0.0022
080	04811-10160	O RING	1				0.001	0.0022
090	31391-39000	ASSY VALVE CONTROL	1	<=30279			0	0
090	31391-39002	ASSY VALVE CONTROL	1	>=30280	¬		1.65	3.63
090	31351-39603	ASSY VALVE CONTROL	1	<=30279		DRAFT	0	0
090	31351-39604	ASSY VALVE CONTROL	1	>=30280	¬	DRAFT	1.9	4.18
100	01123-50845	BOLT	1				0.02	0.044
110	01123-50850	BOLT	2				0.02	0.044
120	04810-00120	O RING	2				0	0

silverhorn.co.uk

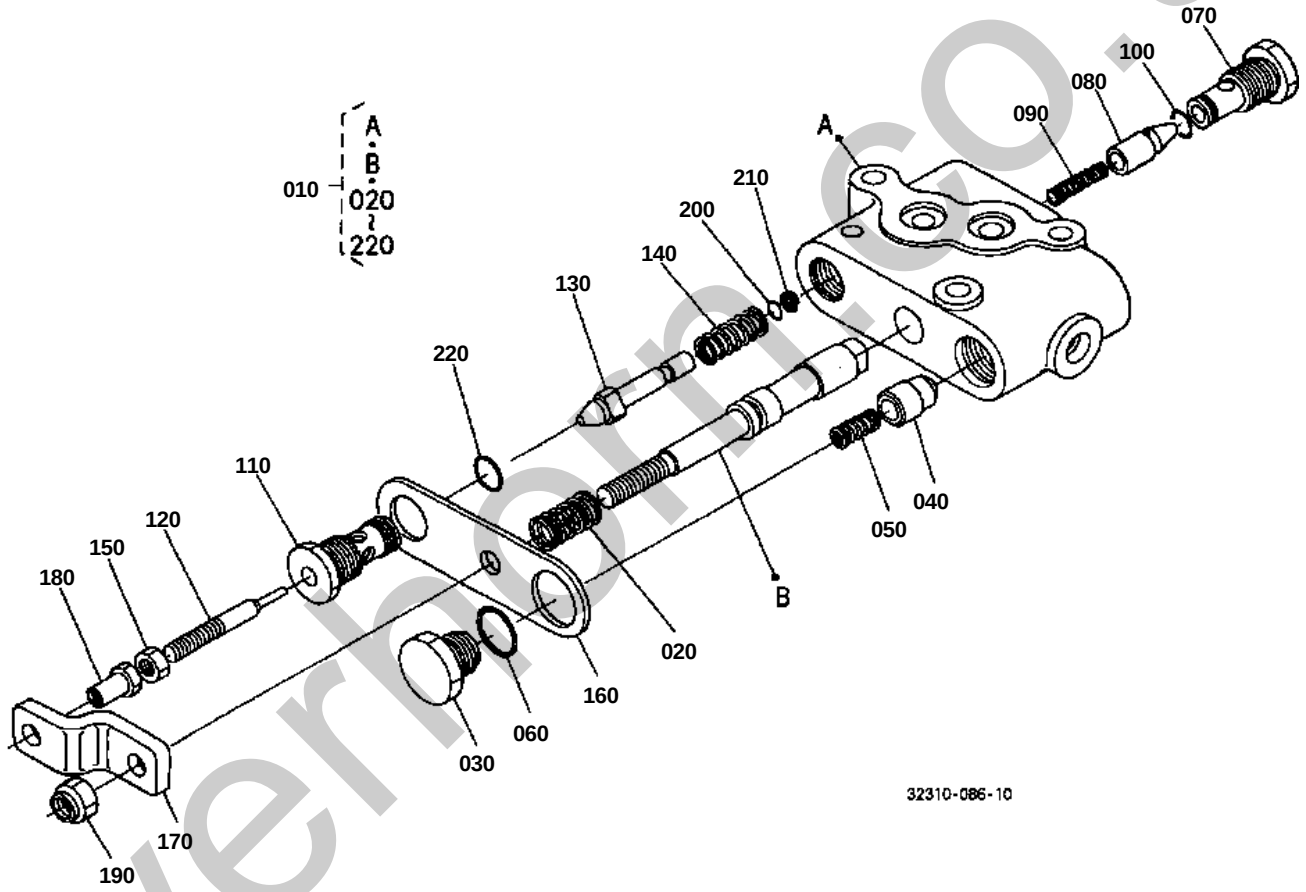

silverhorn.co.uk

↔ Interchangeable; ≠ not interchangeable; ← new for old; → old for new

REF.No	Part No.	Description	Q'ty	S.No.	I/C	REMARKS	Weight (kgf)	Weight (lb)
010	31391-39000	ASSY VALVE CONTROL	1				0	0
020	31351-39130	SPRING SPOOL	1				0.005	0.011
030	31351-39140	PLUG	1				0.05	0.11
040	31351-39150	POPPET	1				0.02	0.044
050	67531-38470	SPRING	1				0.001	0.0022
060	04811-00160	O RING	1				0	0
070	31391-39170	PLUG	1				0.05	0.11
080	31391-39180	POPPET	1				0.015	0.033
090	31391-39190	SPRING	1				0.001	0.0022
100	04810-00090	O RING	1				0	0
110	31351-39200	PLUG	1				0.04	0.088
120	31351-39210	RETAINER ROD	1				0.013	0.0286
130	31351-39180	POPPET	1				0.025	0.055
140	31351-39190	SPRING	1				0.008	0.0176
150	02056-50060	NUT	1				0.002	0.0044
160	31351-39240	PLATE	1				0.05	0.11
170	31351-39250	PLATE JOINT	1				0.052	0.1144
180	31351-39260	NUT ADJUSTING	1				0.008	0.0176
190	31351-39270	U NUT	1				0.005	0.011
200	04811-00050	O RING	1				0	0
210	31351-39290	RING BACK UP	1				0.001	0.0022
220	04810-06100	O RING	1				0	0

silverhorn.co.uk

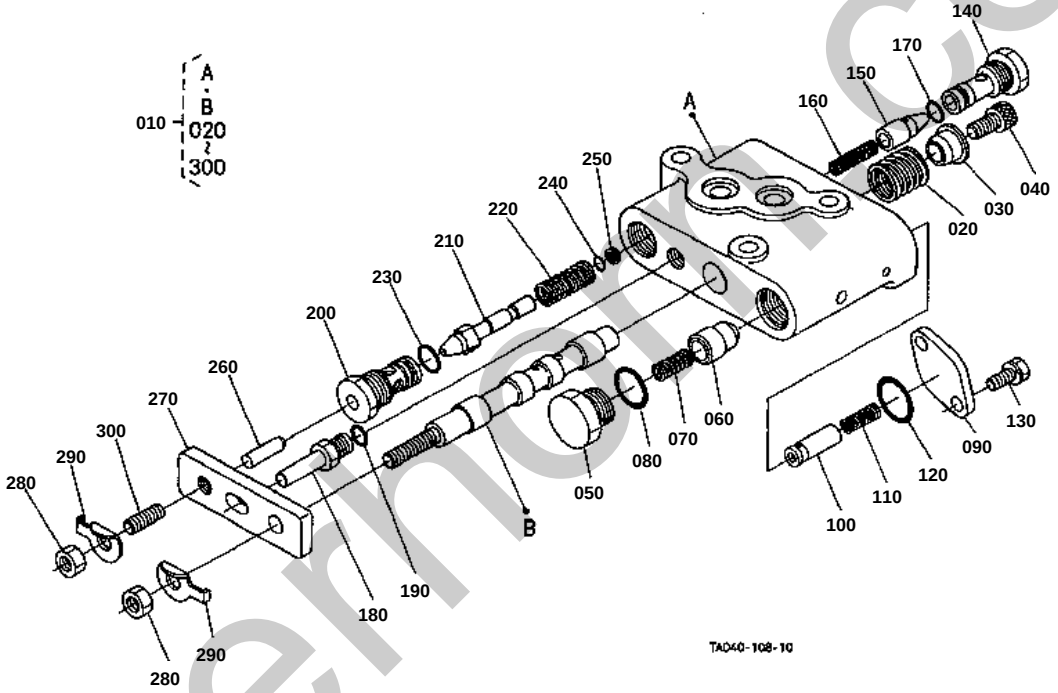

silvermart.co.uk

↔ Interchangeable; ≠ not interchangeable; ← new for old; → old for new

REF.No	Part No.	Description	Q'ty	S.No.	I/C	REMARKS	Weight (kgf)	Weight (lb)
010	31351-39603	ASSY VALVE CONTROL	1	<=30279			0	0
010	31351-39604	ASSY VALVE CONTROL	1	>=30280	¬		1.9	4.18
020	31351-39630	SPRING SPOOL	1				0.02	0.044
030	31351-39640	HOLDER SPRING	1				0.02	0.044
040	01311-10814	BOLT HEX-SOC-HD	1				0.012	0.0264
050	31351-39650	PLUG	1				0.04	0.088
060	31351-39150	POPPET	1				0.02	0.044
070	67531-38470	SPRING	1				0.001	0.0022
080	04811-00140	O RING	1				0	0
090	31351-39660	PLATE	1				0.05	0.11
100	31351-39670	POPPET	1				0.01	0.022
110	31351-39680	SPRING	1				0.01	0.022
120	04811-00160	O RING	1				0	0
130	01023-50614	BOLT	2				0.005	0.011
140	31351-39690	PLUG	1				0.05	0.11
150	31391-39180	POPPET	1				0.015	0.033
160	31391-39190	SPRING	1				0.001	0.0022
170	04810-00090	O RING	1				0	0
180	31351-39720	PIN FULCRUM	1				0.025	0.055
190	04811-00080	O RING	1				0	0
200	31351-39730	PLUG	1				0.05	0.11
210	31351-39180	POPPET	1				0.025	0.055
220	31351-39190	SPRING	1				0.008	0.0176
230	04810-06100	O RING	1				0	0
240	04811-00050	O RING	1				0	0
250	31351-39290	RING BACK UP	1				0.001	0.0022
260	31351-39740	RETAINER ROD	1				0.005	0.011
270	31351-39750	PLATE JOINT	1				0.05	0.11
280	02156-50080	NUT	2				0.004	0.0088
290	04111-50080	WASHER	2				0.001	0.0022
300	03650-50816	SCREW SET	1				0.01	0.022

silverhorn.co.uk

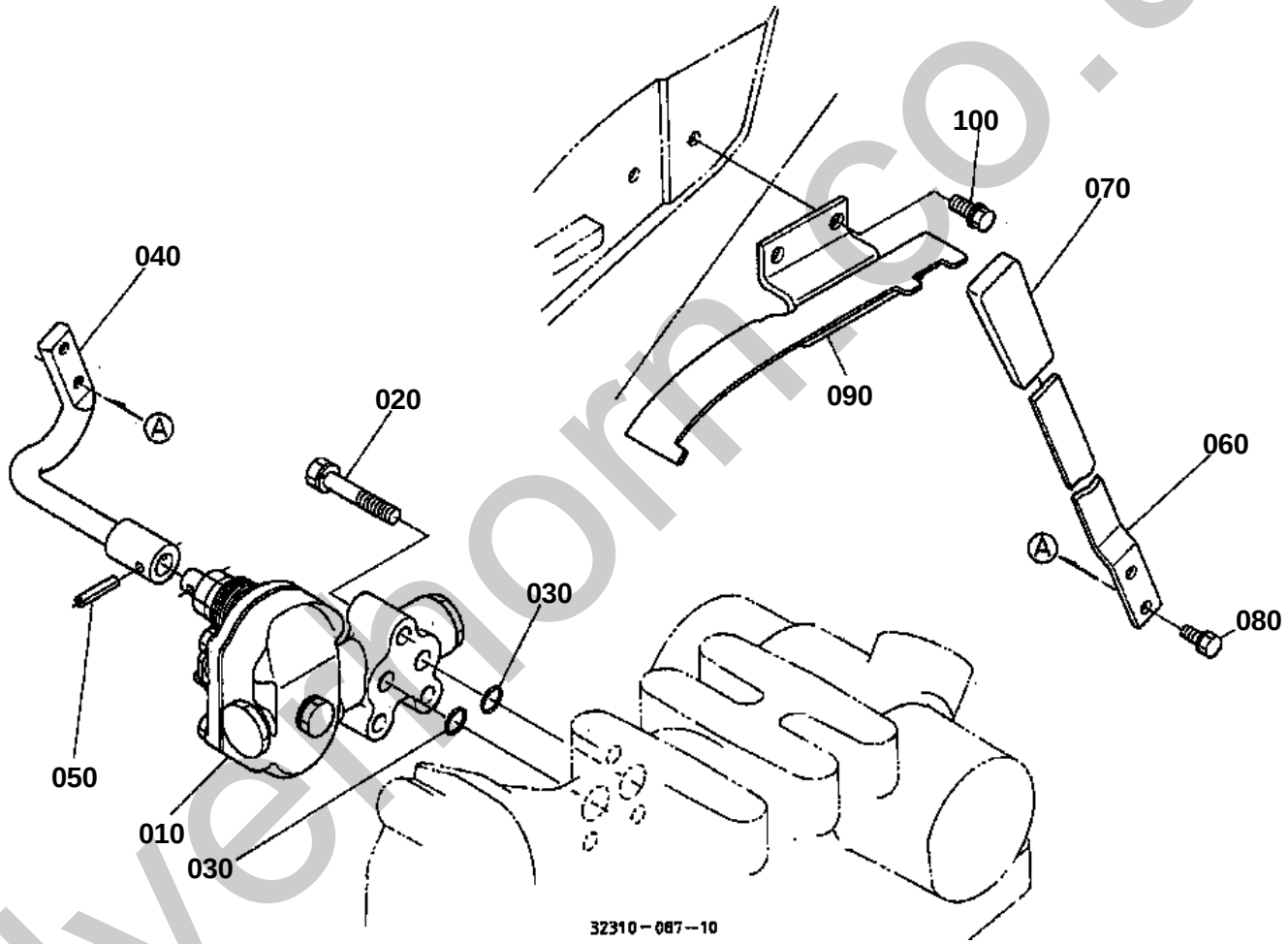

silvermorm.co.uk

DRAFT CONTROL VALVE [OPTION]

↔ Interchangeable; ≠ not interchangeable; ← new for old; → old for new

REF.No	Part No.	Description	Q'ty	S.No.	I/C	REMARKS	Weight (kgf)	Weight (lb)
010	35080-41100	ASSY VALVE DRAFT CON	1				2.5	5.5
020	01123-50845	BOLT	3				0.02	0.044
030	04810-00140	O RING	2				0	0
040	32430-41240	LEVER DRAFT CON.	1				0.3	0.66
050	05411-00525	PIN SPRING	1				0.002	0.0044
060	32400-41250	LEVER DRAFT CON.	1				0.12	0.264
070	31351-36880	GRIP LEVER	1				0.04	0.088
080	01023-50612	BOLT	2				0.005	0.011
090	32400-41260	GUIDE DRAFT LEVER	1				0.27	0.594
100	01754-50812	BOLT FLANGE	2				0.01	0.022

silverhorn.co.uk

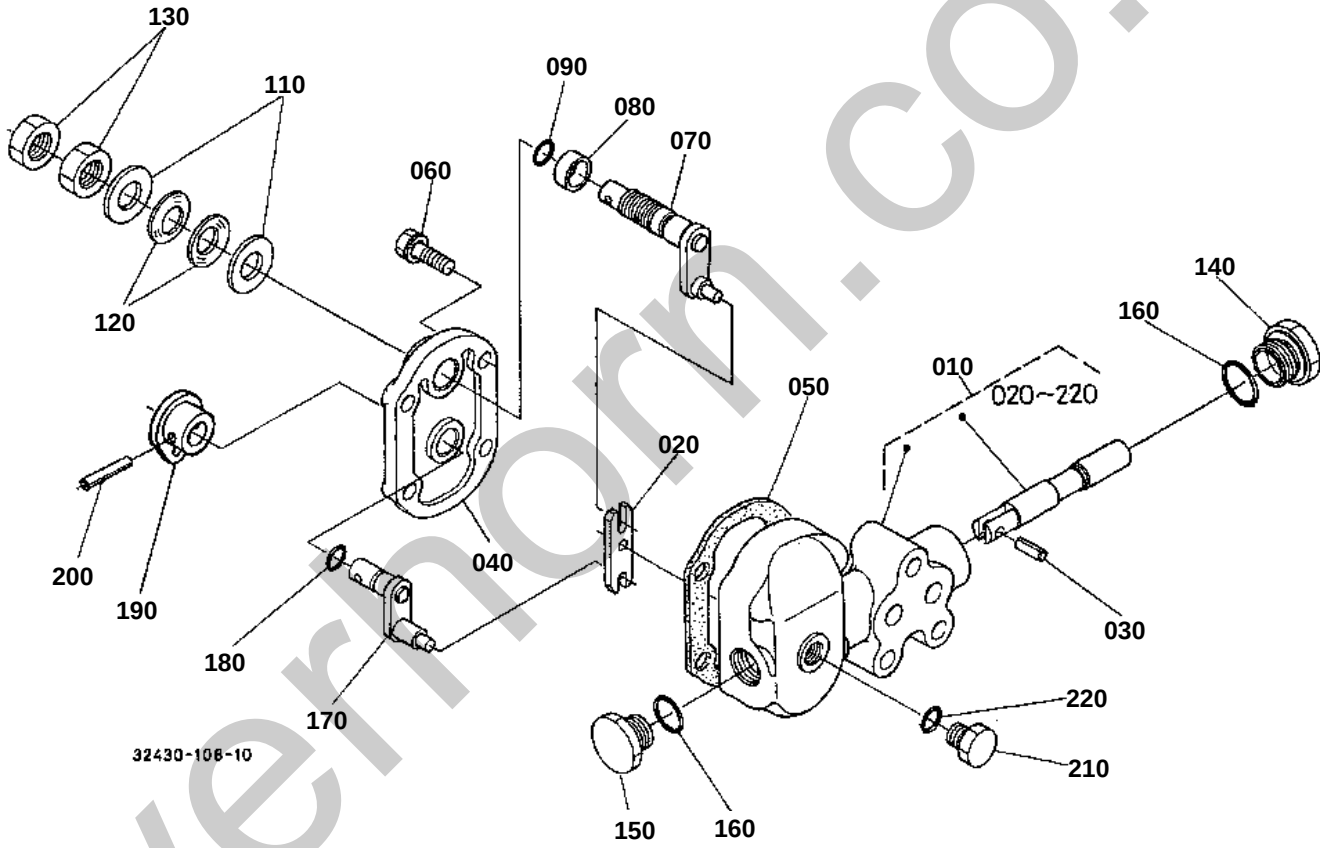

silverhorn.co.uk

↔ Interchangeable; ≠ not interchangeable; ← new for old; → old for new

REF.No	Part No.	Description	Q'ty	S.No.	I/C	REMARKS	Weight (kgf)	Weight (lb)
010	35080-41100	ASSY VALVE DRAFT CON	1				2.5	5.5
020	35080-41130	LEVER SPOOL DRIVE	1				0.02	0.044
030	05411-00614	PIN SPRING	1				0.002	0.0044
040	35080-41140	COVER VALVE	1				0.39	0.858
050	35080-41150	GASKET	1				0.005	0.011
060	01123-50830	BOLT	4				0.015	0.033
070	35080-41160	ARM CONTROL	1				0.09	0.198
080	35080-41270	COLLAR	1				0.015	0.033
090	04811-06100	O RING	1				0	0
100	99999-99999	BLANK	0				0	0
110	04013-60140	WASHER PLAIN	2				0.01	0.022
120	37300-41280	SPRING PLATE	2				0.005	0.011
130	02172-50140	NUT	2				0.01	0.022
140	35080-41170	PLUG	1				0.04	0.088
150	35080-41230	PLUG	1				0.06	0.132
160	04811-00180	O RING	2				0	0
170	35080-41180	ARM FEED BACK	1				0.05	0.11
180	04811-00090	O RING	1				0	0
190	35080-41190	LEVER FEED BACK	1				0.05	0.11
200	05411-00520	PIN SPRING	1				0.002	0.0044
210	35080-41280	PLUG	1				0.025	0.055
220	04811-00110	O RING	1				0	0

silverhorn.co.uk

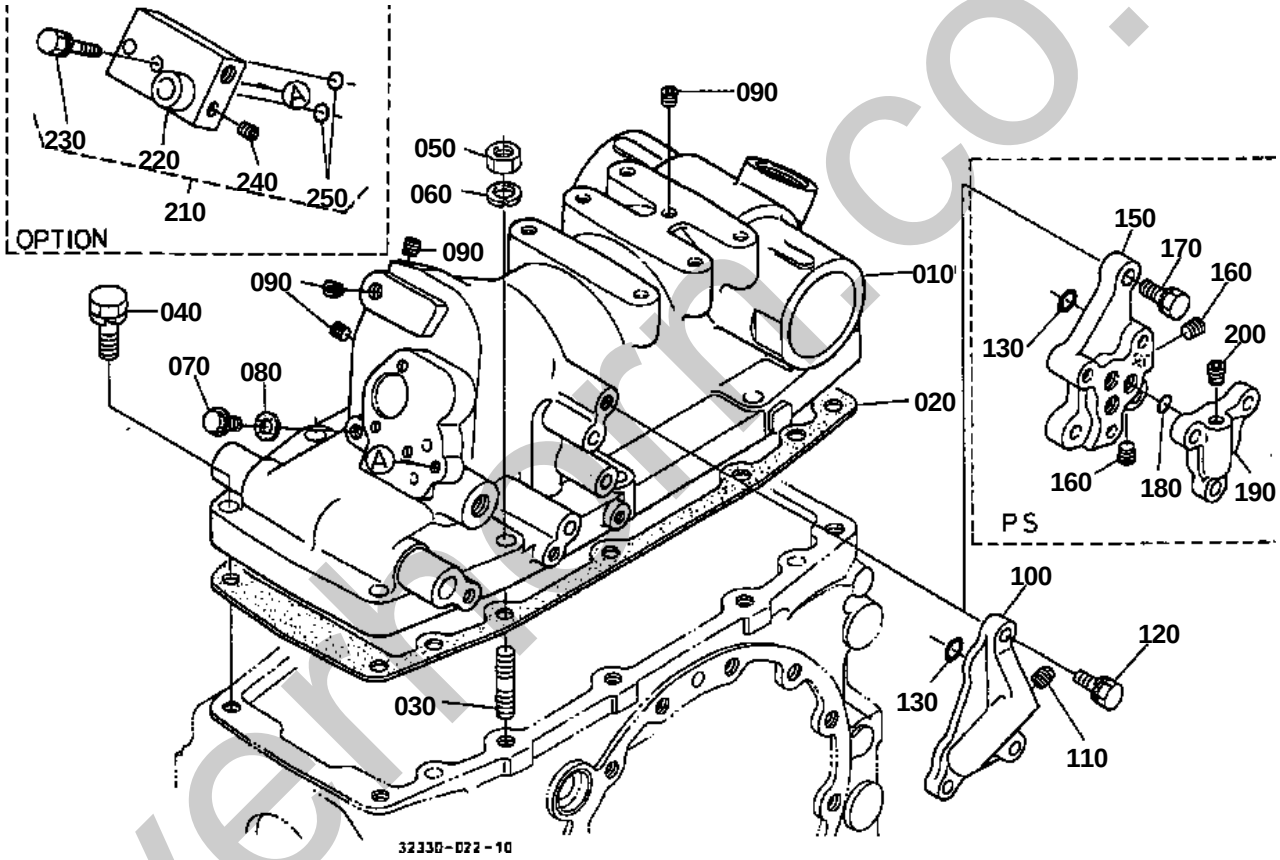

silverhorse.co.uk

HYDRAULIC CYLINDER

↔ Interchangeable; ≠ not interchangeable; ← new for old; → old for new

REF.No	Part No.	Description	Q'ty	S.No.	I/C	REMARKS	Weight (kgf)	Weight (lb)
010	32412-37112	CASE HYD.CYLINDER	1				20	44
020	32425-37120	GASKET	1				0.025	0.055
030	01574-51245	STUD	2				0.051	0.1122
040	01133-51245	BOLT	8				0.055	0.121
050	02176-50120	NUT	2				0.01	0.022
060	04512-60120	WASHER SPRING	4				0.005	0.011
070	37150-36730	PLUG	1				0.03	0.066
080	37150-36720	GASKET	1				0.01	0.022
090	31351-37160	PLUG	4				0.003	0.0066
100	31351-37280	COVER CYL.LH	1			MANUAL STRG.	0.12	0.264
110	06312-10010	PLUG	1			MANUAL STRG.	0.007	0.0154
120	01123-50825	BOLT	3				0.013	0.0286
130	04810-00100	O RING	3				0	0
140	99999-99999	BLANK	0				0	0
210	32400-99810	ASSY OUTLET HYD.	1			OPTION	0.61	1.342
220	70760-62690	BLOCK HYD.OUTLET	1			OPTION	0.54	1.188
230	01123-50860	BOLT	2			OPTION	0.002	0.0044
240	31351-37160	PLUG	1			OPTION	0.003	0.0066
250	04810-00100	O RING	2			OPTION	0	0

silverhorn.co.uk

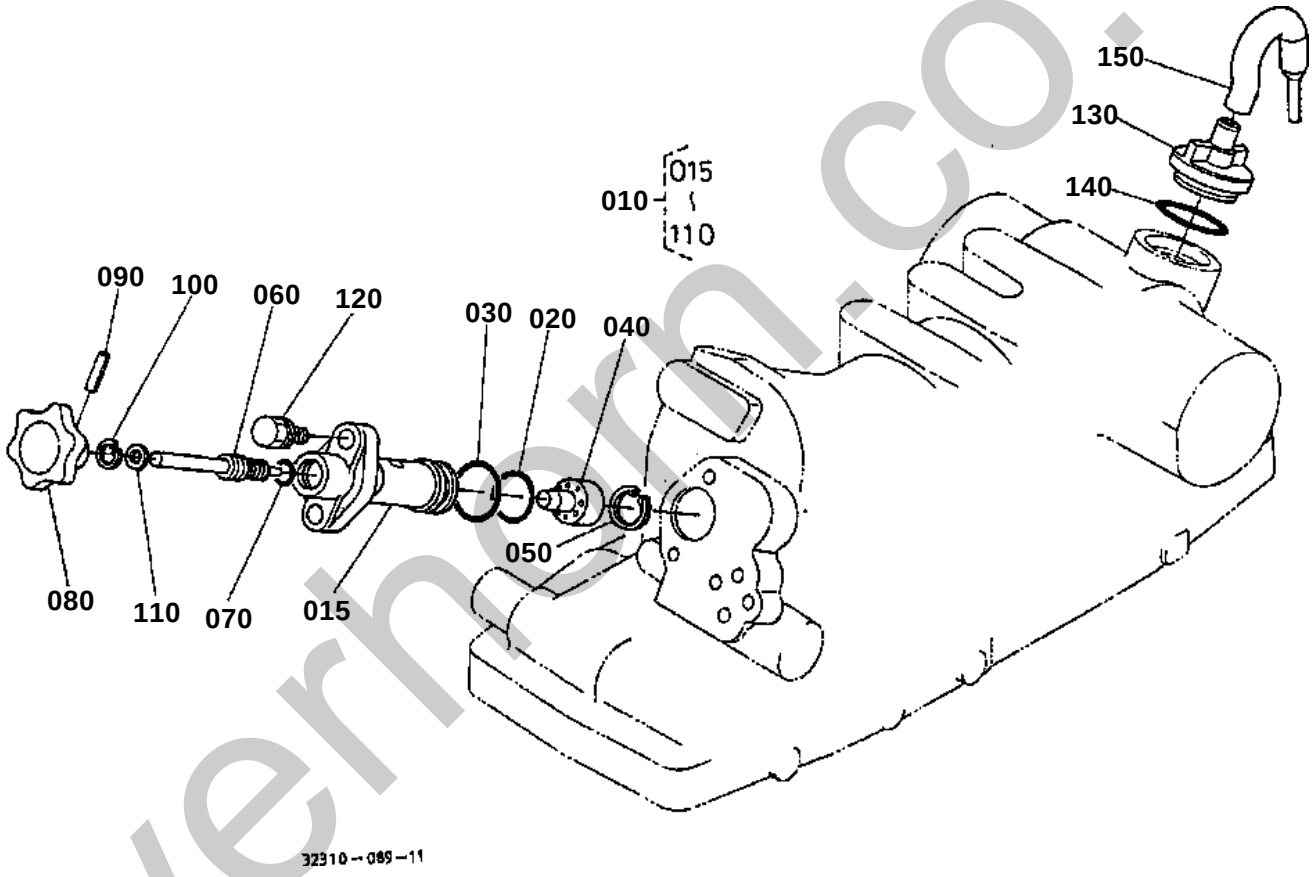

silverhorn.co.uk

CYLINDER FRONT COVER

↔ Interchangeable; ≠ not interchangeable; ← new for old; → old for new

REF.No	Part No.	Description	Q'ty	S.No.	I/C	REMARKS	Weight (kgf)	Weight (lb)
010	31351-37200	ASSY COVER CYL.FRONT	1				0.3	0.66
015	31351-37210	COVER CYL.FRONT	1				0.315	0.693
020	04810-00220	O RING	1				0	0
030	04810-06250	O RING	1				0	0
040	38240-37250	COLLAR ADJUSTING	1				0.01	0.022
050	04611-00160	CIR CLIP INTERNAL	1				0.001	0.0022
060	31351-37220	SHAFT HYD.ADJUST	1				0.04	0.088
070	04810-00100	O RING	1				0	0
080	34150-37230	GRIP	1				0.04	0.088
090	05411-00418	PIN SPRING	1				0.001	0.0022
100	34150-37260	CIR CLIP INTERNAL	1				0.001	0.0022
110	04012-50080	WASHER PLAIN	1				0.001	0.0022
120	01123-50825	BOLT	2				0.013	0.0286
130	38180-21410	PLUG	1				0.02	0.044
140	04811-50300	O RING	1				0	0
150	38180-37140	BREATHER	1				0.01	0.022

silverhorn.co.uk

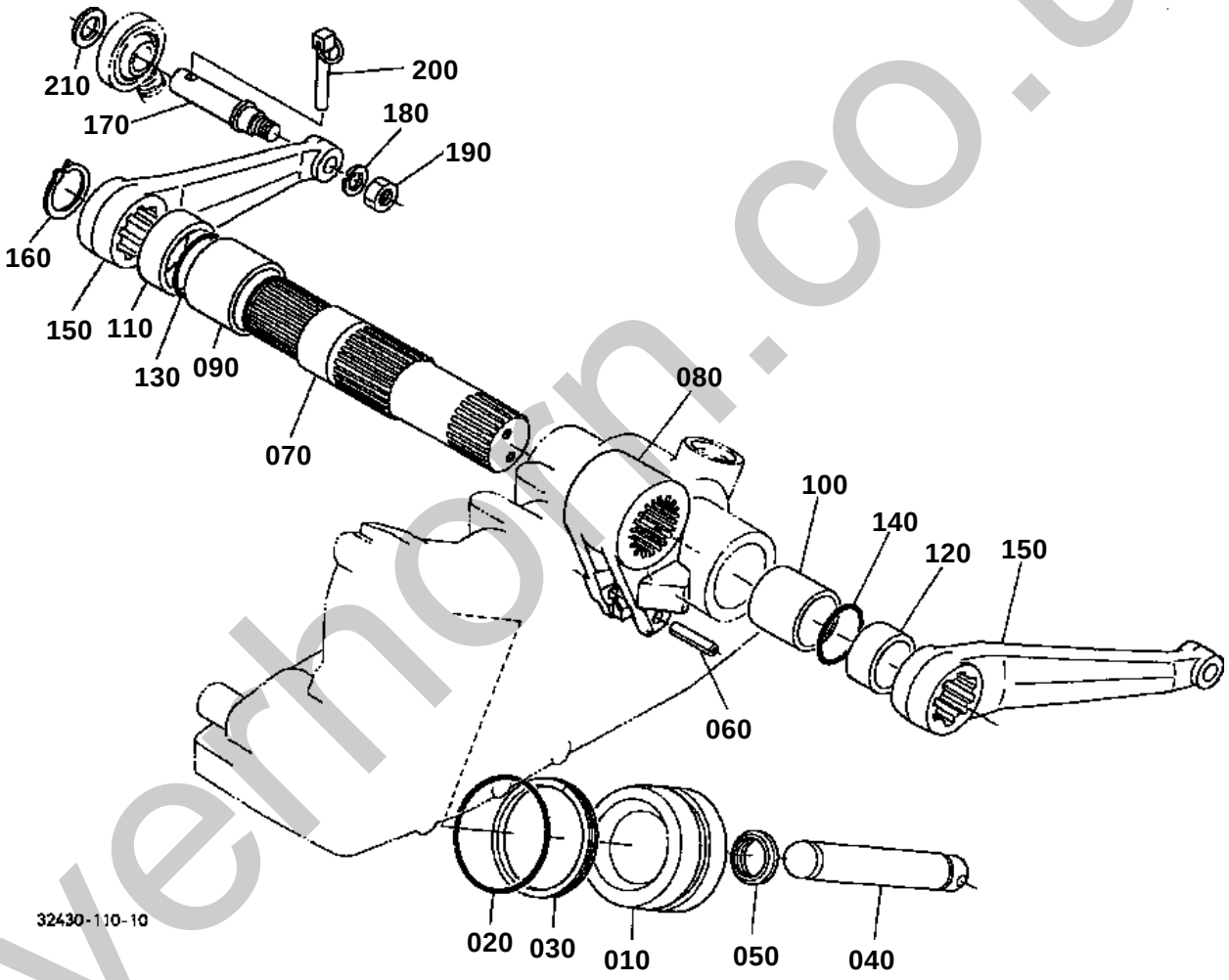

silverhorn.co.uk

LIFT ARM

↔ Interchangeable; ≠ not interchangeable; ← new for old; → old for new

REF.No	Part No.	Description	Q'ty	S.No.	I/C	REMARKS	Weight (kgf)	Weight (lb)
010	31321-37310	PISTON HYD.	1				1.08	2.376
020	04811-00650	O RING	1				0.007	0.0154
030	34220-37380	RING BACK UP	1				0.001	0.0022
040	31351-37320	ROD HYD	1				0.605	1.331
050	31351-37330	GUIDE HYD.ROD	1				0.003	0.0066
060	05411-00656	PIN SPRING	1				0.006	0.0132
070	31321-37430	SHAFT HYD.ARM	1				2.22	4.884
080	31321-37444	ARM HYDRAULIC	1				0	0
090	31321-37450	BUSH	1				0.09	0.198
090	30400-37450	BUSH	1			SERVICE PARTS	0.09	0.198
100	34150-37460	BUSH	1				0.062	0.1364
100	30400-37460	BUSH	1			SERVICE PARTS	0.065	0.143
110	34150-37480	COLLAR	1				0.005	0.011
120	34150-37490	COLLAR	1				0.002	0.0044
130	04811-50450	O RING	1				0	0
140	04811-06400	O RING	1				0	0
150	30401-37610	ARM LIFT	2				2.1	4.62
160	04612-00400	CIRCLIP EXTERNAL	1				0.005	0.011
170	30442-37690	PIN LIFT ROD	2				0.2	0.44
180	04512-60160	WASHER SPRING	2				0.01	0.022
190	02174-50160	NUT	2				0.022	0.0484
200	34150-37640	PIN SET	2				0.06	0.132
210	04011-50180	WASHER PLAIN	2				0.012	0.0264

silverhorn.co.uk

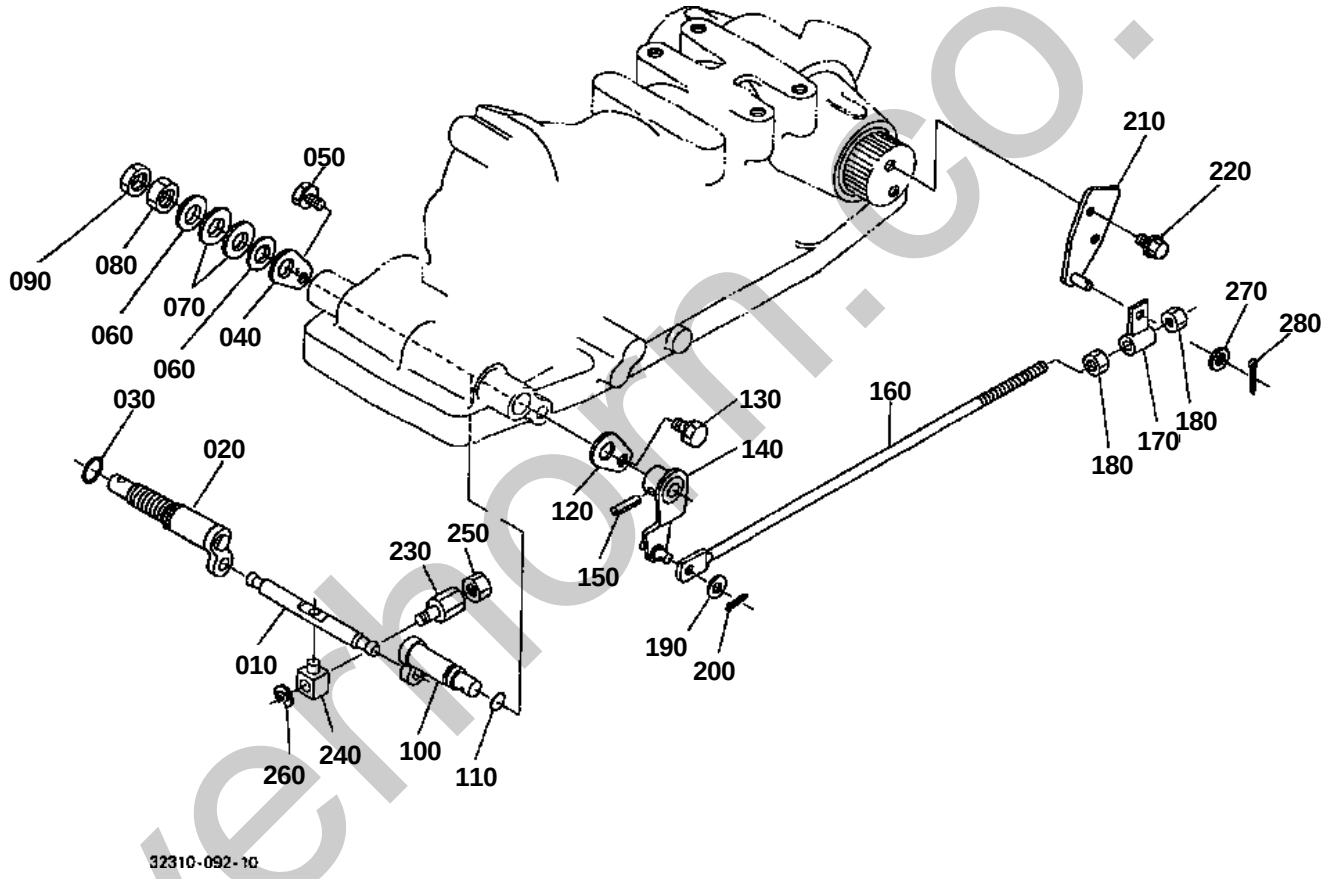

silverhorn.co.uk

FEED BACK LEVER

↔ Interchangeable; ≠ not interchangeable; ← new for old; → old for new

REF.No	Part No.	Description	Q'ty	S.No.	I/C	REMARKS	Weight (kgf)	Weight (lb)
010	31351-37640	LEVER SPOOL DRIVE	1				0.05	0.11
020	31351-37650	ARM CONTROL	1				0.16	0.352
030	04811-00140	O RING	1				0	0
040	31351-37660	SET PLATE	1				0.01	0.022
050	01123-60816	BOLT	1				0.01	0.022
060	04013-60140	WASHER PLAIN	2				0.01	0.022
070	34260-36880	SPRING PLATE	2				0.006	0.0132
080	02174-50140	NUT	1				0.014	0.0308
090	02172-50140	NUT	1				0.01	0.022
100	31351-37750	SHAFT BACK LEVER	1				0.1	0.22
110	04811-00120	O RING	1				0	0
120	38240-36890	SET PLATE	1				0.013	0.0286
130	01123-60816	BOLT	1				0.01	0.022
140	31351-37760	LEVER FEED BACK	1				0.08	0.176
150	05411-00525	PIN SPRING	1				0.002	0.0044
160	31321-37770	ROD FEEDBACK	1				0.12	0.264
170	31351-37780	ROD CONTROL	1				0.03	0.066
180	02114-50080	NUT	2				0.005	0.011
190	04013-60080	WASHER PLAIN	1				0.002	0.0044
200	05511-50218	PIN SPLIT	1				0.001	0.0022
210	99999-99999	BLANK	0				0	0
220	T0070-36010	LINK CONTROL	1				0.07	0.154
230	01754-50814	BOLT FLANGE	2				0.005	0.011
240	67531-38280	JOINT SPOOL	1				0.17	0.374
250	37150-36420	JOINT SPOOL	1				0.02	0.044
260	02112-50080	NUT	1				0.003	0.0066
270	04613-50060	CIRCLIP EXTERNAL	1				0.001	0.0022
280	04013-60080	WASHER PLAIN	1				0.002	0.0044
290	05511-50215	PIN SPLIT	1				0.001	0.0022

silvermorn.co.uk

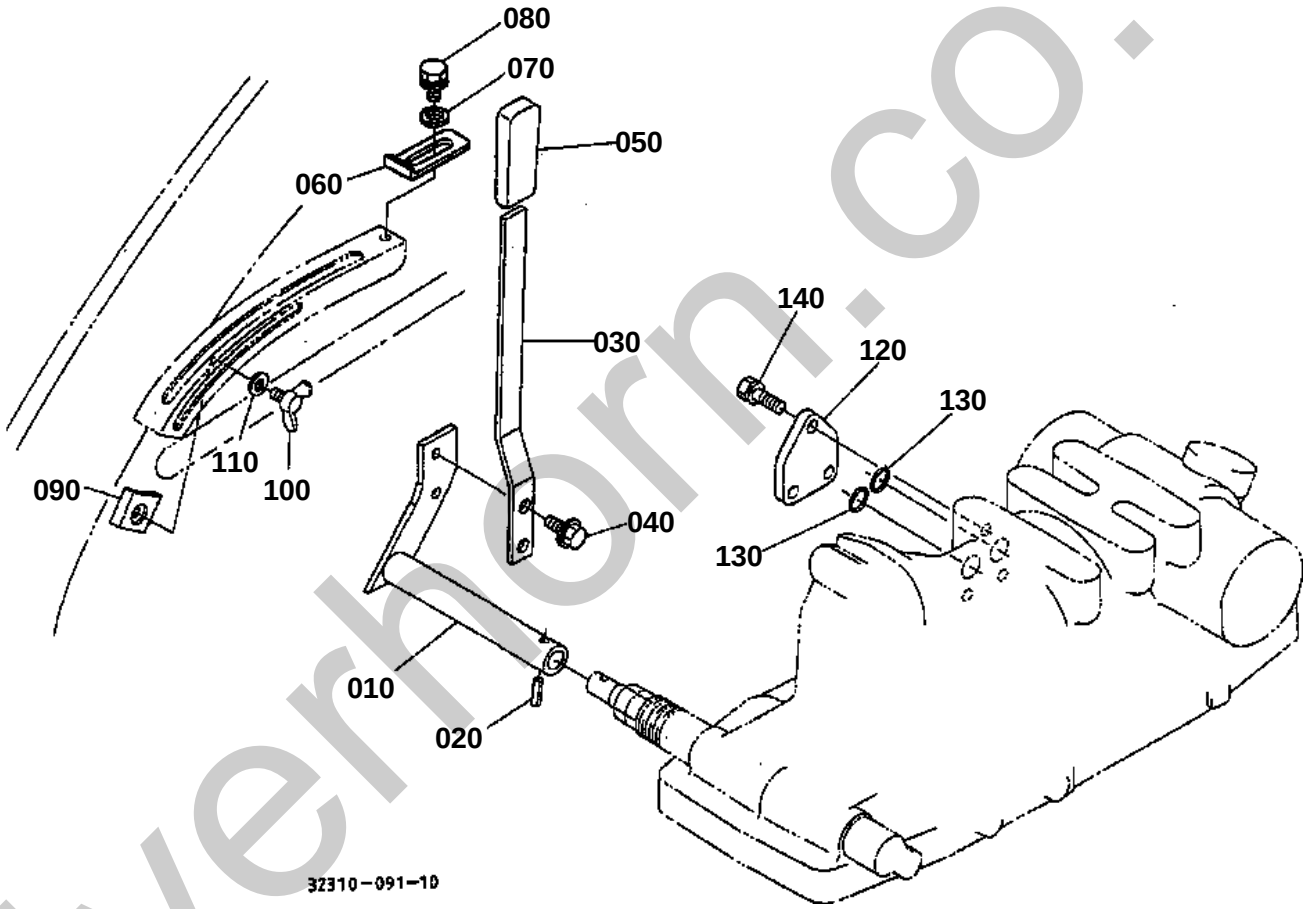

silverhorn.co.uk

POSITION CONTROL LEVER

↔ Interchangeable; ≠ not interchangeable; ← new for old; → old for new

REF.No	Part No.	Description	Q'ty	S.No.	I/C	REMARKS	Weight (kgf)	Weight (lb)
010	32430-36850	LEVER POSITION	1				0.42	0.924
020	05411-00525	PIN SPRING	1				0.002	0.0044
030	31351-36860	LEVER POSITION	1				0.14	0.308
040	01754-50616	BOLT FLANGE	2				0.006	0.0132
050	31351-36880	GRIP LEVER	1				0.04	0.088
060	38240-36930	STOPPER	1				0.02	0.044
070	04015-60080	WASHER PLAIN	1				0.01	0.022
080	01123-60816	BOLT	1				0.01	0.022
090	31351-36910	STOPPER	1				0.02	0.044
100	01811-50610	BOLT WING	1				0.014	0.0308
110	04013-60060	WASHER PLAIN	1				0.001	0.0022
120	32430-41210	COVER CYL.SIDE LH	1			WITHOUT DRAFT	0.11	0.242
130	04810-00140	O RING	2			WITHOUT DRAFT	0	0
140	01123-50820	BOLT	3			WITHOUT DRAFT	0.011	0.0242

silverhorn.co.uk

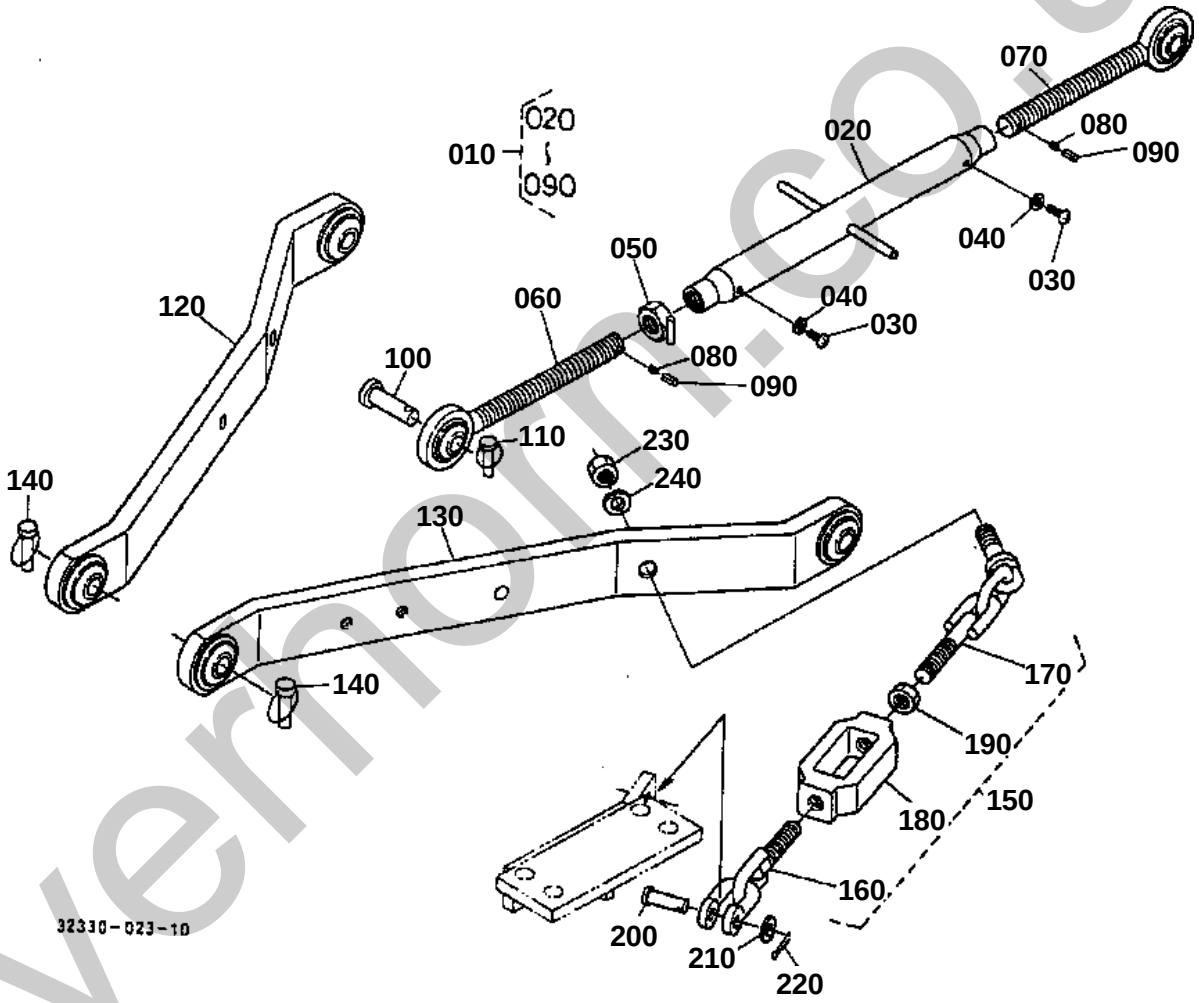

silvermorn.co.uk

3-POINT LINKAGE 1 (LOWER LINK/TOP LINK)

↔ Interchangeable; ≠ not interchangeable; ← new for old; → old for new

REF.No	Part No.	Description	Q'ty	S.No.	I/C	REMARKS	Weight (kgf)	Weight (lb)
010	32310-71100	ASSY LINK TOP	1				2.8	6.16
020	31341-71110	LINK TOP	1				1.1	2.42
030	31351-71150	SCREW	2				0.018	0.0396
040	04512-60060	WASHER SPRING	2				0.001	0.0022
050	38247-71180	NUT TOP LINK	1				0.06	0.132
060	34670-71210	JOINT TOP LINK RH	1				0.86	1.892
070	34670-71220	JOINT TOP LINK LH	1				0.83	1.826
080	70436-58360	SPRING	2				0.001	0.0022
090	31351-71160	PIN	2				0.002	0.0044
100	31150-71360	PIN JOINT	2				0.166	0.3652
110	34150-37640	PIN SET	2				0.06	0.132
120	32310-71310	COMP.LINK LOWER RH	1				7.2	15.84
130	32310-71330	COMP.LINK LOWER LH	1				7.2	15.84
140	34150-37640	PIN SET	4				0.06	0.132
150	32330-39700	ASSY CHAIN CHECK	2				0	0
160	31331-71813	JOINT CHAIN	2	<=20001			0	0
160	31331-71814	JOINT CHAIN	2	>=20002	¬		0.27	0.594
170	32420-71824	JOINT CHAIN	2	<=20001			0.43	0.946
170	31341-71820	JOINT CHAIN	2	>=20002	¬		0.435	0.957
180	T0030-39730	TURNBUCKLE	2	<=20001			0.58	1.276
180	32420-71840	TURNBUCKLE	2	>=20002	¬		0	0
190	02052-50140	NUT	2				0.018	0.0396
200	99571-22820	PIN	2				0.03	0.066
210	04013-60100	WASHER PLAIN	2				0.003	0.0066
220	05511-50318	PIN SPLIT	2				0.001	0.0022
230	02074-50160	NUT	2				0.029	0.0638
240	04512-60160	WASHER SPRING	2				0.01	0.022

silverhorn.co.uk

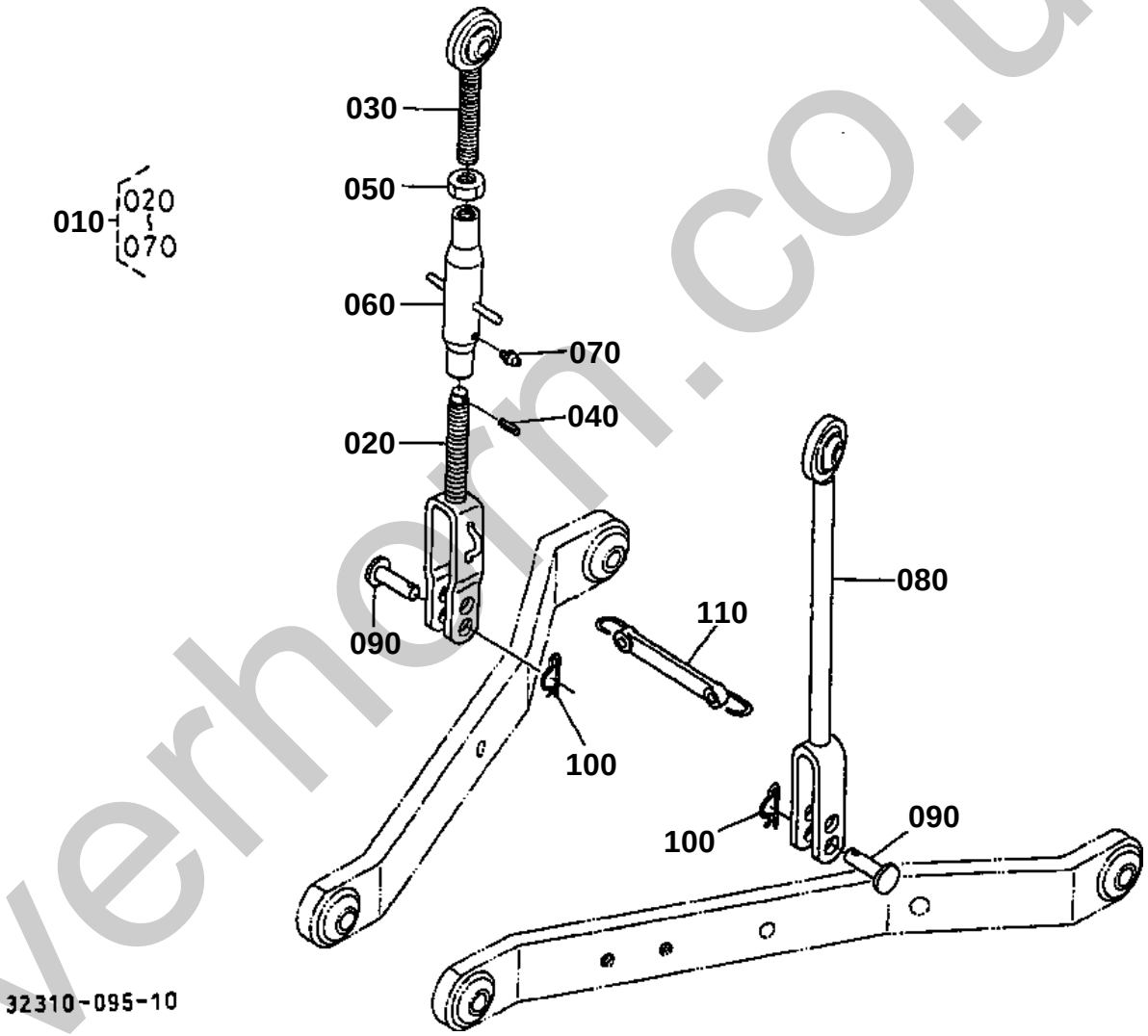

silverhorn.co.uk

3-POINT LINKAGE 2 (LIFT ROD)

↔ Interchangeable; ≠ not interchangeable; ← new for old; → old for new

REF.No	Part No.	Description	Q'ty	S.No.	I/C	REMARKS	Weight (kgf)	Weight (lb)
010	32310-71560	ASSY ROD LIFT RH	1				2.1	4.62
020	32400-71520	ROD LIFT LOWER	1				0.93	2.046
030	31331-71510	ROD LIFT UPPER	1				0.58	1.276
040	05411-00320	PIN SPRING	1				0.001	0.0022
050	35110-71570	NUT	1				0.05	0.11
060	38187-71770	ROD LIFT MIDDLE	1				0.54	1.188
070	06613-10675	NIPPLE GREASE	1				0.003	0.0066
080	32310-71540	ROD LIFT LH	1				1.55	3.41
090	38187-71580	PIN LIFT ROD	2				0.061	0.1342
100	05515-51600	PIN SNAP	2				0.007	0.0154
110	35080-71750	COMP.RUBBER	1				0.065	0.143

silverhorn.co.uk

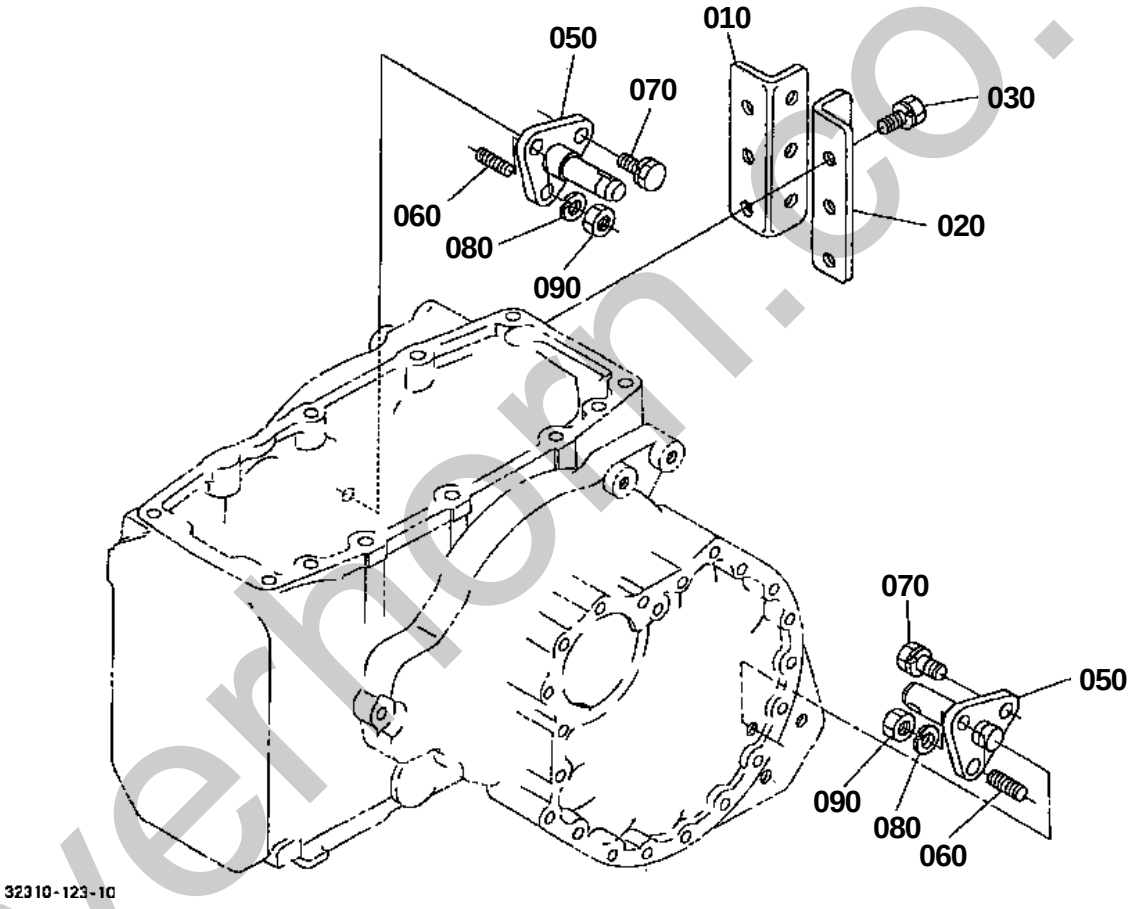

silverhorn.co.uk

TOP LINK BRACKET/LOWER LINK HOLDER

↔ Interchangeable; ≠ not interchangeable; ← new for old; → old for new

REF.No	Part No.	Description	Q'ty	S.No.	I/C	REMARKS	Weight (kgf)	Weight (lb)
010	99571-22140	HOLDER TOP LINK RH	1			WITH POSITION CONTROL	0.96	2.112
020	99571-22150	HOLDER TOP LINK LH	1			WITH POSITION CONTROL	0.99	2.178
030	01133-51230	BOLT	6			WITH POSITION CONTROL	0.04	0.088
040	99999-99999	BLANK	0				0	0
050	31351-29820	HOLDER LOWER LINK	2				0.515	1.133
060	01574-51225	STUD	2				0.034	0.0748
070	01133-51230	BOLT	4				0.04	0.088
080	04512-60120	WASHER SPRING	2				0.005	0.011
090	02176-50120	NUT	2				0.01	0.022

silverhorn.co.uk

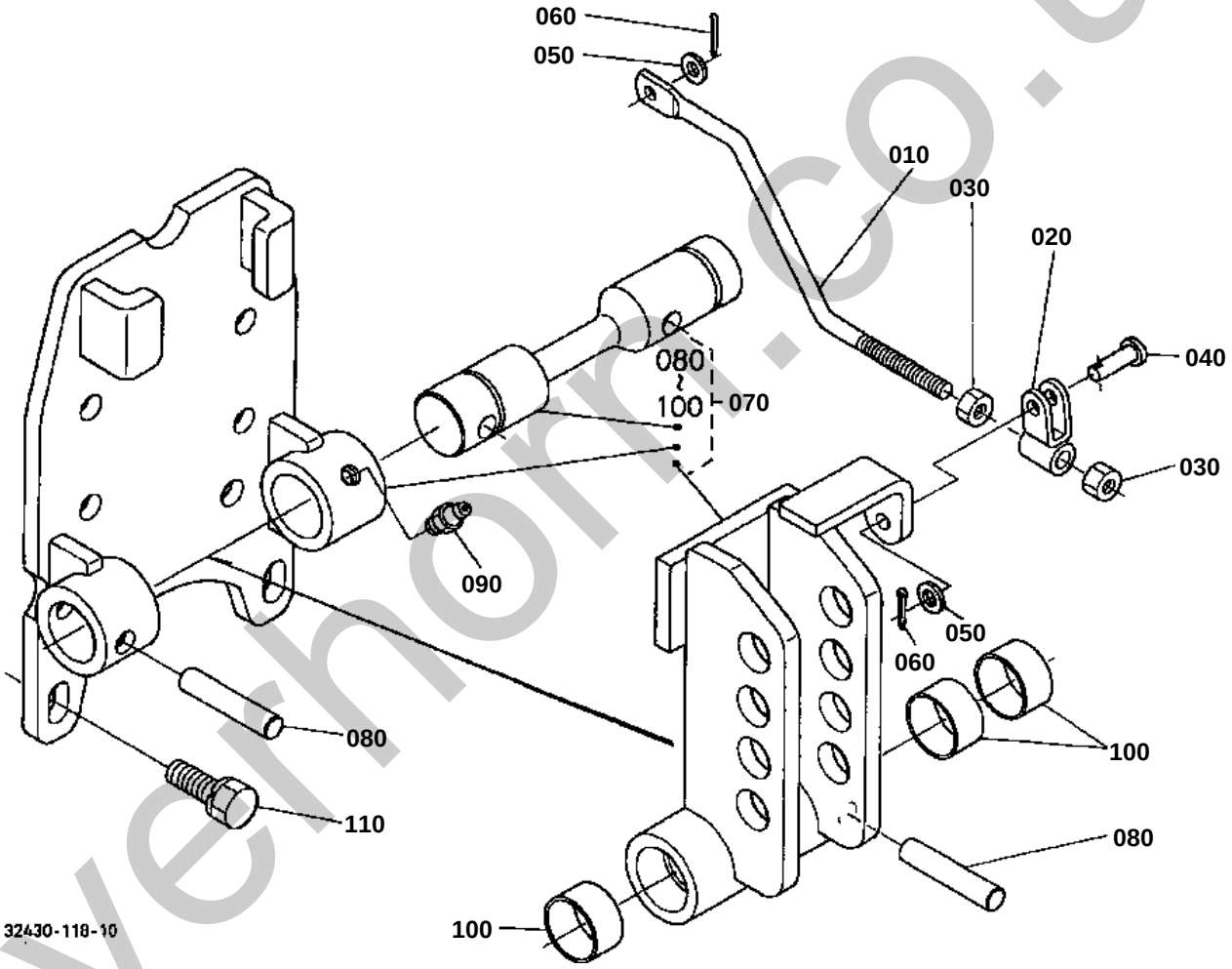

silverthorn.co.uk

TOP LINK BRACKET (WITH DRAFT CONTROL) [OPTION]

↔ Interchangeable; ≠ not interchangeable; ← new for old; → old for new

REF.No	Part No.	Description	Q'ty	S.No.	I/C	REMARKS	Weight (kgf)	Weight (lb)
010	35080-41310	ROD DRAFT CONTROL	1	<=21340			0	0
010	35080-41312	ROD DRAFT CONTROL	1	>=21341	¬		0.095	0.209
020	35260-41320	HOLDER CONTROL	1				0.03	0.066
030	02112-50080	NUT	2				0.003	0.0066
040	05122-50818	PIN JOINT	1				0.008	0.0176
050	04012-50080	WASHER PLAIN	2				0.001	0.0022
060	05511-50218	PIN SPLIT	2				0.001	0.0022
070	35080-41400	COMP HOLDER TOP LINK	1				6.85	15.07
080	37300-41440	PIN STRAIGHT	2				0.055	0.121
090	06613-10010	NIPPLE GREASE	2				0.006	0.0132
100	37300-41450	BUSH	3				0.03	0.066
110	01133-51230	BOLT	6				0.04	0.088

silverhorn.co.uk

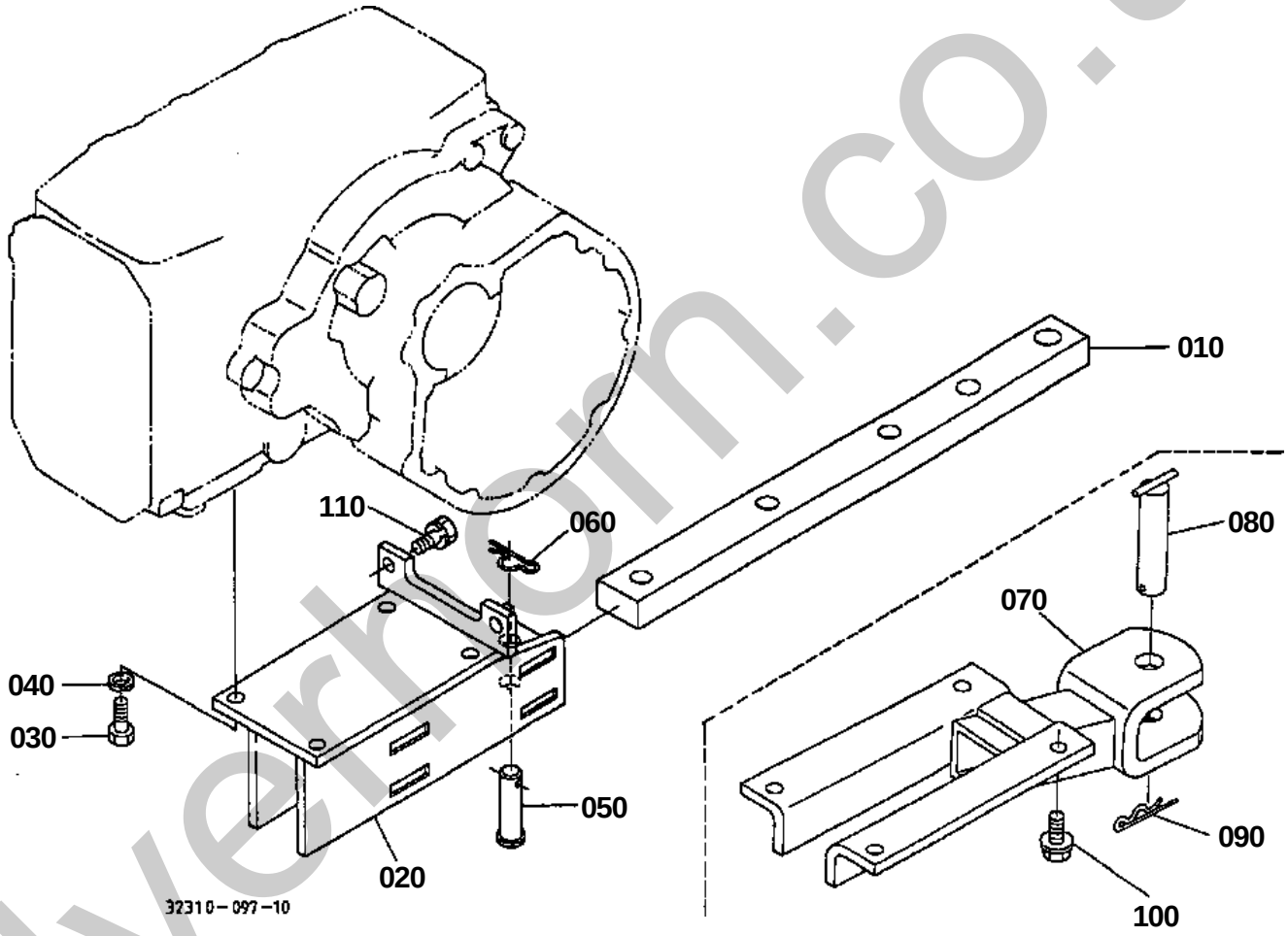

silverhorn.co.uk

↔ Interchangeable; ≠ not interchangeable; ← new for old; → old for new

REF.No	Part No.	Description	Q'ty	S.No.	I/C	REMARKS	Weight (kgf)	Weight (lb)
070	32400-29710	HITCH	1				4.45	9.79
080	38240-29784	PIN HITCH	1				0.415	0.913
090	70515-16330	PIN SPRING	1				0.03	0.066
100	01774-51430	BOLT FLANGE	4				0.06	0.132

silverhorn.co.uk

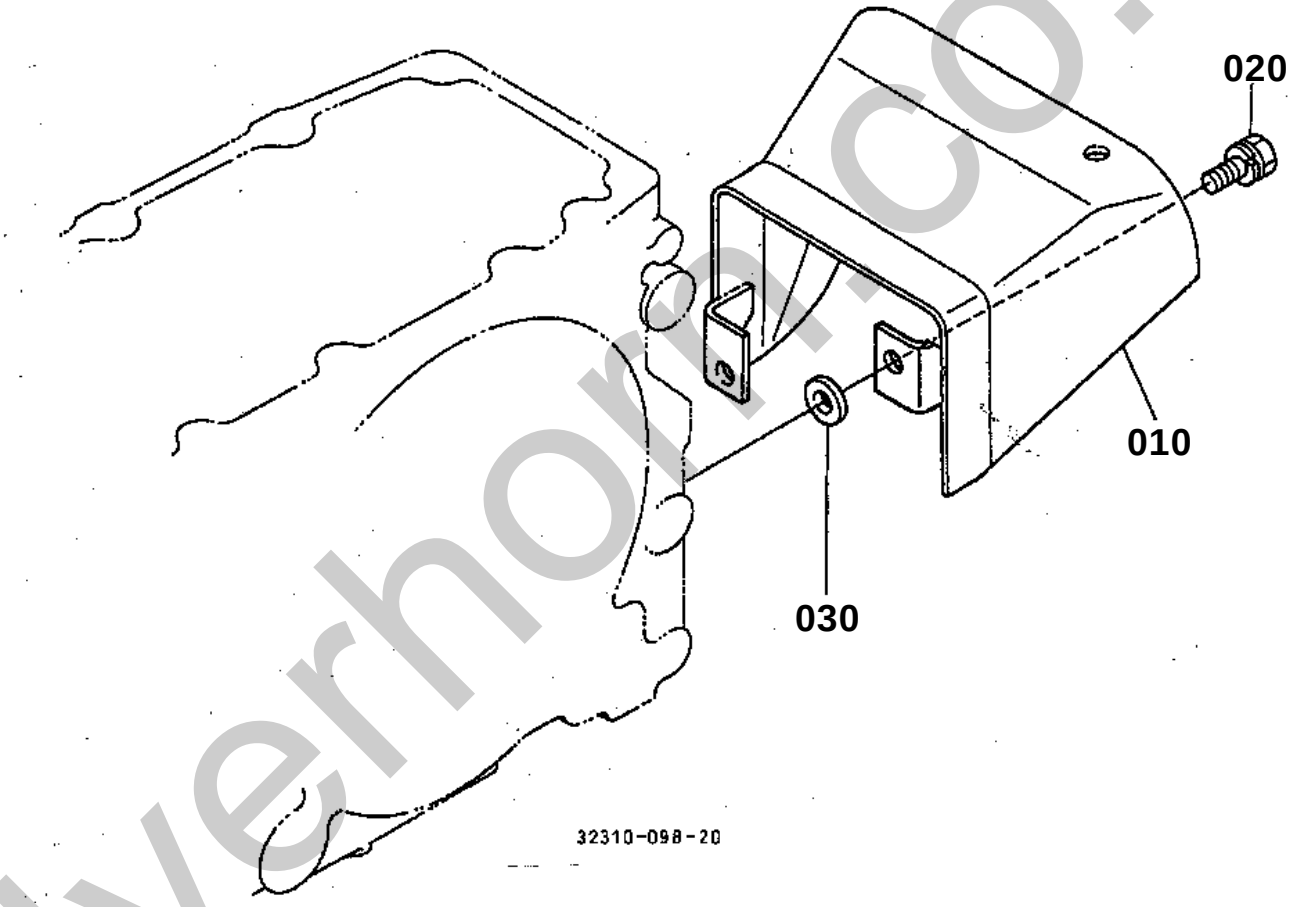

silverhorn.co.uk

PTO SHAFT PROTECTOR

↔ Interchangeable; ≠ not interchangeable; ← new for old; → old for new

REF.No	Part No.	Description	Q'ty	S.No.	I/C	REMARKS	Weight (kgf)	Weight (lb)
010	32330-25430	KIT COVER PTO(A)	1				1.8	3.96
020	32331-25430	KIT COVER PTO (B)	1				1.8	3.96
030	TA040-49590	LABEL PTO WARNING	1			ENGLISH	0.002	0.0044
040	TA041-49590	LEBEL PTO WARNING	1			FRENCH	0.001	0.0022
050	01133-51230	BOLT	3				0.04	0.088
060	35114-25340	COLLAR	1				0.02	0.044

silverhorn.co.uk

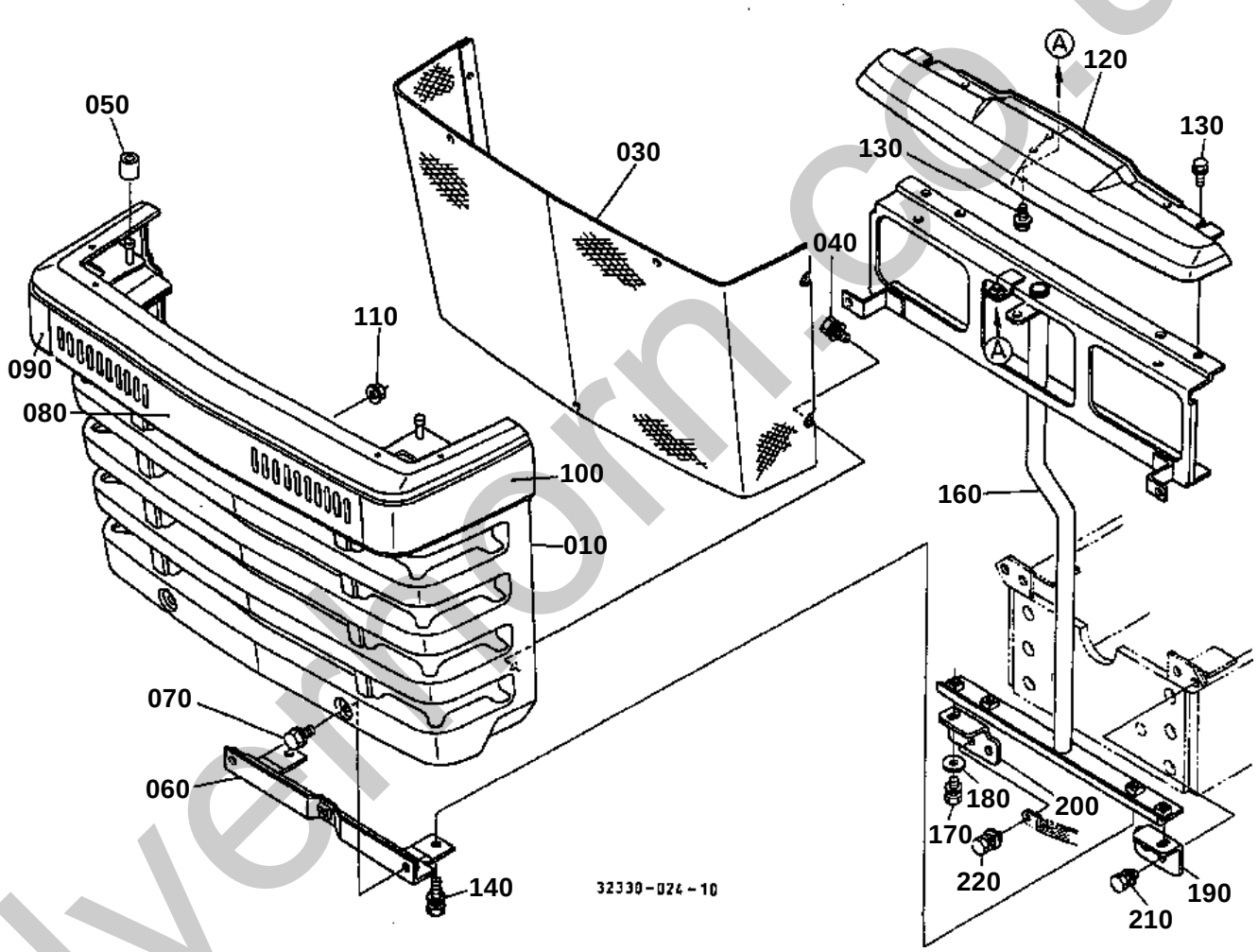

silvermorn.co.uk

FRONT GRILLE

↔ Interchangeable; ≠ not interchangeable; ← new for old; → old for new

REF.No	Part No.	Description	Q'ty	S.No.	I/C	REMARKS	Weight (kgf)	Weight (lb)
010	30400-18230	GRILLE FRONT	1				0	0
020	99999-99999	BLANK	0				0	0
030	30590-18250	NET FRONT GRILLE	1				0.385	0.847
040	30442-15230	BOLT	7				0.01	0.022
050	31351-18260	PIPE	2				0.001	0.0022
060	35080-18280	RETAINER GRILLE	1				0.27	0.594
070	01754-50816	BOLT FLANGE	2				0.011	0.0242
080	32430-94170	BELT GRILLE FRONT	1				0.145	0.319
090	32430-94180	BELT GRILLE RH	1				0.07	0.154
100	32430-94190	BELT GRILLE LH	1				0.07	0.154
110	02761-50050	NUT FLANGE	8				0.002	0.0044
120	34670-18160	ROOF FRONT	1				0.345	0.759
130	01754-50612	BOLT FLANGE	3				0.005	0.011
140	01123-50816	BOLT FLANGE	2				0	0
150	99999-99999	BLANK	0				0	0
160	35080-18310	SUPPORT GRILLE	1				2	4.4
170	01123-50820	BOLT	2				0.011	0.0242
180	04015-60080	WASHER PLAIN	2				0.01	0.022
190	32430-18320	STAY FRONT GRILLE LH	1			MANUAL STRG.	0.08	0.176
200	32430-18330	STAY FRONT GRILLE RH	1			MANUAL STRG.	0.09	0.198
210	01133-51020	BOLT	1				0.02	0.044
220	01135-61020	BOLT	1				0.015	0.033

silverhorn.co.uk

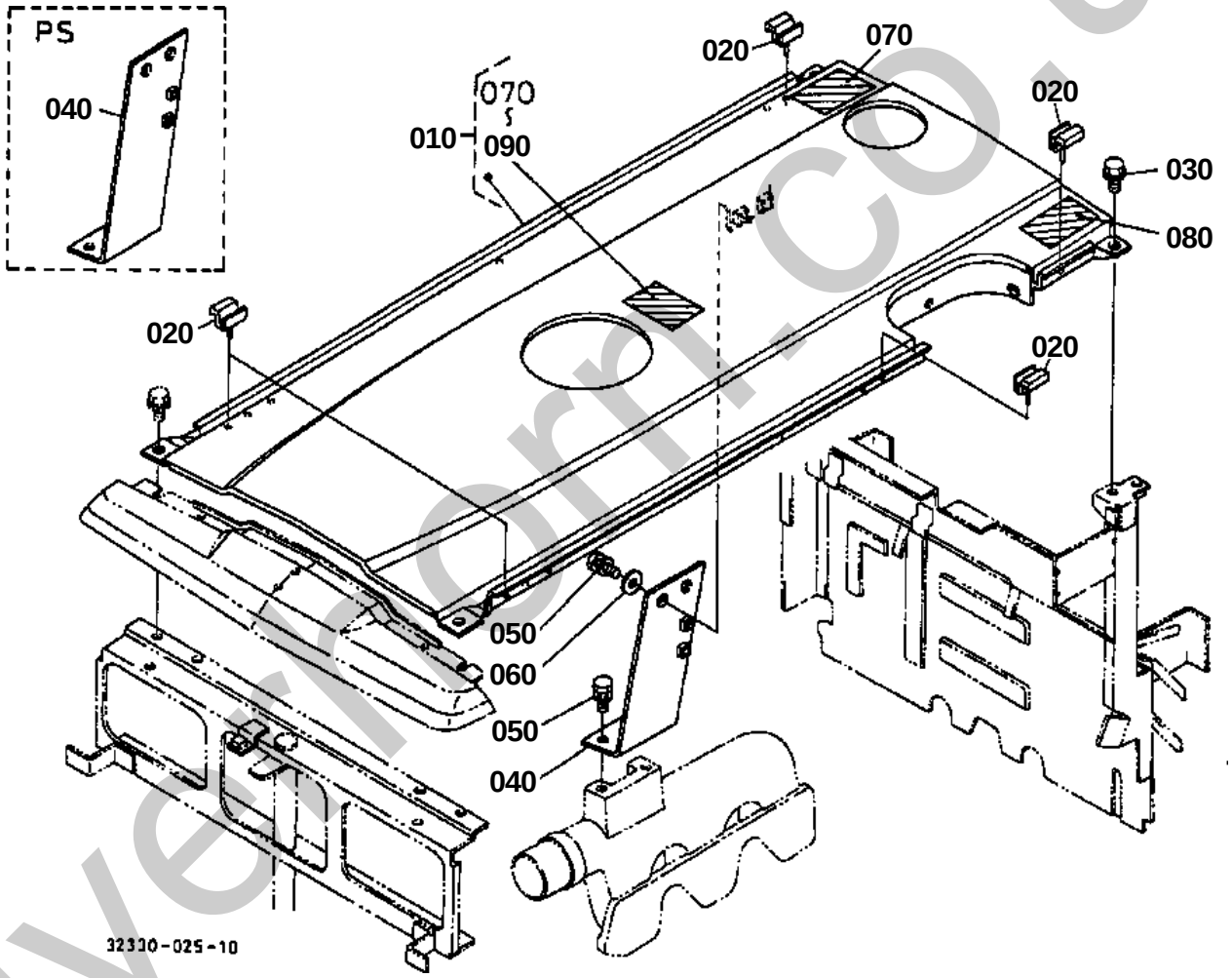

silverthorn.co.uk

HOOD (BONNET)

↔ Interchangeable; ≠ not interchangeable; ← new for old; → old for new

REF.No	Part No.	Description	Q'ty	S.No.	I/C	REMARKS	Weight (kgf)	Weight (lb)
010	32330-18700	KIT BONNET UPPER	1				5	11
020	30442-18625	CUSHION	5				0.005	0.011
030	01754-50616	BOLT FLANGE	4				0.006	0.0132
040	32330-18380	SUPPORT BONNET	1			MANUAL STRG.	0.36	0.792
050	01123-50820	BOLT	4	<=21572			0.011	0.0242
050	01123-50818	BOLT	4	>=30001	¬		0.012	0.0264
060	04015-60080	WASHER PLAIN	2				0.01	0.022
070	TA040-49560	LABEL FILLER	1				0	0
080	32330-49580	LABEL MUFFLER	1				0.002	0.0044
090	32330-49540	LABEL CAUTION	1				0.001	0.0022

silverhorn.co.uk

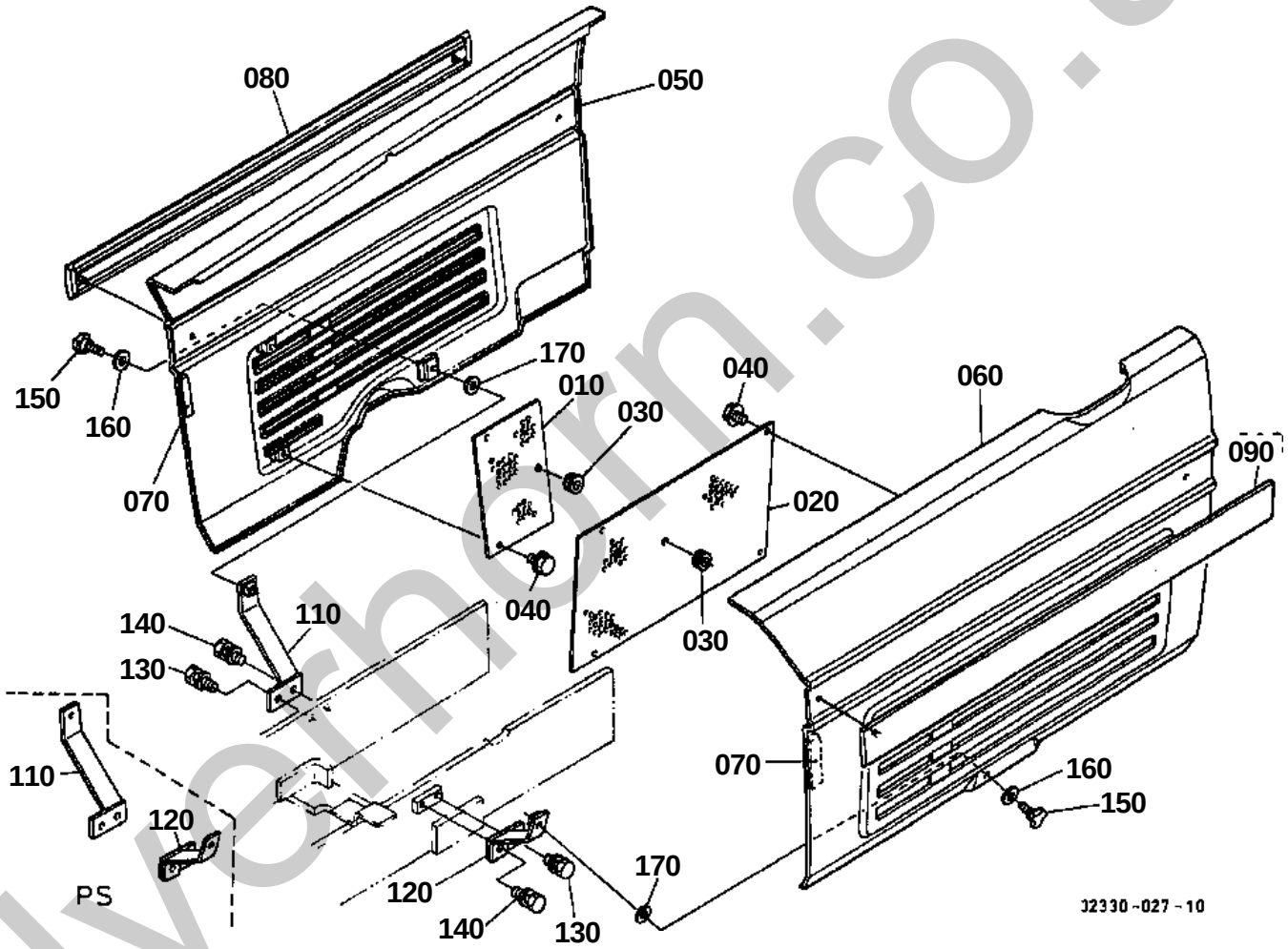

silverhorn.co.uk

HOOD (SIDE COVER)

↔ Interchangeable; ≠ not interchangeable; ← new for old; → old for new

REF.No	Part No.	Description	Q'ty	S.No.	I/C	REMARKS	Weight (kgf)	Weight (lb)
010	32400-18140	NET BONNET SIDE RH	1				0.12	0.264
020	32400-18150	NET BONNET SIDE LH	1				0.31	0.682
030	38240-18220	CUSHION	2				0.003	0.0066
040	01754-50610	BOLT FLANGE	6				0.006	0.0132
050	32330-18630	COMP.BONNET SIDE RH	1				3.8	8.36
060	32330-18640	COMP.BONNET SIDE LH	1				3.8	8.36
070	32400-18950	CUSHION BONNET	2				0.01	0.022
080	31341-18680	COMP BELT SIDE RH	1				0.48	1.056
090	31341-18690	COMP BELT SIDE LH	1				0.47	1.034
100	99999-99999	BLANK	0				0	0
110	32400-18710	SUPPORT HOOK RH	1			MANUAL STRG.	0.21	0.462
120	32400-18720	SUPPORT HOOK LH	1			MANUAL STRG.	0.175	0.385
130	01123-60814	BOLT	4				0.01	0.022
140	01123-50820	BOLT	2				0.011	0.0242
150	01820-50825	BOLT KNOB	2				0.028	0.0616
160	04015-60080	WASHER PLAIN	2				0.01	0.022
170	32400-18220	RUBBER KNOB BOLT	2				0.001	0.0022

silverhorn.co.uk

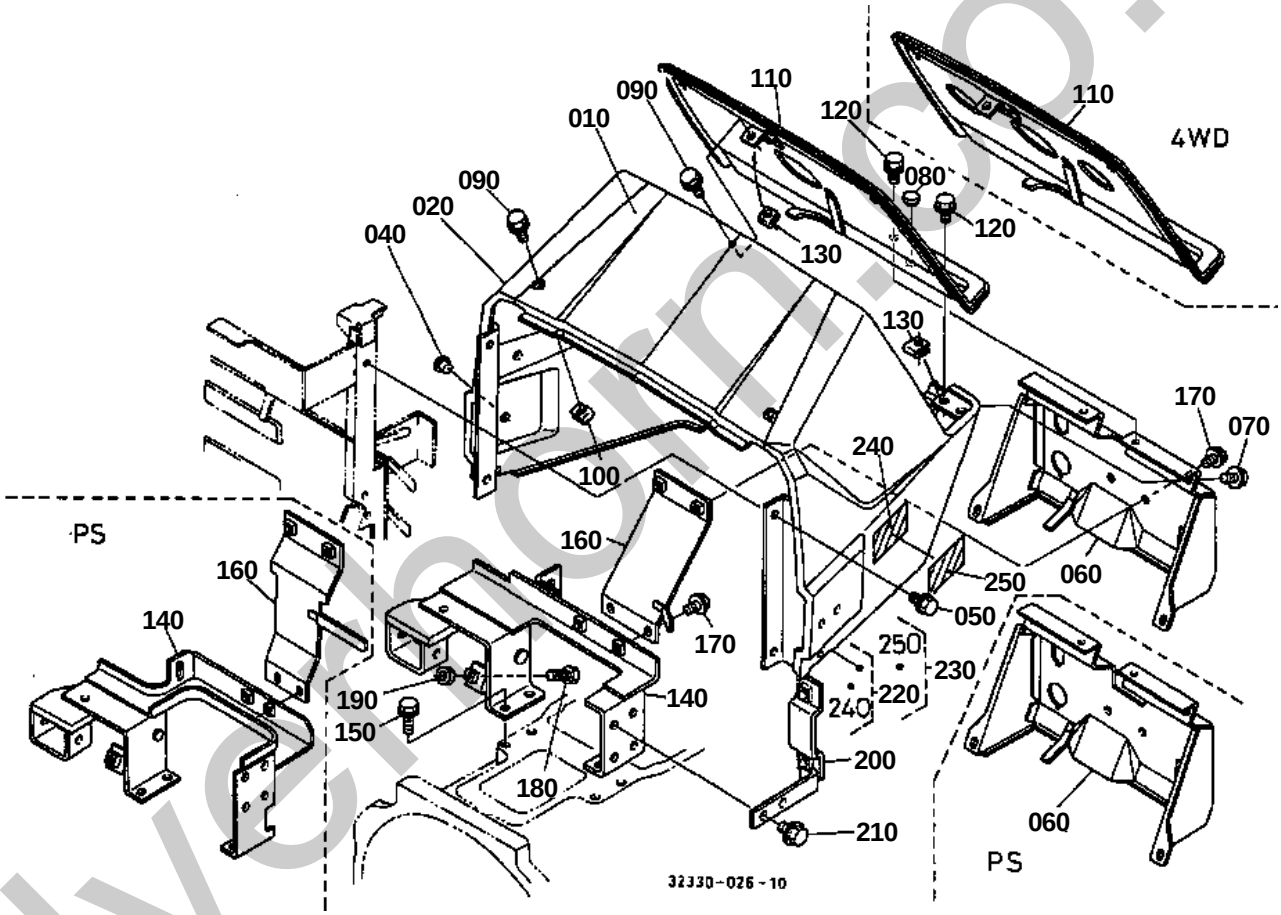

silverhoin.co.uk

REAR HOOD (BONNET)

↔ Interchangeable; ≠ not interchangeable; ← new for old; → old for new

REF.No	Part No.	Description	Q'ty	S.No.	I/C	REMARKS	Weight (kgf)	Weight (lb)
010	32330-18770	ROOF REAR	1				0.465	1.023
020	32330-18810	COMP.BONNET REAR RH	1	<=30279			0	0
020	32330-18812	COMP.BONNET REAR RH	1	>=30280	¬		1.13	2.486
030	99999-99999	BLANK	0				0	0
040	38240-29570	PLUG	2				0.001	0.0022
050	01754-50612	BOLT FLANGE	4				0.005	0.011
060	32330-24410	BOARD SWITCH	1			MANUAL STRG.	0.6	1.32
070	30400-19060	BOLT FLANGE	4				0.006	0.0132
080	35110-32420	PLUG	1				0.002	0.0044
090	30400-19060	BOLT FLANGE	3				0.006	0.0132
100	38240-29250	NUT SPRING	2				0.005	0.011
110	32330-31120	PANEL	1				0.85	1.87
120	30400-19060	BOLT FLANGE	6				0.006	0.0132
130	38240-29250	NUT SPRING	5				0.005	0.011
140	32310-35280	SUPPORT ACCEL.LEVER	1			MANUAL STRG.	0	0
150	01754-50812	BOLT FLANGE	4				0.01	0.022
160	32310-18910	SUPPORT BONNET REAR	1			MANUAL STRG.	0.25	0.55
170	30400-18870	BOLT FLANGE	4				0.01	0.022
180	01155-50840	BOLT	1				0.02	0.044
190	02112-50080	NUT	1				0.003	0.0066
200	32330-18363	HOLDER FUSE BOX	1				0.12	0.264
210	30400-18870	BOLT FLANGE	2				0.01	0.022
220	32330-18920	KIT BONNET REAR LH(A	1				1.2	2.64
230	32331-18920	KIT BONNET REAR LH(B	1				1.1	2.42
240	TA040-49650	LEBEL START CAUTION	1			ENGLISH	0.004	0.0088
250	TA041-49650	LEBEL START CAUTION	1			FRENCH	0.004	0.0088

silverhorn.co.uk

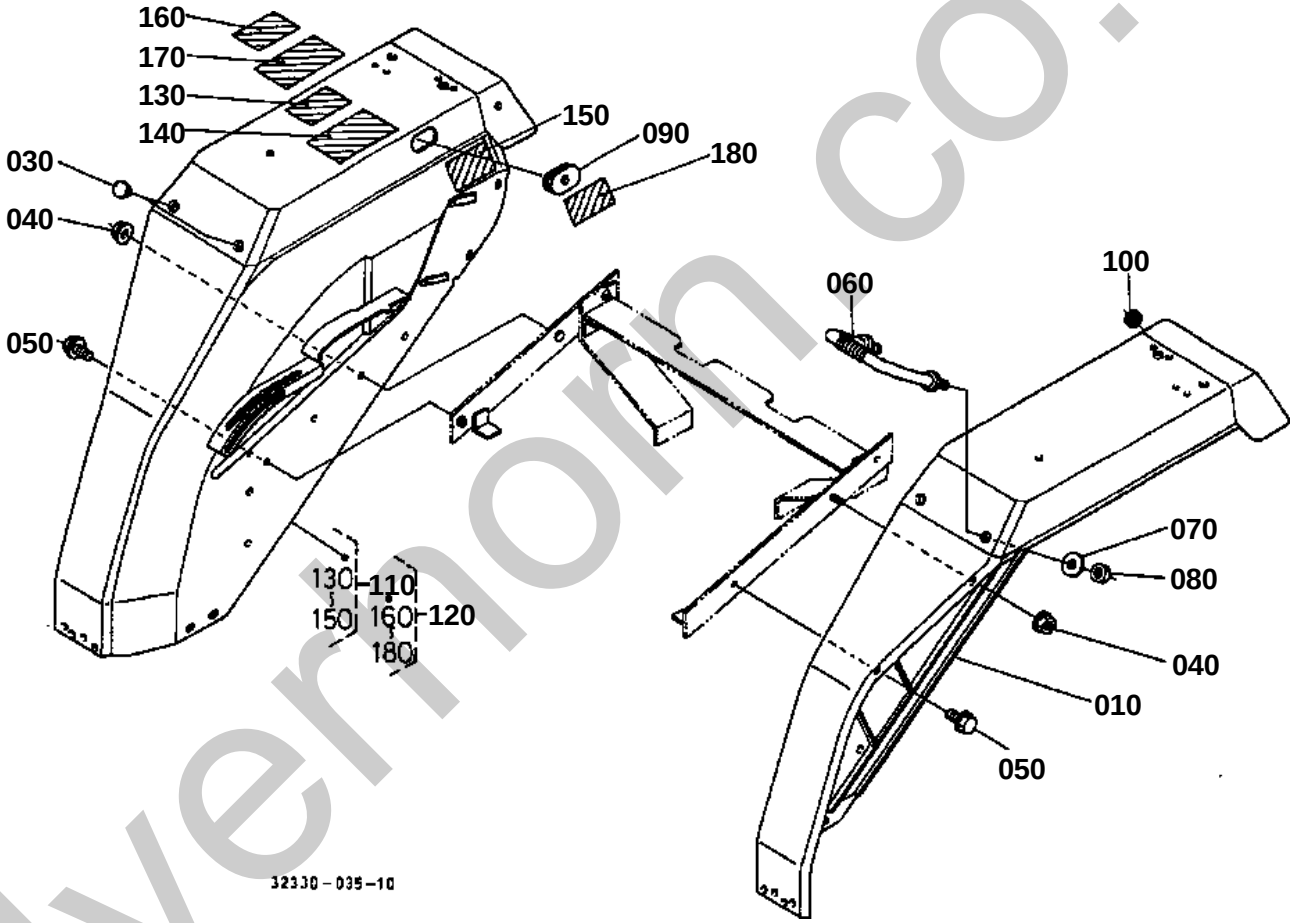

silvermorn.co.uk

FENDER

↔ Interchangeable; ≠ not interchangeable; ← new for old; → old for new

REF.No	Part No.	Description	Q'ty	S.No.	I/C	REMARKS	Weight (kgf)	Weight (lb)
010	32421-29010	COMP.FENDER LH	1				9.7	21.34
020	99999-99999	BLANK	0				0	0
030	30810-29170	PLUG	2				0.003	0.0066
040	02751-50080	NUT FLANGE	2				0.006	0.0132
050	01754-50816	BOLT FLANGE	4				0.011	0.0242
060	34670-29440	HANDRAIL	1				0.1	0.22
070	04013-60140	WASHER PLAIN	2				0.01	0.022
080	02174-50140	NUT	2				0.014	0.0308
090	31351-29490	GROMMET	1				0.003	0.0066
100	32150-29180	CAP RUBBER	1				0.002	0.0044
110	32330-47100	KIT FENDER RH(A)	1				11	24.2
120	32331-47100	KIT FENDER RH (B)	1				11	24.2
130	TA040-49320	LABEL ROPS WARNING	1			ENGLISH	0.001	0.0022
140	TA040-49350	LABEL DRAWBAR	1			ENGLISH	0.002	0.0044
150	35260-34913	LABEL SAFETY	1			ENGLISH	0	0
160	TA040-49150	LABEL ROPS WARNING	1			FRENCH	0.003	0.0066
170	TA041-49350	LABEL DRAWBAR	1			FRENCH	0.003	0.0066
180	TA041-65700	LABEL SAFETY	1			FRENCH	0	0

silverhorn.co.uk

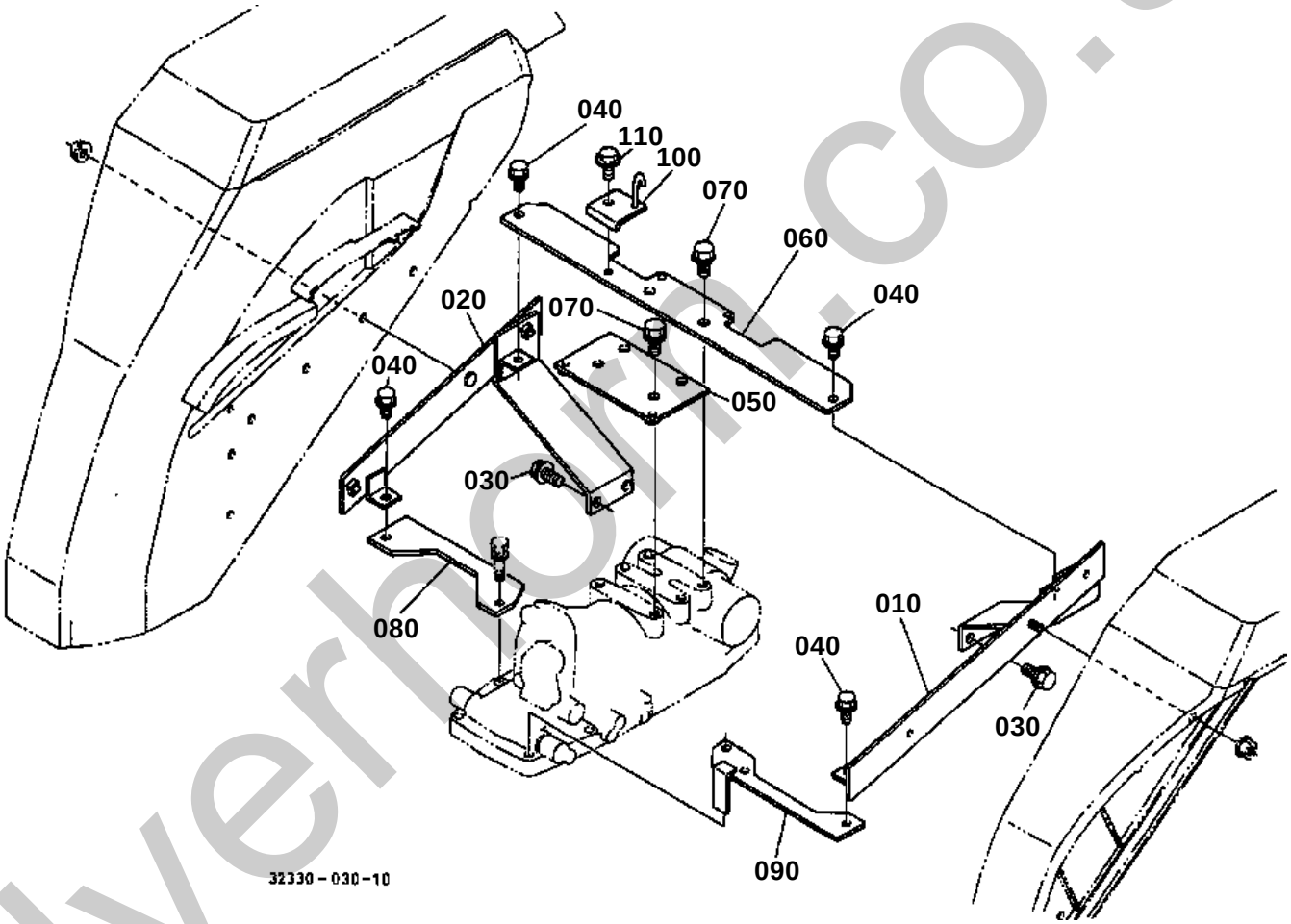

silverhorn.co.uk

FENDER SUPPORT

↔ Interchangeable; ≠ not interchangeable; ← new for old; → old for new

REF.No	Part No.	Description	Q'ty	S.No.	I/C	REMARKS	Weight (kgf)	Weight (lb)
010	35010-29210	SUPPORT FENDER LH	1	<=20464			0	0
010	35010-29212	SUPPORT FENDER LH	1	>=20465	¬		2.06	4.532
020	35010-29220	SUPPORT FENDER RH	1	<=20464			0	0
020	35010-29222	SUPPORT FENDER RH	1	>=20465	¬		1.915	4.213
030	01774-51220	BOLT FLANGE	4				0.03	0.066
040	01754-50816	BOLT FLANGE	4	<=30279			0.011	0.0242
040	01754-50820	BOLT FLANGE	2	>=30280	¬		0.015	0.033
045	01754-50825	BOLT FLANGE	2	>=30280			0.01	0.022
050	32330-29220	STAY SEAT	1				0.8	1.76
060	32330-29230	STAY SEAT	1				0	0
070	01774-51016	BOLT FLANGE	6				0.02	0.044
080	35010-29242	STAY FENDER RH	1				0.3	0.66
090	35010-29250	STAY FENDER LH	1				0.315	0.693
100	32330-29270	SUPPORT	1				0.05	0.11
110	01754-50816	BOLT FLANGE	1				0.011	0.0242

silverhorn.co.uk

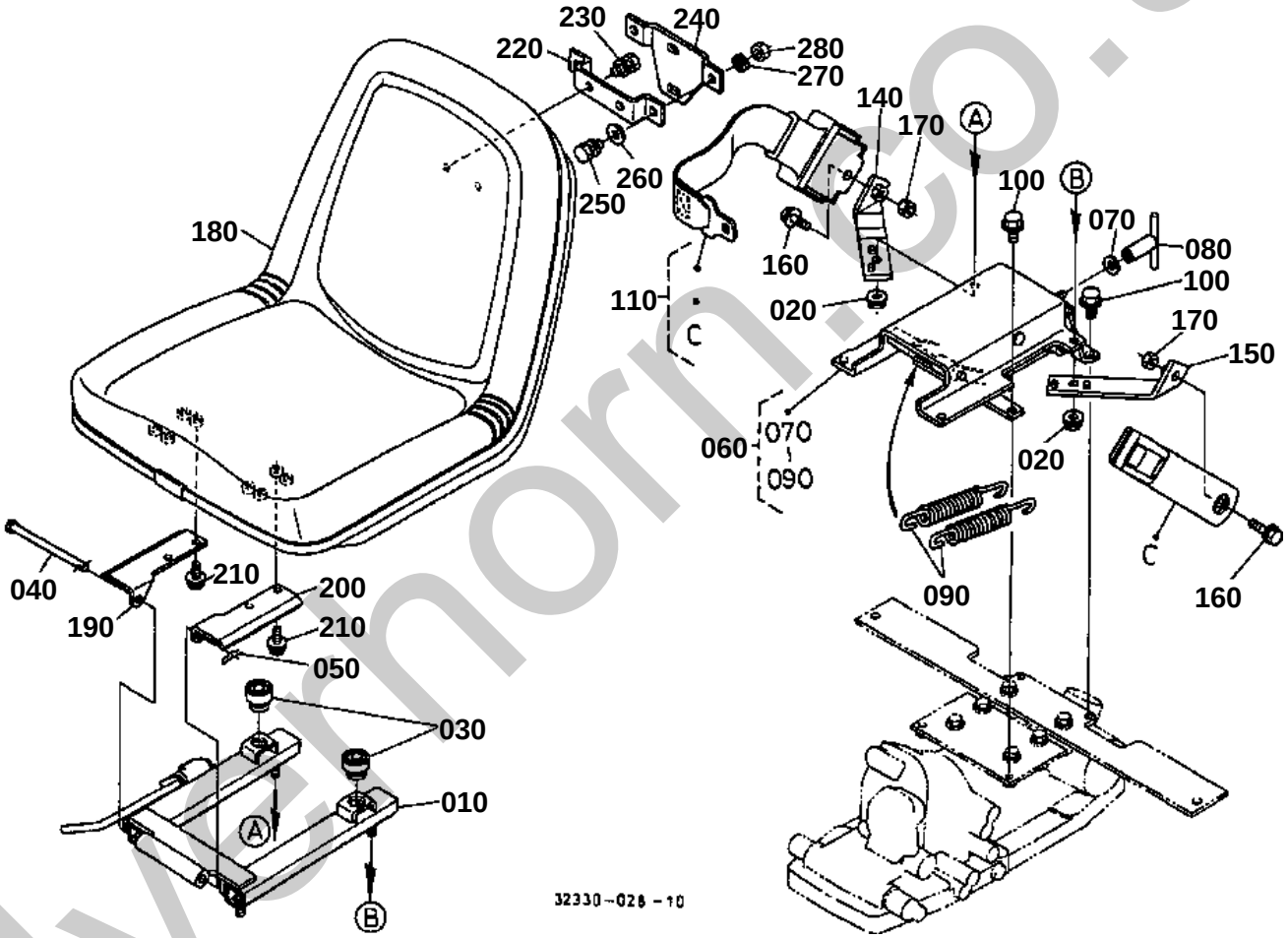

silvernorm.co.uk

SEAT

↔ Interchangeable; ≠ not interchangeable; ← new for old; → old for new

REF.No	Part No.	Description	Q'ty	S.No.	I/C	REMARKS	Weight (kgf)	Weight (lb)
010	TA040-18430	ASSY ADJUSTER SEAT	1				2.3	5.06
020	02783-50100	NUT FLANGE	4				0.01	0.022
030	32160-18440	CUSHION	2				0.013	0.0286
040	32430-11853	PIN JOINT	1				0.08	0.176
050	05525-61000	PIN SNAP	1				0.002	0.0044
060	TA040-11806	ASSY SUSPENSION SEAT	1				3.9	8.58
070	04011-50100	WASHER PLAIN	1				0.002	0.0044
080	TA040-11860	NUT ADJUSTING	1				0.605	1.331
090	TA040-11870	SPRING SEAT	2				0.26	0.572
100	01754-50820	BOLT FLANGE	4				0.015	0.033
110	TA040-18502	ASSY BELT SEAT	1	<=30279			0	0
110	TA040-18503	ASSY BELT SEAT	1	>=30280	┐		0.825	1.815
120	99999-99999	BLANK	0				0	0
130	99999-99999	BLANK	0				0	0
140	32330-18480	BRACKET SEAT BELT RH	1				0.365	0.803
150	TA040-18492	BRACKET SEAT BELT LH	1				0.27	0.594
160	01774-51025	BOLT FLANGE	2				0.02	0.044
170	02116-50100	NUT	2				0.004	0.0088
180	TA040-48510	ASSY SEAT	1				7	15.4
190	32330-18450	BRACKET SEAT RH	1				0.235	0.517
200	32330-18460	BRACKET SEAT LH	1				0.235	0.517
210	01754-50816	BOLT FLANGE	4				0.011	0.0242
220	67401-45922	STAY	1				0.08	0.176
230	01123-60816	BOLT	2				0.01	0.022
240	66704-54952	BRACKET SMV	1				0.15	0.33
250	01023-50618	BOLT	2				0.006	0.0132
260	04013-60060	WASHER PLAIN	2				0.001	0.0022
270	04011-50060	WASHER PLAIN	2				0.001	0.0022
280	02014-50060	NUT	2				0.002	0.0044

silverhorn.co.uk

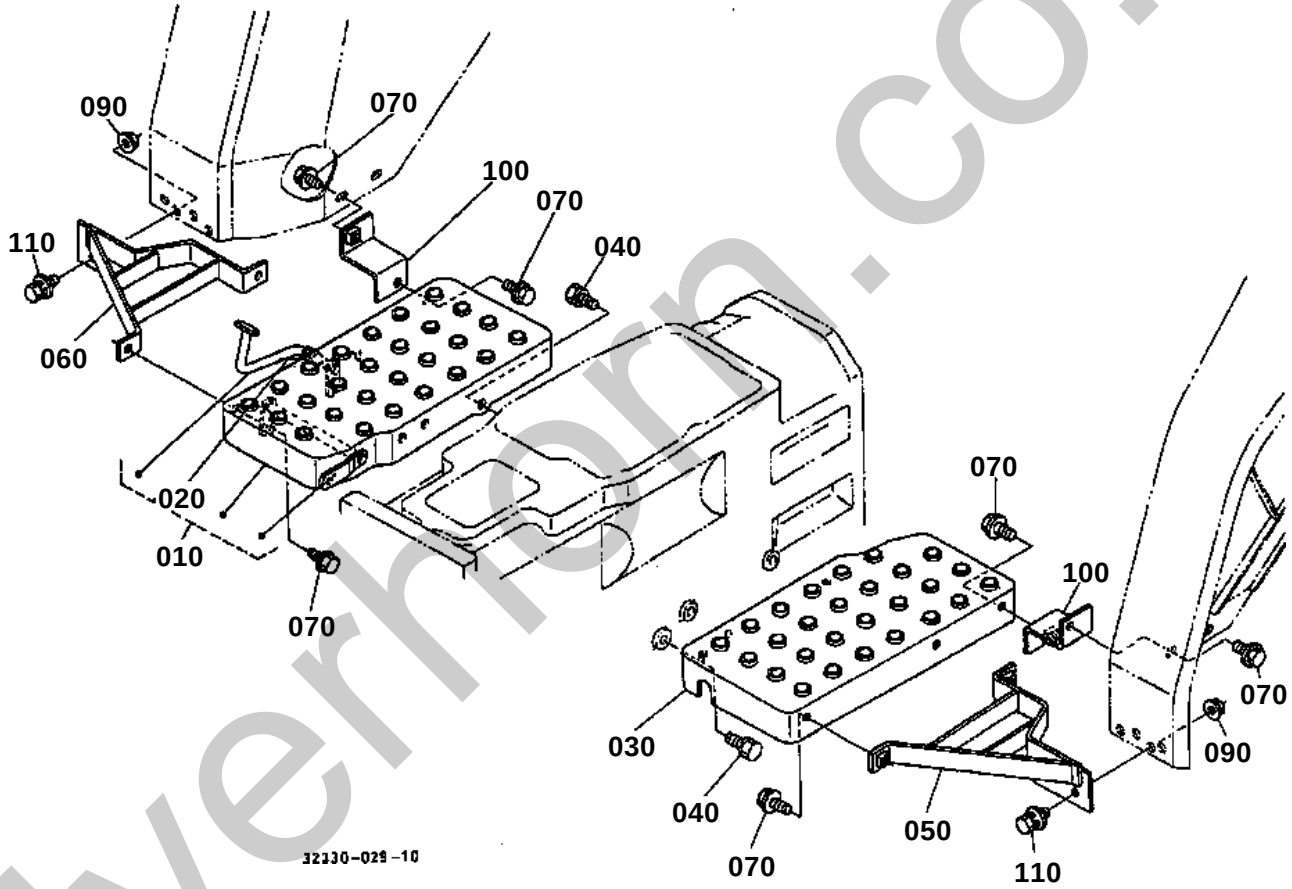

silverhorn.co.uk

STEP

↔ Interchangeable; ≠ not interchangeable; ← new for old; → old for new

REF.No	Part No.	Description	Q'ty	S.No.	I/C	REMARKS	Weight (kgf)	Weight (lb)
010	32330-29900	COMP.STEP RH	1				1.84	4.048
020	37150-17530	SPRING	1				0.01	0.022
030	32330-29920	STEP LH	1				1.69	3.718
040	01133-51016	BOLT	6				0.015	0.033
050	32330-29140	STEP AUX.LH	1				0.57	1.254
060	32330-29150	STEP AUX.RH	1				0.57	1.254
070	01754-50816	BOLT FLANGE	8				0.011	0.0242
080	99999-99999	BLANK	0				0	0
090	02751-50080	NUT FLANGE	4				0.006	0.0132
100	32330-29320	CONNECTOR FENDER	2				0.07	0.154
110	01125-60816	BOLT	4				0.01	0.022

silverhorn.co.uk

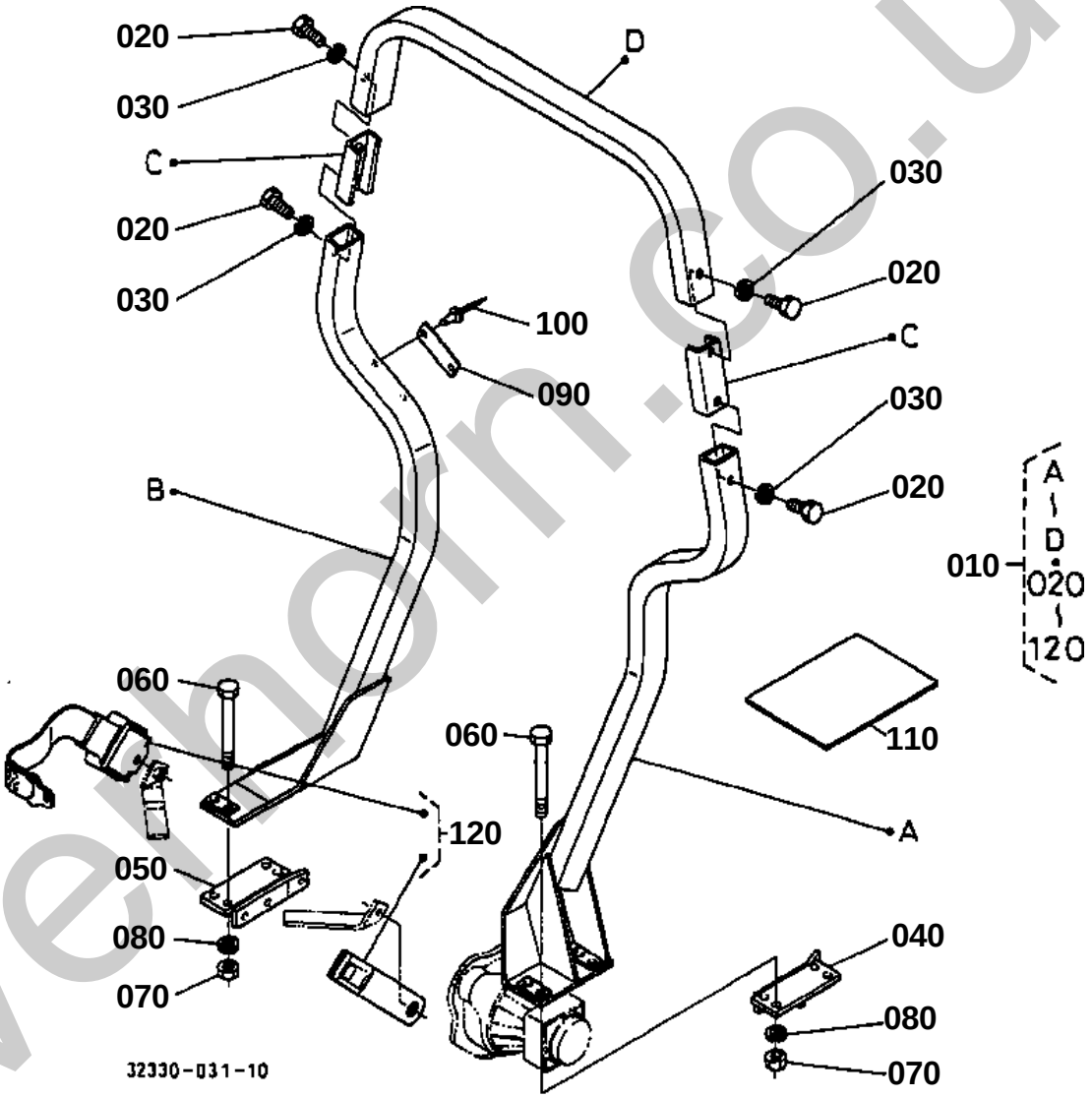

silverhorn.co.uk

↔ Interchangeable; ≠ not interchangeable; ← new for old; → old for new

REF.No	Part No.	Description	Q'ty	S.No.	I/C	REMARKS	Weight (kgf)	Weight (lb)
010	32330-48010	ASSY ROPS	1				0	0
020	75599-04625	HEX.BOLT	4				0.056	0.1232
030	75599-33016	WASHER SPRING	4				0.08	0.176
040	32330-48300	BRACKET CHAIN LH	1				0	0
050	32330-48400	BRACKET CHAIN RH	1				0	0
060	75599-04705	HEX.BOLT	8				0.32	0.704
070	75599-31067	HEX.NUT	8				0.032	0.0704
080	75599-33017	WASHER SPRING	8				0.005	0.011
090	99999-99999	NAME PLATE ROPS	1				0	0
100	32751-34790	RIVET	2				0	0
110	32330-48490	MANUAL INSTRUCTION	1				0	0
120	TA040-18502	ASSY BELT SEAT	1	<=30279		NOT SALE	0	0
120	TA040-18503	ASSY BELT SEAT	1	>=30280	¬		0.825	1.815

silverhorn.co.uk

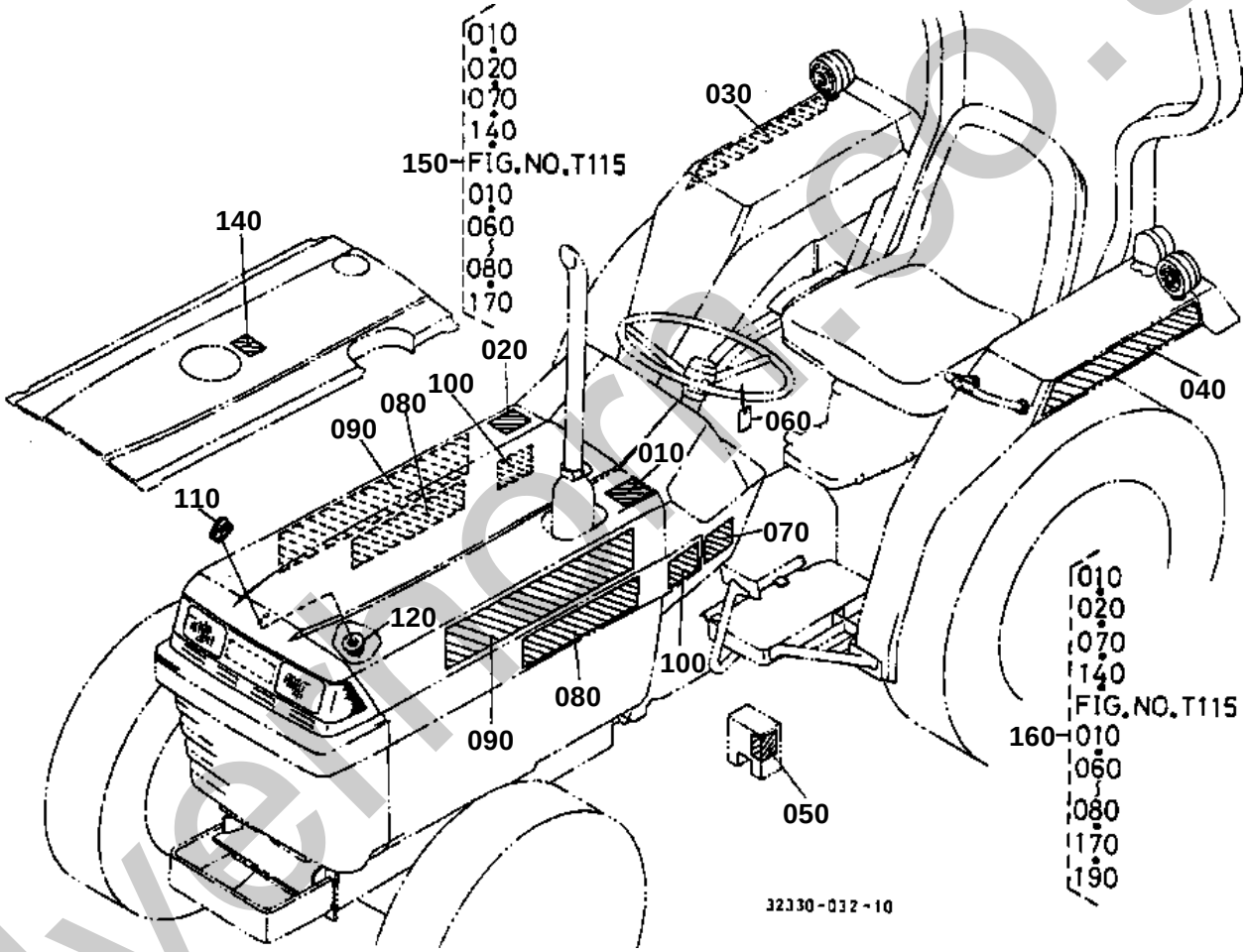

silvermore.co.uk

LABEL 1

↔ Interchangeable; ≠ not interchangeable; ← new for old; → old for new

REF.No	Part No.	Description	Q'ty	S.No.	I/C	REMARKS	Weight (kgf)	Weight (lb)
010	32330-49580	LABEL MUFFLER	1				0.002	0.0044
020	TA040-49560	LABEL FILLER	1				0	0
030	32330-65620	LABEL FENDER RH	1				0.007	0.0154
040	32330-65630	LABEL FENDER LH	1				0.007	0.0154
050	35176-15930	LABEL PEDAL	1				0.005	0.011
060	35170-15940	CARD INSTRUCTION	1				0.015	0.033
070	TA040-49650	LABEL START CAUTION	1			ENGLISH	0.004	0.0088
070	TA041-49650	LABEL START CAUTION	1			FRENCH	0.004	0.0088
080	32330-65100	MARK MODEL LH	2				0.004	0.0088
090	35080-65350	LABEL KUBOTA	2				0.001	0.0022
100	32400-65240	LABEL SIDE	2				0.005	0.011
110	38150-65180	EMBLEM	1				0.02	0.044
120	02761-50040	NUT FLANGE	1				0.002	0.0044
130	99999-99999	BLANK	0				0	0
140	32330-49540	LABEL CAUTION	1				0.001	0.0022
150	32330-49900	KIT LABEL SAFETY (A)	1			ENGLISH	0.018	0.0396
160	32331-49900	KIT LABEL SAFETY (B)	1			FRENCH	0.04	0.088

silverhorn.co.uk

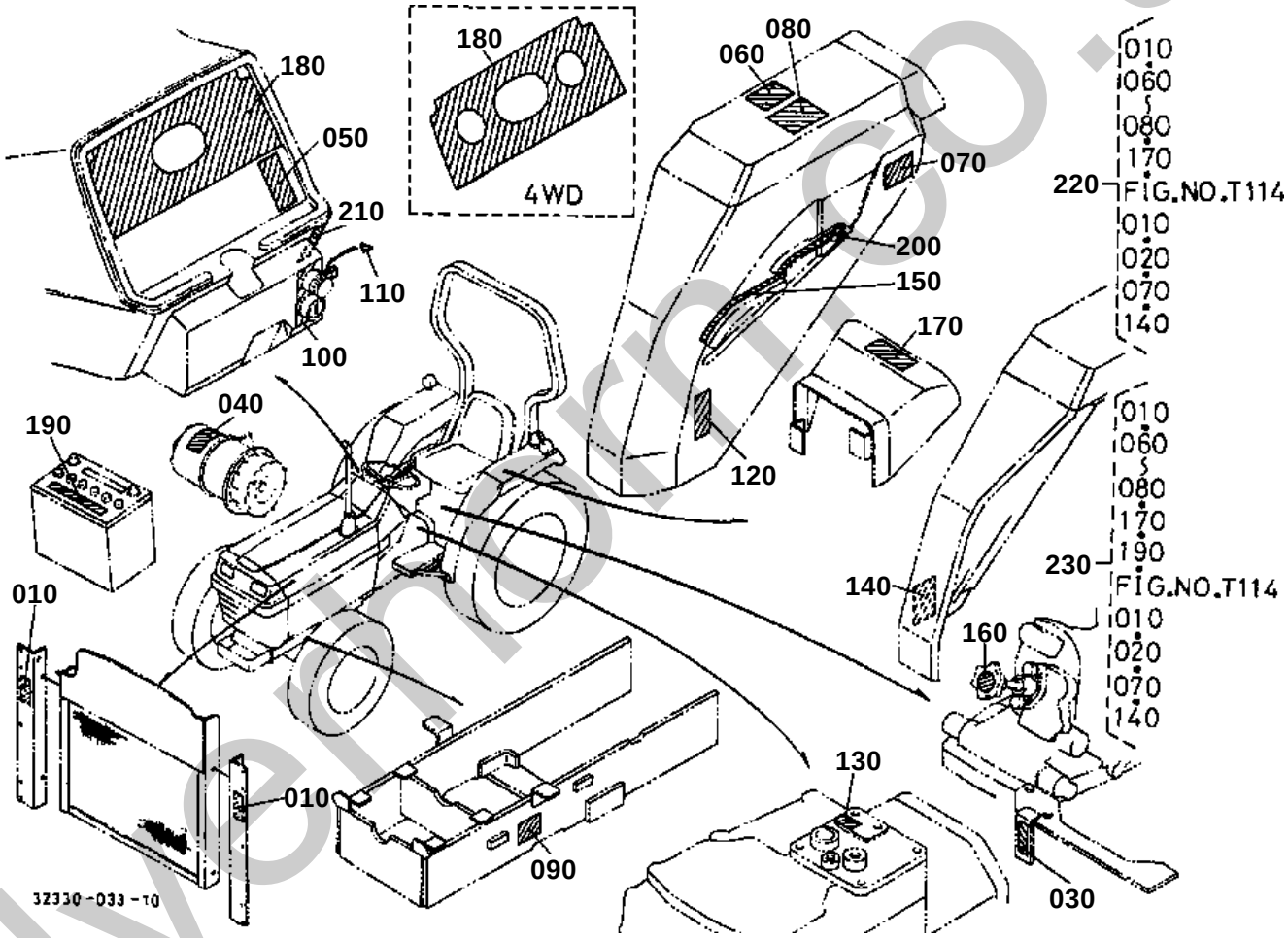

silvernorm.co.uk

↔ Interchangeable; ≠ not interchangeable; ← new for old; → old for new

REF.No	Part No.	Description	Q'ty	S.No.	I/C	REMARKS	Weight (kgf)	Weight (lb)
010	32751-49580	LABEL FAN BELT	2				0.001	0.0022
020	99999-99999	BLANK	0				0	0
040	T0070-93180	LABEL AIR CLEANER	1			ENGLISH	0.001	0.0022
040	TA048-93180	LABEL AIR CLEANER	1			FRENCH	0.002	0.0044
050	35260-25050	LABEL SHUTTLE	1			ENGLISH	0.01	0.022
050	35261-25050	LABEL SHUTTLE	1			FRENCH	0.001	0.0022
060	TA040-49320	LABEL ROPS WARNING	1			ENGLISH	0.001	0.0022
060	TA040-49150	LABEL ROPS WARNING	1			FRENCH	0.003	0.0066
070	TA040-49350	LABEL DRAWBAR	1			ENGLISH	0.002	0.0044
070	TA041-49350	LABEL DRAWBAR	1			FRENCH	0.003	0.0066
080	35260-34913	LABEL SAFETY	1			ENGLISH	0	0
080	TA041-65700	LABEL SAFETY	1			FRENCH	0	0
090	99999-99999	NAME PLATE	1				0	0
100	32430-65510	LABEL MAIN SWITCH	1				0.001	0.0022
110	32539-65530	LABEL HAZARD MARK	1				0.001	0.0022
120	TA040-49760	MARK DIFF.LOCK	1				0.001	0.0022
130	35260-24950	LABEL PTO	1				0.002	0.0044
140	35176-24580	LABEL RANGE SHIFT	1				0.002	0.0044
150	32430-65760	LABEL POSITION CON.	1			ENGLISH	0.003	0.0066
150	32431-65760	LABEL POSITION CON.	1			FRENCH	0.003	0.0066
160	31351-65780	LABEL HYD ADJUST	1			ENGLISH	0.001	0.0022
160	32530-65800	LABEL HYD ADJUST	1			FRENCH	0.001	0.0022
170	TA040-49590	LABEL PTO WARNING	1			ENGLISH	0.002	0.0044
170	TA041-49590	LABEL PTO WARNING	1			FRENCH	0.001	0.0022
180	32330-65160	LABEL PANEL	1				0.019	0.0418
190	TA040-30150	LABEL BATTERY	1			ENGLISH	0.002	0.0044
190	TA041-30150	LABEL BATTERY	1			FRENCH	0.005	0.011
200	32430-65770	LABEL DRAFT CON.	1			OPTION	0.001	0.0022
210	32330-17610	LEBAL ENGINE STOP	1				0.001	0.0022
220	32330-49900	KIT LABEL SAFETY (A)	1			ENGLISH	0.018	0.0396
230	32331-49900	KIT LABEL SAFETY (B)	1			FRENCH	0.04	0.088

silvermorn.co.uk

↔ Interchangeable; ≠ not interchangeable; ← new for old; → old for new

REF.No	Part No.	Description	Q'ty	S.No.	I/C	REMARKS	Weight (kgf)	Weight (lb)
010	32330-19710	MANUAL INSTRUCTION	1	<=21462		ENGLISH	0	0
010	32330-19712	MANUAL INSTRUCTION	1	>=21463	1	ENGLISH	0.16	0.352
010	32331-19710	MANUAL INSTRUCTION	1	<=21462		FRENCH	0.16	0.352
010	32331-19712	MANUAL INSTRUCTION	1	>=21463	1	FRENCH	0.16	0.352
020	01073-51630	BOLT	8			FOR REAR WHEEL	0.079	0.1738
030	02076-50160	NUT	4			FOR REAR WHEEL	0.03	0.066
040	34150-27710	STUD	4			FOR REAR WHEEL	0.062	0.1364
060	04512-60160	WASHER SPRING	12			FOR REAR WHEEL	0.01	0.022
070	04512-60140	WASHER SPRING	12			FOR FRONT WHEEL	0.008	0.0176
080	01517-51428	STUD	12			FOR FRONT WHEEL	0.05	0.11
100	35340-11390	NUT	12			FOR FRONT WHEEL	0.03	0.066
140	35260-31852	ASSYKEY MAIN SWITCH	1				0.03	0.066

silverhorn.co.uk