Instructions for Parts Books

The heading at the top of the page will be the same for the picture of the parts at it is for the page with the part numbers.

Definition of column headings on part number pages:

REF.No → The number refering to the part on the picture page of the parts book.

Part No. → The number assigned to this part at the time of printing the parts book.

Description → Discription of part.

Q'ty → Quanity of part used on that page.

S.No. → Serial number range of the equipment that this part will fit.
>= Your serial number should be greater than or equal to the number shown.
<= Your serial number should be lesser than or equal to the serial number shown.

I/C → Interchangeability of part shown.
←→ The part shown will work for the older and later serial number.
The part shown is not interchangable with the other serial number.
← new for old
→ old for new

Remarks → Notes about this particulart part. Sometimes this may say except [FR] or [CA]

Note about Country Codes:

The parts books we use in the United States of America may also contain information about a part that would be different in another country. It is important that you are aware of the country codes in some instances.

Symbol	Country
A	United States of America
CA	Canada
FR	France
GR	Greece
PO	Portugal
AU	Australia

If the remarks column says for example EXCEPT [FR] this part works in all countries except France.
That means it will work here in the USA.

silverhorn.co.uk

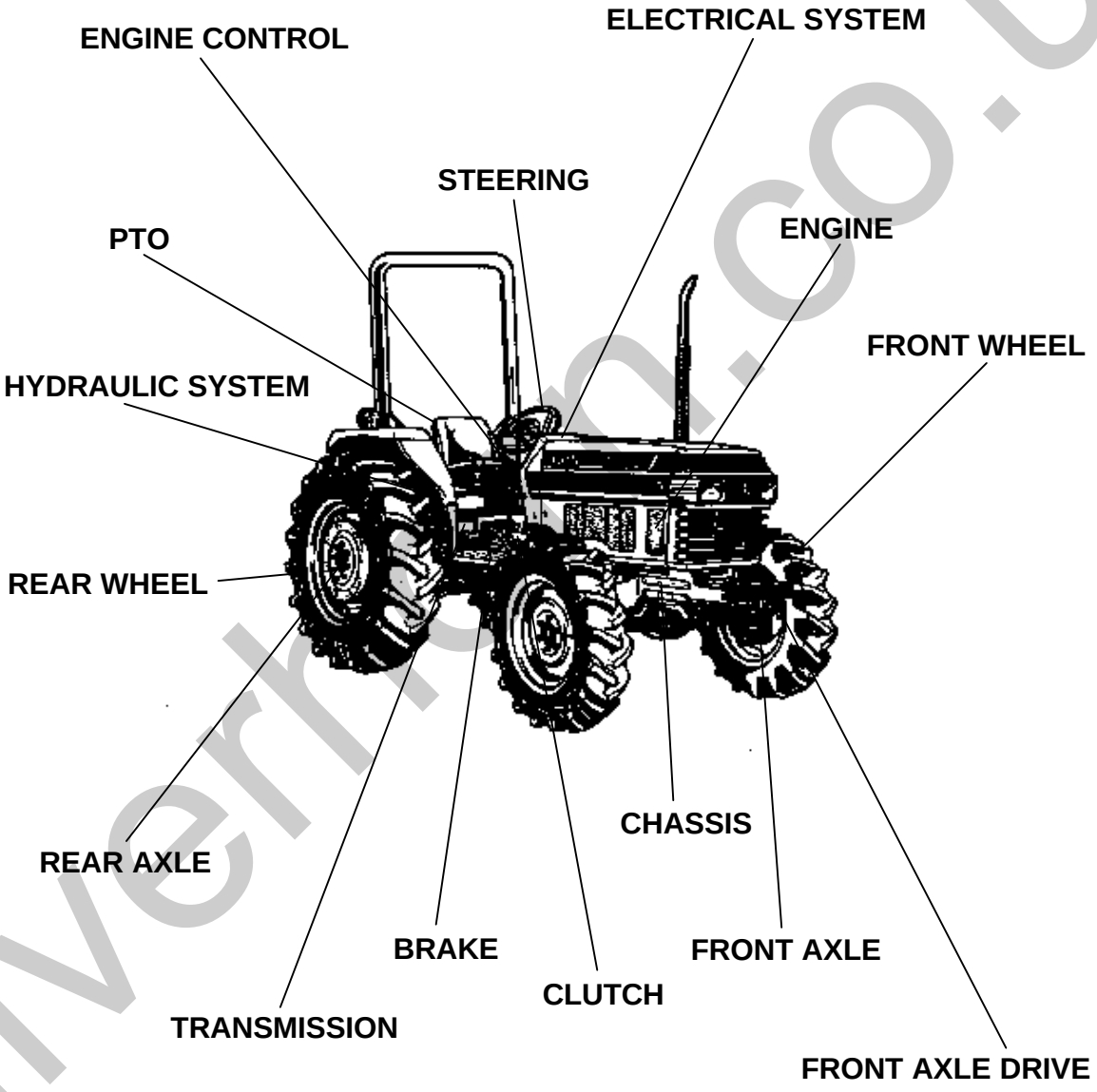

LABEL

ACCESSORIES AND SERVICE PARTS

silverhorn.co.uk

Item	Part No.	Description	Book
ENGINE	01E001	CRANKCASE	100K0326
	01E002	OIL PAN	100K0326
	01E003	CYLINDER HEAD	100K0326
	01E004	GEAR CASE	100K0326
	01E005	OIL FILTER	100K0326
	01E006	MAIN BEARING CASE	100K0326
	01E007	MANIFOLD	100K0326
	01E008	VALVE AND ROCKER ARM	100K0326
	01E009	CYLINDER HEAD COVER	100K0326
	01E010	CAMSHAFT	100K0326
	01E011	PISTON AND CRANKSHAFT	100K0326
	01E012	FLYWHEEL AND STARTER	100K0326
	01E013	INJECTION PUMP	100K0326
	01E014	FUEL CAMSHAFT	100K0326
	01E015	NOZZLE AND GLOW PLUG	100K0326
	01E016	GOVERNOR	100K0326
	01E017	SPEED CONTROL PLATE	100K0326
	01E018	COMPENSATOR	100K0326
	01E019	IDLING APPARATUS	100K0326
	01E020	DYNAMO AND FAN	100K0326
	01E021	THERMOSTAT	100K0326
	01E022	WATER PUMP	100K0326
ELECTRICAL SYSTEM	01T005	BATTERY SUPPORT	100K0326
FRONT AXLE	01T006	FRONT AXLE BRACKET	100K0326
CLUTCH	01T007	CLUTCH (DUAL CLUTCH)	100K0326
	01T008	CLUTCH (SINGLE CLUTCH)	100K0326
	01T009	CLUTCH LEVER (DUAL CLUTCH)	100K0326
	01T010	CLUTCH LEVER (SINGLE CLUTCH)	100K0326
	01T011	CLUTCH PEDAL (DUAL CLUTCH)	100K0326
	01T012	CLUTCH PEDAL (SINGLE CLUTCH)	100K0326
	01T013	CLUTCH PEDAL STOPPER (DUAL CLUTCH)	100K0326
STEERING	01T014	POWER STEERING	100K0326
	01T01401	POWER STEERING (SECTION PARTS)	100K0326
	01T015	STEERING WHEEL TILT LEVER	100K0326
	01T016	STEERING WHEEL	100K0326
	01T017	DRAG LINK	100K0326
	01T018	POWER STEERING OIL LINE (MANUAL SHUTTLE)	100K0326
	01T019	POWER STEERING OIL LINE (HYD.SHUTTLE)	100K0326
	01T020	POWER STEERING OIL TANK	100K0326
ENGINE CONTROL	01T021	THROTTLE LEVER	100K0326
	01T022	THROTTLE PEDAL	100K0326
CHASSIS	01T023	FRONT ROOF	100K0326
	01T024	FRONT GRILLE	100K0326
	01T025	HOOD 1	100K0326
	01T026	HOOD 2	100K0326
	01T027	SEAT	100K0326
	01T028	HOOD CUSHION	100K0326
CLUTCH	01T029	MAIN CLUTCH CASE	100K0326
TRANSMISSION	01T030	MAIN S-CHANGE CASE	100K0326
	01T031	1 ST SHAFT (MANUAL SHUTTLE)	100K0326
	01T032	1 ST SHAFT (HYDRAULIC SHUTTLE)	100K0326
	01T033	2 ND SHAFT (MANUAL SHUTTLE)	100K0326
	01T034	2 ND SHAFT (HYDRAULIC SHUTTLE)	100K0326
	01T035	MAIN SHAFT	100K0326
	01T036	COUNTER SHAFT	100K0326
	01T037	HI-LO S-CHANGE SHAFT	100K0326
PTO	01T038	PTO SHAFT	100K0326
TRANSMISSION	01T039	TRANSMISSION CASE	100K0326
	01T040	REAR DIFFERENTIAL	100K0326
	01T041	DIFF.BEARING SUPPORT	100K0326

silverbarn.co.uk

Item	Part No.	Description	Book
TRANSMISSION	01T042	SPEED CHANGE COVER	100K0326
	01T043	SHIFT FORK	100K0326
	01T044	MAIN GEAR SHIFT LEVER	100K0326
	01T045	HI-LO GEAR SHIFT LEVER	100K0326
PTO	01T046	PTO GEAR SHIFT LEVER	100K0326
TRANSMISSION	01T047	SHUTTLE SHIFT LEVER (MANUAL)	100K0326
	01T048	SHUTTLE SHIFT LEVER (HYDRAULIC)	100K0326
	01T049	DIFF.LOCK PEDAL	100K0326
REAR AXLE	01T050	PLANETARY GEAR	100K0326
	01T051	REAR AXLE	100K0326
BRAKE	01T052	BRAKE	100K0326
	01T053	BRAKE PEDAL	100K0326
	01T054	PARKING BRAKE LEVER	100K0326
CHASSIS	01T055	FENDER	100K0326
	01T056	FLOOR SEAT	100K0326
	01T057	STEP	100K0326
ELECTRICAL SYSTEM	01T058	PANEL BOARD	100K0326
	01T059	SWITCH AND REGURATOR	100K0326
	01T060	LIGHT	100K0326
	01T061	BATTERY	100K0326
	01T062	ELECTRICAL WIRING	100K0326
ENGINE CONTROL	01T063	FUEL TANK	100K0326
	01T064	FUEL TANK SUPPORT	100K0326
	01T065	FUEL LINE	100K0326
	01T066	FUEL FILTER	100K0326
	01T067	FUEL FILTER (SECTION PARTS)	100K0326
HYDRAULIC SYSTEM	01T068	RELIEF VALVE	100K0326
	01T069	HYDRAULIC CYLINDER	100K0326
	01T070	HYDRAULIC CYLINDER COVER	100K0326
	01T071	LIFT ARM	100K0326
	01T072	HYDRAULIC CONTROL VALVE	100K0326
	01T073	FEED BACK LEVER	100K0326
	01T074	DRAFT CONTROL VALVE	100K0326
	01T075	DRAFT CONTROL VALVE (SECTION PARTS)	100K0326
	01T076	DRAFT AND POSITION LEVER 1	100K0326
	01T077	DRAFT AND POSITION LEVER 2	100K0326
	01T078	FLEXIBLE SHAFT	100K0326
	01T079	TOP LINK BRACKET	100K0326
	01T080	HYDRAULIC PUMP (MANUAL SHUTTLE)	100K0326
	01T081	HYDRAULIC PUMP (HYDRAULIC SHUTTLE)	100K0326
	01T082	HYDRAULIC OIL LINE (SUCTION)	100K0326
	01T083	HYDRAULIC OIL LINE (DELIVERY MANUAL SHUTTLE)	100K0326
	01T084	HYDRAULIC OIL LINE (DELIVERY HYD.SHUTTLE)	100K0326
	01T085	HYDRAULIC SHUTTLE OIL LINE	100K0326
	01T086	HYDRAULIC SHUTTLE VALVE	100K0326
	01T087	HYDRAULIC SHUTTLE VALVE (SECTION PARTS 1)	100K0326
	01T088	HYDRAULIC SHUTTLE VALVE (SECTION PARTS 2)	100K0326
	01T089	SWING DRAWBAR	100K0326
ENGINE CONTROL	01T090	MUFFLER	100K0326
	01T091	AIR CLEANER (DOUBLE)	100K0326
	01T092	AIR CLEANER (SECTION PARTS)	100K0326
	01T093	RADIATOR	100K0326
	01T094	ENGINE STOP SOLENOID	100K0326
LABEL	01T095	LABEL 1	100K0326
	01T096	LABEL 2	100K0326
HYDRAULIC SYSTEM	01T097	3-POINT LINKAGE 1	100K0326
	01T098	3-POINT LINKAGE 2	100K0326

silverborn.co.uk

Item	Part No.	Description	Book
HYDRAULIC SYSTEM	01T099	3-POINT LINKAGE 3	100K0326
FRONT AXLE DRIVE	01T100	FRONT DIFF.CASE	100K0326
	01T101	FRONT DIFFERENTIAL	100K0326
	01T102	DIFF.GEAR SHAFT	100K0326
	01T103	BEVEL GEAR SHAFT	100K0326
	01T104	FRONT AXLE CASE	100K0326
	01T105	FRONT AXLE	100K0326
	01T106	FRONT AXLE SUPPORT	100K0326
	01T107	FRONT WHEEL DRIVE CASE	100K0326
	01T108	FRONT COUNTER SHAFT	100K0326
	01T109	PROPELLER SHAFT	100K0326
	01T110	FRONT WHEEL DRIVE LEVER	100K0326
	01T112	TIE ROD	100K0326
FRONT WHEEL	01T116	FRONT WHEEL (8.3-20) [OPTION]	100K0326
	01T117	FRONT WHEEL (9.5-20) [OPTION]	100K0326
REAR WHEEL	01T118	REAR WHEEL (13.6-28) [OPTION]	100K0326
	01T119	REAR WHEEL (14.9-28) [OPTION]	100K0326
ACCESSORIES AND SERVICE PARTS	01T120	ACCESSORIES AND SERVICE PARTS	100K0326

silverhorn.co.uk

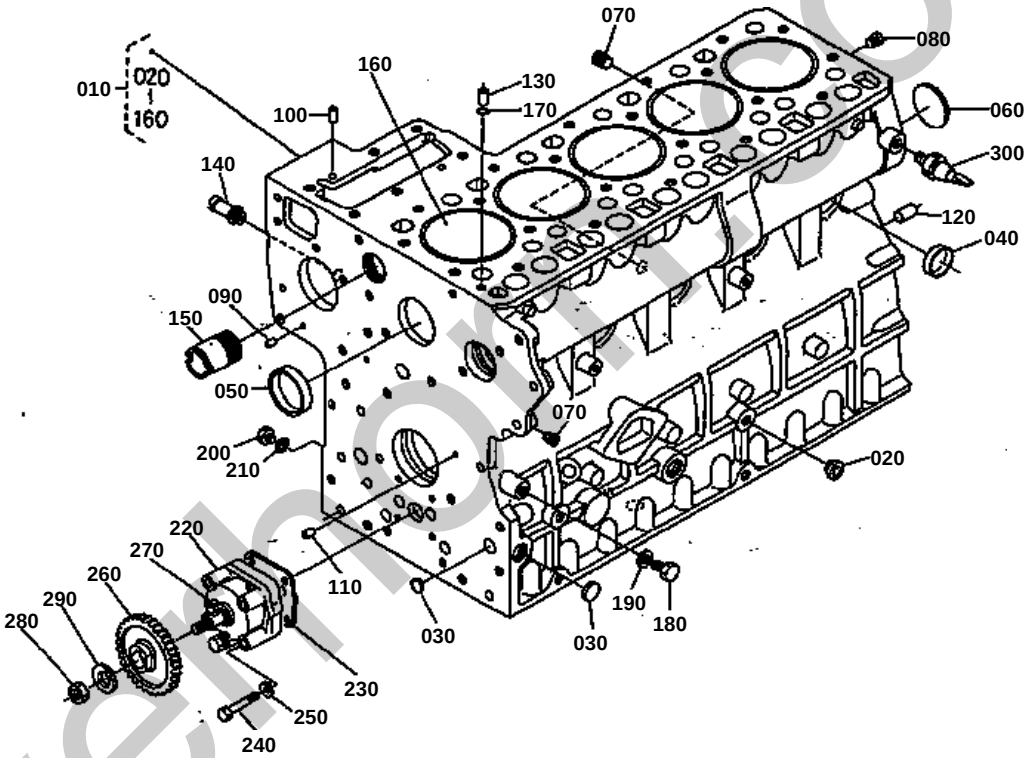

silverhorn.co.uk

CRANKCASE

↔ Interchangeable; ≠ not interchangeable; ← new for old; → old for new

REF.No	Part No.	Description	Q'ty	S.No.	I/C	REMARKS	Weight (kgf)	Weight (lb)
010	17381-01010	COMP.CRANKCASE	1	<=26364			58	127.6
010	17381-01012	COMP.CRANKCASE	1	>=26365	≠		78	171.6
020	34150-27580	PLUG	3				0.001	0.0022
030	06311-75018	PLUG EXPANSION	3				0.004	0.0088
040	15221-03380	CAP SEALING	8				0.017	0.0374
050	15221-03390	CAP SEALING	2				0.03	0.066
060	06311-75045	PLUG EXPANSION	1				0.026	0.0572
070	15521-96020	PLUG	2				0.003	0.0066
080	15521-96030	PLUG	1				0.007	0.0154
090	05012-00408	PIN STRAIGHT	2				0.001	0.0022
100	05012-00609	PIN STRAIGHT	2				0.003	0.0066
110	05012-00612	PIN STRAIGHT	2				0.003	0.0066
120	05012-01018	PIN STRAIGHT	1				0.012	0.0264
130	15221-33650	PIN PIPE	1				0.004	0.0088
140	15321-73340	PIPE WATER RETURN	1				0.016	0.0352
150	15221-72840	PIPE WATER	1				0.078	0.1716
160	15521-02310	LINER CYLINDER	5				0.66	1.452
170	15221-33700	O RING	1				0.001	0.0022
180	15221-33610	PLUG	6				0.009	0.0198
190	15021-33660	GASKET	6				0.001	0.0022
200	15221-33750	PLUG	1				0.032	0.0704
210	15109-33660	GASKET	1				0.001	0.0022
220	17331-35010	ASSY PUMP OIL	1				0	0
230	15221-35150	GASKET OIL PUMP	1				0	0
240	01053-50648	BOLT	4				0.01	0.022
250	04512-50060	WASHER SPRING	4				0	0
260	15601-35660	GEAR OIL PUMP DRIVE	1				0.2	0.44
270	05712-00410	KEY FEATHER	1				0.001	0.0022
280	15221-35680	NUT	1				0	0
290	04211-50120	WASHER CLAW	1				0.003	0.0066
300	15521-39010	SWITCH OIL	1				0.048	0.1056

silverhorn.co.uk

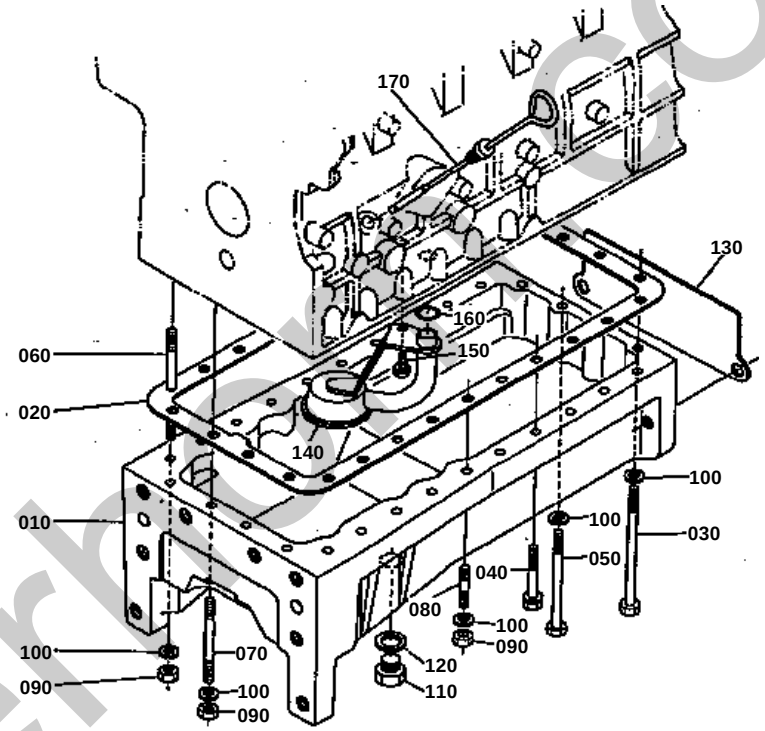

silverbacco.uk

OIL PAN

↔ Interchangeable; ≠ not interchangeable; ← new for old; → old for new

REF.No	Part No.	Description	Q'ty	S.No.	I/C	REMARKS	Weight (kgf)	Weight (lb)
010	17381-01610	OIL PAN	1				25.5	56.1
020	17381-01620	GASKET	1				0	0
030	17381-91010	BOLT	2				0.085	0.187
040	01133-51055	BOLT	10				0.04	0.088
050	01173-51002	BOLT	2				0.064	0.1408
060	17381-91600	STUD	4				0.087	0.1914
070	01517-51000	STUD	2				0.06	0.132
080	01517-51045	STUD	8				0.032	0.0704
090	02076-50100	NUT	14				0.006	0.0132
100	04512-50100	WASHER SPRING	18				0	0
110	15451-33750	PLUG DRAIN	1				0	0
120	15451-96670	GASKET	1				0.003	0.0066
130	17381-04420	SHIM	1				0.015	0.033
130	17381-04430	SHIM	1				0.03	0.066
130	17381-04440	SHIM	1				0.025	0.055
140	17381-32110	FILTER OIL	1				0.225	0.495
150	01123-50814	BOLT	1				0	0
160	04811-00160	O RING	1				0.001	0.0022
170	17381-36410	GAUGE OIL	1				0.06	0.132

silverhorn.co.uk

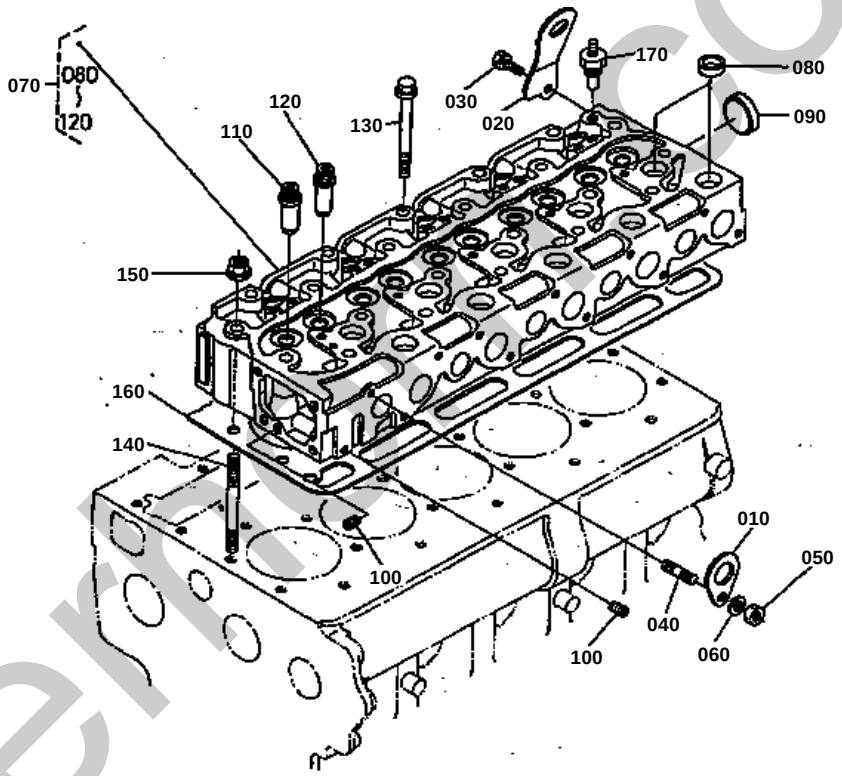

silvermacco.uk

CYLINDER HEAD

↔ Interchangeable; ≠ not interchangeable; ← new for old; → old for new

REF.No	Part No.	Description	Q'ty	S.No.	I/C	REMARKS	Weight (kgf)	Weight (lb)
010	15221-01750	HOOK ENGINE	1				0.04	0.088
020	17331-01750	HOOK ENGINE	1				0.09	0.198
030	01123-50816	BOLT	1				0.011	0.0242
040	15471-91530	STUD	1				0.01	0.022
050	02156-50080	NUT	1				0.004	0.0088
060	04512-50080	WASHER SPRING	1				0	0
070	17381-03040	COMP.CYLINDER HEAD	1				24.4	53.68
080	15221-03370	CAP SEALING	15				0.01	0.022
090	15221-03490	CAP SEALING	1				0.02	0.044
100	15261-96010	PLUG	2				0.002	0.0044
110	17331-13580	GUIDE INLET VALVE	5				0	0
120	17331-13560	GUIDE EXHAUST VALVE	5				0	0
130	19202-03450	BOLT CYLINDER HEAD	20				0.065	0.143
140	19202-03410	STUD CYLINDER HEAD	2				0.065	0.143
150	19202-03510	NUT CYLINDER HEAD	2				0.012	0.0264
160	17381-03310	GASKET CYLINDER HEAD	1				0	0
170	31351-32830	THERMO UNIT	1				0.02	0.044

silverhorn.co.uk

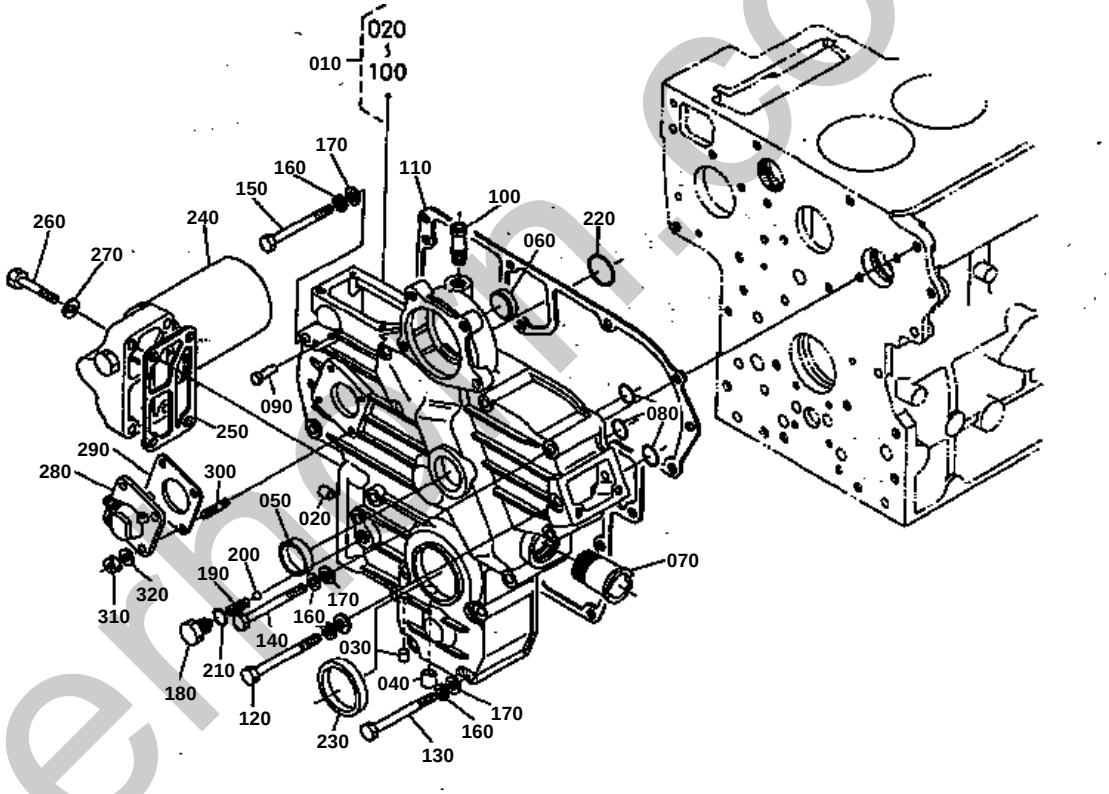

silverhill.co.uk

GEAR CASE

↔ Interchangeable; ≠ not interchangeable; ← new for old; → old for new

REF.No	Part No.	Description	Q'ty	S.No.	I/C	REMARKS	Weight (kgf)	Weight (lb)
010	17381-04020	COMP.CASE GEAR	1				4	8.8
020	15221-33620	PLUG PIN	1				0.002	0.0044
030	17381-96050	PLUG	1				0.002	0.0044
040	15261-96020	PLUG	1				0	0
050	15221-03490	CAP SEALING	1				0.02	0.044
060	15321-96260	CAP SEALING	1				0.014	0.0308
070	15221-72880	PIPE WATER	1				0.115	0.253
080	04811-00150	O RING	3				0.001	0.0022
090	15221-56280	PIN START SPRING	1				0.006	0.0132
100	15321-73340	PIPE WATER RETURN	1				0.016	0.0352
110	15601-04130	GASKET GEAR CASE	1				0	0
120	01053-50885	BOLT	1				0.031	0.0682
130	15221-91040	BOLT	9				0	0
140	15321-91010	BOLT	4				0.03	0.066
150	01053-50880	BOLT	1				0.03	0.066
160	04512-50080	WASHER SPRING	15				0	0
170	04012-50080	WASHER PLAIN	15				0.001	0.0022
180	15221-38420	CAP	1				0.025	0.055
190	15221-38440	SPRING	1				0.004	0.0088
200	07715-00803	BALL	1				0.004	0.0088
210	04811-00100	O RING	1				0.001	0.0022
220	04811-40240	O RING	1				0.002	0.0044
230	09550-00001	SEAL OIL	1				0.015	0.033
240	15402-32023	ASSY FILTER OIL	1				1.05	2.31
250	15213-32320	GASKET	1				0	0
260	15402-91010	BOLT	4				0	0
270	04512-50080	WASHER SPRING	4				0	0
280	38240-34660	ASSY UNIT HOUR METER	1				0.335	0.737
290	15221-88130	GASKET	1				0	0
300	15221-88210	STUD	4				0.005	0.011
310	02056-50060	NUT	4				0.002	0.0044
320	04512-50060	WASHER SPRING	4				0	0

silverhorn.co.uk

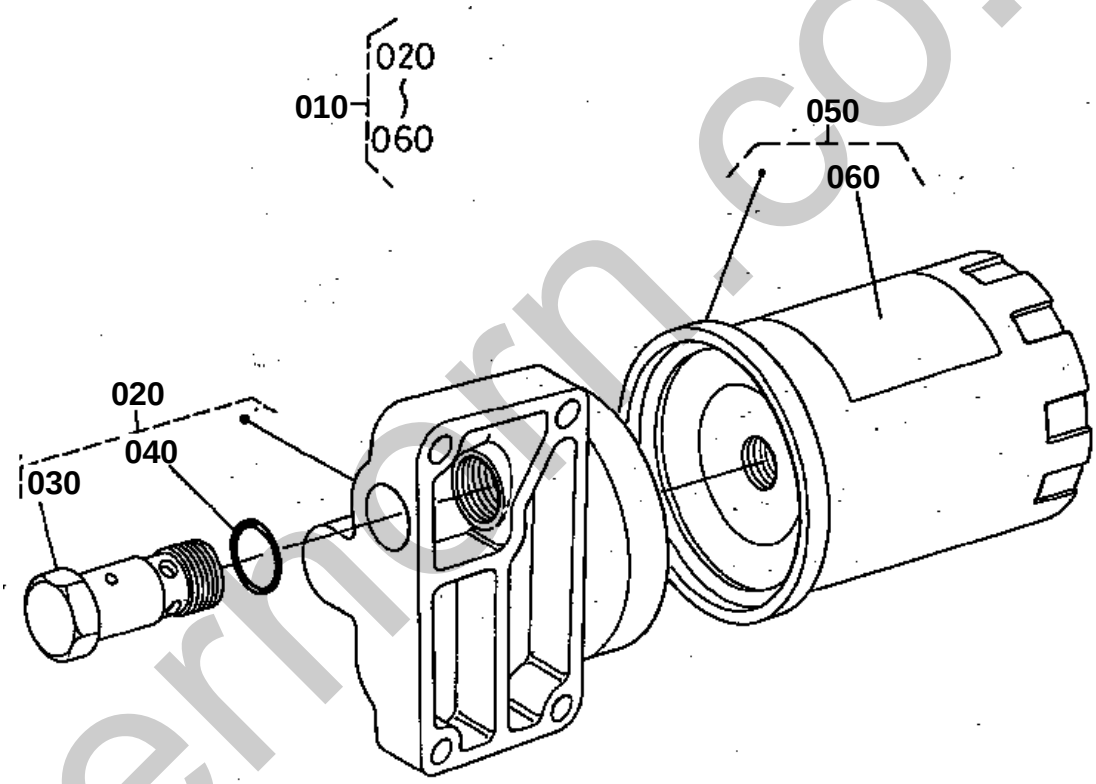

silvermern.co.uk

OIL FILTER

↔ Interchangeable; ≠ not interchangeable; ← new for old; → old for new

REF.No	Part No.	Description	Q'ty	S.No.	I/C	REMARKS	Weight (kgf)	Weight (lb)
010	15402-32023	ASSY FILTER OIL	1				1.05	2.31
020	15402-32070	ASSY COVER	1				0.52	1.144
030	15213-36070	COMP VALVE RELIEF	1				0.13	0.286
040	04811-00200	O RING	1				0.001	0.0022
050	15402-32090	ASSY CARTRIDGE FILTE	1				0.5	1.1
060	15213-94400	LABEL OIL FILTER	1				0.001	0.0022

silverhorn.co.uk

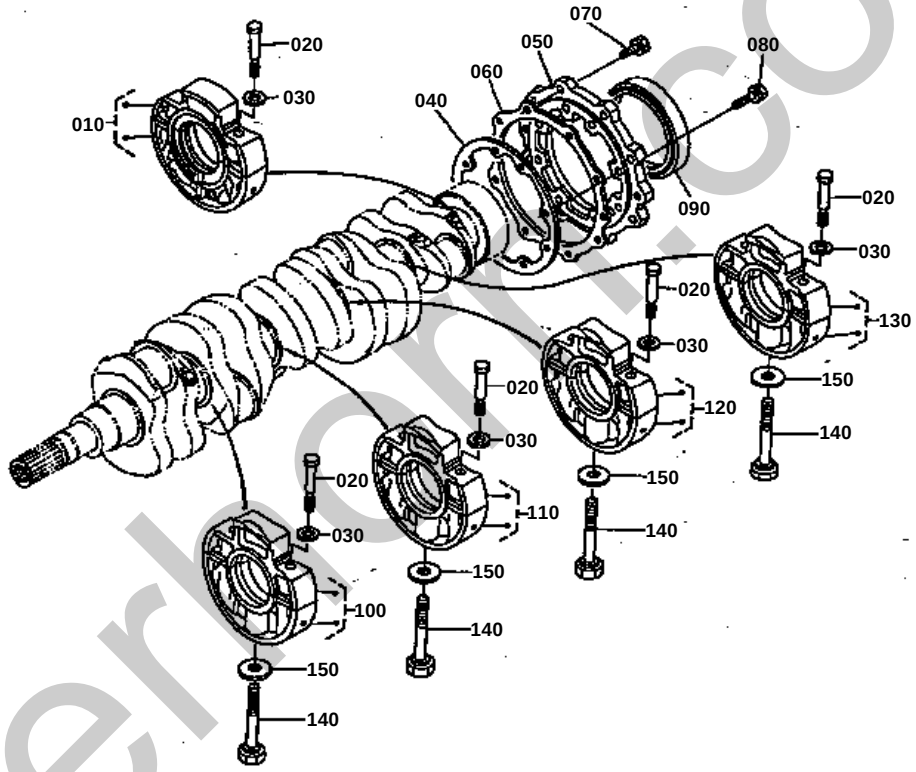

silverhorn.co.uk

MAIN BEARING CASE

↔ Interchangeable; ≠ not interchangeable; ← new for old; → old for new

REF.No	Part No.	Description	Q'ty	S.No.	I/C	REMARKS	Weight (kgf)	Weight (lb)
010	19202-04040	ASSY CASE MAIN BRG	1				1.28	2.816
020	15521-04540	BOLT BEARING CASE	10				0	0
030	15521-94010	WASHER PLAIN	10				0.001	0.0022
040	15221-04360	GASKET	1				0	0
050	19202-04810	COVER BEARING CASE	1				0.36	0.792
060	15221-04820	GASKET	1				0	0
070	01123-50825	BOLT	8				0.013	0.0286
080	01123-50828	BOLT	8				0.014	0.0308
090	17381-04460	SEAL OIL	1				0.05	0.11
100	17331-04050	ASSY CASE MAIN BRG.	1				0	0
110	17331-04060	ASSY CASE MAIN BRG.	1				0	0
120	17345-04070	ASSY CASE MAIN BRG.	1				0	0
130	15601-04080	ASSY CASE MAIN BRG.	1				1.28	2.816
140	15291-04560	BOLT	4				0.06	0.132
150	15521-94020	WASHER PLAIN	4				0.004	0.0088

silverhorn.co.uk

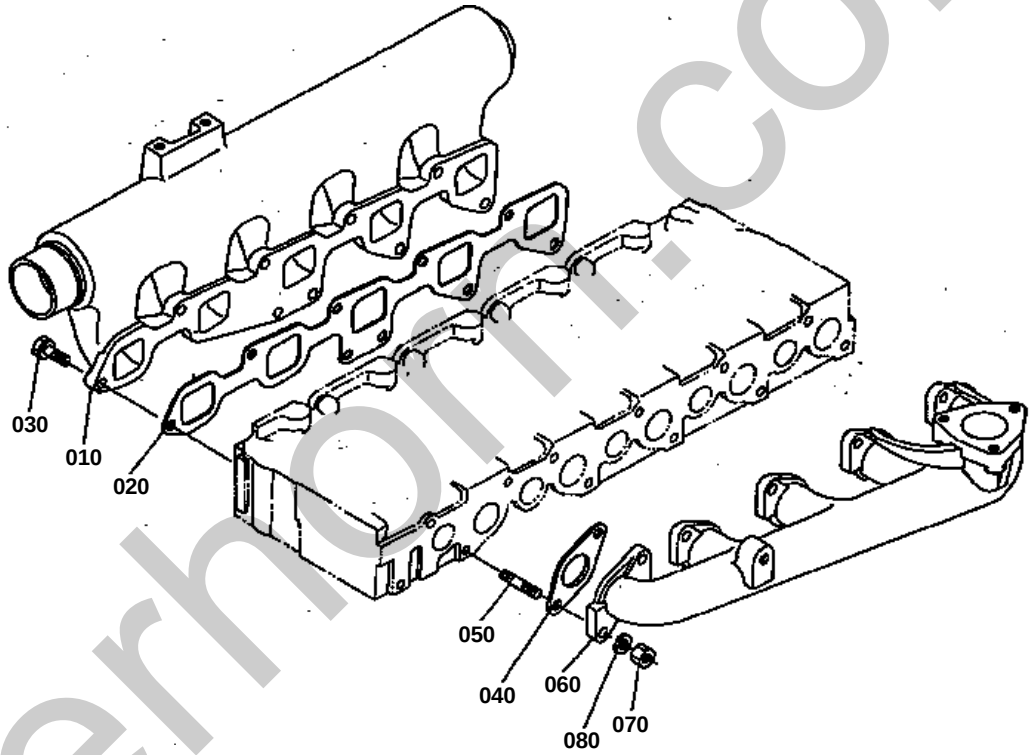

silverhorn.co.uk

MANIFOLD

↔ Interchangeable; ≠ not interchangeable; ← new for old; → old for new

REF.No	Part No.	Description	Q'ty	S.No.	I/C	REMARKS	Weight (kgf)	Weight (lb)
010	17381-11760	MANIFOLD INLET	1				2	4.4
020	17381-11820	GASKET	1				0	0
030	01123-50822	BOLT	9				0.012	0.0264
040	15521-12350	GASKET	5				0	0
050	15221-91530	STUD	10				0.011	0.0242
060	17381-12310	MANIFOLD EXHAUST	1				0	0
070	02156-50080	NUT	10				0.004	0.0088
080	04512-50080	WASHER SPRING	10				0	0

silverhorn.co.uk

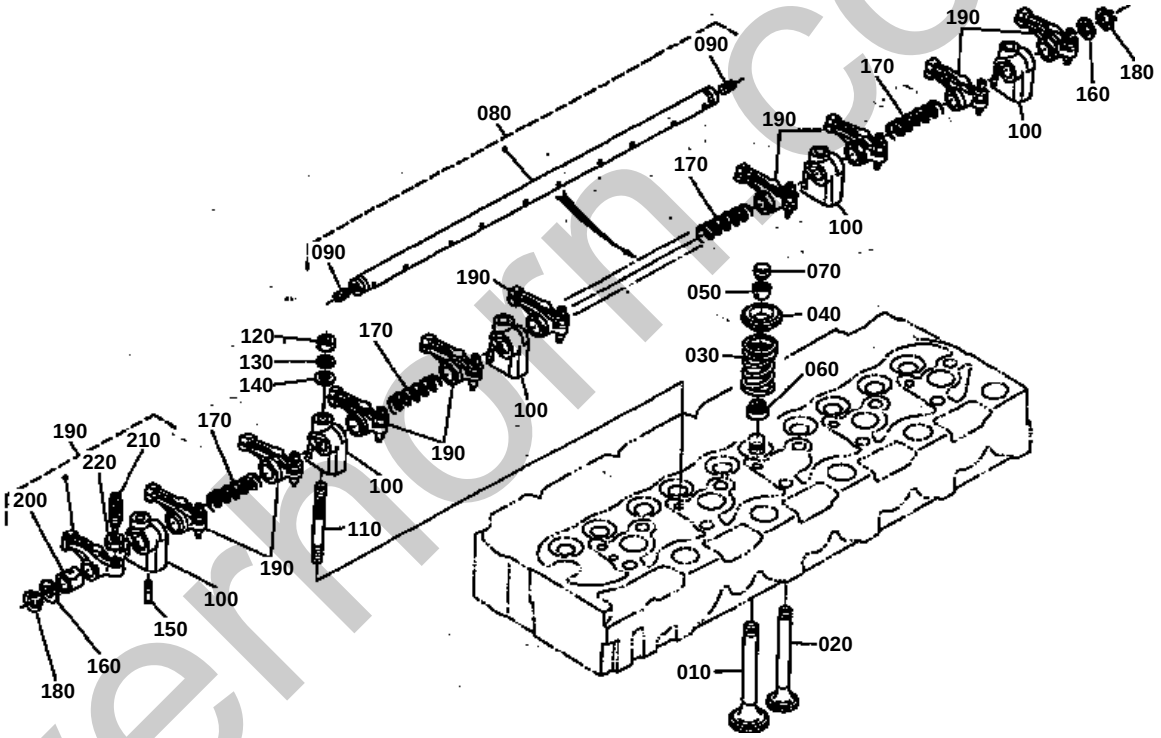

silvermorn.co.uk

VALVE AND ROCKER ARM

↔ Interchangeable; ≠ not interchangeable; ← new for old; → old for new

REF.No	Part No.	Description	Q'ty	S.No.	I/C	REMARKS	Weight (kgf)	Weight (lb)
010	17331-13110	VALVE INLET	5				0.065	0.143
020	17331-13120	VALVE EXHAUST	5				0.061	0.1342
030	15221-13240	SPRING VALVE	10				0.036	0.0792
040	15221-13330	RETAINER VALVE SP.	10				0.03	0.066
050	15221-13360	COLLET VALVE SPRING	10				0	0
060	15221-13150	SEAL VALVE STEM	10				0.001	0.0022
070	15221-13280	CAP VALVE	10				0.006	0.0132
080	17381-14050	ASSY SHAFT	1				0	0
090	03410-50808	SCREW	2				0.002	0.0044
100	15221-14350	BRACKET ROCKER ARM	5				0.044	0.0968
110	15521-91500	STUD	5				0.035	0.077
120	02156-50080	NUT	5				0.004	0.0088
130	04512-50080	WASHER SPRING	5				0	0
140	04012-50080	WASHER PLAIN	5				0.001	0.0022
150	15221-14420	SCREW SET	1				0.003	0.0066
160	15221-14430	WASHER	2				0.002	0.0044
170	15221-14310	SPRING ROCKER ARM	4				0.005	0.011
180	04612-00140	CIR-CLIP EXTERNAL	2				0.001	0.0022
190	15601-14030	ASSY ROCKER ARM	10				0	0
200	15221-14180	BUSH ROCKER ARM	10				0.007	0.0154
210	15521-14230	SCREW	10				0.009	0.0198
220	15021-14240	NUT	10				0.003	0.0066

silverhorn.co.uk

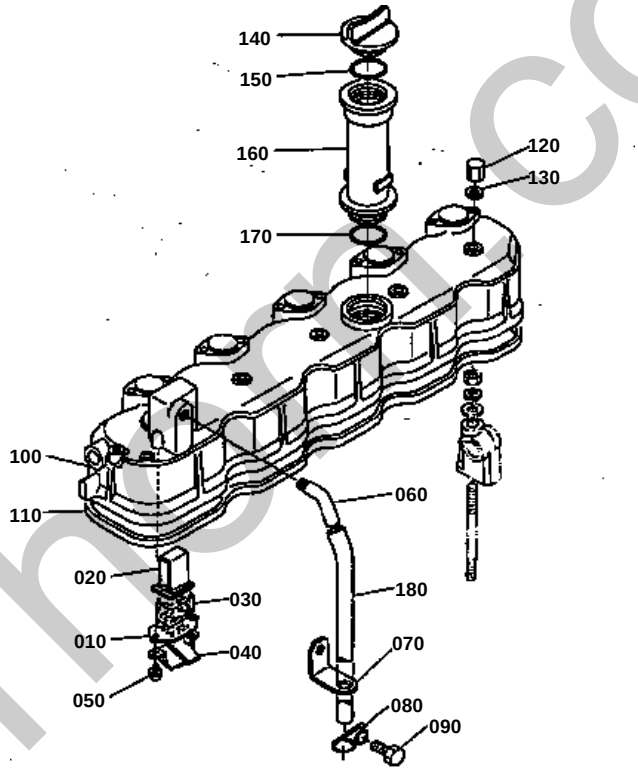

silverhome.co.uk

CYLINDER HEAD COVER

↔ Interchangeable; ≠ not interchangeable; ← new for old; → old for new

REF.No	Part No.	Description	Q'ty	S.No.	I/C	REMARKS	Weight (kgf)	Weight (lb)
010	15521-05140	PLATE ELEMENT	1				0.005	0.011
020	15521-05150	PLATE ELEMENT	1				0.01	0.022
030	15521-05670	ELEMENT BREATHER	1				0.01	0.022
040	15521-05370	OIL SHIELD BREATHER	1				0.005	0.011
050	15521-93310	SCREW	2				0	0
060	15521-05550	JOINT BREATHER PIPE	1				0.04	0.088
070	15401-05580	CLAMP PIPE	1				0.02	0.044
080	15401-05590	CLAMP PIPE	1				0.003	0.0066
090	01173-51018	BOLT	1				0.018	0.0396
100	17381-14510	COVER HEAD	1				1.8	3.96
110	17381-14520	GASKET HEAD COVER	1				0.05	0.11
120	15451-92330	NUT CAP	5				0.015	0.033
130	15021-33660	GASKET	5				0.001	0.0022
140	15221-33140	PLUG OIL FILLER	1				0.038	0.0836
150	04811-50300	O RING	1				0.001	0.0022
160	15324-33110	FLANGE OIL FILTER	1				0.295	0.649
170	04811-50300	O RING	1				0.001	0.0022
180	15521-05510	PIPE BREATHER	1				0.075	0.165

silverhorn.co.uk

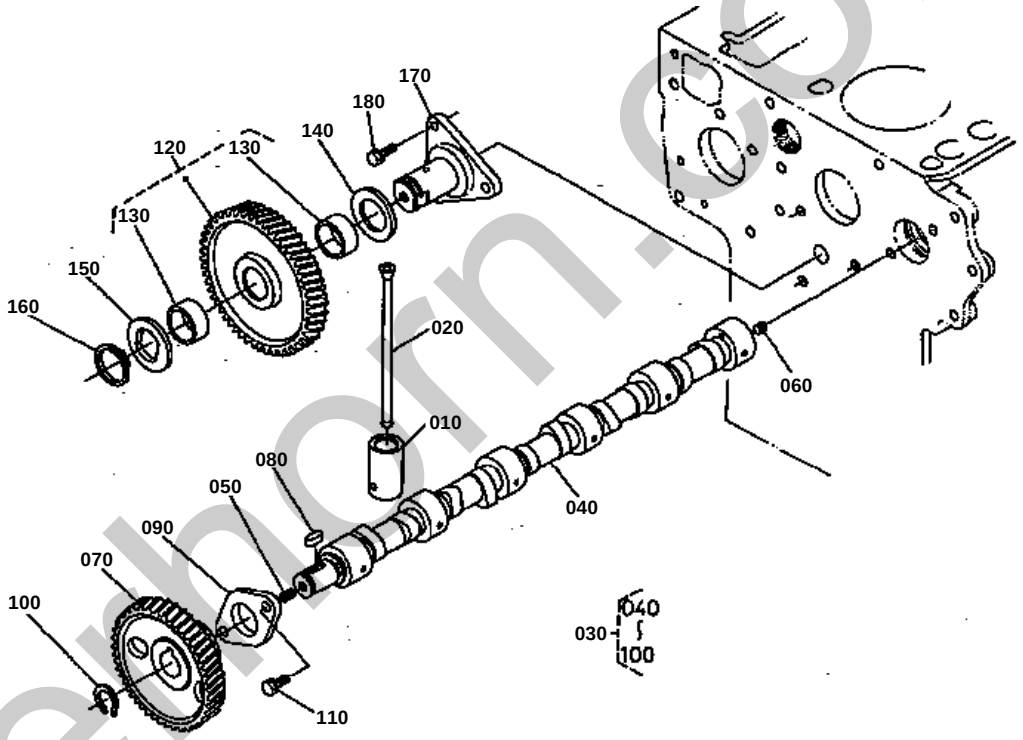

silverthorn.co.uk

CAMSHAFT

↔ Interchangeable; ≠ not interchangeable; ← new for old; → old for new

REF.No	Part No.	Description	Q'ty	S.No.	I/C	REMARKS	Weight (kgf)	Weight (lb)
010	15221-15550	TAPPET	10				0	0
020	15221-15110	ROD PUSH	10				0.05	0.11
030	17381-16010	ASSY CAMSHAFT	1				3.57	7.854
040	17381-16150	CAMSHAFT	1				2.6	5.72
050	15521-93610	SCREW	1				0.002	0.0044
060	15601-93620	SCREW	1				0.025	0.055
070	15601-16510	GEAR CAMSHAFT	1				0	0
080	05712-00720	KEY FEATHER	1				0.008	0.0176
090	15221-16270	STOPPER CAMSHAFT	1				0.073	0.1606
100	04612-00240	CIR-CLIP EXTERNAL	1				0.002	0.0044
110	01123-50818	BOLT	2				0.012	0.0264
120	15601-24010	COMP.GEAR IDLE	1				1.07	2.354
130	15221-24980	BUSH IDLE GEAR	2				0.02	0.044
140	15521-24360	COLLAR	1				0.015	0.033
150	15521-24370	COLLAR	1				0.015	0.033
160	15221-24320	CIR-CLIP IDLE GEAR	1				0.01	0.022
170	15221-24250	SHAFT IDLE GEAR	1				0.48	1.056
180	01123-50818	BOLT	3				0.012	0.0264

silverhorn.co.uk

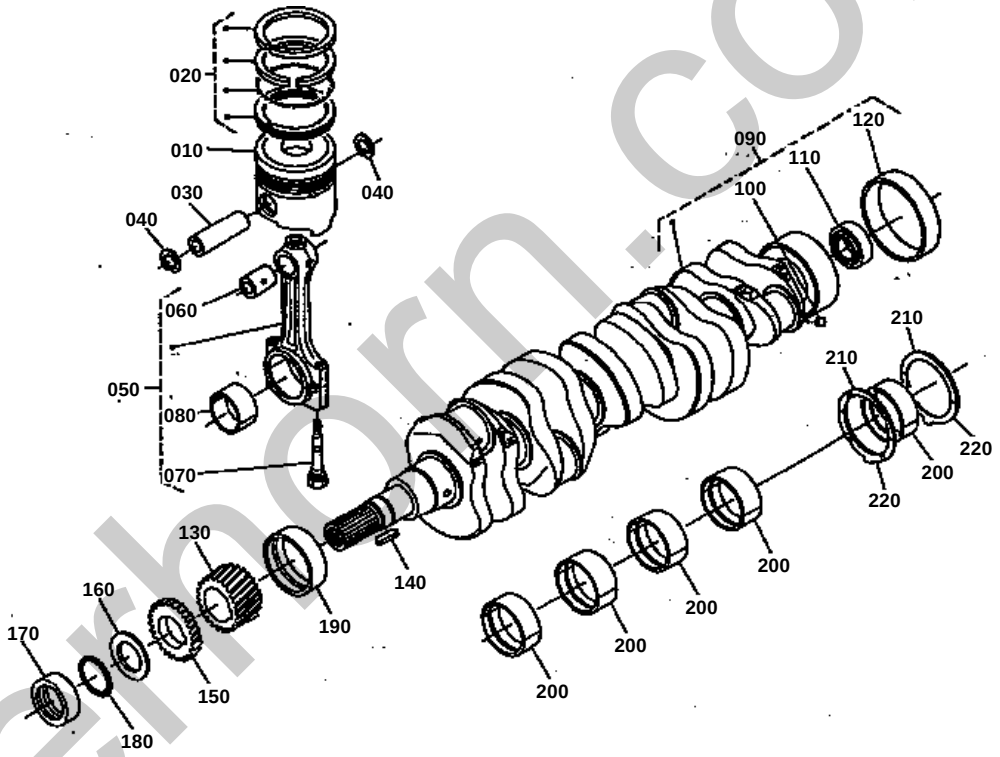

silverhorn.co.uk

PISTON AND CRANKSHAFT

↔ Interchangeable; ≠ not interchangeable; ← new for old; → old for new

REF.No	Part No.	Description	Q'ty	S.No.	I/C	REMARKS	Weight (kgf)	Weight (lb)
010	17381-21110	PISTON	5				0	0
020	15521-21050	ASSY PISTON RING	5				0.06	0.132
030	14901-21310	PIN PISTON	5				0.17	0.374
040	14109-21330	CLIP PISTON PIN	10				0.015	0.033
050	17331-22010	ASSY CONNECTING ROD	5				0	0
060	17331-21980	BUSH PISTON PIN	5				0.025	0.055
070	15521-22140	BOLT CONNECTING ROD	10				0	0
080	17331-22310	METAL CRANKPIN	5				0.045	0.099
090	17381-23010	COMP.CRANKSHAFT	1				18	39.6
100	15131-01380	PLUG PIN	5				0.001	0.0022
110	08121-06203	BEARING BALL	1				0.07	0.154
120	17381-23280	SLEEVE CRANKSHAFT	1				0.09	0.198
130	15601-24110	GEAR CRANKSHAFT	1				0.34	0.748
140	05712-00730	KEY FEATHER	1				0.011	0.0242
150	15601-35630	GEAR OIL PUMP DRIVE	1				0.181	0.3982
160	15401-23310	SLINGER OIL	1				0	0
170	17381-23250	COLLAR CRANKSHAFT	1				0.07	0.154
180	04811-10300	O RING	1				0.001	0.0022
190	17331-23470	METAL CRANKSHAFT	1				0.06	0.132
200	17331-23480	METAL CRANKSHAFT	5				0	0
210	15221-23530	METAL SIDE	2				0	0
220	15221-23540	METAL SIDE	2				0	0

silverhorn.co.uk

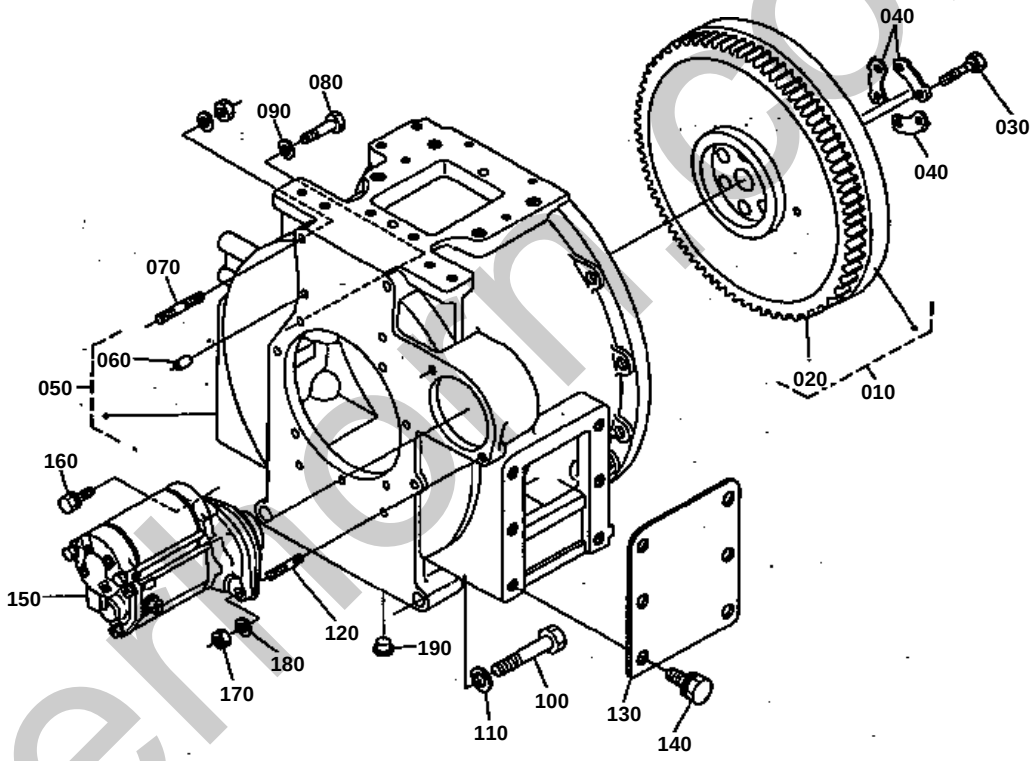

silverton.co.uk

FLYWHEEL AND STARTER

↔ Interchangeable; ≠ not interchangeable; ← new for old; → old for new

REF.No	Part No.	Description	Q'ty	S.No.	I/C	REMARKS	Weight (kgf)	Weight (lb)
010	17382-25010	COMP.FLYWHEEL	1				0	0
020	15601-63820	GEAR RING	1				0	0
030	15321-25160	BOLT FLYWHEEL	6				0.05	0.11
040	15601-25170	WASHER FLYWHEEL	3				0.009	0.0198
050	17381-04600	HOUSING FLYWHEEL	1	<=25529			35	77
050	17381-04603	HOUSING FLYWHEEL	1	>=25530	≠		0	0
060	05012-01018	PIN STRAIGHT	2				0.012	0.0264
070	17381-91610	STUD	2				0.225	0.495
080	01073-51032	BOLT	11				0.03	0.066
090	04512-50100	WASHER SPRING	11				0	0
100	01173-51475	BOLT	2				0.107	0.2354
110	04512-50140	WASHER SPRING	2				0	0
120	01517-51028	STUD	1				0.022	0.0484
130	32530-10530	COVER	2	<=25529			0.31	0.682
130	32530-10532	COVER	2	>=25530	≠		0.31	0.682
140	01123-50816	BOLT	4	<=25529			0.011	0.0242
140	01133-51425	BOLT	8	<=25529			0.055	0.121
140	01133-51425	BOLT	12	>=25530	≠		0.055	0.121
150	17381-63010	ASSY STARTER	1	<=26364			5.4	11.88
150	17381-63012	ASSY STARTER	1	>=26365	≠		4.9	10.78
160	01133-51030	BOLT	1				0.025	0.055
170	02176-50100	NUT	1				0.005	0.011
180	04512-50100	WASHER SPRING	1				0	0
190	31220-14290	PLUG	4				0.002	0.0044

silverhorn.co.uk

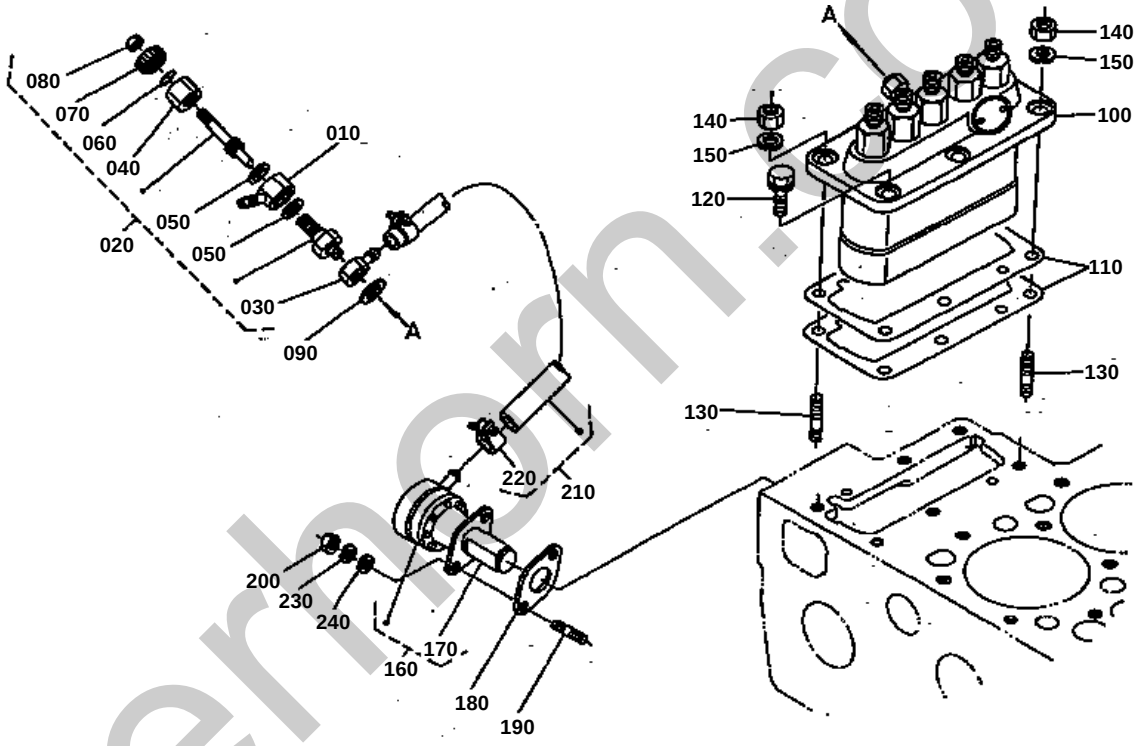

silverhorn.co.uk

↔ Interchangeable; ≠ not interchangeable; ← new for old; → old for new

REF.No	Part No.	Description	Q'ty	S.No.	I/C	REMARKS	Weight (kgf)	Weight (lb)
010	15401-95690	JOINT EYE	1				0.04	0.088
020	15401-51900	ASSY COCK	1				0.075	0.165
030	15401-95680	JOINT EYE	1				0.01	0.022
040	15401-92320	NUT CAP	1				0.015	0.033
050	15221-96650	GASKET	2				0.001	0.0022
060	04811-00040	O RING	1				0.001	0.0022
070	14311-60540	KNOB	1				0.015	0.033
080	02054-50040	NUT	1				0.001	0.0022
090	15021-33660	GASKET	1				0.001	0.0022
100	17381-51010	ASSY PUMP INJECTION	1				3.45	7.59
110	17381-52090	SHIM	1				0.005	0.011
110	17381-52110	SHIM	2				0	0
110	17381-52120	SHIM	2				0	0
120	01123-50822	BOLT	4				0.012	0.0264
130	01513-50822	STUD	2				0.01	0.022
140	02156-50080	NUT	2				0.004	0.0088
150	04512-50080	WASHER SPRING	2				0	0
160	15381-52030	ASSY PUMP FUEL	1				0	0
170	15381-52040	COMP.DIAPHRAGM	1				0	0
180	15241-52140	GASKET FUEL PUMP	1				0	0
190	01513-50616	STUD	2				0.004	0.0088
200	02056-50060	NUT	2				0.002	0.0044
210	15401-42010	ASSY PIPE FUEL	1				0.04	0.088
220	14301-42750	CLIP PIPE	2				0.005	0.011
230	04512-50060	WASHER SPRING	2				0	0
240	04012-50060	WASHER PLAIN	2				0.001	0.0022

silverhorn.co.uk

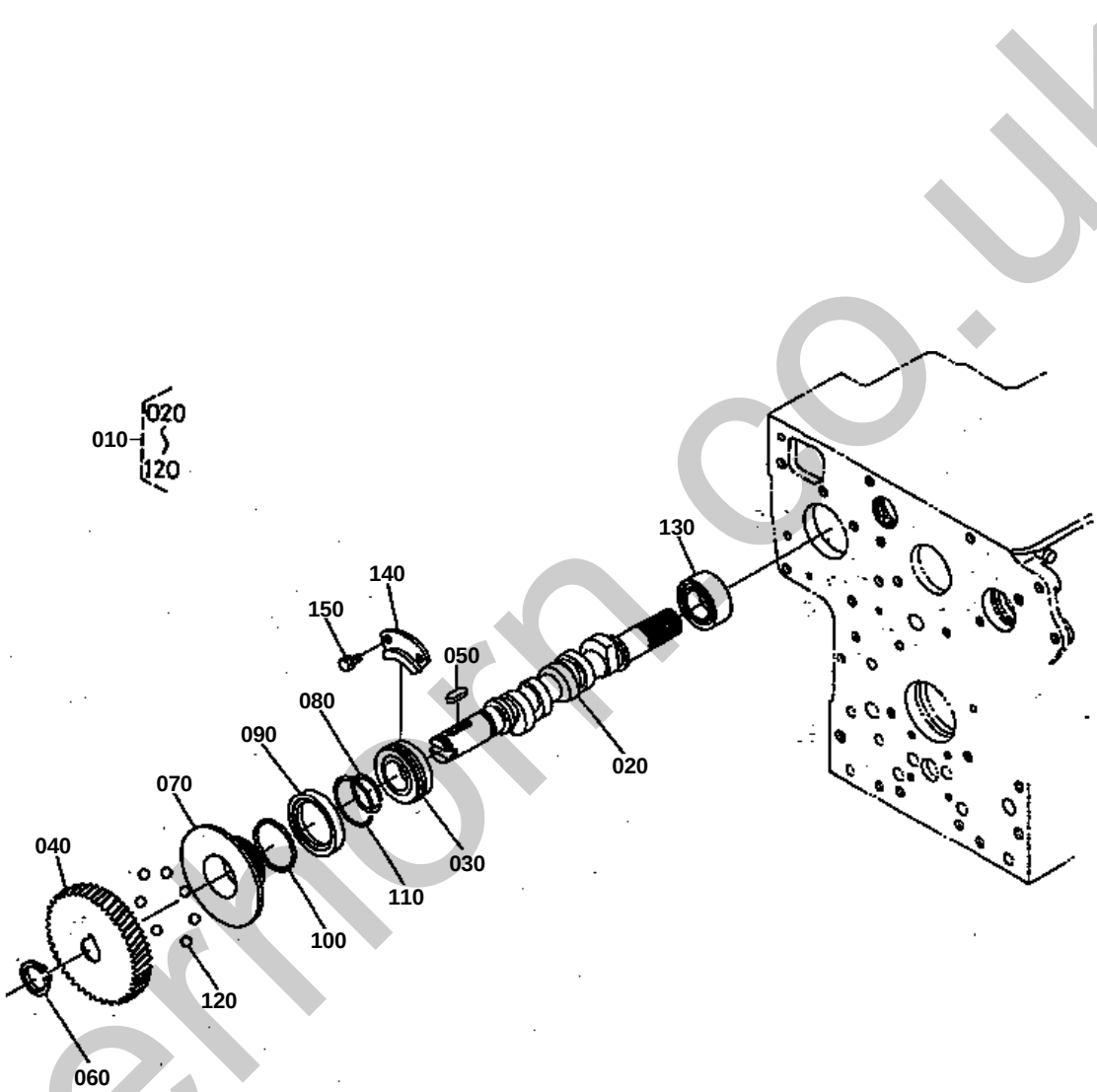

silverthorn.co.uk

FUEL CAMSHAFT

↔ Interchangeable; ≠ not interchangeable; ← new for old; → old for new

REF.No	Part No.	Description	Q'ty	S.No.	I/C	REMARKS	Weight (kgf)	Weight (lb)
010	17381-16020	ASSY CAMSHAFT FUEL	1				0	0
020	17381-16170	CAMSHAFT FUEL	1				0	0
030	08153-06205	BEARING BALL	1				0.13	0.286
040	15611-51150	GEAR INJECTION PUMP	1				1.035	2.277
050	05712-00525	KEY FEATHER	1				0.005	0.011
060	04612-00240	CIR-CLIP EXTERNAL	1				0.002	0.0044
070	15611-55450	SLEEVE GOVERNOR	1				0.117	0.2574
080	15221-55470	CIR-CLIP GOV. SLEEVE	1				0.003	0.0066
090	15611-55690	CASE G0VERNOR BALL	1				0.03	0.066
100	07715-03205	BALL	39				0.001	0.0022
110	15221-55740	CIR-CLIP	1				0.002	0.0044
120	07715-00403	BALL	7				0.03	0.066
130	08240-00001	BEARING BALL	1				0.19	0.418
140	15221-16320	STOPPER	1				0.02	0.044
150	01123-50814	BOLT	2				0	0

silverhorn.co.uk

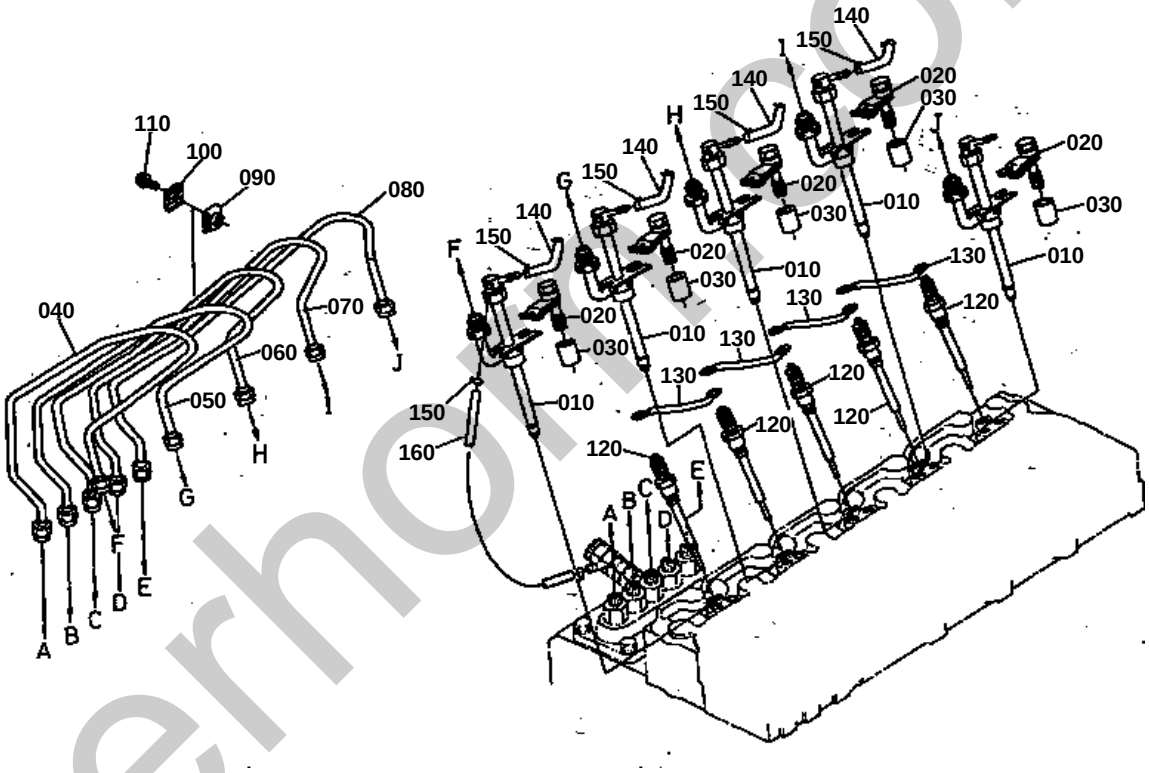

silverhoffmeo.uk

NOZZLE AND GLOW PLUG

↔ Interchangeable; ≠ not interchangeable; ← new for old; → old for new

REF.No	Part No.	Description	Q'ty	S.No.	I/C	REMARKS	Weight (kgf)	Weight (lb)
010	17331-53000	ASSY NOZZLE	5				0.151	0.3322
020	17331-53450	CLAMP NOZZLE	5				0.03	0.066
030	17331-53460	SPACER NOZZLE	5				0.025	0.055
040	17381-53710	PIPE INJECTION	1				0.16	0.352
050	17381-53720	PIPE INJECTION	1				0.16	0.352
060	17381-53730	PIPE INJECTION	1				0.16	0.352
070	17381-53740	PIPE INJECTION	1				0.16	0.352
080	17381-53750	PIPE INJECTION	1				0.16	0.352
090	15841-53850	CLAMP PIPE	8				0.01	0.022
100	15841-53860	CLAMP PIPE	8				0.009	0.0198
110	03024-50520	SCREW	8				0.004	0.0088
120	17331-65510	PLUG GLOW	5				0.05	0.11
130	17331-65560	CORD GLOW PLUG	4				0.005	0.011
140	17331-42510	PIPE FUEL OVER FLOW	4				0.006	0.0132
150	14971-42750	CLIP PIPE	10				0.001	0.0022
160	15471-42520	PIPE FUEL OVER FLOW	1				0	0

silverhorn.co.uk

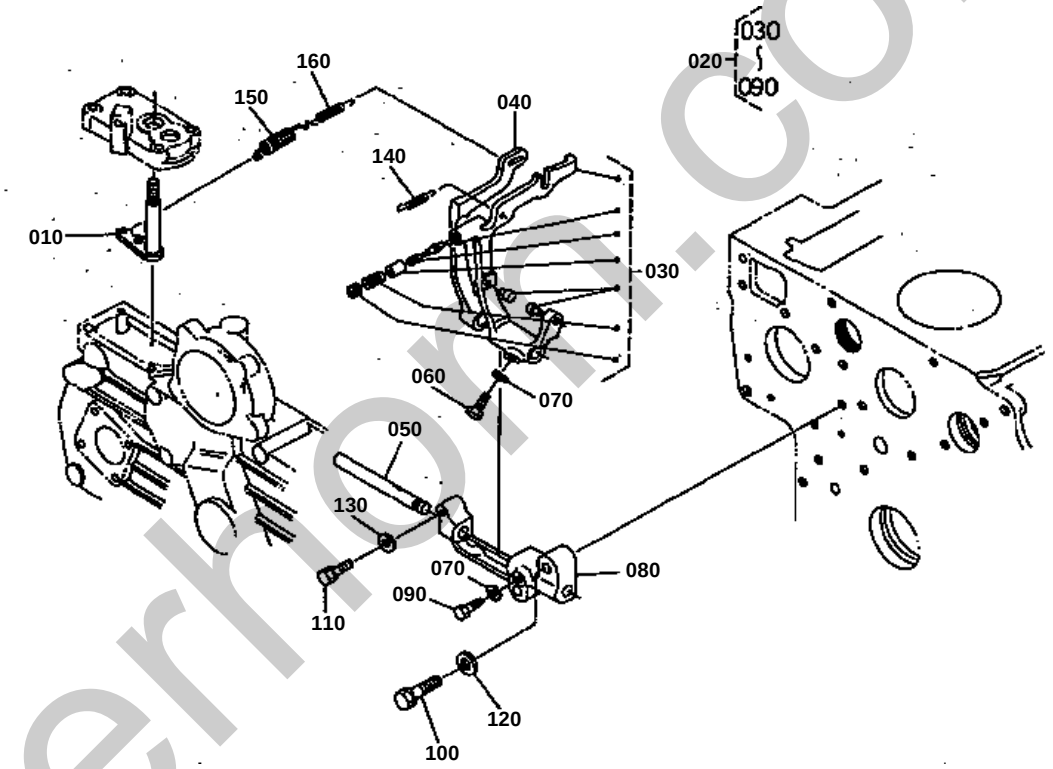

silverhorn.co.uk

GOVERNOR

↔ Interchangeable; ≠ not interchangeable; ← new for old; → old for new

REF.No	Part No.	Description	Q'ty	S.No.	I/C	REMARKS	Weight (kgf)	Weight (lb)
010	17331-56020	COMP.LEVER GOVERNOR	1				0.07	0.154
020	17381-56050	ASSY LEVER FORK	1				0.41	0.902
030	17381-56040	COMP.LEVER FORK	1				0.19	0.418
040	17331-56130	LEVER FORK	1				0.065	0.143
050	15221-56150	SHAFT FORK LEVER	1				0.1	0.22
060	15021-56240	BOLT LEVER SHAFT	1				0.005	0.011
070	04512-50060	WASHER SPRING	2				0	0
080	15221-56230	HOLDER FORK LEVER	1				0.1	0.22
090	15221-66410	BOLT	1				0.005	0.011
100	01123-50832	BOLT	2				0.016	0.0352
110	01023-50628	BOLT	1				0.015	0.033
120	04012-50080	WASHER PLAIN	2				0.001	0.0022
130	04012-50060	WASHER PLAIN	1				0.001	0.0022
140	15611-56480	SPRING START	1				0.001	0.0022
150	17381-56410	SPRING GOVERNOR	1				0.005	0.011
160	17381-56420	SPRING GOVERNOR	1				0.005	0.011

silverhorn.co.uk

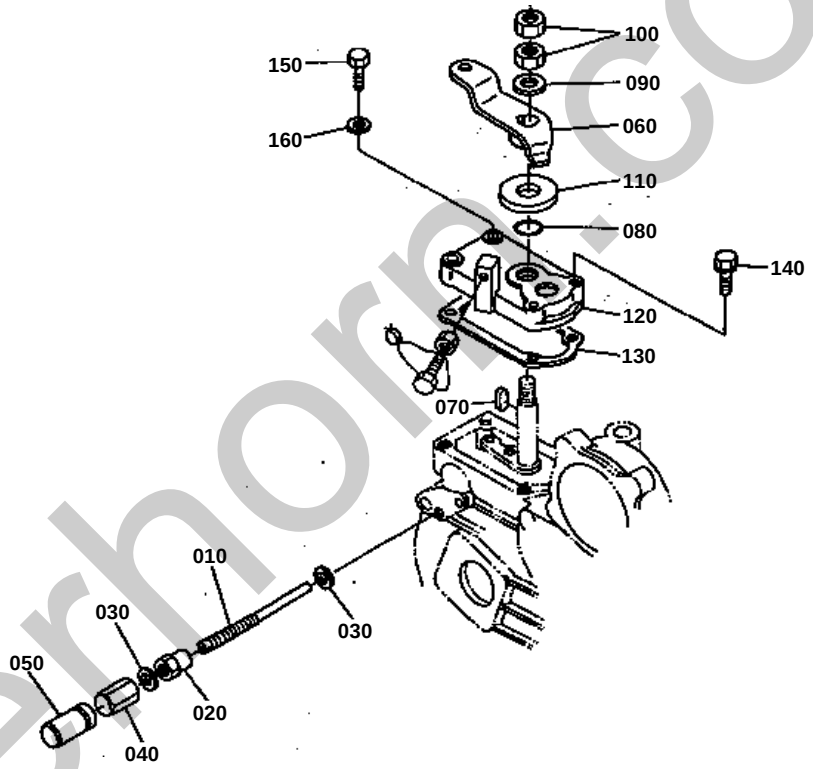

silverhorn.co.uk

SPEED CONTROL PLATE

↔ Interchangeable; ≠ not interchangeable; ← new for old; → old for new

REF.No	Part No.	Description	Q'ty	S.No.	I/C	REMARKS	Weight (kgf)	Weight (lb)
010	15601-54120	BOLT ADJUSTING	1				0.011	0.0242
020	15601-92010	NUT	1				0	0
030	15601-96650	GASKET	2				0.001	0.0022
040	15601-54220	NUT CAP	1				0	0
050	15601-54420	CAP	1				0	0
060	17331-57150	LEVER SPEED CONTROL	1				0.05	0.11
070	05712-00408	KEY FEATHER	1				0.001	0.0022
080	04811-00120	O RING	1				0.001	0.0022
090	04013-50080	WASHER PLAIN	1				0	0
100	02112-50080	NUT	2				0.003	0.0066
110	17011-57380	PLATE FRICTION	1				0	0
120	17331-57110	PLATE SPEED CONTROL	1				0.15	0.33
130	17331-57210	GASKET	1				0	0
140	01023-50630	BOLT	3				0.008	0.0176
150	17331-91040	BOLT	1				0.01	0.022
160	15601-96650	GASKET	1				0.001	0.0022

silverhorn.co.uk

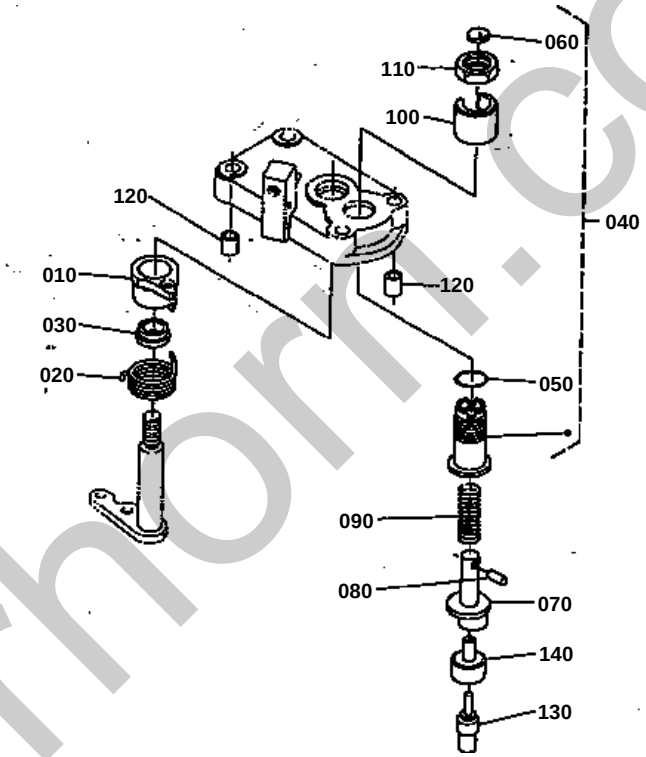

silverhorn.co.uk

COMPENSATOR

↔ Interchangeable; ≠ not interchangeable; ← new for old; → old for new

REF.No	Part No.	Description	Q'ty	S.No.	I/C	REMARKS	Weight (kgf)	Weight (lb)
010	17331-59100	LEVER COMPENSATOR	1				0.03	0.066
020	17331-59110	SPRING RETURN	1				0.01	0.022
030	17331-59120	COLLAR	1				0.005	0.011
040	17331-59010	HOUSING COMPENSATOR	1				0.035	0.077
050	04811-10160	O RING	1				0.001	0.0022
060	06311-75012	PLUG EXPANSION	1				0.002	0.0044
070	17331-59140	COMPENSATOR IDLE	1				0.03	0.066
080	17331-59150	PIN STRAIGHT	1				0.005	0.011
090	17331-59160	SPRING	1				0.005	0.011
100	17331-59170	WASHER	1				0.023	0.0506
110	17331-59180	NUT LOCK	1				0.01	0.022
120	17331-59190	PIN PIPE	2				0.02	0.044
130	17331-59200	THEMOSTAT	1				0.015	0.033
140	17331-59210	HOUSING THERMOSTAT	1				0.015	0.033

silverhorn.co.uk

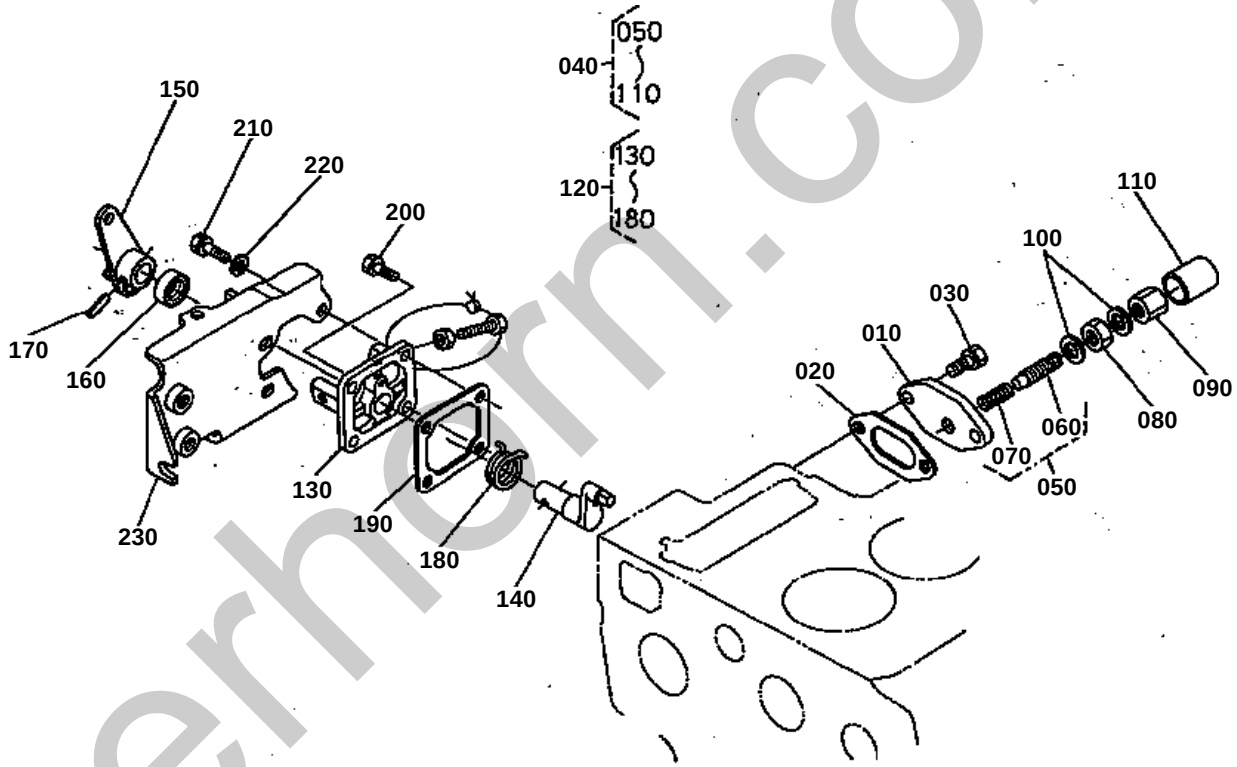

silverhorn.co.uk

IDLING APPARATUS

↔ Interchangeable; ≠ not interchangeable; ← new for old; → old for new

REF.No	Part No.	Description	Q'ty	S.No.	I/C	REMARKS	Weight (kgf)	Weight (lb)
010	15401-01930	COVER	1				0.09	0.198
020	15221-05430	GASKET	1				0	0
030	01023-50616	BOLT	2				0.005	0.011
040	15601-54090	APPARATUS IDLING	1				0.04	0.088
050	15601-54100	ASSY BOLT ADJUSTING	1				0.01	0.022
060	15401-54250	BOLT ADJUSTING	1				0.01	0.022
070	15601-54260	SPRING	1				0.002	0.0044
080	15401-92010	NUT	1				0.01	0.022
090	15401-92330	NUT CAP	1				0.01	0.022
100	15021-33660	GASKET	2				0.001	0.0022
110	15401-54270	CAP	1				0.004	0.0088
120	17331-57700	ASSY LVR.ENGINE STOP	1				0	0
130	15471-51650	COVER INJECTION PUMP	1				0	0
140	17331-57740	SHAFT LEVER	1				0.04	0.088
150	17331-57720	LEVER ENGINE STOP	1				0.05	0.11
160	15471-57980	SEAL OIL	1				0.001	0.0022
170	05411-00420	PIN SPRING	1				0.001	0.0022
180	15471-57920	SPRING RETURN	1				0.005	0.011
190	15221-51660	GASKET PUMP COVER	1				0	0
200	01023-50618	BOLT	1				0.006	0.0132
210	01023-50622	BOLT	3				0.005	0.011
220	04012-50060	WASHER PLAIN	3				0.001	0.0022
230	15471-60110	SUPPORT SOLENOID	1				0.295	0.649

silverhorn.co.uk

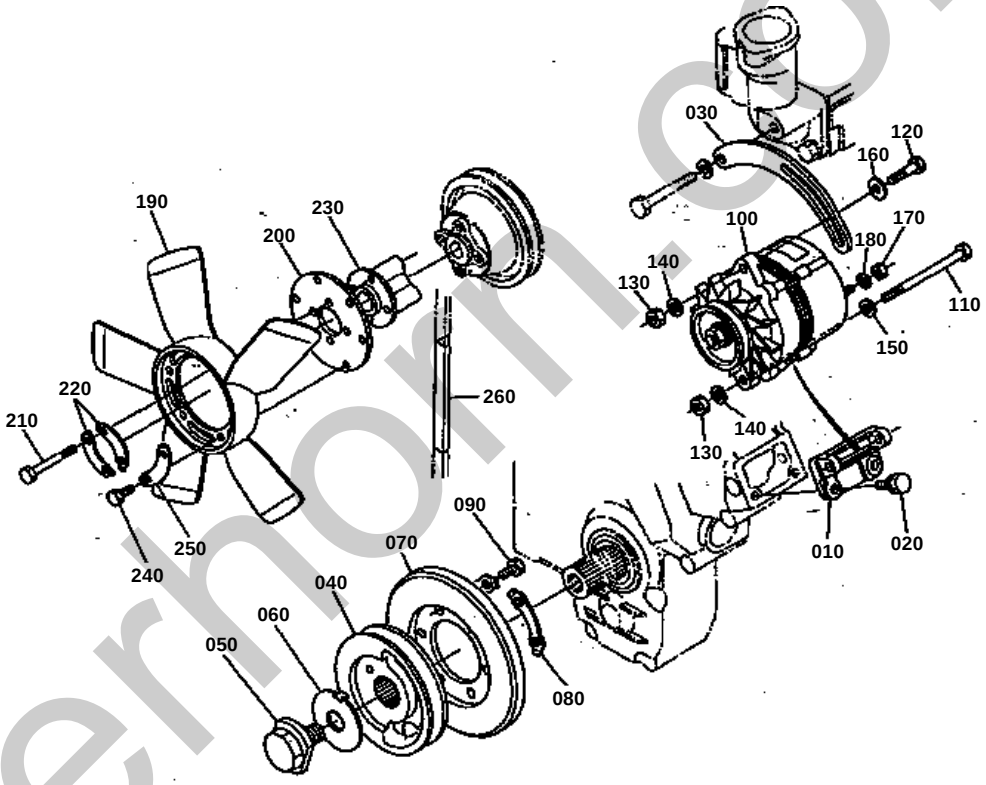

silverhorn.co.uk

DYNAMO AND FAN

↔ Interchangeable; ≠ not interchangeable; ← new for old; → old for new

REF.No	Part No.	Description	Q'ty	S.No.	I/C	REMARKS	Weight (kgf)	Weight (lb)
010	15601-64350	SUPPORT DYNAMO	1				0.28	0.616
020	01123-50825	BOLT	2				0.013	0.0286
030	15601-64420	STAY DYNAMO	1				0.105	0.231
040	17381-74280	PULLY FAN DRIVE	1				0	0
050	15601-91010	BOLT	1				0	0
060	15601-94190	WASHER CLAW	1				0.023	0.0506
070	15601-23780	DAMPER CRANK SHAFT	1				1.7	3.74
080	15601-23810	WASHER DAMPER	3				0.006	0.0132
090	01053-50814	BOLT	6				0.01	0.022
100	15763-64010	ASSY DYNAMO	1				3.47	7.634
110	15221-91010	BOLT	1				0	0
120	01153-50830	BOLT	1				0	0
130	02156-50080	NUT	2				0.004	0.0088
140	04512-50080	WASHER SPRING	2				0	0
150	04012-50080	WASHER PLAIN	1				0.001	0.0022
160	04015-50080	WASHER PLAIN	1				0	0
170	02056-50060	NUT	1				0.002	0.0044
180	04512-50060	WASHER SPRING	1				0	0
190	15601-74110	FAN	1				0.43	0.946
200	15601-74130	SUPPORT FAN	1				0.35	0.77
210	01053-50860	BOLT	4				0.024	0.0528
220	15606-74230	WASHER FAN	2				0.006	0.0132
230	17381-74150	COLLAR FAN	1				0.2	0.44
240	01053-50610	BOLT	6				0.004	0.0088
250	15601-74240	WASHER FAN	3				0.006	0.0132
260	17381-97010	BELT V	1				0	0

silverhorn.co.uk

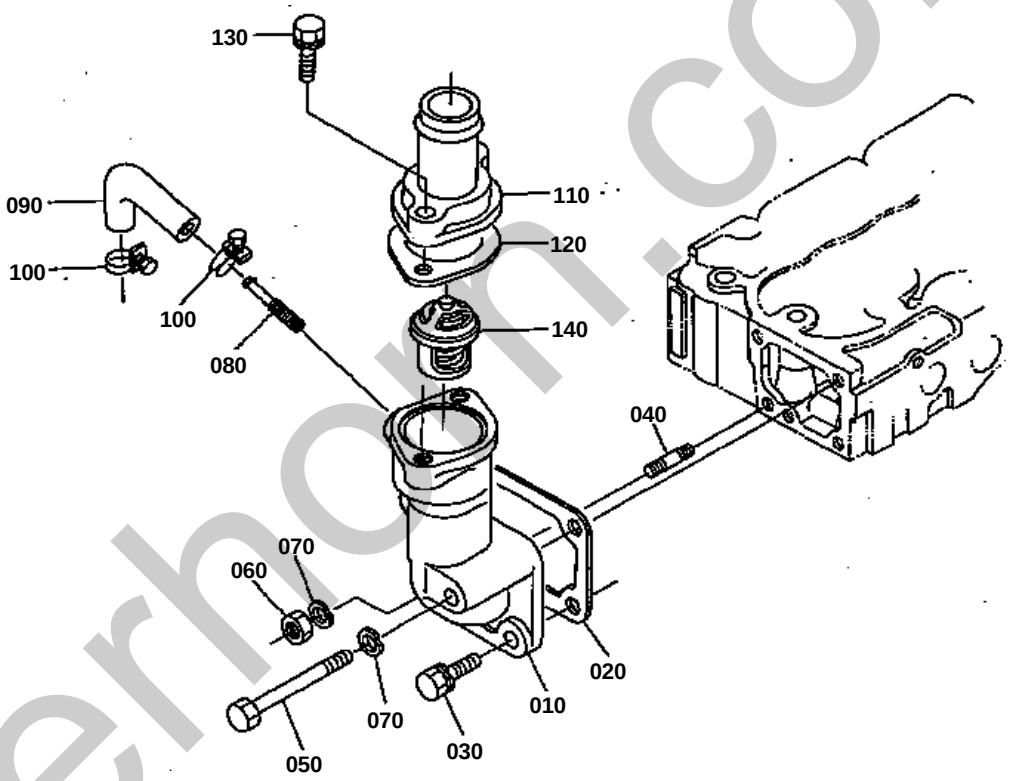

silverhorn.co.uk

THERMOSTAT

↔ Interchangeable; ≠ not interchangeable; ← new for old; → old for new

REF.No	Part No.	Description	Q'ty	S.No.	I/C	REMARKS	Weight (kgf)	Weight (lb)
010	15521-72910	FLANGE WATER	1				0	0
020	15521-72920	GASKET WATER FLANGE	1				0	0
030	01123-50822	BOLT	2				0.012	0.0264
040	01513-50822	STUD	1				0.01	0.022
050	01153-50870	BOLT	1				0.026	0.0572
060	02156-50080	NUT	1				0.004	0.0088
070	04512-50080	WASHER SPRING	2				0	0
080	15321-73340	PIPE WATER RETURN	1				0.016	0.0352
090	17381-73350	PIPE WATER RETURN	1				0.025	0.055
100	15109-73360	BAND PIPE	2				0.01	0.022
110	15321-73260	COVER THERMOSTAT	1				0.107	0.2354
120	15321-73270	GASKET	1				0	0
130	01123-50835	BOLT	2				0.02	0.044
140	15321-73010	ASSY THERMOSTAT	1				0	0

silverhorn.co.uk

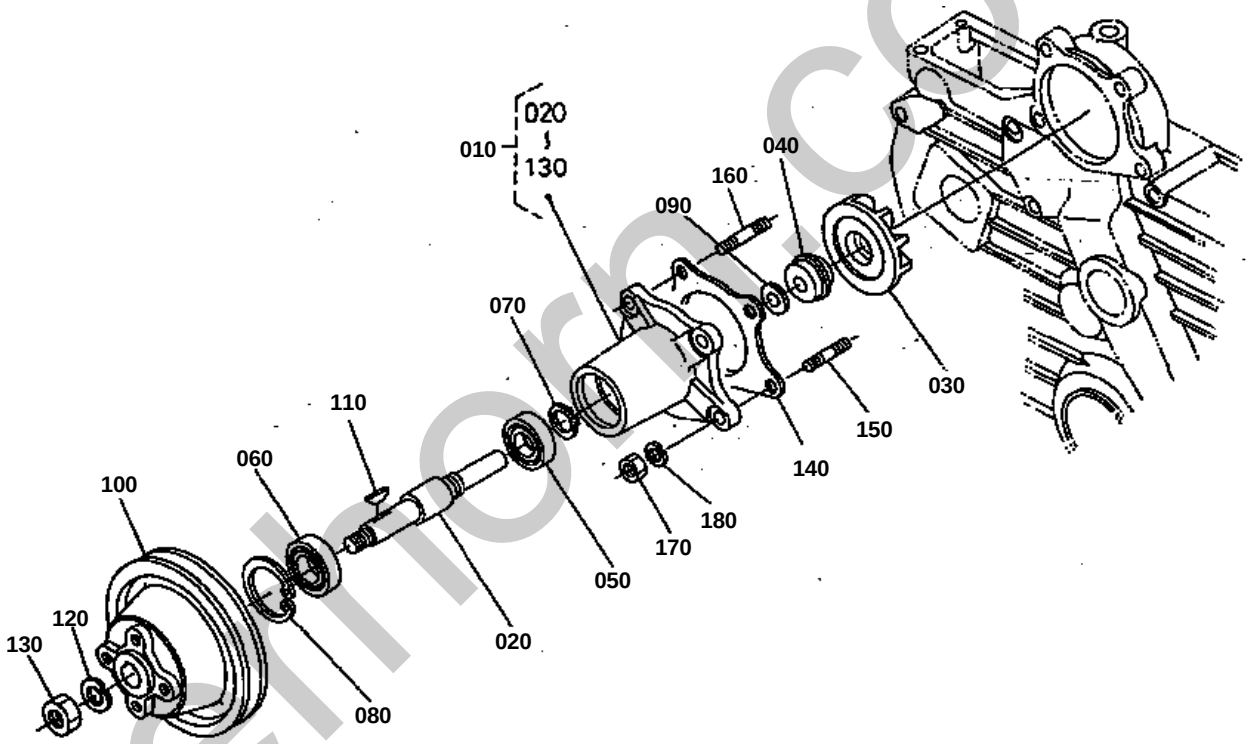

silvermorn.co.uk

WATER PUMP

↔ Interchangeable; ≠ not interchangeable; ← new for old; → old for new

REF.No	Part No.	Description	Q'ty	S.No.	I/C	REMARKS	Weight (kgf)	Weight (lb)
010	17381-73030	ASSY PUMP WATER	1				0	0
020	15601-73480	SHAFT WATER PUMP	1				0	0
030	15321-73510	IMPELLER WATER PUMP	1				0.22	0.484
040	15121-73050	SET SEAL	1				0	0
050	08143-06302	BEARING BALL	1				0.082	0.1804
060	08143-06202	BEARING BALL	1				0.043	0.0946
070	04612-00150	CIR-CLIP EXTERNAL	1				0.001	0.0022
080	04611-00420	CIR-CLIP INTERNAL	1				0.006	0.0132
090	15121-73620	SLINGER	1				0.002	0.0044
100	17381-74250	PULLY FAN	1				1.15	2.53
110	05811-00416	KEY	1				0.002	0.0044
120	04512-50140	WASHER SPRING	1				0	0
130	02076-50140	NUT	1				0.022	0.0484
140	15321-73430	GASKET WATER PUMP	1				0	0
150	01518-50822	STUD	2				0.012	0.0264
160	01518-50825	STUD	2				0.014	0.0308
170	02056-50080	NUT	4				0.005	0.011
180	04512-50080	WASHER SPRING	4				0	0

silverhorn.co.uk

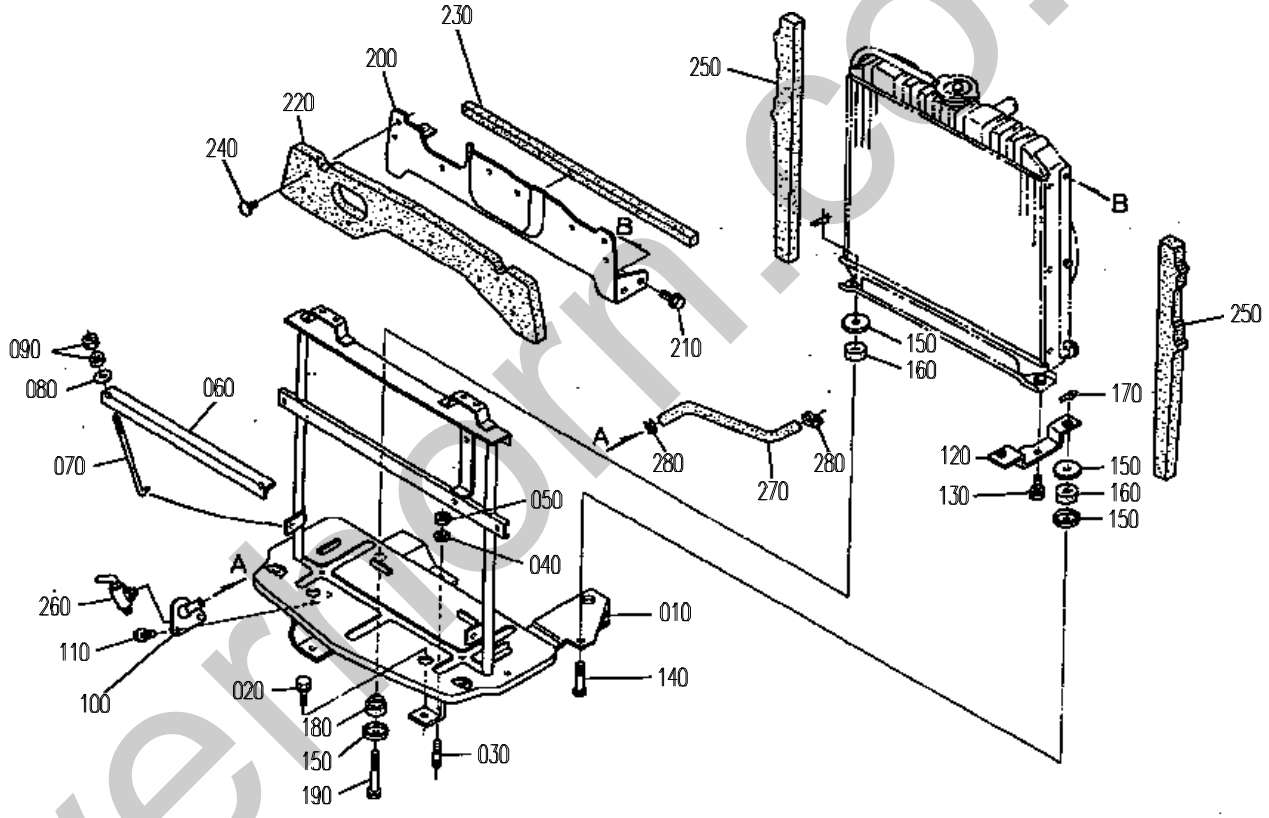

silverhorn.co.uk

BATTERY SUPPORT

↔ Interchangeable; ≠ not interchangeable; ← new for old; → old for new

REF.No	Part No.	Description	Q'ty	S.No.	I/C	REMARKS	Weight (kgf)	Weight (lb)
010	32530-33210	SUPPORT BATTERY	1				0	0
020	01133-51022	BOLT	3				0.025	0.055
030	01517-51022	STUD	1				0	0
040	04512-50100	WASHER SPRING	1				0	0
050	02176-50100	NUT	1				0.005	0.011
060	32350-33270	RETAINER BATTERY	1				0.35	0.77
070	38430-33290	BOLT HOOK	2				0.005	0.011
080	04015-50060	WASHER PLAIN	2				0	0
090	02014-50060	NUT	4				0.003	0.0066
100	32530-33250	BASE RADIATOR COCK	1				0.135	0.297
110	01754-50816	BOLT FLANGE	2				0.011	0.0242
120	32530-13750	SUPPORT RADIATOR	1				0	0
130	01133-51020	BOLT	1				0.02	0.044
140	66711-51340	BOLT	2				0.032	0.0704
150	15111-72200	WASHER	6				0.013	0.0286
160	15111-72180	CUSHION	3				0.015	0.033
170	05515-51000	PIN SNAP	3				0	0
180	15111-72190	CUSHION	1				0.016	0.0352
190	15108-72380	BOLT	1				0.04	0.088
200	32530-17810	SUPPORT CUSHION	1				0	0
210	01754-50610	BOLT FLANGE	2				0.006	0.0132
220	32530-17820	CUSHION	1				0.13	0.286
230	32530-18750	CUSHION BONNET	1				0.02	0.044
240	32530-17830	STOPPER	8				0.002	0.0044
250	32530-17840	CUSHION	2				0	0
260	15575-73100	COCK DRAIN	1				0.065	0.143
270	32530-13510	PIPE DRAIN	1				0.08	0.176
280	68171-63630	BAND HOSE	2				0.013	0.0286

silverhorn.co.uk

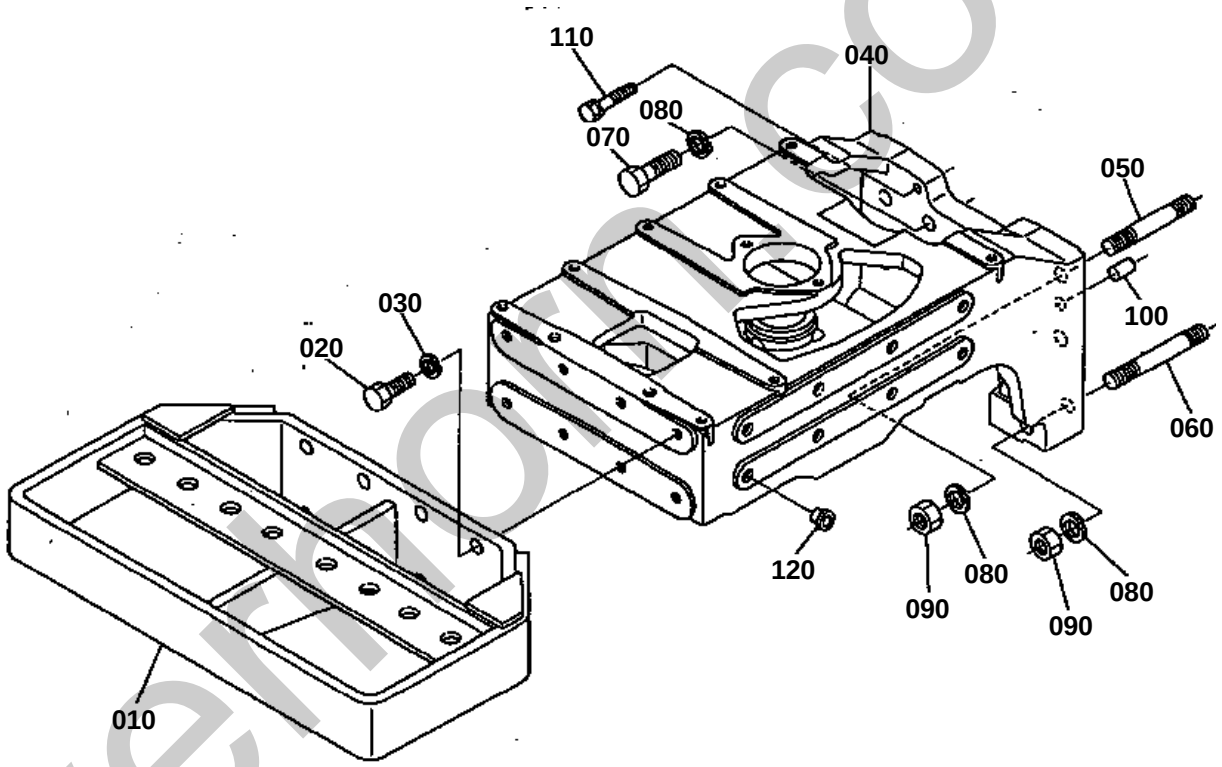

silverhorse.co.uk

FRONT AXLE BRACKET

↔ Interchangeable; ≠ not interchangeable; ← new for old; → old for new

REF.No	Part No.	Description	Q'ty	S.No.	I/C	REMARKS	Weight (kgf)	Weight (lb)
010	32530-13860	BUMPER	1				30	66
020	01173-51435	BOLT	8				0.056	0.1232
030	04512-50140	WASHER SPRING	8				0	0
040	32530-13610	BRACKET FRONT AXLE	1				29	63.8
050	01517-51650	STUD	4				0.106	0.2332
060	01517-51670	STUD	2				0.135	0.297
070	01173-51650	BOLT	2				0.099	0.2178
080	04512-50160	WASHER SPRING	8				0	0
090	02076-50160	NUT	6				0.03	0.066
100	37300-26530	PIN STRAIGHT	2				0.03	0.066
110	01133-51045	BOLT	2				0.034	0.0748
120	31220-14290	PLUG	16				0.002	0.0044

silverhorn.co.uk

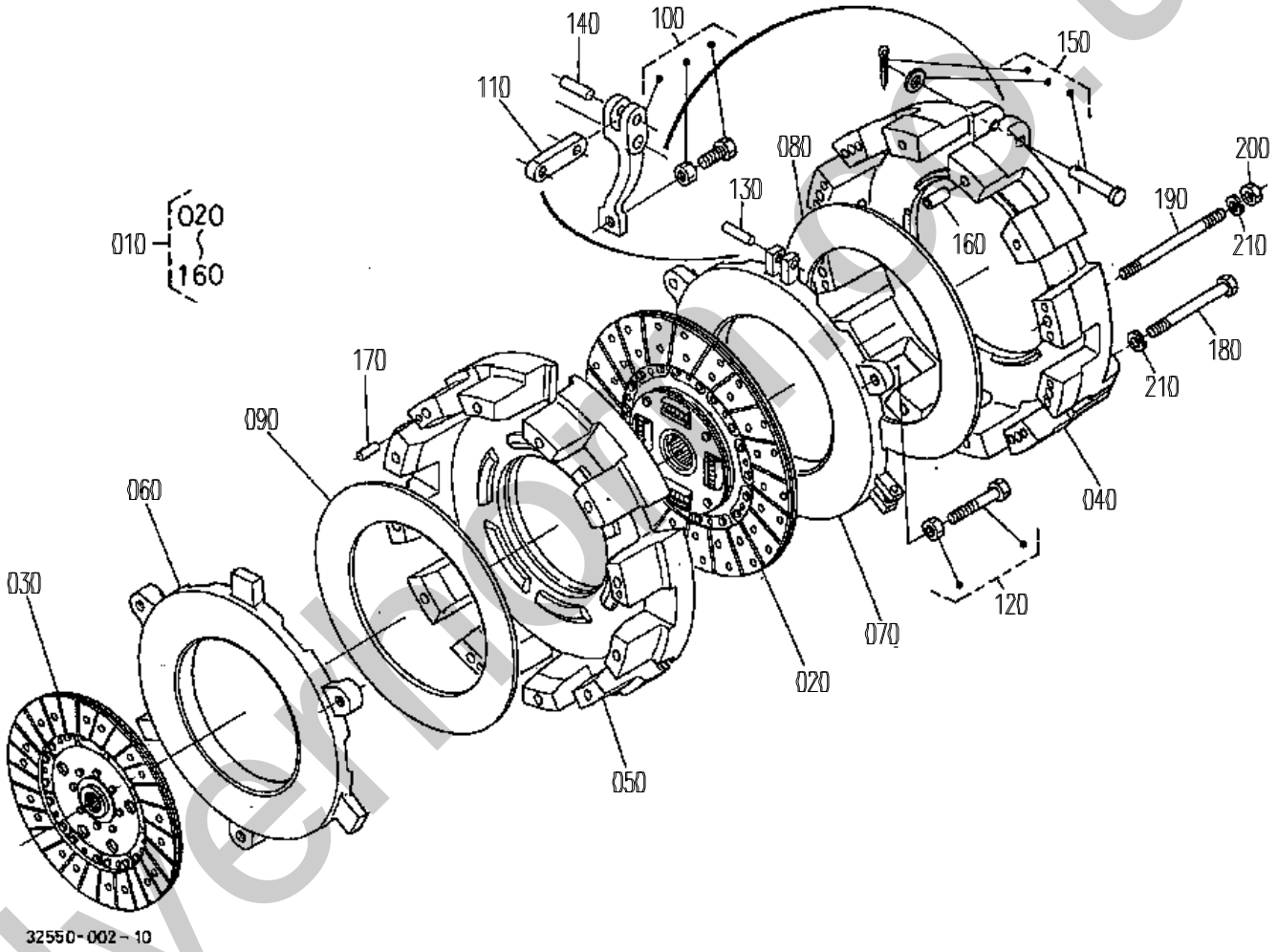

silvermoon-co.uk

CLUTCH (DUAL CLUTCH)

↔ Interchangeable; ≠ not interchangeable; ← new for old; → old for new

REF.No	Part No.	Description	Q'ty	S.No.	I/C	REMARKS	Weight (kgf)	Weight (lb)
010	32530-14200	ASSY CLUTCH DUAL	1				0	0
020	32530-14470	DISK CLUTCH	1				0	0
030	32530-14400	DISK CLUTCH	1				0	0
040	32530-94010	COVER CLUTCH 1	1				6	13.2
050	32530-94020	COVER CLUTCH 2	1				8	17.6
060	32530-94030	PLATE PRESSURE	1				5.2	11.44
070	32530-94040	PLATE PRESSURE	1				4.2	9.24
080	32530-94050	SPRING DIAPHRAGM 1	1				0.77	1.694
090	32530-94060	SPRING DIAPHRAGM 2	1				0.75	1.65
100	32530-94070	KIT LEVER RELEASE	1				0.75	1.65
110	32530-94110	KIT ROD RELEASE	1				0.2	0.44
120	32530-94130	KIT BOLT	1				0.12	0.264
130	32530-94160	KIT PIN STRAIGHT	1				0.06	0.132
140	32530-94180	KIT PIN STRAIGHT	1				0.03	0.066
150	32530-94200	KIT PIN	1				0.12	0.264
160	32530-94240	KIT PIN KNOCK	1				0.02	0.044
170	05012-00612	PIN STRAIGHT	3				0.003	0.0066
180	01153-50800	BOLT	10				0.036	0.0792
190	32530-14590	STUD	2				0.045	0.099
200	02156-50080	NUT	2				0.004	0.0088
210	04512-60080	WASHER SPRING	12				0.002	0.0044

silverhorn.co.uk

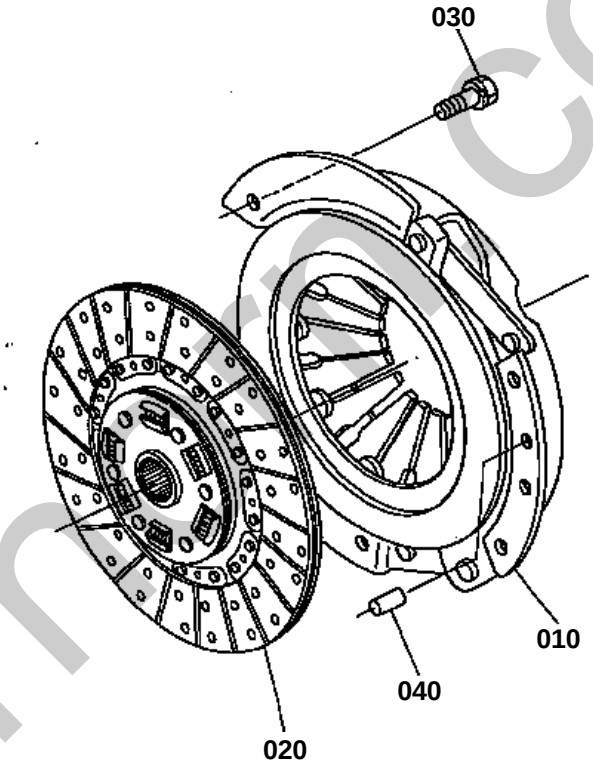

silverhill co.uk

CLUTCH (SINGLE CLUTCH)

↔ Interchangeable; ≠ not interchangeable; ← new for old; → old for new

REF.No	Part No.	Description	Q'ty	S.No.	I/C	REMARKS	Weight (kgf)	Weight (lb)
010	32530-14600	ASSY PLATE PRESSURE	1				11.5	25.3
020	32530-14300	COMP.DISK CLUTCH	1				0	0
030	01123-50820	BOLT	12				0.011	0.0242
040	05012-00612	PIN STRAIGHT	2				0.003	0.0066

silverhorn.co.uk

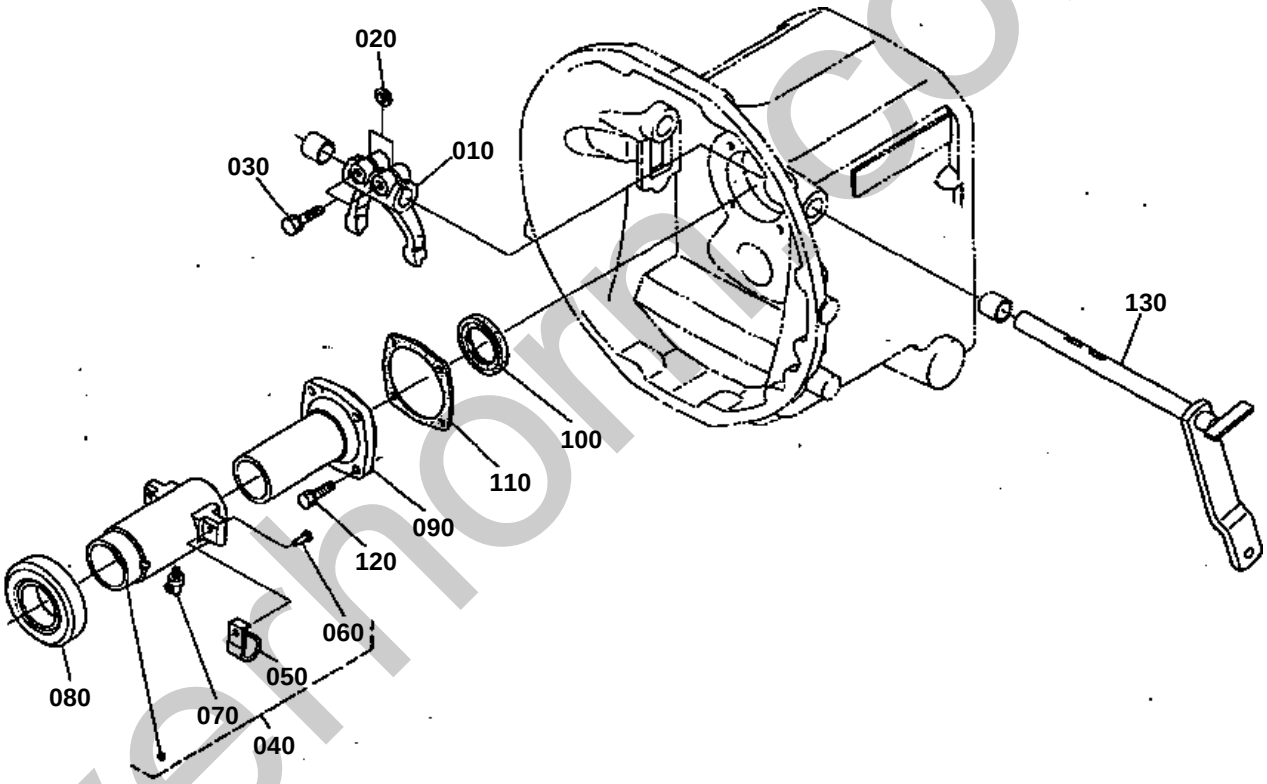

silverhorn.co.uk

CLUTCH LEVER (DUAL CLUTCH)

↔ Interchangeable; ≠ not interchangeable; ← new for old; → old for new

REF.No	Part No.	Description	Q'ty	S.No.	I/C	REMARKS	Weight (kgf)	Weight (lb)
010	32530-14720	FORK CLUTCH RELEASE	1				0.56	1.232
020	31150-14780	KEY FORK	2				0.003	0.0066
030	01123-50835	BOLT	2				0.02	0.044
040	32530-14910	ASSY HUB CLUTCH	1				1.3	2.86
050	33251-26320	SPRING RELEASE HUB	2				0.007	0.0154
060	05611-40412	RIVET	2				0.002	0.0044
070	06613-30010	NIPPLE GREASE	1				0.01	0.022
080	32530-14820	BEARING	1				0.5	1.1
090	32530-15310	COVER SHAFT	1				1.3	2.86
100	09400-40628	SEAL OIL	1				0.025	0.055
110	32530-14840	GASKET	1				0	0
120	01123-50825	BOLT	4				0.013	0.0286
130	32530-14710	LEVER CLUTCH	1				0	0

silverhorn.co.uk

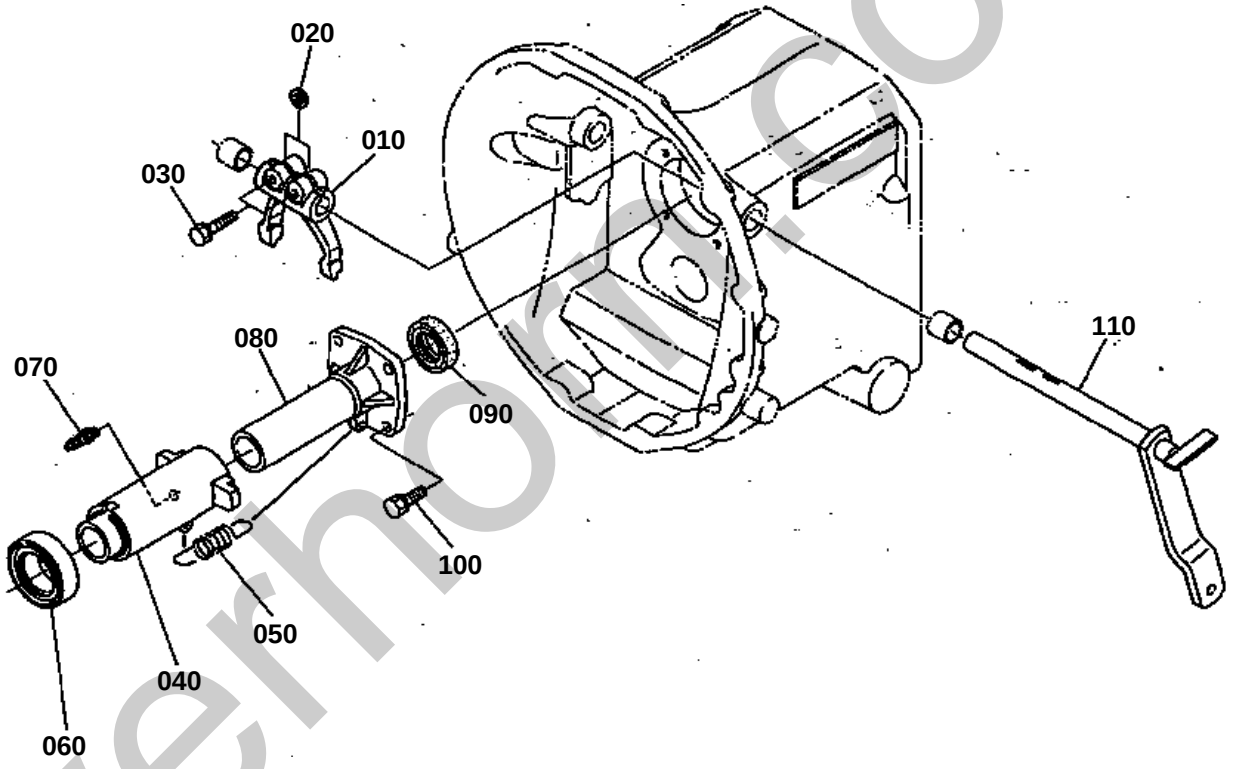

silverhorn.co.uk

CLUTCH LEVER (SINGLE CLUTCH)

↔ Interchangeable; ≠ not interchangeable; ← new for old; → old for new

REF.No	Part No.	Description	Q'ty	S.No.	I/C	REMARKS	Weight (kgf)	Weight (lb)
010	32530-14720	FORK CLUTCH RELEASE	1				0.56	1.232
020	31150-14780	KEY FORK	2				0.003	0.0066
030	01123-50835	BOLT	2				0.02	0.044
040	32530-14810	HUB CLUTCH RELEASE	1				1.06	2.332
050	34150-14840	SPRING	1				0.01	0.022
060	32530-14870	BEARING	1				0.33	0.726
070	06613-30010	NIPPLE GREASE	1				0.01	0.022
080	32530-14830	GUIDE HUB	1				1.28	2.816
090	09403-05210	SEAL OIL	1				0.022	0.0484
100	01123-50825	BOLT	4				0.013	0.0286
110	32530-14710	LEVER CLUTCH	1				0	0

silverhorn.co.uk

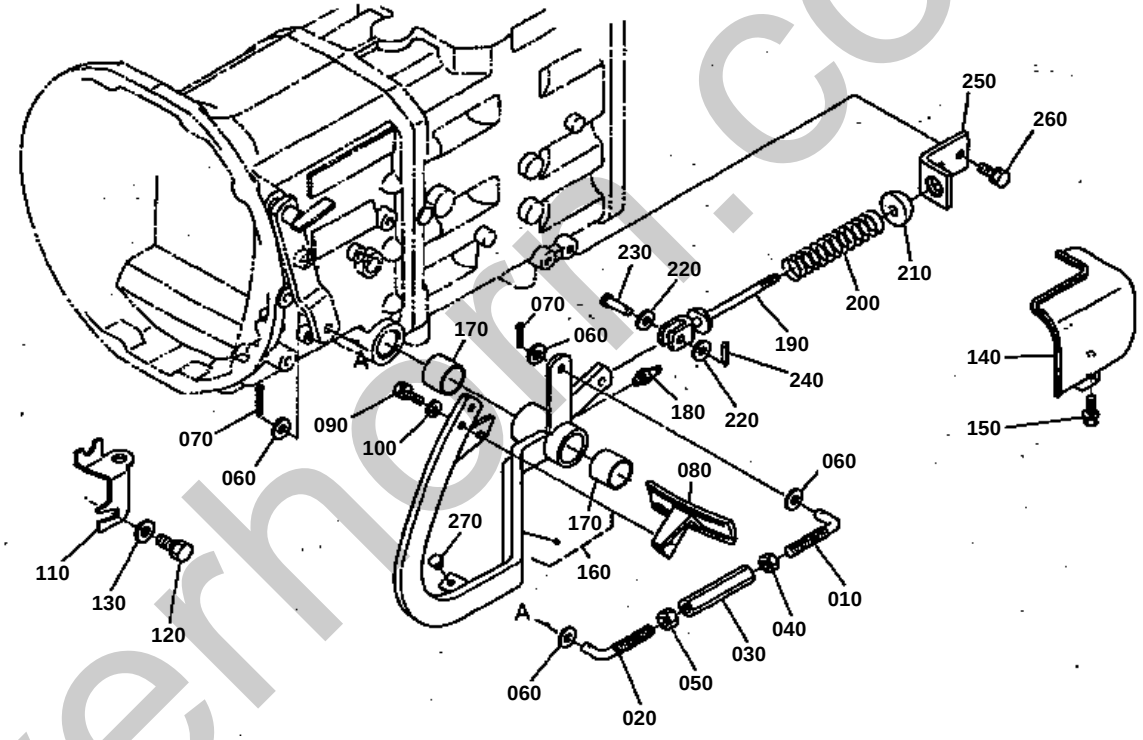

silverhorn.co.uk

CLUTCH PEDAL (DUAL CLUTCH)

↔ Interchangeable; ≠ not interchangeable; ← new for old; → old for new

REF.No	Part No.	Description	Q'ty	S.No.	I/C	REMARKS	Weight (kgf)	Weight (lb)
010	32530-15640	ROD CLUTCH	1				0	0
020	32530-15650	ROD CLUTCH	1				0	0
030	37720-28980	TURNBUCKLE	1				0.099	0.2178
040	37720-28990	NUT	1				0.008	0.0176
050	02172-50120	NUT	1				0.01	0.022
060	04013-50120	WASHER PLAIN	4				0	0
070	05511-50422	PIN SPLIT	2				0.003	0.0066
080	36330-26150	HEEL PEDAL	1				0.71	1.562
090	01123-50825	BOLT	2				0.013	0.0286
100	04013-50080	WASHER PLAIN	2				0	0
110	32530-32250	BRACKET SWITCH	1				0	0
120	01133-51020	BOLT	1				0.02	0.044
130	04015-50100	WASHER PLAIN	1				0.016	0.0352
140	32530-32260	COVER	1				0.22	0.484
150	01754-50816	BOLT FLANGE	2				0.011	0.0242
160	32530-15720	ARM CLUTCH PEDAL	1				3.2	7.04
170	32150-28440	BUSH	2				0.043	0.0946
180	06613-10010	NIPPLE GREASE	1				0.006	0.0132
190	32530-15760	CLIP	1				0	0
200	38430-15770	SPRING	1				0.07	0.154
210	38430-15780	COLLAR	1				0.065	0.143
220	04013-50100	WASHER PLAIN	1				0	0
230	38430-15790	PIN JOINT	1				0.02	0.044
240	05511-50318	PIN SPLIT	1				0.001	0.0022
250	32530-15750	STAY	1				0.18	0.396
260	01133-51022	BOLT	2				0.025	0.055
270	38240-29870	CUSHION	1				0.004	0.0088

silverhorn.co.uk

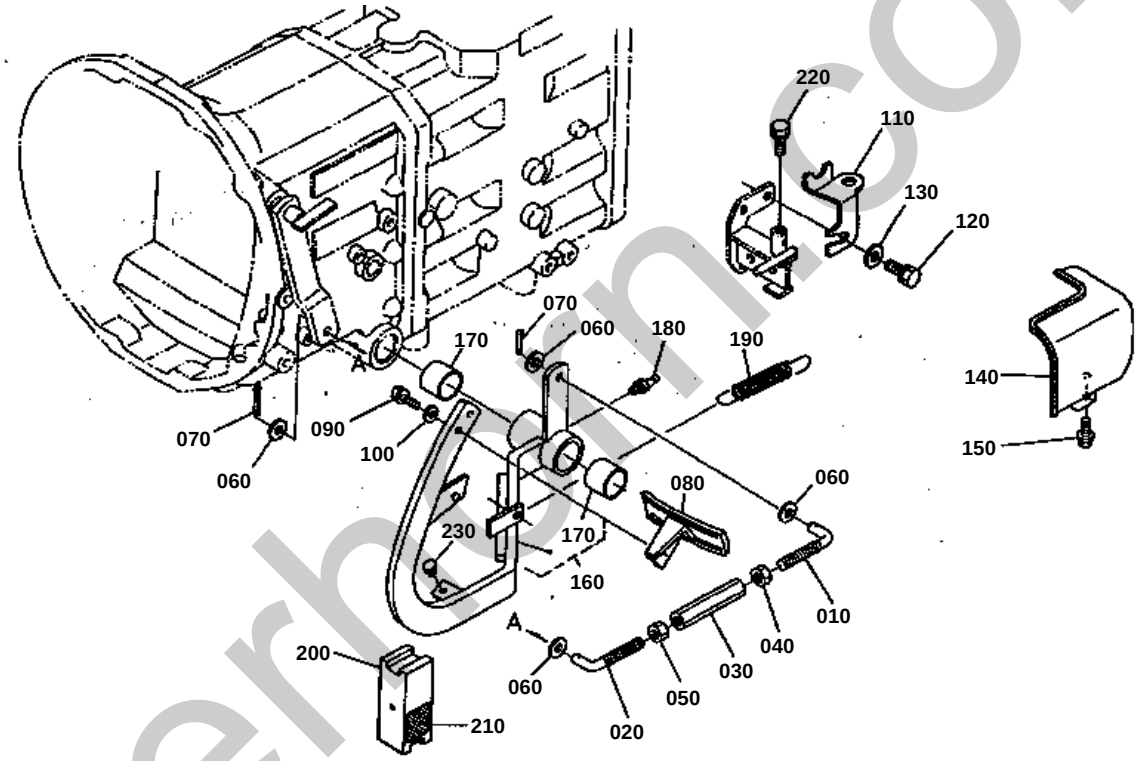

silverhill.co.uk

CLUTCH PEDAL (SINGLE CLUTCH)

↔ Interchangeable; ≠ not interchangeable; ← new for old; → old for new

REF.No	Part No.	Description	Q'ty	S.No.	I/C	REMARKS	Weight (kgf)	Weight (lb)
010	32530-15640	ROD CLUTCH	1				0	0
020	32530-15650	ROD CLUTCH	1				0	0
030	37720-28980	TURNBUCKLE	1				0.099	0.2178
040	37720-28990	NUT	1				0.008	0.0176
050	02172-50120	NUT	1				0.01	0.022
060	04013-50120	WASHER PLAIN	4				0	0
070	05511-50422	PIN SPLIT	2				0.003	0.0066
080	36330-26150	HEEL PEDAL	1				0.71	1.562
090	01123-50825	BOLT	2				0.013	0.0286
100	04013-50080	WASHER PLAIN	2				0	0
110	32530-32250	BRACKET SWITCH	1				0	0
120	01133-51020	BOLT	1				0.02	0.044
130	04015-50100	WASHER PLAIN	1				0.016	0.0352
140	32530-32260	COVER	1				0.22	0.484
150	01754-50816	BOLT FLANGE	2				0.011	0.0242
160	32530-15710	ARM CLUTCH PEDAL	1				3	6.6
170	32150-28440	BUSH	2				0.043	0.0946
180	06613-10010	NIPPLE GREASE	1				0.006	0.0132
190	37150-15840	SPRING	1				0.06	0.132
200	32530-15970	PIECE DISTANCE	1				0.1	0.22
210	32530-65410	LABEL PEDAL PIECE	1				0.001	0.0022
220	01133-51016	BOLT	1				0.015	0.033
230	38240-29870	CUSHION	1				0.004	0.0088

silverhorn.co.uk

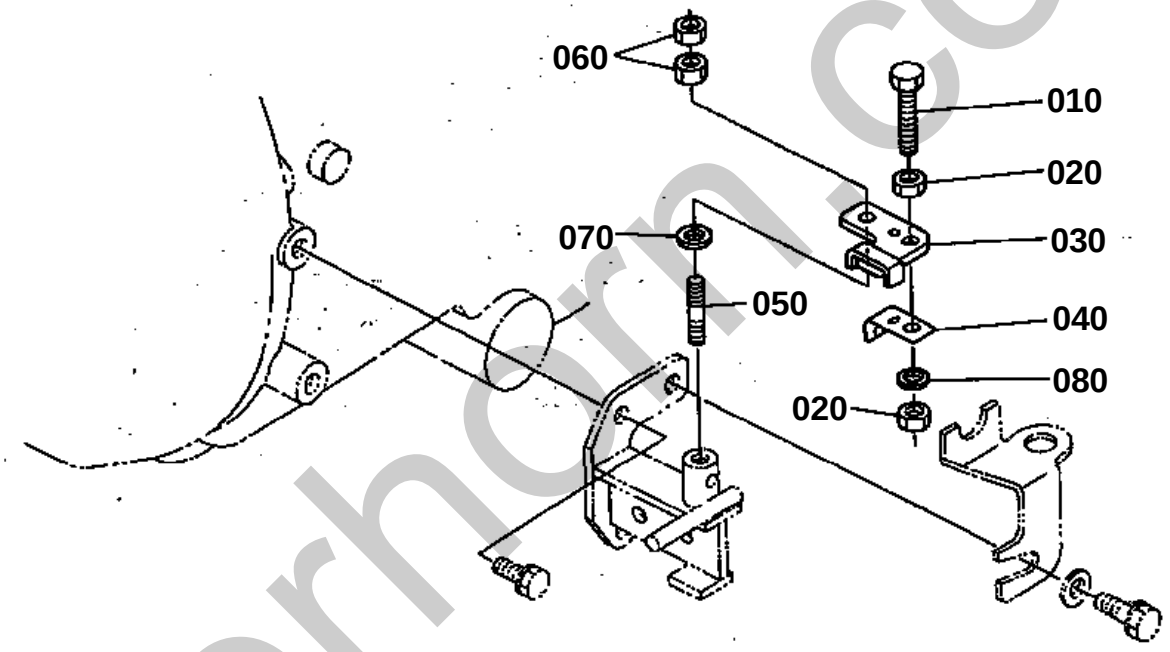

silverhorn.co.uk

CLUTCH PEDAL STOPPER (DUAL CLUTCH)

↔ Interchangeable; ≠ not interchangeable; ← new for old; → old for new

REF.No	Part No.	Description	Q'ty	S.No.	I/C	REMARKS	Weight (kgf)	Weight (lb)
010	32530-15830	BOLT STOPPER	1				0.045	0.099
020	02118-50100	NUT	2				0.005	0.011
030	32530-15810	STOPPER PEDAL	1				0.11	0.242
040	32530-15870	SPRING	1				0.01	0.022
050	01517-51030	STUD	1				0	0
060	02118-50100	NUT	2				0.005	0.011
070	04013-50100	WASHER PLAIN	1				0	0
080	04512-50100	WASHER SPRING	1				0	0

silverhorn.co.uk

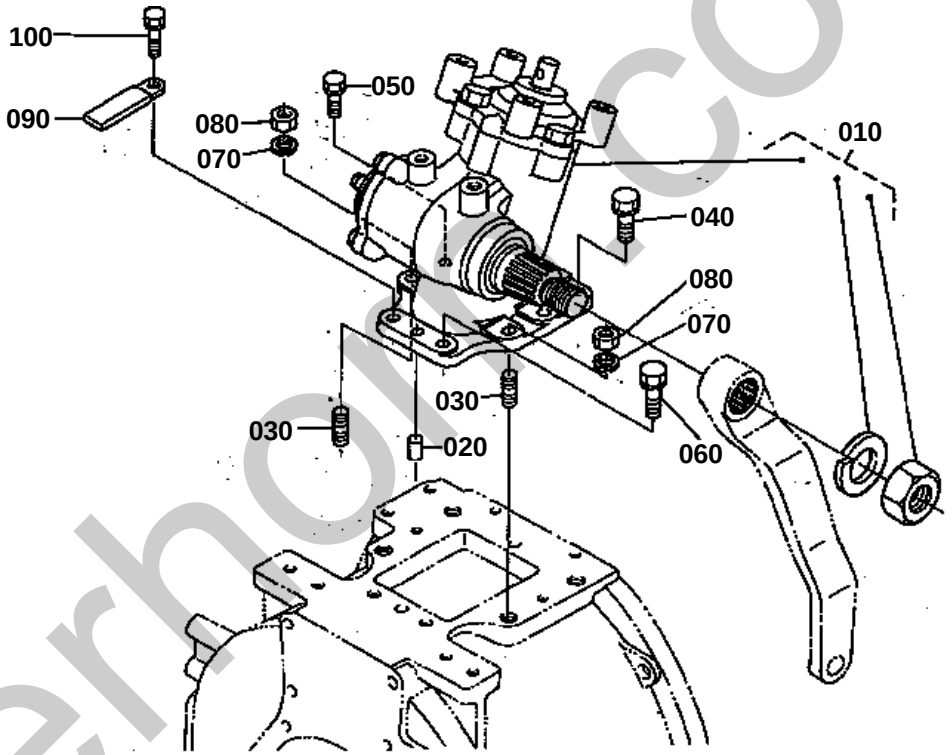

silverhome.co.uk

↔ Interchangeable; ≠ not interchangeable; ← new for old; → old for new

REF.No	Part No.	Description	Q'ty	S.No.	I/C	REMARKS	Weight (kgf)	Weight (lb)
010	32530-16100	ASSY STEERING POWER	1				16.5	36.3
020	37150-27370	PIN STRAIGHT	2				0.009	0.0198
030	01574-51228	STUD	2				0.035	0.077
040	01133-51230	BOLT	2				0.04	0.088
050	01123-50825	BOLT	2				0.013	0.0286
060	01133-51030	BOLT	2				0.025	0.055
070	04512-50120	WASHER SPRING	2				0	0
080	02174-50120	NUT	2				0.01	0.022
090	37150-34460	CLAMP CORD	1				0.03	0.066
100	01173-51014	BOLT	1				0.015	0.033

silverhorn.co.uk

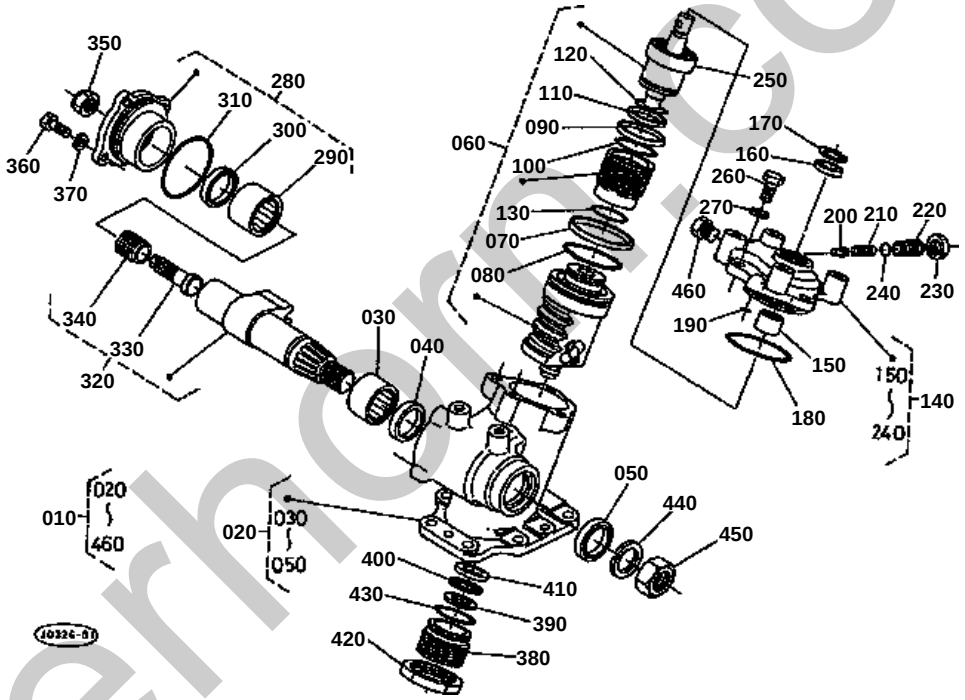

silverhorntc.co.uk

↔ Interchangeable; ≠ not interchangeable; ← new for old; → old for new

REF.No	Part No.	Description	Q'ty	S.No.	I/C	REMARKS	Weight (kgf)	Weight (lb)
010	32530-16100	ASSY STEERING POWER	1				16.5	36.3
020	32530-94310	ASSY BOX GEAR	1				6	13.2
030	38430-66120	BEARING NEEDLE	1				0.195	0.429
040	38430-66130	GASKET	1				0.005	0.011
050	38430-66140	SEAL OIL	1				0.02	0.044
060	32530-94320	ASSY VALVE NUT	1				3	6.6
070	32530-94460	RING	1				0.005	0.011
080	04811-50700	RING	1				0.002	0.0044
090	32530-94470	RING	3				0.002	0.0044
100	32530-94480	O RING	3				0.002	0.0044
110	32530-94490	RING	1				0.002	0.0044
120	04811-10250	RING	1				0.001	0.0022
130	04811-10360	RING	1				0.001	0.0022
140	32530-94330	ASSY VALVE HOUSING	1				2.02	4.444
150	38430-66440	BEARING NEEDLE	1				0.015	0.033
160	31351-66530	SEAL OIL	1				0.01	0.022
170	04611-00320	CIR-CLIP INTERNAL	1				0.002	0.0044
180	32530-94520	O RING	1				0.004	0.0088
190	04811-00080	RING	1				0.001	0.0022
200	31351-66360	POPPET	1				0.005	0.011
210	38430-66380	SPRING	1				0.015	0.033
220	31351-66370	SCREW ADJUSTING	1				0.047	0.1034
230	31351-66380	NUT	1				0.022	0.0484
240	31351-66390	O RING	1				0.001	0.0022
250	32530-94340	BEARING BALL	1				0.05	0.11
260	32530-94350	BOLT	3				0.04	0.088
270	04512-50120	WASHER SPRING	3				0	0
280	32530-94360	ASSY COVER SIDE	1				1.17	2.574
290	38430-66480	BEARING NEEDLE	1				0.12	0.264
300	38430-66130	GASKET	1				0.005	0.011
310	32530-94540	O RING	1				0.004	0.0088
320	32530-94370	ASSY SHAFT SECTOR	1				2.05	4.51
330	38430-66750	SCREW ADJUSTING	1				0.07	0.154
340	38430-66760	ADJUSTER	1				0.015	0.033
350	38430-66770	NUT	1				0.02	0.044
360	32530-94380	BOLT	4				0.021	0.0462
370	04512-50100	WASHER SPRING	4				0	0
380	32530-94390	COVER FRONT	1				0.19	0.418
390	32530-94400	RING DRIVE	1				0.004	0.0088
400	32530-94410	BEARING NEEDLE	1				0.002	0.0044
410	32530-94420	RING DRIVE	1				0.02	0.044
420	32530-94430	NUT	1				0.05	0.11
430	04811-10380	RING	1				0.001	0.0022
440	38430-66730	WASHER SPRING	1				0.05	0.11
450	38430-66720	NUT	1				0.145	0.319
460	32530-94440	PLUG	2				0.005	0.011

simonorn.co.uk

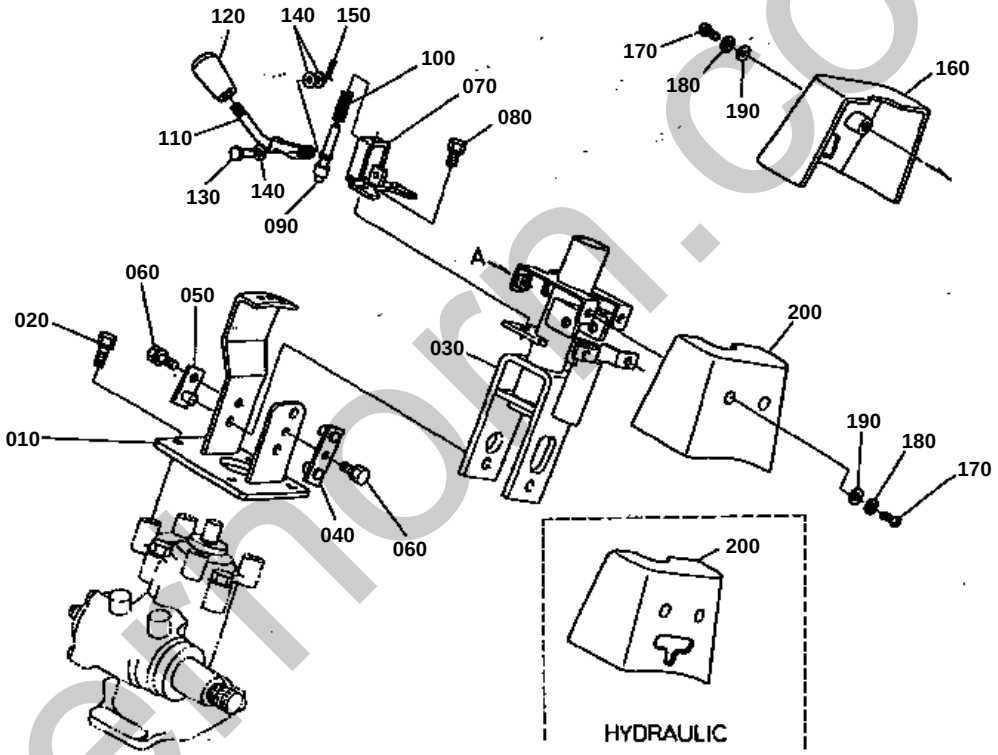

silvermoor.co.uk

STEERING WHEEL TILT LEVER

↔ Interchangeable; ≠ not interchangeable; ← new for old; → old for new

REF.No	Part No.	Description	Q'ty	S.No.	I/C	REMARKS	Weight (kgf)	Weight (lb)
010	32530-16420	BASE STEERING	1				0	0
020	01133-51025	BOLT	4				0.023	0.0506
030	32530-16410	POST STEERING	1				1.5	3.3
040	32530-16430	PIN	1				0.06	0.132
050	32530-16440	PIN	1				0.035	0.077
060	01123-50816	BOLT	2				0.011	0.0242
070	32530-16450	HOLDER TILT PIN	1				0.13	0.286
080	01123-50816	BOLT	2				0.011	0.0242
090	32530-16460	PIN	1				0.06	0.132
100	36330-62210	SPRING	1				0.005	0.011
110	32530-16470	LEVER TILT	1				0.04	0.088
120	33251-80170	GRIP	1				0.008	0.0176
130	05122-50518	PIN JOINT	1				0.002	0.0044
140	04013-50050	WASHER PLAIN	3				0	0
150	05511-51210	PIN SPLIT	1				0.001	0.0022
160	32530-16520	COVER POST RH	1				0.09	0.198
170	32530-31120	SCREW	4				0.01	0.022
180	66021-55280	WASHER SPRING	4				0.001	0.0022
190	32530-18390	WASHER PLAIN	4				0.001	0.0022
200	32530-16530	COVER POST LH	1			MANUAL SHUTTLE	0.09	0.198
200	32530-16540	COVER POST LH	1			HYD.SHUTTLE	0.19	0.418

silverhorn.co.uk

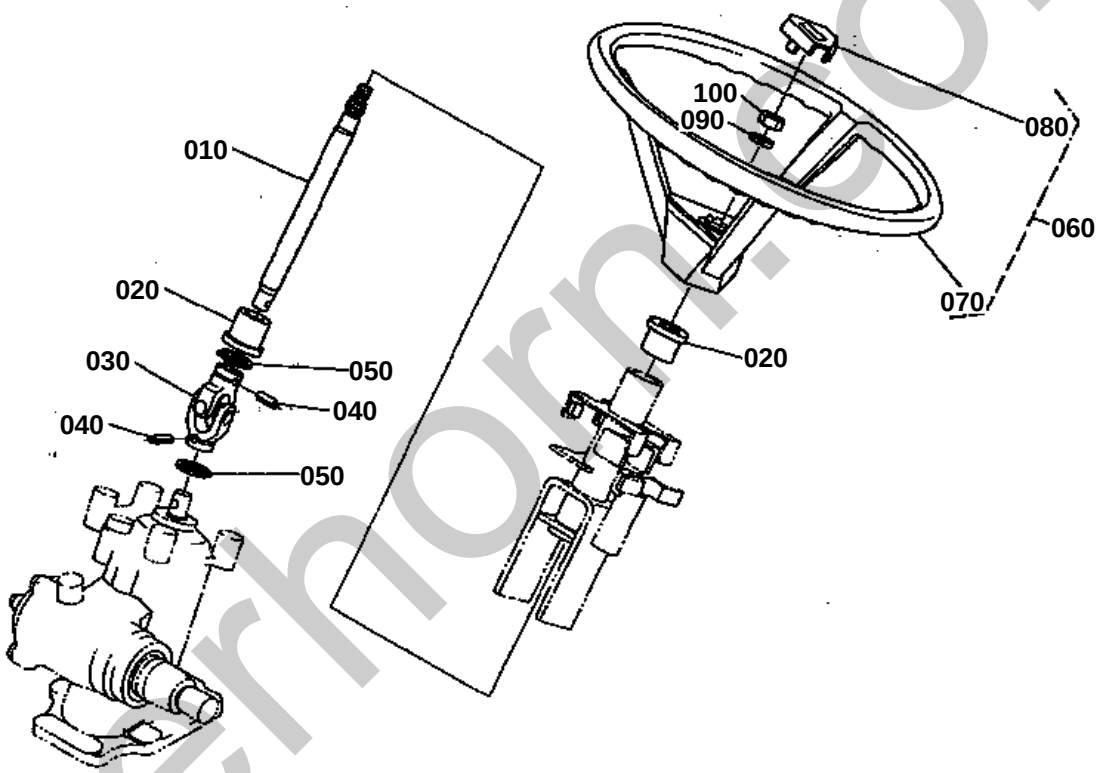

silverhorn.co.uk

STEERING WHEEL

↔ Interchangeable; ≠ not interchangeable; ← new for old; → old for new

REF.No	Part No.	Description	Q'ty	S.No.	I/C	REMARKS	Weight (kgf)	Weight (lb)
010	32530-16480	SHAFT STEERING	1				0.44	0.968
020	32530-16490	BUSH STEERING POST	2				0.02	0.044
030	32530-16510	UNIVERSAL JOINT	1				0.27	0.594
040	05411-00622	PIN SPRING	2				0.003	0.0066
050	04612-00250	CIR-CLIP EXTERNAL	2				0.002	0.0044
060	31351-16060	ASSY WHEEL STEERING	1				0	0
070	31351-16070	WHEEL STEERING	1				2	4.4
080	31351-16080	PAD STEERING	1				0	0
090	04512-50120	WASHER SPRING	1				0	0
100	02176-50120	NUT	1				0.01	0.022

silverhorn.co.uk

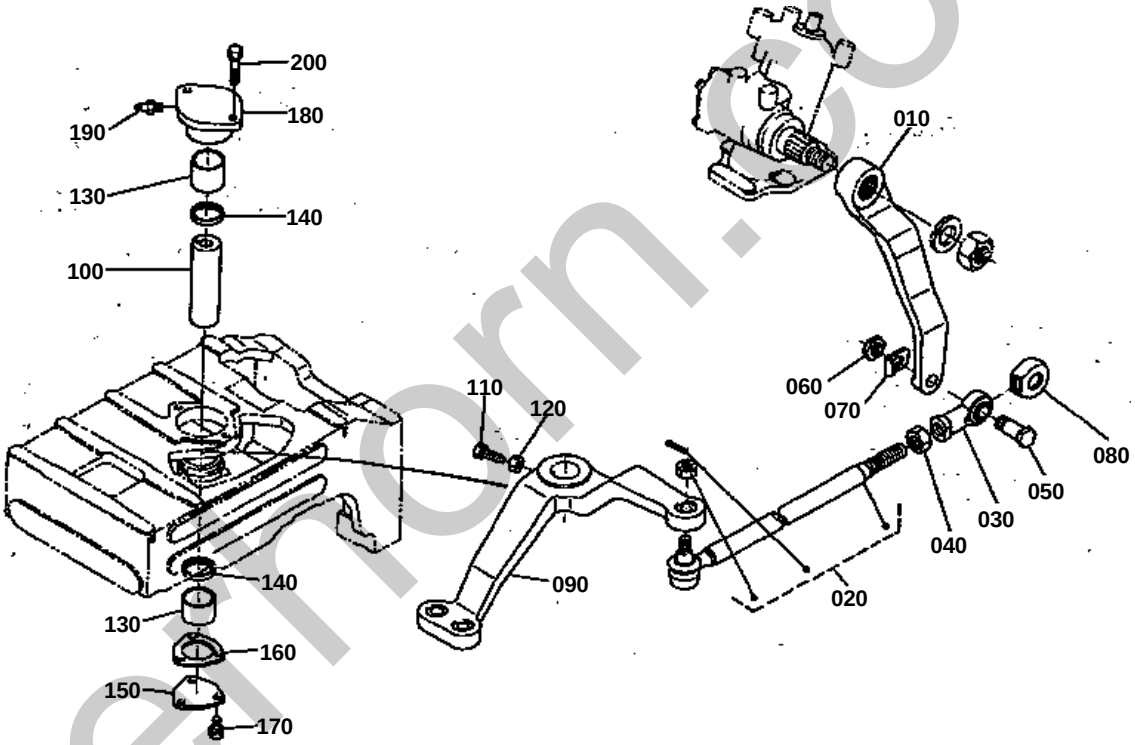

silvermorn.co.uk

DRAG LINK

↔ Interchangeable; ≠ not interchangeable; ← new for old; → old for new

REF.No	Part No.	Description	Q'ty	S.No.	I/C	REMARKS	Weight (kgf)	Weight (lb)
010	32530-16810	ARM PITMAN	1				3.06	6.732
020	32530-16820	LINK DRAG	1				2.95	6.49
030	32530-16830	END ROD	1				0.41	0.902
040	02176-50200	NUT	1				0.042	0.0924
050	32530-16840	PIN ROD END	1				0.135	0.297
060	32530-16850	NUT	1				0.025	0.055
070	32530-16860	WASHER	1				0.01	0.022
080	32530-16870	COVER ROD END	1				0.01	0.022
090	32530-16910	LEVER STEERING	1				0	0
100	32530-16920	SHAFT	1	<=50053			0	0
100	32530-16923	SHAFT	1	>=50054	≠		0	0
110	38630-44830	BOLT LOCK	1				0.04	0.088
120	02172-50120	NUT	1				0.01	0.022
130	32530-16930	BUSH	2				0	0
140	38240-13160	SEAL OIL	2				0.005	0.011
150	32530-16940	COVER LOWER	1				0.05	0.11
160	32530-16950	GASKET	1				0	0
170	01123-50816	BOLT	3				0.011	0.0242
180	32530-16960	COVER UPPER	1				1.16	2.552
190	06613-10675	NIPPLE GREASE	1				0.003	0.0066
200	01133-51035	BOLT	2				0.03	0.066

silverhorn.co.uk

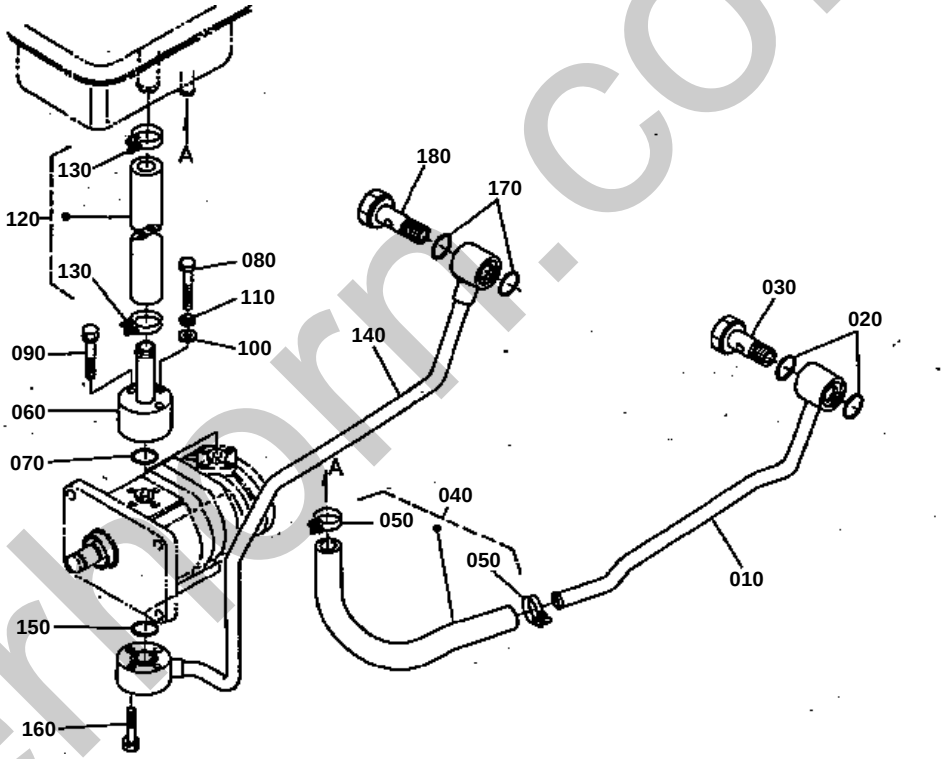

silverthorn.co.uk

POWER STEERING OIL LINE (MANUAL SHUTTLE)

↔ Interchangeable; ≠ not interchangeable; ← new for old; → old for new

REF.No	Part No.	Description	Q'ty	S.No.	I/C	REMARKS	Weight (kgf)	Weight (lb)
010	32530-38560	COMP.PIPE RETURN	1				0.16	0.352
020	04810-00200	O RING	2				0.001	0.0022
030	32530-38550	BOLT JOINT	1				0.09	0.198
040	32530-38590	ASSY PIPE RUBBER	1				0	0
050	36330-63690	BAND HOSE	2				0.01	0.022
060	32530-38630	JOINT	1				0	0
070	04811-00180	O RING	1				0.001	0.0022
080	01023-50640	BOLT	2				0	0
090	01053-50645	BOLT	1				0.012	0.0264
100	04012-50060	WASHER PLAIN	1				0.001	0.0022
110	04512-50060	WASHER SPRING	1				0	0
120	32530-38650	ASSY PIPE RUBBER	1				0.11	0.242
130	36530-04940	BAND HOSE	2				0.013	0.0286
140	32530-38510	COMP.PIPE DELIVERY	1				0.61	1.342
150	04811-40140	O RING	1				0.001	0.0022
160	01023-50635	BOLT	4				0.01	0.022
170	04810-00200	O RING	2				0.001	0.0022
180	32530-38550	BOLT JOINT	1				0.09	0.198

silverhorn.co.uk

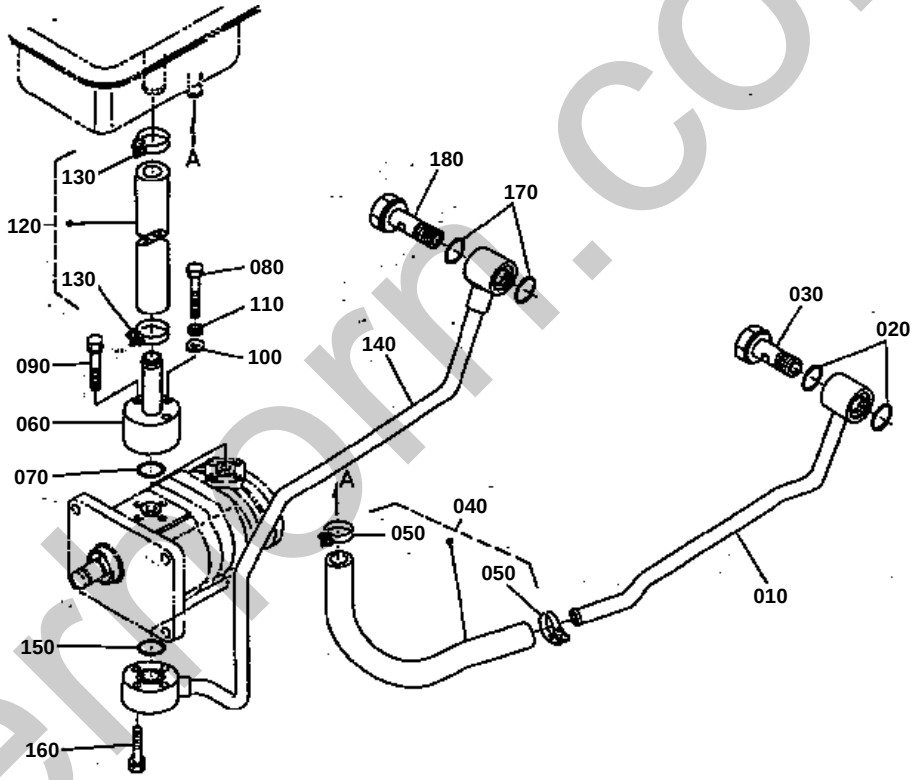

silvermorr.co.uk

POWER STEERING OIL LINE (HYD.SHUTTLE)

↔ Interchangeable; ≠ not interchangeable; ← new for old; → old for new

REF.No	Part No.	Description	Q'ty	S.No.	I/C	REMARKS	Weight (kgf)	Weight (lb)
010	32530-38560	COMP.PIPE RETURN	1				0.16	0.352
020	04810-00200	O RING	2				0.001	0.0022
030	32530-38550	BOLT JOINT	1				0.09	0.198
040	32530-38590	ASSY PIPE RUBBER	1				0	0
050	36330-63690	BAND HOSE	2				0.01	0.022
060	32530-38630	JOINT	1				0	0
070	04811-00180	O RING	1				0.001	0.0022
080	01023-50640	BOLT	2				0	0
090	01053-50645	BOLT	1				0.012	0.0264
100	04012-50060	WASHER PLAIN	1				0.001	0.0022
110	04512-50060	WASHER SPRING	1				0	0
120	32530-38650	ASSY PIPE RUBBER	1				0.11	0.242
130	36530-04940	BAND HOSE	2				0.013	0.0286
140	32530-46550	COMP.PIPE DELIVERY	1				0.6	1.32
150	04811-40140	O RING	1				0.001	0.0022
160	01023-50635	BOLT	4				0.01	0.022
170	04810-00200	O RING	2				0.001	0.0022
180	32530-38550	BOLT JOINT	1				0.09	0.198

silverhorn.co.uk

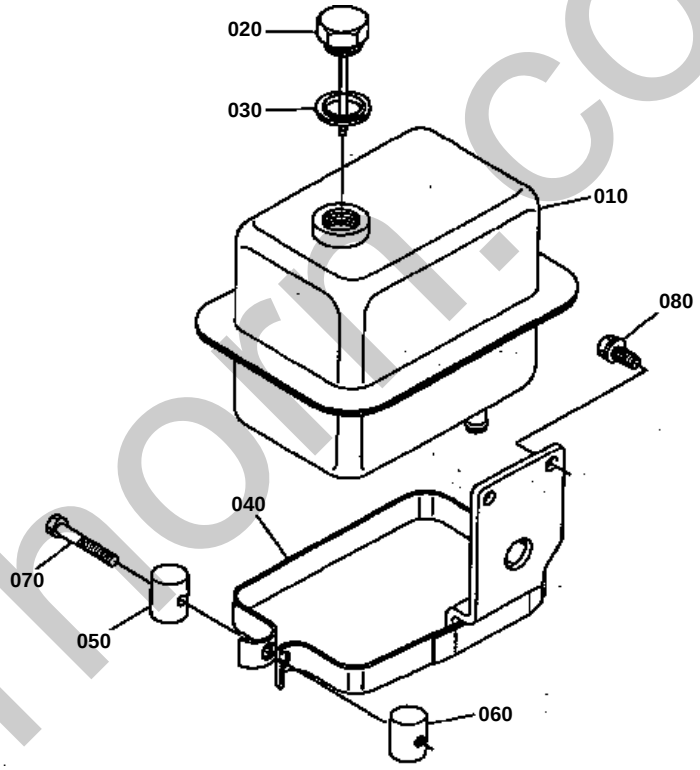

silverhorn.co.uk

POWER STEERING OIL TANK

↔ Interchangeable; ≠ not interchangeable; ← new for old; → old for new

REF.No	Part No.	Description	Q'ty	S.No.	I/C	REMARKS	Weight (kgf)	Weight (lb)
010	32530-16150	TANK OIL	1				1.82	4.004
020	37810-45260	GAUGE PLUG	1				0.076	0.1672
030	04717-02000	WASHER SEAL	1				0.004	0.0088
040	32530-16160	STAY TANK	1				0.41	0.902
050	33400-63440	CLAMP BAND	1				0.015	0.033
060	33400-63450	CLAMP BAND	1				0.015	0.033
070	01053-50645	BOLT	1				0.012	0.0264
080	01754-50816	BOLT FLANGE	2				0.011	0.0242

silverhorn.co.uk

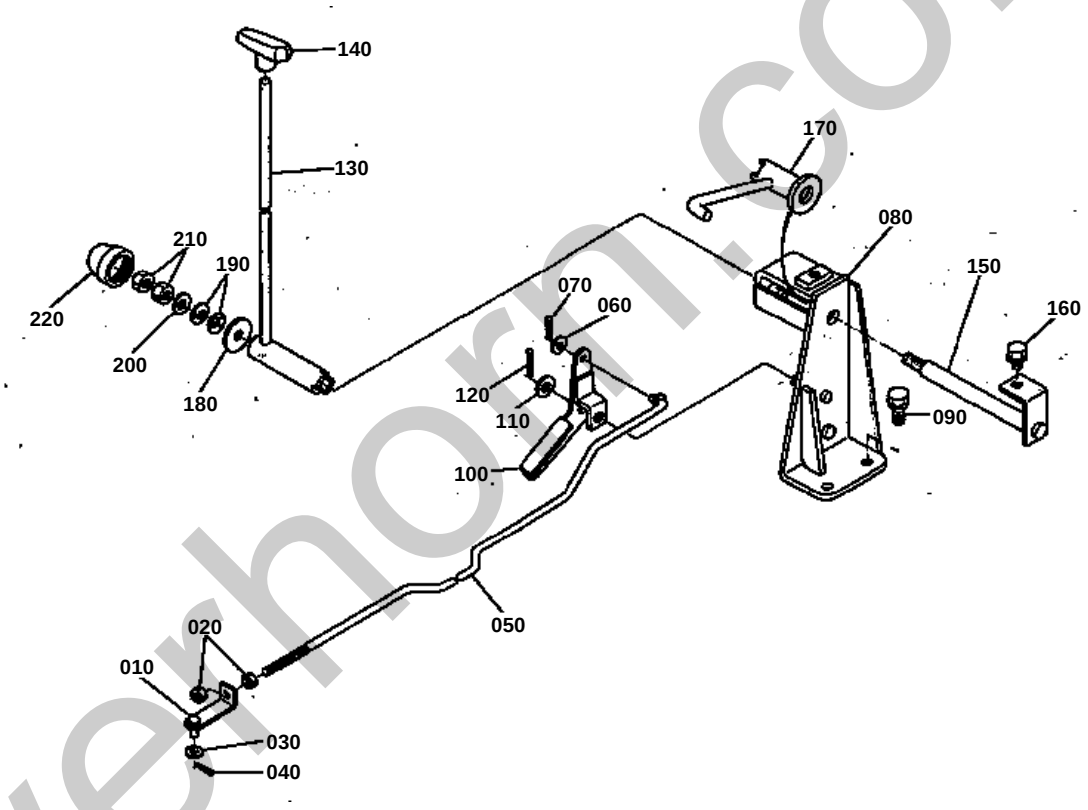

silverhorn.co.uk

THROTTLE LEVER

↔ Interchangeable; ≠ not interchangeable; ← new for old; → old for new

REF.No	Part No.	Description	Q'ty	S.No.	I/C	REMARKS	Weight (kgf)	Weight (lb)
010	34150-17390	JOINT ROD	1				0.025	0.055
020	02012-50060	NUT	2				0	0
030	04012-50060	WASHER PLAIN	1				0.001	0.0022
040	05511-50218	PIN SPLIT	1				0.001	0.0022
050	32530-17370	ROD ACCEL.	1				0.16	0.352
060	04012-50060	WASHER PLAIN	1				0.001	0.0022
070	05511-50218	PIN SPLIT	1				0.001	0.0022
080	32530-17380	LEVER HAND ACCEL	1				1.06	2.332
090	01133-51020	BOLT	2				0.02	0.044
100	32530-17320	LINK ACCEL.	1				0.115	0.253
110	04011-50100	WASHER PLAIN	1				0.002	0.0044
120	05511-50218	PIN SPLIT	1				0.001	0.0022
130	32530-17124	LEVER HAND ACCEL.	1				0.35	0.77
140	35320-17170	GRIP ACCEL.	1				0.018	0.0396
150	32530-17130	SHAFT HAND ACCEL.	1				0.25	0.55
160	01754-50812	BOLT FLANGE	1				0.01	0.022
170	32530-17143	ARM LEVER	1				0.2	0.44
180	04015-50100	WASHER PLAIN	1				0.016	0.0352
190	32530-17160	SPRING	2				0.001	0.0022
200	04013-50100	WASHER PLAIN	1				0	0
210	02118-50100	NUT	2				0.005	0.011
220	32530-17110	CAP	1				0.007	0.0154

silverhorn.co.uk

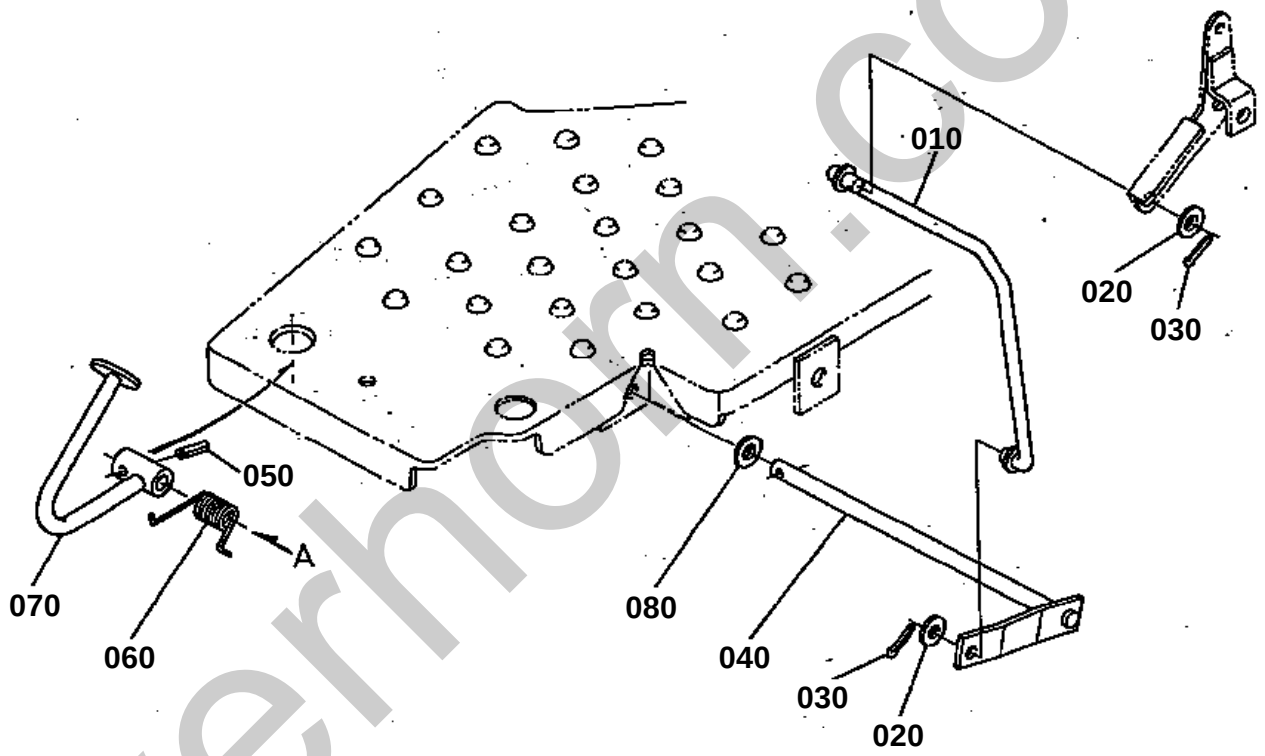

silverhorn.co.uk

THROTTLE PEDAL

↔ Interchangeable; ≠ not interchangeable; ← new for old; → old for new

REF.No	Part No.	Description	Q'ty	S.No.	I/C	REMARKS	Weight (kgf)	Weight (lb)
010	32530-17570	ROD ACCEL.	1				0.15	0.33
020	04012-50080	WASHER PLAIN	2				0.001	0.0022
030	05511-50218	PIN SPLIT	2				0.001	0.0022
040	32530-17580	SHAFT PEDAL	1				0.21	0.462
050	05411-00425	PIN SPRING	1				0.001	0.0022
060	32530-17650	SPRING	1				0.005	0.011
070	32530-17630	PEDAL ACCEL.	1				0.17	0.374
080	04011-50100	WASHER PLAIN	1				0.002	0.0044

silverhorn.co.uk

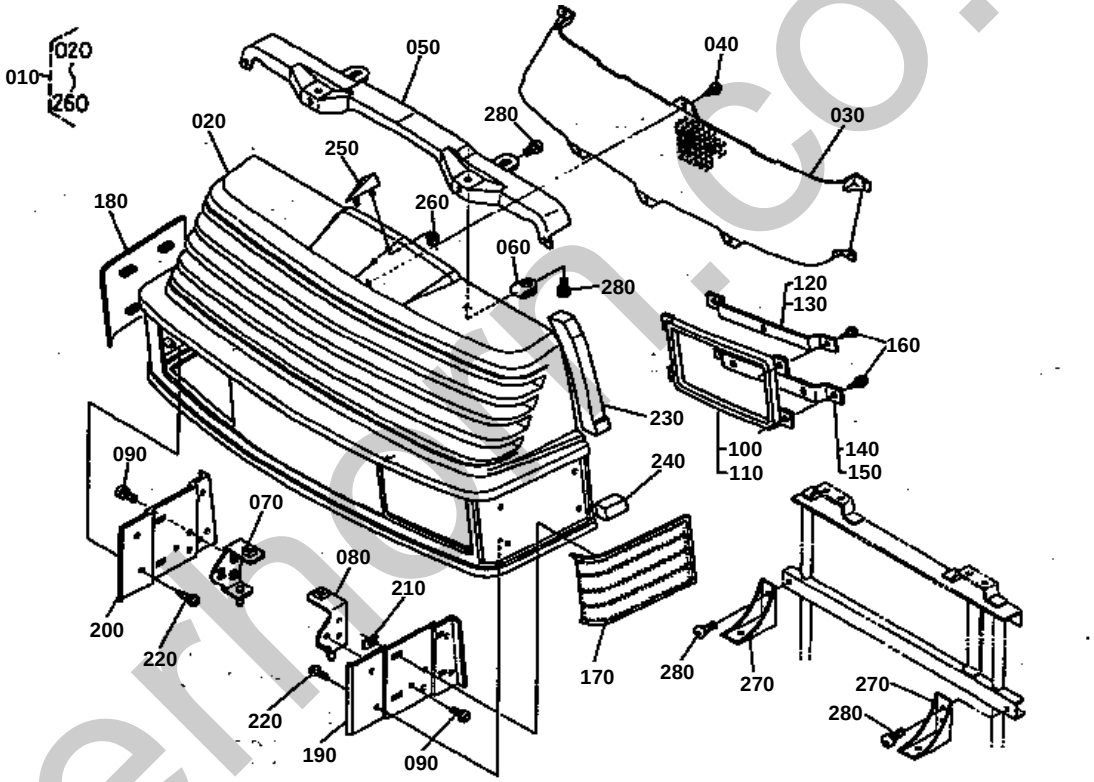

silverhorn.co.uk

FRONT ROOF

↔ Interchangeable; ≠ not interchangeable; ← new for old; → old for new

REF.No	Part No.	Description	Q'ty	S.No.	I/C	REMARKS	Weight (kgf)	Weight (lb)
010	32530-18102	ASSY ROOF FRONT	1				0	0
020	32530-18112	ROOF FRONT	1				0	0
030	32530-18122	NET FRONT ROOF	1				0	0
040	32530-19270	SCREW	8				0.005	0.011
050	32530-18132	BRACKET UPPER	2				0	0
060	32530-19280	NUT PLATE	4				0.005	0.011
070	32530-18142	BRACKET FR0NT R00F	2				0	0
080	32530-18182	BRACKET LH	1				0	0
090	32530-19300	SCREW	6				0.002	0.0044
100	32530-18162	LAMP RH	2				0	0
110	32530-18172	LAMP LH	1				0	0
120	32530-18050	BRACKET LAMP RH	1				0.03	0.066
130	32530-18060	BRACKET LAMP LH	1				0.03	0.066
140	32530-18070	BRACKET LAMP RH	1				0.036	0.0792
150	32530-18080	BRACKET LAMP LH	1				0.036	0.0792
160	32530-19270	SCREW	8				0.005	0.011
170	32530-18212	MASCOT LH	1				0	0
180	32530-18222	MASCOT RH	1				0	0
190	32530-18232	GRILLE MASCOT LH	1				0	0
200	32530-18242	GRILLE MASCOT RH	1				0	0
210	32530-18270	SUPPORT GLILLE	8				0.001	0.0022
220	32530-19270	SCREW	8				0.005	0.011
230	32530-18810	CUSHION	2				0.002	0.0044
240	32530-18820	CUSHION	2				0.001	0.0022
250	31351-65180	MASCOT	1				0.01	0.022
260	32530-19290	NUT	1				0	0
270	32530-18150	SUPPORT FRONT ROOF	2				0.06	0.132
280	01754-50816	BOLT FLANGE	8				0.011	0.0242

silverhorn.co.uk

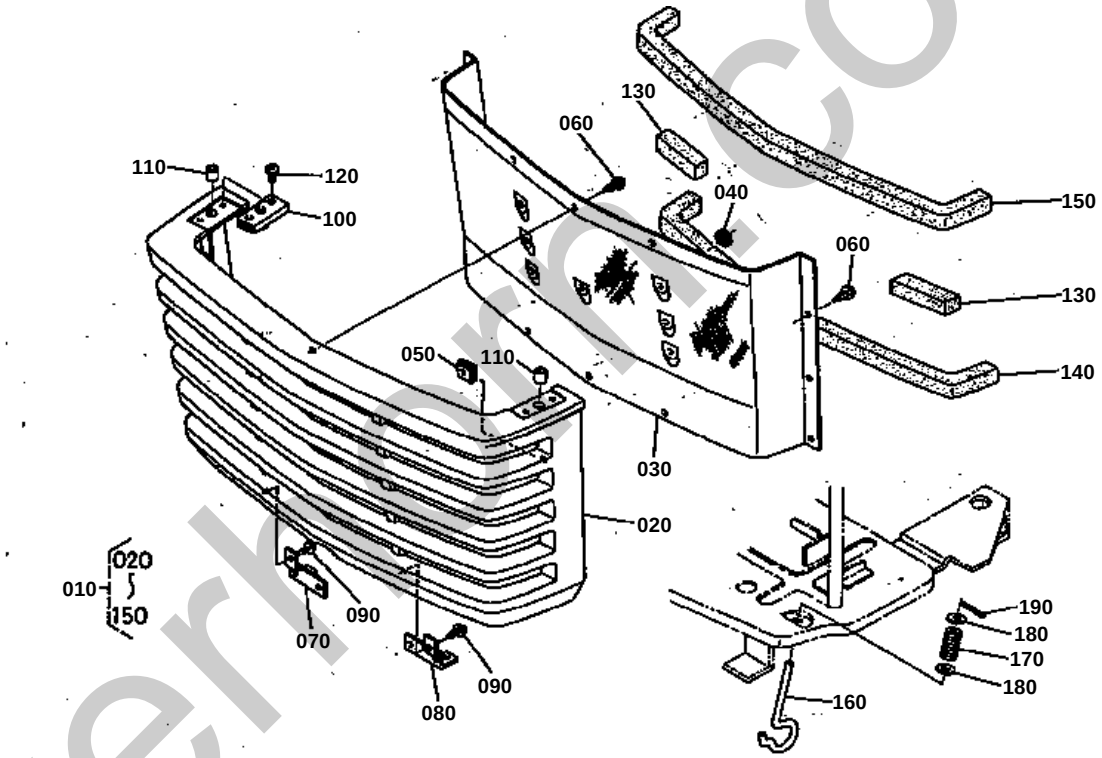

silverhorn.co.uk

FRONT GRILLE

↔ Interchangeable; ≠ not interchangeable; ← new for old; → old for new

REF.No	Part No.	Description	Q'ty	S.No.	I/C	REMARKS	Weight (kgf)	Weight (lb)
010	32530-18303	ASSY GRILLE FRONT	1				0	0
020	32530-18310	GRILLE FRONT	1				0	0
030	32530-18320	NET FRONT GRILLE	1				0	0
040	31351-93550	NUT	7				0.001	0.0022
050	31351-93540	NUT	6				0.002	0.0044
060	32530-19270	SCREW	12				0.005	0.011
070	32530-18250	BRACKET GLILLE RH	1				0.04	0.088
080	32530-19260	BRACKET GLILLE LH	1				0.04	0.088
090	32530-19270	SCREW	6				0.005	0.011
100	32530-18190	SUPPORT PIN	2				0.02	0.044
110	32530-18280	PIPE RUBBER	2				0.001	0.0022
120	32530-19300	SCREW	4				0.002	0.0044
130	32530-18910	CUSHION	2				0.005	0.011
140	32530-18920	CUSHION	1				0.035	0.077
150	32530-18940	CUSHION	1				0.035	0.077
160	32530-18260	SUPPORT GLILLE	2				0.05	0.11
170	67800-54623	SPRING	2				0.005	0.011
180	04015-50060	WASHER PLAIN	4				0	0
190	05511-50315	PIN SPLIT	2				0.002	0.0044

silverhorn.co.uk

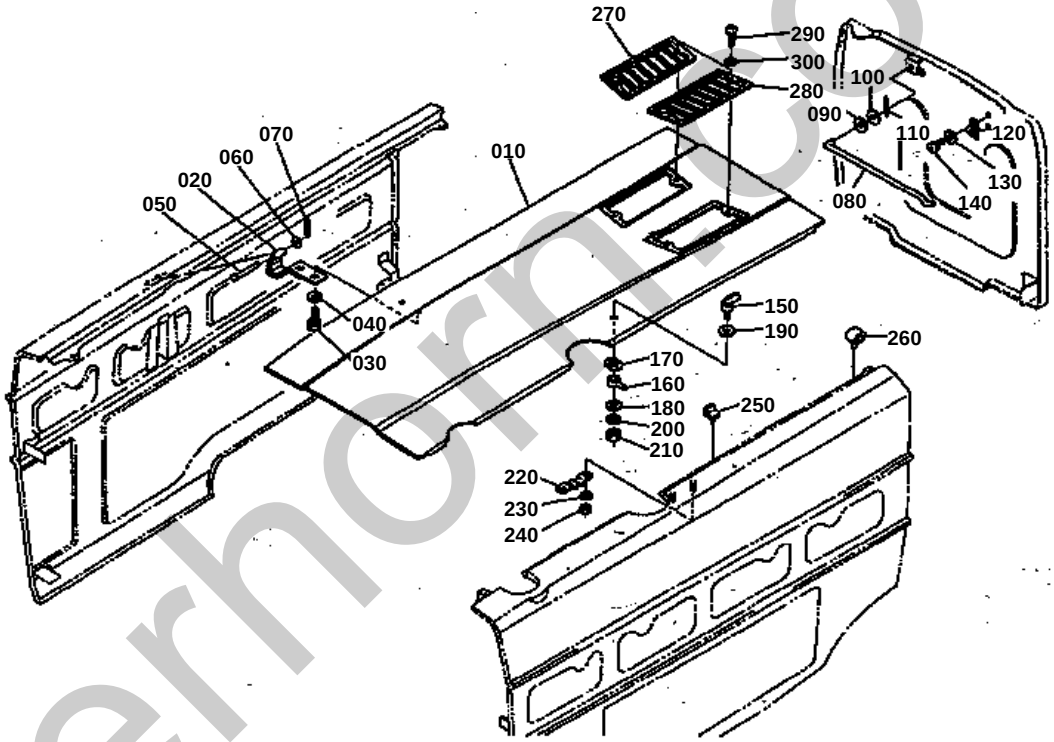

silverhorn.co.uk

↔ Interchangeable; ≠ not interchangeable; ← new for old; → old for new

REF.No	Part No.	Description	Q'ty	S.No.	I/C	REMARKS	Weight (kgf)	Weight (lb)
010	32530-18600	COMP.PLATE UPPER	1				0	0
020	32530-18350	HINGE BONNET	2				0	0
030	01133-50816	BOLT	4				0	0
040	04013-50080	WASHER PLAIN	4				0	0
050	38240-18690	PIN JOINT	2				0.015	0.033
060	04013-50060	WASHER PLAIN	2				0	0
070	05511-50215	PIN SPLIT	2				0.001	0.0022
080	32530-18360	SUPPORT BONNET	1				0.12	0.264
090	33251-83890	CUSHION	1				0.002	0.0044
100	04013-50080	WASHER PLAIN	1				0	0
110	05511-50215	PIN SPLIT	1				0.001	0.0022
120	33251-83900	SPRING BONNET HOLDER	1				0.008	0.0176
130	04411-50050	WASHER	2				0.001	0.0022
140	03054-50512	SCREW	2				0.003	0.0066
150	38180-18240	HANDLE BONNET COVER	1				0	0
160	32530-18370	LEVER BONNET HANDLE	1				0.035	0.077
170	33251-83950	WASHER SPRING	1				0.001	0.0022
180	04012-50080	WASHER PLAIN	1				0.001	0.0022
190	33251-83850	WASHER	1				0.001	0.0022
200	04512-50080	WASHER SPRING	1				0	0
210	02156-50080	NUT	1				0.004	0.0088
220	38240-18270	SPRING B0NNET HANDLE	1				0.01	0.022
230	04512-50080	WASHER SPRING	1				0	0
240	02156-50080	NUT	1				0.004	0.0088
250	32530-18730	CUSHION BONNET	1				0.005	0.011
260	32530-18890	CUSHION BONNET	3				0.004	0.0088
270	32530-18330	GRILLE RH	1				0.04	0.088
280	32530-18340	GRILLE LH	1				0.04	0.088
290	32530-18380	SCREW	4				0.005	0.011
300	32530-18390	WASHER PLAIN	4				0.001	0.0022

silverhorn.co.uk

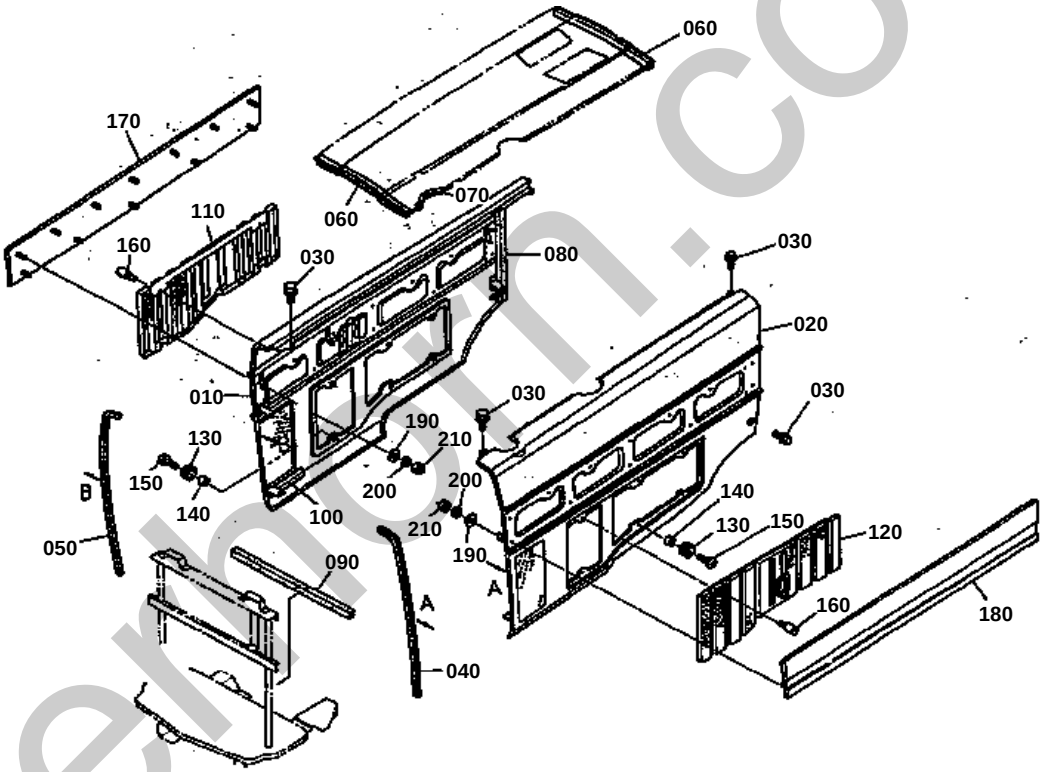

silverthorn.co.uk

↔ Interchangeable; ≠ not interchangeable; ← new for old; → old for new

REF.No	Part No.	Description	Q'ty	S.No.	I/C	REMARKS	Weight (kgf)	Weight (lb)
010	32530-18630	COMP.PLATE SIDE RH	1				0	0
020	32530-18640	COMP.PLATE SIDE LH	1				0	0
030	01754-50816	BOLT FLANGE	10				0.011	0.0242
040	32530-18700	CUSHION LH	1				0.06	0.132
050	32530-18800	CUSHION RH	1				0.065	0.143
060	32530-18740	CUSHION	2				0.01	0.022
070	32530-18830	CUSHION COVER	1				0.009	0.0198
080	32530-18750	CUSHION BONNET	4				0.02	0.044
090	32530-18760	CUSHION	2				0.02	0.044
100	32530-18790	CUSHION	2				0.007	0.0154
110	32530-18650	COVER SIDE RH	1				0.65	1.43
120	32530-18660	COVER SIDE LH	1				0.75	1.65
130	32530-18670	CUSHION	6				0.004	0.0088
140	32530-18710	COLLAR	6				0.002	0.0044
150	03004-50620	SCREW	6				0.005	0.011
160	32530-18720	BOLT	6				0.01	0.022
170	32530-18680	BELT RH	1				0.6	1.32
180	32530-18690	BELT LH	1				0.5	1.1
190	04013-50050	WASHER PLAIN	24				0	0
200	04512-50050	WASHER SPRING	24				0	0
210	02014-50060	NUT	24				0.003	0.0066

silverhorn.co.uk

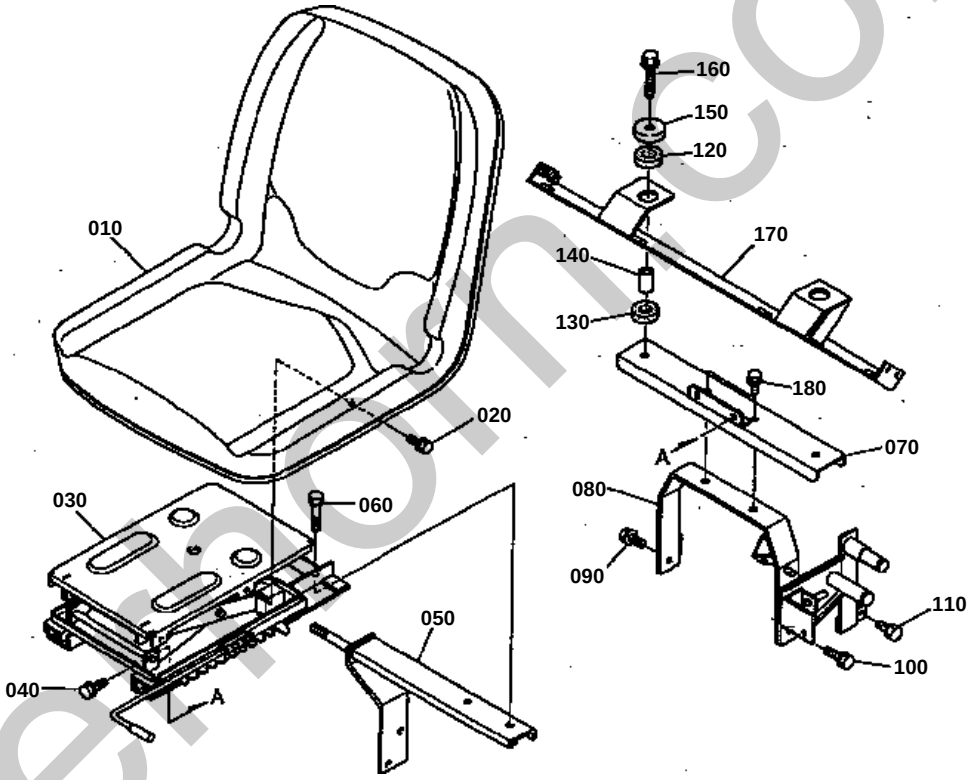

silverhorn.co.uk

↔ Interchangeable; ≠ not interchangeable; ← new for old; → old for new

REF.No	Part No.	Description	Q'ty	S.No.	I/C	REMARKS	Weight (kgf)	Weight (lb)
010	32530-18400	ASSY SEAT	1				9	19.8
020	01123-50820	BOLT	4				0.011	0.0242
030	32530-18410	ASSY SUSPENTION SEAT	1				0	0
040	01774-51025	BOLT FLANGE	2				0.02	0.044
050	32530-36910	SHAFT	1				0	0
060	01133-51055	BOLT	2				0.04	0.088
070	32530-29360	BASE CUSHION	1				1.07	2.354
080	32530-29350	SUPPORT SEAT	1				0	0
090	01774-51025	BOLT FLANGE	1				0.02	0.044
100	01774-51020	BOLT FLANGE	1				0	0
110	01133-51022	BOLT	1				0.025	0.055
120	31351-29260	CUSHION UPPER	2				0.05	0.11
130	31351-29270	CUSHION LOWER	2				0.045	0.099
140	31351-29280	SPACER	2				0.04	0.088
150	32530-29390	RETAINER CUSHION	2				0.05	0.11
160	01774-51265	BOLT FLANGE	2				0.06	0.132
170	32530-29370	SUPPORT CUSHION	1				2.1	4.62
180	01774-51025	BOLT FLANGE	2				0.02	0.044

silverhorn.co.uk

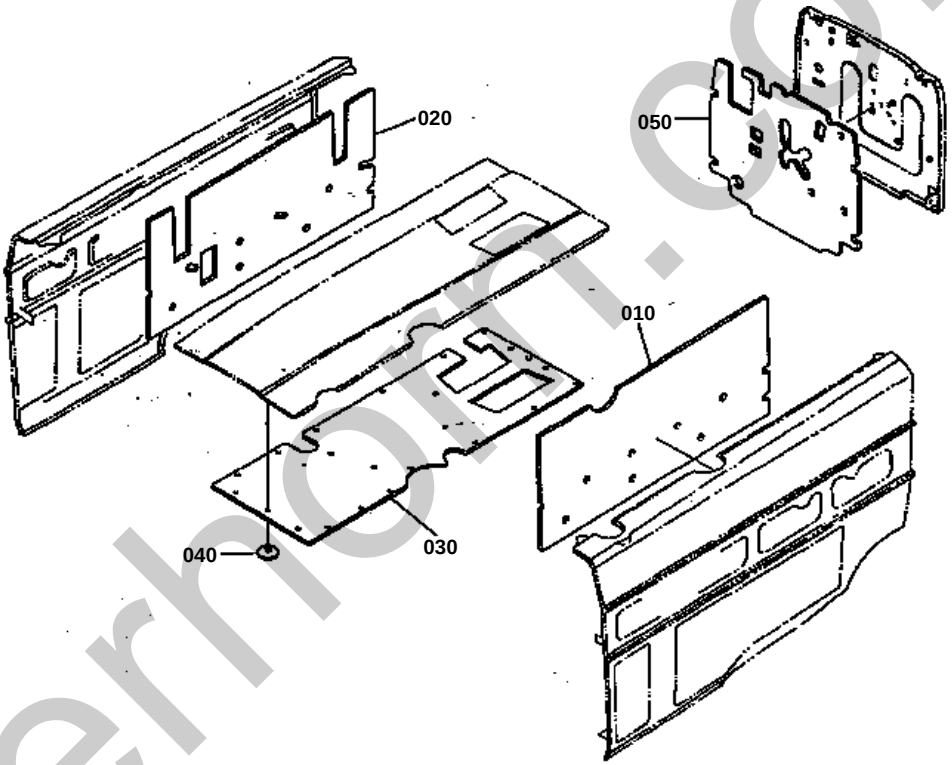

silverhorn.co.uk

HOOD CUSHION

↔ Interchangeable; ≠ not interchangeable; ← new for old; → old for new

REF.No	Part No.	Description	Q'ty	S.No.	I/C	REMARKS	Weight (kgf)	Weight (lb)
010	32530-18870	CUSHION LH	1				0.29	0.638
020	32530-18860	CUSHION RH	1				0.265	0.583
030	32530-18850	CUSHION	1				0.25	0.55
040	32530-18930	STOPPER	22				0.002	0.0044
050	32530-18880	CUSHION	1				0.17	0.374

silverhorn.co.uk

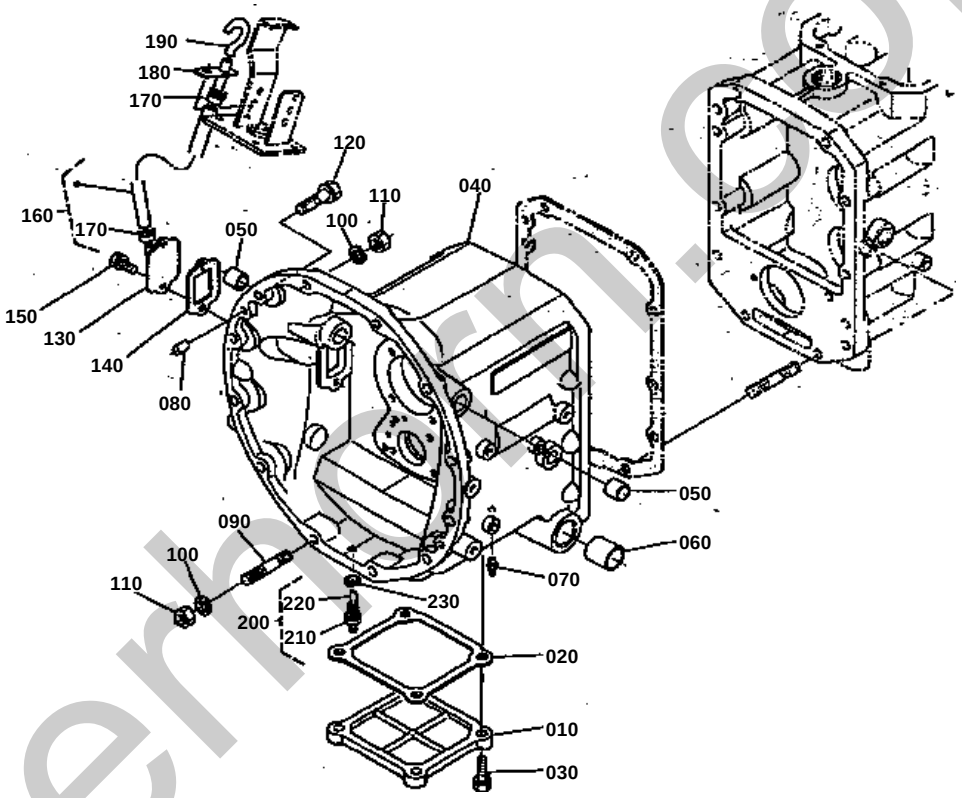

silverhorn.co.uk

MAIN CLUTCH CASE

↔ Interchangeable; ≠ not interchangeable; ← new for old; → old for new

REF.No	Part No.	Description	Q'ty	S.No.	I/C	REMARKS	Weight (kgf)	Weight (lb)
040	32530-14120	CASE MAIN CLUTCH	1	<=50053			41.6	91.52
040	32530-14125	CASE MAIN CLUTCH	1	>=50054	≠		0	0
050	32530-14730	BUSH	2				0	0
060	32150-28440	BUSH	2				0.043	0.0946
070	06613-10010	NIPPLE GREASE	1				0.006	0.0132
080	05012-01018	PIN STRAIGHT	2				0.012	0.0264
090	01574-51235	STUD	2				0	0
100	04512-50120	WASHER SPRING	4				0	0
110	02176-50120	NUT	4				0.01	0.022
120	01133-51245	BOLT	8				0.055	0.121
130	32530-14162	COVER	1				0.07	0.154
140	32530-14170	PACKING RUBBER	1				0.005	0.011
150	01123-50820	BOLT	2				0.011	0.0242
160	32530-14150	ASSY PIPE RUBBER	1				0.13	0.286
170	32530-14190	CLIP PIPE	2				0.005	0.011
180	32530-16310	STAY BREATHER	1				0.045	0.099
190	36200-21620	BREATHER	1				0.006	0.0132
200	32530-14130	KIT PLUG	2				0.02	0.044
210	32530-14140	PLUG	2				0	0
220	05511-50430	PIN SPLIT	2				0.004	0.0088
230	04512-50100	WASHER SPRING	2				0	0

silverhorn.co.uk

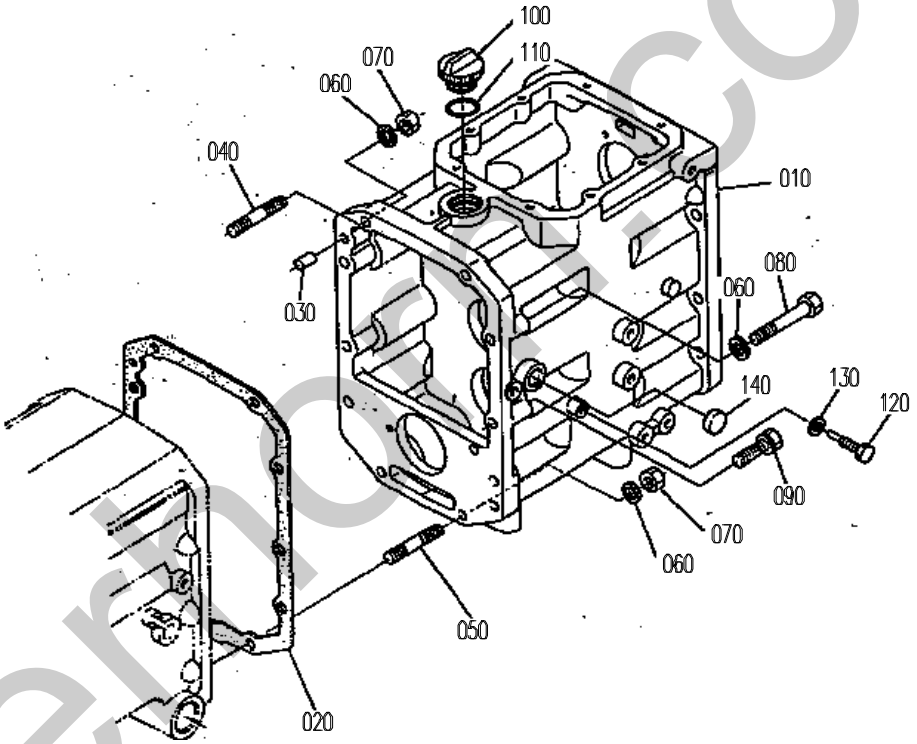

silverhorn.co.uk

MAIN S-CHANGE CASE

↔ Interchangeable; ≠ not interchangeable; ← new for old; → old for new

REF.No	Part No.	Description	Q'ty	S.No.	I/C	REMARKS	Weight (kgf)	Weight (lb)
010	32530-21250	CASE MAIN S-CHANGE	1				0	0
020	32530-21270	GASKET	1				0.029	0.0638
030	05012-01018	PIN STRAIGHT	2				0.012	0.0264
040	32530-14250	STUD	2				0.04	0.088
050	01574-51275	STUD	2				0.074	0.1628
060	04512-50120	WASHER SPRING	6				0	0
070	35340-27360	NUT	4				0.015	0.033
080	01173-51270	BOLT	4				0.067	0.1474
090	01133-51245	BOLT	2				0.055	0.121
100	38430-21410	PLUG	1				0.045	0.099
110	04811-50300	O RING	1				0.001	0.0022
120	32530-23120	SCREW	1				0.02	0.044
130	04717-00800	WASHER SEAL	1				0.001	0.0022
140	36200-21240	PLUG	1				0	0

silverhorn.co.uk

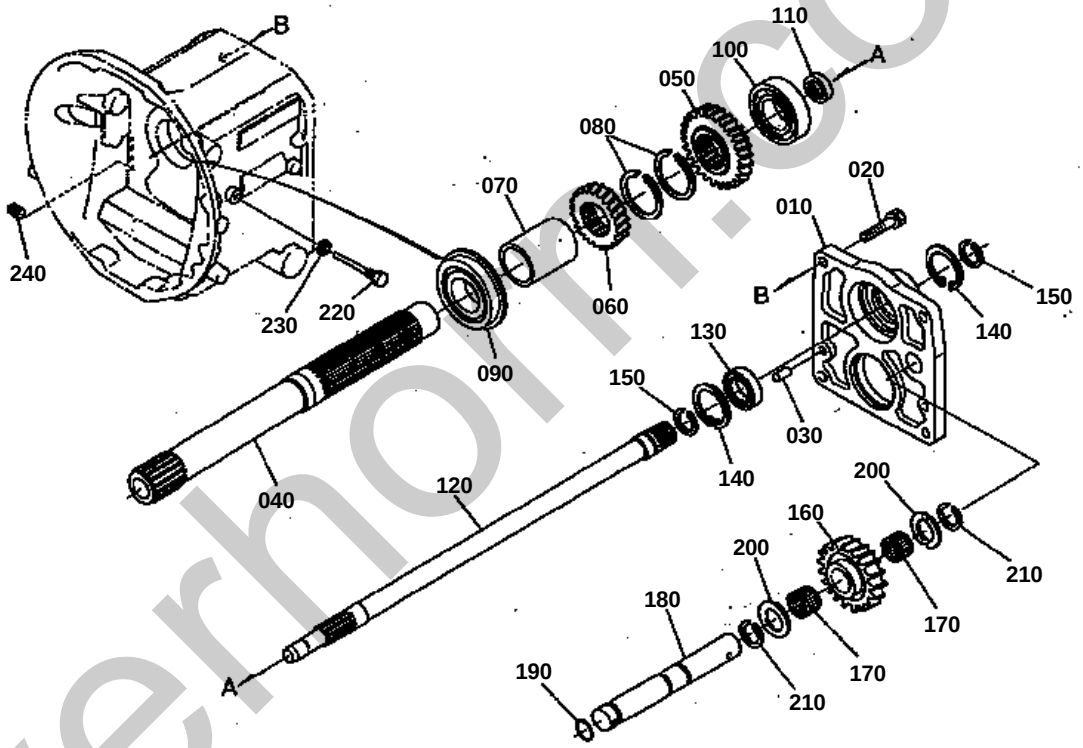

silverhorn.co.uk

1 ST SHAFT (MANUAL SHUTTLE)

↔ Interchangeable; ≠ not interchangeable; ← new for old; → old for new

REF.No	Part No.	Description	Q'ty	S.No.	I/C	REMARKS	Weight (kgf)	Weight (lb)
010	32530-20520	CASE BEARING	1				2.88	6.336
020	01133-51245	BOLT	4				0.055	0.121
030	05012-01018	PIN STRAIGHT	2				0.012	0.0264
040	32530-20610	SHAFT	1				2	4.4
050	32530-20540	GEAR	1				0.6	1.32
060	32530-20560	GEAR	1				0.32	0.704
070	32530-20530	COLLAR	1				0.49	1.078
080	36730-28040	CIR-CLIP EXTERNAL	2				0	0
090	08151-06208	BEARING BALL	1				0.373	0.8206
100	08101-06207	BEARING BALL	1				0.282	0.6204
110	36730-24330	SEAL	1				0.005	0.011
120	32530-20920	SHAFT PTO	1				1.83	4.026
130	08101-06005	BEARING BALL	1				0.08	0.176
140	04611-00470	CIR-CLIP INTERNAL	2				0.006	0.0132
150	38430-21550	CIR-CLIP EXTERNAL	2				0.005	0.011
160	32530-20570	GEAR	1				0.6	1.32
170	08822-53216	BEARING NEEDLE	2				0.026	0.0572
180	32530-20660	SHAFT	1				0.72	1.584
190	04811-00210	O RING	1				0.001	0.0022
200	32530-21760	COLLAR	2				0.02	0.044
210	38430-21550	CIR-CLIP EXTERNAL	2				0.005	0.011
220	32530-23130	SCREW	1				0.025	0.055
230	04512-50080	WASHER SPRING	1				0	0
240	06312-10020	PLUG	4				0.015	0.033

silverhorn.co.uk

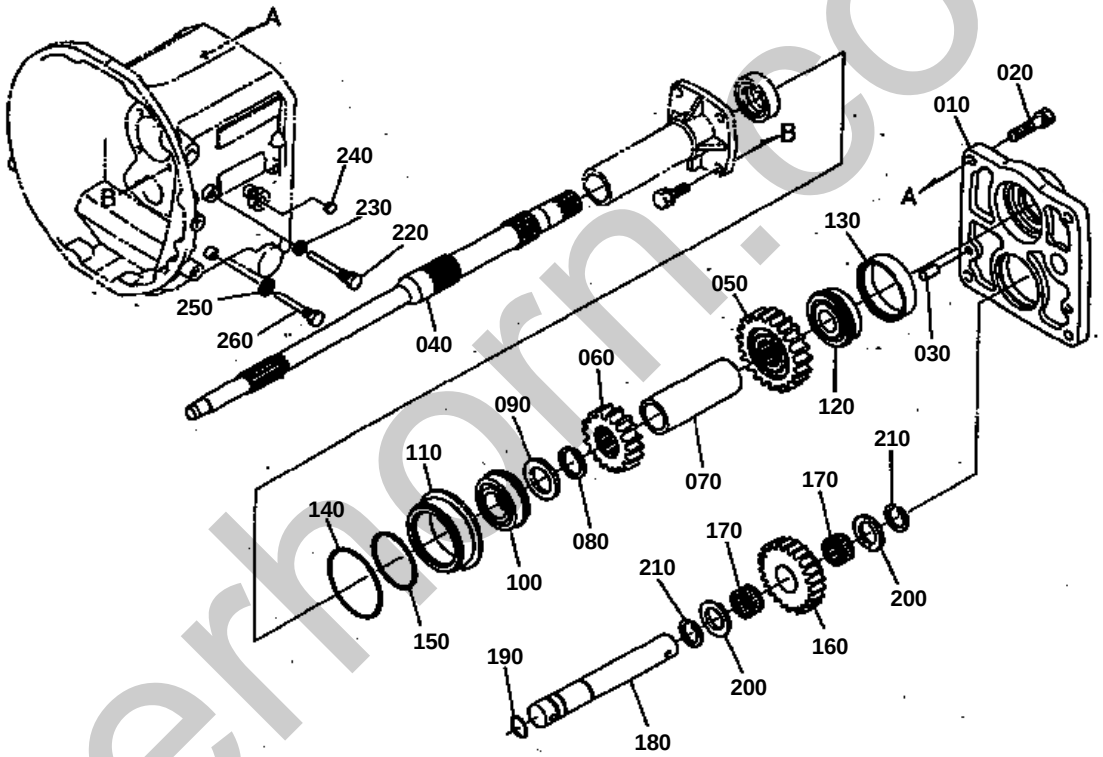

silverhorn.co.uk

1 ST SHAFT (HYDRAULIC SHUTTLE)

↔ Interchangeable; ≠ not interchangeable; ← new for old; → old for new

REF.No	Part No.	Description	Q'ty	S.No.	I/C	REMARKS	Weight (kgf)	Weight (lb)
010	32530-20520	CASE BEARING	1				2.88	6.336
020	01133-51245	BOLT	4				0.055	0.121
030	05012-01018	PIN STRAIGHT	2				0.012	0.0264
040	32530-20110	SHAFT	1				2.05	4.51
050	32530-20120	GEAR	1				0.61	1.342
060	32530-20130	GEAR	1				0.41	0.902
070	32530-20140	COLLAR	1				0.57	1.254
080	38430-25540	CIR-CLIP EXTERNAL	1				0.004	0.0088
090	38450-21990	COLLAR	1				0	0
100	38450-25360	BEARING BALL	1				0.205	0.451
110	32530-20150	COLLAR BEARING	1				0.4	0.88
120	08151-06305	BEARING BALL	1				0.233	0.5126
130	32530-20160	COLLAR BEARING	1				0.115	0.253
140	04811-50750	O RING	1				0.002	0.0044
150	04811-50600	O RING	1				0.002	0.0044
160	32530-20370	GEAR	1				0.6	1.32
170	08822-53216	BEARING NEEDLE	2				0.026	0.0572
180	32530-20170	SHAFT	1				0.73	1.606
190	04811-00210	O RING	1				0.001	0.0022
200	32530-21760	COLLAR	2				0.02	0.044
210	38430-21550	CIR-CLIP EXTERNAL	2				0.005	0.011
220	32530-23130	SCREW	1				0.025	0.055
230	04512-50080	WASHER SPRING	1				0	0
240	36200-21240	PLUG	1				0	0
250	04717-00800	WASHER SEAL	1				0.001	0.0022
260	37150-23120	SCREW	1				0.02	0.044

silverhorn.co.uk

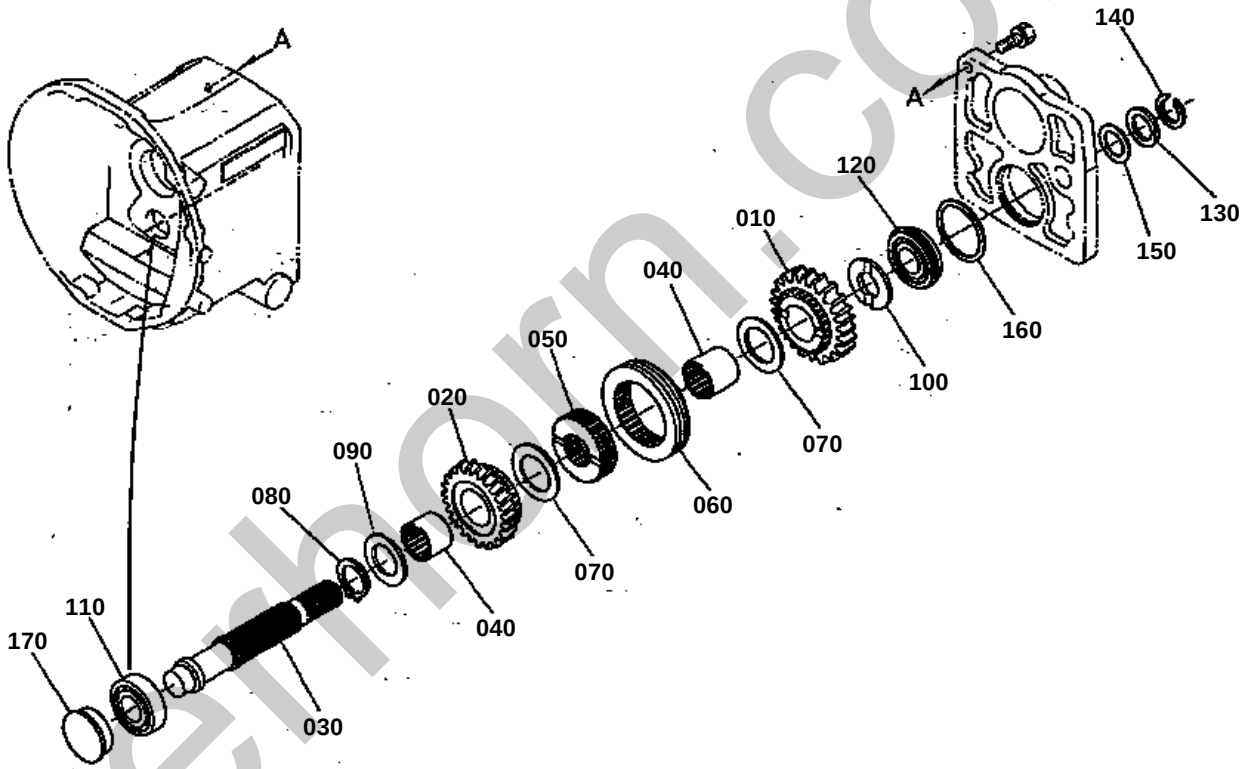

silverhorn.co.uk

2 ND SHAFT (MANUAL SHUTTLE)

↔ Interchangeable; ≠ not interchangeable; ← new for old; → old for new

REF.No	Part No.	Description	Q'ty	S.No.	I/C	REMARKS	Weight (kgf)	Weight (lb)
010	32530-20550	GEAR	1				1.03	2.266
020	32530-20580	GEAR	1				0.73	1.606
030	32530-20620	SHAFT	1				1.34	2.948
040	32530-25120	RACE INNER	2				0.13	0.286
050	32530-20630	BOSS SPLINE	1				0.45	0.99
060	32530-20650	SHIFTER	1				0.34	0.748
070	32530-20640	WASHER	2				0.03	0.066
080	36740-41150	CIR-CLIP EXTERNAL	1				0.01	0.022
090	32530-21930	COLLAR THRUST	1				0	0
100	32530-25230	COLLAR THRUST	1				0.035	0.077
110	08101-06206	BEARING BALL	1				0.196	0.4312
120	08151-06206	BEARING BALL	1				0.2	0.44
130	38450-21990	COLLAR	1				0	0
140	38430-25540	CIR-CLIP EXTERNAL	1				0.004	0.0088
150	32530-20450	SHIM	1				0.002	0.0044
160	32530-20460	SHIM	1				0.002	0.0044
170	41092-11120	PLUG	1				0	0

silverhorn.co.uk

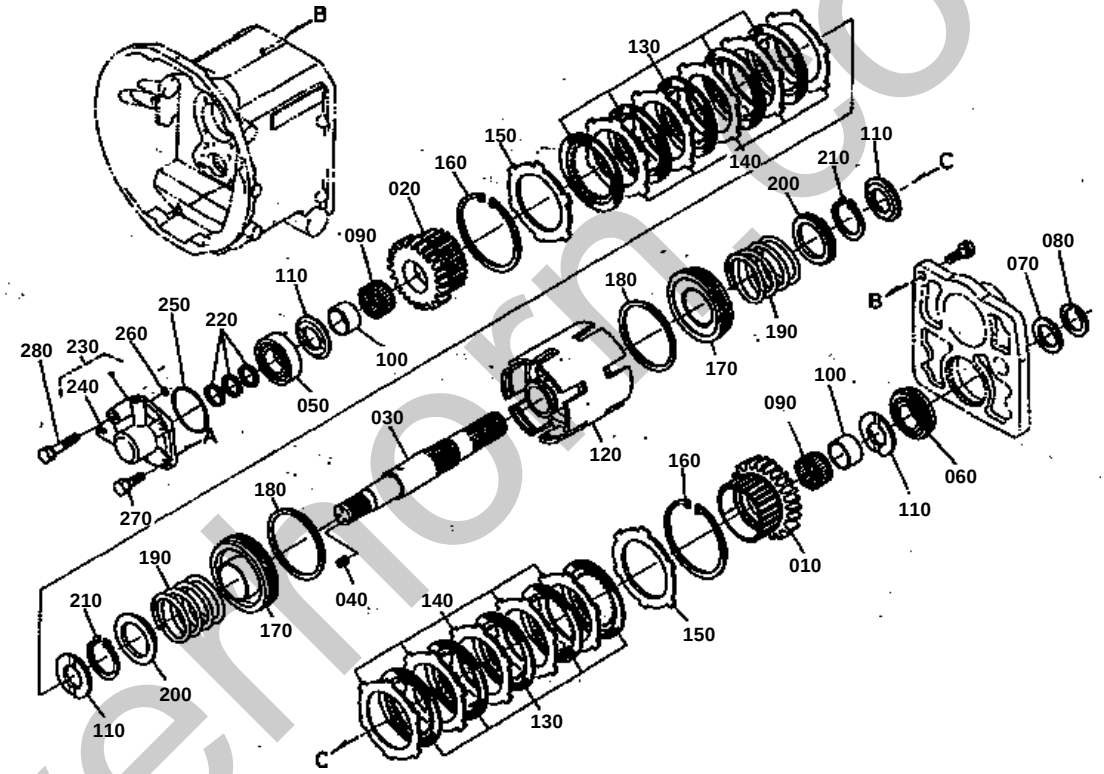

silverhomes.co.uk

2 ND SHAFT (HYDRAULIC SHUTTLE)

↔ Interchangeable; ≠ not interchangeable; ← new for old; → old for new

REF.No	Part No.	Description	Q'ty	S.No.	I/C	REMARKS	Weight (kgf)	Weight (lb)
010	32530-20180	GEAR	1				1.25	2.75
020	32530-20190	GEAR	1				0.88	1.936
030	32530-20210	SHAFT	1				0	0
040	03410-50606	SCREW	2				0.001	0.0022
050	08101-06206	BEARING BALL	1				0.196	0.4312
060	08151-06206	BEARING BALL	1				0.2	0.44
070	38450-21990	COLLAR	1				0	0
080	38430-25540	CIR-CLIP EXTERNAL	1				0.004	0.0088
090	32530-20220	BEARING NEEDLE	2				0.05	0.11
100	32530-20230	RACE INNER	2				0.04	0.088
110	32530-20470	COLLAR THRUST	4				0.04	0.088
120	32530-20240	CASE CLUTCH	1				2.39	5.258
130	35370-14240	DISK CLUTCH	10				0.06	0.132
140	35370-14250	STEEL PLATE	10				0	0
150	32530-20250	PLATE	2				0.1	0.22
160	35370-14270	CIR-CLIP INTERNAL	2				0.05	0.11
170	35370-14190	PISTON	2				0.43	0.946
180	35370-14210	O RING	2				0.005	0.011
190	32530-20290	SPRING	2				0.11	0.242
200	35370-14230	WASHER	2				0.03	0.066
210	04612-00480	CIR-CLIP EXTERNAL	2				0.002	0.0044
220	32530-20270	SEALING	3				0.002	0.0044
230	32530-20280	CASE SEAL	1				0.83	1.826
240	07715-03207	BALL	3				0.001	0.0022
250	04811-10560	O RING	1				0.002	0.0044
260	04811-00080	O RING	3				0.001	0.0022
270	01123-50825	BOLT	3				0.013	0.0286
280	01123-50845	BOLT	1				0.02	0.044

silverhorn.co.uk

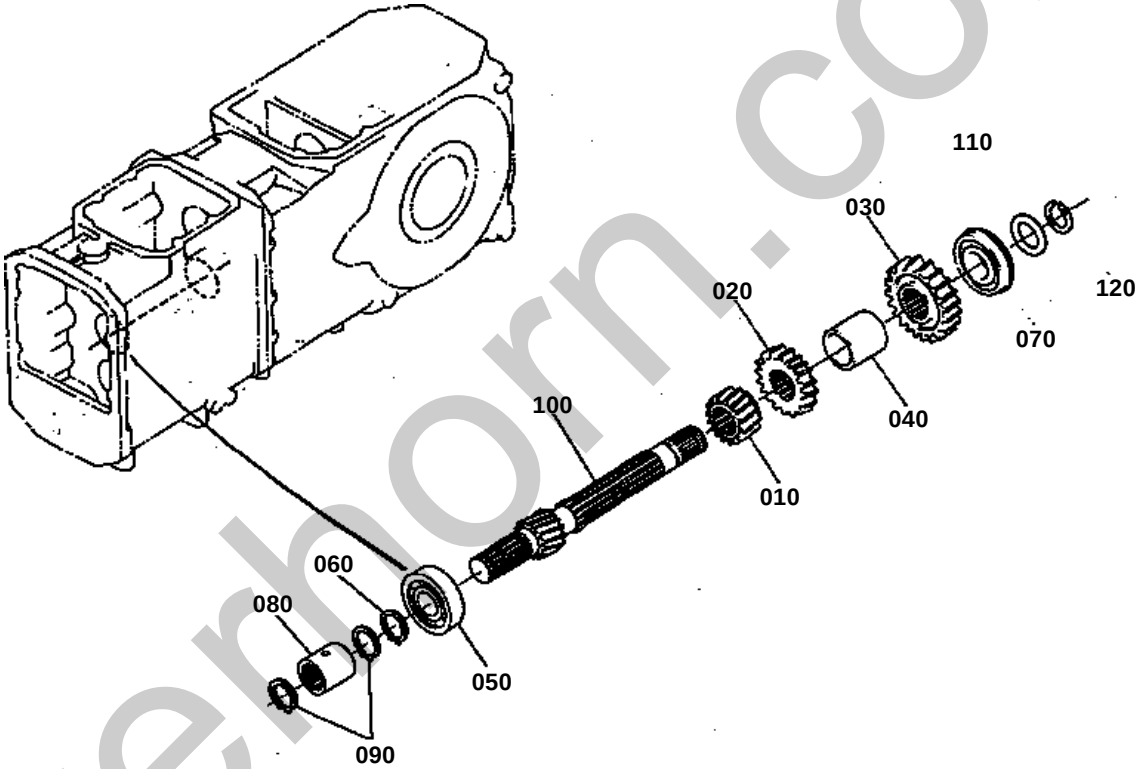

silverhorn.co.uk

↔ Interchangeable; ≠ not interchangeable; ← new for old; → old for new

REF.No	Part No.	Description	Q'ty	S.No.	I/C	REMARKS	Weight (kgf)	Weight (lb)
010	32530-21520	GEAR	1				0	0
020	32530-21530	GEAR	1				0.41	0.902
030	32530-21540	GEAR	1				0.74	1.628
040	32530-21550	COLLAR	1				0.33	0.726
050	32530-21570	BEARING	1				0.38	0.836
060	04612-00300	CIR-CLIP EXTERNAL	1				0.003	0.0066
070	08151-06306	BEARING BALL	1				0.36	0.792
080	38430-25220	COUPLING	1				0	0
090	04612-00300	CIR-CLIP EXTERNAL	2				0.003	0.0066
100	32530-21510	SHAFT MAIN	1				2.08	4.576
110	38450-21990	COLLAR	1				0	0
120	38430-25540	CIR-CLIP EXTERNAL	1				0.004	0.0088

silverhorn.co.uk

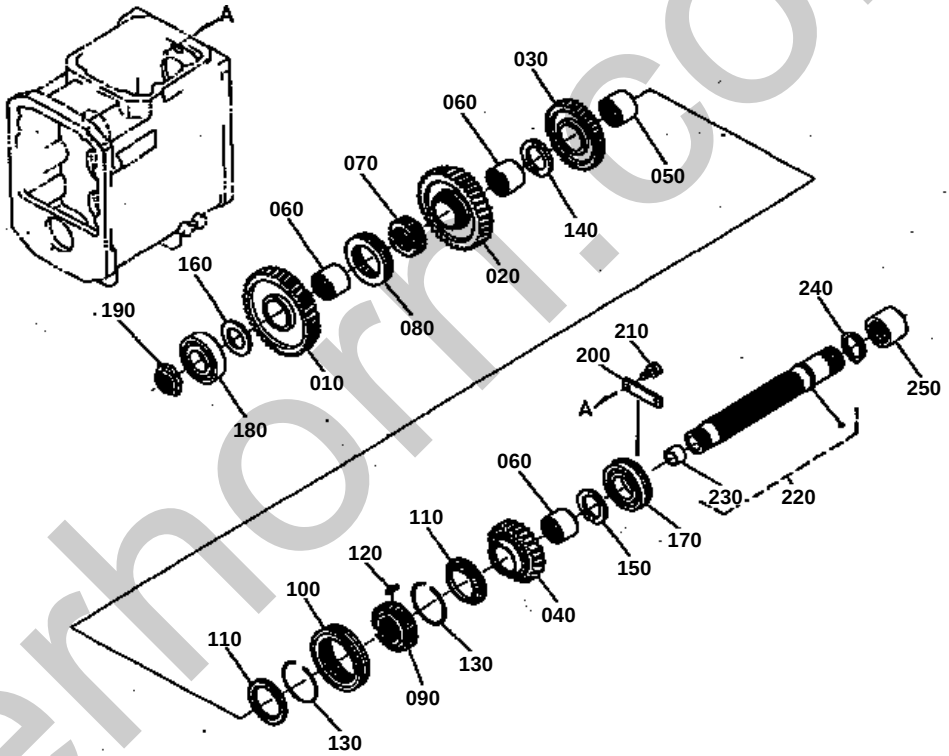

silverhorn.co.uk

COUNTER SHAFT

↔ Interchangeable; ≠ not interchangeable; ← new for old; → old for new

REF.No	Part No.	Description	Q'ty	S.No.	I/C	REMARKS	Weight (kgf)	Weight (lb)
010	32530-21740	GEAR	1				1.74	3.828
020	32530-21730	GEAR	1				1.56	3.432
030	32530-21720	GEAR	1				1.25	2.75
040	32530-21710	GEAR	1				1.09	2.398
050	32530-21820	RACE INNER	1				0.09	0.198
060	32530-21870	RACE INNER	3				0.11	0.242
070	32530-21810	BOSS SPLINE	1				0.21	0.462
080	32530-21750	SHIFTER	1				0.33	0.726
090	32530-21770	HUB CLUTCH	1				0.36	0.792
100	38360-21750	CLUTCH	1				0.44	0.968
110	38360-21790	SYNCHRONIZER	2				0	0
120	38360-21760	KEY	3				0.005	0.011
130	38360-21780	SPRING	2				0.005	0.011
140	32530-21860	SPACER	1				0.075	0.165
150	32530-21830	COLLAR THRUST	1				0.04	0.088
160	32530-21930	COLLAR THRUST	1				0	0
170	08151-06208	BEARING BALL	1				0.373	0.8206
180	08101-06307	BEARING BALL	1				0.44	0.968
190	32530-21620	NUT	1				0.075	0.165
200	38430-25530	RETAINER BEARING	2				0.05	0.11
210	01123-50820	BOLT	4				0.011	0.0242
220	32530-21610	COUNTER SHAFT	1				1.6	3.52
230	32530-25160	BUSH	1				0.015	0.033
240	04612-00400	CIR-CLIP EXTERNAL	1				0.005	0.011
250	32530-21850	COUPLING	1				0.22	0.484

silverhorn.co.uk

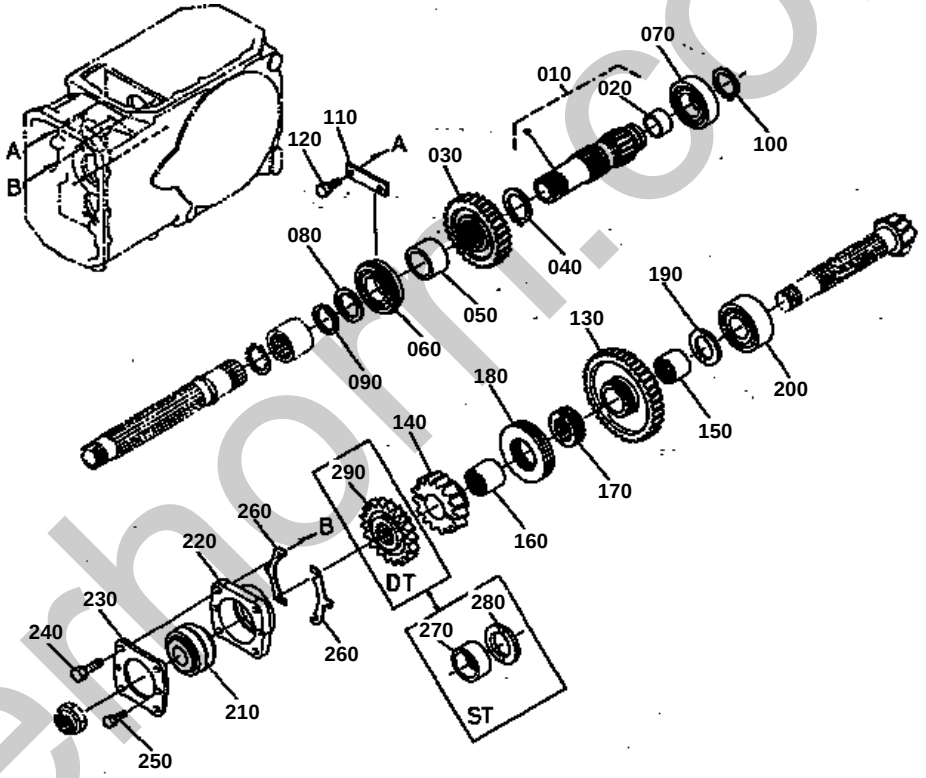

silverhorn.co.uk

↔ Interchangeable; ≠ not interchangeable; ← new for old; → old for new

REF.No	Part No.	Description	Q'ty	S.No.	I/C	REMARKS	Weight (kgf)	Weight (lb)
010	32530-21910	GEAR-SHAFT	1				1.24	2.728
020	32530-25160	BUSH	1				0.015	0.033
030	32530-21920	GEAR	1				1.13	2.486
040	04612-00450	CIR-CLIP EXTERNAL	1				0.007	0.0154
050	32530-21940	COLLAR	1				0.24	0.528
060	08151-06208	BEARING BALL	1				0.373	0.8206
070	08101-06208	BEARING BALL	1				0.355	0.781
080	32530-21990	WASHER	1				0.015	0.033
090	36730-28040	CIR-CLIP EXTERNAL	1				0	0
100	04612-00400	CIR-CLIP EXTERNAL	1				0.005	0.011
110	38430-25530	RETAINER BEARING	1				0.05	0.11
120	01123-50825	BOLT	2				0.013	0.0286
130	32530-21953	GEAR	1				0	0
140	32530-21960	GEAR	1				0.77	1.694
150	32530-25120	RACE INNER	1				0.13	0.286
160	32530-25150	RACE INNER	1				0.11	0.242
170	32530-21970	BOSS SPLINE	1				0.26	0.572
180	32530-21750	SHIFTER	1				0.33	0.726
190	32530-21930	COLLAR THRUST	1				0	0
200	32530-22130	BEARING	1				0.75	1.65
210	32530-22140	BEARING	1				0.86	1.892
220	32530-22150	CASE BEARING	1				0.83	1.826
230	32530-22170	RETAINER BEARING	1				0.235	0.517
240	01133-51040	BOLT	4				0.03	0.066
250	01123-50820	BOLT	2				0.011	0.0242
260	32530-22610	SHIM	2				0.005	0.011
260	32530-22620	SHIM	4				0.003	0.0066
260	32530-22630	SHIM	2				0.001	0.0022
290	32580-44160	GEAR	1				0.98	2.156

silverhorn.co.uk

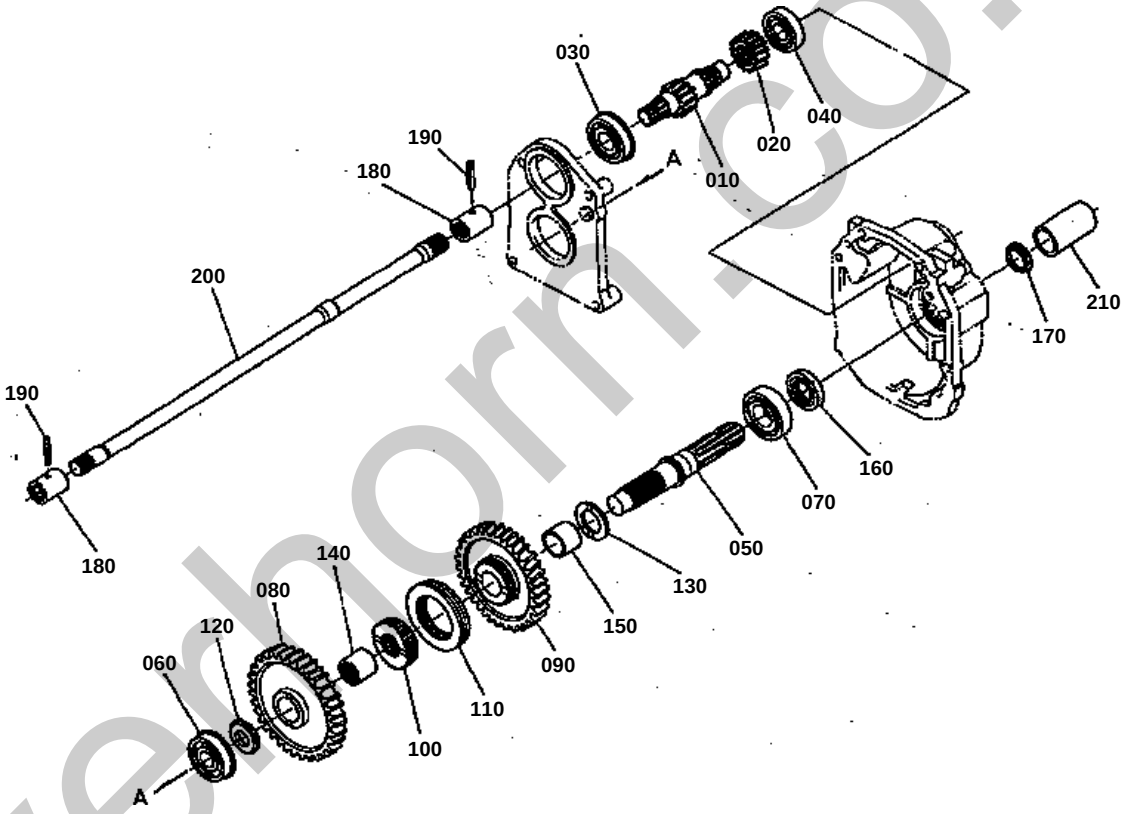

silverhorn.co.uk

PTO SHAFT

↔ Interchangeable; ≠ not interchangeable; ← new for old; → old for new

REF.No	Part No.	Description	Q'ty	S.No.	I/C	REMARKS	Weight (kgf)	Weight (lb)
010	32530-25280	GEAR-SHAFT	1				0.94	2.068
020	32530-25260	GEAR	1				0.26	0.572
030	38450-25340	BEARING BALL	1				0.365	0.803
040	36340-41290	BEARING	1				0.235	0.517
050	32530-25310	SHAFT PTO	1				1.65	3.63
060	08151-06306	BEARING BALL	1				0.36	0.792
070	08101-06307	BEARING BALL	1				0.44	0.968
080	32530-25190	GEAR	1				2.35	5.17
090	32530-25170	GEAR	1				1.87	4.114
100	32530-21970	BOSS SPLINE	1				0.26	0.572
110	32530-21750	SHIFTER	1				0.33	0.726
120	32530-25230	COLLAR THRUST	1				0.035	0.077
130	32530-21930	COLLAR THRUST	1				0	0
140	32530-25150	RACE INNER	1				0.11	0.242
150	32530-25220	RACE INNER	1				0.1	0.22
160	37150-25360	SEAL OIL	1				0.025	0.055
170	38240-25370	SLINGER	1				0.004	0.0088
180	32530-20950	COUPLING	2				0.16	0.352
190	05411-00540	PIN SPRING	2				0.004	0.0088
200	32530-25210	SHAFT	1				2.48	5.456
210	31220-25820	CAP	1				0.055	0.121

silverhorn.co.uk

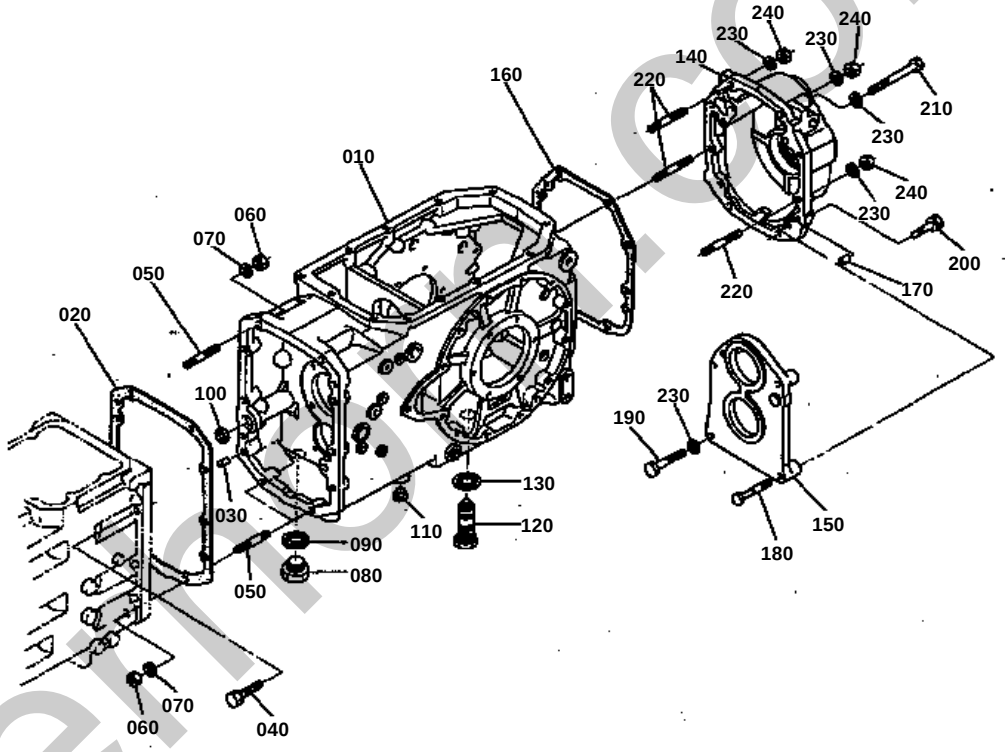

silvermoto.co.uk

↔ Interchangeable; ≠ not interchangeable; ← new for old; → old for new

REF.No	Part No.	Description	Q'ty	S.No.	I/C	REMARKS	Weight (kgf)	Weight (lb)
010	32530-21110	CASE TRANSMISSION	1				0	0
020	32530-21270	GASKET	1				0.029	0.0638
030	05012-01018	PIN STRAIGHT	2				0.012	0.0264
040	01133-51245	BOLT	6				0.055	0.121
050	32530-14250	STUD	4				0.04	0.088
060	35340-27360	NUT	4				0.015	0.033
070	04512-50120	WASHER SPRING	4				0	0
080	36340-43563	PLUG	1				0.095	0.209
090	04717-02400	WASHER SEAL	1				0.005	0.011
100	06311-85025	CAP SEALING	1				0.01	0.022
110	31220-14290	PLUG	16				0.002	0.0044
120	32530-21310	ASSY PLUG MAGNET	1				0.165	0.363
130	04717-02400	WASHER SEAL	1				0.005	0.011
140	32530-25410	CASE PTO	1				8.2	18.04
150	32530-25420	COVER CASE	1				3.27	7.194
160	32530-25430	GASKET	1				0	0
170	05012-01018	PIN STRAIGHT	3				0.012	0.0264
180	32530-25440	BOLT REAMER	1				0.07	0.154
190	01173-51260	BOLT	3				0.06	0.132
200	01133-51240	BOLT	4				0.05	0.11
210	01173-51295	BOLT	1				0.086	0.1892
220	01574-51235	STUD	3				0	0
230	04512-50120	WASHER SPRING	8				0	0
240	02176-50120	NUT	3				0.01	0.022

silverhorn.co.uk

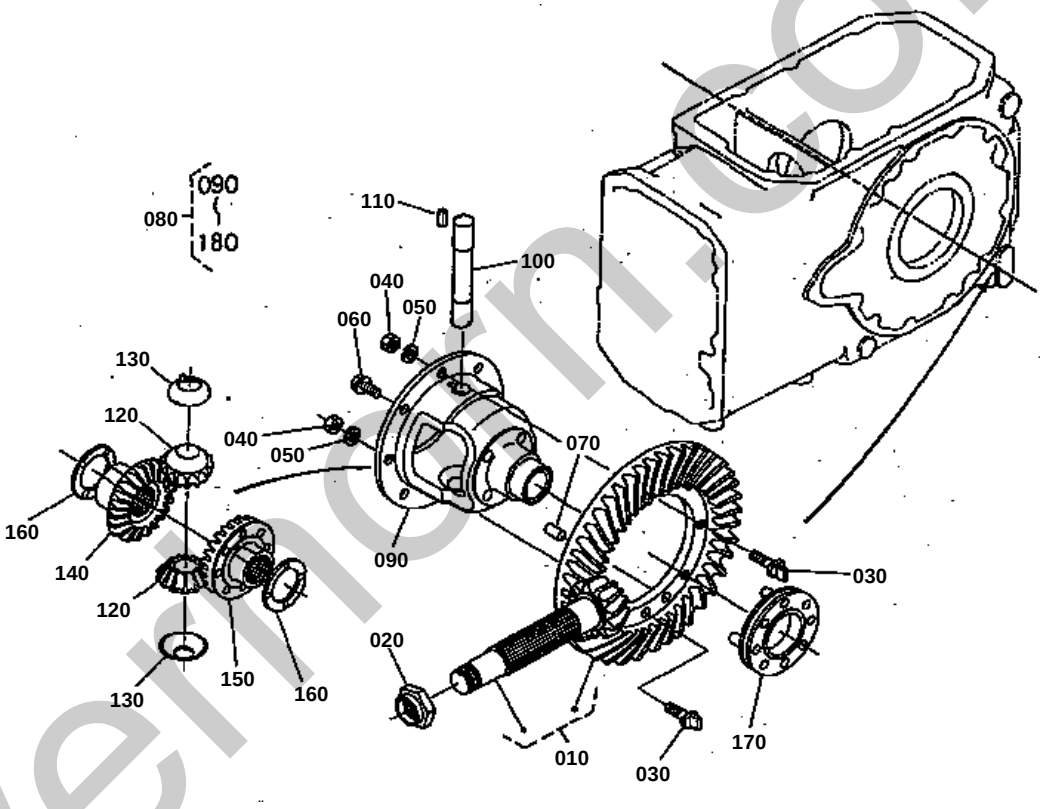

silvermorn.co.uk

↔ Interchangeable; ≠ not interchangeable; ← new for old; → old for new

REF.No	Part No.	Description	Q'ty	S.No.	I/C	REMARKS	Weight (kgf)	Weight (lb)
010	32530-95210	ASSY GEAR BEVEL 9-39	1				7	15.4
020	34150-25330	NUT	1				0.04	0.088
030	33251-32224	BOLT	2				0.055	0.121
040	02176-50120	NUT	2				0.01	0.022
050	04512-50120	WASHER SPRING	2				0	0
060	36280-42320	BOLT	6				0.042	0.0924
070	36340-42330	PIN	2				0.03	0.066
080	36540-43100	COMP.DIFFERENTIAL	1				8.25	18.15
090	36540-43120	CASE DIFFERENTIAL	1				0	0
100	36330-32770	SHAFT DIFF PINION	1				0	0
110	33251-32820	KEY	1				0.002	0.0044
120	36330-32750	PINION DIFF.	2				0	0
130	36330-32810	WASHER	2				0.018	0.0396
140	36540-43140	GEAR DIFF.SIDE	1				0.78	1.716
150	36540-43150	GEAR DIFF.SIDE	1				1.08	2.376
160	36540-43160	WASHER SIDE GEAR	2				0	0
160	36540-43190	WASHER SIDE GEAR	2				0.025	0.055
160	36540-43230	WASHER SIDE GEAR	2				0.025	0.055
170	33400-32850	SHIFTER DIFF LOCK	1				0.86	1.892

silverhorn.co.uk

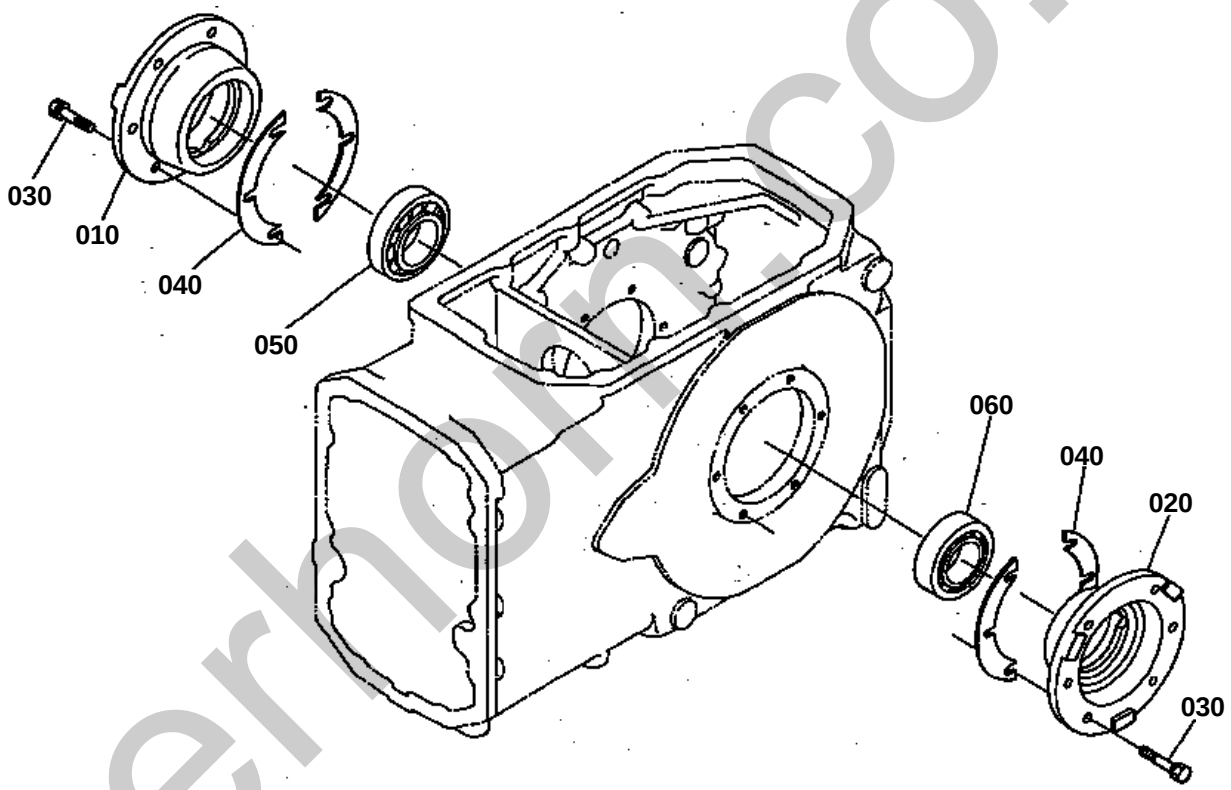

silverhomes.co.uk

↔ Interchangeable; ≠ not interchangeable; ← new for old; → old for new

REF.No	Part No.	Description	Q'ty	S.No.	I/C	REMARKS	Weight (kgf)	Weight (lb)
010	32530-26550	SUPP0RT DIFF.BEARING	1				2.45	5.39
020	32530-26560	SUPP0RT DIFF.BEARING	1				2.41	5.302
030	01133-51035	BOLT	12				0.03	0.066
040	36200-32130	SHIM	8				0.002	0.0044
040	36200-32140	SHIM	8				0.006	0.0132
040	36200-32150	SHIM	4				0.012	0.0264
050	08711-30211	BEARING	1				0.668	1.4696
060	08711-30209	BEARING	1				0.458	1.0076

silverhorn.co.uk

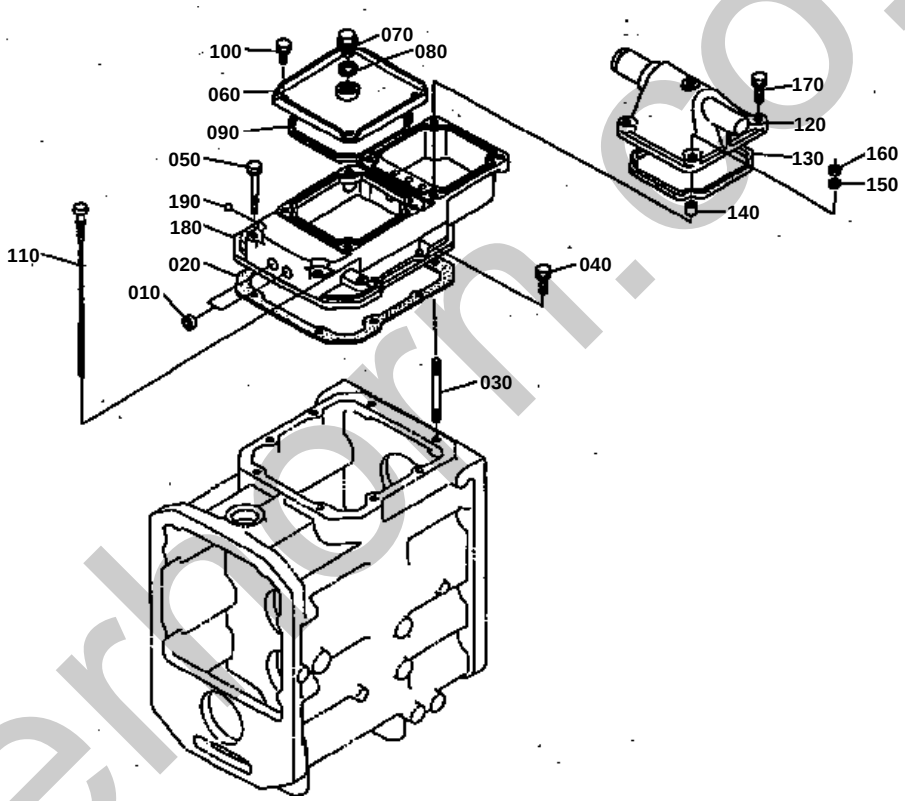

silverhorn.co.uk

SPEED CHANGE COVER

↔ Interchangeable; ≠ not interchangeable; ← new for old; → old for new

REF.No	Part No.	Description	Q'ty	S.No.	I/C	REMARKS	Weight (kgf)	Weight (lb)
010	32530-21220	PLUG	2				0.003	0.0066
020	32530-21240	GASKET	1				0	0
030	01513-50880	STUD	2				0.04	0.088
040	01123-50825	BOLT	4				0.013	0.0286
050	01123-50855	BOLT	2				0.02	0.044
060	32530-23740	COVER	1				0.53	1.166
070	06311-55040	PLUG	1				0.093	0.2046
080	04724-00210	GASKET	1				0.006	0.0132
090	32530-23720	SQUARE RING	1				0.005	0.011
100	01123-50814	BOLT	4				0	0
110	32530-21290	GAUGE OIL	1				0.01	0.022
120	32530-23710	BASE SPEED CHANGE	1				0.65	1.43
130	32530-23720	SQUARE RING	1				0.005	0.011
140	41051-14590	KNOCK PIPE	2				0.002	0.0044
150	04512-50080	WASHER SPRING	2				0	0
160	02156-50080	NUT	2				0.004	0.0088
170	01123-50825	BOLT	2				0.013	0.0286
180	32530-21210	COVER SPEED CHANGE	1				1.66	3.652
190	07715-01607	BALL	1				0.006	0.0132

silverhorn.co.uk

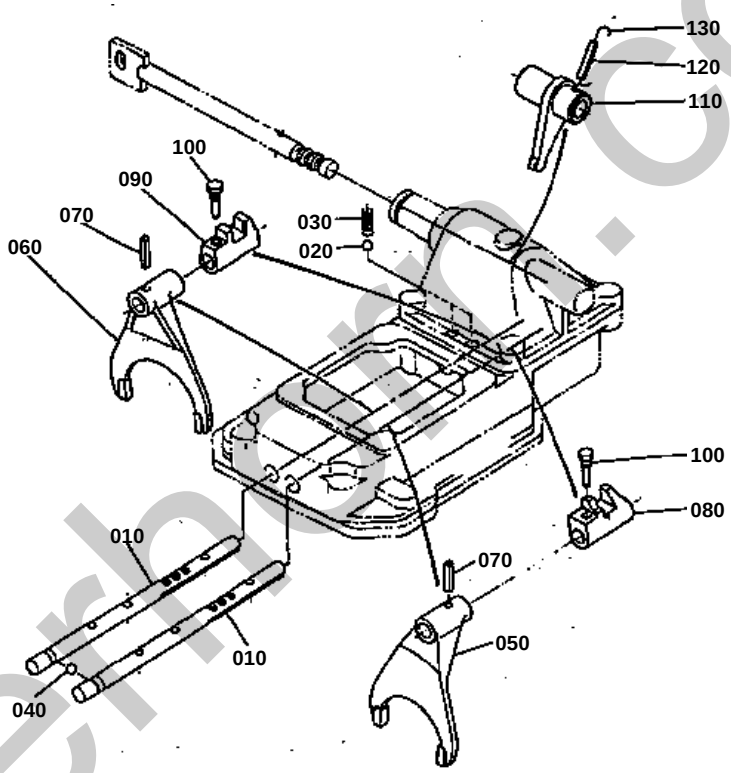

silverhill.co.uk

SHIFT FORK

↔ Interchangeable; ≠ not interchangeable; ← new for old; → old for new

REF.No	Part No.	Description	Q'ty	S.No.	I/C	REMARKS	Weight (kgf)	Weight (lb)
010	32530-23540	ROD FORK	2				0	0
020	07715-01605	BALL	2				0.003	0.0066
030	62581-18230	SPRING STOPPER	2				0.01	0.022
040	07715-00803	BALL	1				0.004	0.0088
050	32530-23510	FORK SHIFT	1				0.42	0.924
060	32530-23520	FORK SHIFT	1				0.42	0.924
070	05411-00635	PIN SPRING	2				0.005	0.011
080	32530-24870	SUPPORT S-CHANGE	1				0.15	0.33
090	32530-24880	SUPPORT S-CHANGE	1				0.13	0.286
100	32530-24890	SCREW	2				0.01	0.022
110	32530-23770	LEVER SHIFT	1				0.23	0.506
120	05411-00635	PIN SPRING	1				0.005	0.011
130	07811-11213	WIRE	1				0.001	0.0022

silverhorn.co.uk

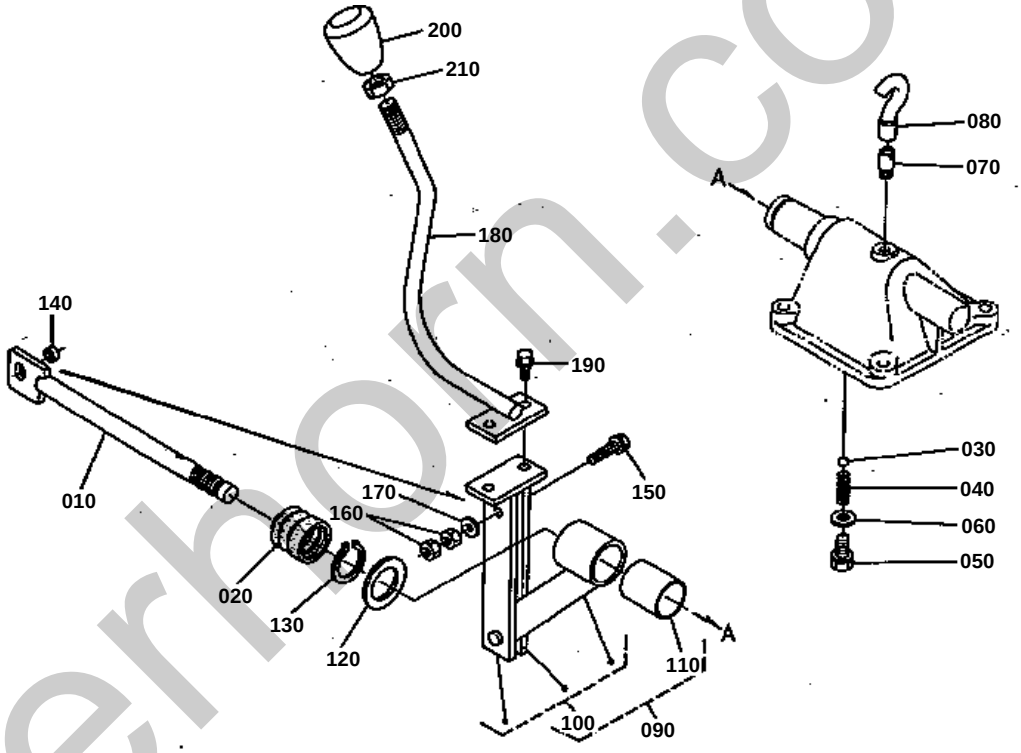

silverhorn.co.uk

MAIN GEAR SHIFT LEVER

↔ Interchangeable; ≠ not interchangeable; ← new for old; → old for new

REF.No	Part No.	Description	Q'ty	S.No.	I/C	REMARKS	Weight (kgf)	Weight (lb)
010	32530-23760	ROD SPEED CHANGE	1				0.4	0.88
020	32530-23780	BOOT	1				0.011	0.0242
030	07715-01605	BALL	1				0.003	0.0066
040	62581-18230	SPRING STOPPER	1				0.01	0.022
050	01133-51022	BOLT	1				0.025	0.055
060	04013-50100	WASHER PLAIN	1				0	0
070	36200-21610	BREATHER	1				0.008	0.0176
080	31351-37140	BREATHER	1				0.01	0.022
090	32530-23790	ASSY LEVER	1				0.85	1.87
100	32530-23800	COMP.LEVER	1				0.83	1.826
110	32530-23860	BUSH	1				0	0
120	38450-21990	COLLAR	1				0	0
130	04612-00300	CIR-CLIP EXTERNAL	1				0.003	0.0066
140	32530-23850	COLLAR	1				0.005	0.011
150	01754-50830	BOLT FLANGE	1				0.01	0.022
160	02114-50080	NUT	2				0.005	0.011
170	04013-50080	WASHER PLAIN	1				0	0
180	32530-23830	LEVER MAIN S-CHANGE	1				0	0
190	01754-50816	BOLT FLANGE	2				0.011	0.0242
200	33251-29620	GRIP	1				0.057	0.1254
210	02172-50140	NUT	1				0.01	0.022

silverhorn.co.uk

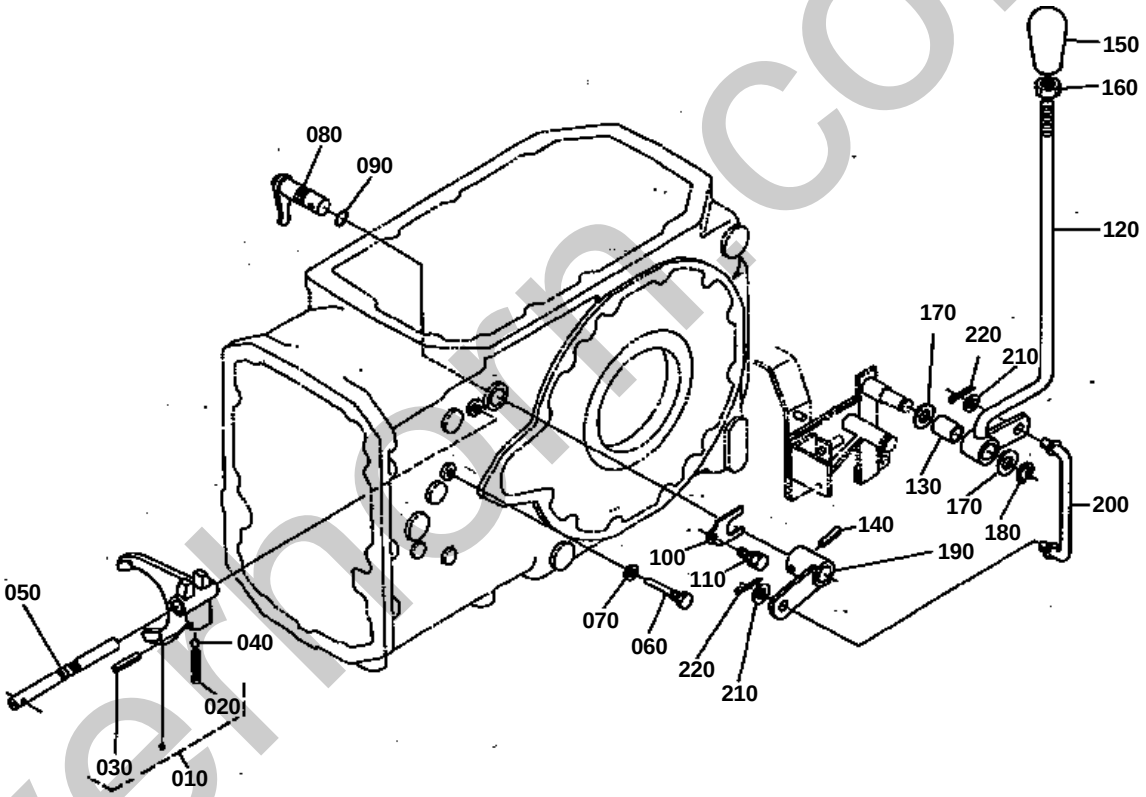

silverhorn.co.uk

HI-LO GEAR SHIFT LEVER

↔ Interchangeable; ≠ not interchangeable; ← new for old; → old for new

REF.No	Part No.	Description	Q'ty	S.No.	I/C	REMARKS	Weight (kgf)	Weight (lb)
010	32530-24100	ASSY FORK SHIFT	1				0.4	0.88
020	62581-18230	SPRING STOPPER	1				0.01	0.022
030	05411-00325	PIN SPRING	1				0.001	0.0022
040	07715-01605	BALL	1				0.003	0.0066
050	32530-24130	ROD FORK	1				0.18	0.396
060	37150-23120	SCREW	1				0.02	0.044
070	04717-00800	WASHER SEAL	1				0.001	0.0022
080	32530-24820	LEVER SHIFT	1				0.18	0.396
090	04811-00150	O RING	1				0.001	0.0022
100	34150-24350	STOPPER LEVER	1				0.015	0.033
110	01123-50820	BOLT	1				0.011	0.0242
120	32530-24210	LEVER S-CHANGE	1				0.52	1.144
130	32530-20750	BUSH	1				0	0
140	05411-00640	PIN SPRING	1				0.006	0.0132
150	38240-24920	GRIP LEVER	1				0.04	0.088
160	02118-50100	NUT	1				0.005	0.011
170	04013-50200	WASHER PLAIN	2				0.02	0.044
180	04612-00200	CIR-CLIP EXTERNAL	1				0.001	0.0022
190	32530-24220	ARM LEVER	1				0.4	0.88
200	32530-24230	ROD SPEED CHANGE	1				0.165	0.363
210	04013-50120	WASHER PLAIN	2				0	0
220	05511-50322	PIN SPLIT	2				0.002	0.0044

silverhorn.co.uk

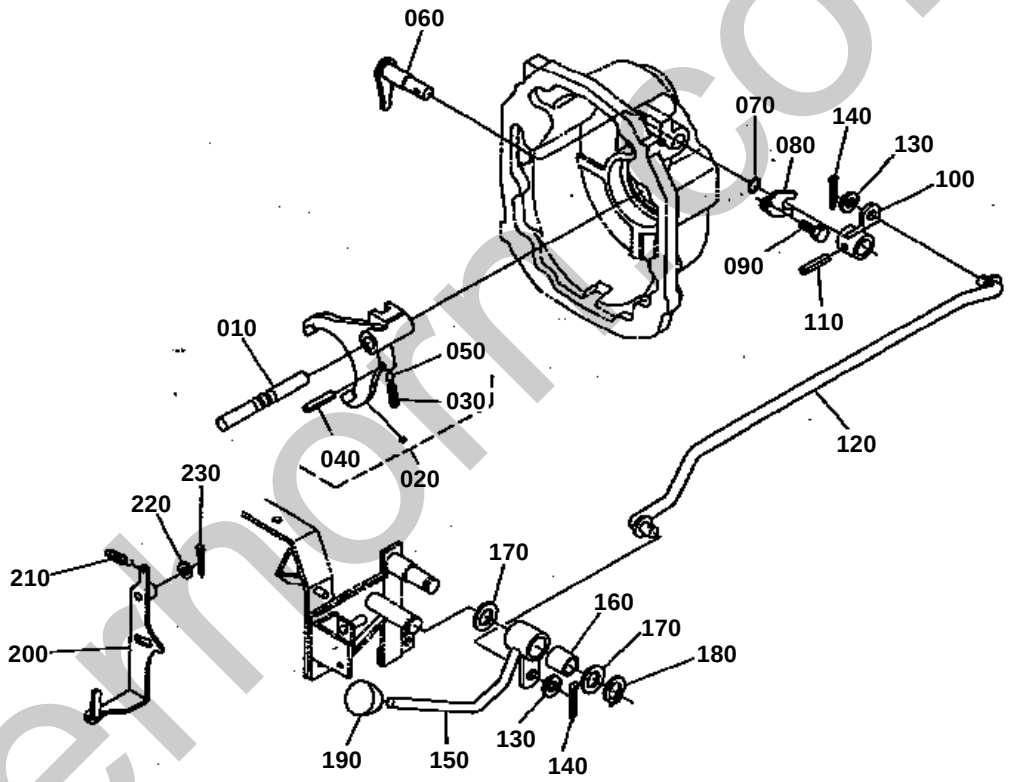

silvermoor.co.uk

PTO GEAR SHIFT LEVER

↔ Interchangeable; ≠ not interchangeable; ← new for old; → old for new

REF.No	Part No.	Description	Q'ty	S.No.	I/C	REMARKS	Weight (kgf)	Weight (lb)
010	32530-24740	ROD FORK PTO	1				0.25	0.55
020	32530-24603	ASSY FORK SHIFT	1				0.37	0.814
030	62581-18230	SPRING STOPPER	1				0.01	0.022
040	05411-00316	PIN SPRING	1				0.001	0.0022
050	07715-01605	BALL	1				0.003	0.0066
060	32530-24820	LEVER SHIFT	1				0.18	0.396
070	04811-00150	O RING	1				0.001	0.0022
080	34150-24350	STOPPER LEVER	1				0.015	0.033
090	01123-50820	BOLT	1				0.011	0.0242
100	32530-24830	ARM LEVER	1				0.11	0.242
110	05411-00640	PIN SPRING	1				0.006	0.0132
120	32530-24840	ROD SPEED CHANGE	1				0.56	1.232
130	04013-50120	WASHER PLAIN	2				0	0
140	05511-50322	PIN SPLIT	2				0.002	0.0044
150	32530-24850	LEVER SPEED CHANGE	1				0	0
160	32530-20750	BUSH	1				0	0
170	04013-50200	WASHER PLAIN	2				0.02	0.044
180	04612-00200	CIR-CLIP EXTERNAL	1				0.001	0.0022
190	66711-42310	GRIP LEVER	1				0.033	0.0726
200	32530-24900	LEVER CHECK	1				0.16	0.352
210	32530-24960	SPRING	1				0.015	0.033
220	04011-50100	WASHER PLAIN	1				0.002	0.0044
230	05511-50322	PIN SPLIT	1				0.002	0.0044

silverhorn.co.uk

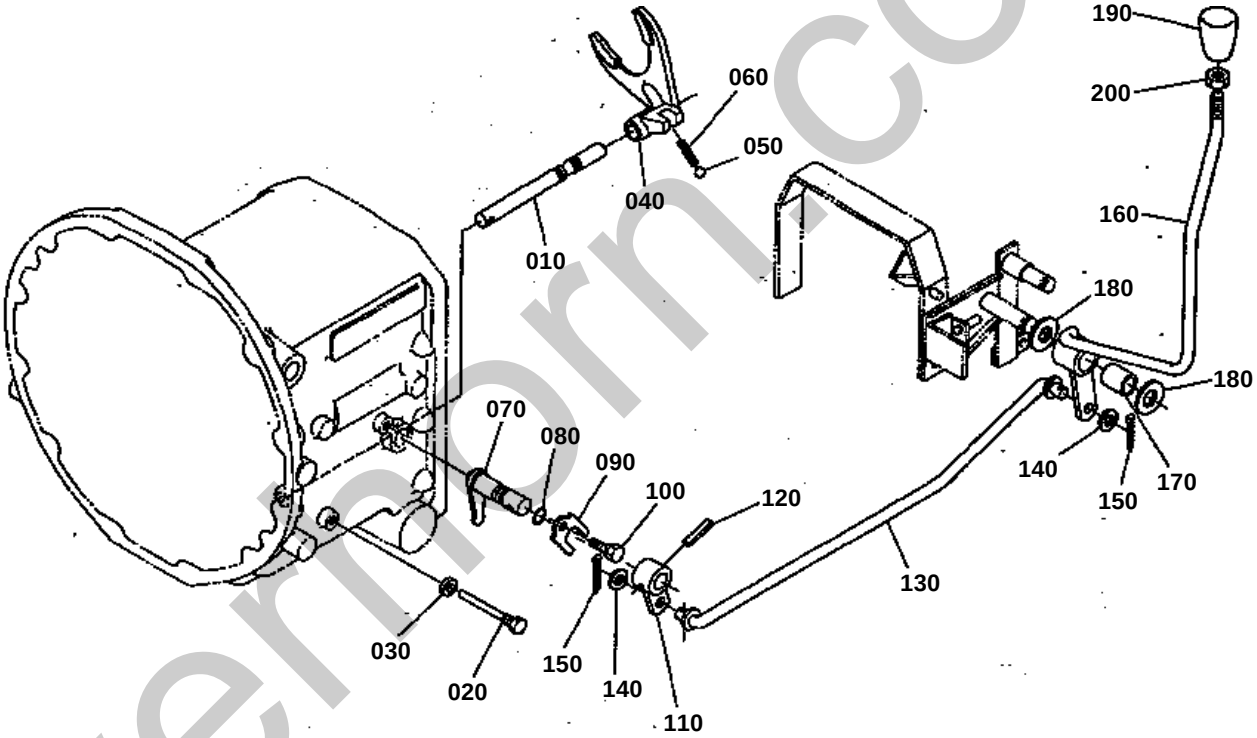

silvermorn.co.uk

SHUTTLE SHIFT LEVER (MANUAL)

↔ Interchangeable; ≠ not interchangeable; ← new for old; → old for new

REF.No	Part No.	Description	Q'ty	S.No.	I/C	REMARKS	Weight (kgf)	Weight (lb)
010	32530-20810	ROD FORK	1				0.25	0.55
020	32530-23130	SCREW	1				0.025	0.055
030	04717-00800	WASHER SEAL	1				0.001	0.0022
040	32530-20820	FORK SHIFT	1				0.38	0.836
050	07715-01605	BALL	1				0.003	0.0066
060	62581-18230	SPRING STOPPER	1				0.01	0.022
070	32530-20870	LEVER SHIFT	1				0.175	0.385
080	04811-00150	O RING	1				0.001	0.0022
090	34150-24350	STOPPER LEVER	1				0.015	0.033
100	01123-50816	BOLT	1				0.011	0.0242
110	32530-20720	ARM SHUTTLE	1				0	0
120	05411-00840	PIN SPRING	1				0.008	0.0176
130	32530-20730	ROD SHUTTLE	1				0.46	1.012
140	04013-50120	WASHER PLAIN	2				0	0
150	05511-50322	PIN SPLIT	2				0.002	0.0044
160	32530-20760	LEVER SHUTTLE	1				0	0
170	32530-20750	BUSH	1				0	0
180	04013-50200	WASHER PLAIN	2				0.02	0.044
190	33251-29620	GRIP	1				0.057	0.1254
200	02172-50140	NUT	1				0.01	0.022

silverhorn.co.uk

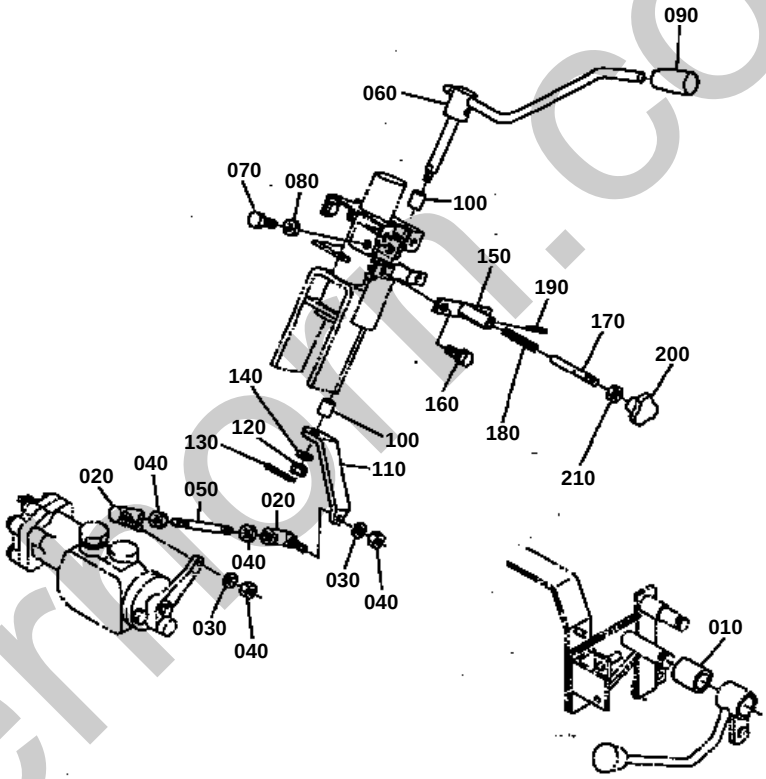

silvermoon.co.uk

SHUTTLE SHIFT LEVER (HYDRAULIC)

↔ Interchangeable; ≠ not interchangeable; ← new for old; → old for new

REF.No	Part No.	Description	Q'ty	S.No.	I/C	REMARKS	Weight (kgf)	Weight (lb)
010	32530-20770	COLLAR	1				0.07	0.154
020	35370-31280	END ROD	2				0.025	0.055
030	04512-50050	WASHER SPRING	2				0	0
040	02054-50050	NUT	4				0.002	0.0044
050	32530-46360	ROD	1				0.01	0.022
060	32530-46410	LEVER SHUTTLE	1				0.36	0.792
070	01173-51025	BOLT	2				0.021	0.0462
080	02176-50100	NUT	2				0.005	0.011
090	55611-31460	GRIP LEVER	1				0.03	0.066
100	32530-46420	BUSH	2				0	0
110	32530-46460	LEVER	1				0.105	0.231
120	02312-50080	NUT	1				0.004	0.0088
130	05511-50218	PIN SPLIT	1				0.001	0.0022
140	04012-50080	WASHER PLAIN	1				0.001	0.0022
150	32530-46470	GUIDE LOCK	1				0.06	0.132
160	01754-50820	BOLT FLANGE	2				0.015	0.033
170	32530-46480	PIN LOCK	1				0.02	0.044
180	32530-46490	SPRING	1				0.001	0.0022
190	05411-00210	PIN SPRING	1				0.001	0.0022
200	02820-00060	NUT	1				0.012	0.0264
210	02012-50060	NUT	1				0	0

silverhorn.co.uk

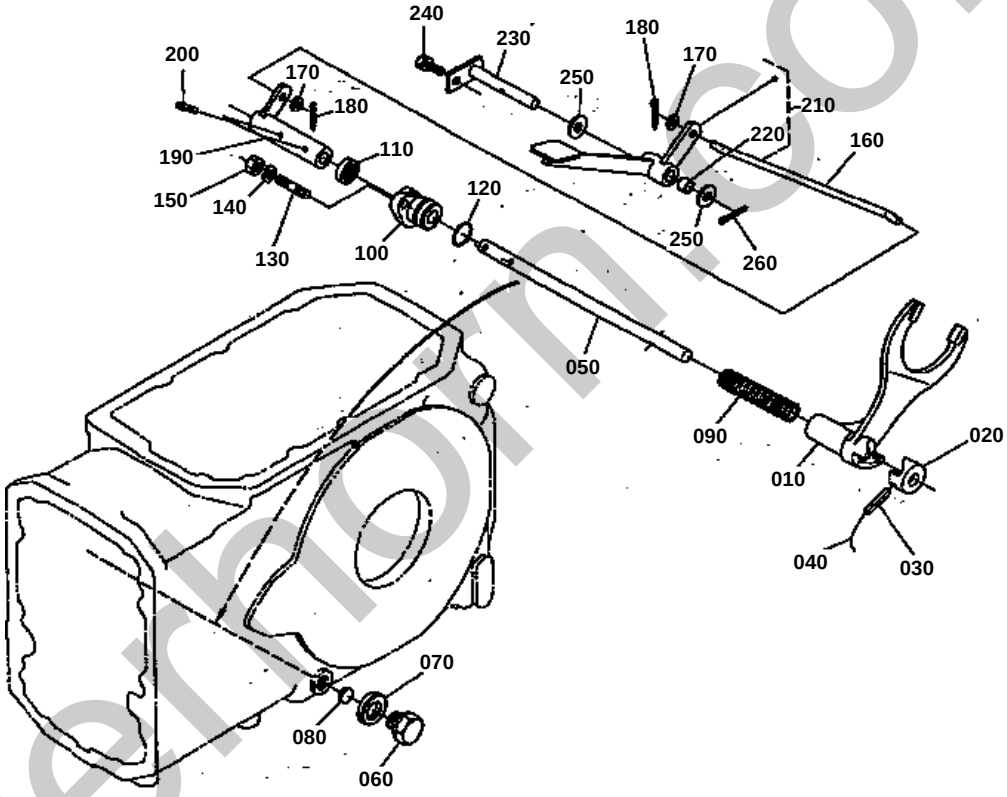

silverhorn.co.uk

↔ Interchangeable; ≠ not interchangeable; ← new for old; → old for new

REF.No	Part No.	Description	Q'ty	S.No.	I/C	REMARKS	Weight (kgf)	Weight (lb)
010	32530-26630	FORK SHIFT	1				1.26	2.772
020	36200-32890	CAM DIFF LOCK	1				0.09	0.198
030	05411-00636	PIN SPRING	1				0.005	0.011
040	07811-11213	WIRE	1				0.001	0.0022
050	32530-26680	SHAFT DIFF LOCK	1				0.5	1.1
060	06331-35020	PLUG	1				0.068	0.1496
070	04717-02000	WASHER SEAL	1				0.004	0.0088
080	36200-32950	SHIM	1				0.002	0.0044
090	32530-26640	SPRING	1				0.09	0.198
100	32530-26670	SUPPORT SHAFT	1				0.28	0.616
110	09500-16287	SEAL OIL	1				0.01	0.022
120	04811-10290	O RING	1				0.001	0.0022
130	01517-51030	STUD	2				0	0
140	04512-50100	WASHER SPRING	2				0	0
150	02118-50100	NUT	2				0.005	0.011
160	32530-26610	ROD DIFF LOCK	1				0.15	0.33
170	04013-50080	WASHER PLAIN	2				0	0
180	05511-50322	PIN SPLIT	2				0.002	0.0044
190	32530-26620	ARM DIFF LOCK	1				0	0
200	05411-00640	PIN SPRING	2				0.006	0.0132
210	32530-26600	ASSY PEDAL DIFF LOCK	1				0.345	0.759
220	32530-26690	BUSH	2				0	0
230	32530-26570	SHAFT PEDAL	1				0.17	0.374
240	01133-51020	BOLT	1				0.02	0.044
250	04013-50140	WASHER PLAIN	2				0	0
260	05511-50325	PIN SPLIT	1				0.002	0.0044

silverhorn.co.uk

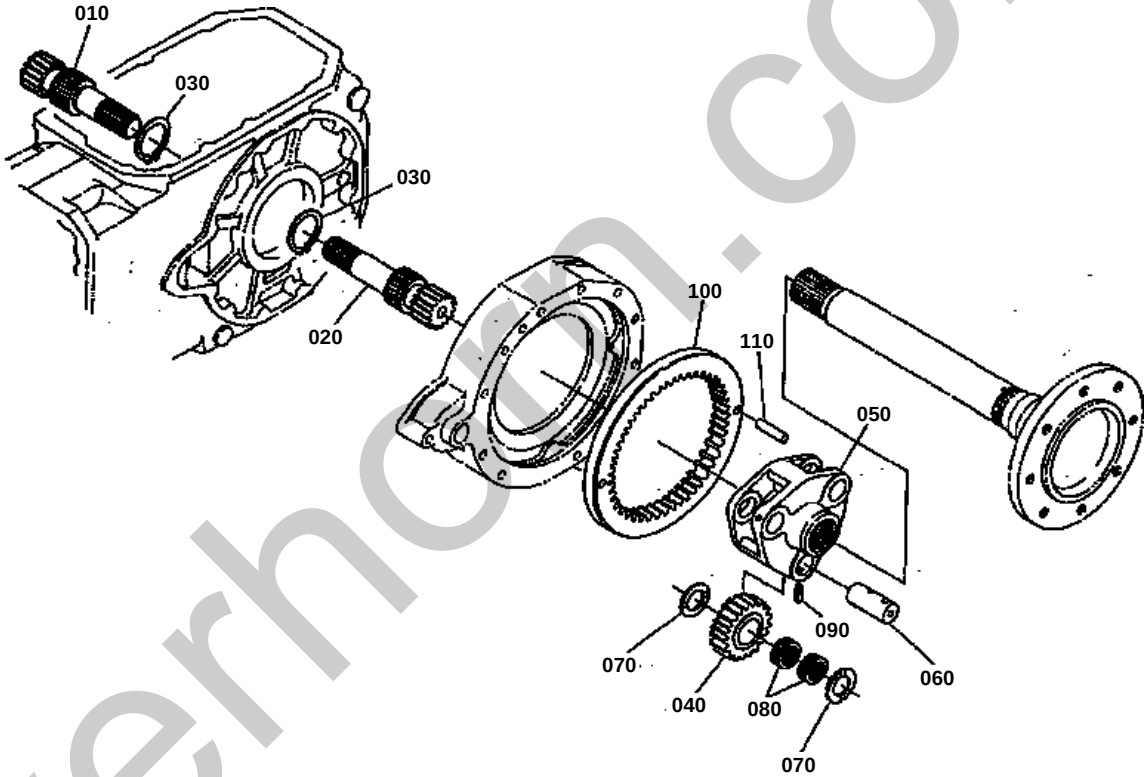

silverhorn.co.uk

PLANETARY GEAR

↔ Interchangeable; ≠ not interchangeable; ← new for old; → old for new

REF.No	Part No.	Description	Q'ty	S.No.	I/C	REMARKS	Weight (kgf)	Weight (lb)
010	32530-26710	GEAR-SHAFT RH	1				1.225	2.695
020	32530-26720	GEAR-SHAFT LH	1				1.915	4.213
030	04612-00550	CIR-CLIP EXTERNAL	2				0.01	0.022
040	32530-26810	GEAR PLANETARY	6				1.25	2.75
050	32530-26820	SUPPORT 1	2				0	0
060	36200-48362	PIN PLANETARY GEAR	6				0.4	0.88
070	32530-26840	COLLAR THRUST	12				0.015	0.033
080	08823-23916	BEARING NEEDLE	12				0.031	0.0682
090	05411-00825	PIN SPRING	6				0.006	0.0132
100	32530-26850	GEAR	2				4.15	9.13
110	36200-48410	PIN STRAIGHT	4				0.005	0.011

silverhorn.co.uk

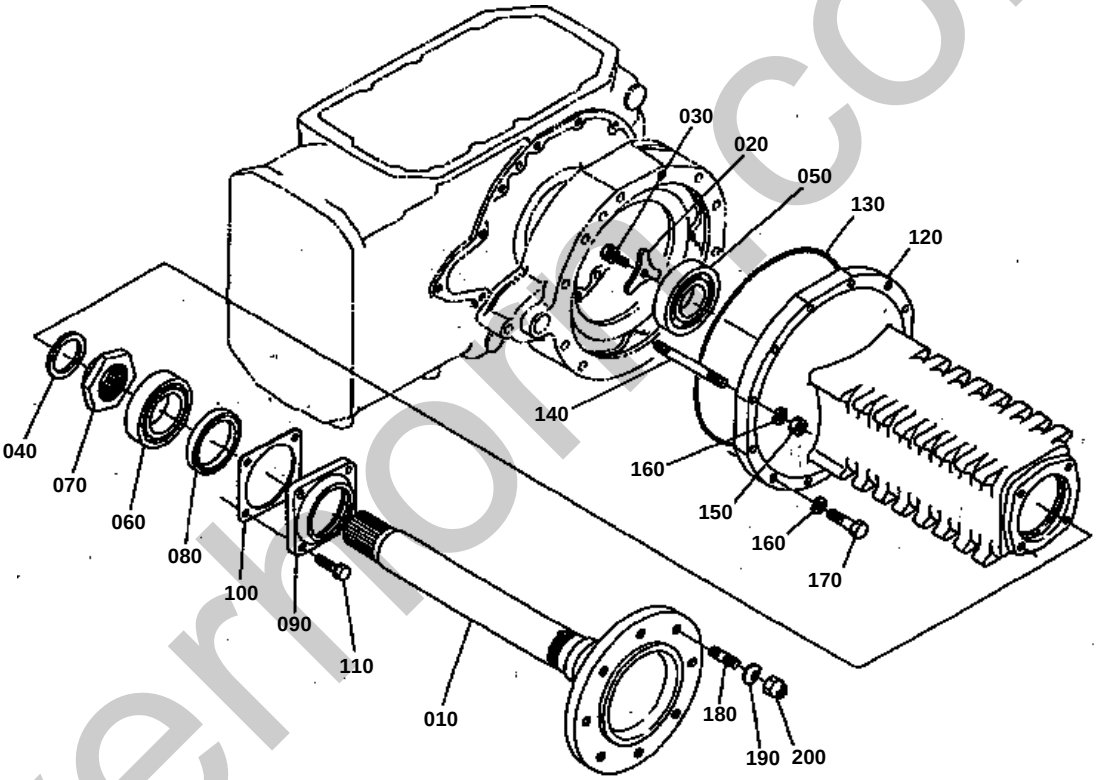

silverhorse.co.uk

↔ Interchangeable; ≠ not interchangeable; ← new for old; → old for new

REF.No	Part No.	Description	Q'ty	S.No.	I/C	REMARKS	Weight (kgf)	Weight (lb)
010	32530-27110	AXLE REAR	2				20.8	45.76
020	38430-27170	HOLDER CARRIER	2				0.066	0.1452
030	01133-51025	BOLT	2				0.023	0.0506
040	38430-27140	COLLAR	2				0.035	0.077
050	08101-06211	BEARING BALL	2				0.6	1.32
060	08101-06212	BEARING BALL	2				0.78	1.716
070	38430-27150	NUT	2				0.17	0.374
080	36540-48250	SEAL	2				0.13	0.286
090	36200-48120	COVER REAR AXLE	2				1.08	2.376
100	36200-48130	GASKET	2				0	0
110	01133-51038	BOLT	8				0.03	0.066
120	32530-27310	CASE AXLE	2				21.8	47.96
130	36200-48160	O RING	2				0.006	0.0132
140	32530-27350	STUD	10				0.115	0.253
150	02176-50120	NUT	10				0.01	0.022
160	04512-50120	WASHER SPRING	24				0	0
170	32530-37180	BOLT	14				0.11	0.242
180	32530-27410	STUD	16				0.08	0.176
190	36500-49410	SPRING	16				0.024	0.0528
200	33251-49170	NUT	16				0.045	0.099

silverhorn.co.uk

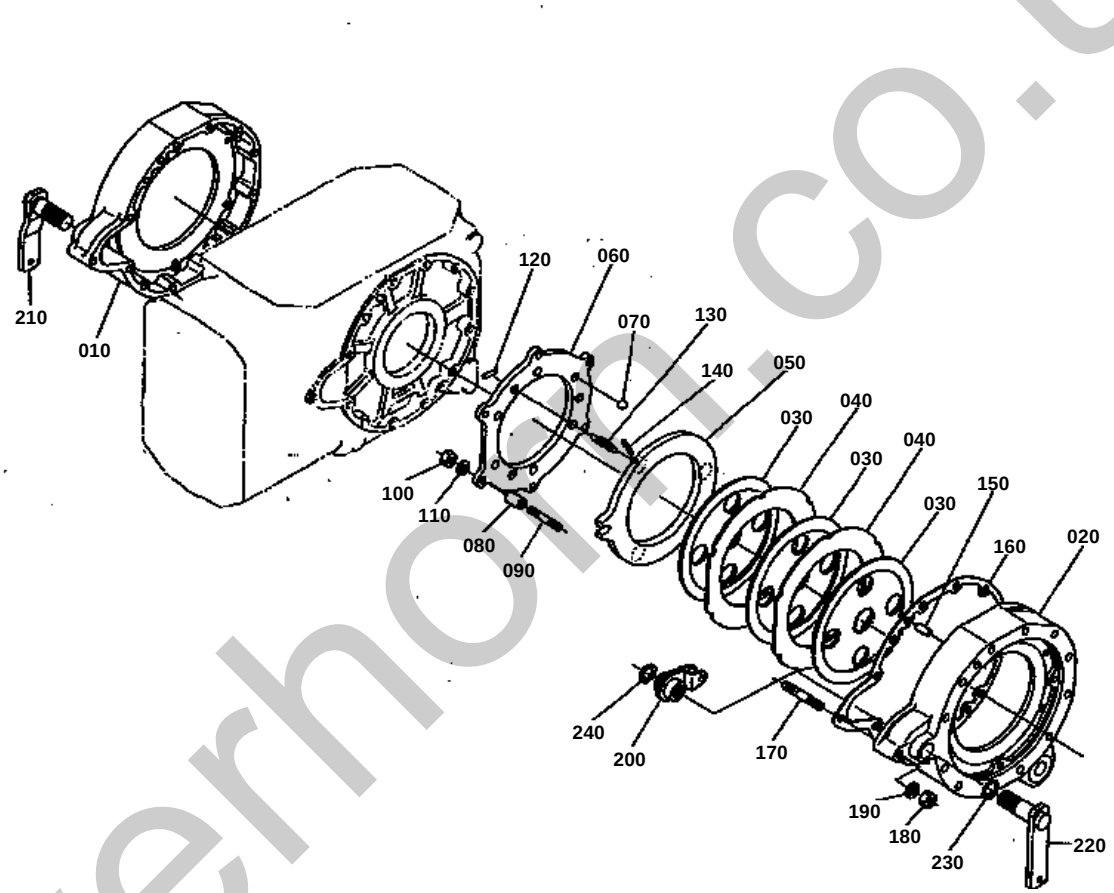

silverhorn.co.uk

↔ Interchangeable; ≠ not interchangeable; ← new for old; → old for new

REF.No	Part No.	Description	Q'ty	S.No.	I/C	REMARKS	Weight (kgf)	Weight (lb)
010	32530-28150	CASE BRAKE RH	1				0	0
020	32530-28160	CASE BRAKE LH	1				16.5	36.3
030	36200-65120	PLATE FRICTION	6				0	0
040	36330-65130	PLATE	4				0.56	1.232
050	36200-65147	PLATE CAM	2				2.5	5.5
060	36200-65150	PLATE CAM	2				2.42	5.324
070	07715-00805	BALL	12				0.016	0.0352
080	36500-65160	SPACER	12				0.02	0.044
090	36500-65170	STUD	12				0.042	0.0924
100	02118-50100	NUT	12				0.005	0.011
110	04512-50100	WASHER SPRING	12				0	0
120	36200-65180	RETAINER SPRING	12				0.025	0.055
130	36200-65810	SPRING	12				0.003	0.0066
140	05411-00435	PIN SPRING	12				0.002	0.0044
150	05012-01325	PIN STRAIGHT	4				0.028	0.0616
160	32530-28170	GASKET	2				0	0
170	01574-51275	STUD	2				0.074	0.1628
180	02176-50120	NUT	2				0.01	0.022
190	04512-50120	WASHER SPRING	2				0	0
200	36200-65310	LEVER BRAKE CAM	2				0.35	0.77
210	32530-28230	CAMSHAFT BRAKE RH	1				0.9	1.98
220	32530-28240	CAMSHAFT BRAKE LH	1				0.92	2.024
230	04811-05250	O RING	2				0.001	0.0022
240	04612-00280	CIR-CLIP EXTERNAL	2				0.003	0.0066

silverhorn.co.uk

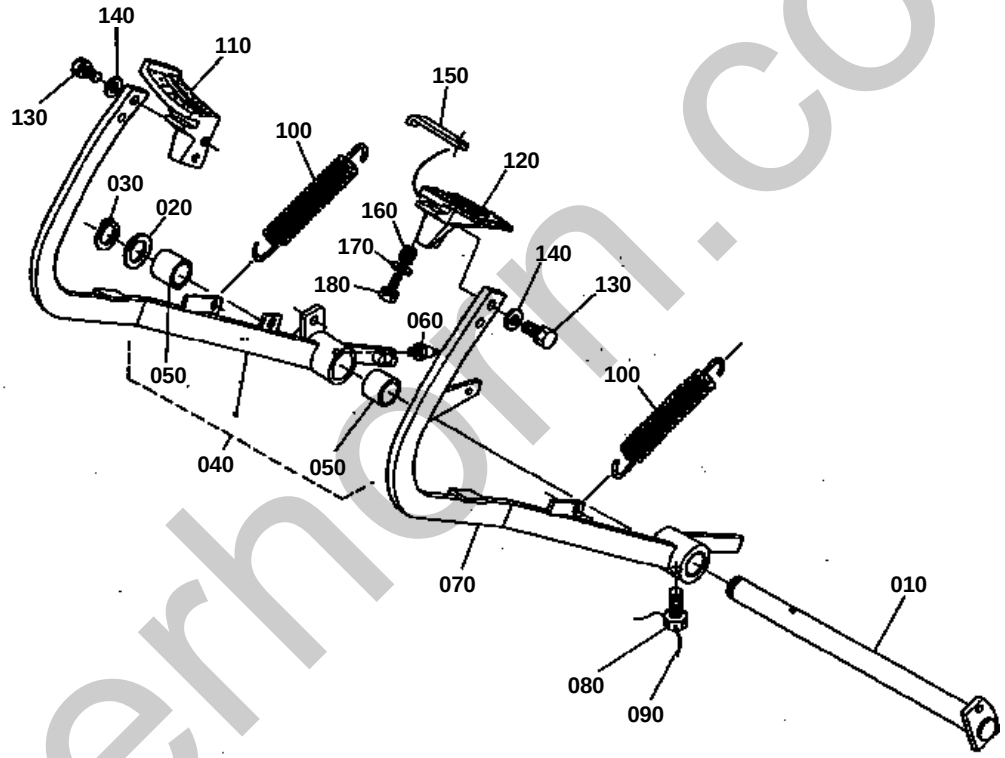

silverhorn.co.uk

BRAKE PEDAL

↔ Interchangeable; ≠ not interchangeable; ← new for old; → old for new

REF.No	Part No.	Description	Q'ty	S.No.	I/C	REMARKS	Weight (kgf)	Weight (lb)
010	32530-28650	SHAFT BRAKE PEDAL	1				2.46	5.412
020	32530-28660	COLLAR	1				0.018	0.0396
030	04612-00280	CIR-CLIP EXTERNAL	1				0.003	0.0066
040	32530-28610	ARM BRAKE PEDAL RH	1				2.7	5.94
050	32150-28440	BUSH	2				0.043	0.0946
060	06613-10010	NIPPLE GREASE	1				0.006	0.0132
070	32530-28620	ARM BRAKE PEDAL LH	1				2.8	6.16
080	33251-26350	BOLT	1				0.045	0.099
090	07811-11620	WIRE	1				0	0
100	37150-15840	SPRING	2				0.06	0.132
110	36330-67120	HEEL PEDAL	1				0.85	1.87
120	36330-67220	HEEL PEDAL	1				0.86	1.892
130	01123-50825	BOLT	4				0.013	0.0286
140	04013-50080	WASHER PLAIN	4				0	0
150	36330-67230	STOPPER BRAKE PEDAL	1				0.06	0.132
160	36330-67240	SPRING	1				0.001	0.0022
170	04013-50060	WASHER PLAIN	1				0	0
180	01023-50625	BOLT	1				0.007	0.0154

silverhorn.co.uk

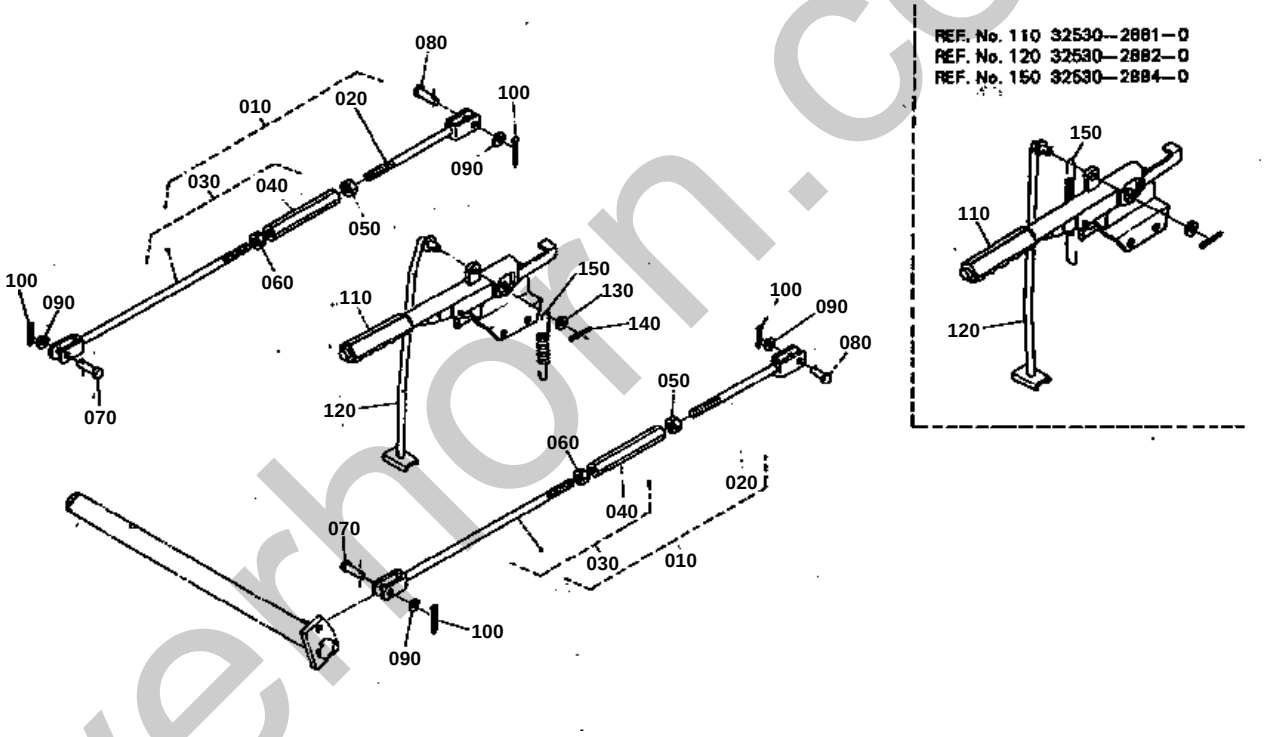

silverhorn.co.uk

PARKING BRAKE LEVER

↔ Interchangeable; ≠ not interchangeable; ← new for old; → old for new

REF.No	Part No.	Description	Q'ty	S.No.	I/C	REMARKS	Weight (kgf)	Weight (lb)
010	32530-28920	ASSY ROD BRAKE	2				0.59	1.298
020	32530-28930	ROD BRAKE	2				0.7	1.54
030	32530-28940	ROD BRAKE	2				0.3	0.66
040	37720-28980	TURNBUCKLE	2				0.099	0.2178
050	02172-50120	NUT	2				0.01	0.022
060	37720-28990	NUT	2				0.008	0.0176
070	05122-51028	PIN JOINT	2				0	0
080	05122-51035	PIN JOINT	2				0.023	0.0506
090	04011-50100	WASHER PLAIN	4				0.002	0.0044
100	05511-50322	PIN SPLIT	4				0.002	0.0044
110	32530-28810	ASSY LEVER BRAKE	1	<=50187			0.72	1.584
110	32530-28813	ASSY LEVER BRAKE	1	>=50188	≠		0.77	1.694
120	32530-28820	ROD BRAKE	1	<=50187			0.25	0.55
120	32530-28824	ROD BRAKE	1	>=50188	≠		0.27	0.594
130	04011-50100	WASHER PLAIN	1				0.002	0.0044
140	05511-50322	PIN SPLIT	1				0.002	0.0044
150	32530-28840	SPRING	1	<=50187			0.012	0.0264
150	32530-28850	SPRING	1	>=50188	≠		0.015	0.033

silverhorn.co.uk

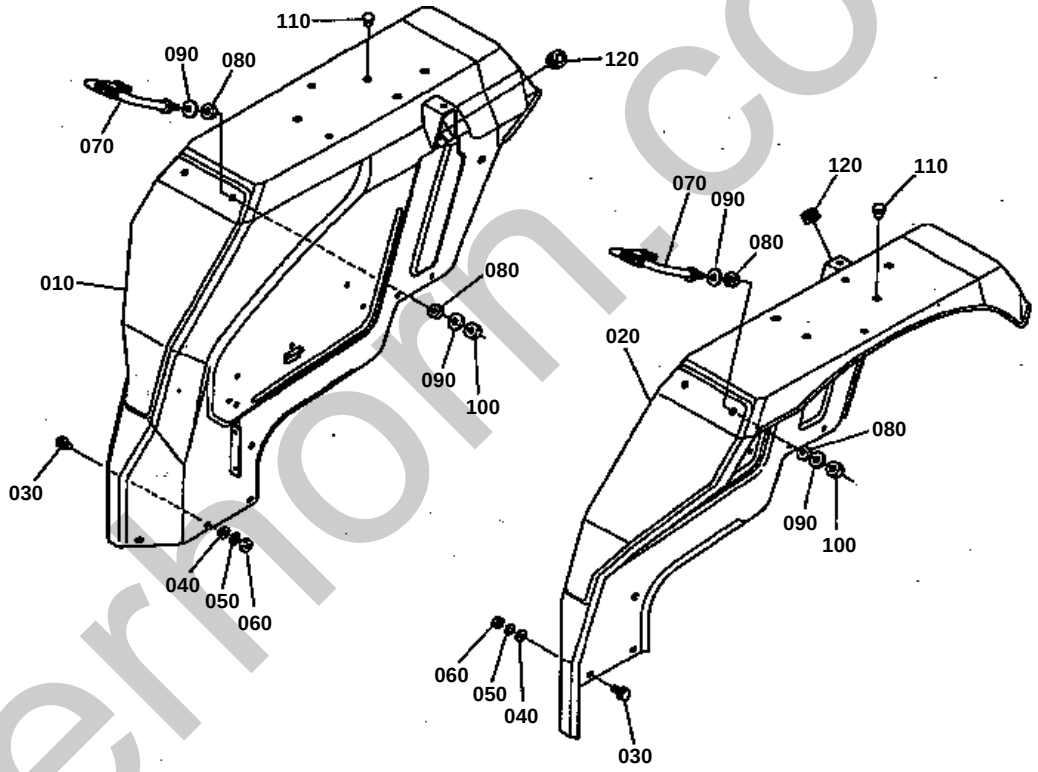

silverhorn.co.uk

FENDER

↔ Interchangeable; ≠ not interchangeable; ← new for old; → old for new

REF.No	Part No.	Description	Q'ty	S.No.	I/C	REMARKS	Weight (kgf)	Weight (lb)
010	32530-29110	COMP.FENDER RH	1				0	0
020	32530-29210	COMP.FENDER LH	1				0	0
030	01754-50816	BOLT FLANGE	18				0.011	0.0242
040	04012-50080	WASHER PLAIN	6				0.001	0.0022
050	04512-50080	WASHER SPRING	6				0	0
060	02114-50080	NUT	6				0.005	0.011
070	31351-29440	BALUSTRADE	2				0	0
080	32260-29180	CUSHION	4				0.005	0.011
090	04013-50140	WASHER PLAIN	4				0	0
100	02174-50140	NUT	4				0.014	0.0308
110	32530-29170	PLUG	10				0.001	0.0022
120	32150-29180	CAP	2				0.002	0.0044

silverhorn.co.uk

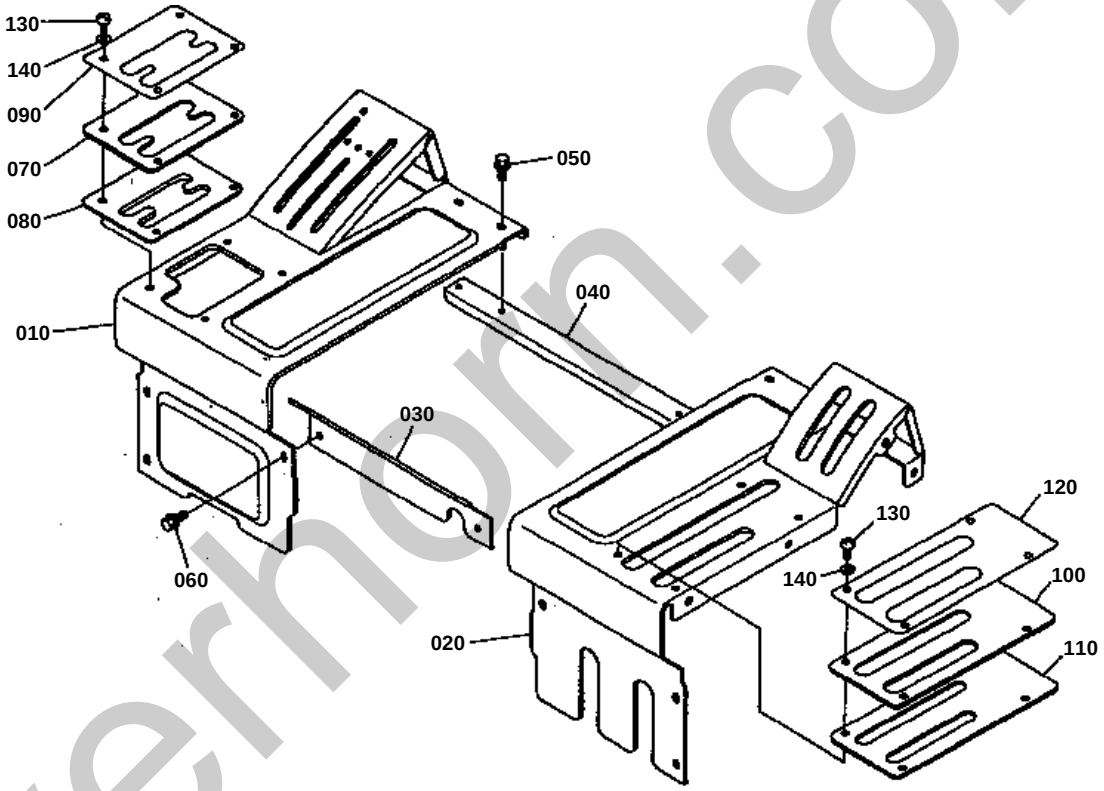

silverhorn.co.uk

FLOOR SEAT

↔ Interchangeable; ≠ not interchangeable; ← new for old; → old for new

REF.No	Part No.	Description	Q'ty	S.No.	I/C	REMARKS	Weight (kgf)	Weight (lb)
010	32530-29320	SEAT FLOOR RH	1				0	0
020	32530-29330	SEAT FLOOR LH	1				0	0
030	32530-29340	SEAT FLOOR MIDDLE	1				0.24	0.528
040	32530-29420	SUPPORT FLOOR SEAT	1				0	0
050	01754-50610	BOLT FLANGE	12				0.006	0.0132
060	01754-50616	BOLT FLANGE	2				0.006	0.0132
070	32530-29140	GUIDE LEVER RH	1				0.3	0.66
080	32530-29150	CUSHION RH	1				0.05	0.11
090	32530-23880	PATTERN S-CHANGE	1				0.025	0.055
100	32530-29240	GUIDE LEVER LH	1				0.55	1.21
110	32530-29250	CUSHION LH	1				0.1	0.22
120	32530-24240	PATTERN SHUTTLE	1				0.04	0.088
130	03004-50620	SCREW	8				0.005	0.011
140	04013-50060	WASHER PLAIN	8				0	0

silverhorn.co.uk

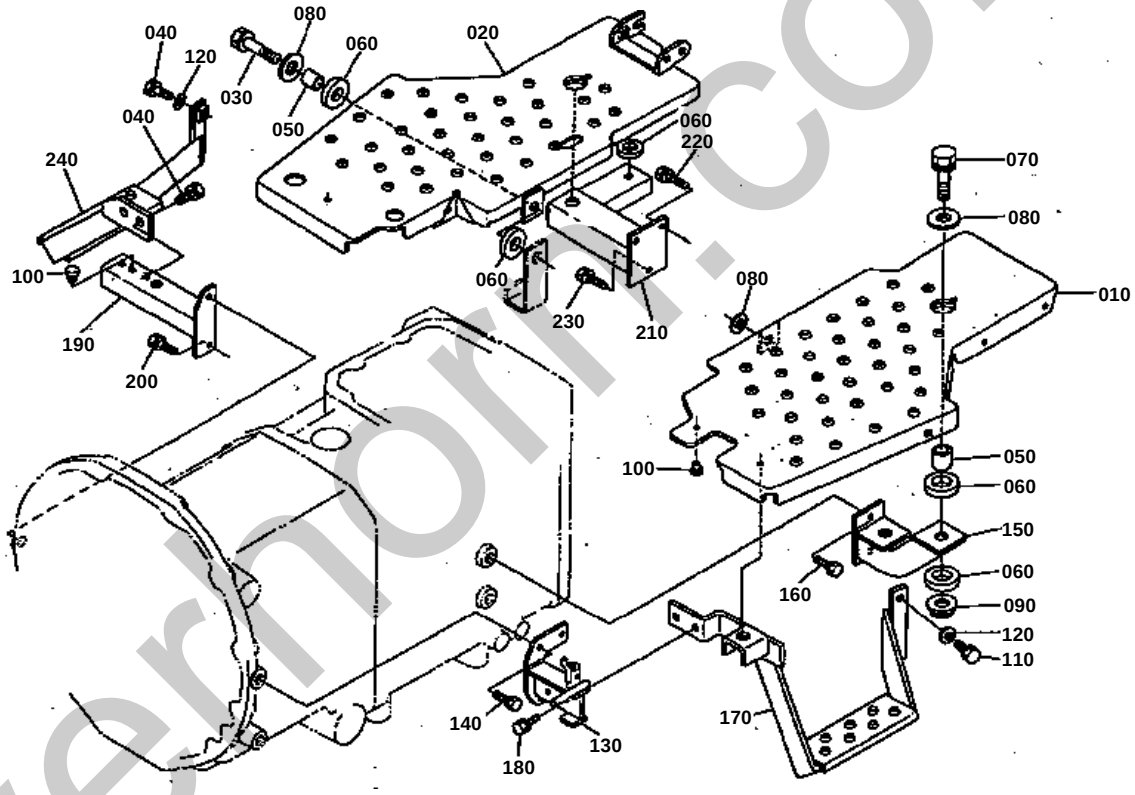

silvermorn.co.uk

↔ Interchangeable; ≠ not interchangeable; ← new for old; → old for new

REF.No	Part No.	Description	Q'ty	S.No.	I/C	REMARKS	Weight (kgf)	Weight (lb)
010	32530-29910	COMP.STEP RH	1				0	0
020	32530-29920	COMP.STEP LH	1	<=50053			3.6	7.92
020	32530-29925	COMP.STEP LH	1	>=50054	≠		0	0
030	01133-51040	BOLT	2				0.03	0.066
040	01133-51030	BOLT	3				0.025	0.055
050	32530-29940	SPACER	6				0.01	0.022
060	38240-18640	CUSHION	13				0.01	0.022
070	01133-51045	BOLT	4				0.034	0.0748
080	04015-50100	WASHER PLAIN	7				0.016	0.0352
090	32530-29930	NUT	4				0.024	0.0528
100	38240-29870	CUSHION	5				0.004	0.0088
110	01133-51025	BOLT	1				0.023	0.0506
120	04013-50100	WASHER PLAIN	2				0	0
130	32530-29974	SUPPORT STEP LH	1				0	0
140	01133-51030	BOLT	2				0.025	0.055
150	32530-29980	SUPPORT STEP LH	1				0.2	0.44
160	01133-51030	BOLT	2				0.025	0.055
170	32530-29990	SUPPORT STEP LH	1				0	0
180	01133-51020	BOLT	3				0.02	0.044
190	32530-29950	SUPPORT STEP RH	1				0	0
200	01133-51030	BOLT	2				0.025	0.055
210	32530-29960	SUPPORT STEP RH	1				1.05	2.31
220	01133-51030	BOLT	2				0.025	0.055
230	01133-51025	BOLT	1				0.023	0.0506
240	32530-29870	STEP RH	1				1.1	2.42

silverhorn.co.uk

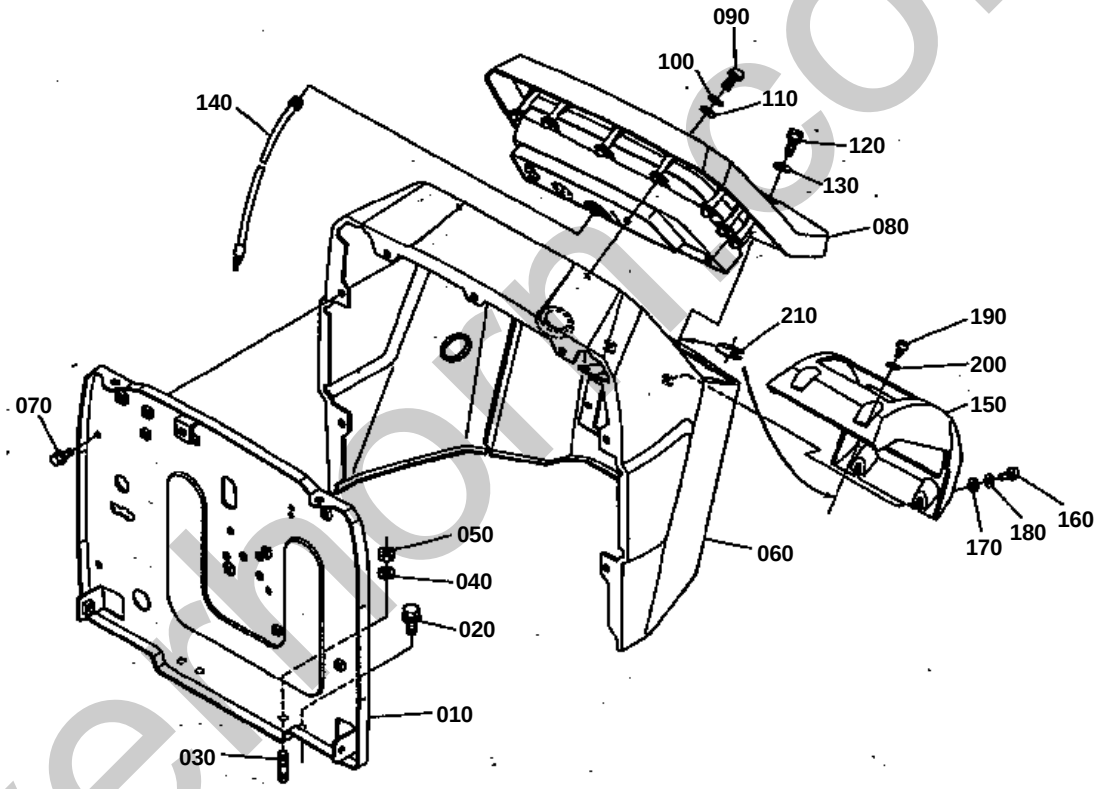

silverhorse.co.uk

PANEL BOARD

↔ Interchangeable; ≠ not interchangeable; ← new for old; → old for new

REF.No	Part No.	Description	Q'ty	S.No.	I/C	REMARKS	Weight (kgf)	Weight (lb)
010	32530-31160	PLATE SHUTTER	1				0	0
020	01774-51020	BOLT FLANGE	2				0	0
030	01517-51020	STUD	2				0.019	0.0418
040	04512-50100	WASHER SPRING	2				0	0
050	02176-50100	NUT	2				0.005	0.011
060	32530-31110	COMP.PANEL	1				3.5	7.7
070	01754-50812	BOLT FLANGE	9				0.01	0.022
080	32530-31100	ASSY BOARD PANEL	1	<=50053			1.5	3.3
080	32530-31103	ASSY BOARD PANEL	1	>=50054	≠		2.8	6.16
090	32530-31120	SCREW	2				0.01	0.022
100	66021-55280	WASHER SPRING	2				0.001	0.0022
110	32530-18390	WASHER PLAIN	2				0.001	0.0022
120	01202-50616	BOLT	2				0.006	0.0132
130	04015-50060	WASHER PLAIN	2				0	0
140	35300-34650	CABLE TRACTORMETER	1				0.213	0.4686
150	32530-31140	COVER POST LOWER	1				0.2	0.44
160	32530-31120	SCREW	2				0.01	0.022
170	32530-31130	WASHER PLAIN	2				0.01	0.022
180	66021-55280	WASHER SPRING	2				0.001	0.0022
190	32530-31150	SCREW	2				0.01	0.022
200	32530-18390	WASHER PLAIN	2				0.001	0.0022
210	31351-93540	NUT	2				0.002	0.0044

silverhorn.co.uk

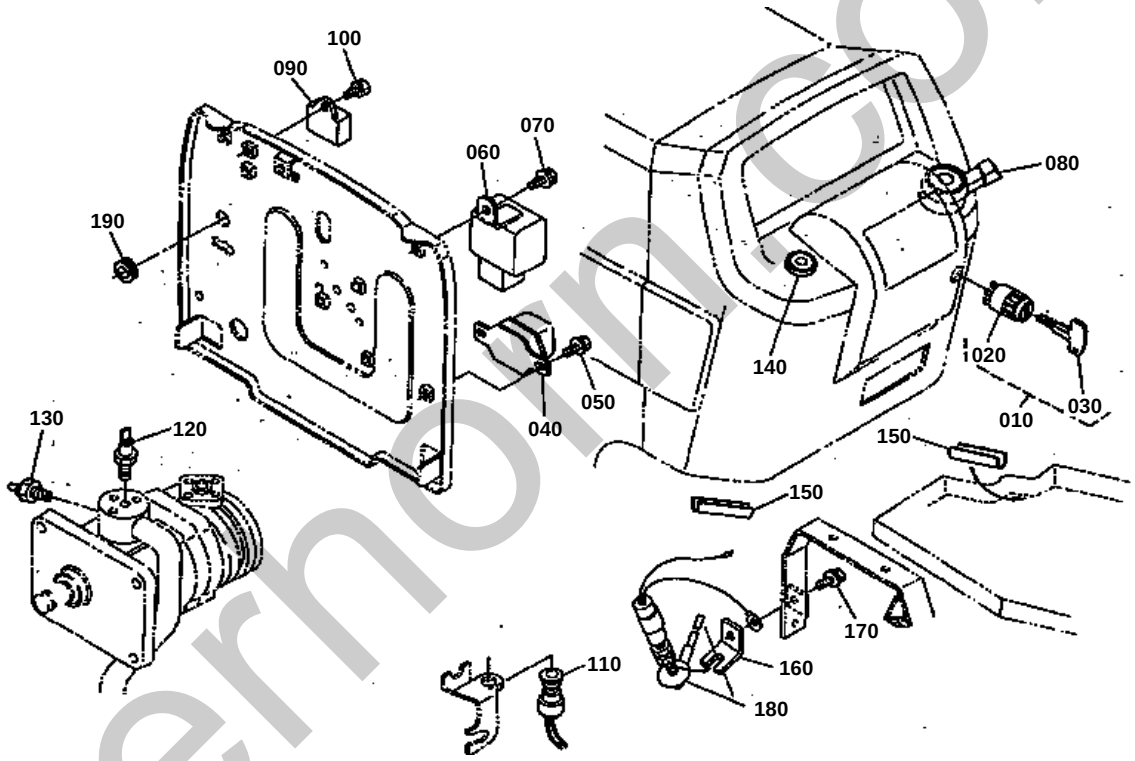

silverhorn.co.uk

SWITCH AND REGURATOR

↔ Interchangeable; ≠ not interchangeable; ← new for old; → old for new

REF.No	Part No.	Description	Q'ty	S.No.	I/C	REMARKS	Weight (kgf)	Weight (lb)
010	32530-31800	ASSY SWITCH MAIN	1				0.4	0.88
020	36330-75162	SWITCH MAIN	1				0.35	0.77
030	35260-31850	ASSY KEY SWITCH	1				0	0
040	33251-74010	ASSY REGURATOR	1				0.35	0.77
050	01754-50616	BOLT FLANGE	2				0.006	0.0132
060	31351-31410	TIMER	1				0	0
070	01754-50612	BOLT FLANGE	1				0.005	0.011
080	36330-75010	SWITCH	1				0.09	0.198
090	35170-33700	UNIT FLASHER	1				0.06	0.132
100	01754-50616	BOLT FLANGE	1				0.006	0.0132
110	37150-32240	SWITCH	1				0.12	0.264
120	38240-37930	SWITCH VACUUM	1				0.051	0.1122
130	38240-37940	SWITCH	1				0.04	0.088
140	17381-65950	INDICATOR GLOW PLUG	1				0.075	0.165
150	66301-43550	COVER PROTECTOR	2				0.003	0.0066
160	32530-28830	HOLDER SWITCH	1	>=50054			0.075	0.165
170	01774-51020	BOLT FLANGE	1	>=50054			0	0
180	36530-75140	SWITCH PARKING BRAKE	1	>=50054			0.08	0.176
190	32530-31180	RING RUBBER	1				0.005	0.011

silverhorn.co.uk

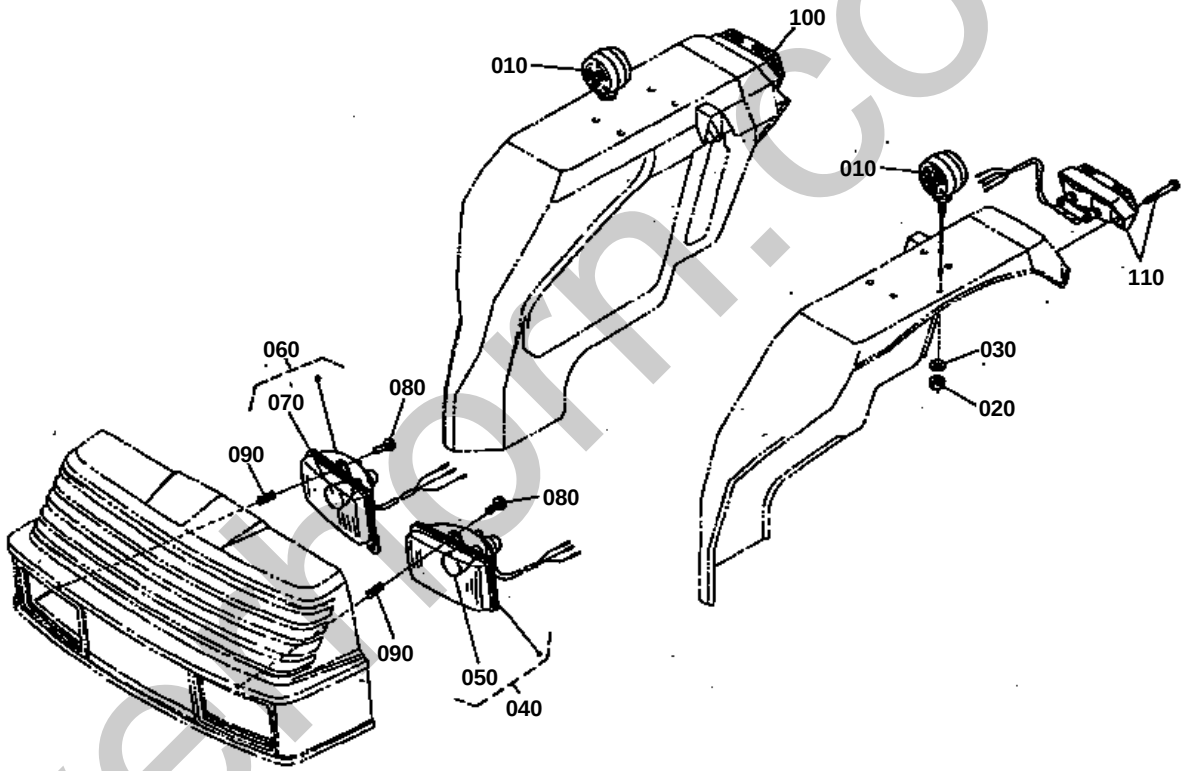

silverthorn.co.uk

↔ Interchangeable; ≠ not interchangeable; ← new for old; → old for new

REF.No	Part No.	Description	Q'ty	S.No.	I/C	REMARKS	Weight (kgf)	Weight (lb)
010	32530-33610	ASSY LIGHT HAZARD	2				0.5	1.1
020	02114-50100	NUT	2				0.005	0.011
030	04512-50100	WASHER SPRING	2				0	0
040	32530-33800	LIGHT HEAD LH	1				0.5	1.1
050	38450-33870	BULB LIGHT	1				0.025	0.055
060	32530-33850	LIGHT HEAD RH	1				0.5	1.1
070	38450-33870	BULB LIGHT	1				0.025	0.055
080	03054-50520	SCREW	6				0.005	0.011
090	38240-33860	SPRING LIGHT	6				0.001	0.0022
100	32530-33620	LIGHT REAR COMBI.RH	1				0.638	1.4036
110	32530-33630	LIGHT REAR COMBI.LH	1				0.4	0.88

silverhorn.co.uk

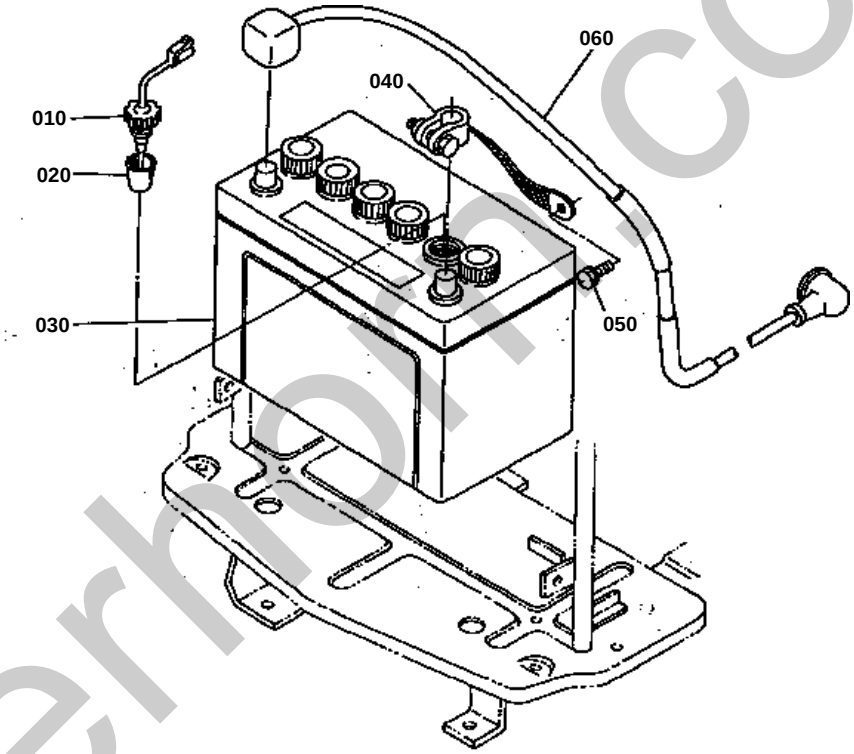

silverhorn.co.uk

↔ Interchangeable; ≠ not interchangeable; ← new for old; → old for new

REF.No	Part No.	Description	Q'ty	S.No.	I/C	REMARKS	Weight (kgf)	Weight (lb)
010	38240-33370	SENSER BATTERY	1				0.03	0.066
020	38240-33360	BUFFER	1				0.005	0.011
030	32360-33200	BATTERY DRY	1				18	39.6
040	32530-33380	CORD EARTH	1				0.17	0.374
050	01133-51020	BOLT	1				0.02	0.044
060	32530-33330	CORD BATTERY	1				0	0

silverhorn.co.uk

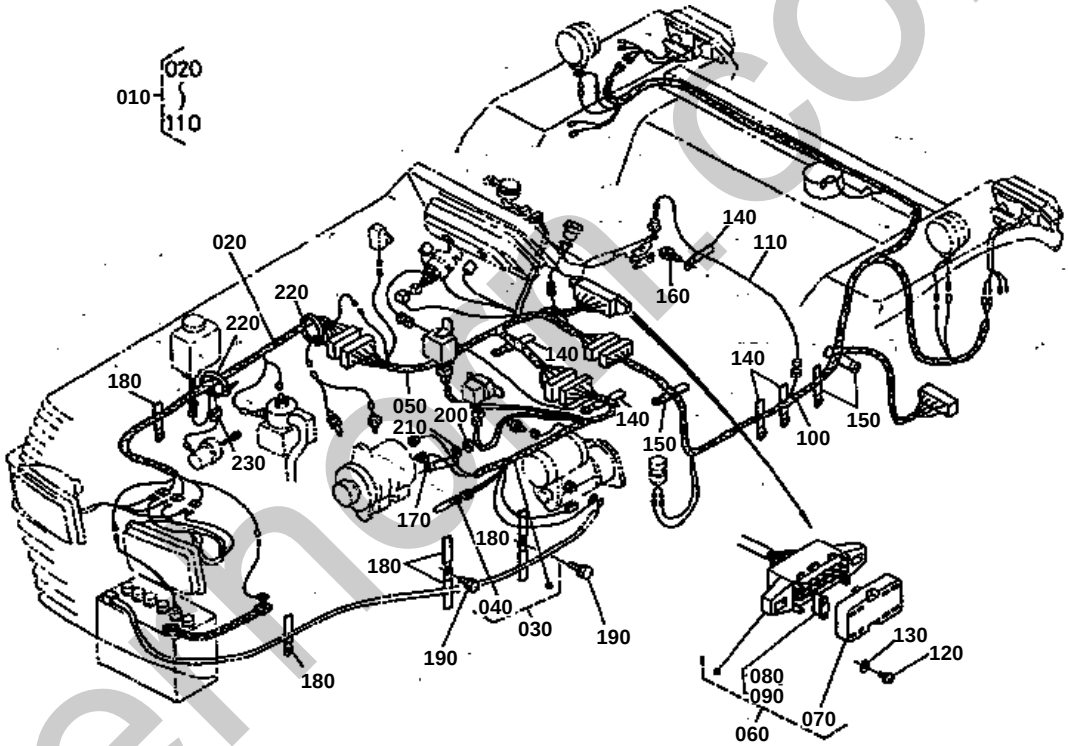

silvermachinery.co.uk

↔ Interchangeable; ≠ not interchangeable; ← new for old; → old for new

REF.No	Part No.	Description	Q'ty	S.No.	I/C	REMARKS	Weight (kgf)	Weight (lb)
010	32530-34400	ASSY WIREHARNESS	1				2.1	4.62
020	32530-34410	WIREHARNESS	1				0.31	0.682
030	32530-34420	WIREHARNESS	1				0.37	0.814
040	36330-75380	LINK	1				0.01	0.022
050	32530-34430	WIREHARNESS	1				0.76	1.672
060	32530-34490	ASSY BOX FUSE	1				0.078	0.1716
070	32530-34450	COVER FUSE CASE	1				0	0
080	36730-75550	FUSE	7			10A	0.001	0.0022
090	35820-75560	FUSE	3			15A	0.002	0.0044
100	32530-34440	WIREHARNESS	1				0.535	1.177
110	32530-34480	WIREHARNESS	1	>=50054			0.01	0.022
120	03054-50512	SCREW	2				0.003	0.0066
130	04013-50050	WASHER PLAIN	2				0	0
140	37150-34460	CLAMP CORD	4				0.03	0.066
150	35340-29380	CLAMP CORD	3				0.01	0.022
160	01133-51016	BOLT	1				0.015	0.033
170	34150-29390	CLAMP CORD	1				0.004	0.0088
180	13313-69750	ASSY CLAMP CORD	6				0	0
190	01023-50610	BOLT	2				0.005	0.011
200	02118-50080	NUT	1				0.006	0.0132
210	04512-50080	WASHER SPRING	1				0	0
220	34350-29380	BAND CORD	2				0.001	0.0022
230	66706-55220	SUPPORT CORD	1				0.002	0.0044

silverhorn.co.uk

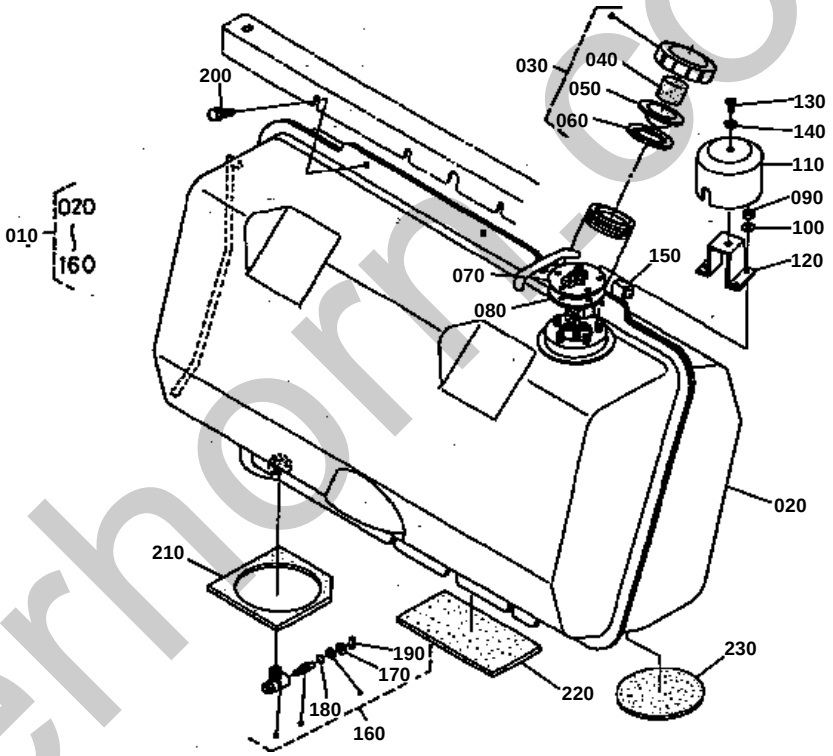

silverhorn.co.uk

FUEL TANK

↔ Interchangeable; ≠ not interchangeable; ← new for old; → old for new

REF.No	Part No.	Description	Q'ty	S.No.	I/C	REMARKS	Weight (kgf)	Weight (lb)
010	32530-35100	ASSY TANK FUEL	1				10	22
020	32530-35110	COMP.TANK FUEL	1				10	22
030	38240-35200	ASSY CAP FUEL TANK	1				0.06	0.132
040	34150-35240	SPONGE	1				0.001	0.0022
050	34150-35230	GASKET	1				0.01	0.022
060	34150-35180	GASKET	1				0.001	0.0022
070	32530-35210	UNIT TANK	1				0.17	0.374
080	36330-75310	GASKET	1				0.005	0.011
090	02054-50050	NUT	5				0.002	0.0044
100	04013-50050	WASHER PLAIN	5				0	0
110	32530-35250	UNIT COVER	1				0.05	0.11
120	32530-35260	BRACKET UNIT COVER	1				0.045	0.099
130	03017-50612	SCREW	1				0.004	0.0088
140	04717-00600	WASHER SEAL	1				0.001	0.0022
150	32530-35320	RUBBER PROTECTOR	1				0	0
160	31220-35400	ASSY COCK FUEL	1				0.11	0.242
170	04611-00140	CIR-CLIP INTERNAL	1				0.001	0.0022
180	04811-00080	O RING	1				0.001	0.0022
190	05411-00330	PIN SPRING	1				0.001	0.0022
200	01754-50816	BOLT FLANGE	6				0.011	0.0242
210	32530-35170	CUSHION TANK	1				0.04	0.088
220	32530-35180	CUSHION TANK	1				0.08	0.176
230	32530-35190	CUSHION TANK	1				0.05	0.11

silverhorn.co.uk

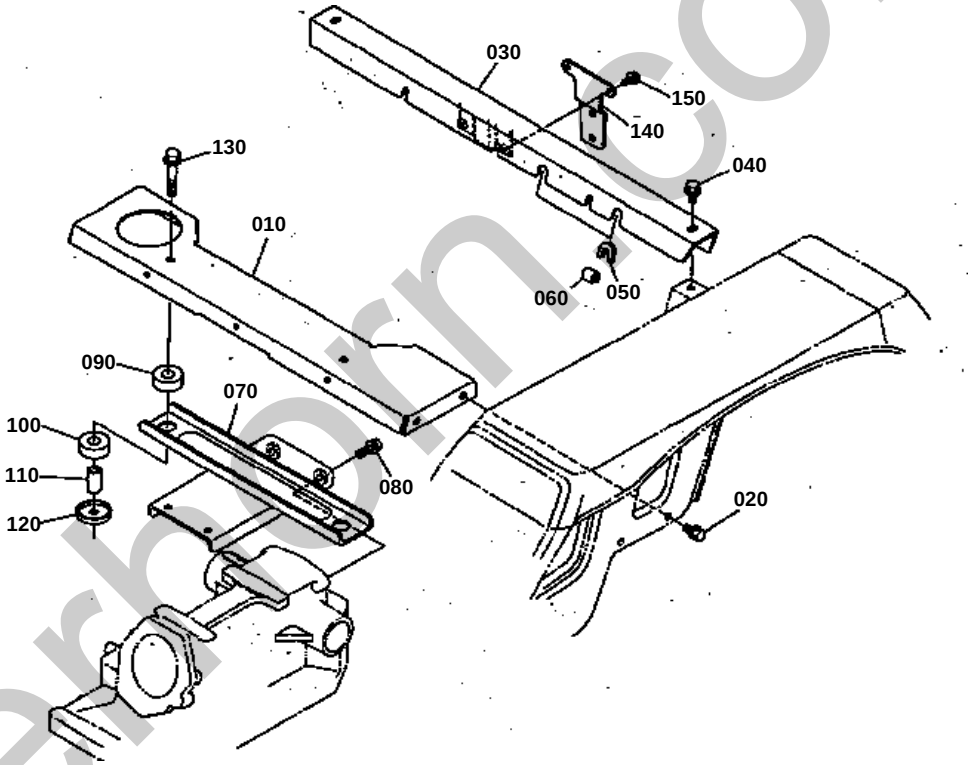

silverhorn.co.uk

FUEL TANK SUPPORT

↔ Interchangeable; ≠ not interchangeable; ← new for old; → old for new

REF.No	Part No.	Description	Q'ty	S.No.	I/C	REMARKS	Weight (kgf)	Weight (lb)
010	32530-35150	SUPPORT TANK	1				3.15	6.93
020	01754-50816	BOLT FLANGE	4				0.011	0.0242
030	32530-35160	SUPPORT TANK	1				2.7	5.94
040	01774-51016	BOLT FLANGE	2				0.02	0.044
050	32530-35290	RUBBER PROTECTOR	2				0.002	0.0044
060	32530-35320	RUBBER PROTECTOR	1				0	0
070	32530-35310	BASE CUSHION	1				3.17	6.974
080	01774-51025	BOLT FLANGE	2				0.02	0.044
090	31351-29260	CUSHION UPPER	2				0.05	0.11
100	31351-29270	CUSHION LOWER	2				0.045	0.099
110	31351-29280	SPACER	2				0.04	0.088
120	31351-29310	RETAINER CUSHION	2				0.065	0.143
130	01774-51265	BOLT FLANGE	2				0.06	0.132
140	32530-71750	CLAMP MARK	1				0	0
150	01754-50816	BOLT FLANGE	2				0.011	0.0242

silverhorn.co.uk

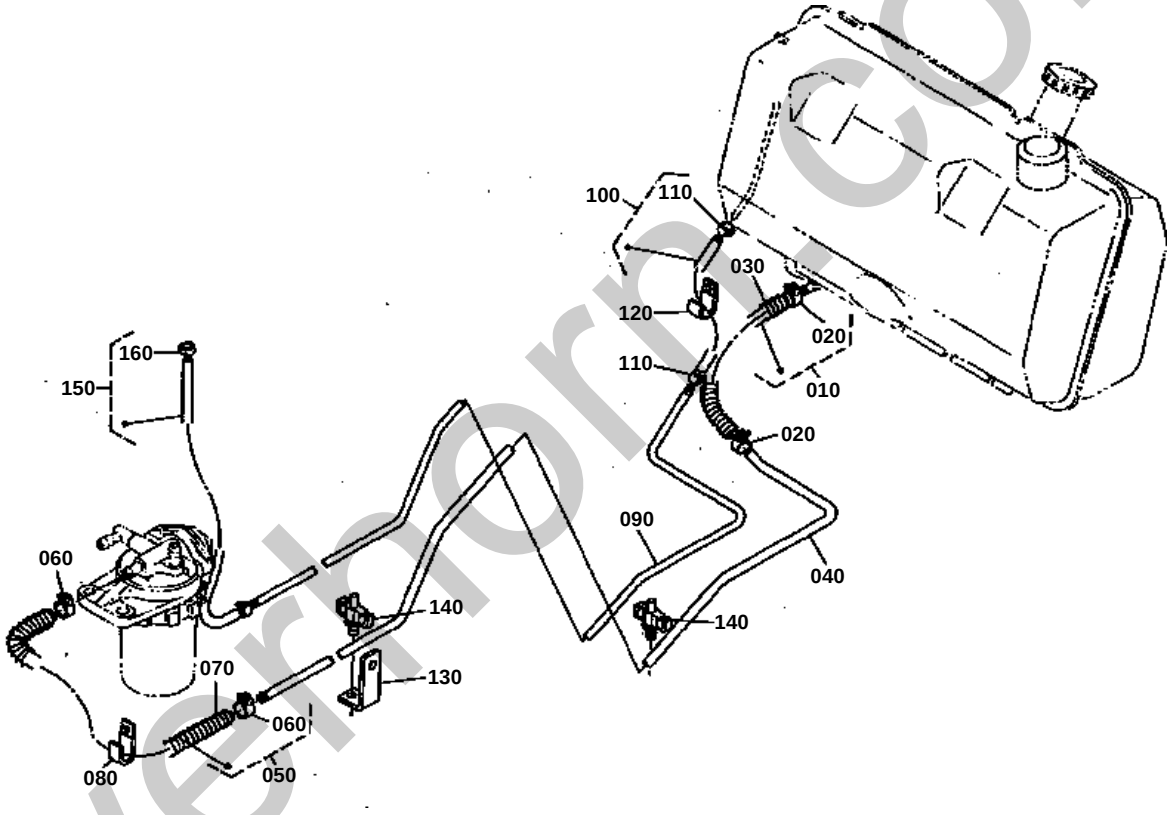

silverhorn.co.uk

FUEL LINE

↔ Interchangeable; ≠ not interchangeable; ← new for old; → old for new

REF.No	Part No.	Description	Q'ty	S.No.	I/C	REMARKS	Weight (kgf)	Weight (lb)
010	32530-35510	ASSY PIPE FUEL	1				0.04	0.088
020	14301-42750	CLIP PIPE	2				0.005	0.011
030	32530-35530	SPRING PIPE PROTECT.	1				0.01	0.022
040	32530-35550	PIPE FUEL	1				0	0
050	32530-35570	ASSY PIPE FUEL	1				0	0
060	14301-42750	CLIP PIPE	2				0.005	0.011
070	32530-35590	SPRING PIPE PROTECT.	1				0.025	0.055
080	35340-29380	CLAMP CORD	1				0.01	0.022
090	32530-35740	PIPE FUEL	1				0	0
100	32530-35760	ASSY PIPE FUEL	1				0.02	0.044
110	10244-42320	CLIP PIPE	2				0.001	0.0022
120	34150-29390	CLAMP CORD	3				0.004	0.0088
130	32530-35860	SUPPORT PIPE	1				0.062	0.1364
140	32530-35870	SUPPORT PIPE	2				0.001	0.0022
150	32530-35650	ASSY PIPE FUEL	1				0.07	0.154
160	10244-42320	CLIP PIPE	2				0.001	0.0022

silverhorn.co.uk

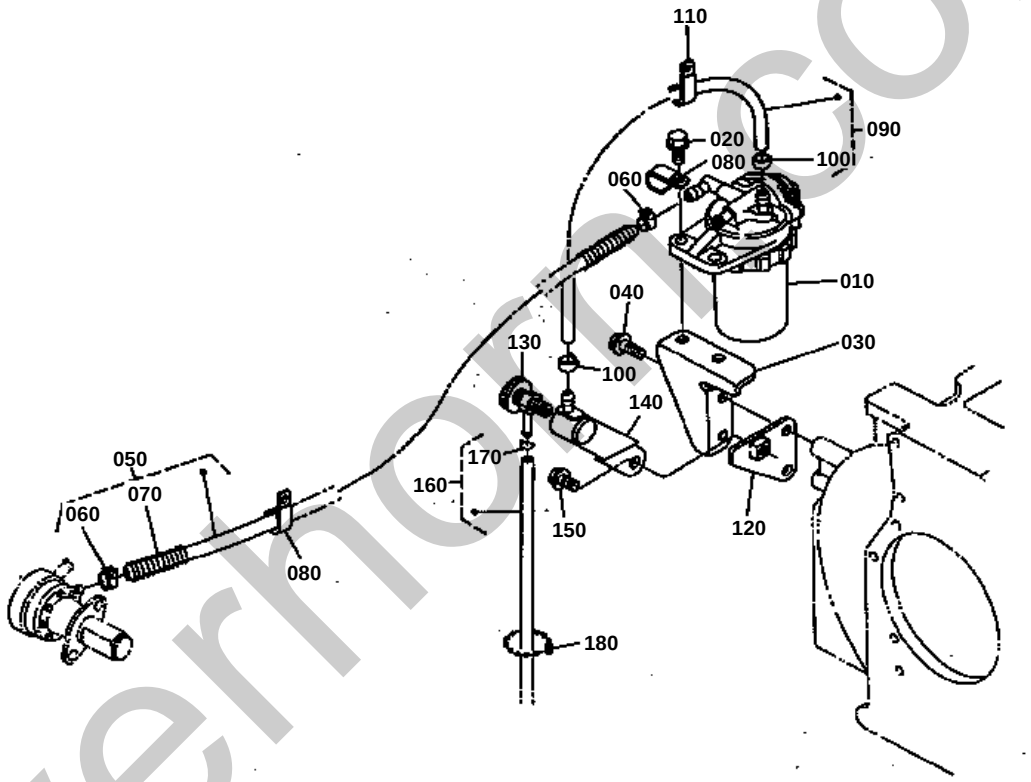

silverhorse.co.uk

FUEL FILTER

↔ Interchangeable; ≠ not interchangeable; ← new for old; → old for new

REF.No	Part No.	Description	Q'ty	S.No.	I/C	REMARKS	Weight (kgf)	Weight (lb)
010	19271-43010	ASSY FILTER FUEL	1				0	0
020	01754-50820	BOLT FLANGE	2				0.015	0.033
030	32530-35810	BRACKET FUEL FILTER	1				0	0
040	01754-50816	BOLT FLANGE	1				0.011	0.0242
050	32530-35610	ASSY PIPE FUEL	1				0	0
060	14301-42750	CLIP PIPE	2				0.005	0.011
070	32530-35630	SPRING PIPE PROTECT.	1				0.025	0.055
080	34150-29390	CLAMP CORD	2				0.004	0.0088
090	32530-35680	ASSY PIPE FUEL	1				0	0
100	10244-42320	CLIP PIPE	2				0.001	0.0022
110	34150-29390	CLAMP CORD	1				0.004	0.0088
120	32530-35820	BRACKET AIR-COCK	1				0.07	0.154
130	14311-60504	ASSY COCK JET START	1				0.034	0.0748
140	15531-42800	COMP.SUPPORT COCK	1				0.05	0.11
150	01754-50820	BOLT FLANGE	1				0.015	0.033
160	32530-35932	ASSY PIPE BREATHER	1				0	0
170	10244-42320	CLIP PIPE	1				0.001	0.0022
180	34350-29380	BAND CORD	2				0.001	0.0022

silverhorn.co.uk

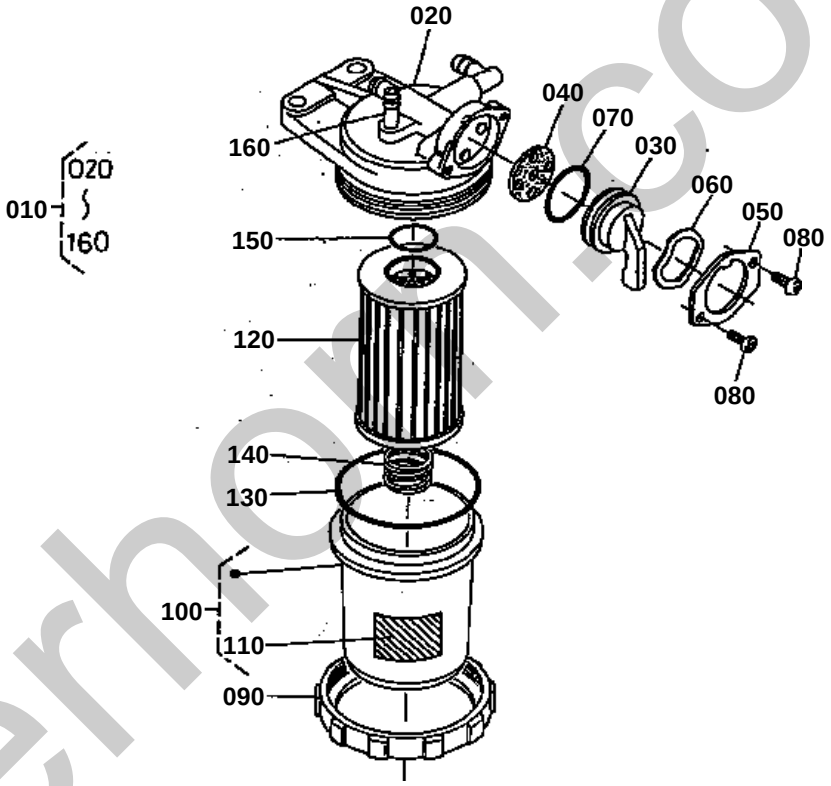

silverhorn.co.uk

FUEL FILTER (SECTION PARTS)

↔ Interchangeable; ≠ not interchangeable; ← new for old; → old for new

REF.No	Part No.	Description	Q'ty	S.No.	I/C	REMARKS	Weight (kgf)	Weight (lb)
010	19271-43010	ASSY FILTER FUEL	1				0	0
020	15521-43112	ASSY BODY	1				0	0
030	15521-43522	HANDLE FILTER	1				0.04	0.088
040	15521-43672	GASKET	1				0.001	0.0022
050	15521-43552	RETAINER HANDLE	1				0.01	0.022
060	15521-43542	PLATE THRUST	1				0.001	0.0022
070	04811-10290	O RING	1				0.001	0.0022
080	15521-93310	SCREW	2				0	0
090	15521-43150	RING RETAINER	1				0.14	0.308
100	19271-43100	ASSY POT FILTER	1				0	0
110	19271-87210	LABEL FUEL FILTER	1				0.001	0.0022
120	15521-43160	ELEMENT FILTER	1				0.07	0.154
130	04811-50650	O RING	1				0.002	0.0044
140	15521-43930	SPRING	1				0.004	0.0088
150	04811-00160	O RING	1				0.001	0.0022
160	15521-43282	JOINT BREATHER	1				0.005	0.011

silverhorn.co.uk

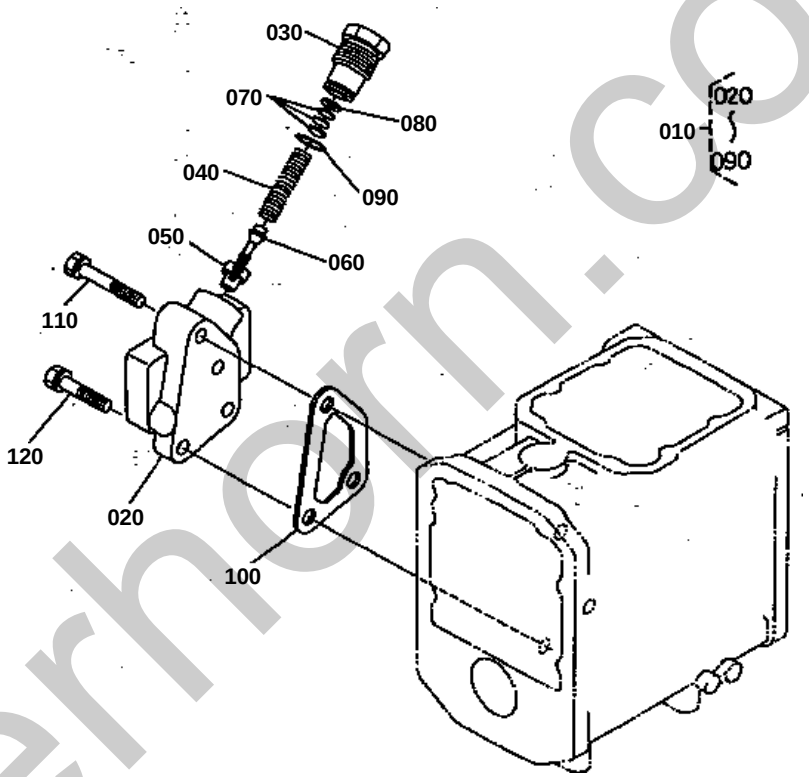

silverhorn.co.uk

RELIEF VALVE

↔ Interchangeable; ≠ not interchangeable; ← new for old; → old for new

REF.No	Part No.	Description	Q'ty	S.No.	I/C	REMARKS	Weight (kgf)	Weight (lb)
010	32530-36600	ASSY VALVE RELIEF	1				0.84	1.848
020	32530-36610	BODY RELIEF VALVE	1				0.8	1.76
030	31351-37910	PLUG	1				0.06	0.132
040	31351-37920	SPRING	1				0.02	0.044
050	31351-37930	SEAT	1				0.02	0.044
060	31351-37940	POPPET	1				0.005	0.011
070	31351-37950	SHIM	5				0.001	0.0022
070	31351-37960	SHIM	2				0.001	0.0022
070	31351-37970	SHIM	2				0.001	0.0022
080	04013-50050	WASHER PLAIN	2				0	0
090	04811-10160	O RING	1				0.001	0.0022
100	32530-36630	GASKET	1				0	0
110	01123-50845	BOLT	2				0.02	0.044
120	01123-50835	BOLT	1				0.02	0.044

silverhorn.co.uk

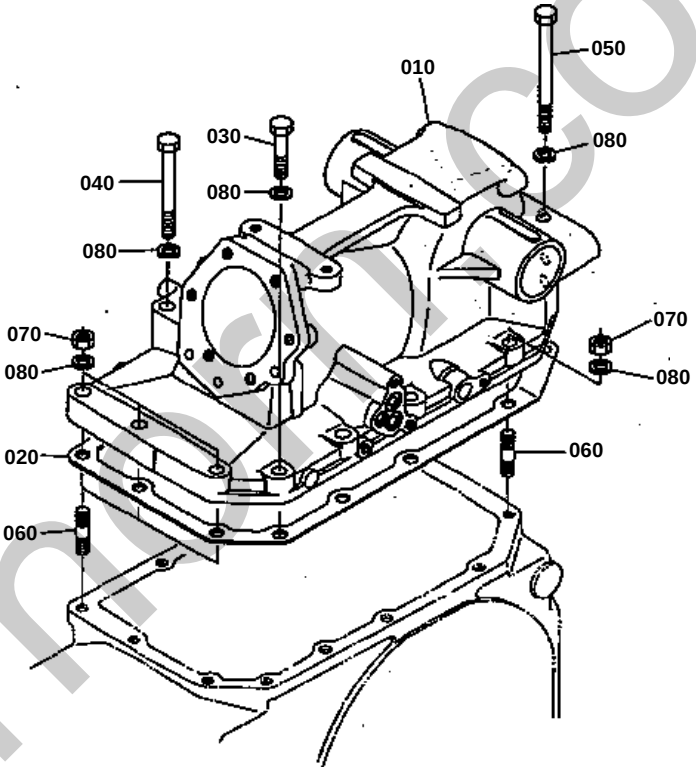

silverhomeco.uk

HYDRAULIC CYLINDER

↔ Interchangeable; ≠ not interchangeable; ← new for old; → old for new

REF.No	Part No.	Description	Q'ty	S.No.	I/C	REMARKS	Weight (kgf)	Weight (lb)
010	32530-37110	CYLINDER O/P	1				0	0
020	32530-37120	GASKET	1				0	0
030	01173-51250	BOLT	5				0.053	0.1166
040	01173-51295	BOLT	1				0.086	0.1892
050	32530-37180	BOLT	2				0.11	0.242
060	01574-51245	STUD	4				0.051	0.1122
070	02176-50120	NUT	4				0.01	0.022
080	04512-50120	WASHER SPRING	12				0	0

silverhorn.co.uk

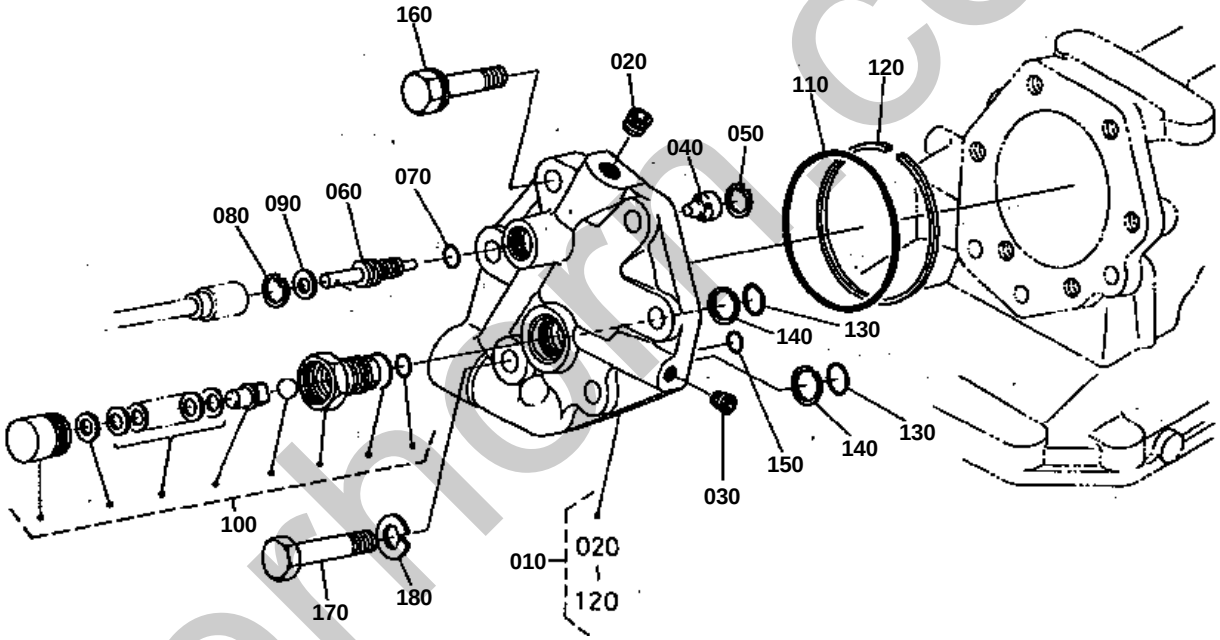

silverhorn.co.uk

HYDRAULIC CYLINDER COVER

↔ Interchangeable; ≠ not interchangeable; ← new for old; → old for new

REF.No	Part No.	Description	Q'ty	S.No.	I/C	REMARKS	Weight (kgf)	Weight (lb)
010	32530-37200	CYLINDER O/P	1				3.5	7.7
020	31351-37150	PLUG	1				0.007	0.0154
030	31351-37160	PLUG	1				0.003	0.0066
040	38240-37250	COLLAR ADJUSTING	1				0.01	0.022
050	04611-00160	CIR-CLIP INTERNAL	1				0.001	0.0022
060	38240-37220	SHAFT O/P ADJUSTING	1				0.025	0.055
070	04810-00100	O RING	1				0.001	0.0022
080	34150-37260	CIR-CLIP INTERNAL	1				0.001	0.0022
090	04012-50080	WASHER PLAIN	1				0.001	0.0022
100	33251-82400	ASSY VALVE SAFETY	1				0.205	0.451
110	04810-50850	O RING	1				0.003	0.0066
120	32530-37260	RING BACK UP	1				0.005	0.011
130	04810-00140	O RING	2				0.001	0.0022
140	36200-82330	RING BACK UP	2				0.001	0.0022
150	04811-00100	O RING	1				0.001	0.0022
160	01133-51245	BOLT	5				0.055	0.121
170	01173-51255	BOLT	1				0.057	0.1254
180	04512-50120	WASHER SPRING	1				0	0

silverhorn.co.uk

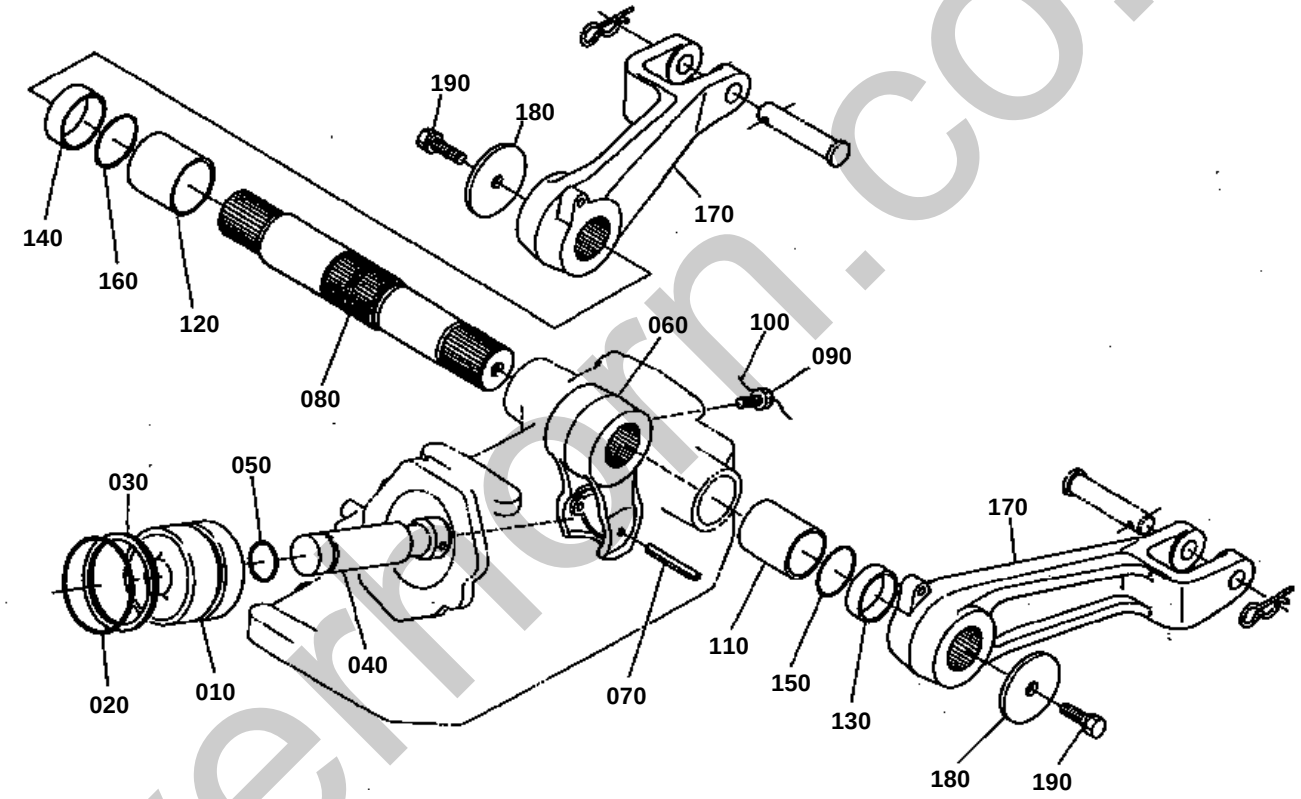

silverfern.co.uk

↔ Interchangeable; ≠ not interchangeable; ← new for old; → old for new

REF.No	Part No.	Description	Q'ty	S.No.	I/C	REMARKS	Weight (kgf)	Weight (lb)
010	32530-37310	PISTON O/P	1				0	0
020	04810-00800	O RING	1				0.009	0.0198
030	32530-37330	RING BACK UP	1				0	0
040	32530-37320	ROD OIL PRESSURE	1				1.2	2.64
050	04811-00320	O RING	1				0.002	0.0044
060	32530-37440	ARM O/P	1				2.25	4.95
070	05411-00870	PIN SPRING	1				0.015	0.033
080	32530-37433	SHAFT	1				4.25	9.35
090	32530-37510	BOLT	1				0.015	0.033
100	07811-11220	WIRE	1				0	0
110	32530-37450	BUSH	1				0.175	0.385
120	32530-37460	BUSH	1				0.175	0.385
130	32530-37480	COLLAR	1				0.005	0.011
140	32530-37490	COLLAR	1				0.01	0.022
150	04811-50450	O RING	1				0.002	0.0044
160	04811-50500	O RING	1				0.001	0.0022
170	32530-37613	ARM LIFT	2				5.25	11.55
180	32530-37660	RETAINER ARM	2				0.16	0.352
190	01133-51228	BOLT	2				0.04	0.088

silverhorn.co.uk

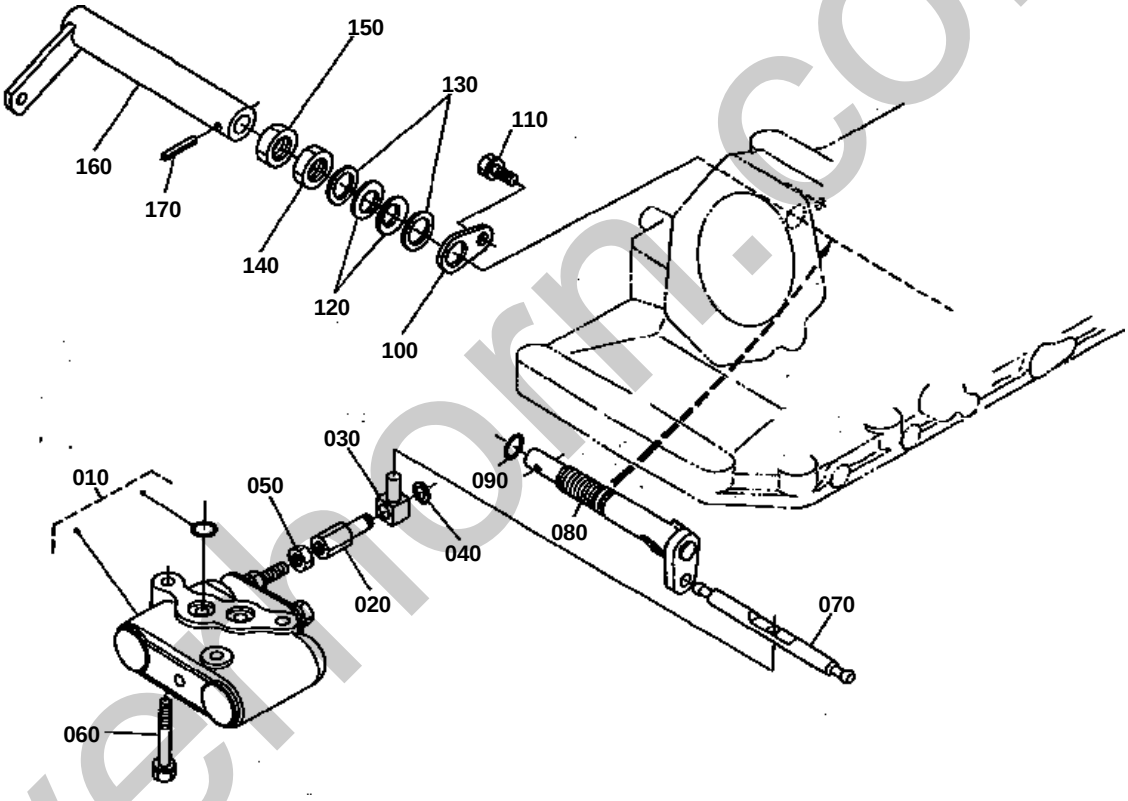

silverhorn.co.uk

↔ Interchangeable; ≠ not interchangeable; ← new for old; → old for new

REF.No	Part No.	Description	Q'ty	S.No.	I/C	REMARKS	Weight (kgf)	Weight (lb)
010	38240-39143	VALVE CONTROL	1				1.685	3.707
020	32530-36410	JOINT SPOOL	1				0.02	0.044
030	37150-36420	JOINT SPOOL	1				0.02	0.044
040	04613-00060	CIR-CLIP EXTERNAL	1				0	0
050	02112-50080	NUT	1				0.003	0.0066
060	01123-50850	BOLT	3				0.02	0.044
070	38240-36430	LEVER SPOOL DRIVE	1				0.065	0.143
080	32530-37650	ARM CONTROL	1				0.19	0.418
090	04811-00120	O RING	1				0.001	0.0022
100	34260-36890	SET PLATE	1				0.009	0.0198
110	01123-50816	BOLT	1				0.011	0.0242
120	34260-36880	SPRING	2				0.006	0.0132
130	38430-36890	WASHER	2				0.01	0.022
140	02174-50140	NUT	1				0.014	0.0308
150	02172-50140	NUT	1				0.01	0.022
160	32530-36830	LEVER POSITION	1				0.39	0.858
170	05411-00522	PIN SPRING	1				0.002	0.0044

silverhorn.co.uk

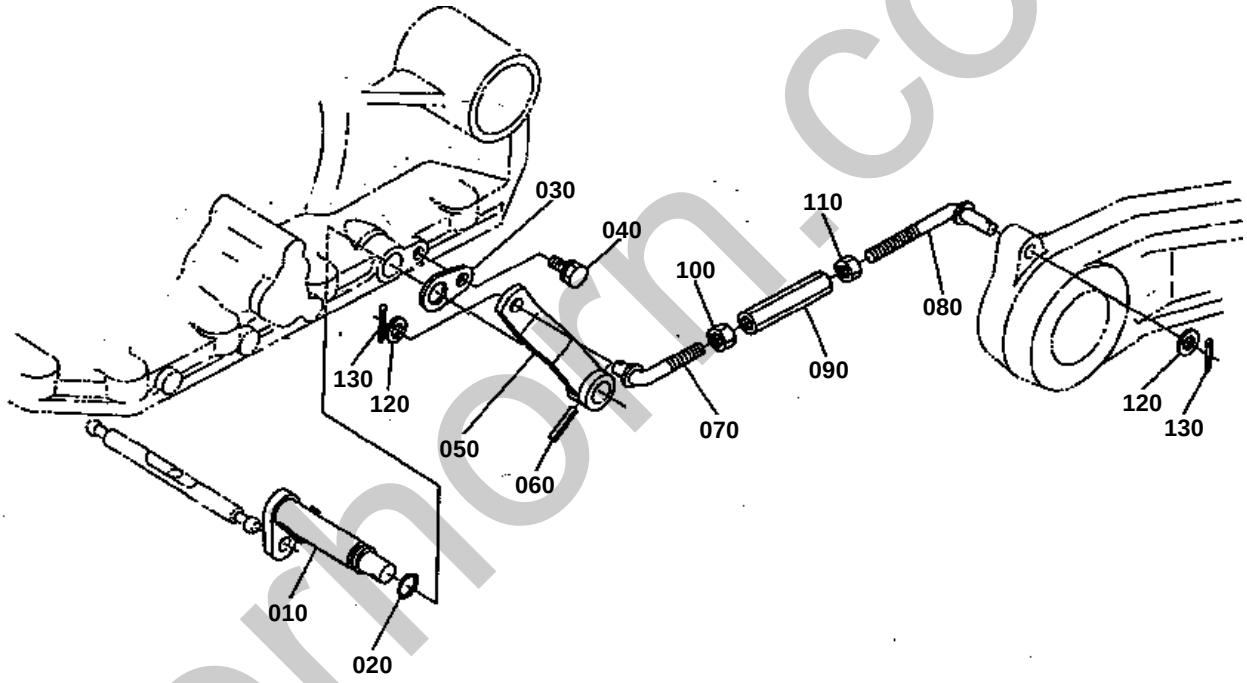

silverhorn.co.uk

FEED BACK LEVER

↔ Interchangeable; ≠ not interchangeable; ← new for old; → old for new

REF.No	Part No.	Description	Q'ty	S.No.	I/C	REMARKS	Weight (kgf)	Weight (lb)
010	32530-37670	SHAFT LEVER	1				0.14	0.308
020	04811-00120	O RING	1				0.001	0.0022
030	38240-36890	SET PLATE	1				0.013	0.0286
040	01123-50816	BOLT	1				0.011	0.0242
050	32530-37680	LEVER	1				0.1	0.22
060	05411-00522	PIN SPRING	1				0.002	0.0044
070	32530-37750	ROD CONTROL	1				0.022	0.0484
080	32530-37760	ROD CONTROL	1				0.035	0.077
090	66591-42410	TURNBUCKLE	1				0.046	0.1012
100	02112-50080	NUT	1				0.003	0.0066
110	37300-41330	NUT	1				0.005	0.011
120	04012-50080	WASHER PLAIN	2				0.001	0.0022
130	05511-50215	PIN SPLIT	2				0.001	0.0022

silverhorn.co.uk

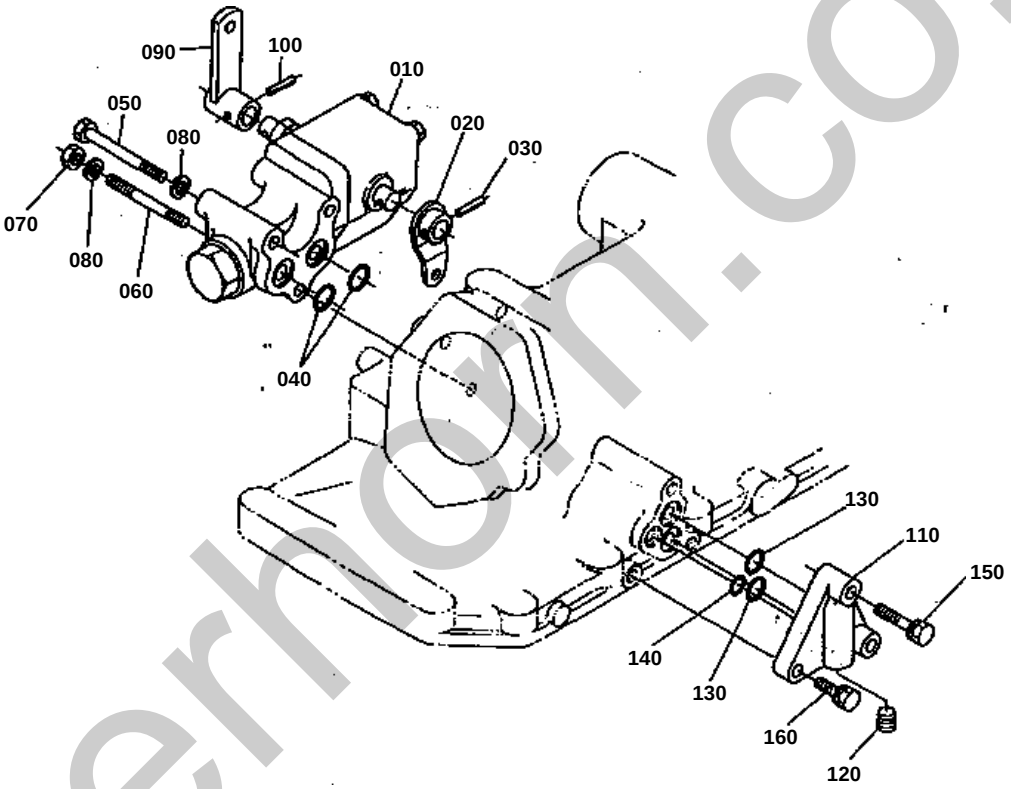

silverhorn.co.uk

DRAFT CONTROL VALVE

↔ Interchangeable; ≠ not interchangeable; ← new for old; → old for new

REF.No	Part No.	Description	Q'ty	S.No.	I/C	REMARKS	Weight (kgf)	Weight (lb)
010	37300-41100	ASSY VALVE DRAFT C0N	1				3.2	7.04
020	32530-41340	LEVER	1				0.06	0.132
030	05411-00522	PIN SPRING	1				0.002	0.0044
040	04811-00160	O RING	2				0.001	0.0022
050	01153-50875	BOLT	1				0.028	0.0616
060	01513-50880	STUD	2				0.04	0.088
070	02156-50080	NUT	2				0.004	0.0088
080	04512-50080	WASHER SPRING	3				0	0
090	32530-41360	LEVER DRAFT	1				0.045	0.099
100	05411-00522	PIN SPRING	1				0.002	0.0044
110	32530-36650	BLOCK BY-PASS	1				0.45	0.99
120	31351-37150	PLUG	1				0.007	0.0154
130	04810-00160	O RING	2				0.001	0.0022
140	04811-00120	O RING	1				0.001	0.0022
150	01123-50838	BOLT	2				0.02	0.044
160	01123-50825	BOLT	1				0.013	0.0286

silverhorn.co.uk

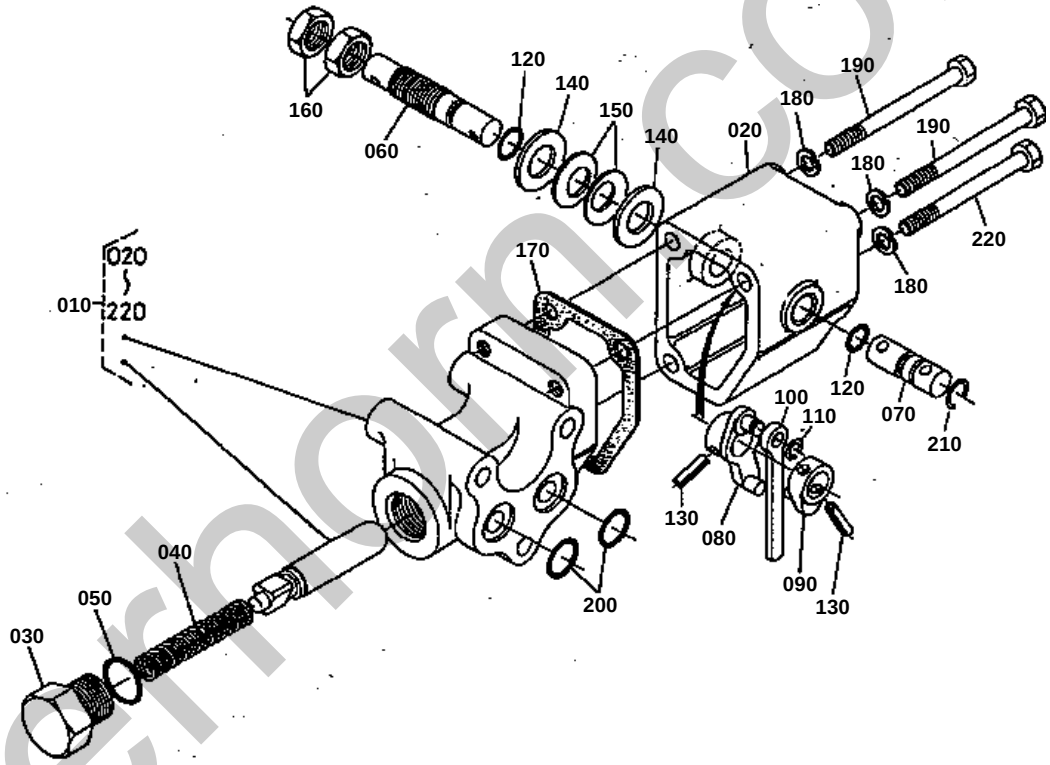

silverhorn.co.uk

DRAFT CONTROL VALVE (SECTION PARTS)

↔ Interchangeable; ≠ not interchangeable; ← new for old; → old for new

REF.No	Part No.	Description	Q'ty	S.No.	I/C	REMARKS	Weight (kgf)	Weight (lb)
010	37300-41100	ASSY VALVE DRAFT C0N	1				3.2	7.04
020	37300-41120	COVER	1				1.05	2.31
030	37300-41140	PLUG	1				0.098	0.2156
040	37300-41150	SPRING	1				0.01	0.022
050	04811-00180	O RING	1				0.001	0.0022
060	37300-41160	SHAFT	1				0.065	0.143
070	37300-41170	SHAFT	1				0.03	0.066
080	37300-41180	ARM	1				0.03	0.066
090	32240-36630	ARM	1				0.015	0.033
100	37300-41270	LINK	1				0.012	0.0264
110	04613-00050	CIR-CLIP EXTERNAL	1				0	0
120	04811-00090	O RING	2				0.001	0.0022
130	05411-00518	PIN SPRING	2				0.002	0.0044
140	04011-50140	WASHER PLAIN	2				0.007	0.0154
150	37300-41280	SPRING	2				0.005	0.011
160	02172-50140	NUT	2				0.01	0.022
170	37300-41290	GASKET	1				0.001	0.0022
180	04512-50080	WASHER SPRING	3				0	0
190	01150-50875	BOLT	2				0	0
200	04810-00160	O RING	2				0.001	0.0022
210	37300-41360	CIR-CLIP	1				0.001	0.0022
220	01150-50870	BOLT	1				0	0

silverhorn.co.uk

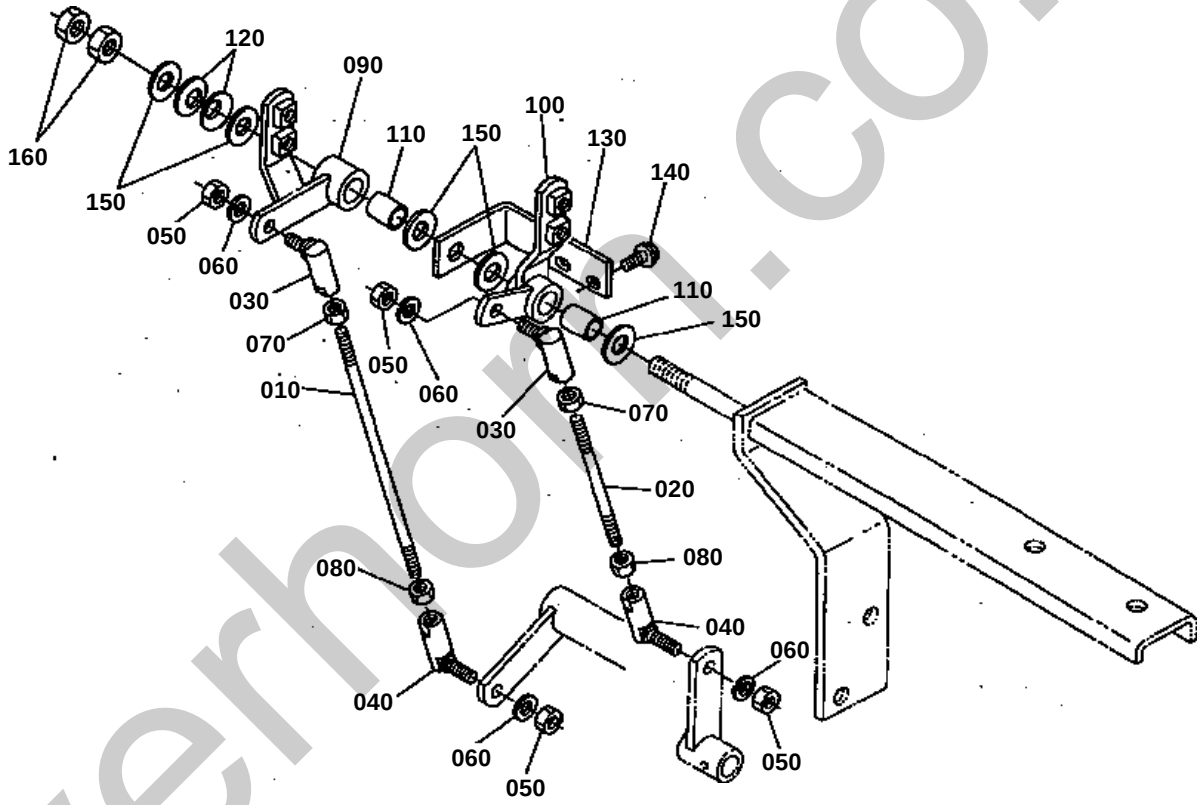

silverhorn.co.uk

DRAFT AND POSITION LEVER 1

↔ Interchangeable; ≠ not interchangeable; ← new for old; → old for new

REF.No	Part No.	Description	Q'ty	S.No.	I/C	REMARKS	Weight (kgf)	Weight (lb)
010	32530-36860	ROD POSITION	1				0.04	0.088
020	32530-41370	ROD DRAFT	1				0	0
030	36530-27750	END ROD RH	2				0.04	0.088
040	36530-27760	END ROD LH	2				0.03	0.066
050	02014-50060	NUT	4				0.003	0.0066
060	04512-50060	WASHER SPRING	4				0	0
070	02012-50060	NUT	2				0	0
080	36530-27770	NUT	2				0.002	0.0044
090	32530-36874	ARM POSITION	1				0	0
100	32530-41380	ARM DRAFT	1				0	0
110	32530-36810	BUSH	2				0	0
120	32530-36930	SPRING	2				0.005	0.011
130	32530-36920	SEPARATOR	1				0.08	0.176
140	01754-50616	BOLT FLANGE	2				0.006	0.0132
150	04013-50120	WASHER PLAIN	5				0	0
160	02174-50120	NUT	2				0.01	0.022

silverhorn.co.uk

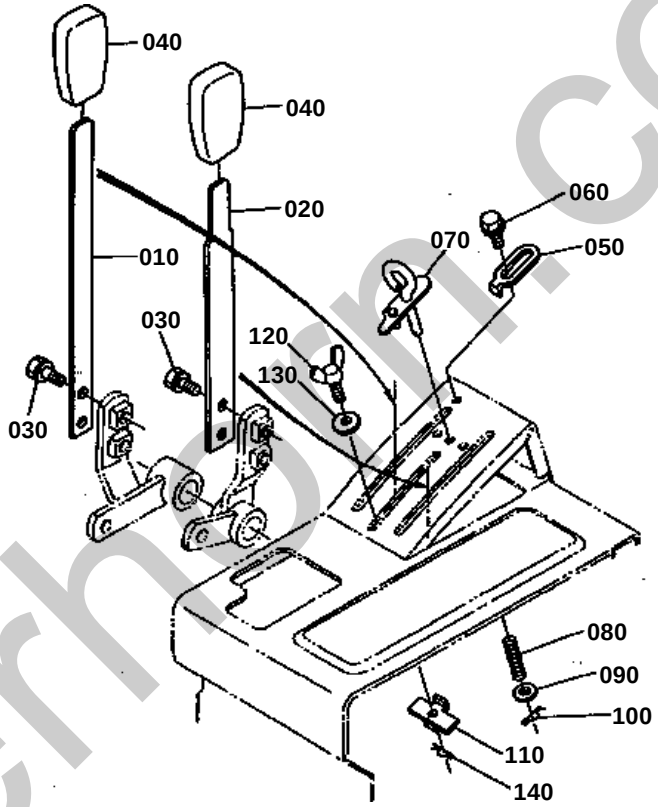

silverhorn.co.uk

DRAFT AND POSITION LEVER 2

↔ Interchangeable; ≠ not interchangeable; ← new for old; → old for new

REF.No	Part No.	Description	Q'ty	S.No.	I/C	REMARKS	Weight (kgf)	Weight (lb)
010	32530-36854	LEVER	1				0	0
020	32530-41390	LEVER	1				0	0
030	01123-50818	BOLT	4				0.012	0.0264
040	31351-36880	GRIP LEVER	2				0.04	0.088
050	32530-36950	STOPPER LEVER	1				0.01	0.022
060	01754-50812	BOLT FLANGE	1				0.01	0.022
070	32530-36960	STOPPER LEVER	1				0.04	0.088
080	32530-36970	SPRING STOPPER	1				0.001	0.0022
090	04012-50060	WASHER PLAIN	1				0.001	0.0022
100	05515-50600	PIN SNAP	1				0.002	0.0044
110	32530-36980	STOPPER LEVER	1				0.025	0.055
120	32530-36990	BOLT STOPPER	1				0.015	0.033
130	04012-50060	WASHER PLAIN	2				0.001	0.0022
140	05525-50600	PIN SNAP	1				0	0

silverhorn.co.uk

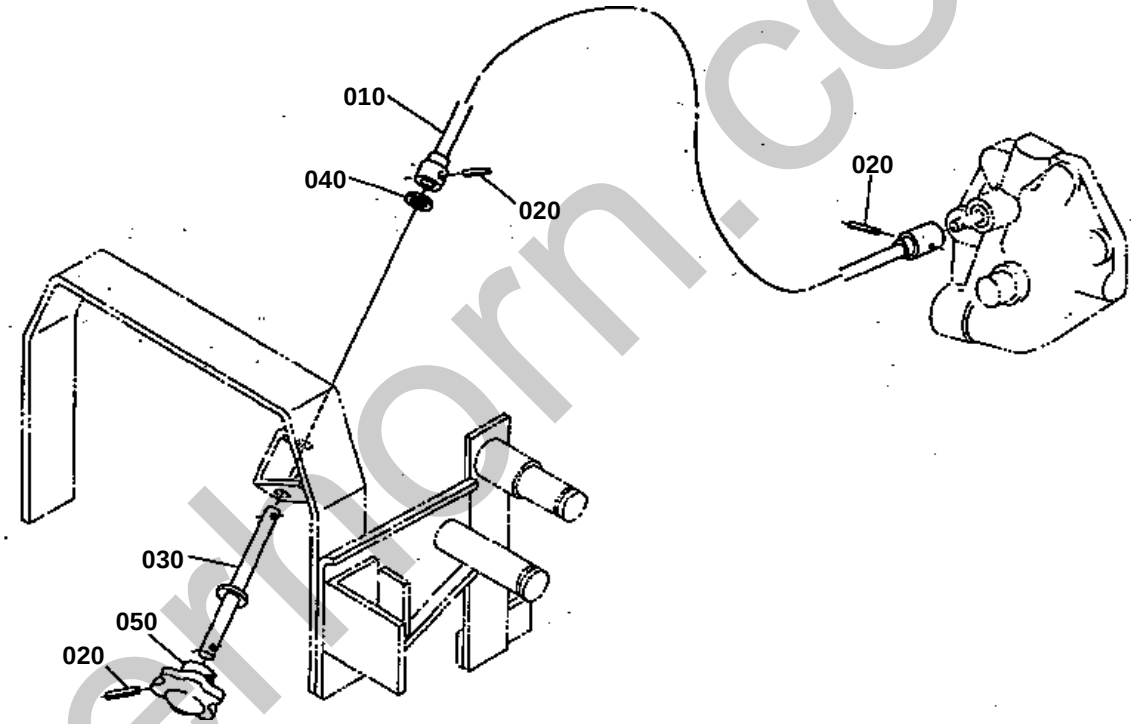

silverthorn.co.uk

FLEXIBLE SHAFT

↔ Interchangeable; ≠ not interchangeable; ← new for old; → old for new

REF.No	Part No.	Description	Q'ty	S.No.	I/C	REMARKS	Weight (kgf)	Weight (lb)
010	32530-37360	SHAFT	1				0.11	0.242
020	05411-00418	PIN SPRING	3				0.001	0.0022
030	32530-37370	SHAFT	1				0.06	0.132
040	04013-50080	WASHER PLAIN	1				0	0
050	34150-37230	GRIP	1				0.04	0.088

silverhorn.co.uk

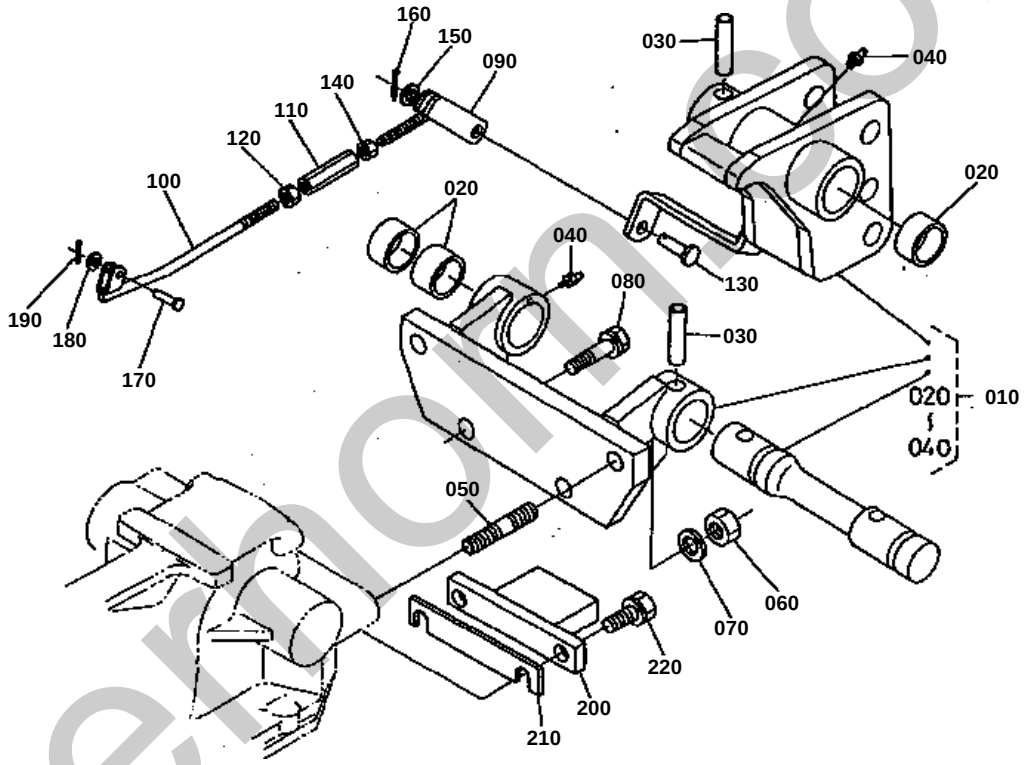

silverholm.co.uk

TOP LINK BRACKET

↔ Interchangeable; ≠ not interchangeable; ← new for old; → old for new

REF.No	Part No.	Description	Q'ty	S.No.	I/C	REMARKS	Weight (kgf)	Weight (lb)
010	32530-41400	COMP BRACKET LINK	1				7	15.4
020	37300-41450	BUSH	3				0.03	0.066
030	32530-41460	PIN STRAIGHT	2				0.06	0.132
040	06613-10010	NIPPLE GREASE	2				0.006	0.0132
050	01575-51230	STUD	2				0.04	0.088
060	02176-50120	NUT	2				0.01	0.022
070	04512-50120	WASHER SPRING	2				0	0
080	01133-51240	BOLT	2				0.05	0.11
090	32530-41310	ROD DRAFT CONTROL	1				0.06	0.132
100	32530-41320	ROD DRAFT CONTROL	1				0.2	0.44
110	66591-42410	TURNBUCKLE	1				0.046	0.1012
120	02114-50080	NUT	1				0.005	0.011
130	05122-51022	PIN JOINT	1				0.014	0.0308
140	37300-41330	NUT	1				0.005	0.011
150	04011-50100	WASHER PLAIN	1				0.002	0.0044
160	05511-50318	PIN SPLIT	1				0.001	0.0022
170	05122-50816	PIN JOINT	1				0.007	0.0154
180	04012-50080	WASHER PLAIN	1				0.001	0.0022
190	05511-50218	PIN SPLIT	1				0.001	0.0022
200	32530-41440	STOPPER	1				0.61	1.342
210	32530-41450	SHIM	3				0.01	0.022
220	01133-51235	BOLT	2				0.05	0.11

silverhorn.co.uk

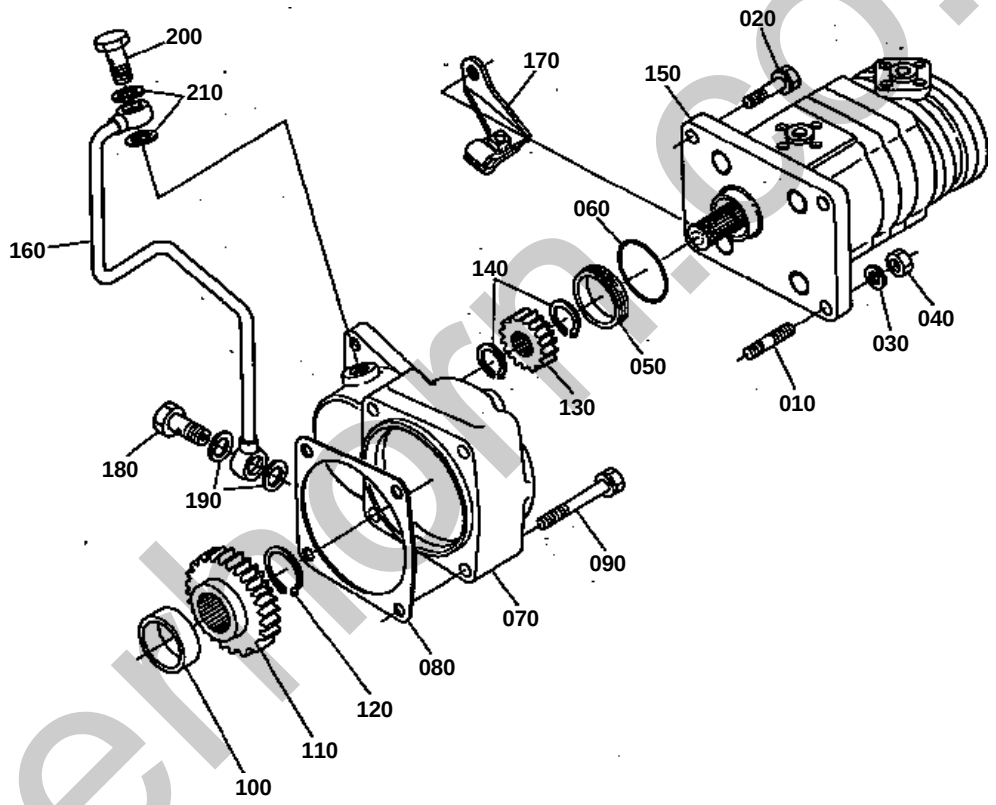

silverhorn.co.uk

HYDRAULIC PUMP (MANUAL SHUTTLE)

↔ Interchangeable; ≠ not interchangeable; ← new for old; → old for new

REF.No	Part No.	Description	Q'ty	S.No.	I/C	REMARKS	Weight (kgf)	Weight (lb)
010	01513-50830	STUD	2				0	0
020	01123-50835	BOLT	2				0.02	0.044
030	04512-50080	WASHER SPRING	2				0	0
040	02114-50080	NUT	2				0.005	0.011
050	36200-82250	RING	1				0.072	0.1584
060	04811-10500	O RING	1				0.001	0.0022
070	32530-10580	BASE PUMP	1				1.52	3.344
080	34150-37860	GASKET	1				0	0
090	01123-50850	BOLT	4				0.02	0.044
100	36200-82260	COLLAR	1				0.035	0.077
110	36230-82270	GEAR	1				0.42	0.924
120	04612-00250	CIR-CLIP EXTERNAL	1				0.002	0.0044
130	36230-82280	GEAR	1				0.16	0.352
140	04612-00170	CIR-CLIP EXTERNAL	2				0.001	0.0022
150	35430-82200	PUMP OIL PRESSURE	1				0	0
160	32530-10670	PIPE	1				0.1	0.22
170	32530-10690	CLAMP	1				0.04	0.088
180	32530-10710	BOLT JOINT	1				0.015	0.033
190	15021-33660	GASKET	2				0.001	0.0022
200	32530-10720	BOLT JOINT	1				0.035	0.077
210	04724-00120	GASKET	2				0.002	0.0044

silverhorn.co.uk

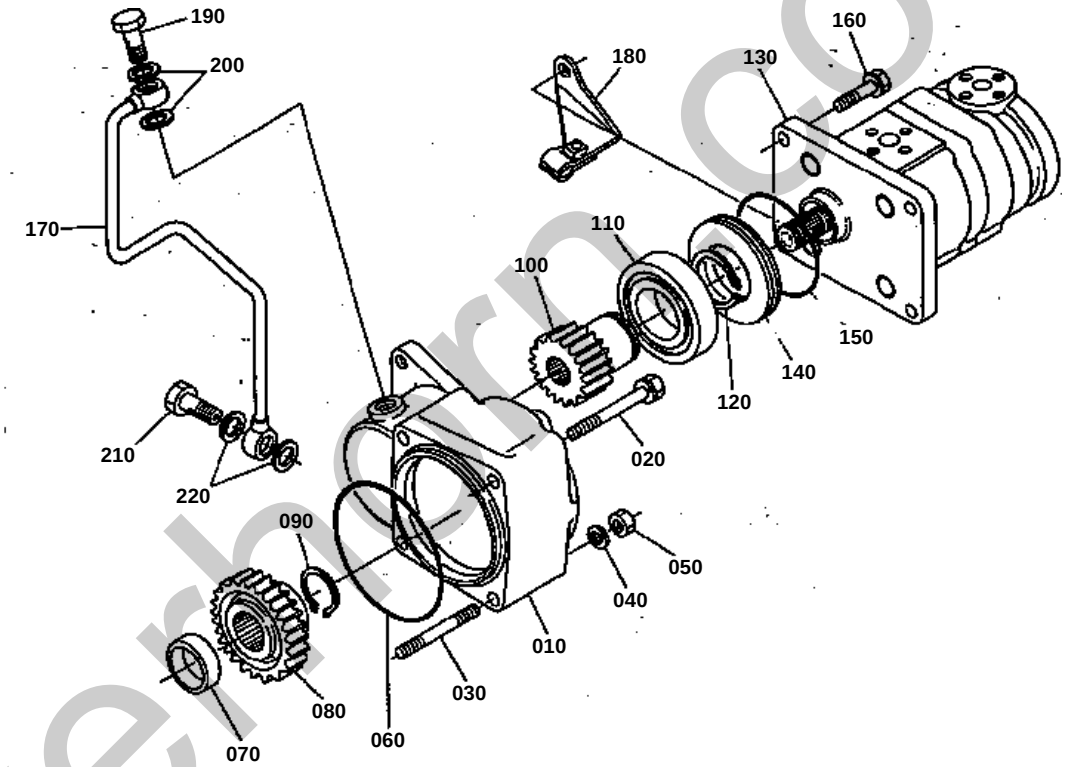

silverhorn.co.uk

HYDRAULIC PUMP (HYDRAULIC SHUTTLE)

↔ Interchangeable; ≠ not interchangeable; ← new for old; → old for new

REF.No	Part No.	Description	Q'ty	S.No.	I/C	REMARKS	Weight (kgf)	Weight (lb)
010	32530-10612	BASE PUMP	1				0	0
020	01123-50865	BOLT	2				0.028	0.0616
030	01513-50860	STUD	2				0.024	0.0528
040	04512-50080	WASHER SPRING	2				0	0
050	02156-50080	NUT	2				0.004	0.0088
060	04811-10850	O RING	1				0.002	0.0044
070	32530-10650	COLLAR	1				0.02	0.044
080	32530-10620	GEAR	1				0.4	0.88
090	04612-00250	CIR-CLIP EXTERNAL	1				0.002	0.0044
100	32530-10630	GEAR	1				0.27	0.594
110	08241-03206	BEARING BALL	1				0.302	0.6644
120	04612-00300	CIR-CLIP EXTERNAL	1				0.003	0.0066
130	32530-76100	PUMP OIL PRESSURE	1				0	0
140	32530-10640	SPACER	1				0.115	0.253
150	04811-06560	O RING	1				0.001	0.0022
160	01123-50835	BOLT	4				0.02	0.044
170	32530-10660	PIPE	1				0.1	0.22
180	32530-10680	CLAMP	1				0.04	0.088
190	32530-10720	BOLT JOINT	1				0.035	0.077
200	04724-00120	GASKET	2				0.002	0.0044
210	32530-10710	BOLT JOINT	1				0.015	0.033
220	15021-33660	GASKET	2				0.001	0.0022

silverhorn.co.uk

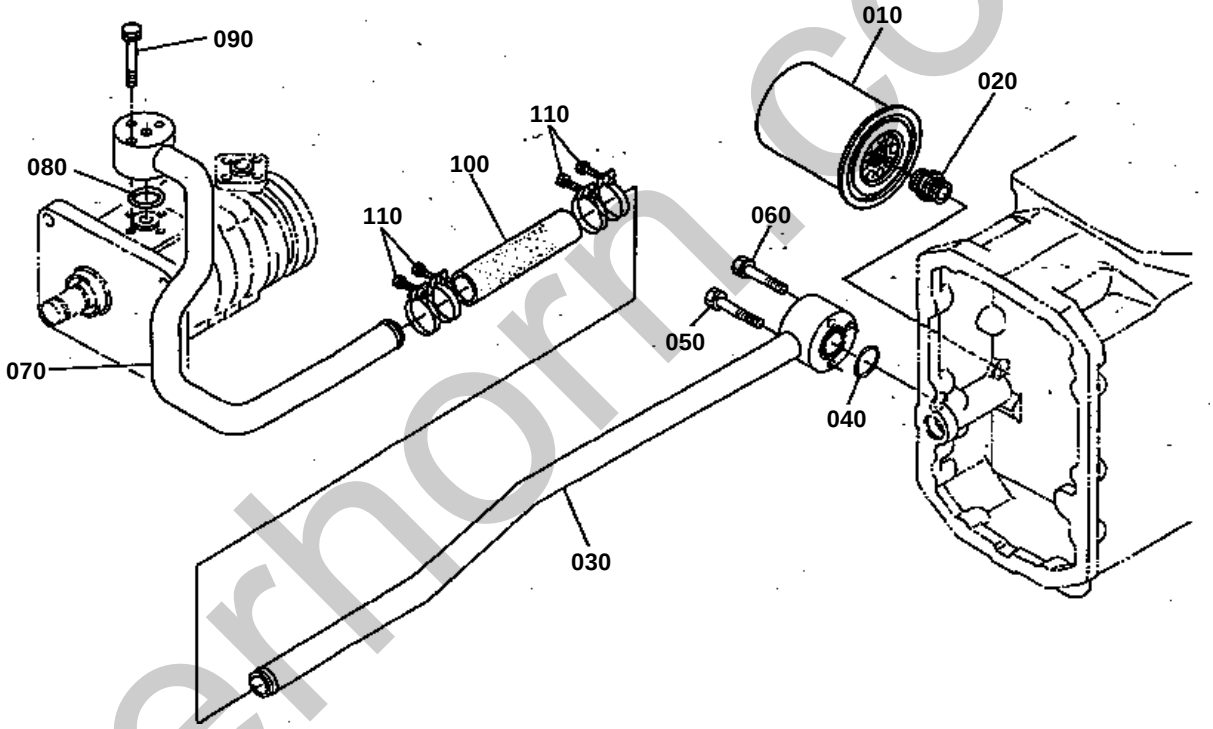

silverhorn.co.uk

HYDRAULIC OIL LINE (SUCTION)

↔ Interchangeable; ≠ not interchangeable; ← new for old; → old for new

REF.No	Part No.	Description	Q'ty	S.No.	I/C	REMARKS	Weight (kgf)	Weight (lb)
010	36330-82630	COMP.FILTER OIL	1				0.6	1.32
020	36330-82670	JOINT	1				0.04	0.088
030	32530-38110	COMP.PIPE SUCTION	1				1.54	3.388
040	04811-00280	O RING	1				0.002	0.0044
050	01123-50855	BOLT	2				0.02	0.044
060	01123-50850	BOLT	1				0.02	0.044
070	32530-38140	COMP.PIPE SUCTION	1				1.31	2.882
080	04811-00220	O RING	1				0.001	0.0022
090	01123-50855	BOLT	3				0.02	0.044
100	32530-38270	PIPE RUBBER	1				0.092	0.2024
110	34350-37780	CLAMP	4				0.02	0.044

silverhorn.co.uk

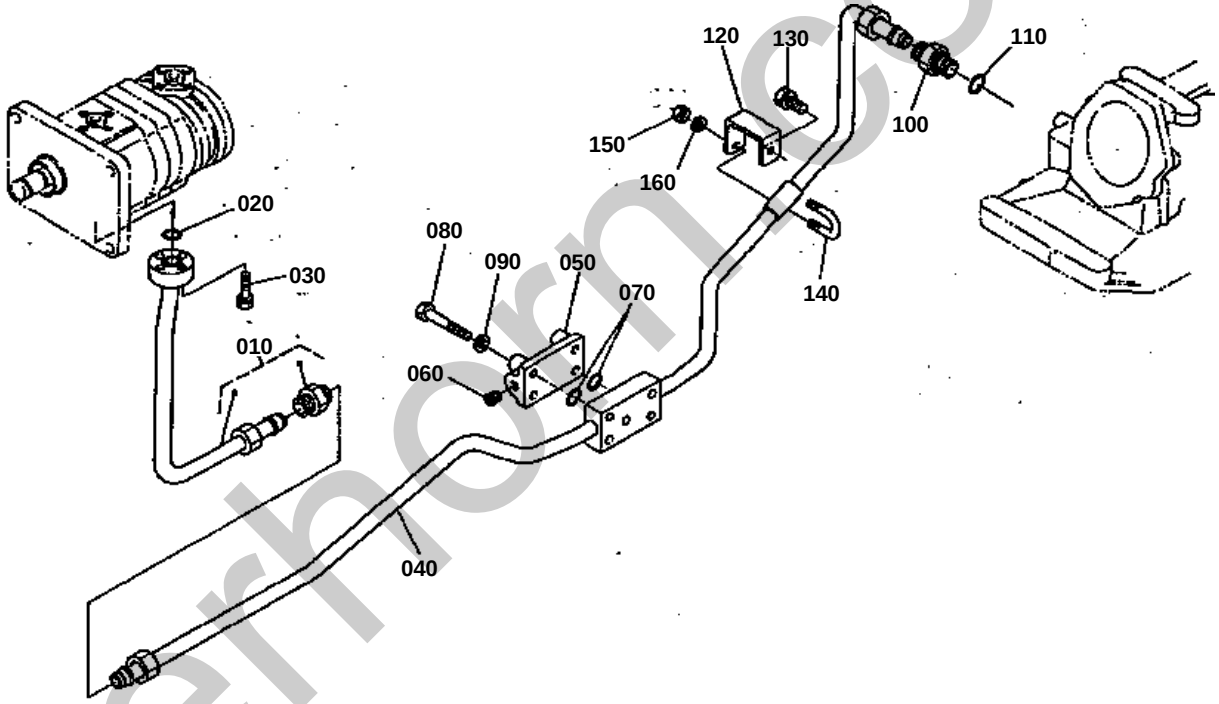

silverhorn.co.uk

HYDRAULIC OIL LINE (DELIVERY MANUAL SHUTTLE)

↔ Interchangeable; ≠ not interchangeable; ← new for old; → old for new

REF.No	Part No.	Description	Q'ty	S.No.	I/C	REMARKS	Weight (kgf)	Weight (lb)
010	32530-38180	COMP.PIPE DELIVERY	1				0.5	1.1
020	04811-40110	O RING	1				0.001	0.0022
030	01023-50628	BOLT	4				0.015	0.033
040	32530-38220	COMP.PIPE DELIVERY	1				0	0
050	32530-36720	COVER O/P BLOCK	1				0.51	1.122
060	31351-37150	PLUG	1				0.007	0.0154
070	04810-00160	O RING	3				0.001	0.0022
080	01153-50860	BOLT	4				0.024	0.0528
090	04512-50080	WASHER SPRING	4				0	0
100	32530-38760	JOINT	1				0.065	0.143
110	04810-00180	O RING	1				0.001	0.0022
120	32530-35850	SUPPORT PIPE	1				0.095	0.209
130	01133-51020	BOLT	1				0.02	0.044
140	32530-35880	BOLT	1				0.02	0.044
150	02014-50060	NUT	2				0.003	0.0066
160	04512-50060	WASHER SPRING	2				0	0

silverhorn.co.uk

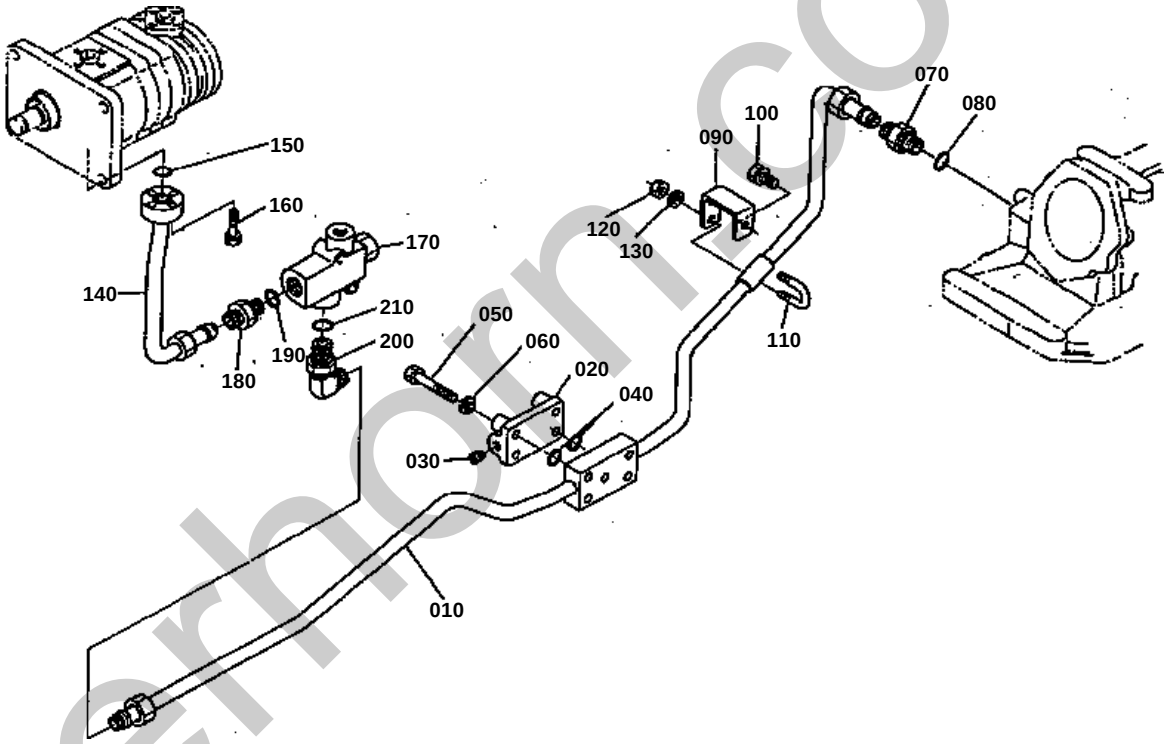

silverhorn.co.uk

HYDRAULIC OIL LINE (DELIVERY HYD.SHUTTLE)

↔ Interchangeable; ≠ not interchangeable; ← new for old; → old for new

REF.No	Part No.	Description	Q'ty	S.No.	I/C	REMARKS	Weight (kgf)	Weight (lb)
010	32530-38220	COMP.PIPE DELIVERY	1				0	0
020	32530-36720	COVER O/P BLOCK	1				0.51	1.122
030	31351-37150	PLUG	1				0.007	0.0154
040	04810-00160	O RING	3				0.001	0.0022
050	01153-50860	BOLT	4				0.024	0.0528
060	04512-50080	WASHER SPRING	4				0	0
070	32530-38760	JOINT	1				0.065	0.143
080	04810-00180	O RING	1				0.001	0.0022
090	32530-35850	SUPPORT PIPE	1				0.095	0.209
100	01133-51020	BOLT	1				0.02	0.044
110	32530-35880	BOLT	1				0.02	0.044
120	02014-50060	NUT	2				0.003	0.0066
130	04512-50060	WASHER SPRING	2				0	0
140	32530-38310	COMP.PIPE DELIVERY	1				0.37	0.814
150	04811-40110	O RING	1				0.001	0.0022
160	01023-50628	BOLT	4				0.015	0.033
170	32530-38280	ASSY VALVE	1				1.4	3.08
180	32530-38760	JOINT	1				0.065	0.143
190	04810-00180	O RING	1				0.001	0.0022
200	32530-38780	JOINT	1				0	0
210	04810-00180	O RING	1				0.001	0.0022

silverhorn.co.uk

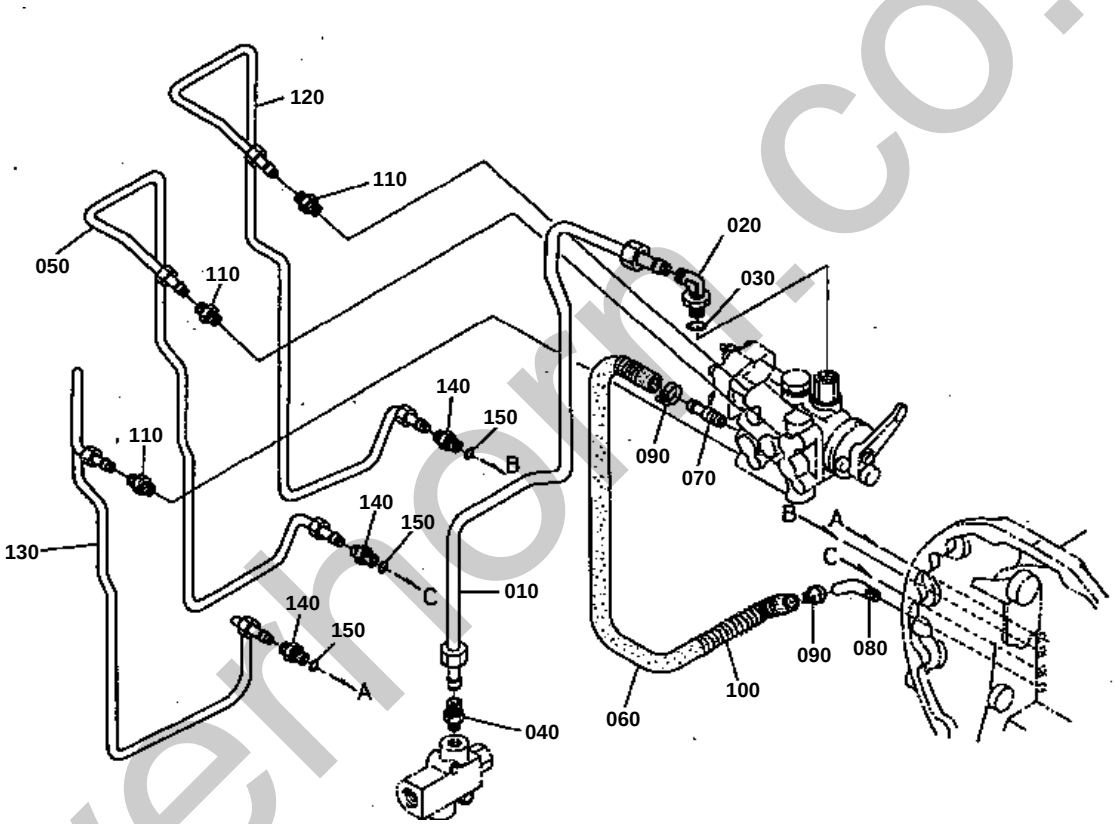

silvermoor.co.uk

HYDRAULIC SHUTTLE OIL LINE

↔ Interchangeable; ≠ not interchangeable; ← new for old; → old for new

REF.No	Part No.	Description	Q'ty	S.No.	I/C	REMARKS	Weight (kgf)	Weight (lb)
010	32530-38360	PIPE SHUTTLE	1				0.29	0.638
020	32530-38790	JOINT	1				0	0
030	04810-00140	O RING	1				0.001	0.0022
040	32530-38810	JOINT	1				0	0
050	32530-38380	PIPE SHUTTLE	1				0.35	0.77
060	32530-38394	PIPE SHUTTLE	1				0	0
070	15321-73340	PIPE WATER RETURN	1				0.016	0.0352
080	15521-05550	JOINT BREATHER PIPE	1				0.04	0.088
090	36330-63690	BAND HOSE	2				0.01	0.022
100	32530-38460	SPRING PIPE PROTECT.	1				0.1	0.22
110	32530-38940	JOINT	3				0	0
120	32530-38420	PIPE SHUTTLE	1				0.26	0.572
130	32530-38430	PIPE SHUTTLE	1				0.29	0.638
140	32530-38970	JOINT	3				0	0
150	04810-00110	O RING	3				0.001	0.0022

silverhorn.co.uk

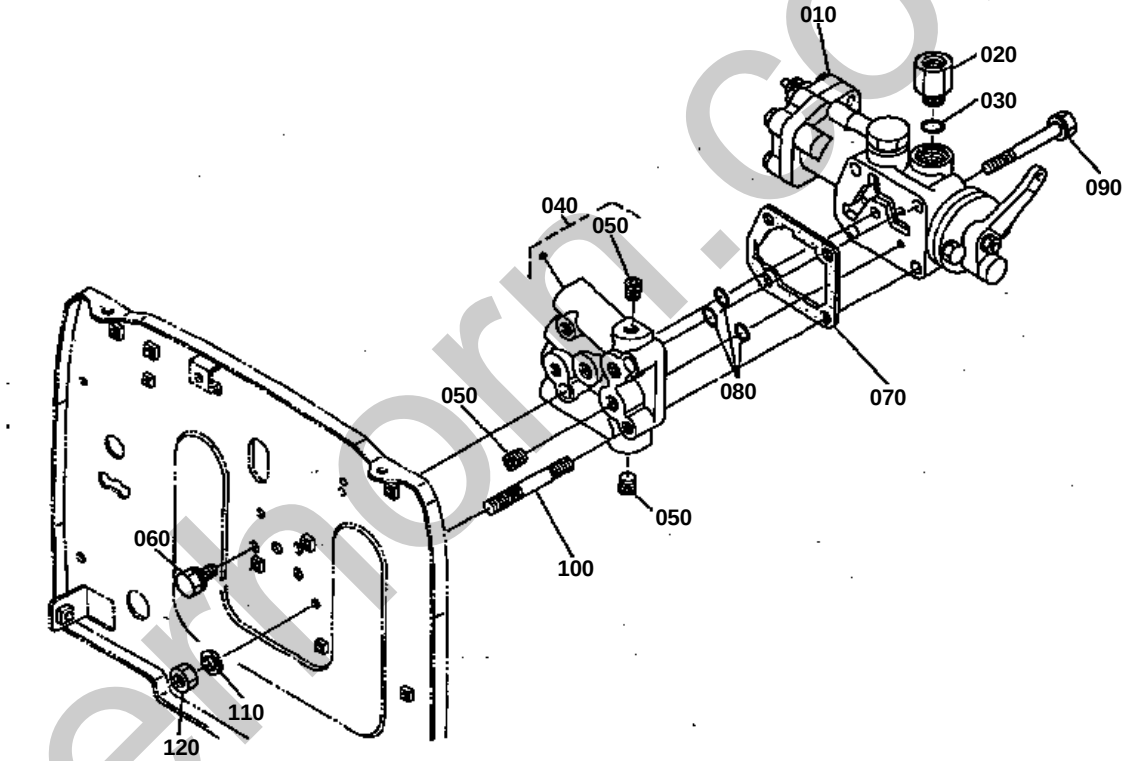

silvermorn.co.uk

HYDRAULIC SHUTTLE VALVE

↔ Interchangeable; ≠ not interchangeable; ← new for old; → old for new

REF.No	Part No.	Description	Q'ty	S.No.	I/C	REMARKS	Weight (kgf)	Weight (lb)
010	32530-46000	ASSY VALVE	1				0	0
020	32530-46160	ADAPTER	1				0.05	0.11
030	04810-00140	O RING	1				0.001	0.0022
040	32530-46340	SPACER VALVE	1				1.9	4.18
050	31351-37160	PLUG	6				0.003	0.0066
060	01123-50816	BOLT	2				0.011	0.0242
070	35370-46330	GASKET	1				0.004	0.0088
080	04811-00120	O RING	3				0.001	0.0022
090	01123-50855	BOLT	2				0.02	0.044
100	01513-50885	STUD	2				0.035	0.077
110	04512-50080	WASHER SPRING	2				0	0
120	02156-50080	NUT	2				0.004	0.0088

silverhorn.co.uk

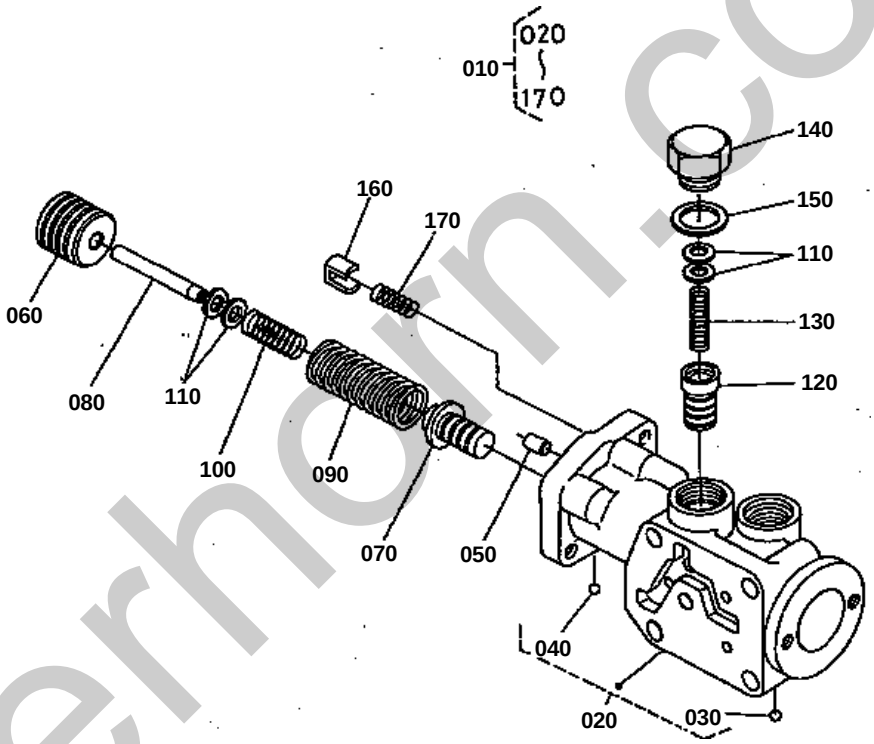

silverhorn.co.uk

HYDRAULIC SHUTTLE VALVE (SECTION PARTS 1)

↔ Interchangeable; ≠ not interchangeable; ← new for old; → old for new

REF.No	Part No.	Description	Q'ty	S.No.	I/C	REMARKS	Weight (kgf)	Weight (lb)
010	32530-46000	ASSY VALVE	1				0	0
020	35370-46100	ASSY BODY VALVE	1				3	6.6
030	07715-01605	BALL	1				0.003	0.0066
040	07715-03207	BALL	1				0.001	0.0022
050	05012-00408	PIN STRAIGHT	2				0.001	0.0022
060	32530-46120	PISTON VALVE	1				0.09	0.198
070	32530-46130	VALVE RELIEF	1				0.05	0.11
080	35370-46140	PIN	1				0.01	0.022
090	35370-46150	SPRING	1				0.03	0.066
100	35370-46160	SPRING	1				0.01	0.022
110	35370-46170	SHIM	3				0.001	0.0022
110	35370-46180	SHIM	3				0.005	0.011
120	32530-46190	VALVE RELIEF	1				0.015	0.033
130	32530-46200	SPRING	1				0.005	0.011
140	06331-35020	PLUG	1				0.068	0.1496
150	04724-00200	GASKET	1				0.003	0.0066
160	32530-46210	VALVE CHECK	1				0.01	0.022
170	35370-46220	SPRING	1				0.001	0.0022

silverhorn.co.uk

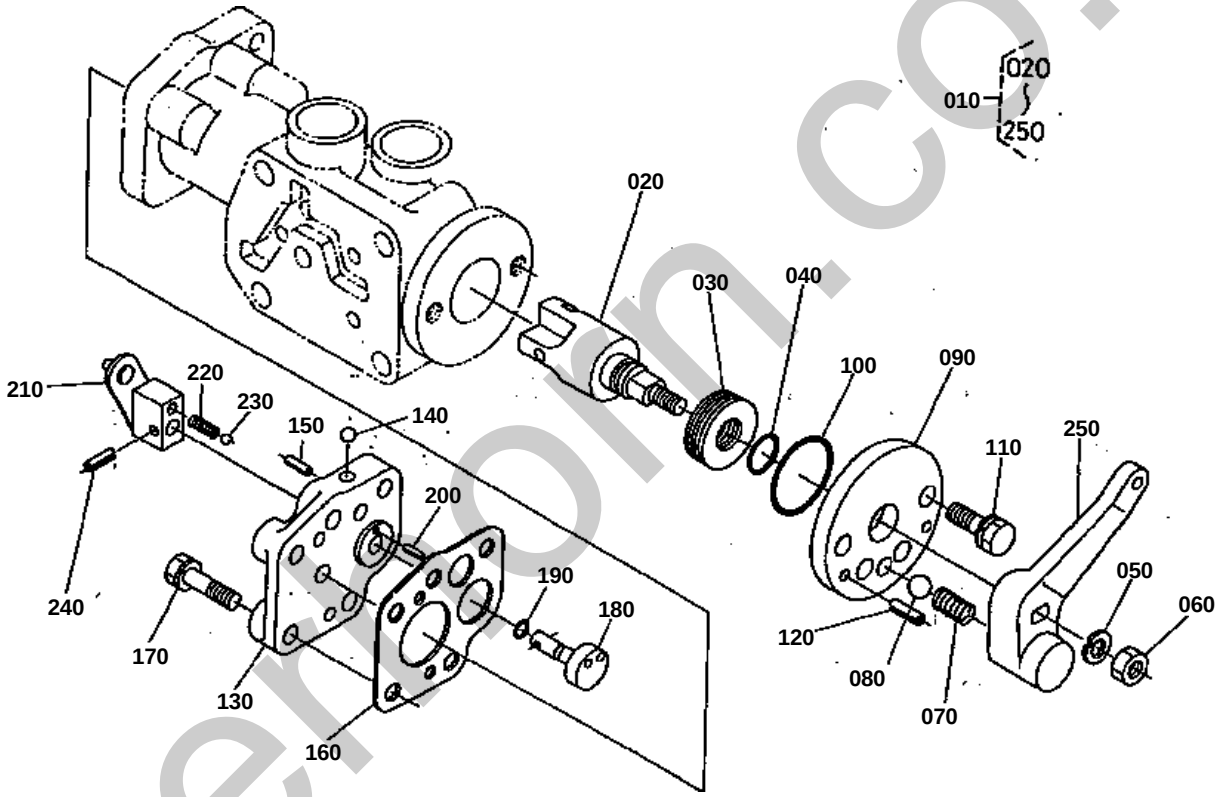

silverecom.co.uk

HYDRAULIC SHUTTLE VALVE (SECTION PARTS 2)

↔ Interchangeable; ≠ not interchangeable; ← new for old; → old for new

REF.No	Part No.	Description	Q'ty	S.No.	I/C	REMARKS	Weight (kgf)	Weight (lb)
010	32530-46000	ASSY VALVE	1				0	0
020	32530-46230	SELECTOR	1				0.21	0.462
030	35370-46240	BEARING THRUST	1				0.013	0.0286
040	04811-00110	O RING	1				0.001	0.0022
050	04512-50080	WASHER SPRING	1				0	0
060	02114-50080	NUT	1				0.005	0.011
070	35370-46260	SPRING	1				0.005	0.011
080	07715-00803	BALL	1				0.004	0.0088
090	35370-46270	COVER SELECTOR	1				0.2	0.44
100	04811-16350	O RING	1				0.001	0.0022
110	01123-50825	BOLT	2				0.013	0.0286
120	05411-00414	PIN SPRING	2				0.001	0.0022
130	35370-46400	ASSY COVER VALVE	1				0.345	0.759
140	07715-03207	BALL	2				0.001	0.0022
150	05411-00208	PIN SPRING	1				0.001	0.0022
160	35370-46290	GASKET	1				0.005	0.011
170	01123-50830	BOLT	5				0.015	0.033
180	35370-46300	ORIFICE ROTARY	1				0.02	0.044
190	04811-10040	O RING	1				0.001	0.0022
200	05411-00208	PIN SPRING	1				0.001	0.0022
210	32530-46310	LEVER	1				0.06	0.132
220	35370-46320	SPRING	1				0.002	0.0044
230	07715-00801	BALL	1				0.001	0.0022
240	05411-00216	PIN SPRING	1				0.001	0.0022
250	32530-46250	LEVER VALVE	1				0.15	0.33

silverhorn.co.uk

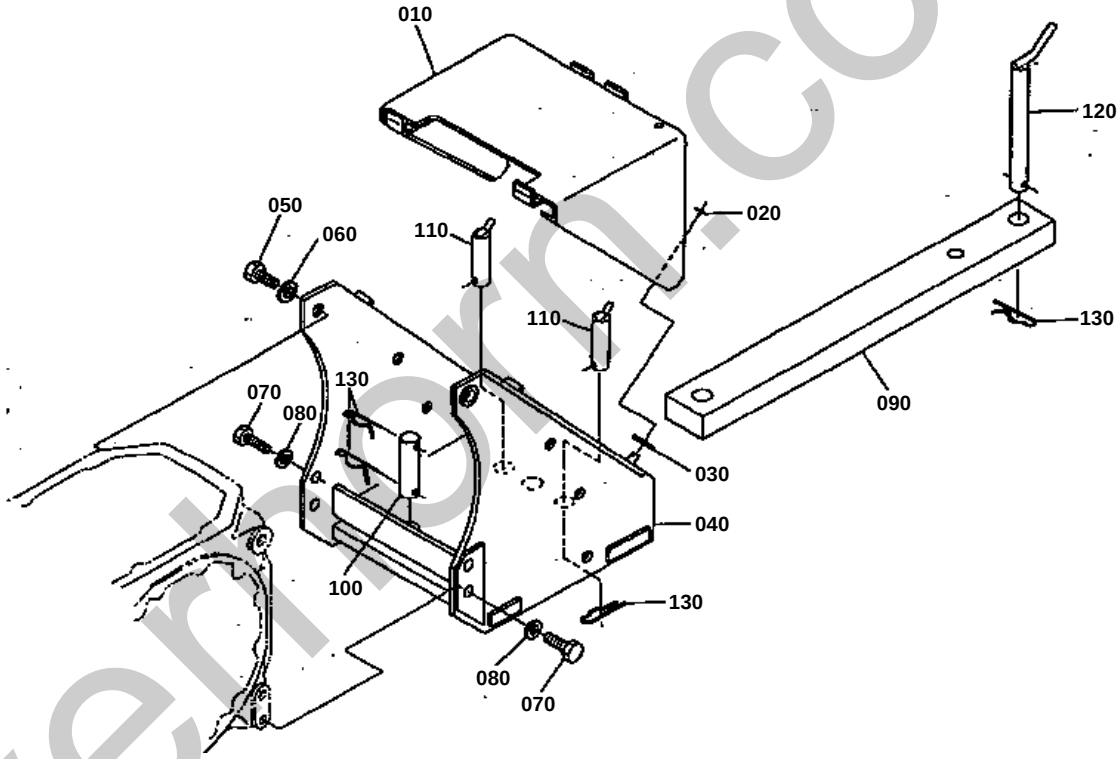

silvermorn.co.uk

↔ Interchangeable; ≠ not interchangeable; ← new for old; → old for new

REF.No	Part No.	Description	Q'ty	S.No.	I/C	REMARKS	Weight (kgf)	Weight (lb)
010	32530-25470	PROTECTOR PTO	1				2.88	6.336
020	05516-50800	PIN SNAP	2				0.002	0.0044
030	32530-25480	CUSHION DRAWBAR	2				0.002	0.0044
040	32530-29710	FRAME	1				0	0
050	01173-51638	BOLT	2				0.083	0.1826
060	04512-50160	WASHER SPRING	2				0	0
070	01176-51438	BOLT	4				0.06	0.132
080	04512-50140	WASHER SPRING	4				0	0
090	32530-71710	DRAWBAR	1				0	0
100	33251-89340	PIN	1				0	0
110	33251-89351	PIN DRAWBAR STOP	2				0.29	0.638
120	36330-89210	PIN DRAWBAR	1				0.7	1.54
130	70515-16330	PIN	5				0.028	0.0616

silverhorn.co.uk

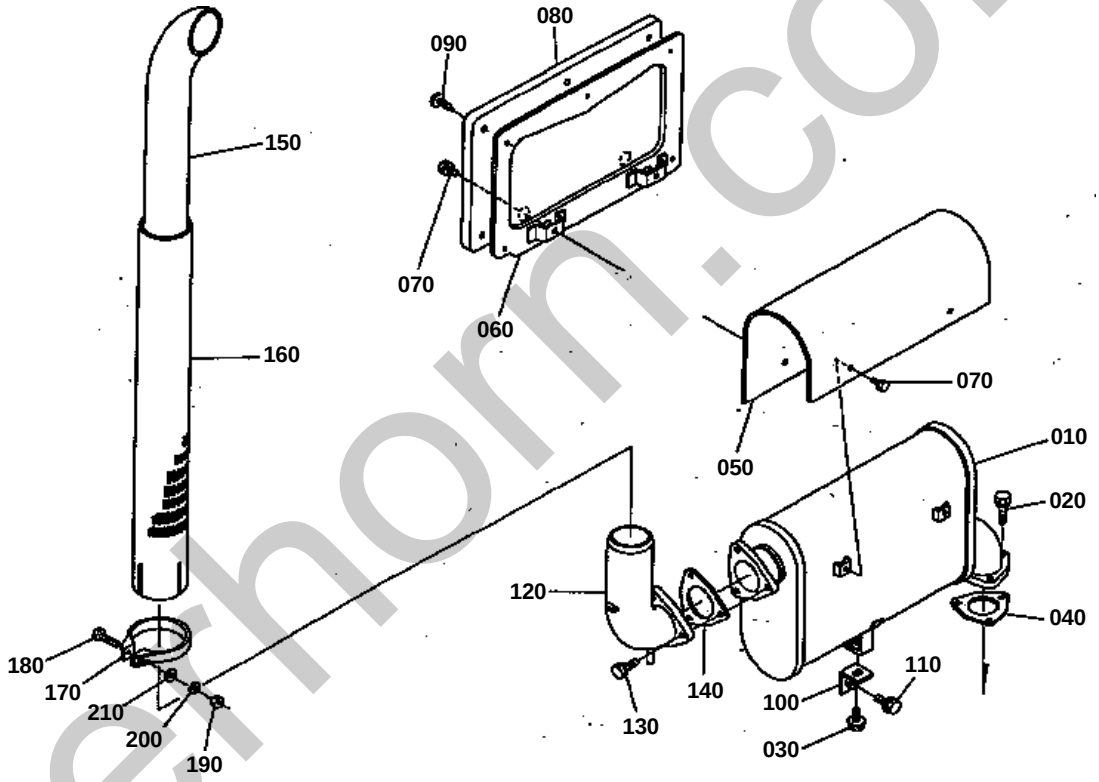

silverthorn.co.uk

MUFFLER

↔ Interchangeable; ≠ not interchangeable; ← new for old; → old for new

REF.No	Part No.	Description	Q'ty	S.No.	I/C	REMARKS	Weight (kgf)	Weight (lb)
010	17381-12110	MUFFLER	1				8.4	18.48
020	01123-50830	BOLT	3				0.015	0.033
030	01754-50816	BOLT FLANGE	1				0.011	0.0242
040	17381-12370	GASKET MUFFLER	1				0	0
050	32530-10540	COVER MUFFLER	1				0.65	1.43
060	32530-10510	PLATE	1				0.475	1.045
070	01023-50610	BOLT	4				0.005	0.011
080	32530-10520	CUSHION	1				0.13	0.286
090	32530-17830	STOPPER	6				0.002	0.0044
100	17381-12510	STAY MUFFLER	1				0	0
110	01774-51020	BOLT FLANGE	1				0	0
120	17381-12320	FLANGE MUFFLER	1				0.92	2.024
130	01123-50822	BOLT	3				0.012	0.0264
140	17381-12380	GASKET MUFFLER	1				0	0
150	17381-12410	PIPE MUFFLER	1				1.55	3.41
160	17381-12660	COVER MUFFLER PIPE	1				0.6	1.32
170	17331-12140	BAND MUFFLER	1				0	0
180	15521-91040	BOLT	1				0.017	0.0374
190	15521-92010	NUT	1				0.004	0.0088
200	15521-94070	WASHER SPRING	1				0.003	0.0066
210	15521-94040	WASHER PLAIN	2				0.001	0.0022

silverhorn.co.uk

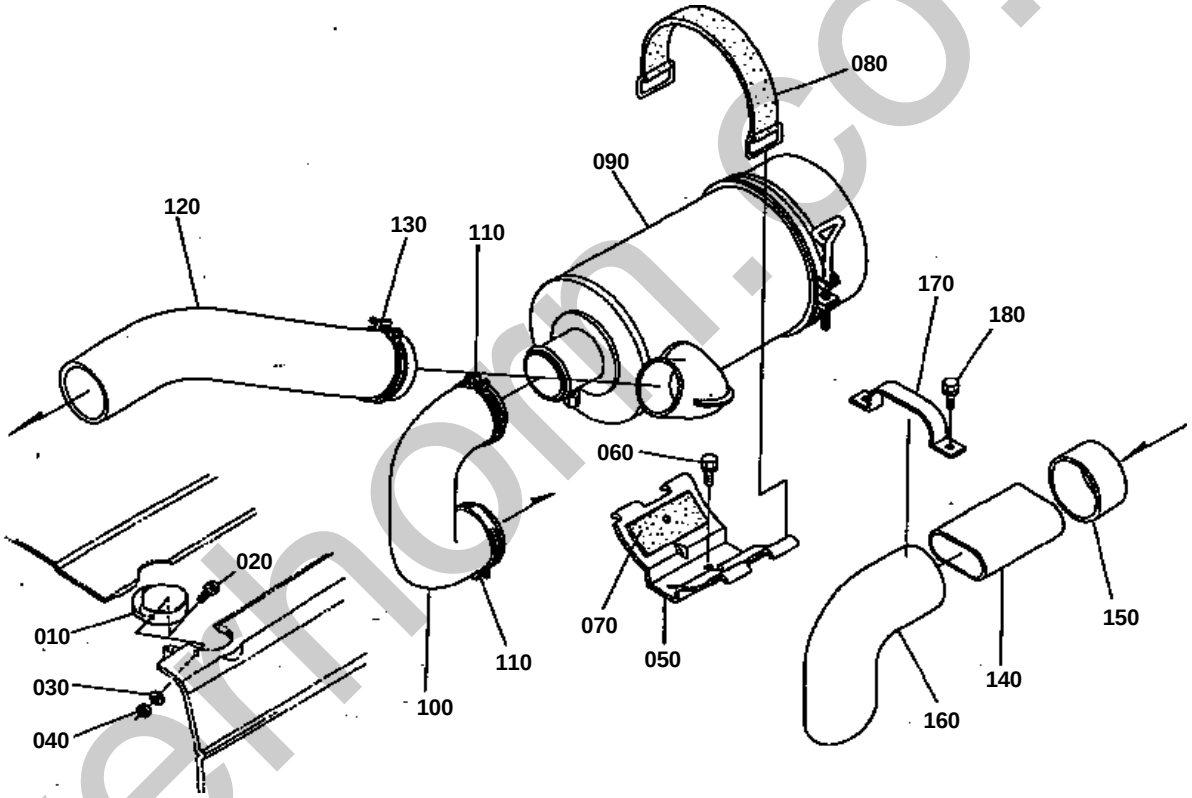

silverhorn.co.uk

AIR CLEANER (DOUBLE)

↔ Interchangeable; ≠ not interchangeable; ← new for old; → old for new

REF.No	Part No.	Description	Q'ty	S.No.	I/C	REMARKS	Weight (kgf)	Weight (lb)
010	32530-11720	COVER	1				0.08	0.176
020	01023-50612	BOLT	2				0.005	0.011
030	04012-50060	WASHER PLAIN	2				0.001	0.0022
040	02056-50060	NUT	2				0.002	0.0044
050	32530-13940	SUPPORT AIR CLEANER	1				0.42	0.924
060	01123-50816	BOLT	2				0.011	0.0242
070	38430-13970	CUSHION	2				0.015	0.033
080	38430-13980	BAND AIR CLEANER	1				0.07	0.154
090	17381-11010	ASSY CLEANER AIR	1				4.75	10.45
100	32530-13950	PIPE INLET	1				0.425	0.935
110	15606-11720	BAND PIPE	2				0.035	0.077
120	32530-13960	PIPE INLET	1				0.6	1.32
130	35466-74460	BAND PIPE	1				0.038	0.0836
140	32530-13980	PIPE JOINT	1				0.08	0.176
150	32530-13990	BAND PIPE	1				0.01	0.022
160	32530-13970	PIPE INLET	1				0.33	0.726
170	32530-11710	CLAMP PIPE	1				0.03	0.066
180	01754-50812	BOLT FLANGE	2				0.01	0.022

silverhorn.co.uk

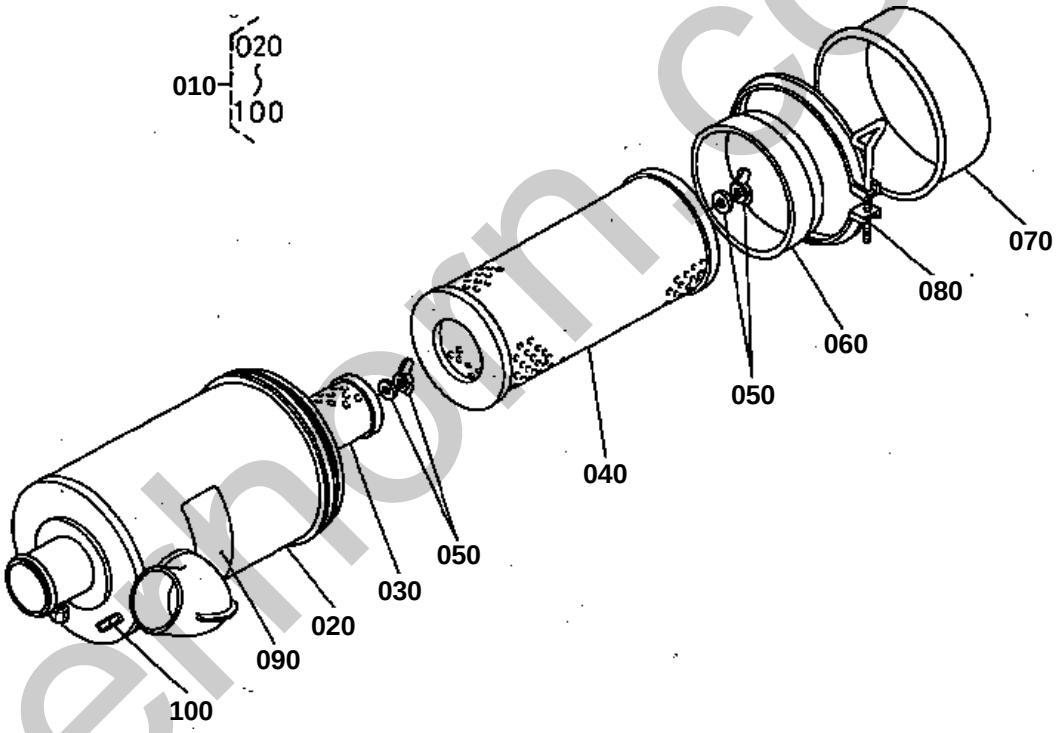

silverthorn.co.uk

AIR CLEANER (SECTION PARTS)

↔ Interchangeable; ≠ not interchangeable; ← new for old; → old for new

REF.No	Part No.	Description	Q'ty	S.No.	I/C	REMARKS	Weight (kgf)	Weight (lb)
010	17381-11010	ASSY CLEANER AIR	1				4.75	10.45
020	17381-11150	BODY AIR CLEANER	1				2.45	5.39
030	68335-43620	ELEMENT INNER	1				0	0
040	15606-11080	ASSY ELEMENT	1				1.15	2.53
050	15401-92620	NUT WING	2				0.01	0.022
060	15606-11410	COVER BUFFLE	1				0.115	0.253
070	15471-11160	COVER AIR CLEANER	1				0.42	0.924
080	15606-11070	ASSY BAND	1				0.125	0.275
090	15401-87450	LABEL AIR CLEANER	1				0.002	0.0044
100	15612-87330	MARK	1				0.001	0.0022

silverhorn.co.uk

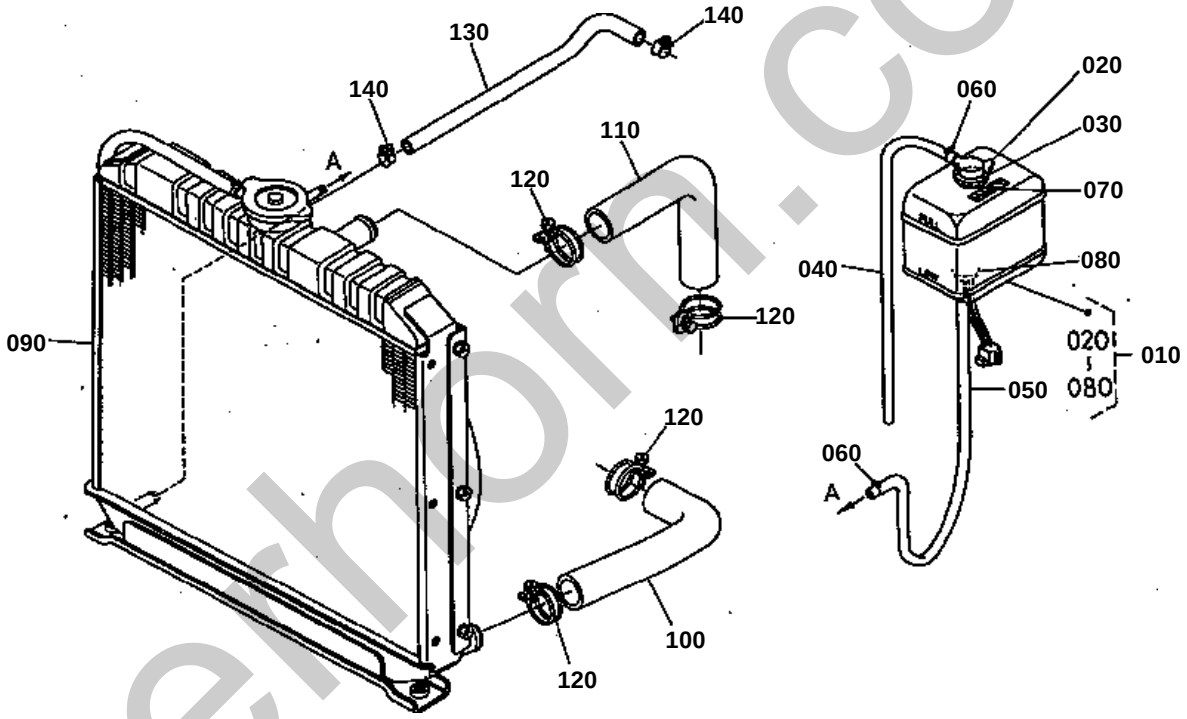

silverhorn.co.uk

↔ Interchangeable; ≠ not interchangeable; ← new for old; → old for new

REF.No	Part No.	Description	Q'ty	S.No.	I/C	REMARKS	Weight (kgf)	Weight (lb)
010	15471-72400	ASSY TANK RESERVE	1				0.35	0.77
020	54911-21720	CAP	1				0.008	0.0176
030	54911-21730	GASKET	1				0.004	0.0088
040	15471-72710	PIPE OVER FLOW	1				0.08	0.176
050	15471-72440	PIPE OVER FLOW	1				0.05	0.11
060	15501-72470	CLIP PIPE	3				0.005	0.011
070	15501-88210	LABEL	1				0.005	0.011
080	15521-72992	SWITCH WATER LEVEL	1				0.06	0.132
090	17381-72060	ASSY RADIATOR	1				9.95	21.89
100	17381-72850	PIPE WATER UNDER	1				0.21	0.462
110	17381-72940	PIPE WATER UPPER	1				0	0
120	15108-72870	BAND	4				0.027	0.0594
130	17381-73340	PIPE WATER RETURN	1				0.085	0.187
140	68171-63630	BAND HOSE	2				0.013	0.0286

silverhorn.co.uk

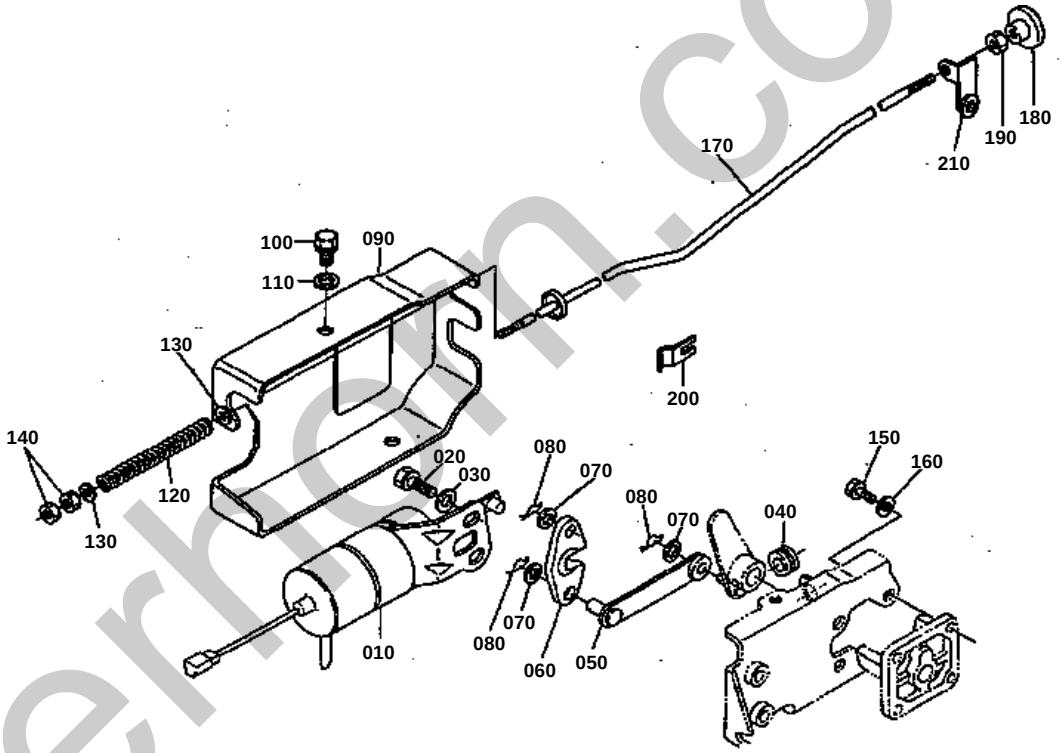

silverhorn.co.uk

ENGINE STOP SOLENOID

↔ Interchangeable; ≠ not interchangeable; ← new for old; → old for new

REF.No	Part No.	Description	Q'ty	S.No.	I/C	REMARKS	Weight (kgf)	Weight (lb)
010	15471-60010	SOLENOID	1				0.415	0.913
020	01123-50816	BOLT	2				0.011	0.0242
030	04012-50080	WASHER PLAIN	2				0.001	0.0022
040	66591-54580	RUBBER RELEASE ROD	1				0.003	0.0066
050	17331-60150	LEVER STOP	1				0.025	0.055
060	15471-60162	LEVER STOP	1				0.007	0.0154
070	04012-50060	WASHER PLAIN	3				0.001	0.0022
080	15471-94810	PIN SNAP	3				0	0
090	15461-60120	COVER SOLENOID	1				0.16	0.352
100	01023-50612	BOLT	2				0.005	0.011
110	04012-50060	WASHER PLAIN	2				0.001	0.0022
120	15471-60250	SPRING	1				0.005	0.011
130	04012-50060	WASHER PLAIN	2				0.001	0.0022
140	02012-50060	NUT	2				0	0
150	01202-50614	BOLT	3				0.006	0.0132
160	04013-50060	WASHER PLAIN	3				0	0
170	32530-17150	ROD STOP	1				0	0
180	35260-17160	KNOB	1				0.015	0.033
190	02012-50060	NUT	1				0	0
200	38430-17180	SPRING	1				0.1	0.22
210	38240-17160	GUIDE STOP ROD	1				0.005	0.011

silverhorn.co.uk

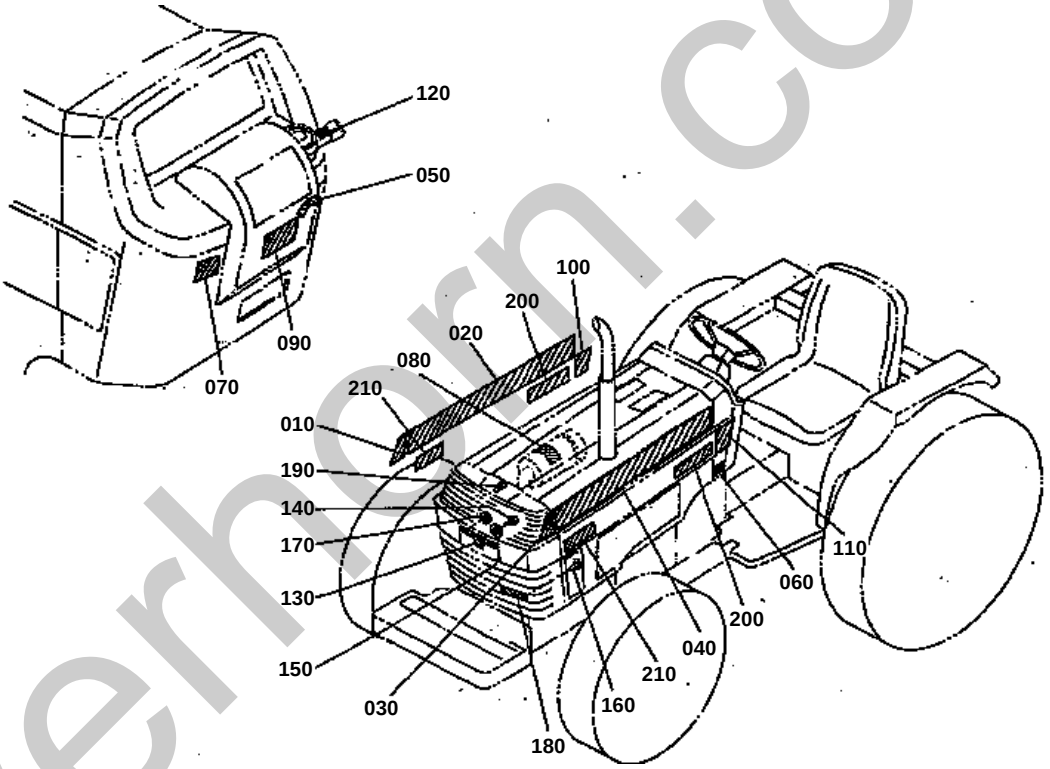

silverhorn.co.uk

↔ Interchangeable; ≠ not interchangeable; ← new for old; → old for new

REF.No	Part No.	Description	Q'ty	S.No.	I/C	REMARKS	Weight (kgf)	Weight (lb)
010	32530-65100	MARK FORM RH	1				0.005	0.011
020	32530-65150	MARK FORM RH	1				0.06	0.132
030	32530-65110	MARK FORM LH	1				0.01	0.022
040	32530-65160	MARK FORM LH	1				0.06	0.132
050	35822-98180	MARK SWITCH	1				0.001	0.0022
060	35820-98630	LABEL ENGINE START	1				0	0
070	32530-65220	LABEL INSTRUCTION	1				0.005	0.011
080	15222-93450	LABEL AIR CLEANER	1				0.001	0.0022
090	35370-31360	LABEL SHUTTLE	1				0	0
100	32530-65240	LABEL PANEL SIDE	1				0.01	0.022
110	32530-65250	LABEL PANEL SIDE	1				0.01	0.022
120	32530-65260	LABEL SIDE BELT	2				0.016	0.0352
130	32530-65530	LABEL HAZARD MARK	1				0.001	0.0022
140	32530-65320	EMBLEM	2				0	0
150	38430-18270	SCREW	2				0.002	0.0044
160	31351-93550	NUT	2				0.001	0.0022
170	04015-50050	WASHER PLAIN	2				0.004	0.0088
180	32530-65330	MARK KUBOTA	1				0.04	0.088
190	38430-18270	SCREW	2				0.002	0.0044
200	32530-65880	LABEL SHUTTLE	2			HYD.SHUTTLE	0.01	0.022
210	32580-65820	MARK	2				0.001	0.0022

silverhorn.co.uk

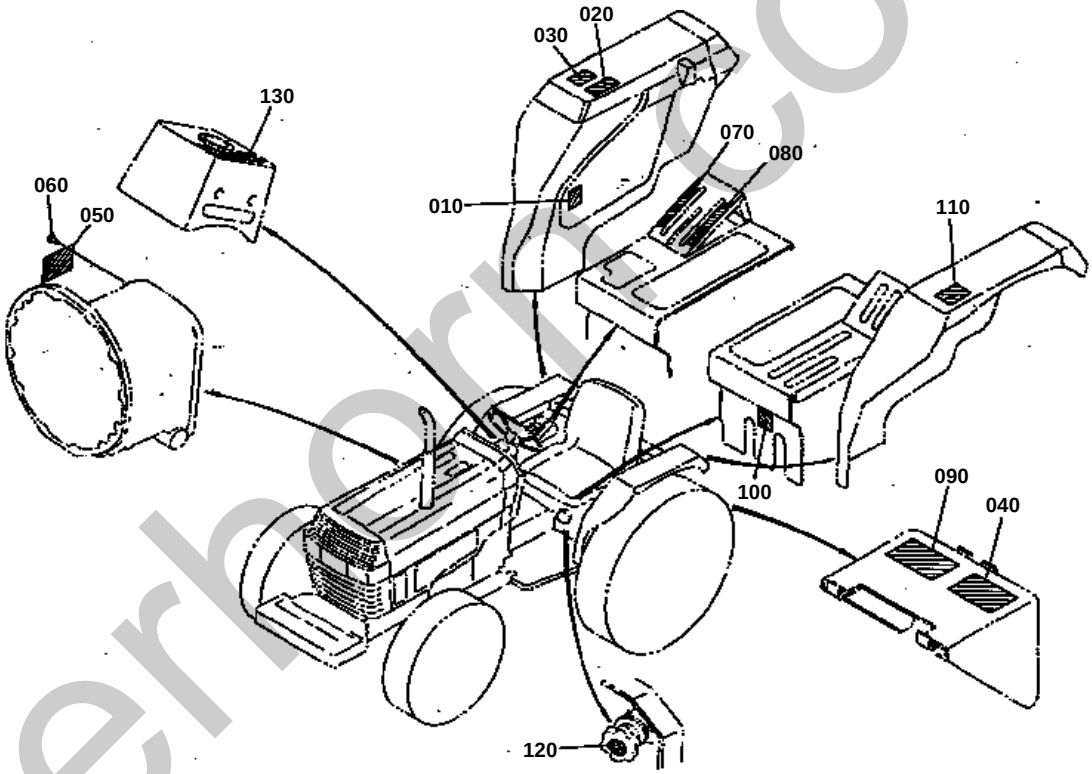

silverhorse.co.uk

↔ Interchangeable; ≠ not interchangeable; ← new for old; → old for new

REF.No	Part No.	Description	Q'ty	S.No.	I/C	REMARKS	Weight (kgf)	Weight (lb)
010	32530-65650	LABEL DIFF.LOCK	1				0.002	0.0044
020	35260-34910	LABEL SAFETY	1				0	0
030	35260-29780	LABEL ROPS	1				0	0
040	35260-29790	LABEL DRAWBAR	1				0.002	0.0044
050	32530-65460	NAME PLATE	1				0.01	0.022
060	34152-57920	RIVET	4				0.001	0.0022
070	32530-65760	LABEL	1				0.001	0.0022
080	32530-65770	LABEL	1				0.001	0.0022
090	35260-25340	LABEL	1				0.005	0.011
100	32530-65780	LABEL	1				0.001	0.0022
110	32530-65382	LABEL	1				0	0
120	31351-65780	LABEL O/P ADJUSTING	1				0.001	0.0022
130	32530-46430	LABEL SHUTTLE CHANGE	1			HYD.SHUTTLE	0.001	0.0022

silverhorn.co.uk

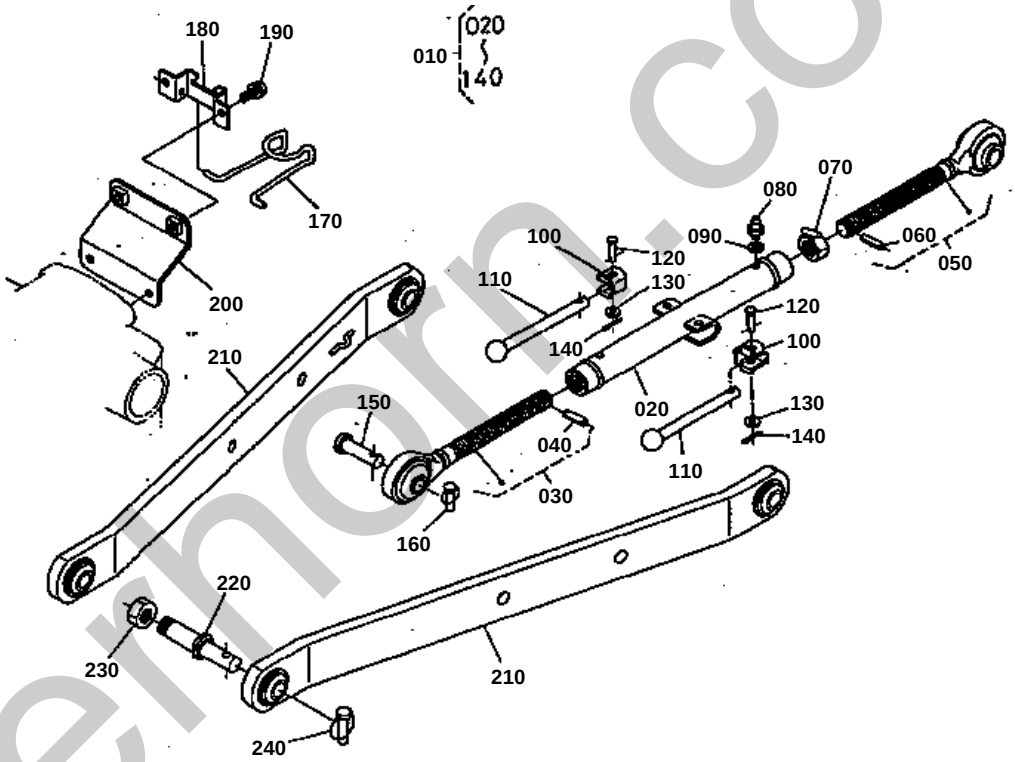

silverthorn.co.uk

↔ Interchangeable; ≠ not interchangeable; ← new for old; → old for new

REF.No	Part No.	Description	Q'ty	S.No.	I/C	REMARKS	Weight (kgf)	Weight (lb)
010	32530-71100	ASSY LINK TOP	1				5.2	11.44
020	32530-71110	SLEEVE TOP LINK	1				2.12	4.664
030	35458-91550	ASSY LINK TOP FRONT	1				1.33	2.926
040	05411-00632	PIN SPRING	1				0.004	0.0088
050	35458-91610	ASSY LINK TOP REAR	1				1.32	2.904
060	05411-00632	PIN SPRING	1				0.004	0.0088
070	33400-91590	NUT TOP LINK	1				0.11	0.242
080	36530-91680	NIPPLE GREESE	2				0.004	0.0088
090	04724-00100	GASKET	2				0.001	0.0022
100	36330-91693	HOLDER HANDLE	2				0.01	0.022
110	36330-91643	HANDLE TOP LINK	2				0.175	0.385
120	05122-50635	PIN JOINT	2				0.01	0.022
130	04012-50060	WASHER PLAIN	2				0.001	0.0022
140	05511-51610	PIN SPLIT	2				0.001	0.0022
150	37307-71360	PIN JOINT	2				0	0
160	34150-37640	PIN	2				0.06	0.132
170	36330-91960	HOLDER TOP LINK	1				0.06	0.132
180	36330-91970	PLATE	1				0.1	0.22
190	01754-50812	BOLT FLANGE	2				0.01	0.022
200	32530-71140	PLATE TOP LINK	1				0.348	0.7656
210	32530-71310	COMP.LINK LOWER	2				9.6	21.12
220	32530-71330	PIN LOWER LINK	2				0.5	1.1
230	32530-71340	NUT	2				0.03	0.066
240	34150-37640	PIN	2				0.06	0.132

silverhorn.co.uk

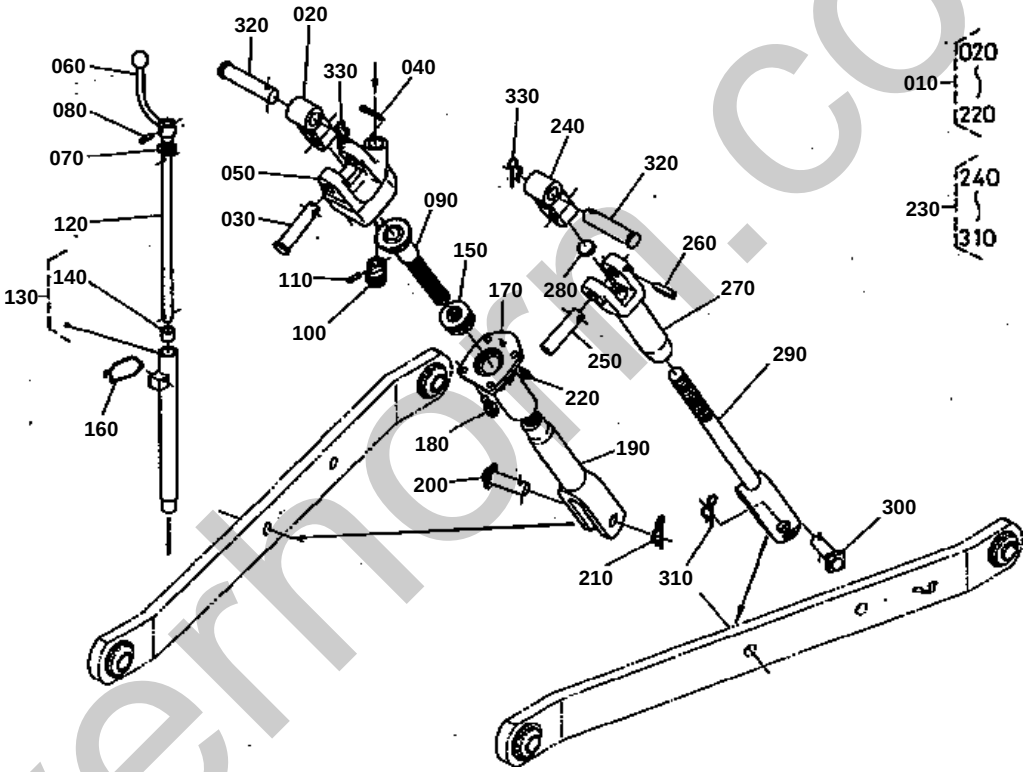

silvermoor.co.uk

↔ Interchangeable; ≠ not interchangeable; ← new for old; → old for new

REF.No	Part No.	Description	Q'ty	S.No.	I/C	REMARKS	Weight (kgf)	Weight (lb)
010	32530-71500	ASSY ADJUSTER	1				0	0
020	32530-71510	JOINT LIFT ROD	1				0.63	1.386
030	32530-71520	PIN LIFT ROD	1				0.15	0.33
040	05511-50430	PIN SPLIT	1				0.004	0.0088
050	32530-71530	CASE GEAR	1				1.57	3.454
060	36330-91320	HANDLE	1				0	0
070	04724-00180	GASKET	1				0.005	0.011
080	05411-00525	PIN SPRING	1				0.002	0.0044
090	32530-71540	COMP.SHAFT ADJUSTING	1				0.84	1.848
100	36330-91330	PINION	1				0.11	0.242
110	05411-00520	PIN SPRING	1				0.002	0.0044
120	36330-91392	SHAFT HANDLE	1				0.36	0.792
130	36330-91372	SUPPORT HANDLE	1				0.55	1.21
140	36330-91380	BUSH	1				0	0
150	08401-51105	BEARING	1				0.07	0.154
160	36330-91270	HOLDER HANDLE	1				0.025	0.055
170	32530-71560	COMP.SLEEVE	1				1.05	2.31
180	01133-51030	BOLT	4				0.025	0.055
190	32530-71590	ROD LIFT LOWER RH	1				1.02	2.244
200	36200-91540	PIN REAR TIE ROD	1				0.11	0.242
210	33251-91860	PIN	1				0.023	0.0506
220	06613-20010	NIPPLE GREASE	1				0.01	0.022
230	32530-71600	ASSY ROD LIFT LH	1				3.2	7.04
240	32530-71510	JOINT LIFT ROD	1				0.63	1.386
250	32530-71630	PIN LIFT ROD	1				0.175	0.385
260	05411-00540	PIN SPRING	1				0.004	0.0088
270	32530-71610	ROD LIFT UPPER LH	1				0.9	1.98
280	06311-75022	PLUG EXPANSION	1				0.006	0.0132
290	32530-71620	ROD LIFT LH	1				1.37	3.014
300	36200-91540	PIN REAR TIE ROD	1				0.11	0.242
310	33251-91860	PIN	1				0.023	0.0506
320	32530-37690	PIN LIFT ARM	2				0	0
330	66592-35190	PIN	2				0.014	0.0308

silverhorn.co.uk

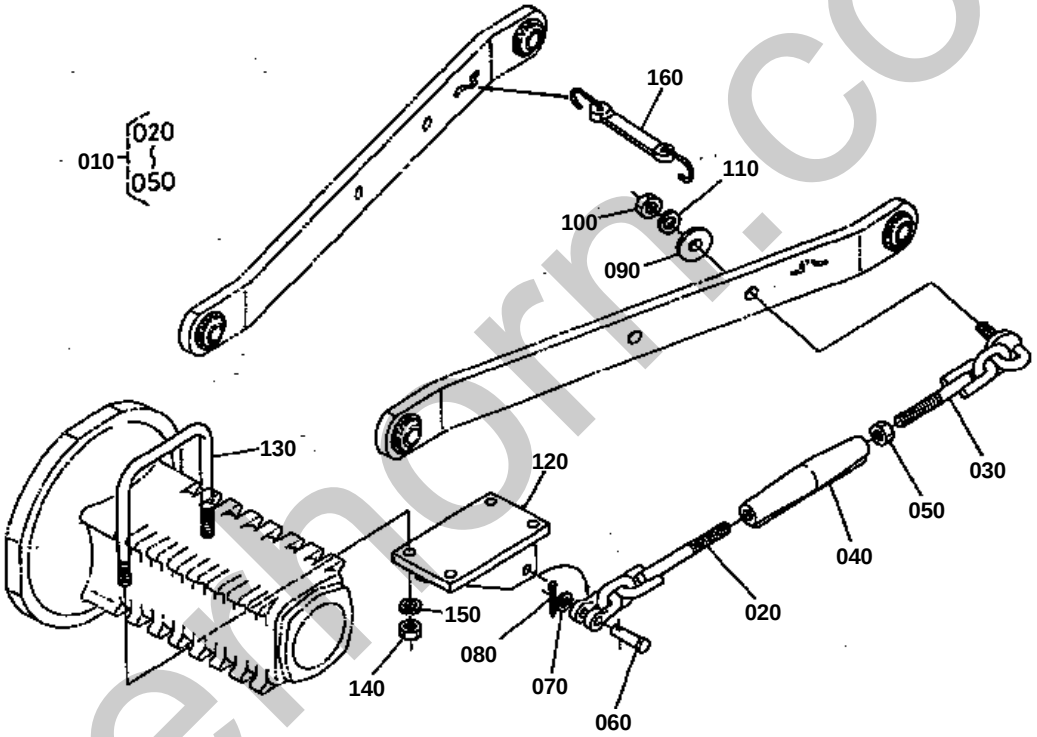

silverthorn.co.uk

↔ Interchangeable; ≠ not interchangeable; ← new for old; → old for new

REF.No	Part No.	Description	Q'ty	S.No.	I/C	REMARKS	Weight (kgf)	Weight (lb)
010	32530-71800	ASSY CHAIN CHECK	2				2.1	4.62
020	32530-71810	CHAIN CHECK	2				0.6	1.32
030	32530-71820	CHAIN CHECK	2				0.8	1.76
040	36200-91190	TURNBUCKLE	2				0.63	1.386
050	02052-50160	NUT	2				0.025	0.055
060	32353-71890	PIN	2				0.041	0.0902
070	04013-50120	WASHER PLAIN	2				0	0
080	05511-50425	PIN SPLIT	2				0.003	0.0066
090	37307-71830	WASHER	2				0.29	0.638
100	02174-50180	NUT	2				0.029	0.0638
110	04512-50180	WASHER SPRING	2				0	0
120	32530-71910	BRACKET CHECK CHAIN	2				4.9	10.78
130	32530-71920	BOLT	4				0.5	1.1
140	02176-50140	NUT	8				0.014	0.0308
150	04512-50140	WASHER SPRING	8				0	0
160	38187-71750	ASSY RUBBER	2				0	0

silverhorn.co.uk

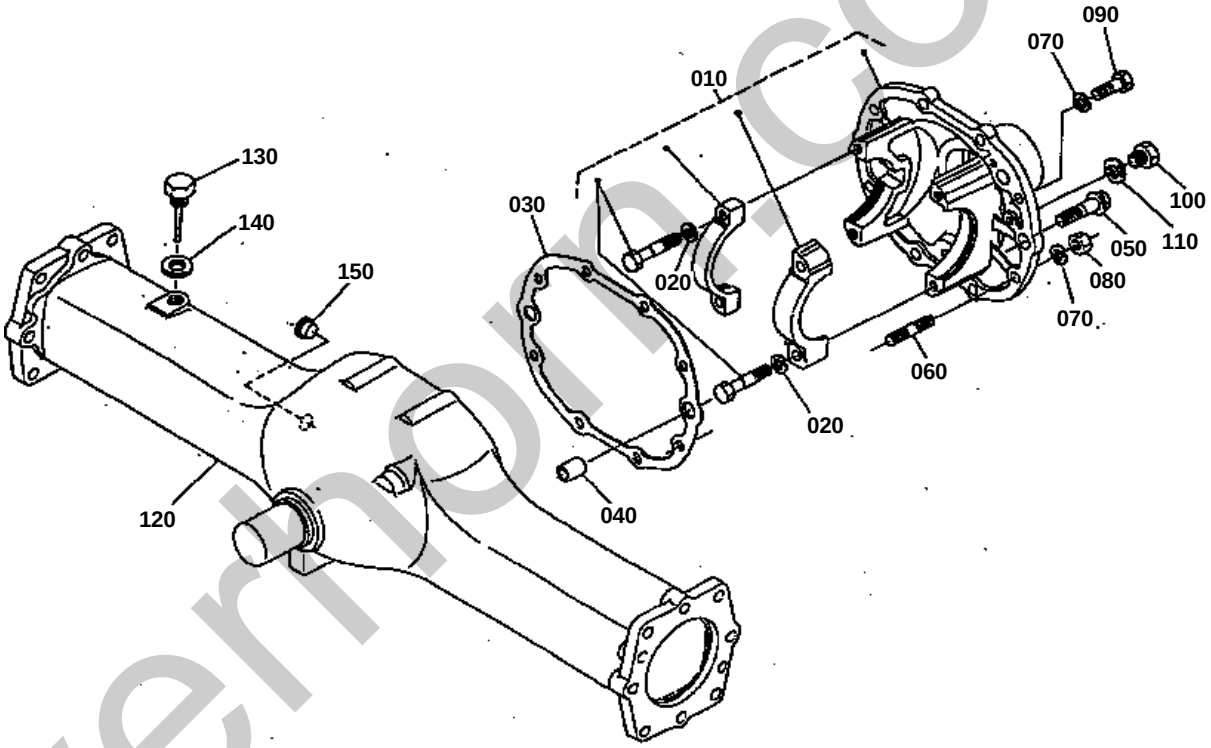

silverhorn.co.uk

↔ Interchangeable; ≠ not interchangeable; ← new for old; → old for new

REF.No	Part No.	Description	Q'ty	S.No.	I/C	REMARKS	Weight (kgf)	Weight (lb)
010	32580-43010	ASSY CASE DIFF.GEAR	1				9	19.8
020	04512-50120	WASHER SPRING	4				0	0
030	32580-43140	GASKET	1				0	0
040	36280-43170	KNOCK PIPE	2				0.022	0.0484
050	36280-43180	BOLT	2				0.052	0.1144
060	35230-43500	STUD	7				0.045	0.099
070	04512-50120	WASHER SPRING	8				0	0
080	32580-43160	NUT	7				0.014	0.0308
090	36740-42220	BOLT	1				0.05	0.11
100	06331-35016	PLUG	1				0.04	0.088
110	04717-01600	WASHER SEAL	1				0.003	0.0066
120	32580-43410	BOX FRONT AXLE	1				0	0
130	31353-43120	GAUGE OIL	1				0	0
140	04717-02000	WASHER SEAL	1				0.004	0.0088
150	32580-44990	PLUG	1				0.01	0.022

silverhorn.co.uk

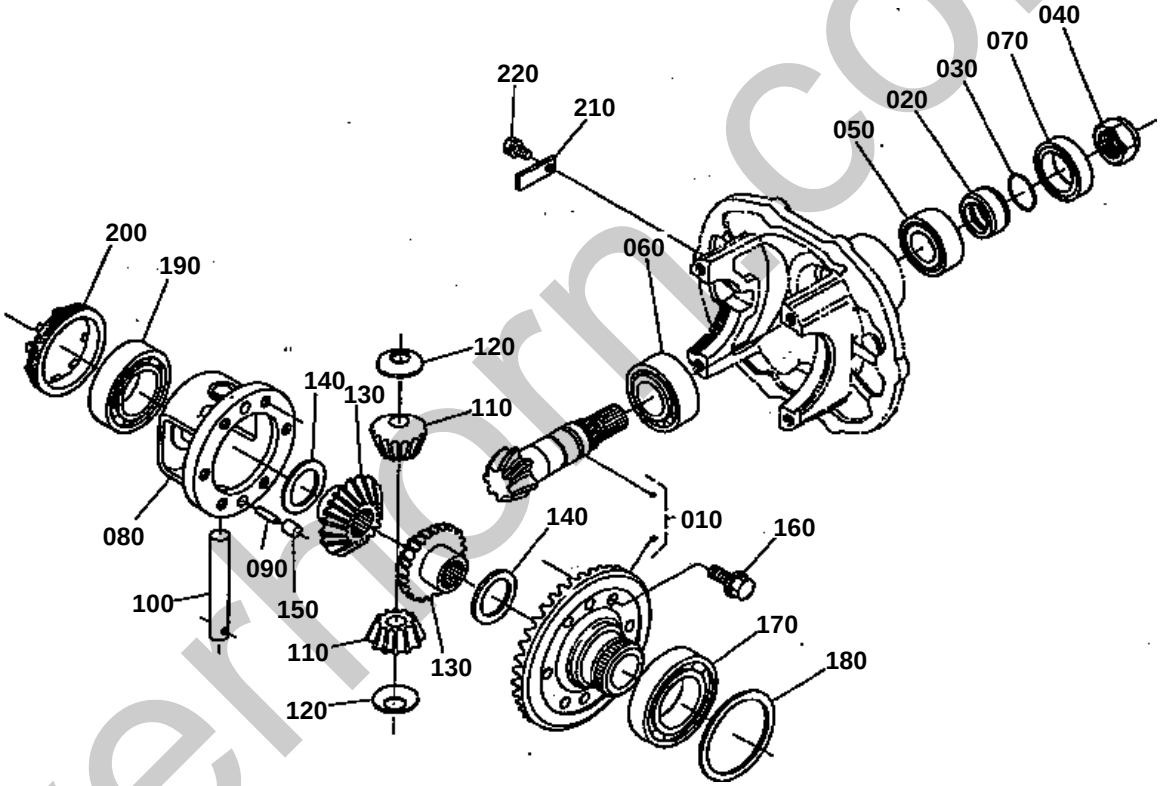

silverthorn.co.uk

↔ Interchangeable; ≠ not interchangeable; ← new for old; → old for new

REF.No	Part No.	Description	Q'ty	S.No.	I/C	REMARKS	Weight (kgf)	Weight (lb)
010	32580-95220	ASSY GEAR BEVEL 7-34	1				0	0
020	35350-43220	COLLAR SEAL	1				0.07	0.154
030	04811-00340	O RING	1				0.002	0.0044
040	32580-43230	NUT	1				0.04	0.088
050	38630-43260	BEARING	1				0.24	0.528
060	32580-43290	BEARING	1				0.456	1.0032
070	09500-45629	SEAL OIL	1				0.023	0.0506
080	32580-43310	CASE DIFFERENTIAL	1				0	0
090	37650-43320	PIN	1				0.01	0.022
100	31393-43330	SHAFT DIFF PINION	1				0.41	0.902
110	35200-26350	PINION DIFF.	2				0.145	0.319
120	35200-26390	WASHER	2				0.02	0.044
130	32580-43330	GEAR DIFF SIDE	2				0.49	1.078
140	31220-26480	WASHER	2				0.015	0.033
140	31220-26490	WASHER	2				0.02	0.044
140	37150-26480	WASHER	2				0.016	0.0352
150	38440-43880	PIN STRAIGHT	2				0	0
160	37800-43870	BOLT	6				0.026	0.0572
170	08101-06211	BEARING BALL	1				0.6	1.32
180	32580-43340	SHIM	1				0.015	0.033
180	32580-43350	SHIM	1				0.015	0.033
180	32580-43360	SHIM	1				0.02	0.044
180	32580-43370	SHIM	1				0.025	0.055
190	08101-06210	BEARING BALL	1				0.45	0.99
200	32580-43380	SCREW	1				0.2	0.44
210	32580-43390	STOPPER	1				0.01	0.022
220	01123-50816	BOLT	1				0.011	0.0242

silverhorn.co.uk

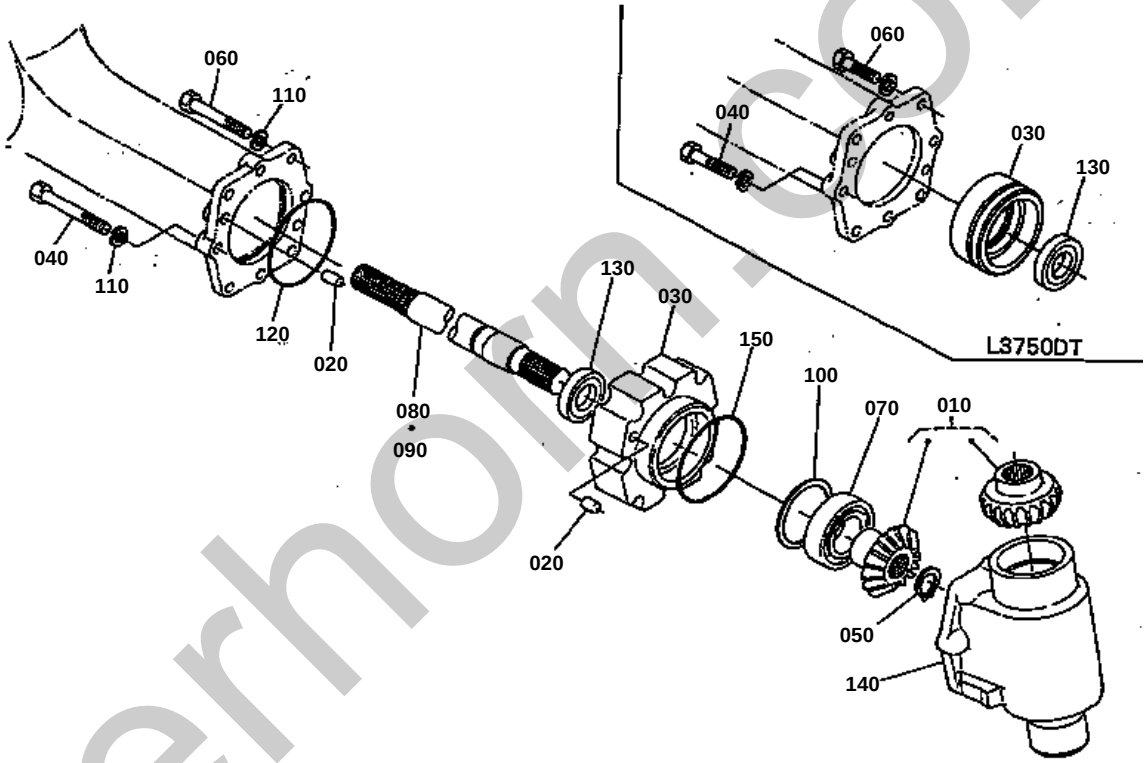

silverhorn.co.uk

↔ Interchangeable; ≠ not interchangeable; ← new for old; → old for new

REF.No	Part No.	Description	Q'ty	S.No.	I/C	REMARKS	Weight (kgf)	Weight (lb)
010	32580-95230	ASSY GEAR BEVEL 13-1	2				2	4.4
020	37300-26530	PIN STRAIGHT	8				0.03	0.066
030	32580-43510	CASE BEARING	2				4.5	9.9
040	01173-51295	BOLT	8				0.086	0.1892
050	04612-00300	CIR-CLIP EXTERNAL	2				0.003	0.0066
060	01173-51285	BOLT	8				0.084	0.1848
070	32580-43550	BEARING BALL	2				0.4	0.88
080	32580-43520	SHAFT DIFF GEAR RH	1				4	8.8
090	32580-43530	SHAFT DIFF GEAR LH	1				3.8	8.36
100	32580-43560	SHIM	2				0.015	0.033
100	32580-43570	SHIM	2				0.015	0.033
100	32580-43580	SHIM	2				0.02	0.044
100	32580-43590	SHIM	2				0.025	0.055
110	04512-50120	WASHER SPRING	16				0	0
120	04811-11050	O RING	2				0.002	0.0044
130	09403-56210	SEAL OIL	2				0.03	0.066
140	32580-43610	CASE GEAR	2				7.8	17.16
150	04811-11050	O RING	2				0.002	0.0044

silverhorn.co.uk

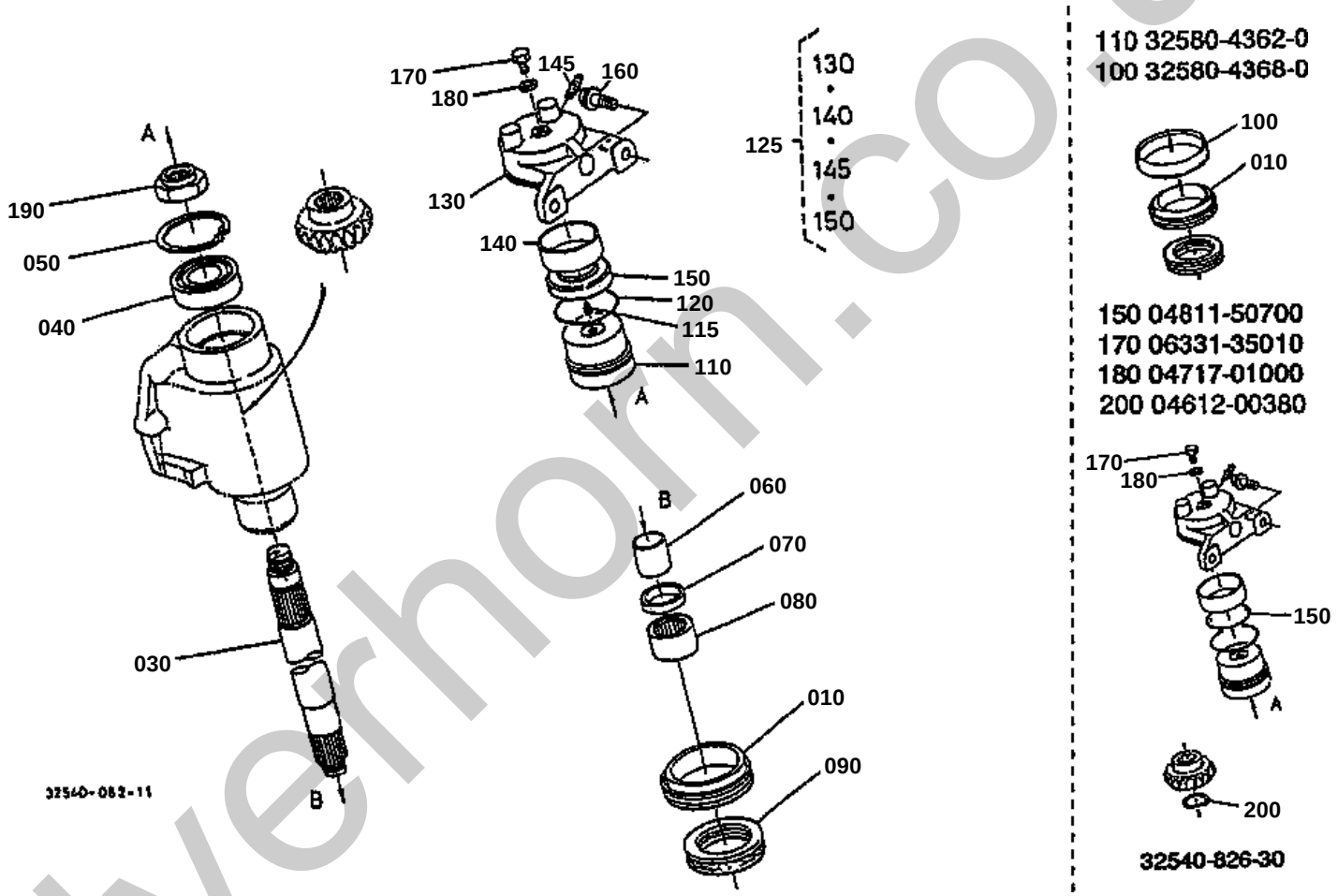

silverhorn.co.uk

BEVEL GEAR SHAFT

↔ Interchangeable; ≠ not interchangeable; ← new for old; → old for new

REF.No	Part No.	Description	Q'ty	S.No.	I/C	REMARKS	Weight (kgf)	Weight (lb)
010	32580-43620	SEAL OIL	2	<=60897			0.09	0.198
010	32590-43620	SEAL OIL	2	>=60898	←		0.25	0.55
020	99999-99999	BLANK	0				0	0
030	32580-43630	SHAFT BEVEL GEAR	2	<=60686			2.38	5.236
030	32580-43634	SHAFT BEVEL GEAR	2	>=60687	←		2.4	5.28
040	32580-43640	BEARING BALL	2				0.5	1.1
050	04611-00800	CIR-CLIP INTERNAL	2				0.02	0.044
060	32580-43650	RING INNER	2				0.08	0.176
070	32580-43660	SEAL OIL	2				0.005	0.011
080	32580-43670	BEARING NEEDLE	2	<=59999			0	0
080	32580-43672	BEARING NEEDLE	2	>=60001	←		0.055	0.121
090	08401-51113	BEARING	2				0.32	0.704
100	32580-43680	SLEEVE	2	<=60897			0.15	0.33
110	32580-43920	SHAFT SUPPORT	2				1.05	2.31
115	68311-13620	PLUG	2	>=60898			0.02	0.044
120	04811-10750	O RING	2				0.001	0.0022
125	32580-43900	ASSY SUPPORT F-AXLE	2	>=60898			2.15	4.73
130	32580-43960	SUPPORT CASE	2	<=60897		NOT SALE ORDER BY REF.No.125	2	4.4
130	32580-43963	SUPPORT F-AXLE CASE	2	>=60898	≠		1.9	4.18
140	32580-43930	BUSH	2	<=60897			0	0
140	32590-43930	BUSH	2	>=60898	≠		0.108	0.2376
145	06611-15010	NIPPLE GREASE	2	>=60898			0.01	0.022
150	04811-50700	O RING	2	<=60897			0.002	0.0044
150	32590-43990	SEAL OIL	2	>=60898	≠		0.016	0.0352
160	32580-43970	BOLT UBS	4				0.05	0.11
170	06331-35010	PLUG	4	<=60897			0.012	0.0264
170	06331-35010	PLUG	2	>=60898			0.012	0.0264
180	04717-01000	WASHER SEAL	4	<=60897			0.001	0.0022
180	04717-01000	WASHER WITH RUBBER	2	>=60898			0.001	0.0022
190	32580-43940	NUT	2				0.08	0.176
200	04612-00380	CIR-CLIP EXTERNAL	2	<=60686			0.005	0.011

silverhorn.co.uk

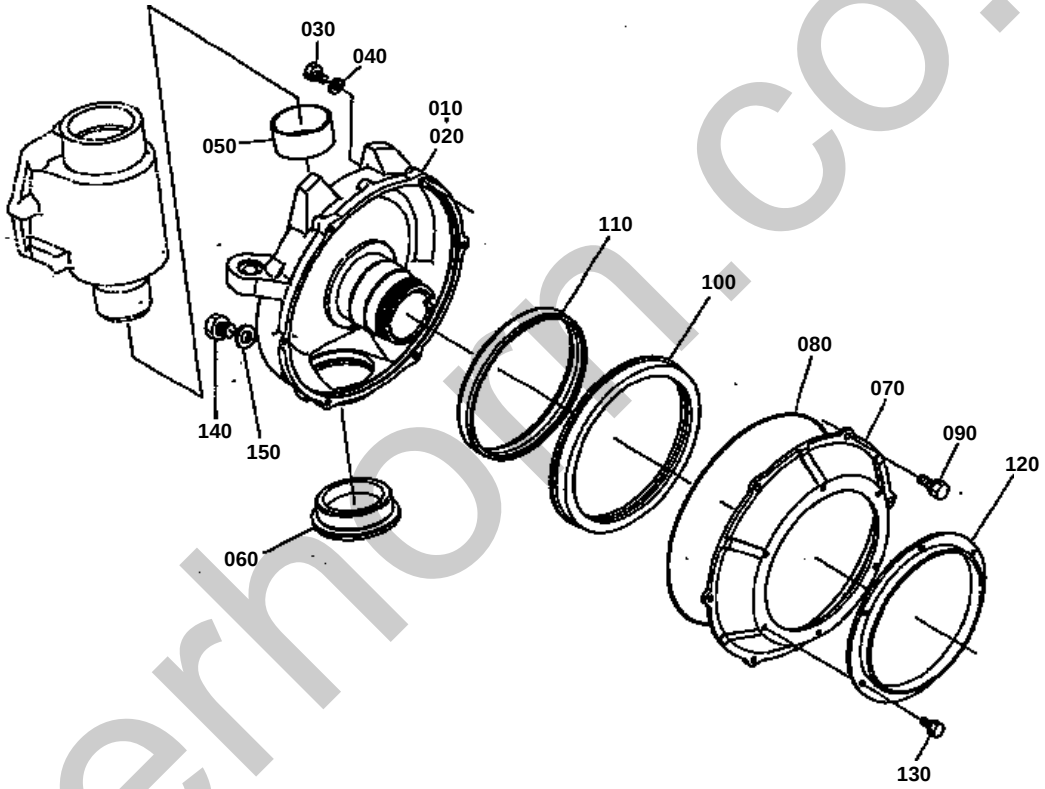

silverhorn.co.uk

FRONT AXLE CASE

↔ Interchangeable; ≠ not interchangeable; ← new for old; → old for new

REF.No	Part No.	Description	Q'ty	S.No.	I/C	REMARKS	Weight (kgf)	Weight (lb)
010	32580-43710	CASE FRONT AXLE RH	1				0	0
020	32580-43720	CASE FRONT AXLE LH	1				0	0
030	06331-35010	PLUG	2				0.012	0.0264
040	04717-01000	WASHER SEAL	2				0.001	0.0022
050	32580-43730	BUSH	2				0.135	0.297
060	32580-43740	CAP	2				0	0
070	32580-43750	COVER OIL SEAL	2				0	0
080	32580-43760	O RING	2				0.005	0.011
090	01123-50820	BOLT	12				0.011	0.0242
100	32580-43770	SEAL OIL	2				0	0
110	32580-43780	SLEEVE	2				0	0
120	32580-43790	PLATE MUD GUARD	2				0.33	0.726
130	01023-50610	BOLT	12				0.005	0.011
140	06331-35016	PLUG	4				0.04	0.088
150	04717-01600	WASHER SEAL	4				0.003	0.0066

silverhorn.co.uk

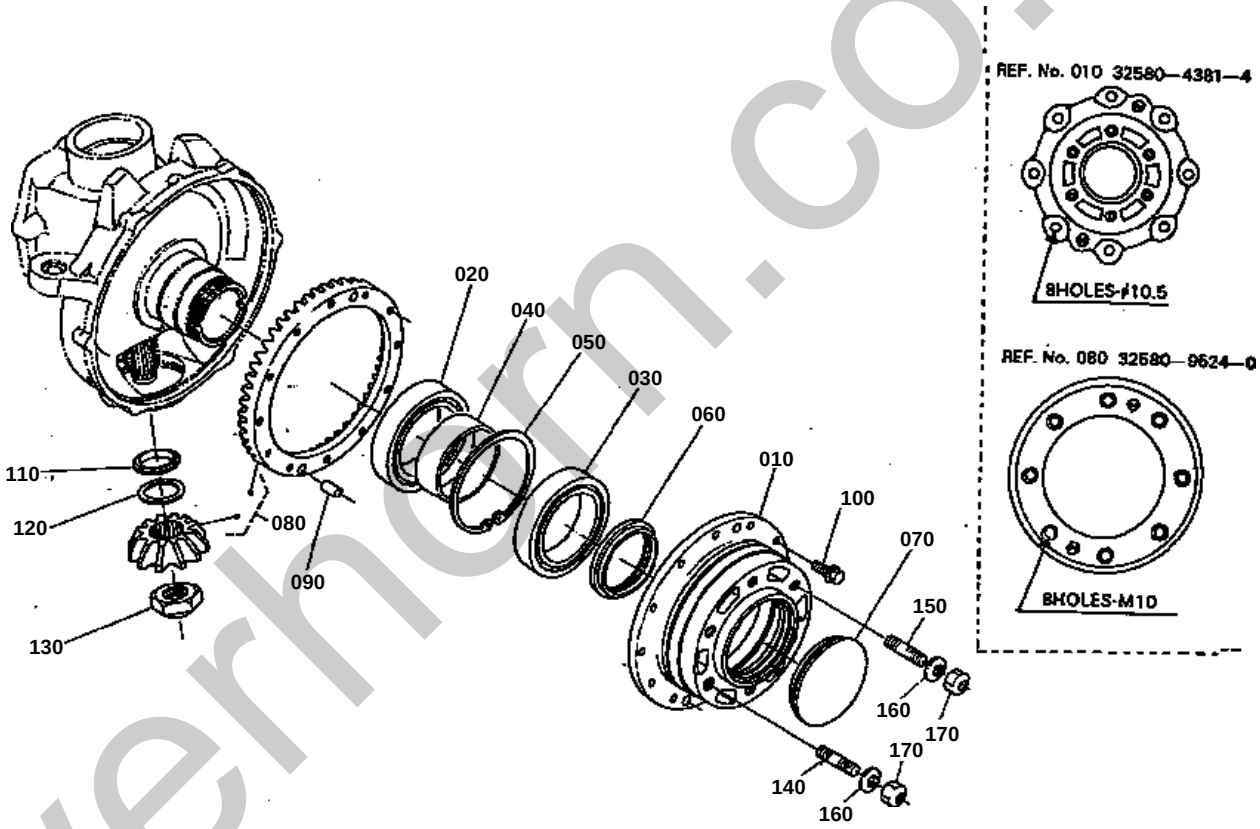

silverhorn.co.uk

FRONT AXLE

↔ Interchangeable; ≠ not interchangeable; ← new for old; → old for new

REF.No	Part No.	Description	Q'ty	S.No.	I/C	REMARKS	Weight (kgf)	Weight (lb)
010	32580-43814	AXLE FRONT	2	<=50277			0	0
010	32580-43815	AXLE FRONT	2	>=50278	≠		9	19.8
020	08101-06017	BEARING BALL	2				0.89	1.958
030	08101-06016	BEARING BALL	2				0.87	1.914
040	32580-43980	COLLAR	2				0.47	1.034
050	32580-43820	CIR-CLIP INTERNAL	2				0.1	0.22
060	32580-43830	NUT	2				0.115	0.253
070	32580-43840	CAP	2				0.12	0.264
080	32580-95240	ASSY GEAR BEVEL 12-4	2	<=50277			5	11
080	32580-95242	ASSY GEAR BEVEL 12-4	2	>=50278	≠		5.3	11.66
090	37300-26530	PIN STRAIGHT	4				0.03	0.066
100	32580-43950	BOLT	16	<=50277			0.03	0.066
100	32580-43950	BOLT	24	>=50278	≠		0.03	0.066
110	32580-43870	COLLAR	2				0.015	0.033
120	32580-43880	SHIM	4				0.002	0.0044
120	32580-43890	SHIM	4				0.004	0.0088
130	32580-43940	NUT	2				0.08	0.176
140	32580-44960	STUD	10				0.05	0.11
150	32580-44860	STUD	2				0.06	0.132
160	32580-44970	SPRING	12				0.025	0.055
170	32580-44940	NUT	12				0.05	0.11

silverhorn.co.uk

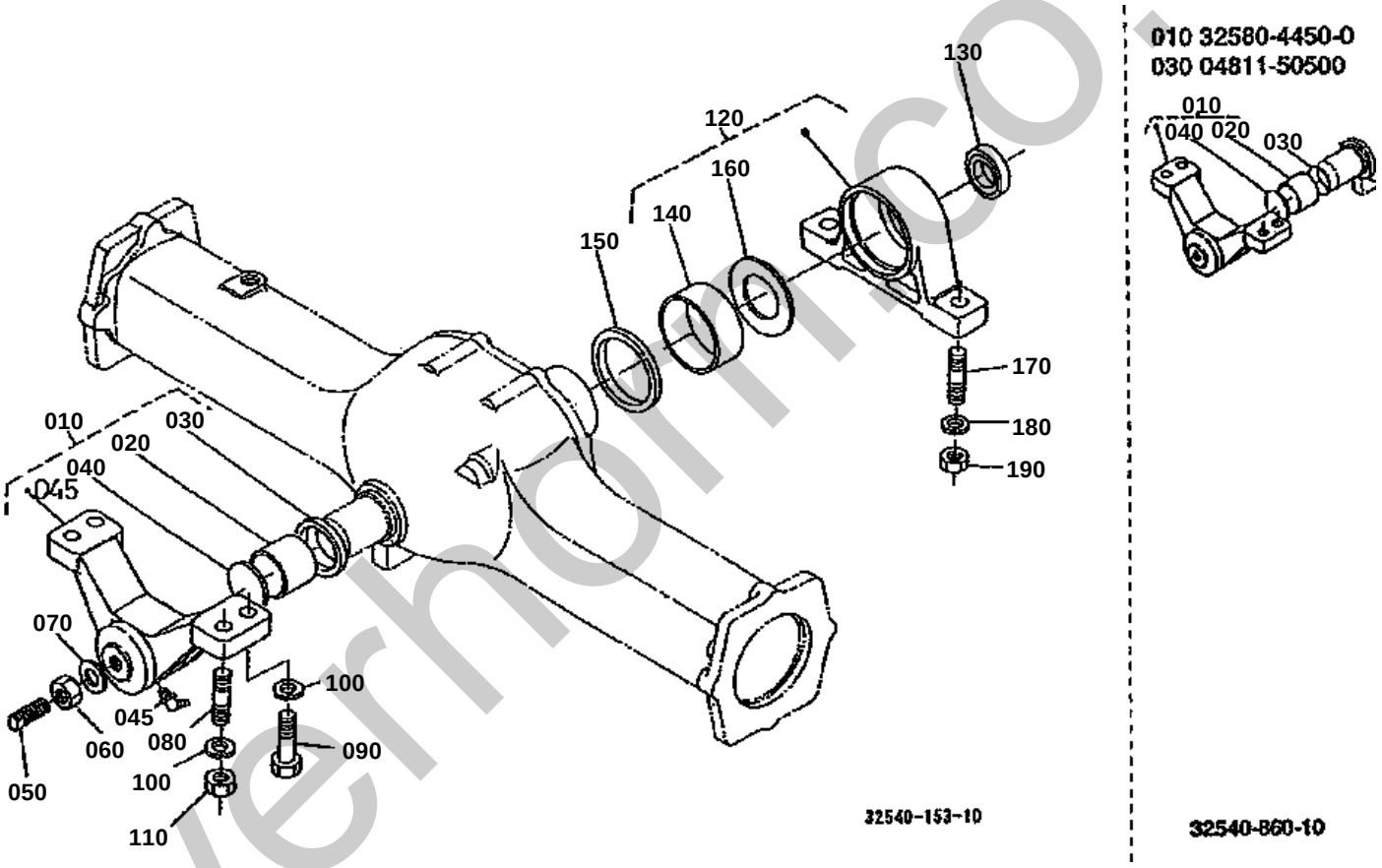

silverhomes.co.uk

FRONT AXLE SUPPORT

↔ Interchangeable; ≠ not interchangeable; ← new for old; → old for new

REF.No	Part No.	Description	Q'ty	S.No.	I/C	REMARKS	Weight (kgf)	Weight (lb)
010	32580-44500	ASSY SUPPORT FRONT A	1	<=60897		NOT SALE	0	0
010	32580-44502	ASSY SUPPORT FRONT A	1	>=60898	←		3.39	7.458
020	32580-44520	BUSH	1	<=60897			0.14	0.308
020	32590-44620	BUSH	1	>=60898	≠		0.118	0.2596
030	04811-50500	O RING	1	<=60897			0.001	0.0022
030	09230-50687	SEAL OIL	1	>=60898	≠		0.021	0.0462
040	32580-44530	COLLAR THRUST	1				0.055	0.121
045	06616-25010	NIPPLE GREASE	1	>=60898			0.008	0.0176
050	32580-44540	BOLT	1				0.05	0.11
060	32580-44580	NUT	1				0.1	0.22
070	38440-44750	WASHER SEAL	1				0.003	0.0066
080	01517-51640	STUD	2				0.09	0.198
080	01517-51645	STUD	2		↔		0	0
090	01173-51650	BOLT	2				0.099	0.2178
100	04512-50160	WASHER SPRING	4				0	0
110	02076-50160	NUT	2				0.03	0.066
120	32580-44600	ASSY SUPPORT FRONT A	1				1.2	2.64
130	32580-44590	SEAL OIL	1				0.02	0.044
140	32580-44560	BUSH	1				0.16	0.352
150	04811-50800	O RING	1				0.003	0.0066
160	32580-44570	COLLAR THRUST	1				0.09	0.198
170	01519-51848	STUD	2				0.15	0.33
180	04512-50180	WASHER SPRING	2				0	0
190	02176-50180	NUT	2				0.028	0.0616

silverhorn.co.uk

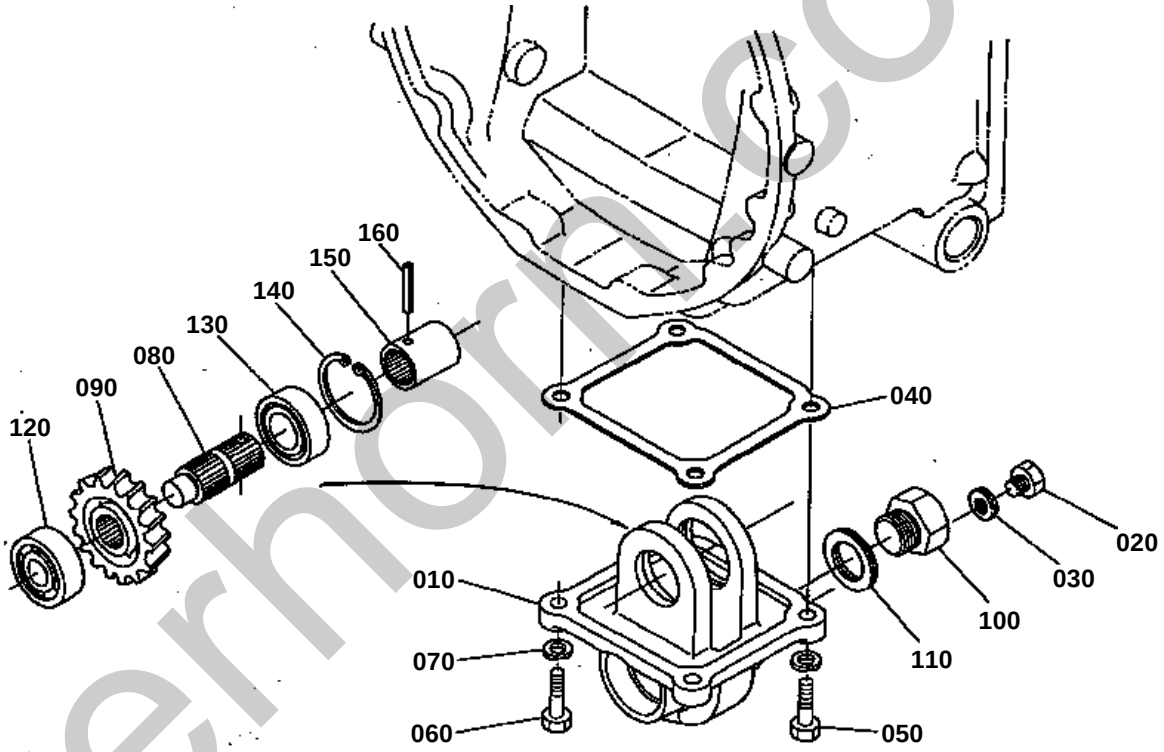

silverhorn.co.uk

FRONT WHEEL DRIVE CASE

↔ Interchangeable; ≠ not interchangeable; ← new for old; → old for new

REF.No	Part No.	Description	Q'ty	S.No.	I/C	REMARKS	Weight (kgf)	Weight (lb)
010	32580-44110	CASE	1				3.6	7.92
020	06331-35012	PLUG	1				0.022	0.0484
030	04717-01200	WASHER SEAL	1				0.002	0.0044
040	32580-44130	GASKET	1				0.005	0.011
050	32580-44120	BOLT REAMER	2				0	0
060	01133-51235	BOLT	2				0.05	0.11
070	04512-50120	WASHER SPRING	4				0	0
080	32580-44230	SHAFT	1				0.26	0.572
090	32580-44260	GEAR	1				0.52	1.144
100	32580-44390	PLUG	1				0.19	0.418
110	04717-03100	WASHER SEAL	1				0.006	0.0132
120	32580-44370	BEARING BALL	1				0	0
130	32580-44380	BEARING BALL	1				0	0
140	04611-00520	CIR-CLIP INTERNAL	1				0.009	0.0198
150	32580-44240	COUPLING	1				0.15	0.33
160	05411-00536	PIN SPRING	1				0.003	0.0066

silverhorn.co.uk

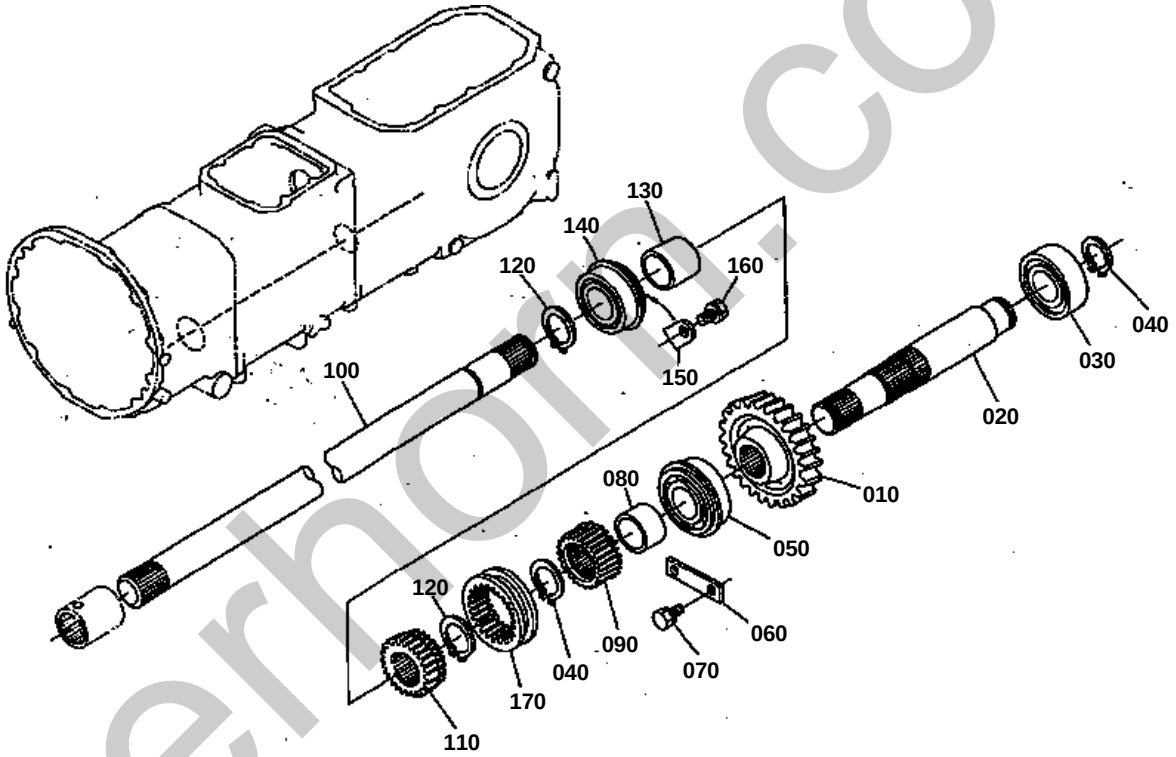

silverhorn.co.uk

FRONT COUNTER SHAFT

↔ Interchangeable; ≠ not interchangeable; ← new for old; → old for new

REF.No	Part No.	Description	Q'ty	S.No.	I/C	REMARKS	Weight (kgf)	Weight (lb)
010	32580-44150	GEAR	1				0.68	1.496
020	32580-44140	COUNTER SHAFT	1				1.1	2.42
030	08101-06305	BEARING BALL	1				0.23	0.506
040	04612-00250	CIR-CLIP EXTERNAL	2				0.002	0.0044
050	35260-23110	BEARING BALL	1				0.235	0.517
060	38430-25530	RETAINER BEARING	1				0.05	0.11
070	01123-50825	BOLT	2				0.013	0.0286
080	32580-44170	COLLAR	1				0.04	0.088
090	32580-44180	BOSS-SPRINE REAR	1				0.18	0.396
100	32580-44190	SHAFT	1				1.95	4.29
110	32580-44210	BOSS-SPRINE FRONT	1				0.18	0.396
120	04612-00250	CIR-CLIP EXTERNAL	2				0.002	0.0044
130	32580-44220	COLLAR	1				0.07	0.154
140	08151-06205	BEARING BALL	1				0.131	0.2882
150	34150-21942	RETAINER BEARING	1				0.035	0.077
160	01123-50820	BOLT	1				0.011	0.0242
170	38240-21750	SHIFTER	1				0.14	0.308

silverhorn.co.uk

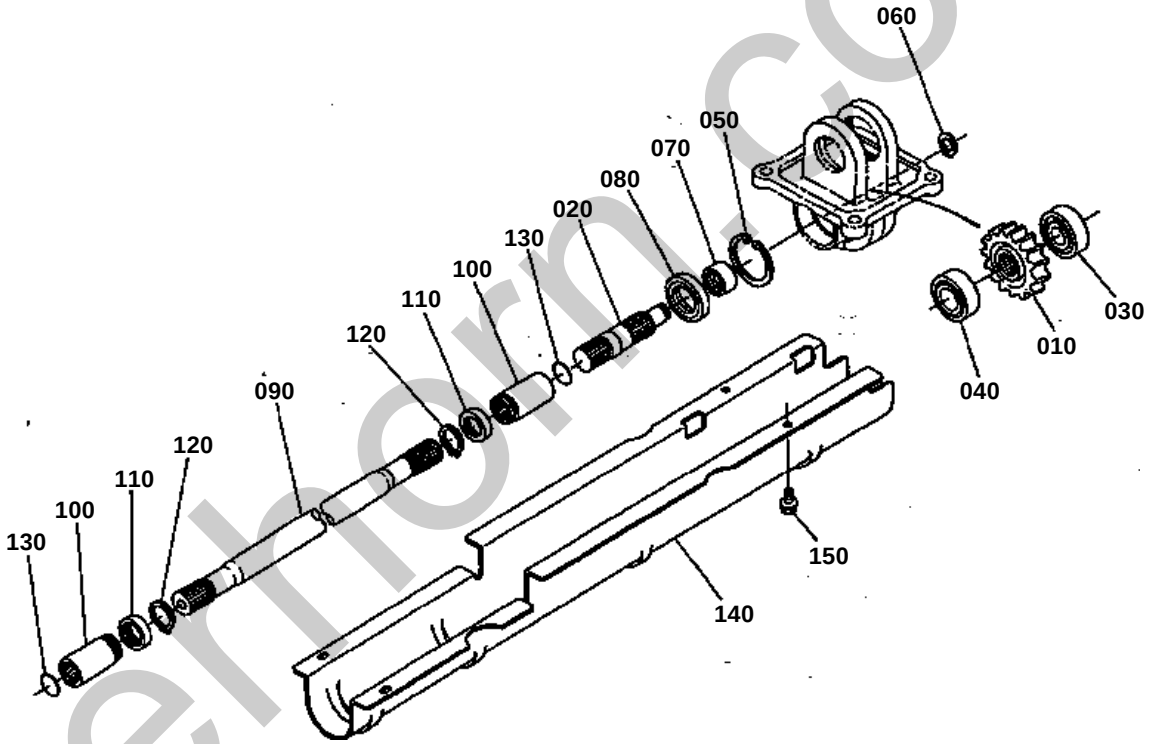

silverthorn.co.uk

PROPELLER SHAFT

↔ Interchangeable; ≠ not interchangeable; ← new for old; → old for new

REF.No	Part No.	Description	Q'ty	S.No.	I/C	REMARKS	Weight (kgf)	Weight (lb)
010	32580-44250	GEAR	1				0.45	0.99
020	32580-44270	SHAFT PROPELLER	1				0.41	0.902
030	32580-44370	BEARING BALL	1				0	0
040	32580-44380	BEARING BALL	1				0	0
050	04611-00520	CIR-CLIP INTERNAL	1				0.009	0.0198
060	04612-00200	CIR-CLIP EXTERNAL	1				0.001	0.0022
070	32580-44280	SLEEVE	1				0.02	0.044
080	09503-25211	SEAL OIL	1				0.024	0.0528
090	32580-44290	SHAFT PROPELLER	1				2.86	6.292
100	32580-44310	COUPLING	2				0.2	0.44
110	32580-44320	SEAL SPLINE	2				0.01	0.022
120	04612-00250	CIR-CLIP EXTERNAL	2				0.002	0.0044
130	04811-00210	O RING	2				0.001	0.0022
140	32580-44332	COVER SHAFT	1				0	0
150	01754-50812	BOLT FLANGE	4				0.01	0.022

silverhorn.co.uk

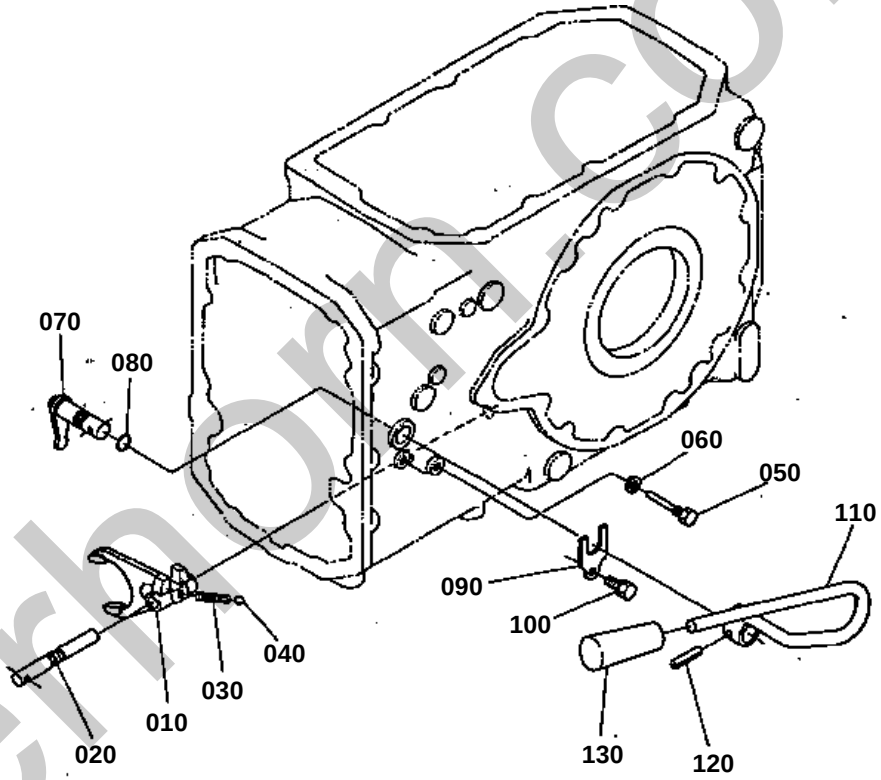

silverhorn.co.uk

FRONT WHEEL DRIVE LEVER

↔ Interchangeable; ≠ not interchangeable; ← new for old; → old for new

REF.No	Part No.	Description	Q'ty	S.No.	I/C	REMARKS	Weight (kgf)	Weight (lb)
010	32580-44410	FORK SHIFT	1				0.25	0.55
020	32580-44420	ROD FORK	1				0.09	0.198
030	62581-18230	SPRING STOPPER	1				0.01	0.022
040	07715-01605	BALL	1				0.003	0.0066
050	37150-23120	SCREW	1				0.02	0.044
060	04717-00800	WASHER SEAL	1				0.001	0.0022
070	32530-24820	LEVER SHIFT	1				0.18	0.396
080	04811-00150	O RING	1				0.001	0.0022
090	34150-24350	STOPPER LEVER	1				0.015	0.033
100	01123-50820	BOLT	1				0.011	0.0242
110	32580-44430	LEVER CHANGE	1				0	0
120	05411-00640	PIN SPRING	1				0.006	0.0132
130	06914-00140	GRIP LEVER	1				0.014	0.0308

silverhorn.co.uk

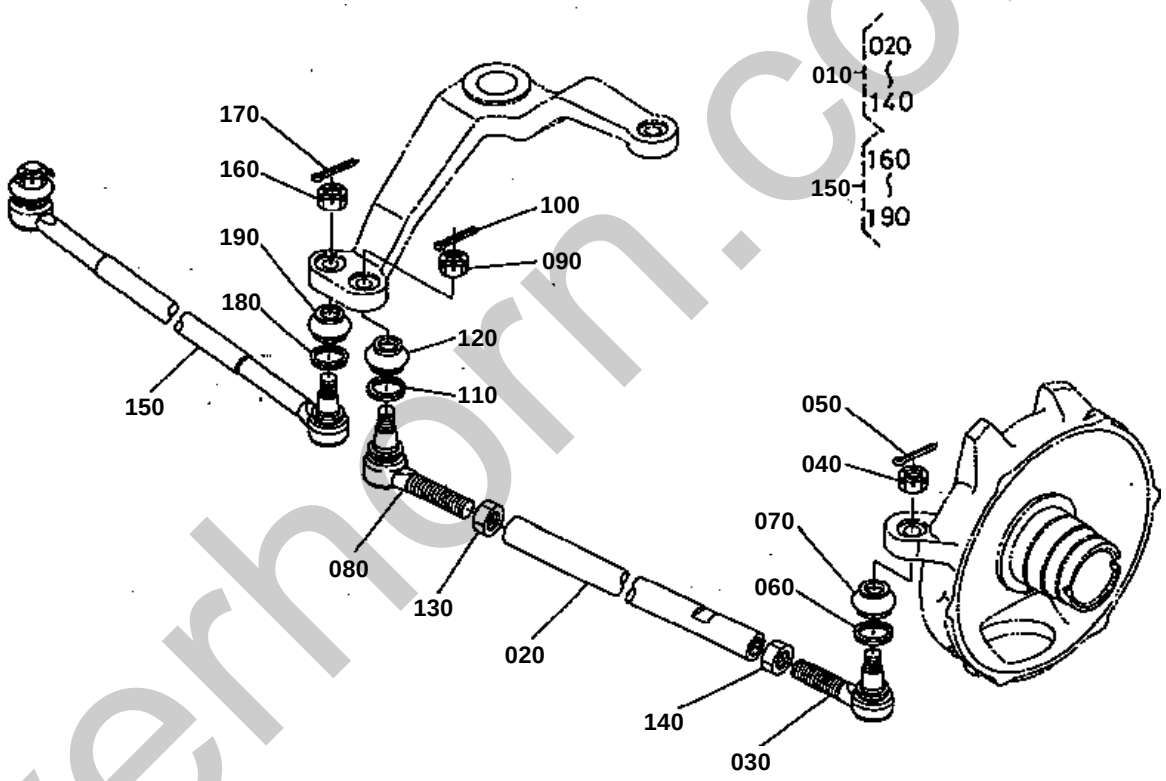

silverhorn.co.uk

TIE ROD

↔ Interchangeable; ≠ not interchangeable; ← new for old; → old for new

REF.No	Part No.	Description	Q'ty	S.No.	I/C	REMARKS	Weight (kgf)	Weight (lb)
010	32580-44700	ASSY ROD TIE LH	1				3.07	6.754
020	32580-44710	ROD TIE	1				2	4.4
030	32580-44750	COMP.END TIE ROD LH	1				0.5	1.1
040	35820-62750	NUT	1				0.05	0.11
050	05511-50328	PIN SPLIT	1				0.002	0.0044
060	35270-12660	CLIP	1				0.005	0.011
070	32580-44780	COVER DUST	1				0.01	0.022
080	32580-44770	COMP.END TIE ROD RH	1				0.49	1.078
090	35820-62750	NUT	1				0.05	0.11
100	05511-50328	PIN SPLIT	1				0.002	0.0044
110	35270-12660	CLIP	1				0.005	0.011
120	32580-44780	COVER DUST	1				0.01	0.022
130	38630-44980	NUT	1				0.01	0.022
140	02172-50200	NUT	1				0.03	0.066
150	32580-44790	COMP.ROD TIE RH	1				2.67	5.874
160	35820-62750	NUT	2				0.05	0.11
170	05511-50328	PIN SPLIT	2				0.002	0.0044
180	35270-12660	CLIP	2				0.005	0.011
190	32580-44780	COVER DUST	2				0.01	0.022

silverhorn.co.uk

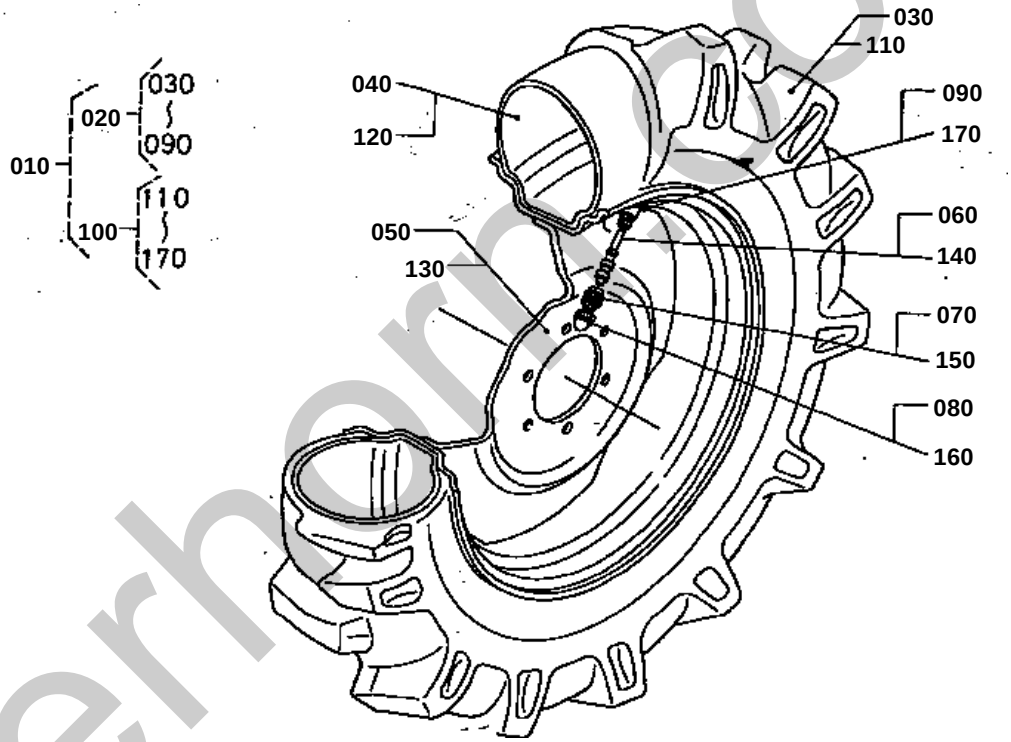

silverhorse.uk

↔ Interchangeable; ≠ not interchangeable; ← new for old; → old for new

REF.No	Part No.	Description	Q'ty	S.No.	I/C	REMARKS	Weight (kgf)	Weight (lb)
010	32580-44800	ASSY WHEEL FRONT	1				0	0
020	32580-44810	ASSY WHEEL FRONT RH	1				0	0
030	32580-44830	TIRE	1				21	46.2
040	35430-24120	TUBE	1				2.06	4.532
050	32580-44840	DISK RIM	1				20	44
060	32150-27740	CORE VALVE	1				0.003	0.0066
070	32270-27730	HOUSING VALVE CORE	1				0.014	0.0308
080	38240-11690	CAP VALVE	1				0.001	0.0022
090	32270-27710	NUT RIM	1				0.006	0.0132
100	32580-44820	ASSY WHEEL FRONT LH	1				0	0
110	32580-44830	TIRE	1				21	46.2
120	35430-24120	TUBE	1				2.06	4.532
130	32580-44840	DISK RIM	1				20	44
140	32150-27740	CORE VALVE	1				0.003	0.0066
150	32270-27730	HOUSING VALVE CORE	1				0.014	0.0308
160	38240-11690	CAP VALVE	1				0.001	0.0022
170	32270-27710	NUT RIM	1				0.006	0.0132

silverhorn.co.uk

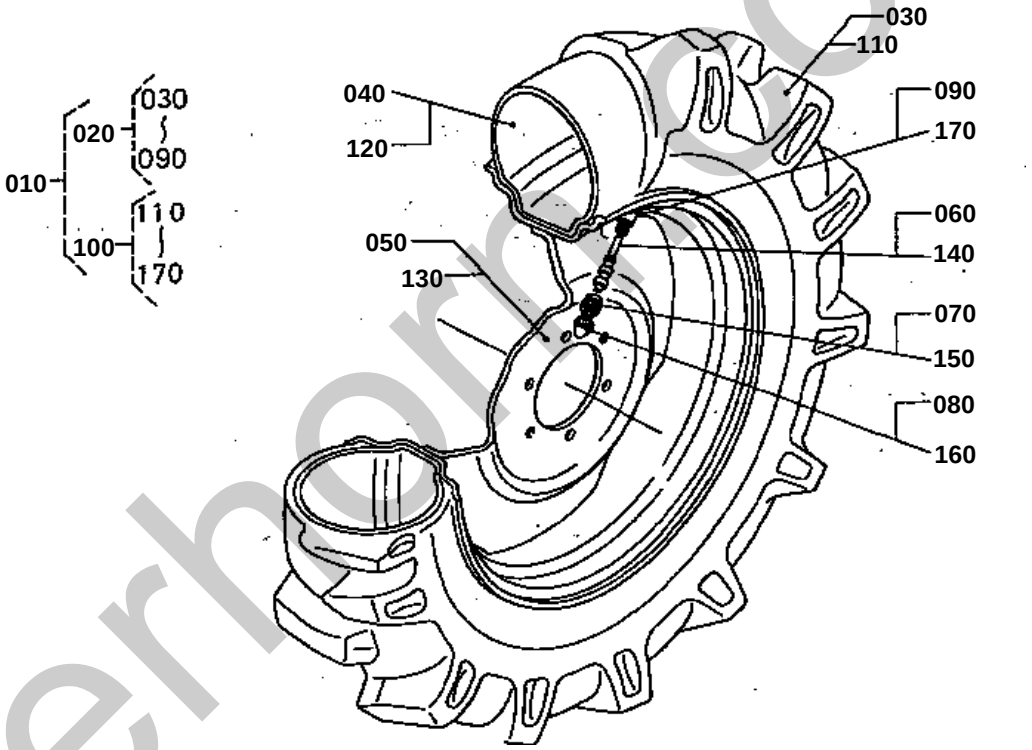

silverhorse.co.uk

FRONT WHEEL (9.5-20) [OPTION]

↔ Interchangeable; ≠ not interchangeable; ← new for old; → old for new

REF.No	Part No.	Description	Q'ty	S.No.	I/C	REMARKS	Weight (kgf)	Weight (lb)
010	32580-44900	ASSY WHEEL FRONT	1				88	193.6
020	32580-44910	ASSY WHEEL FRONT RH	1				44	96.8
030	32580-44930	TIRE	1				23	50.6
040	35787-49220	TUBE TIRE	1				1.95	4.29
050	32580-44840	DISK RIM	1				20	44
060	32150-27740	CORE VALVE	1				0.003	0.0066
070	32270-27730	HOUSING VALVE CORE	1				0.014	0.0308
080	38240-11690	CAP VALVE	1				0.001	0.0022
090	32270-27710	NUT RIM	1				0.006	0.0132
100	32580-44920	ASSY WHEEL FRONT LH	1				0	0
110	32580-44930	TIRE	1				23	50.6
120	35787-49220	TUBE TIRE	1				1.95	4.29
130	32580-44840	DISK RIM	1				20	44
140	32150-27740	CORE VALVE	1				0.003	0.0066
150	32270-27730	HOUSING VALVE CORE	1				0.014	0.0308
160	38240-11690	CAP VALVE	1				0.001	0.0022
170	32270-27710	NUT RIM	1				0.006	0.0132

silverhorn.co.uk

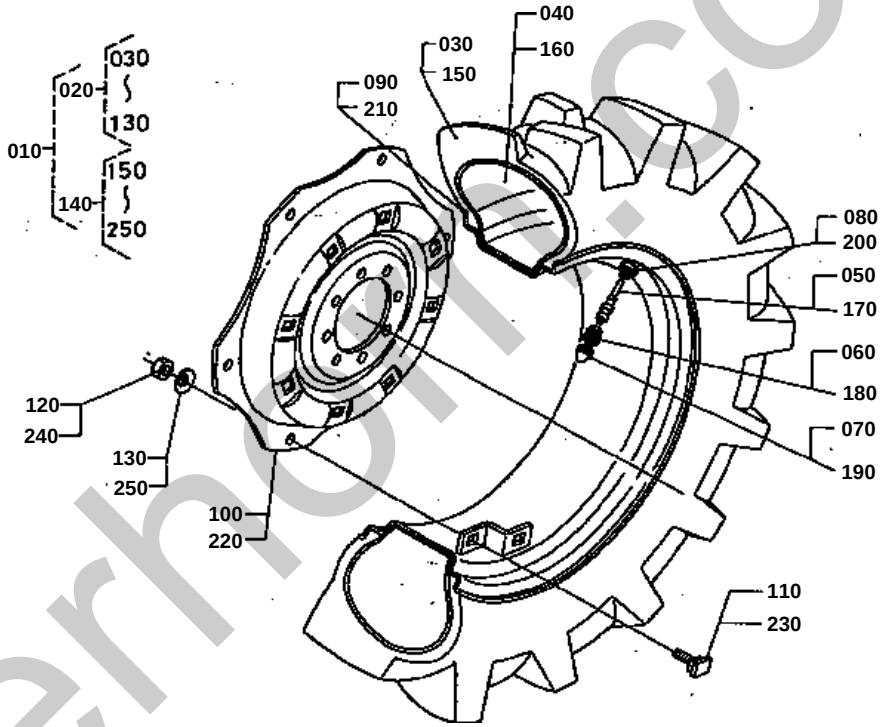

silverhorn.co.uk

REAR WHEEL (13.6-28) [OPTION]

↔ Interchangeable; ≠ not interchangeable; ← new for old; → old for new

REF.No	Part No.	Description	Q'ty	S.No.	I/C	REMARKS	Weight (kgf)	Weight (lb)
010	32520-27800	ASSY WHEEL REAR	1				0	0
020	32520-27810	ASSY WHEEL REAR RH	1				0	0
030	35340-27620	TIRE	1				49	107.8
040	35340-27630	TUBE	1				0	0
050	32150-27740	CORE VALVE	1				0.003	0.0066
060	32270-27730	HOUSING VALVE CORE	1				0.014	0.0308
070	38240-11690	CAP VALVE	1				0.001	0.0022
080	32270-27710	NUT RIM	1				0.006	0.0132
090	35422-49110	RIM REAR WHEEL	1				26.5	58.3
100	32530-27850	DISK REAR WHEEL	1				0	0
110	36200-49380	BOLT	6				0.146	0.3212
120	36500-49390	NUT	6				0.043	0.0946
130	36500-49410	SPRING	6				0.024	0.0528
140	32520-27910	ASSY WHEEL REAR LH	1				0	0
150	35340-27620	TIRE	1				49	107.8
160	35340-27630	TUBE	1				0	0
170	32150-27740	CORE VALVE	1				0.003	0.0066
180	32270-27730	HOUSING VALVE CORE	1				0.014	0.0308
190	38240-11690	CAP VALVE	1				0.001	0.0022
200	32270-27710	NUT RIM	1				0.006	0.0132
210	35422-49110	RIM REAR WHEEL	1				26.5	58.3
220	32530-27850	DISK REAR WHEEL	1				0	0
230	36200-49380	BOLT	6				0.146	0.3212
240	36500-49390	NUT	6				0.043	0.0946
250	36500-49410	SPRING	6				0.024	0.0528

silverhorn.co.uk

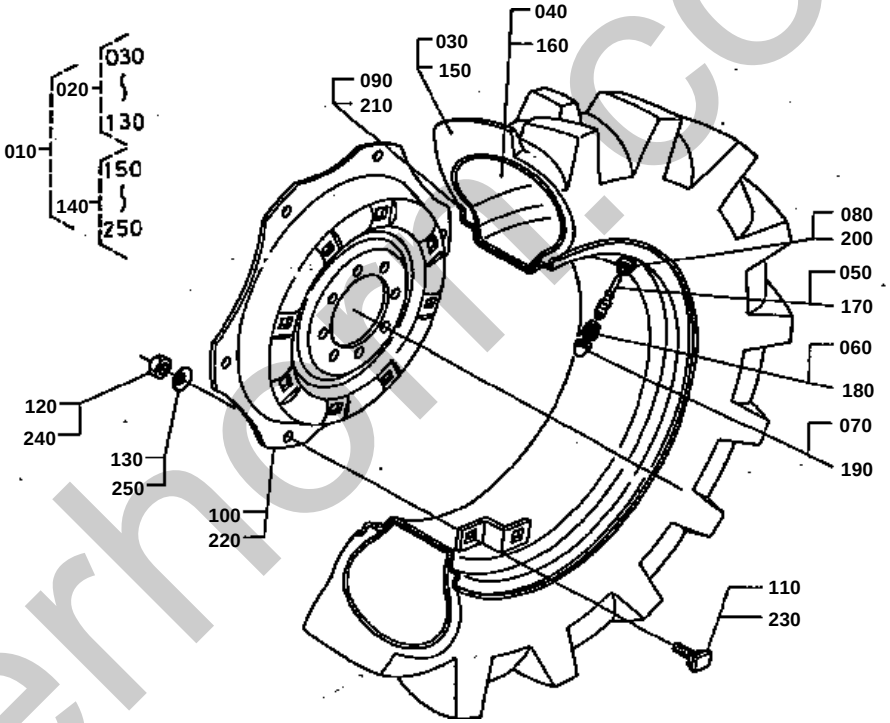

silverhorn.co.uk

REAR WHEEL (14.9-28) [OPTION]

↔ Interchangeable; ≠ not interchangeable; ← new for old; → old for new

REF.No	Part No.	Description	Q'ty	S.No.	I/C	REMARKS	Weight (kgf)	Weight (lb)
010	32530-27800	ASSY WHEEL REAR	1				254	558.8
020	32530-27810	ASSY WHEEL REAR RH	1				127	279.4
030	32530-27820	TIRE	1				58	127.6
040	36332-49320	TUBE TIRE	1				7.4	16.28
050	32150-27740	CORE VALVE	1				0.003	0.0066
060	32270-27730	HOUSING VALVE CORE	1				0.014	0.0308
070	38240-11690	CAP VALVE	1				0.001	0.0022
080	32270-27710	NUT RIM	1				0.006	0.0132
090	99654-25130	RIM REAR WHEEL	1				0	0
100	32530-27850	DISK REAR WHEEL	1				0	0
110	36200-49380	BOLT	6				0.146	0.3212
120	36500-49390	NUT	6				0.043	0.0946
130	36500-49410	SPRING	6				0.024	0.0528
140	32530-27910	ASSY WHEEL REAR LH	1				0	0
150	32530-27820	TIRE	1				58	127.6
160	36332-49320	TUBE TIRE	1				7.4	16.28
170	32150-27740	CORE VALVE	1				0.003	0.0066
180	32270-27730	HOUSING VALVE CORE	1				0.014	0.0308
190	38240-11690	CAP VALVE	1				0.001	0.0022
200	32270-27710	NUT RIM	1				0.006	0.0132
210	99654-25130	RIM REAR WHEEL	1				0	0
220	32530-27850	DISK REAR WHEEL	1				0	0
230	36200-49380	BOLT	6				0.146	0.3212
240	36500-49390	NUT	6				0.043	0.0946
250	36500-49410	SPRING	6				0.024	0.0528

silverhorn.co.uk

IMAGE NOT AVAILABLE

silverhorn.co.uk

↔ Interchangeable; ≠ not interchangeable; ← new for old; → old for new

REF.No	Part No.	Description	Q'ty	S.No.	I/C	REMARKS	Weight (kgf)	Weight (lb)
010	32530-19712	MANUAL INSTRUCTION	1				0	0
020	32530-19750	MANUAL CONSTRUCTION	1				0	0
030	36330-75380	LINK FUSIBLE	1				0.01	0.022
040	02176-50140	NUT	2				0.014	0.0308
050	02176-50160	NUT	2				0.021	0.0462

silverhorn.co.uk