Instructions for Parts Books

The heading at the top of the page will be the same for the picture of the parts at it is for the page with the part numbers.

Definition of column headings on part number pages:

REF.No → The number refering to the part on the picture page of the parts book.

Part No. → The number assigned to this part at the time of printing the parts book.

Description → Discription of part.

Q'ty → Quanity of part used on that page.

S.No. → Serial number range of the equipment that this part will fit.
>= Your serial number should be greater than or equal to the number shown.
<= Your serial number should be lesser than or equal to the serial number shown.

I/C → Interchangeability of part shown.
←→ The part shown will work for the older and later serial number.
The part shown is not interchangable with the other serial number.
← new for old
→ old for new

Remarks → Notes about this particulart part. Sometimes this may say except [FR] or [CA]

Note about Country Codes:

The parts books we use in the United States of America may also contain information about a part that would be different in another country. It is important that you are aware of the country codes in some instances.

Symbol	Country
A	United States of America
CA	Canada
FR	France
GR	Greece
PO	Portugal
AU	Australia

If the remarks column says for example EXCEPT [FR] this part works in all countries except France.
That means it will work here in the USA.

silverhorn.co.uk

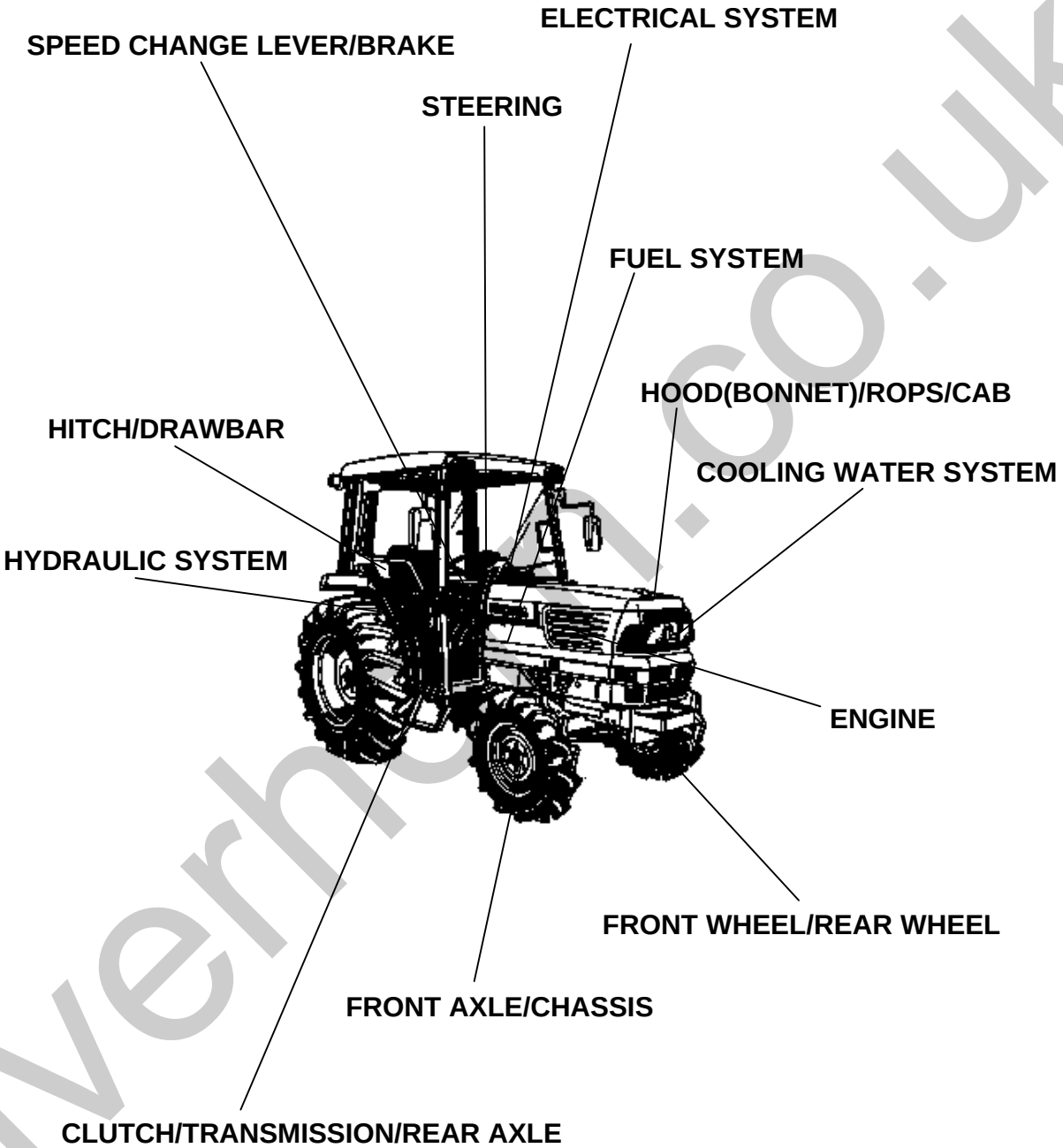

LABELS

ACCESSORIES

OPTION

silverhill.co.uk

Item	Part No.	Description	Book
ENGINE	010001	CRANKCASE	100K0489
	010002	OIL PAN	100K0489
	010003	CYLINDER HEAD	100K0489
	010004	GEAR CASE	100K0489
	010005	HEAD COVER	100K0489
	010100	MAIN BEARING CASE	100K0489
	010101	CAMSHAFT AND IDLE GEAR SHAFT	100K0489
	010102	PISTON AND CRANKSHAFT	100K0489
	01010301	FLYWHEEL [W/O IND-PTO]	100K0489
	01010303	FLYWHEEL [WITH IND-PTO]	100K0489
	010105	FUEL CAMSHAFT	100K0489
	010200	ENGINE STOP LEVER	100K0489
	010202	INJECTION PUMP	100K0489
	010203	INJECTION PUMP [COMPONENT PARTS]	100K0489
	010204	GOVERNOR	100K0489
	010205	SPEED CONTROL PLATE	100K0489
	010206	NOZZLE HOLDER AND GLOW PLUG	100K0489
	010207	NOZZLE HOLDER [COMPONENT PARTS]	100K0489
	01050001	WATER FLANGE AND THERMOSTAT [ROPS TYPE]	100K0489
	010501	WATER PUMP	100K0489
	010600	VALVE AND ROCKER ARM	100K0489
	01060101	INLET MANIFOLD [ROPS TYPE]	100K0489
	01090101	UPPER GASKET KIT	100K0489
	010902	LOWER GASKET KIT	100K0489
	010603	EXHAUST MANIFOLD/MUFFLER	100K0489
	01060401	AIR CLEANER [ROPS TYPE] [OLD TYPE]	100K0489
	01060402	AIR CLEANER [ROPS TYPE] [NEW TYPE]	100K0489
	01A002	STOP SOLENOIDE/ENGINE STOP WIRE	100K0489
	01A01001	ACCELERATOR LEVER [EXCEPT HST TYPE] [ROPS TYPE]	100K0489
	01A01002	ACCELERATOR LEVER [HST TYPE] [ROPS TYPE]	100K0489
	01A025	ACCELERATOR LINKAGE [EXCEPT HST TYPE]	100K0489
	01A03001	ACCELERATOR ROD [EXCEPT HST TYPE] [ROPS TYPE]	100K0489
	01A03003	ACCELERATOR ROD [HST TYPE]	100K0489
FUEL SYSTEM	01A10101	FUEL TANK [ROPS TYPE]	100K0489
	01A110	FUEL PIPE AND FUEL FILTER	100K0489
	01A130	FUEL FILTER [COMPONENT PARTS]	100K0489
COOLING WATER SYSTEM	01A401	FAN	100K0489
	01A41001	WATER PIPE [ROPS TYPE]	100K0489
	01A420	RADIATOR	100K0489
	01A43001	RESERVE TANK [ROPS TYPE]	100K0489
ELECTRICAL SYSTEM	01A51501	ALTERNATOR [ROPS TYPE]	100K0489
	01A52001	ALTERNATOR [COMPONENT PARTS] [ROPS TYPE]	100K0489
	01A525	STARTER	100K0489
	01A530	STARTER [COMPONENT PARTS]	100K0489
	01A53501	BATTERY [ROPS TYPE]	100K0489
	01B10201	SWITCH 1 [EXCEPT HST TYPE] [ROPS TYPE] [OLD TYPE]	100K0489
	01B10202	SWITCH 1 [EXCEPT HST TYPE] [ROPS TYPE] [NEW TYPE]	100K0489
	01B10203	SWITCH 1 [HST TYPE] [ROPS TYPE] [OLD TYPE]	100K0489
	01B10204	SWITCH 1 [HST TYPE] [ROPS TYPE] [NEW TYPE]	100K0489
	01B10301	SWITCH 2 [EXCEPT HST TYPE] [ROPS TYPE]	100K0489
	01B10302	SWITCH 2 [HST TYPE] [ROPS TYPE]	100K0489
	01B115	PANEL BOARD	100K0489
	01B120	PANEL BOARD [COMPONENT PARTS]	100K0489
	01B30401	LIGHT 1 [ROPS TYPE] [OLD TYPE]	100K0489

silverhorse.co.uk

Item	Part No.	Description	Book
ELECTRICAL SYSTEM	01B30402	LIGHT 1 [ROPS TYPE] [NEW TYPE]	100K0489
	01B50101	ELECTRICAL WIRING [EXCEPT HST TYPE] [ROPS TYPE]	100K0489
	01B50102	ELECTRICAL WIRING [EXCEPT HST TYPE] [ROPS TYPE]	100K0489
	01B50103	ELECTRICAL WIRING [HST TYPE] [ROPS TYPE][OLD TYPE]	100K0489
	01B50104	ELECTRICAL WIRING [HST TYPE] [ROPS TYPE][OLD TYPE]	100K0489
	01B50105	ELECTRICAL WIRING [HST TYPE] [ROPS TYPE][NEW TYPE]	100K0489
CLUTCH/TRANSMISSION/REAR AXLE	01C101	CLUTCH	100K0489
	01C201	CLUTCH LEVER	100K0489
	01C30101	CLUTCH PEDAL [EXCEPT HST TYPE] [ROPS TYPE]	100K0489
	01C30102	CLUTCH PEDAL [HST TYPE] [ROPS TYPE]	100K0489
	01C40101	CLUTCH HOUSING [MANUAL T/M TYPE]	100K0489
	01C40103	CLUTCH HOUSING [GST TYPE]	100K0489
	01C40104	CLUTCH HOUSING [HST TYPE]	100K0489
	01C405	GST VALVE [GST TYPE]	100K0489
	01C406	GST VALVE [GST TYPE] [COMPONENT PARTS]	100K0489
	01C407	GST VALVE [GST TYPE] [COMPONENT PARTS]	100K0489
	01C408	GST VALVE [GST TYPE] [COMPONENT PARTS]	100K0489
	01C41001	MID CASE [MANUAL T/M TYPE] [WITH IND-PTO]]	100K0489
	01C41002	MID CASE [GST TYPE] [W/O IND-PTO]	100K0489
	01C41004	MID CASE [HST TYPE] [OLD TYPE]	100K0489
	01C41005	MID CASE [HST TYPE] [NEW TYPE]	100K0489
	01C415	HST [COMPONENT PARTS] [HST TYPE]	100K0489
	01C42001	TRANSMISSION CASE [MANUAL T/M TYPE] [W/O MID PTO]	100K0489
	01C42003	TRANSMISSION CASE [GST TYPE] [W/O MID PTO]	100K0489
	01C42004	TRANSMISSION CASE [HST TYPE] [WITH MID PTO]	100K0489
	01D10101	MAIN SHAFT [EXCEPT HST TYPE] [W/O IND-PTO]	100K0489
	01D10102	MAIN SHAFT [EXCEPT HST TYPE] [WITH IND-PTO]	100K0489
	01D10103	MAIN SHAFT [HST TYPE]	100K0489
	01D103	INPUT SHAFT [HST TYPE]	100K0489
	01D10501	COUNTERSHAFT [MANUAL T/M TYPE]	100K0489
	01D10502	COUNTERSHAFT [GST TYPE]	100K0489
	01D107	OUTPUT SHAFT [HST TYPE]	100K0489
	01D11001	HYDRAULIC CLUTCH [GST TYPE] [W/O IND-PTO]	100K0489
	01D11501	SHUTTLE SHAFT [MANUAL T/M TYPE]	100K0489
	01D11502	SHUTTLE SHAFT [GST TYPE]	100K0489
	01D11701	RANGE GEAR SHAFT [MANUAL T/M TYPE]	100K0489
	01D11702	RANGE GEAR SHAFT [GST TYPE]	100K0489
	01D12503	SPIRAL BEVEL PINION [EXCEPT HST TYPE] [W/O CREEP]	100K0489
	01D12504	SPIRAL BEVEL PINION [EXCEPT HST TYPE][WITH CREEP]	100K0489
	01D12505	SPIRAL BEVEL PINION [HST TYPE]	100K0489
	01D127	REAR DIFFERENTIAL	100K0489
	01D13001	PTO COUNTERSHAFT [EXCEPT HST TYPE] [WITH IND-PTO]	100K0489
	01D13002	PTO COUNTERSHAFT [EXCEPT HST TYPE] [W/O IND-PTO]	100K0489
	01D13201	PTO CLUTCH [EXCEPT HST TYPE] [WITH IND-PTO]	100K0489
	01D13202	PTO CLUTCH [EXCEPT HST TYPE] [W/O IND-PTO]	100K0489

silverhorse.co.uk

Item	Part No.	Description	Book
CLUTCH/TRANSMISSION/REAR AXLE	01D13203	PTO CLUTCH [HST TYPE] [W/O IND-PTO]	100K0489
	01D13502	PTO SHAFT [EXCEPT HST TYPE] [W/O MID PTO]	100K0489
	01D13503	PTO SHAFT [HST TYPE] [WITH MID PTO]	100K0489
	01D137	MID PTO [WITH MID PTO]	100K0489
	01D20101	MAIN GEAR SHIFT FORK [MANUAL T/M TYPE]	100K0489
	01D20102	MAIN GEAR SHIFT FORK [GST TYPE]	100K0489
	01D20501	SHUTTLE SHIFT FORK [MANUAL T/M TYPE]	100K0489
	01D20502	SHUTTLE SHIFT FORK [GST TYPE]	100K0489
	01D21501	RANGE GEAR SHIFT FORK/CREEP GEAR SHIFT FORK	100K0489
	01D21502	RANGE GEAR SHIFT FORK/CREEP GEAR SHIFT FORK	100K0489
	01D217	RANGE GEAR SHIFT FORK [HST TYPE]	100K0489
	01D22501	DIFFERENTIAL LOCK SHIFT FORK [EXCEPT HST TYPE]	100K0489
	01D22502	DIFFERENTIAL LOCK SHIFT FORK [HST TYPE]	100K0489
	01D30101	REAR AXLE [ROPS TYPE]	100K0489
SPEED CHANGE LEVER/BRAKE	01D401	BRAKE	100K0489
	01D40501	BRAKE ROD 1 [EXCEPT HST TYPE] [ROPS TYPE]	100K0489
	01D40502	BRAKE ROD 1 [HST TYPE] [ROPS TYPE]	100K0489
	01D41001	BRAKE ROD 2 [MANUAL T/M TYPE]	100K0489
	01D41002	BRAKE ROD 2 [GST TYPE]	100K0489
	01D41003	BRAKE ROD 2 [HST TYPE]	100K0489
	01E10101	MAIN GEAR SHIFT LEVER [MANUAL T/M TYPE]	100K0489
	01E10102	MAIN GEAR SHIFT LEVER [GST TYPE] [ROPS TYPE]	100K0489
	01E10501	SHUTTLE SHIFT LEVER [EXCEPT HST TYPE] [ROPS TYPE]	100K0489
	01E106	CRUISE CONTROL LEVER [HST TYPE]	100K0489
	01E107	CRUISE CONTROL CABLE [HST TYPE]	100K0489
	01E108	NEUTRAL HOLDER LINK [HST TYPE]	100K0489
	01E10901	SPEED CONTROL PEDAL [HST TYPE] [ROPS TYPE]	100K0489
	01E11001	RANGE GEAR SHIFT LEVER [MANUAL T/M TYPE]	100K0489
	01E11002	RANGE GEAR SHIFT LEVER [HST TYPE] [ROPS TYPE]	100K0489
	01E111	RANGE GEAR SHIFT LEVER/CREEP GEAR SHIFT LEVER	100K0489
	01E11201	RANGE GEAR SHIFT ROD [HST TYPE] [OLD TYPE]	100K0489
	01E11202	RANGE GEAR SHIFT ROD [HST TYPE] [NEW TYPE]	100K0489
	01E115	CREEP GEAR SHIFT LEVER [GST TYPE] [WITH CREEP]	100K0489
	01E122	PTO CLUTCH CONTROL LEVER [WITH IND-PTO]	100K0489
	01E12501	PTO GEAR SHIFT LEVER [EXCEPT HST TYPE]	100K0489
	01E12502	PTO GEAR SHIFT LEVER [HST TYPE]	100K0489
	01E127	PTO CLUTCH VALVE [COMPONENT PARTS] [WITH IND-PTO]	100K0489
	01E129	MID PTO SHIFT LEVER [MID PTO TYPE]	100K0489
	01E140	FRONT WHEEL DRIVE LEVER	100K0489
	01E20101	BRAKE PEDAL [EXCEPT HST TYPE] [ROPS TYPE]	100K0489
	01E20102	BRAKE PEDAL [HST TYPE] [ROPS TYPE]	100K0489
FRONT AXLE/CHASSIS	01F10502	FRONT AXLE FRAME	100K0489
	01F120	PROPELLER SHAFT	100K0489
	01F12201	FRONT WHEEL DRIVE SHAFT [W/O MID PTO]	100K0489
	01F12202	FRONT WHEEL DRIVE SHAFT [WITH MID PTO]	100K0489
	01F125	FRONT DIFFERENTIAL CASE	100K0489
	01F135	FRONT DIFFERENTIAL	100K0489

silverhorn.co.uk

Item	Part No.	Description	Book
FRONT AXLE/CHASSIS	01F140	FRONT AXLE CASE	100K0489
	01F145	DIFFERENTIAL GEAR SHAFT	100K0489
	01F150	FRONT AXLE	100K0489
STEERING	01G10101	STEERING HANDLE [EXCEPT HST TYPE] [ROPS TYPE]	100K0489
	01G10102	STEERING HANDLE [HST TYPE] [ROPS TYPE]	100K0489
	01G110	STEERING CONTROLLER	100K0489
	01G12002	STEERING LINKAGE	100K0489
	01H11002	STEERING CYLINDER	100K0489
	01H115	STEERING CYLINDER [COMPONENT PARTS]	100K0489
HYDRAULIC SYSTEM	01H12001	HYDRAULIC PUMP [EXCEPT HST TYPE]	100K0489
	01H12002	HYDRAULIC PUMP [HST TYPE]	100K0489
	01H12501	HYDRAULIC PUMP [COMPONENT PARTS] [EXCEPT HST TYPE]	100K0489
	01H12502	HYDRAULIC PUMP [COMPONENT PARTS] [HST TYPE]	100K0489
	01H145	REGULATOR VALVE [EXCEPT HST TYPE]	100K0489
	01H20501	HYDRAULIC OIL LINE(INLET) [EXCEPT HST TYPE]	100K0489
	01H20502	HYDRAULIC OIL LINE(INLET) [HST TYPE]	100K0489
	01H21001	HYDRAULIC OIL LINE(DELIVERY) [EXCEPT HST TYPE]	100K0489
	01H21002	HYDRAULIC OIL LINE(DELIVERY) [HST TYPE]	100K0489
	01H21501	HYDRAULIC OIL LINE(PS) [EXCEPT HST TYPE]	100K0489
	01H21502	HYDRAULIC OIL LINE(PS) [HST TYPE]	100K0489
	01H23001	PTO HYDRAULIC OIL LINE [MANUAL T/M TYPE]	100K0489
	01H23002	PTO HYDRAULIC OIL LINE [GST TYPE] [W/O IND-PTO]	100K0489
	01H23501	HYDRAULIC OUTLET BLOCK [EXCEPT HST TYPE]	100K0489
	01H23502	HYDRAULIC OUTLET BLOCK [HST TYPE]	100K0489
	01H240	HYDRAULIC PIPE [HST TYPE]	100K0489
	01H24501	OIL COOLER [HST TYPE] [OLD TYPE]	100K0489
	01H24502	OIL COOLER [HST TYPE] [NEW TYPE]	100K0489
	01H301	HYDRAULIC CYLINDER	100K0489
	01H320	LIFT ARM	100K0489
	01H330	FEED BACK LEVER	100K0489
	01H405	CONTROL VALVE	100K0489
	01H410	CONTROL VALVE [COMPONENT PARTS] [OLD TYPE]	100K0489
	01H41001	CONTROL VALVE [COMPONENT PARTS] [NEW TYPE]	100K0489
	01H44001	POSITION CONTROL LEVER [ROPS TYPE]	100K0489
	01J105	TOP LINK	100K0489
	01J11001	3-POINT LINKAGE 1(LOWER LINK) [OLD TYPE]	100K0489
	01J11002	3-POINT LINKAGE 1(LOWER LINK) [NEW TYPE]	100K0489
	01J115	3-POINT LINKAGE 2(LIFT ROD)	100K0489
HITCH/DRAWBAR	01K105	DRAWBAR	100K0489
	01K12501	PTO PROTECTOR [ROPS TYPE]	100K0489
HOOD(BONNET)/ROPS/CAB	01L101	FRONT GRILLE	100K0489
	01L10301	FRONT GRILLE SUPPORT [EXCEPT HST TYPE]	100K0489
	01L10302	FRONT GRILLE SUPPORT [HST TYPE] [ROPS TYPE]	100K0489
	01L10501	HOOD(BONNET) [ROPS TYPE]	100K0489
	01L111	HOOD(BONNET) SIDE RH	100K0489
	01L113	HOOD(BONNET) SIDE LH	100K0489
	01L11501	SIDE COVER LOWER [ROPS TYPE]	100K0489
	01L13001	SHUTTER PLATE [ROPS TYPE]	100K0489
	01L20101	PANEL FRAME [EXCEPT HST TYPE] [ROPS TYPE]	100K0489

silverhorn.co.uk

Item	Part No.	Description	Book
HOOD(BONNET)/ROPS/CAB	01L20102	PANEL FRAME [HST TYPE] [ROPS TYPE]	100K0489
	01L21001	FENDER [MANUAL T/M TYPE]	100K0489
	01L21002	FENDER [GST TYPE] [ROPS TYPE]	100K0489
	01L21003	FENDER [HST TYPE] [ROPS TYPE]	100K0489
	01L21501	FLOOR SEAT [EXCEPT HST TYPE] [ROPS TYPE]	100K0489
	01L21502	FLOOR SEAT [HST TYPE] [ROPS TYPE]	100K0489
	01L22001	SEAT [ROPS TYPE]	100K0489
	01L221	SEAT SUSPENSION [COMPONENT PARTS]	100K0489
	01L22501	STEP [EXCEPT HST TYPE]	100K0489
	01L22502	STEP [HST TYPE]	100K0489
	01L301	ROPS [ROPS TYPE] [OLD TYPE]	100K0489
	01L30101	ROPS [ROPS TYPE] [NEW TYPE]	100K0489
	01L501	SMV EMBLEM	100K0489
FRONT WHEEL/REAR WHEEL	01P10102	FRONT WHEEL (7.2-16)	100K0489
	01P10103	FRONT WHEEL (8.3-16)	100K0489
	01P10104	FRONT WHEEL (10-16.5)	100K0489
	01P10105	FRONT WHEEL (27*8.5-15)	100K0489
	01P10106	FRONT WHEEL (27*10.50-15)	100K0489
	01P10107	FRONT WHEEL (29*12.50-15)	100K0489
	01P11001	REAR WHEEL (12.4-24)	100K0489
	01P11002	REAR WHEEL (13.6-24)	100K0489
	01P11003	REAR WHEEL (14.9-24)	100K0489
	01P11004	REAR WHEEL (17.5-24)	100K0489
	01P11005	REAR WHEEL (41*14.00-20)	100K0489
	01P11006	REAR WHEEL (21.5L-16.1) [OLD TYPE]	100K0489
	01P11007	REAR WHEEL (21.5L-16.1) [NEW TYPE]	100K0489
LABELS	01R10501	LABEL 1 [A] [MANUAL T/M TYPE] [ROPS TYPE]	100K0489
	01R10502	LABEL 1 [CA] [MANUAL T/M TYPE] [ROPS TYPE]	100K0489
	01R10503	LABEL 1 [A] [GST TYPE] [ROPS TYPE]	100K0489
	01R10504	LABEL 1 [CA] [GST TYPE] [ROPS TYPE]	100K0489
	01R10505	LABEL 1 [A] [HST TYPE] [ROPS TYPE]	100K0489
	01R10506	LABEL 1 [CA] [HST TYPE] [ROPS TYPE]	100K0489
	01R11001	LABEL 2 [A] [MANUAL T/M TYPE] [ROPS TYPE]	100K0489
	01R11002	LABEL 2 [CA] [MANUAL T/M TYPE] [ROPS TYPE]	100K0489
	01R11003	LABEL 2 [A] [GST TYPE] [ROPS TYPE]	100K0489
	01R11004	LABEL 2 [CA] [GST TYPE] [ROPS TYPE]	100K0489
	01R11005	LABEL 2 [A] [HST TYPE] [ROPS TYPE]	100K0489
	01R11006	LABEL 2 [CA] [HST TYPE] [ROPS TYPE]	100K0489
ACCESSORIES	01S105	ACCESSORIES AND SERVICE PARTS	100K0489
OPTION	01T103	AIR CLEANER COVER KIT [OPTION]	100K0489
	01T108	SWITCH KIT [OPTION]	100K0489
	01T120	FRONT GUARD STAY KIT [OPTION]	100K0489
	01T130	POSITION CONTROL LEVER (WITH DRAFT) [OPTION]	100K0489
	01T135	DRAFT CONTROL LEVER (WITH DRAFT) [OPTION]	100K0489
	01T140	TOP LINK HOLDER (WITH DRAFT) [OPTION]	100K0489
	01T145	SWINGING DRAWBAR/CLEVIS DRAWBAR [OPTION]	100K0489
	01T15001	REMOTE CONTROL VALVE LEVER 1 [ROPS TYPE] [OPTION]	100K0489
	01T15003	REMOTE CONTROL VALVE LEVER 2 [ROPS TYPE] [OPTION]	100K0489
	01T15005	REMOTE CONTROL VALVE LEVER 3 [ROPS TYPE] [OPTION]	100K0489
	01T15501	REMOTE CONTROL VALVE COUPLER 1 [OPTION]	100K0489
	01T15502	REMOTE CONTROL VALVE COUPLER 2 [OPTION]	100K0489
	01T15503	REMOTE CONTROL VALVE COUPLER 3 [OPTION]	100K0489
	01T160	ROPS [ROPS TYPE] [OPTION] [OLD TYPE]	100K0489
	01T16001	ROPS [ROPS TYPE] [OPTION] [NEW TYPE]	100K0489

silverbarnco.uk

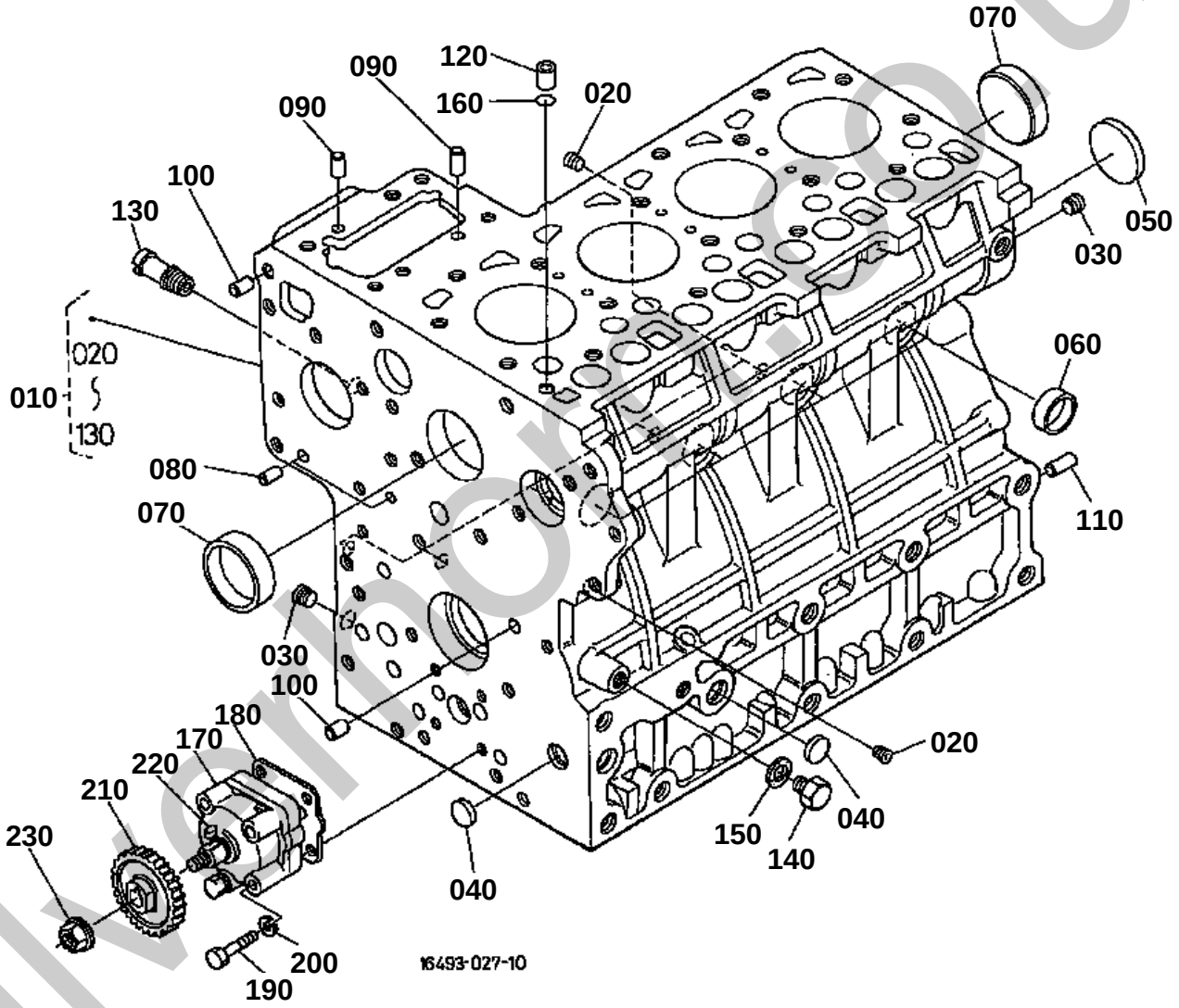

silvermotors.co.uk

CRANKCASE

↔ Interchangeable; ≠ not interchangeable; ← new for old; → old for new

REF.No	Part No.	Description	Q'ty	S.No.	I/C	REMARKS	Weight (kgf)	Weight (lb)
010	16493-01010	COMP.CRANKCASE	1	<=1Y0374			54.5	119.9
010	16493-01014	COMP.CRANKCASE	1	>=2A0001	←		61	134.2
020	15521-96020	PLUG	6				0.003	0.0066
030	15521-96030	PLUG	2				0.007	0.0154
040	17391-96160	PLUG EXPANSION	3				0.003	0.0066
050	06311-75045	PLUG EXPANSION	1				0.026	0.0572
060	15221-03380	CAP SEALING	6				0.017	0.0374
070	15221-03390	CAP SEALING	2				0.03	0.066
080	05012-00408	PIN STRAIGHT	2				0.001	0.0022
090	05012-00609	PIN STRAIGHT	2				0.003	0.0066
100	05012-00612	PIN STRAIGHT	2				0.003	0.0066
110	05012-01018	PIN STRAIGHT	1				0.012	0.0264
120	15221-33650	PIN PIPE	1				0.004	0.0088
130	15321-73340	PIPE WATER RETURN	1				0.016	0.0352
140	15221-33610	PLUG	1				0.009	0.0198
150	15021-33660	GASKET	1				0.001	0.0022
160	15221-33700	O RING	1				0.001	0.0022
170	15471-35012	ASSY PUMP OIL	1				0.55	1.21
180	15296-35150	GASKET OIL PUMP	1				0	0
180	1A021-35150	GASKET OIL PUMP	1		↔		0.001	0.0022
190	01053-50650	BOLT	4				0.011	0.0242
200	04512-60060	WASHER SPRING	4				0.001	0.0022
210	19202-35660	GEAR OIL PUMP DRIVE	1				0.23	0.506
220	05712-00410	KEY FEATHER	1				0.001	0.0022
230	15221-35682	NUT FLANGE	1				0.014	0.0308

silverhorn.co.uk

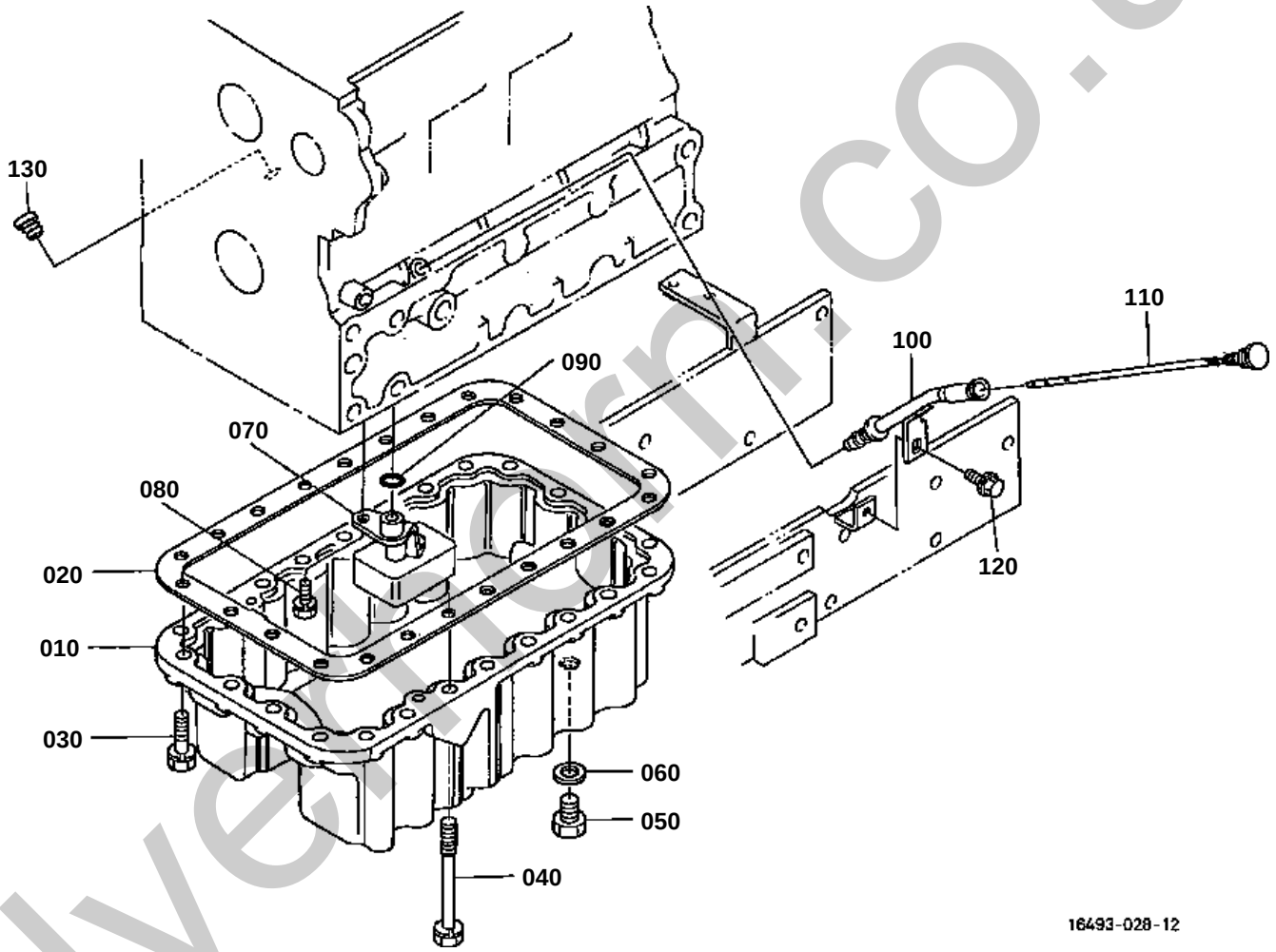

silverthorn.co.uk

110 TA140-3641-0

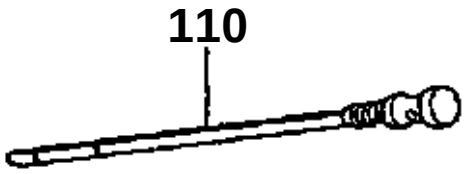

TA140-802-10

silverhorn.co.uk

OIL PAN

↔ Interchangeable; ≠ not interchangeable; ← new for old; → old for new

REF.No	Part No.	Description	Q'ty	S.No.	I/C	REMARKS	Weight (kgf)	Weight (lb)
010	17341-01610	OIL PAN	1				4.1	9.02
020	15815-01620	GASKET OIL PAN	1				0.03	0.066
030	01133-51028	BOLT	22				0.027	0.0594
040	17377-91010	BOLT	2				0.08	0.176
050	15261-33750	PLUG	2	<=YG0504			0.034	0.0748
050	16427-33750	PLUG DRAIN	2	>=YL0001	←		0	0
060	15109-33660	GASKET	2	<=2859			0.001	0.0022
060	6C090-58960	GASKET	2	>=2860	←		0.002	0.0044
070	15411-32110	FILTER OIL	1				0.24	0.528
080	01123-60814	BOLT	1				0.008	0.0176
090	04811-00160	O RING	1				0.001	0.0022
090	04817-00160	O RING	1		←		0	0
100	TA140-36420	GUIDE OIL GAUGE	1				0.067	0.1474
110	TA140-36410	GAUGE OIL	1	<=2363			0	0
110	TA140-36413	GAUGE OIL	1	>=2364	←		0.025	0.055
120	01754-50816	BOLT FLANGE	1				0.011	0.0242
130	16414-33640	PLUG OIL GAUGE	1	>=2A0001			0.003	0.0066

silverhorn.co.uk

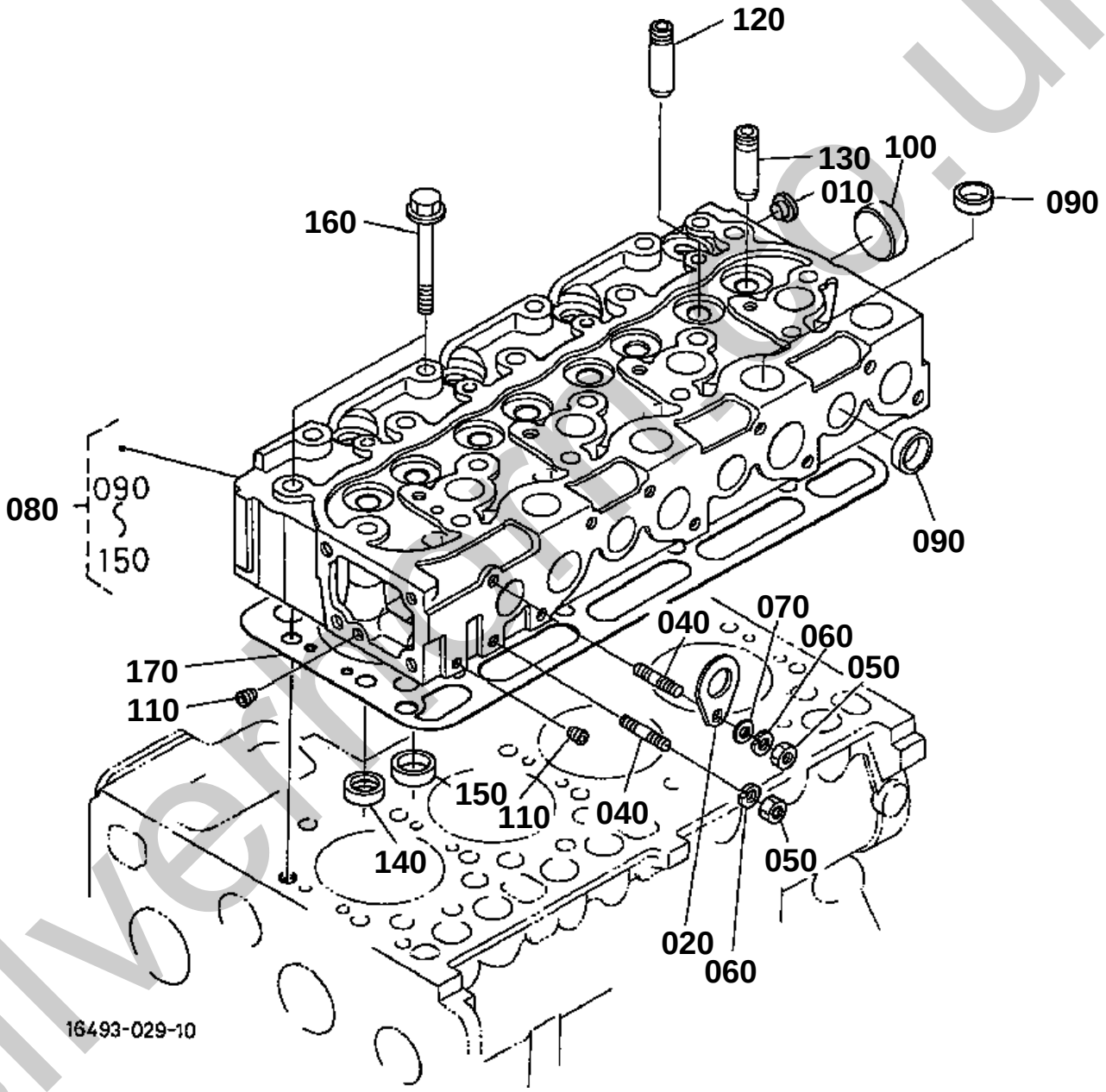

silvermachinery.co.uk

CYLINDER HEAD

↔ Interchangeable; ≠ not interchangeable; ← new for old; → old for new

REF.No	Part No.	Description	Q'ty	S.No.	I/C	REMARKS	Weight (kgf)	Weight (lb)
010	09980-10075	CAP PROTECTOR	1				0.001	0.0022
020	15221-01750	HOOK ENGINE	1				0.04	0.088
030	99999-99999	BLANK	0				0	0
040	15471-91530	STUD	2				0.01	0.022
050	02156-50080	NUT	2				0.004	0.0088
060	04512-60080	WASHER SPRING	2				0.002	0.0044
070	04012-50080	WASHER PLAIN	1				0.001	0.0022
080	16493-03040	COMP.CYLINDER HEAD	1				19.7	43.34
090	15221-03370	CAP SEALING	12				0.01	0.022
100	15221-03490	CAP SEALING	1				0.02	0.044
110	15261-96010	PLUG	2				0.002	0.0044
120	17321-13580	GUIDE INLET VALVE	4				0.015	0.033
130	17321-13560	GUIDE EXHAUST VALVE	4				0.02	0.044
140	16415-13620	SEAT INLET VALVE	4				0.01	0.022
150	16415-13612	SEAT EXHAUST VALVE	4				0.01	0.022
160	19013-03450	BOLT CYLINDER HEAD	18				0.077	0.1694
170	16454-03310	GASKET CYL.HEAD	1				0.145	0.319

silverhorn.co.uk

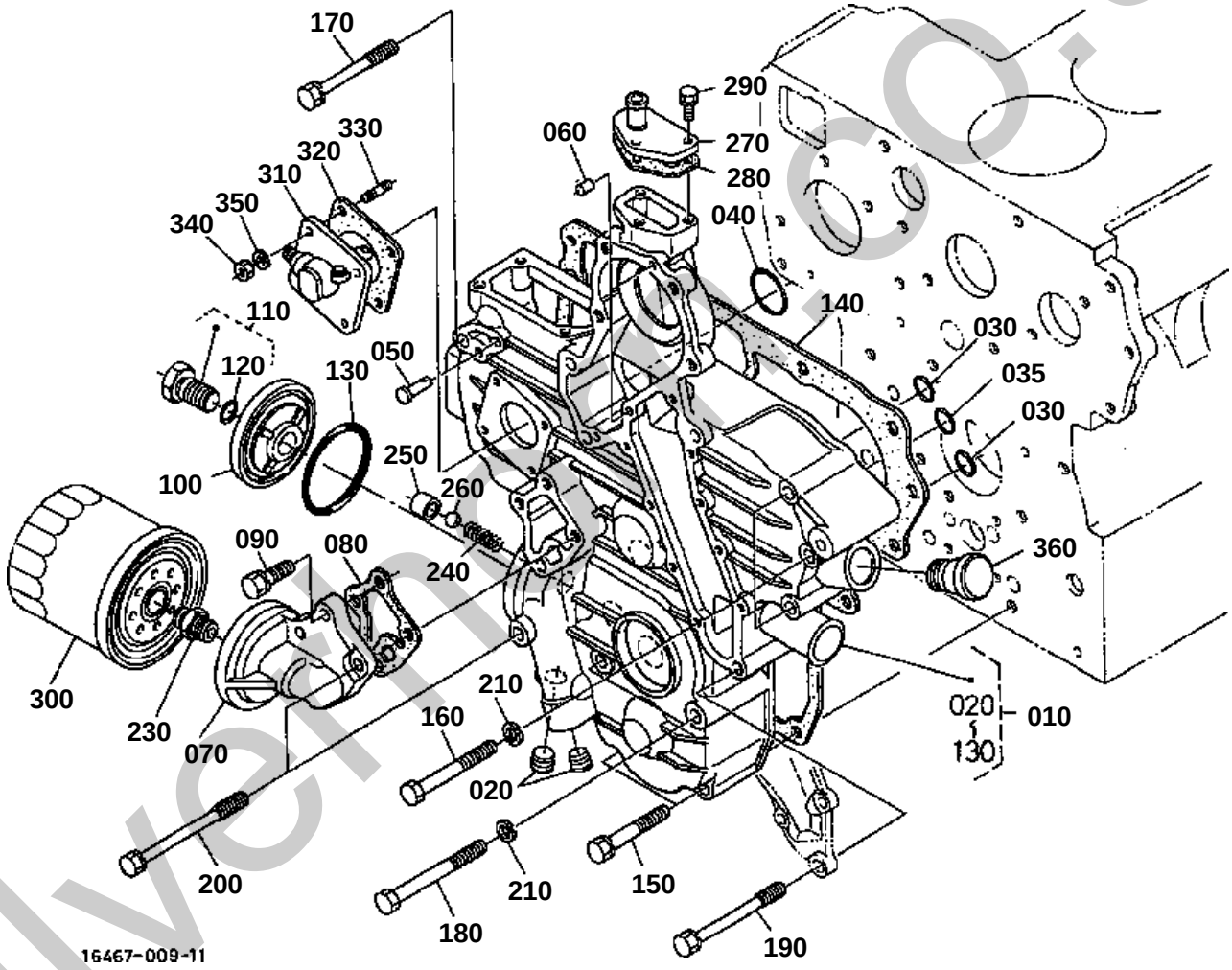

silvermac.co.uk

GEAR CASE

↔ Interchangeable; ≠ not interchangeable; ← new for old; → old for new

REF.No	Part No.	Description	Q'ty	S.No.	I/C	REMARKS	Weight (kgf)	Weight (lb)
010	16705-04032	ASSY CASE GEAR	1				4.2	9.24
020	16241-96020	PLUG	2				0.015	0.033
030	04811-00150	O RING	2				0.001	0.0022
030	04817-00150	O RING	2		←		0	0
035	04811-00200	O RING	1				0.001	0.0022
035	04817-00200	O RING	1		←		0	0
040	04811-00360	O RING	1				0.002	0.0044
040	04817-00360	O RING	1		←		0	0
050	15221-56280	PIN START SPRING	1				0.006	0.0132
060	05012-00612	PIN STRAIGHT	2				0.003	0.0066
070	17331-32610	SUPPORT OIL FILTER	1				0.275	0.605
080	17326-32620	GASKET	1				0.005	0.011
090	01123-50825	BOLT	3				0.013	0.0286
100	17331-32880	COVER	1				0.075	0.165
110	17331-32910	COMP BOLT	1				0.07	0.154
120	04811-00150	O RING	1				0.001	0.0022
120	04817-00150	O RING	1		←		0	0
130	19202-96830	O RING	1				0.01	0.022
140	17326-04132	GASKET GEAR CASE	1				0.03	0.066
150	01123-50860	BOLT	3				0.026	0.0572
160	01153-50870	BOLT	3				0.026	0.0572
170	17367-91010	BOLT	2				0.005	0.011
180	01153-50880	BOLT	2				0.03	0.066
190	17367-91020	BOLT	3				0.035	0.077
200	17367-91030	BOLT	2				0.02	0.044
210	04512-60080	WASHER SPRING	5				0.002	0.0044
220	99999-99999	BLANK	0				0	0
230	15521-32290	JOINT PIPE	1	<=YW0783			0	0
230	15521-32293	JOINT PIPE	1	>=YY0001	←		0	0
240	15241-36950	SPRING	1				0.004	0.0088
250	15521-36930	SEAT VALVE	1				0.015	0.033
260	07715-03213	BALL	1				0.004	0.0088
270	15521-73320	FLANGE WATER RETURN	1				0.04	0.088
280	15766-73330	GASKET WATER FLANGE	1				0	0
280	1A021-73330	GASKET RETURN FLANGE	1		↔		0.001	0.0022
290	01023-50620	BOLT	3				0.006	0.0132
300	17321-32433	CARTRIDGE OIL FILTER	1				0	0
300	16414-32430	CARTRIDGE OIL FILTER	1		↔		0	0
310	38240-34660	ASSY GEAR CASE H/M	1				0.335	0.737
320	15296-88130	GASKET H/METER UNIT	1				0.002	0.0044
330	15221-88210	STUD	4				0.005	0.011
340	02056-50060	NUT	4				0.002	0.0044
350	04512-60060	WASHER SPRING	4				0.001	0.0022
360	15571-33140	PLUG OIL FILLER	1	<=1J0654		NOT SALE	0.03	0.066
360	16427-33140	PLUG OIL FILLER	1	>=1N0001	←		0.025	0.055

silverhorn.co.uk

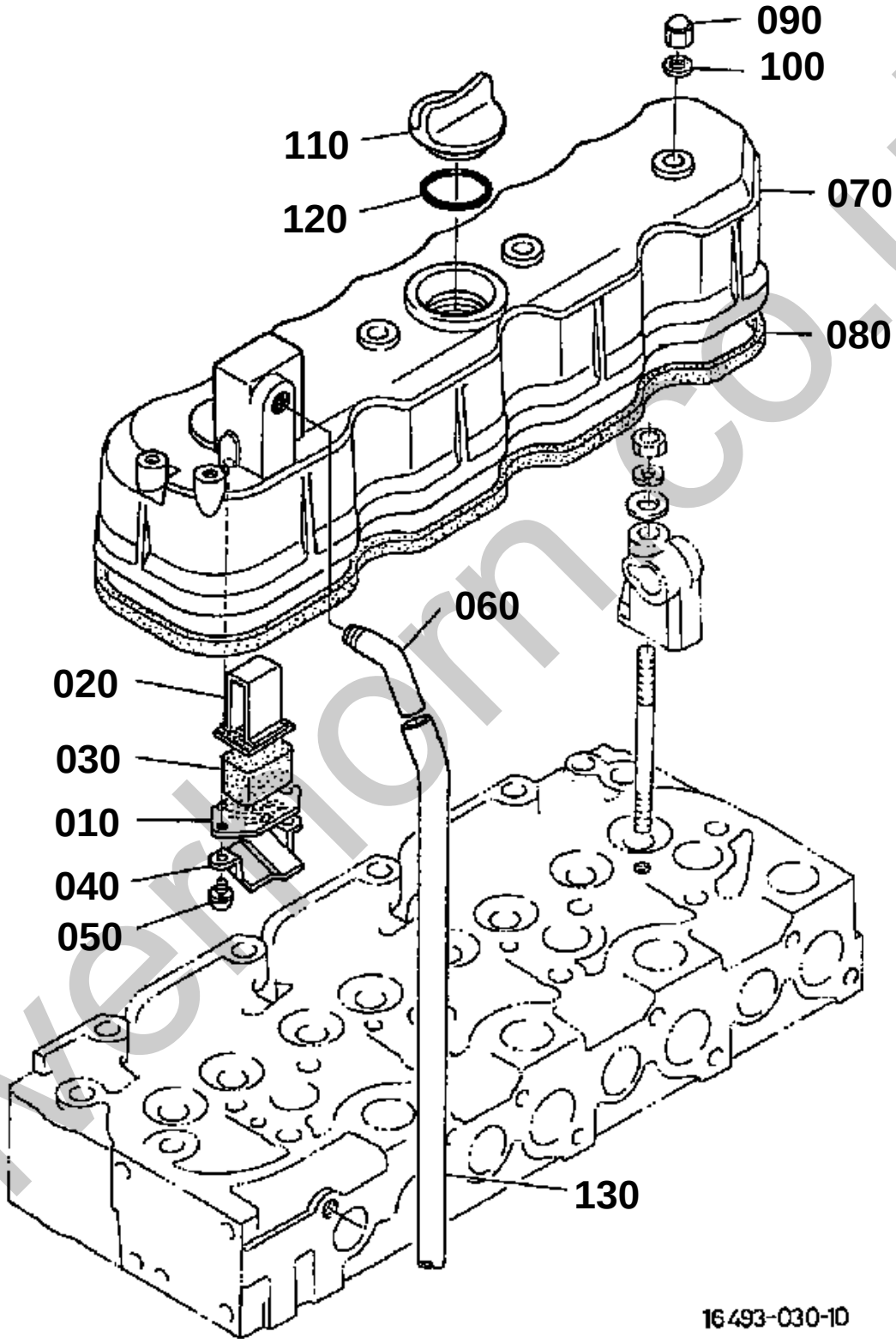

silverthorn.co.uk

HEAD COVER

↔ Interchangeable; ≠ not interchangeable; ← new for old; → old for new

REF.No	Part No.	Description	Q'ty	S.No.	I/C	REMARKS	Weight (kgf)	Weight (lb)
010	15521-05140	PLATE B/THER ELEMENT	1				0.005	0.011
020	15521-05150	PLATE B/THER ELEMENT	1				0.01	0.022
030	15521-05670	ELEMENT BREATHER	1				0.01	0.022
040	15521-05370	OIL SHIELD BREATHER	1				0.005	0.011
050	03034-50510	SCREW WITH WASHER	2				0.003	0.0066
060	17365-05550	JOINT BREATHER	1				0.065	0.143
070	15434-14510	COVER CYL.HEAD	1				1.315	2.893
080	15471-14520	GASKET HEAD COVER	1				0.05	0.11
090	15451-92330	NUT	4				0.015	0.033
100	15021-33660	GASKET	4				0.001	0.0022
110	15852-33140	PLUG OIL FILLER	1				0.038	0.0836
120	04811-50300	O RING	1				0.001	0.0022
120	04817-50300	O RING	1		←		0.001	0.0022
130	15837-05510	PIPE BREATHER	1				0.06	0.132

silverhorn.co.uk

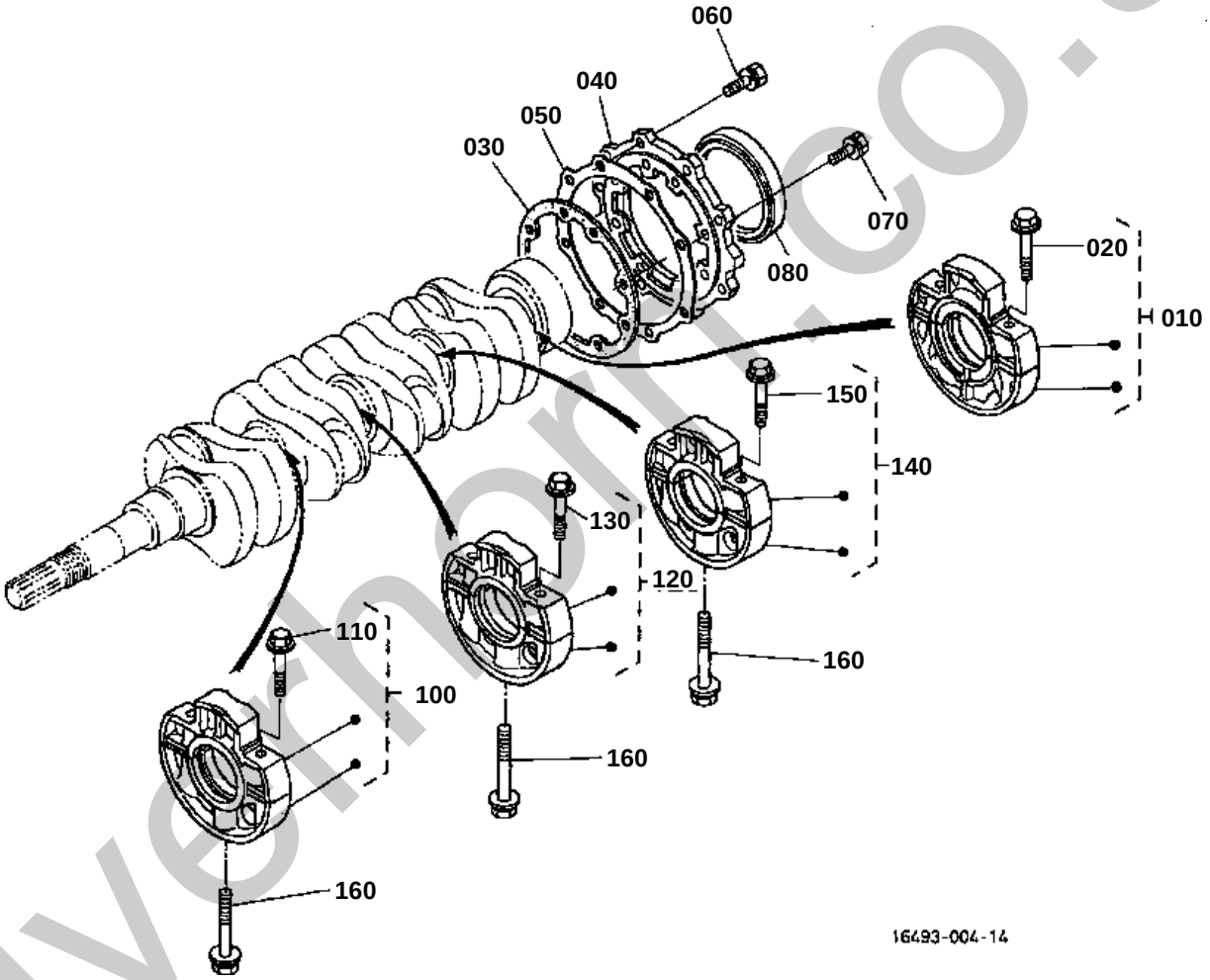

silverhorn.co.uk

050 17118-0483-0

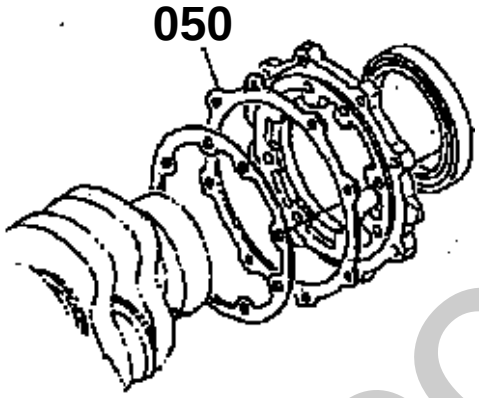

1A021-804-11

silverhorn.co.uk

MAIN BEARING CASE

↔ Interchangeable; ≠ not interchangeable; ← new for old; → old for new

REF.No	Part No.	Description	Q'ty	S.No.	I/C	REMARKS	Weight (kgf)	Weight (lb)
010	19013-07090	ASSY BRG.CASE WHEEL	1				1.55	3.41
020	19013-04540	BOLT BEARING CASE	2				0.038	0.0836
030	19077-04360	GASKET BEARING CASE	1				0.004	0.0088
040	19013-04813	COVER BEARING CASE	1				0.41	0.902
050	17118-04830	GASKET BRG.CASE COV.	1				0	0
050	1A091-04820	GASKET CASE COVER	1		↔		0.006	0.0132
060	01123-50825	BOLT	8				0.013	0.0286
070	01123-50828	BOLT	8				0.014	0.0308
080	19202-04460	SEAL OIL	1				0.055	0.121
090	99999-99999	BLANK	0				0	0
100	19013-07040	ASSY BRG.CASE MAIN	1				1.5	3.3
110	19013-04540	BOLT BEARING CASE	2				0.038	0.0836
120	19013-07050	ASSY BRG.CASE MAIN	1				1.495	3.289
130	19013-04540	BOLT BEARING CASE	2				0.038	0.0836
140	19013-07060	ASSY BRG.CASE MAIN	1				1.52	3.344
150	19013-04540	BOLT BEARING CASE	2				0.038	0.0836
160	15601-04560	BOLT BEARING CASE	3				0.06	0.132

silverhorn.co.uk

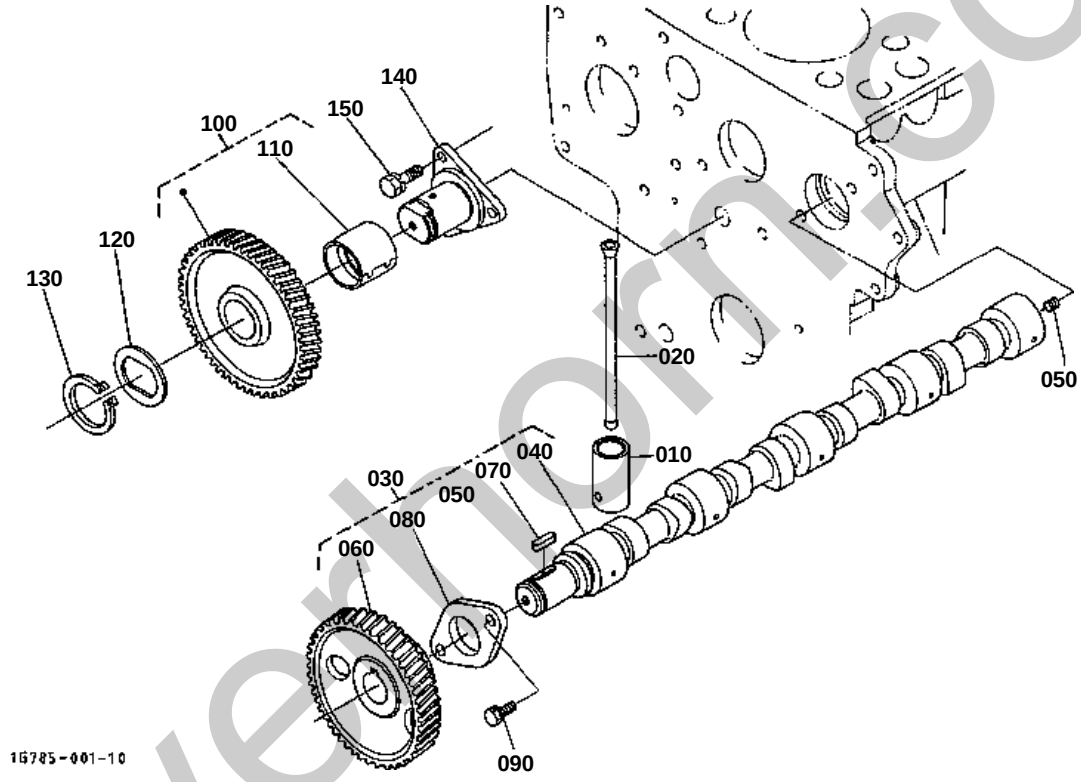

silverthorn.co.uk

100 16427-2401-0
100 1A053-2401-0
110 16427-2498-0
120 16427-2436-0
140 16427-2425-0
160 16427-2437-0

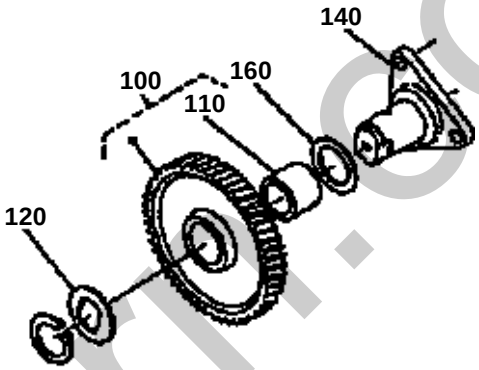

16467-815-10

silverhorn.co.uk

CAMSHAFT AND IDLE GEAR SHAFT

↔ Interchangeable; ≠ not interchangeable; ← new for old; → old for new

REF.No	Part No.	Description	Q'ty	S.No.	I/C	REMARKS	Weight (kgf)	Weight (lb)
010	15601-15550	TAPPET	8				0.08	0.176
020	19013-15110	PUSH ROD	8				0.05	0.11
030	17343-16010	ASSY CAMSHAFT	1				4.2	9.24
040	17343-16150	CAMSHAFT	1				2.2	4.84
050	15521-93610	SCREW SET	1				0.002	0.0044
060	15521-16510	GEAR CAMSHAFT	1	<=1W0523			0.85	1.87
060	15521-16514	GEAR CAM	1	>=1Y0001	←		0.85	1.87
070	05712-00720	KEY FEATHER	1				0.008	0.0176
080	15221-16270	STOPPER CAMSHAFT	1				0.073	0.1606
090	01123-50818	BOLT	2				0.012	0.0264
100	16427-24010	COMP.GEAR IDLE	1	<=1W0523			1.2	2.64
100	1A053-24010	COMP.GEAR IDLE	1	>=1Y0001	←		0	0
100	1G791-24010	COMP.GEAR IDLE	1	>=2A0001	←		1.195	2.629
110	16427-24980	BUSH IDLE GEAR	1	<=1W0523			0.07	0.154
110	1A021-24980	BUSH IDLE GEAR	1	>=1Y0001	←		0.072	0.1584
120	16427-24360	COLLAR	1	<=1W0523			0.02	0.044
120	1A021-24370	COLLAR	1	>=1Y0001	≠		0.022	0.0484
130	15451-95400	CIR CLIP EXTERNAL	1				0.01	0.022
140	16427-24250	SHAFT IDLE GEAR	1	<=1W0523			0.65	1.43
140	1A021-24250	SHAFT IDLE GEAR	1	>=1Y0001	≠		0.685	1.507
150	01123-50818	BOLT	3				0.012	0.0264
160	16427-24370	COLLAR	1	<=1W0523			0.02	0.044

silverhorn.co.uk

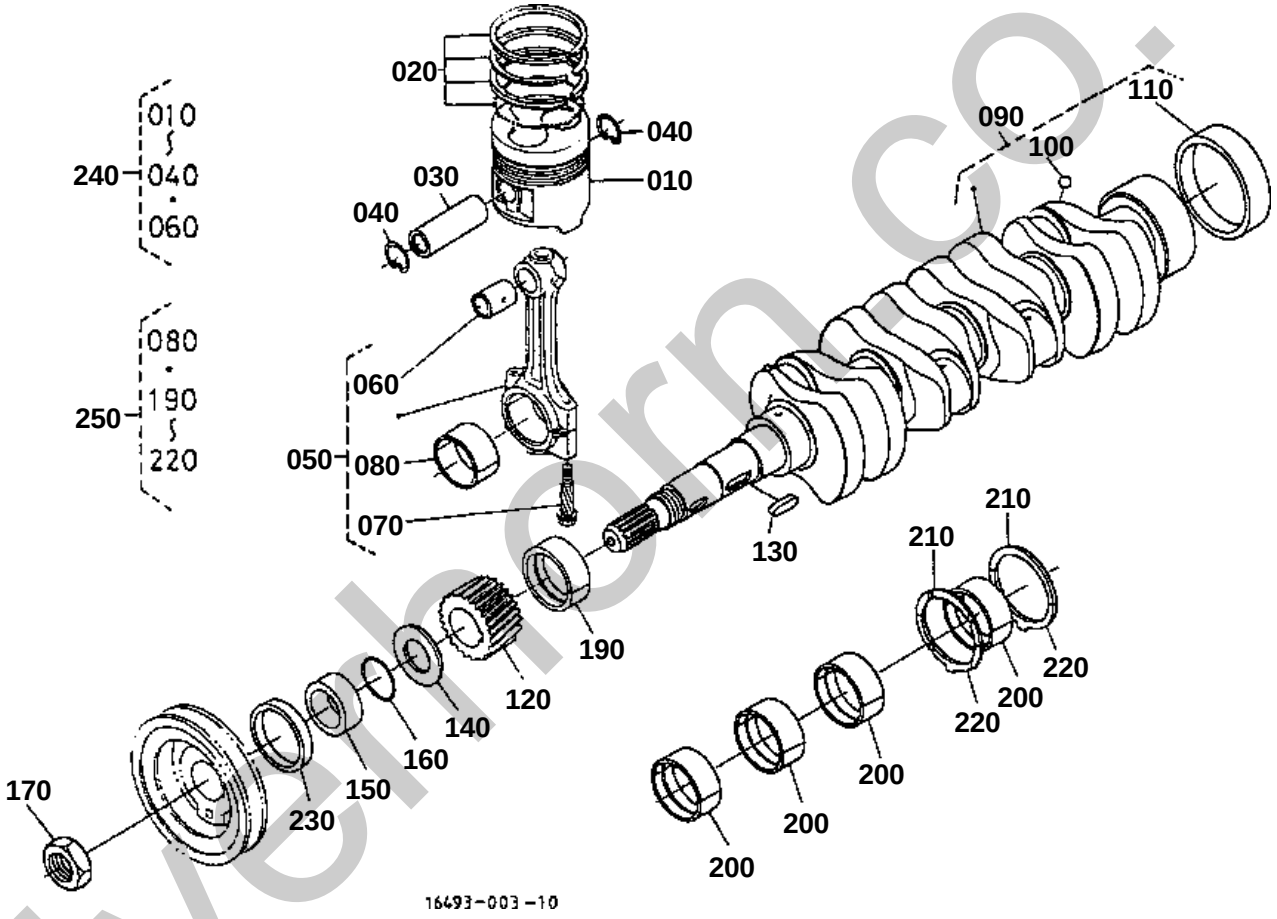

silverthorn.co.uk

PISTON AND CRANKSHAFT

↔ Interchangeable; ≠ not interchangeable; ← new for old; → old for new

REF.No	Part No.	Description	Q'ty	S.No.	I/C	REMARKS	Weight (kgf)	Weight (lb)
010	16427-21110	PISTON	4			STD	0.5	1.1
010	16427-21910	PISTON	4			+0.5mm	0.5	1.1
020	16427-21050	ASSY PISTON RING	4			STD	0.055	0.121
020	16427-21090	ASSY PISTON RING	4			+0.5mm	0.06	0.132
030	14901-21310	PIN PISTON	4				0.17	0.374
040	14109-21330	CIR CLIP INTERNAL	8				0.015	0.033
050	17311-22010	ASSY CONNECTING ROD	4				0.885	1.947
060	17331-21980	BUSH PISTON PIN	4				0.025	0.055
070	15521-22142	BOLT CONNECTING ROD	8				0.026	0.0572
080	17311-22310	METAL CRANKPIN	4			STD SET	0.045	0.099
080	17331-22970	METAL CRANKPIN	4			-0.2mm SET	0.05	0.11
080	17331-22980	METAL CRANKPIN	4			-0.4mm SET	0.045	0.099
090	16641-23010	COMP.CRANKSHAFT	1				17	37.4
100	07715-00401	BALL	4				0.001	0.0022
110	19202-23280	BUSH CRANKSHAFT	1				0.09	0.198
120	15471-24110	GEAR CRANK	1				0.375	0.825
130	05712-00720	KEY FEATHER	1				0.008	0.0176
140	15471-23312	SLINGER OIL	1				0.008	0.0176
150	19202-23250	COLLAR CRANKSHAFT	1				0.065	0.143
160	04811-10300	O RING	1				0.001	0.0022
170	15221-23360	NUT CRANKSHAFT	1				0.11	0.242
180	99999-99999	BLANK	0				0	0
190	17311-23470	METAL CRANKSHAFT	1	<=YA1020		STD	0	0
190	17311-23472	METAL CRANKSHAFT	1	>=YA1021	←	STD	0	0
190	17311-23910	METAL CRANKSHAFT	1			-0.2mm	0.05	0.11
190	17311-23920	METAL CRANKSHAFT	1			-0.4mm	0.06	0.132
200	17311-23480	METAL CRANKSHAFT	4			STD SET	0.045	0.099
200	17311-23930	METAL CRANKSHAFT	4			-0.2mm SET	0.05	0.11
200	17311-23940	METAL CRANKSHAFT	4			-0.4mm SET	0.06	0.132
210	15521-23530	METAL SIDE	2			STD	0.01	0.022
210	15221-23950	METAL SIDE	2	<=YC0987		+0.2mm	0	0
210	15521-23950	METAL SIDE	2	>=YE0444	←	+0.2mm	0.01	0.022
210	15221-23960	METAL SIDE	2	<=YC0987		+0.4mm	0	0
210	15521-23960	METAL SIDE	2	>=YE0444	←	+0.4mm	0.01	0.022
220	19202-23540	METAL SIDE	2			STD	0.01	0.022
220	19202-23970	METAL SIDE	2			+0.2mm	0.01	0.022
220	19202-23980	METAL SIDE	2			+0.4mm	0.01	0.022
230	19202-04140	SEAL OIL	1				0.015	0.033
240	07916-27660	KIT RING PISTON	4			STD	0.72	1.584
240	07916-27670	KIT RING PISTON	4			+0.5mm	0.84	1.848
250	07916-28000	KIT METAL ENGINE	1			STD	0.42	0.924
250	07916-28742	KIT METAL ENGINE	1			-0.2mm	0.55	1.21
250	07916-28752	KIT METAL ENGINE	1			-0.4mm	0.55	1.21

silvermorn.co.uk

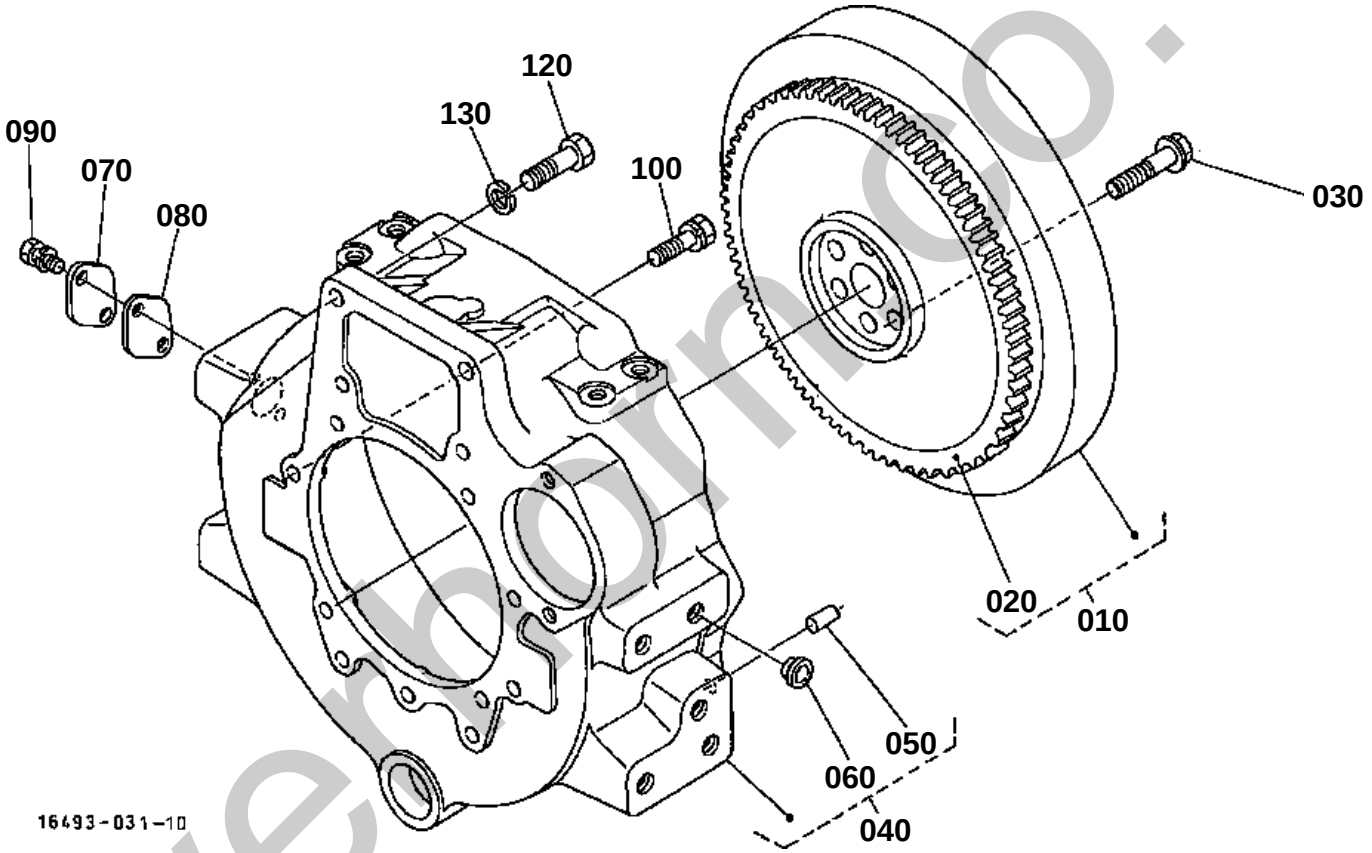

silverhorn.co.uk

FLYWHEEL [W/O IND-PTO]

↔ Interchangeable; ≠ not interchangeable; ← new for old; → old for new

REF.No	Part No.	Description	Q'ty	S.No.	I/C	REMARKS	Weight (kgf)	Weight (lb)
010	16493-25010	COMP.FLYWHEEL	1				29.8	65.56
020	15221-63820	GEAR RING	1				1.2	2.64
030	16457-25160	BOLT FLYWHEEL	6				0.063	0.1386
040	TA040-20102	COMP.HOUSING F-W	1				18.2	40.04
050	05012-01018	PIN STRAIGHT	2				0.012	0.0264
060	31220-14290	PLUG	9				0.002	0.0044
070	15521-04680	COVER	1				0.035	0.077
080	15521-04790	PACKING COVER	1				0.005	0.011
090	01123-50816	BOLT	2				0.011	0.0242
100	16427-91010	BOLT	11				0.004	0.0088
110	99999-99999	BLANK	0				0	0
120	01073-51240	BOLT	2				0.049	0.1078
130	04512-60120	WASHER SPRING	2				0.005	0.011

silverhorn.co.uk

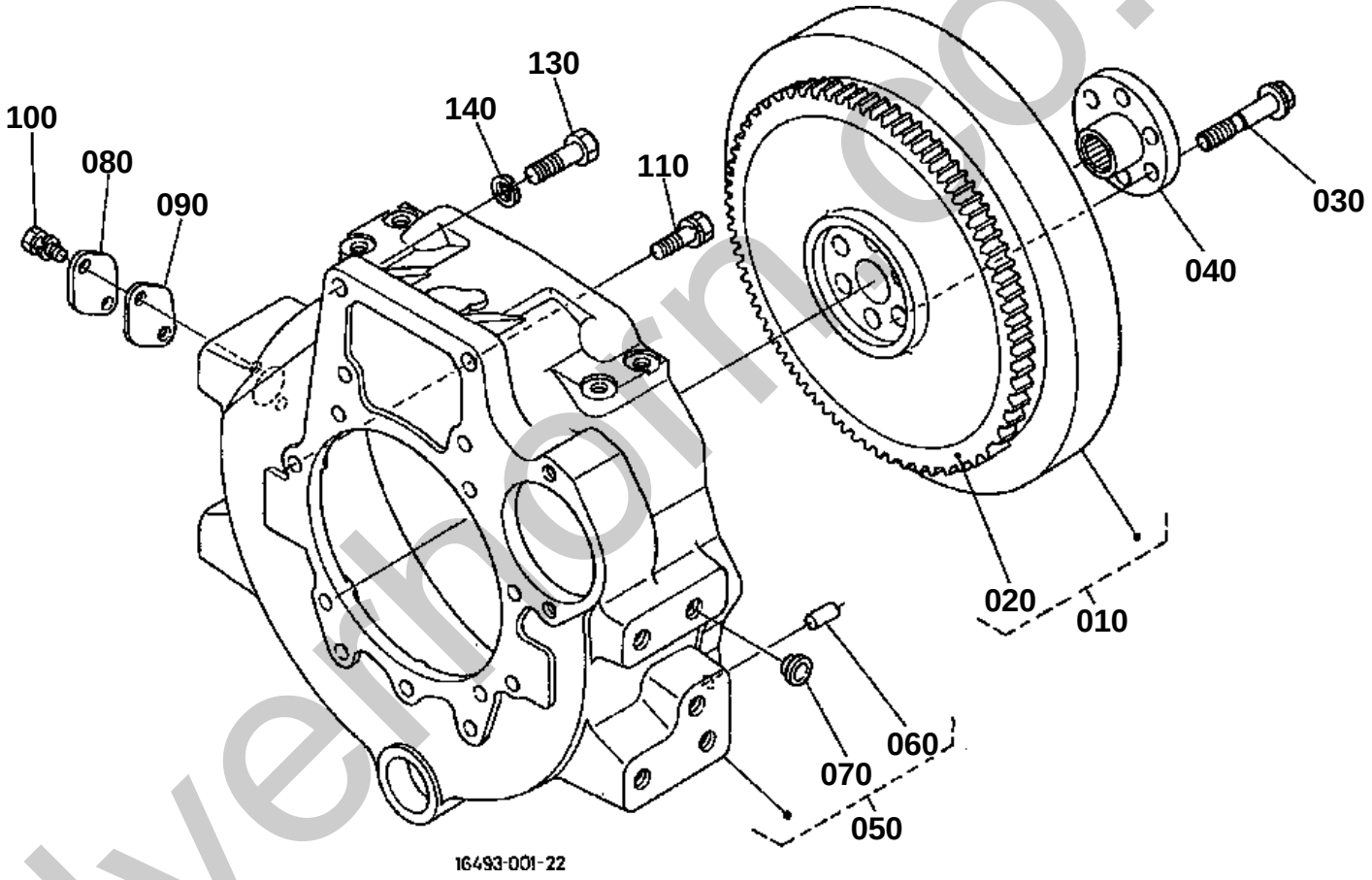

silverthorn.co.uk

FLYWHEEL [WITH IND-PTO]

↔ Interchangeable; ≠ not interchangeable; ← new for old; → old for new

REF.No	Part No.	Description	Q'ty	S.No.	I/C	REMARKS	Weight (kgf)	Weight (lb)
010	16493-25010	COMP.FLYWHEEL	1				29.8	65.56
020	15221-63820	GEAR RING	1				1.2	2.64
030	17394-25160	BOLT FLYWHEEL	6				0.07	0.154
040	35080-14010	HUB SPLINE	1				0.44	0.968
050	TA040-20102	COMP.HOUSING F-W	1				18.2	40.04
060	05012-01018	PIN STRAIGHT	2				0.012	0.0264
070	31220-14290	PLUG	9				0.002	0.0044
080	15521-04680	COVER	1				0.035	0.077
090	15521-04790	PACKING COVER	1				0.005	0.011
100	01123-50816	BOLT	2				0.011	0.0242
110	16427-91010	BOLT	11				0.004	0.0088
120	99999-99999	BLANK	0				0	0
130	01073-51240	BOLT	2				0.049	0.1078
140	04512-60120	WASHER SPRING	2				0.005	0.011

silverhorn.co.uk

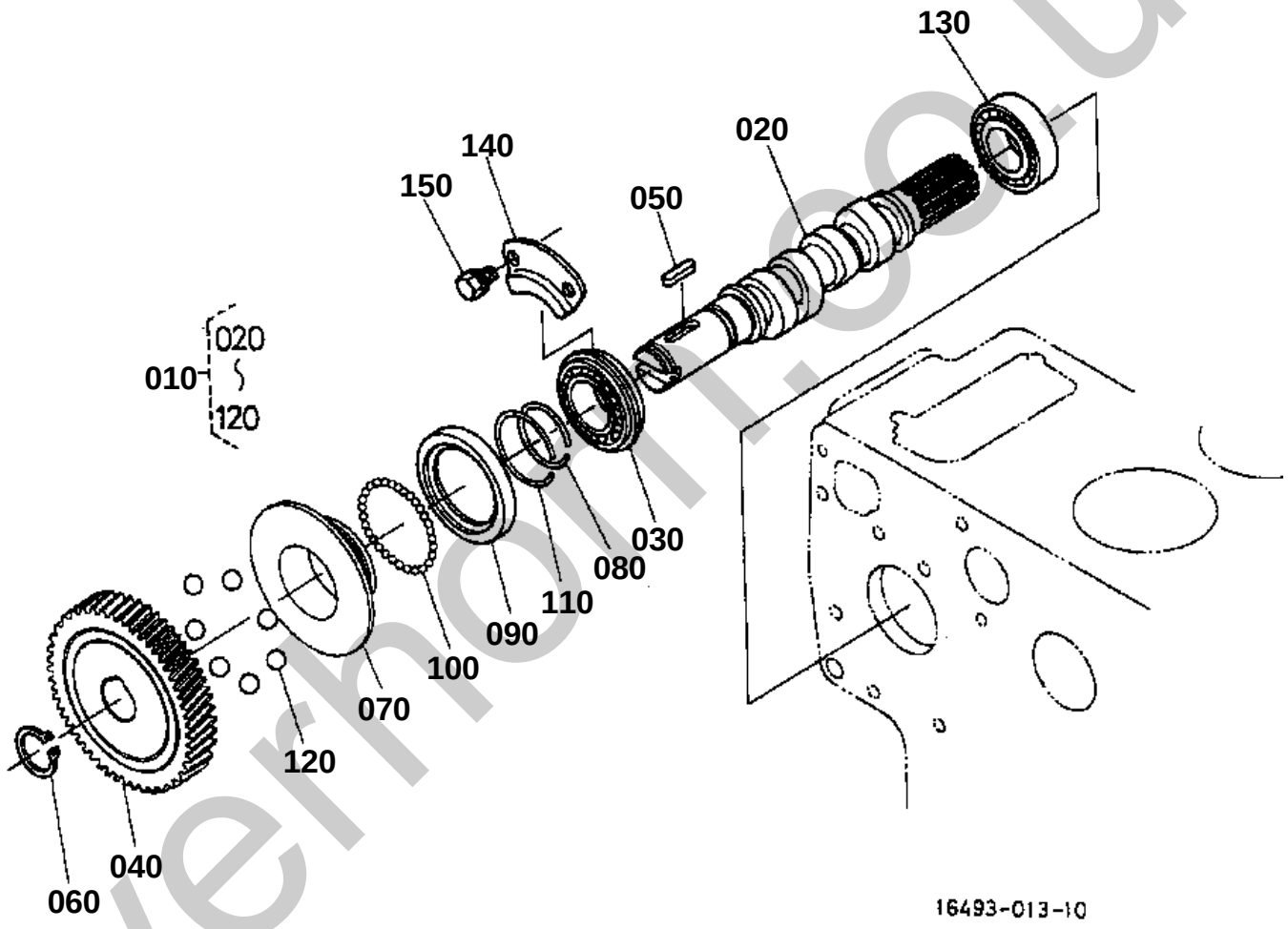

silverhorn.co.uk

FUEL CAMSHAFT

↔ Interchangeable; ≠ not interchangeable; ← new for old; → old for new

REF.No	Part No.	Description	Q'ty	S.No.	I/C	REMARKS	Weight (kgf)	Weight (lb)
010	19077-16020	ASSY CAMSHAFT FUEL	1				3	6.6
020	19077-16170	CAMSHAFT FUEL	1				1.12	2.464
030	08153-06205	BEARING BALL	1				0.13	0.286
040	16415-51150	GEAR INJECTION PUMP	1				1.075	2.365
050	05712-00525	KEY FEATHER	1				0.005	0.011
060	04612-00240	CIR CLIP EXTERNAL	1				0.002	0.0044
070	15611-55450	SLEEVE GOVERNOR	1				0.117	0.2574
080	15221-55470	CIR-CLIP GOV. SLEEVE	1				0.003	0.0066
090	15611-55690	CASE GOVERNOR BALL	1				0.03	0.066
100	07715-03205	BALL	39				0.001	0.0022
110	15221-55740	CIR-CLIP	1				0.002	0.0044
120	07715-00403	BALL	7				0.03	0.066
130	08240-00001	BEARING BALL	1				0.19	0.418
140	15221-16320	STOPPER FUEL C/SHAFT	1				0.02	0.044
150	01123-60814	BOLT	2				0.008	0.0176

silverhorn.co.uk

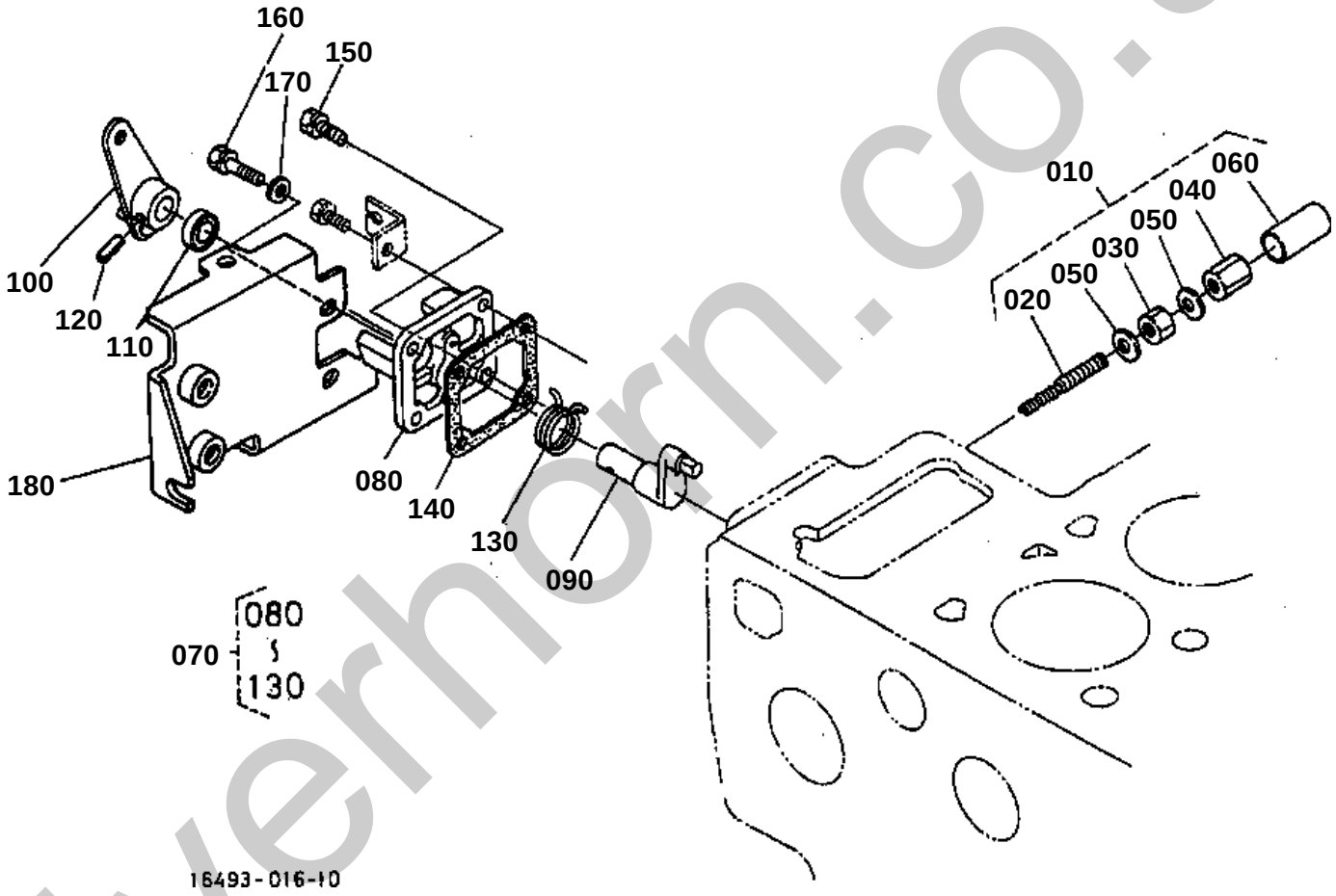

silverhorn.co.uk

ENGINE STOP LEVER

↔ Interchangeable; ≠ not interchangeable; ← new for old; → old for new

REF.No	Part No.	Description	Q'ty	S.No.	I/C	REMARKS	Weight (kgf)	Weight (lb)
010	15521-54090	APPARATUS IDLING	1				0.045	0.099
020	15521-54100	ASSY BOLT ADJUSTMENT	1				0.015	0.033
030	15401-92010	NUT	1				0.01	0.022
040	15521-92330	NUT	1				0.02	0.044
050	15021-33660	GASKET	2				0.001	0.0022
060	15521-54270	CAP	1				0.003	0.0066
070	17331-57702	ASSY LEVER ENG.STOP	1				0.19	0.418
080	15471-51652	COVER INJECTION PUMP	1				0.02	0.044
090	17331-57740	SHAFT LEVER	1				0.04	0.088
100	17331-57720	LEVER ENGINE STOP	1				0.05	0.11
110	15471-57980	SEAL OIL	1				0.001	0.0022
120	05411-00420	PIN SPRING	1				0.001	0.0022
130	15471-57920	SPRING RETURN	1				0.005	0.011
140	15296-51660	GASKET PUMP COVER	1				0	0
140	1A021-51660	GASKET PUMP COVER	1		↔		0.003	0.0066
150	01023-50618	BOLT	1				0.006	0.0132
160	01023-50622	BOLT	2				0.005	0.011
170	04012-50060	WASHER PLAIN	2				0.001	0.0022
180	17394-60110	SUPPORT SOLENOID	1				0.28	0.616

silverhorn.co.uk

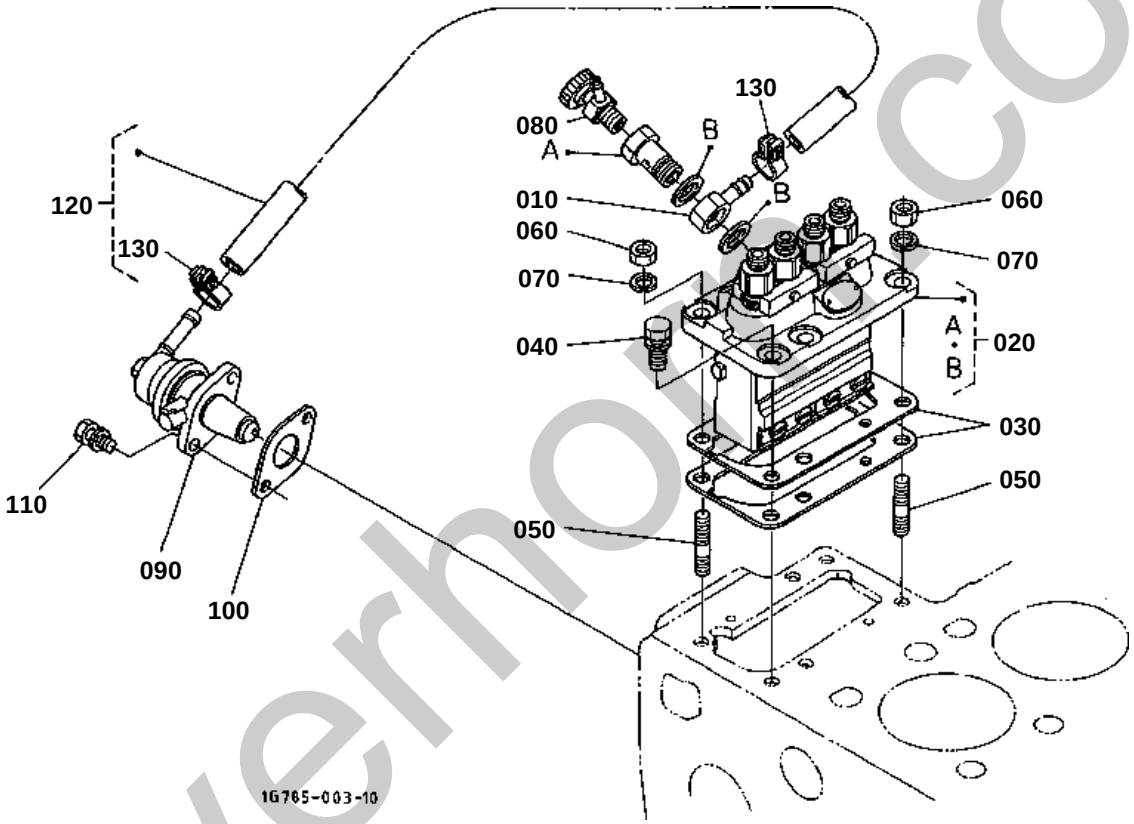

silverhorse.co.uk

↔ Interchangeable; ≠ not interchangeable; ← new for old; → old for new

REF.No	Part No.	Description	Q'ty	S.No.	I/C	REMARKS	Weight (kgf)	Weight (lb)
010	15401-95690	JOINT EYE	1				0.04	0.088
020	16454-51010	ASSY PUMP INJECTION	1	<=2853			3	6.6
020	1G762-51010	ASSY PUMP INJECTION	1	>=XC0001	≠		2.5	5.5
030	19077-52090	SHIM INJECTION PUMP	1	<=2G0380		0.20mm	0.006	0.0132
030	19077-52092	SHIM INJECTION PUMP	1	>=2J0001	≠	0.20mm	0.006	0.0132
030	19077-52110	SHIM INJECTION PUMP	1	<=2G0380		0.25mm	0.002	0.0044
030	19077-52113	SHIM INJECTION PUMP	1	>=2J0001	≠	0.25mm	0.002	0.0044
030	19077-52120	SHIM INJECTION PUMP	1	<=2G0380		0.30mm	0.01	0.022
030	19077-52123	SHIM INJECTION PUMP	1	>=2J0001	≠	0.30mm	0.01	0.022
040	01123-50822	BOLT	4				0.012	0.0264
050	15221-91530	STUD	2				0.011	0.0242
060	02156-50080	NUT	2				0.004	0.0088
070	04512-60080	WASHER SPRING	2				0.002	0.0044
080	14311-60504	ASSY COCK JET START	1				0.034	0.0748
090	17121-52030	ASSY PUMP FUEL	1				0.13	0.286
100	15263-52140	GASKET FUEL PUMP	1				0	0
100	1A021-52140	GASKET FUEL PUMP	1		↔		0.001	0.0022
110	01023-50616	BOLT	2				0.005	0.011
120	32400-35510	ASSY PIPE FUEL	1				0.035	0.077
130	14301-42750	CLIP PIPE	2				0.005	0.011

silverhorn.co.uk

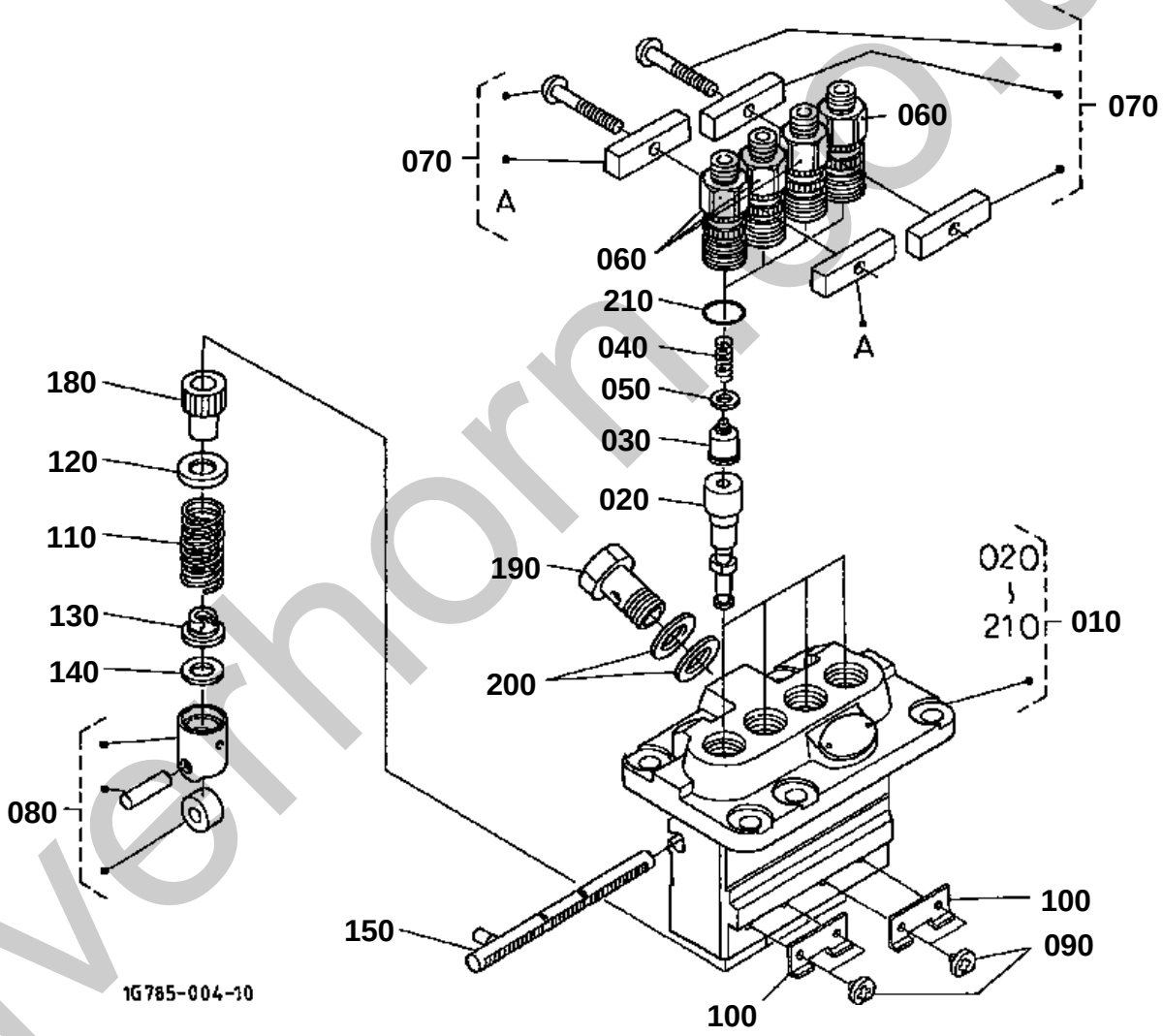

silverhorse.uk

↔ Interchangeable; ≠ not interchangeable; ← new for old; → old for new

REF.No	Part No.	Description	Q'ty	S.No.	I/C	REMARKS	Weight (kgf)	Weight (lb)
010	16454-51010	ASSY PUMP INJECTION	1	<=2853			3	6.6
010	1G762-51010	ASSY PUMP INJECTION	1	>=XC0001	≠		2.5	5.5
020	16454-51050	PLUNGER PUMP	4				0.05	0.11
030	16454-51030	VALVE DELIVERY.	4				0.015	0.033
040	16454-51230	SPRING DELIV.VALVE	4				0.005	0.011
050	15221-51240	GASKET DELIV.VALVE	4				0.001	0.0022
060	16415-51220	HOLDER DELIV.VALVE	4				0.07	0.154
070	16475-51610	ASSY PLATE LOCK	2				0.06	0.132
080	15221-51070	ASSY TAPPET	4				0.039	0.0858
090	14611-51250	PIN TAPPET GUIDE	4				0.003	0.0066
100	14611-51440	PLATE	2				0.005	0.011
110	15221-51280	SPRING PLUNGER	4				0.015	0.033
120	15221-51270	SEAT SPRING UPPER	4				0.004	0.0088
130	15221-51290	SEAT SPRING LOWER	4				0.01	0.022
140	19077-51490	SHIM	4				0.001	0.0022
150	15401-51060	RACK CONTROL	1				0.05	0.11
160	99999-99999	BLANK	0				0	0
170	99999-99999	BLANK	0				0	0
180	15221-51382	SLEEVE CONTROL	4				0.011	0.0242
190	15471-51320	SCREW FOLLOW	1				0.032	0.0704
200	15401-96650	GASKET	2				0.001	0.0022
210	14611-51200	O RING	4				0.001	0.0022

silverhorn.co.uk

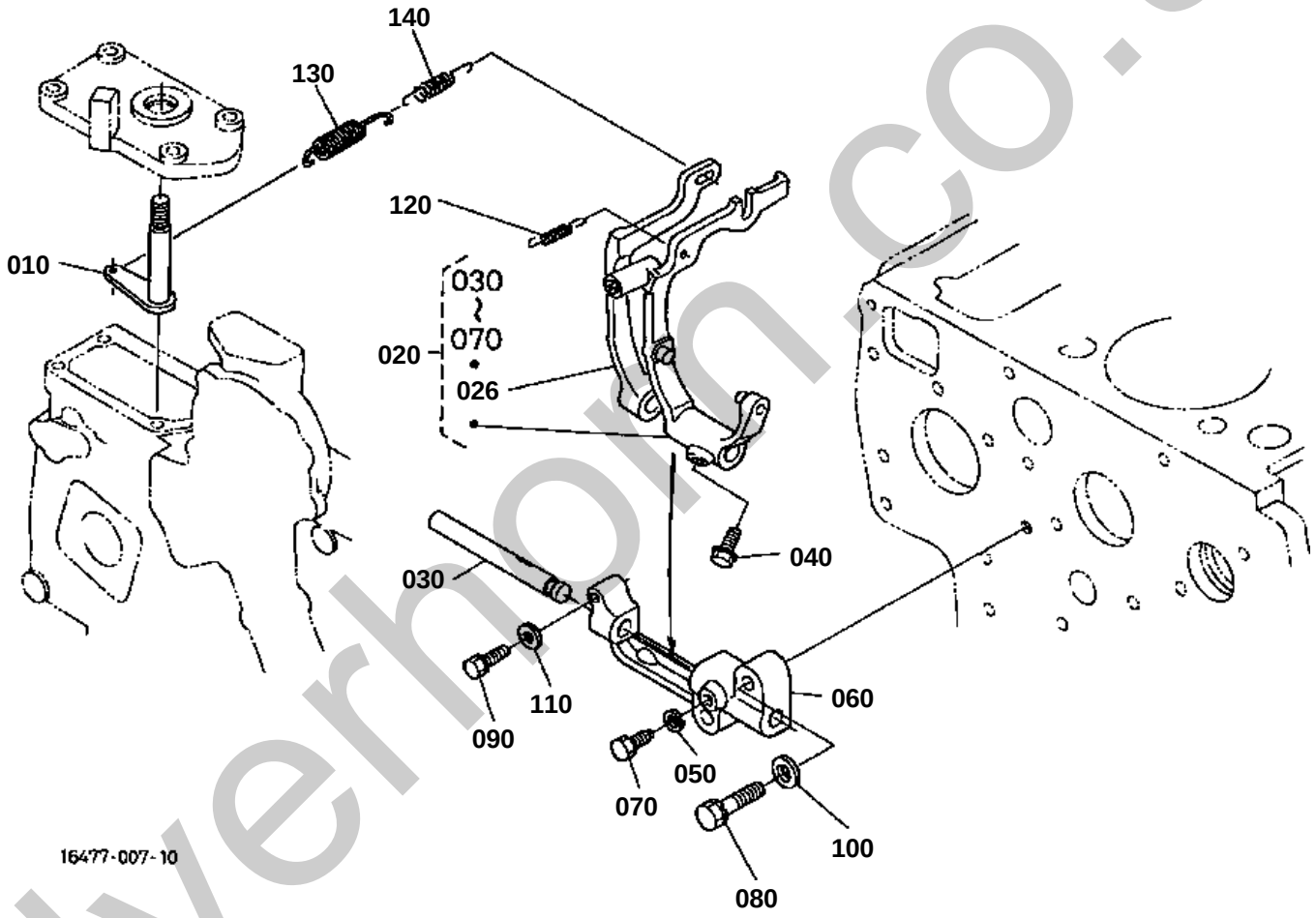

silverhorn.co.uk

040 15021-5624-0
050 04512-60060

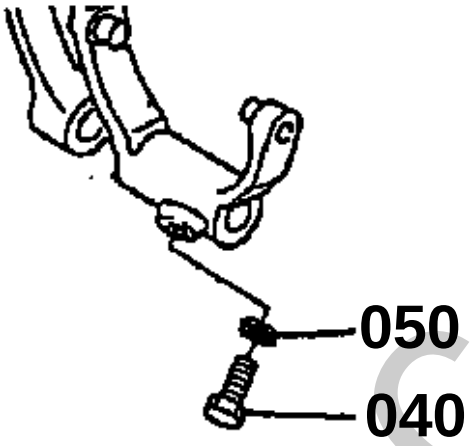

1G782-802-10

silverhorn.co.uk

↔ Interchangeable; ≠ not interchangeable; ← new for old; → old for new

REF.No	Part No.	Description	Q'ty	S.No.	I/C	REMARKS	Weight (kgf)	Weight (lb)
010	15601-56020	COMP.LEVER GOVERNOR	1				0.055	0.121
020	16493-56050	ASSY LEVER FORK	1				0.405	0.891
026	17331-56130	LEVER FORK	1				0.065	0.143
030	15221-56150	SHAFT FORK LEVER	1	<=2A0408			0.1	0.22
030	1G911-56150	SHAFT FORK LEVER	1	>=2C0001	≠		0.05	0.11
040	15021-56240	BOLT LEVER SHAFT	1	<=2A0408			0.005	0.011
040	01754-50618	BOLT FLANGE	1	>=2C0001	≠		0.01	0.022
050	04512-60060	WASHER SPRING	2	<=2A0408			0.001	0.0022
050	04512-60060	WASHER SPRING	1	>=2C0001			0.001	0.0022
060	15221-56230	HOLDER FORK LEVER	1				0.1	0.22
070	15221-66410	BOLT	1				0.005	0.011
080	01123-50832	BOLT	2				0.016	0.0352
090	01023-50628	BOLT	1				0.015	0.033
100	04012-50080	WASHER PLAIN	2				0.001	0.0022
110	04012-50060	WASHER PLAIN	1				0.001	0.0022
120	15611-56480	SPRING START	1				0.001	0.0022
130	19077-56412	SPRING	1				0.01	0.022
140	16415-56420	SPRING GOVERNOR	1				0.002	0.0044

silverhorn.co.uk

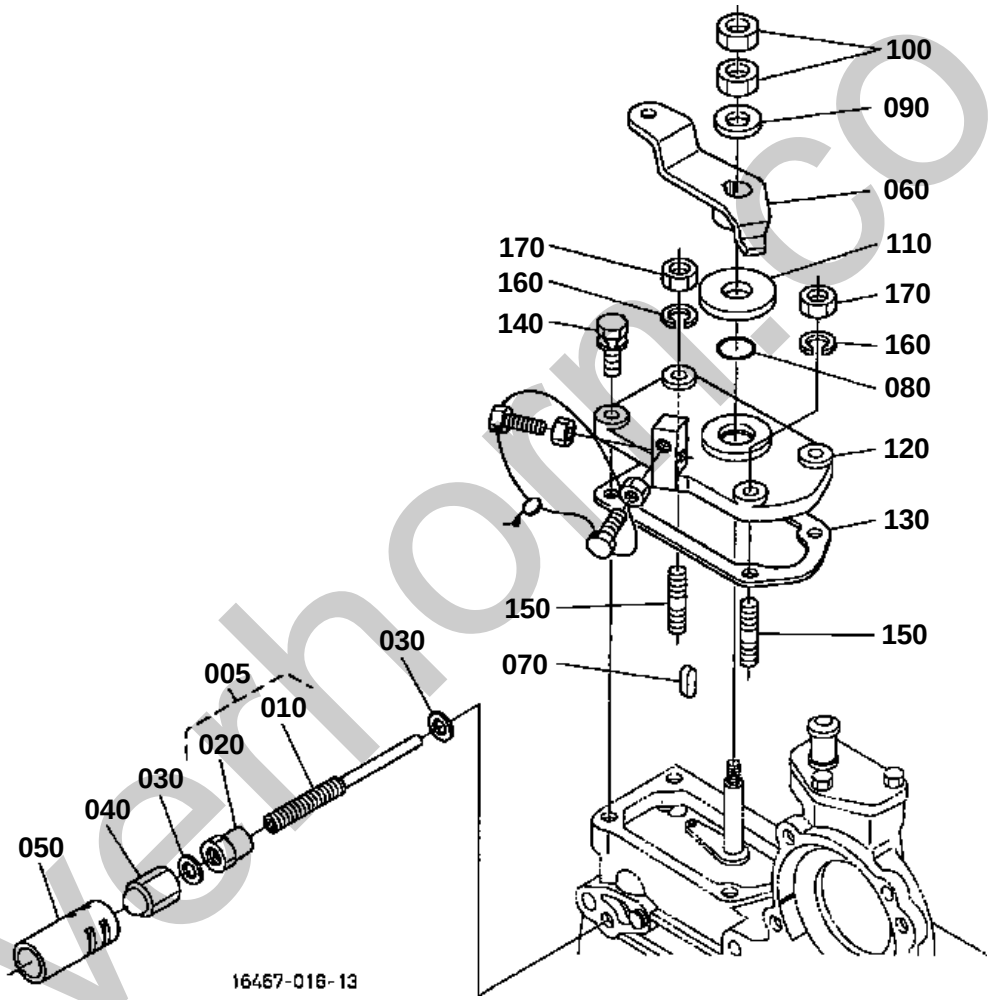

silverhorn.co.uk

050 16221-5442-0

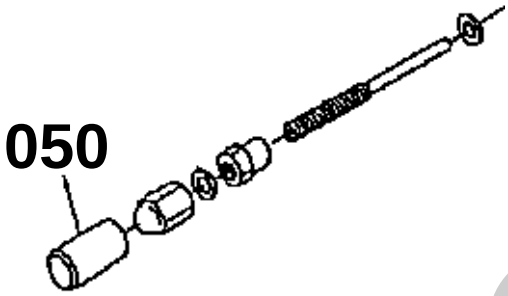

1G722-800-10

silverhorn.co.uk

SPEED CONTROL PLATE

↔ Interchangeable; ≠ not interchangeable; ← new for old; → old for new

REF.No	Part No.	Description	Q'ty	S.No.	I/C	REMARKS	Weight (kgf)	Weight (lb)
005	1A021-54350	ASSY BOLT ADJUSTMENT	1	>=2C0001			0.015	0.033
010	15601-54120	BOLT ADJUSTING	1	<=2A0408			0.011	0.0242
010	1A021-54120	BOLT ADJUSTING	1	>=2C0001	←		0	0
020	15601-92012	NUT	1				0.006	0.0132
030	15601-96650	GASKET	2				0.001	0.0022
040	15841-14620	NUT	1				0.01	0.022
050	16221-54420	CAP	1	<=2853			0.001	0.0022
050	1G833-54290	PIPE LOCK	1	>=XC0001	≠		0.012	0.0264
060	15469-57150	LEVER SPEED CONTROL	1				0.06	0.132
070	05712-00408	KEY FEATHER	1				0.001	0.0022
080	04811-00120	O RING	1				0.001	0.0022
080	04817-00120	O RING	1		←		0	0
090	04013-60080	WASHER PLAIN	1				0.002	0.0044
100	02112-50080	NUT	2				0.003	0.0066
110	15521-57240	COLLAR	1				0.002	0.0044
120	15521-57115	PLATE SPEED CONTROL	1				0.1	0.22
130	15439-57210	GASKET	1				0.005	0.011
140	01023-50625	BOLT	2				0.007	0.0154
150	15221-88210	STUD	2				0.005	0.011
160	04512-60060	WASHER SPRING	2				0.001	0.0022
170	02056-50060	NUT	2				0.002	0.0044

silverhorn.co.uk

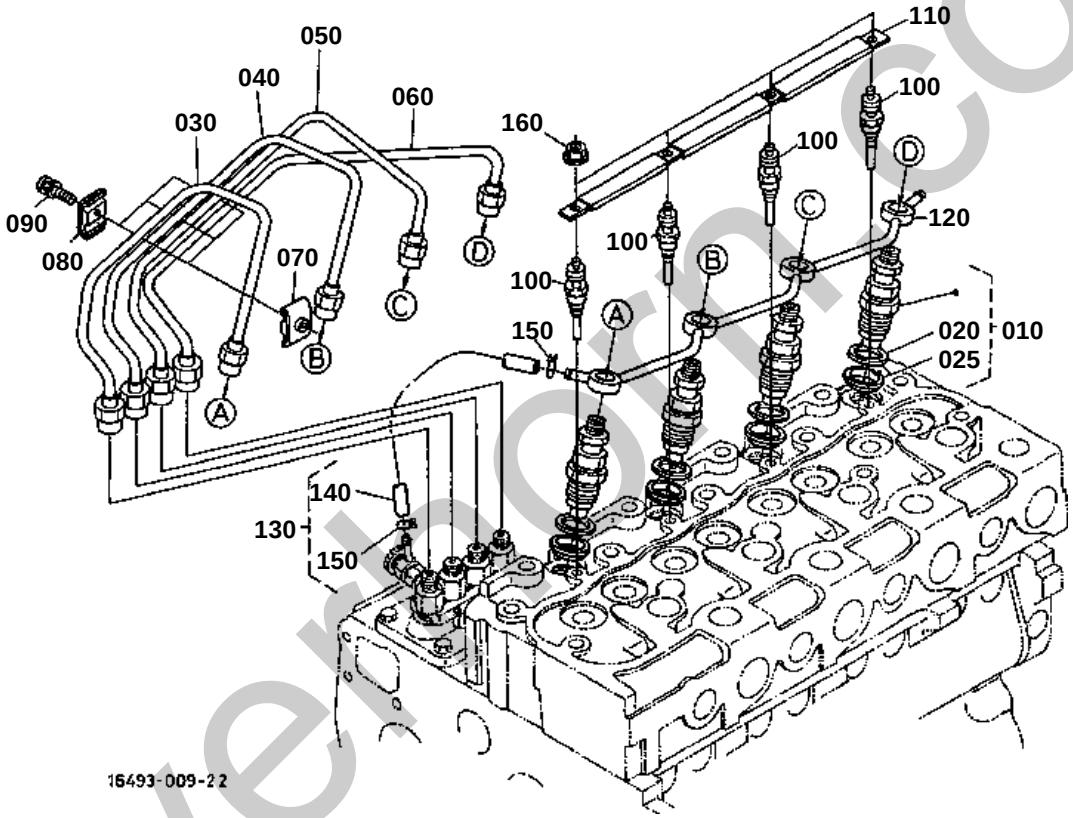

silverthorn.co.uk

170 04013-60040

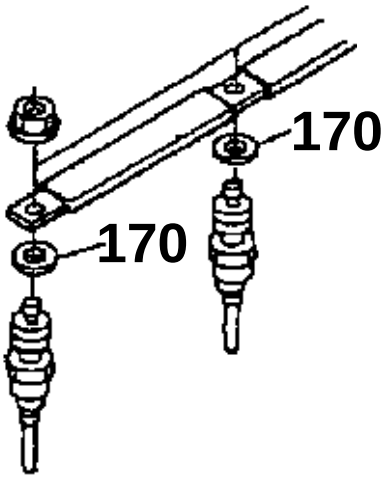

16493-804-10

silverhorn.co.uk

NOZZLE HOLDER AND GLOW PLUG

↔ Interchangeable; ≠ not interchangeable; ← new for old; → old for new

REF.No	Part No.	Description	Q'ty	S.No.	I/C	REMARKS	Weight (kgf)	Weight (lb)
010	16454-53900	KIT HOLDER NOZZLE	4				0.14	0.308
020	15841-53622	GASKET	4				0.002	0.0044
025	19077-53650	SEAL HEAT	4				0.005	0.011
030	19077-53714	PIPE INJECTION	1				0.14	0.308
040	19077-53723	PIPE INJECTION	1				0.14	0.308
050	19077-53733	PIPE INJECTION	1				0.12	0.264
060	19077-53743	PIPE INJECTION	1				0.13	0.286
070	15841-53850	CLAMP PIPE	3				0.01	0.022
080	15841-53860	CLAMP PIPE	3				0.009	0.0198
090	03024-50520	SCREW WITH WASHER	3				0.004	0.0088
100	16415-65510	GLOW PLUG	4				0.03	0.066
110	16475-65560	CORD GLOW PLUG	1				0.02	0.044
120	16454-42502	ASSY PIPE OVER FLOW	1				0.06	0.132
130	34070-42633	ASSY TUBE FUEL	1				0.025	0.055
140	09661-40400	TUBE FUEL	1				0.02	0.044
150	14971-42750	CLIP PIPE	2				0.001	0.0022
160	02761-50040	NUT FLANGE	4				0.002	0.0044
170	04013-60040	WASHER PLAIN	4	<=2853			0.002	0.0044
170	04013-60040	WASHER PLAIN	4	>=XC0001			0.002	0.0044
170	04013-60040	WASHER PLAIN	4	<=XS1201			0.002	0.0044

silverhorn.co.uk

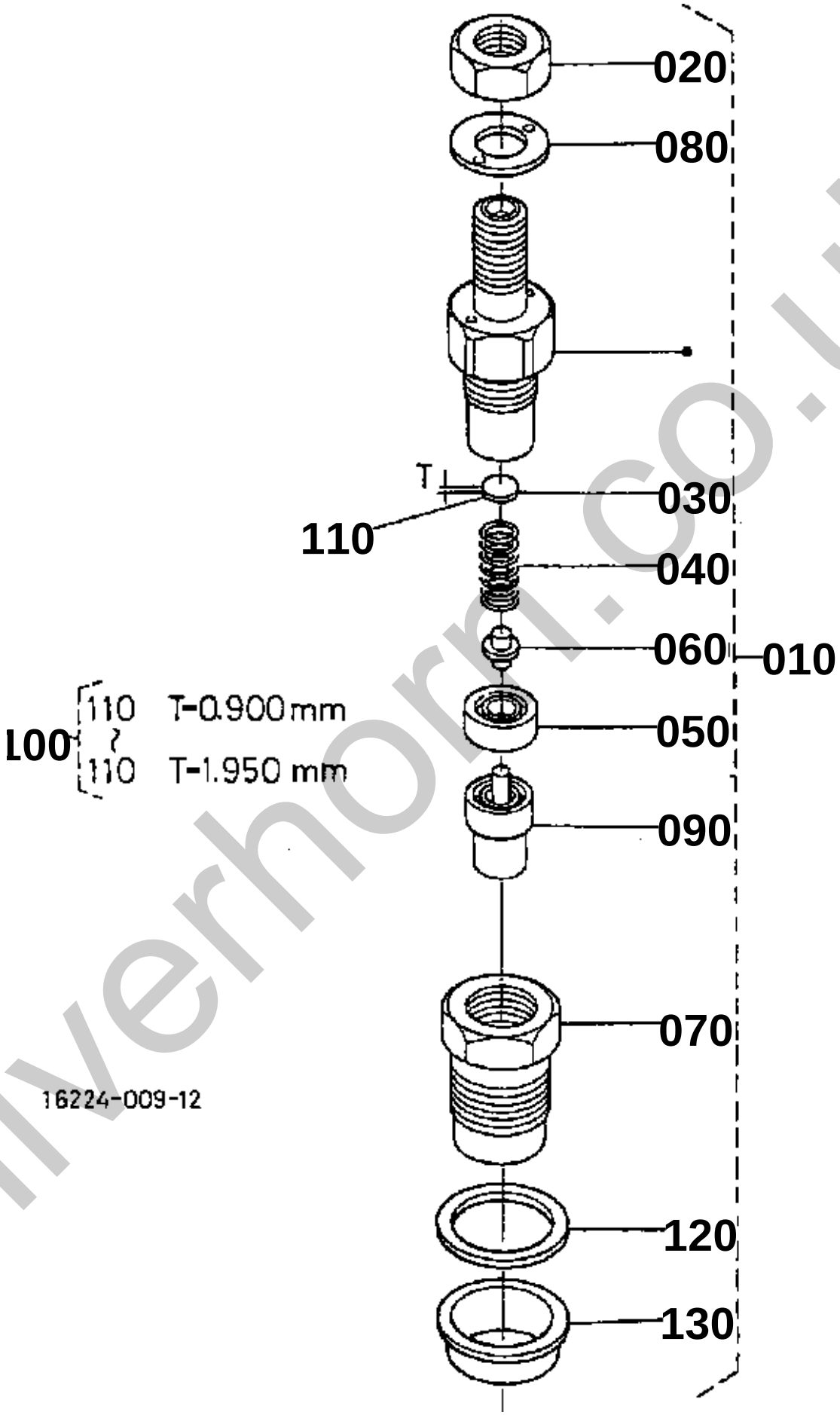

silverhorn.co.uk

NOZZLE HOLDER [COMPONENT PARTS]

↔ Interchangeable; ≠ not interchangeable; ← new for old; → old for new

REF.No	Part No.	Description	Q'ty	S.No.	I/C	REMARKS	Weight (kgf)	Weight (lb)
010	16454-53900	KIT HOLDER NOZZLE	4				0.14	0.308
020	15841-92030	NUT	4				0.005	0.011
030	15841-53230	WASHER ADJUSTING	4				0.001	0.0022
040	16475-53170	SPRING NOZZLE	4				0.005	0.011
050	15841-53350	PIECE DISTANCE	4				0.004	0.0088
060	15841-53160	PUSH ROD	4				0.001	0.0022
070	16475-53280	NUT NOZZLE	4				0.03	0.066
080	15841-94040	WASHER	4				0.001	0.0022
090	16454-53610	PIECE NOZZLE	4				0.024	0.0528
100	15841-98100	ASSY WASHER ADJUST	4				0.043	0.0946
110	15841-53230	WASHER ADJUSTING	4			0.900mm	0.001	0.0022
110	15841-98510	WASHER ADJUSTING	4			0.925mm	0.001	0.0022
110	15841-98520	WASHER ADJUSTING	4			0.950mm	0.001	0.0022
110	15841-98530	WASHER ADJUSTING	4			0.975mm	0.001	0.0022
110	15841-98540	WASHER ADJUSTING	4			1.000mm	0.001	0.0022
110	15841-98550	WASHER ADJUSTING	4			1.025mm	0.001	0.0022
110	15841-98560	WASHER ADJUSTING	4			1.050mm	0.001	0.0022
110	15841-98570	WASHER ADJUSTING	4			1.075mm	0.001	0.0022
110	15841-98580	WASHER ADJUSTING	4			1.100mm	0.001	0.0022
110	15841-98590	WASHER ADJUSTING	4			1.125mm	0.001	0.0022
110	15841-98600	WASHER ADJUSTING	4			1.150mm	0.001	0.0022
110	15841-98610	WASHER ADJUSTING	4			1.175mm	0.001	0.0022
110	15841-98620	WASHER ADJUSTING	4			1.200mm	0.001	0.0022
110	15841-98630	WASHER ADJUSTING	4			1.225mm	0.001	0.0022
110	15841-98640	WASHER ADJUSTING	4			1.250mm	0.001	0.0022
110	15841-98650	WASHER ADJUSTING	4			1.275mm	0.001	0.0022
110	15841-98660	WASHER ADJUSTING	4			1.300mm	0.001	0.0022
110	15841-98670	WASHER ADJUSTING	4			1.325mm	0.001	0.0022
110	15841-98680	WASHER ADJUSTING	4			1.350mm	0.001	0.0022
110	15841-98690	WASHER ADJUSTING	4			1.375mm	0.001	0.0022
110	15841-98700	WASHER ADJUSTING	4			1.400mm	0.001	0.0022
110	15841-98710	WASHER ADJUSTING	4			1.425mm	0.001	0.0022
110	15841-98720	WASHER ADJUSTING	4			1.450mm	0.001	0.0022
110	15841-98730	WASHER ADJUSTING	4			1.475mm	0.001	0.0022
110	15841-98740	WASHER ADJUSTING	4			1.500mm	0.001	0.0022
110	15841-98750	WASHER ADJUSTING	4			1.525mm	0.001	0.0022
110	15841-98760	WASHER ADJUSTING	4			1.550mm	0.001	0.0022
110	15841-98770	WASHER ADJUSTING	4			1.575mm	0.001	0.0022
110	15841-98780	WASHER ADJUSTING	4			1.600mm	0.002	0.0044
110	15841-98790	WASHER ADJUSTING	4			1.625mm	0.001	0.0022
110	15841-98800	WASHER ADJUSTING	4			1.650mm	0.001	0.0022
110	15841-98810	WASHER ADJUSTING	4			1.675mm	0.004	0.0088
110	15841-98820	WASHER ADJUSTING	4			1.700mm	0.001	0.0022
110	15841-98830	WASHER ADJUSTING	4			1.725mm	0.001	0.0022
110	15841-98840	WASHER ADJUSTING	4			1.750mm	0.001	0.0022
110	15841-98850	WASHER ADJUSTING	4			1.775mm	0.001	0.0022
110	15841-98860	WASHER ADJUSTING	4			1.800mm	0.001	0.0022
110	15841-98870	WASHER ADJUSTING	4			1.825mm	0.001	0.0022
110	15841-98880	WASHER ADJUSTING	4			1.850mm	0.001	0.0022
110	15841-98890	WASHER ADJUSTING	4			1.875mm	0.001	0.0022
110	15841-98900	WASHER ADJUSTING	4			1.900mm	0.001	0.0022
110	15841-98910	WASHER ADJUSTING	4			1.925mm	0.001	0.0022
110	15841-98920	WASHER ADJUSTING	4			1.950mm	0.001	0.0022
120	15841-53622	GASKET	4				0.002	0.0044
130	19077-53650	SEAL HEAT	4				0.005	0.011

silomorn.co.uk

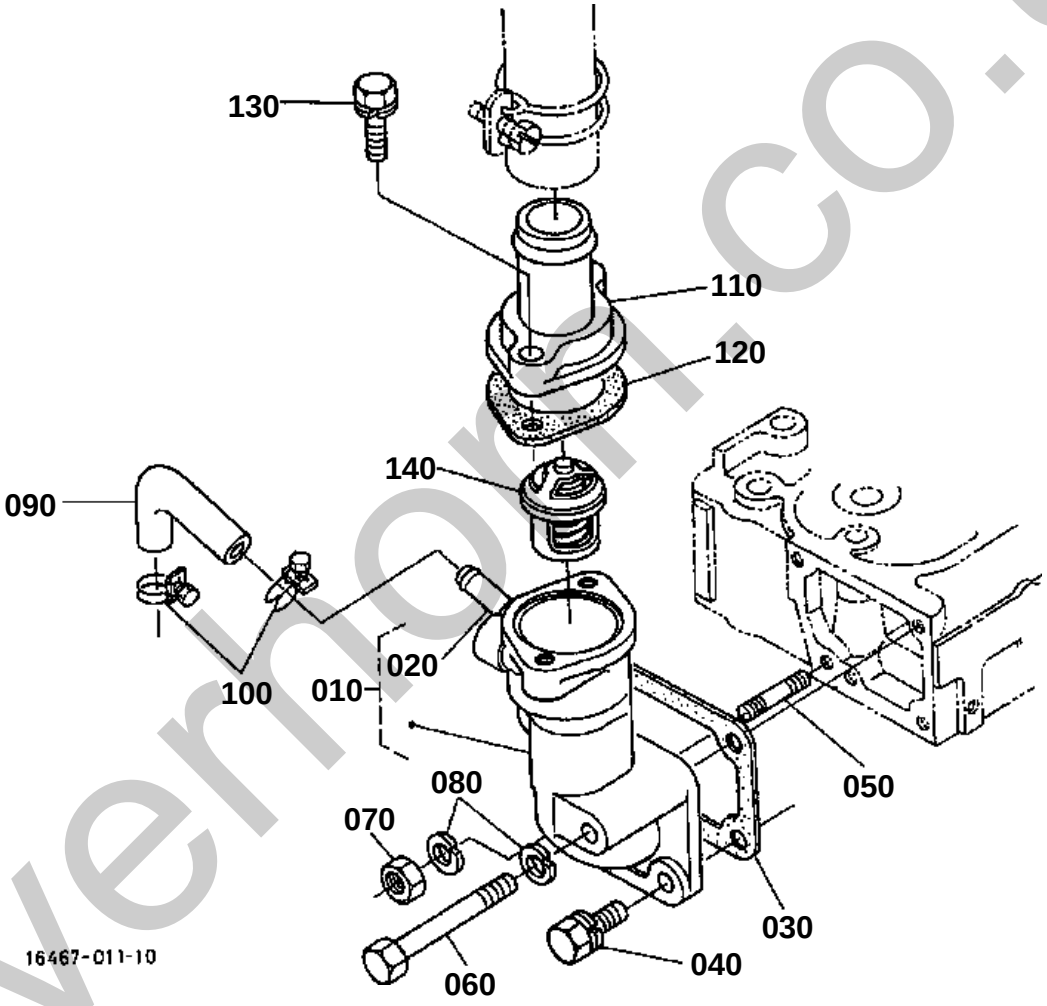

silverhorn.co.uk

WATER FLANGE AND THERMOSTAT [ROPS TYPE]

↔ Interchangeable; ≠ not interchangeable; ← new for old; → old for new

REF.No	Part No.	Description	Q'ty	S.No.	I/C	REMARKS	Weight (kgf)	Weight (lb)
010	16415-72702	COMP.FLANGE WATER	1				0.35	0.77
020	17331-73342	PIPE WATER RETURN	1				0.01	0.022
030	15766-72920	GASKET WATER FLANGE	1				0	0
030	1A021-72920	GASKET WATER FLANGE	1		↔		0.002	0.0044
040	01123-50820	BOLT	2				0.011	0.0242
050	15221-91530	STUD	1				0.011	0.0242
060	01153-50875	BOLT	1				0.028	0.0616
070	02156-50080	NUT	1				0.004	0.0088
080	04512-60080	WASHER SPRING	2				0.002	0.0044
090	15521-73340	PIPE WATER RETURN	1				0.025	0.055
100	15109-73360	BAND PIPE	2				0.01	0.022
110	15321-73260	COVER THERMOSTAT	1				0.107	0.2354
120	15313-73270	GASKET THERMOSTAT	1				0	0
120	1A021-73270	GASKET THERMOSTAT	1		↔		0.001	0.0022
130	01123-50835	BOLT	2				0.02	0.044
140	19434-73014	ASSY THERMOSTAT	1				0	0

silverhorn.co.uk

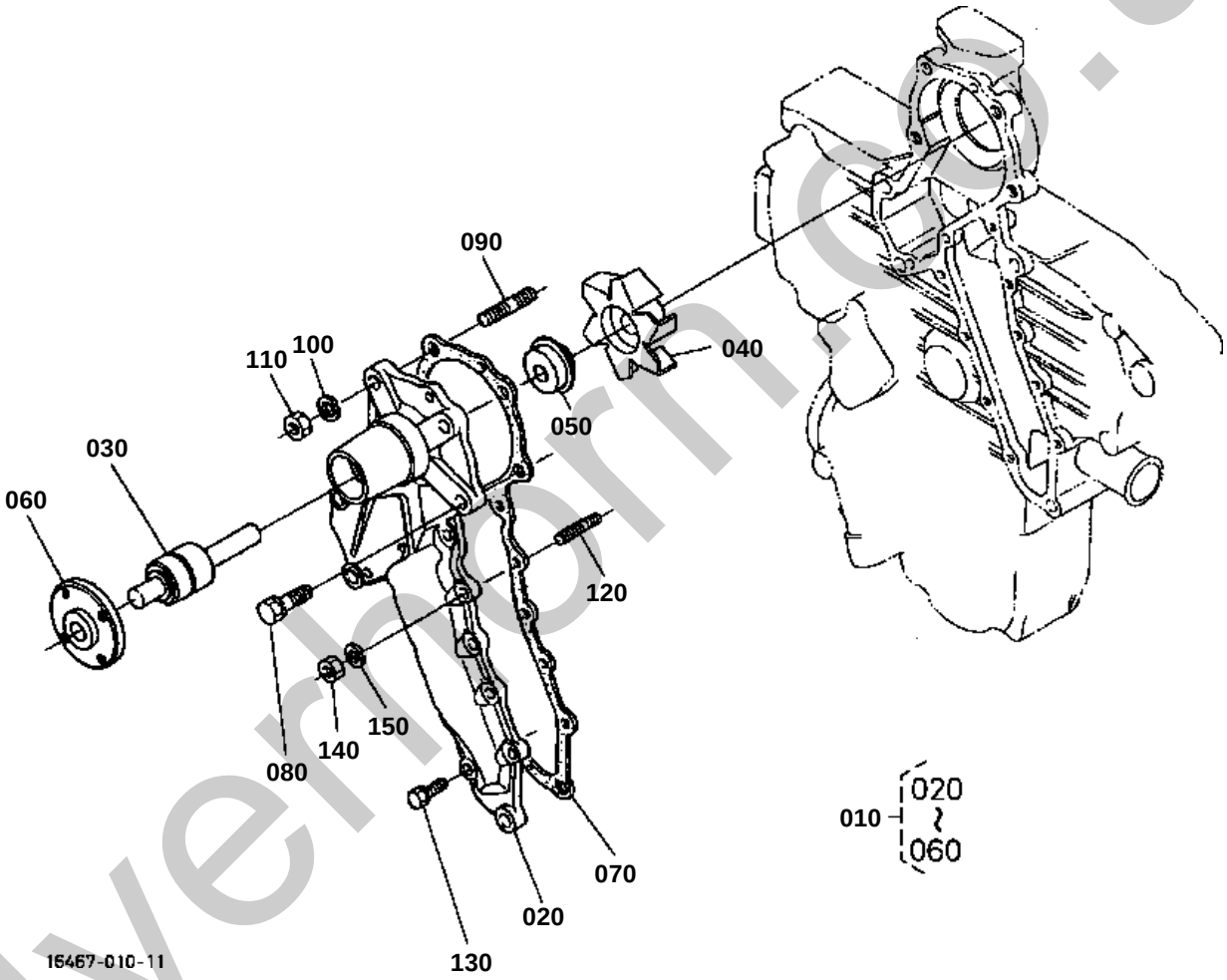

silvermorn.co.uk

040 16661-7351-0

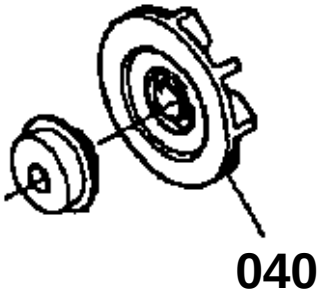

1A012-801-10

silverhorn.co.uk

WATER PUMP

↔ Interchangeable; ≠ not interchangeable; ← new for old; → old for new

REF.No	Part No.	Description	Q'ty	S.No.	I/C	REMARKS	Weight (kgf)	Weight (lb)
010	16412-73030	ASSY PUMP WATER	1	<=1W0523			1.21	2.662
010	1A021-73030	ASSY PUMP WATER	1	>=1Y0001	←		0	0
020	17331-73410	BODY WATER PUMP	1				0.51	1.122
030	15521-73550	BEARING	1				0.235	0.517
040	16661-73510	IMPELLER WATER PUMP	1	<=1W0523			0.195	0.429
040	1A021-73510	IMPELLER WATER PUMP	1	>=1Y0001	←		0	0
050	16661-73050	ASSY SEAL MECHANICAL	1				0.025	0.055
060	15521-73520	FLANGE WATER PUMP	1				0.25	0.55
070	17326-73430	GASKET WATER PUMP	1				0	0
070	1A021-73430	GASKET WATER PUMP	1		↔		0.007	0.0154
080	01123-50828	BOLT	3				0.014	0.0308
090	15521-91510	STUD	1				0.012	0.0264
100	04512-60080	WASHER SPRING	1				0.002	0.0044
110	02156-50080	NUT	1				0.004	0.0088
120	15221-88210	STUD	1				0.005	0.011
130	01023-50618	BOLT	8				0.006	0.0132
140	02056-50060	NUT	1				0.002	0.0044
150	04512-60060	WASHER SPRING	1				0.001	0.0022

silverhorn.co.uk

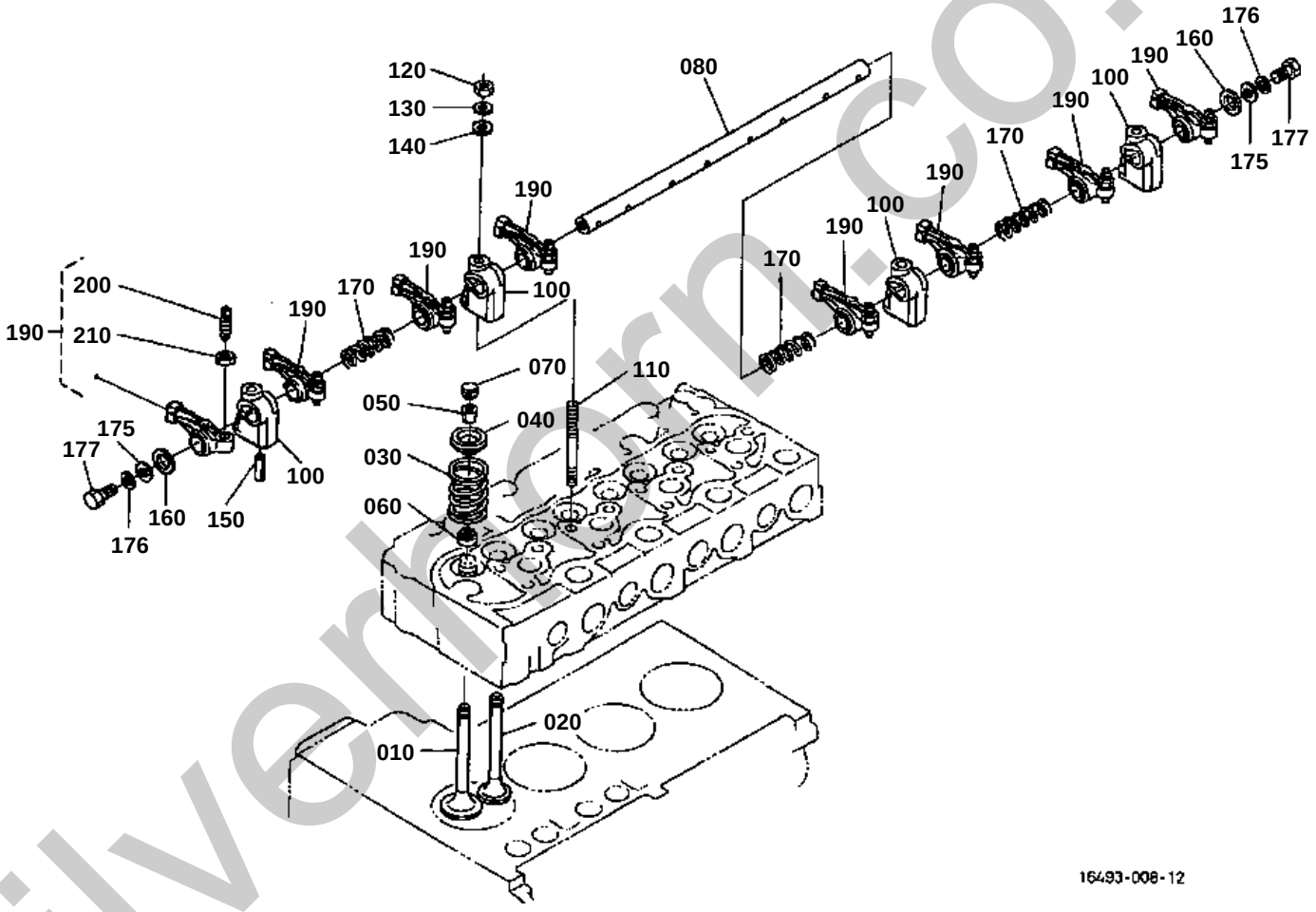

silverhorn.co.uk

080 15401-1405-2
090 03410-00808

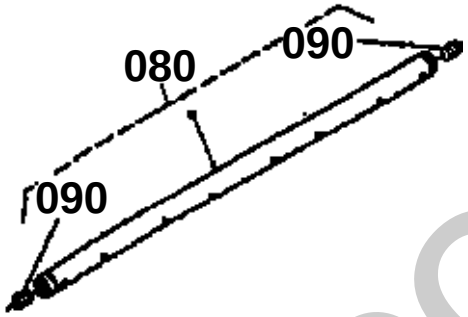

180 04612-00140

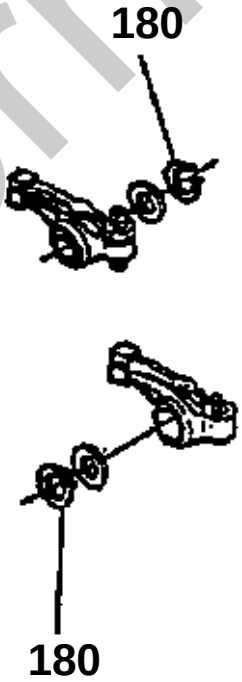

16493-807-10

silverhorn.co.uk

↔ Interchangeable; ≠ not interchangeable; ← new for old; → old for new

REF.No	Part No.	Description	Q'ty	S.No.	I/C	REMARKS	Weight (kgf)	Weight (lb)
010	16484-13110	VALVE INLET	4				0.05	0.11
020	16484-13120	VALVE EXHAUST	4				0.1	0.22
030	15221-13240	SPRING VALVE	8				0.036	0.0792
040	15221-13330	RETAINER VALVE SP.	8				0.03	0.066
050	15221-13360	COLLET VALVE SPRING	8			SET	0	0
050	15221-13980	ASSY COLLET	8		←	SET	0.005	0.011
060	15221-13150	SEAL VALVE STEM	8				0.001	0.0022
070	15221-13280	CAP VALVE	8				0.006	0.0132
080	15401-14052	ASSY SHAFT R-ARM	1	<=1Y0374			0.32	0.704
080	1A091-14260	SHAFT ROCKER ARM	1	>=2A0001	≠		0.313	0.6886
090	03410-50808	SCREW SET	2	<=1Y0374			0.002	0.0044
100	15221-14350	BRACKET ROCKER ARM	4				0.044	0.0968
110	15521-91500	STUD	4				0.035	0.077
120	02156-50080	NUT	4				0.004	0.0088
130	04512-60080	WASHER SPRING	4				0.002	0.0044
140	04012-50080	WASHER PLAIN	4				0.001	0.0022
150	05411-00528	PIN SPRING	1				0.003	0.0066
160	15221-14430	WASHER R-ARM.SHAFT	2				0.002	0.0044
170	15221-14310	SPRING ROCKER ARM	3				0.005	0.011
175	04013-60080	WASHER PLAIN	2	>=2A0001			0.002	0.0044
176	04512-60080	WASHER SPRING	2	>=2A0001			0.002	0.0044
177	01153-50812	BOLT	2	>=2A0001			0.008	0.0176
180	04612-00140	CIR CLIP EXTERNAL	2	<=1Y0374			0.001	0.0022
190	15621-14030	ASSY ROCKER ARM	8				0.1	0.22
200	15521-14230	SCREW ADJUSTING	8				0.009	0.0198
210	15021-14240	NUT	8				0.003	0.0066

silverhorn.co.uk

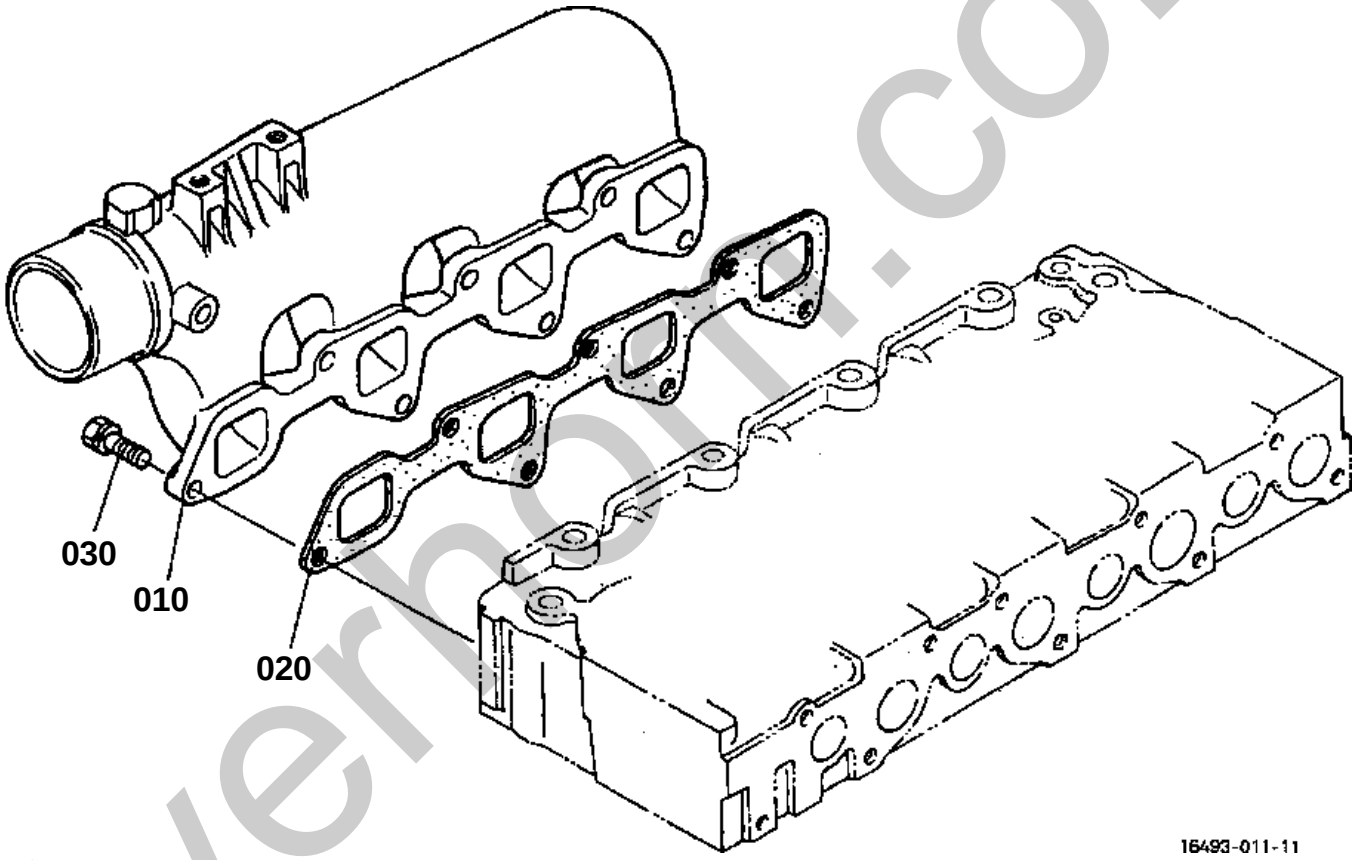

silverhorn.co.uk

010 16475-1176-0

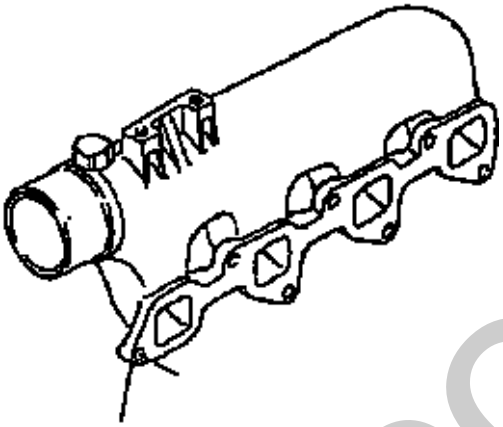

16493-808-10

silverhorn.co.uk

INLET MANIFOLD [ROPS TYPE]

↔ Interchangeable; ≠ not interchangeable; ← new for old; → old for new

REF.No	Part No.	Description	Q'ty	S.No.	I/C	REMARKS	Weight (kgf)	Weight (lb)
010	16475-11760	MANIFOLD INLET	1	<=1Y0374			1.16	2.552
010	16429-11760	MANIFOLD INLET	1	>=2A0001	←		1.19	2.618
020	16423-11820	GASKET IN-MANIFOLUDO	1				0.018	0.0396
030	01123-50822	BOLT	7				0.012	0.0264

silverhorn.co.uk

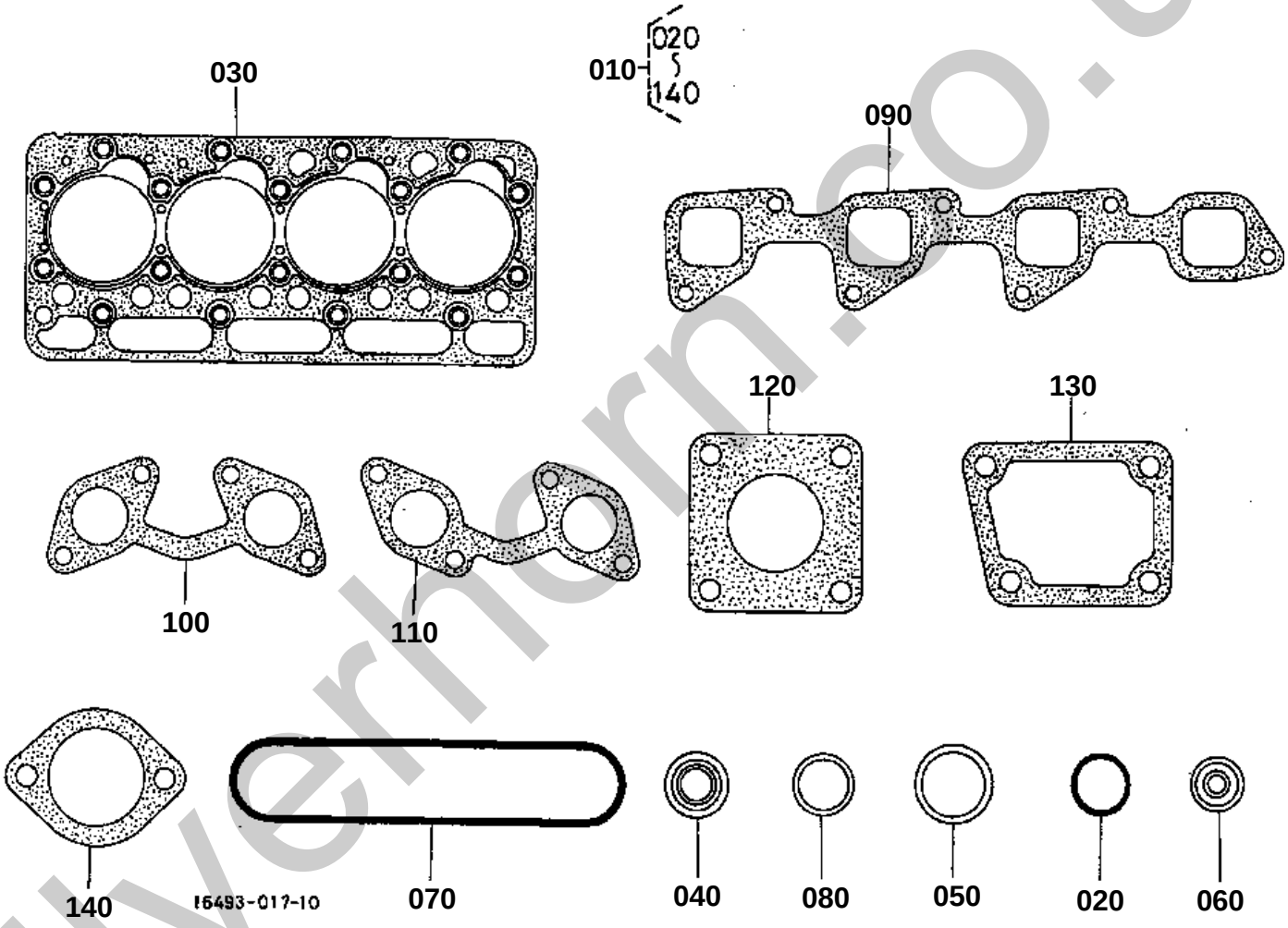

silverhorn.co.uk

UPPER GASKET KIT

↔ Interchangeable; ≠ not interchangeable; ← new for old; → old for new

REF.No	Part No.	Description	Q'ty	S.No.	I/C	REMARKS	Weight (kgf)	Weight (lb)
010	07916-27735	KIT GASKET UPPER	1				0	0
010	07916-27736	KIT GASKET UPPER	1		↔		0	0
020	15221-33700	O RING	1				0.001	0.0022
030	16454-03310	GASKET CYL.HEAD	1				0.145	0.319
040	15221-13150	SEAL VALVE STEM	8				0.001	0.0022
050	15841-53622	GASKET	4				0.002	0.0044
060	19077-53650	SEAL HEAT	4				0.005	0.011
070	15471-14520	GASKET HEAD COVER	1				0.05	0.11
080	15021-33660	GASKET	4				0.001	0.0022
090	16423-11820	GASKET IN-MANIFOLUDO	1				0.018	0.0396
100	1A091-12350	GASKET EX-MANIFOLD	1				0.02	0.044
100	1A091-12350	GASKET EX-MANIFOLD	1		↔		0.02	0.044
110	15439-12350	GASKET EX-MANIFOLD	1				0.02	0.044
110	1A091-12360	GASKET EX-MANIFOLD	1		↔		0.02	0.044
120	T0070-16420	GASKET MUFFLER	1				0.016	0.0352
130	15766-72920	GASKET WATER FLANGE	1				0	0
130	1A021-72920	GASKET WATER FLANGE	1		↔		0.002	0.0044
140	1A021-73270	GASKET THERMOSTAT	1				0.001	0.0022
140	1A021-73270	GASKET THERMO.COVER	1		↔		0.001	0.0022

silverhorn.co.uk

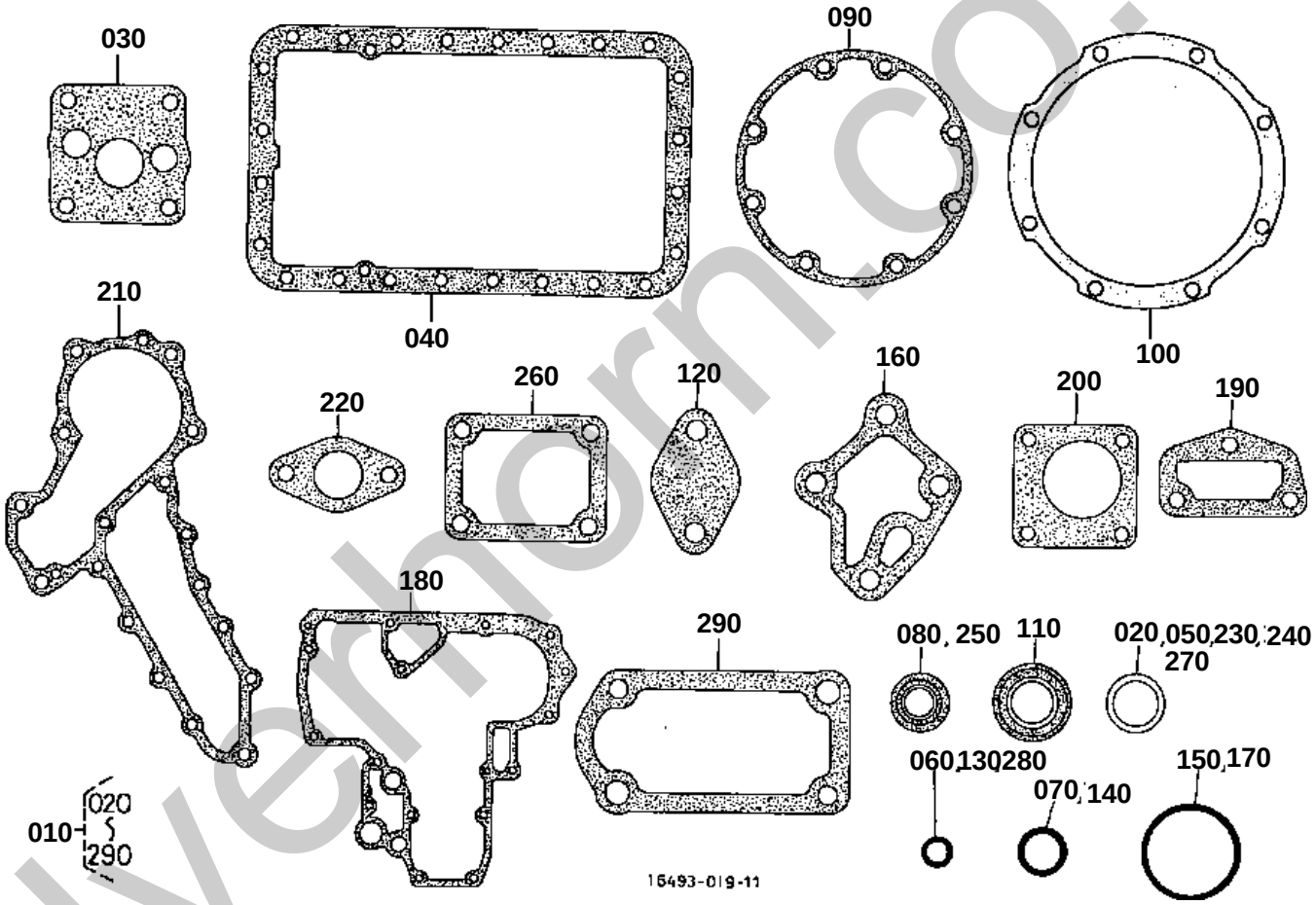

silverthorn.co.uk

100 17118-0483-0

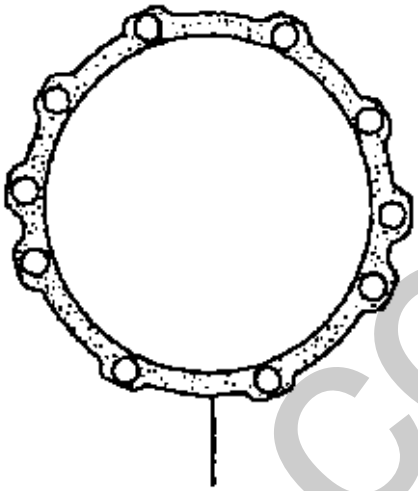

16478-800-10

silverhorn.co.uk

LOWER GASKET KIT

↔ Interchangeable; ≠ not interchangeable; ← new for old; → old for new

REF.No	Part No.	Description	Q'ty	S.No.	I/C	REMARKS	Weight (kgf)	Weight (lb)
010	07916-27755	KIT GASKET LOWER	1				0.3	0.66
010	07916-27756	KIT GASKET LOWER	1		↔		0	0
020	15021-33660	GASKET	1				0.001	0.0022
030	15296-35150	GASKET OIL PUMP	1				0	0
030	1A021-35150	GASKET OIL PUMP	1		↔		0.001	0.0022
040	15815-01620	GASKET OIL PAN	1				0.03	0.066
050	15109-33660	GASKET	2				0.001	0.0022
050	6C090-58960	GASKET	2		←		0.002	0.0044
060	04811-00160	O RING	1				0.001	0.0022
060	04817-00160	O RING	1		←		0	0
070	04811-10300	O RING	1				0.001	0.0022
080	19202-04140	SEAL OIL	1				0.015	0.033
090	19077-04360	GASKET BEARING CASE	1				0.004	0.0088
100	17118-04830	GASKET BRG.CASE COV.	1				0	0
100	1A091-04820	GASKET CASE COVER	1		↔		0.006	0.0132
110	19202-04460	SEAL OIL	1				0.055	0.121
120	15521-04790	PACKING COVER	1				0.005	0.011
130	04811-00150	O RING	3				0.001	0.0022
130	04817-00150	O RING	2		←		0	0
140	04811-00200	O RING	1				0.001	0.0022
140	04817-00200	O RING	1		←		0	0
150	04811-00360	O RING	1				0.002	0.0044
150	04817-00360	O RING	1		←		0	0
160	17326-32620	GASKET	1				0.005	0.011
170	19202-96830	O RING	1				0.01	0.022
180	17326-04132	GASKET GEAR CASE	1				0.03	0.066
190	15766-73330	GASKET WATER FLANGE	1				0	0
190	1A021-73330	GASKET RETURN FLANGE	1		↔		0.001	0.0022
200	15296-88130	GASKET H/METER UNIT	1				0.002	0.0044
210	17326-73430	GASKET WATER PUMP	1				0	0
210	1A021-73430	GASKET WATER PUMP	1		↔		0.007	0.0154
220	15263-52140	GASKET FUEL PUMP	1				0	0
220	1A021-52140	GASKET FUEL PUMP	1		↔		0.001	0.0022
230	15401-96650	GASKET	2				0.001	0.0022
240	15021-33660	GASKET	2				0.001	0.0022
250	15471-57980	SEAL OIL	1				0.001	0.0022
260	15296-51660	GASKET PUMP COVER	1				0	0
260	1A021-51660	GASKET PUMP COVER	1		↔		0.003	0.0066
270	15601-96650	GASKET	2				0.001	0.0022
280	04811-00120	O RING	1				0.001	0.0022
280	04817-00120	O RING	1		←		0	0
290	15439-57210	GASKET	1				0.005	0.011

silverhorn.co.uk

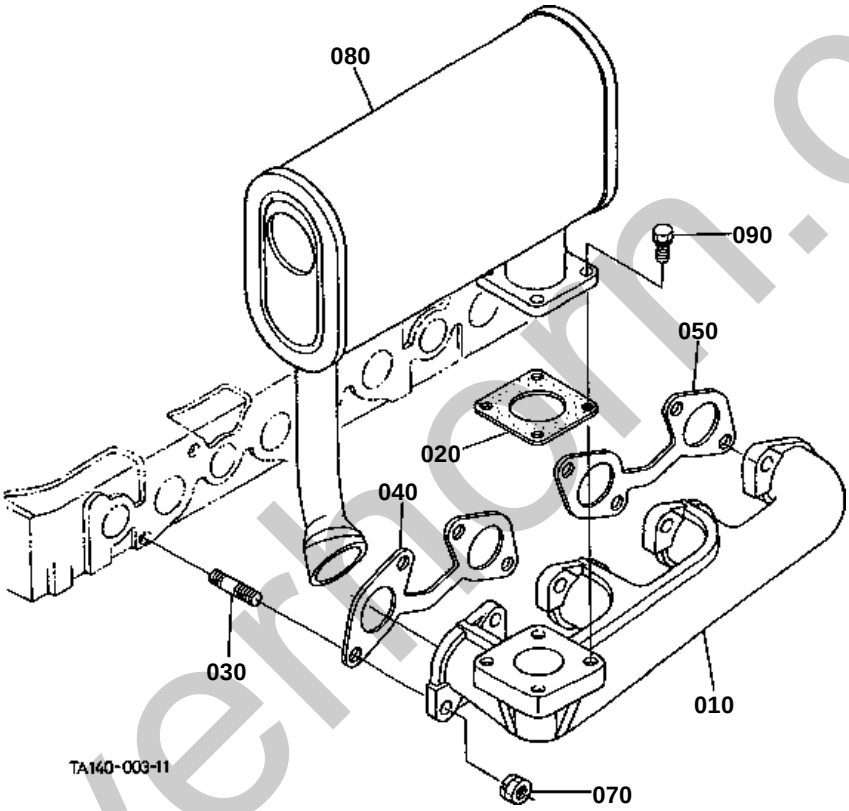

silverhorn.co.uk

060 04512-50080
070 02156-50080

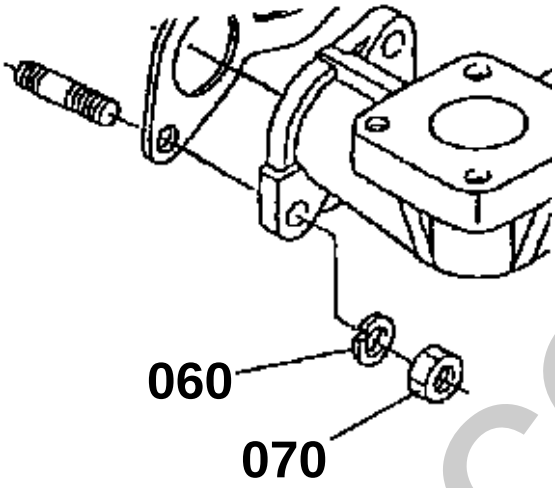

TA140-837-10

silverhorn.co.uk

EXHAUST MANIFOLD/MUFFLER

↔ Interchangeable; ≠ not interchangeable; ← new for old; → old for new

REF.No	Part No.	Description	Q'ty	S.No.	I/C	REMARKS	Weight (kgf)	Weight (lb)
010	17377-12312	MANIFOLD EXHAUST	1				2.95	6.49
020	T0070-16420	GASKET MUFFLER	1				0.016	0.0352
030	15221-91530	STUD	8				0.011	0.0242
040	15296-12350	GASKET EX-MANIFOLD	1				0	0
040	1A091-12350	GASKET EX-MANIFOLD	1		↔		0.02	0.044
050	15439-12350	GASKET EX-MANIFOLD	1				0.02	0.044
050	1A091-12360	GASKET EX-MANIFOLD	1		↔		0.02	0.044
060	04512-60080	WASHER SPRING	8	<=71313			0.002	0.0044
070	02156-50080	NUT	8	<=71313			0.004	0.0088
070	16429-92010	NUT	8	>=71314	←		0.007	0.0154
080	TA140-16410	MUFFLER	1	<=2E0405			5.9	12.98
080	TA140-16414	MUFFLER	1	>=2G0001	←		5.9	12.98
090	01123-50822	BOLT	4	<=1J0654			0.012	0.0264
090	01128-50825	BOLT	4	>=1N0001	←		0	0

silverhorn.co.uk

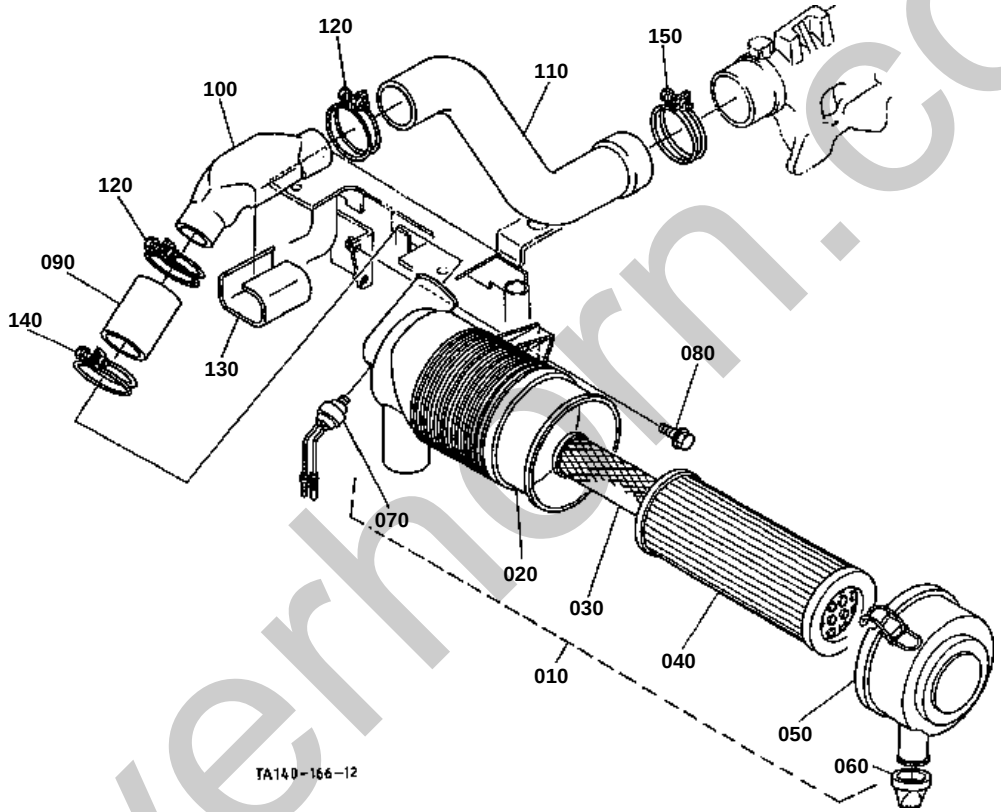

silverhorn.co.uk

010 TA140-9320-0

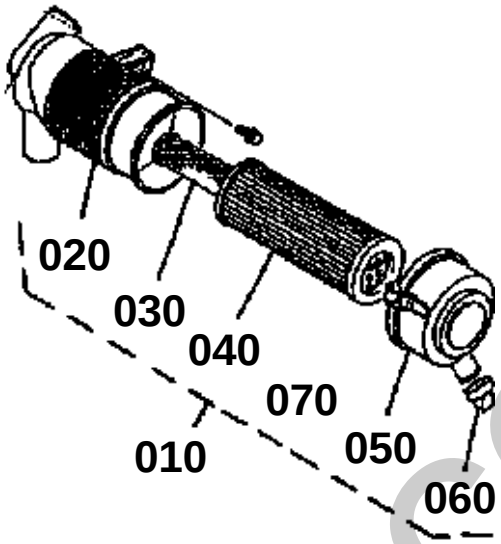

TA140-817-10

silverhorn.co.uk

AIR CLEANER [ROPS TYPE] [OLD TYPE]
[S.No.;<=61237]

↔ Interchangeable; ≠ not interchangeable; ← new for old; → old for new

REF.No	Part No.	Description	Q'ty	S.No.	I/C	REMARKS	Weight (kgf)	Weight (lb)
010	TA140-93200	ASSY CLEANER AIR(W)	1	<=52112			0	0
010	TA140-93202	ASSY CLEANER AIR(W)	1	>=52113	←		1.6	3.52
020	TA140-93210	COMP.BODY A/C	1				0.425	0.935
030	TA040-93220	ASSY ELEMENT INNER	1				0.195	0.429
040	TA040-93230	ASSY ELEMENT OUTER	1				0.56	1.232
050	TA140-93240	ASSY COVER A/C	1				0.305	0.671
060	TA040-93250	VALVE EVACUATOR	1				0.011	0.0242
070	15831-11090	ASSY INDICATOR	1				0.03	0.066
080	01754-50816	BOLT FLANGE	2				0.011	0.0242
090	TA140-16350	HOSE	1				0.105	0.231
100	TA140-16340	HOSE	1	<=50910			0	0
100	TA140-16342	HOSE	1	>=50911	←		0.08	0.176
110	TA140-16330	HOSE	1				0.515	1.133
120	15401-11720	BAND PIPE	2	<=50003			0.05	0.11
120	09318-89066	CLAMP HOSE	2	>=50004	←		0.036	0.0792
130	TA140-16360	COVER RETAINER	1				0.084	0.1848
140	09318-89063	CLAMP HOSE	1	<=50003			0.04	0.088
140	09318-89066	CLAMP HOSE	1	>=50004	←		0.036	0.0792
150	09318-89069	CLAMP HOSE	1				0.04	0.088

silverhorn.co.uk

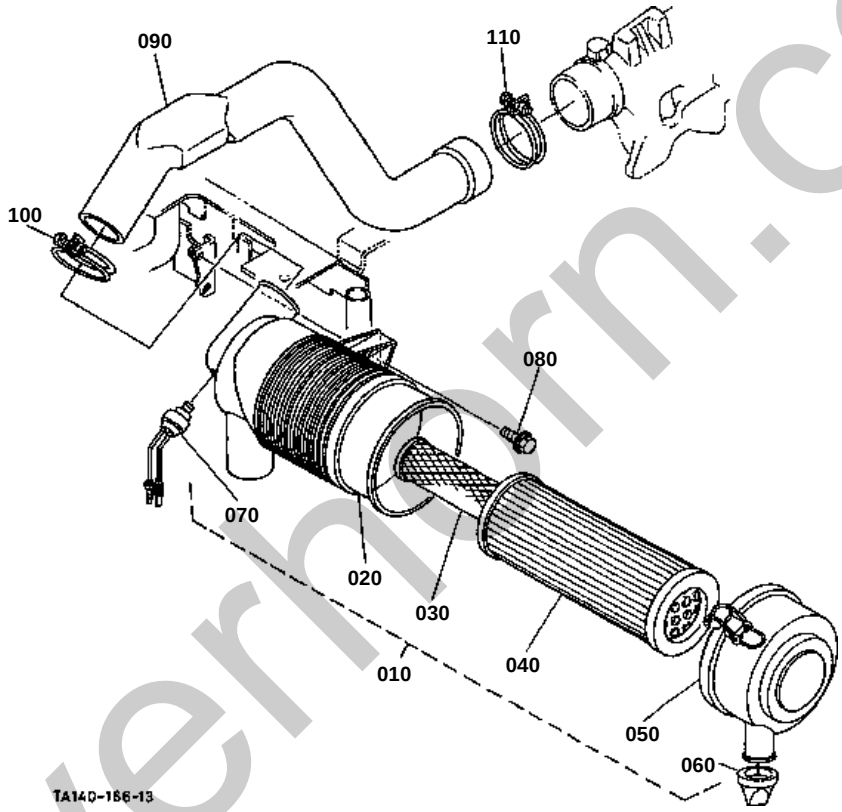

silverhorn.co.uk

AIR CLEANER [ROPS TYPE] [NEW TYPE]

[S.No.;=>61238]

↔ Interchangeable; ≠ not interchangeable; ← new for old; → old for new

REF.No	Part No.	Description	Q'ty	S.No.	I/C	REMARKS	Weight (kgf)	Weight (lb)
010	TA140-93202	ASSY CLEANER AIR(W)	1				1.6	3.52
020	TA140-93210	COMP.BODY A/C	1				0.425	0.935
030	TA040-93220	ASSY ELEMENT INNER	1				0.195	0.429
040	TA040-93230	ASSY ELEMENT OUTER	1				0.56	1.232
050	TA140-93240	ASSY COVER A/C	1				0.305	0.671
060	TA040-93250	VALVE EVACUATOR	1				0.011	0.0242
070	15831-11090	ASSY INDICATOR	1				0.03	0.066
080	01754-50816	BOLT FLANGE	2				0.011	0.0242
090	TA150-16300	HOSE	1				1.025	2.255
100	09318-89066	CLAMP HOSE	1				0.036	0.0792
110	09318-89069	CLAMP HOSE	1				0.04	0.088

silverhorn.co.uk

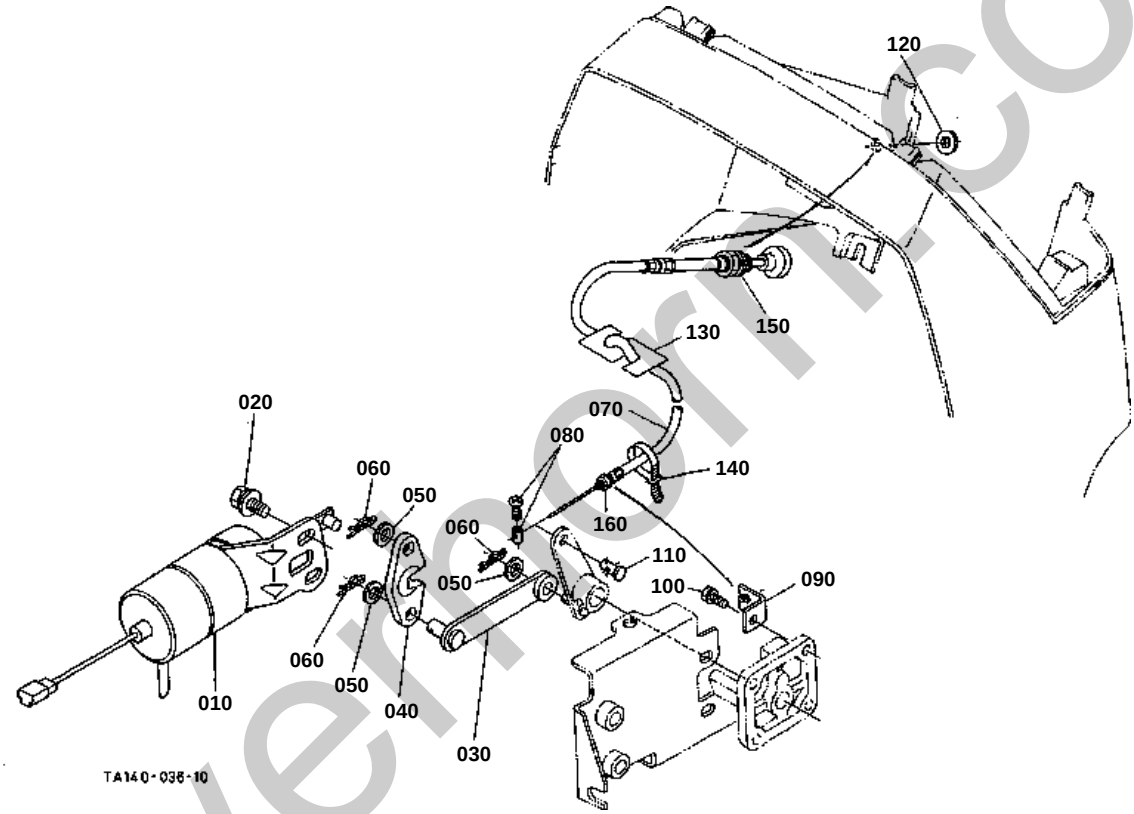

silvermorn.co.uk

STOP SOLENOIDE/ENGINE STOP WIRE

↔ Interchangeable; ≠ not interchangeable; ← new for old; → old for new

REF.No	Part No.	Description	Q'ty	S.No.	I/C	REMARKS	Weight (kgf)	Weight (lb)
010	15471-60010	SOLENOID STOP	1				0.415	0.913
020	01125-60816	BOLT	2				0.01	0.022
030	17331-60150	LEVER STOP	1				0.025	0.055
040	15471-60162	LEVER STOP	1				0.007	0.0154
050	04012-50060	WASHER PLAIN	3				0.001	0.0022
060	05525-60600	PIN SNAP	3				0.001	0.0022
070	T0070-44214	WIRE ENGINE STOP	1				0.11	0.242
080	T0070-44260	SCREW	1				0.005	0.011
090	34070-44220	HOLDER WIRE	1				0.02	0.044
100	01023-50620	BOLT	1				0.006	0.0132
110	34070-44240	PIN JOINT	1				0.005	0.011
120	04011-50100	WASHER PLAIN	1				0.002	0.0044
130	34550-44220	BREAKER STOP WIRE	1				0.008	0.0176
140	53581-64150	BAND CORD	1				0.002	0.0044
150	02771-60100	NUT FLANGE	1				0.01	0.022
160	02012-60060	NUT	1				0.005	0.011

silverhorn.co.uk

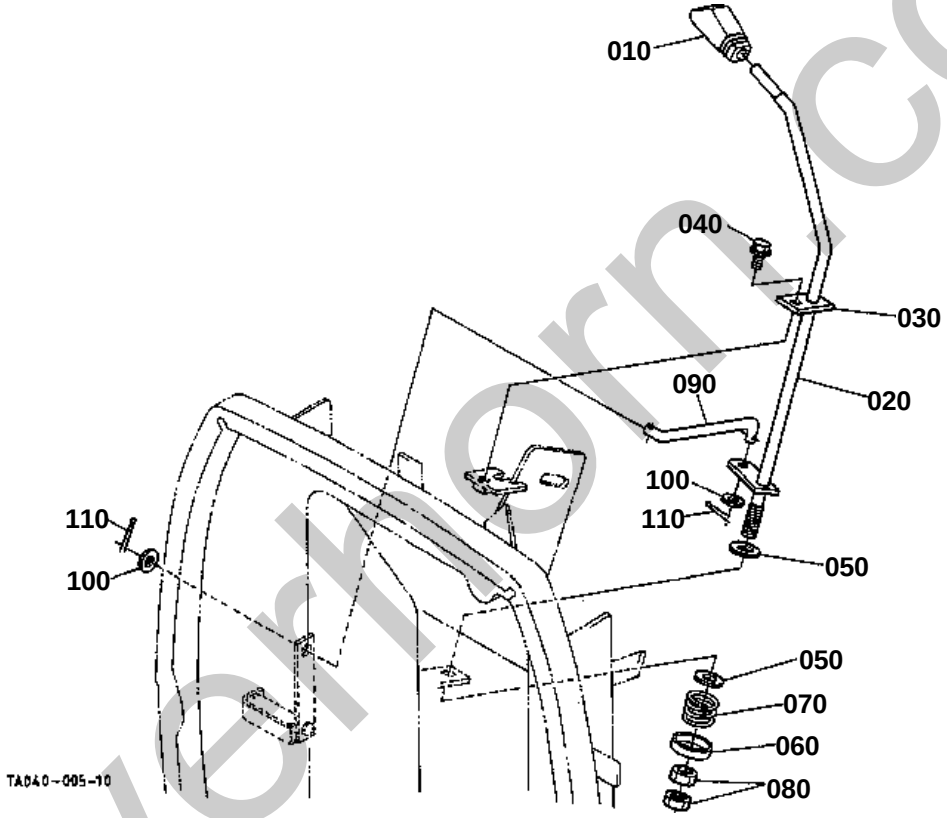

silverhorn.co.uk

ACCELERATOR LEVER [EXCEPT HST TYPE] [ROPS TYPE]
[EXCEPTE TYPE CABINE]

↔ Interchangeable; ≠ not interchangeable; ← new for old; → old for new

REF.No	Part No.	Description	Q'ty	S.No.	I/C	REMARKS	Weight (kgf)	Weight (lb)
010	TA040-49873	GRIP	1				0.024	0.0528
020	TA040-42814	SHAFT ACCEL.CONTROL	1				0.42	0.924
030	T0070-45910	SUPPORT ACCEL.LEVER	1				0.025	0.055
040	01754-50816	BOLT FLANGE	1				0.011	0.0242
050	04013-60120	WASHER PLAIN	2				0.01	0.022
060	33251-10270	CAP SPRING	1				0.01	0.022
070	33251-10320	SPRING ACCEL.LEVER	1				0.012	0.0264
080	02174-50120	NUT	2				0.01	0.022
090	34070-42820	ROD CONNECTING	1				0.07	0.154
100	04012-50080	WASHER PLAIN	2				0.001	0.0022
110	05511-50215	PIN SPLIT	2				0.001	0.0022

silverhorn.co.uk

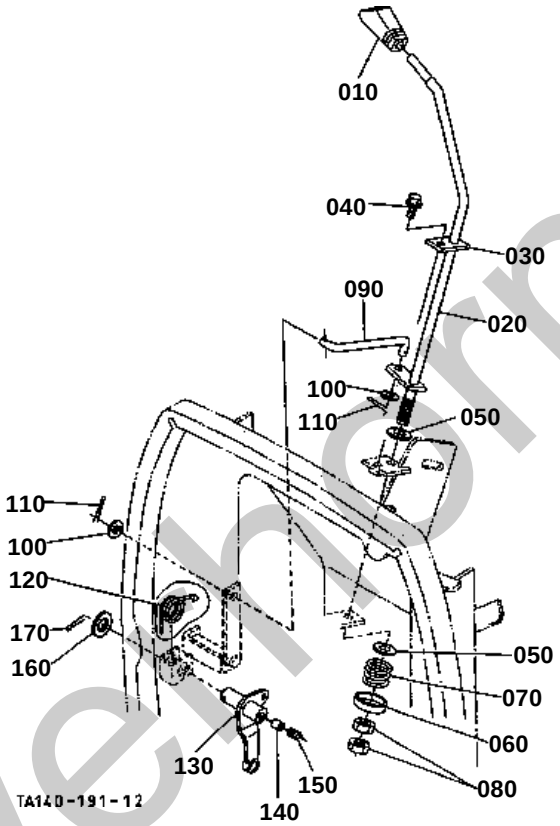

silverthorn.co.uk

ACCELERATOR LEVER [HST TYPE] [ROPS TYPE]
[EXCEPTE TYPE CABINE]

↔ Interchangeable; ≠ not interchangeable; ← new for old; → old for new

REF.No	Part No.	Description	Q'ty	S.No.	I/C	REMARKS	Weight (kgf)	Weight (lb)
010	TA040-49873	GRIP	1				0.024	0.0528
020	TA040-42814	SHAFT ACCEL.CONTROL	1				0.42	0.924
030	T0070-45910	SUPPORT ACCEL.LEVER	1				0.025	0.055
040	01754-50816	BOLT FLANGE	1				0.011	0.0242
050	04013-60120	WASHER PLAIN	2				0.01	0.022
060	33251-10270	CAP SPRING	1				0.01	0.022
070	33251-10320	SPRING ACCEL.LEVER	1				0.012	0.0264
080	02174-50120	NUT	2				0.01	0.022
090	34070-42820	ROD CONNECTING	1				0.07	0.154
100	04012-50080	WASHER PLAIN	2				0.001	0.0022
110	05511-50215	PIN SPLIT	2				0.001	0.0022
120	T0270-76400	SPRING	1				0.018	0.0396
130	T0270-76450	LEVER ACCEL.LINK	1				0.175	0.385
140	67156-38220	PIECE GUIDE	1				0.003	0.0066
150	36741-94450	SPRING	1				0.001	0.0022
160	04011-50180	WASHER PLAIN	1				0.012	0.0264
170	05511-50330	PIN SPLIT	1				0.005	0.011

silverhorn.co.uk

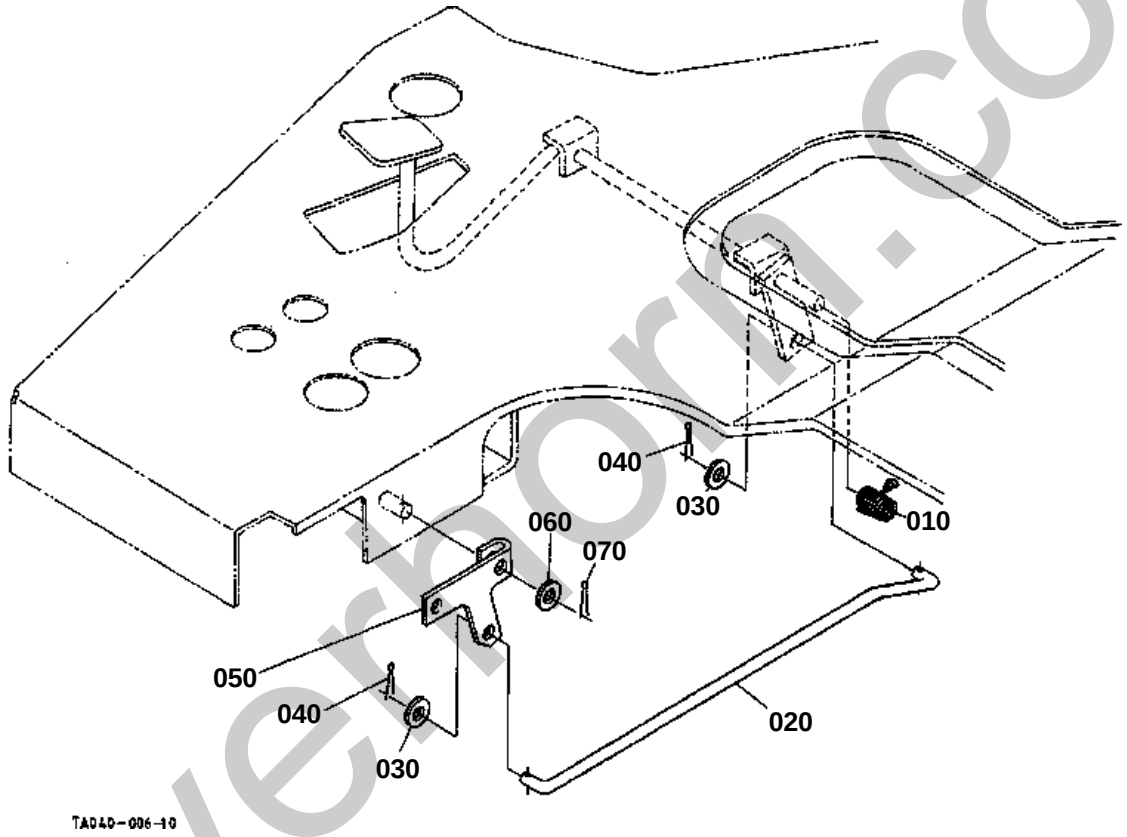

silverhorn.co.uk

ACCELERATOR LINKAGE [EXCEPT HST TYPE]

↔ Interchangeable; ≠ not interchangeable; ← new for old; → old for new

REF.No	Part No.	Description	Q'ty	S.No.	I/C	REMARKS	Weight (kgf)	Weight (lb)
010	T0070-44720	SPRING	1				0.015	0.033
020	T0070-44730	ROD ACCEL.	1				0.075	0.165
030	04012-50060	WASHER PLAIN	2				0.001	0.0022
040	05511-50218	PIN SPLIT	2				0.001	0.0022
050	34070-44744	LEVER ACCEL.	1				0.045	0.099
060	04012-50060	WASHER PLAIN	1				0.001	0.0022
070	05511-51612	PIN SPLIT	1				0.001	0.0022

silverhorn.co.uk

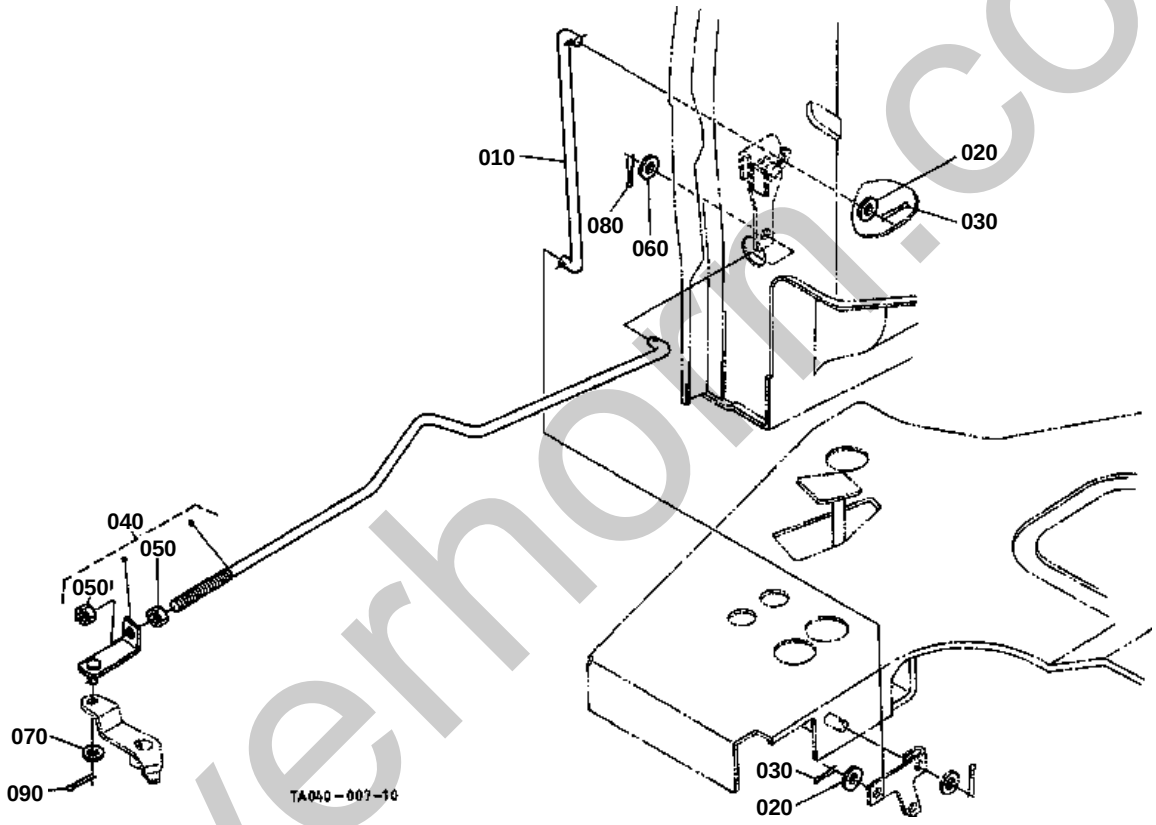

silverhorn.co.uk

ACCELERATOR ROD [EXCEPT HST TYPE] [ROPS TYPE]
[EXCEPTE TYPE CABINE]

↔ Interchangeable; ≠ not interchangeable; ← new for old; → old for new

REF.No	Part No.	Description	Q'ty	S.No.	I/C	REMARKS	Weight (kgf)	Weight (lb)
010	34070-42920	ROD PEDAL	1				0.065	0.143
020	04012-50060	WASHER PLAIN	2				0.001	0.0022
030	05511-50218	PIN SPLIT	2				0.001	0.0022
040	TA040-42900	ASSY ROD ACCEL.	1				0.246	0.5412
050	02112-50080	NUT	2				0.003	0.0066
060	04012-50080	WASHER PLAIN	1				0.001	0.0022
070	04012-50060	WASHER PLAIN	1				0.001	0.0022
080	05511-50218	PIN SPLIT	1				0.001	0.0022
090	05511-51612	PIN SPLIT	1				0.001	0.0022

silverhorn.co.uk

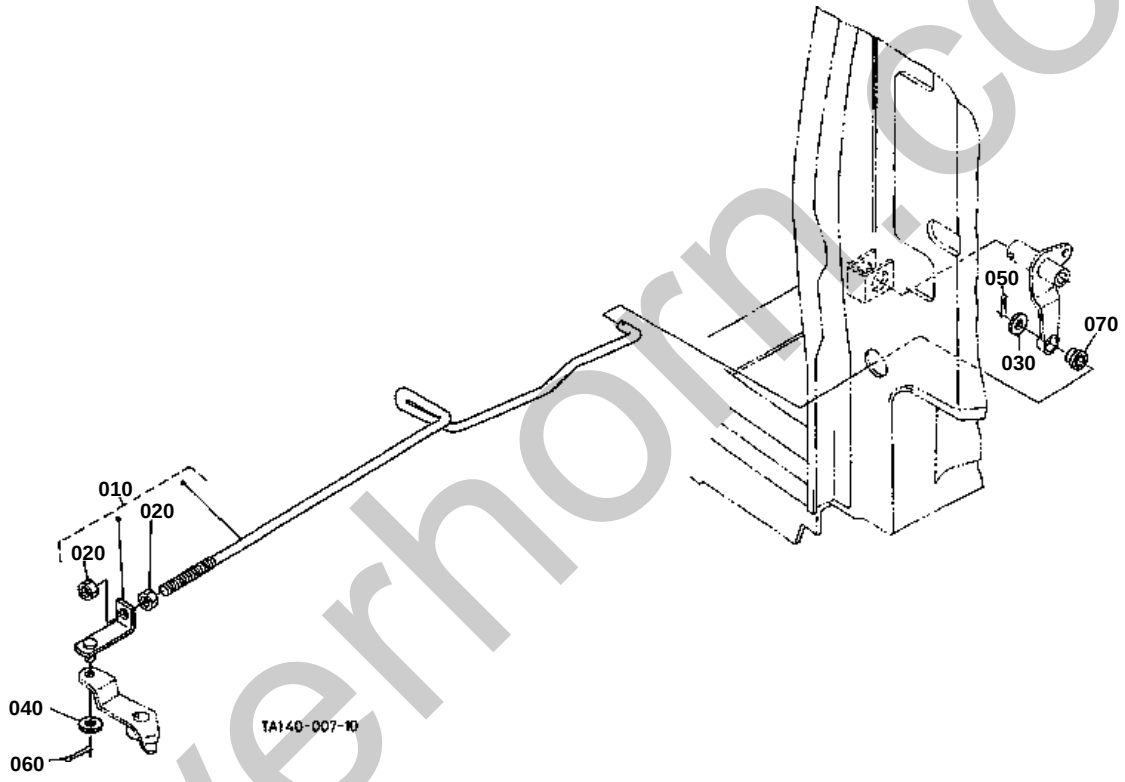

silverhorn.co.uk

ACCELERATOR ROD [HST TYPE]

↔ Interchangeable; ≠ not interchangeable; ← new for old; → old for new

REF.No	Part No.	Description	Q'ty	S.No.	I/C	REMARKS	Weight (kgf)	Weight (lb)
010	T0320-76070	ASSY ROD ACCEL.	1				0.265	0.583
020	02112-50080	NUT	2				0.003	0.0066
030	04012-50080	WASHER PLAIN	1				0.001	0.0022
040	04012-50060	WASHER PLAIN	1				0.001	0.0022
050	05511-50218	PIN SPLIT	1				0.001	0.0022
060	05511-51612	PIN SPLIT	1				0.001	0.0022
070	T0070-76460	CUSHION	1				0.006	0.0132

silverhorn.co.uk

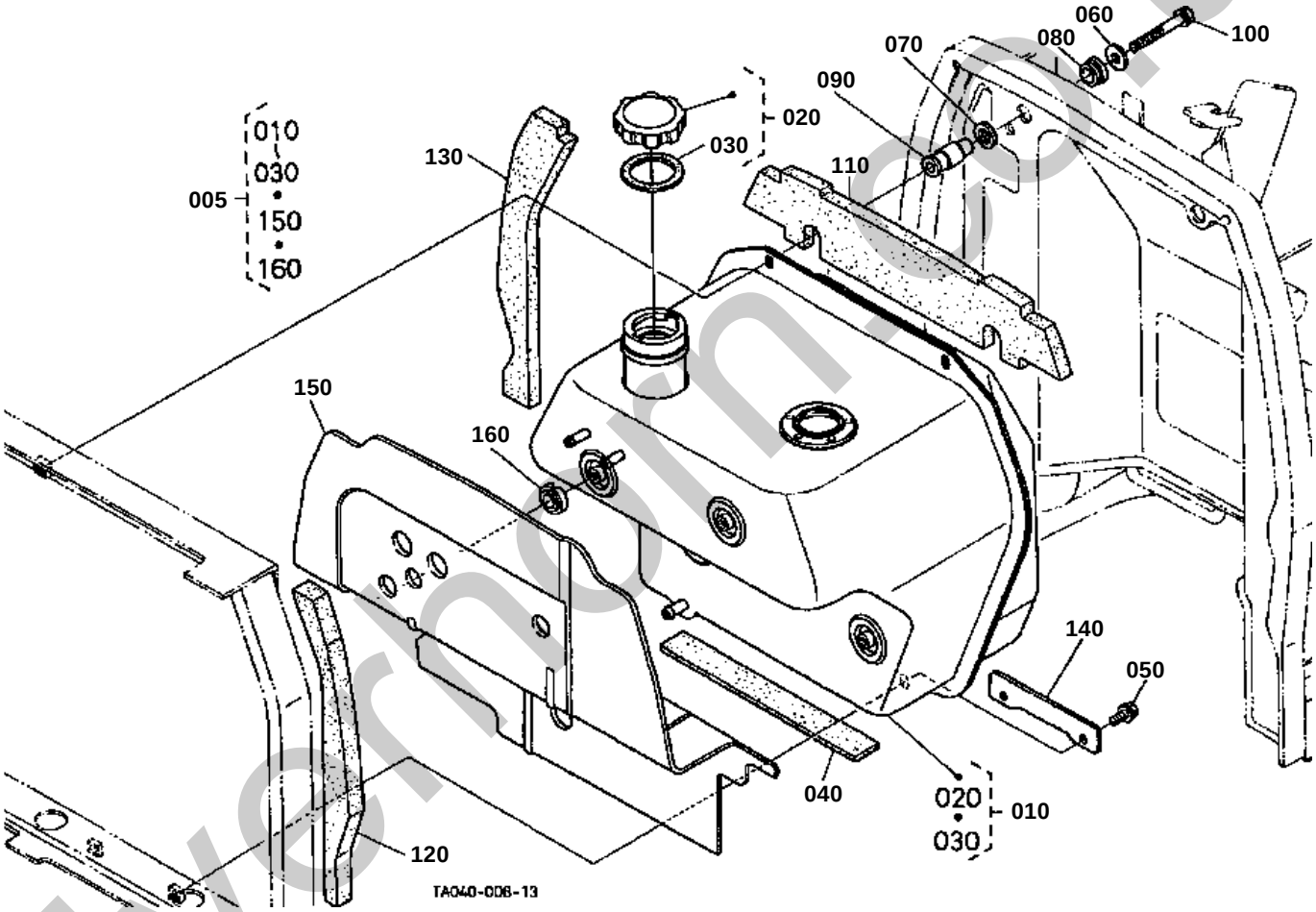

silverhorn.co.uk

010 TA040-4200-3
010 TA040-4200-4
010 TA040-4200-5
010 TA040-4200-6

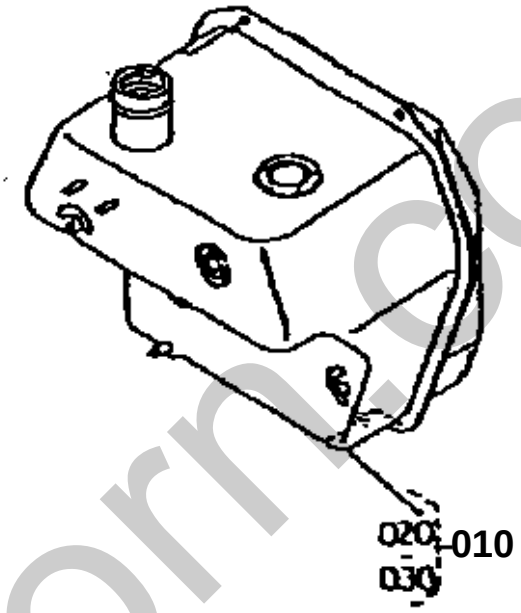

150 34070-4211-0
150 34070-4211-5

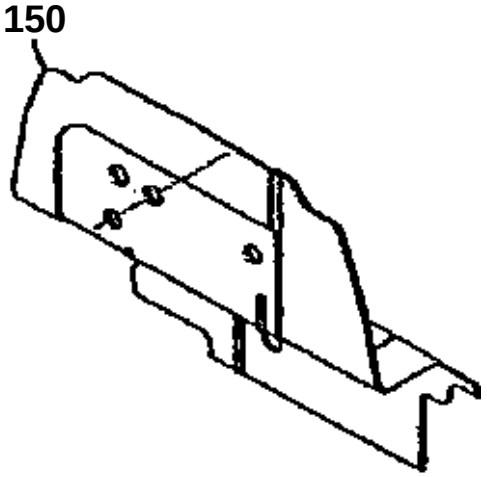

TA147-808-10

silverhorn.co.uk

FUEL TANK [ROPS TYPE]

↔ Interchangeable; ≠ not interchangeable; ← new for old; → old for new

REF.No	Part No.	Description	Q'ty	S.No.	I/C	REMARKS	Weight (kgf)	Weight (lb)
005	TA040-94400	KIT FUEL TANK	1	<=72288			0	0
010	TA040-42003	ASSY TANK FUEL	1	<=50411		NOT SALE ORDER BY REF.No.005	0	0
010	TA040-42004	ASSY TANK FUEL	1	>=50412	←	NOT SALE ORDER BY REF.No.005	7	15.4
010	TA040-42005	ASSY TANK FUEL	1	>=72129	←	NOT SALE ORDER BY REF.No.005	7	15.4
010	TA040-42006	ASSY TANK FUEL	1	>=72217	←	NOT SALE ORDER BY REF.No.005	7	15.4
010	TA040-42007	ASSY TANK FUEL	1	>=72289	←	NOT SALE ORDER BY REF.No.005	7	15.4
020	61191-54720	ASSY CAP FUEL TANK	1				0.09	0.198
030	61191-54740	GASKET TANK CAP	1				0.01	0.022
040	31351-13820	CUSHION BATTERY	1				0.015	0.033
050	01754-50816	BOLT FLANGE	2				0.011	0.0242
060	04015-60080	WASHER PLAIN	2				0.01	0.022
070	04011-50140	WASHER PLAIN	2				0.007	0.0154
080	34070-42060	CUSHION	2				0.005	0.011
090	34070-42070	SPACER	2				0.07	0.154
100	01123-50875	BOLT	2				0.04	0.088
110	T0070-42513	SHUTTER	1				0.03	0.066
120	T0070-42523	SHUTTER	1				0.019	0.0418
130	T0070-42532	SHUTTER	1				0.015	0.033
140	T0120-42150	PLATE FUEL TANK	1				0.08	0.176
150	34070-42110	PLATE SHUTTER	1	<=50189		NOT SALE ORDER BY REF.No.005	0	0
150	34070-42115	PLATE SHUTTER	1	>=50190	←	NOT SALE ORDER BY REF.No.005	3	6.6
150	34070-42116	PLATE SHUTTER	1	>=72289	←		0	0
160	34070-42260	CUSHION	4				0.005	0.011

silverhorn.co.uk

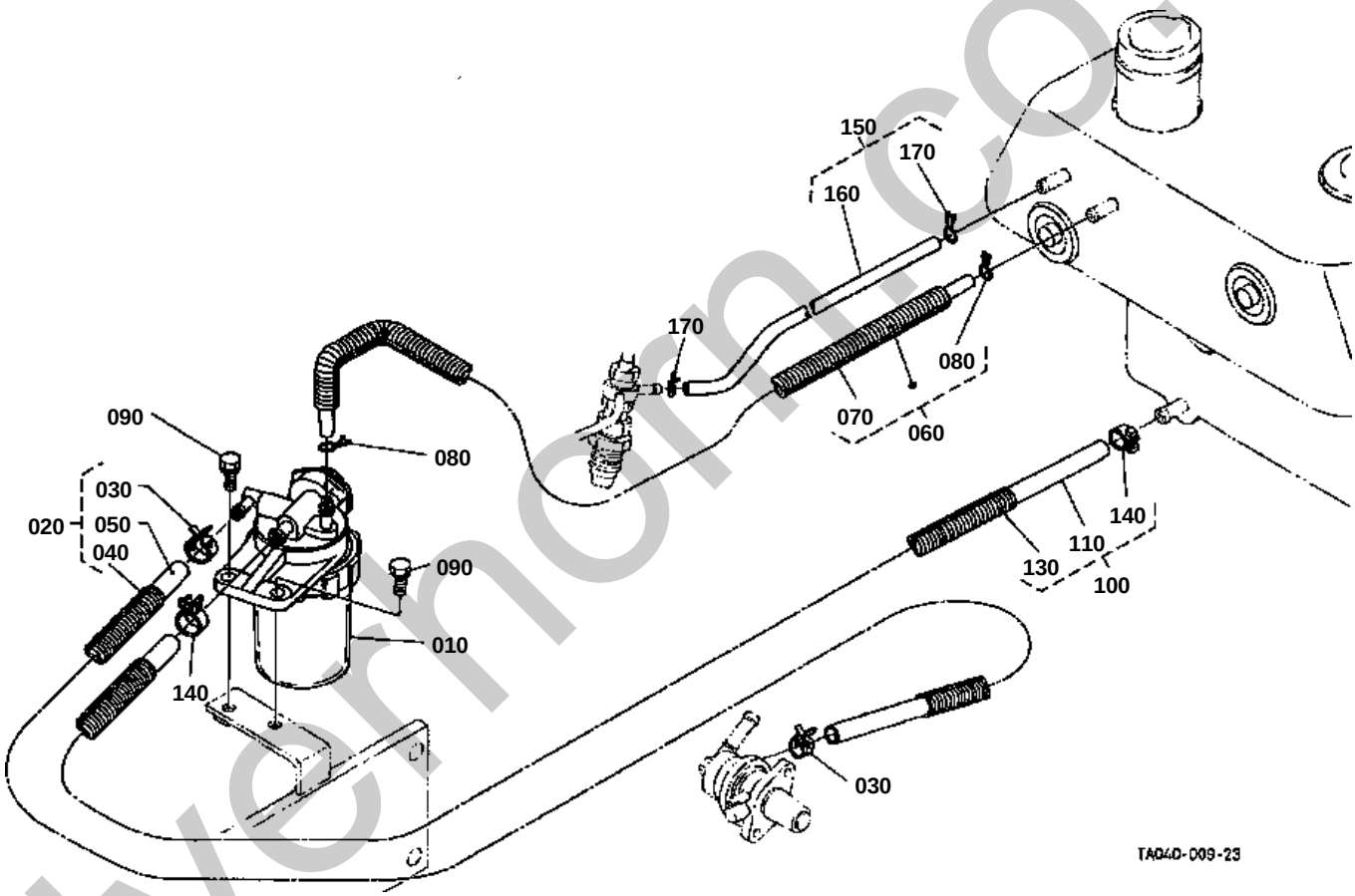

silvermoor.co.uk

030 14301-4275-0

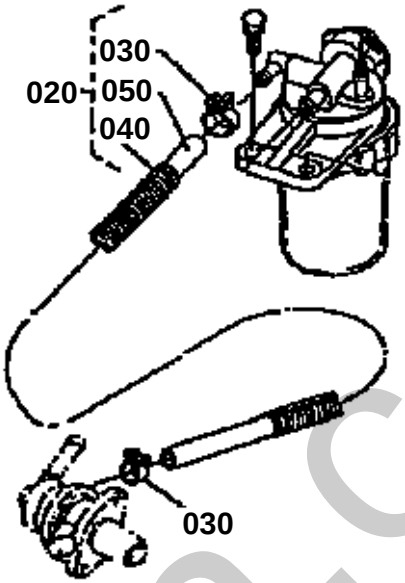

100 34530-4261-2
120 35080-3556-0
140 14301-4275-0

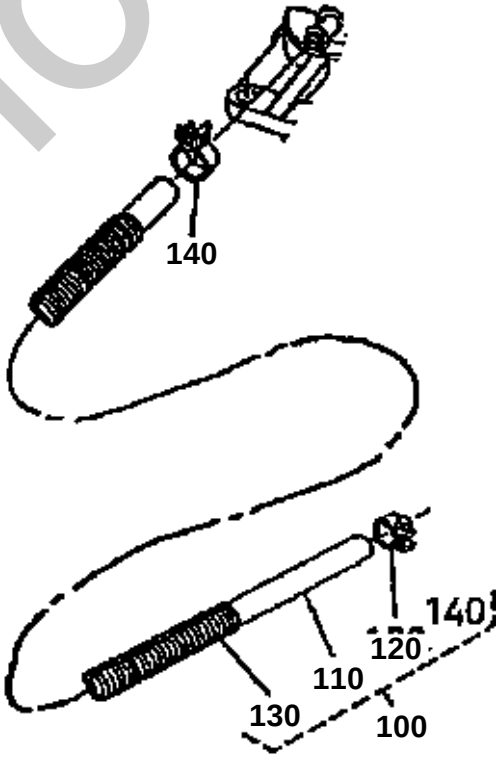

TA129-804-11

silverhorn.co.uk

FUEL PIPE AND FUEL FILTER

↔ Interchangeable; ≠ not interchangeable; ← new for old; → old for new

REF.No	Part No.	Description	Q'ty	S.No.	I/C	REMARKS	Weight (kgf)	Weight (lb)
010	15521-43015	ASSY FILTER FUEL	1				0.59	1.298
020	34530-42620	ASSY TUBE FUEL	1				0.055	0.121
030	14301-42750	CLIP PIPE	2	<=72020			0.005	0.011
030	09318-88125	CLAMP HOSE	2	>=72021	←		0.001	0.0022
040	34530-42670	TUBE	1				0.01	0.022
050	09661-80300	TUBE FUEL	1				0.04	0.088
060	32751-42640	ASSY TUBE FUEL	1				0.06	0.132
070	09661-50750	TUBE FUEL	1				0	0
080	14971-42750	CLIP PIPE	2				0.001	0.0022
090	01123-50825	BOLT	2				0.013	0.0286
100	34530-42612	ASSY TUBE FUEL	1				0.08	0.176
110	09661-80450	PIPE FUEL	1				0.055	0.121
120	35080-35560	CLIP PIPE	1	<=74596			0.005	0.011
130	34530-42710	TUBE	1				0.01	0.022
140	14301-42750	CLIP PIPE	1	<=74596			0.005	0.011
140	14911-42750	CLIP PIPE	2	>=74597	←		0.002	0.0044
150	34070-42633	ASSY TUBE FUEL	1				0.025	0.055
160	09661-40400	TUBE FUEL	1				0.02	0.044
170	14971-42750	CLIP PIPE	2				0.001	0.0022

silverhorn.co.uk

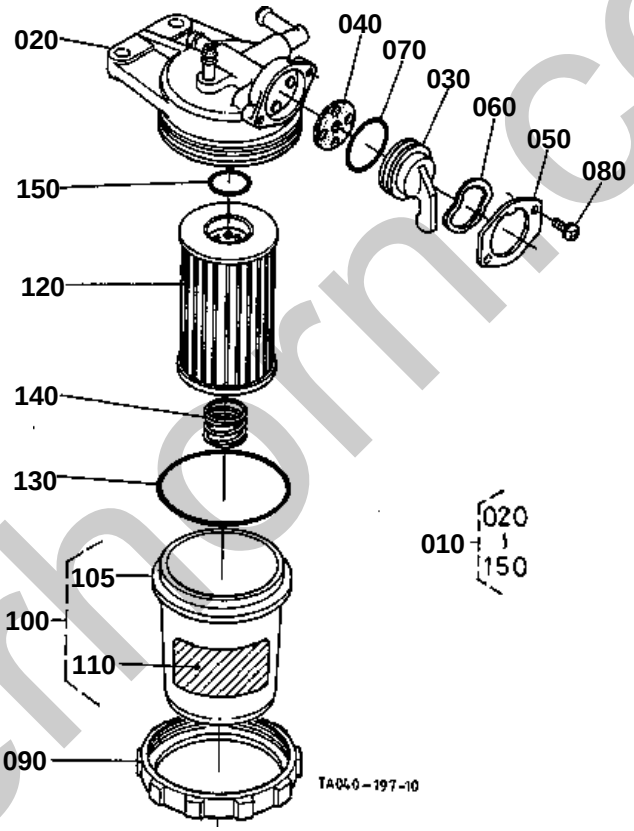

silverhorn.co.uk

FUEL FILTER [COMPONENT PARTS]

↔ Interchangeable; ≠ not interchangeable; ← new for old; → old for new

REF.No	Part No.	Description	Q'ty	S.No.	I/C	REMARKS	Weight (kgf)	Weight (lb)
010	15521-43015	ASSY FILTER FUEL	1				0.59	1.298
020	15521-43114	ASSY BODY	1				0.235	0.517
030	15521-43522	HANDLE FILTER	1				0.04	0.088
040	15521-43672	GASKET	1				0.001	0.0022
050	15521-43552	RETAINER HANDLE	1				0.01	0.022
060	15521-43542	PLATE THRUST	1				0.001	0.0022
070	04811-10290	O RING	1				0.001	0.0022
080	03054-50308	SCREW PAN-HEAD	2				0.005	0.011
090	15521-43150	RING RETAINER	1				0.14	0.308
100	15521-43100	ASSY CUP FILTER	1				0.05	0.11
105	15521-43130	CUP FILTER	1				0.1	0.22
110	16873-88430	LABEL FUEL FILTER	1				0.001	0.0022
120	15521-43160	ELEMENT FILTER	1				0.07	0.154
130	04811-50650	O RING	1				0.002	0.0044
140	15521-43930	SPRING	1				0.004	0.0088
150	04811-00160	O RING	1				0.001	0.0022

silverhorn.co.uk

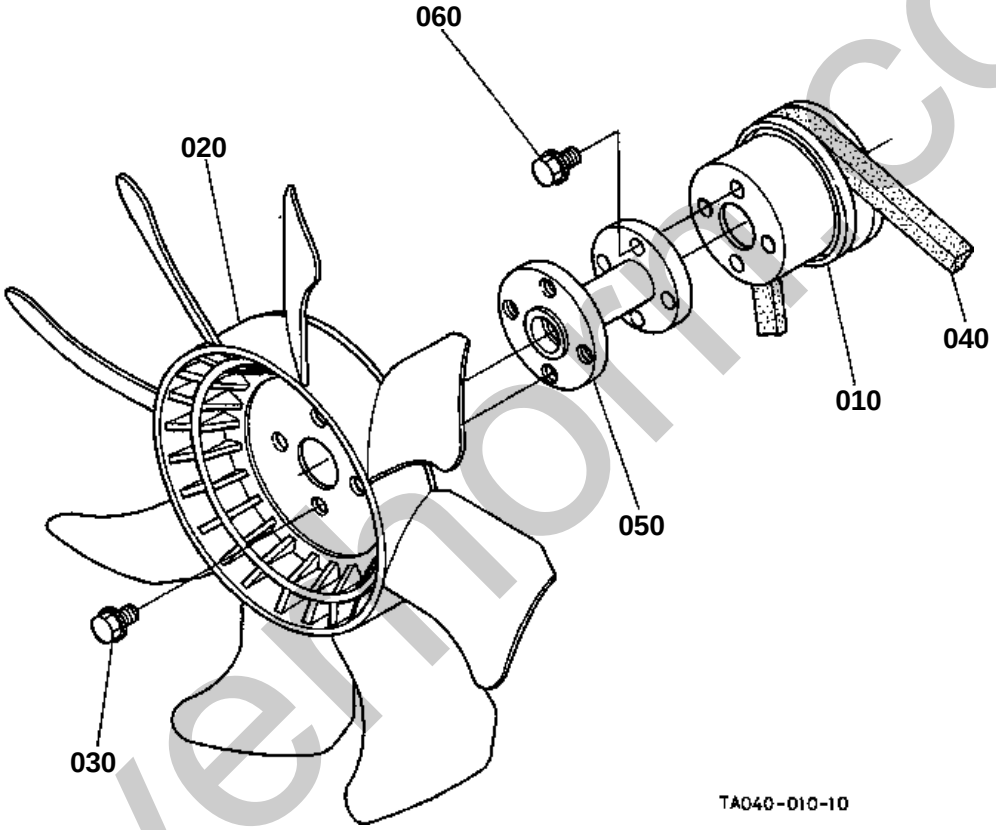

silvermoffco.uk

FAN

↔ Interchangeable; ≠ not interchangeable; ← new for old; → old for new

REF.No	Part No.	Description	Q'ty	S.No.	I/C	REMARKS	Weight (kgf)	Weight (lb)
010	15471-74250	PULLEY FAN	1				0.3	0.66
020	34550-16210	FAN	1				1.19	2.618
030	01754-50816	BOLT FLANGE	4				0.011	0.0242
040	15469-97010	V BELT A	1				0.095	0.209
050	34550-16222	FLANGE FAN	1				0.25	0.55
060	01754-50625	BOLT FLANGE	4				0.008	0.0176

silverhorn.co.uk

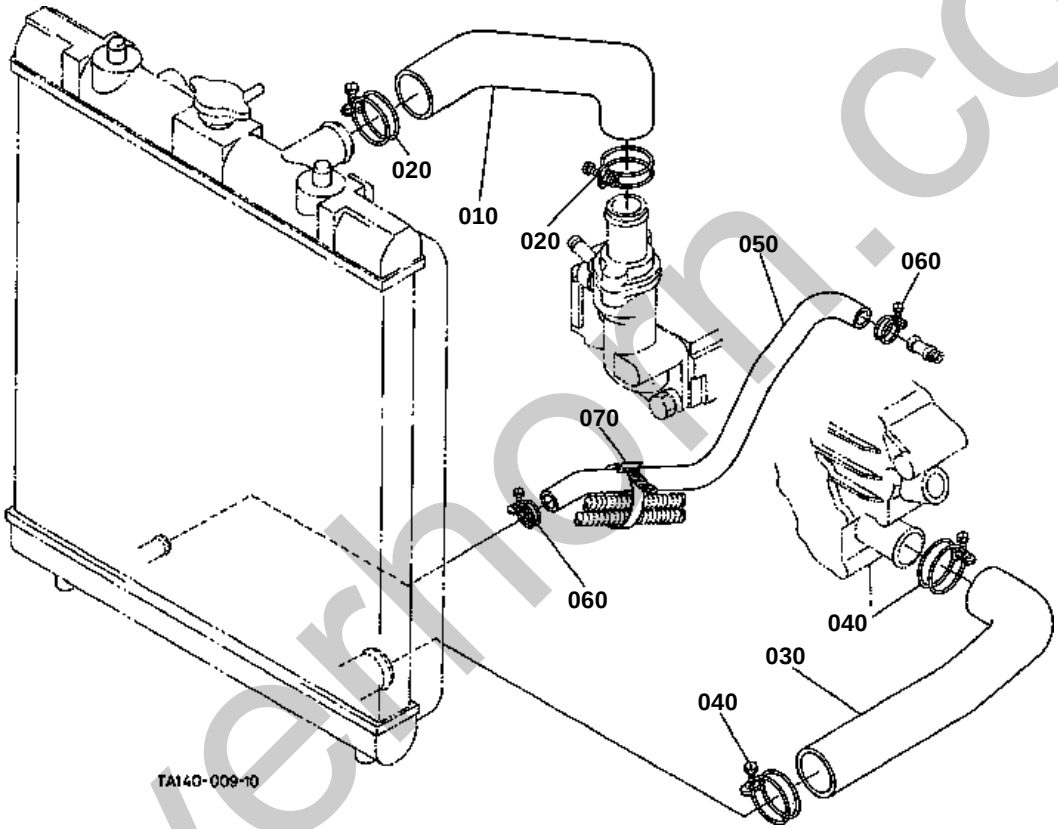

silverhorn.co.uk

↔ Interchangeable; ≠ not interchangeable; ← new for old; → old for new

REF.No	Part No.	Description	Q'ty	S.No.	I/C	REMARKS	Weight (kgf)	Weight (lb)
010	T0180-16120	HOSE	1				0.265	0.583
020	15108-72870	BAND	2				0.027	0.0594
030	34070-80390	HOSE	1				0.27	0.594
040	15108-72870	BAND	2				0.027	0.0594
050	34070-16160	HOSE DRAIN	1				0.085	0.187
060	15109-73360	BAND PIPE	2				0.01	0.022
070	53581-64150	BAND CORD	1				0.002	0.0044

silverhorn.co.uk

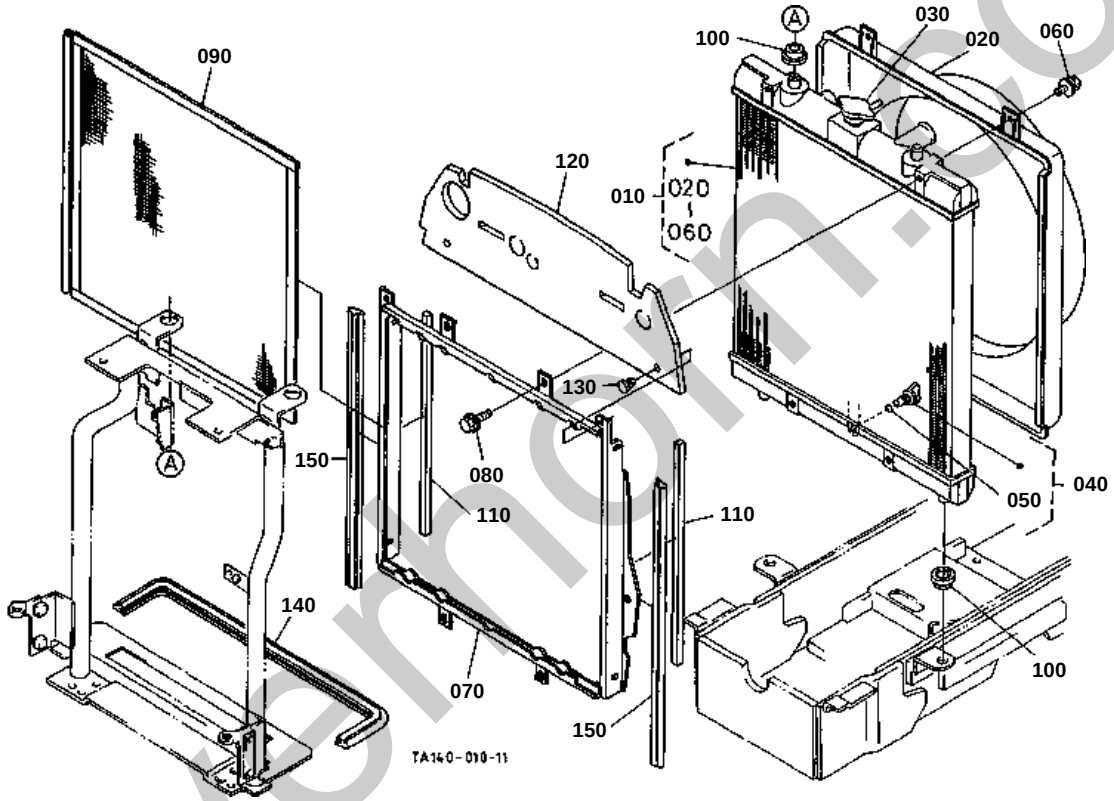

silvermorn.co.uk

RADIATOR

↔ Interchangeable; ≠ not interchangeable; ← new for old; → old for new

REF.No	Part No.	Description	Q'ty	S.No.	I/C	REMARKS	Weight (kgf)	Weight (lb)
010	TA140-16000	ASSY RADIATOR	1				4.1	9.02
020	TA140-16020	SHROUD FAN	1				0.95	2.09
030	17580-16060	CAP RADIATOR	1				0.04	0.088
040	34070-16070	PLUG DRAIN	1				0.005	0.011
050	34070-16090	O RING	1				0.001	0.0022
060	01029-50616	BOLT	4				0.01	0.022
070	TA140-16040	GUIDE	1				0.72	1.584
080	01754-50610	BOLT FLANGE	4				0.006	0.0132
090	TA140-16240	NET RADIATOR	1				0.365	0.803
100	34070-16030	RUBBER	4				0.015	0.033
110	TA140-40660	SPONGE	2				0.005	0.011
120	TA140-42310	SHUTTER	1				0.06	0.132
130	38430-29372	CLIP BUTTON	2				0.001	0.0022
140	T0180-42330	SHIELD	1				0.085	0.187
150	34070-42340	SHIELD	2				0.12	0.264

silverhorn.co.uk

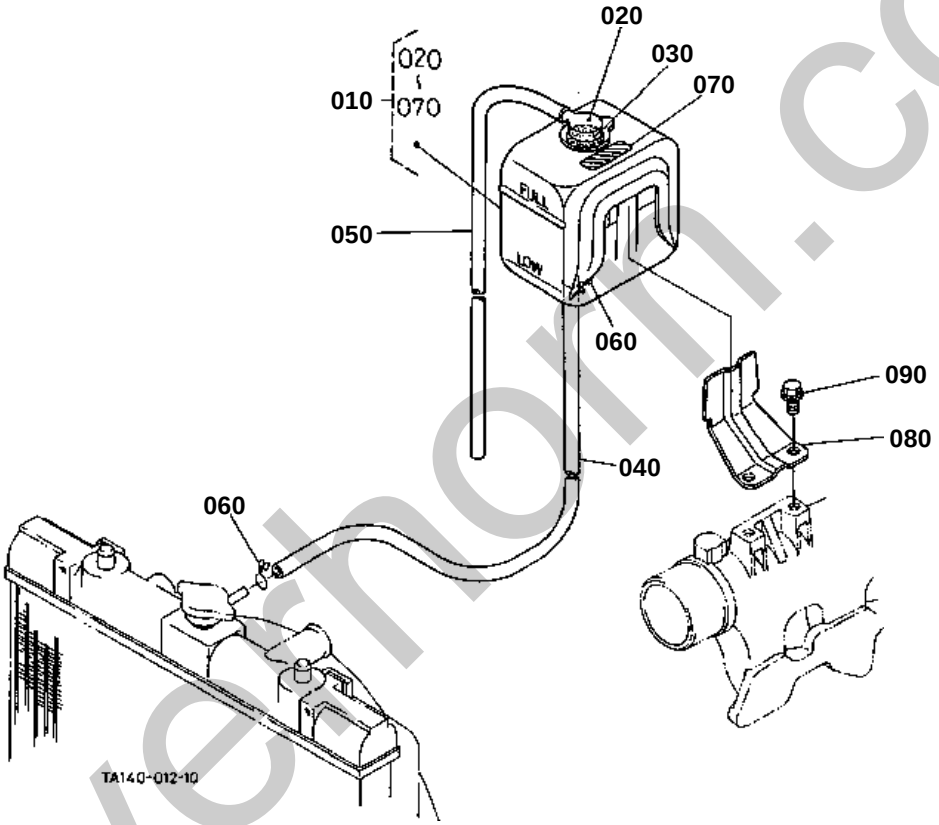

silverhorn.co.uk

RESERVE TANK [ROPS TYPE]

↔ Interchangeable; ≠ not interchangeable; ← new for old; → old for new

REF.No	Part No.	Description	Q'ty	S.No.	I/C	REMARKS	Weight (kgf)	Weight (lb)
010	68841-42360	TANK RESERVE	1				0.48	1.056
020	15272-72420	CAP	1				0.03	0.066
030	15531-72432	GASKET	1				0.002	0.0044
040	17325-72440	PIPE WATER OVER FLOW	1				0.065	0.143
050	68111-42390	PIPE WATER OVER FLOW	1				0.04	0.088
060	15501-72470	CLIP PIPE	2				0.005	0.011
070	15501-88210	LABEL CAUTION	1				0.005	0.011
080	T0070-16710	STAY RESERVE TANK	1				0.09	0.198
090	01754-50816	BOLT FLANGE	2				0.011	0.0242

silverhorn.co.uk

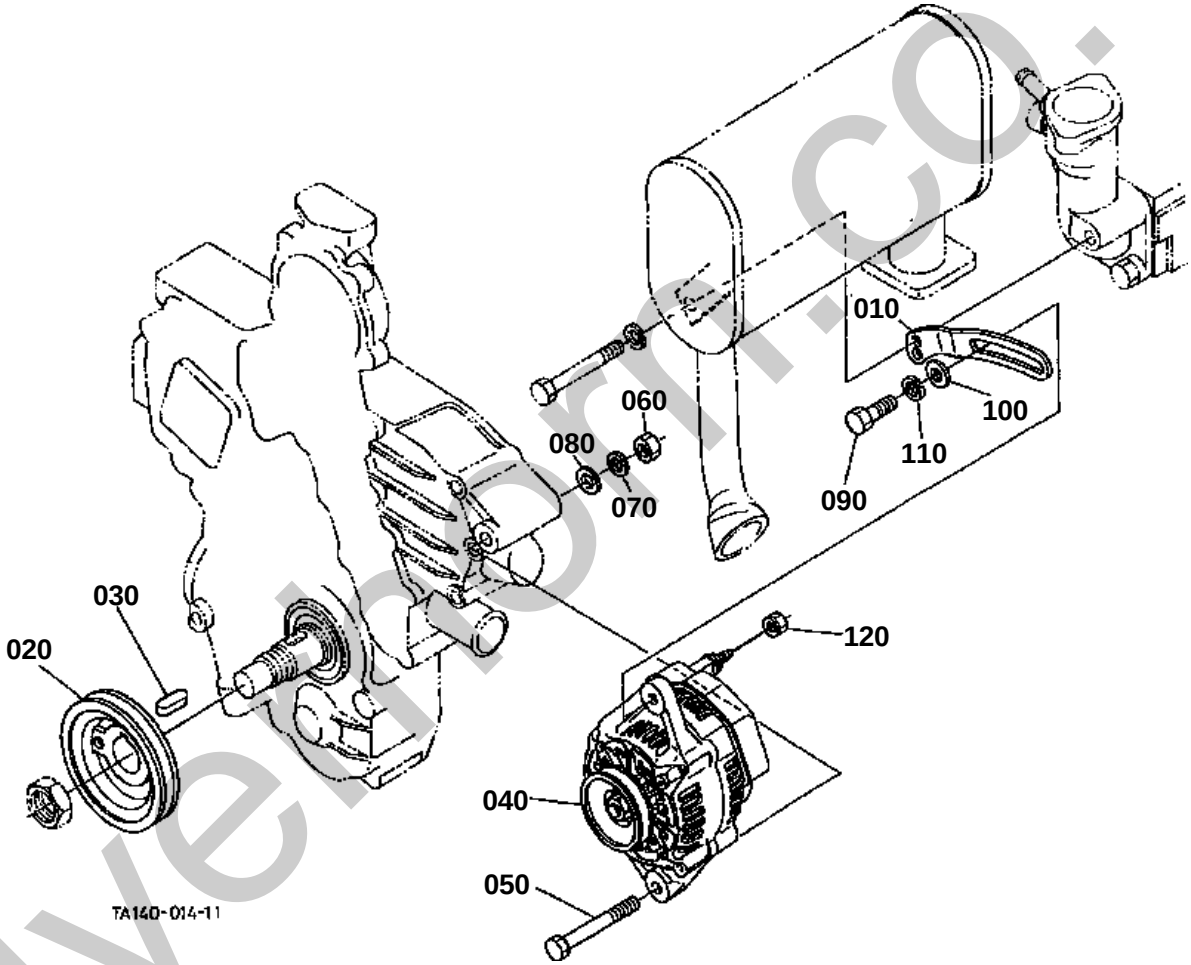

silvermorr.co.uk

120 02056-50060
130 04512-60060

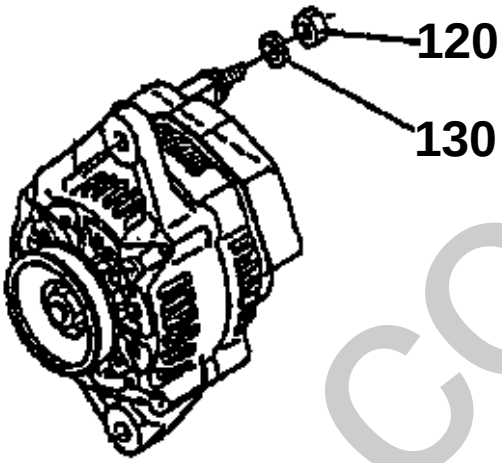

TA120-831-10

silverhorn.co.uk

ALTERNATOR [ROPS TYPE]

↔ Interchangeable; ≠ not interchangeable; ← new for old; → old for new

REF.No	Part No.	Description	Q'ty	S.No.	I/C	REMARKS	Weight (kgf)	Weight (lb)
010	TA040-74020	STAY ALTERNATOR	1				0.09	0.198
020	17371-74280	PULLEY FAN DRIVE	1				0.98	2.156
030	05712-00720	KEY FEATHER	1				0.008	0.0176
040	34070-75602	ASSY ALTERNATOR	1	<=74270			0	0
050	01173-51000	BOLT	1				0.06	0.132
060	02116-50100	NUT	1				0.004	0.0088
070	04512-60100	WASHER SPRING	1				0.002	0.0044
080	04011-50100	WASHER PLAIN	1				0.002	0.0044
090	01153-60830	BOLT	1				0.025	0.055
100	04015-60080	WASHER PLAIN	1				0.01	0.022
110	04512-60080	WASHER SPRING	1				0.002	0.0044
120	02056-50060	NUT	1	<=75376			0.002	0.0044
120	12264-92020	NUT SPRING WASHER M	1	>=75377	←		0.05	0.11
130	04512-60060	WASHER SPRING	1	<=75376			0.001	0.0022

silverhorn.co.uk

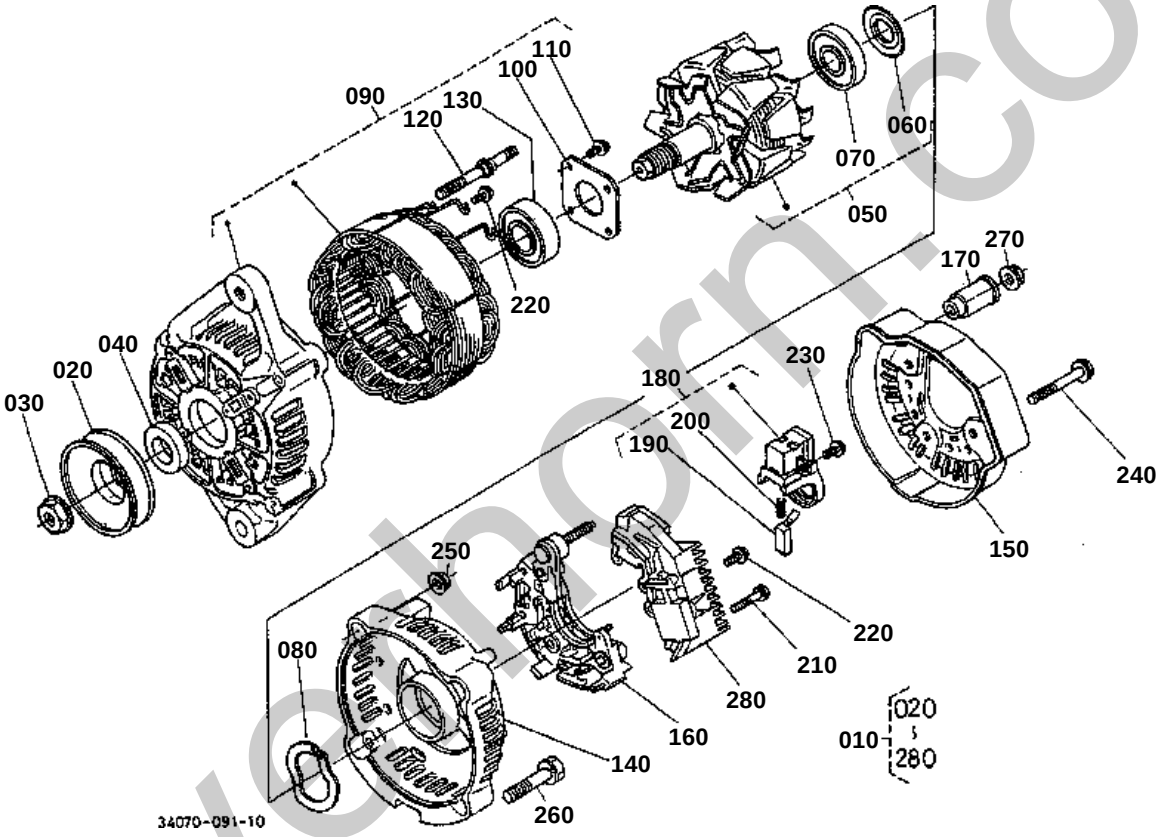

silvethorn.co.uk

ALTERNATOR [COMPONENT PARTS] [ROPS TYPE]
[EXCEPTE TYPE CABINE]

↔ Interchangeable; ≠ not interchangeable; ← new for old; → old for new

REF.No	Part No.	Description	Q'ty	S.No.	I/C	REMARKS	Weight (kgf)	Weight (lb)
010	34070-75602	ASSY ALTERNATOR	1	<=74270			0	0
020	16427-64110	PULLEY ALTERNATOR	1				0.2	0.44
030	15881-92010	NUT	1				0.02	0.044
040	15881-64150	COLLAR	1				0.004	0.0088
050	15881-64040	ROTOR	1	<=74270		NOT SALE	0	0
050	66436-64040	ROTOR	1	>=74271	←		1.2	2.64
060	15881-64800	COVER BEARING	1				0.001	0.0022
070	15881-64770	BEARING BALL	1	<=74270			0.04	0.088
070	16652-64770	BEARING BALL	1	>=74271	←		0.045	0.099
080	15881-64810	WASHER THRUST	1				0.002	0.0044
090	15881-64020	FRAME DRIVE END	1	<=74270			1.2	2.64
090	16678-64020	ASSY FRAME DRIVE END	1	>=74271	≠		0	0
100	15881-64710	PLATE RETAINER	1				0.01	0.022
110	15881-93010	SCREW ROUND HEAD	4				0.003	0.0066
120	15881-64260	BOLT THROUGH	2				0.01	0.022
130	15881-64780	BEARING BALL	1	<=74270			0.05	0.11
130	16652-64770	BEARING BALL	1	>=74271	←		0.045	0.099
140	16241-64060	FRAME END	1				0.2	0.44
150	16241-64230	COVER END	1	<=74270			0.035	0.077
150	16231-64230	COVER END	1	>=74271	≠		0.035	0.077
160	16241-64850	ASSY RECTIFIER	1				0.16	0.352
170	16241-64900	BUSH INSULATION	1				0.007	0.0154
180	15881-64310	HOLDER BRUSH	1	<=74270			0.025	0.055
180	16652-64310	HOLDER BRUSH	1	>=74271	≠		0.025	0.055
190	15881-64090	BRUSH	2				0.002	0.0044
200	15881-64330	SPRING BRUSH	2				0.002	0.0044
210	15881-93020	SCREW ROUND HEAD	2				0.005	0.011
220	15881-93030	SCREW ROUND HEAD	6				0.003	0.0066
230	15881-93040	SCREW ROUND HEAD	1				0.003	0.0066
240	15881-91040	BOLT	3				0.005	0.011
250	15881-92020	NUT	2				0.02	0.044
260	15881-91050	BOLT	2				0.01	0.022
270	14182-92030	NUT	1				0.003	0.0066
280	66436-64600	ASSY REGULATOR	1				0.08	0.176

silverhorn.co.uk

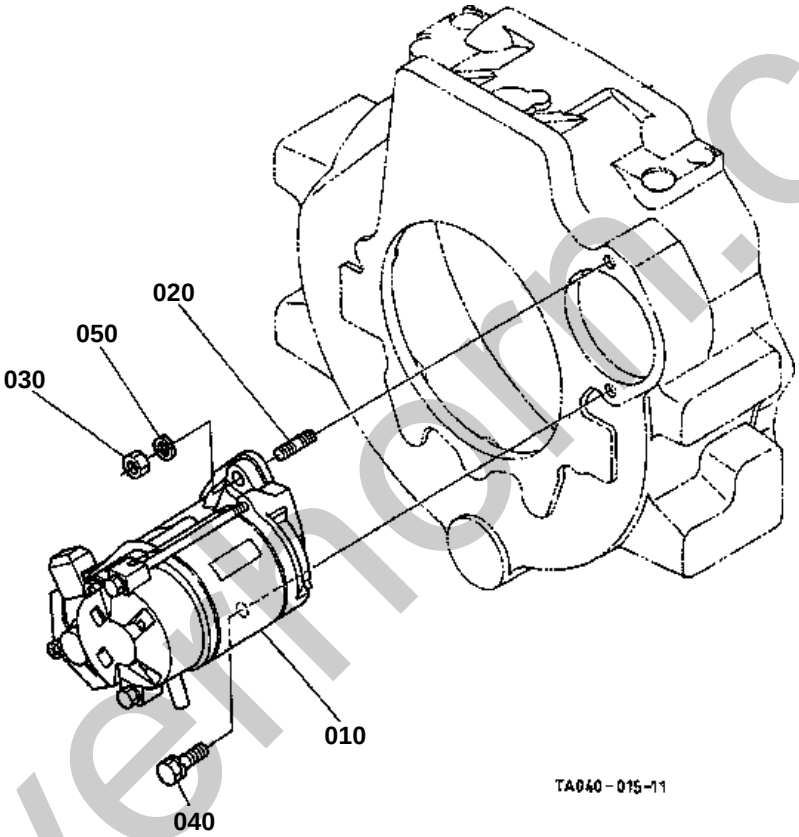

silverhorn.co.uk

STARTER

↔ Interchangeable; ≠ not interchangeable; ← new for old; → old for new

REF.No	Part No.	Description	Q'ty	S.No.	I/C	REMARKS	Weight (kgf)	Weight (lb)
010	17341-63010	ASSY STARTER	1				3.65	8.03
020	01517-51028	STUD	1				0.022	0.0484
030	02176-50100	NUT	1				0.005	0.011
040	01133-51030	BOLT	1				0.025	0.055
050	04512-60100	WASHER SPRING	1				0.002	0.0044

silverhorn.co.uk

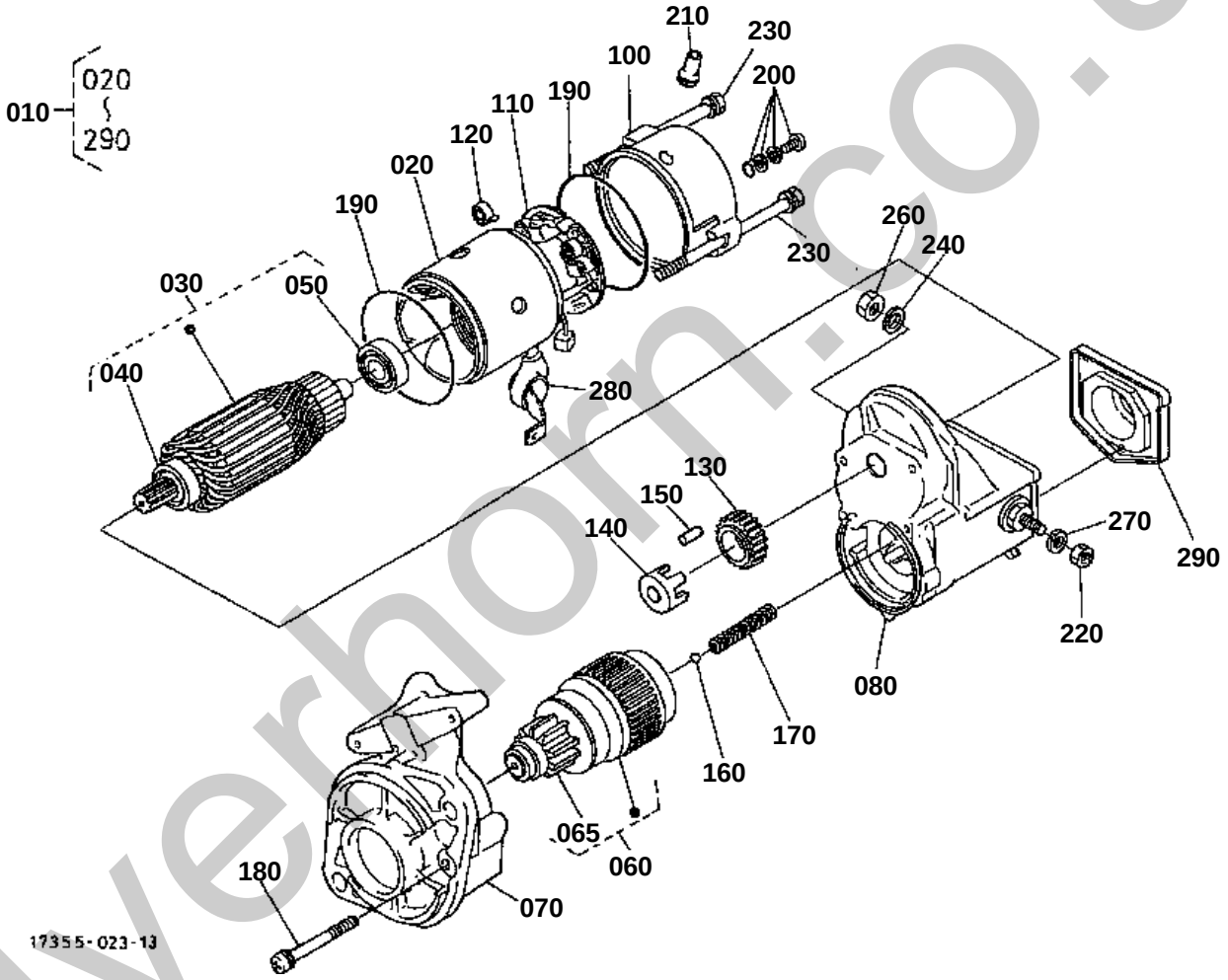

silverhorn.co.uk

↔ Interchangeable; ≠ not interchangeable; ← new for old; → old for new

REF.No	Part No.	Description	Q'ty	S.No.	I/C	REMARKS	Weight (kgf)	Weight (lb)
010	17341-63010	ASSY STARTER	1				3.65	8.03
020	11197-63080	ASSY YOKE	1				0.92	2.024
030	11197-63070	ASSY ARMATURE	1				0.8	1.76
040	11460-63500	BEARING	1				0.03	0.066
050	11460-63530	BEARING	1				0.02	0.044
060	17341-63040	CLUTCH OVER RUNNING	1				0.2	0.44
065	17381-63280	PINION BEVEL	1				0.07	0.154
070	17341-63030	FRAME DRIVE END	1				0.44	0.968
080	11173-63020	ASSY SWITCH MAGNETIC	1	<=50189		ND No.228000-1080	0.2	0.44
080	15621-63020	ASSY SWITCH MAGNETIC	1	>=50190	≠	ND No.228000-1081	1.17	2.574
090	99999-99999	BLANK	0				0	0
100	17341-63200	FRAME END	1				0.13	0.286
110	17381-63380	ASSY HOLDER BRUSH	1				0.05	0.11
120	15401-63390	SPRING BRUSH	4				0.003	0.0066
130	11460-63270	GEAR	1				0.04	0.088
140	11460-63110	RETAINER	1				0.01	0.022
150	19212-63100	ROLLER	5				0.002	0.0044
160	19212-97130	BALL	1				0.003	0.0066
170	11460-63120	SPRING	1				0.01	0.022
180	11460-93310	BOLT	2				0.01	0.022
190	15511-96660	O RING	2				0.005	0.011
200	15511-63760	ASSY BOLT	2				0.005	0.011
210	16285-63570	PIPE DRAIN	1				0.005	0.011
220	13963-92010	NUT HEXAGON	1				0.005	0.011
230	11197-63320	BOLT	2				0.02	0.044
240	04512-50080	WASHER SPRING	1				0	0
250	99999-99999	BLANK	0				0	0
260	16285-92010	NUT HEXAGON	1				0.005	0.011
270	04512-60080	WASHER SPRING	1				0.002	0.0044
280	11173-63130	COVER TERMINAL	1				0.007	0.0154
290	16285-98050	ASSY COVER	1				0.048	0.1056

silverhorn.co.uk

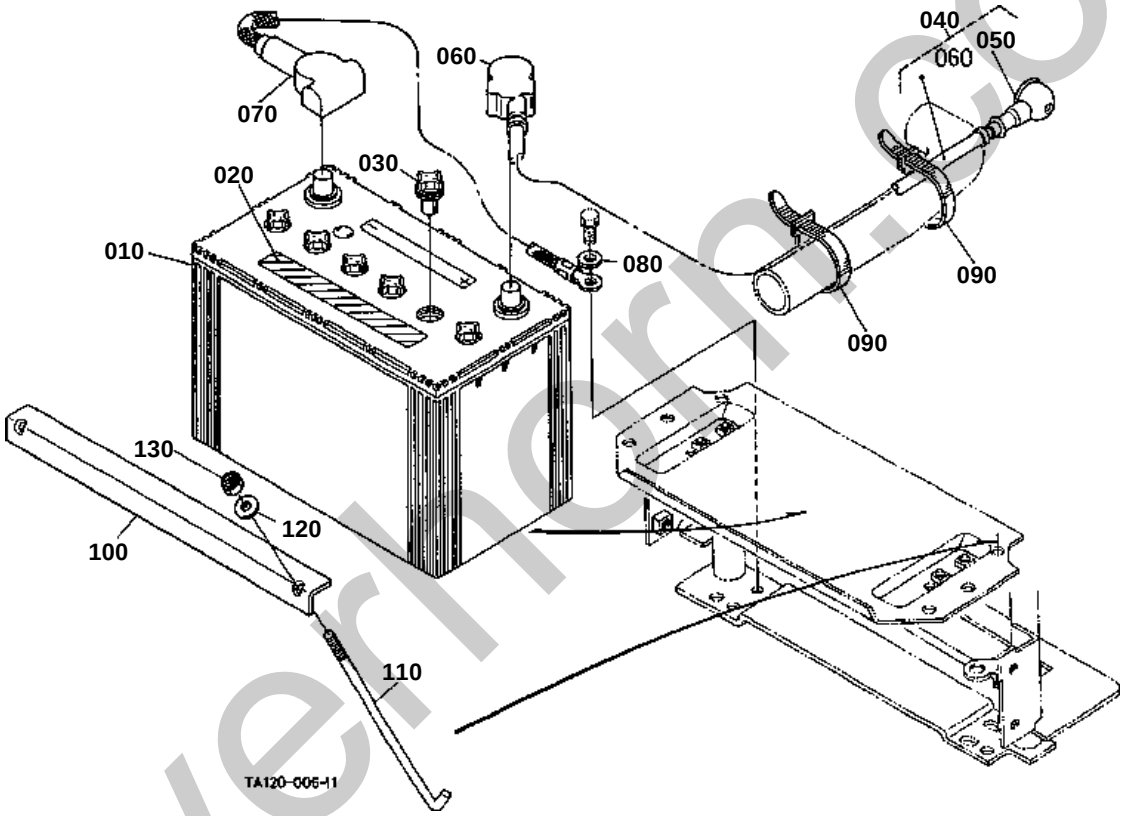

silverhorn.co.uk

BATTERY [ROPS TYPE]

↔ Interchangeable; ≠ not interchangeable; ← new for old; → old for new

REF.No	Part No.	Description	Q'ty	S.No.	I/C	REMARKS	Weight (kgf)	Weight (lb)
010	99999-99999	BATTERY	1			80D26R-MF	0	0
020	TA040-30150	LABEL BATTERY	1			ENGLISH	0.002	0.0044
020	TA041-30150	LABEL BATTERY	1			FRENCH	0.005	0.011
030	TA040-30160	CAP BATTERY	6				0.01	0.022
040	TA240-30120	CORD BATTERY	1				0.485	1.067
050	T0070-30130	CAP	1				0.015	0.033
060	T0070-30140	CAP	1				0.012	0.0264
070	TA140-33340	CORD EARTH	1				0.17	0.374
080	04015-60080	WASHER PLAIN	1				0.01	0.022
090	55311-41260	BAND CORD	2				0.007	0.0154
100	34550-40110	RETAINER BATTERY	1	<=50710			0.325	0.715
100	34070-40110	RETAINER BATTERY	1	>=50711	≠		0.285	0.627
110	38240-33295	BOLT HOOK	2				0.05	0.11
120	04015-60060	WASHER PLAIN	2				0.005	0.011
130	76611-56730	NUT LOCK	2				0.005	0.011
130	02552-50060	NUT LOCK	2		←		0.002	0.0044

silverhorn.co.uk

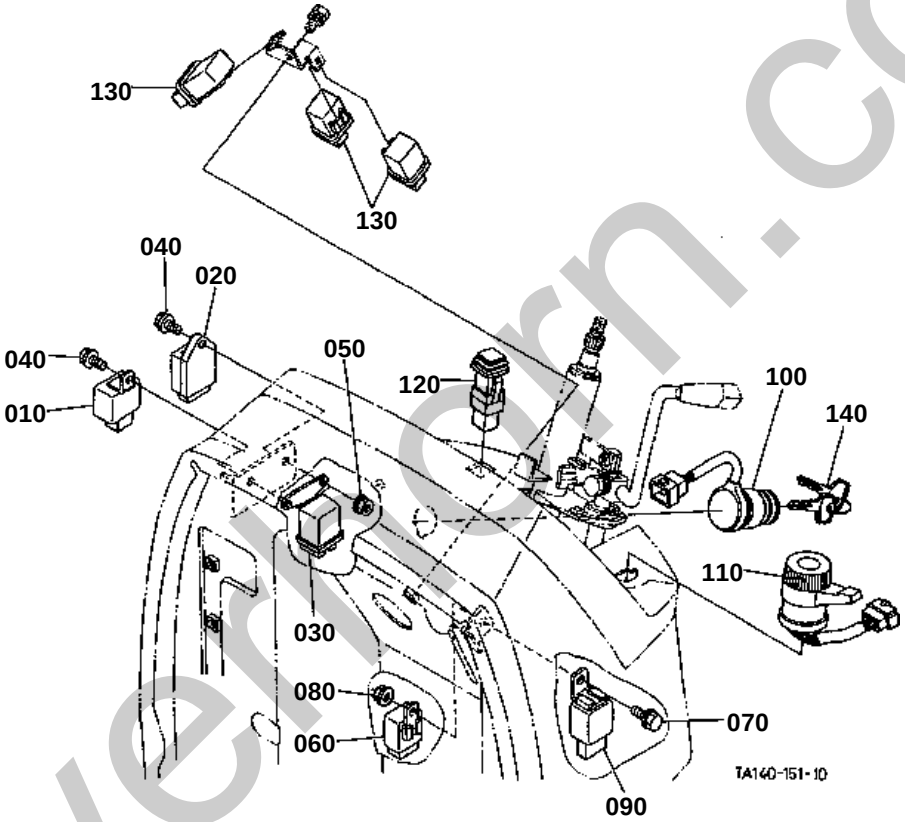

silverthorn.co.uk

SWITCH 1 [EXCEPT HST TYPE] [ROPS TYPE] [OLD TYPE]
[EXCEPTE TYPE CABINE] [TYPE VIEUX] [S.No.;<=51803]

↔ Interchangeable; ≠ not interchangeable; ← new for old; → old for new

REF.No	Part No.	Description	Q'ty	S.No.	I/C	REMARKS	Weight (kgf)	Weight (lb)
010	T0070-31410	TIMER KEY STOP	1				0.065	0.143
020	16415-65660	CONTROLLER	1				0.07	0.154
030	16415-65600	RELAY GLOW	1				0.1	0.22
040	01754-50616	BOLT FLANGE	2				0.006	0.0132
050	02751-50060	NUT FLANGE	2				0.005	0.011
060	35800-75070	RELAY STARTER	1				0.08	0.176
070	01754-50616	BOLT FLANGE	1				0.006	0.0132
080	02751-50060	NUT FLANGE	1				0.005	0.011
090	32400-33700	UNIT HAZARD	1				0.07	0.154
100	34670-31820	SWITCH MAIN	1				0	0
110	TA040-76630	SWITCH COMBINATION	1				0.09	0.198
120	37500-55212	SWITCH HAZARD	1				0.02	0.044
130	36919-75030	RELAY	3				0.038	0.0836
140	35260-31852	ASSY KEY MAIN SWITCH	1				0.02	0.044

silverhorn.co.uk

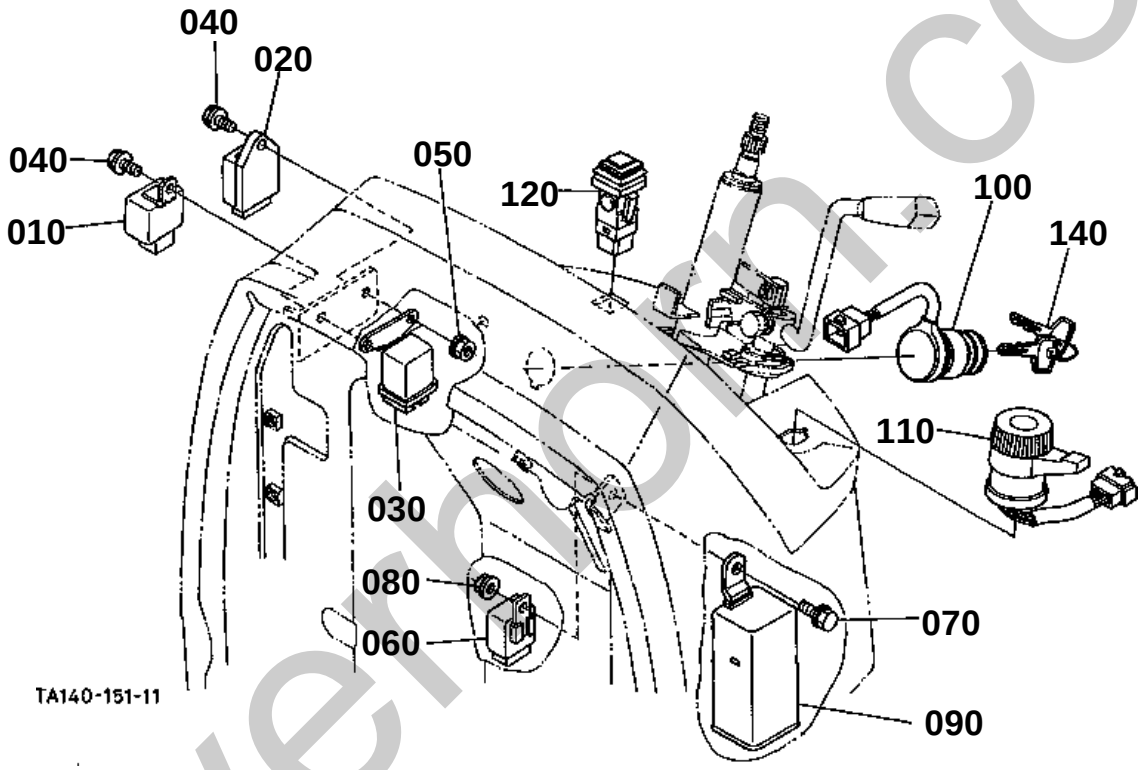

silverhorn.co.uk

↔ Interchangeable; ≠ not interchangeable; ← new for old; → old for new

REF.No	Part No.	Description	Q'ty	S.No.	I/C	REMARKS	Weight (kgf)	Weight (lb)
010	T0070-31410	TIMER KEY STOP	1				0.065	0.143
020	16415-65660	CONTROLLER	1				0.07	0.154
030	16415-65600	RELAY GLOW	1				0.1	0.22
040	01754-50616	BOLT FLANGE	2				0.006	0.0132
050	02751-50060	NUT FLANGE	2				0.005	0.011
060	35800-75070	RELAY STARTER	1				0.08	0.176
070	01754-50616	BOLT FLANGE	1				0.006	0.0132
080	02751-50060	NUT FLANGE	1				0.005	0.011
090	3F240-75430	UNIT FLASHER	1				0.06	0.132
100	34670-31820	SWITCH MAIN	1	<=60380			0	0
100	34670-31822	SWITCH MAIN	1	>=60381	←		0.26	0.572
110	TA040-76630	SWITCH COMBINATION	1	<=60115			0.09	0.198
110	3A751-75010	SWITCH COMBINATION	1	>=60116	←		0.115	0.253
120	TA140-30910	SWITCH HAZARD	1				0.115	0.253
130	99999-99999	BLANK	0				0	0
140	35260-31852	ASSY KEY MAIN SWITCH	1				0.02	0.044

silverhorn.co.uk

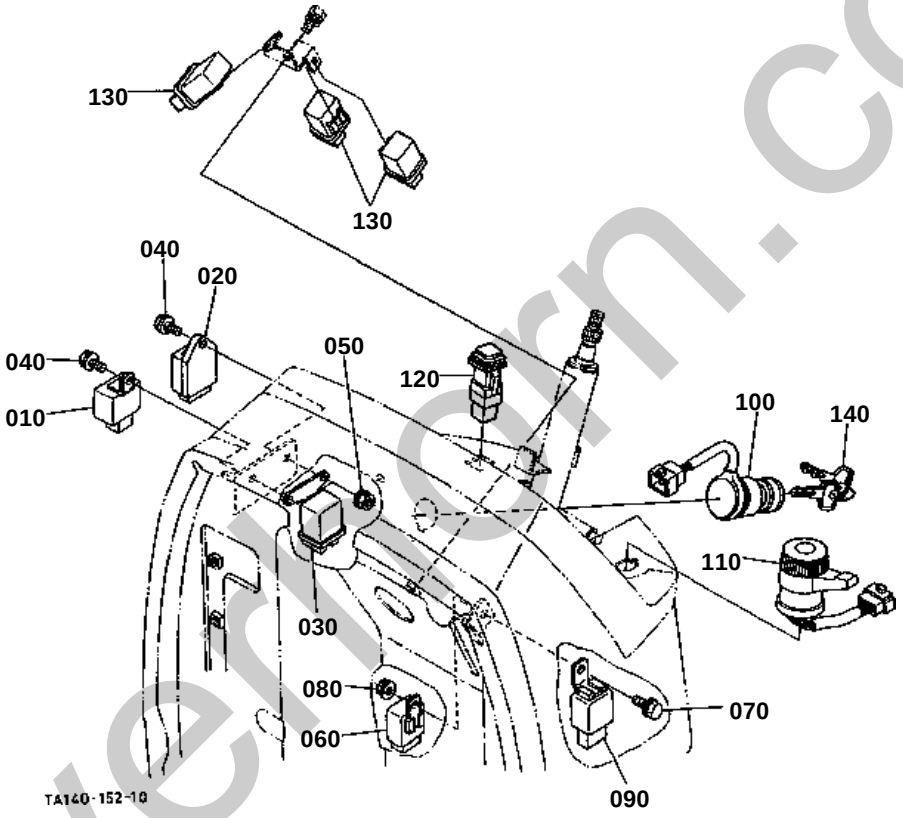

silverhorn.co.uk

↔ Interchangeable; ≠ not interchangeable; ← new for old; → old for new

REF.No	Part No.	Description	Q'ty	S.No.	I/C	REMARKS	Weight (kgf)	Weight (lb)
010	T0070-31410	TIMER KEY STOP	1				0.065	0.143
020	16415-65660	CONTROLLER	1				0.07	0.154
030	16415-65600	RELAY GLOW	1				0.1	0.22
040	01754-50616	BOLT FLANGE	2				0.006	0.0132
050	02751-50060	NUT FLANGE	2				0.005	0.011
060	35800-75070	RELAY STARTER	1				0.08	0.176
070	01754-50616	BOLT FLANGE	1				0.006	0.0132
080	02751-50060	NUT FLANGE	1				0.005	0.011
090	32400-33700	UNIT HAZARD	1				0.07	0.154
100	34670-31820	SWITCH MAIN	1				0	0
110	TA040-76630	SWITCH COMBINATION	1				0.09	0.198
120	37500-55212	SWITCH HAZARD	1				0.02	0.044
130	36919-75030	RELAY	3				0.038	0.0836
140	35260-31852	ASSY KEY MAIN SWITCH	1				0.02	0.044

silverhorn.co.uk

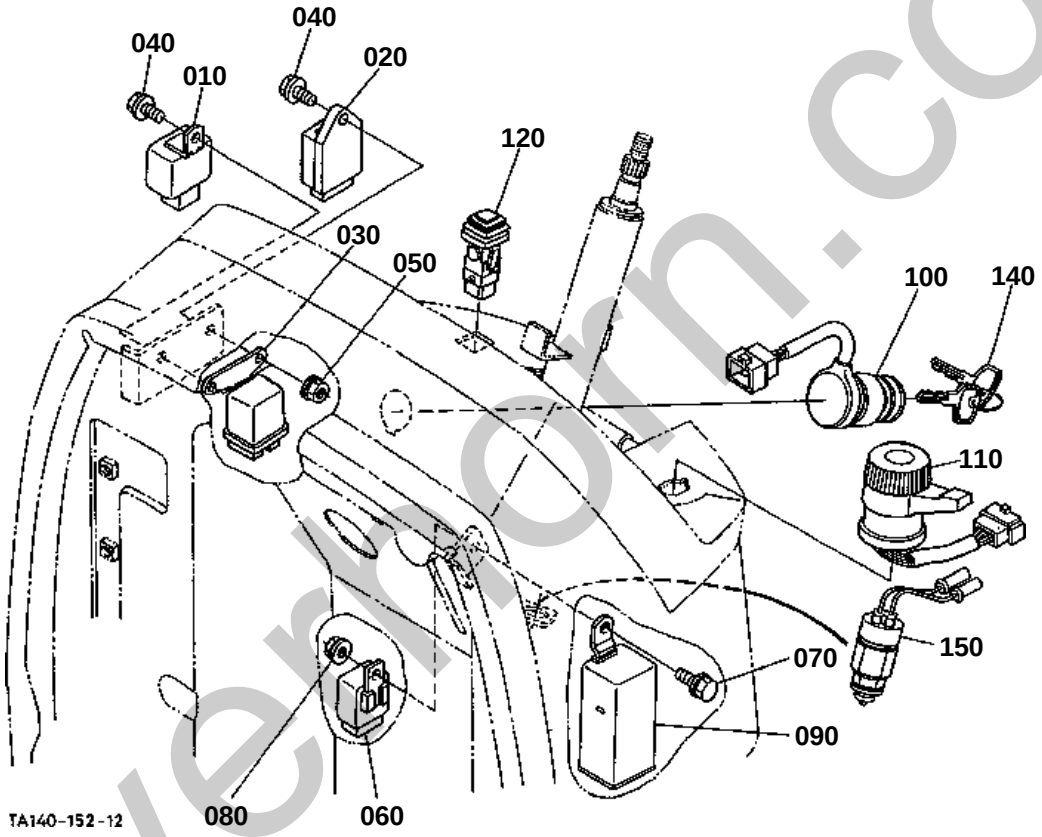

silverthorn.co.uk

↔ Interchangeable; ≠ not interchangeable; ← new for old; → old for new

REF.No	Part No.	Description	Q'ty	S.No.	I/C	REMARKS	Weight (kgf)	Weight (lb)
010	T0070-31410	TIMER KEY STOP	1				0.065	0.143
020	16415-65660	CONTROLLER	1				0.07	0.154
030	16415-65600	RELAY GLOW	1				0.1	0.22
040	01754-50616	BOLT FLANGE	2				0.006	0.0132
050	02751-50060	NUT FLANGE	2				0.005	0.011
060	35800-75070	RELAY STARTER	1				0.08	0.176
070	01754-50616	BOLT FLANGE	1				0.006	0.0132
080	02751-50060	NUT FLANGE	1				0.005	0.011
090	3F240-75430	UNIT FLASHER	1				0.06	0.132
100	34670-31820	SWITCH MAIN	1	<=60380			0	0
100	34670-31822	SWITCH MAIN	1	>=60381	←		0.26	0.572
110	TA040-76630	SWITCH COMBINATION	1	<=60115			0.09	0.198
110	3A751-75010	SWITCH COMBINATION	1	>=60116	←		0.115	0.253
120	TA140-30910	SWITCH HAZARD	1				0.115	0.253
130	99999-99999	BLANK	0				0	0
140	35260-31852	ASSY KEY MAIN SWITCH	1				0.02	0.044
150	37150-32240	SWITCH SAFETY	1	>=70001			0.12	0.264

silverhorn.co.uk

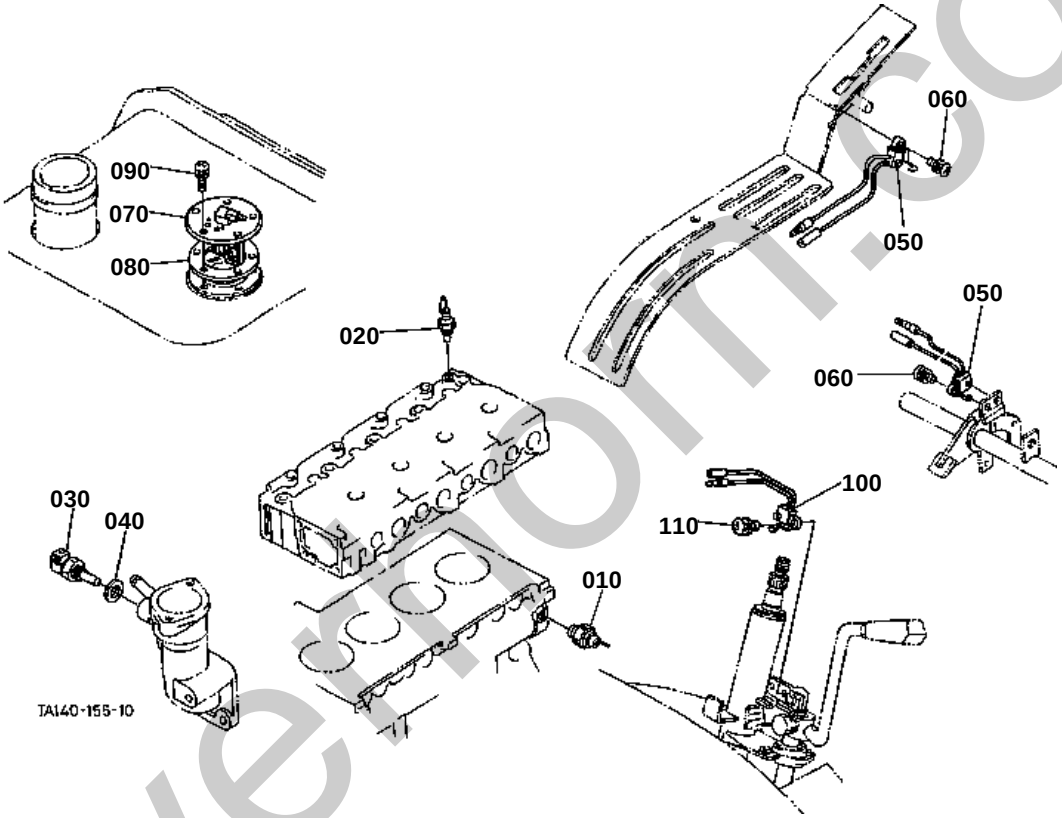

silvermoor.co.uk

SWITCH 2 [EXCEPT HST TYPE] [ROPS TYPE]
[EXCEPTE TYPE CABINE]

↔ Interchangeable; ≠ not interchangeable; ← new for old; → old for new

REF.No	Part No.	Description	Q'ty	S.No.	I/C	REMARKS	Weight (kgf)	Weight (lb)
010	15531-39010	SWITCH OIL	1				0.032	0.0704
020	31351-32830	SENSOR THERMO	1				0.02	0.044
030	16415-83040	SENSOR THERMO	1				0.03	0.066
040	15109-33660	GASKET	1				0.001	0.0022
050	TA040-43900	SWITCH LEVER	2				0.008	0.0176
060	03024-50414	SCREW WITH WASHER	2				0.002	0.0044
070	TA040-31202	ASSY GAUGE FUEL	1				0.505	1.111
080	34070-31220	GASKET	1				0.01	0.022
090	03024-50512	SCREW WITH WASHER	5				0.003	0.0066
100	TA040-43900	SWITCH LEVER	1				0.008	0.0176
110	03024-50416	SCREW WITH WASHER	1				0.002	0.0044

silverhorn.co.uk

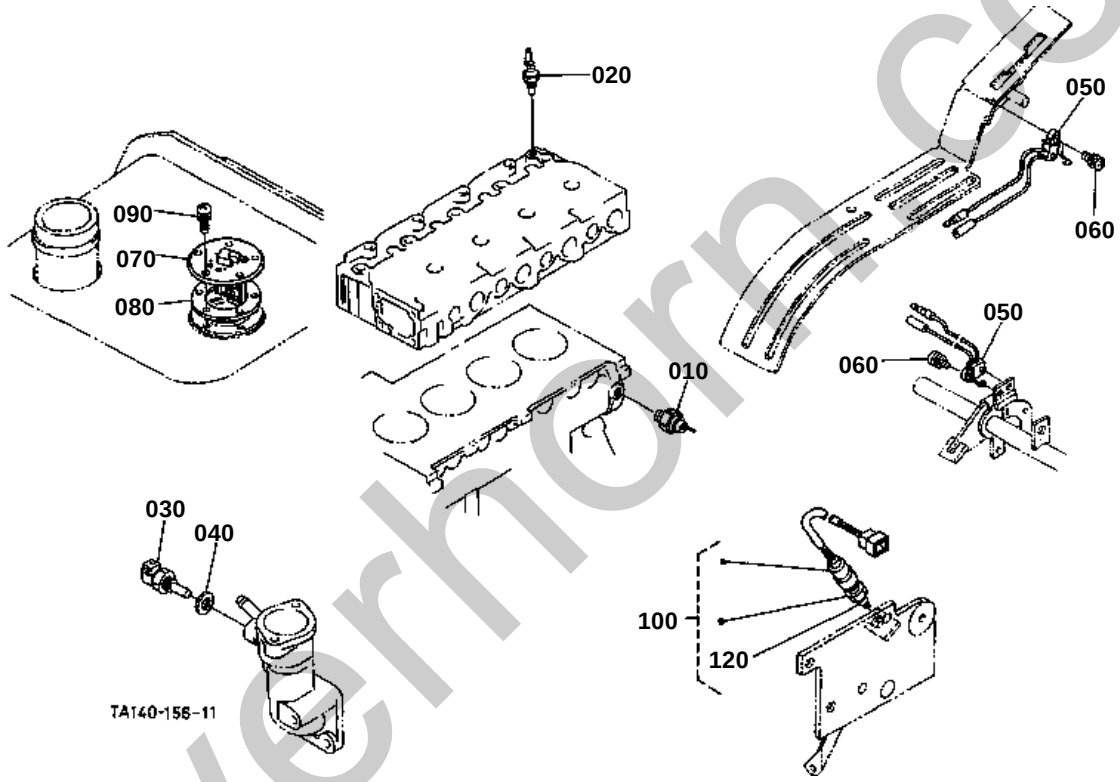

silverhorn.co.uk

100 52320-4290-0
110 67111-5583-0

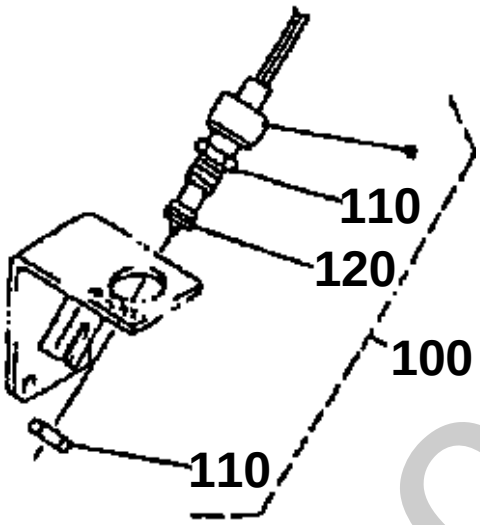

110 67111-5583-0

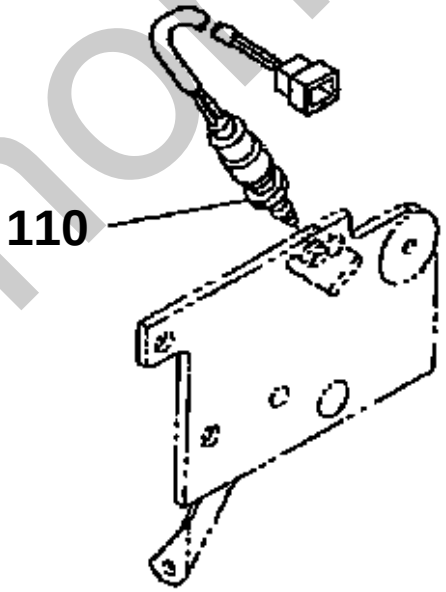

TA140-836-10

silverhorn.co.uk

SWITCH 2 [HST TYPE] [ROPS TYPE]

↔ Interchangeable; ≠ not interchangeable; ← new for old; → old for new

REF.No	Part No.	Description	Q'ty	S.No.	I/C	REMARKS	Weight (kgf)	Weight (lb)
010	15531-39010	SWITCH OIL	1				0.032	0.0704
020	31351-32830	SENSOR THERMO	1				0.02	0.044
030	16415-83040	SENSOR THERMO	1				0.03	0.066
040	15109-33660	GASKET	1				0.001	0.0022
050	TA040-43900	SWITCH LEVER	2				0.008	0.0176
060	03024-50414	SCREW WITH WASHER	2				0.002	0.0044
070	TA040-31202	ASSY GAUGE FUEL	1				0.505	1.111
080	34070-31220	GASKET	1				0.01	0.022
090	03024-50512	SCREW WITH WASHER	5				0.003	0.0066
100	52320-42900	ASSY SWITCH SAFETY	1	<=61504			0.1	0.22
100	TA240-53900	SWITCH SAFETY	1	>=70001	≠		0.062	0.1364
110	67111-55830	NUT SAFETY SWITCH	2	<=61504			0.035	0.077
110	67111-55830	NUT SAFETY SWITCH	1	>=70001			0.035	0.077
110	67111-55830	NUT SAFETY SWITCH	1	<=71313			0.035	0.077
120	67111-55840	CAP SAFETY SWITCH	1				0.002	0.0044

silverhorn.co.uk

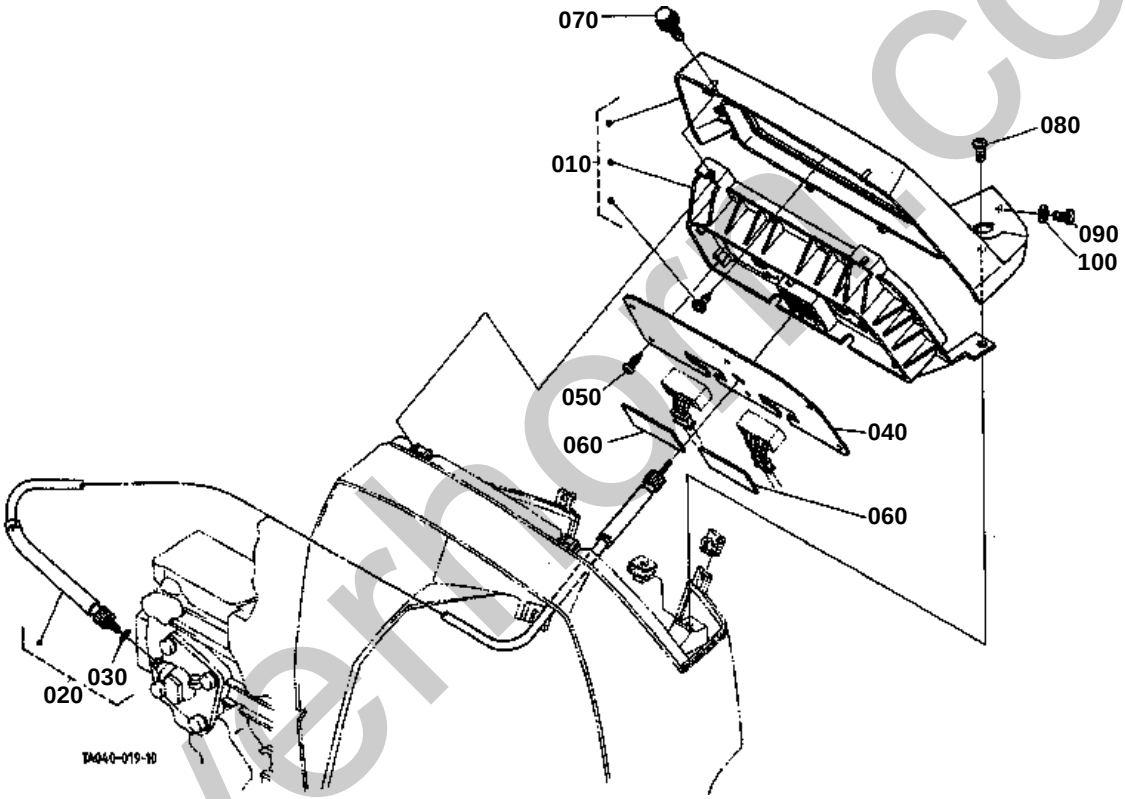

silvermore.co.uk

PANEL BOARD

↔ Interchangeable; ≠ not interchangeable; ← new for old; → old for new

REF.No	Part No.	Description	Q'ty	S.No.	I/C	REMARKS	Weight (kgf)	Weight (lb)
010	TA140-30210	ASSY PANEL	1				1.72	3.784
020	TA040-30610	ASSY CABLE FLEXIBLE	1				0.25	0.55
030	04811-10080	O RING	1				0.001	0.0022
040	34070-30190	PLATE PANEL	1				0.15	0.33
050	03514-50414	SCREW TAPPING	6				0.001	0.0022
060	34070-99410	SEAL PANEL	2	<=74006			0	0
060	34070-99412	SEAL PANEL	2	>=74007	←		0	0
070	34070-41110	BOLT SET	2				0.01	0.022
080	31391-31140	SCREW	2				0.01	0.022
090	37410-54990	SCREW	2				0.003	0.0066
100	04013-60040	WASHER PLAIN	2				0.002	0.0044

silverhorn.co.uk

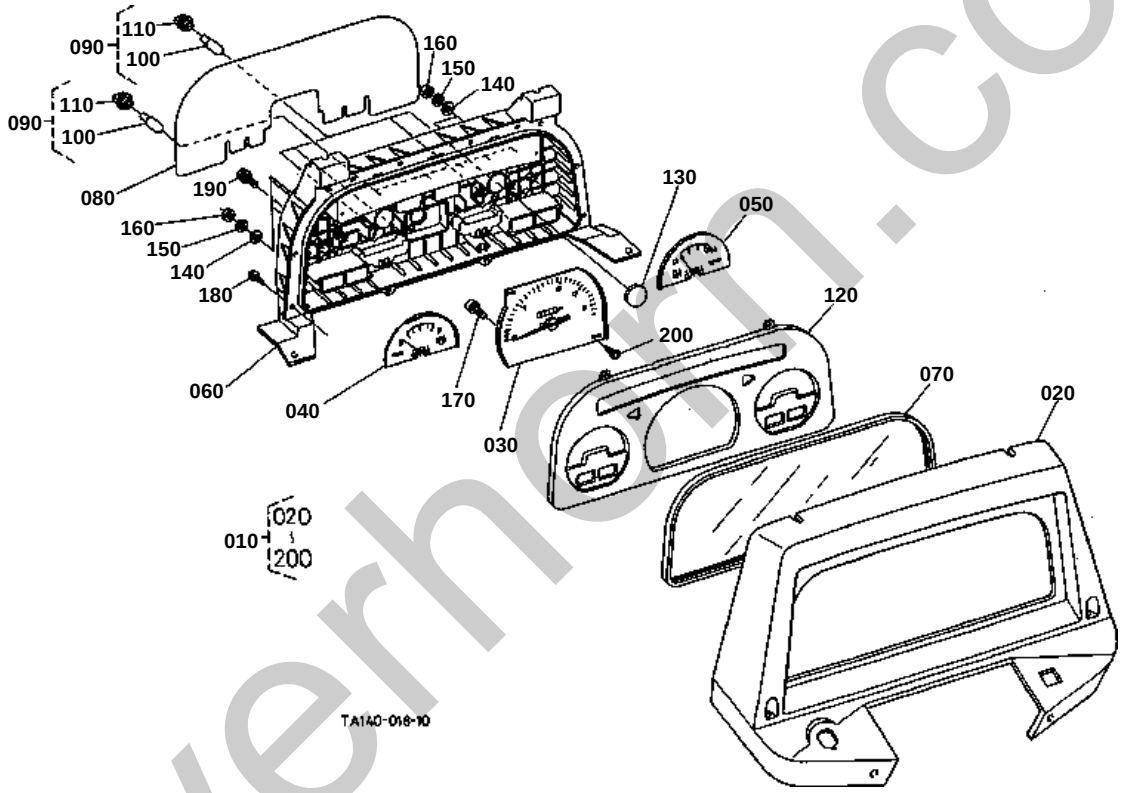

silverhorn.co.uk

PANEL BOARD [COMPONENT PARTS]

↔ Interchangeable; ≠ not interchangeable; ← new for old; → old for new

REF.No	Part No.	Description	Q'ty	S.No.	I/C	REMARKS	Weight (kgf)	Weight (lb)
010	TA140-30210	ASSY PANEL	1				1.72	3.784
020	TA040-76620	HOOD PANEL	1				0.5	1.1
030	TA040-30220	ASSY TACHOMETER	1				0.22	0.484
040	TA040-30230	ASSY METER FUEL	1				0.08	0.176
050	TA040-30240	ASSY THERMOMETER	1				0.08	0.176
060	TA140-30250	CASE	1				0.846	1.8612
070	34070-30260	GLASS	1				0.485	1.067
080	TA040-30270	ASSY PLATE	1				0.135	0.297
090	38240-31460	ASSY LAMP ELECTRIC	9				0.015	0.033
100	38240-31470	BULB	9			3.4W	0.01	0.022
110	38240-31480	SOCKET	9				0.001	0.0022
120	34070-30280	PLATE WINDOW	1				0.21	0.462
130	34070-30170	LENS	2				0.005	0.011
140	66426-81100	WASHER PLAIN	5				0.001	0.0022
150	04512-60040	WASHER SPRING	5				0.002	0.0044
160	02054-50040	NUT	5				0.001	0.0022
170	32530-94900	SCREW WITH WASHER	2				0.002	0.0044
180	03514-50425	SCREW TAPPING	10				0.001	0.0022
190	35533-76230	SCREW WITH WASHER	1				0.002	0.0044
200	34070-30290	SCREW TAPPING	2				0.01	0.022

silverhorn.co.uk

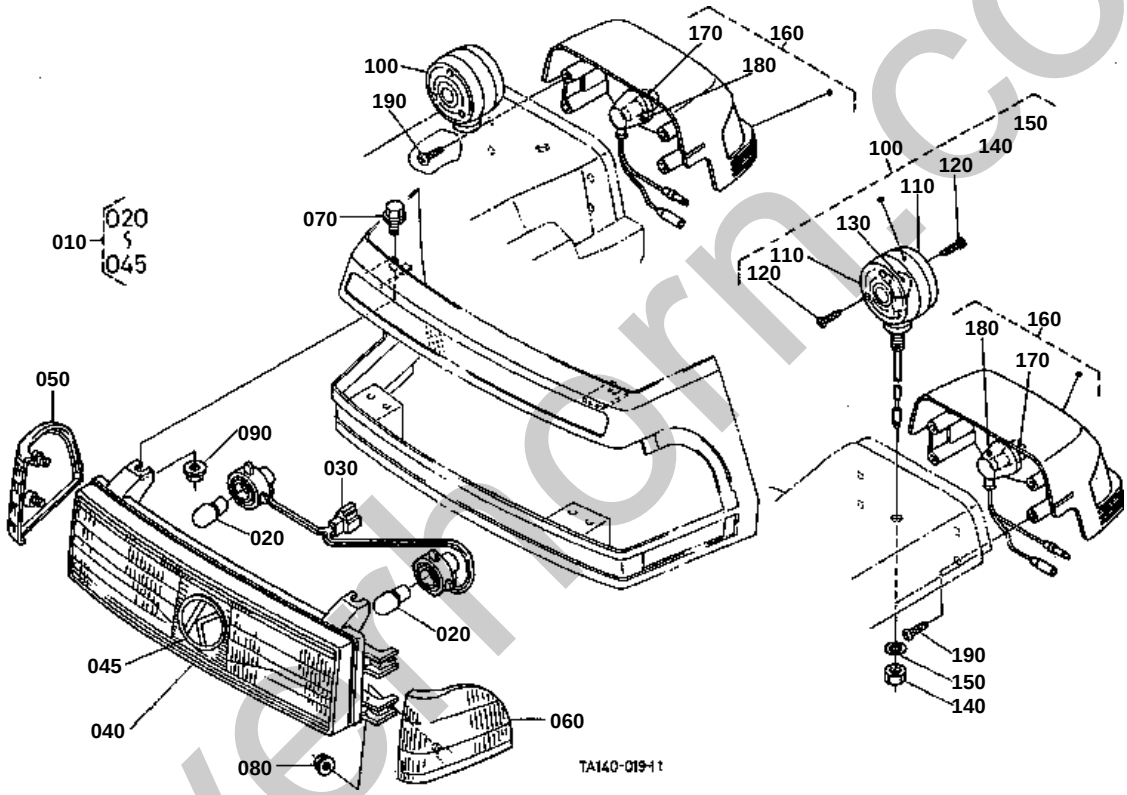

silverthorn.co.uk

010 T0270-9906-0
040 T0270-9910-0

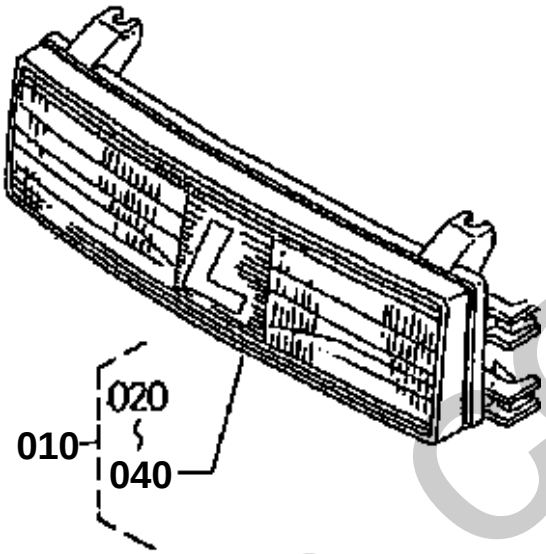

TA140-819-10

silverhorn.co.uk

↔ Interchangeable; ≠ not interchangeable; ← new for old; → old for new

REF.No	Part No.	Description	Q'ty	S.No.	I/C	REMARKS	Weight (kgf)	Weight (lb)
010	T0270-99060	ASSY LIGHT HEAD	1	<=61287			0.8	1.76
010	TA140-99060	ASSY LIGHT HEAD	1	>=61288	≠		0.68	1.496
020	34070-99010	BULB	2			25W	0.02	0.044
030	T0270-99090	ASSY WIRE HARNESS	1				0.05	0.11
040	T0270-99100	UNIT LAMP	1	<=61287			0.715	1.573
040	TA140-99100	UNIT LAMP	1	>=61288	≠		0.6	1.32
045	TA140-49500	MARK SYMBOL	1	>=61288			0.013	0.0286
050	T0270-99070	GRILLE LIGHT RH	1				0.125	0.275
060	T0270-99080	GRILLE LIGHT LH	1				0.125	0.275
070	30400-19060	BOLT FLANGE	2				0.006	0.0132
080	02761-50050	NUT FLANGE	4				0.005	0.011
090	02751-50060	NUT FLANGE	2				0.005	0.011
100	32530-33610	ASSY LIGHT HAZARD	2				0.5	1.1
110	32530-91510	LENS HAZARD LIGHT	4				0.085	0.187
120	32530-91520	SCREW TAPPING	12				0.001	0.0022
130	32530-91530	BULB LIGHT	2			27W	0.02	0.044
140	02114-50100	NUT	2				0.005	0.011
150	04411-50100	WASHER SPRING	2				0.001	0.0022
160	TA040-30020	LIGHT TAIL	2				0.5	1.1
170	TA040-99110	BULB LIGHT	2			8W	0.01	0.022
180	TA040-99120	CORD	2				0.03	0.066
190	03614-50614	SCREW TAPPING	8				0.005	0.011

silverhorn.co.uk

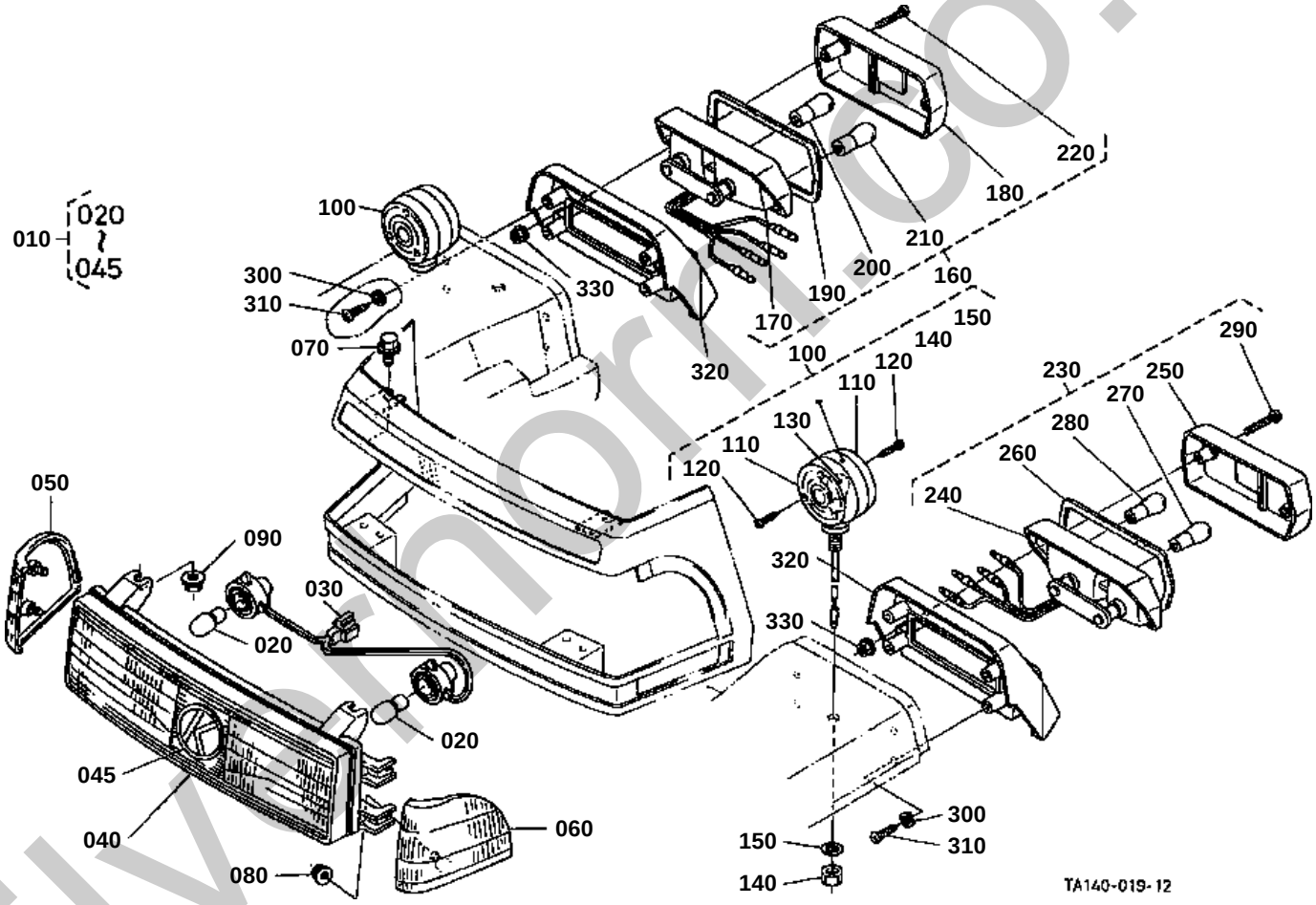

silvermorris.co.uk

↔ Interchangeable; ≠ not interchangeable; ← new for old; → old for new

REF.No	Part No.	Description	Q'ty	S.No.	I/C	REMARKS	Weight (kgf)	Weight (lb)
010	TA140-99060	ASSY LIGHT HEAD	1				0.68	1.496
020	34070-99010	BULB	2			25W	0.02	0.044
030	T0270-99090	ASSY WIRE HARNESS	1				0.05	0.11
040	TA140-99100	UNIT LAMP	1				0.6	1.32
045	TA140-49500	MARK SYMBOL	1				0.013	0.0286
050	T0270-99070	GRILLE LIGHT RH	1				0.125	0.275
060	T0270-99080	GRILLE LIGHT LH	1				0.125	0.275
070	30400-19060	BOLT FLANGE	2				0.006	0.0132
080	02761-50050	NUT FLANGE	4				0.005	0.011
090	02751-50060	NUT FLANGE	2				0.005	0.011
100	32530-33610	ASSY LIGHT HAZARD	2				0.5	1.1
110	32530-91510	LENS HAZARD LIGHT	4				0.085	0.187
120	32530-91520	SCREW TAPPING	12				0.001	0.0022
130	32530-91530	BULB LIGHT	2			27W	0.02	0.044
140	02114-50100	NUT	2				0.005	0.011
150	04411-50100	WASHER SPRING	2				0.001	0.0022
160	31301-34303	ASSY LIGHT COMBI.RH	1				0.4	0.88
170	31301-34320	BODY RH	1				0.18	0.396
180	31301-34340	LENS	1				0.105	0.231
190	31391-34350	GASKET	1				0.002	0.0044
200	31391-34360	BULB	1				0.018	0.0396
210	31301-34370	BULB	1				0.02	0.044
220	31391-34380	SCREW	2				0.007	0.0154
230	31301-34313	ASSY LIGHT COMBI.LH	1				0.54	1.188
240	31301-34330	BODY LH	1				0.21	0.462
250	31301-34340	LENS	1				0.105	0.231
260	31391-34350	GASKET	1				0.002	0.0044
270	31391-34360	BULB	1				0.018	0.0396
280	31301-34370	BULB	1				0.02	0.044
290	31391-34380	SCREW	2				0.007	0.0154
300	04512-60060	WASHER SPRING	8				0.001	0.0022
310	03614-50614	SCREW TAPPING	8				0.005	0.011
320	34040-68960	HOLDER	2				0.23	0.506
330	02761-50050	NUT FLANGE	4				0.005	0.011

silvermorn.co.uk

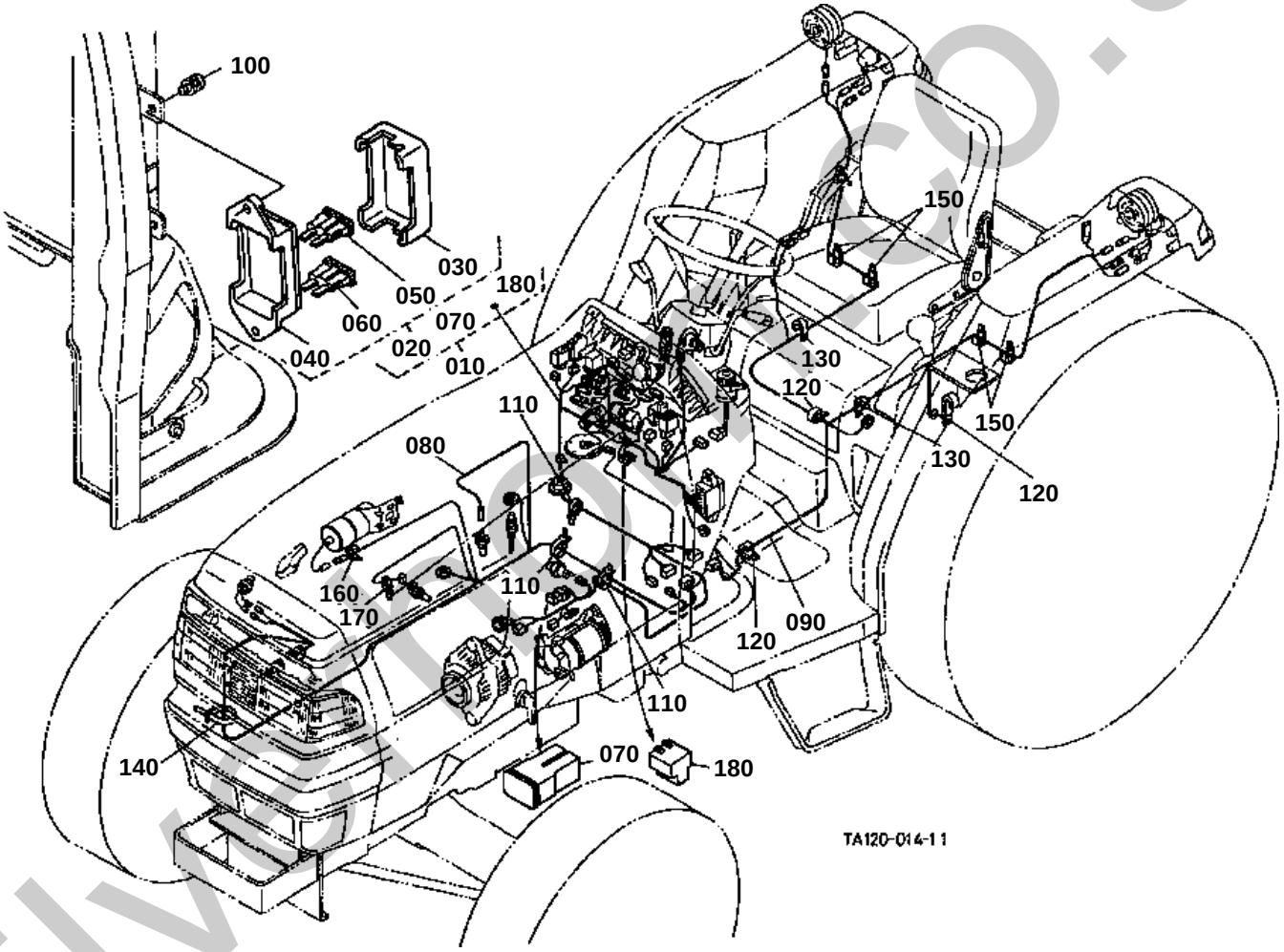

silvertractor.co.uk

↔ Interchangeable; ≠ not interchangeable; ← new for old; → old for new

REF.No	Part No.	Description	Q'ty	S.No.	I/C	REMARKS	Weight (kgf)	Weight (lb)
010	TA140-30310	WIRE HARNESS	1				1.1	2.42
020	TA140-30400	ASSY BOX FUSE	1				0.138	0.3036
030	TA140-30410	COVER FUSE BOX	1				0.02	0.044
040	35533-77350	ASSY CASE FUSE	1				0.04	0.088
050	36730-75550	FUSE	4			10A	0.001	0.0022
060	35820-75560	FUSE	3			15A	0.002	0.0044
070	34670-34530	FUSE	1			40A	0.003	0.0066
080	TA140-30320	WIRE HARNESS	1				0.25	0.55
090	TA140-30332	WIRE HARNESS	1				0.25	0.55
100	03024-50520	SCREW WITH WASHER	2				0.004	0.0088
110	55311-41260	BAND CORD	3				0.007	0.0154
120	32240-34460	CLAMP CORD	3				0.011	0.0242
130	13816-67580	CLAMP CORD	2				0.004	0.0088
140	53581-64150	BAND CORD	2				0.002	0.0044
150	13816-67580	CLAMP CORD	4				0.004	0.0088
160	15241-67580	CLAMP CORD	1				0.004	0.0088
170	44366-68380	BAND CORD	1				0.01	0.022
180	36330-75390	DIODE	2				0.01	0.022

silverhorn.co.uk

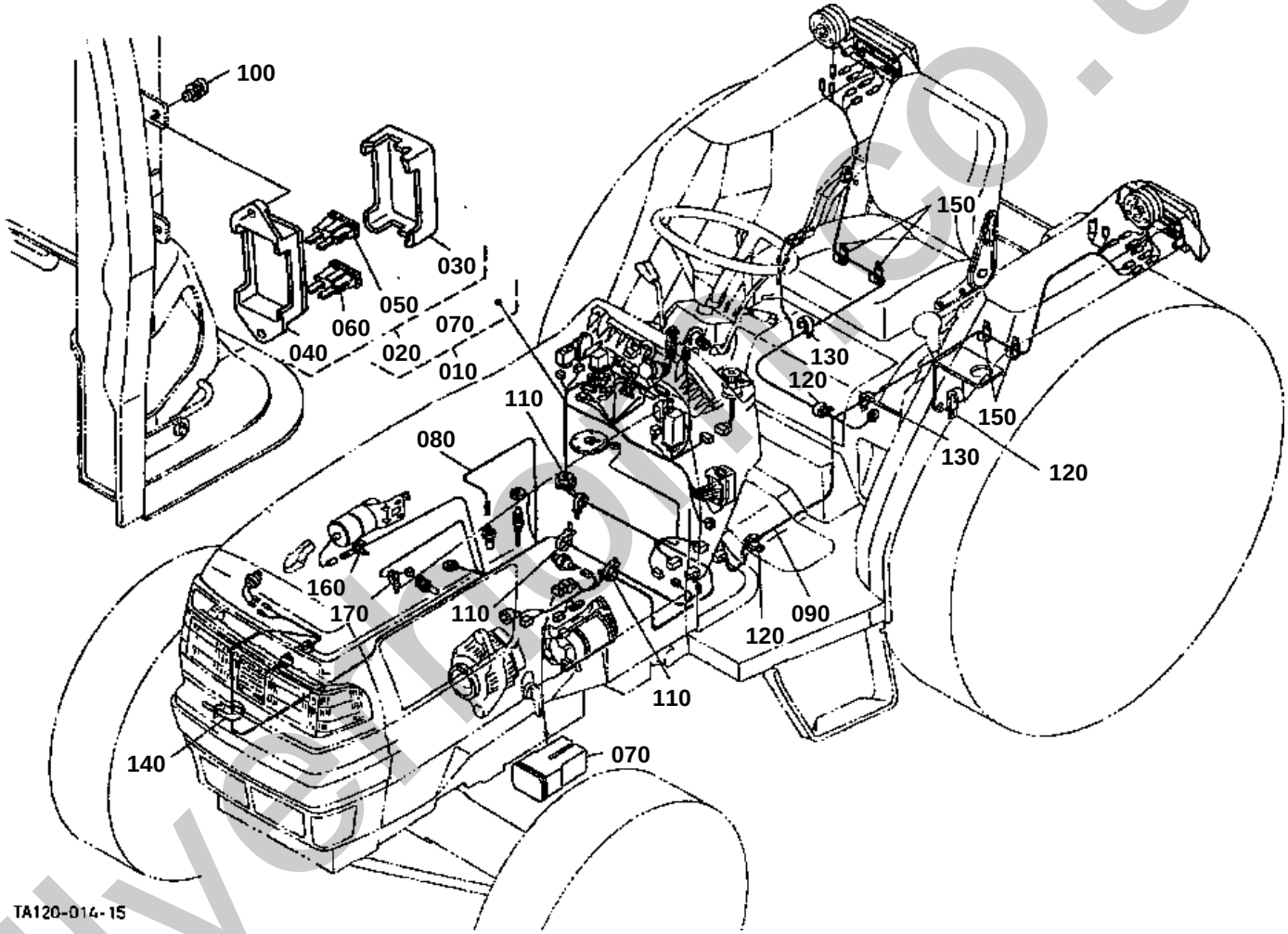

silverstone.co.uk

090 TA140-3033-2

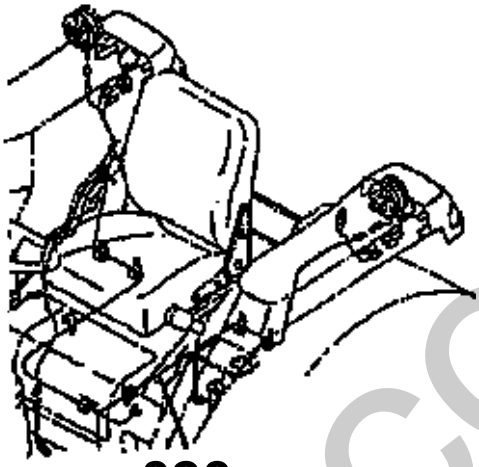

090

silverhorn.co.uk

TA150-816-10

↔ Interchangeable; ≠ not interchangeable; ← new for old; → old for new

REF.No	Part No.	Description	Q'ty	S.No.	I/C	REMARKS	Weight (kgf)	Weight (lb)
010	TA140-30314	WIRE HARNESS	1	<=75110			0	0
010	TA140-30315	WIRE HARNESS	1	>=75111	←		1.1	2.42
020	TA140-30400	ASSY BOX FUSE	1				0.138	0.3036
030	TA140-30410	COVER FUSE BOX	1				0.02	0.044
040	35533-77350	ASSY CASE FUSE	1				0.04	0.088
050	36730-75550	FUSE	4			10A	0.001	0.0022
060	35820-75560	FUSE	3			15A	0.002	0.0044
070	34670-34530	FUSE	1			40A	0.003	0.0066
080	TA140-30320	WIRE HARNESS	1				0.25	0.55
090	TA140-30332	WIRE HARNESS	1	<=75110			0.25	0.55
090	TA140-30333	WIRE HARNESS	1	>=75111	←		0.25	0.55
100	03024-50520	SCREW WITH WASHER	2				0.004	0.0088
110	55311-41260	BAND CORD	3				0.007	0.0154
120	32240-34460	CLAMP CORD	3				0.011	0.0242
130	13816-67580	CLAMP CORD	2				0.004	0.0088
140	53581-64150	BAND CORD	2				0.002	0.0044
150	13816-67580	CLAMP CORD	4				0.004	0.0088
160	15241-67580	CLAMP CORD	1				0.004	0.0088
170	44366-68380	BAND CORD	1				0.01	0.022

silverhorn.co.uk

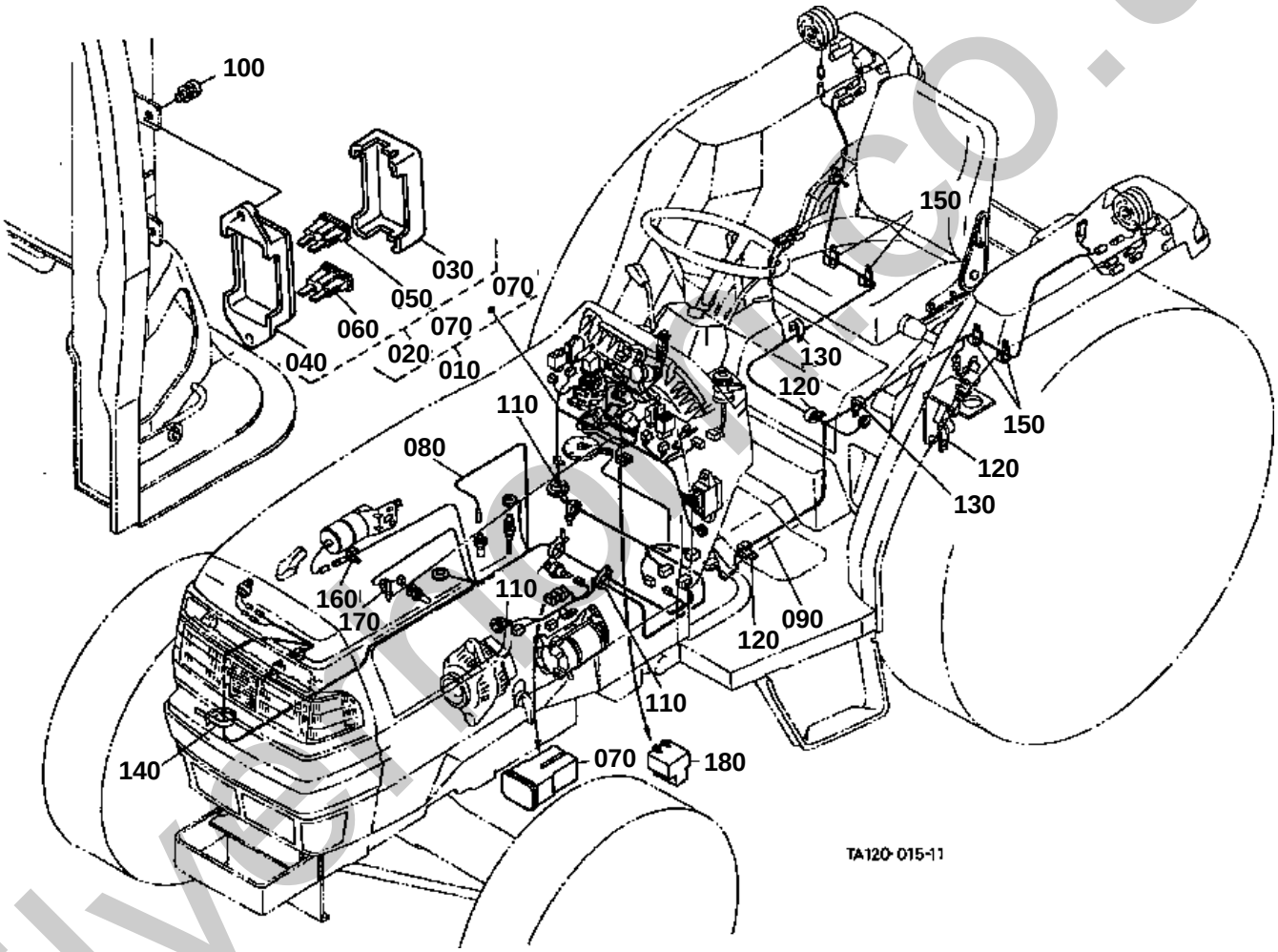

silverstone.co.uk

↔ Interchangeable; ≠ not interchangeable; ← new for old; → old for new

REF.No	Part No.	Description	Q'ty	S.No.	I/C	REMARKS	Weight (kgf)	Weight (lb)
010	TA240-30310	WIRE HARNESS HST	1				1.1	2.42
020	TA140-30400	ASSY BOX FUSE	1				0.138	0.3036
030	TA140-30410	COVER FUSE BOX	1				0.02	0.044
040	35533-77350	ASSY CASE FUSE	1				0.04	0.088
050	36730-75550	FUSE	4			10A	0.001	0.0022
060	35820-75560	FUSE	3			15A	0.002	0.0044
070	34670-34530	FUSE	1			40A	0.003	0.0066
080	TA140-30320	WIRE HARNESS	1				0.25	0.55
090	TA240-30332	WIRE HARNESS HST	1				0.21	0.462
100	03024-50520	SCREW WITH WASHER	2				0.004	0.0088
110	55311-41260	BAND CORD	3				0.007	0.0154
120	32240-34460	CLAMP CORD	3				0.011	0.0242
130	13816-67580	CLAMP CORD	2				0.004	0.0088
140	53581-64150	BAND CORD	2				0.002	0.0044
150	13816-67580	CLAMP CORD	4				0.004	0.0088
160	15241-67580	CLAMP CORD	1				0.004	0.0088
170	44366-68380	BAND CORD	1				0.01	0.022
180	36330-75390	DIODE	2				0.01	0.022

silverhorn.co.uk

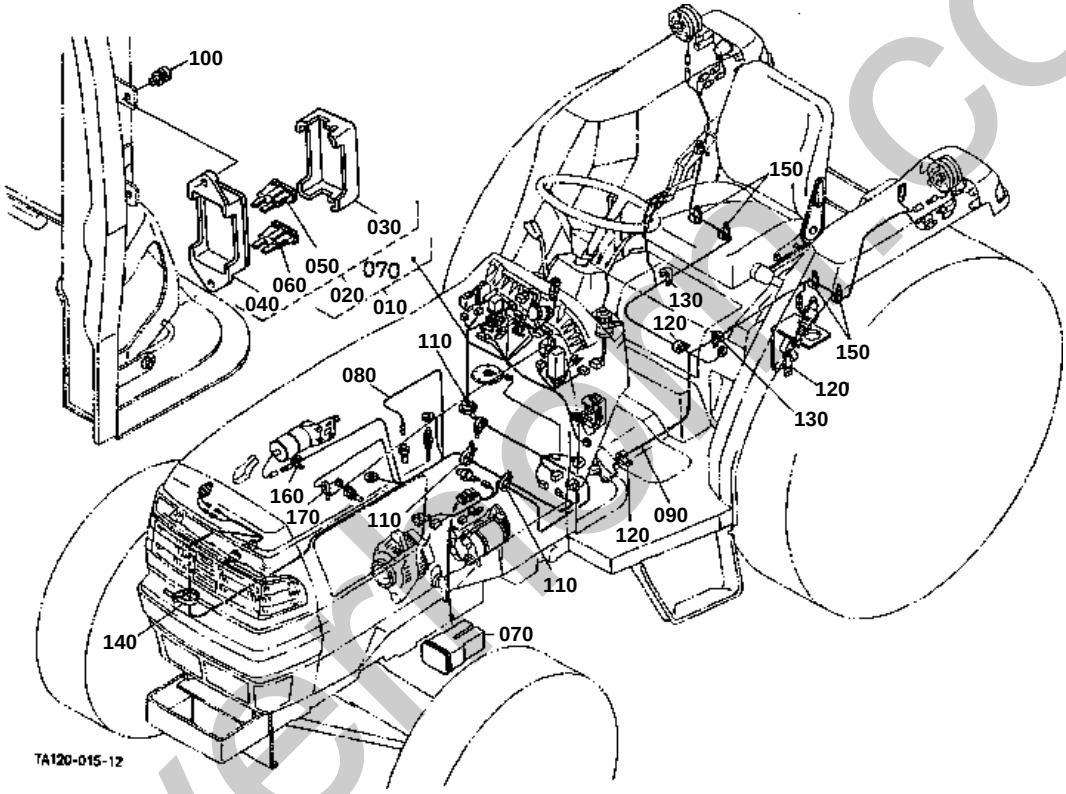

silvermoor.co.uk

↔ Interchangeable; ≠ not interchangeable; ← new for old; → old for new

REF.No	Part No.	Description	Q'ty	S.No.	I/C	REMARKS	Weight (kgf)	Weight (lb)
010	TA240-30314	WIRE HARNESS HST	1				0	0
020	TA140-30400	ASSY BOX FUSE	1				0.138	0.3036
030	TA140-30410	COVER FUSE BOX	1				0.02	0.044
040	35533-77350	ASSY CASE FUSE	1				0.04	0.088
050	36730-75550	FUSE	4			10A	0.001	0.0022
060	35820-75560	FUSE	3			15A	0.002	0.0044
070	34670-34530	FUSE	1			40A	0.003	0.0066
080	TA140-30320	WIRE HARNESS	1				0.25	0.55
090	TA240-30332	WIRE HARNESS HST	1				0.21	0.462
100	03024-50520	SCREW WITH WASHER	2				0.004	0.0088
110	55311-41260	BAND CORD	3				0.007	0.0154
120	32240-34460	CLAMP CORD	3				0.011	0.0242
130	13816-67580	CLAMP CORD	2				0.004	0.0088
140	53581-64150	BAND CORD	2				0.002	0.0044
150	13816-67580	CLAMP CORD	4				0.004	0.0088
160	15241-67580	CLAMP CORD	1				0.004	0.0088
170	44366-68380	BAND CORD	1				0.01	0.022

silverhorn.co.uk

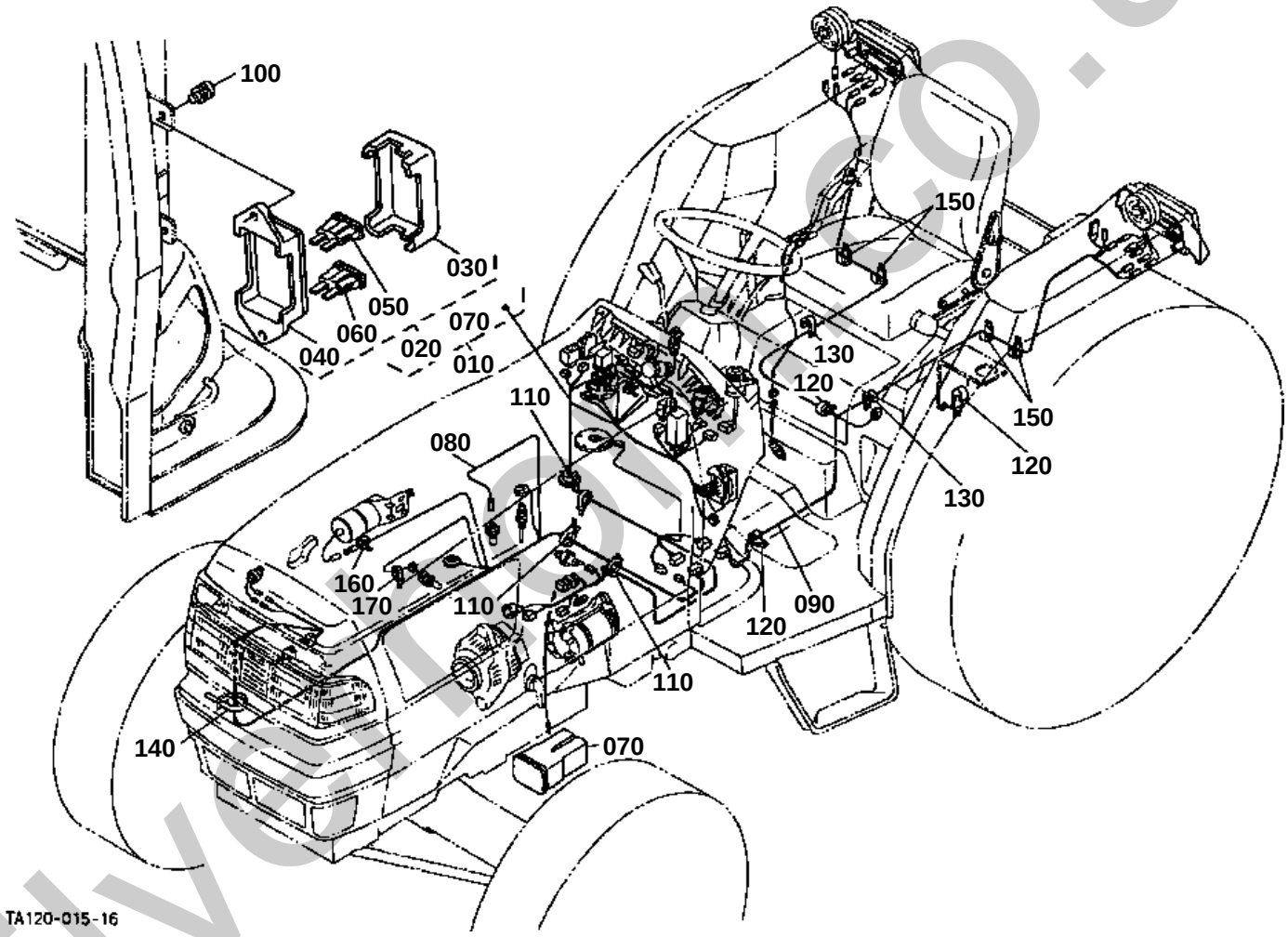

silvermoon.co.uk

090 TA240-3033-3

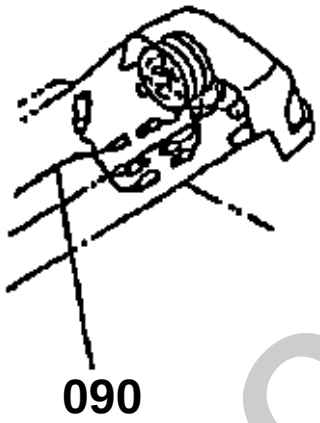

TA120-832-10

silverhorn.co.uk

↔ Interchangeable; ≠ not interchangeable; ← new for old; → old for new

REF.No	Part No.	Description	Q'ty	S.No.	I/C	REMARKS	Weight (kgf)	Weight (lb)
010	TA240-30315	WIRE HARNESS HST	1	<=75110			0	0
010	TA240-30316	WIRE HARNESS HST	1	>=75111	←		1.1	2.42
020	TA140-30400	ASSY BOX FUSE	1				0.138	0.3036
030	TA140-30410	COVER FUSE BOX	1				0.02	0.044
040	35533-77350	ASSY CASE FUSE	1				0.04	0.088
050	36730-75550	FUSE	4			10A	0.001	0.0022
060	35820-75560	FUSE	3			15A	0.002	0.0044
070	34670-34530	FUSE	1			40A	0.003	0.0066
080	TA140-30320	WIRE HARNESS	1				0.25	0.55
090	TA240-30333	WIRE HARNESS HST	1	<=75110			0	0
090	TA240-30334	WIRE HARNESS HST	1	>=75111	←		0.21	0.462
100	03024-50520	SCREW WITH WASHER	2				0.004	0.0088
110	55311-41260	BAND CORD	3				0.007	0.0154
120	32240-34460	CLAMP CORD	3				0.011	0.0242
130	13816-67580	CLAMP CORD	2				0.004	0.0088
140	53581-64150	BAND CORD	2				0.002	0.0044
150	13816-67580	CLAMP CORD	4				0.004	0.0088
160	15241-67580	CLAMP CORD	1				0.004	0.0088
170	44366-68380	BAND CORD	1				0.01	0.022

silverhorn.co.uk

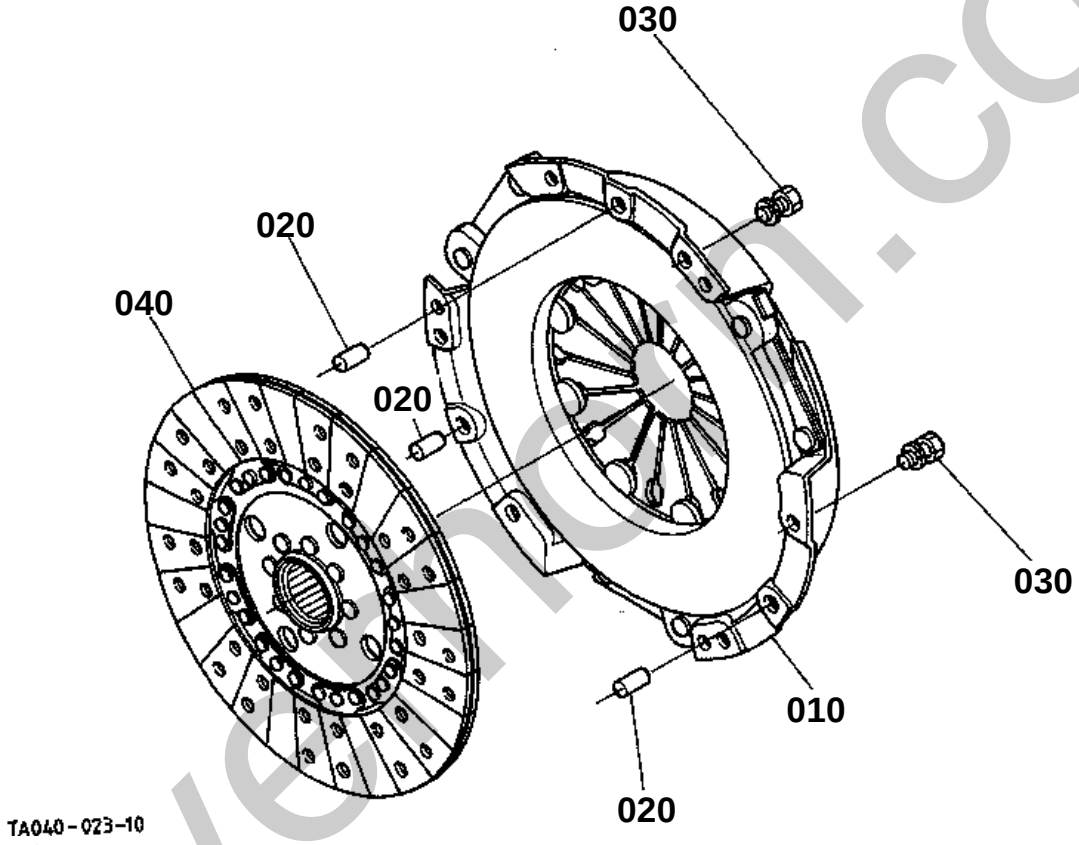

silvermach.co.uk

CLUTCH

↔ Interchangeable; ≠ not interchangeable; ← new for old; → old for new

REF.No	Part No.	Description	Q'ty	S.No.	I/C	REMARKS	Weight (kgf)	Weight (lb)
010	TA040-20600	ASSY PLATE PRESSURE	1				7.5	16.5
020	05012-01018	PIN STRAIGHT	3				0.012	0.0264
030	01123-50816	BOLT	6				0.011	0.0242
040	TA040-20500	COMP.DISK CLUTCH	1				1.2	2.64

silverhorn.co.uk

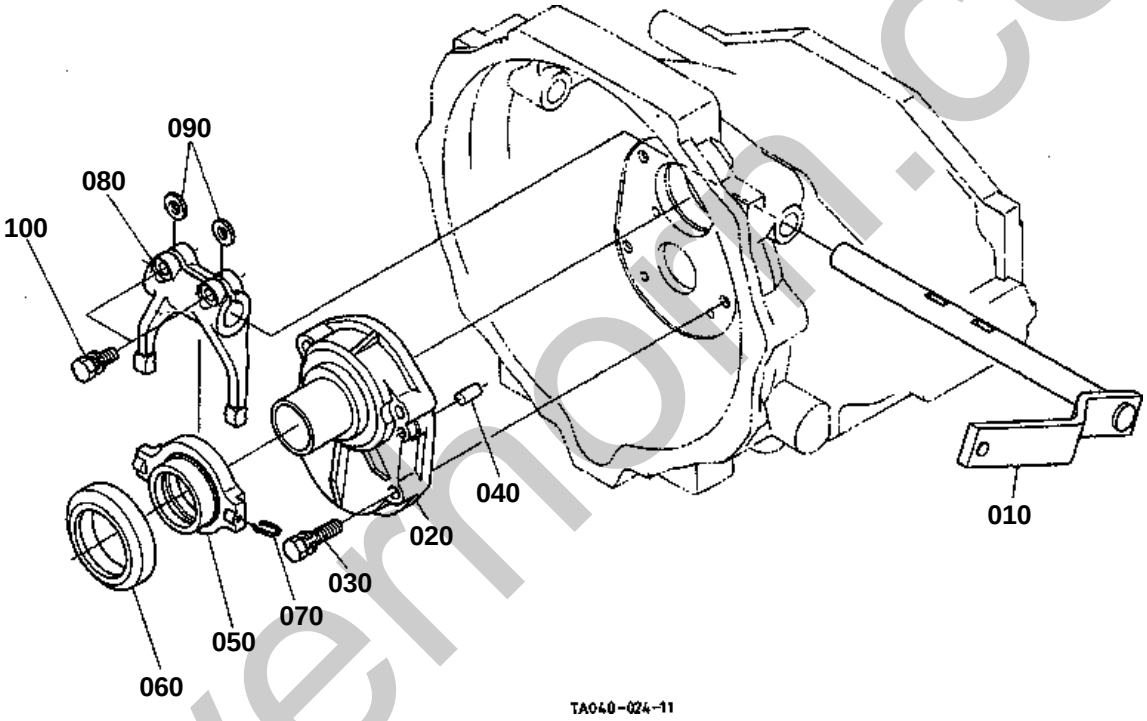

silvermoon.co.uk

CLUTCH LEVER

↔ Interchangeable; ≠ not interchangeable; ← new for old; → old for new

REF.No	Part No.	Description	Q'ty	S.No.	I/C	REMARKS	Weight (kgf)	Weight (lb)
010	TA040-21172	LEVER CLUTCH	1				1.3	2.86
020	TA040-21100	CASE PROPELLER SHAFT	1				0.66	1.452
030	01123-50845	BOLT	4				0.02	0.044
040	05012-00818	PIN STRAIGHT	2				0.008	0.0176
050	TA040-21150	HOLDER CLUTCH	1				0.4	0.88
060	TA040-20700	BEARING RELEASE	1				0.28	0.616
070	TA040-21210	PIN SNAP	2				0.002	0.0044
080	TA040-21200	FORK CLUTCH RELEASE	1				0.54	1.188
090	31150-14780	KEY FORK	2				0.003	0.0066
100	01123-50825	BOLT	2				0.013	0.0286

silverhorn.co.uk

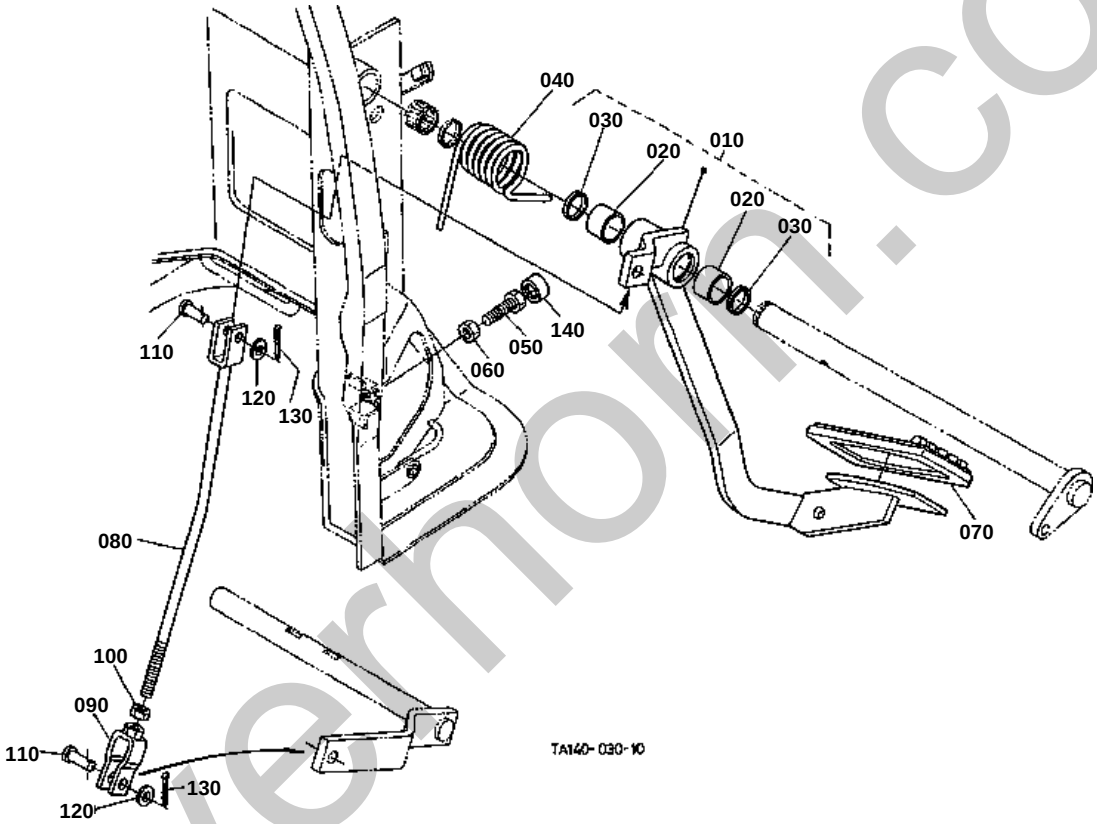

silvernorn.co.uk

CLUTCH PEDAL [EXCEPT HST TYPE] [ROPS TYPE]
[EXCEPTE TYPE CABINE]

↔ Interchangeable; ≠ not interchangeable; ← new for old; → old for new

REF.No	Part No.	Description	Q'ty	S.No.	I/C	REMARKS	Weight (kgf)	Weight (lb)
010	TA040-44052	COMP.PEDAL CLUTCH	1				1.6	3.52
020	08511-02520	BUSH	2				0.02	0.044
030	34070-44140	SEAL OIL	2				0.005	0.011
040	TA040-44160	SPRING	1				0.108	0.2376
050	01073-51030	BOLT	1				0.028	0.0616
060	02116-50100	NUT	1				0.004	0.0088
070	37410-44120	COVER PEDAL	1				0.08	0.176
080	TA040-44460	ROD CLUTCH	1	<=51803			0	0
080	TA040-44462	ROD CLUTCH	1	>=51804	←		0.24	0.528
090	34070-44470	U JOINT	1				0.08	0.176
100	02176-50100	NUT	1				0.005	0.011
110	05122-61028	PIN JOINT	2				0.02	0.044
120	04013-60100	WASHER PLAIN	2				0.004	0.0088
130	05511-50318	PIN SPLIT	2				0.001	0.0022
140	T0270-47490	CUSHION	1				0.002	0.0044

silverhorn.co.uk

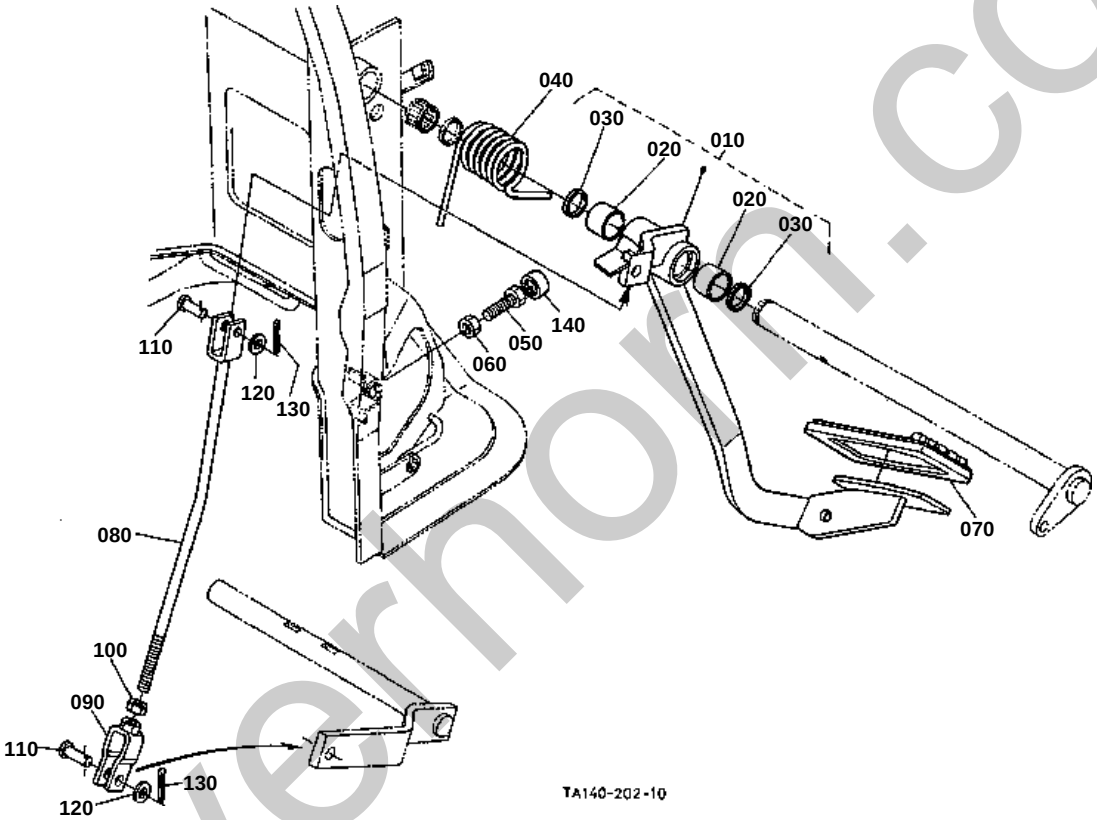

silverhorn.co.uk

010 TA040-4405-2

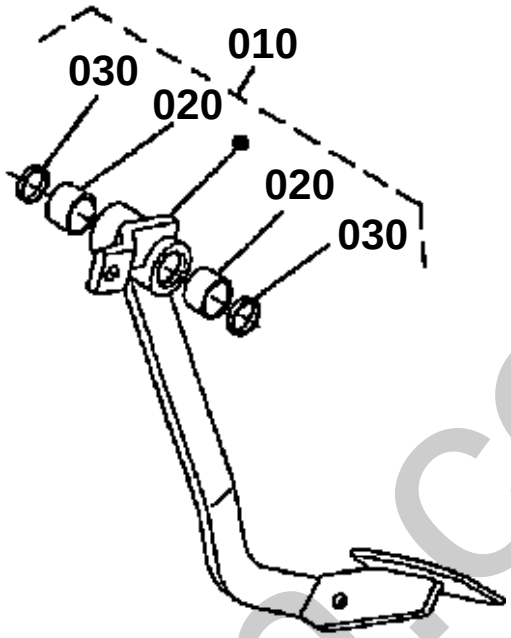

silverhorn.co.uk

CLUTCH PEDAL [HST TYPE] [ROPS TYPE]

↔ Interchangeable; ≠ not interchangeable; ← new for old; → old for new

REF.No	Part No.	Description	Q'ty	S.No.	I/C	REMARKS	Weight (kgf)	Weight (lb)
010	TA040-44052	COMP.PEDAL CLUTCH	1	<=61504			1.6	3.52
010	TA240-44050	COMP.PEDAL CLUTCH	1	>=70001	←		1.56	3.432
020	08511-02520	BUSH	2				0.02	0.044
030	34070-44140	SEAL OIL	2				0.005	0.011
040	TA040-44160	SPRING	1				0.108	0.2376
050	01073-51030	BOLT	1				0.028	0.0616
060	02116-50100	NUT	1				0.004	0.0088
070	37410-44120	COVER PEDAL	1				0.08	0.176
080	TA040-44460	ROD CLUTCH	1	<=51803			0	0
080	TA040-44462	ROD CLUTCH	1	>=51804	←		0.24	0.528
090	34070-44470	U JOINT	1				0.08	0.176
100	02176-50100	NUT	1				0.005	0.011
110	05122-61028	PIN JOINT	2				0.02	0.044
120	04013-60100	WASHER PLAIN	2				0.004	0.0088
130	05511-50318	PIN SPLIT	2				0.001	0.0022
140	T0270-47490	CUSHION	1				0.002	0.0044

silverhorn.co.uk

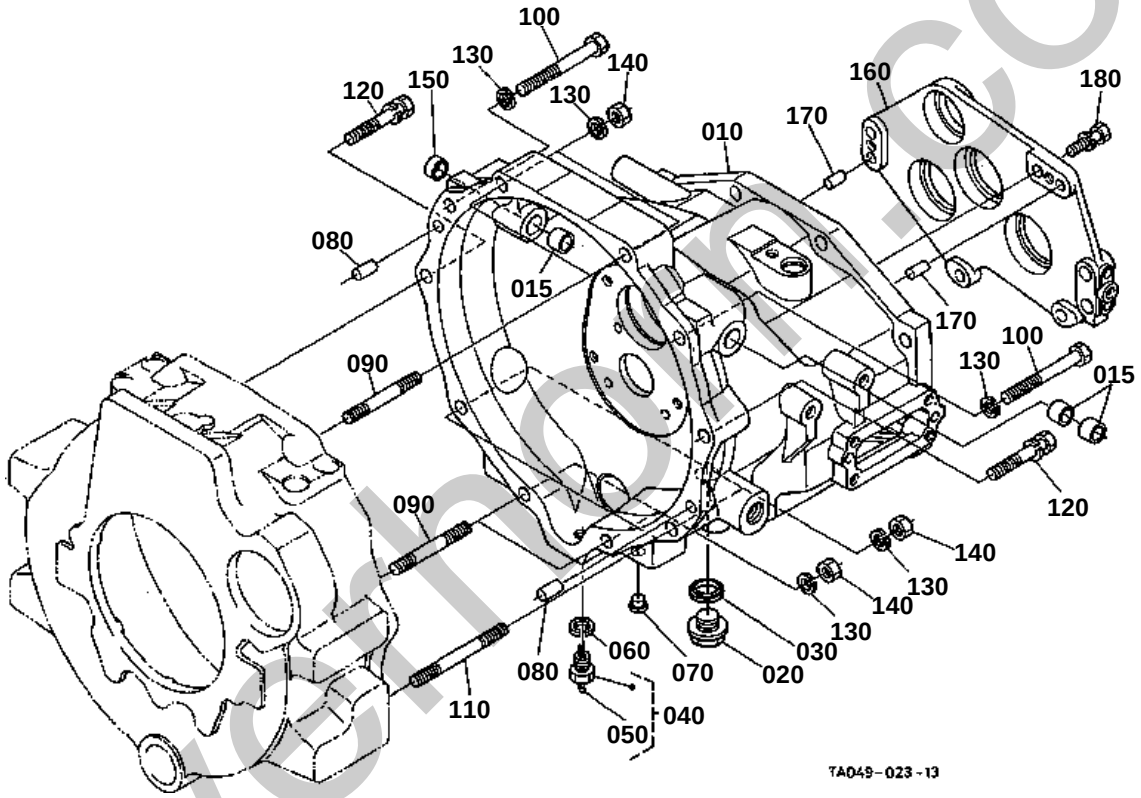

silverhome.co.uk

CLUTCH HOUSING [MANUAL T/M TYPE]

↔ Interchangeable; ≠ not interchangeable; ← new for old; → old for new

REF.No	Part No.	Description	Q'ty	S.No.	I/C	REMARKS	Weight (kgf)	Weight (lb)
010	TA040-20208	HOUSING CLUTCH	1				41	90.2
015	08511-01915	BUSH	3				0.01	0.022
020	15512-96010	PLUG DRAIN	1				0.101	0.2222
030	04717-02150	WASHER WITH RUBBER	1				0.004	0.0088
040	32430-14270	KIT PLUG	1				0.04	0.088
050	05511-50430	PIN SPLIT	1				0.004	0.0088
060	04512-60140	WASHER SPRING	1				0.006	0.0132
070	32210-27580	PLUG	10				0.001	0.0022
080	05012-01018	PIN STRAIGHT	2				0.012	0.0264
090	01574-51265	STUD	4				0.067	0.1474
100	01173-51295	BOLT	2				0.086	0.1892
110	01574-51285	STUD	2				0.085	0.187
120	01133-51265	BOLT	2				0.065	0.143
130	04512-60120	WASHER SPRING	8				0.005	0.011
140	02176-50120	NUT	6				0.01	0.022
150	31351-38720	PLUG	1				0.005	0.011
160	TA040-20250	HOLDER BEARING	1				0.78	1.716
170	05012-00818	PIN STRAIGHT	2				0.008	0.0176
180	01133-51035	BOLT	4				0.03	0.066

silverhorn.co.uk

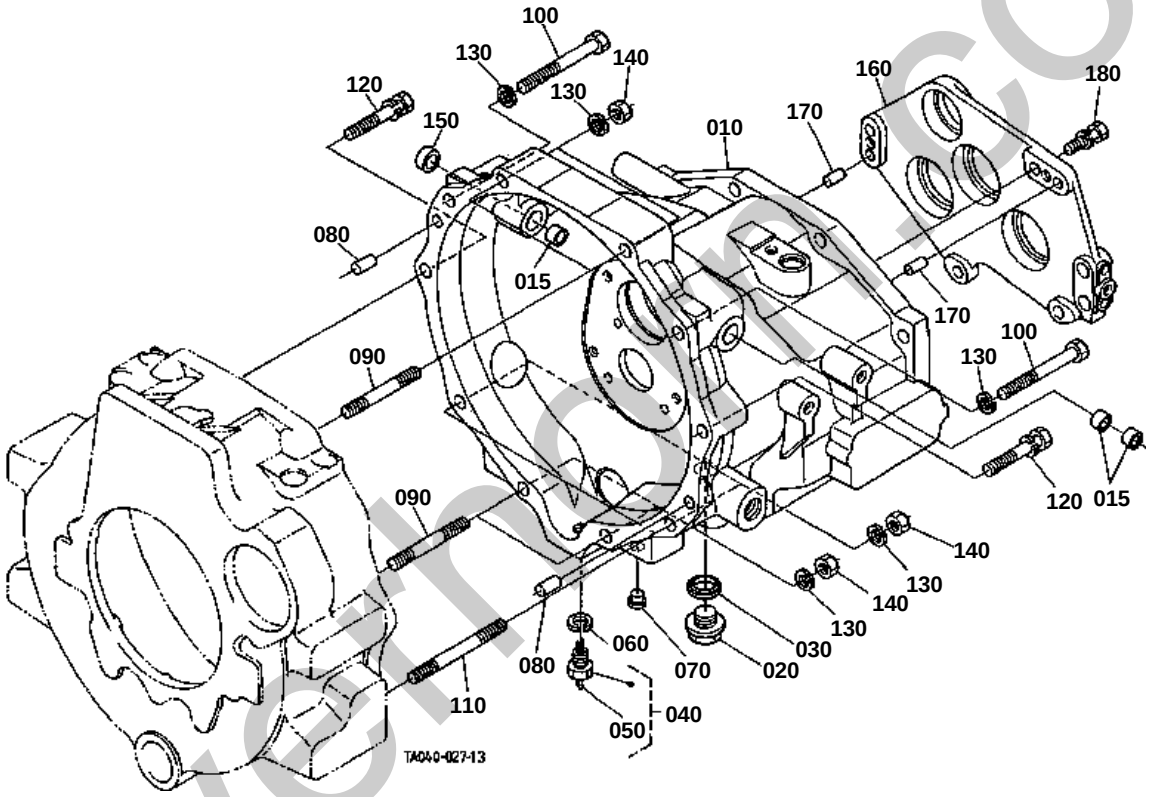

silvermoor.co.uk

CLUTCH HOUSING [GST TYPE]

↔ Interchangeable; ≠ not interchangeable; ← new for old; → old for new

REF.No	Part No.	Description	Q'ty	S.No.	I/C	REMARKS	Weight (kgf)	Weight (lb)
010	TA040-60206	HOUSING CLUTCH	1				39.1	86.02
015	08511-01915	BUSH	3				0.01	0.022
020	15512-96010	PLUG DRAIN	1				0.101	0.2222
030	04717-02150	WASHER WITH RUBBER	1				0.004	0.0088
040	32430-14270	KIT PLUG	1				0.04	0.088
050	05511-50430	PIN SPLIT	1				0.004	0.0088
060	04512-60140	WASHER SPRING	1				0.006	0.0132
070	32210-27580	PLUG	10				0.001	0.0022
080	05012-01018	PIN STRAIGHT	2				0.012	0.0264
090	01574-51265	STUD	4				0.067	0.1474
100	01173-51295	BOLT	2				0.086	0.1892
110	01574-51285	STUD	2				0.085	0.187
120	01133-51265	BOLT	2				0.065	0.143
130	04512-60120	WASHER SPRING	8				0.005	0.011
140	02176-50120	NUT	6				0.01	0.022
150	31351-38720	PLUG	1				0.005	0.011
160	TA040-20250	HOLDER BEARING	1				0.78	1.716
170	05012-00818	PIN STRAIGHT	2				0.008	0.0176
180	01133-51035	BOLT	4				0.03	0.066

silverhorn.co.uk

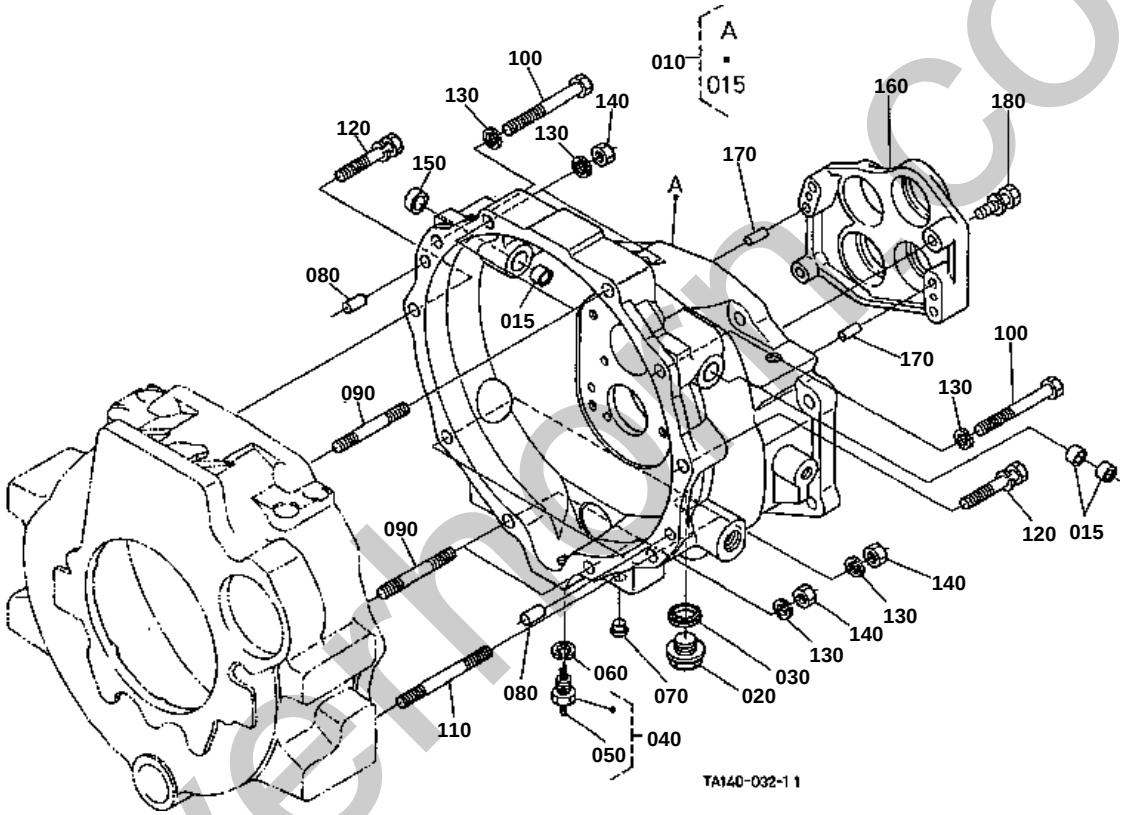

silvermoor.co.uk

010 TA240-5115-0

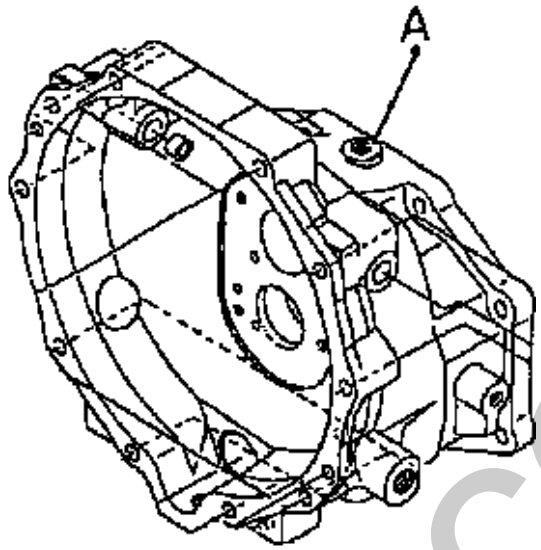

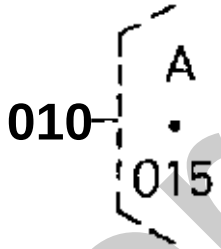

TA140-821-10

silverhorn.co.uk

CLUTCH HOUSING [HST TYPE]

↔ Interchangeable; ≠ not interchangeable; ← new for old; → old for new

REF.No	Part No.	Description	Q'ty	S.No.	I/C	REMARKS	Weight (kgf)	Weight (lb)
010	TA240-51150	ASSY HOUSING CLUTCH	1	<=61504			29.4	64.68
010	TA250-51150	ASSY HOUSING CLUTCH	1	>=70001	≠		0	0
015	08511-01915	BUSH	3				0.01	0.022
020	15512-96010	PLUG DRAIN	1				0.101	0.2222
030	04717-02150	WASHER WITH RUBBER	1				0.004	0.0088
040	32430-14270	KIT PLUG	1				0.04	0.088
050	05511-50430	PIN SPLIT	1				0.004	0.0088
060	04512-60140	WASHER SPRING	1				0.006	0.0132
070	32210-27580	PLUG	6				0.001	0.0022
080	05012-01018	PIN STRAIGHT	2				0.012	0.0264
090	01574-51265	STUD	4				0.067	0.1474
100	01173-51295	BOLT	2				0.086	0.1892
110	01574-51285	STUD	2				0.085	0.187
120	01133-51265	BOLT	2				0.065	0.143
130	04512-60120	WASHER SPRING	8				0.005	0.011
140	02176-50120	NUT	6				0.01	0.022
150	31351-38720	PLUG	1				0.005	0.011
160	TA240-51250	HOLDER BEARING	1	<=73902			1.66	3.652
160	32771-51250	HOLDER BEARING	1	>=73903	←		0	0
170	05012-00818	PIN STRAIGHT	2				0.008	0.0176
180	01123-50845	BOLT	4				0.02	0.044

silverhorn.co.uk

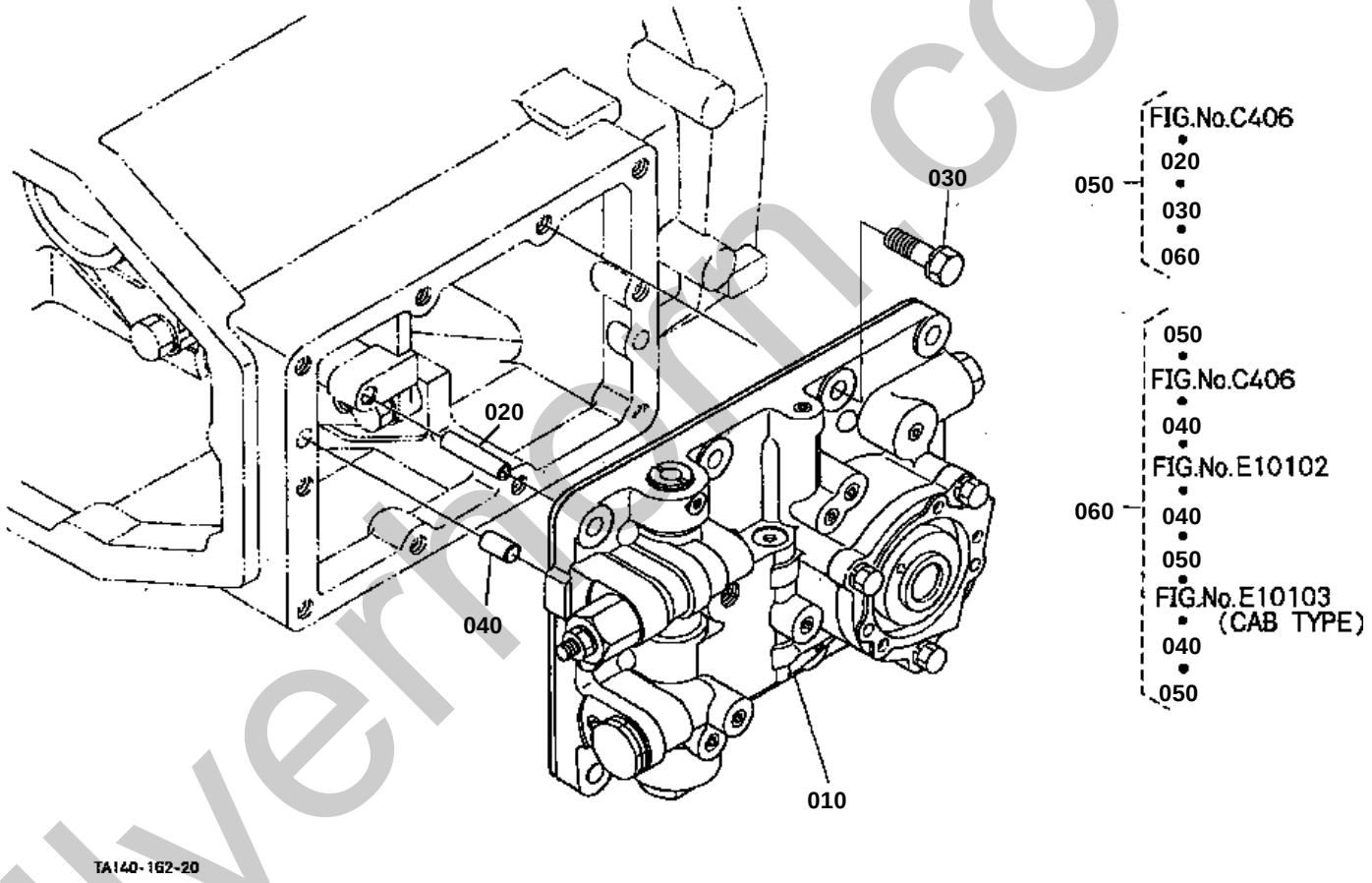

silvermcn.co.uk

GST VALVE [GST TYPE]

↔ Interchangeable; ≠ not interchangeable; ← new for old; → old for new

REF.No	Part No.	Description	Q'ty	S.No.	I/C	REMARKS	Weight (kgf)	Weight (lb)
010	TA040-65015	ASSY VALVE GST	1	<=75376		NOT SALE	0	0
010	TA040-99034	ASSY VALVE GST	1	>=75377	←		8.45	18.59
020	36530-27273	PIPE HYDRAULIC	1				0.005	0.011
030	01133-51032	BOLT	10				0.025	0.055
040	05012-01018	PIN STRAIGHT	2				0.012	0.0264
050	34076-99280	ASSY COVER ROTARYVAL	1				0.23	0.506
060	34076-99200	ASSY SEAL ROTARY VA.	1				0.3	0.66

silverhorn.co.uk

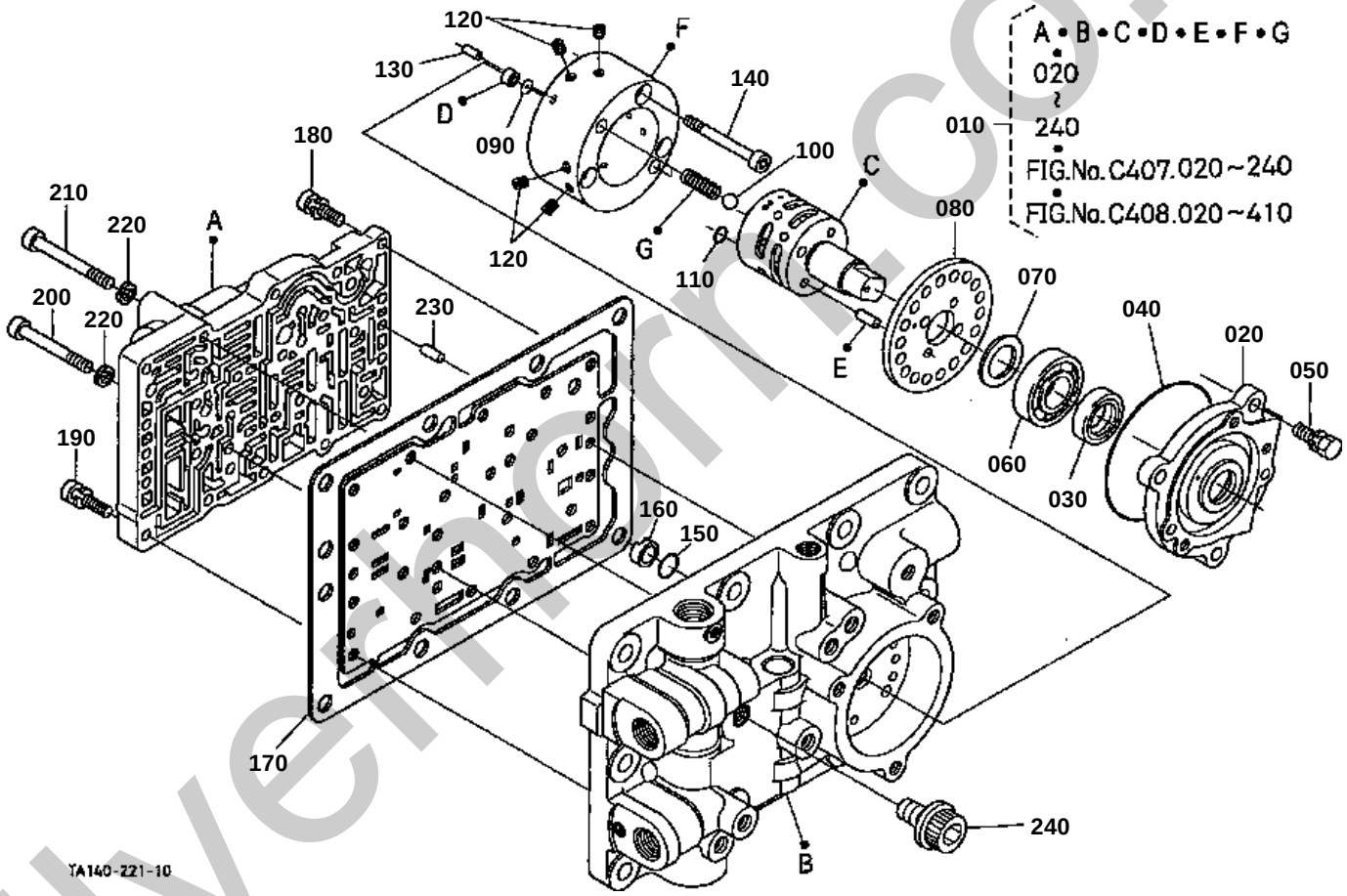

silvermorr.co.uk

↔ Interchangeable; ≠ not interchangeable; ← new for old; → old for new

REF.No	Part No.	Description	Q'ty	S.No.	I/C	REMARKS	Weight (kgf)	Weight (lb)
010	TA040-99030	ASSY VALVE GST	1	<=75376		NOT SALE	8.45	18.59
010	TA040-99034	ASSY VALVE GST	1	>=75377	←		8.45	18.59
020	T0186-65510	COVER ROTARY VALVE	1				0.21	0.462
030	T0186-65530	SEAL OIL	1				0.008	0.0176
040	04811-10850	O RING	1				0.002	0.0044
050	01123-50825	BOLT	3				0.013	0.0286
060	08101-06004	BEARING BALL	1				0.065	0.143
070	50770-12180	COLLAR THRUST	1				0.003	0.0066
080	34076-65550	PLATE DETENT	1				0.11	0.242
090	34076-65580	ORIFICE	1				0.005	0.011
100	07715-01605	BALL	2				0.003	0.0066
110	04811-00060	O RING	9				0.001	0.0022
110	04817-00060	O RING	9		←		0	0
120	32420-67380	PLUG	9				0.005	0.011
130	05012-00406	PIN STRAIGHT	2				0.001	0.0022
140	01311-10645	BOLT HEX-SOC-HD	3				0.01	0.022
150	04810-00120	O RING	1				0.001	0.0022
150	04817-00120	O RING	1		←		0	0
160	34076-65430	BUSH	1				0.005	0.011
170	34076-65910	PLATE SEPARATE	1				0.3	0.66
180	T0276-65880	BOLT HEX-SOC-HD	8				0.008	0.0176
190	T0276-65870	BOLT HEX-SOC-HD	5				0.008	0.0176
200	34076-65850	BOLT	2				0.01	0.022
210	34076-65860	BOLT	5				0.02	0.044
220	04512-60060	WASHER SPRING	7				0.001	0.0022
230	05012-00616	PIN STRAIGHT	2				0.004	0.0088
240	T0276-65990	PLUG	1				0.004	0.0088

silverhorn.co.uk

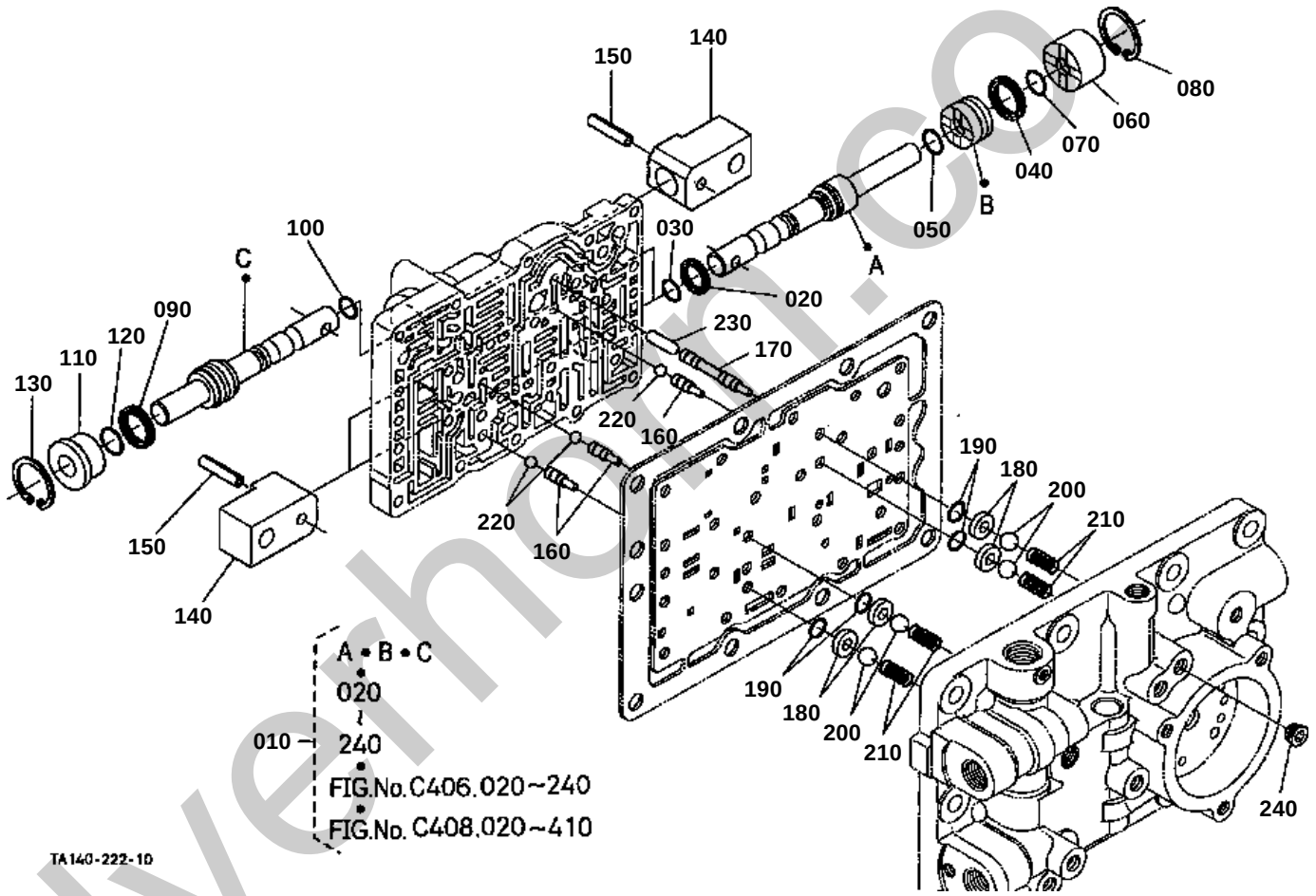

silverhorn.co.uk

↔ Interchangeable; ≠ not interchangeable; ← new for old; → old for new

REF.No	Part No.	Description	Q'ty	S.No.	I/C	REMARKS	Weight (kgf)	Weight (lb)
010	TA040-99030	ASSY VALVE GST	1	<=75376		NOT SALE	8.45	18.59
010	TA040-99034	ASSY VALVE GST	1	>=75377	←		8.45	18.59
020	34076-65140	SEAL PISTON	2				0.005	0.011
030	04811-06100	O RING	2				0.001	0.0022
030	04817-06100	O RING	2		←		0	0
040	34076-65170	SEAL PISTON	2				0.005	0.011
050	04811-00110	O RING	2				0.001	0.0022
050	04817-00110	O RING	2		←		0.001	0.0022
060	34076-65180	COVER PISTON MAIN	2				0.09	0.198
070	04811-00110	O RING	2				0.001	0.0022
070	04817-00110	O RING	2		←		0.001	0.0022
080	04611-00300	CIR CLIP INTERNAL	2				0.004	0.0088
090	34076-65220	SEAL PISTON	1				0.005	0.011
100	04811-06100	O RING	1				0.001	0.0022
100	04817-06100	O RING	1		←		0	0
110	34076-65240	COVER PISTON HI-LO	1				0.06	0.132
120	04811-00140	O RING	1				0.001	0.0022
120	04817-00140	O RING	1		←		0	0
130	04611-00300	CIR CLIP INTERNAL	1				0.004	0.0088
140	34076-65270	SHIFTER PISTON	3				0.135	0.297
150	05411-00625	PIN SPRING	3				0.004	0.0088
160	34076-65930	PIN CHECK	3				0.005	0.011
170	34076-65940	PIN CHECK	1				0.01	0.022
180	34076-65450	SEAT VALVE	4				0.005	0.011
190	04811-06100	O RING	4				0.001	0.0022
190	04817-06100	O RING	4		←		0	0
200	07715-03213	BALL	4				0.004	0.0088
210	34076-65470	SPRING CHECK	4				0.005	0.011
220	07715-00401	BALL	3				0.001	0.0022
230	34076-65950	PIN CHECK ROLLER	1				0.005	0.011
240	67511-36640	PLUG	4				0.003	0.0066

silverhorn.co.uk

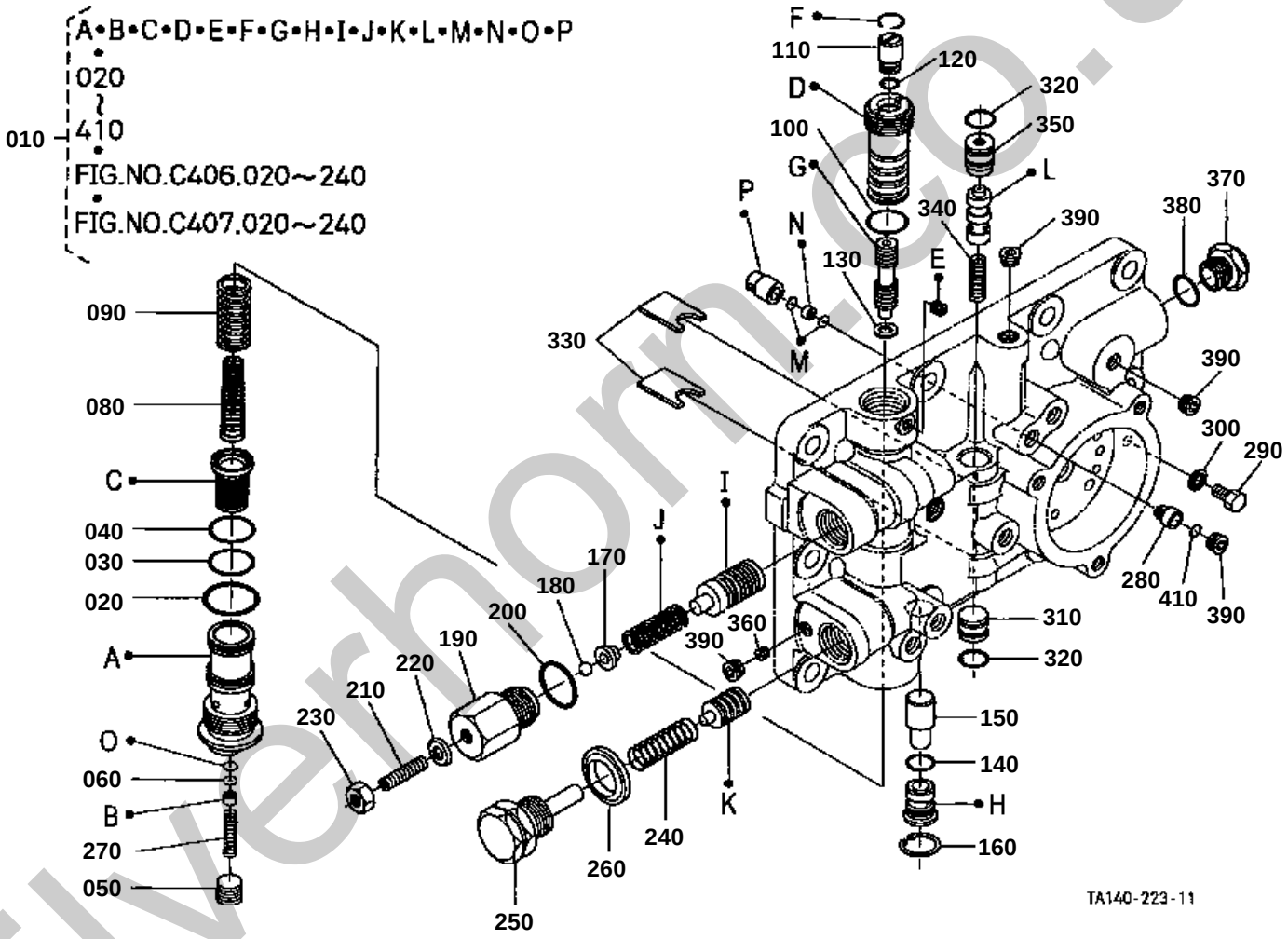

silverhorn.co.uk

270 34076-6583-0
280 34076-6584-0

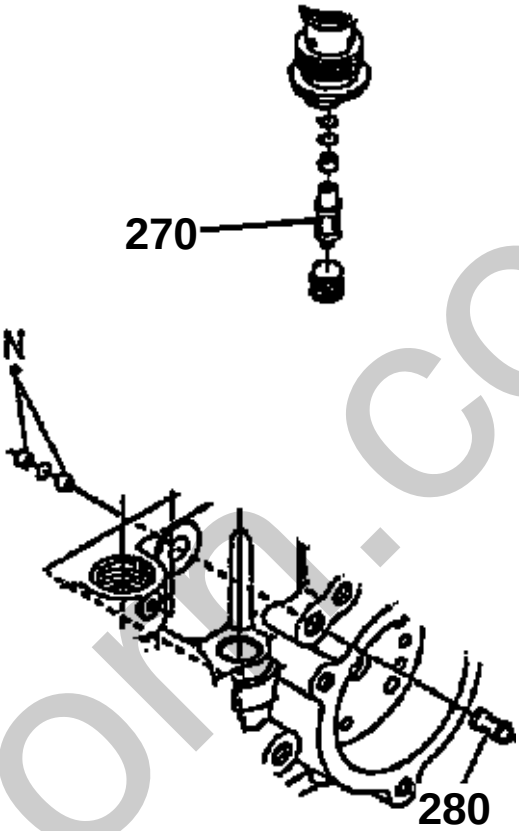

TA150-822-10

silverhorn.co.uk

↔ Interchangeable; ≠ not interchangeable; ← new for old; → old for new

REF.No	Part No.	Description	Q'ty	S.No.	I/C	REMARKS	Weight (kgf)	Weight (lb)
010	TA040-99030	ASSY VALVE GST	1	<=75376		NOT SALE	8.45	18.59
010	TA040-99034	ASSY VALVE GST	1	>=75377	←		8.45	18.59
020	04811-00260	O RING	1				0.001	0.0022
020	04817-00260	O RING	1		←		0	0
030	04811-10240	O RING	1				0.001	0.0022
040	04811-16220	RING	1				0.001	0.0022
050	34076-65800	PLUG	1				0.01	0.022
060	34076-65820	ORIFICE	1				0.005	0.011
070	99999-99999	BLANK	0				0	0
080	34550-65770	SPRING	1				0.02	0.044
090	34076-65760	SPRING RETURN	1				0.02	0.044
100	04811-00180	O RING	1				0.001	0.0022
100	04817-00180	O RING	1		←		0.003	0.0066
110	34076-65750	PLUG	1				0.015	0.033
120	04811-00070	O RING	1				0.001	0.0022
120	04817-00070	O RING	1		←		0	0
130	04013-60060	WASHER PLAIN	1				0.001	0.0022
140	04811-10120	O RING	1				0.001	0.0022
150	67950-29230	POPPET	1				0.015	0.033
160	04611-00160	CIR CLIP INTERNAL	1				0.001	0.0022
170	34076-65390	SUPPORT	1				0.005	0.011
180	07715-00401	BALL	1				0.001	0.0022
190	34076-65380	PLUG	1				0.115	0.253
200	04811-00200	O RING	1				0.001	0.0022
200	04817-00200	O RING	1		←		0	0
210	03651-50825	SCREW SET	1				0.01	0.022
220	62571-13330	WASHER SEAL	1				0.003	0.0066
230	02114-50080	NUT	1				0.005	0.011
240	34076-65320	SPRING	1				0.005	0.011
250	34550-65330	PLUG	1				0.06	0.132
260	04717-01800	WASHER WITH RUBBER	1				0.003	0.0066
270	34076-65830	FILTER MODULATION	1	<=75376		NOT SALE	0.005	0.011
270	3G999-00300	SPRING FILTER	1	>=75377	←		0	0
280	34076-65840	FILTER PILOT	1	<=75376		NOT SALE	0.005	0.011
280	3F750-23710	FILTER	1	>=75377	←		0.002	0.0044
290	01053-50608	BOLT	1				0.004	0.0088
300	04717-00600	WASHER WITH RUBBER	1				0.001	0.0022
310	34076-65680	PLUG	1				0.025	0.055
320	04811-00140	O RING	2				0.001	0.0022
320	04817-00140	O RING	2		←		0	0
330	34076-65650	PLATE STOPPER	2				0.005	0.011
340	34076-65660	SPRING	1				0.005	0.011
350	34076-65690	PLUG	1				0.03	0.066
360	32420-67380	PLUG	1				0.005	0.011
370	34076-65630	PLUG	1				0.035	0.077
380	04811-00140	O RING	1				0.001	0.0022
380	04817-00140	O RING	1		←		0	0
390	67511-36640	PLUG	4				0.003	0.0066
400	99999-99999	BLANK	0				0	0
410	04811-00050	O RING	1				0.001	0.0022
410	04817-00050	O RING	1		←		0	0

silverthorn.co.uk

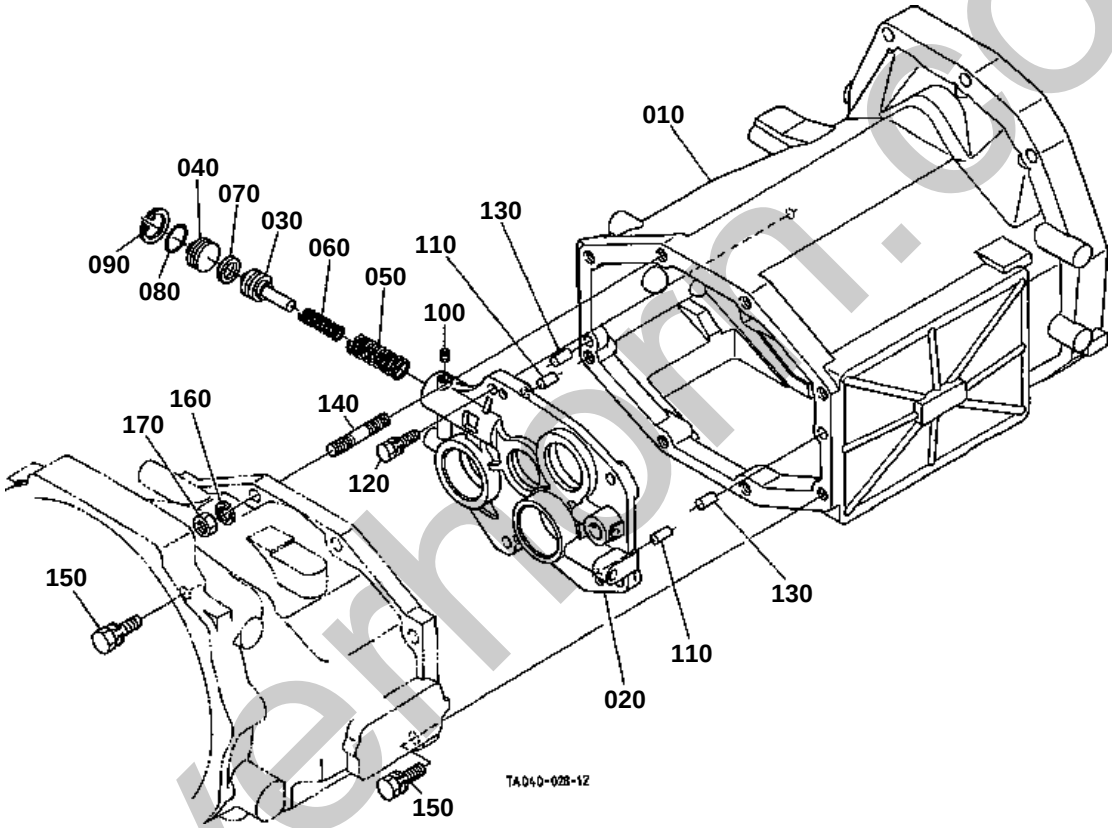

silverhorn.co.uk

↔ Interchangeable; ≠ not interchangeable; ← new for old; → old for new

REF.No	Part No.	Description	Q'ty	S.No.	I/C	REMARKS	Weight (kgf)	Weight (lb)
010	TA040-20304	CASE MID	1				37	81.4
020	TA040-69200	HOLDER	1				3.7	8.14
030	TA040-69210	PISTON	1				0.09	0.198
040	TA040-69220	COVER	1				0.06	0.132
050	TA040-69230	SPRING	1				0.039	0.0858
060	TA040-69240	SPRING	1				0.024	0.0528
070	34076-65170	SEAL PISTON	1				0.005	0.011
080	04811-06230	O RING	1				0.001	0.0022
080	04817-06230	O RING	1		←		0	0
090	04611-00280	CIR CLIP INTERNAL	1				0.002	0.0044
100	32420-67380	PLUG	1				0.005	0.011
110	05012-00818	PIN STRAIGHT	2				0.008	0.0176
120	01133-51035	BOLT	4				0.03	0.066
130	05012-01018	PIN STRAIGHT	2				0.012	0.0264
140	35340-14182	STUD	6				0.05	0.11
150	01133-51240	BOLT	2				0.05	0.11
160	04512-60120	WASHER SPRING	6				0.005	0.011
170	35340-27360	NUT	6				0.015	0.033

silverhorn.co.uk

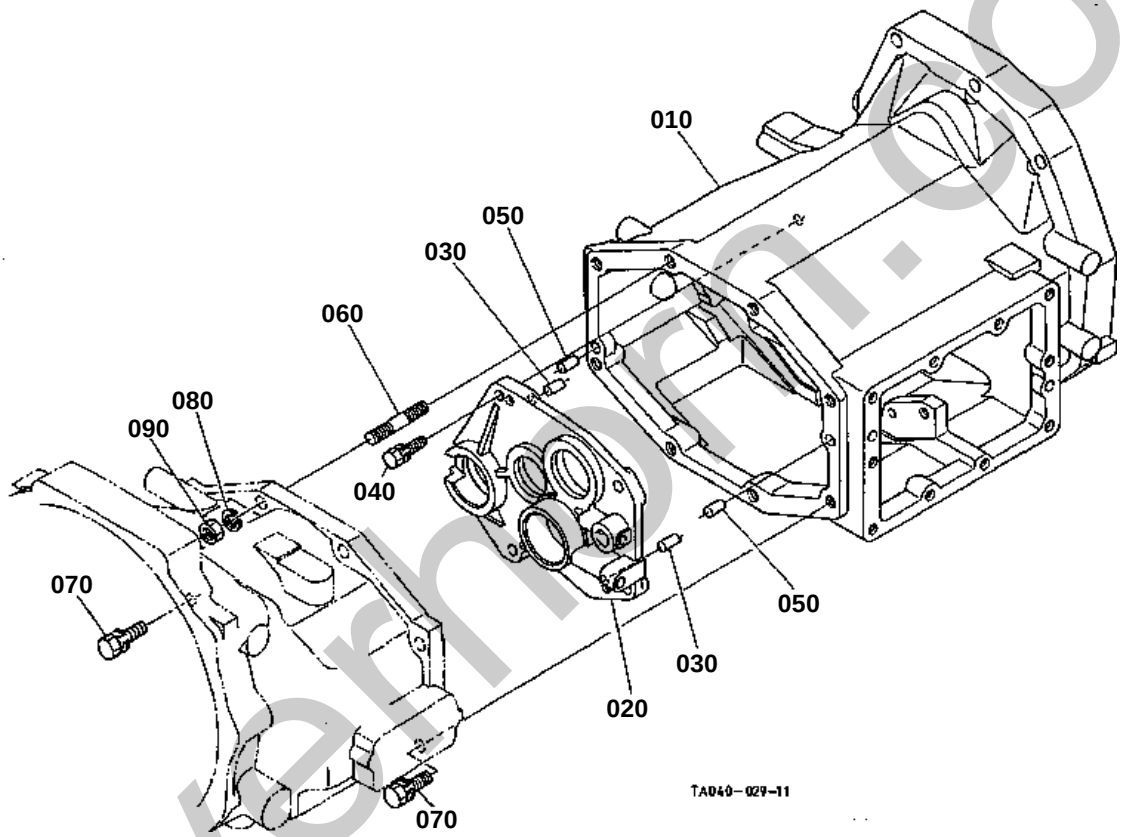

silvermoon.co.uk

↔ Interchangeable; ≠ not interchangeable; ← new for old; → old for new

REF.No	Part No.	Description	Q'ty	S.No.	I/C	REMARKS	Weight (kgf)	Weight (lb)
010	TA040-60325	CASE MID	1				36.5	80.3
020	TA040-20350	HOLDER BEARING	1				3.15	6.93
030	05012-00818	PIN STRAIGHT	2				0.008	0.0176
040	01133-51035	BOLT	4				0.03	0.066
050	05012-01018	PIN STRAIGHT	2				0.012	0.0264
060	35340-14182	STUD	6				0.05	0.11
070	01133-51240	BOLT	2				0.05	0.11
080	04512-60120	WASHER SPRING	6				0.005	0.011
090	35340-27360	NUT	6				0.015	0.033

silverhorn.co.uk

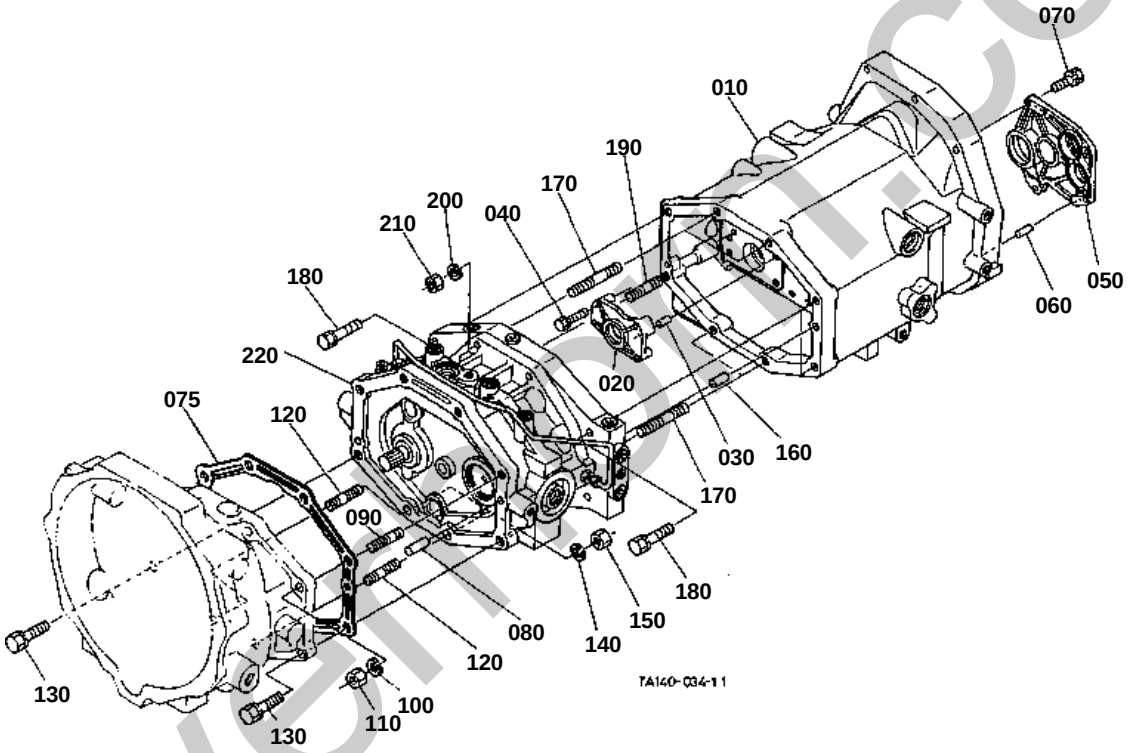

silvermill.co.uk

MID CASE [HST TYPE] [OLD TYPE]
[S.No.;<=61504]

↔ Interchangeable; ≠ not interchangeable; ← new for old; → old for new

REF.No	Part No.	Description	Q'ty	S.No.	I/C	REMARKS	Weight (kgf)	Weight (lb)
010	TA240-50322	CASE MID HST	1				33.5	73.7
020	TA240-50330	HOLDER BEARING	1				0.94	2.068
030	05012-00818	PIN STRAIGHT	2				0.008	0.0176
040	01123-50850	BOLT	4				0.02	0.044
050	TA240-51350	HOLDER MID-BRG.PTO	1				2.4	5.28
060	05012-00818	PIN STRAIGHT	2				0.008	0.0176
070	01133-51030	BOLT	4				0.025	0.055
075	TA240-50310	GASKET	1	>=50190			0.035	0.077
080	05012-01018	PIN STRAIGHT	2				0.012	0.0264
090	TA240-50280	STUD	4				0.066	0.1452
100	04512-60140	WASHER SPRING	4				0.006	0.0132
110	TA240-50240	NUT	4				0.009	0.0198
120	TA240-50210	STUD	2				0.071	0.1562
130	01138-51240	BOLT	2				0.05	0.11
140	04512-60120	WASHER SPRING	2				0.005	0.011
150	35340-27360	NUT	2				0.015	0.033
160	05012-01018	PIN STRAIGHT	2				0.012	0.0264
170	TA240-50220	STUD	4				0.062	0.1364
180	01138-51255	BOLT	3				0.06	0.132
190	TA240-50210	STUD	1				0.071	0.1562
200	04512-60120	WASHER SPRING	5				0.005	0.011
210	35340-27360	NUT	5				0.015	0.033
220	TA240-58000	ASSY HST	1				67	147.4

silverhorn.co.uk

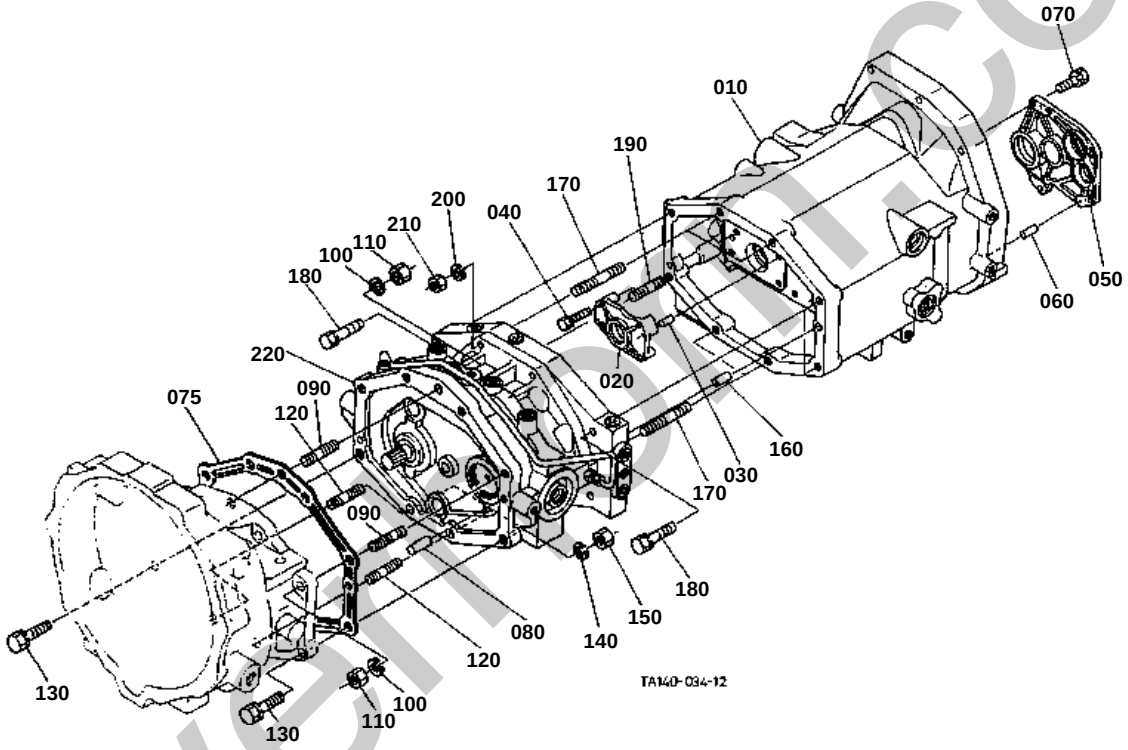

silvermill.co.uk

MID CASE [HST TYPE] [NEW TYPE]
[S.No.;=>70001]

↔ Interchangeable; ≠ not interchangeable; ← new for old; → old for new

REF.No	Part No.	Description	Q'ty	S.No.	I/C	REMARKS	Weight (kgf)	Weight (lb)
010	TA250-50320	CASE MID HST	1				34	74.8
020	TA240-50330	HOLDER BEARING	1				0.94	2.068
030	05012-00818	PIN STRAIGHT	2				0.008	0.0176
040	01123-50850	BOLT	4				0.02	0.044
050	TA240-51350	HOLDER MID-BRG.PTO	1				2.4	5.28
060	05012-00818	PIN STRAIGHT	2				0.008	0.0176
070	01133-51030	BOLT	4				0.025	0.055
075	TA250-50310	GASKET	1				0.03	0.066
080	05012-01018	PIN STRAIGHT	2				0.012	0.0264
090	TA240-50280	STUD	5				0.066	0.1452
100	04512-60140	WASHER SPRING	5				0.006	0.0132
110	TA240-50240	NUT	5				0.009	0.0198
120	TA240-50210	STUD	2				0.071	0.1562
130	01138-51240	BOLT	2				0.05	0.11
140	04512-60120	WASHER SPRING	2				0.005	0.011
150	35340-27360	NUT	2				0.015	0.033
160	05012-01018	PIN STRAIGHT	2				0.012	0.0264
170	TA240-50220	STUD	4				0.062	0.1364
180	01138-51255	BOLT	3				0.06	0.132
190	TA240-50210	STUD	1				0.071	0.1562
200	04512-60120	WASHER SPRING	5				0.005	0.011
210	35340-27360	NUT	5				0.015	0.033
220	TA240-58004	ASSY HST	1	<=74337			0	0
220	TA240-58005	ASSY HST	1	>=74338	≠		62	136.4

silverhorn.co.uk

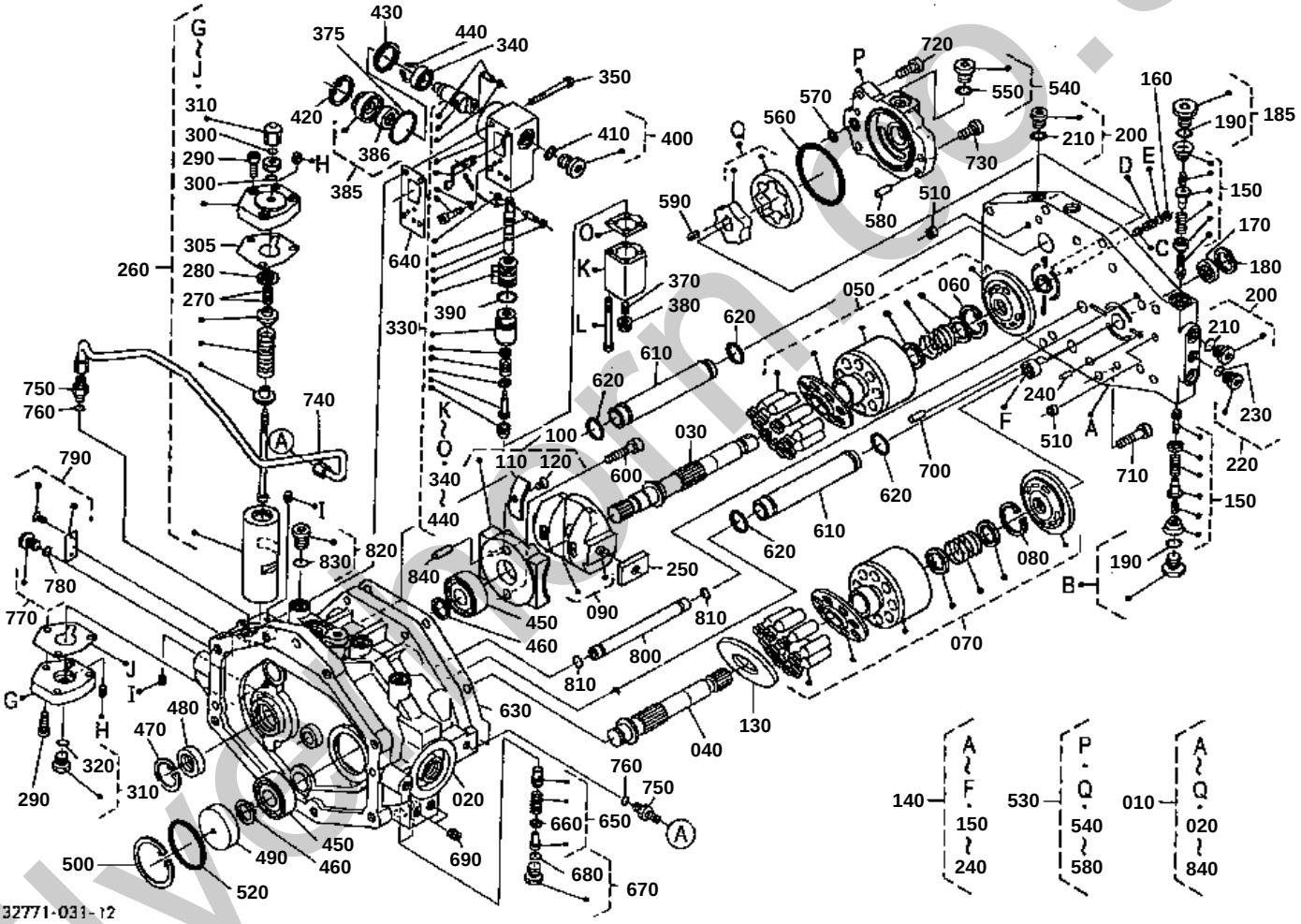

silvermachinery.co.uk

850 TA240-5955-0
860 TA240-5935-0
870 01350-10520

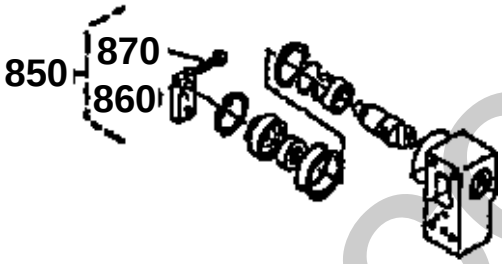

TA150-818-10

silverhorn.co.uk

↔ Interchangeable; ≠ not interchangeable; ← new for old; → old for new

REF.No	Part No.	Description	Q'ty	S.No.	I/C	REMARKS	Weight (kgf)	Weight (lb)
010	TA240-58000	ASSY HST	1	<=61504			67	147.4
010	TA240-58004	ASSY HST	1	>=70001	≠		0	0
010	TA240-58005	ASSY HST	1	>=74338	≠		62	136.4
020	TA240-58110	CASE HST	1	<=69999			27	59.4
020	TA240-58114	CASE HST	1	>=70001	≠		0	0
030	TA240-58120	SHAFT PUMP	1				0.995	2.189
040	TA240-58130	SHAFT MOTOR	1				0.85	1.87
050	TA240-58500	ASSY ROTARY PUMP	1				3	6.6
060	04611-00350	CIR CLIP INTERNAL	1				0.003	0.0066
070	TA240-58600	ASSY ROTARY MOTOR	1				3	6.6
080	04611-00350	CIR CLIP INTERNAL	1				0.003	0.0066
090	TA240-58700	ASSY SWASH PLATE	1				1.105	2.431
100	TA240-58800	ASSY BRACKET	1				0.785	1.727
110	TA240-58820	METAL	2				0.01	0.022
120	03056-50510	SCREW CSK-HD	2				0.001	0.0022
130	TA240-58140	PLATE	1				0.166	0.3652
140	TA240-58900	ASSY COVER PORTBLOCK	1				14	30.8
150	TA240-59000	ASSY VALVE HIGH	2				0.05	0.11
160	04611-00160	CIR CLIP INTERNAL	1				0.001	0.0022
170	58700-11290	SEAL OIL	1				0.012	0.0264
180	04611-00400	CIR CLIP INTERNAL	1				0.005	0.011
185	TA240-58960	ASSY PLUG	2				0	0
190	04810-00180	O RING	2				0.001	0.0022
200	TA240-58210	ASSY PLUG	5				0.026	0.0572
210	04810-00140	O RING	5				0.001	0.0022
220	TA240-58310	ASSY PLUG	1				0.018	0.0396
230	04810-00110	O RING	1				0.001	0.0022
240	05012-00614	PIN STRAIGHT	2				0.004	0.0088
250	TA240-58150	GUIDE	1				0.028	0.0616
260	TA240-59100	ASSY PISTON	1				2.64	5.808
270	02052-50080	NUT	2				0.004	0.0088
280	04611-00280	CIR CLIP INTERNAL	1				0.002	0.0044
290	01311-10825	BOLT HEX-SOC-HD	6				0.02	0.044
300	04810-00110	O RING	2				0.001	0.0022
305	TA240-59210	GASKET	2				0	0
310	TA240-58310	ASSY PLUG	1				0.018	0.0396
320	04810-00110	O RING	1				0.001	0.0022
330	TA240-59300	ASSY REGULATOR	1	<=74337			1.985	4.367
330	TA240-59303	ASSY REGULATOR	1	>=74338	≠		1.985	4.367
340	08101-06804	BEARING BALL	1				0.01	0.022
350	01350-10545	BOLT HEX-SOC-HD	4				0.008	0.0176
360	99999-99999	BLANK	0				0	0
370	03650-50825	SCREW SET	1				0	0
375	TA240-59450	O RING	1				0	0
380	TA240-59280	NUT	1				0.007	0.0154
385	TA240-59800	ASSY CASE	2				0	0
386	TA240-59820	SEAL OIL	2				0.005	0.011
390	04811-00210	O RING	1				0.001	0.0022
400	TA240-58210	ASSY PLUG	1				0.026	0.0572
410	04810-00140	O RING	1				0.001	0.0022
420	04611-00400	CIR CLIP INTERNAL	1				0.005	0.011
430	TA240-59290	COLLAR	1				0.005	0.011
440	04612-00190	CIR CLIP EXTERNAL	1				0.001	0.0022
450	38450-21980	BEARING BALL	2				0.225	0.495
460	04612-00250	CIR CLIP EXTERNAL	2				0.002	0.0044
470	04611-00400	CIR CLIP INTERNAL	1				0.005	0.011
480	58700-11290	SEAL OIL	1				0.012	0.0264
490	TA240-58160	COVER DISTANCE PIECE	1				0.34	0.748
500	04611-00650	CIR CLIP INTERNAL	1				0.011	0.0242

silverhorn.co.uk

↔ Interchangeable; ≠ not interchangeable; ← new for old; → old for new

REF.No	Part No.	Description	Q'ty	S.No.	I/C	REMARKS	Weight (kgf)	Weight (lb)
510	TA240-58170	GASKET	2				0.001	0.0022
520	04811-50650	O RING	1				0.002	0.0044
530	TA240-59500	ASSY PUMP	1				0.495	1.089
540	TA240-58310	ASSY PLUG	1				0.018	0.0396
550	04810-00110	O RING	1				0.001	0.0022
560	04811-50900	O RING	1				0.003	0.0066
570	04811-00180	O RING	1				0.001	0.0022
580	TA240-58230	PIN STRAIGHT	2				0.009	0.0198
590	05912-00510	KEY STRAIGHT	1				0.002	0.0044
600	01311-10825	BOLT HEX-SOC-HD	2				0.02	0.044
610	TA240-58180	PIPE PTO	2				0.17	0.374
620	04811-00280	O RING	4				0.002	0.0044
630	TA240-58190	GASKET	1				0.013	0.0286
640	TA240-58200	GASKET	1				0.003	0.0066
650	TA240-59600	ASSY VALVE LOW	2				0.05	0.11
660	TA240-59630	SHIM	2			0.5mm	0.001	0.0022
670	TA240-58210	ASSY PLUG	2				0.026	0.0572
680	04810-00140	O RING	2				0.001	0.0022
690	TA240-58220	PLUG	2				0.01	0.022
700	TA240-58230	PIN STRAIGHT	2				0.009	0.0198
710	TA240-58240	BOLT HEX-SOC-HD	8				0.051	0.1122
720	TA240-58250	BOLT HEX-SOC-HD	2				0.072	0.1584
730	TA240-58260	BOLT HEX-SOC-HD	1				0.044	0.0968
740	TA240-58270	PIPE	1	<=69999			0.135	0.297
740	TA240-58273	PIPE	1	>=70001	≠		0	0
750	TA240-58280	NIPPLE	2				0.036	0.0792
760	04810-00110	O RING	2				0.001	0.0022
770	TA240-58290	ASSY PLUG	1				0.011	0.0242
780	04810-00080	O RING	1				0.001	0.0022
790	TA240-59700	ASSY PLATE	1				0.003	0.0066
800	TA240-58300	PIPE	1				0.095	0.209
810	04811-00150	O RING	2				0.001	0.0022
820	TA240-58310	ASSY PLUG	3				0.018	0.0396
830	04810-00110	O RING	3				0.001	0.0022
840	TA240-58320	PIN STRAIGHT	1				0.002	0.0044
850	TA240-59550	ASSY LEVER REGULATOR	1	<=74337			0.05	0.11
860	TA240-59350	LEVER REGULATOR	1	<=74337		NOT SALE	0	0
870	01350-10520	BOLT HEX-SOC-HD	1	<=74337			0.004	0.0088

silverhorn.co.uk

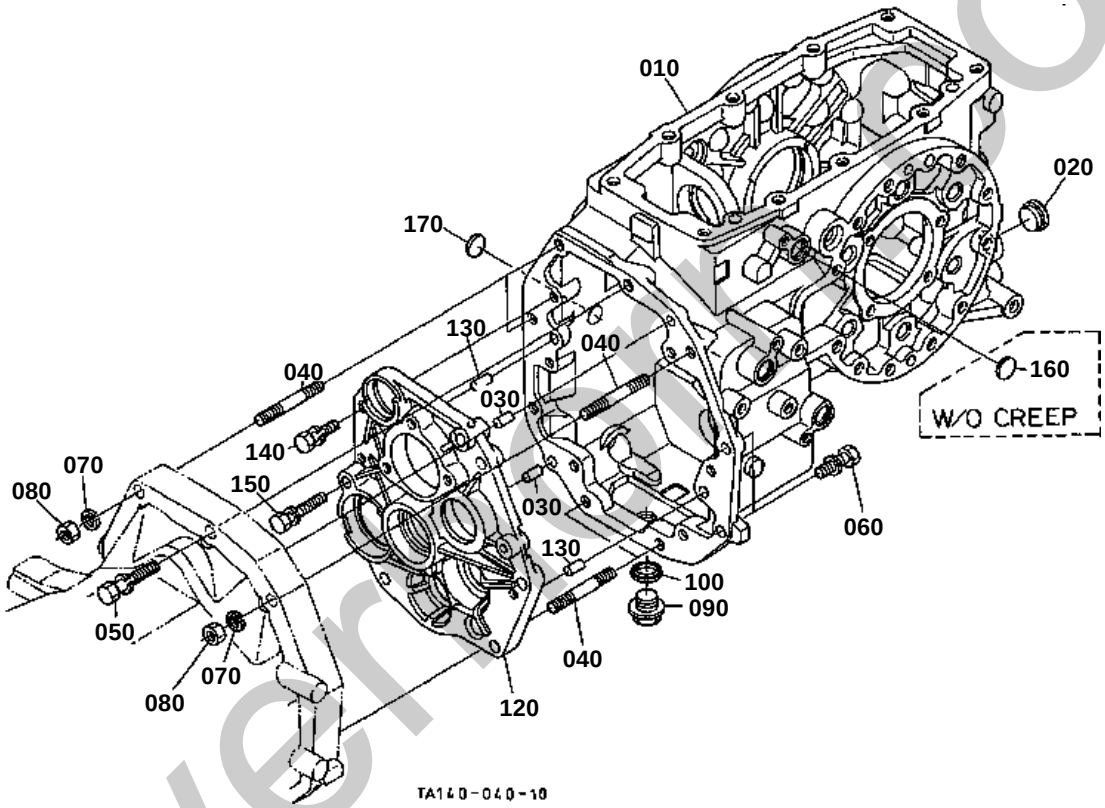

silvermoto.uk

↔ Interchangeable; ≠ not interchangeable; ← new for old; → old for new

REF.No	Part No.	Description	Q'ty	S.No.	I/C	REMARKS	Weight (kgf)	Weight (lb)
010	TA040-20402	CASE TRANSMISSION	1	<=75110			41	90.2
010	TA040-20404	CASE TRANSMISSION	1	>=75111	←		41	90.2
020	31301-14230	GAUGE OIL	1				0.005	0.011
030	05012-01018	PIN STRAIGHT	2				0.012	0.0264
040	01574-61260	STUD	5				0.05	0.11
050	01133-51260	BOLT	2				0.06	0.132
060	01133-51235	BOLT	2				0.05	0.11
070	04512-60120	WASHER SPRING	5				0.005	0.011
080	02176-50120	NUT	5				0.01	0.022
090	15512-96010	PLUG DRAIN	1				0.101	0.2222
100	04717-02150	WASHER WITH RUBBER	1				0.004	0.0088
110	99999-99999	BLANK	0				0	0
120	TA040-20454	HOLDER BEARING	1				4.5	9.9
130	05012-01018	PIN STRAIGHT	2				0.012	0.0264
140	01133-51040	BOLT	5				0.03	0.066
150	01133-51060	BOLT	1				0.042	0.0924
160	34076-60470	PLUG	1			W/O CREEP	0.005	0.011
170	34076-60470	PLUG	1				0.005	0.011

silverhorn.co.uk

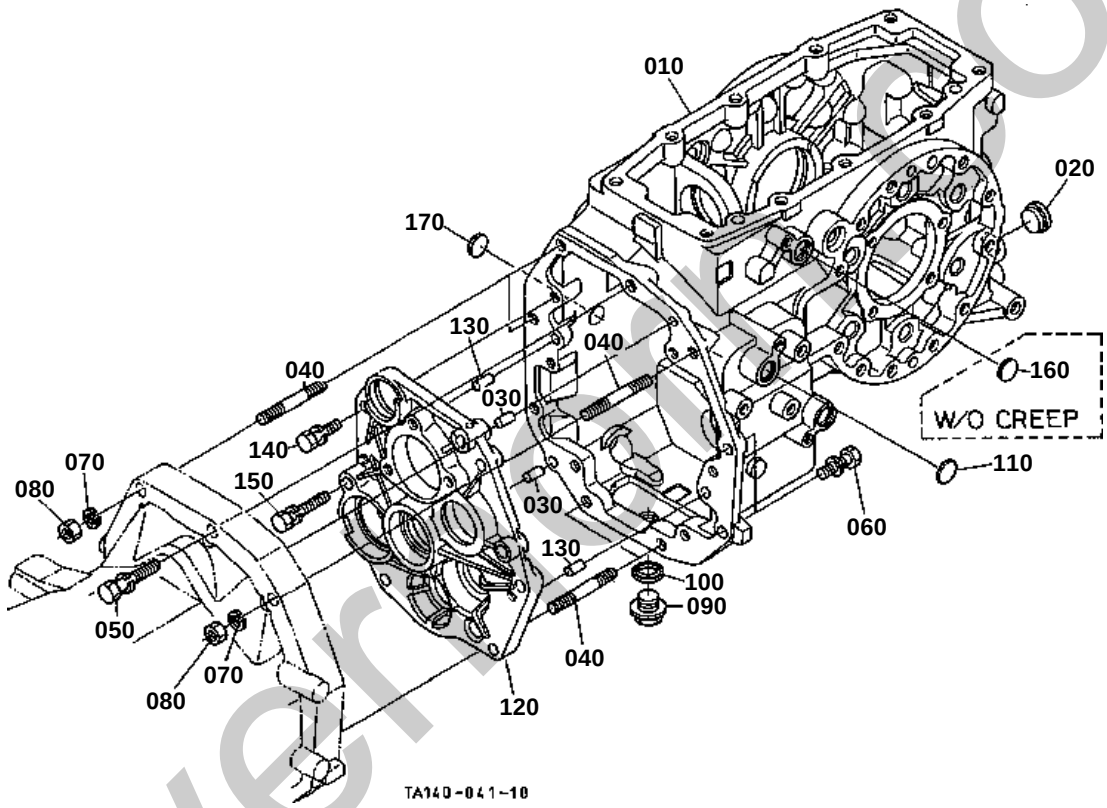

silvermachineo.uk

↔ Interchangeable; ≠ not interchangeable; ← new for old; → old for new

REF.No	Part No.	Description	Q'ty	S.No.	I/C	REMARKS	Weight (kgf)	Weight (lb)
010	TA040-20402	CASE TRANSMISSION	1	<=75110			41	90.2
010	TA040-20404	CASE TRANSMISSION	1	>=75111	←		41	90.2
020	31301-14230	GAUGE OIL	1				0.005	0.011
030	05012-01018	PIN STRAIGHT	2				0.012	0.0264
040	01574-61260	STUD	5				0.05	0.11
050	01133-51260	BOLT	2				0.06	0.132
060	01133-51235	BOLT	2				0.05	0.11
070	04512-60120	WASHER SPRING	5				0.005	0.011
080	02176-50120	NUT	5				0.01	0.022
090	15512-96010	PLUG DRAIN	1				0.101	0.2222
100	04717-02150	WASHER WITH RUBBER	1				0.004	0.0088
110	34076-60470	PLUG	1				0.005	0.011
120	TA040-60450	HOLDER BEARING	1				5.4	11.88
130	05012-01018	PIN STRAIGHT	2				0.012	0.0264
140	01133-51040	BOLT	5				0.03	0.066
150	01133-51060	BOLT	1				0.042	0.0924
160	34076-60470	PLUG	1			W/O CREEP	0.005	0.011
170	34076-60470	PLUG	1				0.005	0.011

silverhorn.co.uk

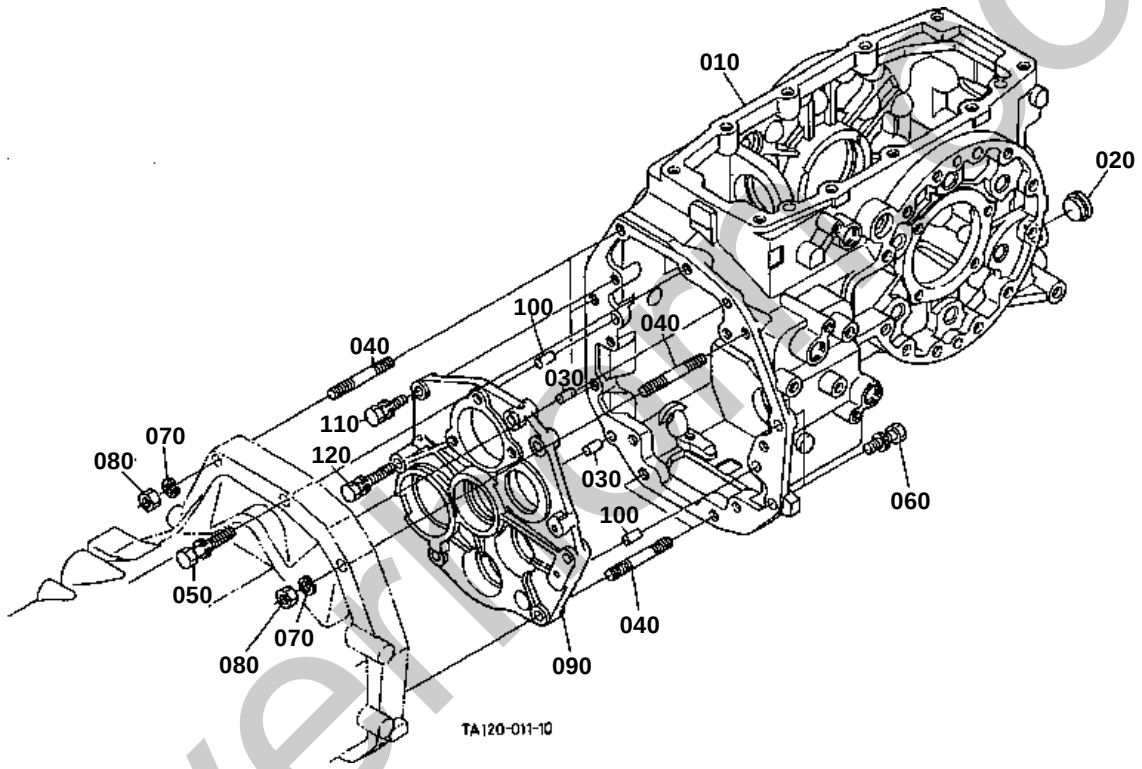

silverpresso.uk

↔ Interchangeable; ≠ not interchangeable; ← new for old; → old for new

REF.No	Part No.	Description	Q'ty	S.No.	I/C	REMARKS	Weight (kgf)	Weight (lb)
010	TA030-20423	CASE TRANSMISSION	1	<=75110			38	83.6
010	TA030-20425	CASE TRANSMISSION	1	>=75111	←		38	83.6
020	31301-14230	GAUGE OIL	1				0.005	0.011
030	05012-01018	PIN STRAIGHT	2				0.012	0.0264
040	01574-61260	STUD	6				0.05	0.11
050	01133-51260	BOLT	1				0.06	0.132
060	01133-51235	BOLT	2				0.05	0.11
070	04512-60120	WASHER SPRING	6				0.005	0.011
080	02176-50120	NUT	6				0.01	0.022
090	TA240-50450	HOLDER BEARING	1				4.7	10.34
100	05012-01018	PIN STRAIGHT	2				0.012	0.0264
110	01133-51040	BOLT	5				0.03	0.066
120	01133-51060	BOLT	1				0.042	0.0924

silverhorn.co.uk

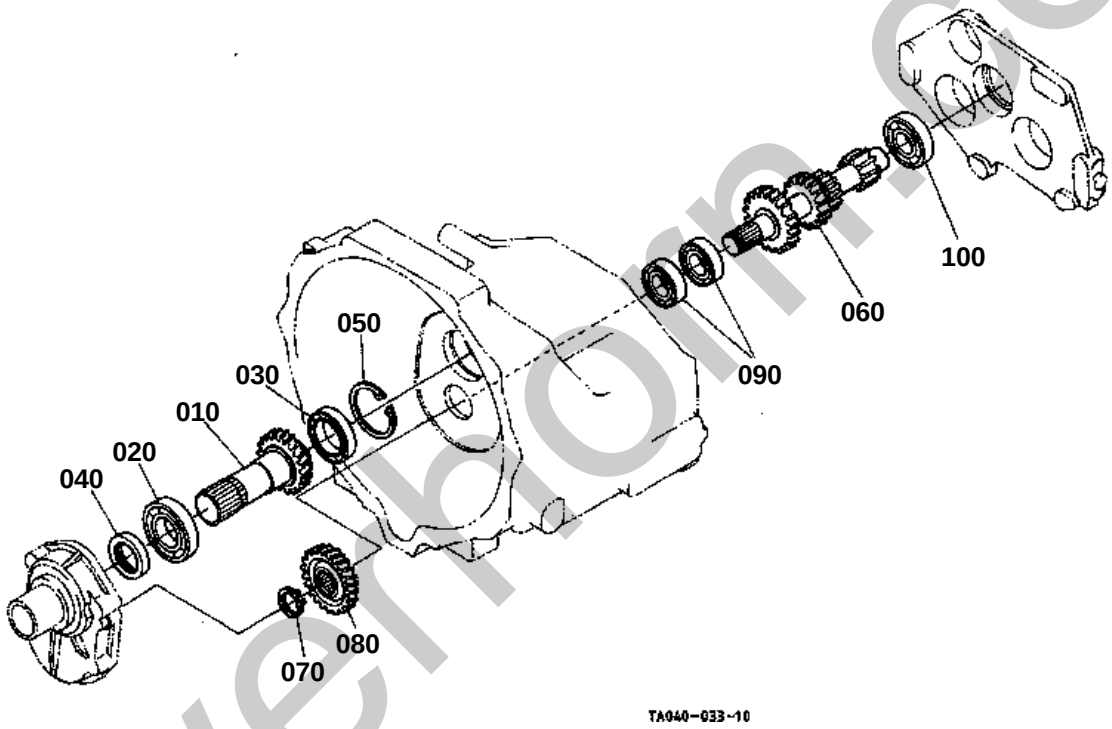

silverhorn.co.uk

↔ Interchangeable; ≠ not interchangeable; ← new for old; → old for new

REF.No	Part No.	Description	Q'ty	S.No.	I/C	REMARKS	Weight (kgf)	Weight (lb)
010	TA040-21400	GEAR-SHAFT PTO	1			24T	1.36	2.992
020	08101-06207	BEARING BALL	1				0.282	0.6204
030	08101-06908	BEARING BALL	1				0.11	0.242
040	09500-35529	SEAL OIL	1				0.017	0.0374
050	04611-00620	CIR CLIP INTERNAL	1				0.011	0.0242
060	TA040-22100	GEAR-SHAFT MAIN	1			22-18-13-10T	1.77	3.894
070	37150-21551	CIR CLIP EXTERNAL	1				0.005	0.011
080	TA040-22110	GEAR	1			27T	0.425	0.935
090	37410-57190	BEARING BALL	2				0.14	0.308
100	35890-41290	BEARING BALL	1				0.233	0.5126

silverhorn.co.uk

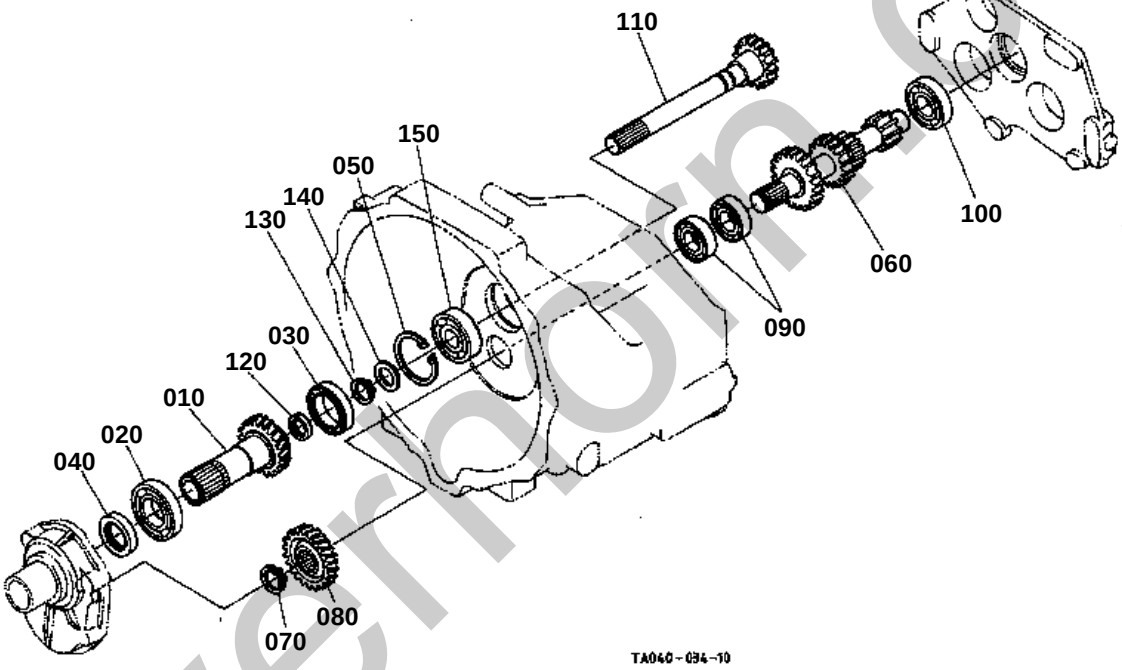

silvermoin.co.uk

↔ Interchangeable; ≠ not interchangeable; ← new for old; → old for new

REF.No	Part No.	Description	Q'ty	S.No.	I/C	REMARKS	Weight (kgf)	Weight (lb)
010	TA040-21300	GEAR-SHAFT	1			24T	0.75	1.65
020	08101-06207	BEARING BALL	1				0.282	0.6204
030	08101-06908	BEARING BALL	1				0.11	0.242
040	09500-35529	SEAL OIL	1				0.017	0.0374
050	04611-00620	CIR CLIP INTERNAL	1				0.011	0.0242
060	TA040-22100	GEAR-SHAFT MAIN	1			22-18-13-10T	1.77	3.894
070	37150-21551	CIR CLIP EXTERNAL	1				0.005	0.011
080	TA040-22110	GEAR	1			27T	0.425	0.935
090	37410-57190	BEARING BALL	2				0.14	0.308
100	35890-41290	BEARING BALL	1				0.233	0.5126
110	TA040-23104	GEAR-SHAFT I-PTO	1			18T	1.23	2.706
120	36730-24330	SEAL FIRST SHAFT	1				0.005	0.011
130	37150-21551	CIR CLIP EXTERNAL	1				0.005	0.011
140	34150-21560	WASHER	1				0.01	0.022
150	35890-41290	BEARING BALL	1				0.233	0.5126

silverhorn.co.uk

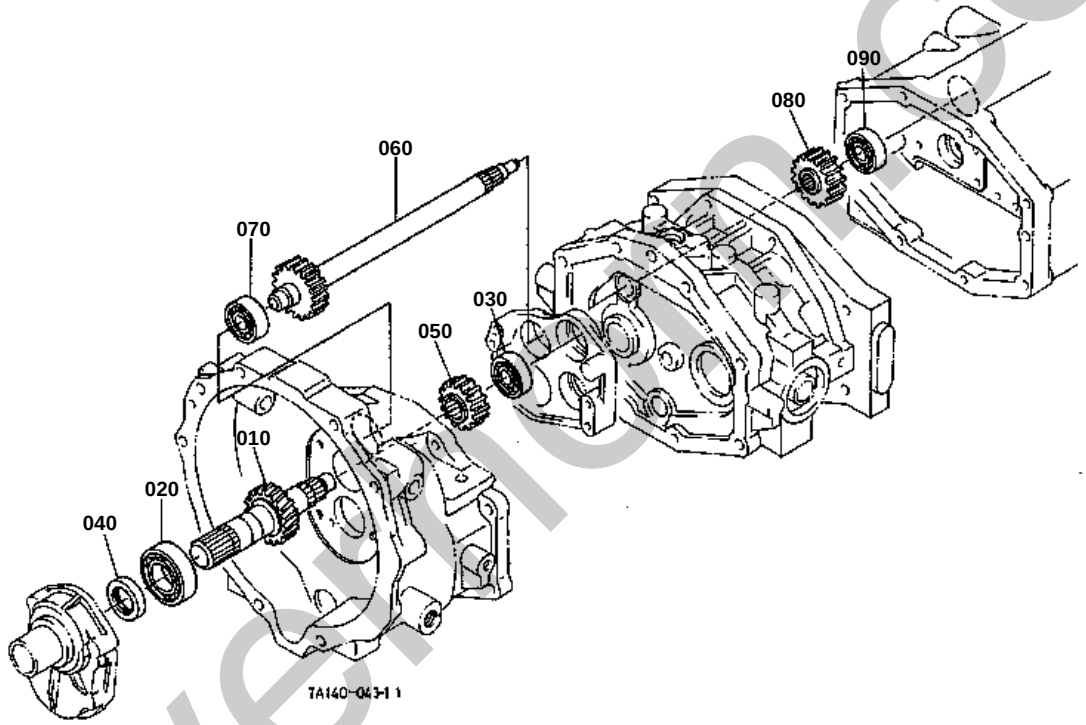

silvermgn.co.uk

MAIN SHAFT [HST TYPE]

↔ Interchangeable; ≠ not interchangeable; ← new for old; → old for new

REF.No	Part No.	Description	Q'ty	S.No.	I/C	REMARKS	Weight (kgf)	Weight (lb)
010	TA240-51400	GEAR-SHAFT PTO	1			24T	1.52	3.344
020	08101-06207	BEARING BALL	1				0.282	0.6204
030	37410-14320	BEARING BALL	1				0.145	0.319
040	09500-35529	SEAL OIL	1				0.017	0.0374
050	TA240-51410	GEAR PTO	1			19T	0.28	0.616
060	TA240-51420	GEAR-SHAFT PTO	1			20T	1.545	3.399
070	37410-14320	BEARING BALL	1				0.145	0.319
080	TA240-53212	GEAR PTO	1			21T	0.42	0.924
090	37410-14320	BEARING BALL	1				0.145	0.319

silverhorn.co.uk

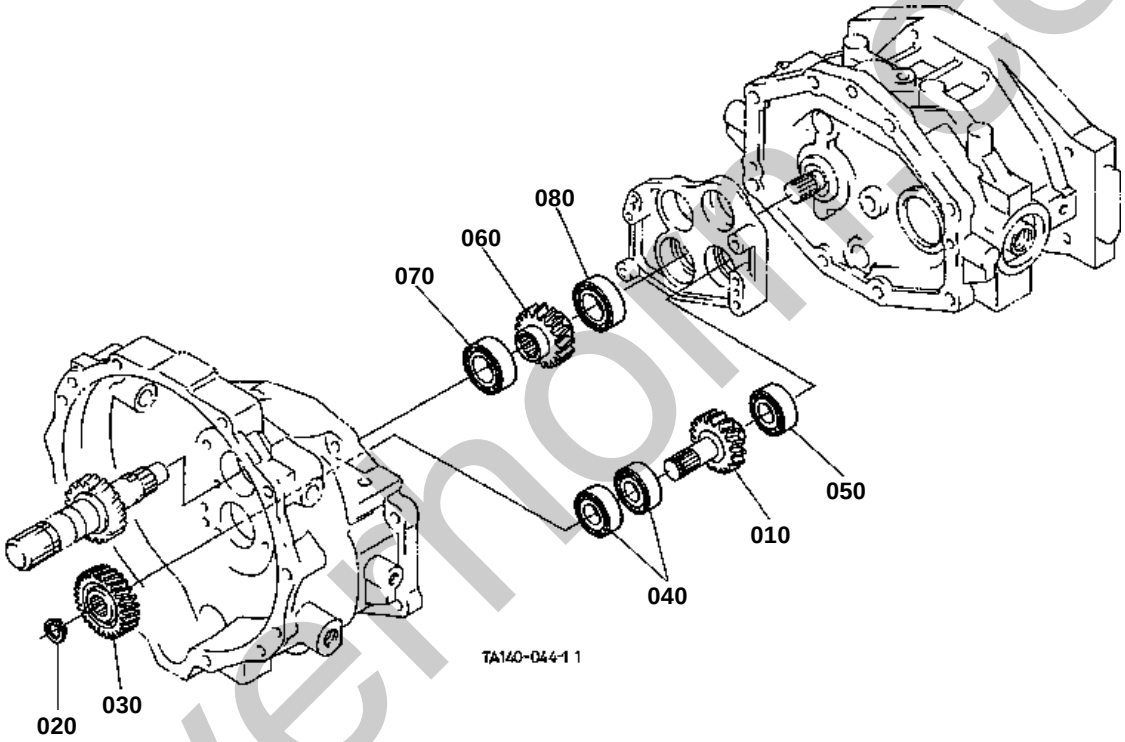

silvermoor.co.uk

INPUT SHAFT [HST TYPE]

↔ Interchangeable; ≠ not interchangeable; ← new for old; → old for new

REF.No	Part No.	Description	Q'ty	S.No.	I/C	REMARKS	Weight (kgf)	Weight (lb)
010	TA240-52100	GEAR-SHAFT	1			18T	0.64	1.408
020	37150-21551	CIR CLIP EXTERNAL	1				0.005	0.011
030	TA040-22110	GEAR	1			27T	0.425	0.935
040	37410-57190	BEARING BALL	2				0.14	0.308
050	67121-56770	BEARING BALL	1				0.127	0.2794
060	TA240-52200	GEAR	1			18T	0.43	0.946
070	08101-06007	BEARING BALL	1				0.16	0.352
080	36920-40090	BEARING BALL	1				0.1	0.22

silverhorn.co.uk

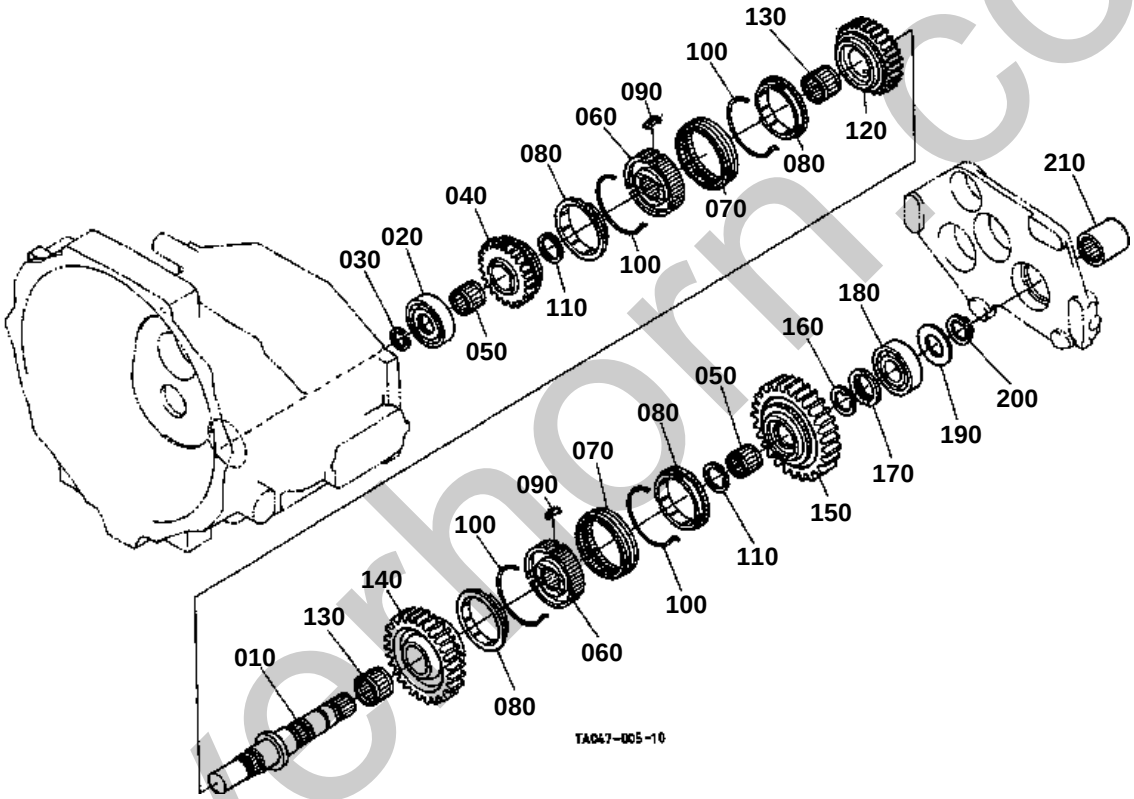

silverhorn.co.uk

COUNTERSHAFT [MANUAL T/M TYPE]

↔ Interchangeable; ≠ not interchangeable; ← new for old; → old for new

REF.No	Part No.	Description	Q'ty	S.No.	I/C	REMARKS	Weight (kgf)	Weight (lb)
010	TA040-22200	COUNTERSHAFT	1				1.055	2.321
020	34070-22260	BEARING BALL	1				0.235	0.517
030	04611-00250	CIR CLIP INTERNAL	1				0.001	0.0022
040	TA040-22210	GEAR	1			24T	0.84	1.848
050	T0073-62320	BEARING NEEDLE	2				0.025	0.055
060	TA040-22250	COUPLING	2				0.33	0.726
070	34076-62253	SHIFTER	2				0.235	0.517
080	34076-62260	RING SYNCHRONIZER	4				0.05	0.11
090	32430-21440	KEY SYNCHRONIZER	6				0.004	0.0088
100	38360-21780	SPRING	4				0.005	0.011
110	37410-14540	CIR-CLIP	2				0.03	0.066
120	TA040-22220	GEAR	1			29T	0.84	1.848
130	08823-23727	BEARING NEEDLE	2				0.04	0.088
140	T0073-62230	GEAR	1			34T	1.13	2.486
150	T0073-62240	GEAR	1			37T	1.46	3.212
160	37150-21790	CIR-CLIP	1				0.001	0.0022
170	34070-22250	COLLAR THRUST	1				0.015	0.033
180	08101-06305	BEARING BALL	1				0.23	0.506
190	34150-21560	WASHER	1				0.01	0.022
200	37150-21551	CIR CLIP EXTERNAL	1				0.005	0.011
210	37150-21682	COUPLING	1				0.24	0.528

silverhorn.co.uk

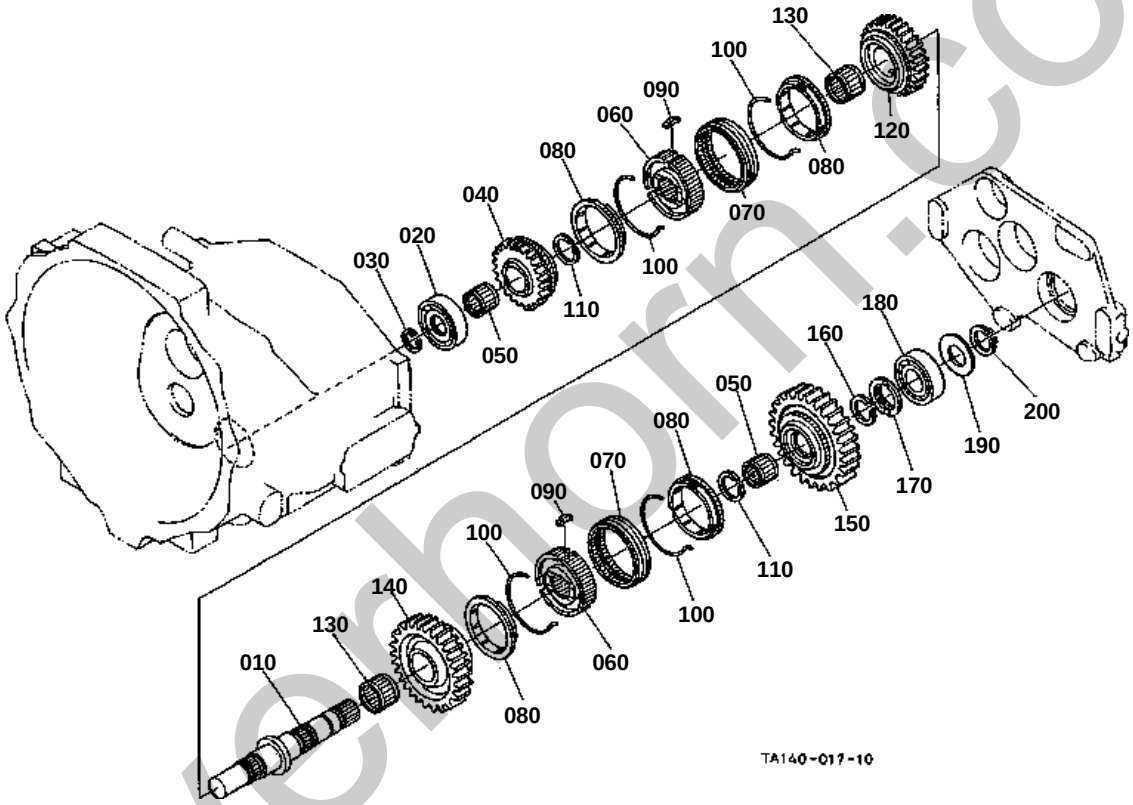

silverhorn.co.uk

COUNTERSHAFT [GST TYPE]

↔ Interchangeable; ≠ not interchangeable; ← new for old; → old for new

REF.No	Part No.	Description	Q'ty	S.No.	I/C	REMARKS	Weight (kgf)	Weight (lb)
010	TA040-22200	COUNTERSHAFT	1				1.055	2.321
020	34070-22260	BEARING BALL	1				0.235	0.517
030	04611-00250	CIR CLIP INTERNAL	1				0.001	0.0022
040	TA040-22210	GEAR	1			24T	0.84	1.848
050	T0073-62320	BEARING NEEDLE	2				0.025	0.055
060	TA040-22250	COUPLING	2				0.33	0.726
070	34076-62253	SHIFTER	2				0.235	0.517
080	34076-62260	RING SYNCHRONIZER	4				0.05	0.11
090	32430-21440	KEY SYNCHRONIZER	6				0.004	0.0088
100	38360-21780	SPRING	4				0.005	0.011
110	37410-14540	CIR-CLIP	2				0.03	0.066
120	TA040-22220	GEAR	1			29T	0.84	1.848
130	08823-23727	BEARING NEEDLE	2				0.04	0.088
140	T0073-62230	GEAR	1			34T	1.13	2.486
150	T0073-62240	GEAR	1			37T	1.46	3.212
160	37150-21790	CIR-CLIP	1				0.001	0.0022
170	34070-22250	COLLAR THRUST	1				0.015	0.033
180	08101-06305	BEARING BALL	1				0.23	0.506
190	34150-21560	WASHER	1				0.01	0.022
200	37150-21551	CIR CLIP EXTERNAL	1				0.005	0.011

silverhorn.co.uk

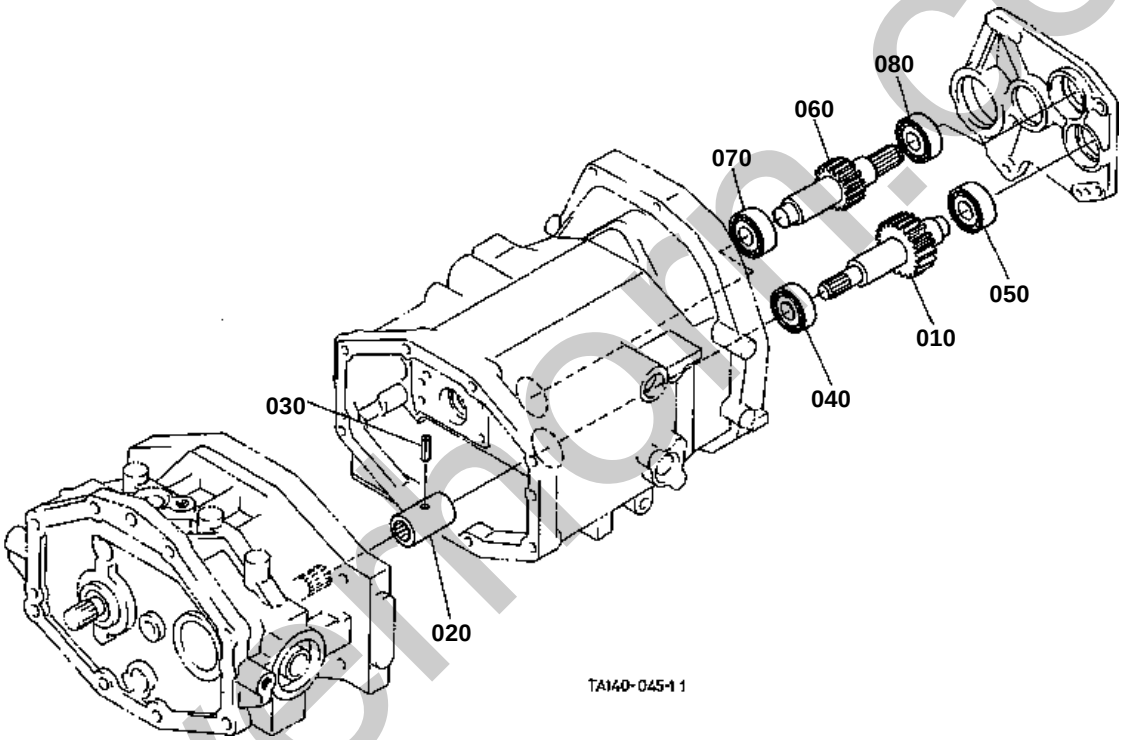

silvermorn.co.uk

OUTPUT SHAFT [HST TYPE]

↔ Interchangeable; ≠ not interchangeable; ← new for old; → old for new

REF.No	Part No.	Description	Q'ty	S.No.	I/C	REMARKS	Weight (kgf)	Weight (lb)
010	TA240-52400	GEAR-SHAFT HST	1			22T	1.43	3.146
020	33710-41310	COUPLING	1				0.2	0.44
030	05411-00635	PIN SPRING	1				0.005	0.011
040	08101-06205	BEARING BALL	1				0.14	0.308
050	37410-57190	BEARING BALL	1				0.14	0.308
060	TA240-52500	GEAR-SHAFT HST	1			16T	1.08	2.376
070	08101-06205	BEARING BALL	1				0.14	0.308
080	37410-57190	BEARING BALL	1				0.14	0.308

silverhorn.co.uk

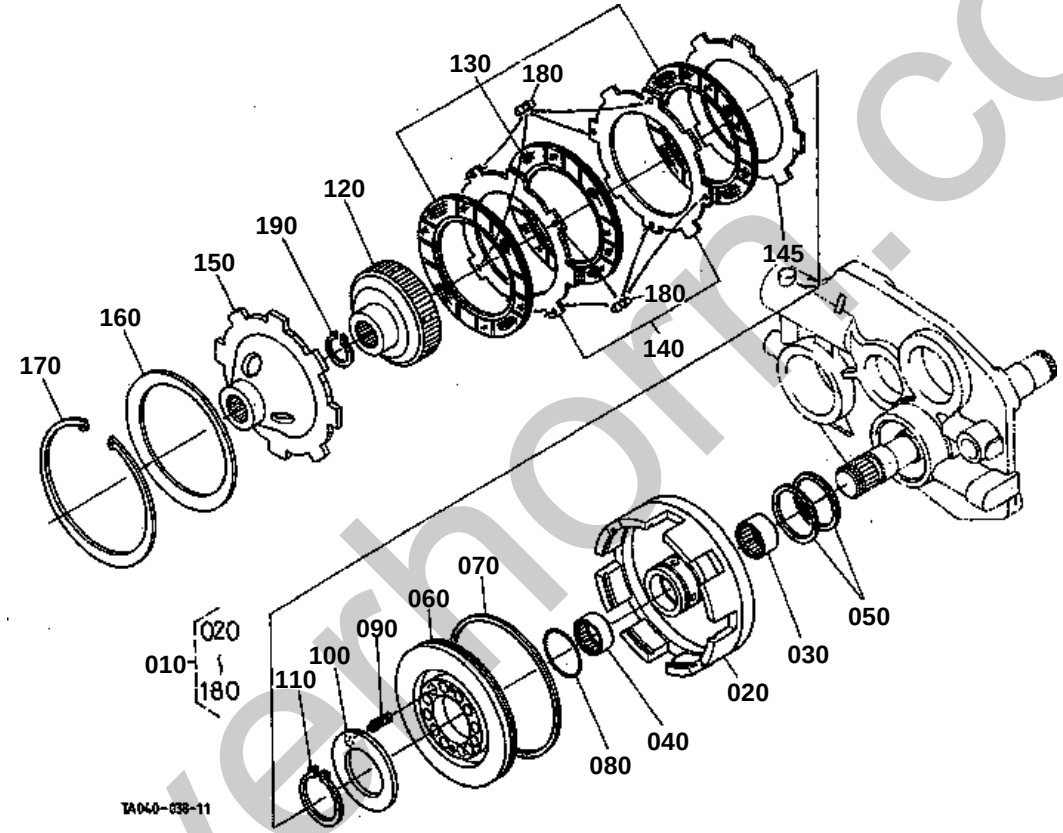

silverhorn.co.uk

↔ Interchangeable; ≠ not interchangeable; ← new for old; → old for new

REF.No	Part No.	Description	Q'ty	S.No.	I/C	REMARKS	Weight (kgf)	Weight (lb)
010	TA040-61503	ASSY CLUTCH	1	<=50710		NOT SALE	0	0
010	TA040-61504	ASSY CLUTCH	1	>=50711	←		3.5	7.7
020	TA040-61550	CASE CLUTCH	1				1.45	3.19
030	34076-61530	BEARING NEEDLE	1				0.04	0.088
040	34076-61540	BEARING NEEDLE	1				0.01	0.022
050	31501-72403	RING SEAL	2				0.005	0.011
060	34076-61560	PISTON	1				0.26	0.572
070	34076-61570	D RING OUTER	1				0.005	0.011
080	04811-06370	O RING	1				0.001	0.0022
080	04817-06370	O RING	1		←		0.003	0.0066
090	34076-61590	SPRING	12				0.005	0.011
100	34076-61610	PLATE RETAINER	1				0.035	0.077
110	04612-00420	CIR CLIP EXTERNAL	1				0.006	0.0132
120	34076-61630	HUB CLUTCH	1				0.455	1.001
130	34076-61650	DISK CLUTCH	3	<=50710			0.09	0.198
130	T0273-61650	DISK CLUTCH	3	>=50711	←		0.075	0.165
140	34076-61660	PLATE	2			1.6mm	0	0
140	T1063-61660	PLATE	2		↔	1.6mm	0.07	0.154
145	34076-61690	PLATE	1			1.6mm	0	0
145	T1063-61670	PLATE	1		↔	1.6mm	0.073	0.1606
150	34076-61710	HUB CLUTCH INPUT	1				0.7	1.54
160	34076-61680	SPRING PLATE	1				0.05	0.11
170	TA040-61720	CIR-CLIP INTERNAL	1				0.082	0.1804
180	34076-61670	RUBBER	8				0.005	0.011
190	37150-21551	CIR CLIP EXTERNAL	1				0.005	0.011

silverhorn.co.uk

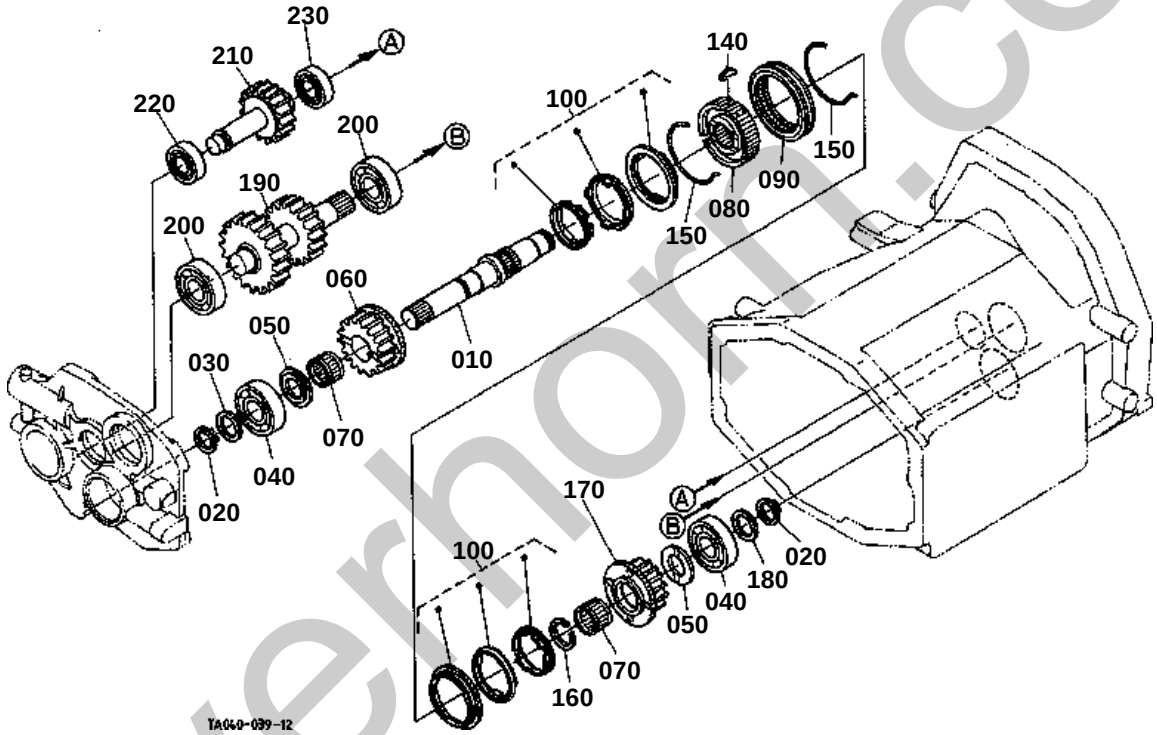

silverhorn.co.uk

SHUTTLE SHAFT [MANUAL T/M TYPE]

↔ Interchangeable; ≠ not interchangeable; ← new for old; → old for new

REF.No	Part No.	Description	Q'ty	S.No.	I/C	REMARKS	Weight (kgf)	Weight (lb)
010	TA040-22400	SHAFT SHUTTLE	1				0.955	2.101
020	37150-21551	CIR CLIP EXTERNAL	2				0.005	0.011
030	34150-21560	WASHER	1				0.01	0.022
040	35890-41290	BEARING BALL	2				0.233	0.5126
050	TA040-22430	COLLAR THRUST	2				0.022	0.0484
060	TA040-22410	GEAR	1			18T	0.58	1.276
070	34070-22430	BEARING NEEDLE	2				0.035	0.077
080	TA040-22450	COUPLING	1				0.3	0.66
090	TA040-22440	SHIFTER	1				0.225	0.495
100	TA040-22460	ASSY SYNCHRO	2				0.12	0.264
110	99999-99999	BLANK	0				0	0
120	99999-99999	BLANK	0				0	0
130	99999-99999	BLANK	0				0	0
140	32430-21440	KEY SYNCHRONIZER	3				0.004	0.0088
150	38360-21780	SPRING	2				0.005	0.011
160	34076-62460	CIR CLIP EXTERNAL	1				0.005	0.011
170	TA040-22420	GEAR BACK	1			15T	0.4	0.88
180	34150-21560	WASHER	1				0.01	0.022
190	TA040-22500	GEAR-SHAFT SHUTTLE	1			22-20T	2.2	4.84
200	35890-41290	BEARING BALL	2				0.233	0.5126
210	TA040-22550	GEAR-SHAFT BACK	1			17T	0.885	1.947
220	08101-06204	BEARING BALL	1				0.102	0.2244
230	34070-22560	BEARING BALL	1				0.1	0.22

silverhorn.co.uk

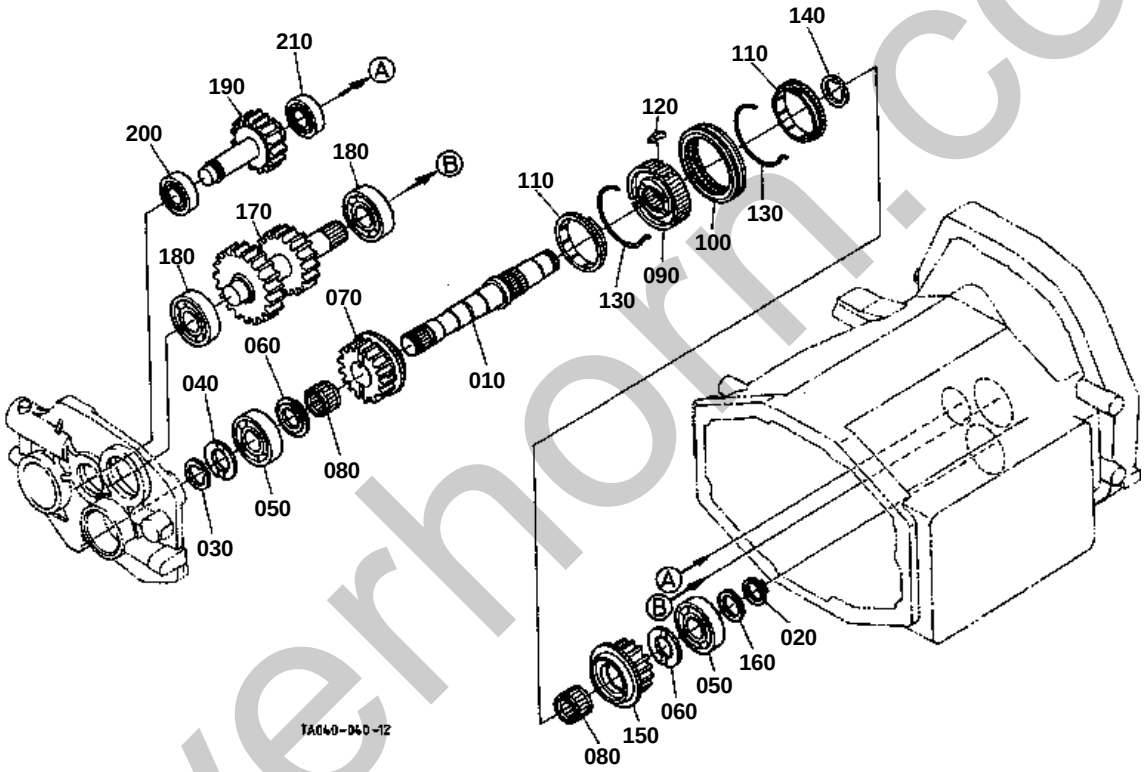

silverhorn.co.uk

SHUTTLE SHAFT [GST TYPE]

↔ Interchangeable; ≠ not interchangeable; ← new for old; → old for new

REF.No	Part No.	Description	Q'ty	S.No.	I/C	REMARKS	Weight (kgf)	Weight (lb)
010	TA040-62400	SHAFT SHUTTLE	1				0.98	2.156
020	37150-21551	CIR CLIP EXTERNAL	1				0.005	0.011
030	37150-21790	CIR-CLIP	1				0.001	0.0022
040	34070-15710	COLLAR THRUST	1				0.021	0.0462
050	35890-41290	BEARING BALL	2				0.233	0.5126
060	TA040-22430	COLLAR THRUST	2				0.022	0.0484
070	TA040-62410	GEAR	1			18T	0.685	1.507
080	34070-22430	BEARING NEEDLE	2				0.035	0.077
090	TA040-22450	COUPLING	1				0.3	0.66
100	TA040-22440	SHIFTER	1				0.225	0.495
110	32430-67630	RING SYNCHRONIZER	2				0.055	0.121
120	32430-21440	KEY SYNCHRONIZER	3				0.004	0.0088
130	38360-21780	SPRING	2				0.005	0.011
140	34076-62460	CIR CLIP EXTERNAL	1				0.005	0.011
150	TA040-62420	GEAR	1			15T	0.48	1.056
160	34150-21560	WASHER	1				0.01	0.022
170	TA040-22500	GEAR-SHAFT SHUTTLE	1			20-20T	2.2	4.84
180	35890-41290	BEARING BALL	2				0.233	0.5126
190	TA040-22550	GEAR-SHAFT BACK	1			17T	0.885	1.947
200	08101-06204	BEARING BALL	1				0.102	0.2244
210	34070-22560	BEARING BALL	1				0.1	0.22

silverhorn.co.uk

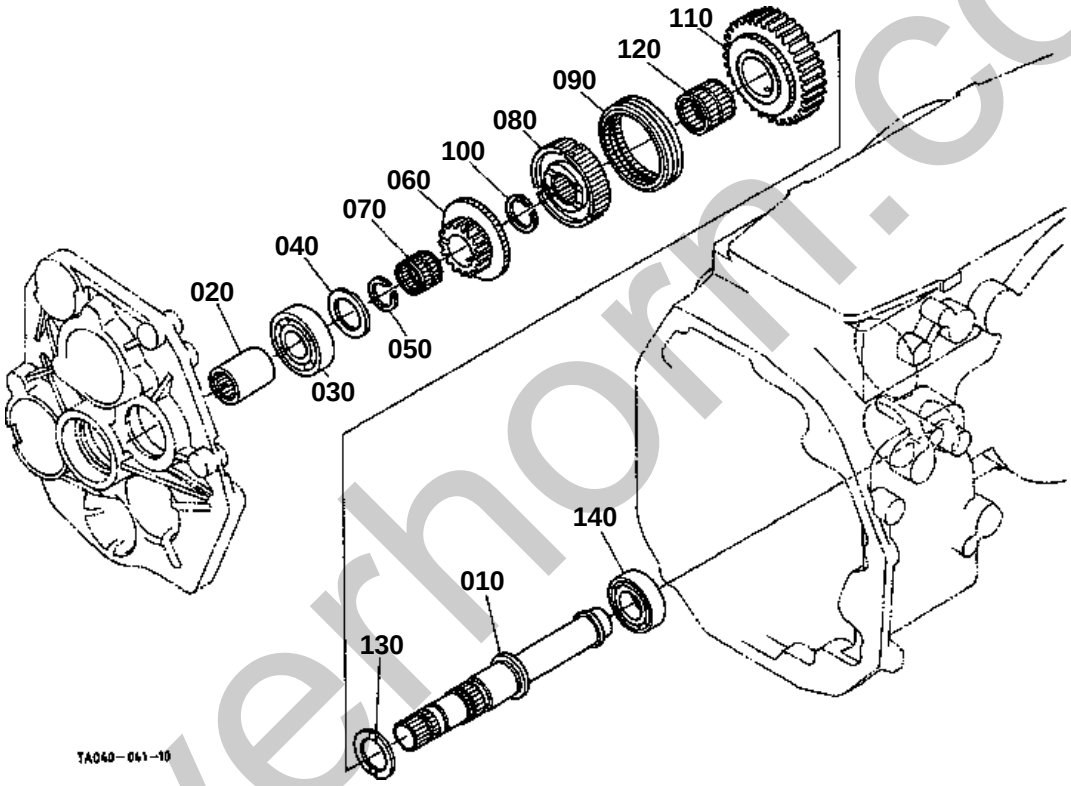

silverhorn.co.uk

RANGE GEAR SHAFT [MANUAL T/M TYPE]

↔ Interchangeable; ≠ not interchangeable; ← new for old; → old for new

REF.No	Part No.	Description	Q'ty	S.No.	I/C	REMARKS	Weight (kgf)	Weight (lb)
010	TA040-22600	SHAFT RANGE GEAR	1				1.14	2.508
020	37150-21682	COUPLING	1				0.24	0.528
030	08101-06305	BEARING BALL	1				0.23	0.506
040	34076-62650	COLLAR THRUST	1				0.01	0.022
050	37150-21790	CIR-CLIP	1				0.001	0.0022
060	TA040-22610	GEAR	1			18T	0.33	0.726
070	TA040-22630	BEARING NEEDLE	1				0.02	0.044
080	TA040-22250	COUPLING	1				0.33	0.726
090	34076-62253	SHIFTER	1				0.235	0.517
100	37410-14540	CIR-CLIP	1				0.03	0.066
110	TA040-22620	GEAR	1			33T	1.36	2.992
120	TA040-22640	BEARING NEEDLE	1				0.05	0.11
130	38450-23230	COLLAR	1				0.024	0.0528
140	08101-06205	BEARING BALL	1				0.14	0.308

silverhorn.co.uk

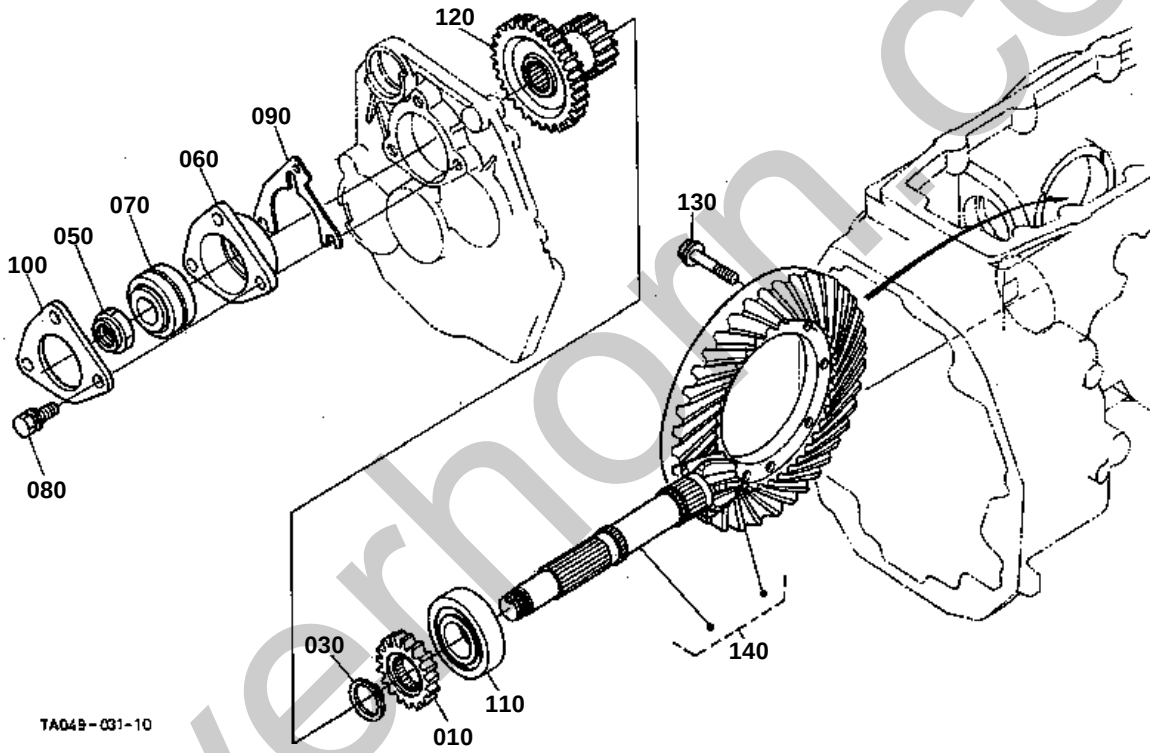

silverhorn.co.uk

SPIRAL BEVEL PINION [EXCEPT HST TYPE] [W/O CREEP]
[SANS TYPE DE RAMPANTE]

↔ Interchangeable; ≠ not interchangeable; ← new for old; → old for new

REF.No	Part No.	Description	Q'ty	S.No.	I/C	REMARKS	Weight (kgf)	Weight (lb)
010	TA040-15110	GEAR 4WD	1			17T	0.22	0.484
020	99999-99999	BLANK	0				0	0
030	04612-00350	CIR CLIP EXTERNAL	1				0.01	0.022
040	99999-99999	BLANK	0				0	0
050	35260-23252	NUT	1				0.04	0.088
060	34070-22770	CASE	1	<=71313			0	0
060	34070-22772	CASE	1	>=71314	←		0	0
070	38240-22140	BEARING TAPER-ROLLER	1				0.56	1.232
080	01133-51040	BOLT	3				0.03	0.066
090	34070-22860	SHIM	2			0.5mm	0.015	0.033
090	34070-22870	SHIM	4			0.2mm	0.004	0.0088
090	34070-22880	SHIM	2			0.1mm	0.005	0.011
100	34070-22780	COVER BEARING	1				0.21	0.462
110	34070-22740	BEARING ROLLER	1				0.51	1.122
120	TA040-21710	GEAR	1			42-16T	1.295	2.849
130	37800-43870	BOLT	8				0.026	0.0572
140	TA040-99340	ASSY GEAR BEVEL	1			6-37T	6.1	13.42

silverhorn.co.uk

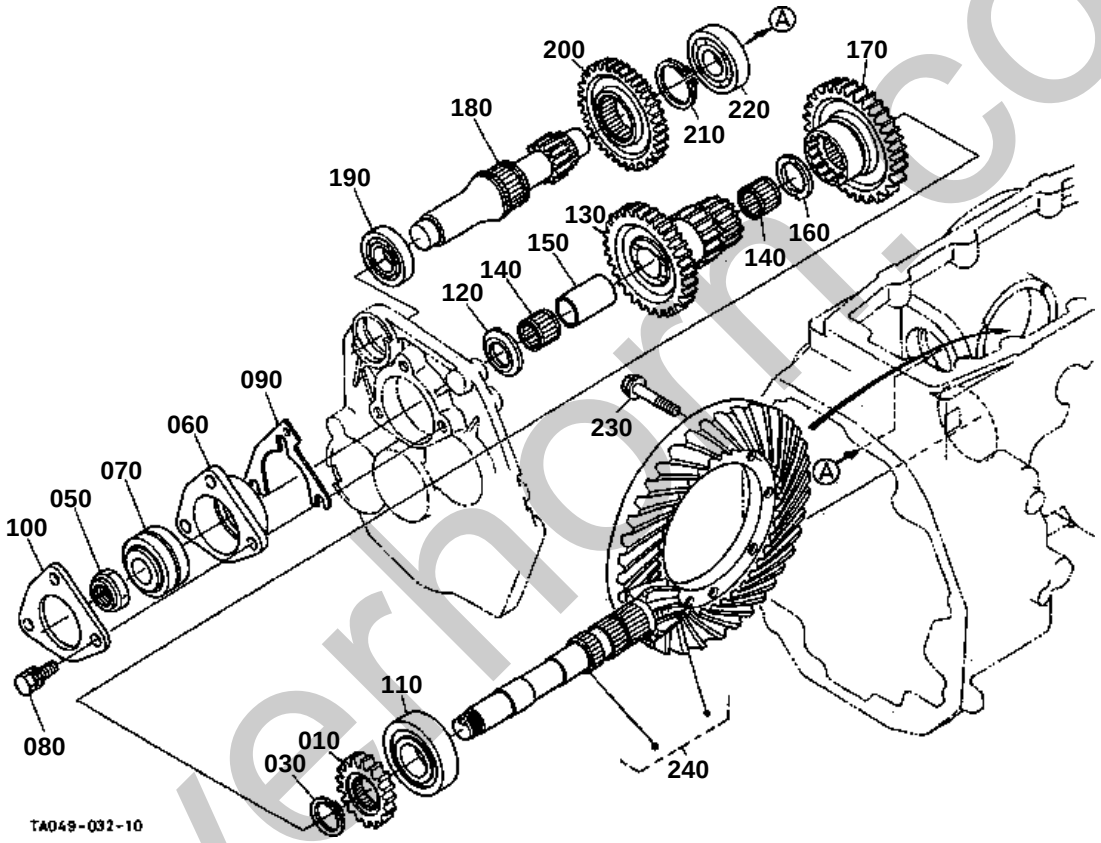

silverhorn.co.uk

SPIRAL BEVEL PINION [EXCEPT HST TYPE][WITH CREEP]
[AVEC TYPE DE RAMPANTE]

↔ Interchangeable; ≠ not interchangeable; ← new for old; → old for new

REF.No	Part No.	Description	Q'ty	S.No.	I/C	REMARKS	Weight (kgf)	Weight (lb)
010	TA040-15110	GEAR 4WD	1			17T	0.22	0.484
020	99999-99999	BLANK	0				0	0
030	04612-00350	CIR CLIP EXTERNAL	1				0.01	0.022
040	99999-99999	BLANK	0				0	0
050	35260-23252	NUT	1				0.04	0.088
060	34070-22770	CASE	1	<=71313			0	0
060	34070-22772	CASE	1	>=71314	←		0	0
070	38240-22140	BEARING TAPER-ROLLER	1				0.56	1.232
080	01133-51040	BOLT	3				0.03	0.066
090	34070-22860	SHIM	2			0.5mm	0.015	0.033
090	34070-22870	SHIM	4			0.2mm	0.004	0.0088
090	34070-22880	SHIM	2			0.1mm	0.005	0.011
100	34070-22780	COVER BEARING	1				0.21	0.462
110	34070-22740	BEARING ROLLER	1				0.51	1.122
120	32420-67662	COLLAR THRUST	1				0.005	0.011
130	TA040-22710	GEAR	1			42-16-18T	1.34	2.948
140	34070-22430	BEARING NEEDLE	2				0.035	0.077
150	34076-62730	COLLAR	1				0.07	0.154
160	30420-74310	COLLAR THRUST	1				0.015	0.033
170	34070-80180	GEAR CREEP	1			47T	1.155	2.541
180	34070-80190	GEAR-SHAFT CREEP	1			12T	1.45	3.19
190	08101-06205	BEARING BALL	1				0.14	0.308
200	34070-22910	GEAR CREEP	1			41T	0.6	1.32
210	04612-00450	CIR CLIP EXTERNAL	1				0.007	0.0154
220	08101-06305	BEARING BALL	1				0.23	0.506
230	37800-43870	BOLT	8				0.026	0.0572
240	TA040-99440	ASSY GEAR BEVEL	1			6-37T	6.13	13.486

silverhorn.co.uk

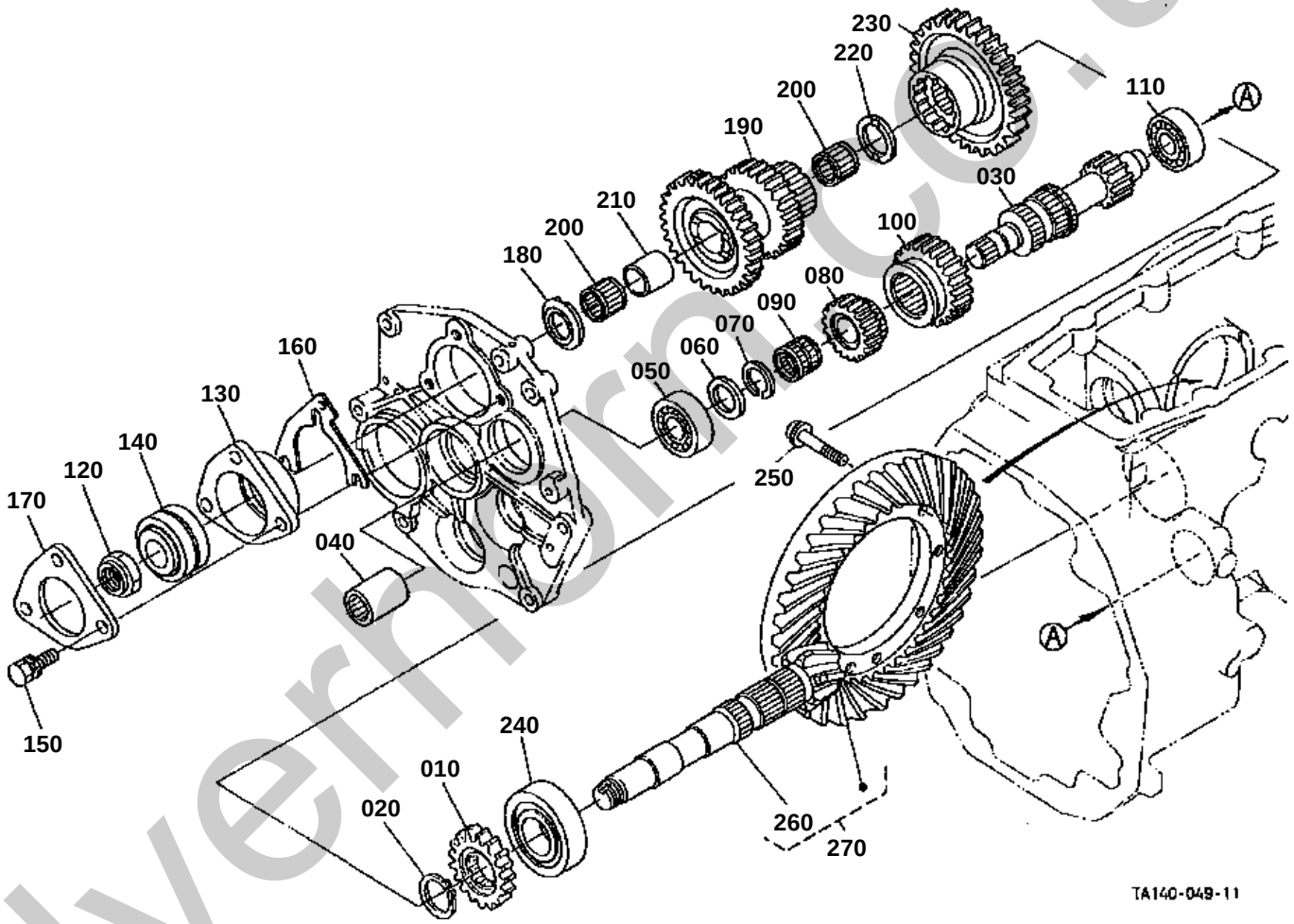

silverhorn.co.uk

SPIRAL BEVEL PINION [HST TYPE]

↔ Interchangeable; ≠ not interchangeable; ← new for old; → old for new

REF.No	Part No.	Description	Q'ty	S.No.	I/C	REMARKS	Weight (kgf)	Weight (lb)
010	TA040-15110	GEAR 4WD	1			17T	0.22	0.484
020	04612-00350	CIR CLIP EXTERNAL	1				0.01	0.022
030	TA240-52600	GEAR-SHAFT	1			13T	1.345	2.959
040	37150-21682	COUPLING	1				0.24	0.528
050	08101-06305	BEARING BALL	1				0.23	0.506
060	34076-62650	COLLAR THRUST	1				0.01	0.022
070	37150-21790	CIR-CLIP	1				0.001	0.0022
080	TA240-52610	GEAR	1	<=75110		17T NOT SALE	0.2	0.44
080	TA240-52612	GEAR	1	>=75111	←		0.2	0.44
090	TA040-22630	BEARING NEEDLE	1				0.02	0.044
100	TA240-52620	GEAR	1			26T	0.55	1.21
110	37410-57190	BEARING BALL	1				0.14	0.308
120	35260-23252	NUT	1				0.04	0.088
130	34070-22770	CASE	1	<=71313			0	0
130	34070-22772	CASE	1	>=71314	←		0	0
140	38240-22140	BEARING TAPER-ROLLER	1				0.56	1.232
150	01133-51040	BOLT	3				0.03	0.066
160	34070-22860	SHIM	2			0.5mm	0.015	0.033
160	34070-22870	SHIM	4			0.2mm	0.004	0.0088
160	34070-22880	SHIM	2			0.1mm	0.005	0.011
170	34070-22780	COVER BEARING	1				0.21	0.462
180	32420-67662	COLLAR THRUST	1				0.005	0.011
190	TA240-52712	GEAR	1			32-23-18T	1.36	2.992
200	34070-22430	BEARING NEEDLE	2				0.035	0.077
210	TA240-52730	COLLAR	1				0.046	0.1012
220	TA240-52720	COLLAR THRUST	1				0.01	0.022
230	T0070-22810	GEAR CREEP	1			46T	1.08	2.376
240	34070-22740	BEARING ROLLER	1				0.51	1.122
250	37800-43870	BOLT	8				0.026	0.0572
260	TA240-52700	GEAR-SHAFT	1			6T	1.66	3.652
270	TA240-99340	ASSY GEAR BEVEL	1			37T	0	0

silverhorn.co.uk

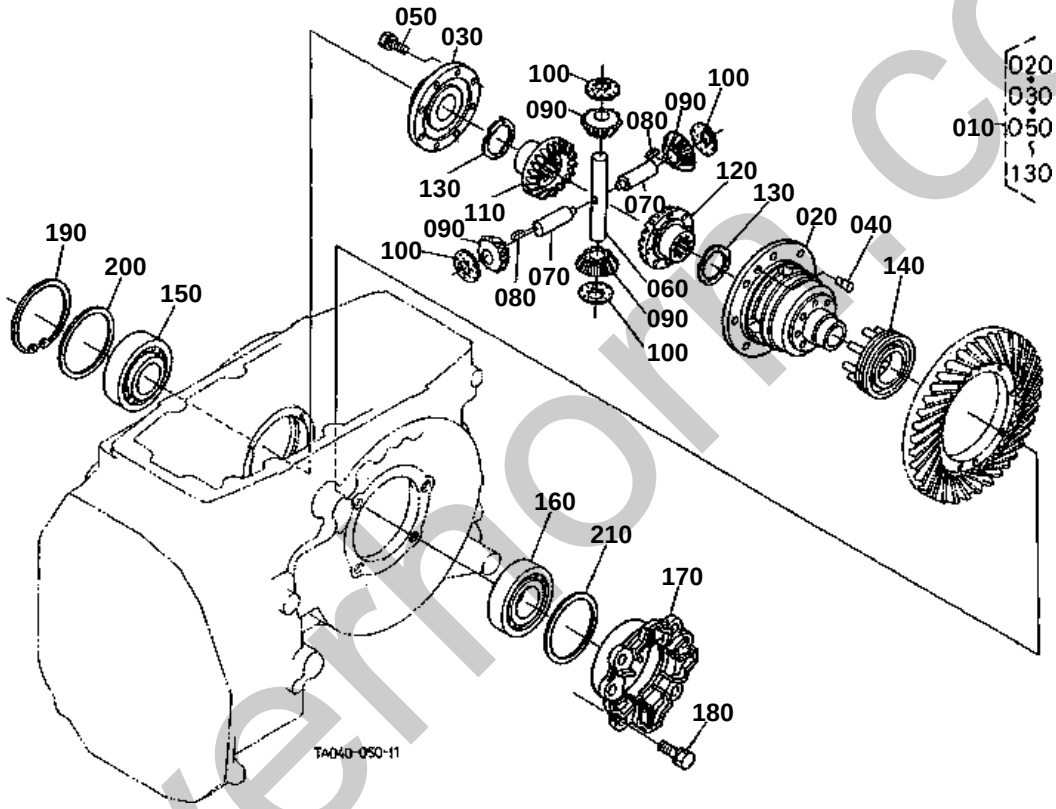

silvermoor.co.uk

↔ Interchangeable; ≠ not interchangeable; ← new for old; → old for new

REF.No	Part No.	Description	Q'ty	S.No.	I/C	REMARKS	Weight (kgf)	Weight (lb)
010	3A011-32204	ASSY DIFFERENTIAL	1				6.2	13.64
020	3A011-32710	CASE DIFFERENTIAL	1				3.35	7.37
030	3A011-32044	COVER DIFF.CASE	1				0.795	1.749
040	37300-28170	PIN STRAIGHT	2				0.025	0.055
050	01133-51025	BOLT	8				0.023	0.0506
060	35430-26340	SHAFT DIFF.PINION	1				0.31	0.682
070	35430-26330	SHAFT DIFF.PINION	2				0.136	0.2992
080	31220-26280	KEY FEATHER	2				0.005	0.011
090	35430-26350	PINION DIFF.	4				0.16	0.352
100	31351-26390	WASHER DIFF.PINION	4				0.012	0.0264
110	37300-26430	GEAR DIFF.SIDE RH	1				0.475	1.045
120	37300-26440	GEAR DIFF.SIDE LH	1				0.63	1.386
130	31351-26470	WASHER SIDE GEAR	2			1.5mm	0.01	0.022
130	31351-26480	WASHER SIDE GEAR	2			1.6mm	0.015	0.033
130	31351-26490	WASHER SIDE GEAR	2			1.7mm	0.016	0.0352
130	3A011-32760	COLLAR THRUST	2			1.8mm	0.01	0.022
130	3A011-32780	COLLAR THRUST	2			2.0mm	0.01	0.022
140	31351-26610	SHIFTER DIFF.LOCK	1				0.43	0.946
150	08711-32011	BEARING TAPER-ROLLER	1				0.538	1.1836
160	08711-30209	BEARING TAPER-ROLLER	1				0.458	1.0076
170	34070-28360	SUPPORT DIFF.	1				0.405	0.891
180	01133-51025	BOLT	4				0.023	0.0506
190	04611-00900	CIR CLIP INTERNAL	1				0.031	0.0682
200	37410-16810	SHIM DIFFERENTIAL	1			0.4mm	0.01	0.022
200	37410-16820	SHIM DIFFERENTIAL	1			0.5mm	0.01	0.022
200	37410-16830	SHIM DIFFERENTIAL	1			0.6mm	0.01	0.022
200	37410-16840	SHIM DIFFERENTIAL	1			0.7mm	0.01	0.022
200	37410-16850	SHIM DIFFERENTIAL	1			0.8mm	0.008	0.0176
200	37410-16860	SHIM DIFFERENTIAL	1			0.9mm	0.009	0.0198
200	37410-16870	SHIM DIFFERENTIAL	1			1.0mm	0.01	0.022
200	37410-16880	SHIM DIFFERENTIAL	1			1.2mm	0.011	0.0242
200	37410-16890	SHIM DIFFERENTIAL	1			1.4mm	0.015	0.033
210	34070-28210	SHIM	1			0.4mm	0.01	0.022
210	34070-28230	SHIM	1			0.6mm	0.015	0.033
210	34070-28250	SHIM	1			0.8mm	0.015	0.033
210	34070-28270	SHIM	1			1.0mm	0.015	0.033
210	34070-28290	SHIM	1			1.2mm	0.02	0.044
210	34070-28310	SHIM	1			1.6mm	0.025	0.055

silverhorn.co.uk

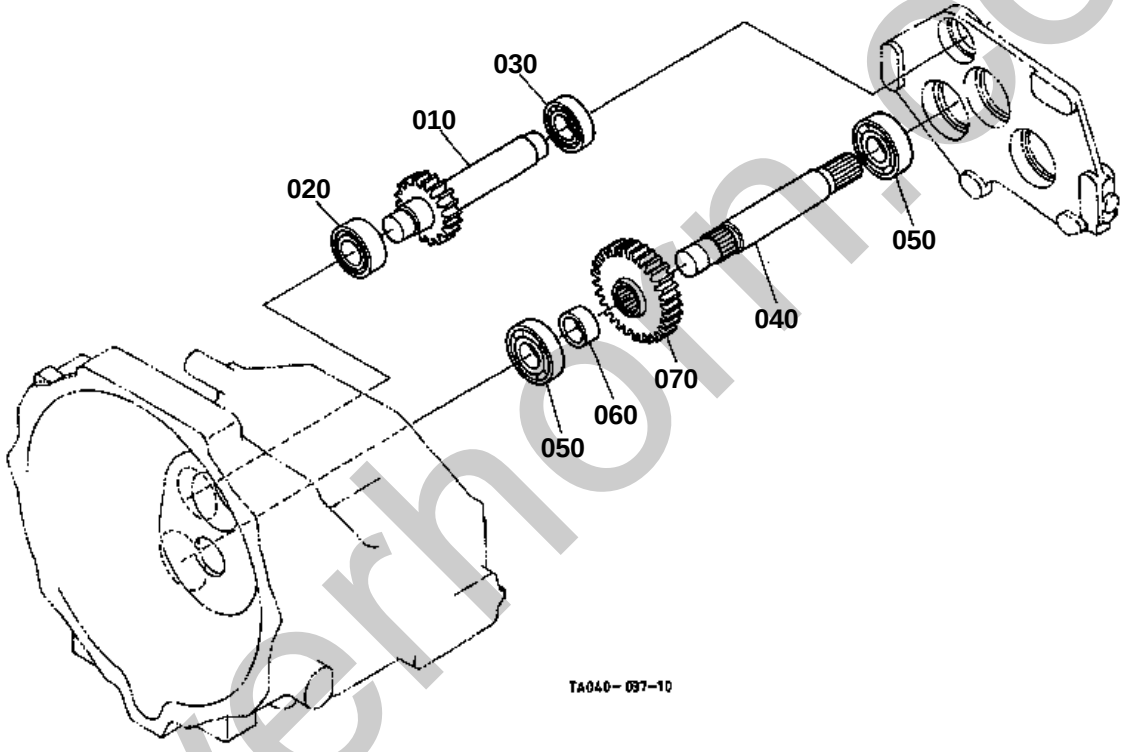

silverhorn.co.uk

↔ Interchangeable; ≠ not interchangeable; ← new for old; → old for new

REF.No	Part No.	Description	Q'ty	S.No.	I/C	REMARKS	Weight (kgf)	Weight (lb)
010	TA040-23200	GEAR-SHAFT I-PTO	1			21T	1.585	3.487
020	33740-31180	BEARING ROLLER	1				0.22	0.484
030	08101-06205	BEARING BALL	1				0.14	0.308
040	TA040-23150	COUNTERSHAFT I-PTO	1				0.99	2.178
050	08101-06305	BEARING BALL	2				0.23	0.506
060	TA040-23230	COLLAR	1				0.055	0.121
070	TA040-23160	GEAR I-PTO	1			33T	0.915	2.013

silverhorn.co.uk

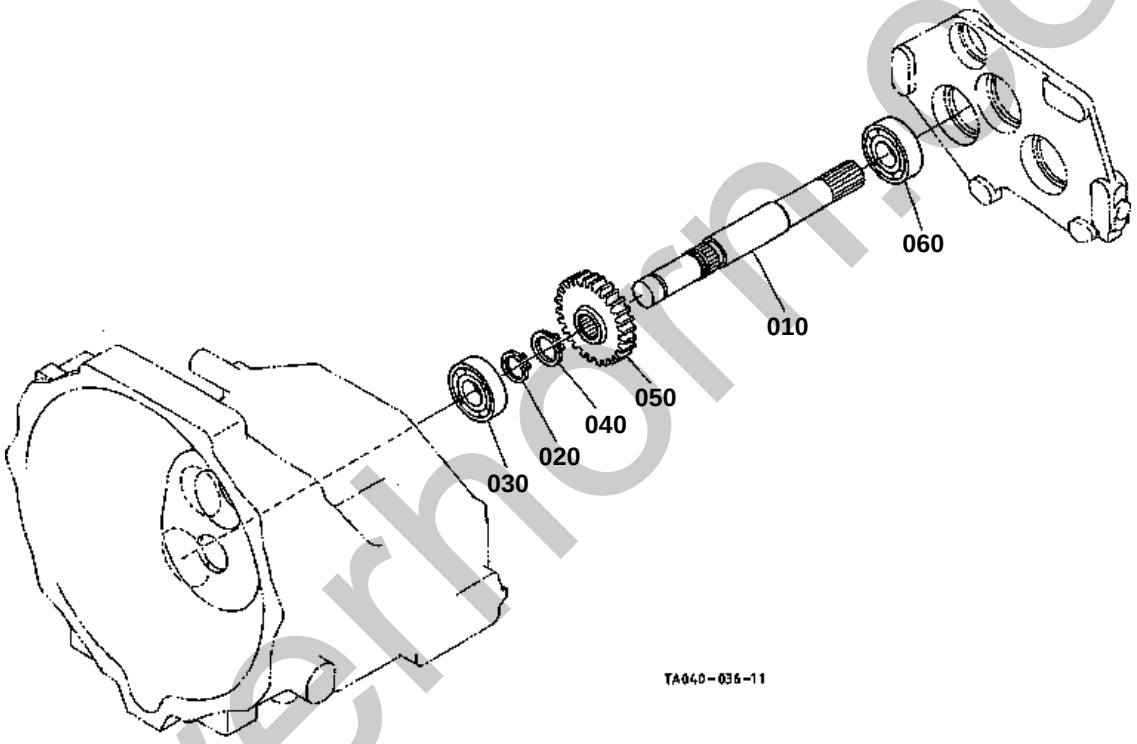

silverhorn.co.uk

↔ Interchangeable; ≠ not interchangeable; ← new for old; → old for new

REF.No	Part No.	Description	Q'ty	S.No.	I/C	REMARKS	Weight (kgf)	Weight (lb)
010	TA040-23254	COUNTERSHAFT PTO	1				1.2	2.64
020	37150-21551	CIR CLIP EXTERNAL	1				0.005	0.011
030	08101-06305	BEARING BALL	1				0.23	0.506
040	15221-24320	CIR CLIP IDLE GEAR	1				0.01	0.022
050	TA040-23260	GEAR PTO	1			29T	0.615	1.353
060	08101-06305	BEARING BALL	1				0.23	0.506

silverhorn.co.uk

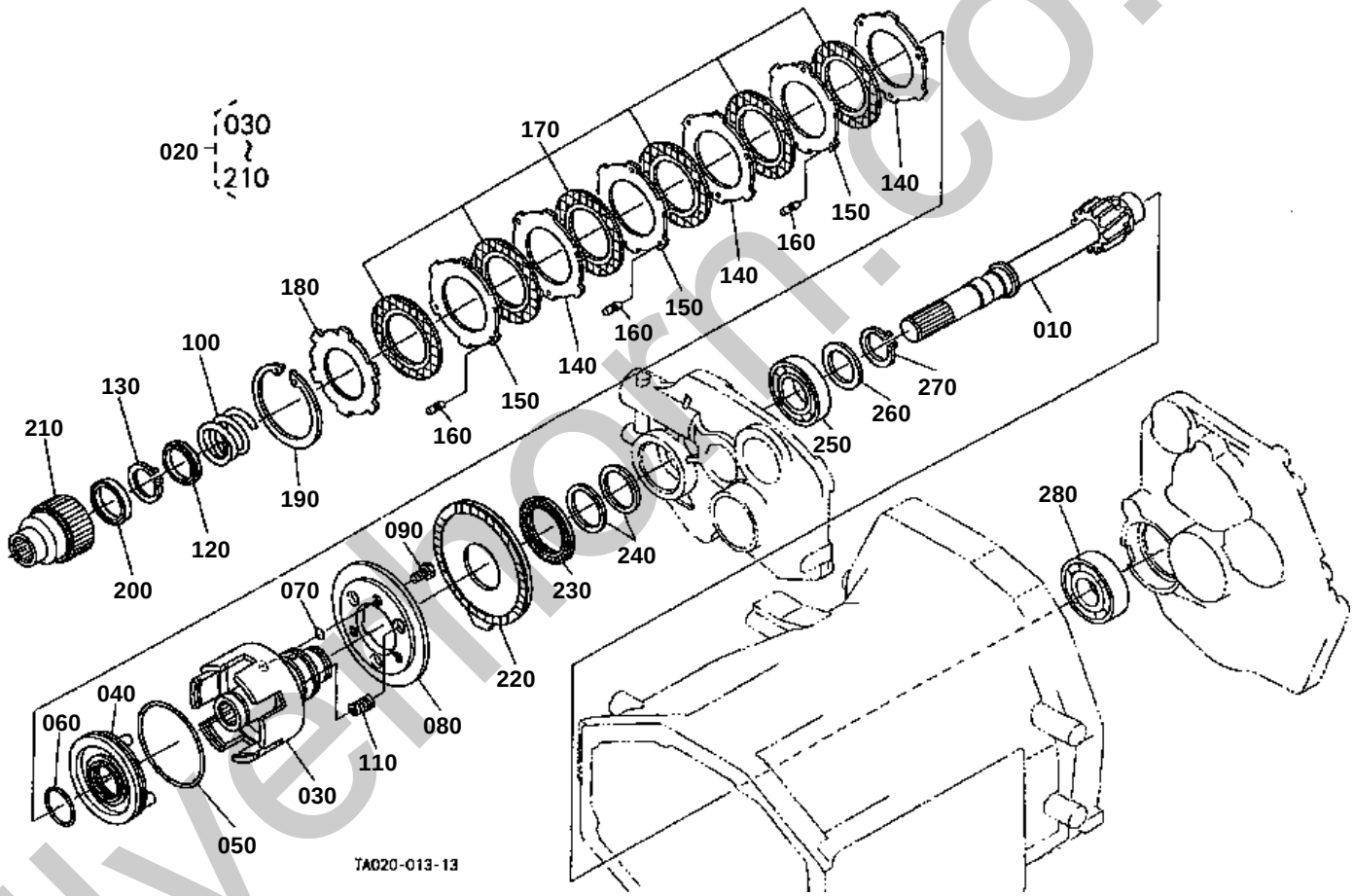

silvermorn.co.uk

140 TA040-6907-0

TA150-811-10

silverhorn.co.uk

↔ Interchangeable; ≠ not interchangeable; ← new for old; → old for new

REF.No	Part No.	Description	Q'ty	S.No.	I/C	REMARKS	Weight (kgf)	Weight (lb)
010	TA040-23500	GEAR-SHAFT I-PTO	1			12T	1.48	3.256
020	TA040-69000	ASSY CLUTCH I-PTO	1				3.6	7.92
030	TA040-69012	CASE PTO CLUTCH	1				1.555	3.421
040	TA040-69020	PISTON	1				0.395	0.869
050	31501-72330	D RING OUTER	1				0.005	0.011
060	31501-72470	D RING INNER	1				0.001	0.0022
070	04811-00100	O RING	3				0.001	0.0022
070	04817-00100	O RING	3		←		0	0
080	TA040-69030	PLATE BRAKE	1				0.5	1.1
090	TA040-69040	BOLT	3				0.004	0.0088
100	TA040-69050	SPRING RETURN	1				0.075	0.165
110	TA040-69060	SPRING RETURN	3				0.008	0.0176
120	31501-72370	WASHER	1				0.018	0.0396
130	04612-00350	CIR CLIP EXTERNAL	1				0.01	0.022
140	TA040-69070	PLATE	3	<=73902			0.036	0.0792
140	TA040-69080	PLATE	3	>=73903	←		0.036	0.0792
150	TA040-69080	PLATE	3				0.036	0.0792
160	TA040-69090	RUBBER	9				0.001	0.0022
170	34070-15250	DISK CLUTCH	6				0.04	0.088
180	TA040-69100	PLATE BACK	1				0.127	0.2794
190	04611-00920	CIR CLIP INTERNAL	1				0.04	0.088
200	08101-06807	BEARING BALL	1				0.03	0.066
210	TA040-69113	HUB CLUTCH	1				0.365	0.803
220	TA040-69150	DISK BRAKE	1				0.41	0.902
230	TA040-69160	BEARING NEEDLE	1				0.029	0.0638
240	31501-72403	RING SEAL	2				0.005	0.011
250	08101-06207	BEARING BALL	1				0.282	0.6204
260	69331-24330	COLLAR DISTANCE	1				0.012	0.0264
270	36740-41150	CIR CLIP EXTERNAL	1				0.01	0.022
280	36540-41130	BEARING BALL	1				0.34	0.748

silverhorn.co.uk

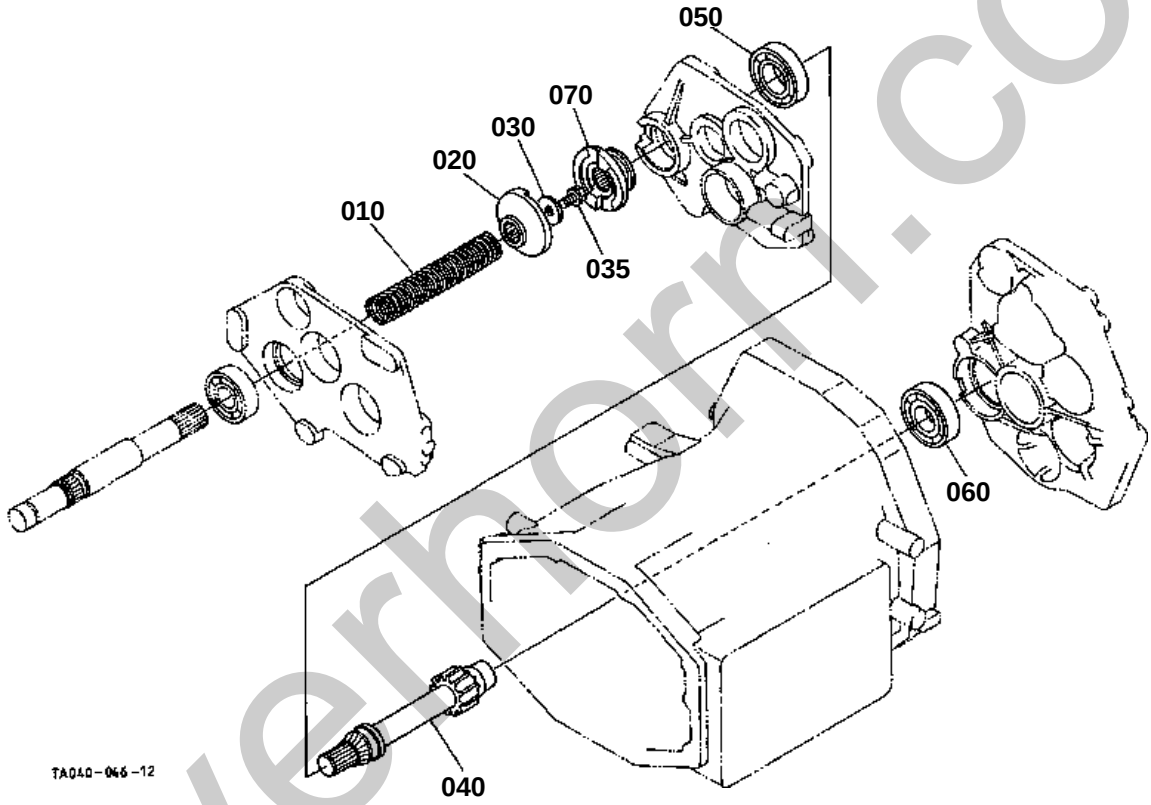

silverhorn.co.uk

↔ Interchangeable; ≠ not interchangeable; ← new for old; → old for new

REF.No	Part No.	Description	Q'ty	S.No.	I/C	REMARKS	Weight (kgf)	Weight (lb)
010	35200-25230	SPRING ONE-WAY	1				0.075	0.165
020	TA040-23450	CAM CLUTCH	1				0.465	1.023
030	41330-76120	WASHER	1				0.025	0.055
035	01779-51020	BOLT UBS	1	<=71651			0.025	0.055
035	TA140-23950	BOLT	1	>=71652	←		0	0
040	TA040-23562	GEAR-SHAFT PTO	1			12T	1.36	2.992
050	08101-06207	BEARING BALL	1				0.282	0.6204
060	36540-41130	BEARING BALL	1				0.34	0.748
070	TA040-23410	CAM CLUTCH	1				0.52	1.144

silverhorn.co.uk

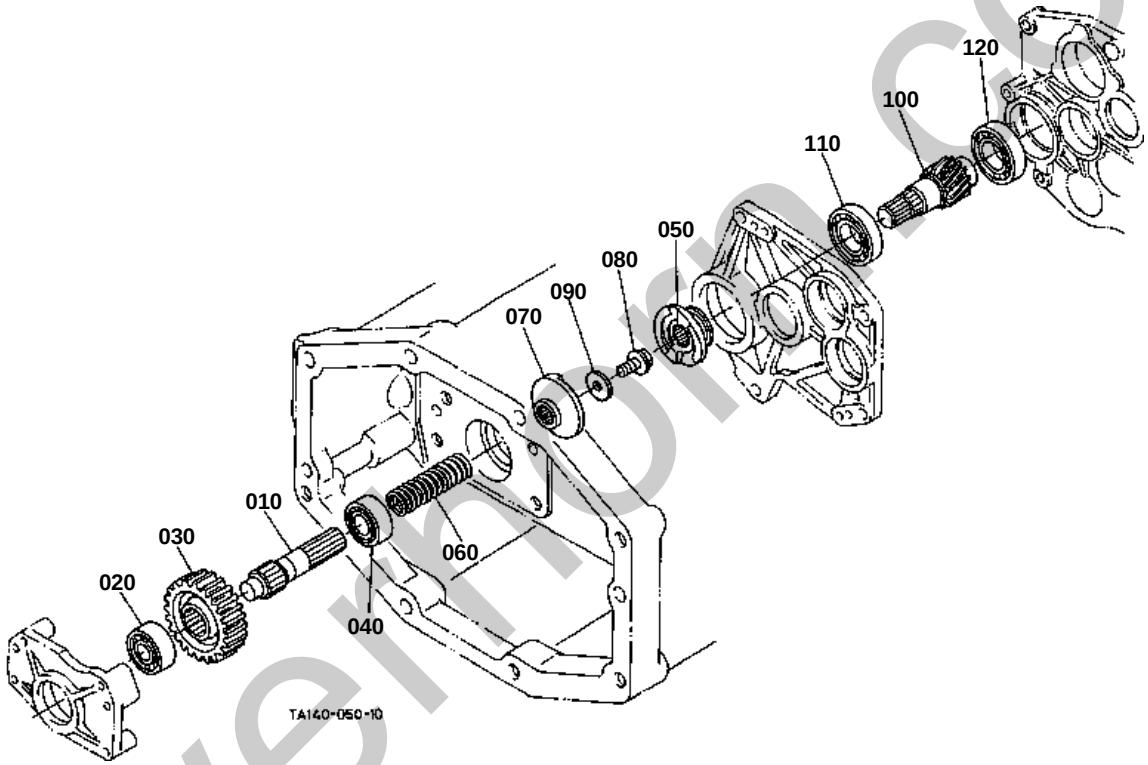

silvermoon.co.uk

PTO CLUTCH [HST TYPE] [W/O IND-PTO]

↔ Interchangeable; ≠ not interchangeable; ← new for old; → old for new

REF.No	Part No.	Description	Q'ty	S.No.	I/C	REMARKS	Weight (kgf)	Weight (lb)
010	TA240-53250	COUNTERSHAFT PTO	1				0.455	1.001
020	08101-06205	BEARING BALL	1				0.14	0.308
030	TA240-53162	GEAR PTO	1			33T	0.795	1.749
040	67121-56770	BEARING BALL	1				0.127	0.2794
050	TA040-23410	CAM CLUTCH	1				0.52	1.144
060	TA240-51470	SPRING	1				0.058	0.1276
070	TA040-23450	CAM CLUTCH	1				0.465	1.023
080	01779-51020	BOLT UBS	1	<=71651			0.025	0.055
080	TA140-23950	BOLT	1	>=71652	←		0	0
090	41330-76120	WASHER	1				0.025	0.055
100	TA240-23560	GEAR-SHAFT PTO	1			11T	0.685	1.507
110	TA140-25000	BEARING BALL	1				0.342	0.7524
120	36540-41130	BEARING BALL	1				0.34	0.748

silverhorn.co.uk

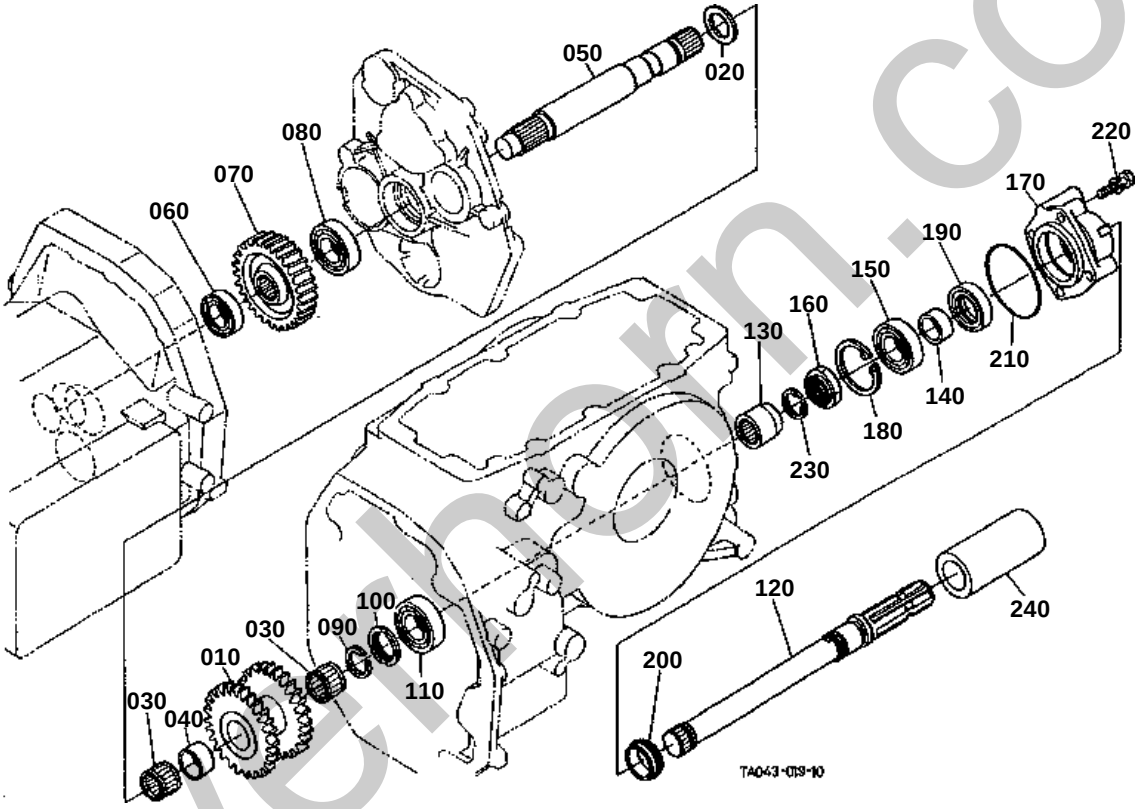

silverthorn.co.uk

↔ Interchangeable; ≠ not interchangeable; ← new for old; → old for new

REF.No	Part No.	Description	Q'ty	S.No.	I/C	REMARKS	Weight (kgf)	Weight (lb)
010	TA040-15120	GEAR	1			29-31T	1.75	3.85
020	38430-25232	COLLAR THRUST	1	<=72288			0.02	0.044
020	38430-25233	COLLAR THRUST	1	>=72289	←		0	0
030	08823-03526	BEARING NEEDLE	2				0.035	0.077
040	TA040-15130	COLLAR	1				0.022	0.0484
050	TA040-23680	SHAFT PTO DRIVE	1				1.83	4.026
060	37410-57190	BEARING BALL	1				0.14	0.308
070	TA040-23610	GEAR PTO	1			30T	1.43	3.146
080	76550-34140	BEARING BALL	1				0.21	0.462
090	34550-62430	CIR CLIP EXTERNAL	1	<=71651			0	0
090	37410-15280	CIR CLIP EXTERNAL	1	>=71652	←		0.005	0.011
100	34550-23360	COLLAR THRUST	1				0.025	0.055
110	37410-57330	BEARING BALL	1				0.2	0.44
120	TA040-23700	SHAFT PTO	1				2.1	4.62
130	TA040-23660	COUPLING PTO	1				0.165	0.363
140	35340-25350	COLLAR OIL SEAL	1				0.03	0.066
150	38430-25330	BEARING BALL	1				0.23	0.506
160	35340-25320	NUT	1				0.05	0.11
170	31391-25410	CASE BEARING	1				1.28	2.816
180	04611-00650	CIR CLIP INTERNAL	1				0.011	0.0242
190	35340-25360	SEAL OIL	1				0.024	0.0528
200	38240-25370	SLINGER	1				0.004	0.0088
210	04811-50800	O RING	1				0.003	0.0066
220	01123-50840	BOLT	4				0.018	0.0396
230	38430-25540	CIR CLIP EXTERNAL	1				0.004	0.0088
240	31220-25820	CAP	1				0.055	0.121

silverhorn.co.uk

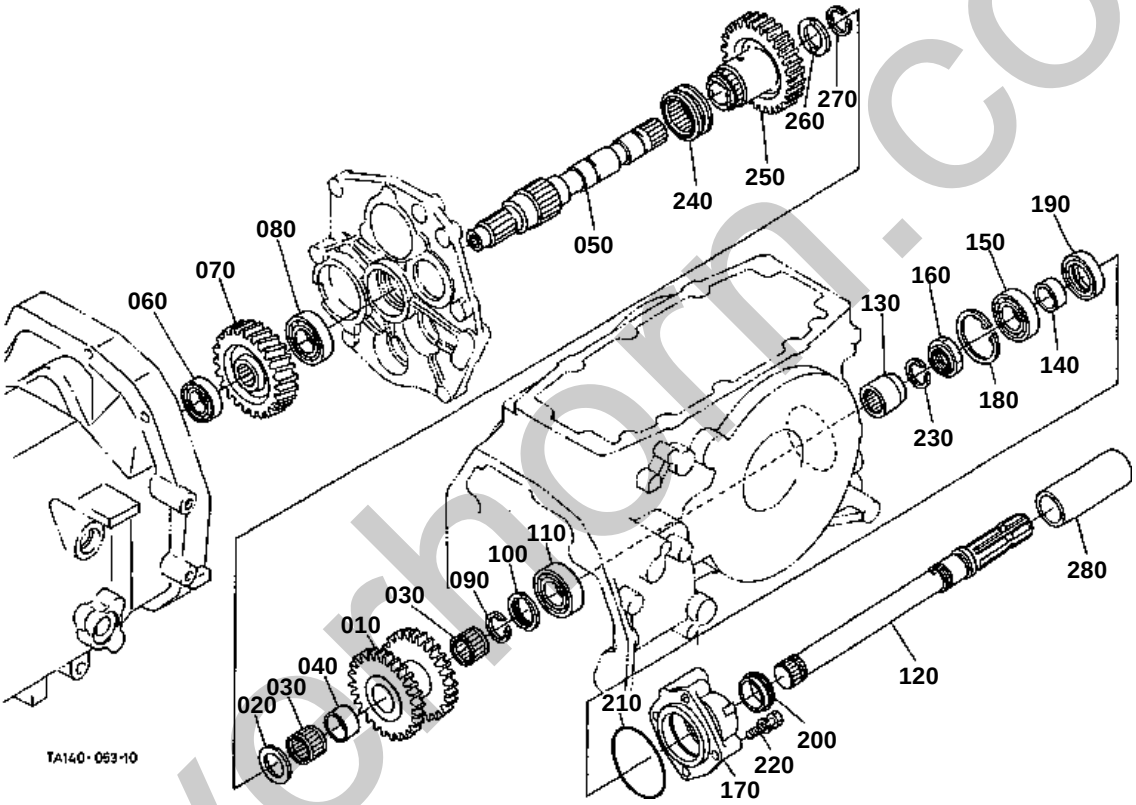

silverhand.co.uk

↔ Interchangeable; ≠ not interchangeable; ← new for old; → old for new

REF.No	Part No.	Description	Q'ty	S.No.	I/C	REMARKS	Weight (kgf)	Weight (lb)
010	TA040-15120	GEAR	1			29-31T	1.75	3.85
020	38430-25232	COLLAR THRUST	1	<=72288			0.02	0.044
020	38430-25233	COLLAR THRUST	1	>=72289	←		0	0
030	08823-03526	BEARING NEEDLE	2				0.035	0.077
040	TA040-15130	COLLAR	1				0.022	0.0484
050	TA230-53600	SHAFT M-PT	1				1.73	3.806
060	37410-57190	BEARING BALL	1				0.14	0.308
070	TA240-23610	GEAR PTO	1			30T	1.51	3.322
080	37410-57330	BEARING BALL	1				0.2	0.44
090	34550-62430	CIR CLIP EXTERNAL	1	<=71651			0	0
090	37410-15280	CIR CLIP EXTERNAL	1	>=71652	←		0.005	0.011
100	34550-23360	COLLAR THRUST	1				0.025	0.055
110	37410-57330	BEARING BALL	1				0.2	0.44
120	TA040-23700	SHAFT PTO	1				2.1	4.62
130	TA040-23660	COUPLING PTO	1				0.165	0.363
140	35340-25350	COLLAR OIL SEAL	1				0.03	0.066
150	38430-25330	BEARING BALL	1				0.23	0.506
160	35340-25320	NUT	1				0.05	0.11
170	31391-25410	CASE BEARING	1				1.28	2.816
180	04611-00650	CIR CLIP INTERNAL	1				0.011	0.0242
190	35340-25360	SEAL OIL	1				0.024	0.0528
200	38240-25370	SLINGER	1				0.004	0.0088
210	04811-50800	O RING	1				0.003	0.0066
220	01123-50840	BOLT	4				0.018	0.0396
230	38430-25540	CIR CLIP EXTERNAL	1				0.004	0.0088
240	TA030-23620	SHIFTER	1				0.23	0.506
250	TA230-55050	GEAR M-PTO	1			28T	1.27	2.794
260	38430-25232	COLLAR THRUST	1	<=72288			0.02	0.044
260	38430-25233	COLLAR THRUST	1	>=72289	←		0	0
270	38430-25540	CIR CLIP EXTERNAL	1				0.004	0.0088
280	31220-25820	CAP	1				0.055	0.121

silverhorn.co.uk

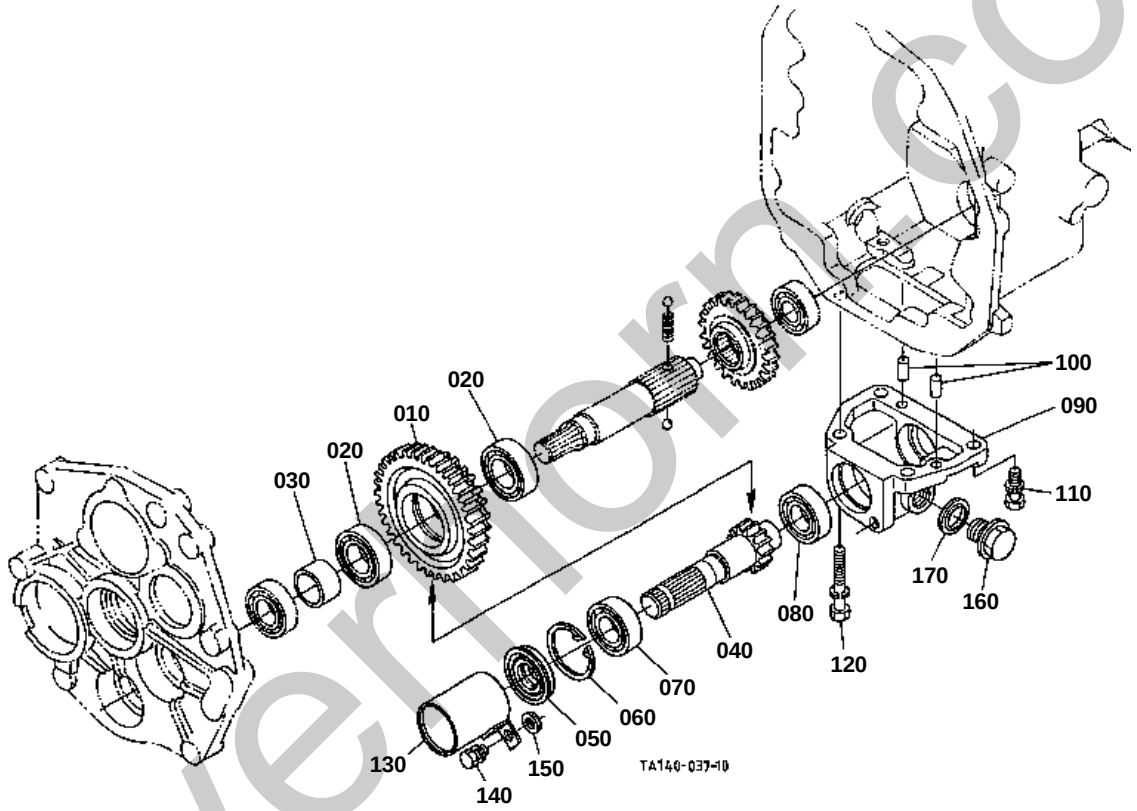

silverthorn.co.uk

↔ Interchangeable; ≠ not interchangeable; ← new for old; → old for new

REF.No	Part No.	Description	Q'ty	S.No.	I/C	REMARKS	Weight (kgf)	Weight (lb)
010	TA230-55100	GEAR M-PTO	1			24-42T	1.965	4.323
020	32430-25560	BEARING BALL	2				0.18	0.396
030	TA030-25120	COLLAR	1				0.052	0.1144
040	TA030-25200	GEAR-SHAFT M-PTO	1			13T	0.79	1.738
050	32430-25540	SEAL OIL MID PTO	1				0.04	0.088
060	04611-00520	CIR CLIP INTERNAL	1				0.009	0.0198
070	08101-06205	BEARING BALL	1				0.14	0.308
080	37410-57190	BEARING BALL	1				0.14	0.308
090	TA030-25253	CASE	1				0.52	1.144
100	05012-00818	PIN STRAIGHT	2				0.008	0.0176
110	01133-51030	BOLT	3				0.025	0.055
120	01133-51065	BOLT	1				0.03	0.066
130	TA030-25270	CAP	1				0.16	0.352
140	01123-60814	BOLT	1				0.008	0.0176
150	12581-57240	COLLAR	1				0.004	0.0088
160	15512-96010	PLUG DRAIN	1				0.101	0.2222
170	04717-02150	WASHER WITH RUBBER	1				0.004	0.0088

silverhorn.co.uk

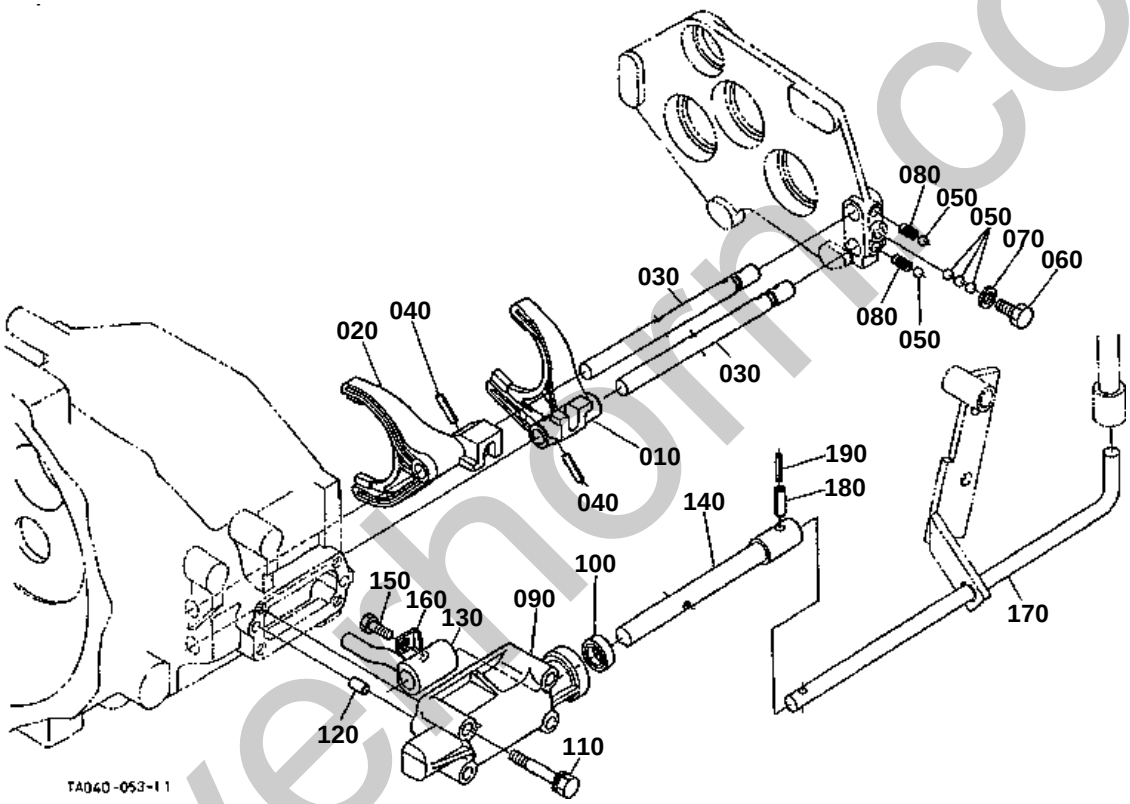

silverhorn.co.uk

MAIN GEAR SHIFT FORK [MANUAL T/M TYPE]
[TYPE T/M MANUELLE]

↔ Interchangeable; ≠ not interchangeable; ← new for old; → old for new

REF.No	Part No.	Description	Q'ty	S.No.	I/C	REMARKS	Weight (kgf)	Weight (lb)
010	T0073-64103	FORK MAIN SHIFT	1				0.225	0.495
020	T0073-64110	FORK MAIN SHIFT	1				0.23	0.506
030	TA040-24120	ROD FORK	2				0.245	0.539
040	05411-00625	PIN SPRING	2				0.004	0.0088
050	07715-01605	BALL	5				0.003	0.0066
060	34070-24190	BOLT	1				0.015	0.033
070	04512-60100	WASHER SPRING	1				0.002	0.0044
080	32530-23730	SPRING	2				0.001	0.0022
090	34070-24142	BASE MAIN SHIFT	1				0.395	0.869
100	09500-16287	SEAL OIL	1				0.01	0.022
110	01123-50860	BOLT	4				0.026	0.0572
120	05012-00818	PIN STRAIGHT	2				0.008	0.0176
130	34070-24154	ARM MAIN SHIFT	1				0.16	0.352
140	T0070-24160	ROD MAIN SHIFT	1				0.35	0.77
150	34070-24332	BOLT SET	1				0.01	0.022
160	32420-67970	WASHER	1				0.002	0.0044
170	TA040-24170	ROD MAIN SHIFT	1				0.395	0.869
180	05411-00525	PIN SPRING	1				0.002	0.0044
190	05411-00325	PIN SPRING	1				0.001	0.0022

silverhorn.co.uk

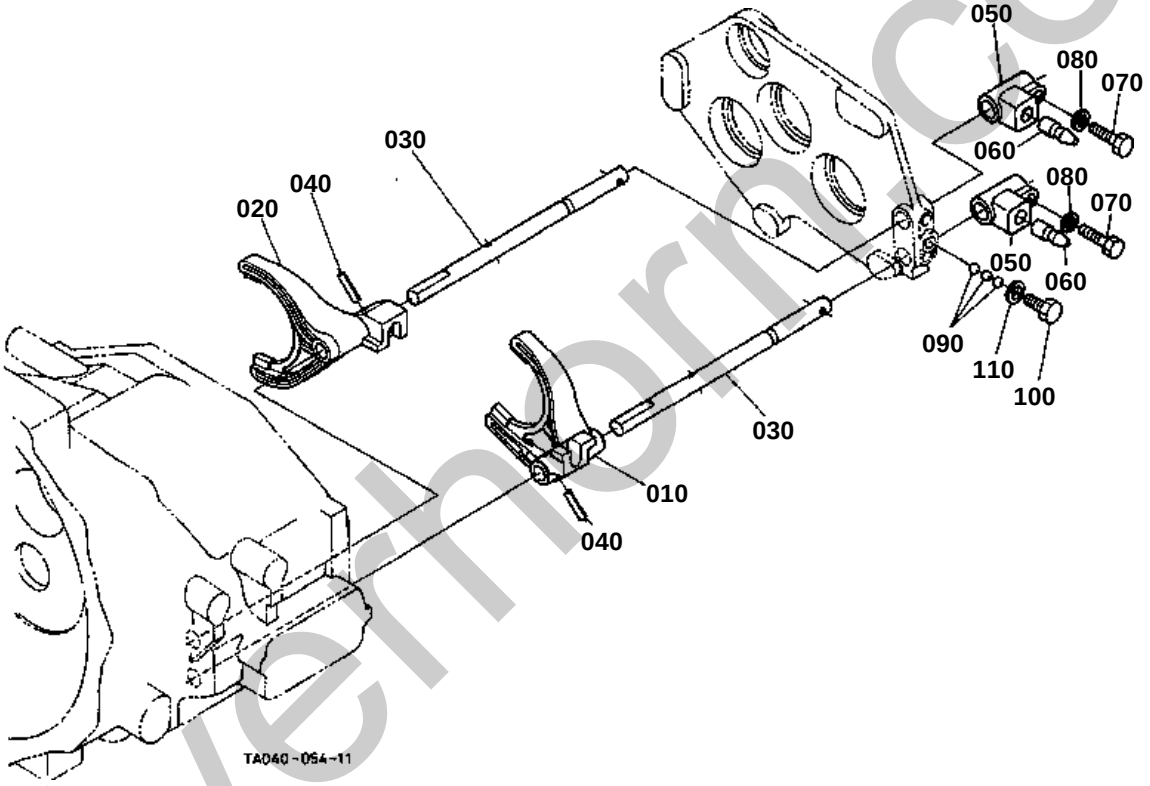

silverhorn.co.uk

MAIN GEAR SHIFT FORK [GST TYPE]

[TYPE GST]

↔ Interchangeable; ≠ not interchangeable; ← new for old; → old for new

REF.No	Part No.	Description	Q'ty	S.No.	I/C	REMARKS	Weight (kgf)	Weight (lb)
010	T0073-64103	FORK MAIN SHIFT	1				0.225	0.495
020	T0073-64110	FORK MAIN SHIFT	1				0.23	0.506
030	TA040-64120	ROD FORK	2				0.29	0.638
040	05411-00625	PIN SPRING	2				0.004	0.0088
050	T0180-64140	SHIFTER	2				0.125	0.275
060	34076-64170	PIN SHIFT	2				0.02	0.044
070	31351-23570	BOLT FORK LOCK	2				0.007	0.0154
080	04512-60060	WASHER SPRING	2				0.001	0.0022
090	07715-01605	BALL	3				0.003	0.0066
100	34070-24190	BOLT	1				0.015	0.033
110	04512-60100	WASHER SPRING	1				0.002	0.0044

silverhorn.co.uk

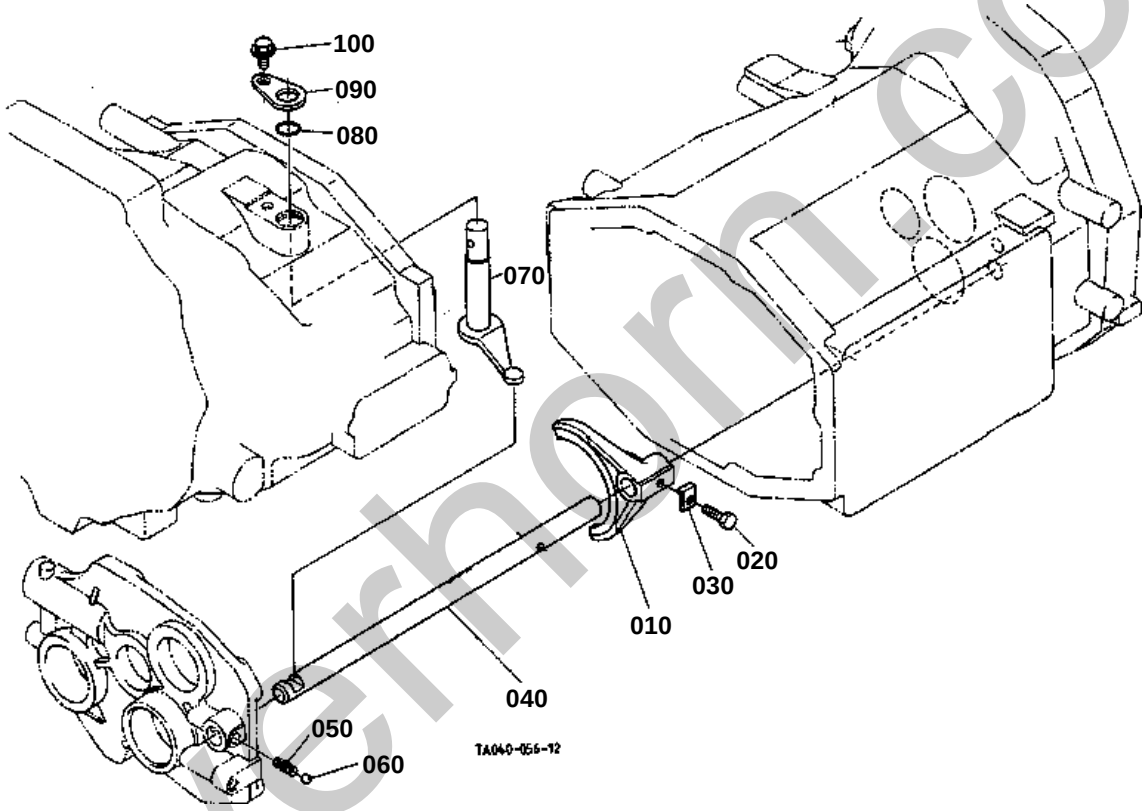

silverhorn.co.uk

SHUTTLE SHIFT FORK [MANUAL T/M TYPE]

↔ Interchangeable; ≠ not interchangeable; ← new for old; → old for new

REF.No	Part No.	Description	Q'ty	S.No.	I/C	REMARKS	Weight (kgf)	Weight (lb)
010	TA040-24300	FORK SHUTTLE SHIFT	1				0.375	0.825
020	34076-64340	BOLT REAMER	1				0.015	0.033
030	32420-67970	WASHER	1				0.002	0.0044
040	TA040-24310	ROD FORK	1				0.735	1.617
050	62231-18530	SPRING	1				0.01	0.022
060	07715-01605	BALL	1				0.003	0.0066
070	T0070-24320	ARM SHUTTLE SHIFT	1				0.325	0.715
080	04811-00200	O RING	1				0.001	0.0022
080	04816-00200	O RING	1		←		0.003	0.0066
090	34070-24350	STOPPER	1				0.02	0.044
100	01754-50812	BOLT FLANGE	1				0.01	0.022

silverhorn.co.uk

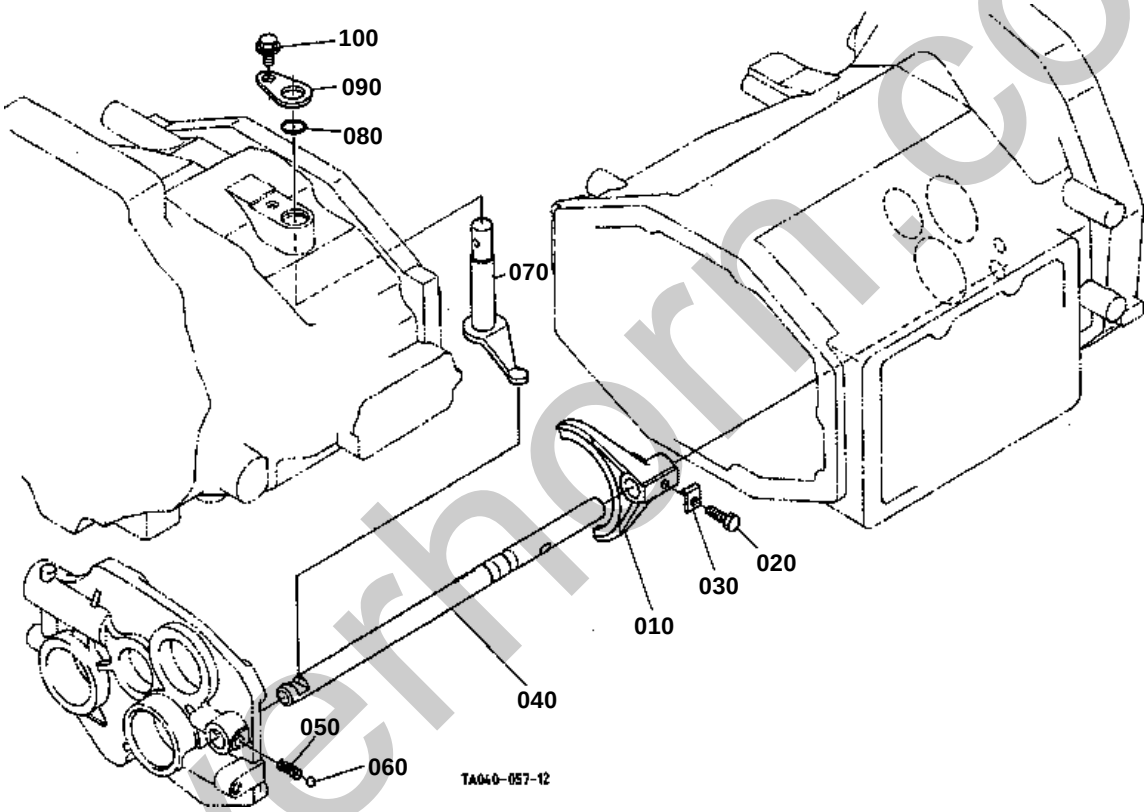

silverhorn.co.uk

SHUTTLE SHIFT FORK [GST TYPE]

↔ Interchangeable; ≠ not interchangeable; ← new for old; → old for new

REF.No	Part No.	Description	Q'ty	S.No.	I/C	REMARKS	Weight (kgf)	Weight (lb)
010	TA040-24300	FORK SHUTTLE SHIFT	1				0.375	0.825
020	34076-64340	BOLT REAMER	1				0.015	0.033
030	32420-67970	WASHER	1				0.002	0.0044
040	TA040-64312	ROD FORK	1				0.75	1.65
050	62231-18530	SPRING	1				0.01	0.022
060	07715-01605	BALL	1				0.003	0.0066
070	T0070-24320	ARM SHUTTLE SHIFT	1				0.325	0.715
080	04811-00200	O RING	1				0.001	0.0022
080	04816-00200	O RING	1		←		0.003	0.0066
090	34070-24350	STOPPER	1				0.02	0.044
100	01754-50812	BOLT FLANGE	1				0.01	0.022

silverhorn.co.uk

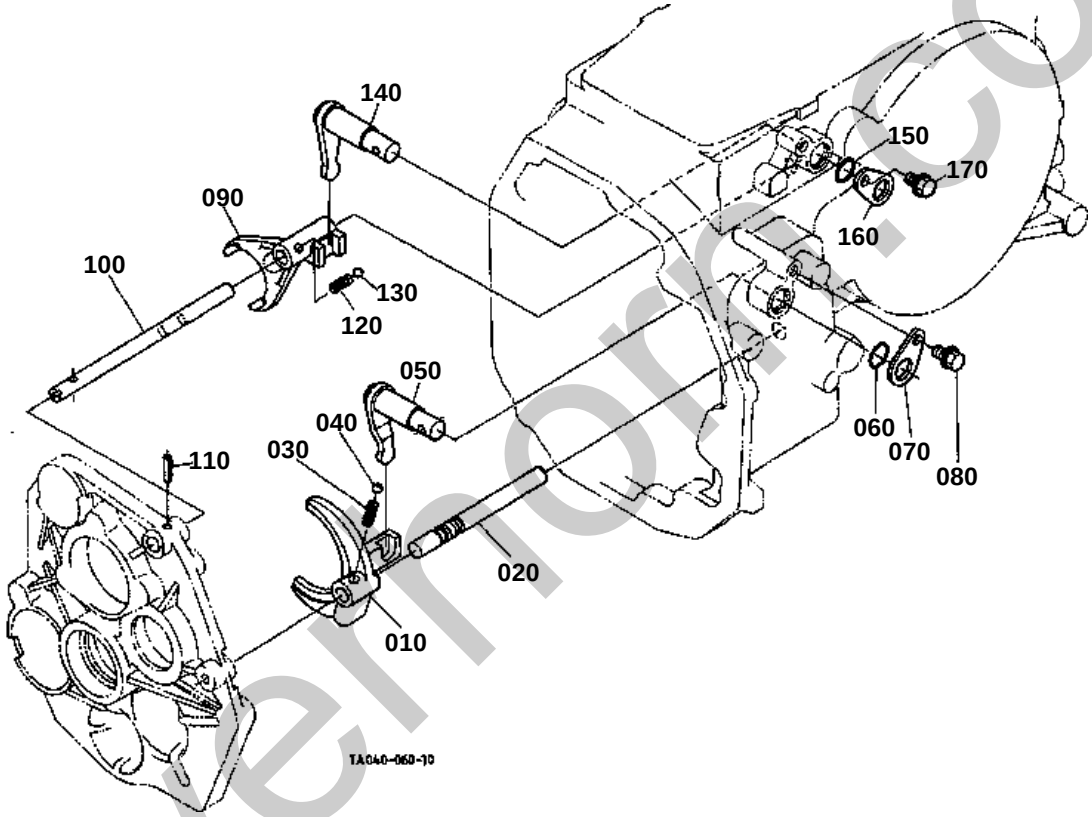

silvermore.co.uk

RANGE GEAR SHIFT FORK/CREEP GEAR SHIFT FORK

[MANUAL T/M TYPE] [TYPE T/M MANUELLE]

↔ Interchangeable; ≠ not interchangeable; ← new for old; → old for new

REF.No	Part No.	Description	Q'ty	S.No.	I/C	REMARKS	Weight (kgf)	Weight (lb)
010	TA040-24400	FORK RANGE SHIFT	1				0.37	0.814
020	TA040-24410	ROD FORK	1				0.175	0.385
030	62231-18530	SPRING	1				0.01	0.022
040	07715-01605	BALL	1				0.003	0.0066
050	TA040-24420	ARM RANGE SHIFT	1				0.215	0.473
060	04811-00200	O RING	1				0.001	0.0022
060	04816-00200	O RING	1		←		0.003	0.0066
070	34070-24350	STOPPER	1				0.02	0.044
080	01754-50812	BOLT FLANGE	1				0.01	0.022
090	34070-24500	FORK CREEP SHIFT	1				0.145	0.319
100	TA040-24510	ROD FORK	1				0.19	0.418
110	05411-00522	PIN SPRING	1				0.002	0.0044
120	62231-18530	SPRING	1				0.01	0.022
130	07715-01605	BALL	1				0.003	0.0066
140	34070-24420	ARM SHIFT	1				0.22	0.484
150	04811-00200	O RING	2				0.001	0.0022
150	04817-00200	O RING	2		←		0	0
160	34070-24350	STOPPER	1				0.02	0.044
170	01754-50812	BOLT FLANGE	1				0.01	0.022

silverhorn.co.uk

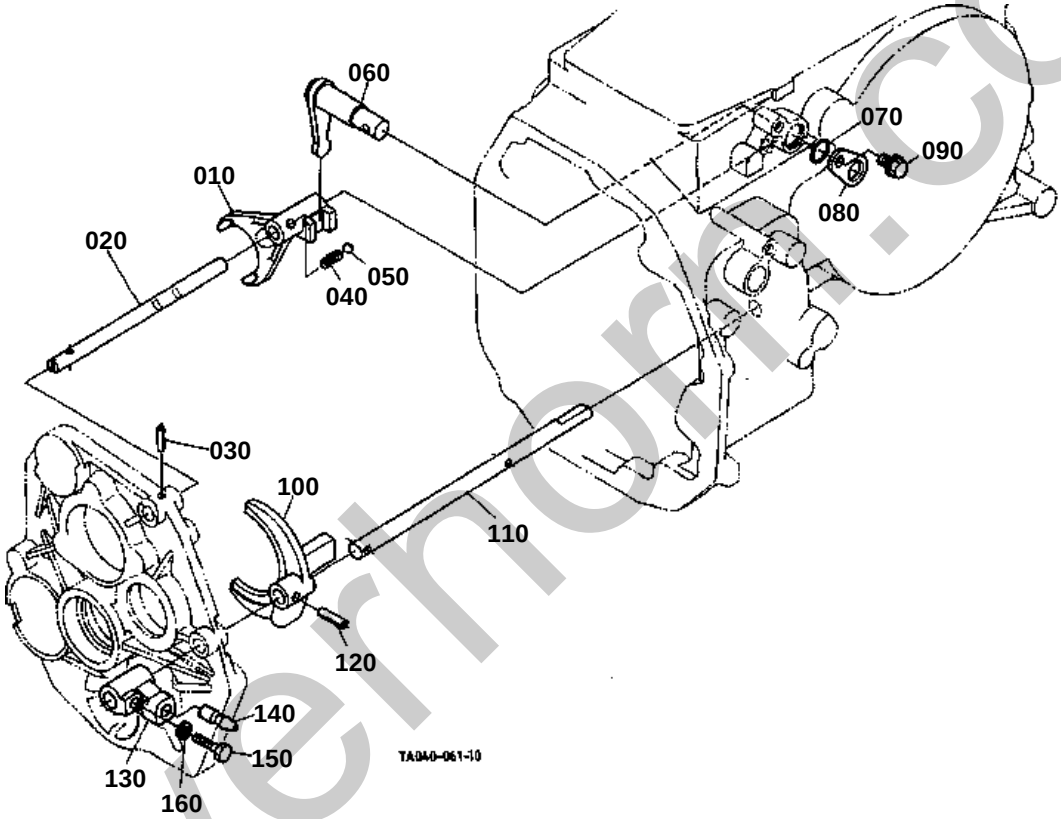

silverhorn.co.uk

RANGE GEAR SHIFT FORK/CREEP GEAR SHIFT FORK
[GST TYPE] [TYPE GST]

↔ Interchangeable; ≠ not interchangeable; ← new for old; → old for new

REF.No	Part No.	Description	Q'ty	S.No.	I/C	REMARKS	Weight (kgf)	Weight (lb)
010	34070-24500	FORK CREEP SHIFT	1				0.145	0.319
020	TA040-24510	ROD FORK	1				0.19	0.418
030	05411-00522	PIN SPRING	1				0.002	0.0044
040	62231-18530	SPRING	1				0.01	0.022
050	07715-01605	BALL	1				0.003	0.0066
060	34070-24420	ARM SHIFT	1				0.22	0.484
070	04811-00200	O RING	1				0.001	0.0022
070	04816-00200	O RING	1		←		0.003	0.0066
080	34070-24350	STOPPER	1				0.02	0.044
090	01754-50812	BOLT FLANGE	1				0.01	0.022
100	TA040-64400	FORK RANGE SHIFT	1				0.39	0.858
110	TA040-64410	ROD FORK	1				0.39	0.858
120	05411-00625	PIN SPRING	1				0.004	0.0088
130	34076-64420	SHIFTER	1				0.14	0.308
140	34076-64170	PIN SHIFT	1				0.02	0.044
150	31351-23570	BOLT FORK LOCK	1				0.007	0.0154
160	04512-60060	WASHER SPRING	1				0.001	0.0022

silverhorn.co.uk

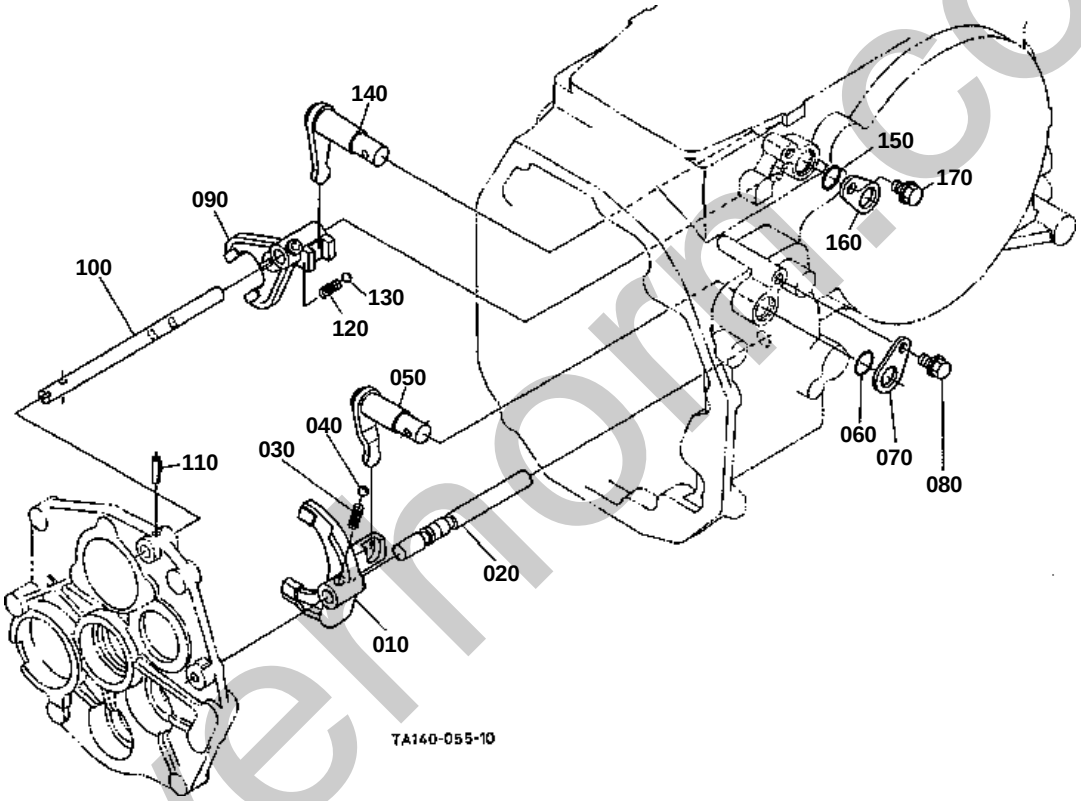

silvermore.co.uk

RANGE GEAR SHIFT FORK [HST TYPE]

↔ Interchangeable; ≠ not interchangeable; ← new for old; → old for new

REF.No	Part No.	Description	Q'ty	S.No.	I/C	REMARKS	Weight (kgf)	Weight (lb)
010	TA240-54402	FORK RANGE SHIFT	1				0.285	0.627
020	TA240-54410	ROD SHIFF	1				0.168	0.3696
030	62231-18530	SPRING	1				0.01	0.022
040	07715-01605	BALL	1				0.003	0.0066
050	TA040-24420	ARM RANGE SHIFT	1				0.215	0.473
060	04811-00200	O RING	1				0.001	0.0022
060	04816-00200	O RING	1		←		0.003	0.0066
070	34070-24350	STOPPER	1				0.02	0.044
080	01754-50812	BOLT FLANGE	1				0.01	0.022
090	TA240-54502	FORK SHIFT L	1				0.33	0.726
100	TA040-24510	ROD FORK	1				0.19	0.418
110	05411-00522	PIN SPRING	1				0.002	0.0044
120	62231-18530	SPRING	1				0.01	0.022
130	07715-01605	BALL	1				0.003	0.0066
140	34070-24420	ARM SHIFT	1				0.22	0.484
150	04811-00200	O RING	1				0.001	0.0022
150	04816-00200	O RING	1		←		0.003	0.0066
160	34070-24350	STOPPER	1				0.02	0.044
170	01754-50812	BOLT FLANGE	1				0.01	0.022

silverhorn.co.uk

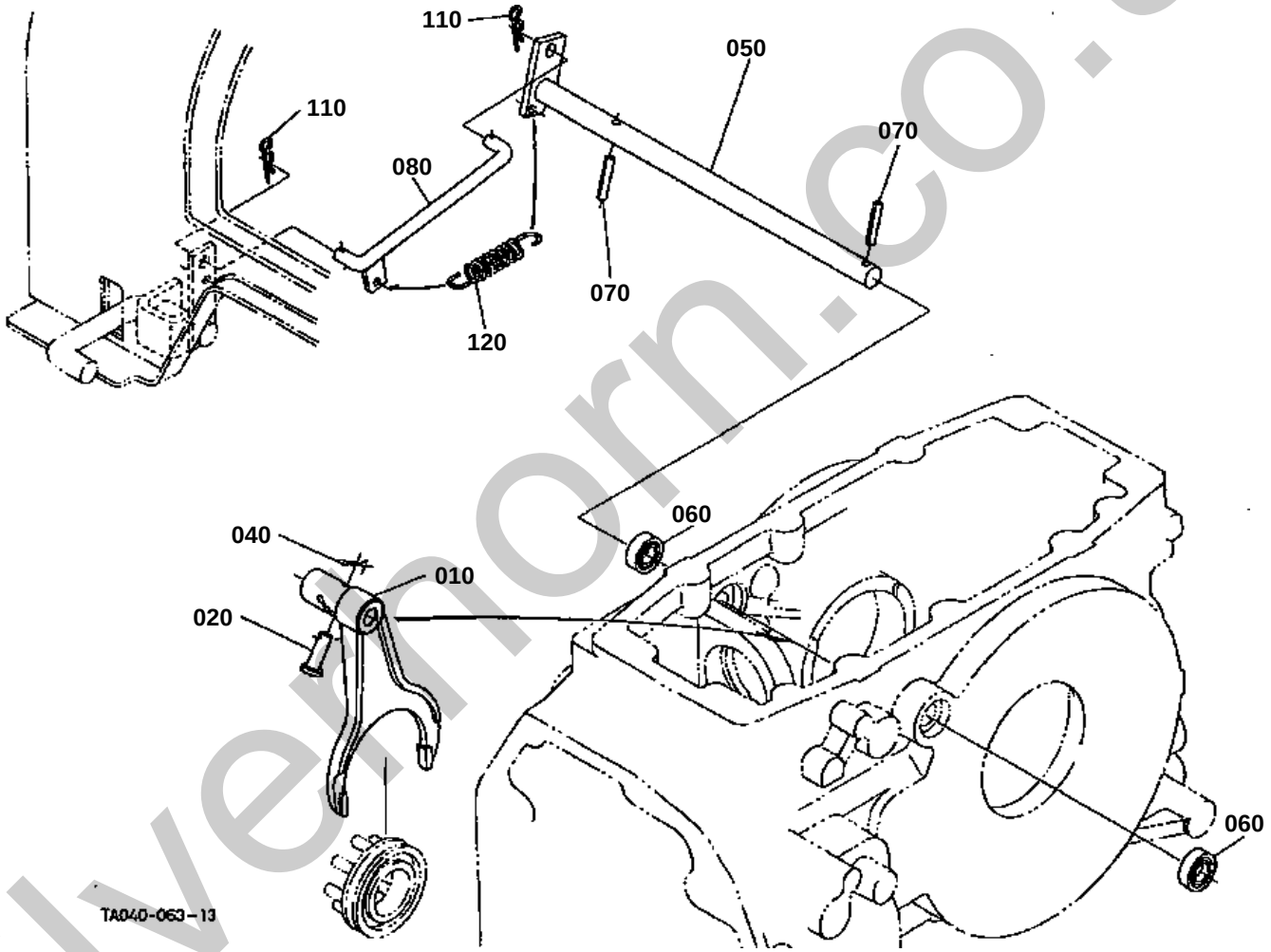

silvermorn.co.uk

030 04013-50060

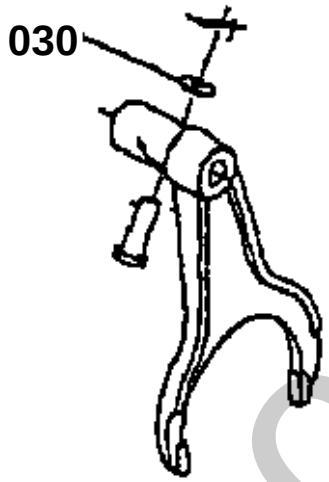

090 04012-50080
100 05511-50218
110 05515-60800

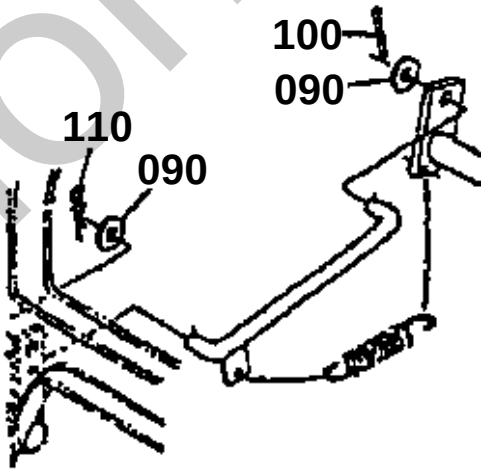

TA120-822-11

silverhorn.co.uk

DIFFERENTIAL LOCK SHIFT FORK [EXCEPT HST TYPE]
[ROPS TYPE] [EXCEPTE TYPE HST] [EXCEPTE TYPE CABINE]

↔ Interchangeable; ≠ not interchangeable; ← new for old; → old for new

REF.No	Part No.	Description	Q'ty	S.No.	I/C	REMARKS	Weight (kgf)	Weight (lb)
010	31351-26630	FORK DIFF.LOCK SHIFT	1	<=74528		NOT SALE	0.465	1.023
010	31351-26632	FORK DIFF.LOCK SHIFT	1	>=74529	←		0.465	1.023
020	31351-26620	PIN JOINT	1				0.008	0.0176
030	04013-60060	WASHER PLAIN	1	<=73292			0.001	0.0022
040	3A011-32870	PIN SNAP	1	<=73292			0.001	0.0022
040	50080-34110	PIN SNAP	1	>=73293	←		0.001	0.0022
050	34070-28402	SHAFT FORK	1				0.545	1.199
060	09500-16287	SEAL OIL	2				0.01	0.022
070	05411-00635	PIN SPRING	2				0.005	0.011
080	T0070-28414	ROD DIFF.LOCK	1				0.08	0.176
090	04012-50080	WASHER PLAIN	2	<=73034			0.001	0.0022
100	05511-50218	PIN SPLIT	1	<=73034			0.001	0.0022
110	05515-60800	PIN SNAP	1	<=73034			0.002	0.0044
110	05515-60800	PIN SNAP	2	>=73035			0.002	0.0044
120	37150-15840	SPRING	1				0.06	0.132

silverhorn.co.uk

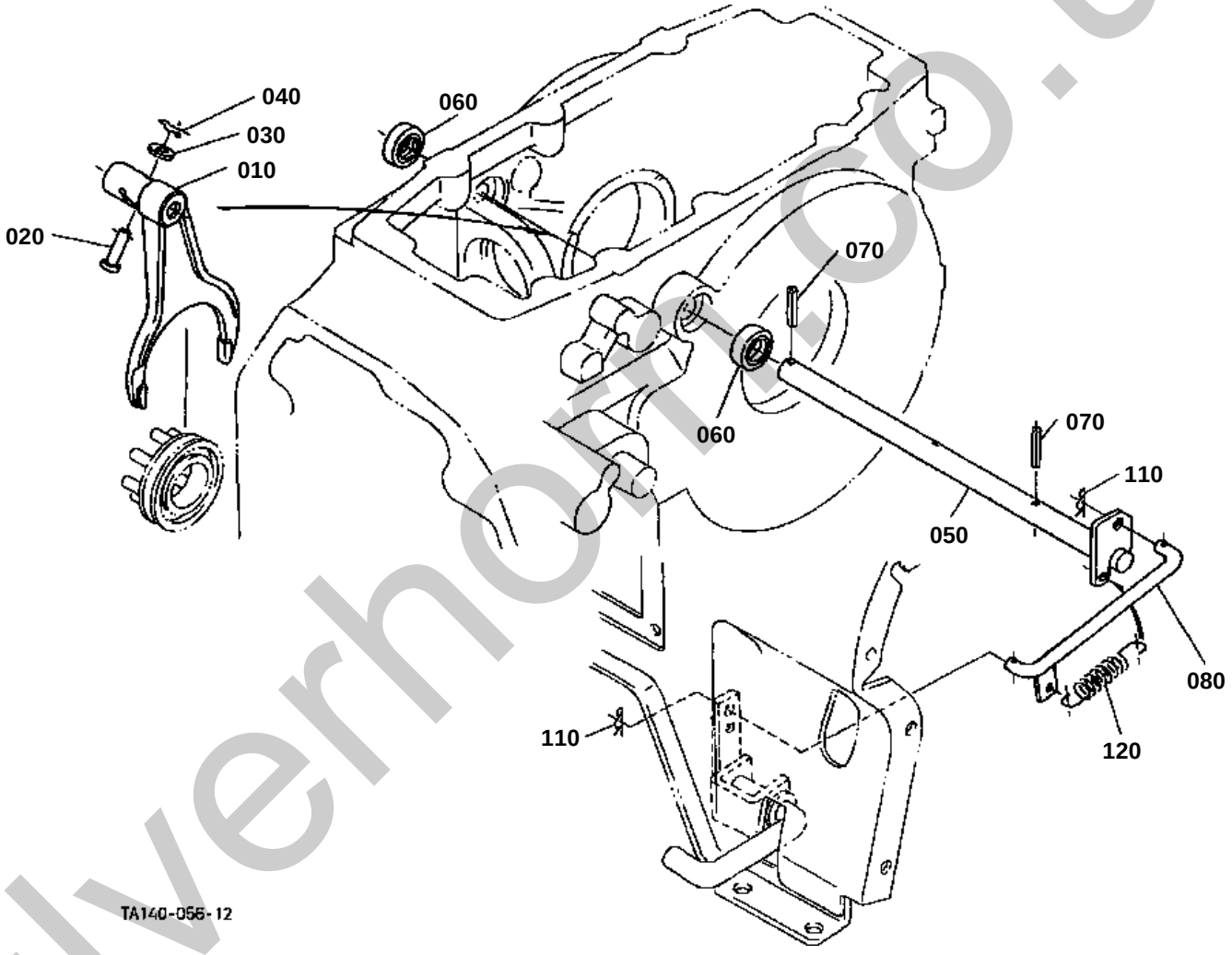

silverhorn.co.uk

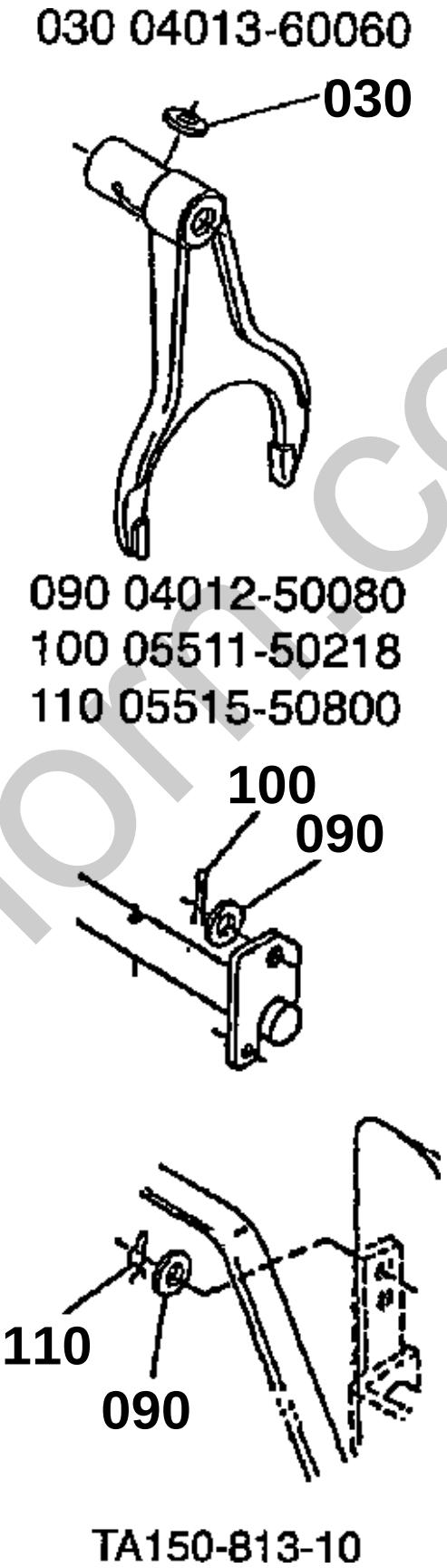

silverhorn.co.uk

DIFFERENTIAL LOCK SHIFT FORK [HST TYPE]
[ROPS TYPE] [EXCEPTE TYPE CABINE]

↔ Interchangeable; ≠ not interchangeable; ← new for old; → old for new

REF.No	Part No.	Description	Q'ty	S.No.	I/C	REMARKS	Weight (kgf)	Weight (lb)
010	31351-26630	FORK DIFF.LOCK SHIFT	1	<=74528		NOT SALE	0.465	1.023
010	31351-26632	FORK DIFF.LOCK SHIFT	1	>=74529	←		0.465	1.023
020	31351-26620	PIN JOINT	1				0.008	0.0176
030	04013-60060	WASHER PLAIN	1	<=73292			0.001	0.0022
040	3A011-32870	PIN SNAP	1	<=73292			0.001	0.0022
040	50080-34110	PIN SNAP	1	>=73293	←		0.001	0.0022
050	TA240-28400	SHAFT FORK	1				0.555	1.221
060	09500-16287	SEAL OIL	2				0.01	0.022
070	05411-00635	PIN SPRING	2				0.005	0.011
080	T0070-28414	ROD DIFF.LOCK	1				0.08	0.176
090	04012-50080	WASHER PLAIN	2	<=73034			0.001	0.0022
100	05511-50218	PIN SPLIT	1	<=73034			0.001	0.0022
110	05515-60800	PIN SNAP	1	<=73034			0.002	0.0044
110	05515-60800	PIN SNAP	2	>=73035			0.002	0.0044
120	37150-15840	SPRING	1				0.06	0.132

silverhorn.co.uk

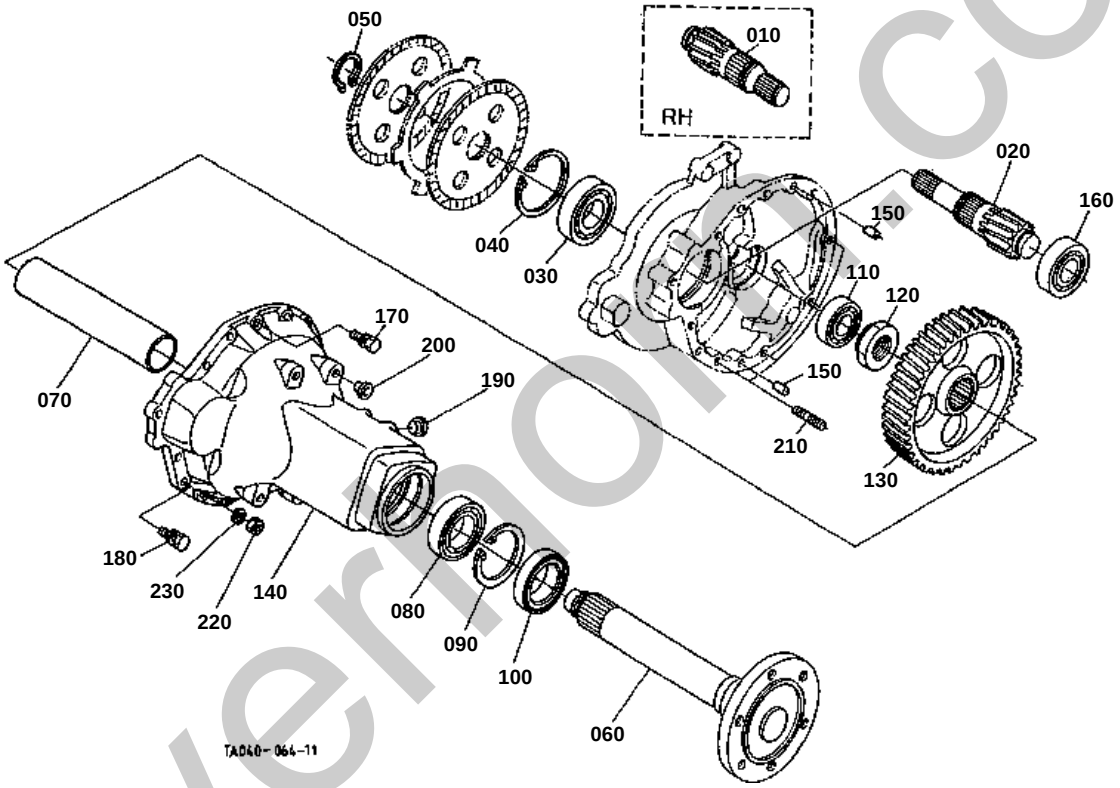

silvermoor.co.uk

↔ Interchangeable; ≠ not interchangeable; ← new for old; → old for new

REF.No	Part No.	Description	Q'ty	S.No.	I/C	REMARKS	Weight (kgf)	Weight (lb)
010	TA040-26710	SHAFT DIFF.GEAR RH	1			11T	2	4.4
020	TA040-26720	SHAFT DIFF.GEAR LH	1			11T	2.2	4.84
030	08101-06309	BEARING BALL	2				0.82	1.804
040	04611-01000	CIR CLIP INTERNAL	2				0.042	0.0924
050	04612-00450	CIR CLIP EXTERNAL	2				0.007	0.0154
060	32430-27115	AXLE REAR	2				11	24.2
070	32430-27144	SPACER	2				1.7	3.74
080	08101-06210	BEARING BALL	2				0.45	0.99
090	04611-00900	CIR CLIP INTERNAL	2				0.031	0.0682
100	31359-44510	SEAL OIL	2				0.18	0.396
110	TA140-25000	BEARING BALL	2				0.342	0.7524
120	70631-15730	NUT	2				0.15	0.33
130	32440-26830	GEAR	2			60T	6.6	14.52
140	32440-27333	CASE REAR AXLE	2	<=51803			0	0
140	32440-27334	CASE REAR AXLE	2	>=51804	←		19	41.8
150	37150-27370	PIN STRAIGHT	4				0.009	0.0198
160	08100-00026	BEARING BALL	2				0.495	1.089
170	01133-51035	BOLT	10				0.03	0.066
180	01133-51240	BOLT	2				0.05	0.11
190	31220-14290	PLUG	12				0.002	0.0044
200	32210-27580	PLUG	8				0.001	0.0022
210	34070-20313	STUD	8				0.045	0.099
220	37300-14190	NUT	8				0.009	0.0198
230	04512-60100	WASHER SPRING	8				0.002	0.0044

silverhorn.co.uk

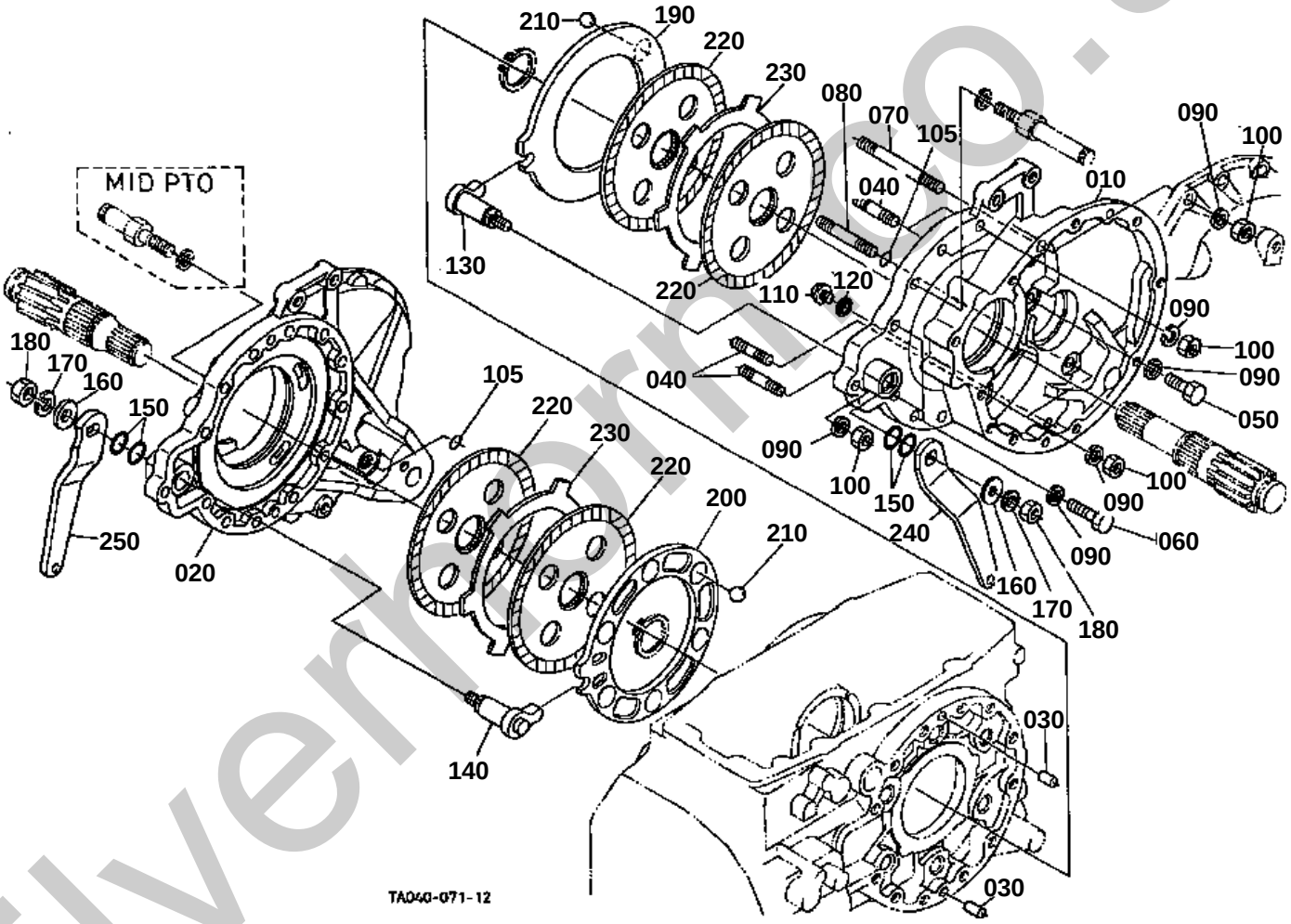

silverthorne.co.uk

↔ Interchangeable; ≠ not interchangeable; ← new for old; → old for new

REF.No	Part No.	Description	Q'ty	S.No.	I/C	REMARKS	Weight (kgf)	Weight (lb)
010	TA040-28616	CASE BRAKE LH	1	<=61237		NOT SALE	0	0
010	TA040-28617	CASE BRAKE LH	1	>=61238	←	NOT SALE	14.6	32.12
010	TA040-28618	CASE BRAKE LH	1	>=75733	←		14.6	32.12
020	TA040-28626	CASE BRAKE RH	1	<=61237		NOT SALE	0	0
020	TA040-28627	CASE BRAKE RH	1	>=61238	←	NOT SALE	14.6	32.12
020	TA040-28628	CASE BRAKE RH	1	>=75733	←		14.6	32.12
030	05012-01018	PIN STRAIGHT	4				0.012	0.0264
040	01574-61240	STUD	14				0.045	0.099
050	01173-51235	BOLT	2	<=73769			0.04	0.088
050	01133-51235	BOLT	2	>=73770	←		0.05	0.11
060	01173-51245	BOLT	6	<=73769			0.049	0.1078
060	01133-51245	BOLT	6	>=73770	←		0.055	0.121
070	01574-51200	STUD	2				0.1	0.22
080	01574-61260	STUD	2				0.05	0.11
090	04512-60120	WASHER SPRING	26	<=74240			0.005	0.011
090	04512-60120	WASHER SPRING	18	>=74241			0.005	0.011
100	02176-50120	NUT	18				0.01	0.022
105	04811-10120	O RING	2	>=61238			0.001	0.0022
110	06331-45010	PLUG	2				0.02	0.044
120	04717-01000	WASHER WITH RUBBER	2				0.001	0.0022
130	34070-28715	CAM BRAKE LH	1				0.285	0.627
140	34070-28725	CAM BRAKE RH	1				0.285	0.627
150	04811-00220	O RING	4				0.001	0.0022
150	04817-00220	O RING	4		←		0.005	0.011
160	04015-60120	WASHER PLAIN	2				0.022	0.0484
170	04512-60120	WASHER SPRING	2				0.005	0.011
180	02174-50120	NUT	2				0.01	0.022
190	34070-28770	PLATE BRAKE CAM LH	1				1.11	2.442
200	34070-28780	PLATE BRAKE CAM RH	1				1.09	2.398
210	07715-00805	BALL	12				0.016	0.0352
220	37150-28200	DISK BRAKE	4				0	0
220	T1060-28200	DISK BRAKE MAIN	4		↔		0.75	1.65
230	37720-28170	PLATE	2				0.422	0.9284
240	34070-44615	LEVER BRAKE CAM LH	1				0.41	0.902
250	34070-44623	LEVER BRAKE CAM RH	1				0.41	0.902

silverhorn.co.uk

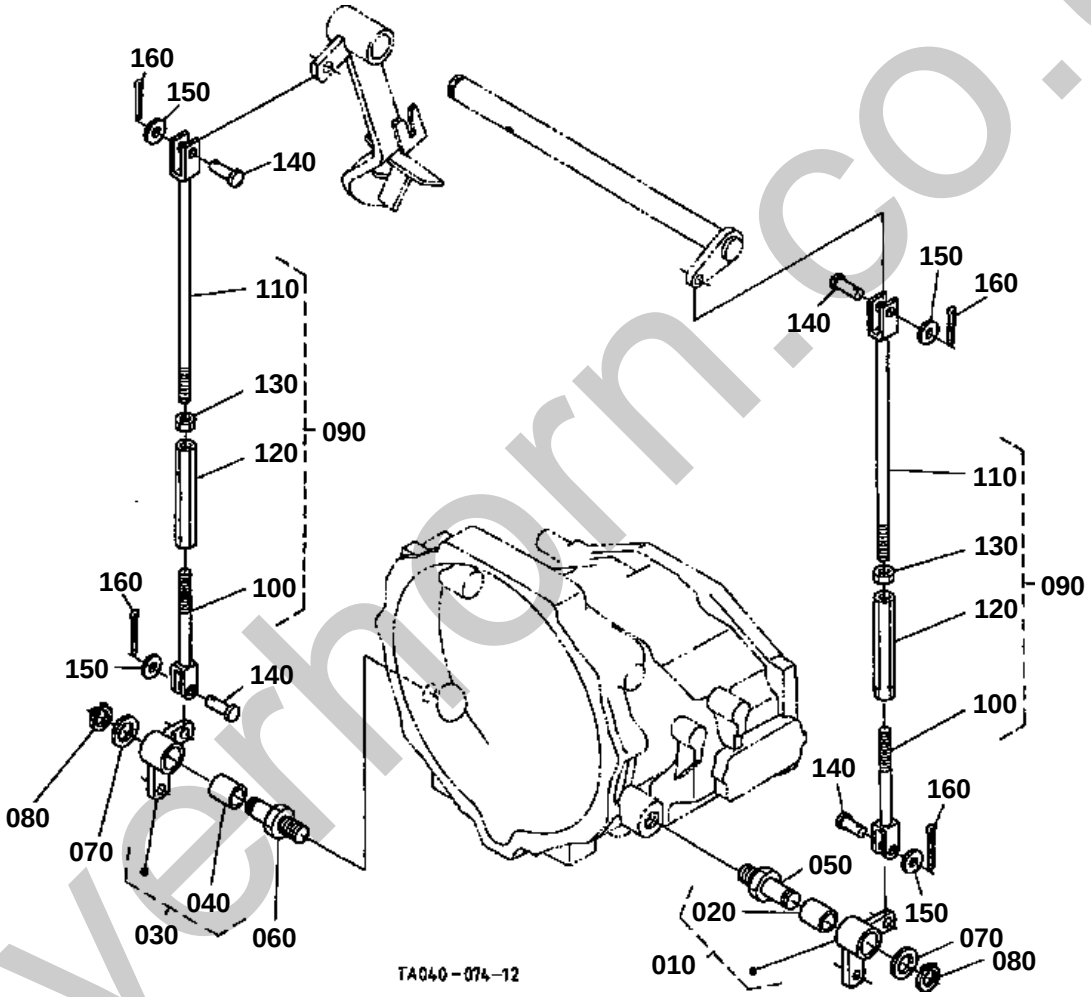

silverhorn.co.uk

BRAKE ROD 1 [EXCEPT HST TYPE] [ROPS TYPE]
[EXCEPTE TYPE CABINE]

↔ Interchangeable; ≠ not interchangeable; ← new for old; → old for new

REF.No	Part No.	Description	Q'ty	S.No.	I/C	REMARKS	Weight (kgf)	Weight (lb)
010	34070-44810	ASSY LEVER BRAKE LH	1				0	0
020	34070-44890	BUSH	1				0.035	0.077
030	34070-44910	ASSY LEVER BRAKE RH	1				0	0
040	34070-44890	BUSH	1				0.035	0.077
050	34070-44870	SHAFT BRAKE LH	1				0.225	0.495
060	34070-44880	SHAFT BRAKE RH	1				0.22	0.484
070	04011-50200	WASHER PLAIN	2				0.015	0.033
080	04612-00200	CIR CLIP EXTERNAL	2				0.001	0.0022
090	34070-44800	ASSY ROD BRAKE	2				0.425	0.935
100	34070-44840	ROD BRAKE LOWER	2				0.13	0.286
110	34070-44460	ROD CLUTCH BRAKE	2				0.225	0.495
120	32350-28980	TURNBUCKLE	2				0.124	0.2728
130	02116-50100	NUT	2				0.004	0.0088
140	05122-61028	PIN JOINT	4				0.02	0.044
150	04013-60100	WASHER PLAIN	4				0.004	0.0088
160	05511-50318	PIN SPLIT	4				0.001	0.0022

silverhorn.co.uk

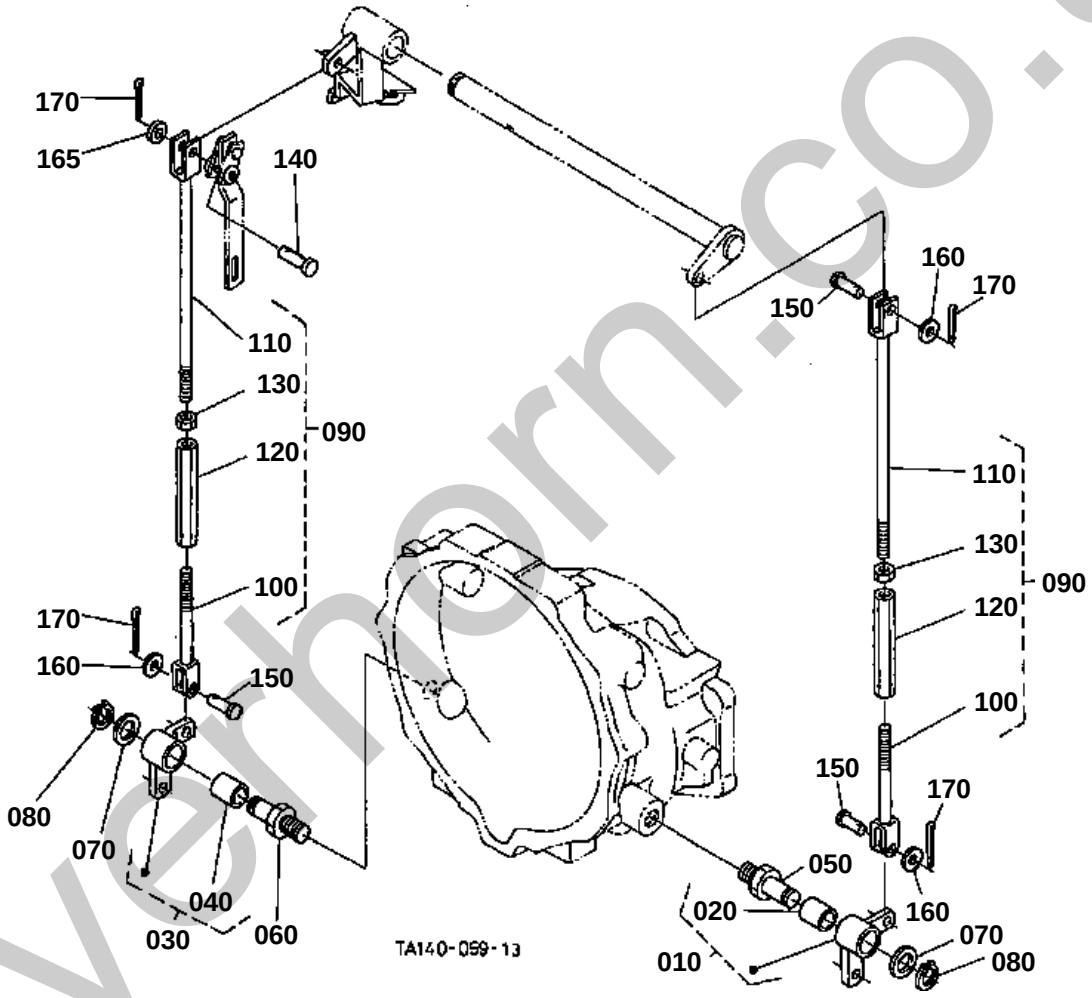

silverhorn.co.uk

160 04013-50100

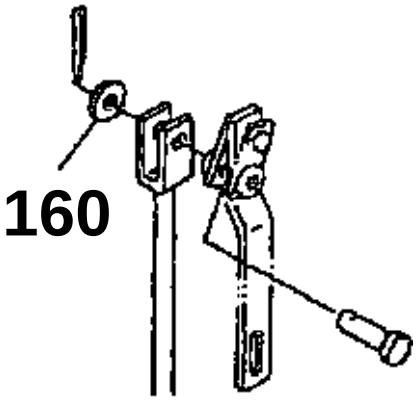

TA140-803-11

silverhorn.co.uk

BRAKE ROD 1 [HST TYPE] [ROPS TYPE]
[EXCEPTE TYPE CABINE]

↔ Interchangeable; ≠ not interchangeable; ← new for old; → old for new

REF.No	Part No.	Description	Q'ty	S.No.	I/C	REMARKS	Weight (kgf)	Weight (lb)
010	34070-44810	ASSY LEVER BRAKE LH	1				0	0
020	34070-44890	BUSH	1				0.035	0.077
030	34070-44910	ASSY LEVER BRAKE RH	1				0	0
040	34070-44890	BUSH	1				0.035	0.077
050	34070-44870	SHAFT BRAKE LH	1				0.225	0.495
060	34070-44880	SHAFT BRAKE RH	1				0.22	0.484
070	04011-50200	WASHER PLAIN	2				0.015	0.033
080	04612-00200	CIR CLIP EXTERNAL	2				0.001	0.0022
090	34070-44800	ASSY ROD BRAKE	2				0.425	0.935
100	34070-44840	ROD BRAKE LOWER	2				0.13	0.286
110	34070-44460	ROD CLUTCH BRAKE	2				0.225	0.495
120	32350-28980	TURNBUCKLE	2				0.124	0.2728
130	02116-50100	NUT	2				0.004	0.0088
140	05122-51035	PIN JOINT	1				0.023	0.0506
150	05122-61028	PIN JOINT	3				0.02	0.044
160	04013-60100	WASHER PLAIN	4	<=50910			0.004	0.0088
160	04013-60100	WASHER PLAIN	3	>=50911			0.004	0.0088
165	TA240-56470	COLLAR BRAKE ROD	1	>=50911			0.013	0.0286
170	05511-50318	PIN SPLIT	4				0.001	0.0022

silverhorn.co.uk

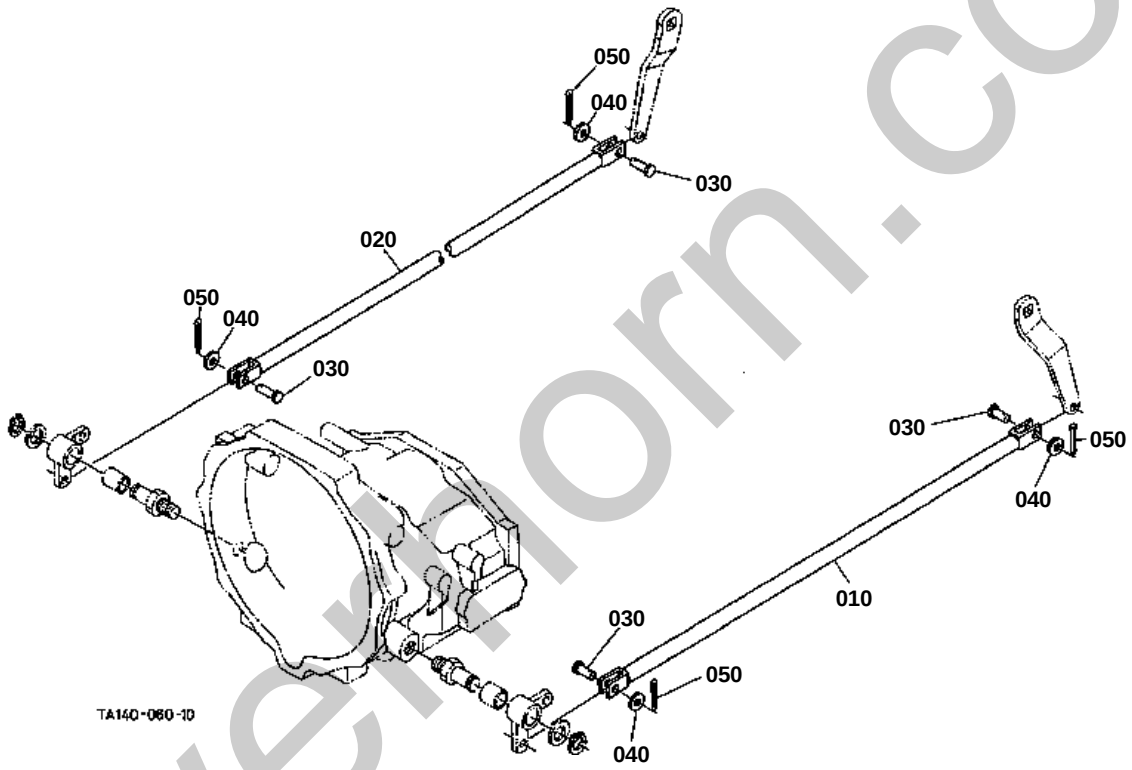

silverthorn.co.uk

BRAKE ROD 2 [MANUAL T/M TYPE]

↔ Interchangeable; ≠ not interchangeable; ← new for old; → old for new

REF.No	Part No.	Description	Q'ty	S.No.	I/C	REMARKS	Weight (kgf)	Weight (lb)
010	34030-44630	ROD BRAKE LH	1				1.125	2.475
020	34030-44640	ROD BRAKE RH	1				0.99	2.178
030	05122-61028	PIN JOINT	4				0.02	0.044
040	04013-60100	WASHER PLAIN	4				0.004	0.0088
050	05511-50318	PIN SPLIT	4				0.001	0.0022

silverhorn.co.uk

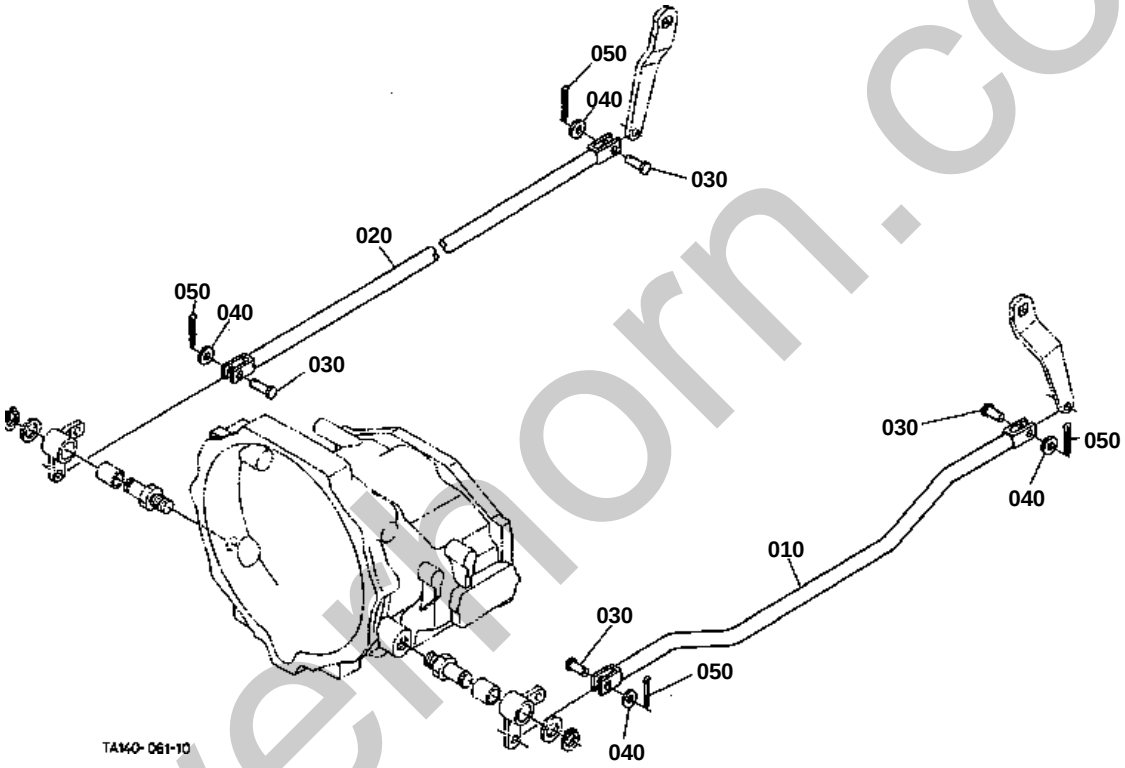

silverthorn.co.uk

BRAKE ROD 2 [GST TYPE]

↔ Interchangeable; ≠ not interchangeable; ← new for old; → old for new

REF.No	Part No.	Description	Q'ty	S.No.	I/C	REMARKS	Weight (kgf)	Weight (lb)
010	TA040-44630	ROD BRAKE LH	1				1	2.2
020	34030-44640	ROD BRAKE RH	1				0.99	2.178
030	05122-61028	PIN JOINT	4				0.02	0.044
040	04013-60100	WASHER PLAIN	4				0.004	0.0088
050	05511-50318	PIN SPLIT	4				0.001	0.0022

silverhorn.co.uk

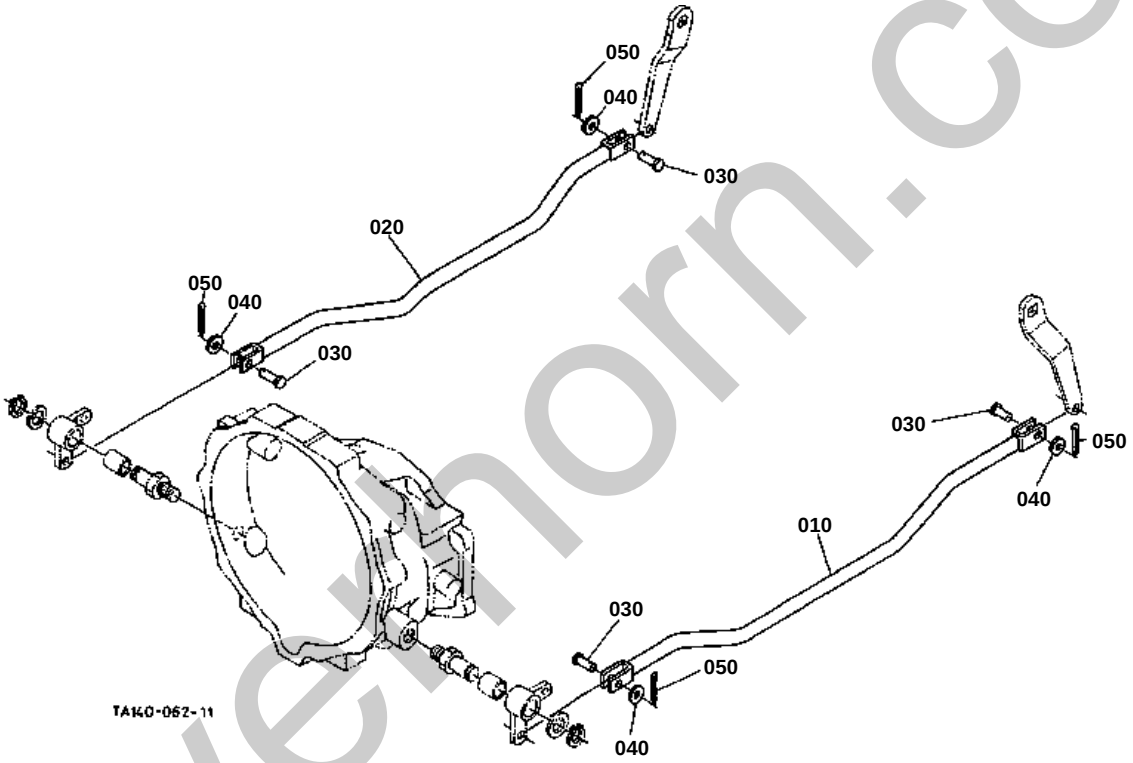

silverthorn.co.uk

BRAKE ROD 2 [HST TYPE]

↔ Interchangeable; ≠ not interchangeable; ← new for old; → old for new

REF.No	Part No.	Description	Q'ty	S.No.	I/C	REMARKS	Weight (kgf)	Weight (lb)
010	TA040-44630	ROD BRAKE LH	1				1	2.2
020	TA240-44640	ROD BRAKE RH	1				0.98	2.156
030	05122-61028	PIN JOINT	4				0.02	0.044
040	04013-60100	WASHER PLAIN	4				0.004	0.0088
050	05511-50318	PIN SPLIT	4				0.001	0.0022

silverhorn.co.uk

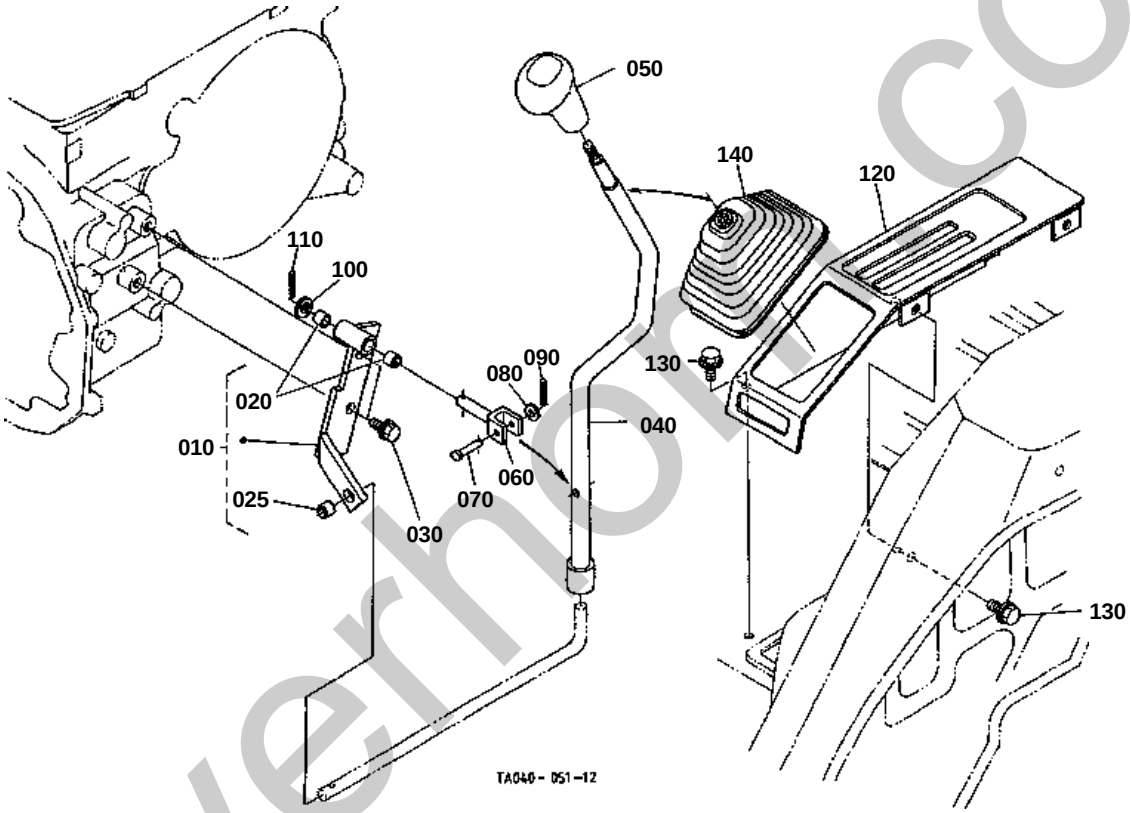

silverhorse.co.uk

MAIN GEAR SHIFT LEVER [MANUAL T/M TYPE]
[TYPE T/M MANUELLE]

↔ Interchangeable; ≠ not interchangeable; ← new for old; → old for new

REF.No	Part No.	Description	Q'ty	S.No.	I/C	REMARKS	Weight (kgf)	Weight (lb)
010	T0070-24254	ASSY BRACKET	1				0.1	0.22
020	08511-01210	BUSH	2				0.005	0.011
025	08511-01310	BUSH	1				0.004	0.0088
030	01774-61020	BOLT FLANGE	2				0.022	0.0484
040	TA040-24213	LEVER MAIN SHIFT	1				1.21	2.662
050	TA040-49820	GRIP LEVER	1				0.116	0.2552
060	T0070-24230	U JOINT	1				0.107	0.2354
070	05122-50635	PIN JOINT	1				0.01	0.022
080	04012-50060	WASHER PLAIN	1				0.001	0.0022
090	05511-51612	PIN SPLIT	1				0.001	0.0022
100	04011-50120	WASHER PLAIN	1				0.005	0.011
110	05511-50420	PIN SPLIT	1				0.002	0.0044
120	34070-47100	GUIDE SHIFT	1	<=51803			0	0
120	34070-47102	GUIDE SHIFT	1	>=51804	←		0.97	2.134
130	01754-50812	BOLT FLANGE	4				0.01	0.022
140	T0070-47150	BOOT	1				0.175	0.385

silverhorn.co.uk

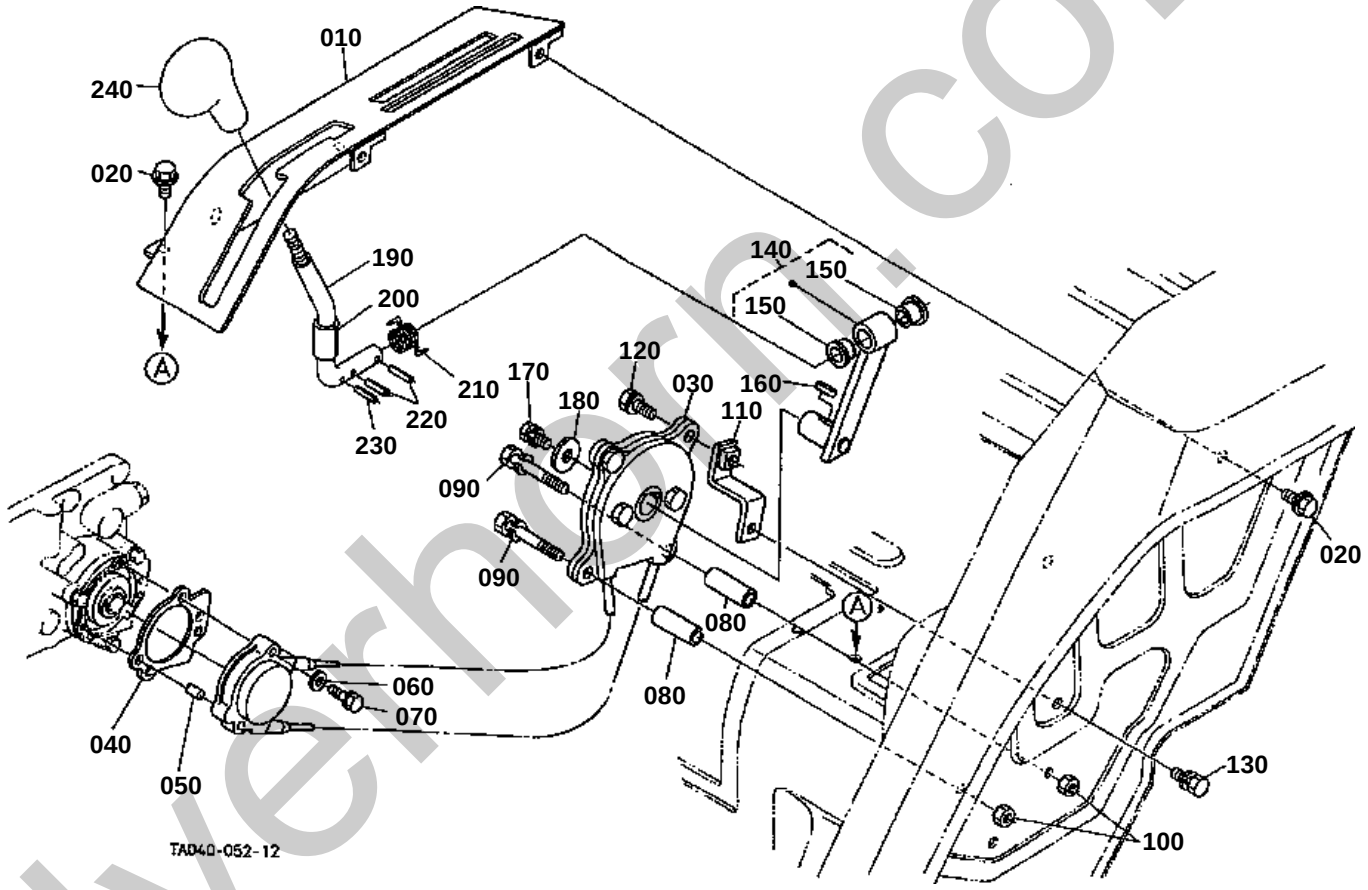

silverhorn.co.uk

↔ Interchangeable; ≠ not interchangeable; ← new for old; → old for new

REF.No	Part No.	Description	Q'ty	S.No.	I/C	REMARKS	Weight (kgf)	Weight (lb)
010	TA040-47102	GUIDE	1				0.89	1.958
020	01754-50812	BOLT FLANGE	4				0.01	0.022
030	34076-64803	ASSY CABLE SHIFT	1				1.61	3.542
040	32425-72690	GASKET	1				0.002	0.0044
050	05012-00608	PIN STRAIGHT	2				0.002	0.0044
060	04013-60060	WASHER PLAIN	3				0.001	0.0022
070	01023-50628	BOLT	3				0.015	0.033
080	34076-64560	COLLAR	2				0.03	0.066
090	01123-50890	BOLT	2				0.04	0.088
100	02114-50080	NUT	2				0.005	0.011
110	34076-64570	STAY	1				0.07	0.154
120	01123-50835	BOLT	1				0.02	0.044
130	01123-50816	BOLT	1				0.011	0.0242
140	34076-64550	ASSY LEVER SHIFT	1				0.28	0.616
150	34076-64540	BUSH	2				0.005	0.011
160	05712-00520	KEY FEATHER	1				0.004	0.0088
170	01123-50816	BOLT	1				0.011	0.0242
180	04015-60080	WASHER PLAIN	1				0.01	0.022
190	TA040-64512	LEVER SHIFT	1				0.225	0.495
200	31391-24510	PIPE LEVER	1				0.005	0.011
210	34076-64530	SPRING	1				0.01	0.022
220	05411-00525	PIN SPRING	2				0.002	0.0044
230	05411-00320	PIN SPRING	1				0.001	0.0022
240	TA040-69820	GRIP LEVER	1				0.117	0.2574

silverhorn.co.uk

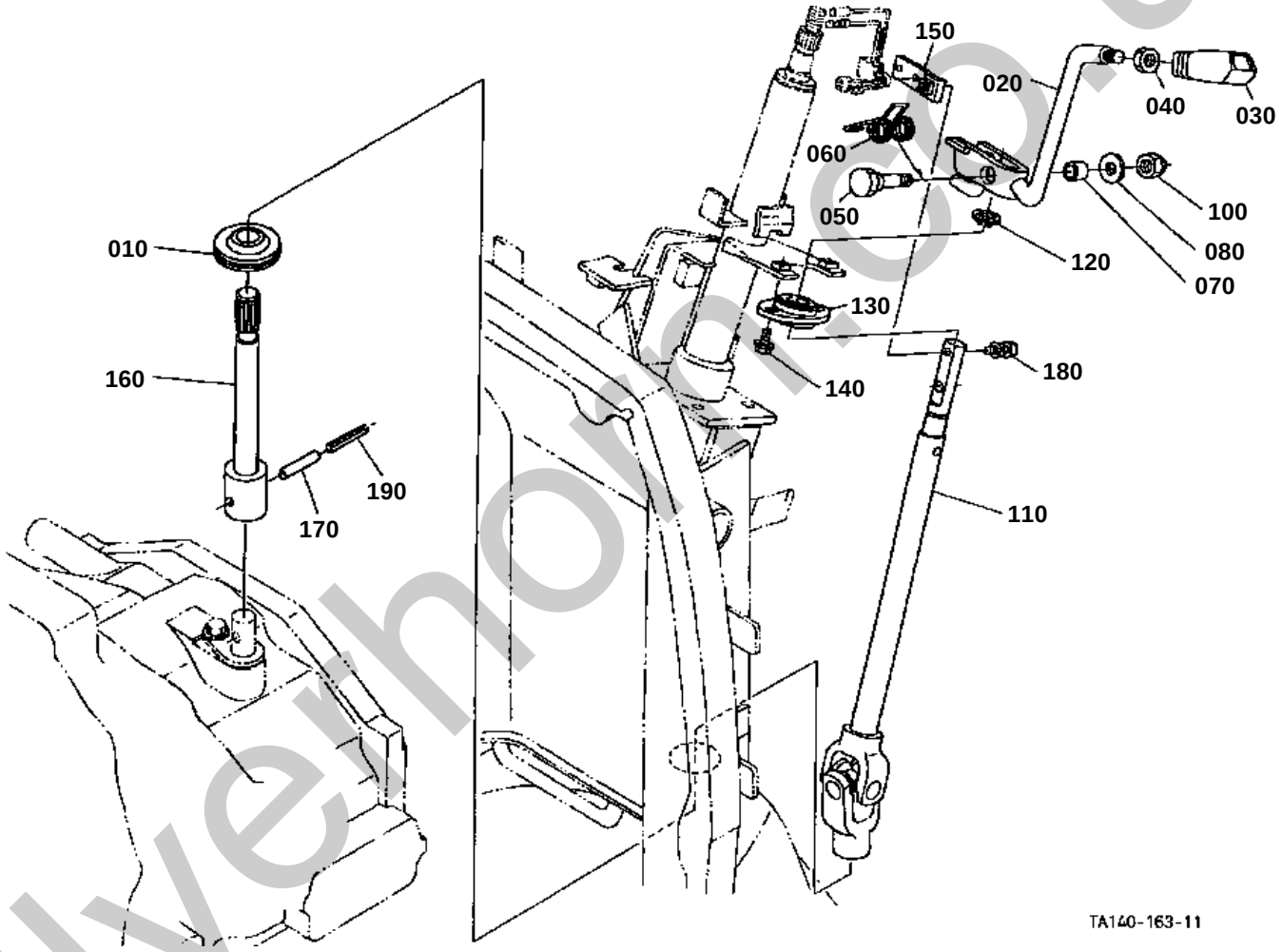

silverhorncp.uk

090 04512-50080
100 02114-50080

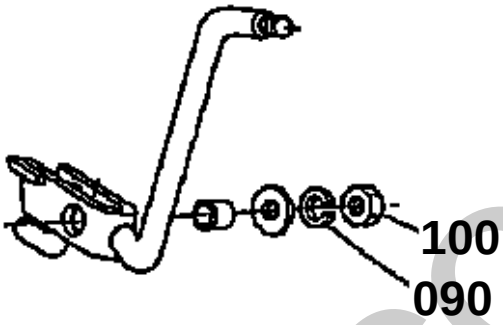

TA150-814-10

silverhorn.co.uk

SHUTTLE SHIFT LEVER [EXCEPT HST TYPE] [ROPS TYPE]
[EXCEPTE TYPE CABINE]

↔ Interchangeable; ≠ not interchangeable; ← new for old; → old for new

REF.No	Part No.	Description	Q'ty	S.No.	I/C	REMARKS	Weight (kgf)	Weight (lb)
010	34070-43320	GROMMET	1				0.01	0.022
020	TA040-43513	LEVER SHUTTLE	1	<=71666			0	0
020	TA040-43515	LEVER SHUTTLE	1	>=71667	←		0.34	0.748
030	TA040-17472	GRIP LEVER	1				0.027	0.0594
040	02116-50100	NUT	1				0.004	0.0088
050	TA040-43970	BOLT REAMER	1				0.042	0.0924
060	T0180-43942	SPRING	1				0.012	0.0264
070	TA040-43920	COLLAR SHUTTLE	1				0.005	0.011
080	04013-60080	WASHER PLAIN	1				0.002	0.0044
090	04512-60080	WASHER SPRING	1	<=73589			0.002	0.0044
100	02114-50080	NUT	1	<=73589			0.005	0.011
100	02552-50080	NUT LOCK	1	>=73590	←		0.005	0.011
110	TA040-43544	JOINT UNIVERSAL	1				0.915	2.013
120	04612-00150	CIR CLIP EXTERNAL	1				0.001	0.0022
130	TA040-43870	BEARING FLANGE	1				0.02	0.044
140	01754-50616	BOLT FLANGE	2				0.006	0.0132
150	TA040-43982	STAY SWITCH	1				0.02	0.044
160	TA040-43534	SHAFT SHUTTLE SHIFT	1				0.385	0.847
170	05411-00630	PIN SPRING	1				0.004	0.0088
180	01023-50620	BOLT	1				0.006	0.0132
190	T0270-15310	PIN SPRING	1				0.002	0.0044

silverhorn.co.uk

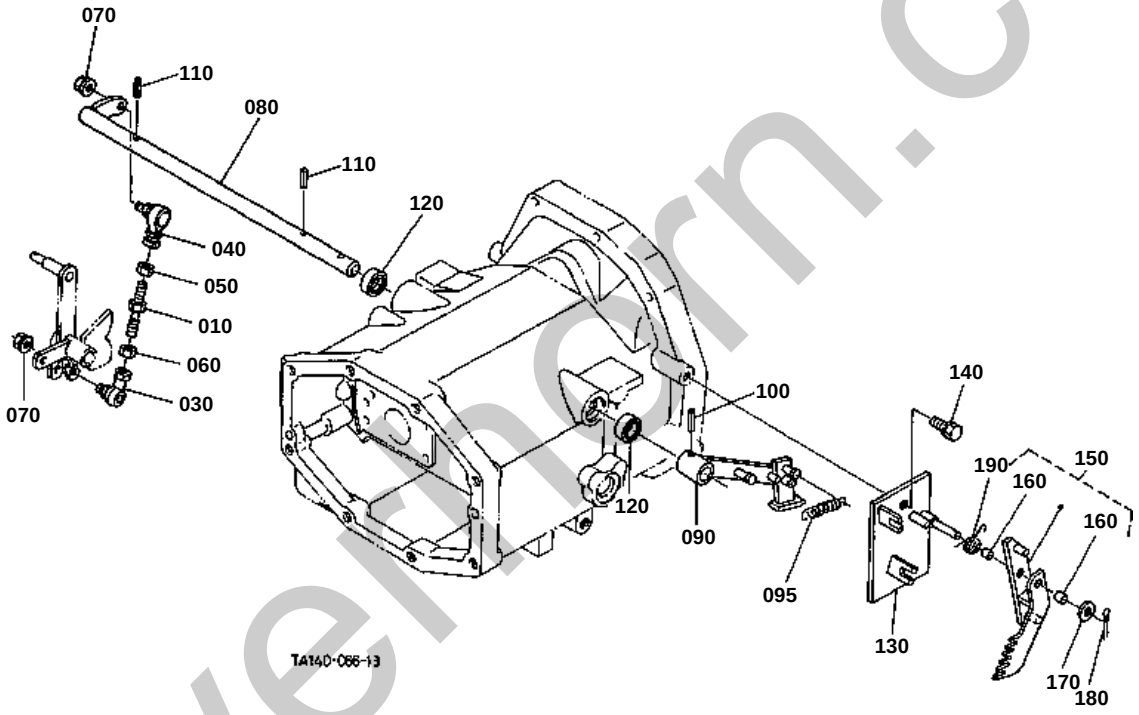

silverthorn.co.uk

CRUISE CONTROL LEVER [HST TYPE]

↔ Interchangeable; ≠ not interchangeable; ← new for old; → old for new

REF.No	Part No.	Description	Q'ty	S.No.	I/C	REMARKS	Weight (kgf)	Weight (lb)
010	TA240-21270	ROD	1				0.026	0.0572
020	99999-99999	BLANK	0				0	0
030	45404-95770	END ROD	1				0.05	0.11
040	54721-31850	BALL LINK	1				0.065	0.143
050	37300-41330	NUT	1				0.005	0.011
060	02114-50080	NUT	1				0.005	0.011
070	02751-50080	NUT FLANGE	2				0.006	0.0132
080	TA240-21253	SHAFT	1	<=50411			0	0
080	TA240-21254	SHAFT	1	>=50412	←		0.78	1.716
090	TA240-21260	LEVER HST LINK	1				0.23	0.506
095	67950-44170	LEVER SPRING	1				0.013	0.0286
100	05411-00625	PIN SPRING	1				0.004	0.0088
110	05411-00635	PIN SPRING	2				0.005	0.011
120	09500-16267	SEAL OIL	2				0.005	0.011
130	TA240-55273	BRACKET	1				0.695	1.529
140	01133-51020	BOLT	2				0.02	0.044
150	TA240-55280	ASSY LEVER	1				0.265	0.583
160	08511-00806	BUSH	2				0.001	0.0022
170	04013-60080	WASHER PLAIN	1				0.002	0.0044
180	05511-50215	PIN SPLIT	1				0.001	0.0022
190	TA240-55260	SPRING	1				0.005	0.011

silverhorn.co.uk

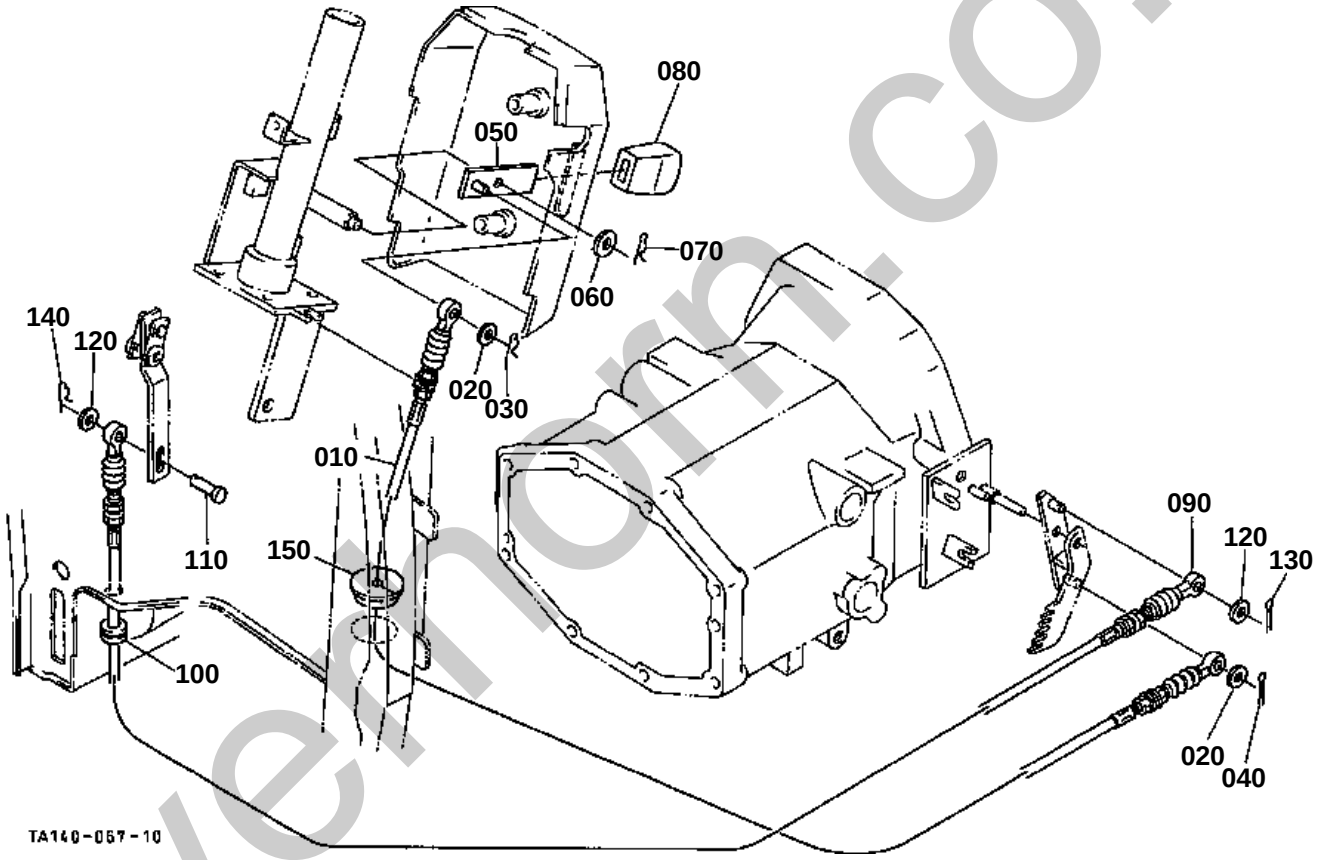

silvernorm.co.uk

CRUISE CONTROL CABLE [HST TYPE]

↔ Interchangeable; ≠ not interchangeable; ← new for old; → old for new

REF.No	Part No.	Description	Q'ty	S.No.	I/C	REMARKS	Weight (kgf)	Weight (lb)
010	TA240-55300	WIRE CONTROL	1				0.205	0.451
020	04012-50060	WASHER PLAIN	2				0.001	0.0022
030	05525-60600	PIN SNAP	1				0.001	0.0022
040	05511-51612	PIN SPLIT	1				0.001	0.0022
050	TA240-55310	LEVER	1				0.06	0.132
060	04015-60080	WASHER PLAIN	1				0.01	0.022
070	05525-50800	PIN SNAP	1				0.001	0.0022
080	6C040-41360	GRIP LEVER	1				0.012	0.0264
090	TA040-24652	WIRE PTO	1	<=50008			0.14	0.308
090	TA140-24650	WIRE PTO	1	>=50009	←		0.14	0.308
100	37410-51760	GROMMET	1				0.003	0.0066
110	05122-50614	PIN JOINT	1				0.004	0.0088
120	04012-50060	WASHER PLAIN	2				0.001	0.0022
130	05511-51612	PIN SPLIT	1				0.001	0.0022
140	05525-60600	PIN SNAP	1				0.001	0.0022
150	TA240-75630	GROMMET	1				0.02	0.044

silverhorn.co.uk

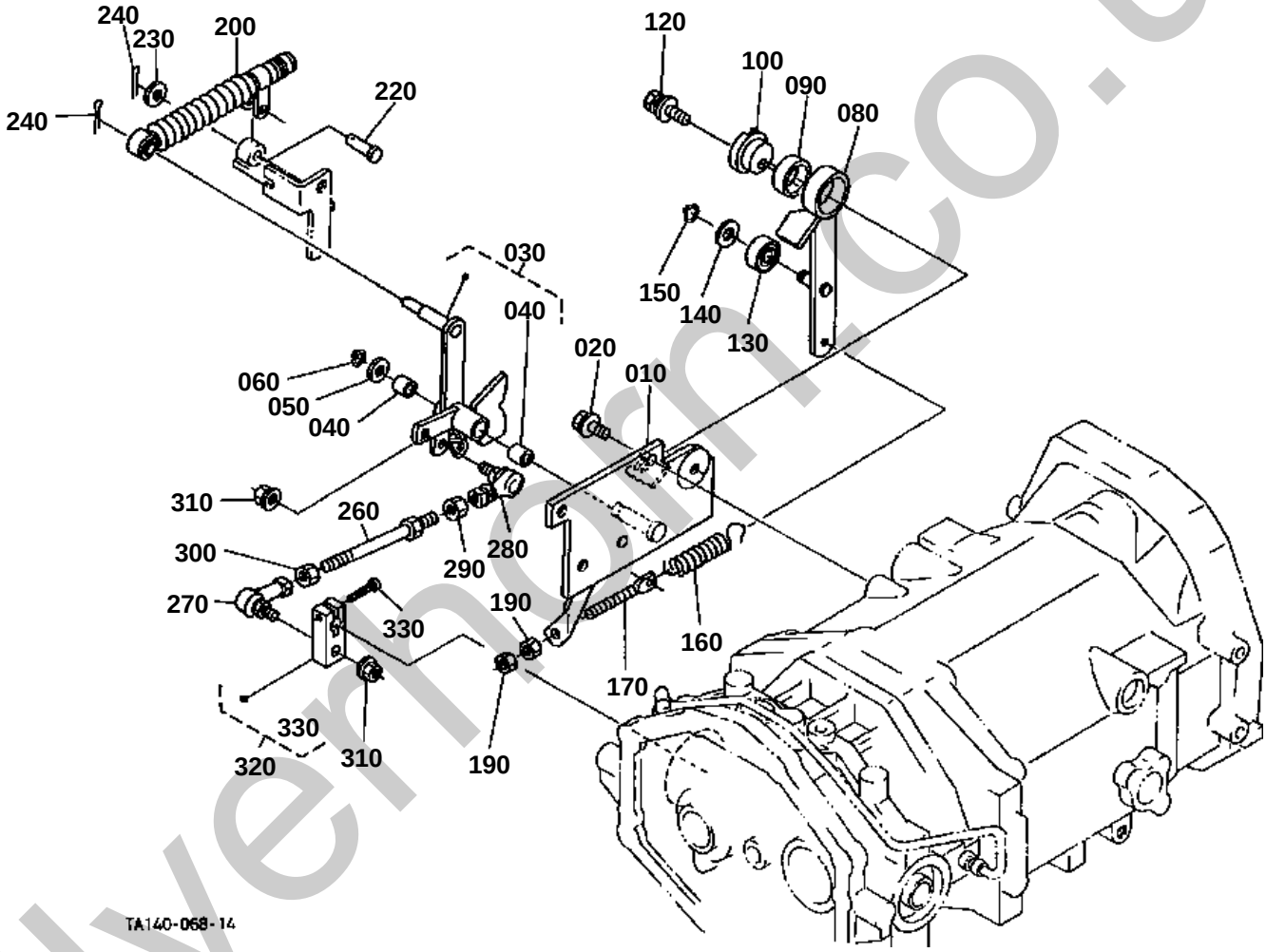

silvermarn.co.uk

010 TA240-5517-0
030 TA240-5550-0
210 TA240-5525-0

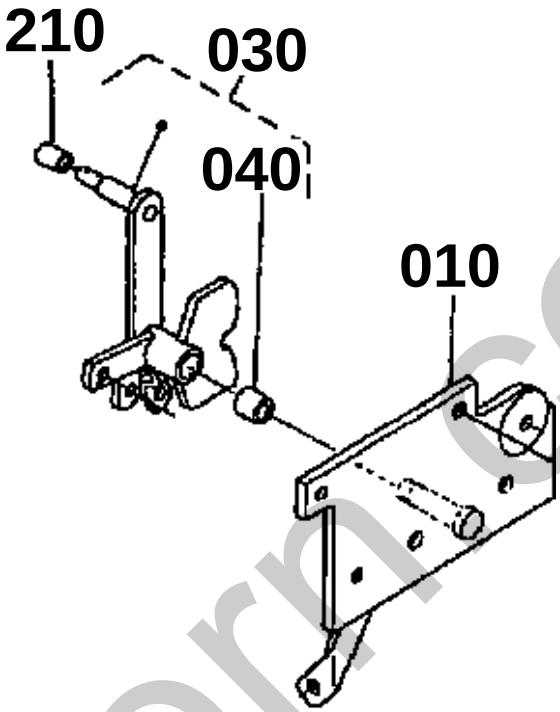

080 66204-4334-3
110 04012-50080

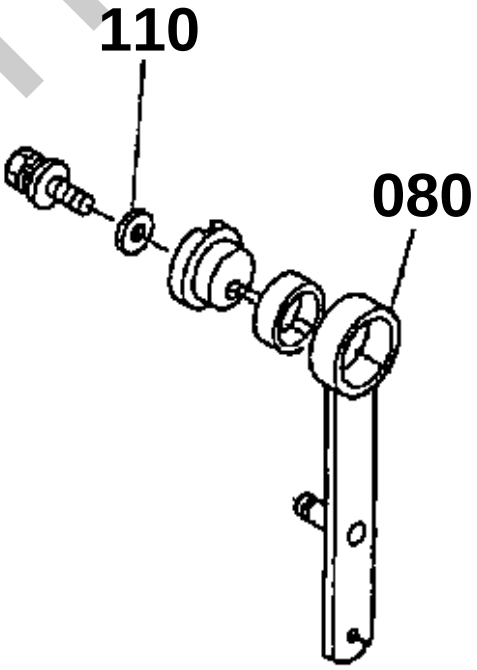

TA140-843-10

silverhorn.co.uk

NEUTRAL HOLDER LINK [HST TYPE]

↔ Interchangeable; ≠ not interchangeable; ← new for old; → old for new

REF.No	Part No.	Description	Q'ty	S.No.	I/C	REMARKS	Weight (kgf)	Weight (lb)
010	TA240-55170	BRACKET HST	1	<=61504			1.09	2.398
010	TA240-55173	BRACKET HST	1	>=70001	←		1.09	2.398
020	01774-61020	BOLT FLANGE	2				0.022	0.0484
030	TA240-55500	ASSY ARM	1	<=61504			0.445	0.979
030	TA240-55503	ASSY ARM	1	>=70001	←		0.445	0.979
030	TA240-55504	ASSY ARM	1		↔		0	0
040	08511-01215	BUSH	2				0.005	0.011
050	04013-60120	WASHER PLAIN	1				0.01	0.022
060	04612-00120	CIR CLIP EXTERNAL	1				0.001	0.0022
070	99999-99999	BLANK	0				0	0
080	66204-43343	ARM NEUTRAL HOLDER	1	<=61504			0.13	0.286
080	TA240-55190	ARM HOLDER	1	>=70001	≠		0.14	0.308
090	66204-43572	BUSH	1				0.003	0.0066
100	66204-43352	SHAFT HOLDER	1				0.072	0.1584
110	04012-50080	WASHER PLAIN	1	<=50003			0.001	0.0022
120	01125-50830	BOLT	1				0.01	0.022
130	08121-06000	BEARING BALL	1				0.02	0.044
140	04011-50100	WASHER PLAIN	1				0.002	0.0044
150	04612-00100	CIR CLIP EXTERNAL	1				0.001	0.0022
160	76611-43320	SPRING	1				0.067	0.1474
170	TA240-55180	BOLT ADJUSTING	1				0.02	0.044
180	99999-99999	BLANK	0				0	0
190	02114-50080	NUT	2				0.005	0.011
200	TA240-54720	DAMPER HST	1				0.28	0.616
210	TA240-55250	COLLAR DAMPER	1	<=50710			0.03	0.066
220	05122-50828	PIN JOINT	1				0.012	0.0264
230	04012-50080	WASHER PLAIN	1				0.001	0.0022
240	05511-50215	PIN SPLIT	2				0.001	0.0022
250	99999-99999	BLANK	0				0	0
260	TA240-55150	ROD	1				0.046	0.1012
270	45404-95770	END ROD	1				0.05	0.11
280	54721-31850	BALL LINK	1				0.065	0.143
290	37300-41330	NUT	1				0.005	0.011
300	02114-50080	NUT	1				0.005	0.011
310	02751-50080	NUT FLANGE	2				0.006	0.0132
320	TA250-59550	ASSY LEVER REGULATOR	1				0	0
330	01350-10520	BOLT HEX-SOC-HD	1				0.004	0.0088

silverhorn.co.uk

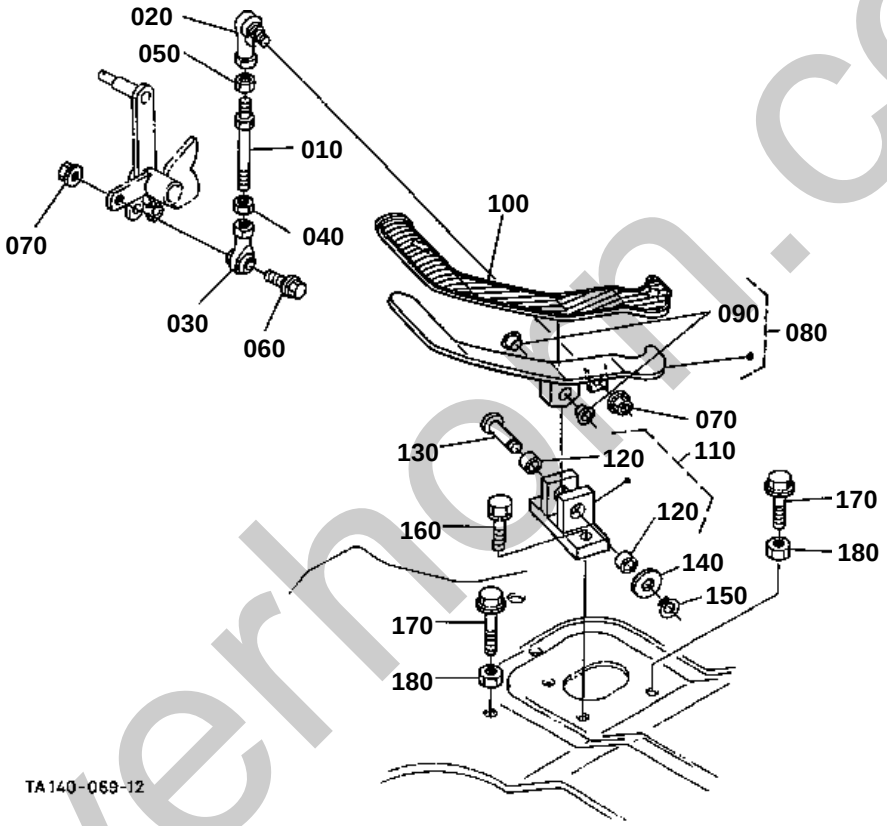

silverhorn.co.uk

SPEED CONTROL PEDAL [HST TYPE] [ROPS TYPE]
[EXCEPTE TYPE CABINE]

↔ Interchangeable; ≠ not interchangeable; ← new for old; → old for new

REF.No	Part No.	Description	Q'ty	S.No.	I/C	REMARKS	Weight (kgf)	Weight (lb)
010	TA240-55160	ROD	1				0.04	0.088
020	45404-95770	END ROD	1				0.05	0.11
030	31351-24210	SCREW ROD-END LH	1				0.04	0.088
040	37300-41330	NUT	1				0.005	0.011
050	02114-50080	NUT	1				0.005	0.011
060	01754-50825	BOLT FLANGE	1				0.01	0.022
070	02751-50080	NUT FLANGE	2				0.006	0.0132
080	TA240-55100	ASSY PEDAL	1				0.81	1.782
090	TA240-55220	BUSH	2				0.001	0.0022
100	TA240-42560	COVER HST PEDAL	1				0.23	0.506
110	TA240-55200	ASSY BRACKET PEDAL	1				0.2	0.44
120	08511-01006	BUSH	2				0.008	0.0176
130	TA240-55130	PIN HST PEDAL	1				0.023	0.0506
140	04011-50100	WASHER PLAIN	1				0.002	0.0044
150	04612-00100	CIR CLIP EXTERNAL	1				0.001	0.0022
160	01123-50816	BOLT	2				0.011	0.0242
170	TA240-55320	BOLT FLANGE	2				0.021	0.0462
180	TA240-55330	NUT	2				0.009	0.0198

silverhorn.co.uk

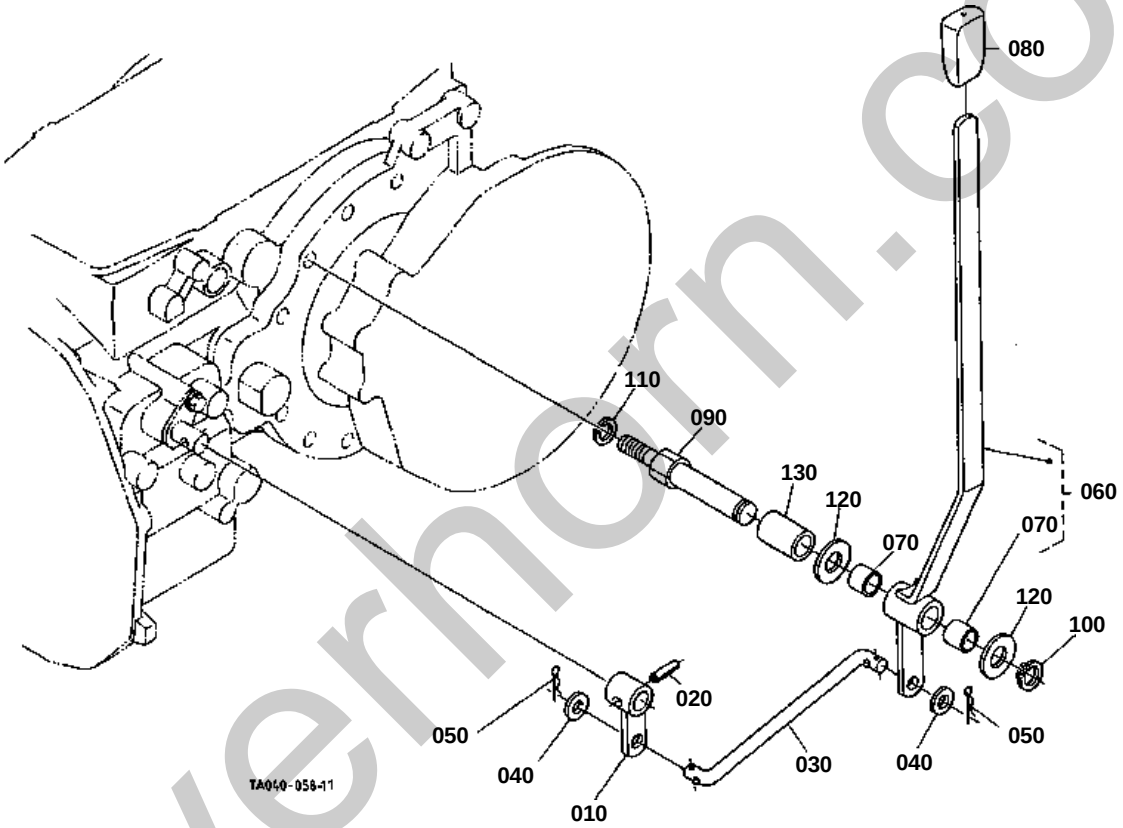

silverhorn.co.uk

RANGE GEAR SHIFT LEVER [MANUAL T/M TYPE]
[W/O CREEP] [TYPE T/M MANUELLE] [SANS TYPE DE RAMPANTE]

↔ Interchangeable; ≠ not interchangeable; ← new for old; → old for new

REF.No	Part No.	Description	Q'ty	S.No.	I/C	REMARKS	Weight (kgf)	Weight (lb)
010	34070-24462	LEVER RANGE SHIFT	1				0.09	0.198
020	05411-00628	PIN SPRING	1				0.004	0.0088
030	TA040-24470	ROD	1				0.135	0.297
040	04011-50100	WASHER PLAIN	2				0.002	0.0044
050	05515-61000	PIN SNAP	2				0.003	0.0066
060	TA040-24430	LEVER RANGE SHIFT	1				0.71	1.562
070	08511-01810	BUSH	2				0.005	0.011
080	TA040-24490	GRIP LEVER	1				0.033	0.0726
090	TA040-24482	SHAFT FULCRUM	1				0.255	0.561
100	04612-00180	CIR CLIP EXTERNAL	1				0.001	0.0022
110	04512-60120	WASHER SPRING	1				0.005	0.011
120	04011-50180	WASHER PLAIN	2				0.012	0.0264
130	TA040-24580	COLLAR	1				0.062	0.1364

silverhorn.co.uk

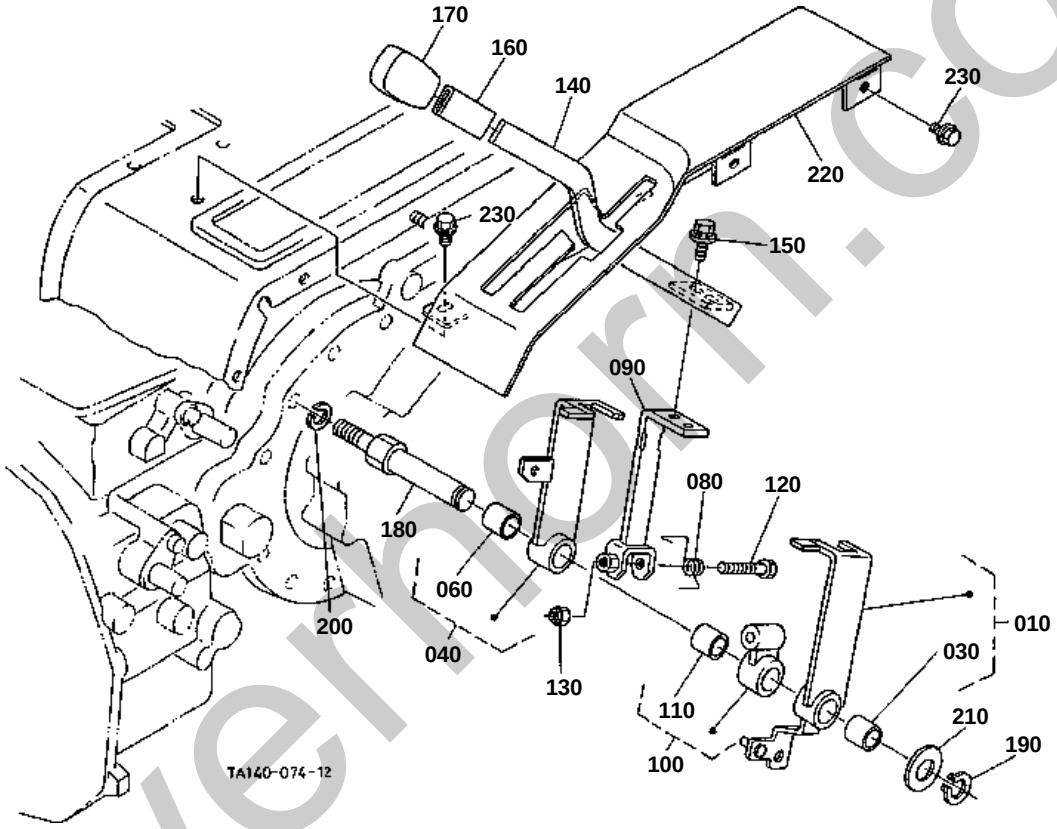

silverhorn.co.uk

100 TA240-5475-0

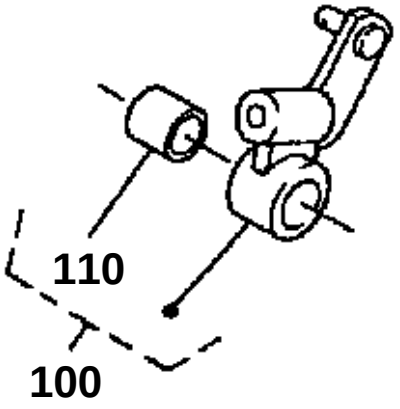

TA140-823-10

silverhorn.co.uk

RANGE GEAR SHIFT LEVER [HST TYPE] [ROPS TYPE]
[EXCEPTE TYPE CABINE]

↔ Interchangeable; ≠ not interchangeable; ← new for old; → old for new

REF.No	Part No.	Description	Q'ty	S.No.	I/C	REMARKS	Weight (kgf)	Weight (lb)
010	TA240-54600	ASSY ARM	1	<=50910			0	0
010	TA240-54603	ASSY ARM	1	>=50911	←		0.675	1.485
020	99999-99999	BLANK	0				0	0
030	08511-01825	BUSH	1				0.01	0.022
040	TA240-54680	ASSY ARM	1				0.435	0.957
050	99999-99999	BLANK	0				0	0
060	08511-01825	BUSH	1				0.01	0.022
070	99999-99999	BLANK	0				0	0
080	TA240-54670	SPRING	1				0.016	0.0352
090	TA240-54642	LEVER RANGE SHIFT	1				0.375	0.825
100	TA240-54750	ASSY HOLDER RANGE	1	<=61504			0.235	0.517
100	TA240-54752	ASSY HOLDER RANGE	1	>=70001	≠		0.15	0.33
110	08511-01825	BUSH	1				0.01	0.022
120	TA240-54660	BOLT	1				0.045	0.099
130	02156-50080	NUT	1				0.004	0.0088
140	TA240-54652	LEVER RANGE SHIFT	1				0.44	0.968
150	01135-61025	BOLT	2				0.04	0.088
160	6A100-18560	CUSHION	1				0.005	0.011
170	TA040-24490	GRIP LEVER	1				0.033	0.0726
180	TA040-24482	SHAFT FULCRUM	1				0.255	0.561
190	04612-00180	CIR CLIP EXTERNAL	1				0.001	0.0022
200	04512-60120	WASHER SPRING	1				0.005	0.011
210	04011-50180	WASHER PLAIN	1				0.012	0.0264
220	TA240-47102	GUIDE HST CAHNGE	1				0.995	2.189
230	01754-50812	BOLT FLANGE	4				0.01	0.022

silverhorn.co.uk

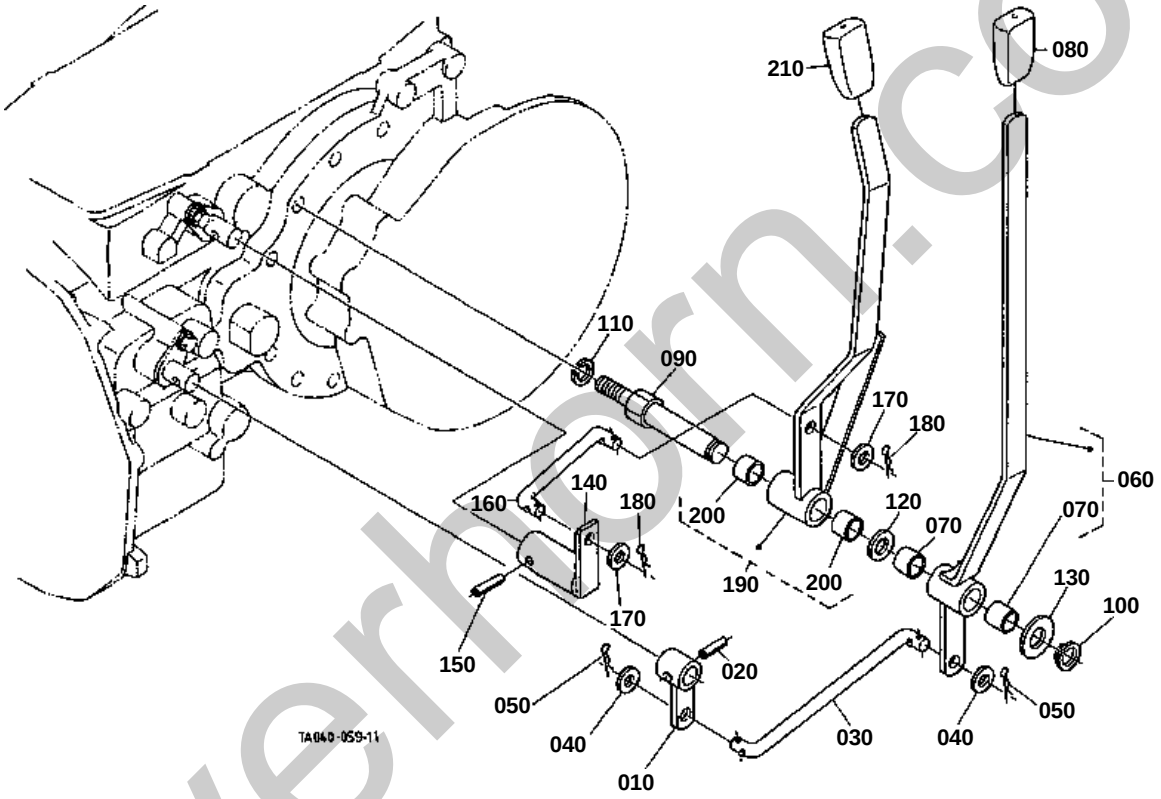

silverhorn.co.uk

RANGE GEAR SHIFT LEVER/CREEP GEAR SHIFT LEVER

[MANUAL T/M TYPE] [WITH CREEP] [TYPE T/M MANUELLE] [AVEC TYPE DE RAMPANTE]

↔ Interchangeable; ≠ not interchangeable; ← new for old; → old for new

REF.No	Part No.	Description	Q'ty	S.No.	I/C	REMARKS	Weight (kgf)	Weight (lb)
010	34070-24462	LEVER RANGE SHIFT	1				0.09	0.198
020	05411-00628	PIN SPRING	1				0.004	0.0088
030	TA040-24470	ROD	1				0.135	0.297
040	04011-50100	WASHER PLAIN	2				0.002	0.0044
050	05515-61000	PIN SNAP	2				0.003	0.0066
060	TA040-24430	LEVER RANGE SHIFT	1				0.71	1.562
070	08511-01810	BUSH	2				0.005	0.011
080	TA040-24490	GRIP LEVER	1				0.033	0.0726
090	TA040-24482	SHAFT FULCRUM	1				0.255	0.561
100	04612-00180	CIR CLIP EXTERNAL	1				0.001	0.0022
110	04512-60120	WASHER SPRING	1				0.005	0.011
120	31351-16590	SHIM	1			1.2mm	0.005	0.011
130	04011-50180	WASHER PLAIN	2				0.012	0.0264
140	TA040-24564	LEVER CREEP	1				0.32	0.704
150	05411-00628	PIN SPRING	1				0.004	0.0088
160	34070-24580	ROD CREEP	1				0.085	0.187
170	04011-50100	WASHER PLAIN	2				0.002	0.0044
180	05515-61000	PIN SNAP	2				0.003	0.0066
190	34070-24554	ASSY LEVER CREEP	1				0.73	1.606
200	08511-01810	BUSH	2				0.005	0.011
210	TA040-24490	GRIP LEVER	1				0.033	0.0726

silverhorn.co.uk

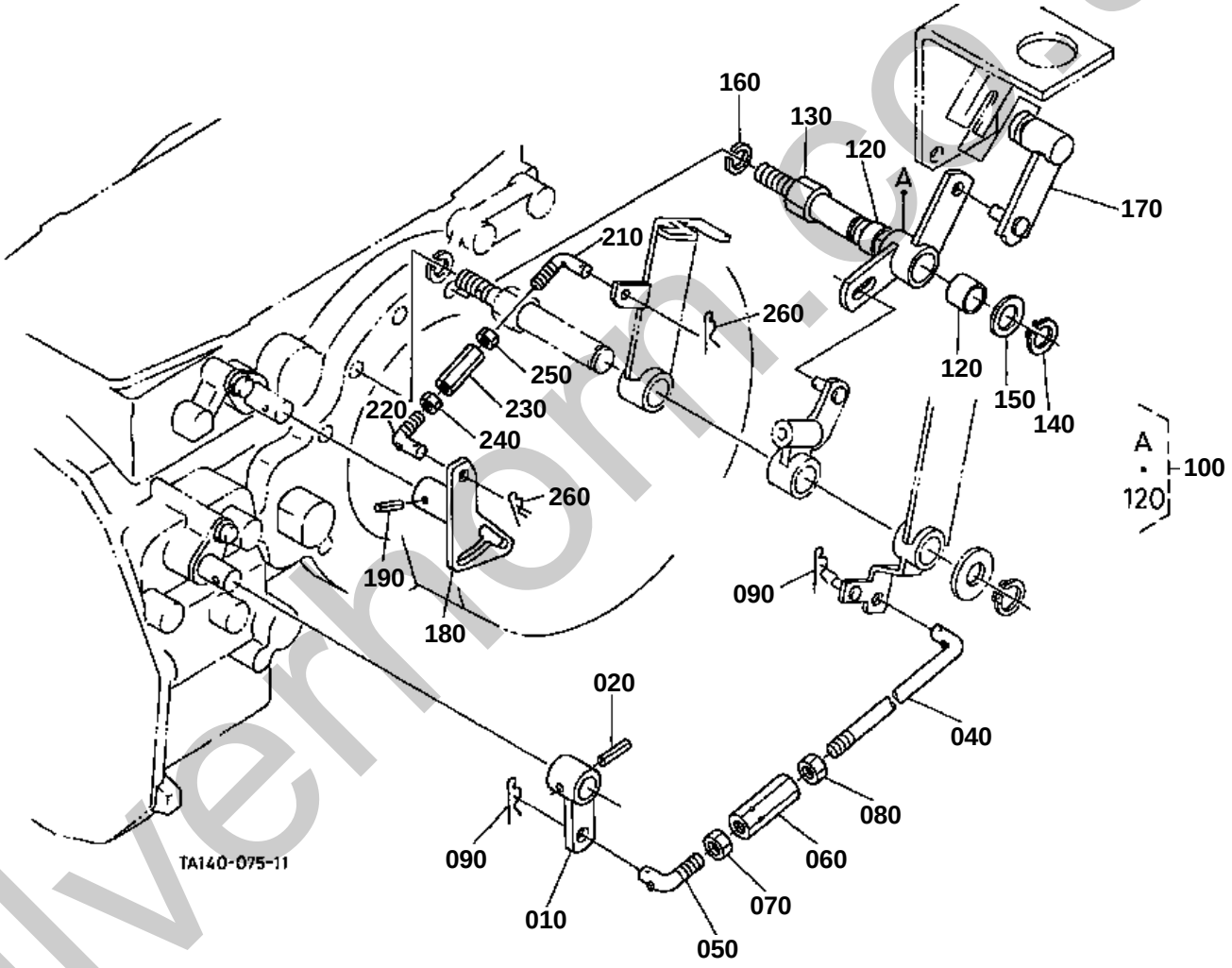

silverhorn.co.uk

RANGE GEAR SHIFT ROD [HST TYPE] [OLD TYPE]

[TYPE VIEUX] [S.No.;<=61504]

↔ Interchangeable; ≠ not interchangeable; ← new for old; → old for new

REF.No	Part No.	Description	Q'ty	S.No.	I/C	REMARKS	Weight (kgf)	Weight (lb)
010	34070-24462	LEVER RANGE SHIFT	1				0.09	0.198
020	05411-00628	PIN SPRING	1				0.004	0.0088
030	99999-99999	BLANK	0				0	0
040	TA240-54472	ROD RANGE	1				0.072	0.1584
050	TA240-54592	ROD RANGE L	1				0.03	0.066
060	TA240-54480	TURNBUCKLE	1				0.031	0.0682
070	32350-28990	NUT	1				0.009	0.0198
080	02116-50100	NUT	1				0.004	0.0088
090	05525-61000	PIN SNAP	2	<=50008			0.002	0.0044
090	05515-61000	PIN SNAP	2	>=50009	←		0.003	0.0066
100	TA240-54760	ASSY LINK	1				0.16	0.352
110	99999-99999	BLANK	0				0	0
120	08511-01810	BUSH	2				0.005	0.011
130	TA040-64482	SHAFT	1				0.175	0.385
140	04612-00180	CIR CLIP EXTERNAL	1				0.001	0.0022
150	31351-16570	SHIM	1			0.8mm	0.005	0.011
160	04512-60120	WASHER SPRING	1				0.005	0.011
170	TA240-23180	ROD NEUTRAL SWITCH	1				0.115	0.253
180	TA240-54562	LEVER RANGE SHIFT	1				0.305	0.671
190	05411-00628	PIN SPRING	1				0.004	0.0088
200	99999-99999	BLANK	0				0	0
210	TA240-54582	ROD RANGE R	1				0.03	0.066
220	TA240-54592	ROD RANGE L	1				0.03	0.066
230	TA240-54480	TURNBUCKLE	1				0.031	0.0682
240	32350-28990	NUT	1				0.009	0.0198
250	02116-50100	NUT	1				0.004	0.0088
260	05515-61000	PIN SNAP	2				0.003	0.0066

silverhorn.co.uk

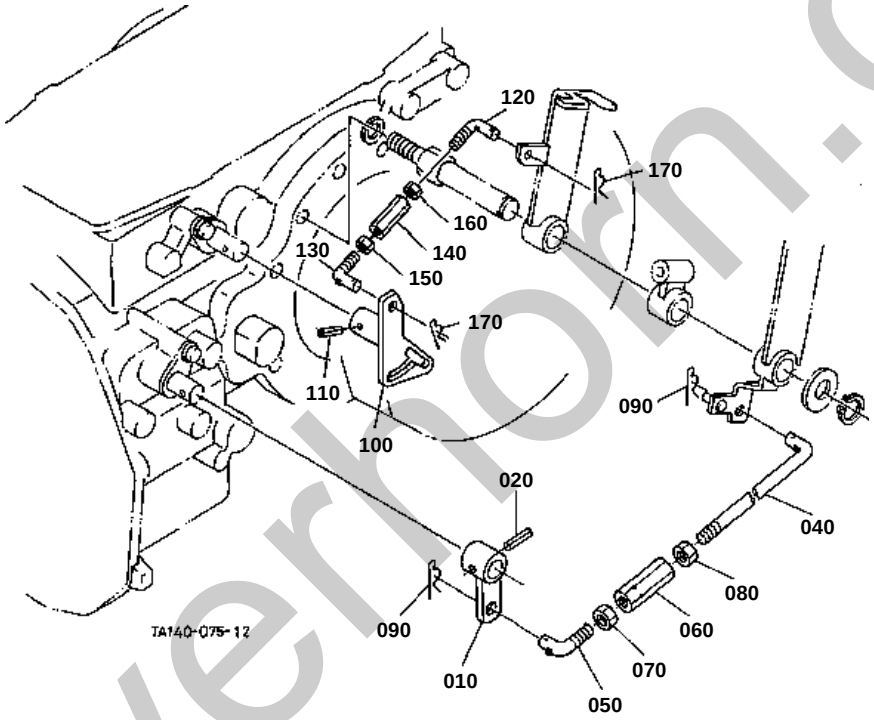

silverhorn.co.uk

RANGE GEAR SHIFT ROD [HST TYPE] [NEW TYPE]
[TYPE NOUVEAU] [S.No.;=>70001]

↔ Interchangeable; ≠ not interchangeable; ← new for old; → old for new

REF.No	Part No.	Description	Q'ty	S.No.	I/C	REMARKS	Weight (kgf)	Weight (lb)
010	34070-24462	LEVER RANGE SHIFT	1				0.09	0.198
020	05411-00628	PIN SPRING	1				0.004	0.0088
030	99999-99999	BLANK	0				0	0
040	TA240-54472	ROD RANGE	1				0.072	0.1584
050	TA240-54592	ROD RANGE L	1				0.03	0.066
060	TA240-54480	TURNBUCKLE	1				0.031	0.0682
070	32350-28990	NUT	1				0.009	0.0198
080	02116-50100	NUT	1				0.004	0.0088
090	05515-61000	PIN SNAP	2				0.003	0.0066
100	TA240-54562	LEVER RANGE SHIFT	1				0.305	0.671
110	05411-00628	PIN SPRING	1				0.004	0.0088
120	TA240-54582	ROD RANGE R	1				0.03	0.066
130	TA240-54592	ROD RANGE L	1				0.03	0.066
140	TA240-54480	TURNBUCKLE	1				0.031	0.0682
150	32350-28990	NUT	1				0.009	0.0198
160	02116-50100	NUT	1				0.004	0.0088
170	05515-61000	PIN SNAP	2				0.003	0.0066

silverhorn.co.uk

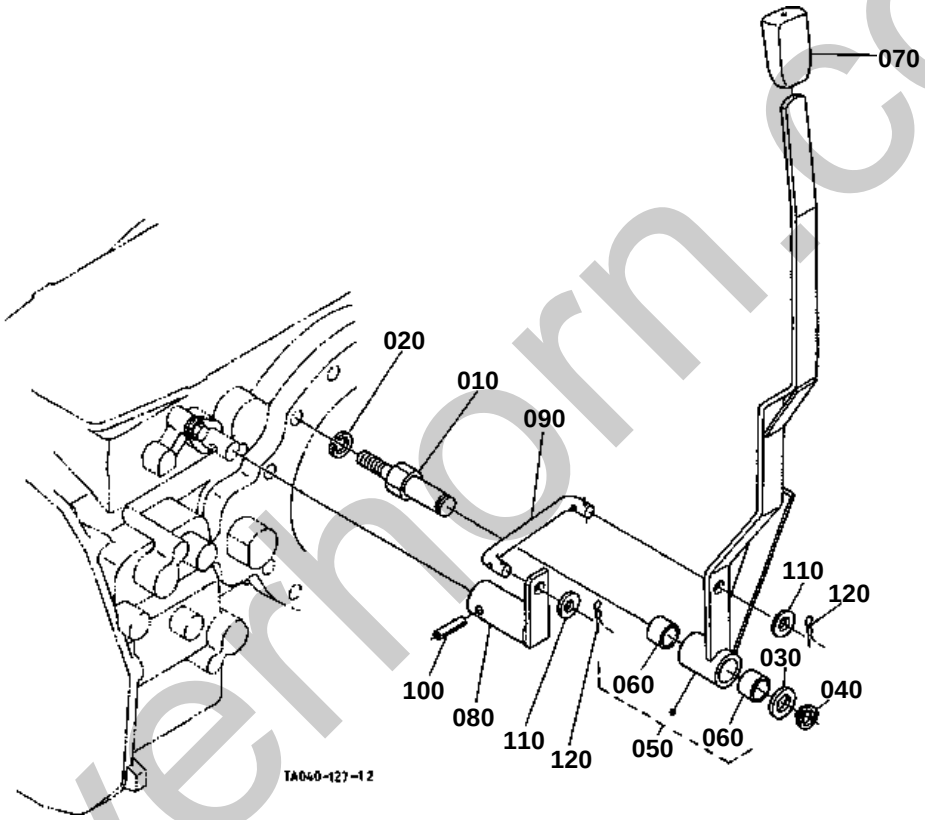

silvermorn.co.uk

CREEP GEAR SHIFT LEVER [GST TYPE] [WITH CREEP]
[AVEC TYPE DE RAMPANTE]

↔ Interchangeable; ≠ not interchangeable; ← new for old; → old for new

REF.No	Part No.	Description	Q'ty	S.No.	I/C	REMARKS	Weight (kgf)	Weight (lb)
010	TA040-64482	SHAFT	1				0.175	0.385
020	04512-60120	WASHER SPRING	1				0.005	0.011
030	31351-16590	SHIM	1				0.005	0.011
040	04612-00180	CIR CLIP EXTERNAL	1				0.001	0.0022
050	34076-24553	ASSY LEVER CREEP	1				1	2.2
060	08511-01810	BUSH	2				0.005	0.011
070	TA040-24490	GRIP LEVER	1				0.033	0.0726
080	TA040-24564	LEVER CREEP	1				0.32	0.704
090	34076-24580	ROD CREEP	1				0.09	0.198
100	05411-00628	PIN SPRING	1				0.004	0.0088
110	04011-50100	WASHER PLAIN	2				0.002	0.0044
120	05515-61000	PIN SNAP	2				0.003	0.0066

silverhorn.co.uk

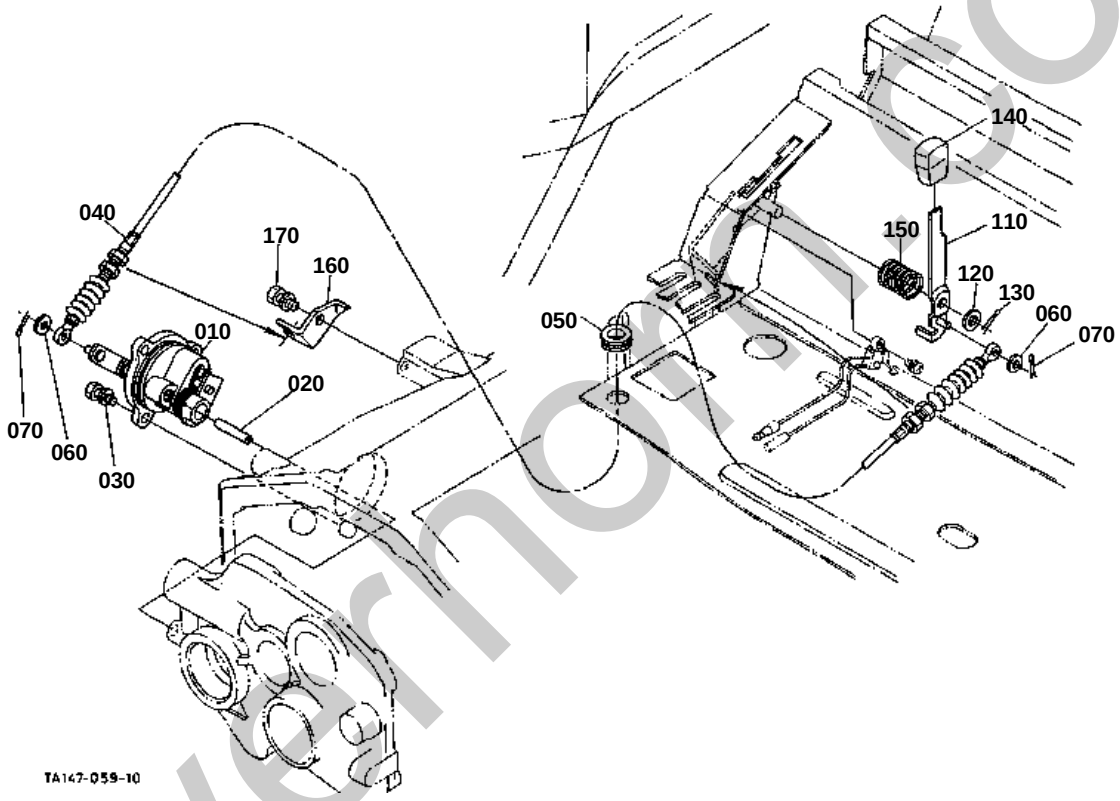

silverhorse.co.uk

PTO CLUTCH CONTROL LEVER [WITH IND-PTO]

↔ Interchangeable; ≠ not interchangeable; ← new for old; → old for new

REF.No	Part No.	Description	Q'ty	S.No.	I/C	REMARKS	Weight (kgf)	Weight (lb)
010	TA040-69300	ASSY VALVE I-PTO	1				0.955	2.101
020	36530-27273	PIPE HYDRAULIC	1				0.005	0.011
030	01123-50820	BOLT	3				0.011	0.0242
040	TA040-24652	WIRE PTO	1	<=50008			0.14	0.308
040	TA140-24650	WIRE PTO	1	>=50009	←		0.14	0.308
050	53226-54390	GROMMET	1				0.004	0.0088
060	04012-50060	WASHER PLAIN	2				0.001	0.0022
070	05511-51612	PIN SPLIT	2				0.001	0.0022
080	99999-99999	BLANK	0				0	0
090	99999-99999	BLANK	0				0	0
100	99999-99999	BLANK	0				0	0
110	TA040-69710	LEVER I-PTO	1				0.053	0.1166
120	04013-60080	WASHER PLAIN	1				0.002	0.0044
130	05511-50215	PIN SPLIT	1				0.001	0.0022
140	36919-27820	GRIP PTO LEVER	1				0.015	0.033
150	33251-29630	SPRING	1				0.013	0.0286
160	TA040-69600	STAY WIRE	1				0.046	0.1012
170	01123-60814	BOLT	1				0.008	0.0176

silverhorn.co.uk

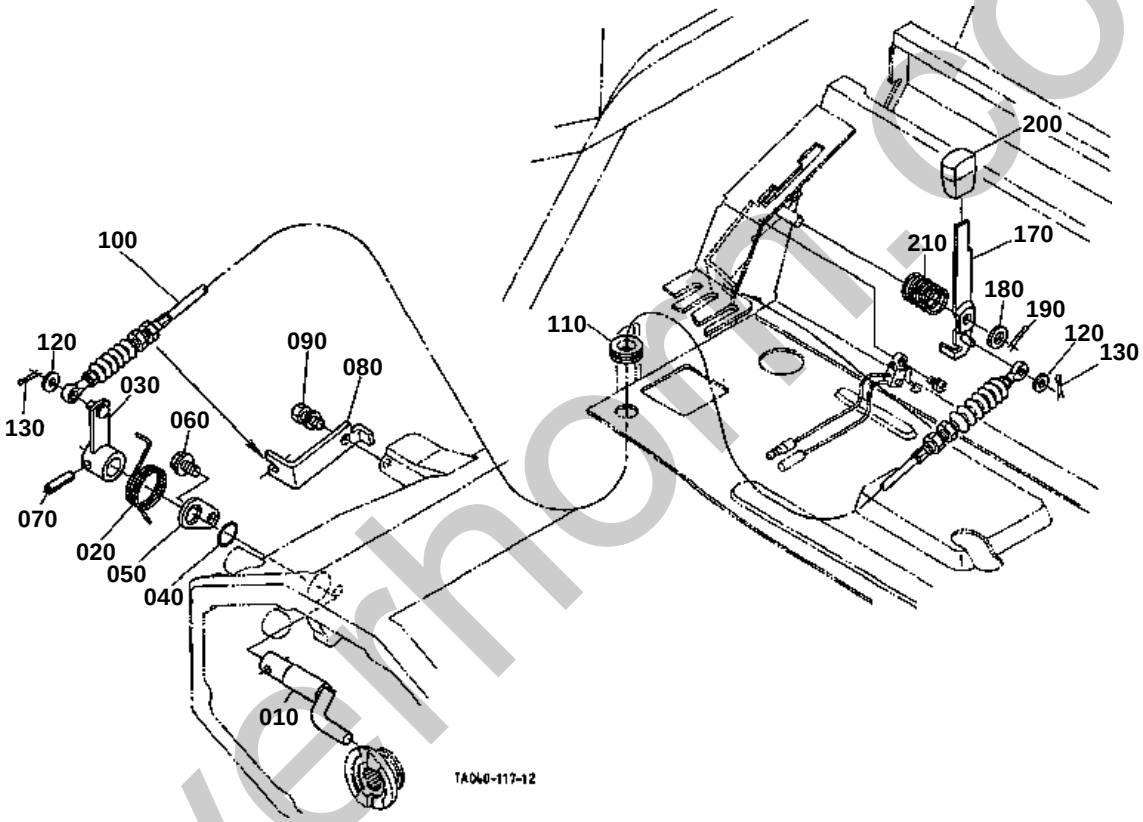

silverhorn.co.uk

PTO GEAR SHIFT LEVER [EXCEPT HST TYPE]
[W/O IND-PTO] [SANS TYPE DE PDF IND]

↔ Interchangeable; ≠ not interchangeable; ← new for old; → old for new

REF.No	Part No.	Description	Q'ty	S.No.	I/C	REMARKS	Weight (kgf)	Weight (lb)
010	TA040-24600	ARM PTO SHIFT	1				0.105	0.231
020	TA040-24610	SPRING	1				0.029	0.0638
030	TA040-24620	LEVER PTO	1				0.08	0.176
040	04811-00200	O RING	1				0.001	0.0022
040	04817-00200	O RING	1		←		0	0
050	34070-24350	STOPPER	1				0.02	0.044
060	01754-50812	BOLT FLANGE	1				0.01	0.022
070	05411-00628	PIN SPRING	1				0.004	0.0088
080	TA040-24660	STAY WIRE	1				0.075	0.165
090	01123-60814	BOLT	1				0.008	0.0176
100	TA040-24652	WIRE PTO	1	<=50008			0.14	0.308
100	TA140-24650	WIRE PTO	1	>=50009	←		0.14	0.308
110	53226-54390	GROMMET	1				0.004	0.0088
120	04012-50060	WASHER PLAIN	2				0.001	0.0022
130	05511-51612	PIN SPLIT	2				0.001	0.0022
140	99999-99999	BLANK	0				0	0
150	99999-99999	BLANK	0				0	0
160	99999-99999	BLANK	0				0	0
170	TA040-69710	LEVER I-PTO	1				0.053	0.1166
180	04013-60080	WASHER PLAIN	1				0.002	0.0044
190	05511-50215	PIN SPLIT	1				0.001	0.0022
200	36919-27820	GRIP PTO LEVER	1				0.015	0.033
210	33251-29630	SPRING	1				0.013	0.0286

silverhorn.co.uk

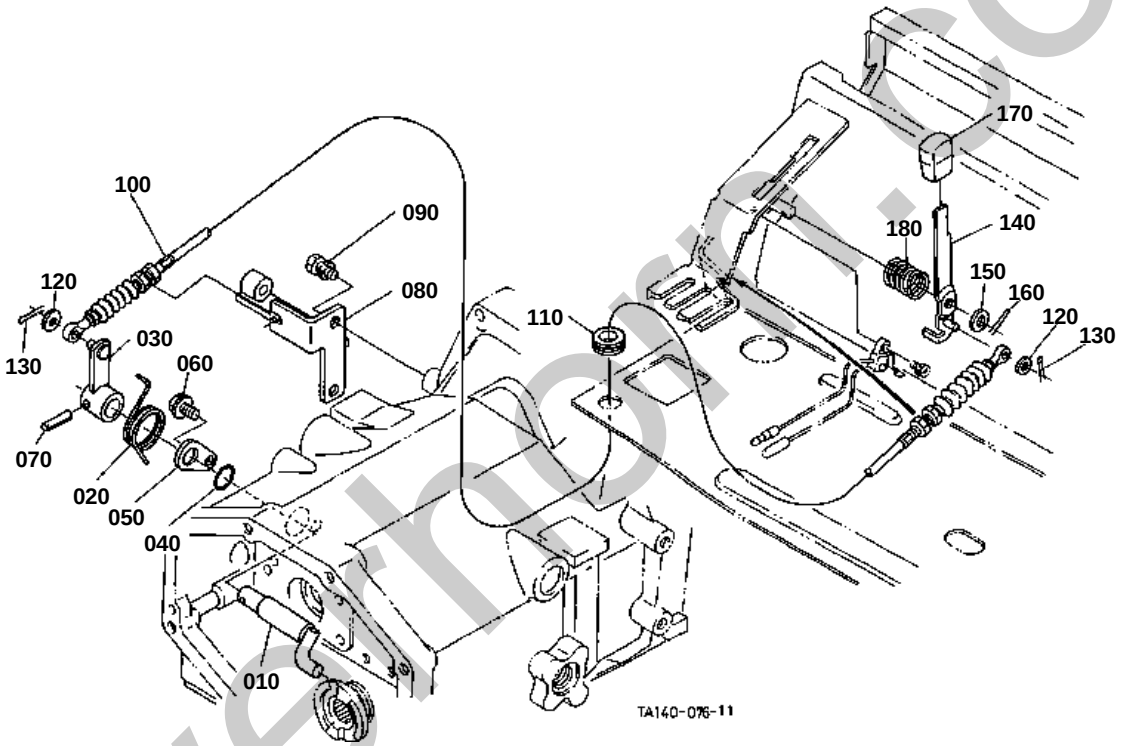

silvermore.co.uk

PTO GEAR SHIFT LEVER [HST TYPE]

↔ Interchangeable; ≠ not interchangeable; ← new for old; → old for new

REF.No	Part No.	Description	Q'ty	S.No.	I/C	REMARKS	Weight (kgf)	Weight (lb)
010	TA240-24600	ARM PTO SHIFT	1				0.22	0.484
020	TA040-24610	SPRING	1				0.029	0.0638
030	TA040-24620	LEVER PTO	1				0.08	0.176
040	04811-00200	O RING	1				0.001	0.0022
040	04816-00200	O RING	1		←		0.003	0.0066
050	34070-24350	STOPPER	1				0.02	0.044
060	01754-50812	BOLT FLANGE	1				0.01	0.022
070	05411-00628	PIN SPRING	1				0.004	0.0088
080	TA240-24663	STAY WIRE	1				0.315	0.693
090	01133-51020	BOLT	2				0.02	0.044
100	TA040-24652	WIRE PTO	1	<=50008			0.14	0.308
100	TA140-24650	WIRE PTO	1	>=50009	←		0.14	0.308
110	53226-54390	GROMMET	1				0.004	0.0088
120	04012-50060	WASHER PLAIN	2				0.001	0.0022
130	05511-51612	PIN SPLIT	2				0.001	0.0022
140	TA040-69710	LEVER I-PTO	1				0.053	0.1166
150	04013-60080	WASHER PLAIN	1				0.002	0.0044
160	05511-50215	PIN SPLIT	1				0.001	0.0022
170	36919-27820	GRIP PTO LEVER	1				0.015	0.033
180	33251-29630	SPRING	1				0.013	0.0286

silverhorn.co.uk

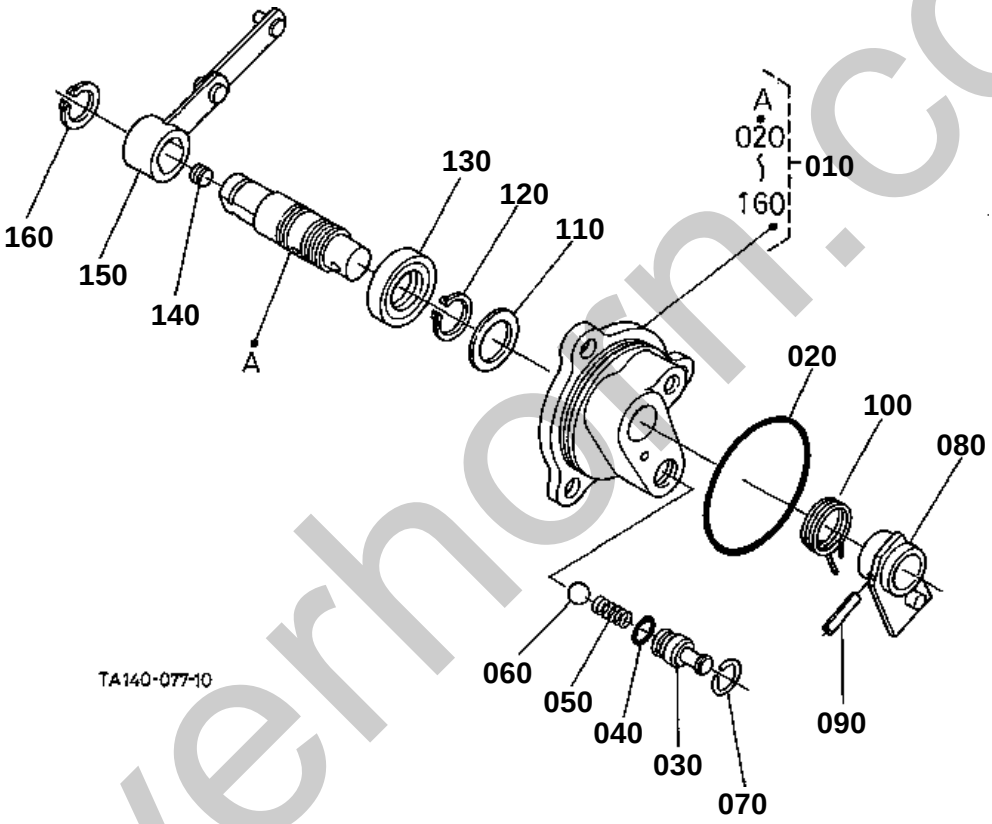

silverhorn.co.uk

PTO CLUTCH VALVE [COMPONENT PARTS] [WITH IND-PTO]
[AVEC TYPE DE PDF IND]

↔ Interchangeable; ≠ not interchangeable; ← new for old; → old for new

REF.No	Part No.	Description	Q'ty	S.No.	I/C	REMARKS	Weight (kgf)	Weight (lb)
010	TA040-69300	ASSY VALVE I-PTO	1				0.955	2.101
020	04811-06630	O RING	1				0.001	0.0022
030	TA040-69320	PLUG	1				0.006	0.0132
040	04811-00090	O RING	1				0.001	0.0022
040	04817-00090	O RING	1		←		0.001	0.0022
050	TA040-69330	SPRING	1				0.001	0.0022
060	07715-03209	BALL	1				0.002	0.0044
070	67401-03690	RING	1				0.001	0.0022
080	TA040-69340	LEVER VALVE ROTOR	1				0.057	0.1254
090	05411-00522	PIN SPRING	1				0.002	0.0044
100	TA040-69360	SPRING	1				0.014	0.0308
110	50770-12180	COLLAR THRUST	1				0.003	0.0066
120	04612-00200	CIR CLIP EXTERNAL	1				0.001	0.0022
130	09500-20358	SEAL OIL	1				0.01	0.022
140	67511-36640	PLUG	1				0.003	0.0066
150	TA040-69370	LEVER VALVE	1				0.075	0.165
160	04612-00180	CIR CLIP EXTERNAL	1				0.001	0.0022

silverhorn.co.uk

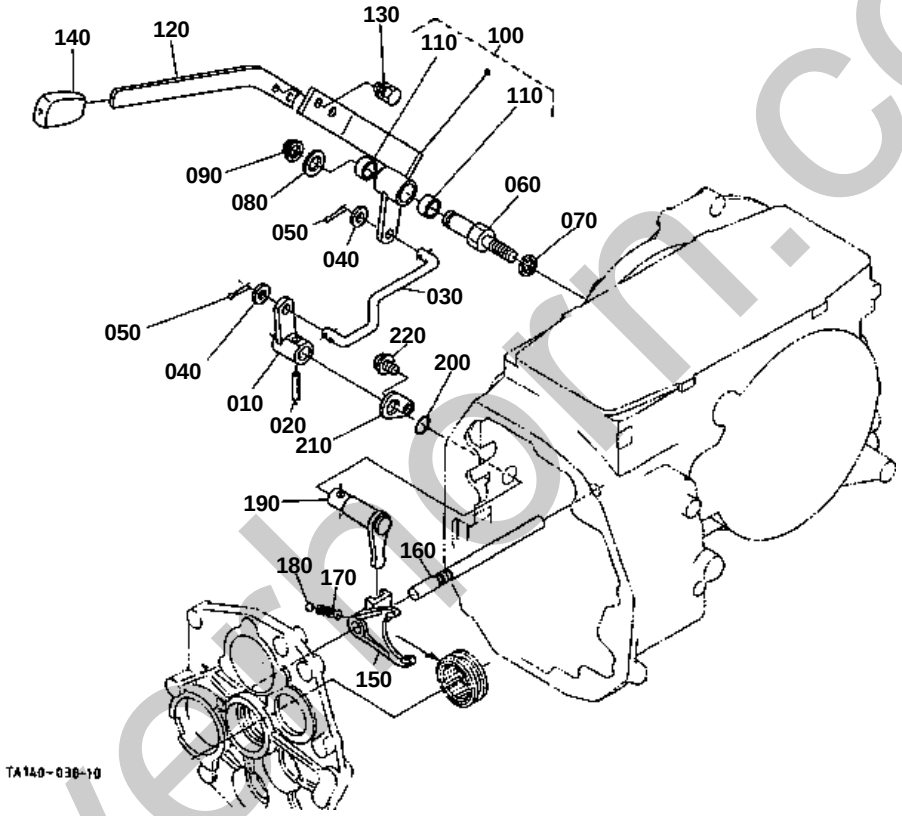

silverhorn.co.uk

MID PTO SHIFT LEVER [MID PTO TYPE]

↔ Interchangeable; ≠ not interchangeable; ← new for old; → old for new

REF.No	Part No.	Description	Q'ty	S.No.	I/C	REMARKS	Weight (kgf)	Weight (lb)
010	TA030-25340	LEVER M-PTO	1				0.145	0.319
020	05411-00628	PIN SPRING	1				0.004	0.0088
030	34070-24470	ROD	1				0.145	0.319
040	04011-50100	WASHER PLAIN	2				0.002	0.0044
050	05511-50318	PIN SPLIT	2				0.001	0.0022
060	TA040-64482	SHAFT	1				0.175	0.385
070	04512-60120	WASHER SPRING	1				0.005	0.011
080	31351-16590	SHIM	1			1.2mm	0.005	0.011
090	04612-00180	CIR CLIP EXTERNAL	1				0.001	0.0022
100	TA030-25353	ASSY LEVER M-PTO	1				0.43	0.946
110	08511-01810	BUSH	2				0.005	0.011
120	TA030-25374	LEVER M-PT CHANGE	1				0.22	0.484
130	01123-50816	BOLT	2				0.011	0.0242
140	TA030-25380	GRIP	1				0.035	0.077
150	TA030-25300	FORK SHIFT PTO	1				0.3	0.66
160	TA230-55310	ROD FORK	1				0.23	0.506
170	62231-18530	SPRING	1				0.01	0.022
180	07715-01605	BALL	1				0.003	0.0066
190	TA030-25320	ARM	1				0.23	0.506
200	04811-00200	O RING	1				0.001	0.0022
200	04816-00200	O RING	1		←		0.003	0.0066
210	34070-24350	STOPPER	1				0.02	0.044
220	01754-50812	BOLT FLANGE	1				0.01	0.022

silverhorn.co.uk

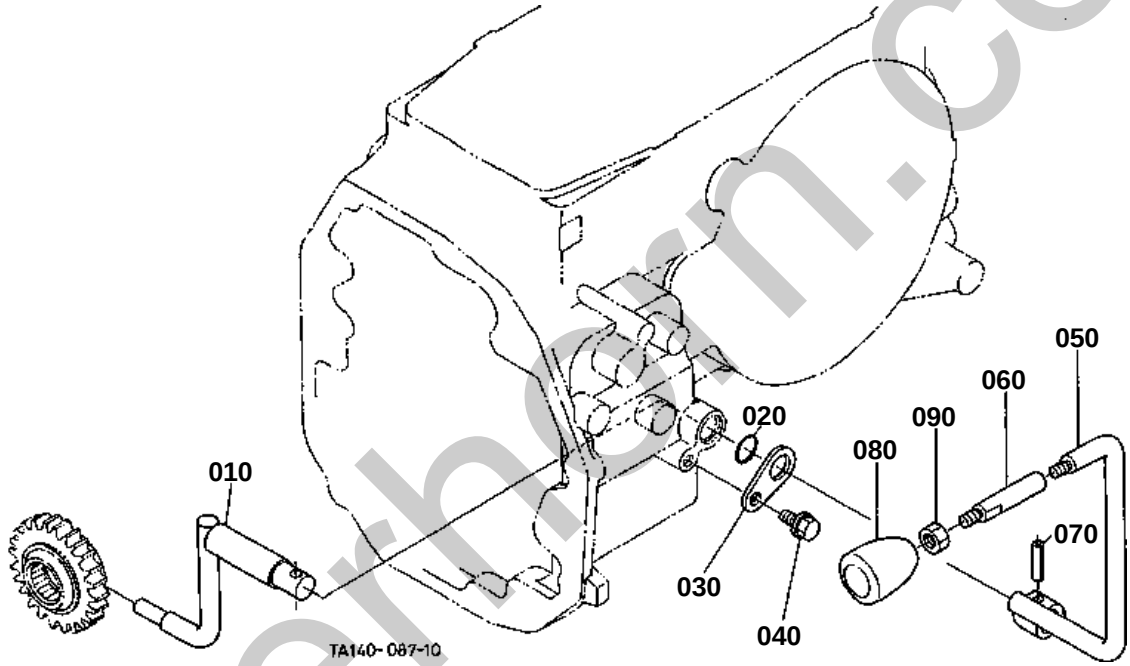

silverhorn.co.uk

FRONT WHEEL DRIVE LEVER

↔ Interchangeable; ≠ not interchangeable; ← new for old; → old for new

REF.No	Part No.	Description	Q'ty	S.No.	I/C	REMARKS	Weight (kgf)	Weight (lb)
010	TA040-15180	LEVER SHIFT	1				0.405	0.891
020	04811-00200	O RING	1				0.001	0.0022
020	04816-00200	O RING	1		←		0.003	0.0066
030	34070-24350	STOPPER	1				0.02	0.044
040	01754-50812	BOLT FLANGE	1				0.01	0.022
050	TA140-15470	LEVER 4WD CHANGE	1	<=74854			0.505	1.111
050	TA140-15473	LEVER 4WD CHANGE	1	>=74855	←		0.505	1.111
060	TA140-15490	LEVER 4WD CHANGE	1				0.086	0.1892
070	05411-00630	PIN SPRING	1				0.004	0.0088
080	TA040-15480	GRIP LEVER	1				0.053	0.1166
090	02116-50100	NUT	1				0.004	0.0088

silverhorn.co.uk

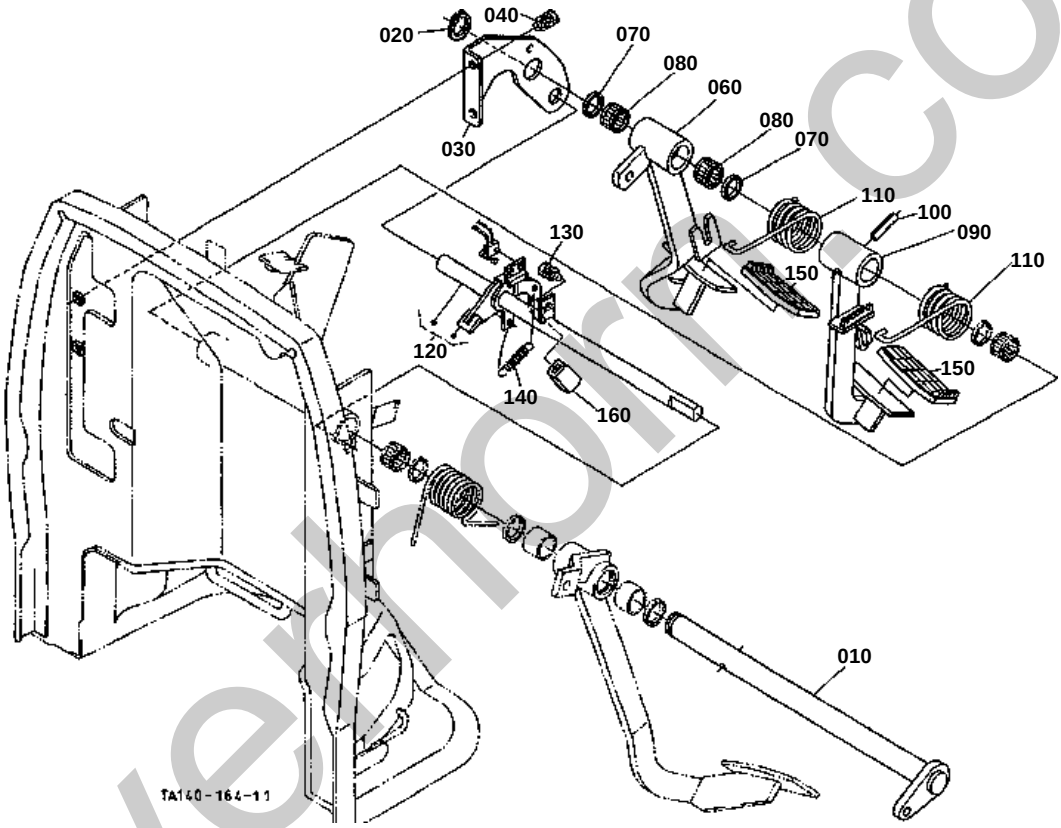

silverthorn.co.uk

120 TA040-4400-3
160 TA040-4984-2

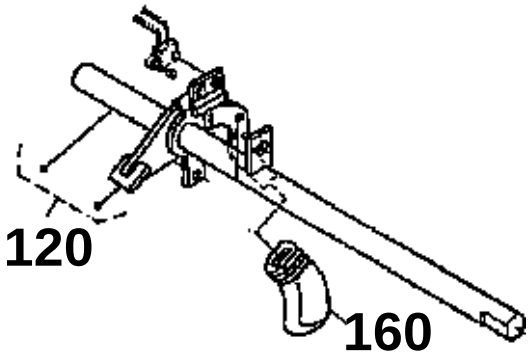

TA140-800-10

silverhorn.co.uk

BRAKE PEDAL [EXCEPT HST TYPE] [ROPS TYPE]
[EXCEPTE TYPE CABINE]

↔ Interchangeable; ≠ not interchangeable; ← new for old; → old for new

REF.No	Part No.	Description	Q'ty	S.No.	I/C	REMARKS	Weight (kgf)	Weight (lb)
010	34070-44010	SHAFT PEDAL	1				1.81	3.982
020	04612-00250	CIR CLIP EXTERNAL	1				0.002	0.0044
030	34070-44072	SUPPORT PEDAL SHAFT	1	<=60115			0	0
030	34070-44073	SUPPORT PEDAL SHAFT	1	>=60116	←		0.255	0.561
040	01123-50816	BOLT	2				0.011	0.0242
050	99999-99999	BLANK	0				0	0
060	TA040-44102	ASSY PEDAL BRAKE RH	1				1.41	3.102
070	34070-44140	SEAL OIL	2				0.005	0.011
080	34070-44360	BEARING NEEDLE	2				0.012	0.0264
090	TA040-44114	PEDAL BRAKE LH	1				1.32	2.904
100	05411-00840	PIN SPRING	1				0.008	0.0176
110	34070-44170	SPRING	2				0.08	0.176
120	TA040-44003	COMP.LOCK PARKING	1	<=50189			0.95	2.09
120	TA140-44000	COMP.LOCK PARKING	1	>=50190	≠		1.005	2.211
130	01123-50816	BOLT	1				0.011	0.0242
140	36330-83420	SPRING LOCK	1				0.006	0.0132
150	37410-44120	COVER PEDAL	2				0.08	0.176
160	TA040-49842	GRIP	1	<=50189			0.025	0.055
160	TA140-43560	GRIP	1	>=50190	≠		0.022	0.0484

silverhorn.co.uk

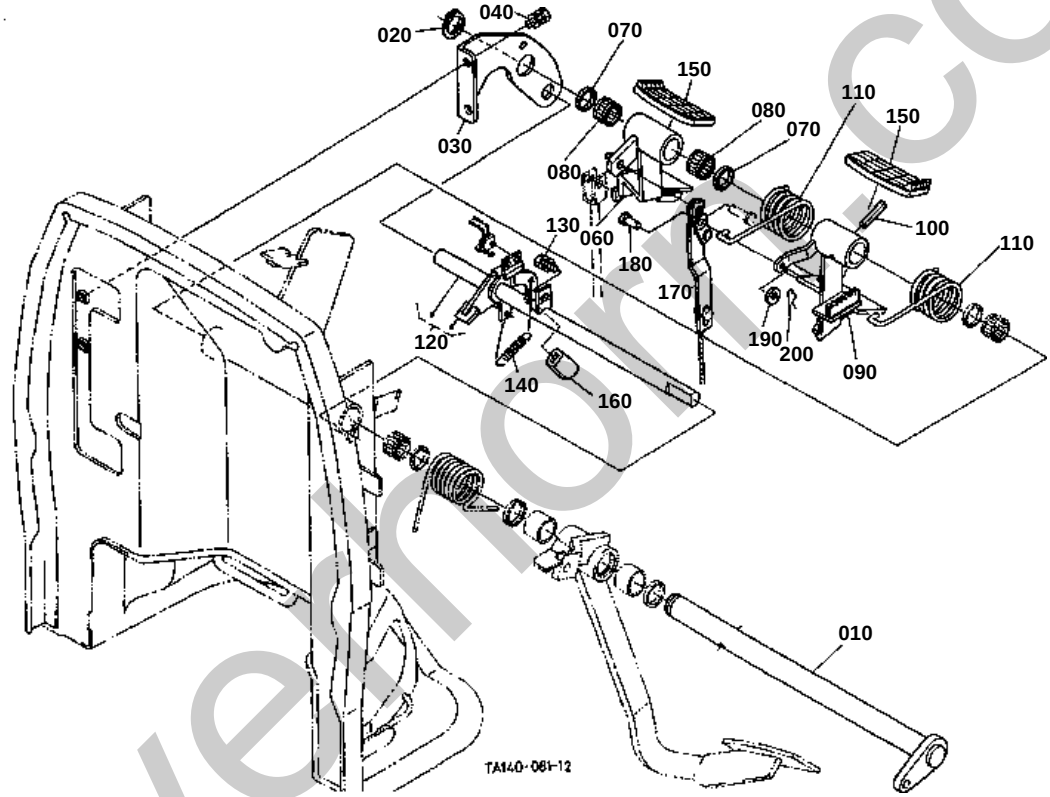

silvermoor.co.uk

120 TA040-4400-3
160 TA040-4984-2

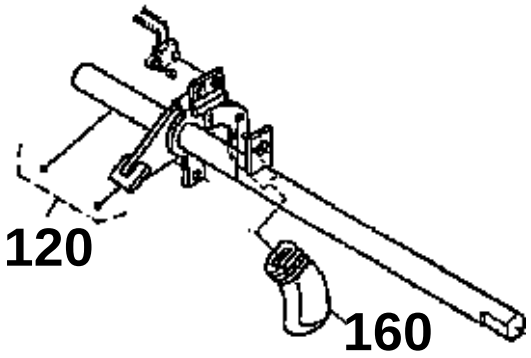

TA140-800-10

silverhorn.co.uk

BRAKE PEDAL [HST TYPE] [ROPS TYPE]
[EXCEPTE TYPE CABINE]

↔ Interchangeable; ≠ not interchangeable; ← new for old; → old for new

REF.No	Part No.	Description	Q'ty	S.No.	I/C	REMARKS	Weight (kgf)	Weight (lb)
010	34070-44010	SHAFT PEDAL	1				1.81	3.982
020	04612-00250	CIR CLIP EXTERNAL	1				0.002	0.0044
030	34070-44072	SUPPORT PEDAL SHAFT	1	<=60115			0	0
030	34070-44073	SUPPORT PEDAL SHAFT	1	>=60116	←		0.255	0.561
040	01123-50816	BOLT	2				0.011	0.0242
050	99999-99999	BLANK	0				0	0
060	TA240-44100	ASSY PEDAL BRAKE RH	1				1.25	2.75
070	34070-44140	SEAL OIL	2				0.005	0.011
080	34070-44360	BEARING NEEDLE	2				0.012	0.0264
090	TA240-44110	PEDAL BRAKE LH	1				1.2	2.64
100	05411-00840	PIN SPRING	1				0.008	0.0176
110	34070-44170	SPRING	2				0.08	0.176
120	TA040-44003	COMP.LOCK PARKING	1	<=50189			0.95	2.09
120	TA140-44000	COMP.LOCK PARKING	1	>=50190	≠		1.005	2.211
130	01123-50816	BOLT	1				0.011	0.0242
140	36330-83420	SPRING LOCK	1				0.006	0.0132
150	37410-44120	COVER PEDAL	2				0.08	0.176
160	TA040-49842	GRIP	1	<=50189			0.025	0.055
160	TA140-43560	GRIP	1	>=50190	≠		0.022	0.0484
170	TA240-43340	ASSY LINK	1	<=50189			0	0
170	TA240-43342	ASSY LINK	1	>=50190	←		0.105	0.231
180	05122-50816	PIN JOINT	1				0.007	0.0154
190	04012-50080	WASHER PLAIN	1				0.001	0.0022
200	05525-50800	PIN SNAP	1				0.001	0.0022

silverhorn.co.uk

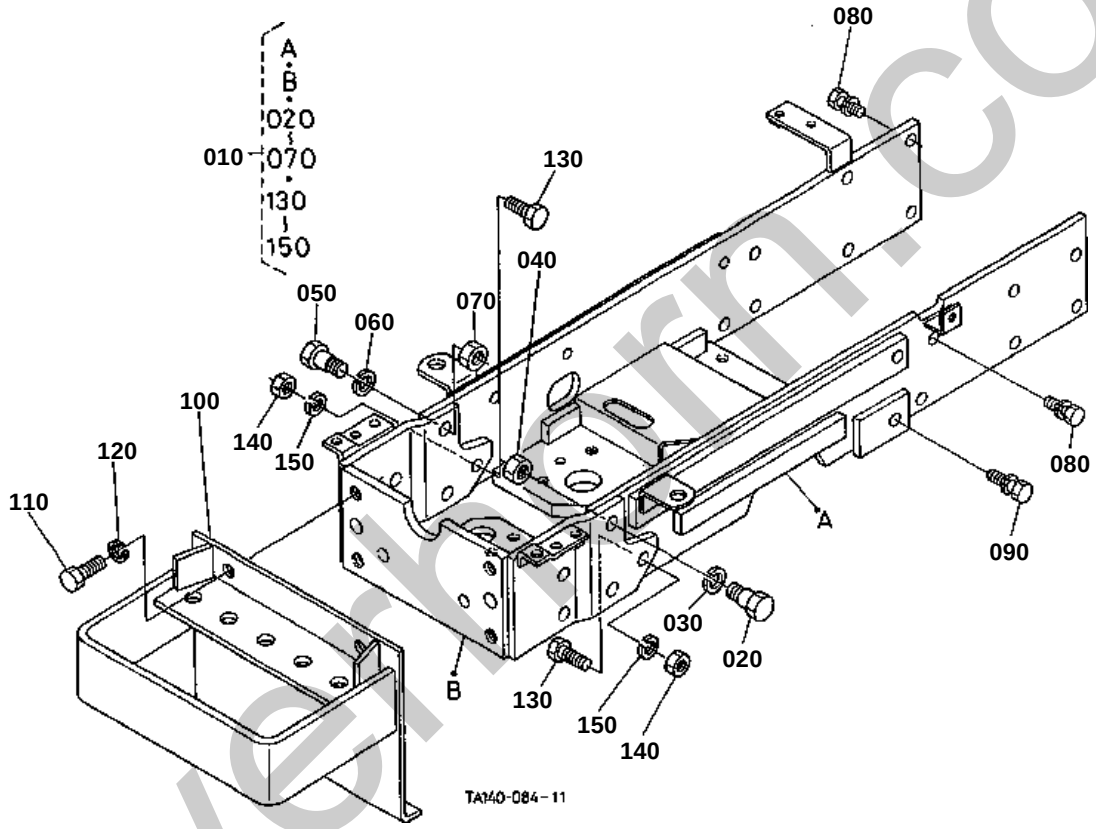

silverhorn.co.uk

FRONT AXLE FRAME

↔ Interchangeable; ≠ not interchangeable; ← new for old; → old for new

REF.No	Part No.	Description	Q'ty	S.No.	I/C	REMARKS	Weight (kgf)	Weight (lb)
010	TA140-14000	COMP.FRAME F-AXLE	1	<=50411			0	0
010	TA140-14003	COMP.FRAME F-AXLE	1	>=50412	←		30	66
020	TA040-14250	BOLT REAMER	2				0.085	0.187
030	04512-60160	WASHER SPRING	2				0.01	0.022
040	02174-50160	NUT	2				0.022	0.0484
050	TA040-14250	BOLT REAMER	2				0.085	0.187
060	04512-60160	WASHER SPRING	2				0.01	0.022
070	02174-50160	NUT	2				0.022	0.0484
080	01133-51230	BOLT	11				0.04	0.088
090	01133-51240	BOLT	4				0.05	0.11
100	32420-44880	BUMPER	1	<=73902			0	0
100	TA049-44880	BUMPER	1	>=73903	←		8.2	18.04
110	01133-51435	BOLT	4				0.001	0.0022
120	04512-60140	WASHER SPRING	4				0.006	0.0132
130	01173-51435	BOLT	2				0.056	0.1232
140	02174-50140	NUT	2				0.014	0.0308
150	04512-60140	WASHER SPRING	2				0.006	0.0132

silverhorn.co.uk

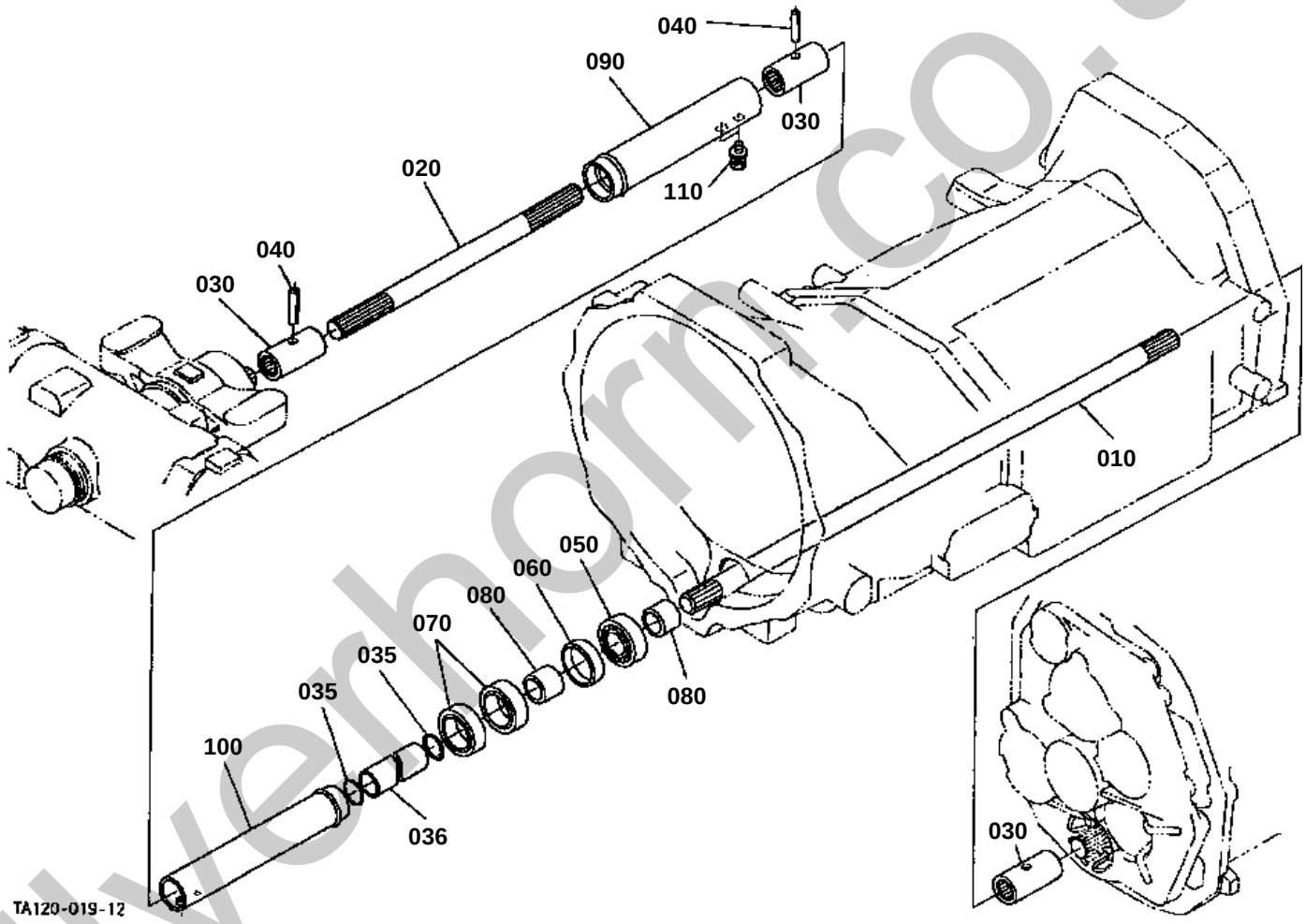

silverhorn.co.uk

110 01053-50510
120 04512-60050
130 04012-50050

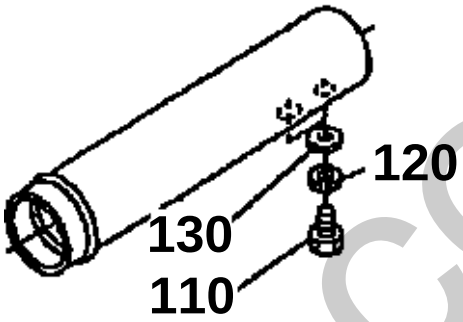

TA120-834-10

silverhorn.co.uk

PROPELLER SHAFT

↔ Interchangeable; ≠ not interchangeable; ← new for old; → old for new

REF.No	Part No.	Description	Q'ty	S.No.	I/C	REMARKS	Weight (kgf)	Weight (lb)
010	TA040-14640	SHAFT PROPELLER	1				1.9	4.18
020	TA040-14633	SHAFT PROPELLER	1				0.79	1.738
030	T0070-14710	COUPLING	3				0.16	0.352
035	TA040-82180	O RING	2				0.001	0.0022
036	TA040-14720	SPACER	1				0.21	0.462
040	05411-00430	PIN SPRING	2				0.002	0.0044
050	08101-06904	BEARING BALL	1				0.02	0.044
060	34070-14650	COLLAR	1				0.01	0.022
070	09500-25388	SEAL OIL	2				0.01	0.022
080	53582-53520	SLEEVE	2				0.015	0.033
090	TA040-14574	COVER SHAFT FRONT	1				0.33	0.726
100	TA040-14580	COVER SHAFT REAR	1				0.25	0.55
110	01053-50510	BOLT	2	<=74596			0.002	0.0044
110	TC050-14590	BOLT WITH WASHER	2	>=74597	←		0	0
120	04512-60050	WASHER SPRING	2	<=74596			0.002	0.0044
130	04012-50050	WASHER PLAIN	2	<=74596			0.001	0.0022

silverhorn.co.uk

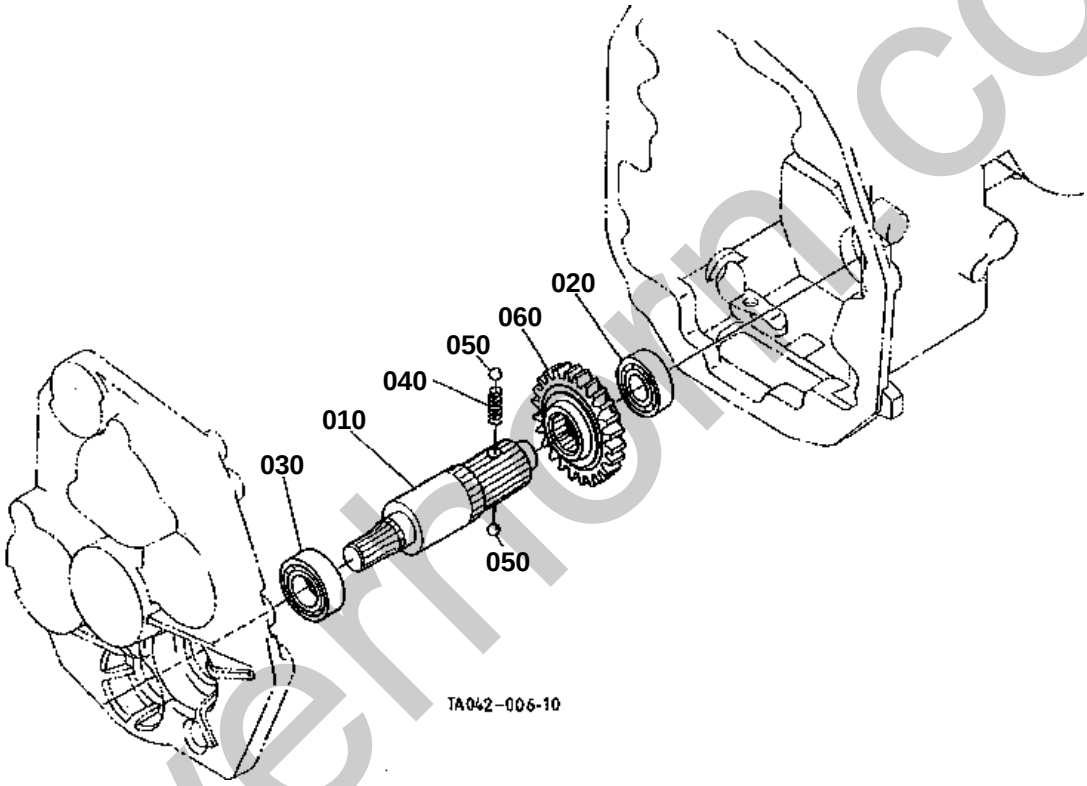

silverhorn.co.uk

FRONT WHEEL DRIVE SHAFT [W/O MID PTO]
[SANS TYPE DE PDF VENTRALE]

↔ Interchangeable; ≠ not interchangeable; ← new for old; → old for new

REF.No	Part No.	Description	Q'ty	S.No.	I/C	REMARKS	Weight (kgf)	Weight (lb)
010	TA040-15220	SHAFT DRIVE	1				1.125	2.475
020	34070-22560	BEARING BALL	1				0.1	0.22
030	37410-57190	BEARING BALL	1				0.14	0.308
040	35260-24110	SPRING	1				0.02	0.044
050	07715-01605	BALL	2				0.003	0.0066
060	TA040-15170	GEAR 4WD SHIFT	1			24T	0.625	1.375

silverhorn.co.uk

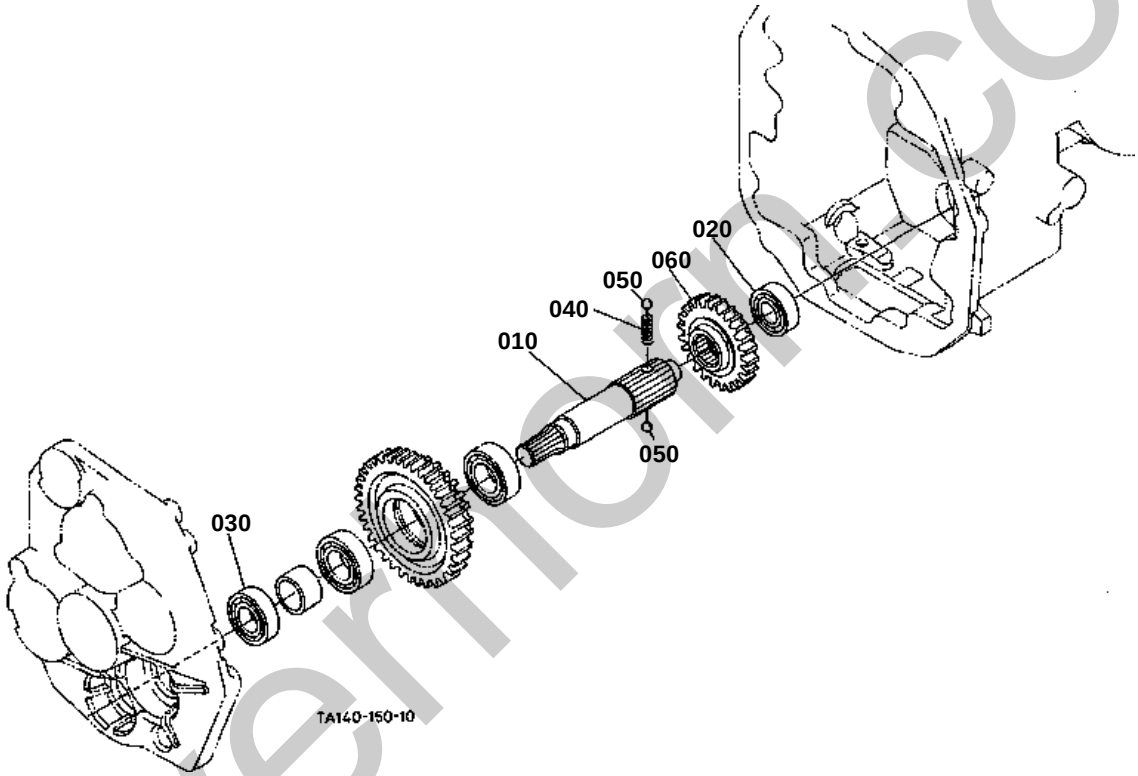

silvermoor.co.uk

FRONT WHEEL DRIVE SHAFT [WITH MID PTO]
[AVEC TYPE DE PDF VENTRALE]

↔ Interchangeable; ≠ not interchangeable; ← new for old; → old for new

REF.No	Part No.	Description	Q'ty	S.No.	I/C	REMARKS	Weight (kgf)	Weight (lb)
010	TA030-15210	SHAFT MID PTO	1				0.845	1.859
020	34070-22560	BEARING BALL	1				0.1	0.22
030	37410-57190	BEARING BALL	1				0.14	0.308
040	35260-24110	SPRING	1				0.02	0.044
050	07715-01605	BALL	2				0.003	0.0066
060	TA040-15170	GEAR 4WD SHIFT	1			24T	0.625	1.375

silverhorn.co.uk

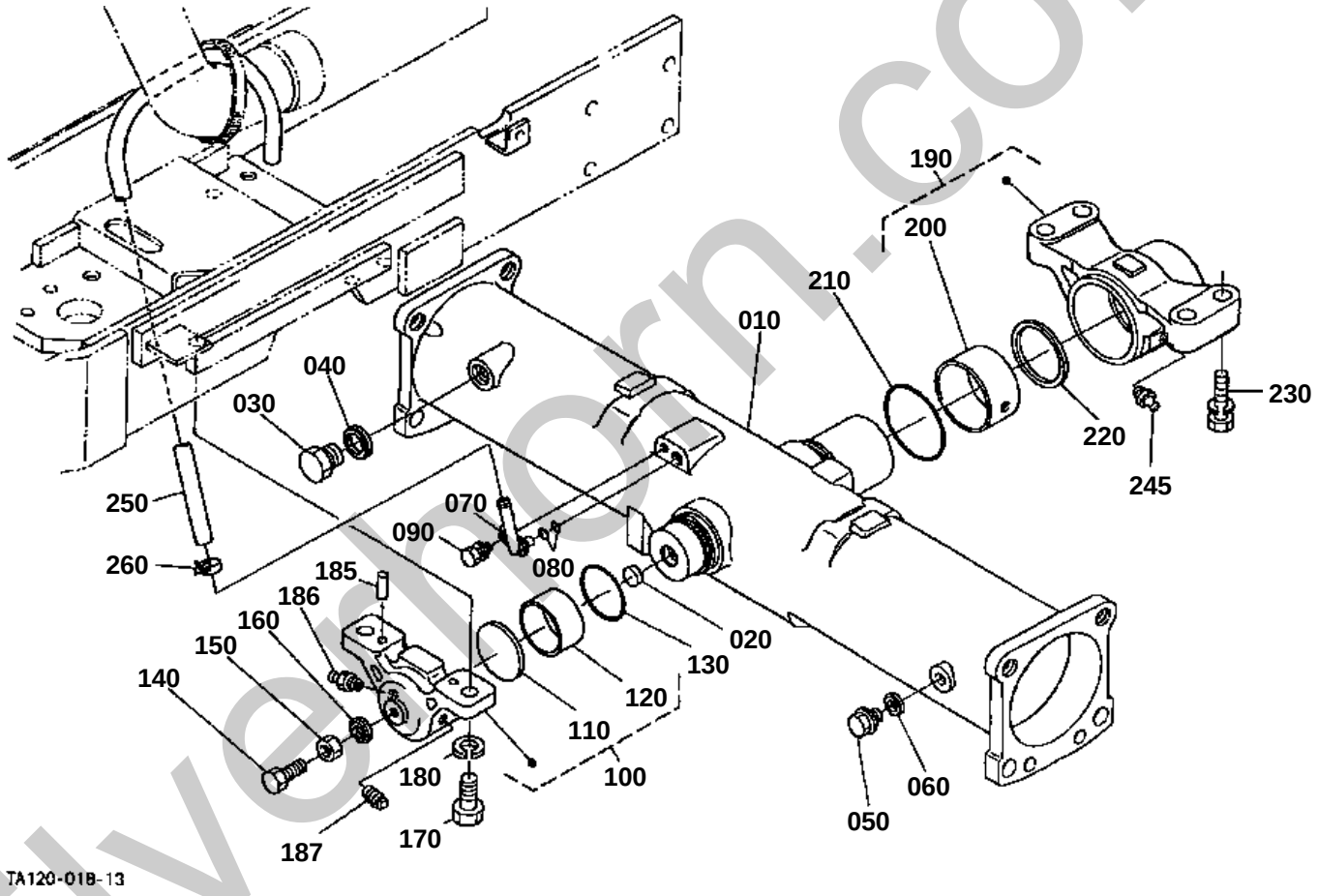

silverhorn.co.uk

100 TA140-1355-0

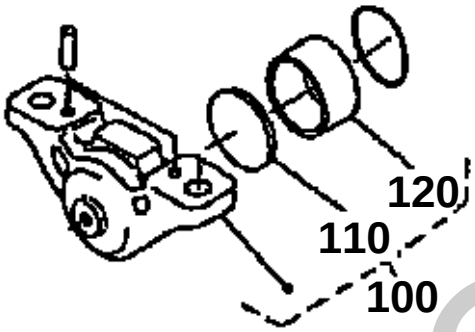

190 32751-1360-0
200 34070-1364-0

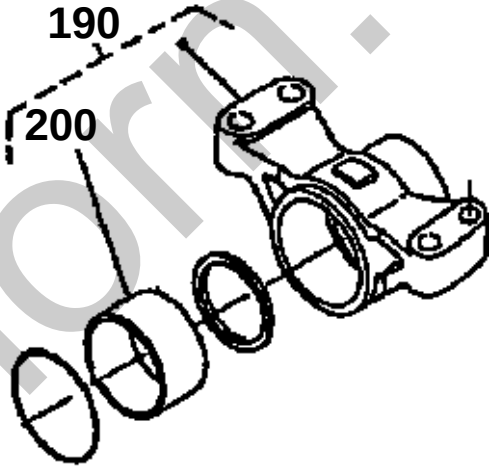

230 01176-51245
240 04512-50120

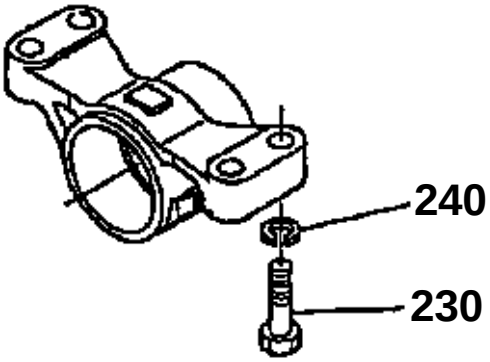

TA140-824-11

silverhorn.co.uk

FRONT DIFFERENTIAL CASE

↔ Interchangeable; ≠ not interchangeable; ← new for old; → old for new

REF.No	Part No.	Description	Q'ty	S.No.	I/C	REMARKS	Weight (kgf)	Weight (lb)
010	TA040-12003	CASE FRONT AXLE	1				19.3	42.46
020	31321-38720	PLUG	1				0.005	0.011
030	06331-35020	PLUG	1				0.068	0.1496
040	04717-02000	WASHER WITH RUBBER	1				0.004	0.0088
050	06331-45010	PLUG	1				0.02	0.044
060	04717-01000	WASHER WITH RUBBER	1				0.001	0.0022
070	TA040-12910	PIPE BREATHER	1				0.017	0.0374
080	04811-00080	O RING	2				0.001	0.0022
080	04816-00080	O RING	2		←		0.002	0.0044
090	01123-60814	BOLT	1				0.008	0.0176
100	TA140-13550	ASSY HOLDER FRONT	1	<=61089			0	0
100	TA140-13552	ASSY HOLDER FRONT	1	>=61090	←		1.485	3.267
110	37410-56180	COLLAR THRUST	1				0.07	0.154
120	08511-05020	BUSH	1				0.06	0.132
130	04811-00490	O RING	1				0.002	0.0044
130	04817-00490	O RING	1		←		0	0
140	01173-51030	BOLT	1				0.023	0.0506
150	02118-50100	NUT	1				0.005	0.011
160	31351-16250	WASHER SEAL	1				0.015	0.033
170	TA040-13570	BOLT	2				0.08	0.176
180	04512-60160	WASHER SPRING	2				0.01	0.022
185	05012-00818	PIN STRAIGHT	2				0.008	0.0176
186	06613-10010	NIPPLE GREASE	1	>=61090			0.006	0.0132
187	06312-10010	PLUG	1	>=61090			0.007	0.0154
190	32751-13600	ASSY HOLDER REAR	1	<=61089			3.2	7.04
190	TA140-13600	ASSY HOLDER REAR	1	>=61090	←		3.2	7.04
200	34070-13640	BUSH	1	<=61089			0.105	0.231
200	TA140-13640	BUSH	1	>=61090	←		0.09	0.198
210	04811-50700	O RING	1				0.002	0.0044
220	34070-13620	COLLAR THRUST	1				0.05	0.11
230	01176-51245	BOLT	4	<=73769			0.05	0.11
230	01138-51245	BOLT	4	>=73770	←		0.051	0.1122
240	04512-60120	WASHER SPRING	4	<=73769			0.005	0.011
245	06613-10010	NIPPLE GREASE	1	>=61090			0.006	0.0132
250	09663-80725	TUBE FUEL	1				0.08	0.176
260	09318-88115	CLAMP HOSE	1				0.002	0.0044

silverhorn.co.uk

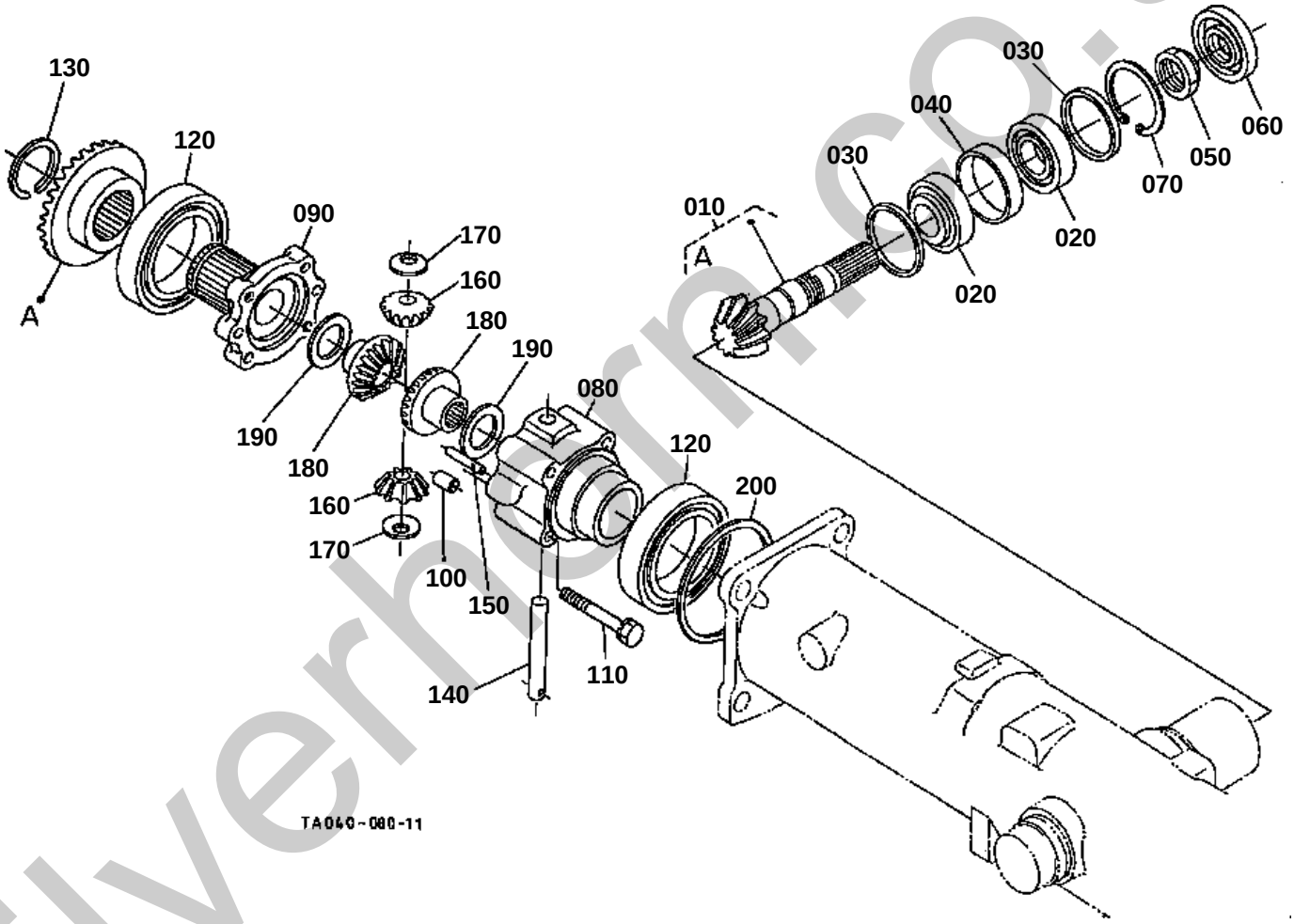

silverhern.co.uk

↔ Interchangeable; ≠ not interchangeable; ← new for old; → old for new

REF.No	Part No.	Description	Q'ty	S.No.	I/C	REMARKS	Weight (kgf)	Weight (lb)
010	TA040-12013	ASSY GEAR BEVEL	1	<=72536		9-23T	0	0
010	TA040-12013	ASSY GEAR BEVEL	1	>=72537	←	9-23T	0	0
020	34070-12200	BEARING TAPER-ROLLER	2				0.305	0.671
030	34070-12060	COLLAR	2			5.8mm	0.015	0.033
030	34070-12070	COLLAR	2			5.9mm	0.015	0.033
030	34070-12080	COLLAR	2			6.0mm	0.015	0.033
030	34070-12090	COLLAR	2			6.1mm	0.015	0.033
030	34070-12100	COLLAR	2			6.2mm	0.02	0.044
040	34070-12130	COLLAR	1			9.8mm	0.03	0.066
040	34070-12140	COLLAR	1			9.9mm	0.02	0.044
040	34070-12150	COLLAR	1	<=71651		10.0mm	0	0
040	3A221-43100	COLLAR	1	>=71652	←	10.0mm	0.025	0.055
040	34070-12160	COLLAR	1			10.1mm	0.03	0.066
040	34070-12170	COLLAR	1			10.2mm	0.03	0.066
050	37410-56710	NUT	1				0.03	0.066
060	34070-12220	SEAL OIL	1				0.03	0.066
070	04611-00580	CIR CLIP INTERNAL	1				0.005	0.011
080	34070-12250	CASE DIFF.	1				1.895	4.169
090	32751-12260	CASE DIFF.	1				0.9	1.98
100	05012-01020	PIN STRAIGHT	2				0.02	0.044
110	01133-51075	BOLT	4				0.03	0.066
120	08101-06212	BEARING BALL	2				0.78	1.716
130	34070-12280	CIR CLIP EXTERNAL	1				0.005	0.011
140	31353-43330	SHAFT PINION	1				0.13	0.286
150	05012-00628	PIN STRAIGHT	1				0.006	0.0132
160	31353-43343	PINION DIFF.	2				0.1	0.22
170	67121-56670	COLLAR PINION THRUST	2				0.006	0.0132
180	31353-43353	GEAR DIFF.SIDE	2				0.19	0.418
190	67211-15160	SHIM	2			1.0mm	0.01	0.022
190	67211-15170	SHIM	2			0.8mm	0.008	0.0176
190	67211-15180	SHIM	2			1.2mm	0.01	0.022
190	31353-43360	SHIM	2			0.6mm	0.01	0.022
190	31353-43370	SHIM	2			0.4mm	0.01	0.022
200	34070-12300	SHIM	1			1.6mm	0.02	0.044
200	34070-12310	SHIM	1			1.8mm	0.03	0.066
200	34070-12320	SHIM	1			2.0mm	0.03	0.066
200	34070-12330	SHIM	1			2.2mm	0.03	0.066
200	34070-12340	SHIM	1			2.4mm	0.035	0.077

silverhorn.co.uk

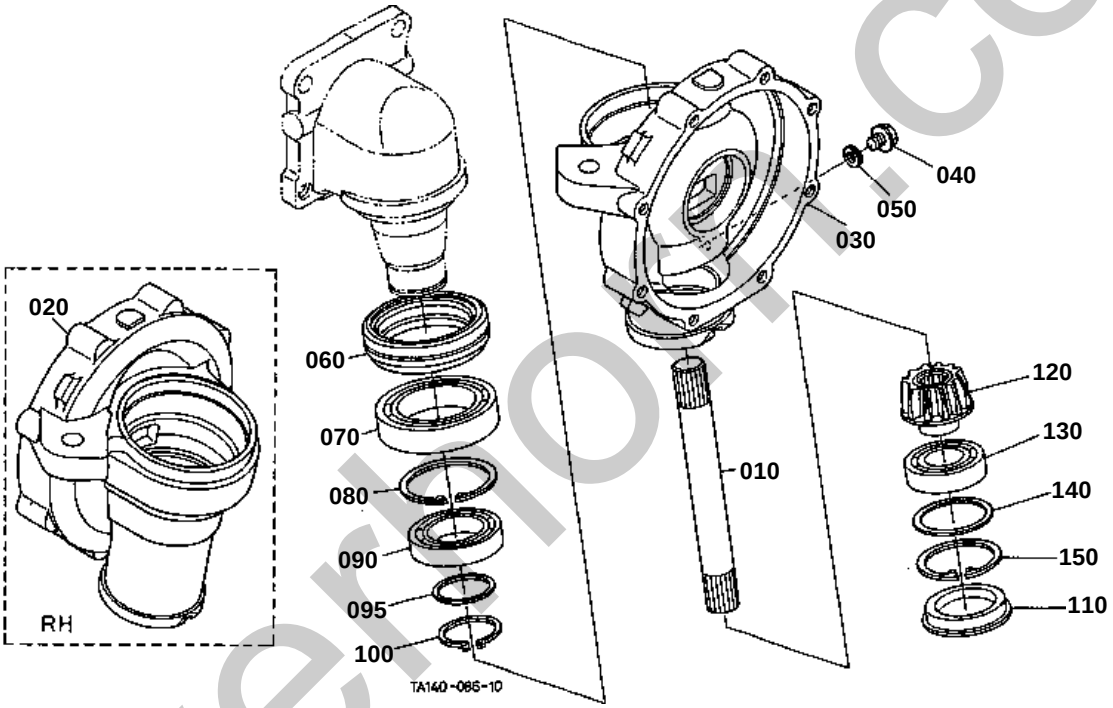

silverhoe.co.uk

↔ Interchangeable; ≠ not interchangeable; ← new for old; → old for new

REF.No	Part No.	Description	Q'ty	S.No.	I/C	REMARKS	Weight (kgf)	Weight (lb)
010	TA040-12720	SHAFT BEVEL GEAR	2				0.73	1.606
020	TA040-13016	CASE FRONT GEAR RH	1				8.75	19.25
030	TA040-13026	CASE FRONT GEAR LH	1				8.75	19.25
040	06331-45010	PLUG	2				0.02	0.044
050	04717-01000	WASHER WITH RUBBER	2				0.001	0.0022
060	TA140-13040	SEAL OIL	2				0.155	0.341
070	08101-06014	BEARING BALL	2				0.6	1.32
080	04611-00800	CIR CLIP INTERNAL	2				0.02	0.044
090	08101-06010	BEARING BALL	2				0.262	0.5764
095	TA140-12080	SHIM	2			0.8mm	0.007	0.0154
095	TA140-12100	SHIM	2			1.0mm	0.008	0.0176
095	TA140-12120	SHIM	2			1.2mm	0.01	0.022
095	TA140-12140	SHIM	2			1.4mm	0.011	0.0242
095	TA140-12160	SHIM	2			1.6mm	0.013	0.0286
100	04612-00500	CIR CLIP EXTERNAL	2				0.009	0.0198
110	34070-13100	PLUG	2				0.03	0.066
120	TA040-13200	GEAR BEVEL	2			11T	0.48	1.056
130	08101-06207	BEARING BALL	2				0.282	0.6204
140	37410-57160	SHIM	2			1.0mm	0.01	0.022
140	37410-57170	SHIM	2			1.2mm	0.011	0.0242
140	34070-12610	SHIM	2			1.4mm	0.015	0.033
140	34070-12620	SHIM	2			1.6mm	0.015	0.033
140	34070-12630	SHIM	2			1.8mm	0.015	0.033
140	34070-12640	SHIM	2			2.0mm	0.02	0.044
140	34070-12650	SHIM	2			2.2mm	0.02	0.044
150	04611-00720	CIR CLIP INTERNAL	2				0.018	0.0396

silverhorn.co.uk

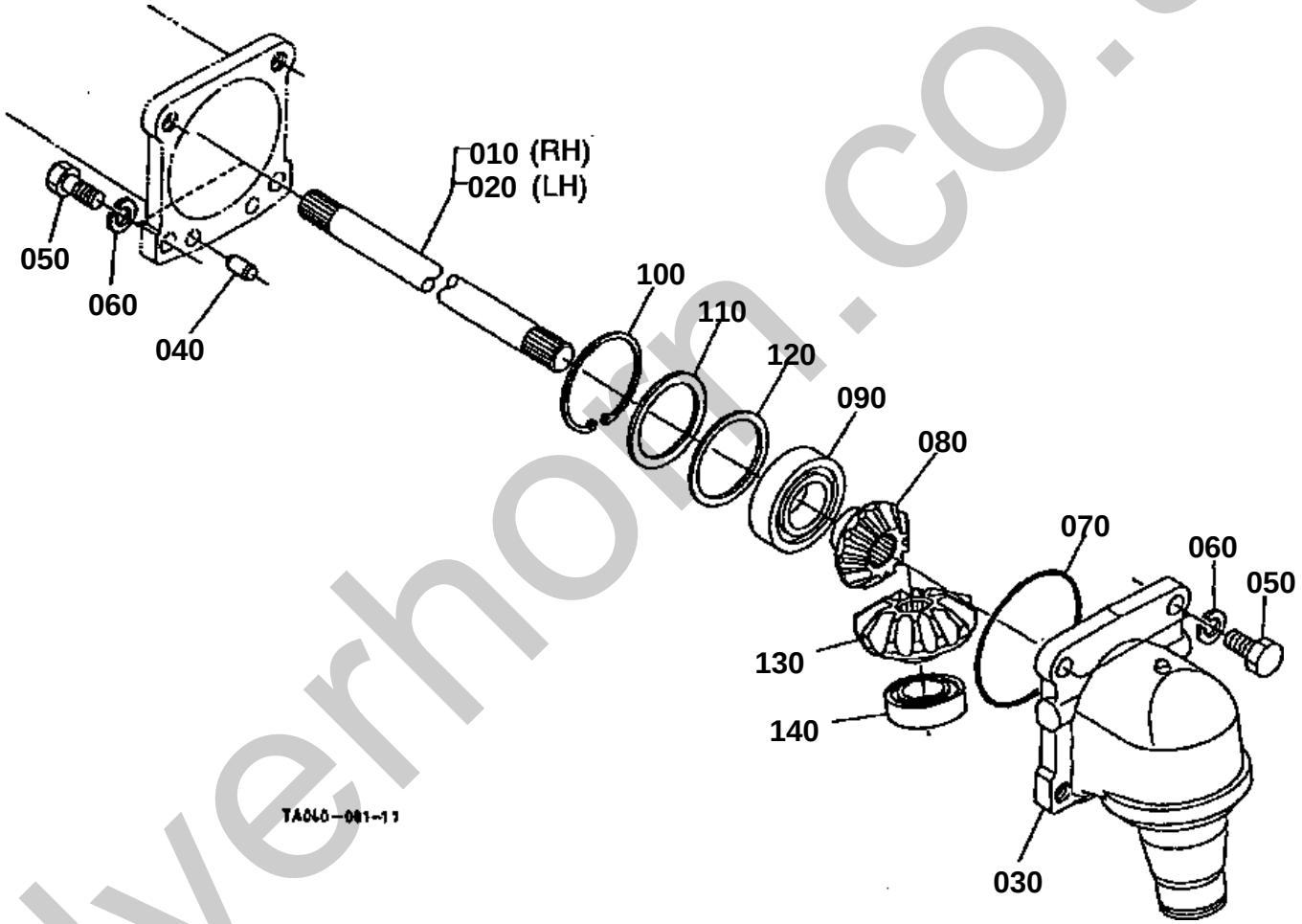

silverhorn.co.uk

DIFFERENTIAL GEAR SHAFT

↔ Interchangeable; ≠ not interchangeable; ← new for old; → old for new

REF.No	Part No.	Description	Q'ty	S.No.	I/C	REMARKS	Weight (kgf)	Weight (lb)
010	T0070-12450	SHAFT YOKE LH	1			(RH)	1.77	3.894
020	T0070-12460	SHAFT YOKE RH	1			(LH)	1.1	2.42
030	TA140-12800	CASE BEVEL GEAR	2				4.4	9.68
040	31353-43880	PIN STRAIGHT	4				0.02	0.044
050	01133-51435	BOLT	8				0.001	0.0022
060	04512-60140	WASHER SPRING	8				0.006	0.0132
070	04811-51050	O RING	2				0.003	0.0066
080	TA040-12520	GEAR BEVEL	2			11T	0.37	0.814
090	08101-06307	BEARING BALL	2				0.44	0.968
100	04611-00800	CIR CLIP INTERNAL	2				0.02	0.044
110	TA040-12702	COLLAR	2			T=2.6mm	0.035	0.077
120	31353-43750	SHIM	2			0.4mm	0.008	0.0176
120	31353-43760	SHIM	2			0.6mm	0.01	0.022
120	31353-43770	SHIM	2			0.8mm	0.015	0.033
120	31353-43780	SHIM	2			1.0mm	0.014	0.0308
120	31353-43790	SHIM	2			1.2mm	0.015	0.033
130	TA040-12530	GEAR BEVEL	2			16T	0.67	1.474
140	08101-06207	BEARING BALL	2				0.282	0.6204

silverhorn.co.uk

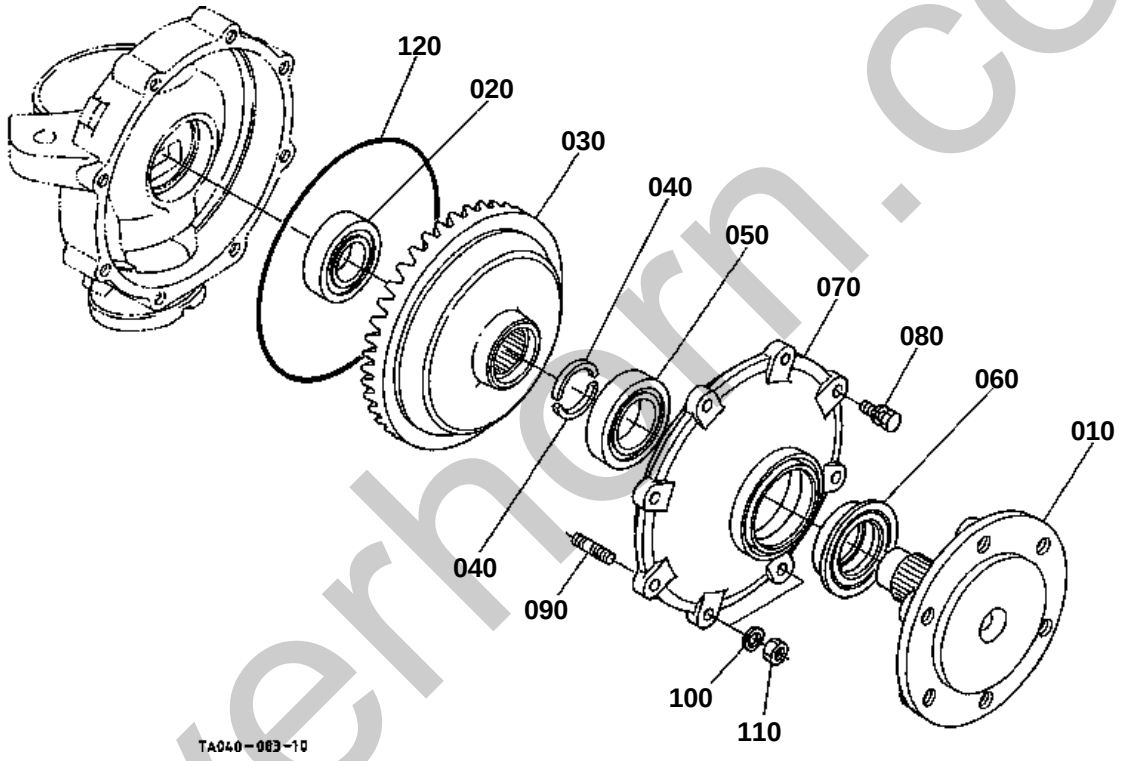

silverhorn.co.uk

FRONT AXLE

↔ Interchangeable; ≠ not interchangeable; ← new for old; → old for new

REF.No	Part No.	Description	Q'ty	S.No.	I/C	REMARKS	Weight (kgf)	Weight (lb)
010	34070-13330	AXLE FRONT	2				3.5	7.7
020	08101-06207	BEARING BALL	2	<=61287			0.282	0.6204
020	TA140-13140	BEARING BALL	2	>=61288	≠		0.29	0.638
030	34070-13210	GEAR BEVEL	2			42T	5.45	11.99
040	34070-13350	COLLAR	4				0.01	0.022
050	32751-12510	BEARING BALL	2	<=61287		NOT SALE	0.36	0.792
050	TA140-13150	BEARING BALL	2	>=61288	≠		0.37	0.814
060	34070-13370	SEAL OIL	2				0.1	0.22
070	TA040-13130	COVER FRONT AXLE	2	<=60731			0	0
070	TA040-13133	COVER FRONT AXLE	2	>=60732	←		3.05	6.71
080	01123-50825	BOLT	12				0.013	0.0286
090	01513-60825	STUD	4				0.012	0.0264
100	04512-60080	WASHER SPRING	4				0.002	0.0044
110	02156-50080	NUT	4				0.004	0.0088
120	31353-44130	O RING	2				0.01	0.022

silverhorn.co.uk

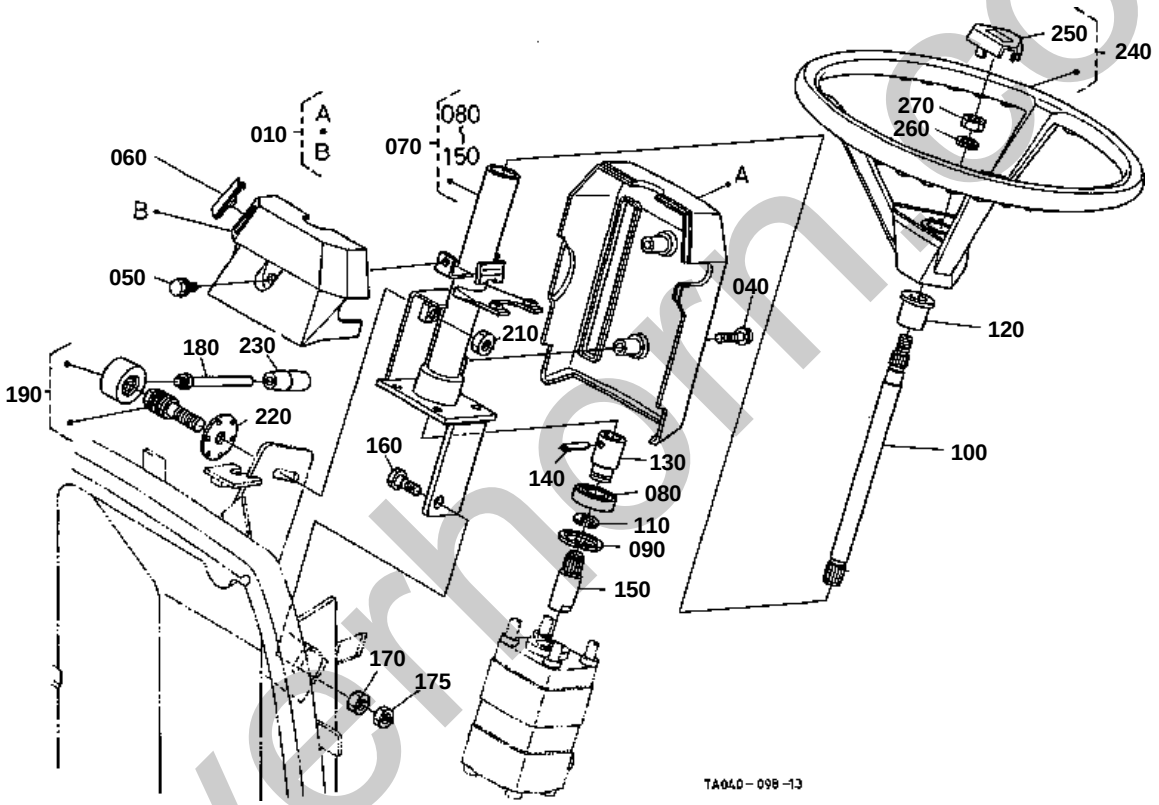

silverhorse.co.uk

STEERING HANDLE [EXCEPT HST TYPE] [ROPS TYPE]
[EXCEPTE TYPE CABINE]

↔ Interchangeable; ≠ not interchangeable; ← new for old; → old for new

REF.No	Part No.	Description	Q'ty	S.No.	I/C	REMARKS	Weight (kgf)	Weight (lb)
010	34070-43100	COVER STEERING POST	1				0.255	0.561
020	99999-99999	BLANK	0				0	0
030	99999-99999	BLANK	0				0	0
040	34070-43110	BOLT FLANGE	2				0.02	0.044
050	30400-18870	BOLT FLANGE	1				0.01	0.022
060	34070-43140	COVER HANDLE POST	1				0.005	0.011
070	TA040-43600	ASSY POST STEERING	1				1.8	3.96
080	08121-06004	BEARING BALL	1				0.075	0.165
090	04611-00420	CIR CLIP INTERNAL	1				0.006	0.0132
100	TA040-43680	SHAFT STEERING	1				0.4	0.88
110	36919-30040	CIR-CLIP	1				0.001	0.0022
120	37410-41340	BUSH POST	1				0.015	0.033
130	34550-43690	COUPLING STEERING	1				0.103	0.2266
140	05411-00425	PIN SPRING	1				0.001	0.0022
150	35080-40170	SHAFT JOINT	1				0.11	0.242
160	34070-43670	BOLT	1				0.02	0.044
170	02114-50080	NUT	1				0.005	0.011
175	02112-50080	NUT	1				0.003	0.0066
180	34070-43720	LEVER TILT	1				0.065	0.143
190	34550-43750	ASSY SHAFT SCREW	1				0.23	0.506
200	99999-99999	BLANK	0				0	0
210	02172-50120	NUT	1				0.01	0.022
220	34070-43640	HOLDER TILT	1				0.03	0.066
230	61023-41630	GRIP	1				0.015	0.033
240	31351-16063	ASSY WHEEL STEERING	1				2.4	5.28
250	31351-16082	PAD STEERING	1				0.07	0.154
260	04512-60120	WASHER SPRING	1				0.005	0.011
270	02176-50120	NUT	1				0.01	0.022

silverhorn.co.uk

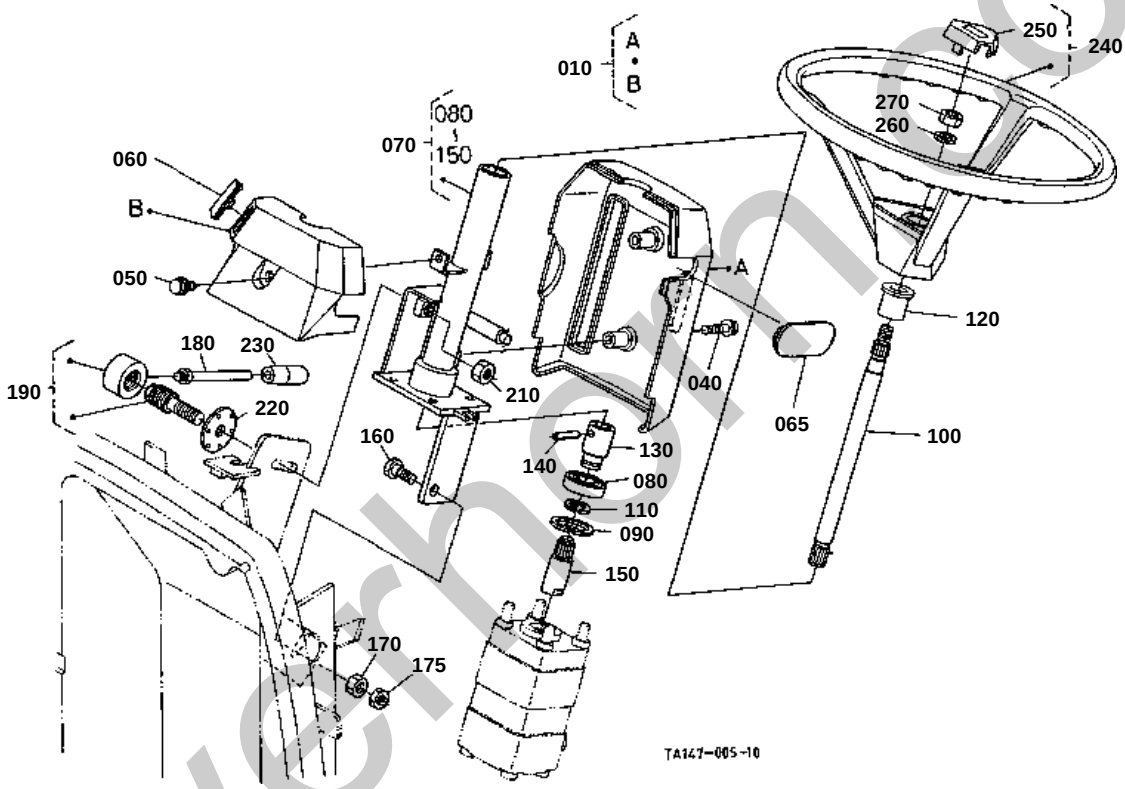

silverhorn.co.uk

011 TA240-9962-0
015 TA240-4991-0
020 TA241-9962-0
025 TA241-4991-0

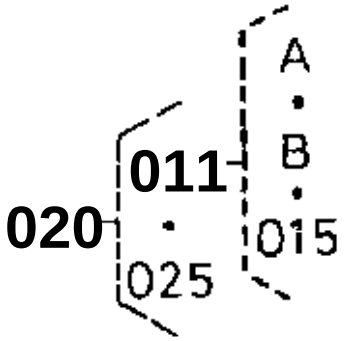

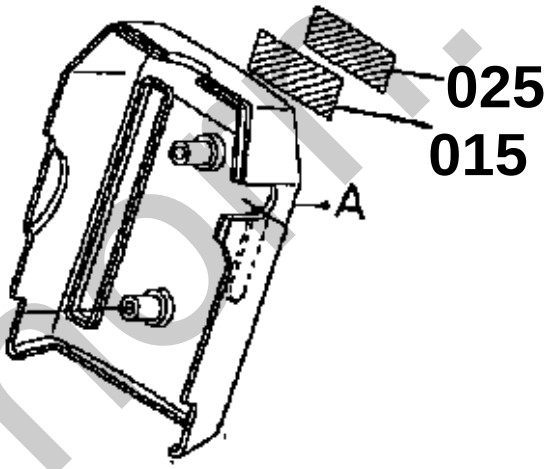

TA140-845-10

silverhorn.co.uk

STEERING HANDLE [HST TYPE] [ROPS TYPE]
[EXCEPTE TYPE CABINE]

↔ Interchangeable; ≠ not interchangeable; ← new for old; → old for new

REF.No	Part No.	Description	Q'ty	S.No.	I/C	REMARKS	Weight (kgf)	Weight (lb)
010	TA240-43100	COVER STEERING POST	1				0.205	0.451
011	TA240-99620	KIT COVER STEERING(A	1	<=70508		ENGLISH	0.145	0.319
015	TA240-49910	LABEL SPEED WARNING	1	<=70508		ENGLISH	0.001	0.0022
020	TA241-99620	KIT COVER STEERING(B	1			FRENCH	0.145	0.319
025	TA241-49910	LABEL SPEED WARNING	1	<=70508		FRENCH	0.002	0.0044
030	99999-99999	BLANK	0				0	0
040	34070-43110	BOLT FLANGE	2				0.02	0.044
050	30400-18870	BOLT FLANGE	1				0.01	0.022
060	34070-43140	COVER HANDLE POST	1				0.005	0.011
065	TA240-43150	COVER SHUTTLE	1				0.015	0.033
070	TA240-43600	ASSY POST STEERING	1				1.725	3.795
080	08121-06004	BEARING BALL	1				0.075	0.165
090	04611-00420	CIR CLIP INTERNAL	1				0.006	0.0132
100	TA040-43680	SHAFT STEERING	1				0.4	0.88
110	36919-30040	CIR-CLIP	1				0.001	0.0022
120	37410-41340	BUSH POST	1				0.015	0.033
130	34550-43690	COUPLING STEERING	1				0.103	0.2266
140	05411-00425	PIN SPRING	1				0.001	0.0022
150	35080-40170	SHAFT JOINT	1				0.11	0.242
160	34070-43670	BOLT	1				0.02	0.044
170	02114-50080	NUT	1				0.005	0.011
175	02112-50080	NUT	1				0.003	0.0066
180	34070-43720	LEVER TILT	1				0.065	0.143
190	34550-43750	ASSY SHAFT SCREW	1				0.23	0.506
200	99999-99999	BLANK	0				0	0
210	02172-50120	NUT	1				0.01	0.022
220	34070-43640	HOLDER TILT	1				0.03	0.066
230	61023-41630	GRIP	1				0.015	0.033
240	31351-16063	ASSY WHEEL STEERING	1				2.4	5.28
250	31351-16082	PAD STEERING	1				0.07	0.154
260	04512-60120	WASHER SPRING	1				0.005	0.011
270	02176-50120	NUT	1				0.01	0.022

silverhorn.co.uk

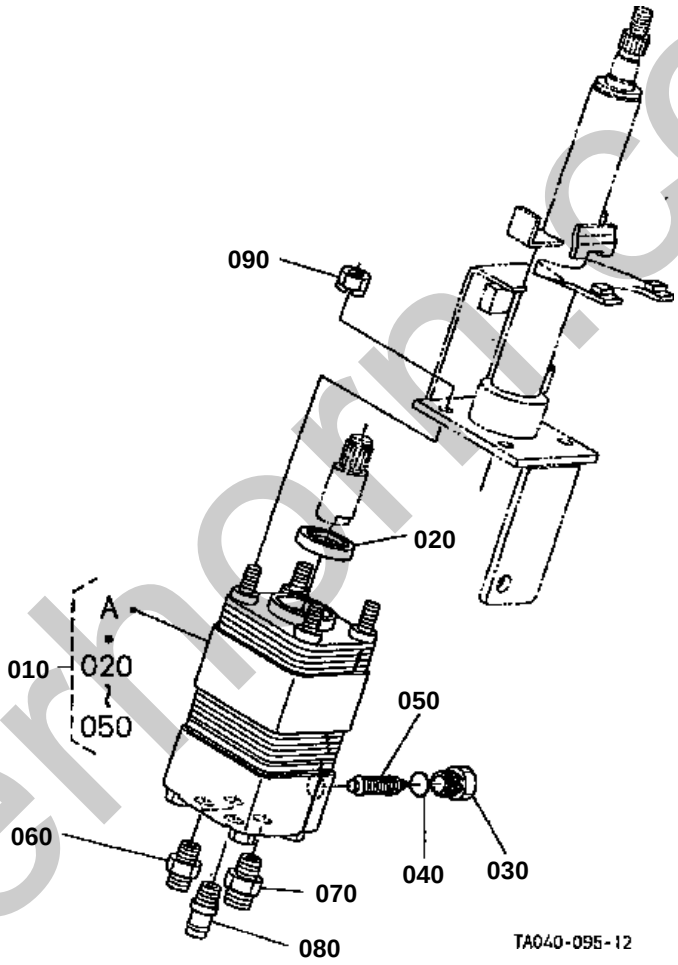

silverhorn.co.uk

090 02156-50080
100 04512-50080

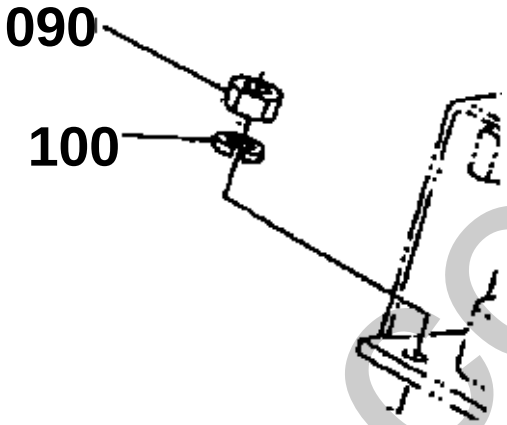

TA140-857-10

silverhorn.co.uk

STEERING CONTROLLER

↔ Interchangeable; ≠ not interchangeable; ← new for old; → old for new

REF.No	Part No.	Description	Q'ty	S.No.	I/C	REMARKS	Weight (kgf)	Weight (lb)
010	TA040-37002	CONTROLLER STEERING	1				4.8	10.56
020	09500-19387	SEAL OIL	1				0.012	0.0264
030	35070-40840	PLUG	1				0.042	0.0924
040	04810-00150	O RING	1				0.001	0.0022
040	04817-00150	O RING	1		←		0	0
050	35080-40870	COMP.VALVE RELIEF	1				0.018	0.0396
060	56713-28140	ADAPTER CYLINDER	2				0.03	0.066
070	T0180-37300	JOINT	1				0.06	0.132
080	31391-66810	JOINT PIPE	1				0.04	0.088
090	02156-50080	NUT	4	<=73589			0.004	0.0088
090	16429-92010	NUT	4	>=73590	←		0.007	0.0154
100	04512-60080	WASHER SPRING	4	<=73589			0.002	0.0044

silverhorn.co.uk

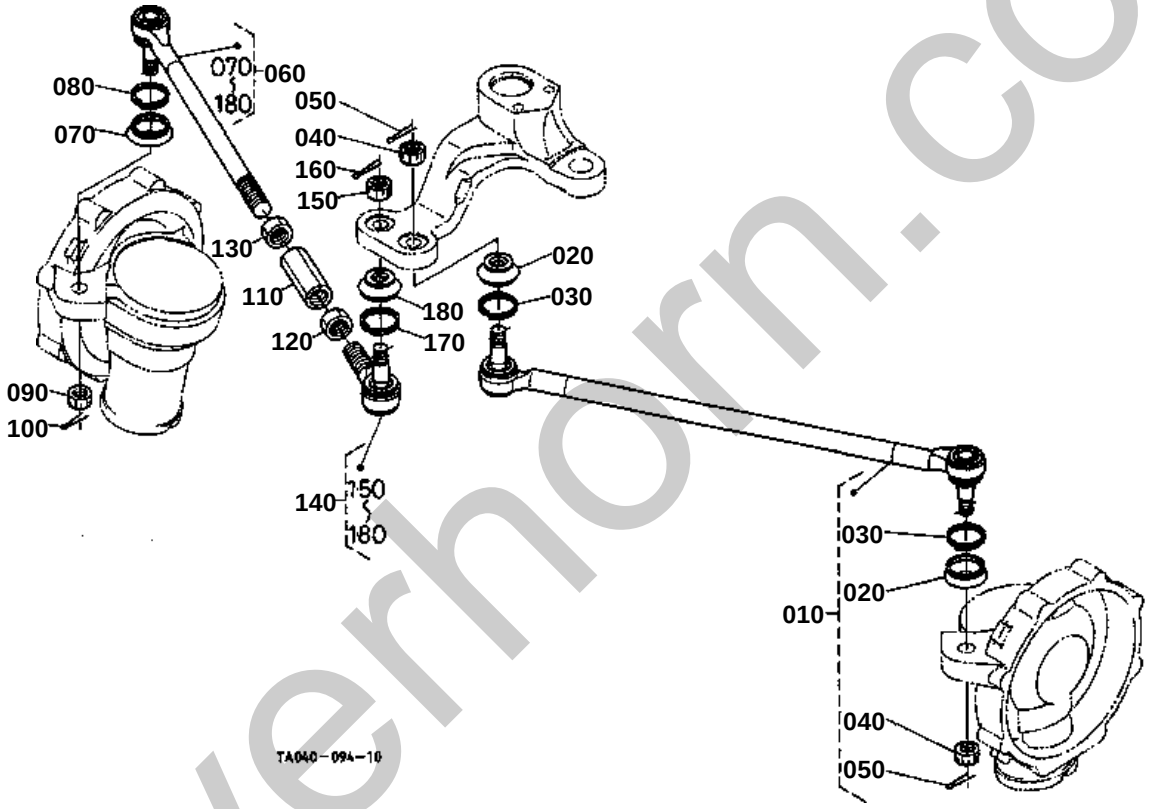

silverhorn.co.uk

↔ Interchangeable; ≠ not interchangeable; ← new for old; → old for new

REF.No	Part No.	Description	Q'ty	S.No.	I/C	REMARKS	Weight (kgf)	Weight (lb)
010	TA040-13700	ASSY ROD TIE LH	1				2.08	4.576
020	32580-44780	COVER DUST	2				0.01	0.022
030	35270-12660	CLIP	2				0.005	0.011
040	36330-62750	NUT	2				0.022	0.0484
050	05511-50328	PIN SPLIT	2				0.002	0.0044
060	TA040-13740	ASSY ROD TIE RH	1				2	4.4
070	32580-44780	COVER DUST	1				0.01	0.022
080	35270-12660	CLIP	1				0.005	0.011
090	36330-62750	NUT	1				0.022	0.0484
100	05511-50328	PIN SPLIT	1				0.002	0.0044
110	32570-44720	ROD ADJUSTING	1				0.21	0.462
120	02172-50200	NUT	1				0.03	0.066
130	38630-44980	NUT	1				0.01	0.022
140	32580-44770	COMP.END TIE ROD RH	1				0.49	1.078
150	36330-62750	NUT	1				0.022	0.0484
160	05511-50328	PIN SPLIT	1				0.002	0.0044
170	35270-12660	CLIP	1				0.005	0.011
180	32580-44780	COVER DUST	1				0.01	0.022

silverhorn.co.uk

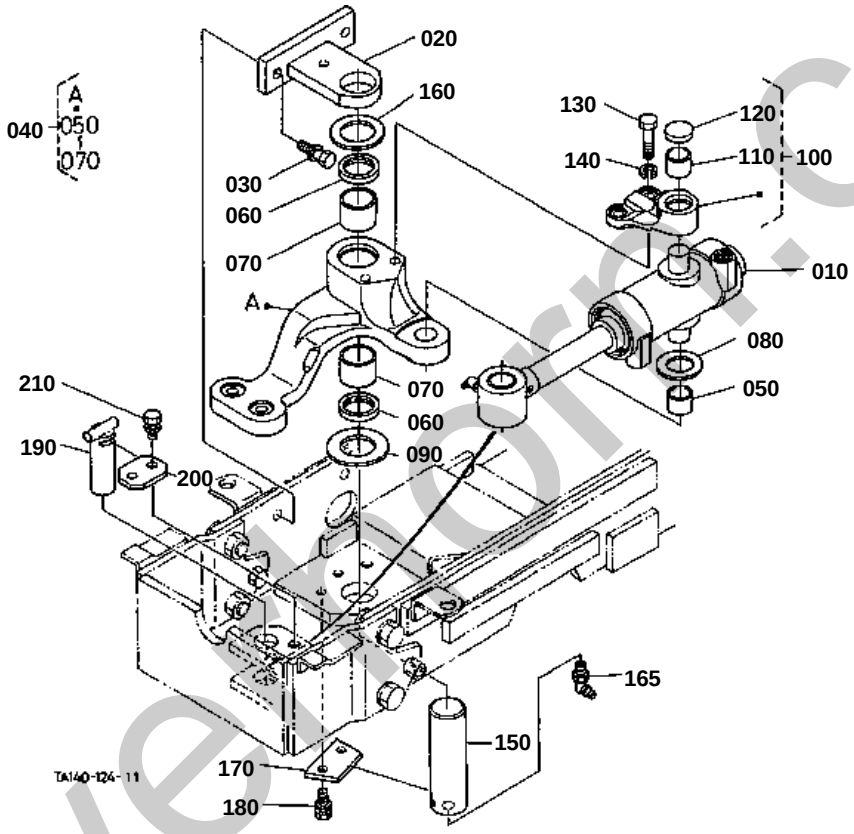

silverthorn.co.uk

STEERING CYLINDER

↔ Interchangeable; ≠ not interchangeable; ← new for old; → old for new

REF.No	Part No.	Description	Q'ty	S.No.	I/C	REMARKS	Weight (kgf)	Weight (lb)
010	TA040-37803	ASSY CYLINDER STRG.	1				4.85	10.67
020	TA040-14310	SUPPORT SHAFT	1				1.15	2.53
030	01133-51235	BOLT	2				0.05	0.11
040	TA040-17130	ASSY ARM PITMAN	1	<=50008			0	0
040	TA040-17132	ASSY ARM PITMAN	1	>=50009	←		4.95	10.89
050	08511-02420	BUSH	1				0.018	0.0396
060	38240-13160	SEAL OIL	2				0.005	0.011
070	08511-04030	BUSH	2	<=50008			0.06	0.132
070	52200-22430	BUSH	2	>=50009	≠		0.05	0.11
080	TA040-17200	WASHER	1				0.01	0.022
090	TA040-17210	WASHER	1				0.03	0.066
100	TA140-17100	ASSY ARM PITMAN	1				0.6	1.32
110	08511-02420	BUSH	1				0.018	0.0396
120	69331-11160	PLUG	1				0.008	0.0176
130	TA040-17190	BOLT REAMER	2				0.035	0.077
140	04512-60100	WASHER SPRING	2				0.002	0.0044
150	TA040-17160	SHAFT PITMAN ARM	1	<=50008		NOT SALE	1.33	2.926
150	TA040-17162	SHAFT PITMAN ARM	1	>=50009	←		1.33	2.926
160	TA040-17250	WASHER	1				0.016	0.0352
165	06616-25010	NIPPLE GREASE	1	>=50009			0.008	0.0176
170	TA040-17262	PLATE SHAFT	1				0.08	0.176
180	01133-51025	BOLT	2				0.023	0.0506
190	TA040-17173	SHAFT ROD END	1				0.4	0.88
200	TA040-17150	PLATE ROD END	1				0.055	0.121
210	01123-51016	BOLT	2				0.03	0.066

silverhorn.co.uk

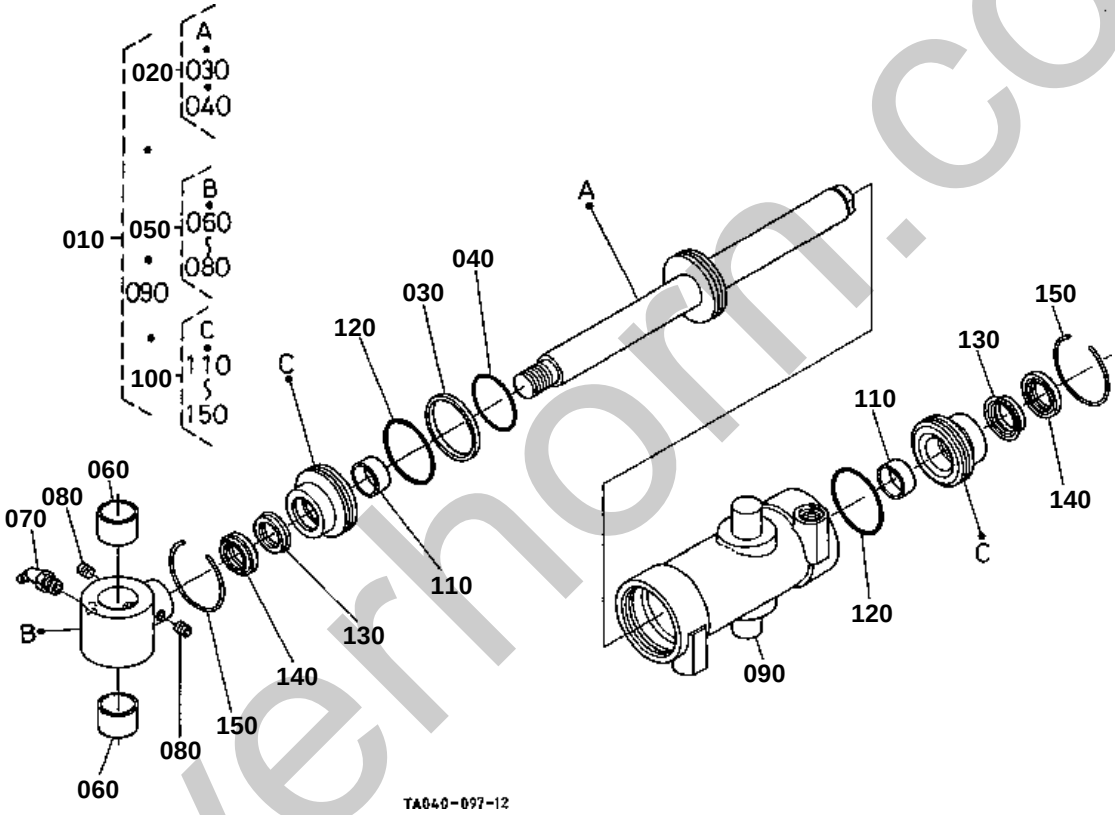

silverhorn.co.uk

↔ Interchangeable; ≠ not interchangeable; ← new for old; → old for new

REF.No	Part No.	Description	Q'ty	S.No.	I/C	REMARKS	Weight (kgf)	Weight (lb)
010	TA040-37803	ASSY CYLINDER STRG.	1				4.85	10.67
020	TA040-37814	ASSY ROD	1				1.55	3.41
030	TA040-37570	GASKET PISTON	1				0.002	0.0044
040	04811-00450	O RING	1				0.002	0.0044
040	04816-00450	O RING	1		←		0.002	0.0044
050	TA040-37860	ASSY END ROD	1				0.7	1.54
060	08511-02820	BUSH	2				0.029	0.0638
070	06613-20010	NIPPLE GREASE	1				0.01	0.022
080	03653-50610	SCREW SET	2				0.001	0.0022
090	TA040-37874	TUBE CYLINDER	1				1.91	4.202
100	TA040-37840	ASSY COVER CYLINDER	2				0.365	0.803
110	08511-02512	BUSH	2				0.03	0.066
120	04810-50500	O RING	2				0.005	0.011
120	04817-50500	O RING	2		←		0	0
130	TA040-37560	GASKET ROD	2				0.002	0.0044
140	TA040-37580	SEAL DUST	2				0.002	0.0044
150	TA040-37880	CIR-CLIP	2				0.005	0.011

silverhorn.co.uk

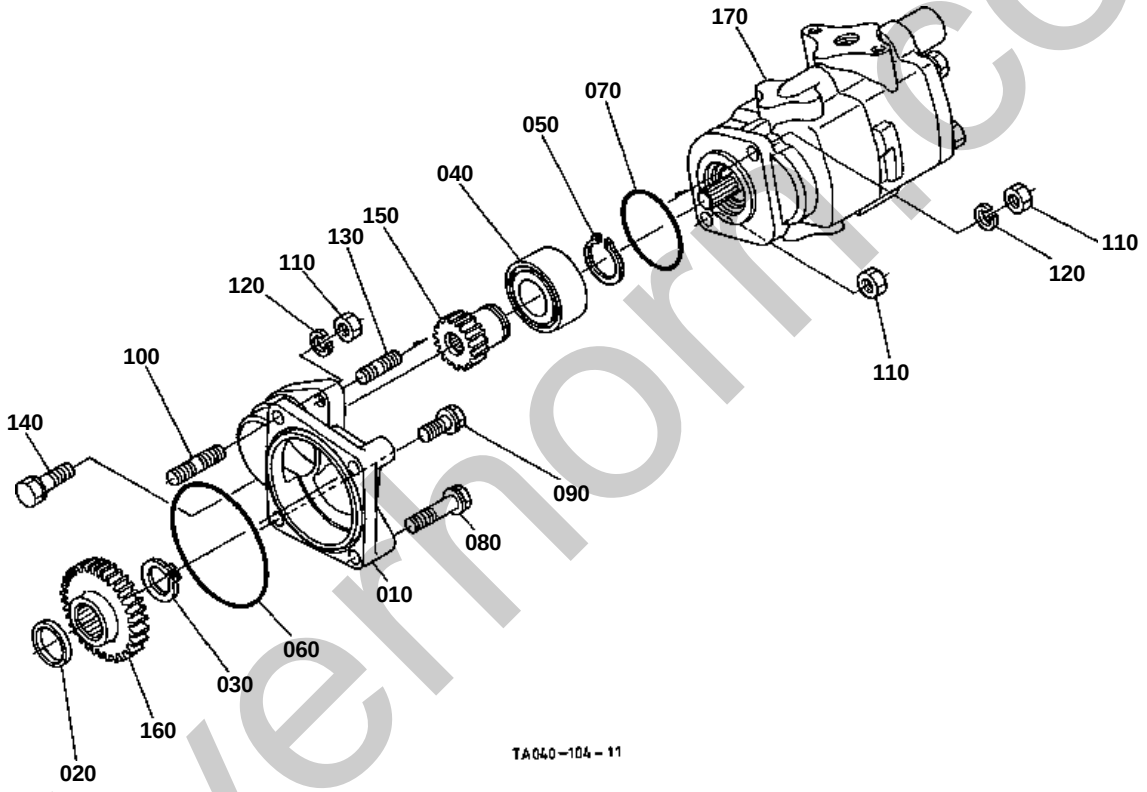

silverhorn.co.uk

HYDRAULIC PUMP [EXCEPT HST TYPE]

↔ Interchangeable; ≠ not interchangeable; ← new for old; → old for new

REF.No	Part No.	Description	Q'ty	S.No.	I/C	REMARKS	Weight (kgf)	Weight (lb)
010	34070-33610	HOLDER PUMP	1	<=61287			0	0
010	34070-33612	HOLDER PUMP	1	>=61288	←		0.375	0.825
020	35370-37820	COLLAR	1				0.015	0.033
030	15471-95360	CIR CLIP EXTERNAL	1				0.004	0.0088
040	08241-05205	BEARING BALL	1				0.177	0.3894
050	04612-00250	CIR CLIP EXTERNAL	1				0.002	0.0044
060	04811-10850	O RING	1				0.002	0.0044
070	04811-10500	O RING	1	<=74854			0.001	0.0022
070	T1060-36620	O RING	1	>=74855	←		0.001	0.0022
080	01754-50840	BOLT FLANGE	2				0.02	0.044
090	01754-50820	BOLT FLANGE	1				0.015	0.033
100	38240-36330	STUD	1				0.008	0.0176
110	02156-50080	NUT	3				0.004	0.0088
120	04512-60080	WASHER SPRING	2				0.002	0.0044
130	01513-60820	STUD	1				0.015	0.033
140	01123-50835	BOLT	1				0.02	0.044
150	31391-76520	GEAR	1			17T	0.16	0.352
160	31391-37810	GEAR	1			34T	0.33	0.726
170	34550-36400	ASSY PUMP HYDRAULIC	1				3.5	7.7

silverhorn.co.uk

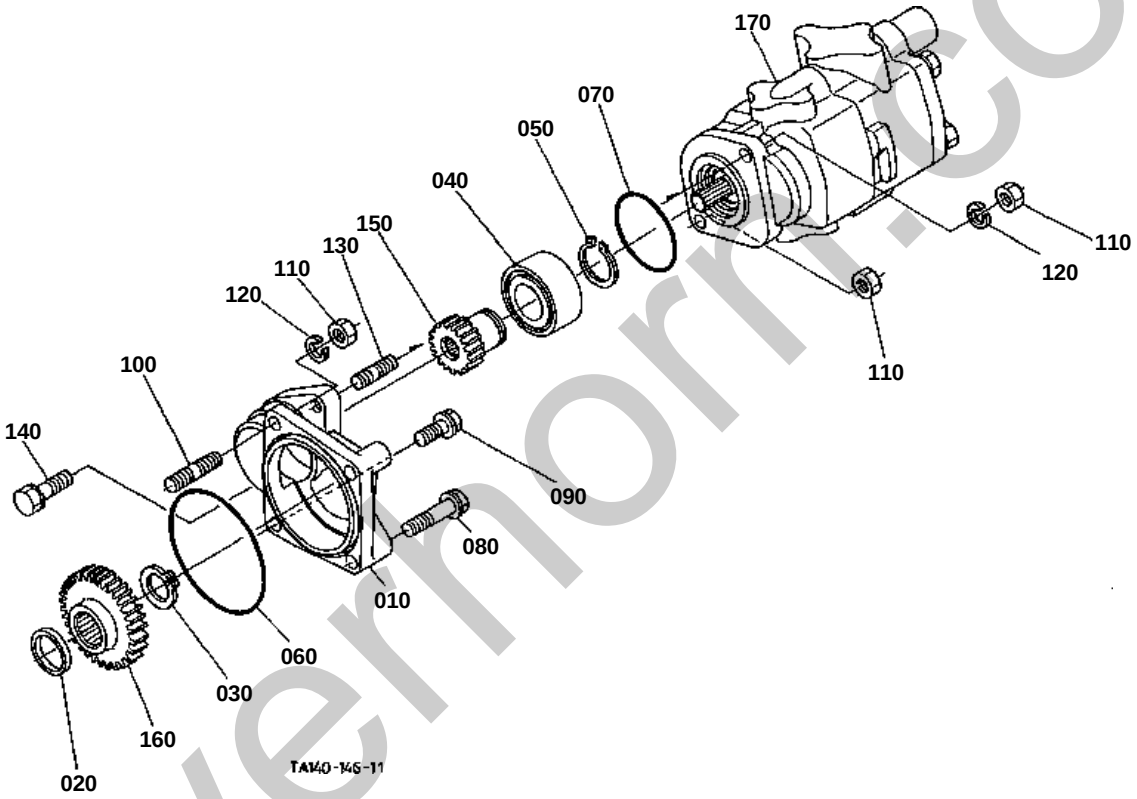

silvermorris.co.uk

HYDRAULIC PUMP [HST TYPE]

↔ Interchangeable; ≠ not interchangeable; ← new for old; → old for new

REF.No	Part No.	Description	Q'ty	S.No.	I/C	REMARKS	Weight (kgf)	Weight (lb)
010	34070-33610	HOLDER PUMP	1	<=61287			0	0
010	34070-33612	HOLDER PUMP	1	>=61288	←		0.375	0.825
020	35370-37820	COLLAR	1				0.015	0.033
030	15471-95360	CIR CLIP EXTERNAL	1				0.004	0.0088
040	08241-05205	BEARING BALL	1				0.177	0.3894
050	04612-00250	CIR CLIP EXTERNAL	1				0.002	0.0044
060	04811-10850	O RING	1				0.002	0.0044
070	04811-10500	O RING	1	<=74854			0.001	0.0022
070	T1060-36620	O RING	1	>=74855	←		0.001	0.0022
080	01754-50840	BOLT FLANGE	2				0.02	0.044
090	01754-50820	BOLT FLANGE	1				0.015	0.033
100	38240-36330	STUD	1				0.008	0.0176
110	02156-50080	NUT	3				0.004	0.0088
120	04512-60080	WASHER SPRING	2				0.002	0.0044
130	01513-60820	STUD	1				0.015	0.033
140	01123-50835	BOLT	1				0.02	0.044
150	31391-76520	GEAR	1			17T	0.16	0.352
160	31391-37810	GEAR	1			34T	0.33	0.726
170	TA240-36400	ASSY PUMP HYDRAULIC	1				3.4	7.48

silverhorn.co.uk

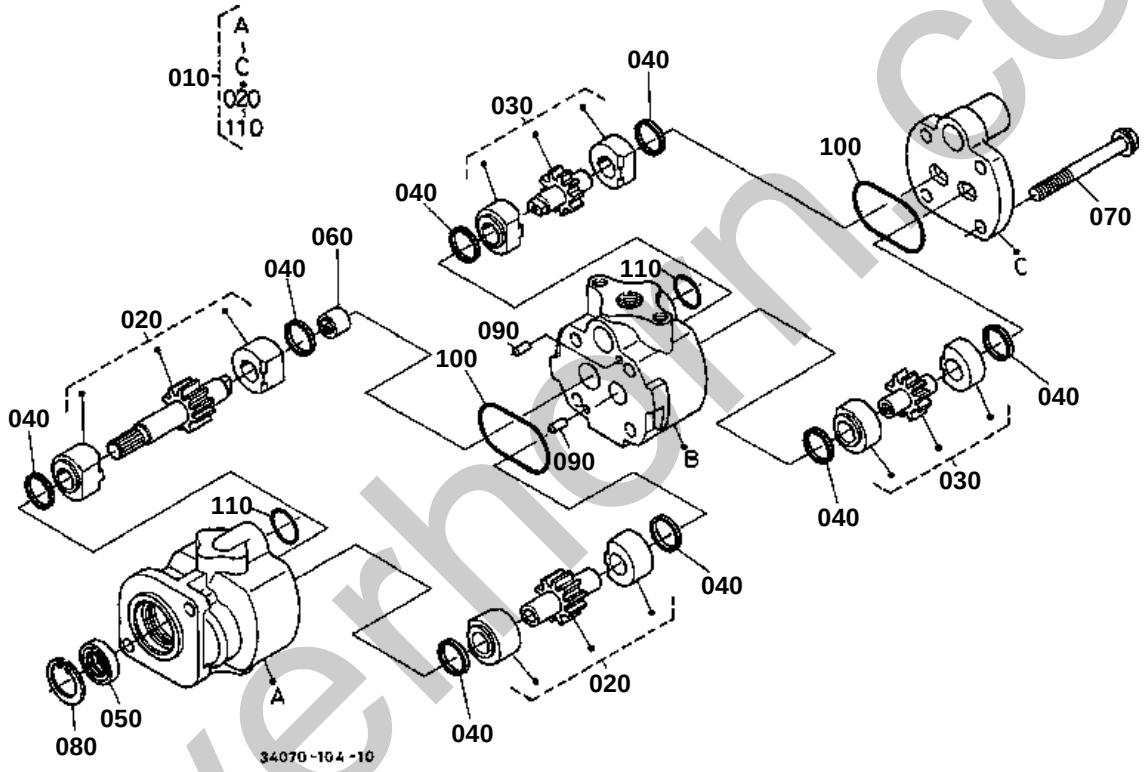

silverhorn.co.uk

↔ Interchangeable; ≠ not interchangeable; ← new for old; → old for new

REF.No	Part No.	Description	Q'ty	S.No.	I/C	REMARKS	Weight (kgf)	Weight (lb)
010	34550-36400	ASSY PUMP HYDRAULIC	1				3.5	7.7
020	31391-76302	COMP.GEAR HYD.PUMP	1				0.51	1.122
030	35080-76500	COMP.GEAR HYD.PUMP	1				0.29	0.638
040	38180-76172	SQUARE RING	8				0.002	0.0044
050	31381-76390	SEAL OIL	1				0.01	0.022
060	37410-76470	COUPLING	1				0.01	0.022
070	01754-51090	BOLT FLANGE	4				0.05	0.11
080	04611-00300	CIR CLIP INTERNAL	1				0.004	0.0088
090	05012-00612	PIN STRAIGHT	2				0.003	0.0066
100	04810-50550	O RING	2				0.002	0.0044
110	04811-00220	O RING	2				0.001	0.0022
110	04817-00220	O RING	2		←		0.005	0.011

silverhorn.co.uk

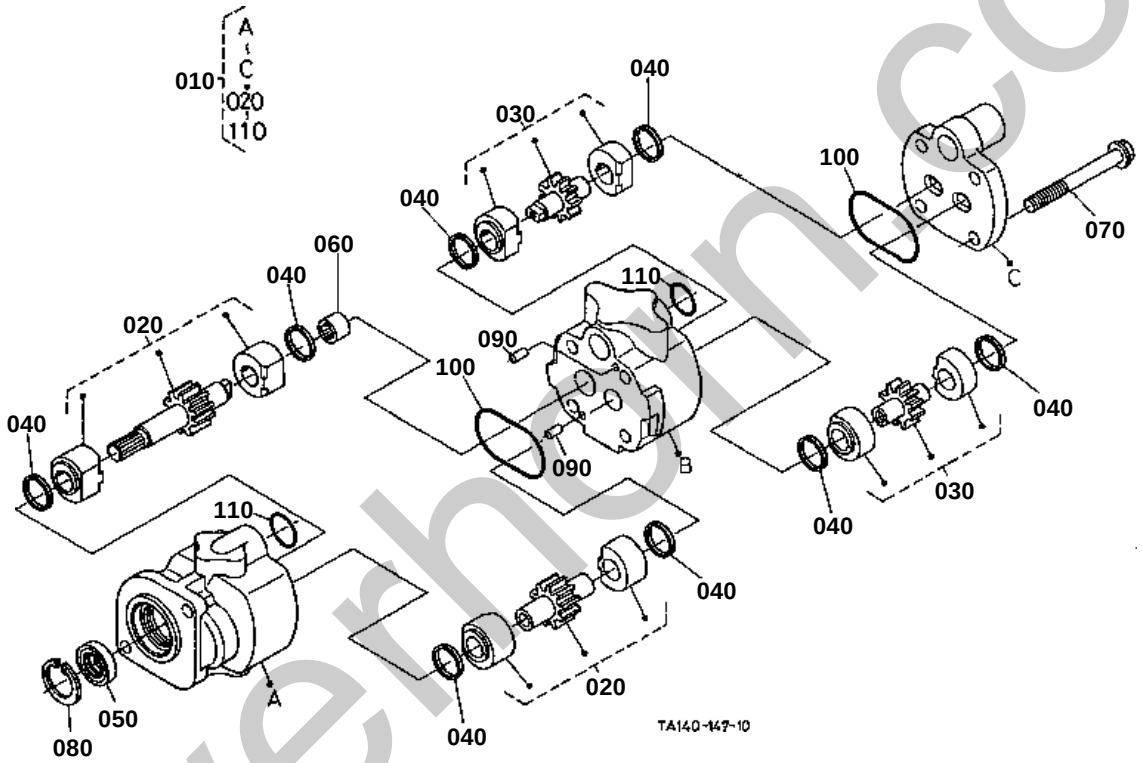

silverhorn.co.uk

↔ Interchangeable; ≠ not interchangeable; ← new for old; → old for new

REF.No	Part No.	Description	Q'ty	S.No.	I/C	REMARKS	Weight (kgf)	Weight (lb)
010	TA240-36400	ASSY PUMP HYDRAULIC	1				3.4	7.48
020	31391-76302	COMP.GEAR HYD.PUMP	1				0.51	1.122
030	35080-76500	COMP.GEAR HYD.PUMP	1				0.29	0.638
040	38180-76172	SQUARE RING	8				0.002	0.0044
050	31381-76390	SEAL OIL	1				0.01	0.022
060	37410-76470	COUPLING	1				0.01	0.022
070	01754-51090	BOLT FLANGE	4				0.05	0.11
080	04611-00300	CIR CLIP INTERNAL	1				0.004	0.0088
090	05012-00612	PIN STRAIGHT	2				0.003	0.0066
100	04810-50550	O RING	2				0.002	0.0044
110	04811-00220	O RING	2				0.001	0.0022
110	04817-00220	O RING	2		←		0.005	0.011

silverhorn.co.uk

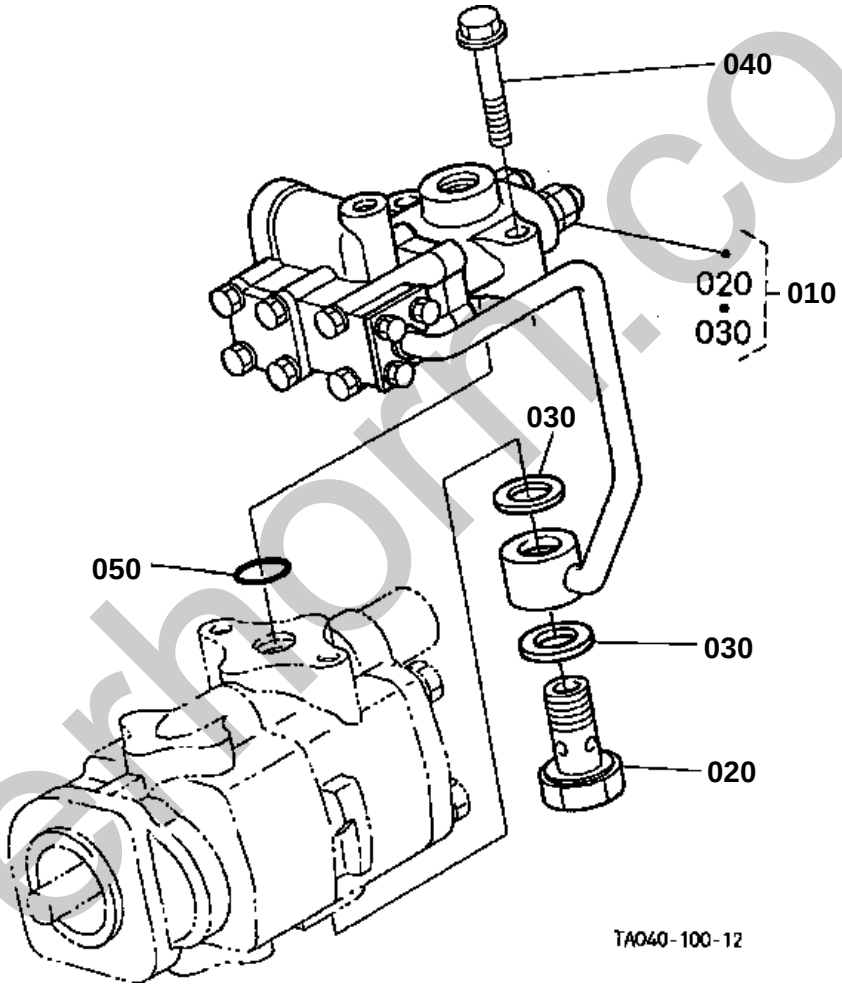

silverhorn.co.uk

040 01123-50845

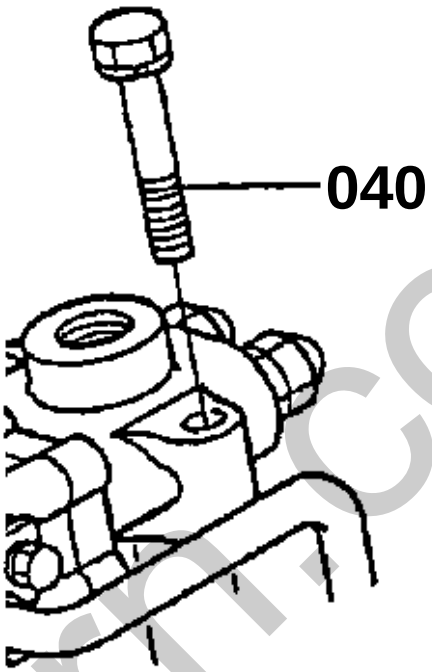

TA150-823-10

silverhorn.co.uk

REGULATOR VALVE [EXCEPT HST TYPE]

↔ Interchangeable; ≠ not interchangeable; ← new for old; → old for new

REF.No	Part No.	Description	Q'ty	S.No.	I/C	REMARKS	Weight (kgf)	Weight (lb)
010	TA040-66010	ASSY VALVE REGULATOR	1				1.73	3.806
020	66591-36250	JOINT	1				0.08	0.176
030	67111-37180	GASKET	2				0.003	0.0066
040	01123-50845	BOLT	2	<=75552			0.02	0.044
040	01754-50840	BOLT FLANGE	2	>=75553	←		0.02	0.044
050	04811-00200	O RING	1				0.001	0.0022
050	04817-00200	O RING	1		←		0	0

silverhorn.co.uk

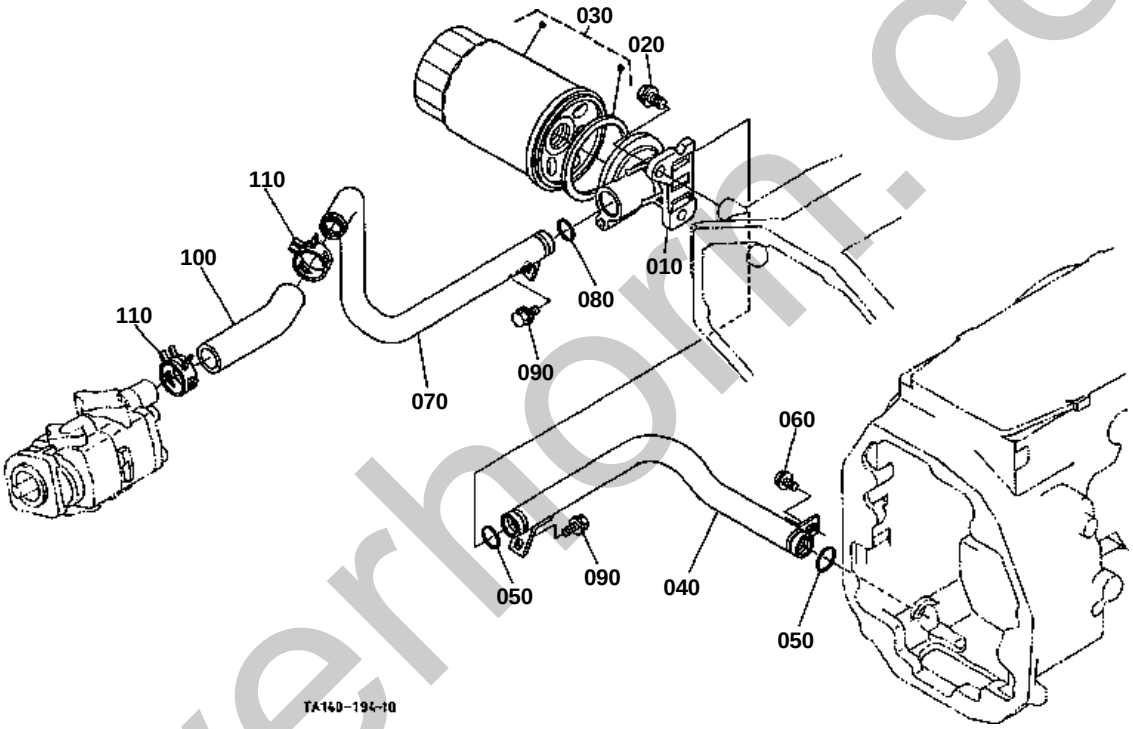

silverhorn.co.uk

HYDRAULIC OIL LINE(INLET) [EXCEPT HST TYPE]

↔ Interchangeable; ≠ not interchangeable; ← new for old; → old for new

REF.No	Part No.	Description	Q'ty	S.No.	I/C	REMARKS	Weight (kgf)	Weight (lb)
010	TA040-33212	BRACKET FILTER	1				0.525	1.155
020	01774-61020	BOLT FLANGE	2				0.022	0.0484
030	T0070-37710	CARTRIDGE OIL FILTER	1				0.725	1.595
040	TA040-33362	PIPE INLET	1				0.42	0.924
050	04811-07230	O RING	2				0.001	0.0022
050	04817-07230	O RING	2		←		0	0
060	01754-50812	BOLT FLANGE	1				0.01	0.022
070	TA040-33320	PIPE INLET	1				0.46	1.012
080	04810-07230	O RING	1				0.001	0.0022
080	04817-07230	O RING	1		←		0	0
090	01754-50816	BOLT FLANGE	2				0.011	0.0242
100	TA040-33340	HOSE INLET	1				0.103	0.2266
110	31351-38180	BAND PIPE	2				0.02	0.044

silverhorn.co.uk

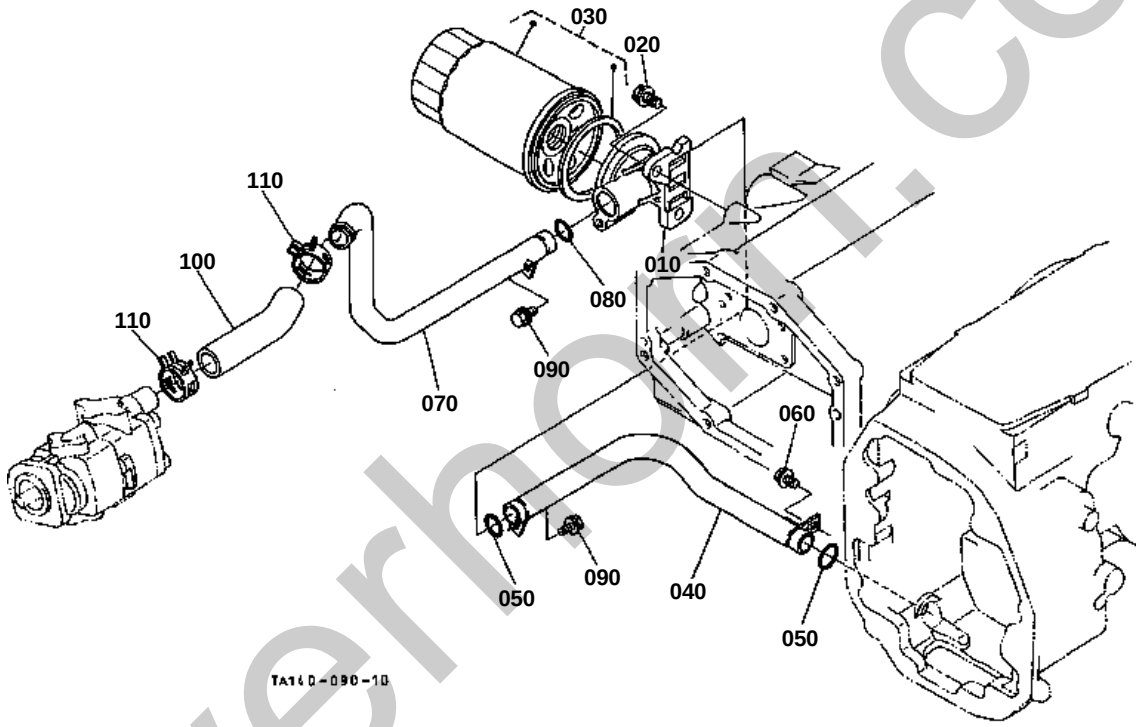

silverhorn.co.uk

HYDRAULIC OIL LINE(INLET) [HST TYPE]

↔ Interchangeable; ≠ not interchangeable; ← new for old; → old for new

REF.No	Part No.	Description	Q'ty	S.No.	I/C	REMARKS	Weight (kgf)	Weight (lb)
010	TA040-33212	BRACKET FILTER	1				0.525	1.155
020	01774-61020	BOLT FLANGE	2				0.022	0.0484
030	T0070-37710	CARTRIDGE OIL FILTER	1				0.725	1.595
040	TA240-56310	PIPE INLET HST	1				0.43	0.946
050	04810-07230	RING	2				0.001	0.0022
050	04817-07230	O RING	2		←		0	0
060	01754-50812	BOLT FLANGE	1				0.01	0.022
070	TA240-56320	PIPE INLET HST	1				0.47	1.034
080	04810-07230	O RING	1				0.001	0.0022
080	04817-07230	O RING	1		←		0	0
090	01754-50816	BOLT FLANGE	2				0.011	0.0242
100	TA040-33340	HOSE INLET	1				0.103	0.2266
110	31351-38180	BAND PIPE	2				0.02	0.044

silverhorn.co.uk

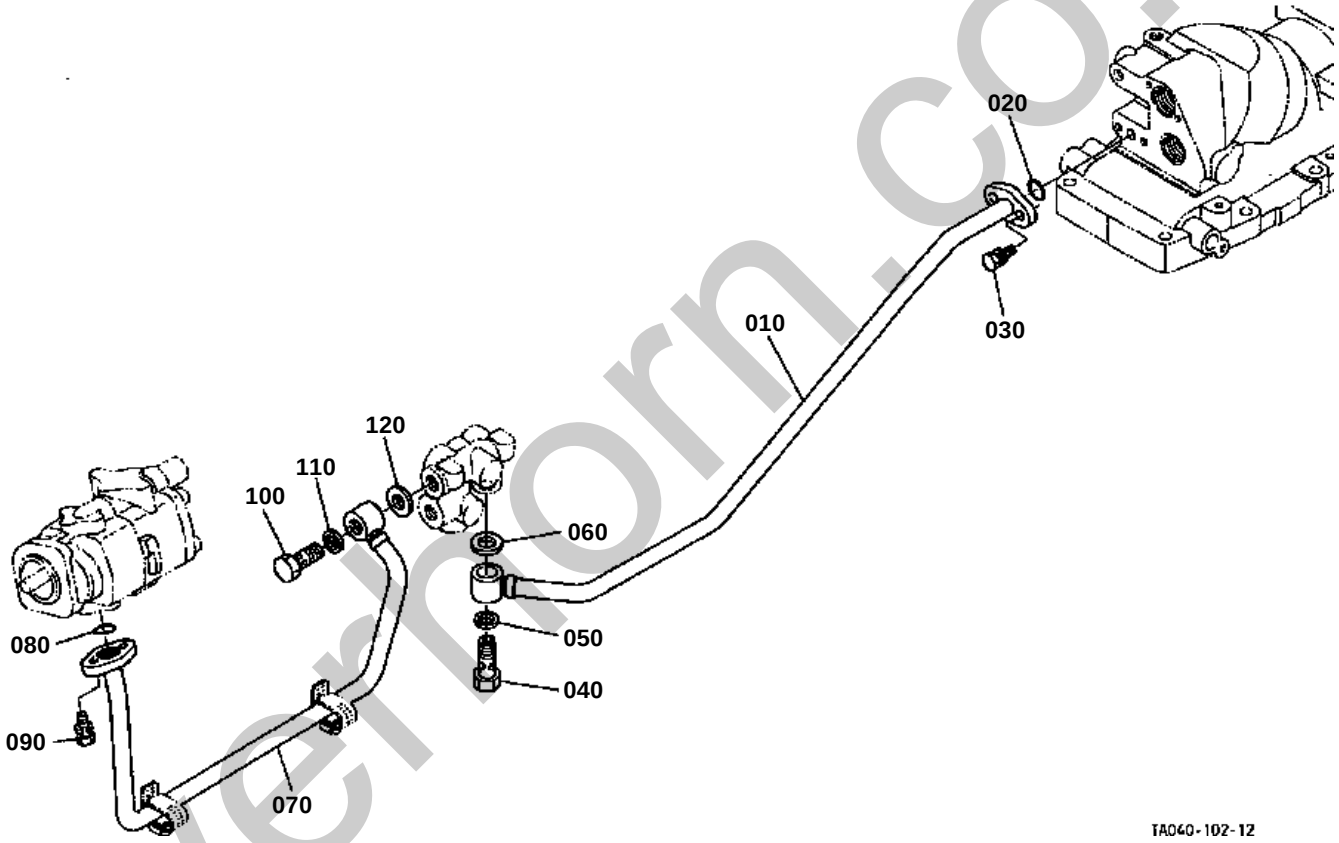

silverhorn.co.uk

HYDRAULIC OIL LINE(DELIVERY) [EXCEPT HST TYPE]

↔ Interchangeable; ≠ not interchangeable; ← new for old; → old for new

REF.No	Part No.	Description	Q'ty	S.No.	I/C	REMARKS	Weight (kgf)	Weight (lb)
010	TA040-33412	COMP.PIPE DELIVERY	1				0.555	1.221
020	04810-00180	O RING	1				0.001	0.0022
020	04817-00180	O RING	1		←		0.003	0.0066
030	01123-50820	BOLT	2				0.011	0.0242
040	66591-36250	JOINT	1				0.08	0.176
050	67111-37180	GASKET	1				0.003	0.0066
060	67401-36720	GASKET	1				0.005	0.011
070	TA040-33422	COMP.PIPE DELIVERY	1				0.525	1.155
080	04810-00180	O RING	1				0.001	0.0022
080	04817-00180	O RING	1		←		0.003	0.0066
090	01123-50820	BOLT	2				0.011	0.0242
100	66591-36250	JOINT	1				0.08	0.176
110	67111-37180	GASKET	1				0.003	0.0066
120	67401-36720	GASKET	1				0.005	0.011

silverhorn.co.uk

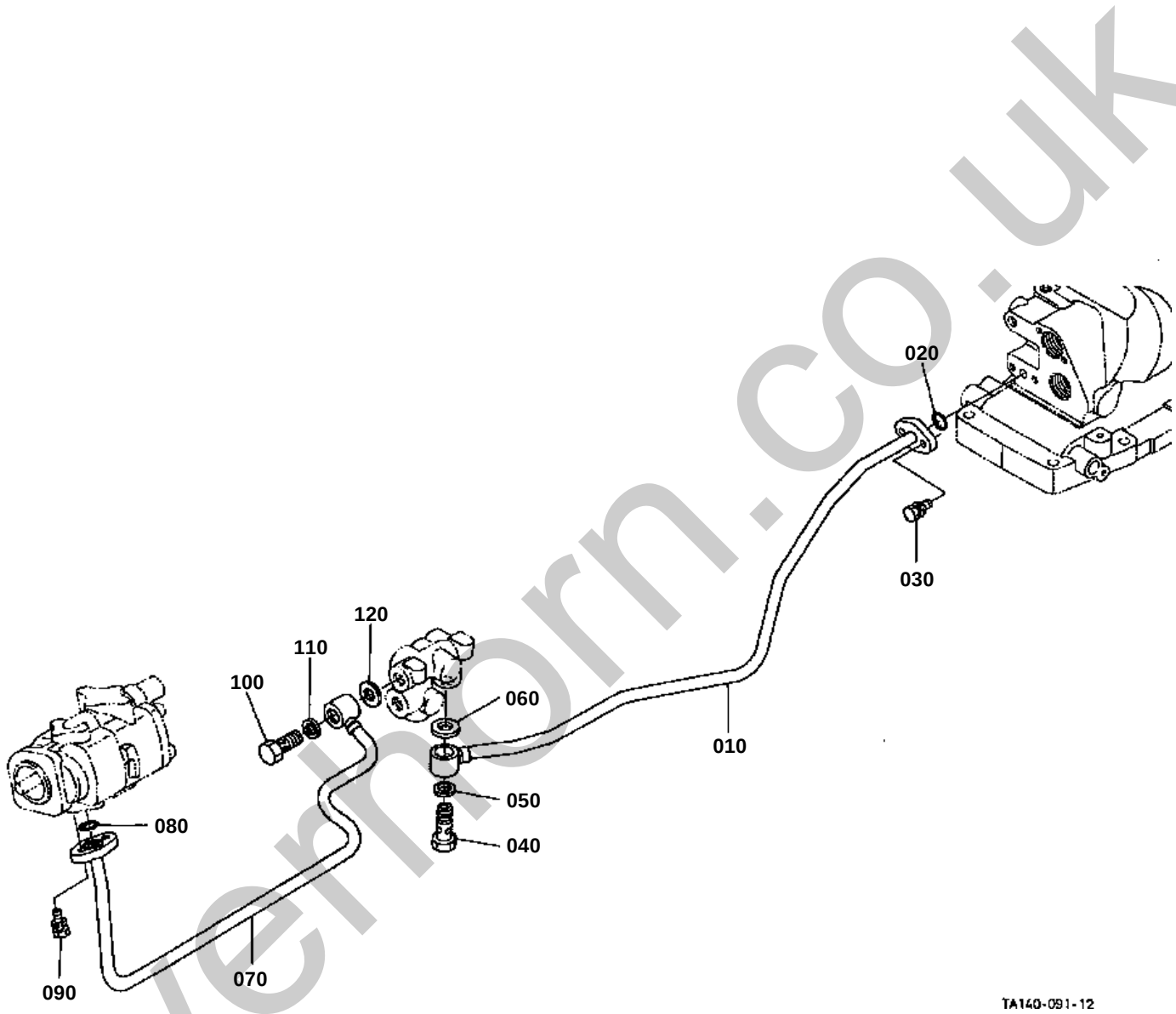

silverhorn.co.uk

HYDRAULIC OIL LINE(DELIVERY) [HST TYPE]

↔ Interchangeable; ≠ not interchangeable; ← new for old; → old for new

REF.No	Part No.	Description	Q'ty	S.No.	I/C	REMARKS	Weight (kgf)	Weight (lb)
010	TA240-56360	COMP.PIPE DELIVERY	1	<=70508			0	0
010	TA240-56362	COMP.PIPE DELIVERY	1	>=70509	←		0.69	1.518
020	04810-00180	O RING	1				0.001	0.0022
020	04817-00180	O RING	1		←		0.003	0.0066
030	01123-50820	BOLT	2				0.011	0.0242
040	66591-36250	JOINT	1				0.08	0.176
050	67111-37180	GASKET	1				0.003	0.0066
060	67401-36720	GASKET	1				0.005	0.011
070	TA240-56370	COMP.PIPE DELIVERY	1	<=50910			0	0
070	TA240-56373	COMP.PIPE DELIVERY	1	>=50911	←		0.56	1.232
080	04810-00180	O RING	1				0.001	0.0022
080	04817-00180	O RING	1		←		0.003	0.0066
090	01123-50820	BOLT	2				0.011	0.0242
100	66591-36250	JOINT	1				0.08	0.176
110	67111-37180	GASKET	1				0.003	0.0066
120	67401-36720	GASKET	1				0.005	0.011

silverhorn.co.uk

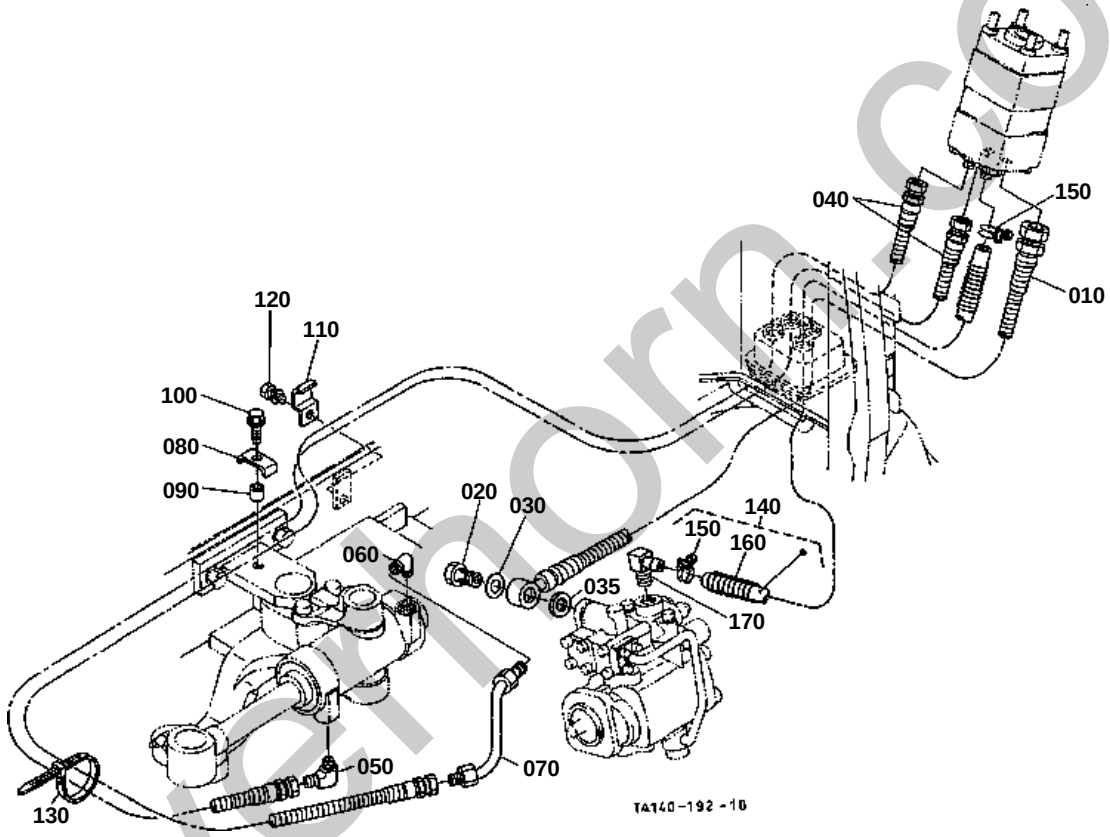

silvermorn.co.uk

HYDRAULIC OIL LINE(PS) [EXCEPT HST TYPE]

↔ Interchangeable; ≠ not interchangeable; ← new for old; → old for new

REF.No	Part No.	Description	Q'ty	S.No.	I/C	REMARKS	Weight (kgf)	Weight (lb)
010	T0150-33510	HOSE DELIVERY	1				0.45	0.99
020	66591-36250	JOINT	1				0.08	0.176
030	67111-37180	GASKET	1				0.003	0.0066
035	TA040-37180	GASKET	1				0.004	0.0088
040	TA040-33524	HOSE DELIVERY	2				0.26	0.572
050	56713-28130	ADAPTER CYLINDER	1				0.052	0.1144
060	31301-10850	JOINT	1				0	0
060	06014-51022	JOINT	1	<=74240	↔		0.031	0.0682
060	06014-51023	JOINT	1	>=74241	≠		0.06	0.132
070	TA040-33560	COMP.PIPE POWER STRG	1				0	0
070	TA040-33563	COMP.PIPE POWER STRG	1	<=74187	↔		0.095	0.209
070	TA040-33564	COMP.PIPE POWER STRG	1	>=74188	≠		0	0
080	TA040-33280	HOLDER HOSE	1				0.019	0.0418
090	TA040-33290	COLLAR	1				0.005	0.011
100	01754-50830	BOLT FLANGE	1				0.01	0.022
110	TA040-33300	HOLDER HOSE	1				0.027	0.0594
120	01123-60814	BOLT	1	<=74528			0.008	0.0176
120	01123-50816	BOLT	1	>=74529	←		0.011	0.0242
130	55311-41260	BAND CORD	1				0.007	0.0154
140	34030-33530	ASSY HOSE RETURN	1				0.29	0.638
150	15109-73360	BAND PIPE	2				0.01	0.022
160	31351-45330	SPRING PROTECTOR	1				0.055	0.121
170	34070-36910	JOINT	1				0.07	0.154

silverhorn.co.uk

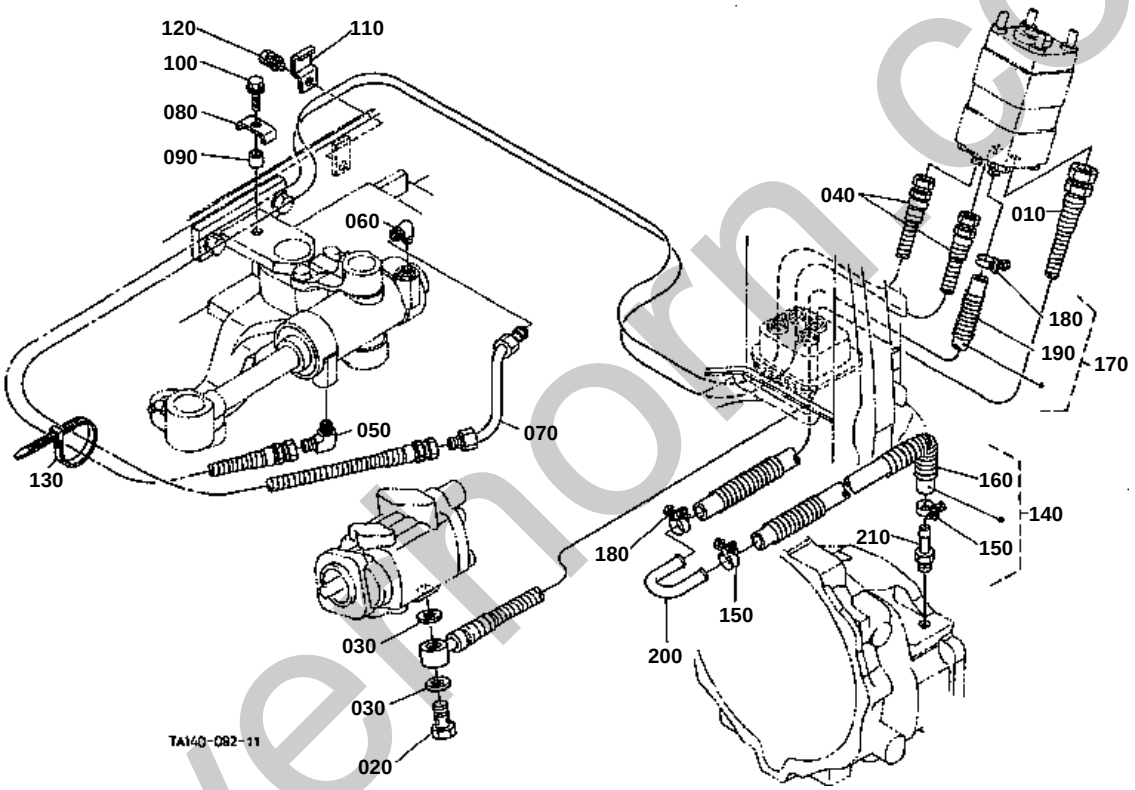

silvermorn.co.uk

140 TA240-3353-0

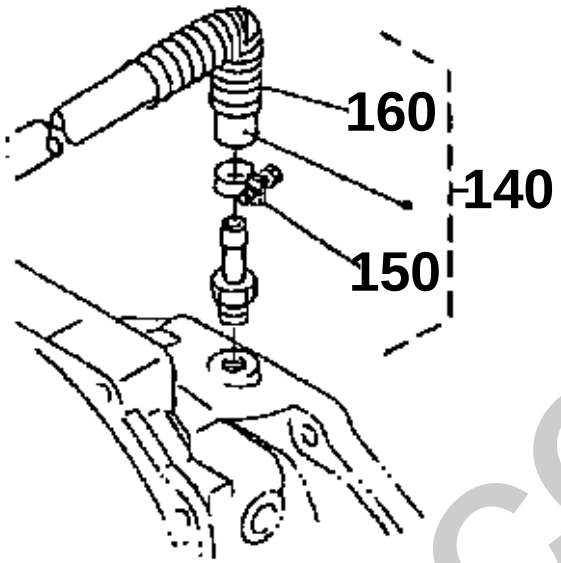

TA140-852-10

silverhorn.co.uk

HYDRAULIC OIL LINE(PS) [HST TYPE]

↔ Interchangeable; ≠ not interchangeable; ← new for old; → old for new

REF.No	Part No.	Description	Q'ty	S.No.	I/C	REMARKS	Weight (kgf)	Weight (lb)
010	TA220-33510	HOSE DELIVERY	1				0.435	0.957
020	66591-36250	JOINT	1				0.08	0.176
030	67111-37180	GASKET	2				0.003	0.0066
040	TA040-33524	HOSE DELIVERY	2				0.26	0.572
050	56713-28130	ADAPTER CYLINDER	1				0.052	0.1144
060	31301-10850	JOINT	1				0	0
060	06014-51022	JOINT	1	<=74240	↔		0.031	0.0682
060	06014-51023	JOINT	1	>=74241	≠		0.06	0.132
070	TA040-33560	COMP.PIPE POWER STRG	1				0	0
070	TA040-33563	COMP.PIPE POWER STRG	1	<=74187	↔		0.095	0.209
070	TA040-33564	COMP.PIPE POWER STRG	1	>=74188	≠		0	0
080	TA040-33280	HOLDER HOSE	1				0.019	0.0418
090	TA040-33290	COLLAR	1				0.005	0.011
100	01754-50830	BOLT FLANGE	1				0.01	0.022
110	TA040-33300	HOLDER HOSE	1				0.027	0.0594
120	01123-60814	BOLT	1	<=74528			0.008	0.0176
120	01123-50816	BOLT	1	>=74529	←		0.011	0.0242
130	55311-41260	BAND CORD	1				0.007	0.0154
140	TA240-33530	ASSY HOSE RETURN	1	<=61504			0.235	0.517
140	TA240-33533	ASSY HOSE RETURN	1	>=70001	←		0.235	0.517
150	15109-73360	BAND PIPE	2				0.01	0.022
160	31351-45330	SPRING PROTECTOR	1				0.055	0.121
170	34030-33530	ASSY HOSE RETURN	1				0.29	0.638
180	15109-73360	BAND PIPE	2				0.01	0.022
190	31351-45330	SPRING PROTECTOR	1				0.055	0.121
200	TA240-33550	PIPE	1				0.04	0.088
210	TA240-36910	JOINT	1				0.06	0.132

silverhorn.co.uk

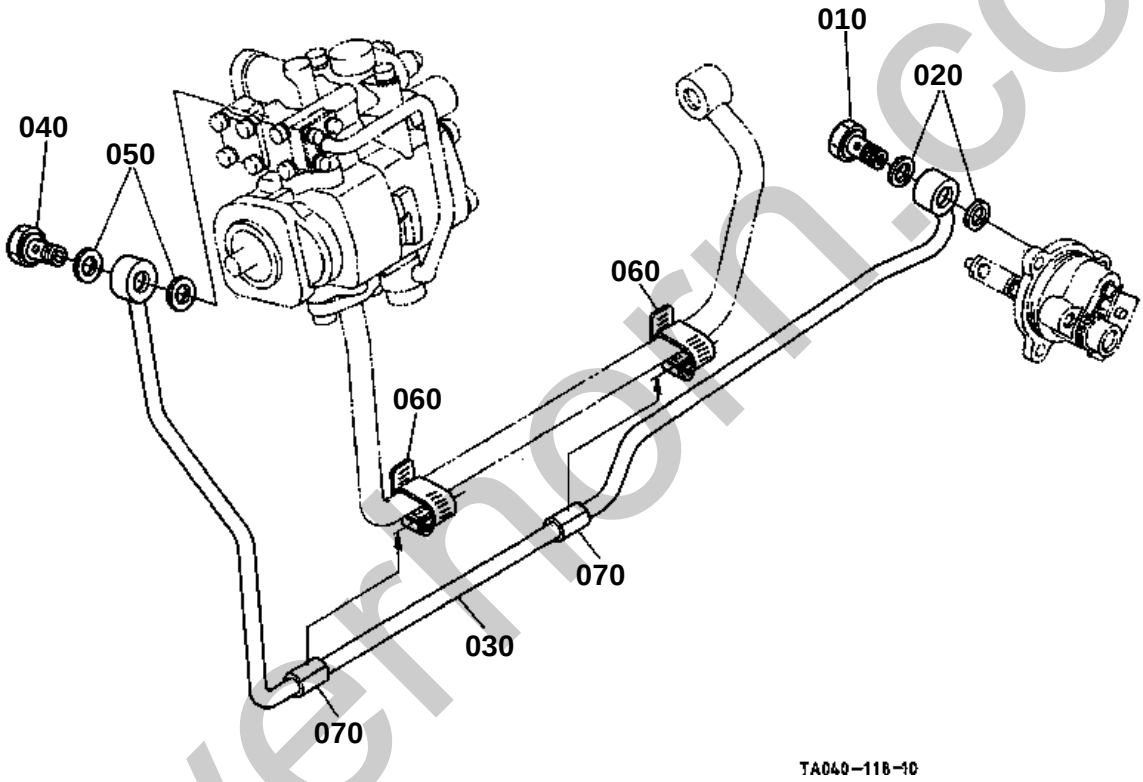

silvernorn.co.uk

↔ Interchangeable; ≠ not interchangeable; ← new for old; → old for new

REF.No	Part No.	Description	Q'ty	S.No.	I/C	REMARKS	Weight (kgf)	Weight (lb)
010	TA040-69402	ASSY BOLT	1				0.045	0.099
020	04714-00200	GASKET	2				0.002	0.0044
030	TA040-69930	COMP.PIPE I-PTO	1				0.1	0.22
040	34076-66590	BOLT JOINT	1				0.05	0.11
050	04714-00200	GASKET	2				0.002	0.0044
060	67955-36230	CLAMP	2				0.023	0.0506
070	31351-45270	PIPE RUBBER	2				0.005	0.011

silverhorn.co.uk

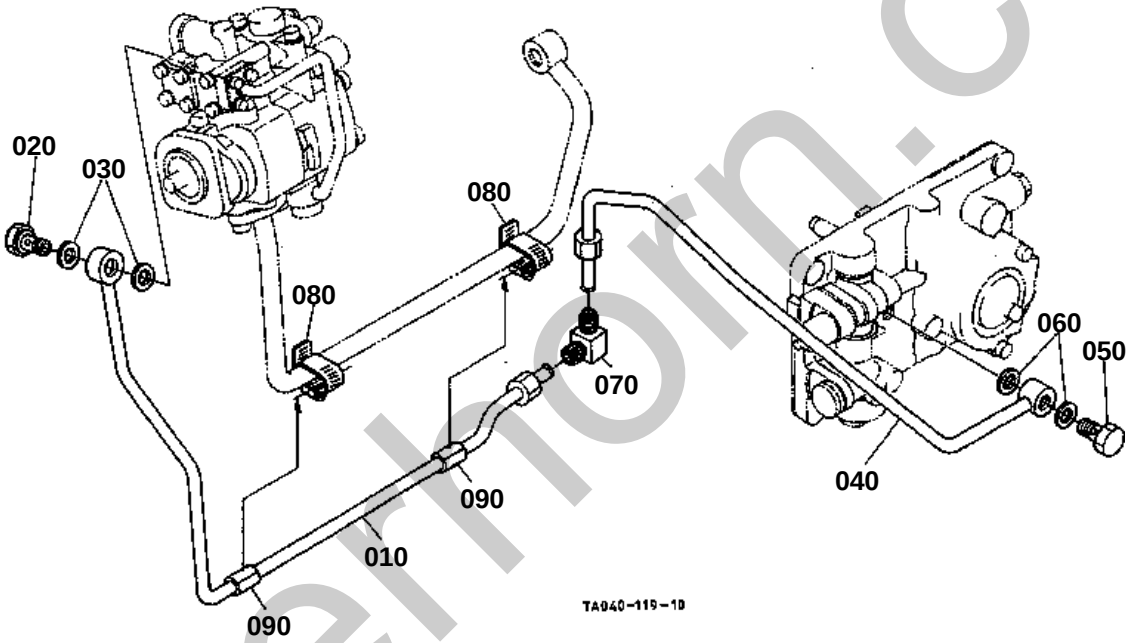

silverhorn.co.uk

↔ Interchangeable; ≠ not interchangeable; ← new for old; → old for new

REF.No	Part No.	Description	Q'ty	S.No.	I/C	REMARKS	Weight (kgf)	Weight (lb)
010	TA040-66530	COMP.PIPE GST	1				0.25	0.55
020	34076-66590	BOLT JOINT	1				0.05	0.11
030	04714-00200	GASKET	2				0.002	0.0044
040	TA040-66570	COMP.PIPE GST	1				0.205	0.451
050	34076-66590	BOLT JOINT	1				0.05	0.11
060	04714-00200	GASKET	2				0.002	0.0044
070	TA040-66550	JOINT	1				0.08	0.176
080	67955-36230	CLAMP	2				0.023	0.0506
090	31351-45270	PIPE RUBBER	2				0.005	0.011

silverhorn.co.uk

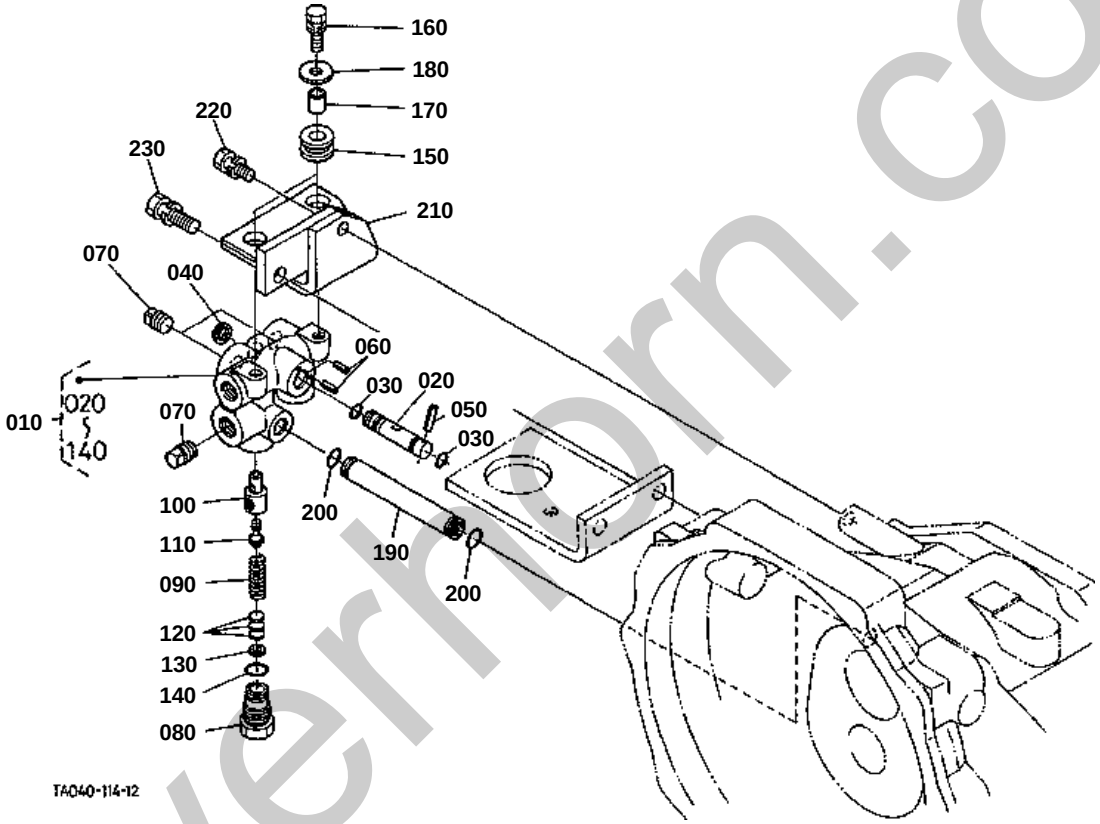

silverhorn.co.uk

HYDRAULIC OUTLET BLOCK [EXCEPT HST TYPE]

↔ Interchangeable; ≠ not interchangeable; ← new for old; → old for new

REF.No	Part No.	Description	Q'ty	S.No.	I/C	REMARKS	Weight (kgf)	Weight (lb)
010	TA040-37500	ASSY BLOCK FRONT HYD	1				1.545	3.399
020	TA040-37520	SPOOL	1				0.067	0.1474
030	04810-06100	O RING	2				0.001	0.0022
030	04817-06100	O RING	2		←		0	0
040	04612-00140	CIR CLIP EXTERNAL	1				0.001	0.0022
050	05411-00320	PIN SPRING	1				0.001	0.0022
060	05411-00310	PIN SPRING	2				0.001	0.0022
070	06312-10030	PLUG	3				0.029	0.0638
080	31351-37910	PLUG	1				0.06	0.132
090	31351-37920	SPRING RELIEF	1				0.02	0.044
100	31351-37930	SEAT RELIEF VALVE	1				0.02	0.044
110	31351-37940	POPPET	1				0.005	0.011
120	31351-37950	SHIM	5			0.4mm	0.001	0.0022
120	31351-37960	SHIM	2			0.2mm	0.001	0.0022
120	31351-37970	SHIM	2			0.1mm	0.001	0.0022
130	04013-60050	WASHER PLAIN	2				0.001	0.0022
140	04811-10160	O RING	1				0.001	0.0022
150	TA040-37590	CUSHION	2				0.006	0.0132
160	01123-50828	BOLT	2				0.014	0.0308
170	TA040-37600	COLLAR	2				0.009	0.0198
180	04015-60080	WASHER PLAIN	2				0.01	0.022
190	TA040-37550	PIPE RETURN	1				0.052	0.1144
200	04811-00110	O RING	2				0.001	0.0022
200	04817-00110	O RING	2		←		0.001	0.0022
210	TA040-37544	STAY HYD.BLOCK	1				1.175	2.585
220	01133-51035	BOLT	1				0.03	0.066
230	01133-51240	BOLT	1				0.05	0.11

silverhorn.co.uk

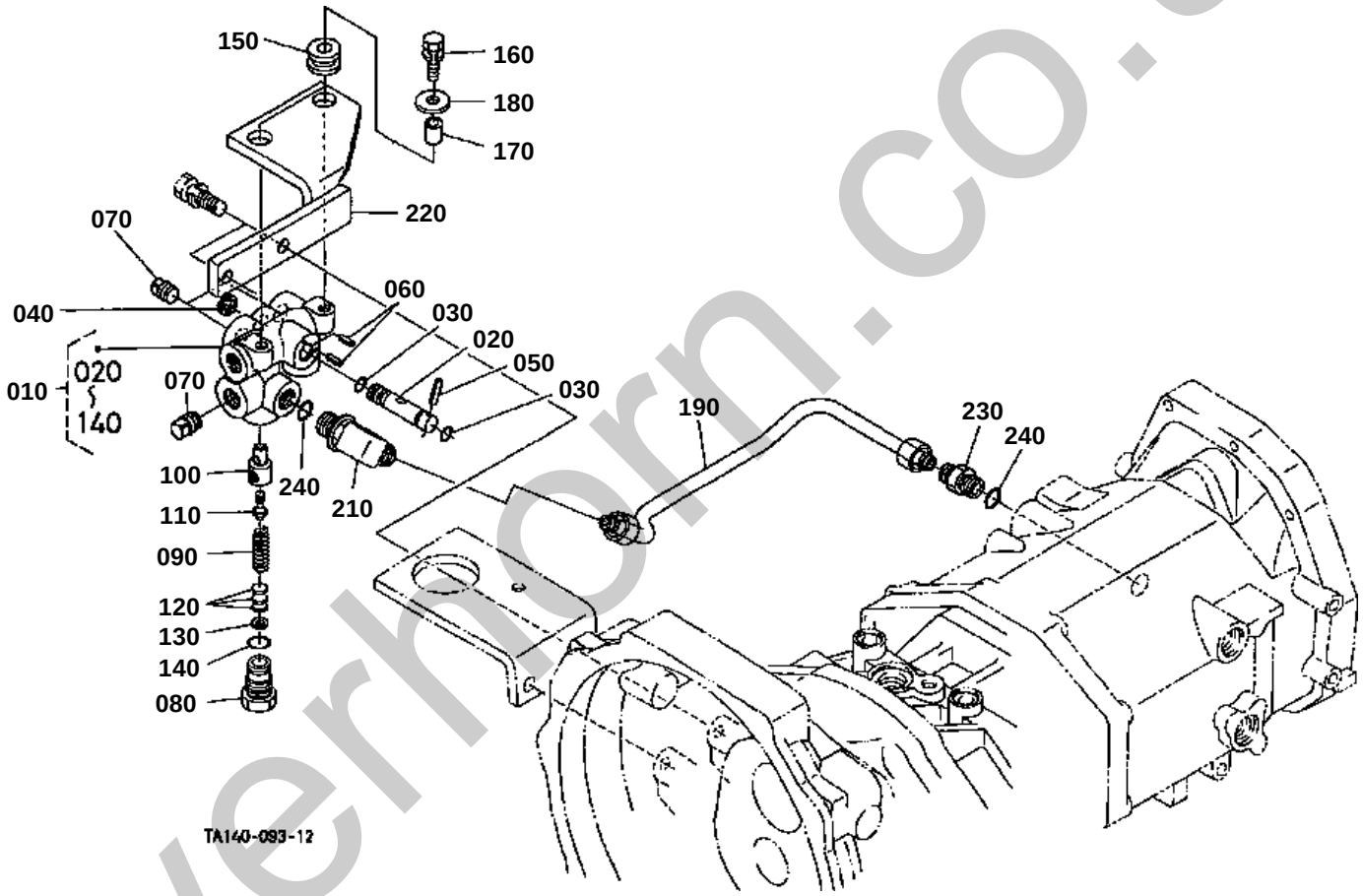

silverhorn.co.uk

010 TA040-3750-0
190 TA240-5646-0
200 01754-50608
210 04811-00110

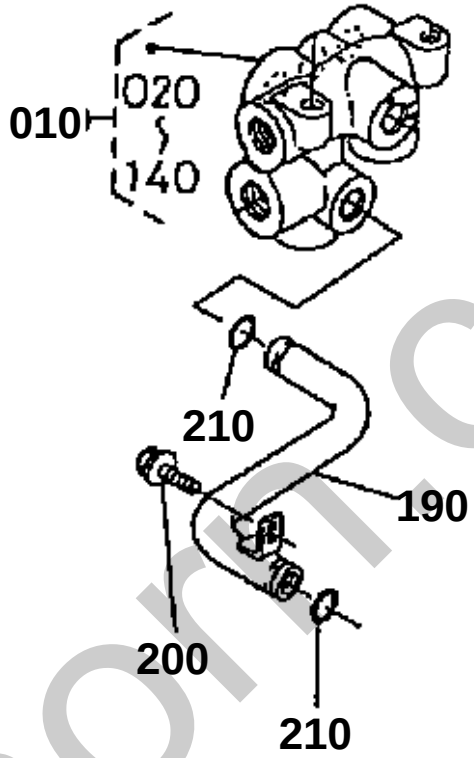

190 TA250-5646-0

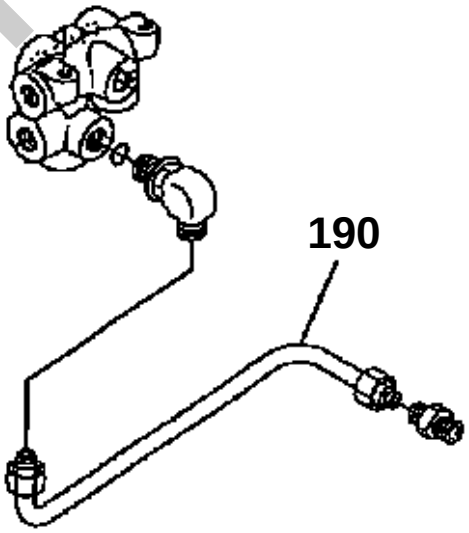

TA140-825-11

silverhorn.co.uk

HYDRAULIC OUTLET BLOCK [HST TYPE]

↔ Interchangeable; ≠ not interchangeable; ← new for old; → old for new

REF.No	Part No.	Description	Q'ty	S.No.	I/C	REMARKS	Weight (kgf)	Weight (lb)
010	TA040-37500	ASSY BLOCK FRONT HYD	1	<=61504			1.545	3.399
010	TA250-37500	ASSY BLOCK FRONT HYD	1	>=70001	≠		1.535	3.377
010	TA250-37500	ASSY BLOCK FRONT HYD	1		↔		1.535	3.377
020	TA040-37520	SPOOL	1				0.067	0.1474
030	04810-06100	O RING	2				0.001	0.0022
030	04817-06100	O RING	2		←		0	0
040	04612-00140	CIR CLIP EXTERNAL	1				0.001	0.0022
050	05411-00320	PIN SPRING	1				0.001	0.0022
060	05411-00310	PIN SPRING	2				0.001	0.0022
070	06312-10030	PLUG	3				0.029	0.0638
080	31351-37910	PLUG	1				0.06	0.132
090	31351-37920	SPRING RELIEF	1				0.02	0.044
100	31351-37930	SEAT RELIEF VALVE	1				0.02	0.044
110	31351-37940	POPPET	1				0.005	0.011
120	31351-37950	SHIM	5			0.4mm	0.001	0.0022
120	31351-37960	SHIM	2			0.2mm	0.001	0.0022
120	31351-37970	SHIM	2			0.1mm	0.001	0.0022
130	04013-60050	WASHER PLAIN	2				0.001	0.0022
140	04811-10160	O RING	1				0.001	0.0022
150	TA040-37590	CUSHION	2				0.006	0.0132
160	01123-50828	BOLT	2				0.014	0.0308
170	TA040-37600	COLLAR	2				0.009	0.0198
180	04015-60080	WASHER PLAIN	2				0.01	0.022
190	TA240-56460	PIPE RETURN	1	<=61504			0.09	0.198
190	TA250-56460	PIPE RETURN	1	>=70001	≠		0	0
190	TA250-56462	PIPE RETURN	1	>=71652	←		0.48	1.056
200	01754-50608	BOLT FLANGE	1	<=61504			0.005	0.011
210	04811-00110	O RING	2	<=61504			0.001	0.0022
210	06015-51533	JOINT	1	>=70001	≠		0	0
220	TA240-55210	BRACKET HYD.BLOCK	1				0.94	2.068
230	06012-51533	JOINT PIPE	1	>=70001			0.066	0.1452
240	04811-00140	O RING	2	>=70001			0.001	0.0022
240	04817-00140	O RING	2		←		0	0

silverhorn.co.uk

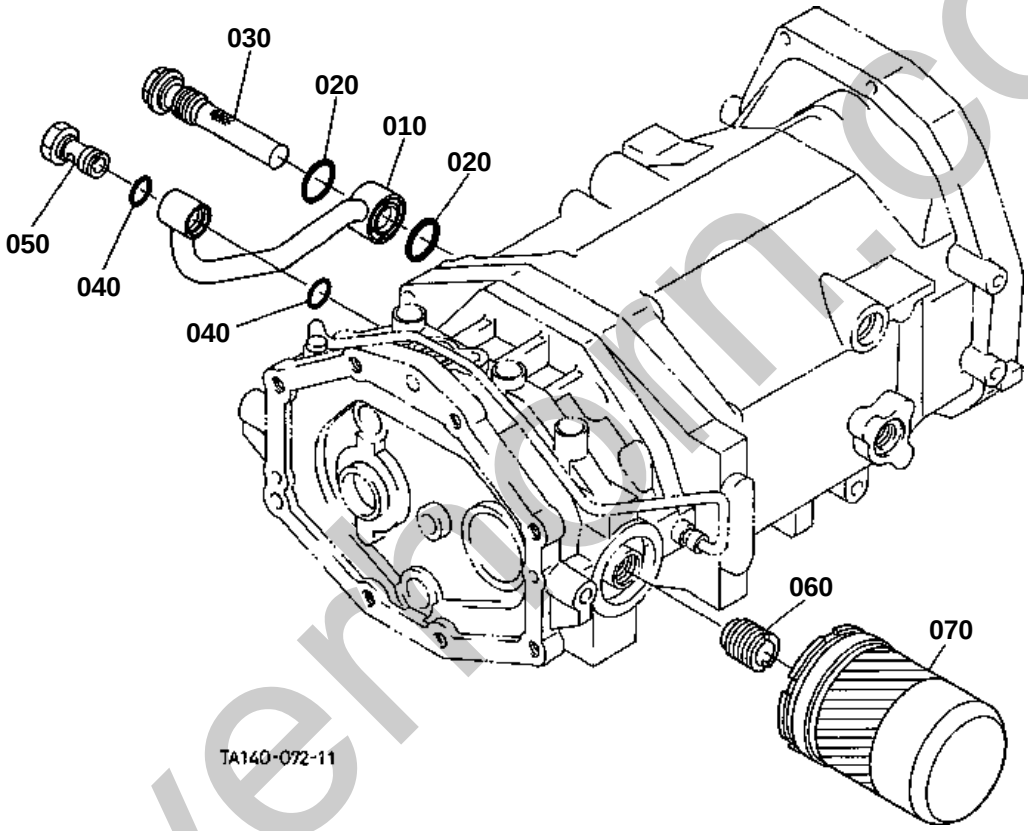

silvermoon.co.uk

HYDRAULIC PIPE [HST TYPE]

↔ Interchangeable; ≠ not interchangeable; ← new for old; → old for new

REF.No	Part No.	Description	Q'ty	S.No.	I/C	REMARKS	Weight (kgf)	Weight (lb)
010	TA240-56110	PIPE SUCTION HST	1				0.31	0.682
020	04811-10300	O RING	2				0.001	0.0022
030	54516-36560	FILTER	1				0.21	0.462
040	04810-00220	O RING	2				0.001	0.0022
040	04817-00220	O RING	2		←		0.005	0.011
050	67810-37710	BOLT JOINT	1				0.1	0.22
060	58700-11530	ADAPTER	1				0.063	0.1386
070	TA240-59900	FILTER OIL	1				0.955	2.101

silverhorn.co.uk

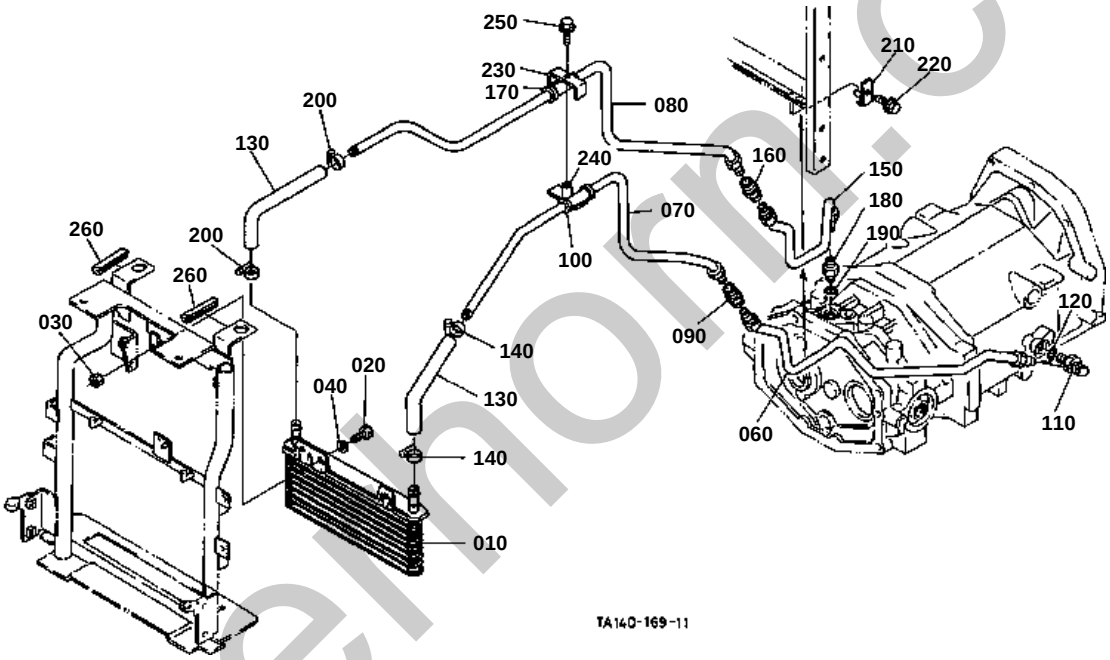

silvelhorn.co.uk

OIL COOLER [HST TYPE] [OLD TYPE]
[S.No.;<=51309]

↔ Interchangeable; ≠ not interchangeable; ← new for old; → old for new

REF.No	Part No.	Description	Q'ty	S.No.	I/C	REMARKS	Weight (kgf)	Weight (lb)
010	TA240-55370	COOLER OIL	1				0.72	1.584
020	01153-50814	BOLT	2				0.009	0.0198
030	02114-50080	NUT	2				0.005	0.011
040	04512-60080	WASHER SPRING	2				0.002	0.0044
050	99999-99999	BLANK	0				0	0
060	TA240-21110	COMP.PIPE OIL COOLER	1				0.58	1.276
070	TA240-21120	COMP.PIPE OIL COOLER	1				0.51	1.122
080	TA240-21140	COMP.PIPE OIL COOLER	1				0.59	1.298
090	06013-51503	JOINT PIPE	1				0.062	0.1364
100	34550-33290	TUBE	1				0.01	0.022
110	06015-51543	JOINT	1				0.15	0.33
120	04810-00180	O RING	1				0.001	0.0022
130	TA240-21150	HOSE OIL COOLER	2				0.08	0.176
140	66204-36280	BAND PIPE	2				0.02	0.044
150	TA240-21130	COMP.PIPE OIL COOLER	1				0.415	0.913
160	06013-51503	JOINT PIPE	1				0.062	0.1364
170	34550-33290	TUBE	1				0.01	0.022
180	3A011-82930	JOINT PIPE	1				0.09	0.198
190	04810-00180	O RING	1				0.001	0.0022
200	66204-36280	BAND PIPE	2				0.02	0.044
210	TA240-55470	HOLDER OIL COOLER	1				0.033	0.0726
220	01754-50830	BOLT FLANGE	1				0.01	0.022
230	TA240-21910	HOLDER OIL COOLER	1				0.05	0.11
240	TA240-21920	HOLDER OIL COOLER	1				0.059	0.1298
250	01754-50835	BOLT FLANGE	1				0.019	0.0418
260	31351-34320	RUBBER PROTECTOR	2	>=50009			0.003	0.0066

silverhorn.co.uk

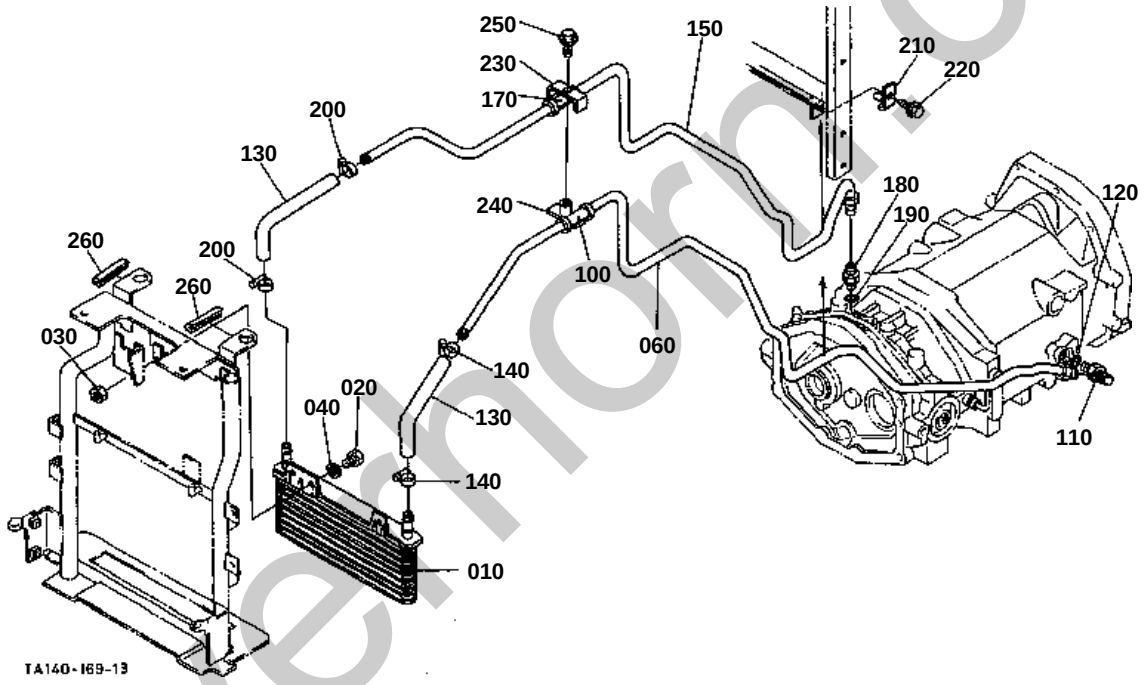

silvermorn.co.uk

OIL COOLER [HST TYPE] [NEW TYPE]
[S.No.;>=51310]

↔ Interchangeable; ≠ not interchangeable; ← new for old; → old for new

REF.No	Part No.	Description	Q'ty	S.No.	I/C	REMARKS	Weight (kgf)	Weight (lb)
010	TA240-55370	COOLER OIL	1				0.72	1.584
020	01153-50814	BOLT	2				0.009	0.0198
030	02114-50080	NUT	2				0.005	0.011
040	04512-60080	WASHER SPRING	2				0.002	0.0044
050	99999-99999	BLANK	0				0	0
060	TA240-21113	COMP.PIPE OIL COOLER	1	<=70979			0.78	1.716
060	TA240-21115	COMP.PIPE OIL COOLER	1	>=70980	←		0.78	1.716
070	99999-99999	BLANK	0				0	0
080	99999-99999	BLANK	0				0	0
090	99999-99999	BLANK	0				0	0
100	34550-33290	TUBE	1				0.01	0.022
110	06015-51543	JOINT	1				0.15	0.33
120	04810-00180	O RING	1				0.001	0.0022
120	04817-00180	O RING	1		←		0.003	0.0066
130	TA240-21150	HOSE OIL COOLER	2				0.08	0.176
140	66204-36280	BAND PIPE	2				0.02	0.044
150	TA240-21133	COMP.PIPE OIL COOLER	1	<=70979			0.415	0.913
150	TA240-21135	COMP.PIPE OIL COOLER	1	>=70980	←		0.78	1.716
160	99999-99999	BLANK	0				0	0
170	34550-33290	TUBE	1				0.01	0.022
180	3A011-82930	JOINT PIPE	1				0.09	0.198
190	04810-00180	O RING	1				0.001	0.0022
190	04817-00180	O RING	1		←		0.003	0.0066
200	66204-36280	BAND PIPE	2				0.02	0.044
210	TA240-55473	HOLDER OIL COOLER	1				0.033	0.0726
220	01754-50630	BOLT FLANGE	1				0.01	0.022
230	TA240-21910	HOLDER OIL COOLER	1				0.05	0.11
240	TA240-21920	HOLDER OIL COOLER	1				0.059	0.1298
250	01123-50840	BOLT	1				0.018	0.0396
260	31351-34320	RUBBER PROTECTOR	2				0.003	0.0066

silverhorn.co.uk

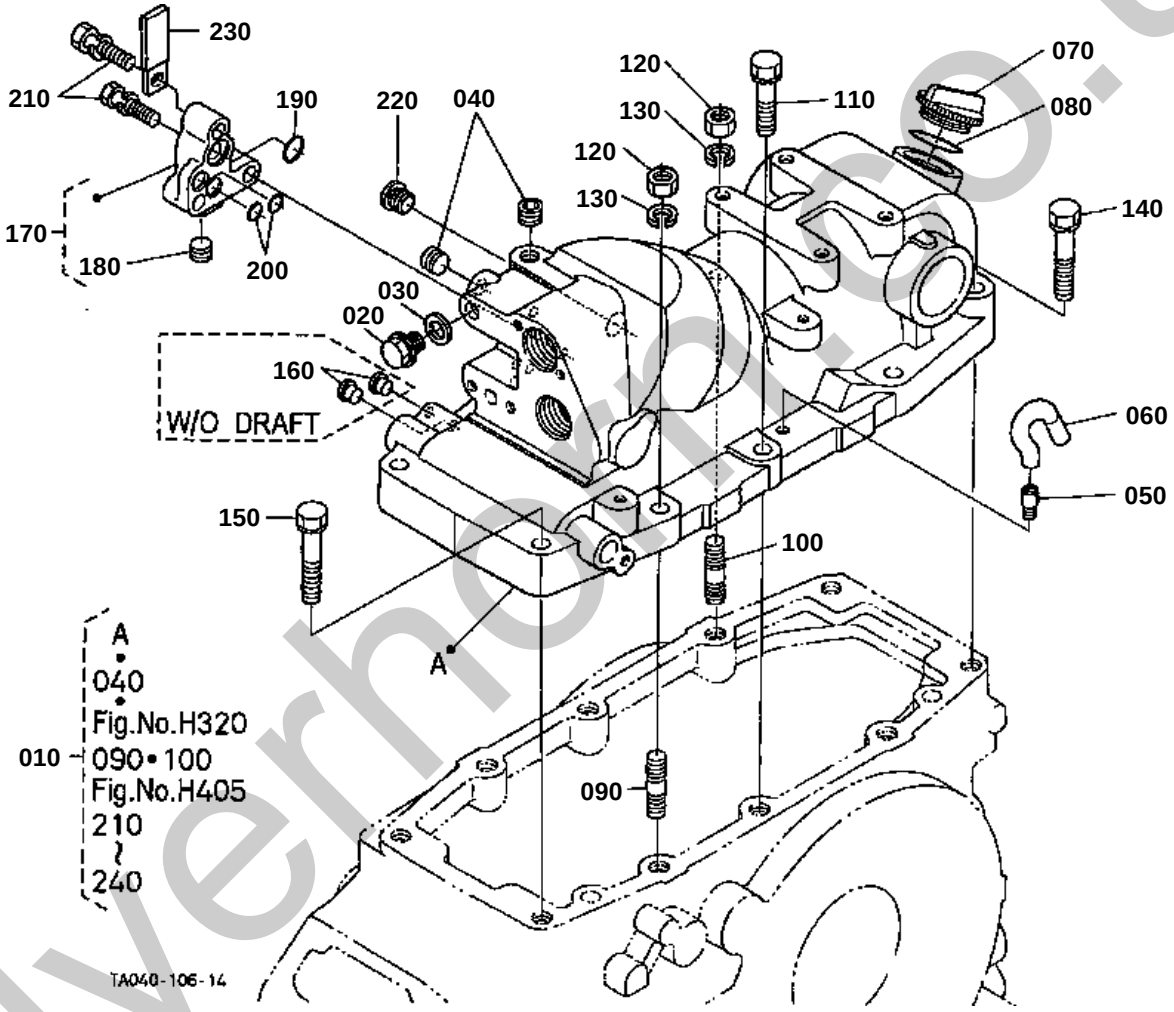

silverhomes.co.uk

010 TA040-3411-4

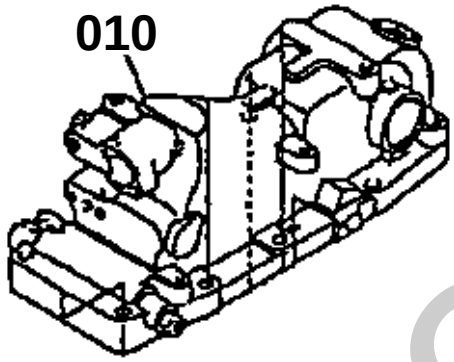

010 TA150-9935-0
010 TA150-9935-3

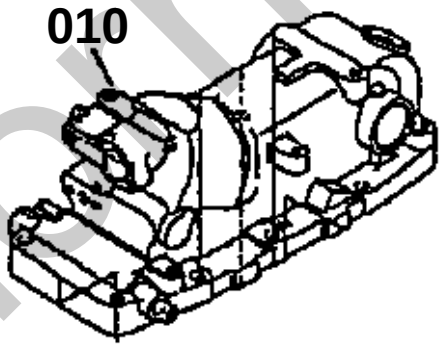

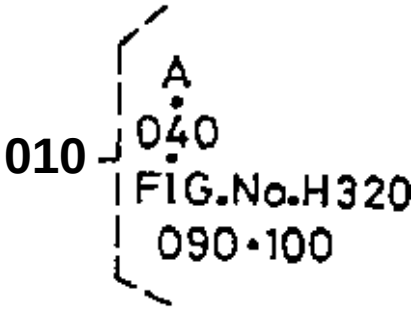

TA140-840-11

silverhorn.co.uk

HYDRAULIC CYLINDER

↔ Interchangeable; ≠ not interchangeable; ← new for old; → old for new

REF.No	Part No.	Description	Q'ty	S.No.	I/C	REMARKS	Weight (kgf)	Weight (lb)
010	TA040-34114	CASE HYD.CYLINDER	1	<=71666		NOT SALE	21.3	46.86
010	TA150-99350	ASSY CASE HYD.CYLIN.	1	>=71667	←		0	0
010	TA150-99353	CASE HYD.CYLINDER	1	>=72289	←		0	0
010	TC050-99360	ASSY CASE CYLINDER	1	>=75733	←		0	0
020	37150-36730	PLUG	1				0.03	0.066
030	37150-36720	GASKET	1				0.01	0.022
040	31351-37150	PLUG	2				0.007	0.0154
050	36200-21610	BREATHER	1				0.008	0.0176
060	31351-37140	BREATHER	1				0.01	0.022
070	38240-21410	PLUG	1				0.015	0.033
080	04811-50300	O RING	1				0.001	0.0022
080	04817-50300	O RING	1		←		0.001	0.0022
090	01574-51245	STUD	1				0.051	0.1122
100	01574-51245	STUD	1				0.051	0.1122
110	01133-51245	BOLT	4				0.055	0.121
120	02176-50120	NUT	2				0.01	0.022
130	04512-60120	WASHER SPRING	2				0.005	0.011
140	01133-51260	BOLT	2				0.06	0.132
150	01133-51255	BOLT	2				0.08	0.176
160	66591-51130	PLUG	2			W/O DRAFT	0.001	0.0022
170	TA040-36620	ASSY COVER CYLINDER	1			W/O REMOTE CONTROL VALVE	0.3	0.66
180	31351-37150	PLUG	1			W/O REMOTE CONTROL VALVE	0.007	0.0154
190	04810-00140	O RING	1			W/O REMOTE CONTROL VALVE	0.001	0.0022
190	04817-00140	O RING	1		←	W/O REMOTE CONTROL VALVE	0	0
200	04810-00100	O RING	2			W/O REMOTE CONTROL VALVE	0.001	0.0022
200	04817-00100	O RING	2		←	W/O REMOTE CONTROL VALVE	0	0
210	01123-50835	BOLT	3			W/O REMOTE CONTROL VALVE	0.02	0.044
220	TA040-36650	PLUG	1			W/O REMOTE CONTROL VALVE	0.005	0.011
230	13816-67580	CLAMP CORD	1			W/O REMOTE CONTROL VALVE	0.004	0.0088

silverhorn.co.uk

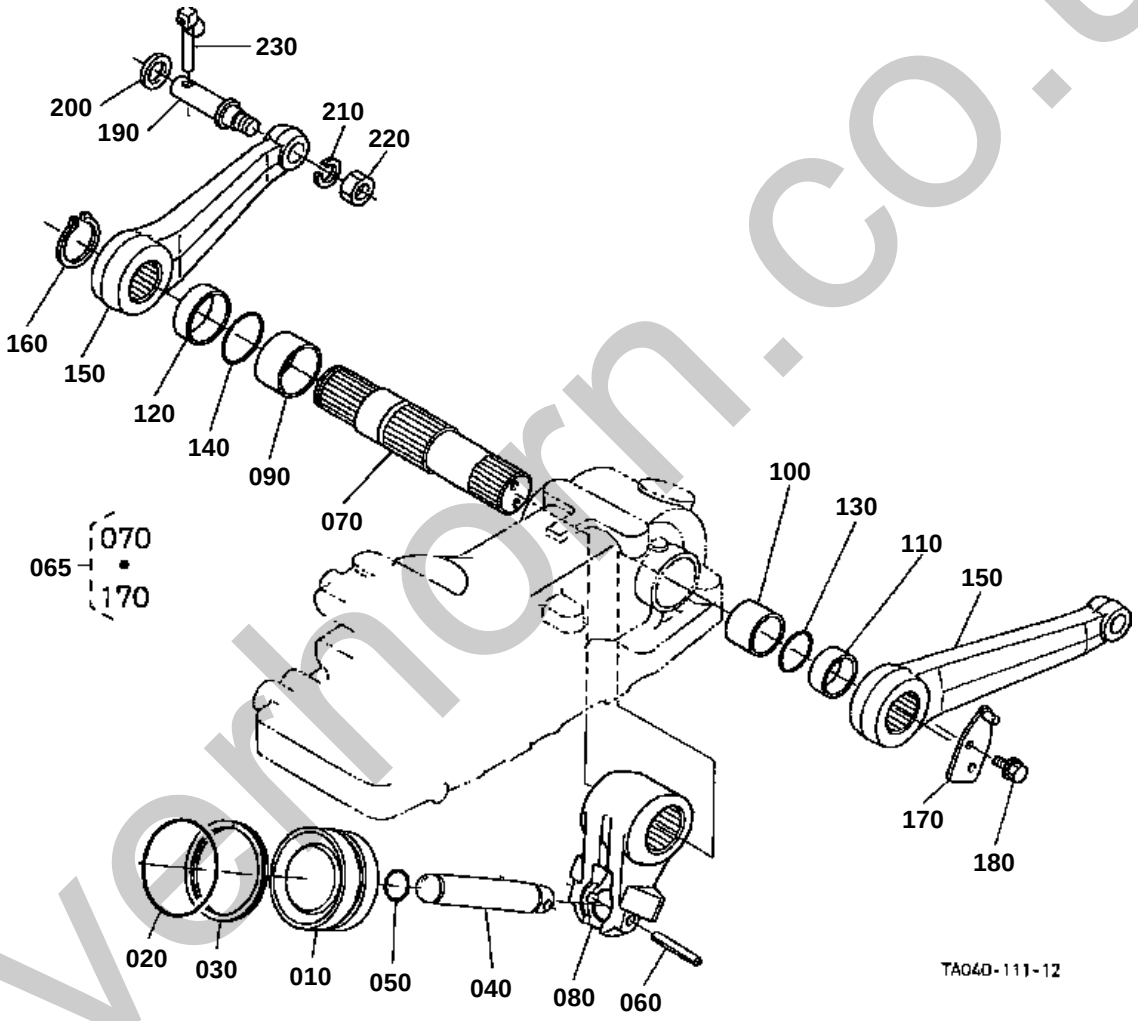

silverhorn.co.uk

↔ Interchangeable; ≠ not interchangeable; ← new for old; → old for new

REF.No	Part No.	Description	Q'ty	S.No.	I/C	REMARKS	Weight (kgf)	Weight (lb)
010	34070-34210	PISTON HYD.	1	<=60731			0	0
010	34070-34213	PISTON HYD.	1	>=60732	←		0	0
010	34070-34214	PISTON HYD.	1	>=71667	←		0	0
020	04810-00800	O RING	1				0.009	0.0198
030	31391-37330	RING BACK UP	1				0.005	0.011
040	31351-37320	ROD HYD.	1				0.605	1.331
050	04810-00240	O RING	1				0.001	0.0022
050	04817-00240	O RING	1		←		0	0
060	05411-00656	PIN SPRING	1				0.006	0.0132
065	TA150-37420	ASSY SHAFT HYD.ARM	1	>=74529			2.3	5.06
070	31321-37430	SHAFT HYD.ARM	1	<=71313			2.22	4.884
070	TA150-37430	SHAFT HYD.ARM	1	>=71314	←		2.2	4.84
070	TA150-37434	SHAFT HYD.ARM	1	>=74529	≠	NOT SALE ORDER BY REF.No.065	0	0
080	TA040-34232	ARM HYDRAULIC	1	<=73769		NOT SALE	1.94	4.268
080	TA040-34234	ARM HYDRAULIC	1	>=73770	←		0	0
090	30400-37450	BUSH	1				0.09	0.198
100	30400-37460	BUSH	1				0.065	0.143
110	34150-37490	COLLAR	1				0.002	0.0044
120	34150-37480	COLLAR	1				0.005	0.011
130	04811-06400	O RING	1				0.001	0.0022
130	04817-06400	O RING	1		←		0	0
140	04811-50450	O RING	1				0.002	0.0044
140	04817-50450	O RING	1		←		0	0
150	TA040-34610	ARM LIFT	2				2.22	4.884
160	04612-00400	CIR CLIP EXTERNAL	1				0.005	0.011
170	T0070-36010	LINK CONTROL	1	<=74528			0.07	0.154
170	TA150-37720	LINK CONTROL	1	>=74529	≠		0.035	0.077
180	01754-50812	BOLT FLANGE	2				0.01	0.022
190	30442-37690	PIN LIFT ROD	2				0.205	0.451
200	04011-50180	WASHER PLAIN	2				0.012	0.0264
210	04512-60160	WASHER SPRING	2				0.01	0.022
220	02174-50160	NUT	2				0.022	0.0484
230	34150-37640	PIN SET	2				0.06	0.132

silverhorn.co.uk

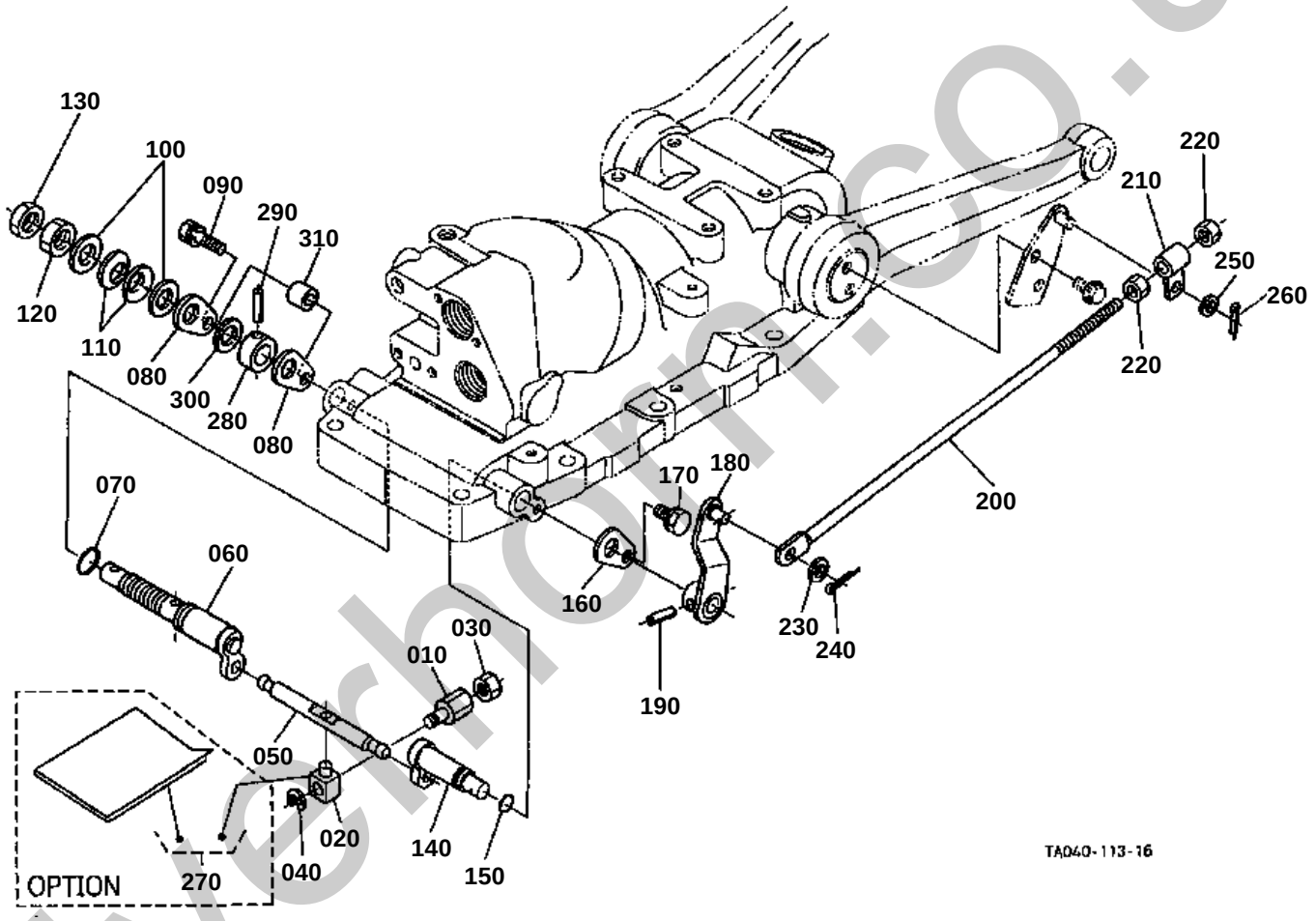

silverhorn.co.uk

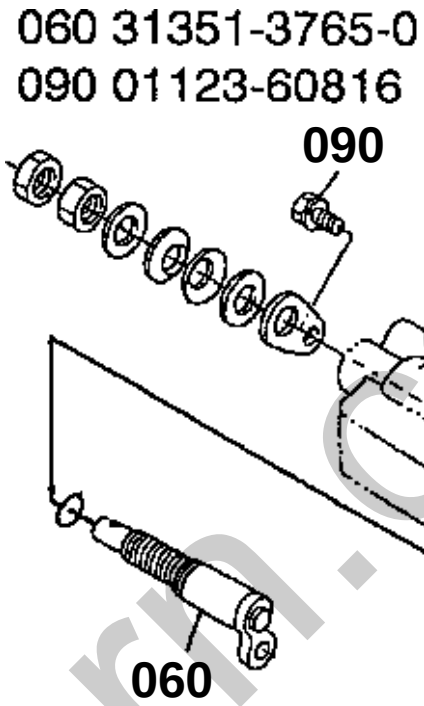

TA049-870-10

silverhorn.co.uk

FEED BACK LEVER

↔ Interchangeable; ≠ not interchangeable; ← new for old; → old for new

REF.No	Part No.	Description	Q'ty	S.No.	I/C	REMARKS	Weight (kgf)	Weight (lb)
010	67531-38280	JOINT SPOOL	1				0.17	0.374
020	37150-36420	JOINT SPOOL	1				0.02	0.044
030	02112-50080	NUT	1				0.003	0.0066
040	04613-50060	CIR CLIP EXTERNAL	1				0.001	0.0022
050	31351-37640	LEVER SPOOL DRIVE	1				0.05	0.11
060	31351-37650	ARM CONTROL	1	<=71755			0.16	0.352
060	TA140-37650	ARM CONTROL	1	>=71756	≠		0	0
070	04811-00140	O RING	1				0.001	0.0022
070	04817-00140	O RING	1		←		0	0
080	31351-37660	SET PLATE	1	<=71755			0.01	0.022
080	31351-37660	SET PLATE	2	>=71756			0.01	0.022
090	01123-50816	BOLT	1	<=71755			0.011	0.0242
090	01123-50830	BOLT	1	>=71756	≠		0.015	0.033
100	04013-60140	WASHER PLAIN	2				0.01	0.022
110	34260-36880	SPRING PLATE	2				0.006	0.0132
120	02174-50140	NUT	1				0.014	0.0308
130	02172-50140	NUT	1				0.01	0.022
140	31351-37750	SHAFT BACK LEVER	1				0.1	0.22
150	04811-00120	O RING	1				0.001	0.0022
150	04816-00120	O RING	1		←		0.001	0.0022
160	38240-36890	SET PLATE	1				0.013	0.0286
170	01123-50816	BOLT	1				0.011	0.0242
180	31351-37760	LEVER FEED BACK	1				0.08	0.176
190	05411-00525	PIN SPRING	1				0.002	0.0044
200	31321-37770	ROD FEED BACK	1				0.12	0.264
210	31351-37780	ROD CONTROL	1				0.03	0.066
220	02114-50080	NUT	2				0.005	0.011
230	04013-60080	WASHER PLAIN	1				0.002	0.0044
240	05511-50218	PIN SPLIT	1				0.001	0.0022
250	04013-60080	WASHER PLAIN	1				0.002	0.0044
260	05511-50215	PIN SPLIT	1				0.001	0.0022
270	TA040-99800	ASSY JOINT	1			OPTION	0.019	0.0418
280	TA140-36900	SPACER	1	>=71756			0	0
290	05411-00528	PIN SPRING	1	>=71756			0.003	0.0066
300	TA140-36920	PLATE FRICTION	1	>=71756			0	0
310	TA140-36930	SPACER	1	>=71756			0	0

silvermorn.co.uk

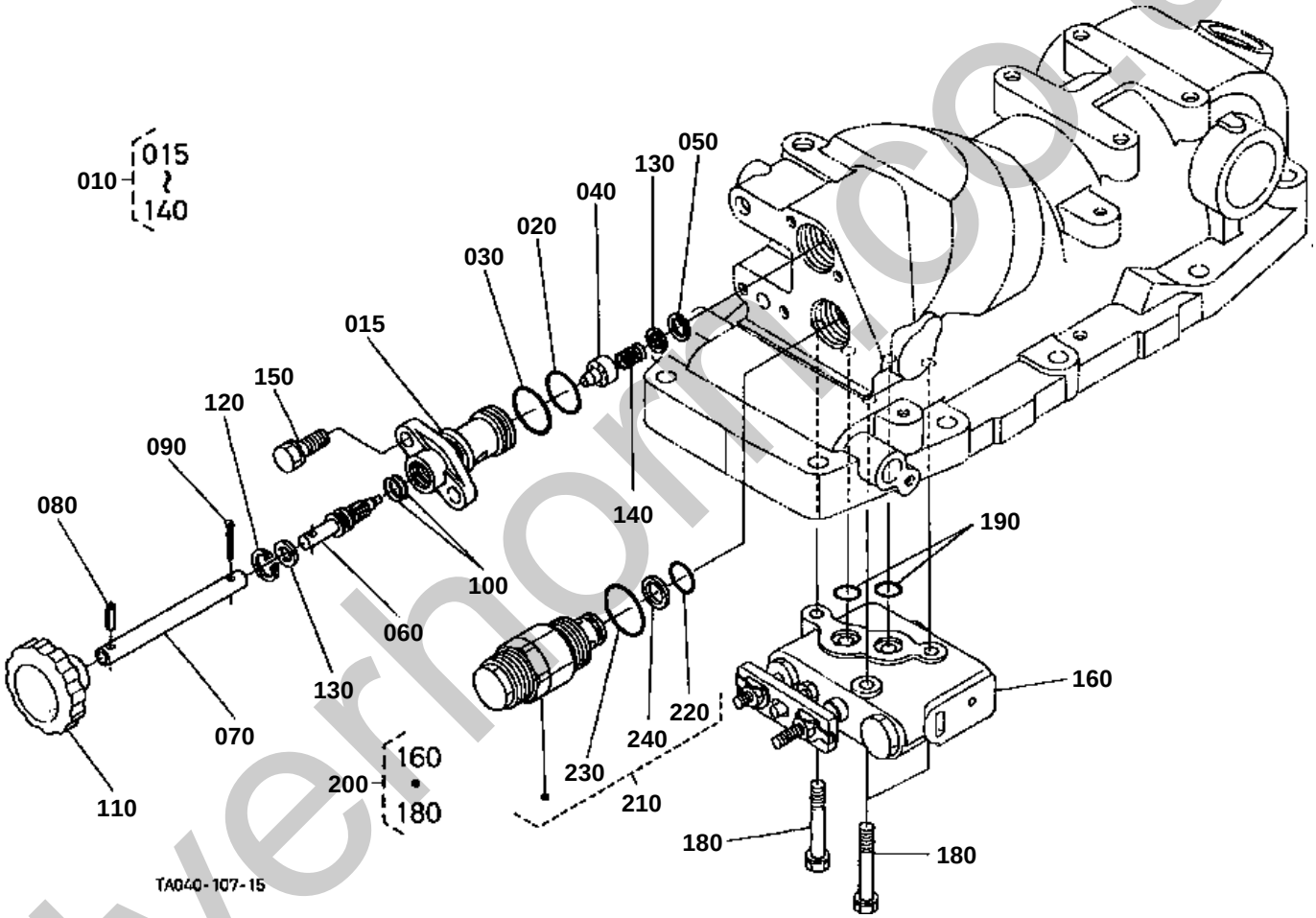

silverhorn.co.uk

160 31351-3960-3

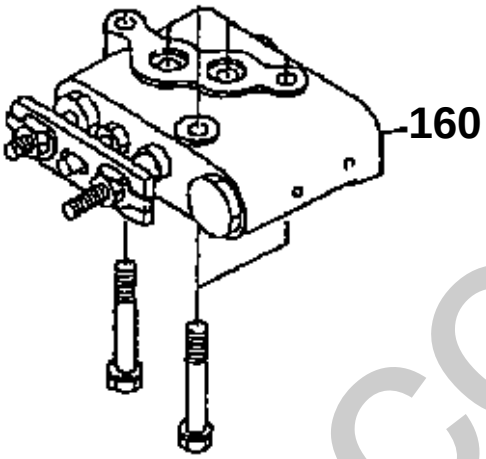

TA040-918-10

silverhorn.co.uk

↔ Interchangeable; ≠ not interchangeable; ← new for old; → old for new

REF.No	Part No.	Description	Q'ty	S.No.	I/C	REMARKS	Weight (kgf)	Weight (lb)
010	TA040-34500	ASSY VALVE	1				0.215	0.473
015	31351-37210	COVER CYL.FRONT	1				0.315	0.693
020	04810-00220	O RING	1				0.001	0.0022
020	04817-00220	O RING	1		←		0.005	0.011
030	04810-06250	O RING	1				0.001	0.0022
030	04817-06250	O RING	1		←		0	0
040	38240-37250	COLLAR ADJUSTING	1				0.01	0.022
050	04611-00160	CIR CLIP INTERNAL	1				0.001	0.0022
060	T0070-34510	SHAFT	1				0.04	0.088
070	TA040-34570	PIPE	1				0.035	0.077
080	05411-00414	PIN SPRING	1				0.001	0.0022
090	05511-50425	PIN SPLIT	1				0.003	0.0066
100	04810-00100	O RING	2				0.001	0.0022
100	04817-00100	O RING	2		←		0	0
110	T0070-34560	GRIP	1				0.011	0.0242
120	34150-37260	CIR CLIP INTERNAL	1				0.001	0.0022
130	04012-50080	WASHER PLAIN	2				0.001	0.0022
140	30812-37360	SPRING	1				0.005	0.011
150	01123-50825	BOLT	2				0.013	0.0286
160	31351-39603	ASSY VALVE CONTROL	1	<=72128			0	0
160	31351-39604	ASSY VALVE CONTROL	1	>=72129	←		0	0
170	99999-99999	BLANK	0				0	0
180	TA040-36400	BOLT	3				0.02	0.044
190	04810-00120	O RING	2				0.001	0.0022
190	04817-00120	O RING	2		←		0	0
200	31351-39700	ASSY BOLT C/V	1	<=72128		OPTION	0	0
200	31351-39702	ASSY BOLT C/V	1	>=72129	←	OPTION	0	0
210	TC050-39000	ASSY VALVE SAFETY	1	>=75733			0	0
220	04810-00160	O RING	1	>=75733			0.001	0.0022
220	04817-00160	O RING	1		←		0	0
230	04815-06280	O RING	1	>=75733			0.001	0.0022
230	04817-06280	O RING	1		←		0.002	0.0044
240	33770-94040	RING BACK UP	1	>=75733			0.002	0.0044

silverhorn.co.uk

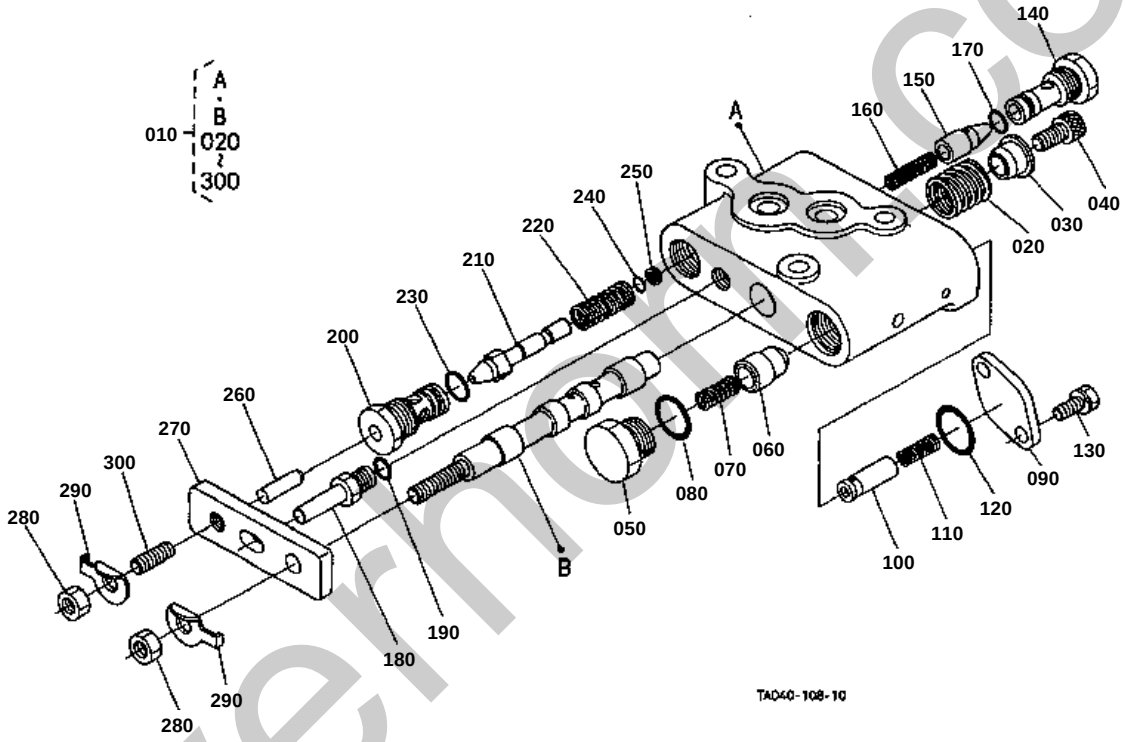

silverhorn.co.uk

↔ Interchangeable; ≠ not interchangeable; ← new for old; → old for new

REF.No	Part No.	Description	Q'ty	S.No.	I/C	REMARKS	Weight (kgf)	Weight (lb)
010	31351-39603	ASSY VALVE CONTROL	1				0	0
020	31351-39630	SPRING SPOOL	1				0.02	0.044
030	31351-39640	HOLDER SPRING	1				0.02	0.044
040	01311-10814	BOLT HEX-SOC-HD	1				0.012	0.0264
050	31351-39650	PLUG	1				0.04	0.088
060	31351-39150	POPPET	1				0.02	0.044
070	67531-38470	SPRING	1				0.001	0.0022
080	04811-00140	O RING	1				0.001	0.0022
090	31351-39660	PLATE	1				0.05	0.11
100	31351-39670	POPPET	1				0.01	0.022
110	31351-39680	SPRING	1				0.01	0.022
120	04811-00160	O RING	1				0.001	0.0022
130	01023-50614	BOLT	2				0.005	0.011
140	31351-39690	PLUG	1				0.05	0.11
150	31391-39180	POPPET	1				0.015	0.033
160	31391-39190	SPRING	1				0.001	0.0022
170	04810-00090	O RING	1				0.001	0.0022
180	31351-39720	PIN FULCRUM	1				0.025	0.055
190	04811-00080	O RING	1				0.001	0.0022
200	31351-39730	PLUG	1				0.05	0.11
210	31351-39180	POPPET	1				0.025	0.055
220	31351-39190	SPRING	1				0.008	0.0176
230	04810-06100	O RING	1				0.001	0.0022
240	04811-00050	O RING	1				0.001	0.0022
250	31351-39290	RING BACK UP	1				0.001	0.0022
260	31351-39740	RETAINER ROD	1				0.005	0.011
270	31351-39750	PLATE JOINT	1				0.05	0.11
280	02156-50080	NUT	2				0.004	0.0088
290	04111-50080	WASHER	2				0.001	0.0022
300	03650-50816	SCREW SET	1				0.01	0.022

silverhorn.co.uk

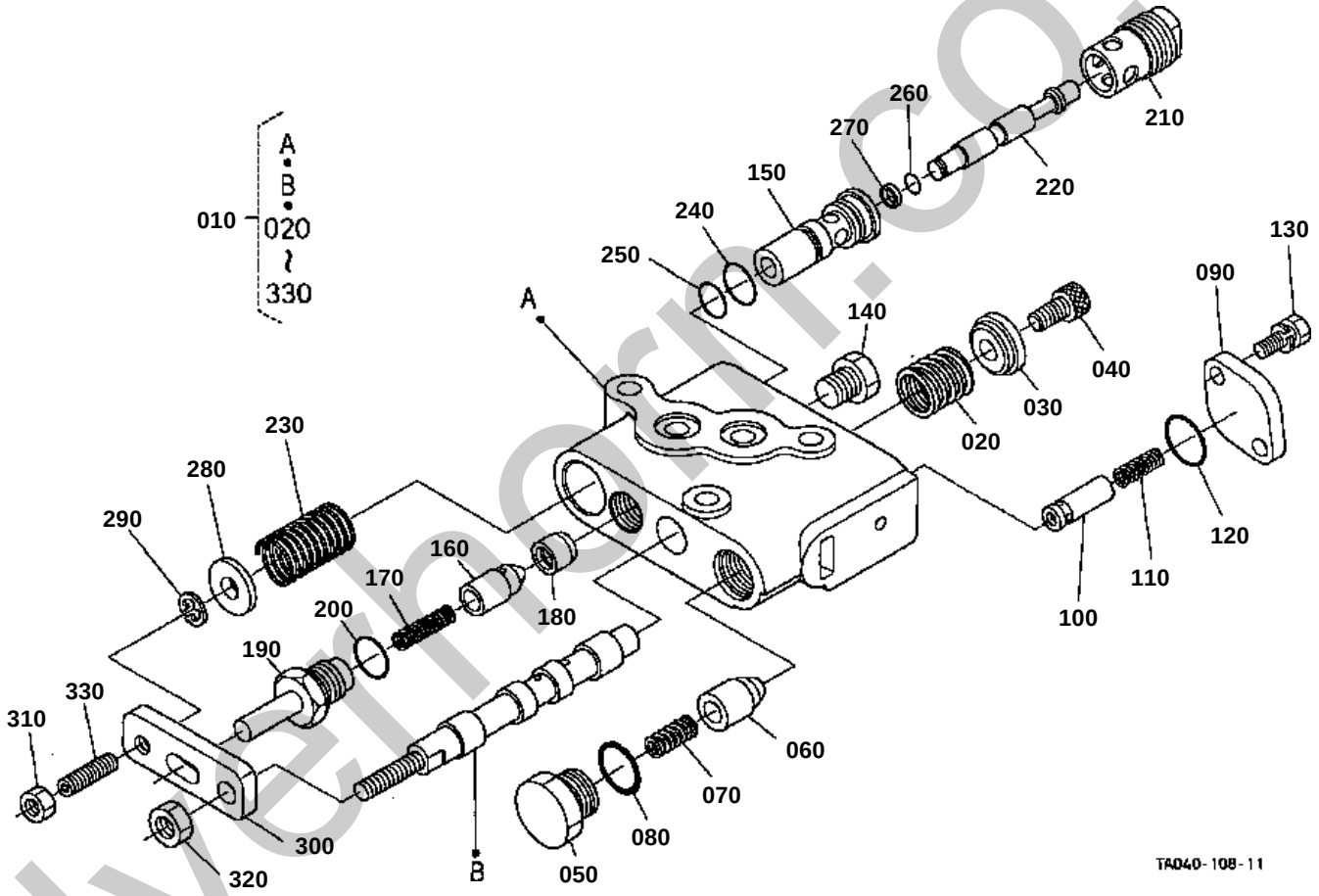

silverhorn.co.uk

↔ Interchangeable; ≠ not interchangeable; ← new for old; → old for new

REF.No	Part No.	Description	Q'ty	S.No.	I/C	REMARKS	Weight (kgf)	Weight (lb)
010	31351-39604	ASSY VALVE CONTROL	1				0	0
020	31351-39630	SPRING SPOOL	1				0.02	0.044
030	31351-39640	HOLDER SPRING	1				0.02	0.044
040	01311-10814	BOLT HEX-SOC-HD	1				0.012	0.0264
050	31351-39650	PLUG	1				0.04	0.088
060	31351-39150	POPPET	1				0.02	0.044
070	67531-38470	SPRING	1				0.001	0.0022
080	04811-00140	O RING	1				0.001	0.0022
080	04817-00140	O RING	1		←		0	0
090	31351-39660	PLATE	1				0.05	0.11
100	31351-39670	POPPET	1				0.01	0.022
110	31351-39680	SPRING	1				0.01	0.022
120	04811-00160	O RING	1				0.001	0.0022
120	04817-00160	O RING	1		←		0	0
130	01023-50616	BOLT	2				0.005	0.011
140	06331-35010	PLUG	1				0.012	0.0264
150	T0430-37600	SLEEVE	1				0	0
160	T0430-37580	POPPET	1				0	0
170	31391-39190	SPRING	1				0.001	0.0022
180	T0430-37530	SEAT CHECK VALVE	1				0	0
190	31351-37670	PLUG	1				0	0
200	04811-00120	O RING	1				0.001	0.0022
200	04817-00120	O RING	1		←		0	0
210	31351-37620	PLUG	1				0	0
220	T0430-37610	POPPET	1				0	0
230	T0430-37620	SPRING	1				0	0
240	04811-05120	O RING	1				0.001	0.0022
240	04817-05120	O RING	1		←		0	0
250	04811-05110	O RING	1				0.001	0.0022
250	04817-05110	O RING	1		←		0.005	0.011
260	04811-00050	O RING	1				0.001	0.0022
260	04816-00050	O RING	1		←		0.001	0.0022
270	31351-39290	RING BACK UP	1				0.001	0.0022
280	31351-39740	RETAINER ROD	1				0.005	0.011
290	04613-50060	CIR CLIP EXTERNAL	1				0.001	0.0022
300	31351-39750	PLATE JOINT	1				0.05	0.11
310	02014-50060	NUT	1				0.003	0.0066
320	02114-50080	NUT	1				0.005	0.011
330	03650-50622	SCREW SET	1				0.004	0.0088

silvernorn.co.uk

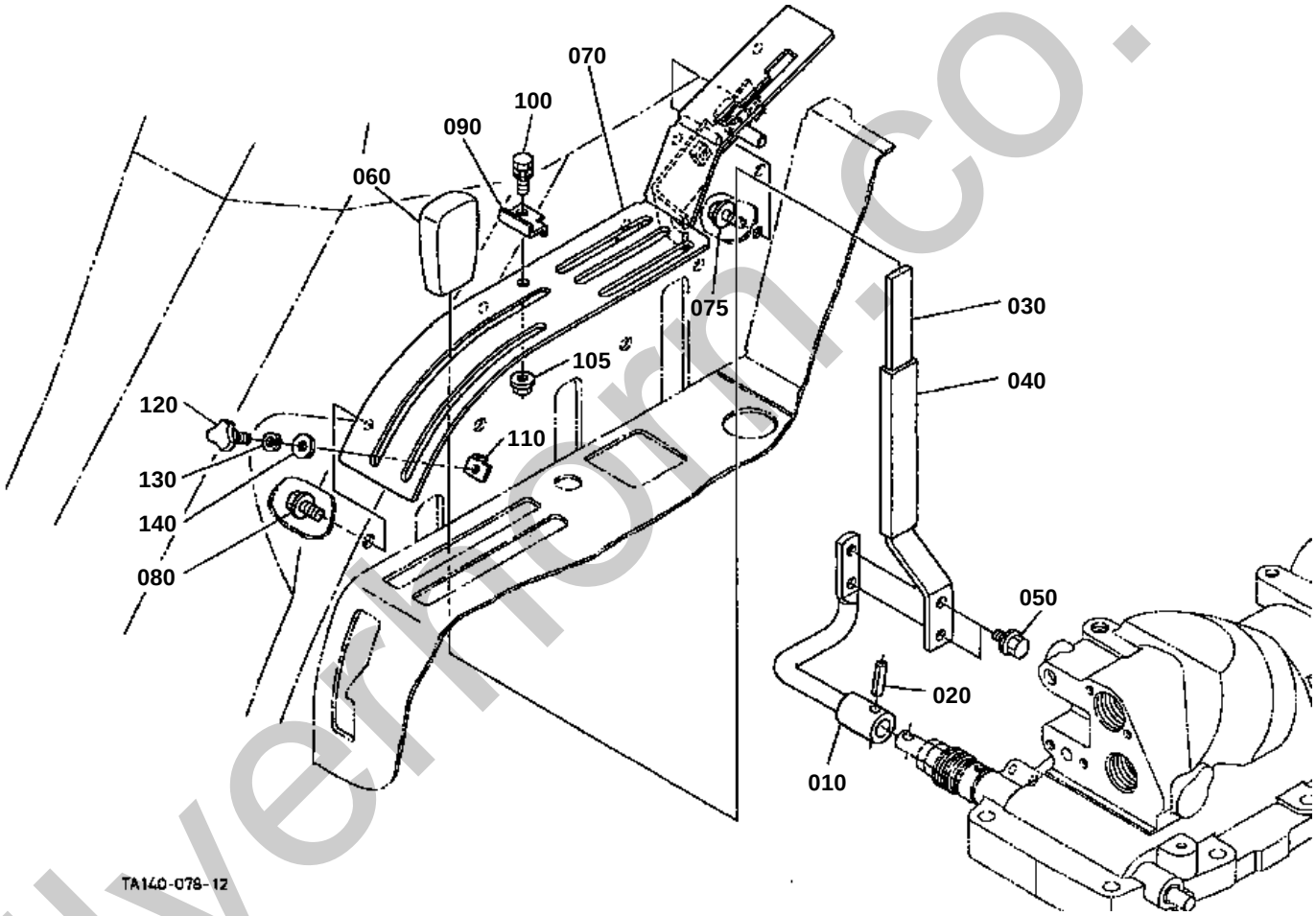

silverfordn.co.uk

100 01125-60816

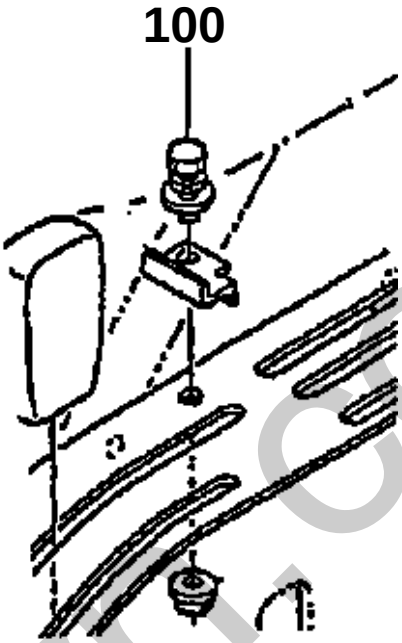

TA140-865-10

silverhorn.co.uk

POSITION CONTROL LEVER [ROPS TYPE]
[EXCEPTE TYPE CABINE]

↔ Interchangeable; ≠ not interchangeable; ← new for old; → old for new

REF.No	Part No.	Description	Q'ty	S.No.	I/C	REMARKS	Weight (kgf)	Weight (lb)
010	TA040-36110	LEVER POSITION	1	<=71755		W/O DRAFT	0.276	0.6072
010	TA140-36110	LEVER POSITION	1	>=71756	≠	W/O DRAFT	0	0
020	05411-00525	PIN SPRING	1			W/O DRAFT	0.002	0.0044
030	TA040-36120	LEVER POSITION	1			W/O DRAFT	0.21	0.462
040	TA040-36130	TUBE LEVER	1	<=50024		W/O DRAFT	0	0
040	TA040-36132	TUBE LEVER	1	>=50025	←	W/O DRAFT	0.01	0.022
050	01754-50616	BOLT FLANGE	2			W/O DRAFT	0.006	0.0132
060	52300-32640	GRIP LEVER	1				0.04	0.088
070	TA140-47610	ASSY GUIDE HYD.LEVER	1				0.91	2.002
075	01754-50816	BOLT FLANGE	2				0.011	0.0242
080	01754-50812	BOLT FLANGE	5				0.01	0.022
090	34070-36130	STOPPER	1				0.015	0.033
100	01125-60816	BOLT	1	<=74854			0.01	0.022
100	01123-50816	BOLT	1	>=74855	←		0.011	0.0242
105	02751-50080	NUT FLANGE	1				0.006	0.0132
110	34070-36140	STOPPER	1	<=74854			0	0
110	34070-36140	STOPPER	1	>=74855	←		0	0
120	01820-50620	BOLT KNOB	1				0.015	0.033
130	04512-60060	WASHER SPRING	1				0.001	0.0022
140	31351-18860	WASHER	1				0.002	0.0044

silverhorn.co.uk

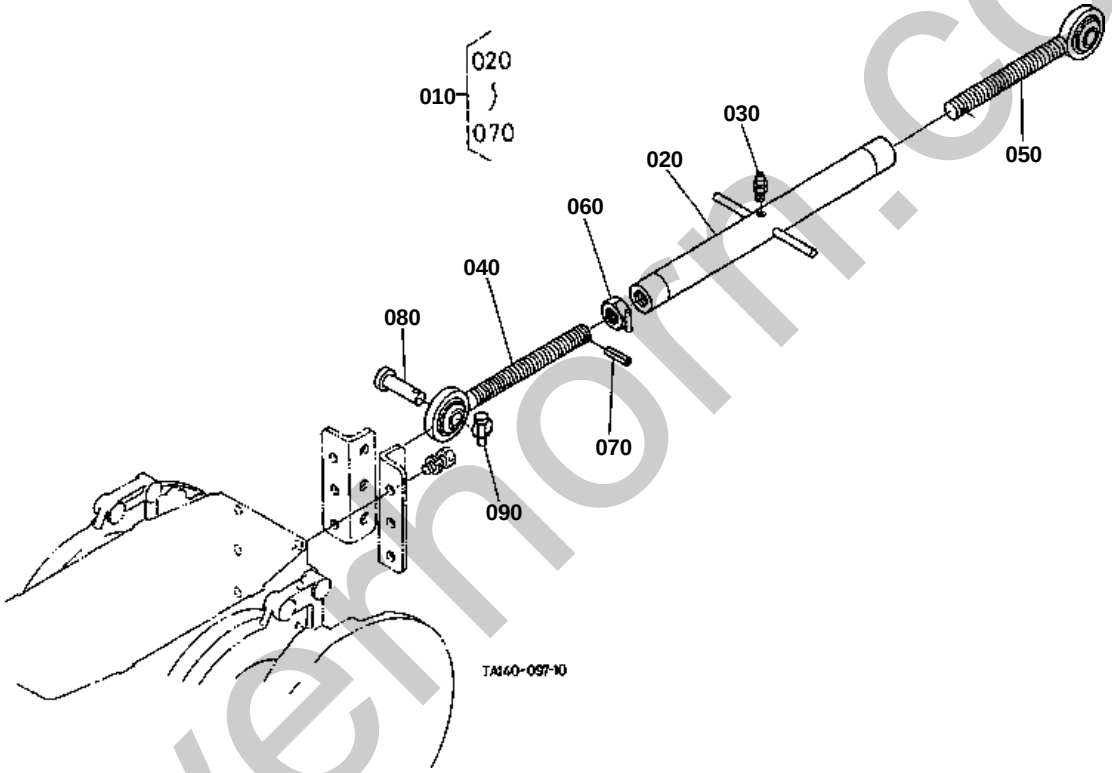

silvermoor.co.uk

↔ Interchangeable; ≠ not interchangeable; ← new for old; → old for new

REF.No	Part No.	Description	Q'ty	S.No.	I/C	REMARKS	Weight (kgf)	Weight (lb)
010	35080-71100	ASSY LINK TOP	1				3.6	7.92
020	35340-71113	LINK TOP	1				1.265	2.783
030	67211-42940	NIPPLE GREASE	1				0.001	0.0022
040	35340-71210	JOINT TOP LINK	1				1.06	2.332
050	35340-71220	JOINT TOP LINK	1				1.06	2.332
060	32244-71180	NUT TOP LINK	1				0.057	0.1254
070	05411-00430	PIN SPRING	2				0.002	0.0044
080	31150-71360	PIN JOINT	2				0.166	0.3652
090	34150-37640	PIN SET	2				0.06	0.132

silverhorn.co.uk

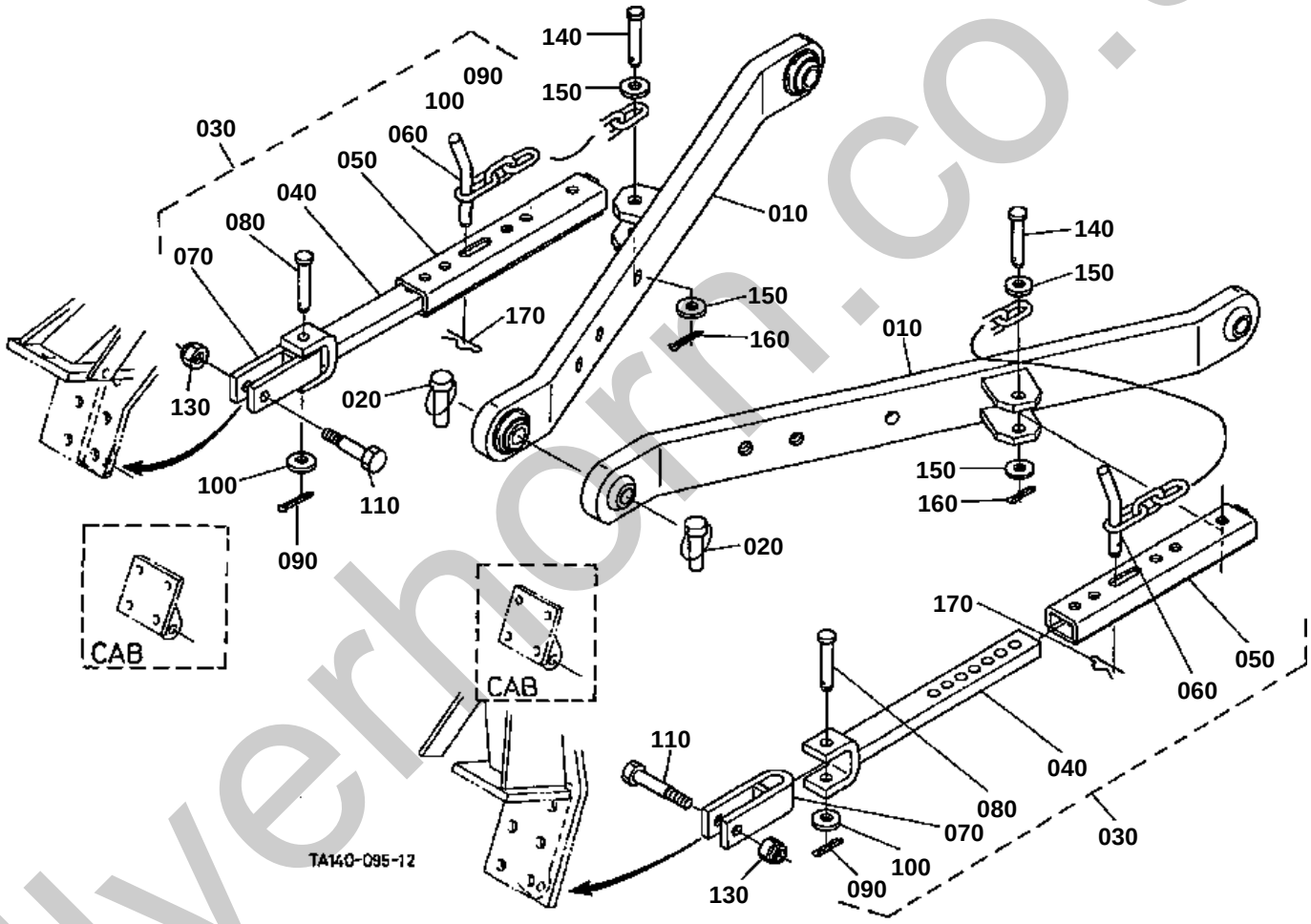

silverhorn.co.uk

130 05511-50425

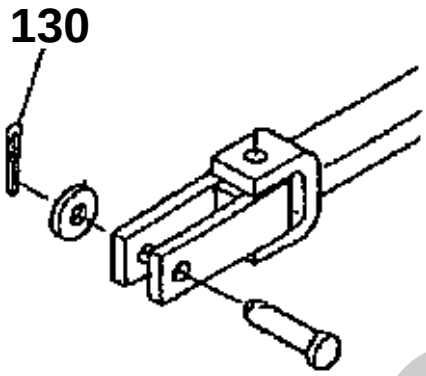

110 TA140-3981-0
120 04013-50120
130 67156-3434-0

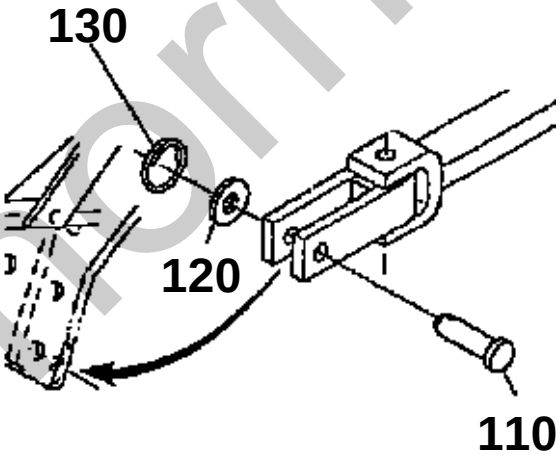

TA140-827-10

silverhorn.co.uk

3-POINT LINKAGE 1(LOWER LINK) [OLD TYPE]

S.No.;<=74337

↔ Interchangeable; ≠ not interchangeable; ← new for old; → old for new

REF.No	Part No.	Description	Q'ty	S.No.	I/C	REMARKS	Weight (kgf)	Weight (lb)
010	TA130-71312	COMP.LINK LOWER	2	<=74187			7.8	17.16
010	TA130-71313	COMP.LINK LOWER	2	>=74188	←		0	0
020	34150-37640	PIN SET	2				0.06	0.132
030	TA140-39600	ASSY STABILIZER	2	<=70508			0	0
030	TA140-39604	ASSY STABILIZER	2	>=70509	←		2.85	6.27
040	TA140-39610	COMP.STAB.FRONT	2				1.17	2.574
050	TA140-39620	COMP.STAB.BEAR	2				0.895	1.969
060	TA140-39630	COMP.JOINT	2				0.23	0.506
070	TA140-39640	COMP.JOINT	2	<=70508			0	0
070	TA140-39643	COMP.JOINT	2	>=70509	←		0.48	1.056
080	05122-51265	PIN JOINT	2				0.06	0.132
090	05511-50428	PIN SPLIT	2				0.004	0.0088
100	04011-50120	WASHER PLAIN	2				0.005	0.011
110	TA140-39810	PIN STABILIZER	2	<=70979			0	0
110	TA140-39850	BOLT STABILIZER	2	>=70980	←		0.06	0.132
120	04013-60120	WASHER PLAIN	2	<=70979			0.01	0.022
130	05511-50425	PIN SPLIT	2	<=60115			0.003	0.0066
130	67156-34340	RING SNAP	2	>=60116	←		0.01	0.022
130	02576-50120	NUT LOCK	2	>=70980	≠		0.011	0.0242
140	TA140-39820	PIN STABILIZER REAR	2				0.064	0.1408
150	04011-50120	WASHER PLAIN	4				0.005	0.011
160	05511-50425	PIN SPLIT	2				0.003	0.0066
170	05515-61200	PIN SNAP	2				0.005	0.011

silverhorn.co.uk

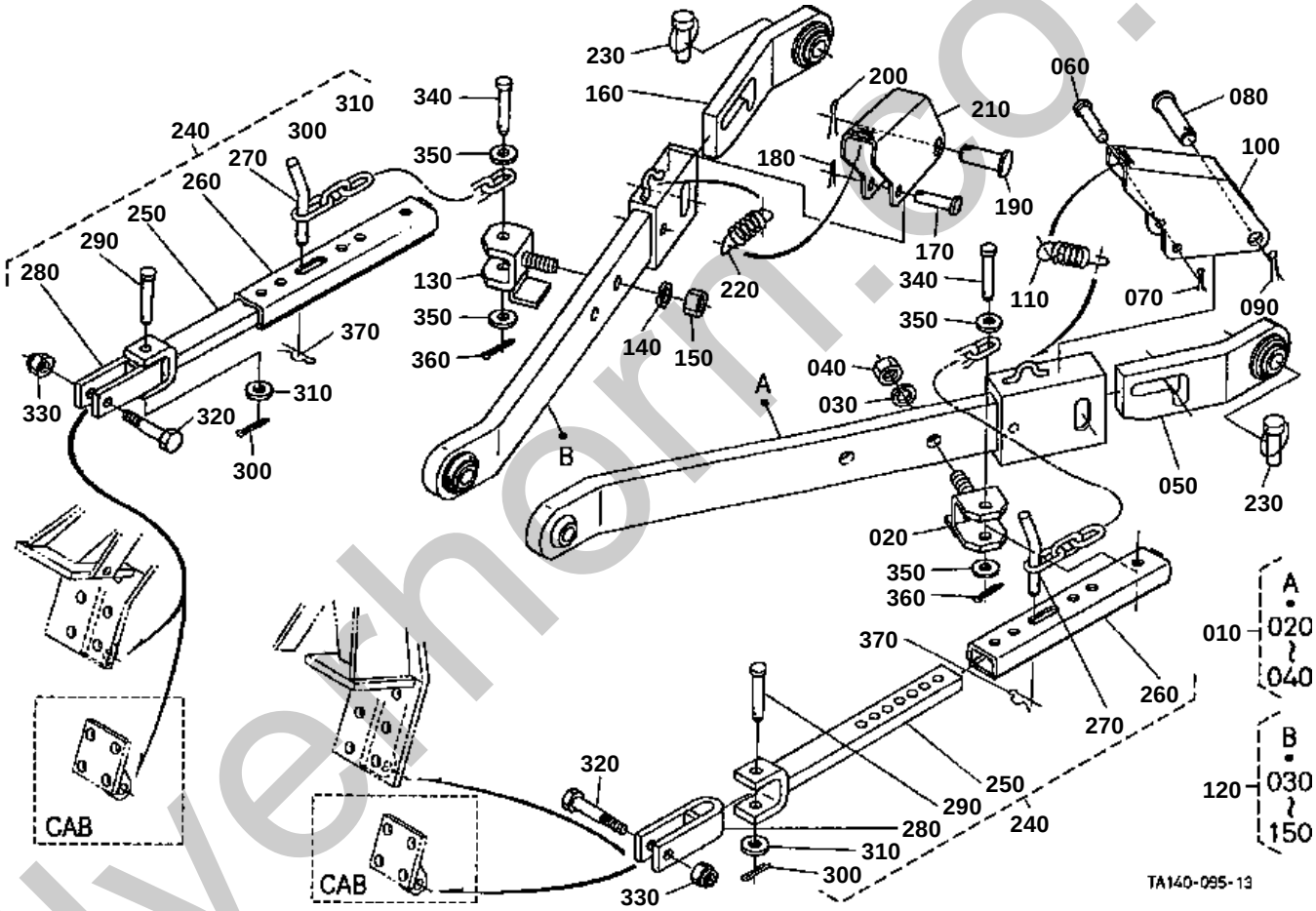

silverhorn.co.uk

3-POINT LINKAGE 1(LOWER LINK) [NEW TYPE]

S.No.;>=74338

↔ Interchangeable; ≠ not interchangeable; ← new for old; → old for new

REF.No	Part No.	Description	Q'ty	S.No.	I/C	REMARKS	Weight (kgf)	Weight (lb)
010	TA130-71360	COMP.LINK LOWER LH	1				7.2	15.84
020	TA140-71350	BRACKET	1				0.65	1.43
030	04512-60160	WASHER SPRING	1				0.01	0.022
040	02074-50160	NUT	1				0.029	0.0638
050	TA140-71380	LINK LOWER REAR LH	1				1.85	4.07
060	05122-50645	PIN JOINT	1				0.01	0.022
070	05511-51615	PIN SPLIT	1				0.001	0.0022
080	TA140-71400	PIN	1				0.085	0.187
090	05511-50530	PIN SPLIT	1				0.006	0.0132
100	TA140-71410	LEVER	1				0.34	0.748
110	33660-92170	SPRING	1				0.02	0.044
120	TA130-71370	COMP.LINK LOWER RH	1				0	0
130	TA140-71350	BRACKET	1				0.65	1.43
140	04512-60160	WASHER SPRING	1				0.01	0.022
150	02074-50160	NUT	1				0.029	0.0638
160	TA140-71390	LINK LOWER REAR RH	1				1.85	4.07
170	05122-50645	PIN JOINT	1				0.01	0.022
180	05511-51615	PIN SPLIT	1				0.001	0.0022
190	TA140-71400	PIN	1				0.085	0.187
200	05511-50530	PIN SPLIT	1				0.006	0.0132
210	TA140-71410	LEVER	1				0.34	0.748
220	33660-92170	SPRING	1				0.02	0.044
230	34150-37640	PIN SET	2				0.06	0.132
240	TA140-39604	ASSY STABILIZER	2				2.85	6.27
250	TA140-39610	COMP.STAB.FRONT	2				1.17	2.574
260	TA140-39620	COMP.STAB.BEAR	2				0.895	1.969
270	TA140-39630	COMP.JOINT	2				0.23	0.506
280	TA140-39643	COMP.JOINT	2				0.48	1.056
290	TA140-39820	PIN STABILIZER REAR	2				0.064	0.1408
300	05511-50428	PIN SPLIT	2				0.004	0.0088
310	04011-50120	WASHER PLAIN	2				0.005	0.011
320	TA140-39850	BOLT STABILIZER	2				0.06	0.132
330	02576-50120	NUT LOCK	2	<=73376			0.011	0.0242
330	02572-50120	NUT SELF-LOCKING	2	>=73377	←		0.014	0.0308
340	TA140-39820	PIN STABILIZER REAR	2				0.064	0.1408
350	04011-50120	WASHER PLAIN	4				0.005	0.011
360	05511-50425	PIN SPLIT	2				0.003	0.0066
370	05515-61200	PIN SNAP	2	<=75109			0.005	0.011
370	TC050-51200	PIN SNAP	2	>=75110	←		0	0

silvermorn.co.uk

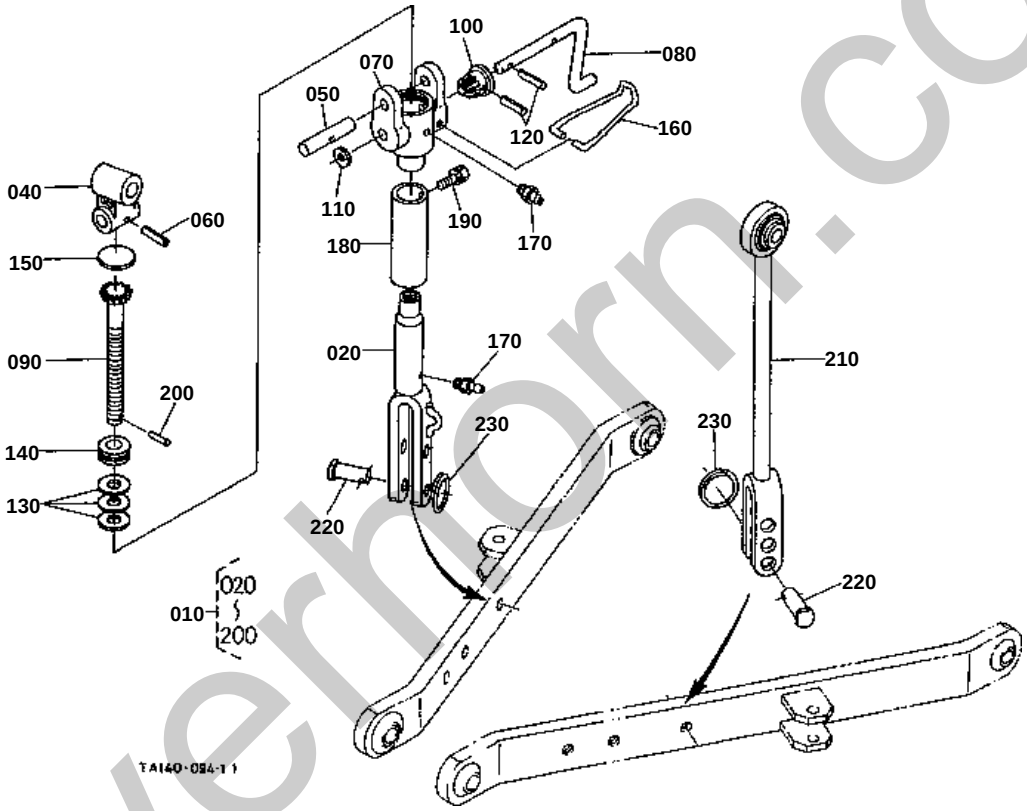

silverhorn.co.uk

240 35080-7175-0

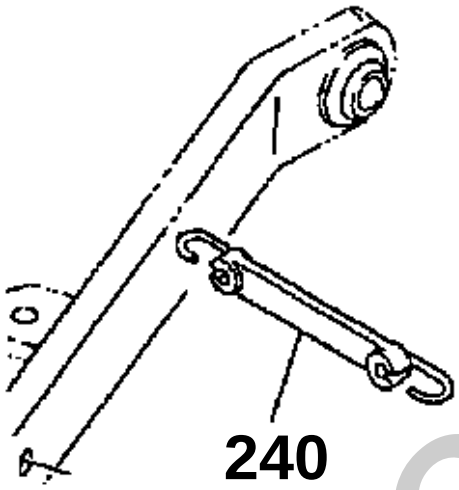

TA140-846-10

silverhorn.co.uk

3-POINT LINKAGE 2(LIFT ROD)

↔ Interchangeable; ≠ not interchangeable; ← new for old; → old for new

REF.No	Part No.	Description	Q'ty	S.No.	I/C	REMARKS	Weight (kgf)	Weight (lb)
010	TA140-39500	ASSY ROD	1				3.5	7.7
020	TA140-39520	ROD LIFT LOWER	1				0.96	2.112
030	99999-99999	BLANK	0				0	0
040	31351-71570	JOINT GEAR CASE	1				0.475	1.045
050	TA140-39550	PIN LIFT ROD	1				0.11	0.242
060	05411-00532	PIN SPRING	1				0.003	0.0066
070	31351-71710	CASE LIFT ROD GEAR	1				0.85	1.87
080	31351-71660	HANDLE LIFT ROD	1				0.235	0.517
090	TA140-39530	GEAR LIFT ROD	1				0.345	0.759
100	TA140-39540	GEAR LIFT ROD	1				0.1	0.22
110	31351-71670	WASHER PLAIN	1				0.002	0.0044
120	05411-00622	PIN SPRING	2				0.003	0.0066
130	31220-71720	SHIM	3				0.001	0.0022
140	32294-71770	BEARING THRUST BALL	1				0.073	0.1606
150	06311-75045	PLUG EXPANSION	1				0.026	0.0572
160	32244-71730	STOPPER HANDLE	1				0.027	0.0594
170	06613-10675	NIPPLE GREASE	2				0.003	0.0066
180	31351-71700	PIPE	1				0.2	0.44
190	01202-50612	BOLT	1				0.005	0.011
200	05411-00320	PIN SPRING	1				0.001	0.0022
210	31351-71540	ROD LIFT LH	1				1.55	3.41
220	38747-71582	PIN LIFT ROD	2				0.1	0.22
230	67156-34340	RING SNAP	2				0.01	0.022
240	35080-71750	COMP.RUBBER	1	<=50008			0.065	0.143

silverhorn.co.uk

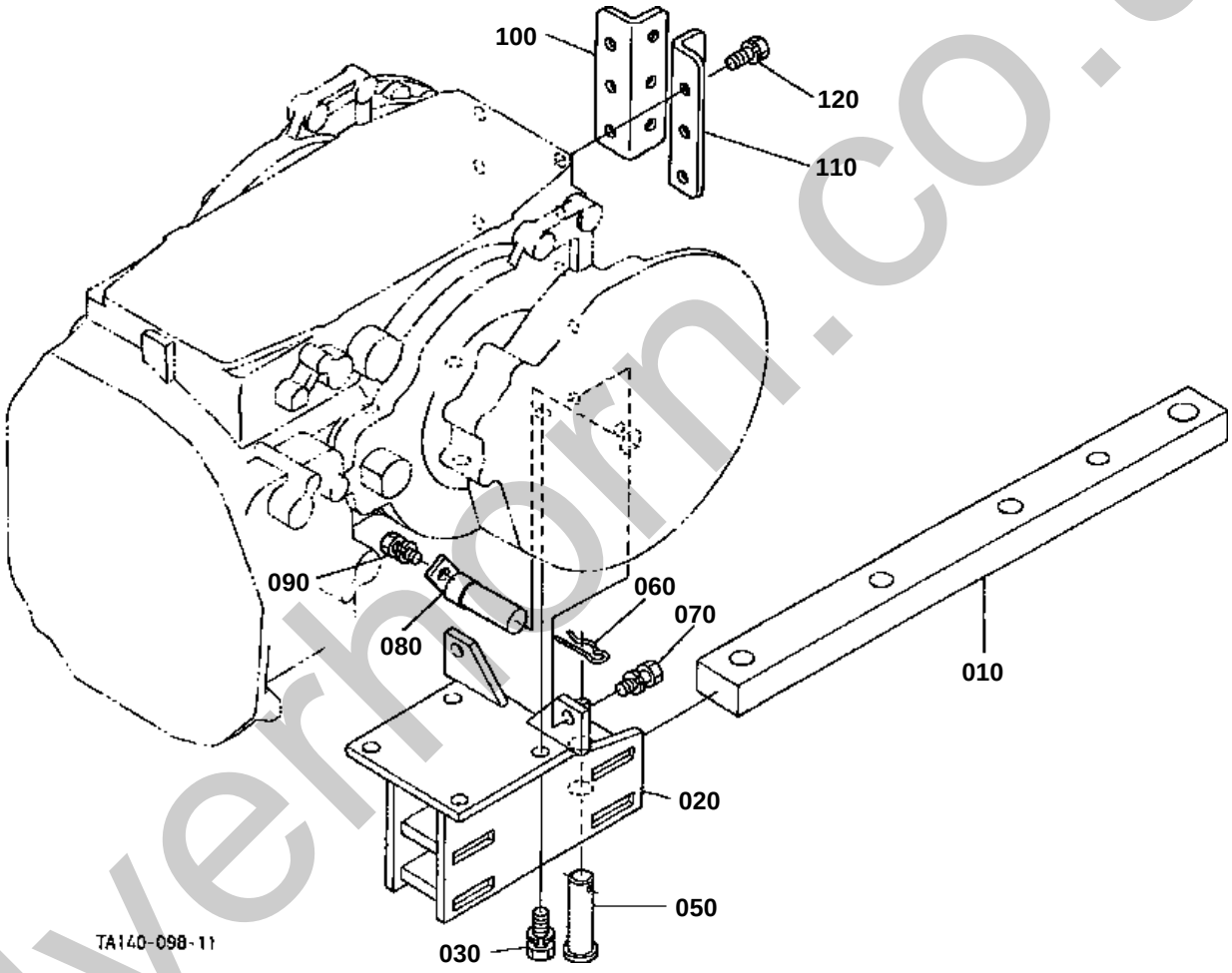

silverhorn.co.uk

030 01176-51430
040 04512-60140

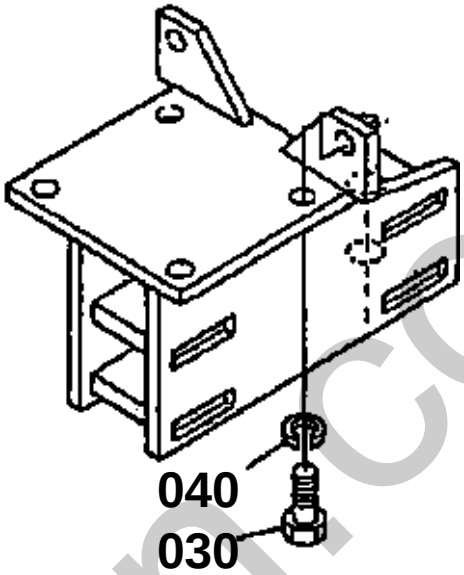

TA150-815-10

silverhorn.co.uk

↔ Interchangeable; ≠ not interchangeable; ← new for old; → old for new

REF.No	Part No.	Description	Q'ty	S.No.	I/C	REMARKS	Weight (kgf)	Weight (lb)
010	35070-29710	DRAWBAR	1				6.7	14.74
020	TA040-29730	FRAME DRAWBAR	1				6.2	13.64
030	01176-51430	BOLT	4	<=73769			0.052	0.1144
030	01138-51430	BOLT	4	>=73770	←		0	0
040	04512-60140	WASHER SPRING	4	<=73769			0.006	0.0132
050	05122-52070	PIN JOINT	1				0.186	0.4092
060	05515-51600	PIN SNAP	1				0.007	0.0154
070	01133-51230	BOLT	2				0.04	0.088
080	TA040-39410	PIN LOWER LINK	2	<=74270			0	0
080	TA040-39412	PIN LOWER LINK	2	>=74271	←		0	0
090	01133-51020	BOLT	2				0.02	0.044
100	99571-22140	HOLDER TOP LINK RH	1			W/O DRAFT	0.99	2.178
110	99571-22150	HOLDER TOP LINK LH	1			W/O DRAFT	0.99	2.178
120	01133-51230	BOLT	6			W/O DRAFT	0.04	0.088

silverhorn.co.uk

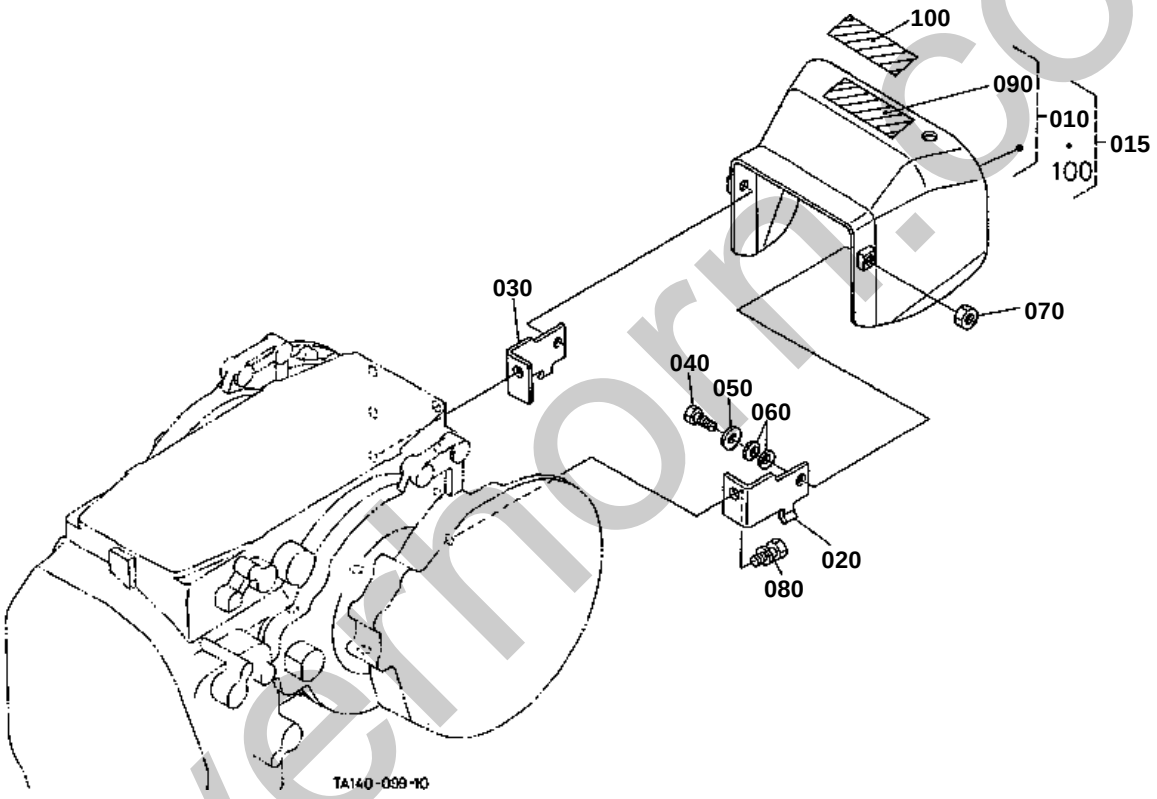

silvermorr.co.uk

PTO PROTECTOR [ROPS TYPE]

↔ Interchangeable; ≠ not interchangeable; ← new for old; → old for new

REF.No	Part No.	Description	Q'ty	S.No.	I/C	REMARKS	Weight (kgf)	Weight (lb)
010	TA140-99570	KIT COVER PTO (A)	1			ENGLISH	2.1	4.62
015	TA141-99570	KIT COVER PTO (B)	1			FRENCH	2.1	4.62
020	TA040-23752	STAY	1				0.19	0.418
030	TA040-23762	STAY	1				0.19	0.418
040	01173-51025	BOLT	2				0.021	0.0462
050	04013-60100	WASHER PLAIN	2				0.004	0.0088
060	62151-42412	SPRING PLATE	4				0.002	0.0044
070	02116-50100	NUT	2				0.004	0.0088
080	01133-51225	BOLT	2				0.038	0.0836
090	TA040-49590	LABEL PTO WARNING	1			ENGLISH	0.002	0.0044
100	TA041-49590	LABEL PTO WARNING	1			FRENCH	0.005	0.011

silverhorn.co.uk

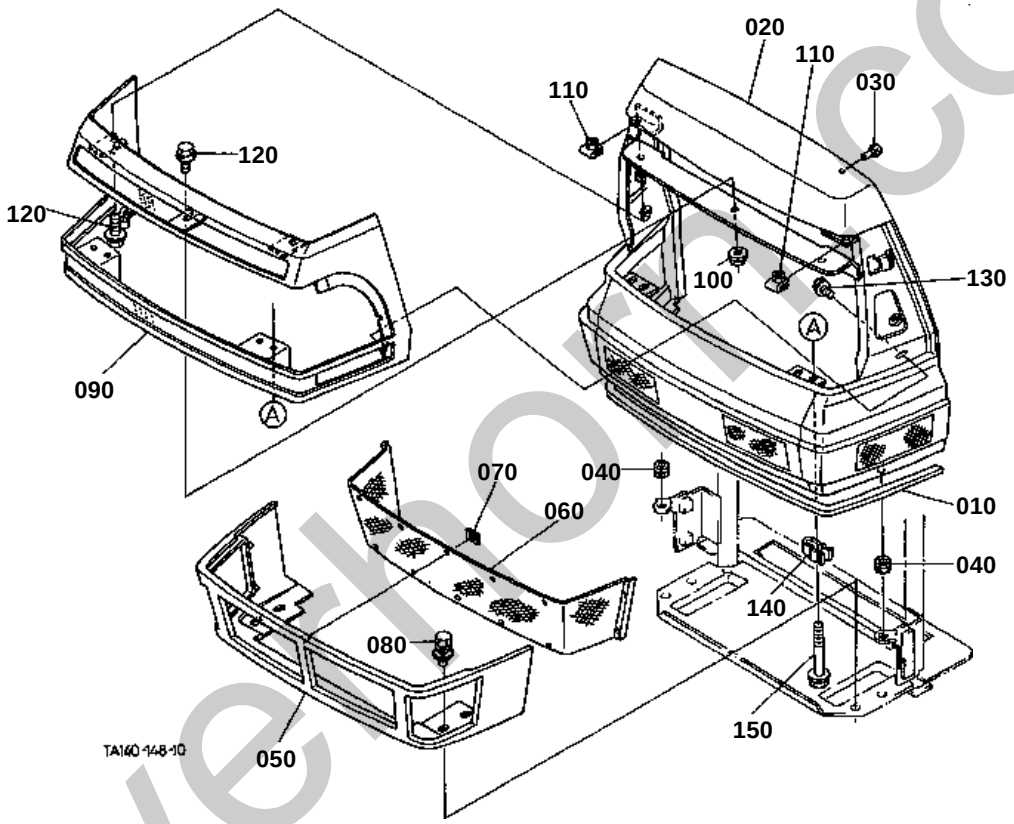

silverthorn.co.uk

FRONT GRILLE

↔ Interchangeable; ≠ not interchangeable; ← new for old; → old for new

REF.No	Part No.	Description	Q'ty	S.No.	I/C	REMARKS	Weight (kgf)	Weight (lb)
010	34070-40642	SPONGE	1				0.01	0.022
020	T0270-41014	GRILLE FRONT	1				2.8	6.16
030	36330-83120	CUSHION	2				0.001	0.0022
040	66591-54580	RUBBER RELEASE ROD	2				0.003	0.0066
050	TA040-41062	COVER FRONT	1				0.25	0.55
060	TA040-41070	NET	1				0.115	0.253
070	55611-44190	NUT	14				0.004	0.0088
080	01125-60816	BOLT	4				0.01	0.022
090	TA140-41830	GRILLE RADIATOR	1				0.62	1.364
100	02751-50060	NUT FLANGE	1				0.005	0.011
110	38240-29250	NUT SPRING	2				0.005	0.011
120	30400-19060	BOLT FLANGE	3				0.006	0.0132
130	01754-50612	BOLT FLANGE	2				0.005	0.011
140	T0270-41910	SPACER	2				0.006	0.0132
150	01754-50670	BOLT FLANGE	2				0.015	0.033

silverhorn.co.uk

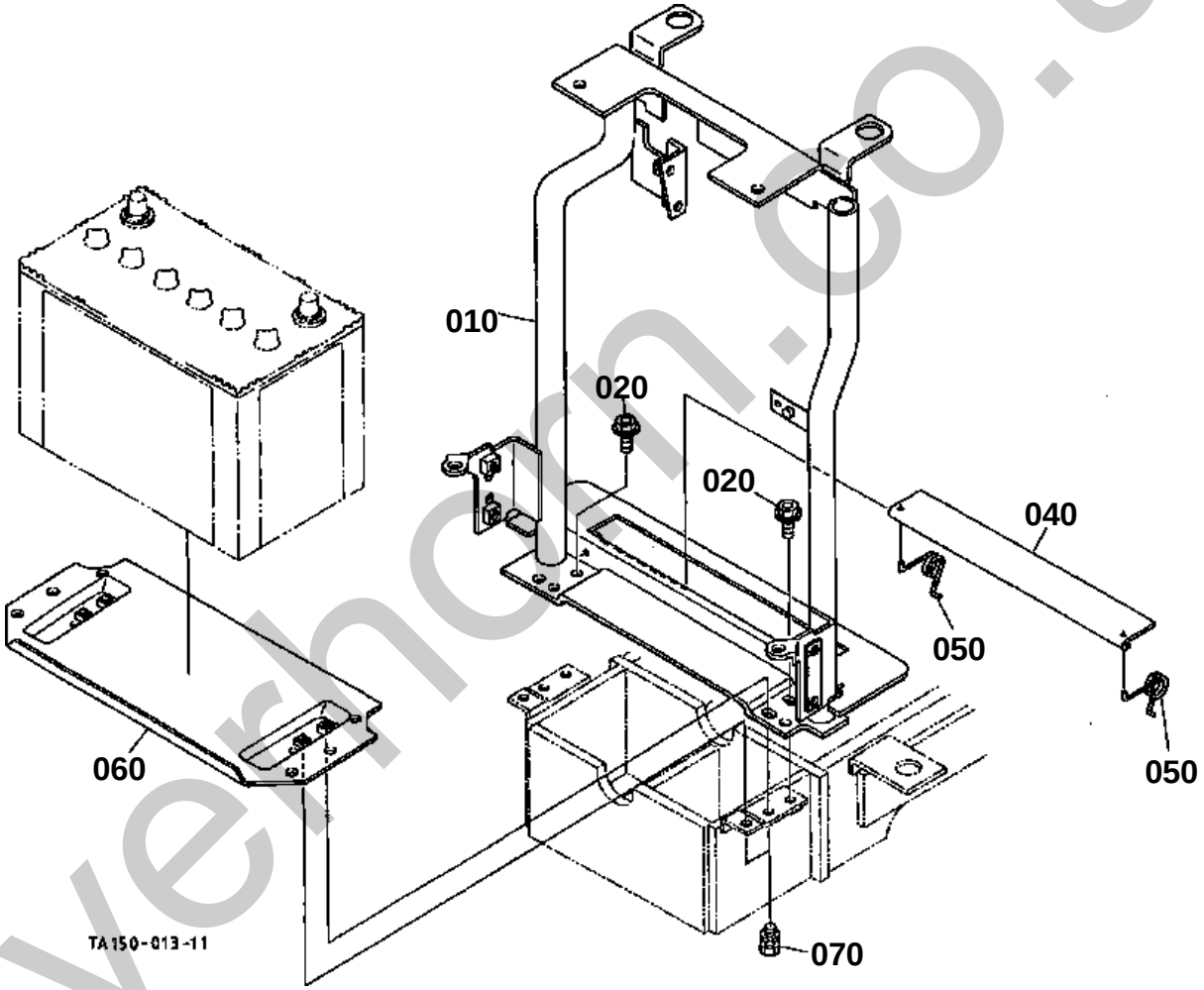

silverhorn.co.uk

010 TA140-4001-2

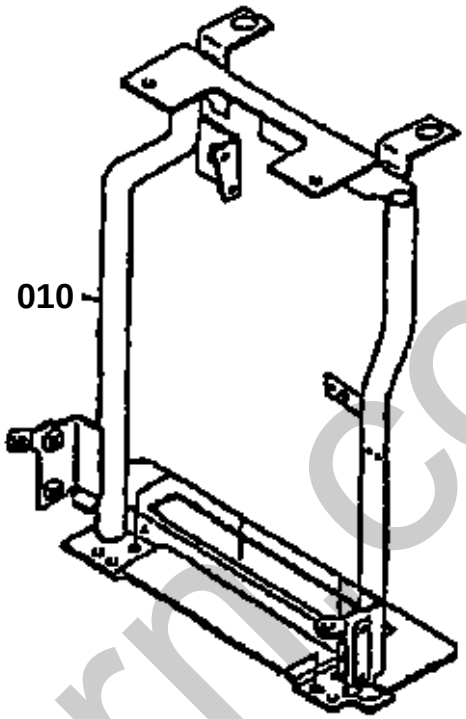

020 01123-50820
030 04012-50080

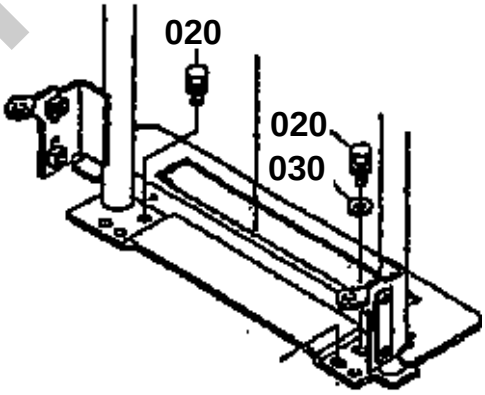

TA140-828-11

silverhorn.co.uk

FRONT GRILLE SUPPORT [EXCEPT HST TYPE]

↔ Interchangeable; ≠ not interchangeable; ← new for old; → old for new

REF.No	Part No.	Description	Q'ty	S.No.	I/C	REMARKS	Weight (kgf)	Weight (lb)
010	TA140-40012	SUPPORT FRONT	1	<=60115			0	0
010	TA140-40016	SUPPORT FRONT	1	>=60116	←		0	0
010	TA140-40017	SUPPORT FRONT	1	>=70509	←		0	0
010	TA140-40018	SUPPORT FRONT	1	>=70980	←		4.4	9.68
020	01123-50820	BOLT	2	<=74006			0.011	0.0242
020	01754-50820	BOLT FLANGE	2	>=74007	←		0.015	0.033
030	04012-50080	WASHER PLAIN	1	<=74006			0.001	0.0022
040	TA040-40024	SHUTTER	1				0.25	0.55
050	TA040-40033	SPRING	2				0.005	0.011
060	TA040-14213	SUPPORT	1				1.3	2.86
070	01123-50820	BOLT	4				0.011	0.0242

silverhorn.co.uk

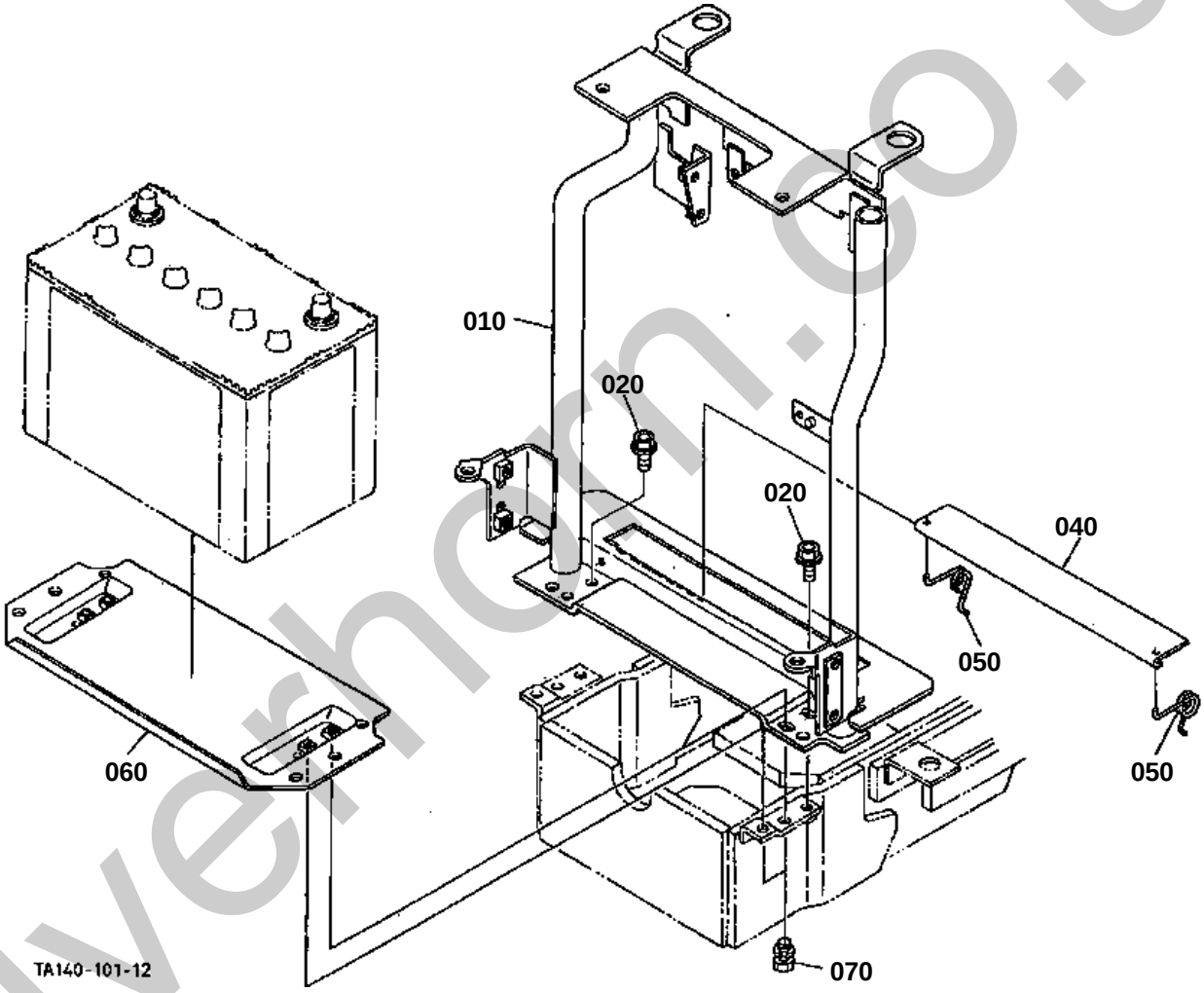

silverhorn.co.uk

010 TA240-4001-2

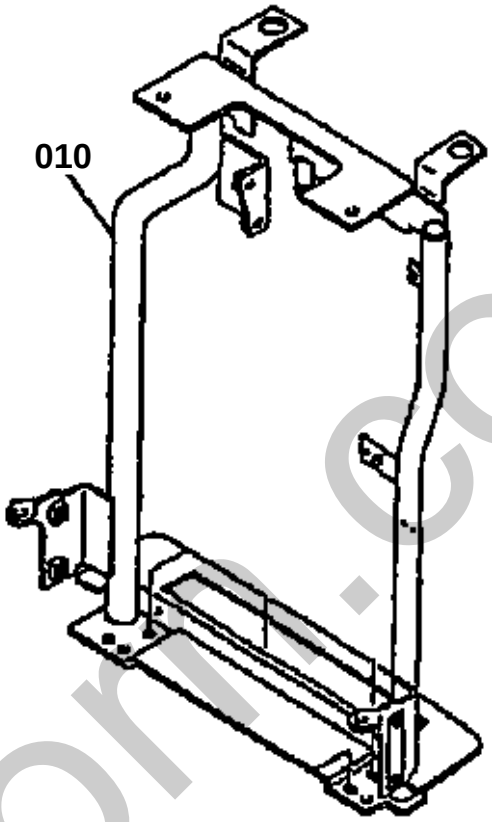

020 01123-50820
030 04012-50080

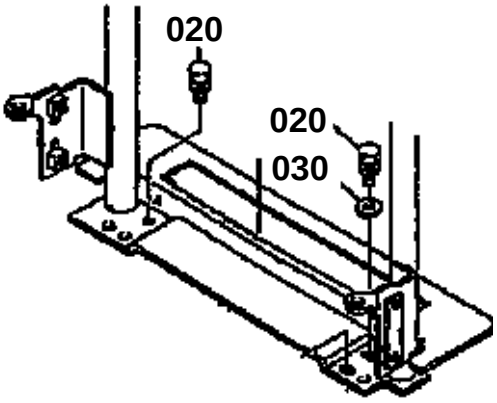

TA140-829-11

silverhorn.co.uk

FRONT GRILLE SUPPORT [HST TYPE] [ROPS TYPE]
[EXCEPTE TYPE CABINE]

↔ Interchangeable; ≠ not interchangeable; ← new for old; → old for new

REF.No	Part No.	Description	Q'ty	S.No.	I/C	REMARKS	Weight (kgf)	Weight (lb)
010	TA240-40012	SUPPORT FRONT	1	<=60115			0	0
010	TA240-40016	SUPPORT FRONT	1	>=60116	←		0	0
010	TA240-40017	SUPPORT FRONT	1	>=70509	←		0	0
020	01123-50820	BOLT	2	<=74006			0.011	0.0242
020	01754-50820	BOLT FLANGE	2	>=74007	←		0.015	0.033
030	04012-50080	WASHER PLAIN	1	<=74006			0.001	0.0022
040	TA040-40024	SHUTTER	1				0.25	0.55
050	TA040-40033	SPRING	2				0.005	0.011
060	TA040-14213	SUPPORT	1				1.3	2.86
070	01123-50820	BOLT	4				0.011	0.0242

silverhorn.co.uk

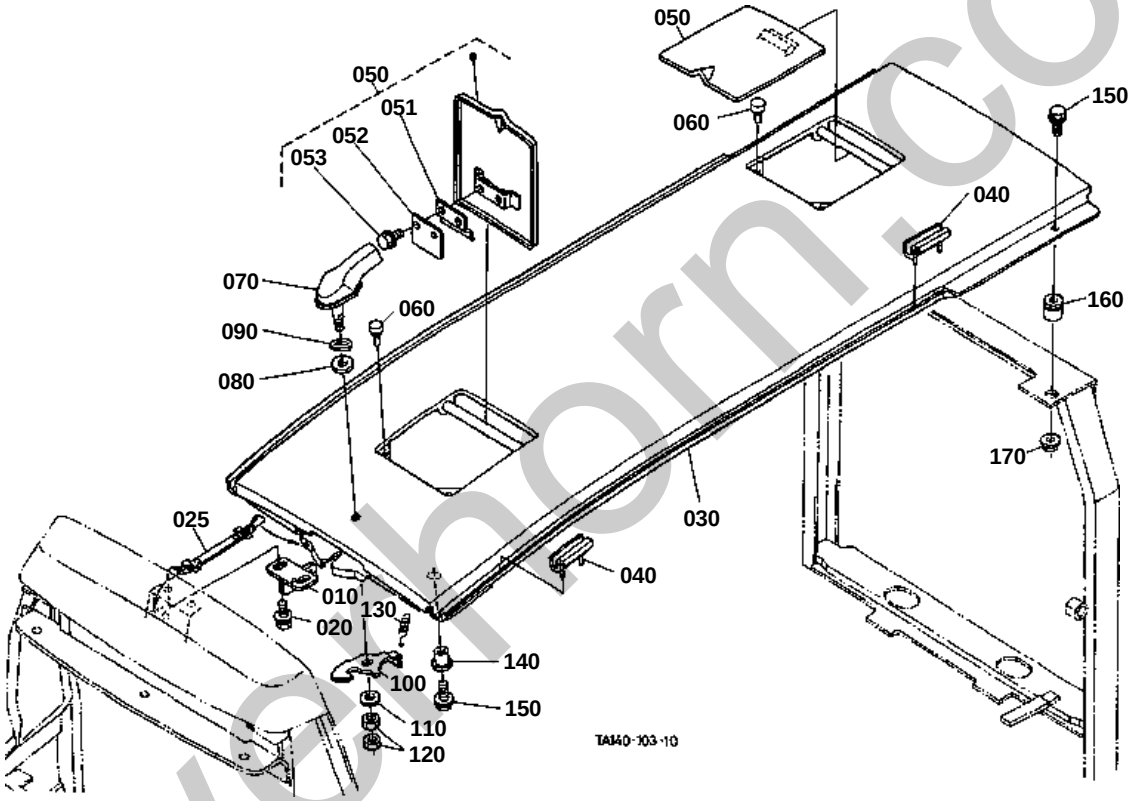

silverthorn.co.uk

HOOD(BONNET) [ROPS TYPE]

↔ Interchangeable; ≠ not interchangeable; ← new for old; → old for new

REF.No	Part No.	Description	Q'ty	S.No.	I/C	REMARKS	Weight (kgf)	Weight (lb)
010	34070-41210	STRIKER FRONT GRILLE	1				0.05	0.11
020	01125-60816	BOLT	2				0.01	0.022
025	33740-83290	SUSPENDER	1				0.03	0.066
030	TA040-41313	COMP.BONNET	1				5.9	12.98
040	TA040-18620	CUSHION	4				0.01	0.022
050	34070-41463	COVER BONNET	2				0.21	0.462
051	30400-94080	SPRING BONNET COVER	2				0.012	0.0264
052	30400-94092	SPRING BONNET COVER	1				0.015	0.033
053	01754-50616	BOLT FLANGE	4				0.006	0.0132
060	36330-83120	CUSHION	4				0.001	0.0022
070	T0070-41560	HANDLE MASCOT	1				0.085	0.187
080	33251-83850	WASHER HANDLE	1				0.001	0.0022
090	33251-83950	WASHER SPRING	1				0.001	0.0022
100	34070-41220	LOCK FRONT GRILLE	1				0.05	0.11
110	04012-50080	WASHER PLAIN	1				0.001	0.0022
120	02114-50080	NUT	2				0.005	0.011
130	36330-83420	SPRING LOCK	1				0.006	0.0132
140	34070-41610	NUT CUSHION	2				0.01	0.022
150	01754-50820	BOLT FLANGE	4				0.015	0.033
160	34070-41630	CUSHION RUBBER	2				0.005	0.011
170	02751-50080	NUT FLANGE	2				0.006	0.0132

silverhorn.co.uk

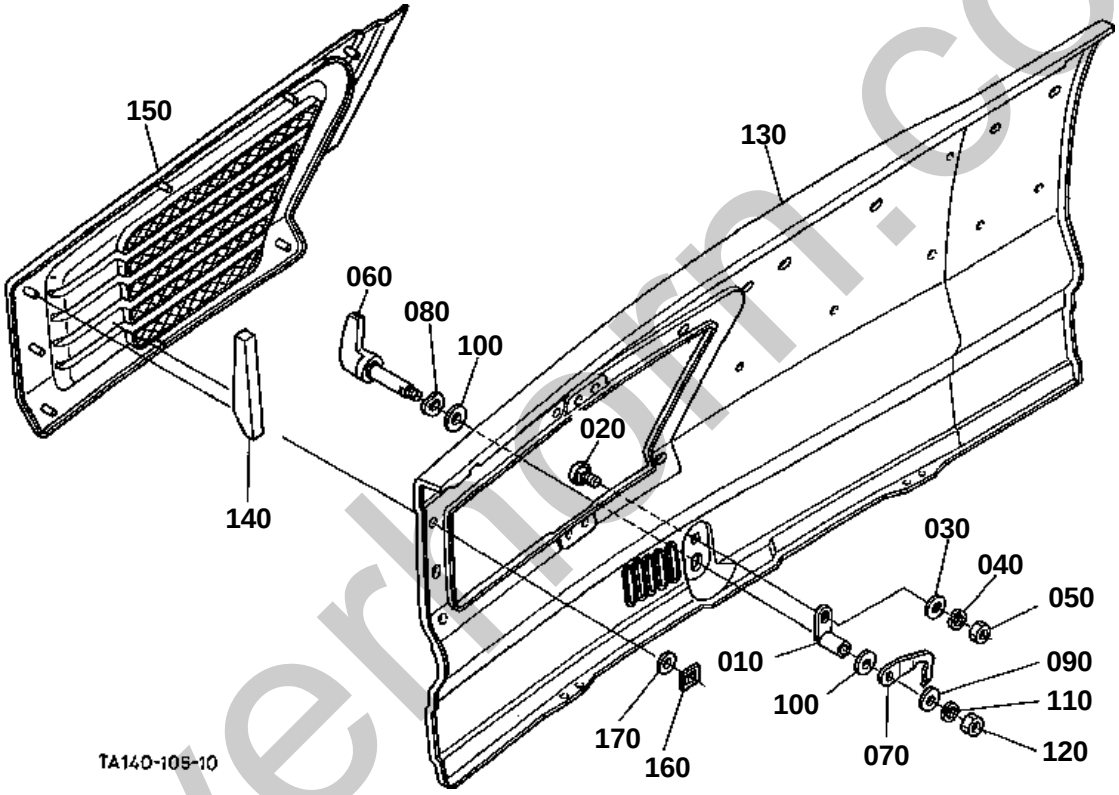

silverhorn.co.uk

HOOD(BONNET) SIDE RH

↔ Interchangeable; ≠ not interchangeable; ← new for old; → old for new

REF.No	Part No.	Description	Q'ty	S.No.	I/C	REMARKS	Weight (kgf)	Weight (lb)
010	T0070-40250	HOLDER	1				0.053	0.1166
020	34070-41162	BOLT	1				0.01	0.022
030	04012-50080	WASHER PLAIN	1				0.001	0.0022
040	04512-60080	WASHER SPRING	1				0.002	0.0044
050	02114-50080	NUT	1				0.005	0.011
060	T0070-40260	GRIP HANDLE	1				0.075	0.165
070	34550-40270	HOOK BONNET	1	<=50189			0.06	0.132
070	T0270-40270	HOOK BONNET	1	>=50190	←		0.055	0.121
080	33251-83950	WASHER SPRING	1				0.001	0.0022
090	04012-50080	WASHER PLAIN	1				0.001	0.0022
100	33251-83850	WASHER HANDLE	2				0.001	0.0022
110	04512-60080	WASHER SPRING	1				0.002	0.0044
120	02114-50080	NUT	1				0.005	0.011
130	T0320-41320	BONNET SIDE RH	1				5	11
140	TA140-40680	SHIELD SIDE COVER	1				0.017	0.0374
150	TA140-41890	GLILLE RH	1				0.51	1.122
160	55611-44190	NUT	8				0.004	0.0088
170	30400-65040	PLATE WASHER	8				0.001	0.0022

silverhorn.co.uk

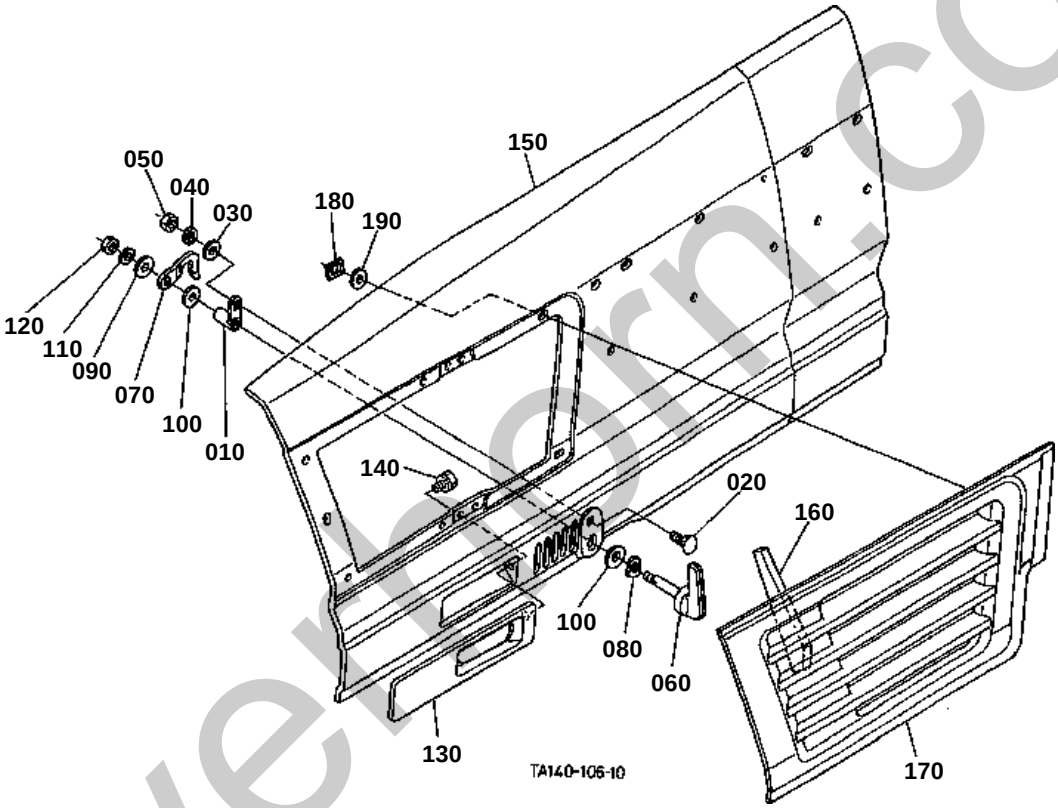

silverthorn.co.uk

HOOD(BONNET) SIDE LH

↔ Interchangeable; ≠ not interchangeable; ← new for old; → old for new

REF.No	Part No.	Description	Q'ty	S.No.	I/C	REMARKS	Weight (kgf)	Weight (lb)
010	T0320-40250	HOLDER	1				0.08	0.176
020	34070-41162	BOLT	1				0.01	0.022
030	04012-50080	WASHER PLAIN	1				0.001	0.0022
040	04512-60080	WASHER SPRING	1				0.002	0.0044
050	02114-50080	NUT	1				0.005	0.011
060	T0070-40260	GRIP HANDLE	1				0.075	0.165
070	34550-40280	HOOK BONNET	1	<=50189			0.06	0.132
070	T0270-40280	HOOK BONNET	1	>=50190	←		0.055	0.121
080	33251-83950	WASHER SPRING	1				0.001	0.0022
090	04012-50080	WASHER PLAIN	1				0.001	0.0022
100	33251-83850	WASHER HANDLE	2				0.001	0.0022
110	04512-60080	WASHER SPRING	1				0.002	0.0044
120	02114-50080	NUT	1				0.005	0.011
130	T0120-40530	COVER MUFFLER PIPE	1				0.14	0.308
140	01023-50610	BOLT	2				0.005	0.011
150	T0320-41330	BONNET SIDE LH	1				5	11
160	TA140-40680	SHIELD SIDE COVER	1				0.017	0.0374
170	TA140-41880	GLILLE LH	1				0.51	1.122
180	55611-44190	NUT	8				0.004	0.0088
190	30400-65040	PLATE WASHER	8				0.001	0.0022

silverhorn.co.uk

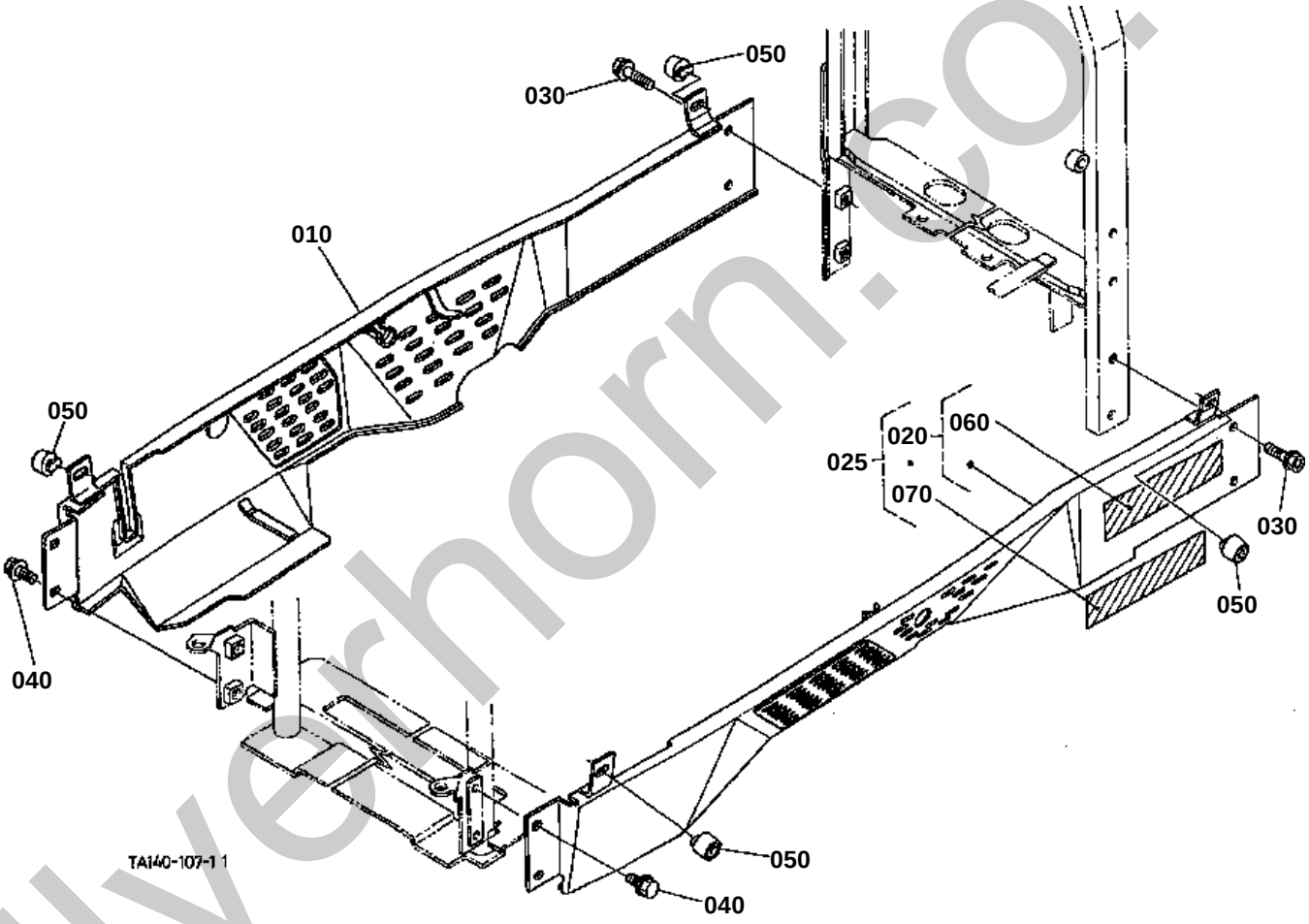

silverhorn.co.uk

010 TA140-4136-0

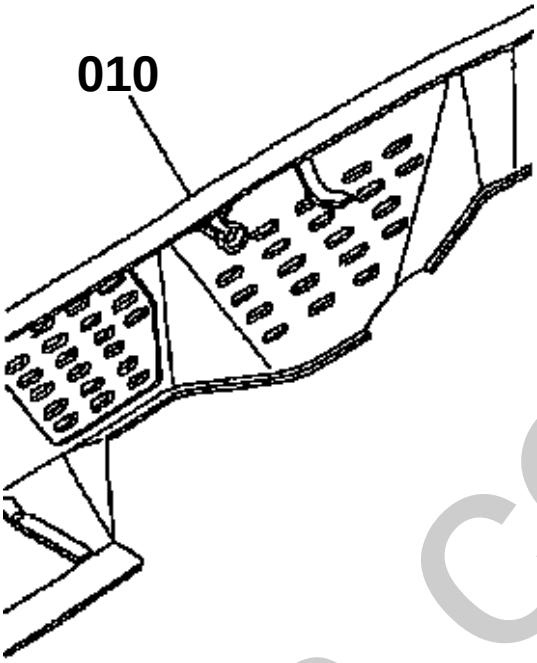

silverhorn.co.uk

TA140-831-10

SIDE COVER LOWER [ROPS TYPE]

↔ Interchangeable; ≠ not interchangeable; ← new for old; → old for new

REF.No	Part No.	Description	Q'ty	S.No.	I/C	REMARKS	Weight (kgf)	Weight (lb)
010	TA140-41360	COVER RH	1	<=70508			2.2	4.84
010	TA150-41360	COVER RH	1	>=70509	≠		0	0
020	TA140-99560	KIT COVER LH(A)	1			ENGLISH	2.2	4.84
025	TA141-99560	KIT COVER LH(B)	1			FRENCH	2.2	4.84
030	34070-41130	BOLT FLANGE	4				0.015	0.033
040	01754-50816	BOLT FLANGE	4				0.011	0.0242
050	30400-17980	RUBBER BLOCK	4				0.01	0.022
060	TA040-49650	LABEL START CAUTION	1			ENGLISH	0.004	0.0088
070	TA041-49650	LABEL START CAUTION	1			FRENCH	0.004	0.0088

silverhorn.co.uk

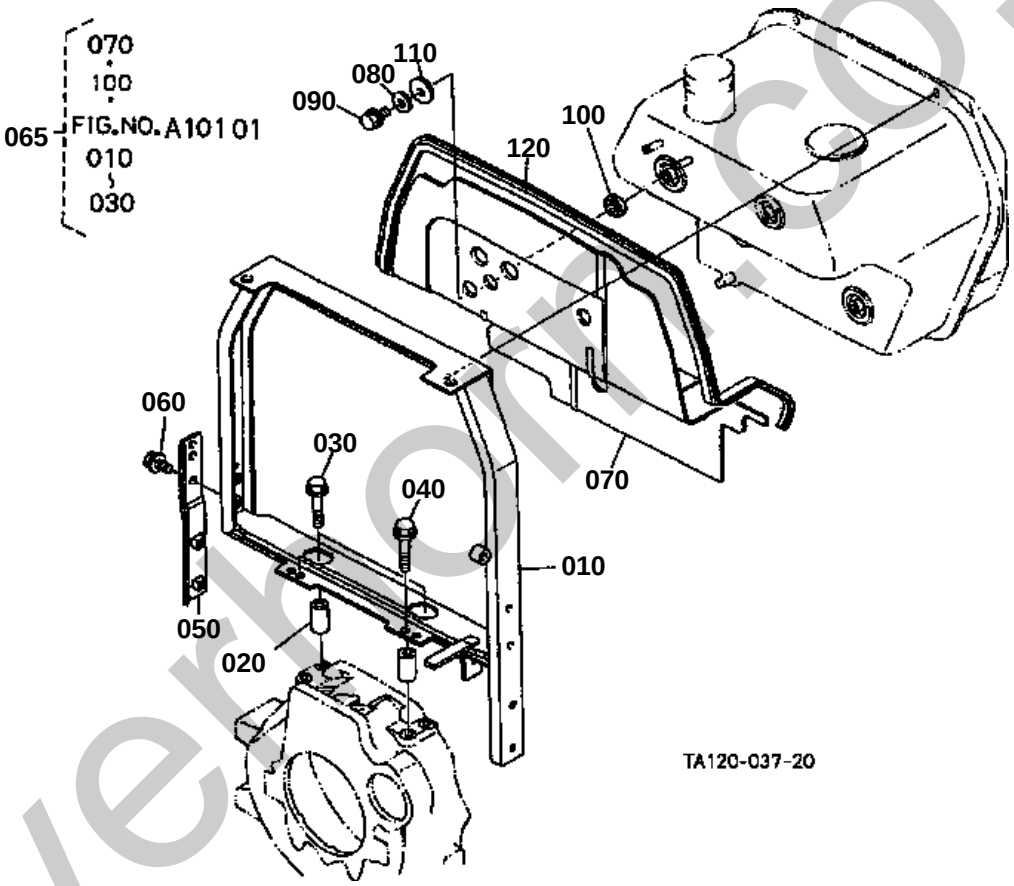

silverhorn.co.uk

070 34070-4211-0
070 34070-4211-5

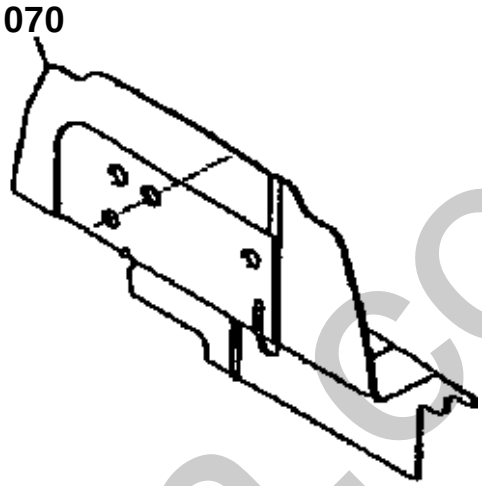

TA147-804-10

silverhorn.co.uk

SHUTTER PLATE [ROPS TYPE]

↔ Interchangeable; ≠ not interchangeable; ← new for old; → old for new

REF.No	Part No.	Description	Q'ty	S.No.	I/C	REMARKS	Weight (kgf)	Weight (lb)
010	TA140-42130	SUPPORT BONNET REAR	1	<=51309			4.6	10.12
010	TA140-42135	SUPPORT BONNET REAR	1	>=51310	≠		4.6	10.12
020	T0270-42140	SPACER	4				0.056	0.1232
030	01779-51060	BOLT UBS	2				0.005	0.011
040	01774-51060	BOLT FLANGE	2				0.04	0.088
050	TA140-42160	SUPPORT	1				0.275	0.605
060	01754-50816	BOLT FLANGE	2				0.011	0.0242
065	TA040-94400	KIT FUEL TANK	1	<=72288			0	0
070	34070-42110	PLATE SHUTTER	1	<=50189		NOT SALE ORDER BY REF.No.065	0	0
070	34070-42115	PLATE SHUTTER	1	>=50190	←	NOT SALE ORDER BY REF.No.065	3	6.6
070	34070-42116	PLATE SHUTTER	1	>=72289	←		0	0
080	04015-60080	WASHER PLAIN	4				0.01	0.022
090	01754-50812	BOLT FLANGE	4				0.01	0.022
100	34070-42260	CUSHION	4				0.005	0.011
110	34070-42270	CUSHION	4				0.005	0.011
120	34070-42220	SHIELD	1	<=51309			0	0
120	34070-42223	SHIELD	1	>=51310	←		0.33	0.726

silverhorn.co.uk

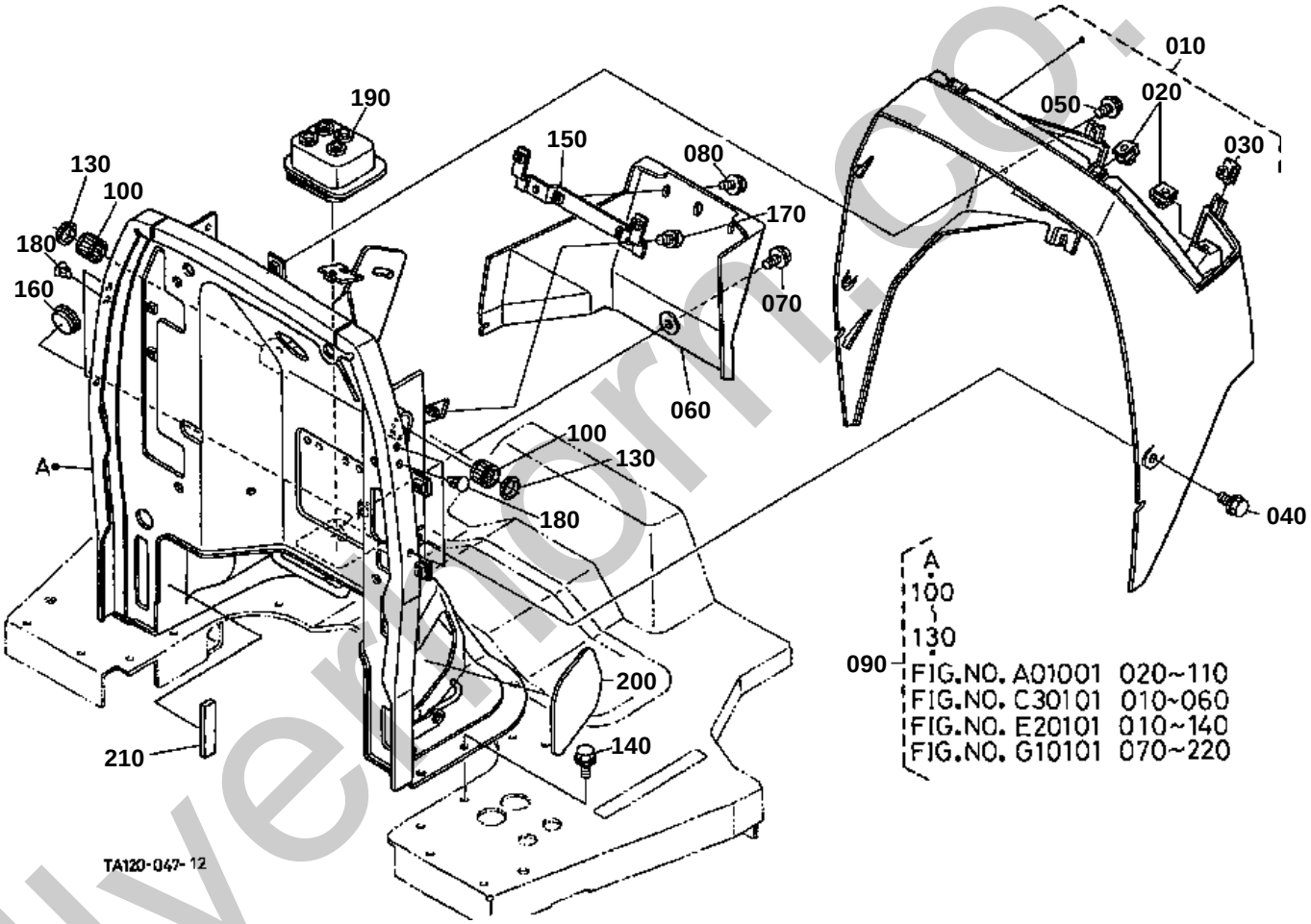

silvermorr.co.uk

110 TA040-7369-0
120 03014-50608
125 02751-50060

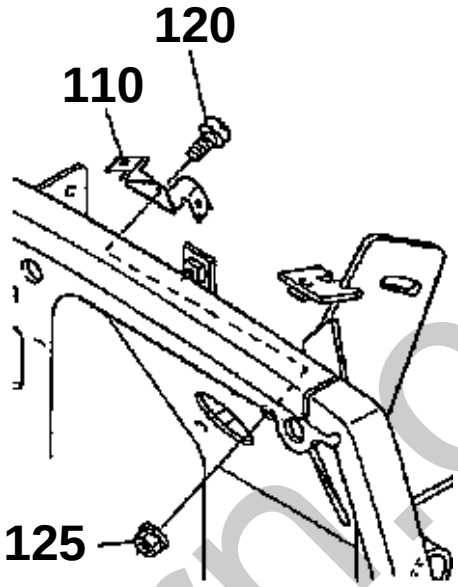

TA127-802-10

silverhorn.co.uk

PANEL FRAME [EXCEPT HST TYPE] [ROPS TYPE]
[EXCEPTE TYPE CABINE]

↔ Interchangeable; ≠ not interchangeable; ← new for old; → old for new

REF.No	Part No.	Description	Q'ty	S.No.	I/C	REMARKS	Weight (kgf)	Weight (lb)
010	34070-43010	BONNET	1				2	4.4
020	34070-99160	NUT SPRING	4				0.005	0.011
030	37410-54930	NUT SPRING	2				0.025	0.055
040	30400-18870	BOLT FLANGE	5				0.01	0.022
050	01754-50816	BOLT FLANGE	1				0.011	0.0242
060	34070-43032	COVER PANEL UNDER	1				0.28	0.616
070	30400-18870	BOLT FLANGE	1				0.01	0.022
080	30400-19060	BOLT FLANGE	2				0.006	0.0132
090	TA140-43200	ASSY FRAME PANEL	1				24	52.8
100	34070-44360	BEARING NEEDLE	2				0.012	0.0264
110	TA040-73690	STAY RELAY	1	<=51803			0.035	0.077
120	03014-50608	SCREW PAN-HEAD	1	<=51803			0.002	0.0044
125	02751-50060	NUT FLANGE	1	<=51803			0.005	0.011
130	34070-44140	SEAL OIL	2				0.005	0.011
140	01754-50812	BOLT FLANGE	8				0.01	0.022
150	34550-43240	BRACKET PANEL COVER	1				0.135	0.297
160	35880-04570	CAP	1				0.01	0.022
170	01123-50816	BOLT	2				0.011	0.0242
180	38240-29570	PLUG	6				0.001	0.0022
190	34550-43335	GROMMET	1				0.06	0.132
200	34070-43280	COVER PANEL FRAME	1				0.12	0.264
210	TA140-33590	CUSHION P/STRG HOSE	1	>=71667			0.125	0.275

silverhorn.co.uk

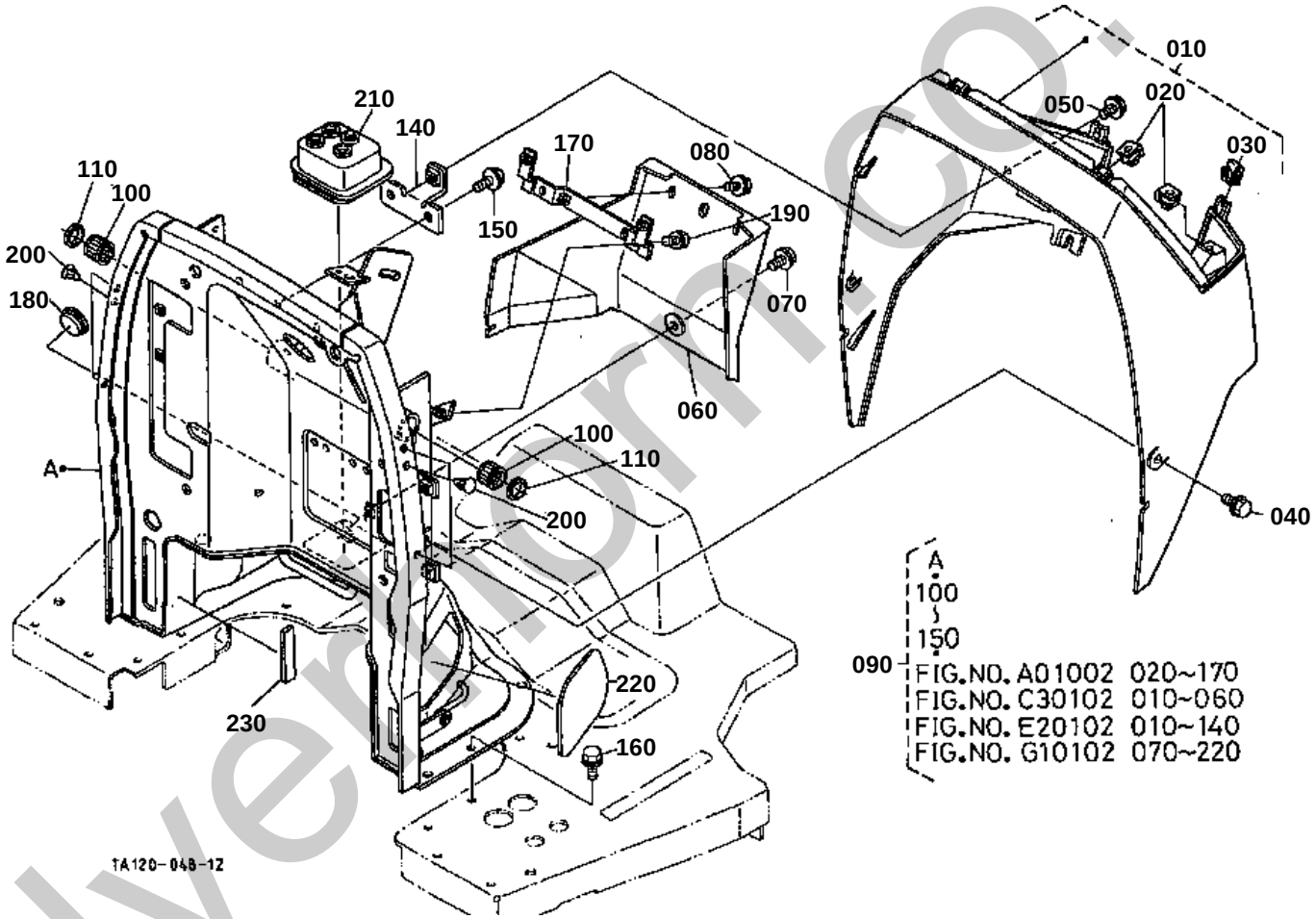

silvermorn.co.uk

120 TA040-7369-0
130 03014-50608

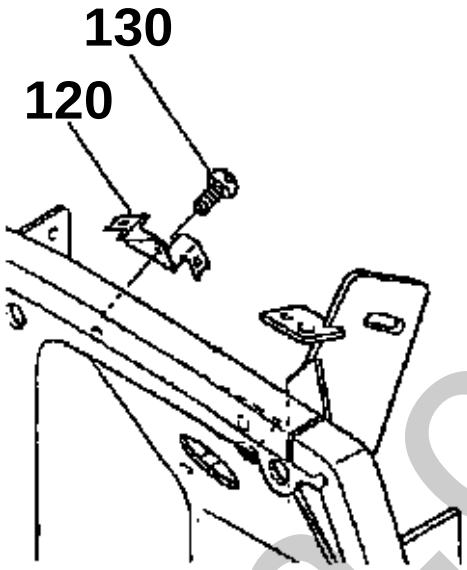

TA140-847-10

silverhorn.co.uk

PANEL FRAME [HST TYPE] [ROPS TYPE]

↔ Interchangeable; ≠ not interchangeable; ← new for old; → old for new

REF.No	Part No.	Description	Q'ty	S.No.	I/C	REMARKS	Weight (kgf)	Weight (lb)
010	34070-43010	BONNET	1				2	4.4
020	34070-99160	NUT SPRING	4				0.005	0.011
030	37410-54930	NUT SPRING	2				0.025	0.055
040	30400-18870	BOLT FLANGE	5				0.01	0.022
050	01754-50816	BOLT FLANGE	1				0.011	0.0242
060	34070-43032	COVER PANEL UNDER	1				0.28	0.616
070	30400-18870	BOLT FLANGE	1				0.01	0.022
080	30400-19060	BOLT FLANGE	2				0.006	0.0132
090	TA240-43200	ASSY FRAME PANEL	1	<=61504			0	0
090	TA240-43203	ASSY FRAME PANEL	1	>=70001	←		0	0
100	34070-44360	BEARING NEEDLE	2				0.012	0.0264
110	34070-44140	SEAL OIL	2				0.005	0.011
120	TA040-73690	STAY RELAY	1	<=50803			0.035	0.077
130	03014-50608	SCREW PAN-HEAD	1	<=50803			0.002	0.0044
140	T0270-43230	STAY.PANEL FRAME	1				0.063	0.1386
150	01754-50816	BOLT FLANGE	2				0.011	0.0242
160	01754-50812	BOLT FLANGE	8				0.01	0.022
170	34550-43240	BRACKET PANEL COVER	1				0.135	0.297
180	35880-04570	CAP	1				0.01	0.022
190	01123-50816	BOLT	2				0.011	0.0242
200	38240-29570	PLUG	6				0.001	0.0022
210	34550-43335	GROMMET	1				0.06	0.132
220	34070-43280	COVER PANEL FRAME	1				0.12	0.264
230	TA140-33590	CUSHION P/STRG HOSE	1	>=71667			0.125	0.275

silverhorn.co.uk

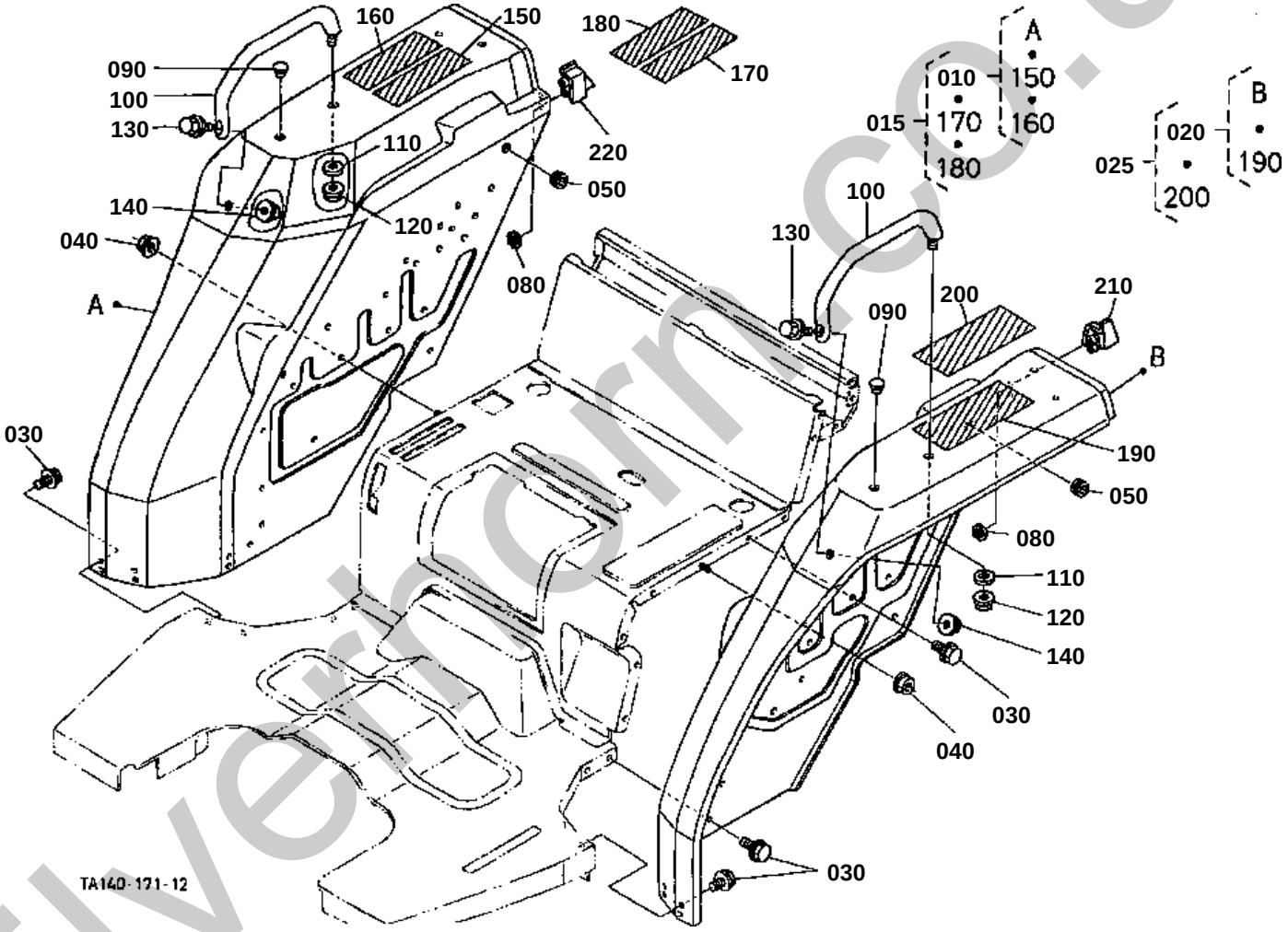

silvermorn.co.uk

060 34070-4706-0
070 34070-4707-0
080 31351-9355-0

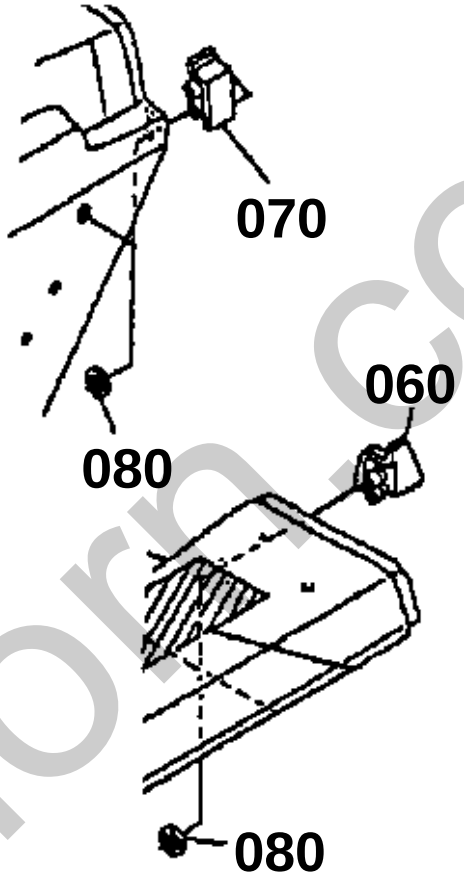

TA140-863-10

silverhorn.co.uk

FENDER [MANUAL T/M TYPE]

↔ Interchangeable; ≠ not interchangeable; ← new for old; → old for new

REF.No	Part No.	Description	Q'ty	S.No.	I/C	REMARKS	Weight (kgf)	Weight (lb)
010	TA140-99510	KIT FENDER RH (A)	1			ENGLISH	10	22
015	TA141-99510	KIT FENDER RH (B)	1			FRENCH	10	22
020	TA140-99530	KIT FENDER LH(A)	1			ENGLISH	10	22
025	TA141-99530	KIT FENDER LH(B)	1			FRENCH	10	22
030	01754-50812	BOLT FLANGE	28	<=74596			0.01	0.022
030	T1060-47370	BOLT	28	>=74597	←		0.011	0.0242
040	02751-50080	NUT FLANGE	2				0.006	0.0132
050	32150-29180	CAP RUBBER	2				0.002	0.0044
060	34070-47060	PLATE FENDER LH	1	<=75110			0.025	0.055
070	34070-47070	PLATE FENDER RH	1	<=75110			0.025	0.055
080	31351-93550	NUT	4	<=75110			0.001	0.0022
090	30810-29170	PLUG	2				0.003	0.0066
100	T0270-29442	GRIP	2				0.3	0.66
110	04013-60100	WASHER PLAIN	2				0.004	0.0088
120	02771-60100	NUT FLANGE	2				0.01	0.022
130	T0180-83590	BOLT FLANGE	2				0.022	0.0484
140	02771-60100	NUT FLANGE	2				0.01	0.022
150	TA040-49320	LABEL ROPS WARNING	1			ENGLISH	0.001	0.0022
160	TA140-49330	LABEL SHUTTLE	1			ENGLISH	0.005	0.011
170	TA040-49150	LABEL ROPS WARNING	1			FRENCH	0.003	0.0066
180	TA141-49330	LABEL SHUTTLE	1			FRENCH	0.005	0.011
190	35260-34913	LABEL SAFETY	1			ENGLISH	0.005	0.011
200	TA041-65700	LABEL SAFETY	1			FRENCH	0.01	0.022
210	34040-68990	PLATE FENDER RH	1	>=75111			0.025	0.055
220	34040-68980	PLATE FENDER LH	1	>=75111			0.02	0.044

silverhorn.co.uk

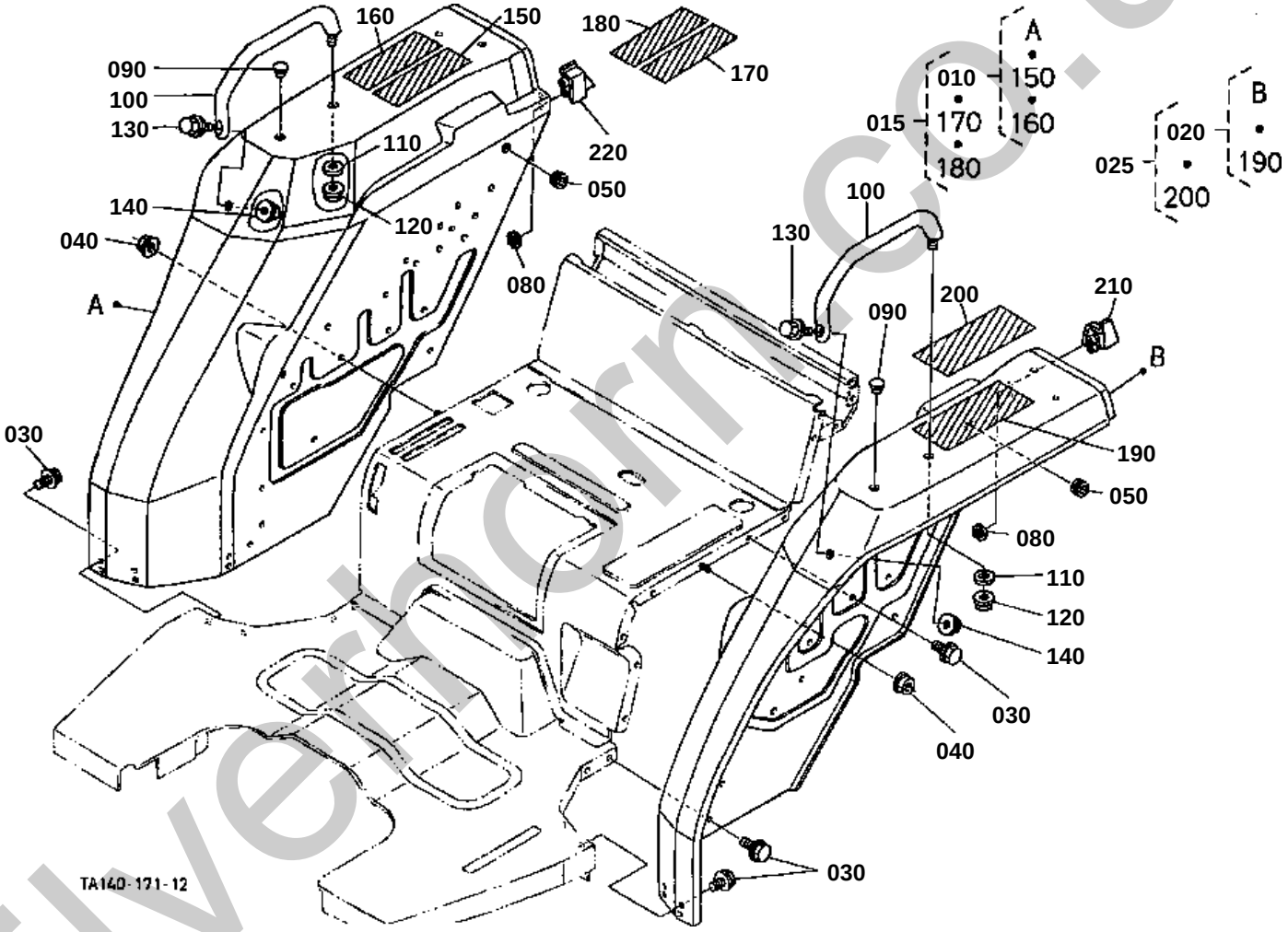

silvernorm.co.uk

060 34070-4706-0
070 34070-4707-0
080 31351-9355-0

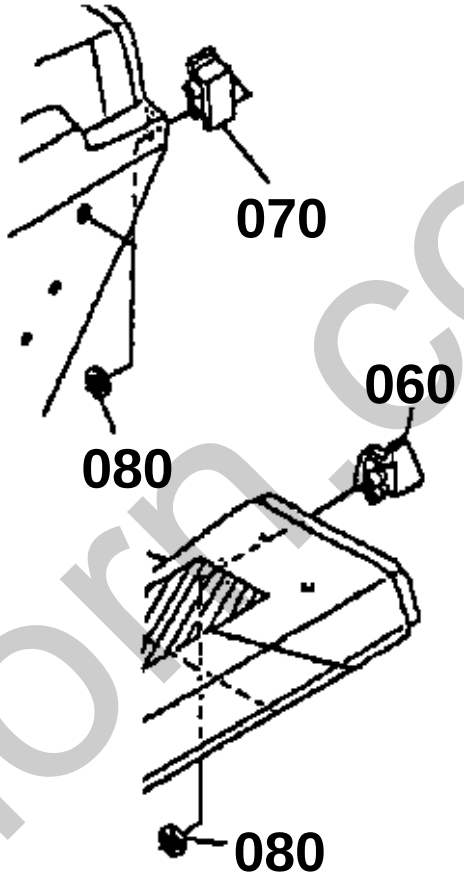

TA140-863-10

silverhorn.co.uk

↔ Interchangeable; ≠ not interchangeable; ← new for old; → old for new

REF.No	Part No.	Description	Q'ty	S.No.	I/C	REMARKS	Weight (kgf)	Weight (lb)
010	TA140-99520	KIT FENDER RH(A)	1			ENGLISH	10	22
015	TA141-99520	KIT FENDER RH(B)	1			FRENCH	10	22
020	TA140-99530	KIT FENDER LH(A)	1			ENGLISH	10	22
025	TA141-99530	KIT FENDER LH(B)	1			FRENCH	10	22
030	01754-50812	BOLT FLANGE	28				0.01	0.022
040	02751-50080	NUT FLANGE	2				0.006	0.0132
050	32150-29180	CAP RUBBER	2				0.002	0.0044
060	34070-47060	PLATE FENDER LH	1	<=75110			0.025	0.055
070	34070-47070	PLATE FENDER RH	1	<=75110			0.025	0.055
080	31351-93550	NUT	4	<=75110			0.001	0.0022
090	30810-29170	PLUG	2				0.003	0.0066
100	T0270-29442	GRIP	2				0.3	0.66
110	04013-60100	WASHER PLAIN	2				0.004	0.0088
120	02771-60100	NUT FLANGE	2				0.01	0.022
130	T0180-83590	BOLT FLANGE	2				0.022	0.0484
140	02771-60100	NUT FLANGE	2				0.01	0.022
150	TA040-49320	LABEL ROPS WARNING	1			ENGLISH	0.001	0.0022
160	TA140-49920	LABEL SHUTTLE	1			ENGLISH	0.005	0.011
170	TA040-49150	LABEL ROPS WARNING	1			FRENCH	0.003	0.0066
180	TA141-49920	LABEL SHUTTLE	1			FRENCH	0.005	0.011
190	35260-34913	LABEL SAFETY	1			ENGLISH	0.005	0.011
200	TA041-65700	LABEL SAFETY	1			FRENCH	0.01	0.022
210	34040-68990	PLATE FENDER RH	1	>=75111			0.025	0.055
220	34040-68980	PLATE FENDER LH	1	>=75111			0.02	0.044

silverhorn.co.uk

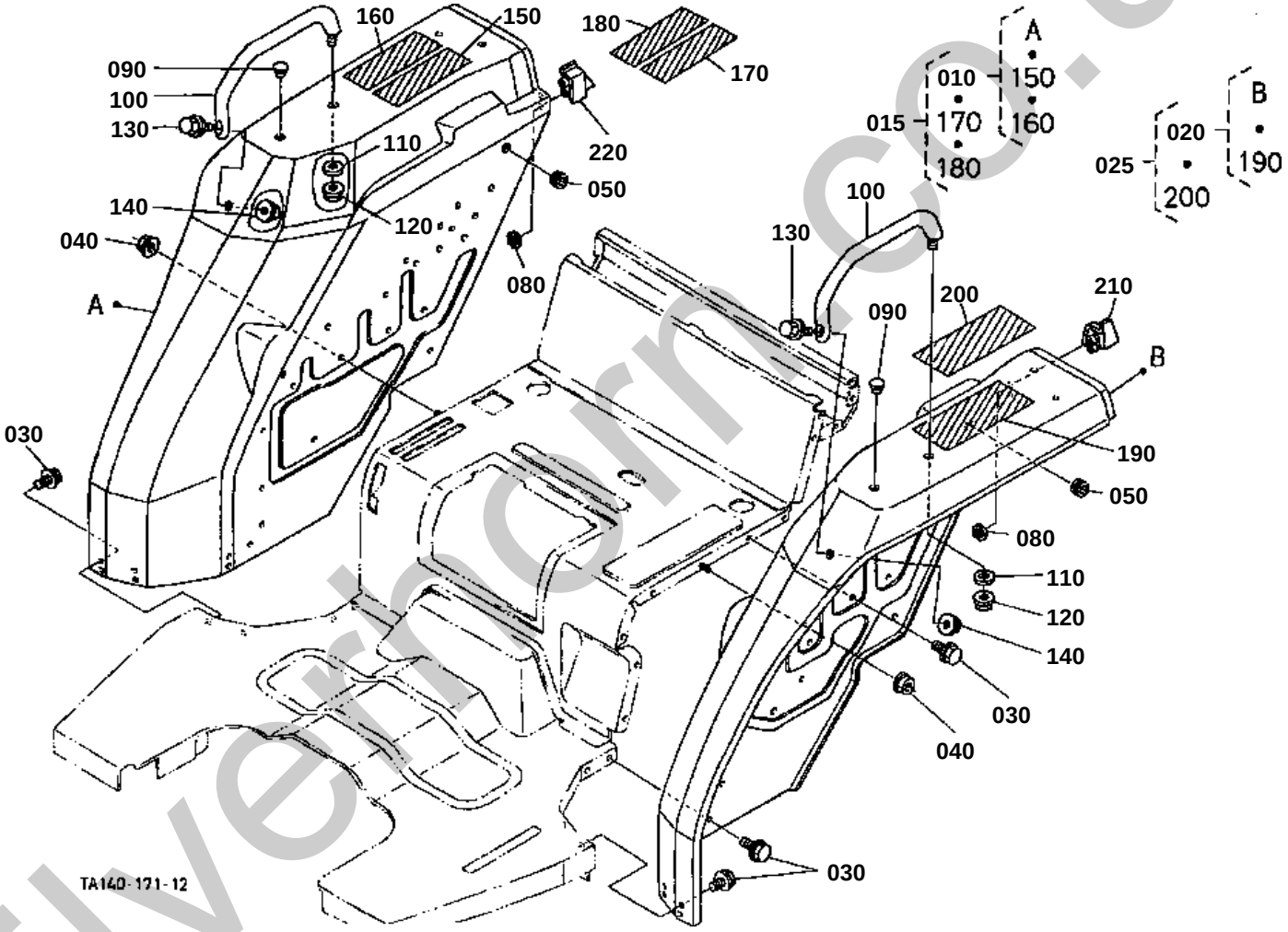

silvernorm.co.uk

060 34070-4706-0
070 34070-4707-0
080 31351-9355-0

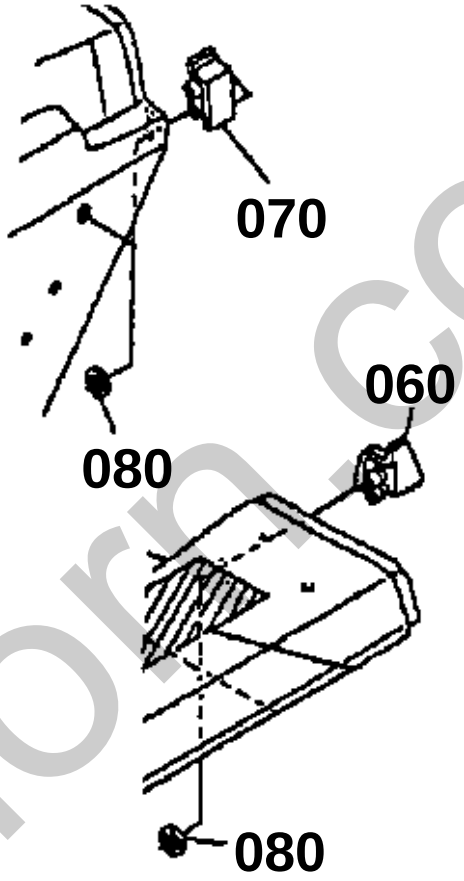

TA140-863-10

silverhorn.co.uk

FENDER [HST TYPE] [ROPS TYPE]

↔ Interchangeable; ≠ not interchangeable; ← new for old; → old for new

REF.No	Part No.	Description	Q'ty	S.No.	I/C	REMARKS	Weight (kgf)	Weight (lb)
010	TA240-99510	KIT FENDER RH(A)	1			ENGLISH	10	22
015	TA241-99510	KIT FENDER RH(B)	1			FRENCH	10	22
020	TA140-99530	KIT FENDER LH(A)	1			ENGLISH	10	22
025	TA141-99530	KIT FENDER LH(B)	1			FRENCH	10	22
030	01754-50812	BOLT FLANGE	28				0.01	0.022
040	02751-50080	NUT FLANGE	2				0.006	0.0132
050	32150-29180	CAP RUBBER	2				0.002	0.0044
060	34070-47060	PLATE FENDER LH	1	<=75110			0.025	0.055
070	34070-47070	PLATE FENDER RH	1	<=75110			0.025	0.055
080	31351-93550	NUT	4	<=75110			0.001	0.0022
090	30810-29170	PLUG	2				0.003	0.0066
100	T0270-29442	GRIP	2				0.3	0.66
110	04013-60100	WASHER PLAIN	2				0.004	0.0088
120	02771-60100	NUT FLANGE	2				0.01	0.022
130	T0180-83590	BOLT FLANGE	2				0.022	0.0484
140	02771-60100	NUT FLANGE	2				0.01	0.022
150	TA040-49320	LABEL ROPS WARNING	1			ENGLISH	0.001	0.0022
160	TA240-49330	LABEL PARKING	1			ENGLISH	0.005	0.011
170	TA040-49150	LABEL ROPS WARNING	1			FRENCH	0.003	0.0066
180	TA241-49330	LABEL PARKING WARNIN	1			FRENCH	0.005	0.011
190	35260-34913	LABEL SAFETY	1			ENGLISH	0.005	0.011
200	TA041-65700	LABEL SAFETY	1			FRENCH	0.01	0.022
210	34040-68990	PLATE FENDER RH	1	>=75111			0.025	0.055
220	34040-68980	PLATE FENDER LH	1	>=75111			0.02	0.044

silverhorn.co.uk

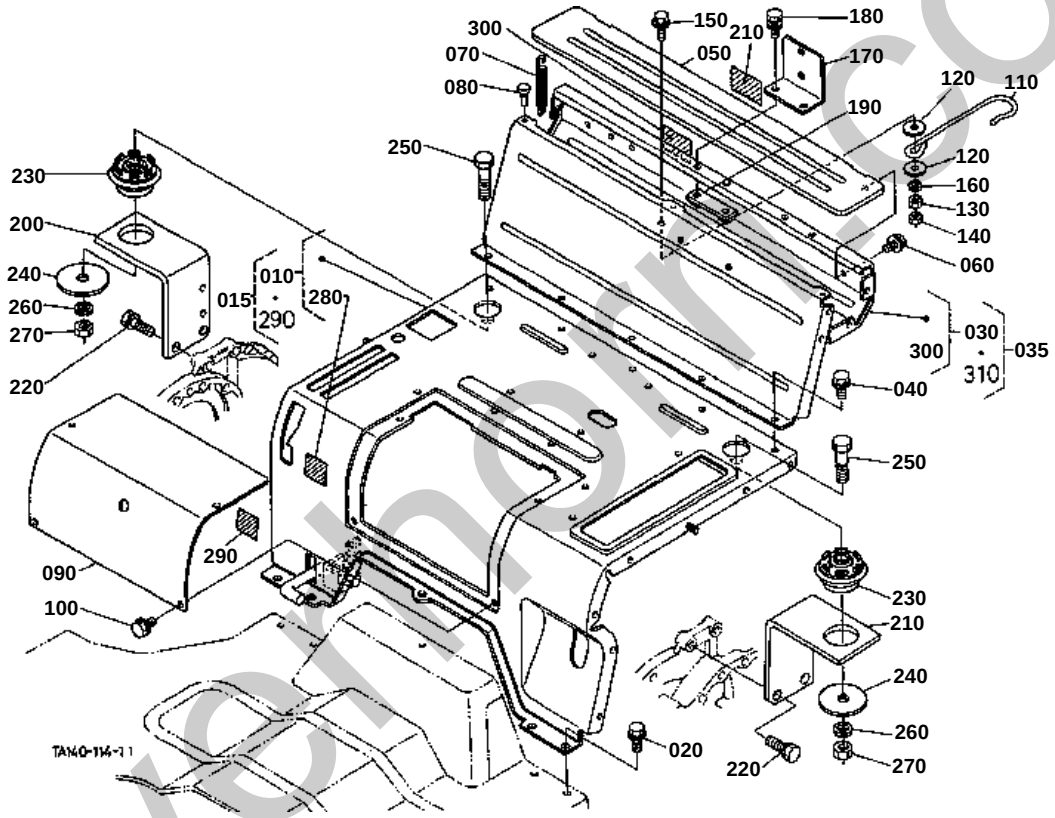

silverthorne.co.uk

FLOOR SEAT [EXCEPT HST TYPE] [ROPS TYPE]
[EXCEPTE TYPE CABINE]

↔ Interchangeable; ≠ not interchangeable; ← new for old; → old for new

REF.No	Part No.	Description	Q'ty	S.No.	I/C	REMARKS	Weight (kgf)	Weight (lb)
010	TA140-99540	KIT FLOOR SEAT(A)	1			ENGLISH	8.85	19.47
015	TA141-99540	KIT FLOOR SEAT(B)	1			FRENCH	8.85	19.47
020	01754-50816	BOLT FLANGE	5				0.011	0.0242
030	TA140-99580	KIT FLOOR SEAT R.(A)	1			ENGLISH	3.15	6.93
035	TA141-99580	KIT FLOOR SEAT R.(B)	1			FRENCH	3.15	6.93
040	01754-50812	BOLT FLANGE	5				0.01	0.022
050	34070-47260	COVER TOOLS BOX	1				0.77	1.694
060	01754-50812	BOLT FLANGE	2				0.01	0.022
070	50400-51210	SPRING CORD STRAIGHT	1				0.015	0.033
080	36330-83120	CUSHION	3				0.001	0.0022
090	34070-47280	COVER FLOOR SEAT	1				1.14	2.508
100	01754-50812	BOLT FLANGE	4				0.01	0.022
110	TA040-29420	HOLDER	1				0.043	0.0946
120	04015-60080	WASHER PLAIN	2				0.01	0.022
130	02114-50080	NUT	1				0.005	0.011
140	02112-50080	NUT	1				0.003	0.0066
150	01754-50825	BOLT FLANGE	1				0.01	0.022
160	04512-60080	WASHER SPRING	1				0.002	0.0044
170	TA040-29430	BRACKET SMV	1				0.25	0.55
180	01123-50816	BOLT	2				0.011	0.0242
190	TA047-29450	STAY WORKING LIGHT	1				0.035	0.077
200	TA040-47210	SUPPORT FLOOR SEAT	1				1.55	3.41
210	TA040-47220	SUPPORT FLOOR SEAT	1				1.55	3.41
220	01133-51230	BOLT	4				0.04	0.088
230	T0270-47310	CUSHION	2				0.131	0.2882
240	34070-47320	WASHER	2				0.015	0.033
250	01173-51660	BOLT	2				0.114	0.2508
260	04512-60160	WASHER SPRING	2				0.01	0.022
270	02176-50160	NUT	2				0.021	0.0462
280	TA040-49340	LABEL M-PTO WARNING	1	<=74187		ENGLISH	0.001	0.0022
280	TA040-49342	LABEL M-PTO WARNING	1	>=74188	←	ENGLISH	0	0
290	TA041-49340	LABEL M-PTO WARNING	1	<=74187		FRENCH	0.003	0.0066
290	TA041-49342	LABEL M-PTO WARNING	1	>=74188	←	FRENCH	0	0
300	TA040-49350	LABEL DRAWBAR	1			ENGLISH	0.002	0.0044
310	TA041-49350	LABEL DRAWBAR	1			FRENCH	0.003	0.0066

silvermorn.co.uk

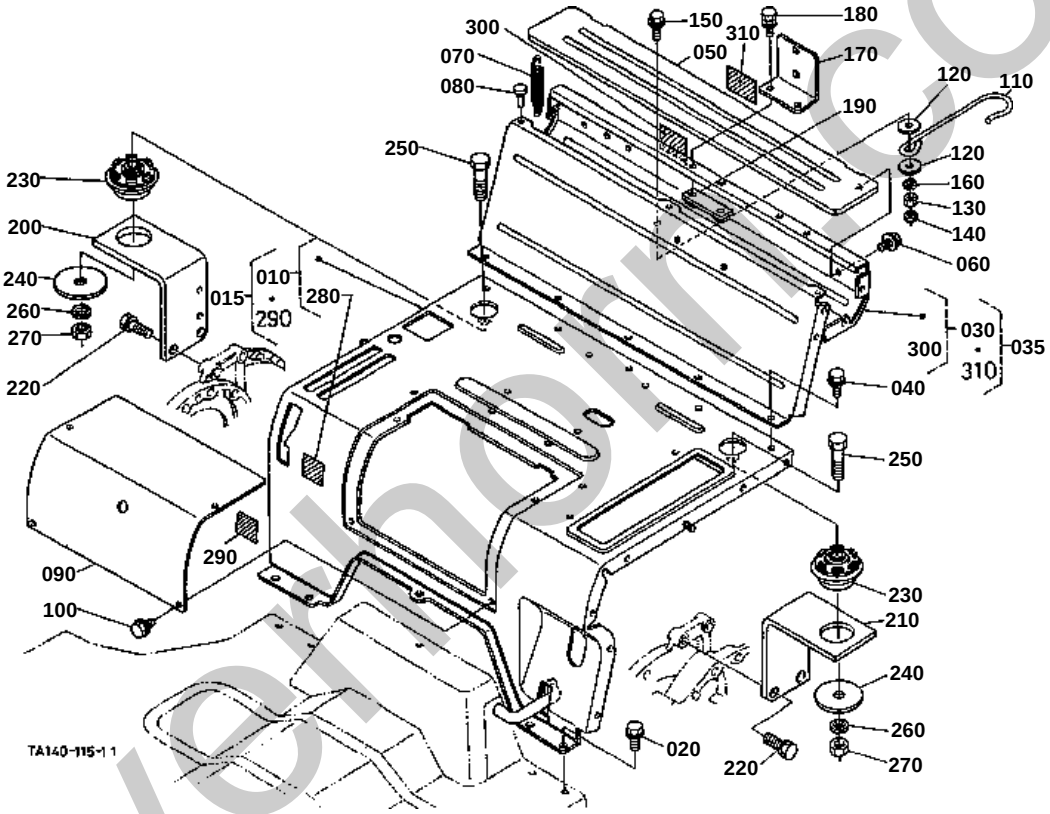

silverhorse.co.uk

210 TA240-4722-0

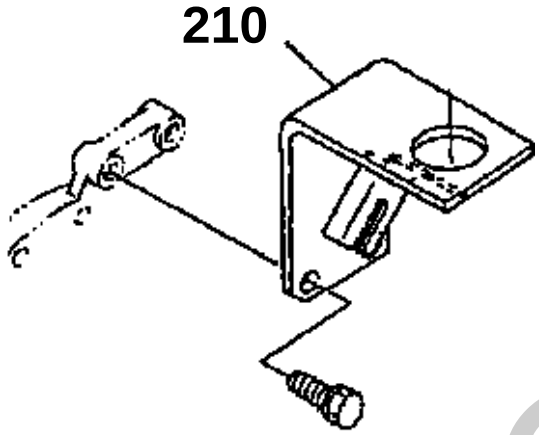

TA140-832-10

silverhorn.co.uk

↔ Interchangeable; ≠ not interchangeable; ← new for old; → old for new

REF.No	Part No.	Description	Q'ty	S.No.	I/C	REMARKS	Weight (kgf)	Weight (lb)
010	TA240-99550	KIT FLOOR SEAT(A)	1			ENGLISH	7.7	16.94
015	TA241-99550	KIT FLOOR SEAT(B)	1			FRENCH	0	0
020	01754-50816	BOLT FLANGE	5				0.011	0.0242
030	TA140-99580	KIT FLOOR SEAT R.(A)	1			ENGLISH	3.15	6.93
035	TA141-99580	KIT FLOOR SEAT R.(B)	1			FRENCH	3.15	6.93
040	01754-50812	BOLT FLANGE	5				0.01	0.022
050	34070-47260	COVER TOOLS BOX	1				0.77	1.694
060	01754-50812	BOLT FLANGE	2				0.01	0.022
070	50400-51210	SPRING CORD STRAIGHT	1				0.015	0.033
080	36330-83120	CUSHION	3				0.001	0.0022
090	34070-47280	COVER FLOOR SEAT	1				1.14	2.508
100	01754-50812	BOLT FLANGE	4				0.01	0.022
110	TA040-29420	HOLDER	1				0.043	0.0946
120	04015-60080	WASHER PLAIN	2				0.01	0.022
130	02114-50080	NUT	1				0.005	0.011
140	02112-50080	NUT	1				0.003	0.0066
150	01754-50825	BOLT FLANGE	1				0.01	0.022
160	04512-60080	WASHER SPRING	1				0.002	0.0044
170	TA040-29430	BRACKET SMV	1				0.25	0.55
180	01123-50816	BOLT	2				0.011	0.0242
190	TA047-29450	STAY WORKING LIGHT	1				0.035	0.077
200	TA040-47210	SUPPORT FLOOR SEAT	1				1.55	3.41
210	TA240-47220	SUPPORT FLOOR SEAT	1	<=61504			1.67	3.674
210	TA040-47220	SUPPORT FLOOR SEAT	1	>=70001	≠		1.55	3.41
220	01133-51230	BOLT	4				0.04	0.088
230	T0270-47310	CUSHION	2				0.131	0.2882
240	34070-47320	WASHER	2				0.015	0.033
250	01173-51660	BOLT	2				0.114	0.2508
260	04512-60160	WASHER SPRING	2				0.01	0.022
270	02176-50160	NUT	2				0.021	0.0462
280	TA040-49340	LABEL M-PTO WARNING	1	<=74187		ENGLISH	0.001	0.0022
280	TA040-49342	LABEL M-PTO WARNING	1	>=74188	←	ENGLISH	0	0
290	TA041-49340	LABEL M-PTO WARNING	1	<=74187		FRENCH	0.003	0.0066
290	TA041-49342	LABEL M-PTO WARNING	1	>=74188	←	FRENCH	0	0
300	TA040-49350	LABEL DRAWBAR	1			ENGLISH	0.002	0.0044
310	TA041-49350	LABEL DRAWBAR	1			FRENCH	0.003	0.0066

silverform.co.uk

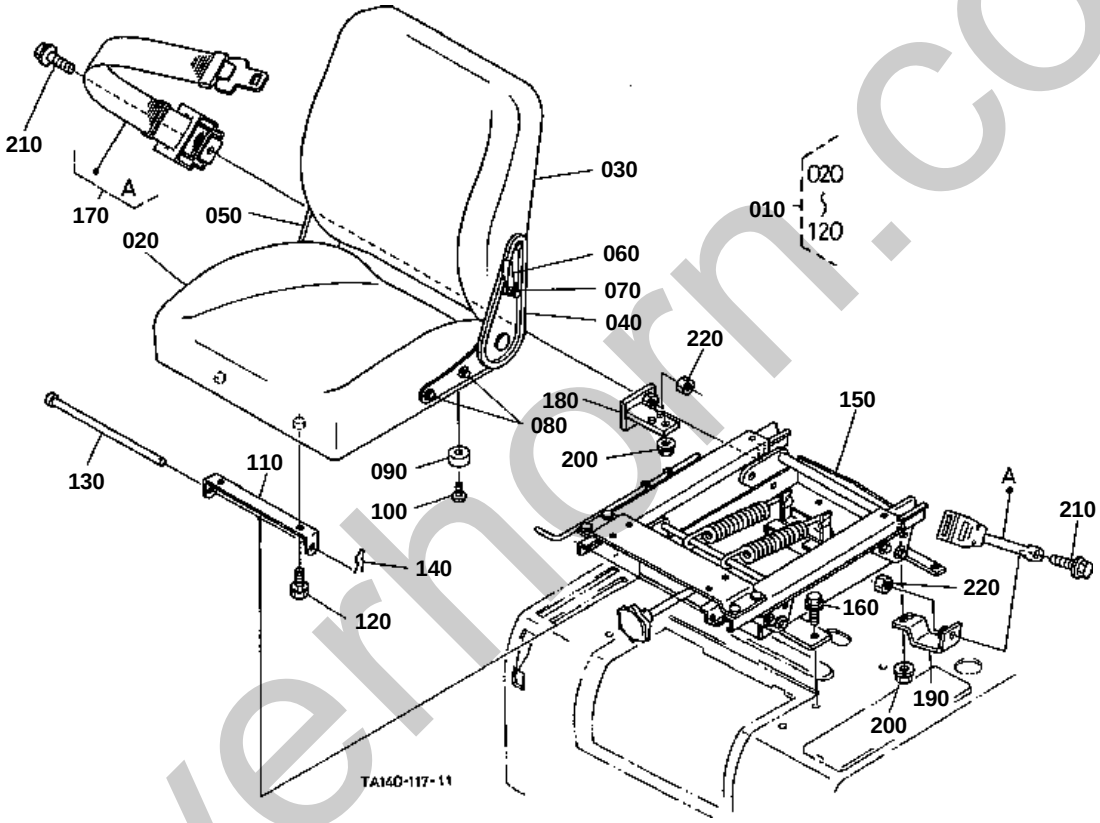

silverhorn.co.uk

SEAT [ROPS TYPE]

↔ Interchangeable; ≠ not interchangeable; ← new for old; → old for new

REF.No	Part No.	Description	Q'ty	S.No.	I/C	REMARKS	Weight (kgf)	Weight (lb)
010	TA140-47700	ASSY SEAT	1				9.6	21.12
020	TA140-47710	CUSHION SEAT	1				3.9	8.58
030	TA140-47720	BACK SEAT	1				3.85	8.47
040	TA140-47730	HINGE	1				1.03	2.266
050	TA140-47740	HINGE	1				0.305	0.671
060	TA140-47750	KNOB	1				0.02	0.044
070	TA140-47760	SCREW	1				0.002	0.0044
080	TA140-47770	BOLT	8				0.01	0.022
090	TA140-47780	CUSHION	2				0.043	0.0946
100	TA140-47790	SCREW	2				0.01	0.022
110	TA140-47800	BRACKET SEAT	1				0.185	0.407
120	TA140-47810	BOLT	2				0.01	0.022
130	56811-35462	PIN	1				0.1	0.22
140	05525-50800	PIN SNAP	1				0.001	0.0022
150	TA140-11800	ASSY SUSPENSION	1				9.4	20.68
160	01754-50820	BOLT FLANGE	4				0.015	0.033
170	6C040-72252	ASSY BELT SEAT	1	<=75110		NOT SALE	0.9	1.98
170	6C040-72253	ASSY BELT SEAT	1	>=75111	←		0.9	1.98
180	TA140-18482	BRACKET SEAT BELT RH	1				0.16	0.352
190	TA140-18492	BRACKET SEAT BELT LH	1				0.175	0.385
200	02763-50080	NUT FLANGE	2				0.005	0.011
210	01774-51025	BOLT FLANGE	2				0.02	0.044
220	02116-50100	NUT	2				0.004	0.0088

silverhorn.co.uk

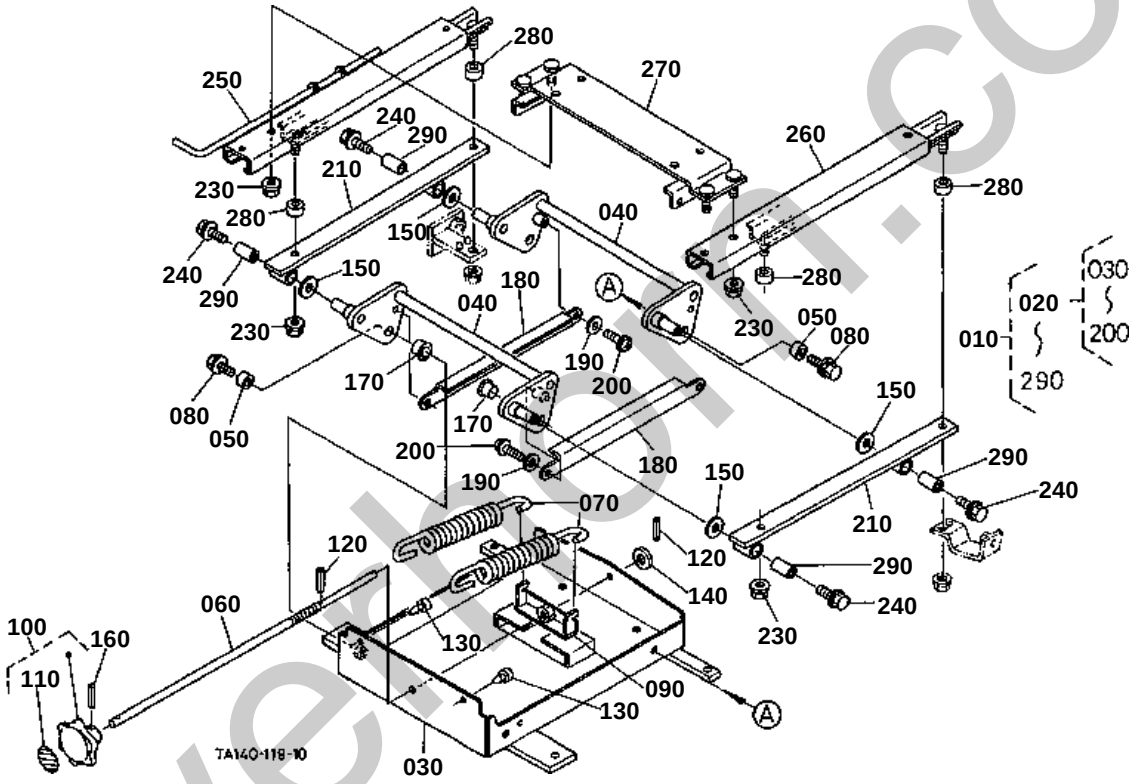

silverhorn.co.uk

↔ Interchangeable; ≠ not interchangeable; ← new for old; → old for new

REF.No	Part No.	Description	Q'ty	S.No.	I/C	REMARKS	Weight (kgf)	Weight (lb)
010	TA140-11800	ASSY SUSPENSION	1				9.4	20.68
020	TA140-11810	ASSY SUSPENSION	1				5.5	12.1
030	TA140-11820	FRAME SUSPENSION	1				2.7	5.94
040	TA140-11830	COMP.LINK	2				0.62	1.364
050	TA140-11840	SPACER SUSPENSION	4				0.005	0.011
060	TA140-11990	SHAFT	1				0.23	0.506
070	TA140-11860	SPRING SUSPENSION	2				0.24	0.528
080	TA140-11870	BOLT	4				0.015	0.033
090	TA140-11880	NUT ADJUST	1				0.095	0.209
100	TA140-11890	KNOB ADJUST	1				0.105	0.231
110	TA140-11900	LABEL ADJUST	1				0.001	0.0022
120	TA140-11910	PIN SPRING	2				0.001	0.0022
130	TA140-11920	CUSHION	2				0.006	0.0132
140	TA140-11930	WASHER PLAIN	1				0.01	0.022
150	TA140-11940	SHIM	4				0.001	0.0022
160	TA140-11950	PIN SPRING	1				0.002	0.0044
170	TA140-11960	BUSH SUSPENSION	4				0.003	0.0066
180	TA140-11980	PLATE	2				0.205	0.451
190	TA140-11710	BUSH PLATE	4				0.003	0.0066
200	TA140-11720	SCREW	4				0.006	0.0132
210	TA140-18370	PLATE	2				0.395	0.869
220	99999-99999	BLANK	0				0	0
230	TA140-18310	NUT FLANGE	6				0.006	0.0132
240	TA140-18320	BOLT FLANGE	4				0.012	0.0264
250	TA140-18330	RAIL RH	1				1.38	3.036
260	TA140-18340	RAIL LH	1				0.925	2.035
270	TA140-18350	BRACKET	1				0.725	1.595
280	TA140-18390	SPACER	4				0.009	0.0198
290	TA140-18410	BUSH	4				0.006	0.0132

silverhorn.co.uk

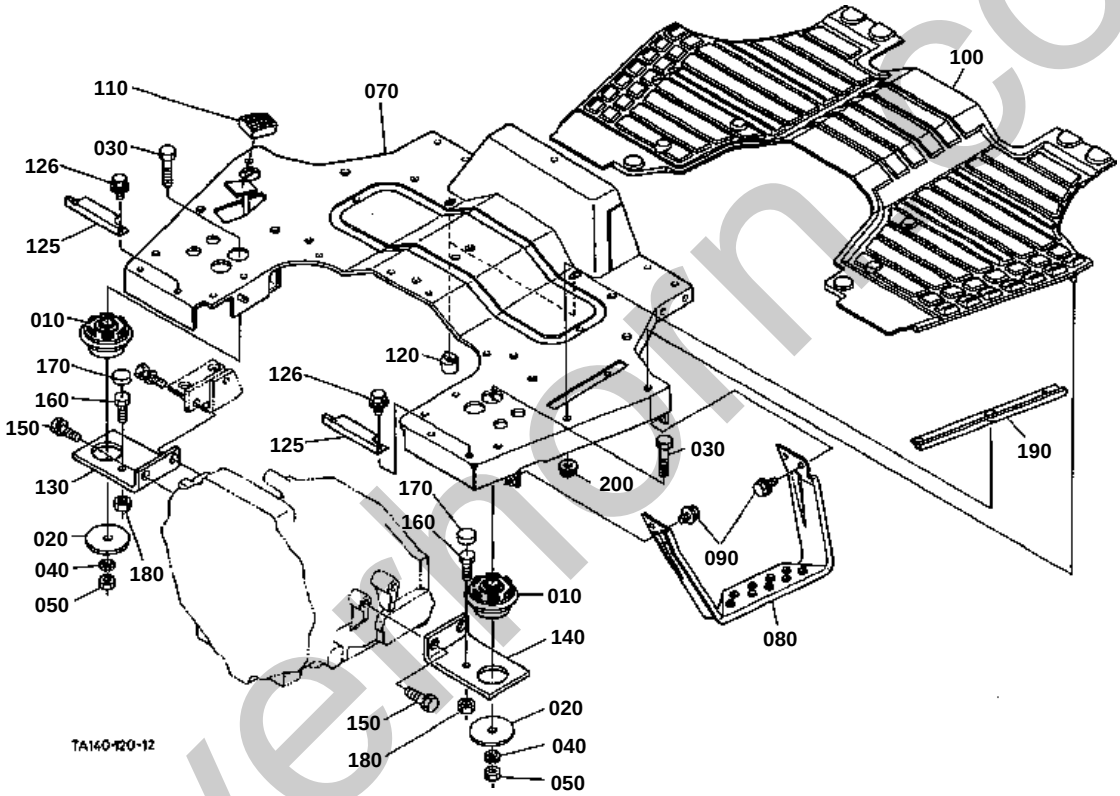

silvermine.co.uk

105 TA140-4746-0

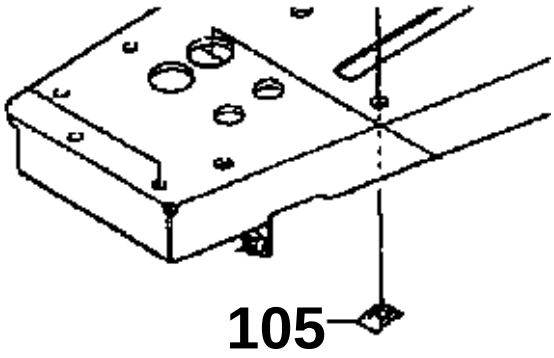

TA140-848-10

silverhorn.co.uk

STEP [EXCEPT HST TYPE]

↔ Interchangeable; ≠ not interchangeable; ← new for old; → old for new

REF.No	Part No.	Description	Q'ty	S.No.	I/C	REMARKS	Weight (kgf)	Weight (lb)
010	T0270-47310	CUSHION	2				0.131	0.2882
020	34070-47320	WASHER	2				0.015	0.033
030	01173-51660	BOLT	2				0.114	0.2508
040	04512-60160	WASHER SPRING	2				0.01	0.022
050	02176-50160	NUT	2				0.021	0.0462
060	99999-99999	BLANK	0				0	0
070	TA040-47403	STEP	1				16	35.2
080	TA140-47470	STEP AID LH	1				0.985	2.167
090	01754-50812	BOLT FLANGE	4	<=70508			0.01	0.022
090	01754-50816	BOLT FLANGE	4	>=70509	←		0.011	0.0242
100	TA140-47450	MAT STEP	1				1.3	2.86
105	TA140-47460	NUT	4	<=50008			0.002	0.0044
110	37410-42760	COVER PEDAL	1				0.025	0.055
120	30400-17980	RUBBER BLOCK	2				0.01	0.022
125	TA140-47480	CLAMP STEP MAT	2				0.05	0.11
126	01754-50816	BOLT FLANGE	4				0.011	0.0242
130	TA040-47410	BRACKET STEP RH	1				1.15	2.53
140	TA040-47420	BRACKET STEP LH	1				1.15	2.53
150	01133-51230	BOLT	3				0.04	0.088
160	01073-51030	BOLT	2				0.028	0.0616
170	34070-47490	CUSHION	2				0.005	0.011
180	02118-50100	NUT	2				0.005	0.011
190	TA150-47490	CLAMP STEP MAT LH	1	>=70001			0.155	0.341
200	02751-50080	NUT FLANGE	2	>=70001			0.006	0.0132

silverhorn.co.uk

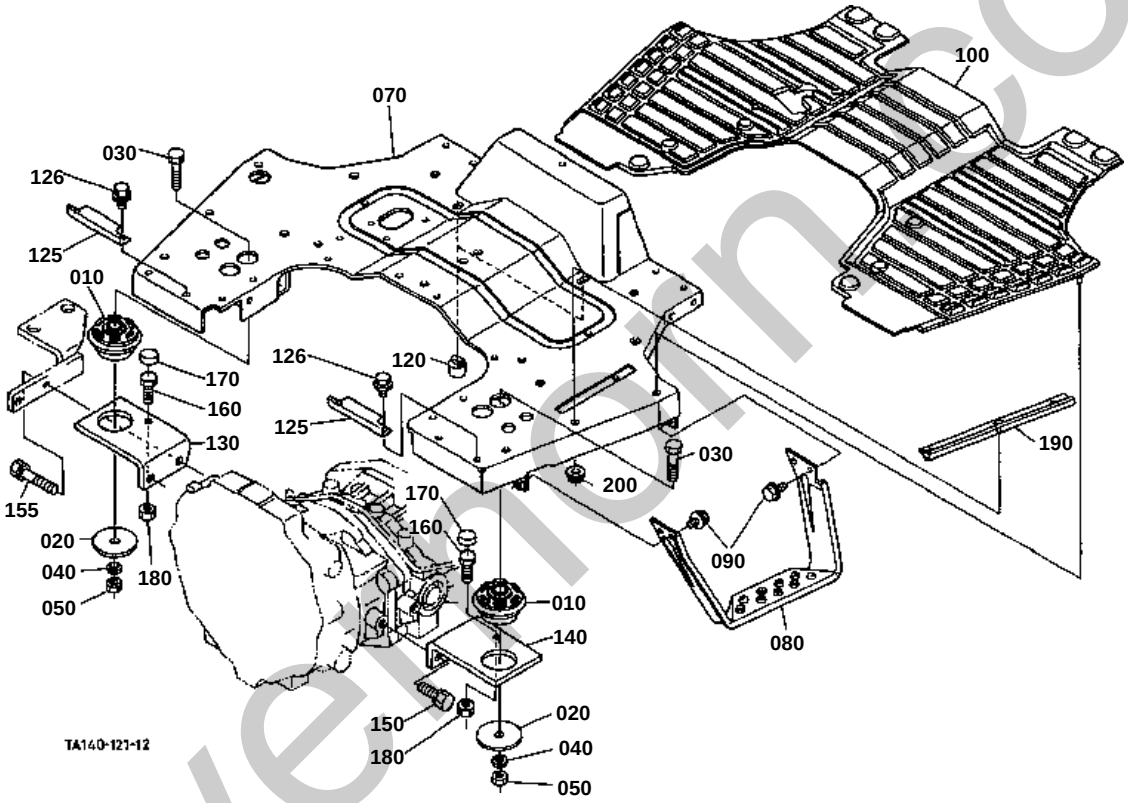

silvermine.co.uk

110 TA140-4746-0

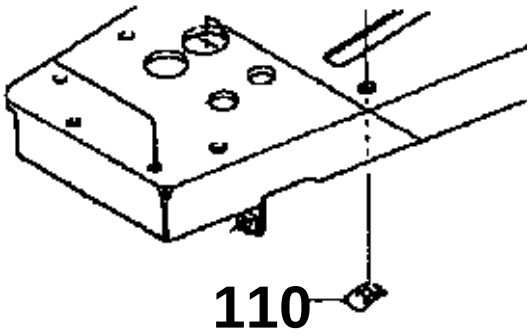

TA140-849-10

silverhorn.co.uk

↔ Interchangeable; ≠ not interchangeable; ← new for old; → old for new

REF.No	Part No.	Description	Q'ty	S.No.	I/C	REMARKS	Weight (kgf)	Weight (lb)
010	T0270-47310	CUSHION	2				0.131	0.2882
020	34070-47320	WASHER	2				0.015	0.033
030	01173-51660	BOLT	2				0.114	0.2508
040	04512-60160	WASHER SPRING	2				0.01	0.022
050	02176-50160	NUT	2				0.021	0.0462
060	99999-99999	BLANK	0				0	0
070	TA240-47400	STEP	1	<=61504			0	0
070	TA240-47405	STEP	1	>=70001	←		0	0
080	TA140-47470	STEP AID LH	1				0.985	2.167
090	01754-50812	BOLT FLANGE	4	<=70508			0.01	0.022
090	01754-50816	BOLT FLANGE	4	>=70509	←		0.011	0.0242
100	TA240-47450	MAT	1				1.55	3.41
110	TA140-47460	NUT	4	<=50008			0.002	0.0044
120	30400-17980	RUBBER BLOCK	2				0.01	0.022
125	TA140-47480	CLAMP STEP MAT	2				0.05	0.11
126	01754-50816	BOLT FLANGE	4				0.011	0.0242
130	TA240-47410	BRACKET STEP RH	1				1.05	2.31
140	TA240-47420	BRACKET STEP LH	1				1.05	2.31
150	01133-51230	BOLT	2				0.04	0.088
155	01133-51240	BOLT	2				0.05	0.11
160	01073-51030	BOLT	2				0.028	0.0616
170	34070-47490	CUSHION	2				0.005	0.011
180	02118-50100	NUT	2				0.005	0.011
190	TA150-47490	CLAMP STEP MAT LH	1	>=70001			0.155	0.341
200	02751-50080	NUT FLANGE	2	>=70001			0.006	0.0132

silverhorn.co.uk

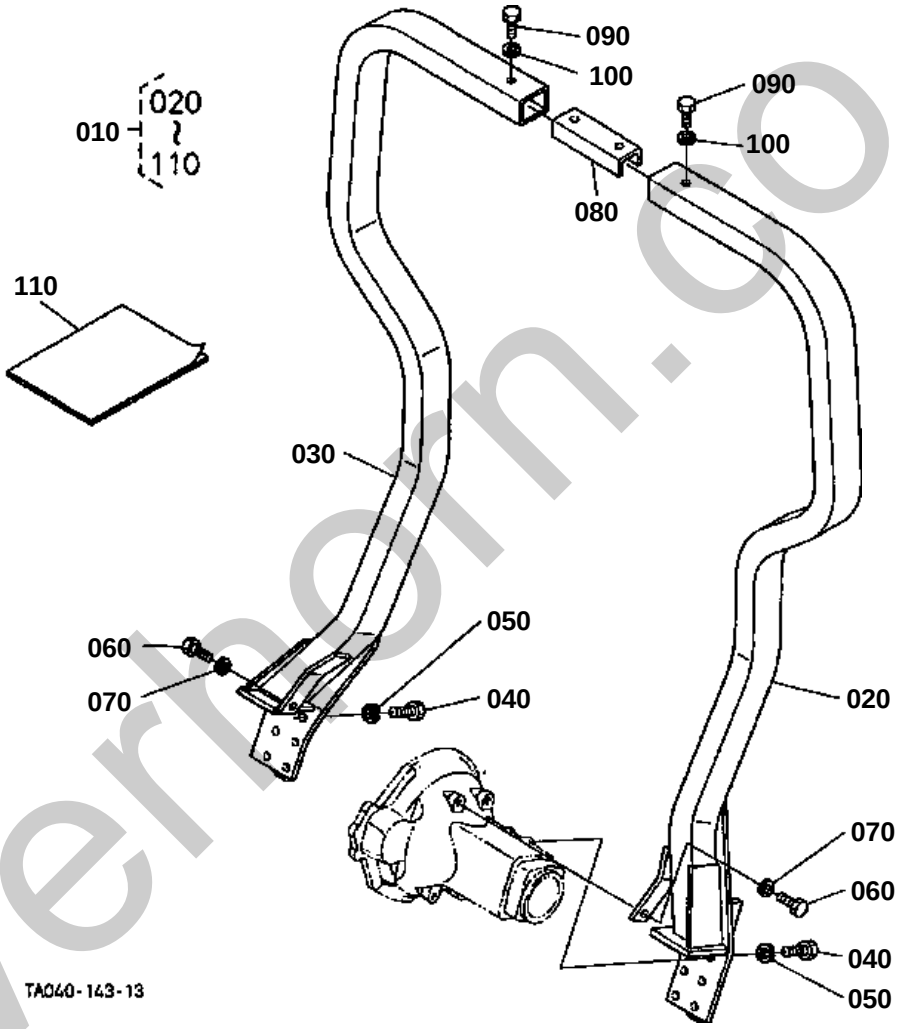

silverhorn.co.uk

↔ Interchangeable; ≠ not interchangeable; ← new for old; → old for new

REF.No	Part No.	Description	Q'ty	S.No.	I/C	REMARKS	Weight (kgf)	Weight (lb)
010	TA040-48012	ASSY ROPS	1				0	0
020	99999-99999	COMP.FRAME LH	1				0	0
030	99999-99999	COMP.FRAME RH	1				0	0
040	01176-51430	BOLT	12				0.052	0.1144
050	75599-33016	WASHER SPRING	12				0.08	0.176
060	01173-51230	BOLT	2				0.037	0.0814
070	04512-60120	WASHER SPRING	2				0.005	0.011
080	99999-99999	CONNECTOR ROPS	1				0	0
090	75599-04625	HEX.BOLT	2				0	0
100	75599-33016	WASHER SPRING	2				0.08	0.176
110	TA140-48493	MANUAL ASSEMBLY	1				0	0

silverhorn.co.uk

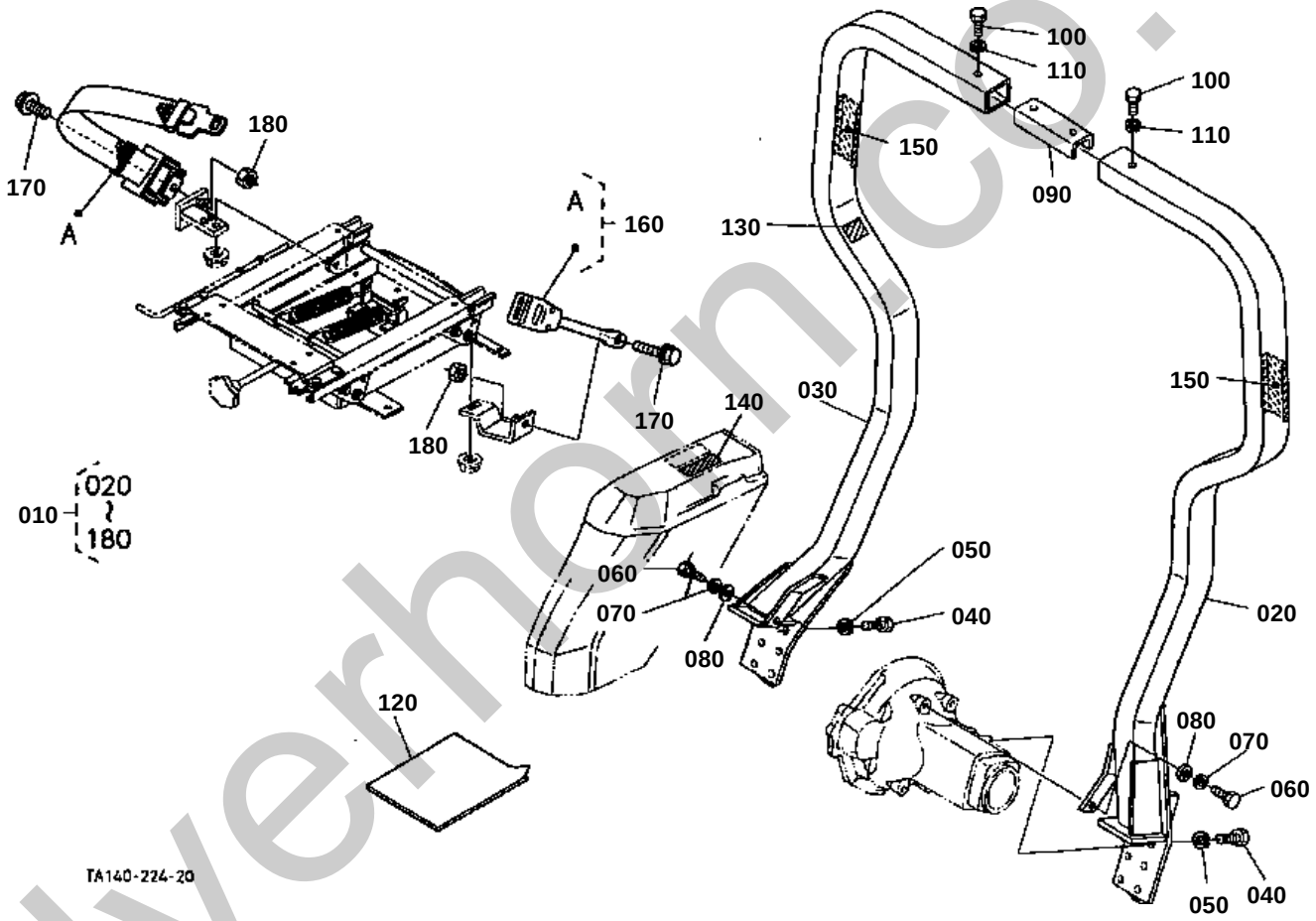

silverhorn.co.uk

↔ Interchangeable; ≠ not interchangeable; ← new for old; → old for new

REF.No	Part No.	Description	Q'ty	S.No.	I/C	REMARKS	Weight (kgf)	Weight (lb)
010	TA140-48442	KIT ROPS REPLACEMENT	1	<=75110			0	0
010	TA140-48442	KIT ROPS REPLACEMENT	1	>=75111	←		0	0
020	99999-99999	COMP.FRAME LH	1				0	0
030	99999-99999	COMP.FRAME RH	1				0	0
040	01176-51430	BOLT	12				0.052	0.1144
050	0Y450-50090	WASHER SPRING	12				0	0
060	01073-51230	BOLT	2				0.041	0.0902
070	04512-60120	WASHER SPRING	2				0.005	0.011
080	04013-60120	WASHER PLAIN	2				0.01	0.022
090	99999-99999	PLATE	1				0	0
100	0Y109-50920	BOLT	2				0	0
110	0Y450-50090	WASHER SPRING	2				0	0
120	99999-99999	MANUAL INSTRUCTION	1				0	0
130	6C140-47460	LABEL ROPS WARNING	1			ENGLISH	0.001	0.0022
130	6C141-47460	LABEL ROPS WARNING	1			FRENCH	0	0
140	TA040-49320	LABEL ROPS WARNING	1			ENGLISH	0.001	0.0022
140	TA040-49150	LABEL ROPS WARNING	1			FRENCH	0.003	0.0066
150	6C140-54990	REFLECTOR LABEL	2	>=75111			0.003	0.0066
160	6C040-72252	ASSY BELT SEAT	1	<=75110		NOT SALE	0.9	1.98
160	6C040-72253	ASSY BELT SEAT	1	>=75111	←		0.9	1.98
170	01774-51025	BOLT FLANGE	2				0.02	0.044
180	02116-50100	NUT	2				0.004	0.0088

silverhorn.co.uk

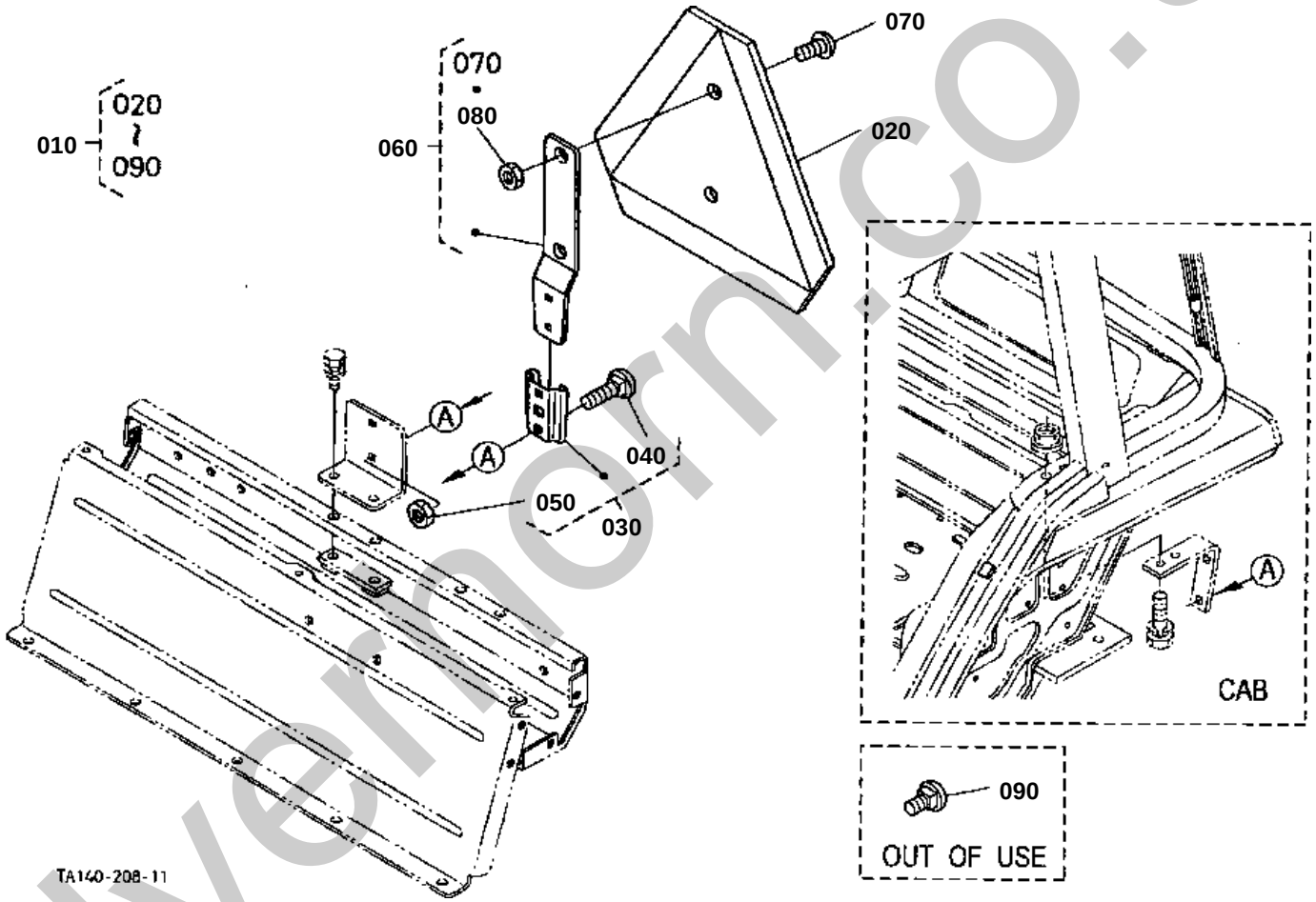

silvermorn.co.uk

↔ Interchangeable; ≠ not interchangeable; ← new for old; → old for new

REF.No	Part No.	Description	Q'ty	S.No.	I/C	REMARKS	Weight (kgf)	Weight (lb)
020	7L500-89910	SIGN SMV	1				0	0
030	7L500-89920	SOCKET SMV SIGN	1				0	0
040	7L500-89940	BOLT SQUARE NECK	2				0	0
050	7L500-89950	NUT	2				0	0
060	7L500-89960	SPADE SMV SIGN	1				0	0
070	7L500-89980	VIS	2				0	0
080	7L500-89990	NUT	2				0	0
090	7L500-89810	BOLT SQUARE NECK	2			OUT OF USE	0	0

silverhorn.co.uk

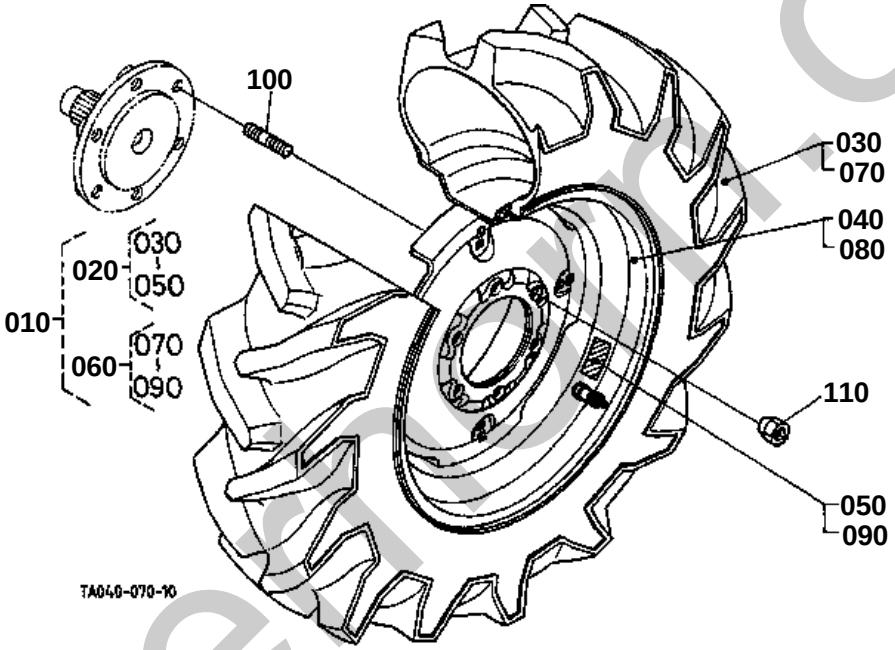

silvermoor.co.uk

↔ Interchangeable; ≠ not interchangeable; ← new for old; → old for new

REF.No	Part No.	Description	Q'ty	S.No.	I/C	REMARKS	Weight (kgf)	Weight (lb)
010	TA020-10700	ASSY FRONT WHEEL	1				0	0
020	TA020-10710	ASSY FRONT WHEEL RH	1				0	0
030	TA020-43740	TIRE	1				0	0
040	66434-17640	WHEEL	1				0	0
050	TA020-10750	LABEL TIRE RH	1				0	0
060	TA020-10720	ASSY FRONT WHEEL LH	1				0	0
070	TA020-43740	TIRE	1				0	0
080	66434-17640	WHEEL	1				0	0
090	TA020-10760	LABEL TIRE LH	1				0	0
100	35450-49160	STUD	12	<=71651			0.05	0.11
100	TA150-49160	STUD WHEEL	12	>=71652	≠		0	0
110	35340-11390	NUT	12				0.03	0.066

silverhorn.co.uk

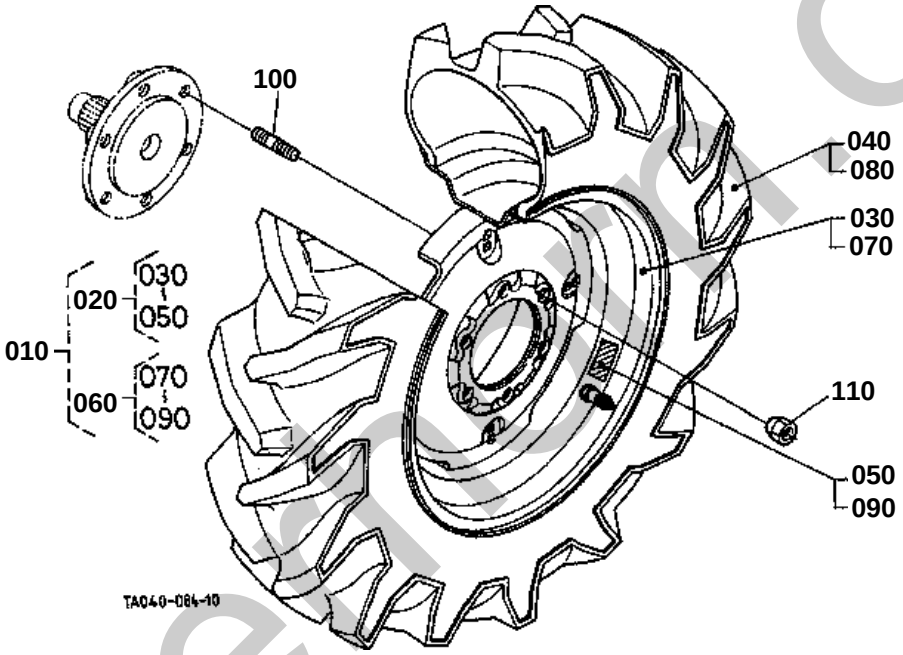

silvermoor.co.uk

FRONT WHEEL (8.3-16)

↔ Interchangeable; ≠ not interchangeable; ← new for old; → old for new

REF.No	Part No.	Description	Q'ty	S.No.	I/C	REMARKS	Weight (kgf)	Weight (lb)
010	66434-17610	ASSY TIRE	1				0	0
020	66434-17620	ASSY TIRE LH	1				0	0
030	66434-17640	WHEEL	1				0	0
040	66434-17650	TIRE	1				0	0
050	66434-17660	LABEL TIRE LH	1				0	0
060	66434-17630	ASSY TIRE RH	1				0	0
070	66434-17640	WHEEL	1				0	0
080	66434-17650	TIRE	1				0	0
090	66434-17670	LABEL TIRE RH	1				0	0
100	35450-49160	STUD	12	<=71651			0.05	0.11
100	TA150-49160	STUD WHEEL	12	>=71652	≠		0	0
110	35340-11390	NUT	12				0.03	0.066

silverhorn.co.uk

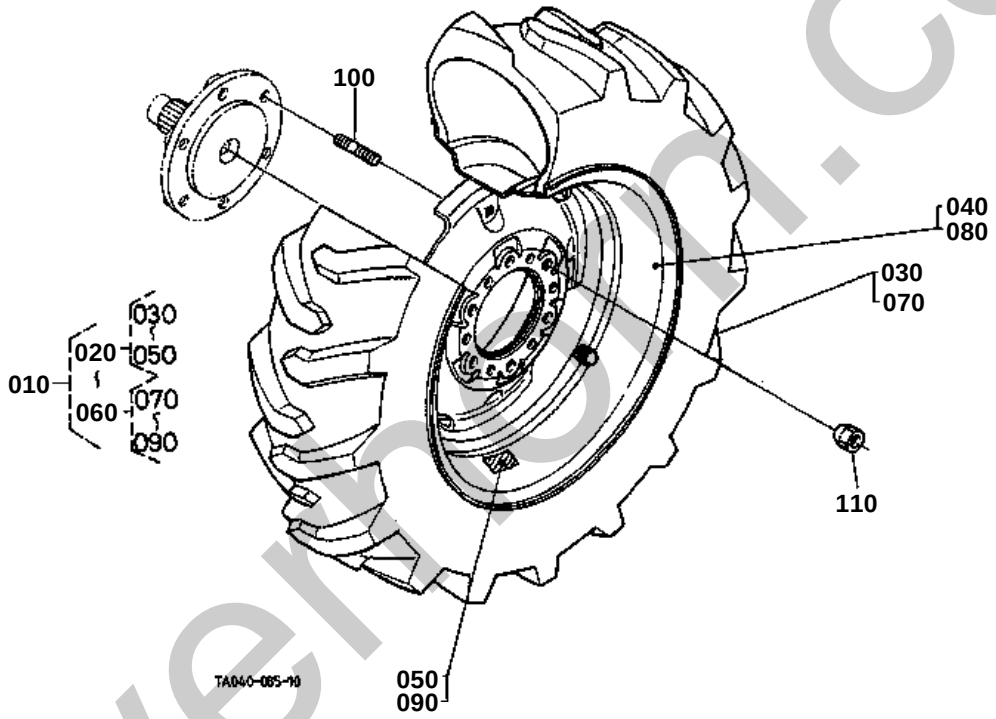

silverhorn.co.uk

FRONT WHEEL (10-16.5)

↔ Interchangeable; ≠ not interchangeable; ← new for old; → old for new

REF.No	Part No.	Description	Q'ty	S.No.	I/C	REMARKS	Weight (kgf)	Weight (lb)
010	TA040-10900	ASSY FRONT WHEEL	1				0	0
020	TA040-10910	ASSY FRONT WHEEL RH	1				0	0
030	35080-11930	TIRE	1				0	0
040	TA040-42420	WHEEL	1				0	0
050	TA040-10950	LABEL TIRE RH	1				0	0
060	TA040-10920	ASSY FRONT WHEEL LH	1				0	0
070	35080-11930	TIRE	1				0	0
080	TA040-42420	WHEEL	1				0	0
090	TA040-10960	LABEL TIRE LH	1				0	0
100	35450-49160	STUD	12	<=71651			0.05	0.11
100	TA150-49160	STUD WHEEL	12	>=71652	≠		0	0
110	35340-11390	NUT	12				0.03	0.066

silverhorn.co.uk

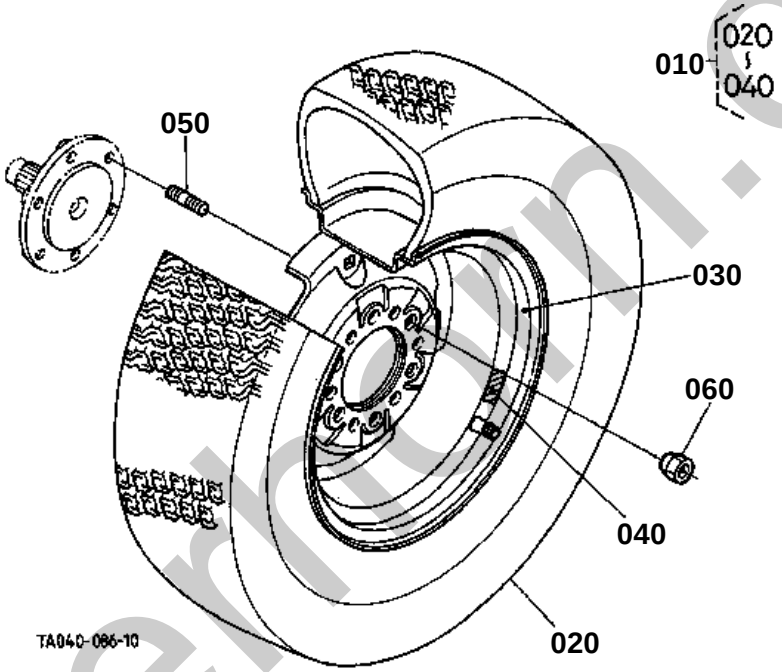

silvermann.co.uk

FRONT WHEEL (27*8.5-15)

↔ Interchangeable; ≠ not interchangeable; ← new for old; → old for new

REF.No	Part No.	Description	Q'ty	S.No.	I/C	REMARKS	Weight (kgf)	Weight (lb)
010	TA040-10500	ASSY FRONT WHEEL	2				0	0
020	67002-17630	TIRE	2				0	0
030	TA040-10550	WHEEL	2				0	0
040	TA040-10560	LABEL TIRE	2				0	0
050	35450-49160	STUD	12	<=71651			0.05	0.11
050	TA150-49160	STUD WHEEL	12	>=71652	≠		0	0
060	35340-11390	NUT	12				0.03	0.066

silverhorn.co.uk

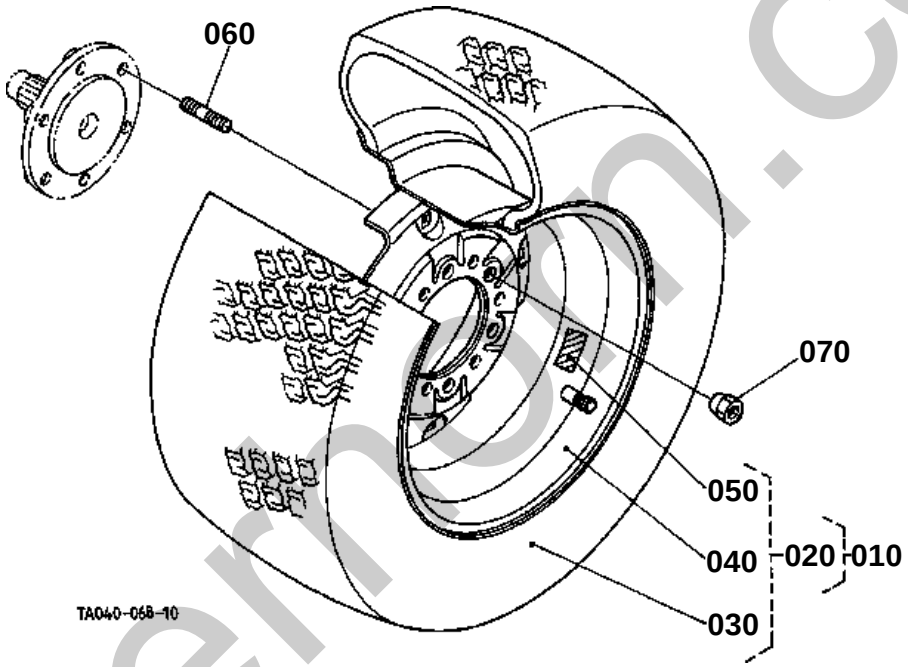

silvermoon.co.uk

FRONT WHEEL (27*10.50-15)

↔ Interchangeable; ≠ not interchangeable; ← new for old; → old for new

REF.No	Part No.	Description	Q'ty	S.No.	I/C	REMARKS	Weight (kgf)	Weight (lb)
010	35080-11700	ASSY TIRE	1				0	0
020	35080-11710	TIRE ASSY	2				0	0
030	35080-11720	TIRE	2				0	0
040	35998-01430	WHEEL	2				0	0
050	35080-11730	LABEL TIRE	2				0	0
060	35450-49160	STUD	12	<=71651			0.05	0.11
060	TA150-49160	STUD WHEEL	12	>=71652	≠		0	0
070	35340-11390	NUT	12				0.03	0.066

silverhorn.co.uk

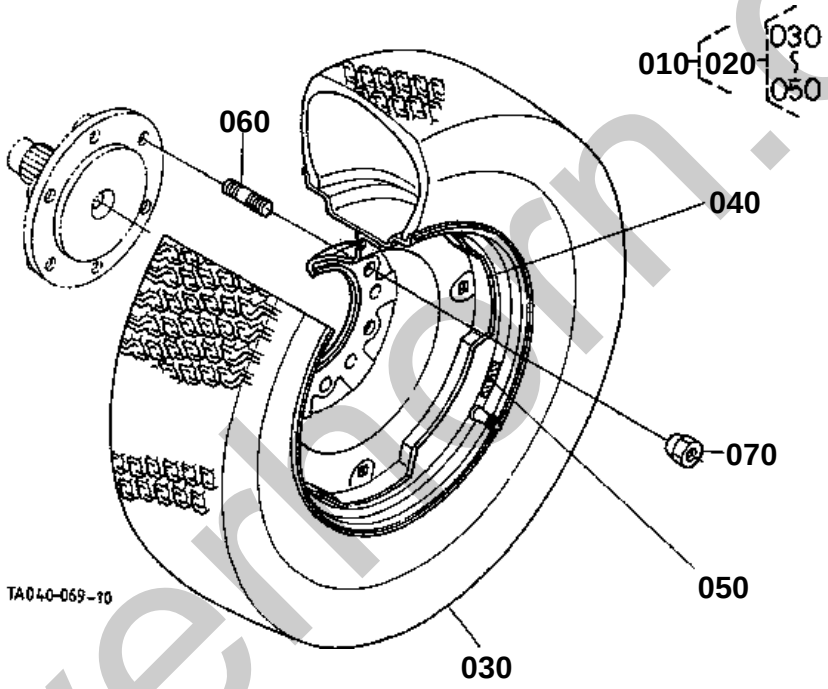

silverham.co.uk

FRONT WHEEL (29*12.50-15)

↔ Interchangeable; ≠ not interchangeable; ← new for old; → old for new

REF.No	Part No.	Description	Q'ty	S.No.	I/C	REMARKS	Weight (kgf)	Weight (lb)
010	35080-11500	ASSY TIRE	1				0	0
020	35080-11510	TIRE ASSY	2				0	0
030	35080-11530	TIRE	2				0	0
040	35080-11540	WHEEL	2				0	0
050	35080-11550	LABEL TIRE	2				0	0
060	35450-49160	STUD	12	<=71651			0.05	0.11
060	TA150-49160	STUD WHEEL	12	>=71652	≠		0	0
070	35340-11390	NUT	12				0.03	0.066

silverhorn.co.uk

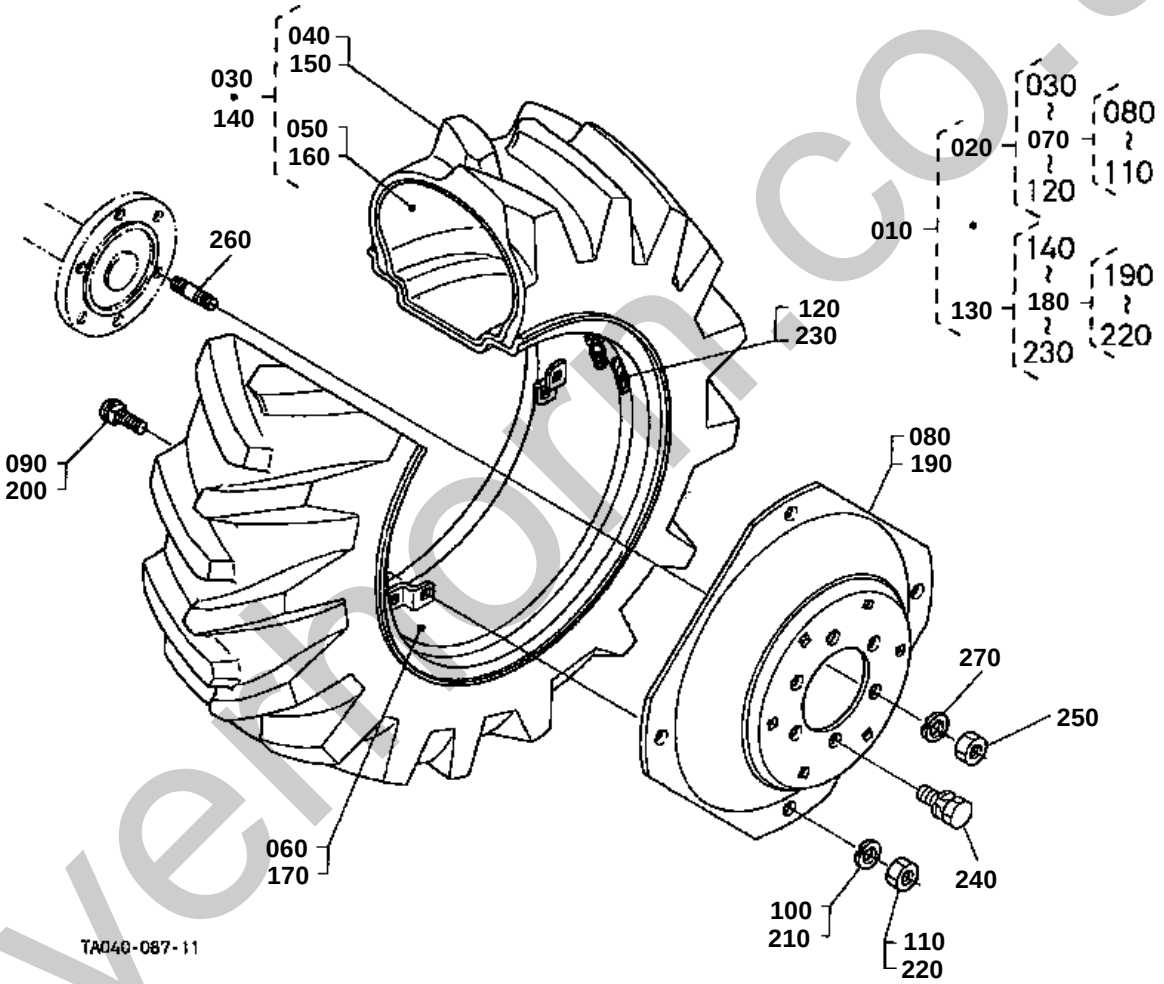

silverhorn.co.uk

240 01073-51630
270 04512-60160

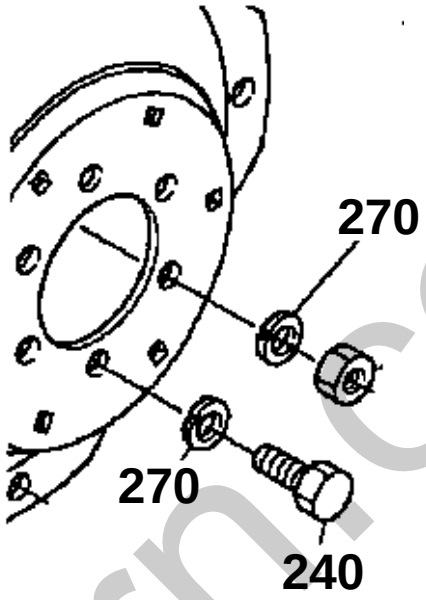

TA120-826-10

silverhorn.co.uk

↔ Interchangeable; ≠ not interchangeable; ← new for old; → old for new

REF.No	Part No.	Description	Q'ty	S.No.	I/C	REMARKS	Weight (kgf)	Weight (lb)
010	35070-27600	ASSY REAR WHEEL	1				0	0
020	35070-27610	ASSY REAR WHEEL LH	1				0	0
030	35070-27670	ASSY REAR WHEEL	1				0	0
040	35070-27620	TIRE	1				0	0
050	35070-27630	TUBE	1				0	0
060	35070-27640	RIM	1				0	0
070	35070-27650	ASSY DISK	1				0	0
080	35080-27660	DISK	1				0	0
090	31220-27680	BOLT	4				0.09	0.198
100	04512-60160	WASHER SPRING	4				0.01	0.022
110	02174-50160	NUT	4				0.022	0.0484
120	35070-27930	LABEL TIRE LH	1				0	0
130	35070-27690	ASSY REAR WHEEL RH	1				0	0
140	35070-27670	ASSY REAR WHEEL	1				0	0
150	35070-27620	TIRE	1				0	0
160	35070-27630	TUBE	1				0	0
170	35070-27640	RIM	1				0	0
180	35070-27650	ASSY DISK	1				0	0
190	35080-27660	DISK	1				0	0
200	31220-27680	BOLT	4				0.09	0.198
210	04512-60160	WASHER SPRING	4				0.01	0.022
220	02174-50160	NUT	4				0.022	0.0484
230	35070-27940	LABEL TIRE RH	1				0	0
240	01073-51630	BOLT	8	<=72536			0.079	0.1738
240	01033-51630	BOLT	8	>=72537	←		0	0
250	02076-50160	NUT	4				0.03	0.066
260	01517-51632	STUD	4	<=74528			0.076	0.1672
260	01517-51635	STUD	4	>=74529	←		0.08	0.176
270	04512-60160	WASHER SPRING	12	<=72536			0.01	0.022
270	04512-60160	WASHER SPRING	4	>=72537			0.01	0.022

silverhorn.co.uk

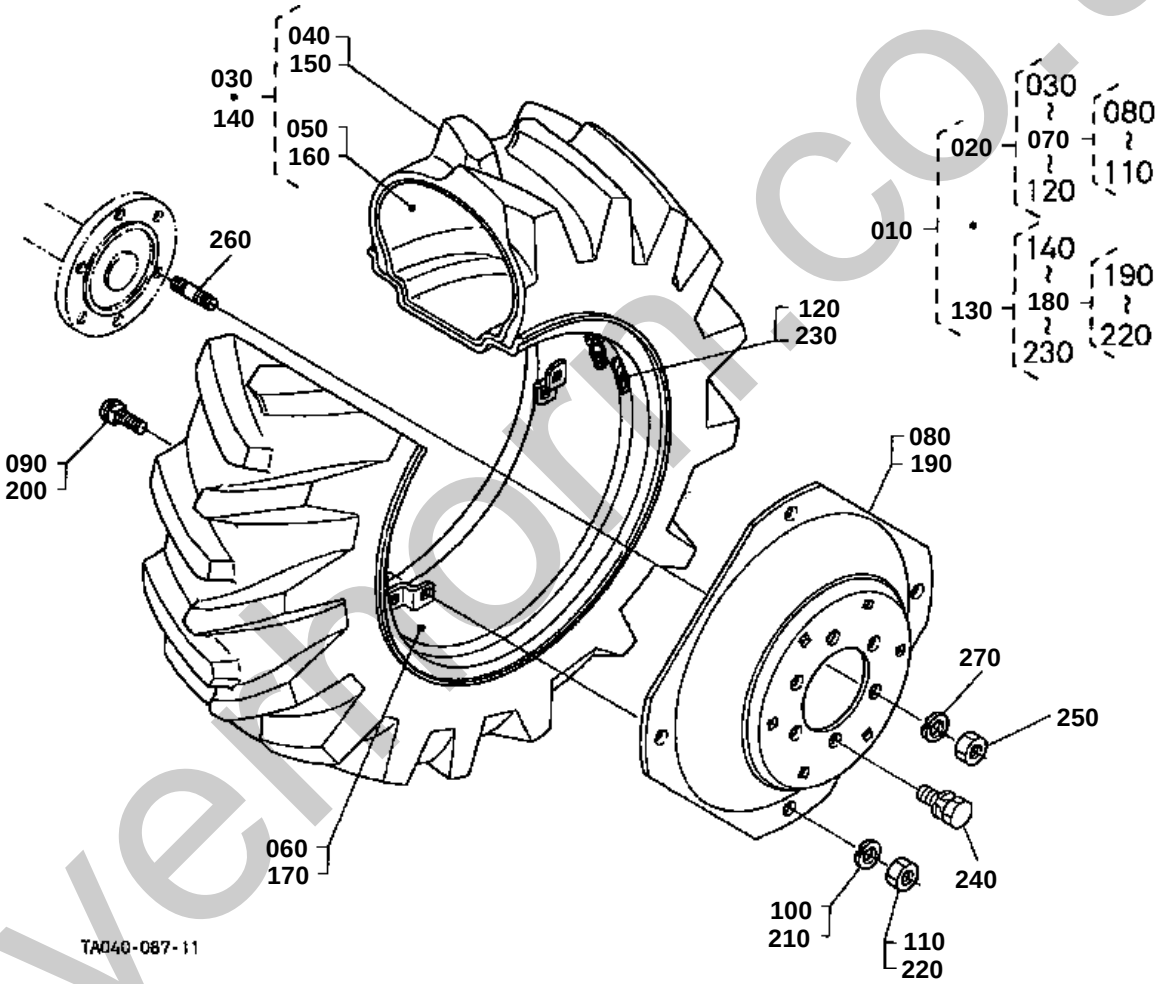

silverhorn.co.uk

240 01073-51630
270 04512-60160

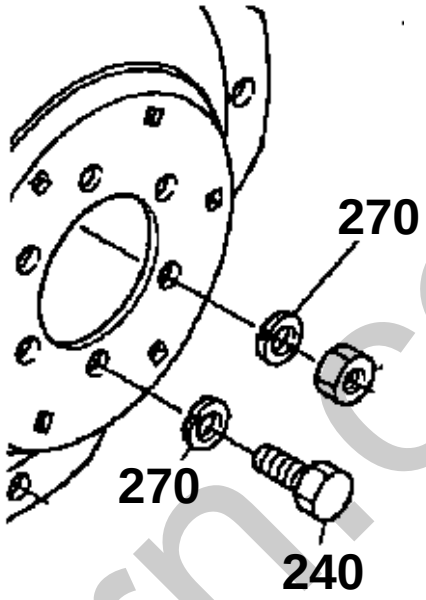

TA120-826-10

silverhorn.co.uk

↔ Interchangeable; ≠ not interchangeable; ← new for old; → old for new

REF.No	Part No.	Description	Q'ty	S.No.	I/C	REMARKS	Weight (kgf)	Weight (lb)
010	35070-27800	ASSY REAR WHEEL	1				0	0
020	35070-27810	ASSY REAR WHEEL RH	1				0	0
030	35070-27870	ASSY REAR WHEEL	1				0	0
040	35070-27820	TIRE	1				0	0
050	35070-27830	TUBE	1				0	0
060	35070-27850	RIM	1				0	0
070	35070-27650	ASSY DISK	1				0	0
080	35080-27660	DISK	1				0	0
090	31220-27680	BOLT	4				0.09	0.198
100	04512-60160	WASHER SPRING	4				0.01	0.022
110	02174-50160	NUT	4				0.022	0.0484
120	35070-27980	LABEL TIRE RH	1				0	0
130	35070-27910	ASSY REAR WHEEL LH	1				0	0
140	35070-27870	ASSY REAR WHEEL	1				0	0
150	35070-27820	TIRE	1				0	0
160	35070-27830	TUBE	1				0	0
170	35070-27850	RIM	1				0	0
180	35070-27650	ASSY DISK	1				0	0
190	35080-27660	DISK	1				0	0
200	31220-27680	BOLT	4				0.09	0.198
210	04512-60160	WASHER SPRING	4				0.01	0.022
220	02174-50160	NUT	4				0.022	0.0484
230	35070-27970	LABEL TIRE LH	1				0	0
240	01073-51630	BOLT	8	<=72536			0.079	0.1738
240	01033-51630	BOLT	8	>=72537	←		0	0
250	02076-50160	NUT	4				0.03	0.066
260	01517-51632	STUD	4	<=74528			0.076	0.1672
260	01517-51635	STUD	4	>=74529	←		0.08	0.176
270	04512-60160	WASHER SPRING	12	<=72536			0.01	0.022
270	04512-60160	WASHER SPRING	4	>=72537			0.01	0.022

silverhorn.co.uk

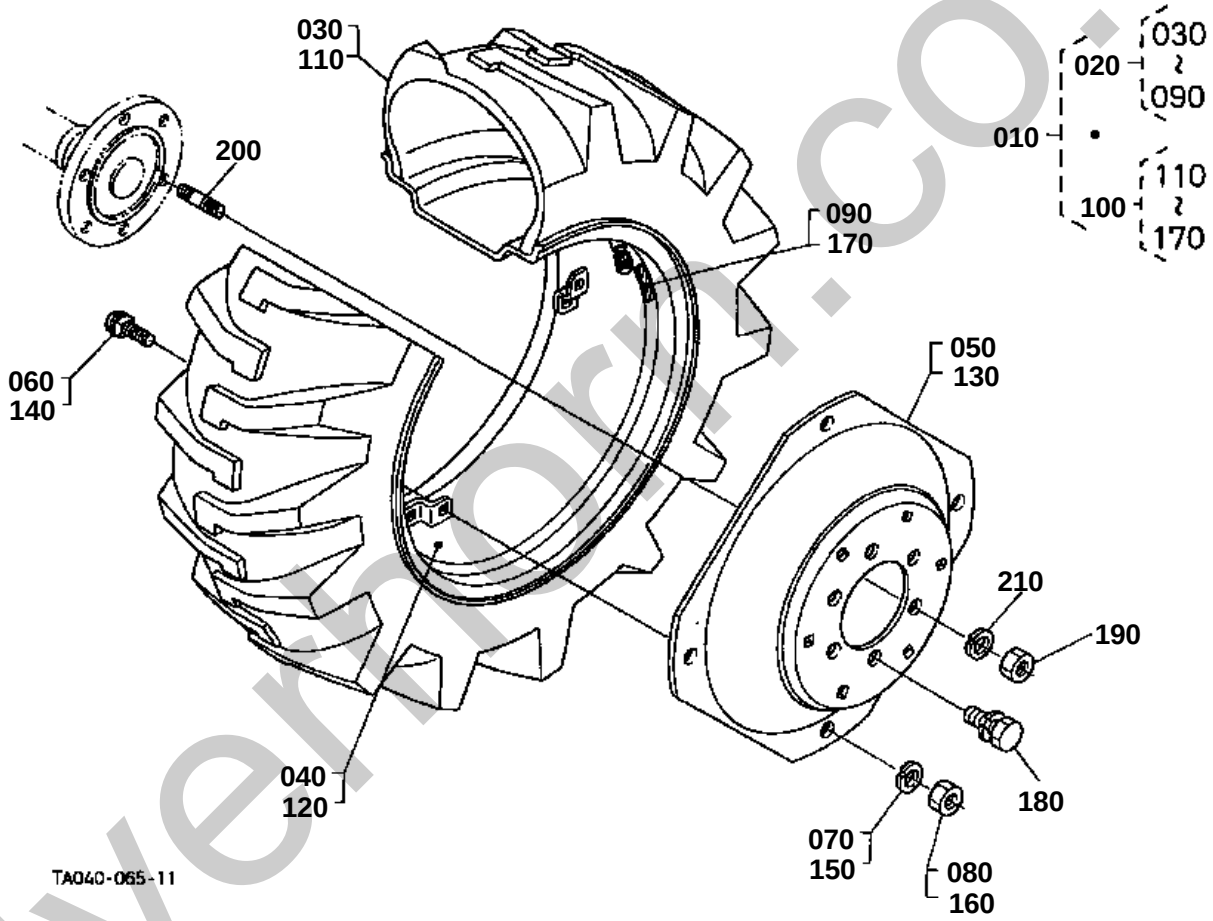

silvermorr.co.uk

180 01073-51630
210 04512-60160

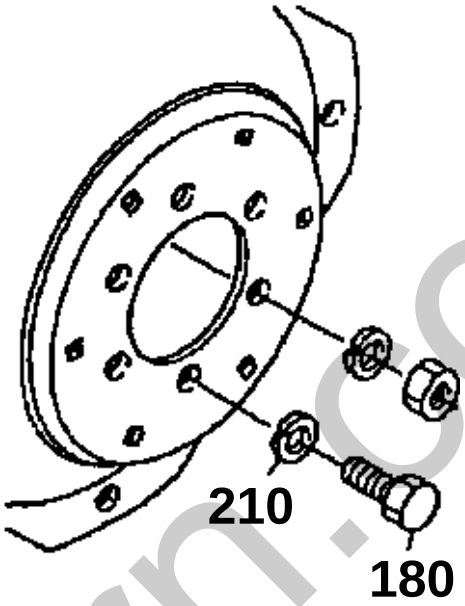

TA140-855-10

silverhorn.co.uk

↔ Interchangeable; ≠ not interchangeable; ← new for old; → old for new

REF.No	Part No.	Description	Q'ty	S.No.	I/C	REMARKS	Weight (kgf)	Weight (lb)
010	TA040-27802	ASSY FRONT WHEEL	1				0	0
020	TA040-27812	ASSY FRONT WHEEL RH	1				0	0
030	32550-40410	ASSY TIRE	1				0	0
040	35070-27850	RIM	1				0	0
050	35080-27660	DISK	1				0	0
060	31220-27680	BOLT	4	<=72536			0.09	0.198
060	T1150-27680	BOLT	4	>=72537	←		0	0
070	04512-60160	WASHER SPRING	4				0.01	0.022
080	02174-50160	NUT	4				0.022	0.0484
090	TA040-27980	LABEL TIRE RH	1				0	0
100	TA040-27912	ASSY FRONT WHEEL LH	1				0	0
110	32550-40410	ASSY TIRE	1				0	0
120	35070-27850	RIM	1				0	0
130	35080-27660	DISK	1				0	0
140	31220-27680	BOLT	4	<=72536			0.09	0.198
140	T1150-27680	BOLT	4	>=72537	←		0	0
150	04512-60160	WASHER SPRING	4				0.01	0.022
160	02174-50160	NUT	4				0.022	0.0484
170	TA040-27970	LABEL TIRE LH	1				0	0
180	01073-51630	BOLT	8	<=72536			0.079	0.1738
180	01033-51630	BOLT	8	>=72537	←		0	0
190	02076-50160	NUT	4				0.03	0.066
200	01517-51632	STUD	4	<=74528			0.076	0.1672
200	01517-51635	STUD	4	<=74528	←		0.08	0.176
210	04512-60160	WASHER SPRING	12	<=72536			0.01	0.022
210	04512-60160	WASHER SPRING	4	>=72537			0.01	0.022

silverhorn.co.uk

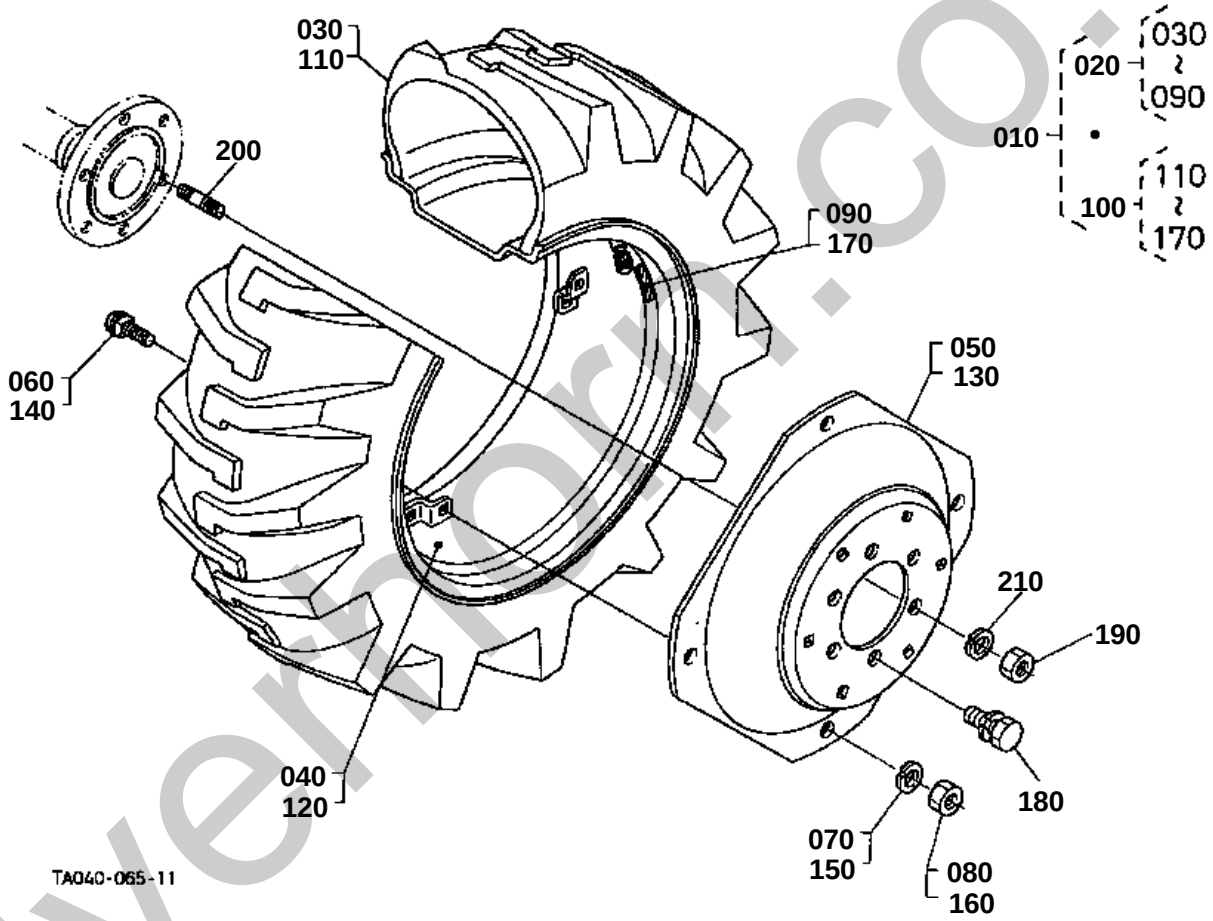

silvermorr.co.uk

180 01073-51630
210 04512-60160

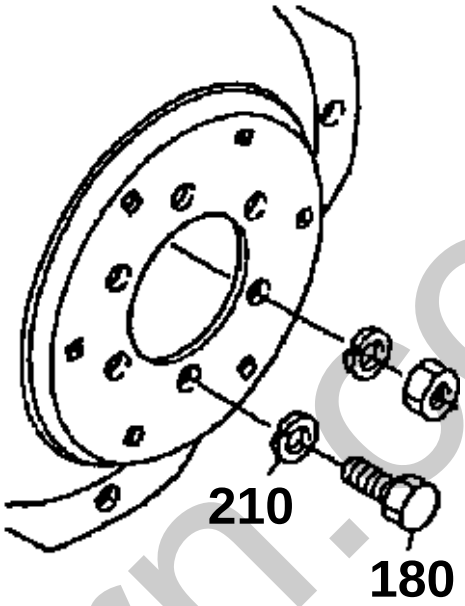

TA140-855-10

silverhorn.co.uk

REAR WHEEL (17.5-24)

↔ Interchangeable; ≠ not interchangeable; ← new for old; → old for new

REF.No	Part No.	Description	Q'ty	S.No.	I/C	REMARKS	Weight (kgf)	Weight (lb)
010	TA040-27700	ASSY REAR WHEEL	1				0	0
020	TA040-27710	ASSY REAR WHEEL RH	1				0	0
030	TA040-27730	TIRE	1				0	0
040	35060-27840	RIM	1				0	0
050	35080-27660	DISK	1				0	0
060	75599-07760	HEXAGONE BOLT	4				0	0
070	70070-02009	WASHER	4				0	0
080	75599-31013	HEX.NUT	4				0	0
090	TA040-27750	LABEL TIRE RH	1				0	0
100	TA040-27720	ASSY REAR WHEEL LH	1				0	0
110	TA040-27730	TIRE	1				0	0
120	35060-27840	RIM	1				0	0
130	35080-27660	DISK	1				0	0
140	75599-07760	HEXAGONE BOLT	4				0	0
150	70070-02009	WASHER	4				0	0
160	75599-31013	HEX.NUT	4				0	0
170	TA040-27760	LABEL TIRE LH	1				0	0
180	01073-51630	BOLT	8	<=72536			0.079	0.1738
180	01033-51630	BOLT	8	>=72537	←		0	0
190	02076-50160	NUT	4				0.03	0.066
200	01517-51632	STUD	4	<=74528			0.076	0.1672
200	01517-51635	STUD	4	>=74529	←		0.08	0.176
210	04512-60160	WASHER SPRING	12	<=72536			0.01	0.022
210	04512-60160	WASHER SPRING	4	>=72537			0.01	0.022

silverhorn.co.uk

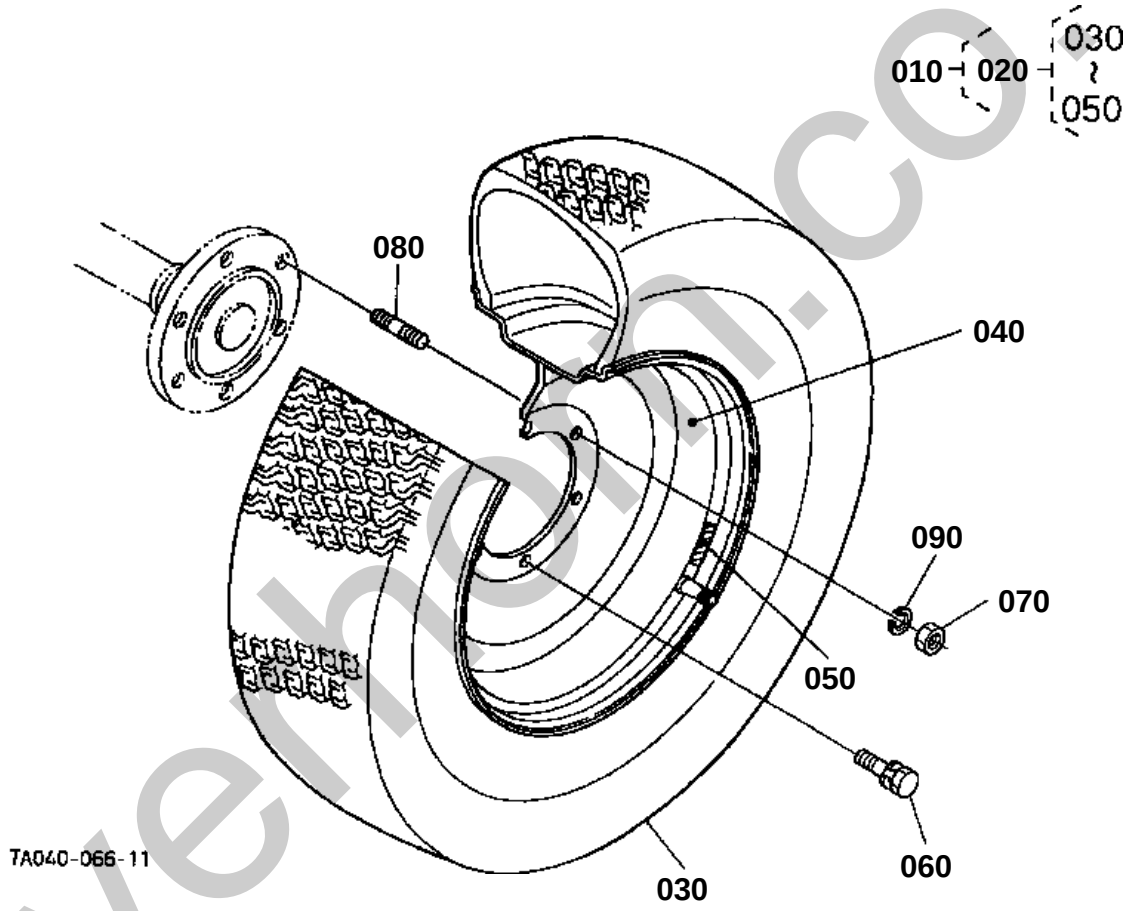

silverhern.co.uk

060 01073-51630
090 04512-60160

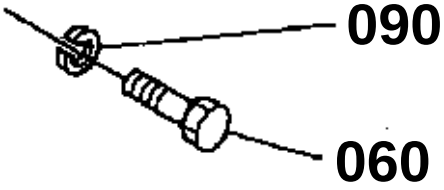

TA120-828-10

silverhorn.co.uk

↔ Interchangeable; ≠ not interchangeable; ← new for old; → old for new

REF.No	Part No.	Description	Q'ty	S.No.	I/C	REMARKS	Weight (kgf)	Weight (lb)
010	35080-27900	ASSY REAR WHEEL	1				0	0
020	35080-27910	ASSY REAR WHEEL	2				0	0
030	35998-01880	ASSY TIRE REAR	2				0	0
040	35080-27950	WHEEL	2				0	0
050	35080-27870	LABEL TIRE	2				0	0
060	01073-51630	BOLT	8	<=72536			0.079	0.1738
060	01033-51630	BOLT	8	>=72537	←		0	0
070	02076-50160	NUT	4				0.03	0.066
080	01517-51632	STUD	4	<=74528			0.076	0.1672
080	01517-51632	STUD	4	>=74529	←		0.076	0.1672
090	04512-60160	WASHER SPRING	12	<=72536			0.01	0.022
090	04512-60160	WASHER SPRING	4	>=72537			0.01	0.022

silverhorn.co.uk

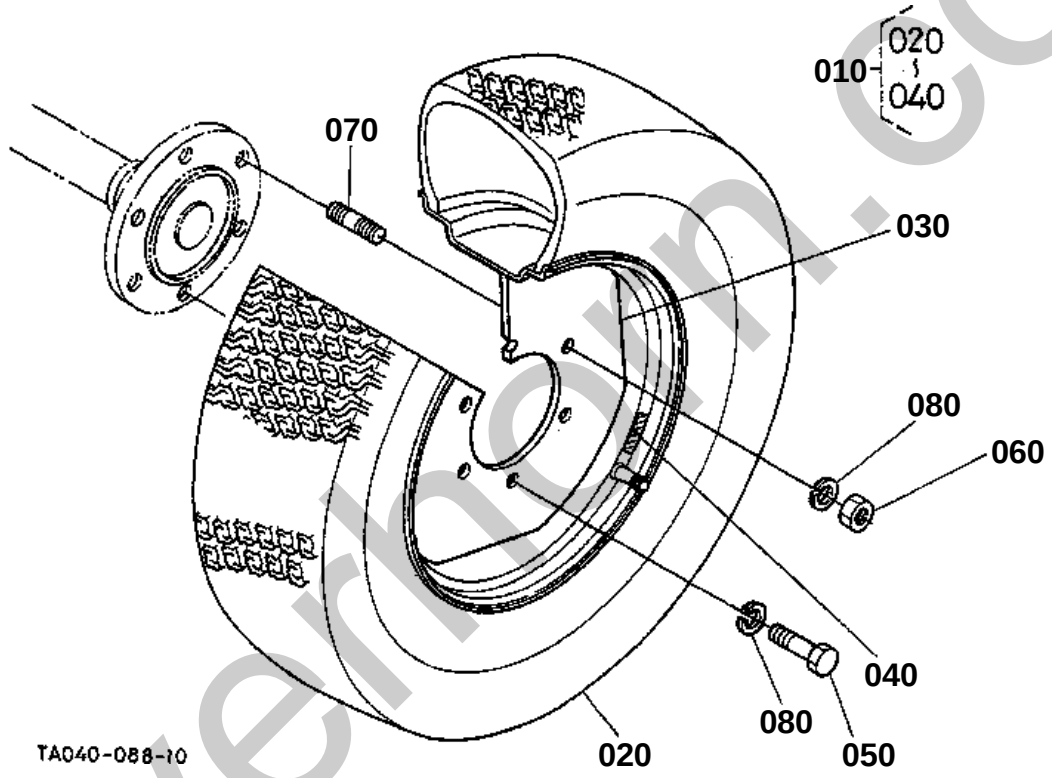

silverhorn.co.uk

REAR WHEEL (21.5L-16.1) [OLD TYPE]

S.No.;<=52112

↔ Interchangeable; ≠ not interchangeable; ← new for old; → old for new

REF.No	Part No.	Description	Q'ty	S.No.	I/C	REMARKS	Weight (kgf)	Weight (lb)
010	35080-27700	ASSY TIRE	2				0	0
020	35080-27710	TIRE	2				0	0
030	35080-27720	WHEEL	2				0	0
040	35080-27730	LABEL TIRE	2				0	0
050	01073-51630	BOLT	8				0.079	0.1738
060	02076-50160	NUT	4				0.03	0.066
070	01517-51632	STUD	4				0.076	0.1672
080	04512-60160	WASHER SPRING	12				0.01	0.022

silverhorn.co.uk

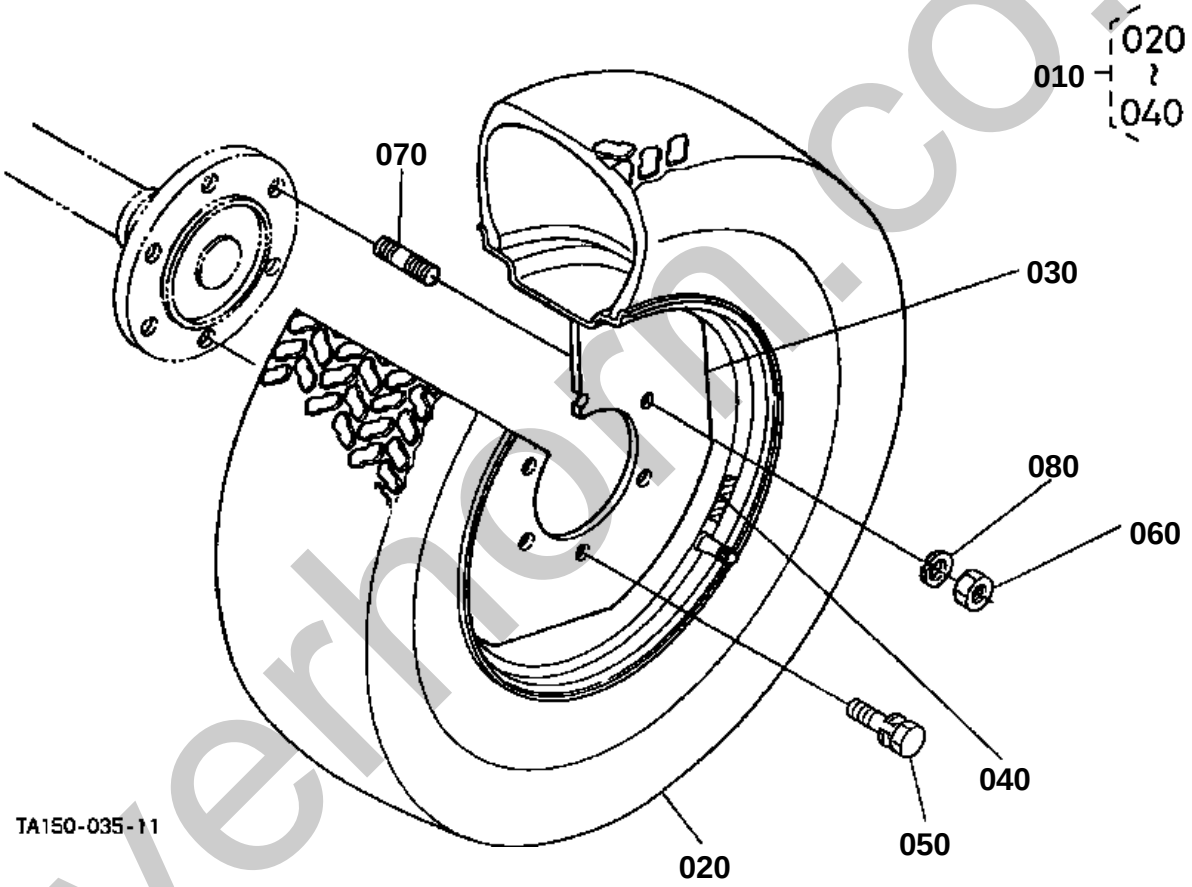

silverhorn.co.uk

050 01073-51630
080 04512-60160

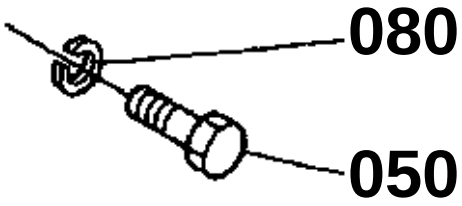

TA120-827-10

silverhorn.co.uk

REAR WHEEL (21.5L-16.1) [NEW TYPE]
S.No.;>=52113

↔ Interchangeable; ≠ not interchangeable; ← new for old; → old for new

REF.No	Part No.	Description	Q'ty	S.No.	I/C	REMARKS	Weight (kgf)	Weight (lb)
010	TA140-27700	ASSY TIRE	2				0	0
020	32550-42510	ASSY TIRE	2				0	0
030	35080-27720	WHEEL	2				0	0
040	35080-27730	LABEL TIRE	2				0	0
050	01073-51630	BOLT	8	<=72536			0.079	0.1738
050	01033-51630	BOLT	8	>=72537	←		0	0
060	02076-50160	NUT	4				0.03	0.066
070	01517-51632	STUD	4	<=74528			0.076	0.1672
070	01517-51635	STUD	4	<=74528	←		0.08	0.176
080	04512-60160	WASHER SPRING	12	<=72536			0.01	0.022
080	04512-60160	WASHER SPRING	4	>=72537			0.01	0.022

silverhorn.co.uk

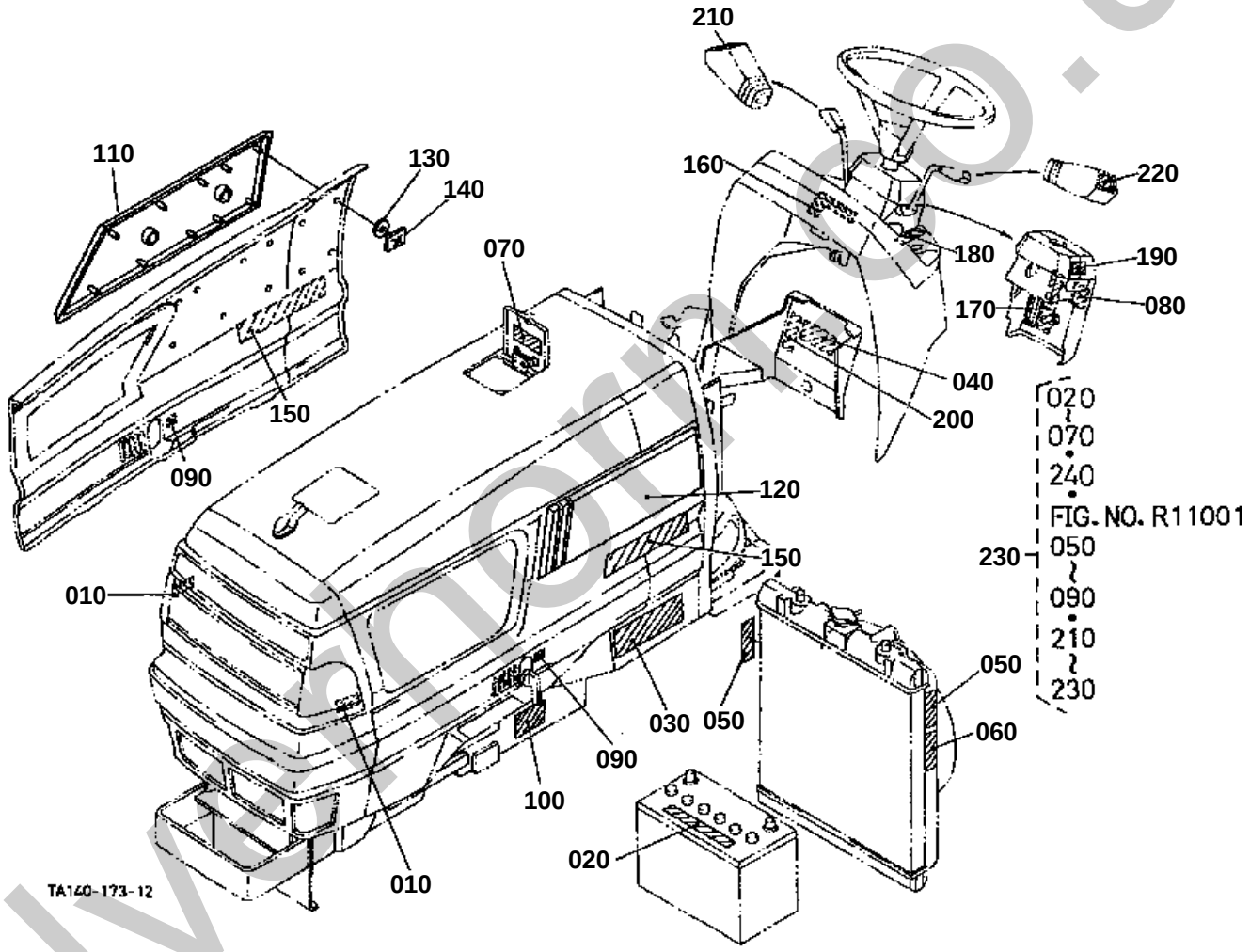

silvermore.co.uk

LABEL 1 [A] [MANUAL T/M TYPE] [ROPS TYPE]
[EXCEPTE TYPE CABINE]

↔ Interchangeable; ≠ not interchangeable; ← new for old; → old for new

REF.No	Part No.	Description	Q'ty	S.No.	I/C	REMARKS	Weight (kgf)	Weight (lb)
010	T0270-65240	LABEL FRONT GRILLE	2				0.002	0.0044
020	TA040-30150	LABEL BATTERY	1				0.002	0.0044
030	TA040-49650	LABEL START CAUTION	1				0.004	0.0088
040	35080-65280	LABEL KEY STOP	1				0.001	0.0022
050	TA040-49570	LABEL FAN WARNING	2	<=50189			0.002	0.0044
050	32751-49580	LABEL FAN BELT	2	>=50190	≠		0.001	0.0022
060	TA040-49580	LABEL MUFFLER	1				0.001	0.0022
070	TA040-49562	LABEL FUEL	1				0.002	0.0044
080	TA040-49390	LABEL SHUTTLE	1				0.001	0.0022
090	TA040-49440	MARK HANDLE	2				0.001	0.0022
100	99999-99999	NAME PLATE	1			NOT SALE	0	0
110	TA140-49400	ASSY LACE RH	1				0.27	0.594
120	TA140-49410	ASSY LACE LH	1				0.27	0.594
130	30400-65040	PLATE WASHER	14				0.001	0.0022
140	55611-44190	NUT	14				0.004	0.0088
150	TA130-49420	MARK MODEL	2				0.003	0.0066
160	TA140-49360	MARK MAIN SWITCH	1				0.002	0.0044
170	TA040-49450	MARK TILT	1				0.001	0.0022
180	TA040-49290	MARK SHUTTLE	1				0.001	0.0022
180	T1060-49290	MARK SHUTTLE	1		↔		0.001	0.0022
190	TA040-49540	MARK NEUTRAL	1				0.001	0.0022
200	TA040-49460	LABEL PARKING	1				0.001	0.0022
210	TA040-49370	MARK ACCEL.GRIP	1				0.001	0.0022
220	TA040-49380	MARK SHUTTLE GRIP	1				0.001	0.0022
230	TA140-99500	KIT LABEL SAFETY (A)	1				0.06	0.132
240	TA240-49910	LABEL SPEED WARNING	1			NOT SHOWN IN FIG.	0.001	0.0022

silverhorn.co.uk

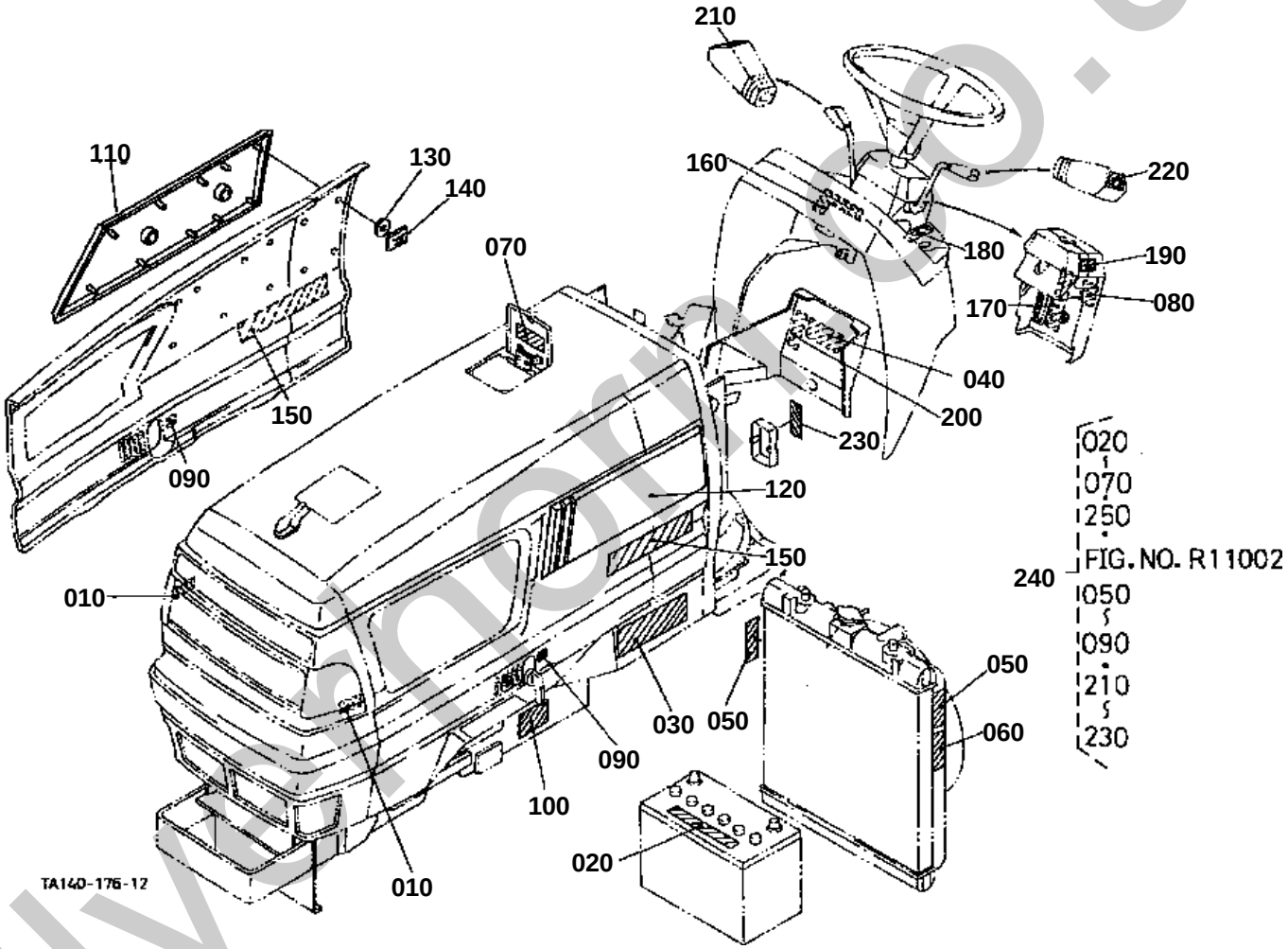

silvermorris.co.uk

LABEL 1 [CA] [MANUAL T/M TYPE] [ROPS TYPE]
[EXCEPTE TYPE CABINE]

↔ Interchangeable; ≠ not interchangeable; ← new for old; → old for new

REF.No	Part No.	Description	Q'ty	S.No.	I/C	REMARKS	Weight (kgf)	Weight (lb)
010	T0270-65240	LABEL FRONT GRILLE	2				0.002	0.0044
020	TA040-30150	LABEL BATTERY	1			ENGLISH	0.002	0.0044
020	TA041-30150	LABEL BATTERY	1			FRENCH	0.005	0.011
030	TA040-49650	LABEL START CAUTION	1			ENGLISH	0.004	0.0088
030	TA041-49650	LABEL START CAUTION	1			FRENCH	0.004	0.0088
040	35080-65280	LABEL KEY STOP	1			ENGLISH	0.001	0.0022
040	35081-65280	LABEL KEY STOP	1			FRENCH	0.02	0.044
050	TA040-49570	LABEL FAN WARNING	2	<=50189			0.002	0.0044
050	32751-49580	LABEL FAN BELT	2	>=50190	≠		0.001	0.0022
060	TA040-49580	LABEL MUFFLER	1				0.001	0.0022
070	TA040-49562	LABEL FUEL	1				0.002	0.0044
080	TA040-49390	LABEL SHUTTLE	1				0.001	0.0022
090	TA040-49440	MARK HANDLE	2				0.001	0.0022
100	99999-99999	NAME PLATE	1			NOT SALE	0	0
110	TA140-49400	ASSY LACE RH	1				0.27	0.594
120	TA140-49410	ASSY LACE LH	1				0.27	0.594
130	30400-65040	PLATE WASHER	14				0.001	0.0022
140	55611-44190	NUT	14				0.004	0.0088
150	TA130-49420	MARK MODEL	2				0.003	0.0066
160	TA140-49360	MARK MAIN SWITCH	1				0.002	0.0044
170	TA040-49450	MARK TILT	1				0.001	0.0022
180	TA040-49290	MARK SHUTTLE	1				0.001	0.0022
180	T1060-49290	MARK SHUTTLE	1		↔		0.001	0.0022
190	TA040-49540	MARK NEUTRAL	1				0.001	0.0022
200	TA040-49460	LABEL PARKING	1				0.001	0.0022
210	TA040-49370	MARK ACCEL.GRIP	1				0.001	0.0022
220	TA040-49380	MARK SHUTTLE GRIP	1				0.001	0.0022
230	TA140-30430	LABEL FUSE	1			FRENCH	0.001	0.0022
240	TA140-99500	KIT LABEL SAFETY (A)	1			ENGLISH	0.06	0.132
240	TA141-99500	KIT LABEL SAFETY (B)	1			FRENCH	0.04	0.088
250	TA240-49910	LABEL SPEED WARNING	1			ENGLISH NOT SHOWN IN FIG.	0.001	0.0022
250	TA241-49910	LABEL SPEED WARNING	1			FRENCH NOT SHOWN IN FIG.	0.002	0.0044

silverhorn.co.uk

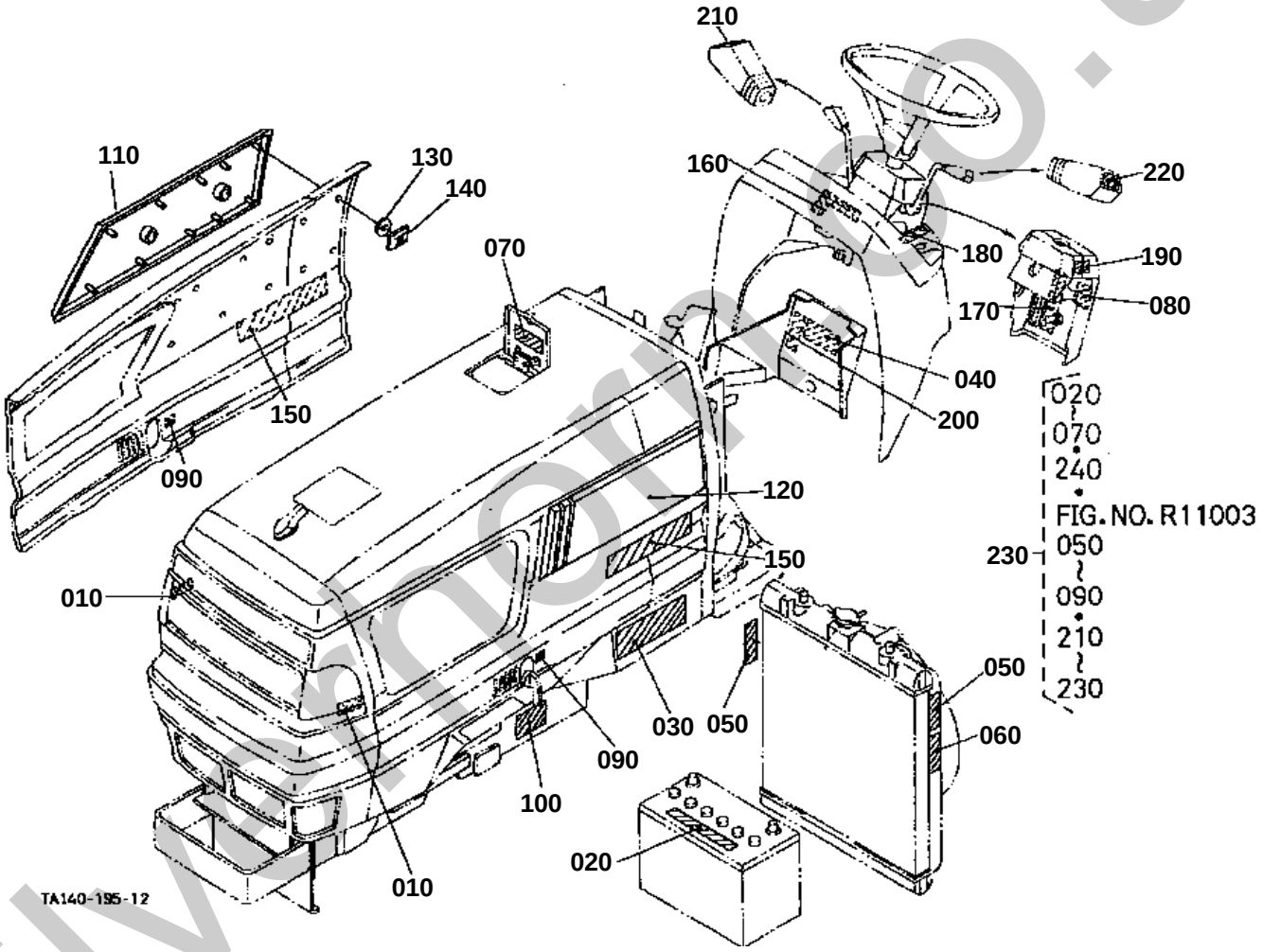

silvermore.co.uk

↔ Interchangeable; ≠ not interchangeable; ← new for old; → old for new

REF.No	Part No.	Description	Q'ty	S.No.	I/C	REMARKS	Weight (kgf)	Weight (lb)
010	T0270-65240	LABEL FRONT GRILLE	2				0.002	0.0044
020	TA040-30150	LABEL BATTERY	1				0.002	0.0044
030	TA040-49650	LABEL START CAUTION	1				0.004	0.0088
040	35080-65280	LABEL KEY STOP	1				0.001	0.0022
050	TA040-49570	LABEL FAN WARNING	2	<=50189			0.002	0.0044
050	32751-49580	LABEL FAN BELT	2	>=50190	≠		0.001	0.0022
060	TA040-49580	LABEL MUFFLER	1				0.001	0.0022
070	TA040-49562	LABEL FUEL	1				0.002	0.0044
080	TA040-49390	LABEL SHUTTLE	1				0.001	0.0022
090	TA040-49440	MARK HANDLE	2				0.001	0.0022
100	99999-99999	NAME PLATE	1			NOT SALE	0	0
110	TA140-49400	ASSY LACE RH	1				0.27	0.594
120	TA140-49410	ASSY LACE LH	1				0.27	0.594
130	30400-65040	PLATE WASHER	14				0.001	0.0022
140	55611-44190	NUT	14				0.004	0.0088
150	TA130-49420	MARK MODEL	2				0.003	0.0066
160	TA140-49360	MARK MAIN SWITCH	1				0.002	0.0044
170	TA040-49450	MARK TILT	1				0.001	0.0022
180	TA040-49290	MARK SHUTTLE	1				0.001	0.0022
180	T1060-49290	MARK SHUTTLE	1		↔		0.001	0.0022
190	TA040-49540	MARK NEUTRAL	1				0.001	0.0022
200	TA040-49460	LABEL PARKING	1				0.001	0.0022
210	TA040-49370	MARK ACCEL.GRIP	1				0.001	0.0022
220	TA040-49380	MARK SHUTTLE GRIP	1				0.001	0.0022
230	TA140-99500	KIT LABEL SAFETY (A)	1				0.06	0.132
240	TA240-49910	LABEL SPEED WARNING	1			NOT SHOWN IN FIG.	0.001	0.0022

silverhorn.co.uk

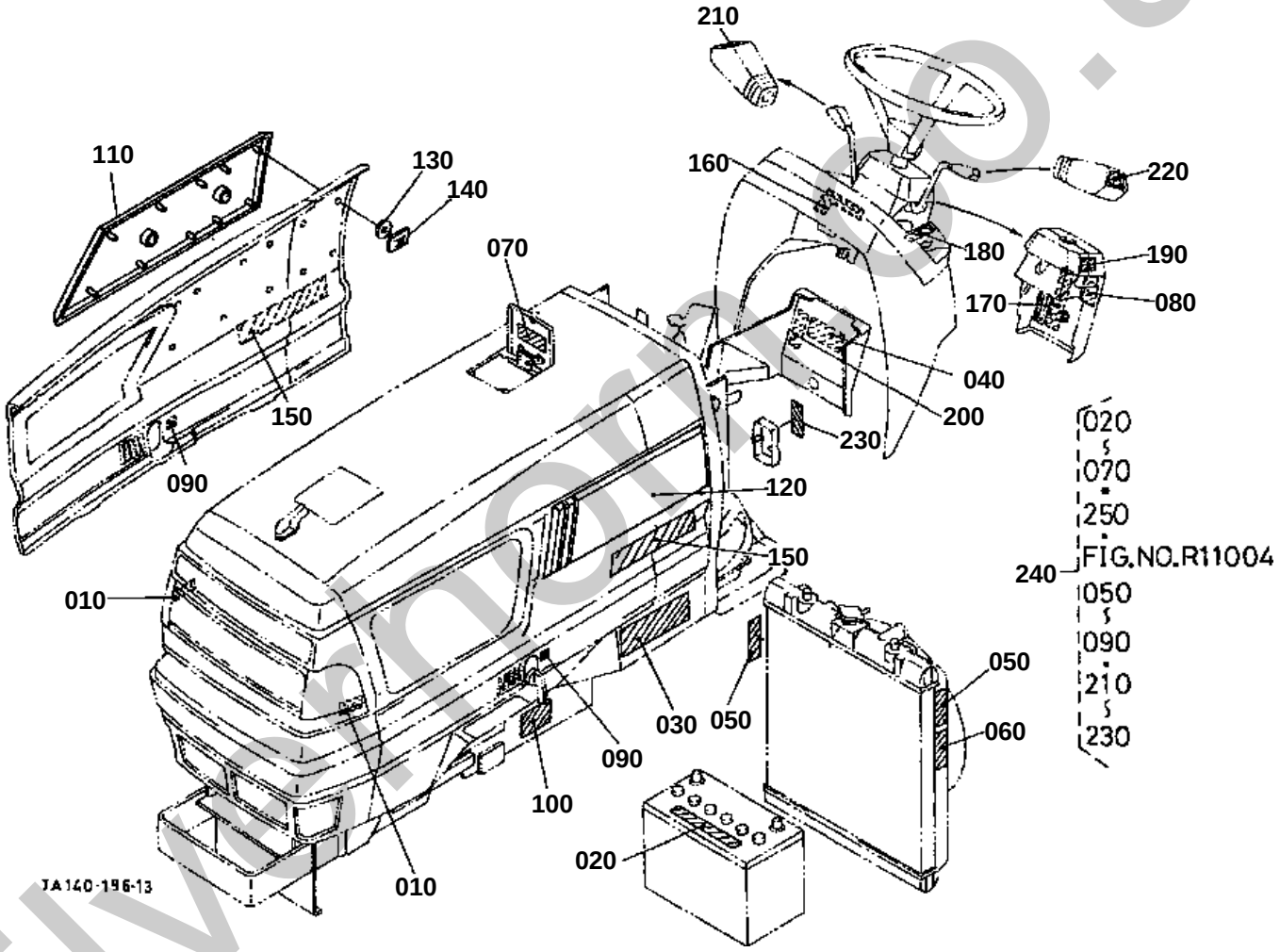

silvermoore.co.uk

LABEL 1 [CA] [GST TYPE] [ROPS TYPE]

↔ Interchangeable; ≠ not interchangeable; ← new for old; → old for new

REF.No	Part No.	Description	Q'ty	S.No.	I/C	REMARKS	Weight (kgf)	Weight (lb)
010	T0270-65240	LABEL FRONT GRILLE	2				0.002	0.0044
020	TA040-30150	LABEL BATTERY	1			ENGLISH	0.002	0.0044
020	TA041-30150	LABEL BATTERY	1			FRENCH	0.005	0.011
030	TA040-49650	LABEL START CAUTION	1			ENGLISH	0.004	0.0088
030	TA041-49650	LABEL START CAUTION	1			FRENCH	0.004	0.0088
040	35080-65280	LABEL KEY STOP	1			ENGLISH	0.001	0.0022
040	35081-65280	LABEL KEY STOP	1			FRENCH	0.02	0.044
050	TA040-49570	LABEL FAN WARNING	2	<=50189			0.002	0.0044
050	32751-49580	LABEL FAN BELT	2	>=50190	≠		0.001	0.0022
060	TA040-49580	LABEL MUFFLER	1				0.001	0.0022
070	TA040-49562	LABEL FUEL	1				0.002	0.0044
080	TA040-49390	LABEL SHUTTLE	1				0.001	0.0022
090	TA040-49440	MARK HANDLE	2				0.001	0.0022
100	99999-99999	NAME PLATE	1			NOT SALE	0	0
110	TA140-49400	ASSY LACE RH	1				0.27	0.594
120	TA140-49410	ASSY LACE LH	1				0.27	0.594
130	30400-65040	PLATE WASHER	14				0.001	0.0022
140	55611-44190	NUT	14				0.004	0.0088
150	TA130-49420	MARK MODEL	2				0.003	0.0066
160	TA140-49360	MARK MAIN SWITCH	1				0.002	0.0044
170	TA040-49450	MARK TILT	1				0.001	0.0022
180	TA040-49290	MARK SHUTTLE	1				0.001	0.0022
180	T1060-49290	MARK SHUTTLE	1		↔		0.001	0.0022
190	TA040-49540	MARK NEUTRAL	1				0.001	0.0022
200	TA040-49460	LABEL PARKING	1				0.001	0.0022
210	TA040-49370	MARK ACCEL.GRIP	1				0.001	0.0022
220	TA040-49380	MARK SHUTTLE GRIP	1				0.001	0.0022
230	TA140-30430	LABEL FUSE	1			FRENCH	0.001	0.0022
240	TA140-99500	KIT LABEL SAFETY (A)	1			ENGLISH	0.06	0.132
240	TA141-99500	KIT LABEL SAFETY (B)	1			FRENCH	0.04	0.088
250	TA240-49910	LABEL SPEED WARNING	1			ENGLISH NOT SHOWN IN FIG.	0.001	0.0022
250	TA241-49910	LABEL SPEED WARNING	1			FRENCH NOT SHOWN IN FIG.	0.002	0.0044

silverhorn.co.uk

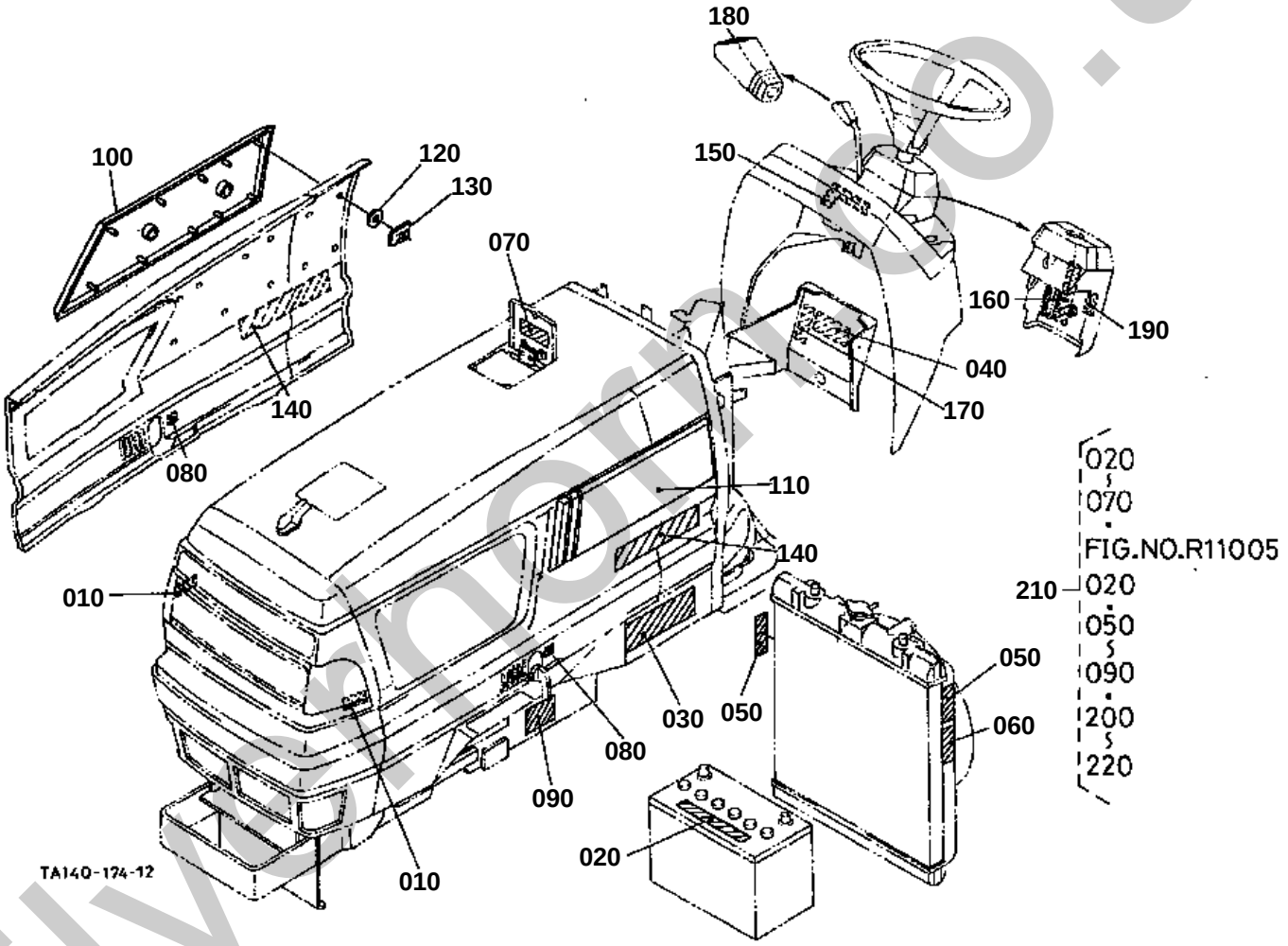

silverhorn.co.uk

200 TA240-4991-0

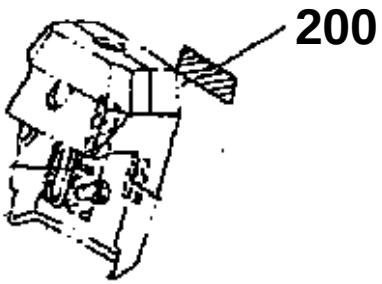

TA140-838-10

silverhorn.co.uk

LABEL 1 [A] [HST TYPE] [ROPS TYPE]

↔ Interchangeable; ≠ not interchangeable; ← new for old; → old for new

REF.No	Part No.	Description	Q'ty	S.No.	I/C	REMARKS	Weight (kgf)	Weight (lb)
010	T0270-65240	LABEL FRONT GRILLE	2				0.002	0.0044
020	TA040-30150	LABEL BATTERY	1				0.002	0.0044
030	TA040-49650	LABEL START CAUTION	1				0.004	0.0088
040	35080-65280	LABEL KEY STOP	1				0.001	0.0022
050	TA040-49570	LABEL FAN WARNING	2	<=50189			0.002	0.0044
050	32751-49580	LABEL FAN BELT	2	>=50190	≠		0.001	0.0022
060	TA040-49580	LABEL MUFFLER	1				0.001	0.0022
070	TA040-49562	LABEL FUEL	1				0.002	0.0044
080	TA040-49440	MARK HANDLE	2				0.001	0.0022
090	99999-99999	NAME PLATE	1			NOT SALE	0	0
100	TA140-49400	ASSY LACE RH	1				0.27	0.594
110	TA140-49410	ASSY LACE LH	1				0.27	0.594
120	30400-65040	PLATE WASHER	14				0.001	0.0022
130	55611-44190	NUT	14				0.004	0.0088
140	TA130-49420	MARK MODEL	2				0.003	0.0066
150	TA140-49360	MARK MAIN SWITCH	1				0.002	0.0044
160	TA040-49450	MARK TILT	1				0.001	0.0022
170	TA040-49460	LABEL PARKING	1				0.001	0.0022
180	TA040-49370	MARK ACCEL.GRIP	1				0.001	0.0022
190	6C050-47310	LABEL HST	1	<=73292			0	0
190	6C050-47312	LABEL HST	1	>=73293	←		0	0
200	TA240-49910	LABEL SPEED WARNING	1	<=70508			0.001	0.0022
210	TA140-99500	KIT LABEL SAFETY (A)	1				0.06	0.132

silverhorn.co.uk

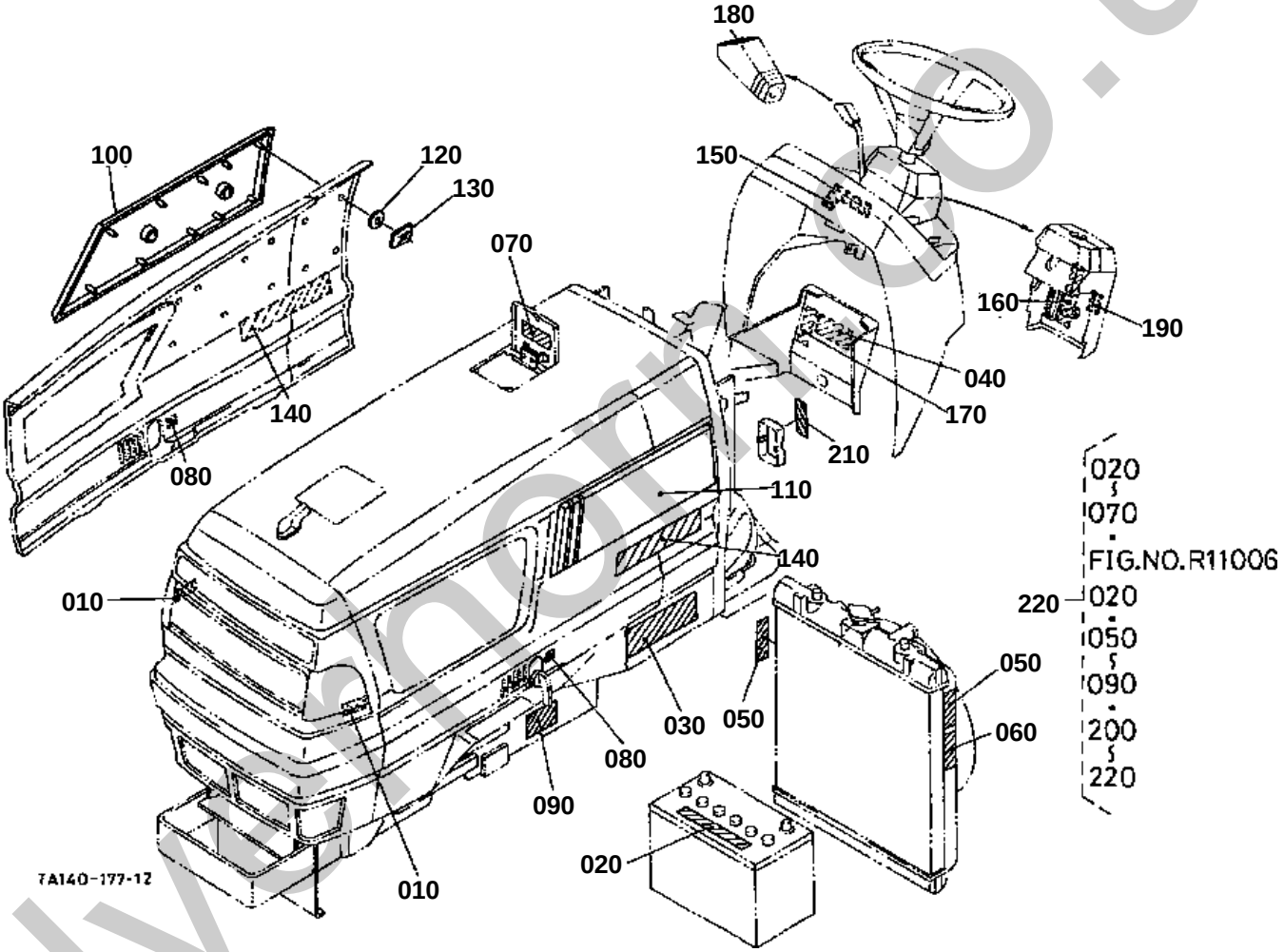

silvermorris.co.uk

200 TA240-4991-0
200 TA241-4991-0

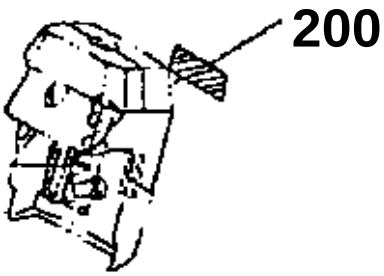

TA140-850-10

silverhorn.co.uk

LABEL 1 [CA] [HST TYPE] [ROPS TYPE]

↔ Interchangeable; ≠ not interchangeable; ← new for old; → old for new

REF.No	Part No.	Description	Q'ty	S.No.	I/C	REMARKS	Weight (kgf)	Weight (lb)
010	T0270-65240	LABEL FRONT GRILLE	2				0.002	0.0044
020	TA040-30150	LABEL BATTERY	1			ENGLISH	0.002	0.0044
020	TA041-30150	LABEL BATTERY	1			FRENCH	0.005	0.011
030	TA040-49650	LABEL START CAUTION	1			ENGLISH	0.004	0.0088
030	TA041-49650	LABEL START CAUTION	1			FRENCH	0.004	0.0088
040	35080-65280	LABEL KEY STOP	1			ENGLISH	0.001	0.0022
040	35081-65280	LABEL KEY STOP	1			FRENCH	0.02	0.044
050	TA040-49570	LABEL FAN WARNING	2	<=50189			0.002	0.0044
050	32751-49580	LABEL FAN BELT	2	>=50190	≠		0.001	0.0022
060	TA040-49580	LABEL MUFFLER	1				0.001	0.0022
070	TA040-49562	LABEL FUEL	1				0.002	0.0044
080	TA040-49440	MARK HANDLE	2				0.001	0.0022
090	99999-99999	NAME PLATE	1			NOT SALE	0	0
100	TA140-49400	ASSY LACE RH	1				0.27	0.594
110	TA140-49410	ASSY LACE LH	1				0.27	0.594
120	30400-65040	PLATE WASHER	14				0.001	0.0022
130	55611-44190	NUT	14				0.004	0.0088
140	TA130-49420	MARK MODEL	2				0.003	0.0066
150	TA140-49360	MARK MAIN SWITCH	1				0.002	0.0044
160	TA040-49450	MARK TILT	1				0.001	0.0022
170	TA040-49460	LABEL PARKING	1				0.001	0.0022
180	TA040-49370	MARK ACCEL.GRIP	1				0.001	0.0022
190	6C050-47310	LABEL HST	1	<=73292			0	0
190	6C050-47312	LABEL HST	1	>=73293	←		0	0
200	TA240-49910	LABEL SPEED WARNING	1	<=70508		ENGLISH	0.001	0.0022
200	TA241-49910	LABEL SPEED WARNING	1	<=70508		FRENCH	0.002	0.0044
210	TA140-30430	LABEL FUSE	1			FRENCH	0.001	0.0022
220	TA140-99500	KIT LABEL SAFETY (A)	1			ENGLISH	0.06	0.132
220	TA141-99500	KIT LABEL SAFETY (B)	1			FRENCH	0.04	0.088

silverhorn.co.uk

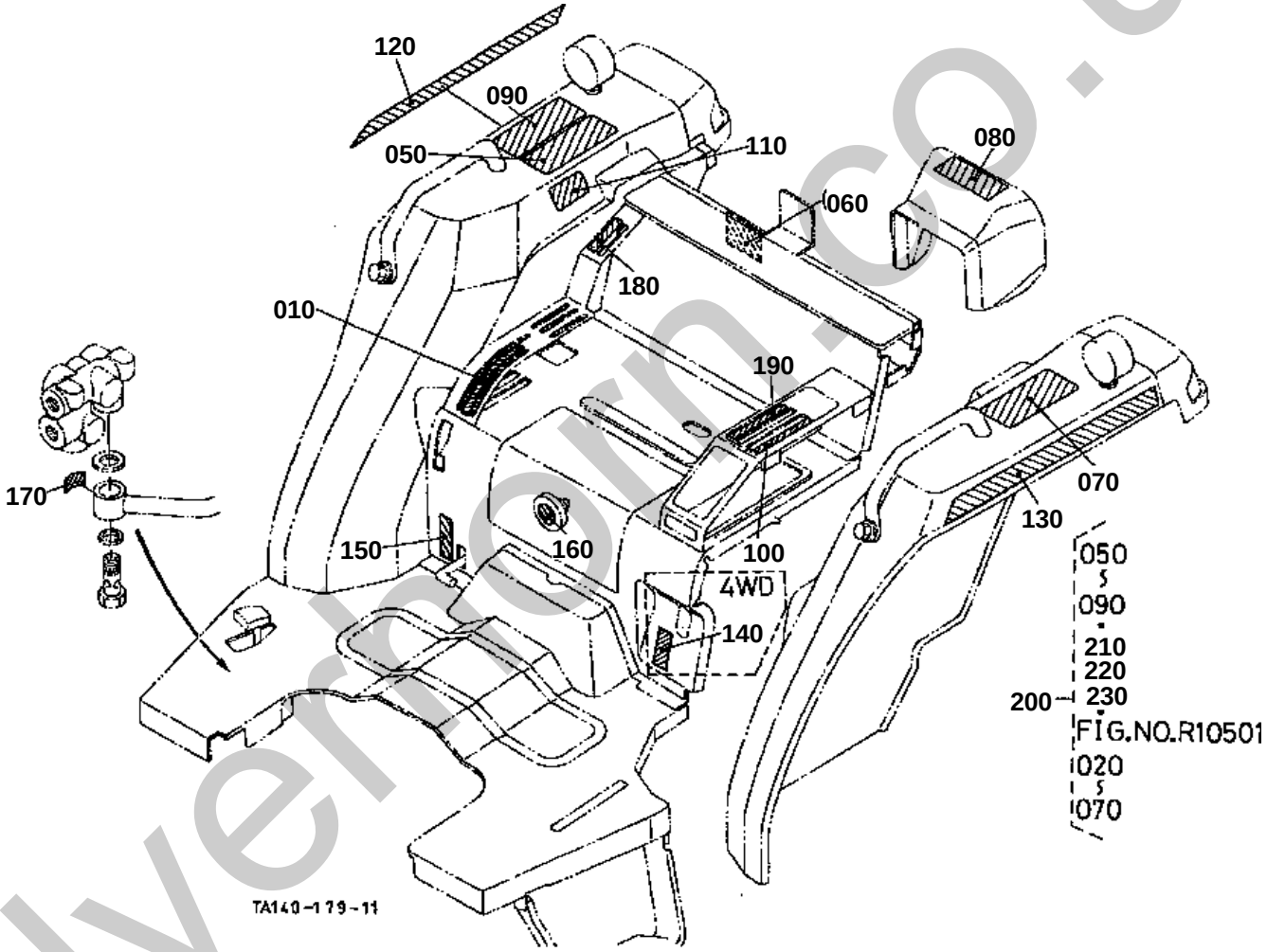

silvermorn.co.uk

↔ Interchangeable; ≠ not interchangeable; ← new for old; → old for new

REF.No	Part No.	Description	Q'ty	S.No.	I/C	REMARKS	Weight (kgf)	Weight (lb)
010	TA040-49500	MARK POSITION	1				0.002	0.0044
020	99999-99999	BLANK	0				0	0
030	99999-99999	BLANK	0				0	0
040	99999-99999	BLANK	0				0	0
050	TA040-49320	LABEL ROPS WARNING	1				0.001	0.0022
060	TA040-49350	LABEL DRAWBAR	1				0.002	0.0044
070	35260-34913	LABEL SAFETY	1				0.005	0.011
080	TA040-49590	LABEL PTO WARNING	1				0.002	0.0044
090	TA140-49330	LABEL SHUTTLE	1				0.005	0.011
100	TA040-49230	MARK RANGE SHIFT	1				0.001	0.0022
110	TA040-49302	LABEL I-PTO CAUTION	1				0.001	0.0022
120	TA140-48470	MARK FENDER LINE RH	1				0.009	0.0198
130	TA140-48480	MARK FENDER LINE LH	1				0.009	0.0198
140	TA040-49550	MARK 4WD	1				0.001	0.0022
150	TA040-49760	MARK DIFF.LOCK	1				0.001	0.0022
160	TA040-49510	MARK HYD.ADJUST.	1				0.001	0.0022
170	32430-65790	LABEL HYD.BLOCK	1				0.01	0.022
180	TA040-49160	MARK REAR PTO	1				0.001	0.0022
190	TA040-49260	MARK CREEP	1			WITH CREEP	0.001	0.0022
200	TA140-99500	KIT LABEL SAFETY (A)	1				0.06	0.132
210	TA140-49920	LABEL SHUTTLE	1			NOT SHOWN IN FIG.	0.005	0.011
220	TA240-49330	LABEL PARKING	1			NOT SHOWN IN FIG.	0.005	0.011
230	TA040-49020	LABEL CAB WARNING	1			NOT SHOWN IN FIG.	0.002	0.0044

silverhorn.co.uk

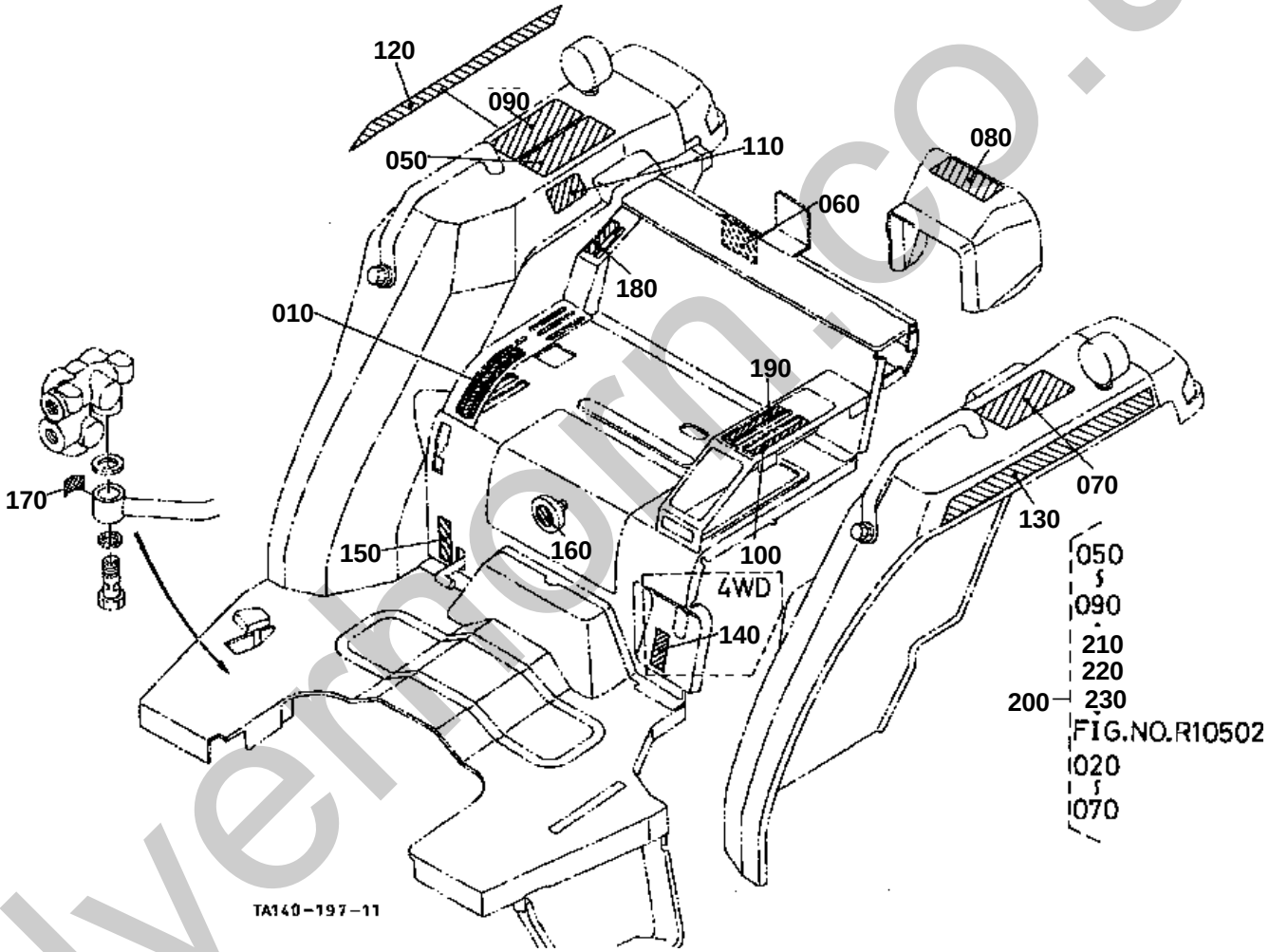

silvermorn.co.uk

LABEL 2 [CA] [MANUAL T/M TYPE] [ROPS TYPE]
[EXCEPTE TYPE CABINE]

↔ Interchangeable; ≠ not interchangeable; ← new for old; → old for new

REF.No	Part No.	Description	Q'ty	S.No.	I/C	REMARKS	Weight (kgf)	Weight (lb)
010	TA040-49500	MARK POSITION	1				0.002	0.0044
020	99999-99999	BLANK	0				0	0
030	99999-99999	BLANK	0				0	0
040	99999-99999	BLANK	0				0	0
050	TA040-49320	LABEL ROPS WARNING	1			ENGLISH	0.001	0.0022
050	TA040-49150	LABEL ROPS WARNING	1			FRENCH	0.003	0.0066
060	TA040-49350	LABEL DRAWBAR	1			ENGLISH	0.002	0.0044
060	TA041-49350	LABEL DRAWBAR	1			FRENCH	0.003	0.0066
070	35260-34913	LABEL SAFETY	1			ENGLISH	0.005	0.011
070	TA041-65700	LABEL SAFETY	1			FRENCH	0.01	0.022
080	TA040-49590	LABEL PTO WARNING	1			ENGLISH	0.002	0.0044
080	TA041-49590	LABEL PTO WARNING	1			FRENCH	0.005	0.011
090	TA140-49330	LABEL SHUTTLE	1			ENGLISH	0.005	0.011
090	TA141-49330	LABEL SHUTTLE	1			FRENCH	0.005	0.011
100	TA040-49230	MARK RANGE SHIFT	1				0.001	0.0022
110	TA040-49302	LABEL I-PTO CAUTION	1				0.001	0.0022
120	TA140-48470	MARK FENDER LINE RH	1				0.009	0.0198
130	TA140-48480	MARK FENDER LINE LH	1				0.009	0.0198
140	TA040-49550	MARK 4WD	1				0.001	0.0022
150	TA040-49760	MARK DIFF.LOCK	1				0.001	0.0022
160	TA040-49510	MARK HYD.ADJUST.	1				0.001	0.0022
170	32430-65790	LABEL HYD.BLOCK	1				0.01	0.022
180	TA040-49160	MARK REAR PTO	1				0.001	0.0022
190	TA040-49260	MARK CREEP	1			WITH CREEP	0.001	0.0022
200	TA140-99500	KIT LABEL SAFETY (A)	1			ENGLISH	0.06	0.132
200	TA141-99500	KIT LABEL SAFETY (B)	1			FRENCH	0.04	0.088
210	TA140-49920	LABEL SHUTTLE	1			NOT SHOWN IN FIG.	0.005	0.011
210	TA141-49920	LABEL SHUTTLE	1			NOT SHOWN IN FIG.	0.005	0.011
220	TA240-49330	LABEL PARKING	1			NOT SHOWN IN FIG.	0.005	0.011
220	TA241-49330	LABEL PARKING WARNIN	1			NOT SHOWN IN FIG.	0.005	0.011
230	TA040-49020	LABEL CAB WARNING	1			ENGLISH NOT SHOWN IN FIG.	0.002	0.0044
230	TA043-49020	LABEL CAB WARNING	1			FRENCH NOT SHOWN IN FIG.	0.005	0.011

silverhorn.co.uk

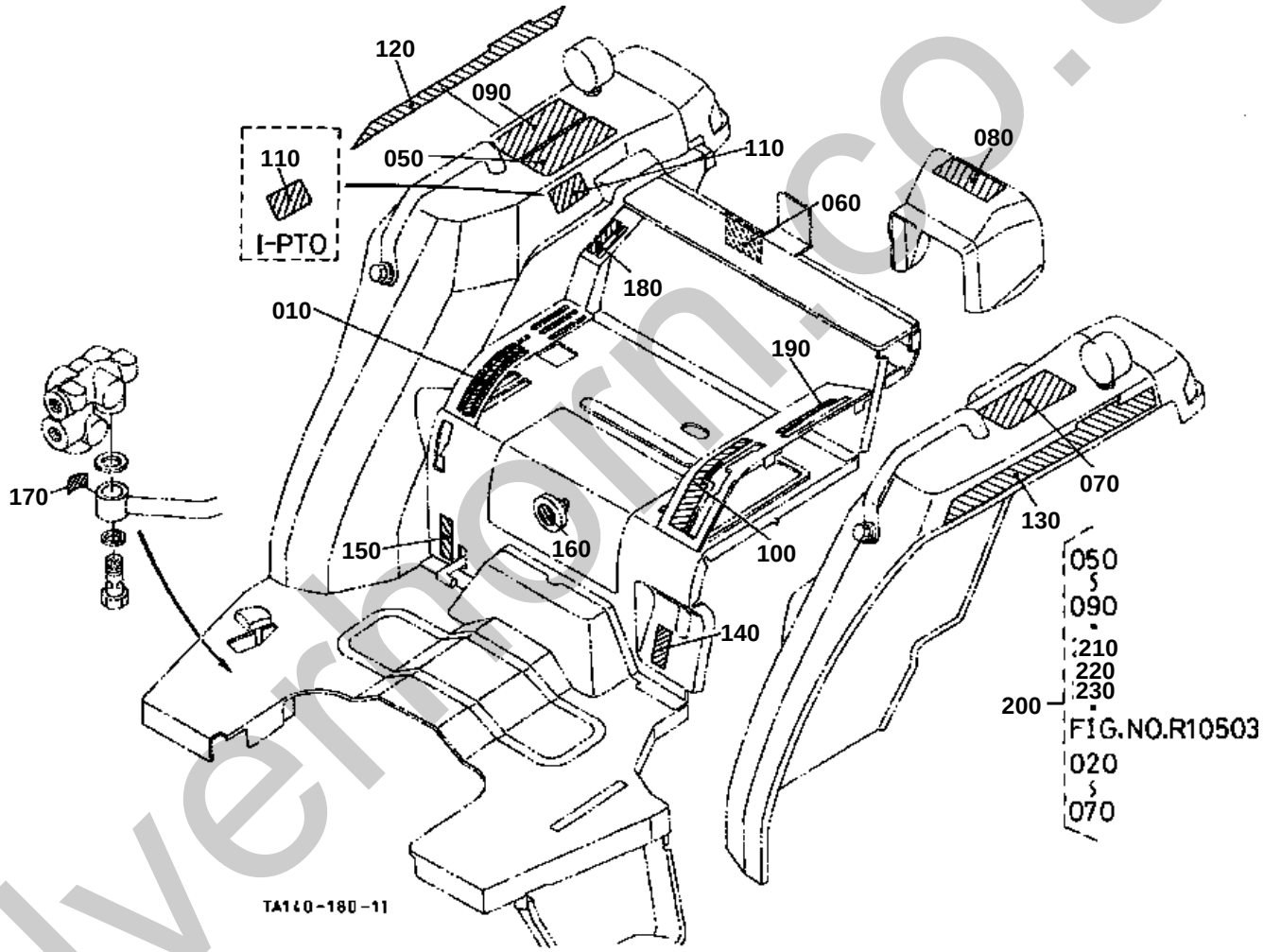

silvermorn.co.uk

↔ Interchangeable; ≠ not interchangeable; ← new for old; → old for new

REF.No	Part No.	Description	Q'ty	S.No.	I/C	REMARKS	Weight (kgf)	Weight (lb)
010	TA040-49500	MARK POSITION	1				0.002	0.0044
020	99999-99999	BLANK	0				0	0
030	99999-99999	BLANK	0				0	0
040	99999-99999	BLANK	0				0	0
050	TA040-49320	LABEL ROPS WARNING	1				0.001	0.0022
060	TA040-49350	LABEL DRAWBAR	1				0.002	0.0044
070	35260-34913	LABEL SAFETY	1				0.005	0.011
080	TA040-49590	LABEL PTO WARNING	1				0.002	0.0044
090	TA140-49920	LABEL SHUTTLE	1				0.005	0.011
100	TA040-49212	MARK SHIFT	1				0.005	0.011
110	TA040-49310	LABEL PTO CAUTION	1			W/O IND-PTO	0.002	0.0044
120	TA140-49470	MARK GST RH	1				0.01	0.022
130	TA140-49480	MARK GST LH	1				0.01	0.022
140	TA040-49550	MARK 4WD	1				0.001	0.0022
150	TA040-49760	MARK DIFF.LOCK	1				0.001	0.0022
160	TA040-49510	MARK HYD.ADJUST.	1				0.001	0.0022
170	32430-65790	LABEL HYD.BLOCK	1				0.01	0.022
180	TA040-49160	MARK REAR PTO	1				0.001	0.0022
190	TA040-49260	MARK CREEP	1			WITH CREEP	0.001	0.0022
200	TA140-99500	KIT LABEL SAFETY (A)	1				0.06	0.132
210	TA140-49330	LABEL SHUTTLE	1			NOT SHOWN IN FIG.	0.005	0.011
220	TA240-49330	LABEL PARKING WARNIN	1			NOT SHOWN IN FIG.	0.005	0.011
230	TA040-49020	LABEL CAB WARNING	1			NOT SHOWN IN FIG.	0.002	0.0044

silverhorn.co.uk

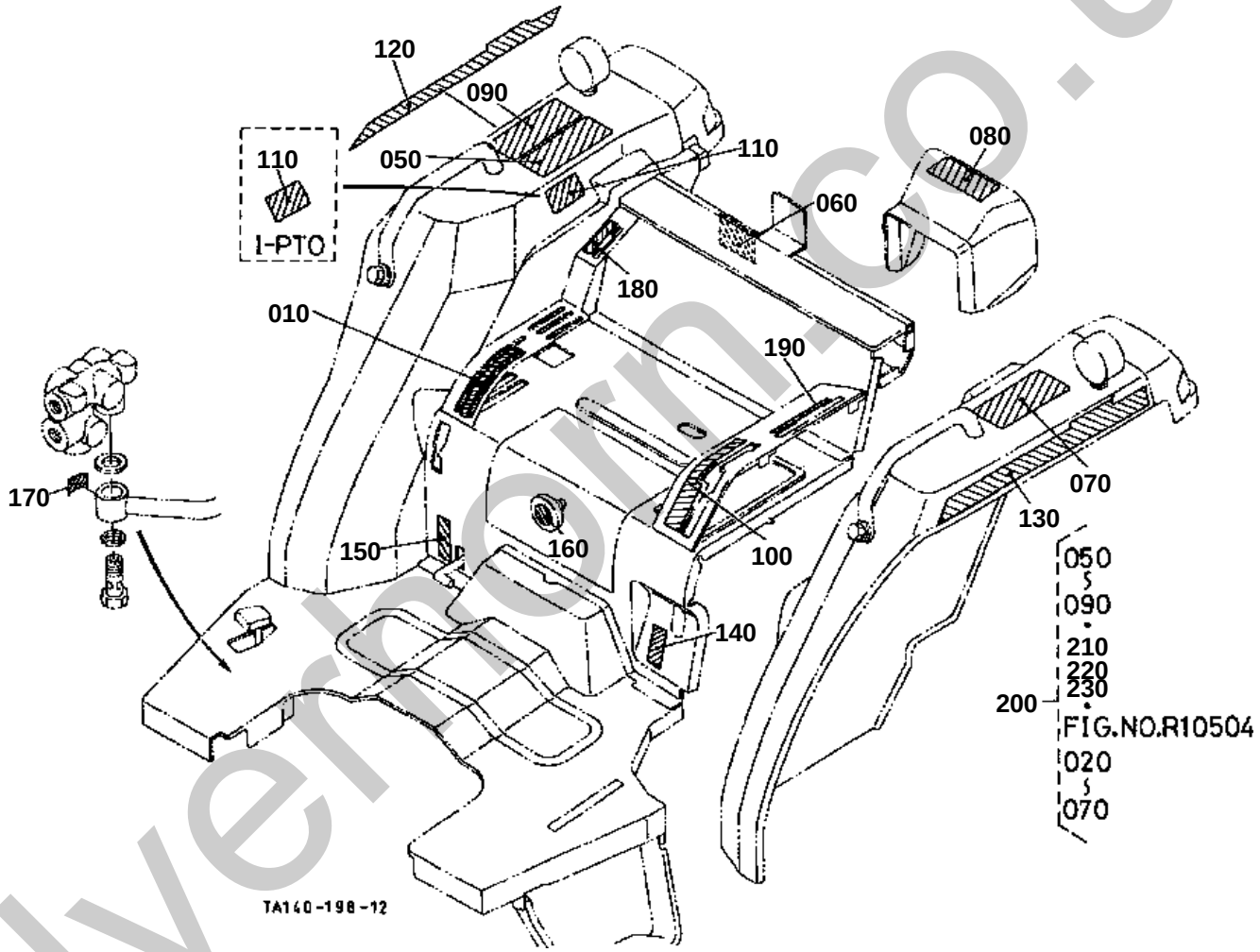

silvermorn.co.uk

LABEL 2 [CA] [GST TYPE] [ROPS TYPE]

↔ Interchangeable; ≠ not interchangeable; ← new for old; → old for new

REF.No	Part No.	Description	Q'ty	S.No.	I/C	REMARKS	Weight (kgf)	Weight (lb)
010	TA040-49500	MARK POSITION	1				0.002	0.0044
020	99999-99999	BLANK	0				0	0
030	99999-99999	BLANK	0				0	0
040	99999-99999	BLANK	0				0	0
050	TA040-49320	LABEL ROPS WARNING	1			ENGLISH	0.001	0.0022
050	TA040-49150	LABEL ROPS WARNING	1			FRENCH	0.003	0.0066
060	TA040-49350	LABEL DRAWBAR	1			ENGLISH	0.002	0.0044
060	TA041-49350	LABEL DRAWBAR	1			FRENCH	0.003	0.0066
070	35260-34913	LABEL SAFETY	1			ENGLISH	0.005	0.011
070	TA041-65700	LABEL SAFETY	1			FRENCH	0.01	0.022
080	TA040-49590	LABEL PTO WARNING	1			ENGLISH	0.002	0.0044
080	TA041-49590	LABEL PTO WARNING	1			FRENCH	0.005	0.011
090	TA140-49920	LABEL SHUTTLE	1			ENGLISH	0.005	0.011
090	TA141-49920	LABEL SHUTTLE	1			FRENCH	0.005	0.011
100	TA040-49212	MARK SHIFT	1				0.005	0.011
110	TA040-49310	LABEL PTO CAUTION	1			W/O IND-PTO	0.002	0.0044
120	TA140-49470	MARK GST RH	1				0.01	0.022
130	TA140-49480	MARK GST LH	1				0.01	0.022
140	TA040-49550	MARK 4WD	1				0.001	0.0022
150	TA040-49760	MARK DIFF.LOCK	1				0.001	0.0022
160	TA040-49510	MARK HYD.ADJUST.	1				0.001	0.0022
170	32430-65790	LABEL HYD.BLOCK	1				0.01	0.022
180	TA040-49160	MARK REAR PTO	1				0.001	0.0022
190	TA040-49260	MARK CREEP	1			WITH CREEP	0.001	0.0022
200	TA140-99500	KIT LABEL SAFETY (A)	1			ENGLISH	0.06	0.132
200	TA141-99500	KIT LABEL SAFETY (B)	1			FRENCH	0.04	0.088
210	TA140-49330	LABEL SHUTTLE	1			ENGLISH NOT SHOWN IN FIG.	0.005	0.011
210	TA141-49330	LABEL SHUTTLE	1			FRENCH NOT SHOWN IN FIG.	0.005	0.011
220	TA240-49330	LABEL PARKING	1			ENGLISH NOT SHOWN IN FIG.	0.005	0.011
220	TA241-49330	LABEL PARKING WARNIN	1			FRENCH NOT SHOWN IN FIG.	0.005	0.011
230	TA040-49020	LABEL CAB WARNING	1			ENGLISH NOT SHOWN IN FIG.	0.002	0.0044
230	TA043-49020	LABEL CAB WARNING	1			FRENCH NOT SHOWN IN FIG.	0.005	0.011

silverhorn.co.uk

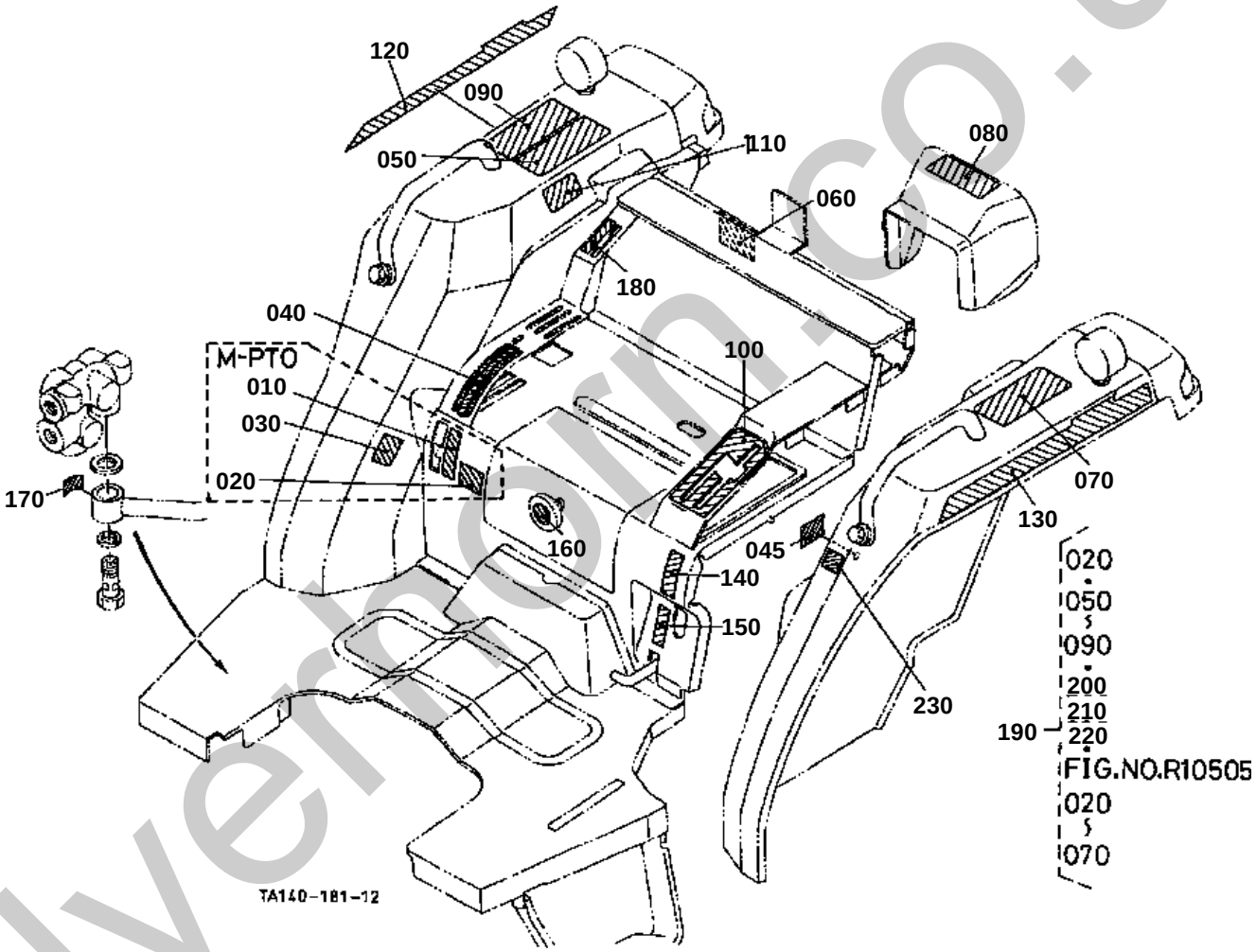

silvermorn.co.uk

↔ Interchangeable; ≠ not interchangeable; ← new for old; → old for new

REF.No	Part No.	Description	Q'ty	S.No.	I/C	REMARKS	Weight (kgf)	Weight (lb)
010	TA040-49170	MARK M-PTO	1			WITH MID PTO	0.002	0.0044
020	TA040-49340	LABEL M-PTO WARNING	1			WITH MID PTO	0.001	0.0022
030	TA040-49400	LABEL M-PTO CAUTION	1			WITH MID PTO	0.002	0.0044
040	TA040-49500	MARK POSITION	1				0.002	0.0044
045	34550-49700	LABEL	1				0.001	0.0022
050	TA040-49320	LABEL ROPS WARNING	1				0.001	0.0022
060	TA040-49350	LABEL DRAWBAR	1				0.002	0.0044
070	35260-34913	LABEL SAFETY	1				0.005	0.011
080	TA040-49590	LABEL PTO WARNING	1				0.002	0.0044
090	TA240-49330	LABEL PARKING	1				0.005	0.011
100	TA240-49210	MARK HST CHANGE	1				0.02	0.044
110	TA040-49310	LABEL PTO CAUTION	1				0.002	0.0044
120	TA240-48470	MARK HST RH	1				0.01	0.022
130	TA240-48480	MARK HST LH	1				0.01	0.022
140	TA040-49550	MARK 4WD	1				0.001	0.0022
150	TA040-49760	MARK DIFF.LOCK	1				0.001	0.0022
160	TA040-49510	MARK HYD.ADJUST.	1				0.001	0.0022
170	32430-65790	LABEL HYD.BLOCK	1				0.01	0.022
180	TA040-49160	MARK REAR PTO	1				0.001	0.0022
190	TA140-99500	KIT LABEL SAFETY (A)	1				0.06	0.132
200	TA140-49330	LABEL SHUTTLE	1			NOT SHOWN IN FIG.	0.005	0.011
210	TA140-49920	LABEL SHUTTLE	1			NOT SHOWN IN FIG.	0.005	0.011
220	TA040-49020	LABEL CAB WARNING	1			NOT SHOWN IN FIG.	0.002	0.0044
230	6C070-47332	LABEL	1	>=60216			0.001	0.0022
230	TA240-49350	LABEL	1	>=73293	←		0	0

silverhorn.co.uk

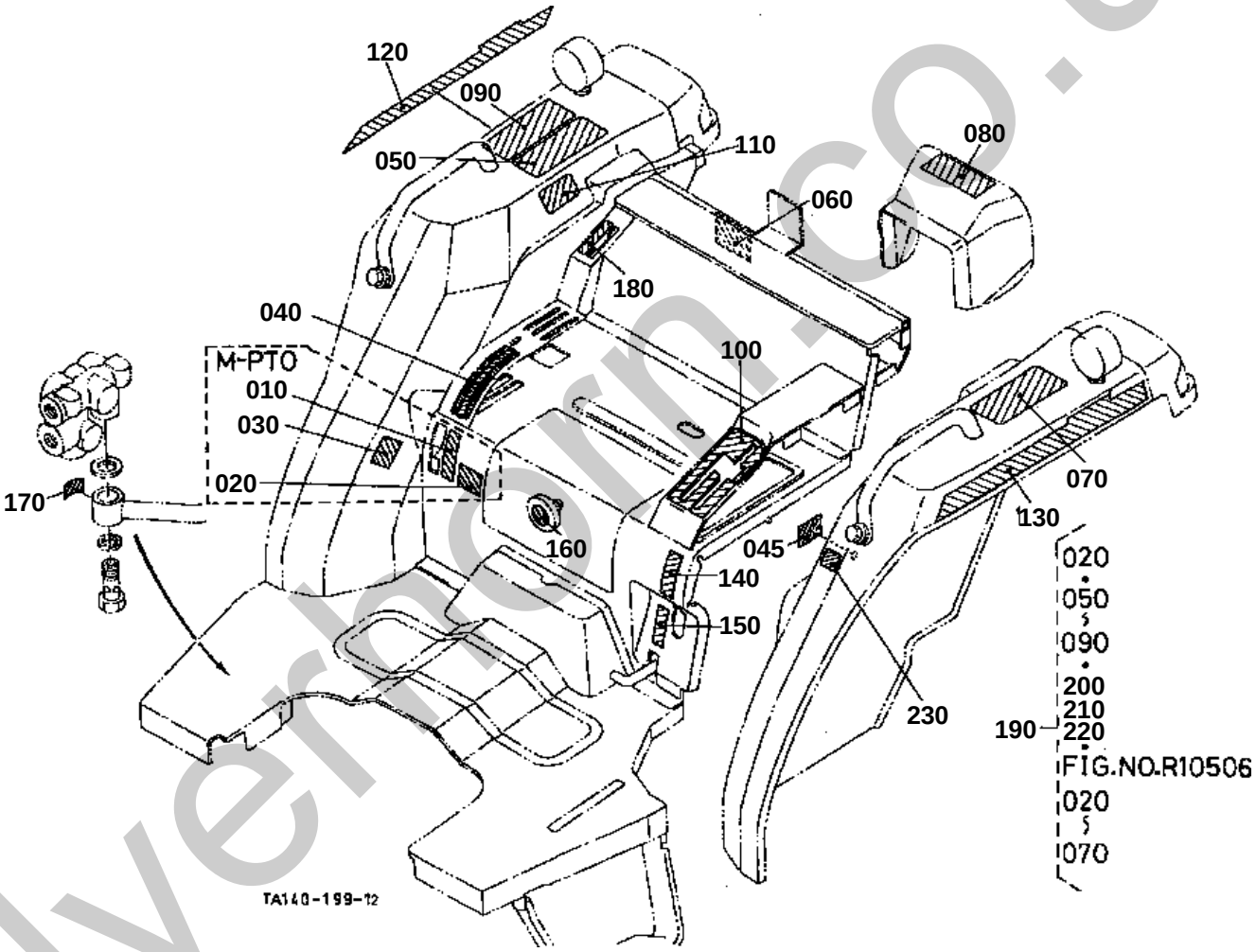

silvernorn.co.uk

↔ Interchangeable; ≠ not interchangeable; ← new for old; → old for new

REF.No	Part No.	Description	Q'ty	S.No.	I/C	REMARKS	Weight (kgf)	Weight (lb)
010	TA040-49170	MARK M-PTO	1			WITH MID PTO	0.002	0.0044
020	TA040-49340	LABEL M-PTO WARNING	1	<=74187		WITH MID PTO ENGLISH	0.001	0.0022
020	TA040-49342	LABEL M-PTO WARNING	1	>=74188	←	WITH MID PTO ENGLISH	0	0
020	TA041-49340	LABEL M-PTO WARNING	1	<=74187		WITH MID PTO FRENCH	0.003	0.0066
020	TA041-49342	LABEL M-PTO WARNING	1	>=74188	←	WITH MID PTO FRENCH	0	0
030	TA040-49400	LABEL M-PTO CAUTION	1			WITH MID PTO	0.002	0.0044
040	TA040-49500	MARK POSITION	1				0.002	0.0044
045	34550-49700	LABEL	1				0.001	0.0022
050	TA040-49320	LABEL ROPS WARNING	1			ENGLISH	0.001	0.0022
050	TA040-49150	LABEL ROPS WARNING	1			FRENCH	0.003	0.0066
060	TA040-49350	LABEL DRAWBAR	1			ENGLISH	0.002	0.0044
060	TA041-49350	LABEL DRAWBAR	1			FRENCH	0.003	0.0066
070	35260-34913	LABEL SAFETY	1			ENGLISH	0.005	0.011
070	TA041-65700	LABEL SAFETY	1			FRENCH	0.01	0.022
080	TA040-49590	LABEL PTO WARNING	1			ENGLISH	0.002	0.0044
080	TA041-49590	LABEL PTO WARNING	1			FRENCH	0.005	0.011
090	TA240-49330	LABEL PARKING	1			ENGLISH	0.005	0.011
090	TA241-49330	LABEL PARKING WARNIN	1			FRENCH	0.005	0.011
100	TA240-49210	MARK HST CHANGE	1				0.02	0.044
110	TA040-49310	LABEL PTO CAUTION	1				0.002	0.0044
120	TA240-48470	MARK HST RH	1				0.01	0.022
130	TA240-48480	MARK HST LH	1				0.01	0.022
140	TA040-49550	MARK 4WD	1				0.001	0.0022
150	TA040-49760	MARK DIFF.LOCK	1				0.001	0.0022
160	TA040-49510	MARK HYD.ADJUST.	1				0.001	0.0022
170	32430-65790	LABEL HYD.BLOCK	1				0.01	0.022
180	TA040-49160	MARK REAR PTO	1				0.001	0.0022
190	TA140-99500	KIT LABEL SAFETY (A)	1			ENGLISH	0.06	0.132
190	TA141-99500	KIT LABEL SAFETY (B)	1			FRENCH	0.04	0.088
200	TA140-49330	LABEL SHUTTLE	1			ENGLISH NOT SHOWN IN FIG.	0.005	0.011
200	TA141-49330	LABEL SHUTTLE	1			FRENCH NOT SHOWN IN FIG.	0.005	0.011
210	TA140-49920	LABEL SHUTTLE	1			ENGLISH NOT SHOWN IN FIG.	0.005	0.011
210	TA141-49920	LABEL SHUTTLE	1			FRENCH NOT SHOWN IN FIG.	0.005	0.011
220	TA040-49020	LABEL CAB WARNING	1			ENGLISH NOT SHOWN IN FIG.	0.002	0.0044
220	TA043-49020	LABEL CAB WARNING	1			FRENCH NOT SHOWN IN FIG.	0.005	0.011
230	6C070-47332	LABEL	1	>=60216			0.001	0.0022
230	TA240-49350	LABEL	1	>=73293	←		0	0

silvermorn.co.uk

↔ Interchangeable; ≠ not interchangeable; ← new for old; → old for new

REF.No	Part No.	Description	Q'ty	S.No.	I/C	REMARKS	Weight (kgf)	Weight (lb)
010	TA140-19715	MANUAL INSTRUCTION	1			ENGLISH	0.15	0.33
010	TA140-19723	MANUAL INSTRUCTION	1			FRENCH	0	0
015	1G511-89810	STATEMENT WARRANTY	1				0.01	0.022
030	35260-31852	ASSY KEY MAIN SWITCH	1			ROPS TYPE	0.02	0.044
040	01073-51630	BOLT	8	<=72536		FOR REAR WHEEL	0.079	0.1738
040	01033-51630	BOLT	8	>=72537	←	FOR REAR WHEEL	0	0
050	02076-50160	NUT	4			FOR REAR WHEEL	0.03	0.066
060	01517-51632	STUD	4	<=74528		FOR REAR WHEEL	0.076	0.1672
060	01517-51635	STUD	4	<=74528	←	FOR REAR WHEEL	0.08	0.176
070	04512-60160	WASHER SPRING	12	<=72536		FOR REAR WHEEL	0.01	0.022
070	04512-60160	WASHER SPRING	4	>=72537		FOR REAR WHEEL	0.01	0.022
080	35450-49160	STUD	12	<=71651		FOR FRONT WHEEL	0.05	0.11
080	TA150-49160	STUD WHEEL	12	>=71652	≠	FOR FRONT WHEEL	0	0
090	35340-11390	NUT	12			FOR FRONT WHEEL	0.03	0.066

silverhorn.co.uk

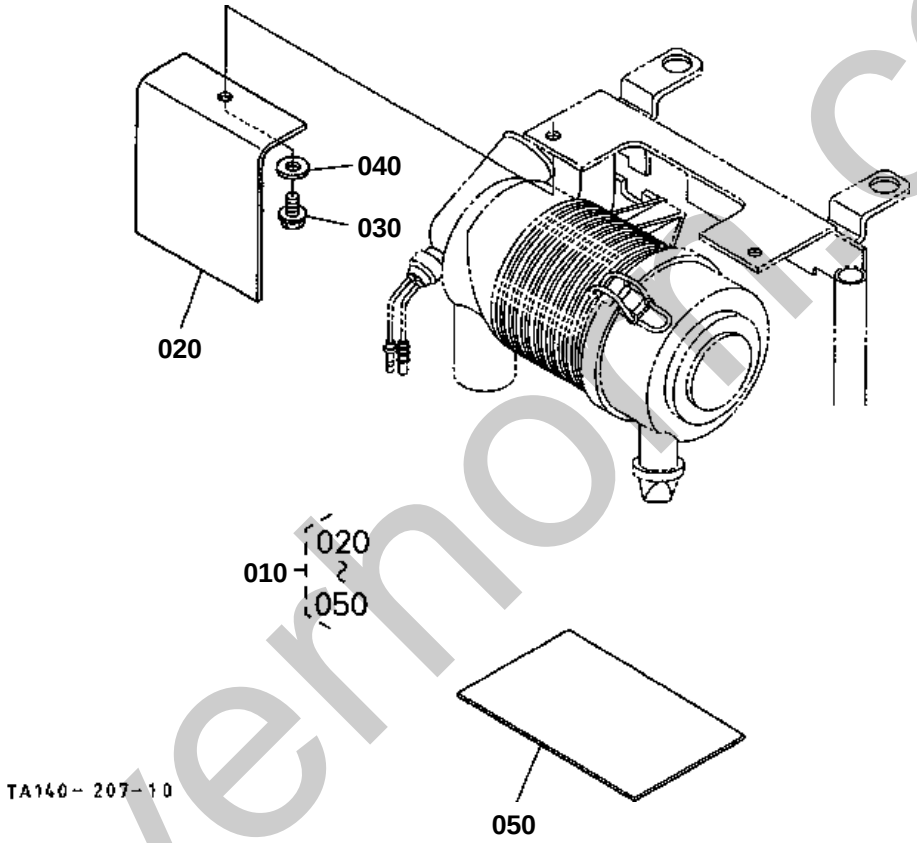

silvermoon.co.uk

AIR CLEANER COVER KIT [OPTION]

↔ Interchangeable; ≠ not interchangeable; ← new for old; → old for new

REF.No	Part No.	Description	Q'ty	S.No.	I/C	REMARKS	Weight (kgf)	Weight (lb)
010	TA140-93220	KIT COVER AIR CLEANE	1				0	0
020	TA140-93230	COVER AIR CLEANER	1				0	0
030	01754-50825	BOLT FLANGE	1				0.01	0.022
040	04015-60080	WASHER PLAIN	1				0.01	0.022
050	99999-99999	MANUAL INSTRUCTION	1				0	0

silverhorn.co.uk

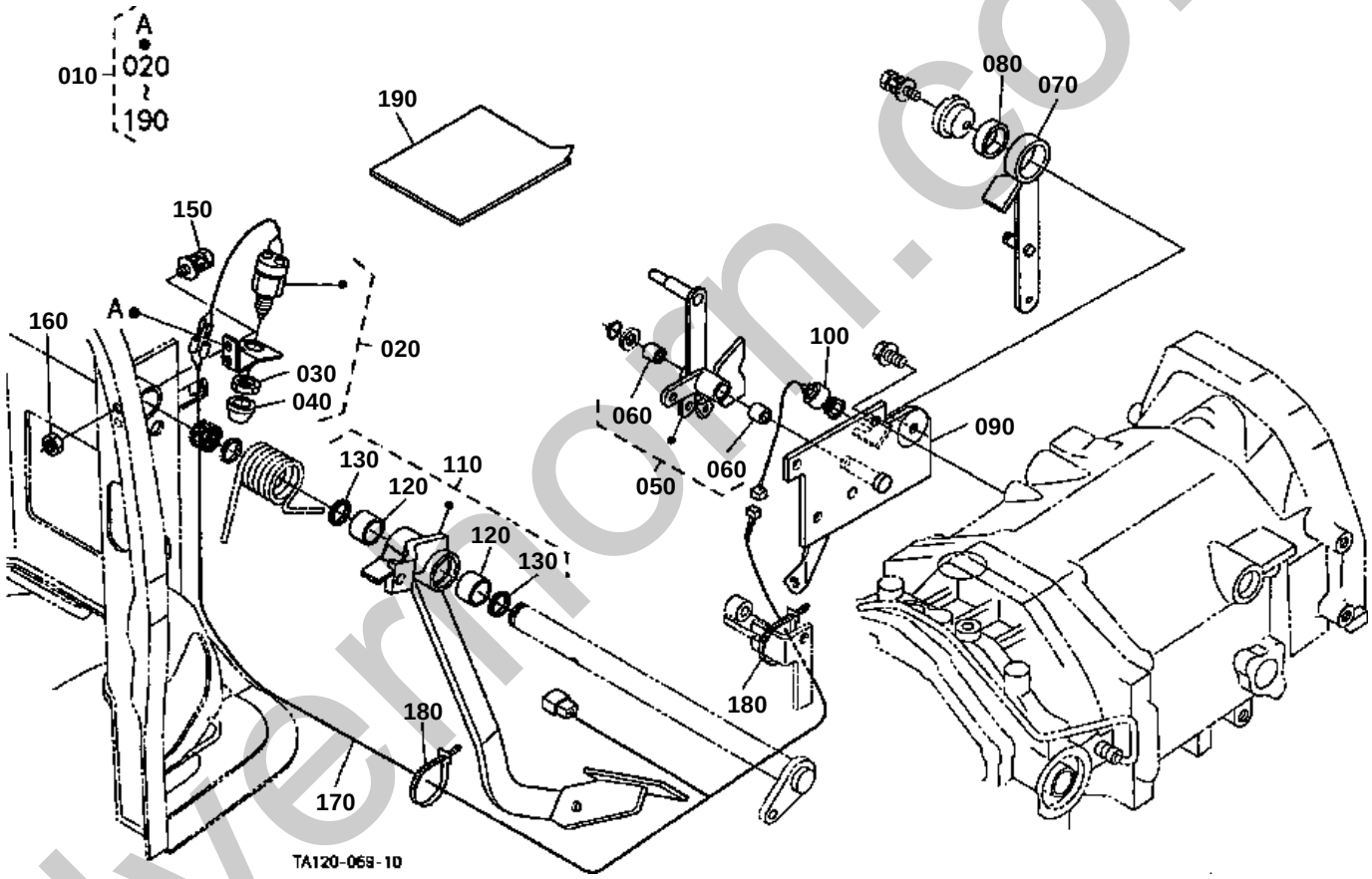

silvermoon.co.uk

SWITCH KIT [OPTION]

↔ Interchangeable; ≠ not interchangeable; ← new for old; → old for new

REF.No	Part No.	Description	Q'ty	S.No.	I/C	REMARKS	Weight (kgf)	Weight (lb)
010	TA240-98330	KIT NEUTRAL SWITCH	1				0	0
020	TA240-53900	SWITCH SAFETY	1				0.062	0.1364
030	67111-55830	NUT SAFETY SWITCH	1				0.035	0.077
040	67111-55840	CAP SAFETY SWITCH	1				0.002	0.0044
050	TA240-55504	ASSY ARM	1				0	0
060	08511-01215	BUSH	2				0.005	0.011
070	TA240-55190	ARM HOLDER	1				0.14	0.308
080	66204-43572	BUSH	1				0.003	0.0066
090	TA240-55173	BRACKET HST	1				1.09	2.398
100	37150-32240	SWITCH SAFETY	1				0.12	0.264
110	TA240-44050	COMP.PEDAL CLUTCH	1				1.56	3.432
120	08511-02520	BUSH	2				0.02	0.044
130	34070-44140	SEAL OIL	2				0.005	0.011
140	99999-99999	BLANK	0				0	0
150	01025-50614	BOLT	2				0.005	0.011
160	02056-50060	NUT	2				0.002	0.0044
170	TA240-90410	HARNESS SAFETY SW.	1				0	0
180	55311-41260	BAND CORD	2				0.007	0.0154
190	99999-99999	MANUAL INSTRUCTION	1				0	0

silverhorn.co.uk

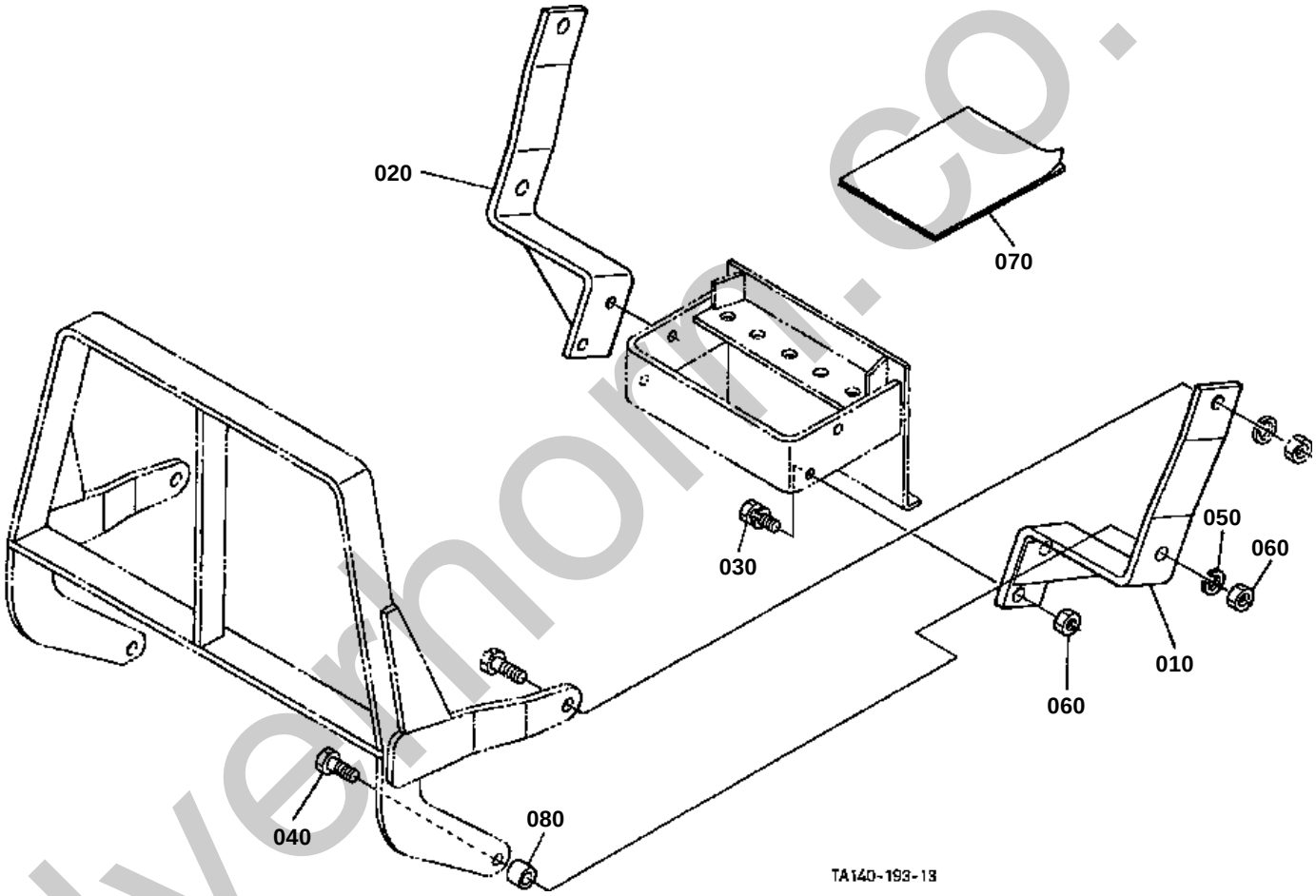

silverhorn.co.uk

030 01173-51435
050 04512-60140

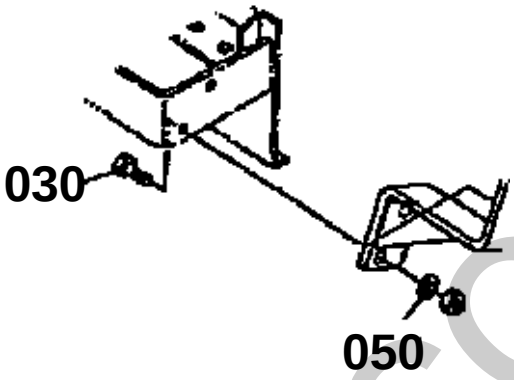

TA120-836-10

silverhorn.co.uk

FRONT GUARD STAY KIT [OPTION]

↔ Interchangeable; ≠ not interchangeable; ← new for old; → old for new

REF.No	Part No.	Description	Q'ty	S.No.	I/C	REMARKS	Weight (kgf)	Weight (lb)
010	TA040-99610	STAY FRONT GUARD LH	1				3.4	7.48
020	TA040-99620	STAY FRONT GUARD RH	1				3.4	7.48
030	01173-51435	BOLT	6	<=73769			0.056	0.1232
030	01133-51435	BOLT	6	>=73770	←		0.001	0.0022
040	01173-51445	BOLT	2	<=51803			0.067	0.1474
040	01173-51450	BOLT	2	>=51804	←		0.075	0.165
050	04512-60140	WASHER SPRING	8	<=73769			0.006	0.0132
050	04512-60140	WASHER SPRING	2	>=73770			0.006	0.0132
060	02174-50140	NUT	8				0.014	0.0308
070	TA040-99642	MANUAL INSTRUCTION	1				0	0

silverhorn.co.uk

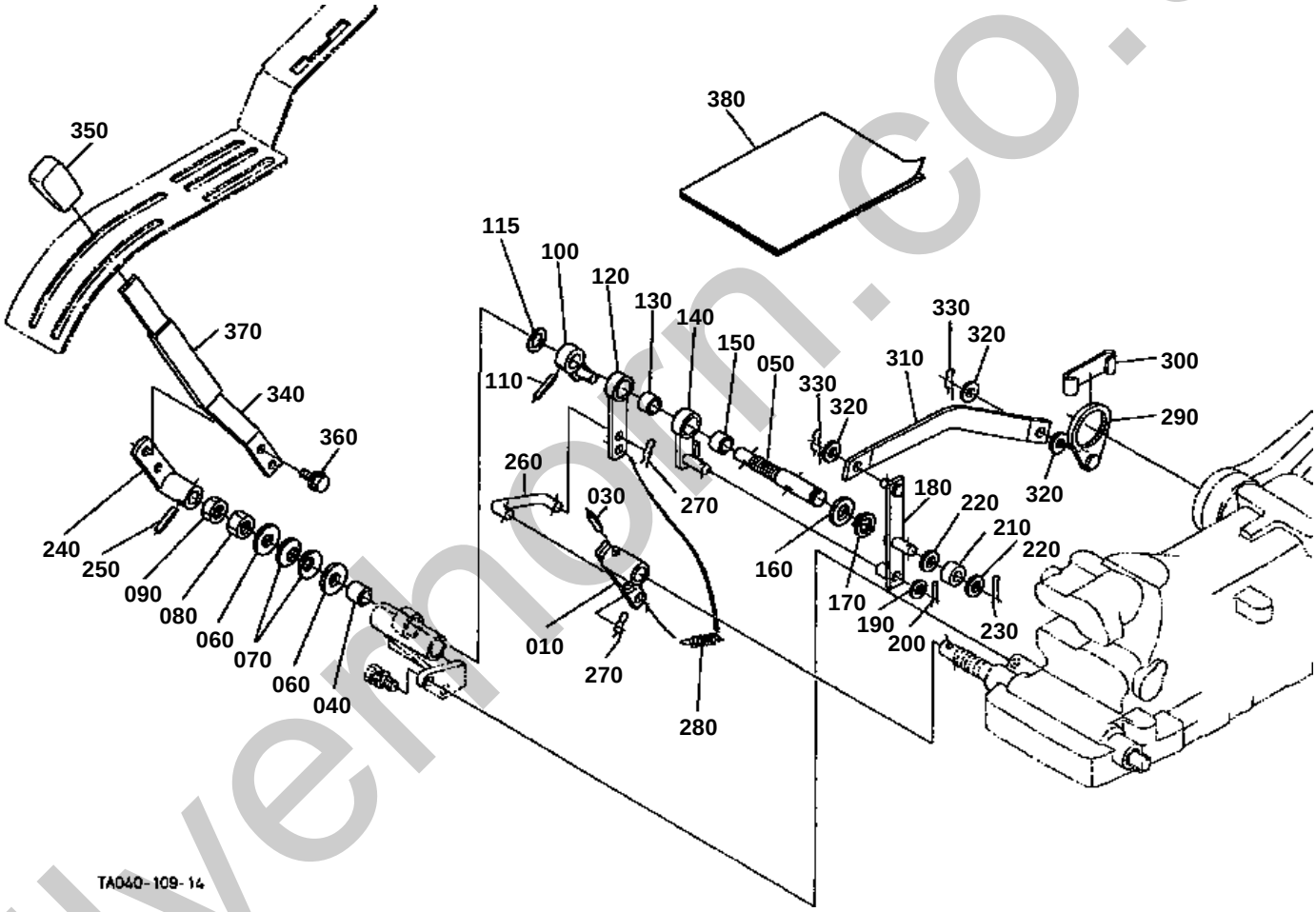

silvermorn.co.uk

010 TA040-3831-2

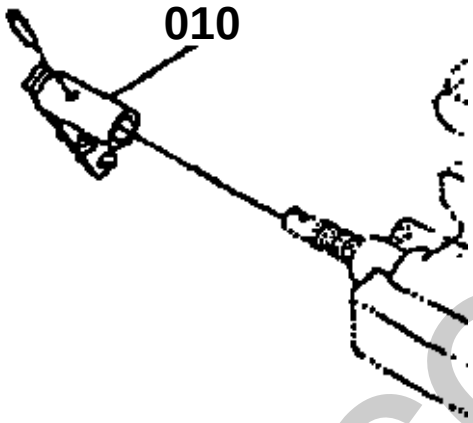

TA129-805-11

silverhorn.co.uk

POSITION CONTROL LEVER (WITH DRAFT) [OPTION]
(AVEC TYPE D'EFFORT) [OPTION]

↔ Interchangeable; ≠ not interchangeable; ← new for old; → old for new

REF.No	Part No.	Description	Q'ty	S.No.	I/C	REMARKS	Weight (kgf)	Weight (lb)
010	TA040-38312	LINK CONTROL	1	<=71888			0.15	0.33
010	TA140-38310	LINK CONTROL	1	>=71889	≠		0	0
020	99999-99999	BLANK	0				0	0
030	05411-00525	PIN SPRING	1				0.002	0.0044
040	08511-01615	BUSH	1				0.01	0.022
050	TA040-38122	SHAFT DRAFT	1				0.14	0.308
060	04013-60140	WASHER PLAIN	2				0.01	0.022
070	34260-36880	SPRING PLATE	2				0.006	0.0132
080	02174-50140	NUT	1				0.014	0.0308
090	02172-50140	NUT	1				0.01	0.022
100	TA040-38142	LINK DRAFT	1				0.065	0.143
110	05411-00525	PIN SPRING	1				0.002	0.0044
115	04714-00300	GASKET	1				0.002	0.0044
120	TA040-38150	LINK DRAFT	1				0.065	0.143
130	08511-01612	BUSH	1				0.005	0.011
140	TA040-38160	LINK DRAFT	1				0.07	0.154
150	08511-01612	BUSH	1				0.005	0.011
160	04011-60160	WASHER PLAIN	1				0.01	0.022
170	04612-00160	CIR CLIP EXTERNAL	1				0.001	0.0022
180	TA040-38170	LINK DRAFT	1				0.095	0.209
190	04012-50080	WASHER PLAIN	1				0.001	0.0022
200	05511-50215	PIN SPLIT	1				0.001	0.0022
210	TA040-38190	COLLAR	1				0.02	0.044
220	04011-50100	WASHER PLAIN	2				0.002	0.0044
230	05511-50320	PIN SPLIT	1				0.002	0.0044
240	TA040-38212	LEVER POSITION	1				0.13	0.286
250	05411-00525	PIN SPRING	1				0.002	0.0044
260	TA040-38322	ROD CONTROL	1				0.045	0.099
270	05525-50800	PIN SNAP	2				0.001	0.0022
280	36919-27830	SPRING	1				0.01	0.022
290	TA040-38262	HOLDER	1				0.06	0.132
300	99999-99999	BLANK	0				0	0
310	TA040-38282	ROD DRAFT	1				0.145	0.319
320	04012-50080	WASHER PLAIN	3				0.001	0.0022
330	05525-50800	PIN SNAP	2				0.001	0.0022
340	TA040-38230	LEVER POSITION	1				0.18	0.396
350	52300-32640	GRIP LEVER	1				0.04	0.088
360	01754-50612	BOLT FLANGE	2				0.005	0.011
370	TA040-36132	TUBE LEVER	1				0.01	0.022
380	99999-99999	MANUAL ASSEMBLY	1				0	0

silvernorn.co.uk

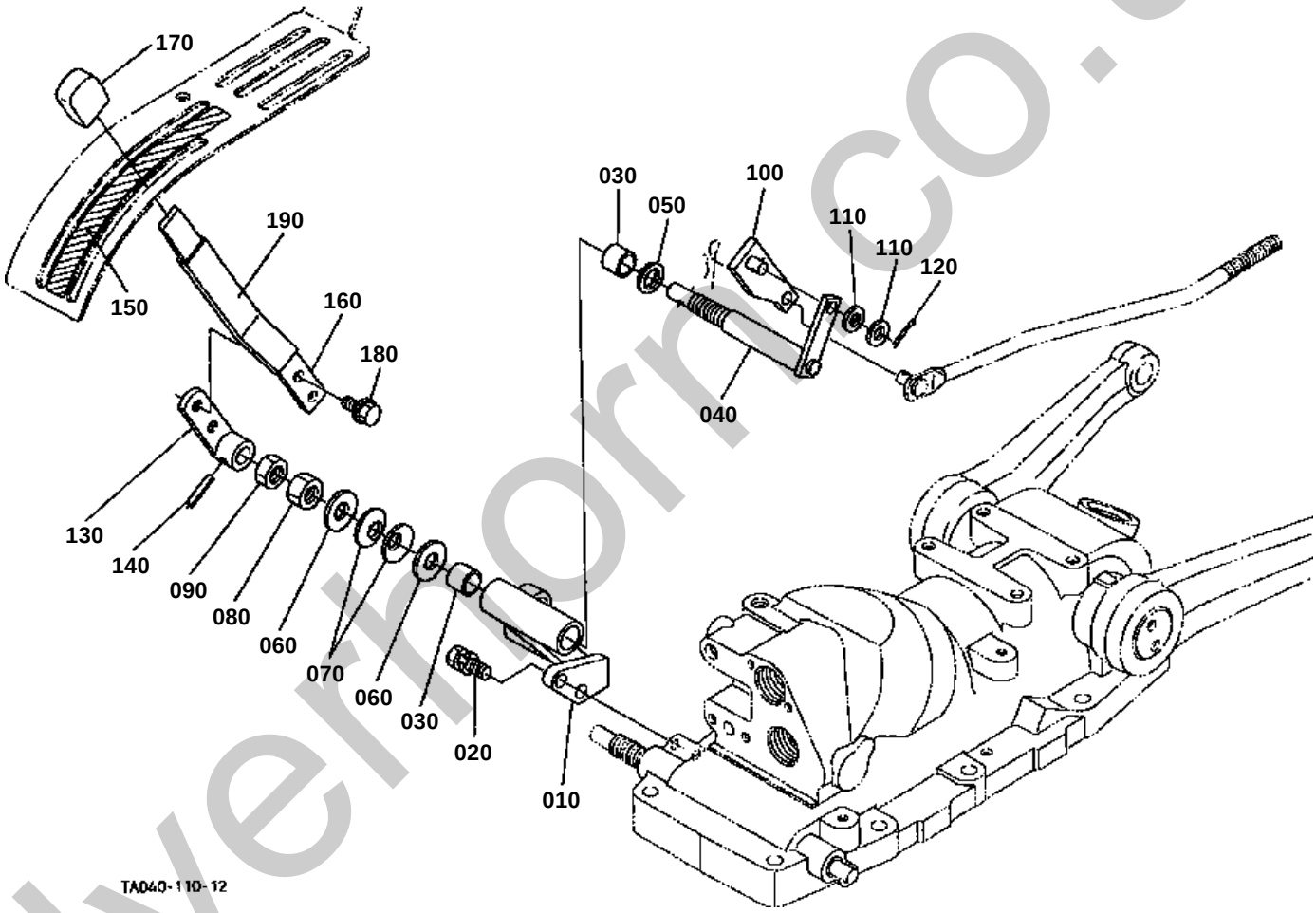

silverthorn.co.uk

DRAFT CONTROL LEVER (WITH DRAFT) [OPTION]
[OPTION]

↔ Interchangeable; ≠ not interchangeable; ← new for old; → old for new

REF.No	Part No.	Description	Q'ty	S.No.	I/C	REMARKS	Weight (kgf)	Weight (lb)
010	TA040-38114	STAY	1				0.255	0.561
020	01123-50822	BOLT	2				0.012	0.0264
030	08511-01615	BUSH	2				0.01	0.022
040	TA040-38132	SHAFT DRAFT	1				0.22	0.484
050	04714-00300	GASKET	1				0.002	0.0044
060	04013-60140	WASHER PLAIN	2				0.01	0.022
070	34260-36880	SPRING PLATE	2				0.006	0.0132
080	02174-50140	NUT	1				0.014	0.0308
090	02172-50140	NUT	1				0.01	0.022
100	TA040-38182	LEVER CAM	1				0.085	0.187
110	04012-50080	WASHER PLAIN	2				0.001	0.0022
120	05511-50215	PIN SPLIT	1				0.001	0.0022
130	TA040-38222	LEVER DRAFT	1				0.095	0.209
140	05411-00525	PIN SPRING	1				0.002	0.0044
150	TA040-49520	MARK DRAFT	1				0.003	0.0066
160	TA040-38240	LEVER DRAFT	1				0.16	0.352
170	37410-43560	GRIP LEVER	1				0.025	0.055
180	01754-50612	BOLT FLANGE	2				0.005	0.011
190	TA040-36132	TUBE LEVER	1				0.01	0.022

silverhorn.co.uk

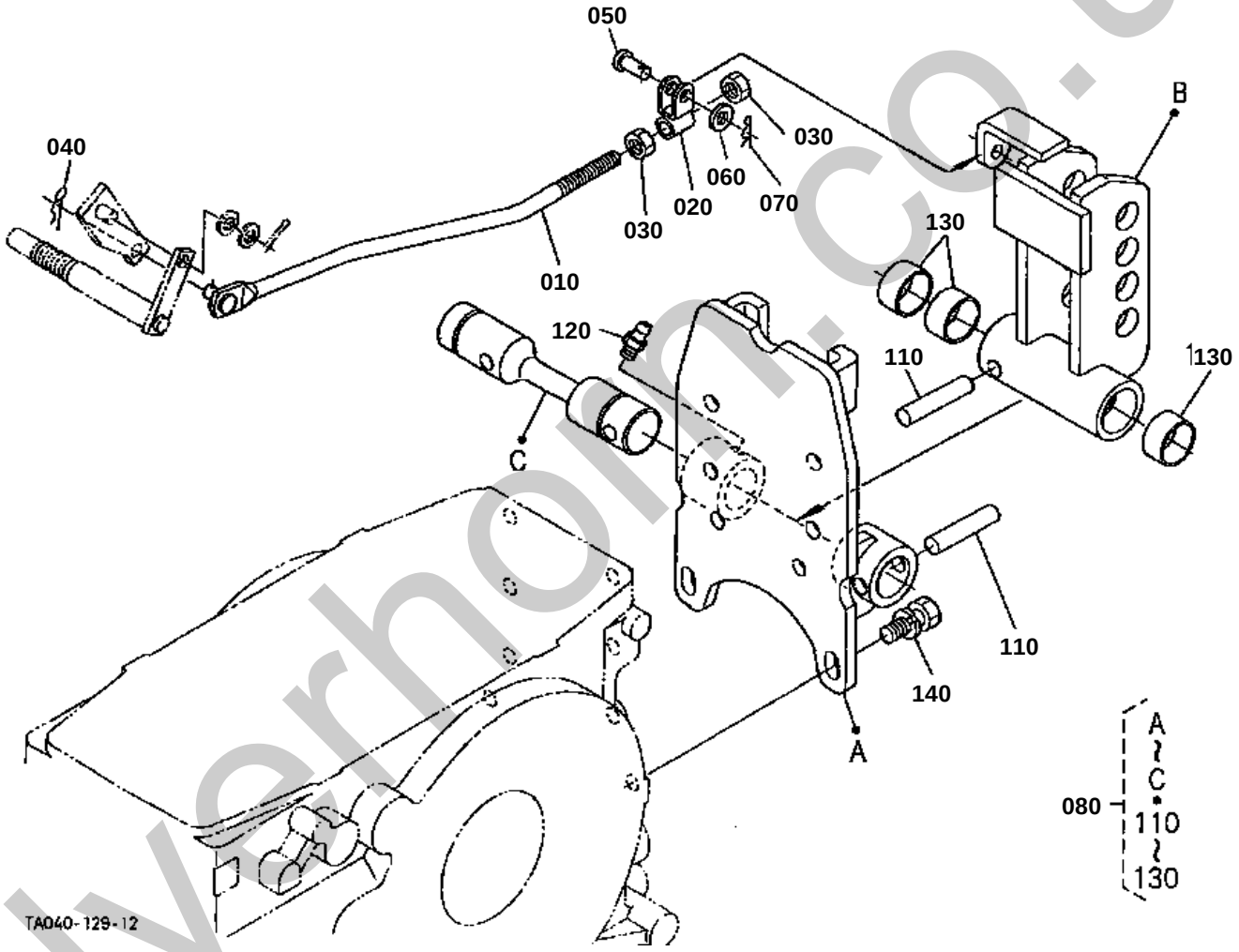

silverhorn.co.uk

060 04012-50080
070 05511-50218

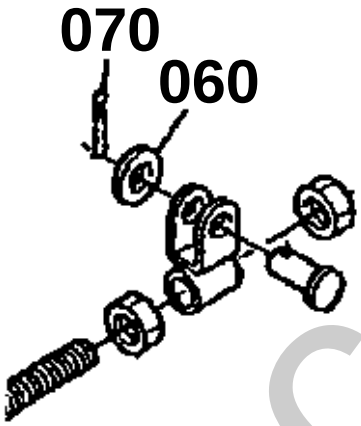

TA150-819-10

silverhorn.co.uk

TOP LINK HOLDER (WITH DRAFT) [OPTION]
(AVEC TYPE DE D'EFFORT) [OPTION]

↔ Interchangeable; ≠ not interchangeable; ← new for old; → old for new

REF.No	Part No.	Description	Q'ty	S.No.	I/C	REMARKS	Weight (kgf)	Weight (lb)
010	TA040-38360	ROD DRAFT	1				0.192	0.4224
020	TA040-38350	HOLDER	1				0.033	0.0726
030	02116-50100	NUT	2				0.004	0.0088
040	05525-50800	PIN SNAP	1				0.001	0.0022
050	05122-50818	PIN JOINT	1				0.008	0.0176
060	04012-50080	WASHER PLAIN	1				0.001	0.0022
070	05511-50218	PIN SPLIT	1	<=75376			0.001	0.0022
070	05525-50800	PIN SNAP	1	>=75377	≠		0.001	0.0022
080	35080-41400	COMP HOLDER TOP LINK	1				6.85	15.07
090	99999-99999	BLANK	0				0	0
100	99999-99999	BLANK	0				0	0
110	37300-41440	PIN STRAIGHT	2				0.055	0.121
120	06613-10010	NIPPLE GREASE	2				0.006	0.0132
130	37300-41450	BUSH	3				0.03	0.066
140	01133-51230	BOLT	6				0.04	0.088

silverhorn.co.uk

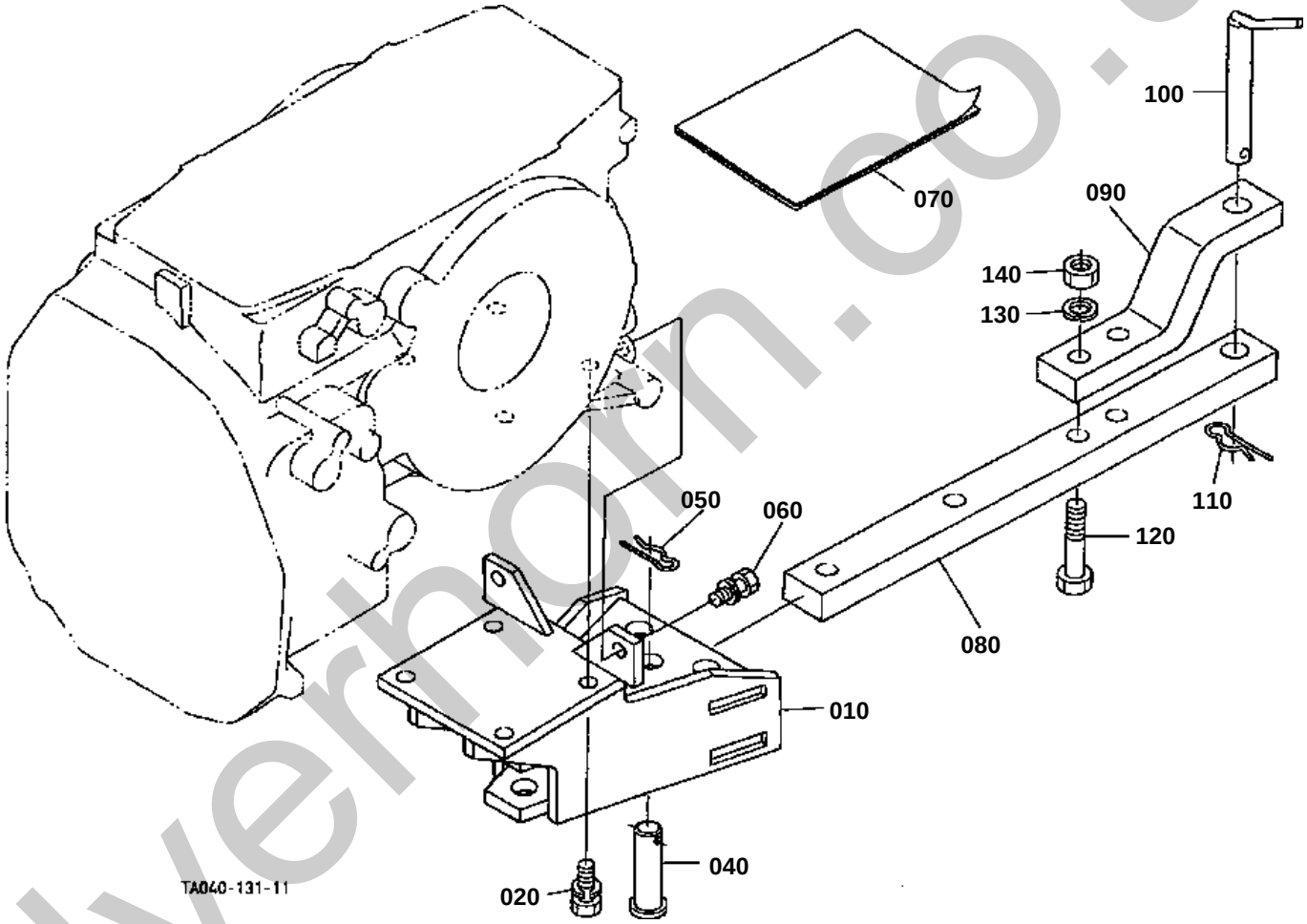

silverhorn.co.uk

020 01176-51430
030 04512-60140

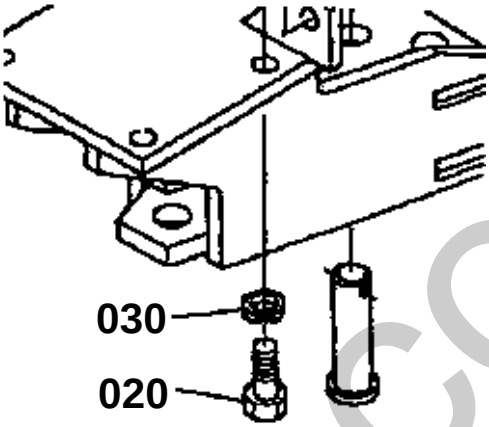

TA150-807-10

silverhorn.co.uk

SWINGING DRAWBAR/CLEVIS DRAWBAR [OPTION]

[OPTION]

↔ Interchangeable; ≠ not interchangeable; ← new for old; → old for new

REF.No	Part No.	Description	Q'ty	S.No.	I/C	REMARKS	Weight (kgf)	Weight (lb)
010	TA040-29830	FRAME SWING DRAWBAR	1	<=74528			7.9	17.38
010	TA040-29832	FRAME SWING DRAWBAR	1	>=74529	←		7.9	17.38
020	01176-51430	BOLT	4	<=73769			0.052	0.1144
020	01138-51430	BOLT	4	>=73770	←		0	0
030	04512-60140	WASHER SPRING	4	<=73769			0.006	0.0132
040	05122-52070	PIN JOINT	3				0.186	0.4092
050	05515-51600	PIN SNAP	3				0.007	0.0154
060	01133-51230	BOLT	2				0.04	0.088
070	TA040-98520	MANUAL ASSEMBLY	1				0.005	0.011
080	35080-29710	DRAWBAR	1				7	15.4
090	35080-29720	HITCH DRAWBAR	1				2.8	6.16
100	99533-78250	PIN	1				0.61	1.342
110	70515-16330	PIN SPRING	1				0.028	0.0616
120	01170-51680	BOLT	2				0.14	0.308
130	04512-60160	WASHER SPRING	2				0.01	0.022
140	02174-50160	NUT	2				0.022	0.0484

silverhorn.co.uk

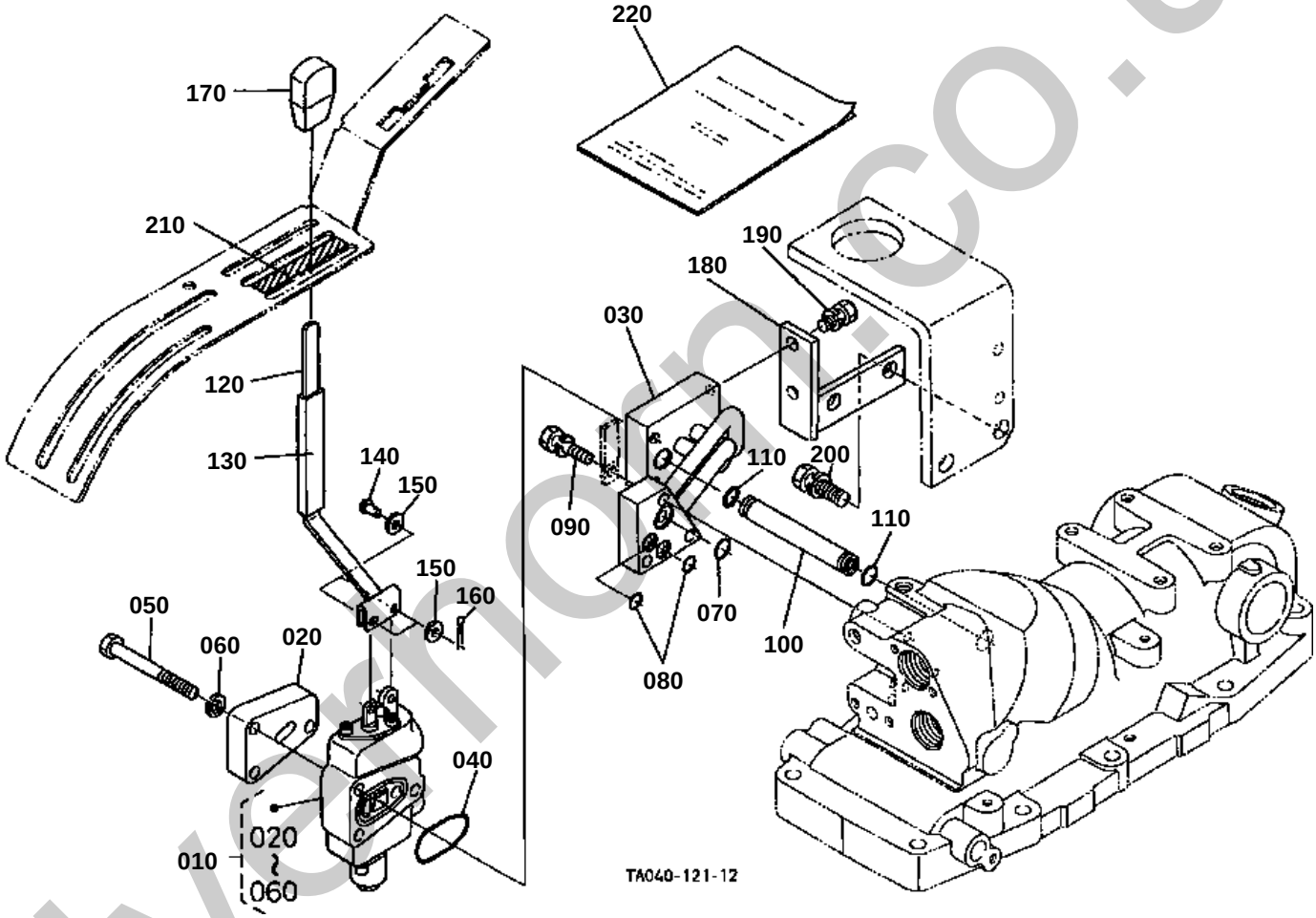

silvermoon.co.uk

REMOTE CONTROL VALVE LEVER 1 [ROPS TYPE] [OPTION]
[EXCEPTE TYPE CABINE] [OPTION]

↔ Interchangeable; ≠ not interchangeable; ← new for old; → old for new

REF.No	Part No.	Description	Q'ty	S.No.	I/C	REMARKS	Weight (kgf)	Weight (lb)
010	TA040-96500	ASSY VALVE AUX.CON.	1				3.3	7.26
020	TA040-96122	COVER AUX.CON.VALVE	1	<=75552			0.475	1.045
020	TA040-96123	COVER AUX.CON.VALVE	1	>=75553	←		0.475	1.045
030	TA040-96142	ASSY PIPE CONT.VALVE	1				1.4	3.08
040	04811-50400	O RING	1				0.002	0.0044
040	04817-50400	O RING	1		←		0.003	0.0066
050	01153-50870	BOLT	3				0.026	0.0572
060	04512-60080	WASHER SPRING	3				0.002	0.0044
070	04810-00140	O RING	1				0.001	0.0022
070	04817-00140	O RING	1		←		0	0
080	04810-00100	O RING	2				0.001	0.0022
080	04817-00100	O RING	2		←		0	0
090	01123-50835	BOLT	3				0.02	0.044
100	TA040-96150	PIPE RETURN	1				0.045	0.099
110	04811-00110	O RING	2				0.001	0.0022
110	04817-00110	O RING	2		←		0.001	0.0022
120	TA040-96220	LEVER AUX.CON.VALVE	1				0.11	0.242
130	TA040-96250	TUBE LEVER	1				0.007	0.0154
140	68021-32790	PIN	2				0.004	0.0088
150	04012-50050	WASHER PLAIN	4				0.001	0.0022
160	05511-51210	PIN SPLIT	2				0.001	0.0022
170	31355-82290	GRIP LEVER	1				0.015	0.033
180	TA040-96160	STAY AUX.CONT.VALVE	1				0.25	0.55
190	01123-50820	BOLT	2				0.011	0.0242
200	01133-51235	BOLT	2				0.05	0.11
210	TA040-49610	MARK AUX.CONT.VALVE	1				0.001	0.0022
220	TA040-98140	MANUAL ASSEMBLY	1	<=75376			0.015	0.033
220	TA040-98142	MANUAL ASSEMBLY	1	>=75377	←		0.015	0.033

silverhorn.co.uk

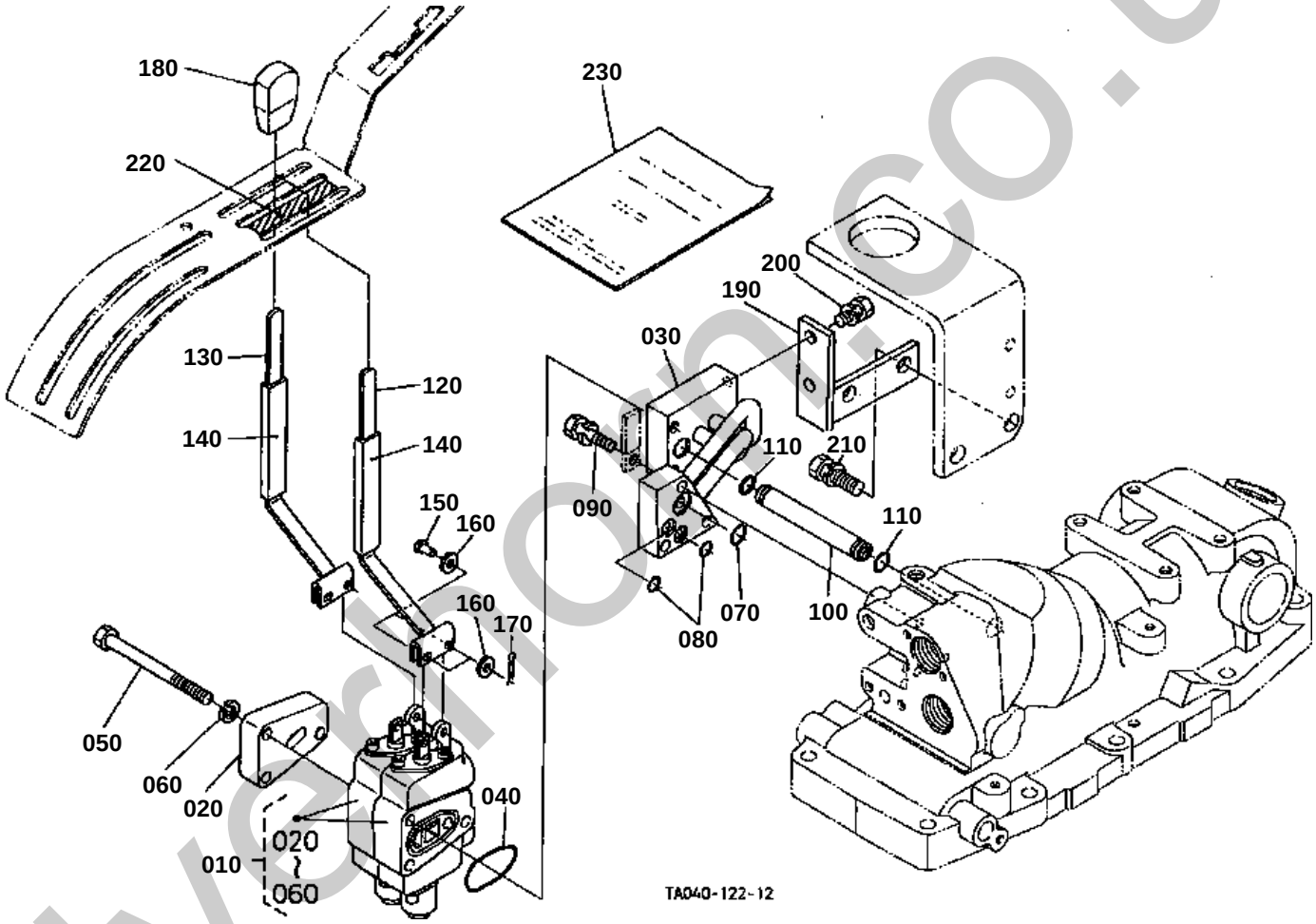

silverhorn.co.uk

REMOTE CONTROL VALVE LEVER 2 [ROPS TYPE] [OPTION]
[EXCEPTE TYPE CABINE] [OPTION]

↔ Interchangeable; ≠ not interchangeable; ← new for old; → old for new

REF.No	Part No.	Description	Q'ty	S.No.	I/C	REMARKS	Weight (kgf)	Weight (lb)
010	TA040-96102	ASSY VALVE AUX.CON.	1				4.7	10.34
020	TA040-96122	COVER AUX.CON.VALVE	1	<=75552			0.475	1.045
020	TA040-96123	COVER AUX.CON.VALVE	1	>=75553	←		0.475	1.045
030	TA040-96142	ASSY PIPE CONT.VALVE	1				1.4	3.08
040	04811-50400	O RING	1				0.002	0.0044
040	04817-50400	O RING	1		←		0.003	0.0066
050	01153-50800	BOLT	3				0.036	0.0792
060	04512-60080	WASHER SPRING	3				0.002	0.0044
070	04810-00140	O RING	1				0.001	0.0022
070	04817-00140	O RING	1		←		0	0
080	04810-00100	O RING	2				0.001	0.0022
080	04817-00100	O RING	2		←		0	0
090	01123-50835	BOLT	3				0.02	0.044
100	TA040-96150	PIPE RETURN	1				0.045	0.099
110	04811-00110	O RING	2				0.001	0.0022
110	04817-00110	O RING	2		←		0.001	0.0022
120	TA040-96220	LEVER AUX.CON.VALVE	1				0.11	0.242
130	TA040-96234	LEVER AUX.CON.VALVE	1				0.1	0.22
140	TA040-96250	TUBE LEVER	2				0.007	0.0154
150	68021-32790	PIN	4				0.004	0.0088
160	04012-50050	WASHER PLAIN	8				0.001	0.0022
170	05511-51210	PIN SPLIT	4				0.001	0.0022
180	31355-82290	GRIP LEVER	2				0.015	0.033
190	TA040-96160	STAY AUX.CONT.VALVE	1				0.25	0.55
200	01123-50820	BOLT	2				0.011	0.0242
210	01133-51235	BOLT	2				0.05	0.11
220	TA040-49610	MARK AUX.CONT.VALVE	1				0.001	0.0022
230	TA040-98140	MANUAL ASSEMBLY	1	<=75376			0.015	0.033
230	TA040-98142	MANUAL ASSEMBLY	1	>=75377	←		0.015	0.033

silverhorn.co.uk

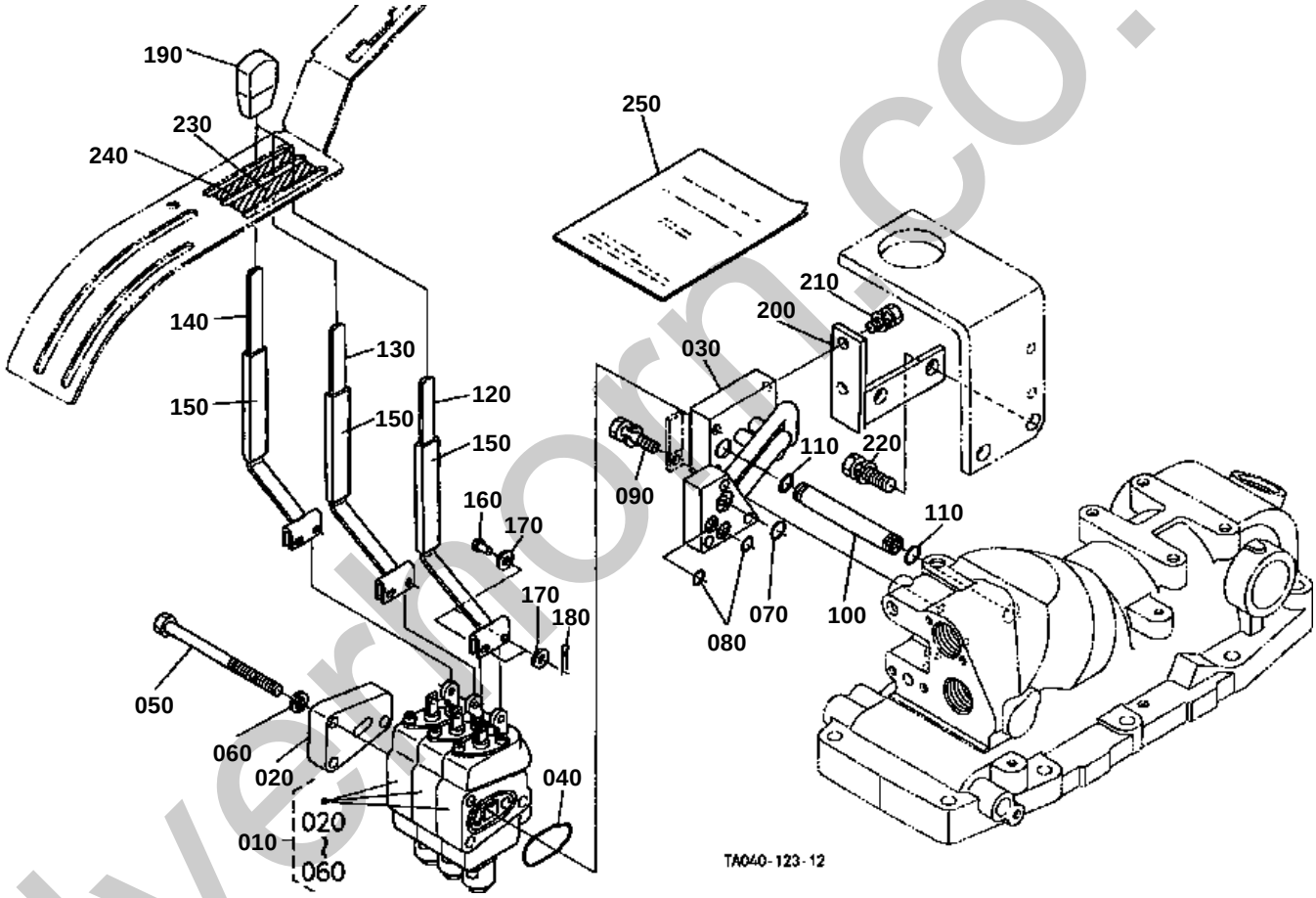

silverthorn.co.uk

REMOTE CONTROL VALVE LEVER 3 [ROPS TYPE] [OPTION]
[EXCEPTE TYPE CABINE] [OPTION]

↔ Interchangeable; ≠ not interchangeable; ← new for old; → old for new

REF.No	Part No.	Description	Q'ty	S.No.	I/C	REMARKS	Weight (kgf)	Weight (lb)
010	TA040-96300	ASSY VALVE AUX.CON.	1				6.1	13.42
020	TA040-96122	COVER AUX.CON.VALVE	1	<=75552			0.475	1.045
020	TA040-96123	COVER AUX.CON.VALVE	1	>=75553	←		0.475	1.045
030	TA040-96142	ASSY PIPE CONT.VALVE	1				1.4	3.08
040	04811-50400	O RING	1				0.002	0.0044
040	04817-50400	O RING	1		←		0.003	0.0066
050	45404-95180	BOLT	3				0.05	0.11
060	04512-60080	WASHER SPRING	3				0.002	0.0044
070	04810-00140	O RING	1				0.001	0.0022
070	04817-00140	O RING	1		←		0	0
080	04810-00100	O RING	2				0.001	0.0022
080	04817-00100	O RING	2		←		0	0
090	01123-50835	BOLT	3				0.02	0.044
100	TA040-96150	PIPE RETURN	1				0.045	0.099
110	04811-00110	O RING	2				0.001	0.0022
110	04817-00110	O RING	2		←		0.001	0.0022
120	TA040-96220	LEVER AUX.CON.VALVE	1				0.11	0.242
130	TA040-96234	LEVER AUX.CON.VALVE	1				0.1	0.22
140	TA040-96240	LEVER AUX.CON.VALVE	1				0.105	0.231
150	TA040-96250	TUBE LEVER	3				0.007	0.0154
160	68021-32790	PIN	6				0.004	0.0088
170	04012-50050	WASHER PLAIN	12				0.001	0.0022
180	05511-51210	PIN SPLIT	6				0.001	0.0022
190	31355-82290	GRIP LEVER	3				0.015	0.033
200	TA040-96160	STAY AUX.CONT.VALVE	1				0.25	0.55
210	01123-50820	BOLT	2				0.011	0.0242
220	01133-51235	BOLT	2				0.05	0.11
230	TA040-49610	MARK AUX.CONT.VALVE	1				0.001	0.0022
240	TA040-49630	MARK AUX.CONT.VALVE	1				0.001	0.0022
250	TA040-98140	MANUAL ASSEMBLY	1	<=75376			0.015	0.033
250	TA040-98142	MANUAL ASSEMBLY	1	>=75377	←		0.015	0.033

silverhorn.co.uk

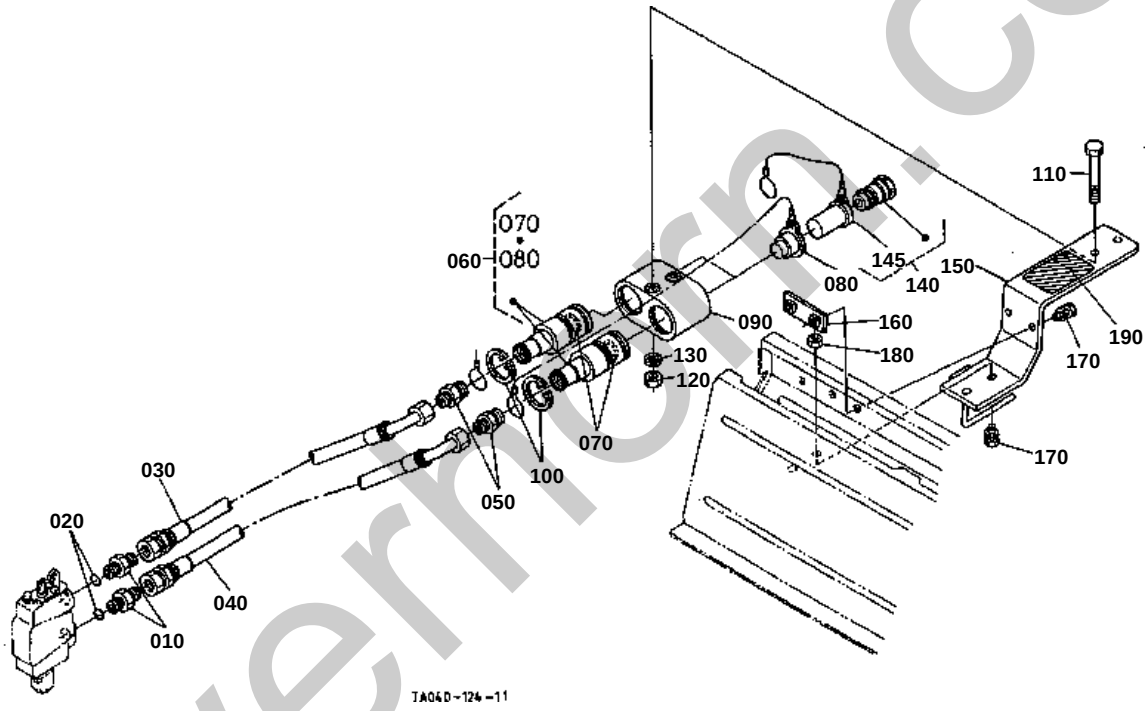

silvermorn.co.uk

REMOTE CONTROL VALVE COUPLER 1 [OPTION]

↔ Interchangeable; ≠ not interchangeable; ← new for old; → old for new

REF.No	Part No.	Description	Q'ty	S.No.	I/C	REMARKS	Weight (kgf)	Weight (lb)
010	70726-61130	ADAPTER	2				0.055	0.121
020	04811-00140	O RING	2				0.001	0.0022
020	04817-00140	O RING	2		←		0	0
030	TA040-96410	HOSE AUX.CONT.VALVE	1				0.308	0.6776
040	TA040-96420	HOSE AUX.CONT.VALVE	1				0.314	0.6908
050	99063-93410	ADAPTER	2				0.07	0.154
060	35861-82032	ASSY COUPLER FEMALE	2				0.32	0.704
070	35861-94510	O RING	2				0.002	0.0044
080	35861-94520	PLUG COUPLER	2				0.005	0.011
090	35893-82610	SUPPORT COUPLER	1				0.715	1.573
100	04611-00380	CIR CLIP INTERNAL	2				0.004	0.0088
110	01153-50865	BOLT	2				0.025	0.055
120	02156-50080	NUT	2				0.004	0.0088
130	04512-60080	WASHER SPRING	2				0.002	0.0044
140	35861-82190	ASSY COUPLER MALE	2				0.086	0.1892
145	35861-94530	CAP	2				0.007	0.0154
150	TA040-96480	STAY COUPLER	1				1.12	2.464
160	TA040-96490	STAY COUPLER	1				0.073	0.1606
170	01123-50820	BOLT	4				0.011	0.0242
180	02114-50080	NUT	2				0.005	0.011
190	TA040-49670	MARK COUPLER	1				0.001	0.0022

silverhorn.co.uk

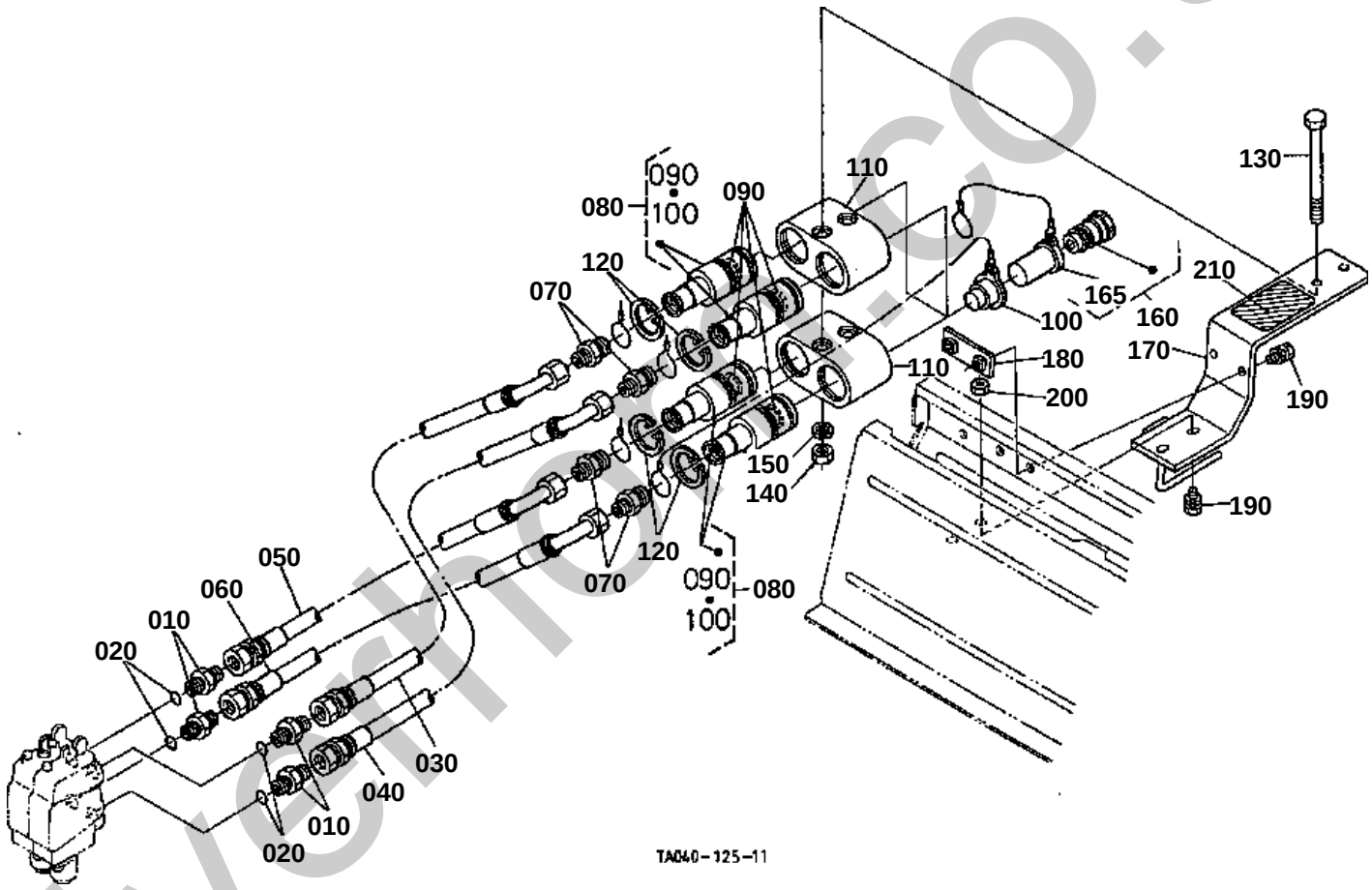

silverhoe.co.uk

REMOTE CONTROL VALVE COUPLER 2 [OPTION]

↔ Interchangeable; ≠ not interchangeable; ← new for old; → old for new

REF.No	Part No.	Description	Q'ty	S.No.	I/C	REMARKS	Weight (kgf)	Weight (lb)
010	70726-61130	ADAPTER	4				0.055	0.121
020	04811-00140	O RING	4				0.001	0.0022
020	04817-00140	O RING	4		←		0	0
030	TA040-96410	HOSE AUX.CONT.VALVE	1				0.308	0.6776
040	TA040-96420	HOSE AUX.CONT.VALVE	1				0.314	0.6908
050	TA040-96430	HOSE AUX.CONT.VALVE	1				0.295	0.649
060	TA040-96440	HOSE AUX.CONT.VALVE	1				0.302	0.6644
070	99063-93410	ADAPTER	4				0.07	0.154
080	35861-82032	ASSY COUPLER FEMALE	4				0.32	0.704
090	35861-94510	O RING	4				0.002	0.0044
100	35861-94520	PLUG COUPLER	4				0.005	0.011
110	35893-82610	SUPPORT COUPLER	2				0.715	1.573
120	04611-00380	CIR CLIP INTERNAL	4				0.004	0.0088
130	01153-50802	BOLT	2				0.045	0.099
140	02156-50080	NUT	2				0.004	0.0088
150	04512-60080	WASHER SPRING	2				0.002	0.0044
160	35861-82190	ASSY COUPLER MALE	4				0.086	0.1892
165	35861-94530	CAP	4				0.007	0.0154
170	TA040-96480	STAY COUPLER	1				1.12	2.464
180	TA040-96490	STAY COUPLER	1				0.073	0.1606
190	01123-50820	BOLT	4				0.011	0.0242
200	02114-50080	NUT	2				0.005	0.011
210	TA040-49620	MARK COUPLER	1				0.001	0.0022

silverhorn.co.uk

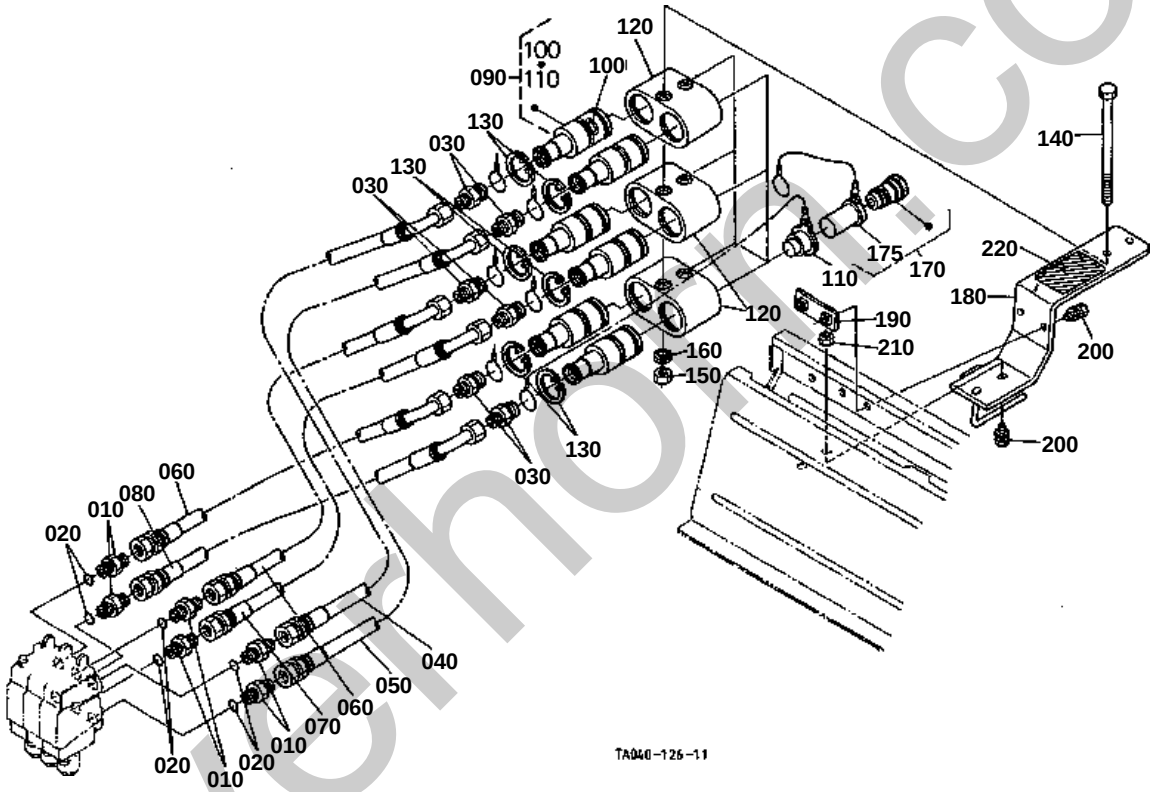

silverhorn.co.uk

REMOTE CONTROL VALVE COUPLER 3 [OPTION]

↔ Interchangeable; ≠ not interchangeable; ← new for old; → old for new

REF.No	Part No.	Description	Q'ty	S.No.	I/C	REMARKS	Weight (kgf)	Weight (lb)
010	70726-61130	ADAPTER	6				0.055	0.121
020	04811-00140	O RING	6				0.001	0.0022
020	04817-00140	O RING	6		←		0	0
030	99063-93410	ADAPTER	6				0.07	0.154
040	TA040-96410	HOSE AUX.CONT.VALVE	1				0.308	0.6776
050	TA040-96420	HOSE AUX.CONT.VALVE	1				0.314	0.6908
060	TA040-96430	HOSE AUX.CONT.VALVE	2				0.295	0.649
070	TA040-96440	HOSE AUX.CONT.VALVE	1				0.302	0.6644
080	TA040-96450	HOSE AUX.CONT.VALVE	1				0.3	0.66
090	35861-82032	ASSY COUPLER FEMALE	6				0.32	0.704
100	35861-94510	O RING	6				0.002	0.0044
110	35861-94520	PLUG COUPLER	6				0.005	0.011
120	35893-82610	SUPPORT COUPLER	3				0.715	1.573
130	04611-00380	CIR CLIP INTERNAL	6				0.004	0.0088
140	35340-99540	BOLT	2				0.06	0.132
150	02156-50080	NUT	2				0.004	0.0088
160	04512-60080	WASHER SPRING	2				0.002	0.0044
170	35861-82190	ASSY COUPLER MALE	6				0.086	0.1892
175	35861-94530	CAP	6				0.007	0.0154
180	TA040-96480	STAY COUPLER	1				1.12	2.464
190	TA040-96490	STAY COUPLER	1				0.073	0.1606
200	01123-50820	BOLT	4				0.011	0.0242
210	02114-50080	NUT	2				0.005	0.011
220	TA040-49640	MARK COUPLER	1				0.002	0.0044

silverhorn.co.uk

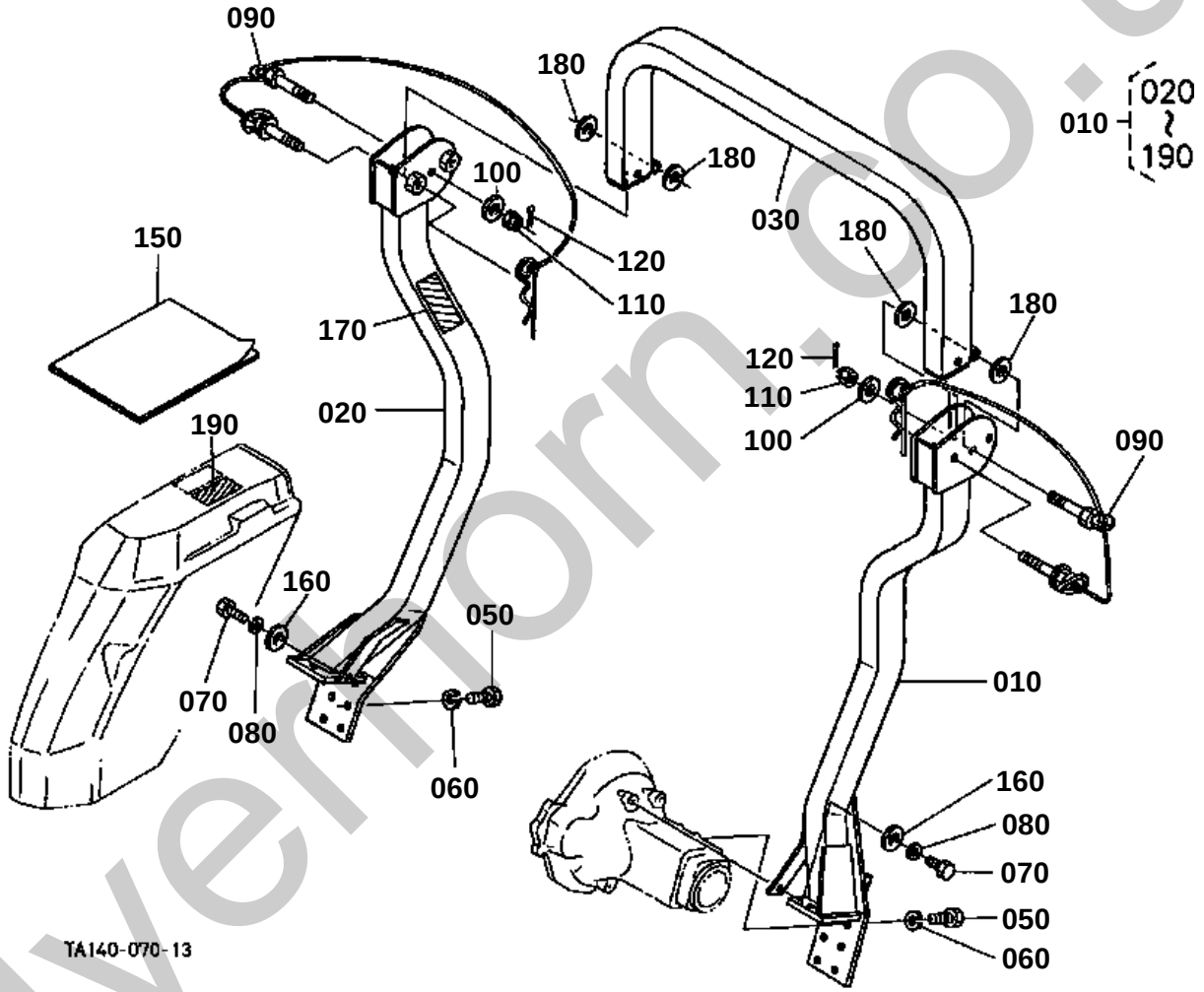

silvermorn.co.uk

↔ Interchangeable; ≠ not interchangeable; ← new for old; → old for new

REF.No	Part No.	Description	Q'ty	S.No.	I/C	REMARKS	Weight (kgf)	Weight (lb)
010	TA240-48012	ASSY ROPS	1				0	0
020	99999-99999	COMP.FRAME LH	1				0	0
030	99999-99999	COMP.FRAME RH	1				0	0
040	99999-99999	COMP UPPER FRAME	1				0	0
050	01176-51430	BOLT	12				0.052	0.1144
060	75599-33016	WASHER SPRING	12				0.08	0.176
070	01173-51230	BOLT	2				0.037	0.0814
080	04512-60120	WASHER SPRING	2				0.005	0.011
090	TA240-48464	ASSY BOLT SET	2				0	0
100	04013-60160	WASHER PLAIN	2				0.01	0.022
110	TA240-48362	NUT	2				0	0
120	75599-53194	PIN COTTER	2				0	0
130	99999-99999	BLANK	0				0	0
140	99999-99999	BLANK	0				0	0
150	TA240-48495	MANUAL INSTRUCTION	1				0	0
160	75599-32015	WASHER PLAIN	2				0	0
170	3A111-95540	LABEL ROPS CAUTION	1				0	0
180	75599-32017	WASHER PLAIN	4				0	0
190	TA240-98480	LABEL ROPS WARNING	1				0.005	0.011

silverhorn.co.uk

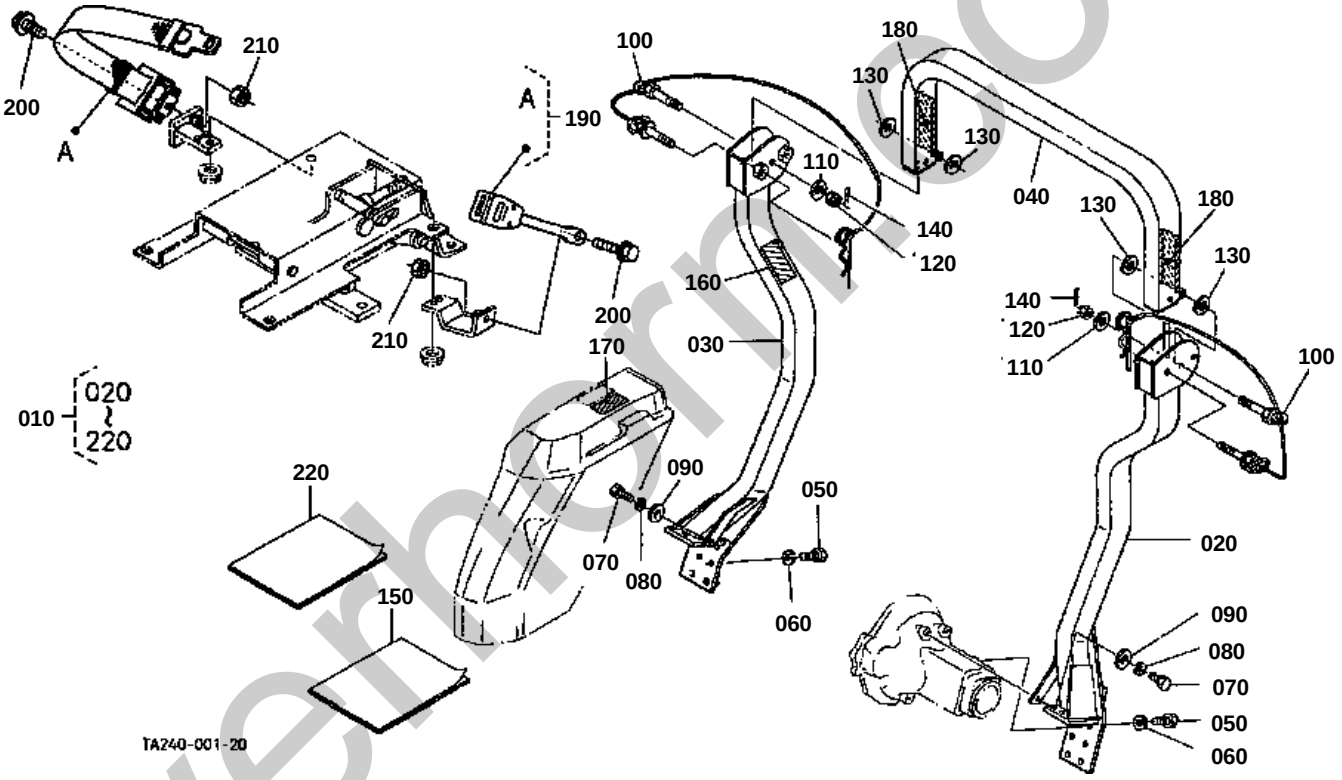

silverhorse.co.uk

↔ Interchangeable; ≠ not interchangeable; ← new for old; → old for new

REF.No	Part No.	Description	Q'ty	S.No.	I/C	REMARKS	Weight (kgf)	Weight (lb)
010	TA240-48442	KIT ROPS REPLACEMENT	1	<=75110			0	0
010	TA240-48442	KIT ROPS REPLACEMENT	1	>=75111	←		0	0
020	99999-99999	COMP.FRAME LH	1				0	0
030	99999-99999	COMP.FRAME RH	1				0	0
040	99999-99999	PLATE	1				0	0
050	01176-51430	BOLT	12				0.052	0.1144
060	0Y450-50090	WASHER SPRING	12				0	0
070	01073-51230	BOLT	2				0.041	0.0902
080	04512-60120	WASHER SPRING	2				0.005	0.011
090	04013-60120	WASHER PLAIN	2				0.01	0.022
100	TA240-48750	SET BOLT	2	<=73292		NOT SALE	0.435	0.957
100	TA240-48752	SET BOLT	2	>=73293	←		0	0
110	04013-60160	WASHER PLAIN	2				0.01	0.022
120	02254-50160	NUT	2				0.04	0.088
130	04013-60160	WASHER PLAIN	4				0.01	0.022
140	05511-50430	PIN SPLIT	2				0.004	0.0088
150	99999-99999	MANUAL INSTRUCTION	1				0	0
160	3A111-95540	LABEL ROPS CAUTION	1			ENGLISH	0	0
160	3A112-95540	LABEL ROPS CAUTION	1			FRENCH	0.003	0.0066
170	TA240-98480	LABEL ROPS WARNING	1			ENGLISH	0.005	0.011
170	3A112-98480	LABEL ROPS WARNING	1			FRENCH	0.004	0.0088
180	6C140-54990	REFLECTOR LABEL	1	>=75111			0.003	0.0066
190	6C040-72252	ASSY BELT SEAT	1	<=75110		NOT SALE	0.9	1.98
190	6C040-72253	ASSY BELT SEAT	1	>=75111	←		0.9	1.98
190	TA040-18503	ASSY BELT SEAT	1			OUT OF USE	0.825	1.815
200	01774-51025	BOLT FLANGE	2				0.02	0.044
210	02116-50100	NUT	2				0.004	0.0088
220	TA240-48680	MANUAL INSTRUCTION	1				0.025	0.055

silverhorn.co.uk

Blank Page Inserted

silverhorn.co.uk