Instructions for Parts Books

The heading at the top of the page will be the same for the picture of the parts at it is for the page with the part numbers.

Definition of column headings on part number pages:

REF.No → The number refering to the part on the picture page of the parts book.

Part No. → The number assigned to this part at the time of printing the parts book.

Description → Discription of part.

Q'ty → Quanity of part used on that page.

S.No. → Serial number range of the equipment that this part will fit.
>= Your serial number should be greater than or equal to the number shown.
<= Your serial number should be lesser than or equal to the serial number shown.

I/C → Interchangeability of part shown.
←→ The part shown will work for the older and later serial number.
The part shown is not interchangable with the other serial number.
← new for old
→ old for new

Remarks → Notes about this particulart part. Sometimes this may say except [FR] or [CA]

Note about Country Codes:

The parts books we use in the United States of America may also contain information about a part that would be different in another country. It is important that you are aware of the country codes in some instances.

Symbol	Country
A	United States of America
CA	Canada
FR	France
GR	Greece
PO	Portugal
AU	Australia

If the remarks column says for example EXCEPT [FR] this part works in all countries except France.
That means it will work here in the USA.

silverhorn.co.uk

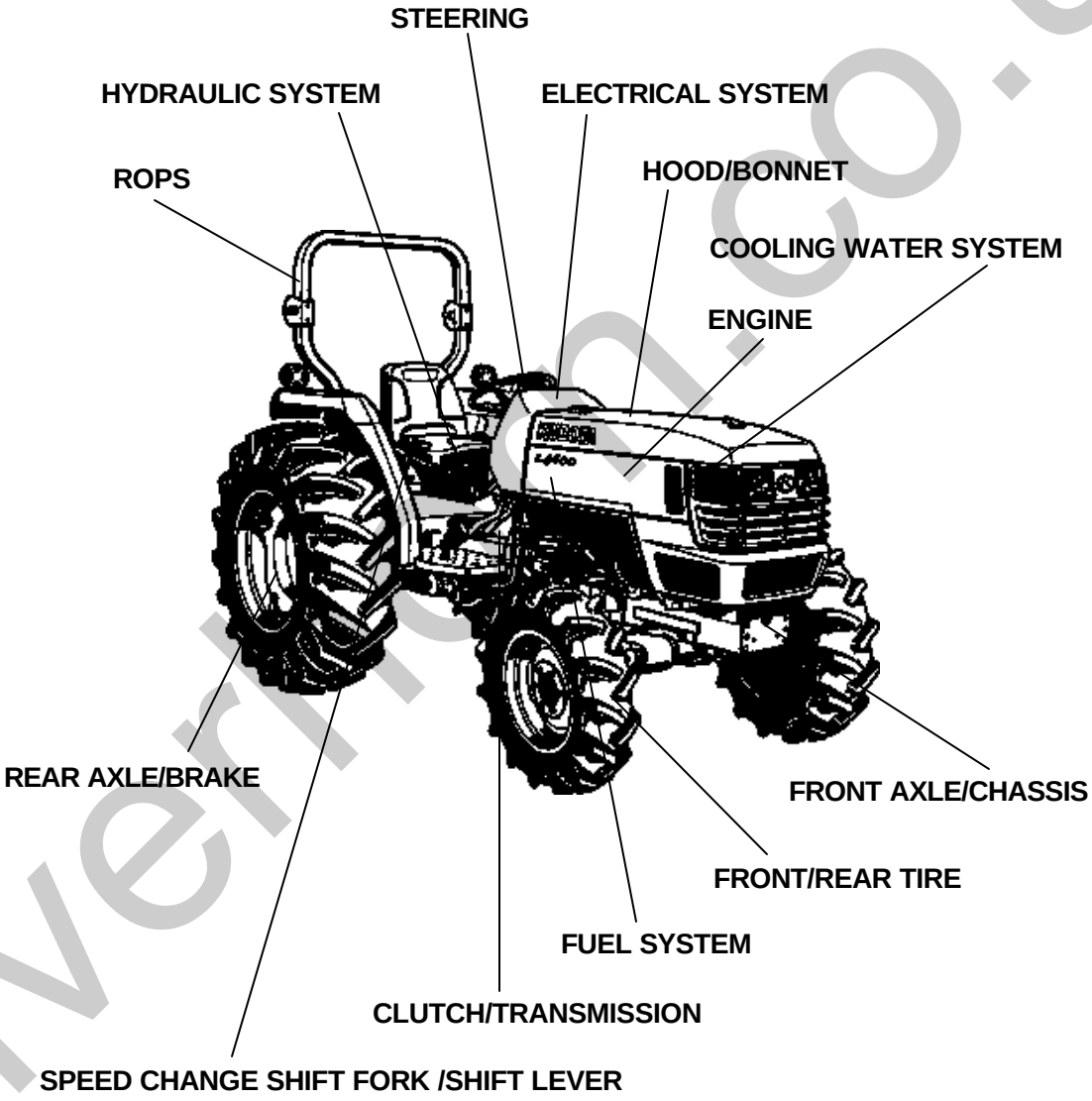

3-POINT LINKAGE/DRAWBAR/HITCH

LABELS

ACCESSORIES AND SERVICE PARTS

OPTION

silverfern.co.uk

Item	Part No.	Description	Book
ENGINE	010001	CRANKCASE	100K0825
	010002	OIL PAN	100K0825
	010003	CYLINDER HEAD	100K0825
	010004	GEAR CASE	100K0825
	010005	HEAD COVER	100K0825
	010100	MAIN BEARING CASE	100K0825
	010101	CAMSHAFT AND IDLE GEAR SHAFT	100K0825
	010102	PISTON AND CRANKSHAFT	100K0825
	01010302	FLYWHEEL	100K0825
	010105	FUEL CAMSHAFT	100K0825
	010200	ENGINE STOP LEVER	100K0825
	010202	INJECTION PUMP	100K0825
	010204	GOVERNOR	100K0825
	010205	SPEED CONTROL PLATE	100K0825
	010206	NOZZLE HOLDER AND GLOW PLUG	100K0825
	010207	NOZZLE HOLDER [COMPONENT PARTS]	100K0825
	010500	WATER FLANGE AND THERMOSTAT	100K0825
	010501	WATER PUMP	100K0825
	010600	VALVE AND ROCKER ARM	100K0825
	010601	INLET MANIFOLD	100K0825
	010603	EXHAUST MANIFOLD/MUFFLER	100K0825
	010604	AIR CLEANER	100K0825
	010901	UPPER GASKET KIT	100K0825
	010902	LOWER GASKET KIT	100K0825
	01A010	ACCELERATOR LEVER	100K0825
	01A025	ACCELERATOR LINKAGE	100K0825
FUEL SYSTEM	01A101	FUEL TANK	100K0825
	01A110	FUEL PIPE AND FUEL FILTER	100K0825
	01A130	FUEL FILTER [COMPONENT PARTS]	100K0825
COOLING WATER SYSTEM	01A401	FAN	100K0825
	01A410	WATER PIPE	100K0825
	01A420	RADIATOR	100K0825
	01A430	RESERVE TANK	100K0825
ELECTRICAL SYSTEM	01A515	ALTERNATOR	100K0825
	01A520	ALTERNATOR [COMPONENT PARTS]	100K0825
	01A525	STARTER	100K0825
	01A530	STARTER [COMPONENT PARTS]	100K0825
	01A535	BATTERY	100K0825
	01B102	SWITCH 1 / RELAY	100K0825
	01B103	SWITCH 2 / SENSOR	100K0825
	01B115	PANEL BOARD	100K0825
	01B120	PANEL BOARD [COMPONENT PARTS]	100K0825
	01B30301	HEAD LIGHT [OLD TYPE]	100K0825
	01B30302	HEAD LIGHT [NEW TYPE]	100K0825
	01B311	HAZARD LIGHT	100K0825
	01B312	REAR LAMP	100K0825
	01B501	ELECTRICAL WIRING	100K0825
CLUTCH/TRANSMISSION	01C101	CLUTCH	100K0825
	01C201	CLUTCH LEVER	100K0825
	01C301	CLUTCH PEDAL	100K0825
	01C40102	CLUTCH HOUSING	100K0825

silverhorse.co.uk

Item	Part No.	Description	Book
CLUTCH/TRANSMISSION	01C410	MID CASE	100K0825
	01C42002	TRANSMISSION CASE	100K0825
	01D101	MAIN SHAFT	100K0825
	01D105	COUNTERSHAFT	100K0825
	01D117	RANGE GEAR SHAFT	100K0825
	01D12502	SPIRAL BEVEL PINION	100K0825
	01D127	REAR DIFFERENTIAL	100K0825
	01D130	PTO COUNTERSHAFT	100K0825
	01D132	PTO CLUTCH	100K0825
	01D133	PTO CLUTCH [COMPONENT PARTS]	100K0825
	01D13502	PTO SHAFT	100K0825
SPEED CHANGE SHIFT FORK /SHIFT LEVER	01D201	MAIN GEAR SHIFT FORK	100K0825
	01D217	RANGE GEAR SHIFT FORK	100K0825
	01D225	DIFFERENTIAL LOCK SHIFT FORK	100K0825
	01E101	MAIN GEAR SHIFT LEVER	100K0825
	01E110	RANGE GEAR SHIFT LEVER	100K0825
	01E112	RANGE GEAR SHIFT ROD	100K0825
	01E126	PTO CLUTCH CONTROL LEVER	100K0825
	01E127	PTO CLUTCH VALVE [COMPONENT PARTS]	100K0825
	01E140	FRONT WHEEL DRIVE LEVER	100K0825
REAR AXLE/BRAKE	01E151	REAR AXLE LH	100K0825
	01E152	REAR AXLE RH	100K0825
	01E161	BRAKE LH	100K0825
	01E162	BRAKE RH	100K0825
	01E165	BRAKE ROD 1 (BRAKE PEDAL)	100K0825
	01E170	BRAKE ROD 2 (BRAKE CAM)	100K0825
	01E201	BRAKE PEDAL	100K0825
FRONT AXLE/CHASSIS	01F10502	FRONT AXLE FRAME	100K0825
	01F120	PROPELLER SHAFT	100K0825
	01F122	FRONT WHEEL DRIVE SHAFT	100K0825
	01F125	FRONT DIFFERENTIAL CASE	100K0825
	01F127	BEVEL GEAR (FRONT)	100K0825
	01F130	DIFFERENTIAL (FRONT)	100K0825
	01F141	FRONT AXLE CASE LH	100K0825
	01F142	FRONT AXLE CASE RH	100K0825
	01F145	DIFFERENTIAL GEAR SHAFT	100K0825
	01F150	FRONT AXLE	100K0825
STEERING	01G101	STEERING HANDLE	100K0825
	01G110	STEERING CONTROLLER	100K0825
	01G11701	STEERING SUPPORT [OLD TYPE]	100K0825
	01G11702	STEERING SUPPORT [NEW TYPE]	100K0825
	01G18002	STEERING CYLINDER	100K0825
	01G18502	STEERING CYLINDER [COMPONENT PARTS]	100K0825
HYDRAULIC SYSTEM	01H120	HYDRAULIC PUMP	100K0825
	01H125	HYDRAULIC PUMP [COMPONENT PARTS]	100K0825
	01H145	REGULATOR VALVE	100K0825
	01H205	HYDRAULIC OIL LINE(INLET)	100K0825
	01H210	HYDRAULIC OIL LINE(DELIVERY)	100K0825
	01H21502	HYDRAULIC OIL LINE (PS)	100K0825
	01H230	PTO HYDRAULIC OIL LINE	100K0825

silverhorse.co.uk

Item	Part No.	Description	Book
HYDRAULIC SYSTEM	01H235	HYDRAULIC OUTLET BLOCK	100K0825
	01H301	HYDRAULIC CYLINDER	100K0825
	01H320	LIFT ARM	100K0825
	01H330	FEED BACK LEVER	100K0825
	01H405	CONTROL VALVE	100K0825
	01H410	CONTROL VALVE [COMPONENT PARTS]	100K0825
	01H440	POSITION CONTROL LEVER	100K0825
3-POINT LINKAGE/DRAWBAR/HITCH	01J105	TOP LINK	100K0825
	01J110	3-POINT LINKAGE 1 (LOWER LINK)	100K0825
	01J115	3-POINT LINKAGE 2 (LIFT ROD)	100K0825
	01K105	DRAWBAR	100K0825
	01K125	PTO PROTECTOR	100K0825
HOOD/BONNET	01L101	FRONT GRILLE	100K0825
	01L102	HOOD(BONNET) FRONT SUPPORT	100K0825
	01L105	HOOD(BONNET)	100K0825
	01L110	HOOD(BONNET) SIDE	100K0825
	01L120	HOOD(BONNET) SIDE COVER	100K0825
	01L130	SHUTTER PLATE	100K0825
	01L135	HOOD(BONNET) REAR	100K0825
	01L210	FENDER	100K0825
	01L213	FENDER SUPPORT	100K0825
	01L217	FLOOR SEAT COVER / FENDER BRACKET	100K0825
	01L220	SEAT	100K0825
	01L225	STEP	100K0825
	01L240	TOOL BOX	100K0825
ROPS	01L30101	ROPS (RIGID TYPE)	100K0825
	01L30102	ROPS (FOLDABLE TYPE)	100K0825
HOOD/BONNET	01L501	SMV EMBLEM	100K0825
FRONT/REAR TIRE	01P10103	FRONT WHEEL (27*8.50-15)	100K0825
	01P10104	FRONT WHEEL (8.3-16)	100K0825
	01P10105	FRONT WHEEL (10.0-16.5)	100K0825
	01P10106	FRONT WHEEL (27-10.50LL15)	100K0825
	01P11001	REAR WHEEL (14.9-24)	100K0825
	01P11002	REAR WHEEL (44*18-20)	100K0825
	01P11003	REAR WHEEL (17.5L-24)	100K0825
LABELS	01R105	LABEL 1 (FRONT)	100K0825
	01R11002	LABEL 2 (REAR)	100K0825
ACCESSORIES AND SERVICE PARTS	01S105	ACCESSORIES AND SERVICE PARTS	100K0825
OPTION	01T121	FRONT BUMPER (W/G No.MX8068) [OPTION]	100K0825
	01T122	FRONT WEIGHT [OPTION]	100K0825
	01T130	POSITION CONTROL LEVER (WITH DRAFT) [OPTION]	100K0825
	01T135	DRAFT CONTROL LEVER (WITH DRAFT) [OPTION]	100K0825
	01T140	TOP LINK HOLDER (WITH DRAFT) [OPTION]	100K0825
	01T141	3-POINT LINKAGE 1 (LOWER LINK) [OPTION]	100K0825
	01T142	3-POINT LINKAGE 2 (LIFT ROD) [OPTION]	100K0825

silverhorn.co.uk

Item	Part No.	Description	Book
OPTION	01T15001	AUXILIARY CONTROL VALVE LEVER (1ST) [OPTION]	100K0825
	01T15002	AUXILIARY CONTROL VALVE LEVER (2ND) [OPTION]	100K0825
	01T15003	AUXILIARY CONTROL VALVE LEVER (2ND/FLOATING TYPE) [OPTION]	100K0825
	01T15004	AUXILIARY CONTROL VALVE LEVER (3RD) [OPTION]	100K0825
	01T15501	AUXILIARY CONTROL VALVE COUPLER (1ST) [OPTION]	100K0825
	01T15502	AUXILIARY CONTROL VALVE COUPLER (2ND) [OPTION]	100K0825
	01T15503	AUXILIARY CONTROL VALVE COUPLER (3RD) [OPTION]	100K0825

silverhorn.co.uk

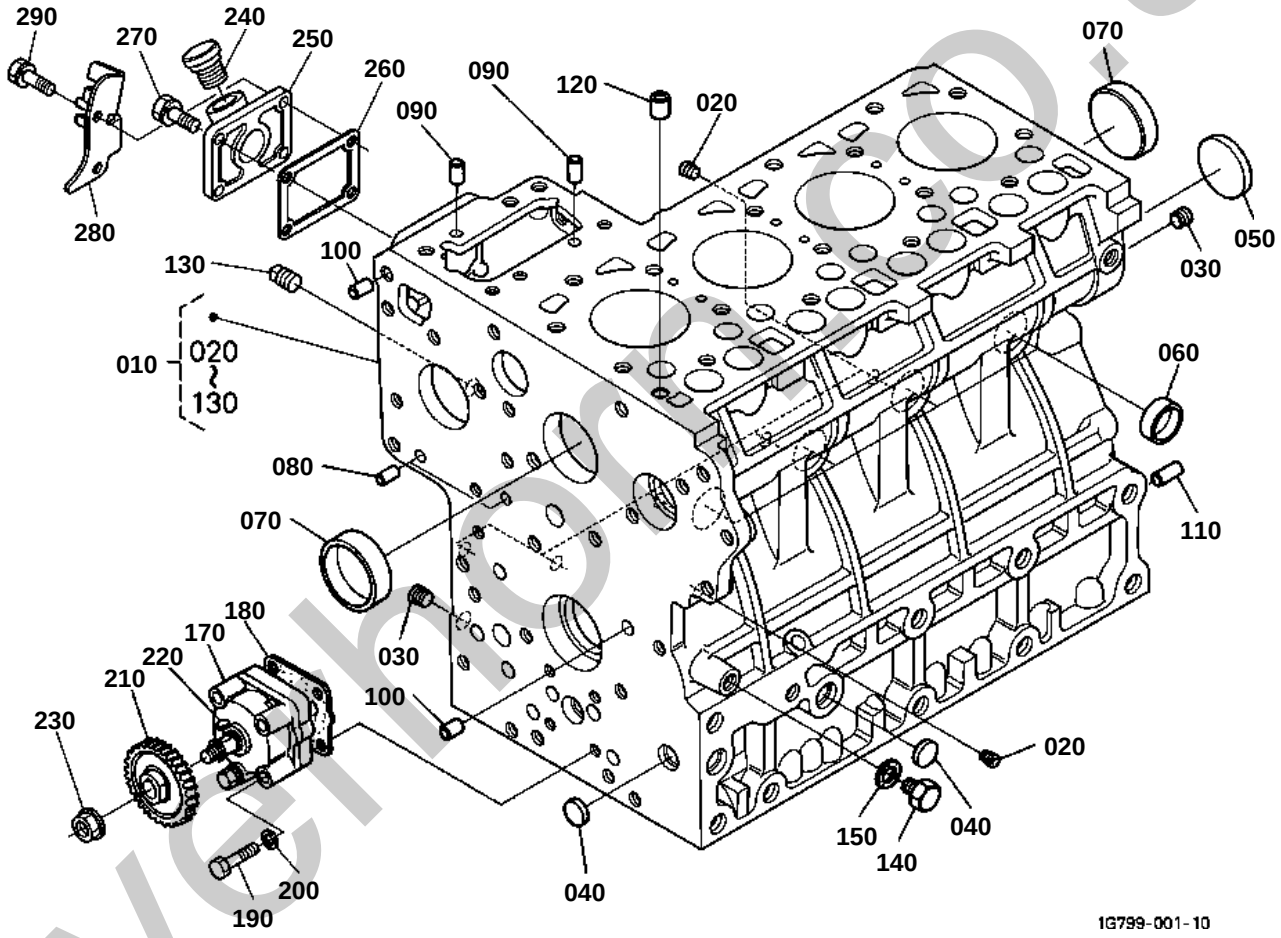

silverhorse.co.uk

CRANKCASE

↔ Interchangeable; ≠ not interchangeable; ← new for old; → old for new

REF.No	Part No.	Description	Q'ty	S.No.	I/C	REMARKS	Weight (kgf)	Weight (lb)
010	1G799-01010	COMP.CRANKCASE	1				54.5	119.9
020	15521-96020	PLUG	6				0.003	0.0066
030	15521-96030	PLUG	2				0.007	0.0154
040	17391-96160	PLUG EXPANSION	3				0.003	0.0066
050	16271-96160	PLUG EXPANSION	1				0.025	0.055
060	15221-03380	CAP SEALING	6				0.017	0.0374
070	15221-03390	CAP SEALING	2				0.03	0.066
080	05012-00408	PIN STRAIGHT	2				0.001	0.0022
090	05012-00609	PIN STRAIGHT	3				0.003	0.0066
100	05012-00612	PIN STRAIGHT	2				0.003	0.0066
110	05012-01018	PIN STRAIGHT	1				0.012	0.0264
120	15221-33650	PIN PIPE	1				0.004	0.0088
130	06312-10020	PLUG	1				0.016	0.0352
140	15469-33610	PLUG	1				0.008	0.0176
150	15021-33660	GASKET	1				0.001	0.0022
160	99999-99999	BLANK	0				0	0
170	15471-35013	ASSY PUMP OIL	1				0	0
180	1A021-35150	GASKET OIL PUMP	1				0.001	0.0022
190	01053-50650	BOLT	4				0.011	0.0242
200	04512-60060	WASHER SPRING	4				0.001	0.0022
210	19202-35660	GEAR OIL PUMP DRIVE	1				0.23	0.506
220	05712-00410	KEY FEATHER	1				0.001	0.0022
230	15221-35682	NUT FLANGE	1				0.014	0.0308
240	16427-33142	PLUG OIL FILLER	1				0.025	0.055
250	1A021-33110	FLANGE OIL FILLER	1				0.07	0.154
260	1A021-51660	GASKET PUMP COVER	1				0.003	0.0066
270	01023-50618	BOLT	2				0.006	0.0132
280	1A053-57482	BRACKET ACCEL.CABLE	1				0.077	0.1694
290	01023-50622	BOLT	2				0.005	0.011

silverhorn.co.uk

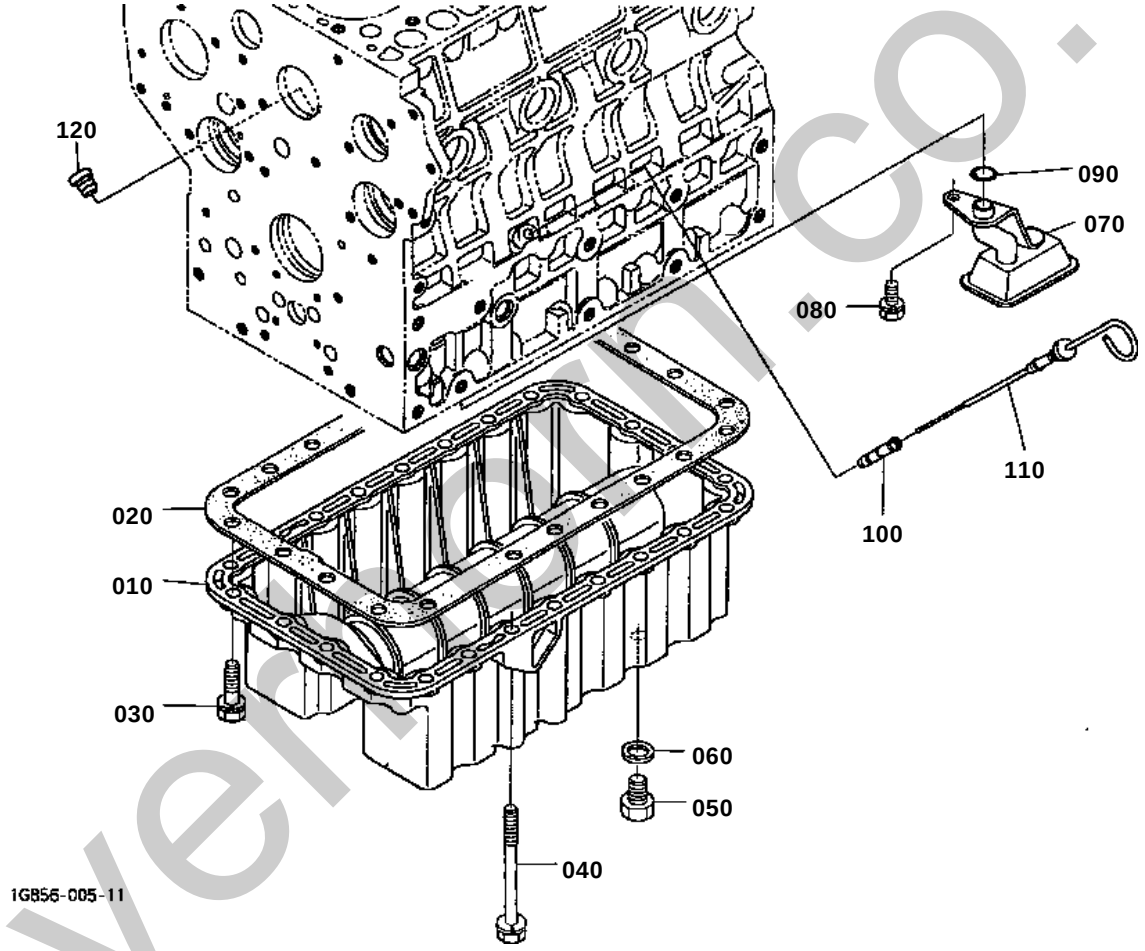

silvermini.co.uk

OIL PAN

↔ Interchangeable; ≠ not interchangeable; ← new for old; → old for new

REF.No	Part No.	Description	Q'ty	S.No.	I/C	REMARKS	Weight (kgf)	Weight (lb)
010	17341-01610	OIL PAN	1				4.1	9.02
020	1A091-01620	GASKET OIL PAN	1				0.018	0.0396
030	01133-51028	BOLT	22				0.027	0.0594
040	17377-91010	BOLT	2				0.08	0.176
050	16427-33750	PLUG DRAIN	2				0.03	0.066
060	6C090-58960	GASKET	2				0.002	0.0044
070	15411-32110	FILTER OIL	1				0.24	0.528
080	01123-60814	BOLT	1				0.01	0.022
090	04817-00160	O RING	1				0.001	0.0022
100	17456-36420	GUIDE OIL GAUGE	1				0.03	0.066
110	1G851-36413	GAUGE OIL	1				0.04	0.088
120	1G513-36550	PLUG OIL GAUGE	1				0	0

silverhorn.co.uk

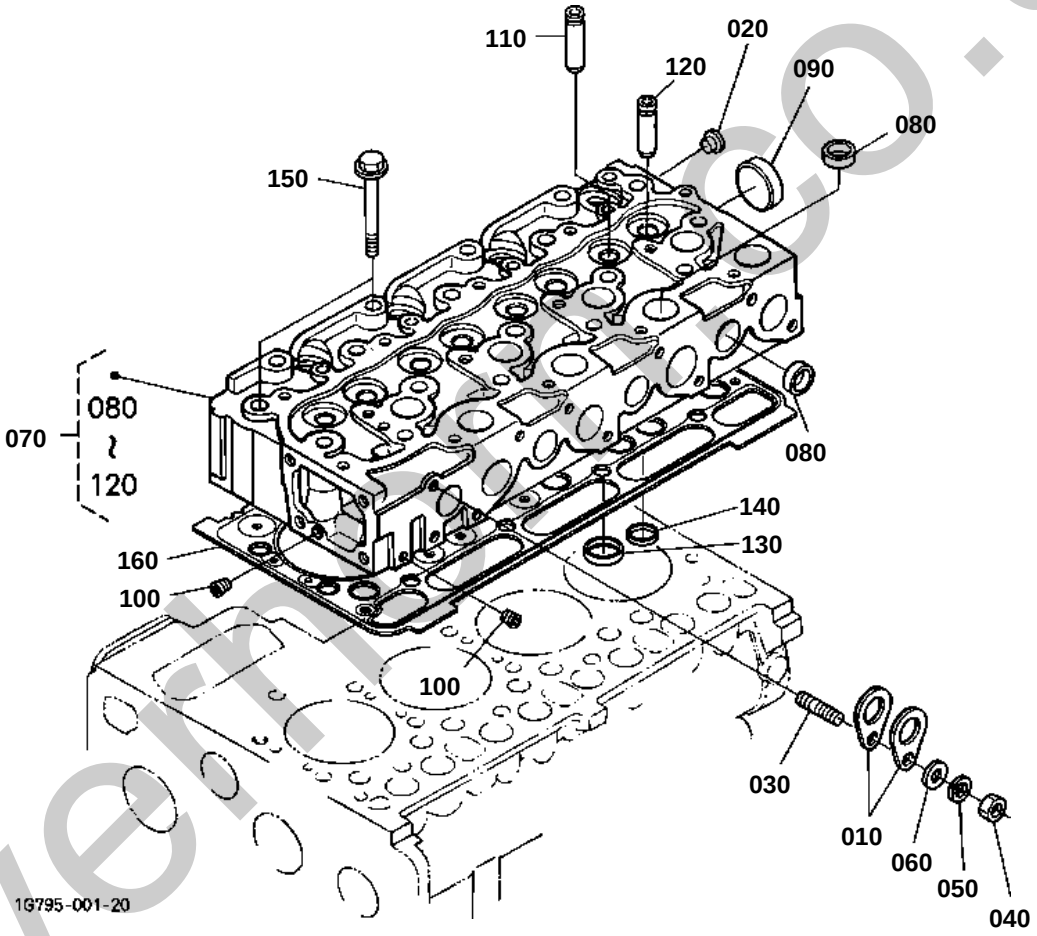

silvermacco.uk

CYLINDER HEAD

↔ Interchangeable; ≠ not interchangeable; ← new for old; → old for new

REF.No	Part No.	Description	Q'ty	S.No.	I/C	REMARKS	Weight (kgf)	Weight (lb)
010	15221-01750	HOOK ENGINE	2				0.04	0.088
020	09980-10075	CAP PROTECTOR	1				0.001	0.0022
030	15471-91530	STUD	1				0.01	0.022
040	02156-50080	NUT	1				0.004	0.0088
050	04512-60080	WASHER SPRING	1				0.002	0.0044
060	04012-50080	WASHER PLAIN	1				0.001	0.0022
070	1G780-03043	COMP.CYLINDER HEAD	1				20	44
080	15221-03370	CAP SEALING	12				0.01	0.022
090	15221-03490	CAP SEALING	1				0.02	0.044
100	15261-96010	PLUG	2				0.002	0.0044
110	17321-13580	GUIDE INLET VALVE	4				0.015	0.033
120	1C010-13560	GUIDE VALVE EXHAUST	4				0.025	0.055
130	16415-13620	SEAT INLET VALVE	4				0.01	0.022
140	16415-13612	SEAT EXHAUST VALVE	4				0.01	0.022
150	19013-03450	BOLT CYLINDER HEAD	18				0.077	0.1694
160	1G790-03312	GASKET CYLINDER HEAD	1				0.29	0.638

silverhorn.co.uk

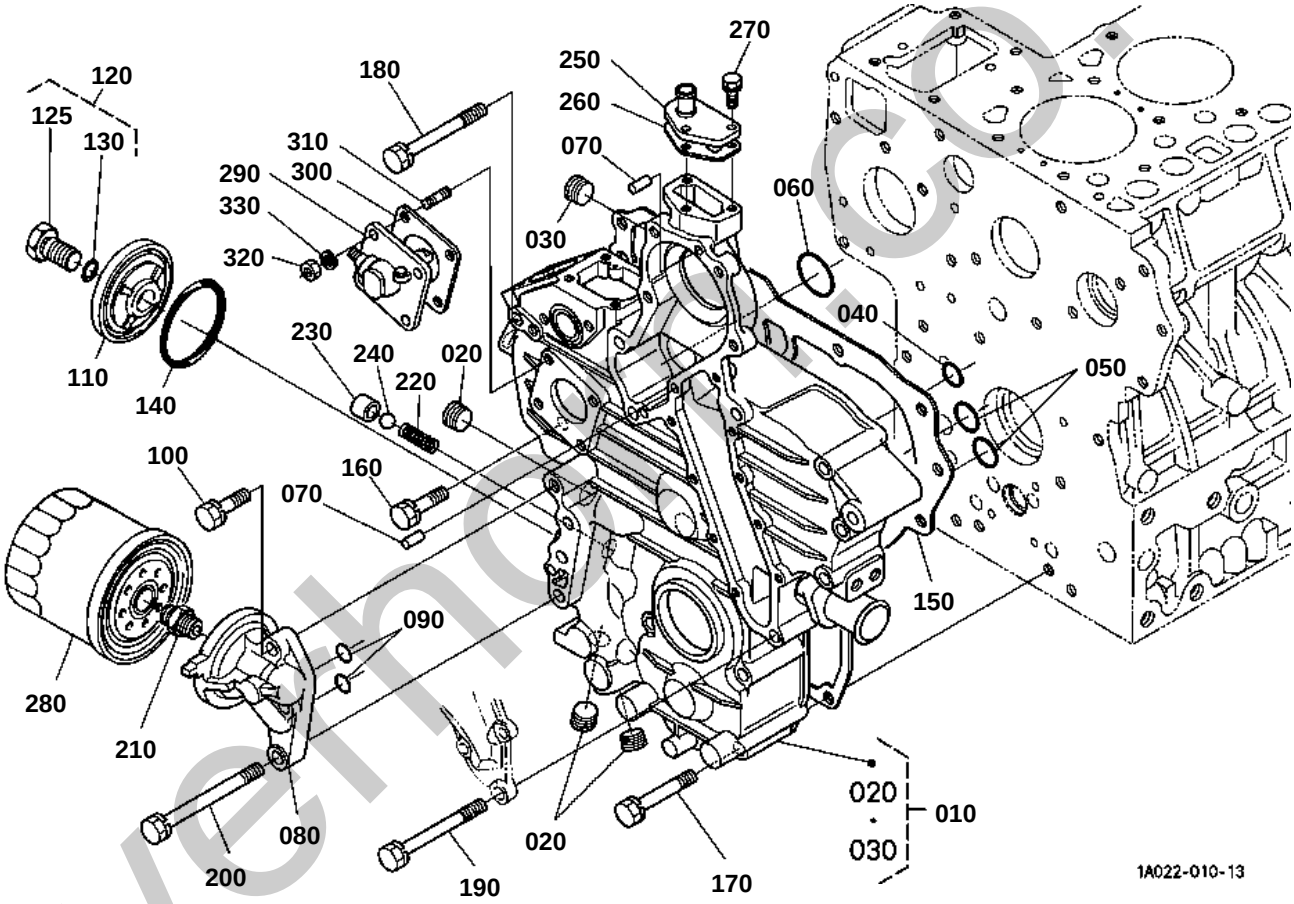

silverhoe.co.uk

Kubota

GEAR CASE

↔ Interchangeable; ≠ not interchangeable; ← new for old; → old for new

REF.No	Part No.	Description	Q'ty	S.No.	I/C	REMARKS	Weight (kgf)	Weight (lb)
010	1A033-04025	COMP.CASE GEAR	1				3.8	8.36
020	16241-96020	PLUG	3				0.015	0.033
030	1A021-96020	PLUG	1				0.015	0.033
040	04817-00150	O RING	1				0.001	0.0022
050	04817-00220	O RING	2				0.001	0.0022
060	04817-00360	O RING	1				0.001	0.0022
070	05012-00612	PIN STRAIGHT	2				0.003	0.0066
080	1G742-32610	BASE OIL FILTER	1				0	0
090	04817-00150	O RING	2				0.001	0.0022
100	01123-50835	BOLT	1				0.02	0.044
110	17331-32880	COVER	1				0.075	0.165
120	17331-32910	COMP BOLT	1				0.07	0.154
125	17331-32900	BOLT	1				0.06	0.132
130	04817-00150	O RING	1				0.001	0.0022
140	19202-96830	O RING	1				0.01	0.022
150	1A021-04130	GASKET GEAR CASE	1				0.019	0.0418
160	01123-50835	BOLT	1				0.02	0.044
170	01123-50870	BOLT	7				0.029	0.0638
180	17367-91010	BOLT	2				0.005	0.011
190	17367-91020	BOLT	3				0.035	0.077
200	1A021-91010	BOLT	2				0.045	0.099
210	1A021-32290	JOINT PIPE	1				0.05	0.11
220	15241-36950	SPRING	1				0.004	0.0088
230	15521-36930	SEAT VALVE	1				0.015	0.033
240	07715-03213	BALL	1				0.004	0.0088
250	15521-73320	FLANGE WATER RETURN	1				0.04	0.088
260	1A021-73330	GASKET RETURN FLANGE	1				0.001	0.0022
270	01023-50620	BOLT	3				0.006	0.0132
280	16414-32430	CARTRIDGE OIL FILTER	1				0.54	1.188
290	38240-34660	ASSY GEAR CASE H/M	1				0.335	0.737
300	1G751-88130	GASKET HOUR METER	1				0.001	0.0022
310	15221-88210	STUD	4				0.005	0.011
320	02056-50060	NUT	4				0.002	0.0044
330	04512-60060	WASHER SPRING	4				0.001	0.0022

silvermorn.co.uk

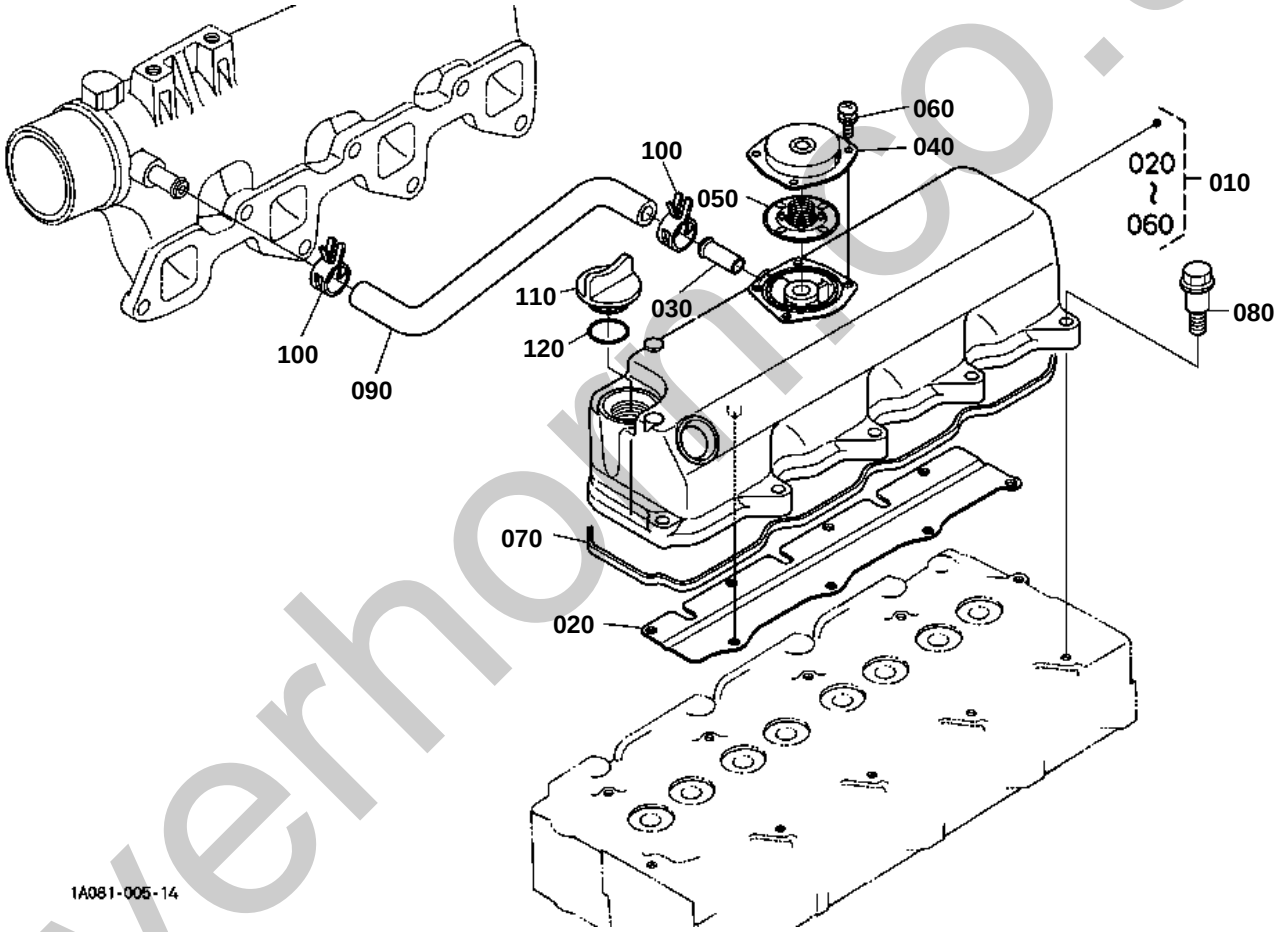

silverhorse.co.uk

HEAD COVER

↔ Interchangeable; ≠ not interchangeable; ← new for old; → old for new

REF.No	Part No.	Description	Q'ty	S.No.	I/C	REMARKS	Weight (kgf)	Weight (lb)
010	1G790-14504	ASSY COVER CYL.HEAD	1				1.6	3.52
020	1G911-05370	SHIELD BREATHER	1				0.14	0.308
030	17331-73342	PIPE WATER RETURN	1				0.01	0.022
040	1G801-05120	COVER BREATHER	1				0	0
050	1G911-05202	COMP.VALVE BREATHER	1				0.01	0.022
060	03024-50510	SCREW WITH WASHER	4				0.002	0.0044
070	1G911-14523	GASKET HEAD COVER	1				0.025	0.055
080	1G911-91022	BOLT	10				0.015	0.033
090	1G780-05510	TUBE BREATHER	1				0.06	0.132
100	09318-88180	CLAMP HOSE	2				0.01	0.022
110	15852-33140	PLUG OIL FILLER	1				0.038	0.0836
120	04817-50300	O RING	1				0.001	0.0022

silverhorn.co.uk

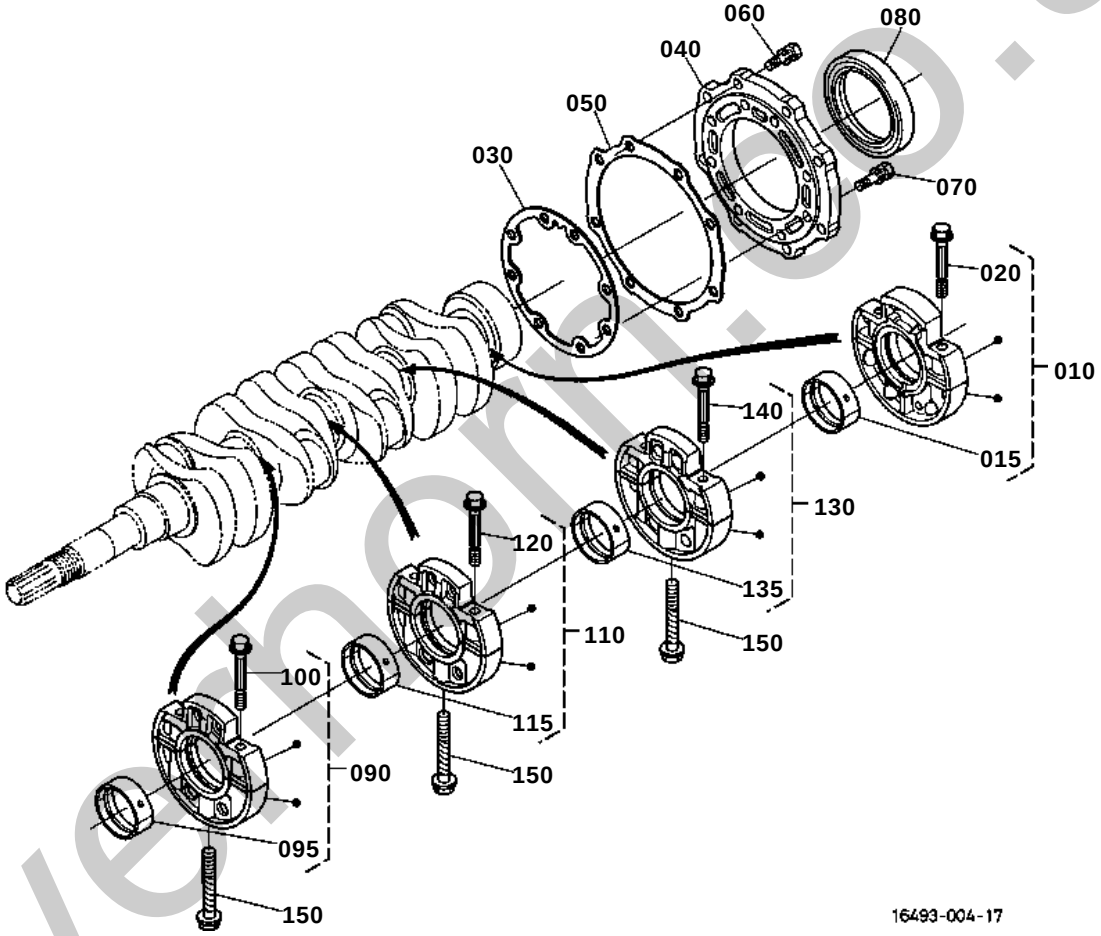

silvermoor.co.uk

MAIN BEARING CASE

↔ Interchangeable; ≠ not interchangeable; ← new for old; → old for new

REF.No	Part No.	Description	Q'ty	S.No.	I/C	REMARKS	Weight (kgf)	Weight (lb)
010	1A041-07093	ASSY BRG.CASE WHEEL	1				1.34	2.948
015	1A091-23480	METAL CRANKSHAFT	1			STD/SET	0.05	0.11
020	1A091-04540	BOLT BEARING CASE	2				0.035	0.077
030	1A091-04362	GASKET BEARING CASE	1				0.005	0.011
040	1G851-04812	COVER BEARING CASE	1				0.495	1.089
050	1A091-04820	GASKET CASE COVER	1				0.006	0.0132
060	01123-50825	BOLT	8				0.013	0.0286
070	01123-50828	BOLT	8				0.014	0.0308
080	19202-04460	SEAL OIL	1				0.055	0.121
090	1A091-07043	ASSY BRG.CASE MAIN	1				1.34	2.948
095	1A091-23480	METAL CRANKSHAFT	1			STD/SET	0.05	0.11
100	1A091-04540	BOLT BEARING CASE	2				0.035	0.077
110	1A091-07053	ASSY BRG.CASE MAIN	1				1.34	2.948
115	1A091-23480	METAL CRANKSHAFT	1			STD/SET	0.05	0.11
120	1A091-04540	BOLT BEARING CASE	2				0.035	0.077
130	1A091-07063	ASSY BRG.CASE MAIN	1				1.445	3.179
135	1A091-23480	METAL CRANKSHAFT	1			STD/SET	0.05	0.11
140	1A091-04540	BOLT BEARING CASE	2				0.035	0.077
150	15601-04560	BOLT BEARING CASE	3				0.06	0.132

silverhorn.co.uk

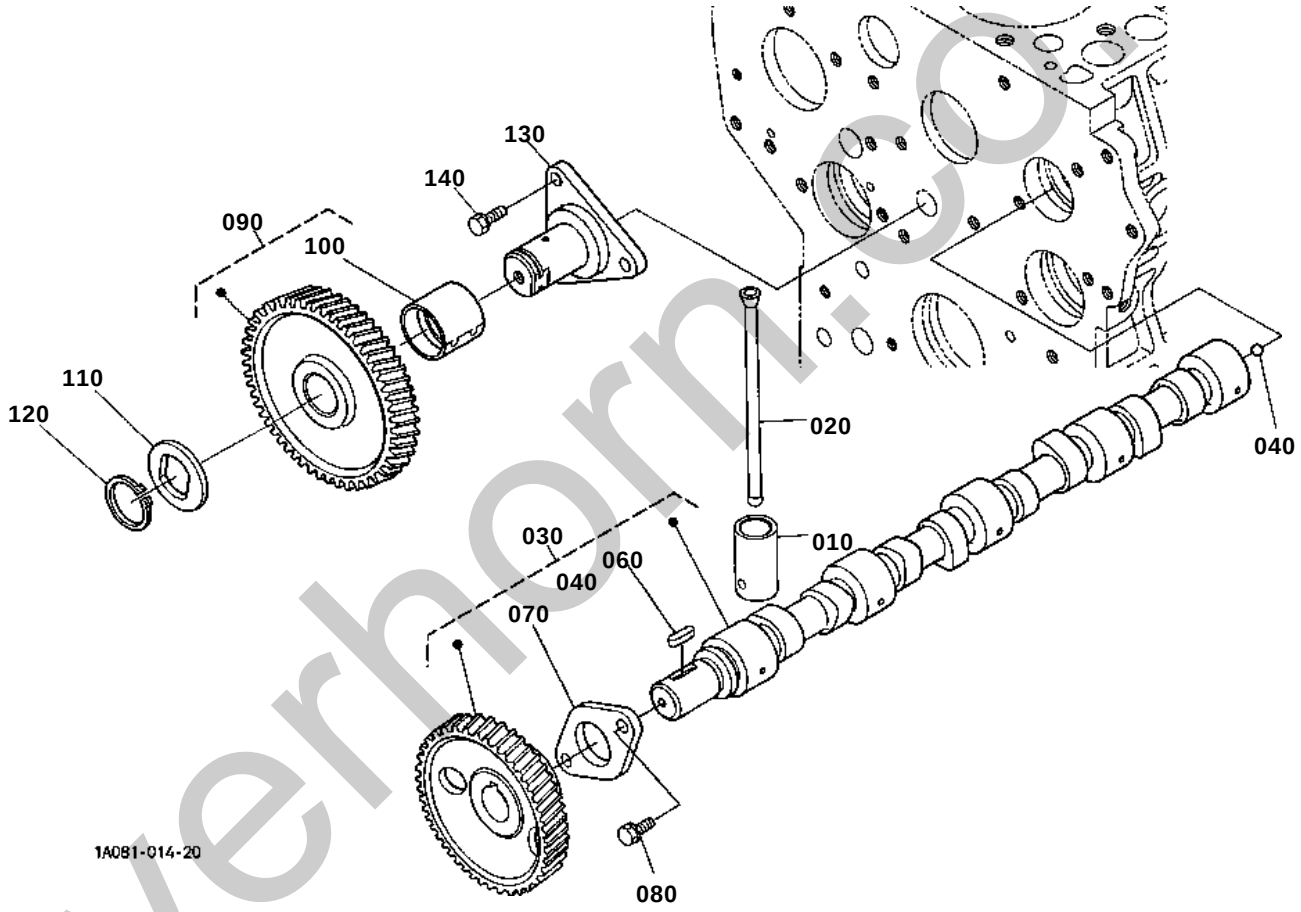

silverhorn.co.uk

CAMSHAFT AND IDLE GEAR SHAFT

↔ Interchangeable; ≠ not interchangeable; ← new for old; → old for new

REF.No	Part No.	Description	Q'ty	S.No.	I/C	REMARKS	Weight (kgf)	Weight (lb)
010	15601-15550	TAPPET	8				0.08	0.176
020	19013-15110	PUSH ROD	8				0.05	0.11
030	1A091-16010	ASSY CAMSHAFT	1				2.73	6.006
040	07715-00401	BALL	1				0.001	0.0022
050	99999-99999	BLANK	0				0	0
060	05712-00720	KEY FEATHER	1				0.008	0.0176
070	15221-16270	STOPPER CAMSHAFT	1				0.073	0.1606
080	01123-50818	BOLT	2				0.012	0.0264
090	1A091-24010	COMP.GEAR IDLE	1				1.21	2.662
100	1A021-24980	BUSH IDLE GEAR	1				0.072	0.1584
110	1A021-24370	COLLAR	1				0.022	0.0484
120	15451-95400	CIR CLIP EXTERNAL	1				0.01	0.022
130	1A021-24252	SHAFT IDLE GEAR	1				0.685	1.507
140	01123-50818	BOLT	3				0.012	0.0264

silverhorn.co.uk

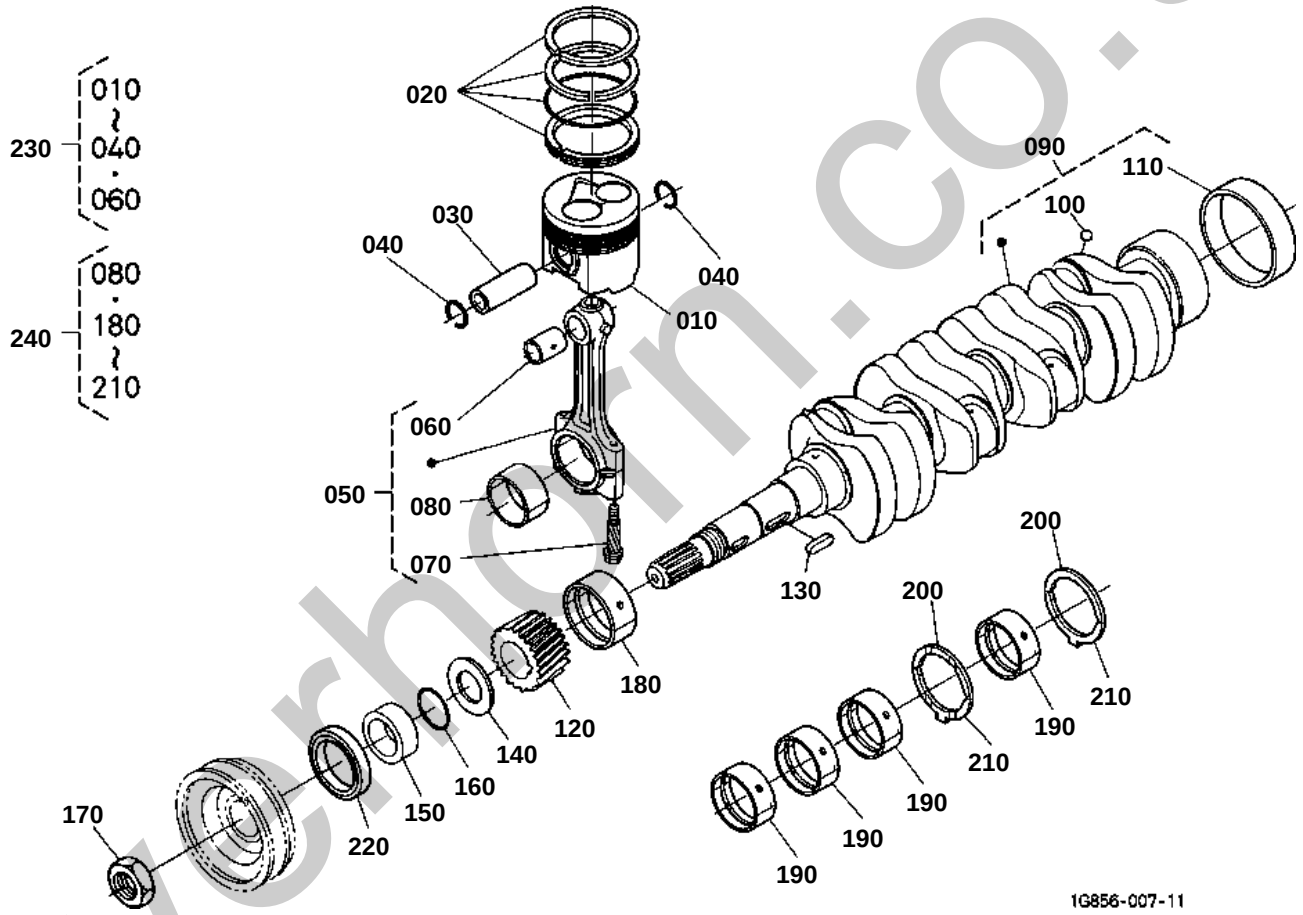

silverhorn.co.uk

PISTON AND CRANKSHAFT

↔ Interchangeable; ≠ not interchangeable; ← new for old; → old for new

REF.No	Part No.	Description	Q'ty	S.No.	I/C	REMARKS	Weight (kgf)	Weight (lb)
010	1A091-21113	PISTON	4			STD	0.545	1.199
010	1A091-21903	PISTON	4			+0.25mm	0.545	1.199
020	1A091-21050	ASSY PISTON RING	4			STD	0.055	0.121
020	1A091-21090	ASSY PISTON RING	4			+0.25mm	0.045	0.099
030	14901-21310	PIN PISTON	4				0.17	0.374
040	1G279-21330	CIR CLIP INTERNAL	8				0.001	0.0022
050	17311-22010	ASSY CONNECTING ROD	4				0.885	1.947
060	17331-21980	BUSH PISTON PIN	4				0.025	0.055
070	15521-22142	BOLT CONNECTING ROD	8				0.026	0.0572
080	17311-22310	METAL CRANKPIN	4			STD/SET	0.045	0.099
080	17311-22970	METAL CRANKPIN	4			-0.20mm/SET	0.05	0.11
080	17311-22980	METAL CRANKPIN	4			-0.40mm/SET	0.045	0.099
090	1G790-23012	COMP.CRANKSHAFT	1				16.5	36.3
100	07715-00401	BALL	4				0.001	0.0022
110	19202-23280	BUSH CRANKSHAFT	1				0.09	0.198
120	1A081-24110	GEAR CRANKSHAFT	1				0.415	0.913
130	05712-00728	KEY FEATHER	1				0.01	0.022
140	15471-23312	SLINGER OIL	1				0.008	0.0176
150	19202-23250	COLLAR CRANKSHAFT	1				0.065	0.143
160	04811-10300	O RING	1				0.001	0.0022
170	15221-23360	NUT CRANKSHAFT	1				0.11	0.242
180	1A091-23470	METAL CRANKSHAFT	1			STD	0.062	0.1364
180	1A091-23910	METAL CRANKSHAFT	1			-0.20mm	0.065	0.143
180	1A091-23920	METAL CRANKSHAFT	1			-0.40mm	0.065	0.143
190	1A091-23480	METAL CRANKSHAFT	4			STD/SET	0.05	0.11
190	1A091-23930	METAL CRANKSHAFT	4			-0.20mm/SET	0.06	0.132
190	1A091-23940	METAL CRANKSHAFT	4			-0.40mm/SET	0.065	0.143
200	1A091-23530	METAL SIDE	2			STD	0.009	0.0198
200	1A091-23950	METAL SIDE	2			+0.20mm	0.005	0.011
200	1A091-23960	METAL SIDE	2			+0.40mm	0.005	0.011
210	1A091-23540	METAL SIDE	2			STD	0.009	0.0198
210	1A091-23970	METAL SIDE	2			+0.20mm	0.005	0.011
210	1A091-23980	METAL SIDE	2			+0.40mm	0.005	0.011
220	19202-04140	SEAL OIL	1				0.015	0.033
230	1G856-21772	KIT PISTON	4			STD	0.89	1.958
230	1G856-21782	KIT PISTON	4			+0.25mm	1.09	2.398
240	1G856-23750	KIT METAL ENGINE	1			STD	0.71	1.562
240	1G856-23760	KIT METAL ENGINE	1			-0.20mm/+0.20mm	0.83	1.826
240	1G856-23770	KIT METAL ENGINE	1			-0.40mm/+0.40mm	0.8	1.76

silvermorn.co.uk

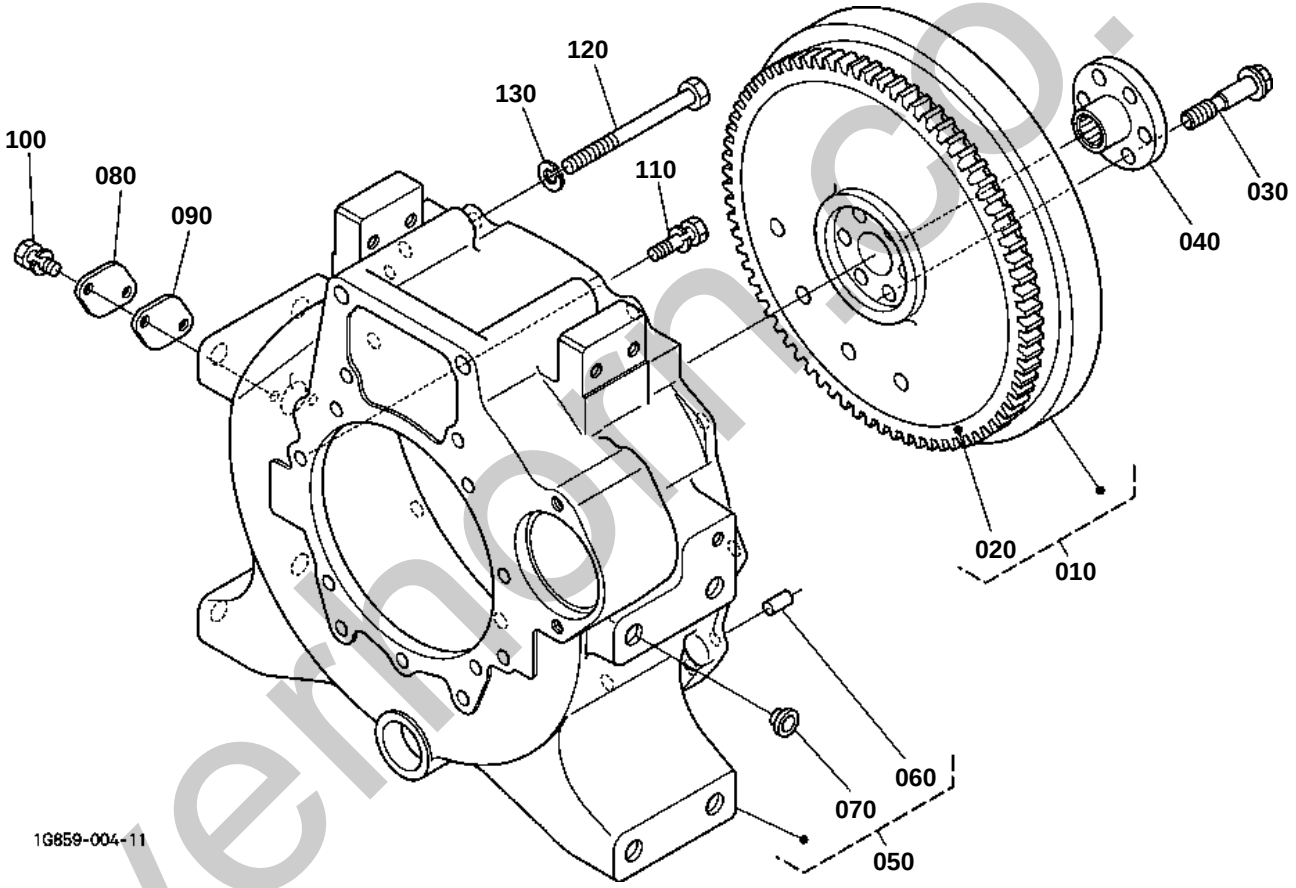

silvermonco.uk

FLYWHEEL

↔ Interchangeable; ≠ not interchangeable; ← new for old; → old for new

REF.No	Part No.	Description	Q'ty	S.No.	I/C	REMARKS	Weight (kgf)	Weight (lb)
010	1G793-25010	COMP.FLYWHEEL	1				30	66
020	1A021-63820	GEAR RING	1				1.5	3.3
030	17394-25160	BOLT FLYWHEEL	6				0.07	0.154
040	35080-14010	HUB SPLINE	1				0.44	0.968
050	TD060-20102	COMP.HOUSING F-W.	1				35	77
060	05012-01018	PIN STRAIGHT	2				0.012	0.0264
070	33300-90910	PLUG	8				0.002	0.0044
080	15521-04680	COVER	1				0.035	0.077
090	15521-04790	PACKING COVER	1				0.005	0.011
100	01123-60816	BOLT	2				0.01	0.022
110	16427-91010	BOLT	11				0.004	0.0088
120	01073-51207	BOLT	2				0.123	0.2706
130	04512-60120	WASHER SPRING	2				0.005	0.011

silverhorn.co.uk

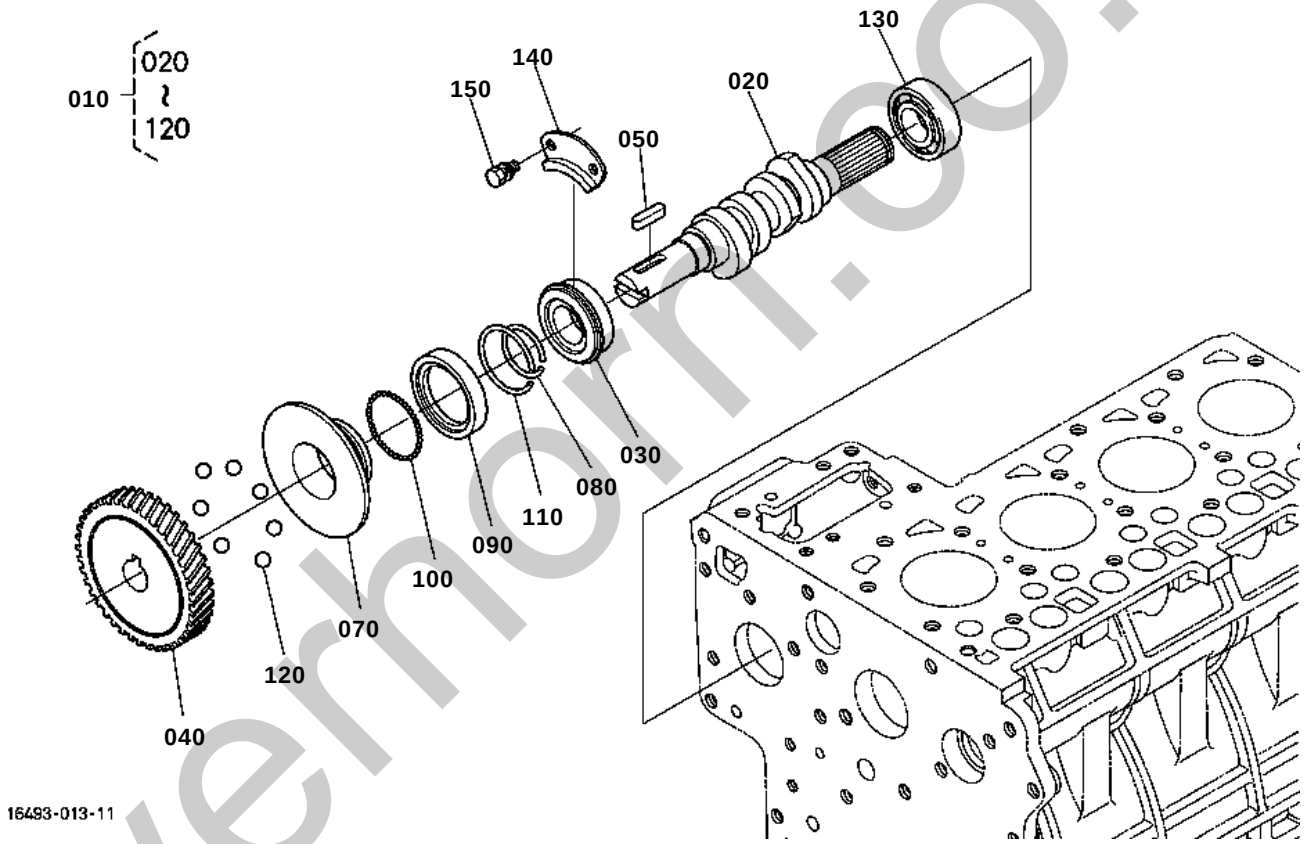

silvernorm.co.uk

FUEL CAMSHAFT

↔ Interchangeable; ≠ not interchangeable; ← new for old; → old for new

REF.No	Part No.	Description	Q'ty	S.No.	I/C	REMARKS	Weight (kgf)	Weight (lb)
010	19077-16020	ASSY CAMSHAFT FUEL	1				3	6.6
020	19077-16170	CAMSHAFT FUEL	1				1.12	2.464
030	08153-06205	BEARING BALL	1				0.13	0.286
040	16415-51150	GEAR INJECTION PUMP	1				1.075	2.365
050	05712-00525	KEY FEATHER	1				0.005	0.011
060	99999-99999	BLANK	0				0	0
070	15611-55450	SLEEVE GOVERNOR	1				0.117	0.2574
080	15221-55470	CIR-CLIP GOV. SLEEVE	1				0.003	0.0066
090	15611-55690	CASE GOVERNOR BALL	1				0.03	0.066
100	07715-03205	BALL	39				0.001	0.0022
110	15221-55740	CIR-CLIP	1				0.002	0.0044
120	07715-00403	BALL	7				0.03	0.066
130	19077-97300	BEARING BALL	1				0.175	0.385
140	15221-16320	STOPPER FUEL C/SHAFT	1				0.02	0.044
150	01123-60814	BOLT	2				0.01	0.022

silverhorn.co.uk

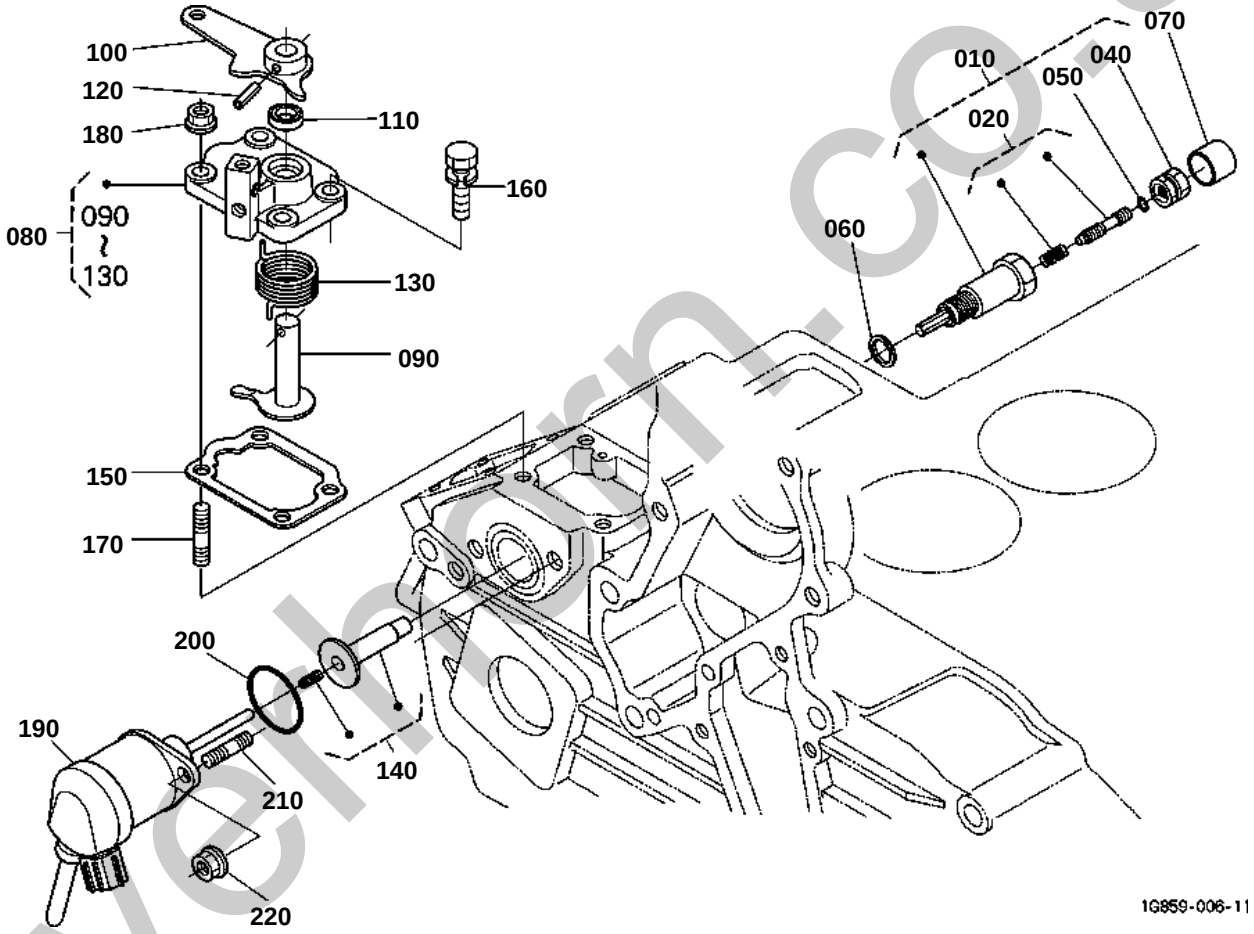

silverthorn.co.uk

ENGINE STOP LEVER

↔ Interchangeable; ≠ not interchangeable; ← new for old; → old for new

REF.No	Part No.	Description	Q'ty	S.No.	I/C	REMARKS	Weight (kgf)	Weight (lb)
010	1A021-54160	APPARATUS IDLING	1				0.103	0.2266
020	1G911-54100	ASSY BOLT ADJUSTMENT	1				0.008	0.0176
030	99999-99999	BLANK	0				0	0
040	1G911-92010	NUT SPRING	1				0.015	0.033
050	04814-00060	O RING	1				0.001	0.0022
060	04724-00140	GASKET	1				0.002	0.0044
070	1G911-54270	CAP	1				0.002	0.0044
080	1A021-57700	ASSY LEVER ENG.STOP	1				0.184	0.4048
090	1A021-57710	COMP.LEVER STOP	1				0.038	0.0836
100	1A021-57720	LEVER ENGINE STOP	1				0.055	0.121
110	15471-57980	SEAL OIL	1				0.001	0.0022
120	05411-00420	PIN SPRING	1				0.001	0.0022
130	1A021-57920	SPRING RETURN	1				0.01	0.022
140	1A021-56602	COMP.GUIDE SOLENOID	1				0.007	0.0154
150	1A021-57210	GASKET PLATE	1				0.001	0.0022
160	01023-50620	BOLT	2				0.006	0.0132
170	15221-88210	STUD	2				0.005	0.011
180	02751-50060	NUT FLANGE	2				0.005	0.011
190	1A021-60013	ASSY SOLENOID	1				0.29	0.638
200	04814-06310	O RING	1				0.002	0.0044
210	15221-88210	STUD	2				0.005	0.011
220	02761-50060	NUT FLANGE	2				0.003	0.0066

silverhorn.co.uk

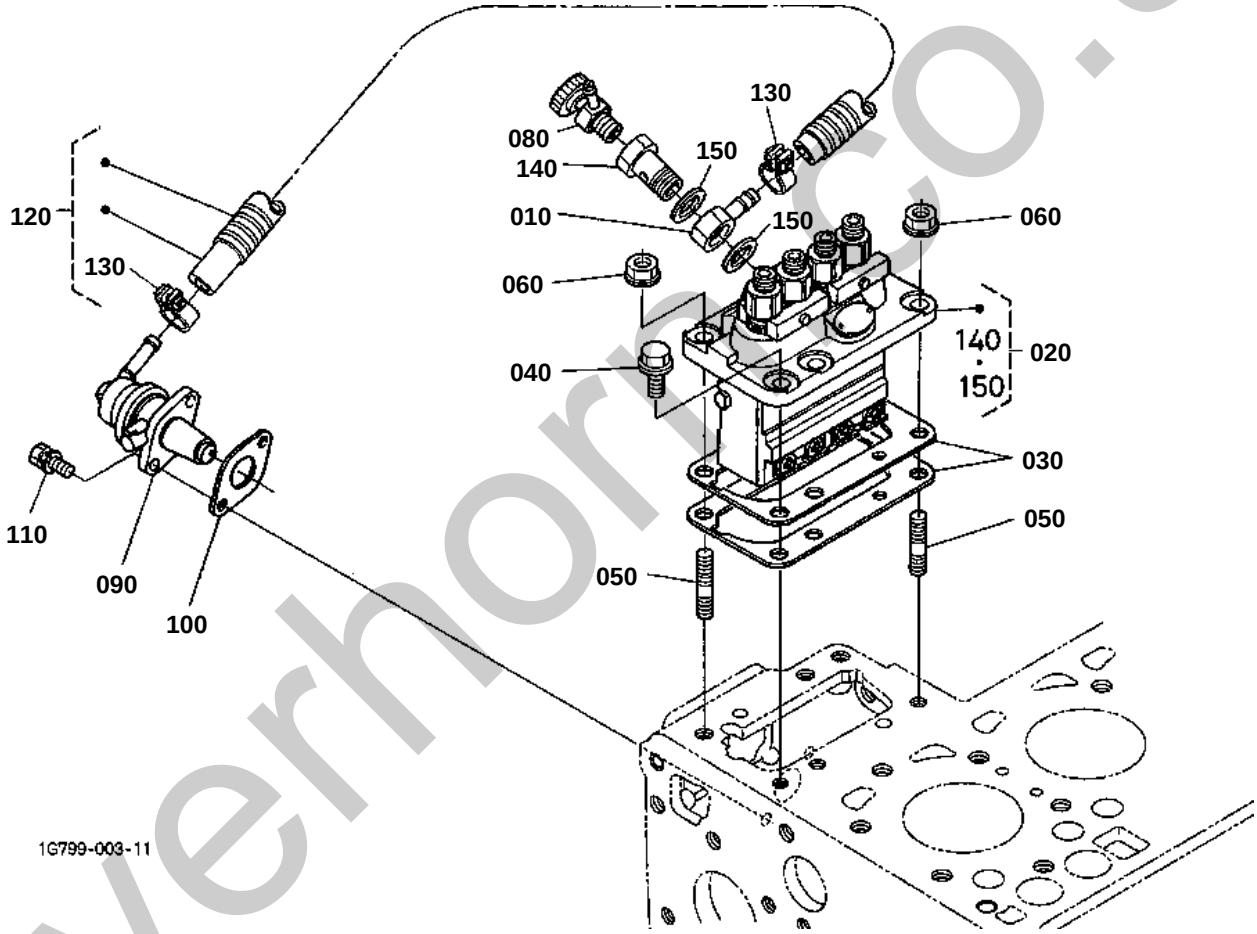

silverhorn.co.uk

↔ Interchangeable; ≠ not interchangeable; ← new for old; → old for new

REF.No	Part No.	Description	Q'ty	S.No.	I/C	REMARKS	Weight (kgf)	Weight (lb)
010	15401-95690	JOINT EYE	1				0.04	0.088
020	1G762-51010	ASSY PUMP INJECTION	1				2.5	5.5
030	19077-52092	SHIM INJECTION PUMP	1			0.20mm	0.006	0.0132
030	19077-52113	SHIM INJECTION PUMP	1			0.25mm	0.002	0.0044
030	19077-52123	SHIM INJECTION PUMP	1			0.30mm	0.01	0.022
040	01754-50820	BOLT FLANGE	4				0.015	0.033
050	15221-91530	STUD	2				0.011	0.0242
060	02751-50080	NUT FLANGE	2				0.006	0.0132
070	99999-99999	BLANK	0				0	0
080	14311-60504	ASSY COCK JET START	1				0.034	0.0748
090	17121-52030	ASSY PUMP FUEL	1				0.13	0.286
100	1G751-52140	GASKET FUEL PUMP	1				0.001	0.0022
110	01023-50616	BOLT	2				0.005	0.011
120	T1060-42600	ASSY TUBE FUEL	1				0.043	0.0946
130	14301-42750	CLIP PIPE	2				0.005	0.011
140	15471-51320	SCREW HOLLOW	1				0.032	0.0704
150	15401-96650	GASKET	2				0.001	0.0022

silverhorn.co.uk

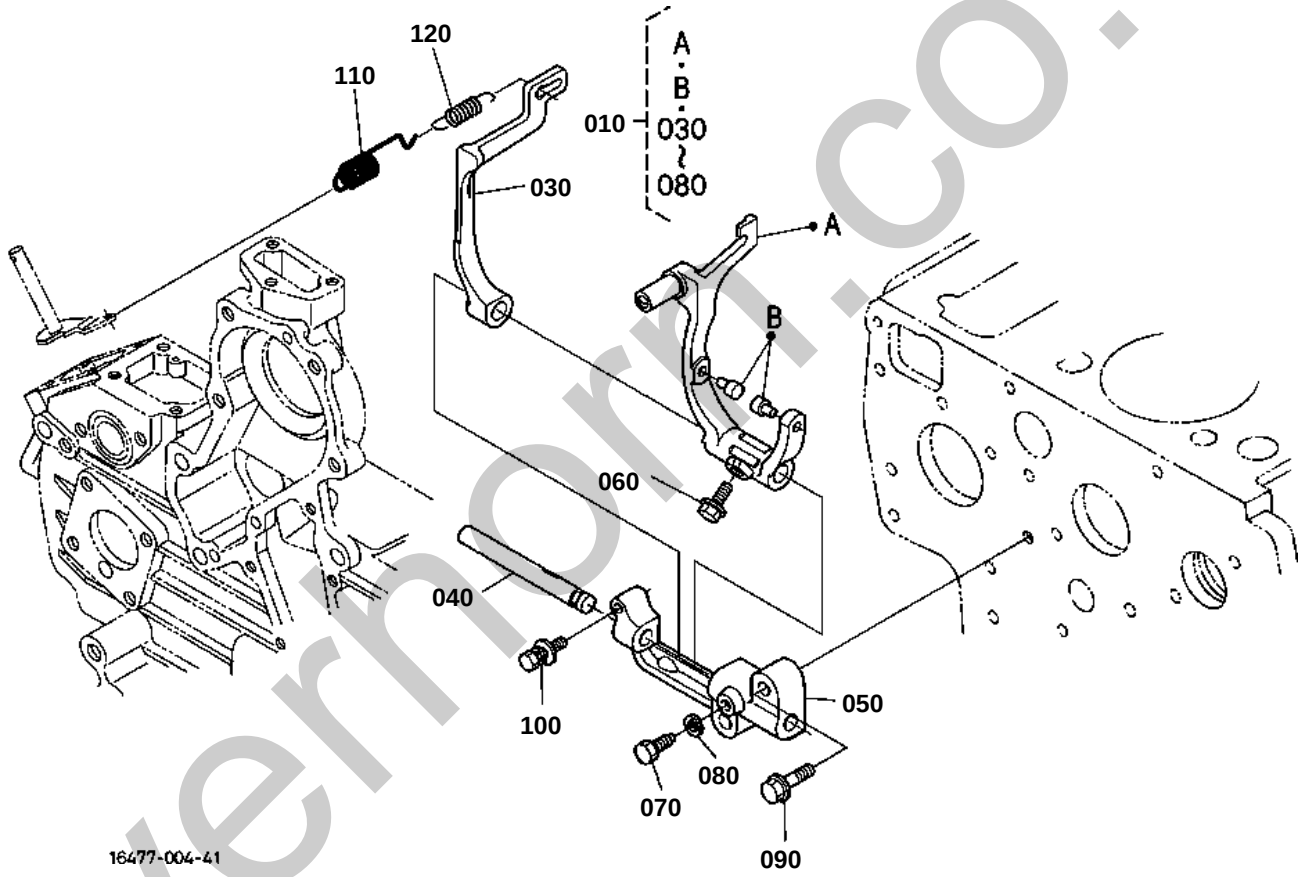

silvermorr.co.uk

GOVERNOR

↔ Interchangeable; ≠ not interchangeable; ← new for old; → old for new

REF.No	Part No.	Description	Q'ty	S.No.	I/C	REMARKS	Weight (kgf)	Weight (lb)
010	1G789-56050	ASSY LEVER FORK	1				0.36	0.792
020	99999-99999	BLANK	0				0	0
030	1A021-56133	LEVER FORK	1				0.035	0.077
040	1G911-56150	SHAFT FORK LEVER	1				0.05	0.11
050	1A091-56230	HOLDER FORK LEVER	1				0.085	0.187
060	01754-50618	BOLT FLANGE	1				0.01	0.022
070	15221-66410	BOLT	1				0.005	0.011
080	04512-60060	WASHER SPRING	1				0.001	0.0022
090	01754-50830	BOLT FLANGE	2				0.05	0.11
100	01025-50630	BOLT	1				0.009	0.0198
110	1A001-56412	SPRING GOVERNOR	1				0.006	0.0132
120	1A021-56420	SPRING GOVERNOR	1				0.002	0.0044

silverhorn.co.uk

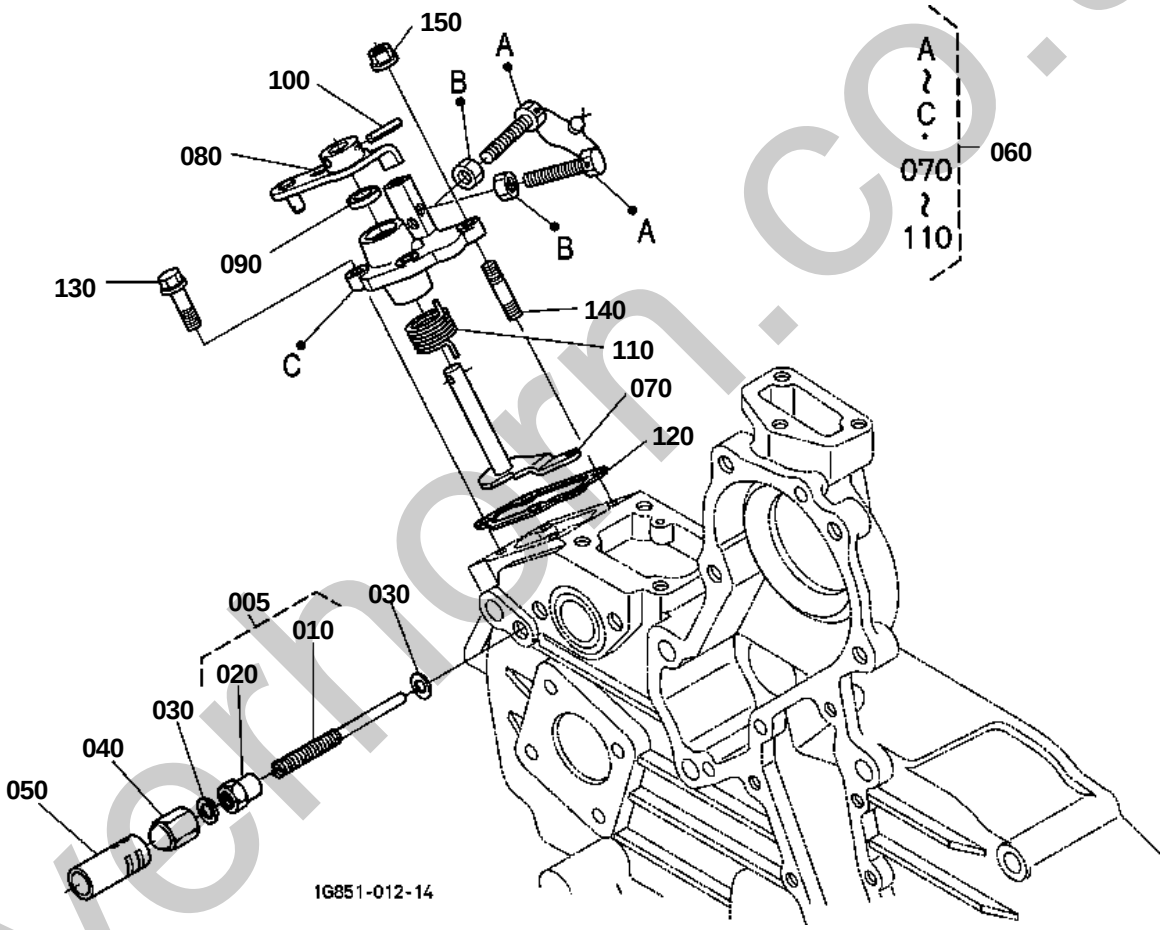

silvermarn.co.uk

SPEED CONTROL PLATE

↔ Interchangeable; ≠ not interchangeable; ← new for old; → old for new

REF.No	Part No.	Description	Q'ty	S.No.	I/C	REMARKS	Weight (kgf)	Weight (lb)
005	1A021-54350	ASSY BOLT ADJUSTMENT	1				0.015	0.033
010	1A021-54120	BOLT ADJUSTING	1				0.009	0.0198
020	15601-92012	NUT	1				0.006	0.0132
030	15601-96650	GASKET	2				0.001	0.0022
040	15841-14620	NUT	1				0.01	0.022
050	99999-99999	PIPE LOCK	1				0	0
060	1A053-57000	ASSY PLATE CONTROL	1				0.21	0.462
070	1A021-56020	COMP.LEVER GOVERNOR	1				0.046	0.1012
080	1A053-57150	LEVER SPEED CONTROL	1				0.051	0.1122
090	15471-57980	SEAL OIL	1				0.001	0.0022
100	05411-00420	PIN SPRING	1				0.001	0.0022
110	1A021-57920	SPRING RETURN	1				0.01	0.022
120	1A021-57210	GASKET PLATE	1				0.001	0.0022
130	01023-50620	BOLT	2				0.006	0.0132
140	15221-88210	STUD	2				0.005	0.011
150	02751-50060	NUT FLANGE	2				0.005	0.011

silverhorn.co.uk

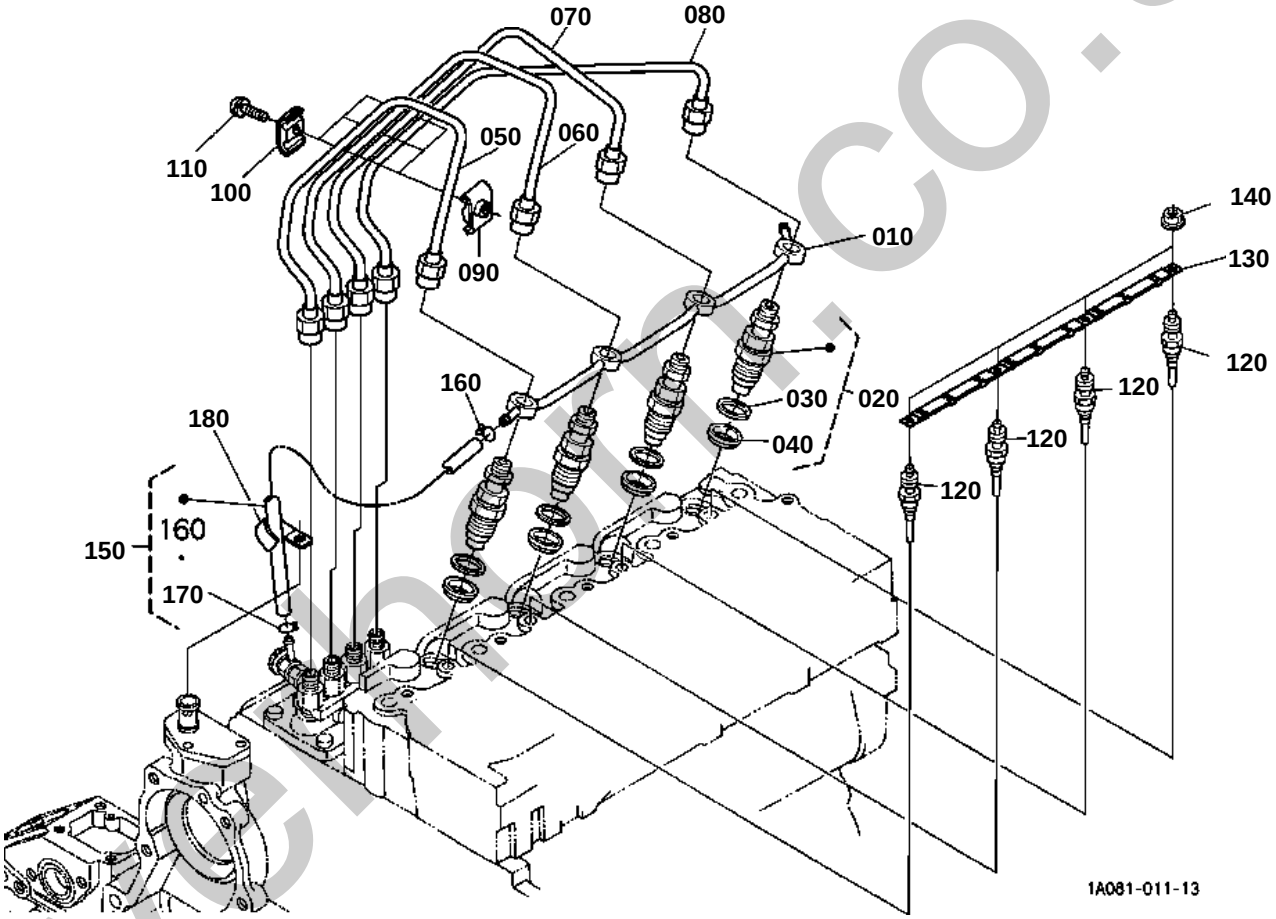

silverhorn.co.uk

NOZZLE HOLDER AND GLOW PLUG

↔ Interchangeable; ≠ not interchangeable; ← new for old; → old for new

REF.No	Part No.	Description	Q'ty	S.No.	I/C	REMARKS	Weight (kgf)	Weight (lb)
010	16454-42502	ASSY PIPE OVER FLOW	1				0.06	0.132
020	16454-53900	KIT HOLDER NOZZLE	4				0.013	0.0286
030	15841-53622	GASKET	4				0.002	0.0044
040	19077-53650	SEAL HEAT	4				0.005	0.011
050	19077-53714	PIPE INJECTION	1				0.14	0.308
060	19077-53723	PIPE INJECTION	1				0.14	0.308
070	19077-53733	PIPE INJECTION	1				0.12	0.264
080	19077-53743	PIPE INJECTION	1				0.13	0.286
090	15841-53850	CLAMP PIPE	3				0.01	0.022
100	15841-53860	CLAMP PIPE	3				0.009	0.0198
110	03024-50520	SCREW WITH WASHER	3				0.004	0.0088
120	19077-65510	GLOW PLUG	4				0.03	0.066
130	1G778-65560	CORD GLOW PLUG	1				0.02	0.044
140	02761-50040	NUT FLANGE	4				0.002	0.0044
150	17331-42500	ASSY PIPE OVER FLOW	1				0.02	0.044
160	14971-42750	CLIP PIPE	1				0.001	0.0022
170	10244-42320	CLIP PIPE	1				0.001	0.0022
180	15241-67580	CLAMP CORD	1				0.004	0.0088

silverhorn.co.uk

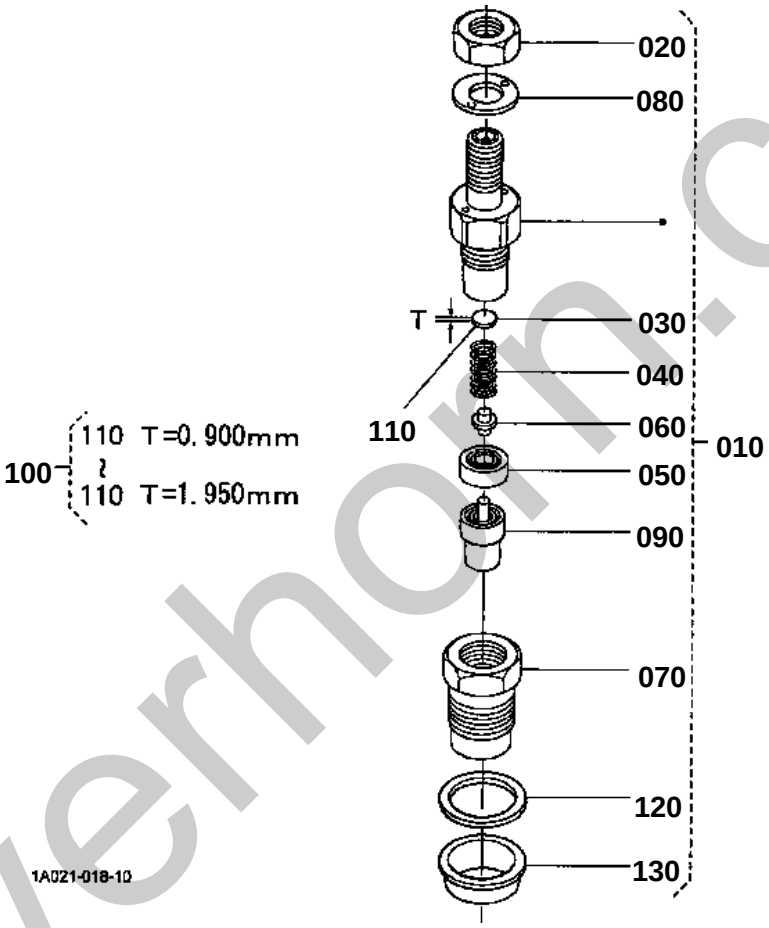

silverhorn.co.uk

↔ Interchangeable; ≠ not interchangeable; ← new for old; → old for new

REF.No	Part No.	Description	Q'ty	S.No.	I/C	REMARKS	Weight (kgf)	Weight (lb)
010	16454-53900	KIT HOLDER NOZZLE	4				0.013	0.0286
020	15841-92030	NUT	4				0.005	0.011
030	15841-53230	WASHER ADJUSTING	4				0.001	0.0022
040	16475-53170	SPRING NOZZLE	4				0.005	0.011
050	15841-53350	PIECE DISTANCE	4				0.004	0.0088
060	15841-53160	PUSH ROD	4				0.001	0.0022
070	16475-53280	NUT NOZZLE	4				0.03	0.066
080	15841-94040	WASHER	4				0.001	0.0022
090	16454-53610	PIECE NOZZLE	4				0.024	0.0528
100	15841-98100	ASSY WASHER ADJUST	4				0.043	0.0946
110	15841-53230	WASHER ADJUSTING	4			0.900mm	0.001	0.0022
110	15841-98510	WASHER ADJUSTING	4			0.925mm	0.001	0.0022
110	15841-98520	WASHER ADJUSTING	4			0.950mm	0.001	0.0022
110	15841-98530	WASHER ADJUSTING	4			0.975mm	0.001	0.0022
110	15841-98540	WASHER ADJUSTING	4			1.000mm	0.001	0.0022
110	15841-98550	WASHER ADJUSTING	4			1.025mm	0.001	0.0022
110	15841-98560	WASHER ADJUSTING	4			1.050mm	0.001	0.0022
110	15841-98570	WASHER ADJUSTING	4			1.075mm	0.001	0.0022
110	15841-98580	WASHER ADJUSTING	4			1.100mm	0.001	0.0022
110	15841-98590	WASHER ADJUSTING	4			1.125mm	0.001	0.0022
110	15841-98600	WASHER ADJUSTING	4			1.150mm	0.001	0.0022
110	15841-98610	WASHER ADJUSTING	4			1.175mm	0.001	0.0022
110	15841-98620	WASHER ADJUSTING	4			1.200mm	0.001	0.0022
110	15841-98630	WASHER ADJUSTING	4			1.225mm	0.001	0.0022
110	15841-98640	WASHER ADJUSTING	4			1.250mm	0.001	0.0022
110	15841-98650	WASHER ADJUSTING	4			1.275mm	0.001	0.0022
110	15841-98660	WASHER ADJUSTING	4			1.300mm	0.001	0.0022
110	15841-98670	WASHER ADJUSTING	4			1.325mm	0.001	0.0022
110	15841-98680	WASHER ADJUSTING	4			1.350mm	0.001	0.0022
110	15841-98690	WASHER ADJUSTING	4			1.375mm	0.001	0.0022
110	15841-98700	WASHER ADJUSTING	4			1.400mm	0.001	0.0022
110	15841-98710	WASHER ADJUSTING	4			1.425mm	0.001	0.0022
110	15841-98720	WASHER ADJUSTING	4			1.450mm	0.001	0.0022
110	15841-98730	WASHER ADJUSTING	4			1.475mm	0.001	0.0022
110	15841-98740	WASHER ADJUSTING	4			1.500mm	0.001	0.0022
110	15841-98750	WASHER ADJUSTING	4			1.525mm	0.001	0.0022
110	15841-98760	WASHER ADJUSTING	4			1.550mm	0.001	0.0022
110	15841-98770	WASHER ADJUSTING	4			1.575mm	0.001	0.0022
110	15841-98780	WASHER ADJUSTING	4			1.600mm	0.002	0.0044
110	15841-98790	WASHER ADJUSTING	4			1.625mm	0.001	0.0022
110	15841-98800	WASHER ADJUSTING	4			1.650mm	0.001	0.0022
110	15841-98810	WASHER ADJUSTING	4			1.675mm	0.004	0.0088
110	15841-98820	WASHER ADJUSTING	4			1.700mm	0.001	0.0022
110	15841-98830	WASHER ADJUSTING	4			1.725mm	0.001	0.0022
110	15841-98840	WASHER ADJUSTING	4			1.750mm	0.001	0.0022
110	15841-98850	WASHER ADJUSTING	4			1.775mm	0.001	0.0022
110	15841-98860	WASHER ADJUSTING	4			1.800mm	0.001	0.0022
110	15841-98870	WASHER ADJUSTING	4			1.825mm	0.001	0.0022
110	15841-98880	WASHER ADJUSTING	4			1.850mm	0.001	0.0022
110	15841-98890	WASHER ADJUSTING	4			1.875mm	0.001	0.0022
110	15841-98900	WASHER ADJUSTING	4			1.900mm	0.001	0.0022

silverthorn.co.uk

↔ Interchangeable; ≠ not interchangeable; ← new for old; → old for new

REF.No	Part No.	Description	Q'ty	S.No.	I/C	REMARKS	Weight (kgf)	Weight (lb)
110	15841-98910	WASHER ADJUSTING	4			1.925mm	0.001	0.0022
110	15841-98920	WASHER ADJUSTING	4			1.950mm	0.001	0.0022
120	15841-53622	GASKET	4				0.002	0.0044
130	19077-53650	SEAL HEAT	4				0.005	0.011

silverhorn.co.uk

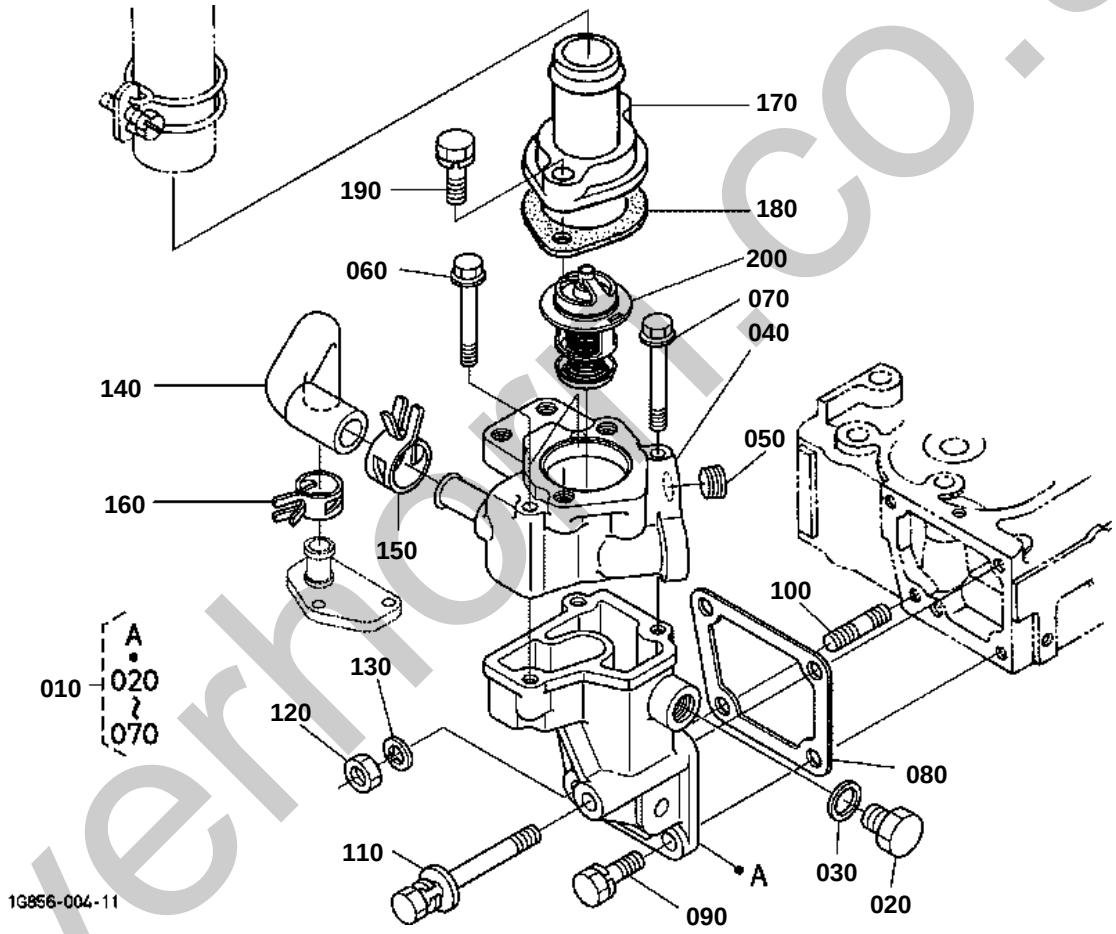

silverhorn.co.uk

WATER FLANGE AND THERMOSTAT

↔ Interchangeable; ≠ not interchangeable; ← new for old; → old for new

REF.No	Part No.	Description	Q'ty	S.No.	I/C	REMARKS	Weight (kgf)	Weight (lb)
010	1A033-72704	COMP.FLANGE WATER	1				0.755	1.661
020	15109-33630	PLUG DRAIN	1				0.025	0.055
030	15109-33660	GASKET	1				0.001	0.0022
040	1A021-72914	FLANGE WATER	1				0.375	0.825
050	1A021-96020	PLUG	1				0.015	0.033
060	01754-50660	BOLT FLANGE	2				0.02	0.044
070	01754-50665	BOLT FLANGE	1				0.01	0.022
080	1A021-72920	GASKET WATER FLANGE	1				0.002	0.0044
090	01123-50820	BOLT	2				0.011	0.0242
100	15221-91530	STUD	1				0.011	0.0242
110	1A021-91020	BOLT	1				0.032	0.0704
120	02156-50080	NUT	1				0.004	0.0088
130	04512-60080	WASHER SPRING	1				0.002	0.0044
140	1A021-73340	PIPE WATER RETURN	1				0.032	0.0704
150	09318-88200	CLAMP HOSE	1				0.004	0.0088
160	09318-88180	CLAMP HOSE	1				0.01	0.022
170	15321-73260	COVER THERMOSTAT	1				0.107	0.2354
180	16221-73270	GASKET THERMOSTAT	1				0.01	0.022
190	01123-50835	BOLT	2				0.02	0.044
200	1A021-73012	ASSY THERMOSTAT	1				0.079	0.1738

silverhorn.co.uk

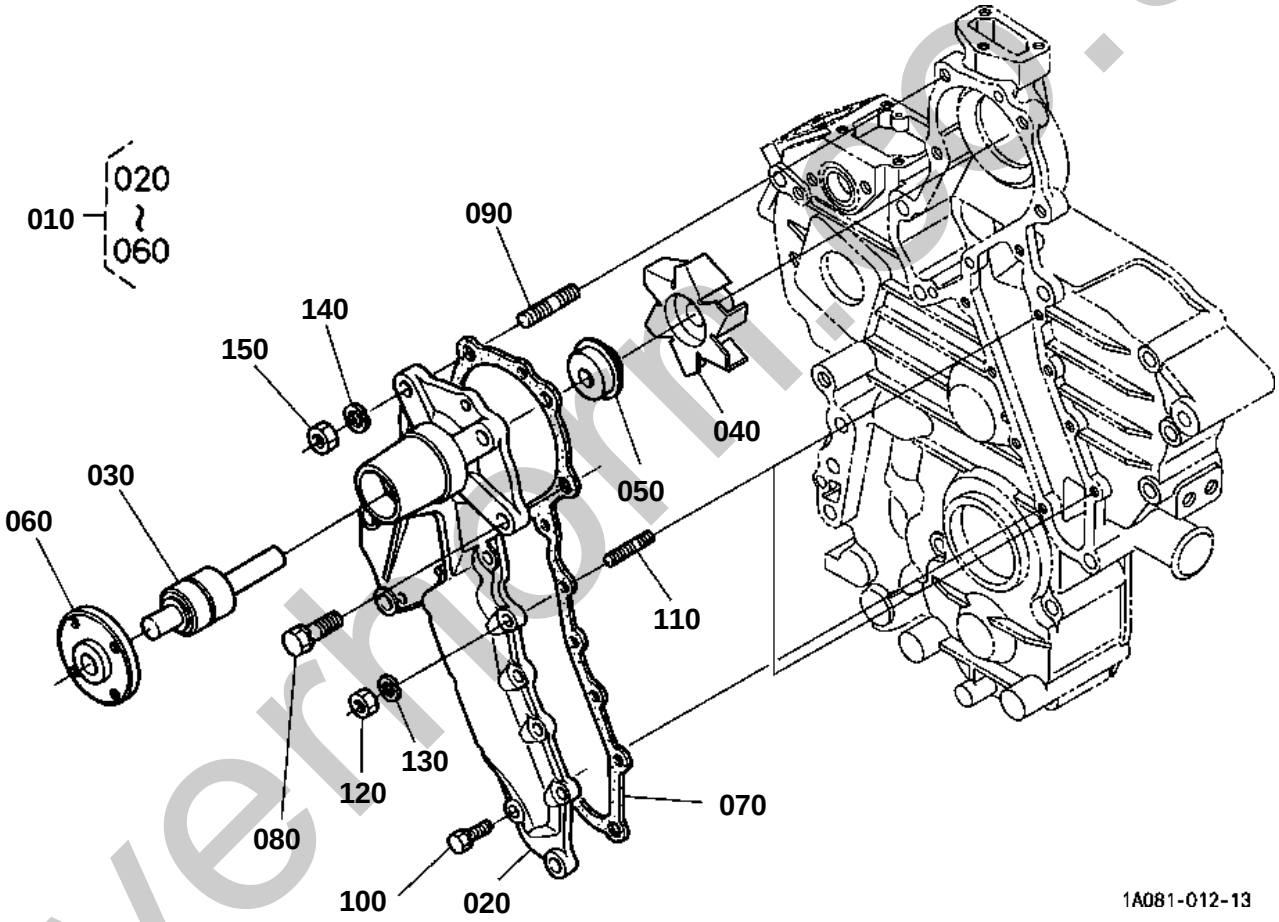

silverhorse.co.uk

WATER PUMP

↔ Interchangeable; ≠ not interchangeable; ← new for old; → old for new

REF.No	Part No.	Description	Q'ty	S.No.	I/C	REMARKS	Weight (kgf)	Weight (lb)
010	1A021-73030	ASSY PUMP WATER	1				1	2.2
020	17331-73410	BODY WATER PUMP	1				0.51	1.122
030	15521-73550	BEARING	1				0.235	0.517
040	1A021-73510	IMPELLER WATER PUMP	1				0.065	0.143
050	16661-73050	ASSY SEAL MECHANICAL	1				0.025	0.055
060	1A021-73520	FLANGE W/PUMP SHAFT	1				0.185	0.407
070	1A021-73430	GASKET WATER PUMP	1				0.007	0.0154
080	01123-50828	BOLT	3				0.014	0.0308
090	01518-50822	STUD	1				0.012	0.0264
100	01023-50618	BOLT	8				0.006	0.0132
110	15221-88210	STUD	1				0.005	0.011
120	02056-50060	NUT	1				0.002	0.0044
130	04512-60080	WASHER SPRING	1				0.002	0.0044
140	04512-60060	WASHER SPRING	1				0.001	0.0022
150	02156-50080	NUT	1				0.004	0.0088

silverhorn.co.uk

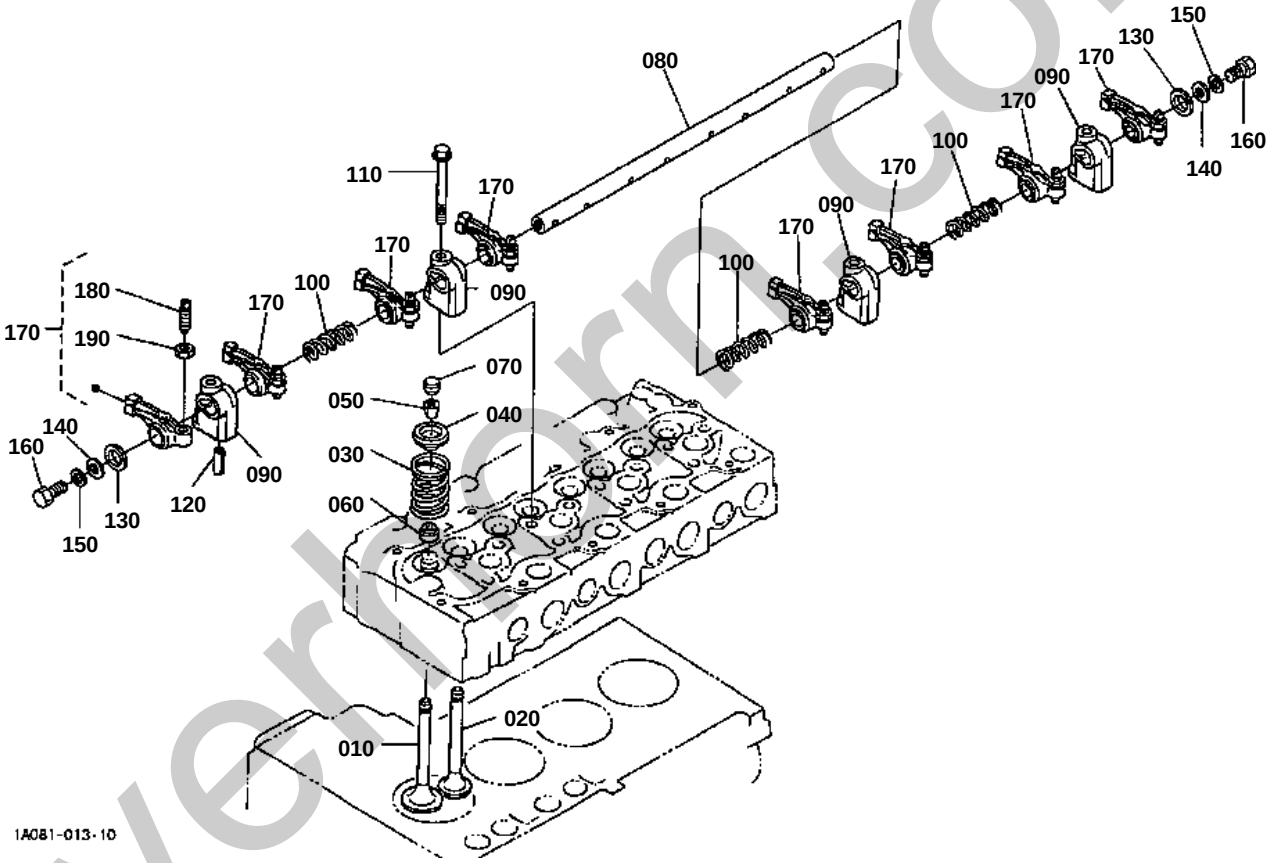

silverthorn.co.uk

VALVE AND ROCKER ARM

↔ Interchangeable; ≠ not interchangeable; ← new for old; → old for new

REF.No	Part No.	Description	Q'ty	S.No.	I/C	REMARKS	Weight (kgf)	Weight (lb)
010	16484-13110	VALVE INLET	4				0.06	0.132
020	16484-13120	VALVE EXHAUST	4				0.13	0.286
030	15221-13240	SPRING VALVE	8				0.036	0.0792
040	15221-13330	RETAINER VALVE SP.	8				0.03	0.066
050	15221-13980	COLLET VALVE SPRING	8			SET	0.002	0.0044
060	15221-13153	SEAL VALVE STEM	8				0.001	0.0022
070	15221-13280	CAP VALVE	8				0.006	0.0132
080	1A091-14260	SHAFT ROCKER ARM	1				0.313	0.6886
090	15221-14353	BRACKET ROCKER ARM	4				0.044	0.0968
100	15221-14310	SPRING ROCKER ARM	3				0.005	0.011
110	01754-50855	BOLT FLANGE	4				0.02	0.044
120	05411-00528	PIN SPRING	1				0.003	0.0066
130	15221-14430	WASHER R-ARM.SHAFT	2				0.002	0.0044
140	04013-60080	WASHER PLAIN	2				0.002	0.0044
150	04512-60080	WASHER SPRING	2				0.002	0.0044
160	01153-50812	BOLT	2				0.008	0.0176
170	15621-14030	ASSY ROCKER ARM	8				0.1	0.22
180	15521-14230	SCREW ADJUSTING	8				0.009	0.0198
190	15021-14240	NUT	8				0.003	0.0066

silverhorn.co.uk

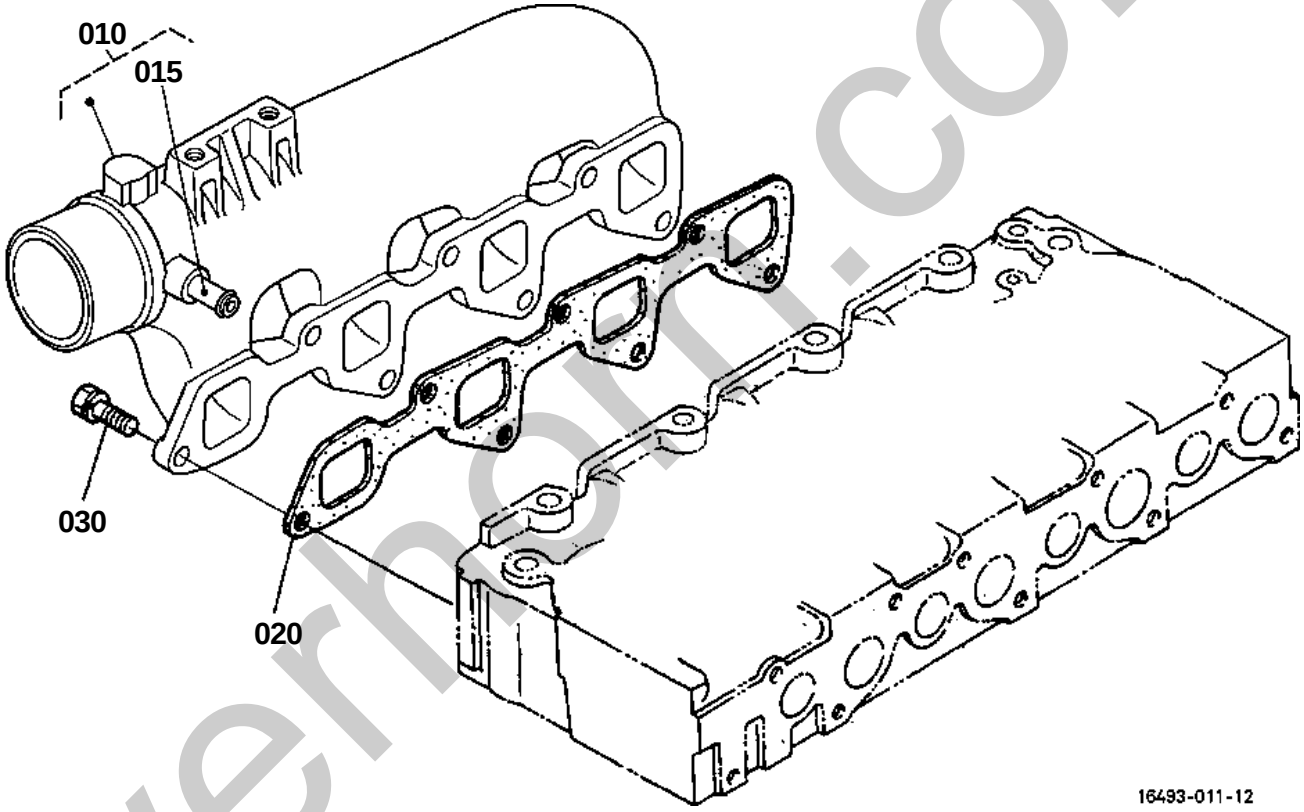

silverhorn.co.uk

INLET MANIFOLD

↔ Interchangeable; ≠ not interchangeable; ← new for old; → old for new

REF.No	Part No.	Description	Q'ty	S.No.	I/C	REMARKS	Weight (kgf)	Weight (lb)
010	1G780-11772	ASSY MANIFOLD INLET	1				1.15	2.53
015	17331-73342	PIPE WATER RETURN	1				0.01	0.022
020	1A091-11822	GASKET IN-MANIFOLD	1				0.007	0.0154
030	01123-50822	BOLT	7				0.012	0.0264

silverhorn.co.uk

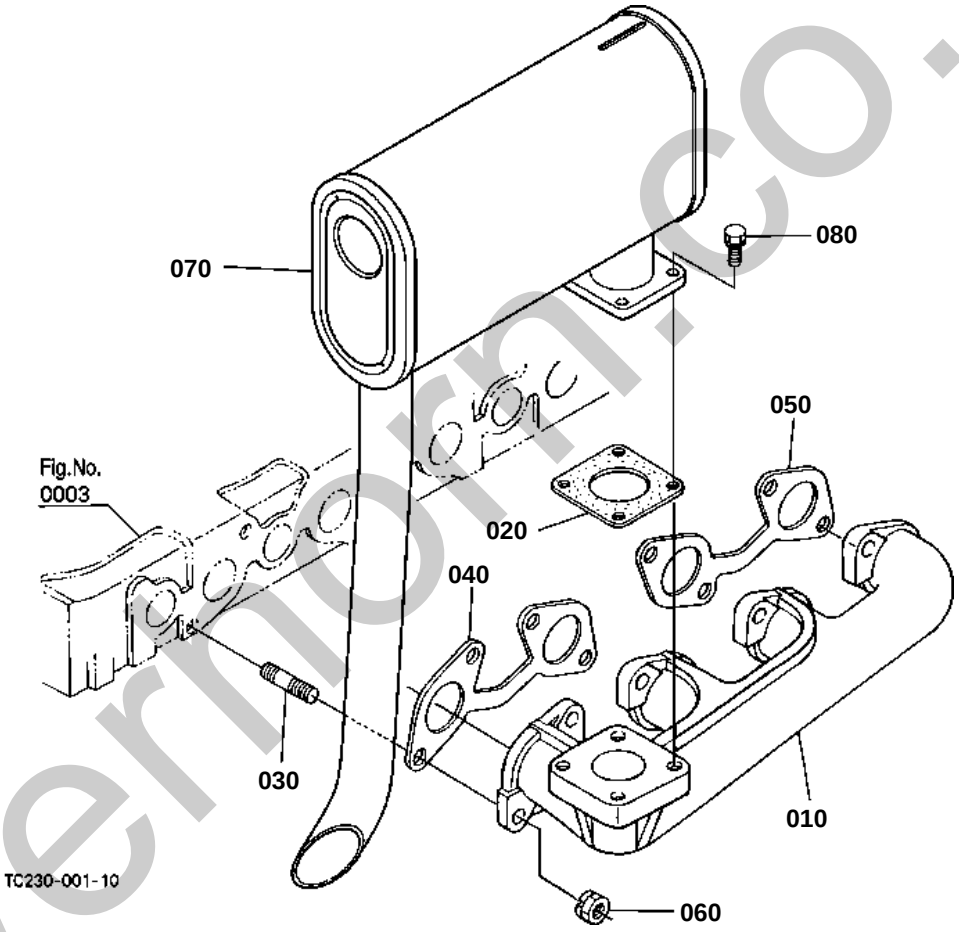

silvermorn.co.uk

EXHAUST MANIFOLD/MUFFLER

↔ Interchangeable; ≠ not interchangeable; ← new for old; → old for new

REF.No	Part No.	Description	Q'ty	S.No.	I/C	REMARKS	Weight (kgf)	Weight (lb)
010	17377-12312	MANIFOLD EXHAUST	1				2.9	6.38
020	T0070-16420	GASKET MUFFLER	1				0.016	0.0352
030	15221-91530	STUD	8				0.011	0.0242
040	1A091-12350	GASKET EX-MANIFOLD	1				0.02	0.044
050	1A091-12360	GASKET EX-MANIFOLD	1				0.02	0.044
060	16429-92010	NUT	8				0.007	0.0154
070	TC220-16410	MUFFLER	1				6.3	13.86
080	01128-50825	BOLT	4				0.015	0.033

silverhorn.co.uk

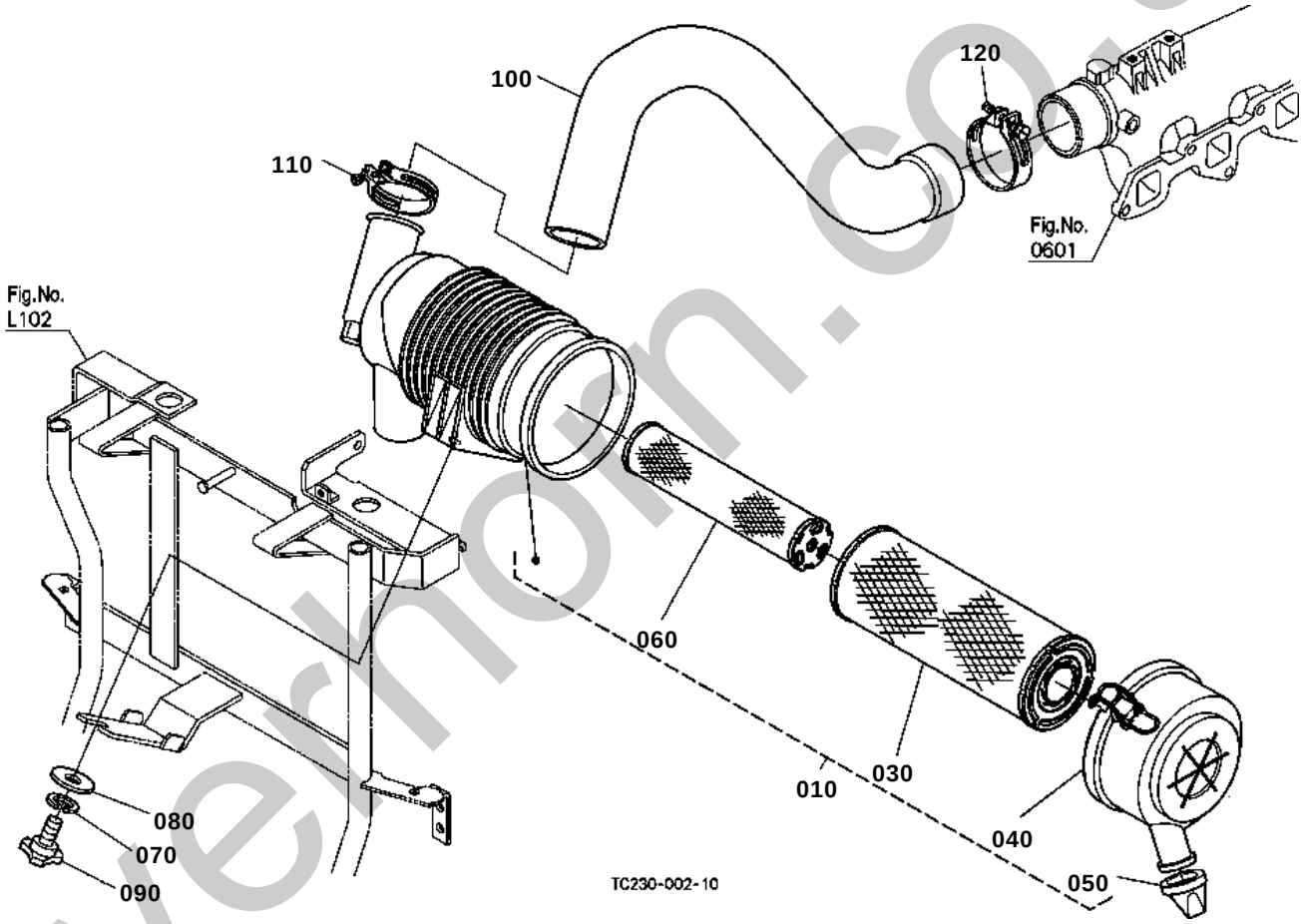

silverhorn.co.uk

AIR CLEANER

↔ Interchangeable; ≠ not interchangeable; ← new for old; → old for new

REF.No	Part No.	Description	Q'ty	S.No.	I/C	REMARKS	Weight (kgf)	Weight (lb)
010	TC230-16300	ASSY CLEANER AIR	1				0	0
020	99999-99999	BLANK	0				0	0
030	TA040-93230	ASSY ELEMENT OUTER	1				0.56	1.232
040	TA140-93240	ASSY COVER A/C	1				0.305	0.671
050	TA040-93250	VALVE EVACUATOR	1				0.011	0.0242
060	TA040-93220	ASSY ELEMENT INNER	1				0.195	0.429
070	04512-60080	WASHER SPRING	1				0.002	0.0044
080	04015-60080	WASHER PLAIN	1				0.01	0.022
090	01820-50820	BOLT KNOB	1				0.029	0.0638
100	TC230-16330	HOSE	1				0	0
110	T0270-35560	CLAMP HOSE	1				0.035	0.077
120	31351-18110	BAND PIPE	1				0.04	0.088

silverhorn.co.uk

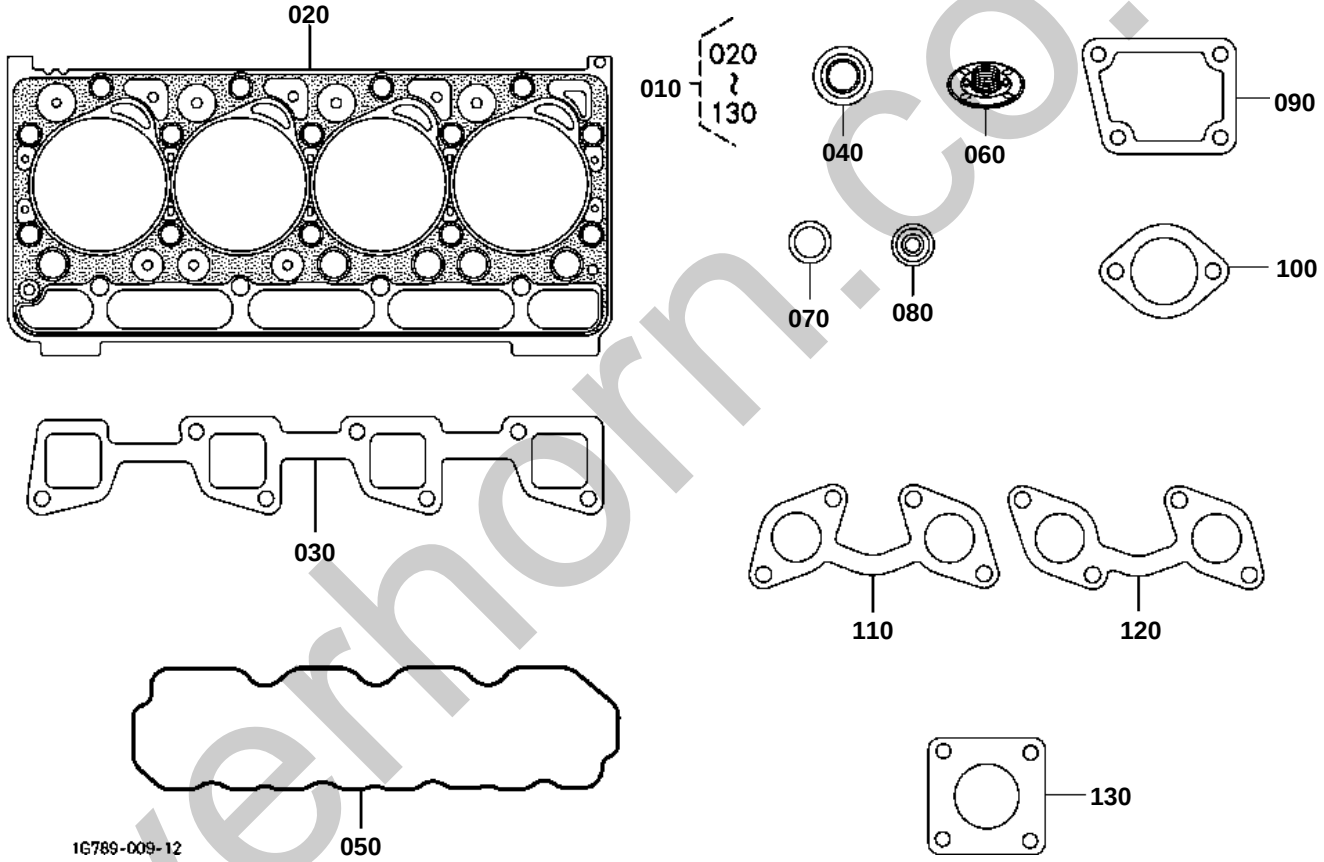

silverhorn.co.uk

UPPER GASKET KIT

↔ Interchangeable; ≠ not interchangeable; ← new for old; → old for new

REF.No	Part No.	Description	Q'ty	S.No.	I/C	REMARKS	Weight (kgf)	Weight (lb)
010	1G789-99354	KIT GASKET UPPER	1				0.4	0.88
020	1G790-03312	GASKET CYLINDER HEAD	1				0.29	0.638
030	1A091-11822	GASKET IN-MANIFOLD	1				0.007	0.0154
040	15221-13153	SEAL VALVE STEM	8				0.001	0.0022
050	1G911-14523	GASKET HEAD COVER	1				0.025	0.055
060	1G911-05202	COMP.VALVE BREATHER	1				0.01	0.022
070	15841-53622	GASKET	4				0.002	0.0044
080	19077-53650	SEAL HEAT	4				0.005	0.011
090	1A021-72920	GASKET WATER FLANGE	1				0.002	0.0044
100	16221-73270	GASKET THERMOSTAT	1				0.01	0.022
110	1A091-12350	GASKET EX-MANIFOLD	1				0.02	0.044
120	1A091-12360	GASKET EX-MANIFOLD	1				0.02	0.044
130	T0070-16420	GASKET MUFFLER	1				0.016	0.0352

silverhorn.co.uk

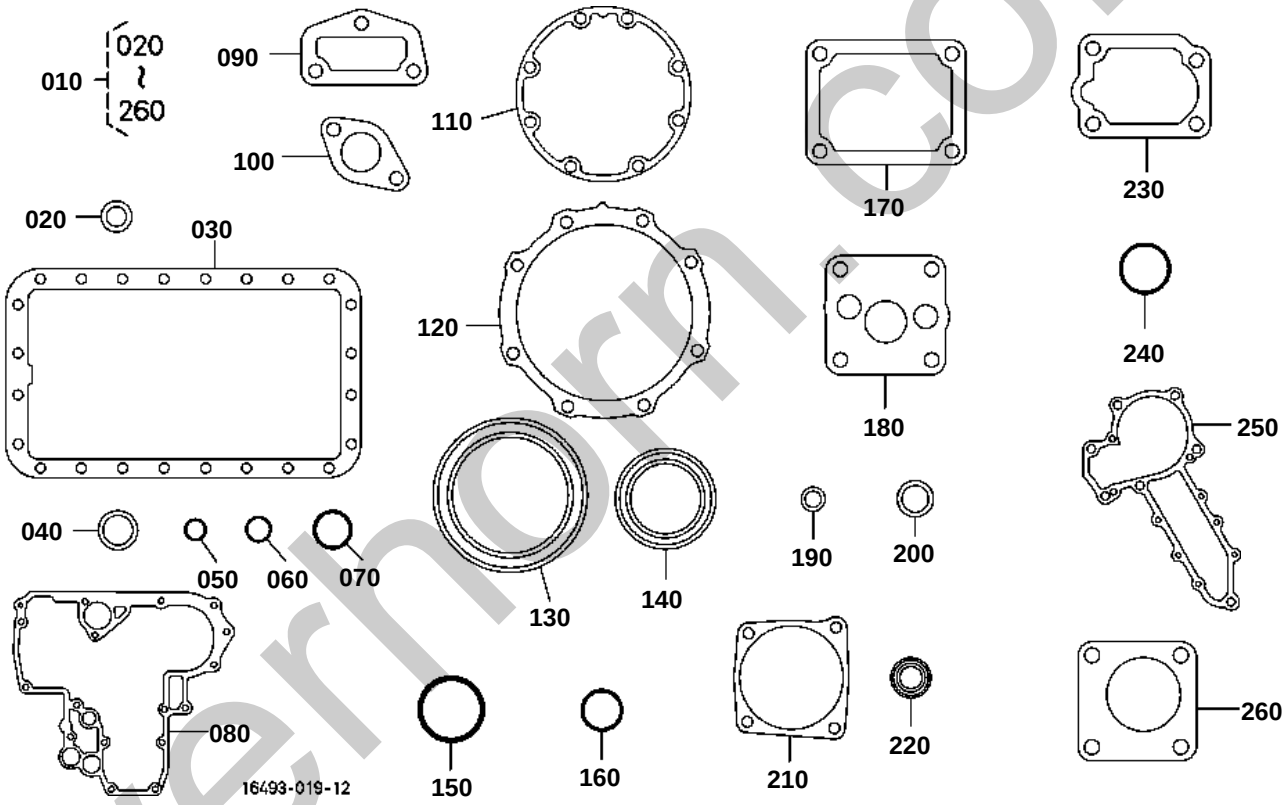

silverhorn.co.uk

LOWER GASKET KIT

↔ Interchangeable; ≠ not interchangeable; ← new for old; → old for new

REF.No	Part No.	Description	Q'ty	S.No.	I/C	REMARKS	Weight (kgf)	Weight (lb)
010	1G799-99360	KIT GASKET LOWER	1				0.17	0.374
020	15021-33660	GASKET	1				0.001	0.0022
030	1A091-01620	GASKET OIL PAN	1				0.018	0.0396
040	6C090-58960	GASKET	2				0.002	0.0044
050	04814-00150	O RING	1				0.001	0.0022
060	04814-00220	O RING	2				0.001	0.0022
070	04814-00360	O RING	1				0.001	0.0022
080	1A021-04130	GASKET GEAR CASE	1				0.019	0.0418
090	1A021-73330	GASKET RETURN FLANGE	1				0.001	0.0022
100	1A053-72840	GASKET WATER FLANGE	1				0.001	0.0022
110	1A091-04362	GASKET BEARING CASE	1				0.005	0.011
120	1A091-04820	GASKET CASE COVER	1				0.006	0.0132
130	19202-04460	SEAL OIL	1				0.055	0.121
140	19202-04140	SEAL OIL	1				0.015	0.033
150	19202-96760	O RING	1				0.001	0.0022
160	04814-00160	O RING	1				0.001	0.0022
170	1A021-51660	GASKET PUMP COVER	1				0.003	0.0066
180	1A021-35150	GASKET OIL PUMP	1				0.001	0.0022
190	15601-96650	GASKET	1				0.001	0.0022
200	15401-96650	GASKET	2				0.001	0.0022
210	1A051-16220	GASKET	1				0.003	0.0066
220	15471-57980	SEAL OIL	2				0.001	0.0022
230	1A021-57210	GASKET PLATE	2				0.001	0.0022
240	04814-06310	O RING	1				0.002	0.0044
250	1A021-73430	GASKET WATER PUMP	1				0.007	0.0154
260	1G751-88130	GASKET HOUR METER	1				0.001	0.0022

silverhorn.co.uk

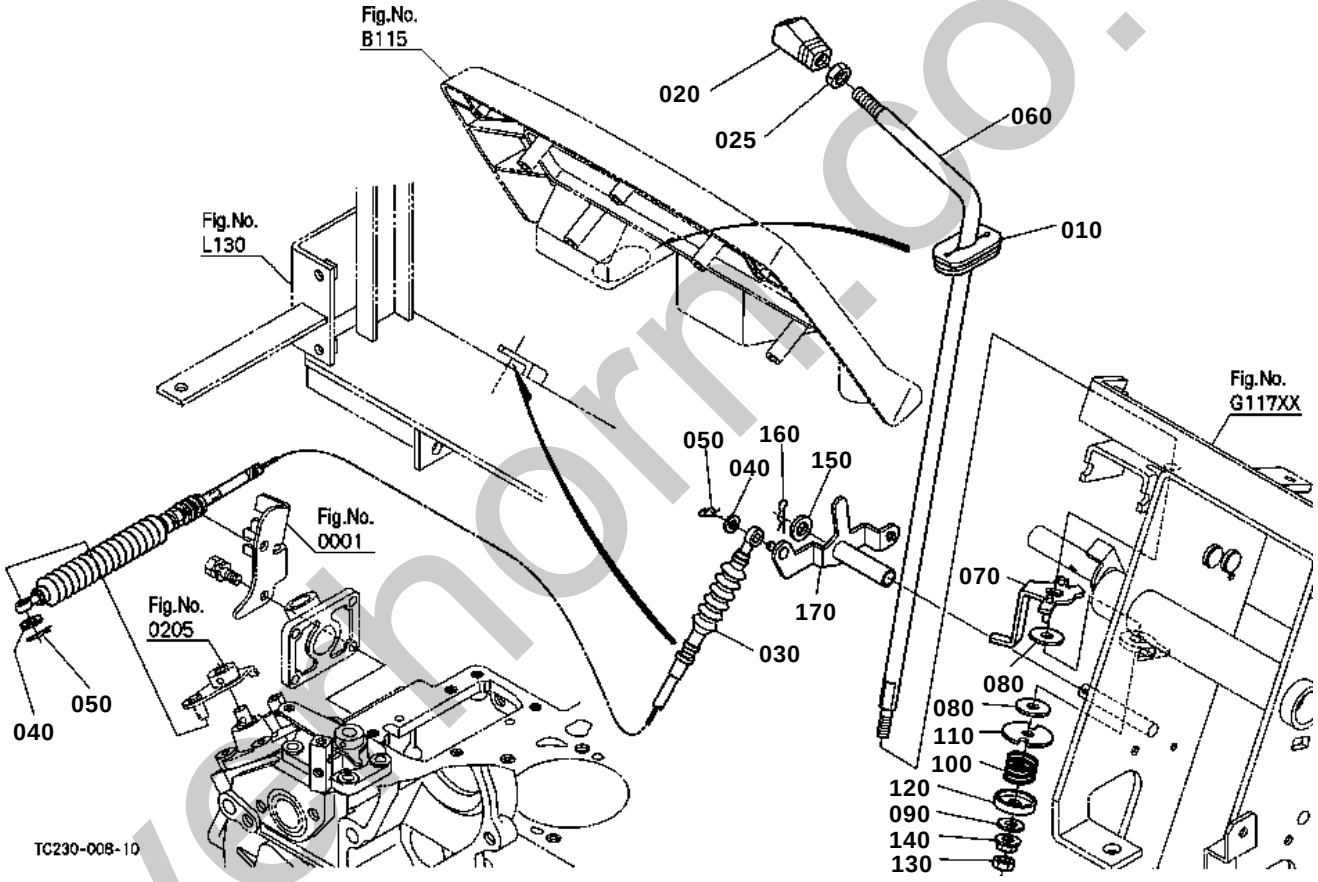

silvermorn.co.uk

ACCELERATOR LEVER

↔ Interchangeable; ≠ not interchangeable; ← new for old; → old for new

REF.No	Part No.	Description	Q'ty	S.No.	I/C	REMARKS	Weight (kgf)	Weight (lb)
010	TC020-43155	GROMMET HAND ACCEL.	1				0.007	0.0154
020	3F740-10680	GRIP LEVER	1				0.026	0.0572
025	30400-15210	NUT	1				0.005	0.011
030	TC230-42900	ASSY CABLE.ACCEL	1				0	0
040	04013-60060	WASHER PLAIN	2				0.001	0.0022
050	05525-60600	PIN SNAP	2				0.001	0.0022
060	TC220-17120	LEVER HAND ACCEL.	1				0.42	0.924
070	TC050-44720	LEVER ACCEL.ARM	1				0.07	0.154
080	TD060-42870	PLATE ACCEL	2				0.01	0.022
090	04015-60080	WASHER PLAIN	1				0.01	0.022
100	33251-10320	SPRING ACCEL.LEVER	1				0.012	0.0264
110	T1060-42840	WASHER	1				0.02	0.044
120	TC050-10270	CAP SPRING	1				0.023	0.0506
130	02114-50080	NUT	1				0.005	0.011
140	02751-50080	NUT FLANGE	1				0.006	0.0132
150	04013-60100	WASHER PLAIN	1				0.003	0.0066
160	05515-61000	PIN SNAP	1				0.002	0.0044
170	TC230-17322	LINK ACCEL.	1				0	0

silverhorn.co.uk

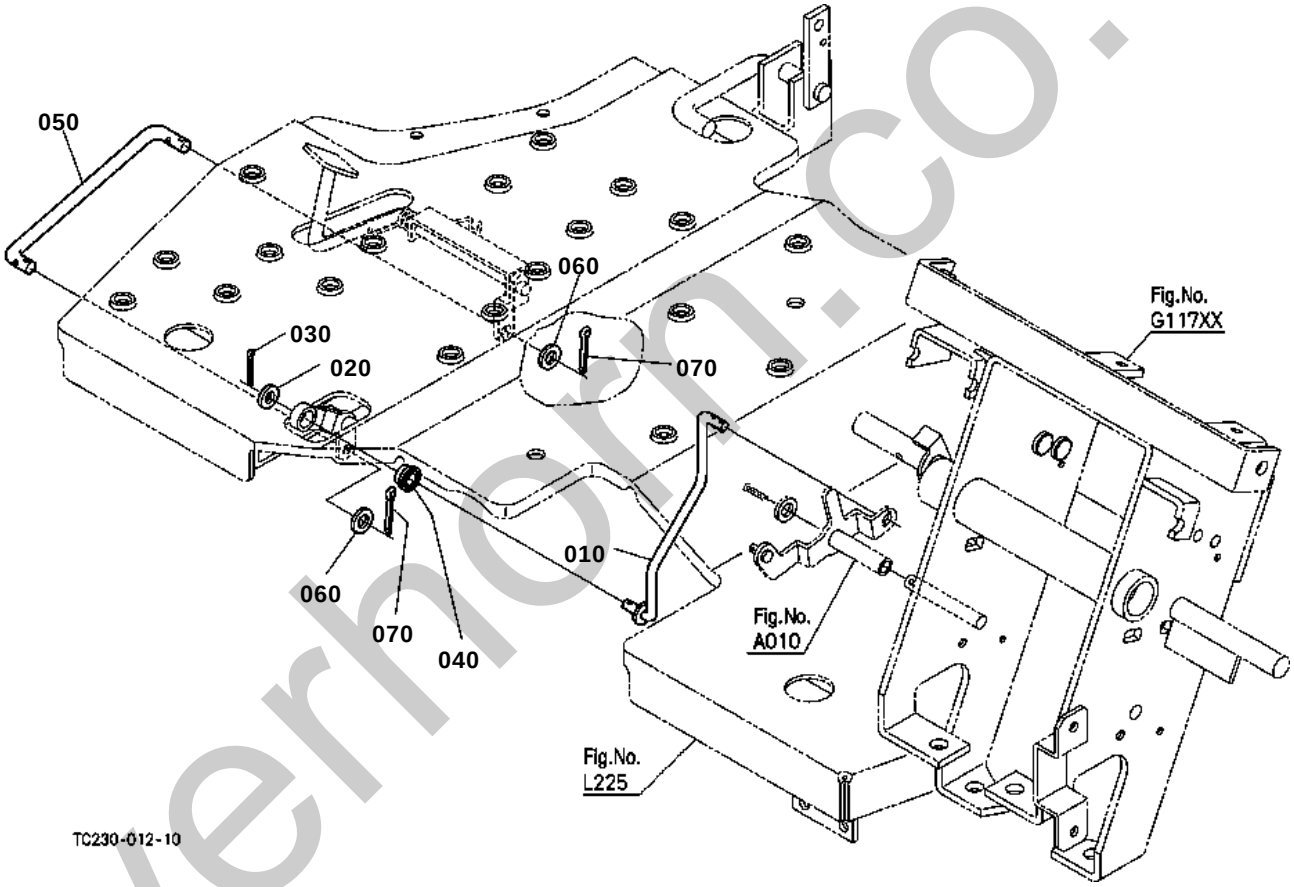

silverhorn.co.uk

ACCELERATOR LINKAGE

↔ Interchangeable; ≠ not interchangeable; ← new for old; → old for new

REF.No	Part No.	Description	Q'ty	S.No.	I/C	REMARKS	Weight (kgf)	Weight (lb)
010	TC230-17570	ROD ACCEL.	1				0	0
020	04012-50080	WASHER PLAIN	1				0.001	0.0022
030	05511-52520	PIN SPLIT	1				0.001	0.0022
040	T0070-76460	CUSHION	1				0.006	0.0132
050	TC030-17580	ROD ACCEL.	1				0.105	0.231
060	04012-50080	WASHER PLAIN	2				0.001	0.0022
070	05511-50218	PIN SPLIT	2				0.001	0.0022

silverhorn.co.uk

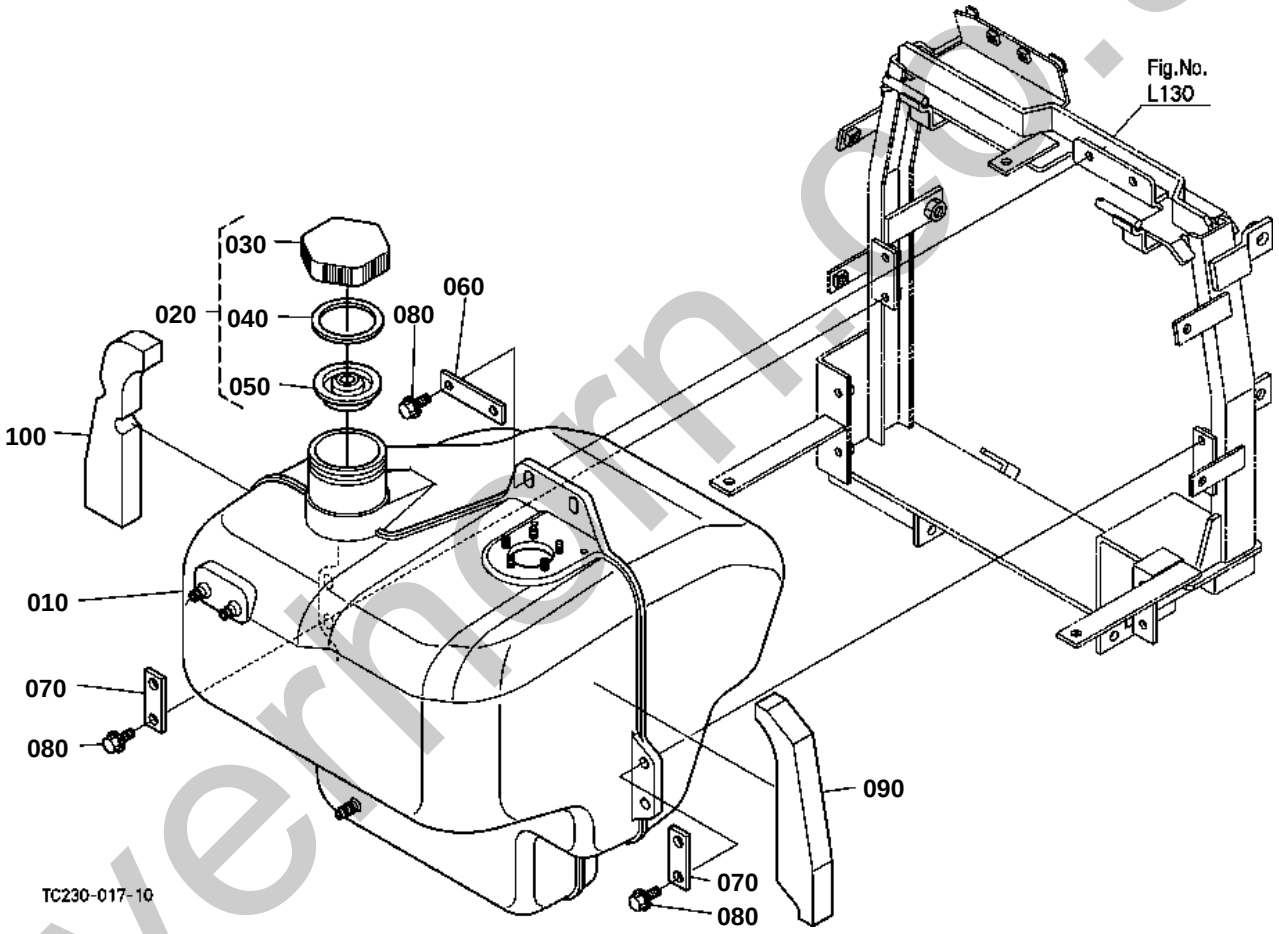

silvernorn.co.uk

FUEL TANK

↔ Interchangeable; ≠ not interchangeable; ← new for old; → old for new

REF.No	Part No.	Description	Q'ty	S.No.	I/C	REMARKS	Weight (kgf)	Weight (lb)
010	TC230-42010	TANK FUEL	1				0	0
020	6A100-54910	ASSY CAP FUEL	1				0.105	0.231
030	6A100-54920	CAP FUEL	1				0.041	0.0902
040	6A100-54942	SPACER	1				0.001	0.0022
050	6A100-54952	GASKET	1				0.02	0.044
060	TC230-42120	PLATE FUEL TANK	1				0	0
070	T1060-42080	PLATE FUEL TANK	2				0.033	0.0726
080	01123-50825	BOLT	6				0.013	0.0286
090	TC230-42183	SPONGE	1				0	0
100	TC220-42190	SPONGE SHUTTER RH	1				0	0

silverhorn.co.uk

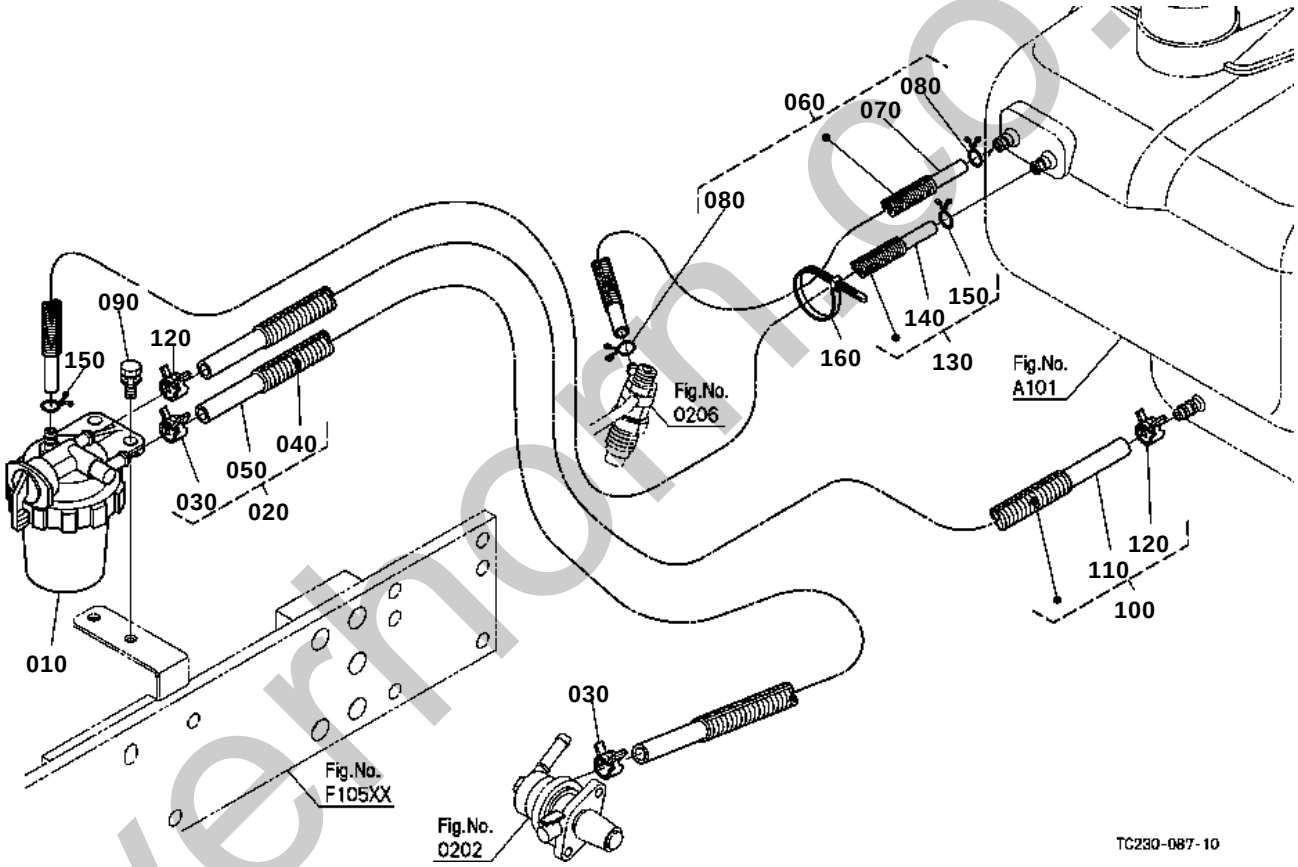

silvermoor.co.uk

FUEL PIPE AND FUEL FILTER

↔ Interchangeable; ≠ not interchangeable; ← new for old; → old for new

REF.No	Part No.	Description	Q'ty	S.No.	I/C	REMARKS	Weight (kgf)	Weight (lb)
010	15521-43015	ASSY FILTER FUEL	1				0.59	1.298
020	34530-42620	ASSY TUBE FUEL	1				0.055	0.121
030	09318-88125	CLAMP HOSE	2				0.001	0.0022
040	34530-42670	TUBE PIPE	1				0.01	0.022
050	09661-80300	TUBE FUEL	1				0.04	0.088
060	32751-42630	ASSY TUBE FUEL	1				0.045	0.099
070	09661-40500	TUBE FUEL	1				0.03	0.066
080	14971-42750	CLIP PIPE	2				0.001	0.0022
090	01123-50825	BOLT	2				0.013	0.0286
100	TA470-42610	ASSY TUBE FUEL	1				0.08	0.176
110	37410-88230	PIPE FUEL	1				0.072	0.1584
120	09318-88125	CLAMP HOSE	2				0.001	0.0022
130	T1060-42640	ASSY TUBE FUEL	1				0.054	0.1188
140	09661-40750	TUBE FUEL	1				0.04	0.088
150	14971-42750	CLIP PIPE	2				0.001	0.0022
160	44366-68380	BAND CORD	1				0.01	0.022

silverhorn.co.uk

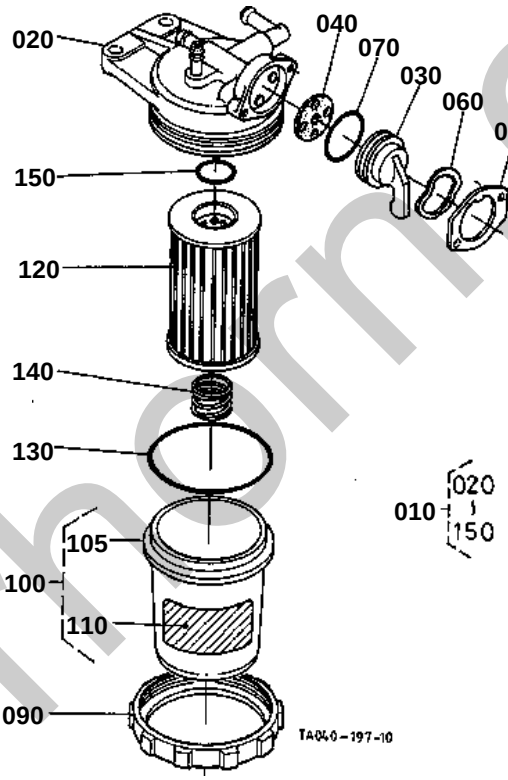

silverhorn.co.uk

FUEL FILTER [COMPONENT PARTS]

↔ Interchangeable; ≠ not interchangeable; ← new for old; → old for new

REF.No	Part No.	Description	Q'ty	S.No.	I/C	REMARKS	Weight (kgf)	Weight (lb)
010	15521-43015	ASSY FILTER FUEL	1				0.59	1.298
020	15521-43114	ASSY BODY	1				0.235	0.517
030	15521-43522	HANDLE FILTER	1				0.04	0.088
040	15521-43672	GASKET	1				0.001	0.0022
050	15521-43552	RETAINER HANDLE	1				0.01	0.022
060	15521-43542	PLATE THRUST	1				0.001	0.0022
070	04811-10290	O RING	1				0.001	0.0022
080	03054-50308	SCREW PAN-HEAD	2				0.005	0.011
090	15521-43150	RING RETAINER	1				0.14	0.308
100	15521-43100	ASSY CUP FILTER	1				0.05	0.11
105	15521-43130	CUP FILTER	1				0.1	0.22
110	16873-88430	LABEL FUEL	1				0.001	0.0022
120	15521-43160	ELEMENT FILTER	1				0.07	0.154
130	04811-50650	O RING	1				0.002	0.0044
140	15521-43930	SPRING	1				0.004	0.0088
150	04816-00160	O RING	1				0.003	0.0066

silverhorn.co.uk

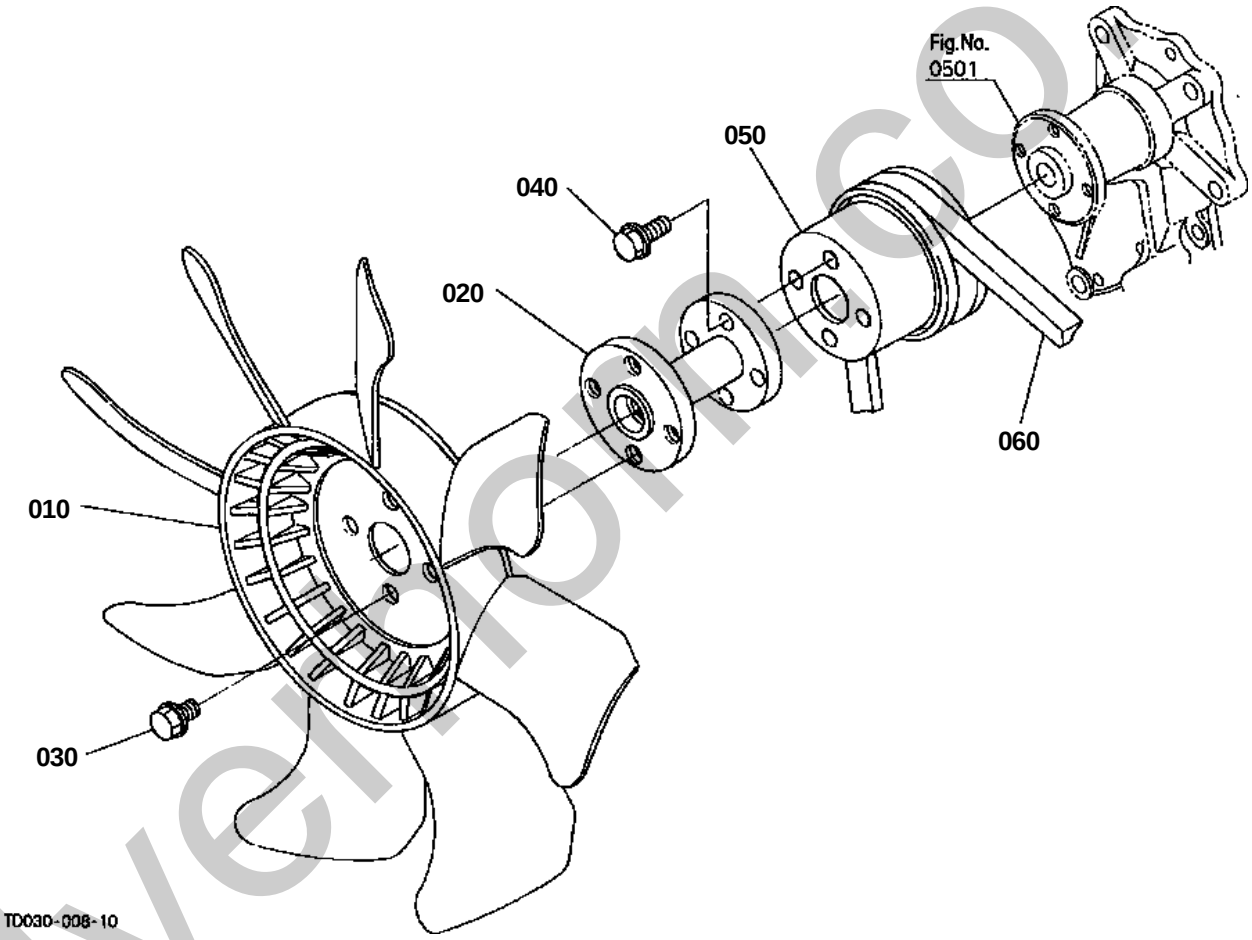

silverromco.uk

FAN

↔ Interchangeable; ≠ not interchangeable; ← new for old; → old for new

REF.No	Part No.	Description	Q'ty	S.No.	I/C	REMARKS	Weight (kgf)	Weight (lb)
010	34550-16210	FAN	1				1.19	2.618
020	34550-16222	FLANGE FAN	1				0.25	0.55
030	01754-50816	BOLT FLANGE	4				0.011	0.0242
040	01754-50625	BOLT FLANGE	4				0.008	0.0176
050	17351-74250	PULLEY FAN	1				0.26	0.572
060	15471-97010	V BELT	1				0.12	0.264

silverhorn.co.uk

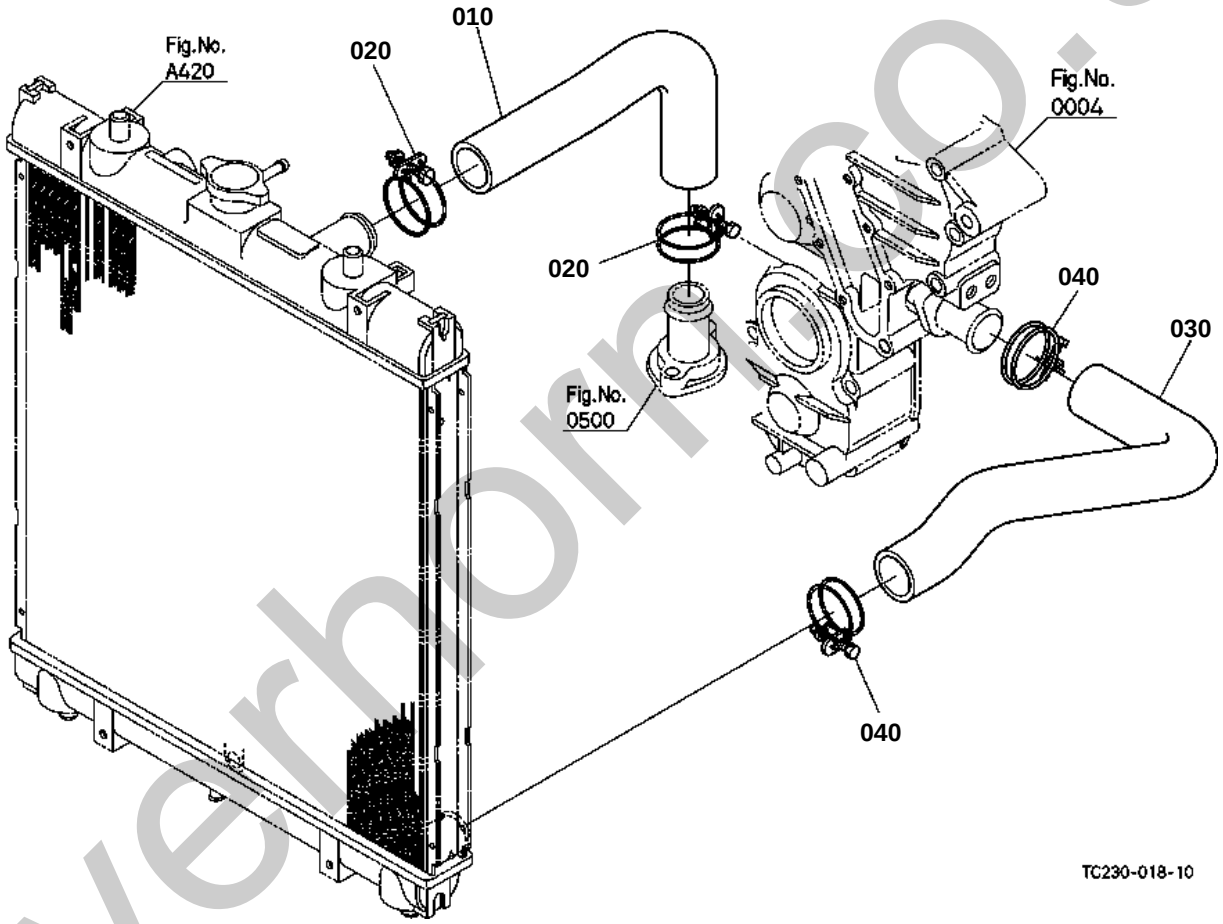

silverhorn.co.uk

WATER PIPE

↔ Interchangeable; ≠ not interchangeable; ← new for old; → old for new

REF.No	Part No.	Description	Q'ty	S.No.	I/C	REMARKS	Weight (kgf)	Weight (lb)
010	TC230-16120	HOSE RADIATOR UPPER	1				0	0
020	15108-72870	BAND	2				0.027	0.0594
030	TC230-16140	HOSE RADIATOR LOWER	1				0	0
040	15108-72870	BAND	2				0.027	0.0594

silverhorn.co.uk

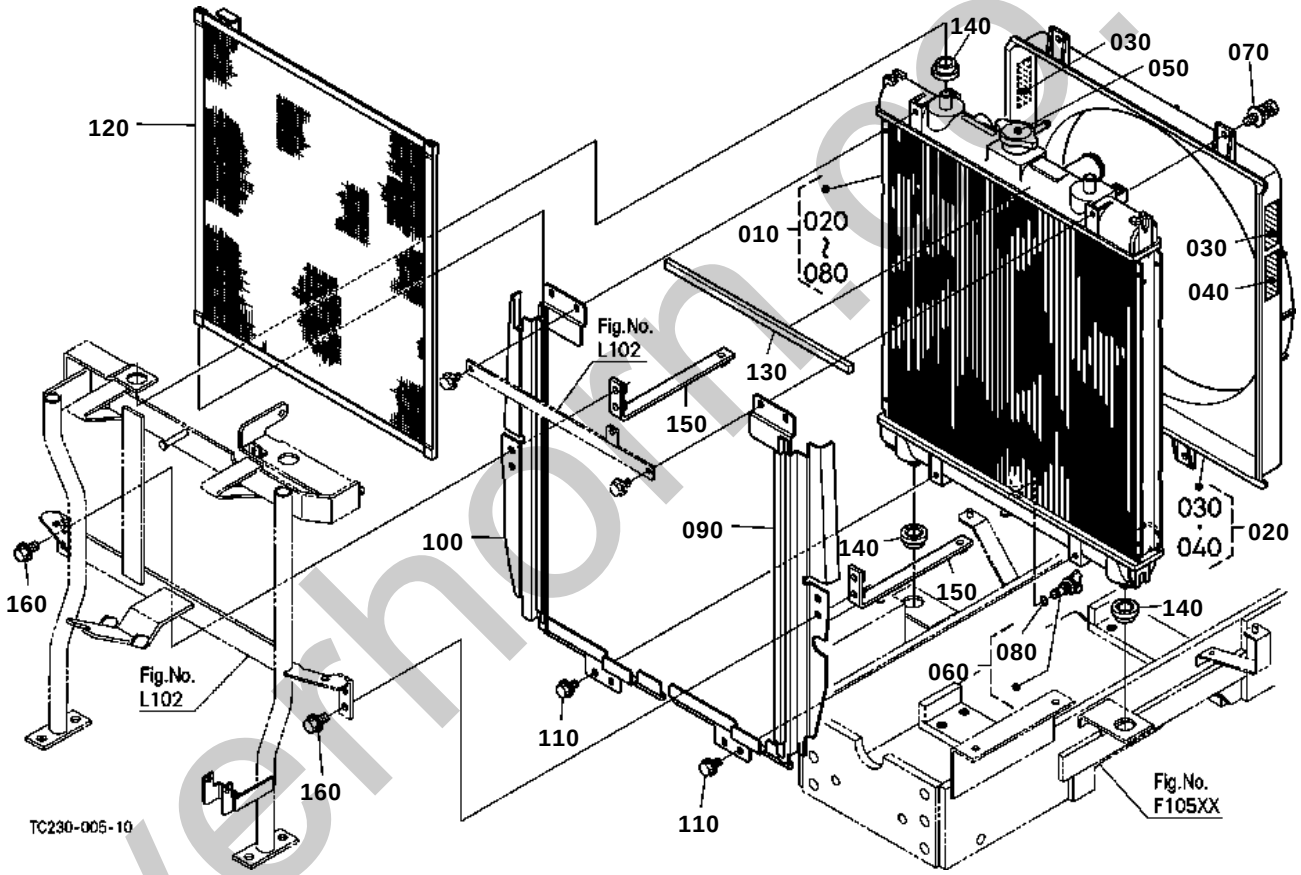

silverhorn.co.uk

RADIATOR

↔ Interchangeable; ≠ not interchangeable; ← new for old; → old for new

REF.No	Part No.	Description	Q'ty	S.No.	I/C	REMARKS	Weight (kgf)	Weight (lb)
010	TC230-99600	ASSY RADIATOR	1				0	0
020	TC230-99620	KIT SHUROUD FAN	1				0	0
030	6C090-49580	LABEL FAN WARNING	2				0.001	0.0022
040	TC030-49580	LABEL MUFFLER	1				0.001	0.0022
050	17580-16060	CAP RADIATOR	1				0.04	0.088
060	34070-16070	PLUG DRAIN	1				0.005	0.011
070	01029-50616	BOLT	4				0.01	0.022
080	34070-16090	O RING	1				0.001	0.0022
090	TC230-16040	GUIDE RADIATOR LH	1				0	0
100	TC230-16050	GUIDE RADIATOR RH	1				0	0
110	01754-50612	BOLT FLANGE	2				0.005	0.011
120	TC230-16240	NET RADIATOR	1				0	0
130	T1060-40660	SPONGE	1				0.005	0.011
140	34070-16030	RUBBER	4				0.015	0.033
150	TC230-41400	STAY COVER	2				0	0
160	01754-50816	BOLT FLANGE	4				0.011	0.0242

silverhorn.co.uk

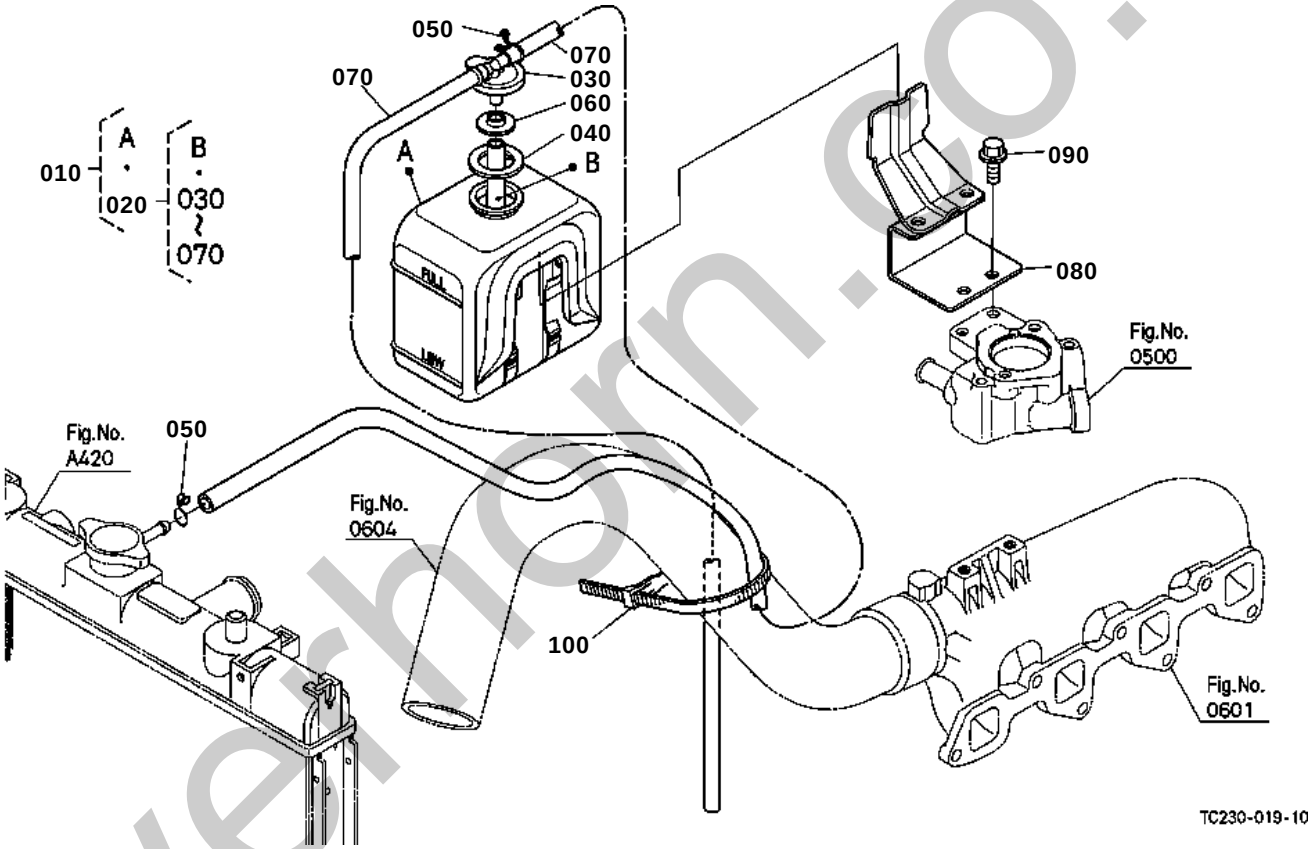

silverhorn.co.uk

RESERVE TANK

↔ Interchangeable; ≠ not interchangeable; ← new for old; → old for new

REF.No	Part No.	Description	Q'ty	S.No.	I/C	REMARKS	Weight (kgf)	Weight (lb)
010	T1150-16700	ASSY TANK RESERVE	1				0.41	0.902
020	T1150-17290	ASSY CAP	1				0.185	0.407
030	15531-72422	CAP	1				0.001	0.0022
040	15531-72432	GASKET	1				0.002	0.0044
050	15501-72470	CLIP PIPE	2				0.005	0.011
060	3G704-17390	PLATE	1				0.001	0.0022
070	3G700-17320	HOSE	2				0.08	0.176
080	TC230-16720	STAY RESERVE TANK	1				0	0
090	01754-50816	BOLT FLANGE	2				0.011	0.0242

silverhorn.co.uk

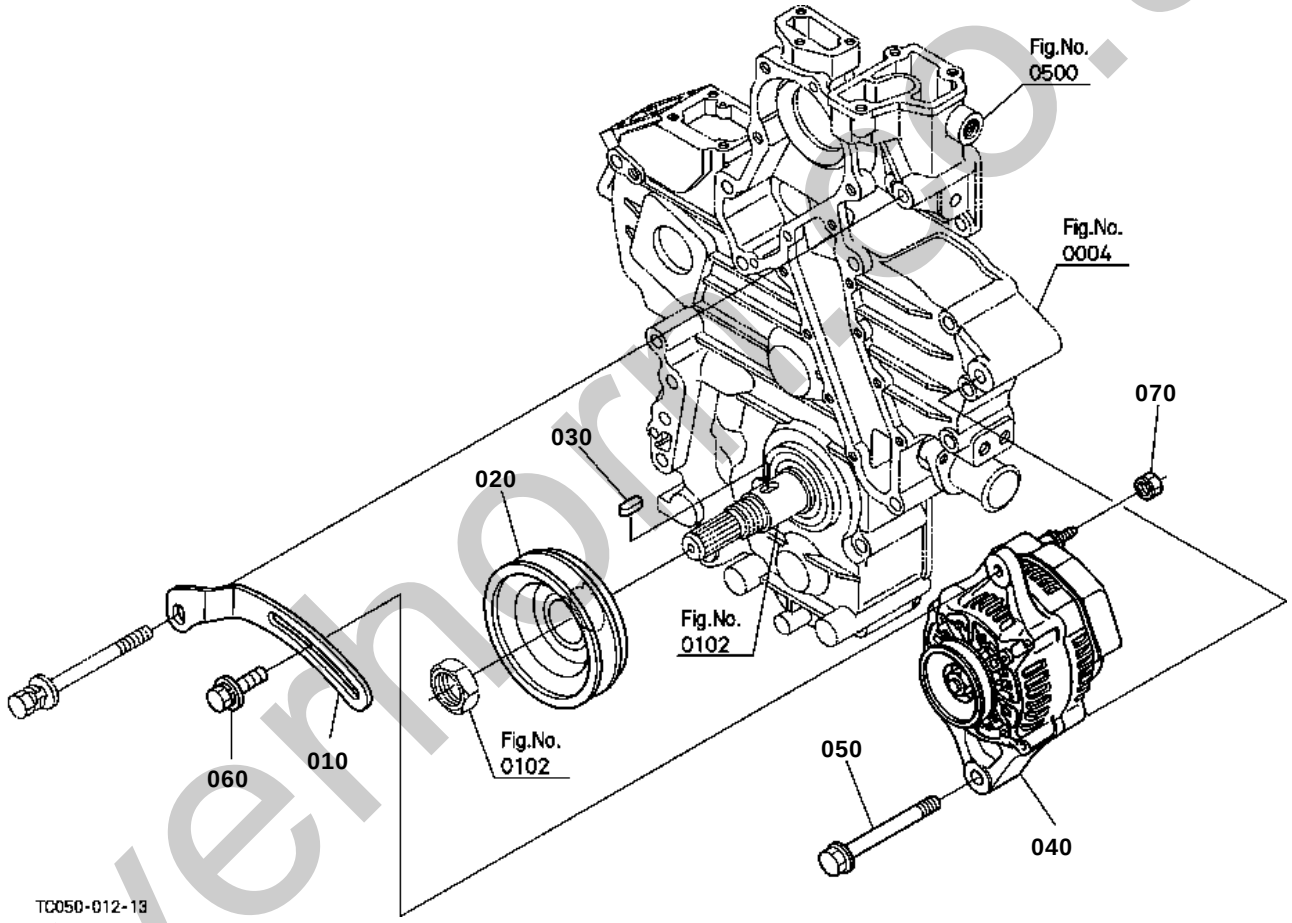

silverhorse.co.uk

ALTERNATOR

↔ Interchangeable; ≠ not interchangeable; ← new for old; → old for new

REF.No	Part No.	Description	Q'ty	S.No.	I/C	REMARKS	Weight (kgf)	Weight (lb)
010	1A033-64420	STAY DYNAMO	1				0.135	0.297
020	1G790-74280	PULLEY FAN DRIVE	1				0.95	2.09
030	05712-00720	KEY FEATHER	1				0.008	0.0176
040	T1060-15682	ASSY ALTERNATOR	1				3.05	6.71
050	01754-51070	BOLT FLANGE	1				0.01	0.022
060	01127-50830	BOLT	1				0.023	0.0506
070	12264-92020	NUT SPRING WASHER M	1				0.05	0.11

silverhorn.co.uk

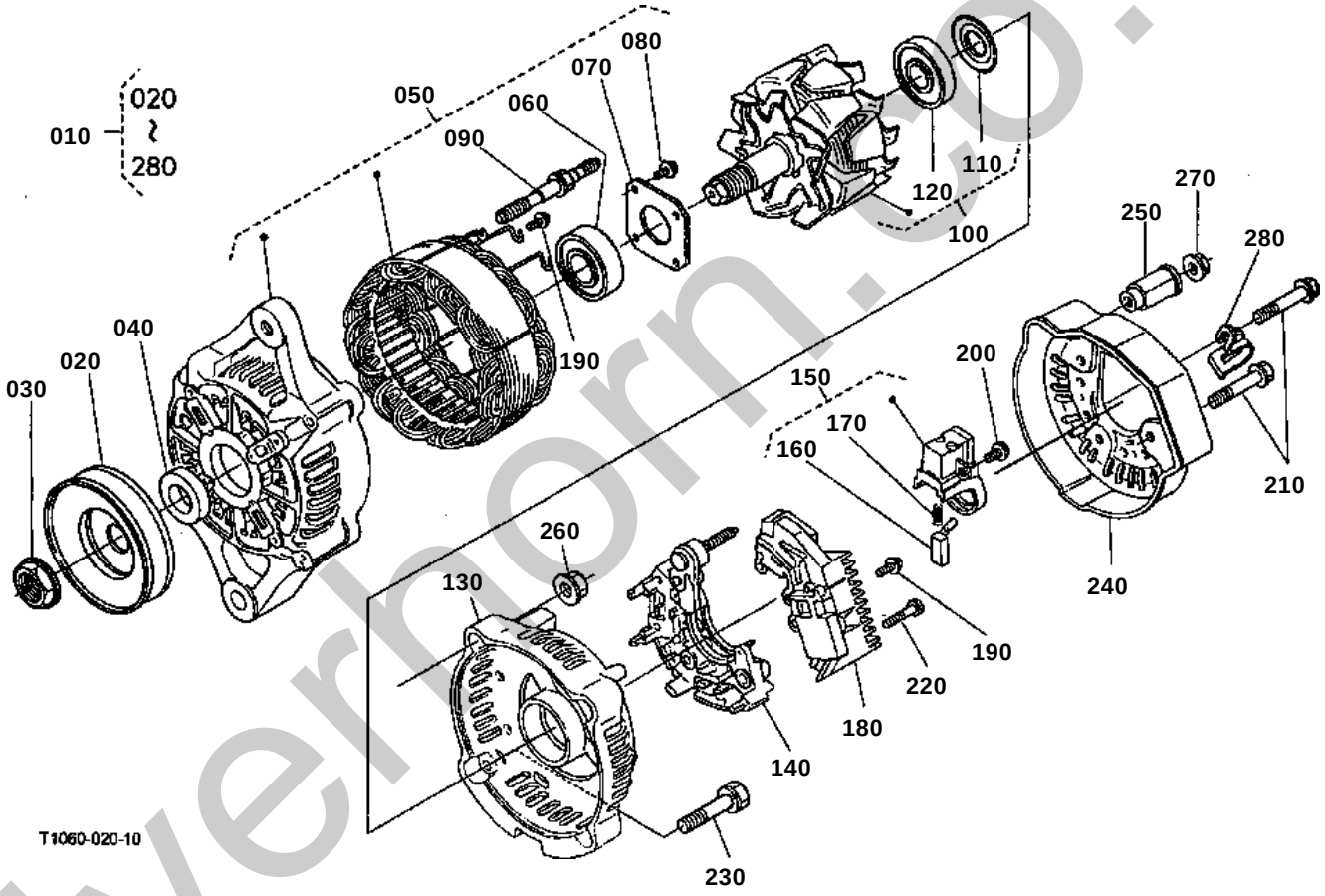

silverhorn.co.uk

↔ Interchangeable; ≠ not interchangeable; ← new for old; → old for new

REF.No	Part No.	Description	Q'ty	S.No.	I/C	REMARKS	Weight (kgf)	Weight (lb)
010	T1060-15682	ASSY ALTERNATOR	1				3.05	6.71
020	16427-64110	PULLEY ALTERNATOR	1				0.2	0.44
030	15881-92010	NUT	1				0.02	0.044
040	15881-64150	COLLAR	1				0.004	0.0088
050	66436-64020	ASSY FRAME DRIVE END	1				1.11	2.442
060	16652-64780	BEARING BALL	1				0.05	0.11
070	15881-64710	PLATE RETAINER	1				0.01	0.022
080	15881-93010	SCREW ROUND HEAD	4				0.003	0.0066
090	15881-64260	BOLT THROUGH	2				0.01	0.022
100	66436-64040	ROTOR	1				1.2	2.64
110	15881-64800	COVER BEARING	1				0.001	0.0022
120	16652-64770	BEARING BALL	1				0.045	0.099
130	16241-64060	FRAME END	1				0.2	0.44
140	16231-64850	ASSY RECTIFIER	1				0.18	0.396
150	16652-64310	HOLDER BRUSH	1				0.025	0.055
160	15881-64090	BRUSH	2				0.002	0.0044
170	15881-64330	SPRING BRUSH	2				0.002	0.0044
180	1K531-64602	ASSY REGULATOR	1				0.08	0.176
190	15881-93030	SCREW ROUND HEAD	6				0.003	0.0066
200	15881-93040	SCREW ROUND HEAD	1				0.003	0.0066
210	15881-91040	BOLT	3				0.005	0.011
220	15881-93020	SCREW ROUND HEAD	2				0.005	0.011
230	15881-91050	BOLT	2				0.01	0.022
240	16231-64230	COVER END	1				0.035	0.077
250	16241-64900	BUSH INSULATION	1				0.007	0.0154
260	15881-92020	NUT	2				0.02	0.044
270	14182-92030	NUT	1				0.003	0.0066
280	17369-67570	CLAMP CORD	1				0.001	0.0022

silverhorn.co.uk

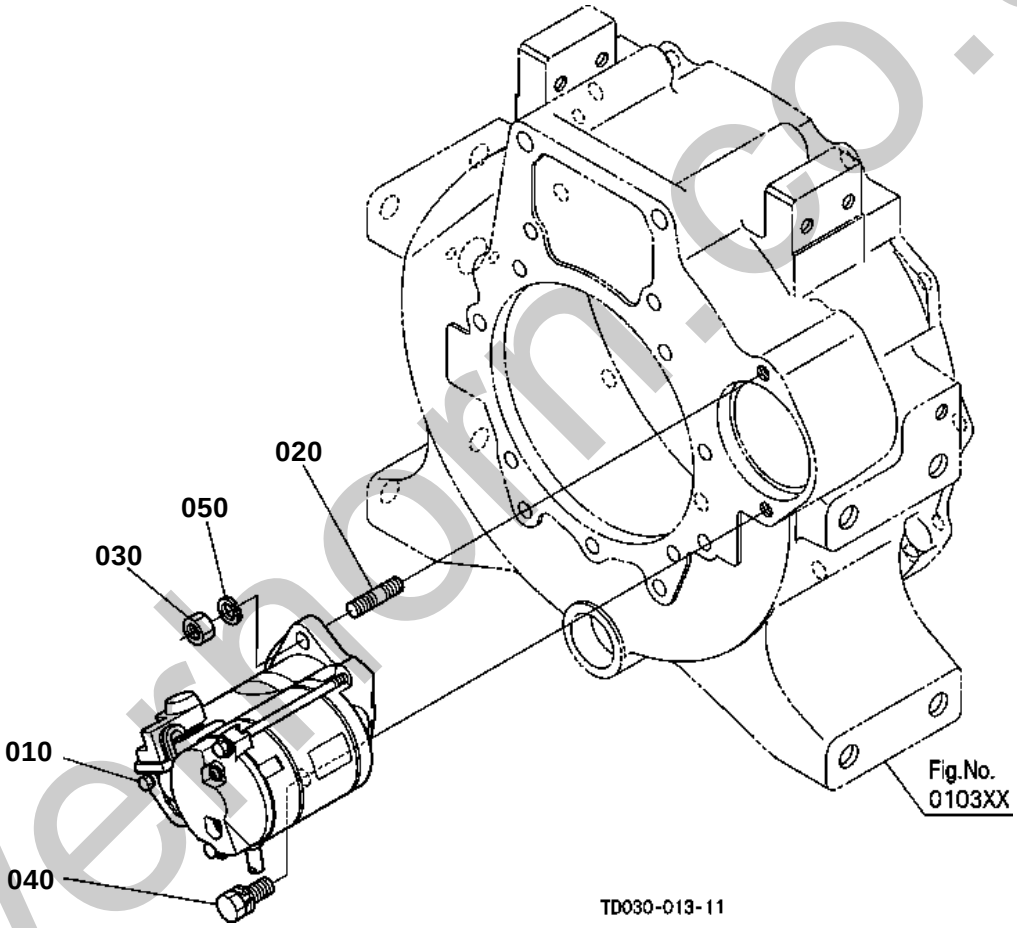

silverhorn.co.uk

↔ Interchangeable; ≠ not interchangeable; ← new for old; → old for new

REF.No	Part No.	Description	Q'ty	S.No.	I/C	REMARKS	Weight (kgf)	Weight (lb)
010	T1150-16800	ASSY STARTER	1				4.05	8.91
020	01517-61030	STUD	1				0.021	0.0462
030	02176-50100	NUT	1				0.005	0.011
040	01133-51030	BOLT	1				0.025	0.055
050	04512-60100	WASHER SPRING	1				0.002	0.0044

silverhorn.co.uk

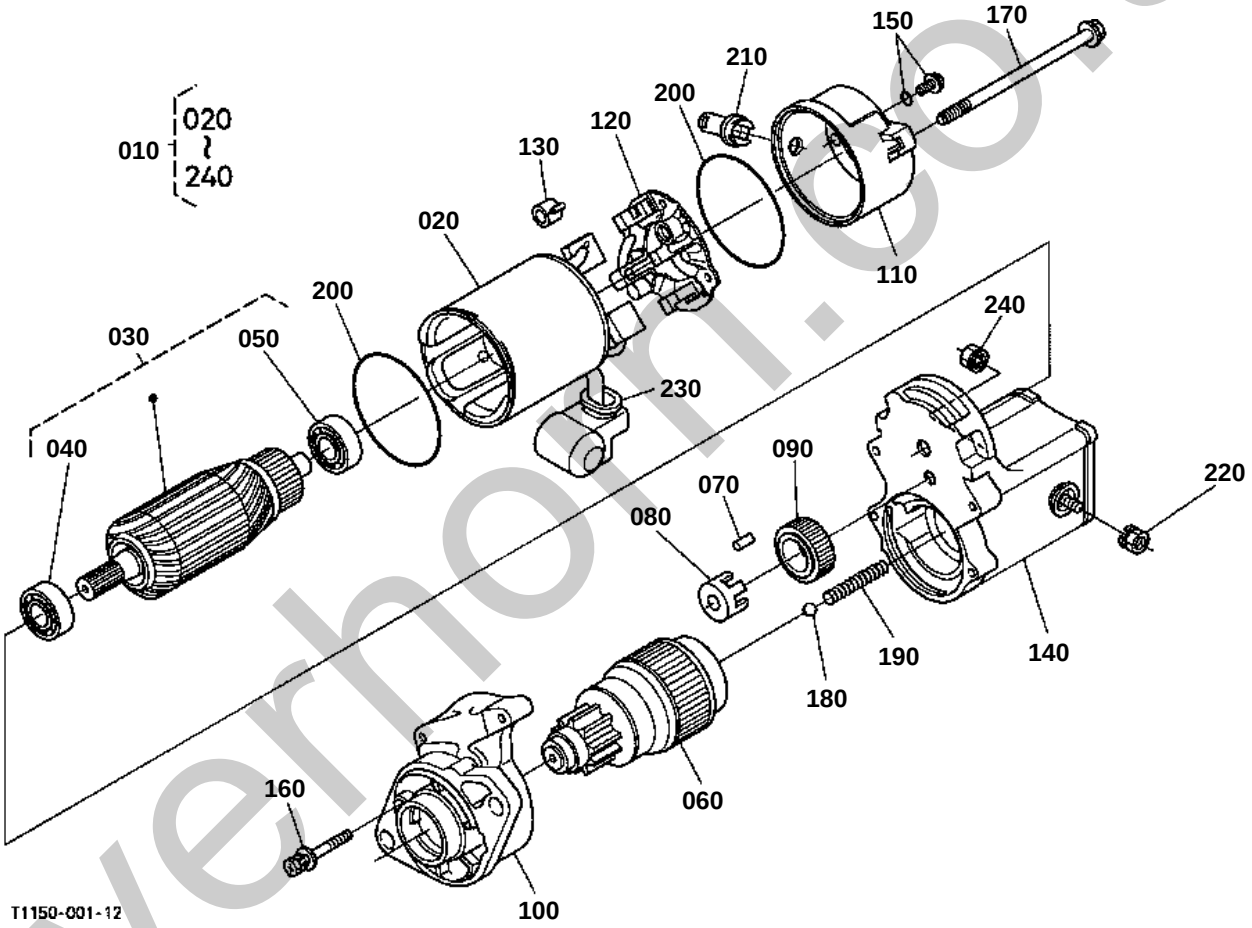

silverhorn.co.uk

STARTER [COMPONENT PARTS]

↔ Interchangeable; ≠ not interchangeable; ← new for old; → old for new

REF.No	Part No.	Description	Q'ty	S.No.	I/C	REMARKS	Weight (kgf)	Weight (lb)
010	T1150-16800	ASSY STARTER	1				4.05	8.91
020	11197-63080	ASSY YOKE	1				0.92	2.024
030	11197-63070	ASSY ARMATURE	1				0.8	1.76
040	11460-63500	BEARING	1				0.03	0.066
050	11460-63530	BEARING	1				0.02	0.044
060	RC411-53260	CLUTCH STARTER	1				0.59	1.298
070	19212-63100	ROLLER	5				0.002	0.0044
080	11460-63110	RETAINER	1				0.01	0.022
090	11460-63270	GEAR	1				0.04	0.088
100	RC411-53270	ASSY HOUSING STARTER	1				0.48	1.056
110	17341-63200	FRAME END	1				0.13	0.286
120	17381-63380	ASSY HOLDER BRUSH	1				0.05	0.11
130	15401-63390	SPRING BRUSH	4				0.003	0.0066
140	RC411-53290	ASSY SWITCH MAGNETIC	1				0.92	2.024
150	15511-63760	ASSY BOLT	2				0.005	0.011
160	11460-93310	BOLT	2				0.01	0.022
170	11197-63320	BOLT	2				0.02	0.044
180	19212-97130	BALL	1				0.003	0.0066
190	11460-63120	SPRING	1				0.01	0.022
200	15511-96660	O RING	2				0.005	0.011
210	16285-63570	PIPE DRAIN	1				0.005	0.011
220	13963-92010	NUT HEXAGON	1				0.005	0.011
230	16611-63450	COVER	1				0.03	0.066
240	16285-92010	NUT HEXAGON	1				0.005	0.011

silverhorn.co.uk

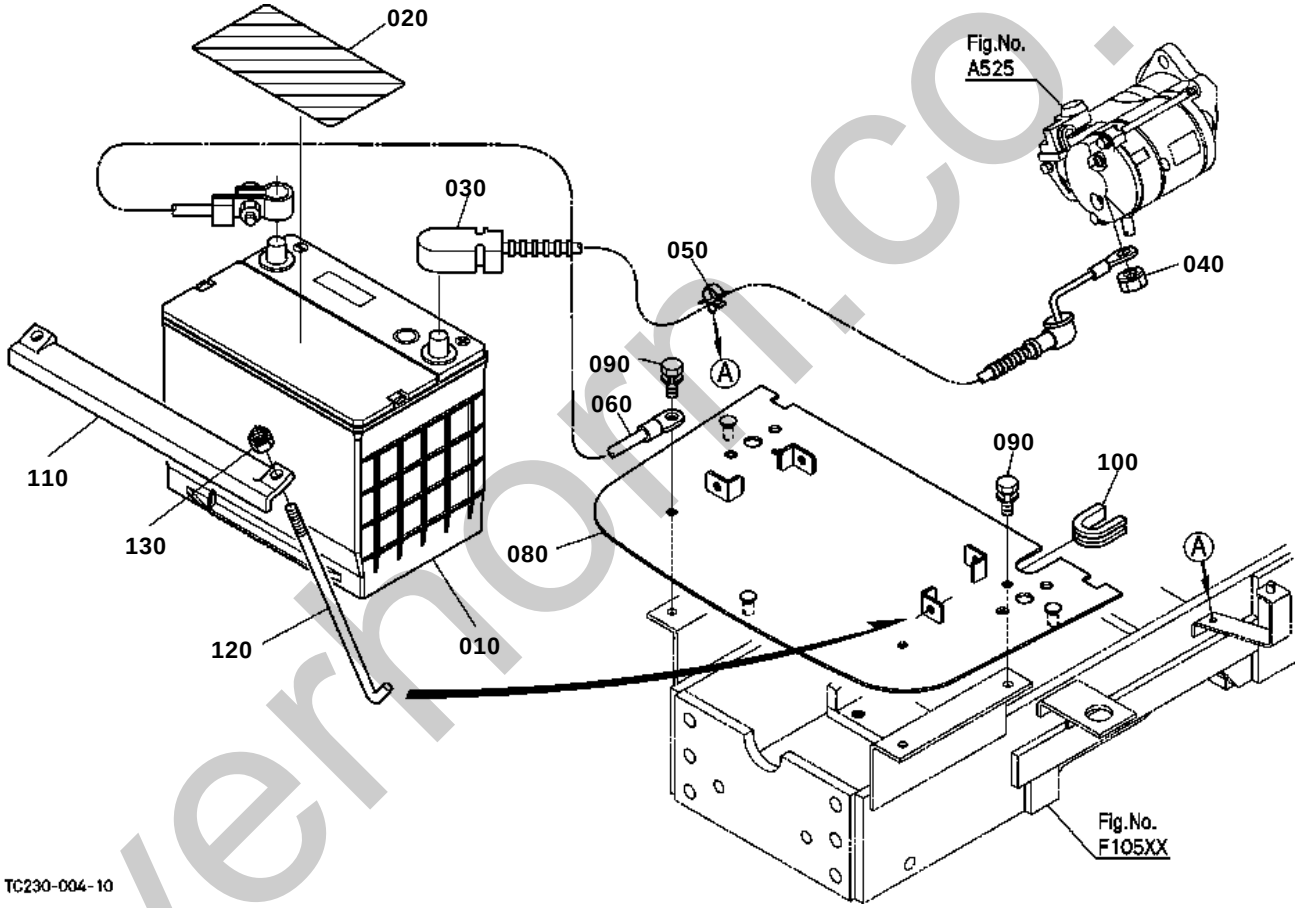

silvernorn.co.uk

BATTERY

↔ Interchangeable; ≠ not interchangeable; ← new for old; → old for new

REF.No	Part No.	Description	Q'ty	S.No.	I/C	REMARKS	Weight (kgf)	Weight (lb)
010	99999-99999	BATTERY	1			80D26R	0	0
020	TD060-30122	LABEL BATTERY	1				0.004	0.0088
030	T1150-30124	CORD BATTERY	1				0.33	0.726
040	16429-92010	NUT	1				0.007	0.0154
050	T1060-30140	CLAMP	1				0.002	0.0044
060	T1060-30130	CORD EARTH	1				0.08	0.176
070	99999-99999	BLANK	0				0	0
080	TC230-45710	SUPPORT BATTERY	1				0	0
090	01123-50820	BOLT	4				0.011	0.0242
100	30430-82770	CUSHION	1				0.005	0.011
110	T1060-40110	RETAINER BATTERY	1				0.2	0.44
120	T0430-40120	BOLT HOOK	2				0.042	0.0924
130	02552-50060	NUT LOCK	2				0.002	0.0044

silverhorn.co.uk

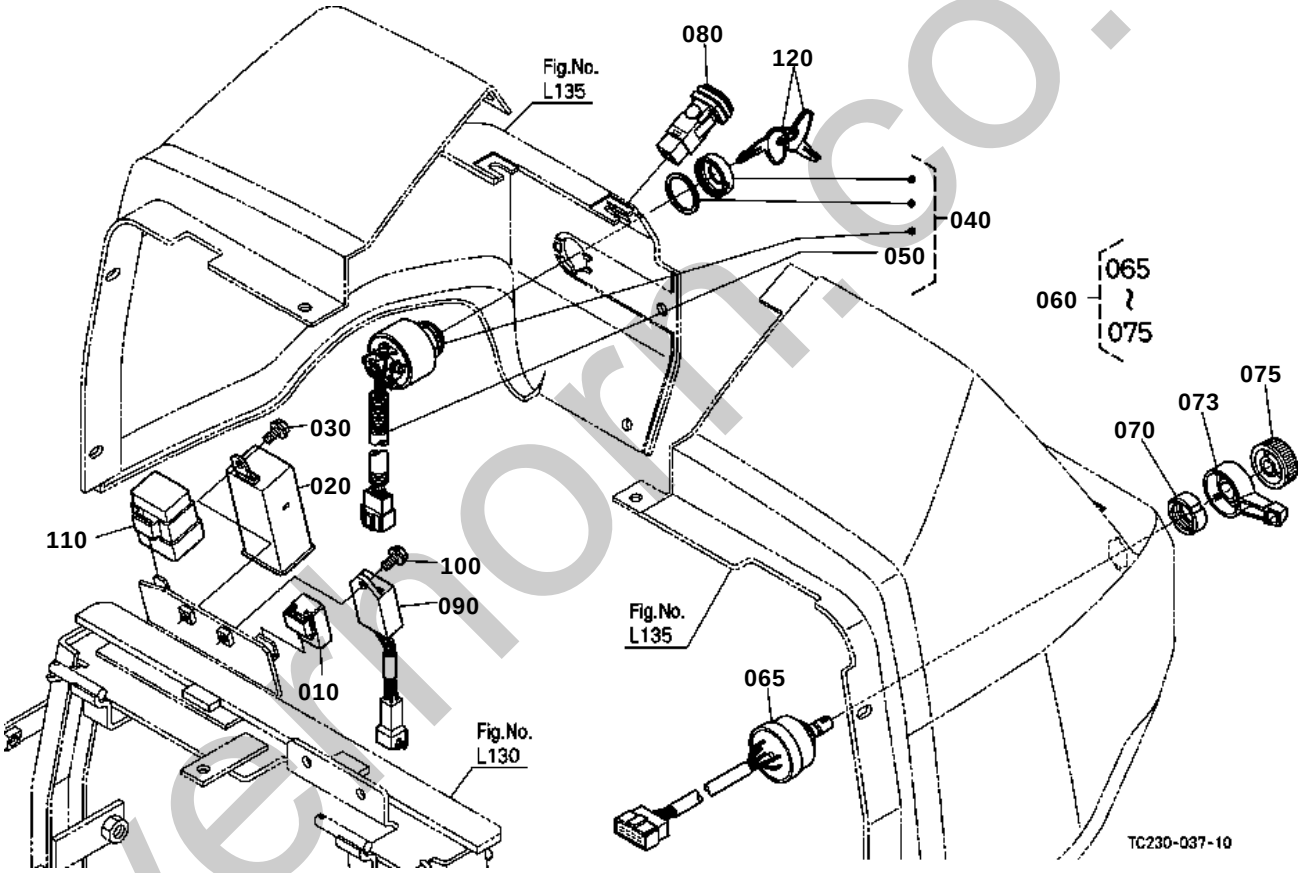

silverhorn.co.uk

SWITCH 1 / RELAY

↔ Interchangeable; ≠ not interchangeable; ← new for old; → old for new

REF.No	Part No.	Description	Q'ty	S.No.	I/C	REMARKS	Weight (kgf)	Weight (lb)
010	T1060-33720	RELAY STARTER	1				0.02	0.044
020	3F240-75430	UNIT FLASHER	1				0.06	0.132
030	01754-50616	BOLT FLANGE	1				0.006	0.0132
040	TC020-31820	SWITCH MAIN	1				0.242	0.5324
050	35080-31830	HARNESS MAIN SWITCH	1				0.02	0.044
060	67156-55210	SWITCH COMBINATION	1				0.095	0.209
065	67156-55260	ASSY BODY SWITCH	1				0.07	0.154
070	67156-55230	NUT RING	1				0.003	0.0066
073	67156-55240	LEVER FLASHER	1				0.004	0.0088
075	67156-55250	KNOB LIGHT	1				0.004	0.0088
080	TA140-30910	SWITCH HAZARD	1				0.115	0.253
090	TD060-30500	TIMER OPC	1				0.04	0.088
100	01754-50616	BOLT FLANGE	1				0.006	0.0132
110	T1060-33710	RELAY GLOW	1				0.07	0.154
120	35260-31852	ASSY KEY MAIN SWITCH	1				0.03	0.066

silverhorn.co.uk

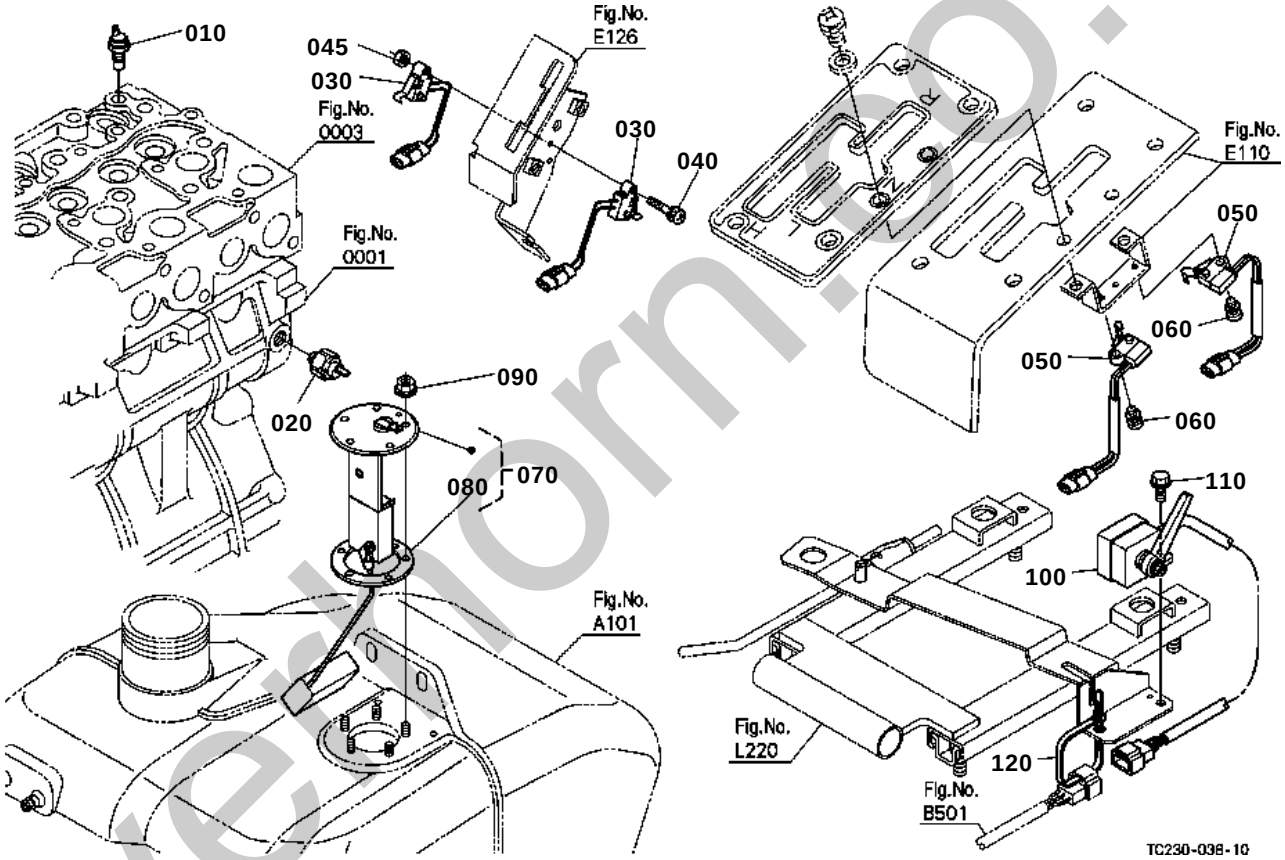

silverthorn.co.uk

SWITCH 2 / SENSOR

↔ Interchangeable; ≠ not interchangeable; ← new for old; → old for new

REF.No	Part No.	Description	Q'ty	S.No.	I/C	REMARKS	Weight (kgf)	Weight (lb)
010	32330-32830	SENSOR WATER TEMP.	1				0.01	0.022
020	15531-39010	SWITCH OIL	1				0.032	0.0704
030	T1060-43900	SWITCH LEVER	2				0.01	0.022
040	03024-50425	SCREW WITH WASHER	1				0.003	0.0066
045	02054-50040	NUT	1				0.001	0.0022
050	TC220-43900	SWITCH LEVER	2				0.005	0.011
060	03034-50312	SCREW WITH WASHER	2				0.012	0.0264
070	TC230-31200	SENSOR FUEL GAUGE	1				0	0
080	6A320-85812	GASKET GAUGE	1				0.005	0.011
090	02761-50050	NUT FLANGE	5				0.002	0.0044
100	TD060-47902	SWITCH SEAT	1				0.03	0.066
110	01754-50612	BOLT FLANGE	1				0.005	0.011
120	44366-68380	BAND CORD	1				0.01	0.022

silverhorn.co.uk

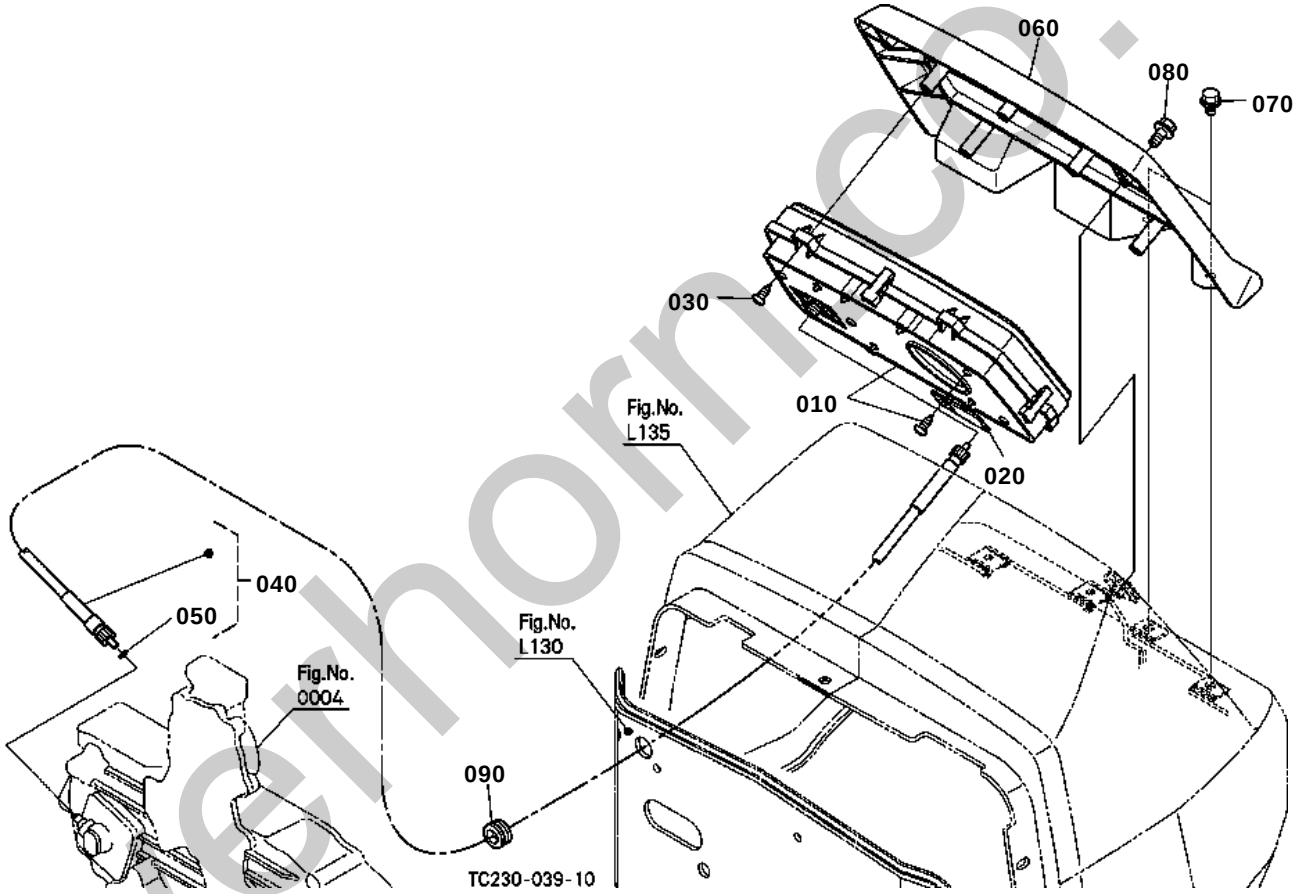

silverhorncp.uk

PANEL BOARD

↔ Interchangeable; ≠ not interchangeable; ← new for old; → old for new

REF.No	Part No.	Description	Q'ty	S.No.	I/C	REMARKS	Weight (kgf)	Weight (lb)
010	TC020-30216	ASSY PANEL	1				0.8	1.76
020	15241-67580	CLAMP CORD	1				0.004	0.0088
030	03614-50620	SCREW TAPPING	4				0.003	0.0066
040	TA040-30610	ASSY CABLE FLEXIBLE	1				0.25	0.55
050	04811-10080	O RING	1				0.001	0.0022
060	TC020-43020	COVER METER PANEL	1				0.4	0.88
070	31351-18790	BOLT FLANGE	4				0.007	0.0154
080	5H100-32900	BOLT FLANGE	2				0.01	0.022
090	37410-51760	GROMMET	1				0.003	0.0066

silverhorn.co.uk

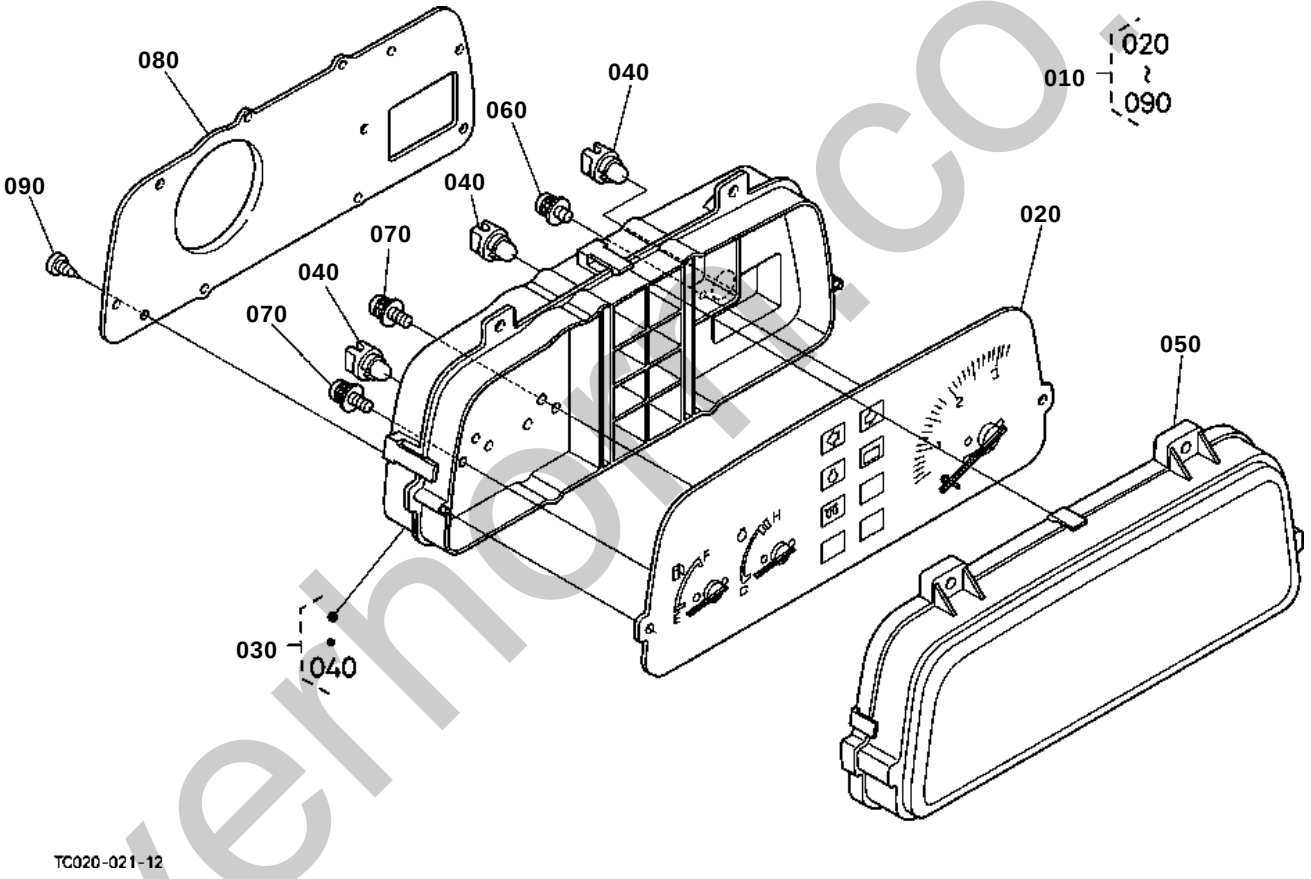

silverhorn.co.uk

PANEL BOARD [COMPONENT PARTS]

↔ Interchangeable; ≠ not interchangeable; ← new for old; → old for new

REF.No	Part No.	Description	Q'ty	S.No.	I/C	REMARKS	Weight (kgf)	Weight (lb)
010	TC020-30216	ASSY PANEL	1				0.8	1.76
020	TC020-30223	COMP.METER	1				0.37	0.814
030	TC020-30252	ASSY CASE	1				0.31	0.682
040	6C040-55140	ASSY BULB	7			1.7W	0.003	0.0066
050	TC020-30260	GLASS	1				0.175	0.385
060	6C040-55150	SCREW	2				0.002	0.0044
070	6C040-55160	SCREW	6				0.002	0.0044
080	TC020-30272	COVER	1				0.075	0.165
090	6C040-55180	SCREW	5				0.003	0.0066

silverhorn.co.uk

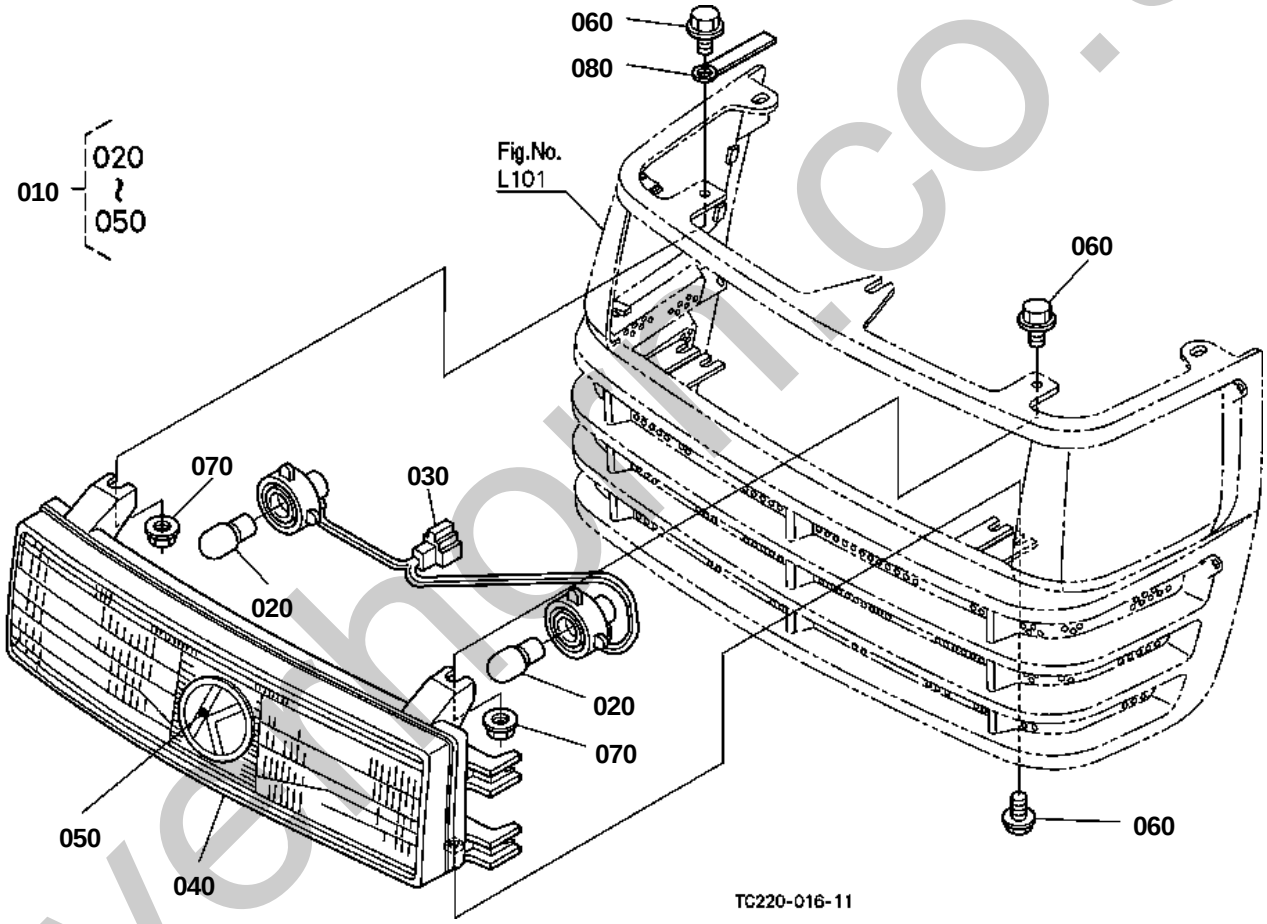

silverhoff.co.uk

HEAD LIGHT [OLD TYPE]

S.No.;<=50013

↔ Interchangeable; ≠ not interchangeable; ← new for old; → old for new

REF.No	Part No.	Description	Q'ty	S.No.	I/C	REMARKS	Weight (kgf)	Weight (lb)
010	T0421-30010	ASSY LIGHT HEAD	1				0.69	1.518
020	34070-99010	BULB	2			25W	0.02	0.044
030	T0430-99090	ASSY WIRE HARNESS	1				0.05	0.11
040	TA140-99100	UNIT LAMP	1				0.6	1.32
050	TA140-49500	MARK SYMBOL	1				0.013	0.0286
060	01754-50612	BOLT FLANGE	4				0.005	0.011
070	02751-50060	NUT FLANGE	2				0.005	0.011
080	15241-67580	CLAMP CORD	1				0.004	0.0088

silverhorn.co.uk

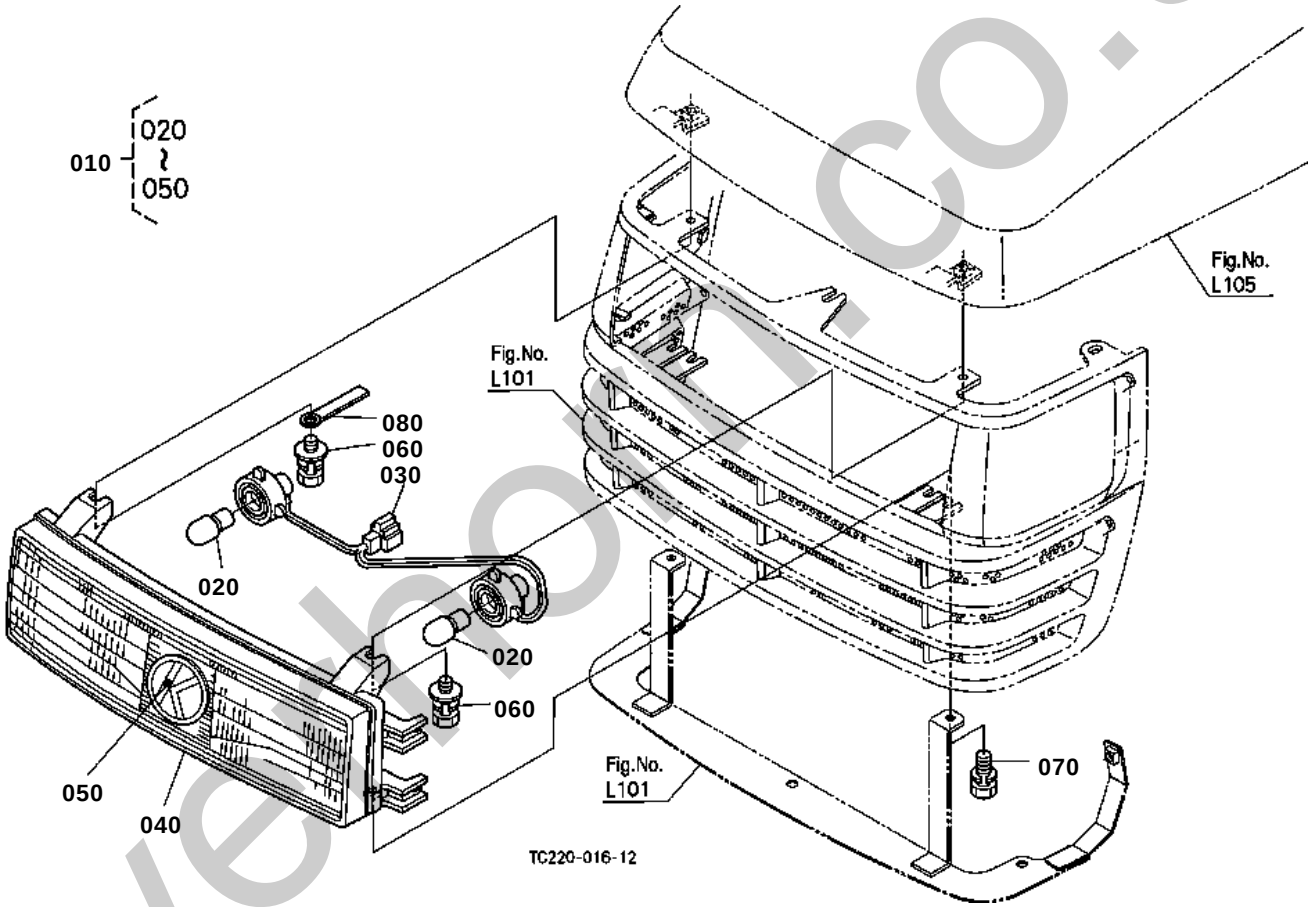

silverthorn.co.uk

HEAD LIGHT [NEW TYPE]

S.No.;>=50014

↔ Interchangeable; ≠ not interchangeable; ← new for old; → old for new

REF.No	Part No.	Description	Q'ty	S.No.	I/C	REMARKS	Weight (kgf)	Weight (lb)
010	T0421-30010	ASSY LIGHT HEAD	1				0.69	1.518
020	34070-99010	BULB	2			25W	0.02	0.044
030	T0430-99090	ASSY WIRE HARNESS	1				0.05	0.11
040	TA140-99100	UNIT LAMP	1				0.6	1.32
050	TA140-49500	MARK SYMBOL	1				0.013	0.0286
060	01025-50616	BOLT	2				0.005	0.011
070	01023-50616	BOLT	2				0.005	0.011
080	15241-67580	CLAMP CORD	1				0.004	0.0088

silverhorn.co.uk

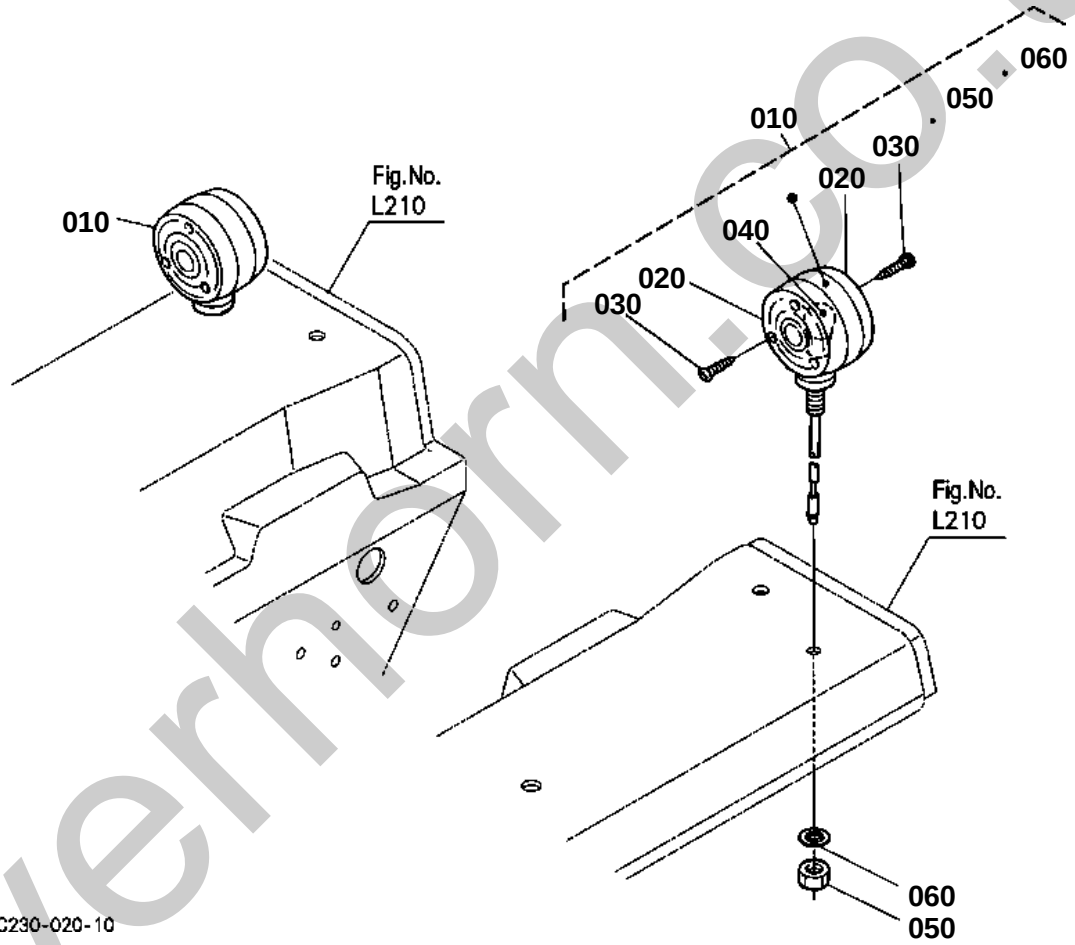

silverhorn.co.uk

HAZARD LIGHT

↔ Interchangeable; ≠ not interchangeable; ← new for old; → old for new

REF.No	Part No.	Description	Q'ty	S.No.	I/C	REMARKS	Weight (kgf)	Weight (lb)
010	32530-33610	ASSY LIGHT HAZARD	2				0.38	0.836
020	32530-91510	LENS HAZARD LIGHT	4				0.085	0.187
030	32530-91520	SCREW TAPPING	12				0.001	0.0022
040	32530-91530	BULB LIGHT	2			27W	0.02	0.044
050	02114-50100	NUT	2				0.005	0.011
060	04411-50100	WASHER TOOTHED	2				0.001	0.0022

silverhorn.co.uk

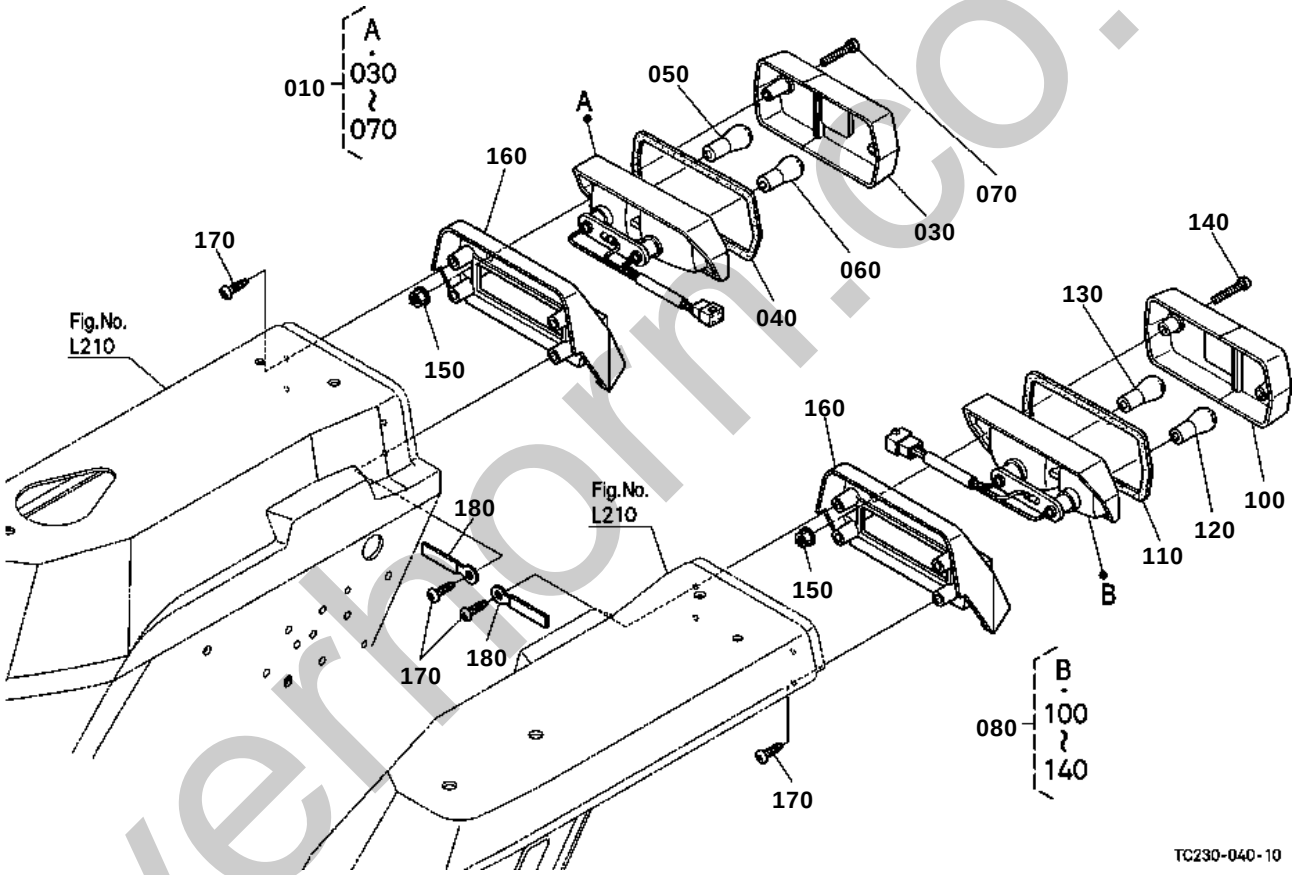

silverhorn.co.uk

REAR LAMP

↔ Interchangeable; ≠ not interchangeable; ← new for old; → old for new

REF.No	Part No.	Description	Q'ty	S.No.	I/C	REMARKS	Weight (kgf)	Weight (lb)
010	T1150-34302	ASSY LIGHT COMBI.RH	1				0.31	0.682
020	99999-99999	BLANK	0				0	0
030	31301-34340	LENS	1				0.105	0.231
040	31391-34350	GASKET	1				0.002	0.0044
050	31391-34360	BULB	1			23W	0.018	0.0396
060	31301-34370	BULB	1			23/8W	0.02	0.044
070	T1150-34380	SCREW	2				0.006	0.0132
080	T1150-34312	ASSY LIGHT COMBI.LH	1				0.31	0.682
090	99999-99999	BLANK	0				0	0
100	31301-34340	LENS	1				0.105	0.231
110	31391-34350	GASKET	1				0.002	0.0044
120	31391-34360	BULB	1			23W	0.018	0.0396
130	31301-34370	BULB	1			23/8W	0.02	0.044
140	T1150-34380	SCREW	2				0.006	0.0132
150	02761-50050	NUT FLANGE	4				0.002	0.0044
160	34040-68960	HOLDER	2				0.23	0.506
170	03614-50614	SCREW TAPPING	8				0.005	0.011
180	15272-67580	CLAMP CORD	2				0.021	0.0462

silverhorn.co.uk

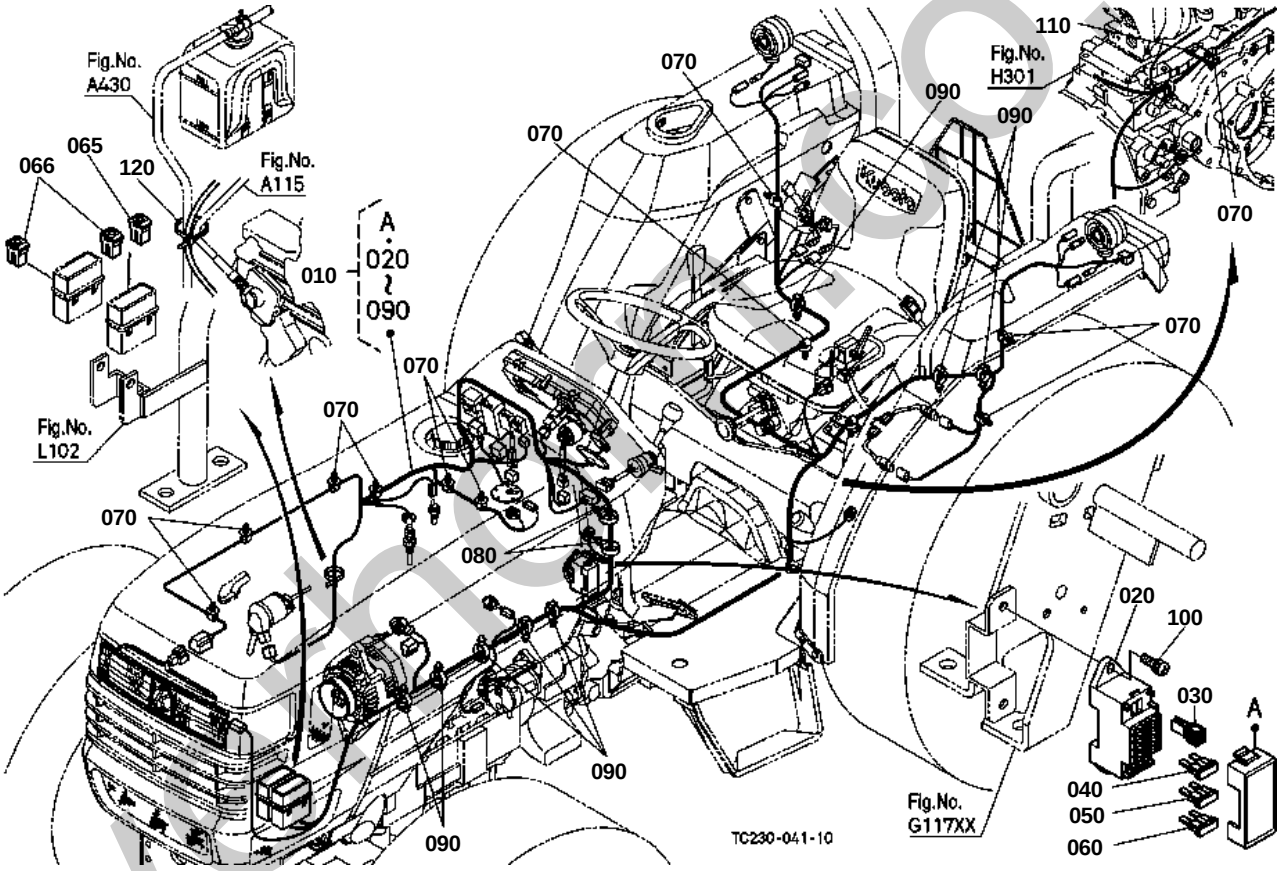

silvercrafts.co.uk

↔ Interchangeable; ≠ not interchangeable; ← new for old; → old for new

REF.No	Part No.	Description	Q'ty	S.No.	I/C	REMARKS	Weight (kgf)	Weight (lb)
010	TC230-30313	WIRE HARNESS	1				0	0
020	T1060-30420	CASE FUSE BOX	1				0	0
030	T1060-30490	PULLER FUSE	1				0.005	0.011
040	T1060-30430	FUSE	4			5A	0.005	0.011
050	T1060-30440	FUSE	3			10A	0.005	0.011
060	T1060-30450	FUSE	3			15A	0.005	0.011
065	T1060-30510	FUSE	1			30A	0.007	0.0154
066	T1060-30520	FUSE	2			40A	0.007	0.0154
070	T1060-30540	CLIP	11				0.01	0.022
080	RP421-54110	CLAMP	2				0.002	0.0044
090	TD060-30570	CLIP	8				0.003	0.0066
100	31391-31140	SCREW	2				0.01	0.022
110	TC230-34510	PLATE HARNESS CLIP	1				0	0
120	44366-68380	BAND CORD	1				0.01	0.022

silverhorn.co.uk

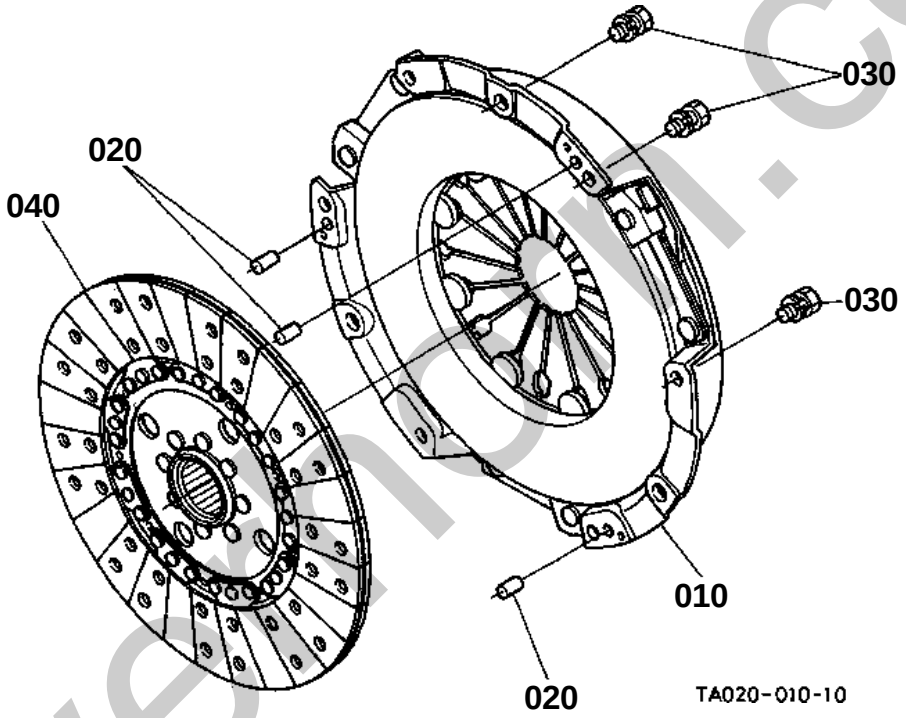

silverhorn.co.uk

CLUTCH

↔ Interchangeable; ≠ not interchangeable; ← new for old; → old for new

REF.No	Part No.	Description	Q'ty	S.No.	I/C	REMARKS	Weight (kgf)	Weight (lb)
010	TA020-20600	ASSY PLATE PRESSURE	1				6.5	14.3
020	05012-00612	PIN STRAIGHT	3				0.003	0.0066
030	01123-60816	BOLT	9				0.01	0.022
040	TD020-20500	COMP.DISK CLUTCH	1				1.03	2.266

silverhorn.co.uk

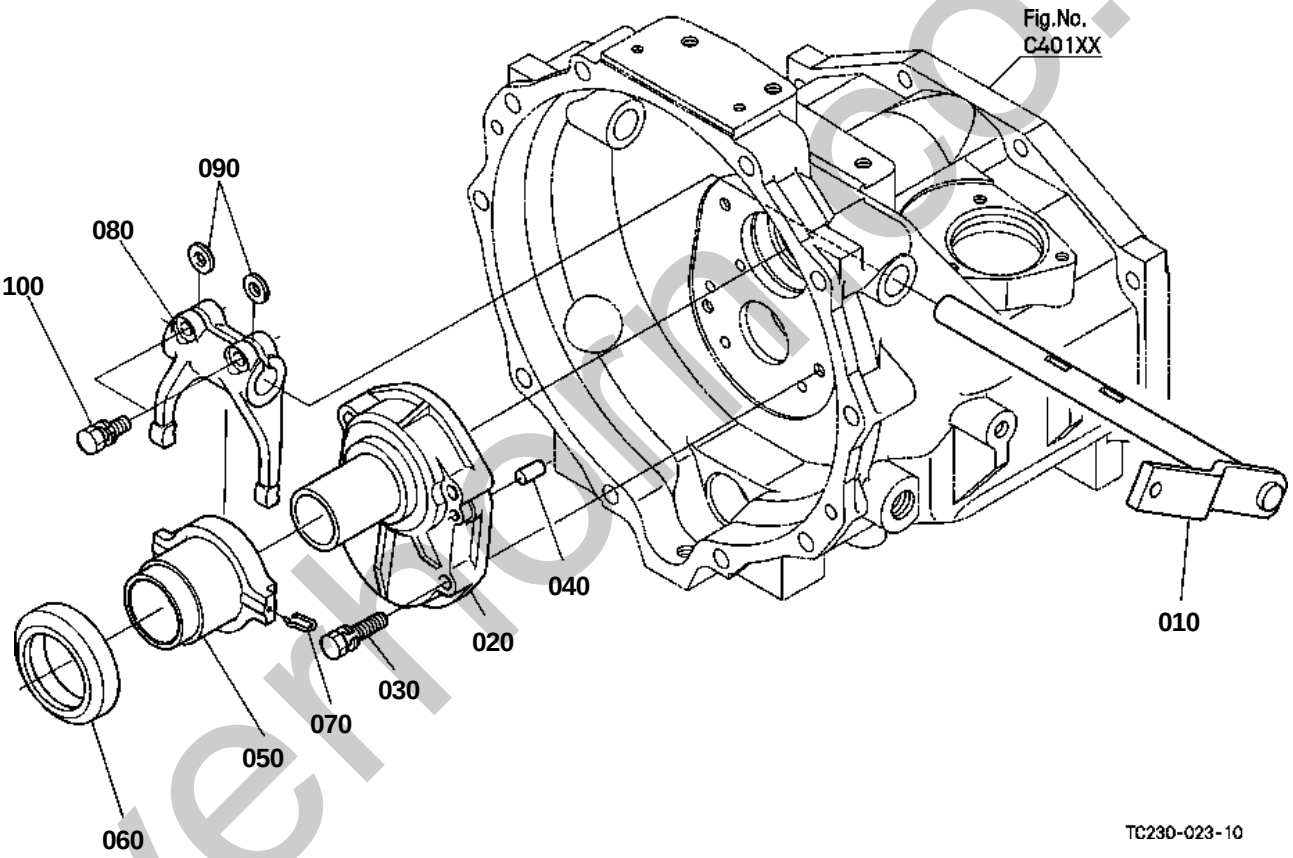

silverhorse.co.uk

CLUTCH LEVER

↔ Interchangeable; ≠ not interchangeable; ← new for old; → old for new

REF.No	Part No.	Description	Q'ty	S.No.	I/C	REMARKS	Weight (kgf)	Weight (lb)
010	TC030-21172	LEVER CLUTCH	1				1.06	2.332
020	T1150-21100	CASE PROPELLER SHAFT	1				0.69	1.518
030	01123-50845	BOLT	4				0.02	0.044
040	05012-00818	PIN STRAIGHT	2				0.013	0.0286
050	TC230-21150	HOLDER CLUTCH	1				0	0
060	TA040-20700	BEARING RELEASE	1				0.29	0.638
070	TA040-21210	PIN SNAP	2				0.002	0.0044
080	TA040-21200	FORK CLUTCH RELEASE	1				0.54	1.188
090	31150-14780	KEY FORK	2				0.003	0.0066
100	01123-50825	BOLT	2				0.013	0.0286

silverhorn.co.uk

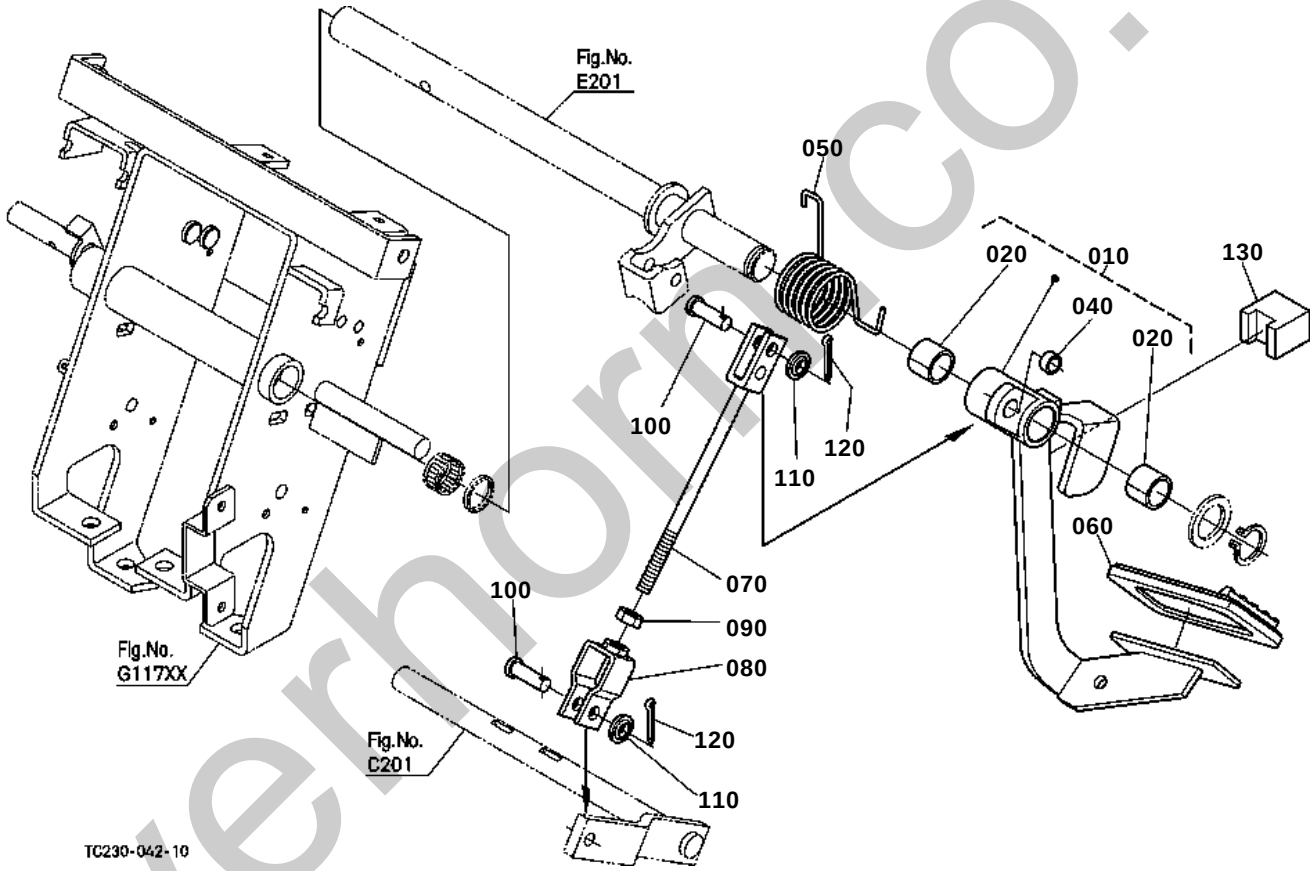

silverhorn.co.uk

CLUTCH PEDAL

↔ Interchangeable; ≠ not interchangeable; ← new for old; → old for new

REF.No	Part No.	Description	Q'ty	S.No.	I/C	REMARKS	Weight (kgf)	Weight (lb)
010	TC230-44050	ASSY PEDAL CLUTCH	1				0	0
020	TD060-44080	BUSH	2				0.002	0.0044
030	99999-99999	BLANK	0				0	0
040	TC030-44030	BUSH	1				0.001	0.0022
050	TC030-44160	SPRING	1				0.1	0.22
060	T2050-44120	COVER PEDAL	1				0.07	0.154
070	TC030-76200	ROD BRAKE UPPER	1				0.165	0.363
080	34070-44470	U JOINT	1				0.08	0.176
090	02176-50100	NUT	1				0.005	0.011
100	05122-61028	PIN JOINT	2				0.02	0.044
110	04717-01000	WASHER WITH RUBBER	2				0.001	0.0022
120	05511-50318	PIN SPLIT	2				0.001	0.0022
130	TC030-15950	SPACER CLUTCH	1				0.015	0.033

silverhorn.co.uk

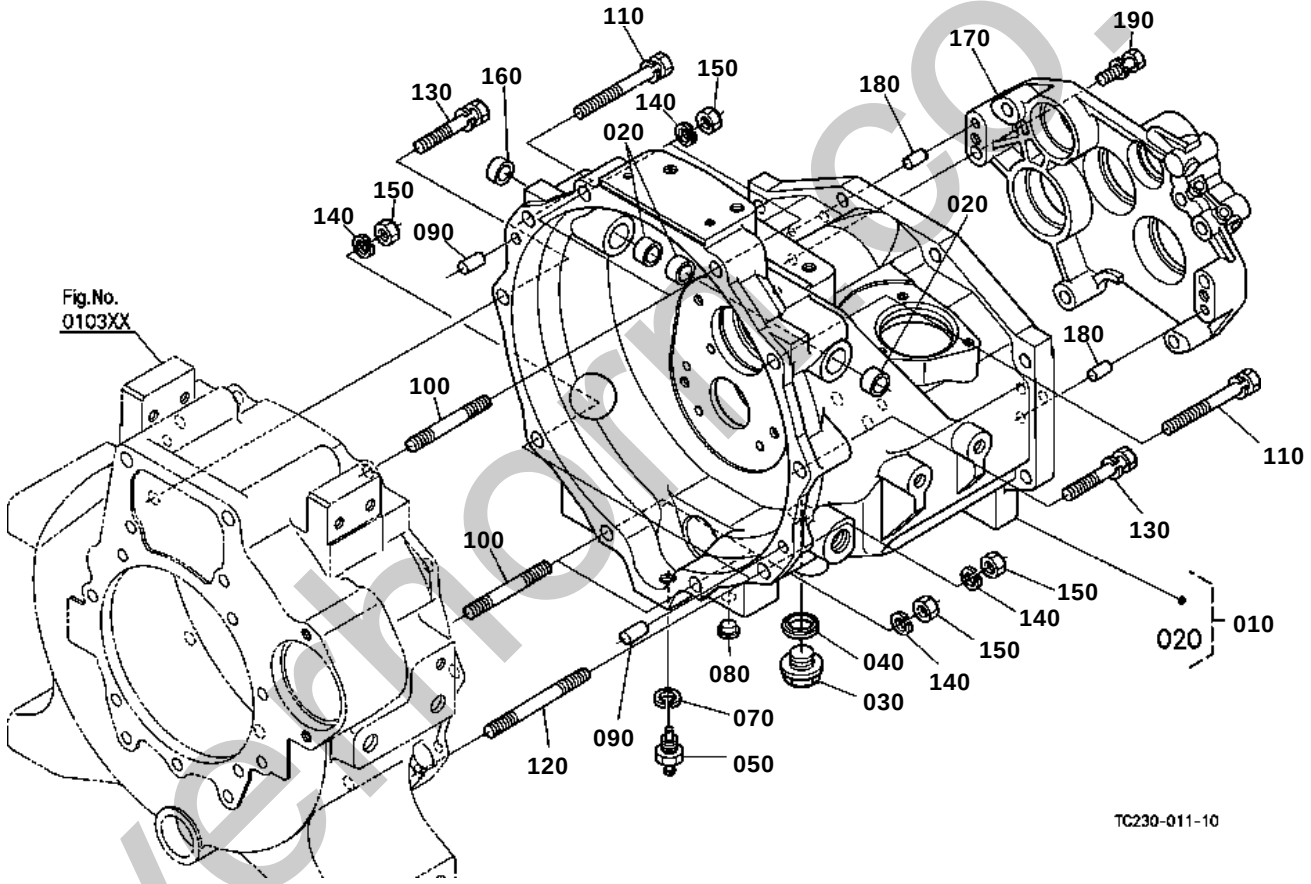

silverhorse.co.uk

CLUTCH HOUSING

↔ Interchangeable; ≠ not interchangeable; ← new for old; → old for new

REF.No	Part No.	Description	Q'ty	S.No.	I/C	REMARKS	Weight (kgf)	Weight (lb)
010	TC230-99202	ASSY HOUSING CLUTCH	1				0	0
020	08511-01915	BUSH	3				0.01	0.022
030	15512-96010	PLUG DRAIN	1				0.101	0.2222
040	04717-02150	WASHER WITH RUBBER	1				0.004	0.0088
050	32430-14270	KIT PLUG	1				0.04	0.088
060	99999-99999	BLANK	0				0	0
070	04512-60140	WASHER SPRING	1				0.008	0.0176
080	32210-27580	PLUG	10				0.001	0.0022
090	05012-01018	PIN STRAIGHT	2				0.012	0.0264
100	01574-51265	STUD	4				0.067	0.1474
110	01133-51295	BOLT	2				0.092	0.2024
120	01574-51285	STUD	2				0.085	0.187
130	01133-51265	BOLT	2				0.065	0.143
140	04512-60120	WASHER SPRING	6				0.005	0.011
150	02176-50120	NUT	6				0.01	0.022
160	31351-38720	PLUG	1				0.005	0.011
170	TC230-20250	HOLDER BEARING	1				0	0
180	05012-00818	PIN STRAIGHT	2				0.013	0.0286
190	01133-51055	BOLT	5				0.039	0.0858

silverhorn.co.uk

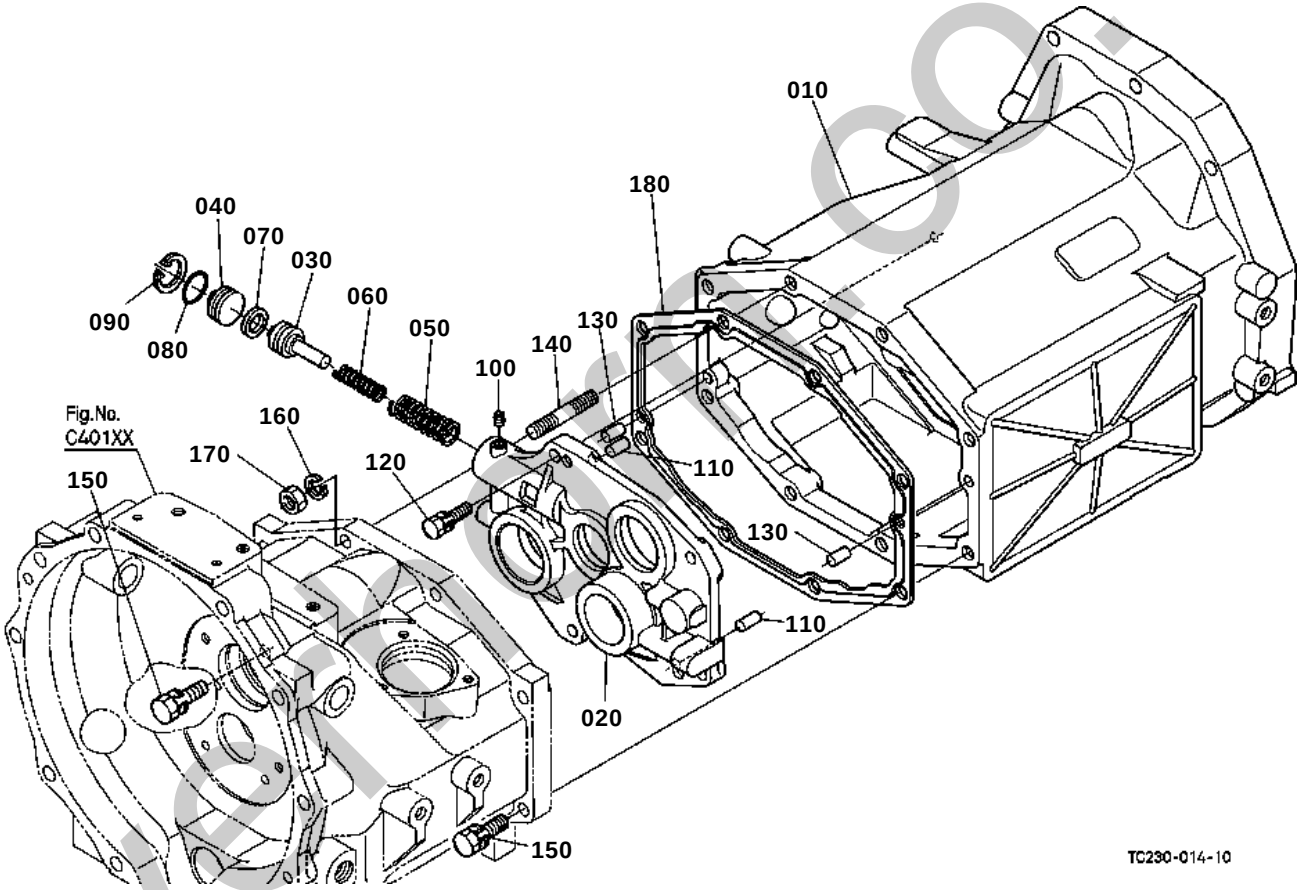

silvermarr.co.uk

MID CASE

↔ Interchangeable; ≠ not interchangeable; ← new for old; → old for new

REF.No	Part No.	Description	Q'ty	S.No.	I/C	REMARKS	Weight (kgf)	Weight (lb)
010	TC030-20306	CASE MID I-PTO	1				39	85.8
020	TC230-20350	HOLDER BEARING	1				0	0
030	TA040-69210	PISTON	1				0.09	0.198
040	TA040-69220	COVER	1				0.06	0.132
050	TA040-69230	SPRING	1				0.039	0.0858
060	TA040-69240	SPRING	1				0.024	0.0528
070	34076-65170	SEAL PISTON	1				0.005	0.011
080	04816-06230	O RING	1				0.002	0.0044
090	04611-00280	CIR CLIP INTERNAL	1				0.002	0.0044
100	32420-67380	PLUG	1				0.005	0.011
110	05012-00818	PIN STRAIGHT	2				0.013	0.0286
120	01133-51035	BOLT	4				0.03	0.066
130	05012-01018	PIN STRAIGHT	2				0.012	0.0264
140	35340-14182	STUD	6				0.05	0.11
150	01138-51240	BOLT	2				0.046	0.1012
160	04512-60120	WASHER SPRING	6				0.005	0.011
170	35340-27360	NUT	6				0.015	0.033
180	TC030-90380	GASKET MID CASE	1				0.021	0.0462

silverhorn.co.uk

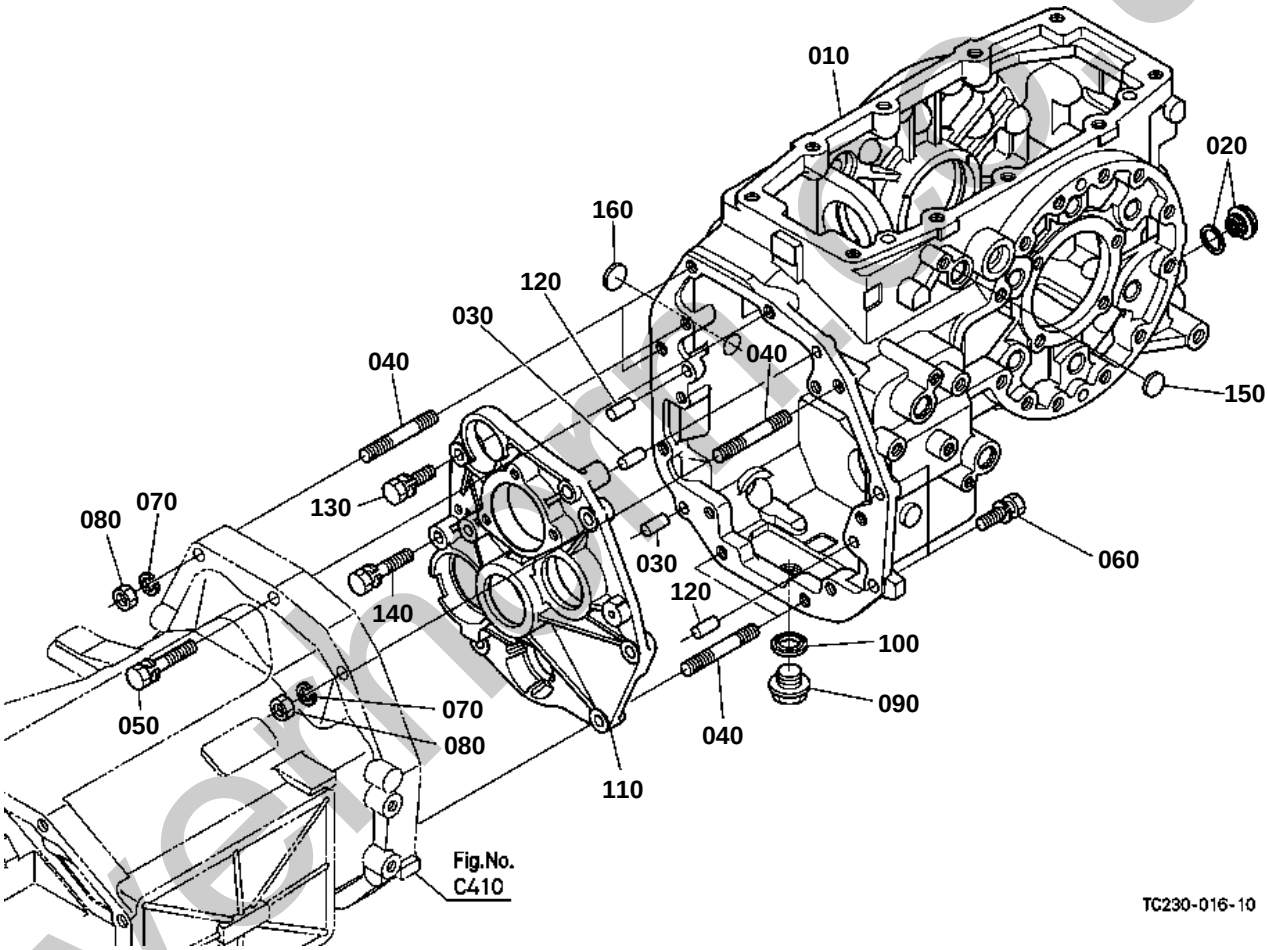

silvermoor.co.uk

TRANSMISSION CASE

↔ Interchangeable; ≠ not interchangeable; ← new for old; → old for new

REF.No	Part No.	Description	Q'ty	S.No.	I/C	REMARKS	Weight (kgf)	Weight (lb)
010	TC230-20400	CASE TRANSMISSION	1				0	0
020	TC230-14610	GAUGE OIL	1				0	0
030	05012-01018	PIN STRAIGHT	2				0.012	0.0264
040	01574-61260	STUD	6				0.05	0.11
050	01133-51260	BOLT	1				0.06	0.132
060	01133-51235	BOLT	2				0.043	0.0946
070	04512-60120	WASHER SPRING	6				0.005	0.011
080	02176-50120	NUT	6				0.01	0.022
090	15512-96010	PLUG DRAIN	1				0.101	0.2222
100	04717-02150	WASHER WITH RUBBER	1				0.004	0.0088
110	TC230-20450	HOLDER BEARING	1				0	0
120	05012-01018	PIN STRAIGHT	2				0.012	0.0264
130	01133-51040	BOLT	5				0.03	0.066
140	01133-51060	BOLT	1				0.042	0.0924
150	34076-60470	PLUG	1				0.005	0.011
160	34076-60470	PLUG	1				0.005	0.011

silverhorn.co.uk

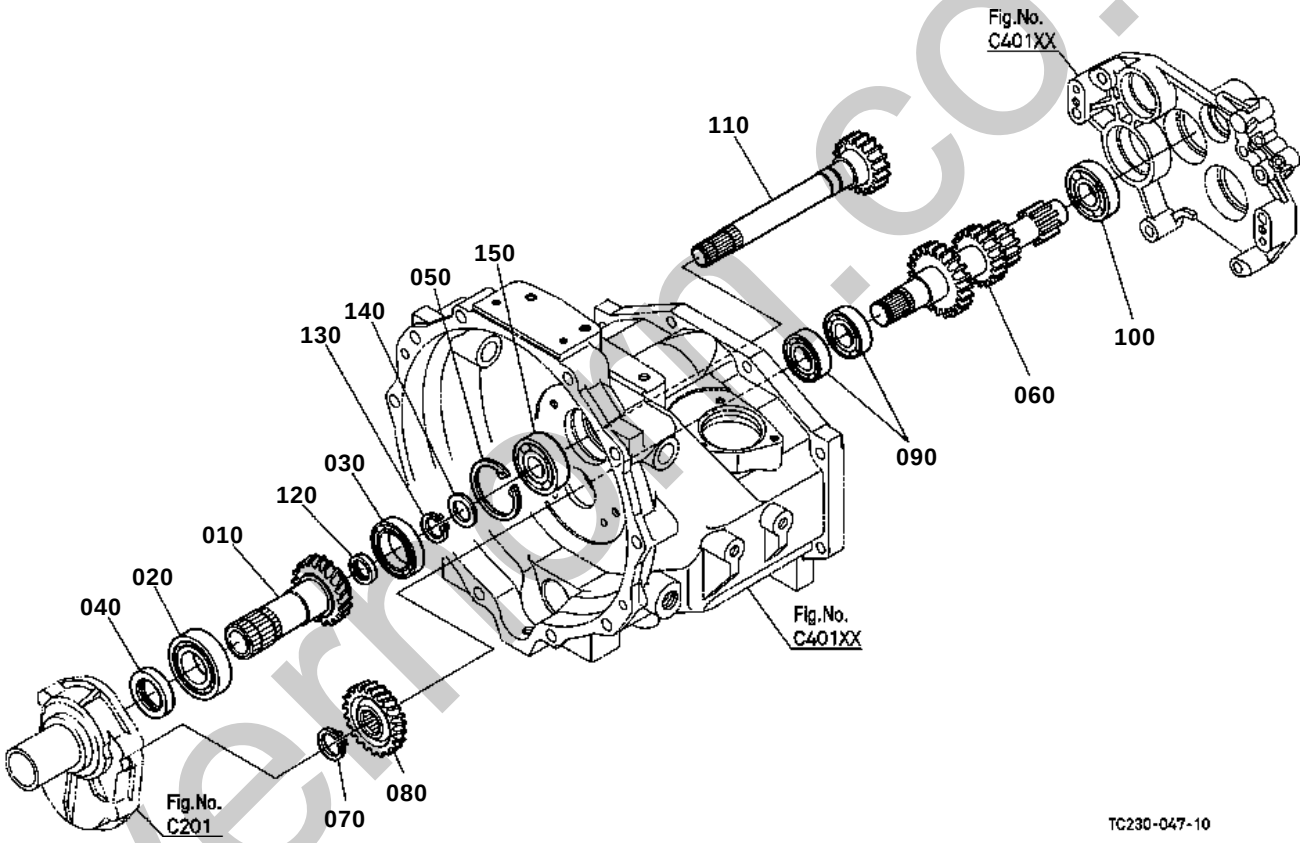

silvermoil.co.uk

MAIN SHAFT

↔ Interchangeable; ≠ not interchangeable; ← new for old; → old for new

REF.No	Part No.	Description	Q'ty	S.No.	I/C	REMARKS	Weight (kgf)	Weight (lb)
010	TC230-21300	GEAR-SHAFT	1			24T	0	0
020	T2050-23460	BEARING BALL	1				0.28	0.616
030	08101-06908	BEARING BALL	1				0.11	0.242
040	09500-35529	SEAL OIL	1				0.017	0.0374
050	04611-00620	CIR CLIP INTERNAL	1				0.011	0.0242
060	TC030-22100	GEAR-SHAFT MAIN	1			22-18-13-10T	2	4.4
070	37150-21551	CIR CLIP EXTERNAL	1				0.005	0.011
080	TA040-22110	GEAR	1			27T	0.425	0.935
090	37410-57190	BEARING BALL	2				0.14	0.308
100	35890-41290	BEARING BALL	1				0.233	0.5126
110	TC230-23100	GEAR-SHAFT PTO	1			18T	0	0
120	36730-24330	SEAL FIRST SHAFT	1				0.005	0.011
130	37150-21551	CIR CLIP EXTERNAL	1				0.005	0.011
140	34150-21560	WASHER	1				0.01	0.022
150	35890-41290	BEARING BALL	1				0.233	0.5126

silverhorn.co.uk

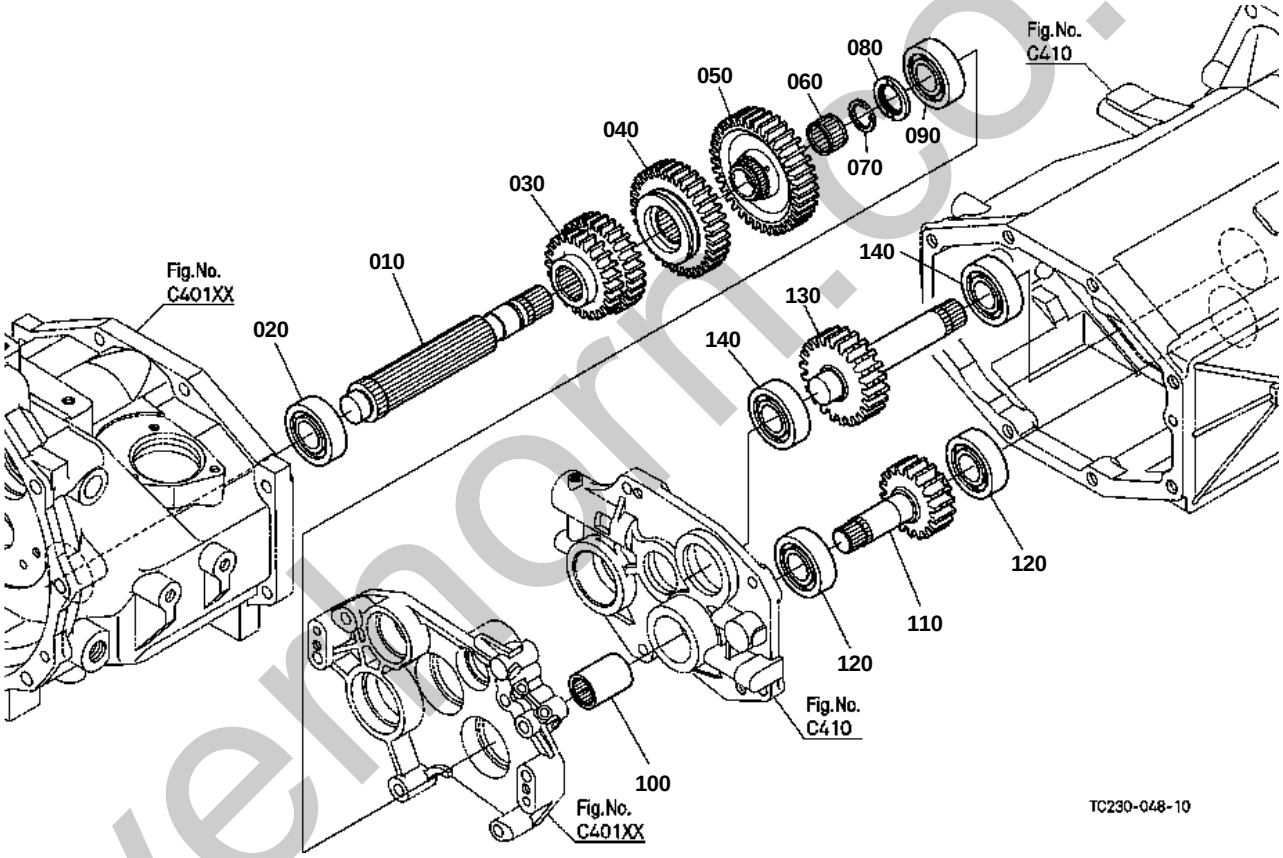

silverthorn.co.uk

COUNTERSHAFT

↔ Interchangeable; ≠ not interchangeable; ← new for old; → old for new

REF.No	Part No.	Description	Q'ty	S.No.	I/C	REMARKS	Weight (kgf)	Weight (lb)
010	TC030-22204	COUNTERSHAFT	1				1.445	3.179
020	08101-06305	BEARING BALL	1				0.23	0.506
030	TC030-23214	GEAR	1			24-29T	1.185	2.607
040	TC030-22230	GEAR	1			34T	1.115	2.453
050	TC030-22240	GEAR	1			37T	1.16	2.552
060	08822-53020	BEARING NEEDLE	1				0.023	0.0506
070	37150-21790	CIR-CLIP	1				0.001	0.0022
080	34070-22250	COLLAR THRUST	1				0.015	0.033
090	08101-06305	BEARING BALL	1				0.23	0.506
100	37150-21682	COUPLING	1				0.24	0.528
110	TC230-22400	GEAR-SHAFT	1			18T	0	0
120	08101-06305	BEARING BALL	2				0.23	0.506
130	TC230-22500	GEAR-SHAFT	1			23T	0	0
140	08101-06305	BEARING BALL	2				0.23	0.506

silverhorn.co.uk

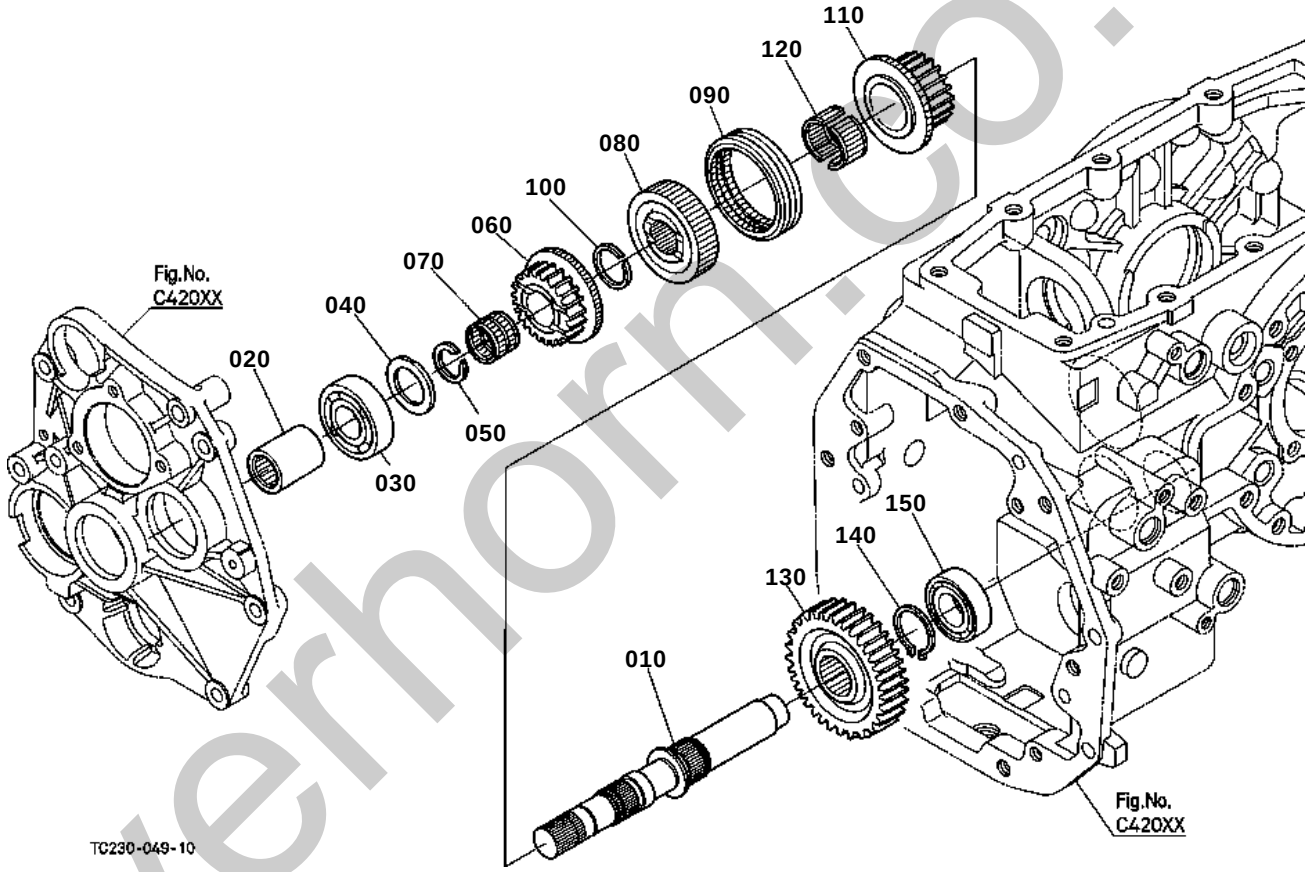

silverhorn.co.uk

RANGE GEAR SHAFT

↔ Interchangeable; ≠ not interchangeable; ← new for old; → old for new

REF.No	Part No.	Description	Q'ty	S.No.	I/C	REMARKS	Weight (kgf)	Weight (lb)
010	TC230-22600	SHAFT RANGE GEAR	1				0	0
020	37150-21682	COUPLING	1				0.24	0.528
030	08101-06305	BEARING BALL	1				0.23	0.506
040	34076-62650	COLLAR THRUST	1				0.01	0.022
050	37150-21790	CIR-CLIP	1				0.001	0.0022
060	TC230-22610	GEAR	1			22T	0	0
070	TA040-22630	BEARING NEEDLE	1				0.02	0.044
080	TC230-22680	BOSS SPLINE	1				0	0
090	TA040-22440	SHIFTER	1				0.225	0.495
100	37410-14540	CIR-CLIP	1				0.03	0.066
110	TC050-22623	GEAR	1			16T	0.47	1.034
120	T1030-22330	BEARING NEEDLE	1			SET	0.03	0.066
130	TC230-22660	GEAR	1			34T	0	0
140	04612-00320	CIR CLIP EXTERNAL	1				0.004	0.0088
150	67121-56770	BEARING BALL	1				0.127	0.2794

silverhorn.co.uk

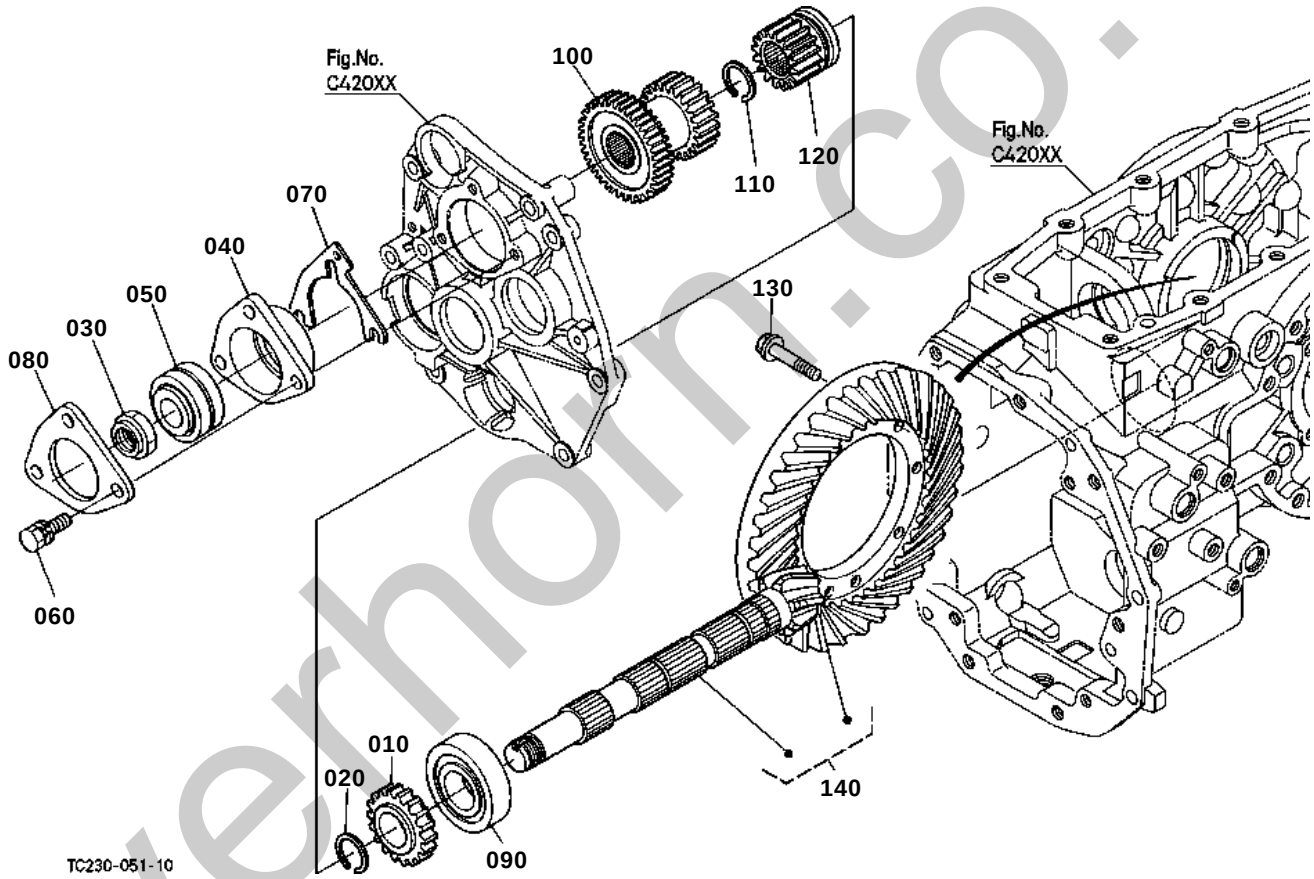

silverhorn.co.uk

SPIRAL BEVEL PINION

↔ Interchangeable; ≠ not interchangeable; ← new for old; → old for new

REF.No	Part No.	Description	Q'ty	S.No.	I/C	REMARKS	Weight (kgf)	Weight (lb)
010	TC230-15110	GEAR 4WD	1			18T	0	0
020	T1060-22882	CIR CLIP EXTERNAL	1				0.005	0.011
030	35260-23252	NUT	1				0.04	0.088
040	34070-22772	CASE	1				0.475	1.045
050	T0330-22200	BEARING TAPER-ROLLER	1				0.575	1.265
060	01133-51040	BOLT	3				0.03	0.066
070	34070-22860	SHIM	2			0.5mm	0.015	0.033
070	34070-22870	SHIM	4			0.2mm	0.004	0.0088
070	34070-22880	SHIM	2			0.1mm	0.005	0.011
080	34070-22780	COVER BEARING	1				0.21	0.462
090	34070-22740	BEARING ROLLER	1				0.51	1.122
100	TC230-21710	GEAR	1			37-22T	0	0
110	T1060-22882	CIR CLIP EXTERNAL	1				0.005	0.011
120	TC230-22652	GEAR	1			16T	0.385	0.847
130	37800-43870	BOLT	8				0.026	0.0572
140	TC050-99342	ASSY GEAR BEVEL	1			6-37T	6.2	13.64

silverhorn.co.uk

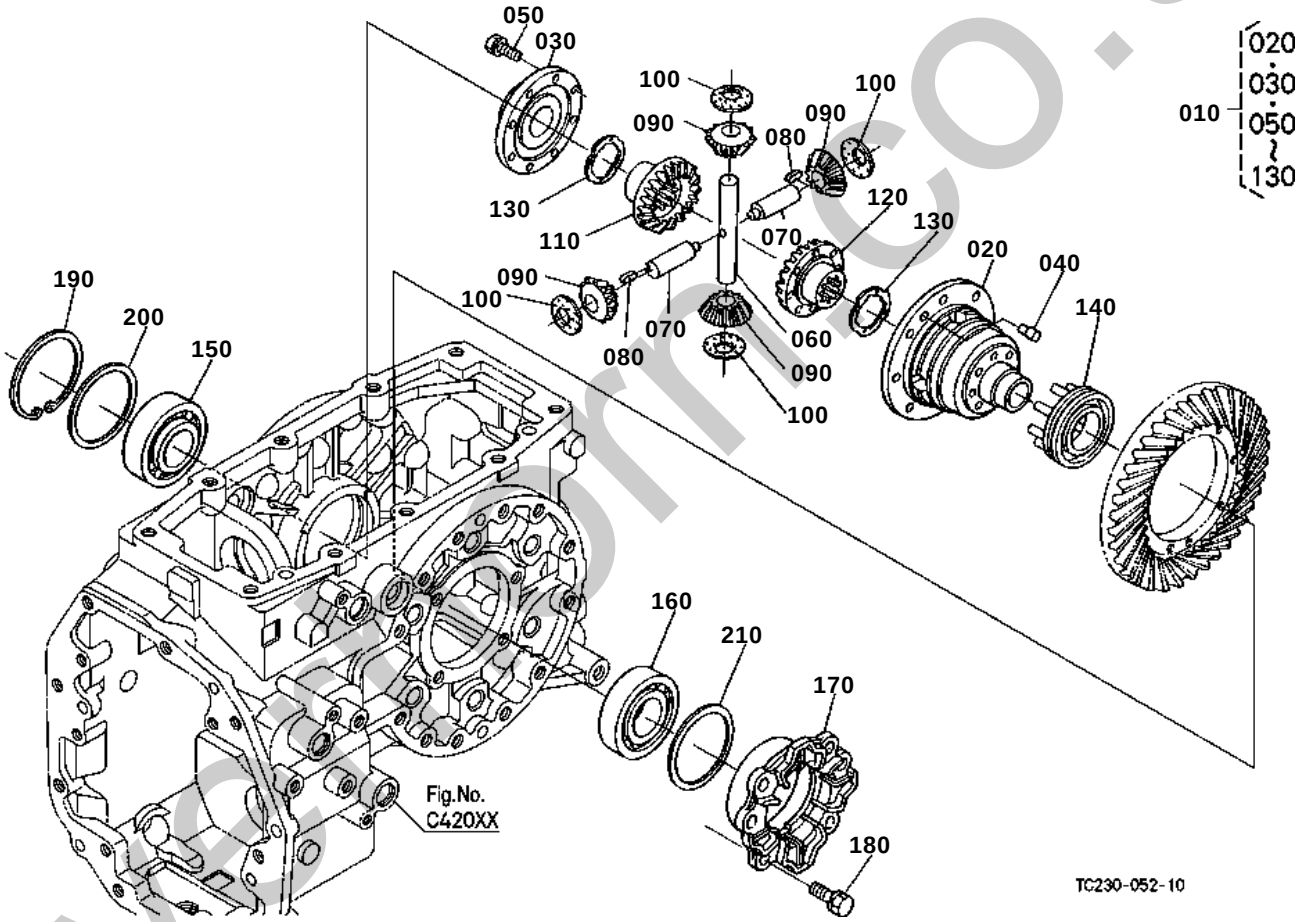

silverthorn.co.uk

↔ Interchangeable; ≠ not interchangeable; ← new for old; → old for new

REF.No	Part No.	Description	Q'ty	S.No.	I/C	REMARKS	Weight (kgf)	Weight (lb)
010	3A011-32204	ASSY DIFFERENTIAL	1				6.2	13.64
020	3A011-32710	CASE DIFFERENTIAL	1				3.35	7.37
030	3A011-32044	COVER DIFF.CASE	1				0.795	1.749
040	T1270-28170	PIN STRAIGHT	2				0	0
050	01133-51025	BOLT	8				0.023	0.0506
060	35430-26340	SHAFT DIFF.PINION	1				0.31	0.682
070	35430-26330	SHAFT DIFF.PINION	2				0.136	0.2992
080	31220-26280	KEY FEATHER	2				0.005	0.011
090	35430-26350	PINION DIFF.	4			12T	0.16	0.352
100	31351-26390	WASHER DIFF.PINION	4				0.012	0.0264
110	37300-26430	GEAR DIFF.SIDE RH	1			20T	0.475	1.045
120	37300-26440	GEAR DIFF.SIDE LH	1			20T	0.63	1.386
130	31351-26470	WASHER SIDE GEAR	2			1.5mm	0.01	0.022
130	31351-26480	WASHER SIDE GEAR	2			1.6mm	0.015	0.033
130	31351-26490	WASHER SIDE GEAR	2			1.7mm	0.016	0.0352
130	3A011-32760	COLLAR THRUST	2			1.8mm	0.01	0.022
130	3A011-32780	COLLAR THRUST	2			2.0mm	0.01	0.022
140	31351-26610	SHIFTER DIFF.LOCK	1				0.43	0.946
150	T0330-26450	BEARING TAPER-ROLLER	1				0.545	1.199
160	08711-30209	BEARING TAPER-ROLLER	1				0.458	1.0076
170	34070-28360	SUPPORT DIFF.	1				0.405	0.891
180	01133-51025	BOLT	4				0.023	0.0506
190	04611-00900	CIR CLIP INTERNAL	1				0.037	0.0814
200	37410-16810	SHIM DIFFERENTIAL	1			0.4mm	0.01	0.022
200	37410-16820	SHIM DIFFERENTIAL	1			0.5mm	0.01	0.022
200	37410-16830	SHIM DIFFERENTIAL	1			0.6mm	0.01	0.022
200	37410-16840	SHIM DIFFERENTIAL	1			0.7mm	0.01	0.022
200	37410-16850	SHIM DIFFERENTIAL	1			0.8mm	0.008	0.0176
200	37410-16860	SHIM DIFFERENTIAL	1			0.9mm	0.009	0.0198
200	37410-16870	SHIM DIFFERENTIAL	1			1.0mm	0.01	0.022
200	37410-16880	SHIM DIFFERENTIAL	1			1.2mm	0.011	0.0242
200	37410-16890	SHIM DIFFERENTIAL	1			1.4mm	0.015	0.033
210	34070-28210	SHIM	1			0.4mm	0.01	0.022
210	34070-28230	SHIM	1			0.6mm	0.015	0.033
210	34070-28250	SHIM	1			0.8mm	0.015	0.033
210	34070-28270	SHIM	1			1.0mm	0.015	0.033
210	34070-28290	SHIM	1			1.2mm	0.02	0.044
210	34070-28310	SHIM	1			1.4mm	0.025	0.055

silvermorn.co.uk

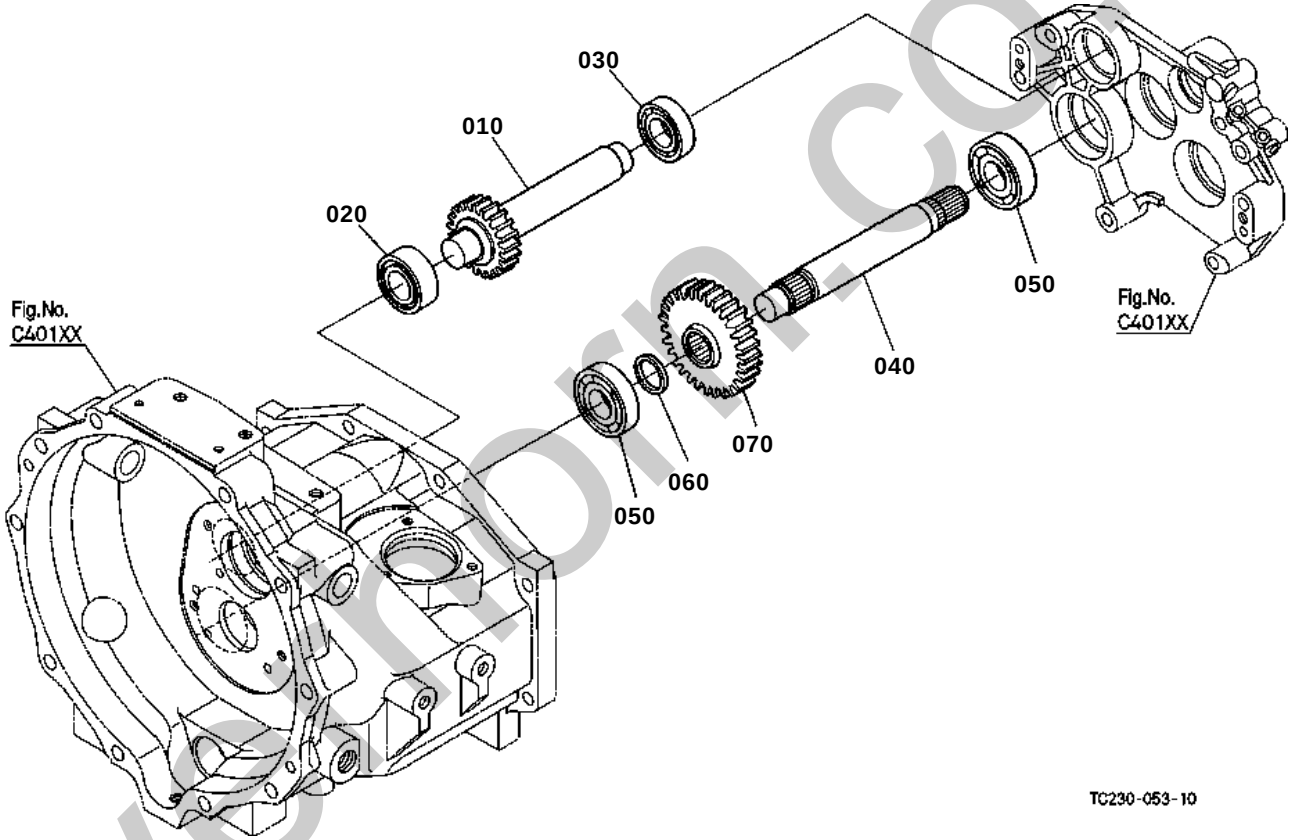

silvermorn.co.uk

PTO COUNTERSHAFT

↔ Interchangeable; ≠ not interchangeable; ← new for old; → old for new

REF.No	Part No.	Description	Q'ty	S.No.	I/C	REMARKS	Weight (kgf)	Weight (lb)
010	TC030-23200	GEAR-SHAFT I-PTO	1			21T	1.55	3.41
020	33740-31180	BEARING ROLLER	1				0.22	0.484
030	08101-06205	BEARING BALL	1				0.14	0.308
040	TC030-23150	COUNTERSHAFT I-PTO	1				1.12	2.464
050	08101-06305	BEARING BALL	2				0.23	0.506
060	TC030-23230	COLLAR	1				0.011	0.0242
070	TA040-23160	GEAR I-PTO	1			33T	0.915	2.013

silverhorn.co.uk

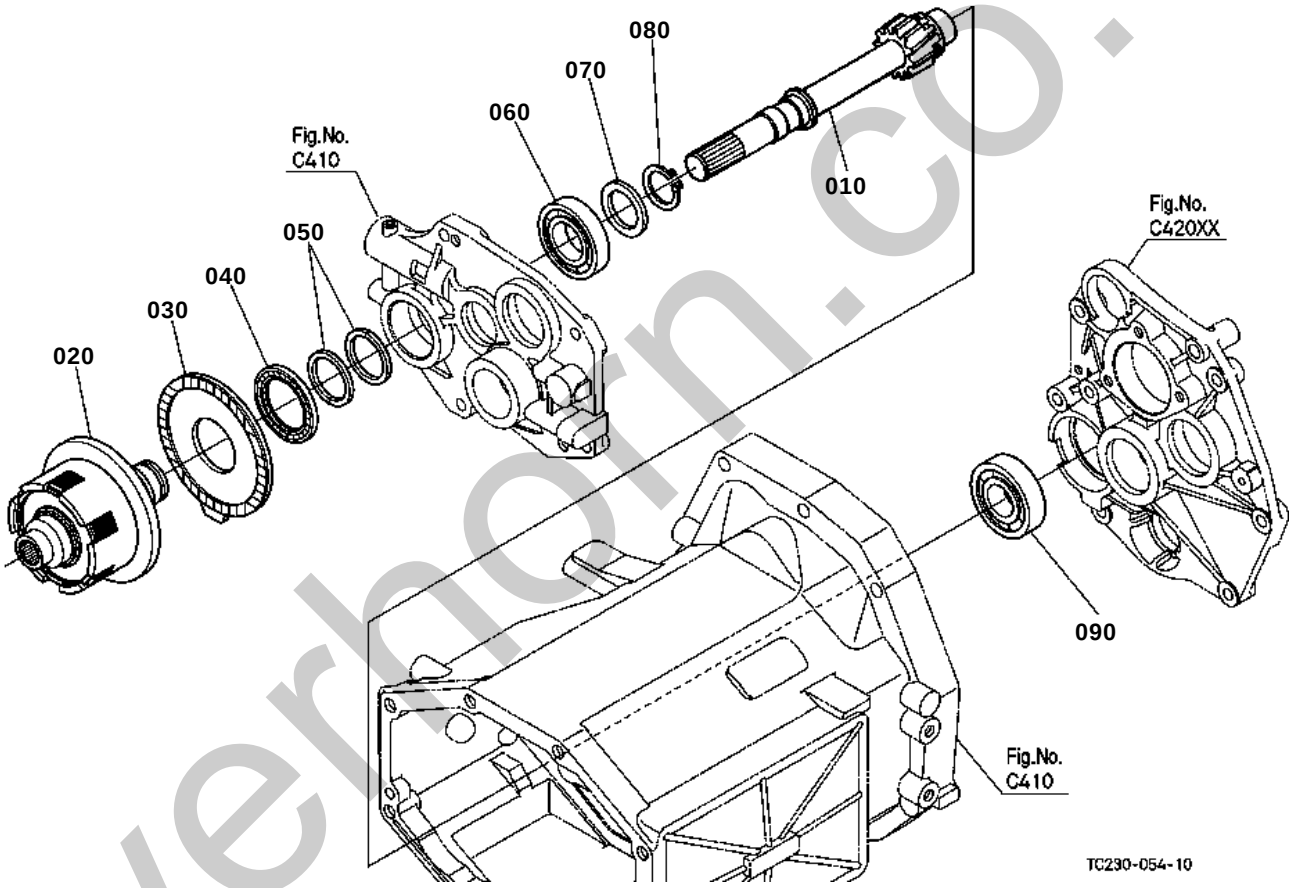

silverhorn.co.uk

PTO CLUTCH

↔ Interchangeable; ≠ not interchangeable; ← new for old; → old for new

REF.No	Part No.	Description	Q'ty	S.No.	I/C	REMARKS	Weight (kgf)	Weight (lb)
010	TA040-23500	GEAR-SHAFT I-PTO	1			12T	1.48	3.256
020	TD060-69002	ASSY CLUTCH I-PTO	1				3.7	8.14
030	TA040-69150	DISK BRAKE	1				0.41	0.902
040	TA040-69160	BEARING NEEDLE	1				0.029	0.0638
050	31501-72403	RING SEAL	2				0.005	0.011
060	08101-06207	BEARING BALL	1				0.282	0.6204
070	69331-24330	COLLAR DISTANCE	1				0.012	0.0264
080	36740-41150	CIR CLIP EXTERNAL	1				0.01	0.022
090	36540-41130	BEARING BALL	1				0.34	0.748

silverhorn.co.uk

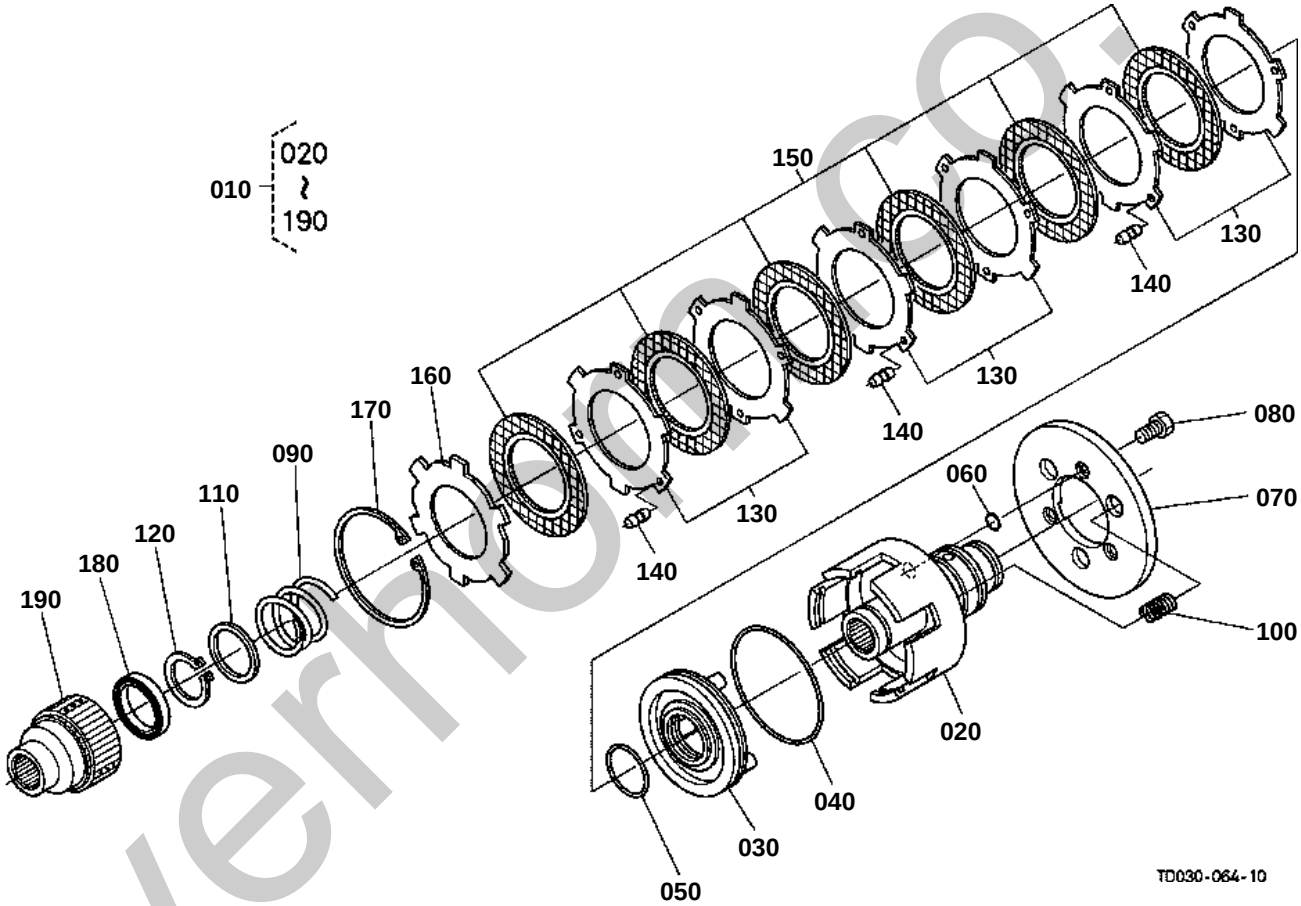

silverhomes.co.uk

PTO CLUTCH [COMPONENT PARTS]

↔ Interchangeable; ≠ not interchangeable; ← new for old; → old for new

REF.No	Part No.	Description	Q'ty	S.No.	I/C	REMARKS	Weight (kgf)	Weight (lb)
010	TD060-69002	ASSY CLUTCH I-PTO	1				3.7	8.14
020	TA040-69012	CASE PTO CLUTCH	1				1.555	3.421
030	TA040-69020	PISTON	1				0.395	0.869
040	31501-72330	D RING OUTER	1				0.005	0.011
050	31501-72470	D RING INNER	1				0.001	0.0022
060	04816-00100	O RING	3				0.001	0.0022
070	3A211-27220	PLATE BRAKE	1				0.64	1.408
080	TA040-69040	BOLT	3				0.004	0.0088
090	TA040-69050	SPRING RETURN	1				0.075	0.165
100	TA040-69060	SPRING RETURN	3				0.008	0.0176
110	PF801-31260	WASHER	1				0.015	0.033
120	04612-00350	CIR CLIP EXTERNAL	1				0.01	0.022
130	TA040-69080	PLATE	6				0.036	0.0792
140	TA040-69090	RUBBER	9				0.001	0.0022
150	34070-15250	DISK CLUTCH	6				0.04	0.088
160	TA040-69103	PLATE BACK	1				0.127	0.2794
170	04611-00920	CIR CLIP INTERNAL	1				0.04	0.088
180	08101-06807	BEARING BALL	1				0.03	0.066
190	TA040-69115	HUB CLUTCH	1				0.365	0.803

silverhorn.co.uk

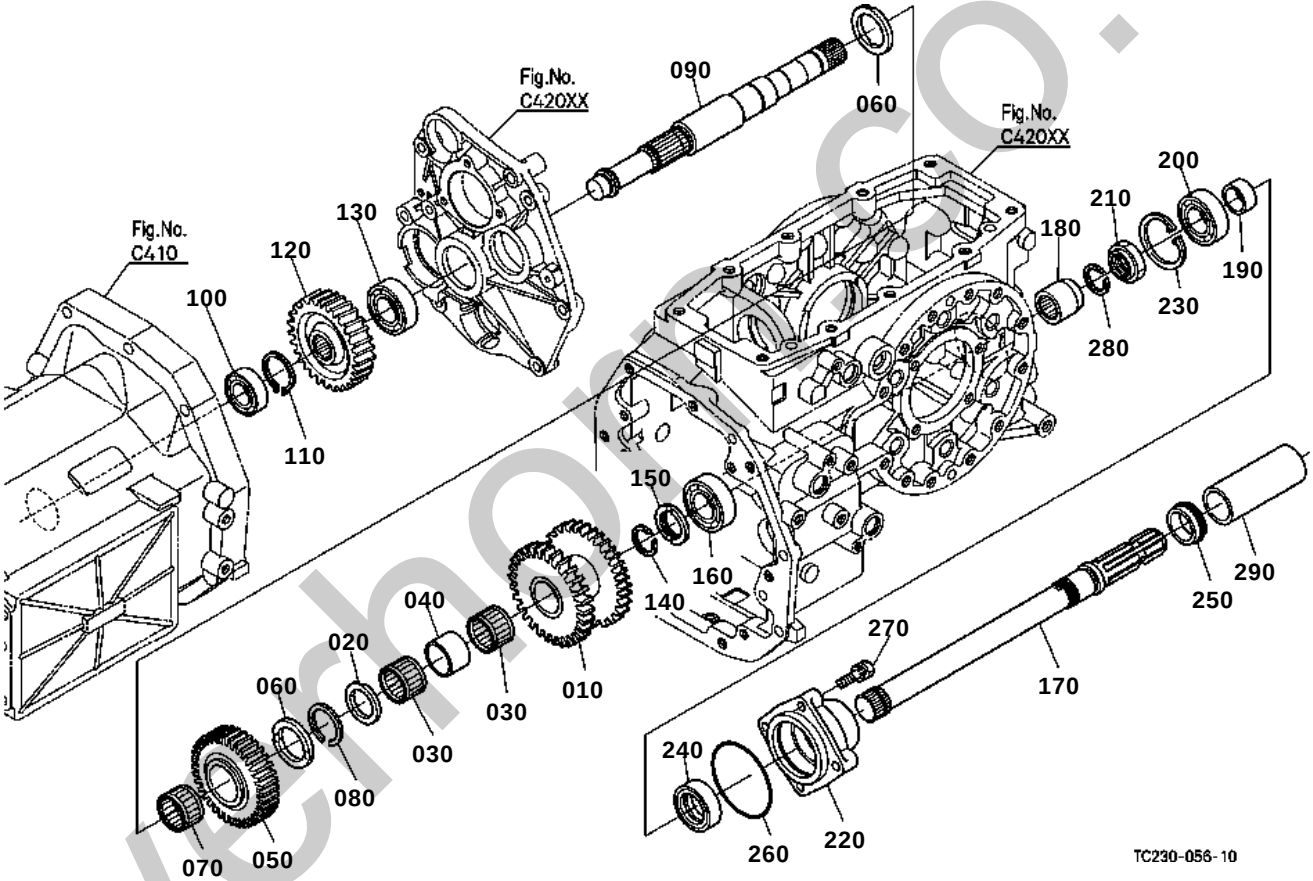

silverhoe.co.uk

PTO SHAFT

↔ Interchangeable; ≠ not interchangeable; ← new for old; → old for new

REF.No	Part No.	Description	Q'ty	S.No.	I/C	REMARKS	Weight (kgf)	Weight (lb)
010	TC230-15120	GEAR	1			29-31T	0	0
020	38430-25233	COLLAR THRUST	1				0.02	0.044
030	38430-25670	BEARING NEEDLE	2				0.03	0.066
040	TC230-15130	COLLAR	1				0	0
050	TC050-23130	GEAR	1			35T	1.43	3.146
060	31391-25280	COLLAR THRUST	2				0.02	0.044
070	TC050-23140	BEARING NEEDLE	1				0.03	0.066
080	36919-92340	CIR CLIP EXTERNAL	1				0.002	0.0044
090	TC230-23600	SHAFT DRIVE	1				0	0
100	37410-57190	BEARING BALL	1				0.14	0.308
110	31351-21930	CIR-CLIP EXTERNAL	1				0.004	0.0088
120	TA040-23610	GEAR PTO	1			30T	1.43	3.146
130	76550-34140	BEARING BALL	1				0.21	0.462
140	37410-15280	CIR-CLIP	1				0.005	0.011
150	34550-23360	COLLAR THRUST	1				0.025	0.055
160	37410-57330	BEARING BALL	1				0.2	0.44
170	TA040-23702	SHAFT PTO	1				2.1	4.62
180	TD060-23660	COUPLING PTO	1				0.165	0.363
190	35340-25350	COLLAR OIL SEAL	1				0.03	0.066
200	TD060-23730	BEARING BALL	1				0.225	0.495
210	35340-25320	NUT	1				0.05	0.11
220	TD050-23720	CASE BEARING	1				1.1	2.42
230	04611-00650	CIR CLIP INTERNAL	1				0.011	0.0242
240	35340-25360	SEAL OIL	1				0.024	0.0528
250	38240-25370	SLINGER	1				0.004	0.0088
260	04811-50800	O RING	1				0.003	0.0066
270	01123-50840	BOLT	4				0.018	0.0396
280	38430-25540	CIR CLIP EXTERNAL	1				0.004	0.0088
290	31220-25820	CAP	1				0.055	0.121

silverhorn.co.uk

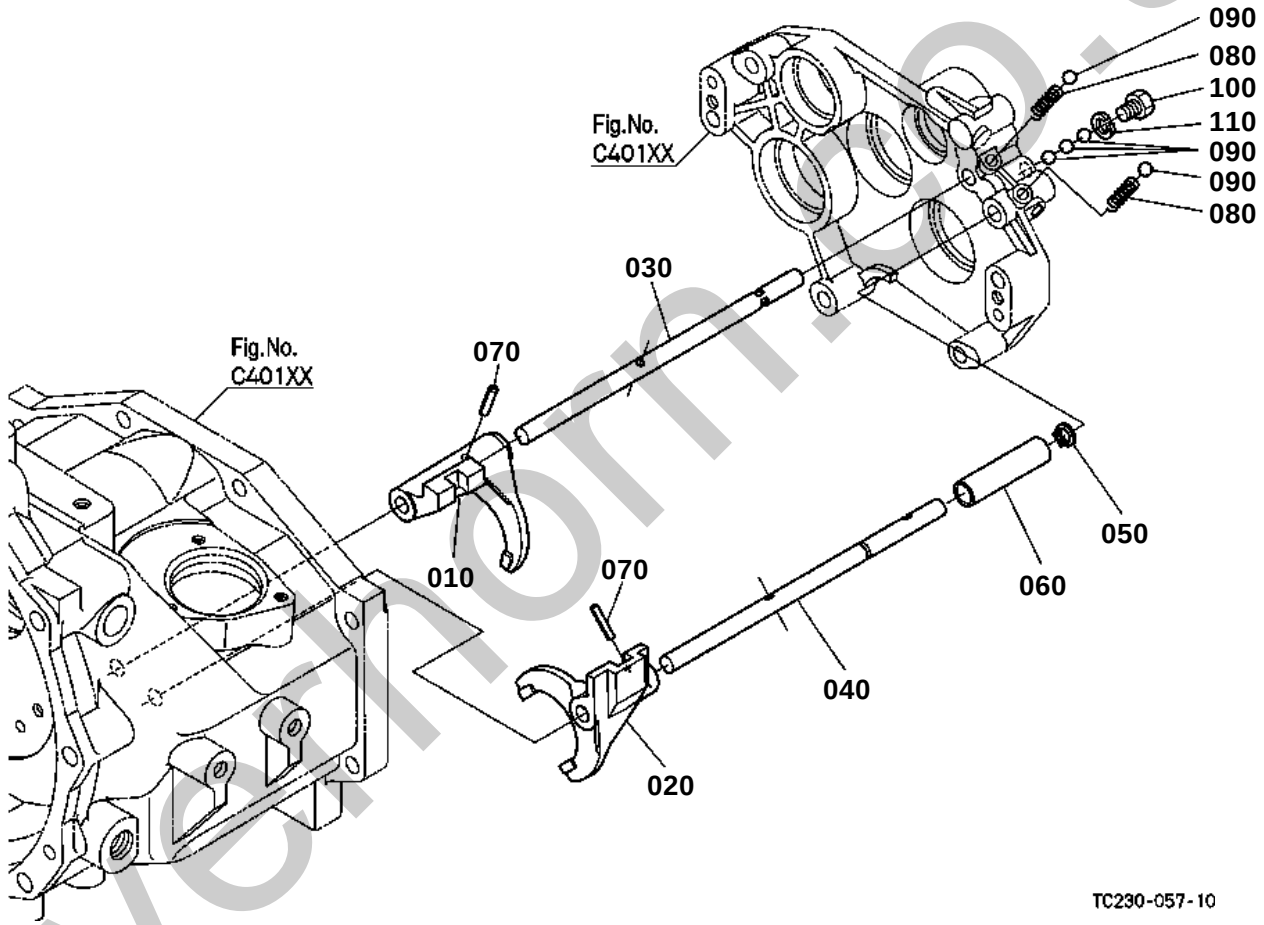

silverhorn.co.uk

MAIN GEAR SHIFT FORK

↔ Interchangeable; ≠ not interchangeable; ← new for old; → old for new

REF.No	Part No.	Description	Q'ty	S.No.	I/C	REMARKS	Weight (kgf)	Weight (lb)
010	TC230-23510	FORK MAIN SHIFT	1				0	0
020	TC230-23520	FORK MAIN SHIFT	1				0	0
030	TC030-23540	ROD FORK	1				0.225	0.495
040	TC030-23552	ROD FORK	1				0.222	0.4884
050	04612-00120	CIR CLIP EXTERNAL	1				0.001	0.0022
060	TC030-23560	COLLAR	1				0.058	0.1276
070	05411-00525	PIN SPRING	2				0.002	0.0044
080	62231-18530	SPRING	2				0.01	0.022
090	07715-01605	BALL	5				0.003	0.0066
100	34070-24190	BOLT	1				0.015	0.033
110	04512-60100	WASHER SPRING	1				0.002	0.0044

silverhorn.co.uk

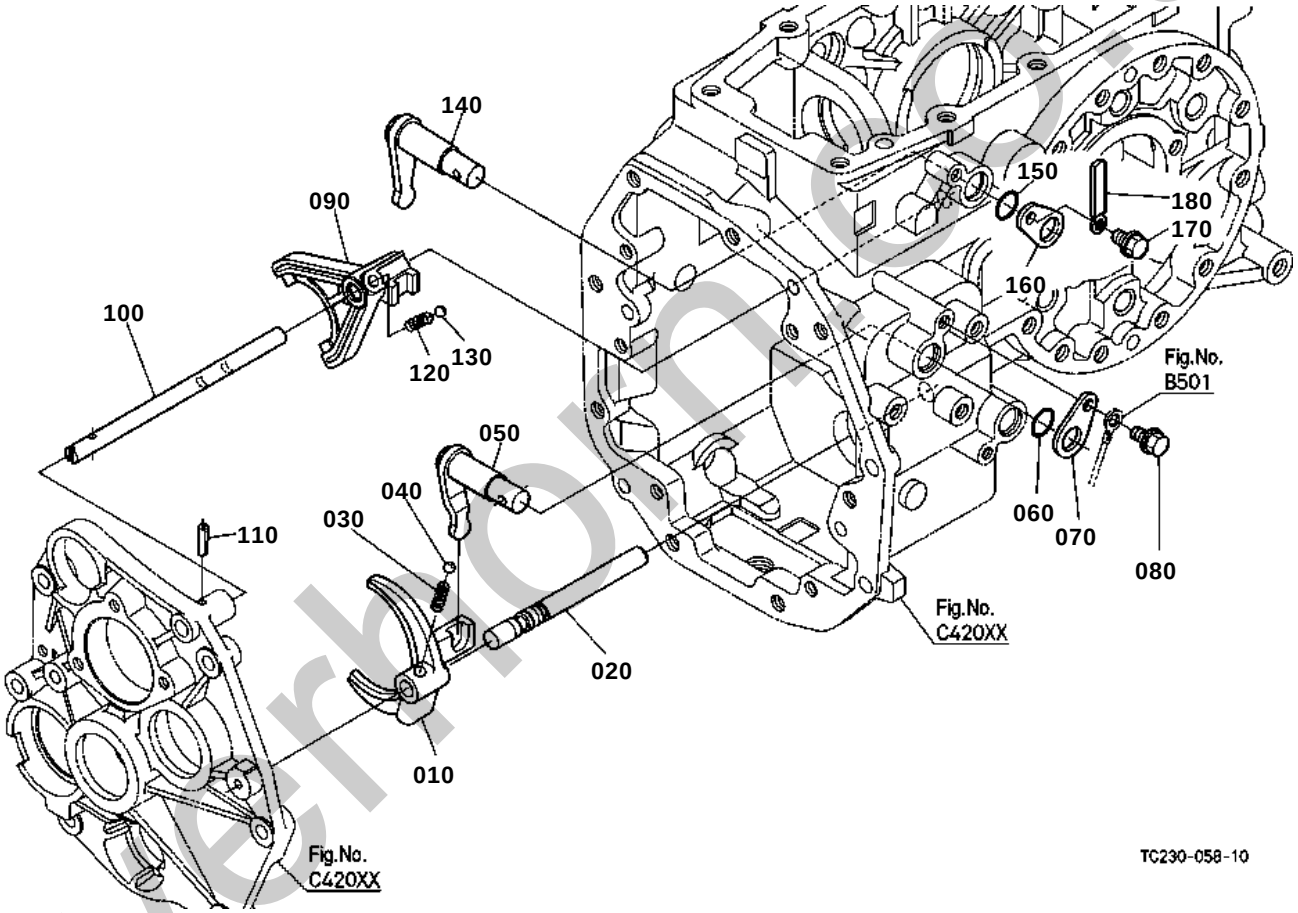

silverhoe.co.uk

RANGE GEAR SHIFT FORK

↔ Interchangeable; ≠ not interchangeable; ← new for old; → old for new

REF.No	Part No.	Description	Q'ty	S.No.	I/C	REMARKS	Weight (kgf)	Weight (lb)
010	TC050-24400	FORK SHIFT	1				0.37	0.814
020	TC050-24410	ROD FORK	1				0.173	0.3806
030	62231-18530	SPRING	1				0.01	0.022
040	07715-01605	BALL	1				0.003	0.0066
050	TC050-24420	ARM SHIFT	1				0.215	0.473
060	04816-00200	O RING	1				0.003	0.0066
070	34070-24350	STOPPER	1				0.02	0.044
080	01754-50812	BOLT FLANGE	1				0.01	0.022
090	34070-24500	FORK CREEP SHIFT	1				0.145	0.319
100	TC230-24510	ROD FORK	1				0	0
110	05411-00522	PIN SPRING	1				0.002	0.0044
120	T1060-24180	SPRING	1				0.003	0.0066
130	07715-01605	BALL	1				0.003	0.0066
140	34070-24422	ARM SHIFT	1				0.21	0.462
150	04816-00200	O RING	1				0.003	0.0066
160	34070-24350	STOPPER	1				0.02	0.044
170	01754-50812	BOLT FLANGE	1				0.01	0.022
180	34150-29390	CLAMP CORD	1				0.004	0.0088

silverhorn.co.uk

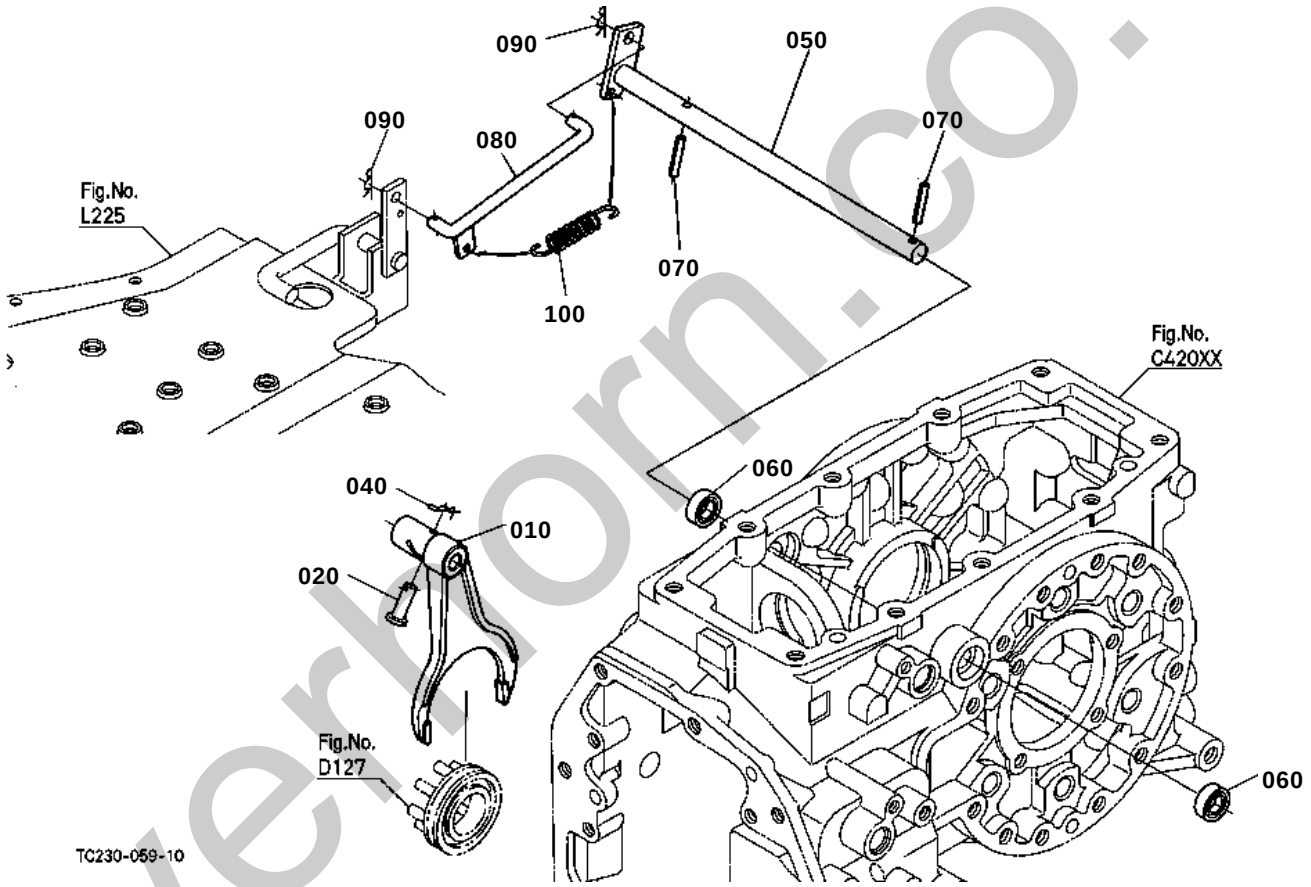

silverhorn.co.uk

DIFFERENTIAL LOCK SHIFT FORK

↔ Interchangeable; ≠ not interchangeable; ← new for old; → old for new

REF.No	Part No.	Description	Q'ty	S.No.	I/C	REMARKS	Weight (kgf)	Weight (lb)
010	31351-26632	FORK DIFF.LOCK SHIFT	1				0.465	1.023
020	31351-26620	PIN JOINT	1				0.008	0.0176
030	99999-99999	BLANK	0				0	0
040	50080-34110	PIN SNAP	1				0.001	0.0022
050	34070-28402	SHAFT FORK	1				0.545	1.199
060	09500-16287	SEAL OIL	2				0.01	0.022
070	05411-00635	PIN SPRING	2				0.005	0.011
080	T0070-28414	ROD DIFF.LOCK	1				0.08	0.176
090	05515-60800	PIN SNAP	2				0.002	0.0044
100	37150-15840	SPRING	1				0.06	0.132

silverhorn.co.uk

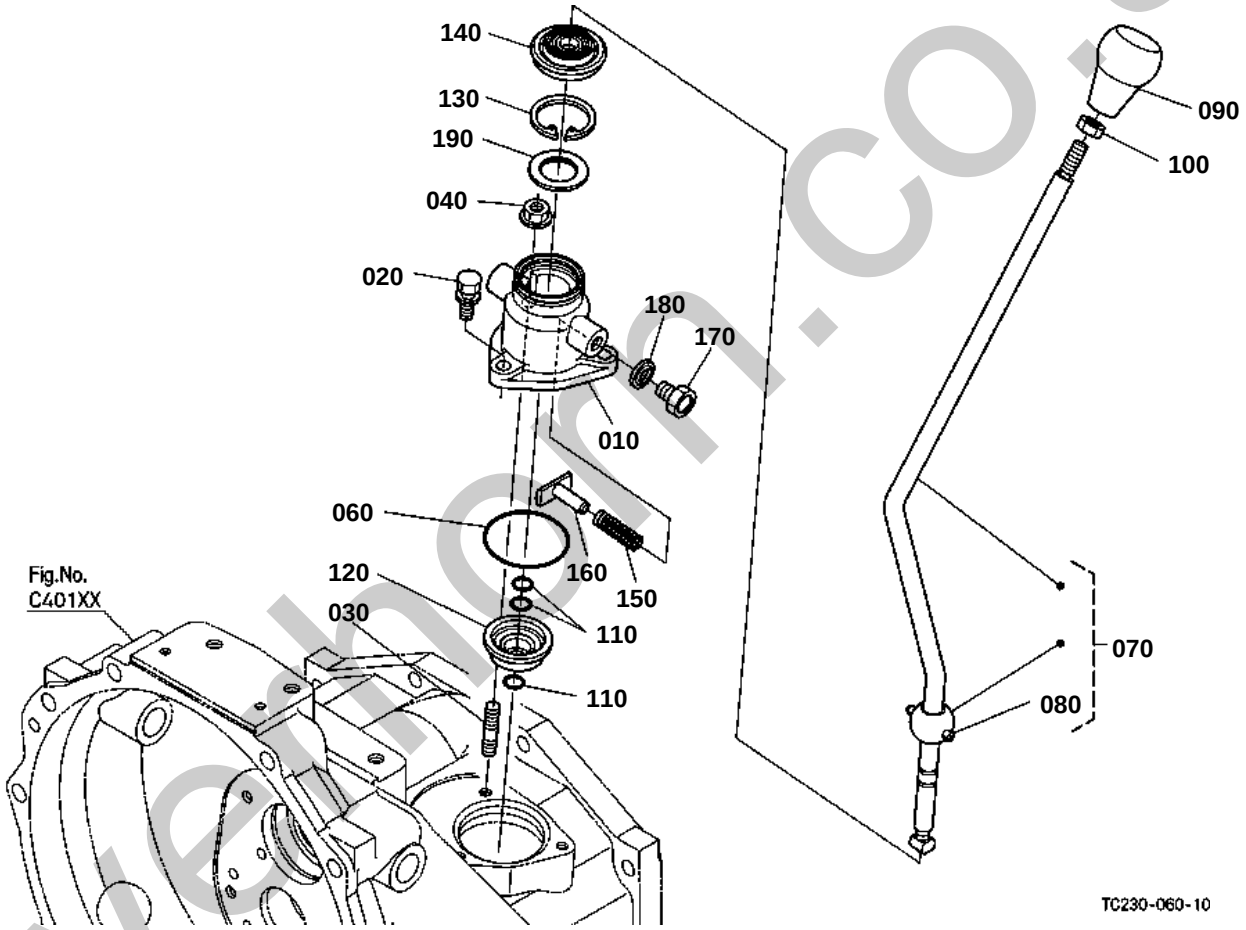

silverhorn.co.uk

MAIN GEAR SHIFT LEVER

↔ Interchangeable; ≠ not interchangeable; ← new for old; → old for new

REF.No	Part No.	Description	Q'ty	S.No.	I/C	REMARKS	Weight (kgf)	Weight (lb)
010	TC230-23710	BASE MAIN SHIFT	1				0	0
020	01123-50820	BOLT	2				0.011	0.0242
030	01513-60825	STUD	1				0.012	0.0264
040	02751-50080	NUT FLANGE	1				0.006	0.0132
050	99999-99999	BLANK	0				0	0
060	04811-50600	O RING	1				0.002	0.0044
070	TC030-23812	LEVER MAIN SHIFT	1				0.71	1.562
080	05411-00640	PIN SPRING	1				0.006	0.0132
090	TC050-49850	GRIP MAIN SHIFT	1				0.088	0.1936
100	02116-50100	NUT	1				0.004	0.0088
110	04816-00120	O RING	3				0.001	0.0022
120	T0270-23870	SHIELD	1				0.018	0.0396
130	04611-00420	CIR CLIP INTERNAL	1				0.006	0.0132
140	T0270-24970	SHIELD	1				0.015	0.033
150	T0070-24760	SPRING PTO SHIFT	1				0.005	0.011
160	T0070-24810	POPPET PTO SHIFT	1				0.02	0.044
170	T0070-24820	PLUG PTO SHIFT	1				0.015	0.033
180	04717-01200	WASHER WITH RUBBER	1				0.002	0.0044
190	TC030-24782	COLLAR MAIN SHIFT	1				0.016	0.0352

silverhorn.co.uk

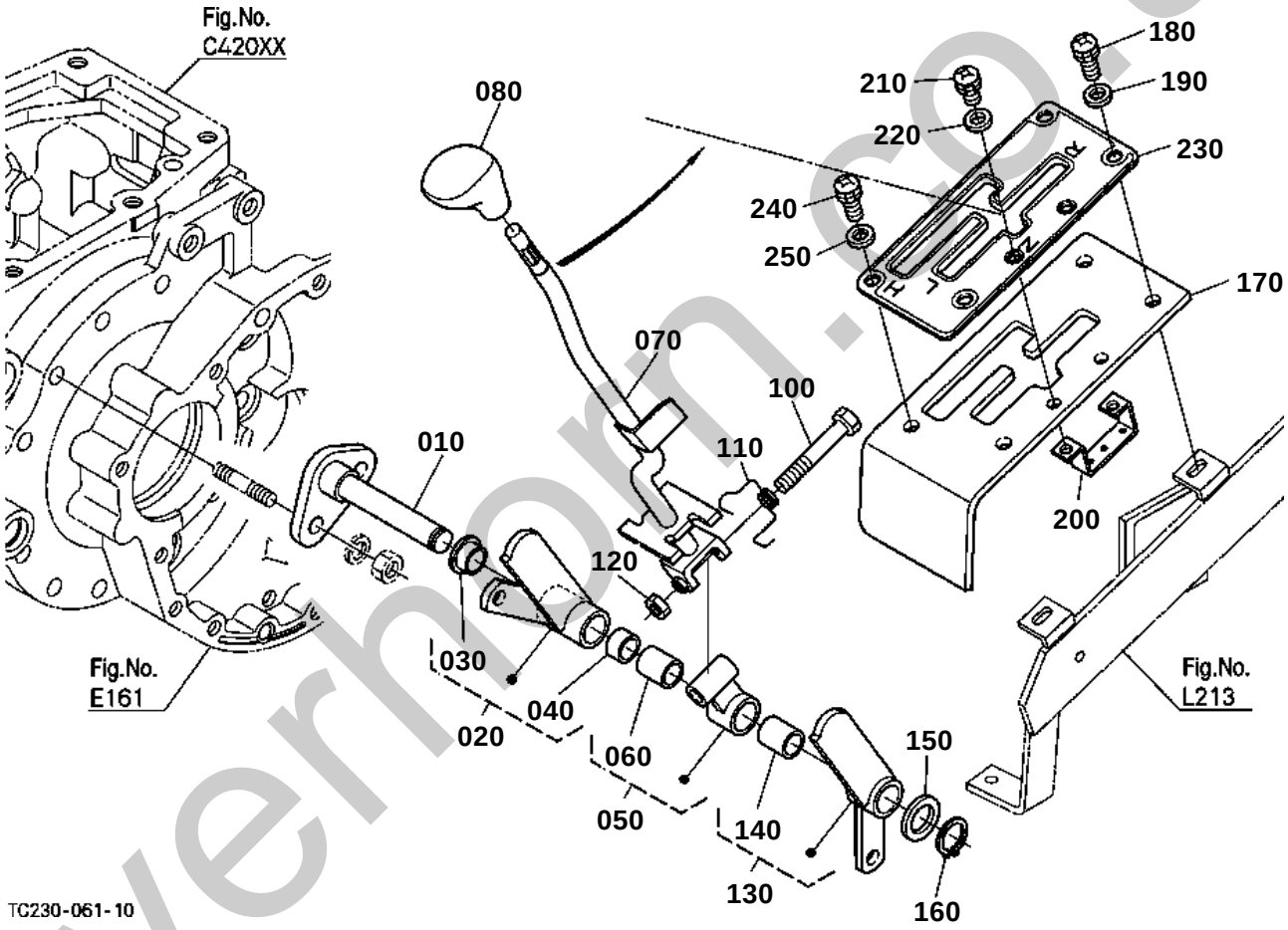

silverhorn.co.uk

RANGE GEAR SHIFT LEVER

↔ Interchangeable; ≠ not interchangeable; ← new for old; → old for new

REF.No	Part No.	Description	Q'ty	S.No.	I/C	REMARKS	Weight (kgf)	Weight (lb)
010	TC050-24480	SHAFT FULCRUM	1				0.54	1.188
020	TC050-24710	ASSY ARM SHIFT	1				0.43	0.946
030	T1060-24570	BUSH	1				0.005	0.011
040	T1060-24460	BUSH	1				0.005	0.011
050	TA240-54752	ASSY HOLDER RANGE	1				0.15	0.33
060	08511-01825	BUSH	1				0.01	0.022
070	TC230-24470	LEVER RANGE SHIFT	1				0	0
080	PK401-73270	GRIP MAIN SP-CHANGE	1				0.075	0.165
090	99999-99999	BLANK	0				0	0
100	TA240-54660	BOLT	1				0.045	0.099
110	TC050-24780	SPRING	1				0.015	0.033
120	02156-50080	NUT	1				0.004	0.0088
130	TC050-24730	ASSY ARM SHIFT	1				0.37	0.814
140	08511-01825	BUSH	1				0.01	0.022
150	04011-50180	WASHER PLAIN	1				0.012	0.0264
160	04612-00180	CIR CLIP EXTERNAL	1				0.001	0.0022
170	TC050-47200	GUIDE SHIFT	1				0.93	2.046
180	03004-60825	SCREW WITH WASHER	2				0.14	0.308
190	04013-60080	WASHER PLAIN	2				0.002	0.0044
200	TC220-43980	STAY SWITCH	1				0.04	0.088
210	03004-60620	SCREW WITH WASHER	2				0.005	0.011
220	04013-60060	WASHER PLAIN	2				0.001	0.0022
230	TC050-47152	GUIDE RANGE SHIFT	1				0.067	0.1474
240	03004-60825	SCREW WITH WASHER	2				0.14	0.308
250	04013-60080	WASHER PLAIN	2				0.002	0.0044

silverhorn.co.uk

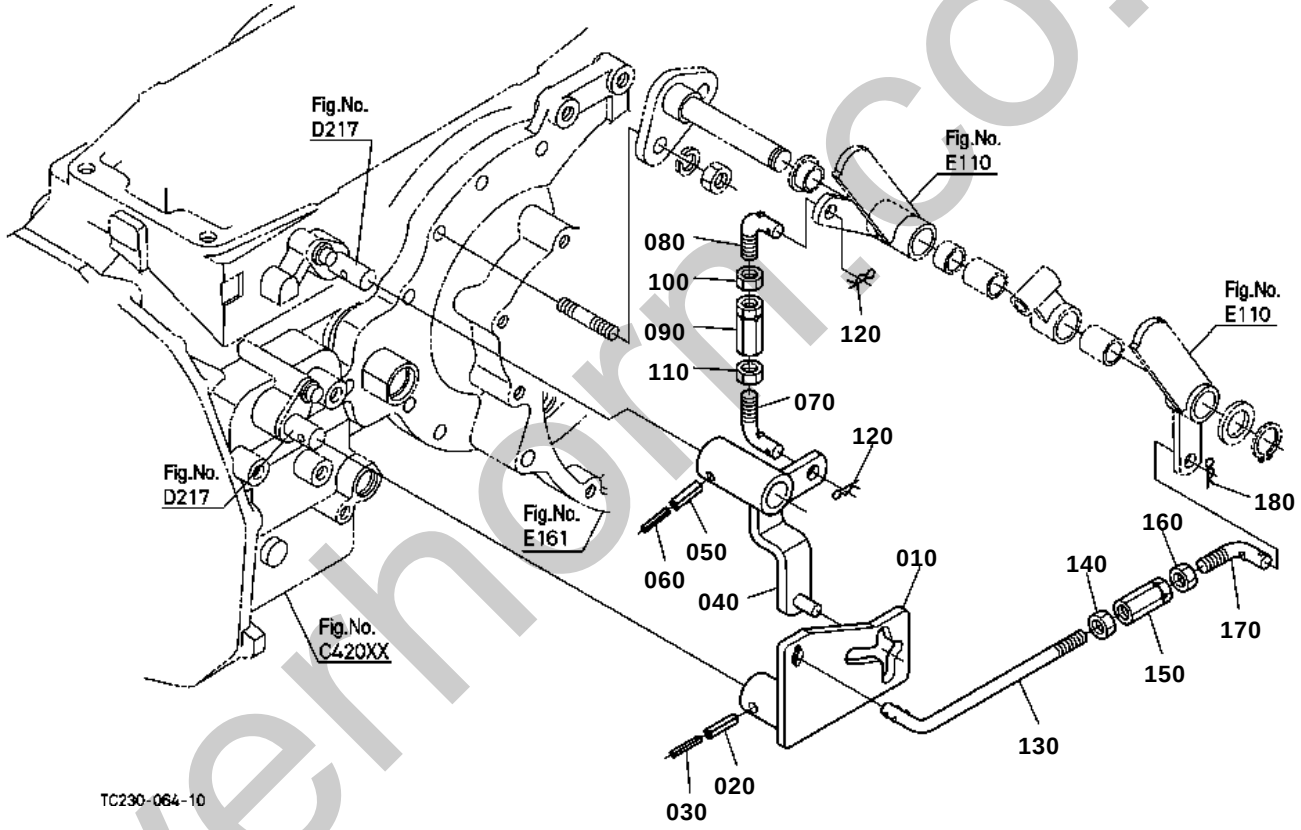

silverthorn.co.uk

RANGE GEAR SHIFT ROD

↔ Interchangeable; ≠ not interchangeable; ← new for old; → old for new

REF.No	Part No.	Description	Q'ty	S.No.	I/C	REMARKS	Weight (kgf)	Weight (lb)
010	TC050-24460	LEVER SHIFT	1				0.4	0.88
020	05411-00635	PIN SPRING	1				0.005	0.011
030	70451-57350	PIN SPRING	1				0.005	0.011
040	TC050-24700	LEVER SHIFT	1				0.27	0.594
050	05411-00635	PIN SPRING	1				0.005	0.011
060	70451-57350	PIN SPRING	1				0.005	0.011
070	TA240-54582	ROD RANGE R	1				0.03	0.066
080	TA240-54592	ROD RANGE L	1				0.03	0.066
090	TA240-54480	TURNBUCKLE	1				0.031	0.0682
100	32350-28990	NUT	1				0.009	0.0198
110	02116-50100	NUT	1				0.004	0.0088
120	05515-61000	PIN SNAP	2				0.002	0.0044
130	TC050-24762	ROD RANGE SHIFT	1				0.11	0.242
140	02116-50100	NUT	1				0.004	0.0088
150	TA240-54480	TURNBUCKLE	1				0.031	0.0682
160	32350-28990	NUT	1				0.009	0.0198
170	TA240-54592	ROD RANGE L	1				0.03	0.066
180	05515-61000	PIN SNAP	1				0.002	0.0044

silverhorn.co.uk

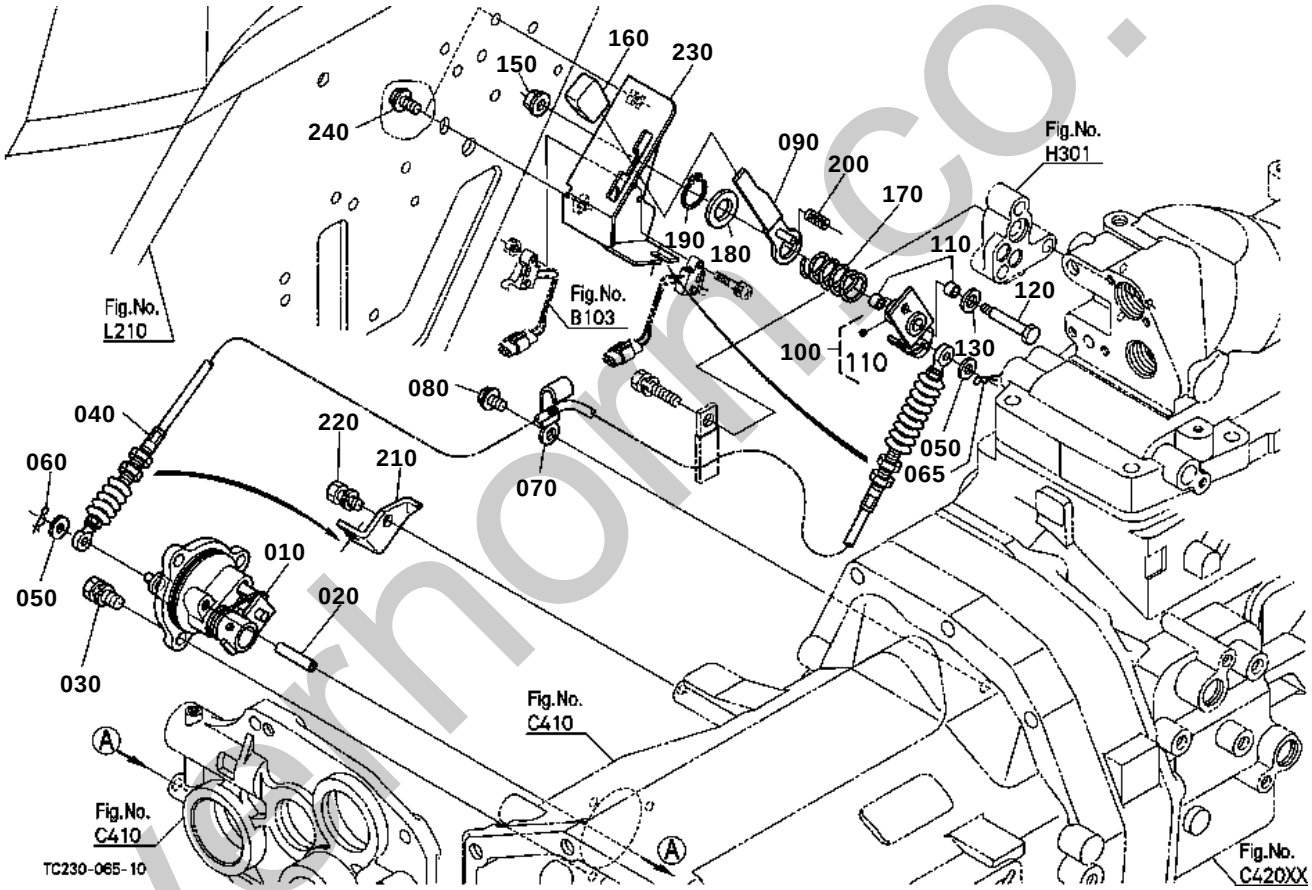

silverhorn.co.uk

PTO CLUTCH CONTROL LEVER

↔ Interchangeable; ≠ not interchangeable; ← new for old; → old for new

REF.No	Part No.	Description	Q'ty	S.No.	I/C	REMARKS	Weight (kgf)	Weight (lb)
010	TD060-69300	ASSY VALVE I-PTO	1				0.91	2.002
020	36530-27273	PIPE HYDRAULIC	1				0.005	0.011
030	01123-50820	BOLT	3				0.011	0.0242
040	TC230-24650	CABLE PTO	1				0	0
050	04012-50060	WASHER PLAIN	2				0.001	0.0022
060	52300-34110	PIN SNAP	1				0.002	0.0044
065	05525-60600	PIN SNAP	1				0.001	0.0022
070	13816-67580	CLAMP CORD	1				0.004	0.0088
080	01754-50812	BOLT FLANGE	1				0.01	0.022
090	3A012-27810	LEVER PTO CLUTCH	1				0.049	0.1078
100	TD060-69722	ASSY CAM PTO LEVER	1				0.095	0.209
110	08511-00810	BUSH	2				0.003	0.0066
120	TD060-69740	PIN PTO LEVER	1				0.02	0.044
130	04013-60080	WASHER PLAIN	1				0.002	0.0044
140	99999-99999	BLANK	0				0	0
150	02761-50060	NUT FLANGE	1				0.003	0.0066
160	36919-27820	GRIP PTO LEVER	1				0.015	0.033
170	3A012-27850	SPRING	1				0.005	0.011
180	04011-50180	WASHER PLAIN	1				0.012	0.0264
190	04612-00180	CIR CLIP EXTERNAL	1				0.001	0.0022
200	3A111-27830	SPRING PTO LEVER	1				0.001	0.0022
210	TA040-69600	STAY WIRE	1				0.046	0.1012
220	01123-60816	BOLT	1				0.01	0.022
230	TC050-47610	GUIDE PTO LEVER	1				0.3	0.66
240	01754-50816	BOLT FLANGE	2				0.011	0.0242

silverhorn.co.uk

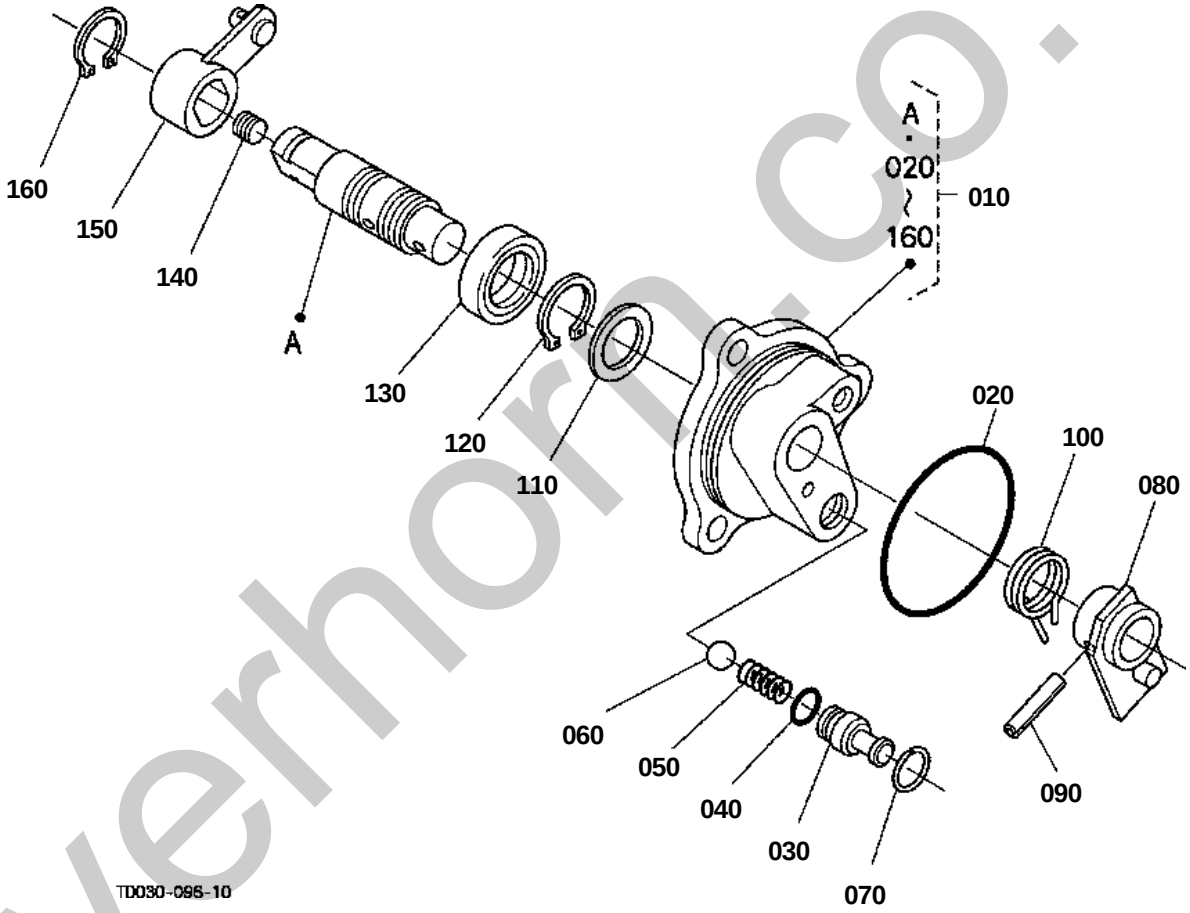

silverhorn.co.uk

PTO CLUTCH VALVE [COMPONENT PARTS]

↔ Interchangeable; ≠ not interchangeable; ← new for old; → old for new

REF.No	Part No.	Description	Q'ty	S.No.	I/C	REMARKS	Weight (kgf)	Weight (lb)
010	TD060-69300	ASSY VALVE I-PTO	1				0.91	2.002
020	04811-06630	O RING	1				0.001	0.0022
030	TA040-69320	PLUG	1				0.006	0.0132
040	04817-00090	O RING	1				0.001	0.0022
050	TA040-69330	SPRING	1				0.001	0.0022
060	07715-03209	BALL	1				0.002	0.0044
070	67401-03690	RING	1				0.001	0.0022
080	TA040-69340	LEVER VALVE ROTOR	1				0.057	0.1254
090	05411-00522	PIN SPRING	1				0.002	0.0044
100	TA040-69360	SPRING	1				0.014	0.0308
110	50770-12180	COLLAR THRUST	1				0.003	0.0066
120	04612-00200	CIR CLIP EXTERNAL	1				0.001	0.0022
130	09500-20358	SEAL OIL	1				0.01	0.022
140	67511-36640	PLUG	1				0.003	0.0066
150	TD060-69370	LEVER VALVE	1				0.05	0.11
160	04612-00180	CIR CLIP EXTERNAL	1				0.001	0.0022

silverhorn.co.uk

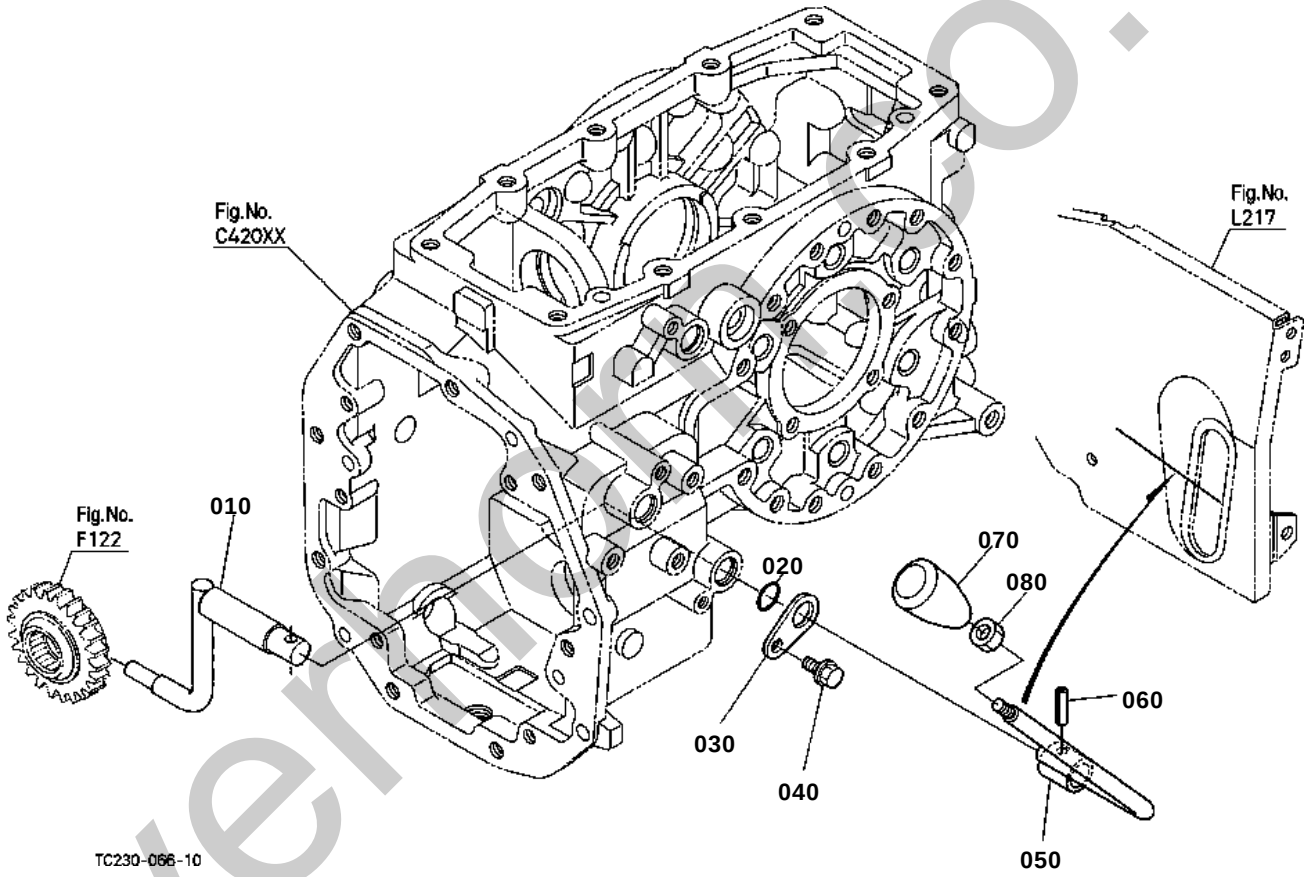

silvermachinery.co.uk

FRONT WHEEL DRIVE LEVER

↔ Interchangeable; ≠ not interchangeable; ← new for old; → old for new

REF.No	Part No.	Description	Q'ty	S.No.	I/C	REMARKS	Weight (kgf)	Weight (lb)
010	TA040-15180	LEVER SHIFT	1				0.405	0.891
020	04816-00200	O RING	1				0.003	0.0066
030	34070-24350	STOPPER	1				0.02	0.044
040	01754-50812	BOLT FLANGE	1				0.01	0.022
050	TC230-15470	LEVER FRONT DRIVE	1				0	0
060	05411-00630	PIN SPRING	1				0.004	0.0088
070	TA040-15480	GRIP LEVER	1				0.053	0.1166
080	02116-50100	NUT	1				0.004	0.0088

silverhorn.co.uk

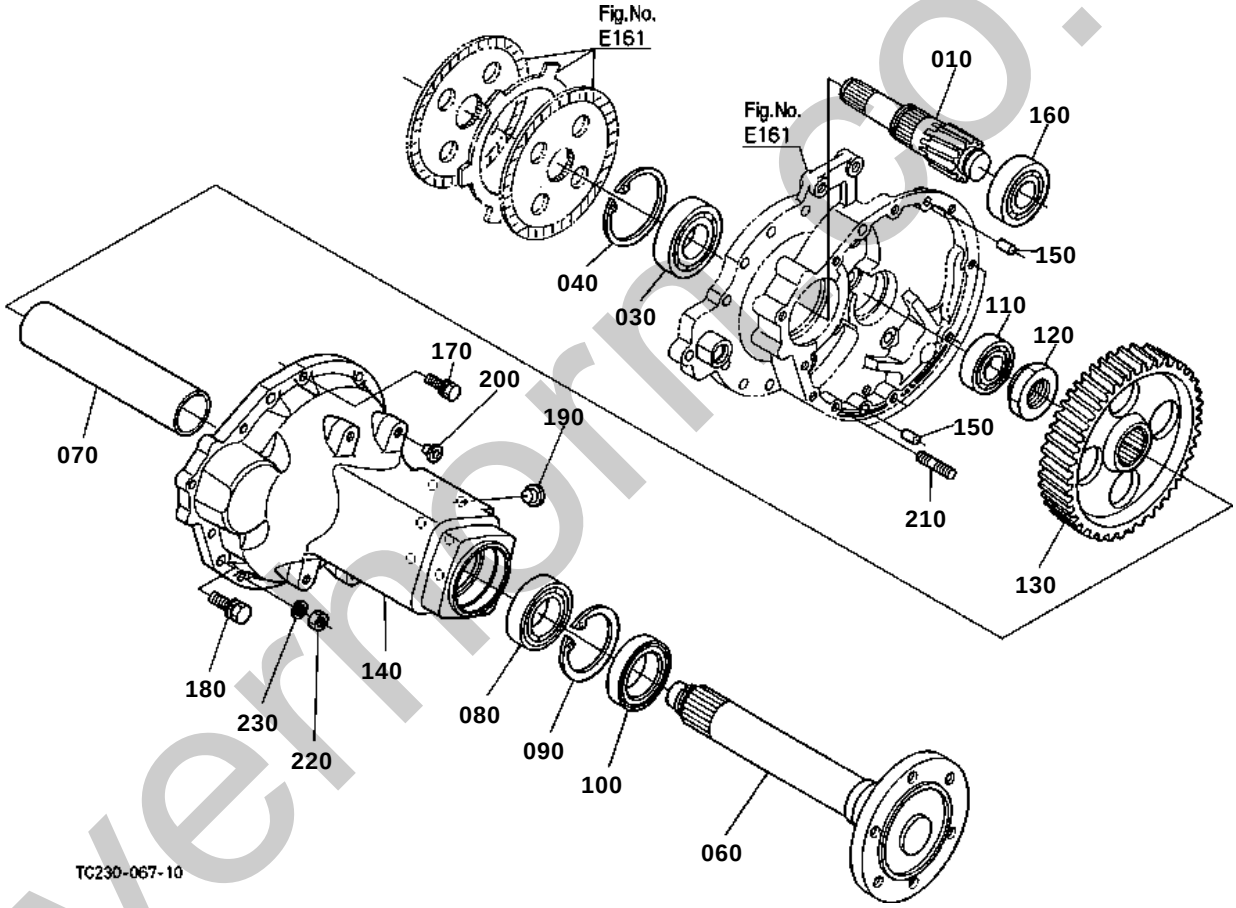

silvermorris.co.uk

REAR AXLE LH

↔ Interchangeable; ≠ not interchangeable; ← new for old; → old for new

REF.No	Part No.	Description	Q'ty	S.No.	I/C	REMARKS	Weight (kgf)	Weight (lb)
010	TA040-26720	SHAFT DIFF.GEAR LH	1			11T	2.2	4.84
020	99999-99999	BLANK	0				0	0
030	TD060-26730	BEARING BALL	1				0.81	1.782
040	04611-01000	CIR CLIP INTERNAL	1				0.042	0.0924
050	99999-99999	BLANK	0				0	0
060	32430-27115	AXLE REAR	1				11	24.2
070	32430-27144	SPACER	1				1.7	3.74
080	TC210-26270	BEARING BALL	1				0.455	1.001
090	04611-00900	CIR CLIP INTERNAL	1				0.037	0.0814
100	31359-44510	SEAL OIL	1				0.18	0.396
110	TA140-25000	BEARING BALL	1				0.342	0.7524
120	70631-15730	NUT	1				0.15	0.33
130	32440-26830	GEAR	1			60T	6.6	14.52
140	32440-27337	CASE REAR AXLE	1				19	41.8
150	37150-27370	PIN STRAIGHT	2				0.009	0.0198
160	35860-79150	BEARING BALL	1				0.45	0.99
170	01133-51035	BOLT	5				0.03	0.066
180	01133-51240	BOLT	1				0.05	0.11
190	31220-14290	PLUG	6				0.002	0.0044
200	32210-27580	PLUG	4				0.001	0.0022
210	34070-20313	STUD	4				0.045	0.099
220	37300-14190	NUT	4				0.009	0.0198
230	04512-60100	WASHER SPRING	4				0.002	0.0044

silverhorn.co.uk

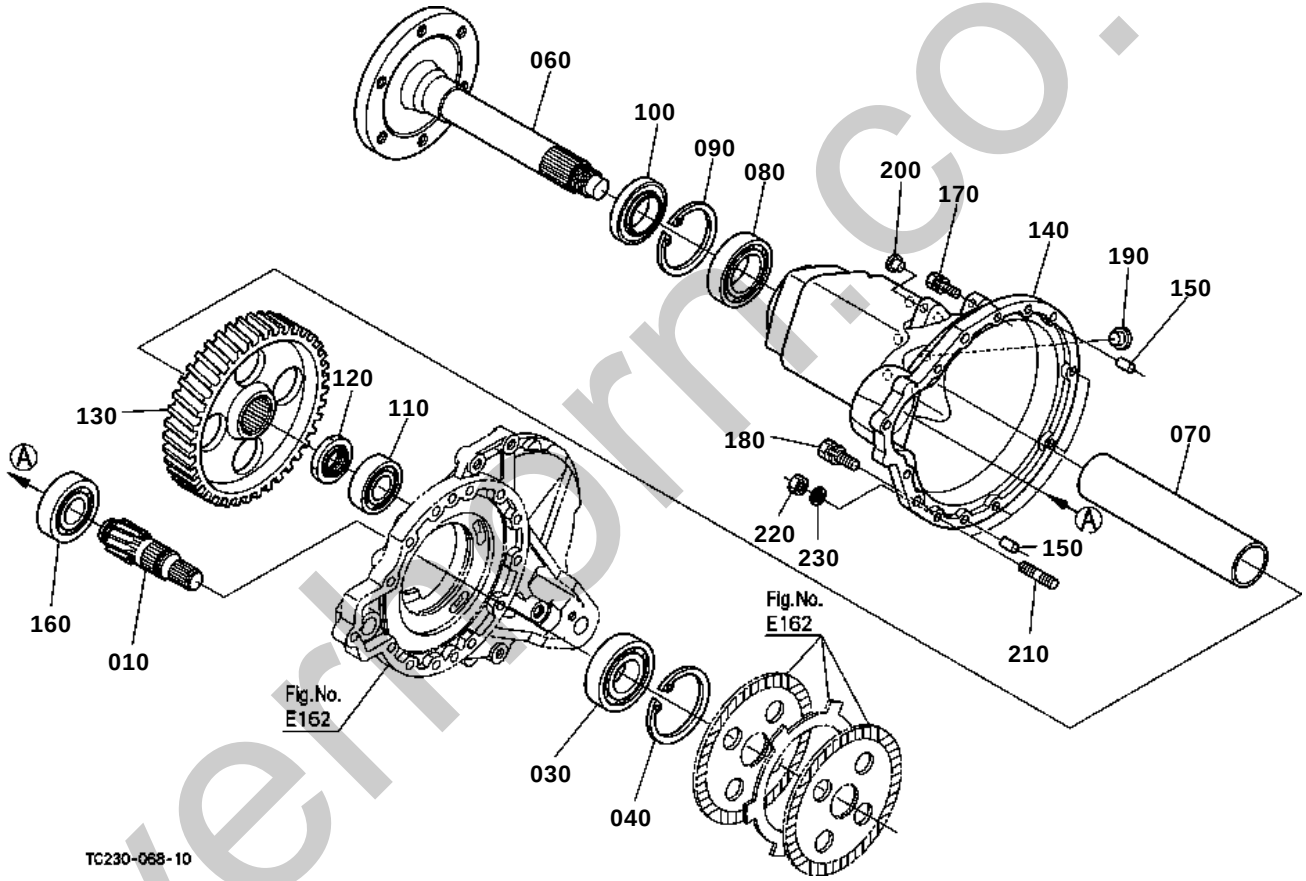

silverfern.co.uk

REAR AXLE RH

↔ Interchangeable; ≠ not interchangeable; ← new for old; → old for new

REF.No	Part No.	Description	Q'ty	S.No.	I/C	REMARKS	Weight (kgf)	Weight (lb)
010	TA040-26710	SHAFT DIFF.GEAR RH	1			11T	2	4.4
020	99999-99999	BLANK	0				0	0
030	TD060-26730	BEARING BALL	1				0.81	1.782
040	04611-01000	CIR CLIP INTERNAL	1				0.042	0.0924
050	99999-99999	BLANK	0				0	0
060	32430-27115	AXLE REAR	1				11	24.2
070	32430-27144	SPACER	1				1.7	3.74
080	TC210-26270	BEARING BALL	1				0.455	1.001
090	04611-00900	CIR CLIP INTERNAL	1				0.037	0.0814
100	31359-44510	SEAL OIL	1				0.18	0.396
110	TA140-25000	BEARING BALL	1				0.342	0.7524
120	70631-15730	NUT	1				0.15	0.33
130	32440-26830	GEAR	1			60T	6.6	14.52
140	32440-27337	CASE REAR AXLE	1				19	41.8
150	37150-27370	PIN STRAIGHT	2				0.009	0.0198
160	35860-79150	BEARING BALL	1				0.45	0.99
170	01133-51035	BOLT	5				0.03	0.066
180	01133-51240	BOLT	1				0.05	0.11
190	31220-14290	PLUG	6				0.002	0.0044
200	32210-27580	PLUG	4				0.001	0.0022
210	34070-20313	STUD	4				0.045	0.099
220	37300-14190	NUT	4				0.009	0.0198
230	04512-60100	WASHER SPRING	4				0.002	0.0044

silverhorn.co.uk

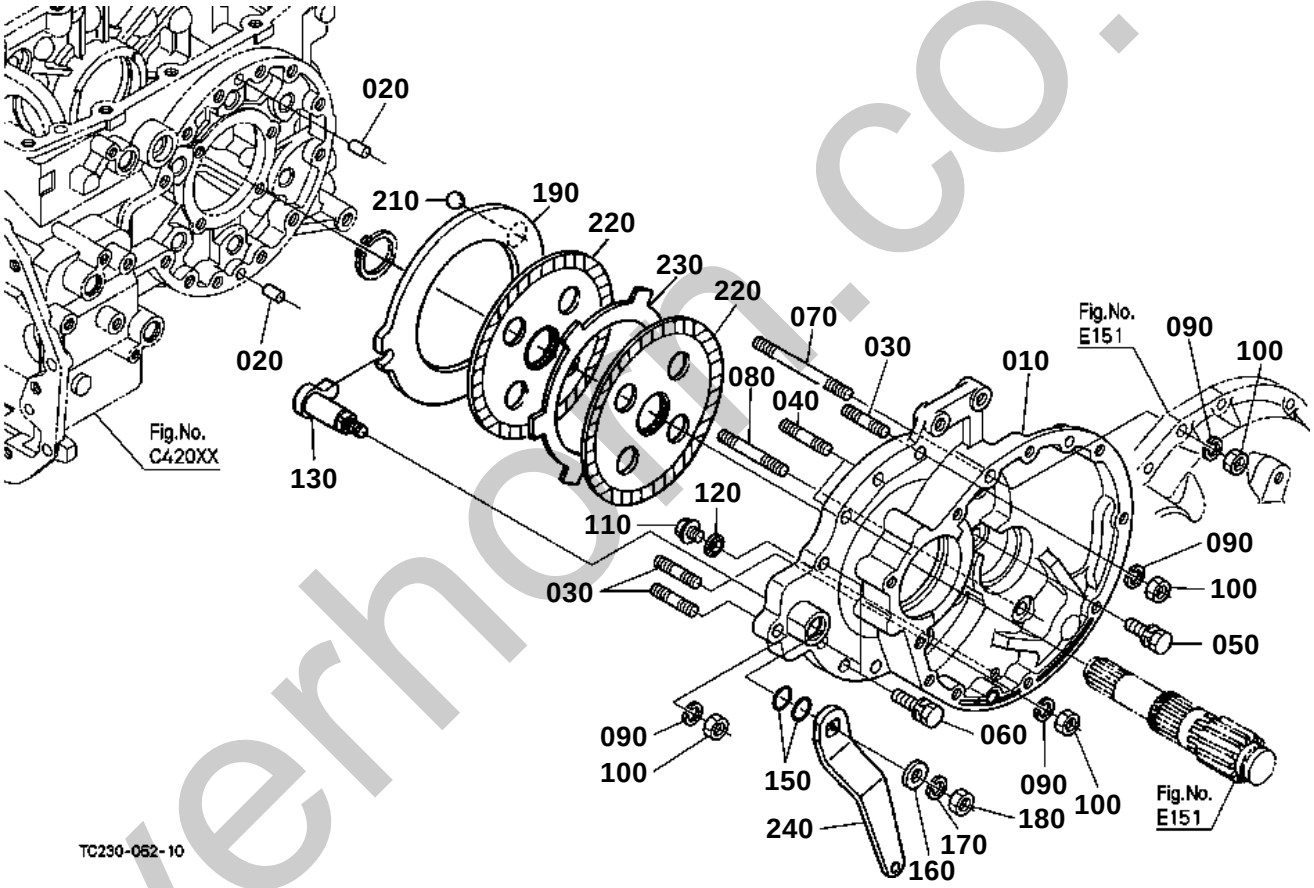

silverhoe.co.uk

BRAKE LH

↔ Interchangeable; ≠ not interchangeable; ← new for old; → old for new

REF.No	Part No.	Description	Q'ty	S.No.	I/C	REMARKS	Weight (kgf)	Weight (lb)
010	TA040-28619	CASE BRAKE LH	1				14.6	32.12
020	05012-01018	PIN STRAIGHT	2				0.012	0.0264
030	01574-61240	STUD	6				0.045	0.099
040	01574-51250	STUD	2				0.054	0.1188
050	01133-51235	BOLT	1				0.043	0.0946
060	01133-51240	BOLT	3				0.05	0.11
070	01574-51200	STUD	1				0.1	0.22
080	01574-61260	STUD	1				0.05	0.11
090	04512-60120	WASHER SPRING	10				0.005	0.011
100	02176-50120	NUT	10				0.01	0.022
110	06331-45010	PLUG	1				0.02	0.044
120	04717-01000	WASHER WITH RUBBER	1				0.001	0.0022
130	34070-28715	CAM BRAKE LH	1				0.285	0.627
140	99999-99999	BLANK	0				0	0
150	04816-00220	O RING	2				0.003	0.0066
160	04015-60120	WASHER PLAIN	1				0.022	0.0484
170	04512-60120	WASHER SPRING	1				0.005	0.011
180	02174-50120	NUT	1				0.01	0.022
190	34070-28770	PLATE BRAKE CAM LH	1				1.11	2.442
200	99999-99999	BLANK	0				0	0
210	07715-00805	BALL	6				0.016	0.0352
220	T1060-28200	DISK BRAKE MAIN	2				0.75	1.65
230	37720-28170	PLATE	1				0.342	0.7524
240	34070-44615	LEVER BRAKE CAM LH	1				0.41	0.902

silverhorn.co.uk

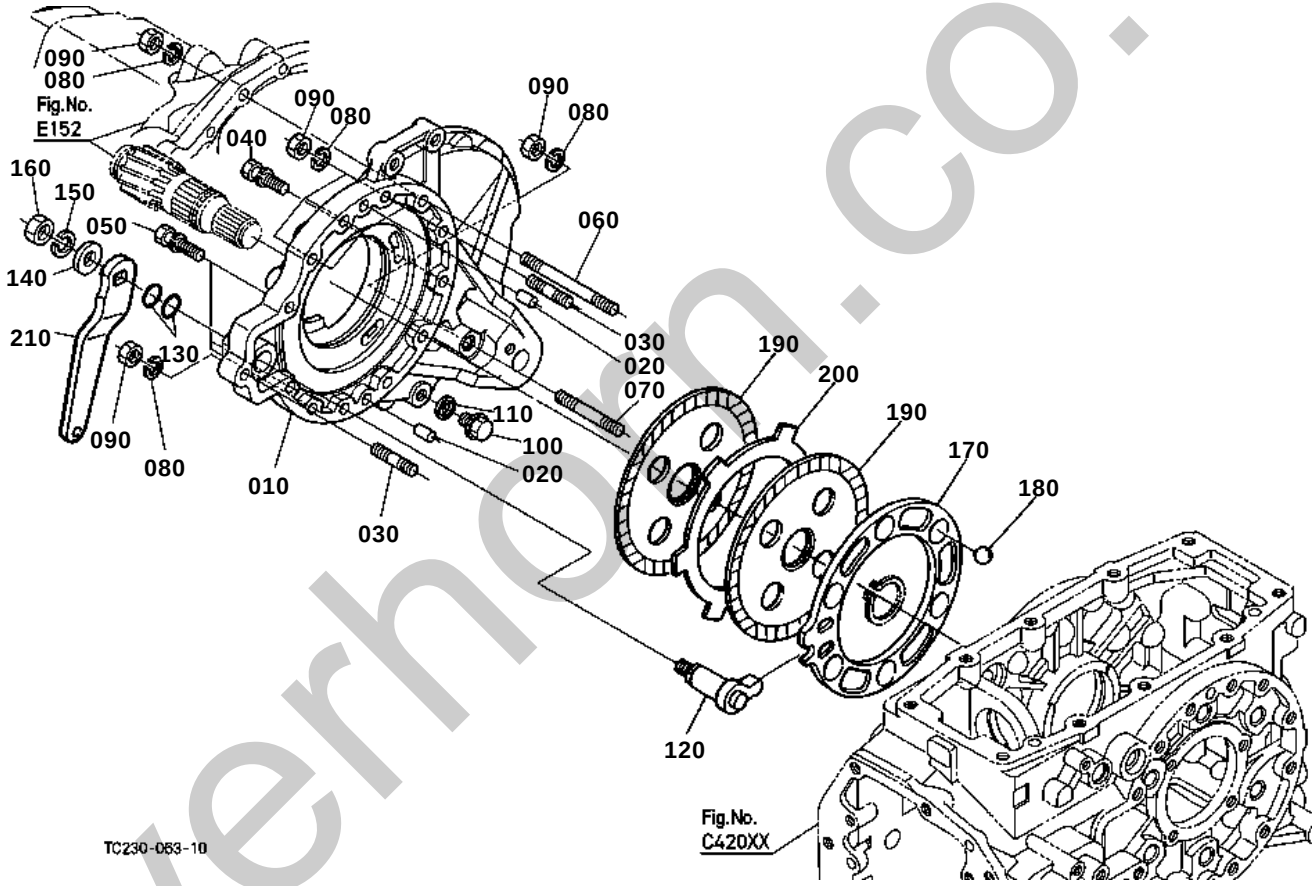

silverhorn.co.uk

BRAKE RH

↔ Interchangeable; ≠ not interchangeable; ← new for old; → old for new

REF.No	Part No.	Description	Q'ty	S.No.	I/C	REMARKS	Weight (kgf)	Weight (lb)
010	TA040-28629	CASE BRAKE RH	1				14.6	32.12
020	05012-01018	PIN STRAIGHT	2				0.012	0.0264
030	01574-61240	STUD	8				0.045	0.099
040	01133-51235	BOLT	1				0.043	0.0946
050	01133-51240	BOLT	3				0.05	0.11
060	01574-51200	STUD	1				0.1	0.22
070	01574-61260	STUD	1				0.05	0.11
080	04512-60120	WASHER SPRING	10				0.005	0.011
090	02176-50120	NUT	10				0.01	0.022
100	06331-45010	PLUG	1				0.02	0.044
110	04717-01000	WASHER WITH RUBBER	1				0.001	0.0022
120	34070-28725	CAM BRAKE RH	1				0.285	0.627
130	04816-00220	O RING	2				0.003	0.0066
140	04015-60120	WASHER PLAIN	1				0.022	0.0484
150	04512-60120	WASHER SPRING	1				0.005	0.011
160	02174-50120	NUT	1				0.01	0.022
170	34070-28780	PLATE BRAKE CAM RH	1				1.14	2.508
180	07715-00805	BALL	6				0.016	0.0352
190	T1060-28200	DISK BRAKE MAIN	2				0.75	1.65
200	37720-28170	PLATE	1				0.342	0.7524
210	34070-44623	LEVER BRAKE CAM RH	1				0.41	0.902

silverhorn.co.uk

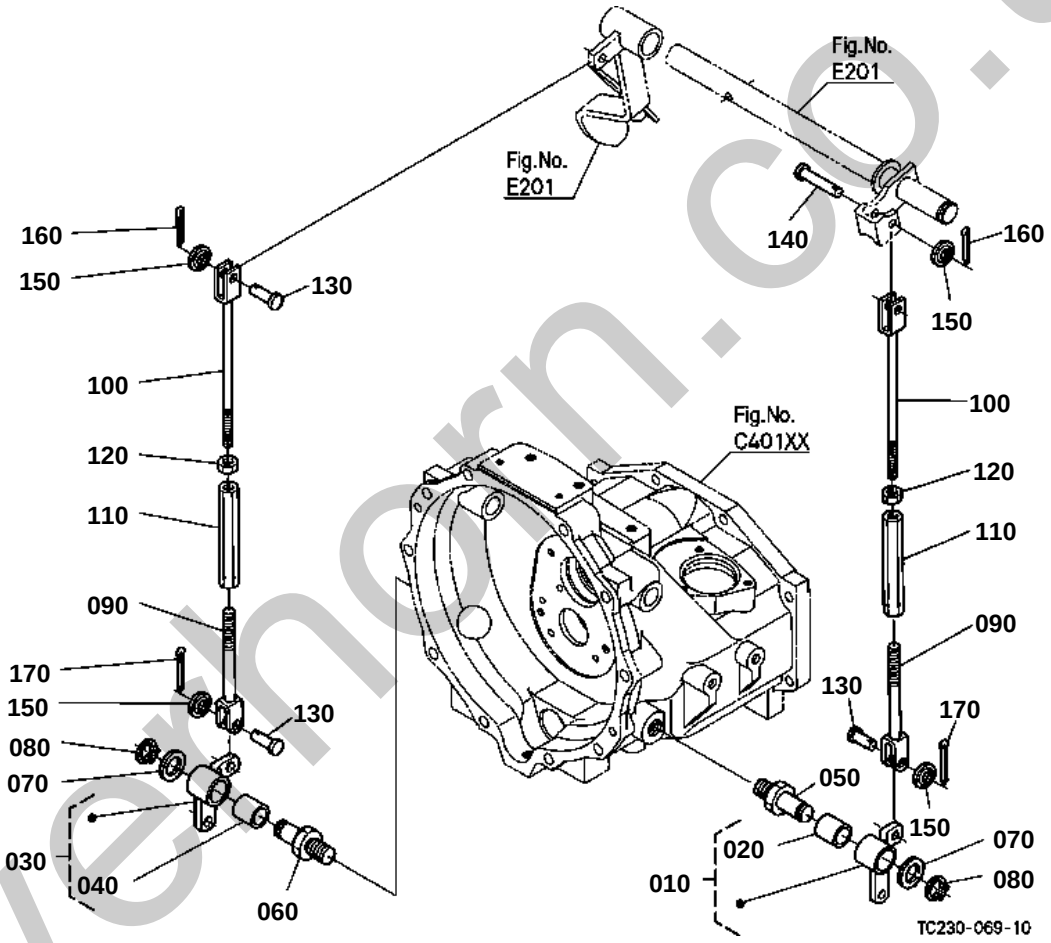

silverthorn.co.uk

BRAKE ROD 1 (BRAKE PEDAL)

↔ Interchangeable; ≠ not interchangeable; ← new for old; → old for new

REF.No	Part No.	Description	Q'ty	S.No.	I/C	REMARKS	Weight (kgf)	Weight (lb)
010	TC030-44810	ASSY LEVER BRAKE LH	1				0.255	0.561
020	34070-44890	BUSH	1				0.035	0.077
030	34070-44910	ASSY LEVER BRAKE RH	1				0.26	0.572
040	34070-44890	BUSH	1				0.035	0.077
050	34070-44870	SHAFT BRAKE LH	1				0.225	0.495
060	34070-44880	SHAFT BRAKE RH	1				0.22	0.484
070	04011-50200	WASHER PLAIN	2				0.015	0.033
080	04612-00200	CIR CLIP EXTERNAL	2				0.001	0.0022
090	34070-44840	ROD BRAKE LOWER	2				0.13	0.286
100	TC030-76200	ROD BRAKE UPPER	2				0.165	0.363
110	32350-28980	TURNBUCKLE	2				0.124	0.2728
120	02116-50100	NUT	2				0.004	0.0088
130	05122-61028	PIN JOINT	3				0.02	0.044
140	05122-61045	PIN JOINT	1				0.005	0.011
150	04717-01000	WASHER WITH RUBBER	4				0.001	0.0022
160	05511-50318	PIN SPLIT	2				0.001	0.0022
170	05511-50318	PIN SPLIT	2				0.001	0.0022

silverhorn.co.uk

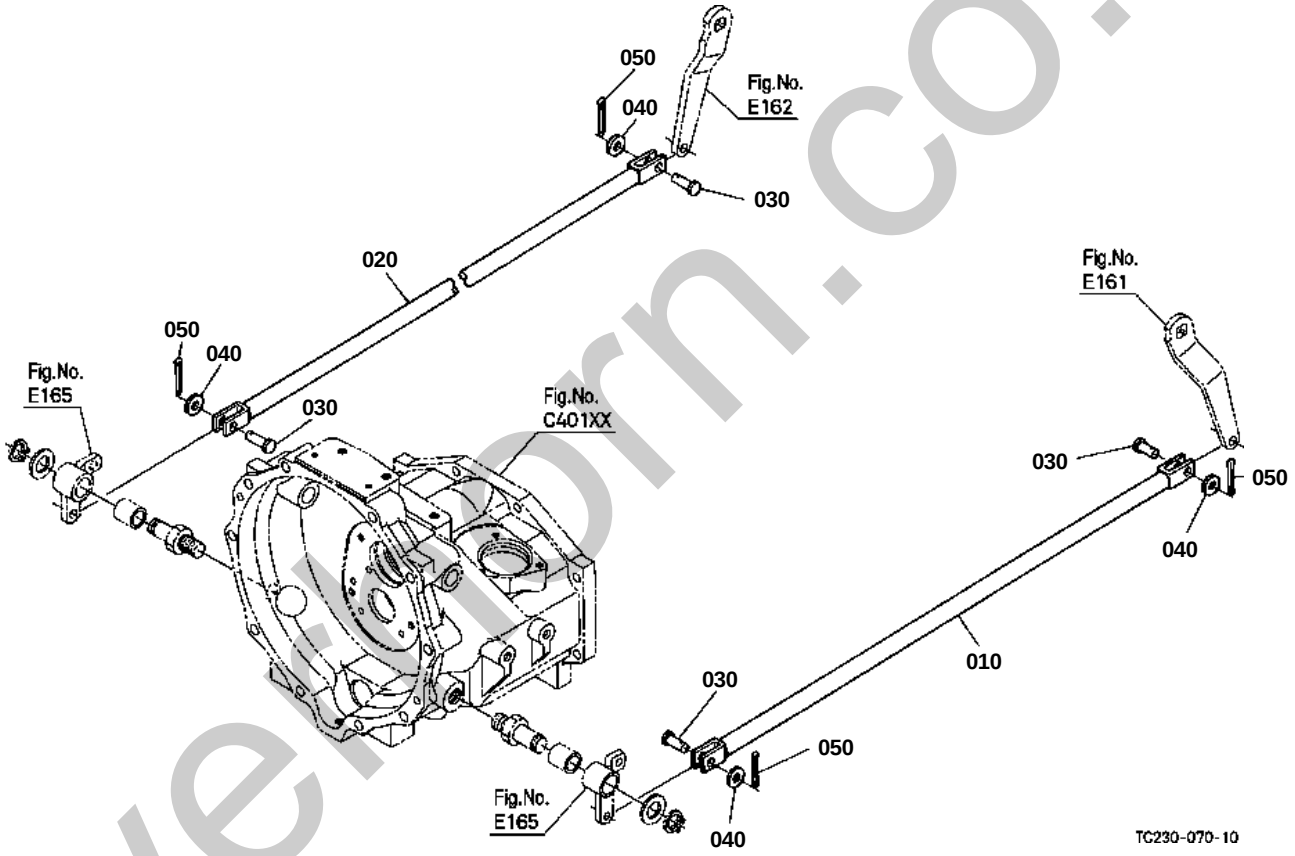

silverthorn.co.uk

BRAKE ROD 2 (BRAKE CAM)

↔ Interchangeable; ≠ not interchangeable; ← new for old; → old for new

REF.No	Part No.	Description	Q'ty	S.No.	I/C	REMARKS	Weight (kgf)	Weight (lb)
010	34030-44630	ROD BRAKE LH	1				1.125	2.475
020	34030-44640	ROD BRAKE RH	1				0.99	2.178
030	05122-61028	PIN JOINT	4				0.02	0.044
040	04013-60100	WASHER PLAIN	4				0.003	0.0066
050	05511-50318	PIN SPLIT	4				0.001	0.0022

silverhorn.co.uk

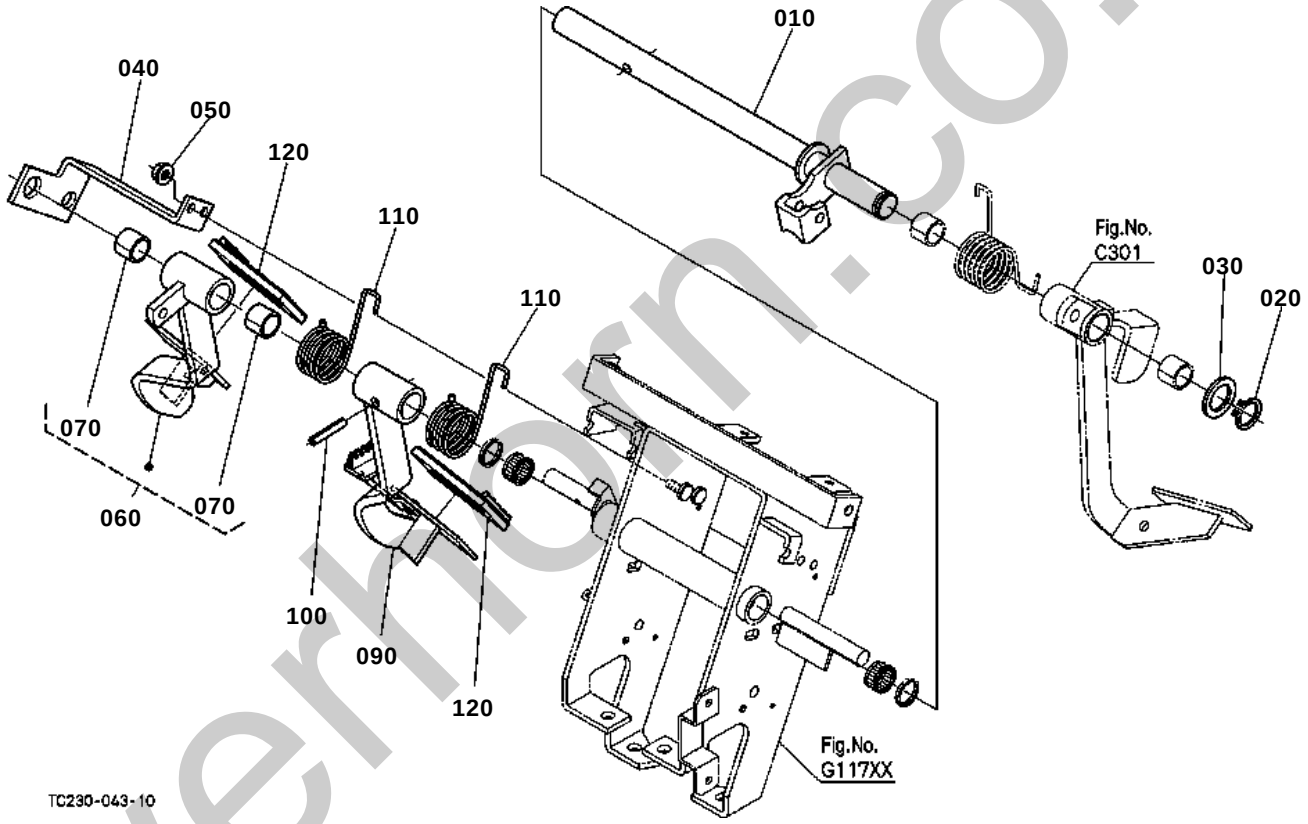

silverhorn.co.uk

BRAKE PEDAL

↔ Interchangeable; ≠ not interchangeable; ← new for old; → old for new

REF.No	Part No.	Description	Q'ty	S.No.	I/C	REMARKS	Weight (kgf)	Weight (lb)
010	TC230-44010	SHAFT PEDAL	1				0	0
020	04612-00250	CIR CLIP EXTERNAL	1				0.002	0.0044
030	04011-50250	WASHER PLAIN	1				0.027	0.0594
040	TC030-44072	SUPPORT SHAFT PEDAL	1				0.38	0.836
050	02751-50080	NUT FLANGE	2				0.006	0.0132
060	TC230-44100	ASSY PEDAL BRAKE RH	1				0	0
070	TD060-44080	BUSH	2				0.002	0.0044
080	99999-99999	BLANK	0				0	0
090	TC030-44110	PEDAL BRAKE LH	1				1.24	2.728
100	05411-00840	PIN SPRING	1				0.008	0.0176
110	TC030-44170	SPRING	2				0.07	0.154
120	T2050-44120	COVER PEDAL	2				0.07	0.154

silverhorn.co.uk

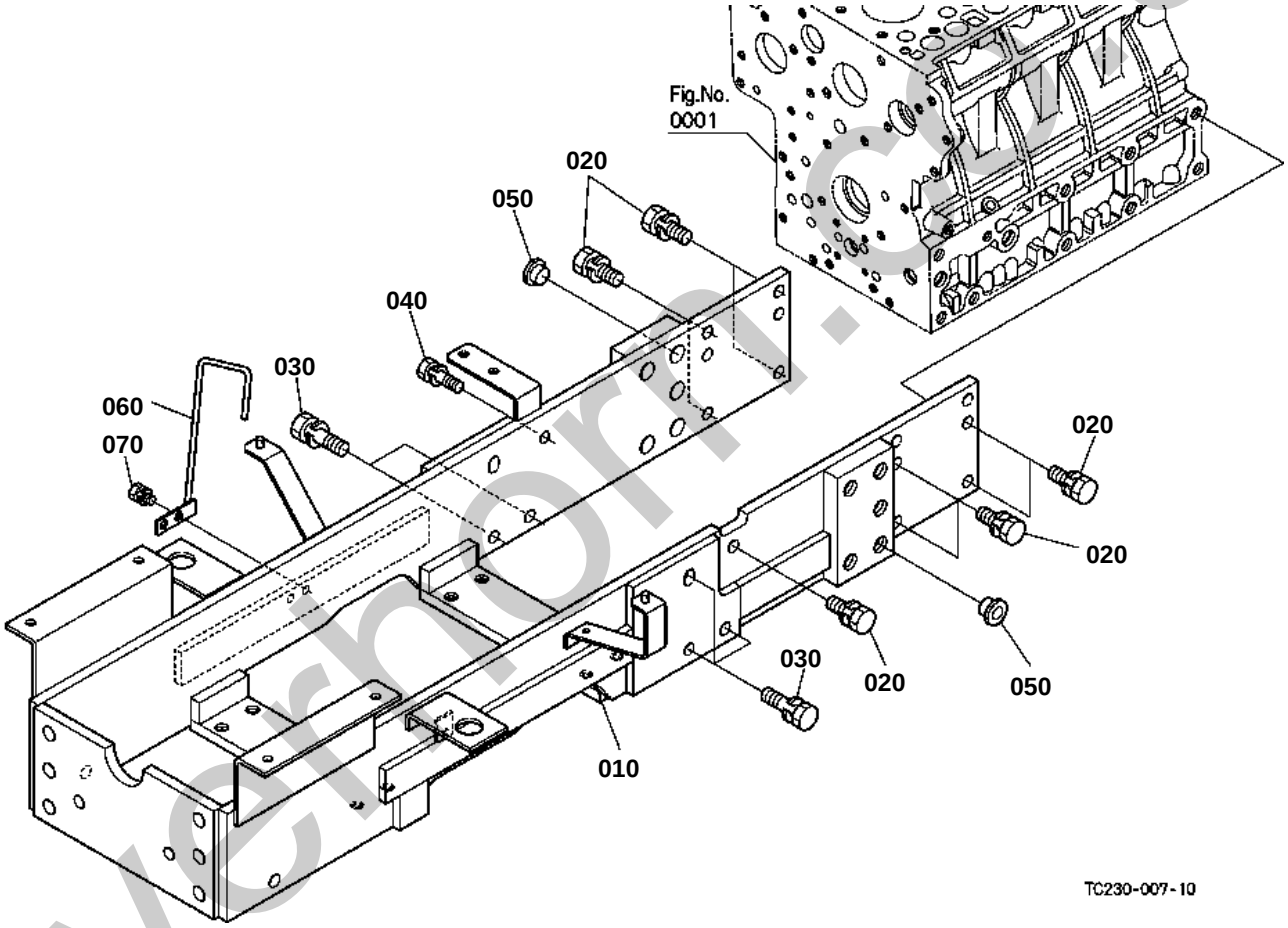

silvernorm.co.uk

FRONT AXLE FRAME

↔ Interchangeable; ≠ not interchangeable; ← new for old; → old for new

REF.No	Part No.	Description	Q'ty	S.No.	I/C	REMARKS	Weight (kgf)	Weight (lb)
010	TC230-14000	FRAME FRONT AXLE	1				0	0
020	01138-51230	BOLT	9				0.2	0.44
030	01138-51240	BOLT	6				0.046	0.1012
040	01138-51030	BOLT	1				0.25	0.55
050	33300-90910	PLUG	10				0.002	0.0044
060	TC230-14252	GUIDE P.S. HOSE	1				0	0
070	01123-50812	BOLT	2				0.1	0.22

silverhorn.co.uk

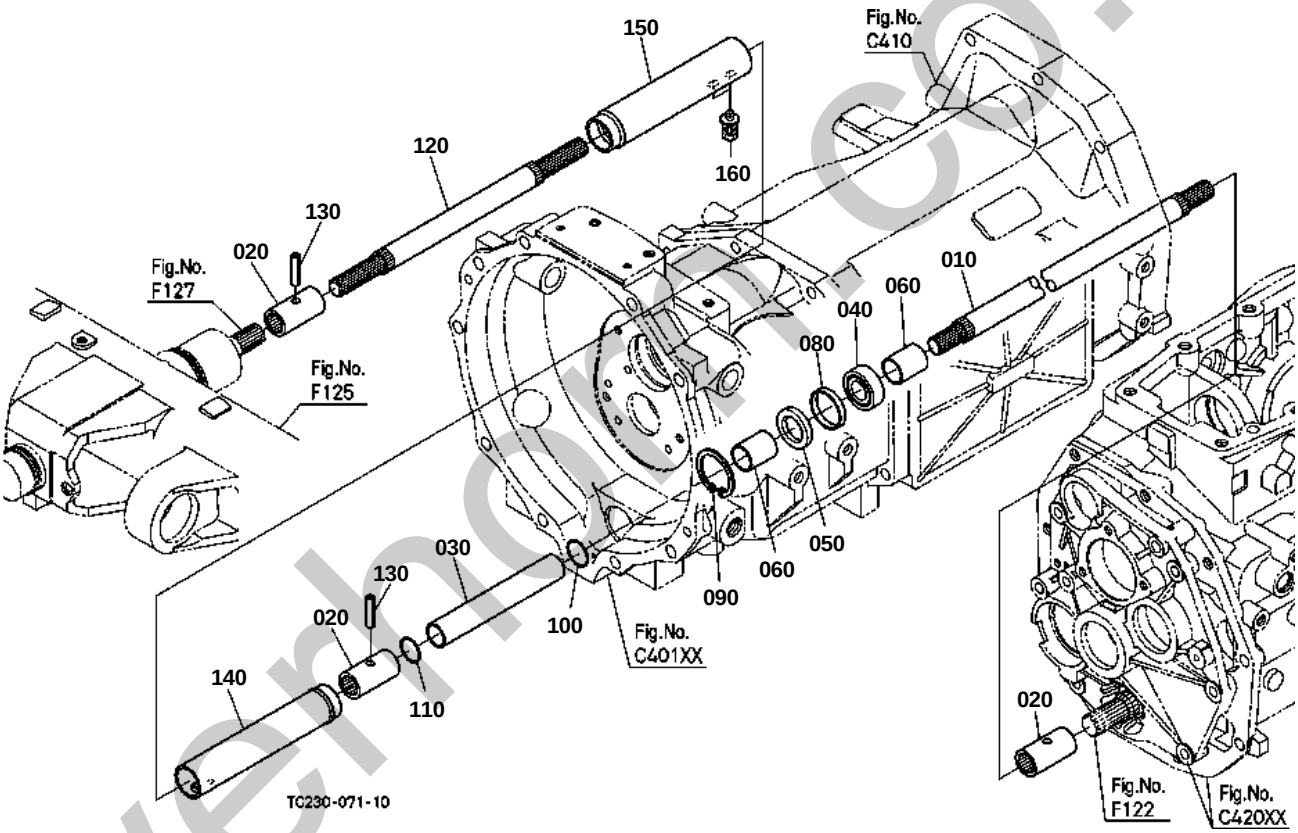

silverhoe.co.uk

PROPELLER SHAFT

↔ Interchangeable; ≠ not interchangeable; ← new for old; → old for new

REF.No	Part No.	Description	Q'ty	S.No.	I/C	REMARKS	Weight (kgf)	Weight (lb)
010	TC230-14640	SHAFT PROPELLER	1				0	0
020	T0070-14710	COUPLING	3				0.16	0.352
030	TC230-14720	SPACER	1				0	0
040	TD060-14590	BEARING BALL	1				0.04	0.088
050	09500-28427	SEAL OIL	1				0.01	0.022
060	52600-15550	SLEEVE	2				0.025	0.055
070	99999-99999	BLANK	0				0	0
080	TD060-14654	SPACER	1				0.01	0.022
090	04611-00420	CIR CLIP INTERNAL	1				0.006	0.0132
100	TA040-82180	O RING	1				0.001	0.0022
110	TA040-82180	O RING	1				0.001	0.0022
120	TC230-14630	SHAFT PROPELLER	1				0	0
130	05411-00430	PIN SPRING	2				0.002	0.0044
140	TD060-14580	COVER SHAFT REAR	1				0.26	0.572
150	TA040-14574	COVER SHAFT FRONT	1				0.33	0.726
160	TC050-14590	BOLT WITH WASHER	2				0.003	0.0066

silverhorn.co.uk

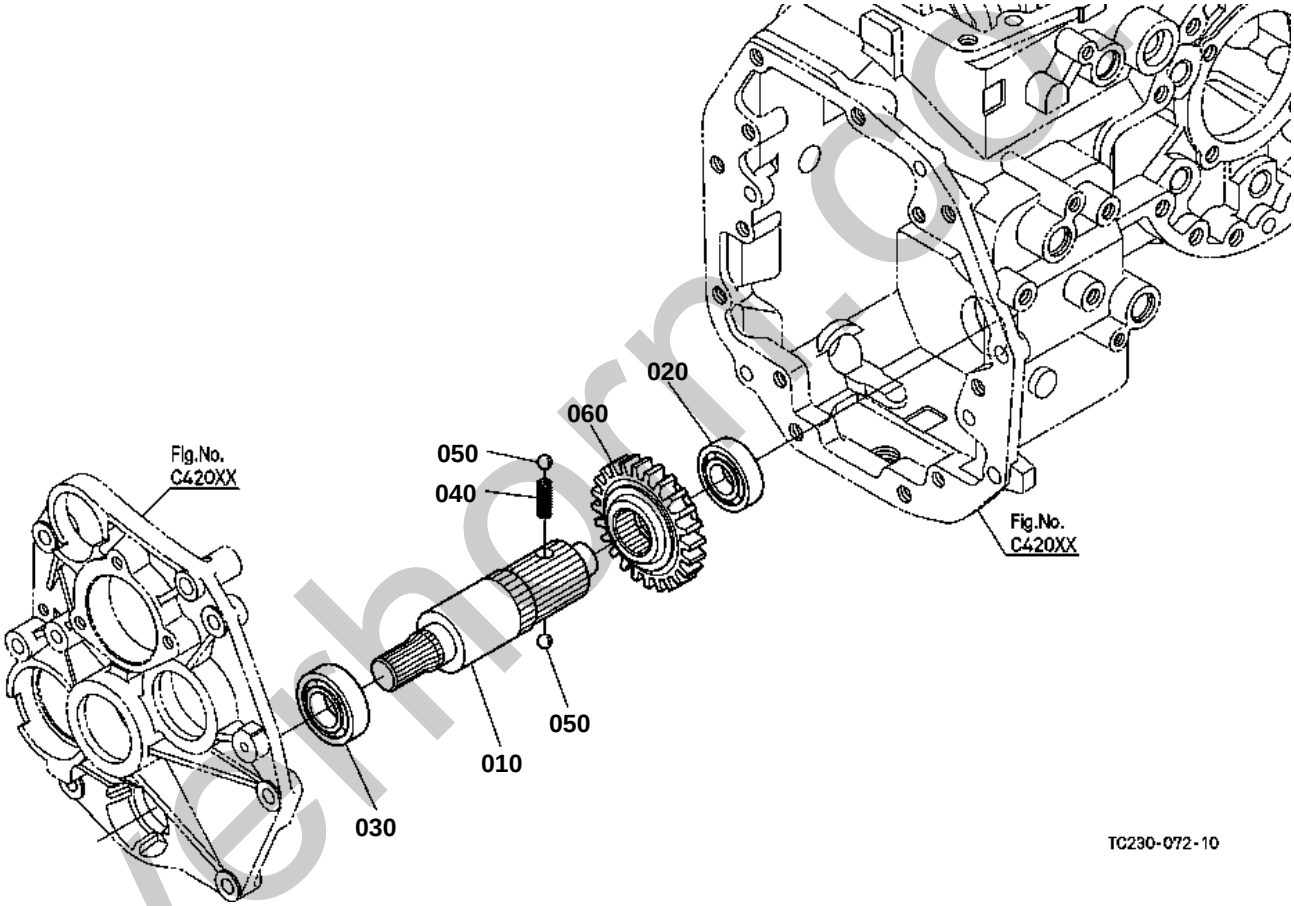

silverhorn.co.uk

FRONT WHEEL DRIVE SHAFT

↔ Interchangeable; ≠ not interchangeable; ← new for old; → old for new

REF.No	Part No.	Description	Q'ty	S.No.	I/C	REMARKS	Weight (kgf)	Weight (lb)
010	TA040-15220	SHAFT DRIVE	1				1.125	2.475
020	34070-22560	BEARING BALL	1				0.1	0.22
030	37410-57190	BEARING BALL	1				0.14	0.308
040	35260-24110	SPRING	1				0.02	0.044
050	07715-01605	BALL	2				0.003	0.0066
060	TA040-15170	GEAR 4WD SHIFT	1			24T	0.625	1.375

silverhorn.co.uk

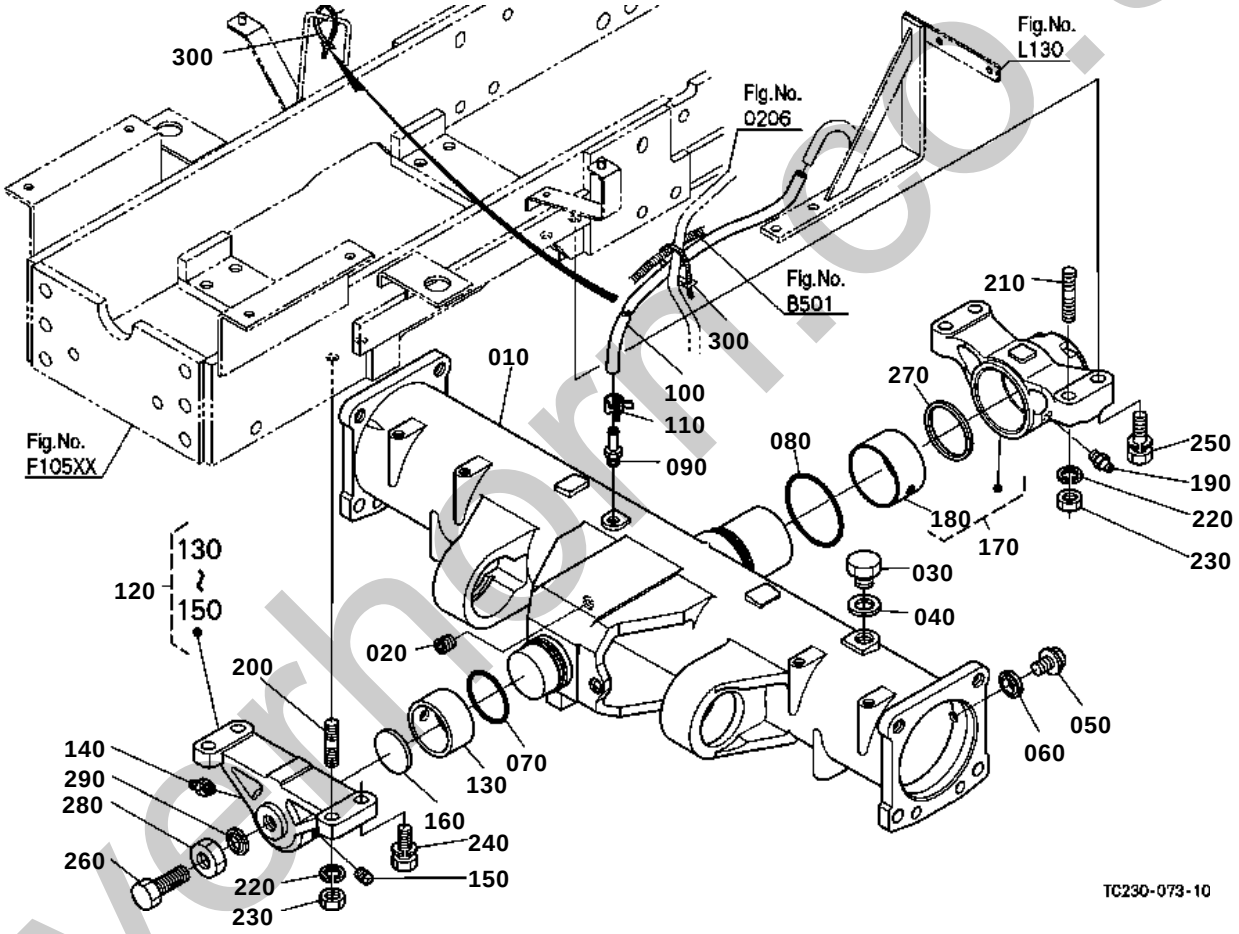

silverhorn.co.uk

FRONT DIFFERENTIAL CASE

↔ Interchangeable; ≠ not interchangeable; ← new for old; → old for new

REF.No	Part No.	Description	Q'ty	S.No.	I/C	REMARKS	Weight (kgf)	Weight (lb)
010	TD030-12004	CASE FRONT AXLE	1				30	66
020	16851-96010	PLUG	1				0.015	0.033
030	06331-35020	PLUG	1				0.068	0.1496
040	04724-00200	GASKET	1				0.003	0.0066
050	06331-45010	PLUG	1				0.02	0.044
060	04717-01000	WASHER WITH RUBBER	1				0.001	0.0022
070	04816-00490	O RING	1				0.005	0.011
080	04811-50700	O RING	1				0.002	0.0044
090	T0180-12070	PIPE BREATHER	1				0.015	0.033
100	09663-80725	TUBE FUEL	1				0.08	0.176
110	09318-88115	CLAMP HOSE	1				0.002	0.0044
120	TA150-13500	ASSY HOLDER FRONT	1				2.2	4.84
130	3A021-41680	BUSH DU	1				0.062	0.1364
140	06611-15010	NIPPLE GREASE	1				0.01	0.022
150	06312-10010	PLUG	1				0.007	0.0154
160	37410-56180	COLLAR THRUST	1				0.06	0.132
170	TA140-13600	ASSY HOLDER REAR	1				3.2	7.04
180	TA140-13640	BUSH	1				0.09	0.198
190	06613-10010	NIPPLE GREASE	1				0.006	0.0132
200	01574-61235	STUD	2				0.04	0.088
210	01574-51245	STUD	2				0.051	0.1122
220	04512-60120	WASHER SPRING	4				0.005	0.011
230	02176-50120	NUT	4				0.01	0.022
240	01133-51235	BOLT	2				0.043	0.0946
250	01133-51245	BOLT	2				0.055	0.121
260	01175-51645	BOLT	1				0.09	0.198
270	34070-13620	COLLAR THRUST	1				0.05	0.11
280	02176-50160	NUT	1				0.021	0.0462
290	04717-01610	WASHER WITH RUBBER	1				0.022	0.0484
300	44366-68380	BAND CORD	2				0.01	0.022

silverhorn.co.uk

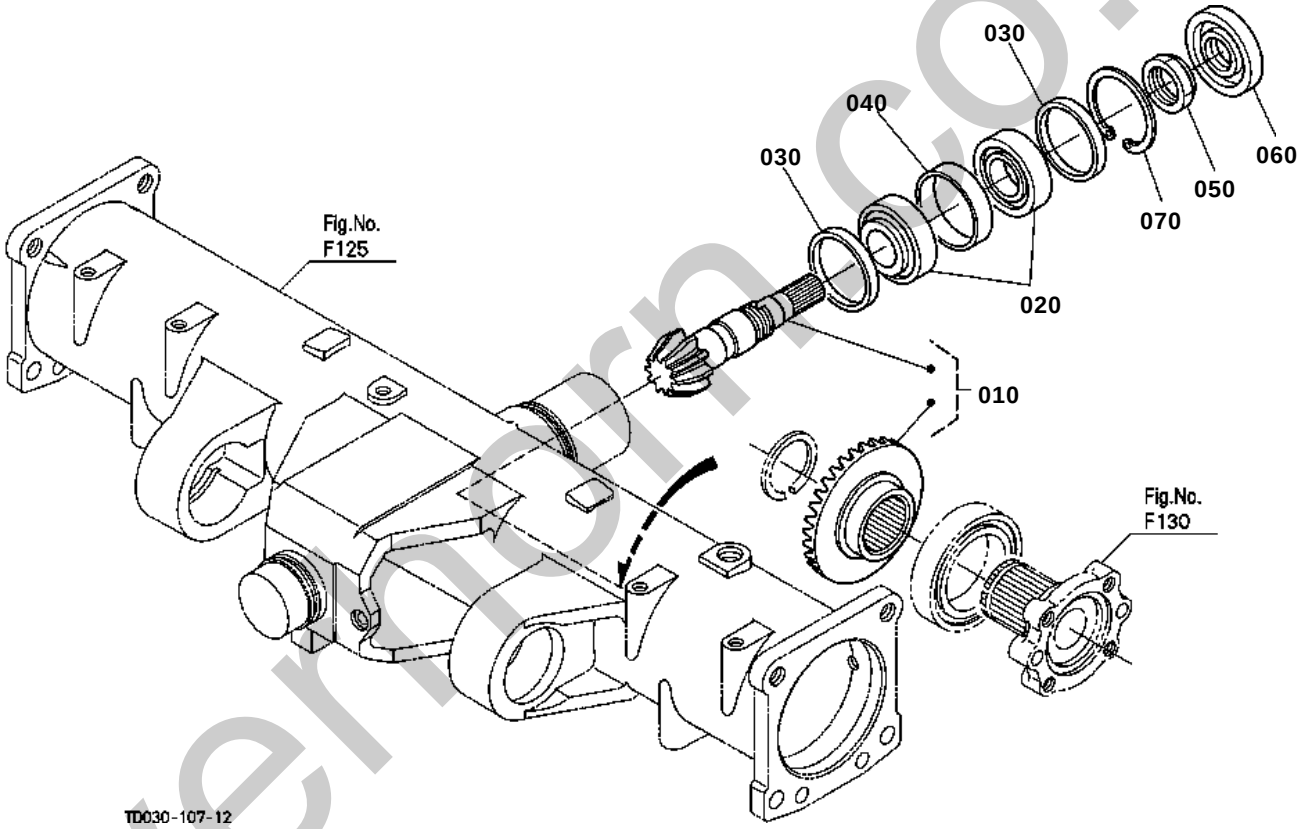

silvermorn.co.uk

BEVEL GEAR (FRONT)

↔ Interchangeable; ≠ not interchangeable; ← new for old; → old for new

REF.No	Part No.	Description	Q'ty	S.No.	I/C	REMARKS	Weight (kgf)	Weight (lb)
010	TD030-12010	ASSY GEAR BEVEL	1			9-23T	1.8	3.96
020	34070-12200	BEARING TAPER-ROLLER	2				0.305	0.671
030	34070-12060	COLLAR	2			5.8mm	0.015	0.033
030	34070-12070	COLLAR	2			5.9mm	0.015	0.033
030	34070-12080	COLLAR	2			6.0mm	0.015	0.033
030	34070-12090	COLLAR	2			6.1mm	0.015	0.033
030	34070-12100	COLLAR	2			6.2mm	0.02	0.044
040	34070-12130	COLLAR	1			9.8mm	0.03	0.066
040	34070-12140	COLLAR	1			9.9mm	0.02	0.044
040	3A221-43100	COLLAR	1			10.0mm	0.025	0.055
040	34070-12160	COLLAR	1			10.1mm	0.03	0.066
040	34070-12170	COLLAR	1			10.2mm	0.03	0.066
050	37410-56710	NUT	1				0.03	0.066
060	34070-12220	SEAL OIL	1				0.03	0.066
070	04611-00580	CIR CLIP INTERNAL	1				0.005	0.011

silverhorn.co.uk

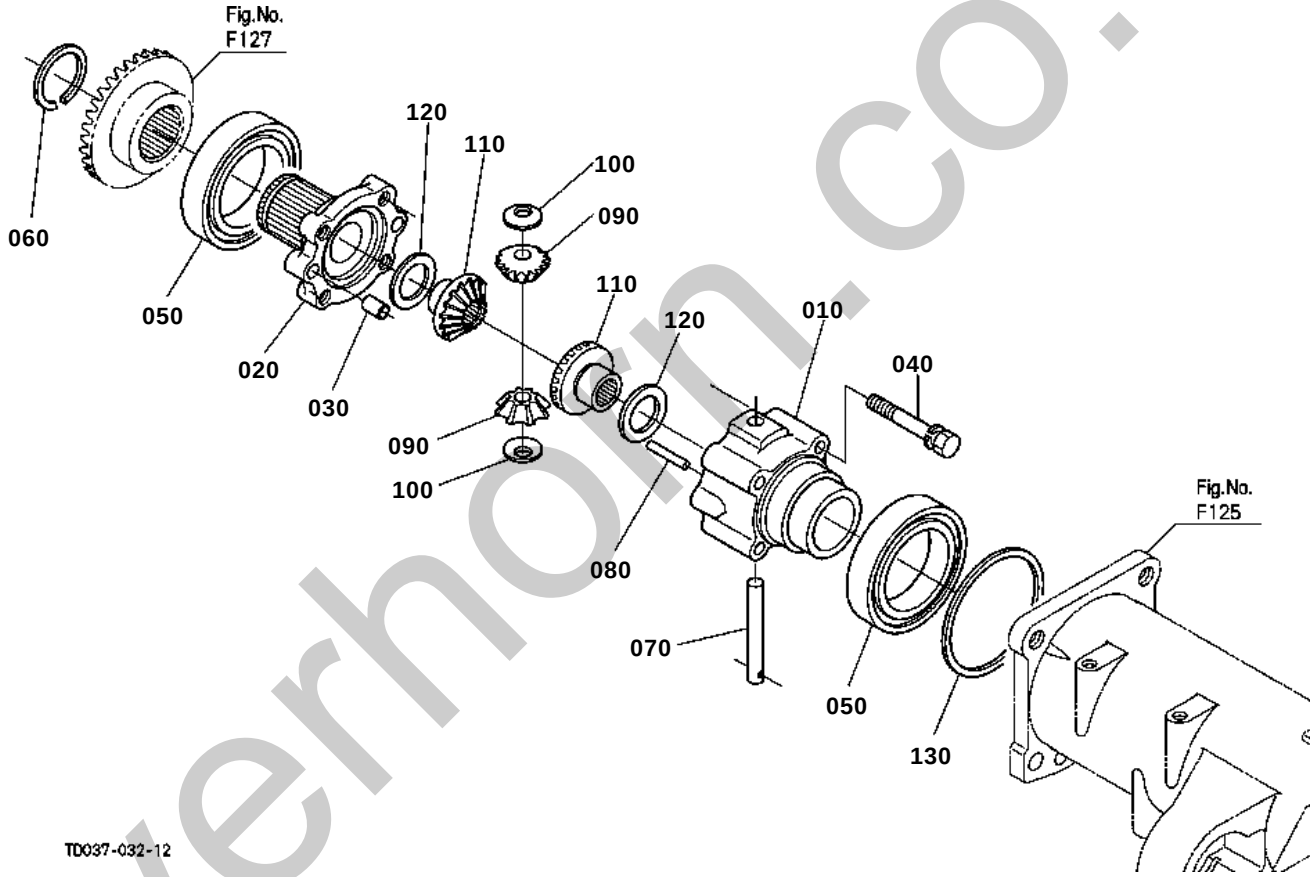

silverhorn.co.uk

DIFFERENTIAL (FRONT)

↔ Interchangeable; ≠ not interchangeable; ← new for old; → old for new

REF.No	Part No.	Description	Q'ty	S.No.	I/C	REMARKS	Weight (kgf)	Weight (lb)
010	34070-12250	CASE DIFF.	1				1.895	4.169
020	32751-12260	CASE DIFF.	1				0.9	1.98
030	05012-01020	PIN STRAIGHT	2				0.013	0.0286
040	01133-51075	BOLT	4				0.03	0.066
050	08101-06212	BEARING BALL	2				0.78	1.716
060	34070-12280	CIR CLIP EXTERNAL	1				0.005	0.011
070	31353-43333	SHAFT PINION	1				0.13	0.286
080	05012-00628	PIN STRAIGHT	1				0.006	0.0132
090	31353-43343	PINION DIFF.	2			12T	0.1	0.22
100	67121-56670	COLLAR PINION THRUST	2				0.006	0.0132
110	31353-43353	GEAR DIFF.SIDE	2			24T	0.19	0.418
120	67211-15160	SHIM	2			1.0mm	0.01	0.022
120	67211-15170	SHIM	2			0.8mm	0.008	0.0176
120	67211-15180	SHIM	2			1.2mm	0.01	0.022
120	31353-43360	SHIM	2			0.6mm	0.01	0.022
120	31353-43370	SHIM	2			0.4mm	0.01	0.022
130	34070-12300	SHIM	1			1.6mm	0.02	0.044
130	34070-12310	SHIM	1			1.8mm	0.03	0.066
130	34070-12320	SHIM	1			2.0mm	0.03	0.066
130	34070-12330	SHIM	1			2.2mm	0.03	0.066
130	34070-12340	SHIM	1			2.4mm	0.035	0.077

silverhorn.co.uk

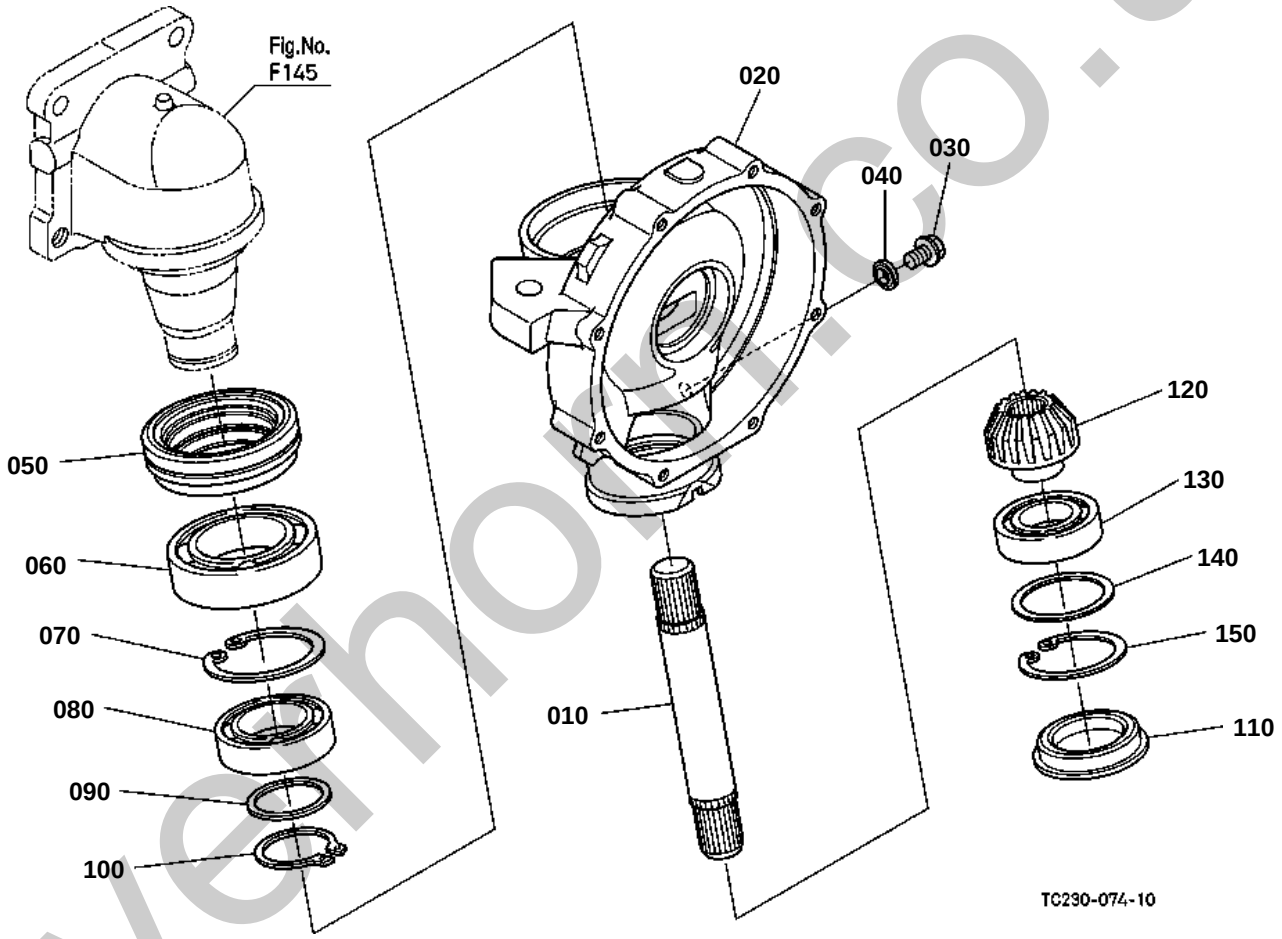

silverhorse.co.uk

FRONT AXLE CASE LH

↔ Interchangeable; ≠ not interchangeable; ← new for old; → old for new

REF.No	Part No.	Description	Q'ty	S.No.	I/C	REMARKS	Weight (kgf)	Weight (lb)
010	TD030-12722	SHAFT BEVEL GEAR	1				0.785	1.727
020	TD030-13020	CASE FRONT GEAR LH	1				8.7	19.14
030	06331-45010	PLUG	1				0.02	0.044
040	04717-01000	WASHER WITH RUBBER	1				0.001	0.0022
050	TC230-13040	SEAL OIL	1				0	0
060	TD060-12810	BEARING BALL	1				0.001	0.0022
070	04611-00800	CIR CLIP INTERNAL	1				0.02	0.044
080	TD030-12820	BEARING BALL	1				0.265	0.583
090	TA140-12080	SHIM	1			0.8mm	0.007	0.0154
090	TA140-12100	SHIM	1			1.0mm	0.008	0.0176
090	TA140-12120	SHIM	1			1.2mm	0.01	0.022
090	TA140-12140	SHIM	1			1.4mm	0.011	0.0242
090	TA140-12160	SHIM	1			1.6mm	0.013	0.0286
100	04612-00500	CIR CLIP EXTERNAL	1				0.009	0.0198
110	34070-13100	PLUG	1				0.06	0.132
120	TD030-13200	GEAR BEVEL	1			11T	0.475	1.045
130	08101-06207	BEARING BALL	1				0.282	0.6204
140	37410-57160	SHIM	1			1.0mm	0.01	0.022
140	37410-57170	SHIM	1			1.2mm	0.011	0.0242
140	34070-12610	SHIM	1			1.4mm	0.015	0.033
140	34070-12620	SHIM	1			1.6mm	0.015	0.033
140	34070-12630	SHIM	1			1.8mm	0.015	0.033
140	34070-12640	SHIM	1			2.0mm	0.02	0.044
140	34070-12650	SHIM	1			2.2mm	0.02	0.044
150	04611-00720	CIR CLIP INTERNAL	1				0.018	0.0396

silverhorn.co.uk

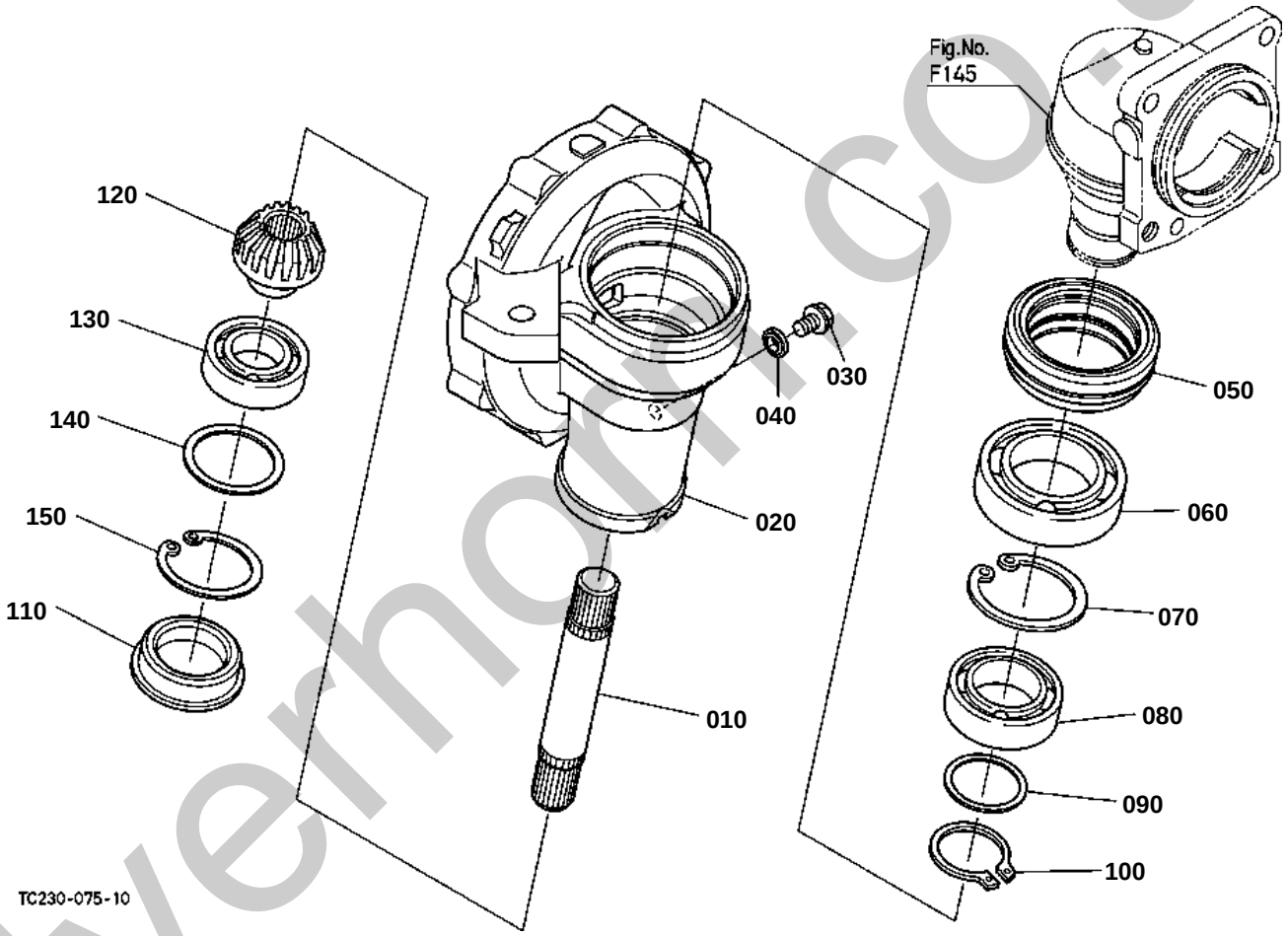

silverhorn.co.uk

FRONT AXLE CASE RH

↔ Interchangeable; ≠ not interchangeable; ← new for old; → old for new

REF.No	Part No.	Description	Q'ty	S.No.	I/C	REMARKS	Weight (kgf)	Weight (lb)
010	TD030-12722	SHAFT BEVEL GEAR	1				0.785	1.727
020	TD030-13010	CASE FRONT GEAR RH	1				8.7	19.14
030	06331-45010	PLUG	1				0.02	0.044
040	04717-01000	WASHER WITH RUBBER	1				0.001	0.0022
050	TC230-13040	SEAL OIL	1				0	0
060	TD060-12810	BEARING BALL	1				0.001	0.0022
070	04611-00800	CIR CLIP INTERNAL	1				0.02	0.044
080	TD030-12820	BEARING BALL	1				0.265	0.583
090	TA140-12080	SHIM	1			0.8mm	0.007	0.0154
090	TA140-12100	SHIM	1			1.0mm	0.008	0.0176
090	TA140-12120	SHIM	1			1.2mm	0.01	0.022
090	TA140-12140	SHIM	1			1.4mm	0.011	0.0242
090	TA140-12160	SHIM	1			1.6mm	0.013	0.0286
100	04612-00500	CIR CLIP EXTERNAL	1				0.009	0.0198
110	34070-13100	PLUG	1				0.06	0.132
120	TD030-13200	GEAR BEVEL	1			11T	0.475	1.045
130	08101-06207	BEARING BALL	1				0.282	0.6204
140	37410-57160	SHIM	1			1.0mm	0.01	0.022
140	37410-57170	SHIM	1			1.2mm	0.011	0.0242
140	34070-12610	SHIM	1			1.4mm	0.015	0.033
140	34070-12620	SHIM	1			1.6mm	0.015	0.033
140	34070-12630	SHIM	1			1.8mm	0.015	0.033
140	34070-12640	SHIM	1			2.0mm	0.02	0.044
140	34070-12650	SHIM	1			2.2mm	0.02	0.044
150	04611-00720	CIR CLIP INTERNAL	1				0.018	0.0396

silverhorn.co.uk

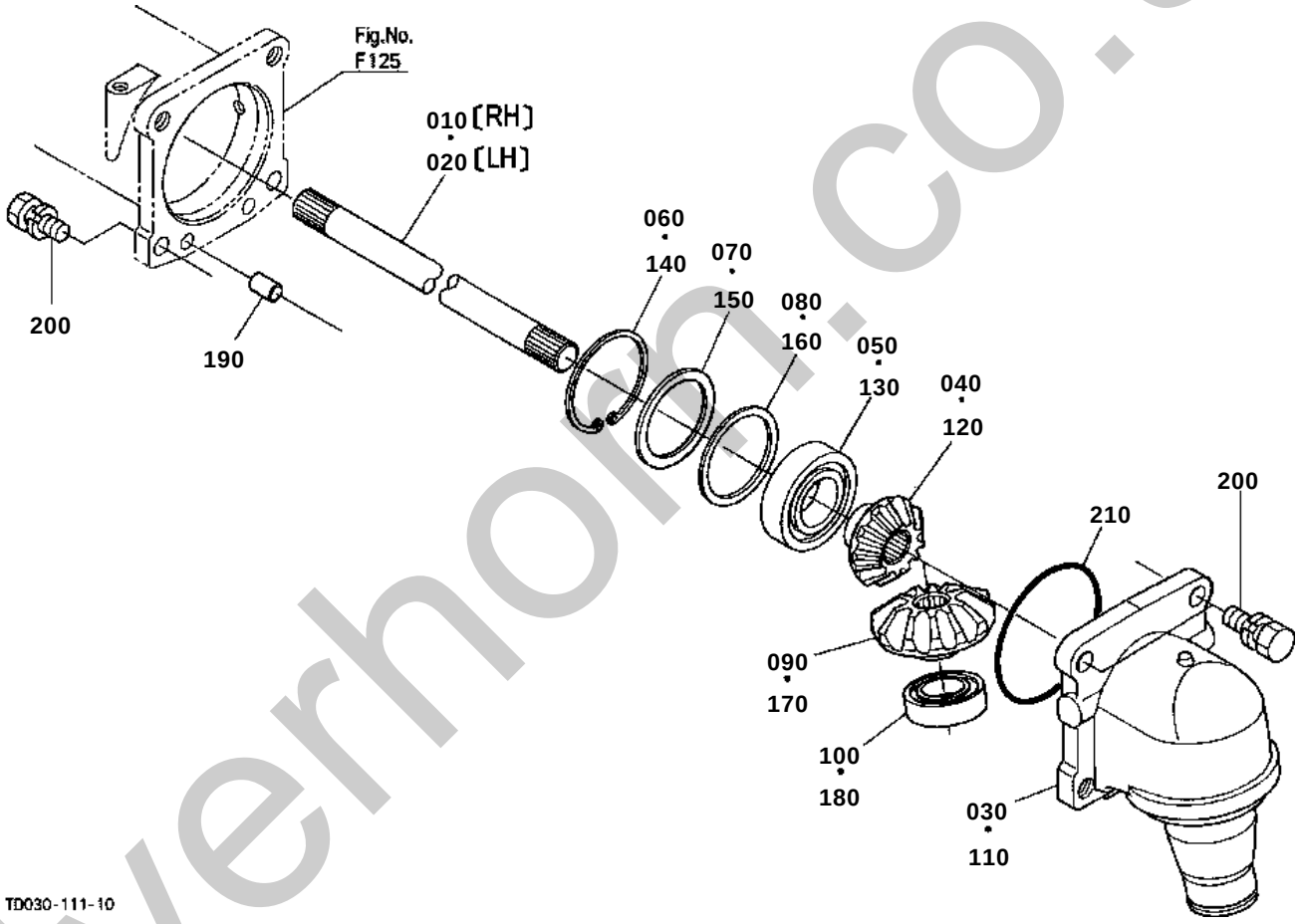

silverhorn.co.uk

DIFFERENTIAL GEAR SHAFT

↔ Interchangeable; ≠ not interchangeable; ← new for old; → old for new

REF.No	Part No.	Description	Q'ty	S.No.	I/C	REMARKS	Weight (kgf)	Weight (lb)
010	T0070-12450	SHAFT YOKE LH	1			RH	1.77	3.894
020	T0070-12460	SHAFT YOKE RH	1			LH	1.1	2.42
030	TA140-12800	CASE BEVEL GEAR	1				4.4	9.68
040	TA040-12520	GEAR BEVEL	1			11T	0.37	0.814
050	TD030-12540	BEARING BALL	1				0.45	0.99
060	04611-00800	CIR CLIP INTERNAL	1				0.02	0.044
070	TA040-12702	COLLAR	1				0.035	0.077
080	31353-43750	SHIM	1			0.4mm	0.008	0.0176
080	31353-43760	SHIM	1			0.6mm	0.01	0.022
080	31353-43770	SHIM	1			0.8mm	0.015	0.033
080	31353-43780	SHIM	1			1.0mm	0.014	0.0308
080	31353-43790	SHIM	1			1.2mm	0.015	0.033
090	TA040-12530	GEAR BEVEL	1			16T	0.67	1.474
100	08101-06207	BEARING BALL	1				0.282	0.6204
110	TA140-12800	CASE BEVEL GEAR	1				4.4	9.68
120	TA040-12520	GEAR BEVEL	1			11T	0.37	0.814
130	TD030-12540	BEARING BALL	1				0.45	0.99
140	04611-00800	CIR CLIP INTERNAL	1				0.02	0.044
150	TA040-12702	COLLAR	1				0.035	0.077
160	31353-43750	SHIM	1			0.4mm	0.008	0.0176
160	31353-43760	SHIM	1			0.6mm	0.01	0.022
160	31353-43770	SHIM	1			0.8mm	0.015	0.033
160	31353-43780	SHIM	1			1.0mm	0.014	0.0308
160	31353-43790	SHIM	1			1.2mm	0.015	0.033
170	TA040-12530	GEAR BEVEL	1			16T	0.67	1.474
180	08101-06207	BEARING BALL	1				0.282	0.6204
190	31353-43880	PIN STRAIGHT	4				0.02	0.044
200	01133-51435	BOLT	8				0.001	0.0022
210	04811-51050	O RING	2				0.003	0.0066

silverhorn.co.uk

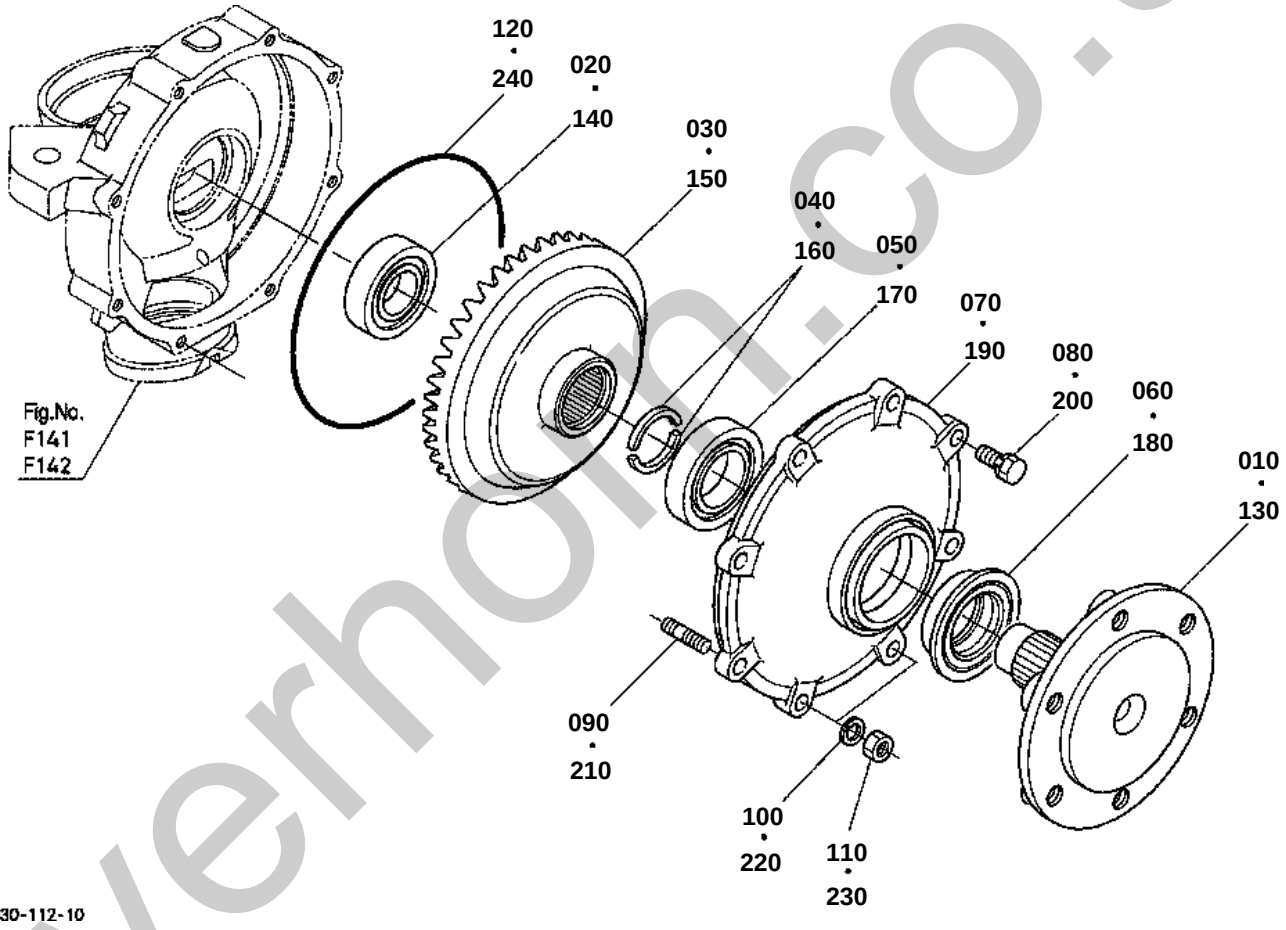

silverholm.co.uk

FRONT AXLE

↔ Interchangeable; ≠ not interchangeable; ← new for old; → old for new

REF.No	Part No.	Description	Q'ty	S.No.	I/C	REMARKS	Weight (kgf)	Weight (lb)
010	34070-13330	AXLE FRONT	1				3.5	7.7
020	TA140-13140	BEARING BALL	1				0.25	0.55
030	TD030-13210	GEAR BEVEL	1			42T	5.4	11.88
040	34070-13350	COLLAR	2				0.01	0.022
050	TD030-13150	BEARING BALL	1				0.36	0.792
060	34070-13370	SEAL OIL	1				0.1	0.22
070	TA040-13133	COVER FRONT AXLE	1				3.05	6.71
080	01123-50825	BOLT	6				0.013	0.0286
090	01513-60825	STUD	2				0.012	0.0264
100	04512-60080	WASHER SPRING	2				0.002	0.0044
110	02156-50080	NUT	2				0.004	0.0088
120	31353-44130	O RING	1				0.01	0.022
130	34070-13330	AXLE FRONT	1				3.5	7.7
140	TA140-13140	BEARING BALL	1				0.25	0.55
150	TD030-13210	GEAR BEVEL	1			42T	5.4	11.88
160	34070-13350	COLLAR	2				0.01	0.022
170	TD030-13150	BEARING BALL	1				0.36	0.792
180	34070-13370	SEAL OIL	1				0.1	0.22
190	TA040-13133	COVER FRONT AXLE	1				3.05	6.71
200	01123-50825	BOLT	6				0.013	0.0286
210	01513-60825	STUD	2				0.012	0.0264
220	04512-60080	WASHER SPRING	2				0.002	0.0044
230	02156-50080	NUT	2				0.004	0.0088
240	31353-44130	O RING	1				0.01	0.022

silverhorn.co.uk

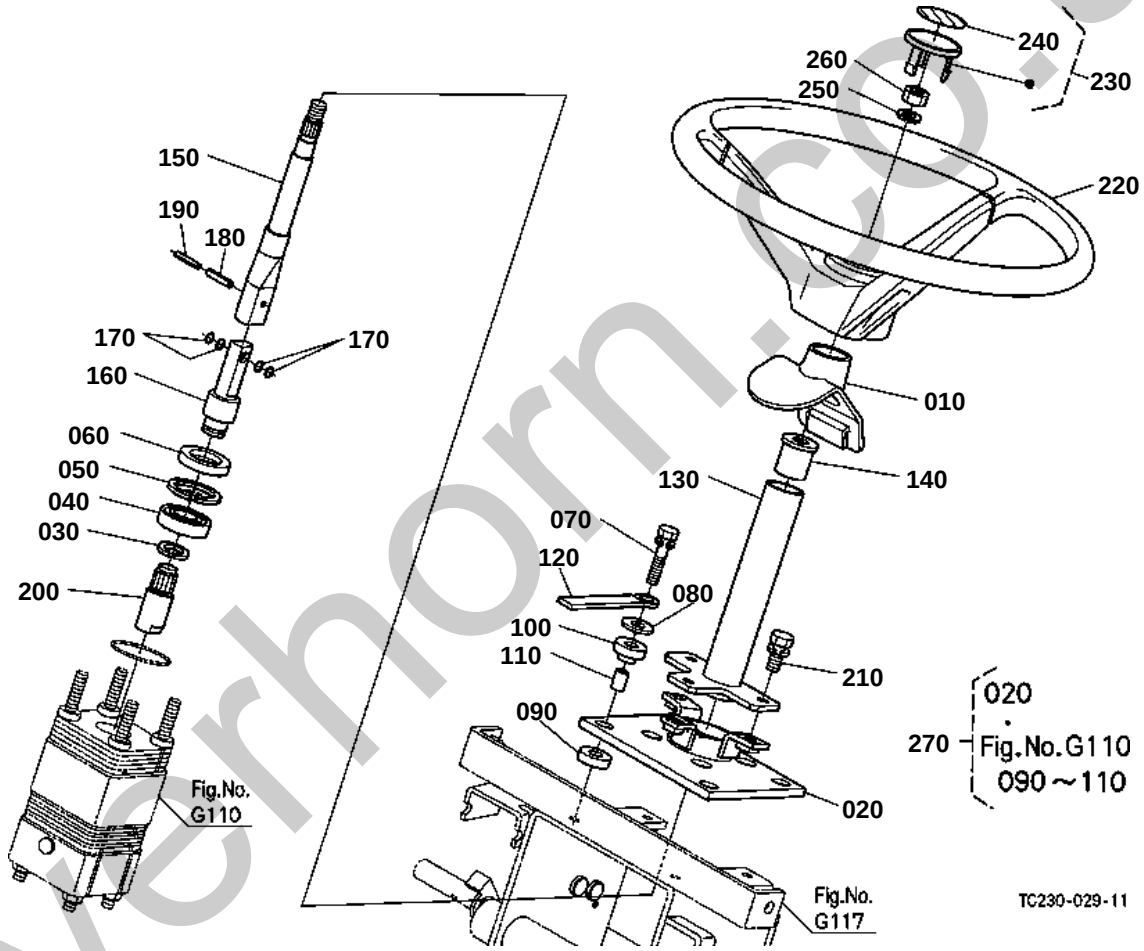

silverhorn.co.uk

STEERING HANDLE

↔ Interchangeable; ≠ not interchangeable; ← new for old; → old for new

REF.No	Part No.	Description	Q'ty	S.No.	I/C	REMARKS	Weight (kgf)	Weight (lb)
010	TC230-16860	COVER	1				0	0
020	TC230-43620	POST STEERING	1			OLD PART ORDER BY REF.No.270	0	0
020	TC230-43623	POST STEERING	1		1	NEW PART	0	0
030	04612-00200	CIR CLIP EXTERNAL	1				0.001	0.0022
040	TD060-18250	BEARING BALL	1				0.065	0.143
050	04611-00420	CIR CLIP INTERNAL	1				0.006	0.0132
060	09500-25428	SEAL OIL	1				0.013	0.0286
070	01023-50635	BOLT	4				0.01	0.022
080	04015-60060	WASHER PLAIN	4				0.005	0.011
090	TC030-46132	CUSHION	4				0.004	0.0088
100	TC030-63222	CUSHION LOWER	4				0.004	0.0088
110	TC030-63210	COLLAR	4				0.007	0.0154
120	13824-67580	CLAMP CORD	1				0.006	0.0132
130	TC230-43610	POST STEERING	1				0	0
140	TC030-41340	BUSH	1				0.015	0.033
150	TC030-43680	SHAFT STEERING	1				0.335	0.737
160	TC230-43690	SHAFT STEERING	1				0	0
170	04817-00060	O RING	4				0.002	0.0044
180	05411-00522	PIN SPRING	1				0.002	0.0044
190	05411-00322	PIN SPRING	1				0.001	0.0022
200	TC230-18240	SHAFT JOINT	1				0	0
210	01123-50820	BOLT	3				0.011	0.0242
220	TD060-18110	WHEEL STEERING	1				2.5	5.5
230	3F740-62583	PAD STEERING	1				0.02	0.044
240	3F740-62802	LABEL PAD	1				0.006	0.0132
250	04512-60120	WASHER SPRING	1				0.005	0.011
260	02176-50120	NUT	1				0.01	0.022
270	TC230-94360	ASSY POST STEERING	1			OPTION	0	0

silvermorn.co.uk

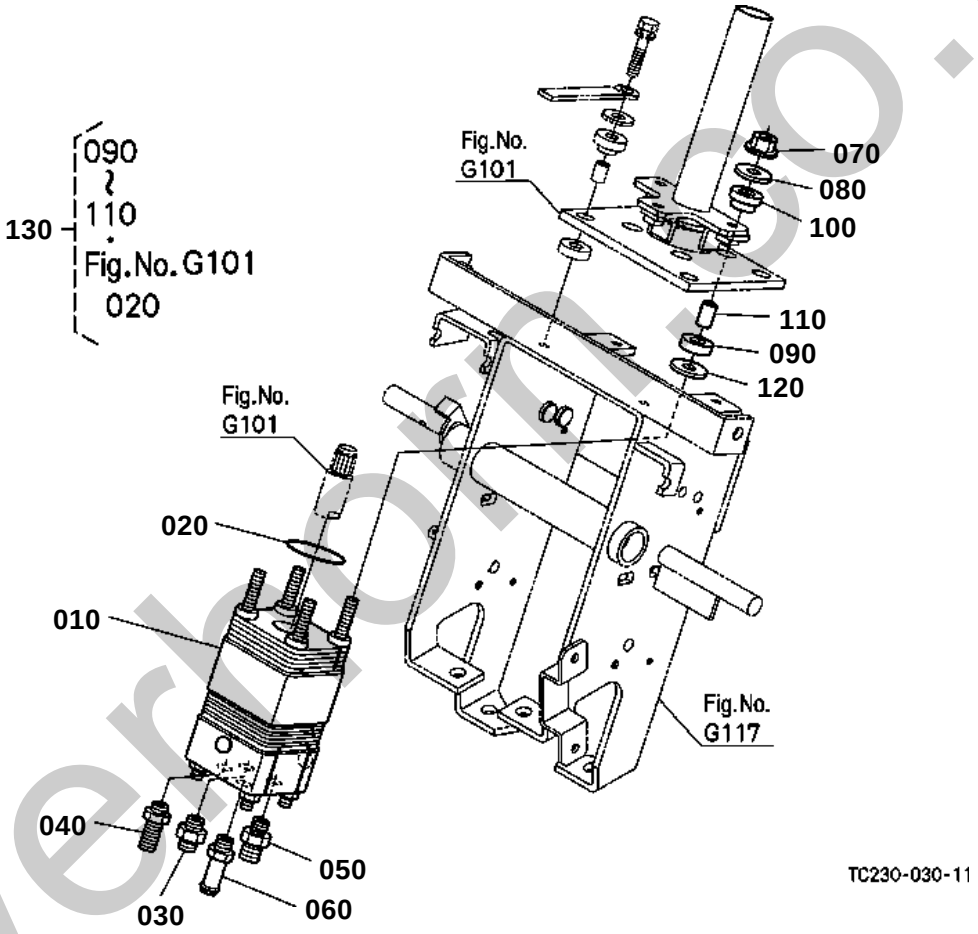

silverhorn.co.uk

↔ Interchangeable; ≠ not interchangeable; ← new for old; → old for new

REF.No	Part No.	Description	Q'ty	S.No.	I/C	REMARKS	Weight (kgf)	Weight (lb)
010	TC230-37000	CONTROLLER	1				0	0
020	04816-06420	O RING	1				0.001	0.0022
030	TD060-37320	JOINT PS CYLINDER	1				0.035	0.077
040	TD060-37340	JOINT PS CYLINDER	1				0.055	0.121
050	TC230-37300	JOINT P.S.	1				0	0
060	TD060-37330	JOINT RETURN	1				0.035	0.077
070	16429-92010	NUT	4				0.007	0.0154
080	04013-60080	WASHER PLAIN	4				0.002	0.0044
090	TC030-46132	CUSHION	4			OLD PART ORDER BY REF.No.130	0.004	0.0088
090	TC230-48330	CUSHION	4		1	NEW PART	0	0
100	TC050-29950	CUSHION	4			OLD PART ORDER BY REF.No.130	0.003	0.0066
100	TC230-48320	CUSHION	4		1	NEW PART	0	0
110	TC230-48310	COLLAR	4			OLD PART ORDER BY REF.No.130	0	0
110	TC230-48312	COLLAR	4		1	NEW PART	0	0
120	04015-60080	WASHER PLAIN	4				0.01	0.022
130	TC230-94360	ASSY POST STEERING	1			OPTION	0	0

silverhorn.co.uk

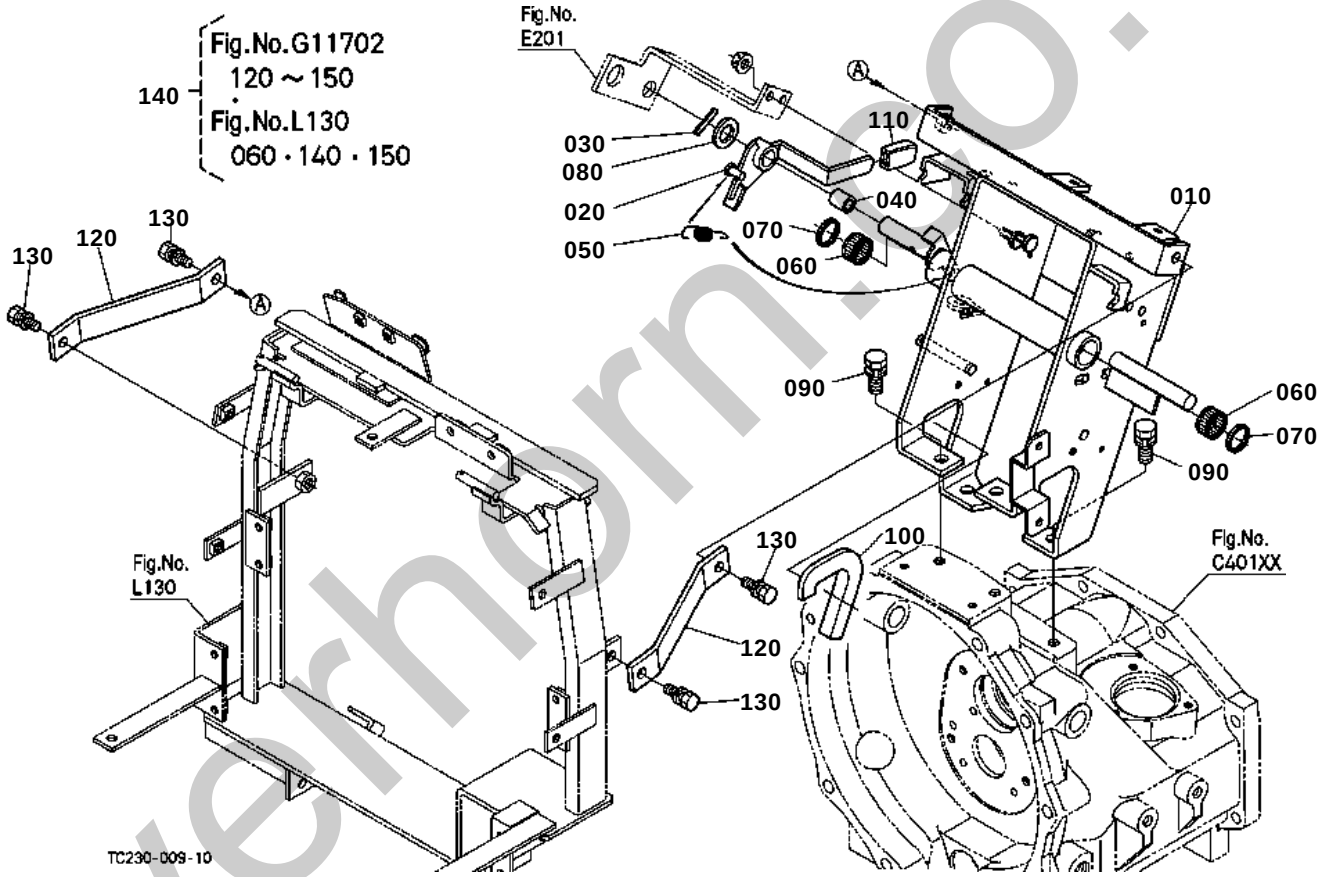

silverhorn.co.uk

STEERING SUPPORT [OLD TYPE]

↔ Interchangeable; ≠ not interchangeable; ← new for old; → old for new

REF.No	Part No.	Description	Q'ty	S.No.	I/C	REMARKS	Weight (kgf)	Weight (lb)
010	TC230-45680	SUPPORT STEERING	1				0	0
020	TC030-44414	LOCK PARKING LEVER	1				0.195	0.429
030	05411-00532	PIN SPRING	1				0.003	0.0066
040	08511-01820	BUSH	1				0.009	0.0198
050	TC030-44420	SPRING	1				0	0
060	34070-44360	BEARING NEEDLE	2				0.012	0.0264
070	34070-44140	SEAL OIL	2				0.005	0.011
080	04011-50180	WASHER PLAIN	1				0.012	0.0264
090	01133-51225	BOLT	4				0.035	0.077
100	TC030-43330	GROMMET	1				0.034	0.0748
110	TA140-43560	GRIP	1				0.022	0.0484
120	TC230-45690	PLATE STEER.SUPPORT	2			ORDER BY REF.No.140	0	0
130	01133-51025	BOLT	4				0.023	0.0506
140	TC230-94300	ASSY SUPPORT BONNET	1			OPTION	0	0

silverhorn.co.uk

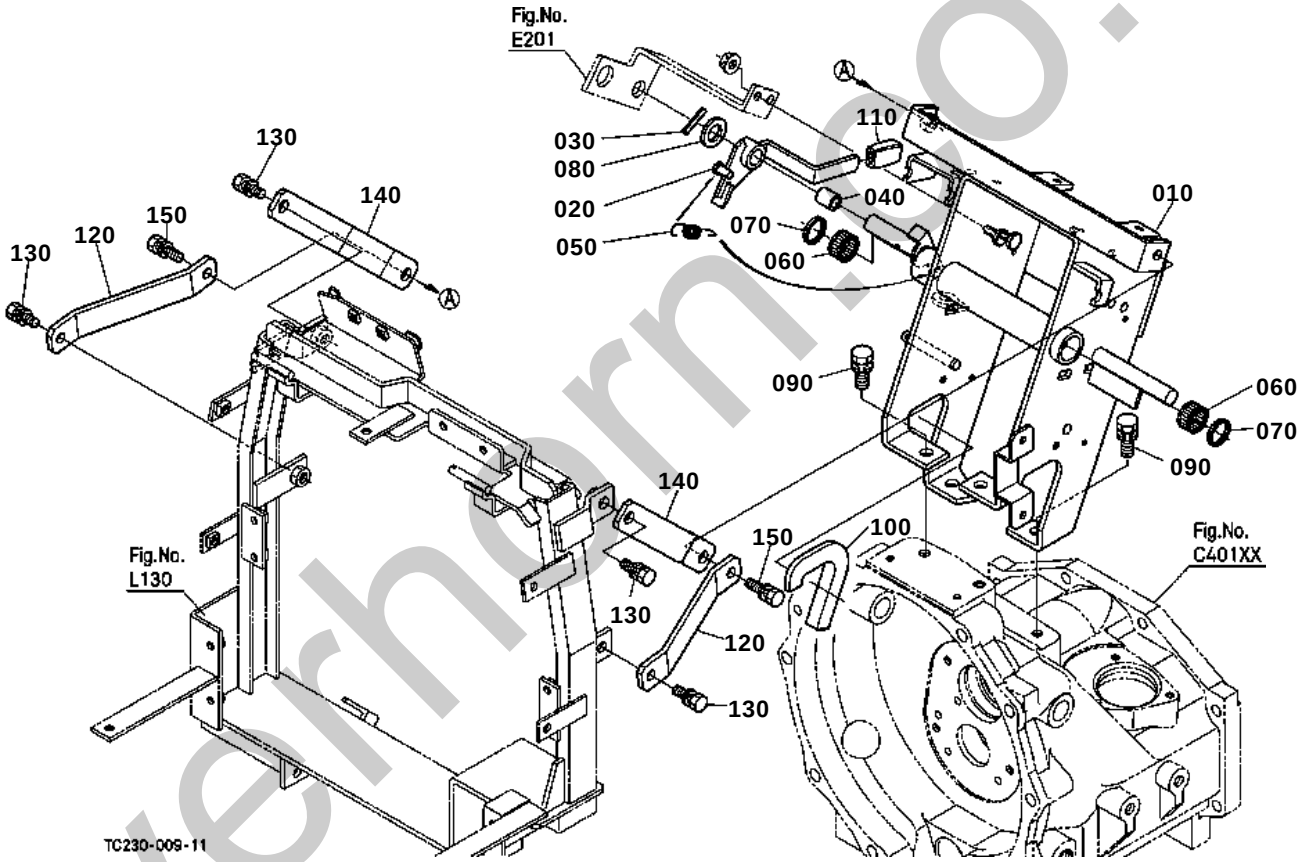

silverhorn.co.uk

STEERING SUPPORT [NEW TYPE]

↔ Interchangeable; ≠ not interchangeable; ← new for old; → old for new

REF.No	Part No.	Description	Q'ty	S.No.	I/C	REMARKS	Weight (kgf)	Weight (lb)
010	TC230-45680	SUPPORT STEERING	1				0	0
020	TC030-44414	LOCK PARKING LEVER	1				0.195	0.429
030	05411-00532	PIN SPRING	1				0.003	0.0066
040	08511-01820	BUSH	1				0.009	0.0198
050	TC030-44420	SPRING	1				0	0
060	34070-44360	BEARING NEEDLE	2				0.012	0.0264
070	34070-44140	SEAL OIL	2				0.005	0.011
080	04011-50180	WASHER PLAIN	1				0.012	0.0264
090	01133-51225	BOLT	4				0.035	0.077
100	TC030-43330	GROMMET	1				0.034	0.0748
110	TA140-43560	GRIP	1				0.022	0.0484
120	TC230-45693	PLATE STEER.SUPPORT	2				0	0
130	01133-51025	BOLT	4				0.023	0.0506
140	TC230-45670	PLATE STEER.SUPPORT	2				0	0
150	01133-51030	BOLT	2				0.025	0.055

silverhorn.co.uk

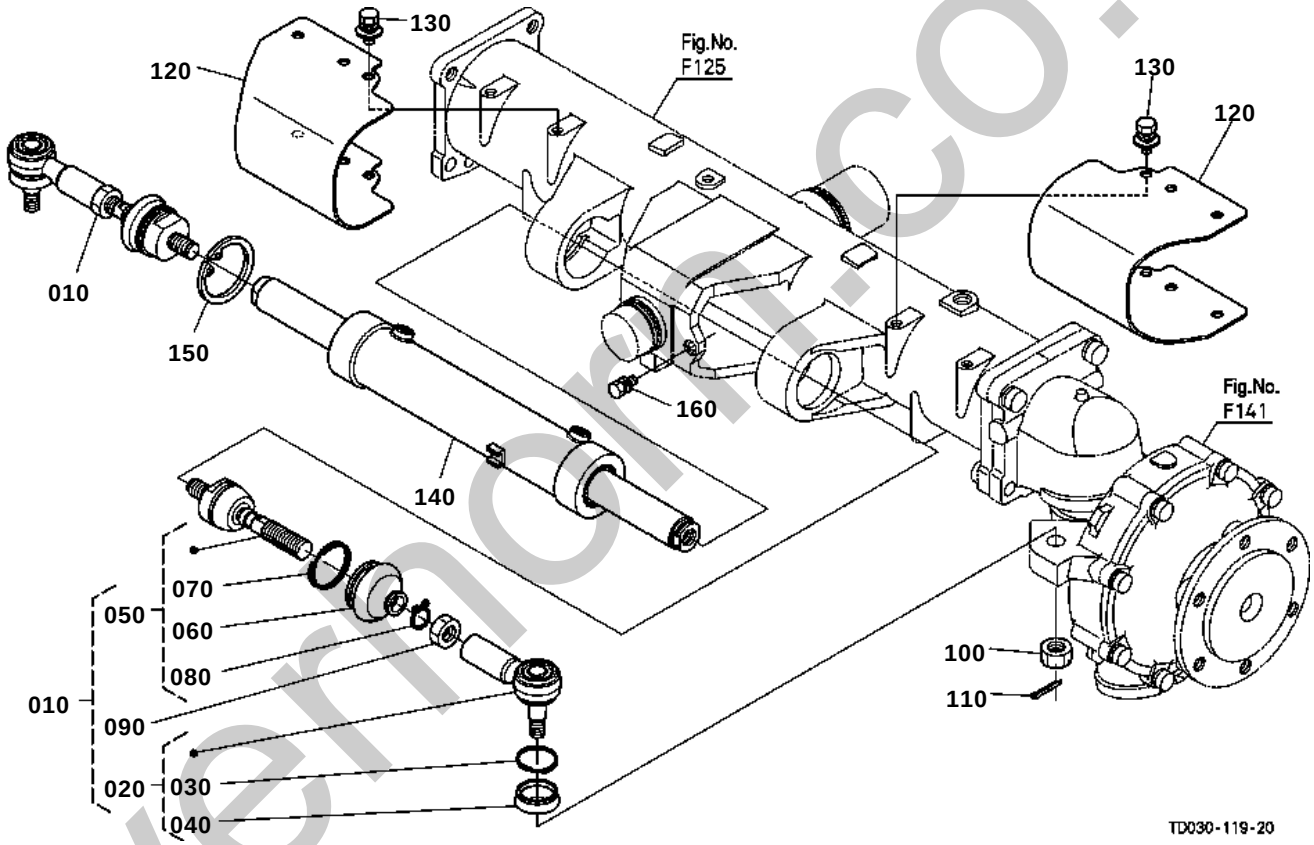

silvermoor.co.uk

STEERING CYLINDER

↔ Interchangeable; ≠ not interchangeable; ← new for old; → old for new

REF.No	Part No.	Description	Q'ty	S.No.	I/C	REMARKS	Weight (kgf)	Weight (lb)
010	TD030-13700	ASSY ROD TIE	2				1.24	2.728
020	TD030-13710	END TIE ROD	2				0.565	1.243
030	35270-12660	CLIP	2				0.005	0.011
040	32580-44780	COVER DUST	2				0.01	0.022
050	35080-44662	JOINT TIE ROD	2				0.65	1.43
060	35080-44680	COVER DUST	2				0.029	0.0638
070	35533-62860	RING SET	2				0.005	0.011
080	35080-44690	CLIP	2				0.002	0.0044
090	02172-50200	NUT	2				0.03	0.066
100	36330-62750	NUT	2				0.022	0.0484
110	05511-50328	PIN SPLIT	2				0.002	0.0044
120	TD030-14313	COVER	2				0.635	1.397
130	01135-61020	BOLT	6				0.015	0.033
140	TD030-37800	CYLINDER HYDRAULIC	1				0.001	0.0022
150	04611-00680	CIR CLIP INTERNAL	1				0.016	0.0352
160	01123-60816	BOLT	1				0.01	0.022

silverhorn.co.uk

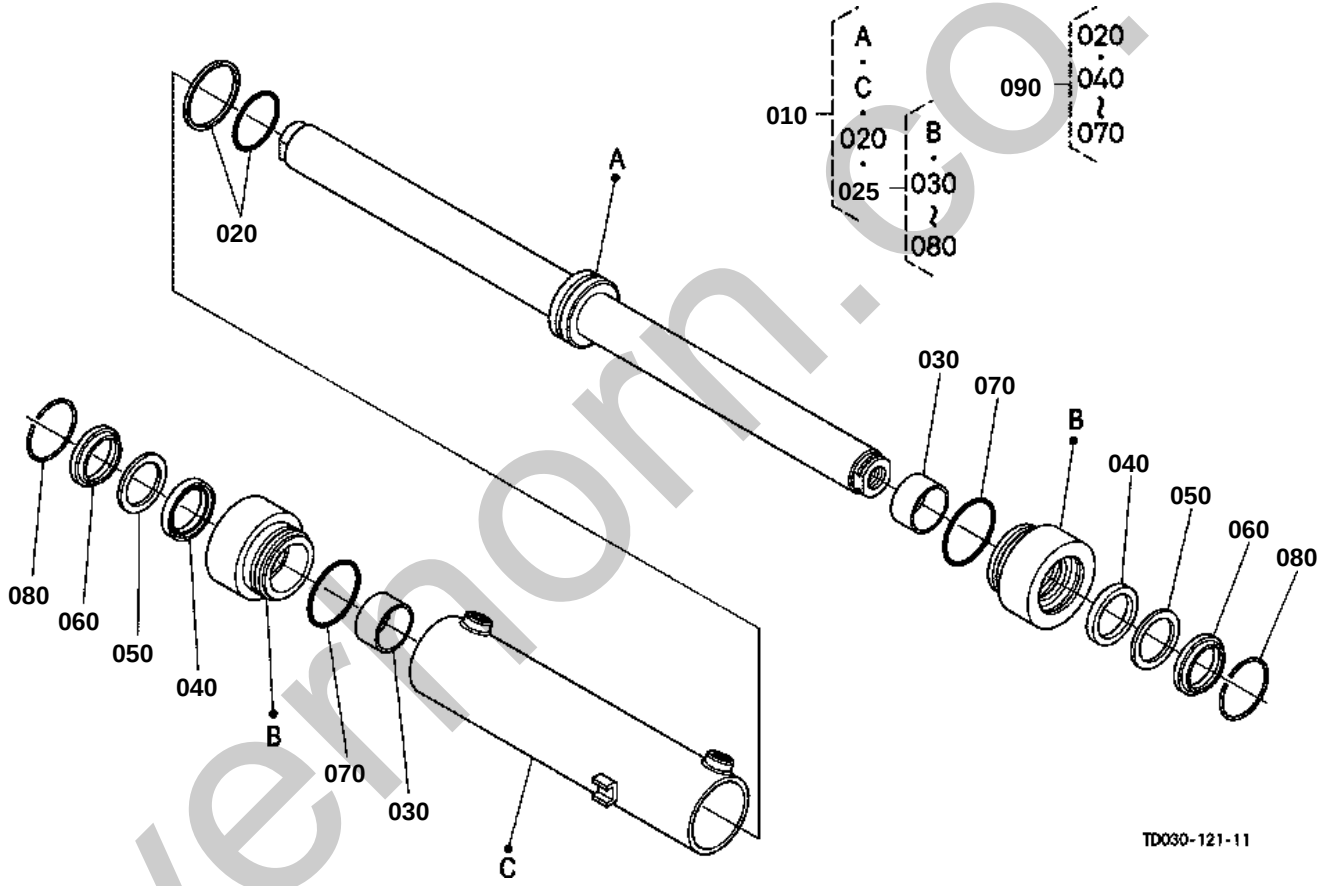

silvermorn.co.uk

↔ Interchangeable; ≠ not interchangeable; ← new for old; → old for new

REF.No	Part No.	Description	Q'ty	S.No.	I/C	REMARKS	Weight (kgf)	Weight (lb)
010	TD030-37800	CYLINDER HYDRAULIC	1				0.001	0.0022
020	TD060-37570	SEAL PISTON	1				0.01	0.022
025	TD060-37840	ASSY END ROD	2				0.7	1.54
030	TD060-37920	BUSH	2				0.032	0.0704
040	TD060-37560	SEAL ROD	2				0.005	0.011
050	TD060-37930	RING BACK UP	2				0.005	0.011
060	TD060-37580	SEAL DUST	2				0.016	0.0352
070	TD060-37940	O RING	2				0.002	0.0044
080	TD060-37960	RING SNAP	2				0.003	0.0066
090	TD060-37950	KIT SEAL	1			OPTION	0.064	0.1408

silverhorn.co.uk

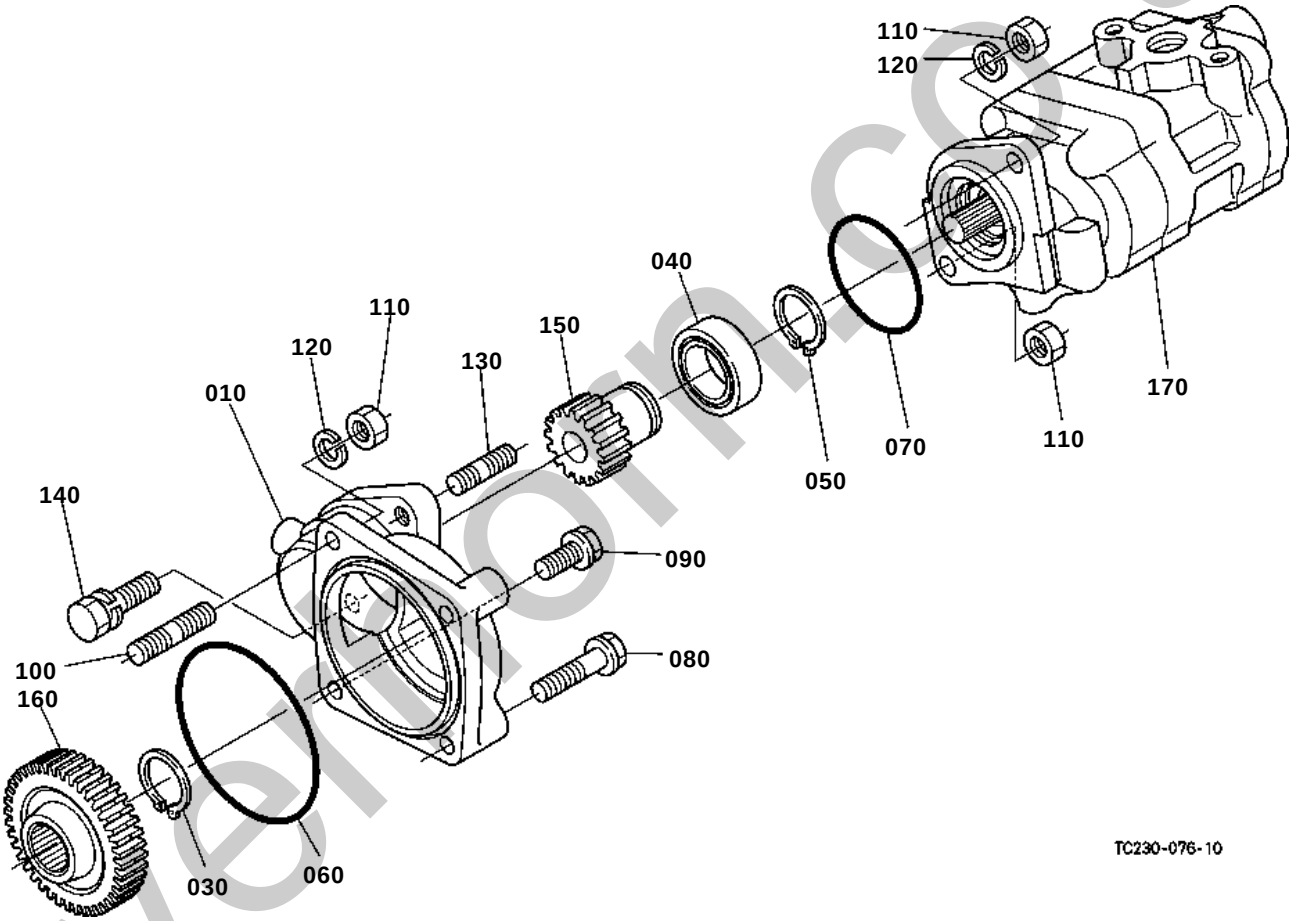

silverform.co.uk

HYDRAULIC PUMP

↔ Interchangeable; ≠ not interchangeable; ← new for old; → old for new

REF.No	Part No.	Description	Q'ty	S.No.	I/C	REMARKS	Weight (kgf)	Weight (lb)
010	34070-33612	HOLDER PUMP	1				0.375	0.825
020	99999-99999	BLANK	0				0	0
030	15471-95360	CIR CLIP EXTERNAL	1				0.004	0.0088
040	TD060-36850	BEARING BALL	1				0.19	0.418
050	04612-00250	CIR CLIP EXTERNAL	1				0.002	0.0044
060	04811-10850	O RING	1				0.002	0.0044
070	T1060-36620	O RING	1				0.001	0.0022
080	01754-50840	BOLT FLANGE	2				0.02	0.044
090	01754-50820	BOLT FLANGE	1				0.015	0.033
100	38240-36330	STUD	1				0.008	0.0176
110	02156-50080	NUT	3				0.004	0.0088
120	04512-60080	WASHER SPRING	2				0.002	0.0044
130	01513-60820	STUD	1				0.015	0.033
140	01123-50835	BOLT	1				0.02	0.044
150	T1062-36820	GEAR PUMP DRIVE	1			17T	0.15	0.33
160	TC230-36810	GEAR PUMP DRIVE	1			41T	0	0
170	T1150-36403	ASSY PUMP HYDRAULIC	1				2.75	6.05

silverhorn.co.uk

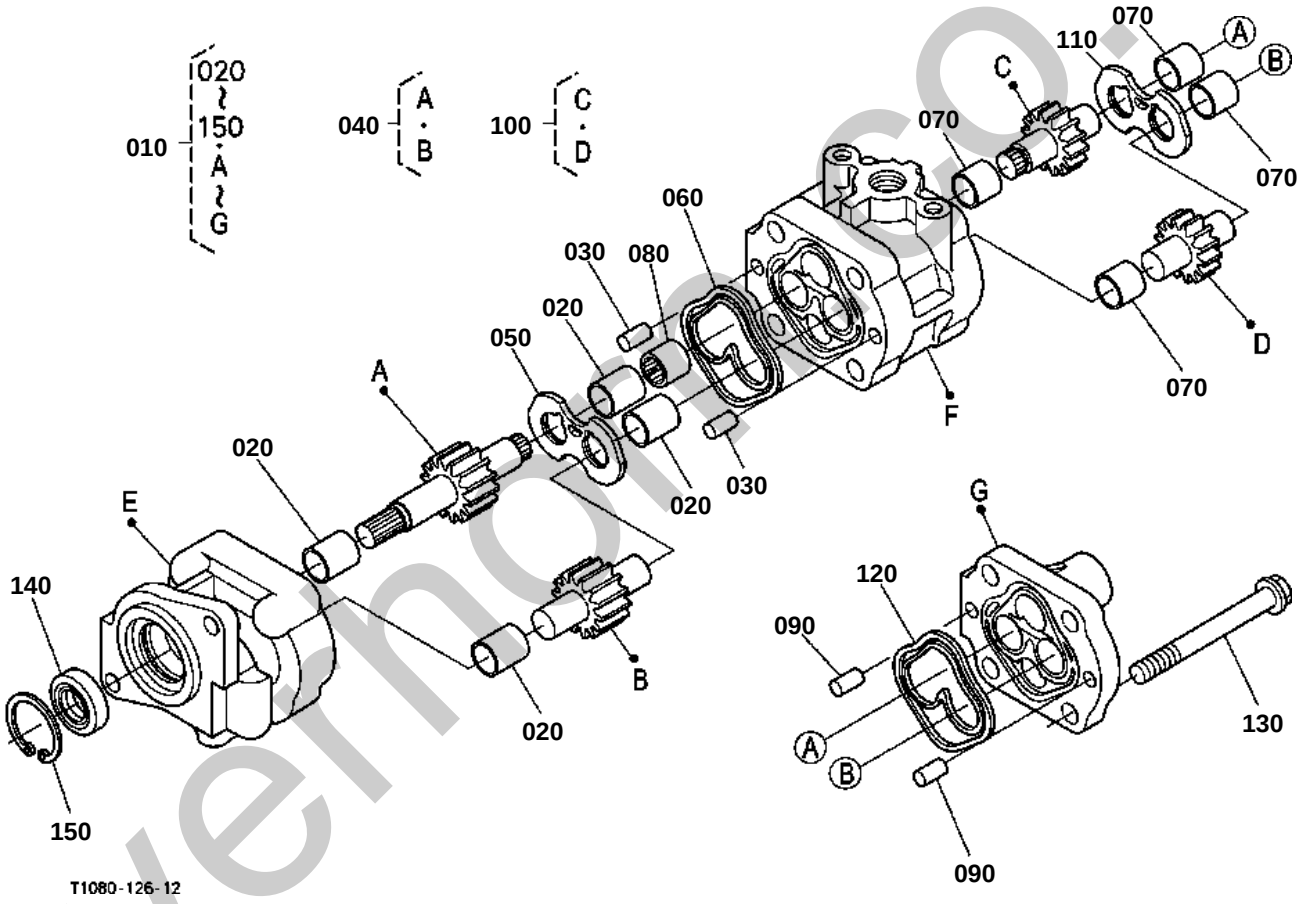

silverhomes.co.uk

↔ Interchangeable; ≠ not interchangeable; ← new for old; → old for new

REF.No	Part No.	Description	Q'ty	S.No.	I/C	REMARKS	Weight (kgf)	Weight (lb)
010	T1150-36403	ASSY PUMP HYDRAULIC	1				2.75	6.05
020	K3511-36762	BUSH	4				0.01	0.022
030	05012-00814	PIN STRAIGHT	2				0.006	0.0132
040	T1060-36450	COMP.GEAR HYD.PUMP	1				0.33	0.726
050	6C140-36350	PLATE SIDE	1				0.05	0.11
060	6C040-36344	RING DOUBLE	1				0.003	0.0066
070	6A100-37232	BUSH	4				0.005	0.011
080	6A100-37430	COUPLING	1				0.01	0.022
090	05012-00814	PIN STRAIGHT	2				0.006	0.0132
100	T1060-36550	COMP.GEAR HYD.PUMP	1				0.2	0.44
110	6C140-36350	PLATE SIDE	1				0.05	0.11
120	6C040-36344	RING DOUBLE	1				0.003	0.0066
130	01754-51090	BOLT FLANGE	4				0.05	0.11
140	31381-76390	SEAL OIL	1				0.01	0.022
150	04611-00300	CIR CLIP INTERNAL	1				0.004	0.0088

silverhorn.co.uk

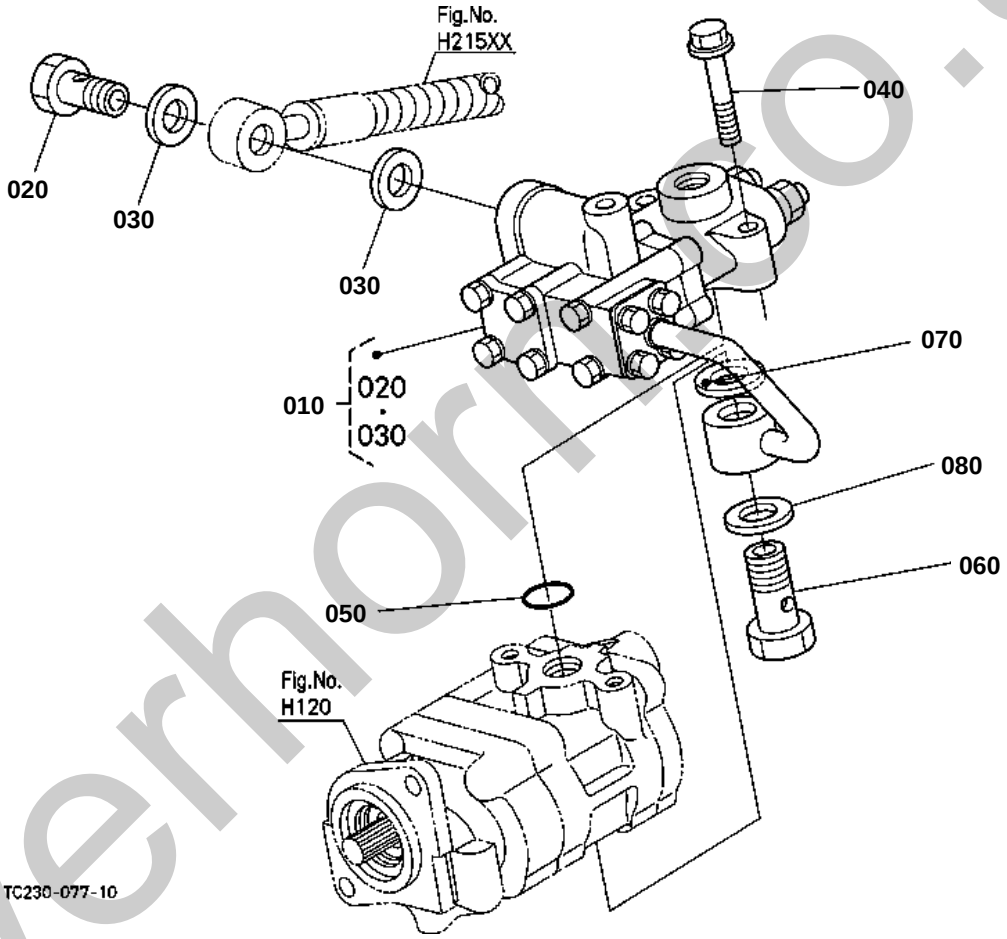

silverhorn.co.uk

REGULATOR VALVE

↔ Interchangeable; ≠ not interchangeable; ← new for old; → old for new

REF.No	Part No.	Description	Q'ty	S.No.	I/C	REMARKS	Weight (kgf)	Weight (lb)
010	T1060-19050	ASSY VALVE REGULATOR	1				1.65	3.63
020	66591-36250	JOINT	1				0.08	0.176
030	67111-37180	GASKET	2				0.003	0.0066
040	01754-50840	BOLT FLANGE	2				0.02	0.044
050	04817-00200	O RING	1				0.011	0.0242
060	66591-36250	JOINT	1				0.08	0.176
070	67111-37180	GASKET	1				0.003	0.0066
080	TA040-37180	GASKET	1				0.004	0.0088

silverhorn.co.uk

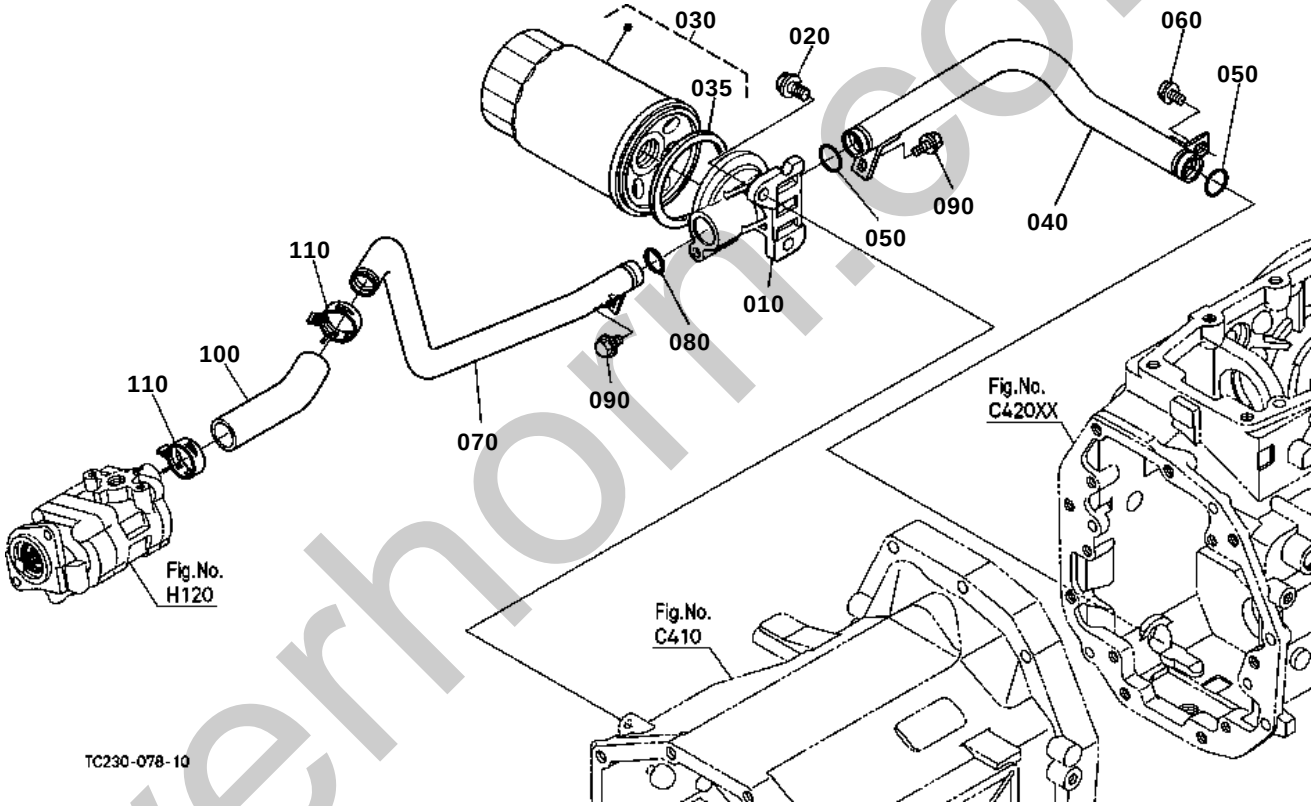

silverhorn.co.uk

HYDRAULIC OIL LINE(INLET)

↔ Interchangeable; ≠ not interchangeable; ← new for old; → old for new

REF.No	Part No.	Description	Q'ty	S.No.	I/C	REMARKS	Weight (kgf)	Weight (lb)
010	TA040-33212	BRACKET FILTER	1				0.525	1.155
020	01774-61020	BOLT FLANGE	2				0.022	0.0484
030	TA040-37710	ASSY FILTER OIL	1				0.73	1.606
035	T0070-37720	MAGNET OIL FILTER	1				0.04	0.088
040	TA040-33362	PIPE INLET	1				0.42	0.924
050	04816-07230	O RING	2				0.002	0.0044
060	01754-50812	BOLT FLANGE	1				0.01	0.022
070	TC230-33320	PIPE INLET	1				0	0
080	04816-07230	O RING	1				0.002	0.0044
090	01754-50816	BOLT FLANGE	2				0.011	0.0242
100	TA040-33340	HOSE INLET	1				0.103	0.2266
110	16241-72970	BAND PIPE	2				0.015	0.033

silverhorn.co.uk

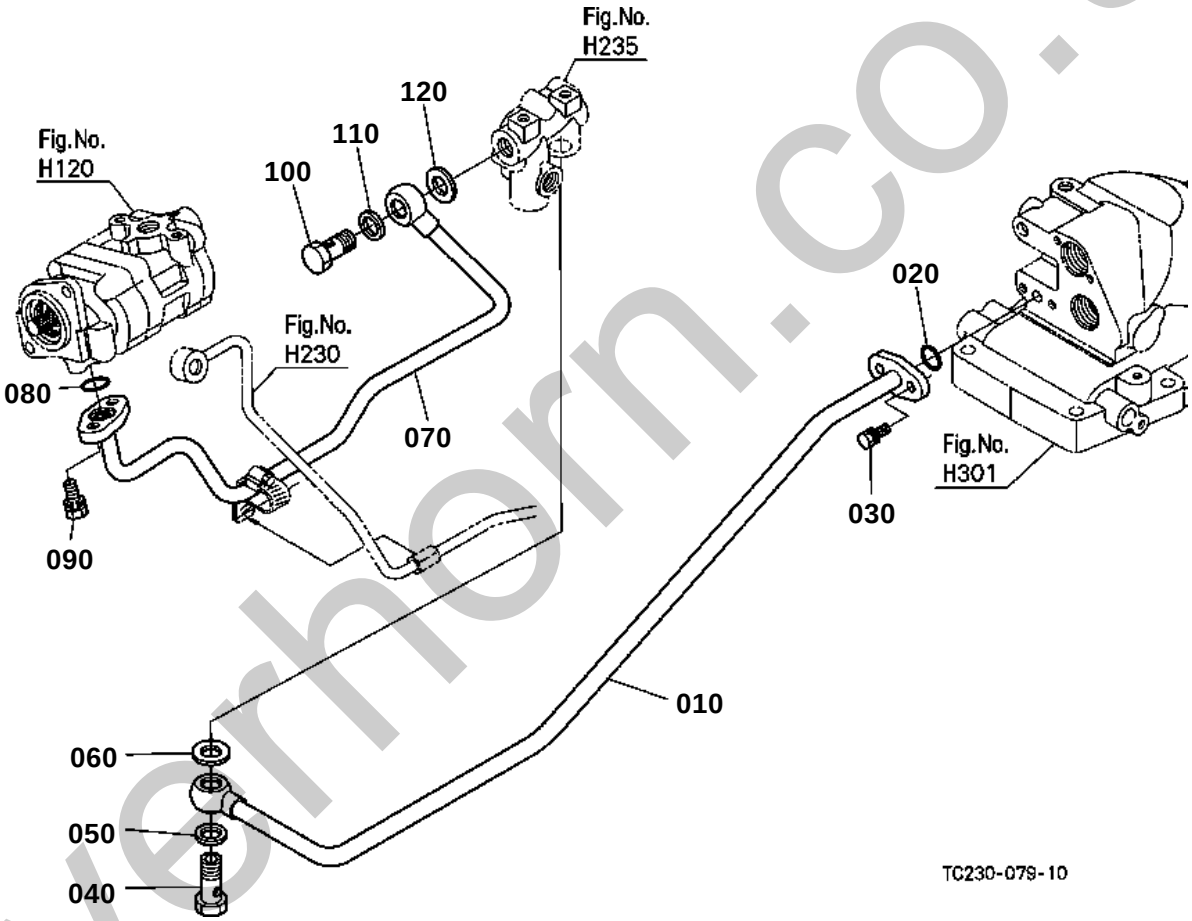

silverhorn.co.uk

HYDRAULIC OIL LINE(DELIVERY)

↔ Interchangeable; ≠ not interchangeable; ← new for old; → old for new

REF.No	Part No.	Description	Q'ty	S.No.	I/C	REMARKS	Weight (kgf)	Weight (lb)
010	TC230-33410	COMP.PIPE DELIVERY	1				0	0
020	04817-00180	O RING	1				0.003	0.0066
030	01123-50820	BOLT	2				0.011	0.0242
040	66591-36250	JOINT	1				0.08	0.176
050	67111-37180	GASKET	1				0.003	0.0066
060	67401-36720	GASKET	1				0.005	0.011
070	TC230-33420	COMP.PIPE DELIVERY	1				0	0
080	04817-00180	O RING	1				0.003	0.0066
090	01123-50820	BOLT	2				0.011	0.0242
100	66591-36250	JOINT	1				0.08	0.176
110	67111-37180	GASKET	1				0.003	0.0066
120	67401-36720	GASKET	1				0.005	0.011

silverhorn.co.uk

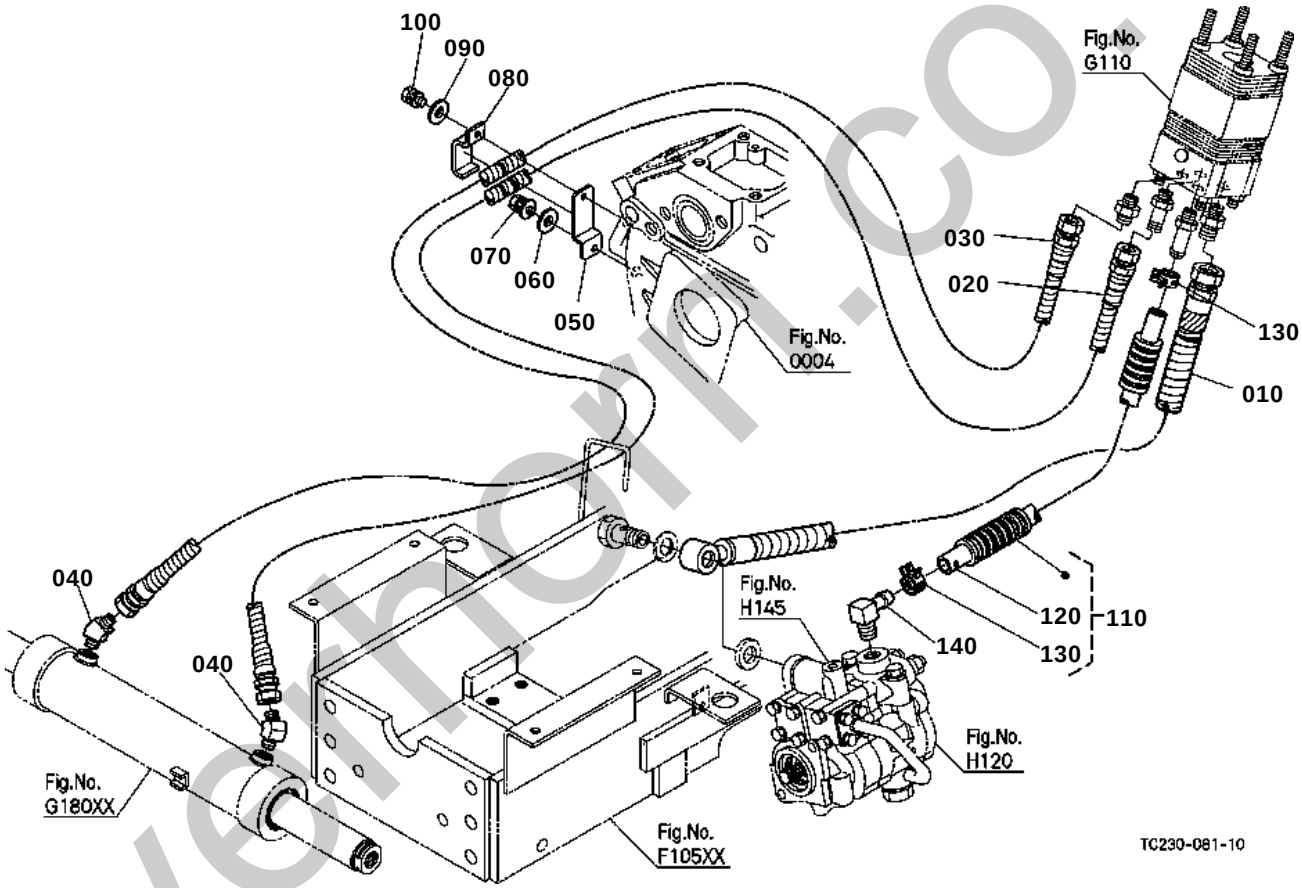

silverthorn.co.uk

HYDRAULIC OIL LINE (PS)

↔ Interchangeable; ≠ not interchangeable; ← new for old; → old for new

REF.No	Part No.	Description	Q'ty	S.No.	I/C	REMARKS	Weight (kgf)	Weight (lb)
010	TC230-33510	HOSE DELIVERY	1				0	0
020	TC230-33520	HOSE DELIVERY	1			LH	0	0
030	TC230-33550	HOSE DELIVERY	1			RH	0	0
040	56811-27380	ADAPTER	2				0.04	0.088
050	TC230-16560	STAY HOLDER	1				0	0
060	04013-60060	WASHER PLAIN	1				0.001	0.0022
070	01025-50612	BOLT	1				0.005	0.011
080	TA040-33300	HOLDER HOSE	1				0.027	0.0594
090	04013-60060	WASHER PLAIN	1				0.001	0.0022
100	01025-50616	BOLT	1				0.005	0.011
110	TC230-33530	ASSY HOSE RETURN	1				0	0
120	TC230-33600	HOSE RETURN	1				0	0
130	T1060-33630	BAND PIPE	2				0.006	0.0132
140	T1270-36910	JOINT	1				0.072	0.1584

silverhorn.co.uk

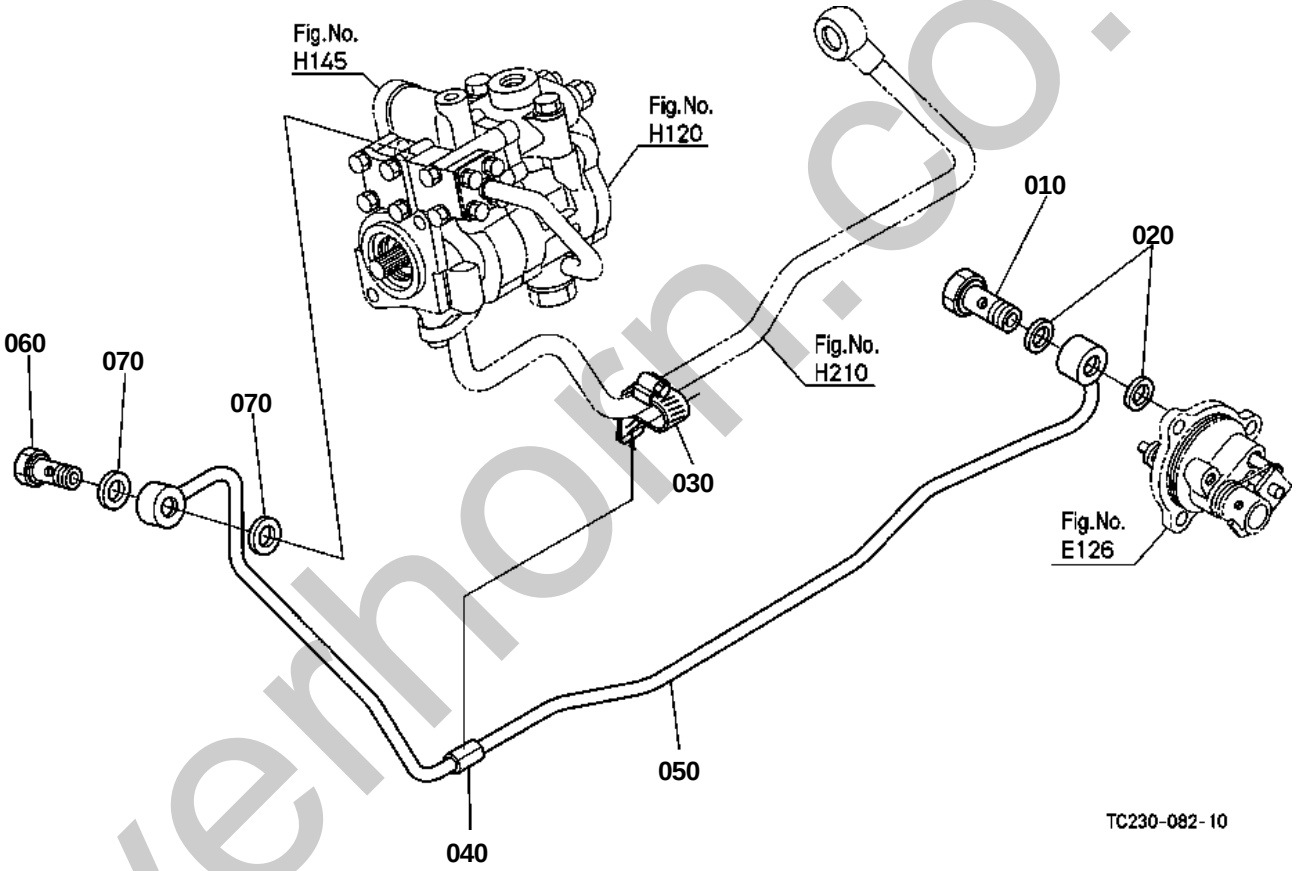

silverhoin.co.uk

PTO HYDRAULIC OIL LINE

↔ Interchangeable; ≠ not interchangeable; ← new for old; → old for new

REF.No	Part No.	Description	Q'ty	S.No.	I/C	REMARKS	Weight (kgf)	Weight (lb)
010	TA040-69402	ASSY BOLT	1				0.045	0.099
020	04714-00200	GASKET	2				0.002	0.0044
030	67955-36230	CLAMP	1				0.023	0.0506
040	31351-45270	PIPE RUBBER	1				0.005	0.011
050	TC230-69930	COMP.PIPE I-PTO	1				0	0
060	34076-66590	BOLT JOINT	1				0.05	0.11
070	04714-00200	GASKET	2				0.002	0.0044

silverhorn.co.uk

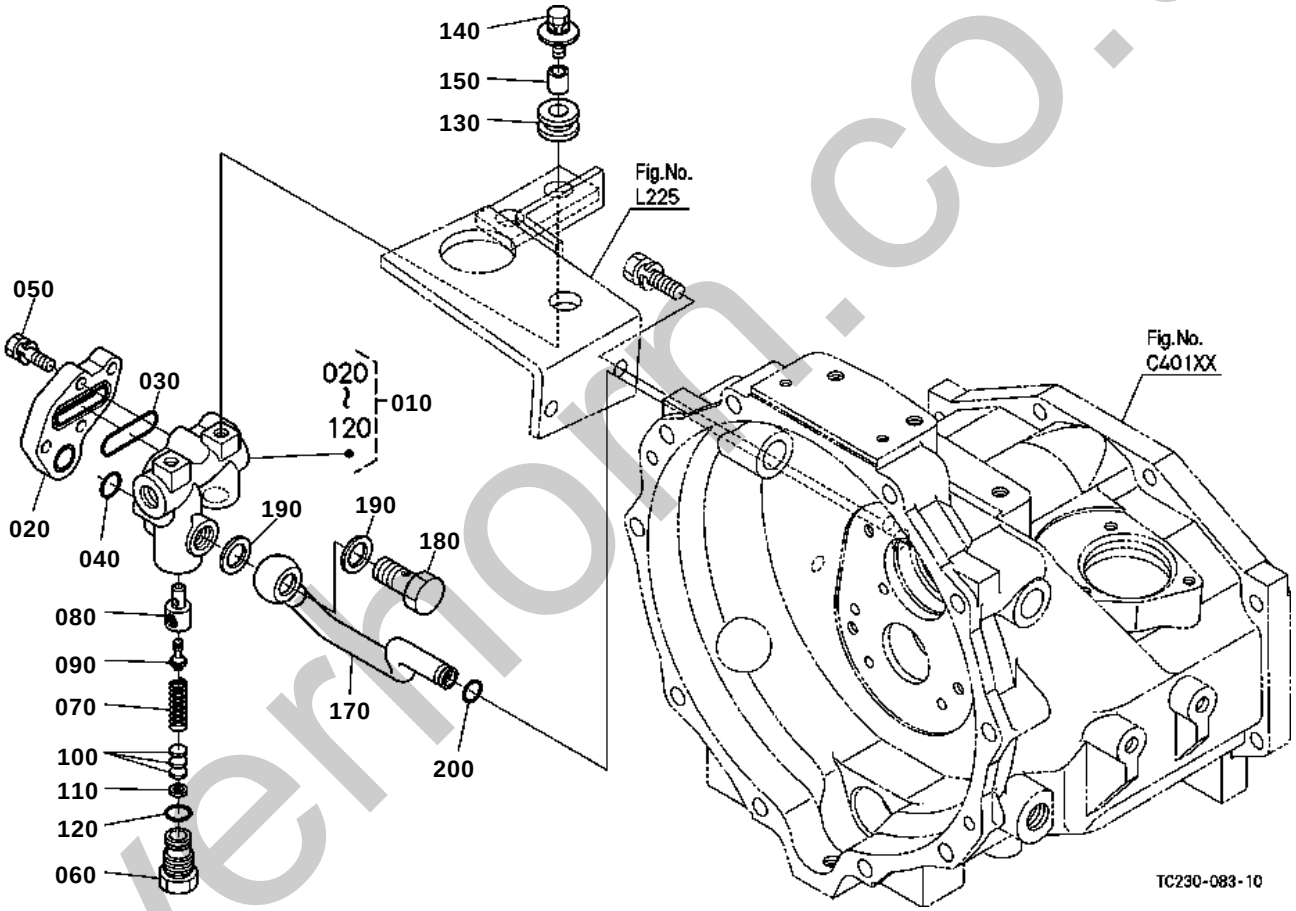

silvermoon.co.uk

HYDRAULIC OUTLET BLOCK

↔ Interchangeable; ≠ not interchangeable; ← new for old; → old for new

REF.No	Part No.	Description	Q'ty	S.No.	I/C	REMARKS	Weight (kgf)	Weight (lb)
010	TD060-37500	ASSY BLOCK FRONT HYD	1				1.245	2.739
020	TD060-37610	CAP HYD.BLOCK	1				0.14	0.308
030	04817-06400	O RING	1				0.003	0.0066
040	04817-05170	O RING	1				0.002	0.0044
050	01123-50828	BOLT	3				0.014	0.0308
060	31351-37910	PLUG	1				0.06	0.132
070	31351-37920	SPRING RELIEF	1				0.02	0.044
080	31351-37930	SEAT RELIEF VALVE	1				0.02	0.044
090	31351-37940	POPPET	1				0.005	0.011
100	31351-37950	SHIM	5			0.4mm	0.001	0.0022
100	31351-37960	SHIM	2			0.2mm	0.001	0.0022
100	31351-37970	SHIM	2			0.1mm	0.001	0.0022
110	04013-60050	WASHER PLAIN	2				0.001	0.0022
120	04811-10160	O RING	1				0.001	0.0022
130	TA040-37590	CUSHION	2				0.006	0.0132
140	01127-50830	BOLT	2				0.023	0.0506
150	35999-02550	COLLAR	2				0.01	0.022
160	99999-99999	BLANK	0				0	0
170	TC230-37550	COMP.PIPE RETURN	1				0	0
180	66591-36250	JOINT	1				0.08	0.176
190	67111-37180	GASKET	2				0.003	0.0066
200	04816-00110	O RING	1				0.001	0.0022

silverhorn.co.uk

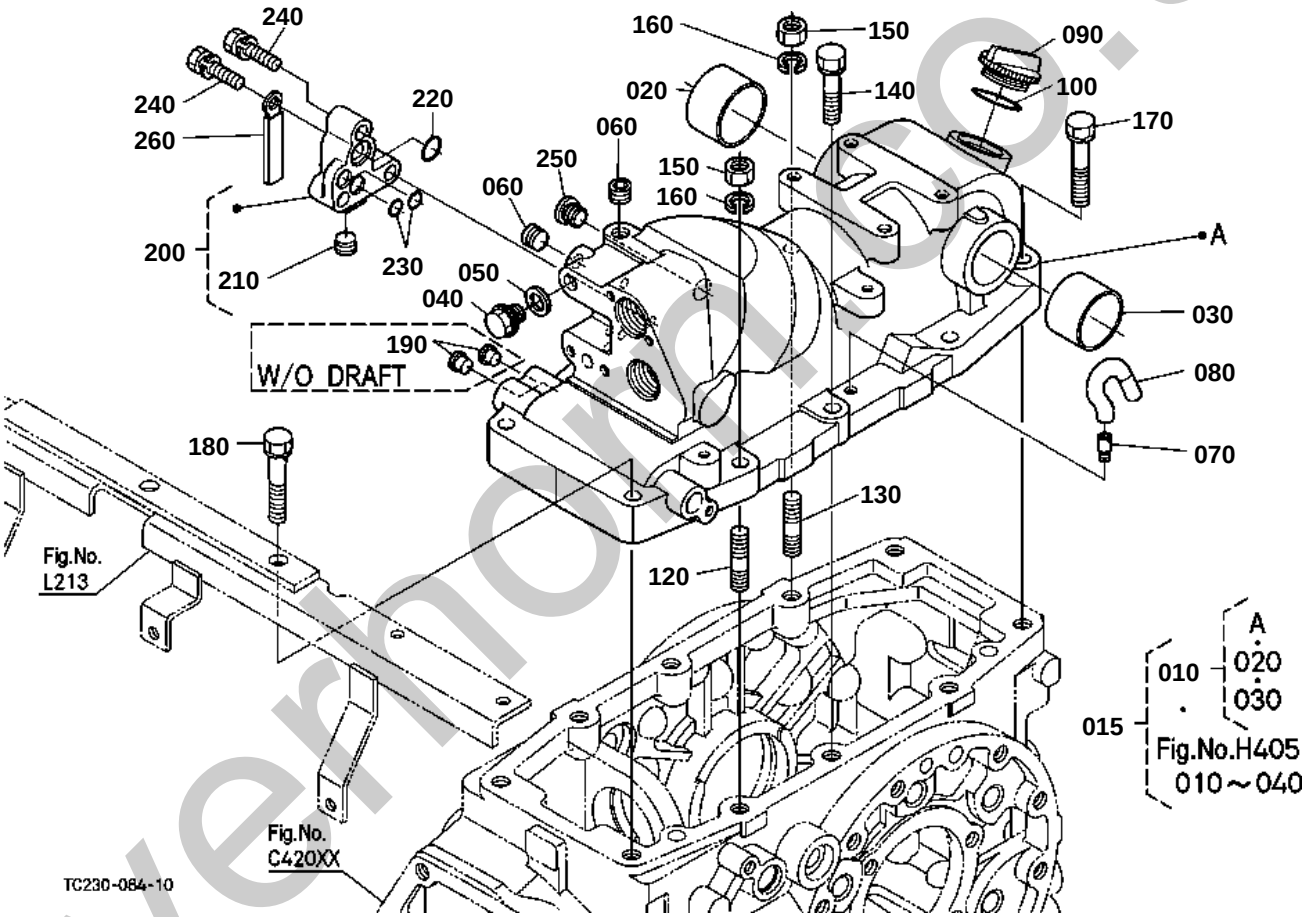

silvermoria.co.uk

↔ Interchangeable; ≠ not interchangeable; ← new for old; → old for new

REF.No	Part No.	Description	Q'ty	S.No.	I/C	REMARKS	Weight (kgf)	Weight (lb)
010	TC050-99350	ASSY CASE CYLINDER	1				23	50.6
015	TC050-99360	ASSY CASE CYLINDER	1			OPTION	23	50.6
020	30400-37450	BUSH	1				0.09	0.198
030	30400-37460	BUSH	1				0.065	0.143
040	37150-36730	PLUG	1				0.03	0.066
050	37150-36720	GASKET	1				0.01	0.022
060	31351-37150	PLUG	2				0.007	0.0154
070	36200-21610	BREATHER	1				0.008	0.0176
080	31351-37140	BREATHER	1				0.01	0.022
090	38240-21410	PLUG	1				0.015	0.033
100	04817-50300	O RING	1				0.001	0.0022
110	99999-99999	BLANK	0				0	0
120	01574-51245	STUD	1				0.051	0.1122
130	01574-51245	STUD	1				0.051	0.1122
140	01133-51245	BOLT	4				0.055	0.121
150	02176-50120	NUT	2				0.01	0.022
160	04512-60120	WASHER SPRING	2				0.005	0.011
170	01133-51260	BOLT	2				0.06	0.132
180	01133-51265	BOLT	2				0.065	0.143
190	66591-51130	PLUG	2			W/O DRAFT	0.001	0.0022
200	TA040-36620	ASSY COVER CYLINDER	1			W/O REMOTE CONTROL VALVE	0.3	0.66
210	31351-37150	PLUG	1			W/O REMOTE CONTROL VALVE	0.007	0.0154
220	04817-00140	O RING	1			W/O REMOTE CONTROL VALVE	0.001	0.0022
230	04817-00100	O RING	2			W/O REMOTE CONTROL VALVE	0.001	0.0022
240	01123-50835	BOLT	3			W/O REMOTE CONTROL VALVE	0.02	0.044
250	TA040-36650	PLUG	1			W/O REMOTE CONTROL VALVE	0.005	0.011
260	13824-67580	CLAMP CORD	1			W/O REMOTE CONTROL VALVE	0.006	0.0132

silverhorn.co.uk

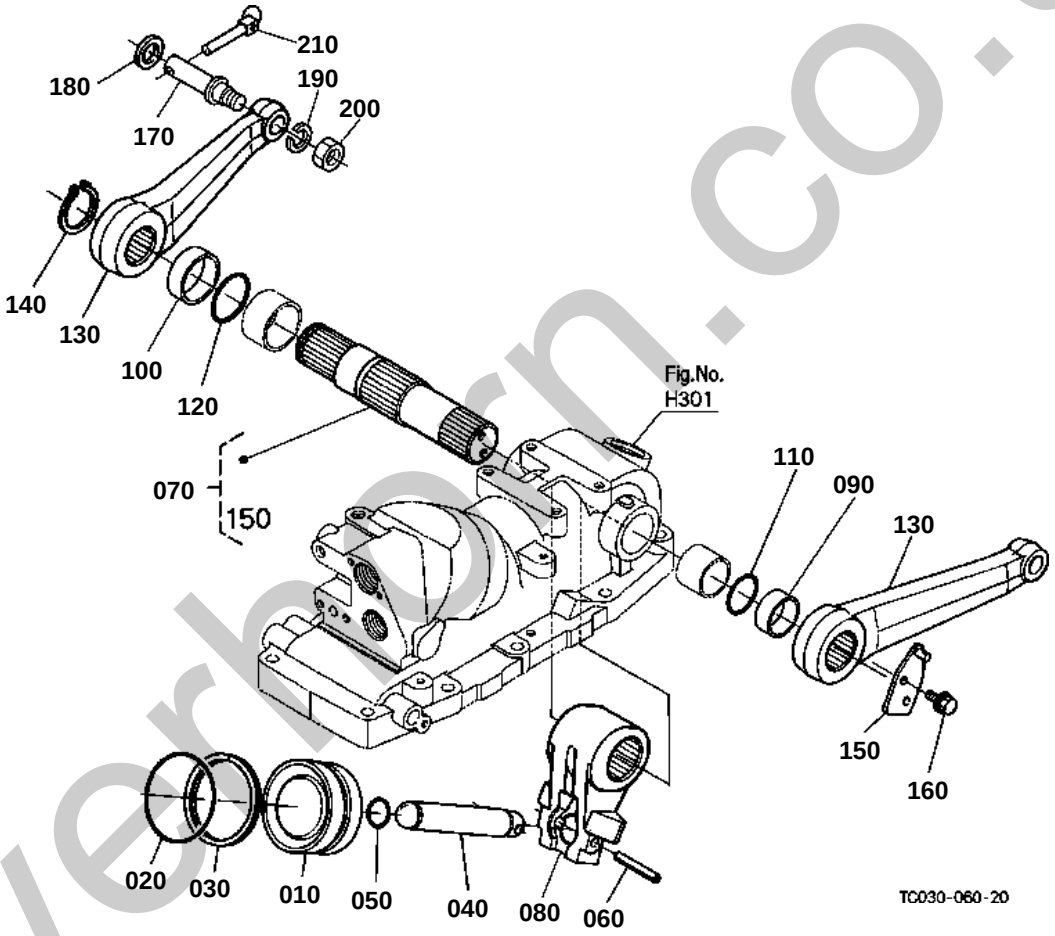

silverhorn.co.uk

LIFT ARM

↔ Interchangeable; ≠ not interchangeable; ← new for old; → old for new

REF.No	Part No.	Description	Q'ty	S.No.	I/C	REMARKS	Weight (kgf)	Weight (lb)
010	34070-34214	PISTON HYD.	1				1.585	3.487
020	04810-00800	O RING	1				0.009	0.0198
030	31391-37330	RING BACK UP	1				0.005	0.011
040	31351-37320	ROD HYD.	1				0.605	1.331
050	04817-00240	O RING	1				0.003	0.0066
060	05411-00656	PIN SPRING	1				0.006	0.0132
070	TA150-37420	ASSY SHAFT HYD.ARM	1				2.3	5.06
080	TA040-34234	ARM HYDRAULIC	1				2.2	4.84
090	34150-37490	COLLAR	1				0.002	0.0044
100	34150-37480	COLLAR	1				0.005	0.011
110	04817-06400	O RING	1				0.003	0.0066
120	04817-50450	O RING	1				0.003	0.0066
130	TA040-34610	ARM LIFT	2				2.22	4.884
140	04612-00400	CIR CLIP EXTERNAL	1				0.005	0.011
150	TA150-37720	LINK CONTROL	1				0.035	0.077
160	01754-50812	BOLT FLANGE	2				0.01	0.022
170	30442-37690	PIN LIFT ROD	2				0.2	0.44
180	04011-50180	WASHER PLAIN	2				0.012	0.0264
190	04512-60160	WASHER SPRING	2				0.01	0.022
200	02174-50160	NUT	2				0.022	0.0484
210	34150-37640	PIN SET	2				0.06	0.132

silverhorn.co.uk

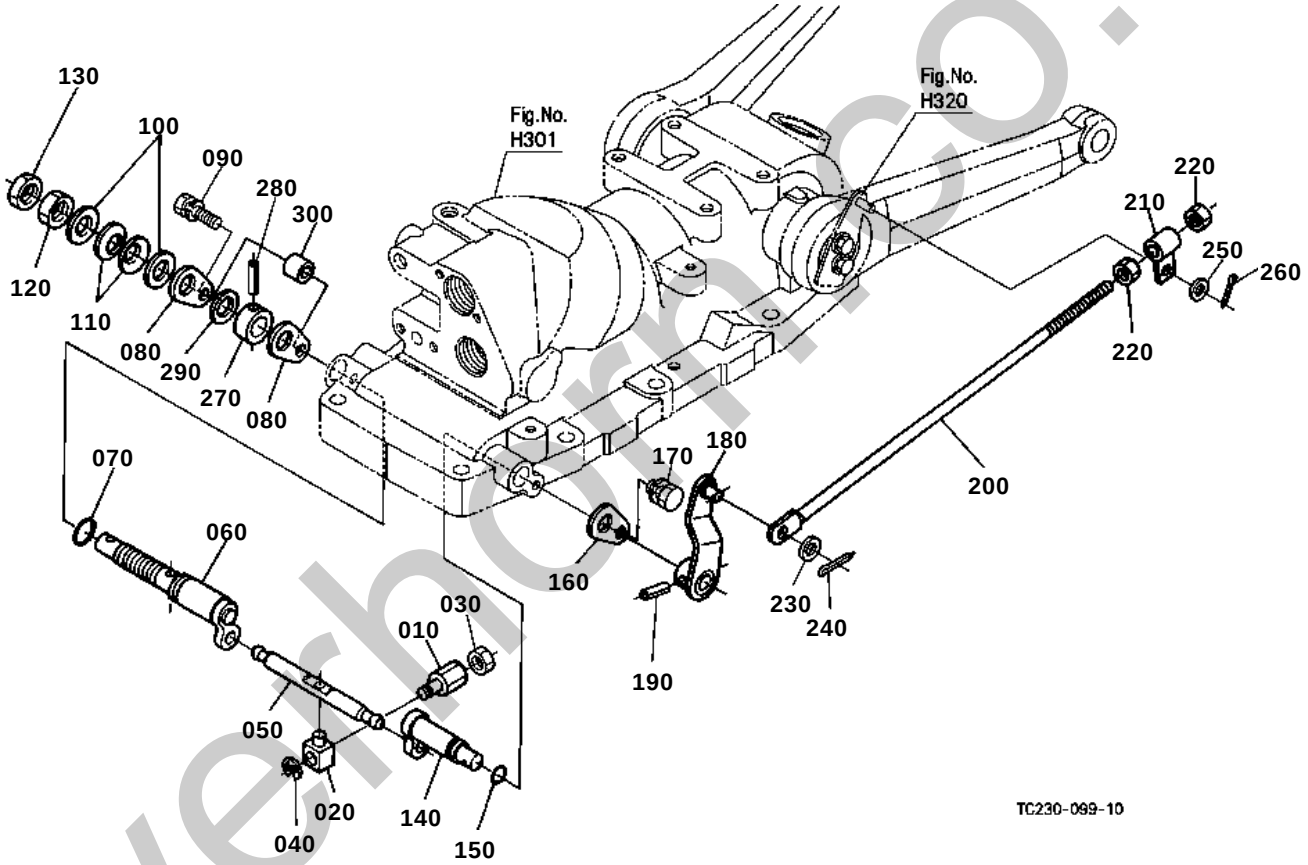

silverhorm.co.uk

FEED BACK LEVER

↔ Interchangeable; ≠ not interchangeable; ← new for old; → old for new

REF.No	Part No.	Description	Q'ty	S.No.	I/C	REMARKS	Weight (kgf)	Weight (lb)
010	67531-38280	JOINT SPOOL	1				0.17	0.374
020	TA040-36420	JOINT SPOOL	1				0.022	0.0484
030	02112-50080	NUT	1				0.003	0.0066
040	04613-50060	CIR CLIP EXTERNAL	1				0.001	0.0022
050	31351-37640	LEVER SPOOL DRIVE	1				0.05	0.11
060	TA140-37650	ARM CONTROL	1				0.162	0.3564
070	04817-00140	O RING	1				0.001	0.0022
080	31351-37660	SET PLATE	2				0.01	0.022
090	01123-50830	BOLT	1				0.015	0.033
100	04013-60140	WASHER PLAIN	2				0.01	0.022
110	34260-36880	SPRING PLATE	2				0.006	0.0132
120	02174-50140	NUT	1				0.014	0.0308
130	02172-50140	NUT	1				0.01	0.022
140	31351-37750	SHAFT BACK LEVER	1				0.1	0.22
150	04816-00120	O RING	1				0.001	0.0022
160	38240-36890	SET PLATE	1				0.013	0.0286
170	01123-60816	BOLT	1				0.01	0.022
180	31351-37760	LEVER FEED BACK	1				0.08	0.176
190	05411-00525	PIN SPRING	1				0.002	0.0044
200	31321-37770	ROD FEED BACK	1				0.12	0.264
210	31351-37780	ROD CONTROL	1				0.03	0.066
220	02114-50080	NUT	2				0.005	0.011
230	04013-60080	WASHER PLAIN	1				0.002	0.0044
240	05511-50218	PIN SPLIT	1				0.001	0.0022
250	04013-60080	WASHER PLAIN	1				0.002	0.0044
260	05511-50215	PIN SPLIT	1				0.001	0.0022
270	TA140-36900	SPACER	1				0.031	0.0682
280	05411-00528	PIN SPRING	1				0.003	0.0066
290	TA140-36920	PLATE FRICTION	1				0.002	0.0044
300	TA140-36930	SPACER	1				0.014	0.0308

silvermorn.co.uk

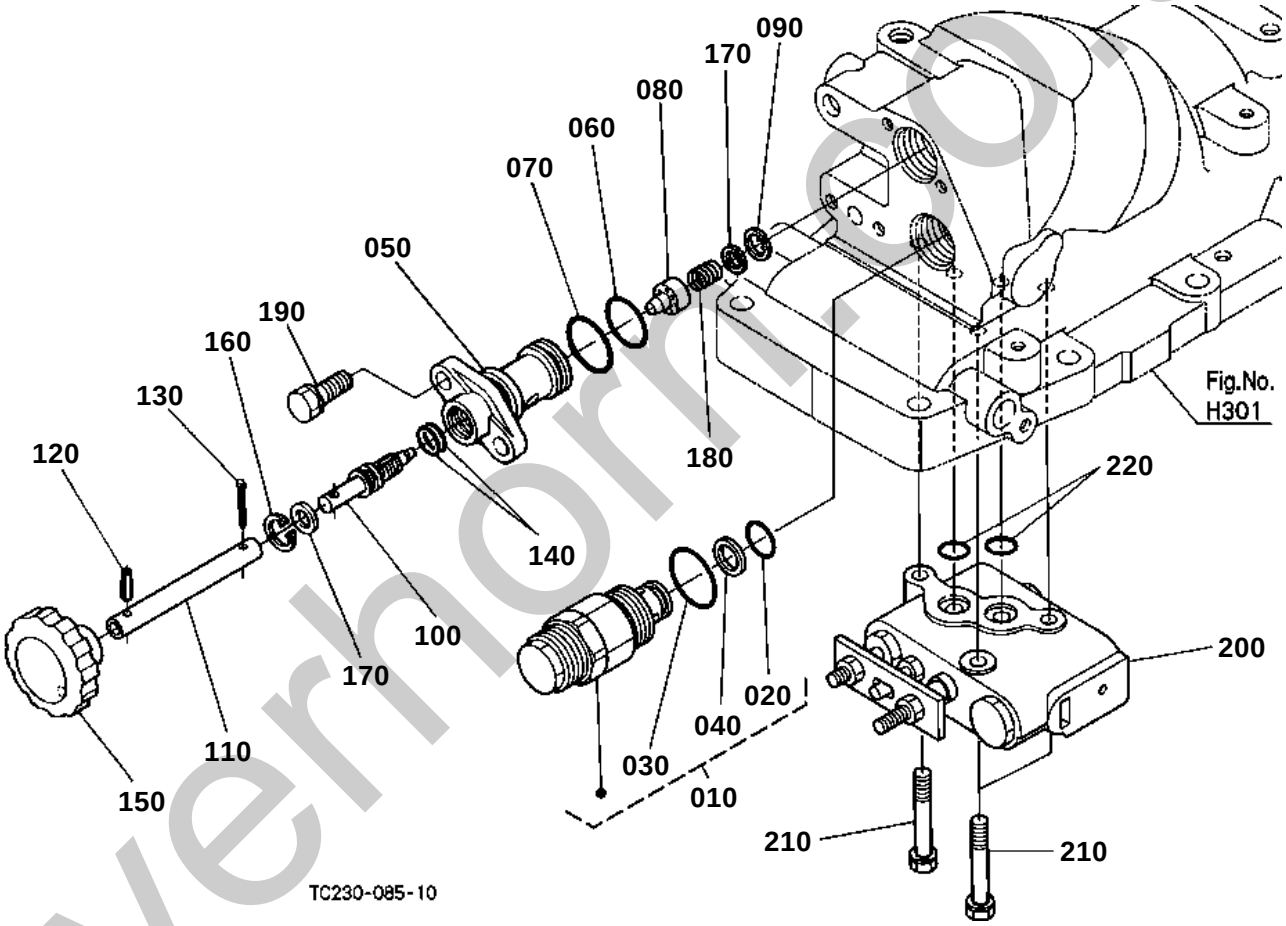

silverhorn.co.uk

CONTROL VALVE

↔ Interchangeable; ≠ not interchangeable; ← new for old; → old for new

REF.No	Part No.	Description	Q'ty	S.No.	I/C	REMARKS	Weight (kgf)	Weight (lb)
010	YW125-00102	ASSY VALVE SAFETY	1				0.4	0.88
020	04817-00160	O RING	1				0.001	0.0022
030	04816-06280	O RING	1				0.002	0.0044
040	YT133-00160	RING BACK UP	1				0.001	0.0022
050	31351-37210	COVER CYL.FRONT	1				0.315	0.693
060	04817-00220	O RING	1				0.001	0.0022
070	04817-06250	O RING	1				0.001	0.0022
080	38240-37250	COLLAR ADJUSTING	1				0.01	0.022
090	04611-00160	CIR CLIP INTERNAL	1				0.001	0.0022
100	T0070-34510	SHAFT	1				0.04	0.088
110	T0070-34570	PIPE	1				0.025	0.055
120	05411-00414	PIN SPRING	1				0.001	0.0022
130	05511-50425	PIN SPLIT	1				0.003	0.0066
140	04817-00100	O RING	2				0.001	0.0022
150	T0070-34560	GRIP	1				0.011	0.0242
160	34150-37260	CIR CLIP INTERNAL	1				0.001	0.0022
170	04012-50080	WASHER PLAIN	2				0.001	0.0022
180	30812-37360	SPRING	1				0.005	0.011
190	01123-50825	BOLT	2				0.013	0.0286
200	31351-39604	ASSY VALVE CONTROL	1				1.9	4.18
210	TA040-36400	BOLT	3				0.02	0.044
220	04817-00120	O RING	2				0.001	0.0022

silverhorn.co.uk

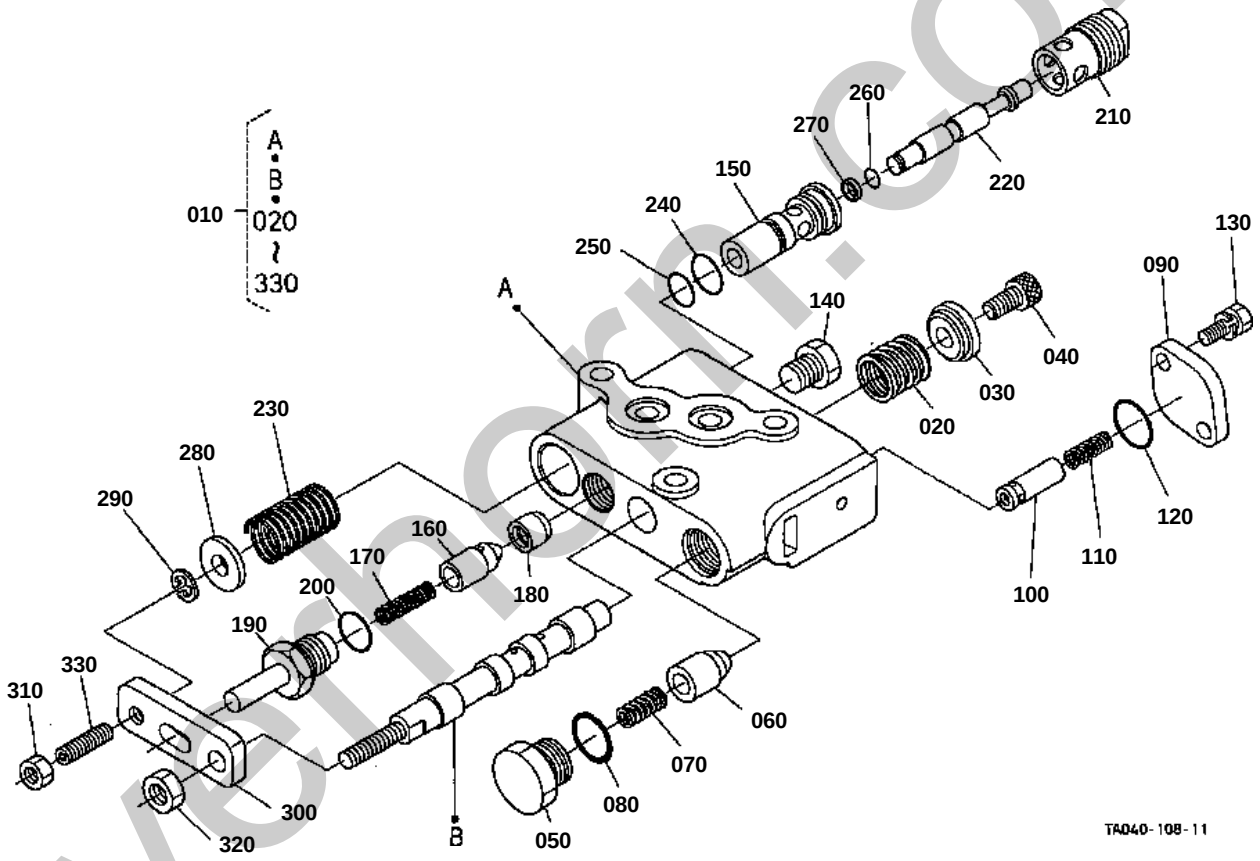

silverhorn.co.uk

↔ Interchangeable; ≠ not interchangeable; ← new for old; → old for new

REF.No	Part No.	Description	Q'ty	S.No.	I/C	REMARKS	Weight (kgf)	Weight (lb)
010	31351-39604	ASSY VALVE CONTROL	1				1.9	4.18
020	31351-39630	SPRING SPOOL	1				0.02	0.044
030	31351-39640	HOLDER SPRING	1				0.02	0.044
040	01311-10814	BOLT HEX-SOC-HD	1				0.012	0.0264
050	31351-39650	PLUG	1				0.04	0.088
060	31351-39150	POPPET	1				0.02	0.044
070	67531-38470	SPRING	1				0.001	0.0022
080	04817-00140	O RING	1				0.001	0.0022
090	31351-39660	PLATE	1				0.05	0.11
100	31351-39670	POPPET	1				0.01	0.022
110	31351-39680	SPRING	1				0.01	0.022
120	04817-00160	O RING	1				0.001	0.0022
130	01023-50616	BOLT	2				0.005	0.011
140	06331-35010	PLUG	1				0.012	0.0264
150	T0430-37600	SLEEVE	1				0.05	0.11
160	T0430-37580	POPPET	1				0.01	0.022
170	31391-39190	SPRING	1				0.001	0.0022
180	T0430-37530	SEAT CHECK VALVE	1				0.005	0.011
190	31351-37670	PLUG	1				0.038	0.0836
200	04817-00120	O RING	1				0.001	0.0022
210	31351-37620	PLUG	1				0.045	0.099
220	T0430-37610	POPPET	1				0.018	0.0396
230	T0430-37620	SPRING	1				0.009	0.0198
240	04817-05120	O RING	1				0.001	0.0022
250	04817-05110	O RING	1				0.005	0.011
260	04816-00050	O RING	1				0.001	0.0022
270	31351-39290	RING BACK UP	1				0.001	0.0022
280	T0430-37640	WASHER PLAIN	1				0.002	0.0044
290	04613-50060	CIR CLIP EXTERNAL	1				0.001	0.0022
300	31351-39752	PLATE	1				0.05	0.11
310	02014-50060	NUT	1				0.002	0.0044
320	02114-50080	NUT	1				0.005	0.011
330	03650-50622	SCREW SET	1				0.004	0.0088

silvermorn.co.uk

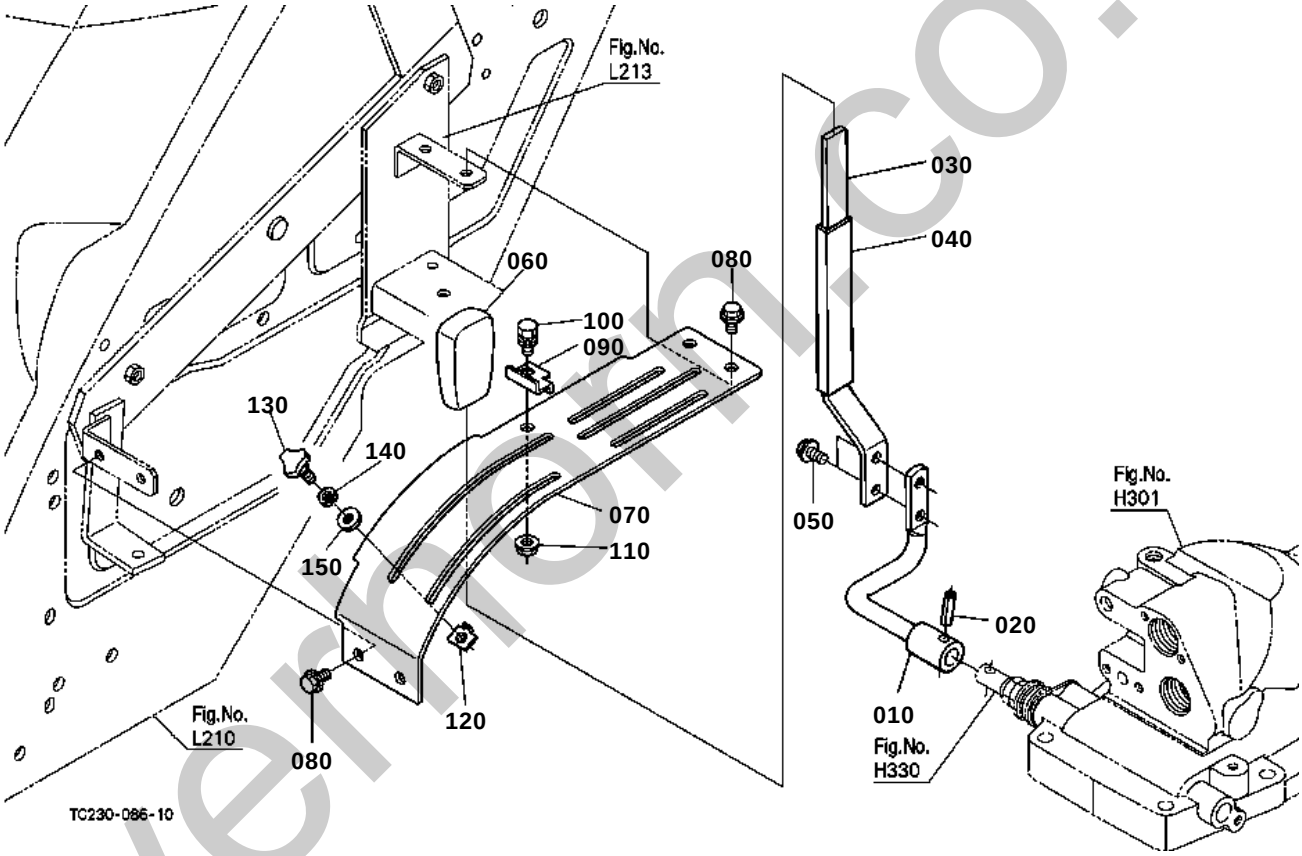

silvermoth.co.uk

POSITION CONTROL LEVER

↔ Interchangeable; ≠ not interchangeable; ← new for old; → old for new

REF.No	Part No.	Description	Q'ty	S.No.	I/C	REMARKS	Weight (kgf)	Weight (lb)
010	TA140-36110	LEVER POSITION	1			W/O DRAFT	0.265	0.583
020	05411-00525	PIN SPRING	1			W/O DRAFT	0.002	0.0044
030	TA040-36120	LEVER POSITION	1			W/O DRAFT	0.21	0.462
040	TA040-36132	TUBE LEVER	1			W/O DRAFT	0.01	0.022
050	01754-50616	BOLT FLANGE	2			W/O DRAFT	0.006	0.0132
060	52300-32640	GRIP LEVER	1				0.04	0.088
070	TC050-47603	GUIDE HYD.LEVER	1				0.8	1.76
080	01754-50816	BOLT FLANGE	4				0.011	0.0242
090	34070-36130	STOPPER	1				0.015	0.033
100	01123-60816	BOLT	1				0.01	0.022
110	02751-50080	NUT FLANGE	1				0.006	0.0132
120	34070-36140	STOPPER	1				0.005	0.011
130	37410-52610	SCREW KNOB	1				0.015	0.033
140	04512-60060	WASHER SPRING	1				0.001	0.0022
150	31351-18860	WASHER	1				0.002	0.0044

silverhorn.co.uk

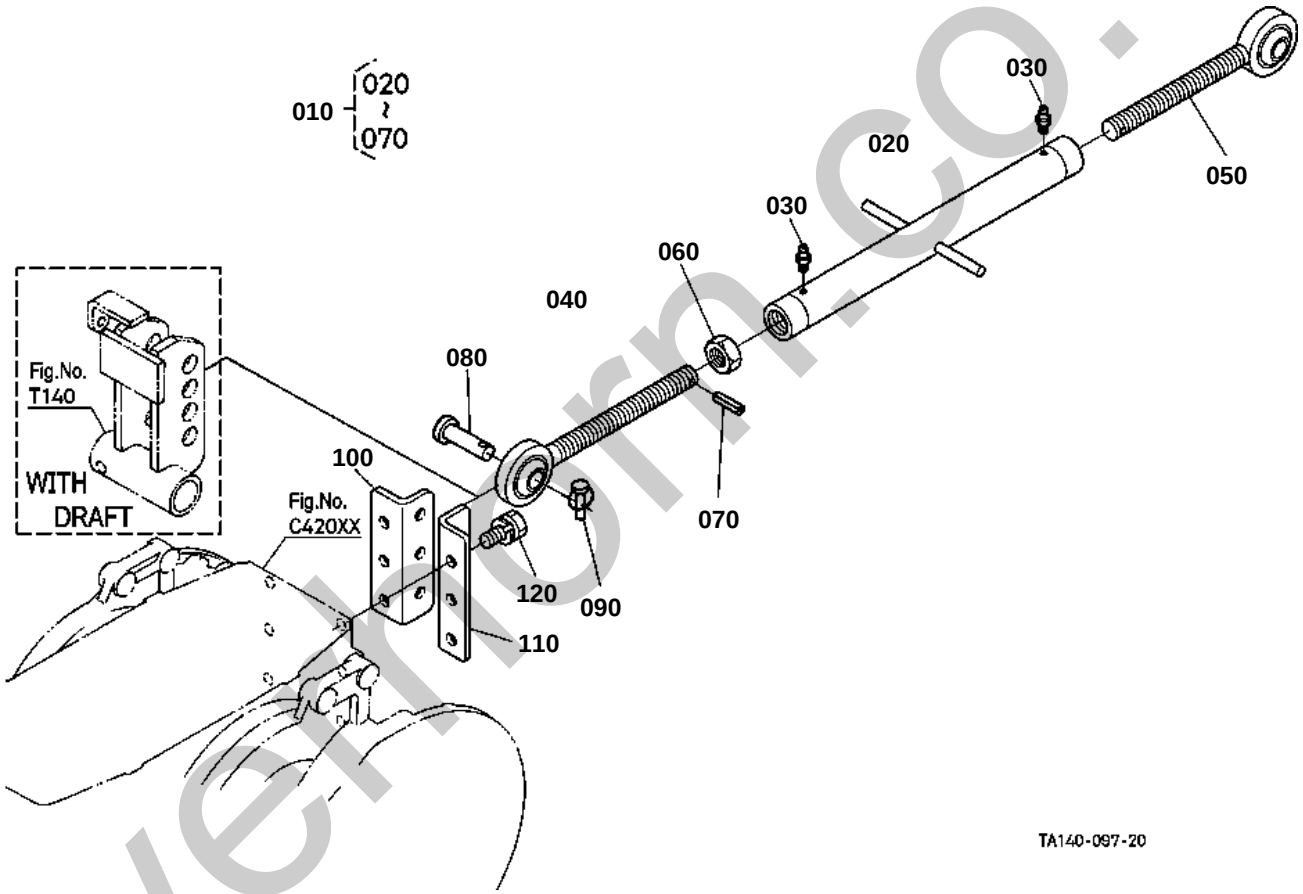

silverthorn.co.uk

TOP LINK

↔ Interchangeable; ≠ not interchangeable; ← new for old; → old for new

REF.No	Part No.	Description	Q'ty	S.No.	I/C	REMARKS	Weight (kgf)	Weight (lb)
010	TD050-71100	ASSY LINK TOP	1				0	0
020	TD050-71110	LINK TOP	1				0	0
030	67211-42940	NIPPLE GREASE	2				0.001	0.0022
040	35340-71210	JOINT TOP LINK	1				1.06	2.332
050	35340-71220	JOINT TOP LINK	1				1.06	2.332
060	32244-71180	NUT TOP LINK	1				0.057	0.1254
070	05411-00430	PIN SPRING	2				0.002	0.0044
080	31150-71360	PIN JOINT	2				0.166	0.3652
090	34150-37640	PIN SET	2				0.06	0.132
100	99571-22140	HOLDER TOP LINK RH	1			W/O DRAFT	0.96	2.112
110	99571-22150	HOLDER TOP LINK LH	1			W/O DRAFT	0.99	2.178
120	01133-51230	BOLT	6			W/O DRAFT	0.04	0.088

silverhorn.co.uk

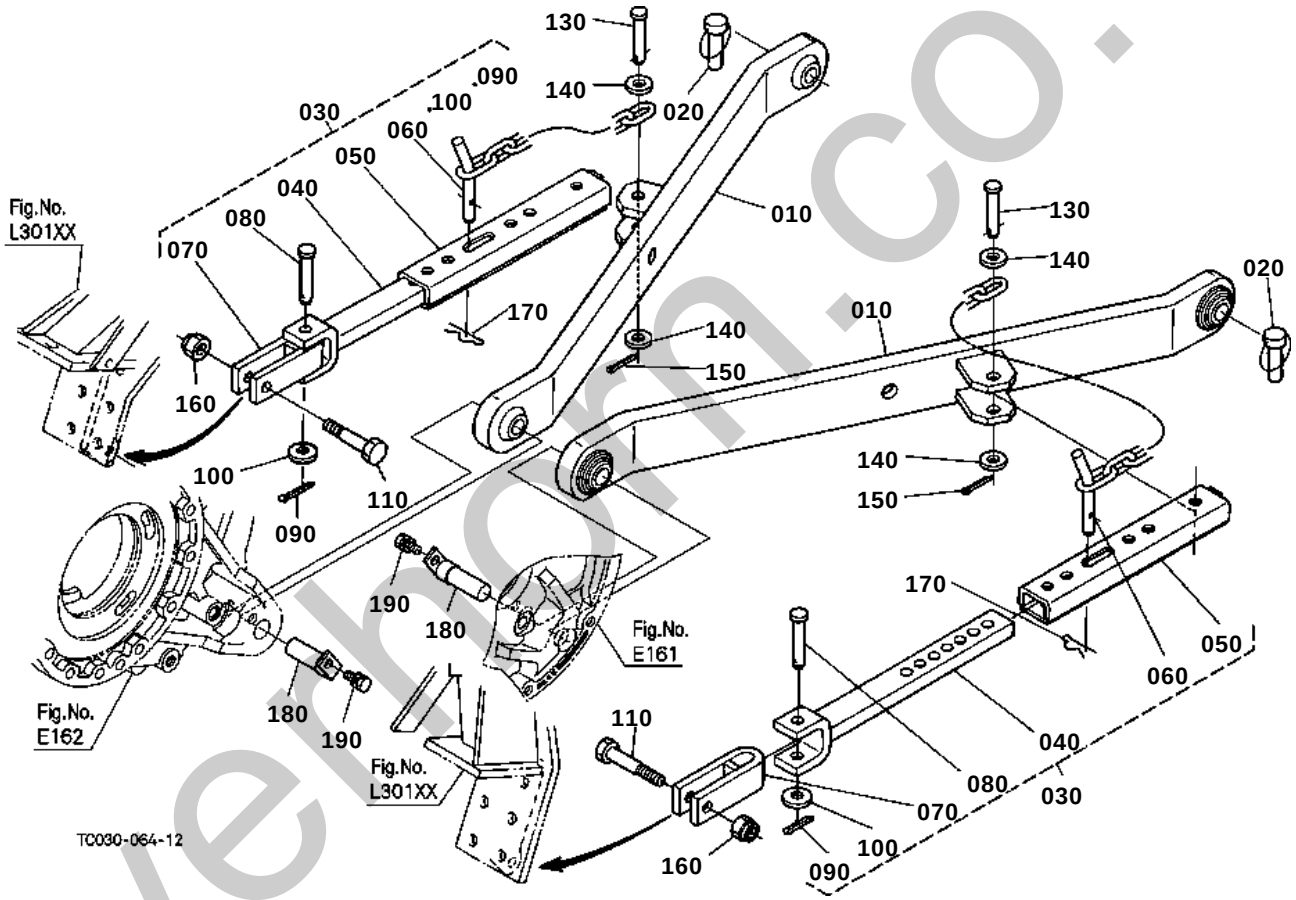

silverthorn.co.uk

3-POINT LINKAGE 1 (LOWER LINK)

↔ Interchangeable; ≠ not interchangeable; ← new for old; → old for new

REF.No	Part No.	Description	Q'ty	S.No.	I/C	REMARKS	Weight (kgf)	Weight (lb)
010	TA140-71313	COMP.LINK LOWER	2				7.6	16.72
020	34150-37640	PIN SET	2				0.06	0.132
030	TA140-39606	ASSY STABILIZER	2				2.85	6.27
040	TA140-39610	COMP.STAB.FRONT	2				1.17	2.574
050	TA140-39620	COMP.STAB.REAR	2				0.895	1.969
060	TA140-39632	COMP.JOINT	2				0.23	0.506
070	TA140-39643	COMP.JOINT	2				0.48	1.056
080	TA140-39820	PIN STABILIZER REAR	2				0.064	0.1408
090	05511-50428	PIN SPLIT	2				0.004	0.0088
100	04011-50120	WASHER PLAIN	2				0.005	0.011
110	TA140-39850	BOLT STABILIZER	2				0.06	0.132
120	99999-99999	BLANK	0				0	0
130	TA140-39820	PIN STABILIZER REAR	2				0.064	0.1408
140	04013-60120	WASHER PLAIN	4				0.01	0.022
150	05511-50425	PIN SPLIT	2				0.003	0.0066
160	02572-50120	NUT LOCK	2				0.014	0.0308
170	TC050-51200	PIN SNAP	2				0.005	0.011
180	TA040-39412	PIN LOWER LINK	2				0.25	0.55
190	01133-51020	BOLT	2				0.02	0.044

silverhorn.co.uk

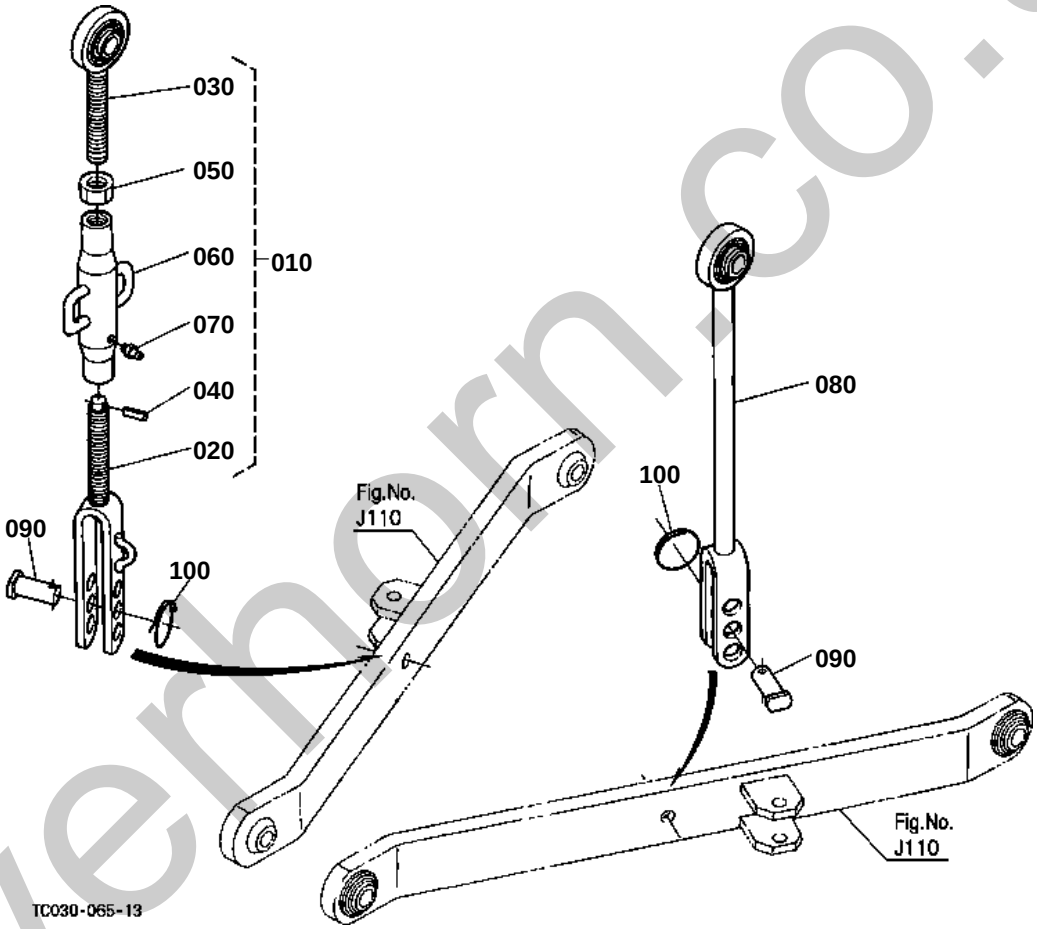

silverhorn.co.uk

3-POINT LINKAGE 2 (LIFT ROD)

↔ Interchangeable; ≠ not interchangeable; ← new for old; → old for new

REF.No	Part No.	Description	Q'ty	S.No.	I/C	REMARKS	Weight (kgf)	Weight (lb)
010	32751-71560	ASSY ROD LIFT RH	1				1.98	4.356
020	35080-71520	ROD LIFT LOWER	1				0.88	1.936
030	31331-71510	ROD LIFT UPPER	1				0.58	1.276
040	05411-00320	PIN SPRING	1				0.001	0.0022
050	35110-71570	NUT	1				0.05	0.11
060	TA040-39350	TURNBUCKLE	1				0.55	1.21
070	06613-10675	NIPPLE GREASE	1				0.003	0.0066
080	35080-71540	ROD LIFT LH	1				1.6	3.52
090	38747-71582	PIN LIFT ROD	2				0.1	0.22
100	67156-34340	RING SNAP	2				0.01	0.022

silverhorn.co.uk

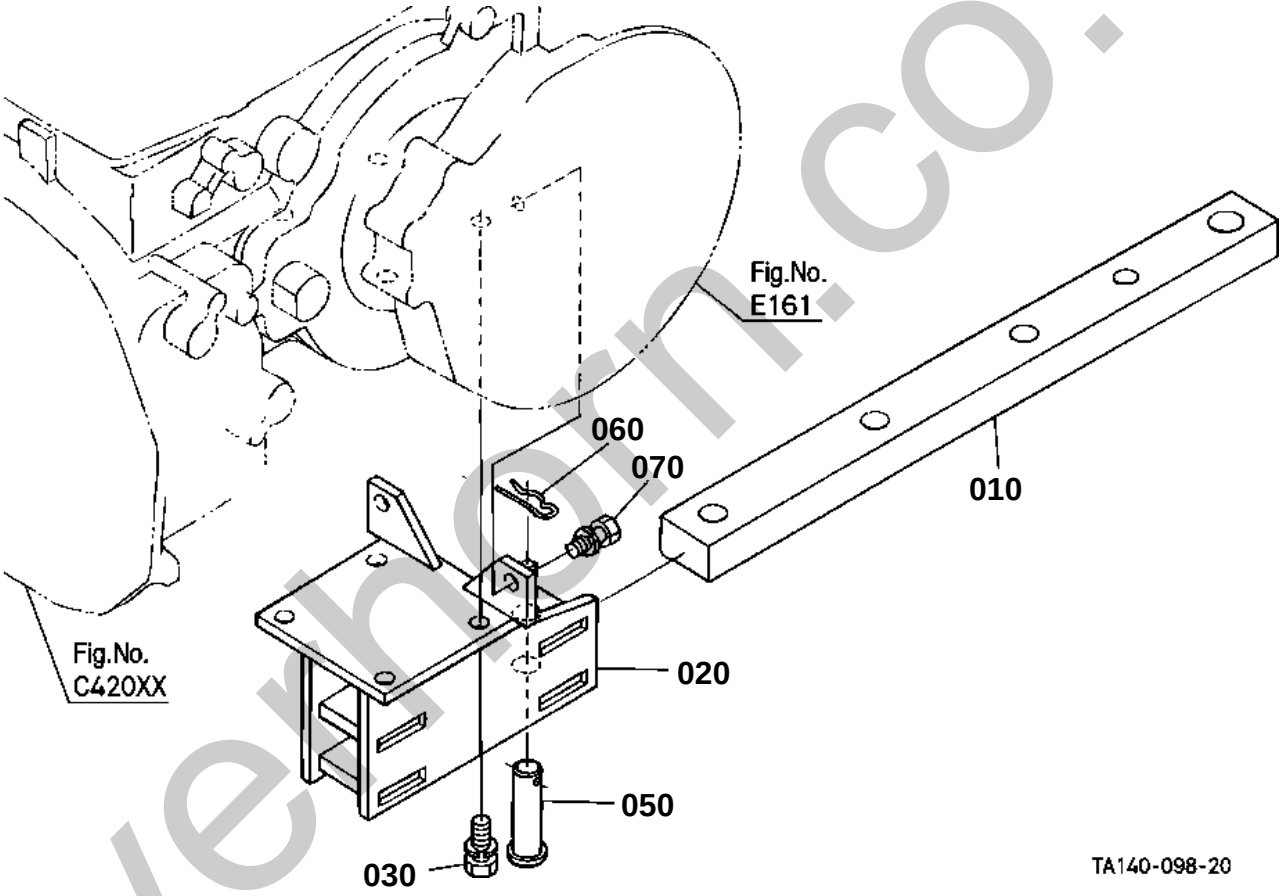

silverthorn.co.uk

DRAWBAR

↔ Interchangeable; ≠ not interchangeable; ← new for old; → old for new

REF.No	Part No.	Description	Q'ty	S.No.	I/C	REMARKS	Weight (kgf)	Weight (lb)
010	35070-29710	DRAWBAR	1				7	15.4
020	TA040-29730	FRAME DRAWBAR	1				6.2	13.64
030	01138-51430	BOLT	4				0.07	0.154
040	99999-99999	BLANK	0				0	0
050	05122-52070	PIN JOINT	1				0.184	0.4048
060	05515-51600	PIN SNAP	1				0.007	0.0154
070	01133-51230	BOLT	2				0.04	0.088

silverhorn.co.uk

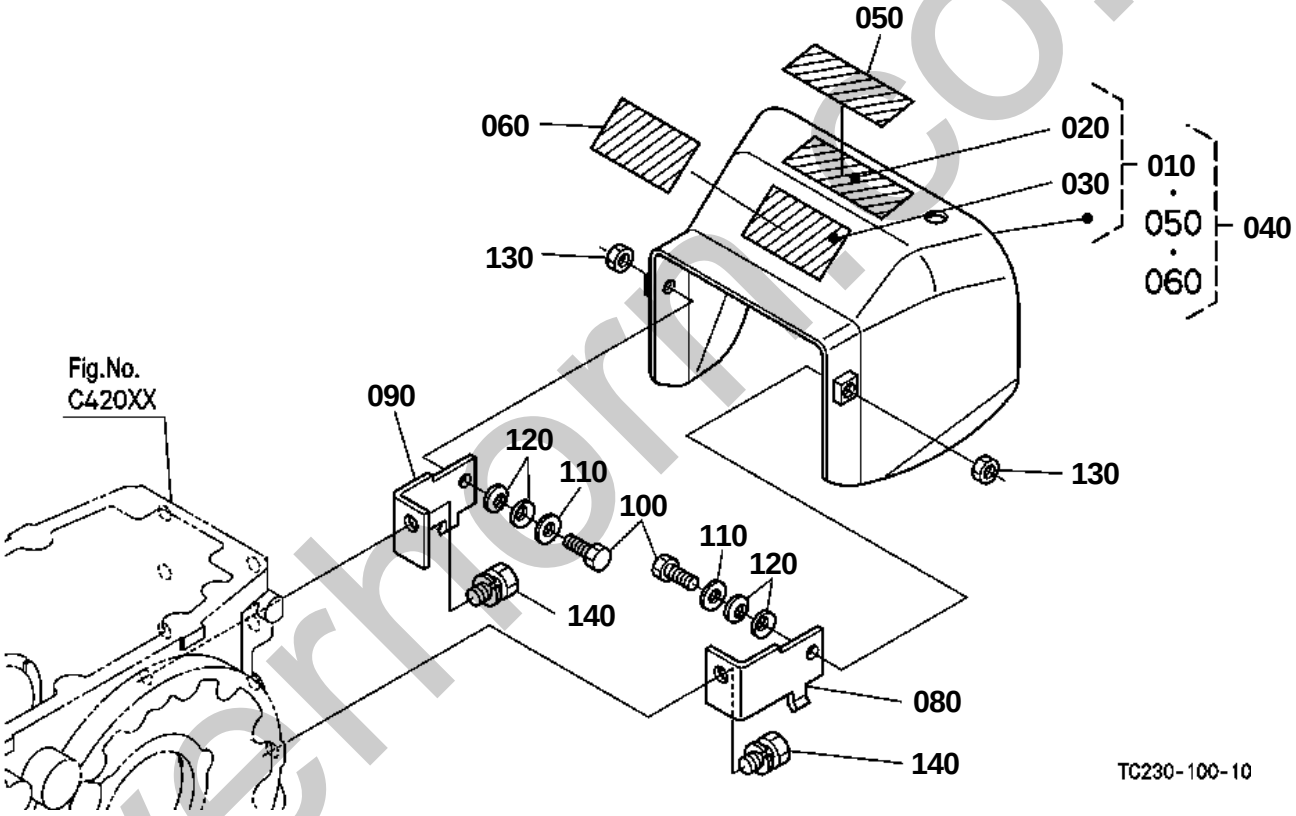

silverhorn.co.uk

PTO PROTECTOR

↔ Interchangeable; ≠ not interchangeable; ← new for old; → old for new

REF.No	Part No.	Description	Q'ty	S.No.	I/C	REMARKS	Weight (kgf)	Weight (lb)
010	TA140-99630	KIT COVER PTO(A)	1			ENGLISH	2.1	4.62
020	TA040-49593	LABEL PTO WARNING	1			ENGLISH	0.001	0.0022
030	TA040-49350	LABEL DRAWBAR	1			ENGLISH	0.002	0.0044
040	TA141-99630	KIT COVER PTO(B)	1			FRENCH	2.1	4.62
050	TA041-49590	LABEL PTO WARNING	1			FRENCH	0.001	0.0022
060	TA041-49350	LABEL DRAWBAR	1			FRENCH	0.003	0.0066
070	99999-99999	BLANK	0				0	0
080	TA040-23752	STAY	1				0.19	0.418
090	TA040-23762	STAY	1				0.19	0.418
100	01173-51025	BOLT	2				0.021	0.0462
110	04013-60100	WASHER PLAIN	2				0.003	0.0066
120	62151-42412	SPRING PLATE	4				0.002	0.0044
130	02116-50100	NUT	2				0.004	0.0088
140	01133-51225	BOLT	2				0.035	0.077

silverhorn.co.uk

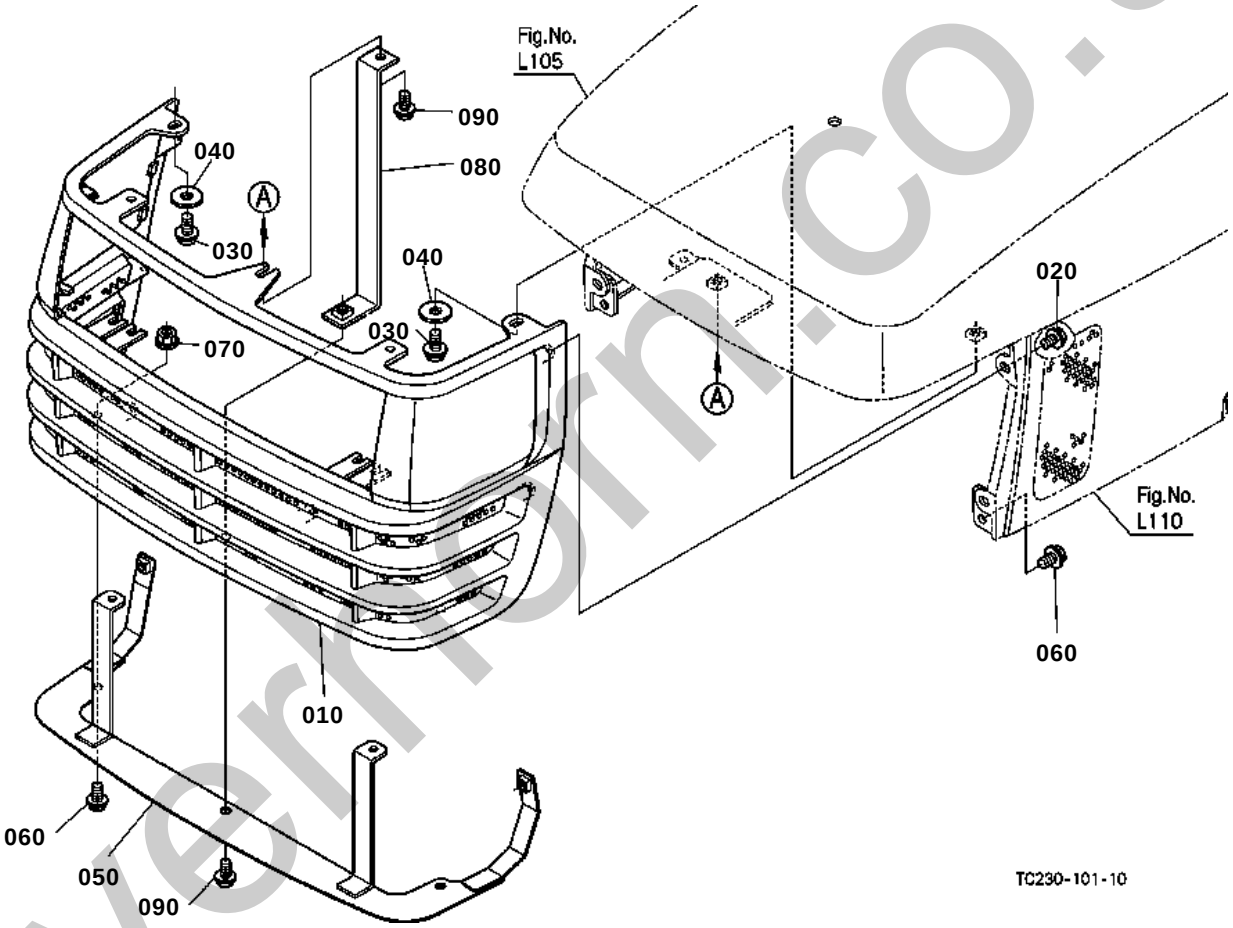

silverhorn.co.uk

OLD PARTS

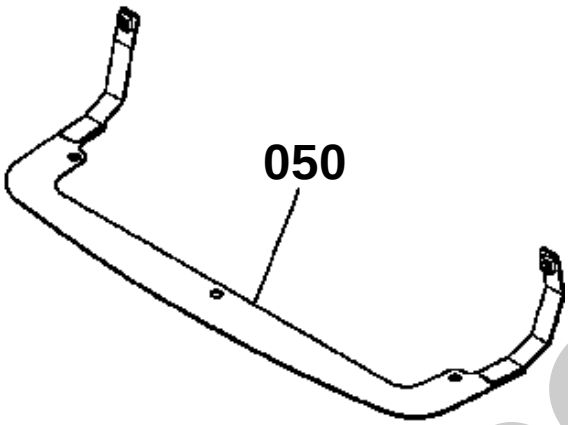

TC230-800-10

silverhorn.co.uk

FRONT GRILLE

↔ Interchangeable; ≠ not interchangeable; ← new for old; → old for new

REF.No	Part No.	Description	Q'ty	S.No.	I/C	REMARKS	Weight (kgf)	Weight (lb)
010	TC220-41820	ASSY GRILLE BONNET	1				1.1	2.42
020	01754-50612	BOLT FLANGE	4				0.005	0.011
030	01754-50816	BOLT FLANGE	2				0.011	0.0242
040	04015-60080	WASHER PLAIN	2				0.01	0.022
050	TC220-41842	BRACKET GRILLE	1	<=50013			0.5	1.1
050	TC220-41843	BRACKET GRILLE	1	>=50014	1		0.5	1.1
060	01754-50816	BOLT FLANGE	4				0.011	0.0242
070	02751-50080	NUT FLANGE	2				0.006	0.0132
080	TC220-41850	SUPPORT BONNET	1				0.21	0.462
090	01754-50816	BOLT FLANGE	2				0.011	0.0242

silverhorn.co.uk

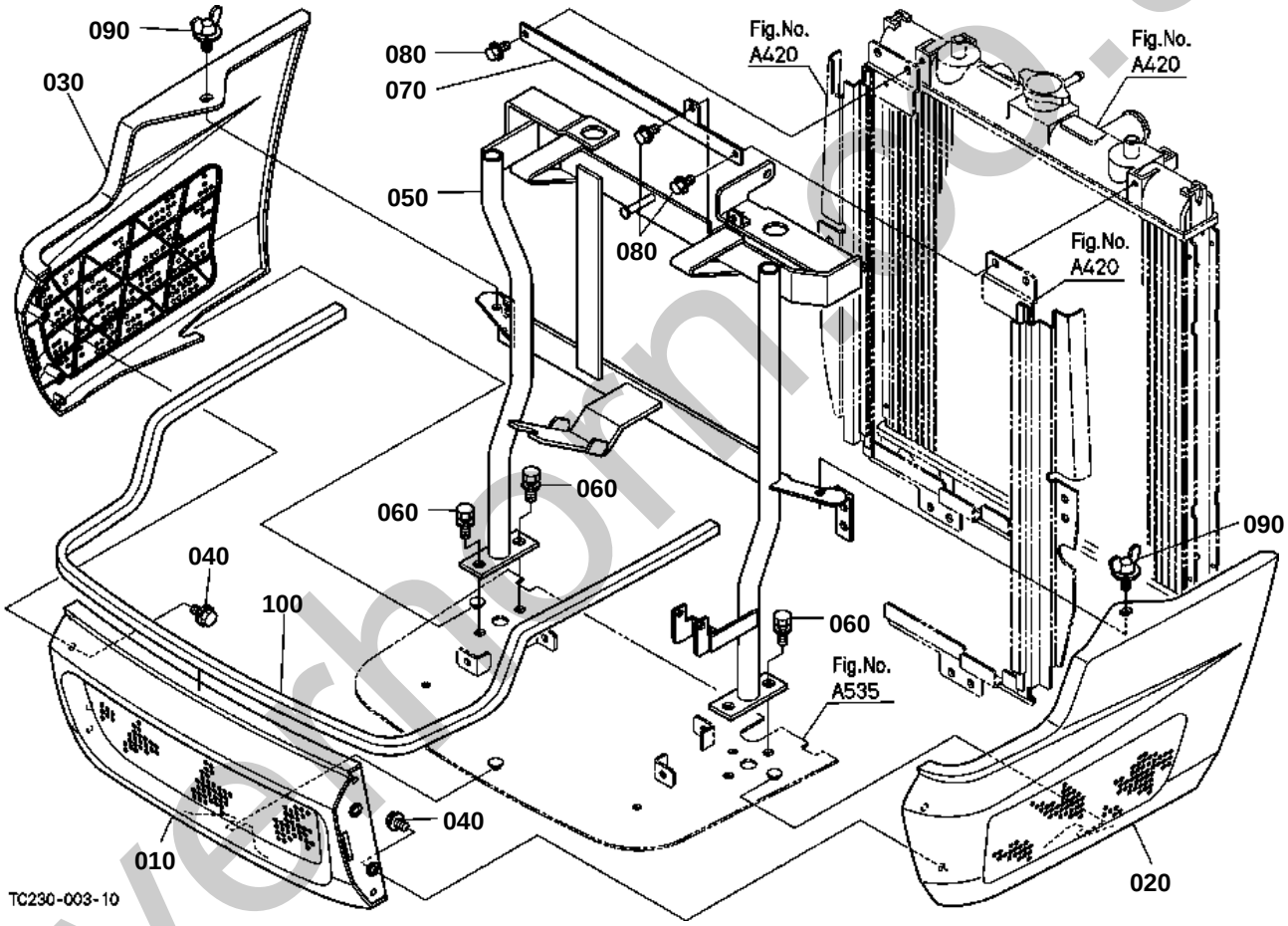

silverhorse.co.uk

HOOD(BONNET) FRONT SUPPORT

↔ Interchangeable; ≠ not interchangeable; ← new for old; → old for new

REF.No	Part No.	Description	Q'ty	S.No.	I/C	REMARKS	Weight (kgf)	Weight (lb)
010	TC230-41060	BONNET UNDER	1				0	0
020	TC230-41080	BONNET FRONT LH	1				0	0
030	TC230-41090	BONNET FRONT RH	1				0	0
040	01754-50612	BOLT FLANGE	4				0.005	0.011
050	TC230-18312	SUPPORT FRONT	1				4.1	9.02
060	01133-51025	BOLT	4				0.023	0.0506
070	TC220-18320	BRACKET	1				0.12	0.264
080	01754-50612	BOLT FLANGE	3				0.005	0.011
090	TC220-41390	BOLT WING	2				0.036	0.0792
100	TC230-41070	SPONGE BONNET LOWER	1				0.04	0.088

silverhorn.co.uk

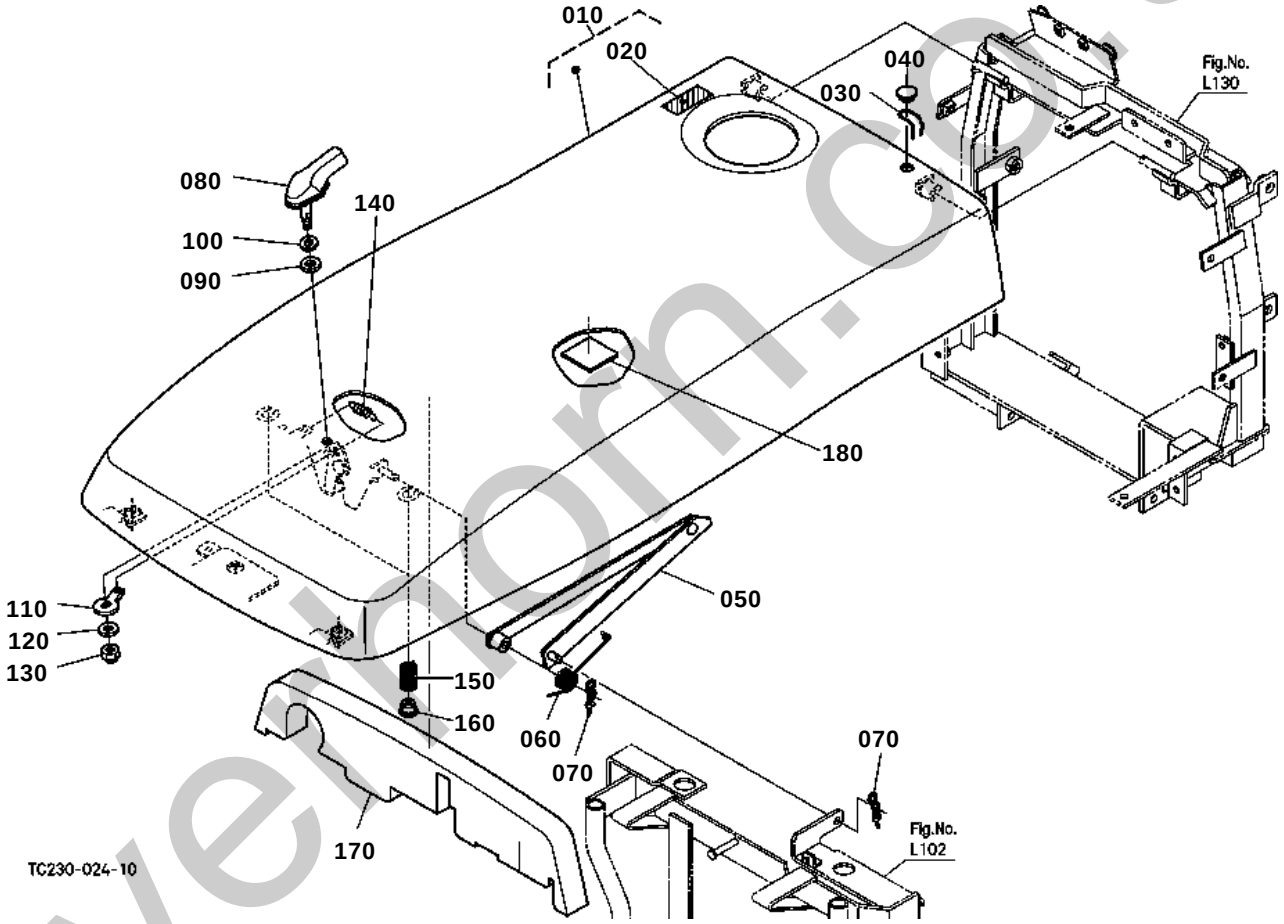

silverthorn.co.uk

HOOD(BONNET)

↔ Interchangeable; ≠ not interchangeable; ← new for old; → old for new

REF.No	Part No.	Description	Q'ty	S.No.	I/C	REMARKS	Weight (kgf)	Weight (lb)
010	TC230-18700	KIT BONNET	1	<=50013			0	0
010	TC230-18702	KIT BONNET	1	>=50014	¬		0	0
010	TC230-18703	KIT BONNET	1		¬	NEW PART	0	0
020	TA040-49562	LABEL FUEL	1				0.002	0.0044
030	3A011-83600	PIN SNAP	1				0.002	0.0044
040	3A111-83750	PLUG	1				0.002	0.0044
050	TC230-41230	LINK	1				0	0
060	TC220-41262	SPRING LINK	1				0.02	0.044
070	52300-34120	PIN SNAP	2				0.001	0.0022
080	T0070-41560	HANDLE MASCOT	1				0.085	0.187
090	33251-83850	WASHER HANDLE	1				0.001	0.0022
100	33251-83950	WASHER SPRING	1				0.001	0.0022
110	T1060-41220	LOCK BONNET	1				0.022	0.0484
120	04013-60080	WASHER PLAIN	1				0.002	0.0044
130	02552-50080	NUT LOCK	1				0.005	0.011
140	T1060-41120	SPRING	1				0.006	0.0132
150	T1060-41130	SPRING	2				0.022	0.0484
160	T1270-41140	CUSHION	2				0.007	0.0154
170	TC230-42312	SPONGE BONNET UPPER	1				0.18	0.396
180	TC230-41270	CUSHION LINK	1				0	0

silverhorn.co.uk

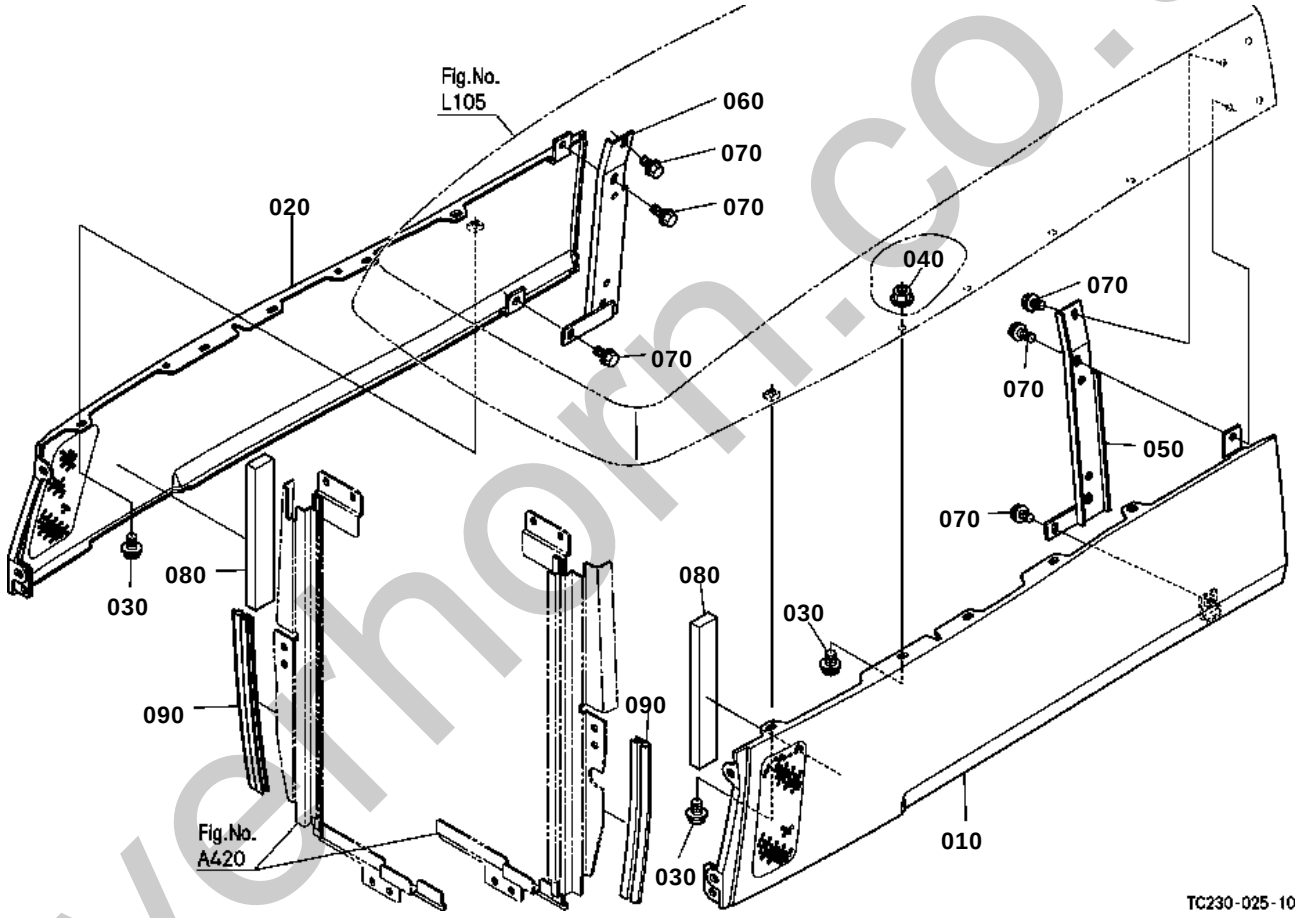

silverthorn.co.uk

HOOD(BONNET) SIDE

↔ Interchangeable; ≠ not interchangeable; ← new for old; → old for new

REF.No	Part No.	Description	Q'ty	S.No.	I/C	REMARKS	Weight (kgf)	Weight (lb)
010	TC230-41320	BONNET SIDE LH	1				0	0
020	TC230-41330	BONNET SIDE RH	1				0	0
030	01754-50812	BOLT FLANGE	10				0.01	0.022
040	02751-50080	NUT FLANGE	8				0.006	0.0132
050	TC230-41450	BRACKET	1				0	0
060	TC230-41460	BRACKET	1				0	0
070	01754-50612	BOLT FLANGE	6				0.005	0.011
080	TC220-42332	SPONGE BONNET SIDE	2				0.013	0.0286
090	TC220-42220	SHIELD	2				0.035	0.077

silverhorn.co.uk

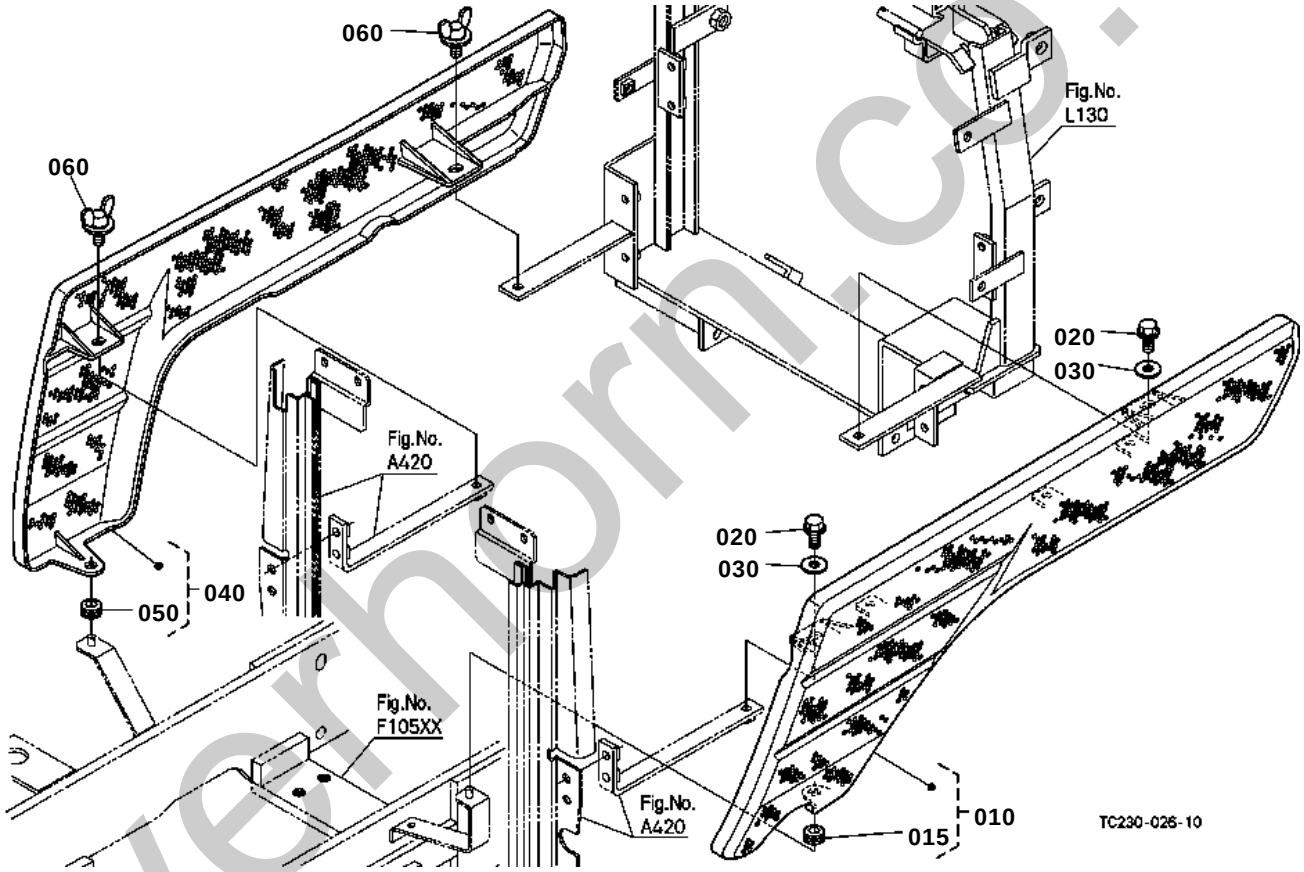

silverhorn.co.uk

HOOD(BONNET) SIDE COVER

↔ Interchangeable; ≠ not interchangeable; ← new for old; → old for new

REF.No	Part No.	Description	Q'ty	S.No.	I/C	REMARKS	Weight (kgf)	Weight (lb)
010	TC230-41370	ASSY COVER LH	1				0	0
015	66591-54580	RUBBER RELEASE ROD	1				0.002	0.0044
020	01754-50820	BOLT FLANGE	2				0.015	0.033
030	04015-60080	WASHER PLAIN	2				0.01	0.022
040	TC230-41340	ASSY COVER RH	1				0	0
050	66591-54580	RUBBER RELEASE ROD	1				0.002	0.0044
060	TC220-41390	BOLT WING	2				0.036	0.0792

silverhorn.co.uk

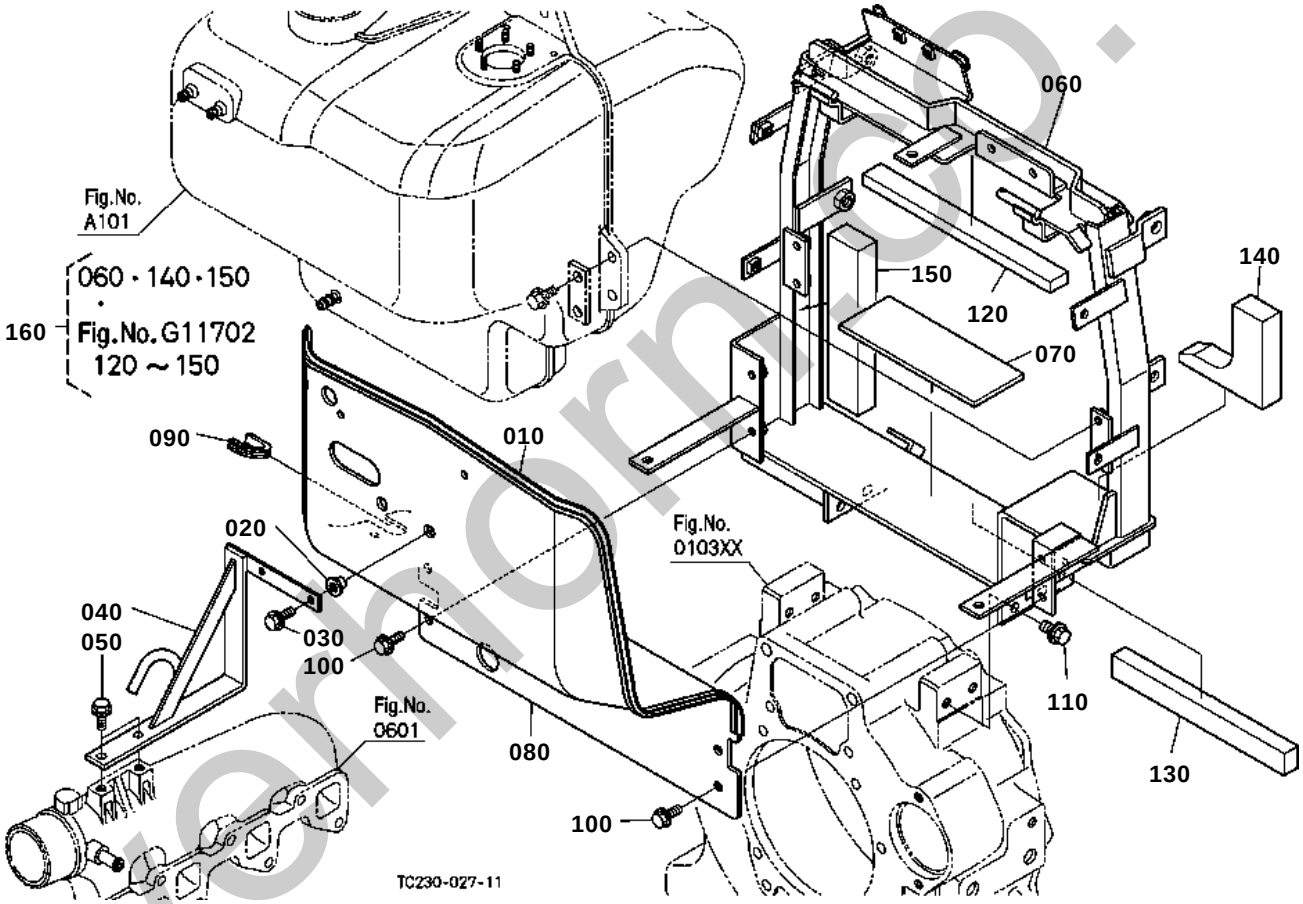

silvermorn.co.uk

OLD PARTS

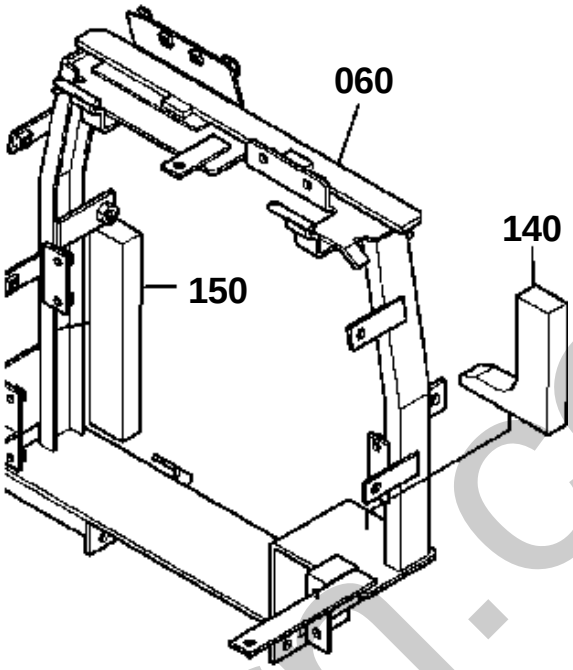

TC230-801-10

silverhorn.co.uk

SHUTTER PLATE

↔ Interchangeable; ≠ not interchangeable; ← new for old; → old for new

REF.No	Part No.	Description	Q'ty	S.No.	I/C	REMARKS	Weight (kgf)	Weight (lb)
010	T1060-42222	SHIELD	1				0.2	0.44
020	34070-71390	NUT CUSHION	2				0.005	0.011
030	01754-50620	BOLT FLANGE	2				0.007	0.0154
040	TC230-41242	SUPPORT SHUTTER	1				0	0
050	01754-50816	BOLT FLANGE	2				0.011	0.0242
060	TC230-42133	SUPPORT BONNET REAR	1			OLD PART ORDER BY REF.No.160	0	0
060	TC230-42134	SUPPORT BONNET REAR	1		¬	NEW PART	0	0
070	31351-35183	CUSHION TANK	1				0.04	0.088
080	TC230-42110	PLATE SHUTTER	1				0	0
090	30430-82770	CUSHION	1				0.005	0.011
100	01754-50816	BOLT FLANGE	4				0.011	0.0242
110	T1150-45610	BOLT	4				0.02	0.044
120	TC220-42200	SPONGE UPPER	1				0	0
130	TC230-42210	SPONGE LOWER	1				0	0
140	TC230-42160	SPONGE LH	1			OLD PART	0	0
140	TC230-42162	SPONGE LH	1		¬	NEW PART	0	0
150	TC230-42170	SPONGE RH	1			OLD PART	0	0
150	TC230-42172	SPONGE RH	1		¬	NEW PART	0	0
160	TC230-94300	ASSY SUPPORT BONNET	1			OPTION	0	0

silverhorn.co.uk

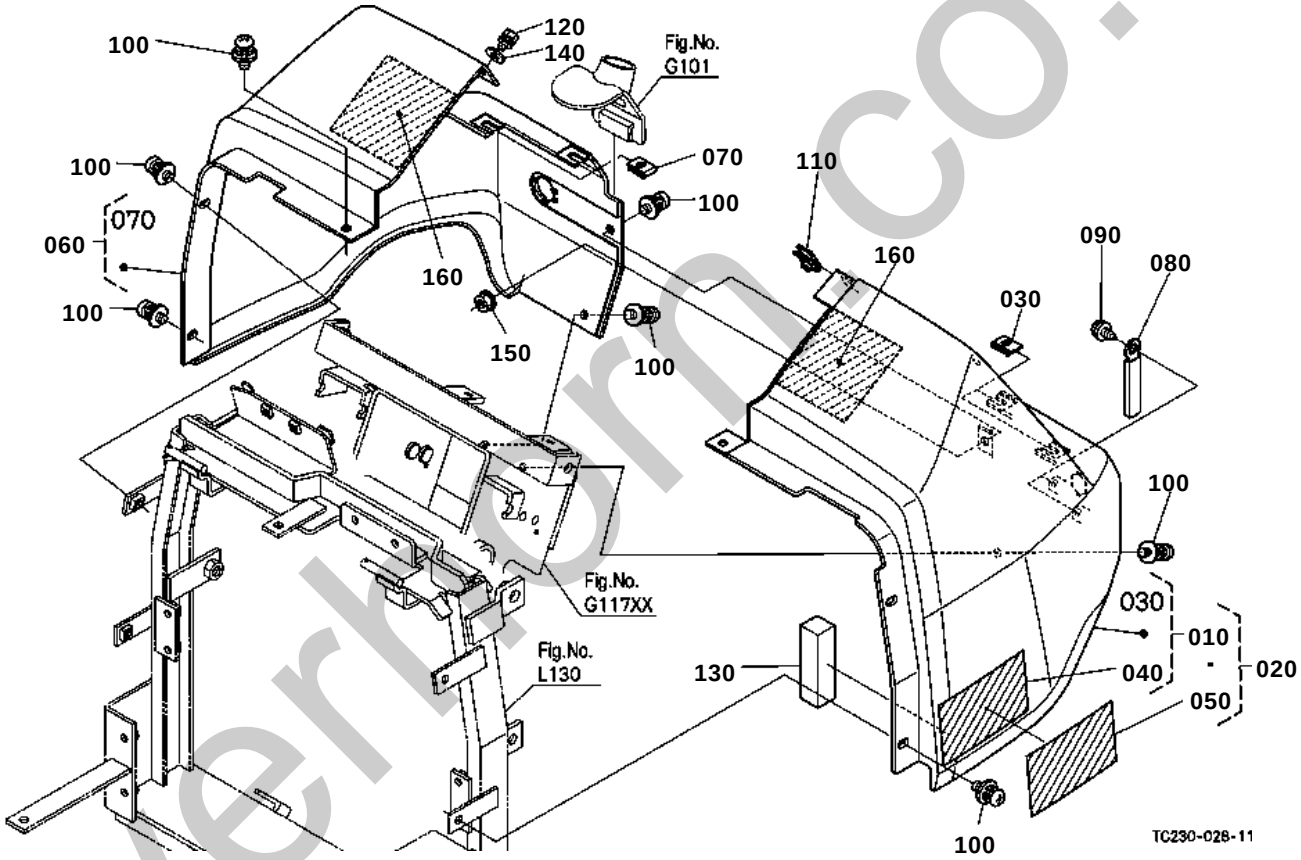

silverthorn.co.uk

HOOD(BONNET) REAR

↔ Interchangeable; ≠ not interchangeable; ← new for old; → old for new

REF.No	Part No.	Description	Q'ty	S.No.	I/C	REMARKS	Weight (kgf)	Weight (lb)
010	TC220-18920	KIT BONNET REAR(A)	1			ENGLISH	0.75	1.65
020	TC220-18930	KIT BONNET REAR(B)	1			FRENCH	0.75	1.65
030	3A011-83490	NUT SPRING	3				0.01	0.022
040	TA040-49650	LABEL START CAUTION	1			ENGLISH	0.004	0.0088
050	TA041-49650	LABEL START CAUTION	1			FRENCH	0.004	0.0088
060	TC220-18790	ASSY BONNET REAR RH	1				0.78	1.716
070	3A011-83490	NUT SPRING	3				0.01	0.022
080	15272-67590	CLAMP CORD	2				0.004	0.0088
090	03614-50610	SCREW TAPPING	2				0.005	0.011
100	03034-50816	SCREW WITH WASHER	8				0.01	0.022
110	34070-99160	NUT SPRING	1				0.005	0.011
120	01023-50612	BOLT	1				0.005	0.011
130	TC220-18840	SPONGE BONNET REAR	1				0.01	0.022
140	04015-60080	WASHER PLAIN	1				0.01	0.022
150	02751-50080	NUT FLANGE	1				0.006	0.0132
160	TC230-18830	RUBBER CUSHION	2				0	0

silverhorn.co.uk

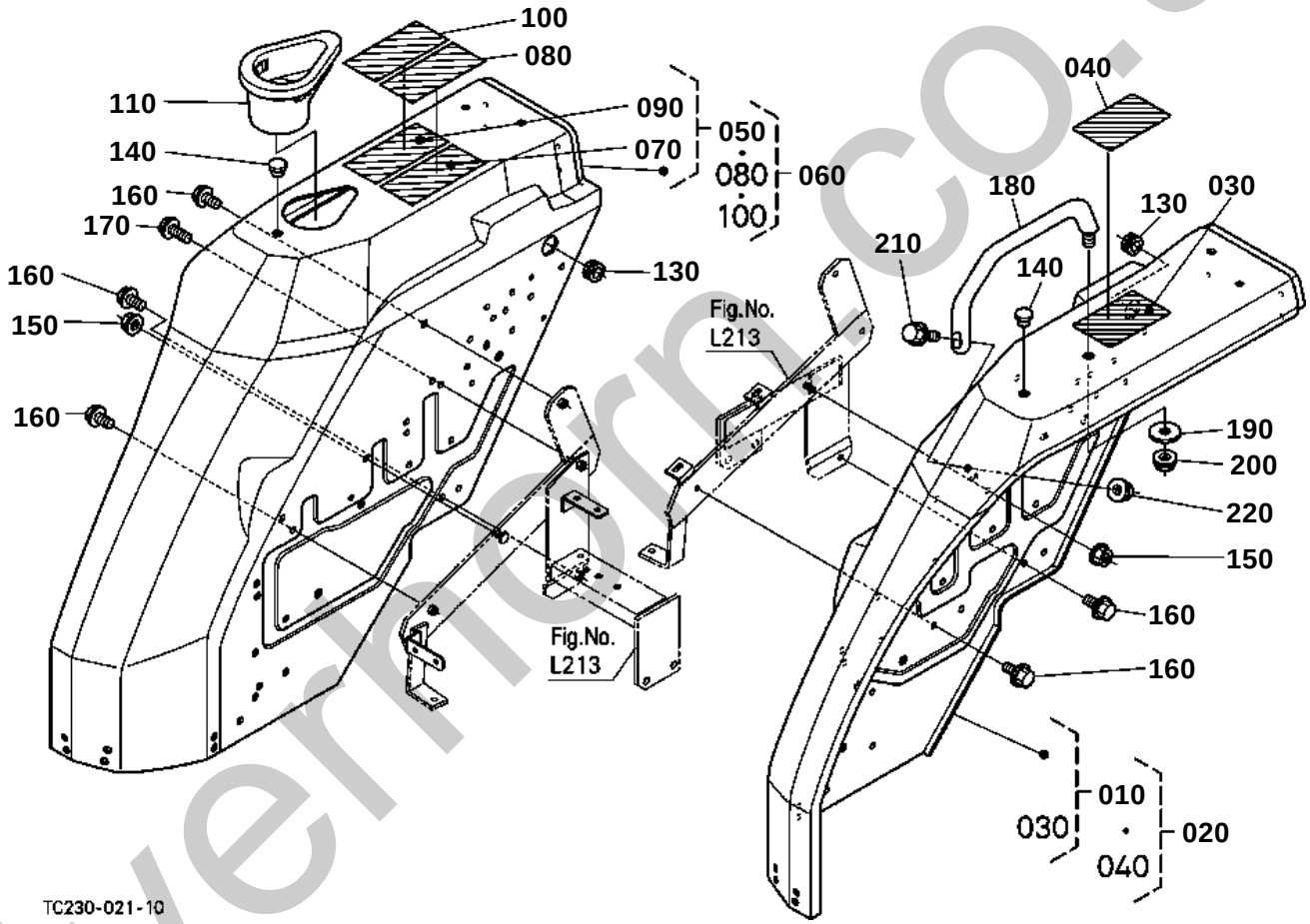

silvermorn.co.uk

↔ Interchangeable; ≠ not interchangeable; ← new for old; → old for new

REF.No	Part No.	Description	Q'ty	S.No.	I/C	REMARKS	Weight (kgf)	Weight (lb)
010	TC230-99530	KIT FENDER LH (A)	1			ENGLISH	0	0
020	TC230-99540	KIT FENDER LH (B)	1			FRENCH	0	0
030	35260-34914	LABEL SAFETY	1			ENGLISH	0.005	0.011
040	TA041-65702	LABEL SAFETY	1			FRENCH	0.01	0.022
050	TC230-47100	KIT FENDER RH(A)	1			ENGLISH	0	0
060	TC230-47110	KIT FENDER RH(B)	1			FRENCH	0	0
070	TA040-49320	LABEL ROPS WARNING	1			ENGLISH RIGID ROPS TYPE	0.001	0.0022
070	TA240-98480	LABEL ROPS WARNING	1			ENGLISH FOLDABLE ROPS TYPE	0.005	0.011
080	TA040-49150	LABEL ROPS WARNING	1			FRENCH RIGID ROPS TYPE	0.003	0.0066
080	3A112-98480	LABEL ROPS WARNING	1			FRENCH FOLDABLE ROPS TYPE	0.004	0.0088
090	TA140-49330	LABEL SHUTTLE	1			ENGLISH	0.005	0.011
100	TA141-49330	LABEL SHUTTLE	1			FRENCH	0.005	0.011
110	TC220-47292	HOLDER CUP	1				0.12	0.264
120	99999-99999	BLANK	0				0	0
130	53761-61260	GROMMET CIRCLE	2				0.005	0.011
140	30810-29170	PLUG	2				0.003	0.0066
150	02751-50080	NUT FLANGE	2				0.006	0.0132
160	01754-50816	BOLT FLANGE	7				0.011	0.0242
170	01754-50820	BOLT FLANGE	1				0.015	0.033
180	T0270-29442	GRIP	1				0.3	0.66
190	04013-60100	WASHER PLAIN	1				0.003	0.0066
200	02771-60100	NUT FLANGE	1				0.01	0.022
210	T0180-83590	BOLT FLANGE	1				0.022	0.0484
220	02771-60100	NUT FLANGE	1				0.01	0.022

silverhorn.co.uk

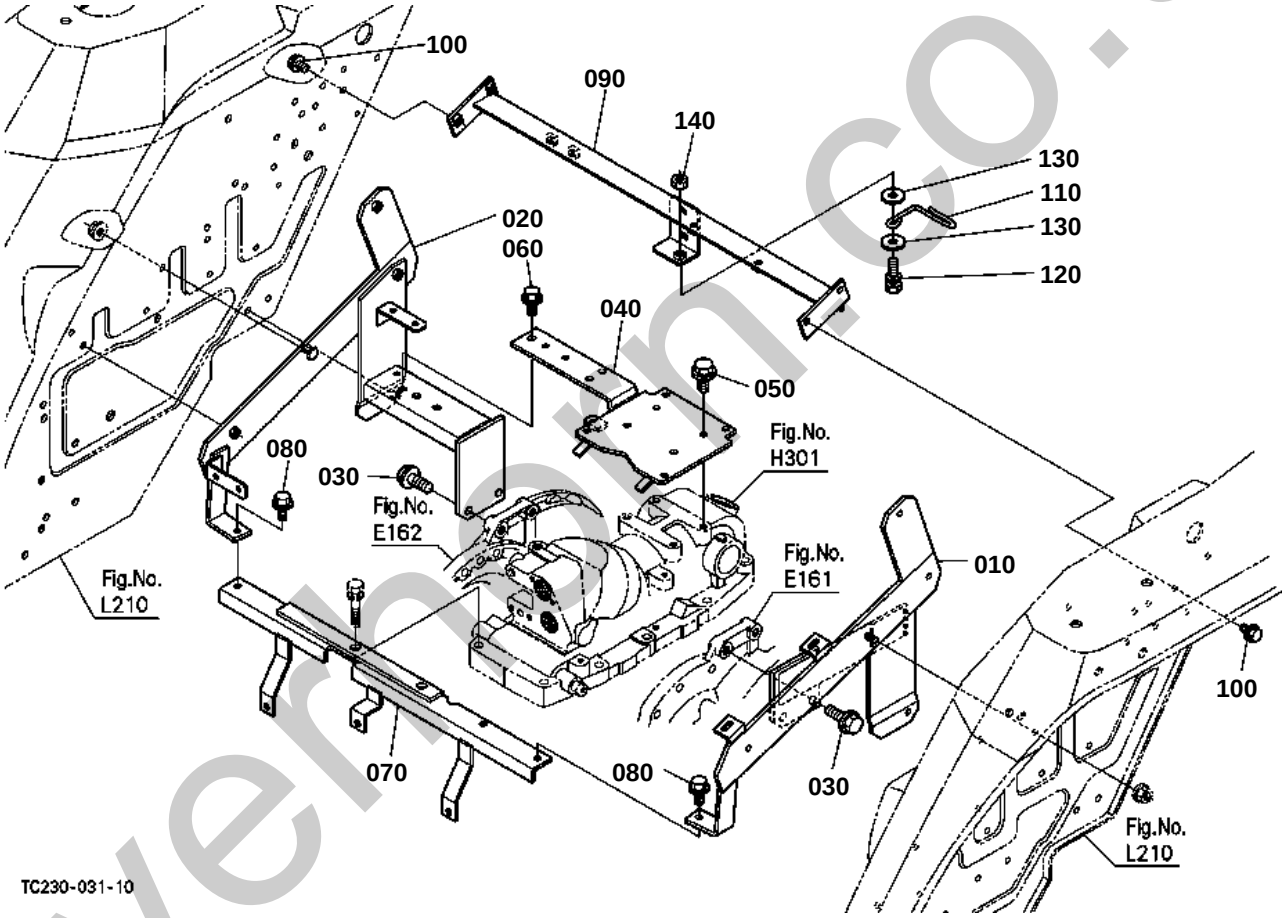

silverhorn.co.uk

FENDER SUPPORT

↔ Interchangeable; ≠ not interchangeable; ← new for old; → old for new

REF.No	Part No.	Description	Q'ty	S.No.	I/C	REMARKS	Weight (kgf)	Weight (lb)
010	TC230-29210	SUPPORT FENDER LH	1				0	0
020	TC230-29220	SUPPORT FENDER RH	1				0	0
030	01774-51230	BOLT FLANGE	4				0.043	0.0946
040	TC030-29233	SUPPORT SEAT	1				1.81	3.982
050	01774-61020	BOLT FLANGE	4				0.022	0.0484
060	01754-50825	BOLT FLANGE	1				0.01	0.022
070	TC230-29240	STAY FENDER	1				0	0
080	01754-50825	BOLT FLANGE	2				0.01	0.022
090	TC230-29443	SUPPORT FENDER	1				0	0
100	01754-50816	BOLT FLANGE	4				0.011	0.0242
110	TC230-29420	HOLDER	1				0	0
120	01123-50830	BOLT	1				0.015	0.033
130	04015-60080	WASHER PLAIN	2				0.01	0.022
140	02112-50080	NUT	1				0.003	0.0066

silverhorn.co.uk

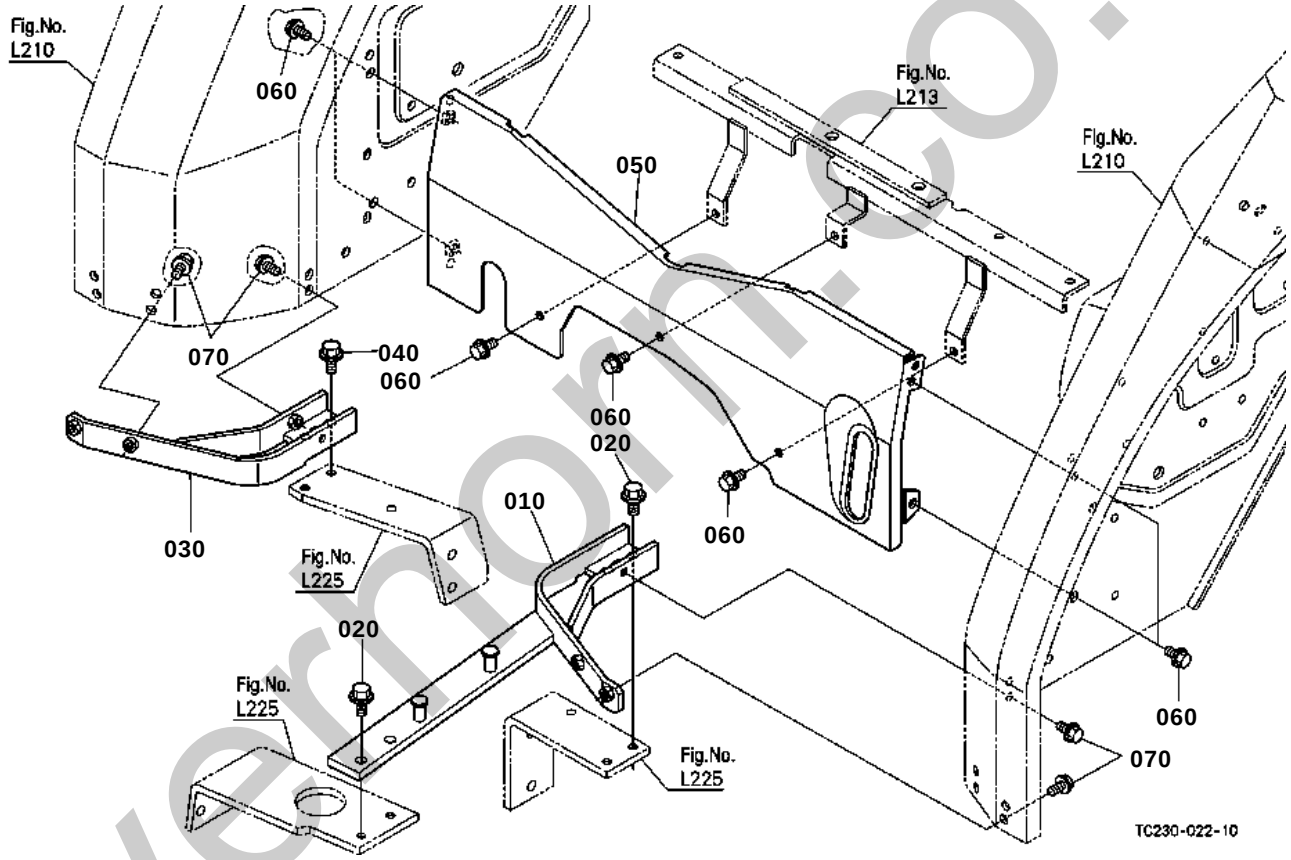

silvernorm.co.uk

FLOOR SEAT COVER / FENDER BRACKET

↔ Interchangeable; ≠ not interchangeable; ← new for old; → old for new

REF.No	Part No.	Description	Q'ty	S.No.	I/C	REMARKS	Weight (kgf)	Weight (lb)
010	TC230-29180	BRACKET FENDER LH	1				0	0
020	01774-61020	BOLT FLANGE	4				0.022	0.0484
030	TC230-29190	BRACKET FENDER RH	1				0	0
040	01774-61020	BOLT FLANGE	2				0.022	0.0484
050	TC230-47210	COVER FLOOR SEAT	1				0	0
060	01754-50816	BOLT FLANGE	7				0.011	0.0242
070	01754-50816	BOLT FLANGE	6				0.011	0.0242

silverhorn.co.uk

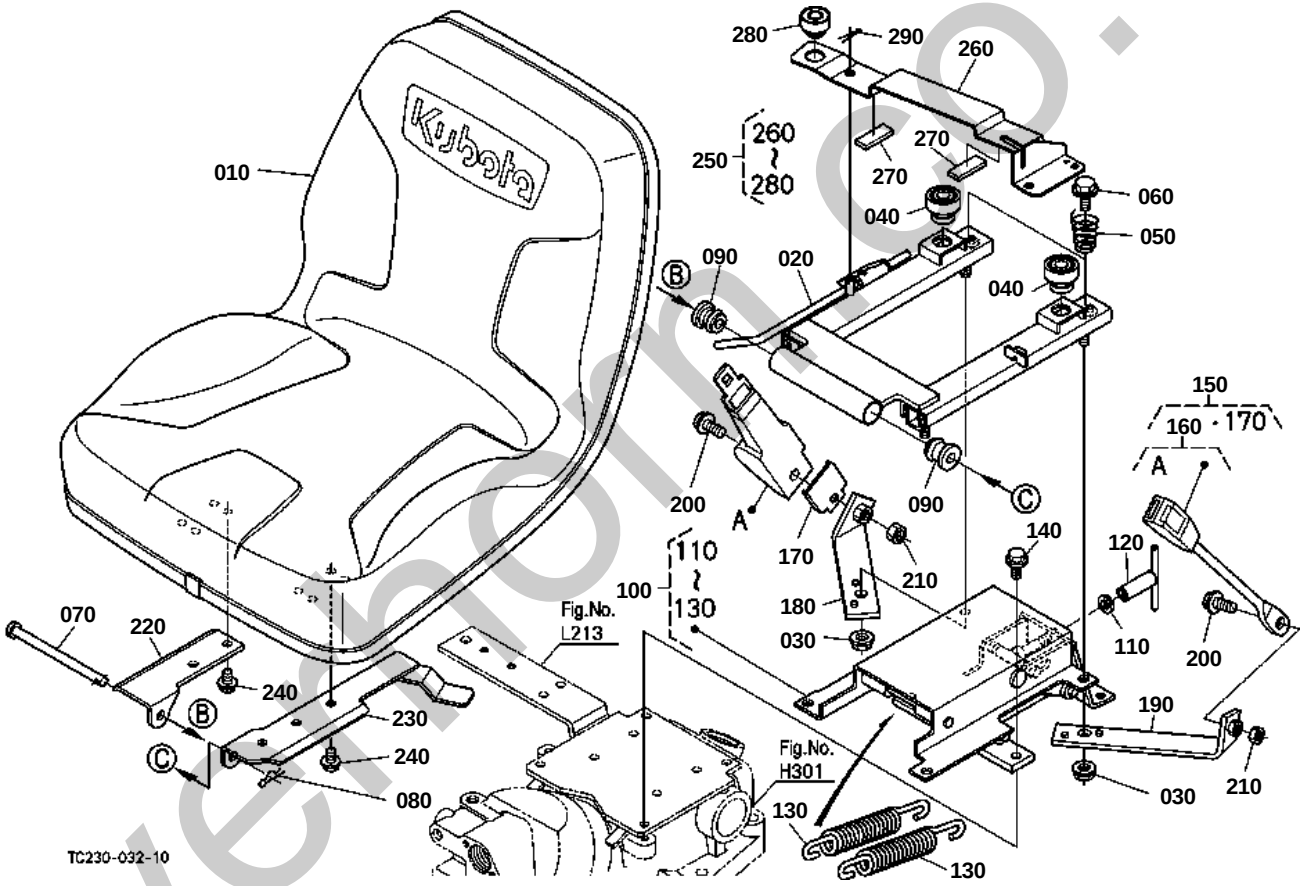

silvermoor.co.uk

SEAT

↔ Interchangeable; ≠ not interchangeable; ← new for old; → old for new

REF.No	Part No.	Description	Q'ty	S.No.	I/C	REMARKS	Weight (kgf)	Weight (lb)
010	TC220-88720	SEAT	1				7.4	16.28
020	TC030-18420	ASSY ADJUSTER SEAT	1				0	0
030	02783-50100	NUT FLANGE	4				0.01	0.022
040	32160-18440	CUSHION	2				0.013	0.0286
050	3A272-75270	SPRING SEAT	2				0.03	0.066
060	01754-50816	BOLT FLANGE	2				0.011	0.0242
070	38240-18470	PIN SEAT	1				0.085	0.187
080	05516-61000	PIN SNAP	1				0.003	0.0066
090	37150-18490	CUSHION	2				0.014	0.0308
100	TC030-11800	ASSY SUSPENSION SEAT	1				4	8.8
110	04011-50100	WASHER PLAIN	1				0.002	0.0044
120	TA040-11860	NUT ADJUSTING	1				0.605	1.331
130	TA040-11870	SPRING SEAT	2				0.26	0.572
140	01754-50820	BOLT FLANGE	4				0.015	0.033
150	TC030-99700	KIT BELT SEAT	1				0.83	1.826
160	TD060-47780	ASSY BELT SEAT	1				0.805	1.771
170	TC050-18472	COVER BELT SEAT	1				0.09	0.198
180	TA040-18482	BRACKET SEAT BELT RH	1				0.27	0.594
190	TC030-18492	BRACKET SEAT BELT LH	1				0.3	0.66
200	01774-51025	BOLT FLANGE	2				0.02	0.044
210	02116-50100	NUT	2				0.004	0.0088
220	TC030-18452	BRACKET SEAT RH	1				0.26	0.572
230	TC030-18472	BRACKET SEAT LH	1				0.46	1.012
240	01754-50816	BOLT FLANGE	4				0.011	0.0242
250	TC030-18400	ASSY SWITCH OPC	1				0	0
260	TC030-18480	BRACKET SWITCH	1				0.35	0.77
270	TC030-23800	CUSHION SWITCH	2				0.005	0.011
280	32160-18440	CUSHION	1				0.013	0.0286
290	05511-50318	PIN SPLIT	1				0.001	0.0022

silvermorn.co.uk

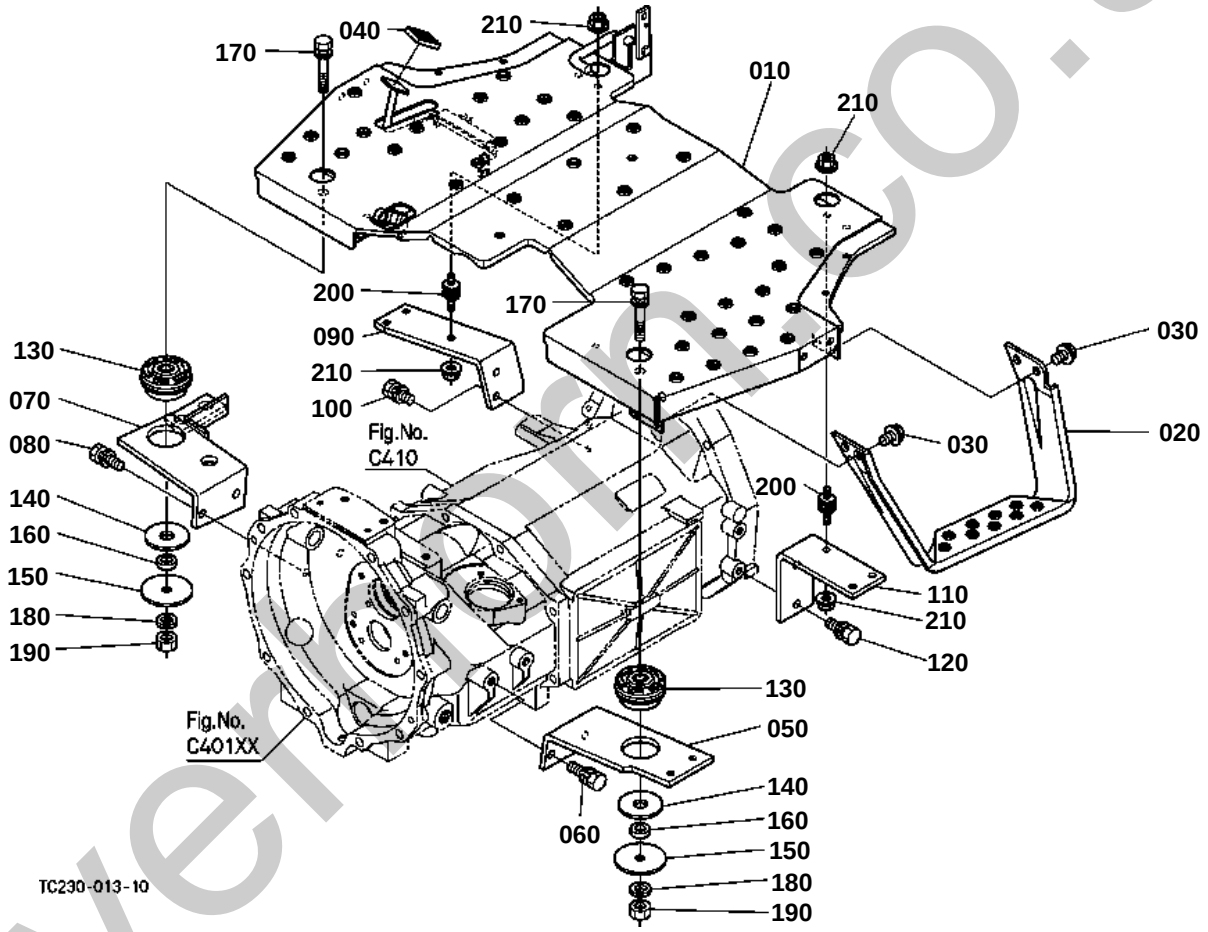

silvermorn.co.uk

STEP

↔ Interchangeable; ≠ not interchangeable; ← new for old; → old for new

REF.No	Part No.	Description	Q'ty	S.No.	I/C	REMARKS	Weight (kgf)	Weight (lb)
010	TC230-29920	COMP.STEP	1				0	0
020	TA140-47470	STEP AID LH	1				0.985	2.167
030	01754-50816	BOLT FLANGE	4				0.011	0.0242
040	37410-44850	COVER ACCEL.PEDAL	1				0.01	0.022
050	TC230-29140	BRACKET STEP FRON.LH	1				0	0
060	01133-51230	BOLT	2				0.04	0.088
070	TC230-29150	BRACKET STEP FRON.RH	1				0	0
080	01133-51230	BOLT	2				0.04	0.088
090	TC230-47410	BRACKET STEP REAR RH	1				0	0
100	01133-51025	BOLT	2				0.023	0.0506
110	TC230-47420	BRACKET STEP REAR LH	1				0	0
120	01133-51025	BOLT	2				0.023	0.0506
130	TA470-47380	CUSHION	2				0.15	0.33
140	04013-50180	WASHER PLAIN	2				0.015	0.033
150	T1060-47320	WASHER	2				0.104	0.2288
160	TC230-29130	COLLAR	2				0	0
170	01133-51475	BOLT	2				0.105	0.231
180	04512-60140	WASHER SPRING	2				0.008	0.0176
190	02174-50140	NUT	2				0.014	0.0308
200	TC030-47350	CUSHION	2				0.038	0.0836
210	02751-50080	NUT FLANGE	4				0.006	0.0132

silverhorn.co.uk

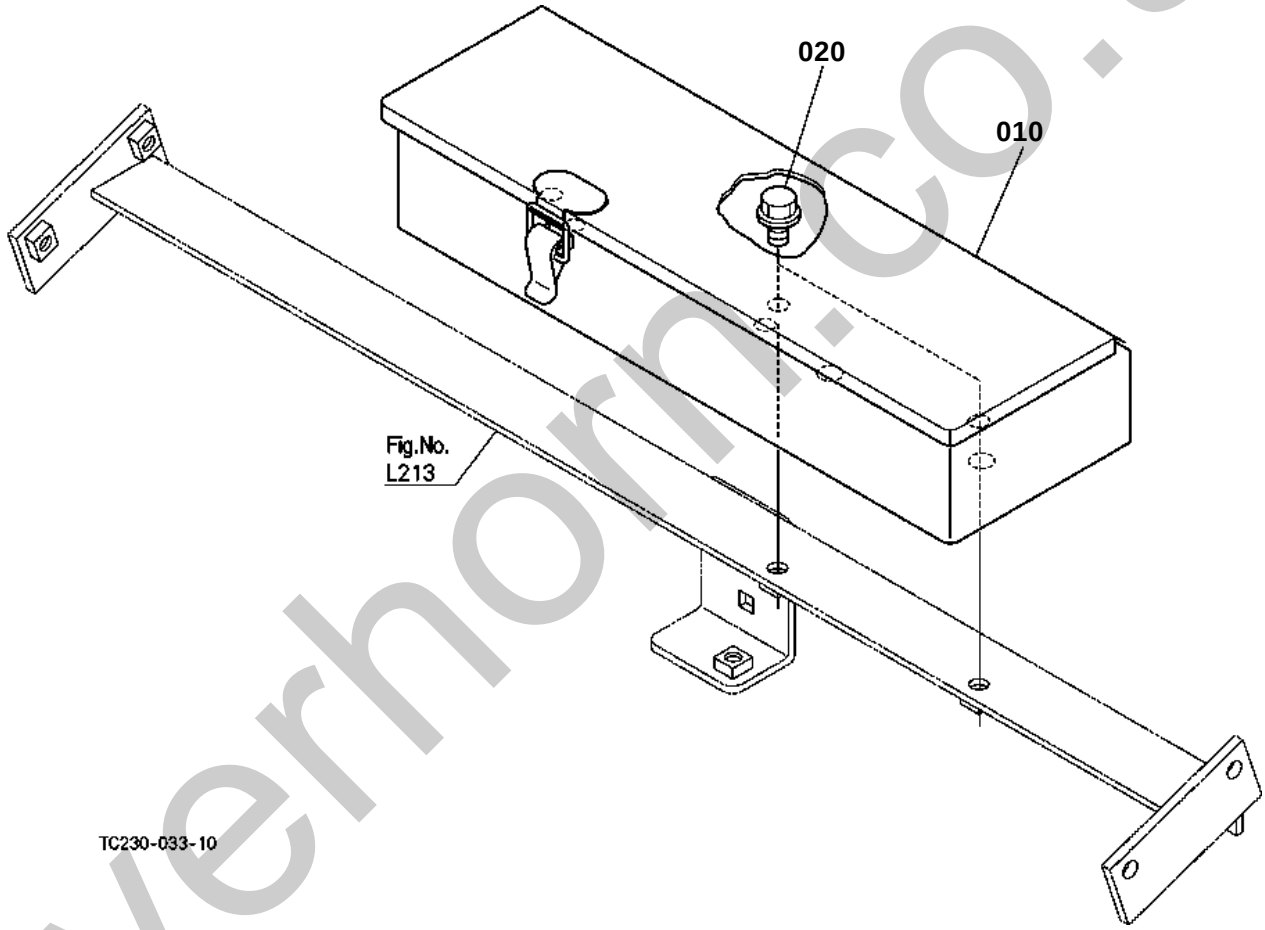

silverhorn.co.uk

↔ Interchangeable; ≠ not interchangeable; ← new for old; → old for new

REF.No	Part No.	Description	Q'ty	S.No.	I/C	REMARKS	Weight (kgf)	Weight (lb)
010	32310-18510	CASE TOOLS	1				0.94	2.068
020	01754-50816	BOLT FLANGE	2				0.011	0.0242

silverhorn.co.uk

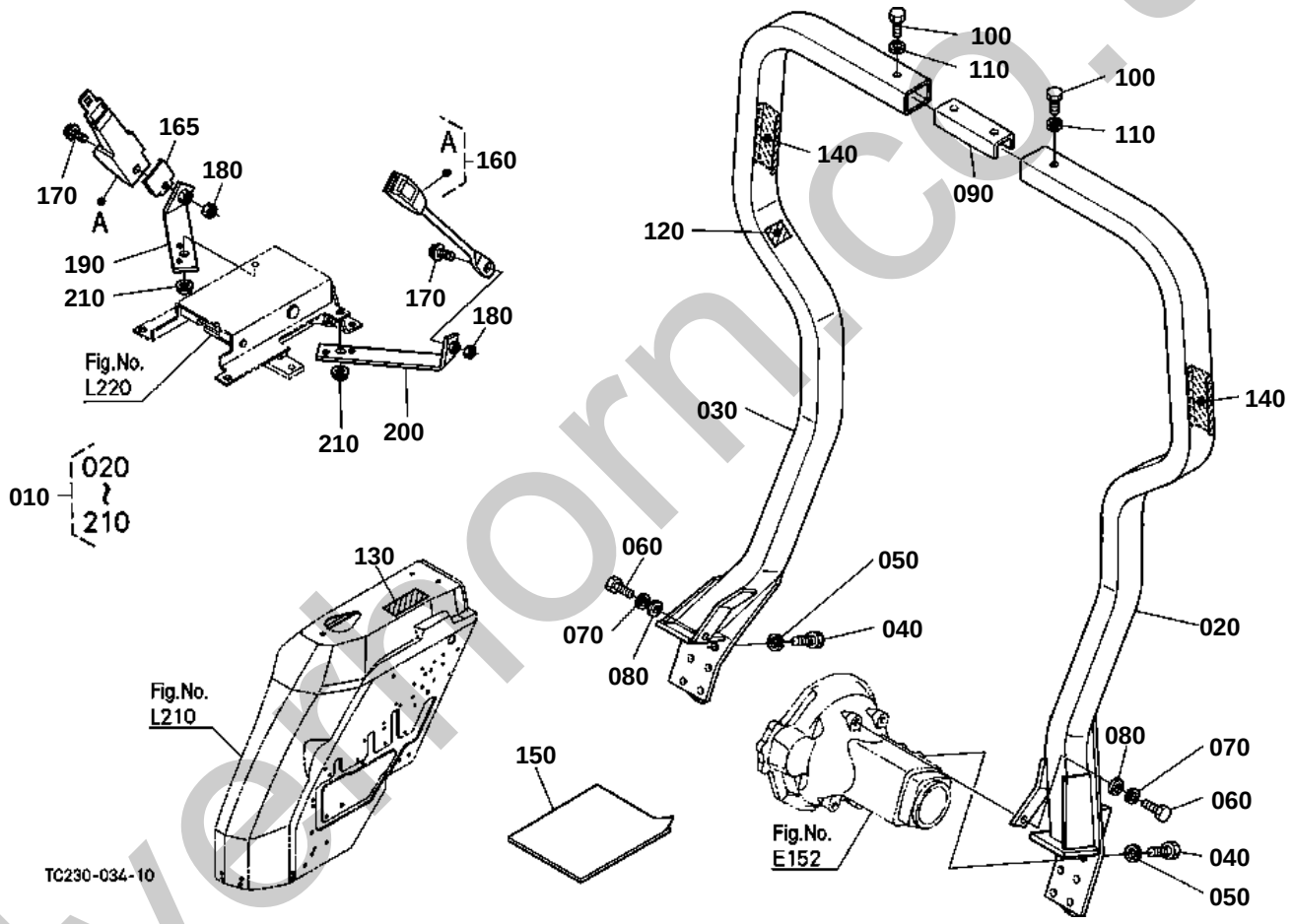

silverthorn.co.uk

↔ Interchangeable; ≠ not interchangeable; ← new for old; → old for new

REF.No	Part No.	Description	Q'ty	S.No.	I/C	REMARKS	Weight (kgf)	Weight (lb)
010	TC230-70080	ASSY ROPS	1				0	0
020	99999-99999	COMP.FRAME LH	1				0	0
030	99999-99999	COMP.FRAME RH	1				0	0
040	01176-51430	BOLT	12				0.052	0.1144
050	0Y450-50090	WASHER SPRING	12				0.007	0.0154
060	01073-51230	BOLT	2				0.041	0.0902
070	04512-60120	WASHER SPRING	2				0.005	0.011
080	04013-60120	WASHER PLAIN	2				0.01	0.022
090	99999-99999	PLATE	1				0	0
100	0Y109-50920	BOLT	2				0.001	0.0022
110	0Y450-50090	WASHER SPRING	2				0.007	0.0154
120	6C140-47460	LABEL ROPS WARNING	1			ENGLISH	0.001	0.0022
120	6C141-47460	LABEL ROPS WARNING	1			FRENCH	0.001	0.0022
130	TA040-49320	LABEL ROPS WARNING	1			ENGLISH	0.001	0.0022
130	TA040-49150	LABEL ROPS WARNING	1			FRENCH	0.003	0.0066
140	6C140-54990	REFLECTOR LABEL	2				0.003	0.0066
150	99999-99999	MANUAL ASSEMBLY	1				0	0
160	TD060-47780	ASSY BELT SEAT	1				0.805	1.771
165	TC050-18472	COVER BELT SEAT	1				0.09	0.198
170	01774-51025	BOLT FLANGE	2				0.02	0.044
180	02116-50100	NUT	2				0.004	0.0088
190	TA040-18482	BRACKET SEAT BELT RH	1				0.27	0.594
200	TC030-18492	BRACKET SEAT BELT LH	1				0.3	0.66
210	02783-50100	NUT FLANGE	2				0.01	0.022

silverhorn.co.uk

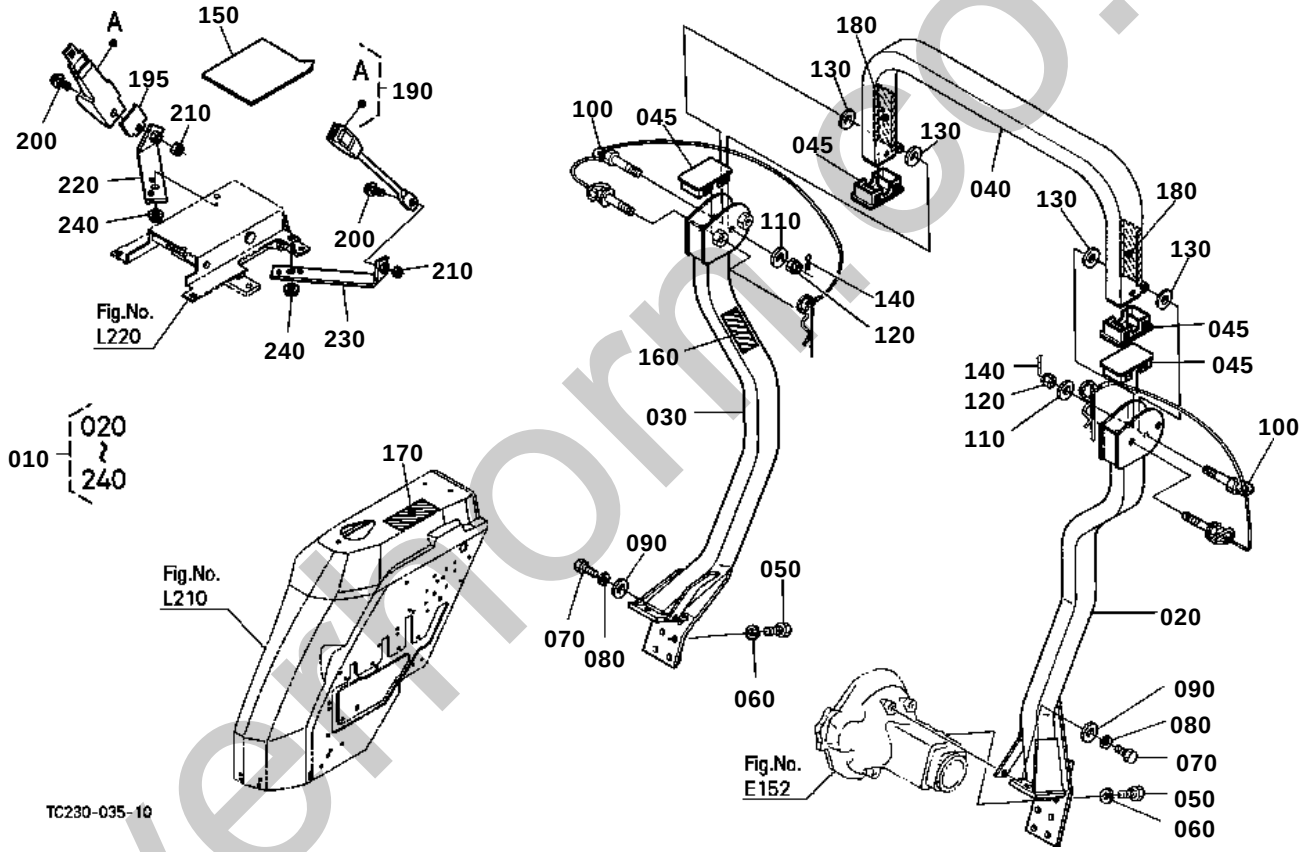

silverfrom.co.uk

↔ Interchangeable; ≠ not interchangeable; ← new for old; → old for new

REF.No	Part No.	Description	Q'ty	S.No.	I/C	REMARKS	Weight (kgf)	Weight (lb)
010	TC230-70070	ASSY ROPS	1				0	0
020	99999-99999	COMP.FRAME LH	1				0	0
030	99999-99999	COMP.FRAME RH	1				0	0
040	99999-99999	FRAME UPPER	1				0	0
045	TC050-48773	COVER ROPS	4				0.03	0.066
050	01176-51430	BOLT	12				0.052	0.1144
060	0Y450-50090	WASHER SPRING	12				0.007	0.0154
070	01073-51230	BOLT	2				0.041	0.0902
080	04512-60120	WASHER SPRING	2				0.005	0.011
090	04013-60120	WASHER PLAIN	2				0.01	0.022
100	TA240-48752	SET BOLT	2				0.435	0.957
110	04013-60160	WASHER PLAIN	2				0.01	0.022
120	02254-50160	NUT	2				0.04	0.088
130	04013-60160	WASHER PLAIN	4				0.01	0.022
140	05511-50430	PIN SPLIT	2				0.004	0.0088
150	99999-99999	MANUAL ASSEMBLY	1				0	0
160	3A111-95540	LABEL ROPS CAUTION	1			ENGLISH	0.003	0.0066
160	3A112-95540	LABEL ROPS CAUTION	1			FRENCH	0.003	0.0066
170	TA240-98480	LABEL ROPS WARNING	1			ENGLISH	0.005	0.011
170	3A112-98480	LABEL ROPS WARNING	1			FRENCH	0.004	0.0088
180	6C140-54990	REFLECTOR LABEL	2				0.003	0.0066
190	TD060-47780	ASSY BELT SEAT	1				0.805	1.771
195	TC050-18472	COVER BELT SEAT	1				0.09	0.198
200	01774-51025	BOLT FLANGE	2				0.02	0.044
210	02116-50100	NUT	2				0.004	0.0088
220	TA040-18482	BRACKET SEAT BELT RH	1				0.27	0.594
230	TC030-18492	BRACKET SEAT BELT LH	1				0.3	0.66
240	02783-50100	NUT FLANGE	2				0.01	0.022

silverhorn.co.uk

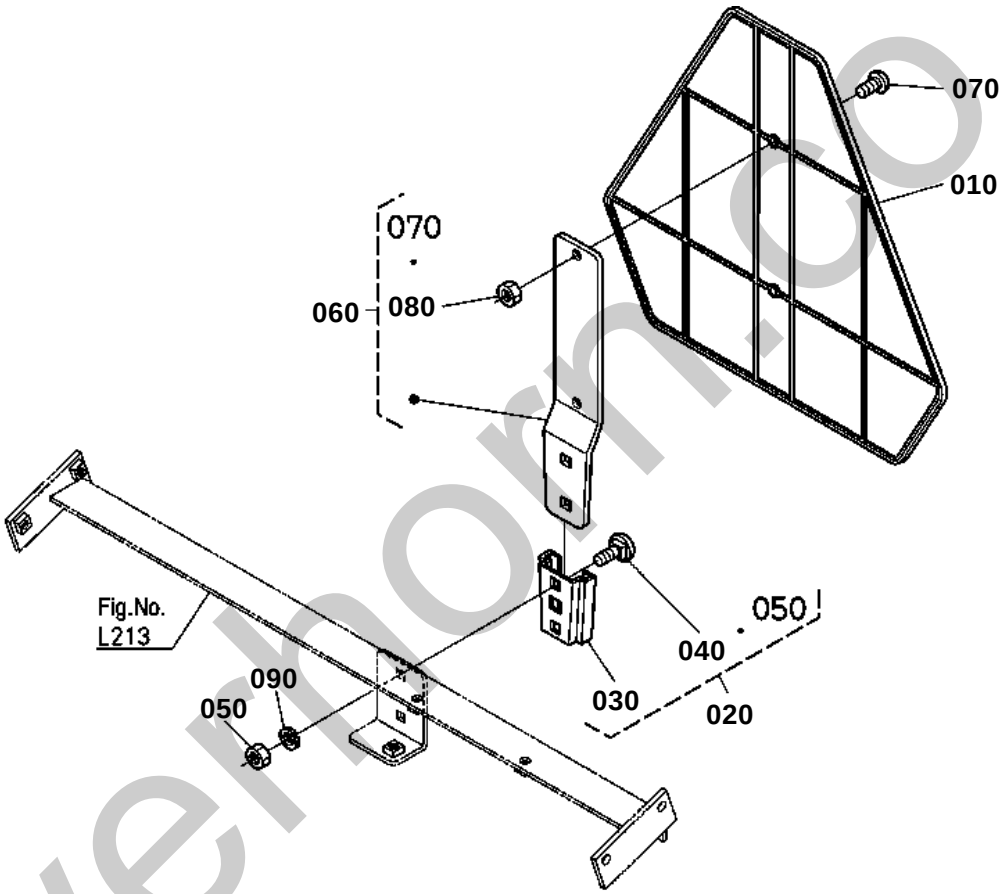

TC230-036-10

silvermorn.co.uk

SMV EMBLEM

↔ Interchangeable; ≠ not interchangeable; ← new for old; → old for new

REF.No	Part No.	Description	Q'ty	S.No.	I/C	REMARKS	Weight (kgf)	Weight (lb)
010	7L500-89912	SIGN SMV	1				0.32	0.704
020	7L500-89920	SOCKET SMV SIGN	1				0.1	0.22
030	7L500-89930	SOCKET-MTG SMV	1				0.05	0.11
040	7L500-89940	BOLT SQUARE NECK	2				0.01	0.022
050	7L500-89950	NUT	2				0.004	0.0088
060	7L500-89960	SPADE SMV SIGN	1				0.24	0.528
070	7L500-89980	VIS	2				0.02	0.044
080	7L500-89990	NUT	2				0.001	0.0022
090	04512-60080	WASHER SPRING	2				0.002	0.0044

silverhorn.co.uk

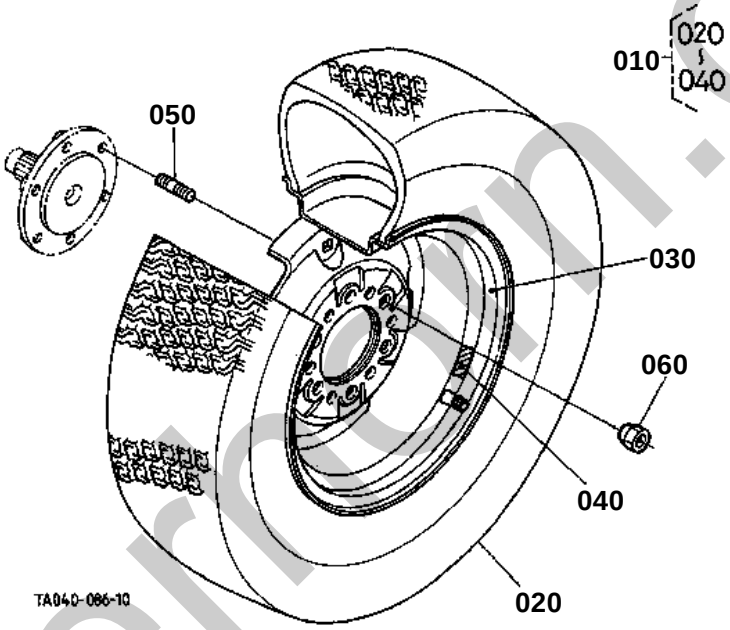

silverfarm.co.uk

FRONT WHEEL (27*8.50-15)

↔ Interchangeable; ≠ not interchangeable; ← new for old; → old for new

REF.No	Part No.	Description	Q'ty	S.No.	I/C	REMARKS	Weight (kgf)	Weight (lb)
010	TA040-10500	ASSY FRONT WHEEL	2			ALR8868	0	0
020	67002-17630	TIRE	2			ALR8868	0	0
030	TA040-10550	WHEEL	2			ALR8868	0	0
040	99999-99999	LABEL TIRE	2			ALR8868	0	0
050	TA150-49160	STUD WHEEL	12				0.05	0.11
060	35340-11390	NUT	12				0.03	0.066

silverhorn.co.uk

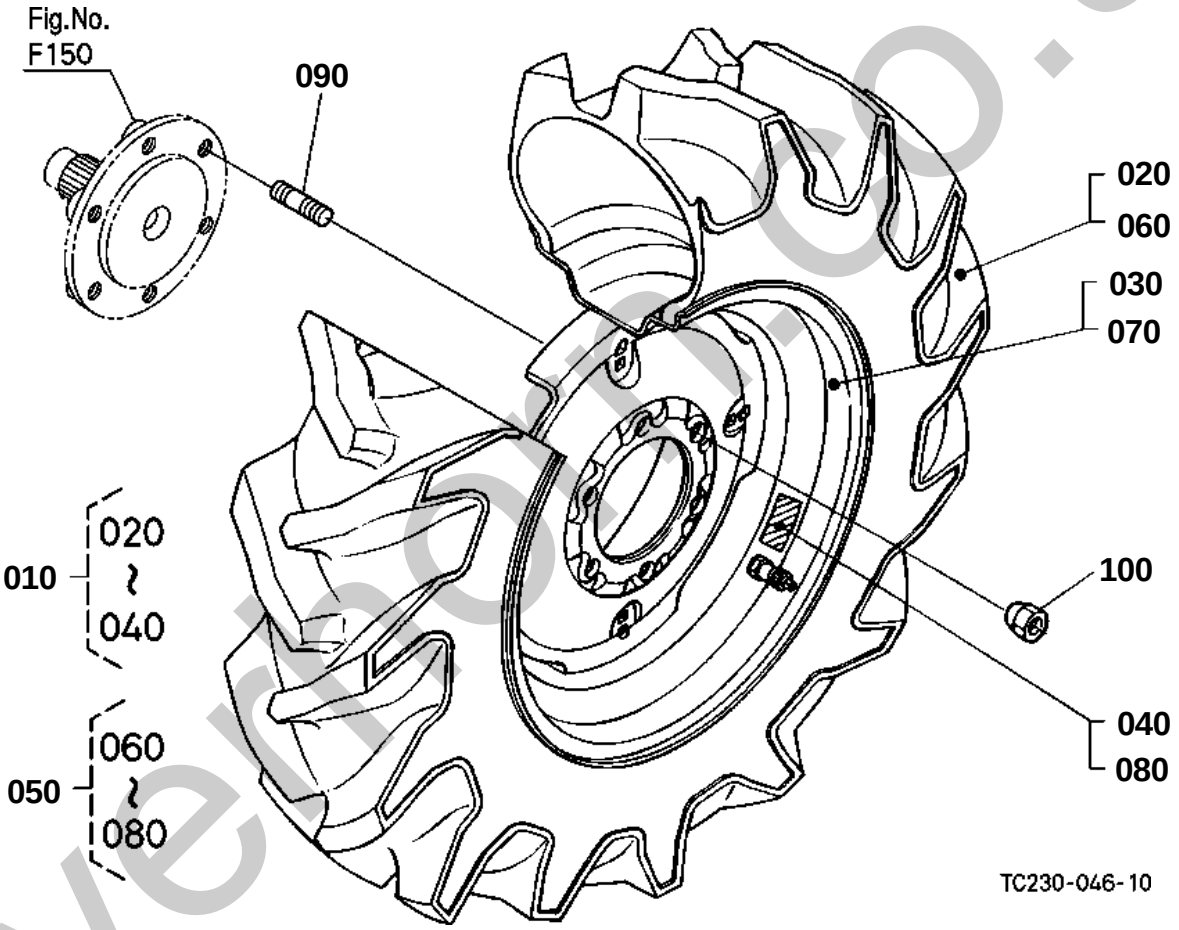

silvermoor.co.uk

FRONT WHEEL (8.3-16)

↔ Interchangeable; ≠ not interchangeable; ← new for old; → old for new

REF.No	Part No.	Description	Q'ty	S.No.	I/C	REMARKS	Weight (kgf)	Weight (lb)
010	TC230-10730	ASSY TIRE	1			ABR8753BR	0	0
020	TC230-43040	TIRE	1			ABR8753BR	0	0
030	66434-17640	WHEEL	1			ABR8753BR	11.3	24.86
040	99999-99999	LABEL TIRE RH	1			ABR8753BR	0	0
050	TC230-10740	ASSY TIRE	1			ABR8753BL	0	0
060	TC230-43040	TIRE	1			ABR8753BL	0	0
070	66434-17640	WHEEL	1			ABR8753BL	11.3	24.86
080	99999-99999	LABEL TIRE LH	1			ABR8753BL	0	0
090	TA150-49160	STUD WHEEL	12				0.05	0.11
100	35340-11390	NUT	12				0.03	0.066

silverhorn.co.uk

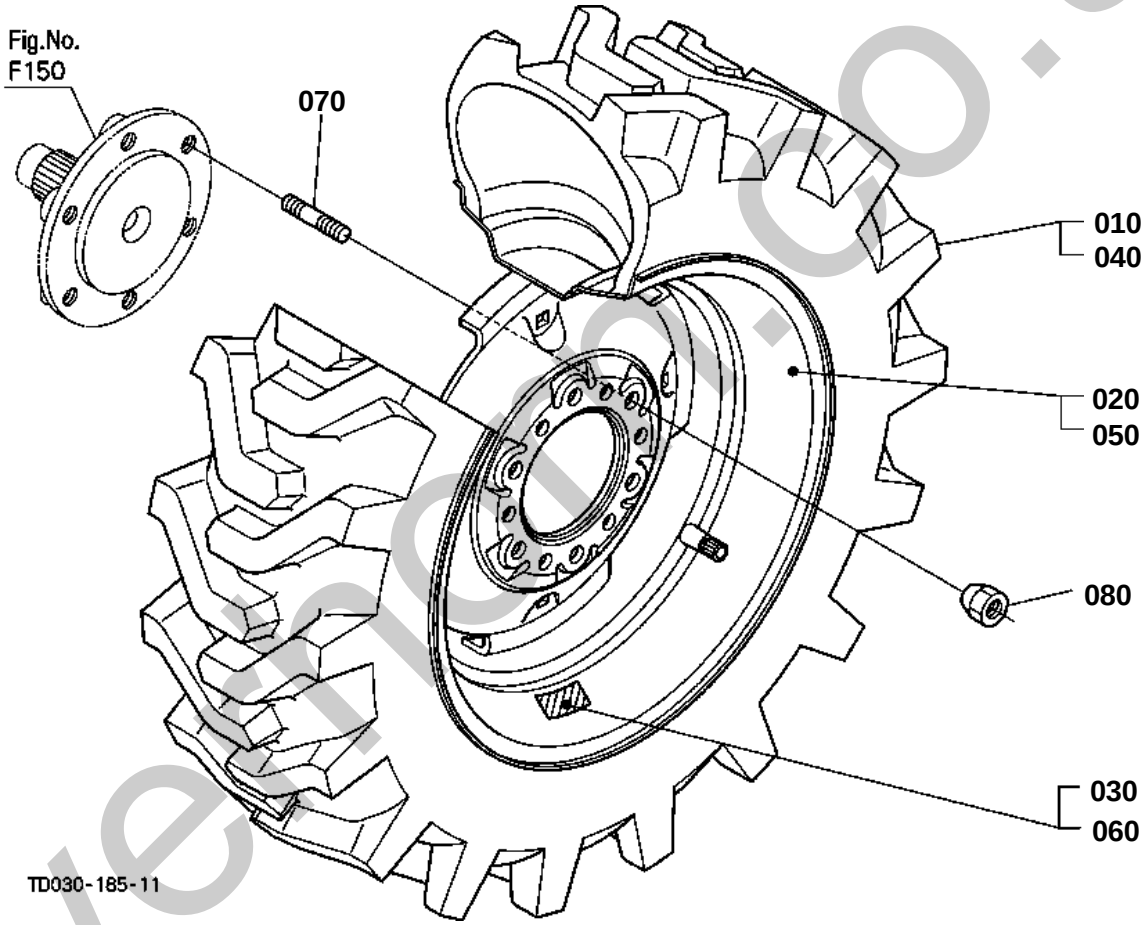

silverhoe.co.uk

FRONT WHEEL (10.0-16.5)

↔ Interchangeable; ≠ not interchangeable; ← new for old; → old for new

REF.No	Part No.	Description	Q'ty	S.No.	I/C	REMARKS	Weight (kgf)	Weight (lb)
010	TA040-50930	TIRE	1			ALR8869AR	0	0
020	TA040-42420	WHEEL	1			ALR8869AR	0	0
030	99999-99999	LABEL RH	1			ALR8869AR	0	0
040	TA040-50930	TIRE	1			ALR8869AL	0	0
050	TA040-42420	WHEEL	1			ALR8869AL	0	0
060	99999-99999	LABEL LH	1			ALR8869AL	0	0
070	TA150-49160	STUD WHEEL	12				0.05	0.11
080	35340-11390	NUT	12				0.03	0.066

silverhorn.co.uk

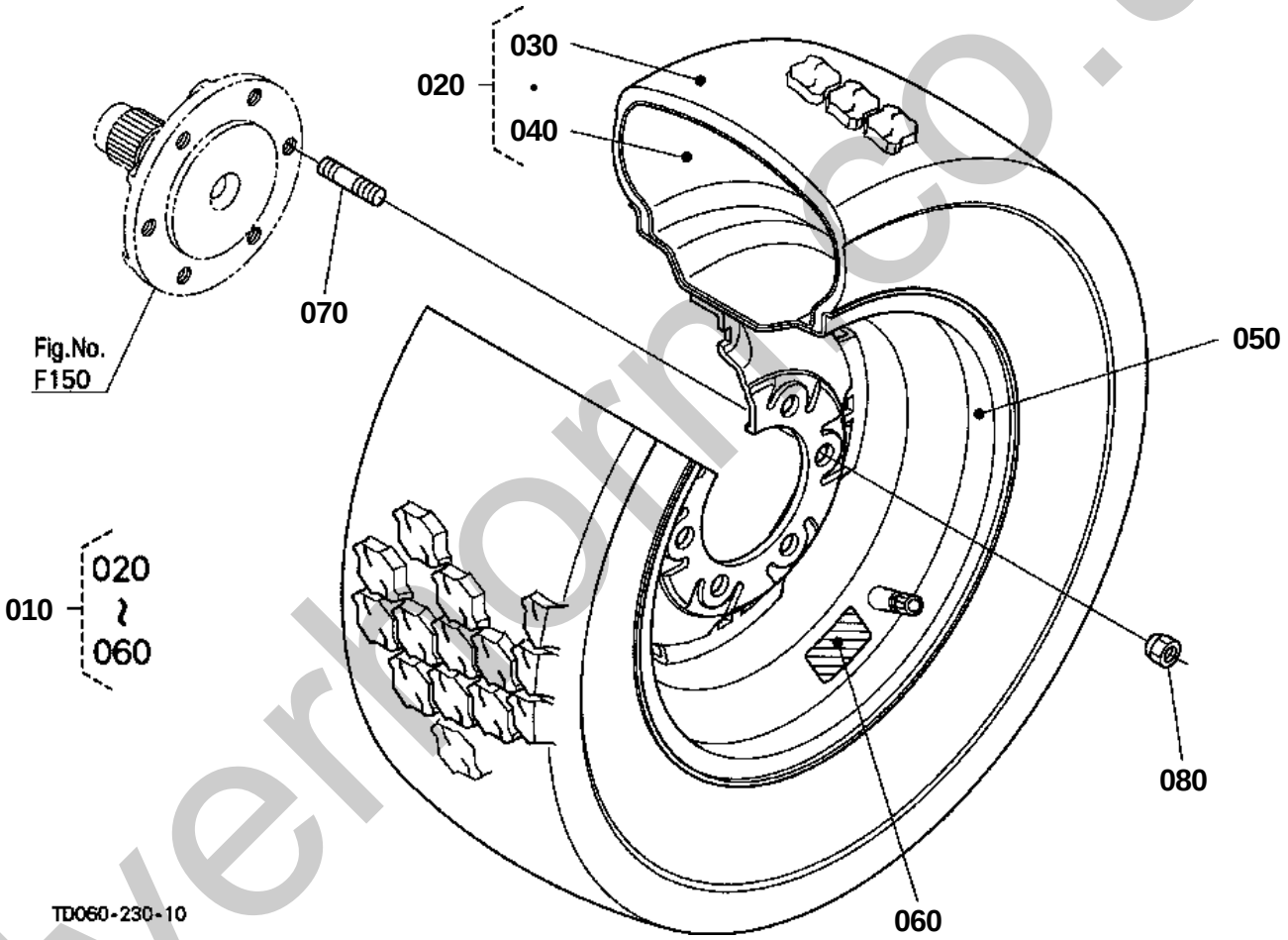

silverborn.co.uk

FRONT WHEEL (27-10.50LL15)

↔ Interchangeable; ≠ not interchangeable; ← new for old; → old for new

REF.No	Part No.	Description	Q'ty	S.No.	I/C	REMARKS	Weight (kgf)	Weight (lb)
010	TA140-11500	FRONT WHEEL	2			ALR8898	0	0
020	TA140-11510	TIRE ASSY	2			ALR8898	0	0
030	TA140-11520	TIRE	2			ALR8898	0	0
040	TA140-11530	TUBE	2			ALR8898	0	0
050	TA140-11540	WHEEL	2			ALR8898	0	0
060	99999-99999	LABEL TIRE	2			ALR8898	0	0
070	TA150-49160	STUD WHEEL	12				0.05	0.11
080	35340-11390	NUT	12				0.03	0.066

silverhorn.co.uk

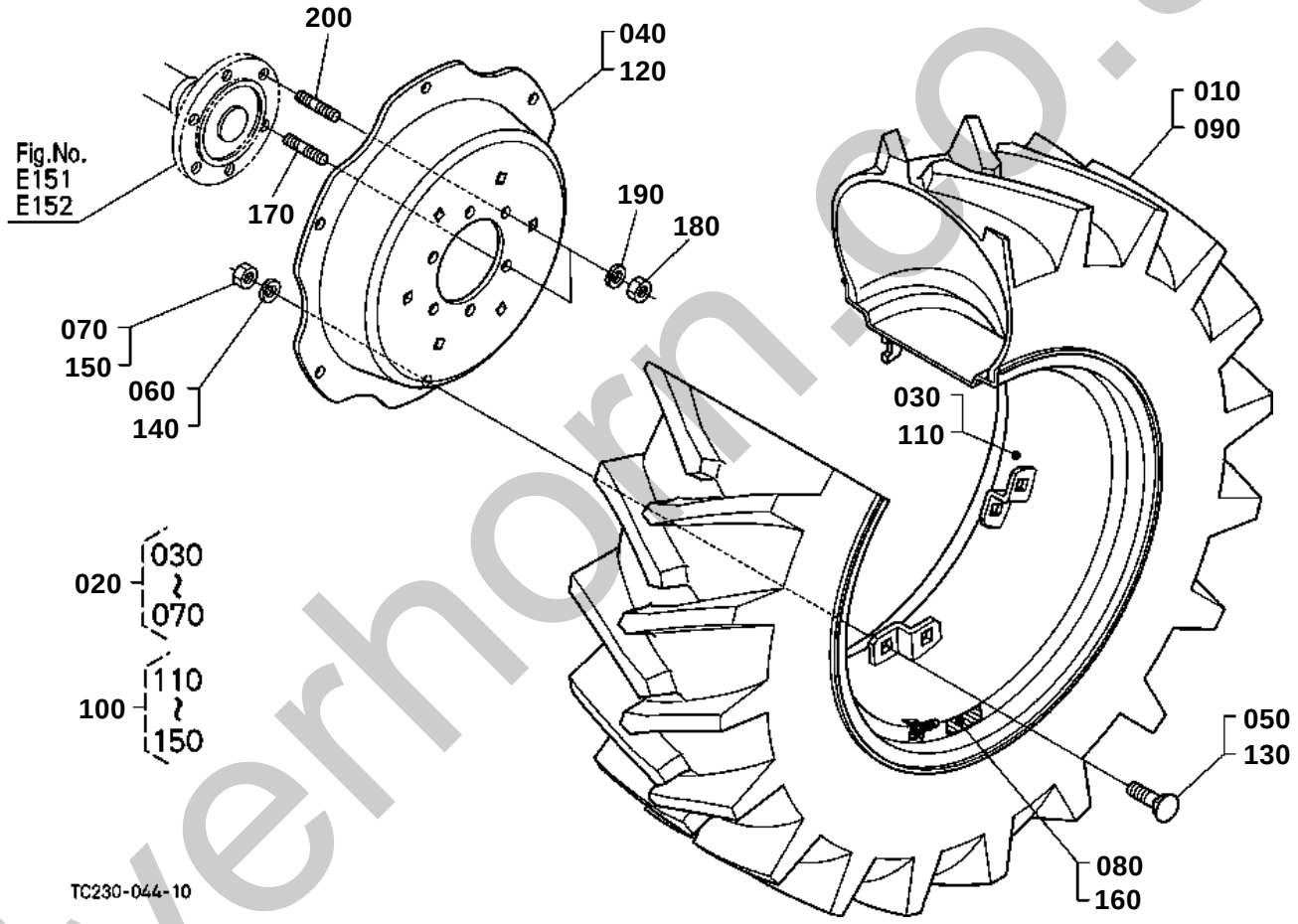

silverhorn.co.uk

REAR WHEEL (14.9-24)

↔ Interchangeable; ≠ not interchangeable; ← new for old; → old for new

REF.No	Part No.	Description	Q'ty	S.No.	I/C	REMARKS	Weight (kgf)	Weight (lb)
010	TC230-27700	TIRE	1			ALR6811R	0	0
020	TC230-27840	ASSY WHEEL	1			ALR6811R	0	0
030	TC230-27850	RIM	1			ALR6811R	0	0
040	TC230-27660	DISK	1			ALR6811R	0	0
050	31220-27680	BOLT	6			ALR6811R	0.09	0.198
060	75599-33017	WASHER SPRING LOCK	6			ALR6811R	0.005	0.011
070	02174-50160	NUT	6			ALR6811R	0.022	0.0484
080	99999-99999	LABEL TIRE RH	1			ALR6811R	0	0
090	TC230-27700	TIRE	1			ALR6811L	0	0
100	TC230-27840	ASSY WHEEL	1			ALR6811L	0	0
110	TC230-27850	RIM	1			ALR6811L	0	0
120	TC230-27660	DISK	1			ALR6811L	0	0
130	31220-27680	BOLT	6			ALR6811L	0.09	0.198
140	75599-33017	WASHER SPRING LOCK	6			ALR6811L	0.005	0.011
150	02174-50160	NUT	6			ALR6811L	0.022	0.0484
160	99999-99999	LABEL TIRE LH	1			ALR6811L	0	0
170	01517-51635	STUD	8				0.078	0.1716
180	02076-50160	NUT	12				0.03	0.066
190	04512-60160	WASHER SPRING	12				0.01	0.022
200	01517-51635	STUD	4				0.078	0.1716

silverhorn.co.uk

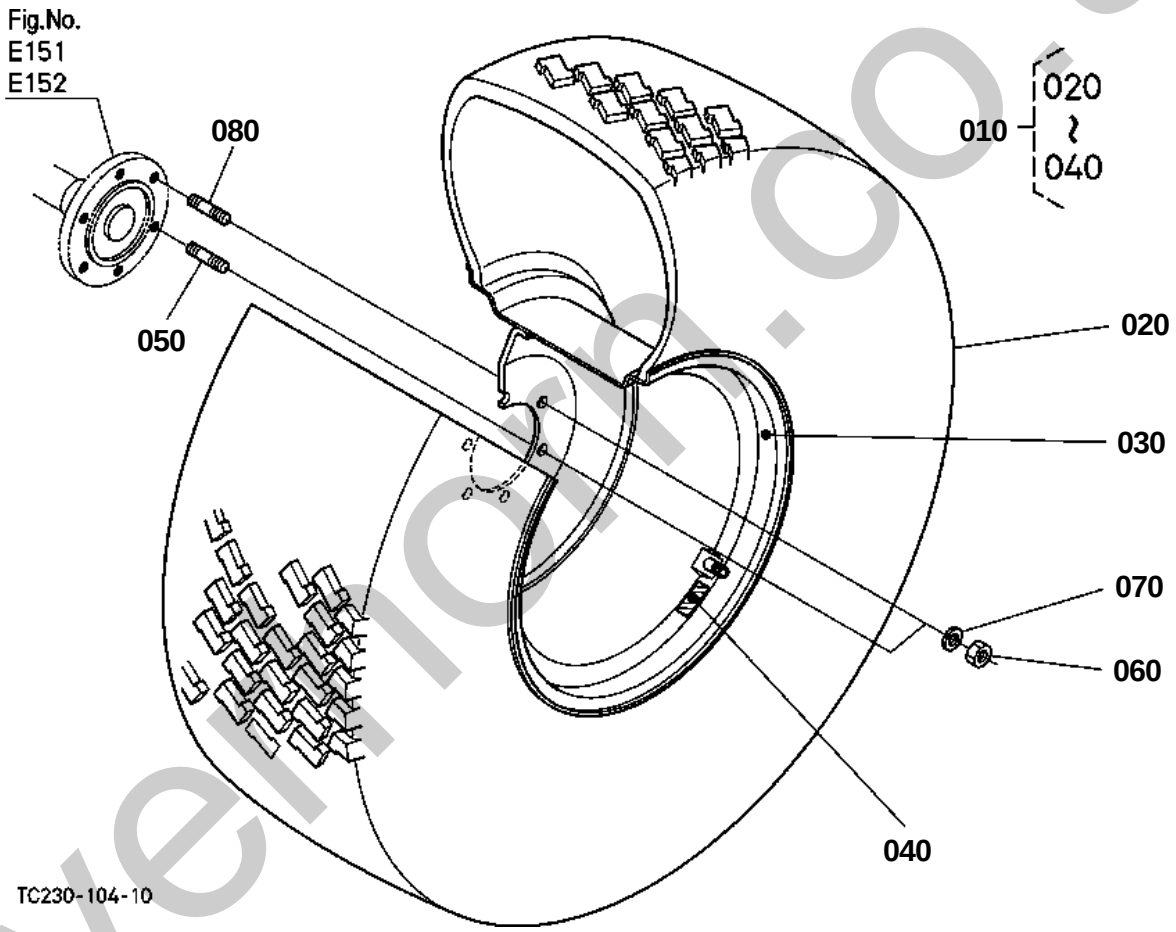

silvermoon.co.uk

REAR WHEEL (44*18-20)

↔ Interchangeable; ≠ not interchangeable; ← new for old; → old for new

REF.No	Part No.	Description	Q'ty	S.No.	I/C	REMARKS	Weight (kgf)	Weight (lb)
010	TD050-51310	ASSY TIRE	2			ALR6803	0	0
020	TC050-51330	TIRE	2			ALR6803	0	0
030	TD050-51340	WHEEL	2			ALR6803	0	0
040	99999-99999	LABEL TIRE	2			ALR6803	0	0
050	01517-51635	STUD	8				0.078	0.1716
060	02076-50160	NUT	12				0.03	0.066
070	04512-60160	WASHER SPRING	12				0.01	0.022
080	01517-51635	STUD	4				0.078	0.1716

silverhorn.co.uk

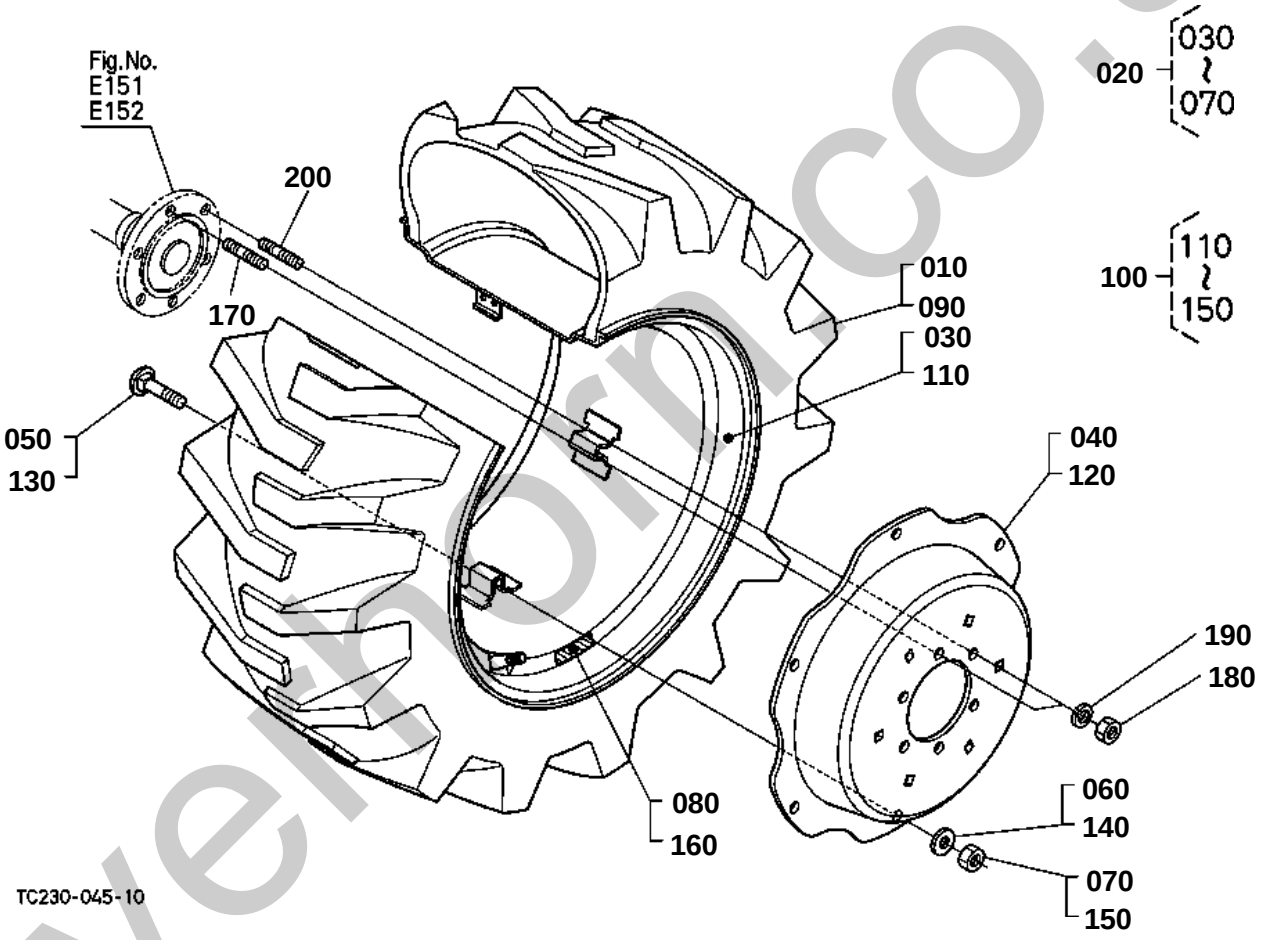

silverthorn.co.uk

REAR WHEEL (17.5L-24)

↔ Interchangeable; ≠ not interchangeable; ← new for old; → old for new

REF.No	Part No.	Description	Q'ty	S.No.	I/C	REMARKS	Weight (kgf)	Weight (lb)
010	TD060-27730	TIRE	1			ALR6807R	0	0
020	TC230-27630	ASSY WHEEL	1			ALR6807R	0	0
030	TC050-00880	RIM	1			ALR6807R	0	0
040	TC230-27660	DISK	1			ALR6807R	0	0
050	TC050-00970	BOLT	6			ALR6807R	0.16	0.352
060	TC050-00980	WASHER PLAIN	6			ALR6807R	0.02	0.044
070	TC050-00990	NUT	6			ALR6807R	0	0
080	99999-99999	LABEL TIRE RH	1			ALR6807R	0	0
090	TD060-27730	TIRE	1			ALR6807L	0	0
100	TC230-27630	ASSY WHEEL	1			ALR6807L	0	0
110	TC050-00880	RIM	1			ALR6807L	0	0
120	TC230-27660	DISK	1			ALR6807L	0	0
130	TC050-00970	BOLT	6			ALR6807L	0.16	0.352
140	TC050-00980	WASHER PLAIN	6			ALR6807L	0.02	0.044
150	TC050-00990	NUT	6			ALR6807L	0	0
160	99999-99999	LABEL TIRE LH	1			ALR6807L	0	0
170	01517-51635	STUD	8				0.078	0.1716
180	02076-50160	NUT	12				0.03	0.066
190	04512-60160	WASHER SPRING	12				0.01	0.022
200	01517-51635	STUD	4				0.078	0.1716

silverhorn.co.uk

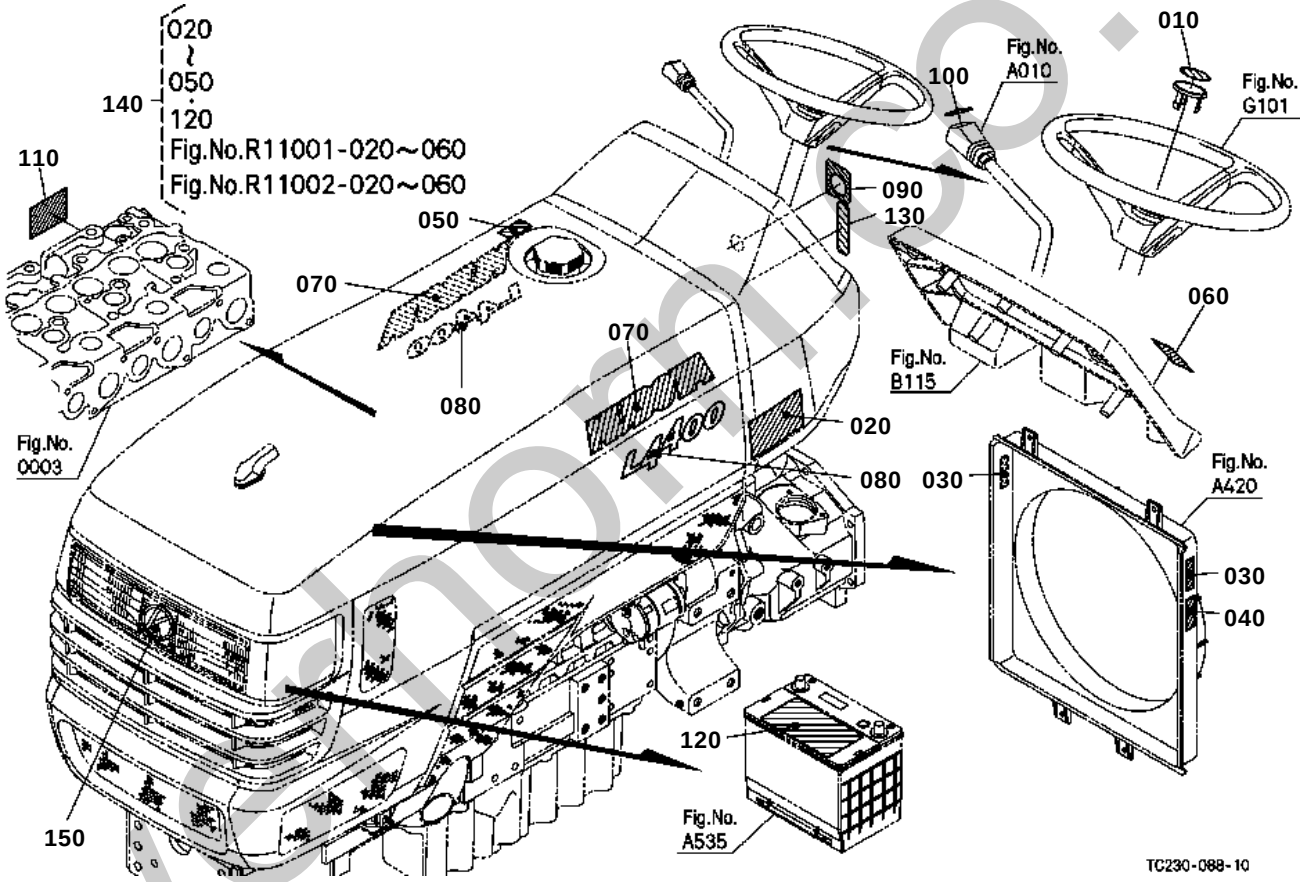

silvermoor.co.uk

LABEL 1 (FRONT)

↔ Interchangeable; ≠ not interchangeable; ← new for old; → old for new

REF.No	Part No.	Description	Q'ty	S.No.	I/C	REMARKS	Weight (kgf)	Weight (lb)
010	3F740-62802	LABEL PAD	1				0.006	0.0132
020	TA040-49650	LABEL START CAUTION	1			ENGLISH	0.004	0.0088
020	TA041-49650	LABEL START CAUTION	1			FRENCH	0.004	0.0088
030	6C090-49580	LABEL FAN WARNING	2				0.001	0.0022
040	TC030-49580	LABEL MUFFLER	1				0.001	0.0022
050	TA040-49562	LABEL FUEL	1				0.002	0.0044
060	35260-25050	LABEL SHUTTLE	1			ENGLISH	0.01	0.022
060	35261-25050	LABEL SHUTTLE	1			FRENCH	0.001	0.0022
070	TC220-80930	LABEL KUBOTA	2				0.013	0.0286
080	TC230-49420	MARK MODEL	2				0	0
090	TC020-65510	LABEL MAIN SWITCH	1				0.001	0.0022
100	TA040-49370	MARK ACCEL.GRIP	1				0.001	0.0022
110	1G790-87210	LABEL PUMP	1			ENGLISH	0.001	0.0022
110	1G851-87210	LABEL PUMP	1			FRENCH	0.001	0.0022
120	TD060-30122	LABEL BATTERY	1			ENGLISH	0.004	0.0088
120	TD061-30120	LABEL BATTERY	1			FRENCH	0.004	0.0088
130	TA040-49460	LABEL PARKING	1				0.001	0.0022
140	TC230-99500	KIT LABEL SAFETY (A)	1			ENGLISH	0	0
140	TC231-99500	KIT LABEL SAFETY (B)	1			FRENCH	0	0
150	TA140-49500	MARK SYMBOL	1				0.013	0.0286

silverhorn.co.uk

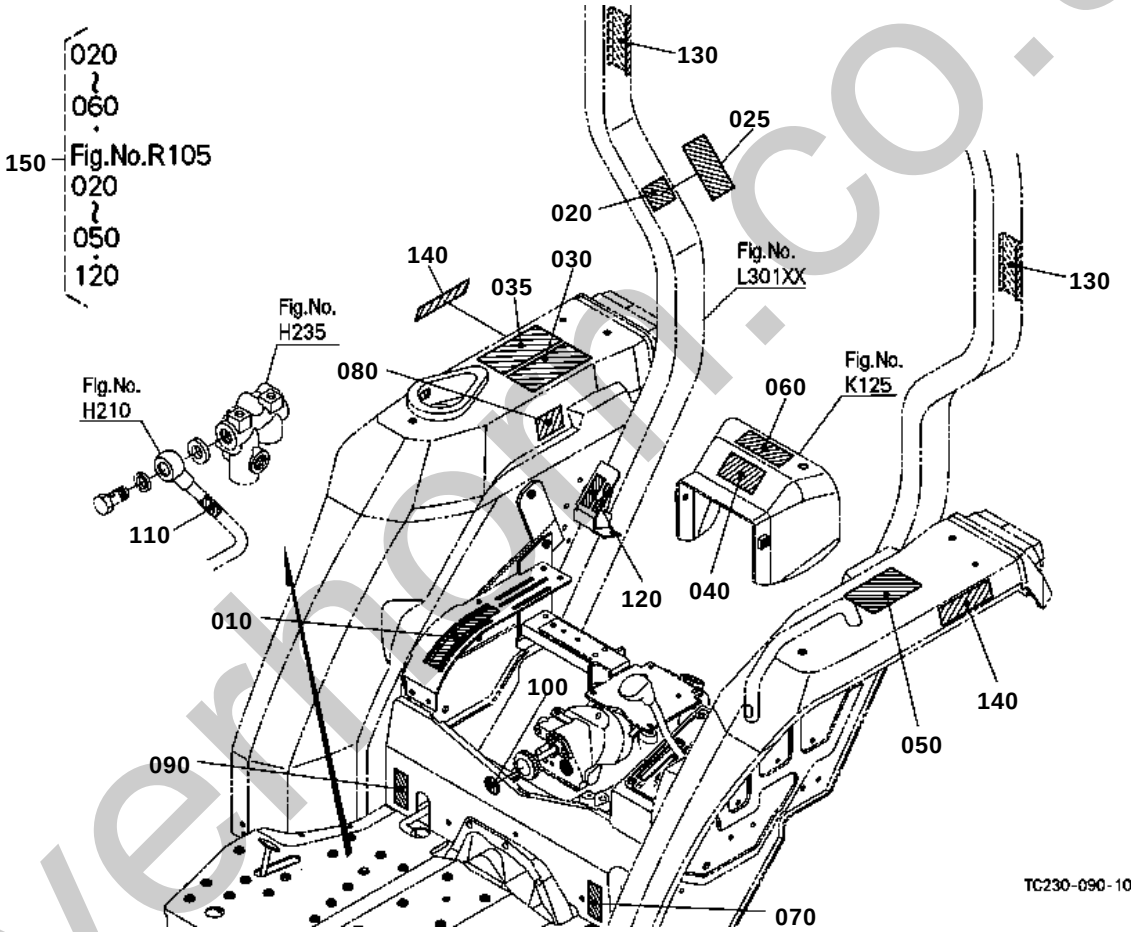

silverhorn.co.uk

↔ Interchangeable; ≠ not interchangeable; ← new for old; → old for new

REF.No	Part No.	Description	Q'ty	S.No.	I/C	REMARKS	Weight (kgf)	Weight (lb)
010	TA040-49500	MARK POSITION	1				0.002	0.0044
020	6C140-47460	LABEL ROPS WARNING	1			ENGLISH/RIGID ROPS TYPE	0.001	0.0022
020	6C141-47460	LABEL ROPS WARNING	1			FRENCH/RIGID ROPS TYPE	0.001	0.0022
025	3A111-95540	LABEL ROPS CAUTION	1			ENGLISH/FOLDABLE ROPS TYPE	0.003	0.0066
025	3A112-95540	LABEL ROPS CAUTION	1			FRENCH/FOLDABLE ROPS TYPE	0.003	0.0066
030	TA040-49320	LABEL ROPS WARNING	1			ENGLISH/RIGID ROPS TYPE	0.001	0.0022
030	TA040-49150	LABEL ROPS WARNING	1			FRENCH/RIGID ROPS TYPE	0.003	0.0066
030	TA240-98480	LABEL ROPS WARNING	1			ENGLISH/FOLDABLE ROPS TYPE	0.005	0.011
030	3A112-98480	LABEL ROPS WARNING	1			FRENCH/FOLDABLE ROPS TYPE	0.004	0.0088
035	TA140-49330	LABEL SHUTTLE	1			ENGLISH	0.005	0.011
035	TA141-49330	LABEL SHUTTLE	1			FRENCH	0.005	0.011
040	TA040-49350	LABEL DRAWBAR	1			ENGLISH	0.002	0.0044
040	TA041-49350	LABEL DRAWBAR	1			FRENCH	0.003	0.0066
050	35260-34914	LABEL SAFETY	1			ENGLISH	0.005	0.011
050	TA041-65702	LABEL SAFETY	1			FRENCH	0.01	0.022
060	TA040-49593	LABEL PTO WARNING	1			ENGLISH	0.001	0.0022
060	TA041-49590	LABEL PTO WARNING	1			FRENCH	0.001	0.0022
070	TA040-49550	MARK 4WD	1				0.001	0.0022
080	TA040-49302	LABEL I-PTO CAUTION	1			ENGLISH	0.001	0.0022
080	TA041-49300	LABEL I-PTO CAUTION	1			FRENCH	0.003	0.0066
090	TA040-49760	MARK DIFF.LOCK	1				0.001	0.0022
100	TA470-49330	MARK HYD.ADJUST.	1				0.001	0.0022
110	32430-65790	LABEL HYD.BLOCK	1				0.01	0.022
120	TA040-49160	MARK REAR PTO	1				0.001	0.0022
130	6C140-54990	REFLECTOR LABEL	2				0.003	0.0066
140	K2571-65250	LABEL 4WD	2				0.002	0.0044
150	TC230-99500	KIT LABEL SAFETY (A)	1			ENGLISH	0	0
150	TC231-99500	KIT LABEL SAFETY (B)	1			FRENCH	0	0

silverthorn.co.uk

ACCESSORIES AND SERVICE PARTS
ACCESSOIRES ET PIECES DE SERVICE
SONTIGES ZUBEHOER UND SERVICE-TEILE

TITLE-001-10

silverhorn.co.uk

↔ Interchangeable; ≠ not interchangeable; ← new for old; → old for new

REF.No	Part No.	Description	Q'ty	S.No.	I/C	REMARKS	Weight (kgf)	Weight (lb)
010	TC230-19710	OPERATOR'S MANUAL	1			ENGLISH	0	0
010	TC231-19710	OPERATOR'S MANUAL	1			FRENCH	0	0
020	1G511-89814	STATEMENT WARRANTY	1				0.01	0.022
030	TA150-49160	STUD WHEEL	12			FOR FRONT WHEEL	0.05	0.11
040	35340-11390	NUT	12			FOR FRONT WHEEL	0.03	0.066
050	04512-60140	WASHER SPRING	12			FOR FRONT WHEEL	0.008	0.0176
060	01517-51635	STUD	8			FOR REAR WHEEL	0.078	0.1716
070	02076-50160	NUT	12			FOR REAR WHEEL	0.03	0.066
080	01517-51635	STUD	4			FOR REAR WHEEL	0.078	0.1716
090	04512-60160	WASHER SPRING	12			FOR REAR WHEEL	0.01	0.022
100	35260-31852	ASSY KEY MAIN SWITCH	1				0.03	0.066

silverhorn.co.uk

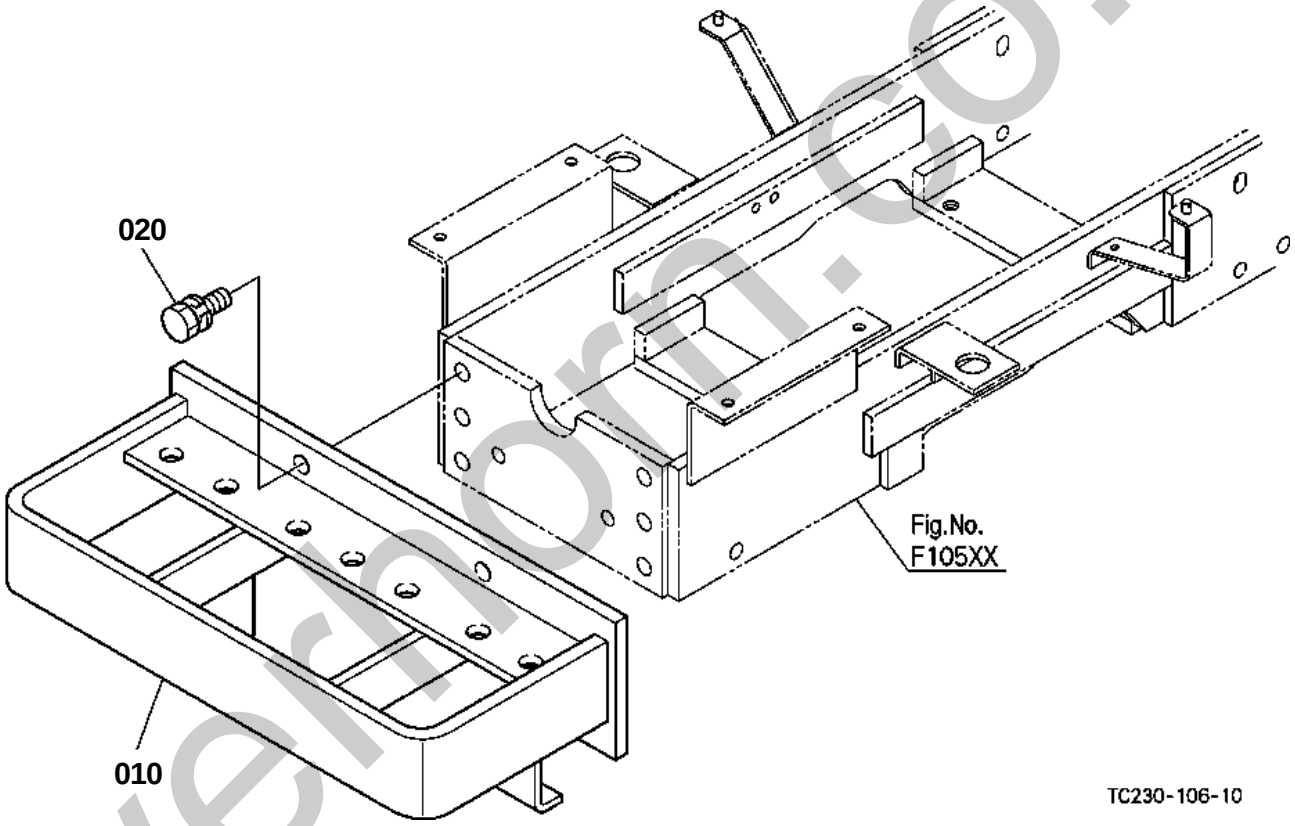

silverhorn.co.uk

FRONT BUMPER (W/G No.MX8068) [OPTION]

↔ Interchangeable; ≠ not interchangeable; ← new for old; → old for new

REF.No	Part No.	Description	Q'ty	S.No.	I/C	REMARKS	Weight (kgf)	Weight (lb)
010	32430-44880	BUMPER	1				12.05	26.51
020	01133-51435	BOLT	4				0.001	0.0022

silverhorn.co.uk

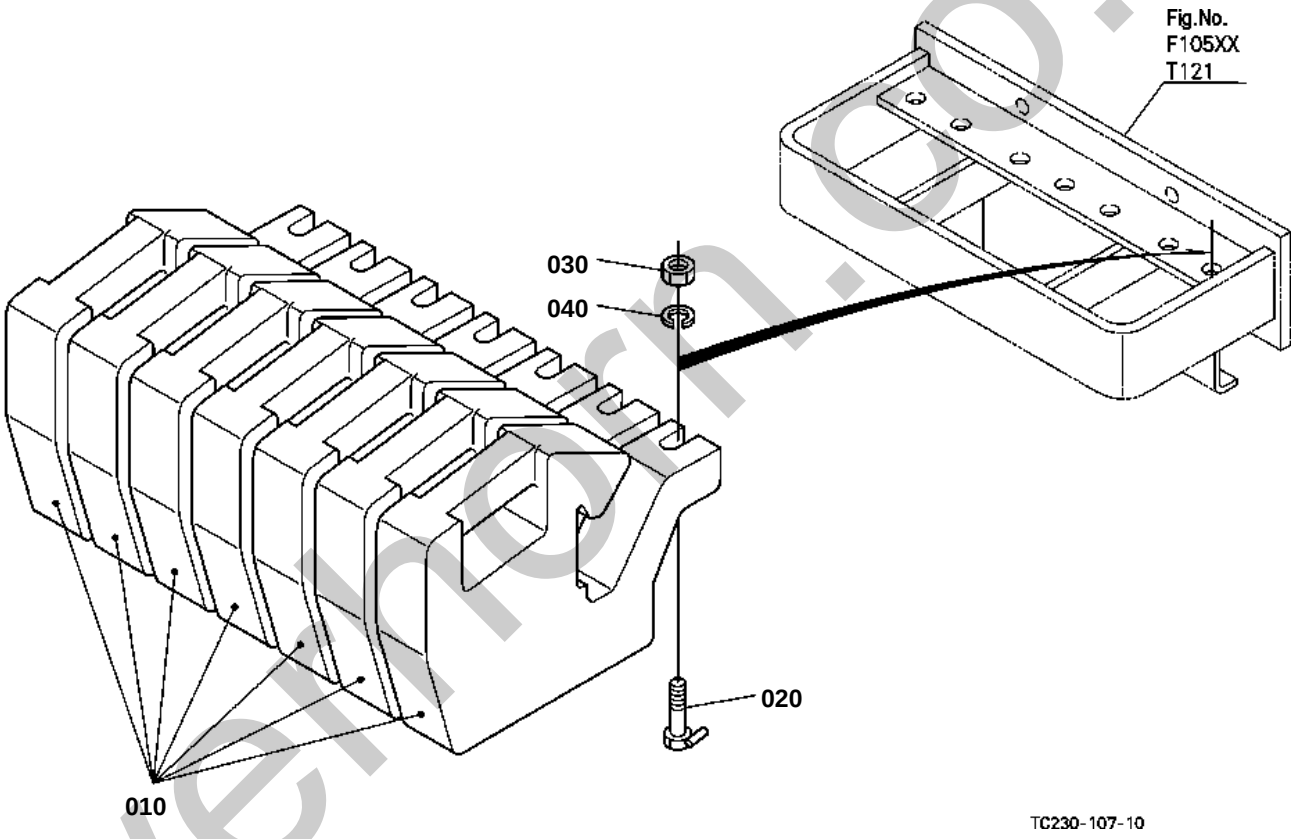

silvermorn.co.uk

FRONT WEIGHT [OPTION]

↔ Interchangeable; ≠ not interchangeable; ← new for old; → old for new

REF.No	Part No.	Description	Q'ty	S.No.	I/C	REMARKS	Weight (kgf)	Weight (lb)
010	96315-11614	WEIGHT FRONT	7			20kg	20	44
010	96315-11620	WEIGHT FRONT	7			25kg	25	55
020	96315-11630	BOLT FRONT WEIGHT	7				0.09	0.198
030	02174-50140	NUT	7				0.014	0.0308
040	04512-60140	WASHER SPRING	7				0.008	0.0176

silverhorn.co.uk

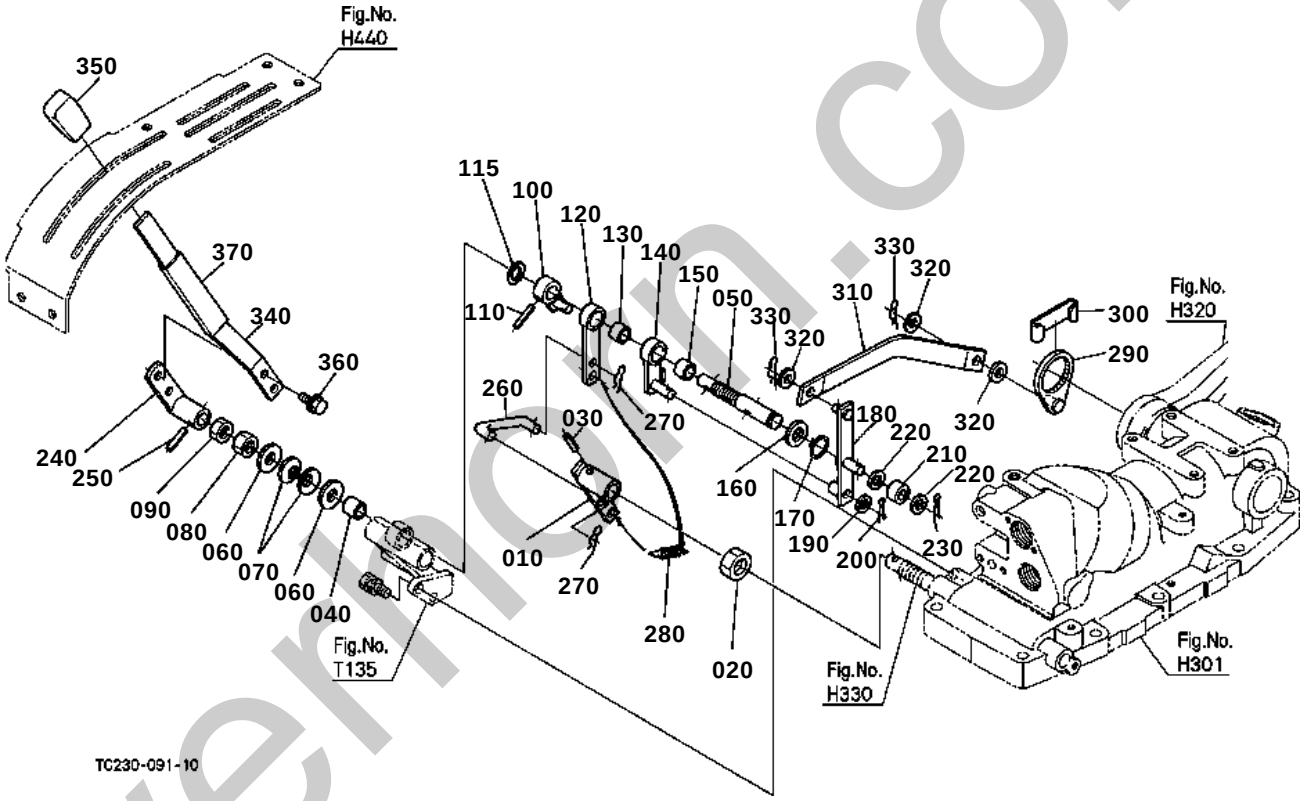

silverhorn.co.uk

POSITION CONTROL LEVER (WITH DRAFT) [OPTION]

↔ Interchangeable; ≠ not interchangeable; ← new for old; → old for new

REF.No	Part No.	Description	Q'ty	S.No.	I/C	REMARKS	Weight (kgf)	Weight (lb)
010	TA140-38310	LINK CONTROL	1				0.13	0.286
020	02174-50140	NUT	1				0.014	0.0308
030	05411-00525	PIN SPRING	1				0.002	0.0044
040	08511-01615	BUSH	1				0.01	0.022
050	TA040-38122	SHAFT DRAFT	1				0.14	0.308
060	04013-60140	WASHER PLAIN	2				0.01	0.022
070	34260-36880	SPRING PLATE	2				0.006	0.0132
080	02174-50140	NUT	1				0.014	0.0308
090	02172-50140	NUT	1				0.01	0.022
100	TA040-38142	LINK DRAFT	1				0.065	0.143
110	05411-00525	PIN SPRING	1				0.002	0.0044
115	04714-00300	GASKET	1				0.002	0.0044
120	TA040-38150	LINK DRAFT	1				0.065	0.143
130	08511-01612	BUSH	1				0.005	0.011
140	TA040-38160	LINK DRAFT	1				0.07	0.154
150	08511-01612	BUSH	1				0.005	0.011
160	04011-60160	WASHER PLAIN	1				0.01	0.022
170	04612-00160	CIR CLIP EXTERNAL	1				0.001	0.0022
180	TA040-38170	LINK DRAFT	1				0.095	0.209
190	04012-50080	WASHER PLAIN	1				0.001	0.0022
200	05511-50215	PIN SPLIT	1				0.001	0.0022
210	TA040-38190	COLLAR	1				0.02	0.044
220	04011-50100	WASHER PLAIN	2				0.002	0.0044
230	05511-50320	PIN SPLIT	1				0.002	0.0044
240	TA040-38212	LEVER POSITION	1				0.13	0.286
250	05411-00525	PIN SPRING	1				0.002	0.0044
260	TA040-38322	ROD CONTROL	1				0.045	0.099
270	05525-50800	PIN SNAP	2				0.001	0.0022
280	TD060-38370	SPRING DRAFT	1				0.008	0.0176
290	TA040-38262	HOLDER	1				0.06	0.132
300	TA040-38270	STOPPER	1				0.033	0.0726
310	TA040-38282	ROD DRAFT	1				0.145	0.319
320	04012-50080	WASHER PLAIN	3				0.001	0.0022
330	05525-50800	PIN SNAP	2				0.001	0.0022
340	TA040-38230	LEVER POSITION	1				0.18	0.396
350	52300-32640	GRIP LEVER	1				0.04	0.088
360	01754-50612	BOLT FLANGE	2				0.005	0.011
370	TA040-36132	TUBE LEVER	1				0.01	0.022

silvermorn.co.uk

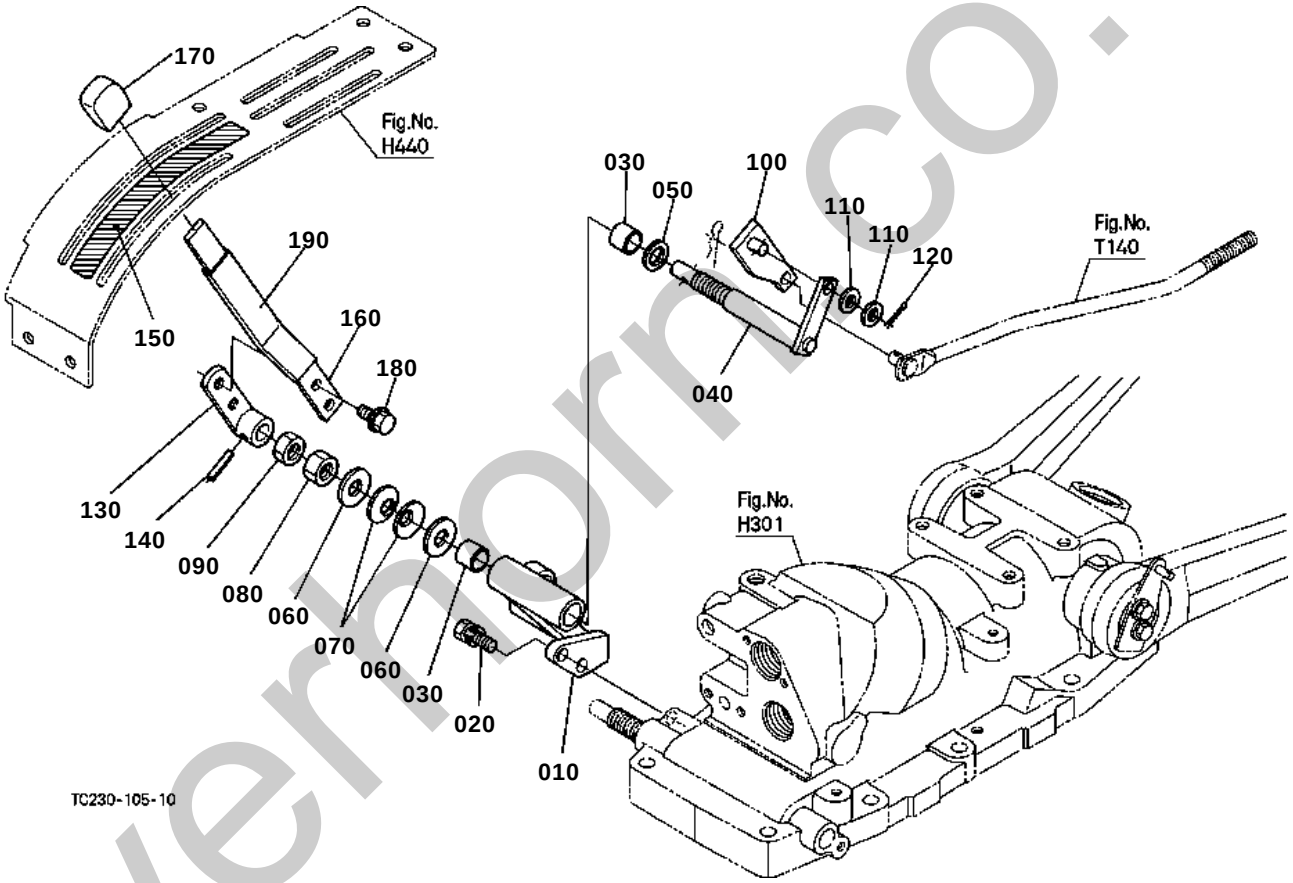

silverhorn.co.uk

DRAFT CONTROL LEVER (WITH DRAFT) [OPTION]

↔ Interchangeable; ≠ not interchangeable; ← new for old; → old for new

REF.No	Part No.	Description	Q'ty	S.No.	I/C	REMARKS	Weight (kgf)	Weight (lb)
010	TA040-38114	STAY	1				0.255	0.561
020	01123-50822	BOLT	2				0.012	0.0264
030	08511-01615	BUSH	2				0.01	0.022
040	TA040-38132	SHAFT DRAFT	1				0.22	0.484
050	04714-00300	GASKET	1				0.002	0.0044
060	04013-60140	WASHER PLAIN	2				0.01	0.022
070	34260-36880	SPRING PLATE	2				0.006	0.0132
080	02174-50140	NUT	1				0.014	0.0308
090	02172-50140	NUT	1				0.01	0.022
100	TA040-38182	LEVER CAM	1				0.085	0.187
110	04012-50080	WASHER PLAIN	2				0.001	0.0022
120	05511-50215	PIN SPLIT	1				0.001	0.0022
130	TA040-38222	LEVER DRAFT	1				0.095	0.209
140	05411-00525	PIN SPRING	1				0.002	0.0044
150	TA040-49520	MARK DRAFT	1				0.003	0.0066
160	TA040-38240	LEVER DRAFT	1				0.16	0.352
170	37410-43560	GRIP LEVER	1				0.025	0.055
180	01754-50612	BOLT FLANGE	2				0.005	0.011
190	TA040-36132	TUBE LEVER	1				0.01	0.022

silverhorn.co.uk

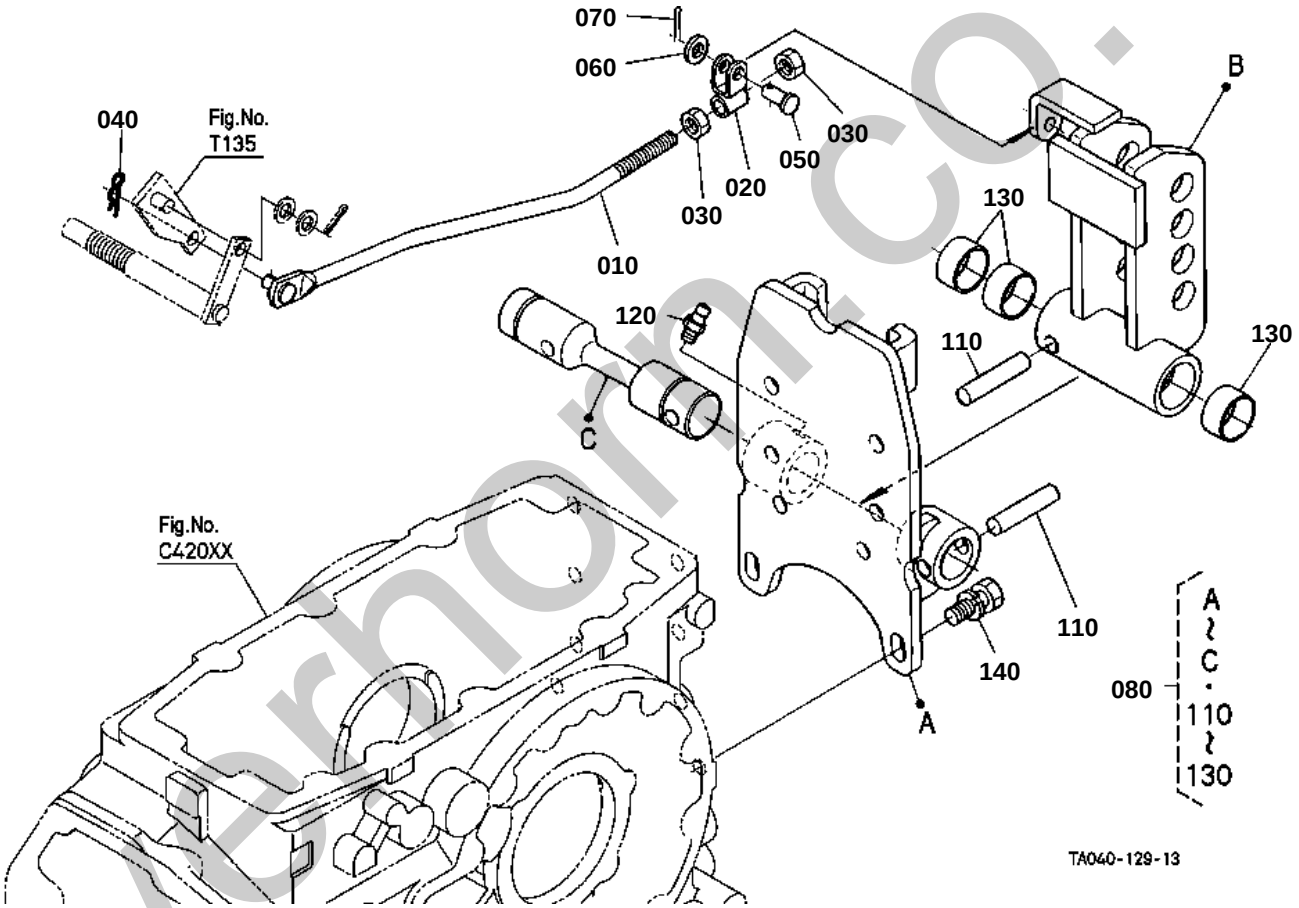

silverhorn.co.uk

TOP LINK HOLDER (WITH DRAFT) [OPTION]

↔ Interchangeable; ≠ not interchangeable; ← new for old; → old for new

REF.No	Part No.	Description	Q'ty	S.No.	I/C	REMARKS	Weight (kgf)	Weight (lb)
010	TA040-38360	ROD DRAFT	1				0.192	0.4224
020	TA040-38350	HOLDER	1				0.033	0.0726
030	02116-50100	NUT	2				0.004	0.0088
040	05525-50800	PIN SNAP	1				0.001	0.0022
050	05122-50818	PIN JOINT	1				0.008	0.0176
060	04012-50080	WASHER PLAIN	1				0.001	0.0022
070	05511-50218	PIN SPLIT	1				0.001	0.0022
080	35080-41400	COMP HOLDER TOP LINK	1				6.85	15.07
090	99999-99999	BLANK	0				0	0
100	99999-99999	BLANK	0				0	0
110	37300-41440	PIN STRAIGHT	2				0.055	0.121
120	06613-10010	NIPPLE GREASE	2				0.006	0.0132
130	37300-41450	BUSH	3				0.03	0.066
140	01133-51230	BOLT	6				0.04	0.088

silverhorn.co.uk

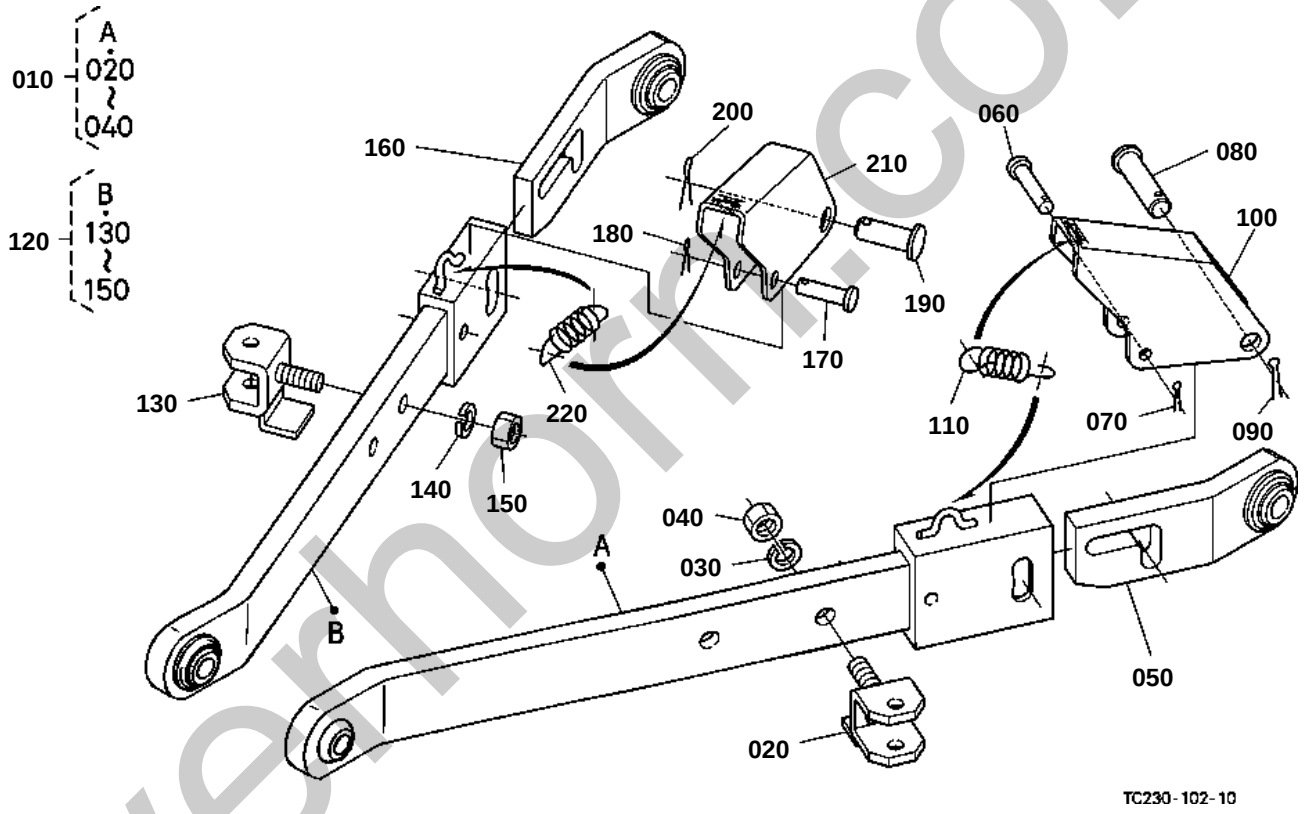

silverhorn.co.uk

3-POINT LINKAGE 1 (LOWER LINK) [OPTION]

↔ Interchangeable; ≠ not interchangeable; ← new for old; → old for new

REF.No	Part No.	Description	Q'ty	S.No.	I/C	REMARKS	Weight (kgf)	Weight (lb)
010	TA140-71363	COMP.LINK LOWER LH	1				7.3	16.06
020	TA140-71353	BRACKET	1				0.65	1.43
030	04512-60160	WASHER SPRING	1				0.01	0.022
040	02074-50160	NUT	1				0.029	0.0638
050	TA140-71380	LINK LOWER REAR LH	1				1.85	4.07
060	05122-50645	PIN JOINT	1				0.01	0.022
070	05511-51615	PIN SPLIT	1				0.001	0.0022
080	TA140-71400	PIN	1				0.085	0.187
090	05511-50530	PIN SPLIT	1				0.006	0.0132
100	TA140-71410	LEVER	1				0.34	0.748
110	33660-92170	SPRING	1				0.02	0.044
120	TA140-71373	COMP.LINK LOWER RH	1				7.3	16.06
130	TA140-71353	BRACKET	1				0.65	1.43
140	04512-60160	WASHER SPRING	1				0.01	0.022
150	02074-50160	NUT	1				0.029	0.0638
160	TA140-71390	LINK LOWER REAR RH	1				1.85	4.07
170	05122-50645	PIN JOINT	1				0.01	0.022
180	05511-51615	PIN SPLIT	1				0.001	0.0022
190	TA140-71400	PIN	1				0.085	0.187
200	05511-50530	PIN SPLIT	1				0.006	0.0132
210	TA140-71410	LEVER	1				0.34	0.748
220	33660-92170	SPRING	1				0.02	0.044

silverhorn.co.uk

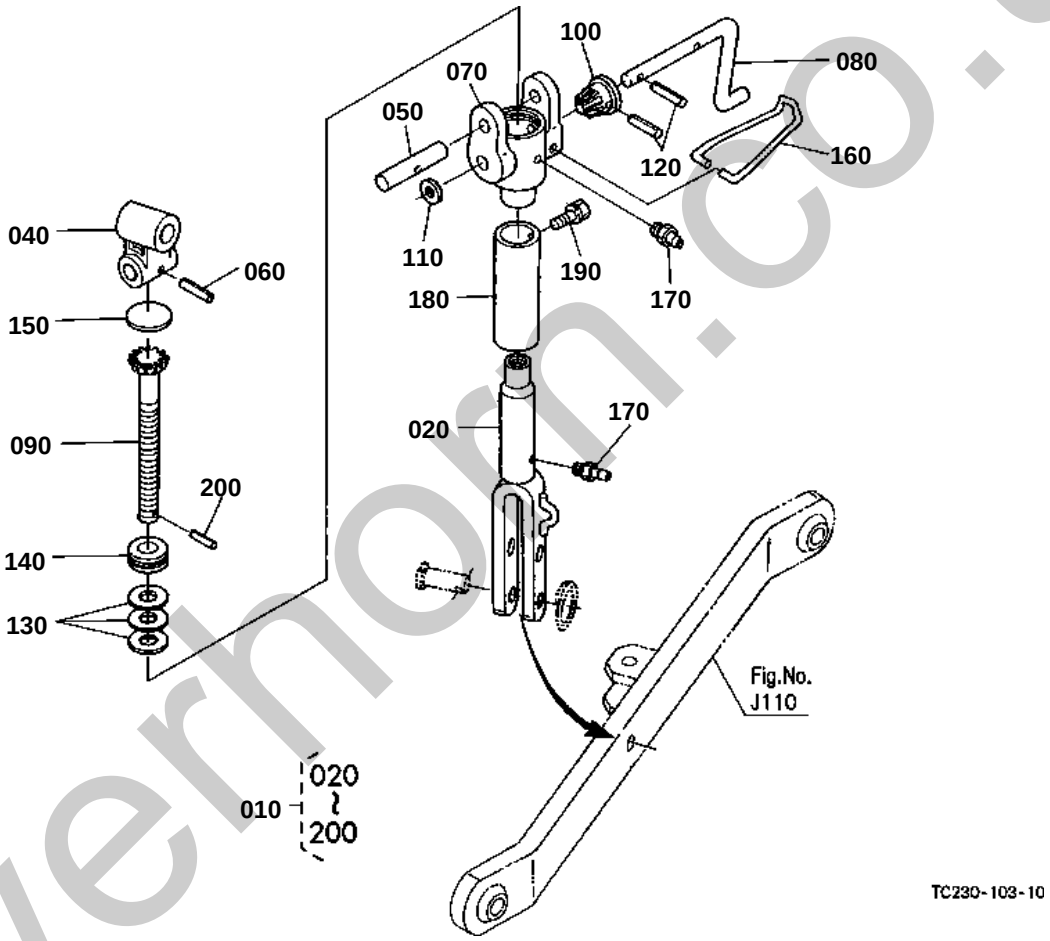

silverhorn.co.uk

3-POINT LINKAGE 2 (LIFT ROD) [OPTION]

↔ Interchangeable; ≠ not interchangeable; ← new for old; → old for new

REF.No	Part No.	Description	Q'ty	S.No.	I/C	REMARKS	Weight (kgf)	Weight (lb)
010	TA140-39500	ASSY ROD	1				3.5	7.7
020	TA140-39520	ROD LIFT LOWER	1				0.96	2.112
030	99999-99999	BLANK	0				0	0
040	31351-71570	JOINT GEAR CASE	1				0.475	1.045
050	TA140-39550	PIN LIFT ROD	1				0.11	0.242
060	05411-00532	PIN SPRING	1				0.003	0.0066
070	31351-71710	CASE LIFT ROD GEAR	1				0.85	1.87
080	31351-71660	HANDLE LIFT ROD	1				0.235	0.517
090	TA140-39530	GEAR LIFT ROD	1				0.345	0.759
100	TA140-39540	GEAR LIFT ROD	1				0.1	0.22
110	31351-71670	WASHER PLAIN	1				0.002	0.0044
120	05411-00622	PIN SPRING	2				0.003	0.0066
130	31220-71720	SHIM	3				0.001	0.0022
140	32294-71770	BEARING THRUST BALL	1				0.073	0.1606
150	06311-75045	PLUG EXPANSION	1				0.026	0.0572
160	32244-71730	STOPPER HANDLE	1				0.027	0.0594
170	06613-10675	NIPPLE GREASE	2				0.003	0.0066
180	31351-71700	PIPE	1				0.2	0.44
190	01202-50612	BOLT	1				0.005	0.011
200	05411-00320	PIN SPRING	1				0.001	0.0022

silverhorn.co.uk

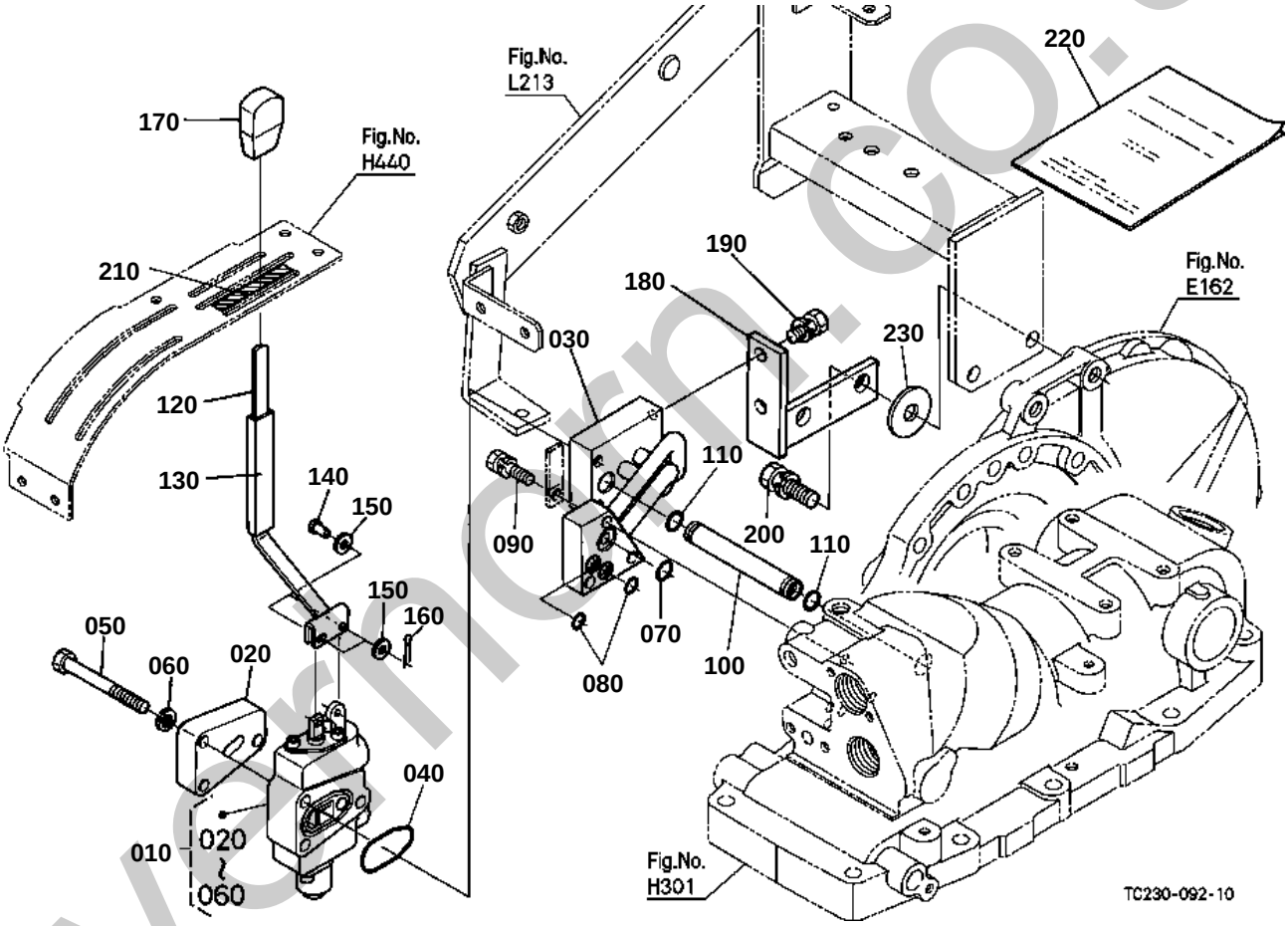

silvermarn.co.uk

AUXILIARY CONTROL VALVE LEVER (1ST) [OPTION]

↔ Interchangeable; ≠ not interchangeable; ← new for old; → old for new

REF.No	Part No.	Description	Q'ty	S.No.	I/C	REMARKS	Weight (kgf)	Weight (lb)
010	TA040-96500	ASSY VALVE AUX.CON.	1				3.3	7.26
020	TA040-96123	COVER AUX.CON.VALVE	1				0.475	1.045
030	TA040-96142	ASSY PIPE CONT.VALVE	1				1.4	3.08
040	04817-50400	O RING	1				0.003	0.0066
050	01153-50870	BOLT	3				0.026	0.0572
060	04512-60080	WASHER SPRING	3				0.002	0.0044
070	04817-00140	O RING	1				0.001	0.0022
080	04817-00100	O RING	2				0.001	0.0022
090	01123-50835	BOLT	3				0.02	0.044
100	TA040-96150	PIPE RETURN	1				0.045	0.099
110	04817-00110	O RING	2				0.001	0.0022
120	TA040-96220	LEVER AUX.CON.VALVE	1				0.11	0.242
130	TA040-96250	TUBE LEVER	1				0.007	0.0154
140	68021-32790	PIN	2				0.004	0.0088
150	04012-50050	WASHER PLAIN	4				0.001	0.0022
160	05511-51210	PIN SPLIT	2				0.001	0.0022
170	31355-82290	GRIP LEVER	1				0.015	0.033
180	TA040-96160	STAY AUX.CONT.VALVE	1				0.25	0.55
190	01123-50820	BOLT	2				0.011	0.0242
200	01133-51235	BOLT	2				0.043	0.0946
210	TA040-49612	MARK AUX.CONT.VALVE	1				0.001	0.0022
220	TA040-98142	MANUAL ASSEMBLY	1				0.015	0.033
230	04015-60120	WASHER PLAIN	2				0.022	0.0484

silverhorn.co.uk

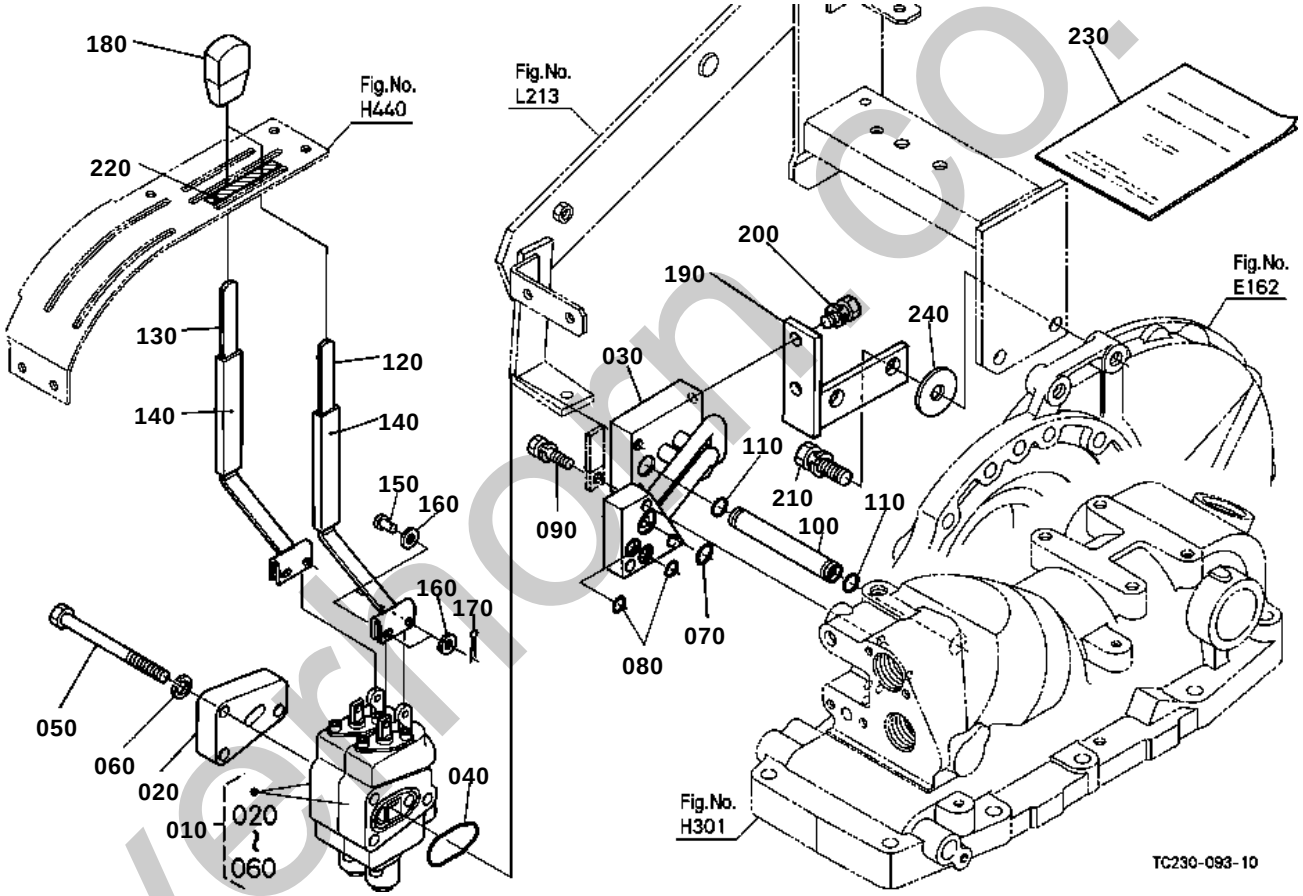

silvermoon.co.uk

AUXILIARY CONTROL VALVE LEVER (2ND) [OPTION]

↔ Interchangeable; ≠ not interchangeable; ← new for old; → old for new

REF.No	Part No.	Description	Q'ty	S.No.	I/C	REMARKS	Weight (kgf)	Weight (lb)
010	TA040-96102	ASSY VALVE AUX.CON.	1				4.7	10.34
020	TA040-96123	COVER AUX.CON.VALVE	1				0.475	1.045
030	TA040-96142	ASSY PIPE CONT.VALVE	1				1.4	3.08
040	04817-50400	O RING	1				0.003	0.0066
050	01153-50800	BOLT	3				0.036	0.0792
060	04512-60080	WASHER SPRING	3				0.002	0.0044
070	04817-00140	O RING	1				0.001	0.0022
080	04817-00100	O RING	2				0.001	0.0022
090	01123-50835	BOLT	3				0.02	0.044
100	TA040-96150	PIPE RETURN	1				0.045	0.099
110	04817-00110	O RING	2				0.001	0.0022
120	TA040-96220	LEVER AUX.CON.VALVE	1				0.11	0.242
130	TA040-96234	LEVER AUX.CON.VALVE	1				0.1	0.22
140	TA040-96250	TUBE LEVER	2				0.007	0.0154
150	68021-32790	PIN	4				0.004	0.0088
160	04012-50050	WASHER PLAIN	8				0.001	0.0022
170	05511-51210	PIN SPLIT	4				0.001	0.0022
180	31355-82290	GRIP LEVER	2				0.015	0.033
190	TA040-96160	STAY AUX.CONT.VALVE	1				0.25	0.55
200	01123-50820	BOLT	2				0.011	0.0242
210	01133-51235	BOLT	2				0.043	0.0946
220	TA040-49612	MARK AUX.CONT.VALVE	1				0.001	0.0022
230	TA040-98142	MANUAL ASSEMBLY	1				0.015	0.033
240	04015-60120	WASHER PLAIN	2				0.022	0.0484

silverhorn.co.uk

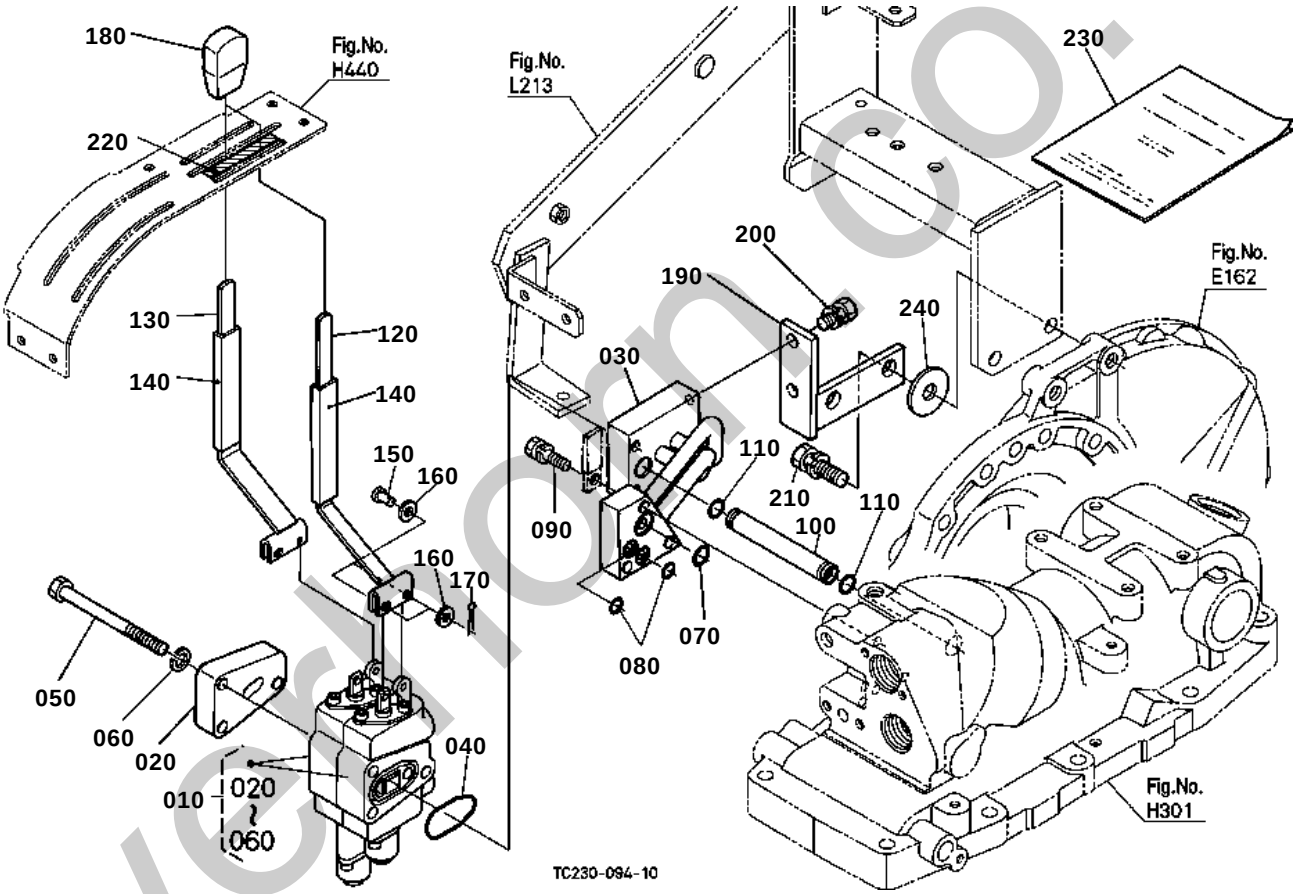

silverhorn.co.uk

AUXILIARY CONTROL VALVE LEVER (2ND/FLOATING TYPE) [OPTION]

↔ Interchangeable; ≠ not interchangeable; ← new for old; → old for new

REF.No	Part No.	Description	Q'ty	S.No.	I/C	REMARKS	Weight (kgf)	Weight (lb)
010	TC050-96100	ASSY VALVE AUX.CON.	1				4.85	10.67
020	TA040-96123	COVER AUX.CON.VALVE	1				0.475	1.045
030	TA040-96142	ASSY PIPE CONT.VALVE	1				1.4	3.08
040	04817-50400	O RING	1				0.003	0.0066
050	01153-50800	BOLT	3				0.036	0.0792
060	04512-60080	WASHER SPRING	3				0.002	0.0044
070	04817-00140	O RING	1				0.001	0.0022
080	04817-00100	O RING	2				0.001	0.0022
090	01123-50835	BOLT	3				0.02	0.044
100	TA040-96150	PIPE RETURN	1				0.045	0.099
110	04817-00110	O RING	2				0.001	0.0022
120	TA040-96220	LEVER AUX.CON.VALVE	1				0.11	0.242
130	TC050-96230	LEVER AUX.CON.VALVE	1				0.12	0.264
140	TA040-96250	TUBE LEVER	2				0.007	0.0154
150	68021-32790	PIN	4				0.004	0.0088
160	04012-50050	WASHER PLAIN	8				0.001	0.0022
170	05511-51210	PIN SPLIT	4				0.001	0.0022
180	31355-82290	GRIP LEVER	2				0.015	0.033
190	TA040-96160	STAY AUX.CONT.VALVE	1				0.25	0.55
200	01123-50820	BOLT	2				0.011	0.0242
210	01133-51235	BOLT	2				0.043	0.0946
220	TA040-49612	MARK AUX.CONT.VALVE	1				0.001	0.0022
230	TA040-98142	MANUAL ASSEMBLY	1				0.015	0.033
240	04015-60120	WASHER PLAIN	2				0.022	0.0484

silverhorn.co.uk

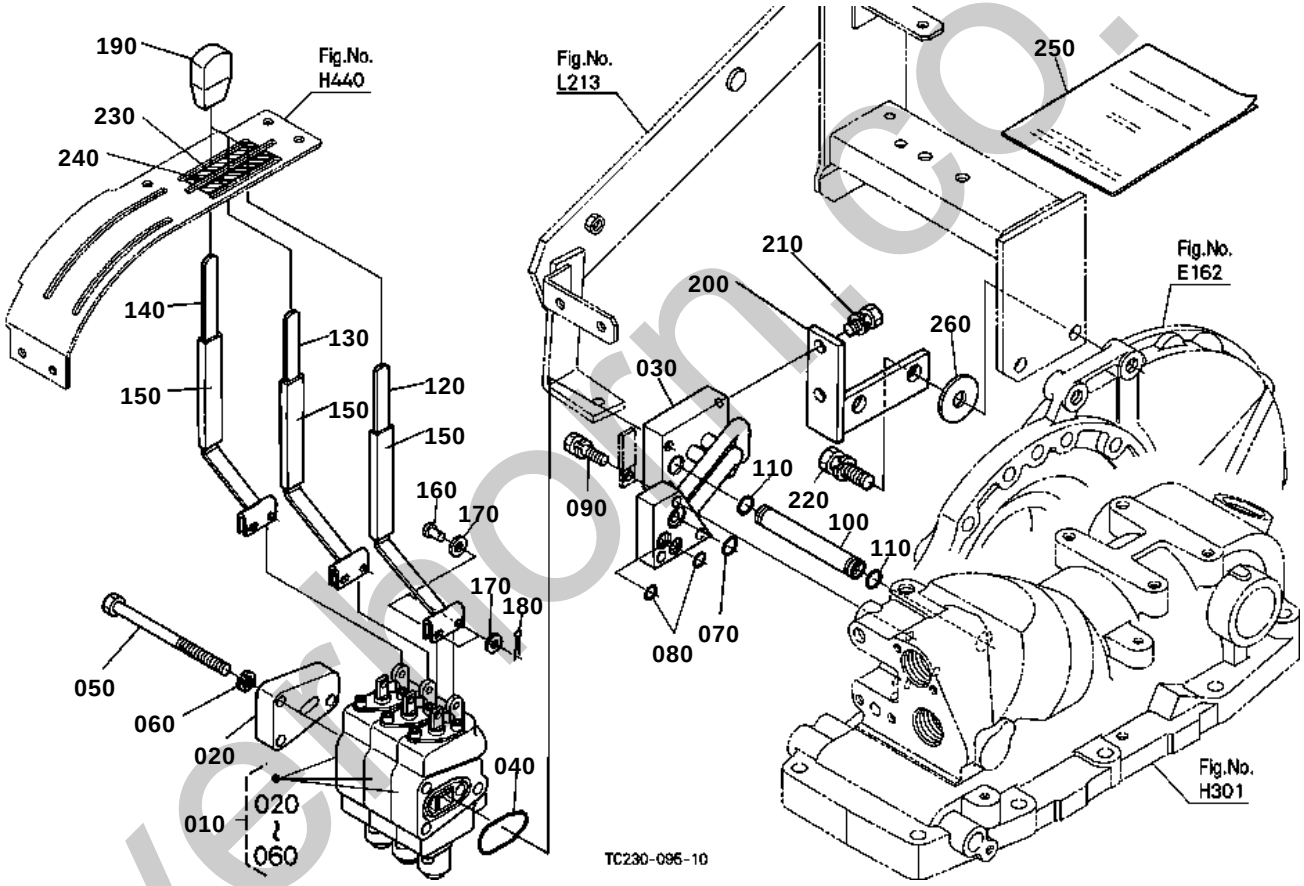

silverthorn.co.uk

AUXILIARY CONTROL VALVE LEVER (3RD) [OPTION]

↔ Interchangeable; ≠ not interchangeable; ← new for old; → old for new

REF.No	Part No.	Description	Q'ty	S.No.	I/C	REMARKS	Weight (kgf)	Weight (lb)
010	TA040-96300	ASSY VALVE AUX.CON.	1				6.1	13.42
020	TA040-96123	COVER AUX.CON.VALVE	1				0.475	1.045
030	TA040-96142	ASSY PIPE CONT.VALVE	1				1.4	3.08
040	04817-50400	O RING	1				0.003	0.0066
050	45404-95180	BOLT	3				0.05	0.11
060	04512-60080	WASHER SPRING	3				0.002	0.0044
070	04817-00140	O RING	1				0.001	0.0022
080	04817-00100	O RING	2				0.001	0.0022
090	01123-50835	BOLT	3				0.02	0.044
100	TA040-96150	PIPE RETURN	1				0.045	0.099
110	04817-00110	O RING	2				0.001	0.0022
120	TA040-96220	LEVER AUX.CON.VALVE	1				0.11	0.242
130	TA040-96234	LEVER AUX.CON.VALVE	1				0.1	0.22
140	TA040-96240	LEVER AUX.CON.VALVE	1				0.105	0.231
150	TA040-96250	TUBE LEVER	3				0.007	0.0154
160	68021-32790	PIN	6				0.004	0.0088
170	04012-50050	WASHER PLAIN	12				0.001	0.0022
180	05511-51210	PIN SPLIT	6				0.001	0.0022
190	31355-82290	GRIP LEVER	3				0.015	0.033
200	TA040-96160	STAY AUX.CONT.VALVE	1				0.25	0.55
210	01123-50820	BOLT	2				0.011	0.0242
220	01133-51235	BOLT	2				0.043	0.0946
230	TA040-49612	MARK AUX.CONT.VALVE	1				0.001	0.0022
240	TA040-49630	MARK AUX.CONT.VALVE	1				0.001	0.0022
250	TA040-98142	MANUAL ASSEMBLY	1				0.015	0.033
260	04015-60120	WASHER PLAIN	2				0.022	0.0484

silverhorn.co.uk

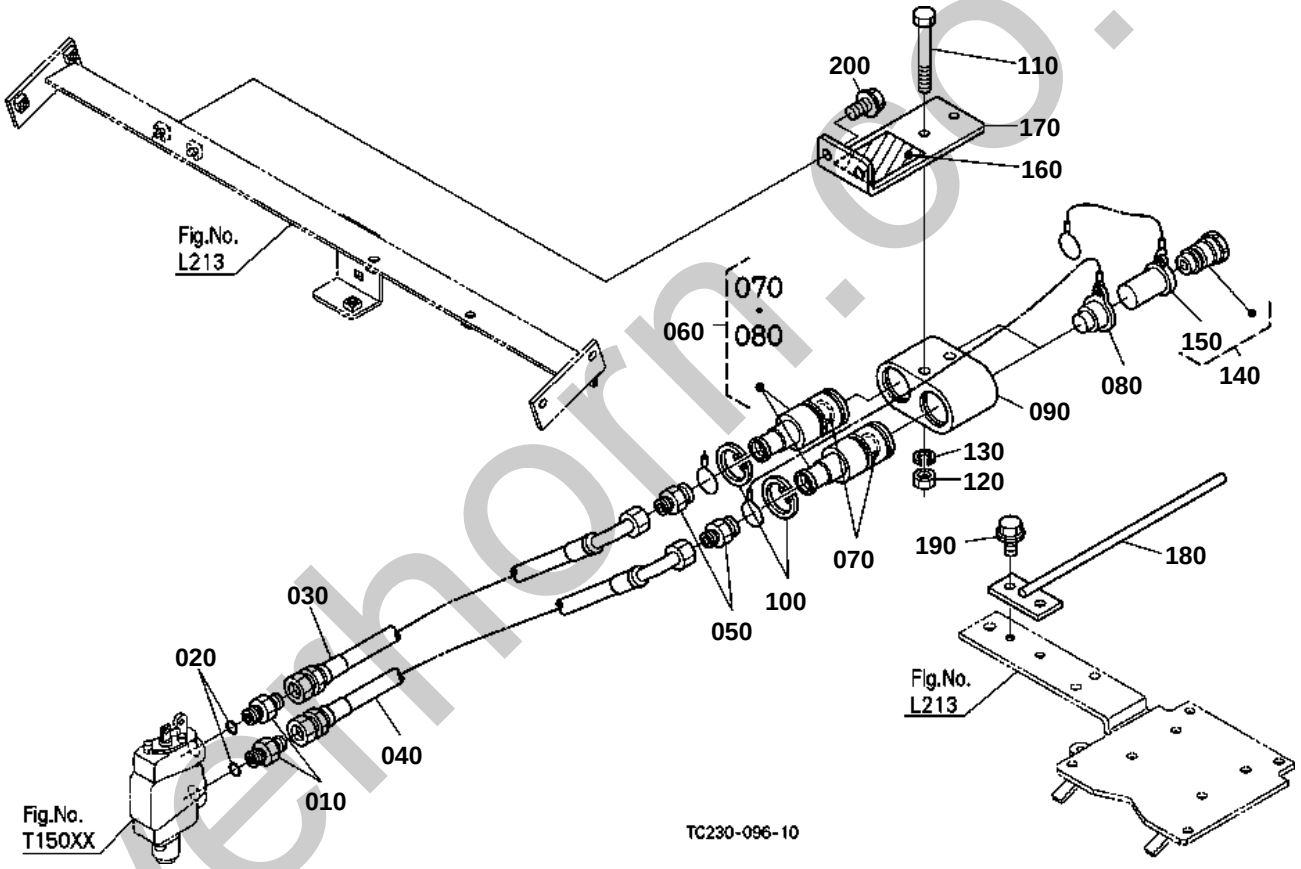

silverthorn.co.uk

AUXILIARY CONTROL VALVE COUPLER (1ST) [OPTION]

↔ Interchangeable; ≠ not interchangeable; ← new for old; → old for new

REF.No	Part No.	Description	Q'ty	S.No.	I/C	REMARKS	Weight (kgf)	Weight (lb)
010	70726-61130	ADAPTER	2				0.055	0.121
020	04816-00140	O RING	2				0.002	0.0044
030	TA040-96410	HOSE AUX.CONT.VALVE	1				0.308	0.6776
040	TA040-96420	HOSE AUX.CONT.VALVE	1				0.314	0.6908
050	99063-93410	ADAPTER	2				0.07	0.154
060	35861-82032	ASSY COUPLER FEMALE	2				0.32	0.704
070	35861-94510	O RING	2				0.002	0.0044
080	35861-94520	PLUG COUPLER	2				0.005	0.011
090	35893-82610	SUPPORT COUPLER	1				0.73	1.606
100	04611-00380	CIR CLIP INTERNAL	2				0.004	0.0088
110	01153-50865	BOLT	2				0.025	0.055
120	02156-50080	NUT	2				0.004	0.0088
130	04512-60080	WASHER SPRING	2				0.002	0.0044
140	35861-82190	ASSY COUPLER MALE	2				0.086	0.1892
150	35861-94530	CAP	2				0.007	0.0154
160	TA040-49670	MARK COUPLER	1				0.001	0.0022
170	TC230-96480	STAY COUPLER	1				0	0
180	TC230-96490	SUPPORT HOSE CLAMP	1				0	0
190	01754-50816	BOLT FLANGE	2				0.011	0.0242
200	01774-61020	BOLT FLANGE	2				0.022	0.0484

silverhorn.co.uk

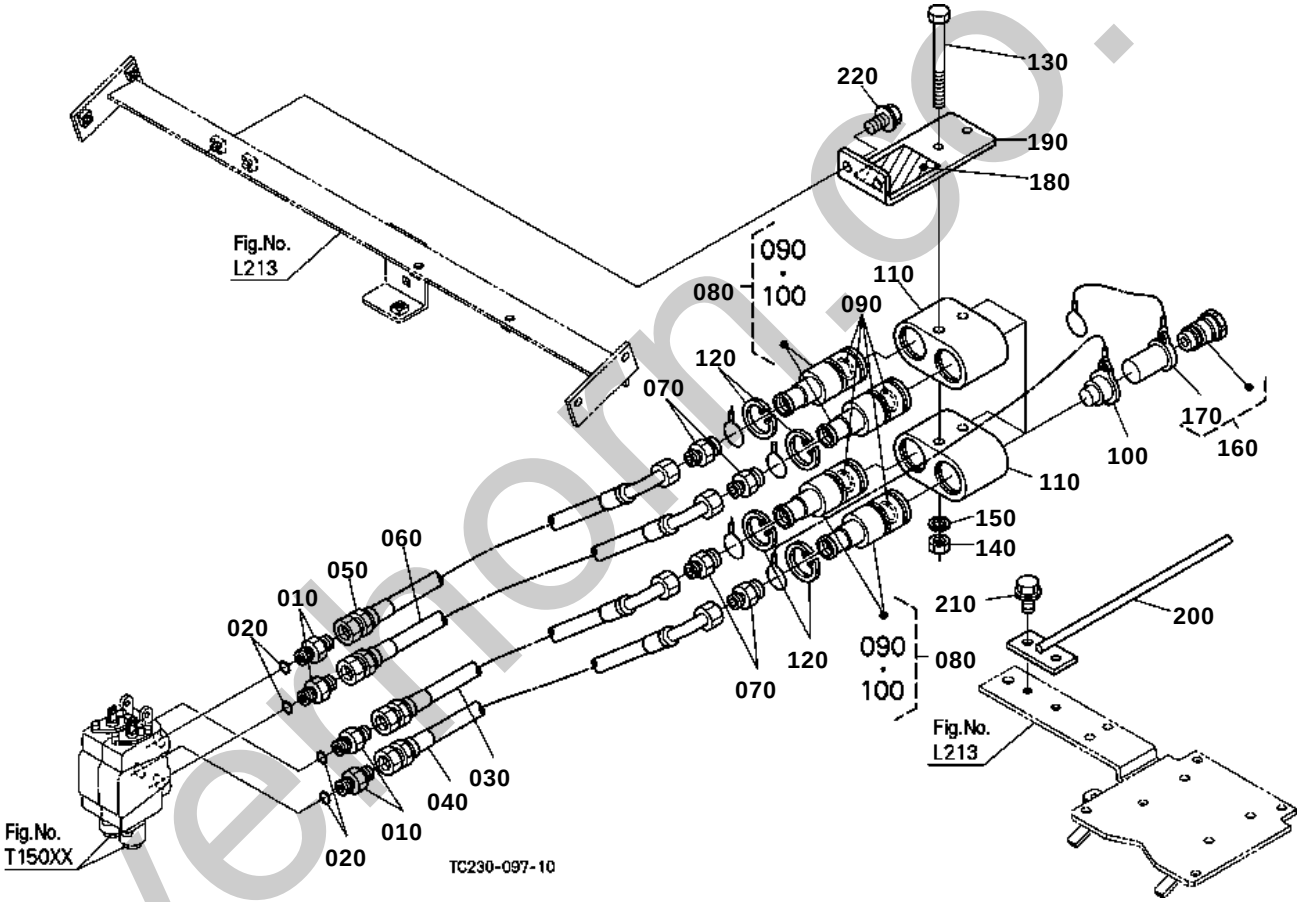

silvermorn.co.uk

AUXILIARY CONTROL VALVE COUPLER (2ND) [OPTION]

↔ Interchangeable; ≠ not interchangeable; ← new for old; → old for new

REF.No	Part No.	Description	Q'ty	S.No.	I/C	REMARKS	Weight (kgf)	Weight (lb)
010	70726-61130	ADAPTER	4				0.055	0.121
020	04816-00140	O RING	4				0.002	0.0044
030	TA040-96410	HOSE AUX.CONT.VALVE	1				0.308	0.6776
040	TA040-96420	HOSE AUX.CONT.VALVE	1				0.314	0.6908
050	TA040-96430	HOSE AUX.CONT.VALVE	1				0.295	0.649
060	TA040-96440	HOSE AUX.CONT.VALVE	1				0.302	0.6644
070	99063-93410	ADAPTER	4				0.07	0.154
080	35861-82032	ASSY COUPLER FEMALE	4				0.32	0.704
090	35861-94510	O RING	4				0.002	0.0044
100	35861-94520	PLUG COUPLER	4				0.005	0.011
110	35893-82610	SUPPORT COUPLER	2				0.73	1.606
120	04611-00380	CIR CLIP INTERNAL	4				0.004	0.0088
130	01153-50802	BOLT	2				0.04	0.088
140	02156-50080	NUT	2				0.004	0.0088
150	04512-60080	WASHER SPRING	2				0.002	0.0044
160	35861-82190	ASSY COUPLER MALE	4				0.086	0.1892
170	35861-94530	CAP	4				0.007	0.0154
180	TA040-49620	MARK COUPLER	1				0.001	0.0022
190	TC230-96480	STAY COUPLER	1				0	0
200	TC230-96490	SUPPORT HOSE CLAMP	1				0	0
210	01754-50816	BOLT FLANGE	2				0.011	0.0242
220	01774-61020	BOLT FLANGE	2				0.022	0.0484

silverhorn.co.uk

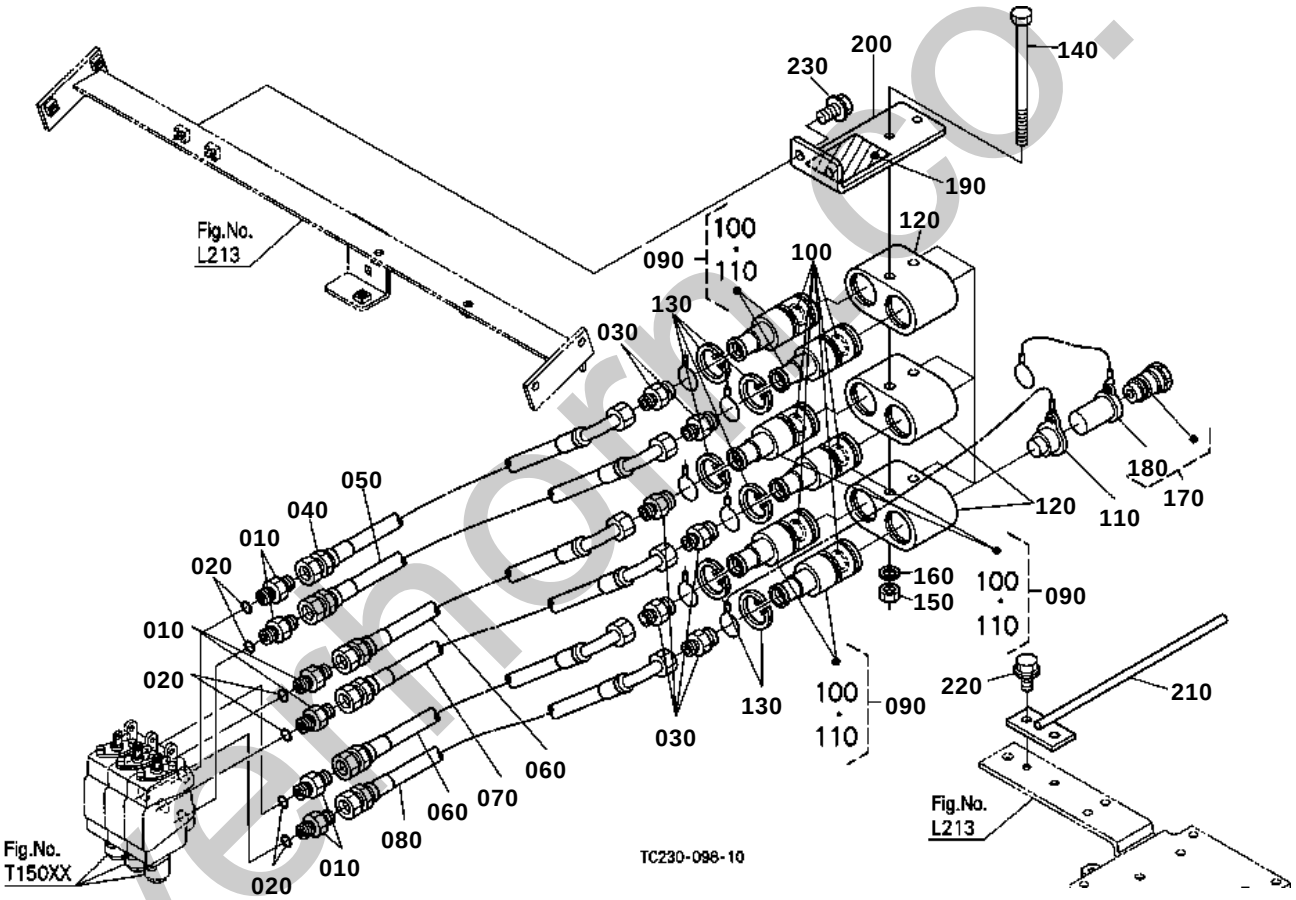

silvermore.co.uk

AUXILIARY CONTROL VALVE COUPLER (3RD) [OPTION]

↔ Interchangeable; ≠ not interchangeable; ← new for old; → old for new

REF.No	Part No.	Description	Q'ty	S.No.	I/C	REMARKS	Weight (kgf)	Weight (lb)
010	70726-61130	ADAPTER	6				0.055	0.121
020	04816-00140	O RING	6				0.002	0.0044
030	99063-93410	ADAPTER	6				0.07	0.154
040	TA040-96410	HOSE AUX.CONT.VALVE	1				0.308	0.6776
050	TA040-96420	HOSE AUX.CONT.VALVE	1				0.314	0.6908
060	TA040-96430	HOSE AUX.CONT.VALVE	2				0.295	0.649
070	TA040-96440	HOSE AUX.CONT.VALVE	1				0.302	0.6644
080	TA040-96450	HOSE AUX.CONT.VALVE	1				0.3	0.66
090	35861-82032	ASSY COUPLER FEMALE	6				0.32	0.704
100	35861-94510	O RING	6				0.002	0.0044
110	35861-94520	PLUG COUPLER	6				0.005	0.011
120	35893-82610	SUPPORT COUPLER	3				0.73	1.606
130	04611-00380	CIR CLIP INTERNAL	6				0.004	0.0088
140	35340-99540	BOLT	2				0.06	0.132
150	02156-50080	NUT	2				0.004	0.0088
160	04512-60080	WASHER SPRING	2				0.002	0.0044
170	35861-82190	ASSY COUPLER MALE	6				0.086	0.1892
180	35861-94530	CAP	6				0.007	0.0154
190	TA040-49640	MARK COUPLER	1				0.002	0.0044
200	TC230-96480	STAY COUPLER	1				0	0
210	TC230-96490	SUPPORT HOSE CLAMP	1				0	0
220	01754-50816	BOLT FLANGE	2				0.011	0.0242
230	01774-61020	BOLT FLANGE	2				0.022	0.0484

silverhorn.co.uk