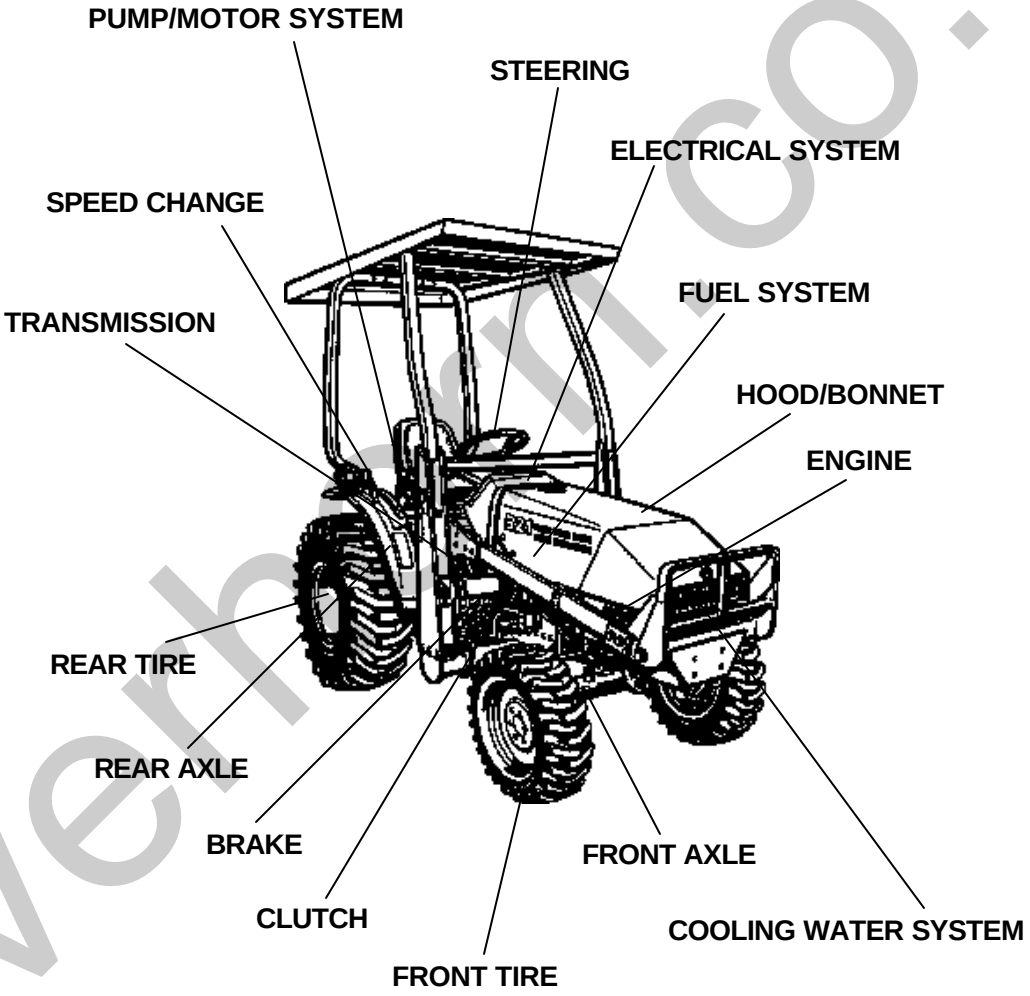

TOP LINK/TOP LINK BRACKET/PTO PROTECTOR

LABELS

ACCESSORIES AND SERVICE PARTS

OPTION

silverhorn.co.uk

Item	Part No.	Description	Book
ENGINE	010001	CRANKCASE	100K0813
	01000101	CRANKCASE	100K0813
	010002	OIL PAN	100K0813
	010003	CYLINDER HEAD	100K0813
	010004	GEAR CASE	100K0813
	010005	HEAD COVER	100K0813
	01000501	HEAD COVER	100K0813
	010006	OIL FILTER	100K0813
	010100	MAIN BEARING CASE	100K0813
	010101	CAMSHAFT AND IDLE GEAR SHAFT	100K0813
	010102	PISTON AND CRANKSHAFT	100K0813
	010103	FLYWHEEL	100K0813
	010105	FUEL CAMSHAFT AND GOVERNOR SHAFT	100K0813
	01020001	IDLE APPARATUS	100K0813
	01020002	IDLE APPARATUS	100K0813
	010202	INJECTION PUMP	100K0813
	01020401	GOVERNOR	100K0813
	01020402	GOVERNOR	100K0813
	01020403	GOVERNOR	100K0813
	010205	SPEED CONTROL PLATE	100K0813
	010206	NOZZLE HOLDER AND GLOW PLUG	100K0813
	01020601	NOZZLE HOLDER AND GLOW PLUG	100K0813
	010207	NOZZLE HOLDER [COMPONENT PARTS]	100K0813
	01020701	NOZZLE HOLDER [COMPONENT PARTS]	100K0813
	010301	FUEL PUMP(MECHANICAL)	100K0813
	010500	WATER FLANGE AND THERMOSTAT	100K0813
	010501	WATER PUMP	100K0813
	010600	VALVE AND ROCKER ARM	100K0813
	010601	INLET MANIFOLD	100K0813
	01060101	INLET MANIFOLD	100K0813
	010602	EXHAUST MANIFOLD	100K0813
	010603	AIR CLEANER	100K0813
	010605	MUFFLER	100K0813
	010900	UPPER GASKET KIT	100K0813
	01090001	UPPER GASKET KIT	100K0813
	010901	LOWER GASKET KIT	100K0813
	01090101	LOWER GASKET KIT	100K0813
	01A001	ACCELERATOR LEVER	100K0813
FUEL SYSTEM	01A101	FUEL TANK	100K0813
	01A11001	FUEL PIPE	100K0813
	01A11002	FUEL PIPE	100K0813
	01A130	FUEL FILTER [COMPONENT PARTS]	100K0813
COOLING WATER SYSTEM	01A401	FAN	100K0813
	01A410	WATER PIPE	100K0813
	01A42001	RADIATOR [EXCEPT [AU]]	100K0813

silverhorn.co.uk

Item	Part No.	Description	Book
COOLING WATER SYSTEM	01A42002	RADIATOR [AU]	100K0813
ELECTRICAL SYSTEM	01A510	STOP SOLENOID	100K0813
	01A515	ALTERNATOR	100K0813
	01A520	ALTERNATOR [COMPONENT PARTS]	100K0813
	01A525	STARTER	100K0813
	01A530	STARTER [COMPONENT PARTS]	100K0813
	01A535	BATTERY	100K0813
	01B101	SWITCH	100K0813
	01B115	PANEL BOARD	100K0813
	01B120	PANEL BOARD [COMPONENT PARTS]	100K0813
	01B301	HEAD LIGHT	100K0813
	01B302	HAZARD LIGHT	100K0813
	01B304	TAIL LIGHT	100K0813
	01B30401	TAIL LIGHT	100K0813
	01B310	WINKER LAMP	100K0813
	01B501	ELECTRICAL WIRING	100K0813
CLUTCH	01C101	CLUTCH	100K0813
	01C110	CLUTCH ROD	100K0813
	01C301	CLUTCH PEDAL	100K0813
	01C401	CLUTCH HOUSING	100K0813
	01C415	CENTER FRAME	100K0813
TRANSMISSION	01C420	TRANSMISSION CASE	100K0813
	01C425	DIFFERENTIAL GEAR CASE	100K0813
	01C427	REAR AXLE CASE	100K0813
	01D001	CLUTCH SHAFT	100K0813
	01D005	PROPELLER SHAFT	100K0813
	01D010	HST	100K0813
	01D01501	HST [COMPONENT PARTS]	100K0813
	01D01502	HST [COMPONENT PARTS]	100K0813
	01D01503	HST [COMPONENT PARTS]	100K0813
	01D103	FRONT SHAFT	100K0813
	01D105	2ND SHAFT/3RD SHAFT/4TH SHAFT	100K0813
	01D135	PTO SHAFT	100K0813
	01D140	REAR DIFFERENTIAL	100K0813
	01D143	FRONT WHEEL PROPELLER SHAFT	100K0813
SPEED CHANGE	01D217	RANGE GEAR SHIFT FORK	100K0813
REAR AXLE	01D301	REAR AXLE	100K0813
BRAKE	01E001	BRAKE	100K0813
	01E015	PARKING BRAKE LEVER	100K0813
SPEED CHANGE	01F107	NEUTRAL HOLDER LINK	100K0813
	01F108	SPEED CONTROL PEDAL	100K0813
	01F110	RANGE GEAR SHIFT LEVER	100K0813
	01F111	RANGE GEAR SHIFT ROD	100K0813
	01F113	FRONT WHEEL DRIVE LEVER	100K0813
	01F125	PTO GEAR SHIFT LEVER	100K0813
PUMP/MOTOR SYSTEM	01F143	HYDRAULIC CONTROL LEVER	100K0813
	01F167	HYDRAULIC CHANGE ROD	100K0813
BRAKE	01F201	BRAKE PEDAL	100K0813
REAR AXLE	01F205	DIFFERENTIAL LOCK PEDAL	100K0813

silverhorn.co.uk

Item	Part No.	Description	Book
FRONT AXLE	01G101	FRONT AXLE FRAME	100K0813
	01G105	FRONT AXLE CASE	100K0813
	01G115	FRONT DIFFERENTIAL	100K0813
	01G123	BEVEL GEAR CASE	100K0813
	01G130	FRONT AXLE	100K0813
	01G135	FRONT DRIVE SHAFT	100K0813
STEERING	01H003	DRAG LINK	100K0813
	01H005	TIE ROD	100K0813
	01H101	STEERING HANDLE	100K0813
PUMP/MOTOR SYSTEM	01J101	HYDRAULIC PUMP(PS)	100K0813
STEERING	01J10501	HYDRAULIC PUMP(PS) [COMPONENT PARTS]	100K0813
PUMP/MOTOR SYSTEM	01J10502	HYDRAULIC PUMP(PS) [COMPONENT PARTS]	100K0813
	01J120	HYDRAULIC PUMP	100K0813
	01J125	HYDRAULIC PUMP [COMPONENT PARTS]	100K0813
	01J150	OIL TANK	100K0813
	01J201	HYDRAULIC OIL LINE(SUCTION)	100K0813
	01J203	FLOW DIVIDER VALVE [COMPONENT PARTS]	100K0813
	01J210	HYDRAULIC OIL LINE(DELIVERY)	100K0813
	01J215	HYDRAULIC OIL LINE(STEERING)	100K0813
	01J216	HYDRAULIC OIL LINE(BACKHOE)	100K0813
	01J235	HYDRAULIC OIL LINE(HST)	100K0813
	01J240	HYDRAULIC OIL LINE(OIL COOLER)	100K0813
	01J245	HYDRAULIC OIL LINE(F/M)	100K0813
	01J301	HYDRAULIC CYLINDER	100K0813
	01J405	CONTROL VALVE	100K0813
	01J410	CONTROL VALVE [COMPONENT PARTS]	100K0813
	01J460	HYDRAULIC OUTLET	100K0813
	01J461	HYDRAULIC OUTLET [COMPONENT PARTS]	100K0813
TOP LINK/TOP LINK BRACKET/PTO PROTECTOR	01K101	3-POINT LINKAGE 2(LIFT ROD)	100K0813
	01K115	HITCH/LOWER LINK	100K0813
	01K120	3-POINT LINKAGE 1(TOP LINK)	100K0813
	01L12501	PTO PROTECTOR [EXCEPT [AU]]	100K0813
	01L12502	PTO PROTECTOR [AU]	100K0813
HOOD/BONNET	01M10501	BONNET [EXCEPT [AU]]	100K0813
	01M10502	BONNET [AU]	100K0813
	01M11301	PANEL COVER/SHUTTER PLATE [EXCEPT [AU]]	100K0813
	01M11302	PANEL COVER/SHUTTER PLATE [AU]	100K0813
	01M21301	FENDER LH [EXCEPT [AU]]	100K0813
	01M21302	FENDER LH [AU]	100K0813
	01M21401	FENDER RH [EXCEPT [AU]]	100K0813

silverhorn.co.uk

Item	Part No.	Description	Book
HOOD/BONNET	01M21402	FENDER RH [AU]	100K0813
	01M220	SEAT	100K0813
	01M221	SEAT TURN TABLE	100K0813
	01M222	BASE SEAT TURN TABLE	100K0813
	01M223	SEAT ADJUSTER	100K0813
	01M225	STEP	100K0813
	01M230	MAIN FLAME	100K0813
	01M32001	ROPS/FOPS	100K0813
	01M32002	ROPS/FOPS	100K0813
	01M501	SMV EMBLEM(BRACKET)	100K0813
FRONT TIRE	01R10101	FRONT WHEEL(23*8.50-14R4)	100K0813
	01R10102	FRONT WHEEL(24*8.50-14)	100K0813
REAR TIRE	01R11001	REAR WHEEL(12.4-16R4)	100K0813
	01R11002	REAR WHEEL(12.4-16)	100K0813
	01R11003	REAR WHEEL(13.6-16)	100K0813
LABELS	01S10101	LABEL [A] [CA] [ENGLISH]	100K0813
	01S10102	LABEL [A] [CA] [FRENCH]	100K0813
	01S10103	LABEL [AU]	100K0813
ACCESSORIES AND SERVICE PARTS	01T105	ACCESSORIES AND SERVICE PARTS	100K0813
OPTION	01U80501	WORKING LIGHT KIT [OPTION]	100K0813
	01U80502	WORKING LIGHT KIT [OPTION]	100K0813
	01U807	WIRE HARNESS KIT [OPTION] [AU]	100K0813
	01U890	DRAWBER KIT [OPTION]	100K0813

silverhorn.co.uk

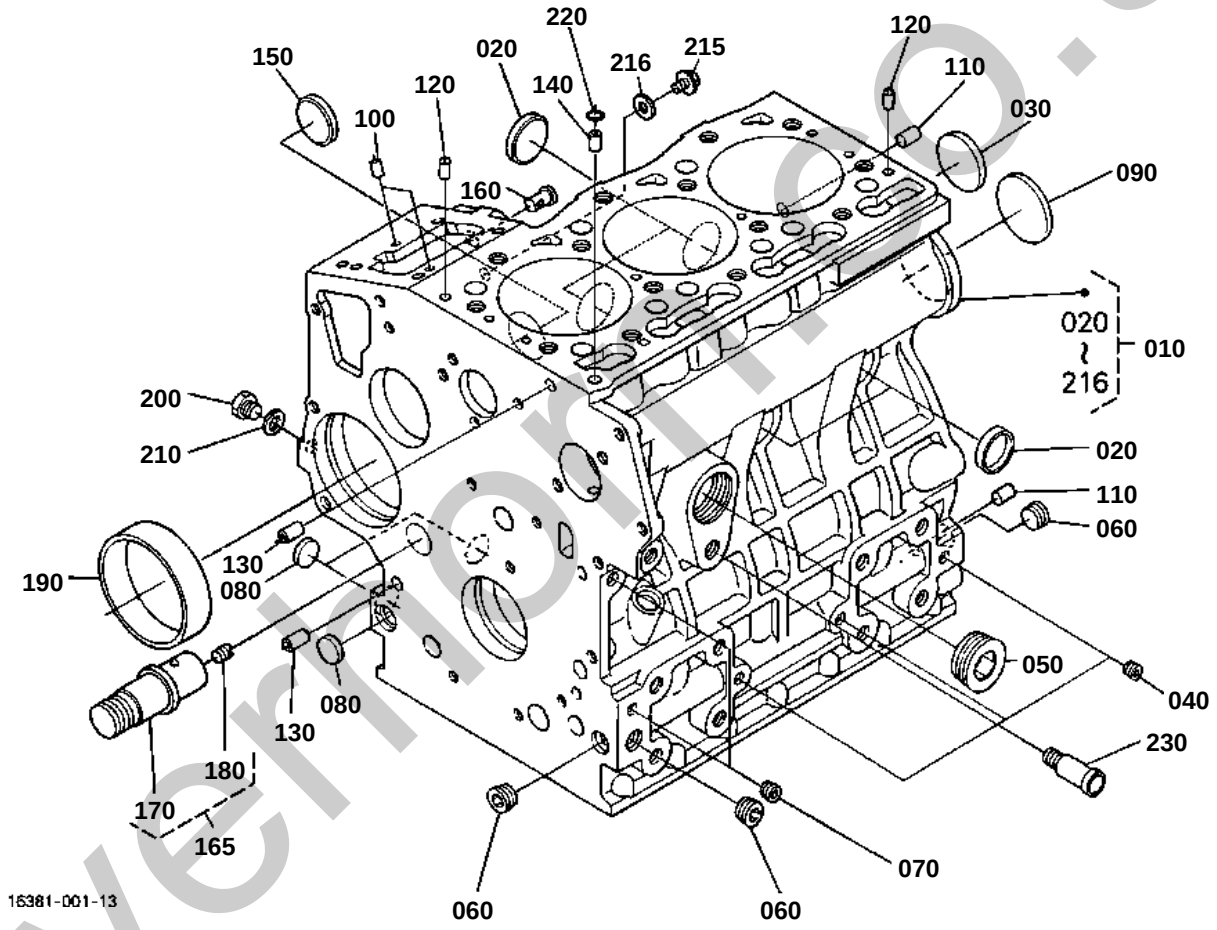

silverhorn.co.uk

Kubota

CRANKCASE

S.No.;<=4Z9999

↔ Interchangeable; ≠ not interchangeable; ← new for old; → old for new

REF.No	Part No.	Description	Q'ty	S.No.	I/C	REMARKS	Weight (kgf)	Weight (lb)
010	16234-01015	COMP.CRANKCASE	1	<=YD1625			32.28	71.016
010	16234-01017	COMP.CRANKCASE	1	>=YE0001	¬		0	0
010	16234-01018	COMP.CRANKCASE	1	>=YL0001	1		0	0
010	16234-01019	COMP.CRANKCASE	1	>=1G0001	1		0	0
010	16234-01020	COMP.CRANKCASE	1	>=2E0004	¬		32	70.4
010	16234-01022	COMP.CRANKCASE	1	>=3L0007	¬		33	72.6
020	15451-96270	CAP SEALING	4				0.001	0.0022
030	15221-03490	CAP SEALING	1				0.02	0.044
040	15261-96010	PLUG	3				0.002	0.0044
050	16683-96020	PLUG	1				0.07	0.154
060	16241-96010	PLUG	3				0.007	0.0154
070	15521-96020	PLUG	2				0.003	0.0066
080	17391-96160	PLUG EXPANSION	3				0.003	0.0066
090	16271-96160	PLUG EXPANSION	1				0.025	0.055
100	05012-00508	PIN STRAIGHT	2				0.001	0.0022
100	16225-94510	PIN STRAIGHT	2		«		0	0
100	05012-00508	PIN STRAIGHT	2		«		0.001	0.0022
110	05012-00814	PIN STRAIGHT	2				0.006	0.0132
110	16221-94530	PIN STRAIGHT	2		«		0.006	0.0132
110	05012-00814	PIN STRAIGHT	2		«		0.006	0.0132
120	05012-00610	PIN STRAIGHT	2				0.003	0.0066
120	16221-94520	PIN STRAIGHT	2		«		0.005	0.011
130	15231-33960	PIN PIPE	2				0.001	0.0022
140	16241-33650	PIN PIPE	1				0.002	0.0044
150	16241-96262	PLUG	1				0.007	0.0154
160	16261-56280	PIN START SPRING	1				0.004	0.0088
165	16251-24060	COMP SHAFT IDLE	1				0.18	0.396
170	16251-24260	SHAFT IDLE GEAR	1			NOT SALE	0.18	0.396
180	15521-93610	SCREW SET	1				0.002	0.0044
190	16271-55350	BUSH GOVERNOR GEAR	1				0.06	0.132
200	15221-33610	PLUG	1				0.009	0.0198
210	15021-33660	GASKET	1				0.001	0.0022
215	01754-50610	BOLT FLANGE	1	>=3L0007			0.006	0.0132
216	15601-96650	GASKET	1	>=3L0007			0.001	0.0022
220	15221-33700	O RING	1				0.001	0.0022
230	15321-73340	PIPE WATER RETURN	1				0.016	0.0352

silvermorn.co.uk

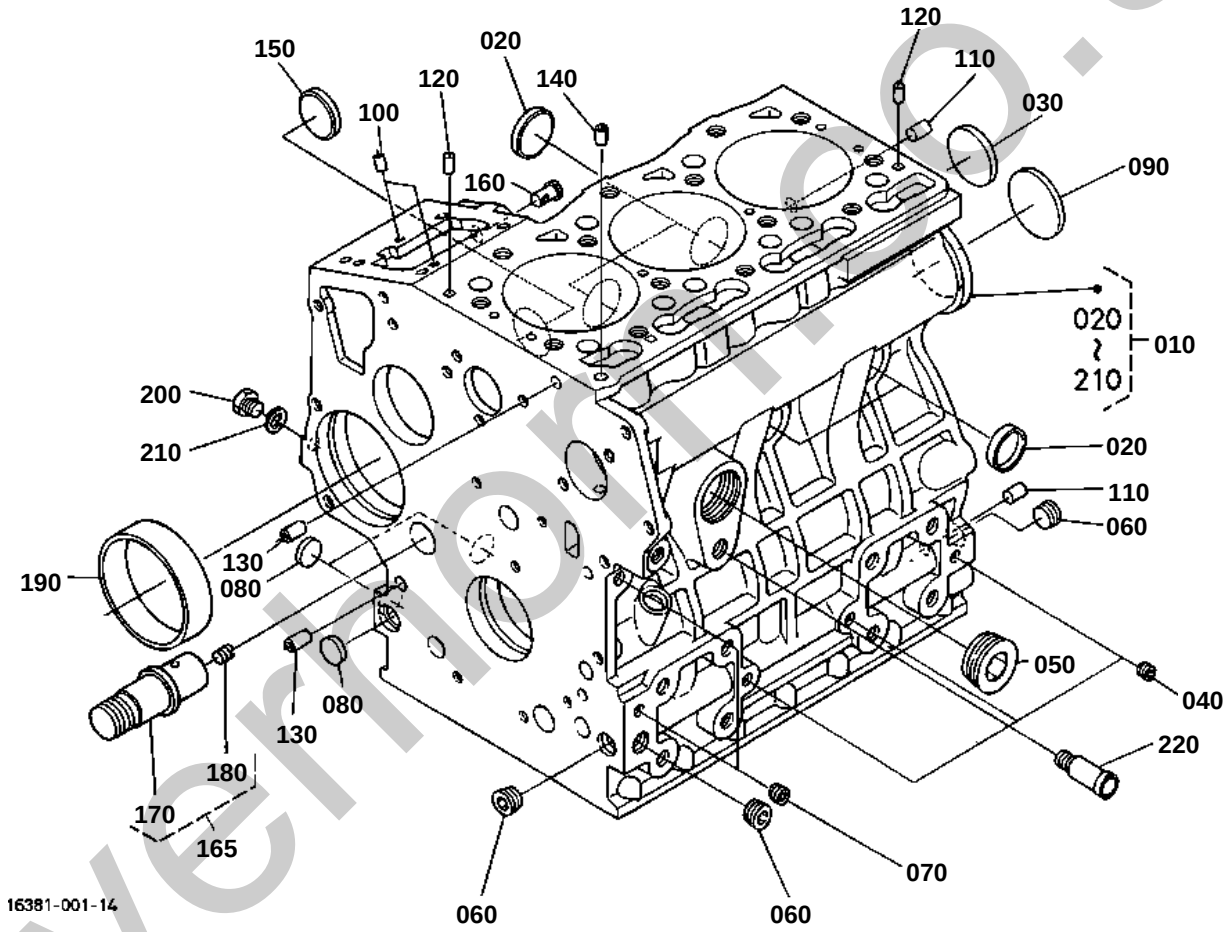

silverhorn.co.uk

CRANKCASE

S.No.;>=5A0001

↔ Interchangeable; ≠ not interchangeable; ← new for old; → old for new

REF.No	Part No.	Description	Q'ty	S.No.	I/C	REMARKS	Weight (kgf)	Weight (lb)
010	1G045-01010	COMP.CRANKCASE	1				0	0
020	15451-96270	CAP SEALING	4				0.001	0.0022
030	15221-03490	CAP SEALING	1				0.02	0.044
040	15261-96010	PLUG	3				0.002	0.0044
050	16683-96020	PLUG	1				0.07	0.154
060	16241-96010	PLUG	3				0.007	0.0154
070	15521-96020	PLUG	2				0.003	0.0066
080	17391-96160	PLUG EXPANSION	3				0.003	0.0066
090	16271-96160	PLUG EXPANSION	1				0.025	0.055
100	05012-00508	PIN STRAIGHT	2				0.001	0.0022
110	05012-00814	PIN STRAIGHT	2				0.006	0.0132
120	16221-94520	PIN STRAIGHT	2				0.005	0.011
130	15231-33960	PIN PIPE	2				0.001	0.0022
140	16241-33650	PIN PIPE	1				0.002	0.0044
150	16241-96262	PLUG	1				0.007	0.0154
160	16261-56280	PIN START SPRING	1				0.004	0.0088
165	16251-24060	COMP SHAFT IDLE	1				0.18	0.396
170	16251-24260	SHAFT IDLE GEAR	1			NOT SALE	0.18	0.396
180	15521-93610	SCREW SET	1				0.002	0.0044
190	16271-55350	BUSH GOVERNOR GEAR	1				0.06	0.132
200	15221-33610	PLUG	1				0.009	0.0198
210	15021-33660	GASKET	1				0.001	0.0022
220	15321-73340	PIPE WATER RETURN	1				0.016	0.0352

silverhorn.co.uk

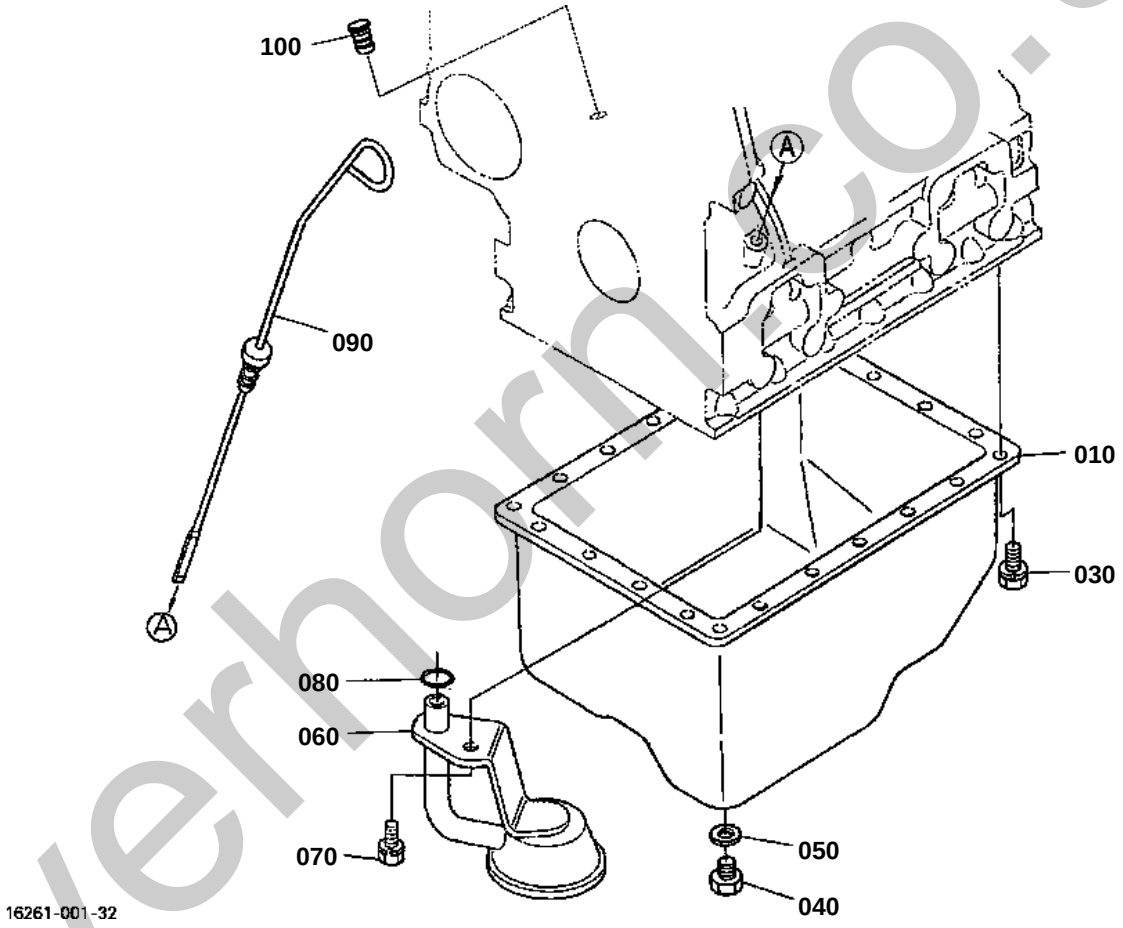

silverhorn.co.uk

OIL PAN

↔ Interchangeable; ≠ not interchangeable; ← new for old; → old for new

REF.No	Part No.	Description	Q'ty	S.No.	I/C	REMARKS	Weight (kgf)	Weight (lb)
010	6C040-58920	COMP.OIL PAN	1				1.2	2.64
020	99999-99999	BLANK	0				0	0
030	01023-50612	BOLT	22				0.005	0.011
030	16221-91120	BOLT	22		«		0.005	0.011
040	15221-33750	PLUG	1				0.032	0.0704
040	16326-33750	PLUG DRAIN	1		«		0.025	0.055
050	15109-33660	GASKET	1				0.001	0.0022
050	6C090-58960	GASKET	1		«		0.002	0.0044
060	16261-32113	FILTER OIL	1	<=XG9803			0	0
060	16261-32114	FILTER OIL	1	>=XJ0001	¬		0.21	0.462
070	01123-60816	BOLT	1				0.01	0.022
080	04811-00160	O RING	1	<=WH4333			0	0
080	04814-00160	O RING	1	>=WJ0001	¬		0.001	0.0022
090	16224-36410	GAUGE OIL	1				0.057	0.1254
100	1G513-36550	PLUG OIL GAUGE	1	>=5A0001			0	0

silverhorn.co.uk

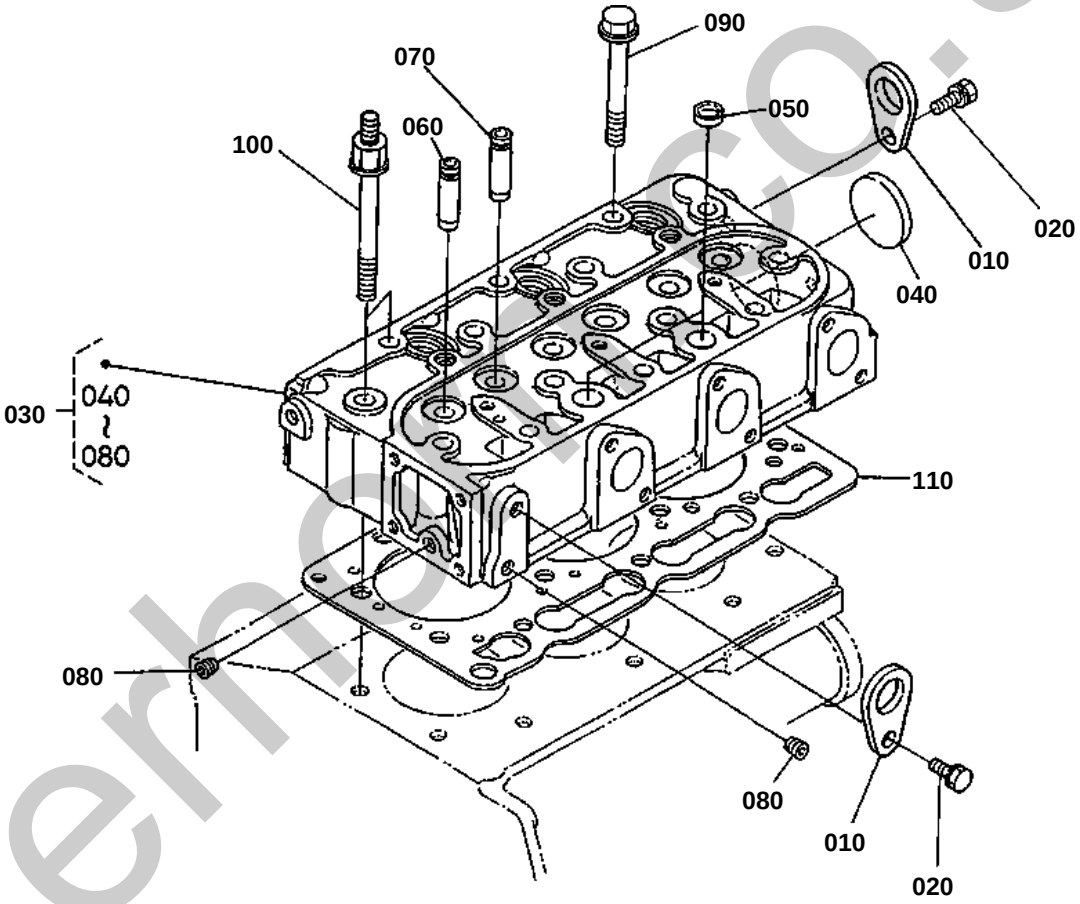

silverhoe.co.uk

OLD PARTS

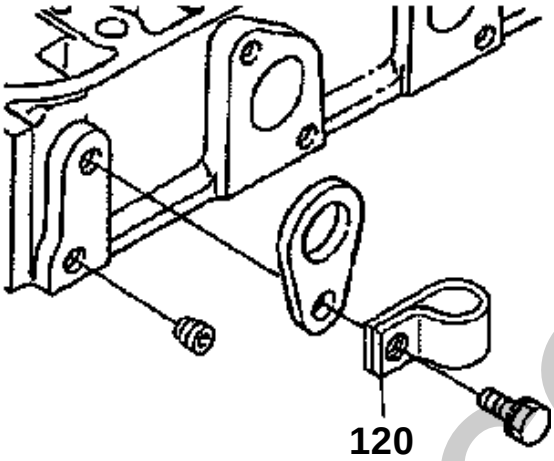

1G041-800-10

silverhorn.co.uk

CYLINDER HEAD

↔ Interchangeable; ≠ not interchangeable; ← new for old; → old for new

REF.No	Part No.	Description	Q'ty	S.No.	I/C	REMARKS	Weight (kgf)	Weight (lb)
010	15221-01750	HOOK ENGINE	2				0.04	0.088
020	01123-60814	BOLT	2				0.01	0.022
030	16027-03040	COMP.CYLINDER HEAD	1	<=4Z9999			8.72	19.184
030	1G042-03040	COMP.CYLINDER HEAD	1	>=5A0001	1		0	0
040	15321-96260	CAP SEALING	1				0.001	0.0022
050	15261-03370	CAP SEALING	2				0.005	0.011
060	16241-13540	GUIDE INLET VALVE	3				0.02	0.044
060	16261-13540	GUIDE INLET VALVE	3		«		0.02	0.044
070	16241-13560	GUIDE EXHAUST VALVE	3				0.01	0.022
070	16261-13560	GUIDE EXHAUST VALVE	3		«		0.019	0.0418
080	15261-96010	PLUG	2				0.002	0.0044
090	16241-03450	BOLT CYLINDER HEAD	12				0.07	0.154
100	16216-03450	BOLT CYLINDER HEAD	2				0.07	0.154
110	16231-03310	GASKET CYLINDER HEAD	1	<=4Z9999			0.07	0.154
110	1G040-03310	GASKET CYLINDER HEAD	1	>=5A0001	1		0.15	0.33
120	52200-41160	CLAMP CORD	1	<=4Z9999			0.01	0.022

silverhorn.co.uk

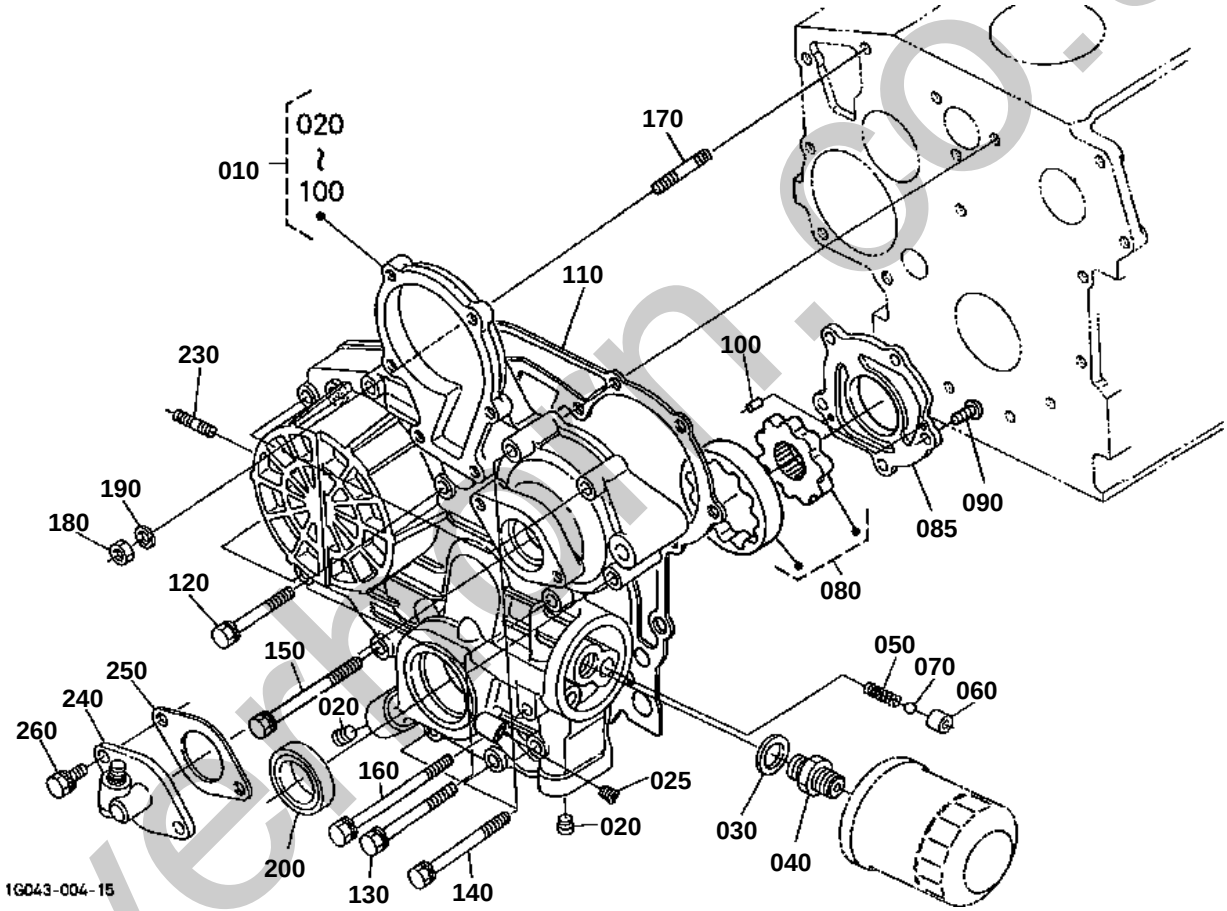

silverhill.co.uk

OLD PARTS

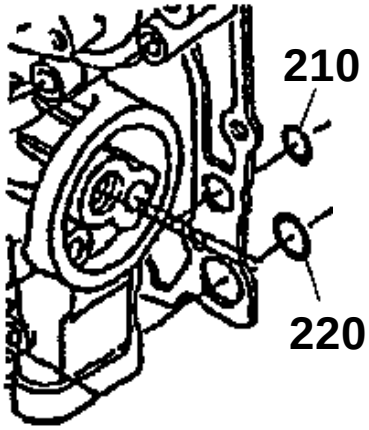

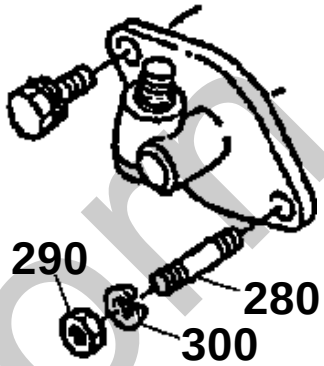

16381-803-11

silverhorn.co.uk

GEAR CASE

NOTE:ORDER BY REF.No.010 and Fig.No.0501 REF.No.010,060 NEW PARTS.

↔ Interchangeable; ≠ not interchangeable; ← new for old; → old for new

REF.No	Part No.	Description	Q'ty	S.No.	I/C	REMARKS	Weight (kgf)	Weight (lb)
010	16251-04020	COMP.CASE GEAR	1	<=1U7903		NOT SALE SEE NOTE	2.5	5.5
010	16251-04027	COMP.CASE GEAR	1	>=1W0001	1		0	0
010	16252-04020	COMP.CASE GEAR	1		«		2.5	5.5
010	16252-04022	COMP.CASE GEAR	1	>=5G0013	¬		0	0
020	16241-96020	PLUG	2				0.015	0.033
025	15521-96020	PLUG	1	>=XG0001			0.003	0.0066
030	04011-50180	WASHER PLAIN	1				0.012	0.0264
040	15241-32290	JOINT PIPE	1				0.053	0.1166
050	16241-36950	SPRING	1				0.015	0.033
060	16241-36930	SEAT VALVE	1				0.032	0.0704
070	07715-00201	BALL	1				0.008	0.0176
080	16241-35070	ASSY ROTOR OIL PUMP	1				0.27	0.594
085	16251-35130	COVER OIL PUMP	1				0.09	0.198
090	03017-50620	SCREW CR-REC-BD-HD	5				0.005	0.011
100	05012-00410	PIN STRAIGHT	2				0.001	0.0022
110	16264-04130	GASKET GEAR CASE	1				0.01	0.022
120	01023-50645	BOLT	3				0.01	0.022
130	01023-60650	BOLT	4				0.015	0.033
140	01023-50655	BOLT	4				0.012	0.0264
150	01023-50665	BOLT	1				0.015	0.033
160	16241-91040	BOLT	1				0.015	0.033
170	01513-50645	BOLT STUD	1				0.011	0.0242
170	16245-91530	STUD	1		«		0.01	0.022
180	02056-50060	NUT	1				0.002	0.0044
190	04512-60060	WASHER SPRING	1				0.001	0.0022
200	16241-04212	SEAL OIL	1				0.012	0.0264
210	04811-06100	O RING	2	<=WH4333			0	0
210	04814-06100	RING	2	>=WJ0001	¬		0.003	0.0066
210	04814-06100	RING	2	<=1S7639			0.003	0.0066
220	04811-00150	O RING	2	<=WH4333			0	0
220	04814-00150	RING	2	>=WJ0001	¬		0.001	0.0022
220	04814-00150	RING	2	<=1S7639			0.001	0.0022
230	01513-50616	BOLT STUD	2				0.004	0.0088
230	16245-91540	STUD	2		«		0.005	0.011
240	58417-25950	ASSY GEAR CASE H/M	1				0.29	0.638
250	16264-88130	GASKET H/METER UNIT	1				0.002	0.0044
260	01023-50618	BOLT	1	<=124821			0.006	0.0132
260	01023-50618	BOLT	2	>=124822			0.006	0.0132
270	99999-99999	BLANK	0				0	0
280	15221-88210	STUD	1	<=124821			0.005	0.011
290	02056-50060	NUT	1	<=124821			0.002	0.0044
300	04512-60060	WASHER SPRING	1	<=124821			0.001	0.0022

silverhorn.co.uk

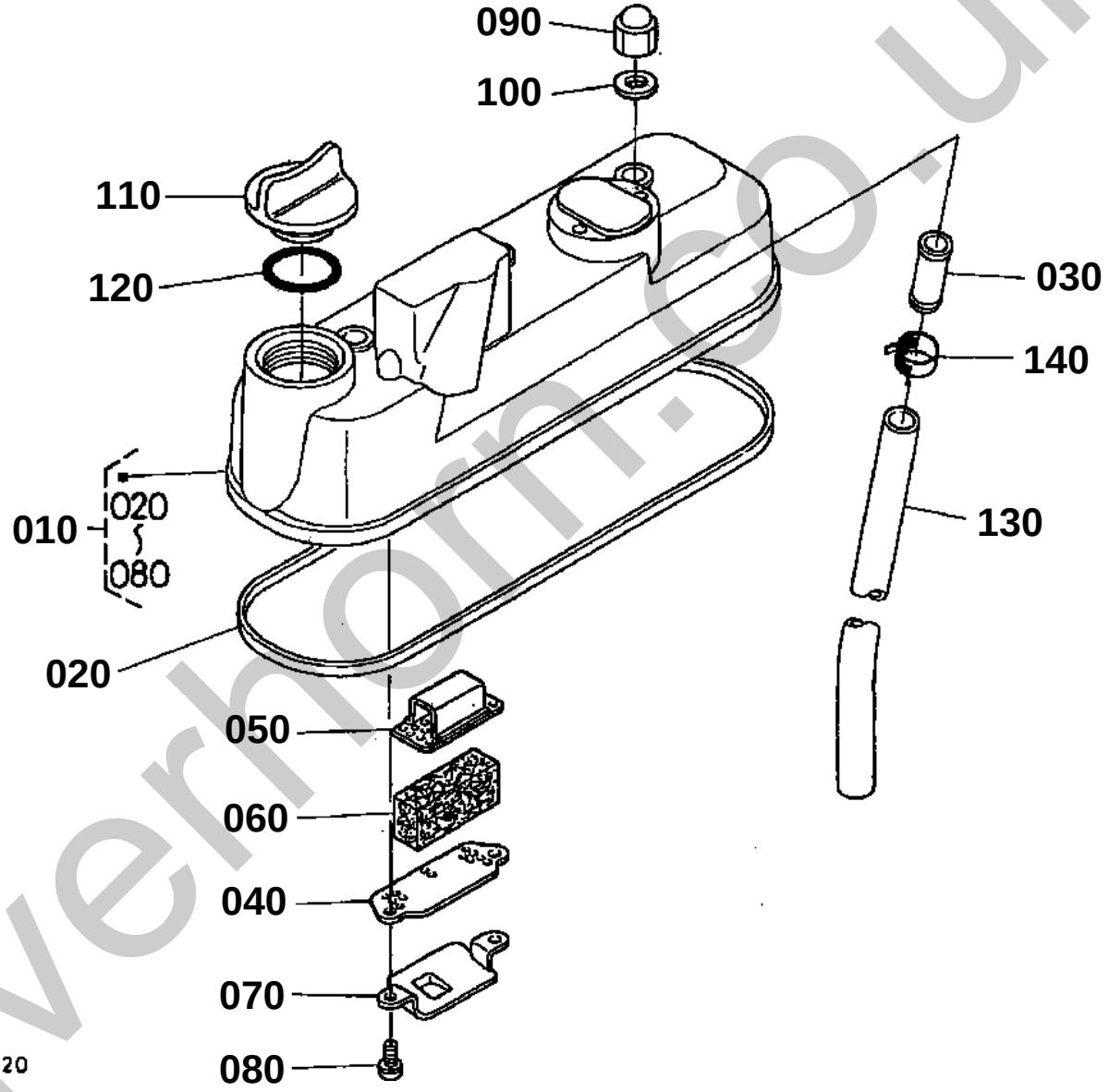

silverhorn.co.uk

HEAD COVER

S.No.;<=4Z9999

↔ Interchangeable; ≠ not interchangeable; ← new for old; → old for new

REF.No	Part No.	Description	Q'ty	S.No.	I/C	REMARKS	Weight (kgf)	Weight (lb)
010	16261-14503	ASSY COVER CYL.HEAD	1				0.78	1.716
020	16261-14520	GASKET HEAD COVER	1				0.01	0.022
030	16241-05550	JOINT BREATHER PIPE	1				0.02	0.044
040	16241-05140	PLATE B/THER ELEMENT	1				0.005	0.011
050	16241-05150	PLATE B/THER ELEMENT	1				0.01	0.022
060	16241-05670	ELEMENT BREATHER	1				0.01	0.022
070	16241-05370	OIL SHIELD BREATHER	1				0.01	0.022
080	03024-50510	SCREW WITH WASHER	2				0.002	0.0044
090	15952-92330	NUT	3				0.01	0.022
100	15951-96660	GASKET	3				0.001	0.0022
110	15852-33140	PLUG OIL FILLER	1				0.038	0.0836
110	E9151-33140	PLUG OIL FILLER	1		«		0.017	0.0374
120	04811-50300	O RING	1	<=WH4333			0	0
120	04814-50300	O RING	1	>=WJ0001	¬		0.001	0.0022
130	16271-05510	PIPE BREATHER	1				0.06	0.132
140	16241-33510	BAND PIPE	1				0.005	0.011
140	6A100-59220	CLAMP HOSE	1		«		0.005	0.011

silverhorn.co.uk

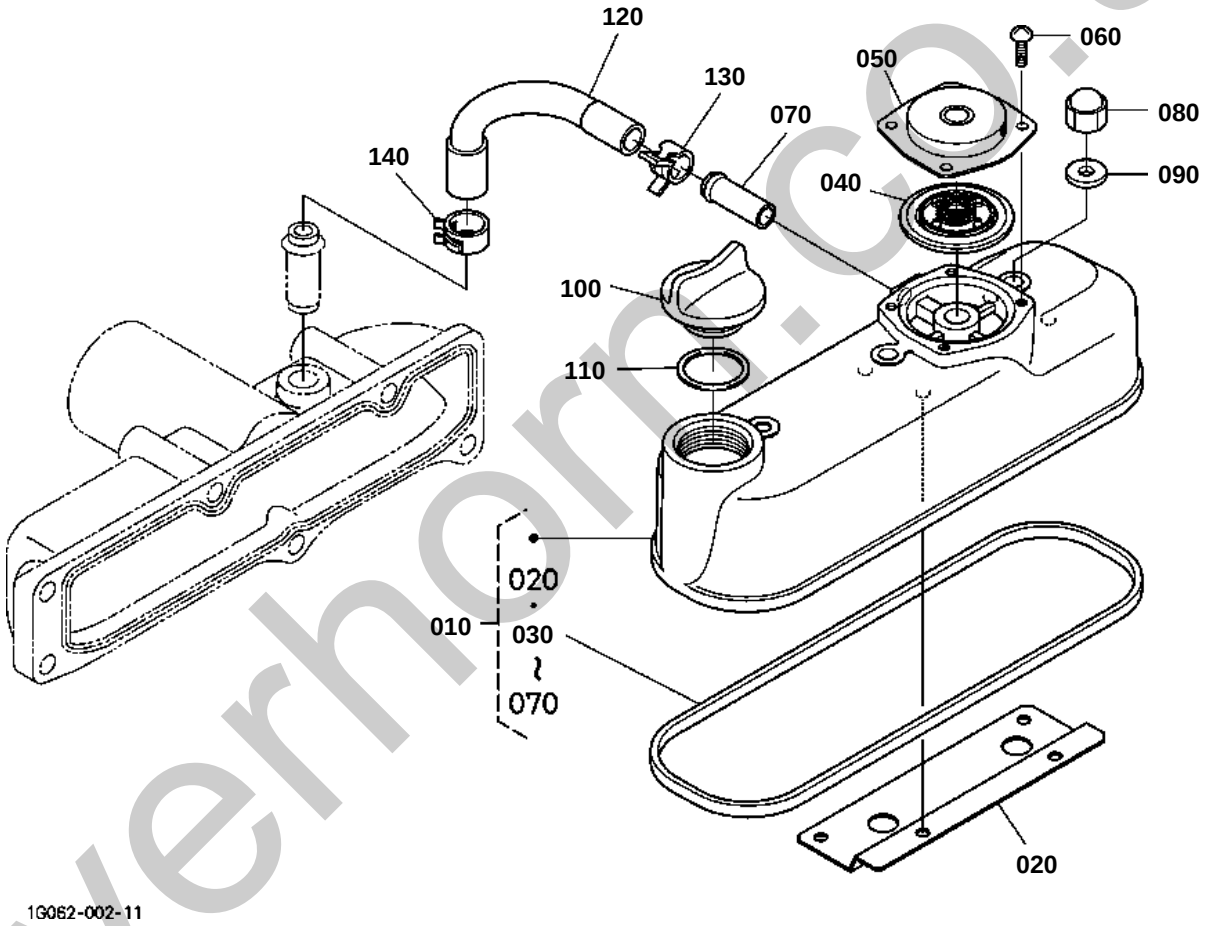

silverhorn.co.uk

HEAD COVER

S.No.;>=5A0001

↔ Interchangeable; ≠ not interchangeable; ← new for old; → old for new

REF.No	Part No.	Description	Q'ty	S.No.	I/C	REMARKS	Weight (kgf)	Weight (lb)
010	1G032-14503	ASSY COVER CYL.HEAD	1	<=5F0181			0	0
010	1G032-14504	ASSY COVER CYL.HEAD	1	>=5G0013	¬		0.79	1.738
020	1G032-05370	SHIELD BREATHER	1				0.03	0.066
030	16261-14520	GASKET HEAD COVER	1				0.01	0.022
040	1G911-05203	COMP.VALVE BREATHER	1				0.01	0.022
050	1G801-05120	COVER BREATHER	1				0.035	0.077
060	03054-50510	SCREW PAN-HEAD	1				0.003	0.0066
070	17331-73342	PIPE WATER RETURN	1				0.01	0.022
080	15952-92330	NUT	3				0.01	0.022
090	15951-96660	GASKET	3				0.001	0.0022
100	E9151-33140	PLUG OIL FILLER	1				0.017	0.0374
110	04814-50300	O RING	1				0.001	0.0022
120	1G032-05510	TUBE BREATHER	1				0.017	0.0374
130	09318-88150	BAND HOSE	1				0.004	0.0088
140	16259-05580	CLAMP HOSE	1				0.03	0.066

silverhorn.co.uk

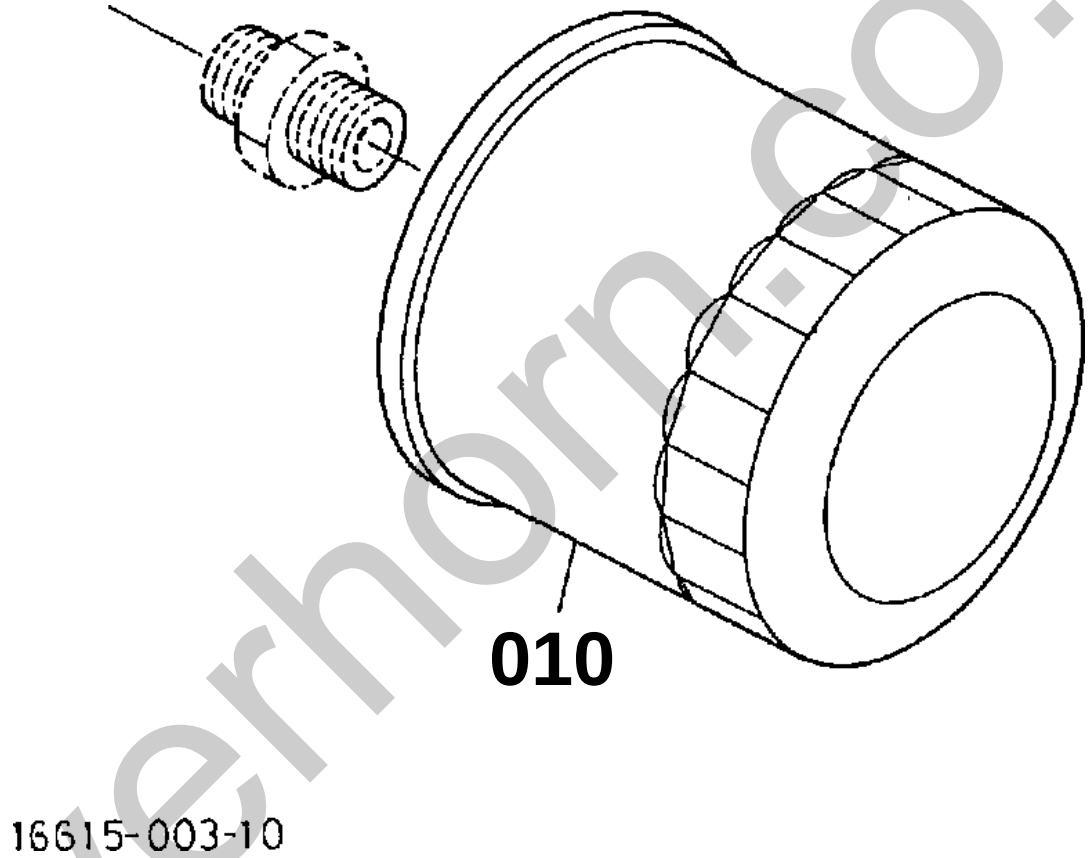

silverhorn.co.uk

OIL FILTER

↔ Interchangeable; ≠ not interchangeable; ← new for old; → old for new

REF.No	Part No.	Description	Q'ty	S.No.	I/C	REMARKS	Weight (kgf)	Weight (lb)
010	15241-32090	ASSY CARTRIDGE OIL	1				0.35	0.77

silverhorn.co.uk

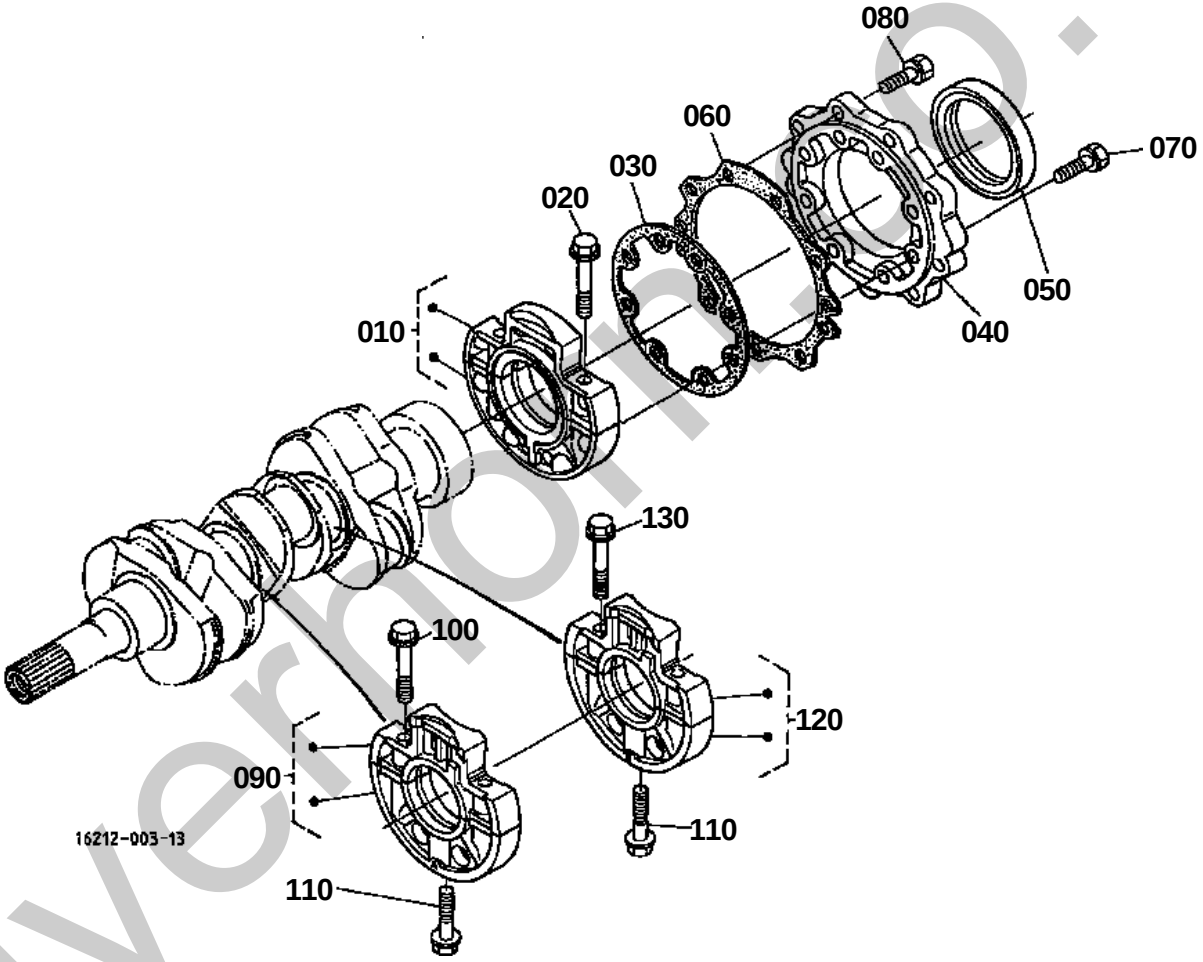

silverhomes.uk

MAIN BEARING CASE

↔ Interchangeable; ≠ not interchangeable; ← new for old; → old for new

REF.No	Part No.	Description	Q'ty	S.No.	I/C	REMARKS	Weight (kgf)	Weight (lb)
010	16241-04092	ASSY CASE MAIN BRG.	1				1.13	2.486
020	16241-04540	BOLT BEARING CASE	2				0.02	0.044
030	16264-04360	GASKET BRG.CASE	1				0.002	0.0044
040	16241-04813	COVER BEARING CASE	1				0.22	0.484
050	16271-04460	SEAL OIL	1				0.04	0.088
060	16264-04820	GASKET	1				0.008	0.0176
070	01023-50625	BOLT	8				0.007	0.0154
080	01023-50620	BOLT	9				0.006	0.0132
090	16261-04040	ASSY CASE MAIN BRG.	1				0.9	1.98
100	16241-04540	BOLT BEARING CASE	2				0.02	0.044
110	16241-04560	BOLT BEARING CASE	2				0.03	0.066
120	16261-04050	ASSY CASE MAIN BRG.	1				1.11	2.442
130	16241-04540	BOLT BEARING CASE	2				0.02	0.044

silverhorn.co.uk

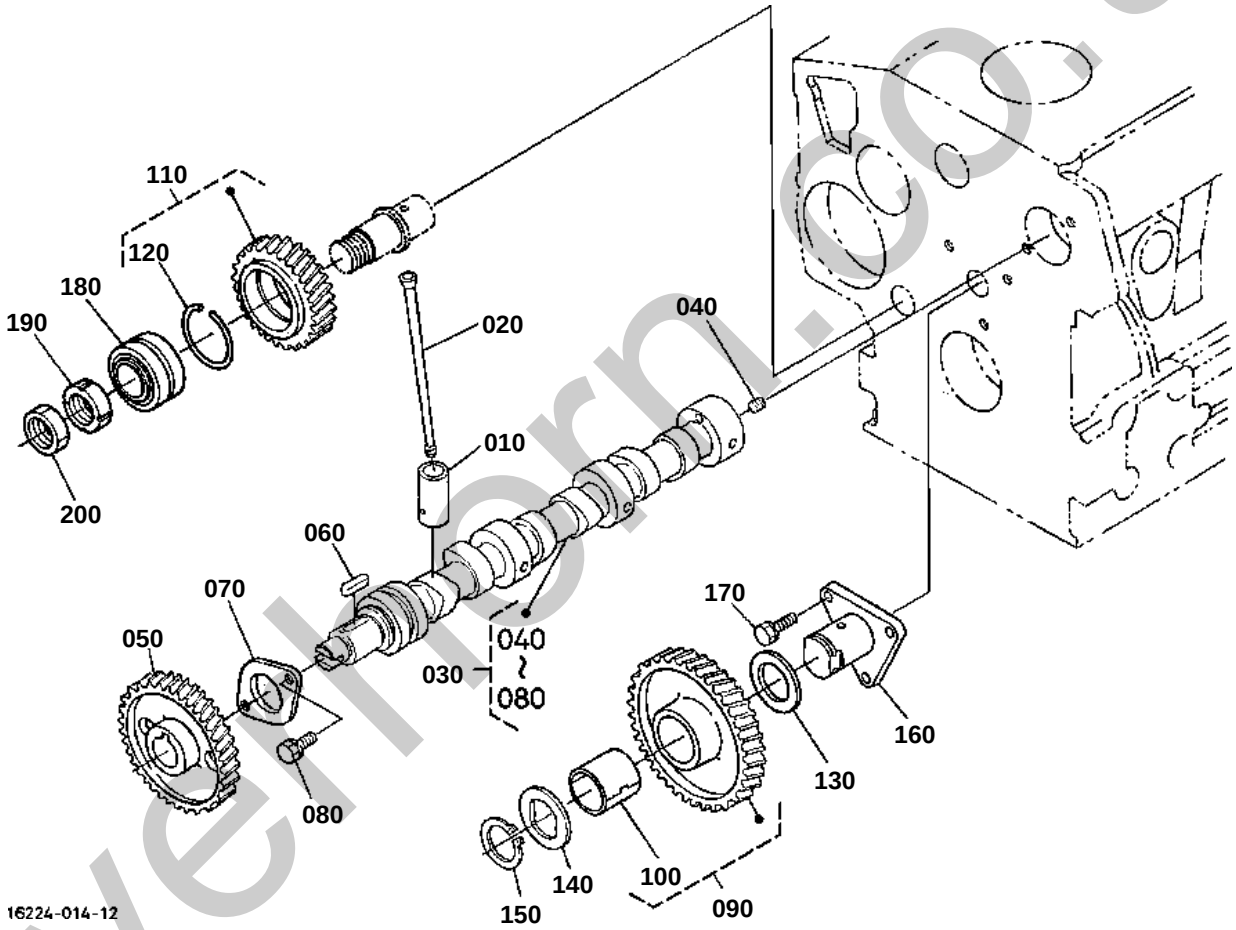

silverthorn.co.uk

CAMSHAFT AND IDLE GEAR SHAFT

↔ Interchangeable; ≠ not interchangeable; ← new for old; → old for new

REF.No	Part No.	Description	Q'ty	S.No.	I/C	REMARKS	Weight (kgf)	Weight (lb)
010	16261-15550	TAPPET	6				0.035	0.077
020	16241-15110	PUSH ROD	6				0.03	0.066
030	16261-16910	ASSY CAMSHAFT	1	<=4J8648			1.7	3.74
030	16261-16013	ASSY CAMSHAFT	1	>=4L0001	1	NOT SALE	1.7	3.74
040	15521-93610	SCREW SET	1				0.002	0.0044
050	16241-16510	GEAR CAM	1				0.45	0.99
060	05712-00518	KEY FEATHER	1				0.003	0.0066
070	16241-16270	STOPPER CAMSHAFT	1				0.04	0.088
080	01023-50614	BOLT	2	<=2D0119			0.005	0.011
080	01023-50616	BOLT	2	>=2E0004	¬		0.005	0.011
090	16243-24010	COMP GEAR IDLE	1				0.6	1.32
100	16251-24980	BUSH IDLE GEAR	1				0.035	0.077
110	16251-24020	COMP GEAR IDLE	1				1.6	3.52
120	16251-24320	CIR CLIP INTERNAL	1				0.01	0.022
130	16251-24360	COLLAR IDLE GEAR	1				0.012	0.0264
140	15741-24370	COLLAR IDLE GEAR	1				0.015	0.033
150	15741-24320	CIR CLIP IDLE GEAR	1				0.01	0.022
160	16251-24250	SHAFT IDLE GEAR	1				0.36	0.792
170	01023-50616	BOLT	3				0.005	0.011
180	16251-24350	BEARING TAPER-ROLLER	1				0.21	0.462
190	02410-00040	NUT BEARING	1				0.019	0.0418
200	16251-92210	NUT LOCK	1				0.01	0.022

silverhorn.co.uk

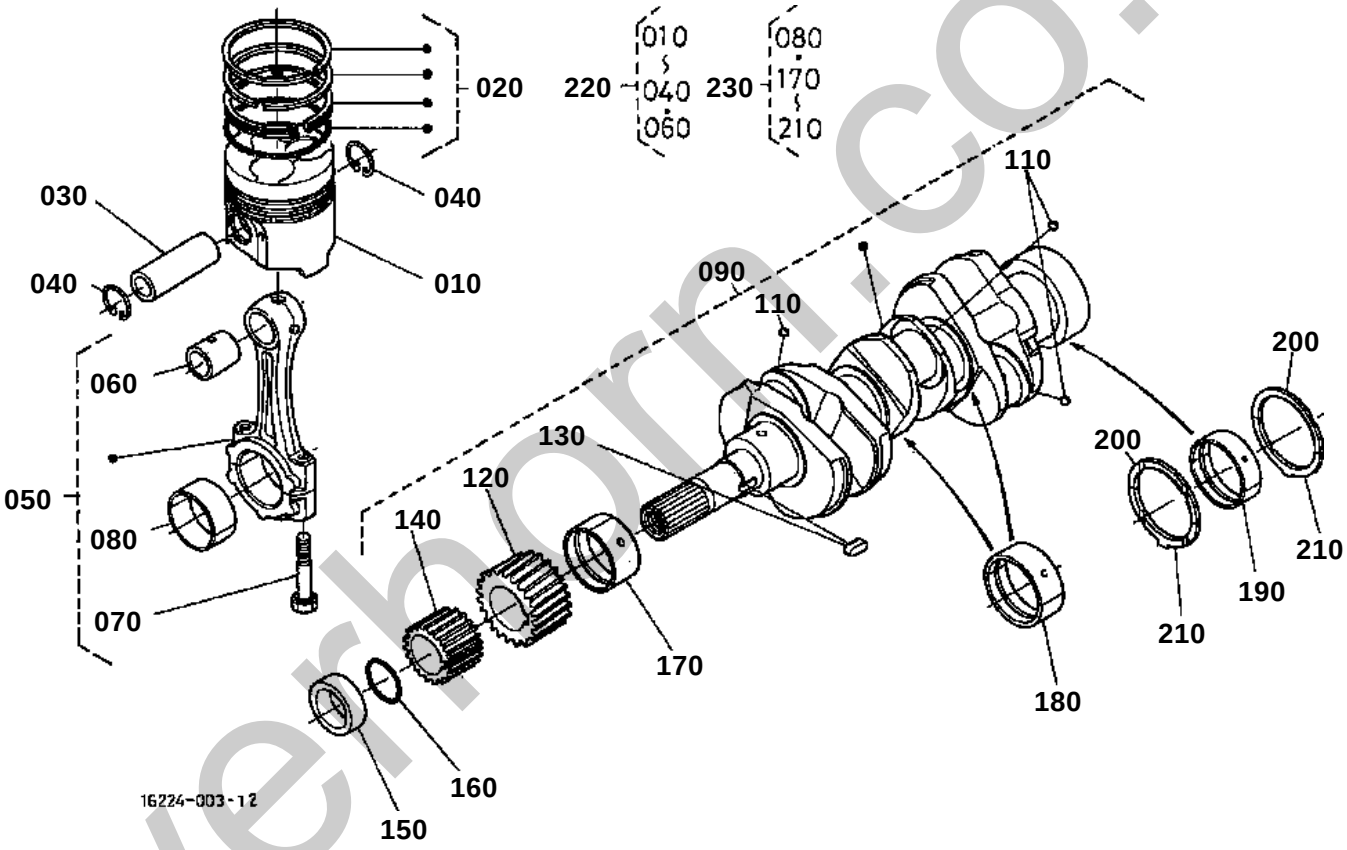

silverhorn.co.uk

PISTON AND CRANKSHAFT

↔ Interchangeable; ≠ not interchangeable; ← new for old; → old for new

REF.No	Part No.	Description	Q'ty	S.No.	I/C	REMARKS	Weight (kgf)	Weight (lb)
010	16050-21110	PISTON	3			STD	0.4	0.88
010	16050-21910	PISTON	3			+0.5mm	0.4	0.88
020	16271-21050	ASSY PISTON RING	3			STD	0.05	0.11
020	16271-21090	ASSY PISTON RING	3			+0.5mm	0.15	0.33
030	16241-21310	PIN PISTON	3				0.135	0.297
040	16241-21330	CIR CLIP PISTON PIN	6				0.002	0.0044
050	16241-22012	ASSY ROD CONNECTING	3				0.545	1.199
060	16241-21980	BUSH PISTON PIN	3	<=3M1525			0	0
060	16241-21982	BUSH PISTON PIN	3	>=3N0001	¬		0.03	0.066
070	16241-22140	ROD BOLT	6				0	0
070	16241-22142	BOLT CONNECTING ROD	6		«		0.024	0.0528
080	16241-22310	METAL CRANKPIN	3			STD SET	0.038	0.0836
080	16241-22970	METAL CRANKPIN	3			-0.2mm SET	0.08	0.176
080	16241-22980	METAL CRANKPIN	3			-0.4mm SET	0.1	0.22
090	16231-23013	COMP.CRANKSHAFT	1				8.5	18.7
100	99999-99999	BLANK	0				0	0
110	07715-00401	BALL	3				0.001	0.0022
120	16241-24110	GEAR CRANK	1				0.15	0.33
130	16271-95230	KEY	1				0.005	0.011
140	16241-35630	GEAR OIL PUMP DRIVE	1				0.102	0.2244
150	16271-23250	COLLAR CRANKSHAFT	1				0.055	0.121
160	04811-10280	O RING	1	<=WH4333			0.001	0.0022
160	04814-10280	RING	1	>=WJ0001	¬		0.001	0.0022
170	16241-23470	METAL CRANKSHAFT	1			STD	0.06	0.132
170	16241-23910	METAL CRANKSHAFT	1			-0.2mm	0.03	0.066
170	16241-23920	METAL CRANKSHAFT	1			-0.4mm	0.068	0.1496
180	16241-23480	METAL CRANKSHAFT	2			STD SET	0.05	0.11
180	16241-23930	METAL CRANKSHAFT	2			-0.2mm SET	0.1	0.22
180	16241-23940	METAL CRANKSHAFT	2			-0.4mm SET	0.05	0.11
190	16241-23490	METAL CRANKSHAFT	1			STD SET	0	0
190	16292-23490	METAL CRANKSHAFT	1		«	STD SET	0.07	0.154
190	16241-23860	METAL CRANKSHAFT	1			-0.2mm SET	0.1	0.22
190	16292-23860	METAL CRANKSHAFT	1		«	-0.2mm SET	0.05	0.11
190	16241-23870	METAL CRANKSHAFT	1			-0.4mm SET	0.068	0.1496
190	16292-23870	METAL CRANKSHAFT	1		«	-0.4mm SET	0.05	0.11
200	15521-23530	METAL SIDE	2			STD	0.01	0.022
200	15521-23950	METAL SIDE	2			+0.2mm	0.01	0.022
200	15521-23960	METAL SIDE	2			+0.4mm	0.01	0.022
210	19202-23540	METAL SIDE	2			STD	0.01	0.022
210	19202-23970	METAL SIDE	2			+0.2mm	0.01	0.022
210	19202-23980	METAL SIDE	2			+0.4mm	0.01	0.022
220	07916-26840	KIT RING PISTON	3			STD	0	0
220	07916-26842	KIT RING PISTON	3	<=4Z9999	¬	STD	0	0
220	1G040-21772	KIT PISTON	3	>=5A0001	1	STD	0.6	1.32
220	07916-26850	KIT RING PISTON	3			+0.5mm	0	0
220	07916-26852	KIT RING PISTON	3	<=4Z9999	¬	+0.5mm	0	0
220	1G040-21790	KIT PISTON	3	>=5A0001	1	+0.5mm	0.6	1.32
230	07916-28240	KIT METAL ENGINE	1	<=4Z9999		STD	0.1	0.22
230	1G069-23753	KIT METAL ENGINE	1	>=5A0001	1	STD	0.32	0.704

silverthorn.co.uk

↔ Interchangeable; ≠ not interchangeable; ← new for old; → old for new

REF.No	Part No.	Description	Q'ty	S.No.	I/C	REMARKS	Weight (kgf)	Weight (lb)
230	07916-28760	KIT METAL ENGINE	1	<=4Z9999		-0.2mm/+0.2mm	0.34	0.748
230	1G069-23764	KIT METAL ENGINE	1	>=5A0001	1	-0.2mm/+0.2mm	0.324	0.7128
230	07916-28770	KIT METAL ENGINE	1	<=4Z9999		-0.4mm/+0.4mm NOT SALE	0	0
230	1G069-23774	KIT METAL ENGINE	1	>=5A0001	1	-0.4mm/+0.4mm	0.346	0.7612

silverhorn.co.uk

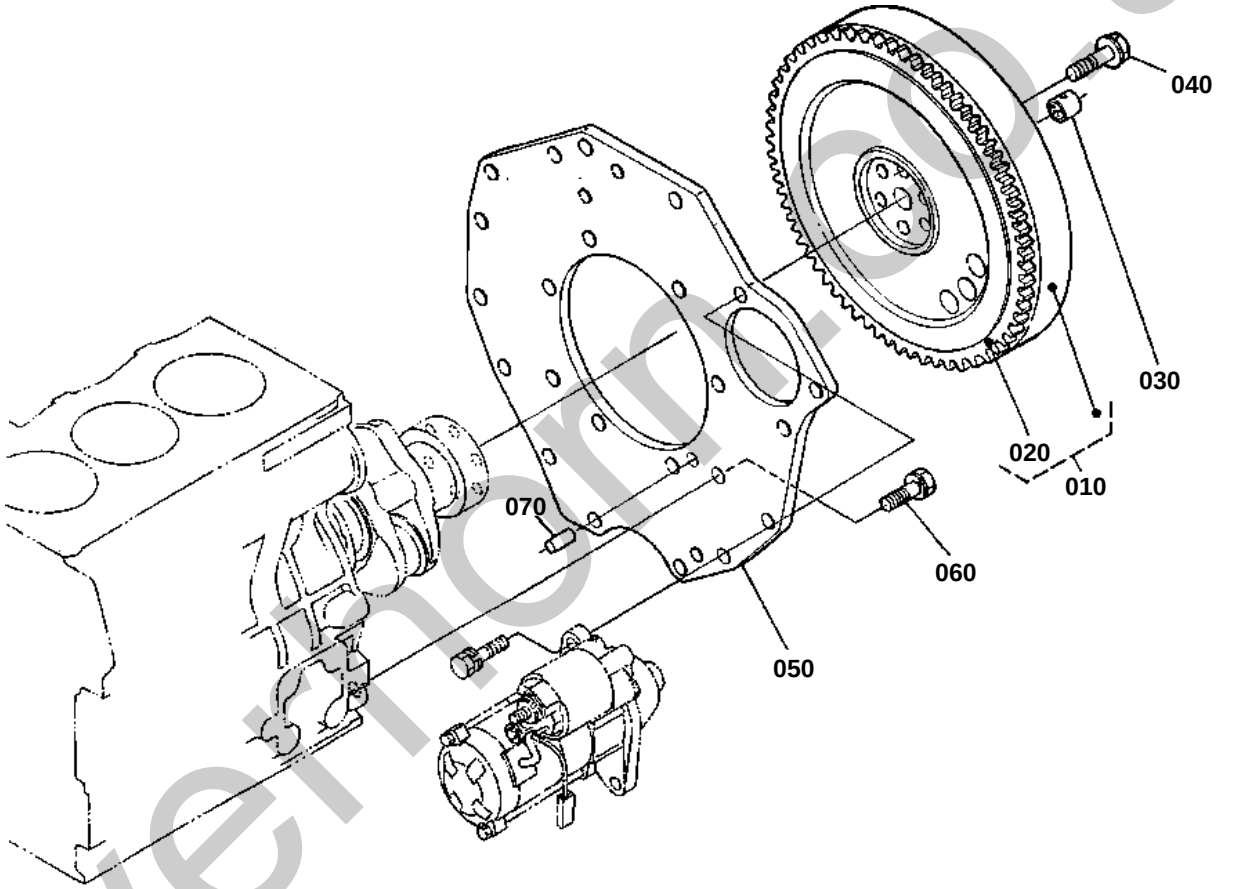

16381-006-10

silvermorn.co.uk

FLYWHEEL

↔ Interchangeable; ≠ not interchangeable; ← new for old; → old for new

REF.No	Part No.	Description	Q'ty	S.No.	I/C	REMARKS	Weight (kgf)	Weight (lb)
010	16261-25014	COMP.FLYWHEEL	1	<=XZ0500			0	0
010	16261-25015	COMP.FLYWHEEL	1	>=YA0001	¬		17.2	37.84
020	16261-63820	GEAR RING	1	<=XZ0500			0	0
020	16261-63822	GEAR RING	1	>=YA0001	¬		0.79	1.738
030	66621-14120	BEARING DRY	1				0.006	0.0132
040	16271-25160	BOLT FLYWHEEL	6				0.036	0.0792
050	6C040-58912	PLATE REAR END	1				3.64	8.008
060	15261-91190	BOLT	8				0.03	0.066
070	16221-94530	PIN STRAIGHT	1				0.006	0.0132
070	05012-00814	PIN STRAIGHT	1		«		0.006	0.0132

silverhorn.co.uk

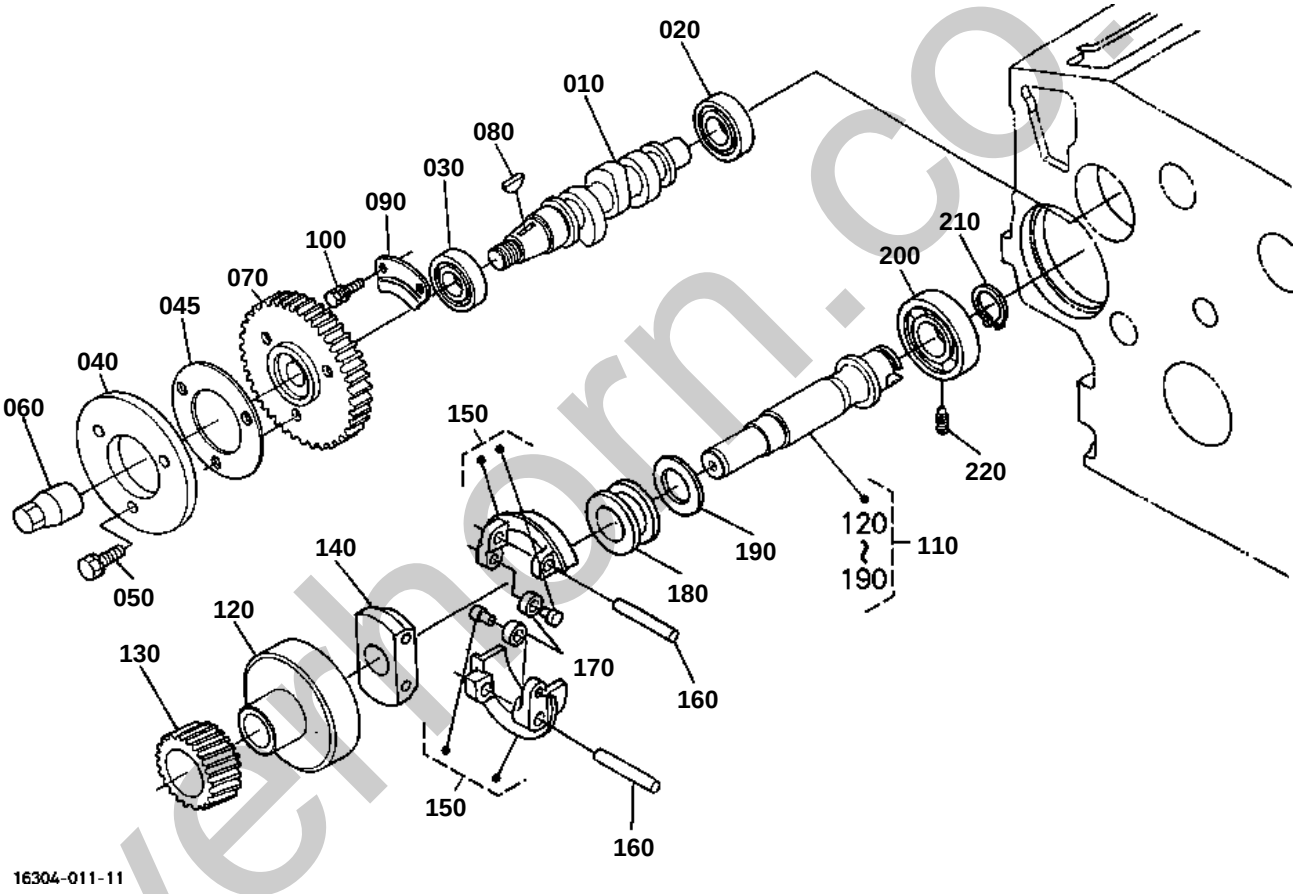

silverthorn.co.uk

FUEL CAMSHAFT AND GOVERNOR SHAFT

↔ Interchangeable; ≠ not interchangeable; ← new for old; → old for new

REF.No	Part No.	Description	Q'ty	S.No.	I/C	REMARKS	Weight (kgf)	Weight (lb)
010	16020-16170	CAMSHAFT FUEL	1				0.38	0.836
020	08103-06202	BEARING BALL	1				0.05	0.11
020	16261-97300	BEARING BALL	1		«		0.044	0.0968
030	08153-06204	BEARING BALL	1				0.11	0.242
040	16241-51113	CAM FUEL	1				0.196	0.4312
045	16241-51190	WASHER	1				0.029	0.0638
050	01023-50618	BOLT	3				0.006	0.0132
060	16241-92330	NUT	1				0.035	0.077
070	16272-51150	GEAR INJECTION PUMP	1	<=4Z9999			0.49	1.078
070	1G065-51150	GEAR INJECTION PUMP	1	>=5A0001	1		0.49	1.078
080	16241-95230	KEY WOODRUFF	1				0.001	0.0022
090	16241-16320	STOPPER FUEL.C/SHAFT	1				0.04	0.088
100	01023-50612	BOLT	2	<=2D0119			0.005	0.011
100	01023-50616	BOLT	2	>=2E0004	¬		0.005	0.011
110	16261-55013	ASSY SHAFT GOVERNOR	1				1.1	2.42
120	16241-55392	HOLDER GOVERNOR GEAR	1				0.34	0.748
130	16271-55320	GEAR GOVERNOR	1				0.145	0.319
140	16241-55270	HOLDER GOV.WEIGHT	1				0.085	0.187
150	16271-55060	COMP.WEIGHT GOVERNOR	2				0.067	0.1474
160	16241-55260	SHAFT GOV. WEIGHT	2				0.013	0.0286
170	19484-55440	ROLLER	2				0.005	0.011
180	16241-55450	SLEEVE GOVERNOR	1				0.04	0.088
190	16241-55463	WASHER THRUST	1				0.005	0.011
200	08101-06304	BEARING BALL	1				0.146	0.3212
200	16261-97320	BEARING BALL	1		«		0.14	0.308
210	16271-55410	CIR CLIP GOV.SHAFT	1				0.005	0.011
220	16241-55554	SCREW SET	1				0.007	0.0154

silverhorn.co.uk

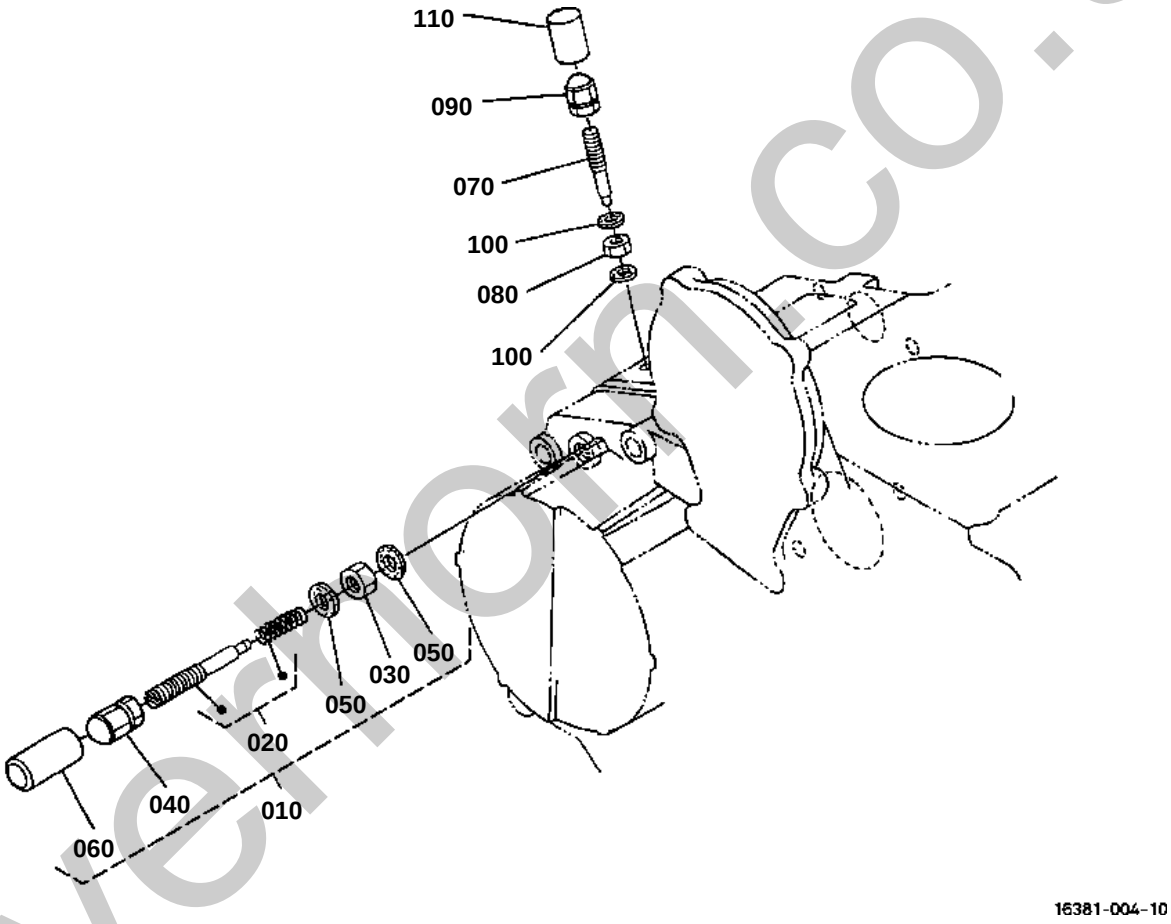

silverhorn.co.uk

IDLE APPARATUS

S.No.;<=4F9999

↔ Interchangeable; ≠ not interchangeable; ← new for old; → old for new

REF.No	Part No.	Description	Q'ty	S.No.	I/C	REMARKS	Weight (kgf)	Weight (lb)
010	16271-54090	ASSY APPARATUS IDLE	1				0.029	0.0638
020	16241-54102	ASSY BOLT ADJUSTING	1				0.008	0.0176
030	15841-92020	NUT	1				0.004	0.0088
040	15841-92330	NUT	1				0.006	0.0132
050	15601-96650	GASKET	2				0.001	0.0022
060	16221-54420	CAP	1				0.001	0.0022
070	16241-54120	BOLT ADJUSTING	1				0.005	0.011
080	15841-92020	NUT	1				0.004	0.0088
090	15852-92330	NUT	1				0.005	0.011
100	15601-96650	GASKET	2				0.001	0.0022
110	16221-54420	CAP	1				0.001	0.0022

silverhorn.co.uk

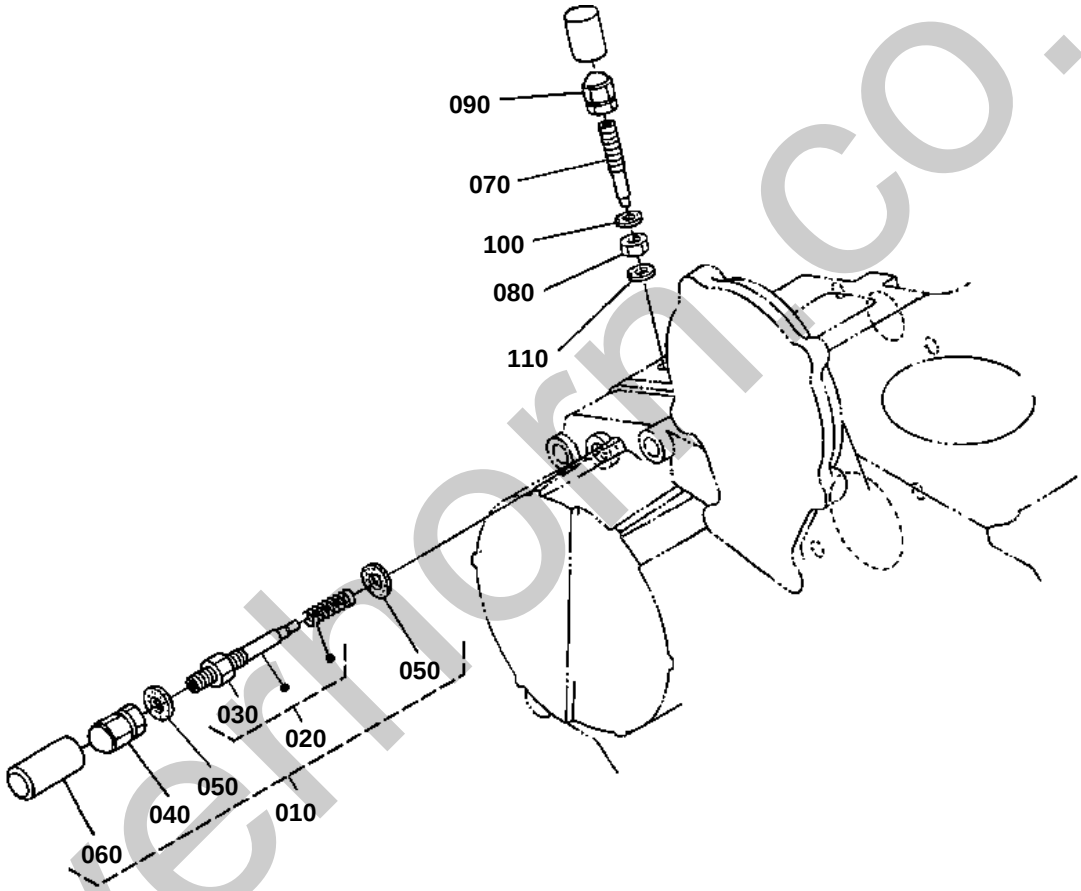

16381-004-11

silverhorn.co.uk

IDLE APPARATUS

S.No.;>=4G0001

↔ Interchangeable; ≠ not interchangeable; ← new for old; → old for new

REF.No	Part No.	Description	Q'ty	S.No.	I/C	REMARKS	Weight (kgf)	Weight (lb)
010	16271-54093	APPARATUS IDLING	1				0.029	0.0638
020	16241-54103	ASSY BOLT ADJUSTMENT	1				0.008	0.0176
030	15841-92020	NUT	1				0.004	0.0088
040	15852-92330	NUT	1				0.005	0.011
050	15601-96650	GASKET	2				0.001	0.0022
060	16221-54420	CAP	1				0.001	0.0022
070	16241-54122	BOLT ADJUSTING	1				0.005	0.011
080	1G031-54210	NUT LOCK	1				0.003	0.0066
090	15852-92330	NUT	1				0.005	0.011
100	15601-96650	GASKET	1				0.001	0.0022
110	1G021-96650	GASKET	1				0.001	0.0022

silverhorn.co.uk

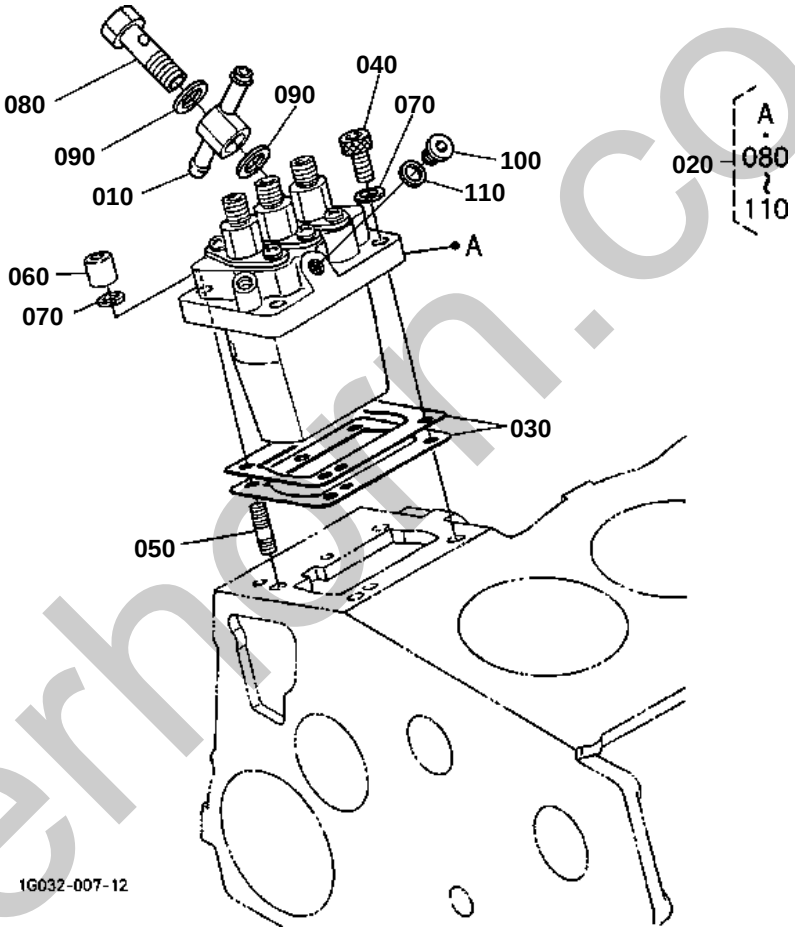

silverhorn.co.uk

↔ Interchangeable; ≠ not interchangeable; ← new for old; → old for new

REF.No	Part No.	Description	Q'ty	S.No.	I/C	REMARKS	Weight (kgf)	Weight (lb)
010	16271-95690	JOINT EYE	1				0.046	0.1012
020	16032-51010	ASSY PUMP INJECTION	1				1	2.2
030	16006-52092	SHIM INJECTION PUMP	1			0.20mm	0.004	0.0088
030	16006-52112	SHIM INJECTION PUMP	1			0.25mm	0.004	0.0088
030	16006-52122	SHIM INJECTION PUMP	1			0.30mm	0.006	0.0132
040	01311-10620	BOLT HEX-SOC-HD	2				0.012	0.0264
050	15841-91500	STUD	2				0.02	0.044
060	15841-92320	NUT	2				0.01	0.022
070	04512-60060	WASHER SPRING	4				0.001	0.0022
080	16271-51320	SCREW HOLLOW	1				0.031	0.0682
090	15841-96650	GASKET	2				0.001	0.0022
100	16030-96010	PLUG	1				0.008	0.0176
110	15861-96650	GASKET	1				0.001	0.0022

silverhorn.co.uk

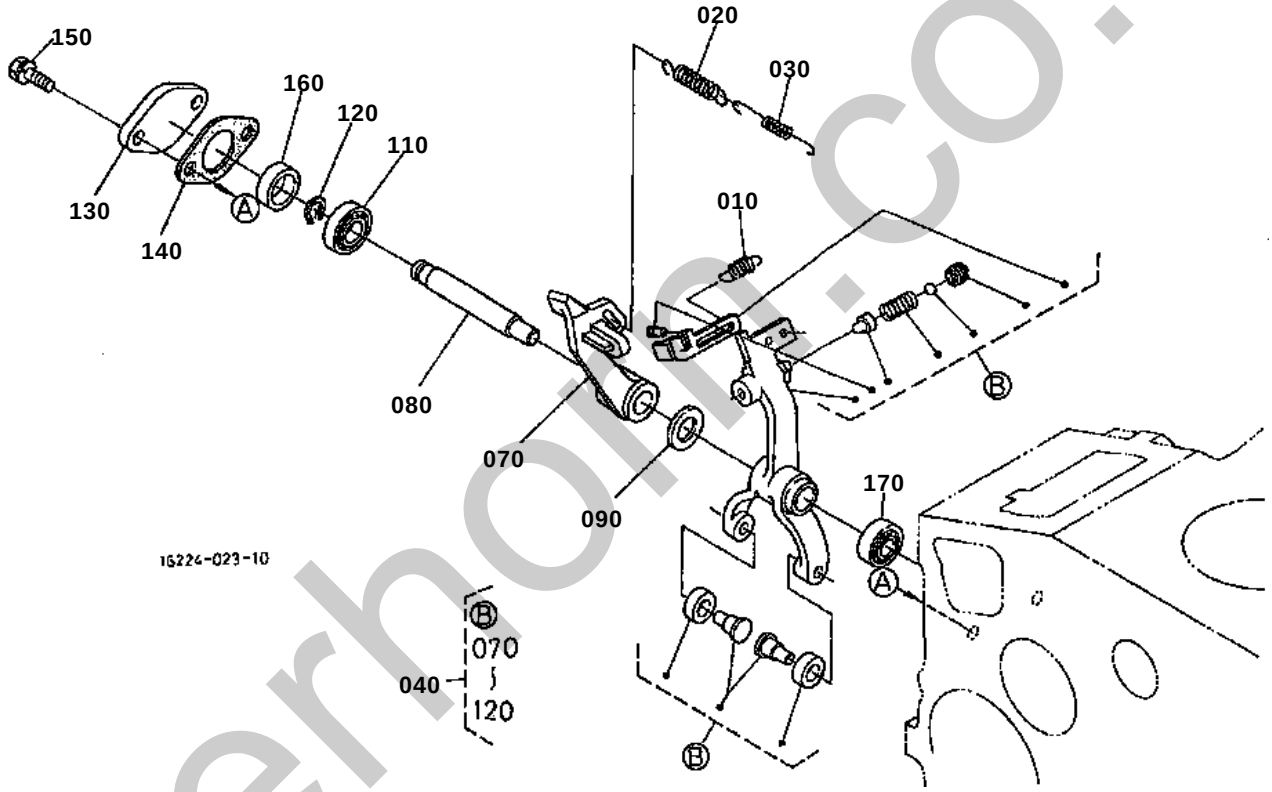

silverhorn.co.uk

↔ Interchangeable; ≠ not interchangeable; ← new for old; → old for new

REF.No	Part No.	Description	Q'ty	S.No.	I/C	REMARKS	Weight (kgf)	Weight (lb)
010	16261-56480	SPRING START	1				0.002	0.0044
020	16271-56412	SPRING GOVERNOR	1	<=WJ9533			0	0
020	16271-56413	SPRING GOVERNOR	1	>=XL0001	¬		0.02	0.044
020	16271-56414	SPRING GOVERNOR	1	>=XG0001	¬		0.022	0.0484
030	16271-56420	SPRING GOVERNOR	1				0.005	0.011
040	16262-56054	ASSY LEVER FORK	1	<=WX2480			0	0
040	16262-56056	ASSY LEVER FORK	1	>=WY0001	¬		0	0
050	99999-99999	BLANK	0				0	0
060	99999-99999	BLANK	0				0	0
070	16271-56132	LEVER FORK	1	<=WA0618			0	0
070	16222-56130	LEVER FORK	1	>=WC0001	¬		0	0
080	16241-56153	SHAFT FORK LEVER	1				0.04	0.088
090	16241-94010	WASHER PLAIN	1				0.002	0.0044
100	99999-99999	BLANK	0				0	0
110	16241-56330	BEARING MINIATURIZE	1				0.007	0.0154
120	04612-00090	RING SNAP	1				0.001	0.0022
130	16241-56250	COVER FORK LEV.SHAFT	1				0.013	0.0286
140	16299-56260	GASKET	1				0.002	0.0044
150	01023-50614	BOLT	2				0.005	0.011
160	16241-56210	COLLAR	1				0.008	0.0176
170	16241-56340	BEARING MINIATURIZE	1				0.007	0.0154

silverhorn.co.uk

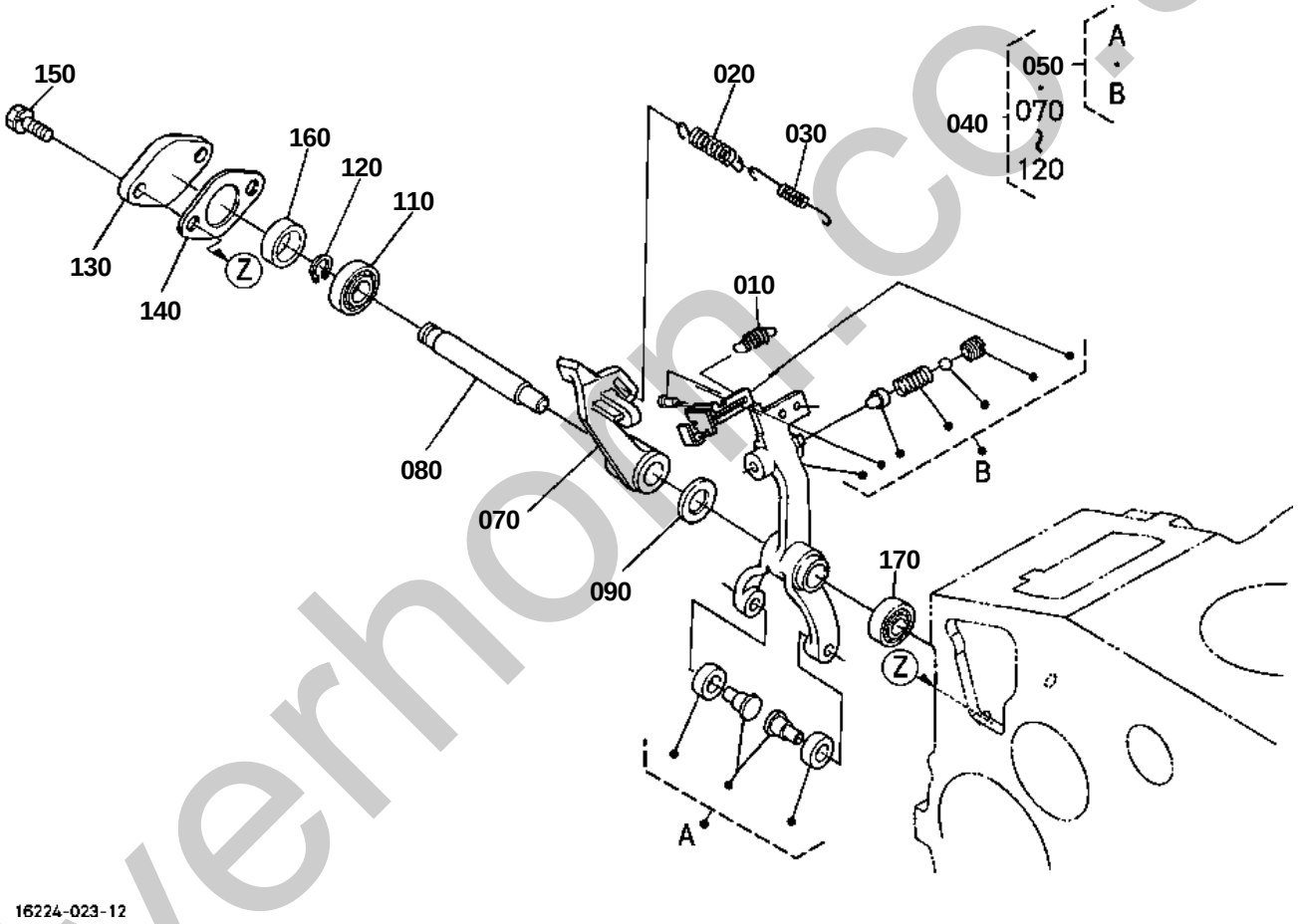

silverhorn.co.uk

OLD PARTS

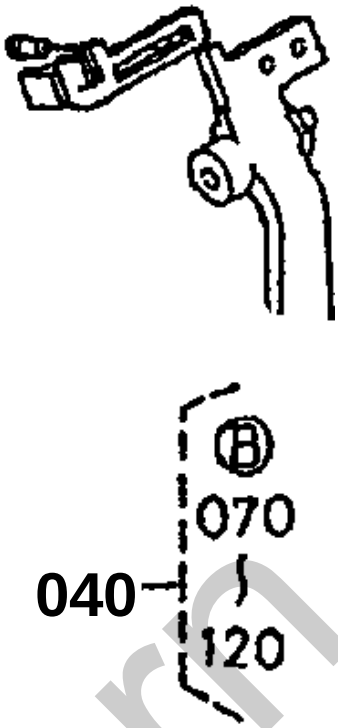

16381-801-11

silverhorn.co.uk

↔ Interchangeable; ≠ not interchangeable; ← new for old; → old for new

REF.No	Part No.	Description	Q'ty	S.No.	I/C	REMARKS	Weight (kgf)	Weight (lb)
010	16261-56480	SPRING START	1				0.002	0.0044
020	16271-56414	SPRING GOVERNOR	1				0.022	0.0484
030	16271-56420	SPRING GOVERNOR	1				0.005	0.011
040	16216-56054	ASSY LEVER FORK	1	<=2F0161			0	0
040	16216-56055	ASSY LEVER FORK	1	>=2G0008	¬		0.25	0.55
050	16216-56044	COMP.LEVER FORK	1				0	0
060	99999-99999	BLANK	0				0	0
070	16271-56132	LEVER FORK	1	<=WA0618			0	0
070	16222-56130	LEVER FORK	1	>=WC0001	¬		0	0
080	16241-56153	SHAFT FORK LEVER	1				0.04	0.088
090	16241-94010	WASHER PLAIN	1				0.002	0.0044
100	99999-99999	BLANK	0				0	0
110	16241-56330	BEARING MINIATURIZE	1				0.007	0.0154
120	04612-00090	RING SNAP	1				0.001	0.0022
130	16241-56250	COVER FORK LEV.SHAFT	1				0.013	0.0286
140	16299-56260	GASKET	1				0.002	0.0044
150	01023-50614	BOLT	2				0.005	0.011
160	16241-56210	COLLAR	1				0.008	0.0176
170	16241-56340	BEARING MINIATURIZE	1				0.007	0.0154

silverhorn.co.uk

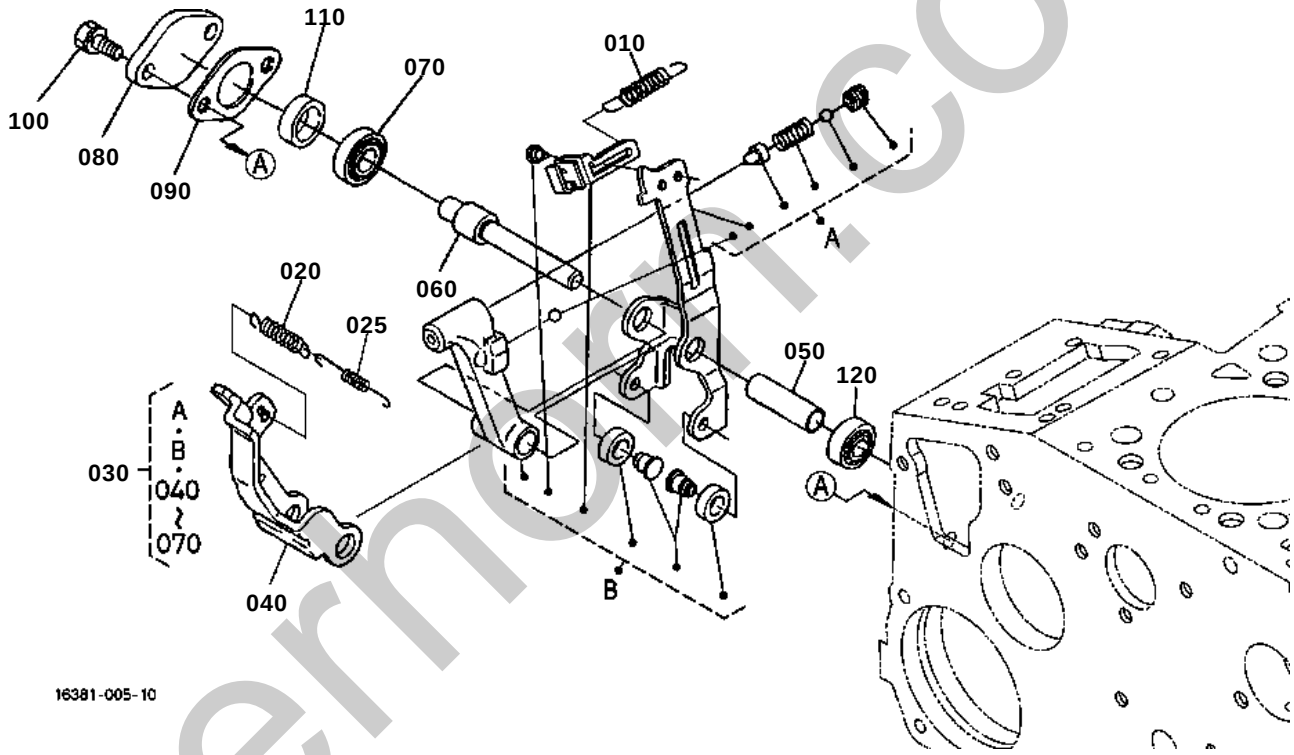

silvernorm.co.uk

↔ Interchangeable; ≠ not interchangeable; ← new for old; → old for new

REF.No	Part No.	Description	Q'ty	S.No.	I/C	REMARKS	Weight (kgf)	Weight (lb)
010	16261-56480	SPRING START	1				0.002	0.0044
020	16271-56414	SPRING GOVERNOR	1				0.022	0.0484
025	16271-56420	SPRING GOVERNOR	1				0.005	0.011
030	16216-56010	ASSY LEVER FORK	1				0.25	0.55
040	1G032-56130	LEVER FORK	1				0.08	0.176
050	1G032-56150	SHAFT FORK LEVER	1				0.007	0.0154
060	1G032-56470	SHAFT FORK LEVER	1				0.04	0.088
070	16241-56330	BEARING MINIATURIZE	1				0.007	0.0154
080	16241-56250	COVER FORK LEV.SHAFT	1				0.013	0.0286
090	16299-56260	GASKET	1				0.002	0.0044
100	01023-50614	BOLT	2				0.005	0.011
110	16241-56210	COLLAR	1				0.008	0.0176
120	16241-56340	BEARING MINIATURIZE	1				0.007	0.0154

silverhorn.co.uk

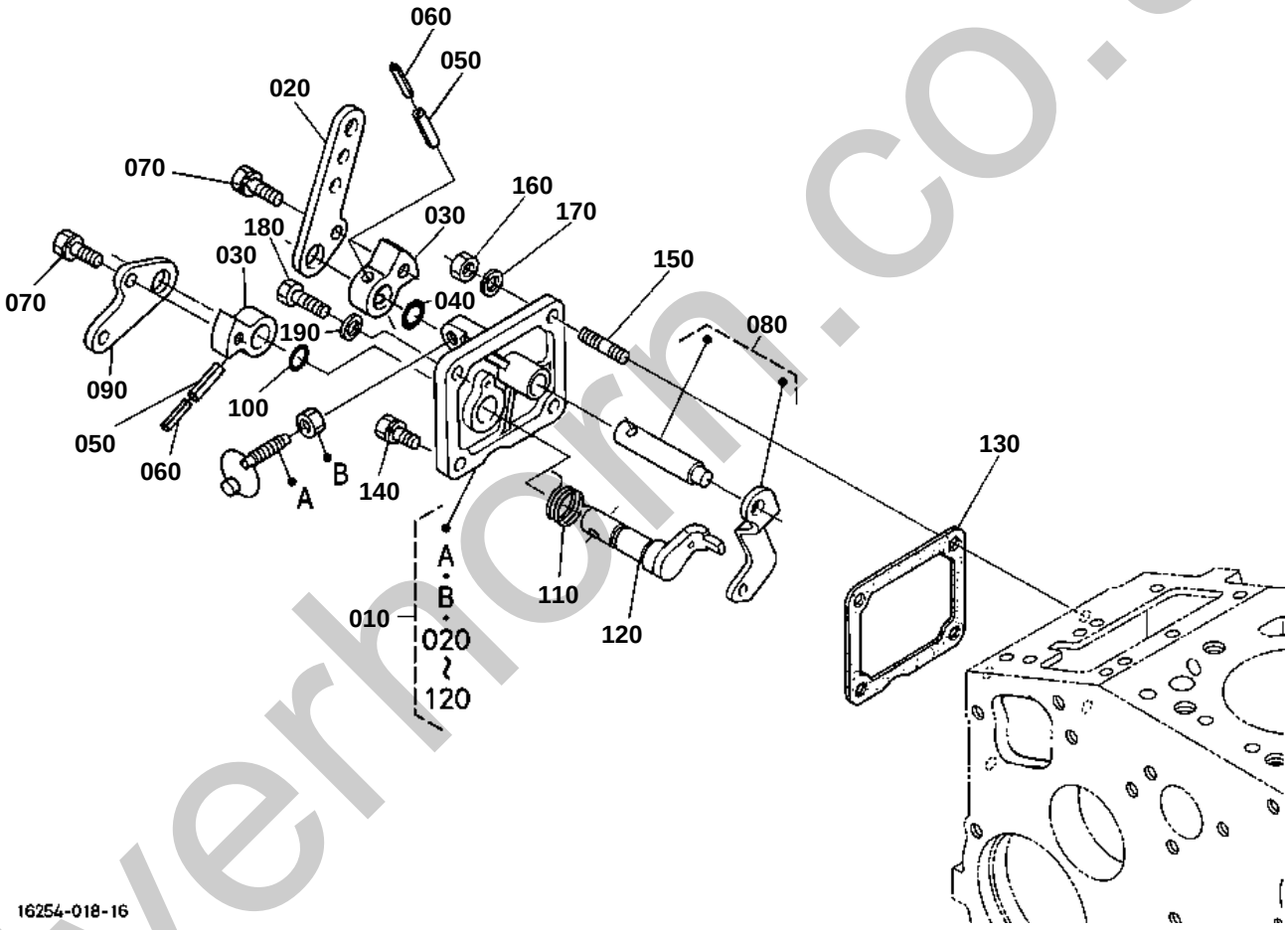

silverhorn.co.uk

SPEED CONTROL PLATE

↔ Interchangeable; ≠ not interchangeable; ← new for old; → old for new

REF.No	Part No.	Description	Q'ty	S.No.	I/C	REMARKS	Weight (kgf)	Weight (lb)
010	16231-57016	ASSY PLATE CONTROL	1				0.34	0.748
020	16205-57150	LEVER SPEED CONTROL	1				0.033	0.0726
030	16205-57160	LEVER SPEED CONTROL	2				0.03	0.066
040	04814-00100	O RING	1				0.001	0.0022
050	05411-00420	PIN SPRING	2				0.001	0.0022
060	05411-02520	PIN SPRING	2				0.001	0.0022
070	01023-50612	BOLT	2				0.005	0.011
080	16205-56020	COMP.LEVER GOVERNOR	1				0.02	0.044
090	16234-57720	LEVER ENGINE STOP	1				0.03	0.066
100	19202-96750	O RING	1	<=WH4333			0.001	0.0022
100	04814-10070	O RING	1	>=WJ0001	1		0.001	0.0022
110	16205-57510	SPRING RETURN	1				0.002	0.0044
120	16205-57740	COMP.LEVER STOP	1				0.046	0.1012
130	16264-57210	GASKET	1				0.002	0.0044
140	01023-50616	BOLT	1				0.005	0.011
150	01513-50616	BOLT STUD	2				0.004	0.0088
150	16245-91540	STUD	2		«		0.005	0.011
160	02056-50060	NUT	2				0.002	0.0044
170	04512-60060	WASHER SPRING	2				0.001	0.0022
180	01053-50618	BOLT	1				0.006	0.0132
190	15601-96650	GASKET	1				0.001	0.0022

silverhorn.co.uk

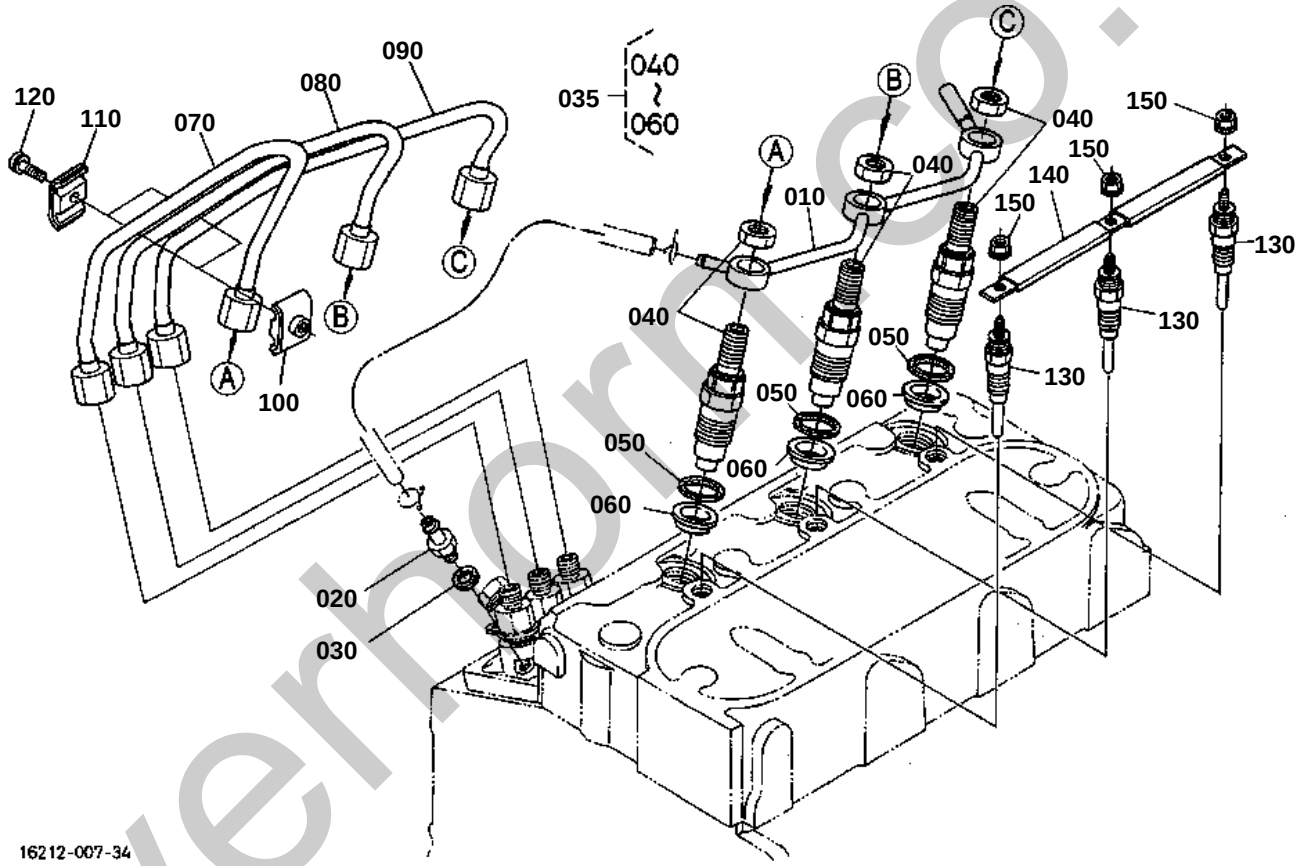

silverhorn.co.uk

OLD PARTS

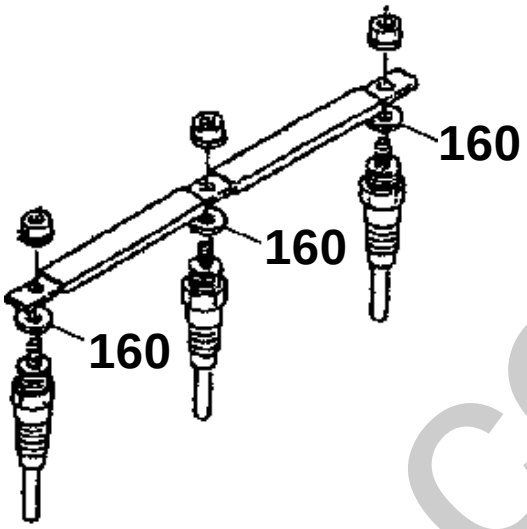

1G042-806-12

silverhorn.co.uk

NOZZLE HOLDER AND GLOW PLUG

S.No.;<=4Z9999

↔ Interchangeable; ≠ not interchangeable; ← new for old; → old for new

REF.No	Part No.	Description	Q'ty	S.No.	I/C	REMARKS	Weight (kgf)	Weight (lb)
010	16261-42502	ASSY PIPE OVER FLOW	1				0.04	0.088
020	15841-51360	SCREW AIR BREEDER	1				0.008	0.0176
030	15601-96650	GASKET	1				0.001	0.0022
035	16032-53900	KIT HOLDER NOZZLE	3				0.16	0.352
040	16032-53000	ASSY HOLDER NOZZLE	3				0.14	0.308
050	15841-53622	GASKET	3				0.002	0.0044
060	19077-53650	SEAL HEAT	3				0.005	0.011
070	16231-53712	PIPE INJECTION	1				0.12	0.264
080	16231-53722	PIPE INJECTION	1				0.12	0.264
090	16231-53732	PIPE INJECTION	1				0.12	0.264
100	15841-53850	CLAMP PIPE	2				0.01	0.022
110	15841-53860	CLAMP PIPE	2				0.009	0.0198
120	03024-50520	SCREW WITH WASHER	2				0.004	0.0088
130	16851-65510	GLOW PLUG	3				0	0
130	16851-65512	GLOW PLUG	3		«		0.01	0.022
140	16261-65560	CORD GLOW PLUG	1				0.01	0.022
150	02761-50040	NUT FLANGE	3				0.002	0.0044
160	04013-60040	WASHER PLAIN	3	<=XS9983			0.002	0.0044

silverhorn.co.uk

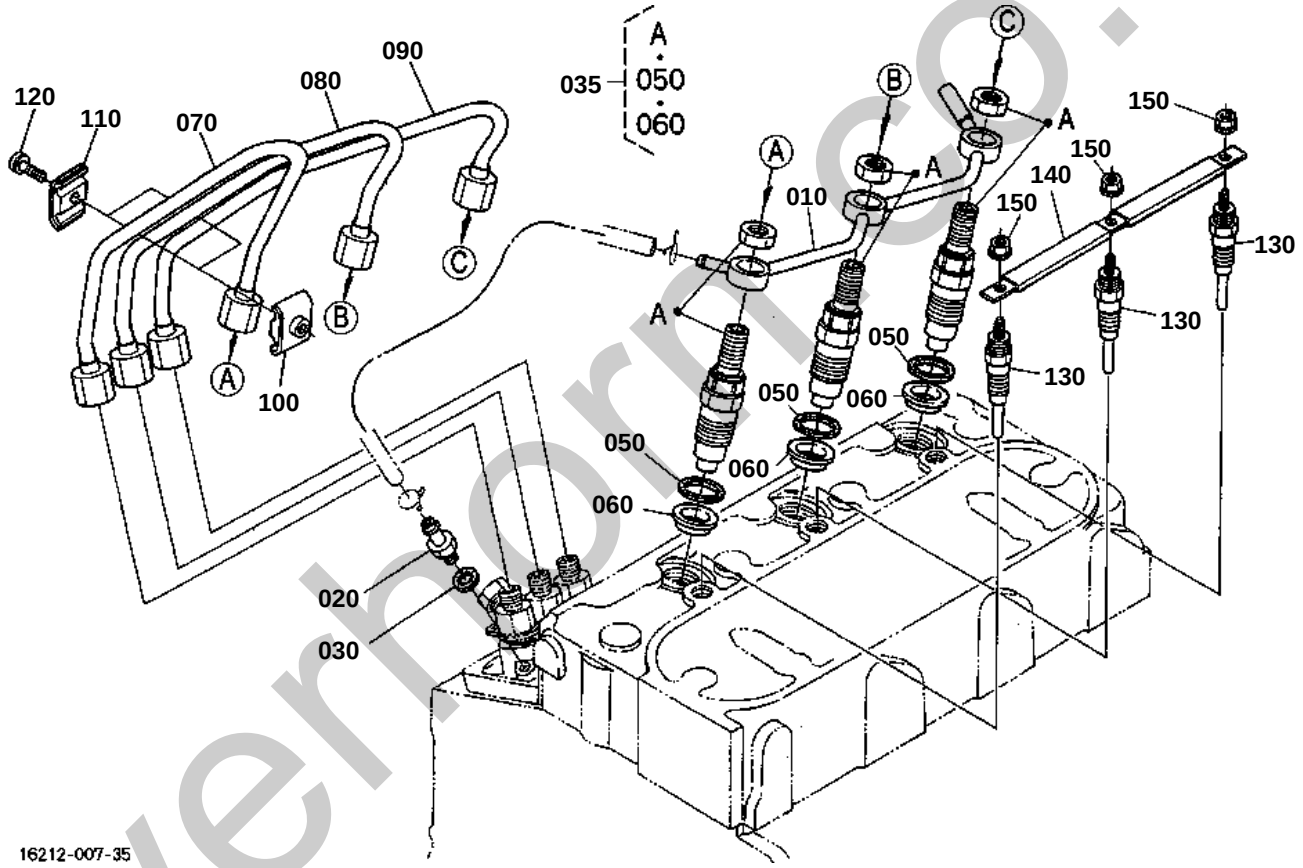

silverhorn.co.uk

NOZZLE HOLDER AND GLOW PLUG

S.No.;>=5A0001

↔ Interchangeable; ≠ not interchangeable; ← new for old; → old for new

REF.No	Part No.	Description	Q'ty	S.No.	I/C	REMARKS	Weight (kgf)	Weight (lb)
010	16261-42502	ASSY PIPE OVER FLOW	1				0.04	0.088
020	15841-51360	SCREW AIR BREEDER	1				0.008	0.0176
030	15601-96650	GASKET	1				0.001	0.0022
035	1G065-53900	KIT HOLDER NOZZLE	3				0.151	0.3322
040	99999-99999	BLANK	0				0	0
050	15841-53622	GASKET	3				0.002	0.0044
060	19077-53650	SEAL HEAT	3				0.005	0.011
070	16231-53712	PIPE INJECTION	1				0.12	0.264
080	16231-53722	PIPE INJECTION	1				0.12	0.264
090	16231-53732	PIPE INJECTION	1				0.12	0.264
100	15841-53850	CLAMP PIPE	2				0.01	0.022
110	15841-53860	CLAMP PIPE	2				0.009	0.0198
120	03024-50520	SCREW WITH WASHER	2				0.004	0.0088
130	16851-65512	GLOW PLUG	3				0.01	0.022
140	16261-65560	CORD GLOW PLUG	1				0.01	0.022
150	02761-50040	NUT FLANGE	3				0.002	0.0044

silverhorn.co.uk

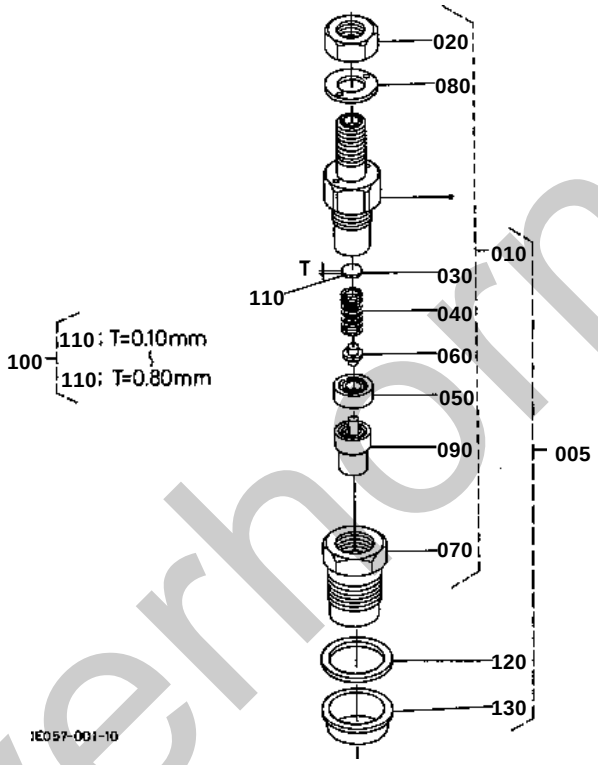

silverhorn.co.uk

NOZZLE HOLDER [COMPONENT PARTS]

S.No.;<=4Z9999

↔ Interchangeable; ≠ not interchangeable; ← new for old; → old for new

REF.No	Part No.	Description	Q'ty	S.No.	I/C	REMARKS	Weight (kgf)	Weight (lb)
005	16032-53900	KIT HOLDER NOZZLE	3				0.16	0.352
010	16032-53000	ASSY HOLDER NOZZLE	3				0.14	0.308
020	16032-92030	NUT	3				0.007	0.0154
030	16032-53230	WASHER ADJUSTING	3				0.001	0.0022
040	16032-53170	SPRING NOZZLE	3				0.007	0.0154
050	16032-53350	SPACER DISTANCE	3				0.02	0.044
060	16032-53160	PUSH ROD	3				0.001	0.0022
070	16032-53280	NUT NOZZLE	3				0.037	0.0814
080	16032-94040	WASHER PLAIN	3				0.002	0.0044
090	16032-53610	PIECE NOZZLE	3				0.021	0.0462
100	16032-98100	ASSY WASHER ADJUST	3			OPTION	0.016	0.0352
110	16032-98500	WASHER ADJUSTING	3			0.10mm	0.001	0.0022
110	16032-98510	WASHER ADJUSTING	3			0.20mm	0.001	0.0022
110	16032-98520	WASHER ADJUSTING	3			0.30mm	0.001	0.0022
110	16032-98530	WASHER ADJUSTING	3			0.40mm	0.001	0.0022
110	16032-98540	WASHER ADJUSTING	3			0.50mm	0.001	0.0022
110	16032-98550	WASHER ADJUSTING	3			0.52mm	0.001	0.0022
110	16032-98560	WASHER ADJUSTING	3			0.54mm	0.001	0.0022
110	16032-98570	WASHER ADJUSTING	3			0.56mm	0.001	0.0022
110	16032-98580	WASHER ADJUSTING	3			0.58mm	0.001	0.0022
110	16032-98590	WASHER ADJUSTING	3			0.80mm	0.001	0.0022
120	15841-53622	GASKET	3				0.002	0.0044
130	19077-53650	SEAL HEAT	3				0.005	0.011

silverhorn.co.uk

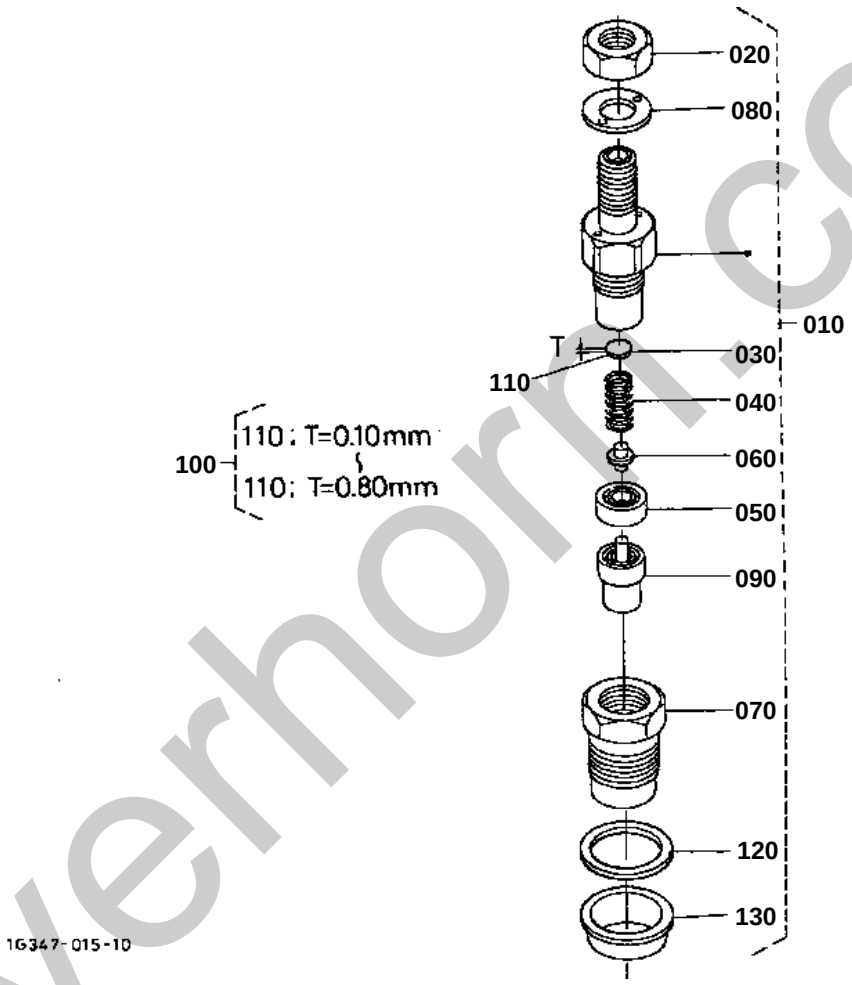

silverhorn.co.uk

NOZZLE HOLDER [COMPONENT PARTS]

S.No.;>=5A0001

↔ Interchangeable; ≠ not interchangeable; ← new for old; → old for new

REF.No	Part No.	Description	Q'ty	S.No.	I/C	REMARKS	Weight (kgf)	Weight (lb)
010	1G065-53900	KIT HOLDER NOZZLE	3				0.151	0.3322
020	16032-92030	NUT	3				0.007	0.0154
030	16032-53230	WASHER ADJUSTING	3				0.001	0.0022
040	16032-53170	SPRING NOZZLE	3				0.007	0.0154
050	16032-53350	SPACER DISTANCE	3				0.02	0.044
060	16032-53160	PUSH ROD	3				0.001	0.0022
070	16032-53280	NUT NOZZLE	3				0.037	0.0814
080	16032-94040	WASHER PLAIN	3				0.002	0.0044
090	16032-53610	PIECE NOZZLE	3				0.021	0.0462
100	16032-98100	ASSY WASHER ADJUST	3			OPTION	0.016	0.0352
110	16032-98500	WASHER ADJUSTING	3			0.10mm	0.001	0.0022
110	16032-98510	WASHER ADJUSTING	3			0.20mm	0.001	0.0022
110	16032-98520	WASHER ADJUSTING	3			0.30mm	0.001	0.0022
110	16032-98530	WASHER ADJUSTING	3			0.40mm	0.001	0.0022
110	16032-98540	WASHER ADJUSTING	3			0.50mm	0.001	0.0022
110	16032-98550	WASHER ADJUSTING	3			0.52mm	0.001	0.0022
110	16032-98560	WASHER ADJUSTING	3			0.54mm	0.001	0.0022
110	16032-98570	WASHER ADJUSTING	3			0.56mm	0.001	0.0022
110	16032-98580	WASHER ADJUSTING	3			0.58mm	0.001	0.0022
110	16032-98590	WASHER ADJUSTING	3			0.80mm	0.001	0.0022
120	15841-53622	GASKET	3				0.002	0.0044
130	19077-53650	SEAL HEAT	3				0.005	0.011

silverhorn.co.uk

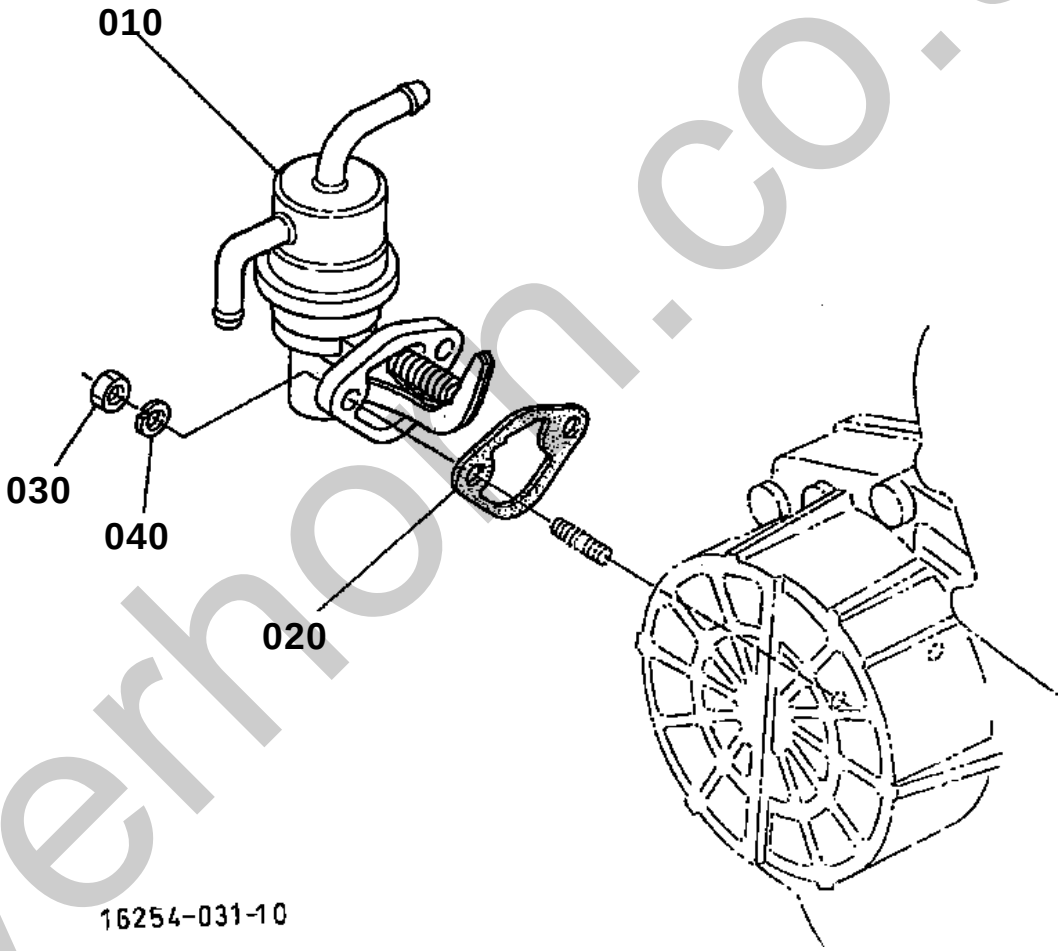

silverhorn.co.uk

FUEL PUMP(MECHANICAL)

↔ Interchangeable; ≠ not interchangeable; ← new for old; → old for new

REF.No	Part No.	Description	Q'ty	S.No.	I/C	REMARKS	Weight (kgf)	Weight (lb)
010	16241-52032	ASSY PUMP FUEL	1				0.13	0.286
020	16264-52140	GASKET FUEL PUMP	1				0.001	0.0022
030	02056-50060	NUT	2				0.002	0.0044
040	04512-60060	WASHER SPRING	2				0.001	0.0022

silverhorn.co.uk

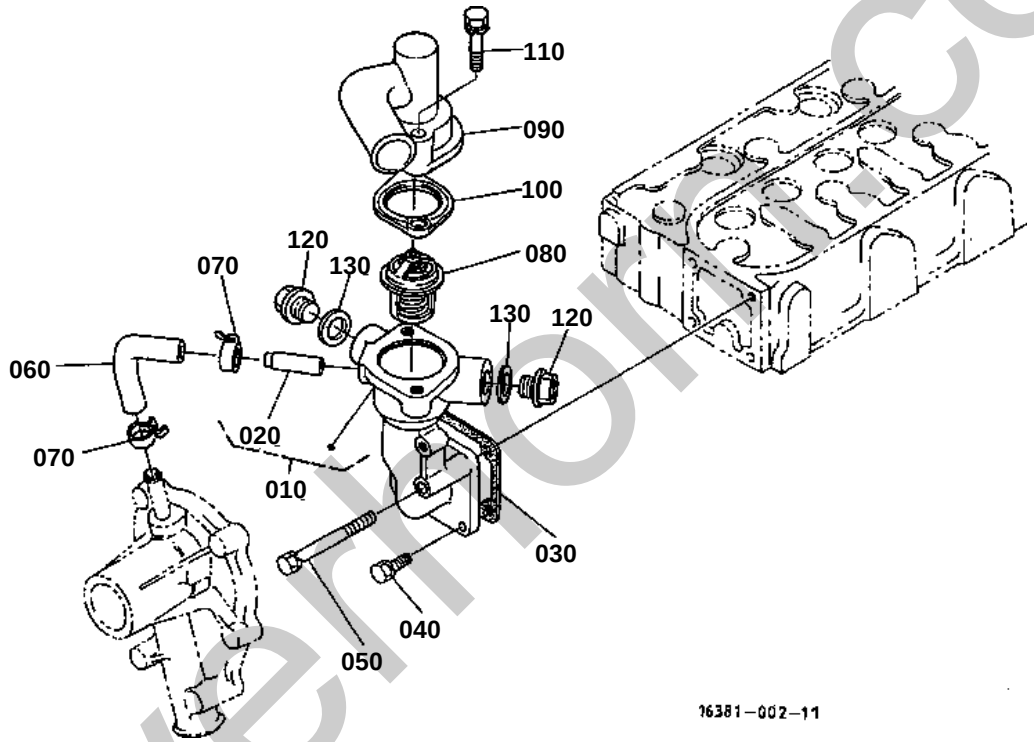

silverhome.co.uk

WATER FLANGE AND THERMOSTAT

↔ Interchangeable; ≠ not interchangeable; ← new for old; → old for new

REF.No	Part No.	Description	Q'ty	S.No.	I/C	REMARKS	Weight (kgf)	Weight (lb)
010	16219-72700	COMP FLANGE WATER	1	<=110326			0.255	0.561
010	16203-72700	COMP FLANGE WATER	1	>=110327	1		0.25	0.55
020	16241-73370	PIPE WATER RETURN	1				0.007	0.0154
030	16264-72920	GASKET WATER FLANGE	1				0.001	0.0022
040	01023-50616	BOLT	3				0.005	0.011
050	01023-50655	BOLT	1				0.012	0.0264
060	16241-73350	PIPE WATER RETURN	1				0.015	0.033
070	16241-73360	BAND PIPE	2				0.003	0.0066
080	15321-73014	ASSY THERMOSTAT	1				0.07	0.154
090	16243-73260	COVER THERMOSTAT	1				0.182	0.4004
100	16851-73270	GASKET	1	<=110326			0.003	0.0066
100	15313-73270	GASKET THERMOSTAT	1	>=110327	1		0	0
100	16221-73270	GASKET THERMOSTAT	1	>=WY0001	«		0.01	0.022
110	01023-50632	BOLT	2				0.01	0.022
120	06311-55030	PLUG	2	>=110327			0.05	0.11
130	16261-96710	GASKET	2	>=110327			0.002	0.0044

silverhorn.co.uk

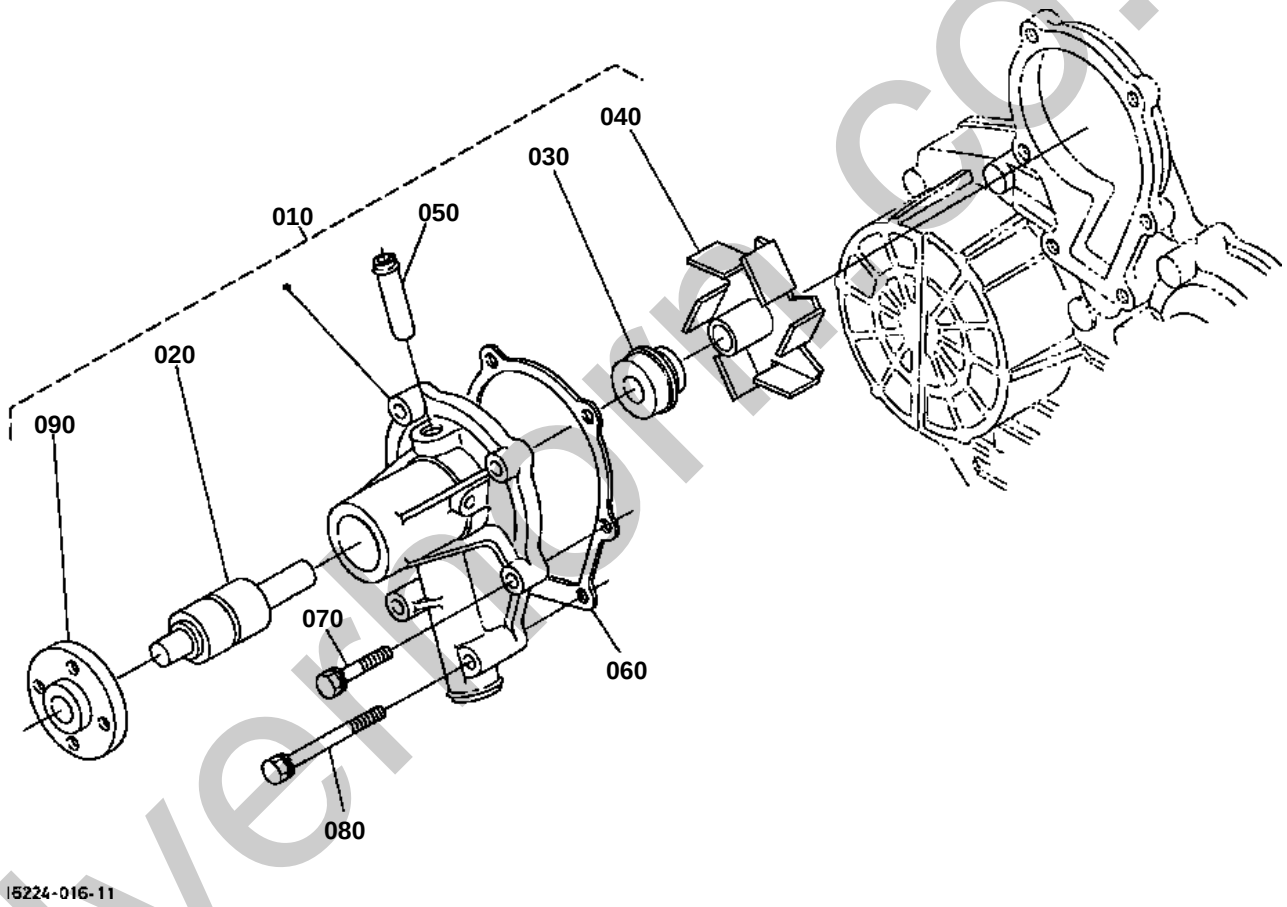

silverbirch.co.uk

WATER PUMP

↔ Interchangeable; ≠ not interchangeable; ← new for old; → old for new

REF.No	Part No.	Description	Q'ty	S.No.	I/C	REMARKS	Weight (kgf)	Weight (lb)
010	16251-73032	ASSY PUMP WATER	1	<=1U7903			0.9	1.98
010	16251-73034	ASSY PUMP WATER	1	>=1W0001	1		0.8	1.76
020	16259-73550	BEARING	1	<=1U7903			0	0
020	16259-73552	BEARING	1	>=1W0001	¬		0.21	0.462
030	15481-73050	ASSY SEAL MECHANICAL	1	<=1U7903			0.02	0.044
030	1G642-73050	ASSY SEAL MECHANICAL	1	>=1W0001	1		0.03	0.066
040	16251-73510	IMPELLER WATER PUMP	1	<=1U7903			0.075	0.165
040	16259-73512	IMPELLER WATER PUMP	1	>=1W0001	1		0.09	0.198
050	16241-73340	PIPE WATER RETURN	1				0.006	0.0132
060	16261-73430	GASKET WATER PUMP	1	>=10001			0.001	0.0022
060	16251-73430	GASKET WATER PUMP	1	<=1U7903	«		0.005	0.011
060	16239-73430	GASKET WATER PUMP	1	>=1W0001	1		0.007	0.0154
070	01023-50630	BOLT	4				0.008	0.0176
080	01023-50685	BOLT	2				0.018	0.0396
090	16259-73520	FLANGE WATER PUMP	1				0.15	0.33

silverhorn.co.uk

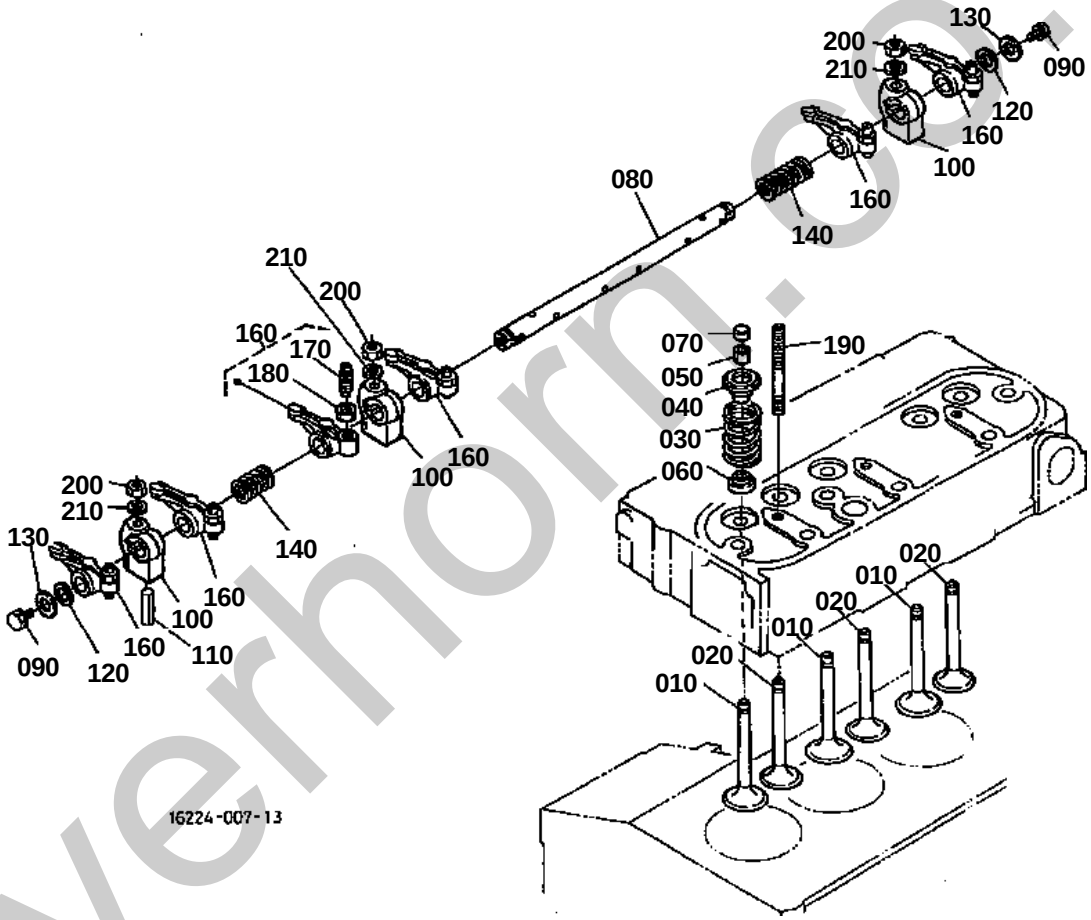

silverhorn.co.uk

OLD PARTS

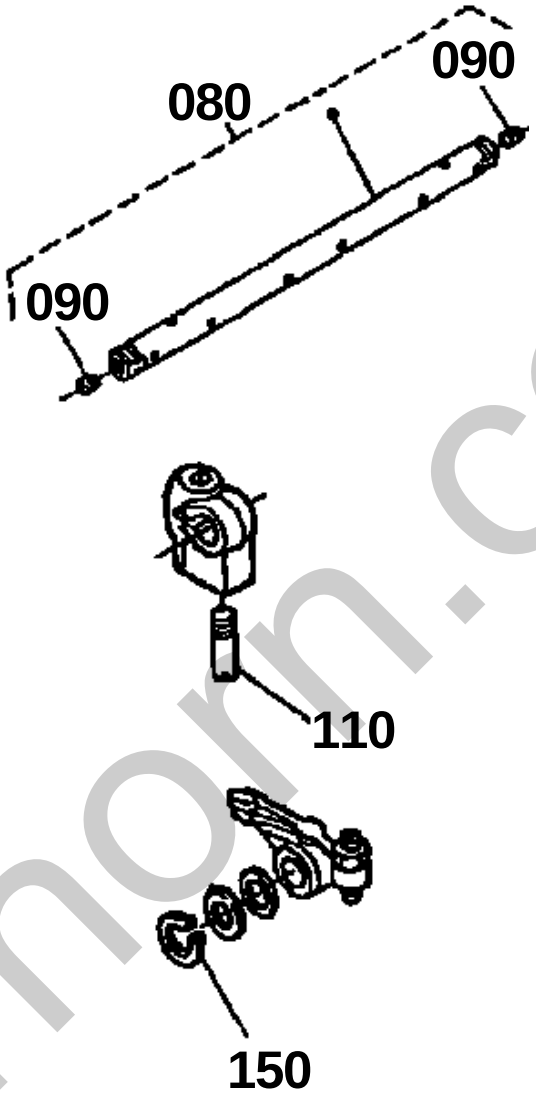

16225-808-11

silverhorn.co.uk

↔ Interchangeable; ≠ not interchangeable; ← new for old; → old for new

REF.No	Part No.	Description	Q'ty	S.No.	I/C	REMARKS	Weight (kgf)	Weight (lb)
010	16241-13110	VALVE INLET	3				0.005	0.011
020	16241-13120	VALVE EXHAUST	3				0.045	0.099
030	16271-13240	SPRING VALVE	6				0.015	0.033
040	16241-13330	RETAINER VALVE SP.	6				0	0
040	16261-13330	RETAINER SPRING	6		«		0.016	0.0352
050	15261-13360	COLLET VALVE SPRING	6			SET	0.001	0.0022
060	16241-13150	SEAL VALVE STEM	6	<=116859			0	0
060	1C010-13150	SEAL VALVE STEM	6	>=116860	«		0.002	0.0044
070	16241-13280	CAP VALVE	6				0.005	0.011
080	16261-14050	ASSY SHAFT R-ARM	1	<=WD2666		REPLASED NEW PARTS AND REF.090.110.130	0.17	0.374
080	16261-14264	SHAFT ROCKER ARM	1	>=WE0001	1		0.16	0.352
090	03410-50606	SCREW SET	2	<=WD2666			0.001	0.0022
090	01023-50610	BOLT	2	>=WE0001	1		0.005	0.011
100	16241-14350	BRACKET ROCKER ARM	3				0.04	0.088
110	15261-14420	SCREW SET.ROCKER ARM	1	<=WD2666			0.002	0.0044
110	05411-00428	PIN SPRING	1	>=WE0001	¬		0.002	0.0044
120	16241-14430	WASHER R-ARM.SHAFT	2				0.002	0.0044
130	16241-14440	WASHER R-ARM.SHAFT	2	<=WD2666			0.002	0.0044
130	15841-94022	WASHER PLAIN	2	>=XE0001	1		0.005	0.011
140	16241-14310	SPRING ROCKER ARM	2				0.004	0.0088
150	04612-00120	CIR CLIP EXTERNAL	2	<=WD2666			0.001	0.0022
160	16241-14030	ASSY ROCKER ARM	6	<=89029			0.06	0.132
160	16241-14032	ASSY ROCKER ARM	6	>=89030	¬		0.052	0.1144
170	16241-14230	SCREW ADJUSTING	6				0.008	0.0176
180	16241-14240	NUT	6				0.004	0.0088
190	16241-14410	STUD	3				0.022	0.0484
200	15261-92010	NUT	3				0.005	0.011
210	15261-94010	WASHER PLAIN	3				0.002	0.0044

silverthorn.co.uk

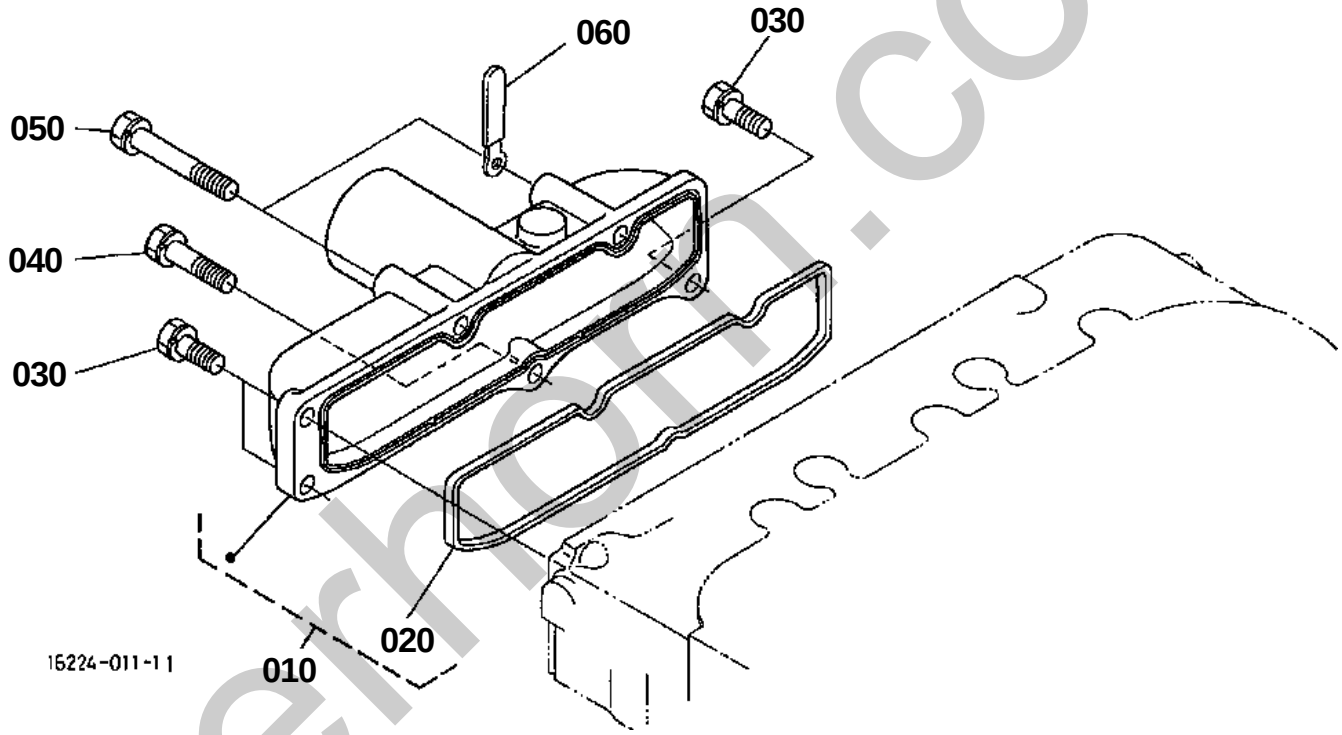

silverhorn.co.uk

INLET MANIFOLD

S.No.;<=4Z9999

↔ Interchangeable; ≠ not interchangeable; ← new for old; → old for new

REF.No	Part No.	Description	Q'ty	S.No.	I/C	REMARKS	Weight (kgf)	Weight (lb)
010	16261-11770	ASSY MANIFOLD INLET	1				0.3	0.66
020	16261-11822	GASKET IN-MANIFOLD	1				0.01	0.022
030	01023-50618	BOLT	3				0.006	0.0132
040	01023-50630	BOLT	1				0.008	0.0176
050	01023-60650	BOLT	2				0.015	0.033
060	15272-67590	CLAMP CORD	1				0.004	0.0088

silverhorn.co.uk

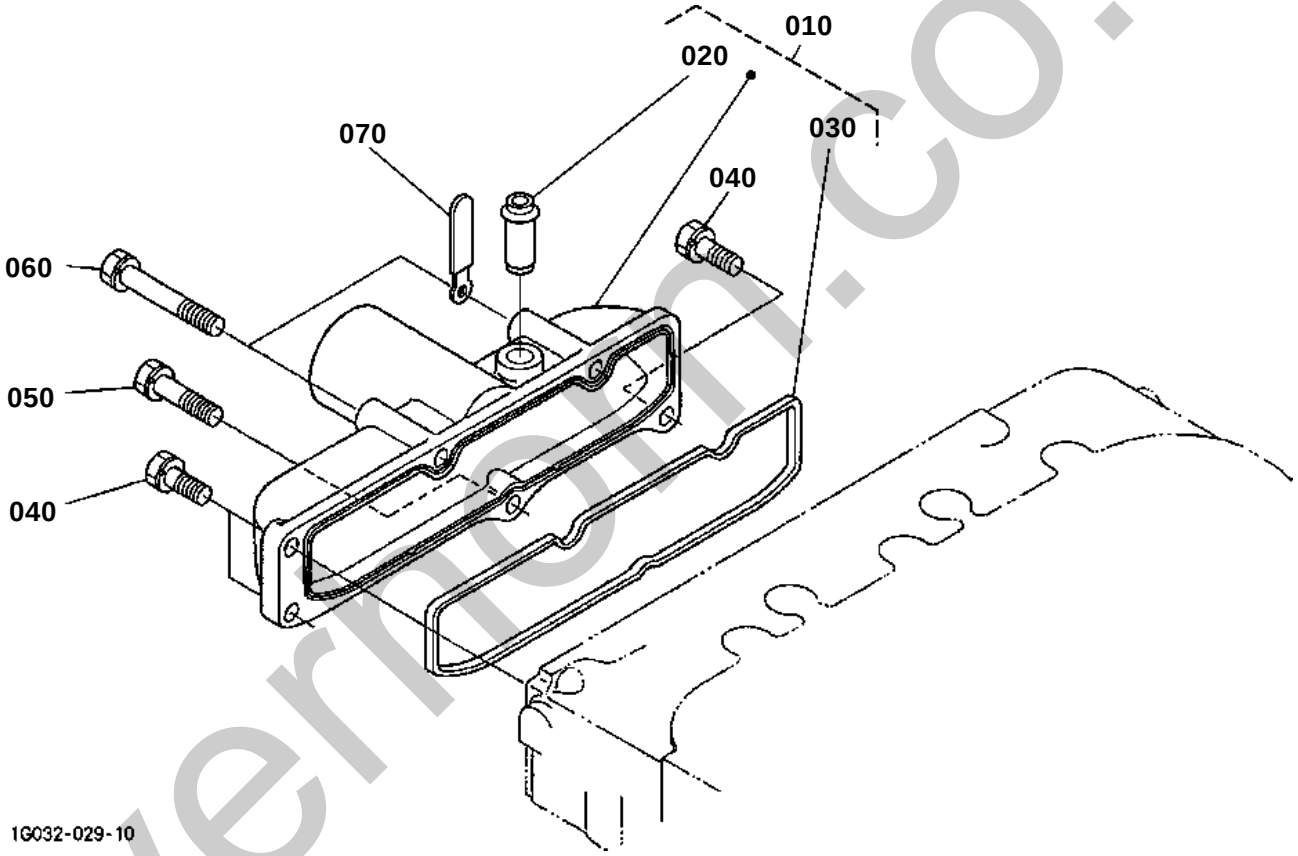

silvermoon.co.uk

INLET MANIFOLD

S.No.;>=5A0001

↔ Interchangeable; ≠ not interchangeable; ← new for old; → old for new

REF.No	Part No.	Description	Q'ty	S.No.	I/C	REMARKS	Weight (kgf)	Weight (lb)
010	17407-11770	ASSY MANIFOLD INLET	1				0.3	0.66
020	16241-05550	JOINT BREATHER PIPE	1				0.02	0.044
030	16261-11822	GASKET IN-MANIFOLD	1				0.01	0.022
040	01023-50618	BOLT	3				0.006	0.0132
050	01023-50630	BOLT	1				0.008	0.0176
060	01023-60650	BOLT	2				0.015	0.033
070	15272-67590	CLAMP CORD	1				0.004	0.0088

silverhorn.co.uk

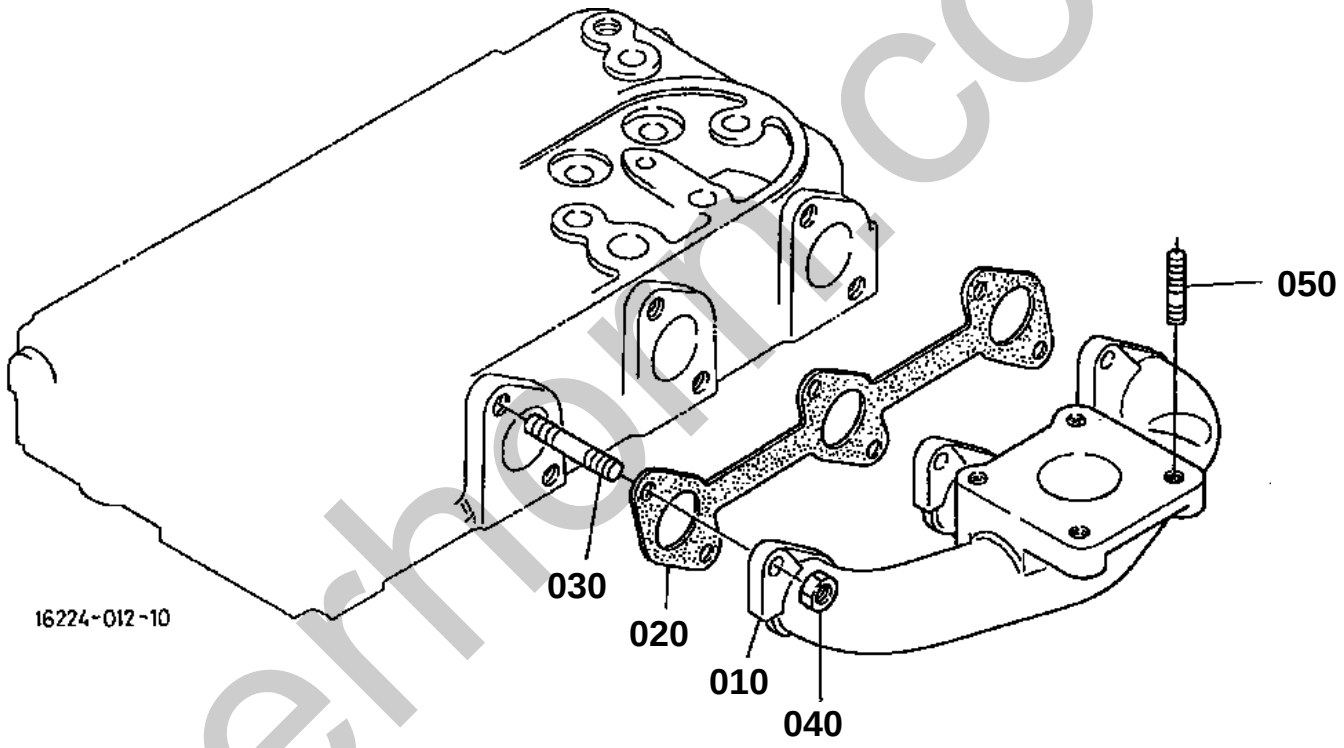

silverhorn.co.uk

EXHAUST MANIFOLD

↔ Interchangeable; ≠ not interchangeable; ← new for old; → old for new

REF.No	Part No.	Description	Q'ty	S.No.	I/C	REMARKS	Weight (kgf)	Weight (lb)
010	16265-12312	MANIFOLD EXHAUST	1				1.35	2.97
020	16261-12350	GASKET EX-MANIFOLD	1				0.019	0.0418
030	16241-91490	STUD	6				0.005	0.011
040	16271-92010	NUT	6				0.005	0.011
050	01513-50822	STUD	4				0.01	0.022

silverhorn.co.uk

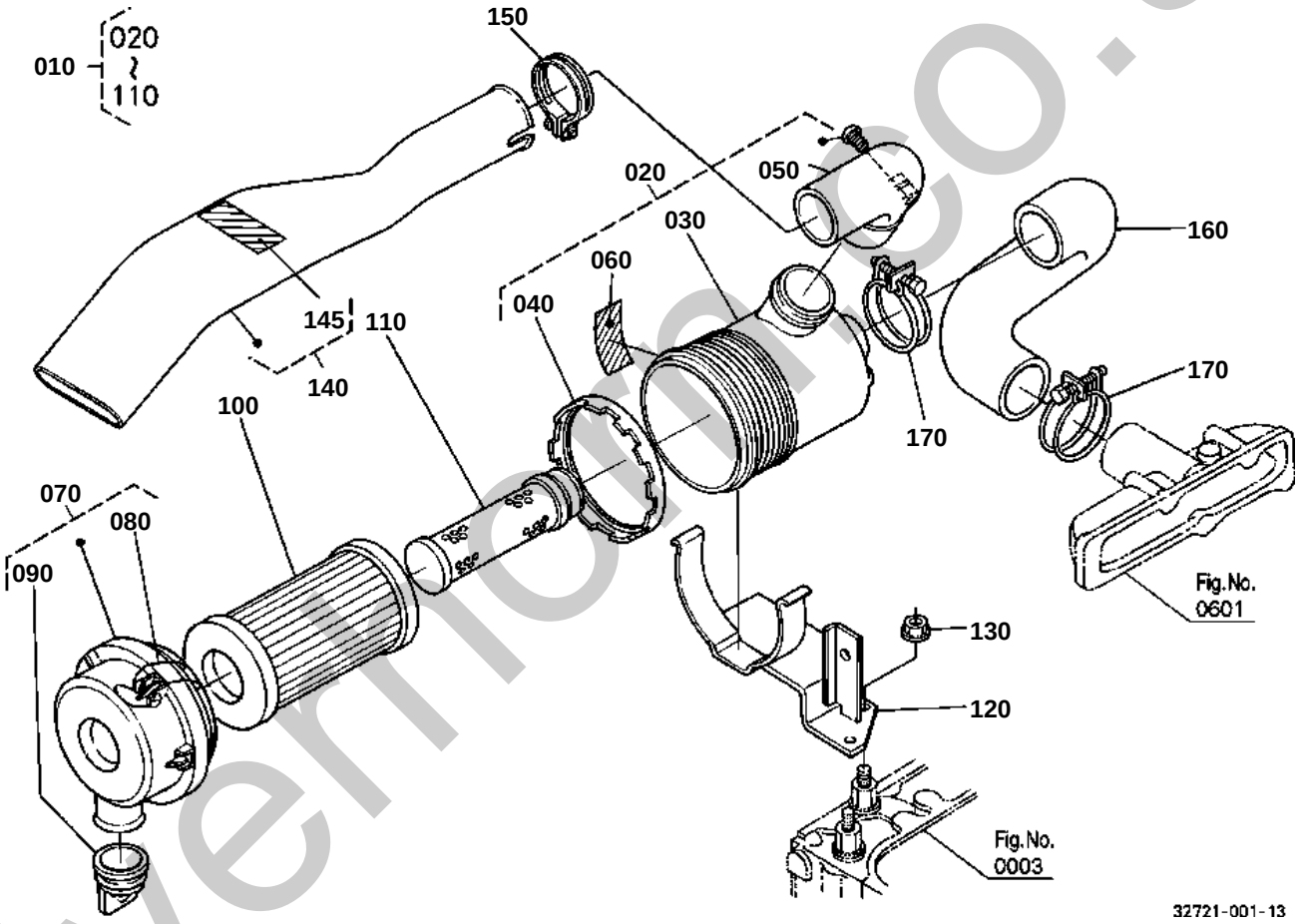

silvermoon.co.uk

AIR CLEANER

↔ Interchangeable; ≠ not interchangeable; ← new for old; → old for new

REF.No	Part No.	Description	Q'ty	S.No.	I/C	REMARKS	Weight (kgf)	Weight (lb)
010	32721-58202	ASSY CLEANER AIR	1	<=50614			0	0
010	32721-58203	ASSY CLEANER AIR	1	>=50615	«		0.67	1.474
020	32721-58210	ASSY CASE	1	<=50614			0	0
020	32721-58212	ASSY CASE	1	>=50615	«		0.2	0.44
030	32721-58220	CASE AIR CLEANER	1				0.2	0.44
040	6A100-82530	GASKET	1				0.03	0.066
050	67980-82530	ELBOW AIR CLEANER	1				0.037	0.0814
060	32721-58280	LABEL CAUTION	1	<=50614		ENGLISH	0	0
060	32721-58282	LABEL CAUTION	1	>=50615	«	ENGLISH FRENCH	0.001	0.0022
070	6A100-82550	ASSY COVER A/C	1				0.179	0.3938
080	6A100-82570	SPRING	2				0.005	0.011
090	67980-82580	VALVE UNLOADER	1				0.011	0.0242
100	6C060-99410	ASSY ELEMENT	1		¬		0.3	0.66
110	32721-58242	ELEMENT INNER	1				0.1	0.22
120	32721-58230	BRACKET AIR CLEANER	1				0.45	0.99
130	02131-50100	NUT	2				0.01	0.022
130	02783-50100	NUT FLANGE	2		«		0.01	0.022
140	32721-99160	ASSY HOSE INLET	1				2.6	5.72
145	32751-49580	LABEL FAN BELT	1				0.001	0.0022
150	15261-11720	BAND PIPE	1				0.03	0.066
160	6C040-58260	HOSE INLET	1				0.27	0.594
170	67955-58260	BAND AIR CLEANER	2				0.028	0.0616

silverhorn.co.uk

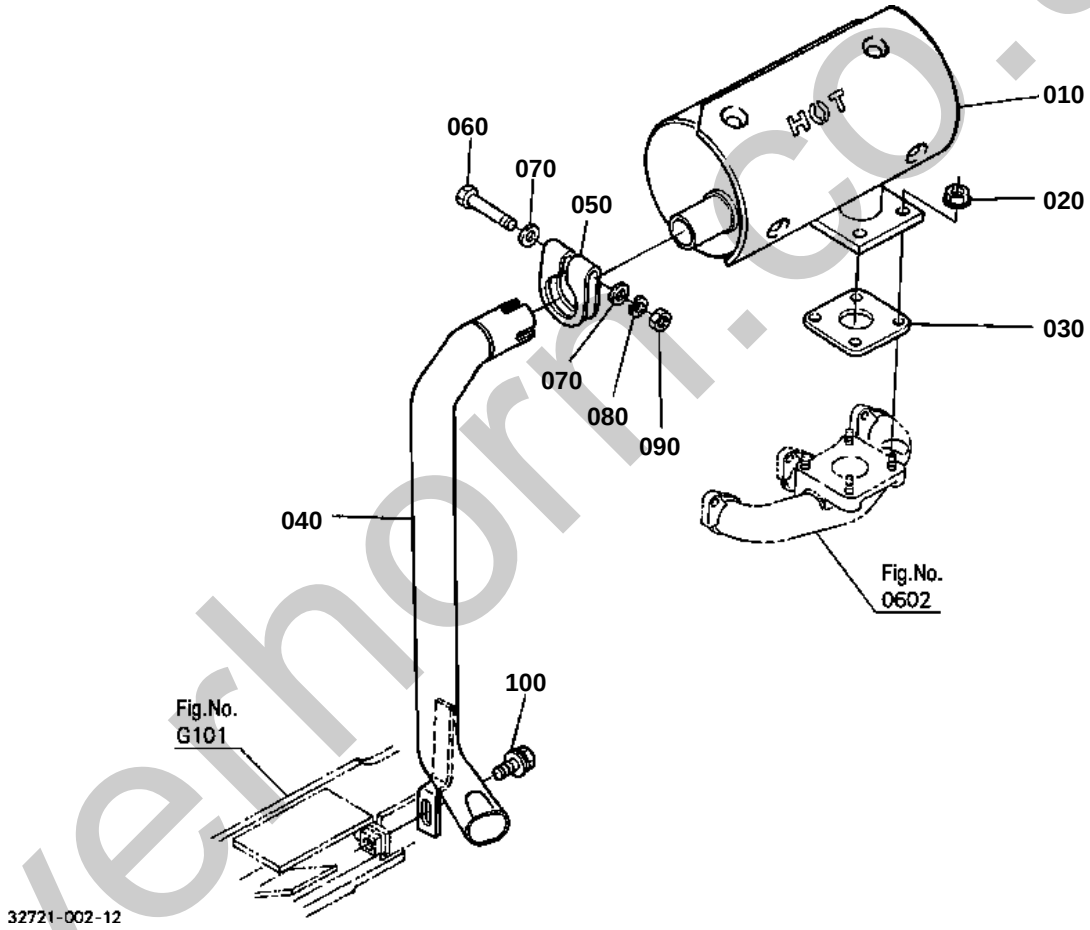

silverhorn.co.uk

OLD PARTS

32721-806-11

silverhorn.co.uk

MUFFLER

↔ Interchangeable; ≠ not interchangeable; ← new for old; → old for new

REF.No	Part No.	Description	Q'ty	S.No.	I/C	REMARKS	Weight (kgf)	Weight (lb)
010	32721-97000	MUFFLER	1				0	0
020	02121-50080	NUT	4				0.01	0.022
030	15263-12370	GASKET MUFFLER NA	1				0.015	0.033
040	32721-58420	PIPE EXHAUST	1	<=50427			0	0
040	32721-58424	PIPE EXHAUST	1	>=50428	¬		0	0
040	32721-58425	PIPE EXHAUST	1	>=51614	¬		0.53	1.166
050	15221-12433	CLAMP MUFFLER PIPE	1				0.05	0.11
060	01153-50865	BOLT	1				0.025	0.055
070	04013-60080	WASHER PLAIN	2				0.002	0.0044
080	04512-60080	WASHER SPRING	1				0.002	0.0044
090	02114-50080	NUT	1				0.005	0.011
100	01125-60820	BOLT	1				0.015	0.033

silverhorn.co.uk

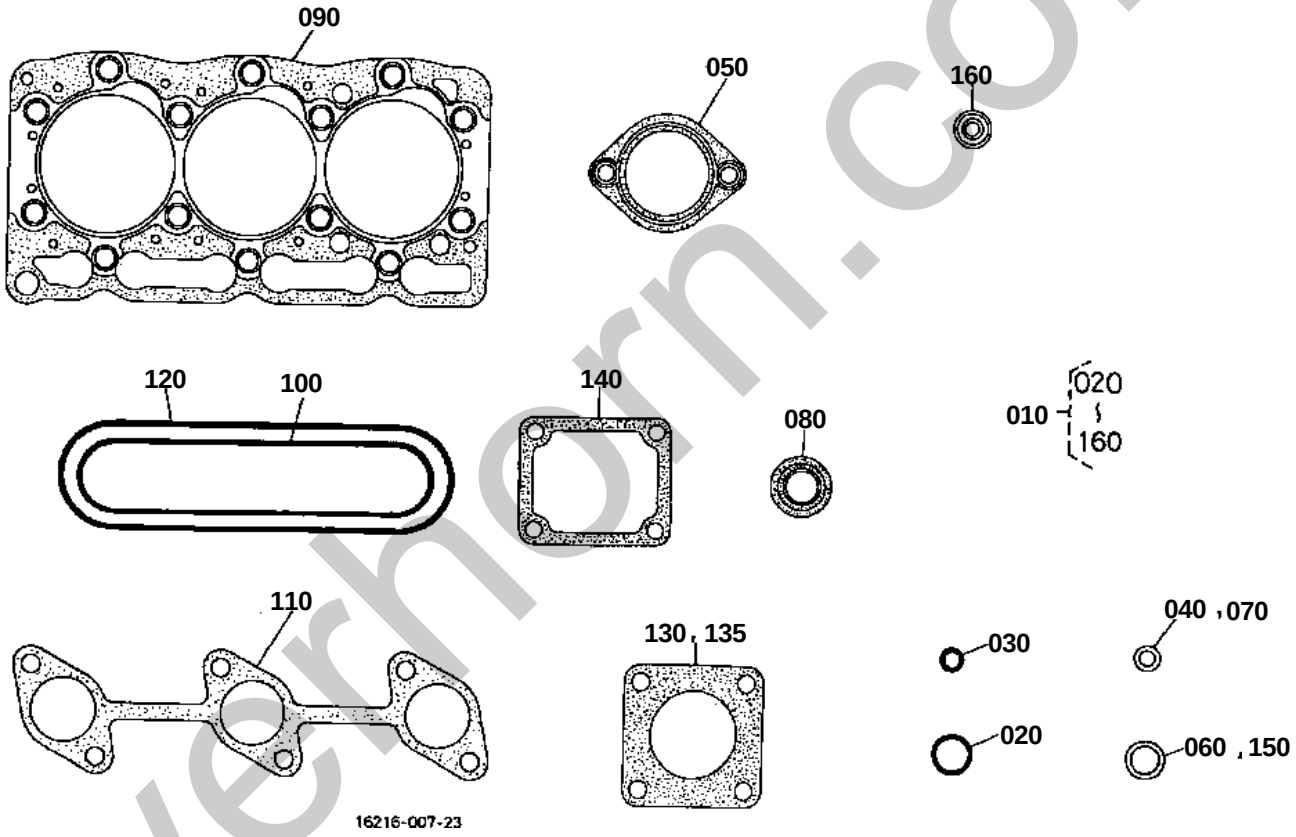

silverhorn.co.uk

OLD PARTS

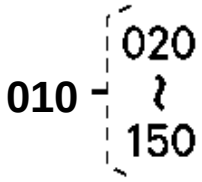

16381-802-11

silverhorn.co.uk

UPPER GASKET KIT

S.No.;<=4Z9999

↔ Interchangeable; ≠ not interchangeable; ← new for old; → old for new

REF.No	Part No.	Description	Q'ty	S.No.	I/C	REMARKS	Weight (kgf)	Weight (lb)
010	07916-27786	KIT GASKET UPPER	1				0.25	0.55
010	07916-27787	KIT GASKET UPPER	1		¬		0.24	0.528
020	04811-50300	O RING	2	<=WH4333			0	0
020	04814-50300	O RING	2	>=WJ0001	¬		0.001	0.0022
030	15221-33700	O RING	1				0.001	0.0022
040	15601-96650	GASKET	1				0.001	0.0022
050	16851-73270	GASKET	1	<=110326			0.003	0.0066
050	15313-73270	GASKET THERMOSTAT	1	>=110327	1		0	0
050	16221-73270	GASKET THERMOSTAT	1	>=WY0001	«		0.01	0.022
060	15841-53622	GASKET	3				0.002	0.0044
070	15951-96660	GASKET	3				0.001	0.0022
080	16241-13150	SEAL VALVE STEM	6				0	0
080	1C010-13150	SEAL VALVE STEM	6		«		0.002	0.0044
090	16231-03310	GASKET CYLINDER HEAD	1				0.07	0.154
100	16261-11822	GASKET IN-MANIFOLD	1				0.01	0.022
110	16261-12350	GASKET EX-MANIFOLD	1				0.019	0.0418
120	16261-14520	GASKET HEAD COVER	1				0.01	0.022
130	15263-12370	GASKET MUFFLER NA	1				0.015	0.033
135	15313-12370	GASKET NA	1			OUT OF USE	0.008	0.0176
140	16264-72920	GASKET WATER FLANGE	1				0.001	0.0022
150	16261-96710	GASKET	1				0.002	0.0044
160	19077-53650	SEAL HEAT	3				0.005	0.011

silverhorn.co.uk

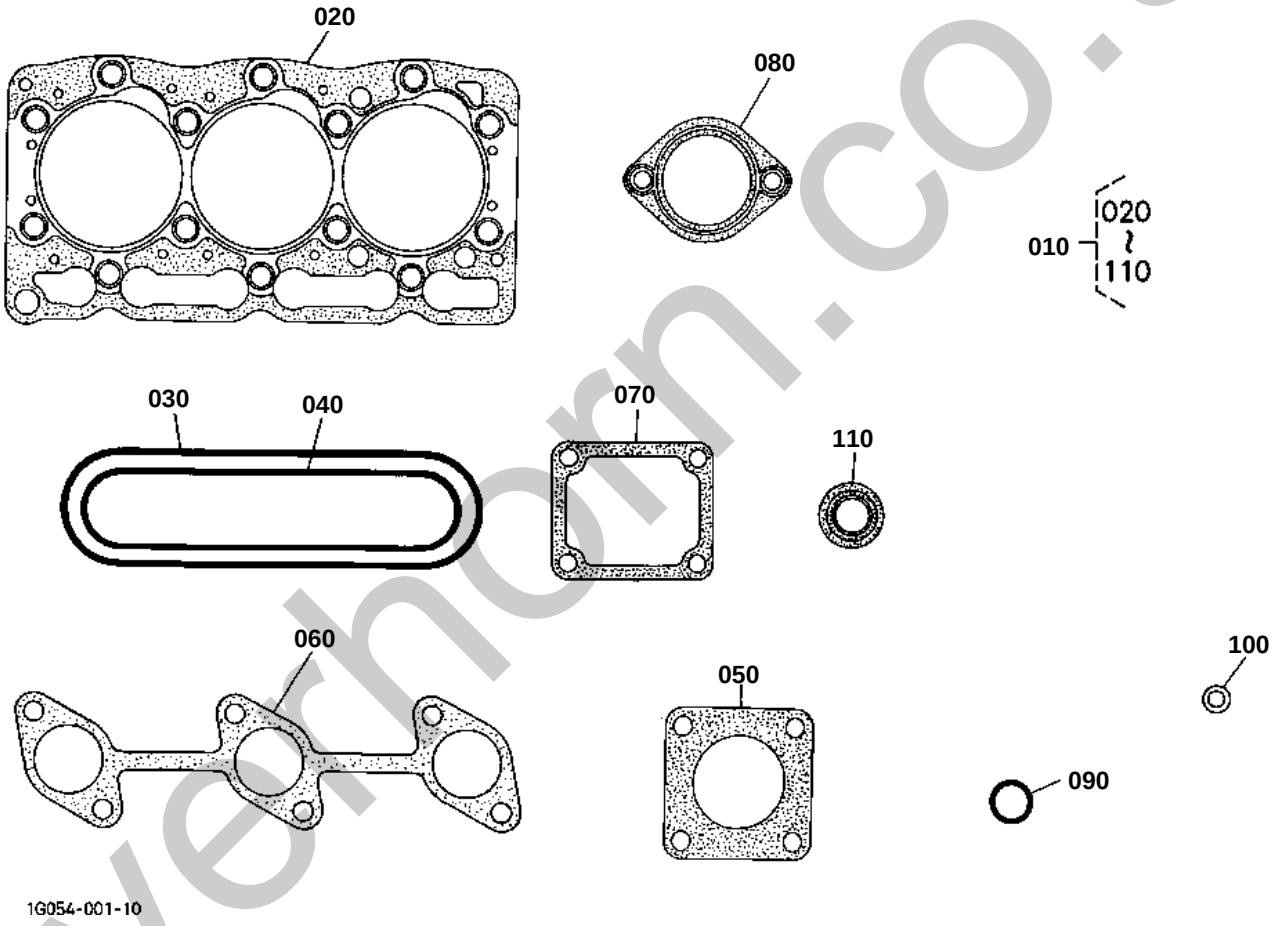

silverhorn.co.uk

UPPER GASKET KIT

S.No.;>=5A0001

↔ Interchangeable; ≠ not interchangeable; ← new for old; → old for new

REF.No	Part No.	Description	Q'ty	S.No.	I/C	REMARKS	Weight (kgf)	Weight (lb)
010	1G041-99350	KIT GASKET UPPER	1				0.316	0.6952
020	1G040-03310	GASKET CYLINDER HEAD	1				0.15	0.33
030	16261-14520	GASKET HEAD COVER	1				0.01	0.022
040	16261-11822	GASKET IN-MANIFOLD	1				0.01	0.022
050	15263-12370	GASKET MUFFLER NA	1				0.015	0.033
060	16261-12350	GASKET EX-MANIFOLD	1				0.019	0.0418
070	16264-72920	GASKET WATER FLANGE	1				0.001	0.0022
080	16221-73270	GASKET THERMOSTAT	1				0.01	0.022
090	04814-50300	O RING	1				0.001	0.0022
100	15951-96660	GASKET	3				0.001	0.0022
110	1C010-13150	SEAL VALVE STEM	6				0.002	0.0044

silverhorn.co.uk

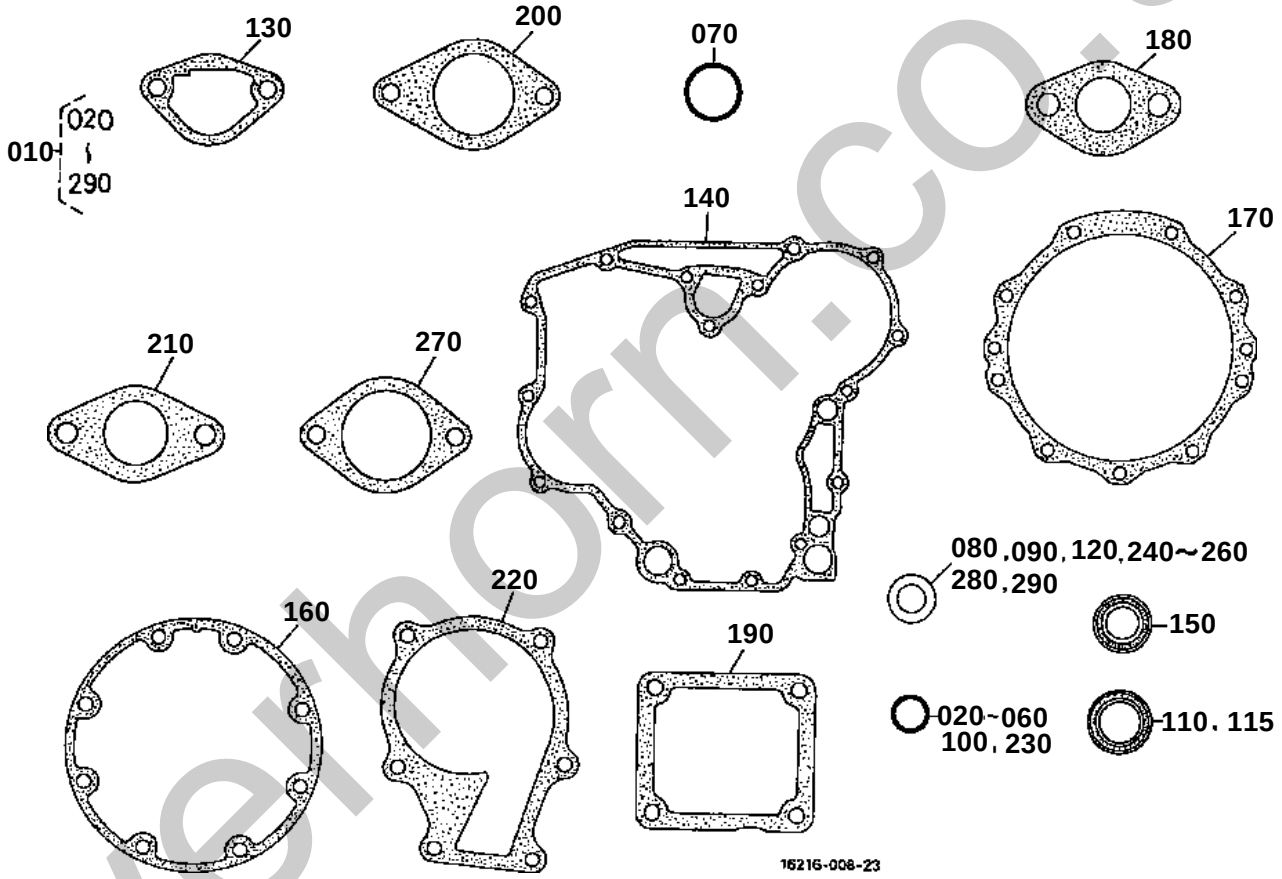

silverhorn.co.uk

LOWER GASKET KIT

S.No.;<=4Z9999

↔ Interchangeable; ≠ not interchangeable; ← new for old; → old for new

REF.No	Part No.	Description	Q'ty	S.No.	I/C	REMARKS	Weight (kgf)	Weight (lb)
010	07916-27796	LOWER GASKET KIT	1				0	0
010	07916-27797	LOWER GASKET KIT	1		¬		0.26	0.572
020	04811-00100	O RING	1				0	0
020	04814-00100	O RING	1		¬		0.001	0.0022
030	04811-00150	O RING	2	<=WH4333			0	0
030	04814-00150	O RING	2	>=WJ0001	¬		0.001	0.0022
030	04814-00150	O RING	2	<=1S7639			0.001	0.0022
040	04811-06100	O RING	2	<=WH4333			0	0
040	04814-06100	O RING	2	>=WJ0001	¬		0.003	0.0066
050	04811-00160	O RING	1	<=WH4333			0	0
050	04814-00160	O RING	1	>=WJ0001	¬		0.001	0.0022
060	04811-10280	O RING	1	<=WH4333			0.001	0.0022
060	04814-10280	O RING	1	>=WJ0001	¬		0.001	0.0022
070	04811-10460	O RING	1				0.002	0.0044
080	15021-33660	GASKET	1				0.001	0.0022
090	15109-33660	GASKET	1				0.001	0.0022
090	6C090-58960	GASKET	1		«		0.002	0.0044
100	04814-00090	O RING	1			OUT OF USE	0.001	0.0022
110	16241-04460	SEAL OIL	1			OUT OF USE	0.02	0.044
115	16271-04460	SEAL OIL	1				0.04	0.088
120	15601-96650	GASKET	5				0.001	0.0022
130	16264-52140	GASKET FUEL PUMP	1				0.001	0.0022
140	16264-04130	GASKET GEAR CASE	1				0.01	0.022
150	16241-04212	SEAL OIL	1				0.012	0.0264
160	16264-04360	GASKET BRG.CASE	1				0.002	0.0044
170	16264-04820	GASKET BRG.CASE	1				0.008	0.0176
180	16299-56260	GASKET	1				0.002	0.0044
190	16264-57210	GASKET	1				0.002	0.0044
200	16264-88130	GASKET H/METER UNIT	1				0.002	0.0044
210	16299-60150	GASKET	1			OUT OF USE	0.003	0.0066
220	16261-73430	GASKET WATER PUMP	1	<=10001			0.001	0.0022
220	16251-73430	GASKET WATER PUMP	1	>=95970	«		0.005	0.011
220	16239-73430	GASKET WATER PUMP	1	>=1W0001	1		0.007	0.0154
230	19202-96750	O RING	1	<=WH4333			0.001	0.0022
230	04814-10070	O RING	1	>=WJ0001	1		0.001	0.0022
240	04724-00100	GASKET	1			OUT OF USE	0.001	0.0022
250	1G031-96650	GASKET	1			OUT OF USE	0	0
260	04714-00200	GASKET	1			OUT OF USE	0.002	0.0044
270	16299-83110	GASKET PUMP COVER NA	1			OUT OF USE	0.005	0.011
280	15841-96650	GASKET	1				0.001	0.0022
290	15861-96650	GASKET	2				0.001	0.0022

silvermorn.co.uk

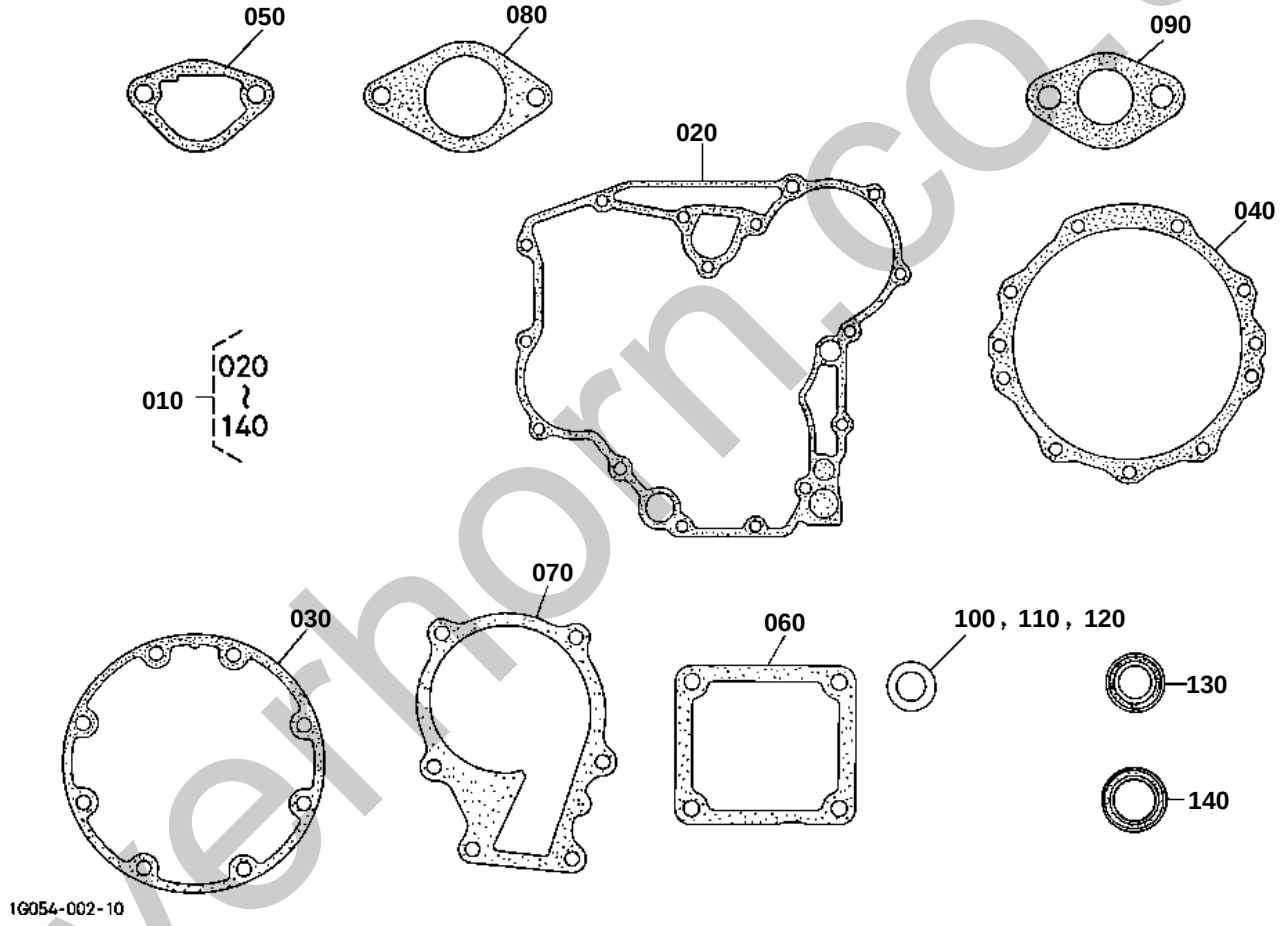

silverhorn.co.uk

LOWER GASKET KIT
S.No.;>=5A0001

↔ Interchangeable; ≠ not interchangeable; ← new for old; → old for new

REF.No	Part No.	Description	Q'ty	S.No.	I/C	REMARKS	Weight (kgf)	Weight (lb)
010	1G062-99360	KIT GASKET LOWER	1				0.182	0.4004
020	16264-04130	GASKET GEAR CASE	1				0.01	0.022
030	16264-04360	GASKET BRG.CASE	1				0.002	0.0044
040	16264-04820	GASKET BRG.CASE	1				0.008	0.0176
050	16264-52140	GASKET FUEL PUMP	1				0.001	0.0022
060	16264-57210	GASKET	1				0.002	0.0044
070	16239-73430	GASKET WATER PUMP	1				0.007	0.0154
080	16264-88130	GASKET H/METER UNIT	1				0.002	0.0044
090	16299-56260	GASKET	1				0.002	0.0044
100	15601-96650	GASKET	5				0.001	0.0022
110	6C090-58960	GASKET	1				0.002	0.0044
120	15841-53622	GASKET	1				0.002	0.0044
130	16241-04212	SEAL OIL	1				0.012	0.0264
140	16271-04460	SEAL OIL	1				0.04	0.088

silverhorn.co.uk

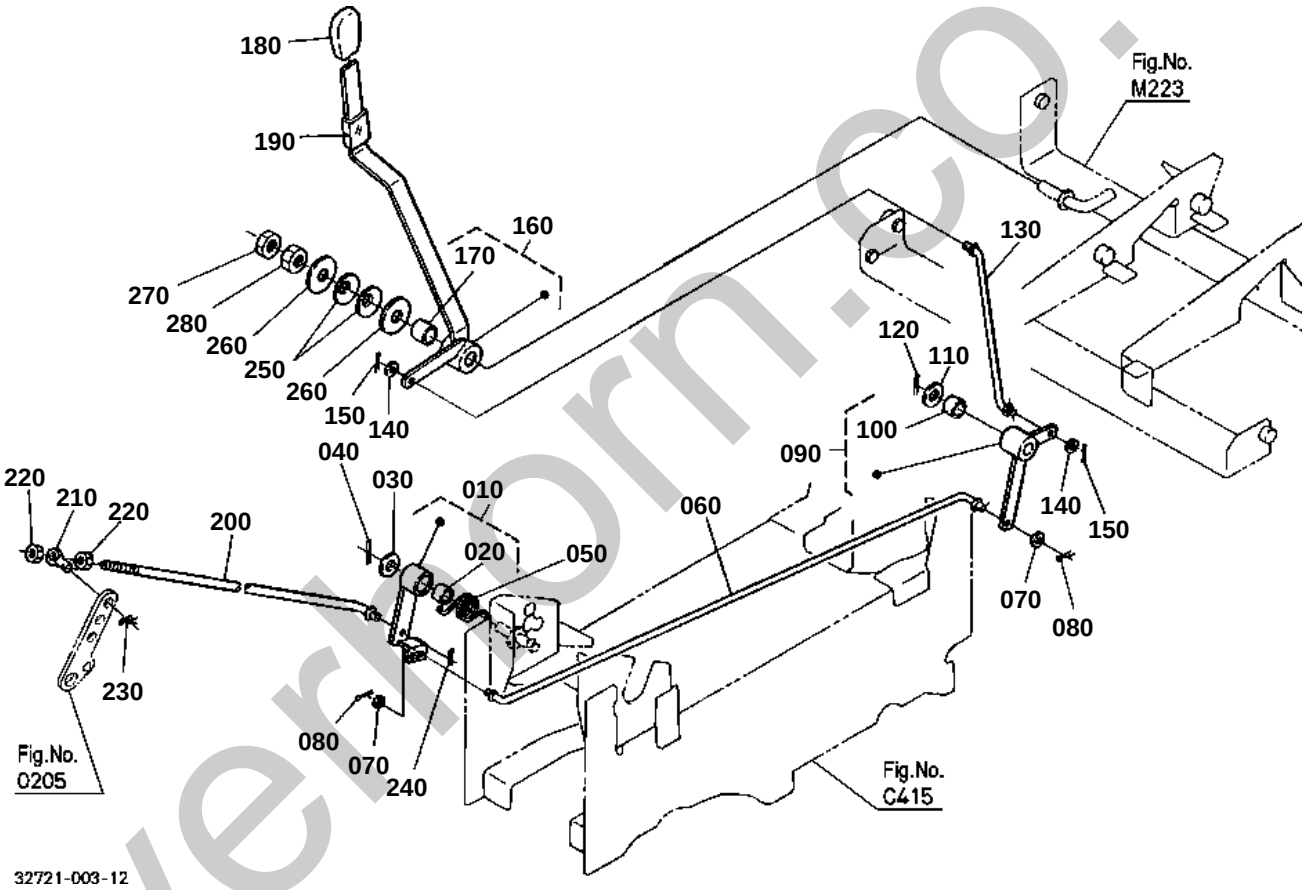

silverhorn.co.uk

OLD PARTS

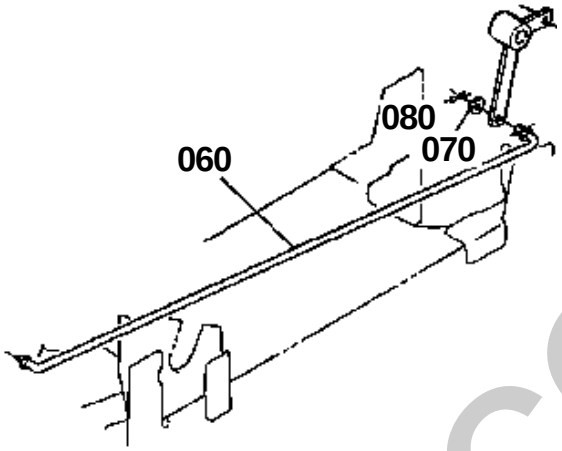

32721-836-10

silverhorn.co.uk

ACCELERATOR LEVER

↔ Interchangeable; ≠ not interchangeable; ← new for old; → old for new

REF.No	Part No.	Description	Q'ty	S.No.	I/C	REMARKS	Weight (kgf)	Weight (lb)
010	32721-43260	ASSY LEVER ACCEL.ROD	1	<=50192			0	0
010	32721-43262	ASSY LEVER ACCEL.ROD	1	>=50193	¬		0.13	0.286
020	08511-01220	BUSH	1				0.004	0.0088
030	04011-50120	WASHER PLAIN	1				0.005	0.011
040	05511-50320	PIN SPLIT	1				0.002	0.0044
050	32721-43290	SPRING ACCEL.	1				0.012	0.0264
060	32721-43240	ROD ACCEL.	1	<=60970			0	0
060	32721-43243	ROD ACCEL.	1	>=60971	¬		0.17	0.374
060	32721-43245	ROD ACCEL.	1	>=63105	1		0.17	0.374
070	04012-50060	WASHER PLAIN	2				0.001	0.0022
080	05511-50218	PIN SPLIT	2				0.001	0.0022
090	32721-43280	ASSY LEVER ACCEL.ROD	1				0.152	0.3344
100	08511-01625	BUSH	1				0.01	0.022
110	04011-60160	WASHER PLAIN	1				0.01	0.022
120	05511-50325	PIN SPLIT	1				0.002	0.0044
130	32721-43250	ROD ACCEL.	1				0.052	0.1144
140	04012-50060	WASHER PLAIN	2				0.001	0.0022
150	05511-50218	PIN SPLIT	2				0.001	0.0022
160	32721-43200	ASSY LEVER ACCEL.	1				0.505	1.111
170	08511-01220	BUSH	1				0.004	0.0088
180	TA040-24490	GRIP LEVER	1				0.033	0.0726
190	6C040-42760	CUSHION	1				0.003	0.0066
200	32721-43270	ROD RELEASE	1				0.094	0.2068
210	6C040-43280	CONNECTOR	1				0.008	0.0176
220	02014-50060	NUT	2				0.002	0.0044
230	05525-50800	PIN SNAP	1				0.001	0.0022
240	05511-50218	PIN SPLIT	1				0.001	0.0022
250	67800-44720	SPRING	2				0.005	0.011
260	04015-60120	WASHER PLAIN	2				0.022	0.0484
270	02172-50120	NUT	1				0.01	0.022
280	02174-50120	NUT	1				0.01	0.022

silvermorn.co.uk

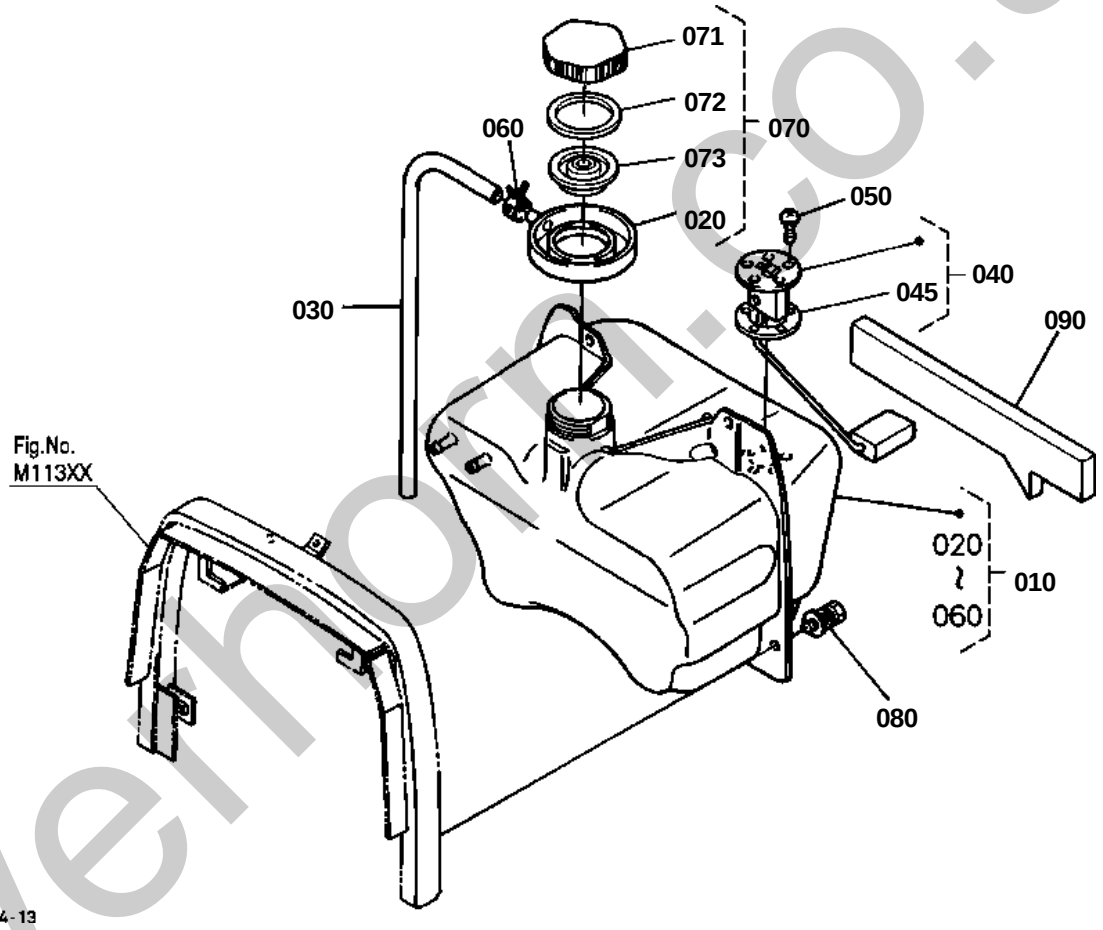

silverhorn.co.uk

OLD PARTS

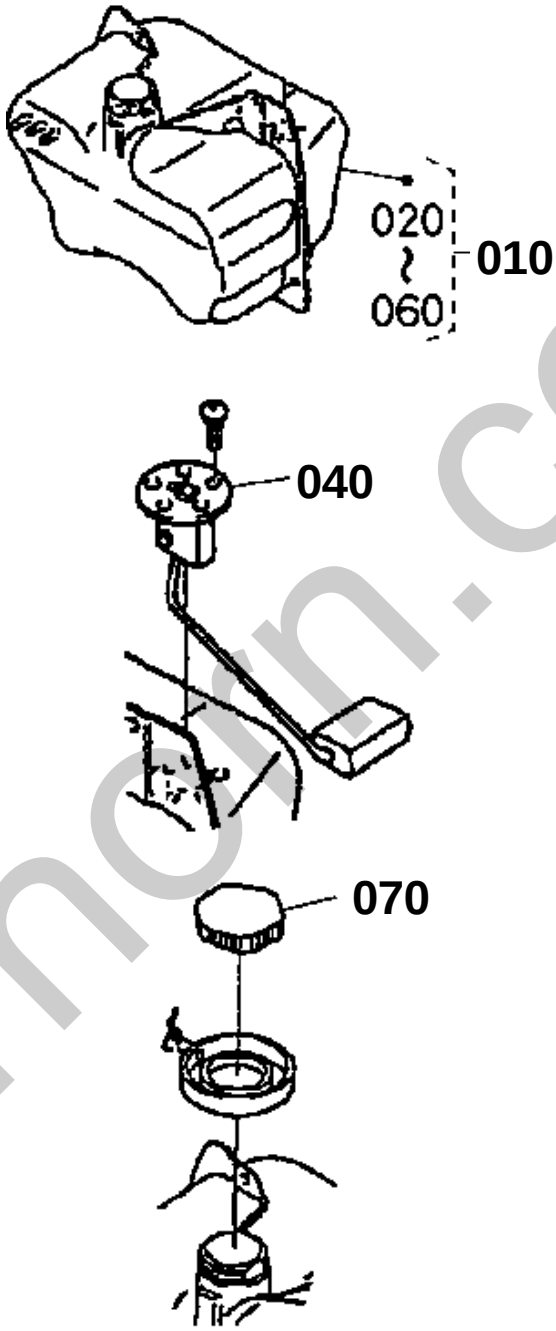

32721-814-12

silverhorn.co.uk

FUEL TANK

↔ Interchangeable; ≠ not interchangeable; ← new for old; → old for new

REF.No	Part No.	Description	Q'ty	S.No.	I/C	REMARKS	Weight (kgf)	Weight (lb)
010	6C040-54705	ASSY TANK FUEL	1	<=53011		NOT SALE	0	0
010	6C040-54706	ASSY TANK FUEL	1	>=53012	¬	NOT SALE	0	0
010	6C040-54707	ASSY TANK FUEL	1	>=60149	¬	NOT SALE	0	0
010	6C040-54709	ASSY TANK FUEL	1	>=60971	¬		4	8.8
020	6C040-54740	TRAY FUEL	1				0.86	1.892
030	6C040-54760	PIPE	1				0	0
030	6C120-54760	PIPE	1		«		0.09	0.198
040	6C040-54750	GAUGE FUEL	1	<=60148			0	0
040	6C040-54752	GAUGE FUEL	1	>=60149	¬		0.14	0.308
045	6A320-85812	GASKET GAUGE	1				0.005	0.011
050	03024-50514	SCREW WITH WASHER	5				0.003	0.0066
060	6C040-54780	CLAMP	1	<=60654			0.005	0.011
060	09318-88185	CLAMP HOSE	1	>=60655	1		0.004	0.0088
070	6A100-54910	ASSY CAP FUEL	1				0.105	0.231
071	6A100-54920	CAP FUEL	1				0.041	0.0902
072	6A100-54942	SPACER	1				0.001	0.0022
073	6A100-54952	GASKET	1				0.02	0.044
080	01127-50820	BOLT	4	<=63584			0.02	0.044
080	01125-50825	BOLT	4	>=63585	1		0.018	0.0396
090	6C040-54790	SPONGE	1				0.392	0.8624

silverhorn.co.uk

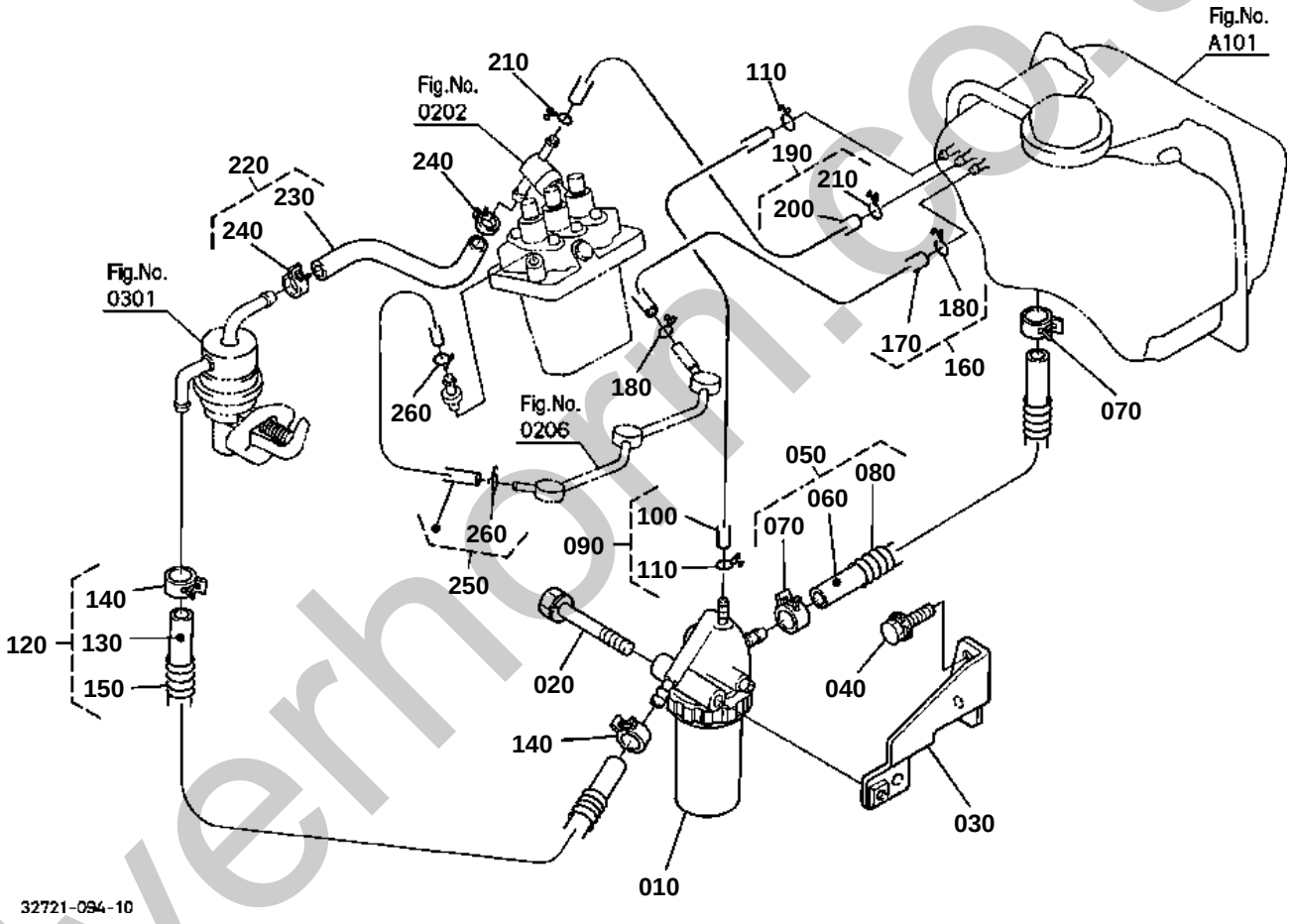

silverhorn.co.uk

FUEL PIPE

S.No.;<=60970

↔ Interchangeable; ≠ not interchangeable; ← new for old; → old for new

REF.No	Part No.	Description	Q'ty	S.No.	I/C	REMARKS	Weight (kgf)	Weight (lb)
010	15751-43010	ASSY FILTER FUEL	1				0.41	0.902
020	01123-50865	BOLT	1				0.028	0.0616
030	6C040-58310	STAY FUEL FILTER	1				0.18	0.396
040	01125-60820	BOLT	1				0.015	0.033
050	6C040-54810	ASSY TUBE FUEL	1				0.048	0.1056
060	09661-70300	TUBE FUEL	1				0.04	0.088
070	14911-42750	CLIP PIPE	2				0.002	0.0044
080	67111-58320	SPRING PIPE PROTECT.	1				0.02	0.044
090	6C040-54850	ASSY PIPE AIR VENT	1				0.024	0.0528
100	09661-40440	TUBE FUEL	1				0.025	0.055
110	14971-42750	CLIP PIPE	2				0.001	0.0022
120	6C040-59410	ASSY TUBE FUEL	1				0.058	0.1276
130	09661-70380	TUBE FUEL	1				0.04	0.088
140	14911-42750	CLIP PIPE	2				0.002	0.0044
150	76611-53370	SPRING PIPE PROTECT.	1				0.01	0.022
160	6C040-59440	ASSY PIPE AIR VENT	1				0.022	0.0484
170	09661-40400	TUBE FUEL	1				0.02	0.044
180	14971-42750	CLIP PIPE	2				0.001	0.0022
190	6C040-59450	ASSY PIPE OVER FLOW	1				0.017	0.0374
200	09661-40300	TUBE FUEL	1				0.016	0.0352
210	14971-42750	CLIP PIPE	2				0.001	0.0022
220	16032-42010	ASSY TUBE FUEL	1				0.012	0.0264
230	09661-80075	TUBE FUEL	1				0.01	0.022
240	16241-42750	CLIP PIPE	2				0	0
250	15841-42500	ASSY PIPE OVER FLOW	1				0.015	0.033
260	14971-42750	CLIP PIPE	2				0.001	0.0022

silverhorn.co.uk

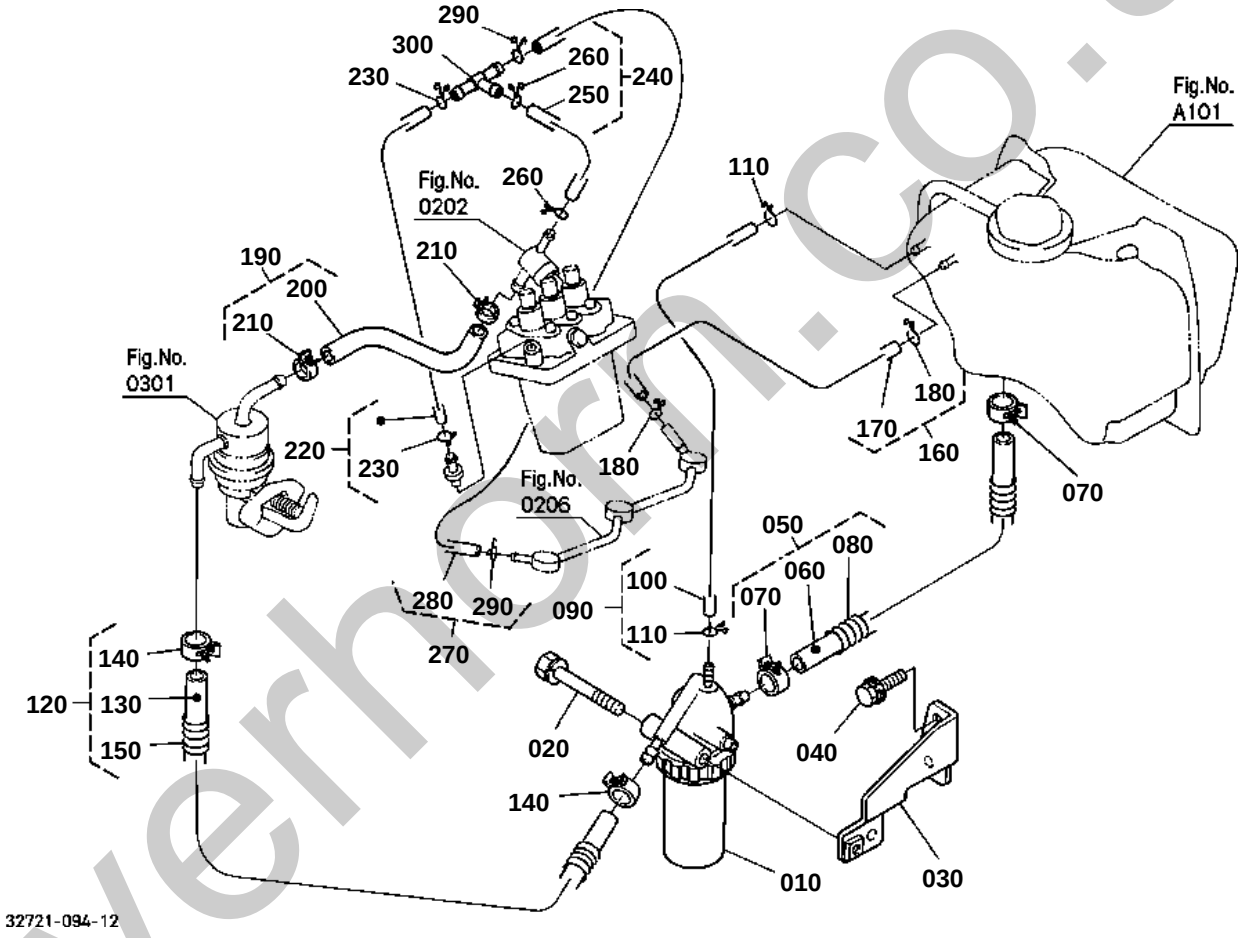

silverhorn.co.uk

OLD PARTS

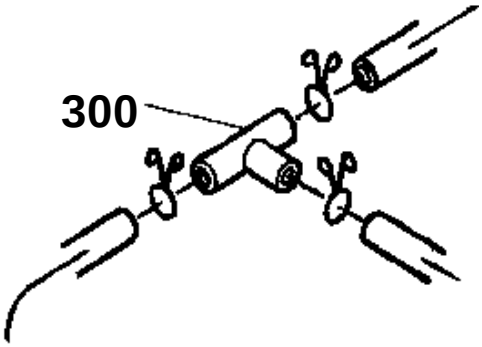

32721-837-10

silverhorn.co.uk

FUEL PIPE
S.No.;>=60971

↔ Interchangeable; ≠ not interchangeable; ← new for old; → old for new

REF.No	Part No.	Description	Q'ty	S.No.	I/C	REMARKS	Weight (kgf)	Weight (lb)
010	15751-43010	ASSY FILTER FUEL	1				0.41	0.902
020	01123-50865	BOLT	1				0.028	0.0616
030	6C040-58310	STAY FUEL FILTER	1				0.18	0.396
040	01125-60820	BOLT	1				0.015	0.033
050	6C040-54810	ASSY TUBE FUEL	1				0.048	0.1056
060	09661-70300	TUBE FUEL	1				0.04	0.088
070	14911-42750	CLIP PIPE	2				0.002	0.0044
080	67111-58320	SPRING PIPE PROTECT.	1				0.02	0.044
090	6C040-54850	ASSY PIPE AIR VENT	1				0.024	0.0528
100	09661-40440	TUBE FUEL	1				0.025	0.055
110	14971-42750	CLIP PIPE	2				0.001	0.0022
120	6C040-59410	ASSY TUBE FUEL	1				0.058	0.1276
130	09661-70380	TUBE FUEL	1				0.04	0.088
140	14911-42750	CLIP PIPE	2				0.002	0.0044
150	76611-53370	SPRING PIPE PROTECT.	1				0.01	0.022
160	6C040-59450	ASSY PIPE OVER FLOW	1				0.017	0.0374
170	09661-40300	TUBE FUEL	1				0.016	0.0352
180	14971-42750	CLIP PIPE	2				0.001	0.0022
190	16032-42010	ASSY TUBE FUEL	1				0.012	0.0264
200	09661-80075	TUBE FUEL	1				0.01	0.022
210	14911-42750	CLIP PIPE	2				0.002	0.0044
220	17208-42500	ASSY PIPE OVER FLOW	1				0.007	0.0154
230	14971-42750	CLIP PIPE	2				0.001	0.0022
240	16282-42020	ASSY PIPE OVER FLOW	1				0.01	0.022
250	09661-40040	TUBE FUEL	1				0.005	0.011
260	14971-42750	CLIP PIPE	2				0.001	0.0022
270	17208-42030	ASSY PIPE OVER FLOW	1				0.006	0.0132
280	09661-40100	TUBE FUEL	1				0.006	0.0132
290	14971-42750	CLIP PIPE	2				0.001	0.0022
300	K3511-58390	JOINT T-PIPE	1	<=63172			0.001	0.0022
300	1C020-42360	JOINT T-PIPE	1	>=63173	1		0.002	0.0044
300	1G065-42360	JOINT T-PIPE	1	>=63962	¬		0	0

silvermorn.co.uk

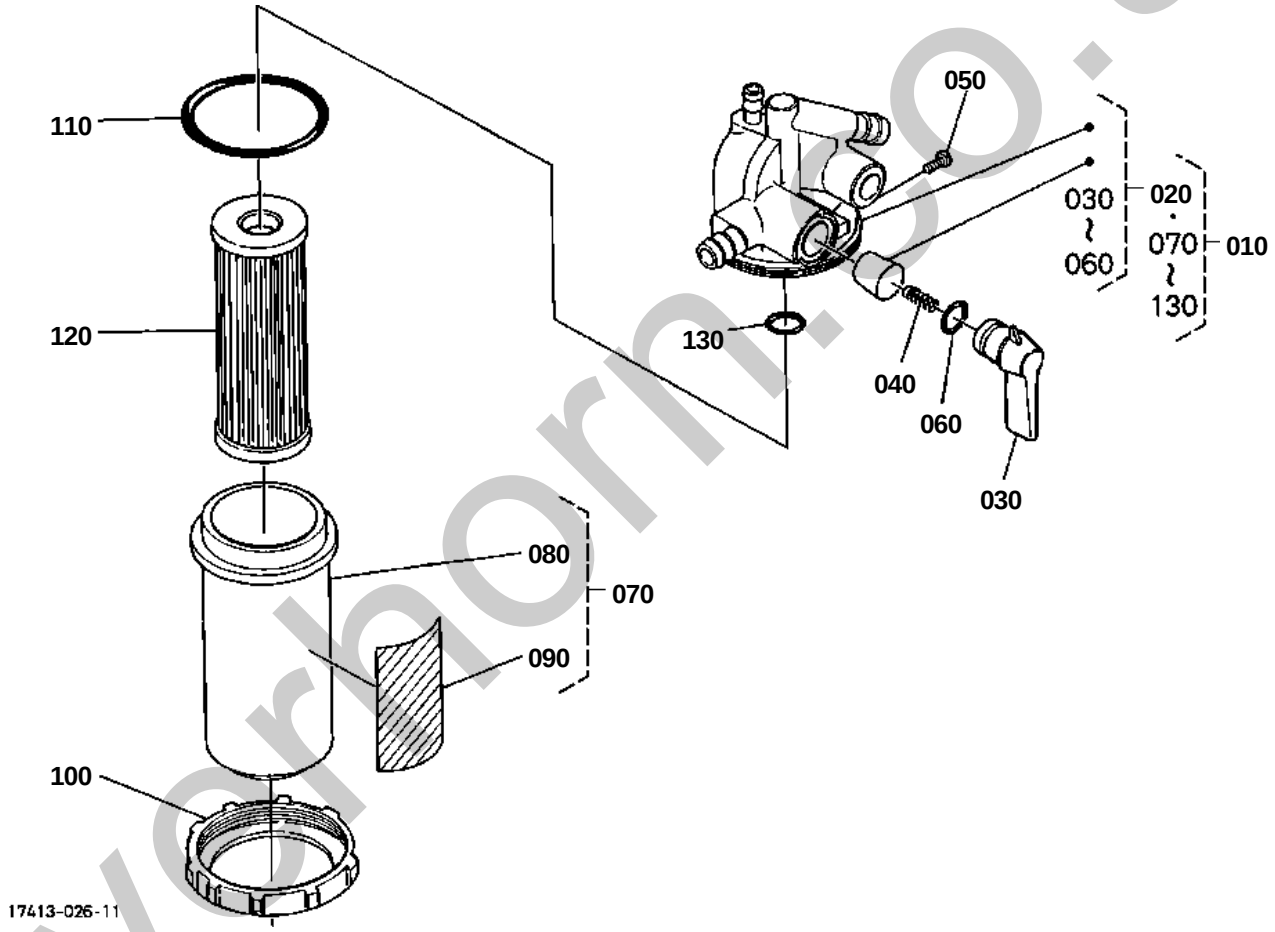

silverhorn.co.uk

FUEL FILTER [COMPONENT PARTS]

↔ Interchangeable; ≠ not interchangeable; ← new for old; → old for new

REF.No	Part No.	Description	Q'ty	S.No.	I/C	REMARKS	Weight (kgf)	Weight (lb)
010	15751-43010	ASSY FILTER FUEL	1				0.41	0.902
020	15531-43110	COMP.BODY COCK	1			NOT SALE	0.255	0.561
030	14301-43522	LEVER COCK	1				0.024	0.0528
040	14301-43820	SPRING VALVE	1				0.001	0.0022
050	14301-43830	SCREW SET	1				0.001	0.0022
060	14301-43840	O RING LEVER	1				0.001	0.0022
070	19204-43100	ASSY CUP FILTER	1				0.02	0.044
080	15393-43580	CUP FILTER	1				0.01	0.022
080	1T021-43580	CUP FILTER	1		¬		0.04	0.088
090	16689-88430	LABEL FUEL	1				0.001	0.0022
100	14301-43590	RING RETAINING	1				0.054	0.1188
100	1T021-43590	RING RETAINING	1		¬		0.066	0.1452
110	14301-43650	O RING FILTER CUP	1				0.001	0.0022
110	04816-00390	O RING FILTER CUP	1		¬		0.003	0.0066
120	15231-43560	ASSY ELEMENT	1				0.03	0.066
120	1T021-43560	ASSY ELEMENT	1		¬		0.02	0.044
130	14301-43570	O RING FILTER	1				0.001	0.0022
130	04816-00100	O RING FILTER	1		¬		0.001	0.0022

silverhorn.co.uk

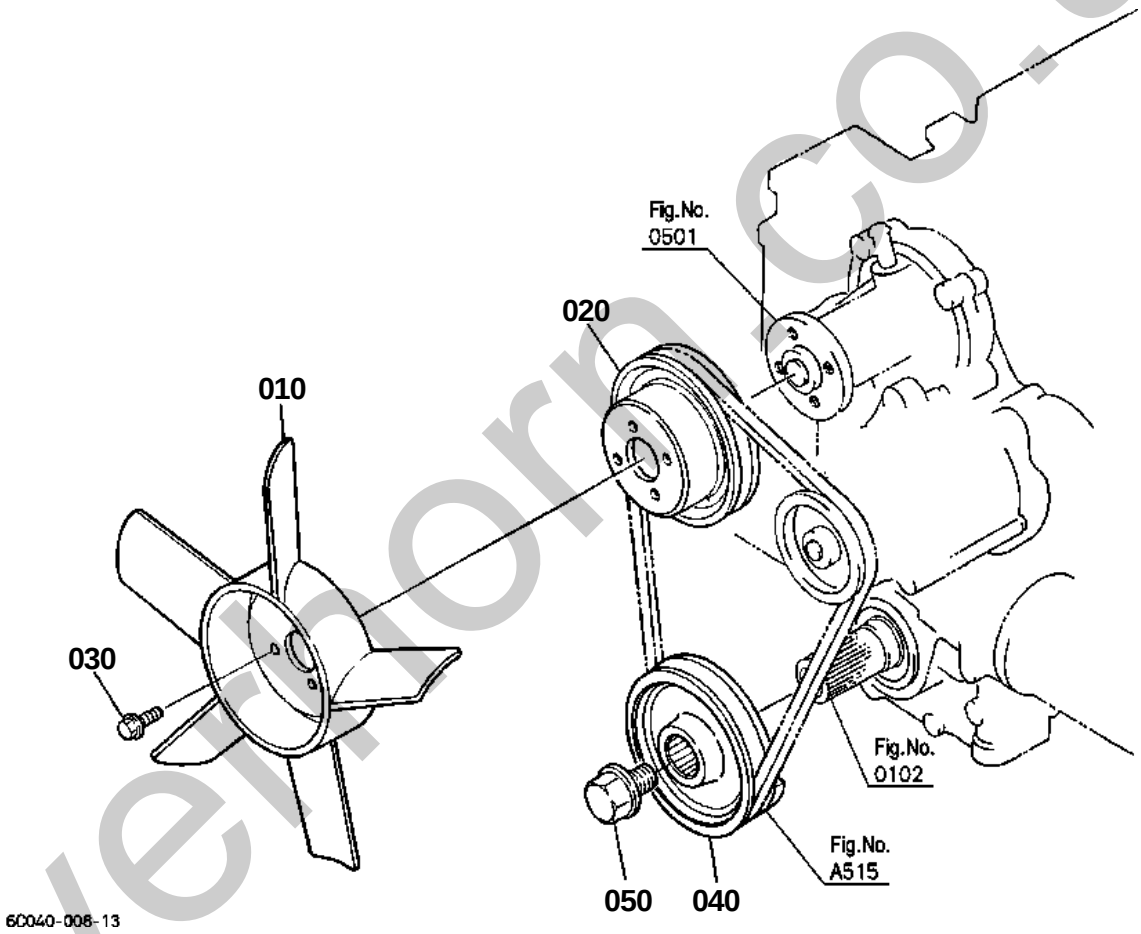

silverthorn.co.uk

FAN

↔ Interchangeable; ≠ not interchangeable; ← new for old; → old for new

REF.No	Part No.	Description	Q'ty	S.No.	I/C	REMARKS	Weight (kgf)	Weight (lb)
010	6C040-58510	FAN	1				0.37	0.814
020	16241-74250	PULLEY FAN	1				0.24	0.528
030	01754-50612	BOLT FLANGE	4				0.005	0.011
040	16261-74280	PULLEY FAN DRIVE	1				1.14	2.508
050	16241-91020	BOLT FAN DRIVE	1				0.1	0.22

silverhorn.co.uk

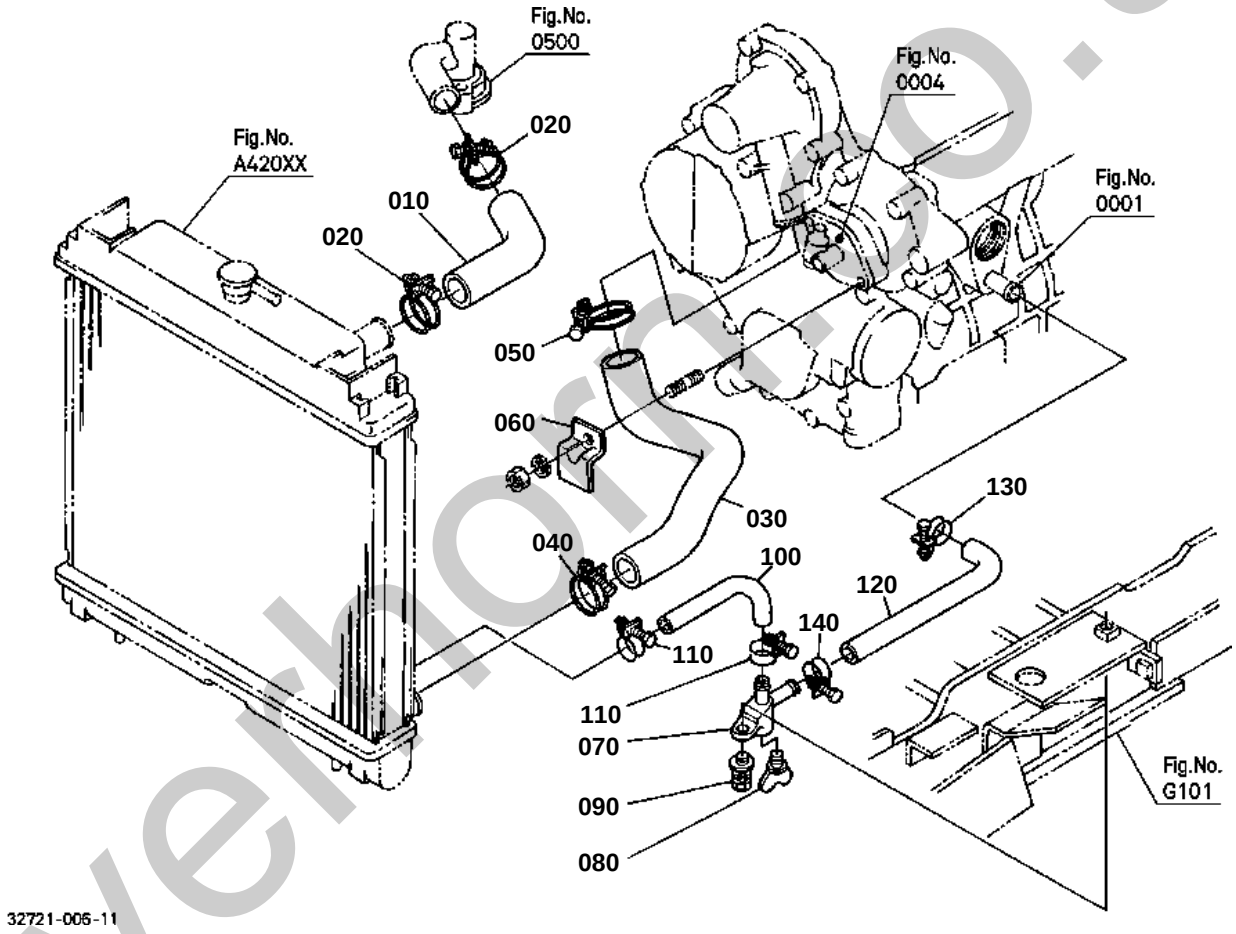

silverhorse.co.uk

WATER PIPE

↔ Interchangeable; ≠ not interchangeable; ← new for old; → old for new

REF.No	Part No.	Description	Q'ty	S.No.	I/C	REMARKS	Weight (kgf)	Weight (lb)
010	32721-58630	HOSE WATER	1				0.075	0.165
020	67955-58630	CLAMP HOSE	2				0.025	0.055
030	32721-58570	HOSE WATER	1				0.155	0.341
040	67955-58630	CLAMP HOSE	1				0.025	0.055
050	67955-58630	CLAMP HOSE	1				0.025	0.055
060	6C040-58640	CLAMP WATER HOSE	1				0.031	0.0682
070	6C040-58650	COCK	1				0.017	0.0374
080	55364-82110	COCK DRAIN	1				0.005	0.011
090	01125-50822	BOLT	1				0.015	0.033
100	32721-58680	HOSE DRAIN	1				0.025	0.055
110	6C040-58720	CLAMP HOSE	2				0.017	0.0374
120	6C040-58690	HOSE DRAIN	1				0.05	0.11
130	6C040-58730	CLAMP HOSE	1				0.017	0.0374
140	6C040-58730	CLAMP HOSE	1				0.017	0.0374

silverhorn.co.uk

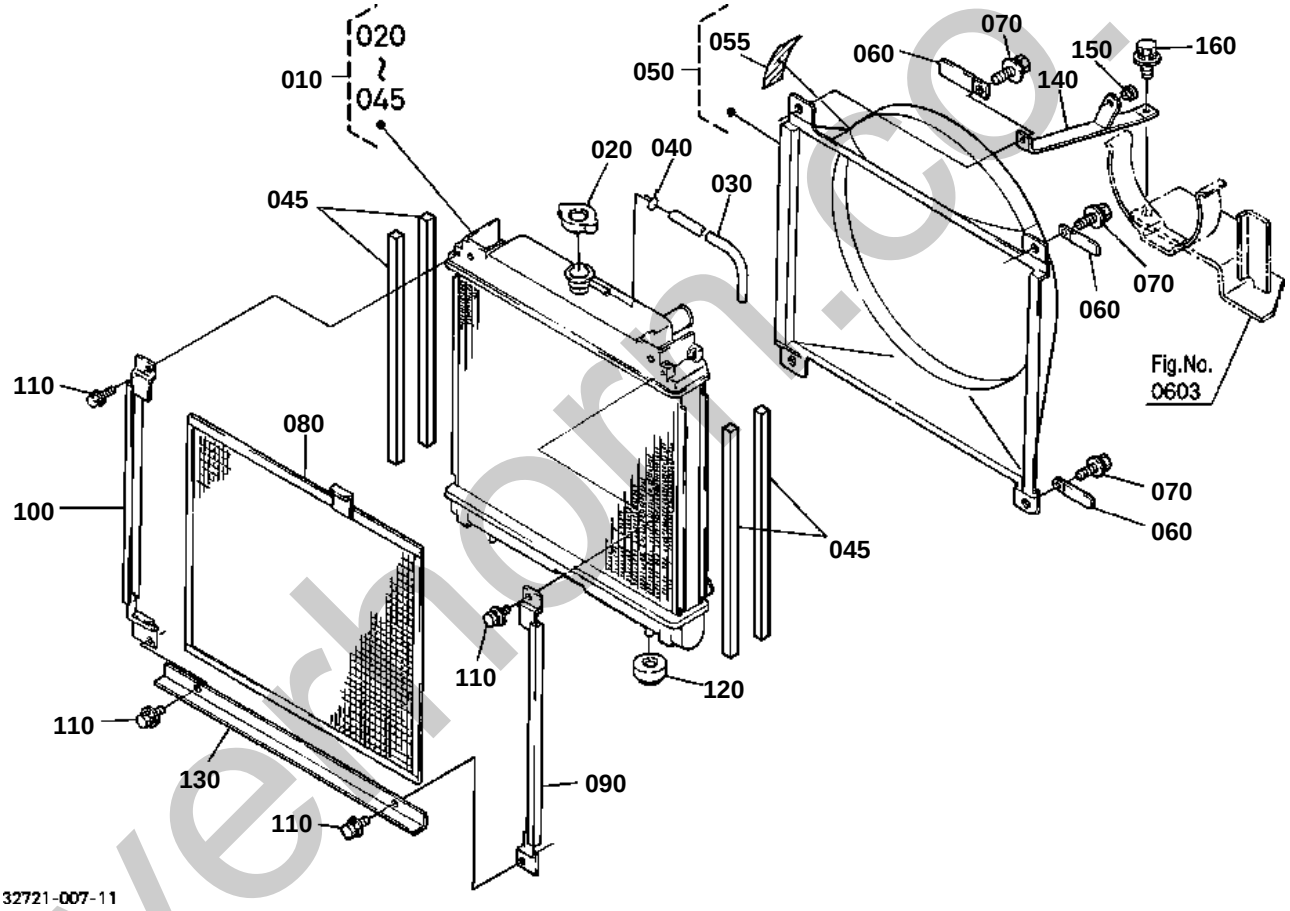

silverhorn.co.uk

RADIATOR [EXCEPT [AU]]

↔ Interchangeable; ≠ not interchangeable; ← new for old; → old for new

REF.No	Part No.	Description	Q'ty	S.No.	I/C	REMARKS	Weight (kgf)	Weight (lb)
010	32721-58520	ASSY RADIATOR	1				4	8.8
020	6C040-58660	ASSY CAP RADIATOR	1				0	0
030	6C040-58670	HOSE OVER FLOW	1				0.055	0.121
040	6C040-58710	CLIP	1				0.002	0.0044
045	32721-58690	SPONGE	4				0	0
050	32721-58600	KIT SHUROUD FAN	1				0.25	0.55
055	32751-49580	LABEL FAN BELT	1				0.001	0.0022
060	15272-67590	CLAMP CORD	4				0.004	0.0088
070	01025-50616	BOLT	4				0.005	0.011
080	32721-58530	NET RADIATOR	1				0.26	0.572
090	32721-58540	GUIDE RADIATOR NET L	1				0.102	0.2244
100	32721-58550	GUIDE RADIATOR NET R	1				0.102	0.2244
110	01025-50616	BOLT	4				0.005	0.011
120	6C040-58580	CUSHION RADIATOR	2				0.021	0.0462
130	32721-58560	RETAINER RADIATOR	1				0.112	0.2464
140	32721-58590	STAY RADIATOR	1	<=50921			0	0
140	32721-58594	STAY RADIATOR	1	>=50922	¬		0.172	0.3784
150	38240-29870	CUSHION	1				0.004	0.0088
160	01025-50616	BOLT	1				0.005	0.011

silverhorn.co.uk

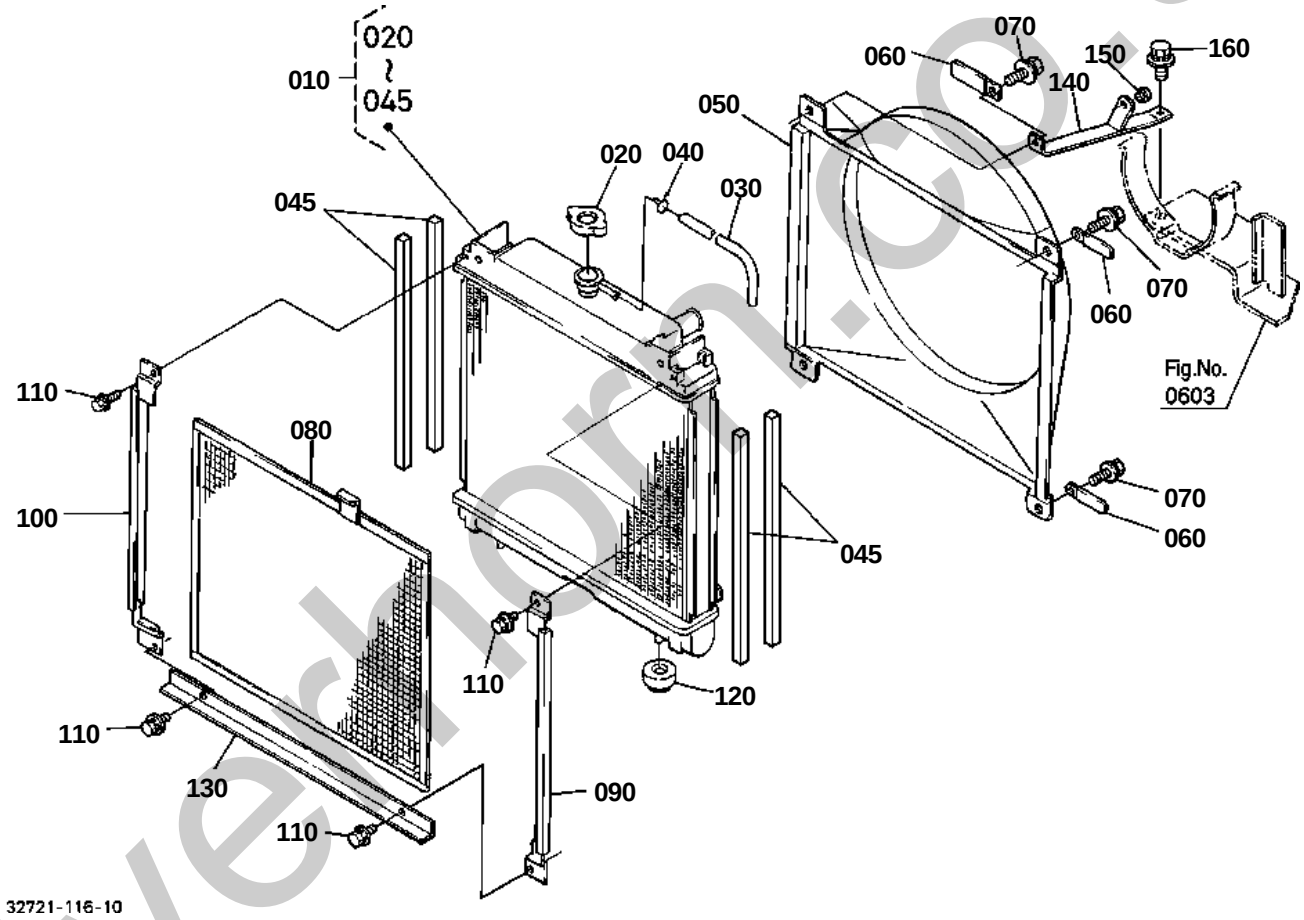

silverhorn.co.uk

RADIATOR [AU]

↔ Interchangeable; ≠ not interchangeable; ← new for old; → old for new

REF.No	Part No.	Description	Q'ty	S.No.	I/C	REMARKS	Weight (kgf)	Weight (lb)
010	32721-58520	ASSY RADIATOR	1				4	8.8
020	6C040-58660	ASSY CAP RADIATOR	1				0	0
030	6C040-58670	HOSE OVER FLOW	1				0.055	0.121
040	6C040-58710	CLIP	1				0.002	0.0044
045	32721-58690	SPONGE	4				0	0
050	32721-58610	SHROUD FAN	1				0.38	0.836
060	15272-67590	CLAMP CORD	4				0.004	0.0088
070	01025-50616	BOLT	4				0.005	0.011
080	32721-58530	NET RADIATOR	1				0.26	0.572
090	32721-58540	GUIDE RADIATOR NET L	1				0.102	0.2244
100	32721-58550	GUIDE RADIATOR NET R	1				0.102	0.2244
110	01025-50616	BOLT	4				0.005	0.011
120	6C040-58580	CUSHION RADIATOR	2				0.021	0.0462
130	32721-58560	RETAINER RADIATOR	1				0.112	0.2464
140	32721-58590	STAY RADIATOR	1	<=50921			0	0
140	32721-58594	STAY RADIATOR	1	>=50922	¬		0.172	0.3784
150	38240-29870	CUSHION	1				0.004	0.0088
160	01025-50616	BOLT	1				0.005	0.011

silverhorn.co.uk

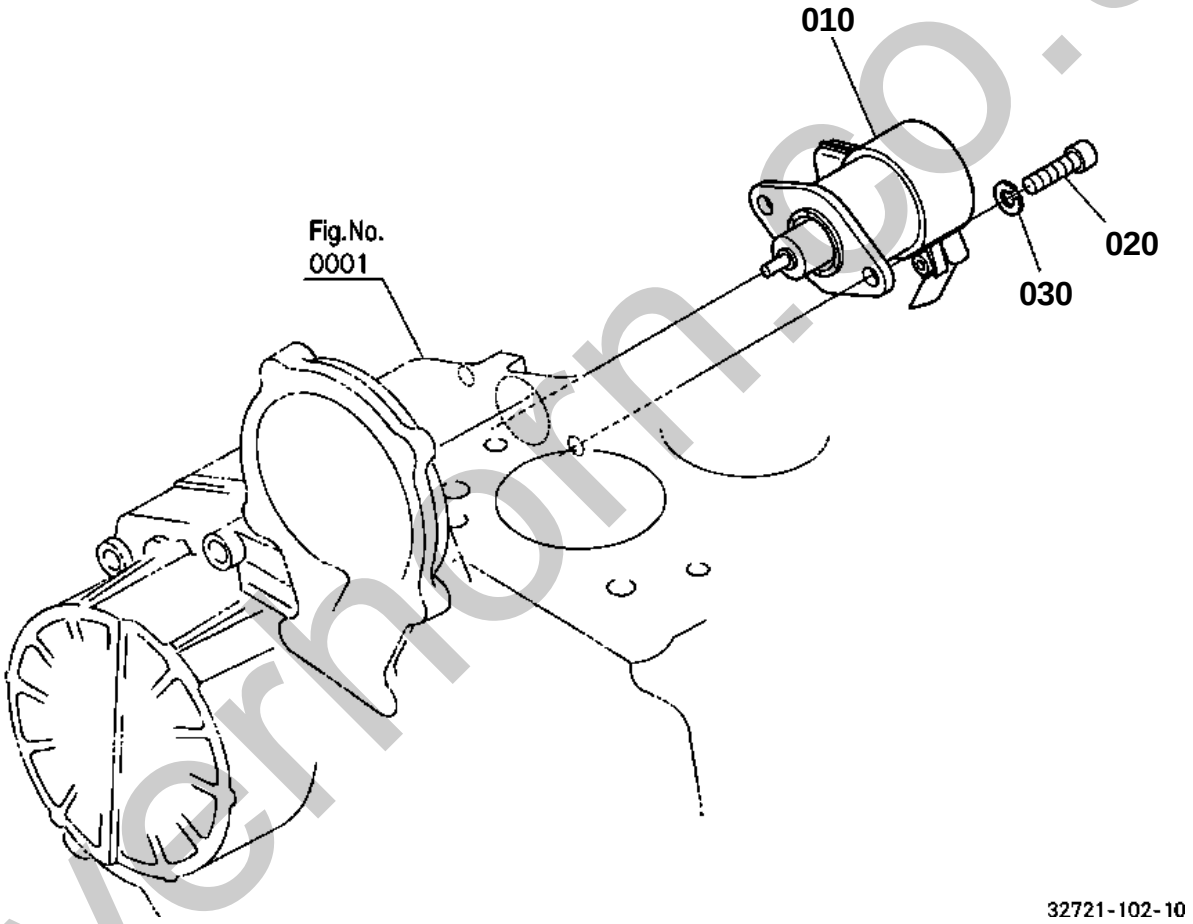

silvermoor.co.uk

OLD PARTS

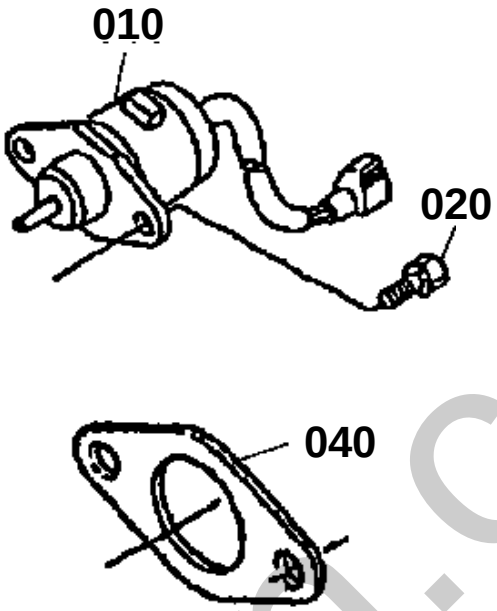

16381-800-11

silverhorn.co.uk

STOP SOLENOID

↔ Interchangeable; ≠ not interchangeable; ← new for old; → old for new

REF.No	Part No.	Description	Q'ty	S.No.	I/C	REMARKS	Weight (kgf)	Weight (lb)
010	16616-60010	SOLENOID STOP	1	<=50715			0	0
010	17454-60010	SOLENOID STOP	1	>=50716	¬		0.35	0.77
010	32721-60010	SOLENOID STOP	1	>=62889	1		0.28	0.616
020	01311-10614	BOLT HEX-SOC-HD	2				0.005	0.011
030	04512-60060	WASHER SPRING	2				0.001	0.0022
040	16299-60150	GASKET	1	<=2M0758			0.003	0.0066

silverhorn.co.uk

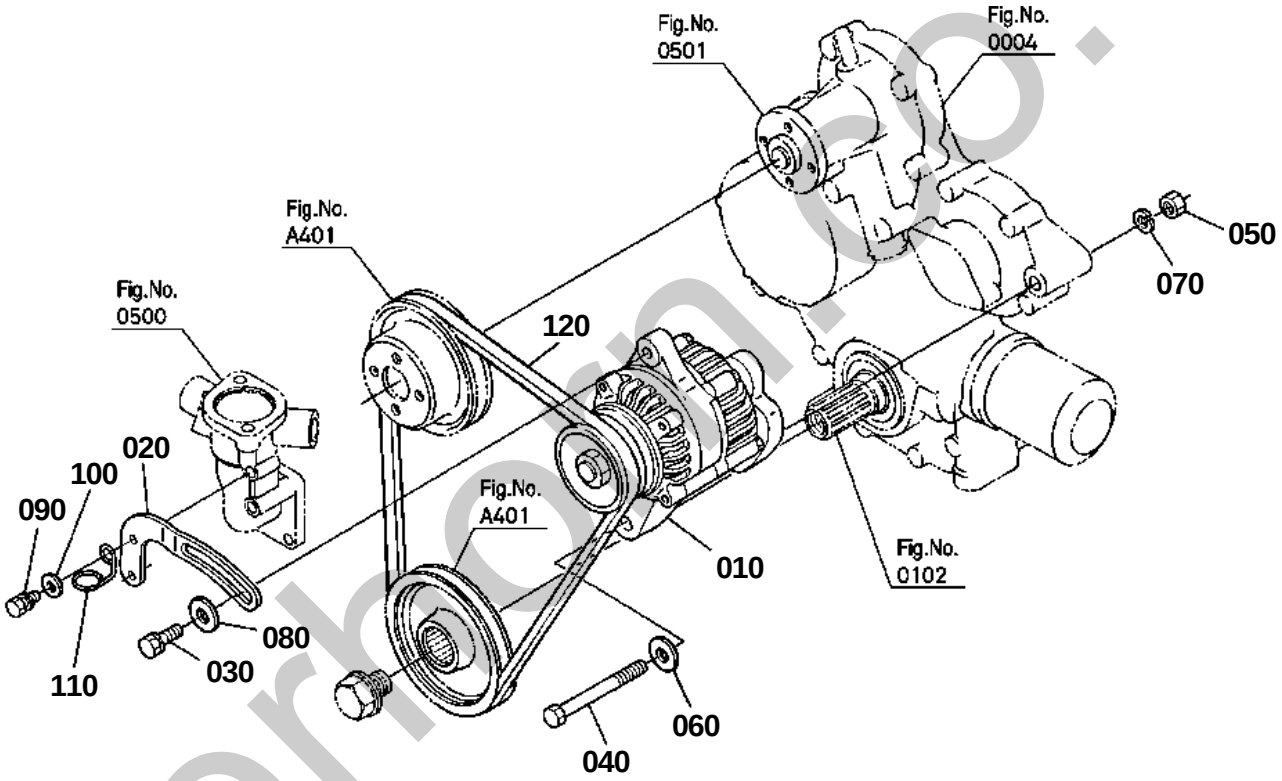

32721-095-10

silverhoin.co.uk

ALTERNATOR

↔ Interchangeable; ≠ not interchangeable; ← new for old; → old for new

REF.No	Part No.	Description	Q'ty	S.No.	I/C	REMARKS	Weight (kgf)	Weight (lb)
010	16241-64010	ASSY ALTERNATOR	1	<=61090			0	0
010	16241-64012	ASSY ALTERNATOR	1	>=61091	¬		3	6.6
020	16241-64420	STAY DYNAMO	1				0.095	0.209
030	01123-50825	BOLT	1				0.013	0.0286
040	01173-51085	BOLT	1				0.051	0.1122
050	02176-50100	NUT	1				0.005	0.011
060	04011-50100	WASHER PLAIN	1				0.002	0.0044
070	04512-60100	WASHER SPRING	1				0.002	0.0044
080	04015-60080	WASHER PLAIN	1				0.01	0.022
090	01023-50618	BOLT	1				0.006	0.0132
100	04012-50060	WASHER PLAIN	1				0.001	0.0022
110	16271-83370	CLAMP CORD	1				0.005	0.011
120	14911-97010	V BELT	1				0.084	0.1848

silverhorn.co.uk

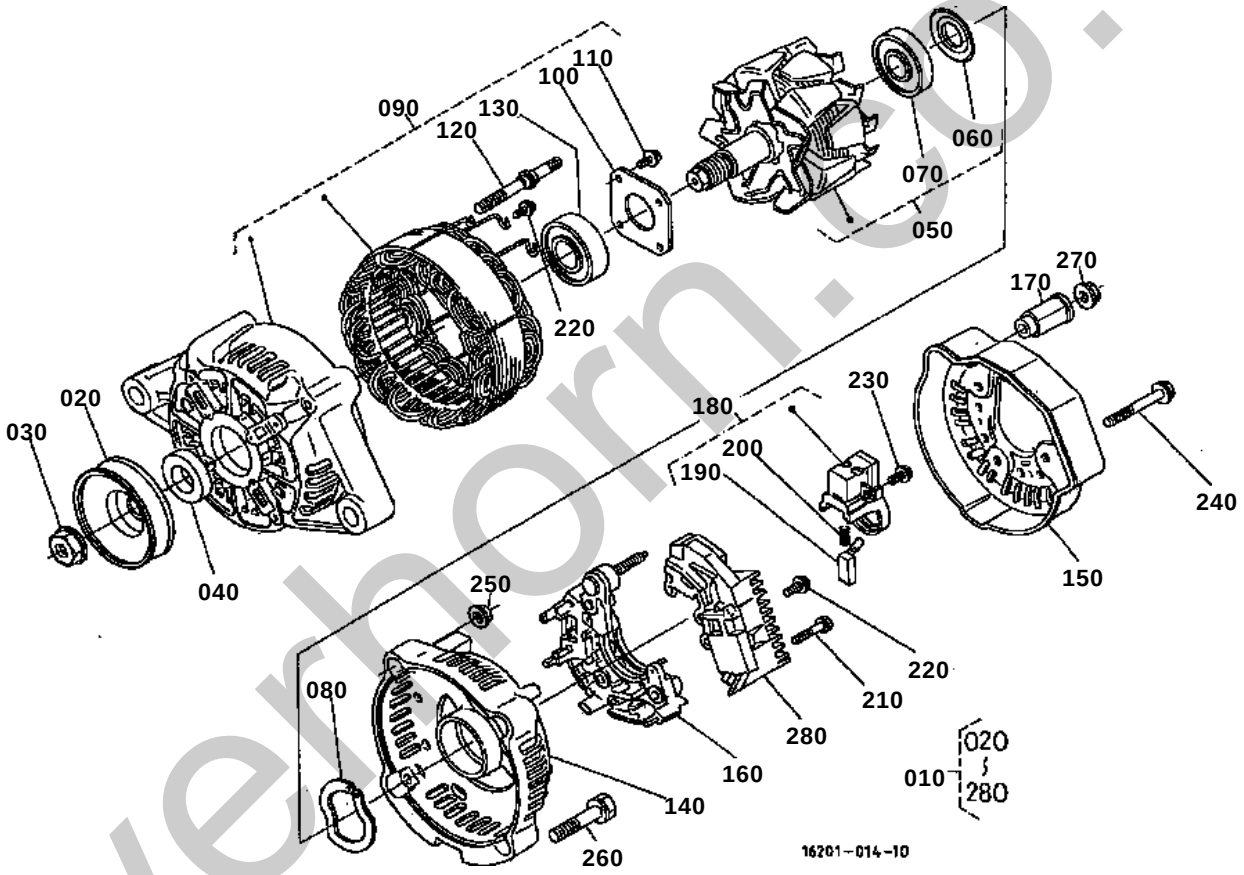

silverhorn.co.uk

↔ Interchangeable; ≠ not interchangeable; ← new for old; → old for new

REF.No	Part No.	Description	Q'ty	S.No.	I/C	REMARKS	Weight (kgf)	Weight (lb)
010	16241-64010	ASSY ALTERNATOR	1	<=61090			0	0
010	16241-64012	ASSY ALTERNATOR	1	>=61091	¬		3	6.6
020	15881-64110	PULLEY DYNAMO	1				0.16	0.352
030	15881-92010	NUT	1				0.02	0.044
040	15881-64150	COLLAR	1				0.004	0.0088
050	15881-64040	ROTOR	1	<=61090			0	0
050	66436-64040	ROTOR	1	>=61091	¬		1.2	2.64
060	15881-64800	COVER BEARING	1				0.001	0.0022
070	15881-64770	BEARING BALL	1				0.04	0.088
070	16652-64770	BEARING BALL	1		«		0.045	0.099
080	15881-64810	WASHER THRUST	1				0.002	0.0044
090	66436-64020	FRAME DRIVE END	1				1.11	2.442
100	15881-64710	PLATE RETAINER	1				0.01	0.022
110	15881-93010	SCREW ROUND HEAD	4				0.003	0.0066
120	15881-64260	BOLT THROUGH	2				0.01	0.022
130	16652-64780	BEARING BALL	1				0.05	0.11
140	16241-64060	FRAME END	1	<=61090			0.2	0.44
140	16231-64060	FRAME END	1	>=61091	¬		0.17	0.374
150	16231-64230	COVER END	1				0.035	0.077
160	16241-64850	ASSY RECTIFIER	1				0	0
160	16231-64850	ASSY RECTIFIER	1		«		0.18	0.396
170	16241-64900	BUSH INSULATION	1				0.007	0.0154
180	15881-64310	HOLDER BRUSH	1	<=61090			0.025	0.055
180	16652-64310	HOLDER BRUSH	1	>=61091	1		0.025	0.055
190	15881-64090	BRUSH	2				0.002	0.0044
200	15881-64330	SPRING BRUSH	2				0.002	0.0044
210	15881-93020	SCREW ROUND HEAD	2				0.005	0.011
220	15881-93030	SCREW ROUND HEAD	6				0.003	0.0066
230	15881-93040	SCREW ROUND HEAD	1				0.003	0.0066
240	15881-91040	BOLT	3				0.005	0.011
250	15881-92020	NUT	2				0.02	0.044
260	15881-91050	BOLT	2				0.01	0.022
270	14182-92030	NUT	1				0.003	0.0066
280	66436-64600	ASSY REGULATOR	1				0	0
280	1K531-64600	ASSY REGULATOR	1	<=63498	«	NOT SALE	0.08	0.176
280	1K531-64602	ASSY REGULATOR	1	>=63499	¬		0.08	0.176

silverhorn.co.uk

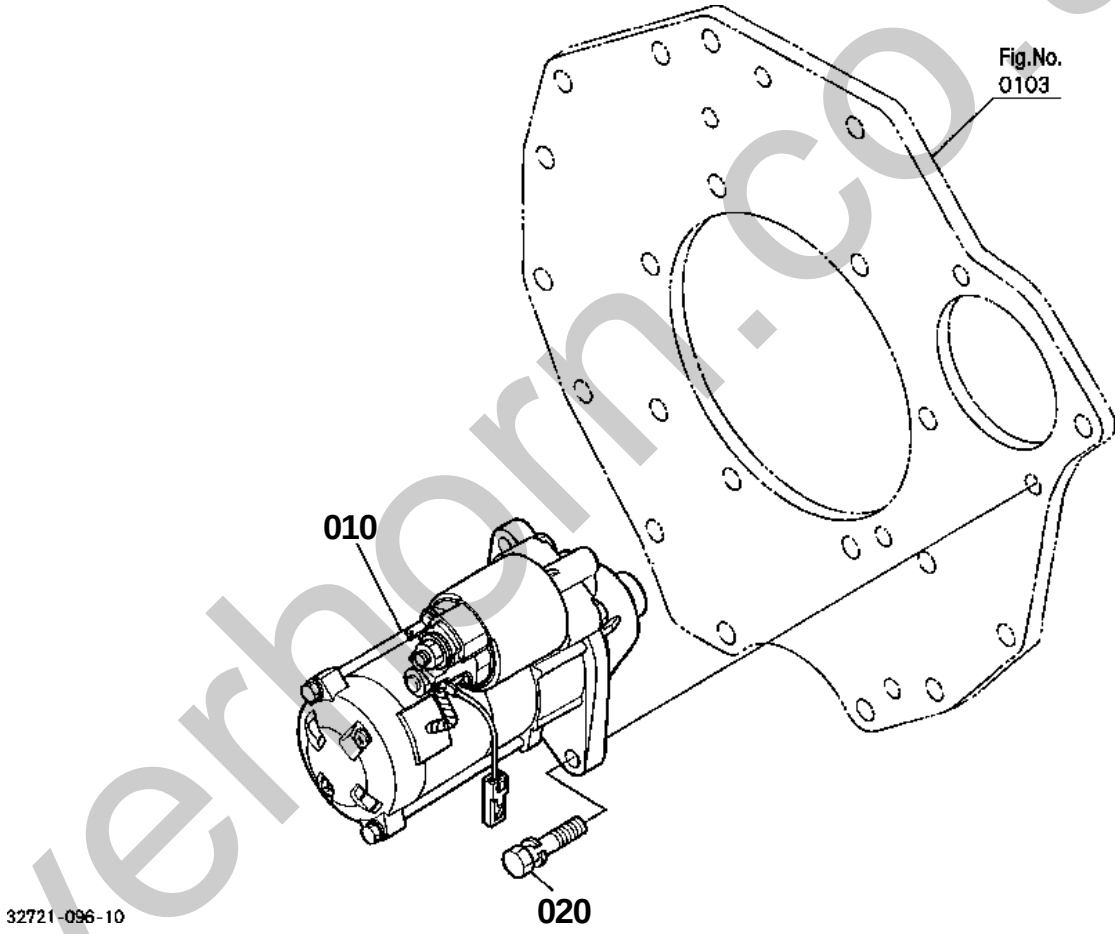

silverhorn.co.uk

↔ Interchangeable; ≠ not interchangeable; ← new for old; → old for new

REF.No	Part No.	Description	Q'ty	S.No.	I/C	REMARKS	Weight (kgf)	Weight (lb)
010	6A100-31150	ASSY STARTER	1				3.07	6.754
020	01123-50840	BOLT	2				0.018	0.0396

silverhorn.co.uk

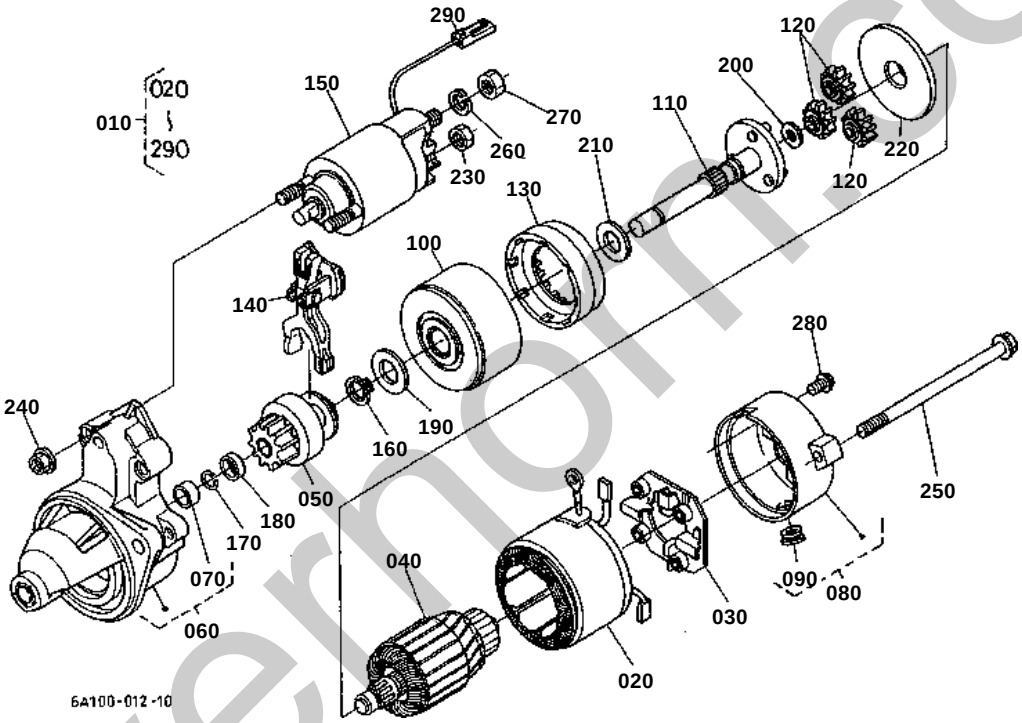

silvernorm.co.uk

↔ Interchangeable; ≠ not interchangeable; ← new for old; → old for new

REF.No	Part No.	Description	Q'ty	S.No.	I/C	REMARKS	Weight (kgf)	Weight (lb)
010	6A100-31150	ASSY STARTER	1				3.07	6.754
020	6A100-31160	ASSY YOKE STARTER	1				0.55	1.21
030	14958-63380	ASSY HOLDER	1				0.068	0.1496
040	6A100-31170	ASSY ARMATURE	1				0.47	1.034
050	K3511-81430	ASSY CLUTCH STARTER	1				0.22	0.484
060	6A100-31180	ASSY HOUSING STARTER	1				0.45	0.99
070	6A100-31190	BEARING	1				0.006	0.0132
080	K3511-81450	ASSY FRAME	1				0.11	0.242
090	12182-63290	COVER	1				0.05	0.11
100	14958-63530	ASSY BEARING	1				0.27	0.594
110	K3511-81460	ASSY SHAFT STARTER	1				0.15	0.33
120	14958-63260	GEAR	3				0.013	0.0286
130	14958-63270	GEAR	1				0.027	0.0594
140	14958-63050	LEVER	1				0.02	0.044
150	12181-63080	ASSY SWITCH MAGNETIC	1				0.6	1.32
160	14958-63170	RING SNAP	1				0.003	0.0066
170	12181-63220	RING SNAP	1				0.001	0.0022
180	13816-63460	COLLAR	1				0.003	0.0066
190	14958-94010	WASHER PLAIN	1				0.007	0.0154
200	14958-94020	WASHER PLAIN	1				0.003	0.0066
210	14958-94030	WASHER PLAIN	1				0.004	0.0088
220	14958-94040	PLATE	1				0.027	0.0594
230	16611-92020	NUT HEXAGON	1				0.005	0.011
240	14278-92010	NUT	2				0.001	0.0022
250	11460-63320	BOLT THROUGH	2				0.02	0.044
260	13801-94100	WASHER SPRING	1				0.002	0.0044
270	19616-92010	NUT HEXAGON	1				0.04	0.088
280	K3511-81480	SCREW	2				0.002	0.0044
290	K3511-81490	ASSY WIRE	1				0.005	0.011

silvernorn.co.uk

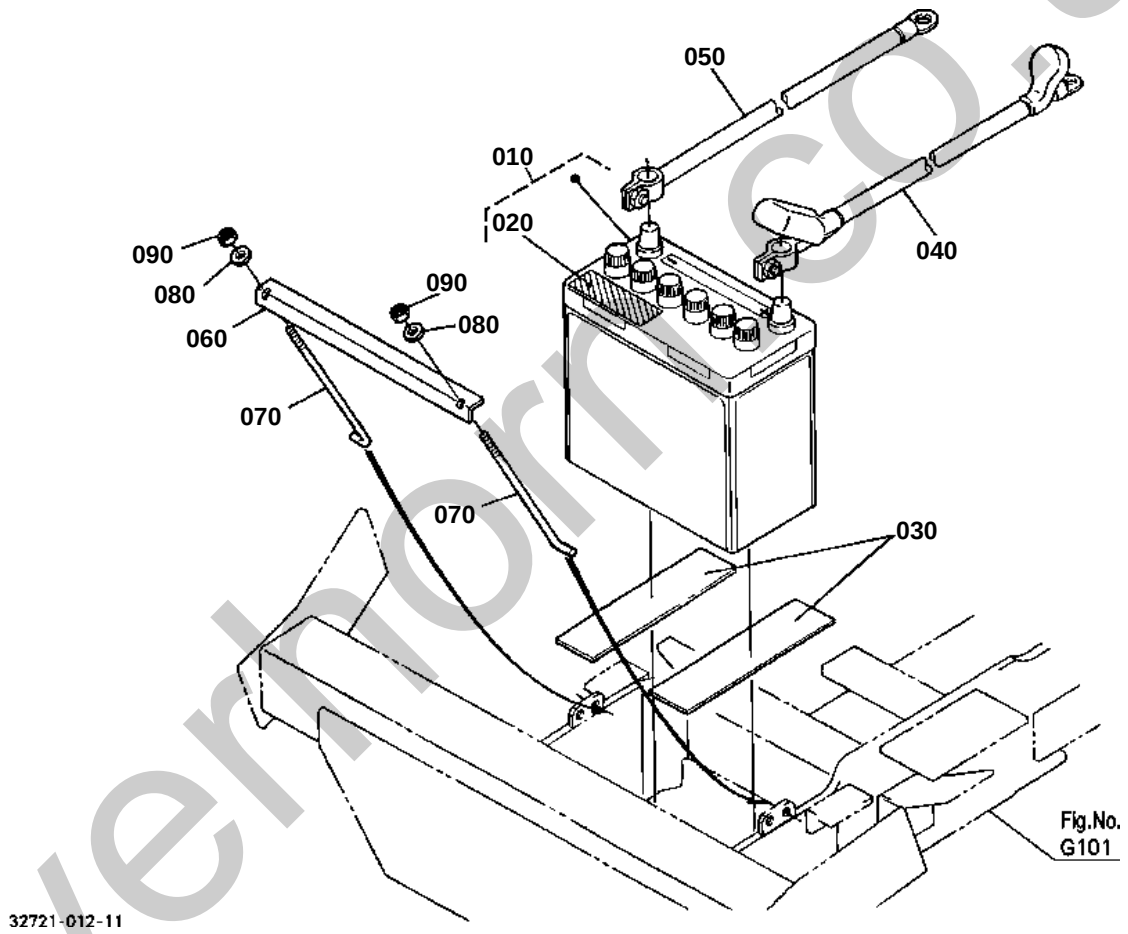

silverhorn.co.uk

BATTERY

↔ Interchangeable; ≠ not interchangeable; ← new for old; → old for new

REF.No	Part No.	Description	Q'ty	S.No.	I/C	REMARKS	Weight (kgf)	Weight (lb)
010	99999-99999	ASSY BATTERY	1			12V36AH	0	0
020	6C040-55590	LABEL BATTERY	1			ENGLISH	0.001	0.0022
030	34150-33220	CUSHION	2				0.015	0.033
040	32721-55530	CORD BATTERY(+)	1				0.2	0.44
050	32721-55540	CORD BATTERY(-)	1				1.34	2.948
060	34150-33272	RETAINER BATTERY	1				0.18	0.396
070	66101-55440	BOLT BATTERY	2				0.02	0.044
080	04015-60060	WASHER PLAIN	2				0.005	0.011
090	76611-56730	NUT LOCK	2				0.005	0.011
090	02552-50060	NUT LOCK	2		«		0.002	0.0044

silverhorn.co.uk

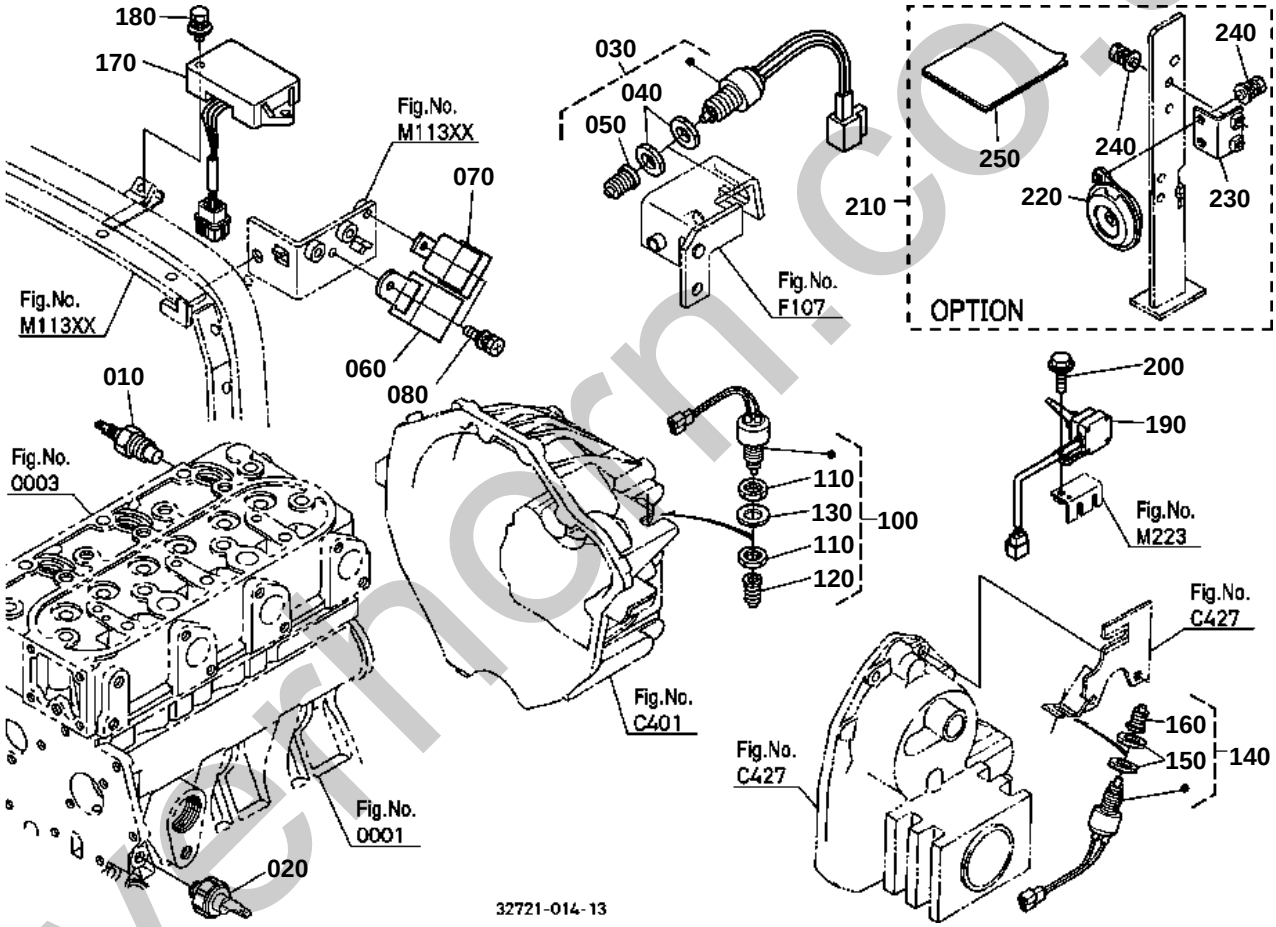

silvermorn.co.uk

OLD PARTS

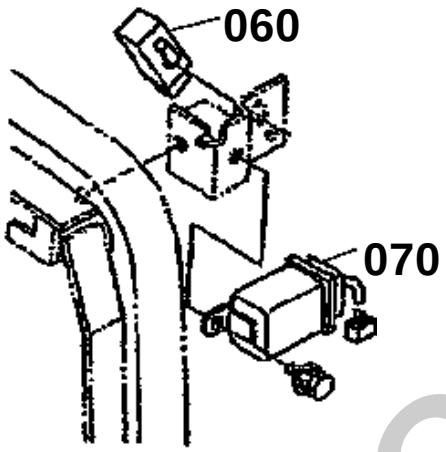

31721-823-11

silverhorn.co.uk

↔ Interchangeable; ≠ not interchangeable; ← new for old; → old for new

REF.No	Part No.	Description	Q'ty	S.No.	I/C	REMARKS	Weight (kgf)	Weight (lb)
010	31351-32830	SENSOR THERMO	1				0.02	0.044
020	15531-39010	SWITCH OIL	1				0.032	0.0704
030	52320-42900	SWITCH SAFETY	1				0.1	0.22
040	67111-55830	NUT SAFETY SWITCH	2				0.035	0.077
050	67111-55840	CAP SAFETY SWITCH	1				0.002	0.0044
060	6C040-55520	UNIT HAZARD	1	<=60970			0.036	0.0792
060	3F240-75430	UNIT FLASHER	1	>=60971	1		0.06	0.132
070	35800-75070	RELAY STARTER	1				0.08	0.176
080	01205-50612	BOLT	1	<=60970			0.005	0.011
080	01205-50612	BOLT	2	>=60971			0.005	0.011
090	99999-99999	BLANK	0				0	0
100	6C040-55850	ASSY SWITCH SAFETY	1	<=54263			0	0
100	6C040-55852	ASSY SWITCH SAFETY	1	>=60001	¬		0.124	0.2728
110	67111-55830	NUT SAFETY SWITCH	2				0.035	0.077
120	67111-55840	CAP SAFETY SWITCH	1				0.002	0.0044
130	6C040-55860	WASHER TOOTHED	1	<=54263			0	0
130	6C040-55862	WASHER TOOTHED	1	>=54264	¬		0.004	0.0088
140	52320-42900	SWITCH SAFETY	1				0.1	0.22
150	67111-55830	NUT SAFETY SWITCH	2				0.035	0.077
160	67111-55840	CAP SAFETY SWITCH	1				0.002	0.0044
170	K3511-55222	CONTROLLER	1	>=62889			0.18	0.396
180	01025-50620	BOLT	1	>=62889			0.02	0.044
190	TD060-47902	SWITCH SEAT	1	>=62889			0.03	0.066
200	01754-50616	BOLT FLANGE	1	<=62889			0.006	0.0132
210	99999-99999	ASSY HORN	1			OPTION	0	0
220	6A100-30850	ASSY HORN	1			OPTION	0.149	0.3278
230	32721-96960	STAY HORN	1			OPTION	0.047	0.1034
240	01025-50616	BOLT	4			OPTION	0.005	0.011
250	32721-96970	MANUAL ASSEMBLY	1	<=60654		OPTION	0	0
250	32721-96972	MANUAL ASSEMBLY	1	>=60655	¬	OPTION	0.003	0.0066

silvermorn.co.uk

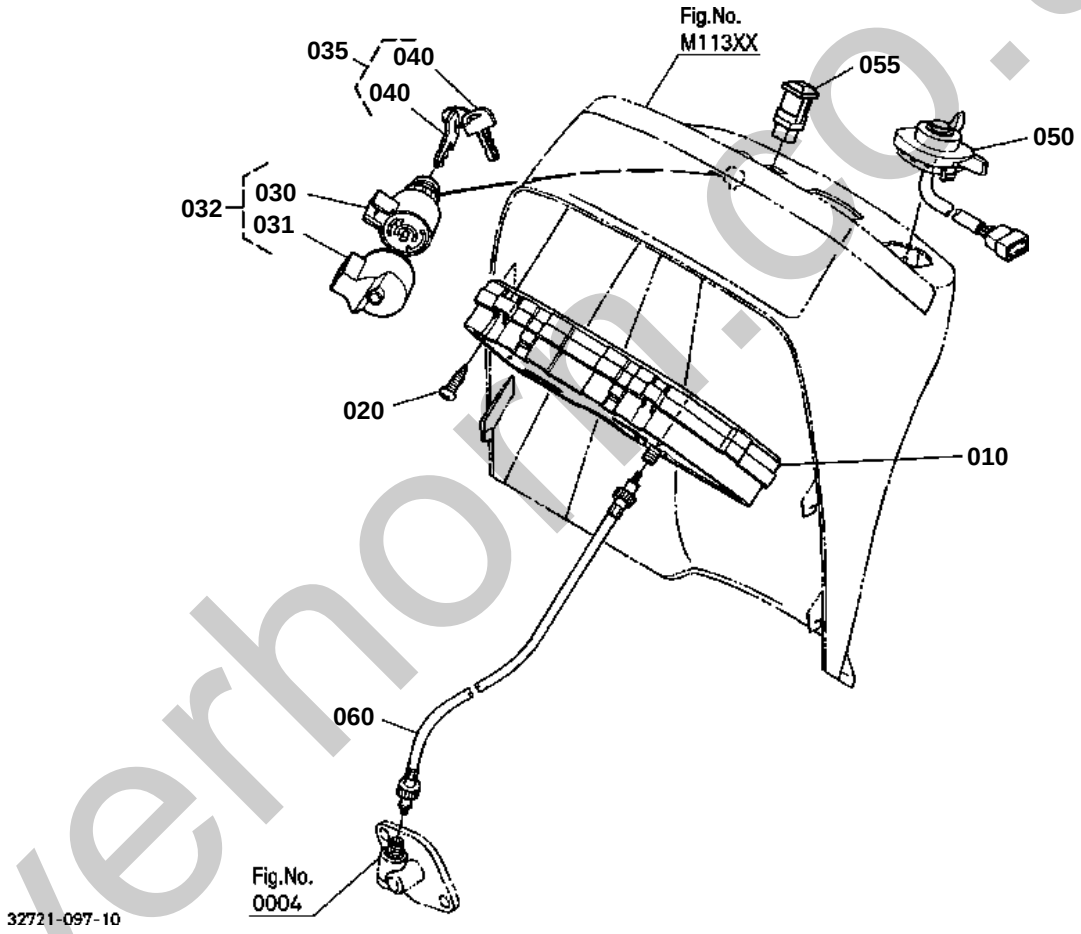

silverhorn.co.uk

PANEL BOARD

↔ Interchangeable; ≠ not interchangeable; ← new for old; → old for new

REF.No	Part No.	Description	Q'ty	S.No.	I/C	REMARKS	Weight (kgf)	Weight (lb)
010	32721-55100	ASSY PANEL	1				0.81	1.782
020	03514-50420	SCREW TAPPING	6				0.002	0.0044
030	6C040-55412	SWITCH STARTER	1				0.198	0.4356
031	32721-55430	COVER SWITCH STARTER	1	>=51188			0.02	0.044
032	32721-55400	ASSY SWITCH STARTER	1	>=51188			0.21	0.462
035	15248-63700	KEY STARTER	1				0.034	0.0748
040	6C040-55432	KEY STARTER	2			NOT SALE	0.012	0.0264
050	32721-55420	SWITCH COMBINATION	1	<=60970			0.09	0.198
050	32721-55550	SWITCH COMBINATION	1	>=60971	1		0.09	0.198
055	6C070-55430	SWITCH HAZARD	1	>=60971			0.019	0.0418
060	6C040-55440	CABLE HOUR METER	1				0.2	0.44

silverhorn.co.uk

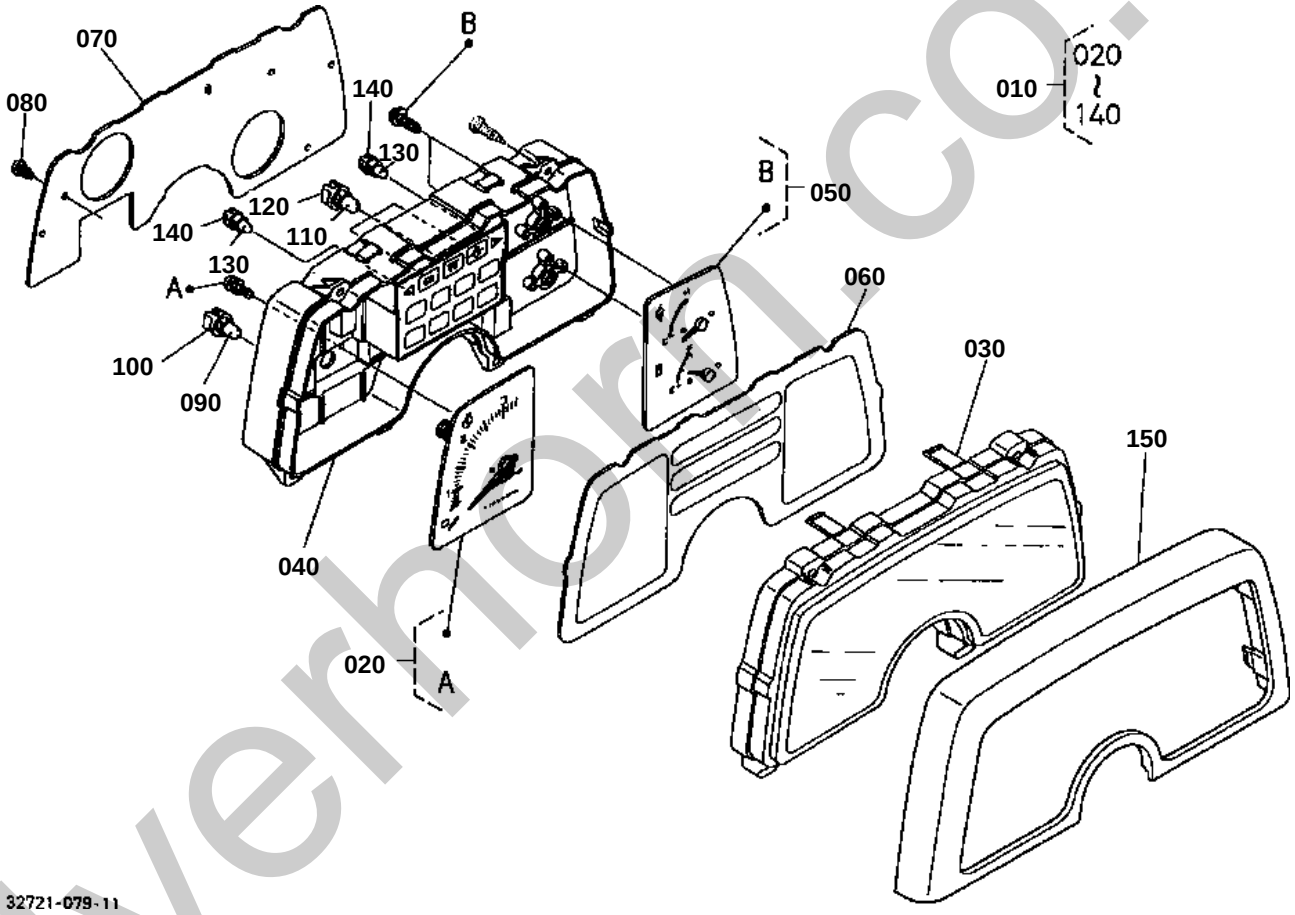

silverhorn.co.uk

PANEL BOARD [COMPONENT PARTS]

↔ Interchangeable; ≠ not interchangeable; ← new for old; → old for new

REF.No	Part No.	Description	Q'ty	S.No.	I/C	REMARKS	Weight (kgf)	Weight (lb)
010	32721-55100	ASSY PANEL	1				0.81	1.782
020	6A100-30210	COMP.METER	1				0.23	0.506
030	6A100-30220	GLASS	1				0.158	0.3476
040	32721-55110	ASSY CASE	1				0.28	0.616
050	6A100-30240	COMP.METER	1				0.15	0.33
060	6A100-30250	PLATE	1				0.125	0.275
070	32721-55120	COVER	1				0.1	0.22
080	03614-50410	SCREW TAPPING	3				0.002	0.0044
090	66101-55770	LIGHT	2				0.001	0.0022
100	6A100-82110	SOCKET	2				0.002	0.0044
110	6A100-82220	LAMP	3			14V2W	0.002	0.0044
120	6A100-82120	SOCKET	3				0.002	0.0044
130	6A100-82230	LAMP	2			14V2W	0.001	0.0022
140	6A100-82130	SOCKET	2				0.001	0.0022
150	6C040-53522	COVER FRAME	1				0.14	0.308

silverhorn.co.uk

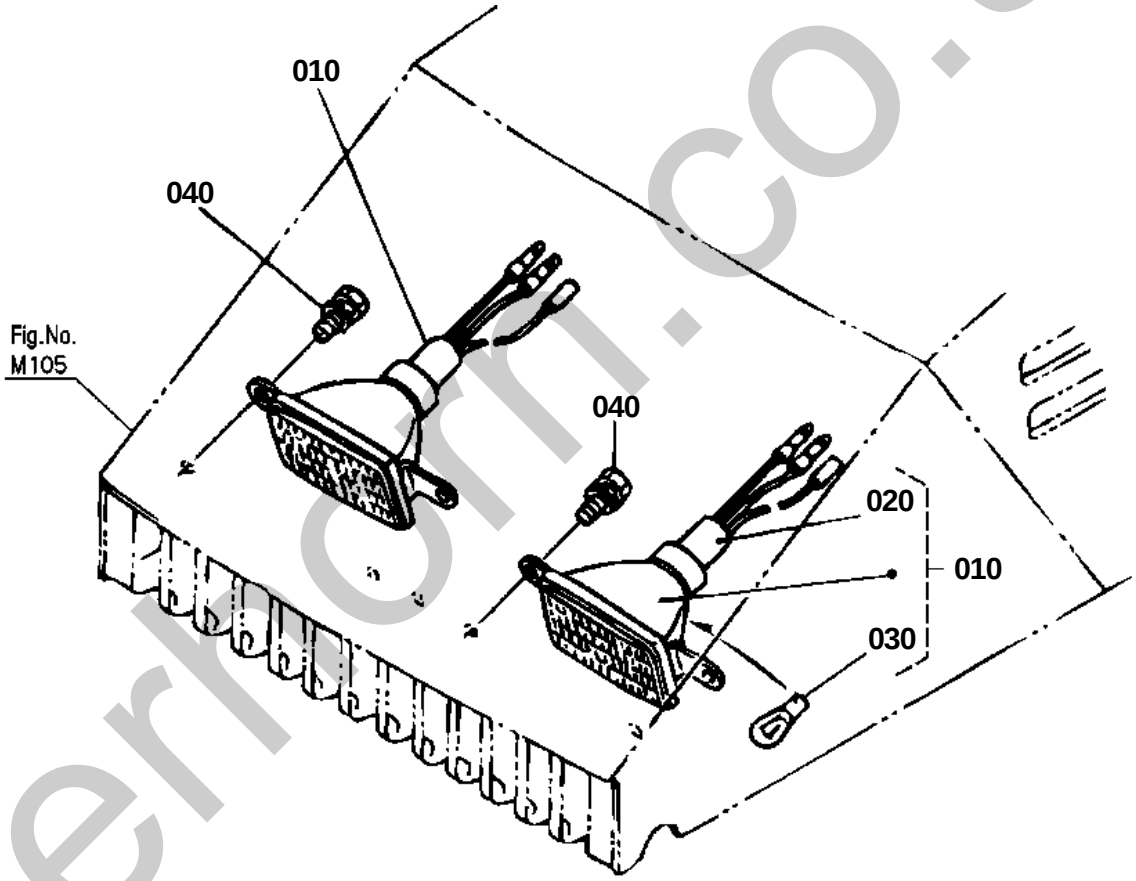

32721-013-12

silverhorn.co.uk

HEAD LIGHT

↔ Interchangeable; ≠ not interchangeable; ← new for old; → old for new

REF.No	Part No.	Description	Q'ty	S.No.	I/C	REMARKS	Weight (kgf)	Weight (lb)
010	67111-55700	ASSY LIGHT HEAD	2				0.21	0.462
020	67111-55780	SOCKET HEAD LIGHT	2				0.03	0.066
030	67111-55790	BULB HEAD LIGHT	2				0.01	0.022
040	01029-50616	BOLT	4				0.01	0.022

silverhorn.co.uk

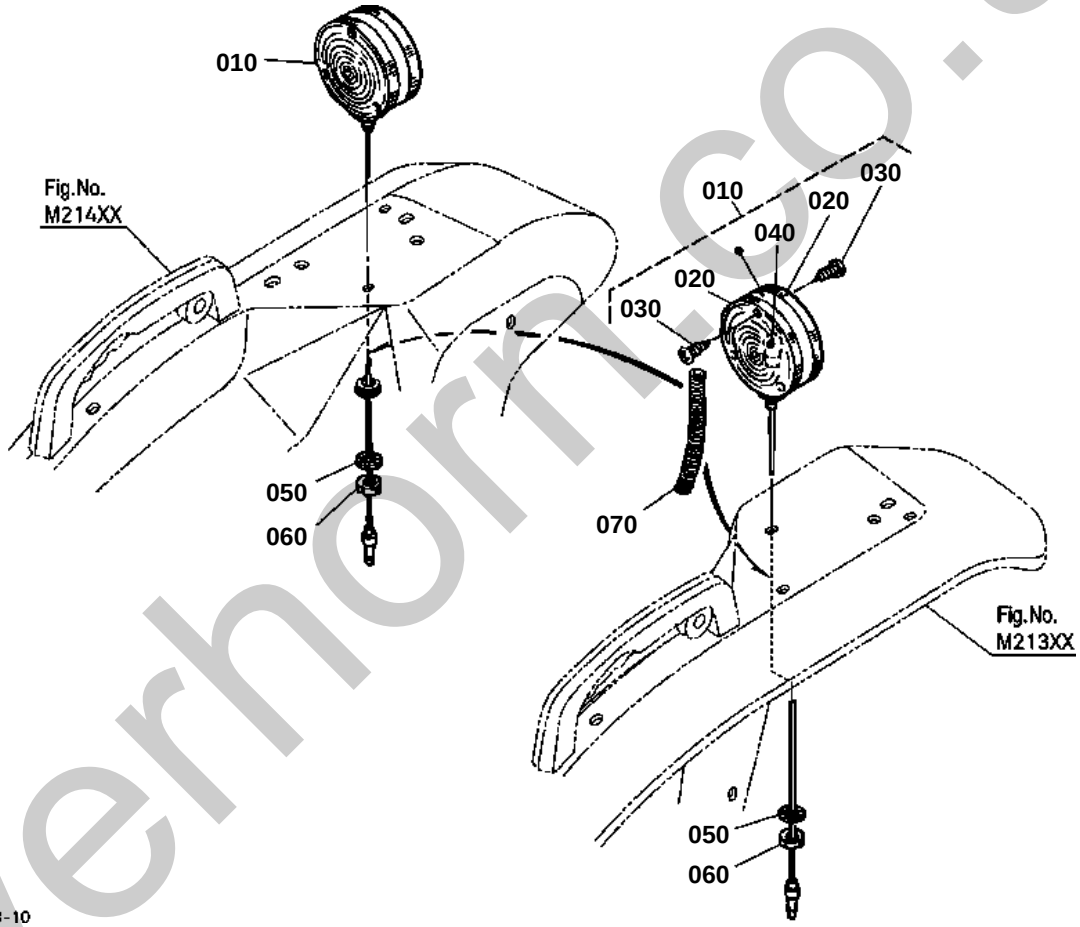

silverhorn.co.uk

HAZARD LIGHT

↔ Interchangeable; ≠ not interchangeable; ← new for old; → old for new

REF.No	Part No.	Description	Q'ty	S.No.	I/C	REMARKS	Weight (kgf)	Weight (lb)
010	32530-33610	ASSY LIGHT HAZARD	2				0.38	0.836
020	32530-91510	LENS HAZARD LIGHT	4				0.085	0.187
030	32530-91520	SCREW TAPPING	12				0.001	0.0022
040	32530-91530	BULB LIGHT	2			27W	0.02	0.044
050	04411-50100	WASHER TOOTHED	2				0.001	0.0022
060	02114-50100	NUT	2				0.005	0.011
070	32721-63150	TUBE PIPE	4				0.003	0.0066

silverhorn.co.uk

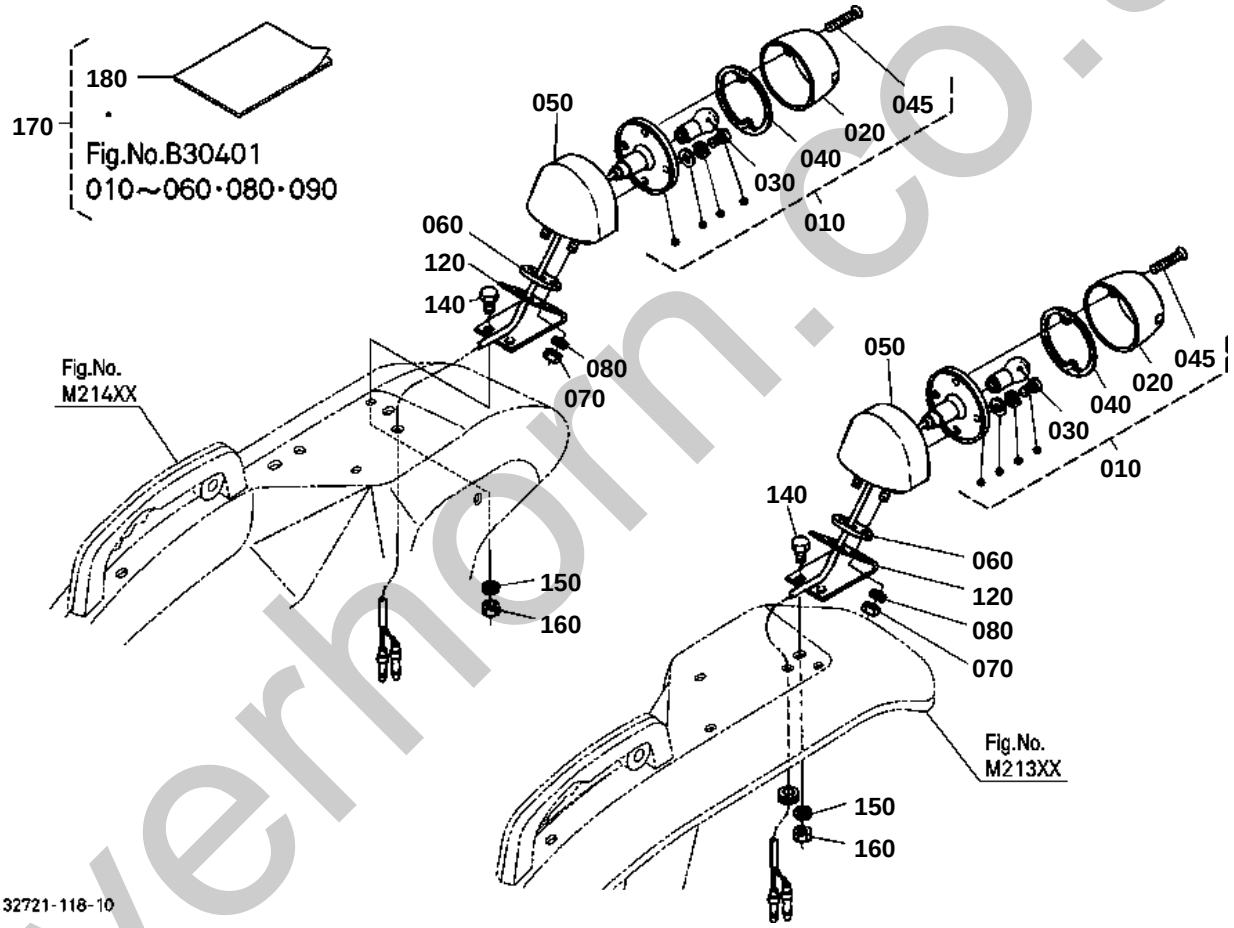

silverhorn.co.uk

OLD PARTS

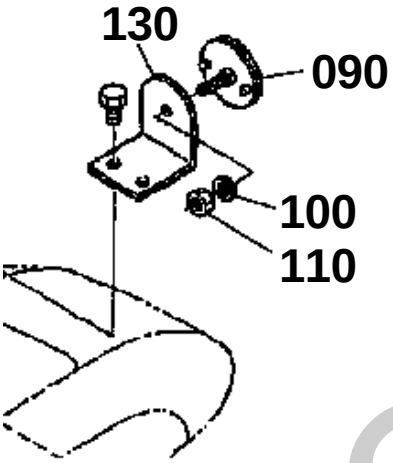

32721-826-11

silverhorn.co.uk

TAIL LIGHT

S.No.;<=63268

↔ Interchangeable; ≠ not interchangeable; ← new for old; → old for new

REF.No	Part No.	Description	Q'ty	S.No.	I/C	REMARKS	Weight (kgf)	Weight (lb)
010	34350-34100	ASSY LIGHT TAIL	1	<=61328		NOT SALE	0	0
010	34350-34100	ASSY LIGHT TAIL	2	>=61329		NOT SALE	0	0
020	34350-34120	LENS TAIL LIGHT	1	<=61328			0	0
020	34350-34120	LENS TAIL LIGHT	2	>=61329			0	0
030	34350-34140	BULB TAIL LIGHT	1	<=61328			0.008	0.0176
030	34350-34140	BULB TAIL LIGHT	2	>=61329			0.008	0.0176
040	34350-99220	GASKET LENS	1	<=61328			0	0
040	34350-99220	GASKET LENS	2	>=61329			0	0
040	34350-99222	GASKET LENS	2	>=62113	¬		0.01	0.022
045	03056-50335	SCREW	2	<=61328			0.001	0.0022
045	03056-50335	SCREW	4	>=61329			0.001	0.0022
050	66416-55540	BRACKET TAIL LIGHT	1	<=61328			0	0
050	66416-55540	BRACKET TAIL LIGHT	2	>=61329			0	0
050	66416-55542	BRACKET TAIL LIGHT	2	>=63105	¬		0.106	0.2332
060	32721-55310	CUSHION	1	<=61328			0.014	0.0308
060	32721-55310	CUSHION	2	>=61329			0.014	0.0308
070	02014-50060	NUT	2	<=61328			0.002	0.0044
070	02014-50060	NUT	4	>=61329			0.002	0.0044
080	04512-60060	WASHER SPRING	2	<=61328			0.001	0.0022
080	04512-60060	WASHER SPRING	4	>=61329			0.001	0.0022
090	67601-55730	ASSY REFLECTOR	1	<=61328			0.02	0.044
100	04512-60050	WASHER SPRING	1	<=61328			0.002	0.0044
110	02054-50050	NUT	1	<=61328			0.002	0.0044
120	32721-52750	STAY	1	<=61328			0.115	0.253
120	32721-52750	STAY	2	>=61329			0.115	0.253
130	32721-52760	STAY REFLECTOR	1	<=61328			0.003	0.0066
140	01053-50616	BOLT	4				0.005	0.011
150	04512-60060	WASHER SPRING	4				0.001	0.0022
160	02014-50060	NUT	4				0.002	0.0044
170	H6640-99100	KIT TAIL LAMP	1			OPTION	0	0
180	99999-99999	MANUAL INSTRUCTION	1			OPTION	0	0

silverhorn.co.uk

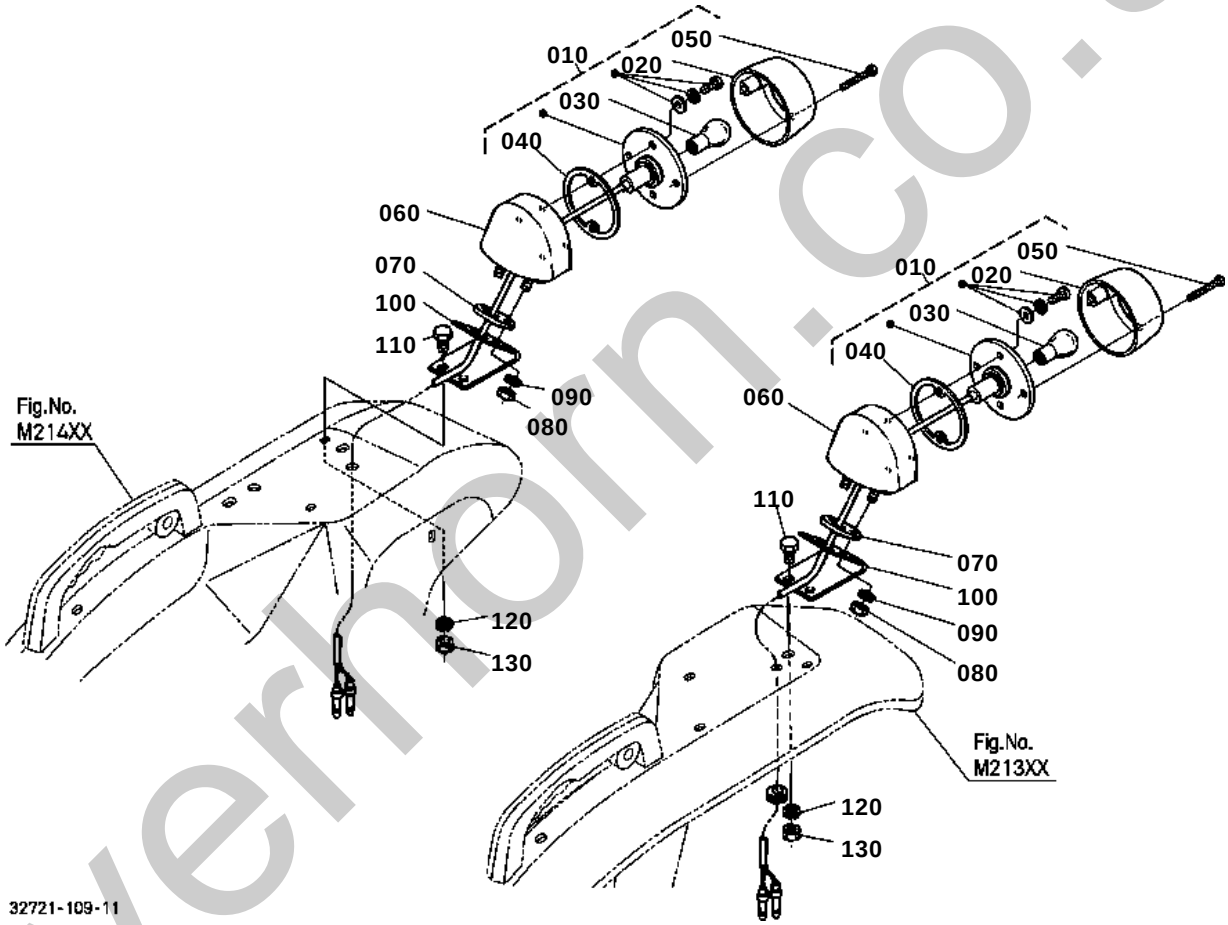

silverhorn.co.uk

TAIL LIGHT

S.No.;>=63269

↔ Interchangeable; ≠ not interchangeable; ← new for old; → old for new

REF.No	Part No.	Description	Q'ty	S.No.	I/C	REMARKS	Weight (kgf)	Weight (lb)
010	TC030-34100	ASSY LIGHT TAIL	2				0.12	0.264
020	TC030-99210	LENS TAIL LIGHT	2				0.035	0.077
030	34350-34140	BULB TAIL LIGHT	2				0.008	0.0176
040	TC030-99220	GASKET LENS	2				0	0
050	03056-50335	SCREW	4				0.001	0.0022
060	66416-55542	BRACKET TAIL LIGHT	2				0.106	0.2332
070	32721-55310	CUSHION	2				0.014	0.0308
080	02014-50060	NUT	4				0.002	0.0044
090	04512-60060	WASHER SPRING	4				0.001	0.0022
100	32721-52750	STAY	2				0.115	0.253
110	01053-50616	BOLT	4				0.005	0.011
120	04512-60060	WASHER SPRING	4				0.001	0.0022
130	02014-50060	NUT	4				0.002	0.0044

silverhorn.co.uk

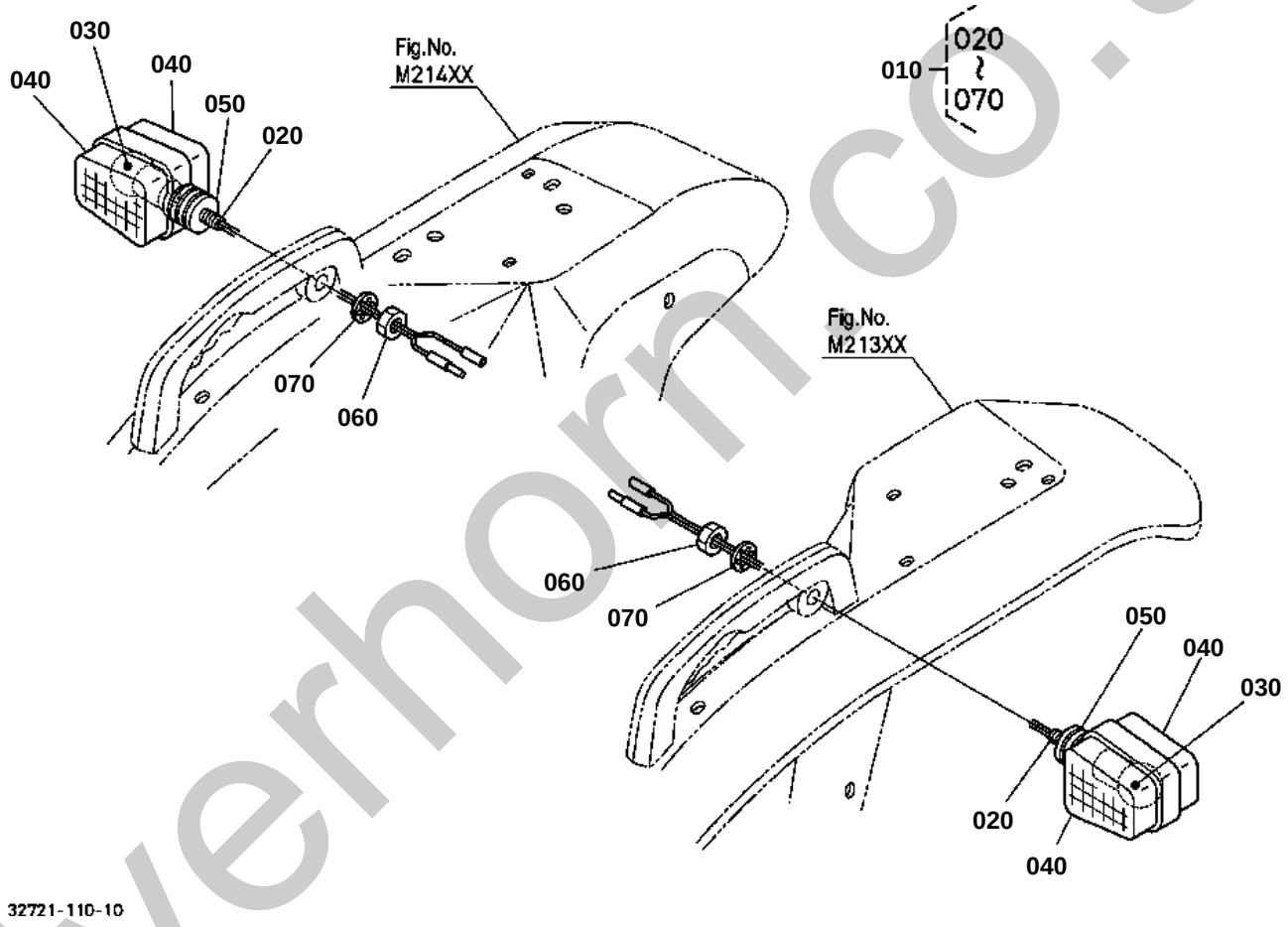

silverhorn.co.uk

WINKER LAMP
S.No.;>=61329

↔ Interchangeable; ≠ not interchangeable; ← new for old; → old for new

REF.No	Part No.	Description	Q'ty	S.No.	I/C	REMARKS	Weight (kgf)	Weight (lb)
010	37410-52290	ASSY WINKER LAMP	2				0.145	0.319
020	37410-52710	ASSY BODY	2				0.055	0.121
030	37410-52720	BULB	2			12V20W	0.02	0.044
040	37410-52730	LENS	4				0.025	0.055
050	37410-52740	GASKET	2				0.025	0.055
060	02116-50100	NUT	2				0.004	0.0088
070	04411-50100	WASHER TOOTHED	2				0.001	0.0022

silverhorn.co.uk

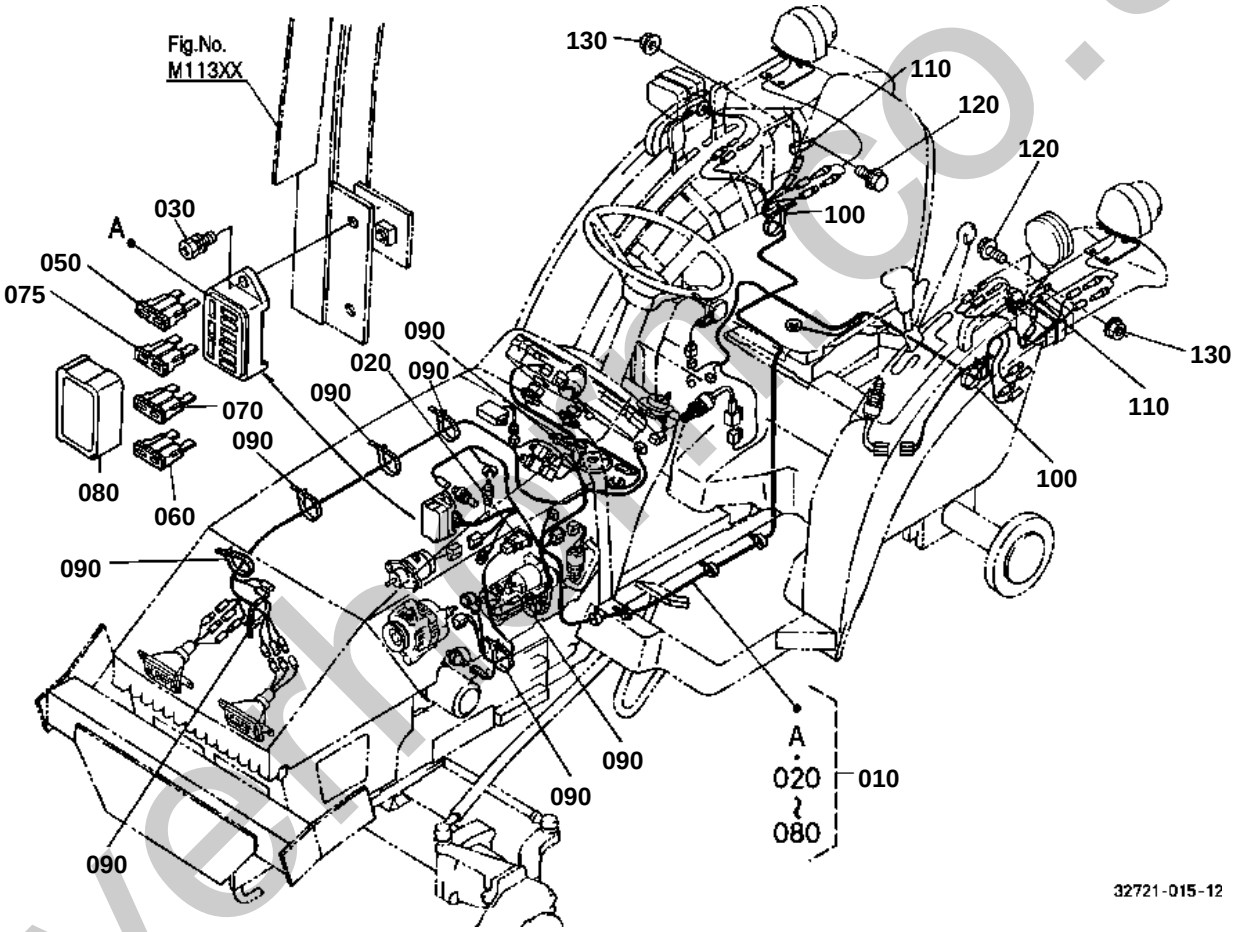

silverhill-co.uk

↔ Interchangeable; ≠ not interchangeable; ← new for old; → old for new

REF.No	Part No.	Description	Q'ty	S.No.	I/C	REMARKS	Weight (kgf)	Weight (lb)
010	32721-55464	ASSY WIRE HARNESS	1	<=60970			1.36	2.992
010	32721-55560	ASSY WIRE HARNESS	1	>=60971	1		0	0
010	32721-55562	ASSY WIRE HARNESS	1	>=61329	¬		1.39	3.058
010	32721-55660	ASSY WIRE HARNESS	1	>=62889	1		1.4	3.08
020	17478-60080	FUSE	1			50A	0.008	0.0176
030	01202-50620	BOLT	2				0.007	0.0154
040	99999-99999	BLANK	0				0	0
050	66426-80010	FUSE AUTO	2	<=60970		5A	0.01	0.022
050	66426-80010	FUSE AUTO	4	>=60971		5A	0.01	0.022
060	36730-75550	FUSE	2			10A	0.001	0.0022
070	35820-75560	FUSE	1			15A	0.002	0.0044
075	36919-56650	FUSE	2	>=60971		20A	0.002	0.0044
080	32721-55490	COVER FUSE BOX	1	<=60970			0.009	0.0198
080	32721-55590	COVER FUSE BOX	1	>=60971	1		0.009	0.0198
080	32721-55690	COVER FUSE BOX	1	>=62889	1		0	0
090	53581-64150	BAND CORD	8				0.002	0.0044
100	55311-41260	BAND CORD	2				0.007	0.0154
110	15272-67590	CLAMP CORD	2				0.004	0.0088
120	01754-50610	BOLT FLANGE	2				0.006	0.0132
130	02751-50060	NUT FLANGE	2				0.005	0.011

silverhorn.co.uk

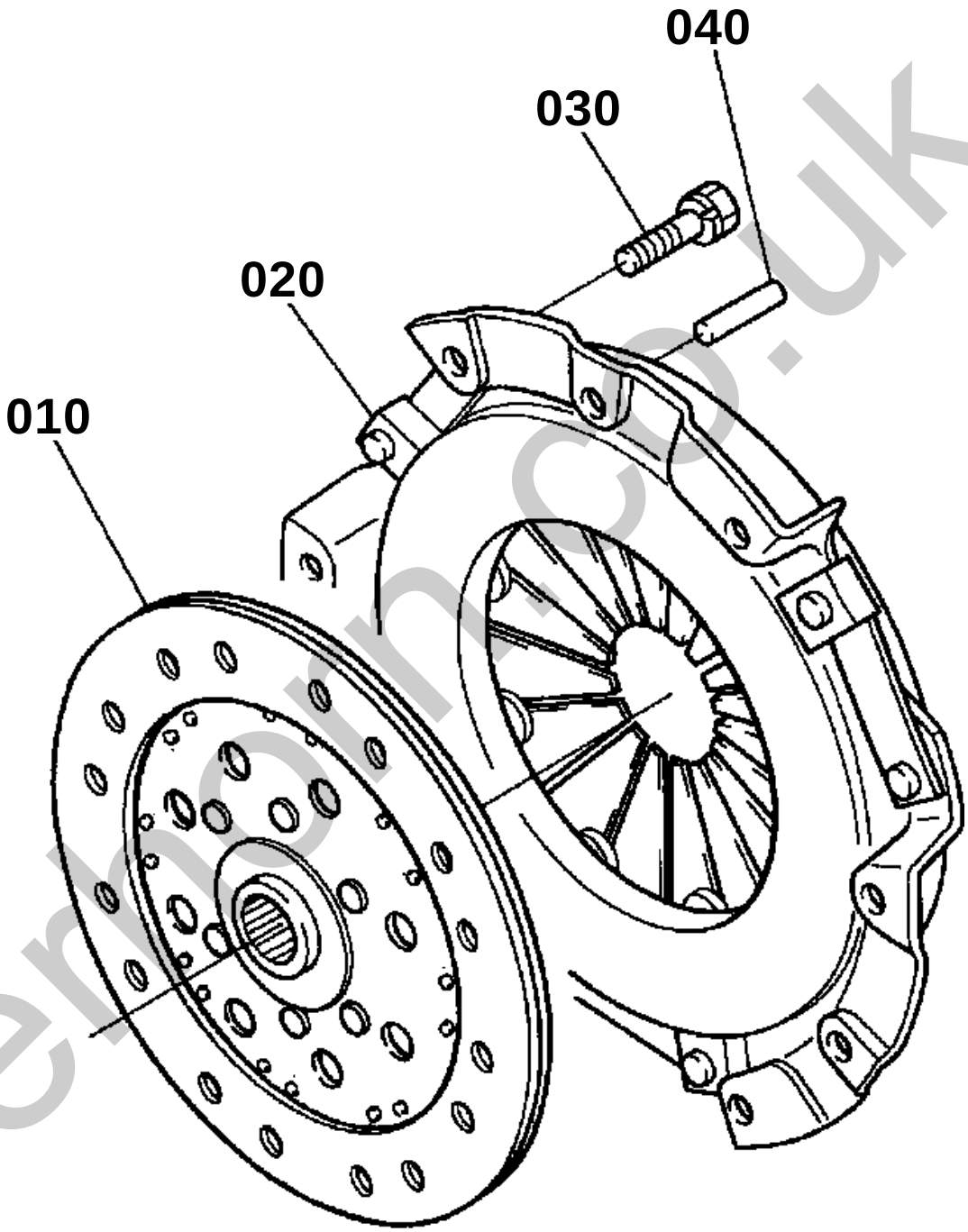

16216-001-10

silvermorn.co.uk

CLUTCH

↔ Interchangeable; ≠ not interchangeable; ← new for old; → old for new

REF.No	Part No.	Description	Q'ty	S.No.	I/C	REMARKS	Weight (kgf)	Weight (lb)
010	6C040-13402	COMP.DISK CLUTCH	1				0.88	1.936
020	6C040-13300	COMP.PLATE PRESSURE	1				4.01	8.822
030	01123-60816	BOLT	6				0.01	0.022
040	05012-00814	PIN STRAIGHT	3				0.006	0.0132

silverhorn.co.uk

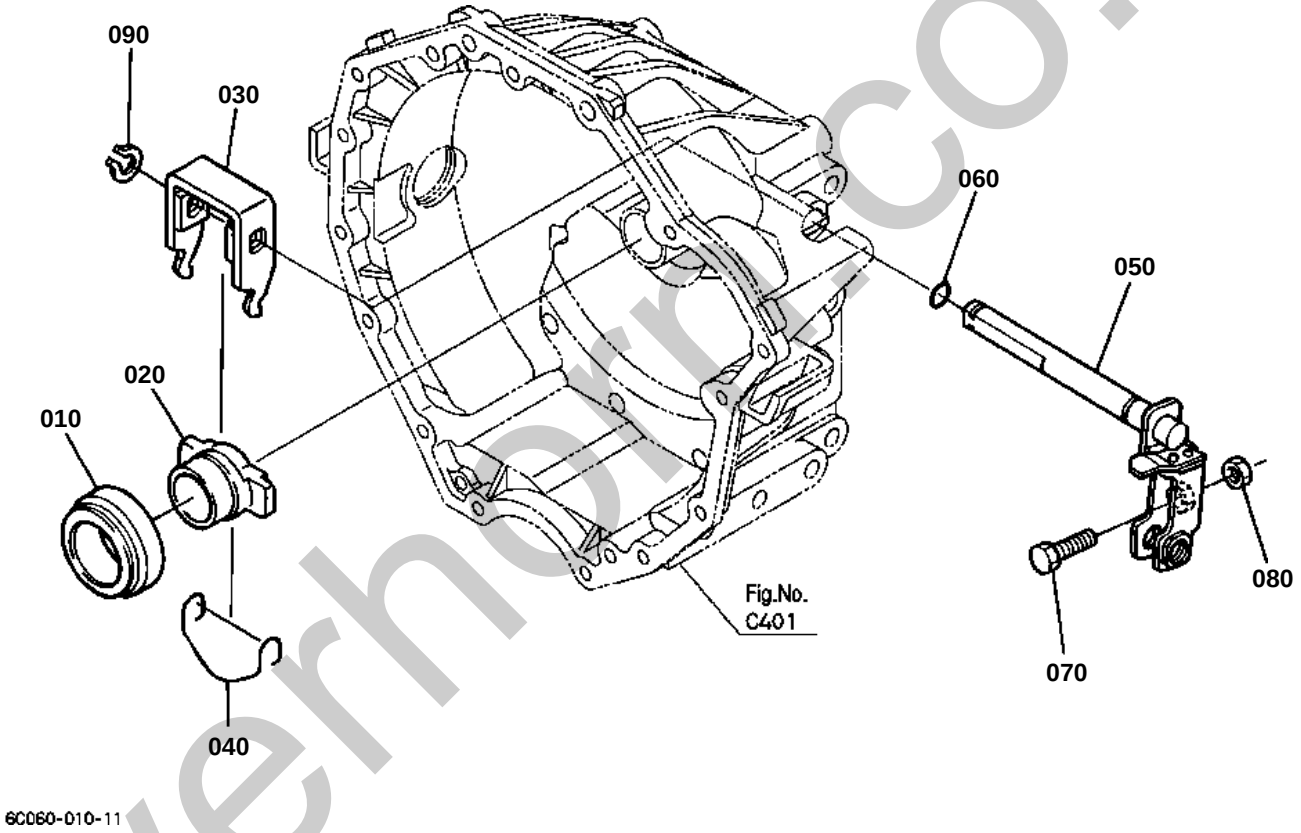

silverhorn.co.uk

CLUTCH ROD

↔ Interchangeable; ≠ not interchangeable; ← new for old; → old for new

REF.No	Part No.	Description	Q'ty	S.No.	I/C	REMARKS	Weight (kgf)	Weight (lb)
010	6C040-13210	BEARING RELEASE	1				0.157	0.3454
020	6C040-13220	HOLDER BEARING	1				0.142	0.3124
030	6C040-13230	FORK CLUTCH RELEASE	1				0.22	0.484
040	6C040-13240	SPRING	1				0.003	0.0066
050	6C040-13250	SHAFT CLUTCH ROD	1	<=52695			0	0
050	6C040-13257	SHAFT CLUTCH ROD	1	>=52696	¬		0.037	0.0814
060	04811-10140	O RING	1				0.001	0.0022
070	66711-13320	BOLT ADJUSTING	1				0.028	0.0616
080	02118-50100	NUT	1				0.005	0.011
090	04612-00160	CIR CLIP EXTERNAL	1				0.001	0.0022

silverhorn.co.uk

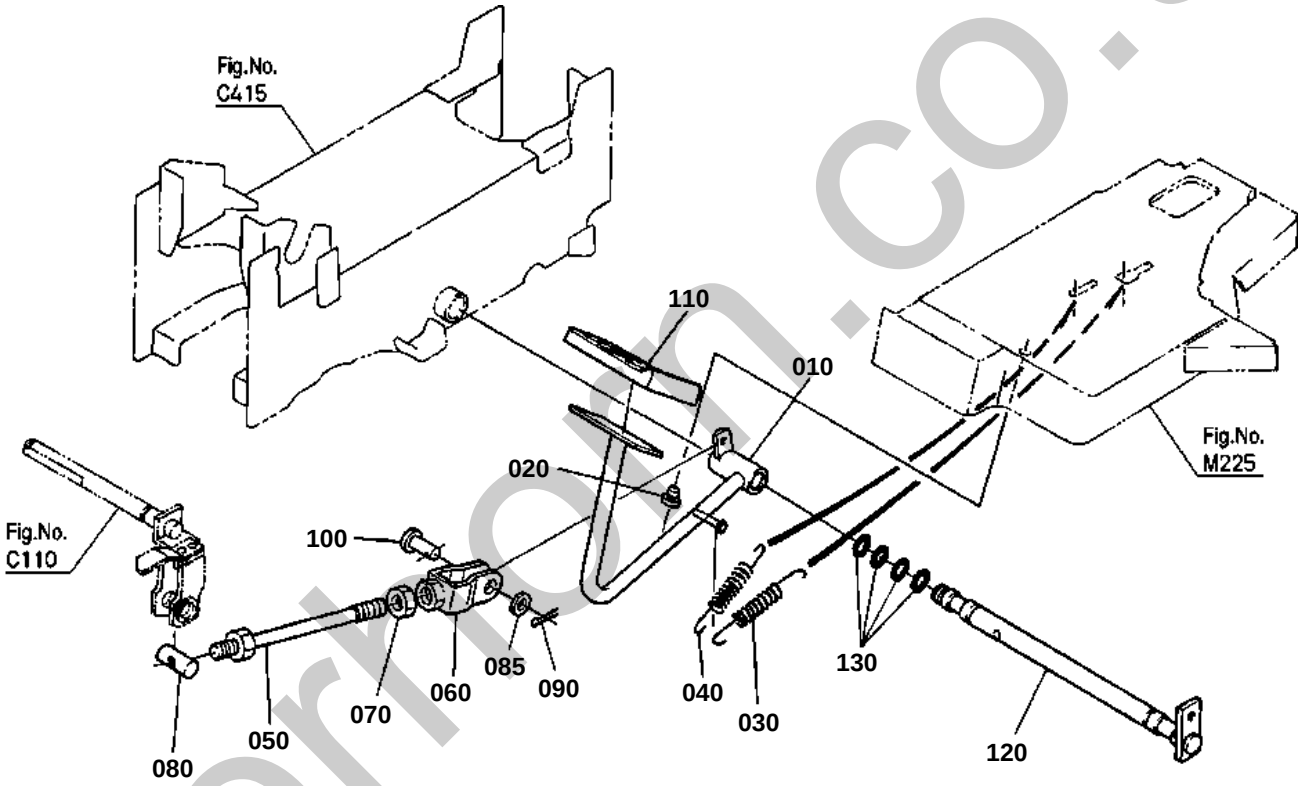

32721-016-11

silverhorn.co.uk

CLUTCH PEDAL

↔ Interchangeable; ≠ not interchangeable; ← new for old; → old for new

REF.No	Part No.	Description	Q'ty	S.No.	I/C	REMARKS	Weight (kgf)	Weight (lb)
010	32721-42130	PEDAL CLUTCH	1				1.8	3.96
020	6C040-42342	CUSHION	1				0.005	0.011
030	6C040-42150	SPRING	1				0.157	0.3454
040	6C040-42160	SPRING	1				0.05	0.11
050	6C040-42113	ROD CLUTCH	1				0.255	0.561
060	6C040-42120	U JOINT	1				0.118	0.2596
070	32721-42170	NUT	1				0.22	0.484
080	6C040-42142	PIN CLUTCH ROD	1				0.034	0.0748
085	04013-60100	WASHER PLAIN	1	>=52697			0.003	0.0066
090	52300-34130	PIN SNAP	1	<=52696			0.004	0.0088
090	05511-50322	PIN SPLIT	1	>=52697	¬		0.002	0.0044
100	05122-51025	PIN JOINT	1				0.017	0.0374
110	37410-44120	COVER PEDAL	1	<=63268			0	0
110	T2050-44120	COVER PEDAL	1	>=63269	¬		0.07	0.154
120	6C040-42310	SHAFT PEDAL	1				1.68	3.696
130	04811-00210	O RING	4	<=61394			0	0
130	04816-00210	O RING	4	>=61395	¬		0.004	0.0088

silverhorn.co.uk

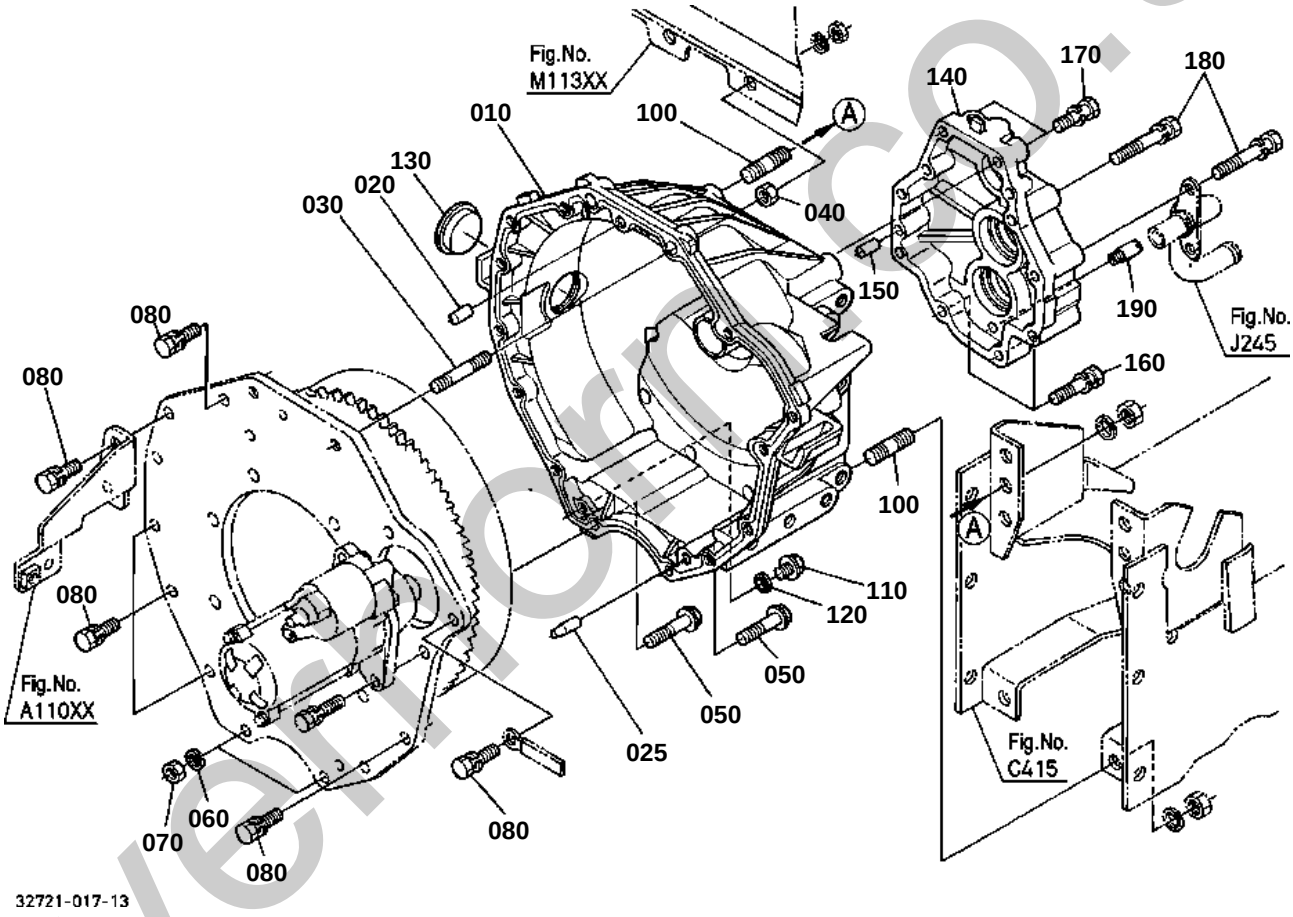

silverfordco.uk

OLD PARTS

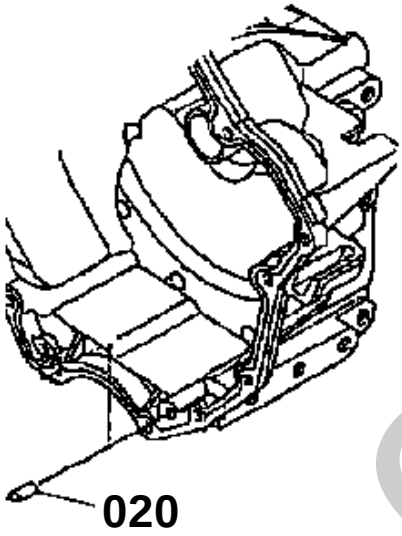

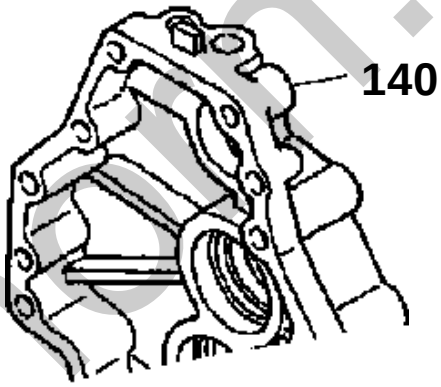

32721-828-11

silverhorn.co.uk

CLUTCH HOUSING

↔ Interchangeable; ≠ not interchangeable; ← new for old; → old for new

REF.No	Part No.	Description	Q'ty	S.No.	I/C	REMARKS	Weight (kgf)	Weight (lb)
010	6C040-13114	HOUSING CLUTCH	1				5.2	11.44
020	05012-00814	PIN STRAIGHT	2	<=51417			0.006	0.0132
020	05012-00814	PIN STRAIGHT	1	>=51418			0.006	0.0132
025	66611-11160	PIN KNOCK	1	>=51418			0.01	0.022
030	01517-51045	STUD	2				0.032	0.0704
040	02118-50100	NUT	2				0.005	0.011
050	01754-50840	BOLT FLANGE	2				0.02	0.044
060	04512-60080	WASHER SPRING	2				0.002	0.0044
070	02114-50080	NUT	2				0.005	0.011
080	01123-50830	BOLT	9				0.015	0.033
090	99999-99999	BLANK	0				0	0
100	01555-51225	STUD	4				0.039	0.0858
110	01754-50812	BOLT FLANGE	1				0.01	0.022
120	04717-00800	WASHER WITH RUBBER	1				0.001	0.0022
130	37410-13124	PLUG	1				0.02	0.044
140	32721-13120	COVER CLUTCH HOUSING	1	<=52435			0	0
140	32721-13122	COVER CLUTCH HOUSING	1	>=52436	¬		0.9	1.98
140	32721-13123	COVER CLUTCH HOUSING	1	>=61797	1		0.9	1.98
150	05012-00614	PIN STRAIGHT	2				0.004	0.0088
160	01123-50840	BOLT	2				0.018	0.0396
170	01123-50835	BOLT	2				0.02	0.044
180	01123-50860	BOLT	6				0.002	0.0044
190	32721-13170	JOINT PIPE	1				0.015	0.033

silverhorn.co.uk

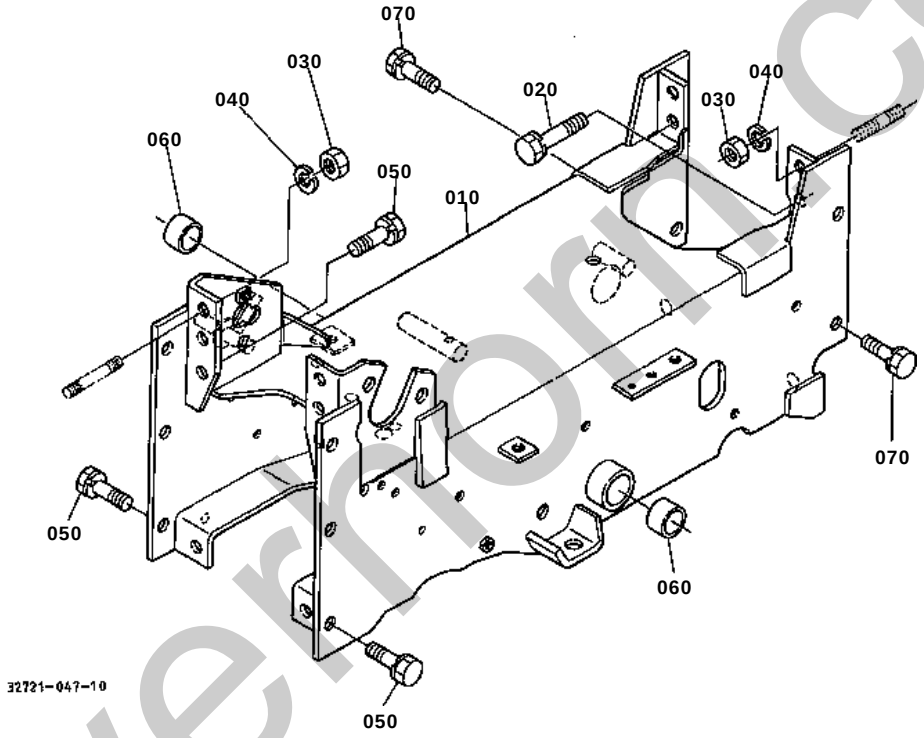

silverfrom.co.uk

CENTER FRAME

↔ Interchangeable; ≠ not interchangeable; ← new for old; → old for new

REF.No	Part No.	Description	Q'ty	S.No.	I/C	REMARKS	Weight (kgf)	Weight (lb)
010	32721-51110	COMP.FRAME CENTER	1	<=52835			0	0
010	32721-51120	COMP.FRAME CENTER	1	>=52836	¬		0	0
010	32721-51122	COMP.FRAME CENTER	1	>=53468	¬		0	0
020	01123-51265	BOLT	2				0.063	0.1386
030	02174-50120	NUT	8				0.01	0.022
040	04512-60120	WASHER SPRING	8				0.005	0.011
050	01123-51230	BOLT	8				0.04	0.088
060	08511-02515	BUSH	2				0.012	0.0264
070	01123-51225	BOLT	4				0.04	0.088
070	01123-61225	BOLT	4		«		0.04	0.088

silverhorn.co.uk

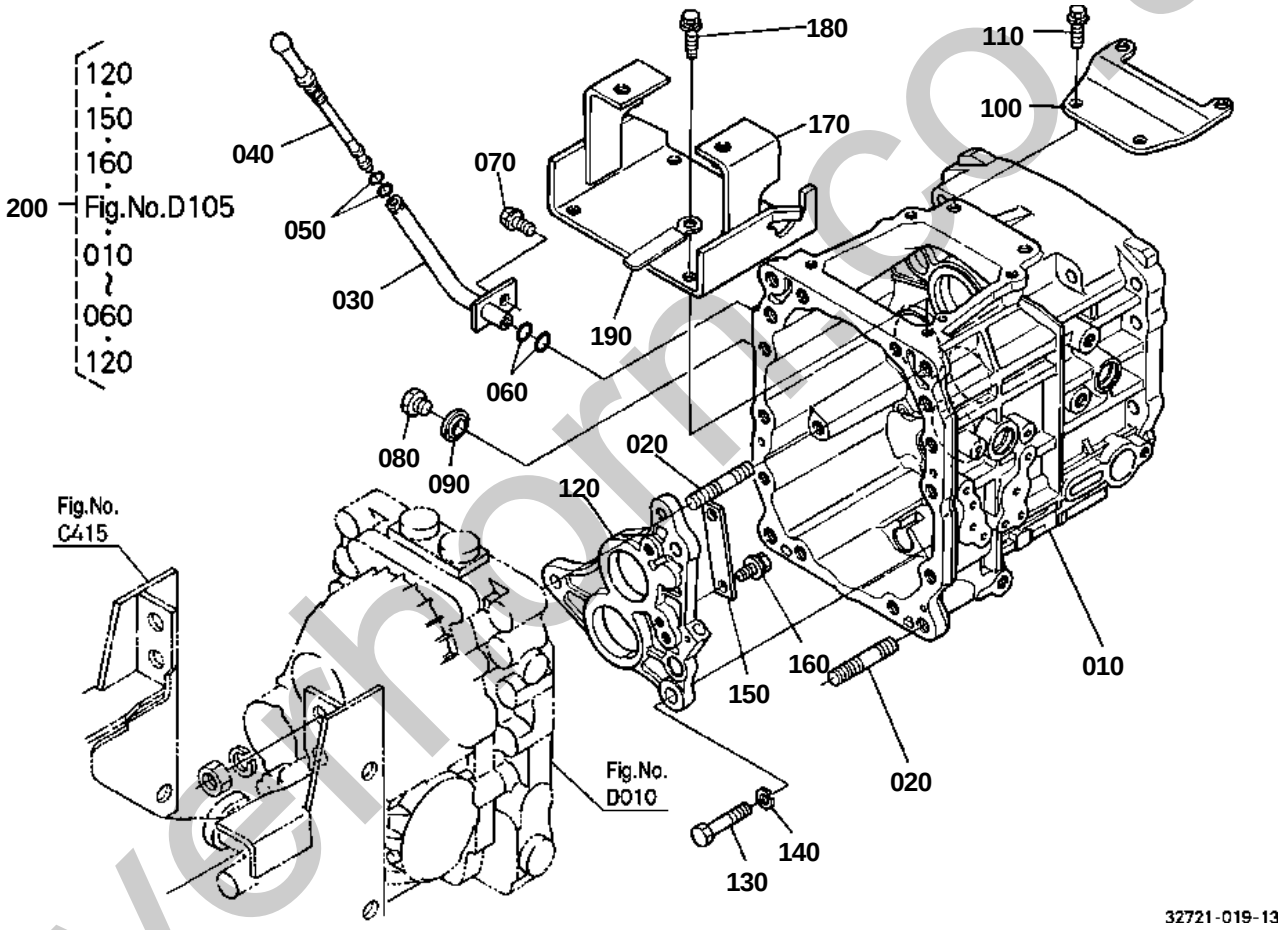

silverthorn.co.uk

↔ Interchangeable; ≠ not interchangeable; ← new for old; → old for new

REF.No	Part No.	Description	Q'ty	S.No.	I/C	REMARKS	Weight (kgf)	Weight (lb)
010	32721-11110	CASE TRANSMISSION	1				5	11
020	01555-51260	STUD	4				0.067	0.1474
030	6C040-11150	PIPE OIL GAUGE	1				0	0
030	6A320-11150	PIPE OIL GAUGE	1	<=60970	«		0	0
030	6A320-11152	PIPE OIL GAUGE	1	>=60971	¬		0.078	0.1716
040	6C040-11160	GAUGE OIL	1				0.01	0.022
050	04811-10070	O RING	2	<=60970			0.001	0.0022
050	04811-00060	O RING	2	>=60971	¬		0	0
050	04816-00060	O RING	2	>=61395	¬		0.001	0.0022
060	04811-00120	O RING	2	<=61394			0	0
060	04816-00120	O RING	2	>=61395	¬		0.001	0.0022
070	01125-60820	BOLT	1				0.015	0.033
080	06311-55030	PLUG	1				0.05	0.11
090	04717-01700	WASHER WITH RUBBER	1				0.003	0.0066
100	6C040-11180	BRACKET	1				0.4	0.88
110	01123-51028	BOLT	2				0.025	0.055
120	32721-12110	HOLDER BEARING	1	<=53291		NOT SALE ORDER BY REF.NO.200	0	0
120	32721-12114	HOLDER BEARING	1	>=53292	¬	NOT SALE ORDER BY REF.NO.200	0.84	1.848
120	32721-12115	HOLDER BEARING	1	>=60001	1		0.858	1.8876
130	6C050-12120	BOLT REAMER	3				0.036	0.0792
140	04512-60100	WASHER SPRING	3				0.002	0.0044
150	32721-12150	PLATE	1	<=54263			0	0
150	32721-12153	PLATE	1	>=60001	¬		0.021	0.0462
160	01123-50818	BOLT	2				0.012	0.0264
170	32721-12410	COVER UPPER	1				1.12	2.464
180	01123-60816	BOLT	4				0.01	0.022
190	13824-67580	CLAMP CORD	1	<=52379			0.006	0.0132
190	13824-67590	CLAMP CORD	1	>=52380	¬		0.002	0.0044
200	32721-12100	KIT HOLDER BEARING	1	>=60289		OPTION	1.7	3.74

silverhorn.co.uk

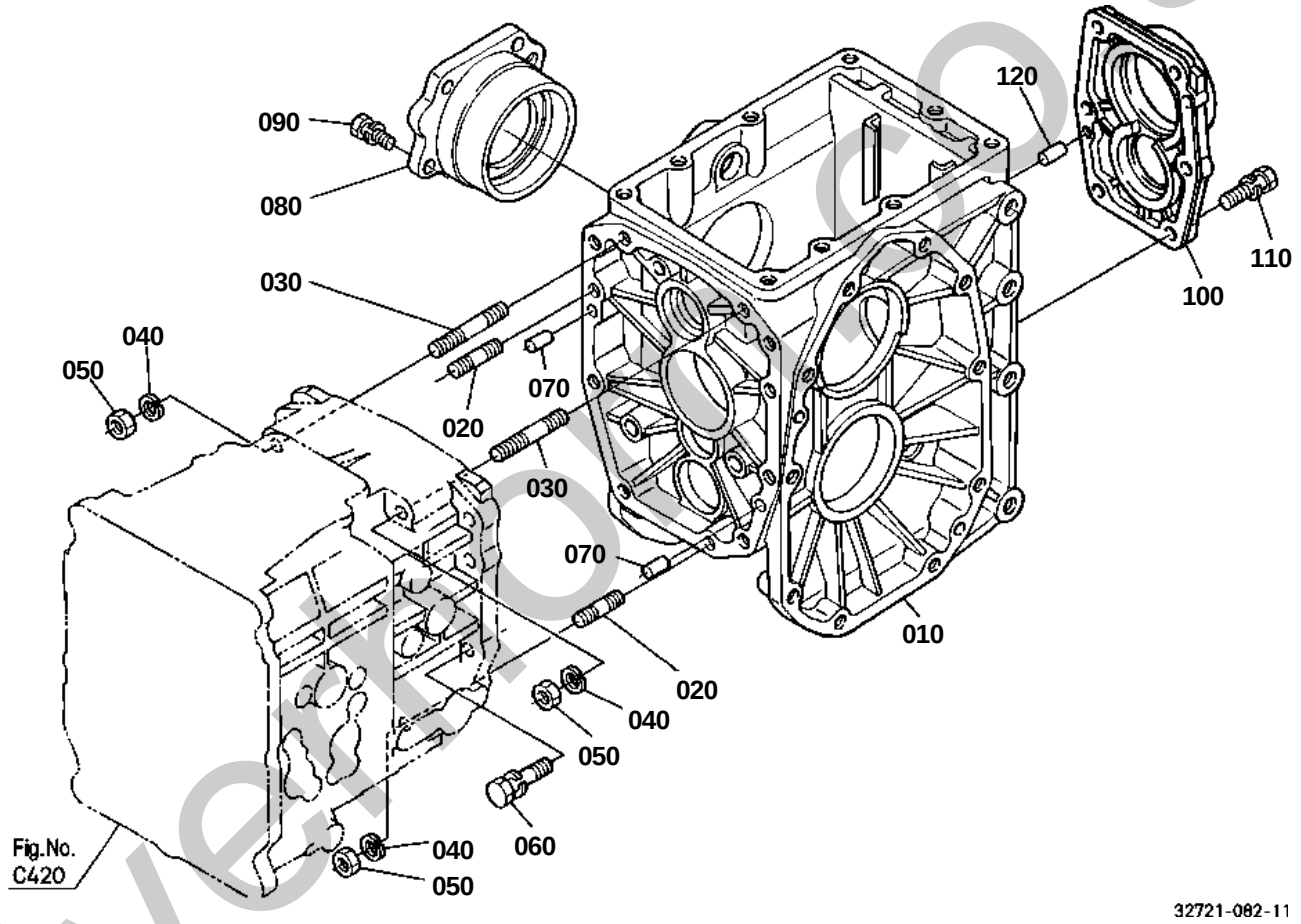

silverfox.co.uk

DIFFERENTIAL GEAR CASE

↔ Interchangeable; ≠ not interchangeable; ← new for old; → old for new

REF.No	Part No.	Description	Q'ty	S.No.	I/C	REMARKS	Weight (kgf)	Weight (lb)
010	6C040-11174	CASE DIFF.GEAR	1				7.3	16.06
020	01555-51035	STUD	2				0.029	0.0638
030	01555-51065	STUD	2				0.048	0.1056
040	04512-60100	WASHER SPRING	4				0.002	0.0044
050	02176-50100	NUT	4				0.005	0.011
060	01123-51040	BOLT	7				0.03	0.066
070	05012-00614	PIN STRAIGHT	2				0.004	0.0088
080	66611-11812	HOLDER DIFF.BRG.RH	1				0.72	1.584
090	01123-50822	BOLT	4				0.012	0.0264
100	6C040-12210	COVER REAR	1				0	0
100	6A100-12210	COVER REAR	1	<=53011	«		0	0
100	6A100-12213	COVER REAR	1	>=53012	¬		0.37	0.814
110	01123-51030	BOLT	6				0.025	0.055
120	05012-00614	PIN STRAIGHT	2				0.004	0.0088

silverhorn.co.uk

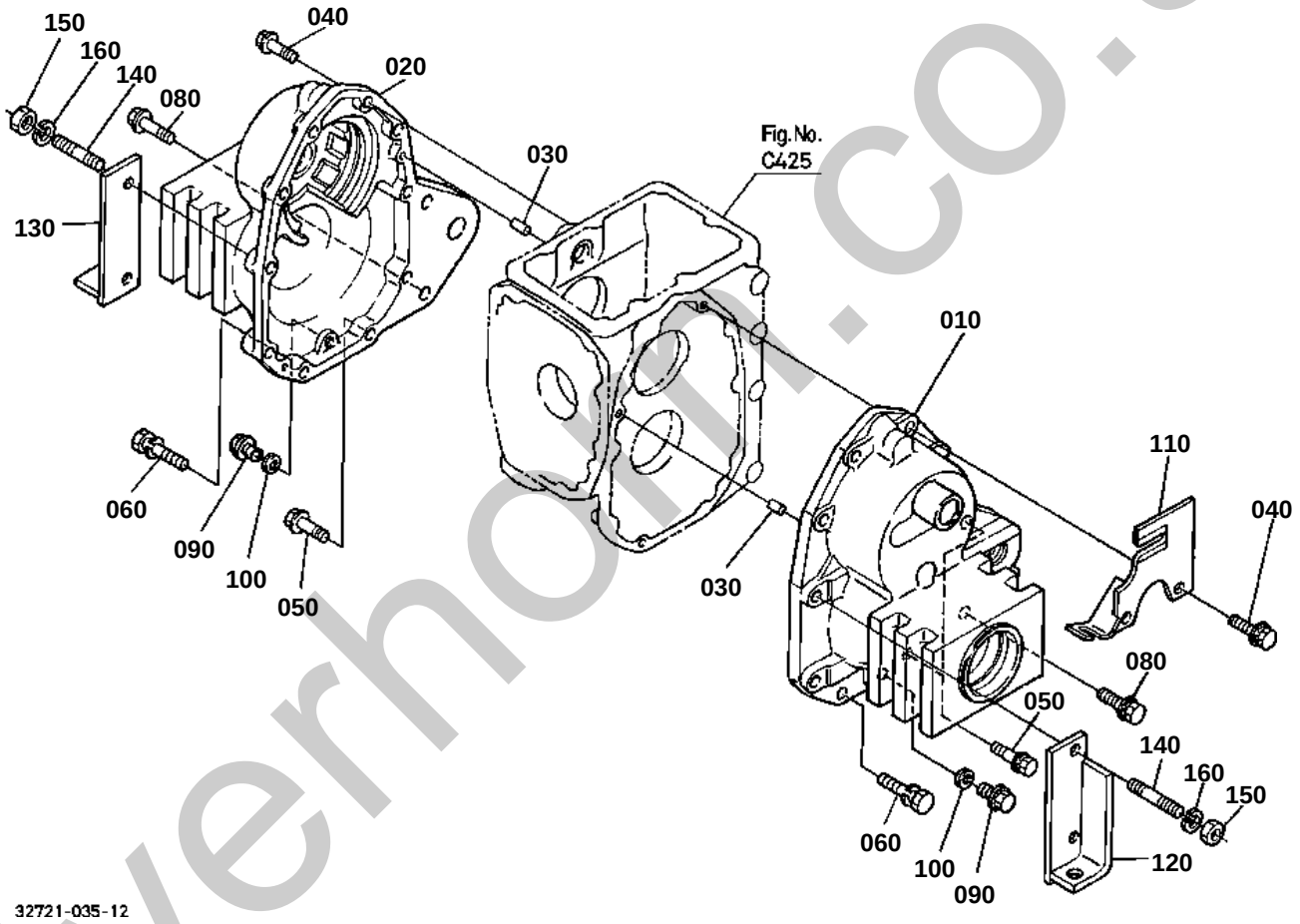

silverhorn.co.uk

OLD PARTS

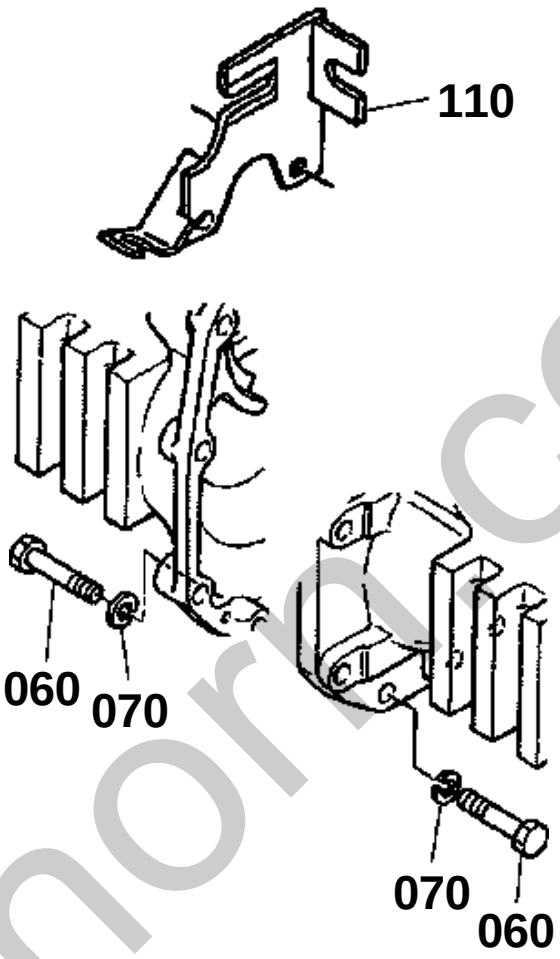

32721-818-11

silverhorn.co.uk

REAR AXLE CASE

↔ Interchangeable; ≠ not interchangeable; ← new for old; → old for new

REF.No	Part No.	Description	Q'ty	S.No.	I/C	REMARKS	Weight (kgf)	Weight (lb)
010	32721-12630	ASSY CASE AXLE L	1				1.3	2.86
020	32721-12640	ASSY CASE AXLE R	1				13	28.6
030	05012-00614	PIN STRAIGHT	4				0.004	0.0088
040	01123-51065	BOLT	10				0.04	0.088
050	01123-51050	BOLT	4				0.035	0.077
060	01173-51080	BOLT	2	<=62950			0.049	0.1078
060	01133-51075	BOLT	2	>=62951	¬		0.03	0.066
070	04512-60100	WASHER SPRING	2	<=62950			0.002	0.0044
080	01123-51250	BOLT	4				0.055	0.121
090	06331-35012	PLUG	2				0.022	0.0484
090	01774-51212	BOLT FLANGE	2		«		0.028	0.0616
100	04717-01200	WASHER WITH RUBBER	2				0.002	0.0044
110	32721-42650	STAY NEUTRAL SWITCH	1	<=61236			0.27	0.594
110	32721-42652	STAY NEUTRAL SWITCH	1	>=61237	1		0.27	0.594
120	32721-12653	STAY OIL TANK LH	1				0.42	0.924
130	32721-12662	SYAY OIL TANK RH	1				0.438	0.9636
140	01555-51050	STUD	4				0.038	0.0836
150	02118-50100	NUT	4				0.005	0.011
160	04512-60100	WASHER SPRING	4				0.002	0.0044

silverhorn.co.uk

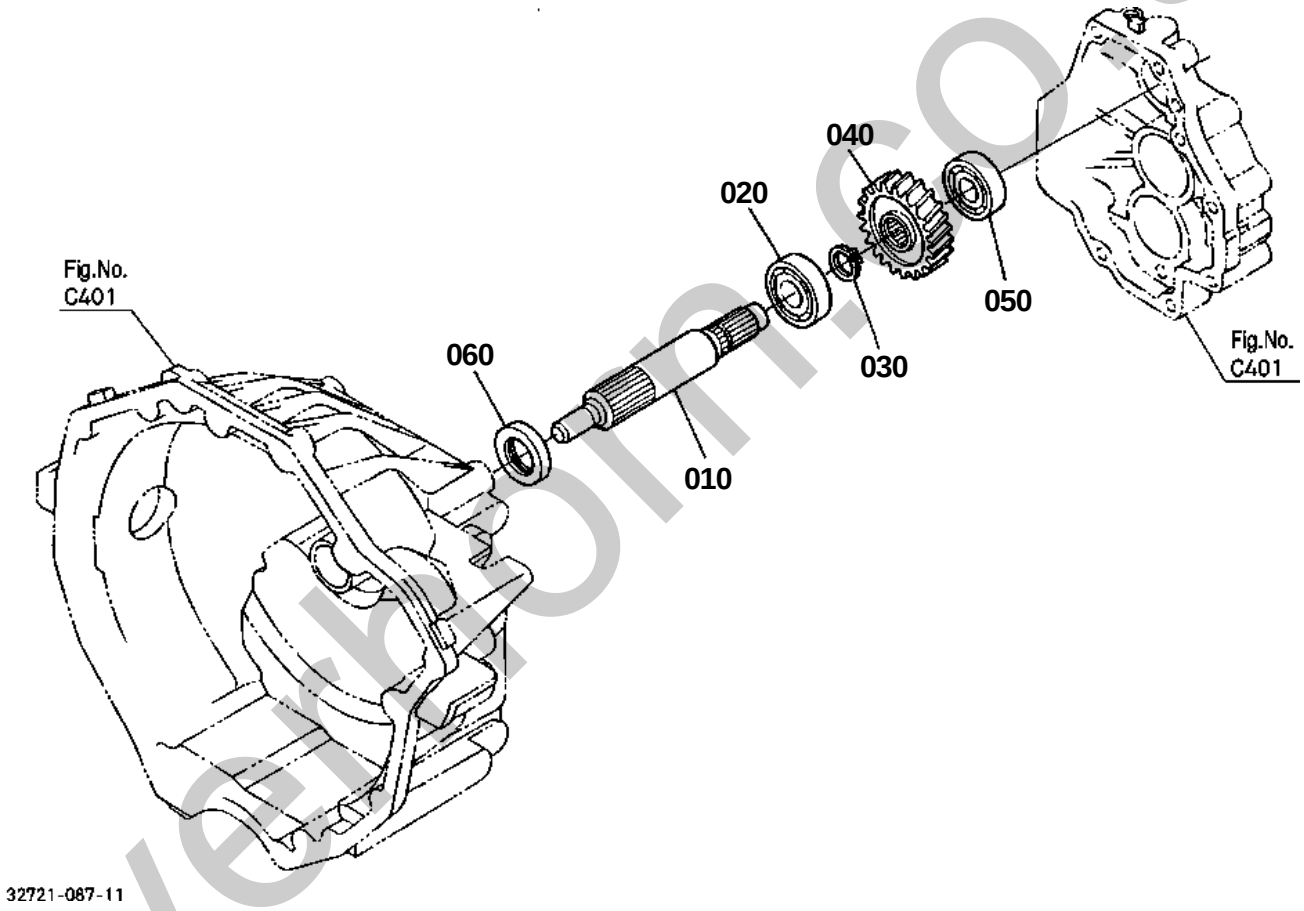

silverthorn.co.uk

CLUTCH SHAFT

↔ Interchangeable; ≠ not interchangeable; ← new for old; → old for new

REF.No	Part No.	Description	Q'ty	S.No.	I/C	REMARKS	Weight (kgf)	Weight (lb)
010	6C040-13514	SHAFT CLUTCH	1				0.5	1.1
020	52300-16180	BEARING	1				0.103	0.2266
030	04612-00200	CIR CLIP EXTERNAL	1				0.001	0.0022
040	6C050-13520	GEAR CLUTCH SHAFT	1			23T	0.38	0.836
050	08101-06203	BEARING BALL	1				0.063	0.1386
060	6C040-13530	SEAL OIL	1				0.012	0.0264

silverhorn.co.uk

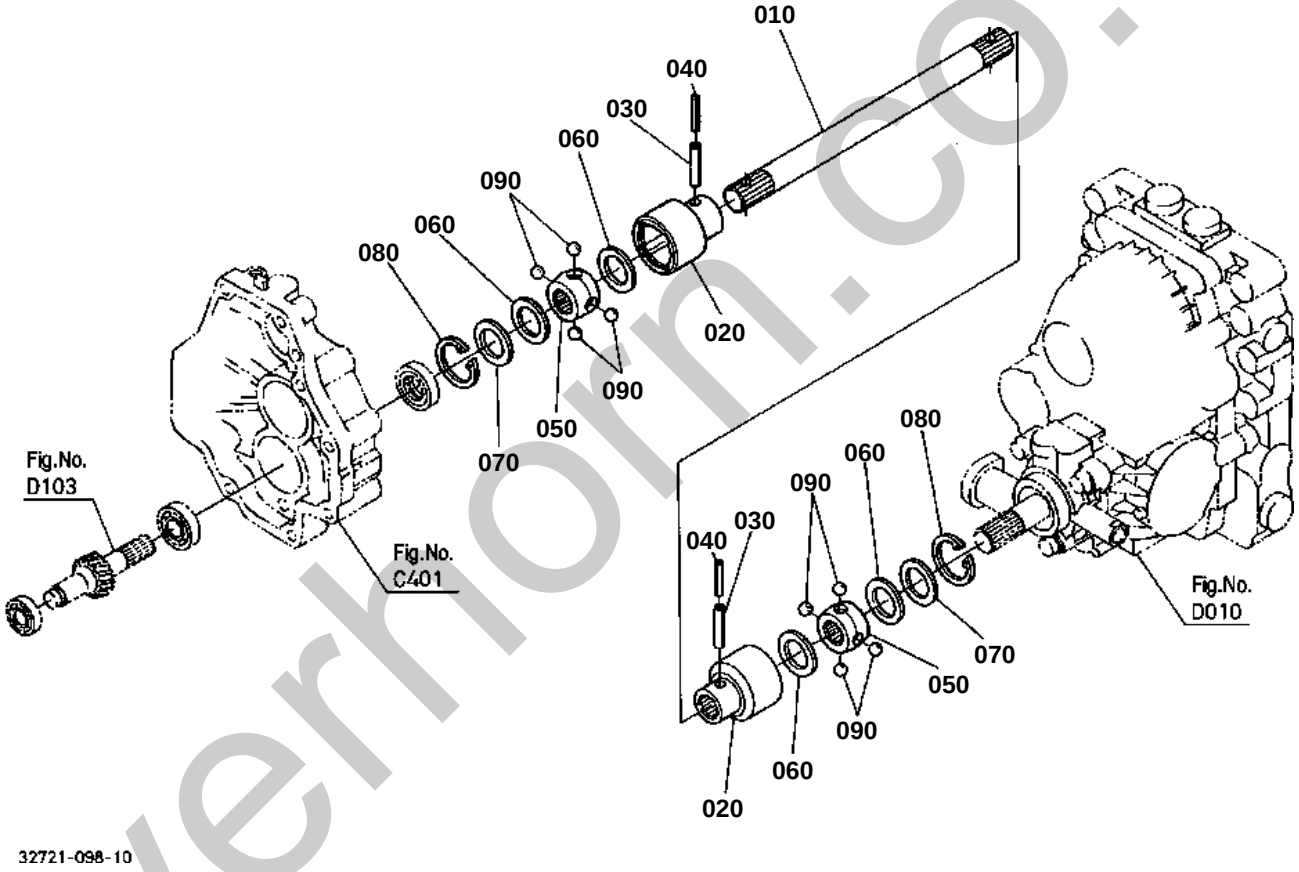

silverhorn.co.uk

PROPELLER SHAFT

↔ Interchangeable; ≠ not interchangeable; ← new for old; → old for new

REF.No	Part No.	Description	Q'ty	S.No.	I/C	REMARKS	Weight (kgf)	Weight (lb)
010	6C050-13723	SHAFT PROPELLER	1				0.64	1.408
020	67111-13710	COUPLING BALL OUTER	2				0.225	0.495
030	05411-00640	PIN SPRING	2				0.006	0.0132
040	70451-57350	PIN SPRING	2				0.005	0.011
040	32721-57680	PIN SPRING	2		«		0.002	0.0044
050	67211-14133	COUPLING BALL INNER	2				0.075	0.165
060	67111-13730	GASKET BALL JOINT	4				0.002	0.0044
070	67111-13740	SUPPORT GASKET	2				0.004	0.0088
080	04611-00350	CIR CLIP INTERNAL	2				0.003	0.0066
090	07715-00803	BALL	8				0.004	0.0088

silverhorn.co.uk

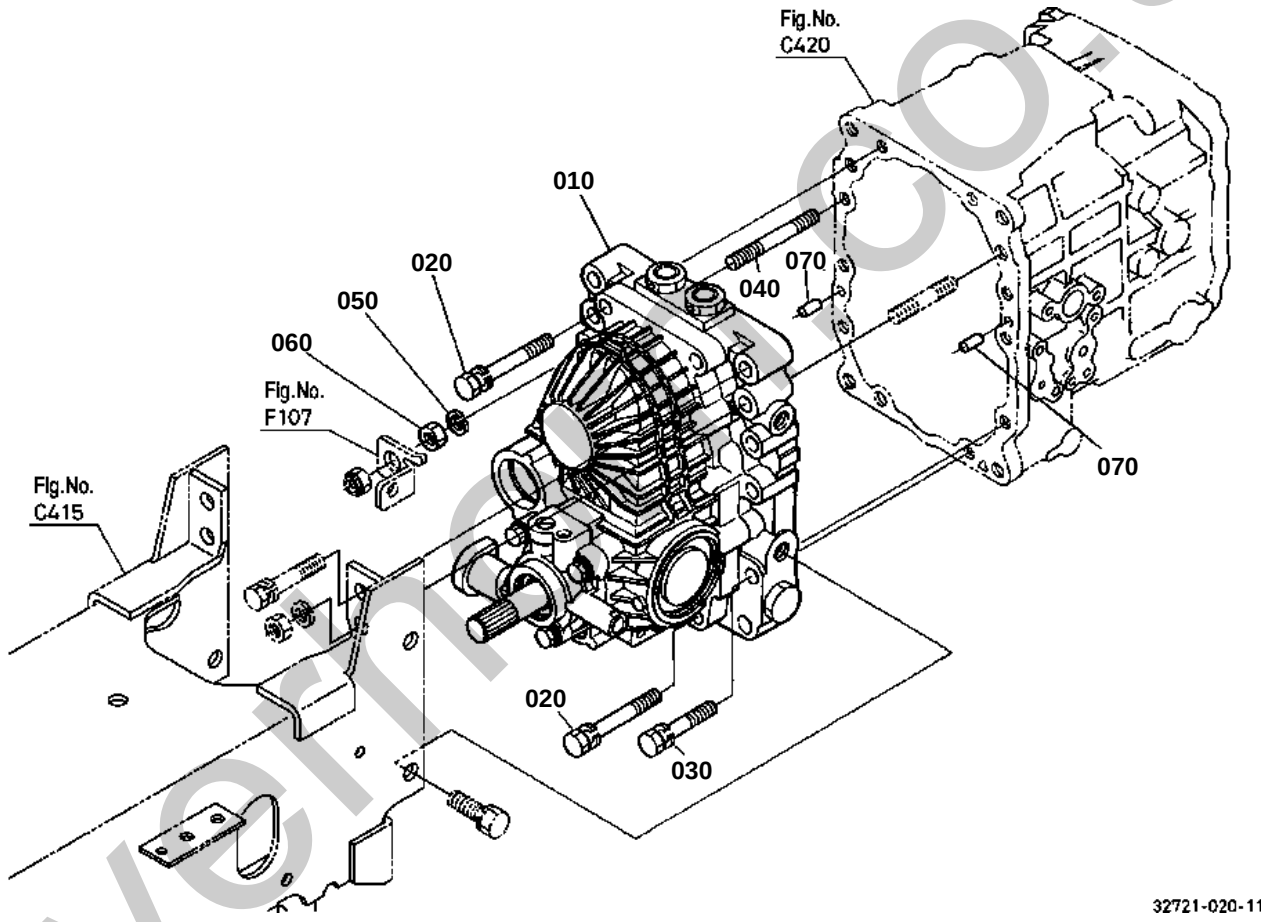

silvermoto.co.uk

↔ Interchangeable; ≠ not interchangeable; ← new for old; → old for new

REF.No	Part No.	Description	Q'ty	S.No.	I/C	REMARKS	Weight (kgf)	Weight (lb)
010	32721-35000	ASSY HST	1	<=54263			0	0
010	32721-35004	ASSY HST	1	>=60001	¬		15.8	34.76
020	01123-51075	BOLT	4				0.05	0.11
030	01123-51055	BOLT	5				0.038	0.0836
040	6C050-11690	STUD	1				0.043	0.0946
050	04512-60100	WASHER SPRING	1				0.002	0.0044
060	02176-50100	NUT	1				0.005	0.011
070	05012-00614	PIN STRAIGHT	2				0.004	0.0088

silverhorn.co.uk

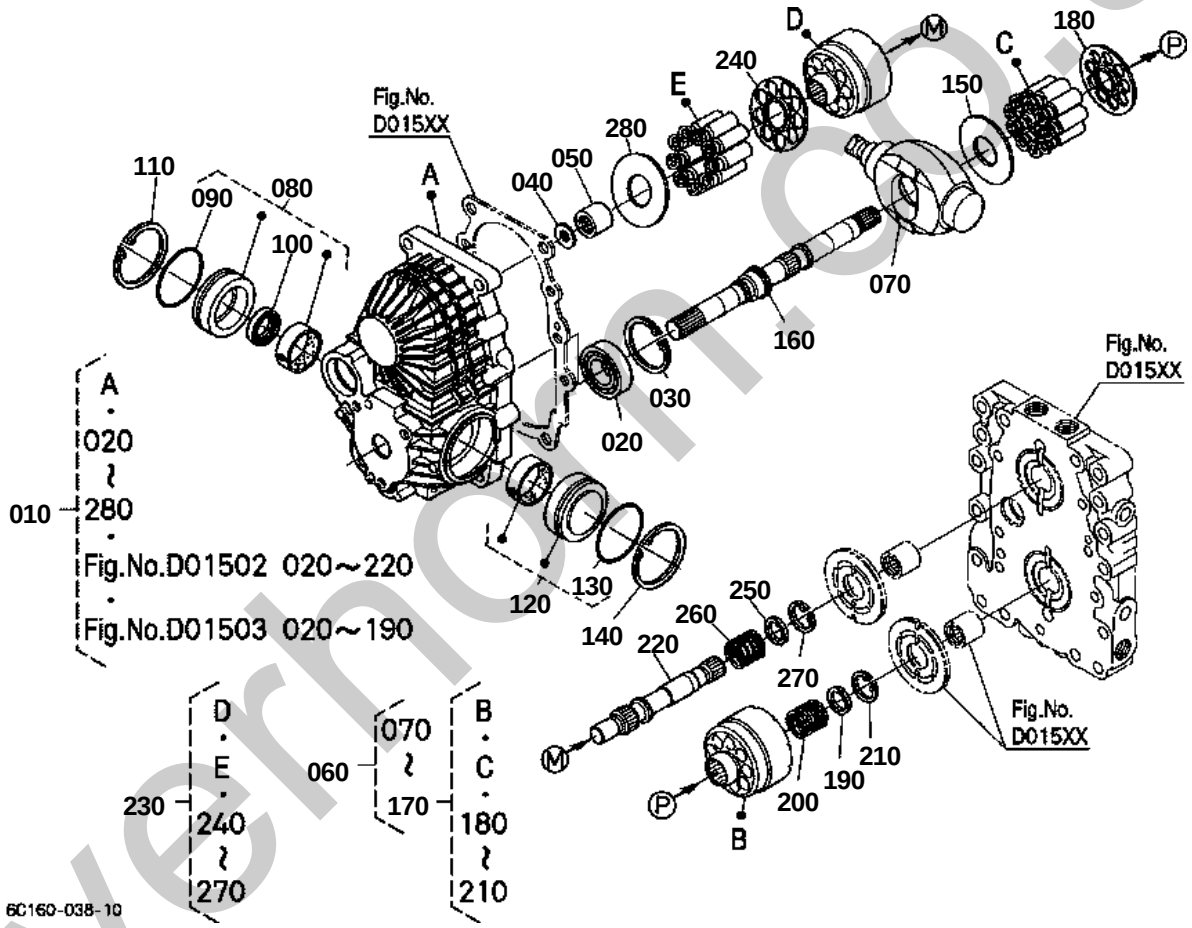

silvernon.co.uk

↔ Interchangeable; ≠ not interchangeable; ← new for old; → old for new

REF.No	Part No.	Description	Q'ty	S.No.	I/C	REMARKS	Weight (kgf)	Weight (lb)
010	32721-35000	ASSY HST	1	<=54263			0	0
010	32721-35004	ASSY HST	1	>=60001	¬		15.8	34.76
020	37410-57190	BEARING BALL	1				0.14	0.308
030	04611-00520	CIR CLIP INTERNAL	1				0.009	0.0198
040	6A110-35240	COLLAR	1				0.002	0.0044
050	6A110-35122	BEARING NEEDLE	1				0.023	0.0506
060	32721-35010	ASSY PUMP	1				3.6	7.92
070	32721-35130	PLATE	1				1.02	2.244
080	6A110-35020	ASSY COVER A	1				0.24	0.528
090	04811-50550	O RING	1				0.002	0.0044
100	6A110-35140	SEAL OIL	1				0.009	0.0198
110	04611-00620	CIR CLIP INTERNAL	1				0.011	0.0242
120	6A110-35030	ASSY COVER B	1				0.24	0.528
130	04811-50550	O RING	1				0.002	0.0044
140	04611-00620	CIR CLIP INTERNAL	1				0.011	0.0242
150	32721-35150	COLLAR THRUST	1				0.026	0.0572
160	32721-35160	SHAFT	1				0.62	1.364
170	32721-35040	ASSY BLOCK CYL.	1				1.09	2.398
180	32721-35180	PLATE RETAINER	1				0.02	0.044
190	66415-39240	HOLDER SPRING	1				0.004	0.0088
200	66415-39250	SPRING	1				0.005	0.011
210	66415-39470	CIR CLIP INTERNAL	1				0.02	0.044
220	32721-35230	SHAFT	1				0.35	0.77
230	32721-35070	ASSY BLOCK CYL.	1				1.09	2.398
240	32721-35180	PLATE RETAINER	1				0.02	0.044
250	66415-39240	HOLDER SPRING	1				0.004	0.0088
260	66415-39250	SPRING	1				0.005	0.011
270	66415-39470	CIR CLIP INTERNAL	1				0.02	0.044
280	32721-35150	COLLAR THRUST	1				0.026	0.0572

silvernorn.co.uk

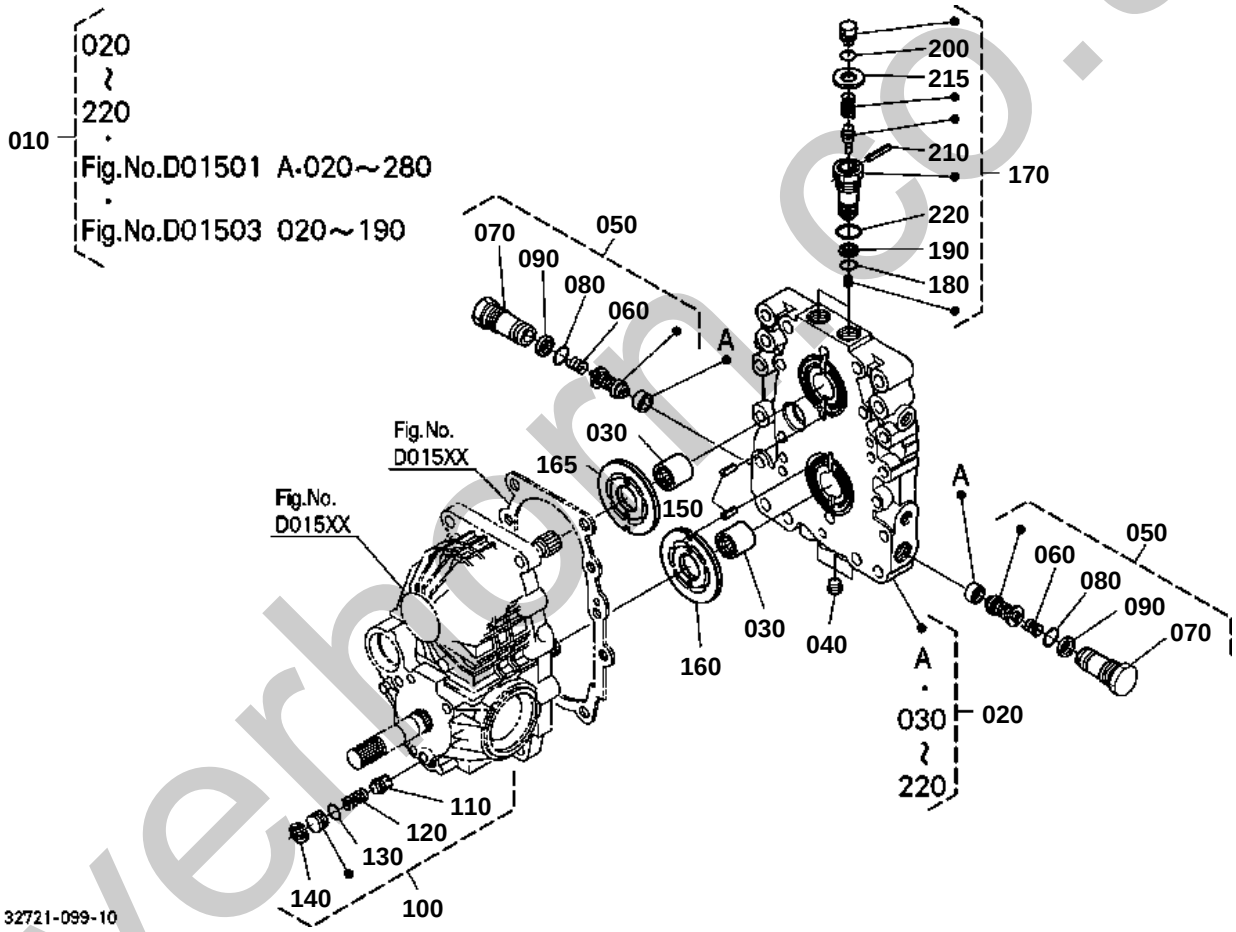

silverhorn.co.uk

↔ Interchangeable; ≠ not interchangeable; ← new for old; → old for new

REF.No	Part No.	Description	Q'ty	S.No.	I/C	REMARKS	Weight (kgf)	Weight (lb)
010	32721-35000	ASSY HST	1	<=54263			0	0
010	32721-35004	ASSY HST	1	>=60001	¬		15.8	34.76
020	32721-35090	ASSY BLOCK PORT	1				0	0
020	32721-35092	ASSY BLOCK PORT	1		«		8	17.6
030	32721-35320	BEARING NEEDLE	2				0.031	0.0682
040	15521-96030	PLUG	3	<=52323			0.007	0.0154
040	K7001-39620	PLUG	3	>=52324	¬		0.005	0.011
050	32721-35400	ASSY VALVE RELIEF	2				0.06	0.132
060	66415-83860	SPRING	2				0.002	0.0044
070	35270-16650	PLUG	2				0.02	0.044
080	04817-00150	O RING	2				0.001	0.0022
090	32721-35280	RING BACK UP	2				0.001	0.0022
100	32721-35200	ASSY VALVE RELIEF	1				0.022	0.0484
110	66363-39710	POPPET L	1				0.006	0.0132
120	66363-39720	SPRING	1				0.01	0.022
130	04817-00120	O RING	1				0.001	0.0022
140	04611-00170	CIR CLIP INTERNAL	1				0.001	0.0022
150	05411-00414	PIN SPRING	2				0.001	0.0022
160	32721-35330	PLATE VALVE	1				0.125	0.275
160	32721-35332	PLATE VALVE	1		«		0.14	0.308
165	32721-35340	PLATE VALVE	1				0.126	0.2772
165	32721-35342	PLATE VALVE	1		«		0.14	0.308
170	66363-83600	ASSY VALVE NEUTRAL	2				0.1	0.22
180	04810-00120	O RING	2	<=61394			0	0
180	04817-00120	O RING	2	>=61395	¬		0.001	0.0022
190	66363-39630	RING BACK UP	2				0.001	0.0022
200	04810-00100	O RING	2	<=61394			0	0
200	04817-00100	O RING	2	>=61395	¬		0.001	0.0022
210	05411-00325	PIN SPRING	2				0.001	0.0022
215	04014-50060	WASHER PLAIN	2				0.001	0.0022
220	04817-00180	O RING	2				0.003	0.0066

silvermorn.co.uk

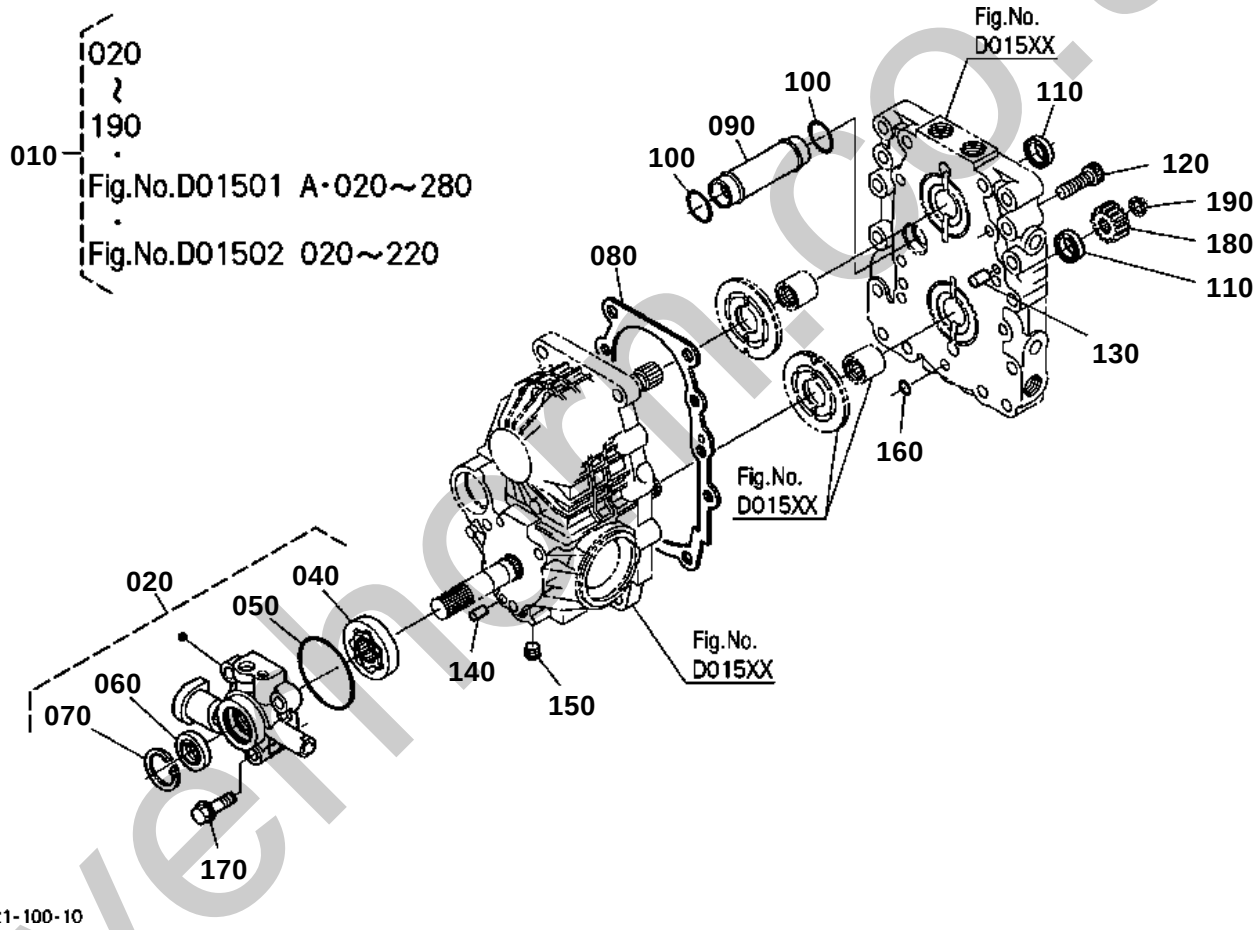

silverhorn.co.uk

↔ Interchangeable; ≠ not interchangeable; ← new for old; → old for new

REF.No	Part No.	Description	Q'ty	S.No.	I/C	REMARKS	Weight (kgf)	Weight (lb)
010	32721-35000	ASSY HST	1	<=54263			0	0
010	32721-35004	ASSY HST	1	>=60001	¬		15.8	34.76
020	32721-35300	ASSY PUMP CHARGE	1				0.45	0.99
030	99999-99999	BLANK	0				0	0
040	6A000-39820	ROTOR	1				0.15	0.33
050	04811-06630	O RING	1				0.001	0.0022
060	66363-39560	SEAL OIL	1				0.01	0.022
070	04611-00350	CIR CLIP INTERNAL	1				0.003	0.0066
080	32721-35360	GASKET	1				0.005	0.011
090	32721-35373	PIPE	1				0.09	0.198
100	04817-00250	O RING	2				0.003	0.0066
110	32721-35380	SEAL OIL	2				0.002	0.0044
120	01311-11035	BOLT HEX-SOC-HD	6				0.03	0.066
130	05012-00814	PIN STRAIGHT	2				0.006	0.0132
140	05012-00614	PIN STRAIGHT	2				0.004	0.0088
150	32721-35450	PLUG	1				0.002	0.0044
160	04817-00100	O RING	1				0.001	0.0022
170	01754-50830	BOLT FLANGE	3				0.05	0.11
180	6C050-14290	GEAR	1				0.115	0.253
190	04612-00180	CIR CLIP EXTERNAL	1				0.001	0.0022

silverhorn.co.uk

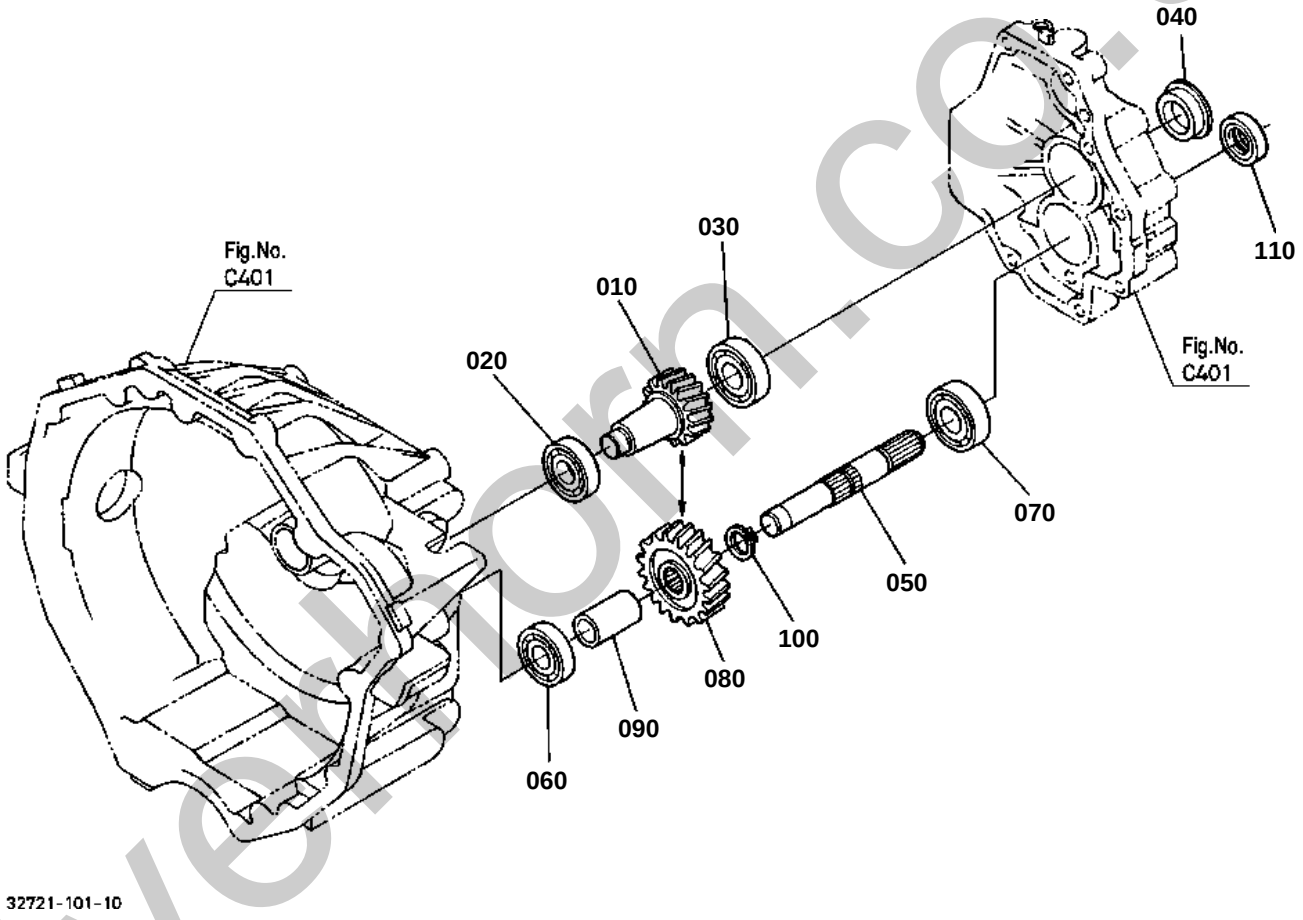

silverthorn.co.uk

FRONT SHAFT

↔ Interchangeable; ≠ not interchangeable; ← new for old; → old for new

REF.No	Part No.	Description	Q'ty	S.No.	I/C	REMARKS	Weight (kgf)	Weight (lb)
010	6C050-13610	SHAFT FRONT	1			16T	0.42	0.924
020	08101-06203	BEARING BALL	1				0.063	0.1386
030	52300-16180	BEARING	1				0.103	0.2266
040	41051-15820	PLUG	1	<=53431			0.015	0.033
040	6A100-12180	PLUG	1	>=53432	¬		0.022	0.0484
050	6C040-13610	SHAFT FRONT	1	<=52211			0	0
050	6C040-13613	SHAFT FRONT	1	>=52212	¬		0.28	0.616
060	08101-06203	BEARING BALL	1				0.063	0.1386
070	52300-16180	BEARING	1				0.103	0.2266
080	6C050-13710	GEAR	1			20T	0.31	0.682
090	6C040-13670	COLLAR	1				0.04	0.088
100	04612-00200	CIR CLIP EXTERNAL	1				0.001	0.0022
110	6C040-13630	SEAL OIL	1	<=52927			0.01	0.022
110	66363-39560	SEAL OIL	1	>=52928	¬		0.01	0.022

silverhorn.co.uk

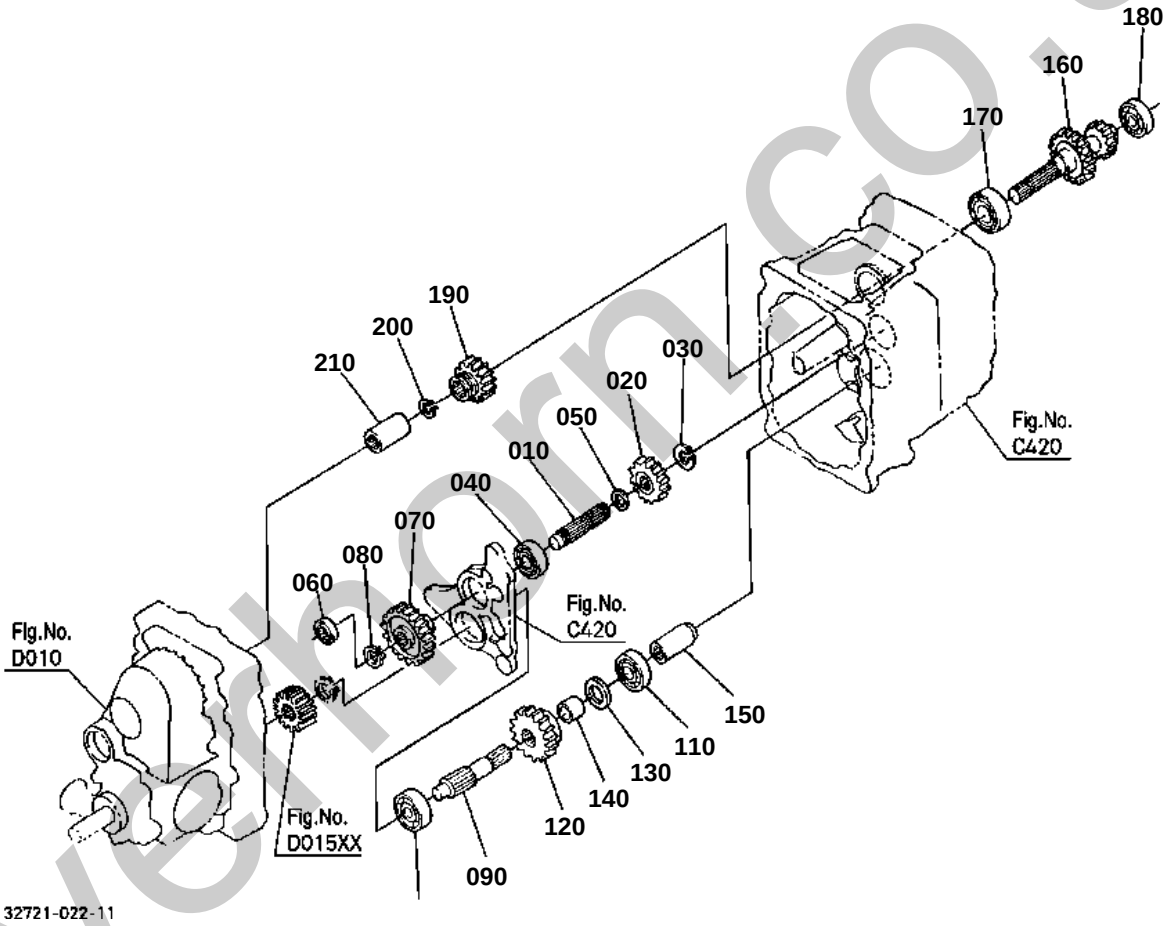

silverhorn.co.uk

2ND SHAFT/3RD SHAFT/4TH SHAFT

↔ Interchangeable; ≠ not interchangeable; ← new for old; → old for new

REF.No	Part No.	Description	Q'ty	S.No.	I/C	REMARKS	Weight (kgf)	Weight (lb)
010	32721-14210	SHAFT	1				0.13	0.286
020	32721-14220	GEAR	1	<=54263		13T	0	0
020	32721-14222	GEAR	1	>=60001	¬	13T	0.17	0.374
030	04612-00190	CIR CLIP EXTERNAL	1				0.001	0.0022
040	34070-22560	BEARING BALL	1	<=54263			0.1	0.22
040	32721-12560	BEARING BALL	1	>=60001	1		0.11	0.242
050	32721-14230	COLLAR SHAFT	1				0.006	0.0132
060	34073-23420	BEARING BALL	1	<=53291			0.045	0.099
060	RC411-73880	BEARING BALL	1	>=53292	1		0.05	0.11
070	32721-14280	GEAR PTO	1			27T	0.3	0.66
080	04612-00190	CIR CLIP EXTERNAL	1				0.001	0.0022
090	6C050-14310	SHAFT	1	<=52696		NOT SALE	0	0
090	6C050-14312	SHAFT	1	>=52697	¬	NOT SALE	0.31	0.682
090	6C050-14313	SHAFT	1	>=60971	¬		0.32	0.704
100	08101-06303	BEARING BALL	1				0.112	0.2464
110	08101-06304	BEARING BALL	1				0.146	0.3212
120	6C040-14320	GEAR	1	<=54263		17T	0.33	0.726
120	32721-14320	GEAR	1	>=60001	¬	17T	0.34	0.748
130	67111-14160	COLLAR	1				0.01	0.022
140	32721-14350	COLLAR SHAFT	1				0.042	0.0924
150	32721-14520	COUPLING	1				0.144	0.3168
160	32721-14410	GEAR-SHAFT	1			11-21T	0.8	1.76
170	08101-06205	BEARING BALL	1				0.14	0.308
180	67311-14270	BEARING BALL	1				0.09	0.198
190	32721-14420	GEAR	1			16T	0.132	0.2904
200	04612-00200	CIR CLIP EXTERNAL	1				0.001	0.0022
210	6C050-14520	COUPLING	1				0.099	0.2178

silverhorn.co.uk

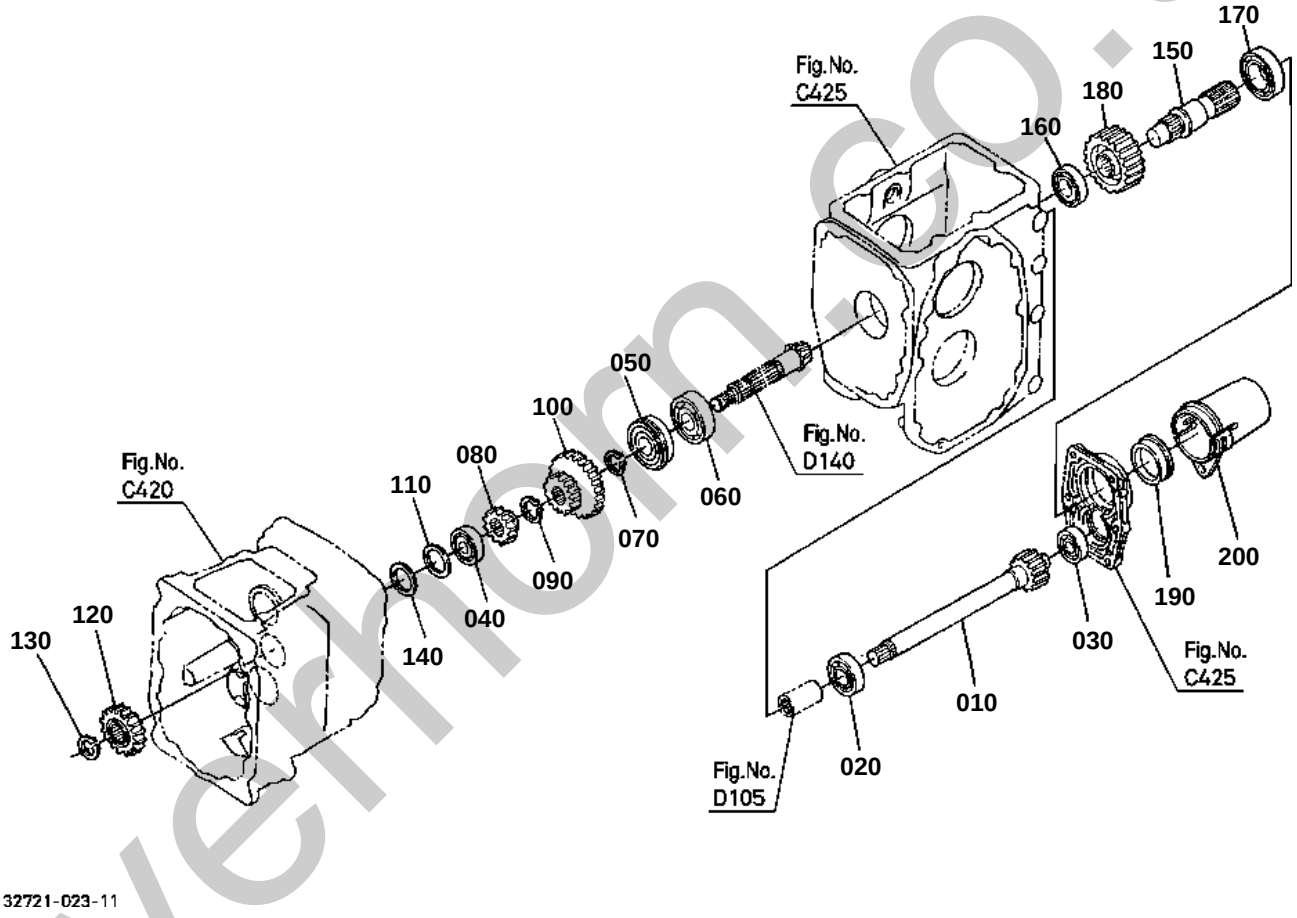

silverhorn.co.uk

PTO SHAFT

↔ Interchangeable; ≠ not interchangeable; ← new for old; → old for new

REF.No	Part No.	Description	Q'ty	S.No.	I/C	REMARKS	Weight (kgf)	Weight (lb)
010	6C050-14510	GEAR-SHAFT	1			11T	1.025	2.255
020	67121-56770	BEARING BALL	1				0.127	0.2794
030	67955-14170	BEARING BALL	1				0.114	0.2508
040	34070-22560	BEARING BALL	1				0.1	0.22
050	38430-21590	BEARING BALL	1				0.25	0.55
060	64441-22170	BEARING BALL	1				0.24	0.528
070	15471-95360	CIR CLIP EXTERNAL	1	<=50008			0.004	0.0088
070	32721-14660	CIR CLIP EXTERNAL	1	>=50009	¬		0.005	0.011
080	32721-14650	GEAR 4WD	1			14T	0.102	0.2244
090	04612-00250	CIR CLIP EXTERNAL	1				0.002	0.0044
100	32721-14620	GEAR	1			16-32T	0.46	1.012
110	66591-14720	SPACER	1				0.002	0.0044
120	32721-14640	GEAR	1				0.29	0.638
130	04612-00200	CIR CLIP EXTERNAL	1	<=50008			0.001	0.0022
130	15875-24320	RING SNAP	1	>=50009	¬		0.003	0.0066
140	66611-14670	SHIM	1	<=50921		1.4mm	0.008	0.0176
140	76611-56430	SHIM	1	>=50922	¬	0.5mm	0.005	0.011
140	66611-14680	SHIM	1	<=50921		1.8mm	0.01	0.022
140	76611-56440	SHIM	1	>=50922	¬	0.3mm	0.005	0.011
140	66611-14690	SHIM	1			0.2mm	0.001	0.0022
150	37410-16510	SHAFT PTO	1				0.79	1.738
160	67121-56770	BEARING BALL	1				0.127	0.2794
170	6C040-14730	BEARING BALL	1				0.15	0.33
180	6C040-14720	GEAR	1			24T	0.68	1.496
190	37410-16550	SEAL OIL	1				0.03	0.066
200	37410-63112	CAP PTO SHAFT	1				0.055	0.121

silverhorn.co.uk

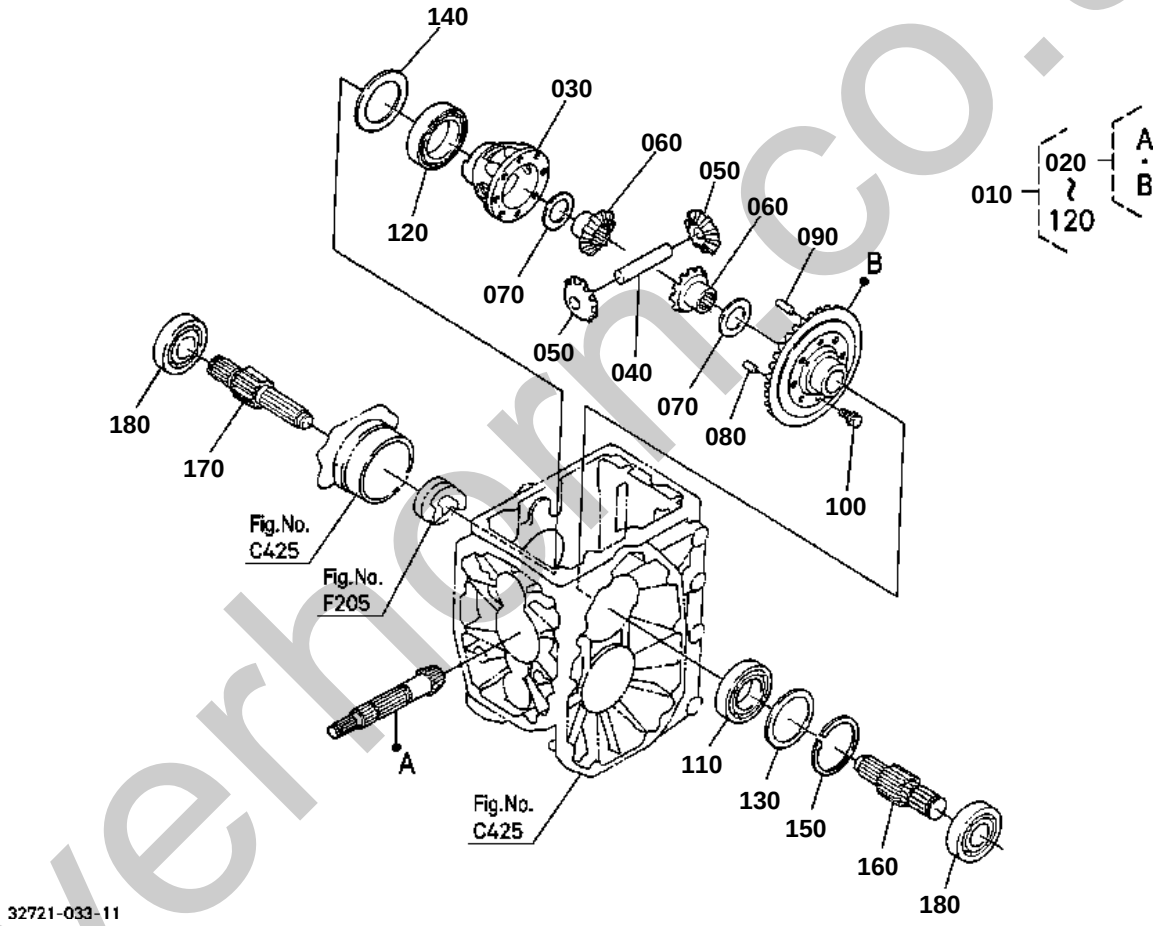

silverhorm.co.uk

REAR DIFFERENTIAL

↔ Interchangeable; ≠ not interchangeable; ← new for old; → old for new

REF.No	Part No.	Description	Q'ty	S.No.	I/C	REMARKS	Weight (kgf)	Weight (lb)
010	32721-97910	ASSY DIFFERENTIAL	1	<=63852		NOT SALE	0	0
010	32721-97912	ASSY DIFFERENTIAL	1	>=63853	¬		4.2	9.24
020	32721-97920	ASSY GEAR BEVEL	1			6-37T	2	4.4
030	6C040-14970	CASE DIFFERENTIAL	1	<=63852		NOT SALE	0	0
030	6C040-14973	CASE DIFFERENTIAL	1	>=63853	¬		0.7	1.54
040	67711-14912	SHAFT DIFF.PINION	1				0.14	0.308
050	67711-14920	PINION DIFF.	2				0.11	0.242
060	6C040-14930	GEAR DIFF.SIDE	2				0.165	0.363
070	67211-15160	SHIM	2			1.0mm	0.01	0.022
070	67211-15170	SHIM	2			0.8mm	0.008	0.0176
070	67211-15180	SHIM	2			1.2mm	0.01	0.022
080	66591-14792	PIN KNOCK	1				0.003	0.0066
090	66591-14783	PIN STRAIGHT	1				0.01	0.022
100	67810-56680	BOLT UBS	6				0.013	0.0286
110	08101-06009	BEARING BALL	1				0.22	0.484
120	08101-06010	BEARING BALL	1				0.262	0.5764
130	66591-14980	SHIM DIFF.SIDE	1			0.5mm	0.005	0.011
130	66591-14990	SHIM DIFF.SIDE	1			0.2mm	0.002	0.0044
140	66611-15140	SHIM DIFF.SIDE	1			0.5mm	0.006	0.0132
140	66611-15150	SHIM DIFF.SIDE	1			0.2mm	0.002	0.0044
150	04611-00750	CIR CLIP INTERNAL	1				0.019	0.0418
160	32721-14940	SHAFT DIFF.GEAR LH	1				0.6	1.32
170	32721-14950	SHAFT DIFF.GEAR RH	1				0.7	1.54
180	08101-06306	BEARING BALL	2				0.335	0.737

silverhorn.co.uk

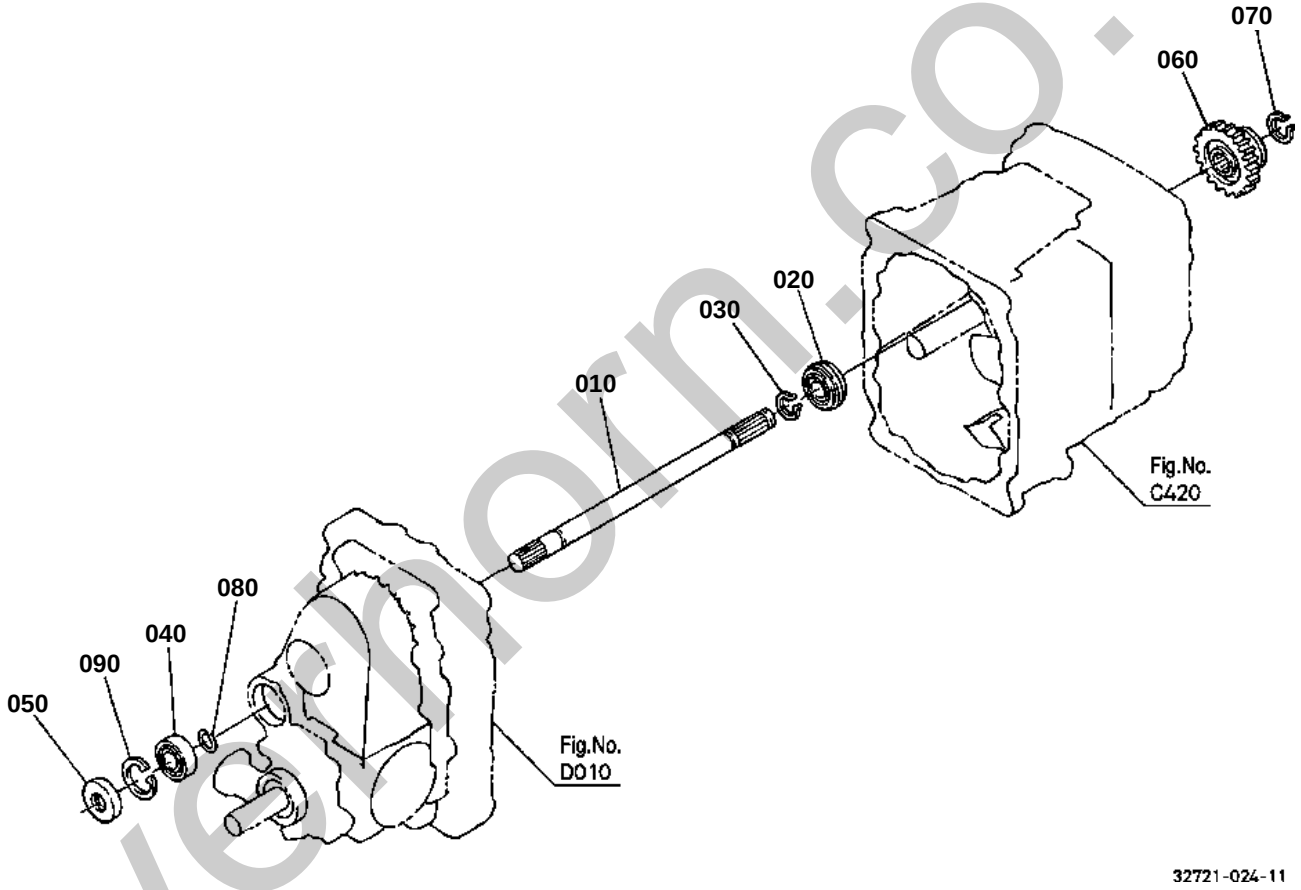

silvermorn.co.uk

FRONT WHEEL PROPELLER SHAFT

↔ Interchangeable; ≠ not interchangeable; ← new for old; → old for new

REF.No	Part No.	Description	Q'ty	S.No.	I/C	REMARKS	Weight (kgf)	Weight (lb)
010	32721-14810	SHAFT 4WD	1				0.84	1.848
020	08151-06204	BEARING BALL	1				0.11	0.242
030	04612-00200	CIR CLIP EXTERNAL	1				0.001	0.0022
040	52300-21660	BEARING	1				0.07	0.154
050	09500-20428	SEAL OIL	1				0.012	0.0264
060	32721-14840	GEAR 4WD	1			19T	0.2	0.44
070	04612-00190	CIR CLIP EXTERNAL	1				0.001	0.0022
080	6C050-14850	CIR CLIP EXTERNAL	1				0.001	0.0022
090	04611-00420	CIR CLIP INTERNAL	1				0.006	0.0132

silverhorn.co.uk

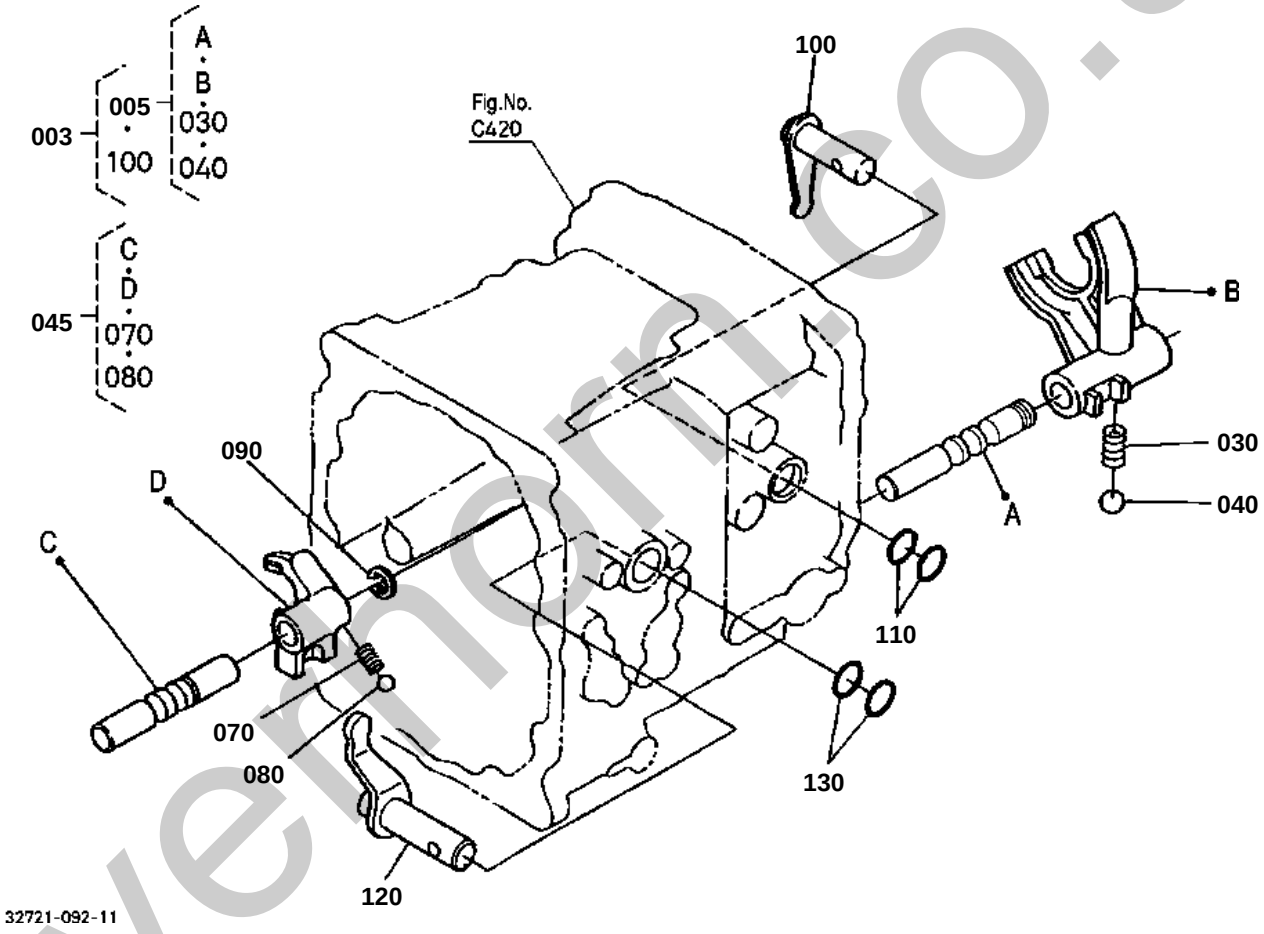

silvermorn.co.uk

OLD PARTS

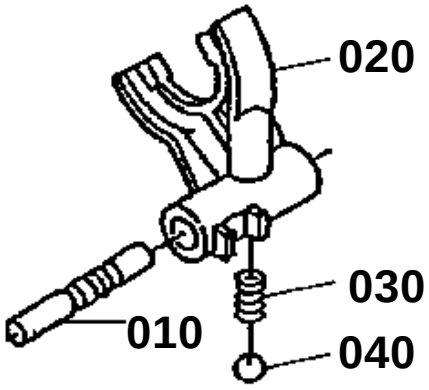

32721-815-11

silverhorn.co.uk

RANGE GEAR SHIFT FORK

↔ Interchangeable; ≠ not interchangeable; ← new for old; → old for new

REF.No	Part No.	Description	Q'ty	S.No.	I/C	REMARKS	Weight (kgf)	Weight (lb)
003	32721-97930	KIT FORK SHIFT	1	>=60971			0.48	1.056
005	32721-18100	ASSY FORK SHIFT	1	<=60970			0	0
005	32721-18103	ASSY FORK SHIFT	1	>=60971	¬		0.34	0.748
010	6C050-18410	ROD FORK	1	<=52695			0.118	0.2596
020	6C040-18420	FORK RANGE SHIFT	1	<=52695			0.079	0.1738
030	62061-18260	SPRING STOPPER	1	<=52695			0.002	0.0044
030	32721-18430	SPRING STOPPER	1	>=52696	1		0	0
040	07715-01605	BALL	1	<=52695			0.003	0.0066
040	07715-03211	BALL	1	>=52696	1		0.003	0.0066
045	32721-18400	ASSY FORK SHIFT	1				0.29	0.638
050	99999-99999	BLANK	0				0	0
060	99999-99999	BLANK	0				0	0
070	62061-18260	SPRING STOPPER	1	<=52695			0.002	0.0044
070	32721-18430	SPRING STOPPER	1	>=52696	1		0	0
080	07715-01605	BALL	1	<=52695			0.003	0.0066
080	07715-03211	BALL	1	>=52696	1		0.003	0.0066
090	04613-50120	CIR CLIP EXTERNAL	1				0.001	0.0022
100	6C040-18510	ARM RANGE SHIFT	1	<=60970			0.075	0.165
100	32721-18510	ARM RANGE SHIFT	1	>=60971	¬		0.14	0.308
110	04811-00160	O RING	2	<=61394			0	0
110	04816-00160	O RING	2	>=61395	¬		0.003	0.0066
120	32721-18550	ARM RANGE SHIFT	1				0.15	0.33
130	04811-00160	O RING	1	<=61394			0	0
130	04816-00160	O RING	2	>=61395	¬		0.003	0.0066

silverhorn.co.uk

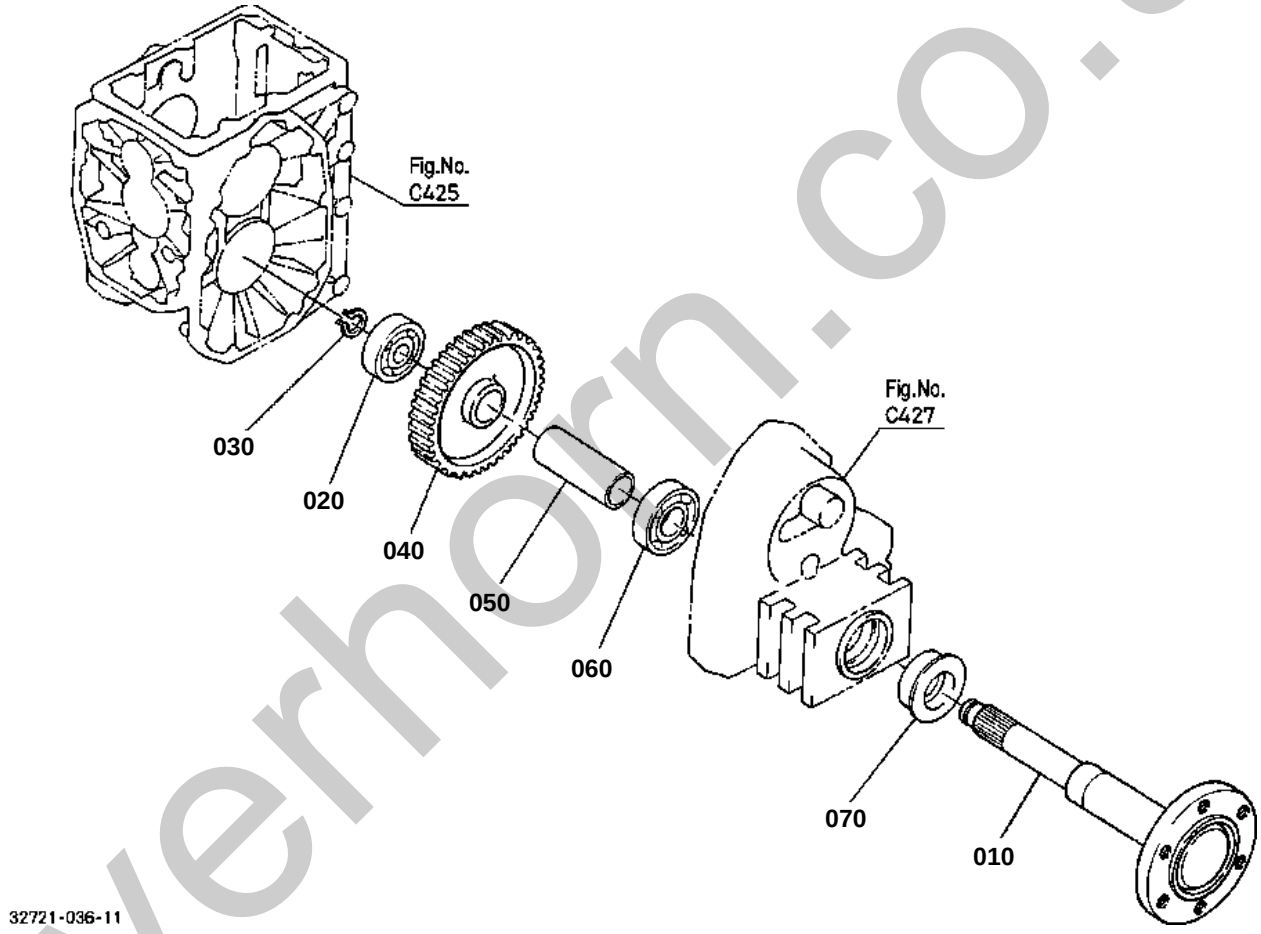

silverhorn.co.uk

↔ Interchangeable; ≠ not interchangeable; ← new for old; → old for new

REF.No	Part No.	Description	Q'ty	S.No.	I/C	REMARKS	Weight (kgf)	Weight (lb)
010	32721-17110	SHAFT REAR AXLE	2	<=50579			0	0
010	32721-17113	SHAFT REAR AXLE	2	>=50580	¬		7.3	16.06
020	08101-06306	BEARING BALL	2				0.335	0.737
030	04612-00300	CIR CLIP EXTERNAL	2				0.003	0.0066
040	32721-17130	GEAR	2			57T	2.72	5.984
050	32721-17140	COLLAR	2				0.5	1.1
060	08101-06208	BEARING BALL	2				0.355	0.781
070	09500-00014	SEAL OIL	2	<=51417			0.06	0.132
070	32721-17150	SEAL OIL	2	>=51418	¬		0.07	0.154

silverhorn.co.uk

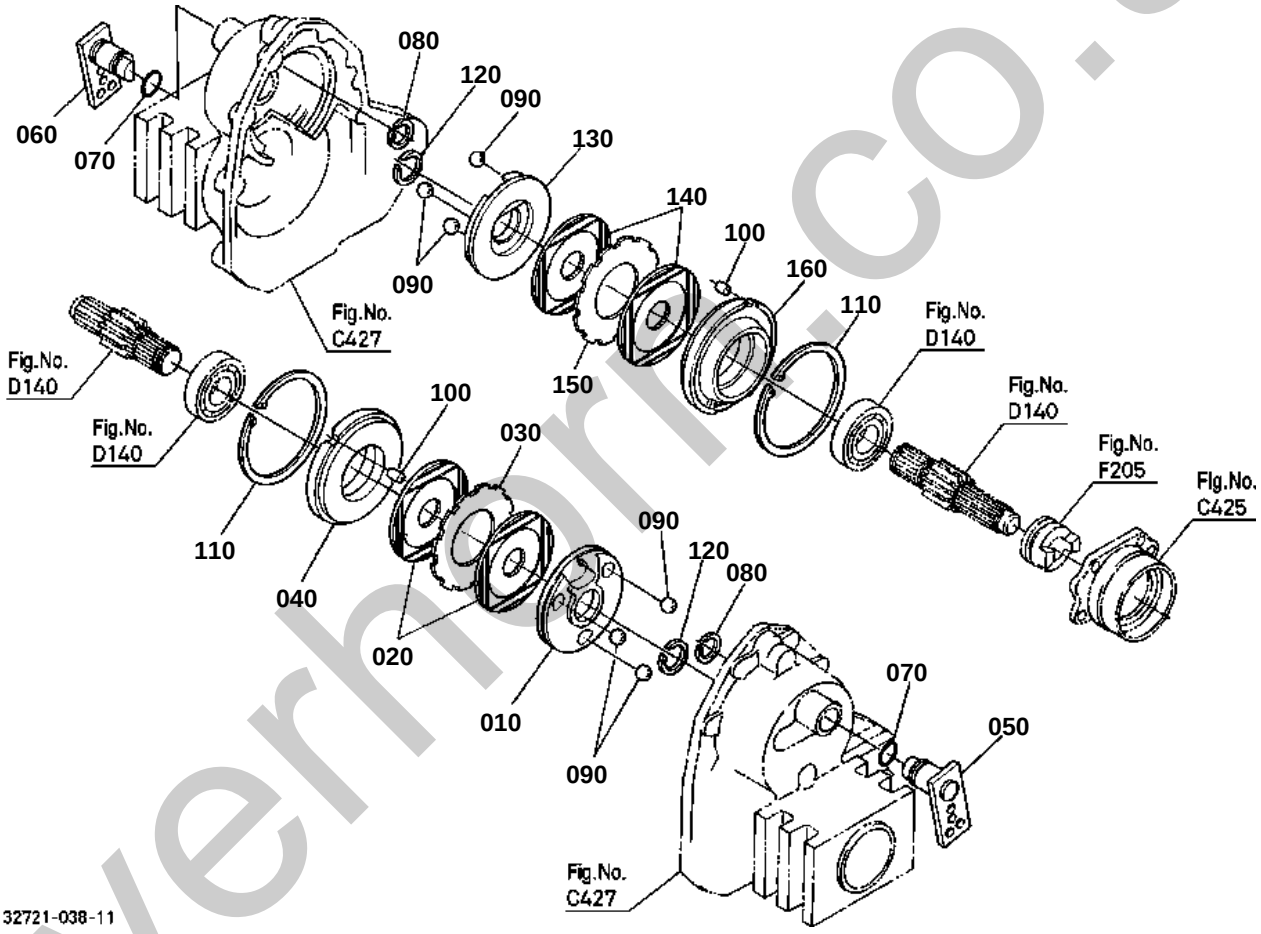

silverhorn.co.uk

↔ Interchangeable; ≠ not interchangeable; ← new for old; → old for new

REF.No	Part No.	Description	Q'ty	S.No.	I/C	REMARKS	Weight (kgf)	Weight (lb)
010	6A100-22320	ACTUATOR LH	1				0.62	1.364
020	6A100-22350	DISK BRAKE	2				0.25	0.55
030	6A100-22340	PLATE FRICTION	1				0.18	0.396
040	32721-22382	HOLDER BEARING	1				1.18	2.596
050	6A100-22360	LEVER CAM LH	1				0.31	0.682
060	6A100-22460	LEVER CAM RH	1				0.31	0.682
070	04811-00210	O RING	2	<=61394			0	0
070	04816-00210	O RING	2	>=61395	¬		0.004	0.0088
080	67061-14370	CIR-CLIP	2				0.002	0.0044
090	07715-00805	BALL	6				0.016	0.0352
100	6C040-22440	PIN	2				0.004	0.0088
110	32580-43820	CIR CLIP INTERNAL	2				0.1	0.22
120	70435-51590	CIR-CLIP	2				0.002	0.0044
130	6A100-22420	ACTUATOR RH	1				0.62	1.364
140	6A100-22350	DISK BRAKE	2				0.25	0.55
150	6A100-22340	PLATE FRICTION	1				0.18	0.396
160	32721-22382	HOLDER BEARING	1				1.18	2.596

silverhorn.co.uk

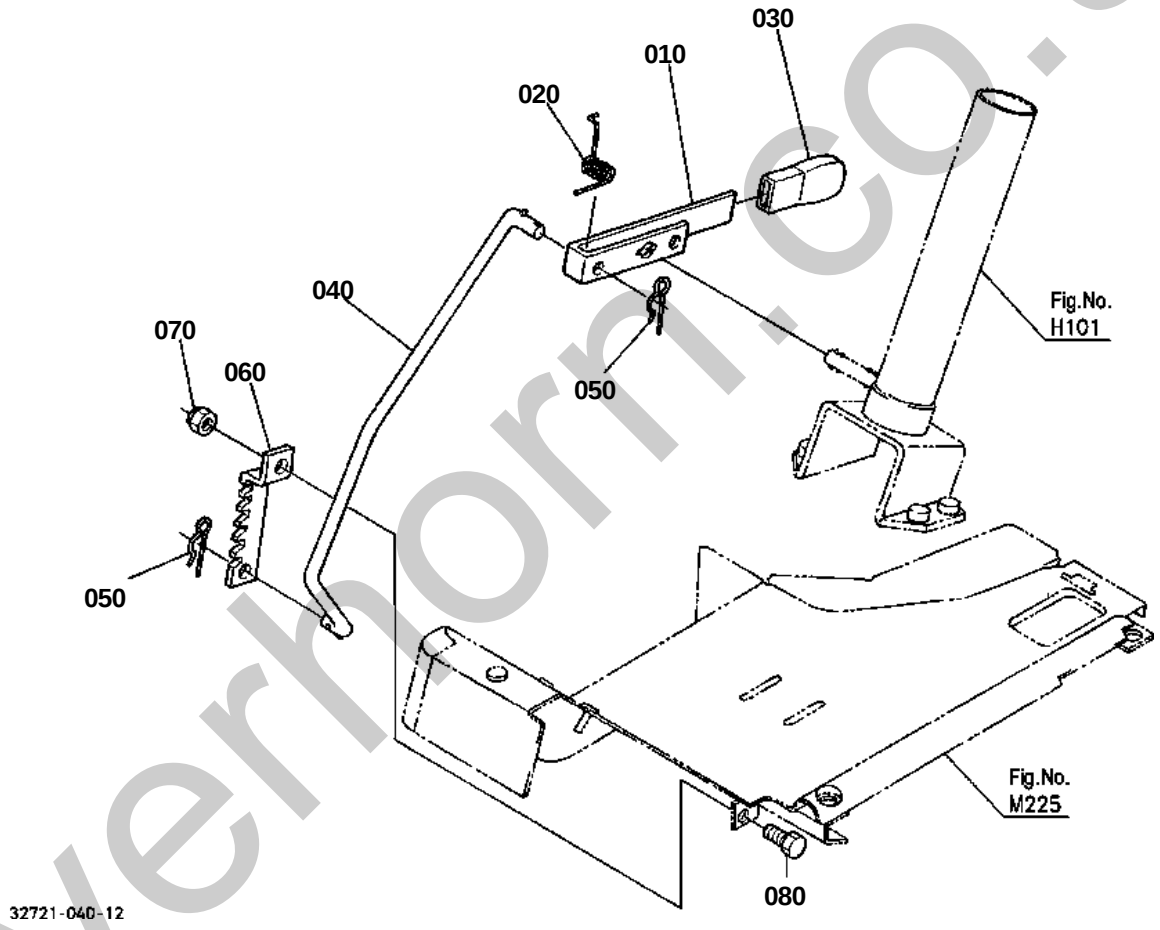

silverhorn.co.uk

PARKING BRAKE LEVER

↔ Interchangeable; ≠ not interchangeable; ← new for old; → old for new

REF.No	Part No.	Description	Q'ty	S.No.	I/C	REMARKS	Weight (kgf)	Weight (lb)
010	6C040-41350	LEVER	1				0.104	0.2288
020	6C040-41380	SPRING RETURN	1				0.008	0.0176
030	6C040-41360	GRIP LEVER	1				0.012	0.0264
040	6C040-41373	ROD BRAKE	1				0.22	0.484
050	05525-50800	PIN SNAP	2				0.001	0.0022
060	6C040-42250	PLATE BRAKE LOCK	1				0.07	0.154
070	50591-62370	NUT	1				0.005	0.011
080	01153-50820	BOLT	1	<=51529			0.012	0.0264
080	01153-50822	BOLT	1	>=51530	¬		0.011	0.0242

silverhorn.co.uk

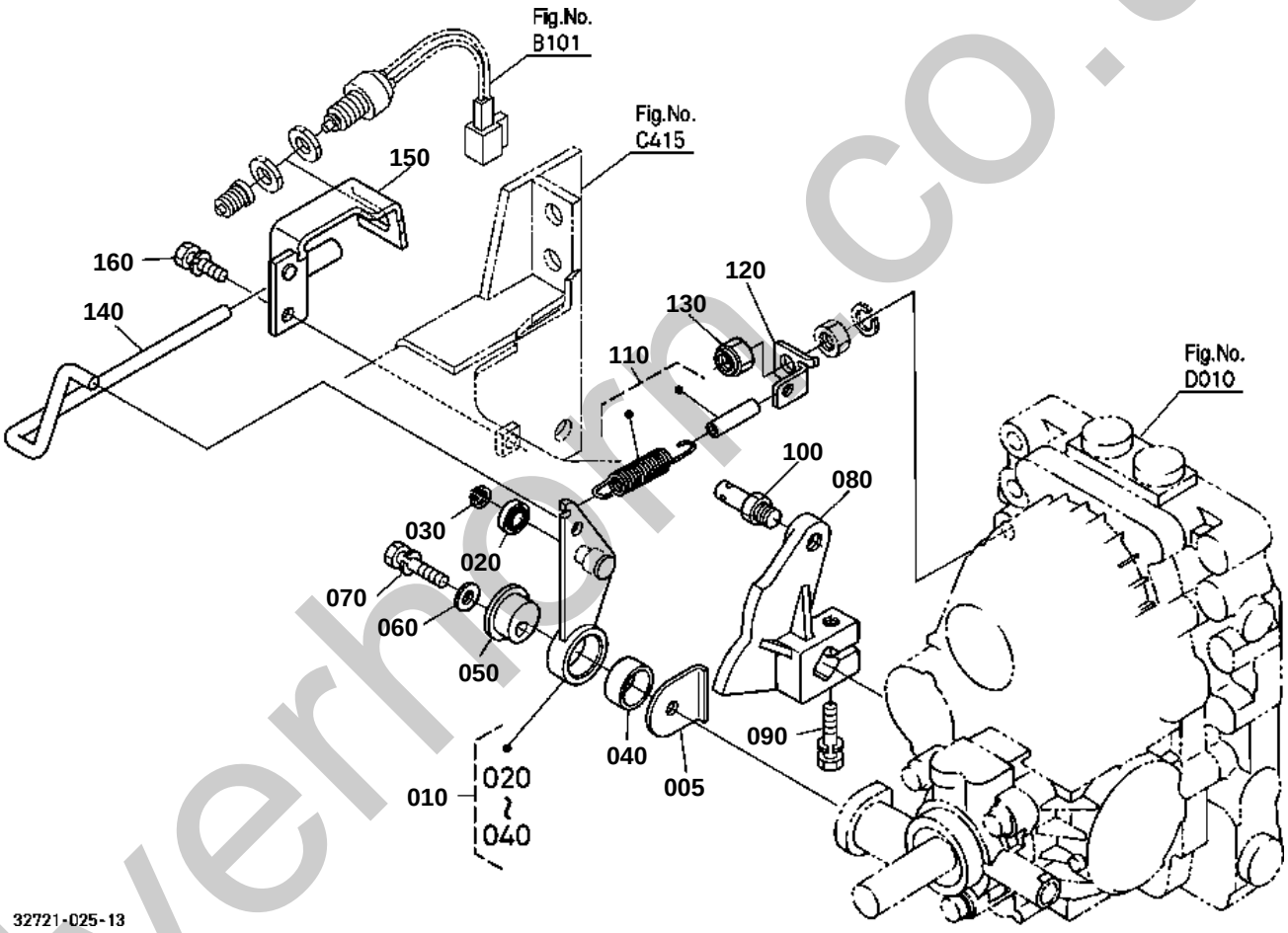

silverhorn.co.uk

OLD PARTS

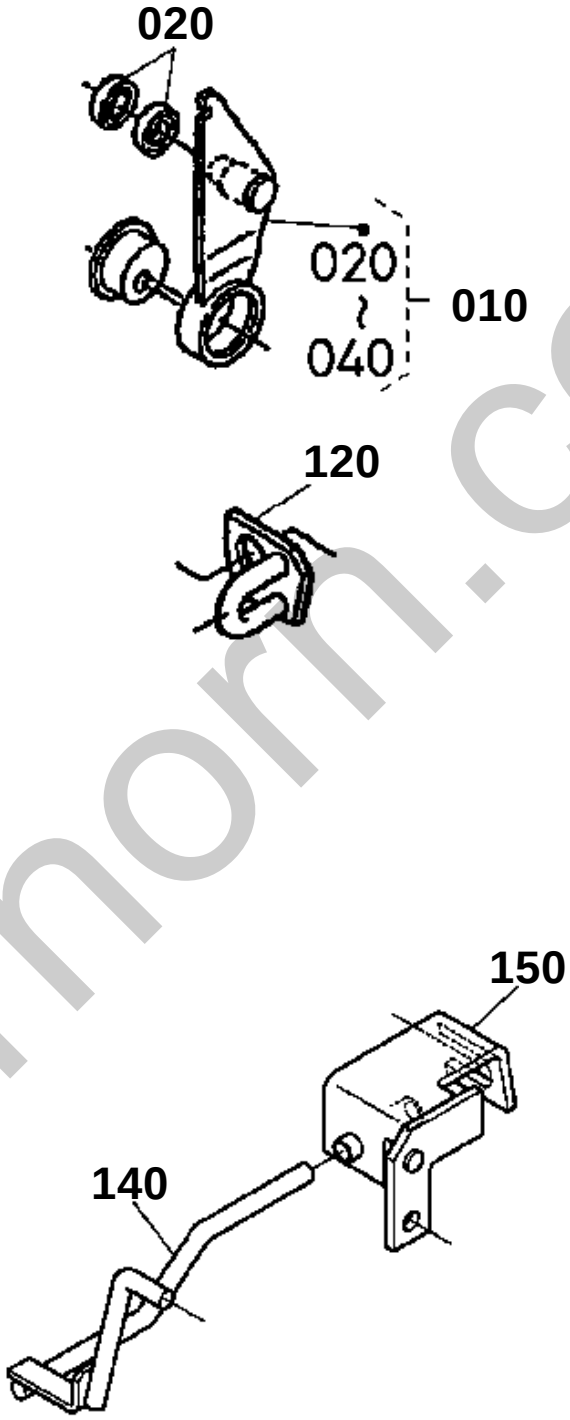

32721-816-12

silverhorn.co.uk

NEUTRAL HOLDER LINK

↔ Interchangeable; ≠ not interchangeable; ← new for old; → old for new

REF.No	Part No.	Description	Q'ty	S.No.	I/C	REMARKS	Weight (kgf)	Weight (lb)
005	6C150-43470	SPACER	1	>=60971			0.009	0.0198
010	32721-43410	ASSY ARM NEUTRAL	1	<=60970			0.17	0.374
010	6C150-43413	ASSY ARM NEUTRAL	1	>=60971	1		0.17	0.374
020	32721-43420	BEARING BALL	2	<=53403			0.007	0.0154
020	08141-06801	BEARING BALL	2	>=53404	¬		0.006	0.0132
020	32721-43420	BEARING BALL	1	>=60971	¬		0.007	0.0154
030	04612-00120	CIR CLIP EXTERNAL	1				0.001	0.0022
040	66204-43572	BUSH	1				0.002	0.0044
050	66204-43352	SHAFT HOLDER	1				0.072	0.1584
060	04012-50080	WASHER PLAIN	1				0.001	0.0022
070	01123-50835	BOLT	1				0.02	0.044
080	32721-43310	HOLDER NEUTRAL	1				0.38	0.836
090	01123-50835	BOLT	1				0.02	0.044
100	32721-43510	STUD	1				0.027	0.0594
110	32721-43470	SPRING	1	<=62950		NOT SALE	0.044	0.0968
110	6C150-43500	ASSY SPRING	1	>=62951	¬		0.05	0.11
120	32721-43480	HOOK SPRING	1				0.029	0.0638
120	6C150-43480	HOOK SPRING	1		«		0.016	0.0352
130	02574-50100	NUT LOCK	1				0.007	0.0154
140	32721-43120	ROD HST NEUTRAL	1	>=60971			0.13	0.286
140	6C150-43430	ROD HST NEUTRAL	1	>=63105	1		0.1	0.22
150	32721-43112	STAY NEUTRAL SWITCH	1	>=60971			0.215	0.473
150	6C150-43443	STAY NEUTRAL SWITCH	1	>=63105	1		0.145	0.319
160	01123-50820	BOLT	1	>=60971			0.011	0.0242

silverhorn.co.uk

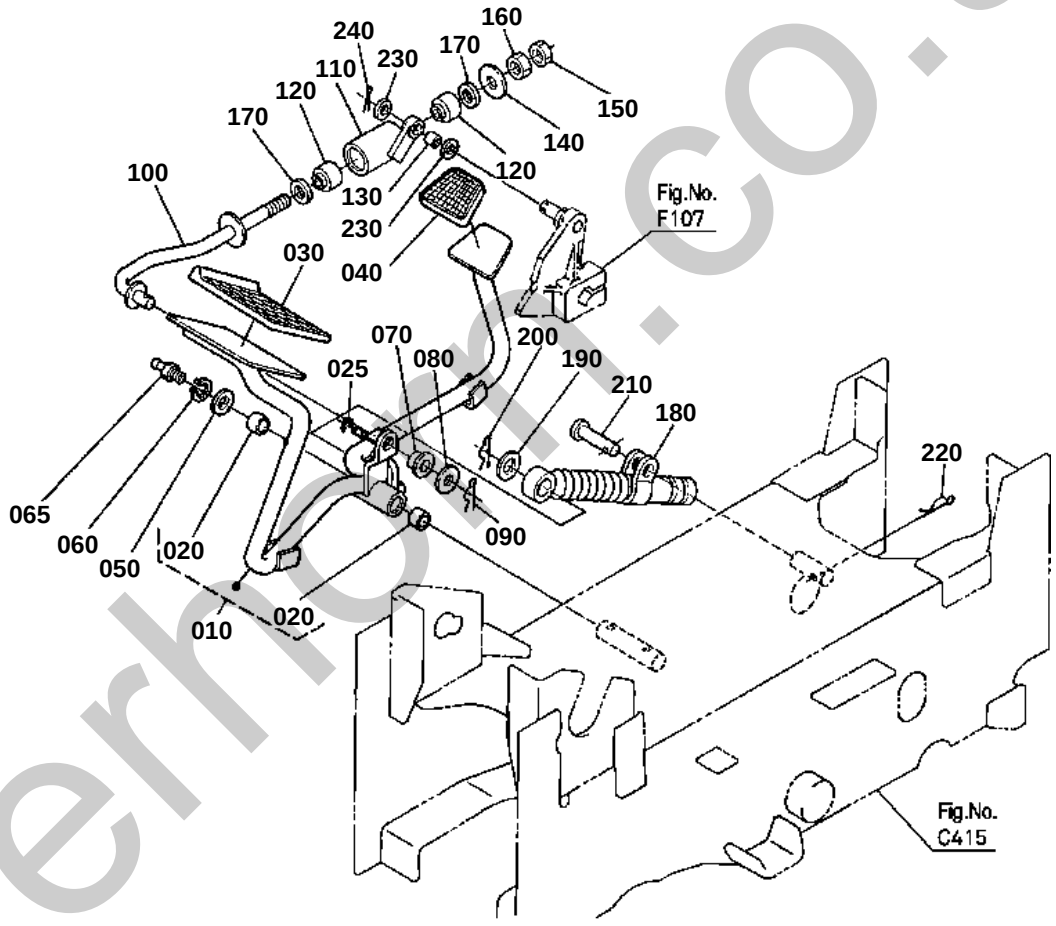

silverhorn.co.uk

OLD PARTS

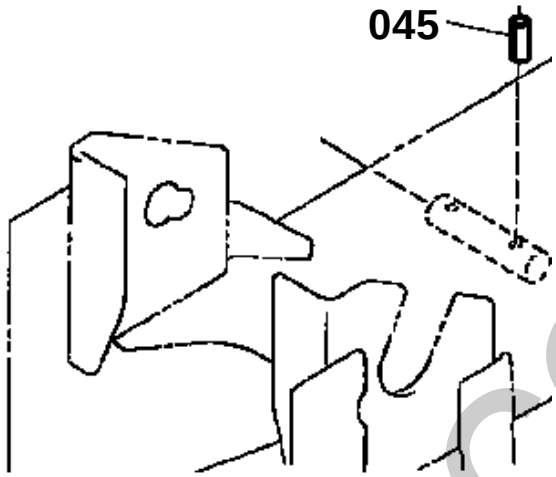

32721-829-10

silverhorn.co.uk

SPEED CONTROL PEDAL

↔ Interchangeable; ≠ not interchangeable; ← new for old; → old for new

REF.No	Part No.	Description	Q'ty	S.No.	I/C	REMARKS	Weight (kgf)	Weight (lb)
010	32721-43370	ASSY PEDAL HST	1	<=51279			0	0
010	32721-43374	ASSY PEDAL HST	1	>=51280	¬		1.9	4.18
020	08511-01615	BUSH	2				0.01	0.022
025	04613-50060	CIR CLIP EXTERNAL	1	>=60971			0.001	0.0022
030	37410-44120	COVER PEDAL	1	<=63268			0	0
030	T2050-44120	COVER PEDAL	1	>=63269	¬		0.07	0.154
040	37410-42760	COVER PEDAL	1				0.025	0.055
045	05411-00625	PIN SPRING	1	<=50008			0.004	0.0088
050	45403-41330	COLLAR DISTANCE	1				0.01	0.022
060	04612-00160	CIR CLIP EXTERNAL	1				0.001	0.0022
065	06613-10675	NIPPLE GREASE	1				0.003	0.0066
070	32721-43540	BUSH	1				0.001	0.0022
080	04013-60100	WASHER PLAIN	1				0.003	0.0066
090	05525-61000	PIN SNAP	1				0.002	0.0044
100	32721-43520	ROD	1				0.167	0.3674
110	32721-43530	ROD	1				0.2	0.44
120	6A110-18260	CUSHION RUBBER	2				0.012	0.0264
130	08511-01015	BUSH	1				0.003	0.0066
140	04015-60100	WASHER PLAIN	1				0.015	0.033
150	02116-50100	NUT	1				0.004	0.0088
160	02118-50100	NUT	1				0.005	0.011
170	04011-50100	WASHER PLAIN	2				0.002	0.0044
180	32721-43350	DAMPER HST	1				0.26	0.572
190	04012-50080	WASHER PLAIN	1				0.001	0.0022
200	05525-50800	PIN SNAP	1				0.001	0.0022
210	05122-50850	PIN JOINT	1				0.02	0.044
220	05525-50800	PIN SNAP	1				0.001	0.0022
220	05525-51600	PIN SNAP	1		¬		0.003	0.0066
230	04011-50100	WASHER PLAIN	2				0.002	0.0044
240	05511-50325	PIN SPLIT	1				0.002	0.0044

silvermorn.co.uk

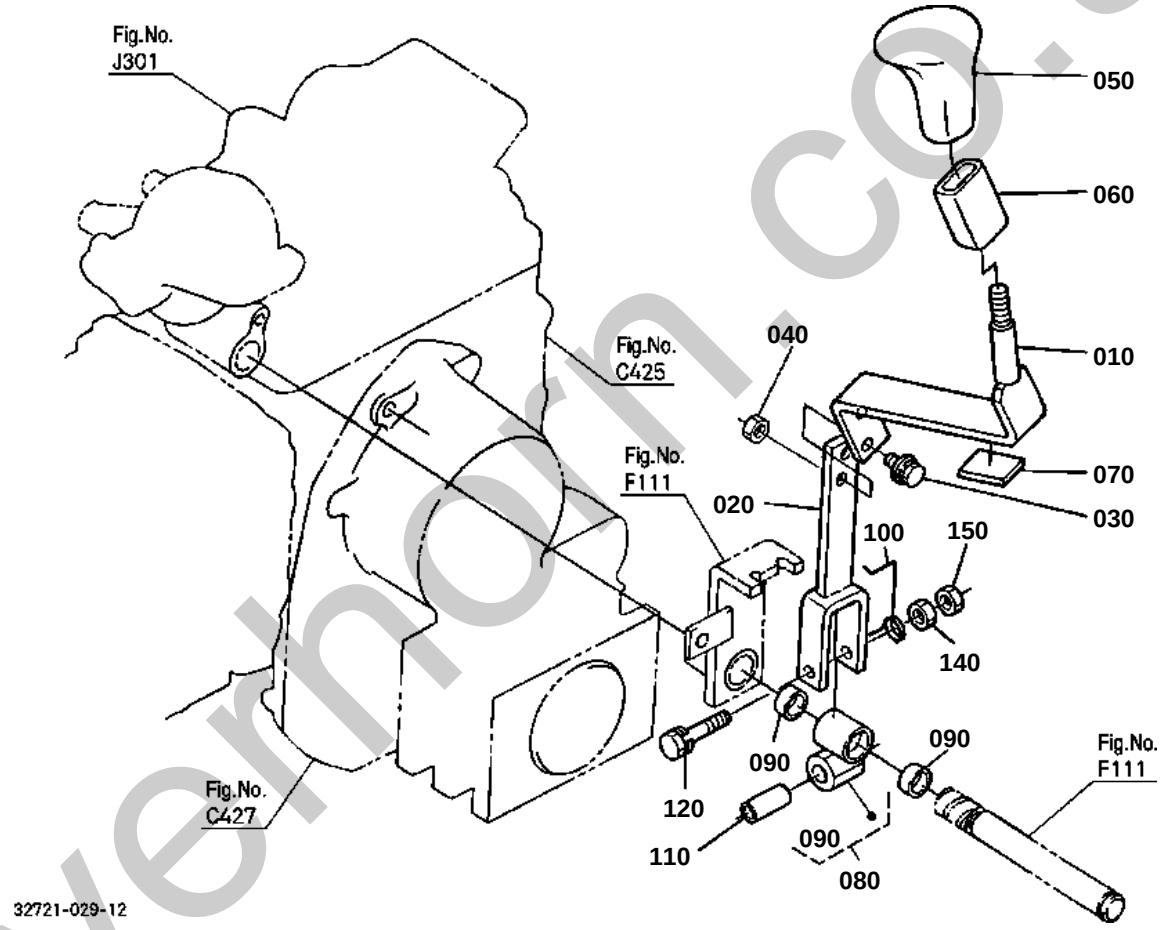

silverhorn.co.uk

OLD PARTS

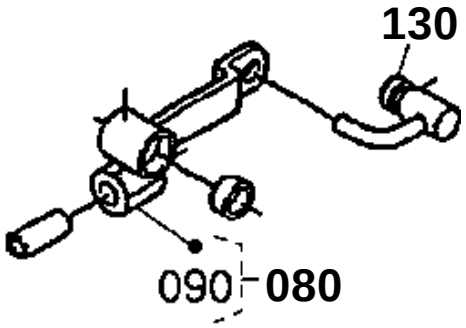

32721-817-11

silverhorn.co.uk

RANGE GEAR SHIFT LEVER

↔ Interchangeable; ≠ not interchangeable; ← new for old; → old for new

REF.No	Part No.	Description	Q'ty	S.No.	I/C	REMARKS	Weight (kgf)	Weight (lb)
010	32721-42560	LEVER SUB UPPER	1				0.68	1.496
020	32721-42570	LEVER SUB UNDER	1	<=52611		NOT SALE	0.315	0.693
020	32721-42573	LEVER SUB UNDER	1	>=52612	1		0.4	0.88
030	01125-50825	BOLT	2				0.018	0.0396
040	02112-50080	NUT	2				0.003	0.0066
050	TA040-69820	GRIP LEVER	1				0.117	0.2574
060	32721-42610	CUSHION	1				0.006	0.0132
070	69181-42520	CUSHION	1	<=50715			0.005	0.011
070	32721-42520	CUSHION SUB LEVER	1	>=50716	¬		0.005	0.011
080	32721-42530	ASSY BOSS	1	<=61236			0.28	0.616
080	32721-42532	ASSY BOSS	1	>=61237	1		0.198	0.4356
090	08511-01810	BUSH	2				0.005	0.011
100	37560-42370	SPRING SUB	1				0.015	0.033
110	32721-42660	COLLAR	1				0.014	0.0308
120	01123-50855	BOLT	1				0.02	0.044
130	6C050-42642	ROD NEUTRAL SWITCH	1	<=60970			0.113	0.2486
140	02156-50080	NUT	1				0.004	0.0088
150	02112-50080	NUT	1				0.003	0.0066

silverhorn.co.uk

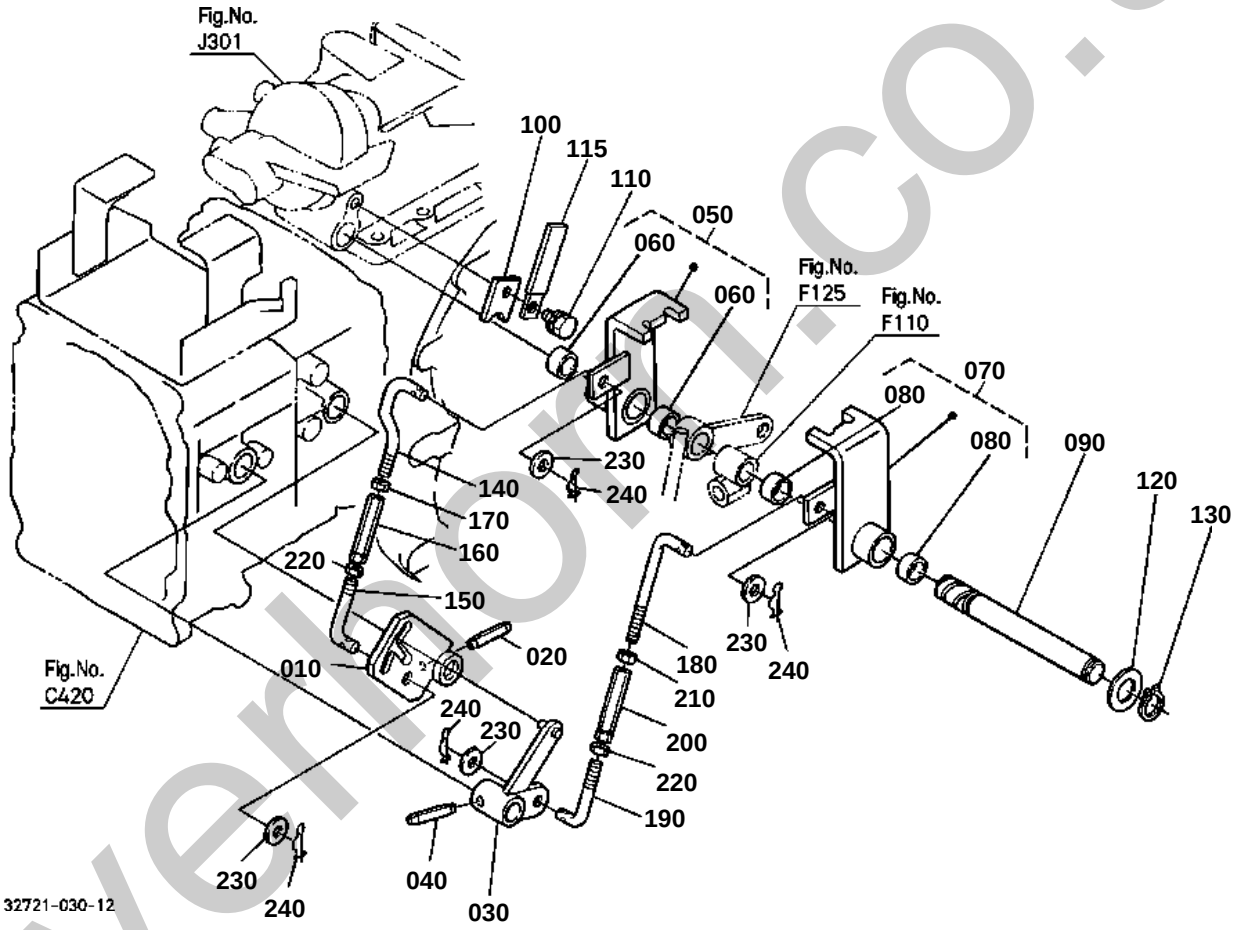

silverhorn.co.uk

OLD PARTS

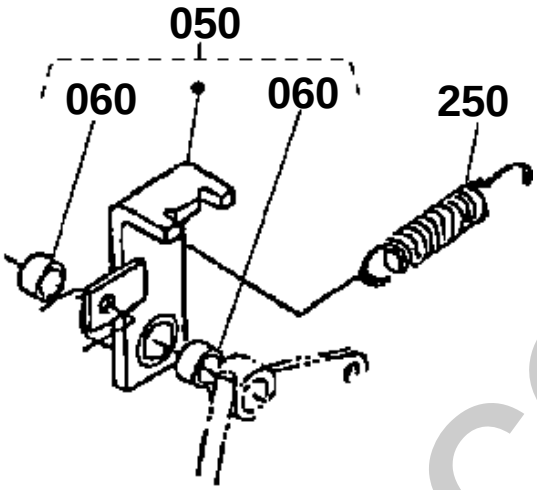

32721-813-11

silverhorn.co.uk

RANGE GEAR SHIFT ROD

↔ Interchangeable; ≠ not interchangeable; ← new for old; → old for new

REF.No	Part No.	Description	Q'ty	S.No.	I/C	REMARKS	Weight (kgf)	Weight (lb)
010	32721-42620	LEVER ARM	1				0.2	0.44
020	05411-00836	PIN SPRING	1	<=50192			0.008	0.0176
020	05411-00832	PIN SPRING	1	>=50193	¬		0.035	0.077
030	32721-42640	LEVER ARM	1				0.166	0.3652
040	05411-00836	PIN SPRING	1	<=50192			0.008	0.0176
040	05411-00832	PIN SPRING	1	>=50193	¬		0.035	0.077
050	32721-42580	ASSY LEVER CHANGE	1	<=51613		NOT SALE	0	0
050	32721-42582	ASSY LEVER CHANGE	1	>=51614	¬	NOT SALE	0.34	0.748
050	32721-42583	ASSY LEVER CHANGE	1	>=52612	¬		0.3	0.66
060	08511-01810	BUSH	2				0.005	0.011
070	32721-42590	ASSY LEVER CHANGE	1	<=52611		NOT SALE	0.328	0.7216
070	32721-42592	ASSY LEVER CHANGE	1	>=52612	¬		0.3	0.66
080	08511-01810	BUSH	2				0.005	0.011
090	32721-42670	SHAFT FULCRUM	1				0.3	0.66
100	6C040-42680	PLATE	1				0.017	0.0374
110	01123-60816	BOLT	1				0.01	0.022
115	13824-67590	CLAMP CORD	1				0.002	0.0044
120	04011-50180	WASHER PLAIN	1				0.012	0.0264
130	04612-00180	CIR CLIP EXTERNAL	1				0.001	0.0022
140	32721-42760	ROD	1				0.058	0.1276
150	32721-42770	ROD	1				0.04	0.088
160	37410-42180	TURNBUCKLE	1				0.05	0.11
170	02176-50100	NUT	1				0.005	0.011
180	32721-42790	ROD	1				0.073	0.1606
190	32721-42770	ROD	1				0.04	0.088
200	37410-42180	TURNBUCKLE	1				0.05	0.11
210	02176-50100	NUT	1				0.005	0.011
220	68011-32680	NUT LOCK	2				0.006	0.0132
230	04013-60100	WASHER PLAIN	4				0.003	0.0066
240	52300-34130	PIN SNAP	4				0.004	0.0088
240	6C040-42390	PIN SNAP	4		«		0.002	0.0044
250	66591-43250	SPRING RETURN	1	>=51614			0.026	0.0572
250	66591-43250	SPRING RETURN	1	<=52611			0.026	0.0572

silvermorn.co.uk

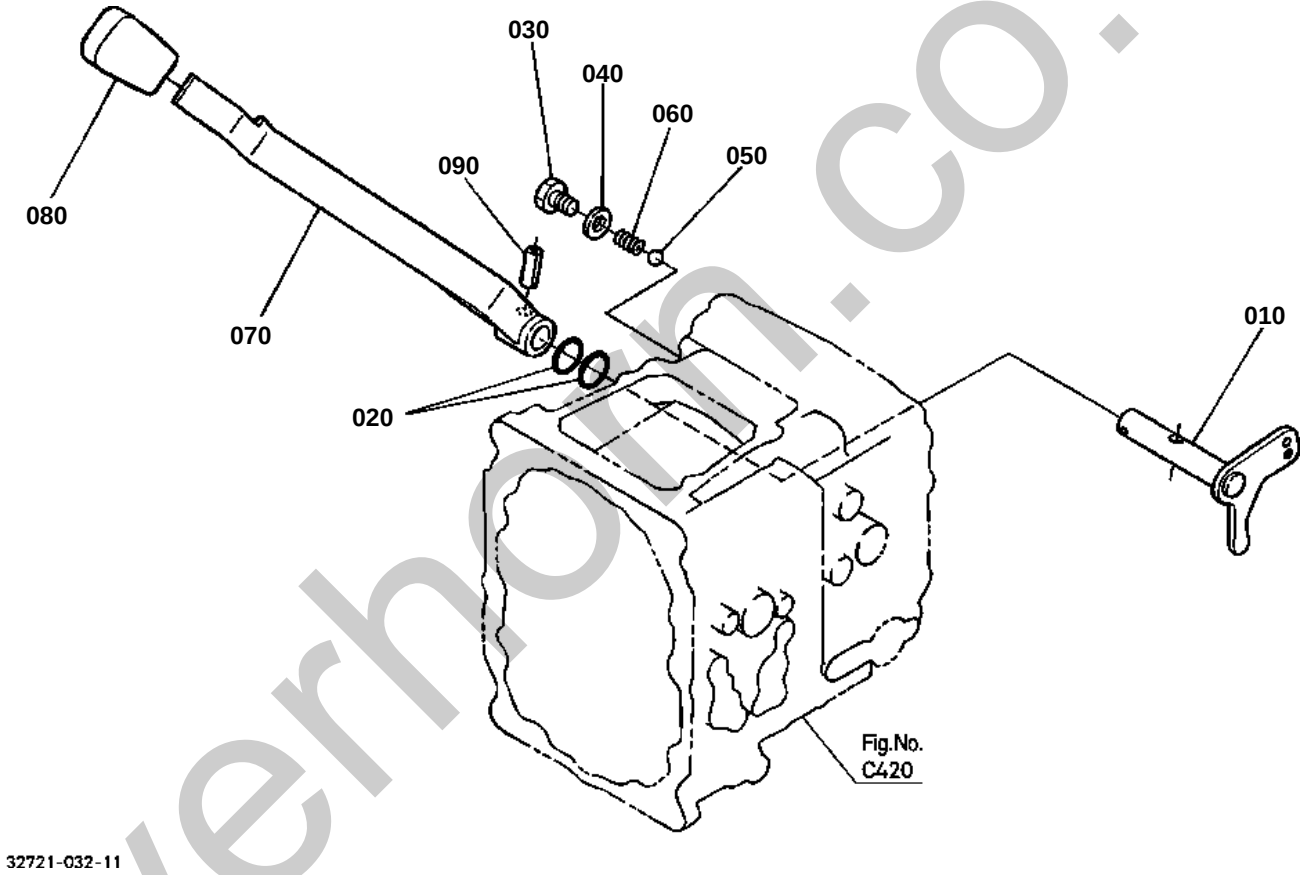

silverhorn.co.uk

FRONT WHEEL DRIVE LEVER

↔ Interchangeable; ≠ not interchangeable; ← new for old; → old for new

REF.No	Part No.	Description	Q'ty	S.No.	I/C	REMARKS	Weight (kgf)	Weight (lb)
010	32721-19212	ARM 4WD SHIFT	1				0.25	0.55
020	04811-00160	O RING	2	<=61394			0	0
020	04816-00160	O RING	2	>=61395	¬		0.003	0.0066
030	6C040-19222	BOLT	1				0.015	0.033
040	04717-01000	WASHER WITH RUBBER	1				0.001	0.0022
050	07715-01605	BALL	1				0.003	0.0066
060	62061-18260	SPRING STOPPER	1				0.002	0.0044
070	32721-42912	LEVER 4WD CHANGE	1				0.2	0.44
080	6C040-42630	GRIP LEVER	1				0	0
080	6A320-42630	GRIP LEVER	1		«		0.019	0.0418
090	05411-00836	PIN SPRING	1				0.008	0.0176

silverhorn.co.uk

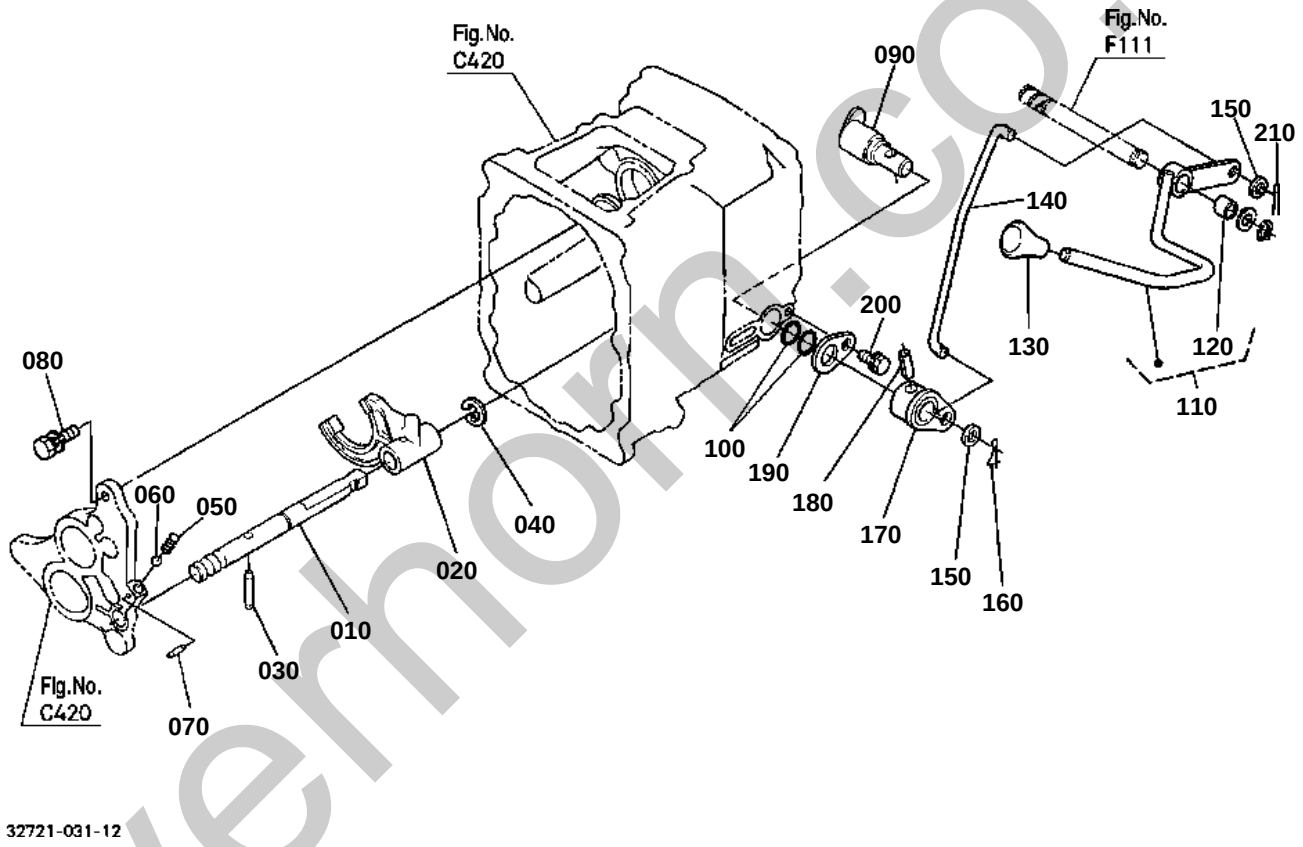

silverhorn.co.uk

OLD PARTS

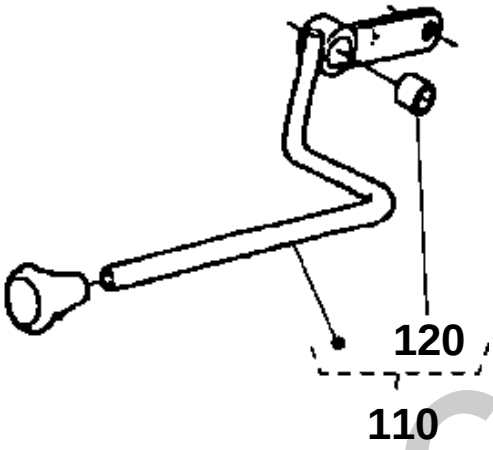

32721-808-11

silverhorn.co.uk

PTO GEAR SHIFT LEVER

↔ Interchangeable; ≠ not interchangeable; ← new for old; → old for new

REF.No	Part No.	Description	Q'ty	S.No.	I/C	REMARKS	Weight (kgf)	Weight (lb)
010	32721-18610	ROD FORK	1				0.175	0.385
020	32721-18620	FORK PTO SHIFT	1				0.093	0.2046
030	05411-00525	PIN SPRING	1				0.002	0.0044
040	04613-50120	CIR CLIP EXTERNAL	1				0.001	0.0022
050	62061-18260	SPRING STOPPER	1				0.002	0.0044
060	07715-01605	BALL	1				0.003	0.0066
070	05411-00320	PIN SPRING	1				0.001	0.0022
080	01123-50818	BOLT	1				0.012	0.0264
090	32721-18710	ARM PTO SHIFT	1				0.147	0.3234
100	04811-00200	O RING	2	<=61394			0	0
100	04816-00200	O RING	2	>=61395	¬		0.003	0.0066
110	32721-42700	LEVER PTO SHIFT	1	<=52211		REPLACED NEW PARTS AND Fig.M225 Ref135	0.51	1.122
110	32721-42703	LEVER PTO SHIFT	1	>=52212	1		0.55	1.21
120	08511-01815	BUSH	1				0.007	0.0154
130	32751-24930	GRIP LEVER	1				0.04	0.088
140	32721-42740	ROD PTO	1				0.15	0.33
150	04013-60100	WASHER PLAIN	2				0.003	0.0066
160	52300-34130	PIN SNAP	1				0.004	0.0088
160	6C040-42390	PIN SNAP	1		«		0.002	0.0044
170	32721-42720	LEVER SHIFT ARM	1				0.1	0.22
180	05411-00836	PIN SPRING	1	<=50192			0.008	0.0176
180	05411-00832	PIN SPRING	1	>=50193	¬		0.035	0.077
190	32721-42730	PLATE PTO ARM	1				0.014	0.0308
200	01123-60816	BOLT	1				0.01	0.022
210	05511-52520	PIN SPLIT	1				0.001	0.0022

silverhorn.co.uk

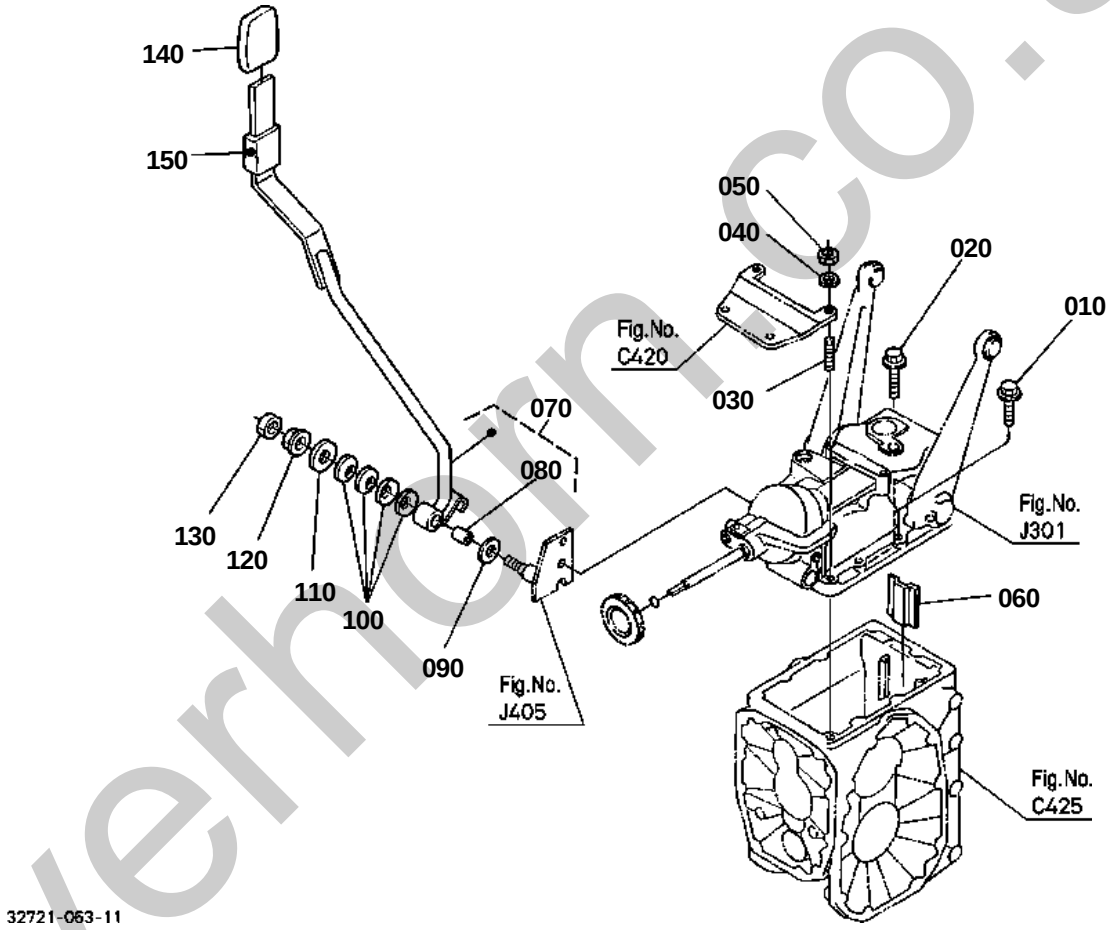

silverhorn.co.uk

HYDRAULIC CONTROL LEVER

↔ Interchangeable; ≠ not interchangeable; ← new for old; → old for new

REF.No	Part No.	Description	Q'ty	S.No.	I/C	REMARKS	Weight (kgf)	Weight (lb)
010	01123-51035	BOLT	5				0.025	0.055
020	01123-51045	BOLT	2				0.032	0.0704
030	01555-51035	STUD	2				0.029	0.0638
040	04512-60100	WASHER SPRING	2				0.002	0.0044
050	02118-50100	NUT	2				0.005	0.011
060	6C040-36750	STOPPER	1				0.222	0.4884
070	32721-36270	ASSY LEVER HYD.	1				0.74	1.628
080	08511-01020	BUSH	1				0.005	0.011
090	6C040-36920	COLLAR	1				0.002	0.0044
100	6C040-36880	SPRING PLATE	4				0.003	0.0066
110	04015-60080	WASHER PLAIN	1				0.01	0.022
120	02121-50080	NUT	1				0.01	0.022
130	02112-50080	NUT	1				0.003	0.0066
140	31395-36880	GRIP LEVER	1				0.04	0.088
150	6C040-42760	CUSHION	1				0.003	0.0066

silverhorn.co.uk

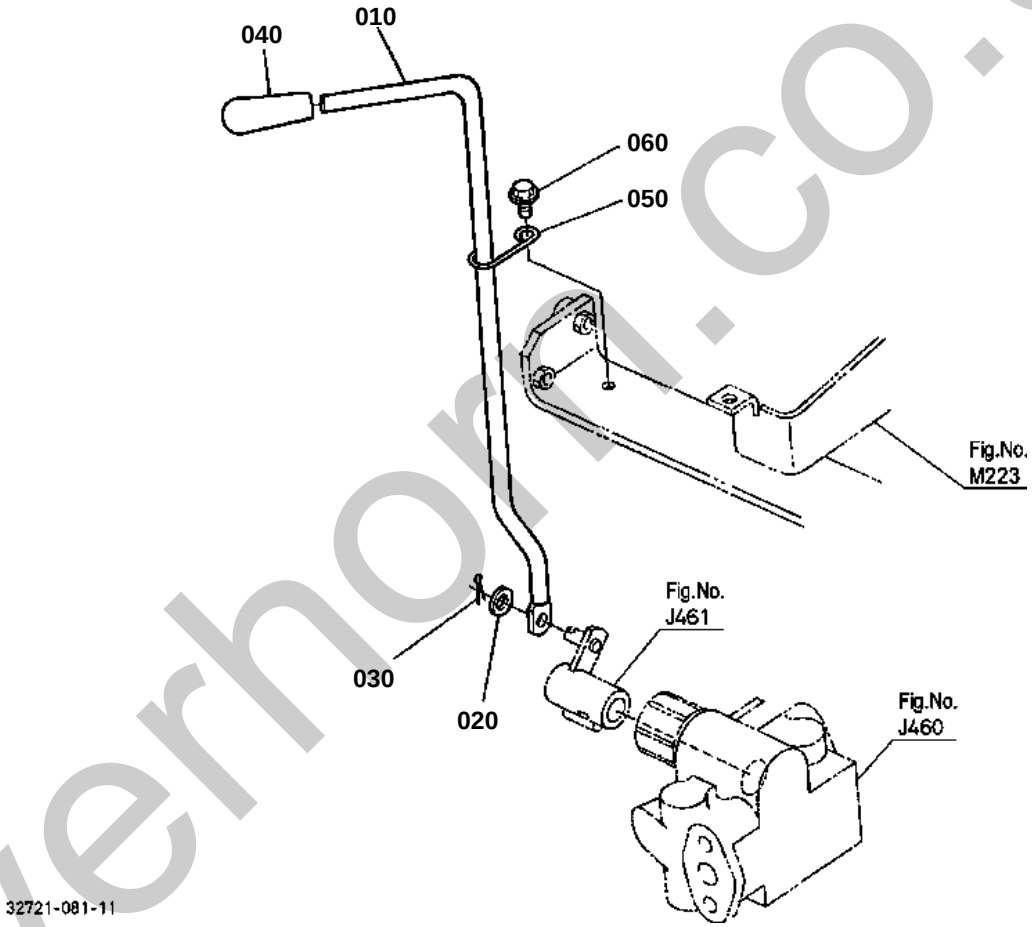

silverhorn.co.uk

HYDRAULIC CHANGE ROD

↔ Interchangeable; ≠ not interchangeable; ← new for old; → old for new

REF.No	Part No.	Description	Q'ty	S.No.	I/C	REMARKS	Weight (kgf)	Weight (lb)
010	32721-38510	ROD	1				0.2	0.44
020	04013-60060	WASHER PLAIN	1				0.001	0.0022
030	05511-51615	PIN SPLIT	1				0.001	0.0022
040	31391-18560	GRIP LEVER	1				0.01	0.022
050	32751-36950	GUIDE	1				0.005	0.011
060	01754-50816	BOLT FLANGE	1				0.011	0.0242

silverhorn.co.uk

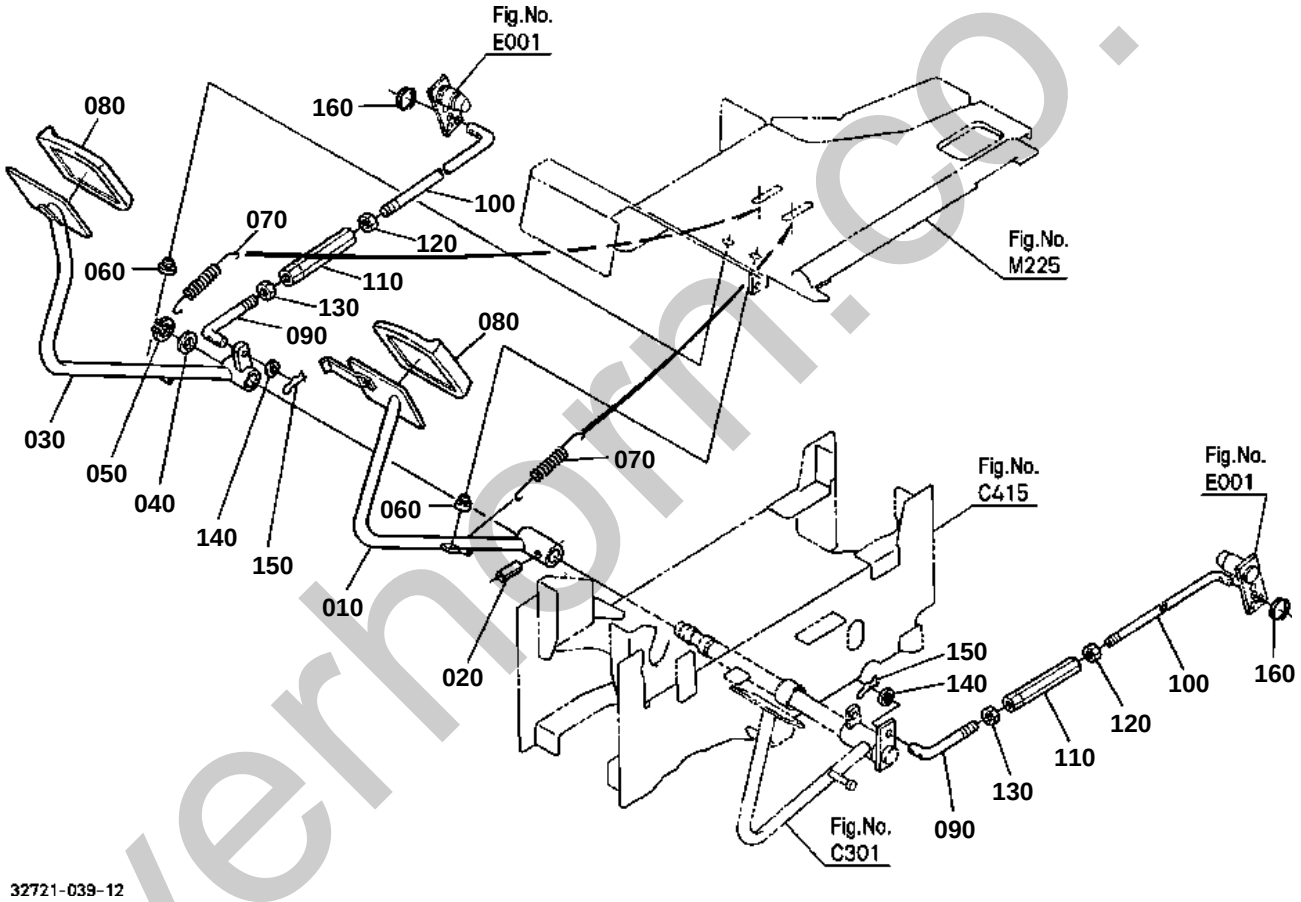

silverhorn.co.uk

OLD PARTS

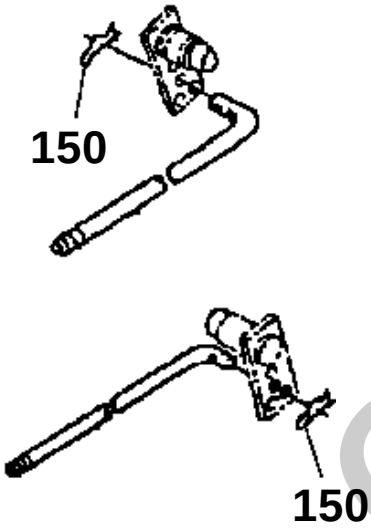

32721-809-11

silverhorn.co.uk

BRAKE PEDAL

↔ Interchangeable; ≠ not interchangeable; ← new for old; → old for new

REF.No	Part No.	Description	Q'ty	S.No.	I/C	REMARKS	Weight (kgf)	Weight (lb)
010	32721-42322	PEDAL BRAKE LH	1				1.9	4.18
020	05411-00845	PIN SPRING	1				0.011	0.0242
030	32721-42330	PEDAL BRAKE RH	1				2	4.4
040	66591-43233	COLLAR	1				0.004	0.0088
050	04612-00240	CIR CLIP EXTERNAL	1				0.002	0.0044
060	6C040-42342	CUSHION	2				0.005	0.011
070	66621-43270	SPRING BRAKE RETURN	2				0.04	0.088
080	37410-44120	COVER PEDAL	2	<=63268			0	0
080	T2050-44120	COVER PEDAL	2	>=63269	¬		0.07	0.154
090	6C040-42350	ROD BRAKE FRONT	2				0.068	0.1496
100	6C040-42360	ROD BRAKE REAR	2	<=52927			0.23	0.506
100	32721-42360	ROD BRAKE REAR	2	>=52928	1		0.24	0.528
110	6C040-42370	TURNBUCKLE	2				0.06	0.132
120	02118-50100	NUT	2				0.005	0.011
130	68011-32680	NUT LOCK	2				0.006	0.0132
140	04011-50100	WASHER PLAIN	2				0.002	0.0044
150	52300-34130	PIN SNAP	4	<=52927			0.004	0.0088
150	52300-34130	PIN SNAP	2	>=52928			0.004	0.0088
150	6C040-42390	PIN SNAP	2		«		0.002	0.0044
160	76550-42190	RING SNAP	2	>=52928			0.004	0.0088

silverhorn.co.uk

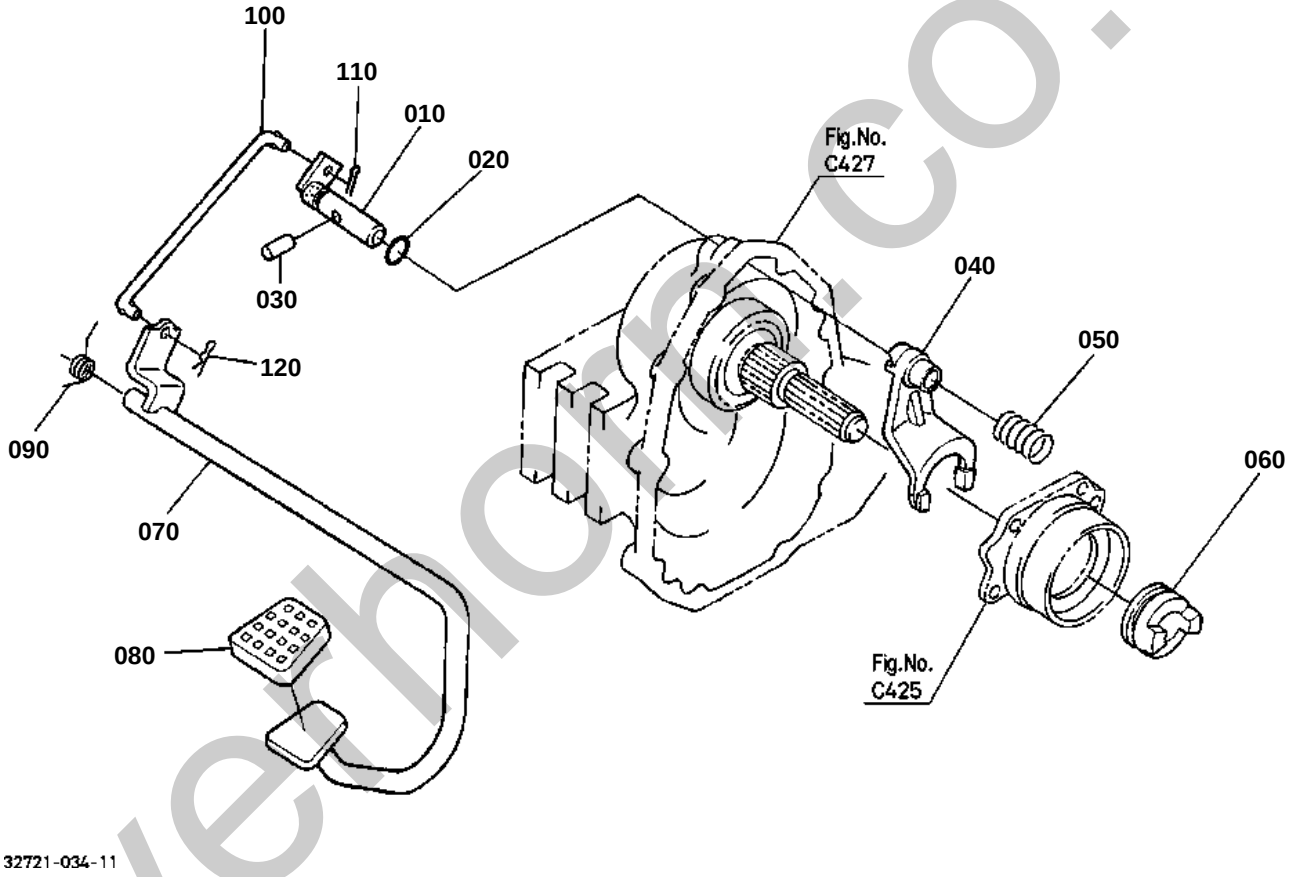

silverthorn.co.uk

DIFFERENTIAL LOCK PEDAL

↔ Interchangeable; ≠ not interchangeable; ← new for old; → old for new

REF.No	Part No.	Description	Q'ty	S.No.	I/C	REMARKS	Weight (kgf)	Weight (lb)
010	32721-19120	ROD FORK	1				0.17	0.374
020	04811-06120	O RING	1	<=61394			0	0
020	04816-06120	O RING	1	>=61395	¬		0.002	0.0044
030	05012-01025	PIN STRAIGHT	1				0.016	0.0352
030	6A100-19130	PIN	1		«		0.017	0.0374
040	6C040-19110	FORK DIFF.LOCK SHIFT	1				0.22	0.484
050	6C040-19130	SPRING	1				0.014	0.0308
060	66611-15130	CLUTCH DIFF.LOCK	1				0.2	0.44
070	6C050-42872	PEDAL DIFF.LOCK	1				1.2	2.64
080	37410-42760	COVER PEDAL	1				0.025	0.055
090	6C050-42890	SPRING	1				0.04	0.088
100	6C040-42880	ROD DIFF.LOCK	1				0.1	0.22
110	05511-50215	PIN SPLIT	1				0.001	0.0022
120	05525-50800	PIN SNAP	1				0.001	0.0022

silverhorn.co.uk

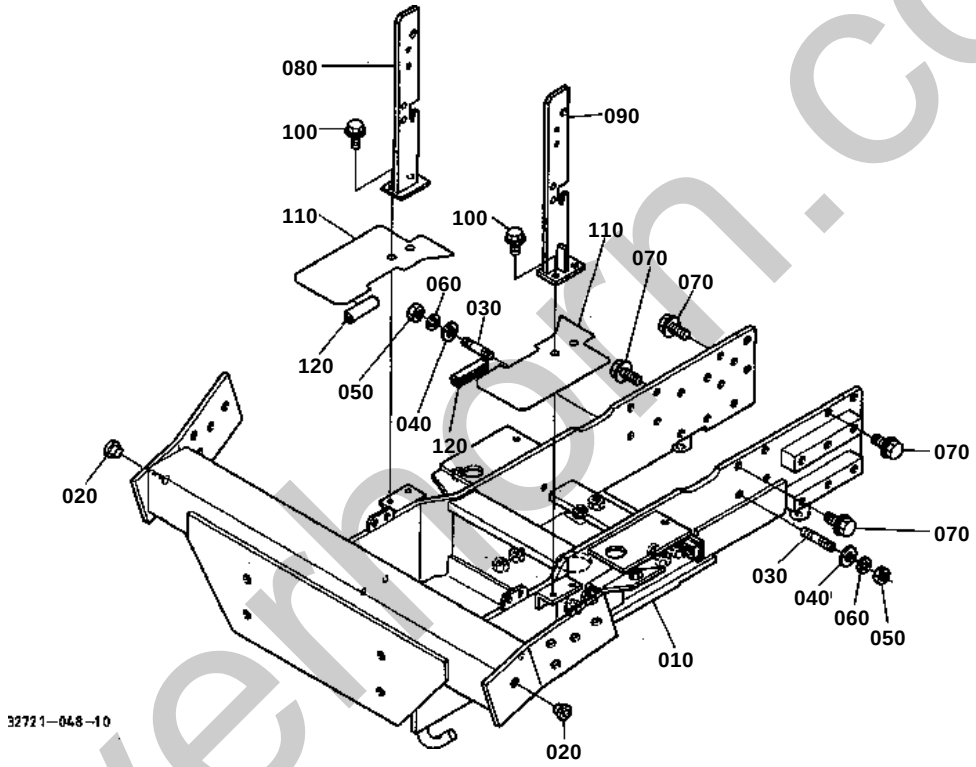

silverhorn.co.uk

FRONT AXLE FRAME

↔ Interchangeable; ≠ not interchangeable; ← new for old; → old for new

REF.No	Part No.	Description	Q'ty	S.No.	I/C	REMARKS	Weight (kgf)	Weight (lb)
010	32721-51210	COMP.FRAME FRONT	1				35	77
020	33300-90910	PLUG	2				0.002	0.0044
030	32721-51250	STUD REAMER	2				0.025	0.055
040	32721-51260	WASHER	2				0.006	0.0132
050	02176-50100	NUT	2				0.005	0.011
060	04512-60100	WASHER SPRING	2				0.002	0.0044
070	32721-51230	BOLT	14				0.032	0.0704
080	32721-51220	SUPPORT OIL COOLER R	1				0.43	0.946
090	32721-51240	SUPPORT OIL COOLER L	1				0.43	0.946
100	6C040-54610	BOLT	4				0.014	0.0308
110	32721-51282	PLATE GRILLE	2				0.137	0.3014
120	32721-51270	TRIM SASH	2				0.004	0.0088

silverhorn.co.uk

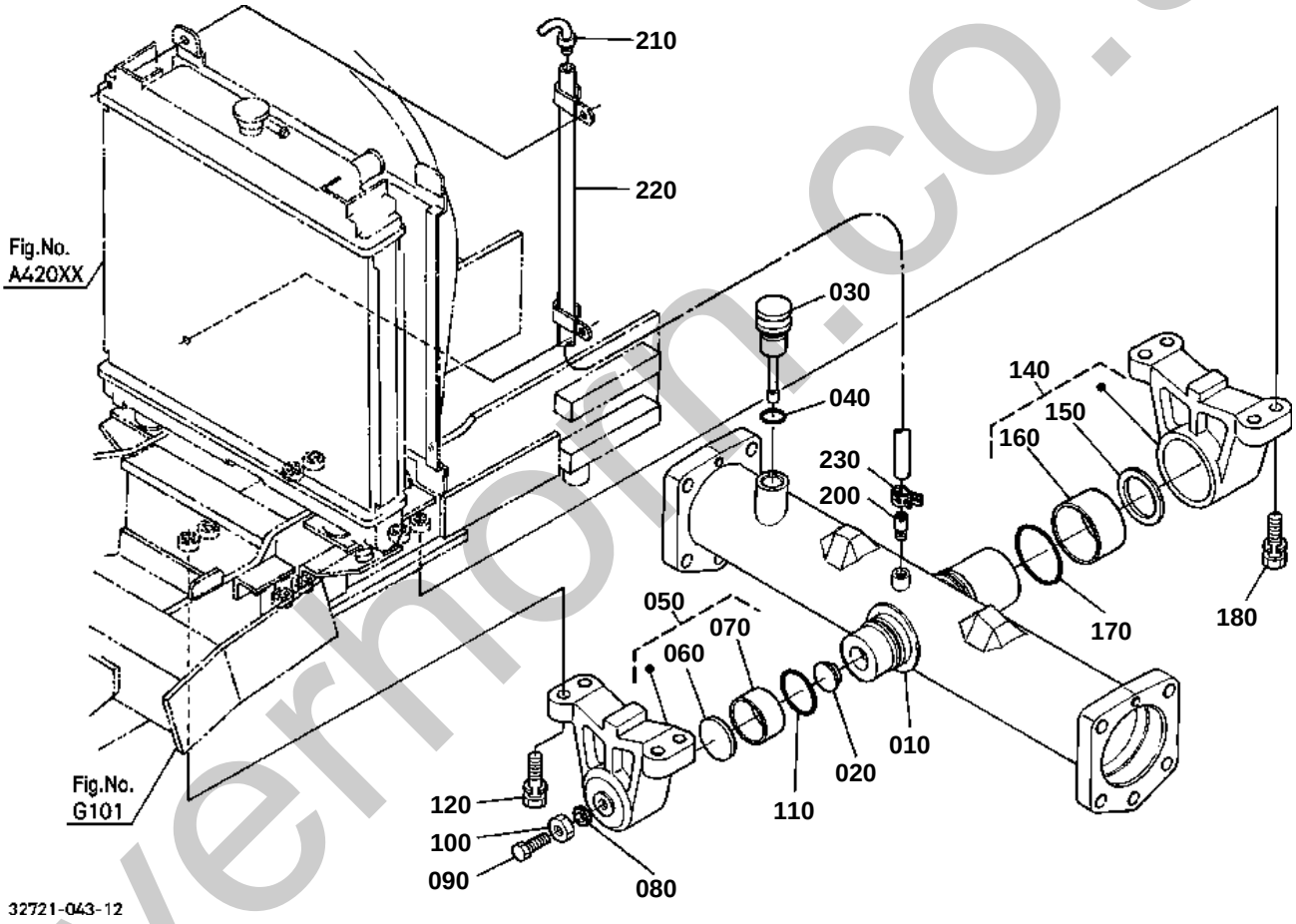

silverhorn.co.uk

OLD PARTS

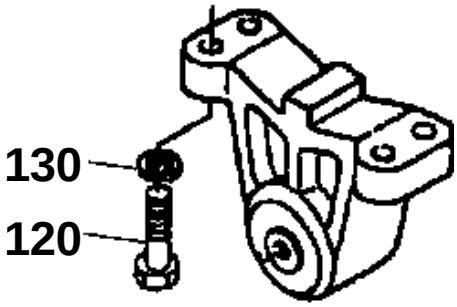

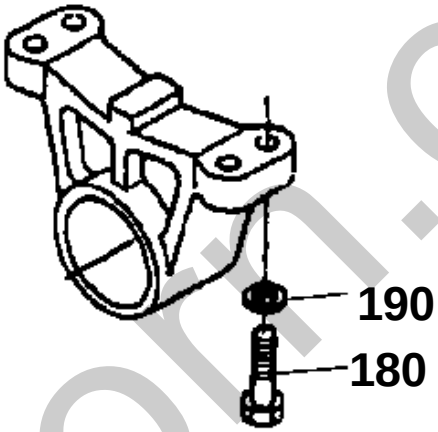

32721-805-11

silverhorn.co.uk

FRONT AXLE CASE

↔ Interchangeable; ≠ not interchangeable; ← new for old; → old for new

REF.No	Part No.	Description	Q'ty	S.No.	I/C	REMARKS	Weight (kgf)	Weight (lb)
010	32721-56110	CASE FRONT AXLE	1	<=51187			0	0
010	32721-56113	CASE FRONT AXLE	1	>=51188	¬		11	24.2
020	06311-85025	CAP SEALING	1				0.01	0.022
020	50140-61210	PLUG	1		«		0.005	0.011
030	6C040-56123	GAUGE OIL	1				0.024	0.0528
040	04811-00180	O RING	1	<=61394			0	0
040	04816-00180	O RING	1	>=61395	¬		0.002	0.0044
050	32721-56170	ASSY HOLDER	1				3.16	6.952
060	37410-56180	COLLAR THRUST	1				0.06	0.132
070	08511-05025	BUSH	1				0.078	0.1716
080	61033-14250	WASHER SEAL	1				0.003	0.0066
090	31303-44760	BOLT	1				0.025	0.055
100	32751-13550	NUT	1				0.026	0.0572
110	04811-00490	O RING	1				0	0
110	04816-00490	O RING	1		¬		0.005	0.011
120	01176-51250	BOLT	4	<=50192			0.051	0.1122
120	01138-61250	BOLT	4	>=50193	¬		0.054	0.1188
130	04512-60120	WASHER SPRING	4	<=50192			0.005	0.011
140	32721-56180	ASSY HOLDER	1				3.52	7.744
150	37410-56270	COLLAR THRUST	1				0.035	0.077
160	32580-43690	DU-BUSH	1				0.14	0.308
170	04811-50650	O RING	1				0.002	0.0044
180	01176-51250	BOLT	4	<=50192			0.051	0.1122
180	01138-61250	BOLT	4	>=50193	¬		0.054	0.1188
190	04512-60120	WASHER SPRING	4	<=50192			0.005	0.011
200	36200-21610	BREATHER	1				0.008	0.0176
210	6A100-36410	BREATHER	1				0.006	0.0132
220	09663-80675	TUBE FUEL	1				0.08	0.176
230	09318-88130	CLAMP HOSE	1				0.002	0.0044

silvermorn.co.uk

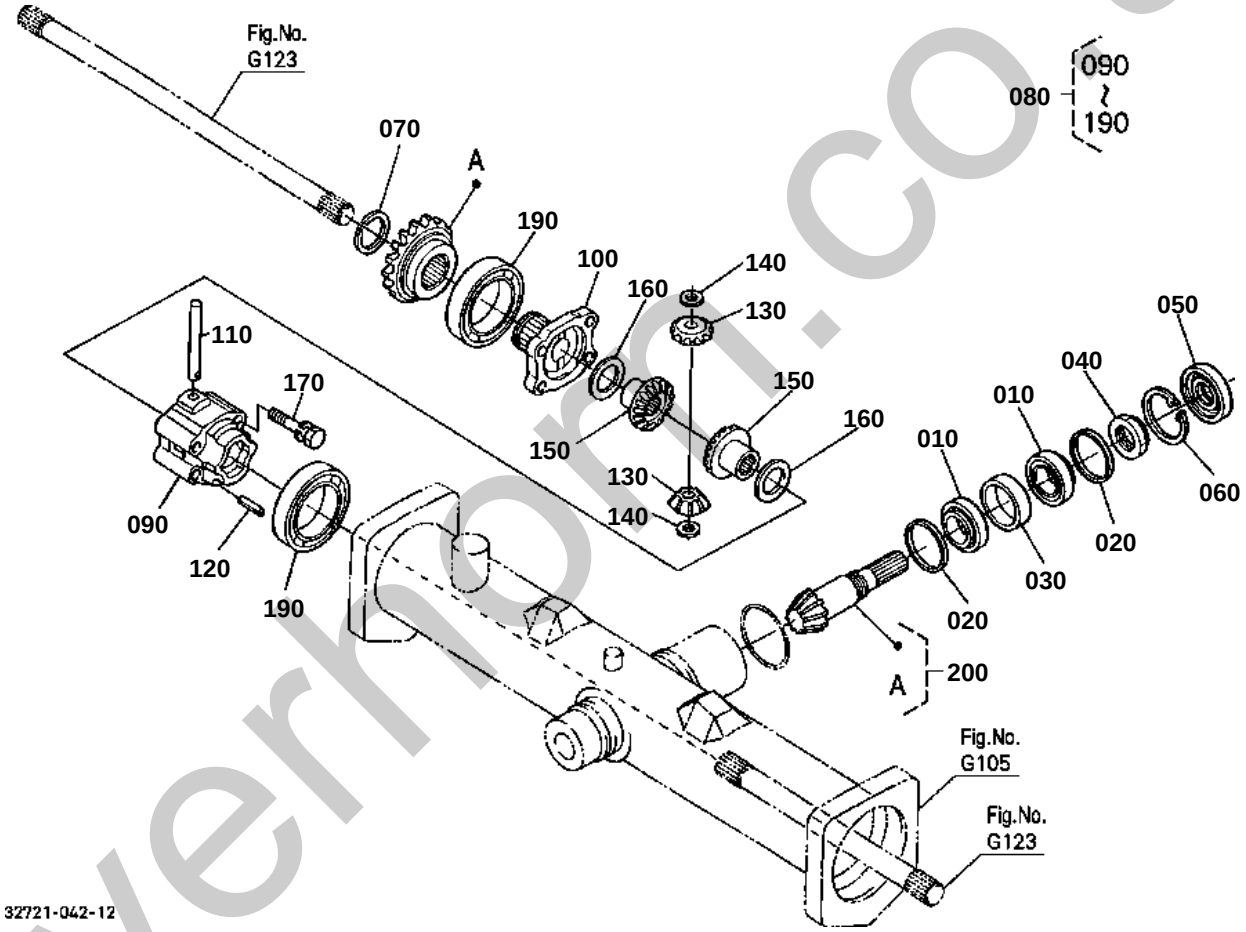

silverhorn.co.uk

OLD PARTS

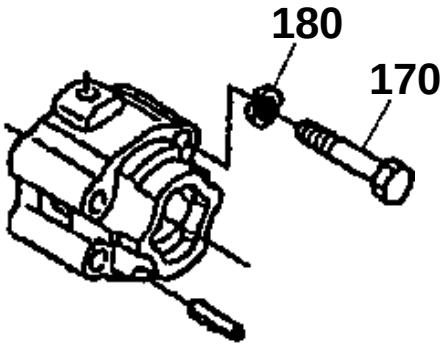

32721-819-11

silverhorn.co.uk

↔ Interchangeable; ≠ not interchangeable; ← new for old; → old for new

REF.No	Part No.	Description	Q'ty	S.No.	I/C	REMARKS	Weight (kgf)	Weight (lb)
010	08711-30205	BEARING TAPER-ROLLER	2				0.148	0.3256
020	37410-58120	COLLAR	2			4.0mm	0.01	0.022
020	37410-58130	COLLAR	2			4.1mm	0.01	0.022
020	37410-58140	COLLAR	2			4.2mm	0.01	0.022
020	37410-58150	COLLAR	2			3.8mm	0.01	0.022
020	37410-58160	COLLAR	2			3.4mm	0.01	0.022
020	37410-56660	COLLAR	2			4.6mm	0.011	0.0242
020	37410-58170	COLLAR	2			3.6mm	0.01	0.022
020	37410-56680	COLLAR	2			4.4mm	0.015	0.033
030	37410-56690	COLLAR	1				0.04	0.088
040	37410-56710	NUT	1				0.03	0.066
050	32721-56720	SEAL OIL	1				0.12	0.264
060	04611-00520	CIR CLIP INTERNAL	1				0.009	0.0198
070	6C040-56820	CIR CLIP EXTERNAL	1				0.003	0.0066
080	6C040-56900	ASSY DIFF. FRONT	1				2	4.4
090	6C040-56830	CASE DIFF.FRONT	1				0.73	1.606
100	6C040-56840	COVER DIFF.CASE	1				0.3	0.66
110	6C040-56850	SHAFT DIFF.PINION	1				0.05	0.11
120	05411-00425	PIN SPRING	1				0.001	0.0022
130	6C040-56860	GEAR BEVEL	2			10T	0.044	0.0968
140	6C040-56870	SHIM	2			1.0mm	0.002	0.0044
140	6C040-56880	SHIM	2			0.8mm	0.001	0.0022
140	6C040-56890	SHIM	2			1.2mm	0.002	0.0044
150	6C040-56910	GEAR BEVEL	2			14T	0.107	0.2354
160	37410-56930	SHIM	2			1.0mm	0.005	0.011
160	37410-56920	SHIM	2			0.8mm	0.005	0.011
160	37410-56940	SHIM	2			1.2mm	0.01	0.022
170	01156-50855	BOLT	4	<=53291			0.012	0.0264
170	01128-50855	BOLT	4	>=53292	¬		0.023	0.0506
180	04512-60080	WASHER SPRING	4	<=53291			0.002	0.0044
190	08101-06010	BEARING BALL	2				0.262	0.5764
200	6C040-97960	ASSY GEAR BEVEL	1			11-20T	0.96	2.112

silverhorn.co.uk

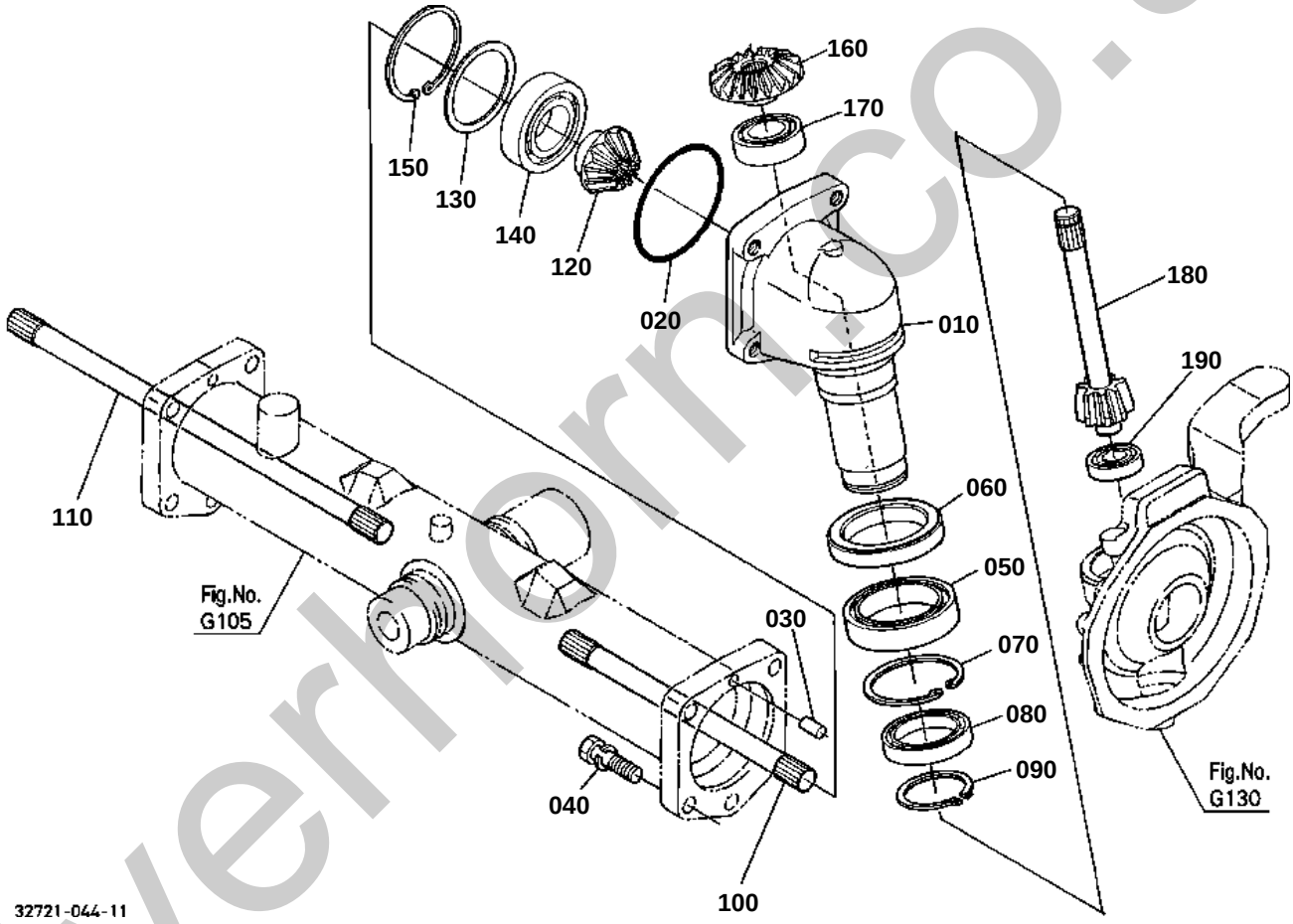

silverhorn.co.uk

BEVEL GEAR CASE

↔ Interchangeable; ≠ not interchangeable; ← new for old; → old for new

REF.No	Part No.	Description	Q'ty	S.No.	I/C	REMARKS	Weight (kgf)	Weight (lb)
010	32721-56210	CASE BEVEL GEAR	2				3.2	7.04
020	04811-10900	O RING	2				0.002	0.0044
030	05012-01018	PIN STRAIGHT	2				0.012	0.0264
030	05012-01020	PIN STRAIGHT	2		«		0.013	0.0286
040	01133-51245	BOLT	10				0.055	0.121
050	08101-06911	BEARING BALL	2				0.2	0.44
060	32721-56220	SEAL OIL	2	<=51187			0	0
060	32721-56223	SEAL OIL	2	>=51188	¬		0.069	0.1518
070	04611-00720	CIR CLIP INTERNAL	2				0.018	0.0396
080	08101-06910	BEARING BALL	2				0.14	0.308
090	04612-00500	CIR CLIP EXTERNAL	2				0.009	0.0198
100	32721-57110	SHAFT YOKE LH	1				0.52	1.144
110	32721-57120	SHAFT YOKE RH	1				0.82	1.804
120	37410-57130	GEAR BEVEL	2			11T	0.25	0.55
130	37410-57150	SHIM	2			0.8mm	0.008	0.0176
130	37410-57160	SHIM	2			1.0mm	0.01	0.022
130	37410-57170	SHIM	2			1.2mm	0.011	0.0242
140	08101-06207	BEARING BALL	2				0.282	0.6204
150	04611-00720	CIR CLIP INTERNAL	2				0.018	0.0396
160	37410-57180	GEAR BEVEL	2			16T	0.32	0.704
170	37410-57190	BEARING BALL	2				0.14	0.308
180	32721-57210	SHAFT GEAR	2			7T	0.51	1.122
190	08101-06304	BEARING BALL	2				0.146	0.3212

silverhorn.co.uk

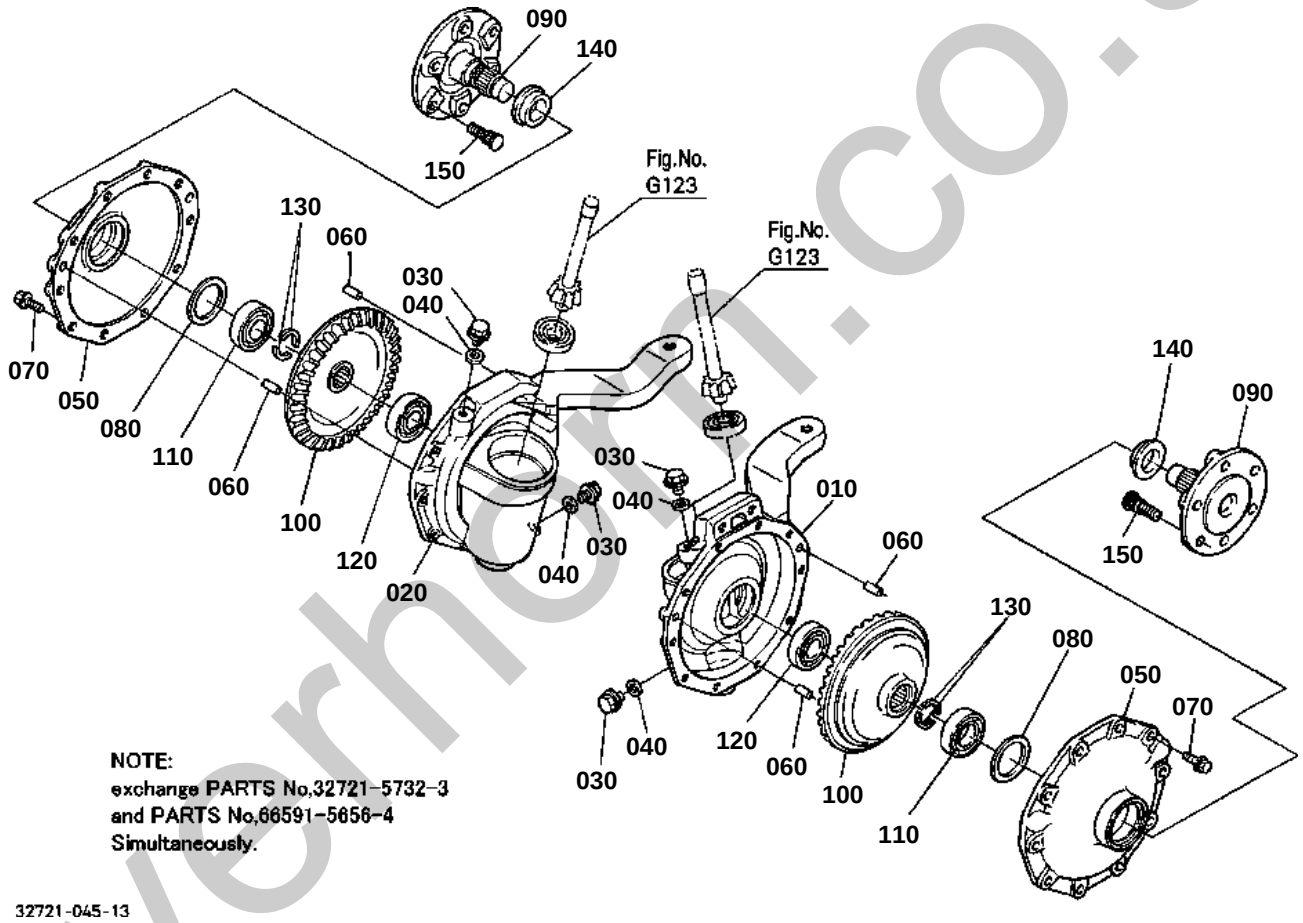

silverhorn.co.uk

OLD PARTS

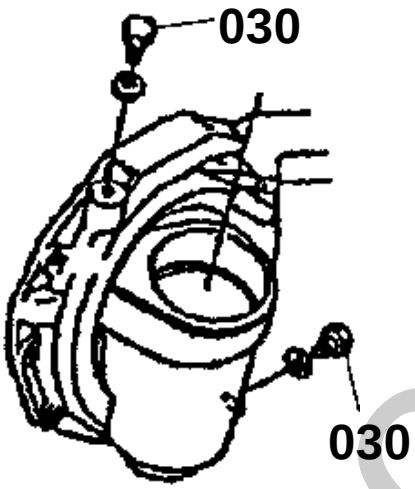

32721-824-11

silverhorn.co.uk

FRONT AXLE

↔ Interchangeable; ≠ not interchangeable; ← new for old; → old for new

REF.No	Part No.	Description	Q'ty	S.No.	I/C	REMARKS	Weight (kgf)	Weight (lb)
010	32721-56310	CASE GEAR LH	1				7.8	17.16
020	32721-56320	CASE GEAR RH	1				7.5	16.5
030	06331-35010	PLUG	4	<=51279			0.012	0.0264
030	01774-51010	BOLT FLANGE	4	>=51280	¬		0.08	0.176
040	04717-01000	WASHER WITH RUBBER	4				0.001	0.0022
050	32721-56340	COVER GEAR CASE	2				2.65	5.83
060	05012-01018	PIN STRAIGHT	4				0.012	0.0264
070	01133-51028	BOLT	20				0.027	0.0594
080	70180-51200	SHIM	2			0.3mm	0.01	0.022
080	70180-51190	SHIM	2			0.4mm	0.005	0.011
080	70180-51180	SHIM	2			0.5mm	0.005	0.011
080	32721-56350	SHIM	2			0.2mmSK	0.001	0.0022
090	32721-57323	SHAFT FRONT AXLE	2			SEE NOTE	1.74	3.828
100	32721-57310	GEAR BEVEL	2				2.7	5.94
110	08103-06206	BEARING BALL	2				0.2	0.44
120	08101-06305	BEARING BALL	2				0.23	0.506
130	67156-56820	COLLAR SET	4				0.004	0.0088
140	37410-57340	SEAL OIL	2				0.045	0.099
150	66591-56564	BOLT STUD	12			SEE NOTE	0.028	0.0616

silverhorn.co.uk

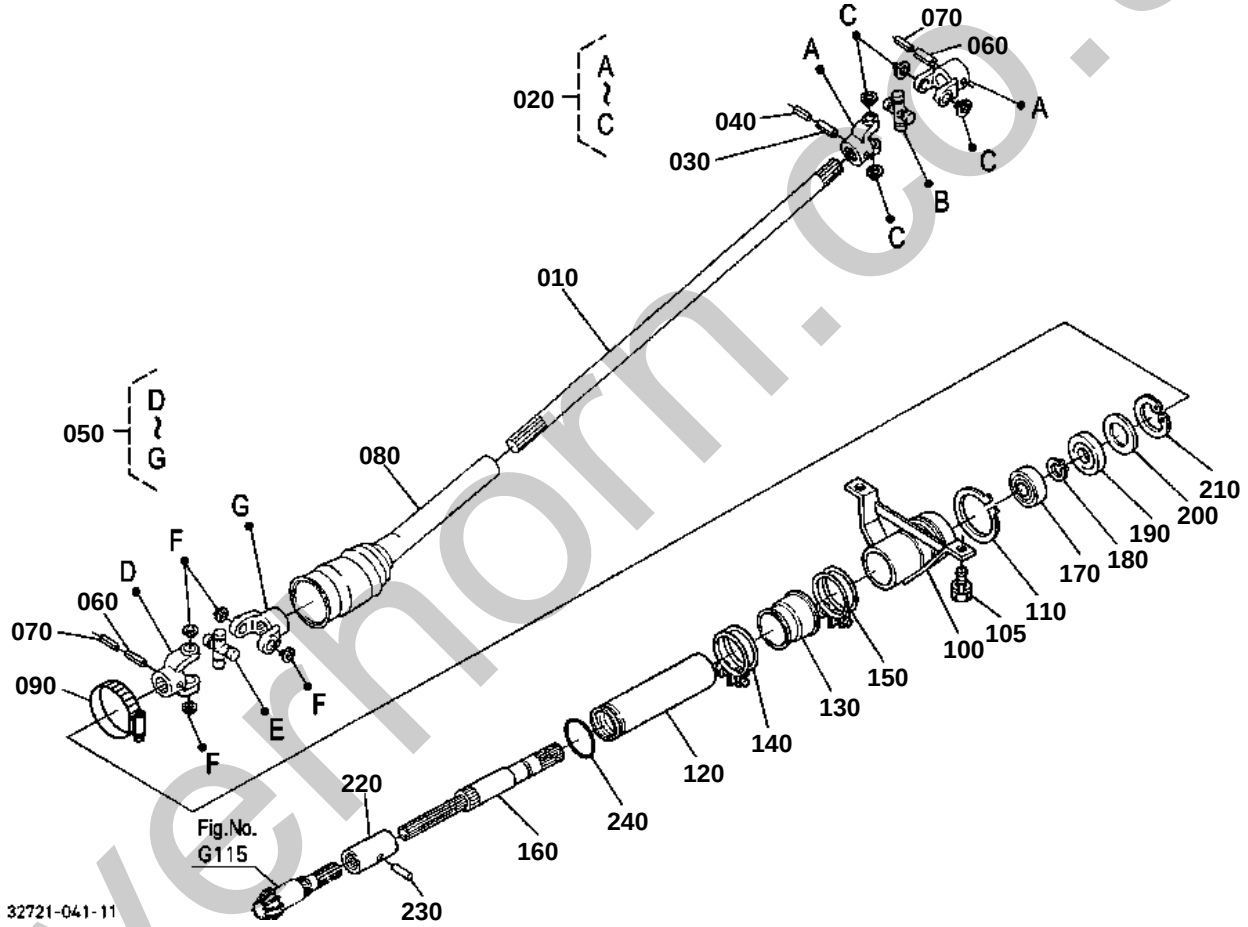

silvernorn.co.uk

OLD PARTS

32721-830-10

silverhorn.co.uk

FRONT DRIVE SHAFT

↔ Interchangeable; ≠ not interchangeable; ← new for old; → old for new

REF.No	Part No.	Description	Q'ty	S.No.	I/C	REMARKS	Weight (kgf)	Weight (lb)
010	32721-57510	SHAFT DRIVE	1				1.45	3.19
020	6C040-57500	ASSY JOINT UNIVERSAL	1				0.6	1.32
030	05411-00640	PIN SPRING	1				0.006	0.0132
040	32721-57680	PIN SPRING	1				0.002	0.0044
050	6C040-57542	ASSY JOINT UNIVERSAL	1				0.69	1.518
060	05411-00640	PIN SPRING	2				0.006	0.0132
070	70451-57350	PIN SPRING	2	<=50192			0.005	0.011
070	32721-57680	PIN SPRING	2	>=50193	¬		0.002	0.0044
080	6C040-57550	COVER	1				0.04	0.088
090	09318-89069	CLAMP HOSE	1	<=60970			0.04	0.088
090	66103-58310	BAND	1	>=60971	1		0.02	0.044
100	32721-57610	COVER FRONT SHAFT	1				0.96	2.112
105	01133-51230	BOLT	2				0.04	0.088
110	04612-00630	CIR CLIP EXTERNAL	1				0.016	0.0352
120	32721-57660	COVER FRONT SHAFT	1				0.156	0.3432
130	6C040-57650	COVER FRONT SHAFT	1				0.035	0.077
140	09318-89052	CLAMP HOSE	1				0.03	0.066
150	09318-89058	CLAMP HOSE	1				0.028	0.0616
160	32721-57620	SHAFT FRONT DRIVE	1				0.51	1.122
170	08141-06204	BEARING BALL	1				0.101	0.2222
180	04612-00200	CIR CLIP EXTERNAL	1				0.001	0.0022
190	6C040-57630	SEAL OIL	1				0.025	0.055
200	32721-57670	COLLAR	1				0.017	0.0374
210	04611-00520	CIR CLIP INTERNAL	1				0.009	0.0198
220	T0070-14710	COUPLING	1				0.16	0.352
230	05411-00430	PIN SPRING	1				0.002	0.0044
240	04811-06370	O RING	1	<=61394			0	0
240	04816-06370	O RING	1	>=61395	¬		0.003	0.0066

silverhorn.co.uk

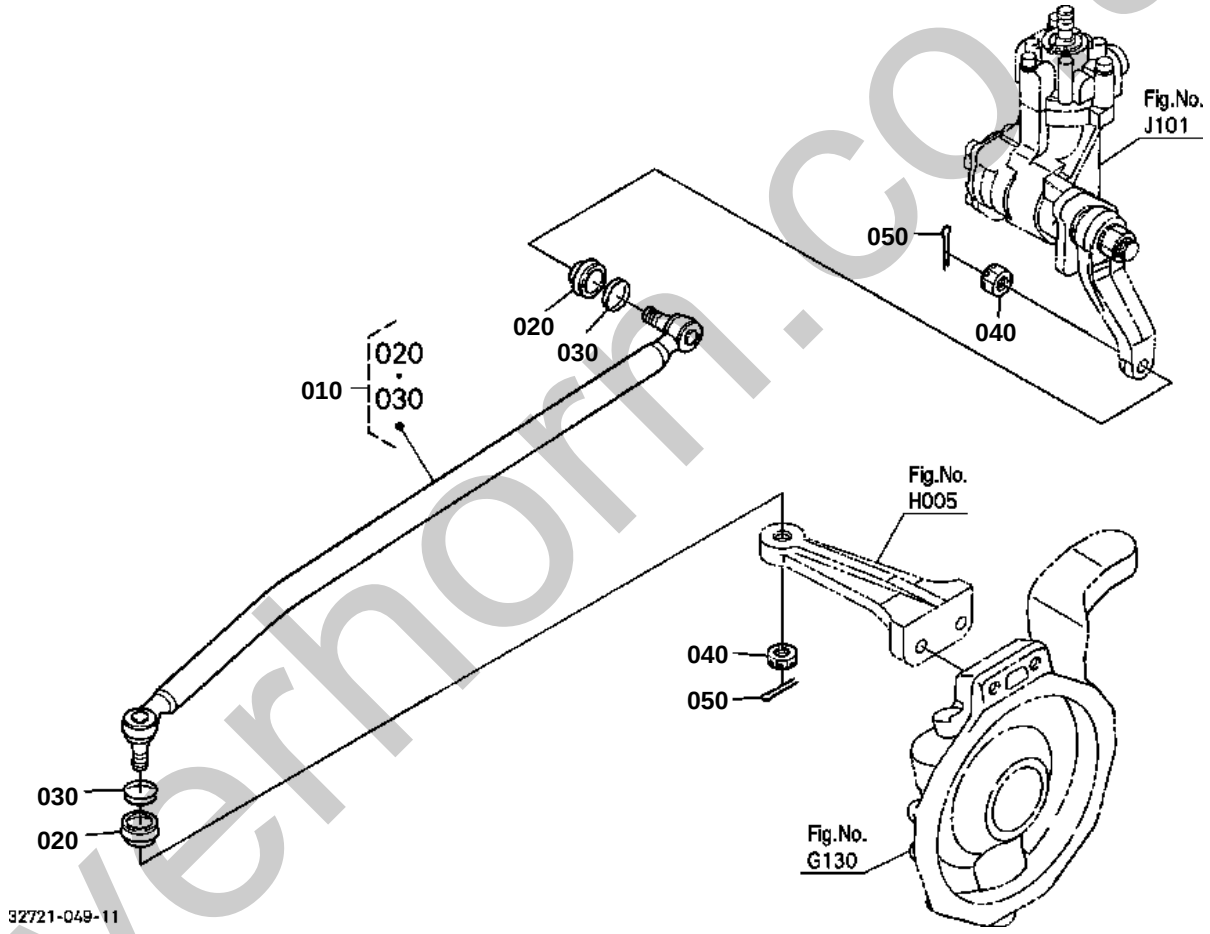

silverhorn.co.uk

DRAG LINK

↔ Interchangeable; ≠ not interchangeable; ← new for old; → old for new

REF.No	Part No.	Description	Q'ty	S.No.	I/C	REMARKS	Weight (kgf)	Weight (lb)
010	32721-57713	ASSY LINK DRAG	1				2.82	6.204
020	38240-12650	COVER DUST	2				0.01	0.022
030	38240-12660	CLIP	2				0.005	0.011
040	38240-12830	NUT	2				0.008	0.0176
050	05511-50325	PIN SPLIT	2				0.002	0.0044

silverhorn.co.uk

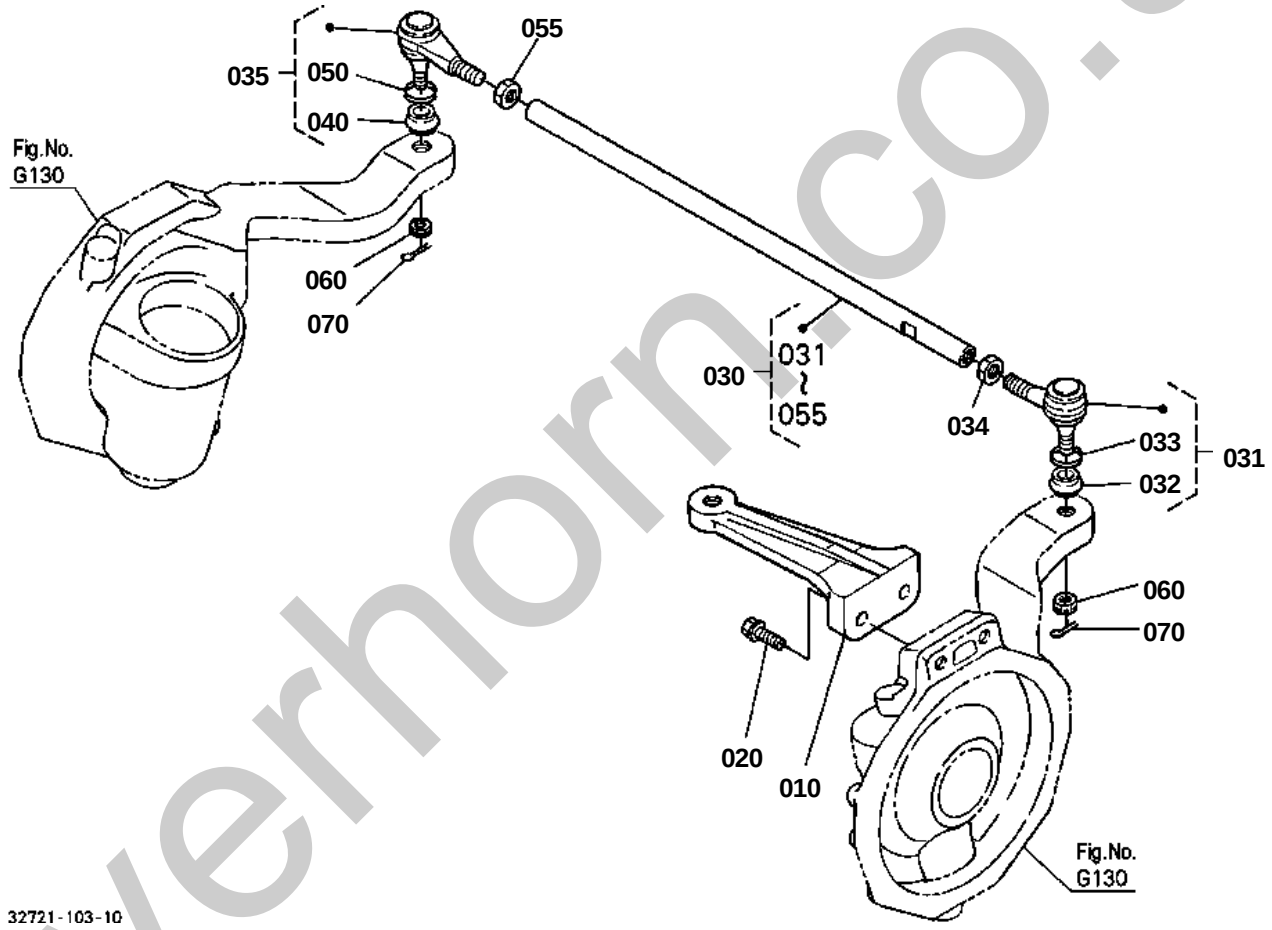

silverhorn.co.uk

TIE ROD

↔ Interchangeable; ≠ not interchangeable; ← new for old; → old for new

REF.No	Part No.	Description	Q'ty	S.No.	I/C	REMARKS	Weight (kgf)	Weight (lb)
010	32721-56412	ARM KNUCKLE	1				1.35	2.97
020	01779-61245	BOLT UBS	2				0.06	0.132
030	32721-56420	ASSY ROD TIE	1				2.2	4.84
031	38440-44780	ASSY END TIE ROD RH	1				0.322	0.7084
032	38240-12650	COVER DUST	1				0.01	0.022
033	38240-12660	CLIP	1				0.005	0.011
034	02174-50160	NUT	1				0.022	0.0484
035	38440-44790	ASSY END TIE ROD LH	1				0.32	0.704
040	38240-12650	COVER DUST	1				0.01	0.022
050	38240-12660	CLIP	1				0.005	0.011
055	32240-12280	NUT	1				0.017	0.0374
060	38240-12830	NUT	2				0.008	0.0176
070	05511-50325	PIN SPLIT	2				0.002	0.0044

silverhorn.co.uk

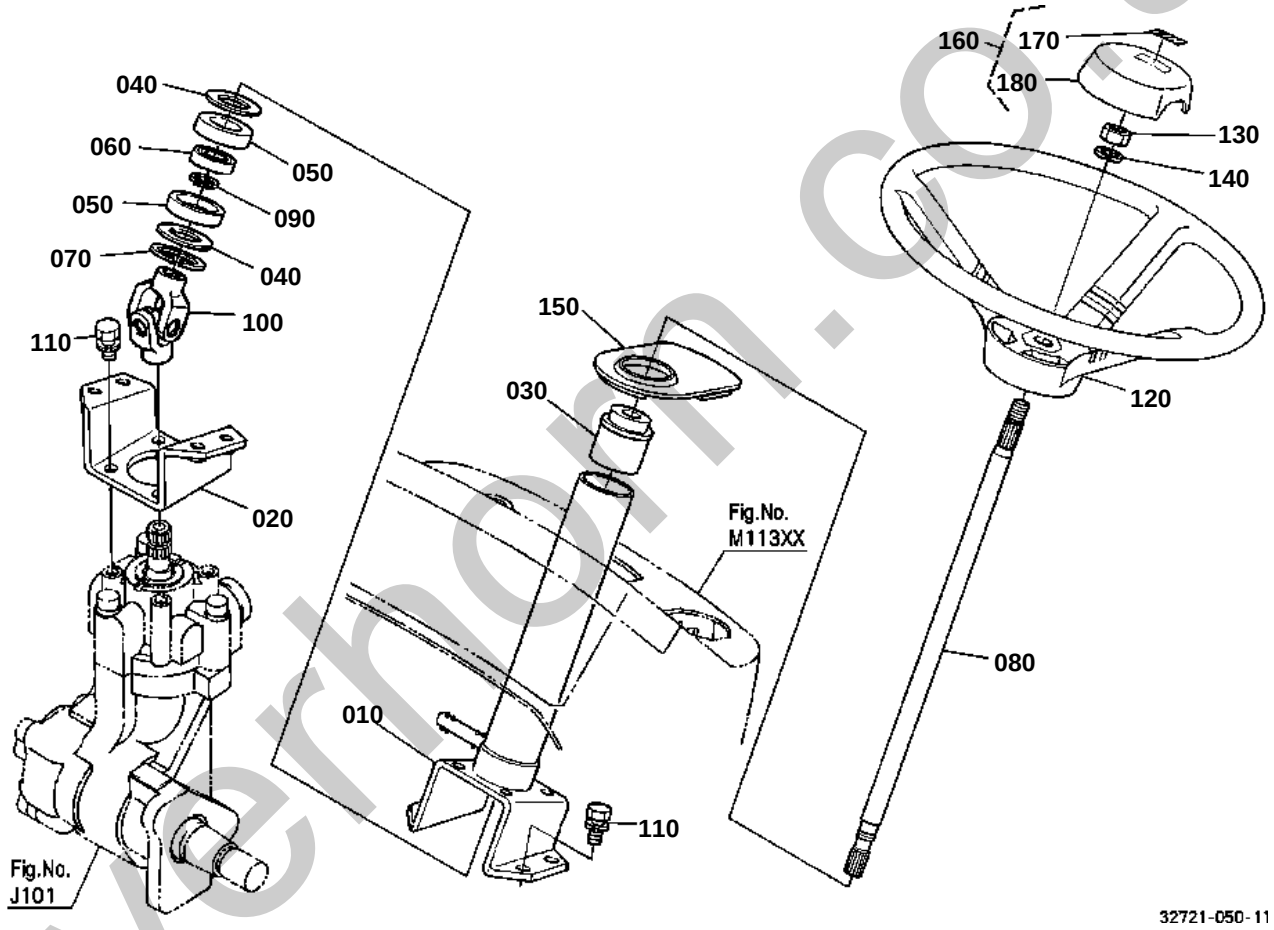

silvermoon.co.uk

STEERING HANDLE

↔ Interchangeable; ≠ not interchangeable; ← new for old; → old for new

REF.No	Part No.	Description	Q'ty	S.No.	I/C	REMARKS	Weight (kgf)	Weight (lb)
010	32721-41320	POST STEERING UPPER	1				1.05	2.31
020	32721-41330	POST STEERING UNDER	1				0.424	0.9328
030	6C040-41510	BUSH	1				0.035	0.077
040	6C040-41390	COLLAR	2				0.007	0.0154
050	6C040-41523	COVER BEARING	2				0.007	0.0154
060	08121-06002	BEARING BALL	1				0.03	0.066
070	04611-00420	CIR CLIP INTERNAL	1				0.006	0.0132
080	6C040-41340	SHAFT STEERING	1				0.49	1.078
090	04612-00150	CIR CLIP EXTERNAL	1				0.001	0.0022
100	6C042-41330	JOINT UNIVERSAL	1				0.27	0.594
110	01123-50820	BOLT	8				0.011	0.0242
120	6C040-41410	WHEEL STEERING	1				1.41	3.102
130	02174-50120	NUT	1				0.01	0.022
140	04512-60120	WASHER SPRING	1				0.005	0.011
150	32721-53550	BOOT STEERING	1				0.048	0.1056
160	6C040-41420	ASSY PAD	1				0.041	0.0902
170	6C040-41440	MARK STEERING	1				0.001	0.0022
180	6C040-41430	PAD STEERING	1				0.039	0.0858

silverhorn.co.uk

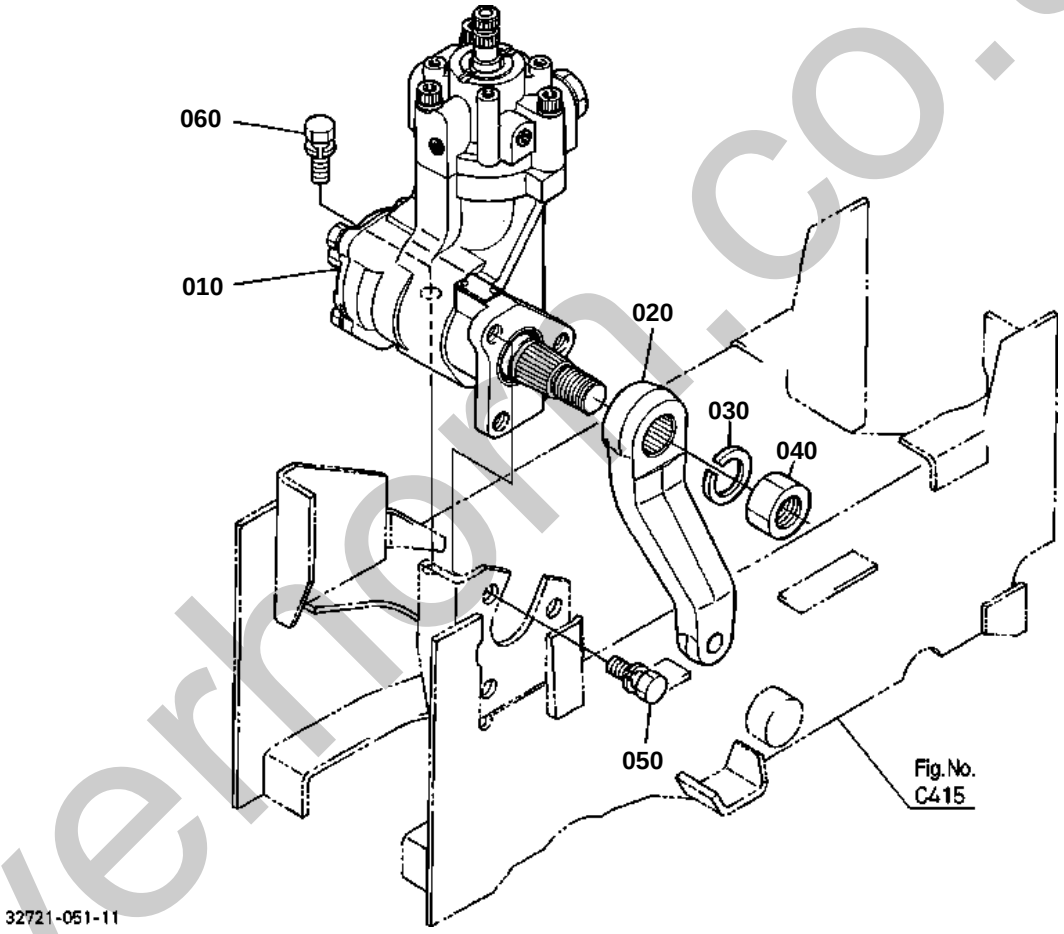

silverhorn.co.uk

HYDRAULIC PUMP(PS)

↔ Interchangeable; ≠ not interchangeable; ← new for old; → old for new

REF.No	Part No.	Description	Q'ty	S.No.	I/C	REMARKS	Weight (kgf)	Weight (lb)
010	32721-41100	ASSY STEERING POWER	1	<=50427			0	0
010	32721-41102	ASSY STEERING POWER	1	>=50428	¬		12.2	26.84
010	32721-41500	ASSY STEERING POWER	1		«		11.3	24.86
020	32721-41210	ARM PITMAN	1				1.15	2.53
030	04512-60220	WASHER SPRING	1				0.025	0.055
040	02176-50220	NUT	1				0.058	0.1276
050	01133-51230	BOLT	3				0.04	0.088
060	01133-51235	BOLT	2				0.043	0.0946

silverhorn.co.uk

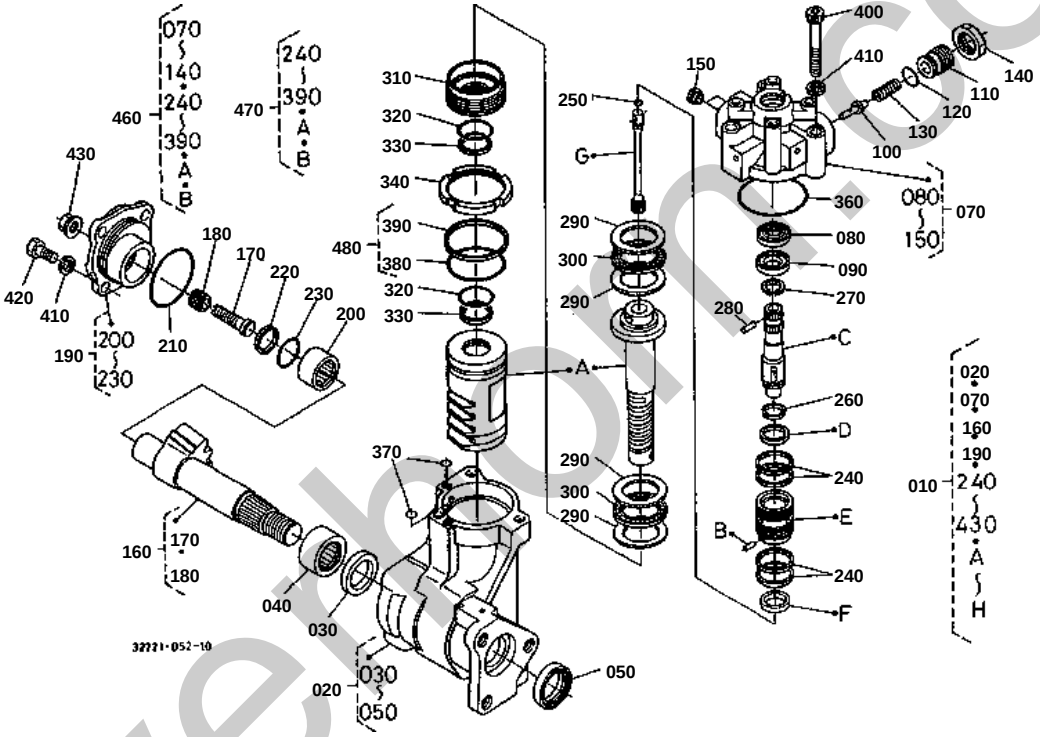

silverhorn.co.uk

OLD PARTS

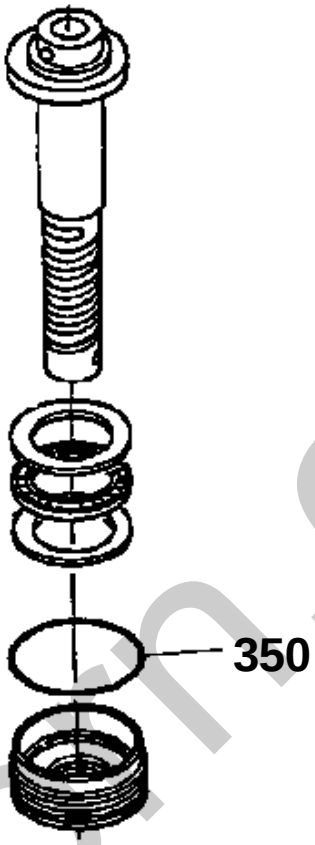

32721-803-11

silverhorn.co.uk

↔ Interchangeable; ≠ not interchangeable; ← new for old; → old for new

REF.No	Part No.	Description	Q'ty	S.No.	I/C	REMARKS	Weight (kgf)	Weight (lb)
010	32721-41100	ASSY STEERING POWER	1	<=50427			0	0
010	32721-41102	ASSY STEERING POWER	1	>=50428	¬		12.2	26.84
020	32721-92000	ASSY CASE GEAR	1	<=50427			0	0
020	32721-92002	ASSY CASE GEAR	1	>=50428	¬		5.2	11.44
030	35270-16140	GASKET	1				0.005	0.011
040	31351-66130	BEARING NEEDLE	1				0.03	0.066
050	35270-16150	SEAL OIL	1				0.015	0.033
060	99999-99999	BLANK	0				0	0
070	6C042-41500	ASSY VALVE	1				1.96	4.312
080	6C042-41520	SEAL OIL	1				0	0
080	6A100-92220	SEAL OIL	1		¬		0.006	0.0132
090	6C042-41530	BEARING ROLLER	1				0	0
090	6A100-92230	BEARING ROLLER	1		¬		0.018	0.0396
100	31351-66360	POPPET	1				0.005	0.011
110	31351-66370	SCREW ADJUSTING	1				0.047	0.1034
120	31351-66390	O RING	1				0.001	0.0022
130	38430-66380	SPRING	1				0.015	0.033
140	31351-66380	NUT	1				0.022	0.0484
150	6C042-41540	FERRULE	2				0.004	0.0088
160	32721-92300	ASSY SHAFT SECTOR	1				1.3	2.86
170	35270-16620	SCREW ADJUSTING	1				0.028	0.0616
180	35270-16630	BOLT	1				0.011	0.0242
190	32721-92350	ASSY COVER SIDE	1				0.73	1.606
200	35270-16420	BEARING NEEDLE	1				0.045	0.099
210	04810-50600	O RING	1				0.002	0.0044
220	32721-92380	SEAL	1				0.001	0.0022
230	04811-10300	O RING	1				0.001	0.0022
240	6A100-92510	SEAL	4				0.002	0.0044
250	04811-10060	O RING	1				0.001	0.0022
260	6A100-92540	SQUARE RING	1				0.001	0.0022
270	6A100-92550	RING SNAP	1				0.002	0.0044
280	6A100-92560	PIN	1				0.002	0.0044
290	6A100-92570	RACE THRUST	4				0.007	0.0154
300	6A100-92580	BEARING THRUST	2				0.01	0.022
310	6A100-92592	PLUG	1				0.16	0.352
320	04811-10300	O RING	2				0.001	0.0022
330	35270-16160	RING	2				0.002	0.0044
340	6A100-92620	NUT LOCK	1				0.029	0.0638
350	04811-10560	O RING	1	<=50427			0.002	0.0044
360	04811-50650	O RING	1				0.002	0.0044
370	04810-00060	O RING	2				0	0
370	04817-00060	O RING	2		¬		0.002	0.0044
380	04810-50500	O RING	1				0	0
380	04817-50500	O RING	1		¬		0.003	0.0066
390	31351-66280	RING	1				0.002	0.0044
400	6C042-41850	BOLT	3				0.05	0.11
410	04512-60101	WASHER SPRING	7				0	0
420	35270-16650	BOLT	4				0.02	0.044
430	32721-92660	NUT LOCK	1				0.011	0.0242
440	99999-99999	BLANK	0				0	0
450	99999-99999	BLANK	0				0	0

silverhorn.co.uk

↔ Interchangeable; ≠ not interchangeable; ← new for old; → old for new

REF.No	Part No.	Description	Q'ty	S.No.	I/C	REMARKS	Weight (kgf)	Weight (lb)
460	32721-92800	ASSY VALVE	1				4.7	10.34
470	32721-92810	ASSY NUT BALL	1				2.7	5.94
480	32721-92820	ASSY SEAL	1				0.005	0.011

silverhorn.co.uk

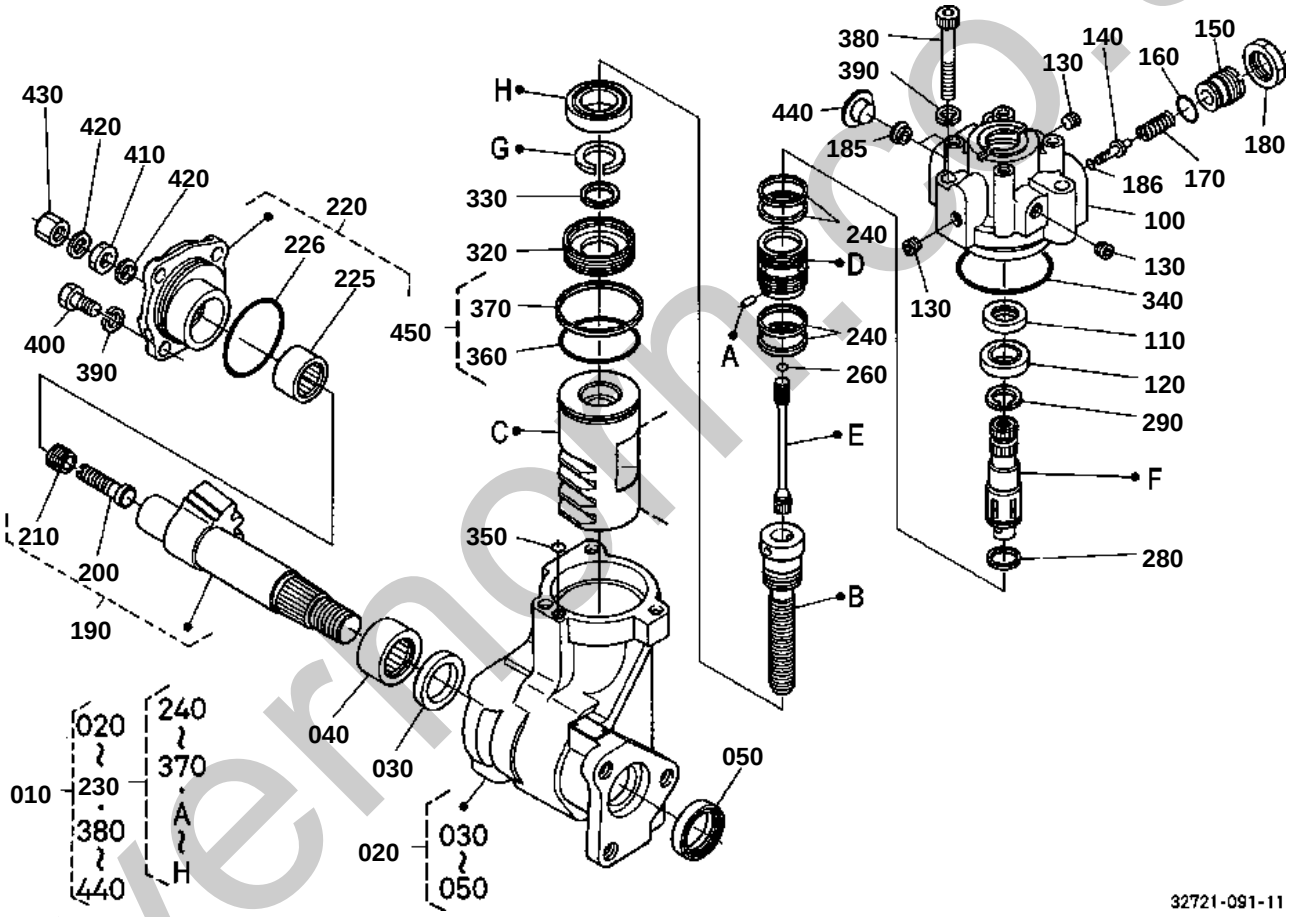

silvermore.co.uk

↔ Interchangeable; ≠ not interchangeable; ← new for old; → old for new

REF.No	Part No.	Description	Q'ty	S.No.	I/C	REMARKS	Weight (kgf)	Weight (lb)
010	32721-41500	ASSY STEERING POWER	1				11.3	24.86
020	6C070-92000	ASSY CASE GEAR	1				5.23	11.506
030	35270-16140	GASKET	1				0.005	0.011
040	31351-66130	BEARING NEEDLE	1				0.03	0.066
050	35270-16150	SEAL OIL	1				0.015	0.033
060	99999-99999	BLANK	0				0	0
070	99999-99999	BLANK	0				0	0
080	99999-99999	BLANK	0				0	0
090	99999-99999	BLANK	0				0	0
100	6C070-92214	VALVE HOUSING	1				0.83	1.826
110	6A100-92220	SEAL OIL	1				0.006	0.0132
120	T0430-37080	ASSY BUSH	1				0.024	0.0528
130	T0430-37090	PLUG	3				0.003	0.0066
140	6C070-92230	POPPET	1				0.005	0.011
150	31351-66370	SCREW ADJUSTING	1				0.047	0.1034
160	31351-66390	O RING	1				0.001	0.0022
170	38430-66380	SPRING	1				0.015	0.033
180	31351-66380	NUT	1				0.022	0.0484
185	6C042-41540	FERRULE	2				0.004	0.0088
186	6C070-92240	O RING	1				0.001	0.0022
190	32721-92300	ASSY SHAFT SECTOR	1				1.3	2.86
200	35270-16620	SCREW ADJUSTING	1				0.028	0.0616
210	35270-16630	BOLT	1				0.011	0.0242
220	6A320-92350	ASSY COVER SIDE	1				0.73	1.606
225	35270-16420	BEARING NEEDLE	1				0.045	0.099
226	04810-50600	O RING	1				0.002	0.0044
230	6C070-92302	ASSY SHAFT PISTON	1			OPTION	2.57	5.654
240	6A100-92510	SEAL	4				0.002	0.0044
250	99999-99999	BLANK	0				0	0
260	04811-10060	O RING	1				0.001	0.0022
270	99999-99999	BLANK	0				0	0
280	6A100-92540	SQUARE RING	1				0.001	0.0022
290	6A100-92550	RING SNAP	1				0.002	0.0044
300	99999-99999	BLANK	0				0	0
310	99999-99999	BLANK	0				0	0
320	6A600-92030	PLUG	1				0.09	0.198
330	T0430-37170	SEAL	1				0.001	0.0022
340	04811-50650	O RING	1				0.002	0.0044
350	04810-00060	O RING	1				0	0
350	04817-00060	O RING	1		┐		0.002	0.0044
360	04810-50500	O RING	1				0	0
360	04817-50500	O RING	1		┐		0.003	0.0066
370	31351-66280	RING	1				0.002	0.0044
380	6C042-41850	BOLT	3				0.05	0.11
390	04512-60100	WASHER SPRING	7				0.002	0.0044
400	35270-16650	BOLT	4				0.02	0.044
410	66363-41250	NUT	1				0.01	0.022
420	35270-16690	GASKET	2				0.001	0.0022
430	35270-16700	NUT	1				0.11	0.242
440	6C042-41860	PLUG	2				0.001	0.0022
450	32721-92820	ASSY SEAL	1			OPTION	0.005	0.011

silverhorn.co.uk

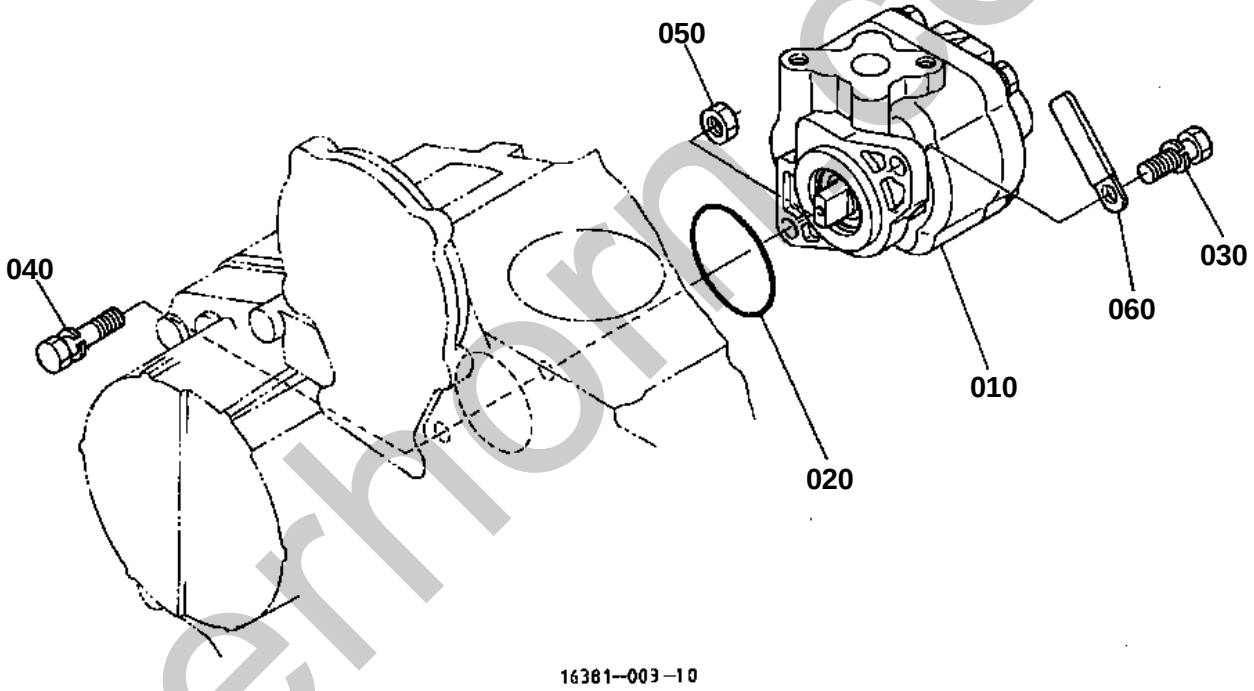

silverhorn.co.uk

HYDRAULIC PUMP

↔ Interchangeable; ≠ not interchangeable; ← new for old; → old for new

REF.No	Part No.	Description	Q'ty	S.No.	I/C	REMARKS	Weight (kgf)	Weight (lb)
010	K3511-36702	ASSY PUMP HYDRAULIC	1	<=61534			0	0
010	K3511-36706	ASSY PUMP HYDRAULIC	1	>=61535	¬		1.46	3.212
020	04811-10460	O RING	1				0.002	0.0044
030	01123-50825	BOLT	1				0.013	0.0286
040	01123-50835	BOLT	1				0.02	0.044
050	02056-50080	NUT	1				0.005	0.011
060	13824-67590	CLAMP CORD	1				0.002	0.0044

silverhorn.co.uk

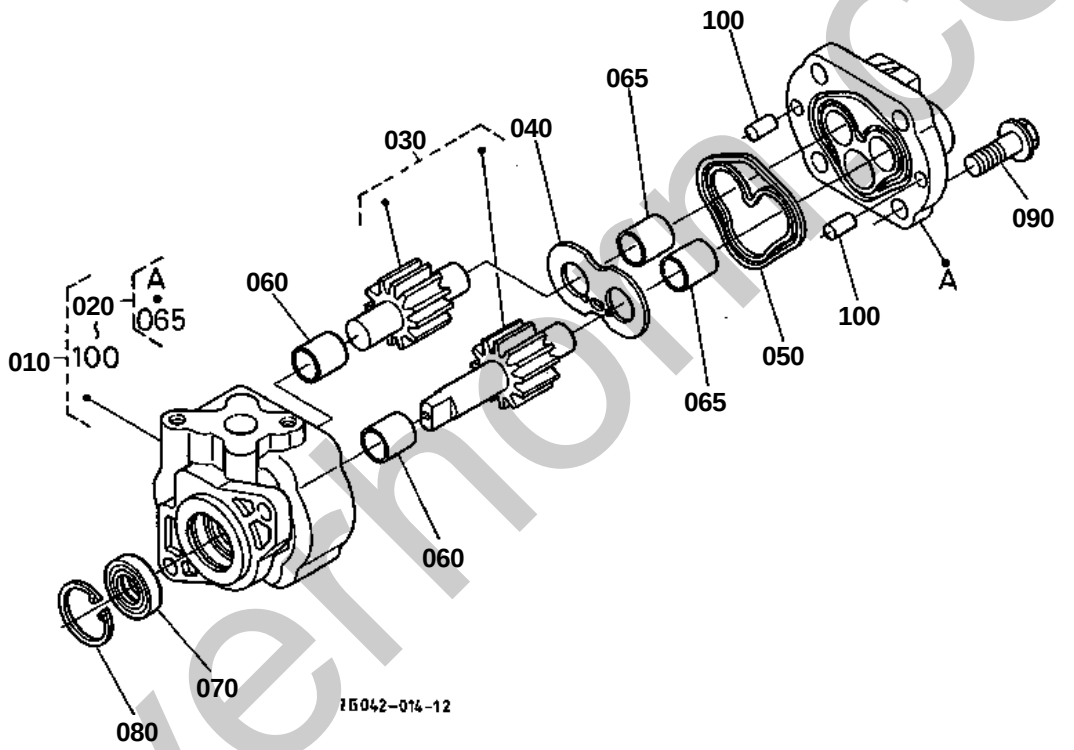

silverhomco.uk

OLD PARTS

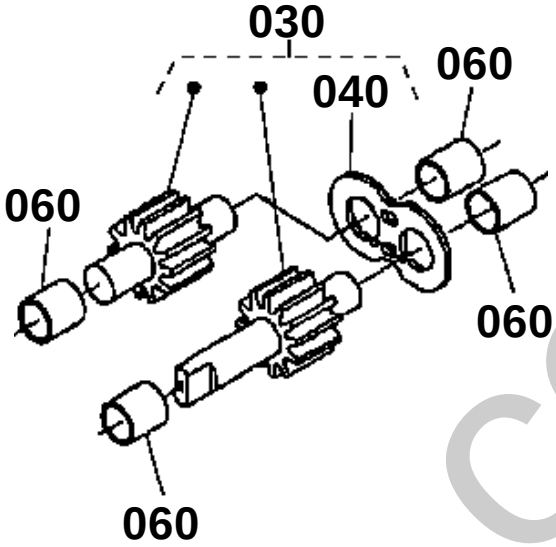

1G042-804-12

silverhorn.co.uk

HYDRAULIC PUMP [COMPONENT PARTS]

↔ Interchangeable; ≠ not interchangeable; ← new for old; → old for new

REF.No	Part No.	Description	Q'ty	S.No.	I/C	REMARKS	Weight (kgf)	Weight (lb)
010	K3511-36702	ASSY PUMP HYDRAULIC	1	<=61534			0	0
010	K3511-36706	ASSY PUMP HYDRAULIC	1	>=61535	¬		1.46	3.212
020	K3511-36802	COMP.COVER	1				0.27	0.594
030	K3511-36790	COMP.GEAR HYD.PUMP	1	<=50614			0.4	0.88
030	K3511-36792	COMP.GEAR HYD.PUMP	1	>=50615	1		0.374	0.8228
040	6C040-36350	PLATE SIDE	1	<=50715			0.023	0.0506
040	6C040-36352	PLATE SIDE	1	>=50716	1		0.023	0.0506
040	6C140-36350	PLATE SIDE	1	>=60001	1		0.05	0.11
050	6C040-36340	RING DOUBLE	1				0.004	0.0088
050	6C040-36342	RING DOUBLE	1	>=61534	«		0	0
050	6C040-36344	RING DOUBLE	1	>=61535	¬		0.003	0.0066
060	K3511-36760	BUSH	4	<=50715			0	0
060	K3511-36760	BUSH	2	>=50716			0	0
060	K3511-36762	BUSH	2	>=61535	¬		0.01	0.022
065	K3511-36760	BUSH	2	<=61534			0	0
065	K3511-36762	BUSH	2	>=61535	¬		0.01	0.022
070	31381-76390	SEAL OIL	1				0.01	0.022
080	04611-00300	CIR CLIP INTERNAL	1				0.004	0.0088
090	01754-51030	BOLT FLANGE	4				0.03	0.066
100	05012-00814	PIN STRAIGHT	2				0.006	0.0132

silverhorn.co.uk

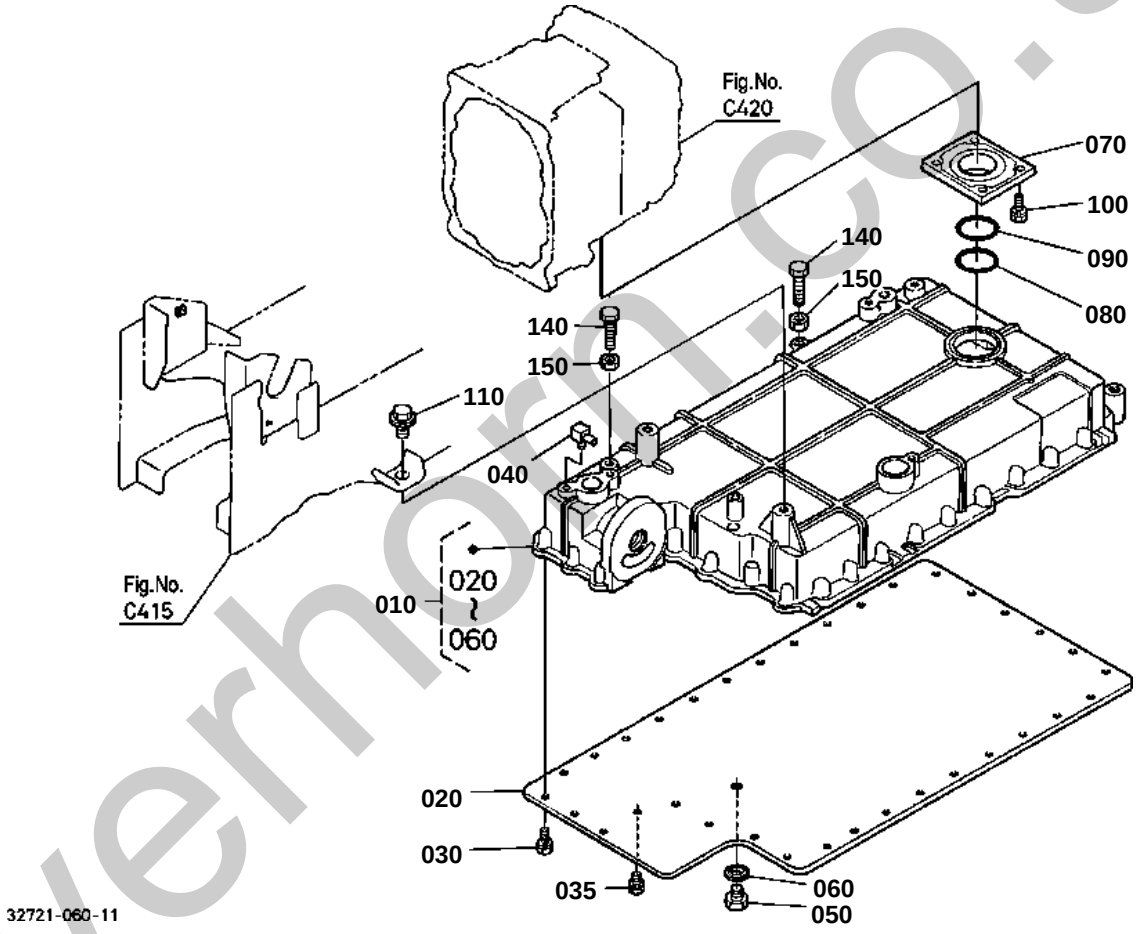

silverhorn.co.uk

OIL TANK

↔ Interchangeable; ≠ not interchangeable; ← new for old; → old for new

REF.No	Part No.	Description	Q'ty	S.No.	I/C	REMARKS	Weight (kgf)	Weight (lb)
010	32721-39703	ASSY TANK OIL	1				14.6	32.12
020	32721-39730	COVER OIL TANK	1				8	17.6
030	01123-50822	BOLT	33				0.012	0.0264
035	01123-50818	BOLT	1				0.012	0.0264
040	34076-61170	JOINT	1				0.025	0.055
050	06331-45012	PLUG	1				0.028	0.0616
060	04717-01200	WASHER WITH RUBBER	1				0.002	0.0044
070	32721-39710	PLATE OIL TANK	1				0.38	0.836
080	04811-00500	O RING	1	<=61394			0	0
080	04816-00500	O RING	1	>=61395	¬		0.003	0.0066
090	04811-07530	O RING	1				0.001	0.0022
100	01123-51025	BOLT	4				0.02	0.044
110	01125-51228	BOLT	1				0	0
120	99999-99999	BLANK	0				0	0
130	99999-99999	BLANK	0				0	0
140	01155-50830	BOLT	2				0.01	0.022
150	02112-50080	NUT	2				0.003	0.0066

silverhorn.co.uk

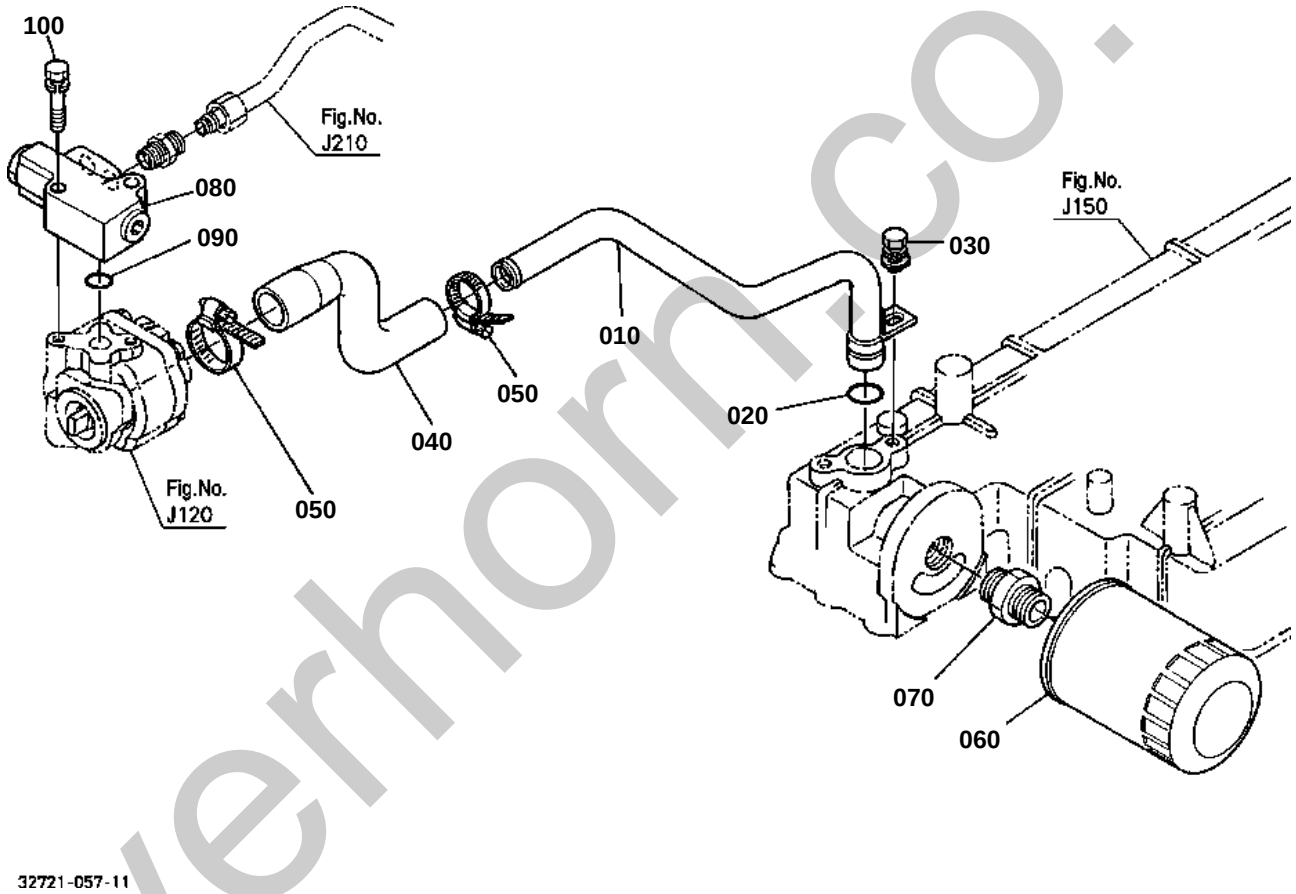

silverhorn.co.uk

HYDRAULIC OIL LINE(SUCTION)

↔ Interchangeable; ≠ not interchangeable; ← new for old; → old for new

REF.No	Part No.	Description	Q'ty	S.No.	I/C	REMARKS	Weight (kgf)	Weight (lb)
010	32721-39110	PIPE SUCTION	1				0.256	0.5632
020	04811-00220	O RING	1	<=60970			0	0
020	04811-00210	O RING	1	>=60971	1		0	0
020	04816-00210	O RING	1	>=61395	¬		0.004	0.0088
030	01125-50818	BOLT	1				0.015	0.033
040	6C040-39150	HOSE INLET	1				0.12	0.264
050	67955-36230	CLAMP	2				0.023	0.0506
060	32590-38380	FILTER OIL	1				0.67	1.474
070	32590-38330	JOINT SCREW	1				0.05	0.11
080	6C040-36100	ASSY VALVE	1				0.95	2.09
090	04810-00160	O RING	1	<=61394			0	0
090	04817-00160	O RING	1	>=61395	¬		0.001	0.0022
100	01123-50845	BOLT	2				0.02	0.044

silverhorn.co.uk

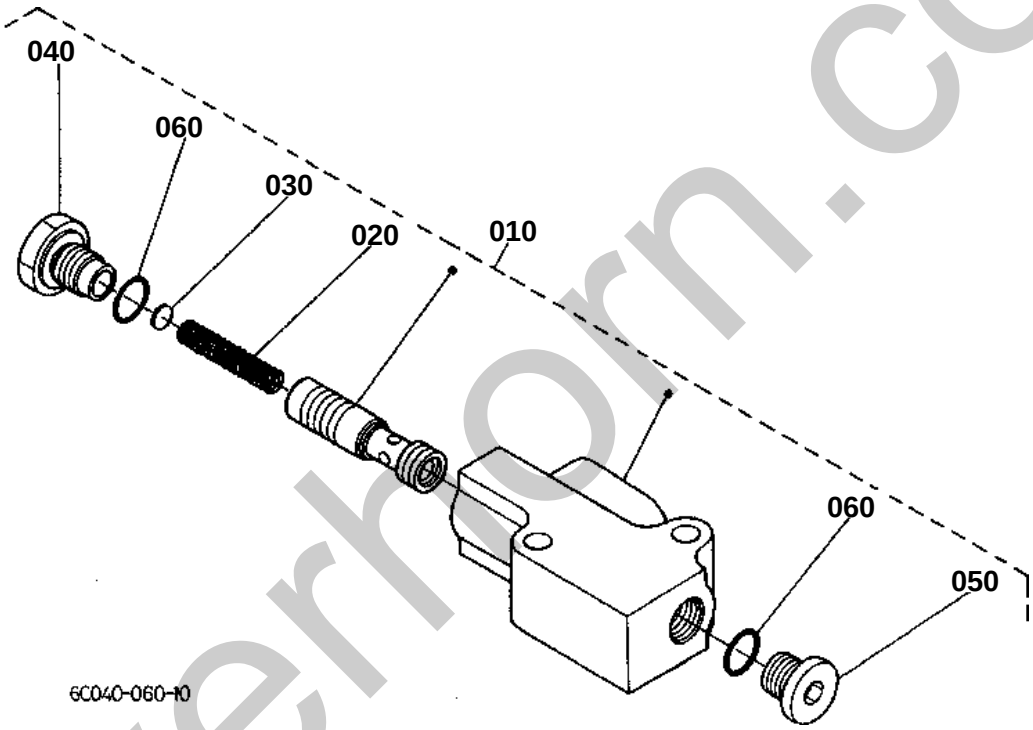

silverhorn.co.uk

FLOW DIVIDER VALVE [COMPONENT PARTS]

↔ Interchangeable; ≠ not interchangeable; ← new for old; → old for new

REF.No	Part No.	Description	Q'ty	S.No.	I/C	REMARKS	Weight (kgf)	Weight (lb)
010	6C040-36100	ASSY VALVE	1				0.95	2.09
020	6C040-36140	SPRING	1				0.005	0.011
030	6C040-36150	SHIM	1				0.001	0.0022
040	6C040-36160	PLUG	1				0.035	0.077
050	6C040-36170	PLUG	1				0.022	0.0484
060	04810-00140	O RING	2	<=61534			0	0
060	04817-00140	O RING	2	>=61535	¬		0.001	0.0022

silverhorn.co.uk

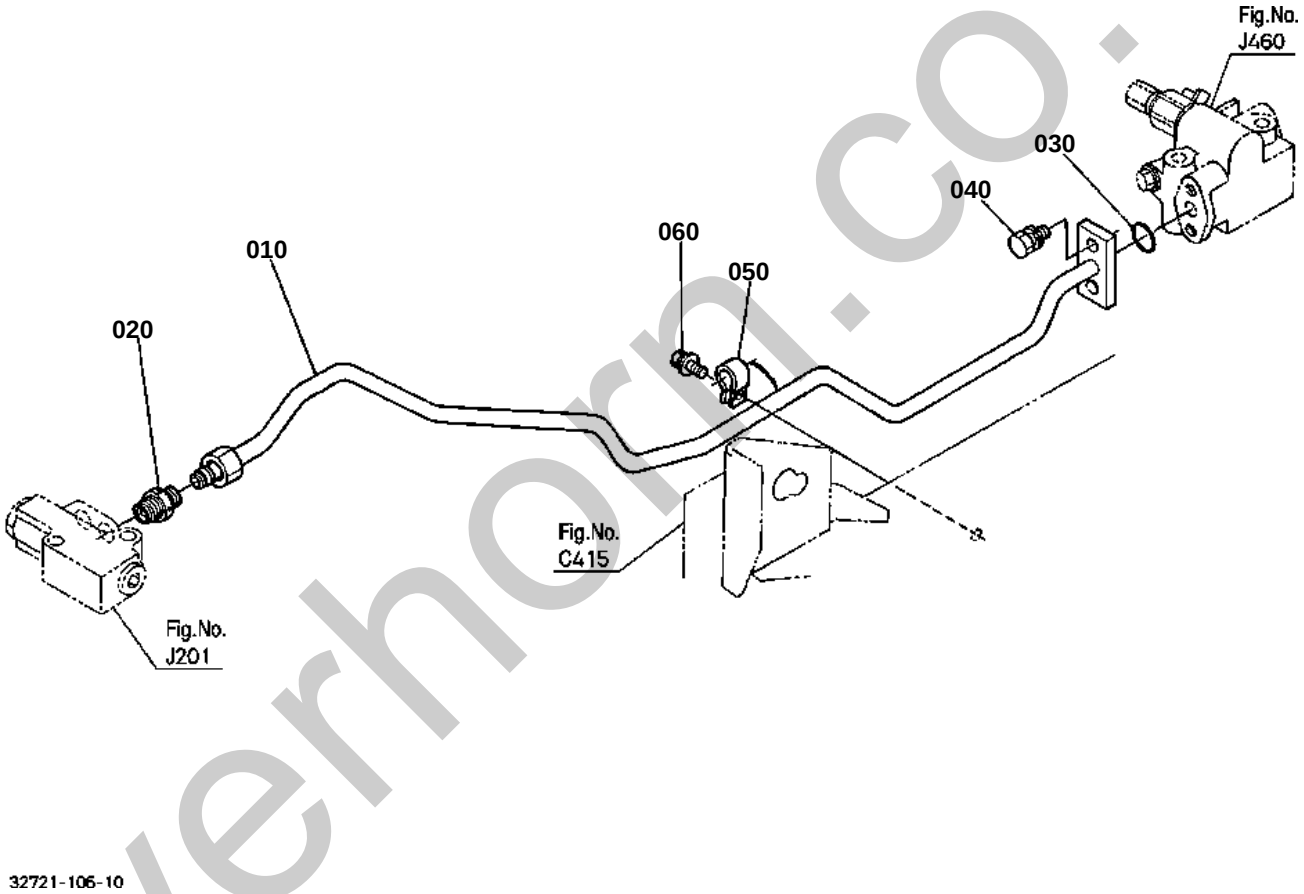

silverhorn.co.uk

OLD PARTS

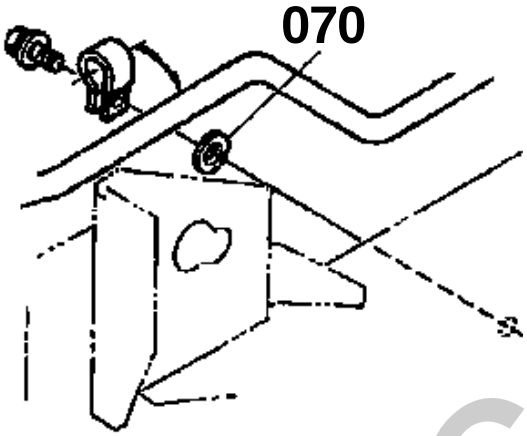

32721-831-10

silverhorn.co.uk

HYDRAULIC OIL LINE(DELIVERY)

↔ Interchangeable; ≠ not interchangeable; ← new for old; → old for new

REF.No	Part No.	Description	Q'ty	S.No.	I/C	REMARKS	Weight (kgf)	Weight (lb)
010	32721-39214	PIPE	1	<=61090			0.45	0.99
010	32721-39215	PIPE	1	>=61091	1		0.452	0.9944
020	32721-39280	JOINT PIPE	1	<=61090			0.033	0.0726
020	32721-39282	JOINT PIPE	1	>=61091	1		0.033	0.0726
030	04810-00180	O RING	1	<=61394			0	0
030	04817-00180	O RING	1	>=61395	¬		0.003	0.0066
040	01123-50820	BOLT	2				0.011	0.0242
050	6C050-39410	CLAMP PIPE	1				0.013	0.0286
060	01125-60816	BOLT	1				0.01	0.022
070	04013-60080	WASHER PLAIN	1	<=50008			0.002	0.0044

silverhorn.co.uk

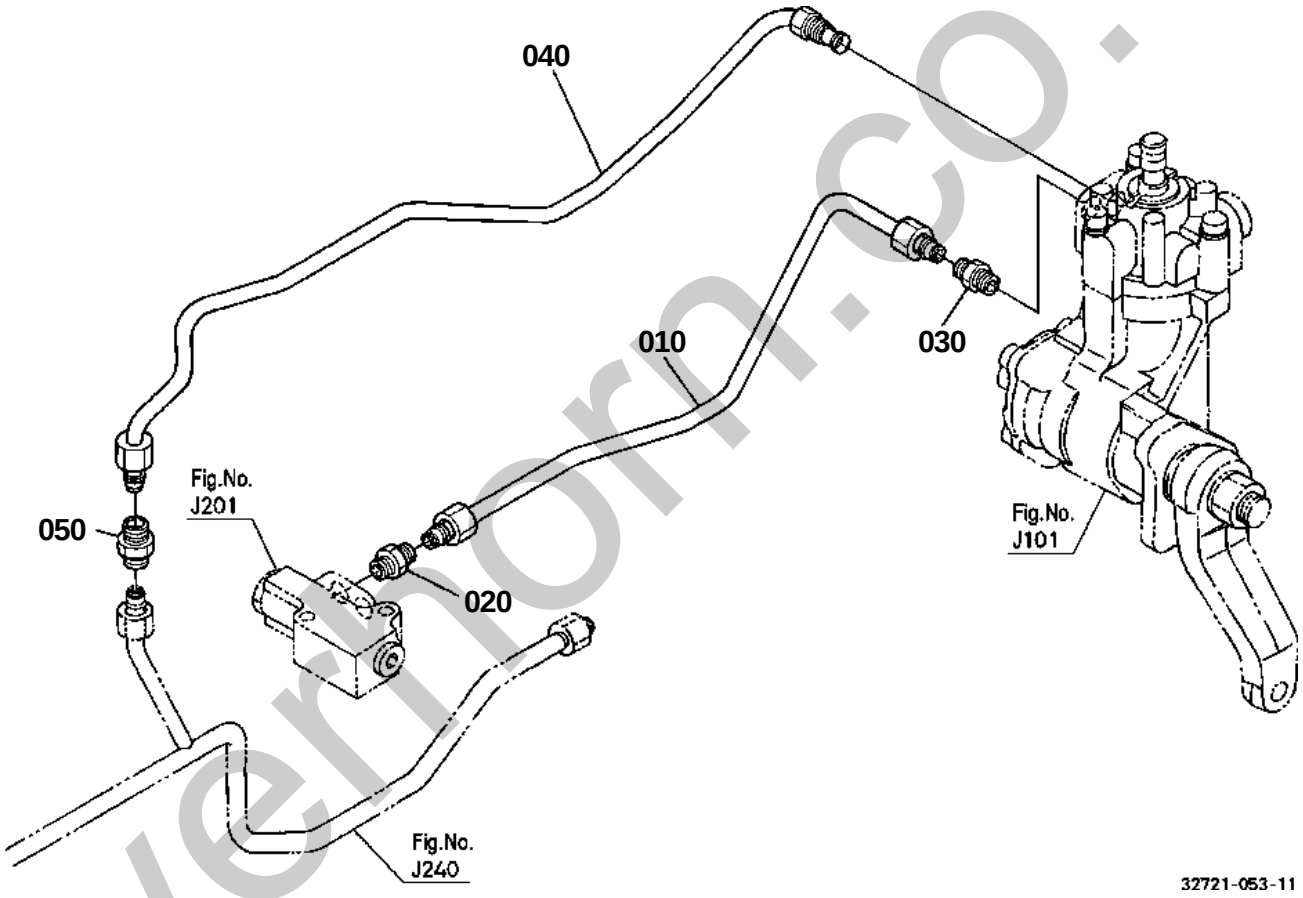

silverthorn.co.uk

HYDRAULIC OIL LINE(STEERING)

↔ Interchangeable; ≠ not interchangeable; ← new for old; → old for new

REF.No	Part No.	Description	Q'ty	S.No.	I/C	REMARKS	Weight (kgf)	Weight (lb)
010	32721-39223	PIPE DELIVERY	1	<=61090			0.18	0.396
010	32721-39224	PIPE DELIVERY	1	>=61091	1		0.178	0.3916
020	6C042-39400	ASSY JOINT PIPE	1	<=61090			0.035	0.077
020	6C042-39402	ASSY JOINT PIPE	1	>=61091	1		0.035	0.077
030	6C042-39430	JOINT PIPE	1	<=61090			0.04	0.088
030	6C042-39432	JOINT PIPE	1	>=61091	1		0.033	0.0726
040	32721-39310	PIPE	1	<=61090			0.195	0.429
040	32721-39314	PIPE	1	>=61091	1		0.196	0.4312
040	32721-39315	PIPE	1	>=62889	¬		0.196	0.4312
050	32583-38980	JOINT PIPE	1				0	0
050	06013-51002	JOINT PIPE	1	<=61090	«		0.03	0.066
050	06013-51003	JOINT PIPE	1	>=61091	1		0.028	0.0616

silverhorn.co.uk

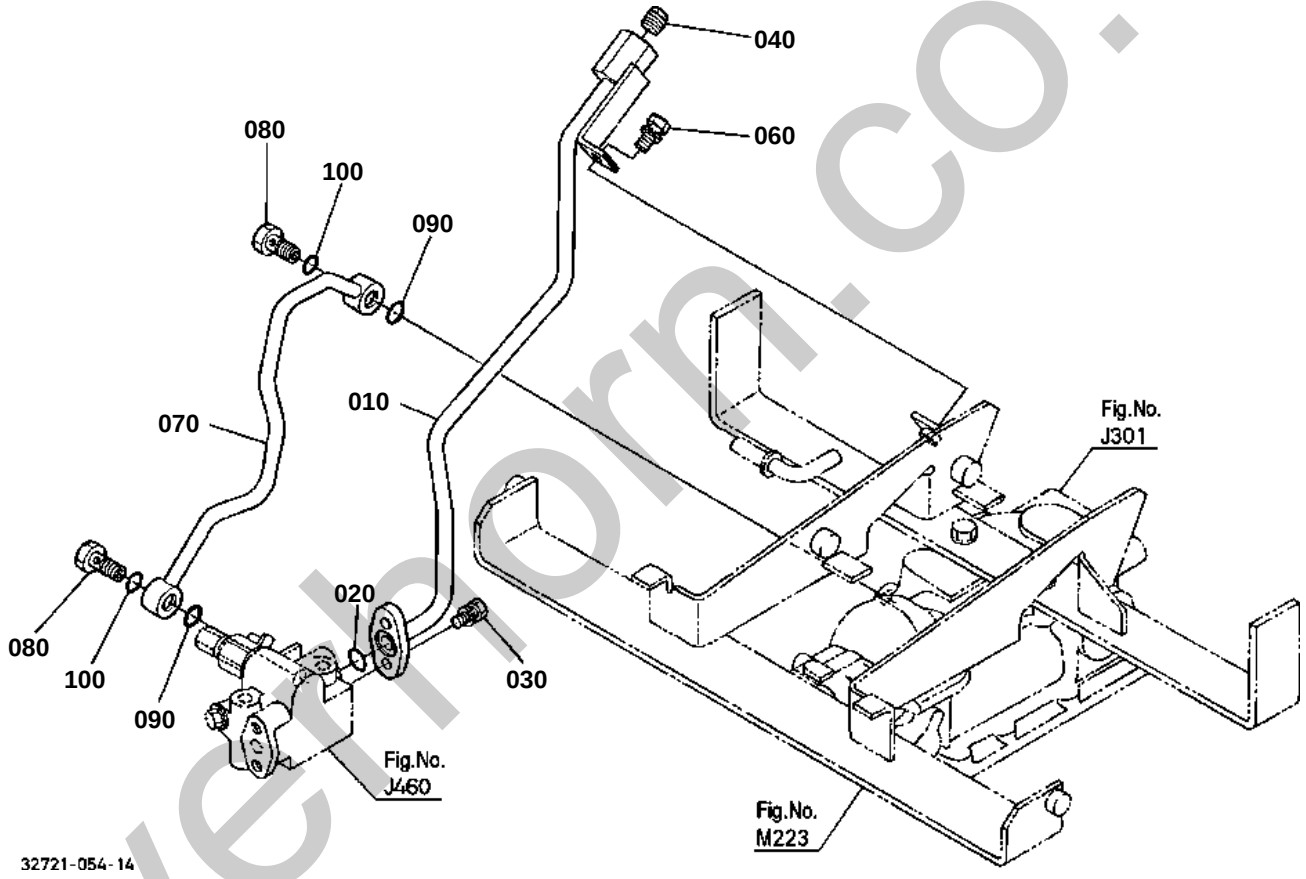

silverthorn.co.uk

OLD PARTS

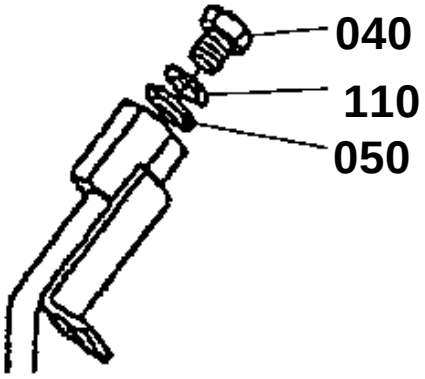

32721-825-11

silverhorn.co.uk

HYDRAULIC OIL LINE(BACKHOE)

↔ Interchangeable; ≠ not interchangeable; ← new for old; → old for new

REF.No	Part No.	Description	Q'ty	S.No.	I/C	REMARKS	Weight (kgf)	Weight (lb)
010	32721-39230	PIPE	1				0.51	1.122
020	04810-00180	O RING	1	<=61394			0	0
020	04817-00180	O RING	1	>=61395	¬		0.003	0.0066
030	01123-50820	BOLT	2				0.011	0.0242
040	32721-39250	PLUG	1	<=50817			0.04	0.088
040	32721-39252	PLUG	1	>=50818	1		0.025	0.055
050	04717-01700	WASHER WITH RUBBER	1	<=50817			0.003	0.0066
060	01123-50820	BOLT	1				0.011	0.0242
070	32721-39240	PIPE	1				0.2	0.44
080	6C040-39290	BOLT JOINT	2				0.045	0.099
090	04810-00160	O RING	2	<=61394			0	0
090	04817-00160	O RING	2	>=61395	¬		0.001	0.0022
100	04810-06120	O RING	2	<=61394			0	0
100	04817-06120	O RING	2	>=61395	¬		0.001	0.0022
110	04011-60160	WASHER PLAIN	1	<=50817			0.01	0.022

silverhorn.co.uk

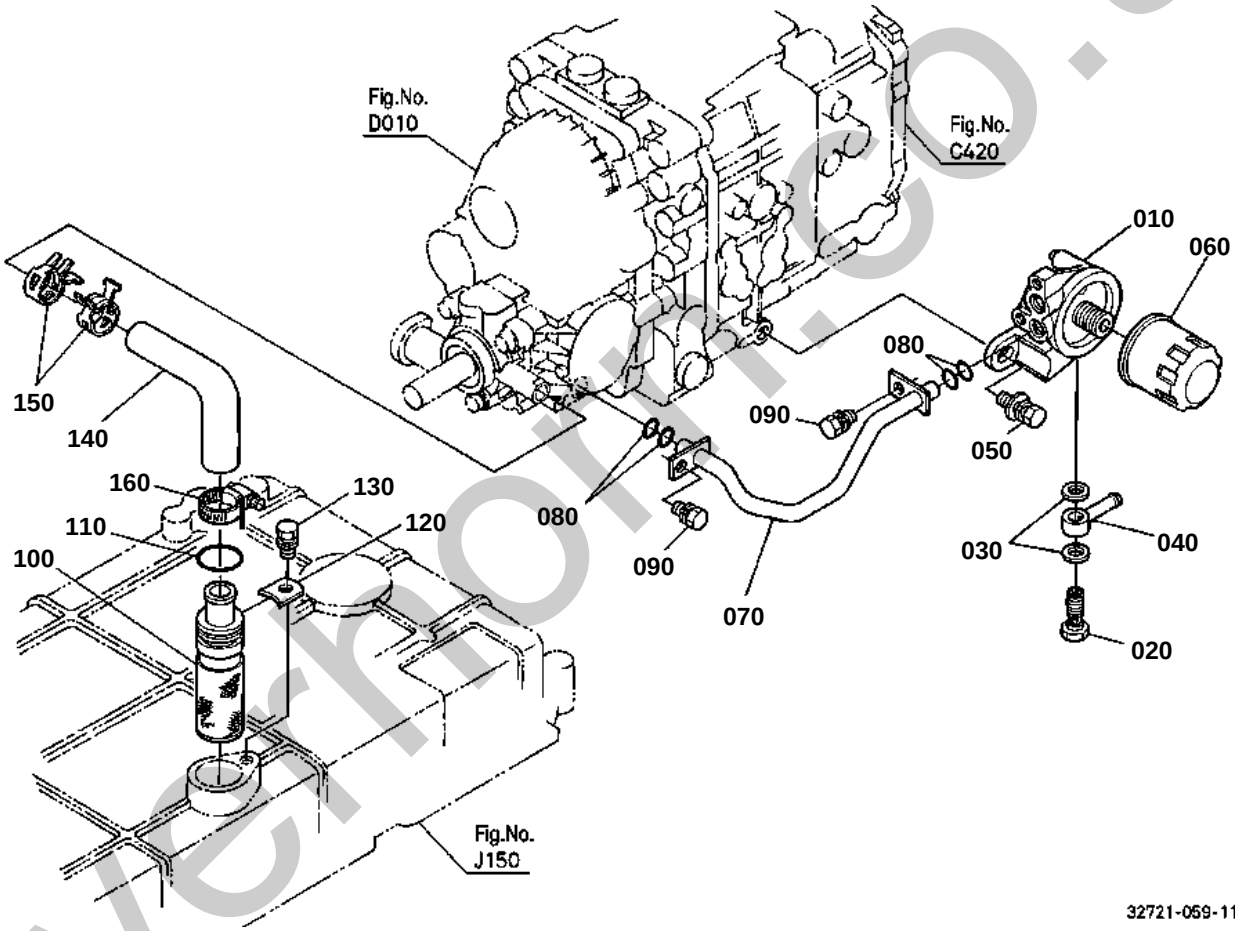

silvermoon.co.uk

OLD PARTS

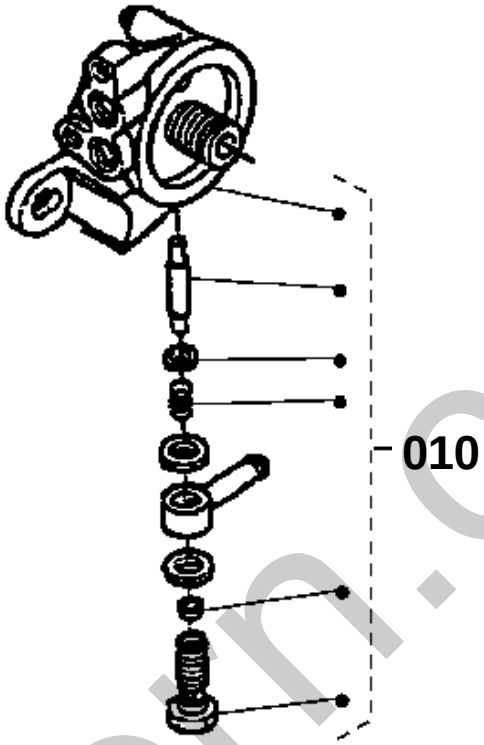

32721-804-11

silverhorn.co.uk

HYDRAULIC OIL LINE(HST)

↔ Interchangeable; ≠ not interchangeable; ← new for old; → old for new

REF.No	Part No.	Description	Q'ty	S.No.	I/C	REMARKS	Weight (kgf)	Weight (lb)
010	6C050-39332	BRACKET FILTER	1				0	0
010	32721-39330	BRACKET FILTER	1	<=50038	«	NOT SALE	0	0
010	32721-39370	BRACKET FILTER	1	>=50039	¬		0.24	0.528
020	32721-39410	BOLT JOINY	1				0.028	0.0616
030	04714-00120	GASKET	2				0.001	0.0022
040	32721-39400	PIPE	1				0.02	0.044
050	01125-51030	BOLT	1				0.03	0.066
060	66021-36060	CARTRIDGE OIL FILTER	1				0.39	0.858
070	32721-39340	PIPE	1				0.09	0.198
080	04811-00120	O RING	4	<=61394			0	0
080	04816-00120	O RING	4	>=61395	¬		0.001	0.0022
090	01123-60816	BOLT	2				0.01	0.022
100	32721-39140	FILTER CHARGE POMP	1				0.25	0.55
110	04811-00290	O RING	1	<=61394			0	0
110	04816-00290	O RING	1	>=61395	¬		0.003	0.0066
120	32721-39150	PLATE	1				0.01	0.022
130	01123-50820	BOLT	1				0.011	0.0242
140	32721-39130	HOSE	1				0.049	0.1078
150	32721-39160	CLAMP HOSE	2				0.005	0.011
160	67955-36230	CLAMP	1				0.023	0.0506

silverhorn.co.uk

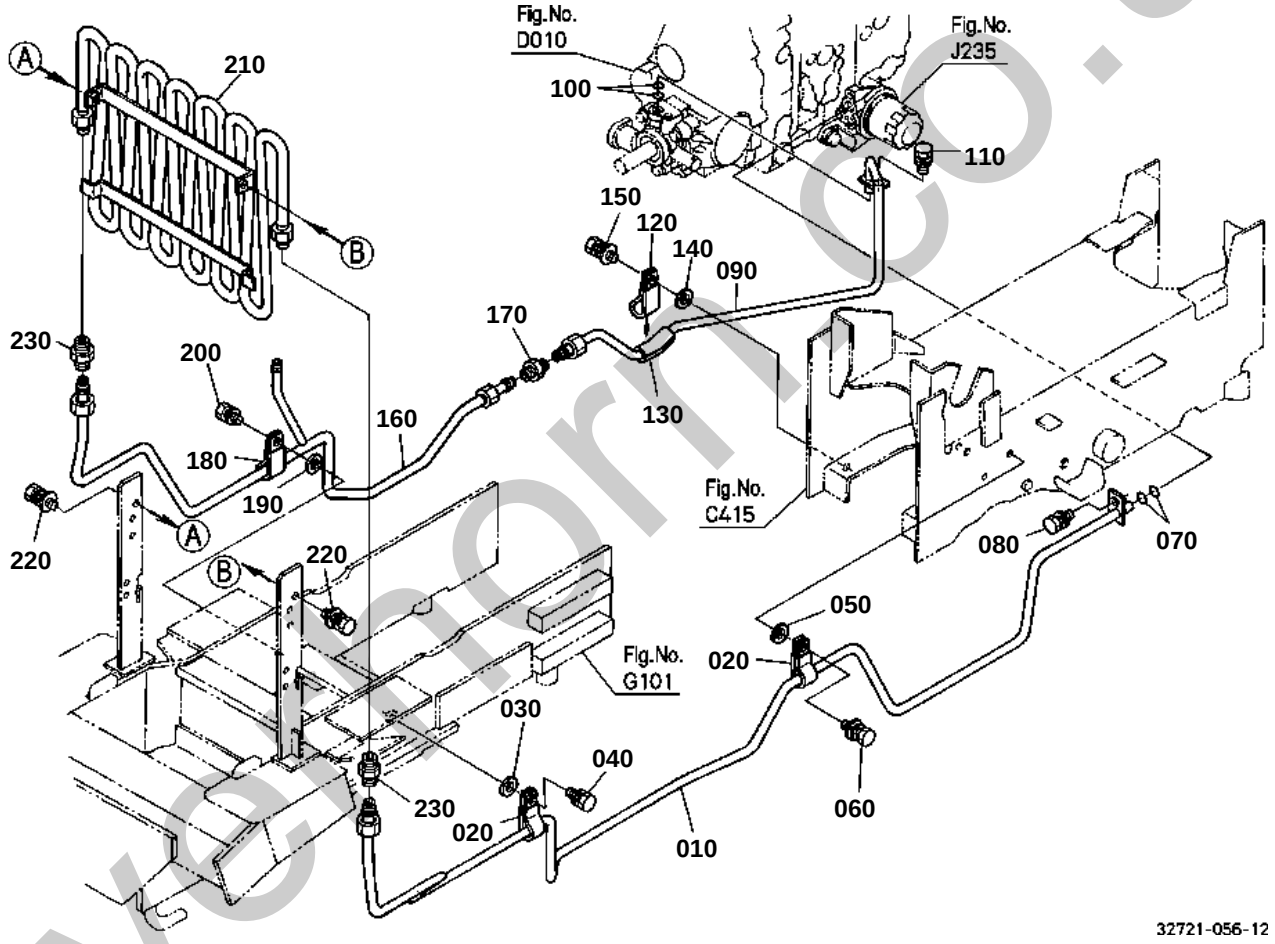

silvermorr.co.uk

OLD PARTS

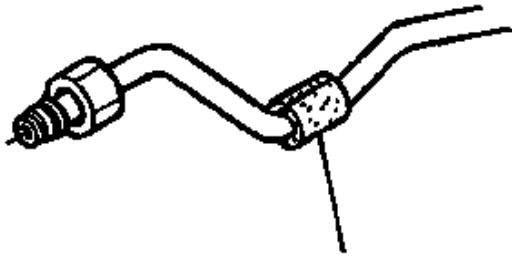

130

32721-838-10

silverhorn.co.uk

HYDRAULIC OIL LINE(OIL COOLER)

↔ Interchangeable; ≠ not interchangeable; ← new for old; → old for new

REF.No	Part No.	Description	Q'ty	S.No.	I/C	REMARKS	Weight (kgf)	Weight (lb)
010	32721-39320	PIPE RETURN	1	<=61090			0.51	1.122
010	32721-39323	PIPE	1	>=61091	1		0.53	1.166
020	6C050-39410	CLAMP PIPE	2				0.013	0.0286
030	04013-60100	WASHER PLAIN	1				0.003	0.0066
040	01133-51016	BOLT	1				0.015	0.033
050	04013-60080	WASHER PLAIN	1				0.002	0.0044
060	01125-60816	BOLT	1				0.01	0.022
070	04811-00120	O RING	2	<=61394			0	0
070	04816-00120	O RING	2	>=61395	¬		0.001	0.0022
080	01123-60816	BOLT	1				0.01	0.022
090	32721-39350	PIPE	1	<=61090			0.18	0.396
090	32721-39353	PIPE	1	>=61091	1		0.184	0.4048
100	04811-00100	O RING	2	<=61394			0	0
100	04816-00100	O RING	2	>=61395	¬		0.001	0.0022
110	01123-60816	BOLT	1				0.01	0.022
120	6C050-39410	CLAMP PIPE	1				0.013	0.0286
130	37410-75540	CUSHION	1				0.001	0.0022
130	T0430-35340	CUSHION PIPE	1		¬		0.002	0.0044
140	04013-60080	WASHER PLAIN	1				0.002	0.0044
150	01125-60816	BOLT	1				0.01	0.022
160	32721-39360	PIPE	1	<=61090			0.35	0.77
160	32721-39363	PIPE	1	>=61091	1		0.356	0.7832
170	32583-38980	JOINT PIPE	1				0	0
170	06013-51002	JOINT PIPE	1	<=61090	«		0.03	0.066
170	06013-51003	JOINT PIPE	1	>=61091	1		0.028	0.0616
180	6C050-39410	CLAMP PIPE	1				0.013	0.0286
190	04013-60100	WASHER PLAIN	1				0.003	0.0066
200	01133-51016	BOLT	1				0.015	0.033
210	32721-58710	PIPE COOLER	1	<=50192			0	0
210	32721-58712	PIPE COOLER	1	>=50193	¬		1.7	3.74
210	6C150-58710	PIPE COOLER	1	>=61091	1		1.7	3.74
220	01125-60816	BOLT	2	<=60288			0.01	0.022
220	01125-50818	BOLT	2	>=60289	¬		0.015	0.033
230	31351-38330	JOINT PIPE	2				0	0
230	06013-11202	JOINT PIPE	2	<=61090	«		0.04	0.088
230	06013-51203	JOINT PIPE	2	>=61091	¬		0.035	0.077

silvernorn.co.uk

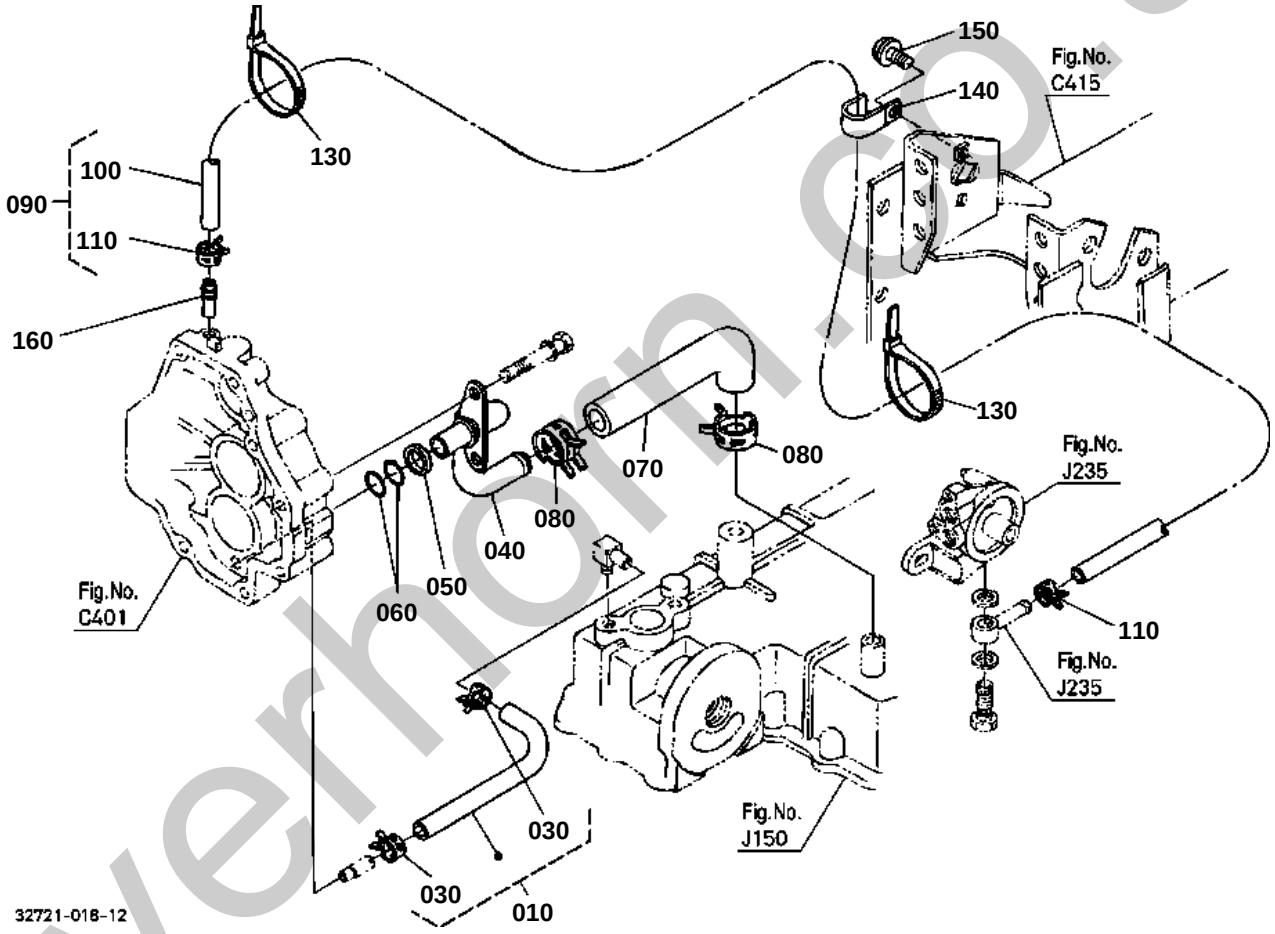

silverhorn.co.uk

OLD PARTS

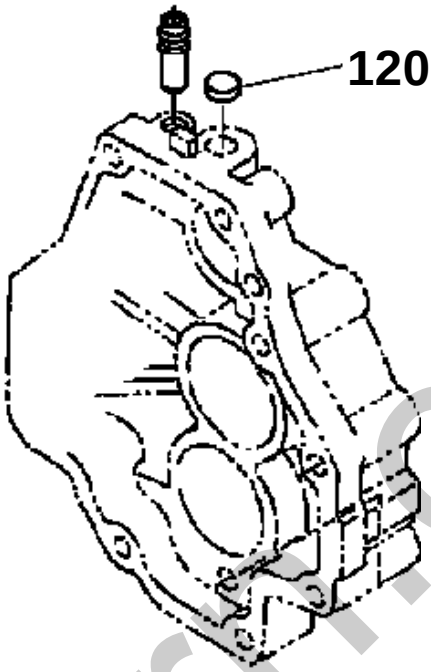

32721-827-11

silverhorn.co.uk

HYDRAULIC OIL LINE(F/M)

↔ Interchangeable; ≠ not interchangeable; ← new for old; → old for new

REF.No	Part No.	Description	Q'ty	S.No.	I/C	REMARKS	Weight (kgf)	Weight (lb)
010	32721-13160	ASSY HOSE	1				0.027	0.0594
020	99999-99999	BLANK	0				0	0
030	09318-88125	CLAMP HOSE	2				0.001	0.0022
040	32721-13150	PIPE	1				0.11	0.242
050	6C040-13160	RING	1				0.001	0.0022
060	04811-00180	O RING	2	<=61394			0	0
060	04816-00180	O RING	2	>=61395	¬		0.002	0.0044
070	32721-13190	HOSE	1				0.07	0.154
080	09318-88230	CLAMP HOSE	2				0.008	0.0176
090	32721-13180	ASSY HOSE	1	<=63584		NOT SALE	0	0
090	32721-13183	ASSY HOSE	1	>=63585	¬		0.178	0.3916
100	09661-81500	TUBE FUEL	1				0.018	0.0396
110	09318-88115	CLAMP HOSE	2	<=63584			0.002	0.0044
110	14911-42750	CLIP PIPE	2	>=63585	1		0.002	0.0044
120	57306-67530	PLUG SEAL	1	<=61796			0.005	0.011
130	53581-64150	BAND CORD	2				0.002	0.0044
140	13824-67590	CLAMP CORD	1				0.002	0.0044
150	01754-50816	BOLT FLANGE	1				0.011	0.0242
160	6C050-13190	JOINT PIPE	1				0.006	0.0132

silverhorn.co.uk

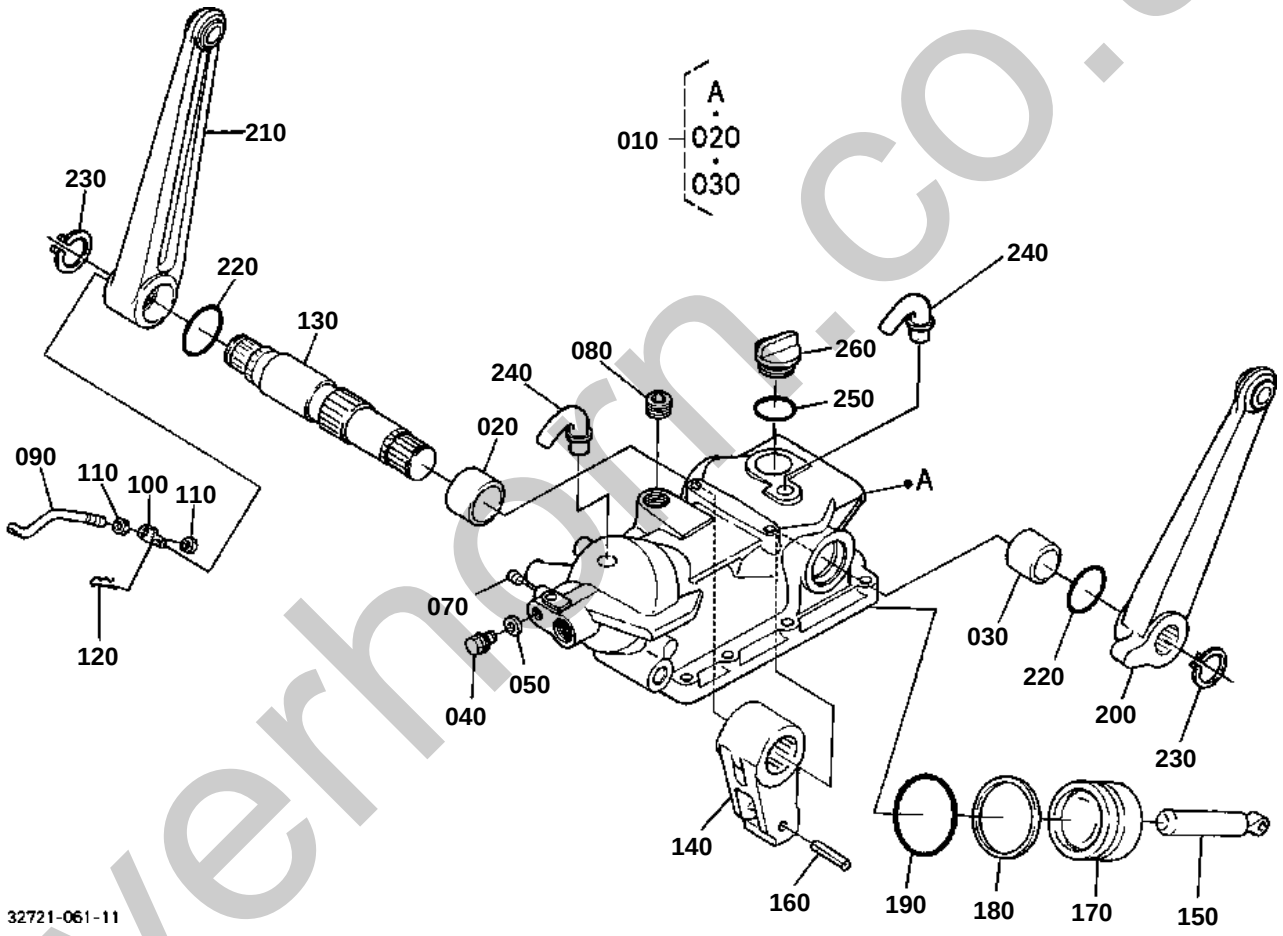

silverhorn.co.uk

HYDRAULIC CYLINDER

↔ Interchangeable; ≠ not interchangeable; ← new for old; → old for new

REF.No	Part No.	Description	Q'ty	S.No.	I/C	REMARKS	Weight (kgf)	Weight (lb)
010	32721-36030	ASSY CASE CYLINDER	1				11.3	24.86
020	6C040-36480	BUSH	1				0.02	0.044
030	6C040-36490	BUSH	1				0.05	0.11
040	37150-36730	PLUG	1				0.03	0.066
050	37150-36720	GASKET	1				0.01	0.022
060	99999-99999	BLANK	0				0	0
070	32701-36150	PLUG	1				0.005	0.011
080	34076-65800	PLUG	1				0.01	0.022
090	6C040-36230	ROD FEED BACK	1				0.045	0.099
100	6C040-36220	PIN FEED BACK	1				0.024	0.0528
110	02112-50080	NUT	2				0.003	0.0066
120	05525-61000	PIN SNAP	1				0.002	0.0044
130	6C040-36470	SHAFT HYD.ARM	1				1.66	3.652
140	6C040-36450	ARM HYDRAULIC	1				0.99	2.178
150	6C040-36430	ROD HYD.PISTON	1				0.36	0.792
160	05411-00640	PIN SPRING	1				0.006	0.0132
170	6C040-36410	PISTON HYD.	1				0.78	1.716
180	67111-36720	RING BACK UP	1				0.005	0.011
180	6A600-36460	RING BACK UP	1		«		0.005	0.011
190	04811-00600	O RING	1				0.006	0.0132
200	6C040-36510	ARM LIFT LH	1				1.88	4.136
210	6C040-36524	ARM LIFT RH	1				1.86	4.092
220	6C040-36550	O RING	2				0.003	0.0066
230	04612-00320	CIR CLIP EXTERNAL	2				0.004	0.0088
240	6A100-36410	BREATHER	2				0.006	0.0132
250	04811-50300	O RING	1	<=61394			0	0
250	04816-50300	O RING	1	>=61395	¬		0.001	0.0022
260	38240-21410	PLUG	1				0.015	0.033

silverhorn.co.uk

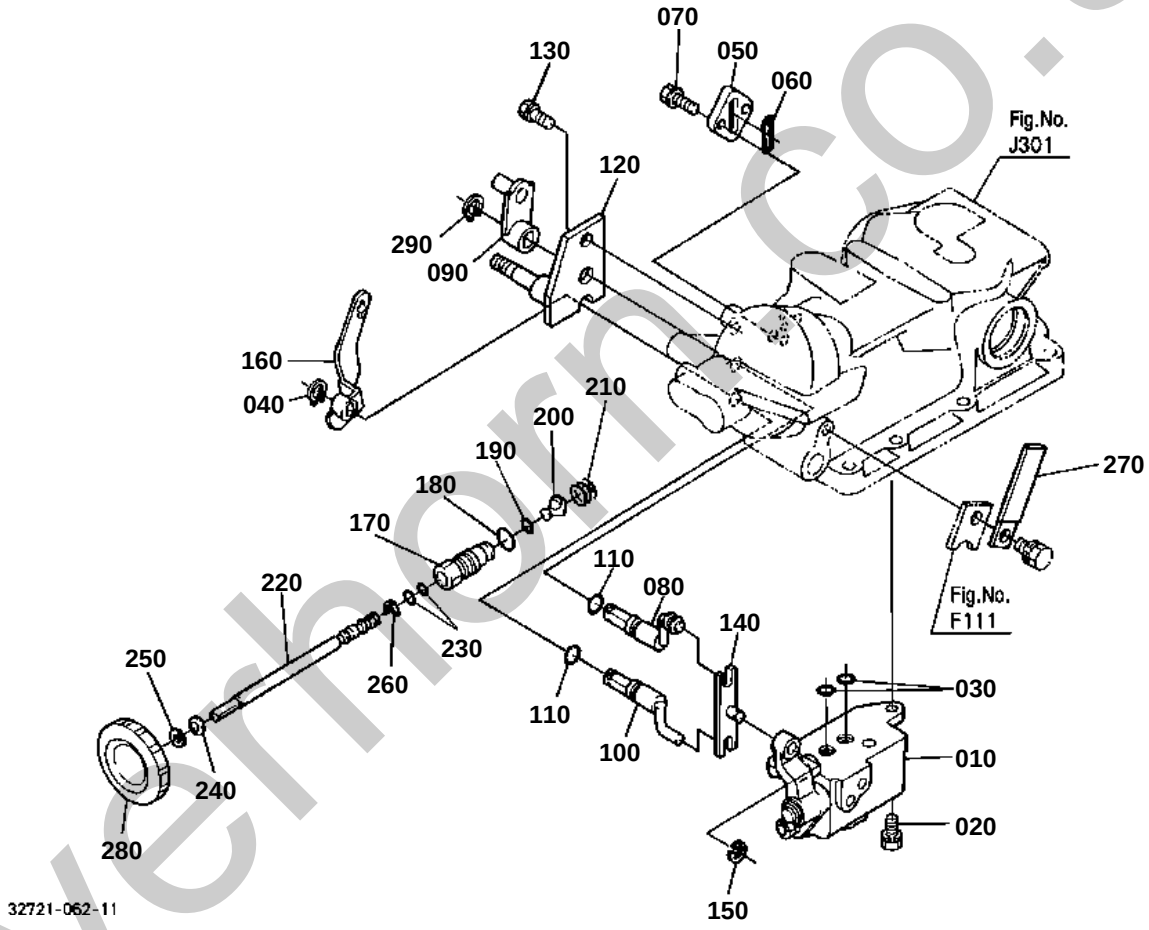

silverhorn.co.uk

CONTROL VALVE

↔ Interchangeable; ≠ not interchangeable; ← new for old; → old for new

REF.No	Part No.	Description	Q'ty	S.No.	I/C	REMARKS	Weight (kgf)	Weight (lb)
010	6C040-36203	ASSY VALVE CONTROL	1	<=52927			0	0
010	6C040-36204	ASSY VALVE CONTROL	1	>=52928	¬		1.31	2.882
020	01123-50822	BOLT	2				0.012	0.0264
030	04811-00080	O RING	2	<=52379			0	0
030	04810-00100	O RING	2	>=52380	¬		0	0
030	04817-00100	O RING	2	>=61535	1		0.001	0.0022
040	04612-00120	CIR CLIP EXTERNAL	1				0.001	0.0022
050	6C040-36620	CAP	1				0.022	0.0484
060	37410-36630	O RING	1				0.001	0.0022
070	01754-50820	BOLT FLANGE	2				0.015	0.033
080	6C040-36932	SHAFT CONTROL LEVER	1				0.03	0.066
090	6C040-36993	ARM CONTROL LEVER	1				0.05	0.11
100	6C040-36972	SHAFT FEED BACK	1				0.06	0.132
110	04811-00110	O RING	2	<=61534			0	0
110	04816-00110	O RING	2	>=61535	¬		0.001	0.0022
120	32721-36960	PLATE	1				0.15	0.33
130	01123-60816	BOLT	1				0.01	0.022
140	6C040-36940	LINK	1				0.05	0.11
150	04613-50060	CIR CLIP EXTERNAL	1				0.001	0.0022
160	6C040-36950	ARM FEED BACK	1				0.092	0.2024
170	6C040-37210	BODY	1				0.077	0.1694
180	04811-00180	O RING	1	<=61534			0	0
180	04816-00180	O RING	1	>=61535	¬		0.002	0.0044
190	04811-06120	O RING	1	<=61534			0	0
190	04816-06120	O RING	1	>=61535	¬		0.002	0.0044
200	6C040-37250	POPPET	1				0.006	0.0132
210	6C040-37430	SPRING	1				0.002	0.0044
220	6C040-37220	SHAFT HYD.ADJUST	1				0.11	0.242
230	04810-00080	O RING	2	<=61534			0	0
230	04817-00080	O RING	2	>=61535	¬		0.001	0.0022
240	6C040-37420	COLLAR	1				0.001	0.0022
250	04611-00170	CIR CLIP INTERNAL	1				0.001	0.0022
260	6C040-37410	STOPPER	1				0.002	0.0044
270	13824-67590	CLAMP CORD	1				0.002	0.0044
280	37410-36643	GRIP	1				0.03	0.066
290	04612-00100	CIR CLIP EXTERNAL	1				0.001	0.0022

silverhorn.co.uk

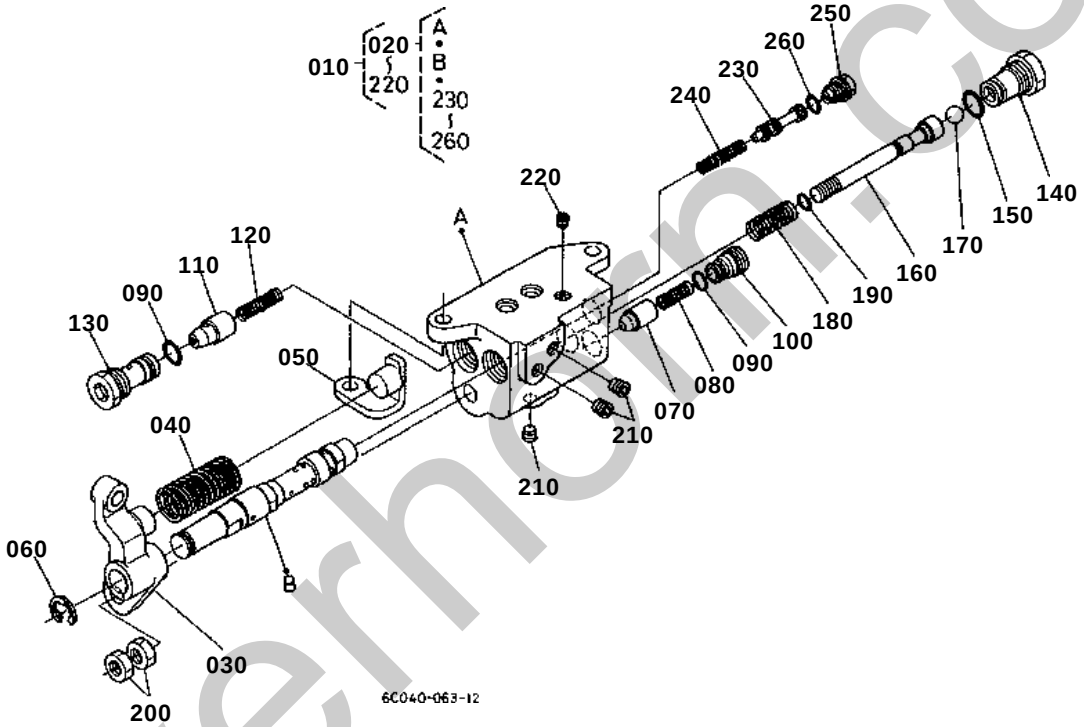

silverhorn.co.uk

CONTROL VALVE [COMPONENT PARTS]

↔ Interchangeable; ≠ not interchangeable; ← new for old; → old for new

REF.No	Part No.	Description	Q'ty	S.No.	I/C	REMARKS	Weight (kgf)	Weight (lb)
010	6C040-36203	ASSY VALVE CONTROL	1	<=52611			0	0
010	6C040-36204	ASSY VALVE CONTROL	1	>=52612	¬		1.31	2.882
020	6C040-36603	ASSY BODY-SPOOL	1	<=52611			0	0
020	6C040-36604	ASSY BODY-SPOOL	1	>=52612	¬		0.96	2.112
030	6C040-36652	LEVER	1				0.039	0.0858
040	6C040-36660	SPRING RETURN	1				0.01	0.022
050	6C040-36270	HOLDER SPRING	1				0.025	0.055
060	04613-50090	CIR CLIP EXTERNAL	2				0.001	0.0022
070	6C040-36670	POPPET	1				0.011	0.0242
080	6C040-36680	SPRING	1				0.001	0.0022
090	04810-00090	O RING	2	<=61534			0	0
090	04817-00090	O RING	2	>=61535	¬		0.001	0.0022
100	6A100-36660	PLUG	1				0.015	0.033
110	48100-38320	POPPET	1				0.014	0.0308
120	48100-38330	SPRING	1				0.005	0.011
130	6A100-36670	PLUG	1				0.027	0.0594
140	6A100-36680	PLUG	1				0.042	0.0924
150	04810-06100	O RING	1	<=61534			0	0
150	04817-06100	O RING	1	>=61535	¬		0.001	0.0022
160	6A100-36690	POPPET	1				0.035	0.077
170	07715-00803	BALL	1				0.004	0.0088
180	6A100-36710	SPRING	1				0.01	0.022
190	04811-00050	O RING	1	<=61534			0	0
190	04816-00050	O RING	1	>=61535	¬		0.001	0.0022
200	02052-50080	NUT	2				0.004	0.0088
210	32701-36150	PLUG	3				0.005	0.011
220	32420-67380	PLUG	1				0.005	0.011
230	6A100-36720	SPRING PLUNGER	1				0.005	0.011
240	6A100-36730	SPRING	1				0.02	0.044
250	6A100-36740	PLUG	1				0.006	0.0132
260	04811-00060	O RING	1	<=61534			0	0
260	04816-00060	O RING	1	>=61535	¬		0.001	0.0022

silverhorn.co.uk

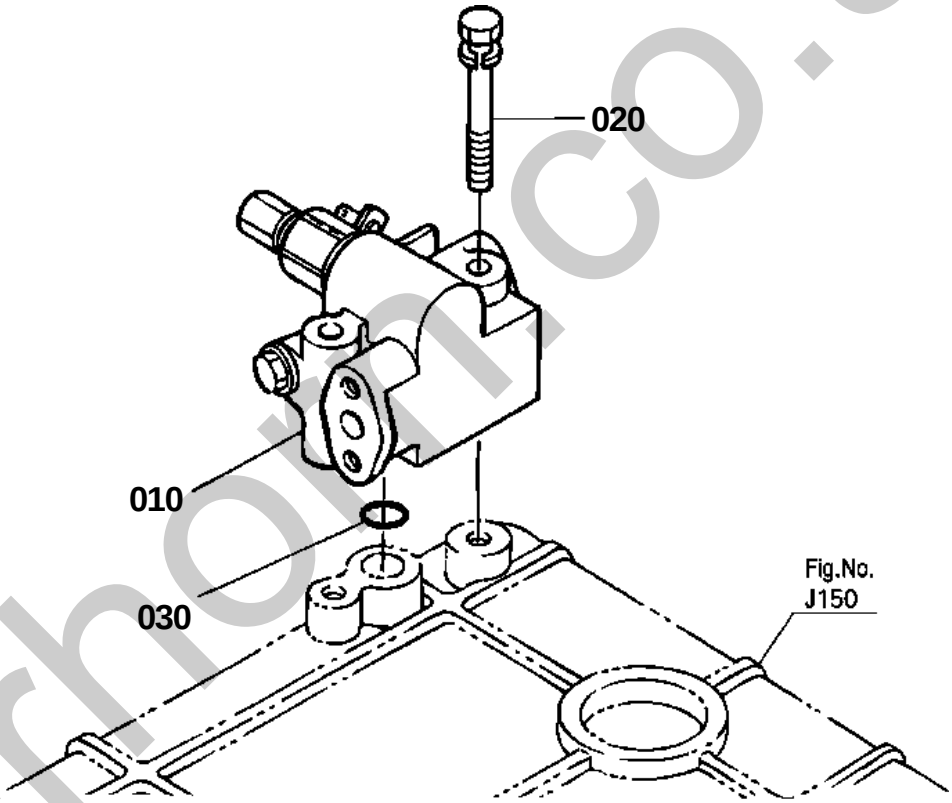

32721-107-10

silverhoim.co.uk

HYDRAULIC OUTLET

↔ Interchangeable; ≠ not interchangeable; ← new for old; → old for new

REF.No	Part No.	Description	Q'ty	S.No.	I/C	REMARKS	Weight (kgf)	Weight (lb)
010	32721-39500	ASSY VALVE	1				2.5	5.5
020	01123-50875	BOLT	2				0.04	0.088
030	04811-00180	O RING	1	<=61394			0	0
030	04817-00180	O RING	1	>=61395	¬		0.003	0.0066

silverhorn.co.uk

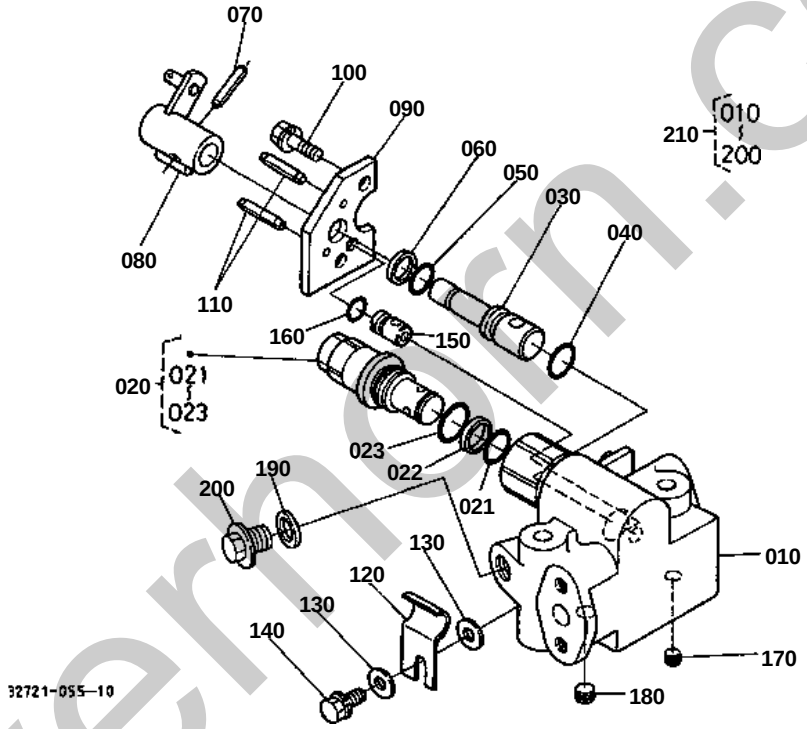

silvernorn.co.uk

HYDRAULIC OUTLET [COMPONENT PARTS]

↔ Interchangeable; ≠ not interchangeable; ← new for old; → old for new

REF.No	Part No.	Description	Q'ty	S.No.	I/C	REMARKS	Weight (kgf)	Weight (lb)
010	32721-39510	BODY RELIEF VALVE	1				2.07	4.554
020	32721-37900	ASSY VALVE RELIEF	1				0.166	0.3652
021	04817-05150	O RING	1				0.001	0.0022
022	67810-38370	RING BACK UP	1				0.001	0.0022
023	04817-00220	O RING	1				0.001	0.0022
030	32721-39520	SPOOL	1				0.07	0.154
040	04810-00180	O RING	1	<=61394			0	0
040	04817-00180	O RING	1	>=61395	¬		0.003	0.0066
050	04810-00140	O RING	1	<=61394			0	0
050	04817-00140	O RING	1	>=61395	¬		0.001	0.0022
060	34076-66250	RING BACK UP	1				0.005	0.011
070	05411-00422	PIN SPRING	1				0.001	0.0022
080	32721-39530	LEVER	1				0.069	0.1518
090	32721-39540	PLATE	1				0.095	0.209
100	01123-50820	BOLT	2				0.011	0.0242
110	05411-00412	PIN SPRING	2	<=50817			0.001	0.0022
110	05411-00414	PIN SPRING	2	>=50818	¬		0.001	0.0022
120	38430-17180	SPRING	1				0.1	0.22
130	04013-60060	WASHER PLAIN	2				0.001	0.0022
140	01023-50616	BOLT	1				0.005	0.011
150	32721-39550	SPOOL	1				0.034	0.0748
160	04810-00070	O RING	1	<=61394			0	0
160	04817-00070	O RING	1	>=61395	¬		0.001	0.0022
170	31351-37160	PLUG	2				0.003	0.0066
180	31351-37150	PLUG	2				0.007	0.0154
190	04717-01700	WASHER WITH RUBBER	1				0.003	0.0066
200	06311-25030	PLUG	1				0.051	0.1122
210	32721-39500	ASSY VALVE	1				2.5	5.5

silverhorn.co.uk

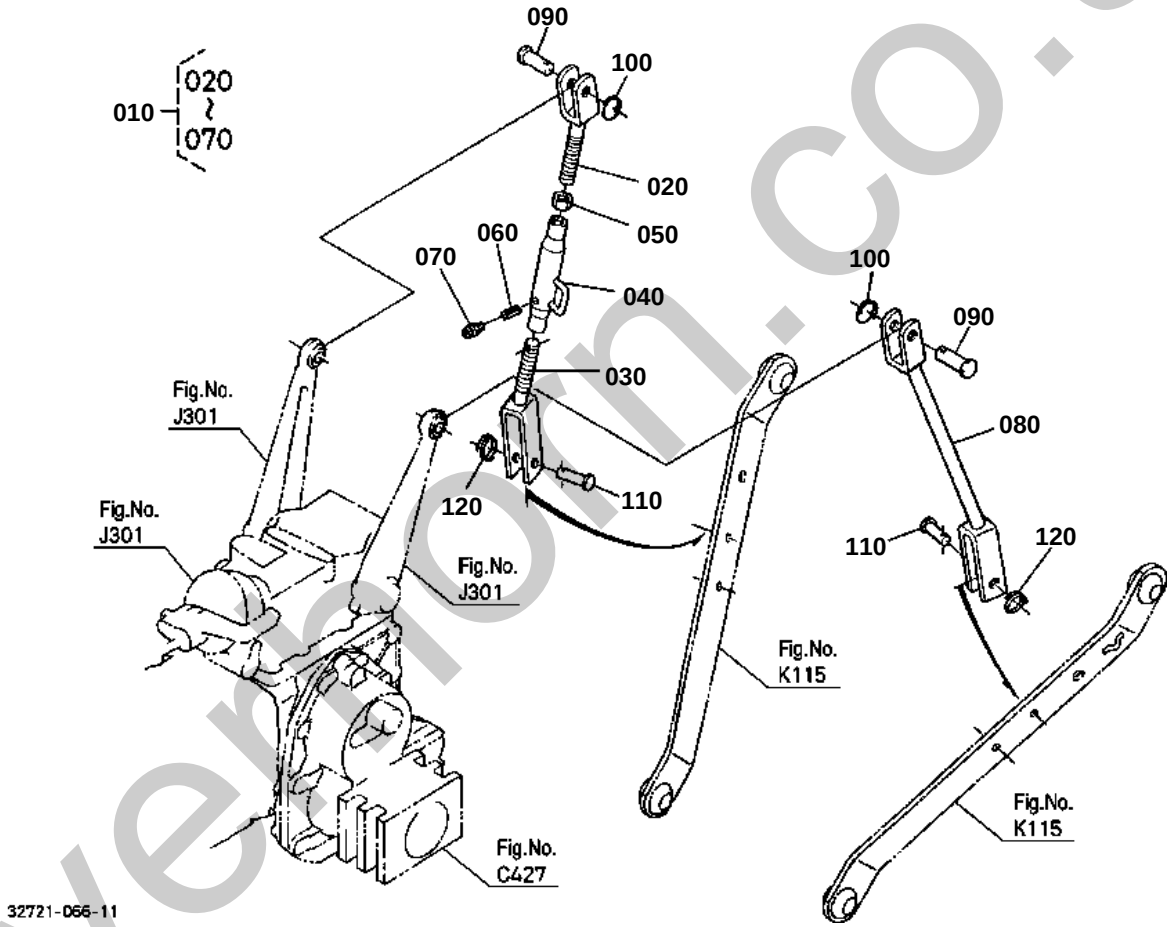

silverhorn.co.uk

3-POINT LINKAGE 2(LIFT ROD)

↔ Interchangeable; ≠ not interchangeable; ← new for old; → old for new

REF.No	Part No.	Description	Q'ty	S.No.	I/C	REMARKS	Weight (kgf)	Weight (lb)
010	32721-65202	ASSY ROD LIFT RH	1				1.43	3.146
020	32721-65232	ROD LIFT UPPER RH	1				0.396	0.8712
030	32721-65242	ROD LIFT LOWER RH	1				0.538	1.1836
040	32721-65250	ROD LIFT MIDDLE	1				0.475	1.045
050	02172-50180	NUT	1				0.021	0.0462
060	05411-00320	PIN SPRING	1				0.001	0.0022
070	06613-10675	NIPPLE GREASE	1				0.003	0.0066
080	32721-65270	ROD LIFT LH	1				1.17	2.574
090	05122-51650	PIN JOINT	2				0.09	0.198
090	05122-51645	PIN JOINT	2		«		0.075	0.165
100	67156-34340	RING SNAP	2				0.01	0.022
110	05122-51240	PIN JOINT	2				0.039	0.0858
120	67156-34340	RING SNAP	2				0.01	0.022

silverhorn.co.uk

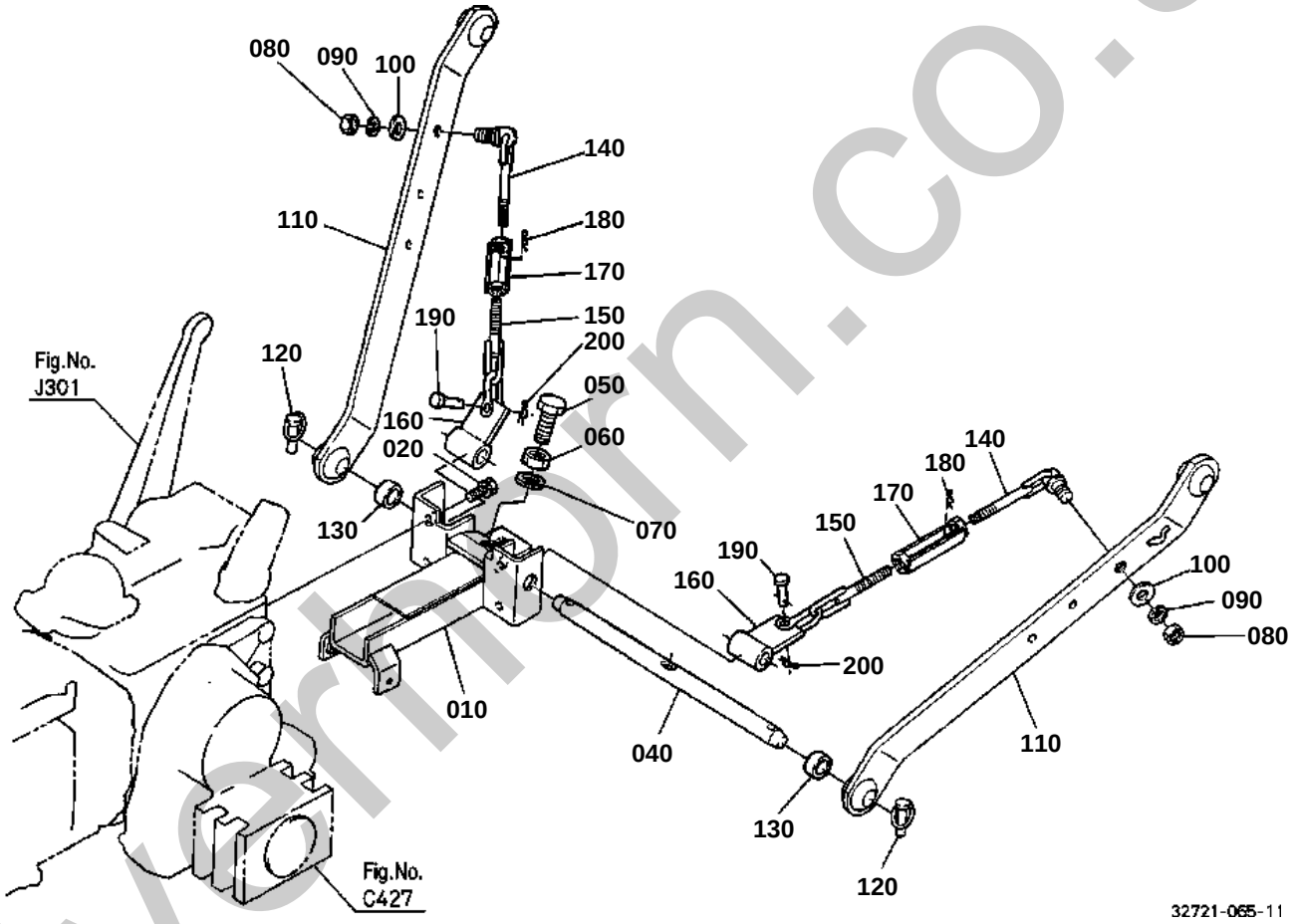

silvermorn.co.uk

↔ Interchangeable; ≠ not interchangeable; ← new for old; → old for new

REF.No	Part No.	Description	Q'ty	S.No.	I/C	REMARKS	Weight (kgf)	Weight (lb)
010	6C040-65604	COMP.HITCH	1				3.35	7.37
020	01123-51230	BOLT	4				0.04	0.088
030	99999-99999	BLANK	0				0	0
040	6C040-66010	PIN LOWER LINK	1				1.14	2.508
050	6C040-65120	BOLT	1				0.02	0.044
060	02118-50100	NUT	1				0.005	0.011
060	02018-50100	NUT	1		«		0.011	0.0242
070	04512-60100	WASHER SPRING	1				0.002	0.0044
080	02174-50160	NUT	2				0.022	0.0484
090	04512-60160	WASHER SPRING	2				0.01	0.022
100	04015-60160	WASHER PLAIN	2				0.058	0.1276
110	6C040-65210	COMP.LINK LOWER	2				5.28	11.616
120	34150-37640	PIN SET	4				0.06	0.132
130	32721-65220	SPACER	2				0.048	0.1056
140	6C040-65320	BOLT TURNBUCKLE	2	<=60970			0	0
140	6C040-65323	BOLT TURNBUCKLE	2	>=60971	¬		0.35	0.77
150	67830-71510	JOINT CHAIN	2				0.22	0.484
160	32721-65292	BRACKET CHECK CHAIN	2				0.36	0.792
170	6C040-65390	TURNBUCKLE	2				0.2	0.44
180	05515-61200	PIN SNAP	2				0.005	0.011
190	32721-65260	PIN JOINT	2				0.023	0.0506
200	52300-34130	PIN SNAP	2				0.004	0.0088
200	6C040-42390	PIN SNAP	2		«		0.002	0.0044

silverhorn.co.uk

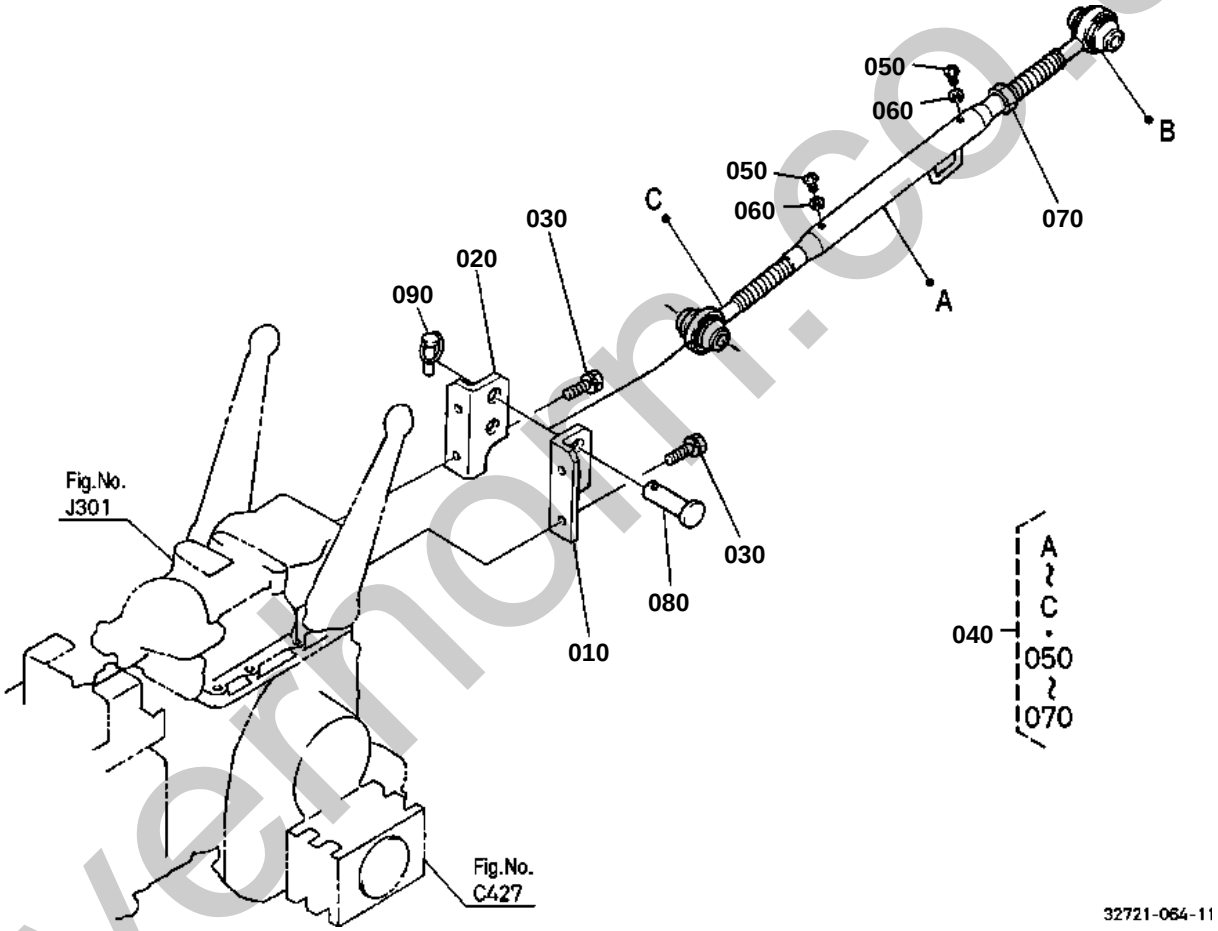

silvermoon.co.uk

3-POINT LINKAGE 1(TOP LINK)

↔ Interchangeable; ≠ not interchangeable; ← new for old; → old for new

REF.No	Part No.	Description	Q'ty	S.No.	I/C	REMARKS	Weight (kgf)	Weight (lb)
010	32721-65190	BRACKET TOP LINK LH	1				0.57	1.254
020	32721-65160	BRACKET TOP LINK RH	1				0.58	1.276
030	01123-51230	BOLT	4				0.04	0.088
040	6C040-65400	ASSY LINK TOP	1				2.16	4.752
050	03014-50606	SCREW PAN-HEAD	2				0.027	0.0594
060	04512-60060	WASHER SPRING	2				0.001	0.0022
070	02152-50200	NUT	1				0.032	0.0704
080	31150-71360	PIN JOINT	2				0.166	0.3652
090	34150-37640	PIN SET	2				0.06	0.132

silverhorn.co.uk

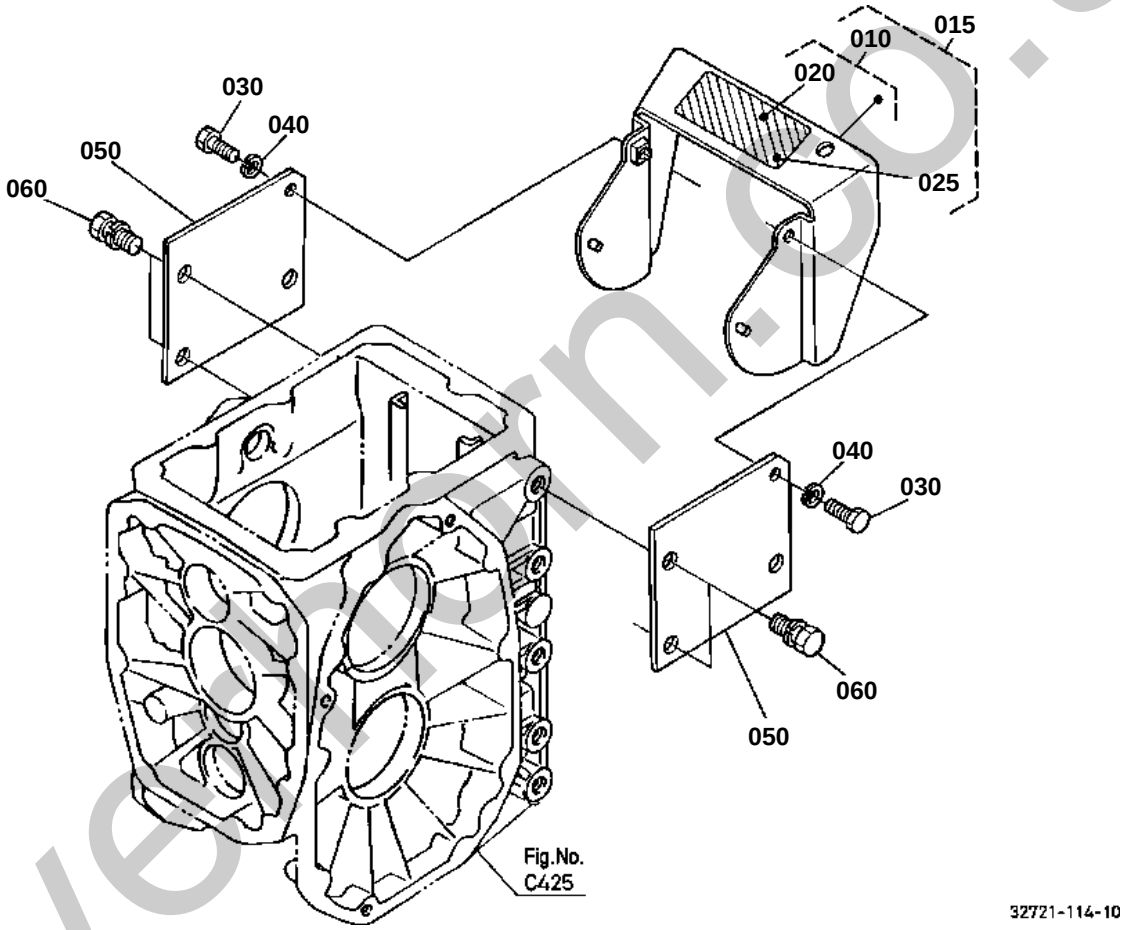

silverfarn.co.uk

PTO PROTECTOR [EXCEPT [AU]]

↔ Interchangeable; ≠ not interchangeable; ← new for old; → old for new

REF.No	Part No.	Description	Q'ty	S.No.	I/C	REMARKS	Weight (kgf)	Weight (lb)
010	6C040-72100	KIT COVER PTO (A)	1			ENGLISH	1.4	3.08
015	6C040-72000	KIT COVER PTO (B)	1			FRENCH	0	0
020	TA040-49590	LABEL PTO WARNING	1			ENGLISH	0	0
020	TA040-49593	LABEL PTO WARNING	1		¬	ENGLISH	0.001	0.0022
025	TA041-49590	LABEL PTO WARNING	1			FRENCH	0.001	0.0022
030	01153-50820	BOLT	2				0.012	0.0264
040	04512-60080	WASHER SPRING	2				0.002	0.0044
050	32721-72160	STAY PTO COVER	2				0.455	1.001
060	01123-51225	BOLT	4				0.04	0.088

silverhorn.co.uk

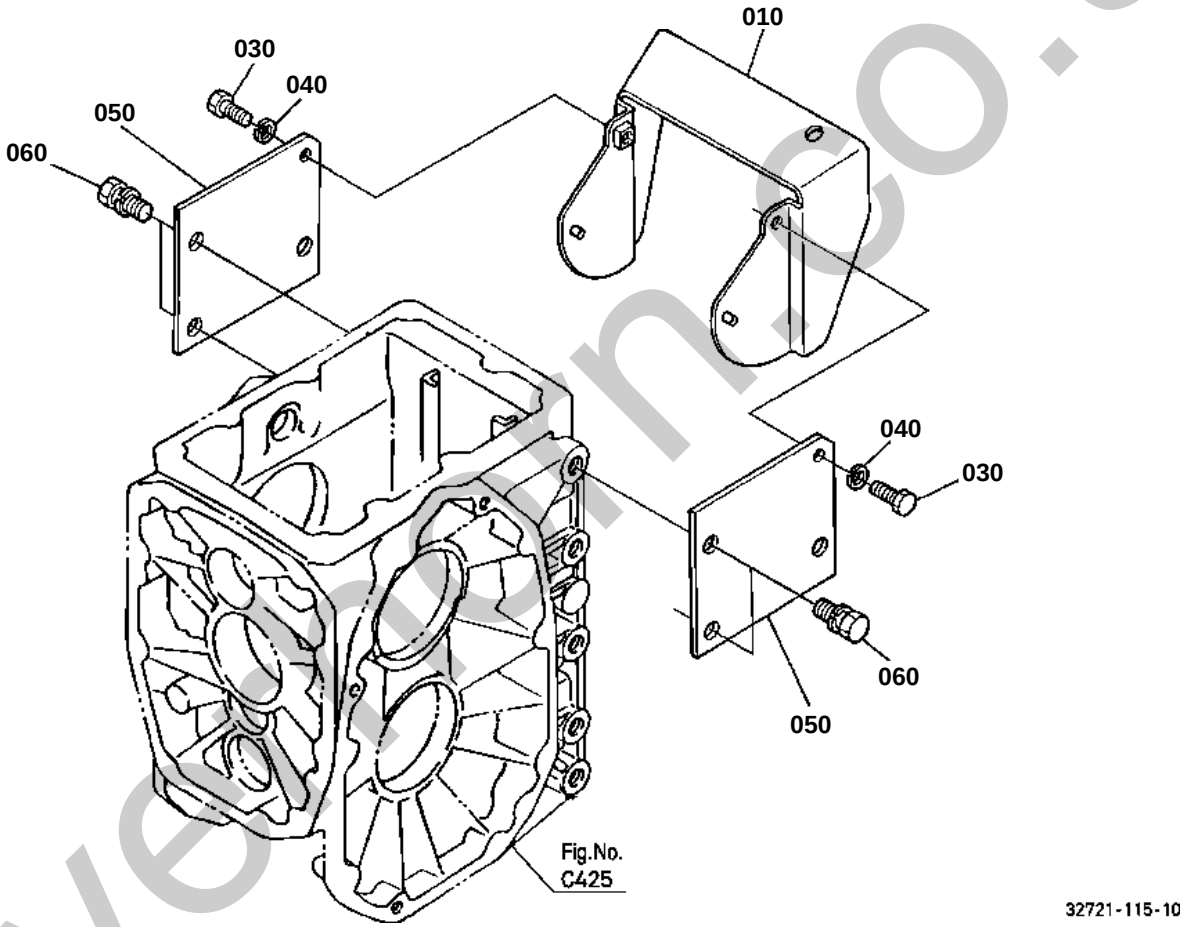

silvermarn.co.uk

PTO PROTECTOR [AU]

↔ Interchangeable; ≠ not interchangeable; ← new for old; → old for new

REF.No	Part No.	Description	Q'ty	S.No.	I/C	REMARKS	Weight (kgf)	Weight (lb)
010	6C140-72150	COVER PTO	1				1.3	2.86
020	99999-99999	BLANK	0				0	0
030	01153-50820	BOLT	2				0.012	0.0264
040	04512-60080	WASHER SPRING	2				0.002	0.0044
050	32721-72160	STAY PTO COVER	2				0.455	1.001
060	01123-51225	BOLT	4				0.04	0.088

silverhorn.co.uk

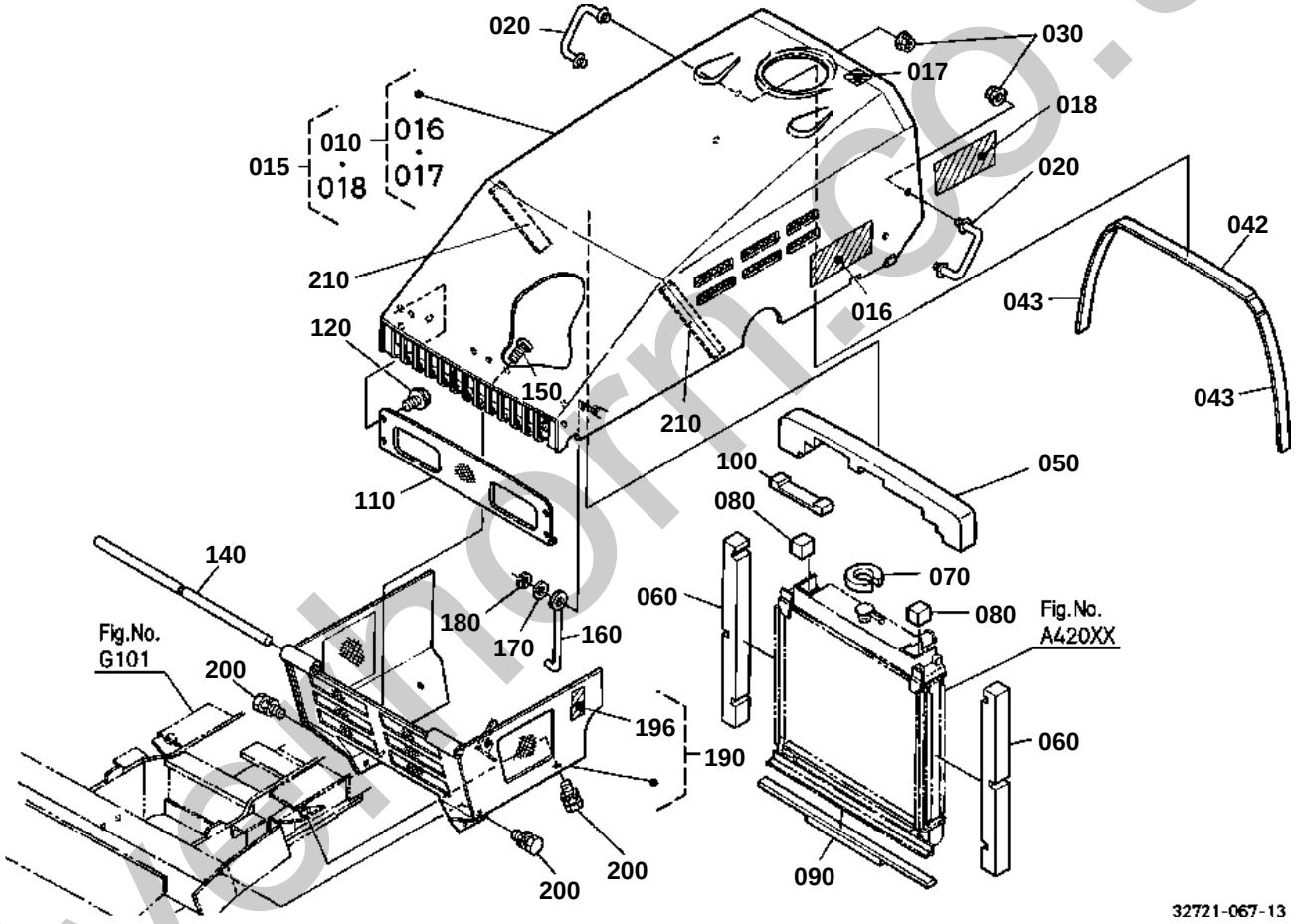

silvermorris.co.uk

OLD PARTS

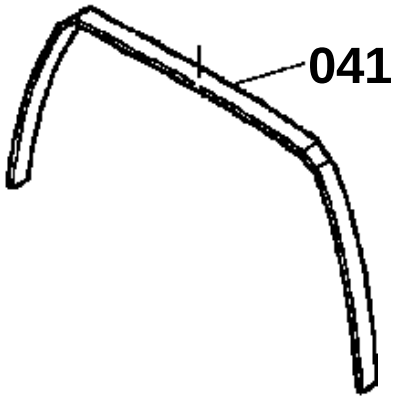

32721-832-10

silverhorn.co.uk

↔ Interchangeable; ≠ not interchangeable; ← new for old; → old for new

REF.No	Part No.	Description	Q'ty	S.No.	I/C	REMARKS	Weight (kgf)	Weight (lb)
010	32721-54000	ASSY BONNET	1				13	28.6
015	32735-54000	KIT BONNET(B)	1				21	46.2
016	TA040-49650	LABEL START CAUTION	1			ENGLISH	0.004	0.0088
017	6C040-47412	LABEL FILLER CAUTION	1				0.001	0.0022
018	TA041-49650	LABEL START CAUTION	1			FRENCH	0.004	0.0088
020	32721-54120	HANDRAIL	2				0.075	0.165
030	02751-50080	NUT FLANGE	4				0.006	0.0132
040	99999-99999	BLANK	0				0	0
041	32721-54132	CUSHION	1	<=50921			0.02	0.044
042	32721-54160	CUSHION BONNET UPPER	1	>=50922			0.049	0.1078
043	32721-54170	CUSHION BONNET SIDE	2	>=50922			0.039	0.0858
050	32721-54462	SPONGE	1				0.05	0.11
060	32721-54440	SPONGE	2				0.013	0.0286
070	32721-54520	SPONGE	1				0.003	0.0066
080	6C040-54490	SPONGE	2				0	0
080	6C090-54490	SPONGE	2		«		0.004	0.0088
090	32721-54480	SPONGE	1				0.007	0.0154
100	32721-54420	SPONGE	1				0.005	0.011
110	32721-54212	NET FRONT GRILLE	1				0.055	0.121
120	01754-50610	BOLT FLANGE	4				0.006	0.0132
130	99999-99999	BLANK	0				0	0
140	32701-54260	SHAFT HINGE	1				0.65	1.43
150	03017-50610	SCREW CR-REC-BD-HD	1				0.004	0.0088
150	01053-50612	BOLT	1		«		0.004	0.0088
160	32701-54270	LINK	1				0.09	0.198
170	04011-50120	WASHER PLAIN	1				0.005	0.011
180	04613-50100	CIR CLIP EXTERNAL	1				0.002	0.0044
190	32721-54010	ASSY GRILLE	1				7	15.4
196	TA040-49580	LABEL MUFFLER	1				0.001	0.0022
200	01133-51020	BOLT	6				0.02	0.044
210	32721-54180	TAPE BONNET SIDE	2	<=51187			0	0
210	32721-54190	TAPE BONNET SIDE	2	>=51188	¬		0.012	0.0264

silvermorn.co.uk

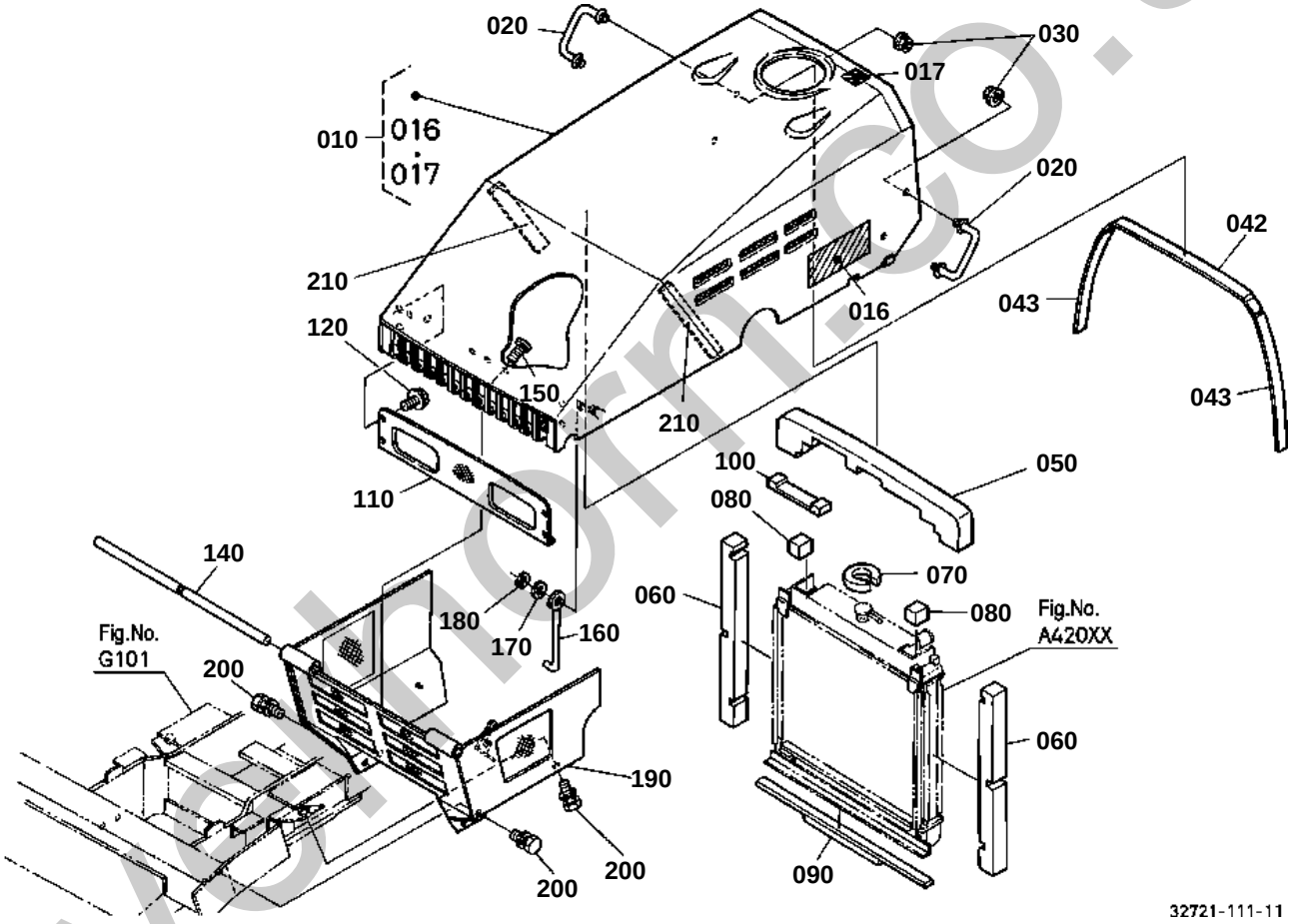

silverthorn.co.uk

OLD PARTS

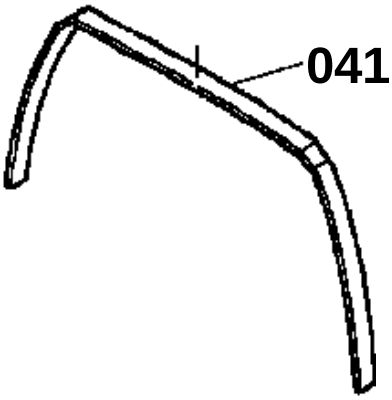

32721-832-10

silverhorn.co.uk

↔ Interchangeable; ≠ not interchangeable; ← new for old; → old for new

REF.No	Part No.	Description	Q'ty	S.No.	I/C	REMARKS	Weight (kgf)	Weight (lb)
010	32721-54000	ASSY BONNET	1				13	28.6
016	TA040-49650	LABEL START CAUTION	1				0.004	0.0088
017	6C040-47412	LABEL FILLER CAUTION	1				0.001	0.0022
020	32721-54120	HANDRAIL	2				0.075	0.165
030	02751-50080	NUT FLANGE	4				0.006	0.0132
040	99999-99999	BLANK	0				0	0
041	32721-54132	CUSHION	1	<=50921			0.02	0.044
042	32721-54160	CUSHION BONNET UPPER	1	>=50922			0.049	0.1078
043	32721-54170	CUSHION BONNET SIDE	2	>=50922			0.039	0.0858
050	32721-54462	SPONGE	1				0.05	0.11
060	32721-54440	SPONGE	2				0.013	0.0286
070	32721-54520	SPONGE	1				0.003	0.0066
080	6C040-54490	SPONGE	2				0	0
080	6C090-54490	SPONGE	2		«		0.004	0.0088
090	32721-54480	SPONGE	1				0.007	0.0154
100	32721-54420	SPONGE	1				0.005	0.011
110	32721-54212	NET FRONT GRILLE	1				0.055	0.121
120	01754-50610	BOLT FLANGE	4				0.006	0.0132
130	99999-99999	BLANK	0				0	0
140	32701-54260	SHAFT HINGE	1				0.65	1.43
150	03017-50610	SCREW CR-REC-BD-HD	1				0.004	0.0088
150	01053-50612	BOLT	1		«		0.004	0.0088
160	32701-54270	LINK	1				0.09	0.198
170	04011-50120	WASHER PLAIN	1				0.005	0.011
180	04613-50100	CIR CLIP EXTERNAL	1				0.002	0.0044
190	32721-54153	COMP.GRILLE	1				5.8	12.76
200	01133-51020	BOLT	6				0.02	0.044
210	32721-54180	TAPE BONNET SIDE	2	<=51187			0	0
210	32721-54190	TAPE BONNET SIDE	2	>=51188	¬		0.012	0.0264

silverhorn.co.uk

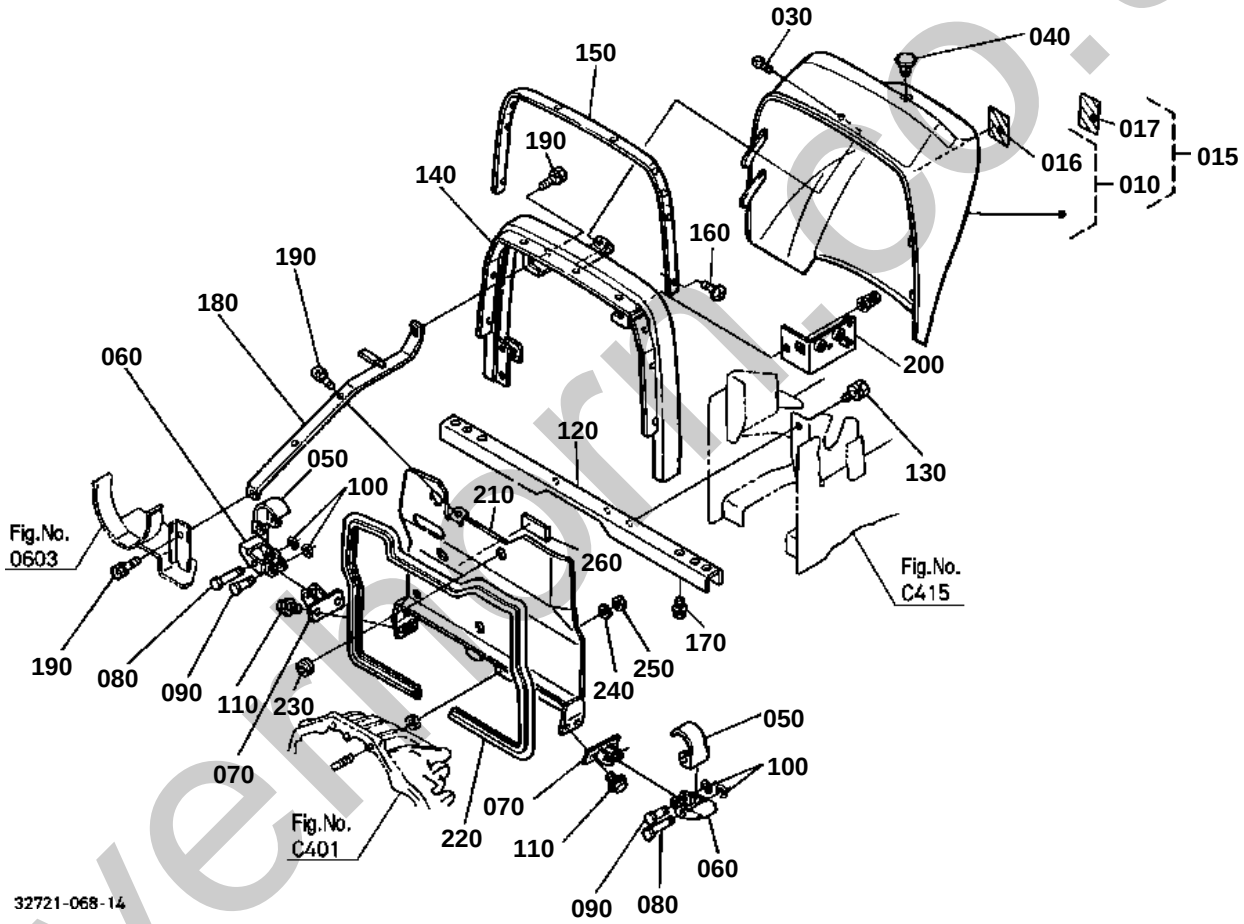

silverhorn.co.uk

OLD PARTS

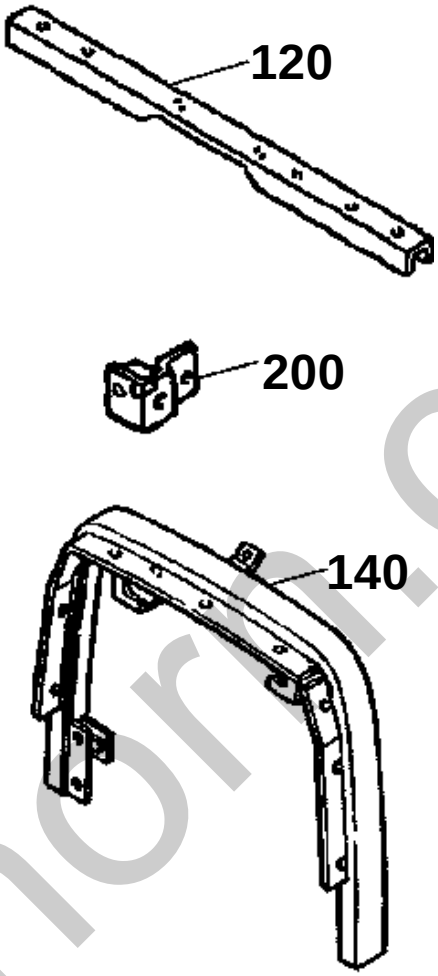

32721-820-11

silverhorn.co.uk

PANEL COVER/SHUTTER PLATE [EXCEPT [AU]]

↔ Interchangeable; ≠ not interchangeable; ← new for old; → old for new

REF.No	Part No.	Description	Q'ty	S.No.	I/C	REMARKS	Weight (kgf)	Weight (lb)
010	32721-99170	ASSY COVER PANEL(A)	1	<=60970			3	6.6
010	32721-99172	ASSY COVER PANEL(A)	1	>=60971	1		0.3	0.66
015	32735-99170	ASSY COVER PANEL(B)	1	<=60970			0.292	0.6424
015	32735-99172	ASSY COVER PANEL(B)	1	>=60971	1		3	6.6
016	32721-47240	LABEL HST	1	<=60970		ENGLISH	0.001	0.0022
016	6C150-47430	LABEL PARKING	1	>=60971	1	ENGLISH	0.002	0.0044
017	32735-92140	LABEL PARKING	1	<=60970		FRENCH	0.001	0.0022
017	6C151-47430	LABEL PARKING WARNIN	1	>=60971	1	FRENCH	0.002	0.0044
020	99999-99999	BLANK	0				0	0
030	37410-61720	SCREW	1				0.001	0.0022
040	38240-29290	PLUG	1	<=62340			0.001	0.0022
040	6A100-63250	PLUG	1	>=62341	1		0.001	0.0022
050	67950-53610	HOOK BONNET	2				0.02	0.044
060	67950-53620	LEVER HOOK	2				0.01	0.022
070	67950-53630	FULCRUM HOOK	2				0.08	0.176
080	67950-53640	PIN FULCRUM A	2				0.01	0.022
090	67950-53650	PIN FULCRUM B	2				0.01	0.022
100	04613-50040	CIR CLIP EXTERNAL	4				0.001	0.0022
110	01754-50612	BOLT FLANGE	4				0.005	0.011
120	6C040-54210	PILLAR CENTER	1	<=52611			0	0
120	6C040-54213	PILLAR CENTER	1	>=52612	¬		1.4	3.08
130	01133-51022	BOLT	2				0.025	0.055
140	32721-54220	PILLAR CENTER UPPER	1	<=62888			2.4	5.28
140	32721-54224	PILLAR CENTER UPPER	1	>=62889	¬		0	0
140	32721-54226	PILLAR CENTER UPPER	1	>=63077	¬		2.4	5.28
150	32721-54253	CUSHION PILLAR UPPER	1				0.22	0.484
160	32721-54260	STOPPER PILLAR UPPER	9				0.001	0.0022
170	6C040-54610	BOLT	2				0.014	0.0308
180	32721-54230	STAY PILLAR	1				0	0
190	01023-50616	BOLT	3				0.005	0.011
200	6C040-54283	BRACKET	1	<=60970			0.09	0.198
200	6A320-54280	BRACKET	1	>=60971	1		0.1	0.22
210	32721-54552	PLATE SHUTTER	1				1.7	3.74
220	32721-54560	TRIM	1				0.12	0.264
230	54721-38340	GROMMET	1				0.003	0.0066
240	04512-60100	WASHER SPRING	2				0.002	0.0044
250	02116-50100	NUT	2				0.004	0.0088
260	32721-54570	CUSHION	1	>=50716			0.008	0.0176

silverthorn.co.uk

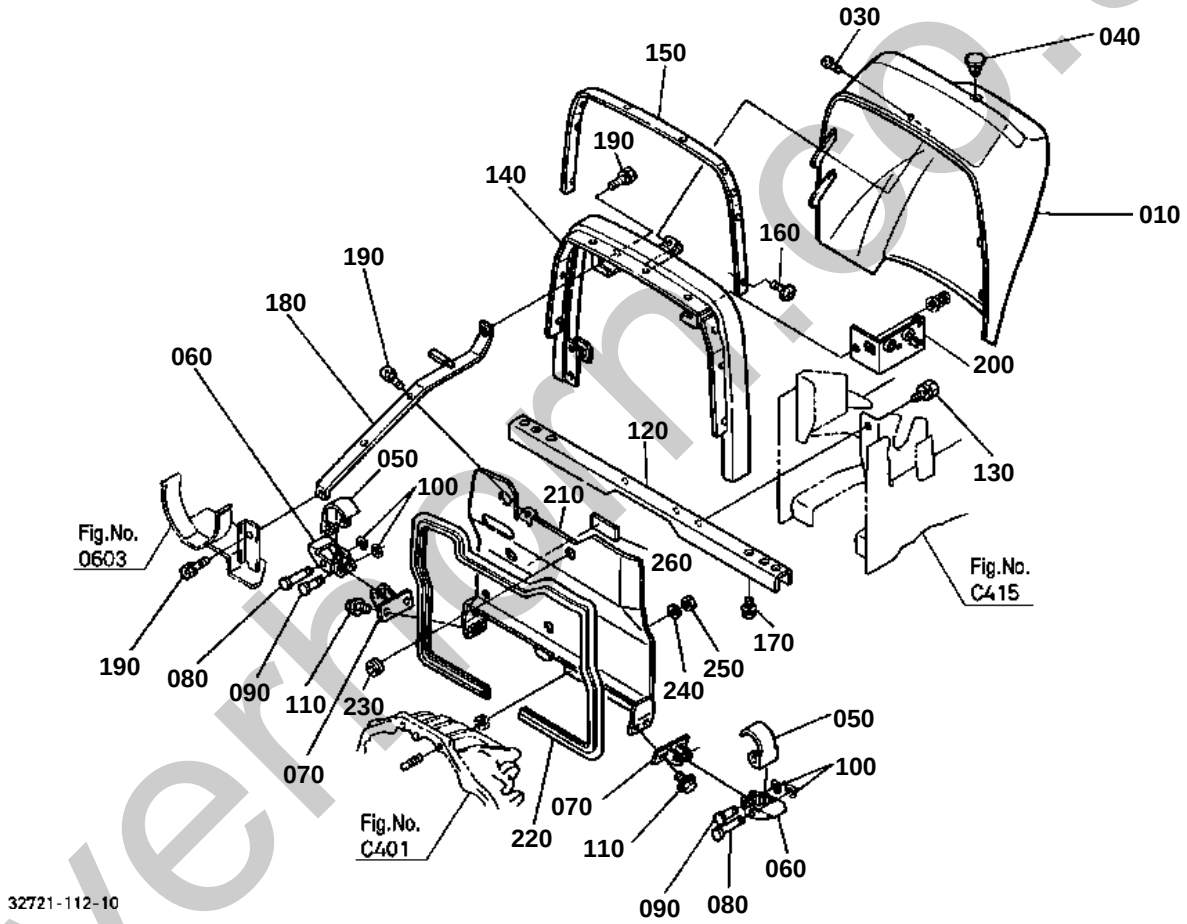

silvermac.co.uk

OLD PARTS

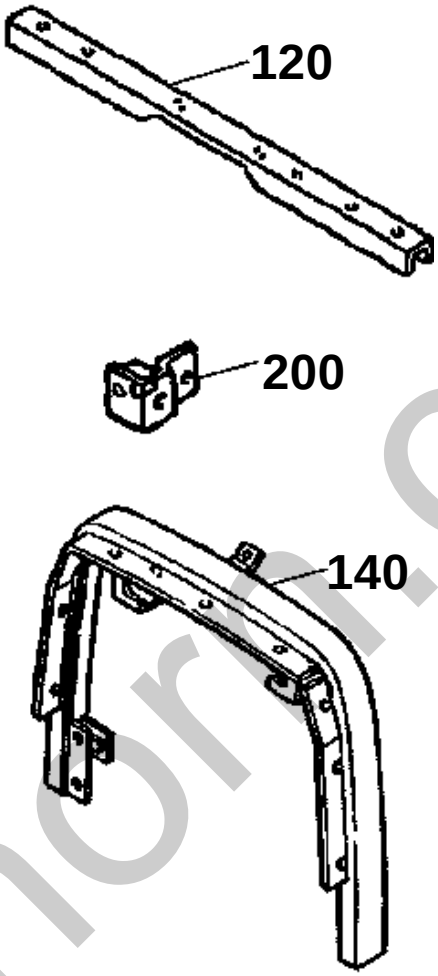

32721-820-11

silverhorn.co.uk

PANEL COVER/SHUTTER PLATE [AU]

↔ Interchangeable; ≠ not interchangeable; ← new for old; → old for new

REF.No	Part No.	Description	Q'ty	S.No.	I/C	REMARKS	Weight (kgf)	Weight (lb)
010	6C040-53514	COVER PANEL	1	<=60970			3	6.6
010	6C070-53510	COVER PANEL	1	>=60971	1		2.75	6.05
010	6C070-53512	COVER PANEL	1	>=62341	1		2.75	6.05
020	99999-99999	BLANK	0				0	0
030	37410-61720	SCREW	1				0.001	0.0022
040	38240-29290	PLUG	1	<=62340			0.001	0.0022
040	6A100-63250	PLUG	1	>=62341	1		0.001	0.0022
050	67950-53610	HOOK BONNET	2				0.02	0.044
060	67950-53620	LEVER HOOK	2				0.01	0.022
070	67950-53630	FULCRUM HOOK	2				0.08	0.176
080	67950-53640	PIN FULCRUM A	2				0.01	0.022
090	67950-53650	PIN FULCRUM B	2				0.01	0.022
100	04613-50040	CIR CLIP EXTERNAL	4				0.001	0.0022
110	01754-50612	BOLT FLANGE	4				0.005	0.011
120	6C040-54210	PILLAR CENTER	1	<=52611			0	0
120	6C040-54213	PILLAR CENTER	1	>=52612	¬		1.4	3.08
130	01133-51022	BOLT	2				0.025	0.055
140	32721-54220	PILLAR CENTER UPPER	1	<=62888			2.4	5.28
140	32721-54224	PILLAR CENTER UPPER	1	>=62889	¬		0	0
140	32721-54226	PILLAR CENTER UPPER	1	>=63077	¬		2.4	5.28
150	32721-54253	CUSHION PILLAR UPPER	1				0.22	0.484
160	32721-54260	STOPPER PILLAR UPPER	9				0.001	0.0022
170	6C040-54610	BOLT	2				0.014	0.0308
180	32721-54230	STAY PILLAR	1				0	0
190	01023-50616	BOLT	3				0.005	0.011
200	6C040-54283	BRACKET	1	<=60970			0.09	0.198
200	6A320-54280	BRACKET	1	>=60971	1		0.1	0.22
210	32721-54552	PLATE SHUTTER	1				1.7	3.74
220	32721-54560	TRIM	1				0.12	0.264
230	54721-38340	GROMMET	1				0.003	0.0066
240	04512-60100	WASHER SPRING	2				0.002	0.0044
250	02116-50100	NUT	2				0.004	0.0088
260	32721-54570	CUSHION	1	>=50716			0.008	0.0176

silverhorn.co.uk

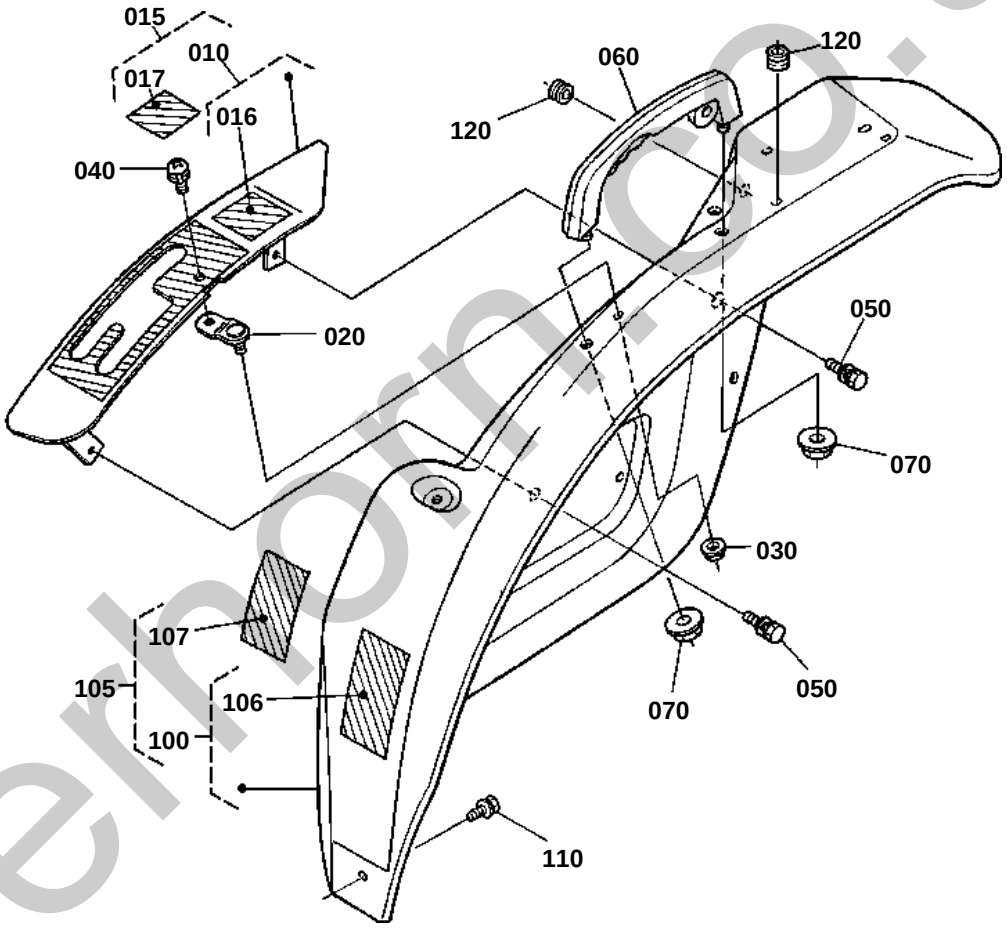

silverhorn.co.uk

↔ Interchangeable; ≠ not interchangeable; ← new for old; → old for new

REF.No	Part No.	Description	Q'ty	S.No.	I/C	REMARKS	Weight (kgf)	Weight (lb)
010	32721-52000	ASSY GUIDE LEVER LH	1	<=51613			0	0
010	32721-52002	ASSY GUIDE LEVER LH	1	>=51614	¬		0	0
010	32721-52003	ASSY GUIDE LEVER LH	1	>=52612	¬		1.8	3.96
015	32735-52000	ASSY GUIDE LEVER LH	1	<=51613			0	0
015	32735-52002	ASSY GUIDE LEVER LH	1	>=51614	¬		0	0
015	32735-52003	ASSY GUIDE LEVER LH	1	>=52612	¬		0.085	0.187
016	32751-49210	LABEL SEAT WARNING	1			ENGLISH	0.002	0.0044
017	32765-49210	LABEL SEAT WARNING	1			FRENCH	0.002	0.0044
020	32721-52130	SUPPORT LEVER GUIDE	1				0.057	0.1254
030	02771-60100	NUT FLANGE	1				0.01	0.022
040	36919-56560	SCREW WITH WASHER	1				0.012	0.0264
050	01754-50816	BOLT FLANGE	2	<=61346			0.011	0.0242
050	01125-60816	BOLT	2	>=61347	¬		0.01	0.022
060	37410-52230	ARM-REST	1				0.34	0.748
070	02783-50100	NUT FLANGE	2				0.01	0.022
080	99999-99999	BLANK	0				0	0
090	99999-99999	BLANK	0				0	0
100	32721-99130	ASSY FENDER LH	1	<=61678			0	0
100	32721-99132	ASSY FENDER LH	1	>=61679	¬		6	13.2
105	32735-99130	ASSY FENDER LH	1	<=61678			0	0
105	32735-99132	ASSY FENDER LH	1	>=61679	¬		0	0
106	6C040-47420	LABEL SAFETY	1	<=61678		ENGLISH	0.001	0.0022
106	6C040-47422	LABEL SAFETY	1	>=61679	¬	ENGLISH	0.001	0.0022
107	TA041-65700	LABEL SAFETY	1	<=61678		FRENCH	0	0
107	TA041-65702	LABEL SAFETY	1	>=61679	¬	FRENCH	0.01	0.022
110	01125-50818	BOLT	3				0.015	0.033
120	36330-87450	RING RUBBER	2				0.001	0.0022

silverhorn.co.uk

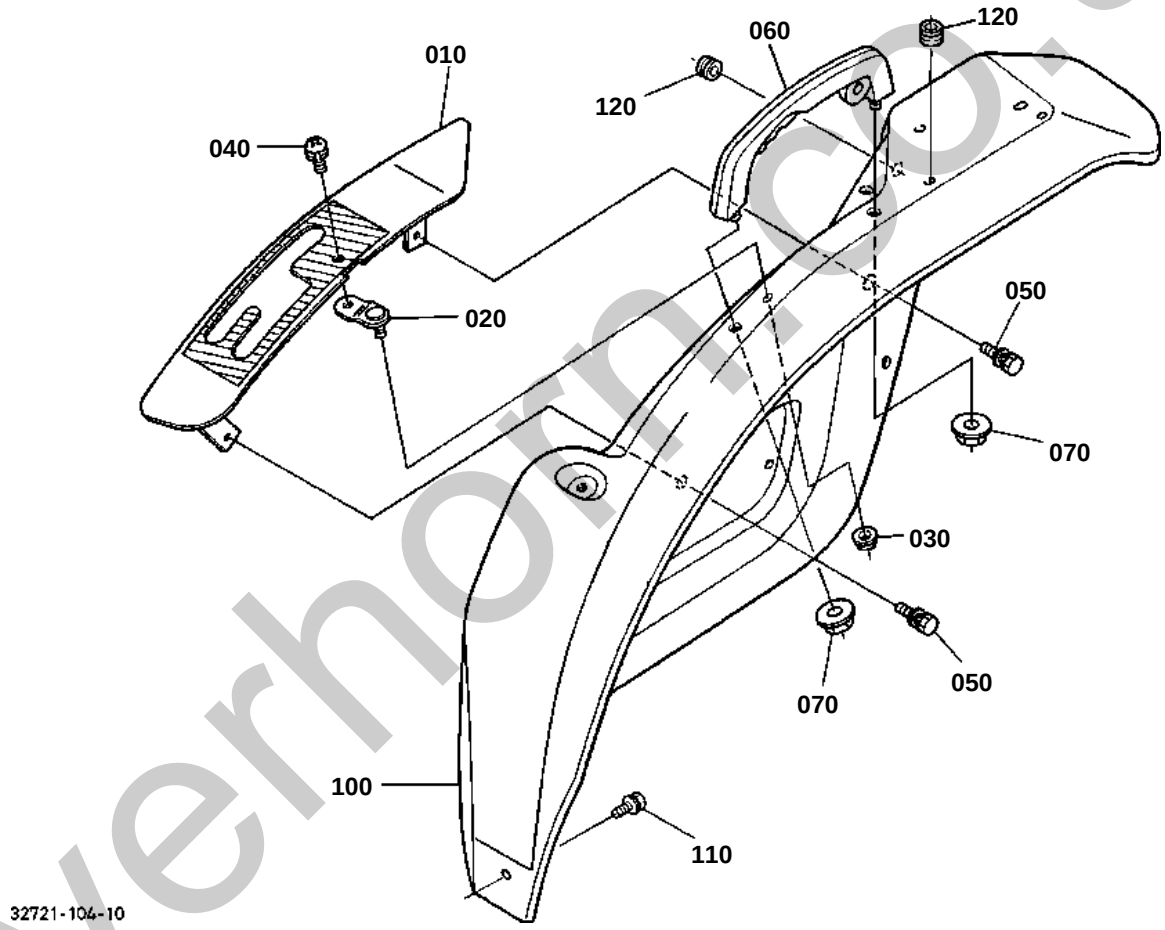

silverhorn.co.uk

FENDER LH [AU]

↔ Interchangeable; ≠ not interchangeable; ← new for old; → old for new

REF.No	Part No.	Description	Q'ty	S.No.	I/C	REMARKS	Weight (kgf)	Weight (lb)
010	32721-52113	GUIDE LEVER LH	1	<=51613			0	0
010	32721-52115	GUIDE LEVER LH	1	>=51614	¬		0	0
010	32721-52116	GUIDE LEVER LH	1	>=52612	¬		1.02	2.244
020	32721-52130	SUPPORT LEVER GUIDE	1				0.057	0.1254
030	02771-60100	NUT FLANGE	1				0.01	0.022
040	36919-56560	SCREW WITH WASHER	1				0.012	0.0264
050	01754-50816	BOLT FLANGE	2	<=61346			0.011	0.0242
050	01125-60816	BOLT	2	>=61347	¬		0.01	0.022
060	37410-52230	ARM-REST	1				0.34	0.748
070	02783-50100	NUT FLANGE	2				0.01	0.022
080	99999-99999	BLANK	0				0	0
090	99999-99999	BLANK	0				0	0
100	6A100-52710	FENDER LH	1	<=54263			0	0
100	6A100-52713	FENDER LH	1	>=60001	¬		3.68	8.096
110	01125-50818	BOLT	3				0.015	0.033
120	36330-87450	RING RUBBER	2				0.001	0.0022

silverhorn.co.uk

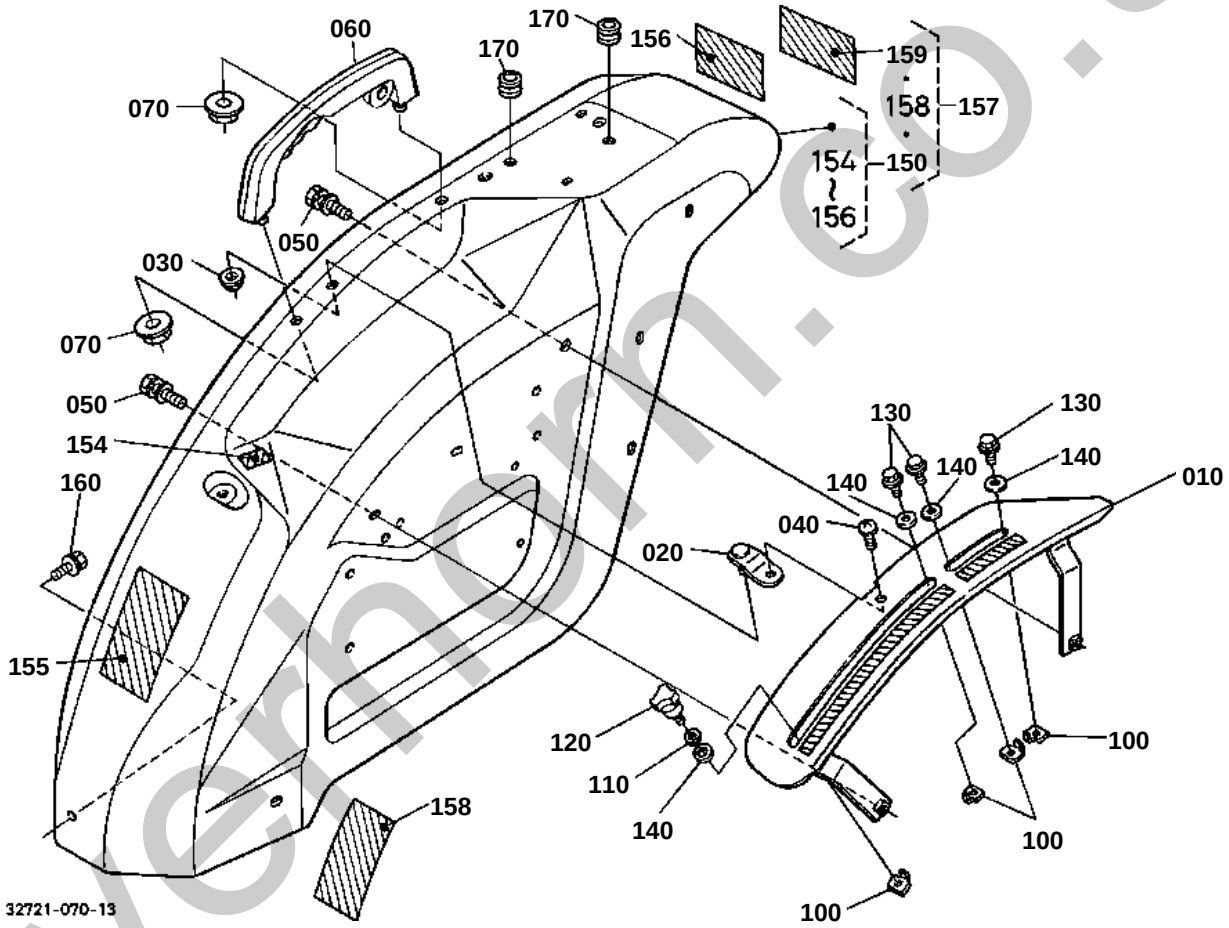

silverhorn.co.uk

FENDER RH [EXCEPT [AU]]

↔ Interchangeable; ≠ not interchangeable; ← new for old; → old for new

REF.No	Part No.	Description	Q'ty	S.No.	I/C	REMARKS	Weight (kgf)	Weight (lb)
010	32721-52123	GUIDE LEVER RH	1				0.84	1.848
020	32721-52130	SUPPORT LEVER GUIDE	1				0.057	0.1254
030	02771-60100	NUT FLANGE	1				0.01	0.022
040	36919-56560	SCREW WITH WASHER	1				0.012	0.0264
050	01754-50816	BOLT FLANGE	2	>=61346			0.011	0.0242
050	01125-60816	BOLT	2	>=61347	¬		0.01	0.022
060	37410-52230	ARM-REST	1				0.34	0.748
070	02783-50100	NUT FLANGE	2				0.01	0.022
080	99999-99999	BLANK	0				0	0
090	99999-99999	BLANK	0				0	0
100	34070-36140	STOPPER	4				0.005	0.011
110	04512-60060	WASHER SPRING	1				0.001	0.0022
120	37410-52610	SCREW KNOB	1				0.015	0.033
130	31351-18790	BOLT FLANGE	3				0.007	0.0154
140	31351-18860	WASHER	4				0.002	0.0044
150	32721-99140	ASSY FENDER RH	1	<=61328			0	0
150	32721-99143	ASSY FENDER RH	1	>=61329	¬		0	0
150	32721-99144	ASSY FENDER RH	1	>=61741	¬		6	13.2
154	6A671-73830	LABEL SEAL	1	>=61741			0.001	0.0022
155	TA040-49320	LABEL ROPS WARNING	1	<=60470		ENGLISH	0.001	0.0022
155	32771-49250	LABEL ROPS WARNING	1	>=60471	¬	ENGLISH	0.001	0.0022
156	TA040-49350	LABEL DRAWBAR	1			ENGLISH	0.002	0.0044
157	32735-99140	ASSY FENDER RH(B)	1	<=61328			0	0
157	32735-99143	ASSY FENDER RH(B)	1	>=61329	¬		0	0
157	32735-99144	ASSY FENDER RH(B)	1	>=61741	¬		6	13.2
158	TA040-49150	LABEL ROPS WARNING	1	<=61328		FRENCH	0.003	0.0066
158	32775-49250	LABEL ROPS WARNING	1	>=61329	¬	FRENCH	0.004	0.0088
159	TA041-49350	LABEL DRAWBAR	1			FRENCH	0.003	0.0066
160	01125-50818	BOLT	3				0.015	0.033
170	36330-87450	RING RUBBER	1	<=61328			0.001	0.0022
170	36330-87450	RING RUBBER	2	>=61329			0.001	0.0022

silverhorn.co.uk

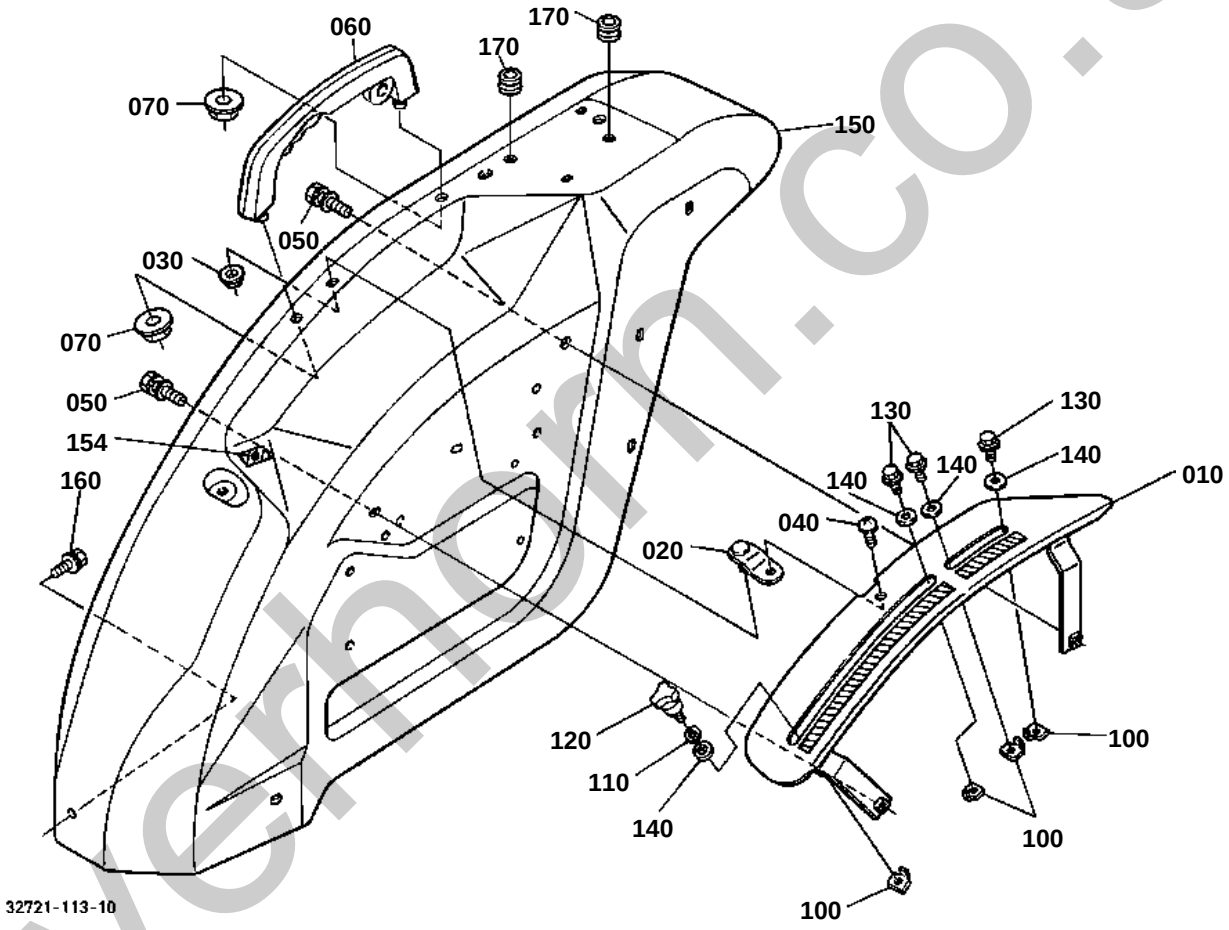

silverhorn.co.uk

FENDER RH [AU]

↔ Interchangeable; ≠ not interchangeable; ← new for old; → old for new

REF.No	Part No.	Description	Q'ty	S.No.	I/C	REMARKS	Weight (kgf)	Weight (lb)
010	32721-52123	GUIDE LEVER RH	1				0.84	1.848
020	32721-52130	SUPPORT LEVER GUIDE	1				0.057	0.1254
030	02771-60100	NUT FLANGE	1				0.01	0.022
040	36919-56560	SCREW WITH WASHER	1				0.012	0.0264
050	01754-50816	BOLT FLANGE	2	<=61346			0.011	0.0242
050	01125-60816	BOLT	2	>=61347	¬		0.01	0.022
060	37410-52230	ARM-REST	1				0.34	0.748
070	02783-50100	NUT FLANGE	2				0.01	0.022
080	99999-99999	BLANK	0				0	0
090	99999-99999	BLANK	0				0	0
100	34070-36140	STOPPER	4				0.005	0.011
110	04512-60060	WASHER SPRING	1				0.001	0.0022
120	37410-52610	SCREW KNOB	1				0.015	0.033
130	31351-18790	BOLT FLANGE	3				0.007	0.0154
140	31351-18860	WASHER	4				0.002	0.0044
150	6A100-52720	FENDER RH	1	<=54263			0	0
150	6A100-52723	FENDER RH	1	>=60001	¬		0	0
150	6A100-52724	FENDER RH	1	>=61329	¬		3.74	8.228
150	6A100-52725	FENDER RH	1	>=61741	1		3.69	8.118
154	6A671-73830	LABEL SEAL	1	>=61741			0.001	0.0022
160	01125-50818	BOLT	3				0.015	0.033
170	36330-87450	RING RUBBER	1	<=61328			0.001	0.0022
170	36330-87450	RING RUBBER	2	>=61329			0.001	0.0022

silverhorn.co.uk

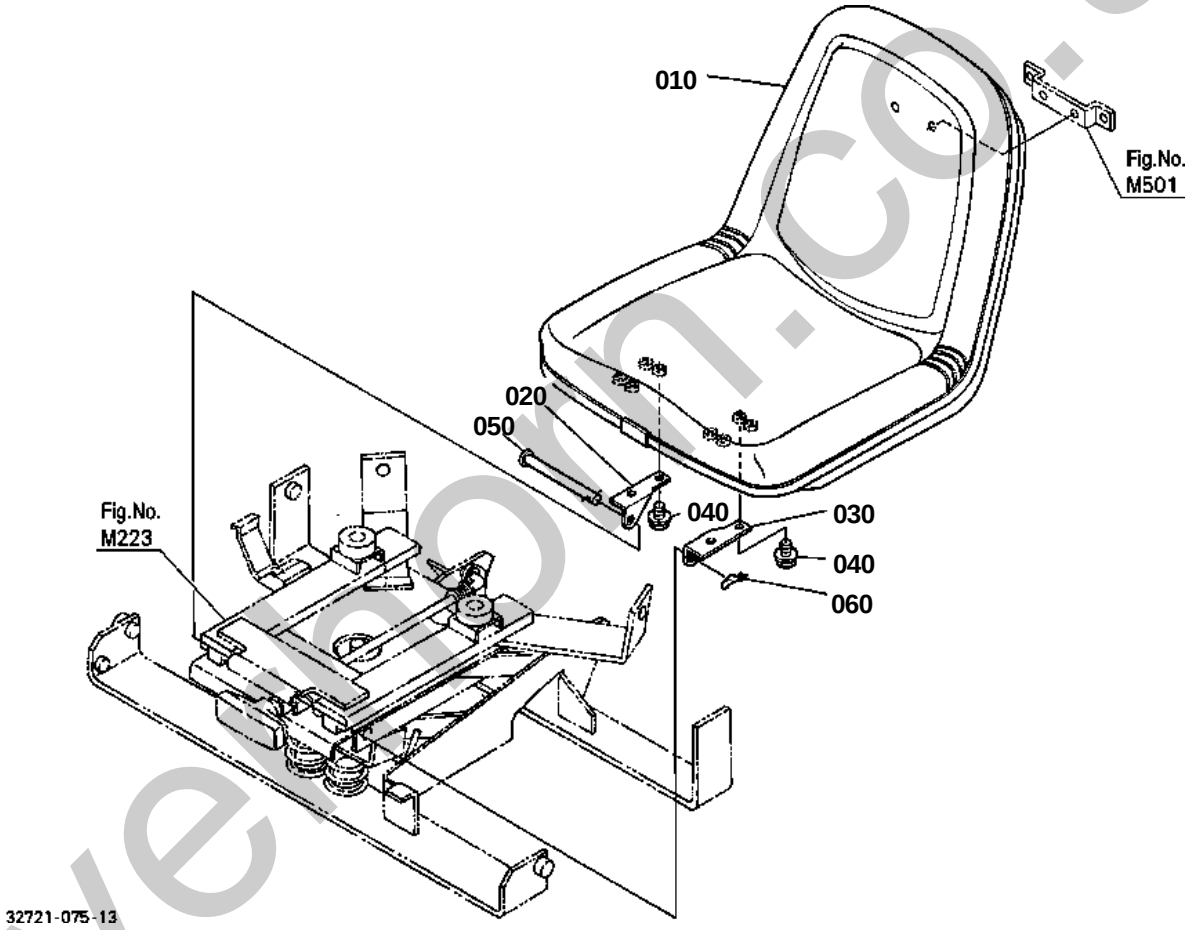

silverthorn.co.uk

SEAT

↔ Interchangeable; ≠ not interchangeable; ← new for old; → old for new

REF.No	Part No.	Description	Q'ty	S.No.	I/C	REMARKS	Weight (kgf)	Weight (lb)
010	TA040-48510	ASSY SEAT	1				7	15.4
020	32430-18450	BRACKET SEAT RH	1				0.08	0.176
030	32430-18460	BRACKET SEAT LH	1				0.08	0.176
040	01754-50816	BOLT FLANGE	4				0.011	0.0242
050	32430-11853	PIN JOINT	1				0.08	0.176
060	52300-34130	PIN SNAP	1				0.004	0.0088
060	6C040-42390	PIN SNAP	1		«		0.002	0.0044

silverhorn.co.uk

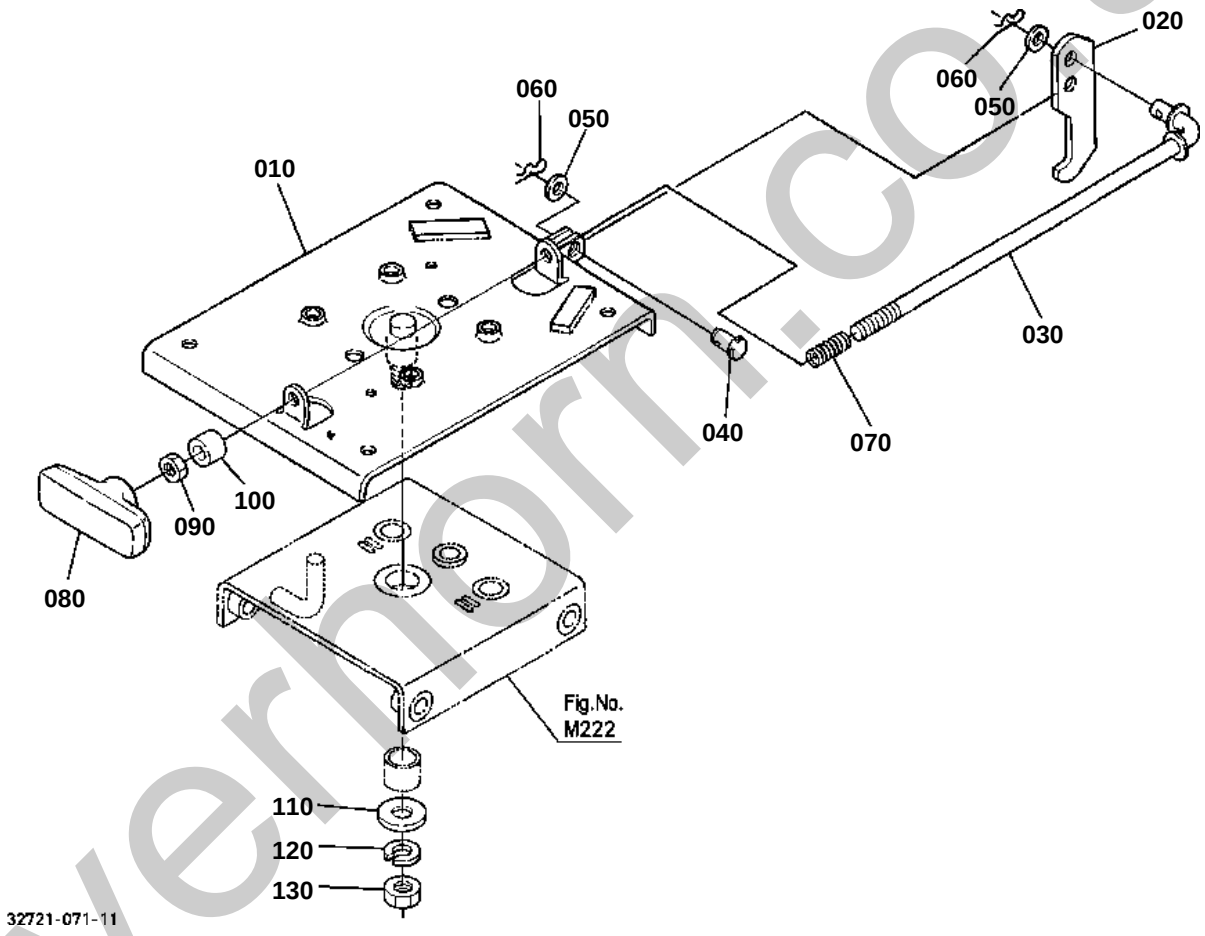

silverhorn.co.uk

SEAT TURN TABLE

↔ Interchangeable; ≠ not interchangeable; ← new for old; → old for new

REF.No	Part No.	Description	Q'ty	S.No.	I/C	REMARKS	Weight (kgf)	Weight (lb)
010	32721-45510	PLATE SEAT TURN	1				1.4	3.08
020	32721-45520	LEVER CLAMP	1				0.118	0.2596
030	32721-45760	ROD CLAMP	1				0.191	0.4202
040	05122-61020	PIN JOINT	1				0.02	0.044
050	04011-50100	WASHER PLAIN	2				0.002	0.0044
060	05515-61000	PIN SNAP	2				0.002	0.0044
070	57304-72260	SPRING OPEN	1				0.01	0.022
080	31355-82370	GRIP LEVER	1				0.04	0.088
090	02118-50100	NUT	1				0.005	0.011
100	38430-29530	SPACER	1				0.01	0.022
110	04013-60140	WASHER PLAIN	1				0.01	0.022
120	04512-60140	WASHER SPRING	1				0.008	0.0176
130	02174-50140	NUT	1				0.014	0.0308

silverhorn.co.uk

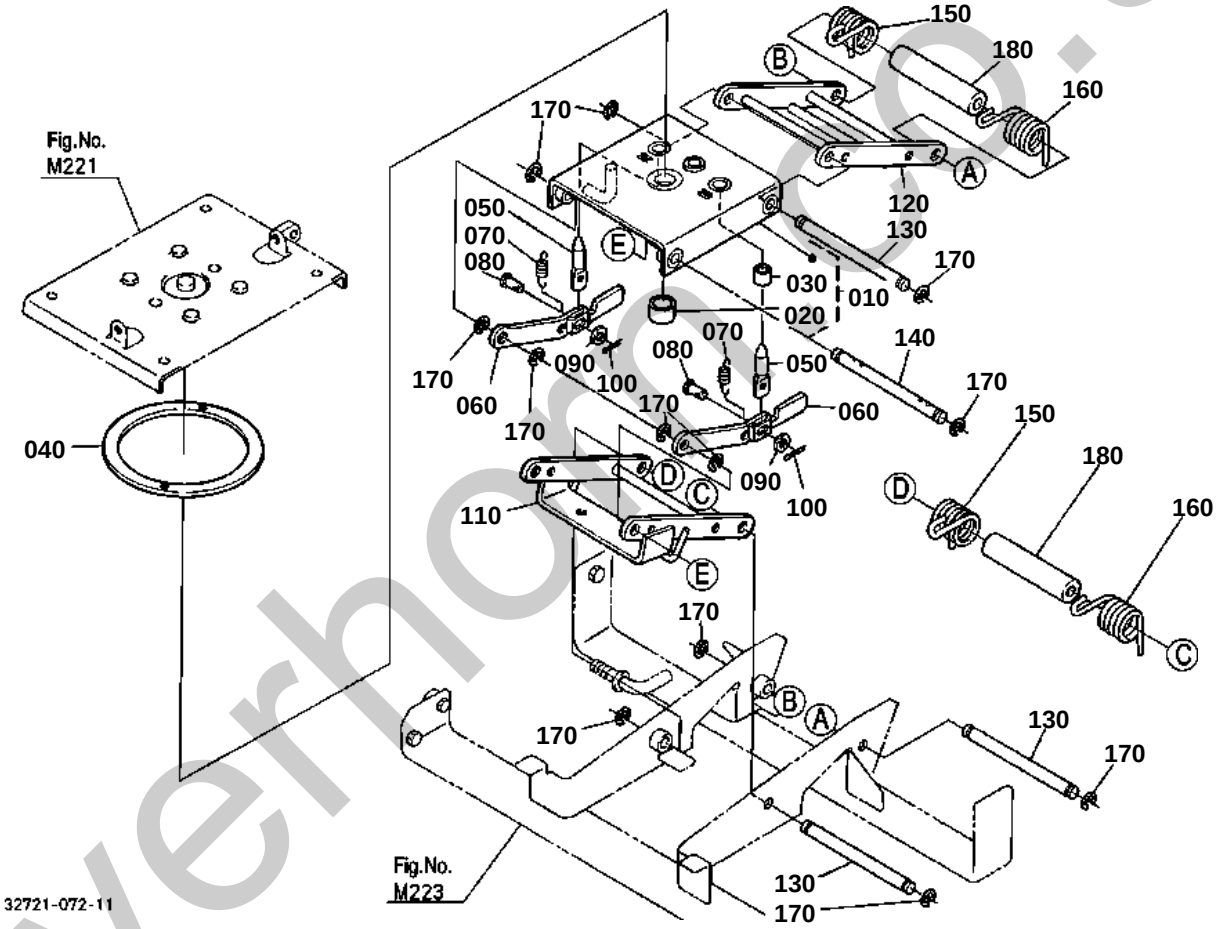

silverhomes.co.uk

OLD PARTS

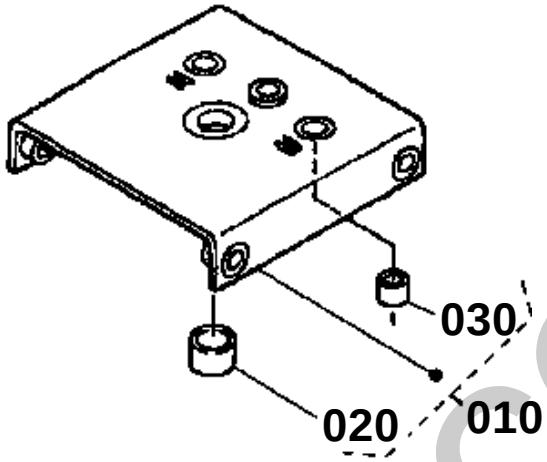

32721-833-10

silverhorn.co.uk

BASE SEAT TURN TABLE

↔ Interchangeable; ≠ not interchangeable; ← new for old; → old for new

REF.No	Part No.	Description	Q'ty	S.No.	I/C	REMARKS	Weight (kgf)	Weight (lb)
010	32721-45500	ASSY BASE SEAT TURN	1	<=62888			0	0
010	32721-45502	ASSY BASE SEAT TURN	1	>=62889	¬		1.4	3.08
020	58511-28120	BUSH	1				0.008	0.0176
030	32721-45650	BUSH	2				0.006	0.0132
040	32721-45670	RING SEAT TURN TABLE	1				0.025	0.055
050	32721-45550	PIN LOCK	2				0.05	0.11
060	32721-45563	LEVER LOCK PIN	1				0.17	0.374
070	32721-45570	SPRING LEVER	2				0.005	0.011
080	05122-50620	PIN JOINT	2				0.005	0.011
090	04013-60060	WASHER PLAIN	2				0.001	0.0022
100	05511-51612	PIN SPLIT	2				0.001	0.0022
110	32721-45580	LINK	1	<=62888			1.18	2.596
110	32721-45582	LINK	1	>=62889	¬		1.18	2.596
120	32721-45590	LINK	1				0.87	1.914
130	32701-52840	PIN FULCRUM	3				0.17	0.374
140	32721-45720	PIN	1				0.164	0.3608
150	32721-45830	SPRING	2				0.07	0.154
160	32721-45610	SPRING	2				0.07	0.154
170	04613-50100	CIR CLIP EXTERNAL	12				0.002	0.0044
180	32721-45750	SPACER LINK	2				0.23	0.506

silverhorn.co.uk

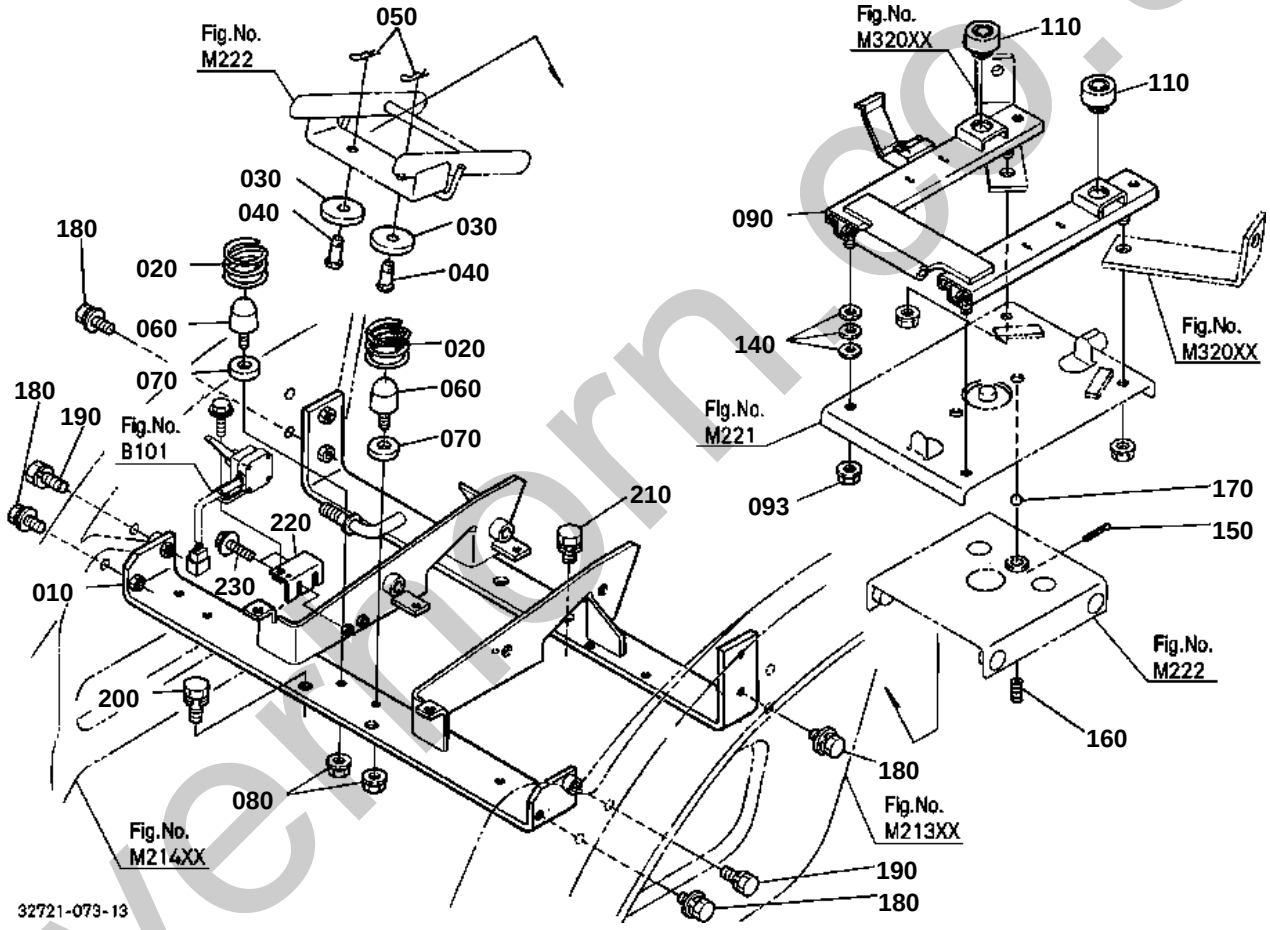

silvermorn.co.uk

SEAT ADJUSTER

↔ Interchangeable; ≠ not interchangeable; ← new for old; → old for new

REF.No	Part No.	Description	Q'ty	S.No.	I/C	REMARKS	Weight (kgf)	Weight (lb)
010	32721-45620	COMP.BASE SEAT	1	<=51613			0	0
010	32721-45624	COMP.BASE SEAT	1	>=51614	¬		0	0
010	32721-45625	COMP.BASE SEAT	1	>=62889	¬		6.4	14.08
020	32721-45630	SPRING SEAT	2				0.154	0.3388
030	32721-45640	CUSHION LINK	2				0.023	0.0506
040	05122-50816	PIN JOINT	2				0.007	0.0154
050	05525-50800	PIN SNAP	2				0.001	0.0022
060	32721-45770	CUSHION STOPPER	2				0.041	0.0902
070	32721-45820	SPACER CUSHION	2				0.042	0.0924
080	02751-50080	NUT FLANGE	2				0.006	0.0132
090	32721-45712	COMP.ADJUSTER SEAT	1				2.33	5.126
093	02771-60100	NUT FLANGE	2				0.01	0.022
100	99999-99999	BLANK	0				0	0
110	32160-18440	CUSHION	2				0.013	0.0286
120	99999-99999	BLANK	0				0	0
130	99999-99999	BLANK	0				0	0
140	04011-50100	WASHER PLAIN	6				0.002	0.0044
150	05511-50330	PIN SPLIT	1				0.005	0.011
160	67156-18150	SPRING SHIFT FORK	1				0.003	0.0066
170	07715-03219	BALL	1				0.014	0.0308
180	01125-50818	BOLT	6				0.015	0.033
190	01123-50830	BOLT	2				0.015	0.033
200	01123-51020	BOLT	2				0.02	0.044
210	01133-51025	BOLT	2				0.023	0.0506
220	32721-47552	STAY SEAT SWITCH	1	>=62889			0	0
230	01754-50616	BOLT FLANGE	2	>=62889			0.006	0.0132

silverhorn.co.uk

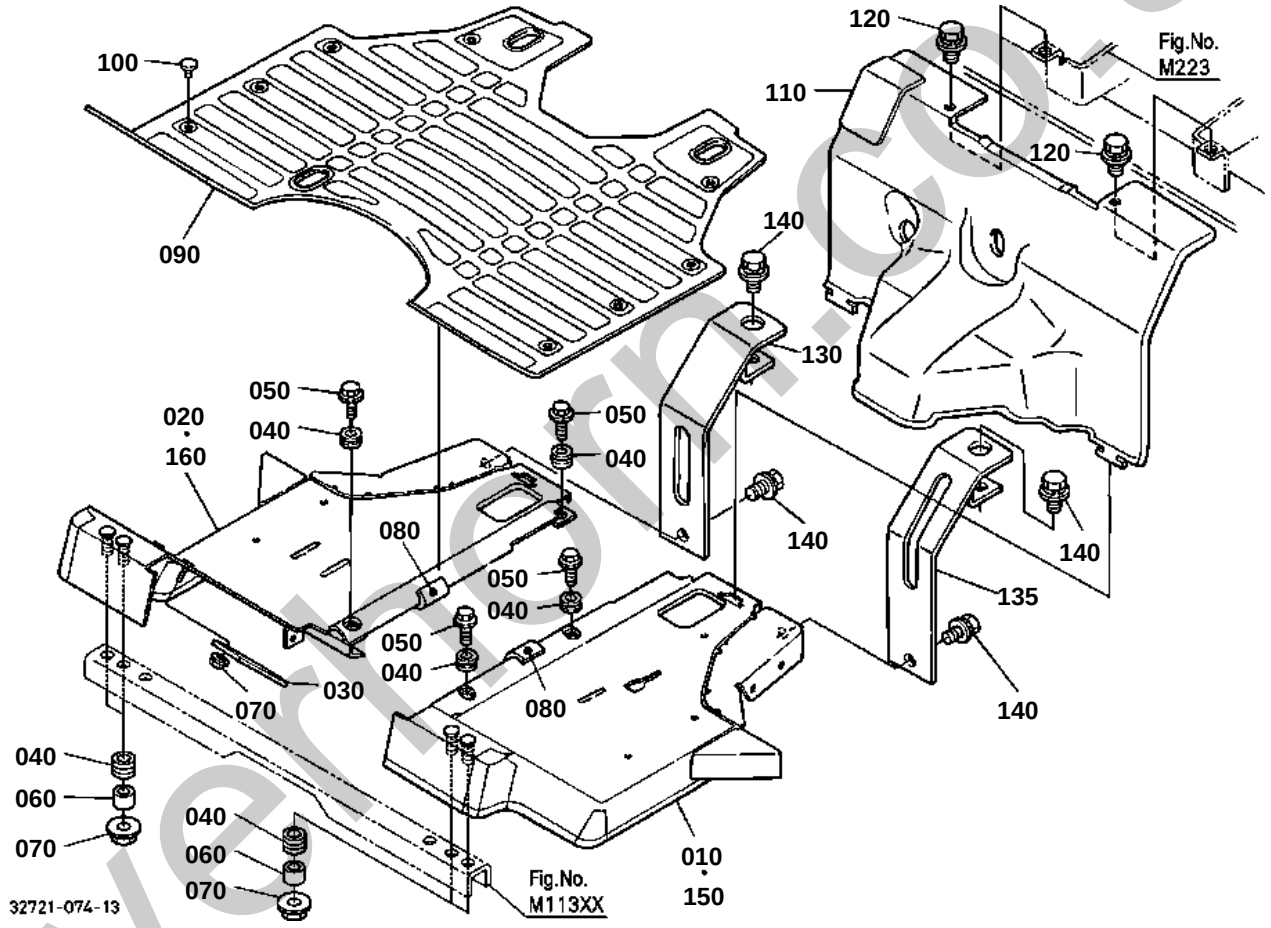

silverthorn.co.uk

OLD PARTS

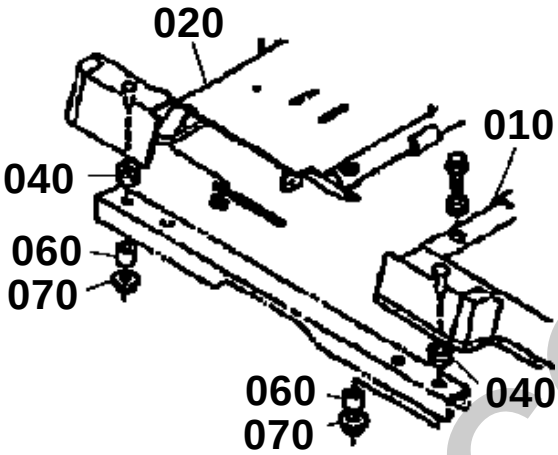

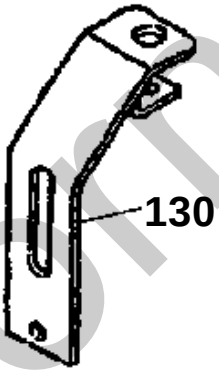

32721-821-10

silverhorn.co.uk

STEP

↔ Interchangeable; ≠ not interchangeable; ← new for old; → old for new

REF.No	Part No.	Description	Q'ty	S.No.	I/C	REMARKS	Weight (kgf)	Weight (lb)
010	32721-51312	COMP.STEP LH	1	<=52611		NOT SALE	3	6.6
010	32721-51313	COMP.STEP LH	1	>=52612	1		2.98	6.556
020	32721-51320	COMP.STEP RH	1	<=52611		NOT SALE	3	6.6
020	32721-51322	COMP.STEP RH	1	>=52612	1		2.96	6.512
030	6C040-51330	SUPPORT STEP RH	1				0.073	0.1606
040	6C040-51380	CUSHION	6				0	0
040	6A100-51380	CUSHION	6	<=52611	«		0.003	0.0066
040	6A100-51380	CUSHION	8	>=52612			0.003	0.0066
050	6C040-51342	BOLT	4				0.017	0.0374
060	6C040-51390	COLLAR	2	<=52611			0.003	0.0066
060	6C040-51390	COLLAR	4	>=52612			0.003	0.0066
070	02121-50080	NUT	4	<=52611			0.01	0.022
070	02121-50080	NUT	6	>=52612			0.01	0.022
080	6C040-51350	CUSHION	1				0.002	0.0044
090	6C040-51364	MAT STEP	1				2.08	4.576
100	67955-51340	STOPPER	12				0.001	0.0022
110	6C040-51370	COVER SEAT UNDER	1				0.38	0.836
120	01811-50818	BOLT WING	2	<=61300			0.033	0.0726
120	01125-60820	BOLT	2	>=61301	¬		0.015	0.033
130	32721-51510	COVER	2	<=52211			0.36	0.792
130	32721-51510	COVER	1	>=52212			0.36	0.792
135	32721-51520	COVER LH	1	>=52212			0.24	0.528
140	01125-50818	BOLT	4	<=61328			0.015	0.033
140	01125-60820	BOLT	4	>=61329	1		0.015	0.033
150	32721-95210	COMP.STEP LH	1	<=52611			2.97	6.534
160	32721-95220	COMP.STEP RH	1	<=52611			2.92	6.424

silverhorn.co.uk

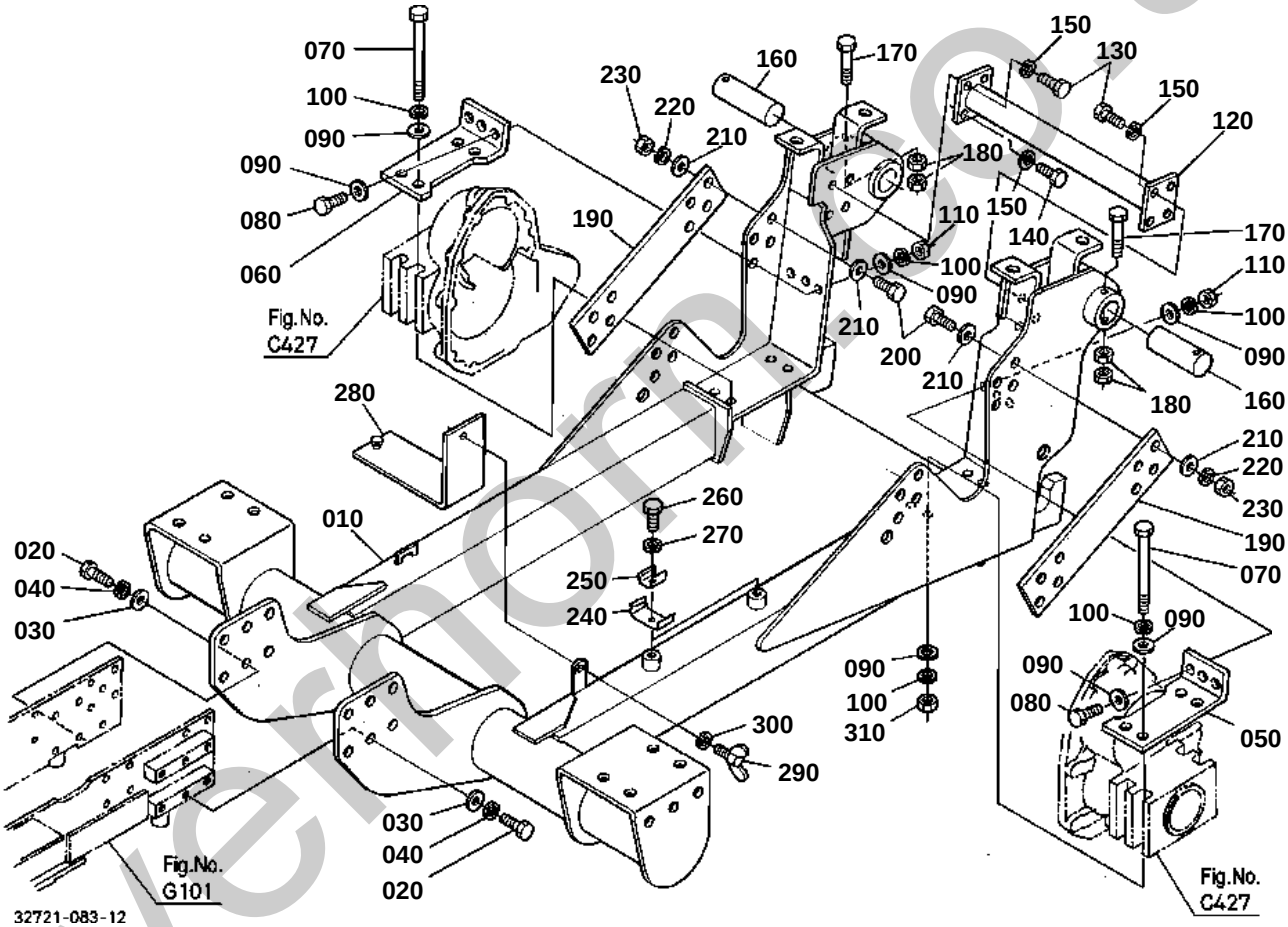

silvermore.co.uk

MAIN FLAME

↔ Interchangeable; ≠ not interchangeable; ← new for old; → old for new

REF.No	Part No.	Description	Q'ty	S.No.	I/C	REMARKS	Weight (kgf)	Weight (lb)
010	32721-29110	FRAME MAIN	1				0	0
020	01073-51435	BOLT	12				0.063	0.1386
030	75599-32516	WASHER PLAIN	12				0.011	0.0242
040	75599-33016	WASHER SPRING	12				0.08	0.176
050	32721-29120	SUPPORT LH FRAME	1				1.27	2.794
060	32721-29160	SUPPORT RH FRAME	1				0	0
070	75599-04502	HEX.BOLT	8	>=11288	¬		0.16	0.352
080	75599-04530	HEX.BOLT	6				0.05	0.11
090	75599-32515	WASHER PLAIN	20	<=11287			0.01	0.022
090	75599-32515	WASHER PLAIN	28	>=11288			0.01	0.022
100	75599-33015	WASHER SPRING LOCK	14				0.006	0.0132
110	75599-31025	HEX.NUT	6				0.015	0.033
120	32721-29130	ROD 1 CONNECTING	1				0	0
130	75599-04520	HEX.BOLT	7				0	0
140	75599-04525	HEX.BOLT	1				0.047	0.1034
150	75599-33015	WASHER SPRING LOCK	8				0.006	0.0132
160	32751-29140	PIN MAIN FRAME	2				0.91	2.002
170	75599-02165	HEX.BOLT	2				0.025	0.055
180	75599-31020	HEX.NUT	4				0	0
190	32721-29170	PLATE CONNECTING	2				1.8	3.96
200	75599-04530	HEX.BOLT	16				0.05	0.11
210	75599-32515	WASHER PLAIN	32				0.01	0.022
220	75599-33015	WASHER SPRING LOCK	16				0.006	0.0132
230	75599-31025	HEX.NUT	16				0.015	0.033
240	32721-29180	SPRING PLATE	2				0.024	0.0528
250	32721-29190	SPRING PLATE	2				0.016	0.0352
260	75599-01212	HEX.BOLT	2				0.012	0.0264
270	75599-33012	WASHER SPRING	2				0.002	0.0044
280	32721-29500	GUARD OIL FILTER	1				1.03	2.266
290	75599-07315	SCREW WING	1				0.04	0.088
300	75599-33013	WASHER SPRING	1				0.006	0.0132
310	75599-31025	HEX.NUT	16	>=11288			0.015	0.033

silvermorn.co.uk

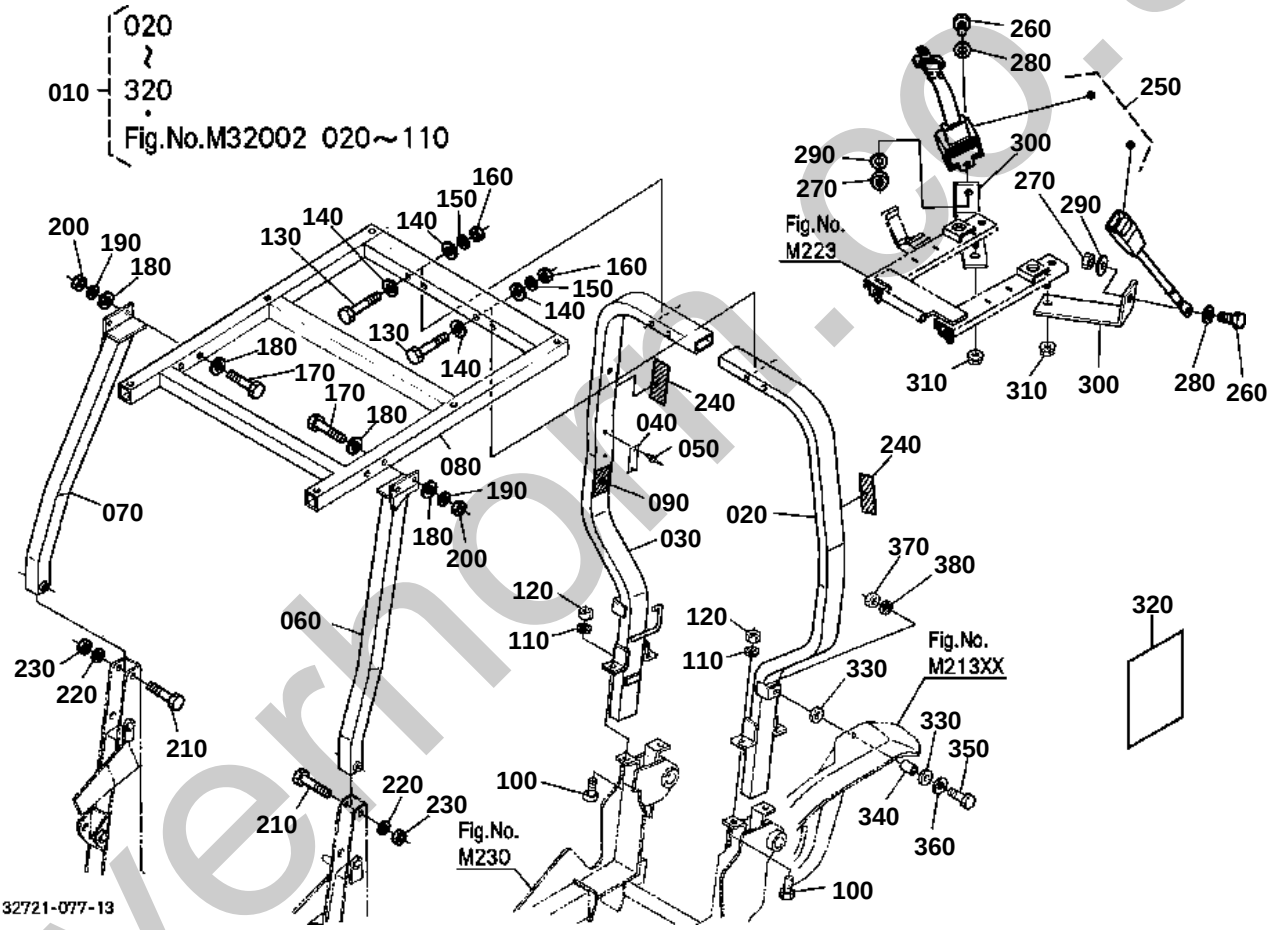

silverhorn.co.uk

OLD PARTS

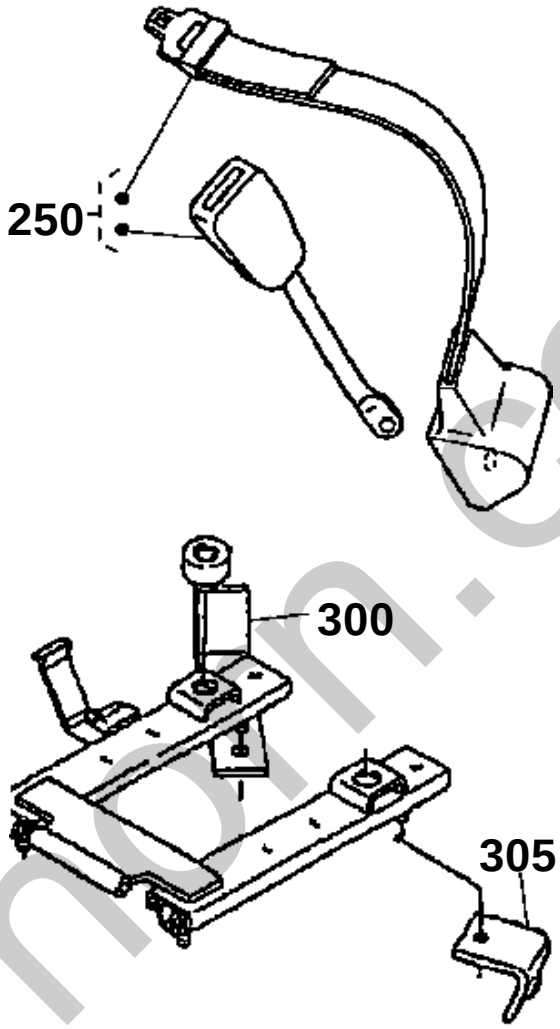

32721-834-10

silverhorn.co.uk

↔ Interchangeable; ≠ not interchangeable; ← new for old; → old for new

REF.No	Part No.	Description	Q'ty	S.No.	I/C	REMARKS	Weight (kgf)	Weight (lb)
010	32721-93940	FCB-21 ROPS KIT	1				0	0
020	99999-99999	COMP.FRAME LH	1				0	0
030	99999-99999	COMP.FRAME RH	1				0	0
040	99999-99999	NAME PLATE	1				0	0
050	99999-99999	RIVET BLIND BLACK	2				0	0
060	99999-99999	COMP FRAME(F/LH)	1				0	0
070	99999-99999	COMP FRAME(F/RH)	1				0	0
080	99999-99999	COMP.FRAME(UPPER)	1				0	0
090	6C140-47460	LABEL ROPS WARNING	1			ENGLISH	0.001	0.0022
090	6C141-47460	LABEL ROPS WARNING	1			FRENCH	0.001	0.0022
100	75599-04730	HEX.BOLT	4				0	0
110	75599-33017	WASHER SPRING LOCK	4				0.005	0.011
120	75599-31067	HEX.NUT	4				0.032	0.0704
130	75599-04590	HEX.BOLT	4				0.13	0.286
140	75599-32115	WASHER PLAIN	8				0.02	0.044
150	75599-33015	WASHER SPRING LOCK	4				0.006	0.0132
160	75599-31025	HEX.NUT	4				0.015	0.033
170	75599-04560	HEX.BOLT	4				0.09	0.198
180	75599-32115	WASHER PLAIN	8				0.02	0.044
190	75599-33015	WASHER SPRING LOCK	4				0.006	0.0132
200	75599-31025	HEX.NUT	4				0.015	0.033
210	75599-04675	HEX.BOLT	2				0.133	0.2926
220	75599-33016	WASHER SPRING	2				0.08	0.176
230	75599-31946	NUT LOCKING	2				0.03	0.066
240	6C140-54990	REFLECTOR LABEL	2				0.003	0.0066
240	K2591-65410	LABEL REFLECTOR	2		«		0.01	0.022
250	32751-18550	ASSY SEAT BELT	1	<=52211			0.8	1.76
250	6C040-72253	ASSY BELT SEAT	1	>=52212	¬		0.9	1.98
250	TD060-47780	ASSY BELT SEAT	1	>=63077	1		0.805	1.771
260	75599-04525	HEX.BOLT	2	<=52211			0.047	0.1034
260	75599-03325	HEX.BOLT	2	>=52212	¬		0.021	0.0462
270	75599-31025	HEX.NUT	4	<=52211			0.015	0.033
270	75599-31913	NUT LOCKING	2	>=52212			0.008	0.0176
280	75599-32015	WASHER PLAIN	4	<=52211			0.01	0.022
280	75599-32015	WASHER PLAIN	2	>=52212			0.01	0.022
280	75599-32013	WASHER PLAIN	2	>=63077	¬		0.03	0.066
290	75599-33013	WASHER SPRING	2				0.006	0.0132
300	32721-45660	STAY SEAT BELT	1	<=52211			0	0
300	32721-45663	STAY SEAT BELT	2	>=52212			0.28	0.616
300	32721-45664	STAY SEAT BELT	2	>=62833	¬		0.28	0.616
305	32721-45780	STAY SEAT BELT	1	<=52211			0	0
310	02771-60100	NUT FLANGE	2				0.01	0.022
320	32721-93960	MANUAL ROPS KIT	1	<=63076			0	0
320	32721-93962	MANUAL ROPS KIT	1	>=63077	1		0	0
330	38240-18640	CUSHION	4				0.01	0.022
340	32530-29940	SPACER	2				0.01	0.022
350	01173-51035	BOLT	2				0.025	0.055
360	04015-60100	WASHER PLAIN	2				0.015	0.033
370	02118-50100	NUT	2				0.005	0.011
380	04512-60100	WASHER SPRING	2				0.002	0.0044

silvermorn.co.uk

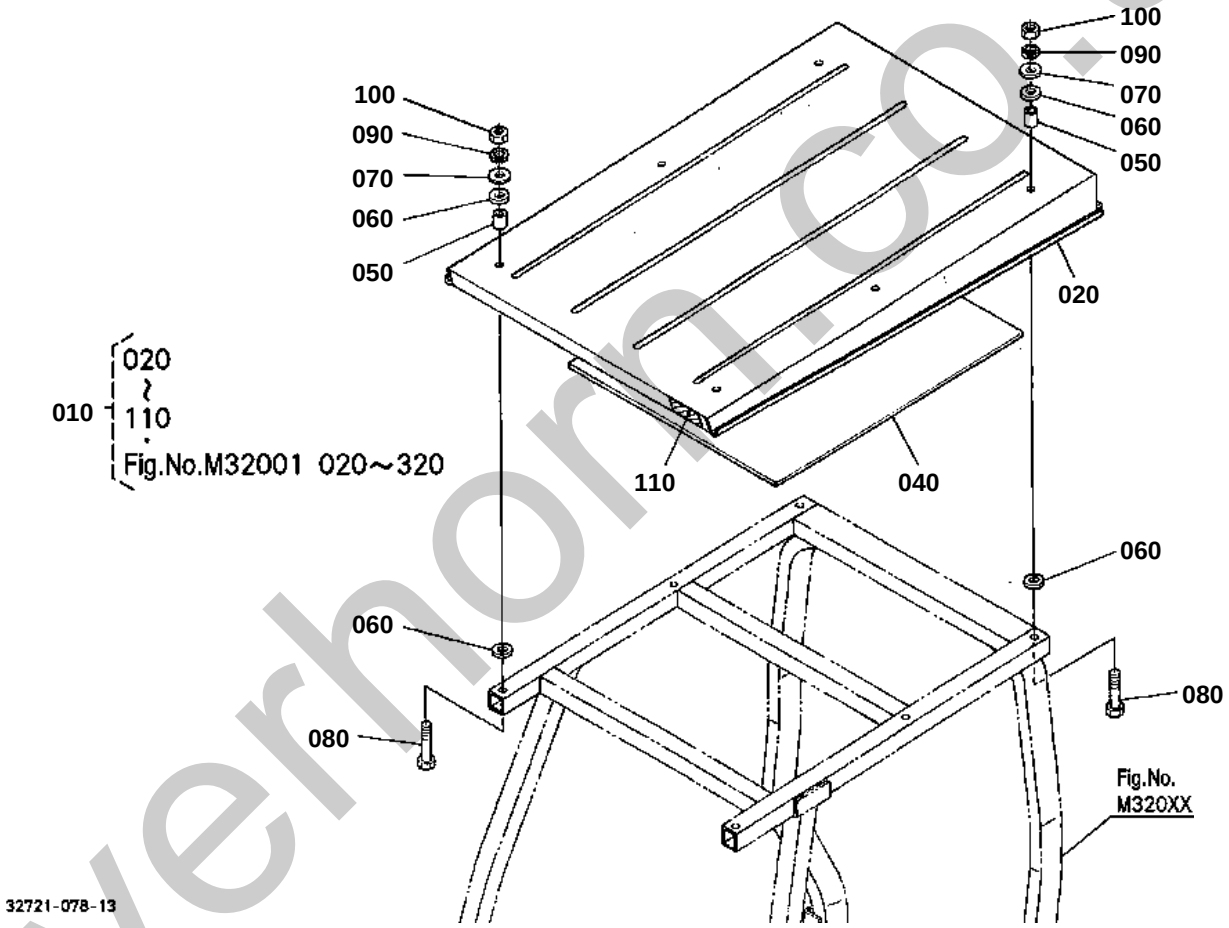

silverhorn.co.uk

↔ Interchangeable; ≠ not interchangeable; ← new for old; → old for new

REF.No	Part No.	Description	Q'ty	S.No.	I/C	REMARKS	Weight (kgf)	Weight (lb)
010	32721-93940	FCB-21 ROPS KIT	1				0	0
020	99999-99999	CANOPY FOPS	1				0	0
030	99999-99999	BLANK	0				0	0
040	99999-99999	ACOUSTIC FOAM(FOPS)	1				0	0
050	32751-34860	COLLAR(FOPS)	6				0.016	0.0352
060	32751-34870	CUSHION(FOPS)	12				0.01	0.022
070	75599-32113	WASHER PLAIN	6				0.01	0.022
080	75599-04330	HEX.BOLT	6				0.035	0.077
090	75599-33013	WASHER SPRING	6				0.006	0.0132
100	75599-31023	NUT	6				0.006	0.0132
110	32751-34880	LABEL KUBOTA(FOPS)	1				0.001	0.0022

silverhorn.co.uk

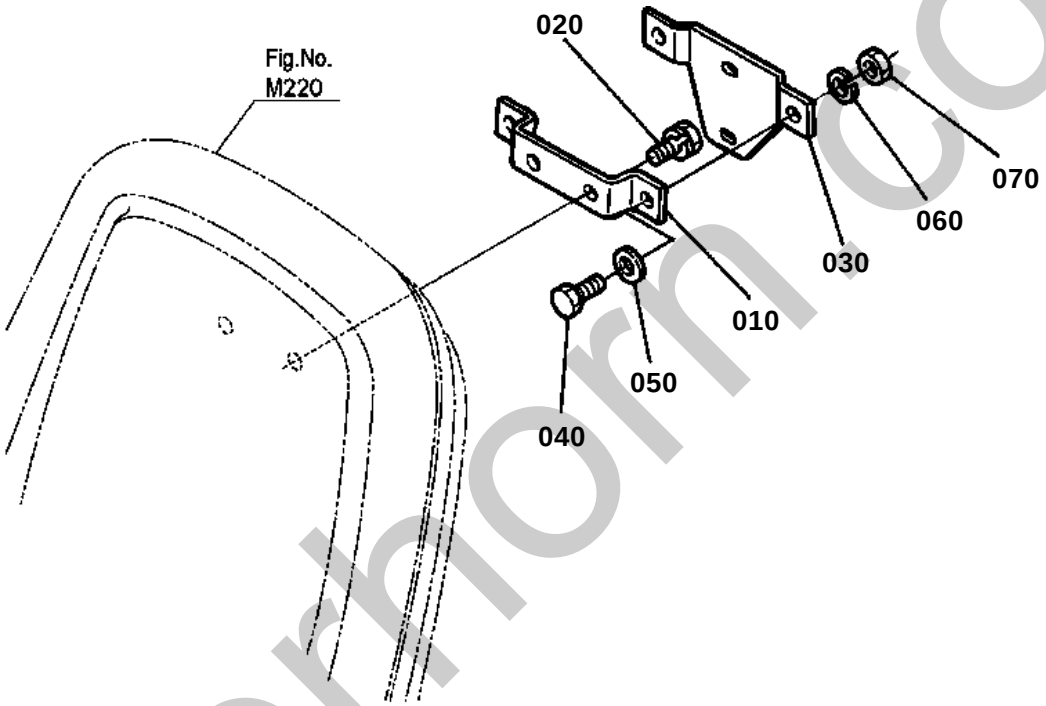

32721-105-10

silverthorn.co.uk

SMV EMBLEM(BRACKET)

↔ Interchangeable; ≠ not interchangeable; ← new for old; → old for new

REF.No	Part No.	Description	Q'ty	S.No.	I/C	REMARKS	Weight (kgf)	Weight (lb)
010	67401-45922	STAY	1				0.08	0.176
020	01123-60816	BOLT	2				0.01	0.022
030	66704-54952	BRACKET SMV	1				0.15	0.33
040	01053-50616	BOLT	2				0.005	0.011
050	04013-60060	WASHER PLAIN	2				0.001	0.0022
060	04512-60060	WASHER SPRING	2				0.001	0.0022
070	02014-50060	NUT	2				0.002	0.0044

silverhorn.co.uk

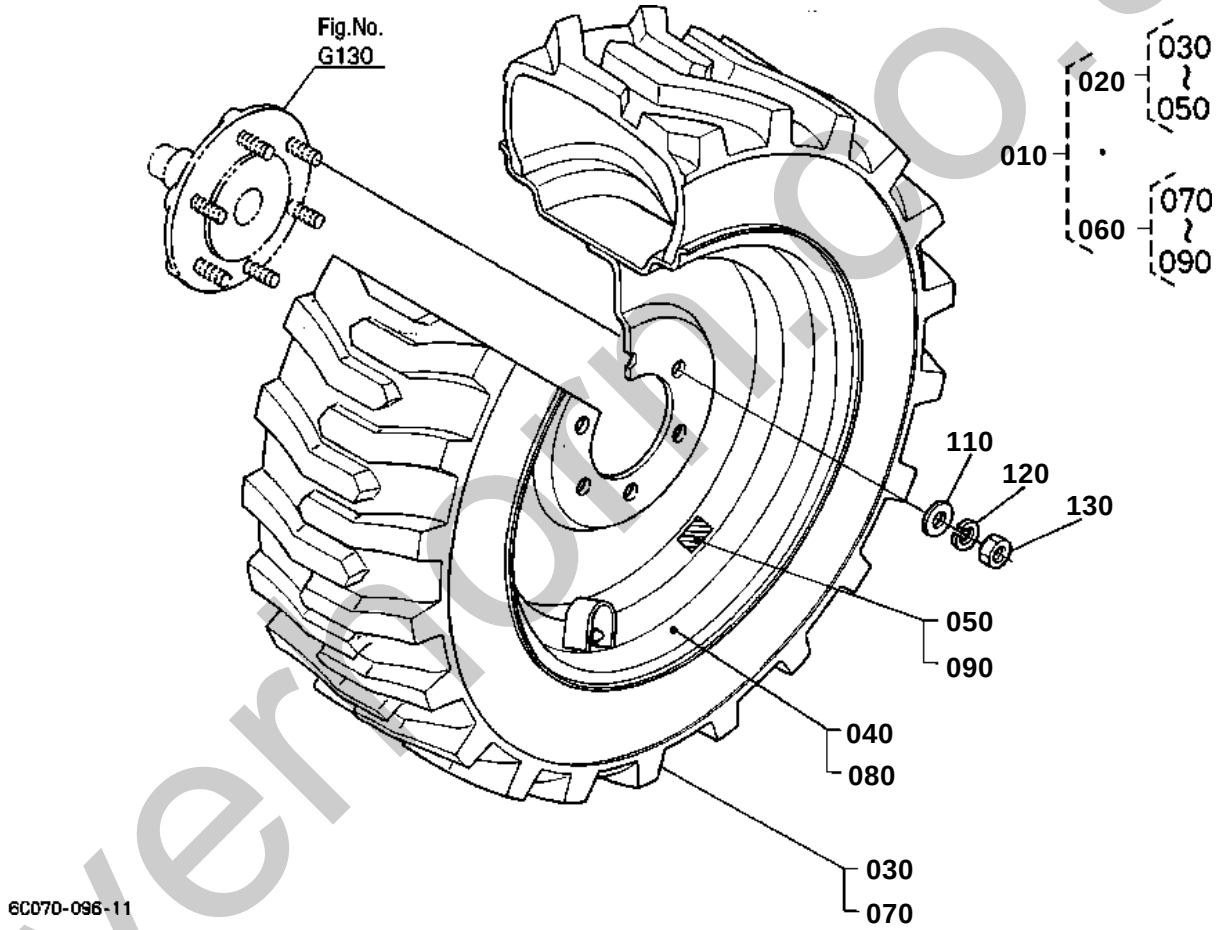

silvermoon.co.uk

FRONT WHEEL(23*8.50-14R4)

↔ Interchangeable; ≠ not interchangeable; ← new for old; → old for new

REF.No	Part No.	Description	Q'ty	S.No.	I/C	REMARKS	Weight (kgf)	Weight (lb)
010	32721-50500	ASSY TIRE	1				0	0
020	32721-50510	ASSY TIRE LH	1				0	0
030	32721-50530	TIRE	1				11	24.2
040	32721-50540	WHEEL	1				11	24.2
050	32721-50560	LABEL LH	1			NOT SALE	0	0
060	32721-50520	ASSY TIRE RH	1				0	0
070	32721-50530	TIRE	1				11	24.2
080	32721-50540	WHEEL	1				11	24.2
090	32721-50550	LABEL RH	1			NOT SALE	0	0
100	99999-99999	BLANK	0				0	0
110	04013-60120	WASHER PLAIN	12				0.01	0.022
120	04512-60120	WASHER SPRING	12				0.005	0.011
130	02174-50120	NUT	12				0.01	0.022

silverhorn.co.uk

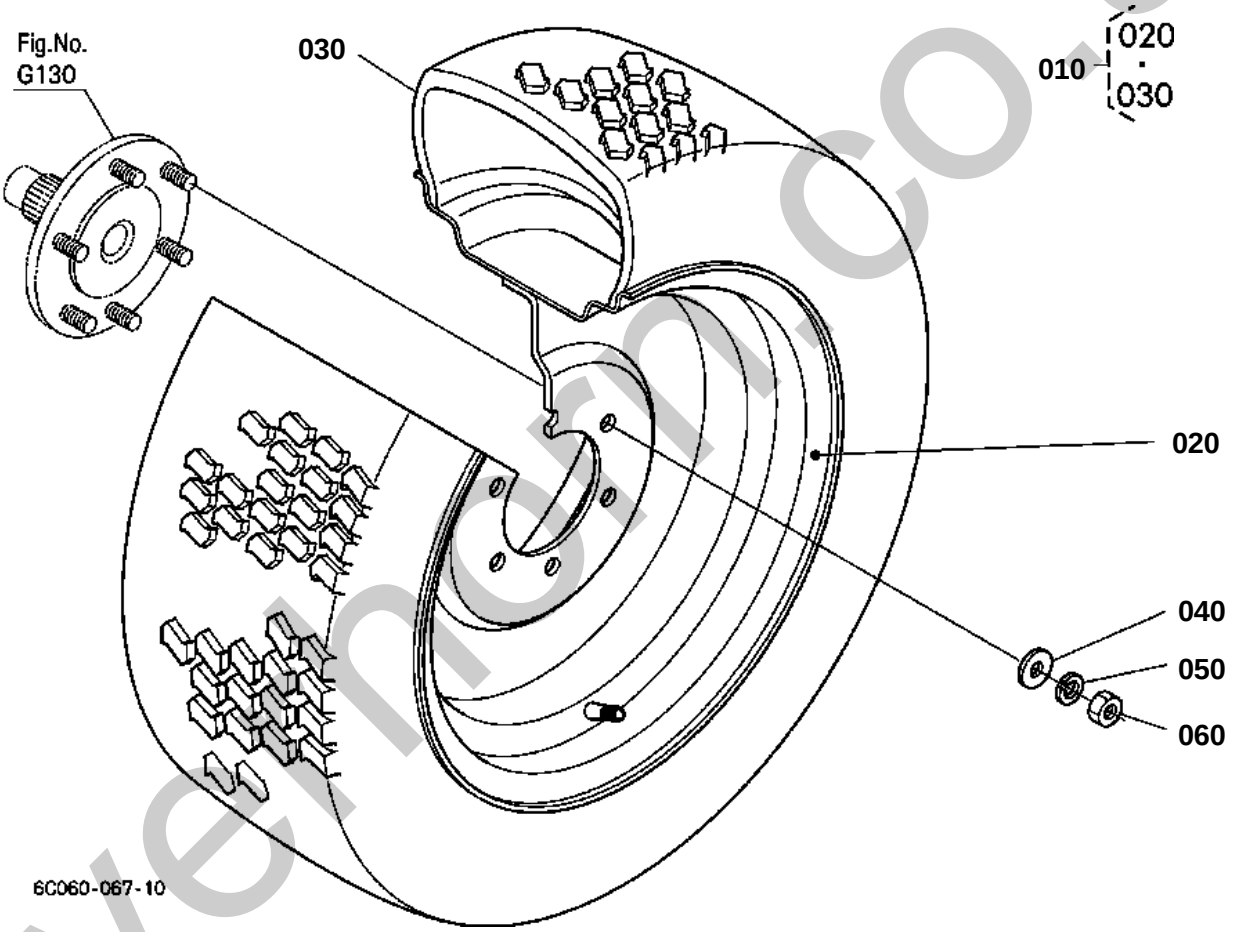

silverhorn.co.uk

FRONT WHEEL(24*8.50-14)

↔ Interchangeable; ≠ not interchangeable; ← new for old; → old for new

REF.No	Part No.	Description	Q'ty	S.No.	I/C	REMARKS	Weight (kgf)	Weight (lb)
010	6C070-50220	TIRE ASSY	2				0	0
020	6C070-50230	WHEEL	2				0	0
030	6C070-50240	TIRE	2				0	0
040	04013-60120	WASHER PLAIN	12				0.01	0.022
050	04512-60120	WASHER SPRING	12				0.005	0.011
060	02174-50120	NUT	12				0.01	0.022

silverhorn.co.uk

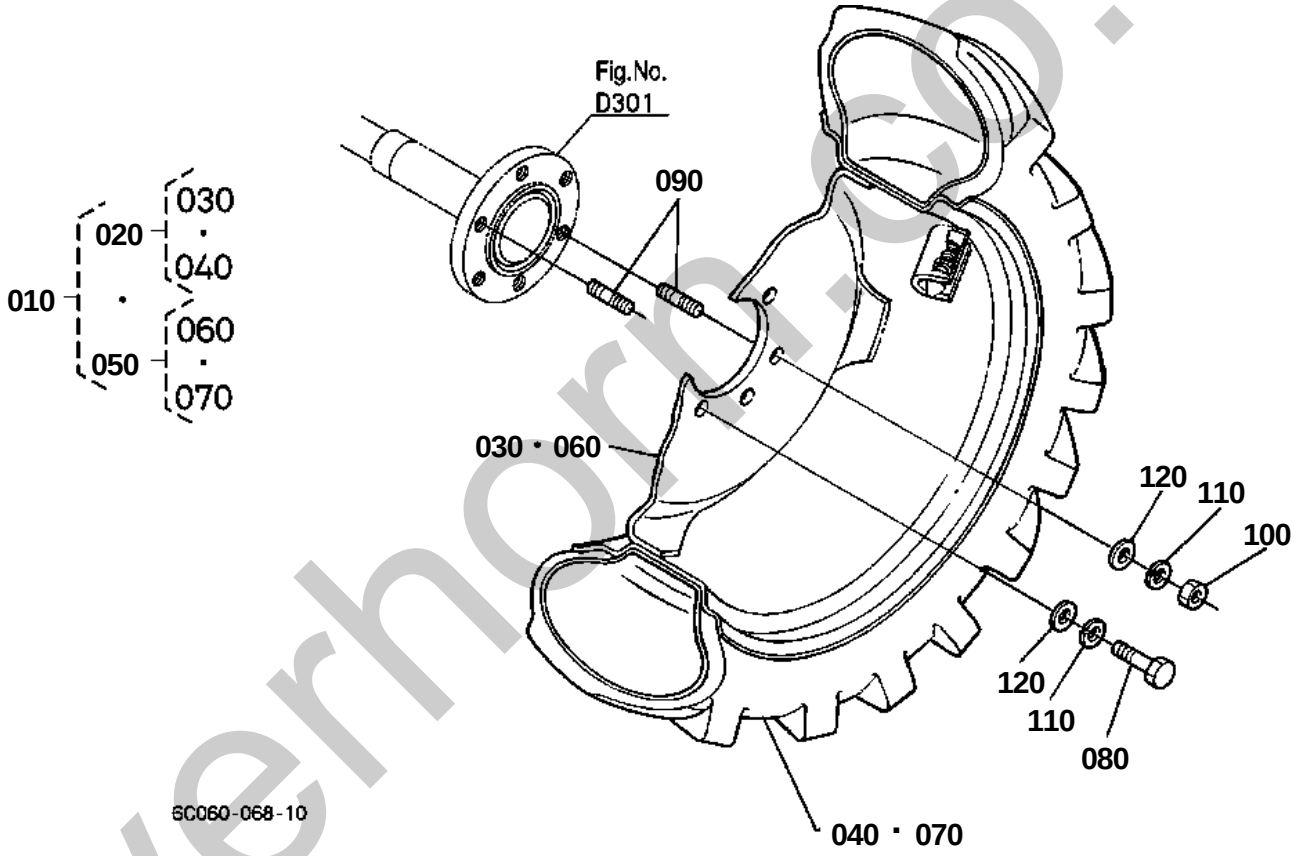

silverhorn.co.uk

REAR WHEEL(12.4-16R4)

↔ Interchangeable; ≠ not interchangeable; ← new for old; → old for new

REF.No	Part No.	Description	Q'ty	S.No.	I/C	REMARKS	Weight (kgf)	Weight (lb)
010	32701-50010	ASSY REAR WHEEL	1				0	0
020	32701-50110	ASSY TIRE LH	1				0	0
030	32701-27950	WHEEL	1				0	0
040	32701-50130	TIRE	1				15	33
050	32701-50210	ASSY TIRE RH	1				0	0
060	32701-27950	WHEEL	1				0	0
070	32701-50130	TIRE	1				15	33
080	01073-51635	BOLT	8				0.086	0.1892
090	01517-51632	STUD	4				0.076	0.1672
100	02076-50160	NUT	4				0.03	0.066
110	04512-60160	WASHER SPRING	12				0.01	0.022
120	04011-60160	WASHER PLAIN	12				0.01	0.022

silverhorn.co.uk

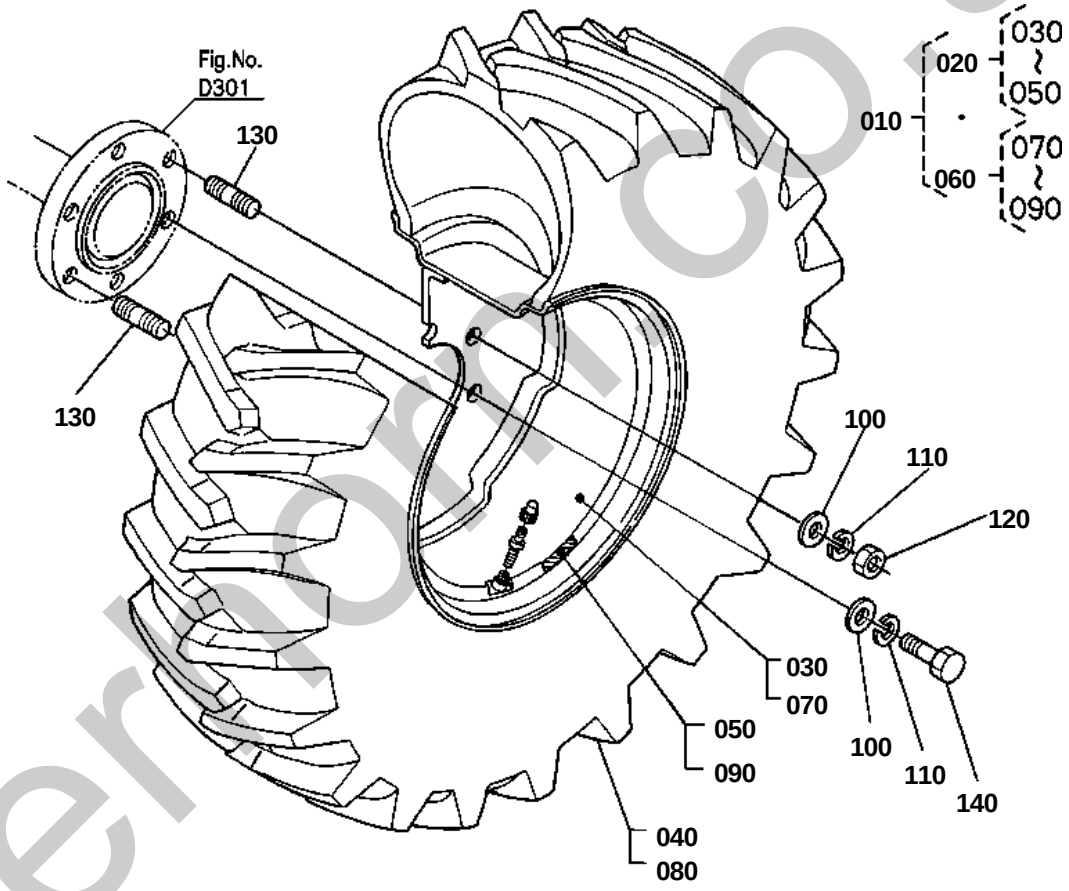

6C070-088-11

silverhorn.co.uk

↔ Interchangeable; ≠ not interchangeable; ← new for old; → old for new

REF.No	Part No.	Description	Q'ty	S.No.	I/C	REMARKS	Weight (kgf)	Weight (lb)
010	66429-17610	ASSY TIRE	1				0	0
020	66429-17620	ASSY TIRE LH	1				0	0
030	32701-27950	WHEEL	1				0	0
040	66429-17650	TIRE	1				0	0
050	66429-17660	LABEL TIRE LH	1			NOT SALE	0	0
060	66429-17630	ASSY TIRE RH	1				0	0
070	32701-27950	WHEEL	1				0	0
080	66429-17650	TIRE	1				0	0
090	66429-17670	LABEL TIRE RH	1			NOT SALE	0	0
100	04011-60160	WASHER PLAIN	12				0.01	0.022
110	04512-60160	WASHER SPRING	12				0.01	0.022
120	02076-50160	NUT	4				0.03	0.066
130	01517-51632	STUD	4				0.076	0.1672
140	01073-51635	BOLT	8				0.086	0.1892

silverhorn.co.uk

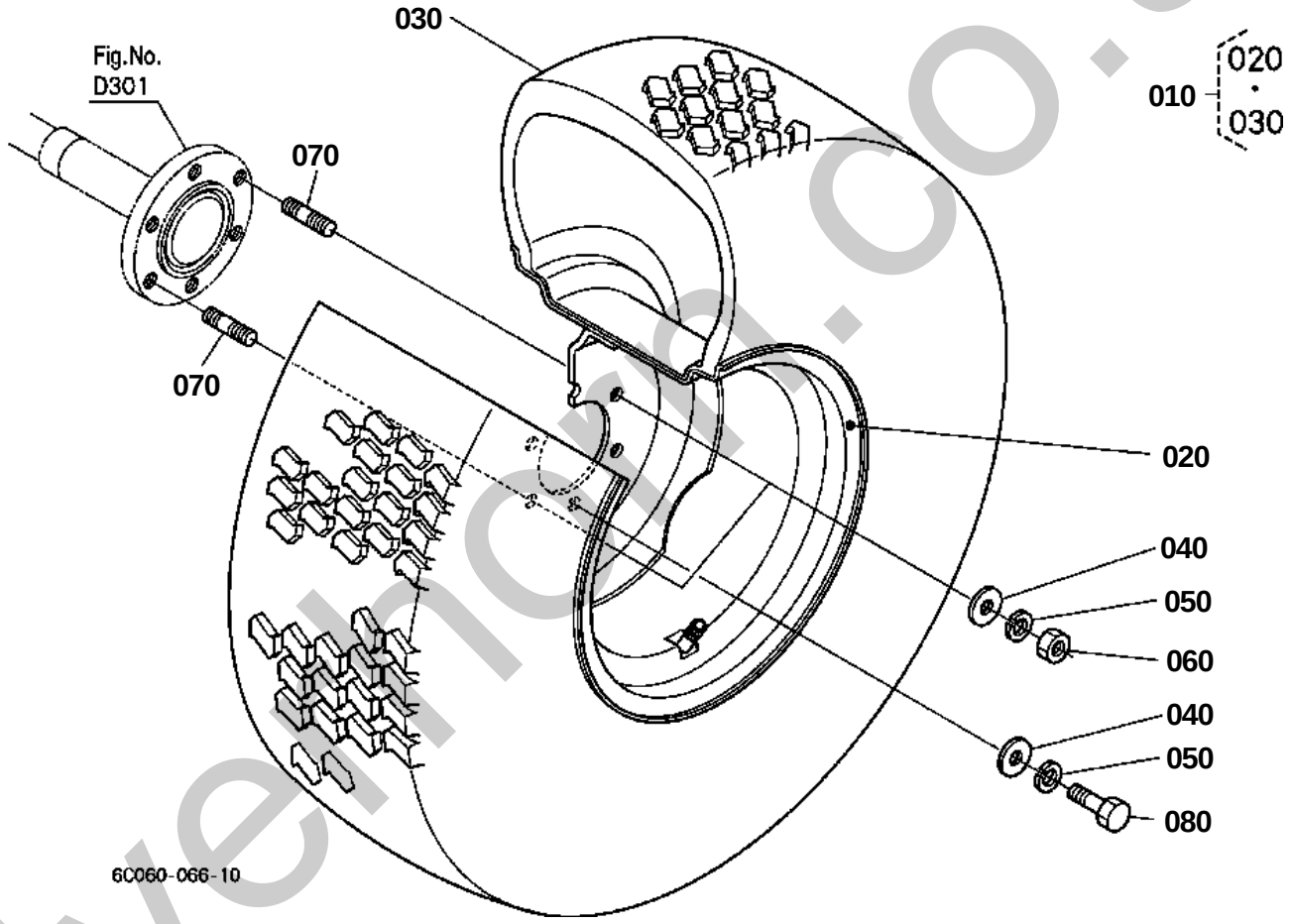

silverhorn.co.uk

↔ Interchangeable; ≠ not interchangeable; ← new for old; → old for new

REF.No	Part No.	Description	Q'ty	S.No.	I/C	REMARKS	Weight (kgf)	Weight (lb)
010	6C070-50320	ASSY TIRE	2				0	0
020	6C070-50330	WHEEL	2				0	0
030	6C070-50340	TIRE	2				0	0
040	04011-60160	WASHER PLAIN	12				0.01	0.022
050	04512-60160	WASHER SPRING	12				0.01	0.022
060	02076-50160	NUT	4				0.03	0.066
070	01517-51632	STUD	4				0.076	0.1672
080	01073-51635	BOLT	8				0.086	0.1892

silverhorn.co.uk

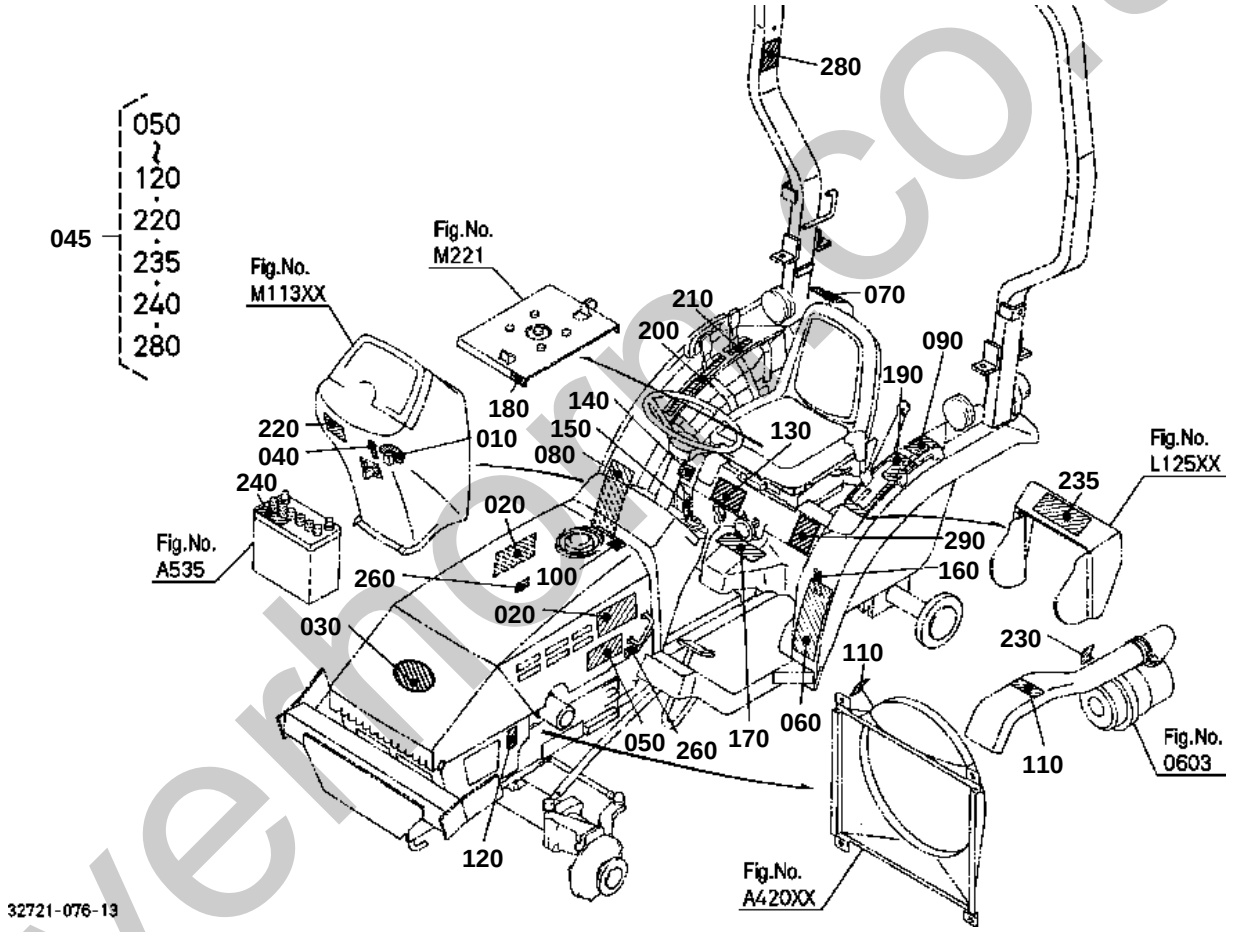

silverthorn.co.uk

OLD PARTS

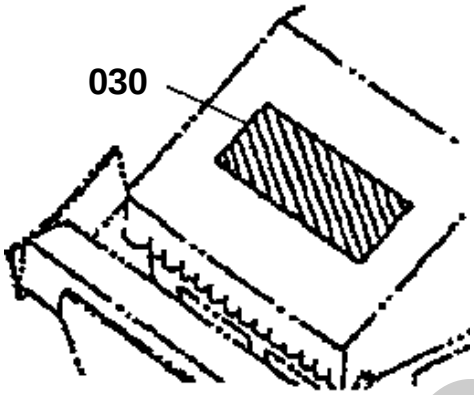

32721-822-11

silverhorn.co.uk

↔ Interchangeable; ≠ not interchangeable; ← new for old; → old for new

REF.No	Part No.	Description	Q'ty	S.No.	I/C	REMARKS	Weight (kgf)	Weight (lb)
010	6C040-47210	MARK MAIN SWITCH	1	<=60970			0.001	0.0022
010	6C070-47212	MARK MAIN SWITCH	1	>=60971	¬		0.001	0.0022
020	32721-47260	MARK	2				0.004	0.0088
030	32721-47290	MARK KUBOTA	1	<=54263			0.005	0.011
030	T1060-49500	MARK SYMBOL	1	>=60001	1		0.01	0.022
040	6C040-47510	LABEL PARKING	1	<=60970			0	0
040	6C040-47512	LABEL PARKING	1	>=60971	¬		0.001	0.0022
045	32721-47400	KIT LABEL SAFETY	1	<=60470			0	0
045	32721-47402	KIT LABEL SAFETY	1	>=60471	¬		0	0
045	32721-47404	KIT LABEL SAFETY	1	>=60971	1		0	0
045	32721-47405	KIT LABEL SAFETY	1	>=61679	¬		0.01	0.022
050	TA040-49650	LABEL START CAUTION	1				0.004	0.0088
060	6C040-47420	LABEL SAFETY	1	<=61678			0.001	0.0022
060	6C040-47422	LABEL SAFETY	1	>=61679	¬		0.001	0.0022
070	TA040-49350	LABEL DRAWBAR	1				0.002	0.0044
080	TA040-49320	LABEL ROPS WARNING	1	<=60470			0.001	0.0022
080	32771-49250	LABEL ROPS WARNING	1	>=60471	¬		0.001	0.0022
090	32751-49210	LABEL SEAT WARNING	1				0.002	0.0044
100	6C040-47412	LABEL FILLER CAUTION	1				0.001	0.0022
110	32751-49580	LABEL FAN BELT	2				0.001	0.0022
120	TA040-49580	LABEL MUFFLER	1				0.001	0.0022
130	32721-47373	LABEL SEAT CHANGE	1				0.004	0.0088
140	32721-47380	LABEL HYDRAULIC	1				0.001	0.0022
150	6C042-47400	LABEL 4WD	1				0.001	0.0022
160	32721-47320	LABEL PTO	1				0.001	0.0022
170	6C050-47480	LABEL PEDAL	1				0.002	0.0044
180	32701-47610	LABEL SEAT LOCK	1				0.002	0.0044
190	32721-47330	LABEL RANGE SHIFT	1	<=51613			0.02	0.044
190	32721-47333	LABEL RANGE SHIFT	1	>=51614	1		0.021	0.0462
200	6C040-47352	LABEL POSITION	1				0.001	0.0022
210	32721-47352	LABEL SPEED SET	1				0.001	0.0022
220	32721-47240	LABEL HST	1	<=60970			0.001	0.0022
220	6C150-47430	LABEL PARKING	1	>=60971	¬		0.002	0.0044
230	32721-58280	LABEL CAUTION	1				0	0
230	32721-58282	LABEL CAUTION	1		«		0.001	0.0022
235	TA040-49590	LABEL PTO WARNING	1				0	0
235	TA040-49593	LABEL PTO WARNING	1		«		0.001	0.0022
240	6C040-55590	LABEL BATTERY	1				0.001	0.0022
250	99999-99999	BLANK	0				0	0
260	32721-47420	LABEL BONNET HOOK	2				0.001	0.0022
260	3F770-95160	LABEL DUMMY	2		«		0.001	0.0022
270	99999-99999	BLANK	0				0	0
280	6C140-47460	LABEL ROPS WARNING	1				0.001	0.0022
290	6C070-47332	LABEL	1				0.001	0.0022

silvermorn.co.uk

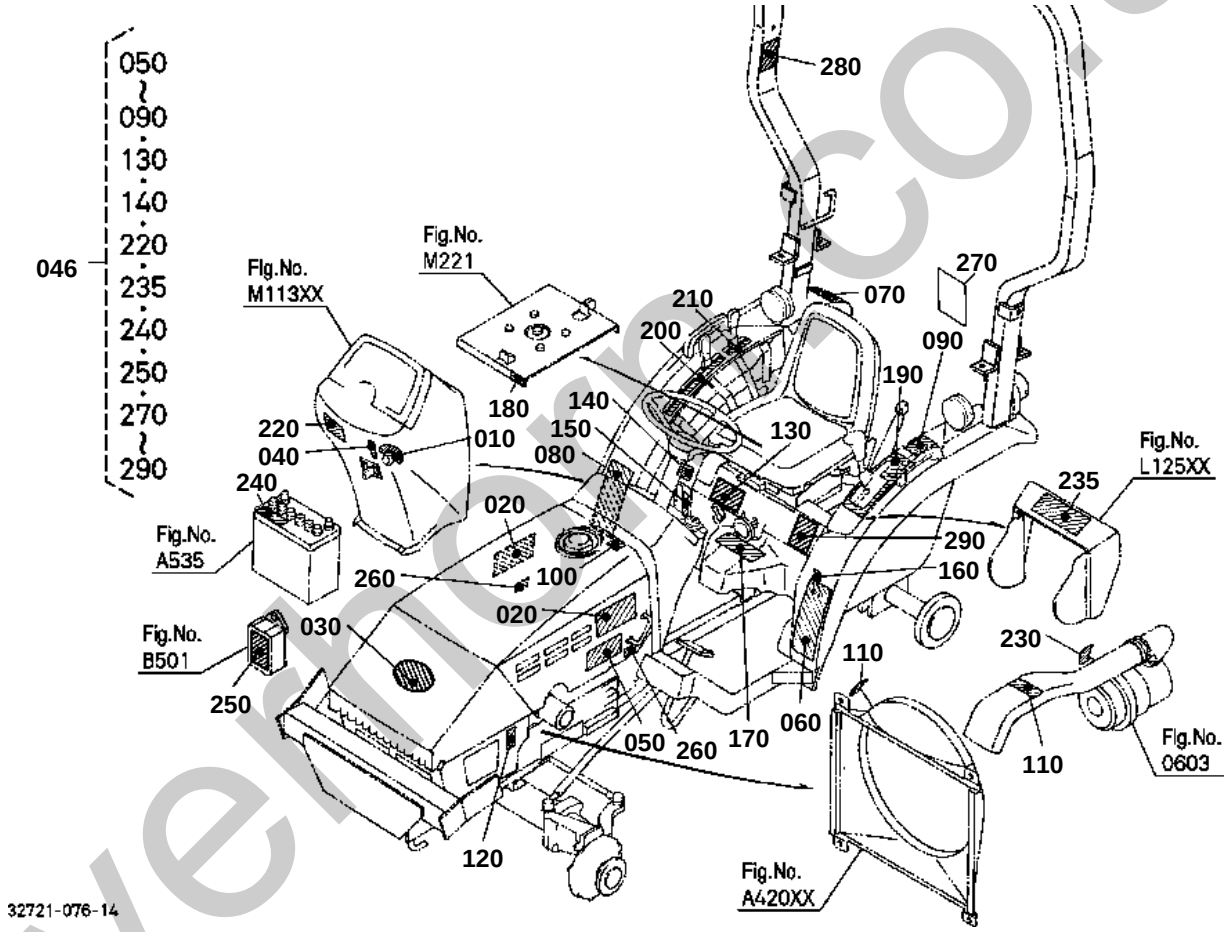

silverthorn.co.uk

OLD PARTS

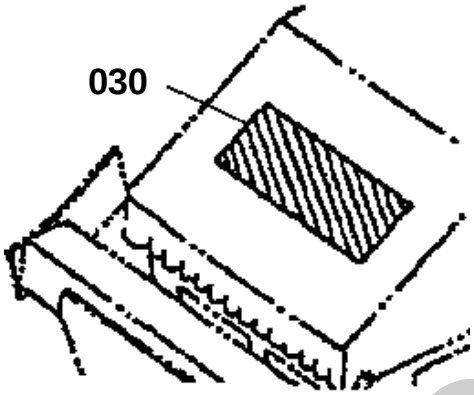

32721-822-11

silverhorn.co.uk

↔ Interchangeable; ≠ not interchangeable; ← new for old; → old for new

REF.No	Part No.	Description	Q'ty	S.No.	I/C	REMARKS	Weight (kgf)	Weight (lb)
010	6C070-47210	MARK MAIN SWITCH	1	<=60970			0	0
010	6C070-47212	MARK MAIN SWITCH	1	>=60971	¬		0.001	0.0022
020	32721-47260	MARK	2				0.004	0.0088
030	32721-47290	MARK KUBOTA	1	<=54263			0.005	0.011
030	T1060-49500	MARK SYMBOL	1	>=60001	1		0.01	0.022
040	6C040-47510	LABEL PARKING	1	<=60970			0	0
040	6C040-47512	LABEL PARKING	1	>=60971	¬		0.001	0.0022
046	32735-92200	KIT LABEL	1	<=61590			0	0
046	32735-92202	KIT LABEL	1	>=61591	¬		0.2	0.44
046	32735-92204	KIT LABEL	1	>=62889	1		0.2	0.44
050	TA041-49650	LABEL START CAUTION	1				0.004	0.0088
060	TA041-65700	LABEL SAFETY	1	<=61590			0	0
060	TA041-65702	LABEL SAFETY	1	>=61591	¬		0.01	0.022
070	TA041-49350	LABEL DRAWBAR	1				0.003	0.0066
080	TA040-49150	LABEL ROPS WARNING	1	<=61328			0.003	0.0066
080	32775-49250	LABEL ROPS WARNING	1	>=61329	¬		0.004	0.0088
090	32765-49210	LABEL SEAT WARNING	1				0.002	0.0044
100	6C040-47412	LABEL FILLER CAUTION	1				0.001	0.0022
110	32751-49580	LABEL FAN BELT	2				0.001	0.0022
120	TA040-49580	LABEL MUFFLER	1				0.001	0.0022
130	32735-92160	LABEL SEAT	1	<=50614			0	0
130	32735-92162	LABEL SEAT	1	>=50615	¬		0.003	0.0066
140	32735-92170	LABEL HYD.	1				0.001	0.0022
150	6C042-47400	LABEL 4WD	1				0.001	0.0022
160	32721-47320	LABEL PTO	1				0.001	0.0022
170	6C050-47480	LABEL PEDAL	1				0.002	0.0044
180	32701-47610	LABEL SEAT LOCK	1				0.002	0.0044
190	32721-47330	LABEL RANGE SHIFT	1	<=51613			0.02	0.044
190	32721-47333	LABEL RANGE SHIFT	1	>=51614	1		0.021	0.0462
200	6C040-47352	LABEL POSITION	1				0.001	0.0022
210	32721-47352	LABEL SPEED SET	1				0.001	0.0022
220	32735-92140	LABEL HST	1	<=60970			0.001	0.0022
220	6C151-47430	LABEL PARKING WARNIN	1	>=60971	¬		0.002	0.0044
230	32721-58282	LABEL CAUTION	1				0.001	0.0022
235	TA041-49590	LABEL PTO WARNING	1				0.001	0.0022
240	6C021-92120	LABEL BATTERY	1				0.001	0.0022
250	32735-92110	LABEL FUSE	1				0.001	0.0022
260	32721-47420	LABEL BONNET HOOK	2	<=50715			0.001	0.0022
260	3F770-95160	LABEL DUMMY	2	>=50716	«		0.001	0.0022
270	32735-92050	OPERATOR'S MANUAL	1	<=52211			0.15	0.33
270	32735-92052	OPERATOR'S MANUAL	1	>=52212	1		0	0
270	32735-92053	OPERATOR'S MANUAL	1	>=54014	1		0	0
270	32735-92054	OPERATOR'S MANUAL	1	>=54264	1		0	0
270	32735-92056	OPERATOR'S MANUAL	1	>=60971	1		0	0
270	32735-92057	OPERATOR'S MANUAL	1	>=61329	1		0.16	0.352
270	32735-92059	OPERATOR'S MANUAL	1	>=62889	1		0	0
270	32735-92060	OPERATOR'S MANUAL	1	>=63769	¬		0.16	0.352
280	6C141-47460	LABEL ROPS WARNING	1				0.001	0.0022
290	6C071-47332	LABEL	1				0.002	0.0044

silvermorn.co.uk

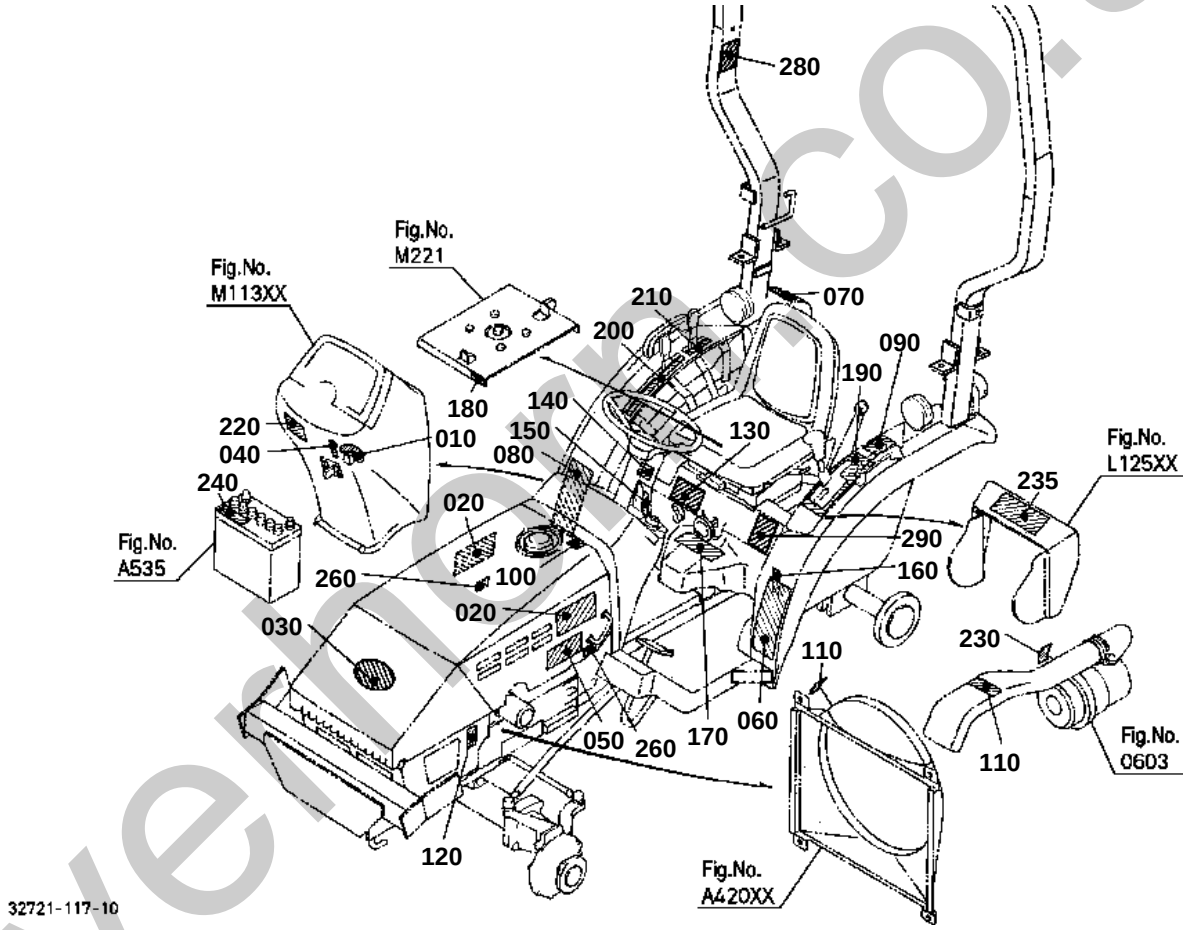

silvermoon.co.uk

OLD PARTS

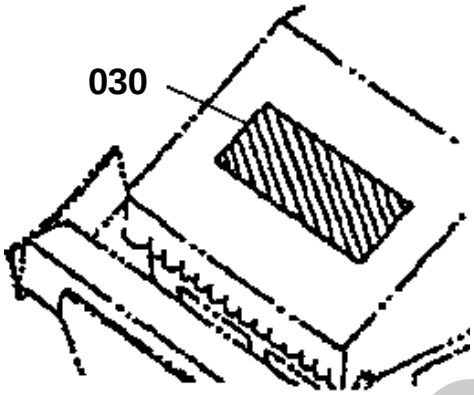

32721-822-11

silverhorn.co.uk

↔ Interchangeable; ≠ not interchangeable; ← new for old; → old for new

REF.No	Part No.	Description	Q'ty	S.No.	I/C	REMARKS	Weight (kgf)	Weight (lb)
010	6C040-47210	MARK MAIN SWITCH	1	<=60970			0.001	0.0022
010	6C070-47212	MARK MAIN SWITCH	1	>=60971	¬		0.001	0.0022
020	32721-47260	MARK	2				0.004	0.0088
030	32721-47290	MARK KUBOTA	1	<=54263			0.005	0.011
030	T1060-49500	MARK SYMBOL	1	>=60001	1		0.01	0.022
040	6C040-47510	LABEL PARKING	1	<=60970			0	0
040	6C040-47512	LABEL PARKING	1	>=60971	¬		0.001	0.0022
050	TA040-49650	LABEL START CAUTION	1				0.004	0.0088
060	6C040-47420	LABEL SAFETY	1	<=61678			0.001	0.0022
060	6C040-47422	LABEL SAFETY	1	>=61679	¬		0.001	0.0022
070	TA040-49350	LABEL DRAWBAR	1				0.002	0.0044
080	TA040-49320	LABEL ROPS WARNING	1	<=60470			0.001	0.0022
080	32771-49250	LABEL ROPS WARNING	1	>=60471	¬		0.001	0.0022
090	32751-49210	LABEL SEAT WARNING	1				0.002	0.0044
100	6C040-47412	LABEL FILLER CAUTION	1				0.001	0.0022
110	32751-49580	LABEL FAN BELT	2				0.001	0.0022
120	TA040-49580	LABEL MUFFLER	1				0.001	0.0022
130	32721-47373	LABEL SEAT CHANGE	1				0.004	0.0088
140	32721-47380	LABEL HYDRAULIC	1				0.001	0.0022
150	6C042-47400	LABEL 4WD	1				0.001	0.0022
160	32721-47320	LABEL PTO	1				0.001	0.0022
170	6C050-47480	LABEL PEDAL	1				0.002	0.0044
180	32701-47610	LABEL SEAT LOCK	1				0.002	0.0044
190	32721-47330	LABEL RANGE SHIFT	1	<=51613			0.02	0.044
190	32721-47333	LABEL RANGE SHIFT	1	>=51614	1		0.021	0.0462
200	6C040-47352	LABEL POSITION	1				0.001	0.0022
210	32721-47352	LABEL SPEED SET	1				0.001	0.0022
220	32721-47240	LABEL HST	1	<=60970			0.001	0.0022
220	6C150-47430	LABEL PARKING	1	>=60971	¬		0.002	0.0044
230	32721-58280	LABEL CAUTION	1				0	0
230	32721-58282	LABEL CAUTION	1		«		0.001	0.0022
235	TA040-49590	LABEL PTO WARNING	1				0	0
235	TA040-49593	LABEL PTO WARNING	1		«		0.001	0.0022
240	6C040-55590	LABEL BATTERY	1				0.001	0.0022
250	99999-99999	BLANK	0				0	0
260	32721-47420	LABEL BONNET HOOK	2				0.001	0.0022
260	3F770-95160	LABEL DUMMY	2		«		0.001	0.0022
270	99999-99999	BLANK	0				0	0
280	6C140-47460	LABEL ROPS WARNING	1				0.001	0.0022
290	6C070-47332	LABEL	1				0.001	0.0022

silvermorn.co.uk

ACCESSORIES AND SERVICE PARTS
ACCESSOIRES ET PIECES DE SERVICE
SONTIGES ZUBEHOER UND SERVICE-TEILE

TITLE-001-10

silverhorn.co.uk

↔ Interchangeable; ≠ not interchangeable; ← new for old; → old for new

REF.No	Part No.	Description	Q'ty	S.No.	I/C	REMARKS	Weight (kgf)	Weight (lb)
010	32721-63110	OPERATOR'S MANUAL	1	<=52211		ENGLISH	0.127	0.2794
010	32721-63113	OPERATOR'S MANUAL	1	>=52212	1	ENGLISH	0	0
010	32721-63114	OPERATOR'S MANUAL	1	>=54014	1	ENGLISH	0.13	0.286
010	32721-63115	OPERATOR'S MANUAL	1	>=54264	1	ENGLISH	0.05	0.11
010	32721-63117	OPERATOR'S MANUAL	1	>=60971	1	ENGLISH	0.16	0.352
010	32721-63118	OPERATOR'S MANUAL	1	>=62889	1	ENGLISH	0	0
010	32721-63119	OPERATOR'S MANUAL	1	>=63769	¬	ENGLISH	0.16	0.352
010	32735-92050	OPERATOR'S MANUAL	1	<=52211		FRENCH	0.15	0.33
010	32735-92052	OPERATOR'S MANUAL	1	>=52212	1	FRENCH	0	0
010	32735-92053	OPERATOR'S MANUAL	1	>=54014	1	FRENCH	0	0
010	32735-92054	OPERATOR'S MANUAL	1	>=54264	1	FRENCH	0	0
010	32735-92056	OPERATOR'S MANUAL	1	>=60971	1	FRENCH	0	0
010	32735-92057	OPERATOR'S MANUAL	1	>=61329	1	FRENCH	0.16	0.352
010	32735-92059	OPERATOR'S MANUAL	1	>=62889	1	FRENCH	0	0
010	32735-92060	OPERATOR'S MANUAL	1	>=63769	¬	FRENCH	0.16	0.352
020	15241-86612	WRENCH FILTER	1				0.115	0.253
030	17478-60080	FUSE	1			50A	0.008	0.0176
040	67401-62930	ASSY SPACER CLUTCH	1				0.03	0.066
050	67401-62950	LABEL CLUTCH SPACER	1				0.002	0.0044
060	66416-62920	ASSY BAG SPARE FUSE	1				0.01	0.022
070	35820-75560	FUSE AUTO	2			15A	0.002	0.0044

silverhorn.co.uk

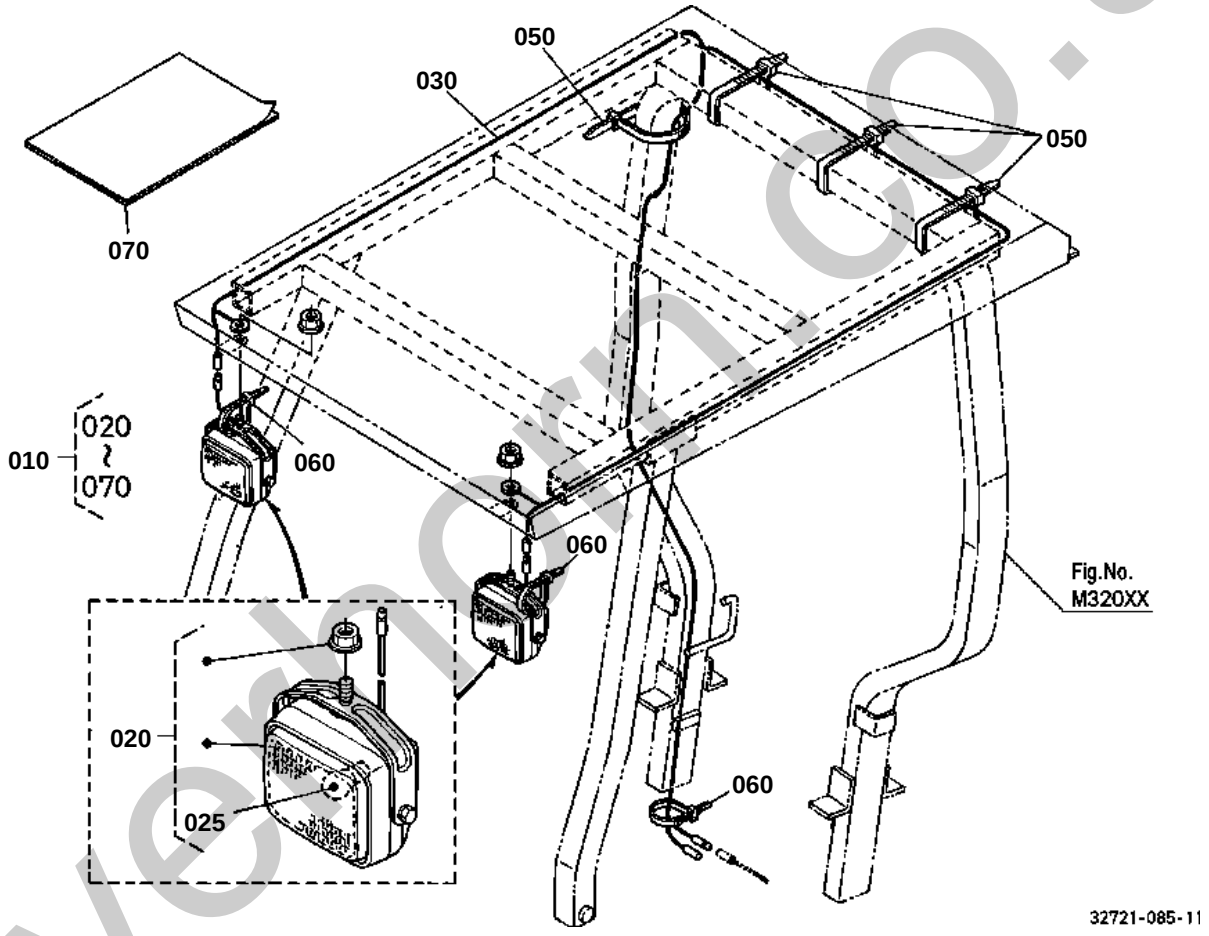

silverhorn.co.uk

WORKING LIGHT KIT [OPTION]

↔ Interchangeable; ≠ not interchangeable; ← new for old; → old for new

REF.No	Part No.	Description	Q'ty	S.No.	I/C	REMARKS	Weight (kgf)	Weight (lb)
010	32721-96800	ASSY LIGHT WORKING	1			NOT SALE	0	0
020	32751-96790	LIGHT WORK	2				0.6	1.32
025	99999-99999	BULB	2			12V27W	0	0
030	32721-96820	WIRE HARNESS	1				0.27	0.594
040	99999-99999	BLANK	0				0	0
050	32751-96300	BAND WORK LIGHT	4				0.005	0.011
060	55311-41260	BAND CORD	3				0.007	0.0154
070	32721-96840	MANUAL INSTRUCTION	1				0	0

silverhorn.co.uk

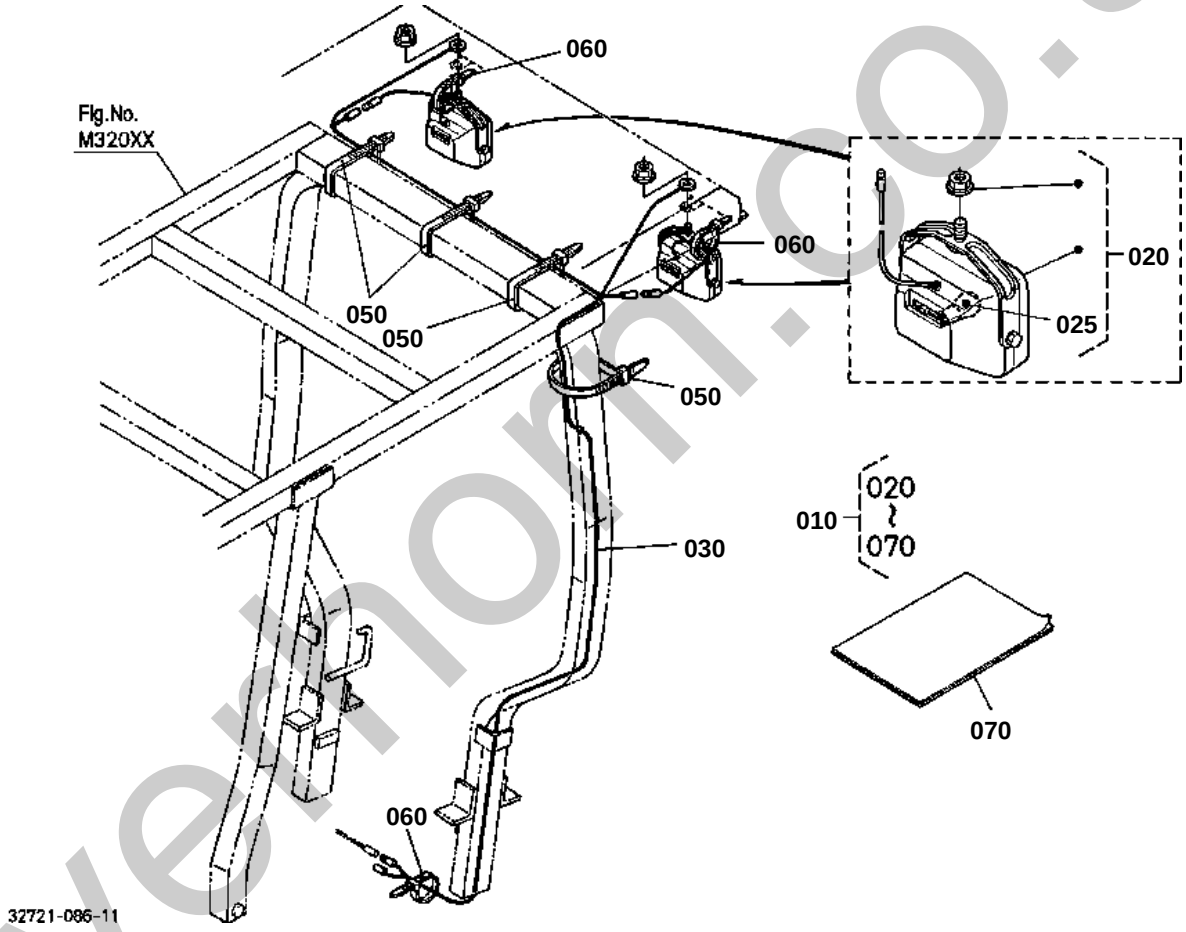

silverthorn.co.uk

WORKING LIGHT KIT [OPTION]

↔ Interchangeable; ≠ not interchangeable; ← new for old; → old for new

REF.No	Part No.	Description	Q'ty	S.No.	I/C	REMARKS	Weight (kgf)	Weight (lb)
010	32721-96810	ASSY LIGHT WORKING	1			NOT SALE	0	0
020	32751-96790	LIGHT WORK	2				0.6	1.32
025	99999-99999	BULB	2			12V27W	0	0
030	32721-96830	WIRE HARNESS	1				0.15	0.33
040	99999-99999	BLANK	0				0	0
050	32751-96300	BAND WORK LIGHT	4				0.005	0.011
060	55311-41260	BAND CORD	3				0.007	0.0154
070	32721-96940	MANUAL INSTRUCTION	1				0	0

silverhorn.co.uk

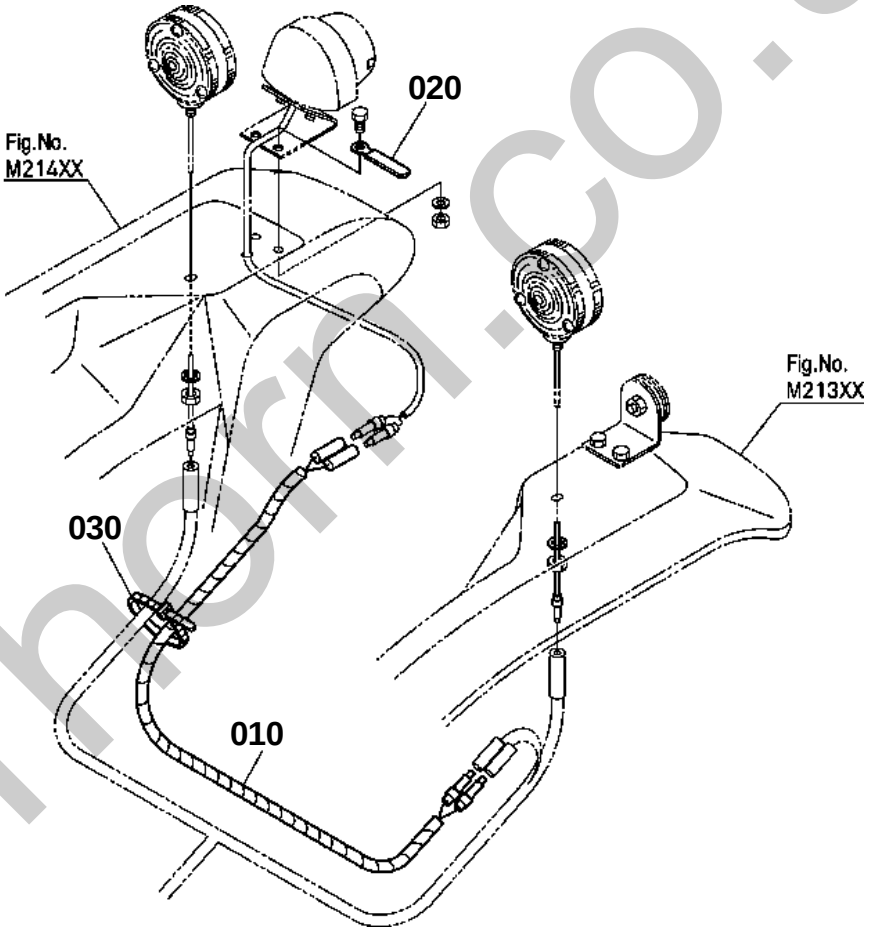

silverhorn.co.uk

WIRE HARNESS KIT [OPTION] [AU]

S.No.;<=61328

↔ Interchangeable; ≠ not interchangeable; ← new for old; → old for new

REF.No	Part No.	Description	Q'ty	S.No.	I/C	REMARKS	Weight (kgf)	Weight (lb)
010	32721-55610	WIRE HARNESS	1				0.04	0.088
020	15241-67580	CLAMP CORD	1				0.004	0.0088
030	55311-41260	BAND CORD	1				0.007	0.0154

silverhorn.co.uk

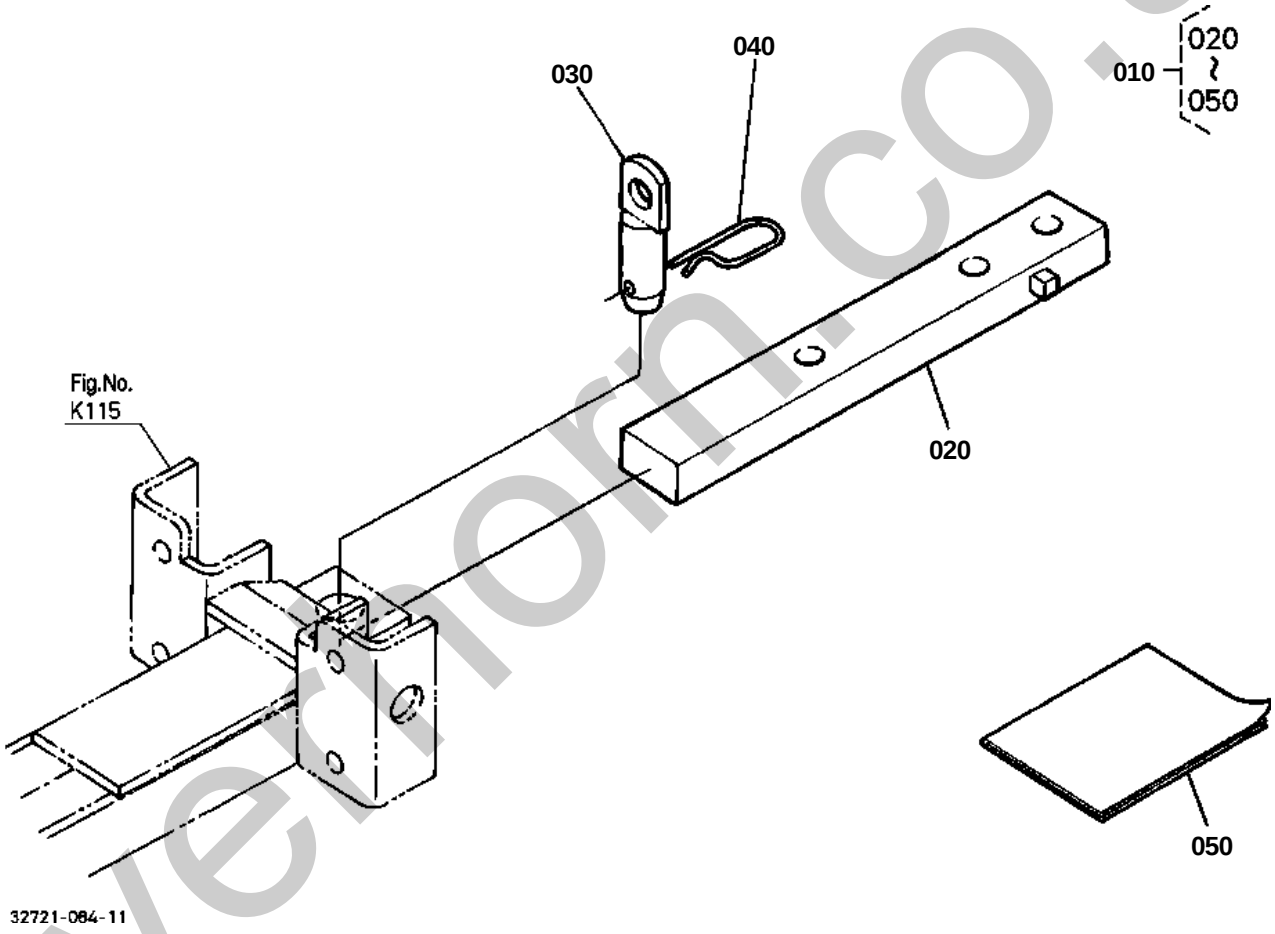

silvermorn.co.uk

DRAWBER KIT [OPTION]

↔ Interchangeable; ≠ not interchangeable; ← new for old; → old for new

REF.No	Part No.	Description	Q'ty	S.No.	I/C	REMARKS	Weight (kgf)	Weight (lb)
010	32721-96900	ASSY DRAWBAR	1				0	0
020	6C040-67110	DRAWBAR	1				4.56	10.032
030	6C040-65610	PIN HITCH	1				0.18	0.396
040	31150-29730	PIN SPRING	1				0.044	0.0968
050	32721-96910	MANUAL INSTRUCTION	1				0.004	0.0088

silverhorn.co.uk