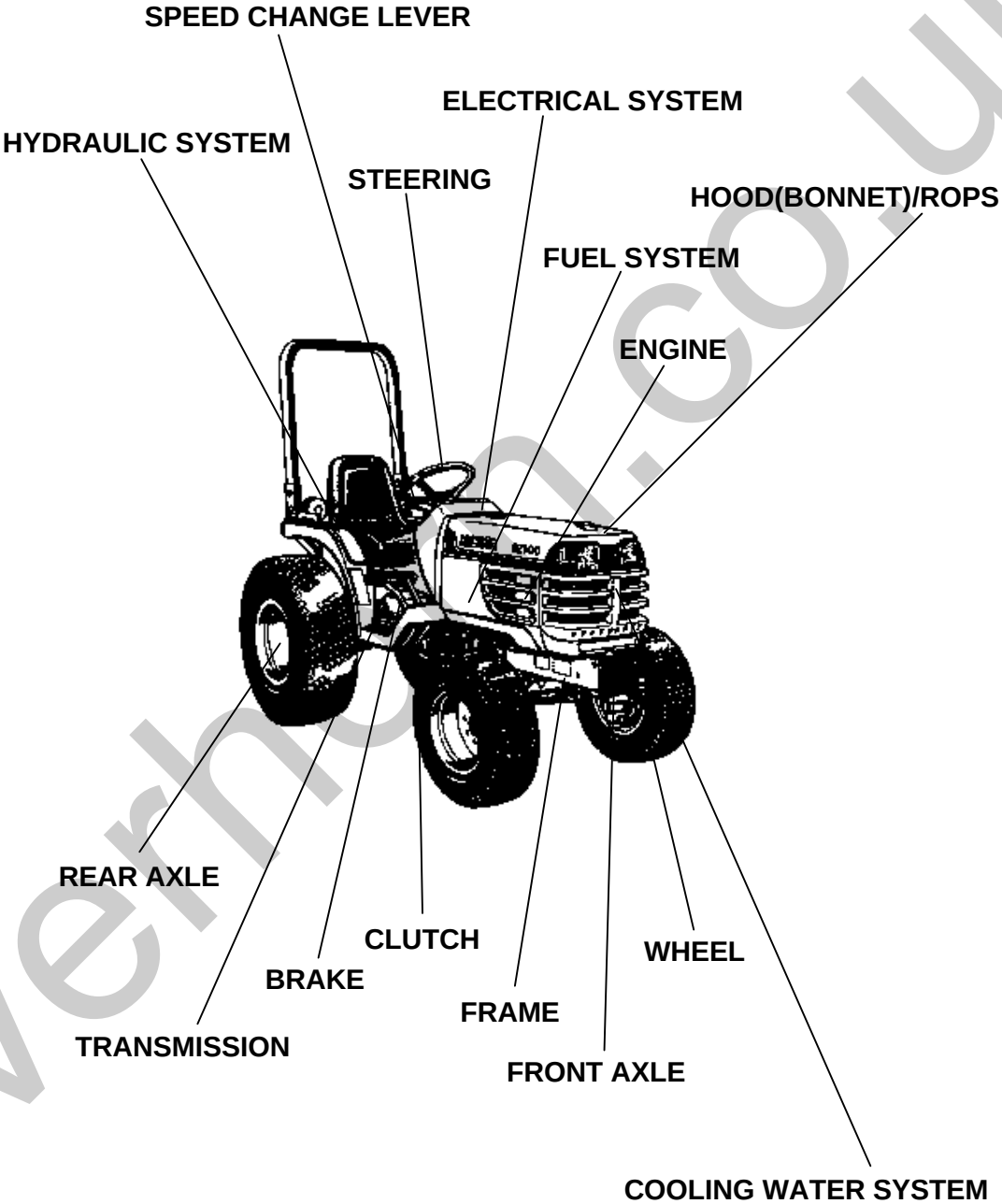

LABELS

ACCESSORIES

silverhorn.co.uk

Item	Part No.	Description	Book
ENGINE	010001	CRANK CASE	100A0079
	010002	OIL PAN	100A0079
	010003	CYLINDER HEAD	100A0079
	010004	GEAR CASE	100A0079
	010005	HEAD COVER	100A0079
	010100	MAIN BEARING CASE	100A0079
	010101	CAMSHAFT AND IDLE GEAR SHAFT	100A0079
	010102	PISTON AND CRANK SHAFT	100A0079
	010103	FLYWHEEL	100A0079
	010105	FUEL CAMSHAFT AND GOVERNOR SHAFT	100A0079
	010201	STOP SOLENOID	100A0079
	010202	INJECTION PUMP	100A0079
	010203	INJECTION PUMP [COMPONENT PARTS]	100A0079
	010204	GOVERNOR	100A0079
	010205	SPEED CONTROL PLATE	100A0079
	010206	NOZZLE HOLDER AND GLOW PLUG	100A0079
	010207	NOZZLE HOLDER [COMPONENT PARTS]	100A0079
	010500	WATER FLANGE AND THERMOSTAT	100A0079
	010501	WATER PUMP	100A0079
	010600	VALVE AND ROCKER ARM	100A0079
	010601	INLET MANIFOLD	100A0079
	010602	EXHAUST MANIFOLD	100A0079
	01090001	UPPER GASKET KIT	100A0079
	01090002	LOWER GASKET KIT	100A0079
ELECTRICAL SYSTEM	01A521	DYNAMO	100A0079
	01A523	DYNAMO [COMPONENT PARTS]	100A0079
CLUTCH	01C101	CLUTCH	100A0079
HYDRAULIC SYSTEM	01J120	HYDRAULIC PUMP	100A0079
	01J125	HYDRAULIC PUMP [COMPONENT PARTS]	100A0079
ENGINE	02060301	AIR CLEANER	100A0079
	02060302	AIR CLEANER	100A0079
	02060303	AIR CLEANER (DOUBLE) [OPTION]	100A0079
	020605	MUFFLER	100A0079
FUEL SYSTEM	02A001	ACCELERATOR LEVER	100A0079
	02A101	FUEL TANK	100A0079
	02A110	FUEL PIPE	100A0079
	02A130	FUEL FILTER [COMPONENT PARTS]	100A0079
COOLING WATER SYSTEM	02A401	FAN	100A0079
	02A410	WATER PIPE	100A0079
	02A420	RADIATOR	100A0079
ELECTRICAL SYSTEM	02A525	STARTER	100A0079
	02A530	STARTER [COMPONENT PARTS]	100A0079
	02A535	BATTERY	100A0079
	02B115	PANEL BOARD	100A0079
	02B120	PANEL BOARD [COMPONENT PARTS]	100A0079
	02B301	HEAD LIGHT	100A0079
	02B302	TAIL LIGHT/HAZARD LIGHT/WORKING LIGHT	100A0079
	02B50101	ELECTRICAL WIRING	100A0079
CLUTCH	02C110	CLUTCH ROD	100A0079
	02C301	CLUTCH PEDAL	100A0079
	02C401	CLUTCH HOUSING	100A0079
FRAME	02C415	FRAME	100A0079
TRANSMISSION	02C420	TRANSMISSION CASE	100A0079
	02C425	DIFFERENTIAL GEAR CASE	100A0079
	02C427	REAR AXLE CASE	100A0079
	02D001	CLUTCH SHAFT/PRORELLER SHAFT	100A0079

silverfern.co.uk

Item	Part No.	Description	Book
TRANSMISSION	02D010	HST	100A0079
	02D015	HST [COMPONENT PARTS]	100A0079
	02D105	2ND SHAFT/3RD SHAFT/4TH SHAFT	100A0079
	02D135	5TH SHAFT/PTO SHAFT	100A0079
	02D137	MID PTO	100A0079
REAR AXLE	02D140	REAR DIFFERENTIAL	100A0079
	02D143	FRONT WHEEL PROPELLER SHAFT	100A0079
	02D301	REAR AXLE	100A0079
BRAKE	02E001	BRAKE	100A0079
	02E015	PARKING BRAKE LEVER	100A0079
SPEED CHANGE LEVER	02F010	SPEED CHANGE LEVER	100A0079
	02F020	SPEED CONTROL PEDAL	100A0079
	02F030	SPEED SET LEVER	100A0079
	02F110	RANGE GEAR SHIFT LEVER	100A0079
	02F113	FRONT WHEEL DRIVE LEVER	100A0079
	02F125	PTO GEAR SHIFT LEVER	100A0079
	02F135	BI-SPEED TURN LEVER	100A0079
	02F140	POSITION CONTROL LEVER	100A0079
	02F201	BRAKE PEDAL	100A0079
	02F205	DIFFERENTIAL LOCK PEDAL	100A0079
FRONT AXLE	02G115	FRONT DIFFERENTIAL	100A0079
	02G123	BEVEL GEAR CASE	100A0079
	02G12501	FRONT AXLE CASE	100A0079
	02G12502	FRONT AXLE CASE	100A0079
	02G13001	FRONT AXLE	100A0079
	02G13002	FRONT AXLE	100A0079
	02G133	BI-SPEED TURN CLUTCH	100A0079
	02G135	FRONT DRIVE SHAFT	100A0079
	02G201	BI-SPEED TURN GEAR CASE	100A0079
	02G205	BI-SPEED TURN CASE	100A0079
	02G210	BI-SPEED TURN SHIFT LEVER	100A0079
STEERING	02H003	DRAG LINK	100A0079
	02H005	TIE ROD	100A0079
	02H101	STEERING HANDLE	100A0079
	02H110	STEERING CONTROLLER	100A0079
	02H11501	STEERING CONTROLLER [COMPONENT PARTS]	100A0079
	02H11502	STEERING CONTROLLER [COMPONENT PARTS]	100A0079
HYDRAULIC SYSTEM	02J201	HYDRAULIC OIL LINE (SUCTION)	100A0079
	02J203	FLOW DIVIDER VALVE [COMPONENT PARTS]	100A0079
	02J215	HYDRAULIC OIL LINE (STEERING)	100A0079
	02J230	HYDRAULIC OIL LINE (T/M)	100A0079
	02J235	HYDRAULIC OIL LINE (HST)	100A0079
	02J240	HYDRAULIC OIL LINE (OIL COOLER)	100A0079
	02J301	HYDRAULIC CYLINDER CASE	100A0079
	02J405	CONTROL VALVE	100A0079
	02J41001	CONTROL VALVE [COMPONENT PARTS]	100A0079
	02J41002	CONTROL VALVE [COMPONENT PARTS]	100A0079
	02K101	LIFT ROD	100A0079
	02K115	LOWER LINK	100A0079
	02K120	TOP LINK	100A0079
HOOD(BONNET)/ROPS	02M101	FRONT GRILLE	100A0079
	02M105	HOOD (BONNET)	100A0079
	02M120	SIDE COVER	100A0079
	02M210	FENDER	100A0079
	02M217	SEAT SUPPORT	100A0079
	02M220	SEAT	100A0079

silverton.co.uk

Item	Part No.	Description	Book
HOOD(BONNET)/ROPS	02M225	STEP	100A0079
	02M301	ROPS	100A0079
WHEEL	02R10101	FRONT WHEEL (6-12)	100A0079
	02R10103	FRONT WHEEL (23*8.50-12)	100A0079
	02R10104	FRONT WHEEL (21*8.00-10)	100A0079
	02R11001	REAR WHEEL (8.3-16)	100A0079
	02R11004	REAR WHEEL (33*12.5-15)	100A0079
	02R11005	REAR WHEEL (31*15.5-15)	100A0079
LABELS	02S101	LABEL	100A0079
ACCESSORIES	02T105	ACCESSORIES AND SERVICE PARTS	100A0079

silverhorn.co.uk

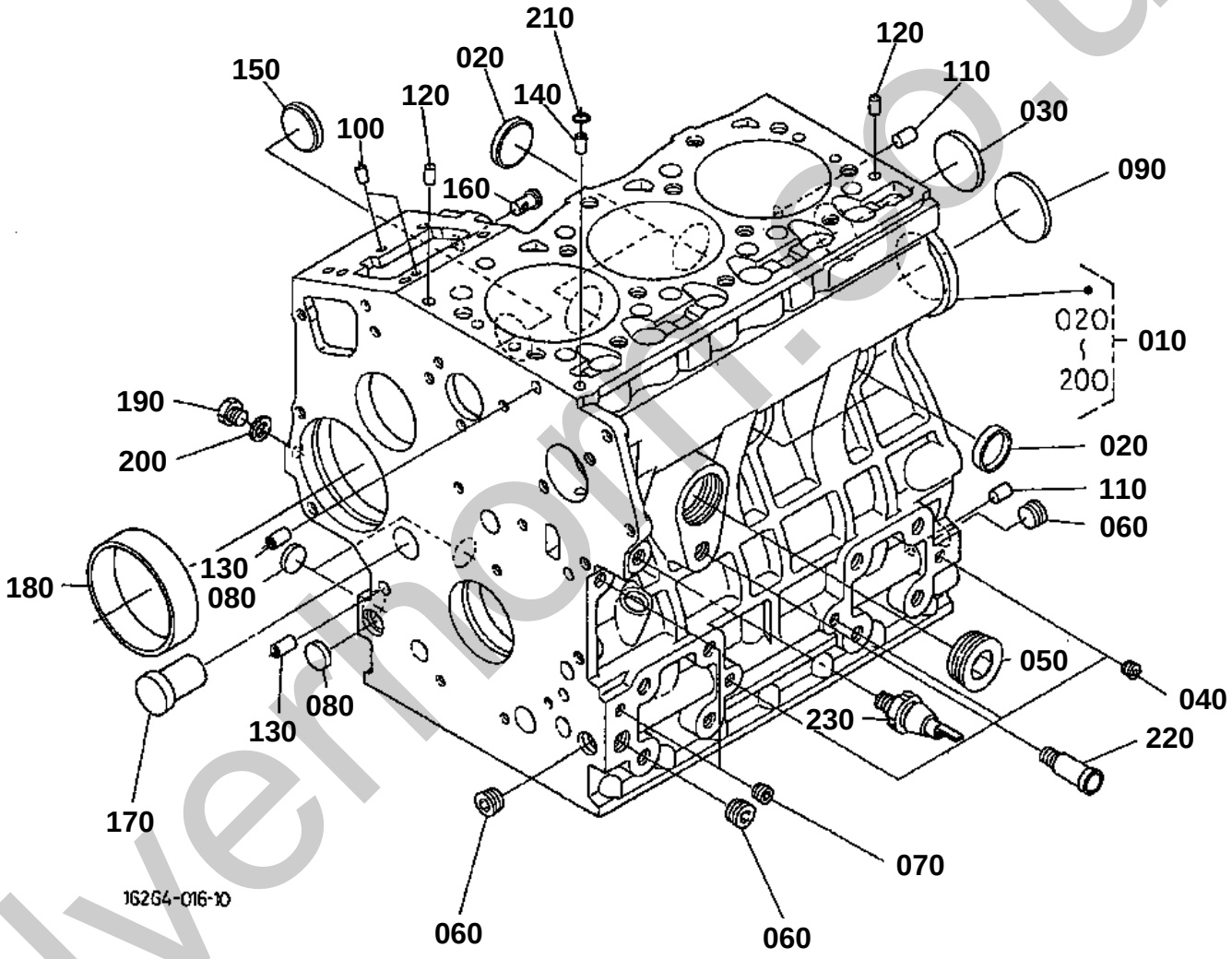

silverhomes.co.uk

CRANK CASE

↔ Interchangeable; ≠ not interchangeable; ← new for old; → old for new

REF.No	Part No.	Description	Q'ty	S.No.	I/C	REMARKS	Weight (kgf)	Weight (lb)
010	16611-01010	COMP.CRANKCASE	1	<=YB0607			32.08	70.576
010	16611-01013	COMP.CRANKCASE	1	>=YC0001	←		0	0
020	15451-96270	CAP SEALING	4				0.012	0.0264
030	15221-03490	CAP SEALING	1				0.02	0.044
040	15261-96010	PLUG	3				0.002	0.0044
050	16683-96020	PLUG	1				0.47	1.034
060	16241-96010	PLUG	3				0.007	0.0154
070	15521-96020	PLUG	2				0.003	0.0066
080	17391-96160	PLUG EXPANSION	3				0.003	0.0066
090	16271-96160	PLUG EXPANSION	1				0.025	0.055
100	05012-00508	PIN STRAIGHT	2	<=WT2678			0.001	0.0022
100	16225-94510	PIN STRAIGHT	2	>=WU0001	↔		0.001	0.0022
110	05012-00814	PIN STRAIGHT	2	<=WT2678			0.006	0.0132
110	16221-94530	PIN STRAIGHT	2	>=WU0001	↔		0.006	0.0132
120	05012-00610	PIN STRAIGHT	2	<=WT2678			0.003	0.0066
120	16221-94520	PIN STRAIGHT	2	>=WU0001	↔		0.005	0.011
130	15231-33960	PIN PIPE	2				0.001	0.0022
140	16241-33650	PIN PIPE	1				0.002	0.0044
150	16241-96260	PLUG	1	<=781870			0	0
150	16241-96260	PLUG	1	>=10001			0	0
150	16241-96262	PLUG FUEL CAMSHAFT	1	>=49890	←		0.007	0.0154
160	16261-56280	PIN START SPRING	1				0.004	0.0088
170	16282-96010	PLUG	1				0.09	0.198
180	16271-55350	BUSH GOVERNOR GEAR	1				0.06	0.132
190	15221-33610	PLUG	1				0.009	0.0198
200	15021-33660	GASKET	1				0.001	0.0022
210	15221-33700	O RING	1				0.001	0.0022
220	15321-73340	PIPE WATER RETURN	1				0.016	0.0352
230	15531-39010	SWITCH OIL	1				0.032	0.0704

silverhorn.co.uk

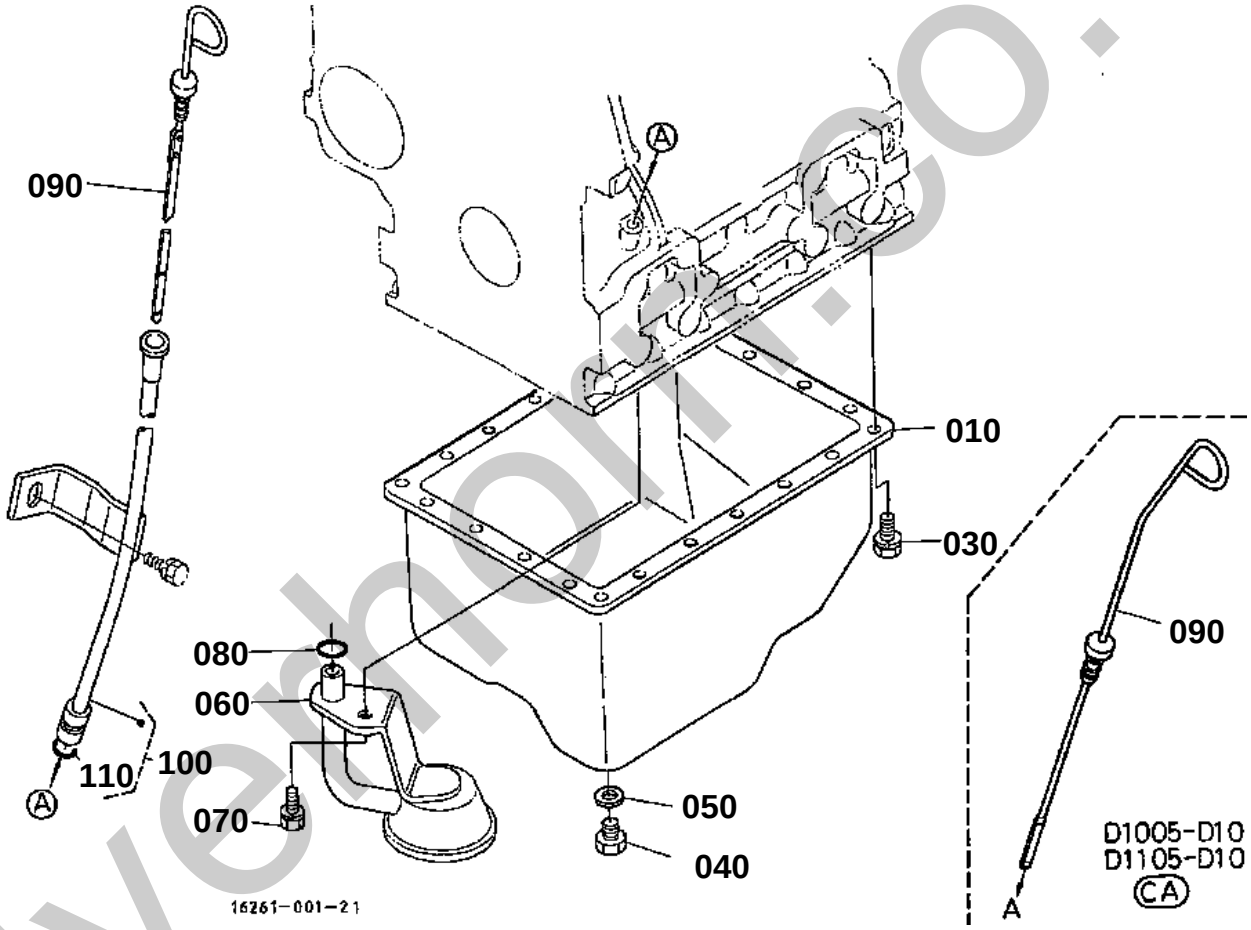

silverhorn.co.uk

020 16266-0162-0

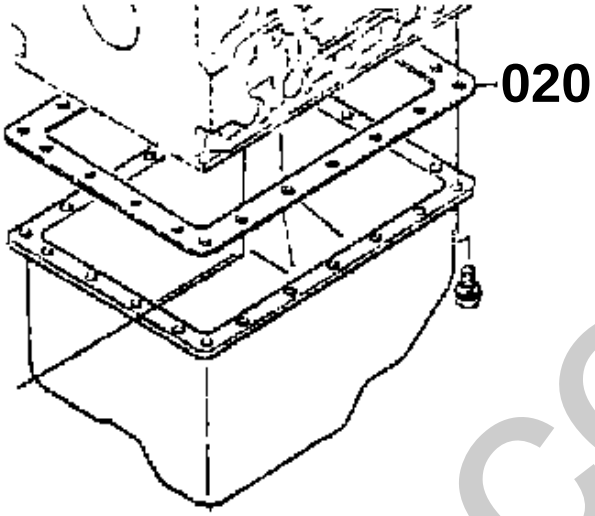

16216-800-10

silverhorn.co.uk

OIL PAN

↔ Interchangeable; ≠ not interchangeable; ← new for old; → old for new

REF.No	Part No.	Description	Q'ty	S.No.	I/C	REMARKS	Weight (kgf)	Weight (lb)
010	6C040-58920	COMP.OIL PAN	1				1.2	2.64
020	16266-01620	GASKET OIL PAN	1	<=741870			0.028	0.0616
020	16266-01620	GASKET OIL PAN	1	>=10001			0.028	0.0616
020	16266-01620	GASKET OIL PAN	1	<=15685			0.028	0.0616
030	01023-50612	BOLT	22				0.005	0.011
040	15221-33750	PLUG	1				0.032	0.0704
050	15109-33660	GASKET	1	<=WP2119			0.001	0.0022
050	6C090-58960	GASKET	1	>=WQ0001	↔		0.002	0.0044
060	16261-32110	FILTER OIL	1	<=741870			0	0
060	16261-32110	FILTER OIL	1	>=10001			0	0
060	16261-32113	FILTER OIL	1	>=25929	←		0	0
060	16261-32114	FILTER OIL	1	>=WJ0001	←		0.21	0.462
070	01123-60816	BOLT	1				0.01	0.022
080	04811-00160	O RING	1	<=WH4333			0.001	0.0022
080	04814-00160	O RING	1	>=WJ0001	←		0.001	0.0022
090	16216-36410	GAUGE OIL	1	<=741870		[A]	0	0
090	16216-36410	GAUGE OIL	1	>=10001		[A]	0	0
090	16216-36412	GAUGE OIL	1	>=139736	←	[A]	0.03	0.066
090	16216-36410	GAUGE OIL	1	<=741870		[CA]	0	0
090	16216-36410	GAUGE OIL	1	>=10001		[CA]	0	0
090	16216-36412	GAUGE OIL	1	>=139736	←	[CA]	0.03	0.066
100	16216-36500	ASSY GUIDE OIL GAUGE	1			[A]	0.14	0.308
100	16216-36500	ASSY GUIDE OIL GAUGE	1			[CA]	0.14	0.308
110	04814-00090	O RING	1			[A]	0.001	0.0022
110	04814-00090	O RING	1			[CA]	0.001	0.0022

silverhorn.co.uk

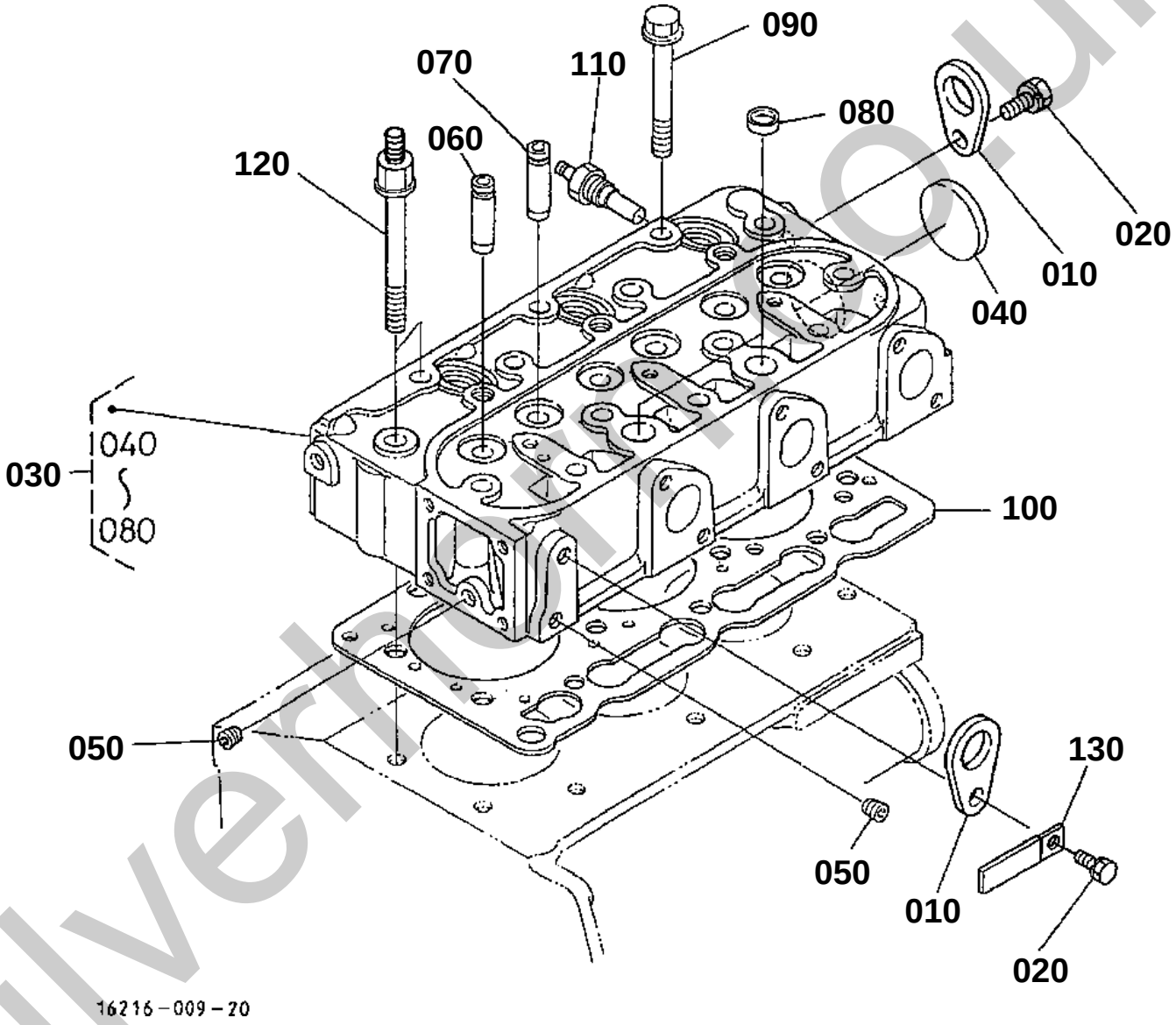

silverhorse.co.uk

CYLINDER HEAD

↔ Interchangeable; ≠ not interchangeable; ← new for old; → old for new

REF.No	Part No.	Description	Q'ty	S.No.	I/C	REMARKS	Weight (kgf)	Weight (lb)
010	15221-01750	HOOK ENGINE	2				0.04	0.088
020	01123-60814	BOLT	2				0.008	0.0176
030	16022-03040	COMP.CYLINDER HEAD	1				10.1	22.22
040	15321-96260	CAP SEALING	1				0.014	0.0308
050	15261-96010	PLUG	2				0.002	0.0044
060	16241-13540	GUIDE INLET VALVE	3				0.02	0.044
070	16241-13560	GUIDE EXHAUST VALVE	3				0.01	0.022
080	15261-03370	CAP SEALING	2				0.005	0.011
090	16241-03450	BOLT CYLINDER HEAD	12				0.07	0.154
100	16221-03310	GASKET CYLINDER HEAD	1				0.075	0.165
110	31351-32830	SENSOR THERMO	1				0.02	0.044
120	16216-03450	BOLT CYLINDER HEAD	2				0.07	0.154
130	52200-41160	CLAMP CORD	1				0.01	0.022

silverhorn.co.uk

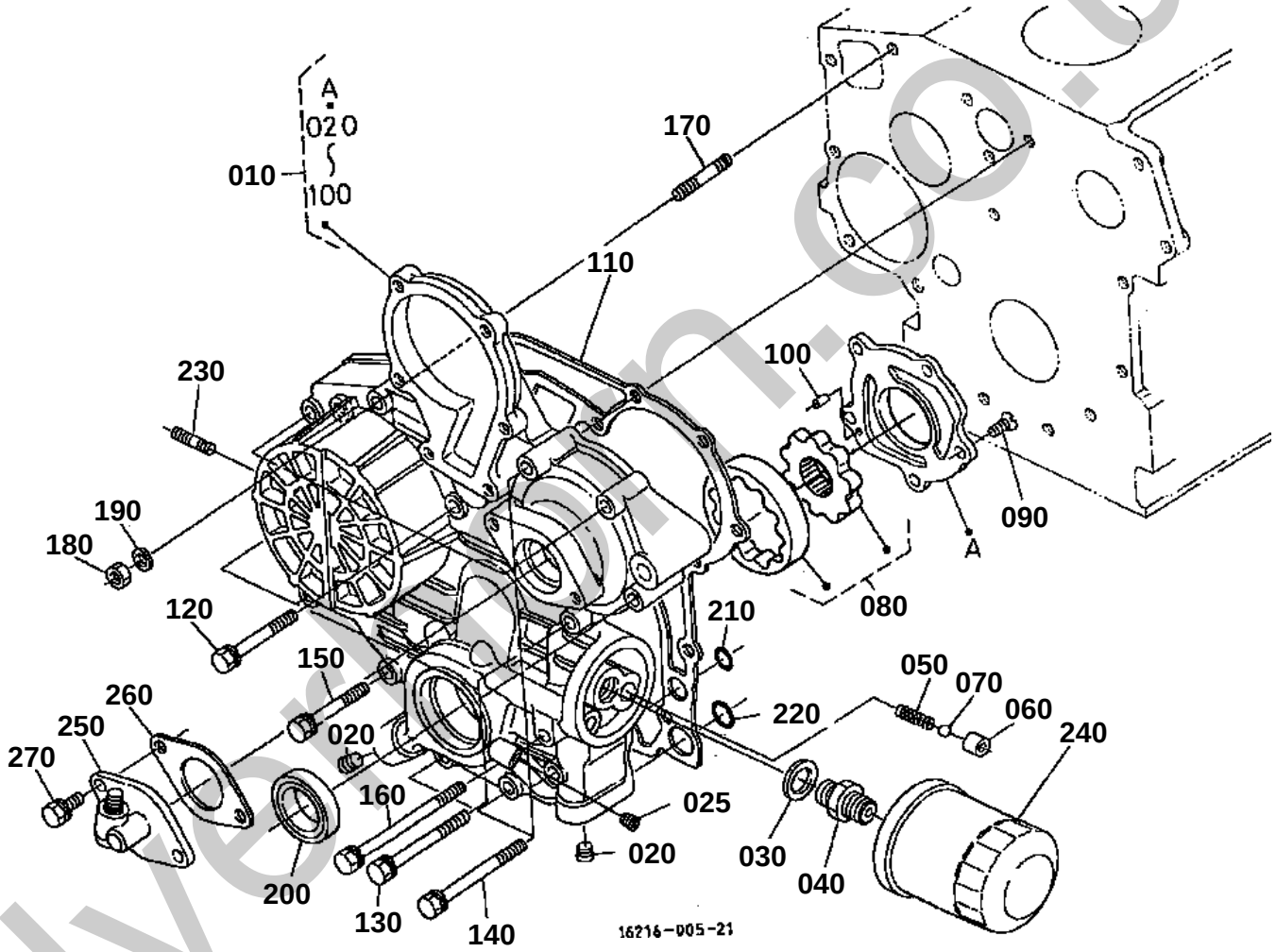

silverton.co.uk

GEAR CASE

↔ Interchangeable; ≠ not interchangeable; ← new for old; → old for new

REF.No	Part No.	Description	Q'ty	S.No.	I/C	REMARKS	Weight (kgf)	Weight (lb)
010	16216-04020	COMP.CASE GEAR	1			[A]	2.45	5.39
010	16216-04020	COMP.CASE GEAR	1			[CA]	2.45	5.39
020	16241-96020	PLUG	2				0.015	0.033
025	15521-96020	PLUG	1	>=XG0001			0.003	0.0066
030	04011-50180	WASHER PLAIN	1				0.012	0.0264
040	15241-32290	JOINT PIPE	1				0.053	0.1166
050	16241-36950	SPRING	1				0.015	0.033
060	16241-36930	SEAT VALVE	1				0.012	0.0264
070	07715-00201	BALL	1				0.008	0.0176
080	16241-35070	ASSY ROTOR OIL PUMP	1				0.27	0.594
090	03017-50620	SCREW CR-REC-BD-HD	5				0.005	0.011
100	05012-00410	PIN STRAIGHT	2				0.001	0.0022
110	16264-04130	GASKET GEAR CASE	1				0.01	0.022
120	01023-50645	BOLT	3				0.01	0.022
130	01023-60650	BOLT	4				0.015	0.033
140	01023-50655	BOLT	4				0.012	0.0264
150	01023-50665	BOLT	1				0.015	0.033
160	16241-91040	BOLT	1				0.015	0.033
170	01513-50645	BOLT STUD	1	<=WH4333			0.011	0.0242
170	16245-91530	STUD	1	>=WJ0001	↔		0.01	0.022
180	02056-50060	NUT	1				0.002	0.0044
190	04512-60060	WASHER SPRING	1				0.001	0.0022
200	16241-04212	SEAL OIL	1				0.012	0.0264
210	04811-06100	O RING	2	<=WH4333			0.001	0.0022
210	04814-06100	O RING	2	>=WJ0001	←		0.003	0.0066
220	04811-00150	O RING	2	<=WH4333			0.001	0.0022
220	04814-00150	O RING	2	>=WJ0001	←		0.001	0.0022
230	01513-50616	BOLT STUD	2	<=WH4333			0.004	0.0088
230	16245-91540	STUD	2	>=WJ0001	↔		0.005	0.011
240	15241-32090	ASSY CARTRIDGE OIL	1				0.35	0.77
250	58417-25950	ASSY GEAR CASE H/M	1				0.29	0.638
260	16264-88130	GASKET H/METER UNIT	1				0.002	0.0044
270	01023-50618	BOLT	2				0.006	0.0132

silverthorn.co.uk

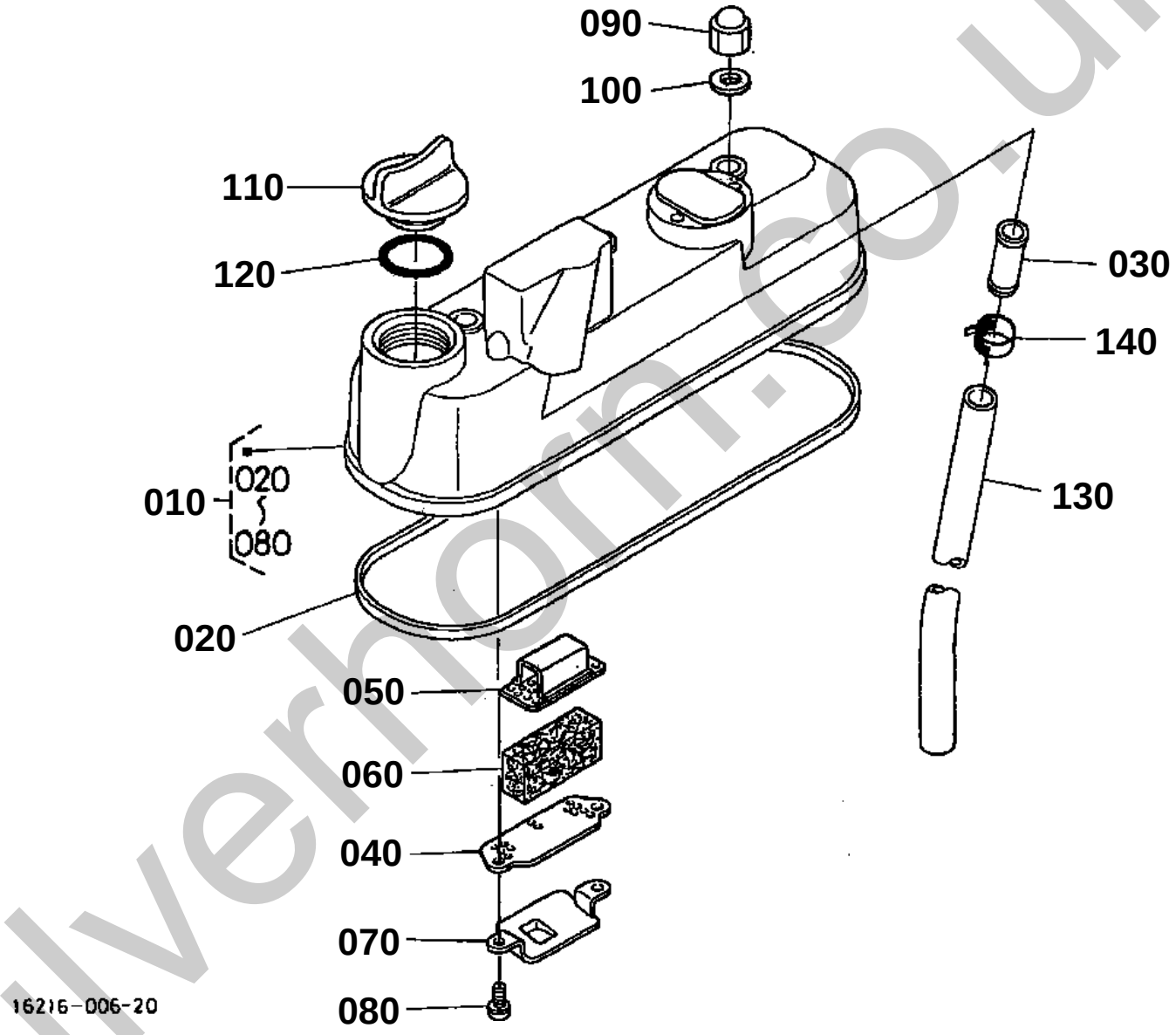

silverhorn.co.uk

HEAD COVER

↔ Interchangeable; ≠ not interchangeable; ← new for old; → old for new

REF.No	Part No.	Description	Q'ty	S.No.	I/C	REMARKS	Weight (kgf)	Weight (lb)
010	16261-14503	ASSY COVER CYL.HEAD	1				0.78	1.716
020	16261-14520	GASKET HEAD COVER	1				0.01	0.022
030	16241-05550	JOINT BREATHER PIPE	1				0.02	0.044
040	16241-05140	PLATE B/THER ELEMENT	1				0.005	0.011
050	16241-05150	PLATE B/THER ELEMENT	1				0.01	0.022
060	16241-05670	ELEMENT BREATHER	1				0.01	0.022
070	16241-05370	OIL SHIELD BREATHER	1				0.01	0.022
080	03024-50510	SCREW WITH WASHER	2				0.002	0.0044
090	15952-92330	NUT	3				0.01	0.022
100	15951-96660	GASKET	3				0.001	0.0022
110	15852-33140	PLUG OIL FILLER	1				0.038	0.0836
120	04811-50300	O RING	1	<=WH4333			0.001	0.0022
120	04814-50300	O RING	1	>=WJ0001	←		0.001	0.0022
130	16271-05510	PIPE BREATHER	1				0.06	0.132
140	16241-33510	BAND PIPE	1				0.005	0.011

silverhorn.co.uk

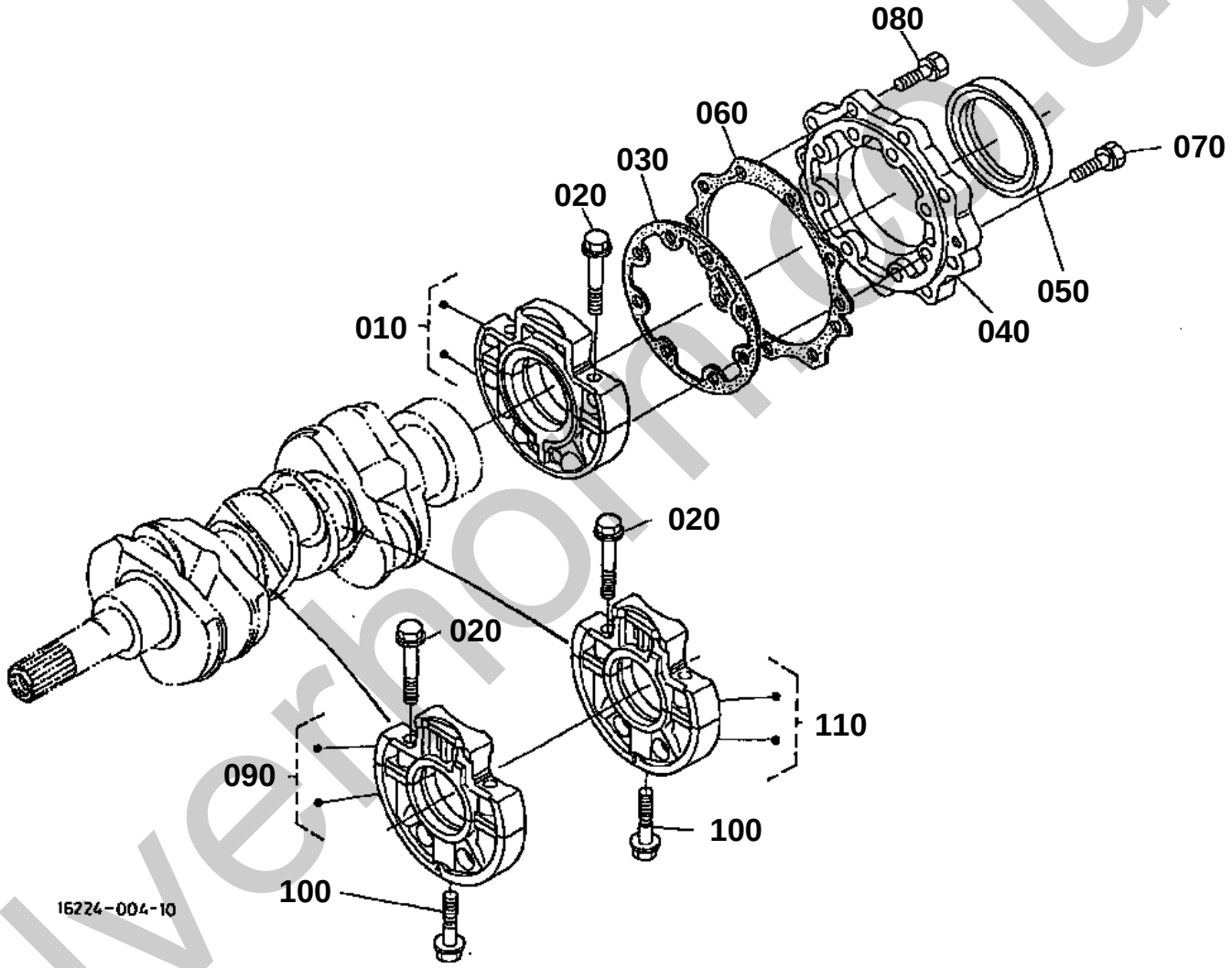

silverhorn.co.uk

MAIN BEARING CASE

↔ Interchangeable; ≠ not interchangeable; ← new for old; → old for new

REF.No	Part No.	Description	Q'ty	S.No.	I/C	REMARKS	Weight (kgf)	Weight (lb)
010	16241-04092	ASSY CASE MAIN BRG.	1				1.13	2.486
020	16241-04540	BOLT BEARING CASE	6				0.02	0.044
030	16264-04360	GASKET BRG.CASE	1				0.002	0.0044
040	16241-04813	COVER BEARING CASE	1				0.22	0.484
050	16271-04460	SEAL OIL	1				0.04	0.088
060	16264-04820	GASKET	1				0.008	0.0176
070	01023-50625	BOLT	8				0.007	0.0154
080	01023-50620	BOLT	9				0.006	0.0132
090	16271-04040	ASSY CASE MAIN BRG.	1	<=681218			1	2.2
090	16261-04040	ASSY CASE MAIN BRG.	1	>=681219	↔		0.9	1.98
100	16241-04560	BOLT BEARING CASE	2				0.03	0.066
110	16271-04050	ASSY CASE MAIN BRG.	1	<=681218			1	2.2
110	16261-04050	ASSY CASE MAIN BRG.	1	>=681219	↔		1.11	2.442

silverhorn.co.uk

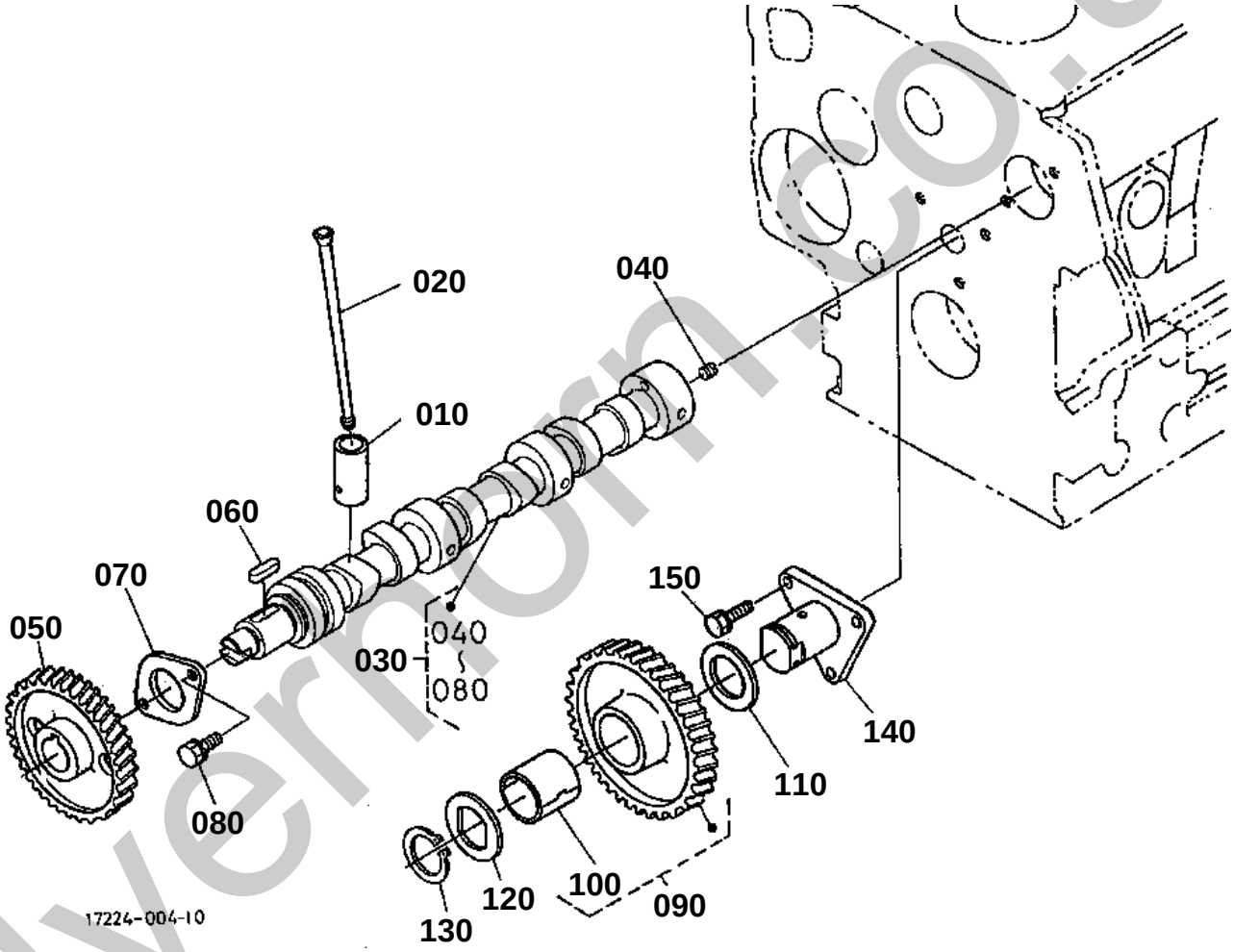

silvermorn.co.uk

CAMSHAFT AND IDLE GEAR SHAFT

↔ Interchangeable; ≠ not interchangeable; ← new for old; → old for new

REF.No	Part No.	Description	Q'ty	S.No.	I/C	REMARKS	Weight (kgf)	Weight (lb)
010	16261-15550	TAPPET	6				0.035	0.077
020	16241-15110	PUSH ROD	6				0.03	0.066
030	16261-16010	ASSY CAMSHAFT	1				1.7	3.74
040	15521-93610	SCREW SET	1				0.002	0.0044
050	16241-16510	GEAR CAM	1				0.45	0.99
060	05712-00518	KEY FEATHER	1				0.003	0.0066
070	16241-16270	STOPPER CAMSHAFT	1				0.04	0.088
080	01023-50614	BOLT	2				0.005	0.011
090	16251-24010	COMP GEAR IDLE	1				0.63	1.386
100	16251-24980	BUSH IDLE GEAR	1				0.035	0.077
110	16251-24360	COLLAR IDLE GEAR	1				0.012	0.0264
120	15741-24370	COLLAR IDLE GEAR	1				0.015	0.033
130	15741-24320	CIR CLIP IDLE GEAR	1				0.01	0.022
140	16251-24250	SHAFT IDLE GEAR	1				0.36	0.792
150	01023-50616	BOLT	3				0.005	0.011

silverhorn.co.uk

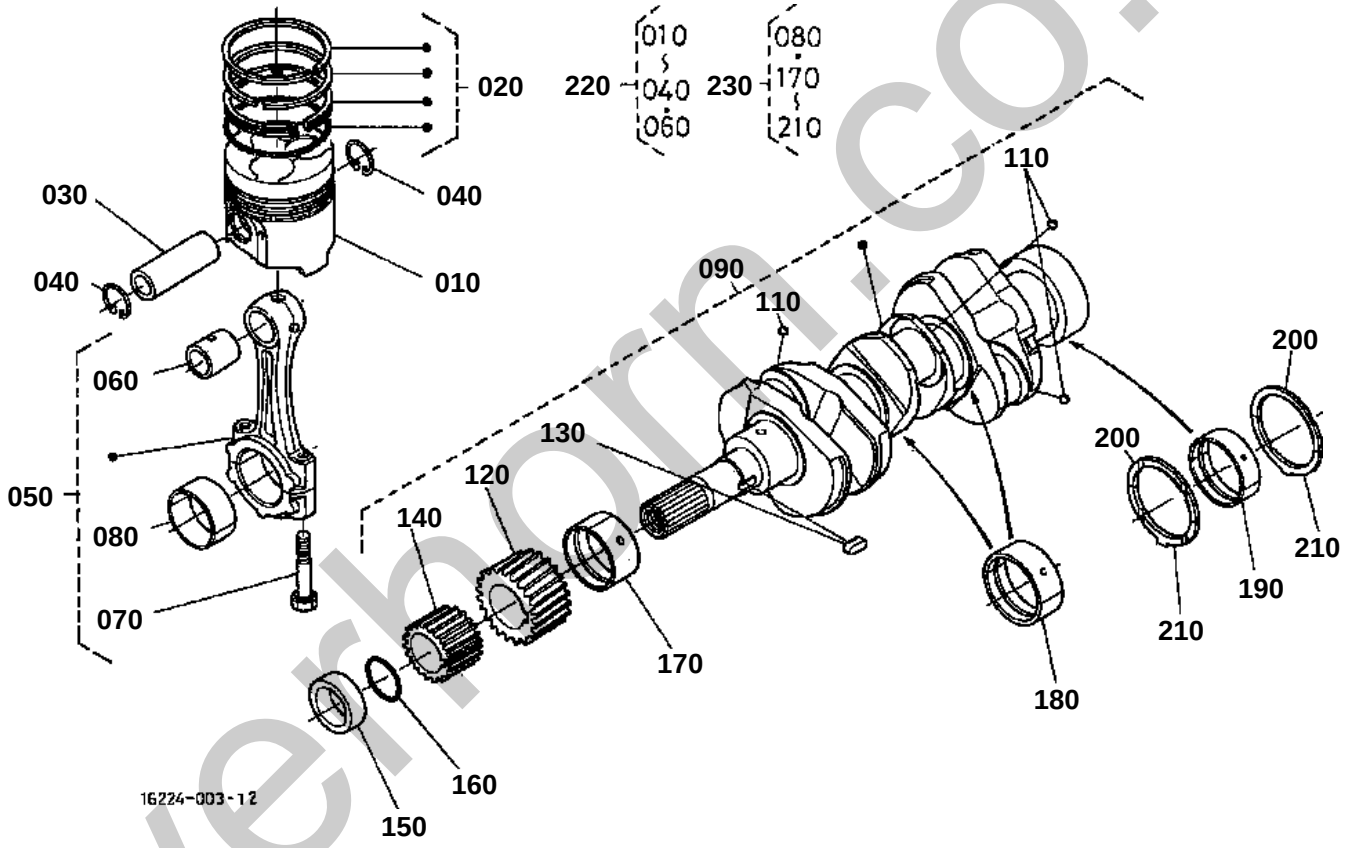

silverhorn.co.uk

PISTON AND CRANK SHAFT

↔ Interchangeable; ≠ not interchangeable; ← new for old; → old for new

REF.No	Part No.	Description	Q'ty	S.No.	I/C	REMARKS	Weight (kgf)	Weight (lb)
010	16224-21110	PISTON	3			STD	0.35	0.77
010	16224-21910	PISTON	3			+0.50MM	0.36	0.792
020	15901-21050	ASSY PISTON RING	3			STD	0.03	0.066
020	15901-21090	ASSY PISTON RING	3			+0.50MM	0.033	0.0726
030	16241-21310	PIN PISTON	3				0.135	0.297
040	16241-21330	CIR CLIP PISTON PIN	6				0.002	0.0044
050	16241-22012	ASSY ROD CONNECTING	3				0.545	1.199
060	16241-21980	BUSH PISTON PIN	3				0.03	0.066
070	16241-22140	BOLT CONNECTING ROD	6				0.024	0.0528
080	16241-22310	METAL CRANKPIN	3			STD SET	0.038	0.0836
080	16241-22970	METAL CRANKPIN	3			-0.20MM SET	0.08	0.176
080	16241-22980	METAL CRANKPIN	3			-0.40MM SET	0.1	0.22
090	16231-23013	COMP.CRANKSHAFT	1				9.35	20.57
110	07715-00401	BALL	3				0.001	0.0022
120	16241-24110	GEAR CRANK	1				0.15	0.33
130	16271-95230	KEY	1				0.005	0.011
140	16241-35630	GEAR OIL PUMP DRIVE	1				0.102	0.2244
150	16271-23250	COLLAR CRANKSHAFT	1				0.055	0.121
160	04811-10280	O RING	1	<=WH4333			0.001	0.0022
160	04814-10280	RING	1	>=WJ0001	←		0.001	0.0022
170	16241-23470	METAL CRANKSHAFT	1			STD	0.06	0.132
170	16241-23910	METAL CRANKSHAFT	1			-0.20MM	0.03	0.066
170	16241-23920	METAL CRANKSHAFT	1			-0.40MM	0.068	0.1496
180	16241-23480	METAL CRANKSHAFT	2			STD SET	0.05	0.11
180	16241-23930	METAL CRANKSHAFT	2			-0.20MM SET	0.1	0.22
180	16241-23940	METAL CRANKSHAFT	2			-0.40MM SET	0.05	0.11
190	16241-23490	METAL CRANKSHAFT	1	<=XC9968		STD SET	0	0
190	16292-23490	METAL CRANKSHAFT	1	>=XE0001	↔	STD SET	0.07	0.154
190	16241-23860	METAL CRANKSHAFT	1	<=XC9968		-0.20MM SET	0.1	0.22
190	16292-23860	METAL CRANKSHAFT	1	>=XE0001	↔	-0.20MM SET	0.05	0.11
190	16241-23870	METAL CRANKSHAFT	1	<=XC9968		-0.40MM SET	0.068	0.1496
190	16292-23870	METAL CRANKSHAFT	1	>=XE0001	↔	-0.40MM SET	0.05	0.11
200	15521-23530	METAL SIDE	2			STD	0.01	0.022
200	15521-23950	METAL SIDE	2			+0.20MM	0.01	0.022
200	15521-23960	METAL SIDE	2			+0.40MM	0.01	0.022
210	19202-23540	METAL SIDE	2			STD	0.01	0.022
210	19202-23970	METAL SIDE	2			+0.20MM	0.01	0.022
210	19202-23980	METAL SIDE	2			+0.40MM	0.01	0.022
220	07916-26800	KIT RING PISTON	3			STD	0.55	1.21
220	07916-26810	KIT RING PISTON	3			+0.50MM	0.57	1.254
230	07916-28240	KIT METAL ENGINE	1			STD	0.1	0.22
230	07916-28760	KIT METAL ENGINE	1			-0.20MM/+0.20MM	0.34	0.748
230	07916-28770	KIT METAL ENGINE	1			-0.40MM/+0.40MM	0.36	0.792

silverfarm.co.uk

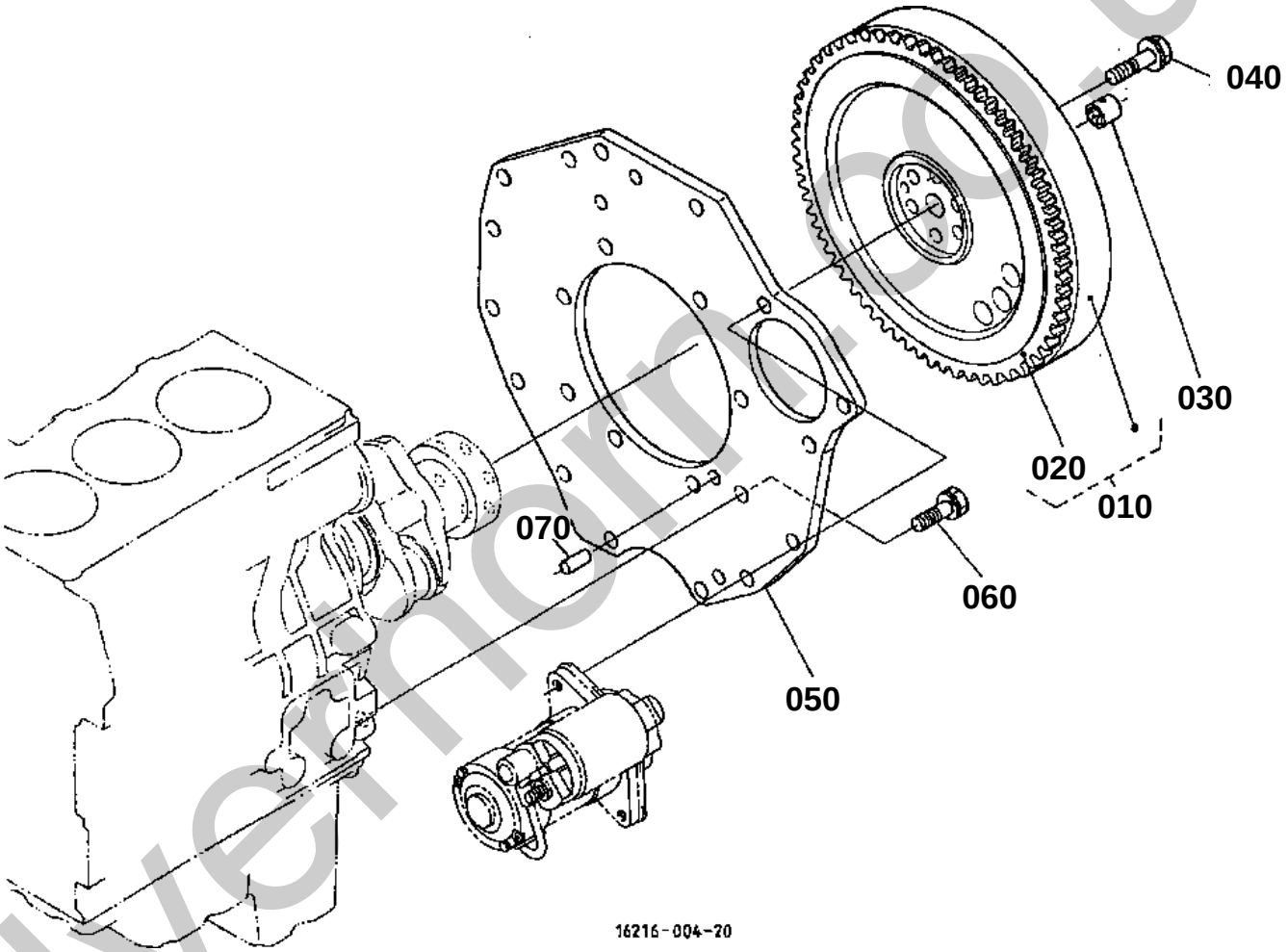

silvermoor.co.uk

FLYWHEEL

↔ Interchangeable; ≠ not interchangeable; ← new for old; → old for new

REF.No	Part No.	Description	Q'ty	S.No.	I/C	REMARKS	Weight (kgf)	Weight (lb)
010	16261-25014	COMP.FLYWHEEL	1	<=XZ0500			17.7	38.94
010	16261-25015	COMP.FLYWHEEL	1	>=YA0001	←		17.2	37.84
020	16261-63822	GEAR RING	1	<=XZ0500			0.75	1.65
030	66621-14120	BEARING DRY	1				0.006	0.0132
040	16271-25160	BOLT FLYWHEEL	6				0.036	0.0792
050	6C040-58912	PLATE REAR END	1				3.6	7.92
060	15261-91190	BOLT	8				0.03	0.066
070	05012-00814	PIN STRAIGHT	1	<=WT2678			0.006	0.0132
070	16221-94530	PIN STRAIGHT	1	>=WU0001	↔		0.006	0.0132

silverhorn.co.uk

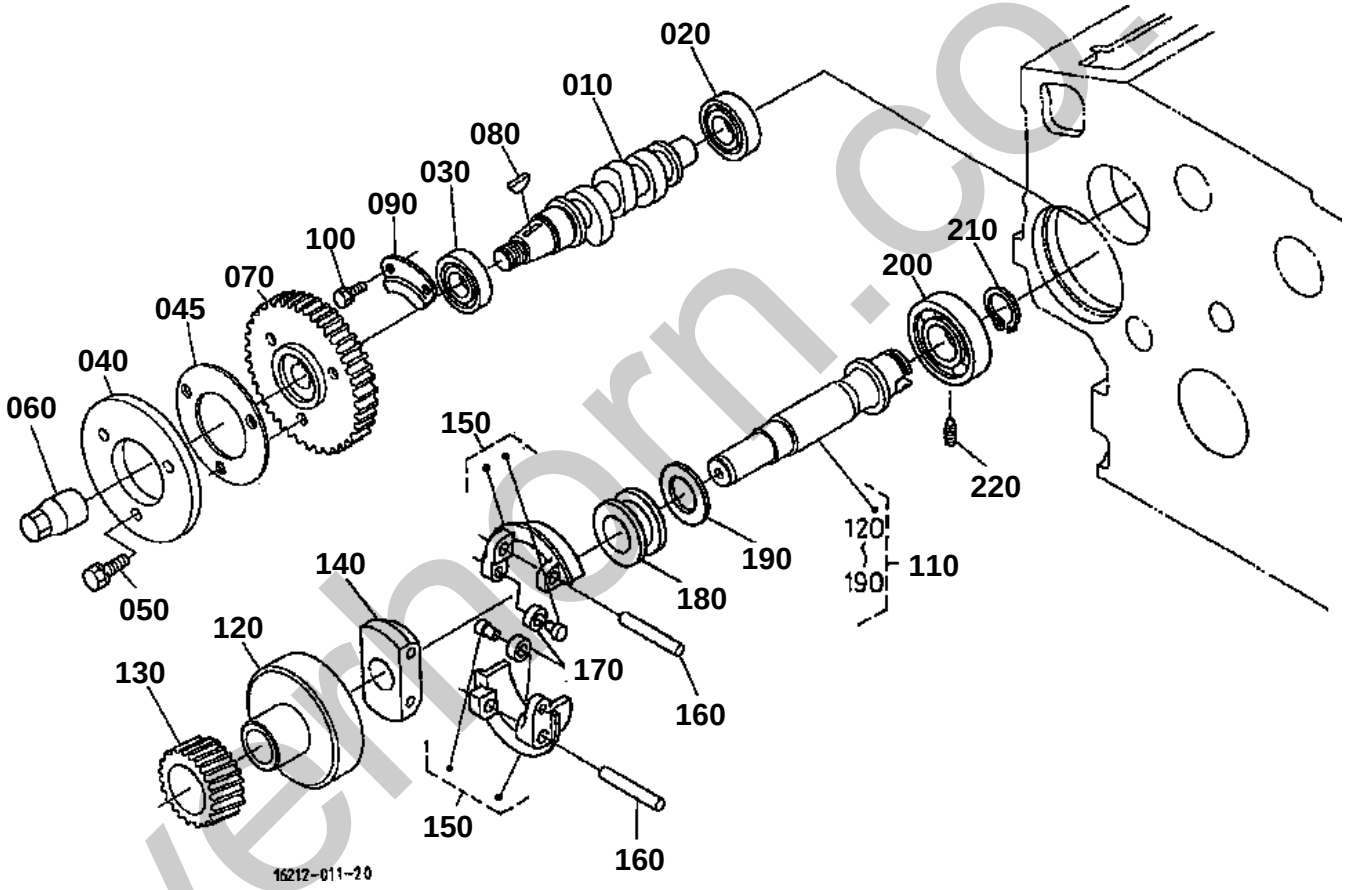

silverborn.co.uk

FUEL CAMSHAFT AND GOVERNOR SHAFT

↔ Interchangeable; ≠ not interchangeable; ← new for old; → old for new

REF.No	Part No.	Description	Q'ty	S.No.	I/C	REMARKS	Weight (kgf)	Weight (lb)
010	16020-16170	CAMSHAFT FUEL	1				0.38	0.836
020	08103-06202	BEARING BALL	1				0.05	0.11
030	08153-06204	BEARING BALL	1				0.11	0.242
040	16241-51113	CAM FUEL	1				0.196	0.4312
045	16241-51190	WASHER	1				0.029	0.0638
050	01023-50618	BOLT	3				0.006	0.0132
060	16241-92330	NUT	1				0.035	0.077
070	16272-51150	GEAR INJECTION PUMP	1				0.49	1.078
080	16241-95230	KEY WOODRUFF	1				0.001	0.0022
090	16241-16320	STOPPER FUEL.C/SHAFT	1				0.04	0.088
100	01023-50612	BOLT	2				0.005	0.011
110	16265-55013	ASSY SHAFT GOVERNOR	1				1.22	2.684
120	16241-55392	HOLDER GOVERNOR GEAR	1				0.34	0.748
130	16282-55320	GEAR GOVERNOR	1				0.24	0.528
140	16241-55270	HOLDER GOV.WEIGHT	1				0.085	0.187
150	16241-55062	COMP.WEIGHT GOVERNOR	2				0.085	0.187
160	16241-55260	SHAFT GOV. WEIGHT	2				0.013	0.0286
170	19484-55440	ROLLER	2				0.005	0.011
180	16241-55450	SLEEVE GOVERNOR	1				0.04	0.088
190	16241-55463	WASHER THRUST	1				0.005	0.011
200	08101-06304	BEARING BALL	1				0.146	0.3212
210	16271-55410	CIR CLIP GOV.SHAFT	1				0.005	0.011
220	16241-55554	SCREW SET	1				0.007	0.0154

silverhorn.co.uk

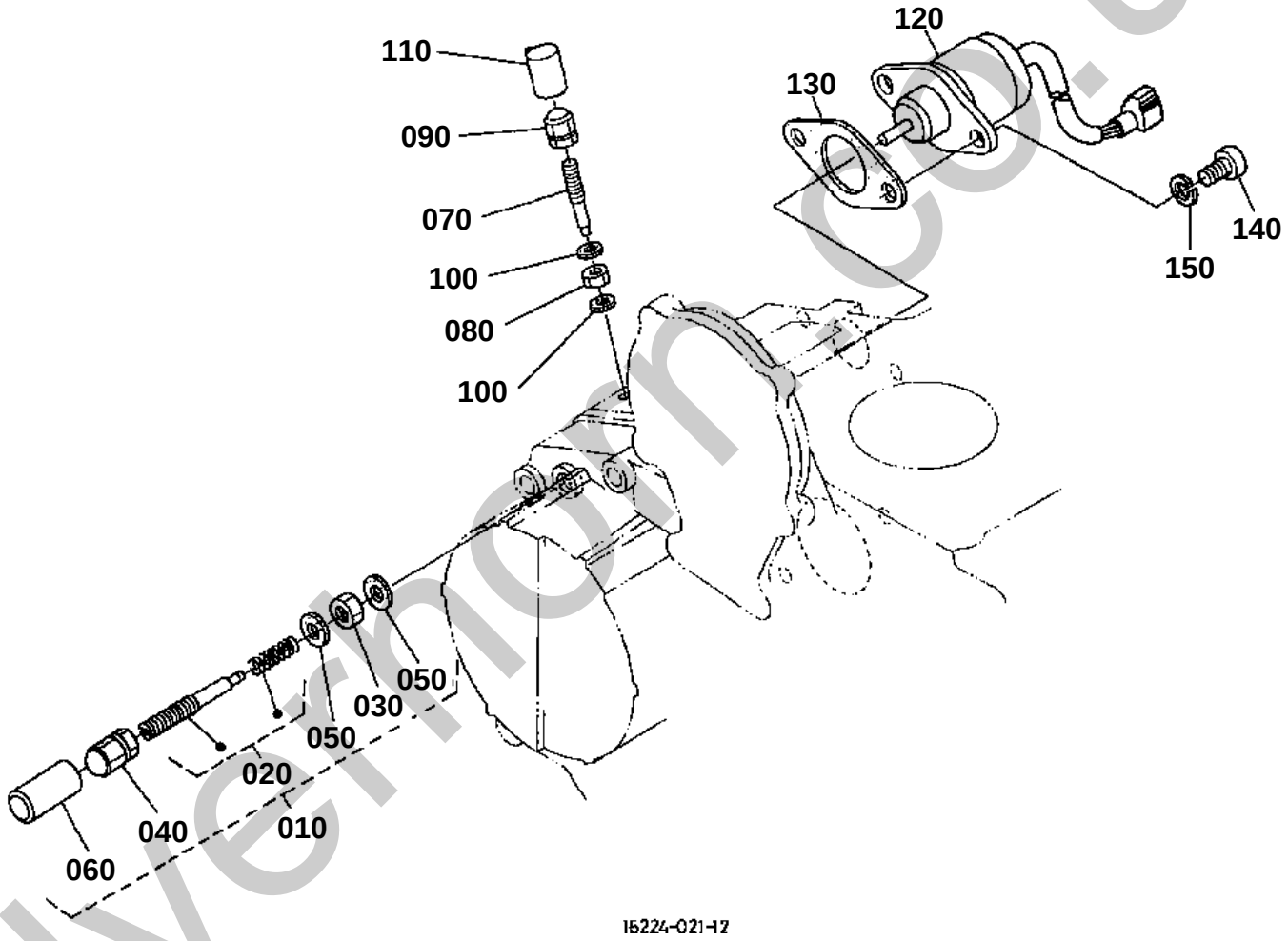

silvermoon.co.uk

120 16616-6001-0

140 01023-50614

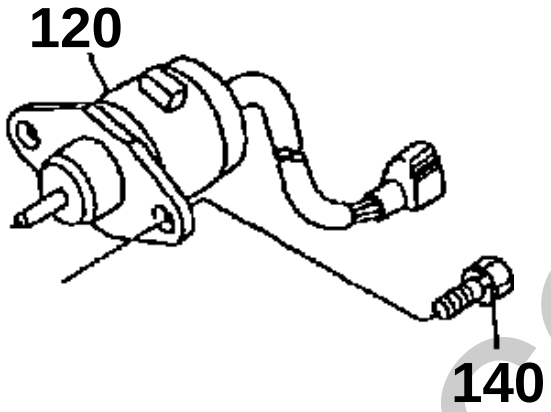

16220-802-11

silverhorn.co.uk

STOP SOLENOID

↔ Interchangeable; ≠ not interchangeable; ← new for old; → old for new

REF.No	Part No.	Description	Q'ty	S.No.	I/C	REMARKS	Weight (kgf)	Weight (lb)
010	16271-54090	APPARATUS FUEL LIMIT	1				0.029	0.0638
020	16241-54102	ASSY BOLT ADJUSTING	1				0.008	0.0176
030	15841-92020	NUT	1				0.004	0.0088
040	15841-92330	NUT	1				0.006	0.0132
050	15601-96650	GASKET	2				0.001	0.0022
060	16241-54420	CAP	1	<=645957			0.004	0.0088
060	16221-54420	CAP	1	>=645958	↔		0.001	0.0022
070	16241-54120	BOLT ADJUSTING	1				0.005	0.011
080	15841-92020	NUT	1				0.004	0.0088
090	15841-92330	NUT	1				0.006	0.0132
100	15601-96650	GASKET	2				0.001	0.0022
110	16241-54420	CAP	1	<=645957			0.004	0.0088
110	16221-54420	CAP	1	>=645958	↔		0.001	0.0022
120	16616-60010	SOLENOID STOP	1	<=741870			0	0
120	16616-60010	SOLENOID STOP	1	>=10001			0	0
120	17454-60010	SOLENOID STOP	1	>=82938	←		0.35	0.77
130	16299-60150	GASKET	1				0.003	0.0066
140	01023-50614	BOLT	2	<=741870			0.005	0.011
140	01023-50614	BOLT	2	>=10001			0.005	0.011
140	01311-10614	BOLT HEX-SOC-HD	2	>=95970	↔		0.005	0.011
150	04512-60060	WASHER SPRING	2	>=95970			0.001	0.0022

silverhorn.co.uk

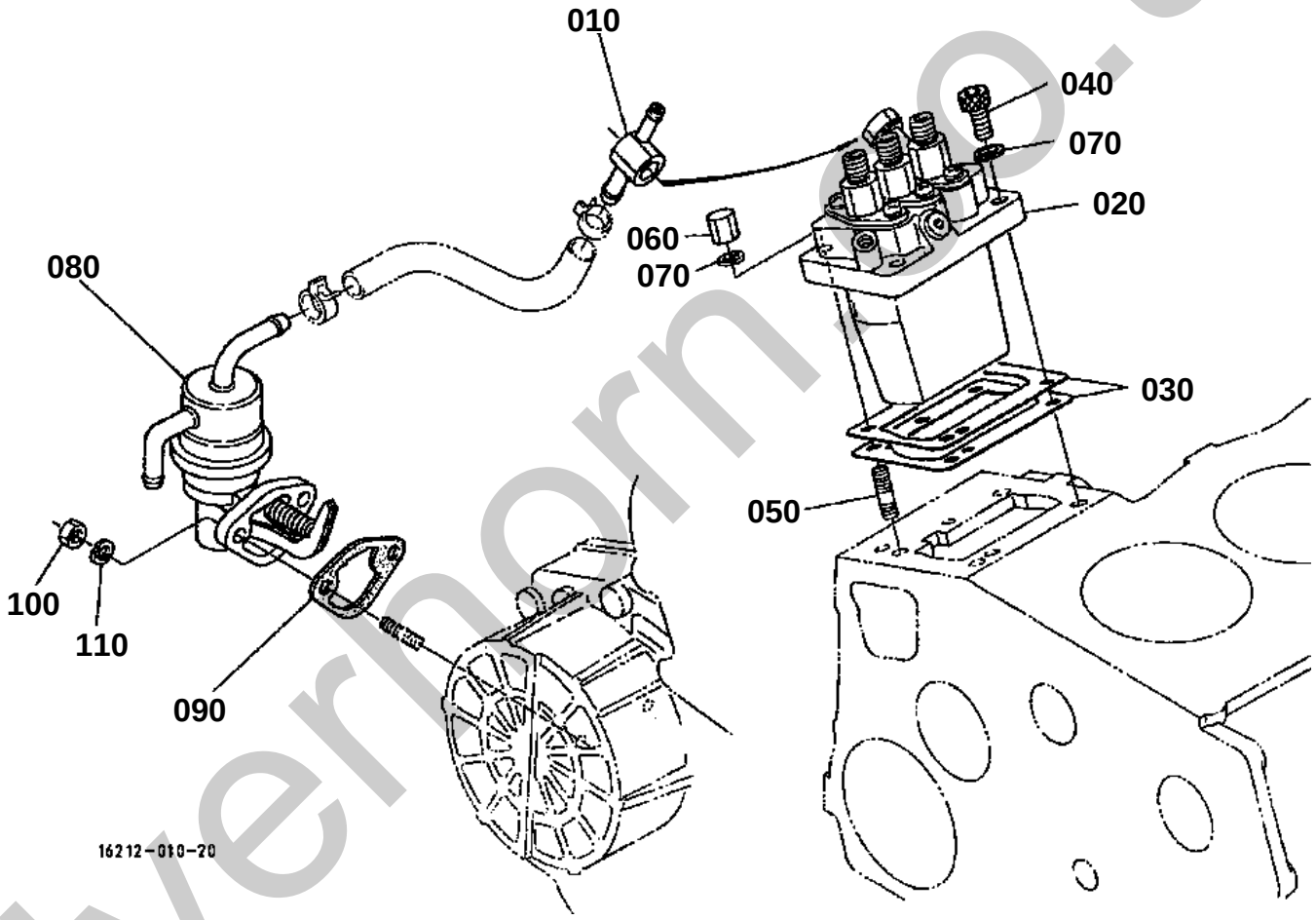

silverhorn.co.uk

↔ Interchangeable; ≠ not interchangeable; ← new for old; → old for new

REF.No	Part No.	Description	Q'ty	S.No.	I/C	REMARKS	Weight (kgf)	Weight (lb)
010	16271-95690	JOINT EYE	1				0.046	0.1012
020	16032-51010	ASSY PUMP INJECTION	1			REFER TO L.No.B08-R FOR COMPONENTS.	1	2.2
030	16006-52092	SHIM INJECTION PUMP	1			0.20MM	0.004	0.0088
030	16006-52112	SHIM INJECTION PUMP	1			0.25MM	0.004	0.0088
030	16006-52122	SHIM INJECTION PUMP	1			0.30MM	0.006	0.0132
040	01311-10620	BOLT HEX-SOC-HD	2				0.012	0.0264
050	15841-91500	STUD	2				0.04	0.088
060	15841-92320	NUT	2				0.01	0.022
070	04512-60060	WASHER SPRING	4				0.001	0.0022
080	16241-52032	ASSY PUMP FUEL	1				0.13	0.286
090	16264-52140	GASKET FUEL PUMP	1				0.001	0.0022
100	02056-50060	NUT	2				0.002	0.0044
110	04512-60060	WASHER SPRING	2				0.001	0.0022

silverhorn.co.uk

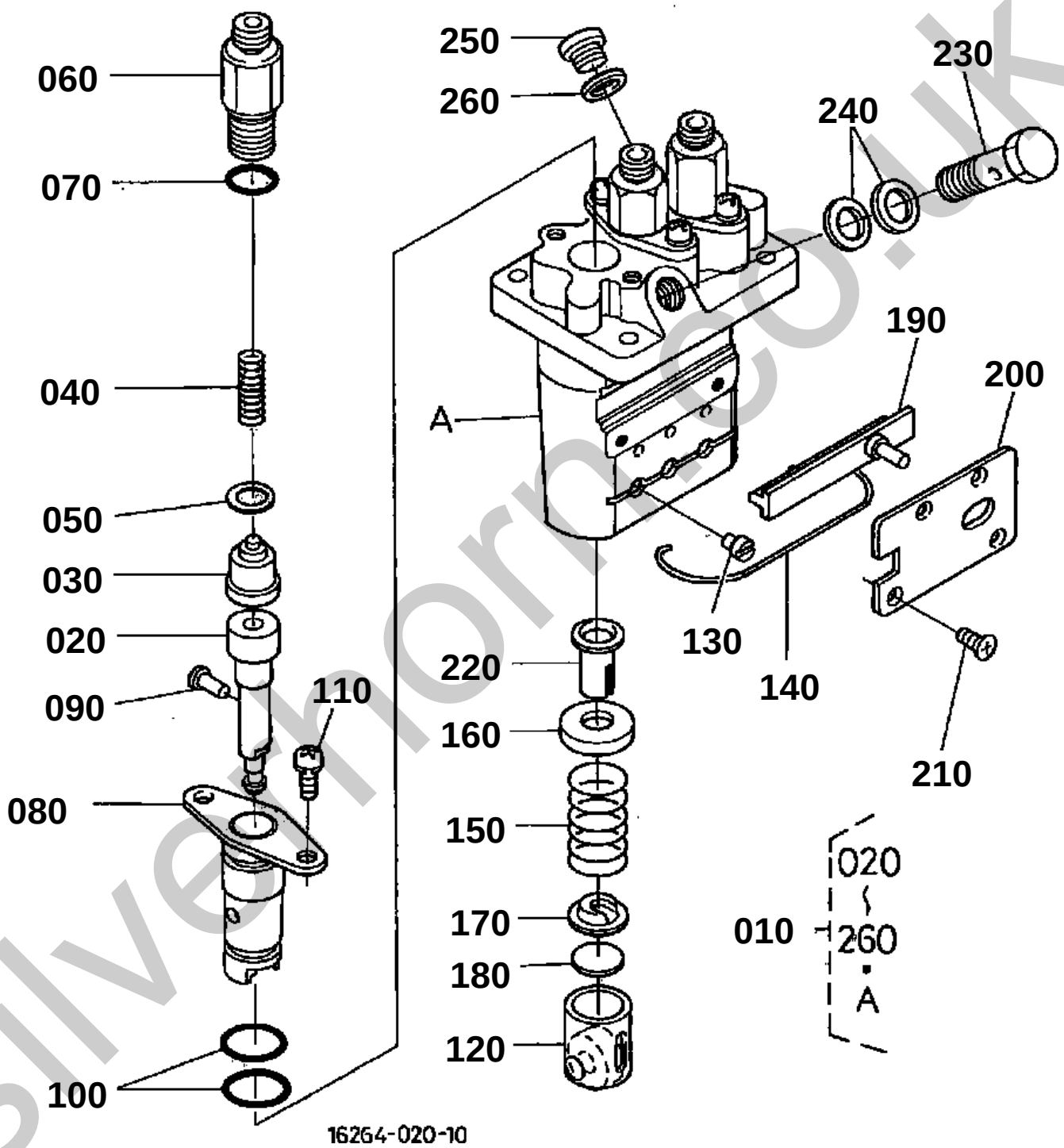

silverhorn.co.uk

↔ Interchangeable; ≠ not interchangeable; ← new for old; → old for new

REF.No	Part No.	Description	Q'ty	S.No.	I/C	REMARKS	Weight (kgf)	Weight (lb)
010	16032-51010	ASSY PUMP INJECTION	1				1	2.2
020	16030-51052	PLUNGER PUMP	3				0.024	0.0528
030	15841-51030	VALVE DELIVERY	3				0.015	0.033
040	15841-51230	SPRING DELIV.VALVE	3				0.004	0.0088
050	15841-51240	GASKET DELIV.VALVE	3				0.001	0.0022
060	16271-51220	HOLDER DELIV.VALVE	3				0.045	0.099
070	15841-96760	O RING	3				0.001	0.0022
080	15841-51560	FLANGE SLEEVE	3				0.06	0.132
090	15841-94570	PIN JOINT	3				0.001	0.0022
100	15841-51200	O RING	6				0.001	0.0022
110	15862-91430	SCREW	6				0.01	0.022
120	15841-51070	ASSY TAPPET	3				0.03	0.066
130	15841-51250	PIN TAPPET GUIDE	3				0.001	0.0022
140	15861-51430	PIN CLAMP	1				0.002	0.0044
150	15841-51280	SPRING PLUNGER	3				0.015	0.033
160	15841-51270	SEAT SPRING UPPER	3				0.005	0.011
170	15841-51290	SEAT SPRING LOWER	3				0.005	0.011
180	15841-51490	SHIM	3				0.005	0.011
190	16030-51060	RACK CONTROL	1				0.027	0.0594
200	16030-51540	PLATE	1				0.035	0.077
210	15841-93110	SCREW CSK-HD	4				0.001	0.0022
220	15841-51380	SLEEVE CONTROL	3				0.006	0.0132
230	16271-51320	SCREW FOLLOW	1				0.031	0.0682
240	15841-96650	GASKET	2				0.001	0.0022
250	16030-96010	PLUG	1				0.008	0.0176
260	15861-96650	GASKET	1				0.001	0.0022

silverhorn.co.uk

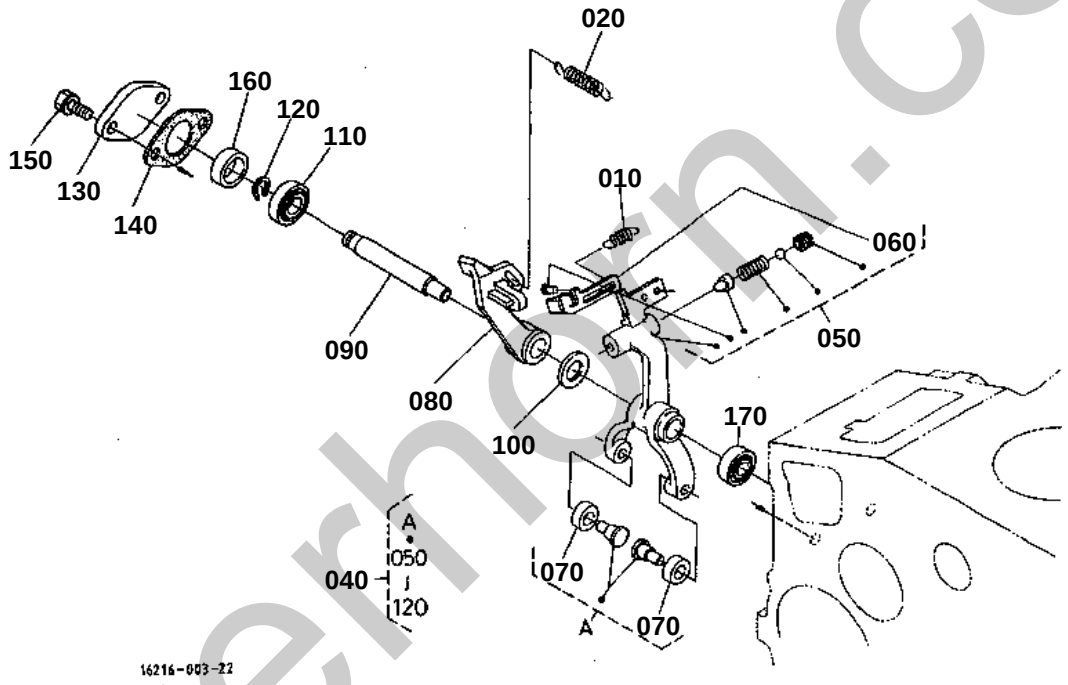

silverhorn.co.uk

030 16271-5642-0

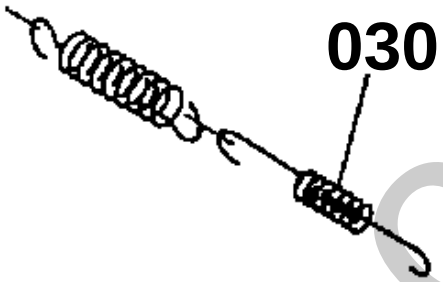

16216-801-10

silverhorn.co.uk

GOVERNOR

↔ Interchangeable; ≠ not interchangeable; ← new for old; → old for new

REF.No	Part No.	Description	Q'ty	S.No.	I/C	REMARKS	Weight (kgf)	Weight (lb)
010	16261-56480	SPRING START	1				0.002	0.0044
020	16271-56412	SPRING GOVERNOR	1	<=WJ9533			0	0
020	16271-56413	SPRING GOVERNOR	1	>=WL0001	←		0.02	0.044
020	16271-56414	SPRING GOVERNOR	1	>=XG0001	≠		0.022	0.0484
020	1G043-56410	SPRING GOVERNOR	1	>=YA0001	≠		0	0
030	16271-56420	SPRING GOVERNOR	1	<=XK9999			0.005	0.011
040	16216-56050	ASSY LEVER FORK	1	<=WX2480			0	0
040	16216-56054	ASSY LEVER FORK	1	>=WY0001	←		0.25	0.55
050	16216-56040	COMP.LEVER FORK	1	<=WX2480			0	0
050	16216-56044	COMP.LEVER FORK	1	>=WY0001	←		0.13	0.286
060	16261-56210	LEVER THRUST	1	<=702846			0.005	0.011
060	16271-56210	LEVER THRUST	1	>=702847	↔		0.008	0.0176
060	16271-56214	LEVER THRUST	1	>=WY0001	←		0.01	0.022
070	19484-55440	ROLLER	2				0.005	0.011
080	16271-56132	LEVER FORK	1	<=WM1322			0	0
080	16222-56130	LEVER FORK	1	>=WN0001	↔		0.06	0.132
090	16241-56153	SHAFT FORK LEVER	1				0.04	0.088
100	16241-94010	WASHER PLAIN	1				0.002	0.0044
110	16241-56330	BEARING MINIATURIZE	1				0.007	0.0154
120	04612-00090	CIR CLIP EXTERNAL	1				0.001	0.0022
130	16241-56250	COVER FORK LEV.SHAFT	1				0.013	0.0286
140	16299-56260	GASKET	1				0.002	0.0044
150	01023-50614	BOLT	2				0.005	0.011
160	16241-56210	COLLAR	1				0.008	0.0176
170	16241-56340	BEARING MINIATURIZE	1				0.007	0.0154

silverhorn.co.uk

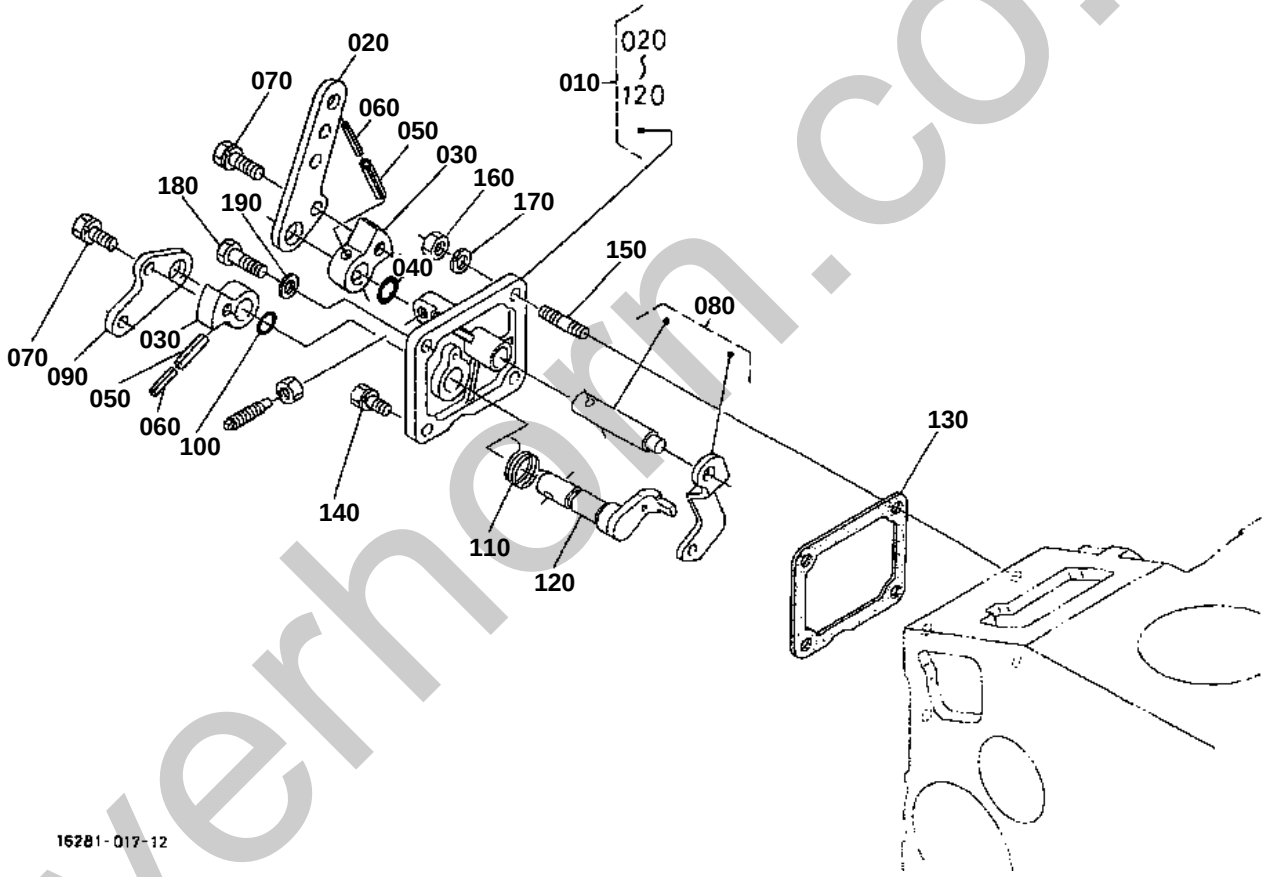

silverhorn.co.uk

SPEED CONTROL PLATE

↔ Interchangeable; ≠ not interchangeable; ← new for old; → old for new

REF.No	Part No.	Description	Q'ty	S.No.	I/C	REMARKS	Weight (kgf)	Weight (lb)
010	16231-57016	ASSY PLATE CONTROL	1				0.34	0.748
020	16205-57150	LEVER SPEED CONTROL	1				0.033	0.0726
030	16205-57160	LEVER SPEED CONTROL	2				0.03	0.066
040	04814-00100	O RING	1				0.001	0.0022
050	05411-00420	PIN SPRING	2				0.001	0.0022
060	05411-02520	PIN SPRING	2				0.001	0.0022
070	01023-50612	BOLT	2				0.005	0.011
080	16205-56020	COMP.LEVER GOVERNOR	1				0.02	0.044
090	16234-57720	LEVER ENGINE STOP	1				0.03	0.066
100	19202-96750	O RING	1	<=WJ9533			0.001	0.0022
100	04814-10070	O RING	1	>=WL0001	≠		0.001	0.0022
110	16205-57510	SPRING RETURN	1				0.002	0.0044
120	16205-57740	COMP.LEVER STOP	1				0.046	0.1012
130	16264-57210	GASKET	1				0.002	0.0044
140	01023-50616	BOLT	2	<=741870			0.005	0.011
140	01023-50616	BOLT	2	>=10001			0.005	0.011
140	01023-50616	BOLT	1	>=89030			0.005	0.011
145	01053-50618	BOLT	1	>=89030			0.006	0.0132
150	01513-50616	BOLT STUD	2	<=WH4333			0.004	0.0088
150	16245-91540	STUD	2	>=WJ0001	≠		0.005	0.011
160	02056-50060	NUT	2				0.002	0.0044
170	04512-60060	WASHER SPRING	2				0.001	0.0022
180	15601-96650	GASKET	1	>=89030			0.001	0.0022

silverhorn.co.uk

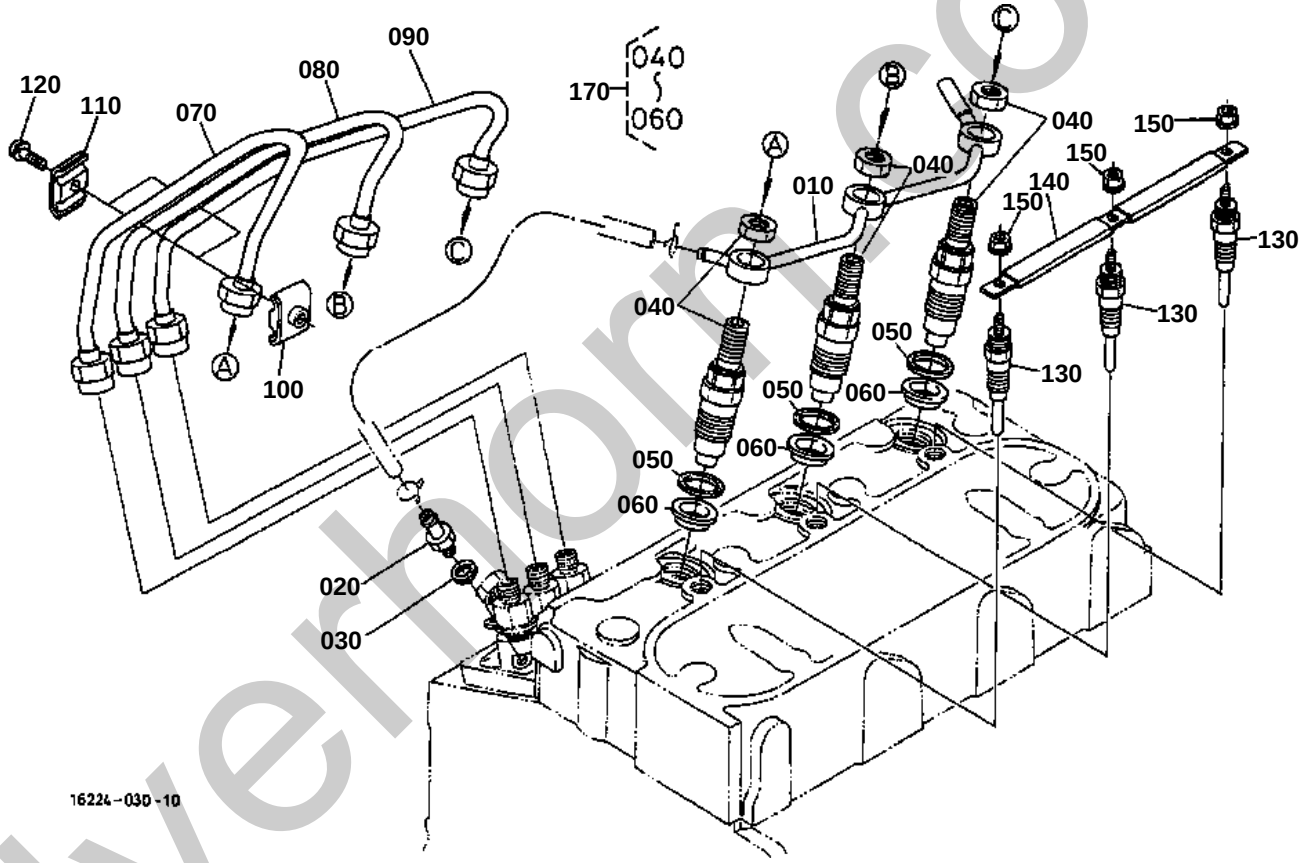

silverhorn.co.uk

160 04013-60040

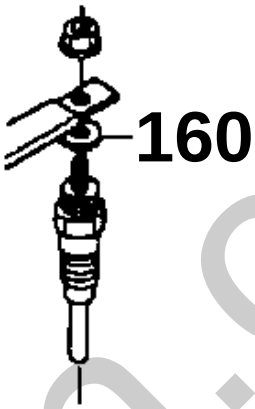

16224-806-10

silverhorn.co.uk

NOZZLE HOLDER AND GLOW PLUG

↔ Interchangeable; ≠ not interchangeable; ← new for old; → old for new

REF.No	Part No.	Description	Q'ty	S.No.	I/C	REMARKS	Weight (kgf)	Weight (lb)
010	16261-42502	ASSY PIPE OVER FLOW	1				0.04	0.088
020	15841-51360	SCREW AIR BREEDER	1				0.008	0.0176
030	15601-96650	GASKET	1				0.001	0.0022
040	16032-53000	ASSY HOLDER NOZZLE	3			REFER TO L.No.B10-R FOR COMPONENTS.	0.14	0.308
050	15841-53622	GASKET	3				0.002	0.0044
060	19077-53650	SEAL HEAT	3				0.005	0.011
070	16231-53712	PIPE INJECTION	1				0.12	0.264
080	16231-53722	PIPE INJECTION	1				0.12	0.264
090	16231-53732	PIPE INJECTION	1				0.12	0.264
100	15841-53850	CLAMP PIPE	2				0.01	0.022
110	15841-53860	CLAMP PIPE	2				0.009	0.0198
120	03024-50520	SCREW WITH WASHER	2				0.004	0.0088
130	16851-65510	GLOW PLUG	3				0.02	0.044
140	16261-65560	CORD GLOW PLUG	1				0.01	0.022
150	02761-50040	NUT FLANGE	3				0.002	0.0044
160	04013-60040	WASHER PLAIN	3	<=XS9983			0.002	0.0044
170	16032-53900	KIT HOLDER NOZZLE	3				0.16	0.352

silverhorn.co.uk

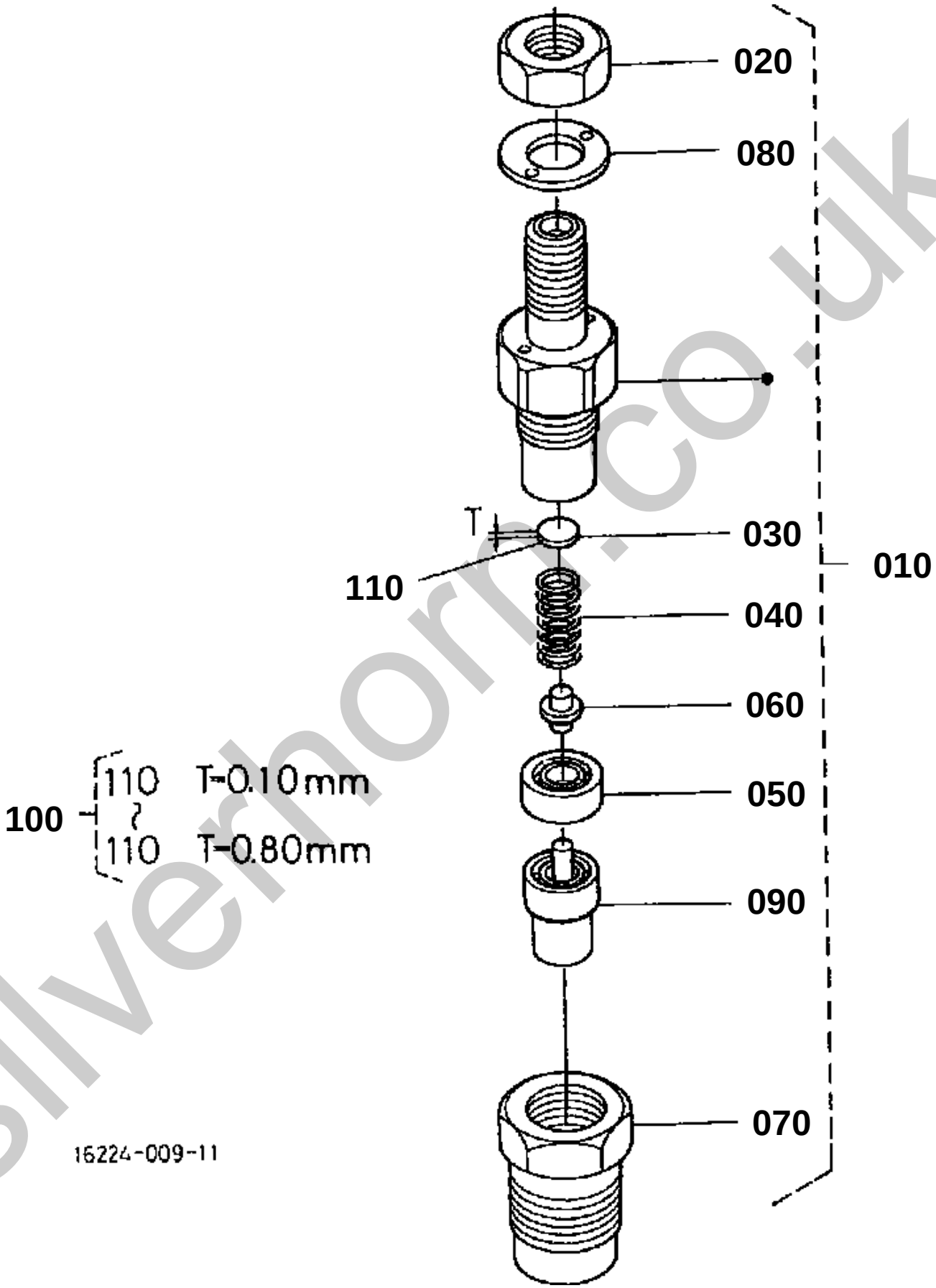

silverhorn.co.uk

NOZZLE HOLDER [COMPONENT PARTS]

↔ Interchangeable; ≠ not interchangeable; ← new for old; → old for new

REF.No	Part No.	Description	Q'ty	S.No.	I/C	REMARKS	Weight (kgf)	Weight (lb)
010	16032-53000	ASSY HOLDER NOZZLE	3				0.14	0.308
020	16032-92030	NUT	3				0.007	0.0154
030	16032-53230	WASHER ADJUSTING	3				0.001	0.0022
040	16032-53170	SPRING NOZZLE	3				0.007	0.0154
050	16032-53350	SPACER DISTANCE	3				0.02	0.044
060	16032-53160	PUSH ROD	3				0.001	0.0022
070	16032-53280	NUT NOZZLE	3				0.037	0.0814
080	16032-94040	WASHER PLAIN	3				0.002	0.0044
090	16032-53610	PIECE NOZZLE	3				0.021	0.0462
100	16032-98100	ASSY WASHER ADJUST	3			OPTION	0.016	0.0352
110	16032-98500	WASHER ADJUSTING	3			0.10MM	0.001	0.0022
110	16032-98510	WASHER ADJUSTING	3			0.20MM	0.001	0.0022
110	16032-98520	WASHER ADJUSTING	3			0.30MM	0.001	0.0022
110	16032-98530	WASHER ADJUSTING	3			0.40MM	0.001	0.0022
110	16032-98540	WASHER ADJUSTING	3			0.50MM	0.001	0.0022
110	16032-98550	WASHER ADJUSTING	3			0.52MM	0.001	0.0022
110	16032-98560	WASHER ADJUSTING	3			0.54MM	0.001	0.0022
110	16032-98570	WASHER ADJUSTING	3			0.56MM	0.001	0.0022
110	16032-98580	WASHER ADJUSTING	3			0.58MM	0.001	0.0022
110	16032-98590	WASHER ADJUSTING	3			0.80MM	0.001	0.0022

silverhorn.co.uk

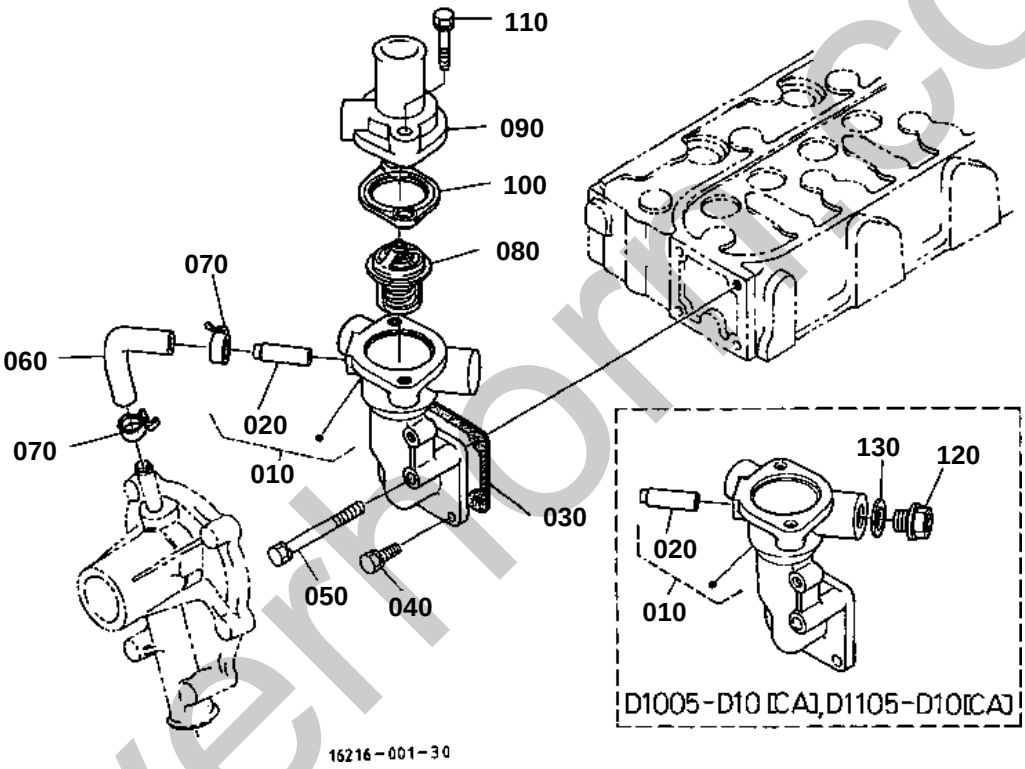

silverhorn.co.uk

010 16241-7270-4

010 16241-7270-5

090 16271-7326-0

100 15676-7327-0

110 01023-50632

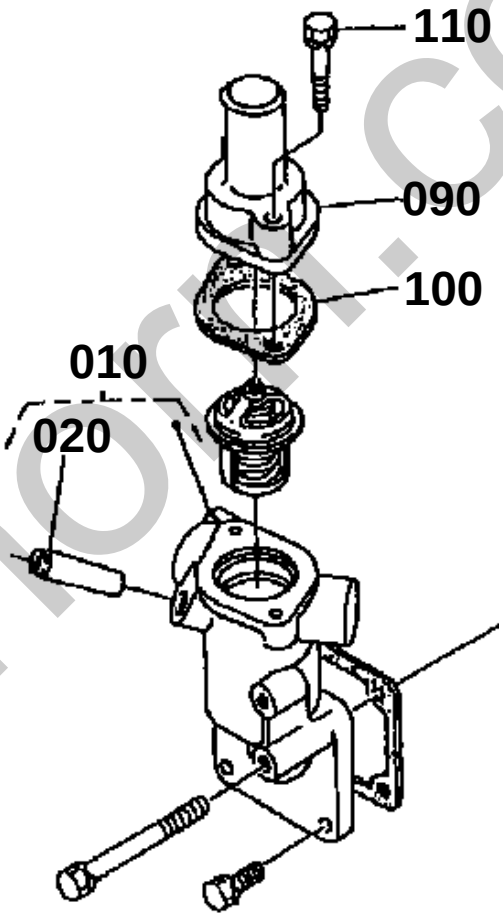

16216-802-10

silverhorn.co.uk

WATER FLANGE AND THERMOSTAT

↔ Interchangeable; ≠ not interchangeable; ← new for old; → old for new

REF.No	Part No.	Description	Q'ty	S.No.	I/C	REMARKS	Weight (kgf)	Weight (lb)
010	16241-72704	COMP FLANGE WATER	1	<=658105		[A]	0	0
010	16241-72705	COMP FLANGE WATER	1	>=658106	←	[A]	0	0
010	16241-72705	COMP FLANGE WATER	1	<=741870		[A]	0	0
010	16241-72705	COMP FLANGE WATER	1	>=10001		[A]	0	0
010	16203-72700	COMP FLANGE WATER	1	>=110327	≠	[A]	0.284	0.6248
010	16241-72704	COMP FLANGE WATER	1	<=658105		[CA]	0	0
010	16241-72705	COMP FLANGE WATER	1	>=658106	←	[CA]	0	0
010	16241-72705	COMP FLANGE WATER	1	<=741870		[CA]	0	0
010	16241-72705	COMP FLANGE WATER	1	>=10001		[CA]	0	0
010	16203-72700	COMP FLANGE WATER	1	>=110327	≠	[CA]	0.284	0.6248
020	16241-73370	PIPE WATER RETURN	1				0.007	0.0154
030	16264-72920	GASKET WATER FLANGE	1				0.001	0.0022
040	01023-50616	BOLT	3				0.005	0.011
050	01023-50655	BOLT	1				0.012	0.0264
060	16241-73350	PIPE WATER RETURN	1				0.015	0.033
070	16241-73360	BAND PIPE	2				0.003	0.0066
080	15531-73010	ASSY THERMOSTAT	1	<=741870			0.07	0.154
080	15531-73010	ASSY THERMOSTAT	1	>=10001			0.07	0.154
080	15321-73010	ASSY THERMOSTAT	1	>=110327	≠		0.068	0.1496
090	16271-73260	COVER THERMOSTAT	1	<=741870			0.06	0.132
090	16271-73260	COVER THERMOSTAT	1	>=10001			0.06	0.132
090	16219-73260	COVER THERMOSTAT	1	>=110327	≠		0.094	0.2068
100	15676-73270	GASKET	1	<=741870			0.005	0.011
100	15676-73270	GASKET	1	>=10001			0.005	0.011
100	15313-73270	GASKET THERMOSTAT	1	>=110327	≠		0.001	0.0022
100	16221-73270	GASKET THERMOSTAT	1	>=WY0001	↔		0.003	0.0066
110	01023-50632	BOLT	2	<=741870			0.01	0.022
110	01023-50632	BOLT	2	>=10001			0.01	0.022
110	01123-50835	BOLT	2	>=110327	≠		0.02	0.044

silverhorn.co.uk

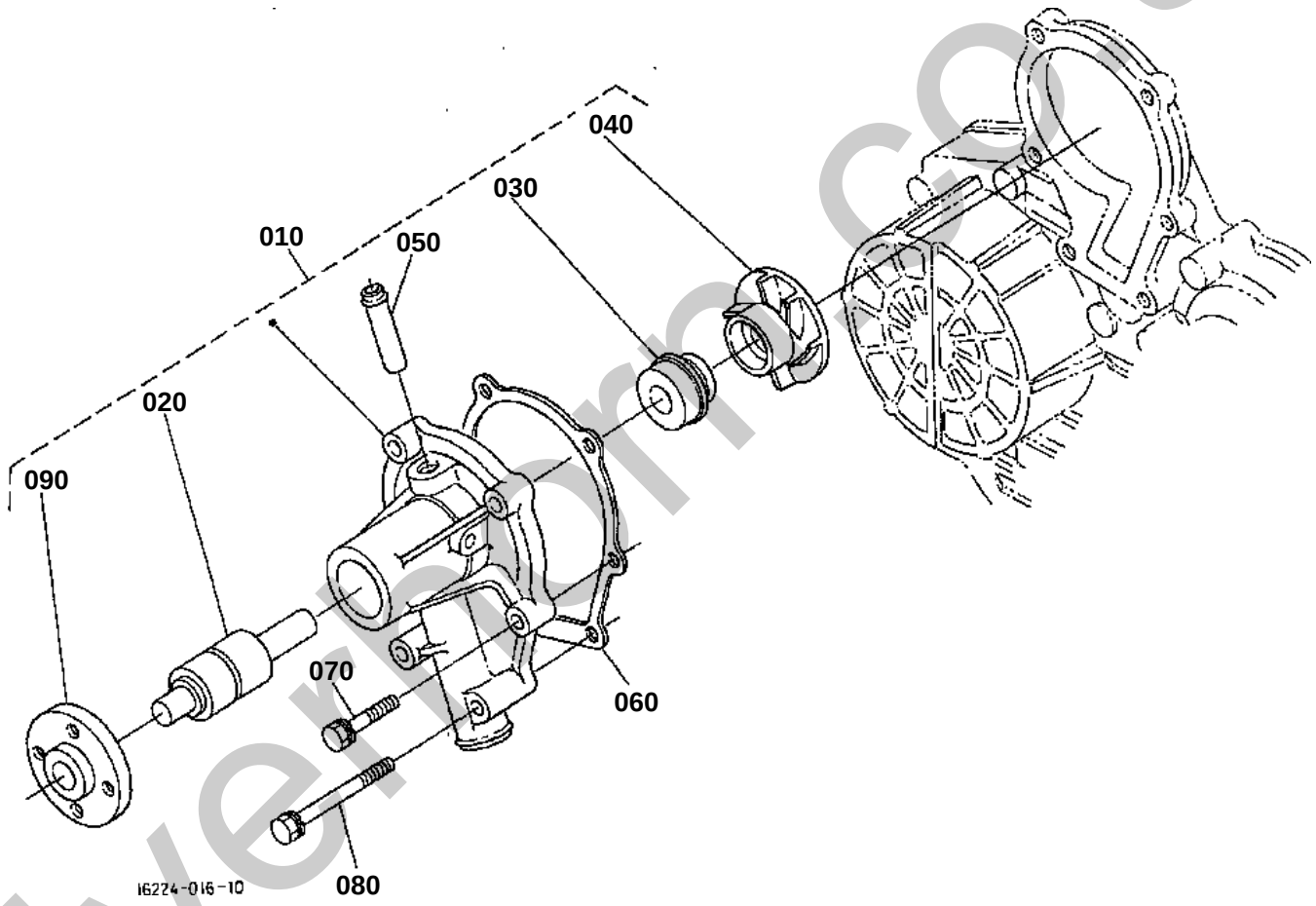

silverhorn.co.uk

WATER PUMP

↔ Interchangeable; ≠ not interchangeable; ← new for old; → old for new

REF.No	Part No.	Description	Q'ty	S.No.	I/C	REMARKS	Weight (kgf)	Weight (lb)
010	16251-73030	ASSY PUMP WATER	1	<=681218			0	0
010	16251-73032	ASSY PUMP WATER	1	>=681219	→		0.9	1.98
020	16259-73550	BEARING	1				0.21	0.462
030	15481-73050	ASSY SEAL MECHANICAL	1				0.02	0.044
040	16251-73510	IMPELLER WATER PUMP	1				0.075	0.165
050	16241-73340	PIPE WATER RETURN	1				0.006	0.0132
060	16261-73430	GASKET WATER PUMP	1	<=741870			0.001	0.0022
060	16261-73430	GASKET WATER PUMP	1	>=10001			0.001	0.0022
060	16251-73430	GASKET WATER PUMP	1	>=95970	↔		0.005	0.011
070	01023-50630	BOLT	4				0.008	0.0176
080	01023-50685	BOLT	2				0.018	0.0396
090	16259-73520	FLANGE WATER PUMP	1				0.15	0.33

silverhorn.co.uk

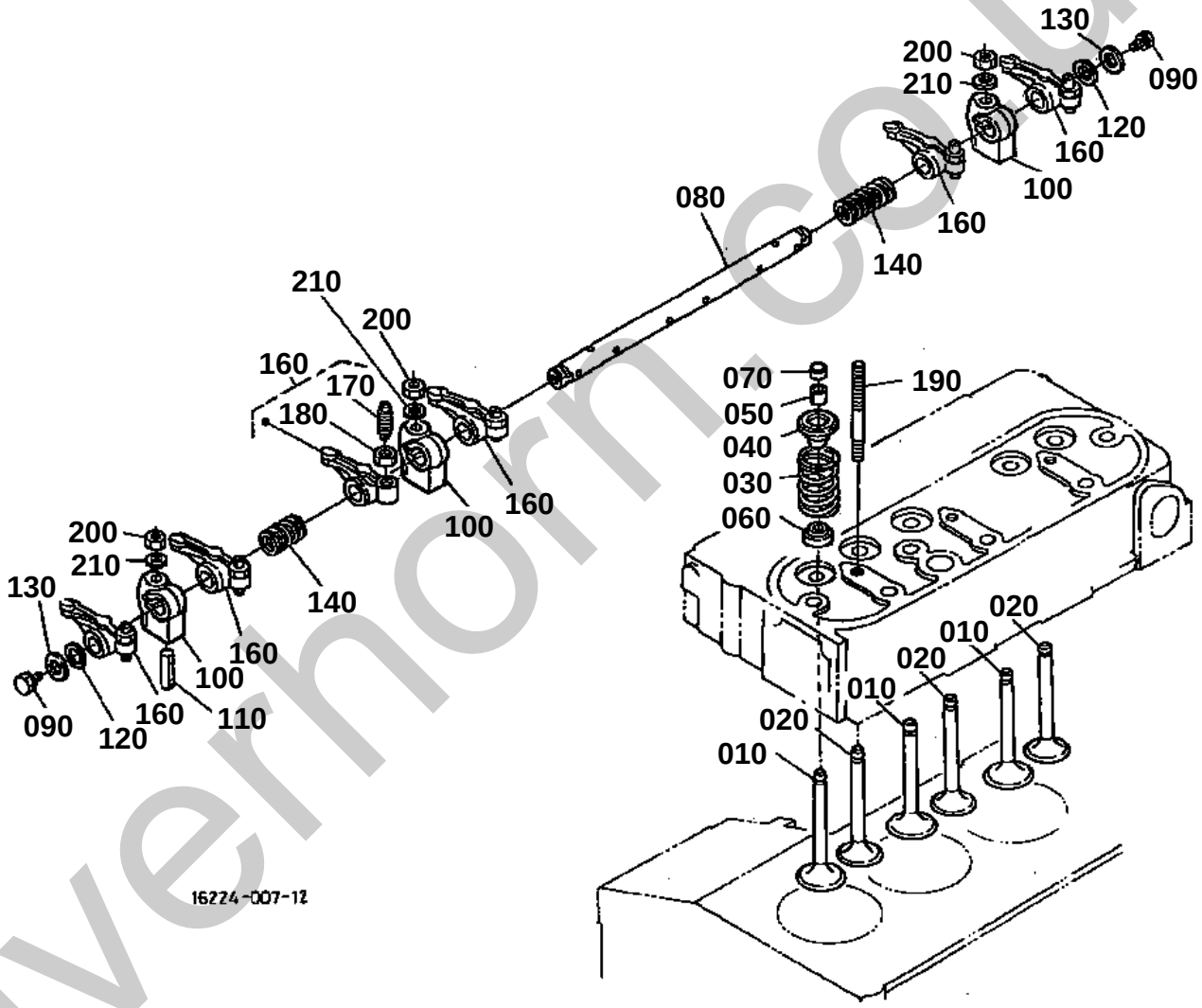

silverhorn.co.uk

080 16261-1405-0

090 03410-50606

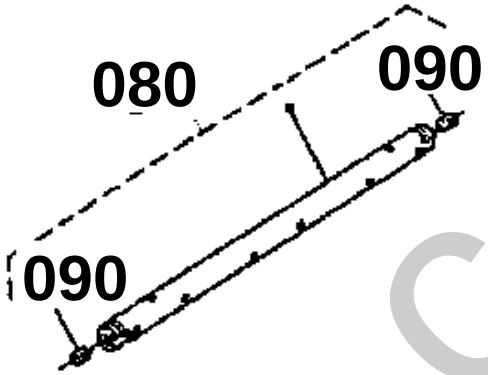

110 15261-1442-0

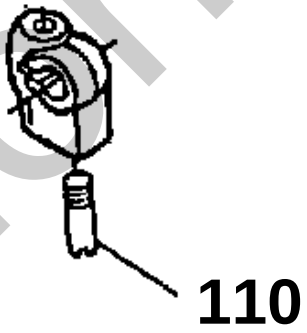

150 04612-00120

16212-802-10

silverhorn.co.uk

VALVE AND ROCKER ARM

↔ Interchangeable; ≠ not interchangeable; ← new for old; → old for new

REF.No	Part No.	Description	Q'ty	S.No.	I/C	REMARKS	Weight (kgf)	Weight (lb)
010	16241-13110	VALVE INLET	3				0.05	0.11
020	16241-13120	VALVE EXHAUST	3				0.045	0.099
030	16271-13240	SPRING VALVE	6				0.015	0.033
040	16241-13330	RETAINER VALVE SP.	6				0.012	0.0264
050	15261-13360	COLLET VALVE SPRING	6			SET	0.004	0.0088
060	16241-13150	SEAL VALVE STEM	6	<=741870			0.002	0.0044
060	16241-13150	SEAL VALVE STEM	6	>=10001			0.002	0.0044
060	1C010-13150	SEAL VALVE STEM	6	>=116860	↔		0.002	0.0044
070	16241-13280	CAP VALVE	6				0.005	0.011
080	16261-14050	ASSY SHAFT R-ARM	1	<=WD2848			0.17	0.374
080	16261-14264	SHAFT ROCKER ARM	1	>=WE0001	≠		0.16	0.352
090	03410-50606	SCREW SET	2	<=WD2848			0.001	0.0022
090	01023-50610	BOLT	2	>=WE0001	≠		0.005	0.011
100	16241-14350	BRACKET ROCKER ARM	3				0.04	0.088
110	15261-14420	SCREW SET.ROCKER ARM	1	<=WD2848			0.002	0.0044
110	05411-00428	PIN SPRING	1	>=WE0001	≠		0.002	0.0044
120	16241-14430	WASHER R-ARM.SHAFT	2				0.002	0.0044
130	16241-14440	WASHER R-ARM.SHAFT	2	<=WD2848			0.002	0.0044
130	15841-94022	WASHER PLAIN	2	>=WE0001	≠		0.005	0.011
140	16241-14310	SPRING ROCKER ARM	2				0.004	0.0088
150	04612-00120	CIR CLIP EXTERNAL	2	<=WD2848			0.001	0.0022
160	16241-14030	ASSY ROCKER ARM	6	<=741870			0.06	0.132
160	16241-14030	ASSY ROCKER ARM	6	>=10001			0.06	0.132
160	16241-14032	ASSY ROCKER ARM	6	>=89030	≠		0.052	0.1144
170	16241-14230	SCREW ADJUSTING	6				0.008	0.0176
180	16241-14240	NUT	6				0.004	0.0088
190	16241-14410	STUD	3				0.022	0.0484
200	15261-92010	NUT	3				0.005	0.011
210	15261-94010	WASHER PLAIN	3				0.002	0.0044

silverhorn.co.uk

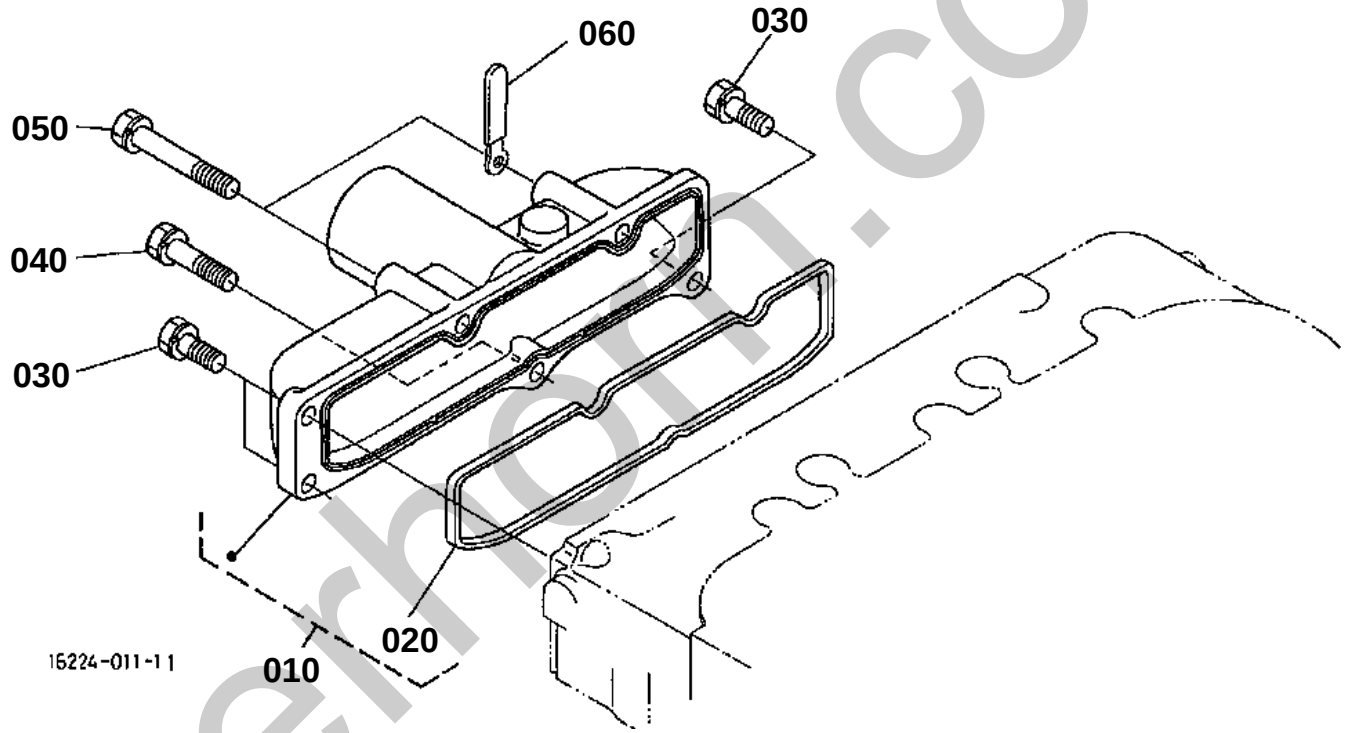

silverhorn.co.uk

INLET MANIFOLD

↔ Interchangeable; ≠ not interchangeable; ← new for old; → old for new

REF.No	Part No.	Description	Q'ty	S.No.	I/C	REMARKS	Weight (kgf)	Weight (lb)
010	16261-11770	ASSY MANIFOLD INLET	1				0.3	0.66
020	16261-11822	GASKET IN-MANIFOLD	1				0.01	0.022
030	01023-50618	BOLT	3				0.006	0.0132
040	01023-50630	BOLT	1				0.008	0.0176
050	01023-60650	BOLT	2				0.015	0.033
060	15272-67590	CLAMP CORD	1				0.004	0.0088

silverhorn.co.uk

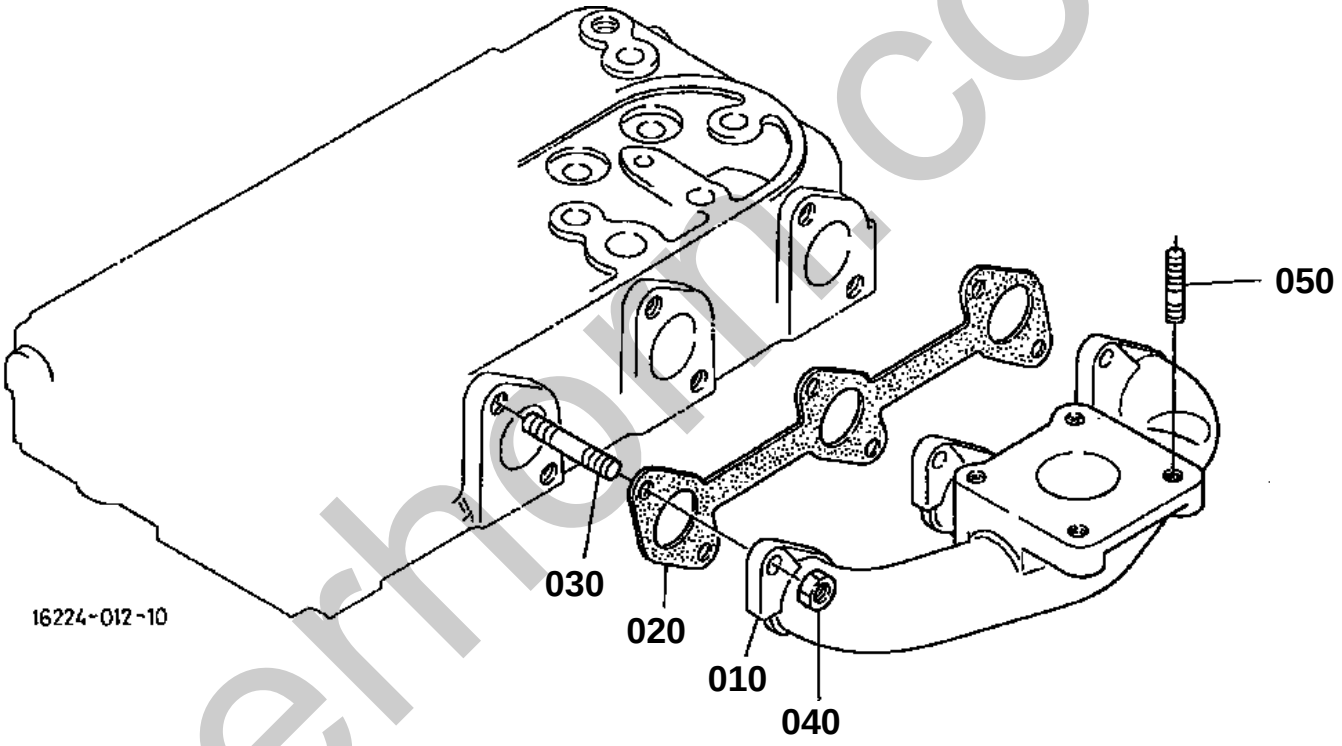

silverhorn.co.uk

EXHAUST MANIFOLD

↔ Interchangeable; ≠ not interchangeable; ← new for old; → old for new

REF.No	Part No.	Description	Q'ty	S.No.	I/C	REMARKS	Weight (kgf)	Weight (lb)
010	16265-12312	MANIFOLD EXHAUST	1				1.35	2.97
020	16261-12350	GASKET EX-MANIFOLD	1				0.019	0.0418
030	16241-91490	STUD	6				0.005	0.011
040	16271-92010	NUT	6				0.005	0.011
050	01513-50822	STUD	4	<=XZ0500			0.01	0.022
050	01513-50818	STUD	4	>=YA0001	≠		0.009	0.0198

silverhorn.co.uk

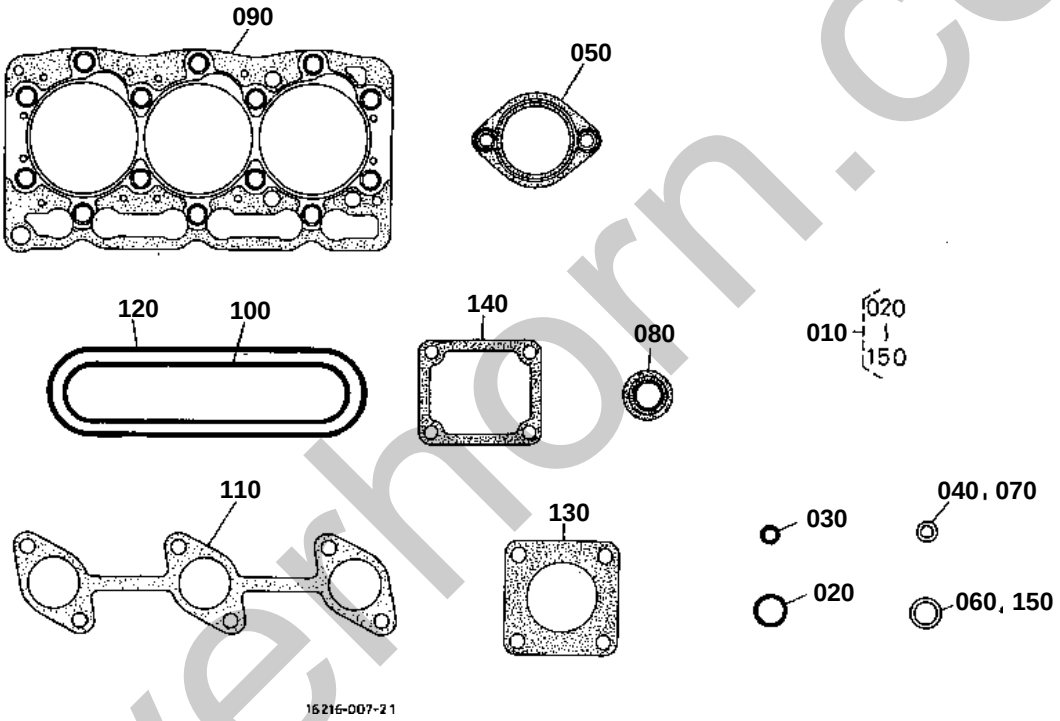

silverhorn.co.uk

UPPER GASKET KIT

↔ Interchangeable; ≠ not interchangeable; ← new for old; → old for new

REF.No	Part No.	Description	Q'ty	S.No.	I/C	REMARKS	Weight (kgf)	Weight (lb)
010	07916-27885	UPPER GASKET KIT	1				0.22	0.484
020	04811-50300	O RING	2				0.001	0.0022
030	15221-33700	O RING	1				0.001	0.0022
040	15601-96650	GASKET	1				0.001	0.0022
050	15676-73270	GASKET THERMOSTAT	1				0.005	0.011
060	15841-53622	GASKET	3				0.002	0.0044
070	15951-96660	GASKET	3				0.001	0.0022
080	16241-13150	SEAL VALVE STEM	6				0.002	0.0044
090	16221-03310	GASKET CYLINDER HEAD	1				0.075	0.165
100	16261-11822	GASKET IN-MANIFOLD	1				0.01	0.022
110	16261-12350	GASKET EX-MANIFOLD	1				0.019	0.0418
120	16261-14520	GASKET HEAD COVER	1				0.01	0.022
130	15263-12370	GASKET MUFFLER NA	1				0.015	0.033
140	16264-72920	GASKET WATER FLANGE	1				0.001	0.0022
150	16261-96710	GASKET	2				0.002	0.0044

silverhorn.co.uk

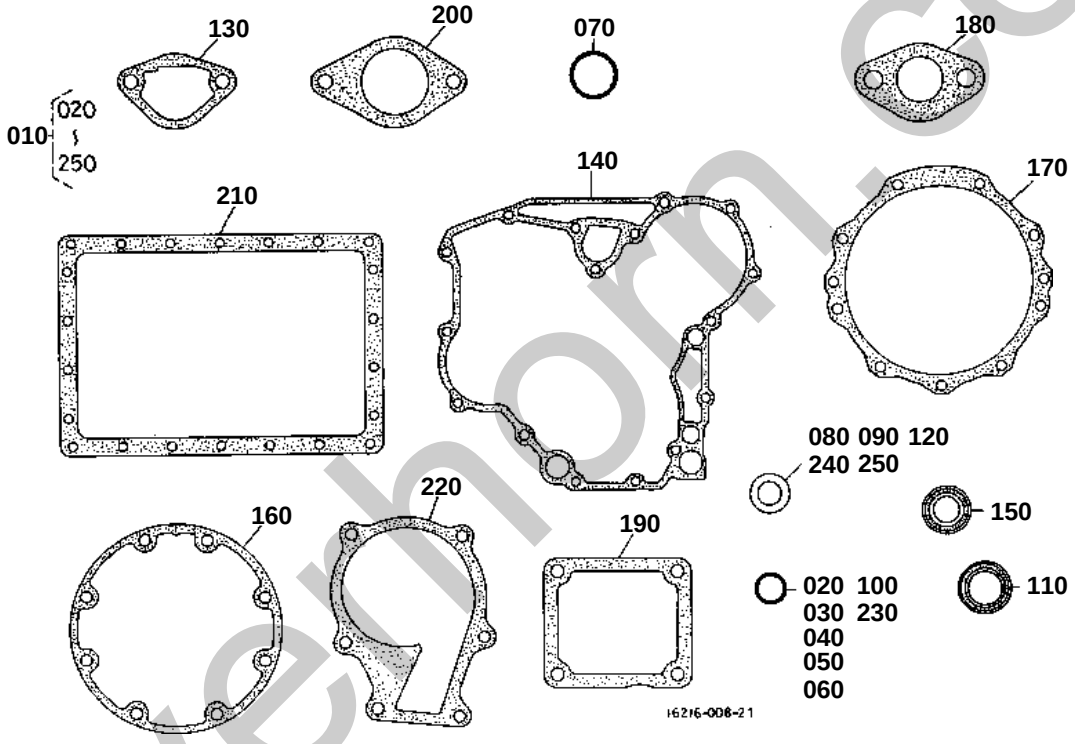

silverhorn.co.uk

LOWER GASKET KIT

↔ Interchangeable; ≠ not interchangeable; ← new for old; → old for new

REF.No	Part No.	Description	Q'ty	S.No.	I/C	REMARKS	Weight (kgf)	Weight (lb)
010	07916-27796	LOWER GASKET KIT	1				0.25	0.55
020	04814-00100	O RING	1				0.001	0.0022
030	04811-00150	O RING	2				0.001	0.0022
040	04811-00160	O RING	1				0.001	0.0022
050	04811-06100	O RING	2				0.001	0.0022
060	04811-10280	RING	1				0.001	0.0022
070	04811-10460	O RING	1				0.002	0.0044
080	15021-33660	GASKET	1				0.001	0.0022
090	15109-33660	GASKET	2				0.001	0.0022
100	04814-00090	O RING	1				0.001	0.0022
110	16271-04460	SEAL OIL	1				0.04	0.088
120	15601-96650	GASKET	5				0.001	0.0022
130	16264-52140	GASKET FUEL PUMP	1				0.001	0.0022
140	16264-04130	GASKET GEAR CASE	1				0.01	0.022
150	16241-04212	SEAL OIL	1				0.012	0.0264
160	16264-04360	GASKET BRG.CASE	1				0.002	0.0044
170	16264-04820	GASKET	1				0.008	0.0176
180	16299-56260	GASKET	1				0.002	0.0044
190	16264-57210	GASKET	1				0.002	0.0044
200	16264-88130	GASKET H/METER UNIT	1				0.002	0.0044
210	16266-01620	GASKET OIL PAN	1				0.028	0.0616
220	16261-73430	GASKET WATER PUMP	1				0.001	0.0022
230	19202-96750	O RING	1				0.001	0.0022
240	04724-00100	GASKET	1				0.001	0.0022
250	1G031-96650	GASKET	1				0.001	0.0022

silverhorn.co.uk

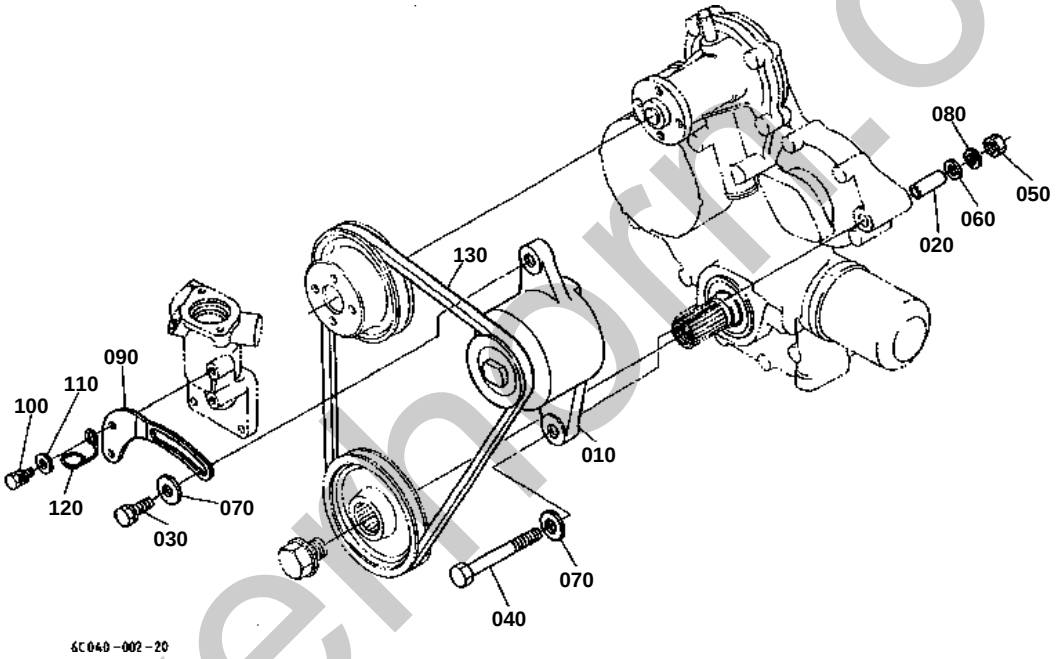

silverhorn.co.uk

↔ Interchangeable; ≠ not interchangeable; ← new for old; → old for new

REF.No	Part No.	Description	Q'ty	S.No.	I/C	REMARKS	Weight (kgf)	Weight (lb)
010	6C040-59250	ASSY DYNAMO	1			REFER TO L.No.C06-L FOR COMPONENTS.	1.33	2.926
020	6C040-59310	COLLAR	1				0.005	0.011
030	01123-50825	BOLT	1	<=741870			0.013	0.0286
030	01123-50825	BOLT	1	>=10001			0.013	0.0286
030	01123-50830	BOLT	1	>=139736	↔		0.015	0.033
040	01153-50860	BOLT	1				0.024	0.0528
050	02112-50080	NUT	1				0.003	0.0066
060	04012-50080	WASHER PLAIN	1				0.001	0.0022
070	04015-60080	WASHER PLAIN	1				0.01	0.022
080	04512-60080	WASHER SPRING	1				0.002	0.0044
090	16225-64420	STAY DYNAMO	1				0.08	0.176
100	01023-50618	BOLT	1				0.006	0.0132
110	04012-50060	WASHER PLAIN	1				0.001	0.0022
120	16271-83370	CLAMP CORD	1				0.005	0.011
130	19482-72530	BELT FAN	1				0.08	0.176

silverhorn.co.uk

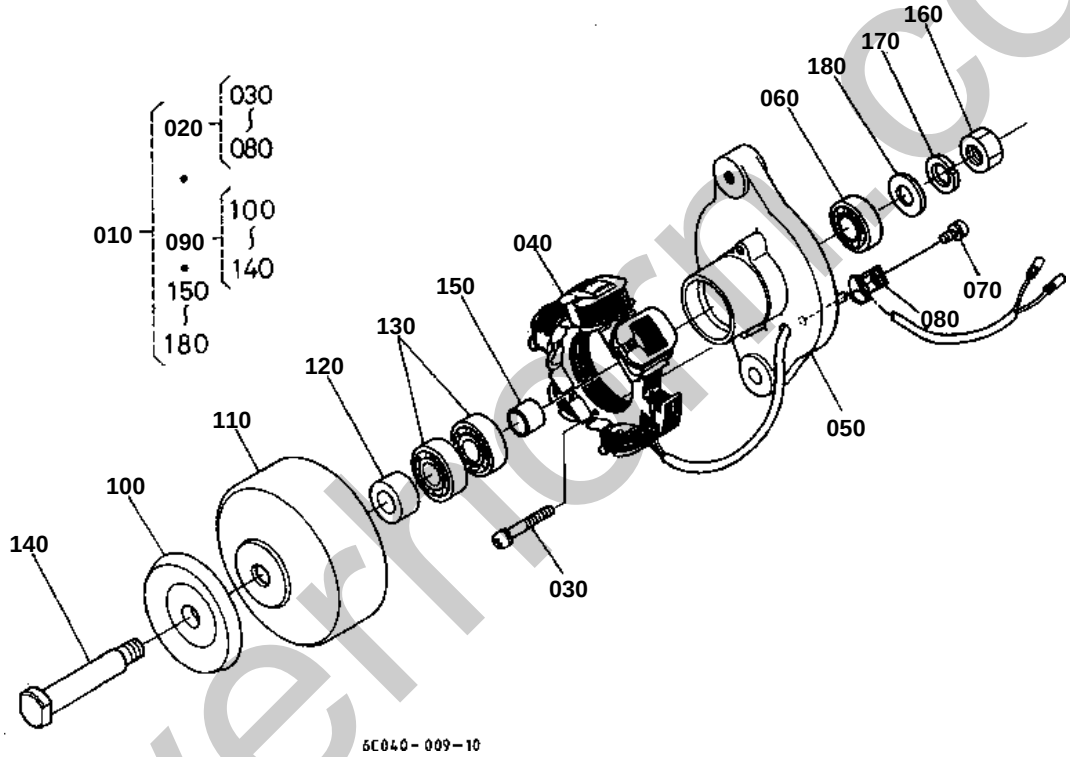

silverhorse.co.uk

↔ Interchangeable; ≠ not interchangeable; ← new for old; → old for new

REF.No	Part No.	Description	Q'ty	S.No.	I/C	REMARKS	Weight (kgf)	Weight (lb)
010	6C040-59250	ASSY DYNAMO	1				1.33	2.926
020	6C040-59260	COMP.STATOR	1				0.55	1.21
030	15261-93010	SCREW ROUND HEAD	2				0.003	0.0066
040	15531-64292	STATOR	1				0.29	0.638
050	6C040-82880	PLATE	1				0.267	0.5874
060	15531-74180	BEARING BALL	1				0.04	0.088
070	15531-93010	SCREW ROUND HEAD	1				0.002	0.0044
080	15531-64190	CLAMP CORD	1				0.005	0.011
090	6C040-59270	COMP.FLYWHEEL	1				0.75	1.65
100	15531-64110	PULLEY	1				0.15	0.33
110	6C040-82850	FLYWHEEL DYNAMO	1				0.48	1.056
120	6C040-82860	COLLAR	1				0.014	0.0308
130	15531-74180	BEARING BALL	2				0.04	0.088
140	6C040-82870	SHAFT	1				0.075	0.165
150	15261-64150	COLLAR	1				0.02	0.044
160	15261-92030	NUT	1				0.01	0.022
170	15261-94070	WASHER SPRING	1				0.003	0.0066
180	15261-94020	WASHER PLAIN	1				0.007	0.0154

silverhorn.co.uk

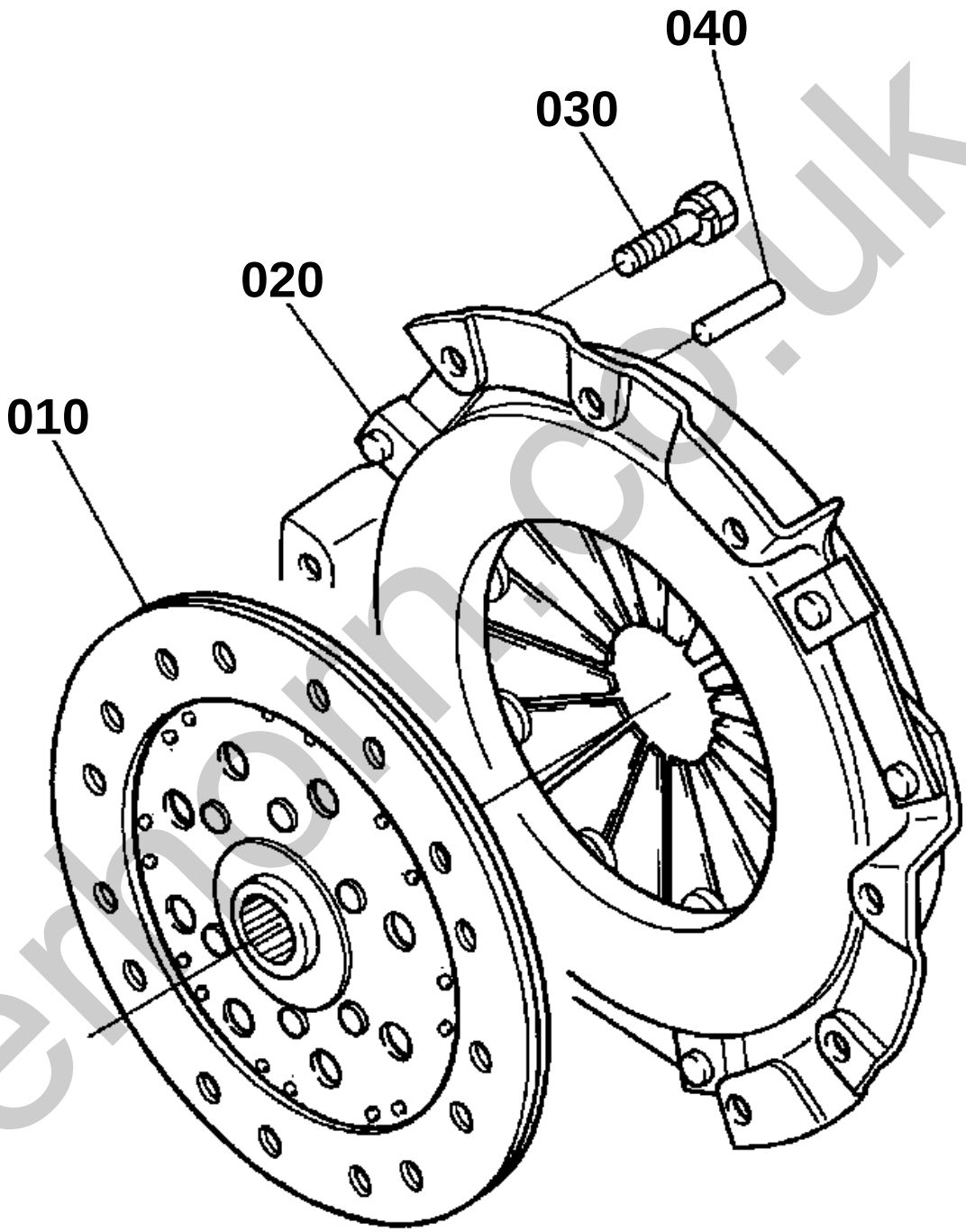

16216-001-10

silvermorn.co.uk

CLUTCH

↔ Interchangeable; ≠ not interchangeable; ← new for old; → old for new

REF.No	Part No.	Description	Q'ty	S.No.	I/C	REMARKS	Weight (kgf)	Weight (lb)
010	6C040-13402	COMP.DISK CLUTCH	1				0.88	1.936
020	6C040-13300	COMP.PLATE PRESSURE	1				4.01	8.822
030	01123-60816	BOLT	6				0.01	0.022
040	16221-94530	PIN STRAIGHT	3				0.006	0.0132

silverhorn.co.uk

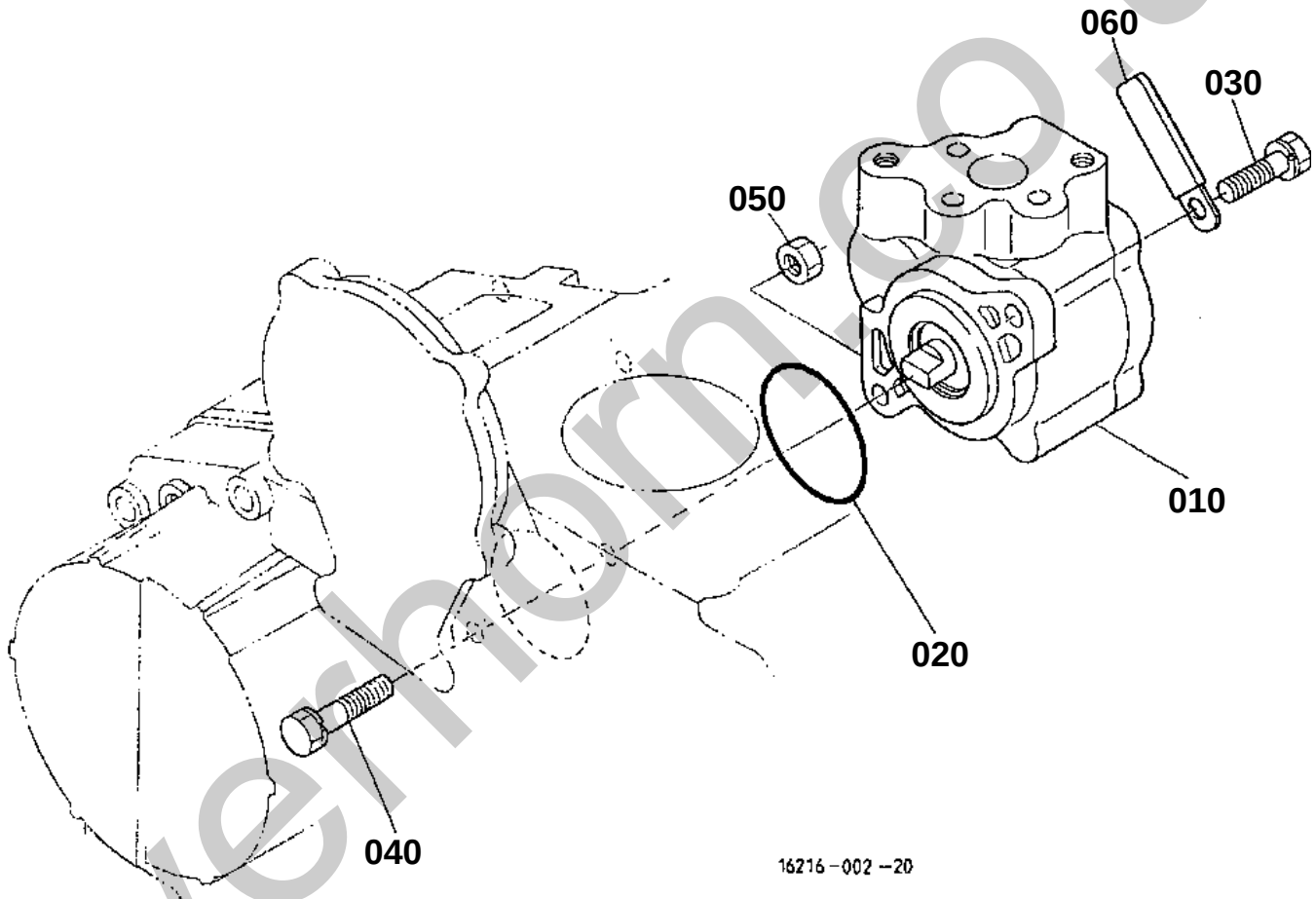

silverhorn.co.uk

↔ Interchangeable; ≠ not interchangeable; ← new for old; → old for new

REF.No	Part No.	Description	Q'ty	S.No.	I/C	REMARKS	Weight (kgf)	Weight (lb)
010	6C040-36300	ASSY PUMP HYDRAULIC	1	<=YX0866		REFER TO L.No.E09-L FOR COMPONENTS.	0	0
010	6C040-36306	ASSY PUMP HYDRAULIC	1	>=YY0001	←	REFER TO L.No.E09-L FOR COMPONENTS.	0	0
020	04811-10460	O RING	1				0.002	0.0044
030	01123-50825	BOLT	1				0.013	0.0286
040	01123-50835	BOLT	1				0.02	0.044
050	02056-50080	NUT	1				0.005	0.011
060	13824-67590	CLAMP CORD	1				0.002	0.0044

silverhorn.co.uk

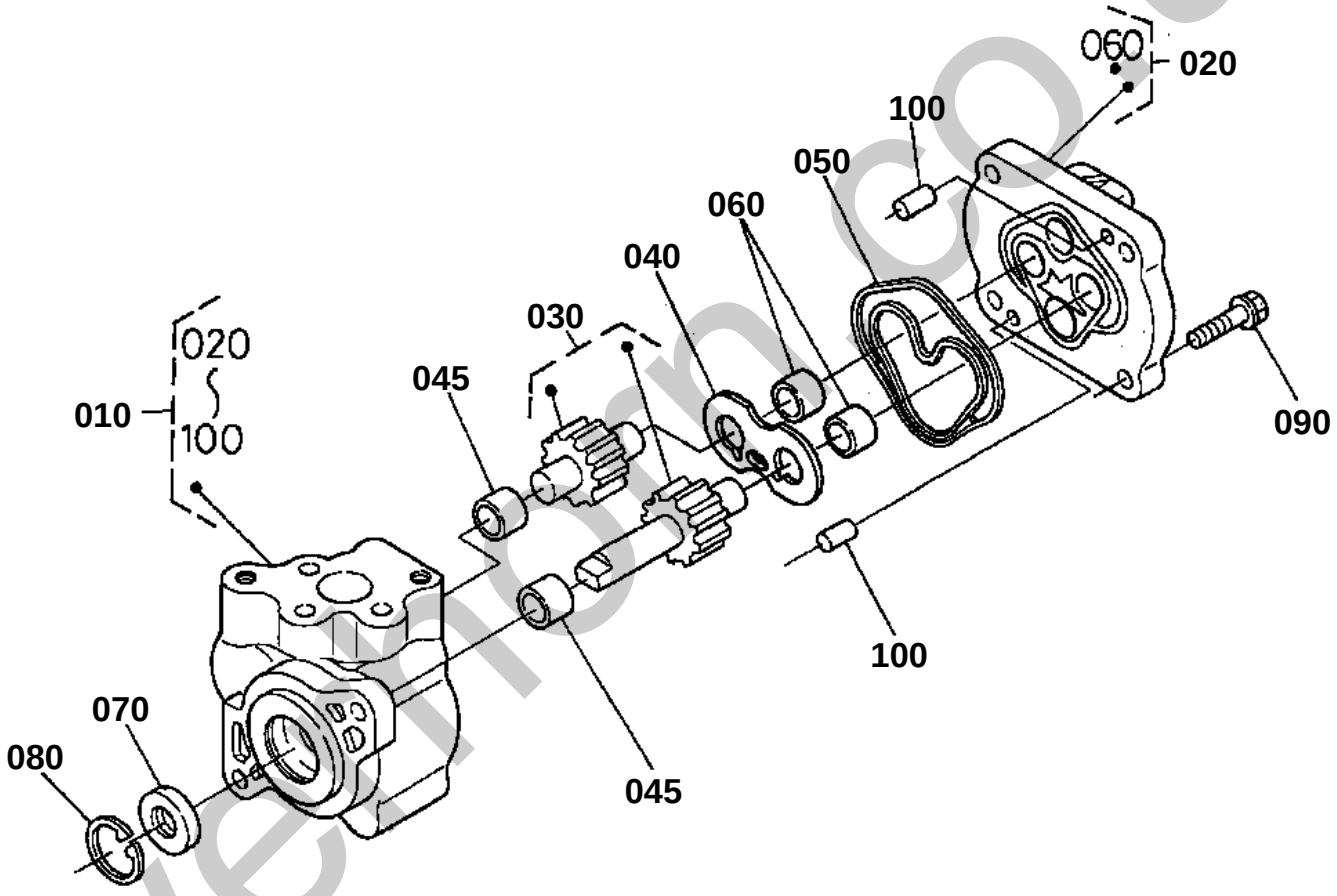

16216-002-11

silvermorn.co.uk

020 K3511-3675-2

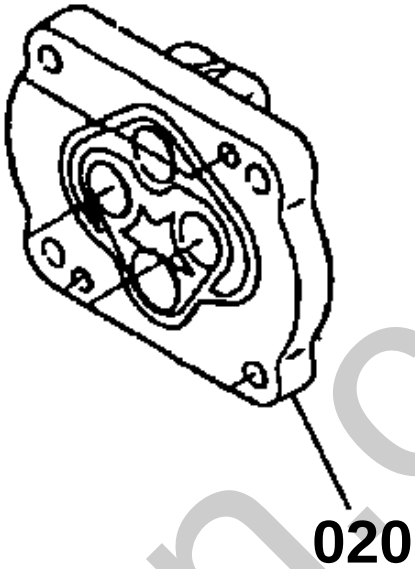

040 6C040-3635-0

6C050-803-10

silverhorn.co.uk

↔ Interchangeable; ≠ not interchangeable; ← new for old; → old for new

REF.No	Part No.	Description	Q'ty	S.No.	I/C	REMARKS	Weight (kgf)	Weight (lb)
010	6C040-36300	ASSY PUMP HYDRAULIC	1	<=YX0866			0	0
010	6C040-36306	ASSY PUMP HYDRAULIC	1	>=YY0001	←		0	0
020	6C040-36360	COVER	1	<=741870			0.24	0.528
020	6C040-36360	COVER	1	>=10001			0.24	0.528
020	K3511-36750	COVER	1	>=25929	↔		0.24	0.528
020	K3511-36752	COVER	1	>=56403	≠		0	0
020	6A100-37502	COMP.COVER	1	>=82938	←		0.26	0.572
030	6C040-36390	COMP.GEAR HYD.PUMP	1	<=741870			0.06	0.132
030	6C040-36390	COMP.GEAR HYD.PUMP	1	>=10001			0.06	0.132
030	6C040-36392	COMP.GEAR HYD.PUMP	1	>=82938	≠		0.309	0.6798
040	6C040-36350	PLATE SIDE	1	<=741870			0.023	0.0506
040	6C040-36350	PLATE SIDE	1	>=10001			0.023	0.0506
040	6C040-36352	PLATE SIDE	1	>=56403	≠		0.023	0.0506
040	6C140-36350	PLATE SIDE	1	>=YY0001	←		0.05	0.11
045	6A100-37230	BUSH	2	>=82938			0.005	0.011
050	6C040-36340	RING DOUBLE	1	<=741870			0.004	0.0088
050	6C040-36340	RING DOUBLE	1	>=10001			0.004	0.0088
050	6C040-36342	RING DOUBLE	1	>=56403	≠		0.003	0.0066
060	6C040-36370	BUSH	4	<=741870			0.004	0.0088
060	6C040-36370	BUSH	4	>=10001			0.004	0.0088
060	6A100-37230	BUSH	4	>=25929	↔		0.005	0.011
060	6A100-37230	BUSH	2	>=82938			0.005	0.011
070	31381-76390	SEAL OIL	1				0.01	0.022
080	04611-00300	CIR CLIP INTERNAL	1				0.004	0.0088
090	01754-51030	BOLT FLANGE	4				0.03	0.066
100	05012-00814	PIN STRAIGHT	2				0.006	0.0132

silverhorn.co.uk

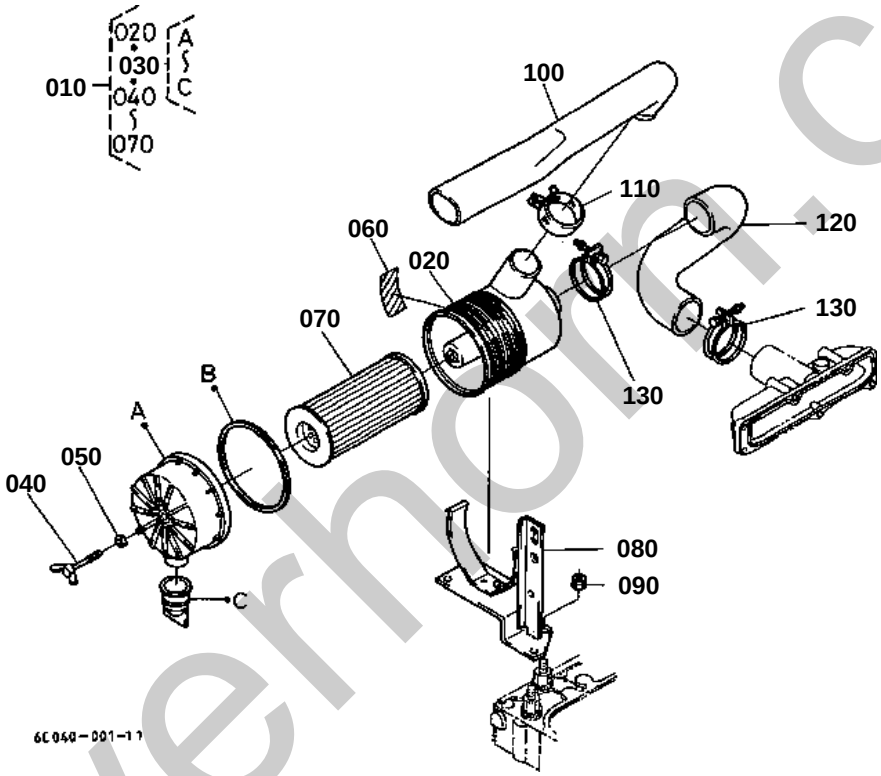

silverhorn.co.uk

AIR CLEANER
S.No;<=72572

↔ Interchangeable; ≠ not interchangeable; ← new for old; → old for new

REF.No	Part No.	Description	Q'ty	S.No.	I/C	REMARKS	Weight (kgf)	Weight (lb)
010	6C040-58200	ASSY CLEANER AIR	1				0	0
020	6C040-82510	BODY AIR CLEANER	1				0.23	0.506
030	67980-82553	ASSY COVER A/C	1				0.1	0.22
040	T0070-16342	BOLT WING	1				0.021	0.0462
050	67980-82610	WASHER	1				0.001	0.0022
060	67980-82620	LABEL CAUTION	1				0.001	0.0022
070	67980-82630	ASSY ELEMENT	1				0.21	0.462
080	6C040-58233	BRACKET AIR CLEANER	1				0.54	1.188
090	02131-50100	NUT	2				0.01	0.022
100	6C040-58250	HOSE INLET	1	<=71729			0.115	0.253
100	6C040-58253	HOSE INLET	1	>=71730	←		0.12	0.264
110	15261-11720	BAND PIPE	1				0.03	0.066
120	6C040-58260	HOSE INLET	1				0.27	0.594
130	67955-58260	BAND AIR CLEANER	2				0.028	0.0616

silverhorn.co.uk

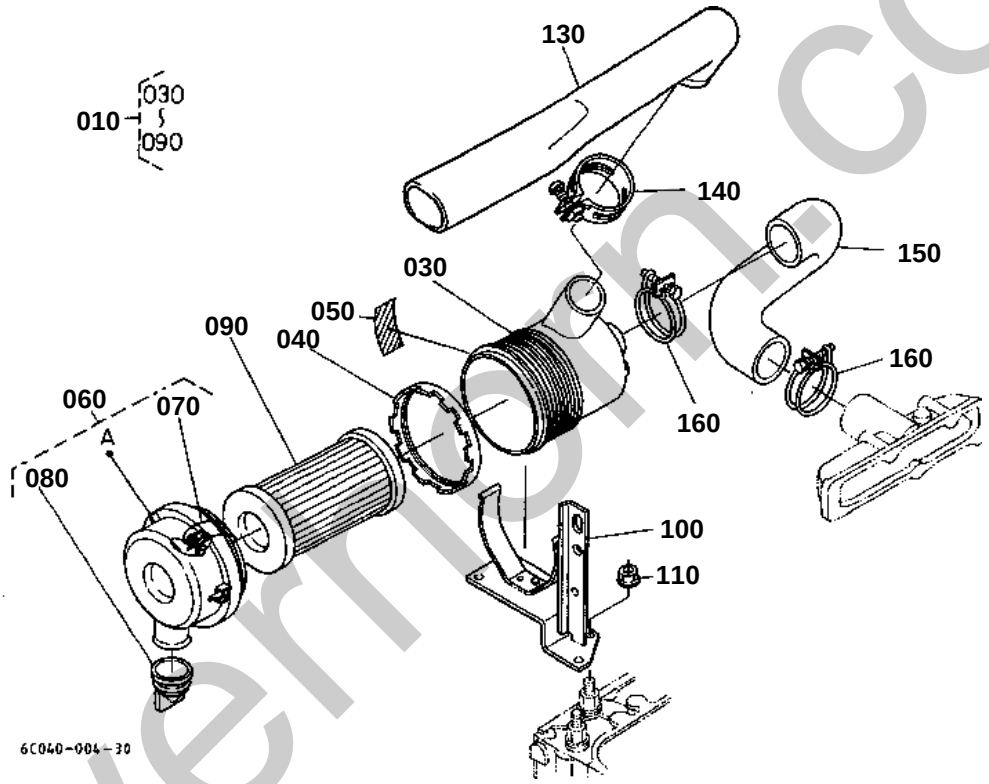

silvermoon.co.uk

AIR CLEANER
S.No;>=72573

↔ Interchangeable; ≠ not interchangeable; ← new for old; → old for new

REF.No	Part No.	Description	Q'ty	S.No.	I/C	REMARKS	Weight (kgf)	Weight (lb)
010	6A100-58200	ASSY CLEANER AIR	1				0.59	1.298
030	6A100-82520	BODY AIR CLEANER	1				0.23	0.506
040	6A100-82530	GASKET	1				0.03	0.066
050	67980-82620	LABEL CAUTION	1				0.001	0.0022
060	6A100-82550	ASSY COVER A/C	1				0.179	0.3938
070	6A100-82570	SPRING	2				0.005	0.011
080	67980-82580	VALVE UNLOADER	1				0.011	0.0242
090	6A100-82630	ASSY ELEMENT	1				0.24	0.528
100	6C040-58233	BRACKET AIR CLEANER	1				0.54	1.188
110	02131-50100	NUT	2				0.01	0.022
130	6C040-58253	HOSE INLET	1				0.12	0.264
140	15261-11720	BAND PIPE	1				0.03	0.066
150	6C040-58260	HOSE INLET	1				0.27	0.594
160	67955-58260	BAND AIR CLEANER	2				0.028	0.0616

silverhorn.co.uk

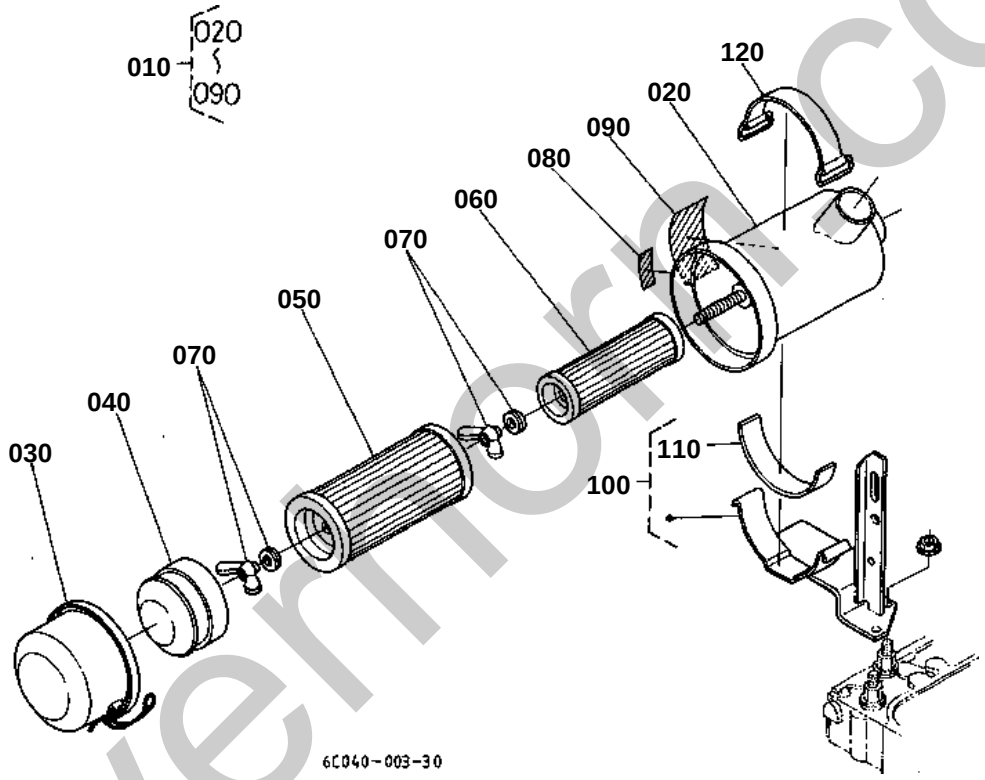

silvermorn.co.uk

AIR CLEANER (DOUBLE) [OPTION]

↔ Interchangeable; ≠ not interchangeable; ← new for old; → old for new

REF.No	Part No.	Description	Q'ty	S.No.	I/C	REMARKS	Weight (kgf)	Weight (lb)
010	6C040-94110	ASSY CLEANER AIR	1				1.44	3.168
020	6C040-94210	ASSY CASE	1				0.68	1.496
030	6C040-94220	ASSY PAN DUST	1				0.26	0.572
040	6C040-94230	RETAINER ELEMENT	1				0.049	0.1078
050	6C040-94240	ELEMENT OUTER	1				0.3	0.66
060	6C040-94250	ELEMENT INNER	1				0.108	0.2376
070	6C040-94260	NUT WING	2				0.001	0.0022
080	6C040-94290	LABEL	1				0.02	0.044
090	15222-87480	LABEL ELEMENT A/C	1				0.001	0.0022
100	6C040-94102	ASSY BRACKET A/C	1				0.53	1.166
110	67401-54280	CUSHION	1				0.01	0.022
120	67401-54290	BAND AIR CLEANER	1				0.06	0.132

silverhorn.co.uk

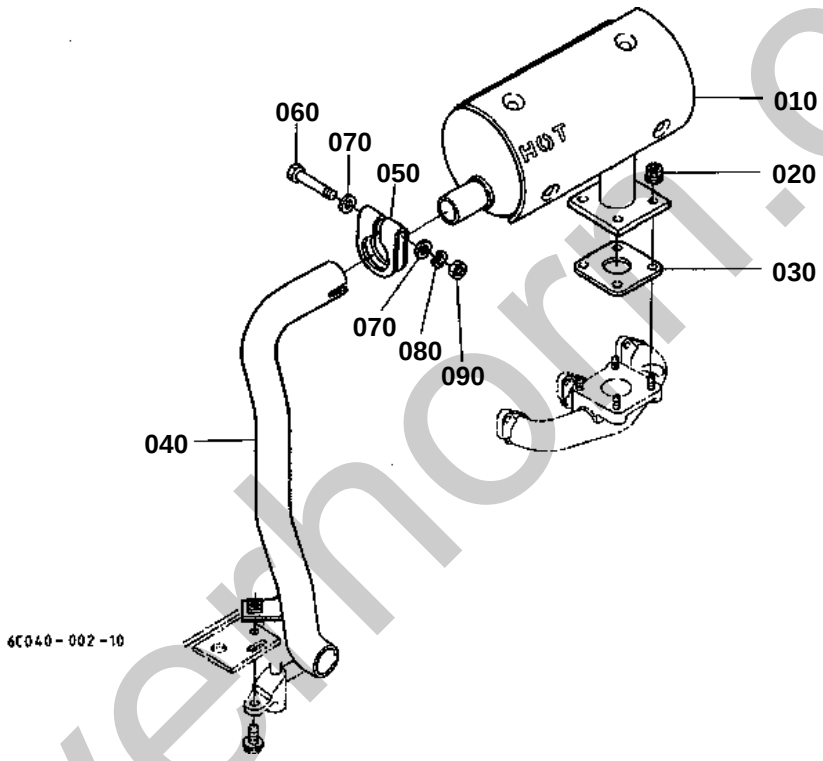

silverhorn.co.uk

MUFFLER

↔ Interchangeable; ≠ not interchangeable; ← new for old; → old for new

REF.No	Part No.	Description	Q'ty	S.No.	I/C	REMARKS	Weight (kgf)	Weight (lb)
010	6C040-58400	COMP.MUFFLER	1	<=70003			0	0
010	6C040-58403	COMP.MUFFLER	1	>=70004	←		2.64	5.808
010	6C040-58404	COMP.MUFFLER	1	>=71730	←		2.62	5.764
020	02121-50080	NUT	4				0.01	0.022
030	15263-12370	GASKET MUFFLER NA	1				0.015	0.033
040	6C040-58420	PIPE EXHAUST	1	<=70831			0	0
040	6C040-58424	PIPE EXHAUST	1	>=70832	←		0.52	1.144
050	15221-12433	CLAMP MUFFLER PIPE	1				0.05	0.11
060	01153-50865	BOLT	1				0.025	0.055
070	04013-60080	WASHER PLAIN	2				0.002	0.0044
080	04512-60080	WASHER SPRING	1				0.002	0.0044
090	02114-50080	NUT	1				0.005	0.011

silverhorn.co.uk

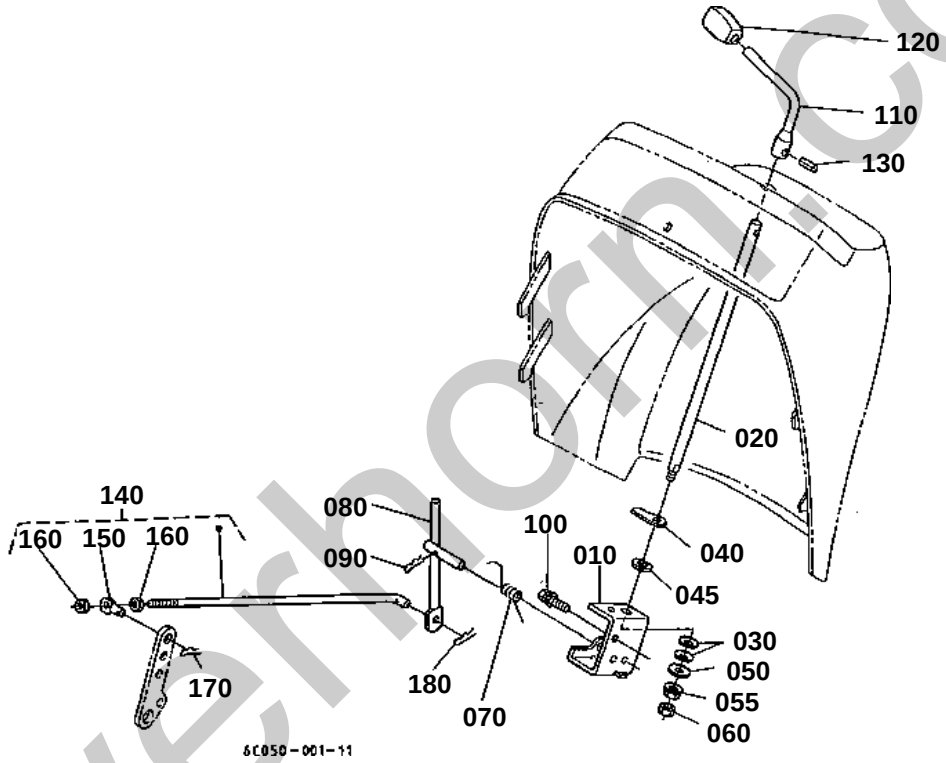

silverhorn.co.uk

ACCELERATOR LEVER

↔ Interchangeable; ≠ not interchangeable; ← new for old; → old for new

REF.No	Part No.	Description	Q'ty	S.No.	I/C	REMARKS	Weight (kgf)	Weight (lb)
010	6C040-43212	BRACKET ACCEL.	1				0.163	0.3586
020	6C040-43220	ROD ACCEL.	1				0.35	0.77
030	66116-51530	SPRING PLATE	2				0.004	0.0088
040	6C040-43250	ARM ACCELERATOR	1				0.04	0.088
045	6C040-43380	WASHER ACCEL.	1	>=74264			0.004	0.0088
050	04512-60080	WASHER PLAIN	1				0.002	0.0044
055	02751-50080	NUT FLANGE	1				0.006	0.0132
060	02156-50080	NUT	1				0.004	0.0088
070	6C040-43290	SPRING	1				0.005	0.011
080	6C050-43230	LINK ACCEL.	1				0.135	0.297
090	05525-61000	PIN SNAP	1				0.002	0.0044
100	01125-60820	BOLT	1				0.015	0.033
110	6C040-43240	LEVER ACCEL.	1	<=71629			0	0
110	6C040-43244	LEVER ACCEL.	1	>=71630	←		0.115	0.253
120	TA040-49873	GRIP	1				0.024	0.0528
130	05411-00520	PIN SPRING	1				0.002	0.0044
140	6C040-43300	ASSY ROD RELEASE	1				0.1	0.22
150	6C040-43280	CONNECTOR	1				0.008	0.0176
160	02014-50060	NUT	2				0.003	0.0066
170	05525-50800	PIN SNAP	1				0.001	0.0022
180	05525-60600	PIN SNAP	1				0.001	0.0022

silverhorn.co.uk

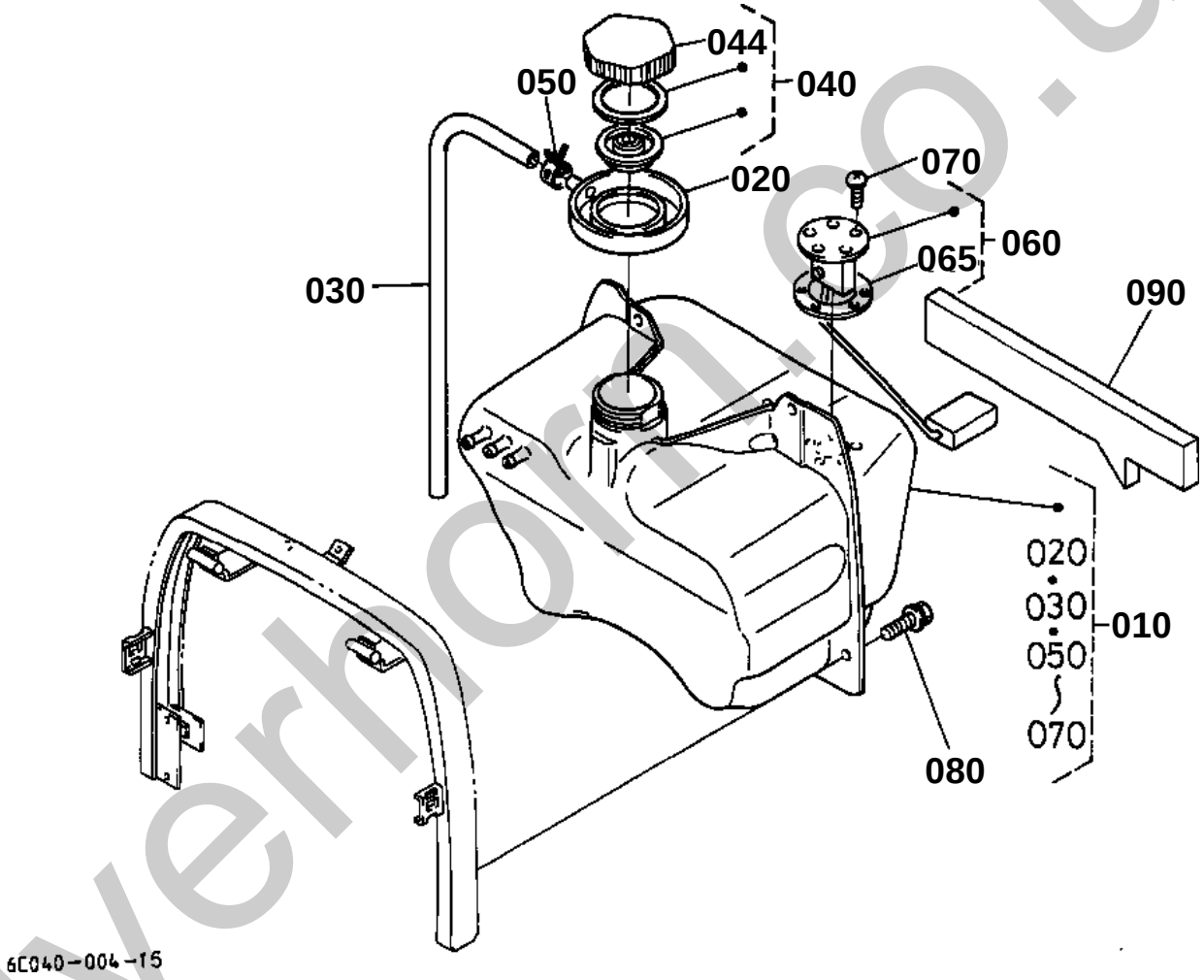

silverhorn.co.uk

040 6C040-5477-0

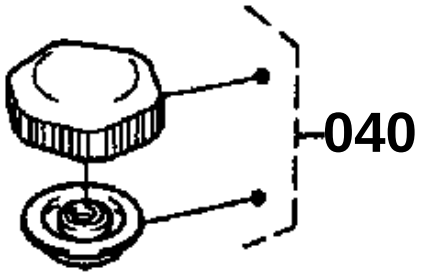

6C040-802-10

silverhorn.co.uk

↔ Interchangeable; ≠ not interchangeable; ← new for old; → old for new

REF.No	Part No.	Description	Q'ty	S.No.	I/C	REMARKS	Weight (kgf)	Weight (lb)
010	6C040-54700	ASSY TANK FUEL	1	<=72382			0	0
010	6C040-54705	ASSY TANK FUEL	1	>=72383	←		0	0
010	6C040-54707	ASSY TANK FUEL	1	>=75155	←		4	8.8
010	6C040-54707	ASSY TANK FUEL	1	>=75501	←		4	8.8
020	6C040-54740	TRAY FUEL	1				0.86	1.892
030	6C040-54760	PIPE	1				0.116	0.2552
040	6C040-54770	ASSY CAP	1	<=72382			0.052	0.1144
040	6A100-54910	ASSY CAP FUEL	1	>=72383	←		0.05	0.11
044	6A100-54920	CAP FUEL	1				0.041	0.0902
050	6C040-54780	CLAMP	1				0.005	0.011
060	6C040-54750	GAUGE FUEL	1	<=75500			0	0
060	6C040-54752	GAUGE FUEL	1	>=75501	←		0	0
065	6A320-85812	GASKET GAUGE	1				0	0
070	03024-50514	SCREW WITH WASHER	5				0.003	0.0066
080	01127-50820	BOLT	4				0.02	0.044
090	6C040-54790	SPONGE	1				0.392	0.8624

silverhorn.co.uk

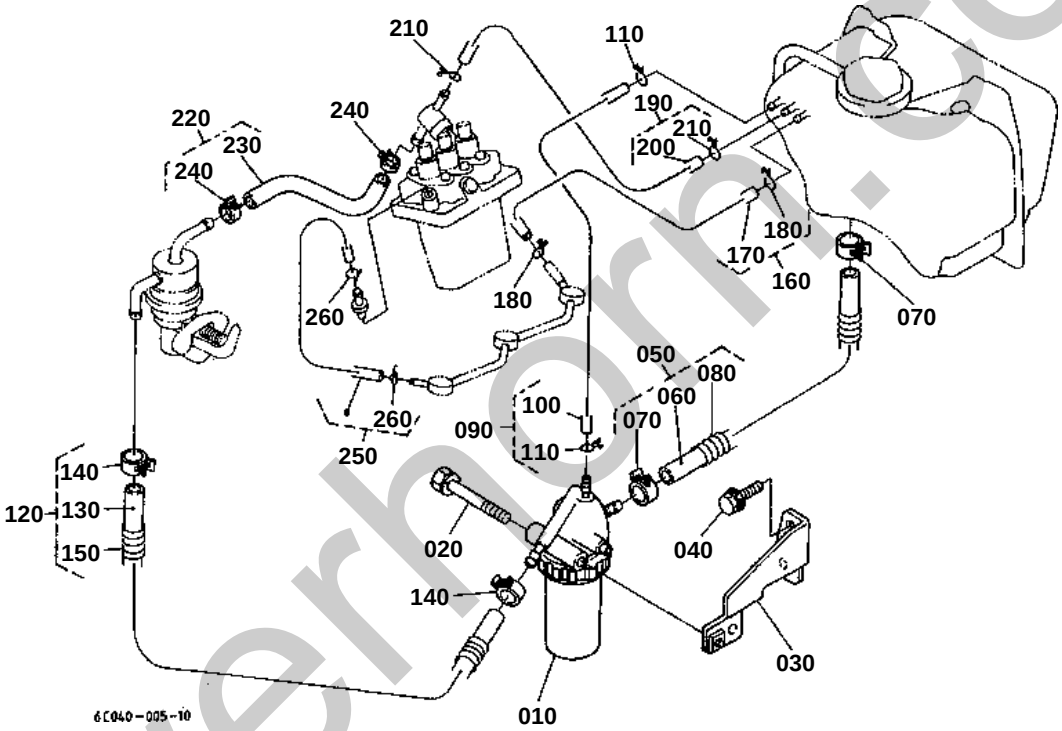

silverhorn.co.uk

FUEL PIPE

↔ Interchangeable; ≠ not interchangeable; ← new for old; → old for new

REF.No	Part No.	Description	Q'ty	S.No.	I/C	REMARKS	Weight (kgf)	Weight (lb)
010	15751-43010	ASSY FILTER FUEL	1			REFER TO L.No.C02-R FOR COMPONENTS.	0.41	0.902
020	01123-50865	BOLT	1				0.028	0.0616
030	6C040-58310	STAY FUEL FILTER	1				0.18	0.396
040	01125-60820	BOLT	1				0.015	0.033
050	6C040-54810	ASSY TUBE FUEL	1				0.048	0.1056
060	09661-70300	TUBE FUEL	1				0.04	0.088
070	14911-42750	CLIP PIPE	2				0.002	0.0044
080	67111-58320	SPRING PIPE PROTECT.	1				0.02	0.044
090	6C040-54850	ASSY PIPE AIR VENT	1				0.024	0.0528
100	09661-40440	TUBE FUEL	1				0.025	0.055
110	14971-42750	CLIP PIPE	2				0.001	0.0022
120	6C040-59410	ASSY TUBE FUEL	1				0.058	0.1276
130	09661-70380	TUBE FUEL	1				0.04	0.088
140	14911-42750	CLIP PIPE	2				0.002	0.0044
150	76611-53370	SPRING PIPE PROTECT.	1				0.01	0.022
160	6C040-59440	ASSY PIPE AIR VENT	1				0.022	0.0484
170	09661-40400	TUBE FUEL	1				0.02	0.044
180	14971-42750	CLIP PIPE	2				0.001	0.0022
190	6C040-59450	ASSY PIPE OVER FLOW	1				0.017	0.0374
200	09661-40300	TUBE FUEL	1				0.016	0.0352
210	14971-42750	CLIP PIPE	2				0.001	0.0022
220	16032-42010	ASSY TUBE FUEL	1				0.012	0.0264
230	09661-80075	TUBE FUEL	1				0.01	0.022
240	16241-42750	CLIP PIPE	2	<=73469			0	0
240	14911-42750	CLIP PIPE	2	>=73470	↔		0.002	0.0044
250	15841-42500	ASSY PIPE OVER FLOW	1				0.015	0.033
260	14971-42750	CLIP PIPE	2				0.001	0.0022

silvernorn.co.uk

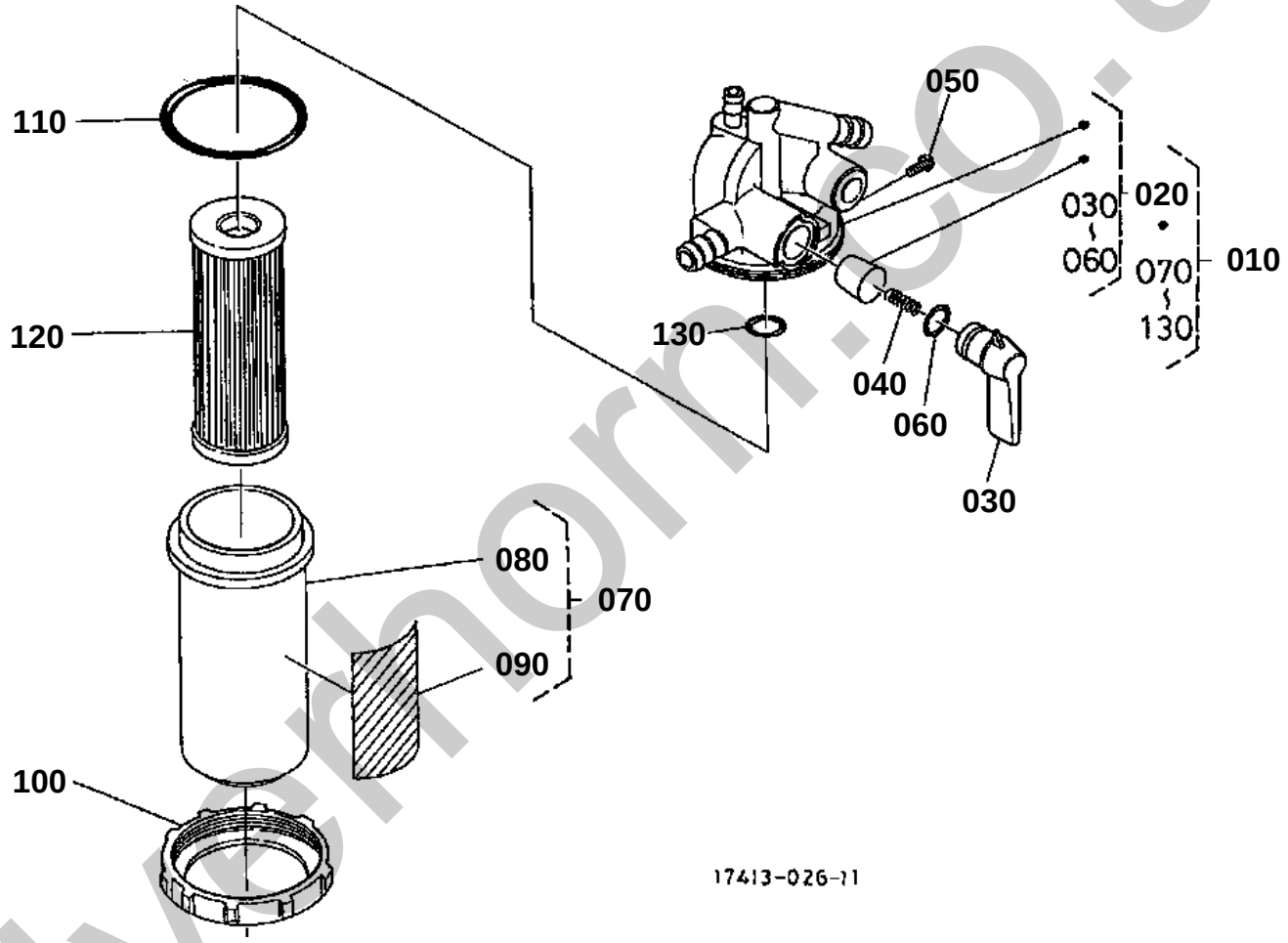

silverhorn.co.uk

FUEL FILTER [COMPONENT PARTS]

↔ Interchangeable; ≠ not interchangeable; ← new for old; → old for new

REF.No	Part No.	Description	Q'ty	S.No.	I/C	REMARKS	Weight (kgf)	Weight (lb)
010	15751-43010	ASSY FILTER FUEL	1				0.41	0.902
020	15531-43110	COMP.BODY COCK	1				0.255	0.561
030	14301-43522	LEVER COCK	1				0.024	0.0528
040	14301-43820	SPRING VALVE	1				0.001	0.0022
050	14301-43830	SCREW SET	1				0.001	0.0022
060	14301-43840	O RING LEVER	1				0.001	0.0022
070	19204-43100	ASSY CUP FILTER	1				0.02	0.044
080	15393-43580	CUP FILTER	1				0.01	0.022
090	16689-88430	LABEL FUEL FILTER	1				0.001	0.0022
100	14301-43590	RING RETAINING	1				0.054	0.1188
110	14301-43650	O RING FILTER CUP	1				0.001	0.0022
120	15231-43560	ASSY ELEMENT	1				0.03	0.066
130	14301-43570	O RING FILTER	1				0.001	0.0022

silverhorn.co.uk

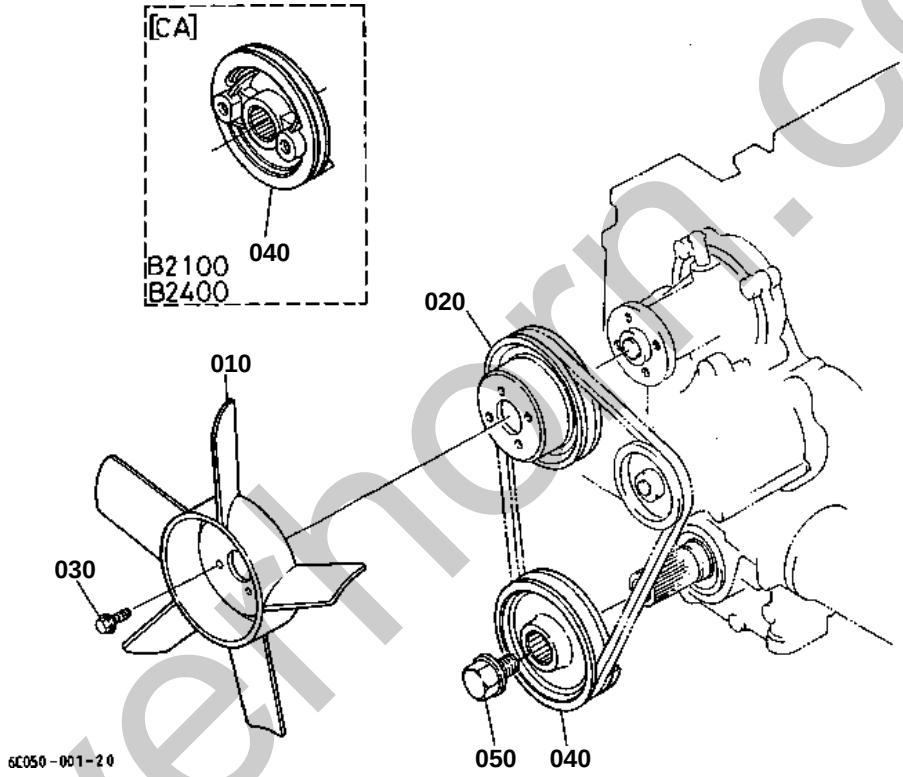

silverthorn.co.uk

FAN

↔ Interchangeable; ≠ not interchangeable; ← new for old; → old for new

REF.No	Part No.	Description	Q'ty	S.No.	I/C	REMARKS	Weight (kgf)	Weight (lb)
010	6C040-58510	FAN	1				0.37	0.814
020	16241-74250	PULLEY FAN	1				0.24	0.528
030	01754-50612	BOLT FLANGE	4				0.005	0.011
040	16261-74280	PULLEY FAN DRIVE	1			[A]	1.14	2.508
040	16261-74280	PULLEY FAN DRIVE	1			[CA]	1.14	2.508
050	16241-91020	BOLT	1				0.1	0.22

silverhorn.co.uk

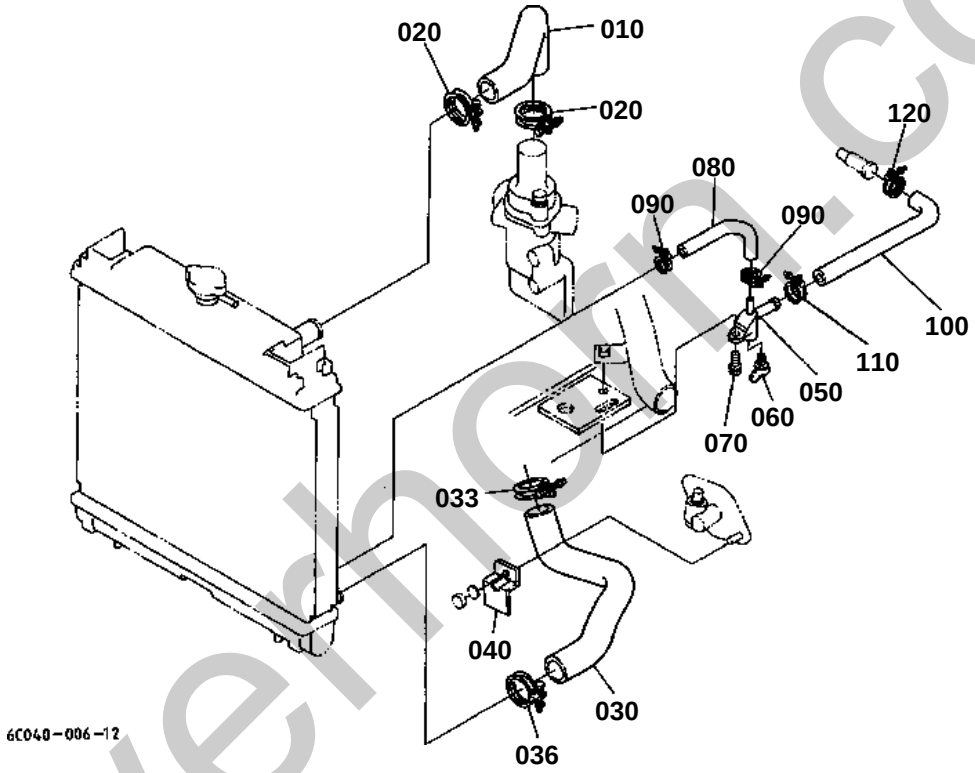

silverhorn.co.uk

WATER PIPE

↔ Interchangeable; ≠ not interchangeable; ← new for old; → old for new

REF.No	Part No.	Description	Q'ty	S.No.	I/C	REMARKS	Weight (kgf)	Weight (lb)
010	6C040-58630	HOSE WATER	1				0.095	0.209
020	67955-58630	CLAMP HOSE	2				0.025	0.055
030	6C040-58570	HOSE WATER	1				0.158	0.3476
033	67955-58630	CLAMP HOSE	1				0.025	0.055
036	67955-58630	CLAMP HOSE	1				0.025	0.055
040	6C040-58640	CLAMP WATER HOSE	1				0.031	0.0682
050	6C040-58650	COCK	1				0.017	0.0374
060	55364-82110	COCK DRAIN	1				0.005	0.011
070	01125-60820	BOLT	1	<=70831			0.015	0.033
070	01125-50822	BOLT	1	>=70832	←		0.015	0.033
080	6C040-58680	HOSE DRAIN	1				0.023	0.0506
090	6C040-58720	CLAMP HOSE	2				0.017	0.0374
100	6C040-58690	HOSE DRAIN	1				0.05	0.11
110	6C040-58730	CLAMP HOSE	1				0.017	0.0374
120	6C040-58730	CLAMP HOSE	1				0.017	0.0374

silverhorn.co.uk

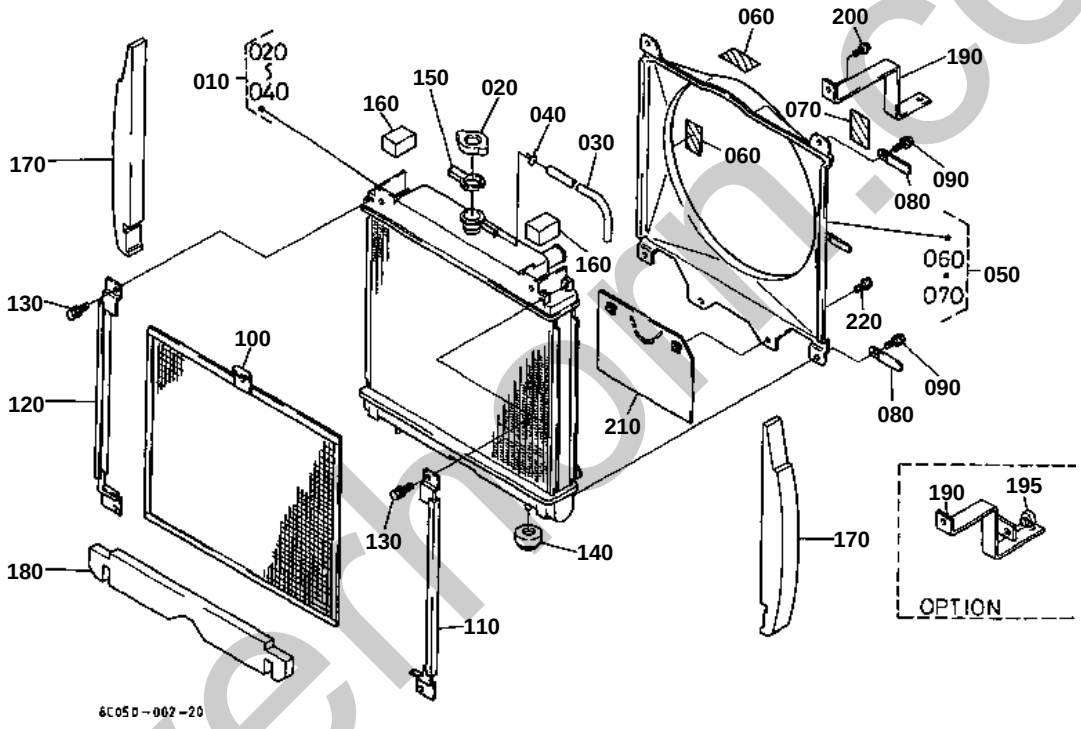

silverhorn.co.uk

RADIATOR

↔ Interchangeable; ≠ not interchangeable; ← new for old; → old for new

REF.No	Part No.	Description	Q'ty	S.No.	I/C	REMARKS	Weight (kgf)	Weight (lb)
010	6C040-58520	ASSY RADIATOR	1				5.18	11.396
020	6C040-58660	ASSY CAP RADIATOR	1				0.043	0.0946
030	6C040-58670	HOSE OVER FLOW	1				0.055	0.121
040	6C040-58710	CLIP	1				0.002	0.0044
050	6C040-58602	KIT SHROUD FAN	1				0.7	1.54
060	32751-49580	LABEL FAN BELT	2				0.001	0.0022
070	TA040-49580	LABEL MUFFLER	1				0.001	0.0022
080	15272-67590	CLAMP CORD	2				0.004	0.0088
090	01025-50612	BOLT	4				0.005	0.011
100	6C040-58530	NET RADIATOR	1				0.25	0.55
110	6C040-58540	GUIDE RADIATOR NET L	1				0.114	0.2508
120	6C040-58550	GUIDE RADIATOR NET R	1				0.114	0.2508
130	01025-50612	BOLT	4				0.005	0.011
140	6C040-58580	CUSHION RADIATOR	2				0.021	0.0462
150	6C040-54520	SPONGE	1				0.005	0.011
160	6C040-54490	SPONGE	2	<=72942			0.005	0.011
160	6C090-54490	SPONGE	2	>=74943	↔		0.004	0.0088
170	6C040-54450	TAPE RADIATOR LH	2	<=71830			0	0
170	6C040-54454	TAPE RADIATOR LH	2	>=71831	←		0.033	0.0726
180	6C040-54472	TAPE RADIATOR	1				0.027	0.0594
190	6C040-58590	STAY RADIATOR	1				0.16	0.352
190	6C040-94130	STAY RADIATOR	1			OPTION (WITH DOUBLE A/C)	0.197	0.4334
195	38240-29870	CUSHION	1			OPTION (WITH DOUBLE A/C)	0.004	0.0088
200	01025-50616	BOLT	2				0.005	0.011
210	6C040-58620	PLATE SHUTTER	1				0.117	0.2574
220	01125-60816	BOLT	2				0.01	0.022

silverhorn.co.uk

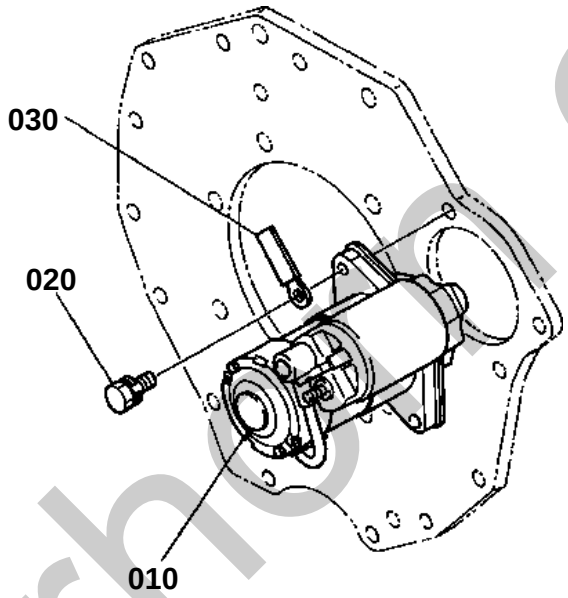

6C040-011-10

silverhorn.co.uk

↔ Interchangeable; ≠ not interchangeable; ← new for old; → old for new

REF.No	Part No.	Description	Q'ty	S.No.	I/C	REMARKS	Weight (kgf)	Weight (lb)
010	6C040-59210	ASSY STARTER	1			REFER TO L.No.C07-L FOR COMPONENTS.	2.78	6.116
020	01123-50840	BOLT	2				0.018	0.0396
030	13824-67580	CLAMP CORD	1				0.006	0.0132

silverhorn.co.uk

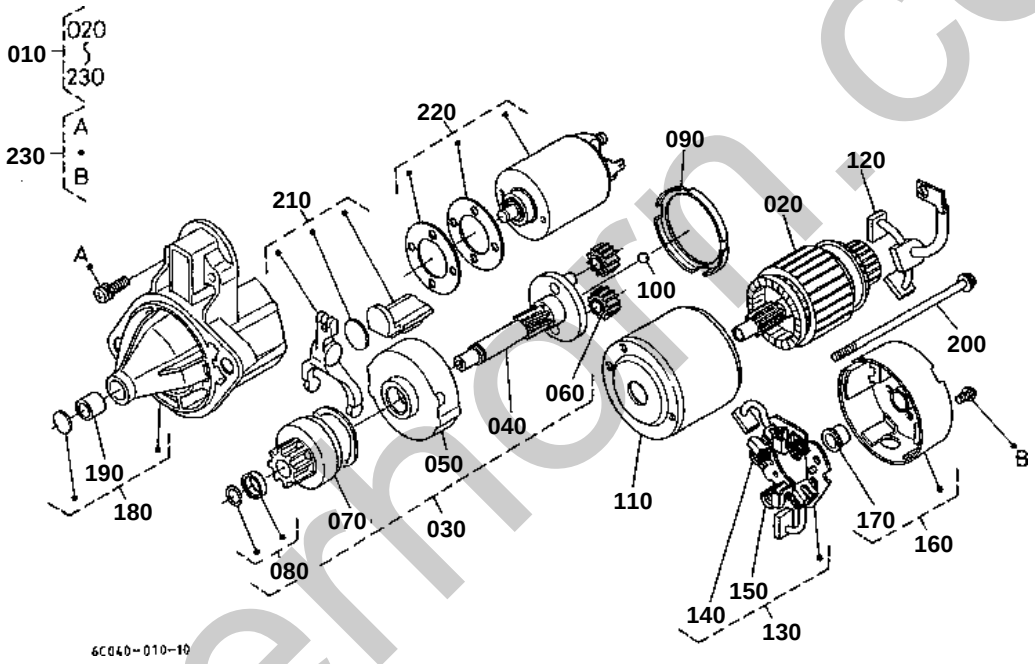

silvermorn.co.uk

STARTER [COMPONENT PARTS]

↔ Interchangeable; ≠ not interchangeable; ← new for old; → old for new

REF.No	Part No.	Description	Q'ty	S.No.	I/C	REMARKS	Weight (kgf)	Weight (lb)
010	6C040-59210	ASSY STARTER	1				2.78	6.116
020	6C040-82610	ARMATURE	1				0.57	1.254
030	6C040-82620	ASSY SHAFT	1				0.5	1.1
040	6C040-82630	GEAR-SHAFT	1				0.165	0.363
050	6C040-82640	GEAR INTERNAL	1				0.047	0.1034
060	6C040-82650	GEAR PLANETARY	2				0.016	0.0352
070	6C040-82660	CLUTCH OVER RUNNING	1				0.3	0.66
080	6C040-82670	STOPPER	1				0.004	0.0088
090	6C040-82680	GASKET	1				0.003	0.0066
100	6C040-82690	BALL	1				0.001	0.0022
110	6C040-82700	YOKE	1				0.4	0.88
120	6C040-82710	BRUSH	1				0.032	0.0704
130	6C040-82720	ASSY HOLDER BRUSH	1				0.05	0.11
140	6C040-82730	SPRING BRUSH	2				0.001	0.0022
150	6C040-82740	SPRING BRUSH	2				0.001	0.0022
160	6C040-82750	ASSY BRACKET REAR	1				0.082	0.1804
170	6C040-82760	BUSH	1				0.005	0.011
180	6C040-82770	ASSY BRACKET FRONT	1				0.4	0.88
190	15852-63240	BUSH	1				0.006	0.0132
200	6C040-82780	BOLT	2				0.015	0.033
210	6C040-82790	LEVER FORK	1				0.022	0.0484
220	6C040-82800	ASSY SWITCH MAGNETIC	1				0.63	1.386
230	15852-93310	SCREW PAN-HEAD	1				0.02	0.044

silverhorn.co.uk

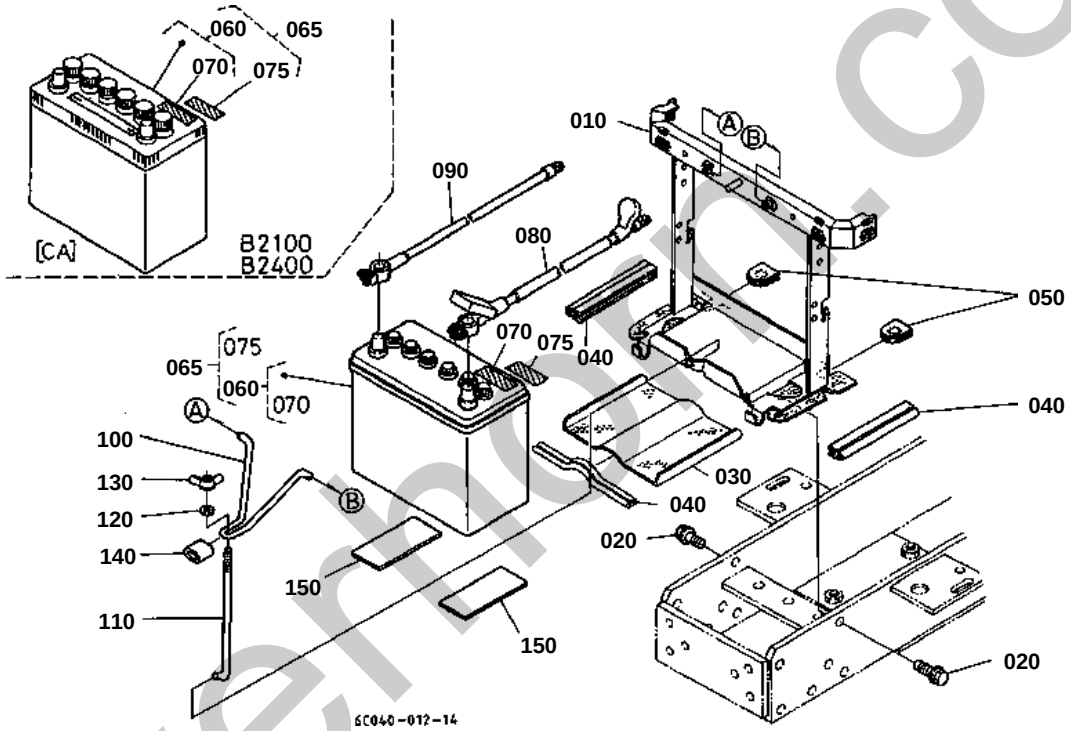

silverthorn.co.uk

130 02021-50060

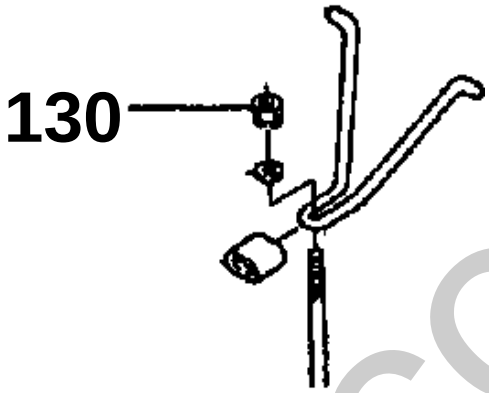

6C040-803-10

silverhorn.co.uk

BATTERY

↔ Interchangeable; ≠ not interchangeable; ← new for old; → old for new

REF.No	Part No.	Description	Q'ty	S.No.	I/C	REMARKS	Weight (kgf)	Weight (lb)
010	6C040-51220	BRACKET BATTERY	1	<=71015			0	0
010	6C040-51224	BRACKET BATTERY	1	>=71016	←		0	0
010	6C040-51225	BRACKET BATTERY	1	>=71730	←		0	0
010	6C040-51227	BRACKET BATTERY	1	>=71899	←		0	0
010	6C040-51228	BRACKET BATTERY	1	>=74702	←		2.25	4.95
020	01133-51025	BOLT	2				0.023	0.0506
030	6C040-51260	NET	1				0.25	0.55
040	76650-42520	TRIM DUSTPROOF	3				0.03	0.066
050	6C040-51290	RUBBER	2				0.003	0.0066
060	6C040-55512	ASSY BATTERY	1			[A]	0	0
060	6C040-55512	ASSY BATTERY	1			[CA]	0	0
065	6C040-99182	KIT BATTERY (B)	1			[CA]	0	0
070	6C040-55590	LABEL BATTERY	1			ENGLISH	0.001	0.0022
075	6C021-92120	LABEL BATTERY	1			FRENCH	0.001	0.0022
080	6C040-55530	CORD BATTERY(+)	1				0.21	0.462
090	6C040-55540	CORD BATTERY(-)	1				0.11	0.242
100	6C040-55550	RETAINER BATTERY	1	<=70326			0	0
100	6C040-55553	RETAINER BATTERY	1	>=70327	←		0.075	0.165
110	6C040-55560	BOLT HOOK	1				0.038	0.0836
120	04015-60060	WASHER PLAIN	1				0.005	0.011
130	02021-50060	NUT	1	<=70831			0.005	0.011
130	02810-50060	NUT WING	1	>=70832	≠		0.009	0.0198
140	6C040-55580	CUSHION	1				0.002	0.0044
150	34150-33220	CUSHION	2				0.015	0.033

silverhorn.co.uk

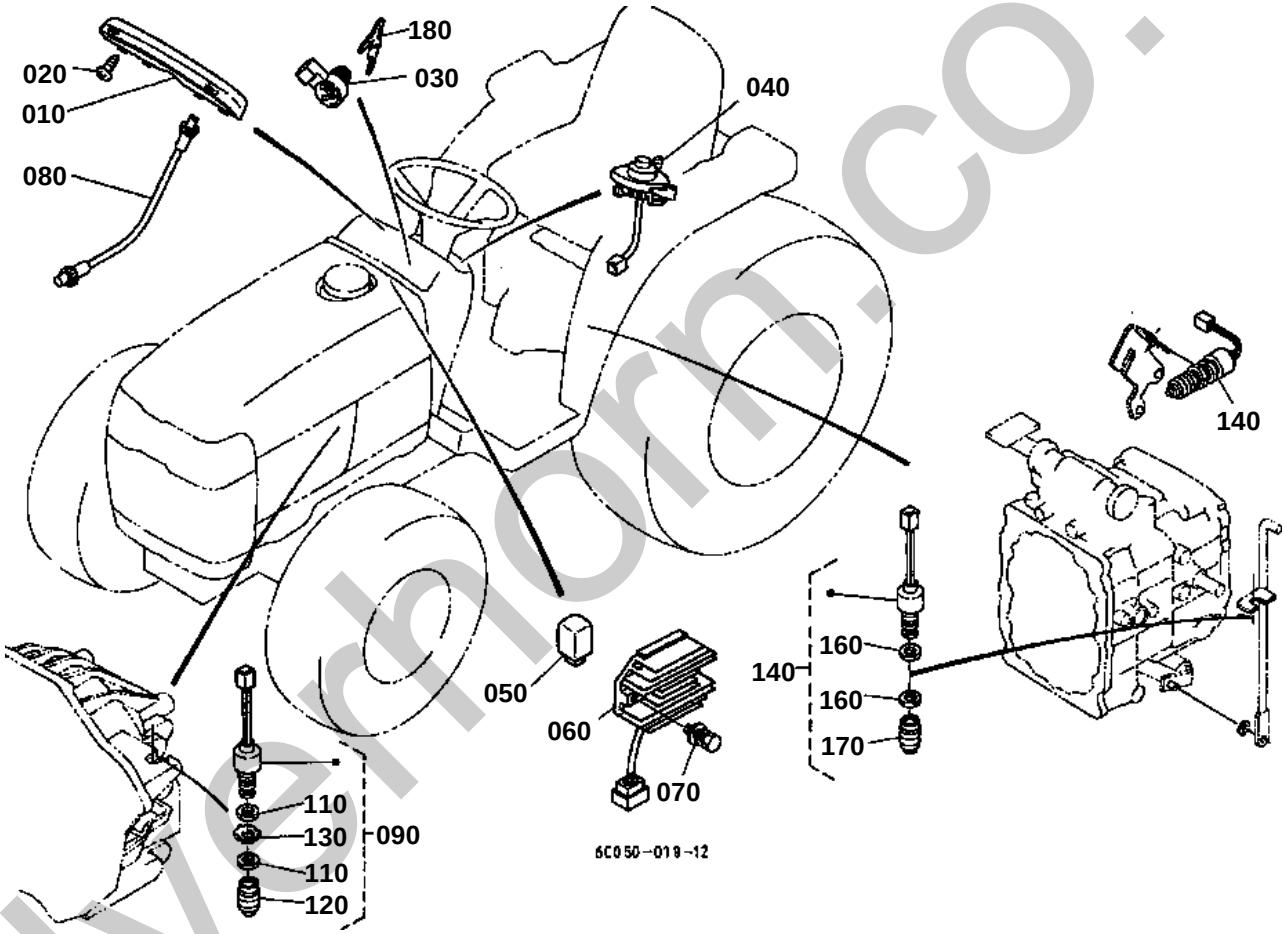

silverhorn.co.uk

060 19267-6460-2

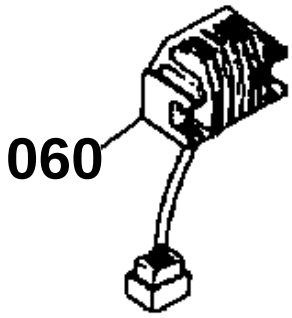

6C040-816-10

silverhorn.co.uk

↔ Interchangeable; ≠ not interchangeable; ← new for old; → old for new

REF.No	Part No.	Description	Q'ty	S.No.	I/C	REMARKS	Weight (kgf)	Weight (lb)
010	6C040-55100	ASSY METER	1			REFER TO L.No.C08-R FOR COMPONENTS.	1.2	2.64
020	03514-50420	SCREW TAPPING	6				0.002	0.0044
030	6C040-55410	SWITCH STARTER	1	<=71830			0	0
030	6C040-55412	SWITCH STARTER	1	>=71831	←		0.198	0.4356
030	6C040-55450	SWITCH STARTER	1	>=74196	≠		0	0
030	6C040-55452	SWITCH STARTER	1	>=75258	←		0.22	0.484
040	6C040-55420	SWITCH COMBINATION	1	<=71629			0	0
040	6C040-55423	SWITCH COMBINATION	1	>=71630	←		0	0
040	6C040-55424	SWITCH COMBINATION	1	>=72439	←		0.09	0.198
050	6C040-55520	HAZARD UNIT	1				0.036	0.0792
060	19267-64602	ASSY REGULATOR	1	<=71194		[A]	0.188	0.4136
060	RP201-53710	ASSY REGULATOR	1	>=71195	↔	[A]	0.185	0.407
060	19267-64602	ASSY REGULATOR	1	<=71194		[CA]	0.188	0.4136
060	RP201-53710	ASSY REGULATOR	1	>=71195	↔	[CA]	0.185	0.407
070	01205-50625	BOLT	1			[A]	0.007	0.0154
070	01205-50625	BOLT	1			[CA]	0.007	0.0154
080	6C040-55440	CABLE HOUR METER	1				0.2	0.44
090	6C040-55852	ASSY SWITCH SAFETY	1	<=75500			0	0
110	67111-55830	NUT SAFETY SWITCH	2				0.035	0.077
120	67111-55840	CAP SAFETY SWITCH	1				0.002	0.0044
130	6C040-55860	WASHER	1	<=75500			0.007	0.0154
130	6C040-55862	WASHER TOOTHED	1	>=75501	←		0	0
140	52320-42900	SWITCH SAFETY	2				0.1	0.22
160	67111-55830	NUT SAFETY SWITCH	4				0.035	0.077
170	67111-55840	CAP SAFETY SWITCH	2				0.002	0.0044
180	15248-63700	KEY STARTER	2				0.034	0.0748

silvermom.co.uk

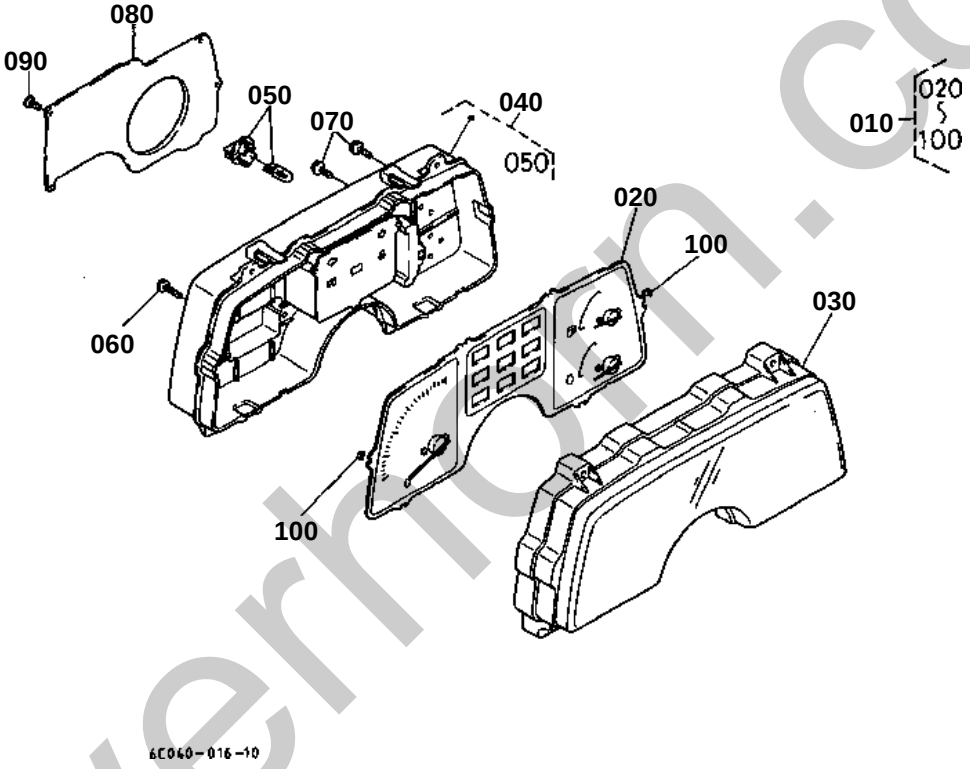

silverhorn.co.uk

PANEL BOARD [COMPONENT PARTS]

↔ Interchangeable; ≠ not interchangeable; ← new for old; → old for new

REF.No	Part No.	Description	Q'ty	S.No.	I/C	REMARKS	Weight (kgf)	Weight (lb)
010	6C040-55100	ASSY METER	1				1.2	2.64
020	6C040-55110	COMP.METER	1				0.47	1.034
030	6C040-55120	GLASS	1				0.16	0.352
040	6C040-55130	ASSY CASE	1				0.25	0.55
050	6C040-55140	ASSY BULB	5				0.003	0.0066
060	6C040-55150	SCREW	2				0.002	0.0044
070	6C040-55160	SCREW	6				0.002	0.0044
080	6C040-55172	COVER	1				0.062	0.1364
090	6C040-55180	SCREW	2				0.003	0.0066
100	6C040-55190	CUSHION	6				0.001	0.0022

silverhorn.co.uk

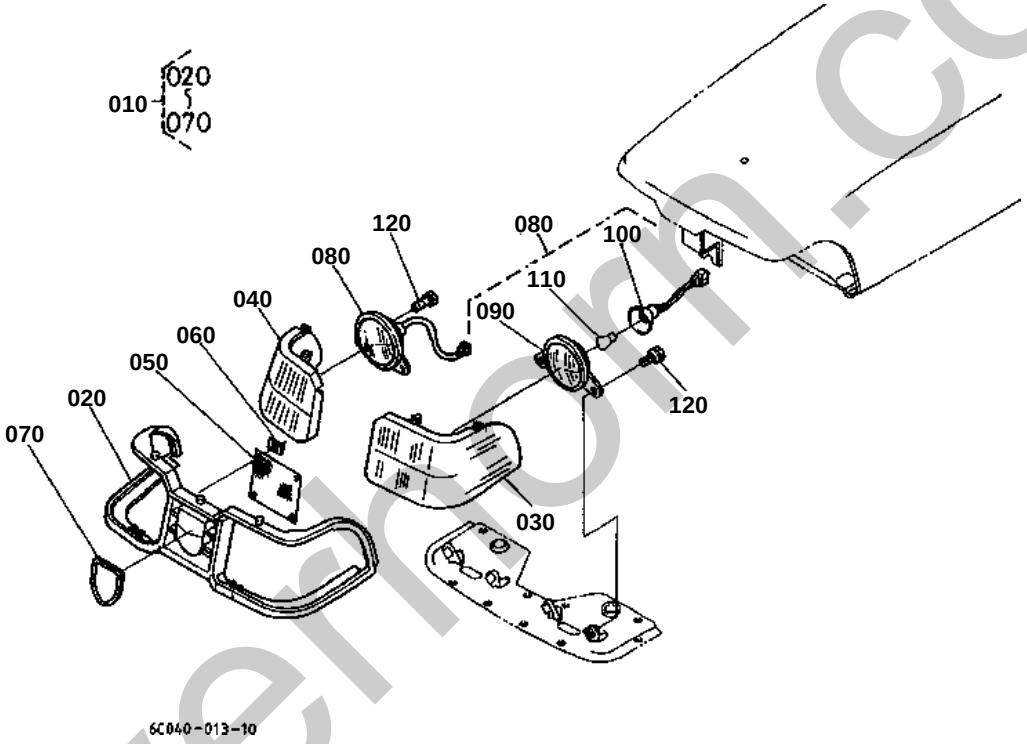

silverhorn.co.uk

HEAD LIGHT

↔ Interchangeable; ≠ not interchangeable; ← new for old; → old for new

REF.No	Part No.	Description	Q'ty	S.No.	I/C	REMARKS	Weight (kgf)	Weight (lb)
010	6C040-54132	ASSY GRILLE LIGHT	1	<=70831			0	0
010	6C040-54134	ASSY GRILLE LIGHT	1	>=70832	←		0.46	1.012
020	6C040-54170	GRILLE HEAD LIGHT	1	<=71729			0	0
020	6C040-54173	GRILLE HEAD LIGHT	1	>=71730	←		0.15	0.33
030	6C040-54180	COVER HEAD LIGHT LH	1	<=70831			0	0
030	6C040-54183	COVER HEAD LIGHT LH	1	>=70832	←		0.131	0.2882
040	6C040-54190	COVER HEAD LIGHT RH	1	<=70831			0	0
040	6C040-54193	COVER HEAD LIGHT RH	1	>=70832	←		0.03	0.066
050	6C040-54240	NET	1				0.017	0.0374
060	55611-44190	NUT	2				0.004	0.0088
070	6C040-54290	MARK MASCOT	1				0.008	0.0176
080	6C040-55610	ASSY LIGHT HEAD	2				0.15	0.33
090	6C040-55620	COMP.LENS HEAD LIGHT	2				0.112	0.2464
100	6C040-55630	COMP.SOCKET	2				0.019	0.0418
110	66591-55630	BULB	2				0.008	0.0176
120	01029-50616	BOLT	4				0.01	0.022

silverhorn.co.uk

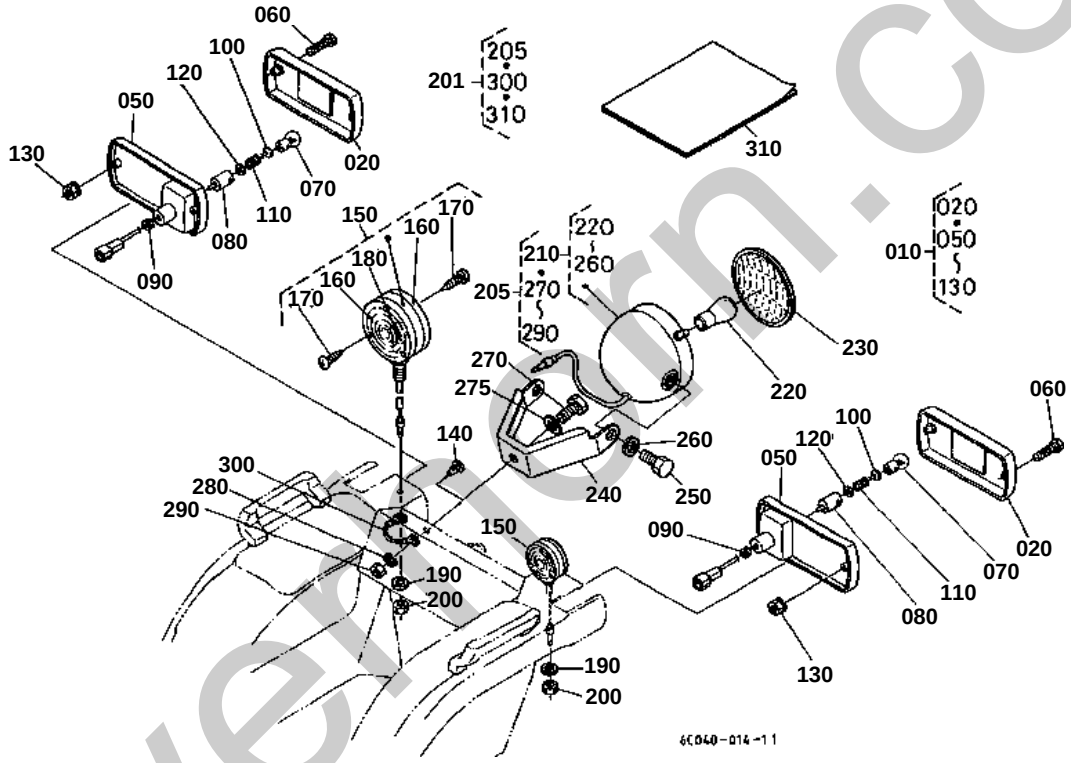

silvermern.co.uk

↔ Interchangeable; ≠ not interchangeable; ← new for old; → old for new

REF.No	Part No.	Description	Q'ty	S.No.	I/C	REMARKS	Weight (kgf)	Weight (lb)
010	6C040-55490	ASSY LIGHT TAIL	2				0.21	0.462
020	6C040-92200	ASSY LENS	2				0.1	0.22
050	6C040-92120	BODY	2				0.065	0.143
060	6C040-92140	SCREW	4				0.007	0.0154
070	6C040-92150	BULB	2				0.006	0.0132
080	6C040-92160	SOCKET	2				0.007	0.0154
090	6C040-92170	BUSH RUBBER	2				0.001	0.0022
100	6C040-92180	INSULATOR	2				0.001	0.0022
110	6C040-92190	SPRING	2				0.001	0.0022
120	6C040-92210	WASHER	2				0.001	0.0022
130	6C040-92230	NUT	4				0.002	0.0044
140	38240-29570	PLUG	1				0.001	0.0022
150	32530-33610	ASSY LIGHT HAZARD	2				0.5	1.1
160	32530-91510	LENS HAZARD LIGHT	4				0.085	0.187
170	32530-91520	SCREW TAPPING	12				0.001	0.0022
180	32530-91530	BULB LIGHT	2			27W	0.02	0.044
190	04411-50100	WASHER TOOTHED	2				0.001	0.0022
200	02114-50100	NUT	2				0.005	0.011
201	6C040-95500	KIT LIGHT WORKING	1			OPTION	11.07	24.354
205	35871-97600	ASSY LIGHT WORKING	1			OPTION	0.88	1.936
210	35871-75900	ASSY LIGHT WORKING	1			OPTION	0.85	1.87
220	68331-53360	BLUB	1			OPTION 12V-35W	0.015	0.033
230	68331-53310	LENS	1			OPTION	0.15	0.33
240	35861-75910	STAY WORKING LAMP 4	1			OPTION	0.25	0.55
250	01153-50820	BOLT	2			OPTION	0.012	0.0264
260	04512-60080	WASHER SPRING	2			OPTION	0.002	0.0044
270	01173-51020	BOLT	1			OPTION	0.017	0.0374
275	04013-60100	WASHER PLAIN	1			OPTION	0.004	0.0088
280	04512-60100	WASHER SPRING	1			OPTION	0.002	0.0044
290	02118-50100	NUT	1			OPTION	0.005	0.011
300	6C040-95520	WIRE HARNESS	1			OPTION	0.008	0.0176
310	6C040-95510	MANUAL ASSEMBLY	1			OPTION	0.004	0.0088

silvernorn.co.uk

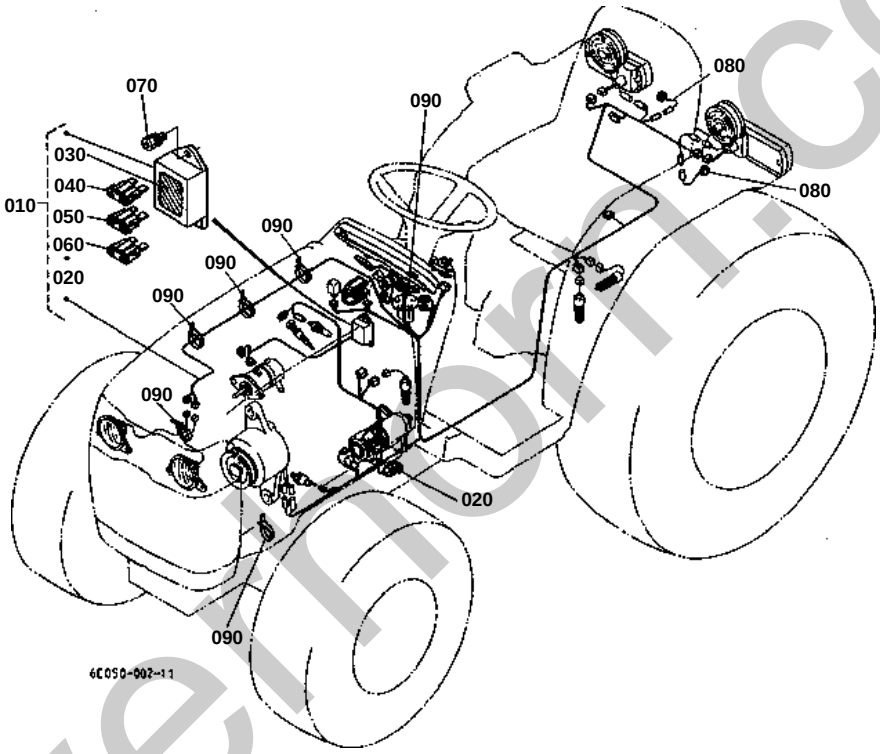

silverhorn.co.uk

↔ Interchangeable; ≠ not interchangeable; ← new for old; → old for new

REF.No	Part No.	Description	Q'ty	S.No.	I/C	REMARKS	Weight (kgf)	Weight (lb)
010	6C040-55460	ASSY WIRE HARNESS	1	<=71015			0	0
010	6C040-55464	ASSY WIRE HARNESS	1	>=71016	←		0	0
010	6C040-55465	ASSY WIRE HARNESS	1	>=71823	←		0.99	2.178
020	1G111-65720	FUSE	1			30A	0.009	0.0198
030	6C040-47490	LABEL FUSE BOX	1			ENGLISH	0.001	0.0022
040	66426-80010	FUSE AUTO	2			5A	0.01	0.022
050	36730-75550	FUSE AUTO	1			10A	0.001	0.0022
060	35820-75560	FUSE AUTO	1			15A	0.002	0.0044
070	01202-50620	BOLT	2				0.007	0.0154
080	6C040-55480	WIRE HARNESS	2				0.005	0.011
090	53581-64150	BAND CORD	7	<=71822			0.002	0.0044
090	53581-64150	BAND CORD	8	>=71823			0.002	0.0044

silverhorn.co.uk

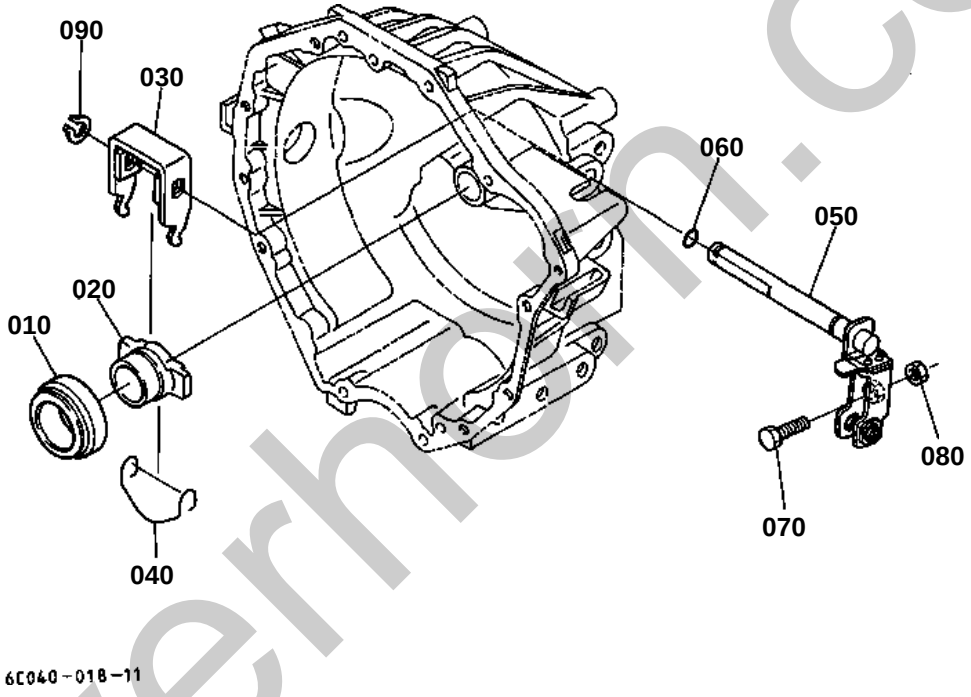

silverhorn.co.uk

CLUTCH ROD

↔ Interchangeable; ≠ not interchangeable; ← new for old; → old for new

REF.No	Part No.	Description	Q'ty	S.No.	I/C	REMARKS	Weight (kgf)	Weight (lb)
010	6C040-13210	BEARING RELEASE	1				0.157	0.3454
020	6C040-13220	HOLDER BEARING	1				0.142	0.3124
030	6C040-13230	FORK CLUTCH RELEASE	1				0.22	0.484
040	6C040-13240	SPRING	1				0.003	0.0066
050	6C040-13250	SHAFT CLUTCH ROD	1	<=74550			0	0
050	6C040-13257	SHAFT CLUTCH ROD	1	>=74551	←		0.37	0.814
060	04811-10140	O RING	1				0.001	0.0022
070	66711-13320	BOLT ADJUSTING	1				0.028	0.0616
080	02118-50100	NUT	2	<=70326			0.005	0.011
080	02118-50100	NUT	1	>=70327			0.005	0.011
090	04612-00160	CIR CLIP EXTERNAL	1				0.001	0.0022

silverhorn.co.uk

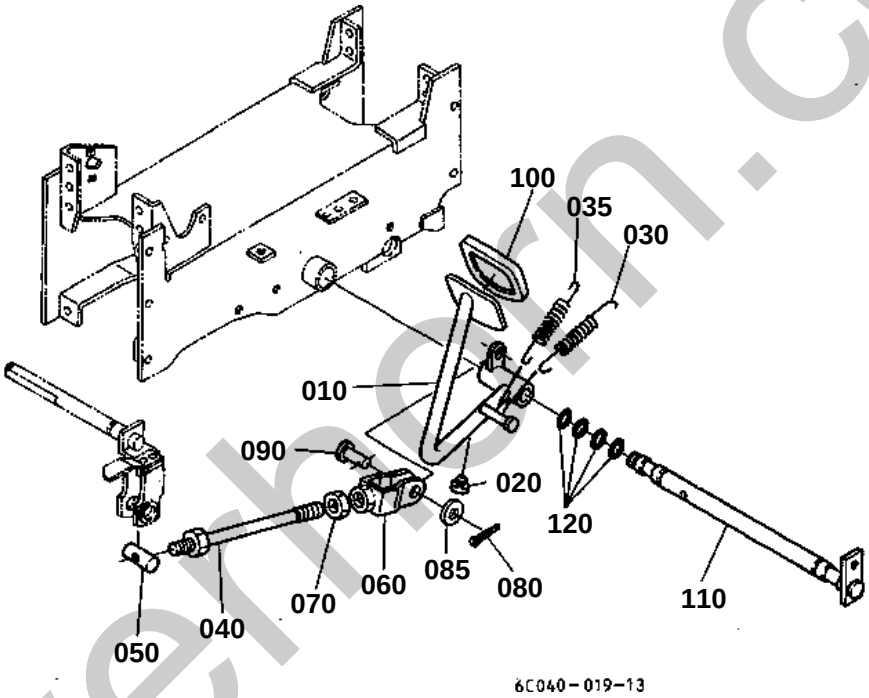

silverhorn.co.uk

CLUTCH PEDAL

↔ Interchangeable; ≠ not interchangeable; ← new for old; → old for new

REF.No	Part No.	Description	Q'ty	S.No.	I/C	REMARKS	Weight (kgf)	Weight (lb)
010	6C040-42135	PEDAL CLUTCH	1				1.68	3.696
020	6C040-42340	CUSHION	1	<=70326			0	0
020	6C040-42342	CUSHION	1	>=70327	←		0.005	0.011
030	6C040-42150	SPRING	1				0.157	0.3454
035	6C040-42160	SPRING	1				0.05	0.11
040	6C040-42113	ROD CLUTCH	1				0.255	0.561
050	6C040-42142	PIN CLUTCH ROD	1				0.034	0.0748
060	6C040-42120	U JOINT	1				0.118	0.2596
070	37720-28990	NUT	1				0.008	0.0176
080	52300-34130	PIN SNAP	1	<=74701			0.004	0.0088
080	05511-50318	PIN SPLIT	1	>=74702	←		0.001	0.0022
085	04013-60100	WASHER PLAIN	1	>=74702			0.004	0.0088
090	05122-51025	PIN JOINT	1				0.017	0.0374
100	37410-44120	COVER PEDAL	1				0.08	0.176
110	6C040-42310	SHAFT PEDAL	1				1.68	3.696
120	04811-00210	O RING	4				0.001	0.0022

silverhorn.co.uk

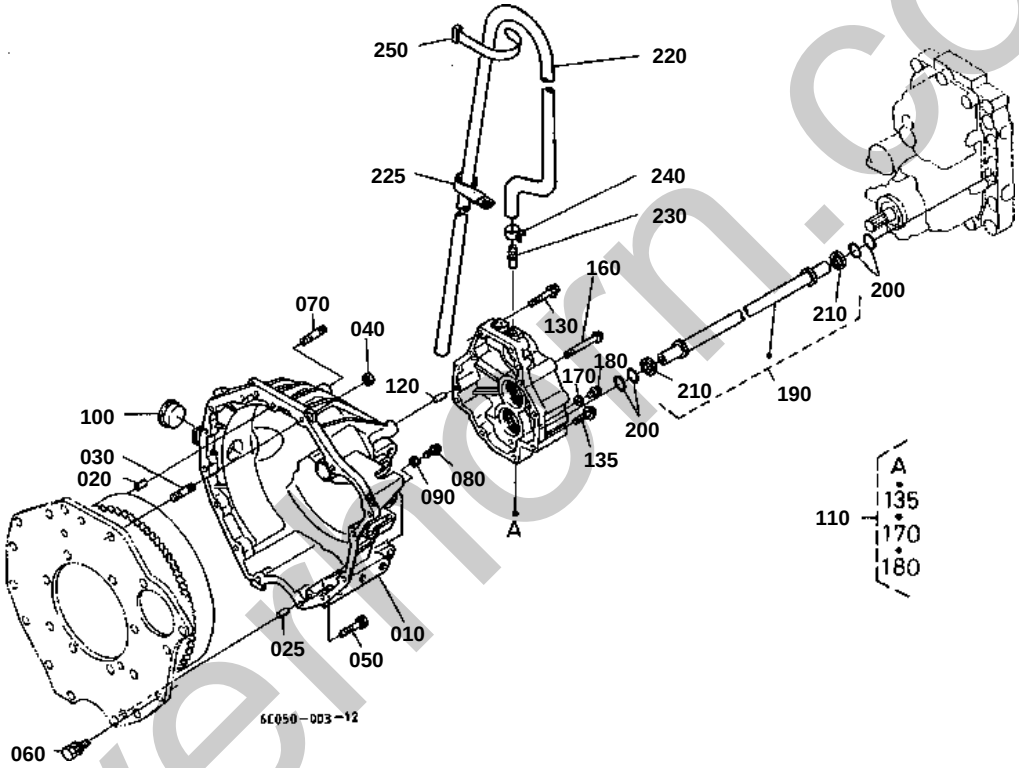

silverthorn.co.uk

140 6C040-1313-0
150 02114-50080
260 6C040-1317-0
270 04811-00100
280 04512-60080
290 02114-50080

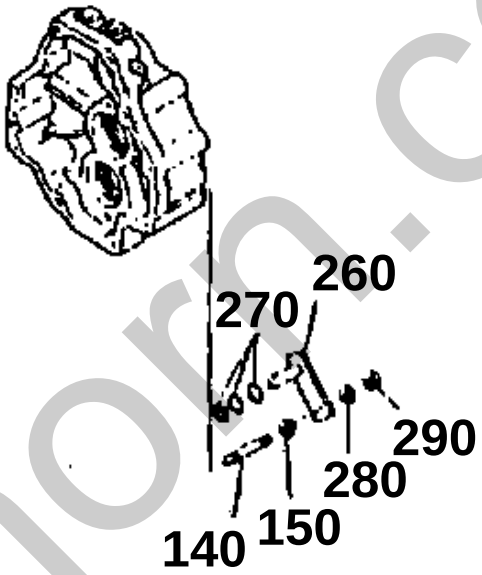

220 6C040-1318-5

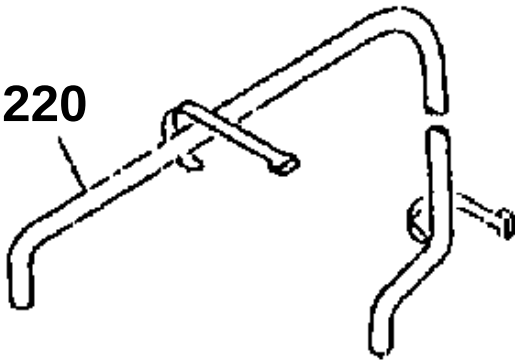

6C040-801-10

silverhorn.co.uk

CLUTCH HOUSING

↔ Interchangeable; ≠ not interchangeable; ← new for old; → old for new

REF.No	Part No.	Description	Q'ty	S.No.	I/C	REMARKS	Weight (kgf)	Weight (lb)
010	6C040-13114	HOUSING CLUTCH	1				5.2	11.44
020	05012-00814	PIN STRAIGHT	2	<=73309			0.006	0.0132
020	05012-00814	PIN STRAIGHT	1	>=73310			0.006	0.0132
025	66611-11160	PIN KNOCK	1	>=73310			0.01	0.022
030	01517-51045	STUD	2				0.032	0.0704
040	02118-50100	NUT	2				0.005	0.011
050	01123-50845	BOLT	2				0.02	0.044
060	01123-50830	BOLT	9			WITHOUT BI-SPEED TURN	0.015	0.033
060	01123-50830	BOLT	7			WITH BI-SPEED TURN	0.015	0.033
070	01555-51225	STUD	4				0.039	0.0858
080	01754-50812	BOLT FLANGE	1				0.01	0.022
090	04717-00800	WASHER WITH RUBBER	1				0.001	0.0022
100	37410-13124	PLUG	1				0.02	0.044
110	6C040-97810	COVER CLUTCH HOUSING	1	<=74263			0	0
110	6C040-97812	COVER CLUTCH HOUSING	1	>=74264	←		10.64	23.408
120	05012-00614	PIN STRAIGHT	2				0.004	0.0088
130	01123-50840	BOLT	3				0.018	0.0396
135	01123-50840	BOLT	1	>=71016			0.018	0.0396
140	6C040-13130	STUD	1	<=71015			0.024	0.0528
150	02114-50080	NUT	1	<=71015			0.005	0.011
160	01123-50860	BOLT	6				0.026	0.0572
170	04717-01000	WASHER WITH RUBBER	1				0.001	0.0022
180	06331-35010	PLUG	1				0.012	0.0264
190	6C040-13153	PIPE	1				0.25	0.55
200	04811-00180	O RING	4	<=73309			0.001	0.0022
200	04811-06170	O RING	4	>=73310	←		0.001	0.0022
210	6C040-13160	RING	2				0.001	0.0022
220	6C040-13185	HOSE BREATHER	1	<=71194			0	0
220	6C040-13186	HOSE BREATHER	1	>=71195	←		0.21	0.462
225	34150-29390	CLAMP CORD	1	>=71195			0.004	0.0088
230	6C040-13140	JOINT	1				0.016	0.0352
240	09318-88200	CLAMP HOSE	1	<=72691			0.004	0.0088
240	32721-39160	CLAMP HOSE	1	>=72692	↔		0.005	0.011
250	53581-64150	BAND CORD	2	<=74701			0.002	0.0044
250	55311-41260	BAND CORD	1	>=74702	↔		0.007	0.0154
260	6C040-13170	ROD	1	<=71015			0.024	0.0528
270	04811-00100	O RING FILTER	3	<=71015			0.001	0.0022
280	04512-60080	WASHER SPRING	1	<=71015			0.002	0.0044
290	02114-50080	NUT	1	<=71015			0.005	0.011

silverhorn.co.uk

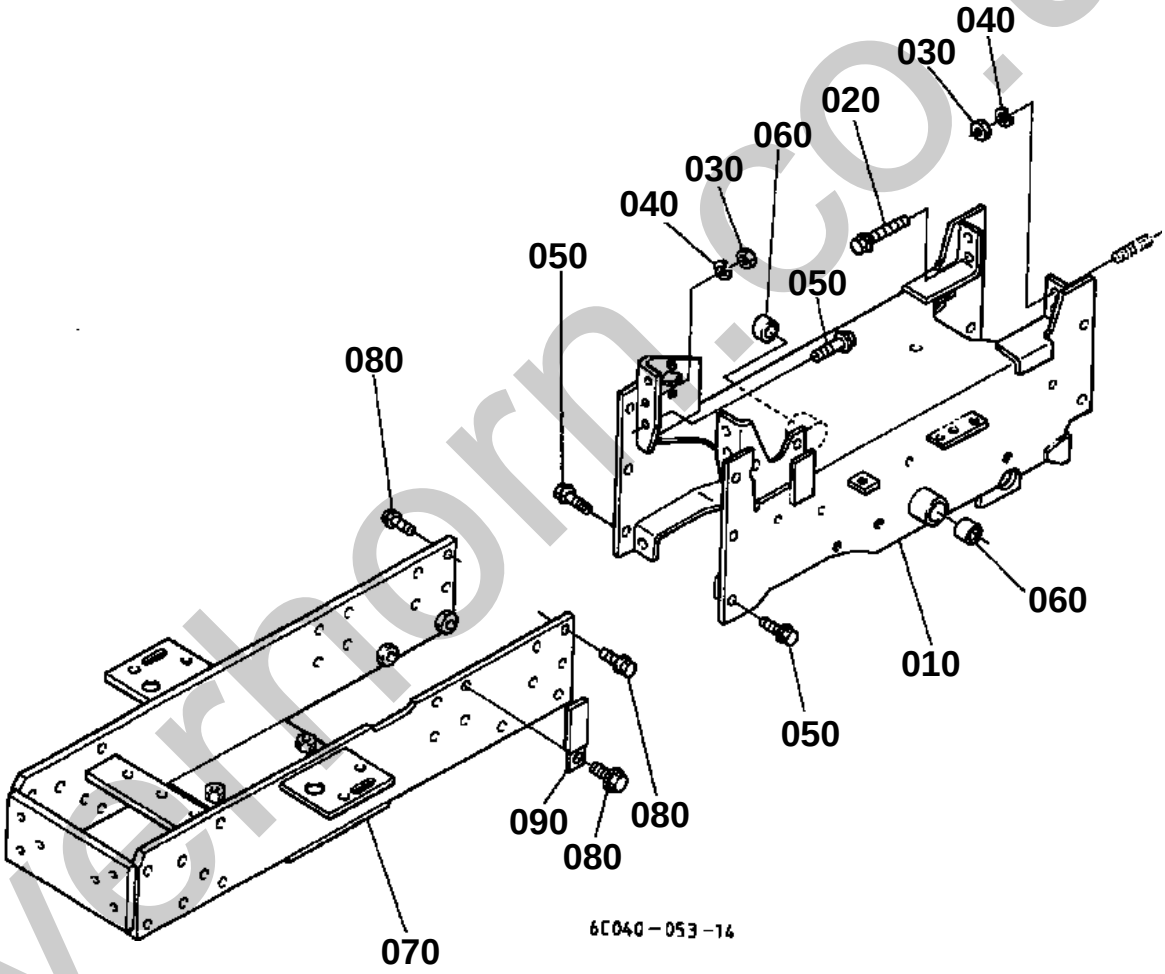

silverthorn.co.uk

FRAME

↔ Interchangeable; ≠ not interchangeable; ← new for old; → old for new

REF.No	Part No.	Description	Q'ty	S.No.	I/C	REMARKS	Weight (kgf)	Weight (lb)
010	6C040-51110	COMP.FRAME	1	<=70831			0	0
010	6C040-51117	COMP.FRAME	1	>=70832	←		0	0
010	6C040-51118	COMP.FRAME	1	>=71730	←		15	33
010	6C040-51124	COMP.FRAME CENTER	1	>=74478	→		15.7	34.54
010	6C040-51124	COMP.FRAME CENTER	1	>=75501	←		15.7	34.54
020	01123-51265	BOLT	2				0.063	0.1386
030	02174-50120	NUT	8				0.01	0.022
040	04512-60120	WASHER SPRING	8				0.005	0.011
050	01123-51230	BOLT	12				0.04	0.088
060	08511-02515	BUSH	2				0.012	0.0264
070	6C040-51218	COMP.FRAME FRONT	1				0	0
080	01133-51025	BOLT	16				0.023	0.0506
090	35340-29380	CLAMP CORD	1				0.01	0.022

silverhorn.co.uk

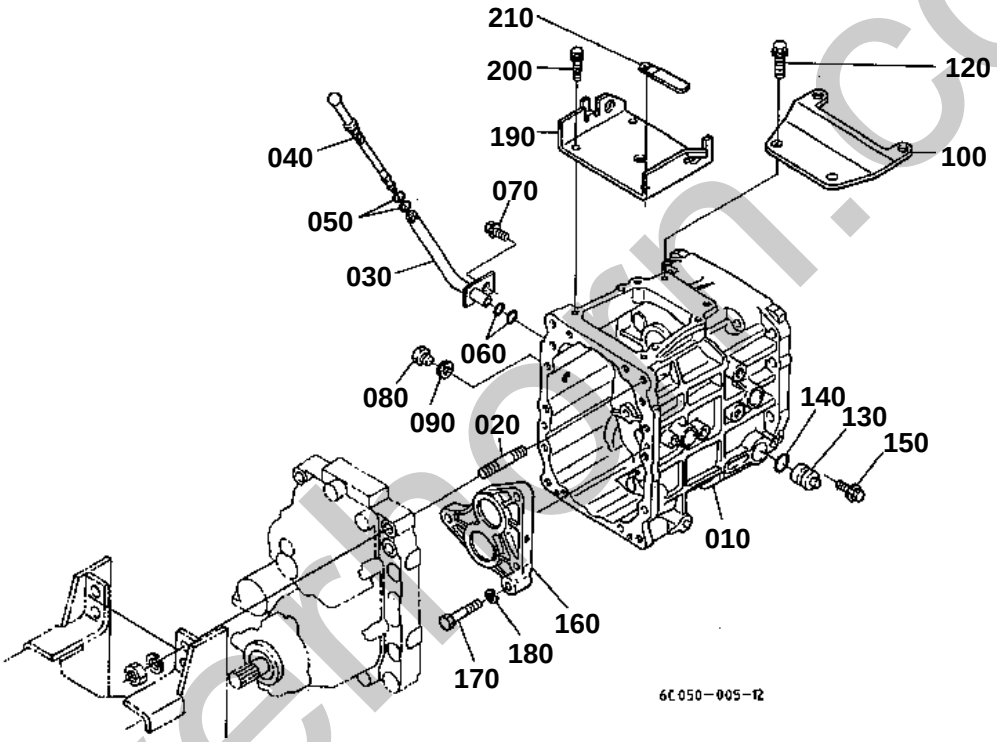

silvermarn.co.uk

110 6C040-1119-0

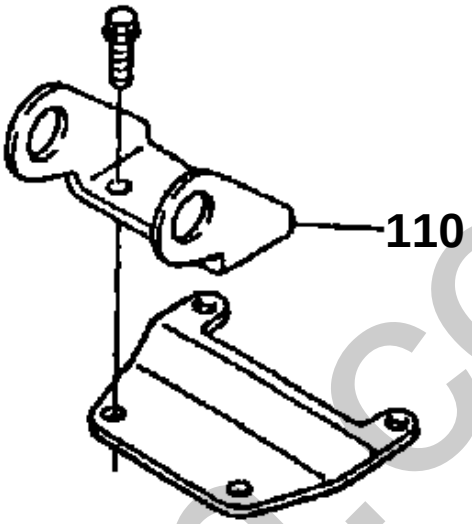

6C050-800-10

silverhorn.co.uk

TRANSMISSION CASE

↔ Interchangeable; ≠ not interchangeable; ← new for old; → old for new

REF.No	Part No.	Description	Q'ty	S.No.	I/C	REMARKS	Weight (kgf)	Weight (lb)
010	6C050-11110	CASE TRANSMISSION	1				5.49	12.078
020	01555-51260	STUD	4				0.067	0.1474
030	6C040-11150	PIPE OIL GAUGE	1	<=73469			0.07	0.154
030	6A320-11150	PIPE OIL GAUGE	1	>=73470	↔		0.078	0.1716
040	6C040-11160	GAUGE OIL	1				0.01	0.022
050	04811-10070	O RING	1	<=72323			0.001	0.0022
050	04811-10070	O RING	2	>=72324			0.001	0.0022
060	04811-00120	O RING	2				0.001	0.0022
070	01123-60816	BOLT	1	<=75384			0.01	0.022
070	01125-60820	BOLT	1	>=75385	←		0.015	0.033
080	06311-55030	PLUG	1				0.05	0.11
090	04717-01700	WASHER WITH RUBBER	1				0.003	0.0066
100	6C040-11180	BRACKET	1				0.4	0.88
110	6C040-11190	HOLDER	1	<=71015			0.35	0.77
120	01123-51030	BOLT	2				0.025	0.055
130	6C050-11140	PLUG	1				0.075	0.165
140	04811-00200	O RING	1				0.001	0.0022
150	01127-50816	BOLT	1				0.02	0.044
160	6C050-12110	HOLDER BEARING	1				0.23	0.506
170	6C050-12120	BOLT REAMER	3				0.036	0.0792
180	04512-60100	WASHER SPRING	3				0.002	0.0044
190	6C050-12412	COVER UPPER	1				0.76	1.672
200	01123-60816	BOLT	4	<=74701			0.01	0.022
200	01123-50820	BOLT	4	>=74702	↔		0.011	0.0242
210	13824-67580	CLAMP CORD	1				0.006	0.0132

silverhorn.co.uk

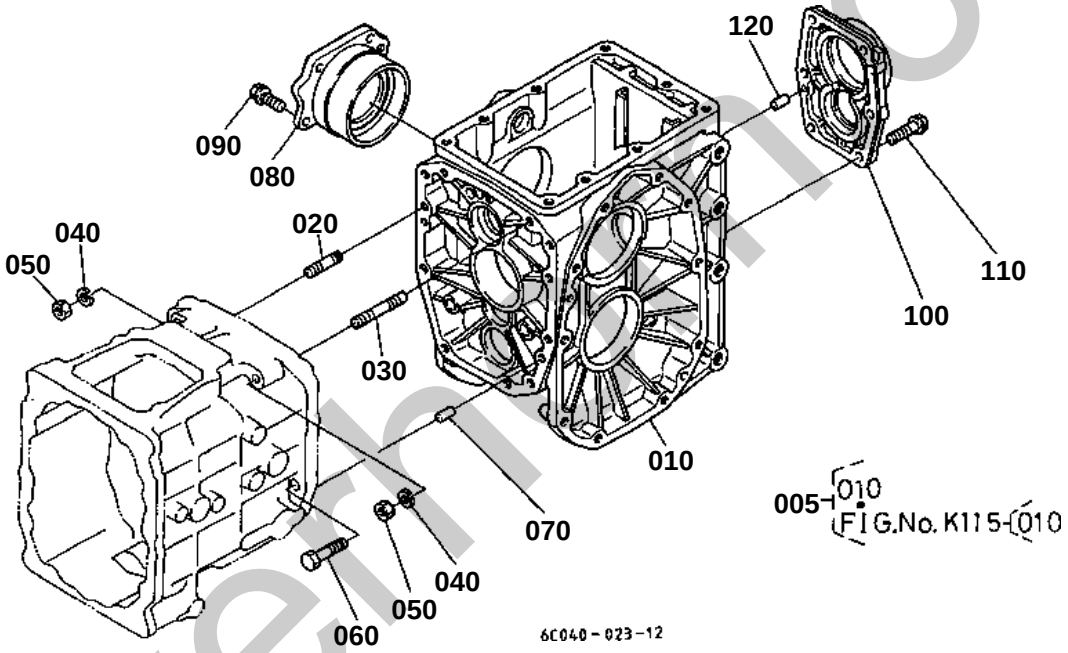

silvermac.co.uk

DIFFERENTIAL GEAR CASE

↔ Interchangeable; ≠ not interchangeable; ← new for old; → old for new

REF.No	Part No.	Description	Q'ty	S.No.	I/C	REMARKS	Weight (kgf)	Weight (lb)
005	6C040-96980	SET CASE DIFF.GEAR	1				11.34	24.948
010	6C040-11170	CASE DIFF.GEAR	1	<=71601		ORDER BY REF.No.005	0.755	1.661
010	6C040-11173	CASE DIFF.GEAR	1	>=71602	←	ORDER BY REF.No.005	5.8	12.76
010	6C040-11174	CASE DIFF.GEAR	1	>=71831	≠		7.3	16.06
020	01555-51035	STUD	2				0.029	0.0638
030	01555-51065	STUD	2				0.048	0.1056
040	04512-60100	WASHER SPRING	4				0.002	0.0044
050	02176-50100	NUT	4				0.005	0.011
060	01123-51040	BOLT	7				0.03	0.066
070	05012-00614	PIN STRAIGHT	2				0.004	0.0088
080	66611-11812	HOLDER DIFF.BRG.RH	1				0.72	1.584
090	01123-50822	BOLT	4				0.012	0.0264
100	6C040-12210	COVER REAR	1	<=73168			0	0
100	6A100-12210	COVER REAR	1	>=73169	↔		0	0
100	6A100-12213	COVER REAR	1	>=75155	←		0.37	0.814
110	01123-51030	BOLT	6				0.025	0.055
120	05012-00614	PIN STRAIGHT	2				0.004	0.0088

silverhorn.co.uk

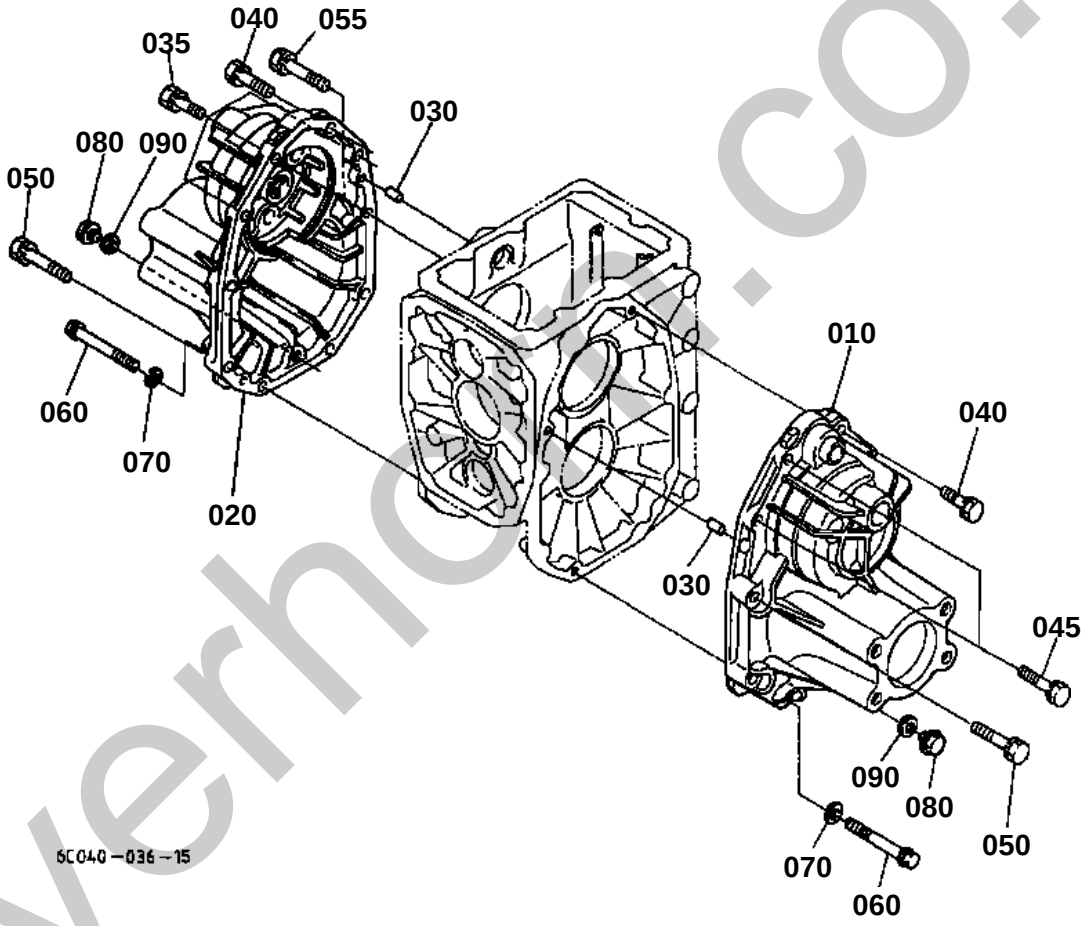

silverhorse.co.uk

010 6C040-1261-3

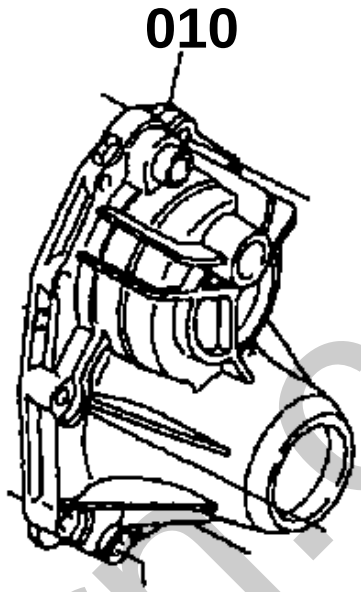

020 6C040-1262-3

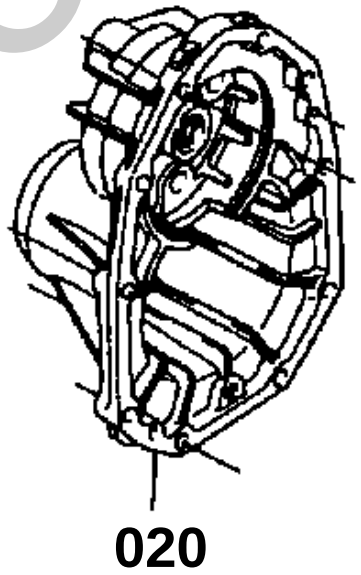

6C040-818-10

silverhorn.co.uk

REAR AXLE CASE

↔ Interchangeable; ≠ not interchangeable; ← new for old; → old for new

REF.No	Part No.	Description	Q'ty	S.No.	I/C	REMARKS	Weight (kgf)	Weight (lb)
010	6C040-12613	CASE AXLE LH	1	<=73012			2.3	5.06
010	K3511-12620	CASE AXLE RH	1	>=73013	↔		2.32	5.104
020	6C040-12623	CASE AXLE RH	1	<=73012			0	0
020	K3511-12610	CASE AXLE LH	1	>=73013	↔		2.42	5.324
030	05012-00614	PIN STRAIGHT	4				0.004	0.0088
035	01123-51035	BOLT	3			WITHOUT BI-SPEED TURN	0.025	0.055
040	01123-51035	BOLT	3				0.025	0.055
045	01123-51035	BOLT	2				0.025	0.055
050	01123-51050	BOLT	9				0.035	0.077
055	01123-51050	BOLT	1			WITHOUT BI-SPEED TURN	0.035	0.077
060	01173-51080	BOLT	2				0.049	0.1078
070	04512-60100	WASHER SPRING	2				0.002	0.0044
080	06331-35012	PLUG	2	<=75500			0.022	0.0484
080	01774-51212	BOLT FLANGE	2	>=75501	≠		0	0
090	04717-01200	WASHER WITH RUBBER	2				0.002	0.0044

silverhorn.co.uk

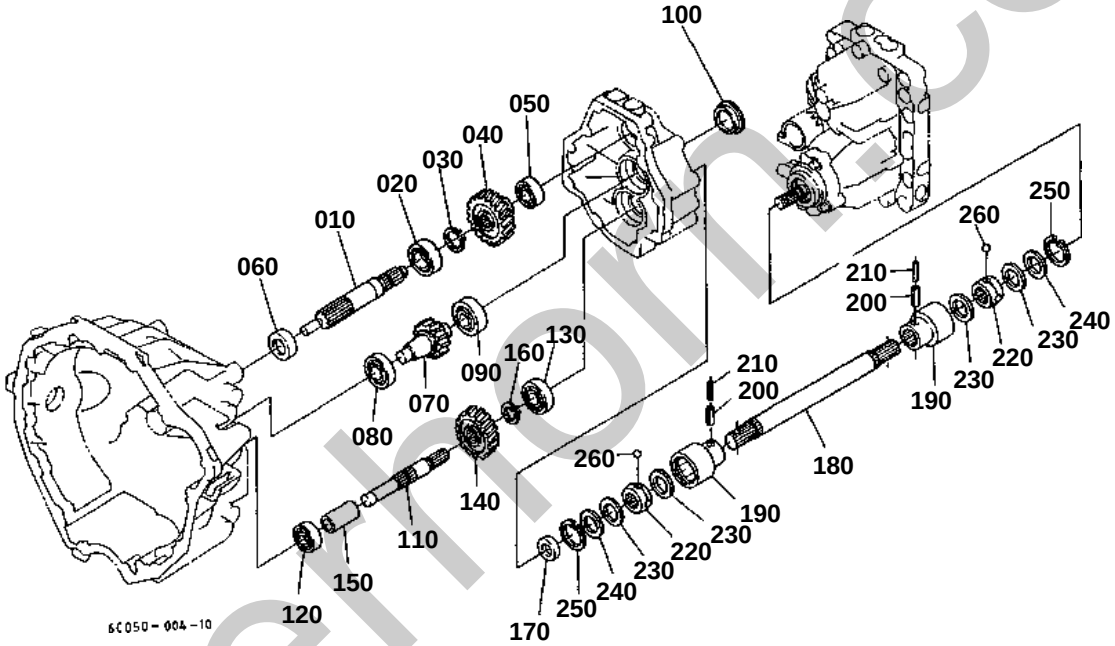

silverthorn.co.uk

↔ Interchangeable; ≠ not interchangeable; ← new for old; → old for new

REF.No	Part No.	Description	Q'ty	S.No.	I/C	REMARKS	Weight (kgf)	Weight (lb)
010	6C040-13510	SHAFT CLUTCH	1	<=72691			0	0
010	6C040-13514	SHAFT CLUTCH	1	>=72692	↔		0.5	1.1
020	34070-22560	BEARING BALL	1	<=71601			0.1	0.22
020	52300-16180	BEARING	1	>=71602	↔		0.05	0.11
030	04612-00200	CIR CLIP EXTERNAL	1				0.001	0.0022
040	6C050-13520	GEAR CLUTCH SHAFT	1			23T	0.38	0.836
050	08101-06203	BEARING BALL	1				0.063	0.1386
060	6C040-13530	SEAL OIL	1				0.012	0.0264
070	6C050-13610	SHAFT FRONT	1			16T	0.42	0.924
080	08101-06203	BEARING BALL	1				0.063	0.1386
090	34070-22560	BEARING BALL	1	<=71601			0.1	0.22
090	52300-16180	BEARING	1	>=71602	↔		0.05	0.11
100	41051-15820	PLUG	1	<=74407			0.015	0.033
100	6A100-12180	PLUG	1	>=74408	←		0.022	0.0484
110	6C040-13610	SHAFT FRONT	1	<=74040			0	0
110	6C040-13613	SHAFT FRONT	1	>=74041	←		0.28	0.616
120	08101-06203	BEARING BALL	1				0.063	0.1386
130	34070-22560	BEARING BALL	1	<=71601			0.1	0.22
130	52300-16180	BEARING	1	>=71602	↔		0.05	0.11
140	6C050-13710	GEAR	1			20T	0.31	0.682
150	6C040-13670	COLLAR	1				0.04	0.088
160	04612-00200	CIR CLIP EXTERNAL	1				0.001	0.0022
170	6C040-13630	SEAL OIL	1	<=74943			0.01	0.022
170	66363-39560	SEAL OIL	1	>=74944	←		0.01	0.022
180	6C050-13723	SHAFT PROPELLER	1				0.64	1.408
190	67111-13710	COUPLING BALL OUTER	2				0.225	0.495
200	67955-13830	PIN SPRING	2	<=73012			0.005	0.011
200	05411-00640	PIN SPRING	2	>=73013	↔		0.006	0.0132
210	70451-57350	PIN SPRING	2	<=73012			0.005	0.011
210	32721-57680	PIN SPRING	2	>=73013	↔		0.002	0.0044
220	67211-14133	COUPLING BALL INNER	2				0.075	0.165
230	67111-13730	GASKET BALL JOINT	4				0.002	0.0044
240	67111-13740	SUPPORT GASKET	2				0.004	0.0088
250	04611-00350	CIR CLIP INTERNAL	2				0.003	0.0066
260	07715-00803	BALL	8				0.004	0.0088

silvermorn.co.uk

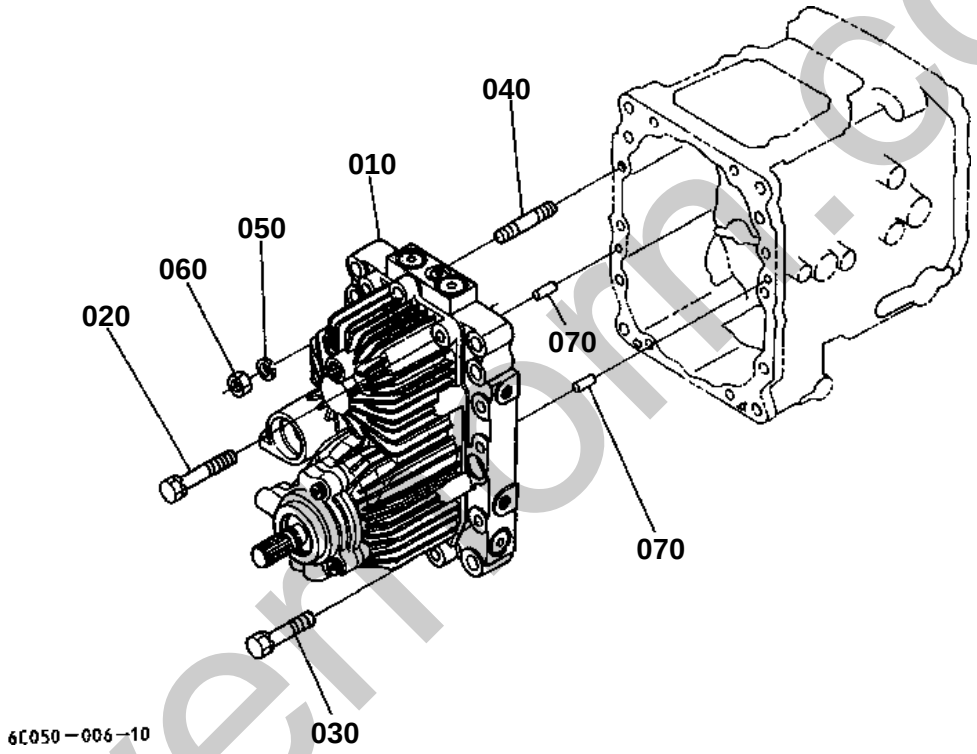

silvermoor.co.uk

↔ Interchangeable; ≠ not interchangeable; ← new for old; → old for new

REF.No	Part No.	Description	Q'ty	S.No.	I/C	REMARKS	Weight (kgf)	Weight (lb)
010	6C050-11600	ASSY HST	1	<=71194		REFER TO L.No.D01-R FOR COMPONENTS.	0	0
010	6C050-11604	ASSY HST	1	>=71195	←	REFER TO L.No.D01-R FOR COMPONENTS.	16.5	36.3
010	6C050-11605	ASSY HST	1	>=71730	←	REFER TO L.No.D01-R FOR COMPONENTS.	0	0
010	6C050-11606	ASSY HST	1	>=72061	←	REFER TO L.No.D01-R FOR COMPONENTS.	15	33
020	01123-51075	BOLT	4				0.05	0.11
030	01123-51060	BOLT	5				0.05	0.11
040	6C050-11690	STUD	1				0.043	0.0946
050	04512-60100	WASHER SPRING	1				0.002	0.0044
060	02176-50100	NUT	1				0.005	0.011
070	05012-00614	PIN STRAIGHT	2				0.004	0.0088

silverhorn.co.uk

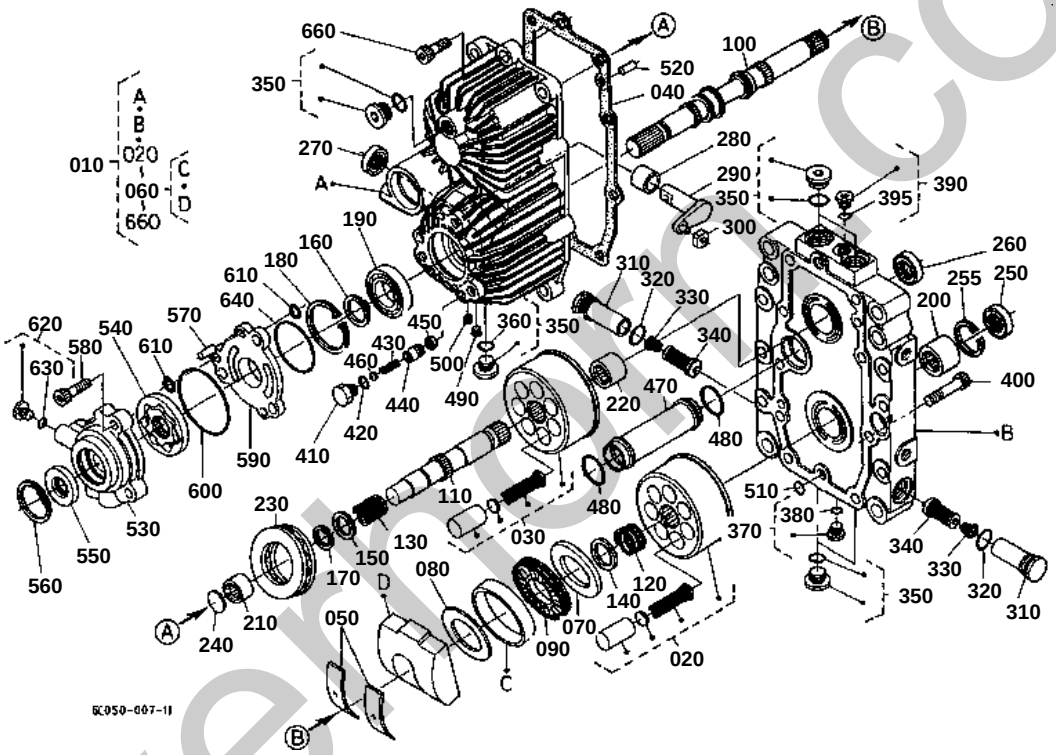

silvermore.co.uk

610 6C050-9861-0
650 6C050-9874-0

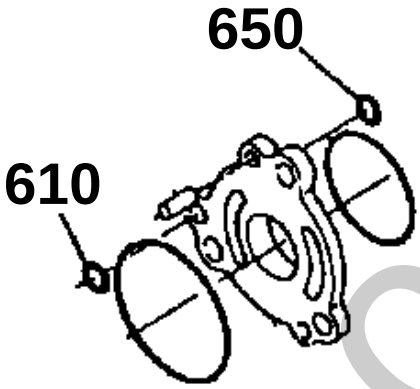

6C050-801-10

silverhorn.co.uk

↔ Interchangeable; ≠ not interchangeable; ← new for old; → old for new

REF.No	Part No.	Description	Q'ty	S.No.	I/C	REMARKS	Weight (kgf)	Weight (lb)
010	6C050-11600	ASSY HST	1	<=71194			0	0
010	6C050-11604	ASSY HST	1	>=71195	←		16.5	36.3
010	6C050-11605	ASSY HST	1	>=71730	←		0	0
010	6C050-11606	ASSY HST	1	>=72061	←		15	33
020	6C050-98100	KIT CYL-BLOCK PUMP	1				0.92	2.024
030	6C050-98200	KIT CYL-BLOCK MOTOR	1				0.92	2.024
040	6C050-98080	GASKET	1				0.005	0.011
050	66101-37320	BEARING CRADLE	2	<=71729			0.02	0.044
050	6C050-98750	BEARING CRADLE	2	>=71730	←		0.017	0.0374
060	6C050-98300	ASSY SWASHPLATE	1	<=72060			0	0
060	6C050-98302	ASSY SWASHPLATE	1	>=72061	←		1.48	3.256
070	6C050-98120	PLATE THRUST	1				0.079	0.1738
080	6C050-98130	PLATE THRUST	1				0.038	0.0836
090	6C050-98140	BEARING THRUST	1	<=72060			0.065	0.143
090	6C052-98140	BEARING THRUST	1	>=72061	←		0.07	0.154
100	6C050-98150	SHAFT PUMP	1				0.585	1.287
110	6C050-98160	SHAFT MOTOR	1				0.34	0.748
120	6C050-98170	SPRING	1				0.013	0.0286
130	6C050-98180	SPRING	1				0.011	0.0242
140	6C050-98190	WASHER	1				0.002	0.0044
150	66101-37060	WASHER PLAIN	1				0.001	0.0022
160	6C050-98210	CIR-CLIP	1				0.002	0.0044
170	66101-37020	CLIP	1				0.001	0.0022
180	6C050-98220	CIR-CLIP	1				0.006	0.0132
190	6C050-98230	BEARING BALL	1				0.08	0.176
200	6C050-98240	BEARING NEEDLE	1	<=71194			0	0
200	6C050-98243	BEARING NEEDLE	1	>=71195	←		0.054	0.1188
210	66101-37080	BEARING NEEDLE	1				0.015	0.033
220	6C050-98250	BEARING NEEDLE	1				0.053	0.1166
230	66101-37220	BEARING THRUST BALL	1				0.25	0.55
240	66101-37230	PLATE	1				0.003	0.0066
250	6C050-98260	SEAL OIL	1				0.006	0.0132
255	6C050-98630	CIR-CLIP	1				0.001	0.0022
260	66101-36780	SEAL OIL	1				0.01	0.022
270	66101-36720	SEAL OIL	1				0.007	0.0154
280	6C050-98640	BEARING JOURNAL	1				0.02	0.044
290	6C050-98650	ARM TRUNNION	1				0.078	0.1716
300	66071-36250	GUIDE THROTTLE	1				0.005	0.011
310	6C050-98270	PLUG	2				0.069	0.1518
320	6C050-98280	O RING	2				0.001	0.0022
330	6C050-98290	SPRING CHECK VALVE	2				0.001	0.0022
340	6C050-98310	ASSY VALVE RELIEF	2				0.02	0.044
350	6C050-98400	ASSY PLUG	1				0.028	0.0616
370	6C050-98350	ASSY PLUG	1				0.013	0.0286
380	6C050-98670	RING	1				0.001	0.0022
390	6C050-98360	ASSY PLUG	1				0.008	0.0176
395	6C050-98690	RING	1				0.001	0.0022
400	6C050-98370	BOLT HEX-SOC-HD	5				0.04	0.088
410	6C050-98380	PLUG	1				0.014	0.0308
420	6C050-98390	O RING	1				0.001	0.0022
430	6C050-98410	SPRING	1				0.001	0.0022
440	6C050-98420	CONE	1				0.006	0.0132
450	6C050-98430	SEAT	1				0.002	0.0044
460	6C050-98440	SHIM	1				0.001	0.0022
470	6C050-98450	PIPE	1				0.1	0.22
480	6C050-98460	O RING	2				0.001	0.0022

silvermorn.co.uk

↔ Interchangeable; ≠ not interchangeable; ← new for old; → old for new

REF.No	Part No.	Description	Q'ty	S.No.	I/C	REMARKS	Weight (kgf)	Weight (lb)
490	6C050-98470	PLUG	1				0.001	0.0022
500	6C050-98480	PLUG	1				0.001	0.0022
510	6C050-98490	O RING	1				0.001	0.0022
520	6C050-98510	PIN	2				0.002	0.0044
530	6C050-98520	HOUSING PUMP	1				0.202	0.4444
540	6C050-98530	ASSY ROTOR	1				0.103	0.2266
550	6C050-98540	SEAL OIL	1				0.01	0.022
560	6C050-98550	CIR-CLIP	1				0.003	0.0066
570	6C050-98560	PIN	1				0.004	0.0088
580	6C050-98570	BOLT HEX-SOC-HD	3				0.021	0.0462
590	6C050-98580	PLATE SPACER	1				0.3	0.66
600	6C050-98590	O RING	1				0.002	0.0044
610	6C050-98610	BEARING NEEDLE	1	<=71194			0.001	0.0022
610	6C050-98610	O RING	2	>=71195			0.001	0.0022
620	6C050-98500	ASSY PLUG	1				0.005	0.011
630	6C050-98720	RING	1				0.001	0.0022
640	6C050-98730	RING	1				0.001	0.0022
650	6C050-98740	O RING	1	<=71194			0	0
660	6C050-98620	BOLT HEX-SOC-HD	1				0.027	0.0594

silverhorn.co.uk

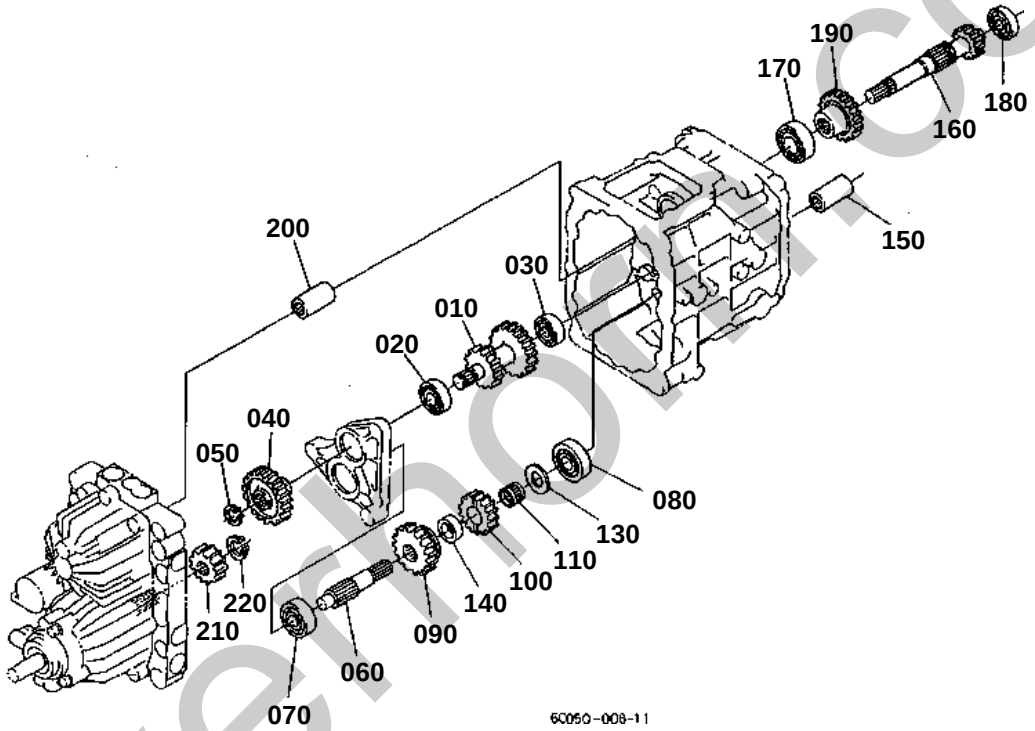

silvermoor.co.uk

100 6C040-1433-0

110 6C040-1439-0

120 67061-1424-0

140 67950-1465-0

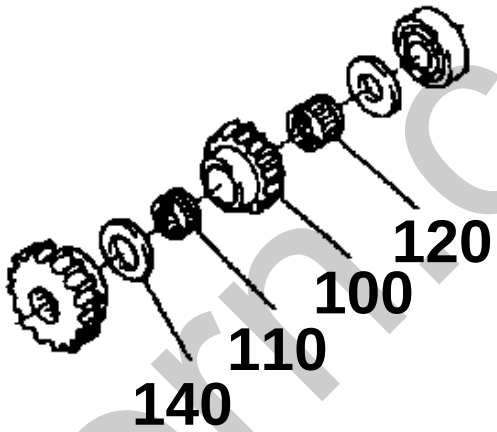

6C040-817-10

silverhorn.co.uk

2ND SHAFT/3RD SHAFT/4TH SHAFT

↔ Interchangeable; ≠ not interchangeable; ← new for old; → old for new

REF.No	Part No.	Description	Q'ty	S.No.	I/C	REMARKS	Weight (kgf)	Weight (lb)
010	6C050-14210	GEAR-SHAFT	1			13-18T	0.85	1.87
020	52300-16180	BEARING	1				0.05	0.11
030	61361-14280	BEARING BALL	1				0.09	0.198
040	6C050-14280	GEAR	1			27T	0.32	0.704
050	04612-00190	CIR CLIP EXTERNAL	1				0.001	0.0022
060	6C050-14310	SHAFT	1	<=74943			0	0
060	6C050-14312	SHAFT	1	>=74944	←		0.31	0.682
070	08101-06303	BEARING BALL	1				0.112	0.2464
080	08101-06304	BEARING BALL	1				0.146	0.3212
090	6C040-14320	GEAR	1			17T	0.33	0.726
100	6C040-14330	GEAR	1	<=74943		13T	0.182	0.4004
100	6C040-14332	GEAR	1	>=74944	≠	13T	0.15	0.33
100	6C040-14333	GEAR	1	>=75501	≠	13T	0	0
110	6C040-14390	BEARING NEEDLE	1	<=74943			0.014	0.0308
110	6C040-14350	BEARING NEEDLE	1	>=74944	≠		0.02	0.044
110	6C040-14352	BEARING NEEDLE	1	>=75501	←		0.03	0.066
120	67061-14240	BEARING NEEDLE	1	<=74943			0.03	0.066
130	67111-14160	COLLAR	1				0.01	0.022
140	67950-14650	COLLAR	1	<=74943			0.02	0.044
140	6C040-14360	COLLAR	1	>=74944	≠		0.051	0.1122
140	6C040-14362	COLLAR	1	>=75501	←		0	0
150	6C050-14520	COUPLING	1				0.099	0.2178
160	6C050-14410	GEAR-SHAFT	1			14T	0.635	1.397
170	08101-06205	BEARING BALL	1				0.14	0.308
180	61361-14280	BEARING BALL	1				0.09	0.198
190	6C050-14450	GEAR	1			18T	0.28	0.616
200	6C050-14520	COUPLING	1				0.099	0.2178
210	6C050-14290	GEAR	1			14T	0.115	0.253
220	04612-00180	CIR CLIP EXTERNAL	1				0.001	0.0022

silverhorn.co.uk

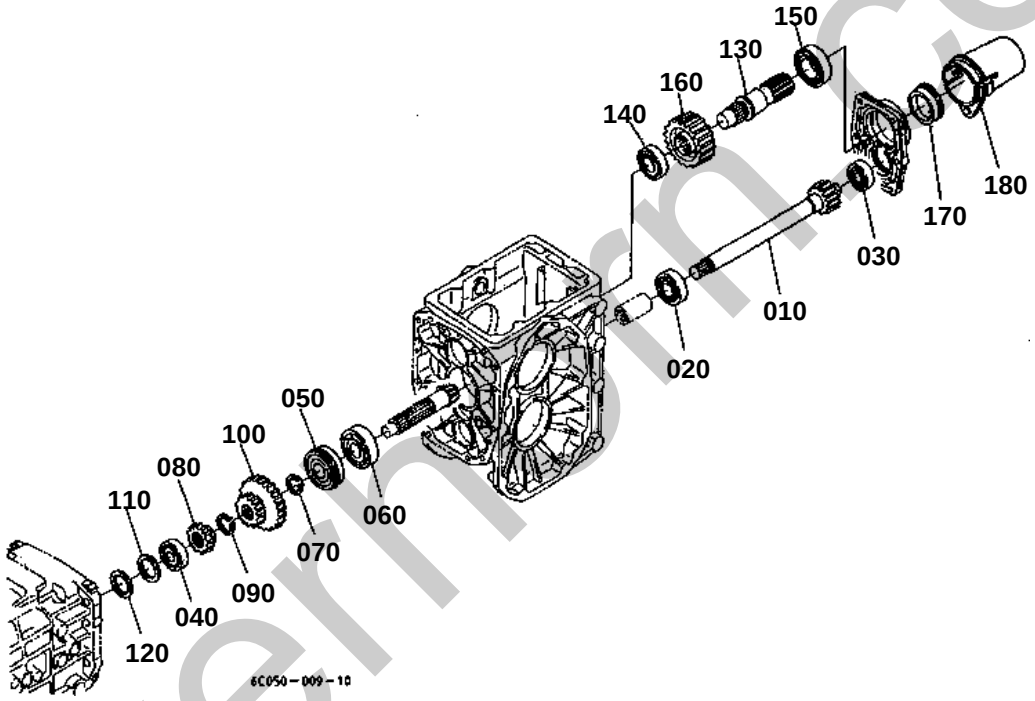

silverhorn.co.uk

180 37410-6311-0

6C040-828-10

silverhorn.co.uk

5TH SHAFT/PTO SHAFT

↔ Interchangeable; ≠ not interchangeable; ← new for old; → old for new

REF.No	Part No.	Description	Q'ty	S.No.	I/C	REMARKS	Weight (kgf)	Weight (lb)
010	6C050-14510	GEAR-SHAFT	1			11T	1.025	2.255
020	67121-56770	BEARING BALL	1				0.127	0.2794
030	67955-14170	BEARING BALL	1				0.114	0.2508
040	08221-07303	BEARING BALL	1				0.116	0.2552
050	38430-21590	BEARING BALL	1				0.25	0.55
060	64441-22170	BEARING BALL	1				0.24	0.528
070	15471-95360	CIR CLIP EXTERNAL	1				0.004	0.0088
080	6C040-14650	GEAR 4WD	1			13T	0.093	0.2046
090	04612-00250	CIR CLIP EXTERNAL	1				0.002	0.0044
100	6C050-14620	GEAR	1			15-29T	0.425	0.935
110	66591-14720	SPACER	1				0.002	0.0044
120	66611-14670	SHIM	1			1.4MM	0.008	0.0176
120	66611-14680	SHIM	1			1.8MM	0.01	0.022
120	66611-14690	SHIM	1			0.2MM	0.001	0.0022
130	37410-16510	SHAFT PTO	1				0.79	1.738
140	67121-56770	BEARING BALL	1				0.127	0.2794
150	6C040-14730	BEARING BALL	1				0.15	0.33
160	6C040-14720	GEAR	1			24T	0.68	1.496
170	37410-16550	SEAL OIL	1				0.03	0.066
180	37410-63110	CAP PTO SHAFT	1	<=71830			0	0
180	37410-63112	CAP PTO SHAFT	1	>=71831	←		0.055	0.121

silverhorn.co.uk

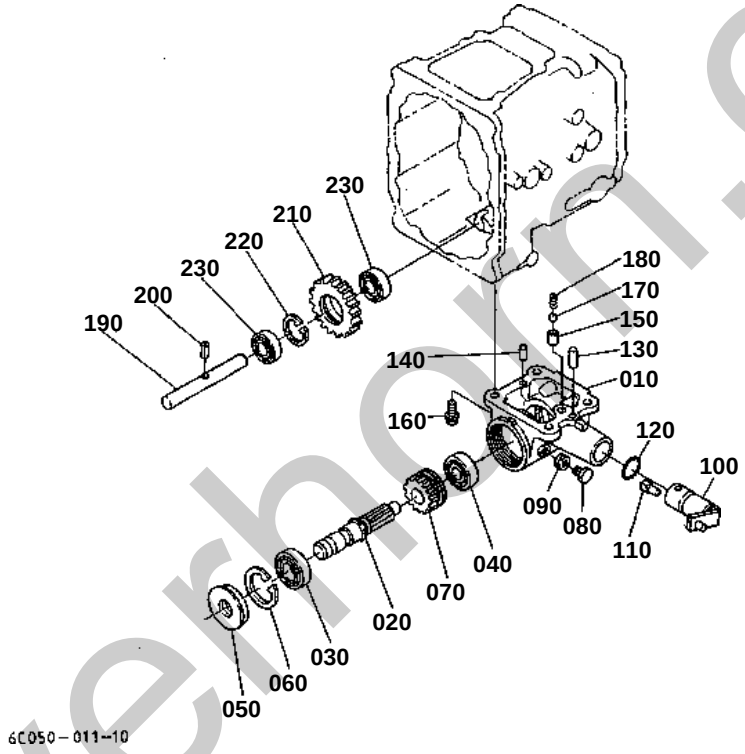

silverhorn.co.uk

MID PTO

↔ Interchangeable; ≠ not interchangeable; ← new for old; → old for new

REF.No	Part No.	Description	Q'ty	S.No.	I/C	REMARKS	Weight (kgf)	Weight (lb)
010	6C050-21210	CASE MID PTO	1				0.48	1.056
020	6C050-21230	SHAFT MID PTO	1				0.37	0.814
030	08101-06205	BEARING BALL	1				0.14	0.308
040	08101-06303	BEARING BALL	1				0.112	0.2464
050	32430-25540	SEAL OIL MID PTO	1				0.04	0.088
060	04611-00520	CIR CLIP INTERNAL	1				0.009	0.0198
070	6C050-21242	GEAR MID PTO	1			11T	0.152	0.3344
080	06331-35012	PLUG	1				0.022	0.0484
090	04717-01200	WASHER WITH RUBBER	1				0.002	0.0044
100	6C050-21282	ARM MID PTO	1				0.33	0.726
110	6C050-21292	SHOE	1				0.01	0.022
120	04811-07220	O RING	1				0.001	0.0022
130	05012-00625	PIN STRAIGHT	1				0.006	0.0132
140	05012-00614	PIN STRAIGHT	1				0.004	0.0088
150	66116-11190	PIPE KNOCK	1				0.002	0.0044
160	01123-51035	BOLT	4				0.025	0.055
170	07715-01605	BALL	1				0.003	0.0066
180	62061-18260	SPRING STOPPER	1				0.002	0.0044
190	6C040-21250	SHAFT IDLE	1	<=73261			0	0
190	6C090-21250	SHAFT IDLE	1	>=73262	↔		0.22	0.484
200	05411-00616	PIN SPRING	1				0.002	0.0044
210	6C040-21220	GEAR M-PTO	1			19T	0.22	0.484
220	04611-00400	CIR CLIP INTERNAL	1				0.005	0.011
230	08101-06203	BEARING BALL	2				0.063	0.1386

silverhorn.co.uk

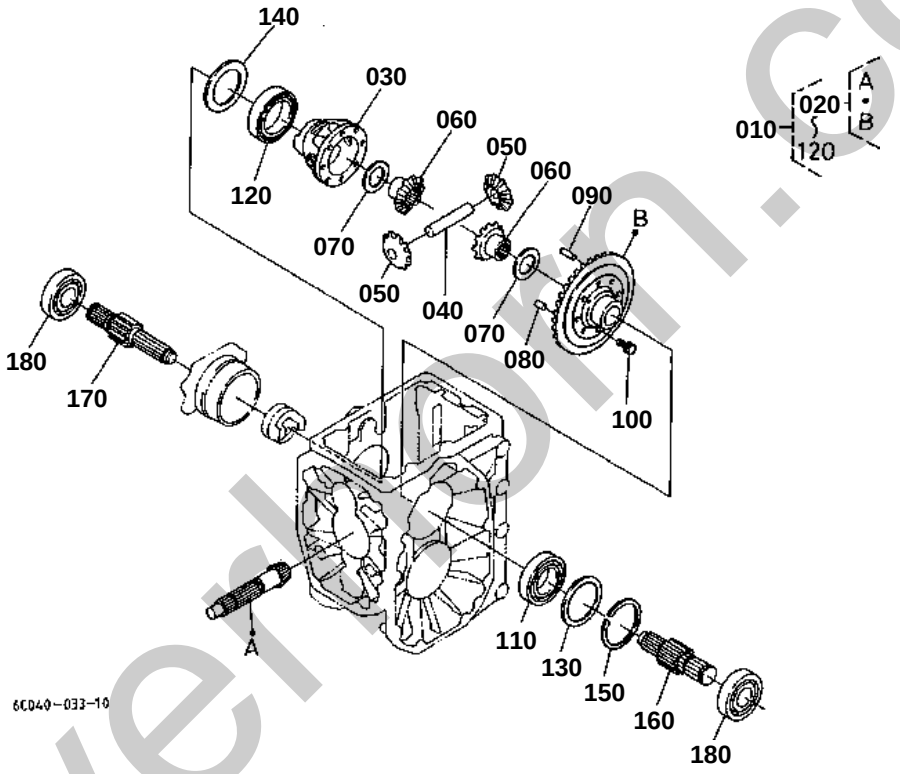

silverkorn.co.uk

REAR DIFFERENTIAL

↔ Interchangeable; ≠ not interchangeable; ← new for old; → old for new

REF.No	Part No.	Description	Q'ty	S.No.	I/C	REMARKS	Weight (kgf)	Weight (lb)
010	6C040-97910	ASSY DIFFERENTIAL	1	<=75500			4.16	9.152
010	6C140-97910	ASSY DIFFERENTIAL	1	>=75501	←		0	0
020	6C040-97920	ASSY GEAR BEVEL	1			6-37T	1.97	4.334
030	6C040-14970	CASE DIFFERENTIAL	1				0.7	1.54
040	67711-14912	SHAFT DIFF.PINION	1				0.14	0.308
050	67711-14920	PINION DIFF.	2				0.11	0.242
060	6C040-14930	GEAR DIFF.SIDE	2				0.165	0.363
070	67211-15160	SHIM	2			1.0MM	0.01	0.022
070	67211-15170	SHIM	2			0.8MM	0.008	0.0176
070	67211-15180	SHIM	2			1.2MM	0.01	0.022
080	66591-14792	PIN KNOCK	1				0.003	0.0066
090	66591-14783	PIN STRAIGHT	1				0.01	0.022
100	67810-56680	BOLT UBS	6				0.013	0.0286
110	08101-06009	BEARING BALL	1	<=75500			0.22	0.484
110	6C140-14990	BEARING BALL	1	>=75501	≠		0	0
120	08101-06010	BEARING BALL	1	<=75500			0.262	0.5764
120	6C140-14980	BEARING BALL	1	>=75501	≠		0	0
130	66591-14980	SHIM DIFF.SIDE	1			0.5MM	0.005	0.011
130	66591-14990	SHIM DIFF.SIDE	1			0.2MM	0.002	0.0044
140	66611-15140	SHIM DIFF.SIDE	1			0.5MM	0.006	0.0132
140	66611-15150	SHIM DIFF.SIDE	1			0.2MM	0.002	0.0044
150	04611-00750	CIR CLIP INTERNAL	1				0.019	0.0418
160	6C040-14940	SHAFT DIFF.GEAR LH	1				0.62	1.364
170	6C040-14950	SHAFT DIFF.GEAR RH	1				0.72	1.584
180	08101-06306	BEARING BALL	2				0.335	0.737

silverhorn.co.uk

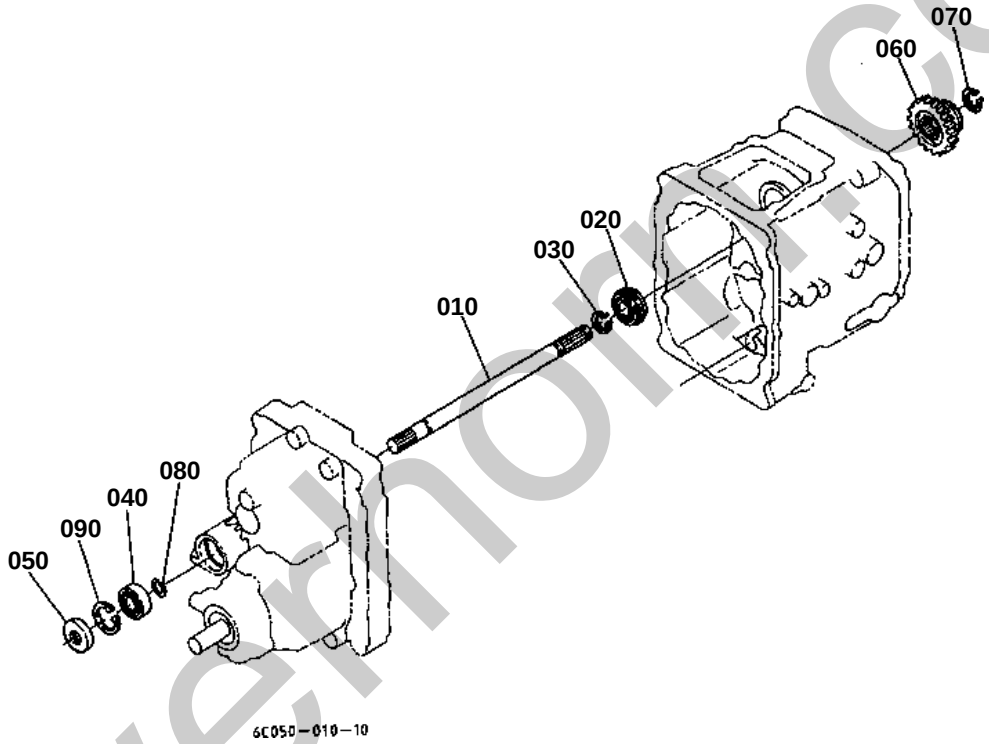

silvermoor.co.uk

FRONT WHEEL PROPELLER SHAFT

↔ Interchangeable; ≠ not interchangeable; ← new for old; → old for new

REF.No	Part No.	Description	Q'ty	S.No.	I/C	REMARKS	Weight (kgf)	Weight (lb)
010	6C050-14810	SHAFT 4WD	1				0.4	0.88
020	08151-06204	BEARING BALL	1				0.11	0.242
030	04612-00200	CIR CLIP EXTERNAL	1				0.001	0.0022
040	52300-21660	BEARING	1				0.07	0.154
050	09500-20428	SEAL OIL	1				0.012	0.0264
060	6C040-14840	GEAR 4WD	1			20T	0.23	0.506
070	04612-00190	CIR CLIP EXTERNAL	1				0.001	0.0022
080	6C050-14850	CIR CLIP EXTERNAL	1				0.001	0.0022
090	04611-00420	CIR CLIP INTERNAL	1				0.006	0.0132

silverhorn.co.uk

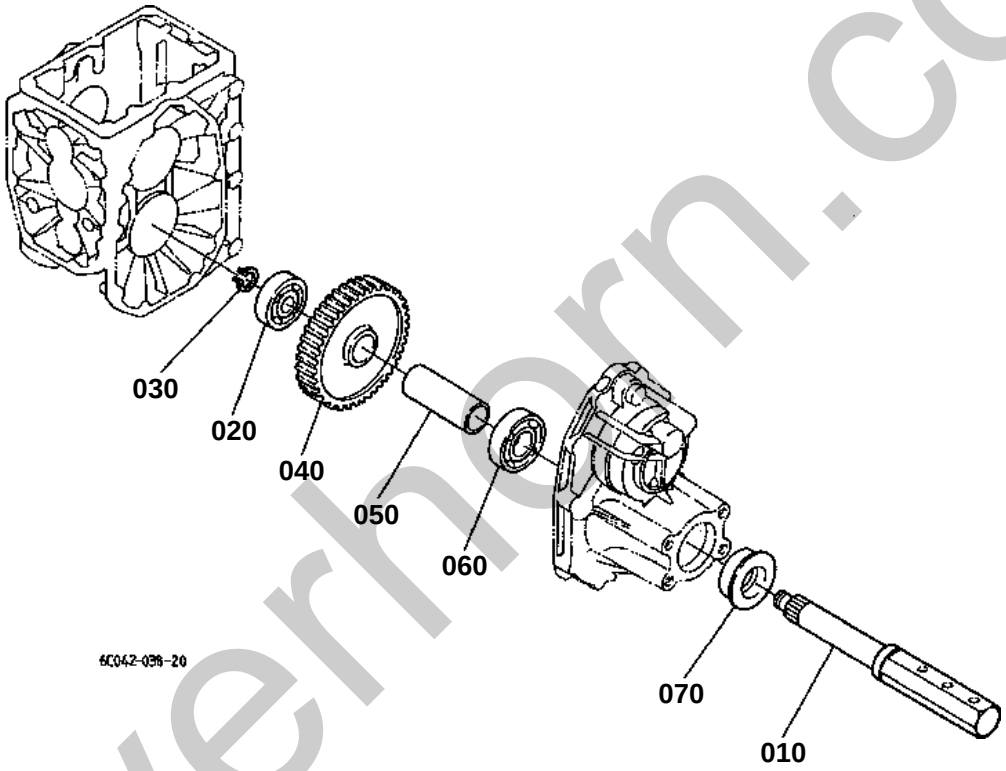

silverhorn.co.uk

REAR AXLE

↔ Interchangeable; ≠ not interchangeable; ← new for old; → old for new

REF.No	Part No.	Description	Q'ty	S.No.	I/C	REMARKS	Weight (kgf)	Weight (lb)
010	66611-17114	AXLE REAR	2				4.64	10.208
020	08101-06306	BEARING BALL	2				0.335	0.737
030	04612-00300	CIR CLIP EXTERNAL	2				0.003	0.0066
040	6C040-17130	GEAR	2			57T	2.55	5.61
050	6C040-17140	COLLAR	2				0.26	0.572
060	08101-06208	BEARING BALL	2				0.355	0.781
070	09500-00014	SEAL OIL	2				0.06	0.132

silverhorn.co.uk

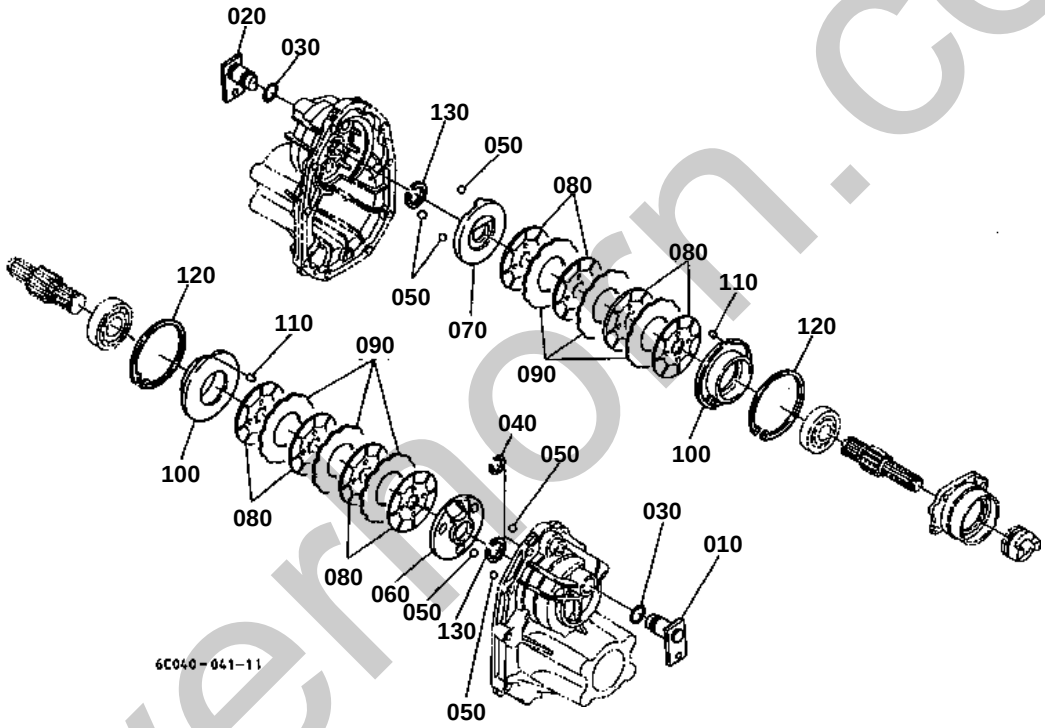

silvermorn.co.uk

↔ Interchangeable; ≠ not interchangeable; ← new for old; → old for new

REF.No	Part No.	Description	Q'ty	S.No.	I/C	REMARKS	Weight (kgf)	Weight (lb)
010	6C040-22360	LEVER CAM LH	1				0.32	0.704
020	6C040-22460	LEVER CAM RH	1				0.33	0.726
030	04811-00210	O RING	2				0.001	0.0022
040	67061-14370	CIR-CLIP	2				0.002	0.0044
050	07715-00805	BALL	6				0.016	0.0352
060	6C040-22320	ACTUATOR LH	1	<=73012			0.65	1.43
060	6C090-22320	ACTUATOR LH	1	>=73013	↔		0.63	1.386
070	6C040-22420	ACTUATOR RH	1	<=73012			0.63	1.386
070	6C090-22420	ACTUATOR RH	1	>=73013	↔		0.63	1.386
080	6C040-22350	DISK BRAKE	8	<=71729			0	0
080	6C042-22350	DISK BRAKE	8	>=72730	←		0.175	0.385
080	6C090-22350	DISK BRAKE	8	>=73310	↔		0.18	0.396
090	6C040-22340	PLATE FRICTION	6	<=73309			0.118	0.2596
090	6C090-22340	PLATE FRICTION	6	>=73310	↔		0.12	0.264
090	6C140-22340	PLATE FRICTION	6	>=75501	↔		0.12	0.264
100	6C040-22380	HOLDER BEARING	2				0.54	1.188
110	6C040-22440	PIN	2				0.004	0.0088
120	6C040-22450	CIR CLIP INTERNAL	2				0.08	0.176
130	70435-51590	CIR-CLIP	2				0.002	0.0044

silverhorn.co.uk

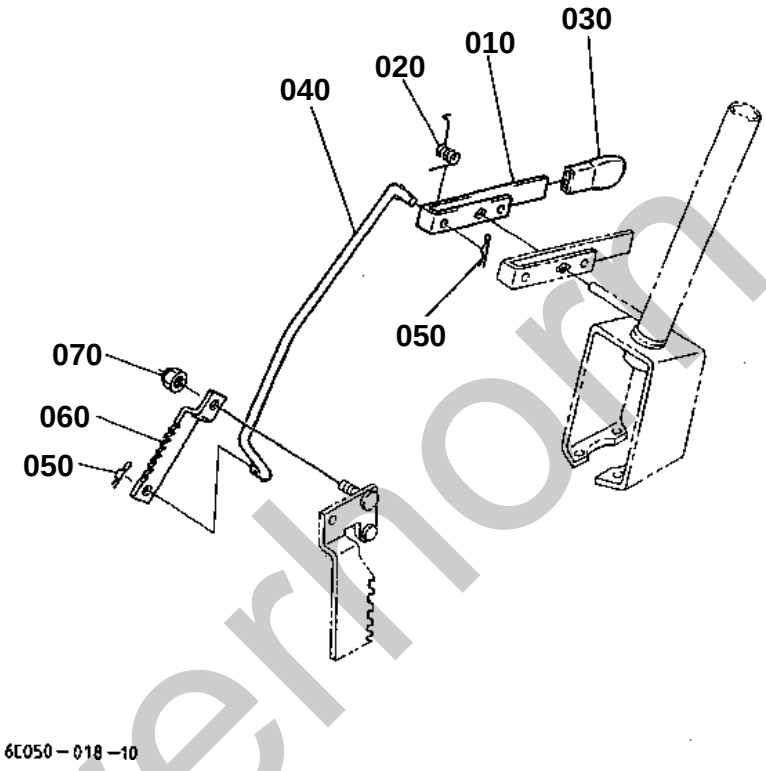

silverhorn.co.uk

PARKING BRAKE LEVER

↔ Interchangeable; ≠ not interchangeable; ← new for old; → old for new

REF.No	Part No.	Description	Q'ty	S.No.	I/C	REMARKS	Weight (kgf)	Weight (lb)
010	6C040-41350	LEVER	1				0.104	0.2288
020	6C040-41380	SPRING RETURN	1				0.008	0.0176
030	6C040-41360	GRIP LEVER	1				0.012	0.0264
040	6C040-41373	ROD BRAKE	1				0.22	0.484
050	05525-50800	PIN SNAP	2				0.001	0.0022
060	6C040-42250	PLATE BRAKE LOCK	1				0.07	0.154
070	50591-62370	NUT	1				0.005	0.011

silverhorn.co.uk

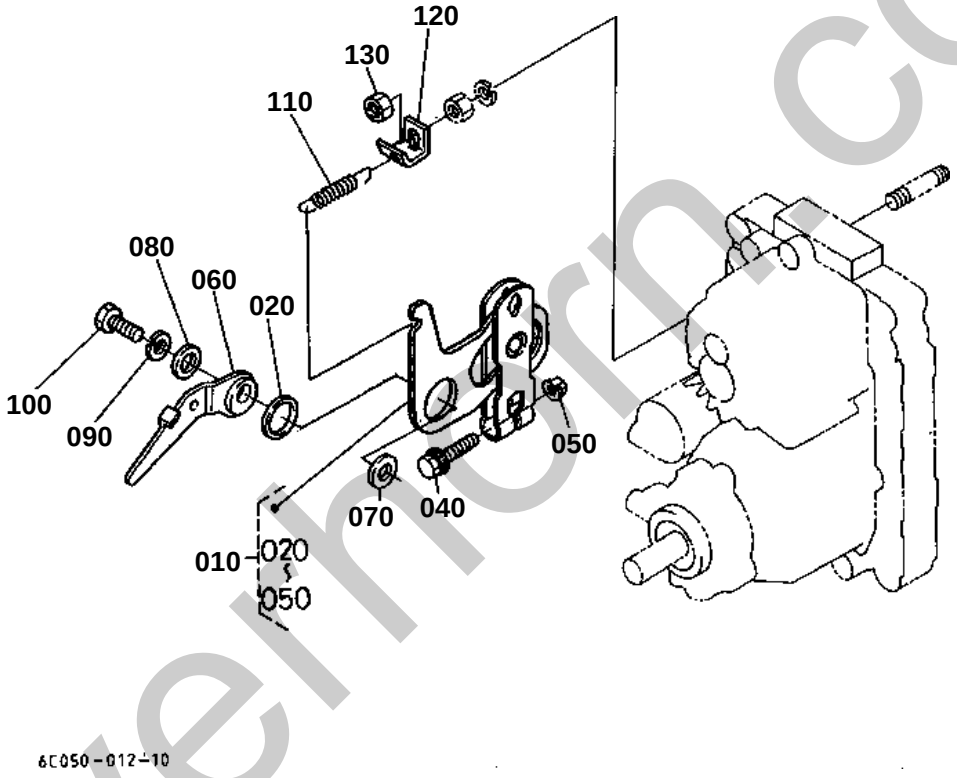

silverhorn.co.uk

SPEED CHANGE LEVER

↔ Interchangeable; ≠ not interchangeable; ← new for old; → old for new

REF.No	Part No.	Description	Q'ty	S.No.	I/C	REMARKS	Weight (kgf)	Weight (lb)
010	6C050-43410	ASSY LEVER TRUNNION	1	<=70831			0	0
010	6C050-43414	ASSY LEVER TRUNNION	1	>=70832	←		0.32	0.704
010	6C052-43410	ASSY LEVER TRUNNION	1	>=71951	←		0.325	0.715
020	6C050-43450	BUSH	1				0.005	0.011
040	01125-50840	BOLT	1				0.02	0.044
050	6C050-43510	NUT	1				0.005	0.011
060	6C050-43463	LEVER NEUTRAL	1	<=70831			0	0
060	6C050-43464	LEVER NEUTRAL	1	>=70832	←		0.065	0.143
070	04015-60100	WASHER PLAIN	1				0.015	0.033
080	04013-60100	WASHER PLAIN	1				0.004	0.0088
090	04512-60100	WASHER SPRING	1				0.002	0.0044
100	6C050-43490	BOLT	1				0.018	0.0396
110	6C050-43470	SPRING	1				0.047	0.1034
120	6C050-43483	HOOK SPRING	1				0.018	0.0396
130	02176-50100	NUT	1				0.005	0.011

silverhorn.co.uk

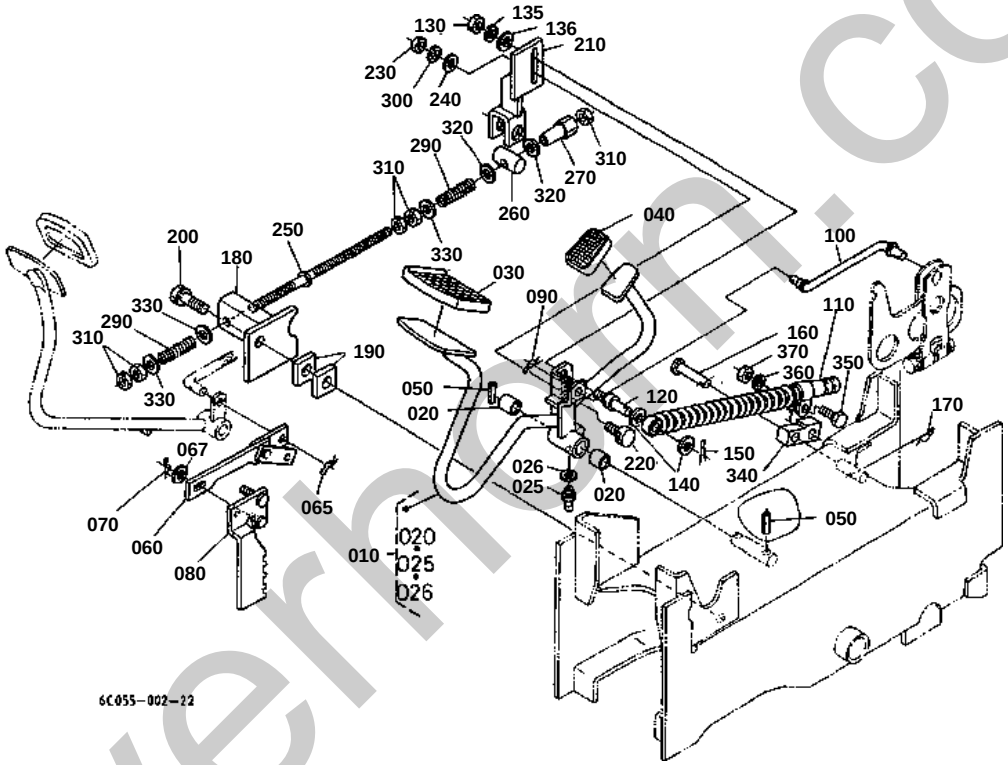

silverhorn.co.uk

110 6C050-4335-3

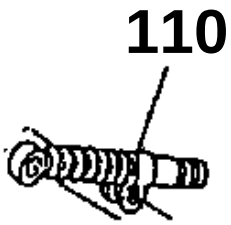

280 44366-4659-0

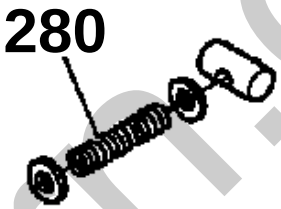

6C050-802-10

silverhorn.co.uk

SPEED CONTROL PEDAL

↔ Interchangeable; ≠ not interchangeable; ← new for old; → old for new

REF.No	Part No.	Description	Q'ty	S.No.	I/C	REMARKS	Weight (kgf)	Weight (lb)
010	6C050-43303	ASSY PEDAL HST	1	<=71015			0	0
010	6C050-43304	ASSY PEDAL HST	1	>=71016	←		0	0
010	6C050-43305	ASSY PEDAL HST	1	>=71630	←		0	0
010	6C050-43306	ASSY PEDAL HST	1	>=72061	←		1.92	4.224
020	08511-01615	BUSH	2				0.01	0.022
025	67111-44250	NIPPLE GREASE	1	<=71629			0.005	0.011
025	06613-10675	NIPPLE GREASE	1	>=71630	←		0.003	0.0066
026	04012-50060	WASHER PLAIN	1	<=71629			0.001	0.0022
026	04013-60060	WASHER PLAIN	1	>=71630	←		0.001	0.0022
030	37410-44120	COVER PEDAL	1				0.08	0.176
040	37410-42760	COVER PEDAL	1				0.025	0.055
050	05411-00625	PIN SPRING	2				0.004	0.0088
060	6C050-43340	ASSY LINK	1				0.142	0.3124
065	05525-61000	PIN SNAP	1				0.002	0.0044
067	04013-60080	WASHER PLAIN	1				0.002	0.0044
070	05525-50800	PIN SNAP	1				0.001	0.0022
080	6C050-43332	ARM	1	<=70005			0	0
080	6C050-43333	ARM	1	>=70006	←		0.33	0.726
090	05525-61000	PIN SNAP	1				0.002	0.0044
100	6C050-43320	ROD HST PEDAL	1	<=71015			0	0
100	6C050-43323	ROD HST PEDAL	1	>=71016	←		0.136	0.2992
110	6C050-43353	DAMPER HST	1	<=71898			1.9	4.18
110	6C052-43350	DAMPER HST	1	>=71899	≠		0.29	0.638
120	6C050-43190	BOLT	1	<=71822			0	0
120	6C050-43192	BOLT	1	>=71823	←		0.02	0.044
130	02114-50080	NUT	1				0.005	0.011
135	04512-60080	WASHER SPRING	1				0.002	0.0044
136	04012-50080	WASHER PLAIN	1	<=71822			0.001	0.0022
136	04013-60080	WASHER PLAIN	1	>=71823	←		0.002	0.0044
140	04012-50080	WASHER PLAIN	1	<=72102			0.001	0.0022
140	04013-60080	WASHER PLAIN	2	>=72103	←		0.002	0.0044
150	05511-50215	PIN SPLIT	1				0.001	0.0022
160	05122-50850	PIN JOINT	1				0.02	0.044
170	05525-61600	PIN SNAP	1				0.002	0.0044
180	6C050-43520	STAY SPRING	1	>=71823			0	0
180	6C050-43522	STAY SPRING	1	>=71899	←		0.25	0.55
190	6C050-43570	SPACER	2	>=71823			0.05	0.11
200	01133-51245	BOLT	1	>=71823			0.055	0.121
210	6C050-43530	ARM SPRING	1	>=71823			0	0
210	6C050-43533	ARM SPRING	1	>=71951	←		0.29	0.638
220	01754-50825	BOLT FLANGE	1	>=71823			0.01	0.022
220	6C050-43590	BOLT SPRING	1	>=71899	←		0.018	0.0396
230	02114-50080	NUT	1	>=71823			0.005	0.011
240	04013-60080	WASHER PLAIN	1	>=71823			0.002	0.0044
250	6C050-43540	ROD	1	>=71823			0.05	0.11
260	6C050-43560	PIN	1	>=71823			0	0
260	6C050-43562	PIN	1	>=71899	←		0.65	1.43
270	6C050-43550	COLLAR	1	>=71823			0	0
270	6C050-43552	COLLAR	1	>=71899	←		0.02	0.044
280	44366-46590	SPRING	1	>=71823			0.007	0.0154
280	44366-46590	SPRING	1	<=71898			0.007	0.0154
290	6C050-43580	SPRING	1	>=71823			0	0
290	6C050-43582	SPRING	2	>=71899	←		0	0
290	6C050-43583	SPRING	2	>=71951	←		0.02	0.044
300	04512-60080	WASHER SPRING	1	>=71823			0.002	0.0044
310	02114-50080	NUT	5	>=71823			0.005	0.011

silverfrom.co.uk

↔ Interchangeable; ≠ not interchangeable; ← new for old; → old for new

REF.No	Part No.	Description	Q'ty	S.No.	I/C	REMARKS	Weight (kgf)	Weight (lb)
320	04013-60100	WASHER PLAIN	2	>=71823			0.004	0.0088
330	04013-60080	WASHER PLAIN	3	>=71823			0.002	0.0044
340	6C050-43620	STAY DAMPER	1	>=71899			0.07	0.154
350	01153-60830	BOLT	1	>=71899			0.025	0.055
360	04512-60080	WASHER SPRING	1	>=71899			0.002	0.0044
370	02114-50080	NUT	1	>=71899			0.005	0.011

silverhorn.co.uk

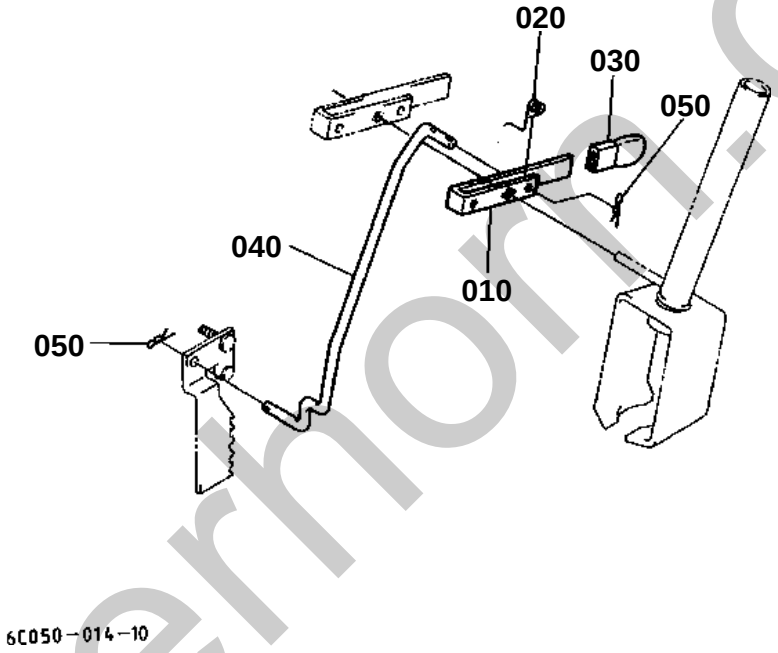

silverhorn.co.uk

SPEED SET LEVER

↔ Interchangeable; ≠ not interchangeable; ← new for old; → old for new

REF.No	Part No.	Description	Q'ty	S.No.	I/C	REMARKS	Weight (kgf)	Weight (lb)
010	6C040-41350	LEVER	1				0.104	0.2288
020	6C050-41390	SPRING RETURN	1				0.006	0.0132
030	6C040-41360	GRIP LEVER	1				0.012	0.0264
040	6C050-41383	ROD	1				0.185	0.407
050	05525-50800	PIN SNAP	2				0.001	0.0022

silverhorn.co.uk

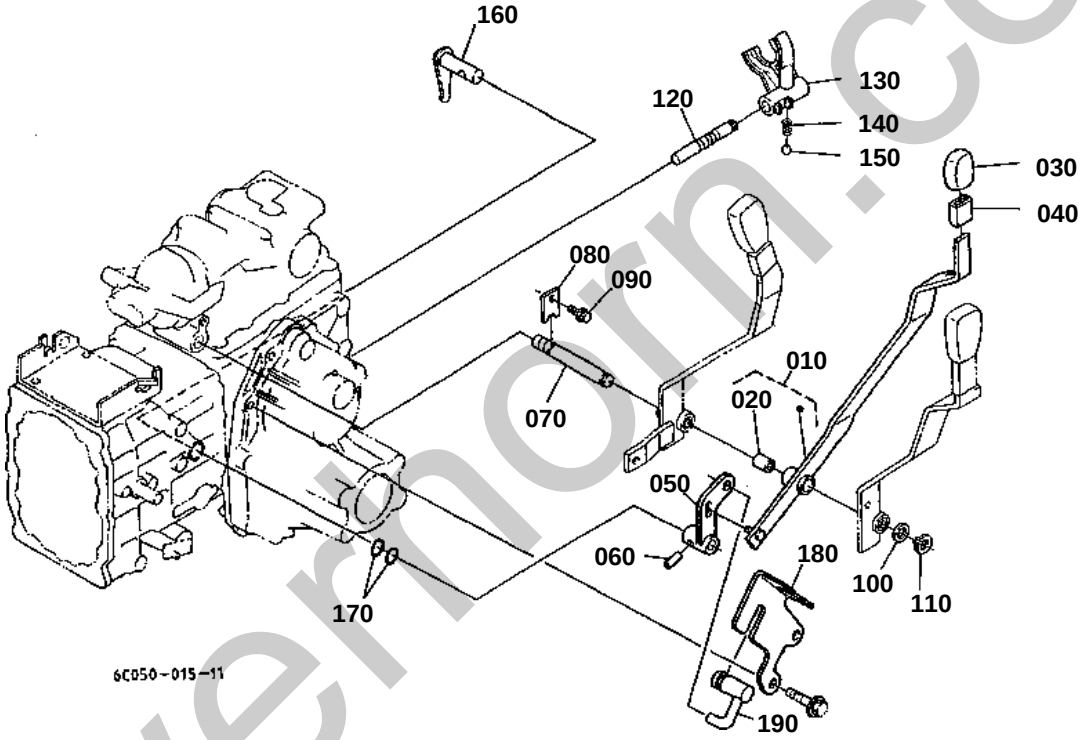

silvermorn.co.uk

RANGE GEAR SHIFT LEVER

↔ Interchangeable; ≠ not interchangeable; ← new for old; → old for new

REF.No	Part No.	Description	Q'ty	S.No.	I/C	REMARKS	Weight (kgf)	Weight (lb)
010	6C040-42600	LEVER RANGE SHIFT	1				0.83	1.826
020	08511-01825	BUSH	1				0.01	0.022
030	6C040-42630	GRIP	1	<=72904			0.02	0.044
030	6A320-42630	GRIP LEVER	1	>=72905	↔		0.019	0.0418
040	37410-43570	PIPE	1				0.005	0.011
050	6C040-42620	LEVER SHIFT ARM	1	<=71822			0	0
050	6C040-42623	LEVER SHIFT ARM	1	>=71823	←		0.174	0.3828
060	05411-00832	PIN SPRING	1				0.035	0.077
070	6C040-42670	SHAFT FULCRUM	1				0.25	0.55
080	6C040-42680	PLATE	1				0.017	0.0374
090	01123-60816	BOLT	1				0.01	0.022
100	04011-50180	WASHER PLAIN	1				0.012	0.0264
110	04612-00180	CIR CLIP EXTERNAL	1				0.001	0.0022
120	6C050-18410	ROD FORK	1				0.118	0.2596
130	6C040-18420	FORK RANGE SHIFT	1				0.079	0.1738
140	62061-18260	SPRING STOPPER	1				0.002	0.0044
150	07715-01605	BALL	1				0.003	0.0066
160	6C040-18510	ARM RANGE SHIFT	1				0.075	0.165
170	04811-00160	O RING	2				0.001	0.0022
180	6C050-42650	STAY NEUTRAL SWITCH	1				0.152	0.3344
190	6C050-42640	ROD NEUTRAL SWITCH	1	<=71950			0	0
190	6C050-42642	ROD NEUTRAL SWITCH	1	>=71951	←		0.113	0.2486

silverhorn.co.uk

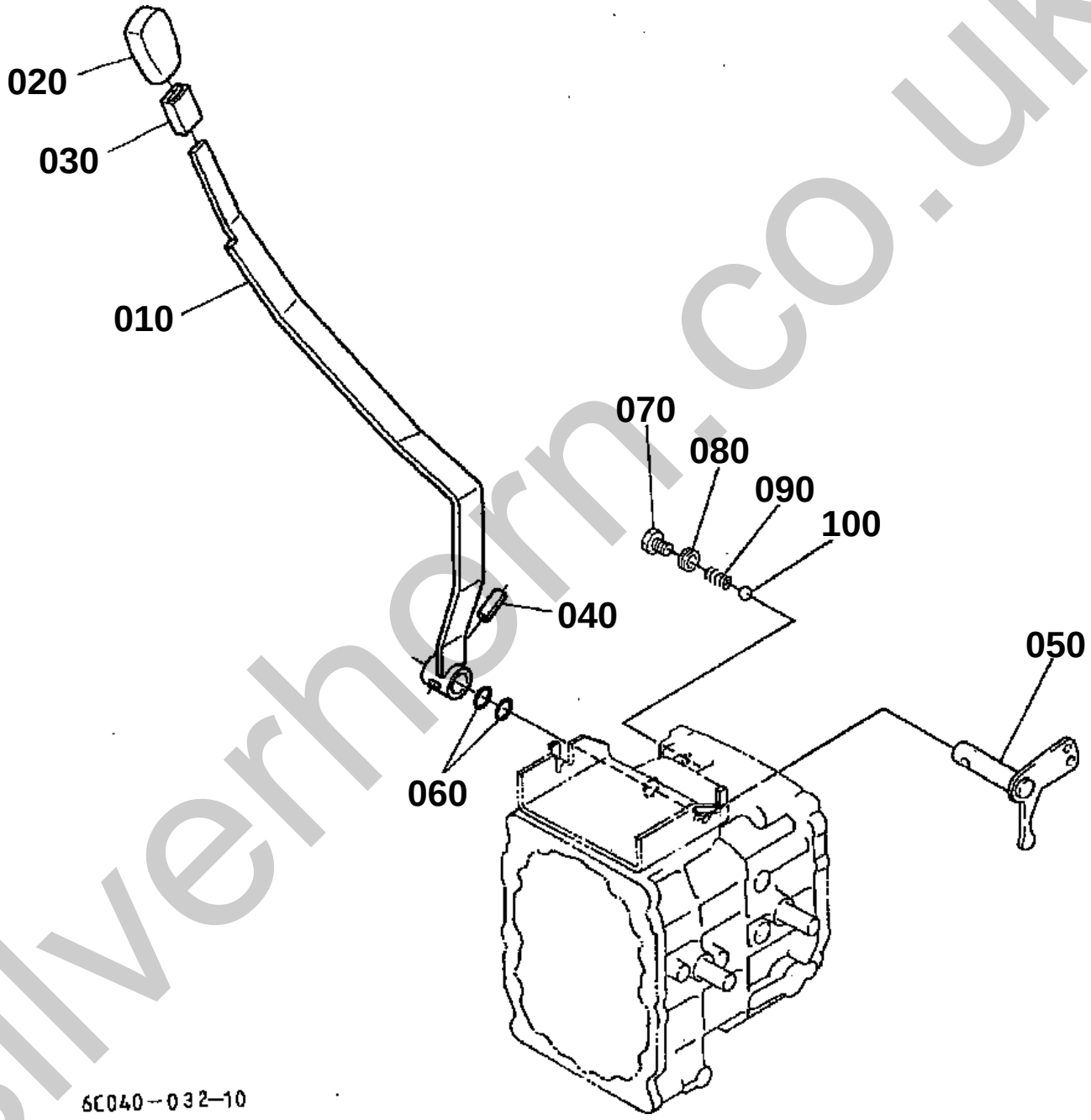

silverhorn.co.uk

FRONT WHEEL DRIVE LEVER

↔ Interchangeable; ≠ not interchangeable; ← new for old; → old for new

REF.No	Part No.	Description	Q'ty	S.No.	I/C	REMARKS	Weight (kgf)	Weight (lb)
010	6C040-42910	LEVER 4WD CHANGE	1				0.66	1.452
020	6C040-42630	GRIP	1	<=72904			0.02	0.044
020	6A320-42630	GRIP LEVER	1	>=72905	↔		0.019	0.0418
030	37410-43570	PIPE	1				0.005	0.011
040	05411-00836	PIN SPRING	1				0.008	0.0176
050	6C040-19210	ARM 4WD SHIFT	1				0.19	0.418
060	04811-00160	O RING	2				0.001	0.0022
070	6C040-19222	BOLT	1				0.015	0.033
080	04717-01000	WASHER WITH RUBBER	1				0.001	0.0022
090	62061-18260	SPRING STOPPER	1				0.002	0.0044
100	07715-01605	BALL	1				0.003	0.0066

silverhorn.co.uk

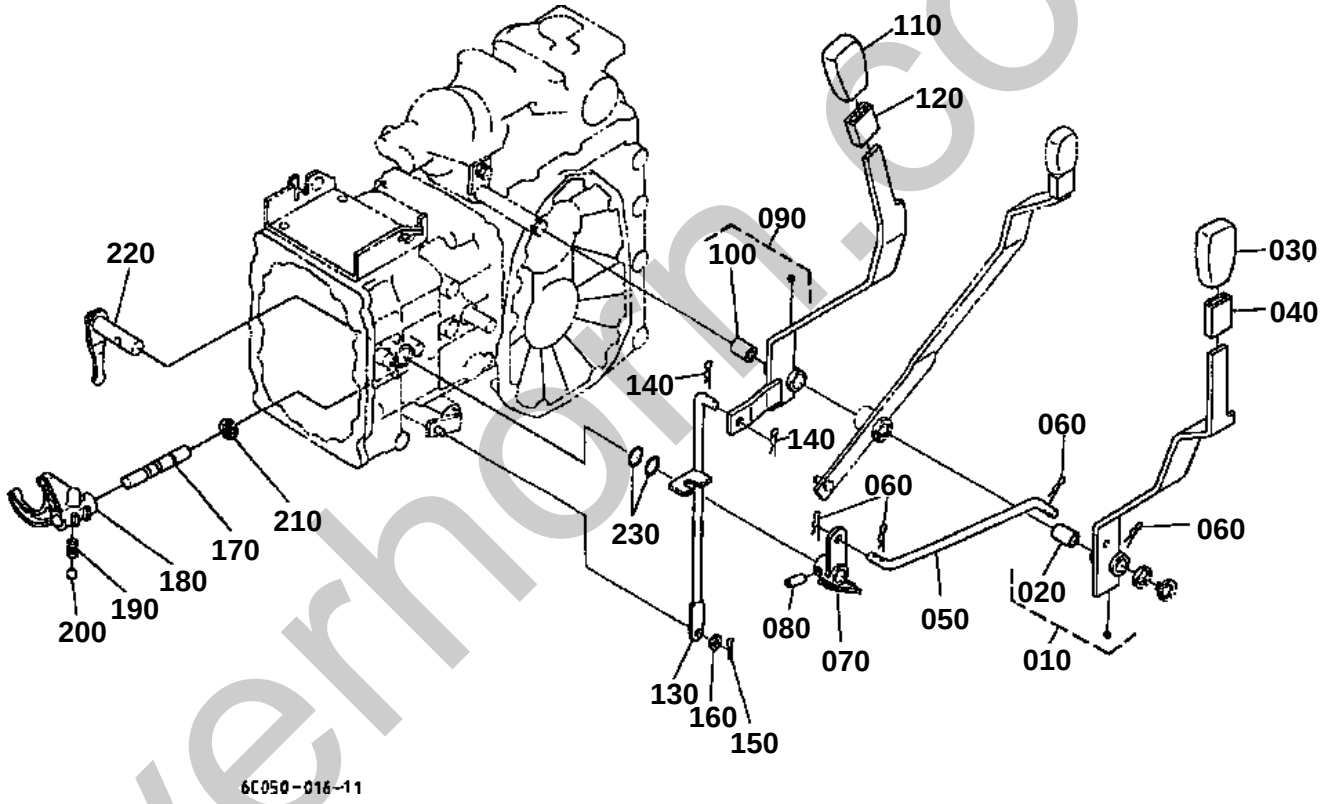

silverhorn.co.uk

160 04011-50100

6C050-804-10

silverhorn.co.uk

PTO GEAR SHIFT LEVER

↔ Interchangeable; ≠ not interchangeable; ← new for old; → old for new

REF.No	Part No.	Description	Q'ty	S.No.	I/C	REMARKS	Weight (kgf)	Weight (lb)
010	6C040-42700	LEVER PTO SHIFT	1				0.7	1.54
020	08511-01825	BUSH	1				0.01	0.022
030	6C040-42730	GRIP LEVER	1	<=75384			0	0
030	6A320-42780	GRIP LEVER	1	>=75385	↔		0.034	0.0748
040	6C040-42760	CUSHION	1				0.003	0.0066
050	6C040-42743	ROD PTO	1				0.15	0.33
060	05525-61000	PIN SNAP	4				0.002	0.0044
070	6C040-42720	LEVER SHIFT ARM	1				0.1	0.22
080	05411-00836	PIN SPRING	1				0.008	0.0176
090	6C040-42800	LEVER MID PTO SHIFT	1				0.8	1.76
100	08511-01825	BUSH	1				0.01	0.022
110	6C040-42730	GRIP LEVER	1	<=75384			0	0
110	6A320-42780	GRIP LEVER	1	>=75385	↔		0.034	0.0748
120	6C040-42760	CUSHION	1				0.003	0.0066
130	6C050-42840	ROD MID PTO	1				0.23	0.506
140	05525-61000	PIN SNAP	2				0.002	0.0044
150	05511-52520	PIN SPLIT	1				0.001	0.0022
160	04011-50100	WASHER PLAIN	2	<=75500			0.002	0.0044
160	04011-50100	WASHER PLAIN	1	>=75501			0.002	0.0044
170	6C050-18610	ROD FORK	1				0.108	0.2376
180	6C040-18620	FORK PTO SHIFT	1				0.09	0.198
190	62061-18260	SPRING STOPPER	1				0.002	0.0044
200	07715-01605	BALL	1				0.003	0.0066
210	04613-50120	CIR CLIP EXTERNAL	1				0.001	0.0022
220	6C040-18712	ARM PTO SHIFT	1				0	0
230	04811-00160	O RING	2				0.001	0.0022

silverhorn.co.uk

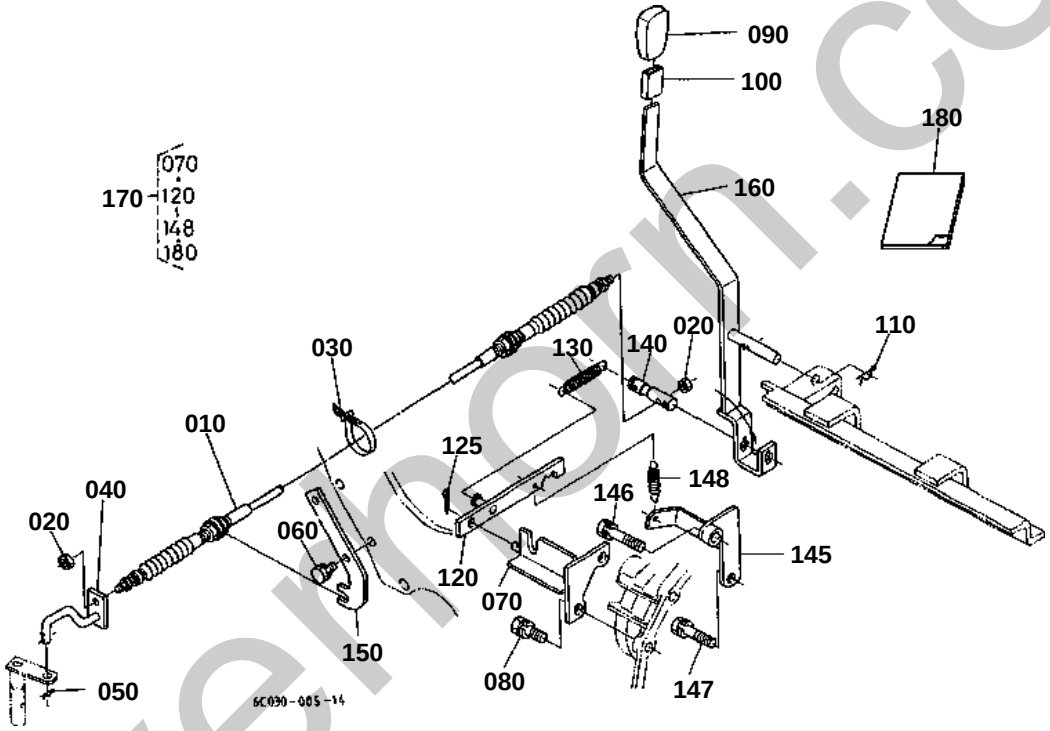

silvermorn.co.uk

070 6C040-7783-0

070 6C040-7783-4

070 6C040-7783-6

120 6C040-7813-0

130 6C040-7815-0

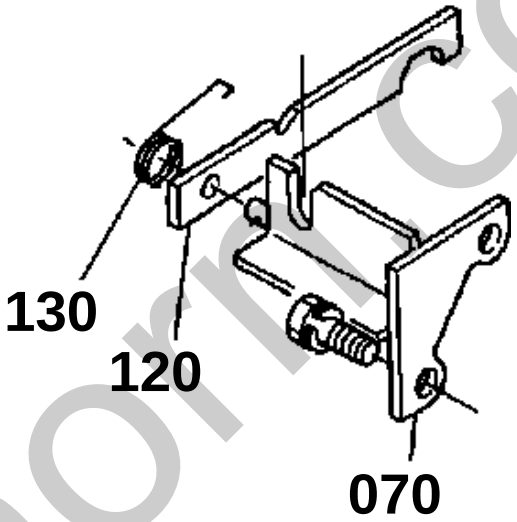

140 6C040-7814-0

6C040-819-10

silverhorn.co.uk

BI-SPEED TURN LEVER
WITH BI-SPEED TURN

↔ Interchangeable; ≠ not interchangeable; ← new for old; → old for new

REF.No	Part No.	Description	Q'ty	S.No.	I/C	REMARKS	Weight (kgf)	Weight (lb)
010	6C040-77810	ASSY CABLE BI-S.TURN	1				0.4	0.88
020	02054-50050	NUT	2				0.002	0.0044
030	53581-64150	BAND CORD	3				0.002	0.0044
040	6C040-77860	ROD CABLE	1				0.078	0.1716
050	05515-61000	PIN SNAP	1				0.003	0.0066
060	01123-50835	BOLT	2				0.02	0.044
070	6C040-77830	SUPPORT BI-S.T.LEVER	1	<=71729			0	0
070	6C040-77834	SUPPORT BI-S.T.LEVER	1	>=71730	←		0	0
070	6C040-77836	SUPPORT BI-S.T.LEVER	1	>=71831	←		0.252	0.5544
070	6C040-77837	SUPPORT BI-S.T.LEVER	1	>=74702	≠		0.24	0.528
080	01123-51040	BOLT	2				0.03	0.066
090	6C040-42630	GRIP	1	<=72904			0.02	0.044
090	6A320-42630	GRIP LEVER	1	>=72905	↔		0.019	0.0418
100	37410-43570	PIPE	1				0.005	0.011
110	05515-61200	PIN SNAP	1				0.005	0.011
120	6C040-78130	PLATE	1	<=74701			0.096	0.2112
120	6C040-78134	PLATE	1	>=74702	≠		0.1	0.22
125	05511-50320	PIN SPLIT	1	>=74702			0.002	0.0044
130	6C040-78150	SPRING	1	<=74701			0.008	0.0176
130	6C040-78170	SPRING	1	>=74702	≠		0.01	0.022
140	6C040-78140	ROD BI-S.T.LEVER	1	<=74701			0.043	0.0946
140	6C040-78142	ROD BI-S.T.LEVER	1	>=74702	≠		0.04	0.088
145	6C040-78180	BRACKET	1	>=74702			0.25	0.55
146	01123-51035	BOLT	1	<=74701			0.025	0.055
146	01123-51050	BOLT	1	>=74702	≠		0.035	0.077
147	01123-51050	BOLT	1	<=74701			0.035	0.077
147	01123-51055	BOLT	1	>=74702	≠		0.038	0.0836
148	6C040-78190	SPRING	1	>=74702			0.01	0.022
150	6C040-77820	STAY CABLE	1				0.12	0.264
160	6C040-77840	LEVER BI-SPEED TURN	1				0.57	1.254
170	6C040-98400	KIT B-SPEED TURN	1			OPTION	0.714	1.5708
180	6C040-98410	MANUAL CONSTRUCTION	1			OPTION	0.01	0.022

silverfrom.co.uk

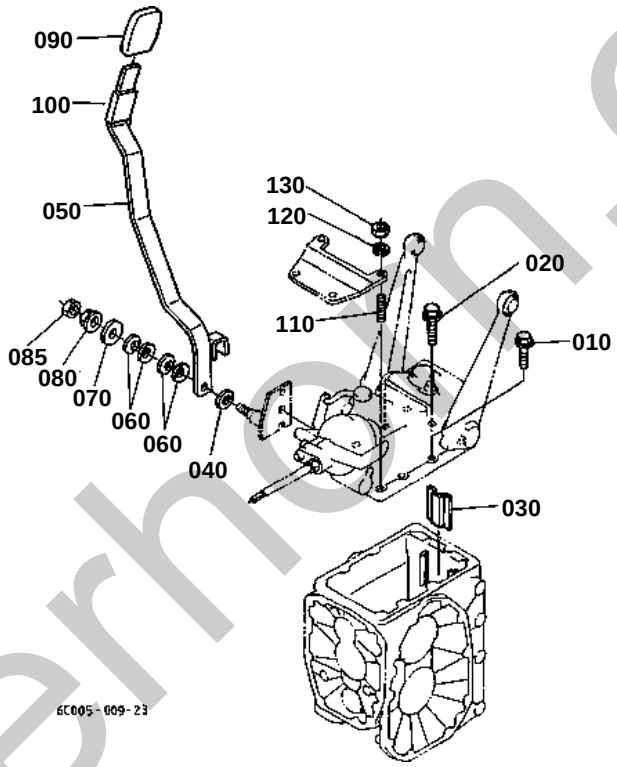

silverhoe.co.uk

050 6C040-3628-0
060 6C040-3625-0
070 04011-50120
080 04612-00120

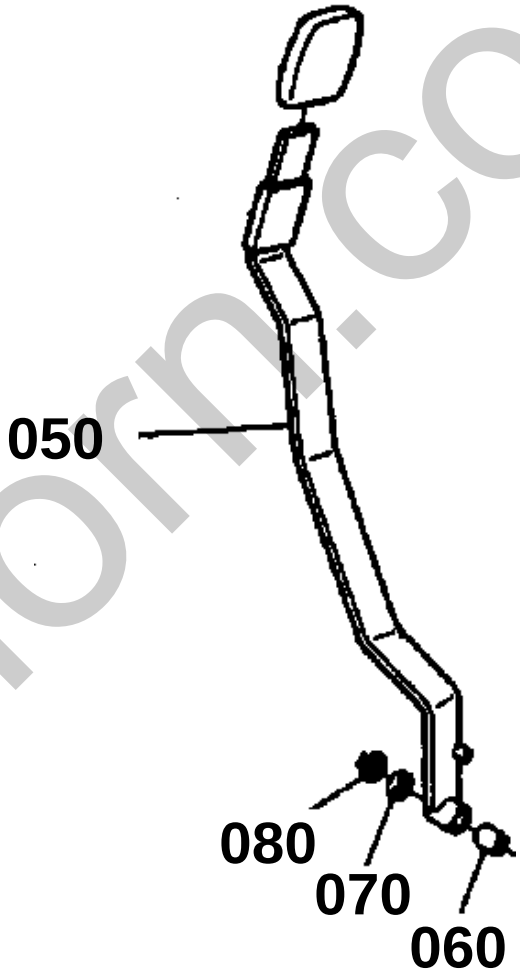

6C040-815-10

silverhorn.co.uk

POSITION CONTROL LEVER

↔ Interchangeable; ≠ not interchangeable; ← new for old; → old for new

REF.No	Part No.	Description	Q'ty	S.No.	I/C	REMARKS	Weight (kgf)	Weight (lb)
010	01123-51035	BOLT	5				0.025	0.055
020	01123-51045	BOLT	2				0.032	0.0704
030	6C040-36750	STOPPER	1				0.188	0.4136
040	6C040-36920	COLLAR	1	>=71823			0.002	0.0044
050	6C040-36280	LEVER HYD.CONTROL	1	<=71822			0.56	1.232
050	6C040-36284	LEVER HYD.CONTROL	1	>=71823	≠		0.556	1.2232
060	6C040-36250	BUSH	4	<=71822			0.3	0.66
060	6C040-36880	SPRING PLATE	4	>=71823	≠		0.003	0.0066
070	04011-50120	WASHER PLAIN	1	<=71822			0.005	0.011
070	04015-60080	WASHER PLAIN	1	>=71823	≠		0.01	0.022
080	04612-00120	CIR CLIP EXTERNAL	1	<=71822			0.001	0.0022
080	02121-50080	NUT	1	>=71823	≠		0.01	0.022
085	02112-50080	NUT	1	>=71823			0.003	0.0066
090	31395-36880	GRIP LEVER	1				0.04	0.088
100	6C040-42760	CUSHION	1				0.003	0.0066
110	01555-51035	STUD	2				0.029	0.0638
120	04512-60100	WASHER SPRING	2				0.002	0.0044
130	02118-50100	NUT	2				0.005	0.011

silverhorn.co.uk

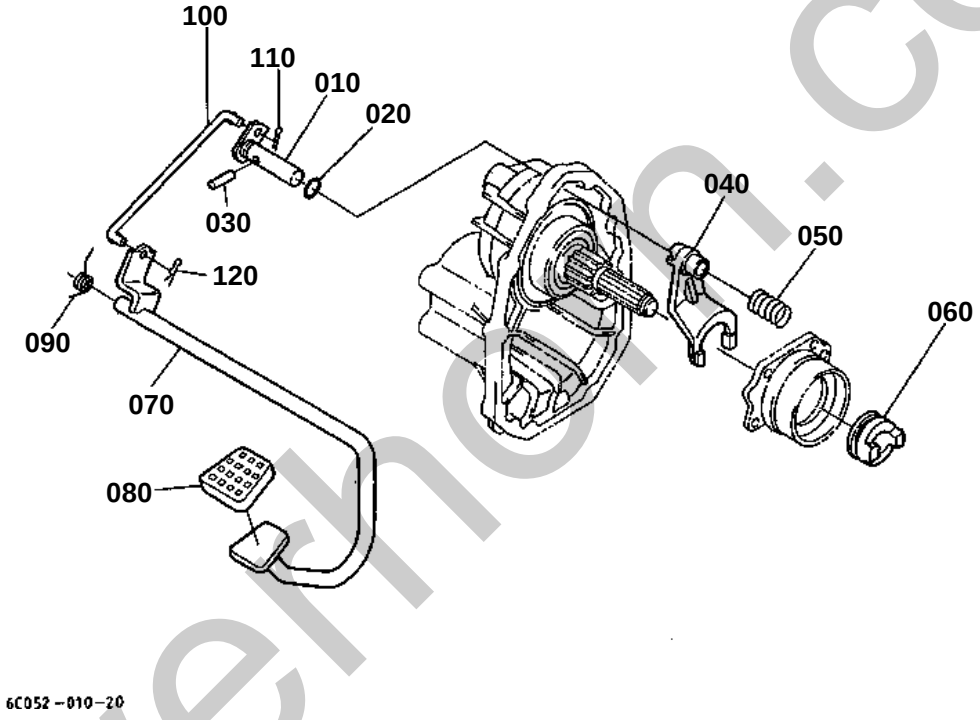

silverthorn.co.uk

DIFFERENTIAL LOCK PEDAL

↔ Interchangeable; ≠ not interchangeable; ← new for old; → old for new

REF.No	Part No.	Description	Q'ty	S.No.	I/C	REMARKS	Weight (kgf)	Weight (lb)
010	6C040-19120	ROD FORK	1				0.17	0.374
020	04811-06120	O RING	1				0.001	0.0022
030	05012-01025	PIN STRAIGHT	1	<=73012			0.016	0.0352
030	6A100-19130	PIN	1	>=73013	↔		0.017	0.0374
040	6C040-19110	FORK DIFF.LOCK SHIFT	1				0.22	0.484
050	6C040-19130	SPRING	1				0.014	0.0308
060	66611-15130	CLUTCH DIFF.LOCK	1				0.2	0.44
070	6C050-42870	PEDAL DIFF.LOCK	1	<=71729			0	0
070	6C050-42872	PEDAL DIFF.LOCK	1	>=71730	←		1.2	2.64
080	37410-42760	COVER PEDAL	1				0.025	0.055
090	6C050-42890	SPRING	1				0.04	0.088
100	6C040-42880	ROD DIFF.LOCK	1				0.1	0.22
110	05511-50215	PIN SPLIT	1				0.001	0.0022
120	05525-50800	PIN SNAP	1				0.001	0.0022

silverhorn.co.uk

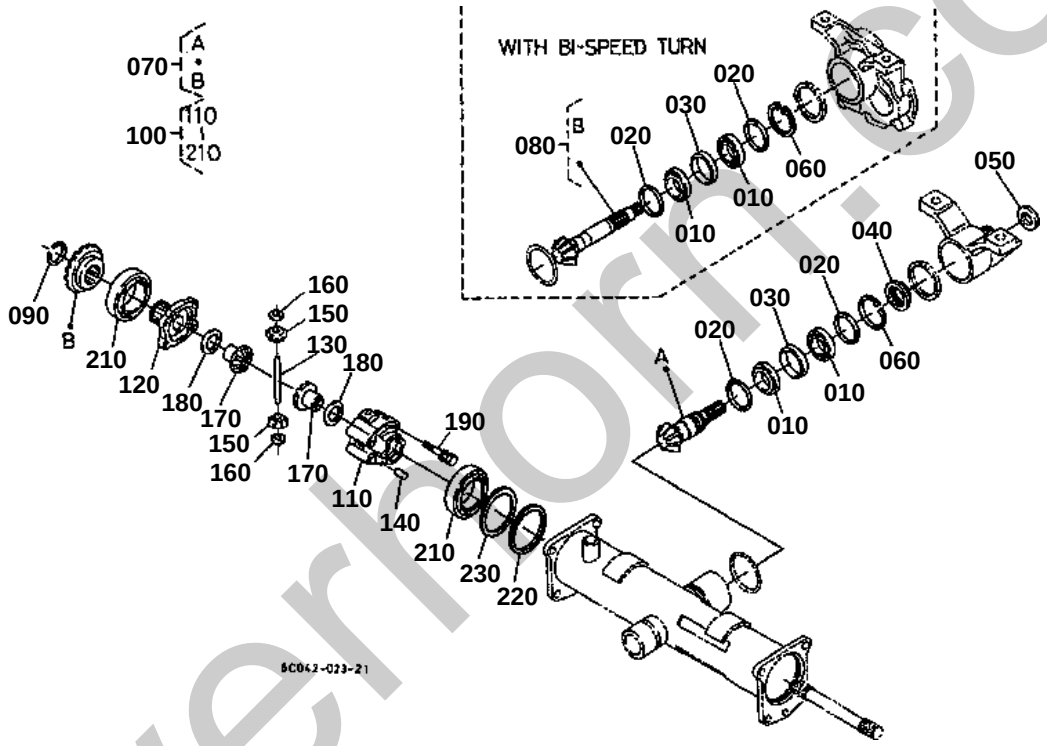

silverhorn.co.uk

190 01156-50855

200 04512-50080

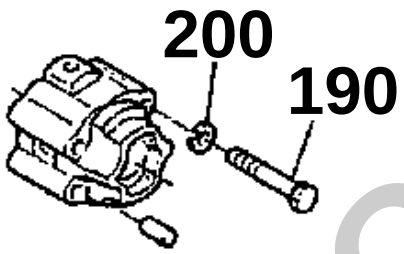

6C040-829-10

silverhorn.co.uk

FRONT DIFFERENTIAL

↔ Interchangeable; ≠ not interchangeable; ← new for old; → old for new

REF.No	Part No.	Description	Q'ty	S.No.	I/C	REMARKS	Weight (kgf)	Weight (lb)
010	08711-30205	BEARING TAPER-ROLLER	2				0.148	0.3256
020	37410-58160	COLLAR	2			3.40MM	0.01	0.022
020	37410-58170	COLLAR	2			3.60MM	0.01	0.022
020	37410-58150	COLLAR	2			3.80MM	0.01	0.022
020	6C040-56630	COLLAR	1			3.90MM	0.009	0.0198
020	37410-58120	COLLAR	2			4.00MM	0.01	0.022
020	37410-58130	COLLAR	2			4.10MM	0.01	0.022
020	37410-58140	COLLAR	2			4.20MM	0.01	0.022
020	37410-56680	COLLAR	2			4.40MM	0.015	0.033
020	6C040-56620	COLLAR	1			4.50MM	0.01	0.022
020	37410-56660	COLLAR	2			4.60MM	0.011	0.0242
030	37410-56690	COLLAR	1				0.04	0.088
040	37410-56710	NUT	1			WITHOUT BI-SPEED TURN	0.03	0.066
050	09500-20408	SEAL OIL	1			WITHOUT BI-SPEED TURN	0.012	0.0264
060	04611-00520	CIR CLIP INTERNAL	1				0.009	0.0198
070	6C040-97960	ASSY GEAR BEVEL	1			11-20T W/O BI-SPEED TURN	0.96	2.112
080	6C040-97980	ASSY GEAR BEVEL	1			11-20T WITH BI-SPEED TURN	0.05	0.11
090	6C040-56820	CIR CLIP EXTERNAL	1				0.003	0.0066
100	6C040-56900	ASSY DIFF. FRONT	1				2	4.4
110	6C040-56830	CASE DIFF.FRONT	1				0.73	1.606
120	6C040-56840	COVER DIFF.CASE	1				0.3	0.66
130	6C040-56850	SHAFT DIFF.PINION	1				0.05	0.11
140	05411-00425	PIN SPRING	1				0.001	0.0022
150	6C040-56860	GEAR BEVEL	2			10T	0.044	0.0968
160	6C040-56870	SHIM	2			1.00MM	0.002	0.0044
160	6C040-56880	SHIM	2			0.80MM	0.001	0.0022
160	6C040-56890	SHIM	2			1.20MM	0.002	0.0044
170	6C040-56910	GEAR BEVEL	2			14T	0.107	0.2354
180	37410-56930	SHIM	2			1.00MM	0.005	0.011
180	37410-56920	SHIM	2			0.80MM	0.005	0.011
180	37410-56940	SHIM	2			1.20MM	0.01	0.022
190	01156-50855	BOLT	4	<=75257			0.012	0.0264
190	01128-50855	BOLT	4	>=75258	←		0.023	0.0506
200	04512-50080	WASHER SPRING	4	<=75257			0	0
210	08101-06010	BEARING BALL	2				0.262	0.5764
220	6C040-56950	COLLAR	1				0.017	0.0374
230	66611-15150	SHIM DIFF.SIDE	1			0.20MM	0.002	0.0044

silverthorn.co.uk

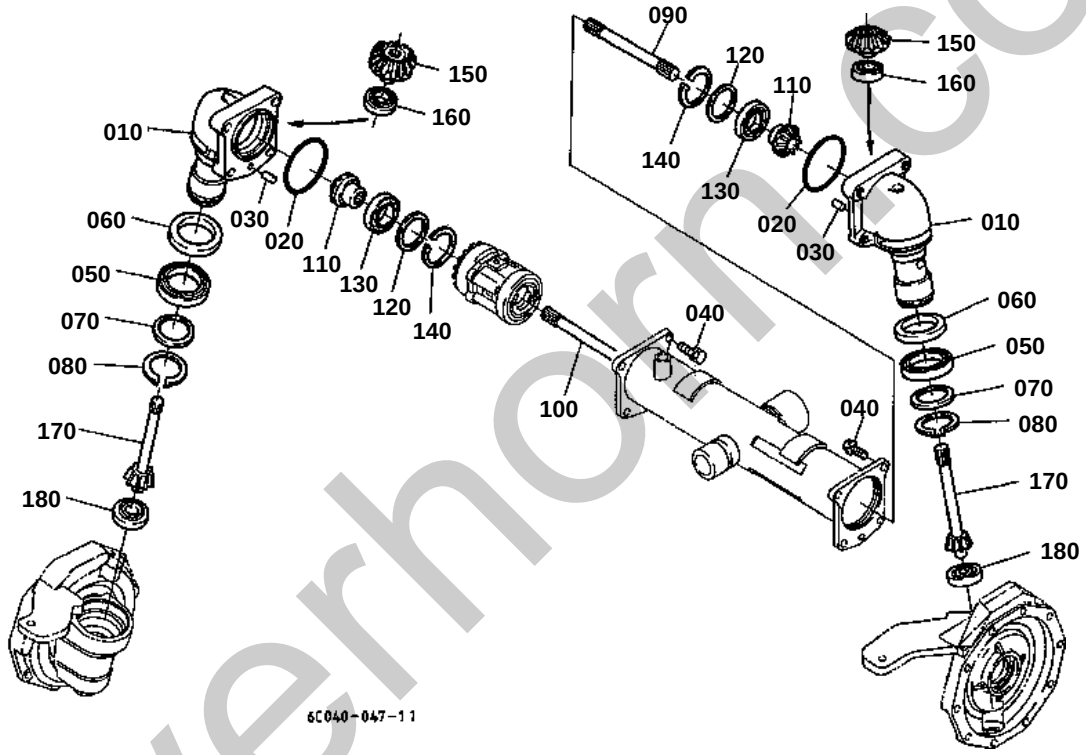

silverhorn.co.uk

BEVEL GEAR CASE

↔ Interchangeable; ≠ not interchangeable; ← new for old; → old for new

REF.No	Part No.	Description	Q'ty	S.No.	I/C	REMARKS	Weight (kgf)	Weight (lb)
010	6C040-56210	CASE BEVEL GEAR	2	<=72572			0	0
010	6C040-56213	CASE BEVEL GEAR	2	>=72573	←		3.3	7.26
020	04811-50850	O RING	2				0.003	0.0066
030	05012-01020	PIN STRAIGHT	2				0.02	0.044
040	01133-51230	BOLT	8				0.04	0.088
050	08101-06911	BEARING BALL	2				0.2	0.44
060	32721-56223	SEAL OIL	2				0.069	0.1518
070	6C040-56350	COLLAR THRUST	2				0.017	0.0374
080	04612-00550	CIR CLIP EXTERNAL	2				0.01	0.022
090	6C040-57110	SHAFT YOKE LH	1				0.37	0.814
100	67950-57110	SHAFT YOKE LH	1				0.68	1.496
110	37410-57130	GEAR BEVEL	2			11T	0.25	0.55
120	6C040-57130	SHIM	2			1.00MM	0.008	0.0176
120	6C040-57140	SHIM	2			0.80MM	0.006	0.0132
120	6C040-57150	SHIM	2			1.20MM	0.009	0.0198
120	6C040-57160	SHIM	2			1.40MM	0.011	0.0242
130	08101-06007	BEARING BALL	2				0.16	0.352
140	04611-00620	CIR CLIP INTERNAL	2				0.011	0.0242
150	37410-57180	GEAR BEVEL	2			16T	0.32	0.704
160	67910-14230	BEARING BALL	2				0.084	0.1848
170	6C040-57210	SHAFT GEAR	2			7T	0.5	1.1
180	08101-06304	BEARING BALL	2				0.146	0.3212

silverhorn.co.uk

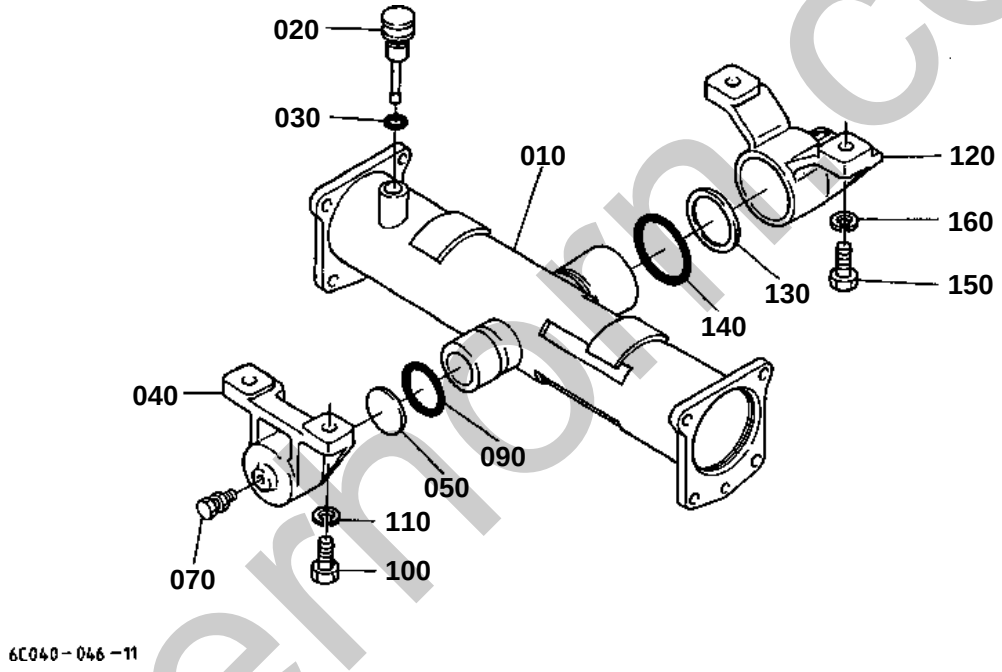

silvermorn.co.uk

060 31351-1625-0

070 01173-51030

080 02076-50100

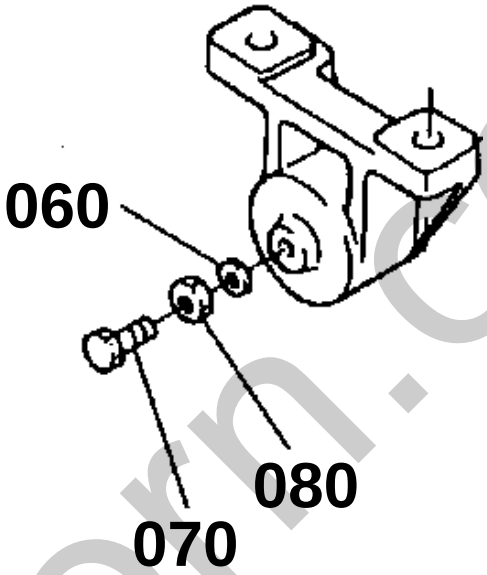

6C040-820-10

silverhorn.co.uk

FRONT AXLE CASE
WITHOUT BI-SPEED TURN

↔ Interchangeable; ≠ not interchangeable; ← new for old; → old for new

REF.No	Part No.	Description	Q'ty	S.No.	I/C	REMARKS	Weight (kgf)	Weight (lb)
010	6C040-56110	CASE FRONT AXLE	1	<=73261			0	0
010	6C040-56113	CASE FRONT AXLE	1	>=73262	←		6.2	13.64
020	6C040-56123	GAUGE OIL	1				0.024	0.0528
030	6C040-56160	O RING	1	<=71822			0	0
030	04811-00180	O RING	1	>=71823	↔		0.001	0.0022
040	6C040-56132	HOLDER FRONT AXLE	1	<=71482			0	0
040	6C040-56133	HOLDER FRONT AXLE	1	>=71483	↔		1.18	2.596
050	37410-56180	COLLAR THRUST	1				0.07	0.154
060	31351-16250	WASHER SEAL	1	<=74040			0.015	0.033
070	01173-51030	BOLT	1	<=74040			0.023	0.0506
070	6C040-56170	COMP.BOLT FRONT AXLE	1	>=74041	←		0.04	0.088
080	02076-50100	NUT	1	<=74040			0.006	0.0132
090	04811-50450	O RING	1				0.002	0.0044
100	01173-51440	BOLT	2				0.062	0.1364
110	04512-60140	WASHER SPRING	2				0.006	0.0132
120	6C040-56140	HOLDER FRONT AXLE	1				1.37	3.014
130	6C040-56150	COLLAR THRUST	1				0.02	0.044
140	04811-50600	O RING	1				0.002	0.0044
150	01173-51440	BOLT	2				0.062	0.1364
160	04512-60140	WASHER SPRING	2				0.006	0.0132

silverhorn.co.uk

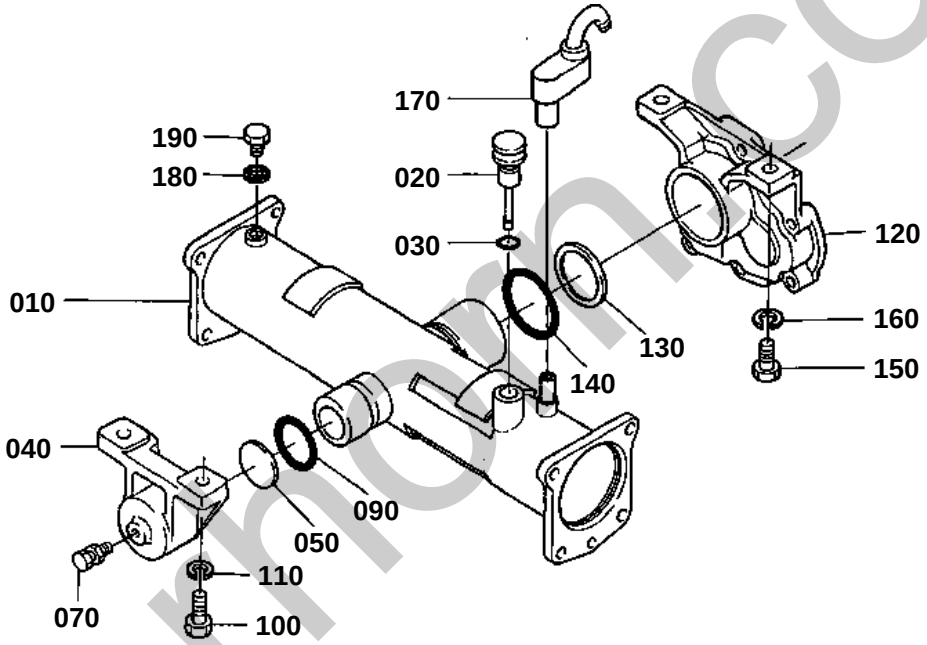

6C030-003-21

silvermoon.co.uk

060 31351-1625-0

070 01173-51030

080 02076-50100

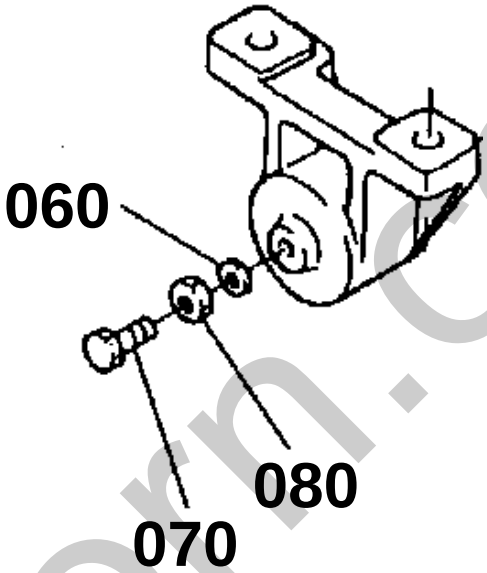

6C040-820-10

silverhorn.co.uk

FRONT AXLE CASE
WITH BI-SPEED TURN

↔ Interchangeable; ≠ not interchangeable; ← new for old; → old for new

REF.No	Part No.	Description	Q'ty	S.No.	I/C	REMARKS	Weight (kgf)	Weight (lb)
010	6C040-77510	CASE FRONT AXLE	1	<=73261			0	0
010	6C040-77513	CASE FRONT AXLE	1	>=73262	←		6.3	13.86
020	6C040-56123	GAUGE OIL	1				0.024	0.0528
030	6C040-56160	O RING	1	<=71822			0	0
030	04811-00180	O RING	1	>=71823	↔		0.001	0.0022
040	6C040-56132	HOLDER FRONT AXLE	1	<=71482			0	0
040	6C040-56133	HOLDER FRONT AXLE	1	>=71483	←		1.18	2.596
050	37410-56180	COLLAR THRUST	1				0.07	0.154
060	31351-16250	WASHER SEAL	1	<=74040			0.015	0.033
070	01173-51030	BOLT	1	<=74040			0.023	0.0506
070	6C040-56170	COMP.BOLT FRONT AXLE	1	>=74041	←		0.04	0.088
080	02076-50100	NUT	1	<=74040			0.006	0.0132
090	04811-50450	O RING	1				0.002	0.0044
100	01173-51440	BOLT	2				0.062	0.1364
110	04512-60140	WASHER SPRING	2				0.006	0.0132
120	6C040-77610	HOLDER FRONT AXLE	1				2.15	4.73
130	6C040-77430	COLLAR	1			2.30MM	0.019	0.0418
130	6C040-77440	COLLAR	1			2.50MM	0.02	0.044
130	6C040-77450	COLLAR	1			2.70MM	0.023	0.0506
130	6C040-77460	COLLAR	1			2.90MM	0.025	0.055
130	6C040-77470	COLLAR	1			3.10MM	0.026	0.0572
130	6C040-77480	COLLAR	1			2.10MM	0.018	0.0396
130	6C040-77490	COLLAR	1			1.90MM	0.015	0.033
140	04811-50600	O RING	1				0.002	0.0044
150	01173-51440	BOLT	2				0.062	0.1364
160	04512-60140	WASHER SPRING	2				0.006	0.0132
170	32701-36910	BREATHER	1				0.015	0.033
180	04717-01000	WASHER WITH RUBBER	1				0.001	0.0022
190	06331-35010	PLUG	1				0.012	0.0264

silverhorn.co.uk

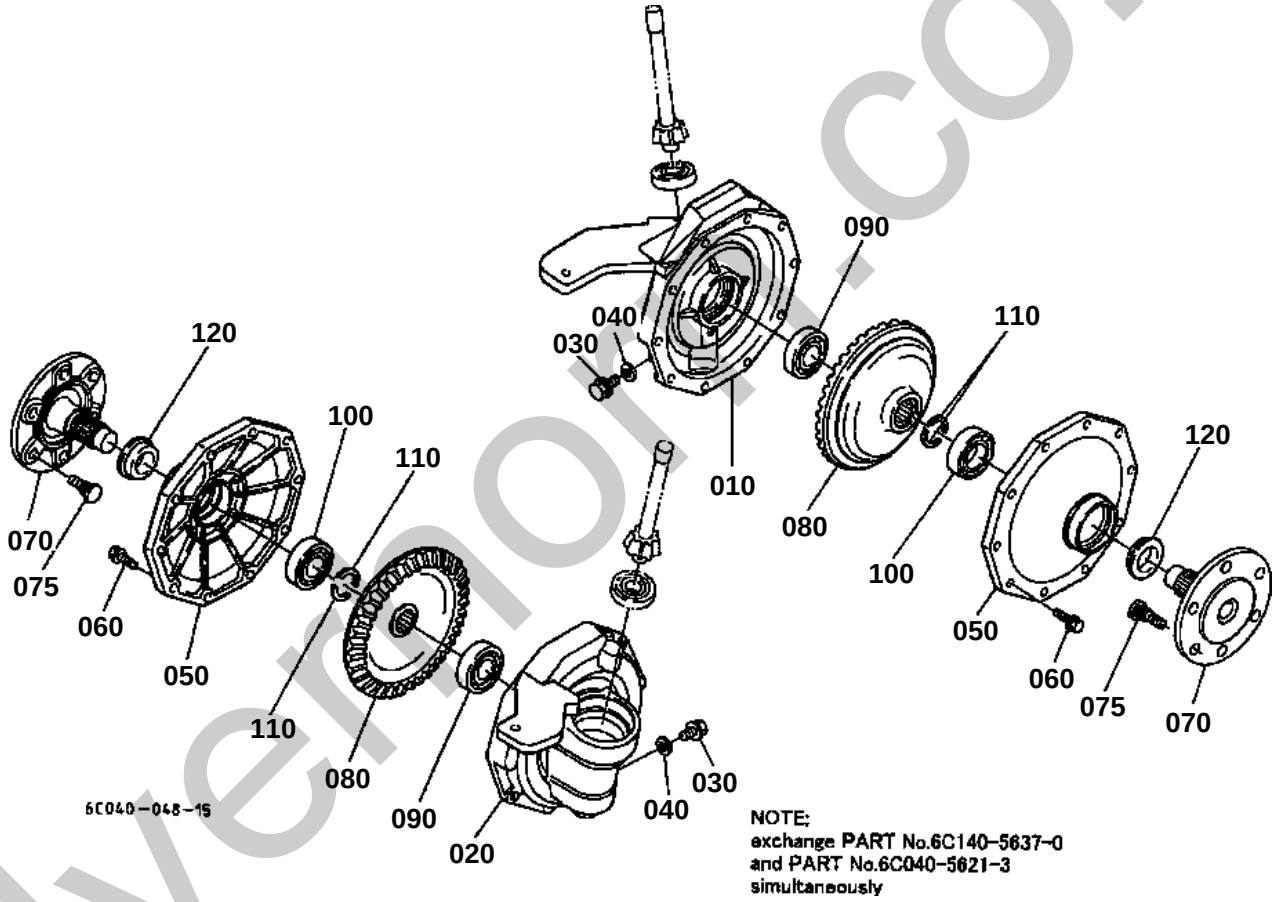

silvermoor.co.uk

070 6C040-5730-0

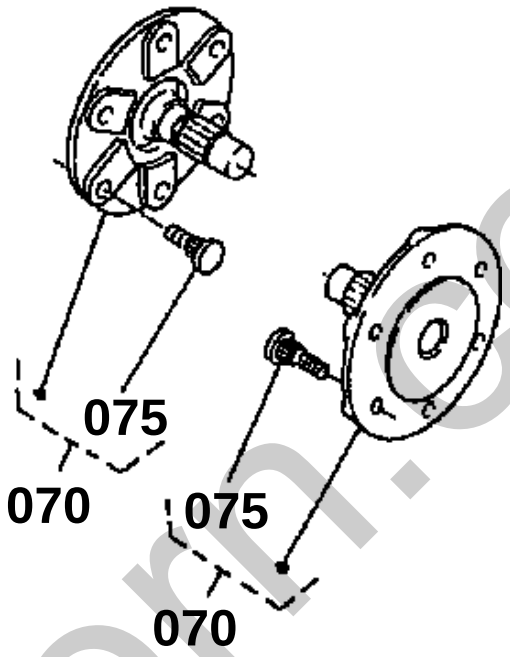

6C030-801-10

silverhorn.co.uk

↔ Interchangeable; ≠ not interchangeable; ← new for old; → old for new

REF.No	Part No.	Description	Q'ty	S.No.	I/C	REMARKS	Weight (kgf)	Weight (lb)
010	6C040-56310	CASE GEAR LH	1	<=70831		SEE NOTE	0	0
010	6C040-56317	CASE GEAR LH	1	>=70832	←	SEE NOTE	8	17.6
010	6C040-56370	CASE GEAR LH	1	>=71630	←	SEE NOTE	7.8	17.16
010	6C040-56372	CASE GEAR LH	1	>=72573	←	SEE NOTE	8	17.6
010	6C140-56370	CASE GEAR LH	1	>=75501	←		0	0
020	6C040-56320	CASE GEAR RH	1	<=70831			0	0
020	6C040-56327	CASE GEAR RH	1	>=70832	←		7.9	17.38
020	6C040-56360	CASE GEAR RH	1	>=71630	↔		7.3	16.06
020	6C040-56363	CASE GEAR RH	1	>=72573	≠		7.4	16.28
020	6C140-56360	CASE GEAR RH	1	>=75501	←		0	0
030	06331-35010	PLUG	4	<=74195			0.012	0.0264
030	01774-51010	BOLT FLANGE	4	>=74196	←		0.08	0.176
030	01774-51010	BOLT FLANGE	2	>=75501			0.08	0.176
040	04717-01000	WASHER WITH RUBBER	4	<=75500			0.001	0.0022
040	04717-01000	WASHER WITH RUBBER	2	>=75501			0.001	0.0022
050	6C040-56340	COVER GEAR CASE	2	<=75025			0	0
050	6C040-56345	COVER GEAR CASE	2	>=75026	←		0.84	1.848
060	01133-51028	BOLT	20				0.027	0.0594
070	6C040-57300	ASSY SHAFT F.AXLE	2	<=72130			0.91	2.002
070	6A100-57320	SHAFT FRONT AXLE	2	>=72131	←		1.7	3.74
075	6C040-57330	BOLT	12				0.035	0.077
080	6C040-57310	GEAR BEVEL	2			41T	2.79	6.138
090	08101-06206	BEARING BALL	2				0.196	0.4312
100	08101-06305	BEARING BALL	2				0.23	0.506
110	67156-56820	COLLAR SET	4				0.004	0.0088
120	T0430-57340	SEAL OIL	2				0.055	0.121

silverhorn.co.uk

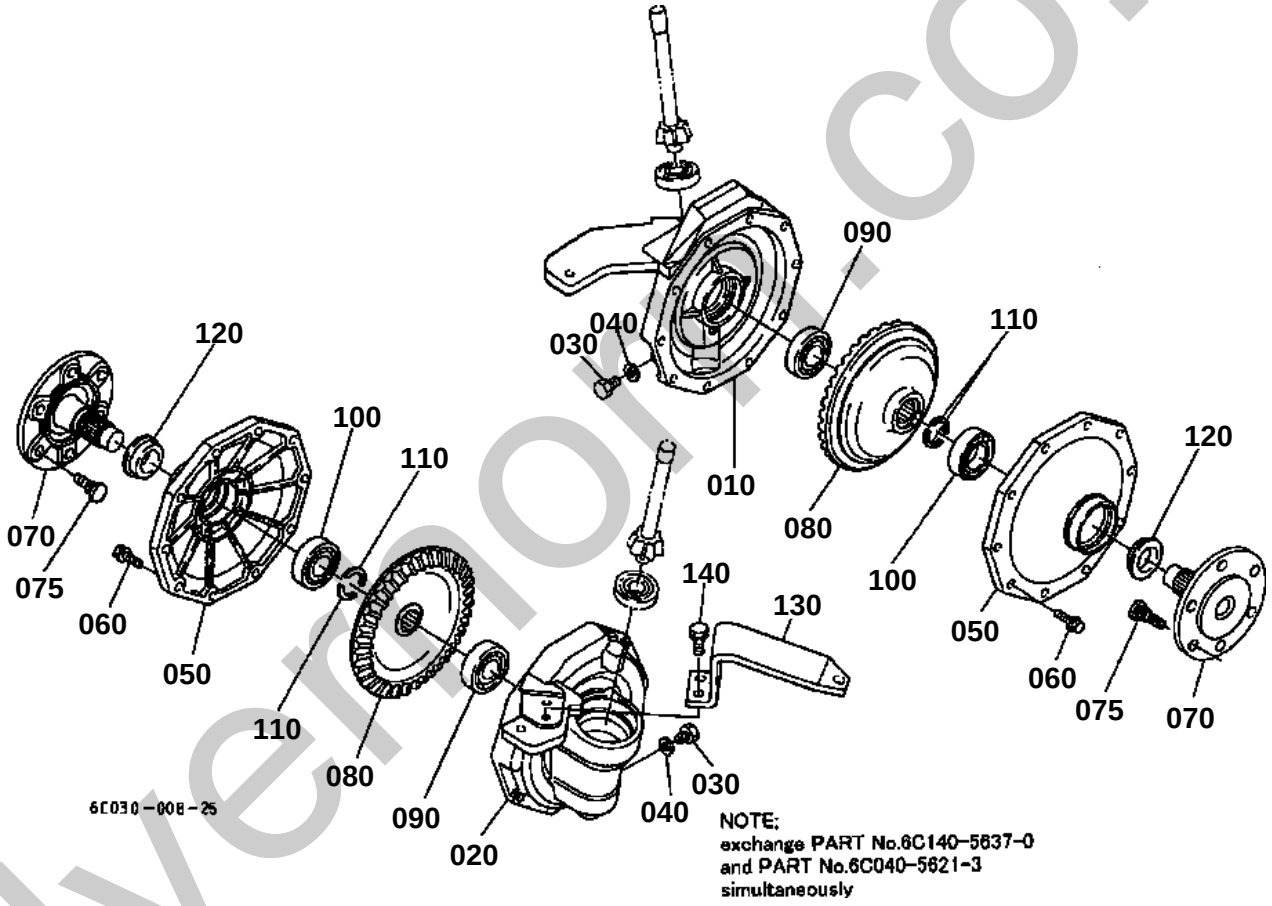

silvermoor.co.uk

070 6C040-5730-0

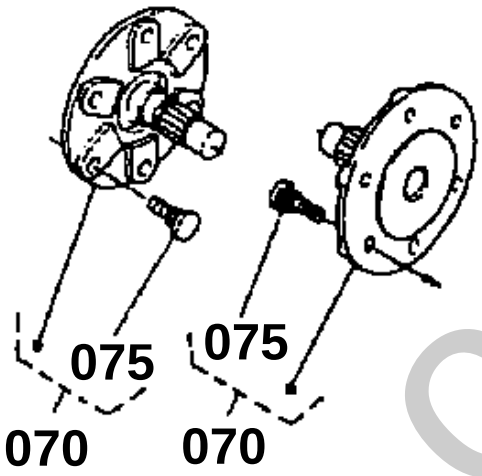

150 6C040-7757-0
160 04512-60120
170 02174-50120
180 01574-51225

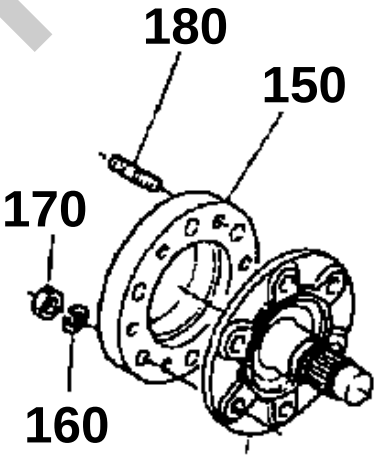

6C040-821-10

silverhorn.co.uk

↔ Interchangeable; ≠ not interchangeable; ← new for old; → old for new

REF.No	Part No.	Description	Q'ty	S.No.	I/C	REMARKS	Weight (kgf)	Weight (lb)
010	6C040-56317	CASE GEAR LH	1	<=71729		SEE NOTE	8	17.6
010	6C040-56370	CASE GEAR LH	1	>=71730	←	SEE NOTE	7.8	17.16
010	6C040-56372	CASE GEAR LH	1	>=72573	←	SEE NOTE	8	17.6
010	6C140-56370	CASE GEAR LH	1	>=75501	←		0	0
020	6C040-77750	CASE GEAR RH	1	<=71729			7	15.4
020	6C040-77752	CASE GEAR RH	1	>=71730	≠		7	15.4
020	6C040-77755	CASE GEAR RH	1	>=72573	≠		7	15.4
020	6C140-77750	CASE GEAR RH	1	>=75501	←		0	0
030	06331-35010	PLUG	4	<=74195			0.012	0.0264
030	01774-51010	BOLT FLANGE	4	>=74196	←		0.08	0.176
030	01774-51010	BOLT FLANGE	2	>=75501			0.08	0.176
040	04717-01000	WASHER WITH RUBBER	4	<=75500			0.001	0.0022
040	04717-01000	WASHER WITH RUBBER	2	>=75501			0.001	0.0022
050	6C040-56340	COVER GEAR CASE	2	<=75025			0	0
050	6C040-56345	COVER GEAR CASE	2	>=75026	←		0.84	1.848
060	01133-51028	BOLT	20				0.027	0.0594
070	6C040-57300	ASSY SHAFT F.AXLE	2	<=72130			0.91	2.002
070	6A100-57320	SHAFT FRONT AXLE	2	>=72131	←		1.7	3.74
075	6C040-57330	BOLT	12				0.035	0.077
080	6C040-57310	GEAR BEVEL	2			41T	2.79	6.138
090	08101-06206	BEARING BALL	2				0.196	0.4312
100	08101-06305	BEARING BALL	2				0.23	0.506
110	67156-56820	COLLAR SET	4				0.004	0.0088
120	T0430-57340	SEAL OIL	2				0.055	0.121
130	6C040-77740	LEVER SHIFT	1				0.87	1.914
140	01133-51230	BOLT	2				0.04	0.088
150	6C040-77570	SPACER	1	<=71822			2.49	5.478
150	6C040-77570	SPACER	2	>=71823			2.49	5.478
150	6C040-77570	SPACER	2	<=73012			2.49	5.478
160	04512-60120	WASHER SPRING	6	<=71822			0.005	0.011
160	04512-60120	WASHER SPRING	12	>=71823			0.005	0.011
160	04512-60120	WASHER SPRING	12	<=73012			0.005	0.011
170	02174-50120	NUT	6	<=71822			0.01	0.022
170	02174-50120	NUT	12	>=71823			0.01	0.022
170	02174-50120	NUT	12	<=73012			0.01	0.022
180	01574-51225	STUD	6	<=71822			0.034	0.0748
180	01574-51225	STUD	12	>=71823			0.034	0.0748
180	01574-51225	STUD	12	<=73012			0.034	0.0748

silverform.co.uk

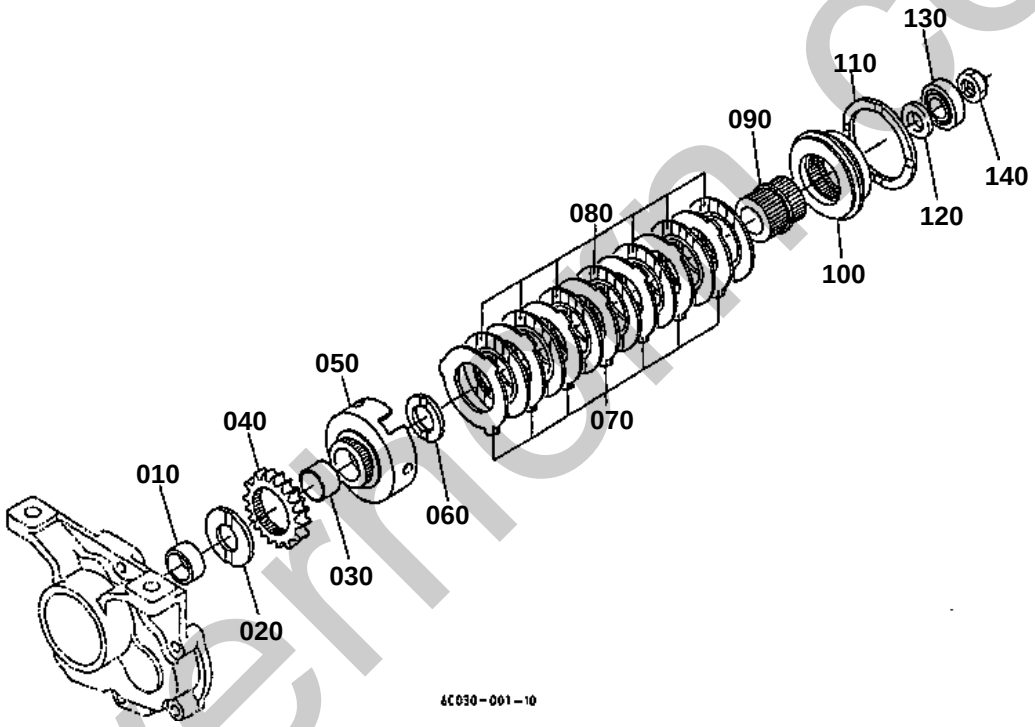

silvermac.co.uk

↔ Interchangeable; ≠ not interchangeable; ← new for old; → old for new

REF.No	Part No.	Description	Q'ty	S.No.	I/C	REMARKS	Weight (kgf)	Weight (lb)
010	6C040-77680	COLLAR	1				0.075	0.165
020	66418-58010	COLLAR THRUST	1				0.02	0.044
030	66418-58020	RING INNER	1				0.025	0.055
040	6C040-77580	GEAR BI-SPEED TURN	1			18T	0.129	0.2838
050	66418-58040	DRUM BI-S.T.CLUTCH	1				0.3	0.66
060	67061-14380	COLLAR	1				0.01	0.022
070	66418-58050	PLATE FRICTION	7				0.03	0.066
080	66418-58060	DISK CLUTCH	7				0.03	0.066
090	66418-58070	COUPLING BI-S.TURN	1				0.21	0.462
100	6C040-77760	SHIFTER	1				0.37	0.814
110	66418-58090	COLLAR	1				0.045	0.099
120	04014-50160	WASHER PLAIN	1				0.013	0.0286
130	08101-06203	BEARING BALL	1				0.063	0.1386
140	66418-58110	NUT	1				0.02	0.044

silverhorn.co.uk

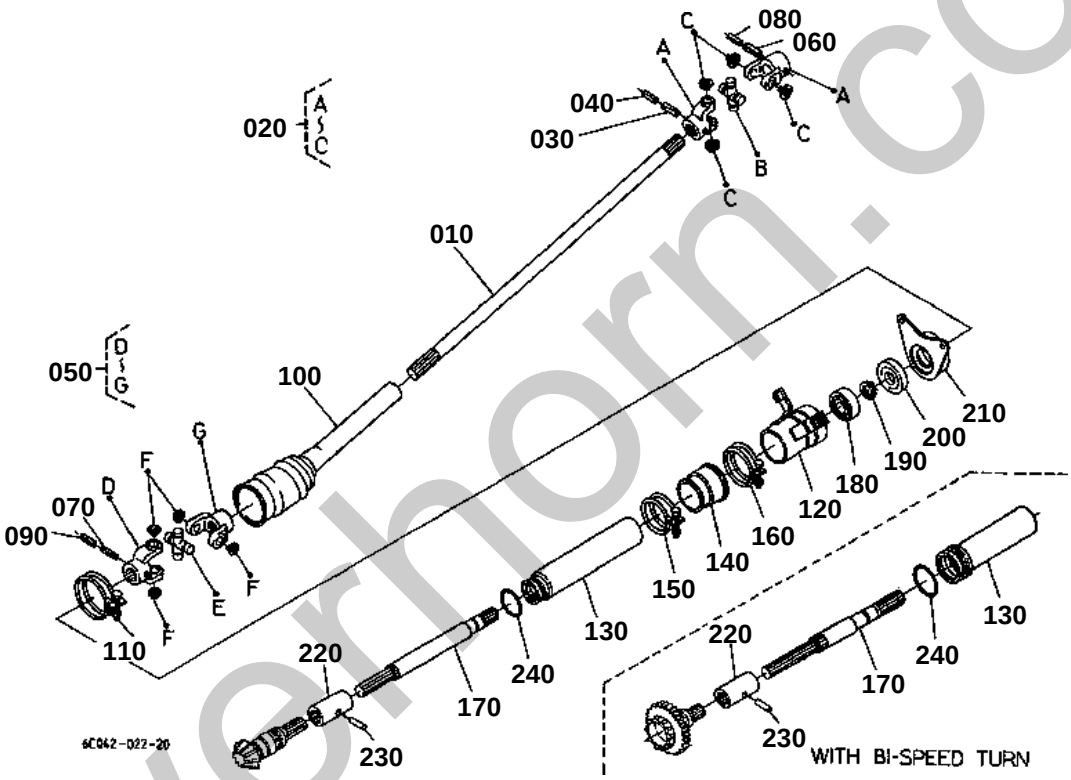

silverhorn.co.uk

FRONT DRIVE SHAFT

↔ Interchangeable; ≠ not interchangeable; ← new for old; → old for new

REF.No	Part No.	Description	Q'ty	S.No.	I/C	REMARKS	Weight (kgf)	Weight (lb)
010	6C050-57510	SHAFT DRIVE REAR	1	<=71822			1.16	2.552
010	6C050-57512	SHAFT DRIVE REAR	1	>=71823	≠		1.17	2.574
020	6C040-57500	ASSY JOINT UNIVERSAL	1				0.68	1.496
030	6C040-57590	PIN SPRING	1	<=73012			0	0
030	05411-00640	PIN SPRING	1	>=73013	↔		0.006	0.0132
040	70451-57350	PIN SPRING	1	<=73012			0.005	0.011
040	32721-57680	PIN SPRING	1	>=73013	↔		0.002	0.0044
050	6C040-57540	ASSY JOINT UNIVERSAL	1	<=71822			0	0
050	6C040-57542	ASSY JOINT UNIVERSAL	1	>=71823	←		0.69	1.518
060	6C040-57590	PIN SPRING	1	<=73012			0	0
060	05411-00640	PIN SPRING	1	>=73013	↔		0.006	0.0132
070	6C040-57590	PIN SPRING	1	<=73012			0	0
070	05411-00640	PIN SPRING	1	>=73013	↔		0.006	0.0132
080	70451-57350	PIN SPRING	1	<=73012			0.005	0.011
080	32721-57680	PIN SPRING	1	>=73013	↔		0.002	0.0044
090	70451-57350	PIN SPRING	1	<=73012			0.005	0.011
090	32721-57680	PIN SPRING	1	>=73013	↔		0.002	0.0044
100	6C040-57550	COVER	1				0.045	0.099
110	09318-89069	CLAMP HOSE	1				0.04	0.088
120	6C040-57610	COVER FRONT SHAFT	1				0.25	0.55
130	6C040-57660	COVER FRONT SHAFT	1	<=70831		WITHOUT BI-SPEED TURN	0	0
130	6C040-57662	COVER FRONT SHAFT	1	>=70832	←	WITHOUT BI-SPEED TURN	0.25	0.55
130	6C040-77670	COVER FRONT SHAFT	1			WITH BI-SPEED TURN	0.11	0.242
140	6C040-57650	COVER FRONT SHAFT	1				0.035	0.077
150	09318-89052	CLAMP HOSE	1				0.03	0.066
160	09318-89058	CLAMP HOSE	1				0.028	0.0616
170	6C040-57620	SHAFT FRONT DRIVE	1	<=70831		WITHOUT BI-SPEED TURN	0	0
170	6C040-57622	SHAFT FRONT DRIVE	1	>=70832	←	WITHOUT BI-SPEED TURN	0.73	1.606
170	6C040-77660	SHAFT FRONT DRIVE	1			WITH BI-SPEED TURN	0.4	0.88
180	08141-06204	BEARING BALL	1				0.101	0.2222
190	04612-00200	CIR CLIP EXTERNAL	1				0.001	0.0022
200	6C040-57630	SEAL OIL	1				0.025	0.055
210	6C040-57640	SUPPORT	1				0.14	0.308
220	T0070-14710	COUPLING	1				0.16	0.352
230	05411-00430	PIN SPRING	1				0.002	0.0044
240	04811-06370	O RING	1			WITHOUT BI-SPEED TURN	0.001	0.0022
240	04811-06400	O RING	1			WITH BI-SPEED TURN	0.001	0.0022

silverthorn.co.uk

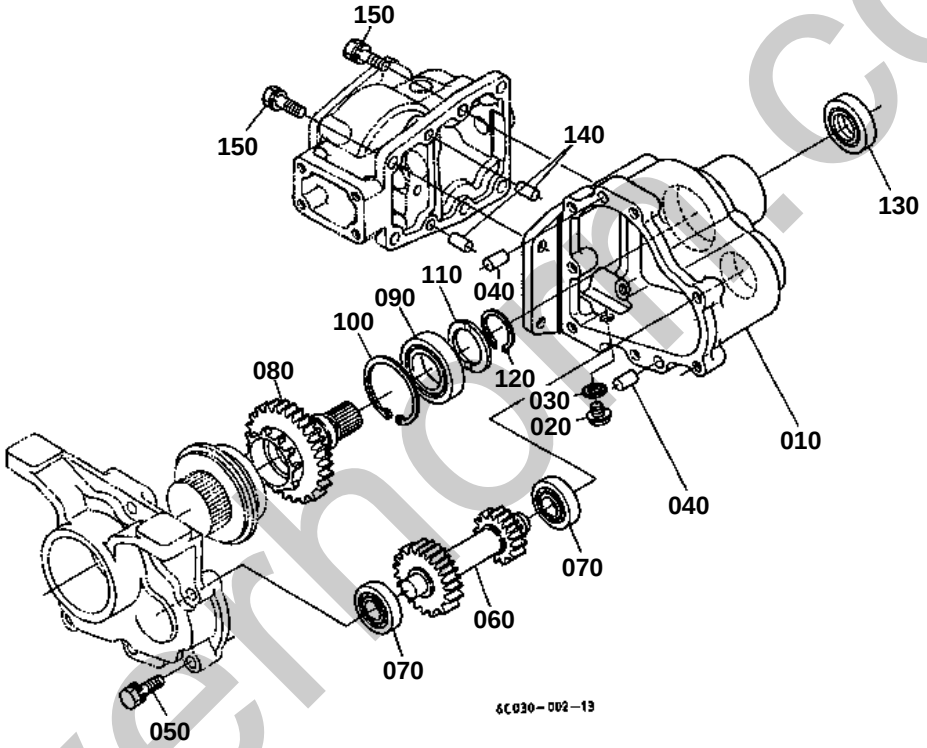

silverhorn.co.uk

020 06331-35010
030 04717-01000

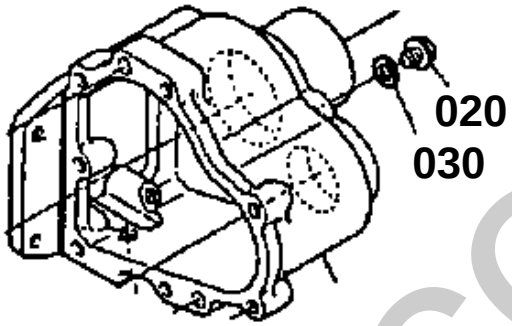

150 01123-50822
160 6C040-7777-0

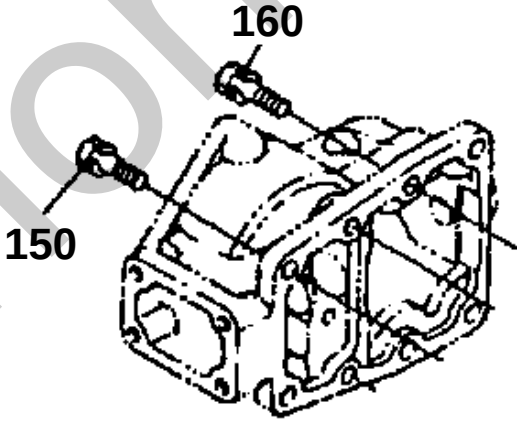

6C030-800-10

silverhorn.co.uk

BI-SPEED TURN GEAR CASE
WITH BI-SPEED TURN

↔ Interchangeable; ≠ not interchangeable; ← new for old; → old for new

REF.No	Part No.	Description	Q'ty	S.No.	I/C	REMARKS	Weight (kgf)	Weight (lb)
010	6C040-77620	CASE BI-S.TURN GEAR	1				3.3	7.26
020	06331-35010	PLUG	2	<=72827			0.012	0.0264
020	06331-35010	PLUG	1	>=72828			0.012	0.0264
020	01774-51010	BOLT FLANGE	1	>=74196	←		0.08	0.176
030	04717-01000	WASHER WITH RUBBER	2	<=72827			0.001	0.0022
030	04717-01000	WASHER WITH RUBBER	1	>=72828			0.001	0.0022
040	66418-56660	PIN STRAIGHT	2				0.009	0.0198
050	01123-50830	BOLT	7				0.015	0.033
060	6C040-77590	GEAR-SHAFT	1			13-10T	0.44	0.968
070	08101-06203	BEARING BALL	2				0.063	0.1386
080	6C040-77643	GEAR-SHAFT	1			21T	0.58	1.276
090	08101-06006	BEARING BALL	1				0.13	0.286
100	04611-00550	CIR CLIP INTERNAL	1				0.01	0.022
110	35340-21760	COLLAR THRUST	1				0.01	0.022
120	04612-00300	CIR CLIP EXTERNAL	1				0.003	0.0066
130	09500-30458	SEAL OIL	1				0.009	0.0198
140	05012-00812	PIN STRAIGHT	2				0.006	0.0132
150	01123-50822	BOLT	5	<=71482			0.012	0.0264
150	6C040-77770	BOLT	6	>=71483	↔		0.013	0.0286
160	6C040-77770	BOLT	1	<=71482			0.013	0.0286

silverhorn.co.uk

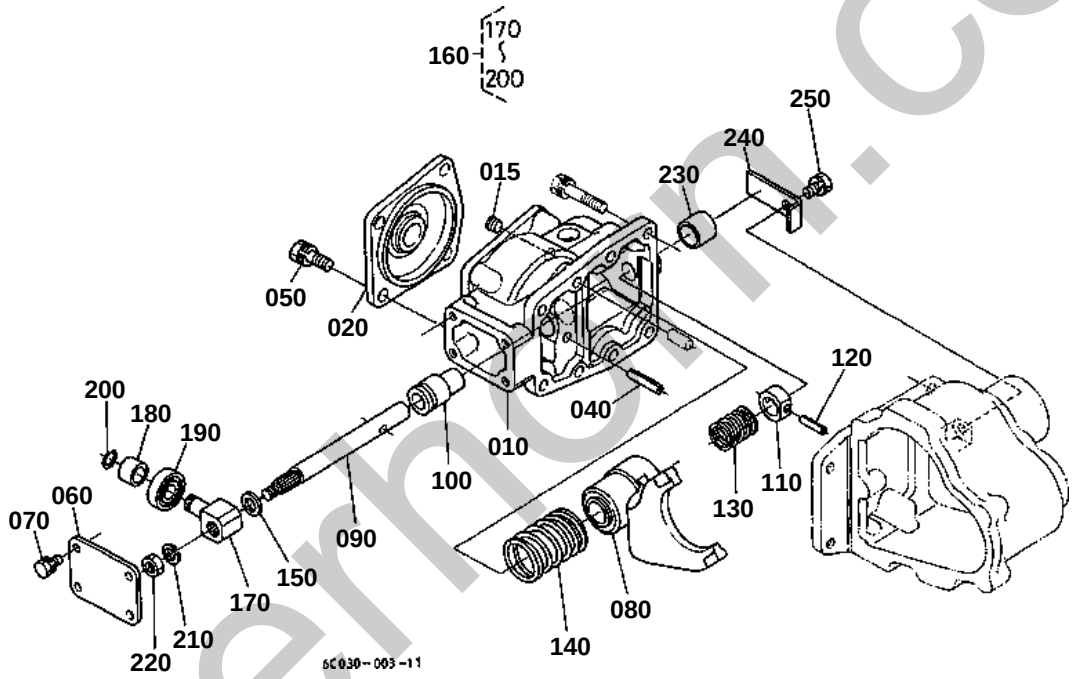

silvermoor.co.uk

010 67950-7611-5
020 66418-9951-0
030 67950-7617-0

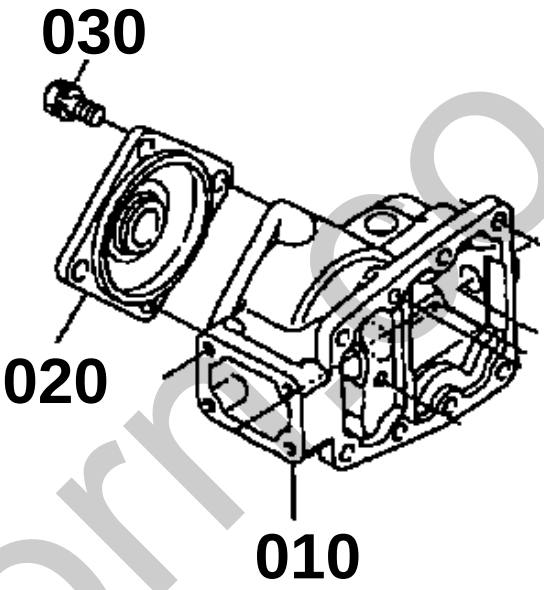

6C040-822-10

silverhorse.co.uk

BI-SPEED TURN CASE
WITH BI-SPEED TURN

↔ Interchangeable; ≠ not interchangeable; ← new for old; → old for new

REF.No	Part No.	Description	Q'ty	S.No.	I/C	REMARKS	Weight (kgf)	Weight (lb)
010	67950-76115	CASE BI-S.TURN	1	<=73012			2.1	4.62
010	6C040-76110	CASE BI-S.TURN	1	>=73013	≠		2.06	4.532
015	15521-96020	PLUG	1	>=73013			0.003	0.0066
020	66418-99510	COVER	1	<=73012			0.35	0.77
020	6C040-76150	COVER	1	>=73013	≠		0.315	0.693
030	67950-76170	BOLT COATING	1	<=73012			0.01	0.022
040	05411-00625	PIN SPRING	1				0.004	0.0088
050	01123-50818	BOLT	3	<=73012			0.012	0.0264
050	01123-50818	BOLT	4	>=73013			0.012	0.0264
060	67950-76210	PLATE COVER	1				0.065	0.143
070	01020-50616	BOLT	4				0.006	0.0132
080	6C040-77650	FORK SHIFT	1	<=71729			0	0
080	6C040-77654	FORK SHIFT	1	>=71730	←		0.58	1.276
090	67950-76524	ROD SHIFT	1				0.16	0.352
100	67950-76580	COLLAR SHIFT ROD	1				0.04	0.088
110	67950-76532	COLLAR PRESSURE	1				0.047	0.1034
120	05411-00625	PIN SPRING	1				0.004	0.0088
130	67950-76552	SPRING	1				0.038	0.0836
140	67950-76563	SPRING	1				0.062	0.1364
150	67950-76730	COLLAR	1				0.005	0.011
160	67950-76602	ASSY SHAFT ROLLER	1				0.11	0.242
170	67950-76615	SHAFT SHIFT ROLLER	1				0.068	0.1496
180	67950-76623	ROLLER SHIFT	1				0.015	0.033
190	08101-06201	BEARING BALL	1				0.036	0.0792
200	67950-76632	STOPPER	1				0.001	0.0022
210	04512-60100	WASHER SPRING	1				0.002	0.0044
220	02118-50100	NUT	1				0.005	0.011
230	66418-57920	CAP	1				0.01	0.022
240	6C040-77690	RETAINER CAP	1				0.025	0.055
250	01123-50818	BOLT	1				0.012	0.0264

silverhorn.co.uk

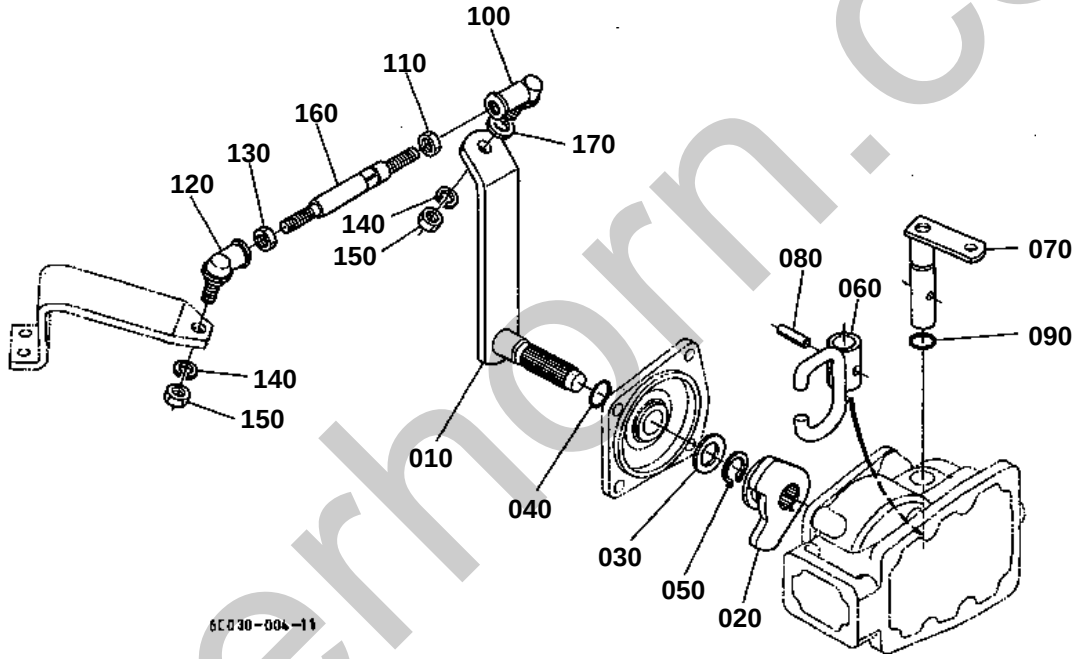

silverhorn.co.uk

BI-SPEED TURN SHIFT LEVER
WITH BI-SPEED TURN

↔ Interchangeable; ≠ not interchangeable; ← new for old; → old for new

REF.No	Part No.	Description	Q'ty	S.No.	I/C	REMARKS	Weight (kgf)	Weight (lb)
010	6C040-77910	LEVER SHIFT	1				0.47	1.034
020	66418-57913	CAM SHIFT	1				0.135	0.297
030	41252-42840	COLLAR	1				0.002	0.0044
040	04811-00180	O RING	1				0.001	0.0022
050	04612-00160	CIR CLIP EXTERNAL	1				0.001	0.0022
060	67950-76710	FORK CHANGE	1				0.1	0.22
070	66418-58180	LEVER BI-S.T.CHANGE	1				0.11	0.242
080	05411-00522	PIN SPRING	1				0.002	0.0044
090	04811-06100	O RING	1				0.001	0.0022
100	66021-56210	END ROD RH	1				0.055	0.121
110	02118-50100	NUT	1				0.005	0.011
120	66021-56220	END ROD LH	1				0.11	0.242
130	55311-31550	NUT	1				0.007	0.0154
140	04512-60100	WASHER SPRING	2				0.002	0.0044
150	02118-50100	NUT	2				0.005	0.011
160	6C040-77730	ROD BI-S.T.SHIFT	1				0.1	0.22
170	04013-60100	WASHER PLAIN	1				0.004	0.0088

silverhorn.co.uk

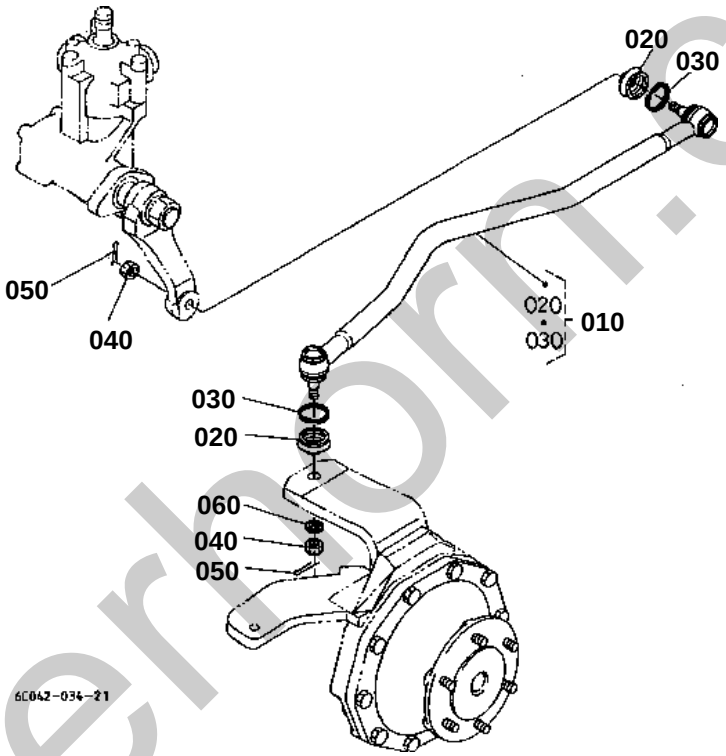

silverhorn.co.uk

DRAG LINK

↔ Interchangeable; ≠ not interchangeable; ← new for old; → old for new

REF.No	Part No.	Description	Q'ty	S.No.	I/C	REMARKS	Weight (kgf)	Weight (lb)
010	6C040-57714	ASSY LINK DRAG	1	<=71322			0	0
010	6C040-57715	ASSY LINK DRAG	1	>=71323	←		2.5	5.5
010	6C090-57710	ASSY LINK DRAG	1	>=72573	≠		2.55	5.61
020	67121-56560	COVER DUST	2				0.008	0.0176
030	67121-56570	CLIP	2				0.003	0.0066
040	66591-56780	NUT	2				0.01	0.022
050	05511-50322	PIN SPLIT	2				0.002	0.0044
060	04512-60100	WASHER SPRING	1				0.002	0.0044

silverhorn.co.uk

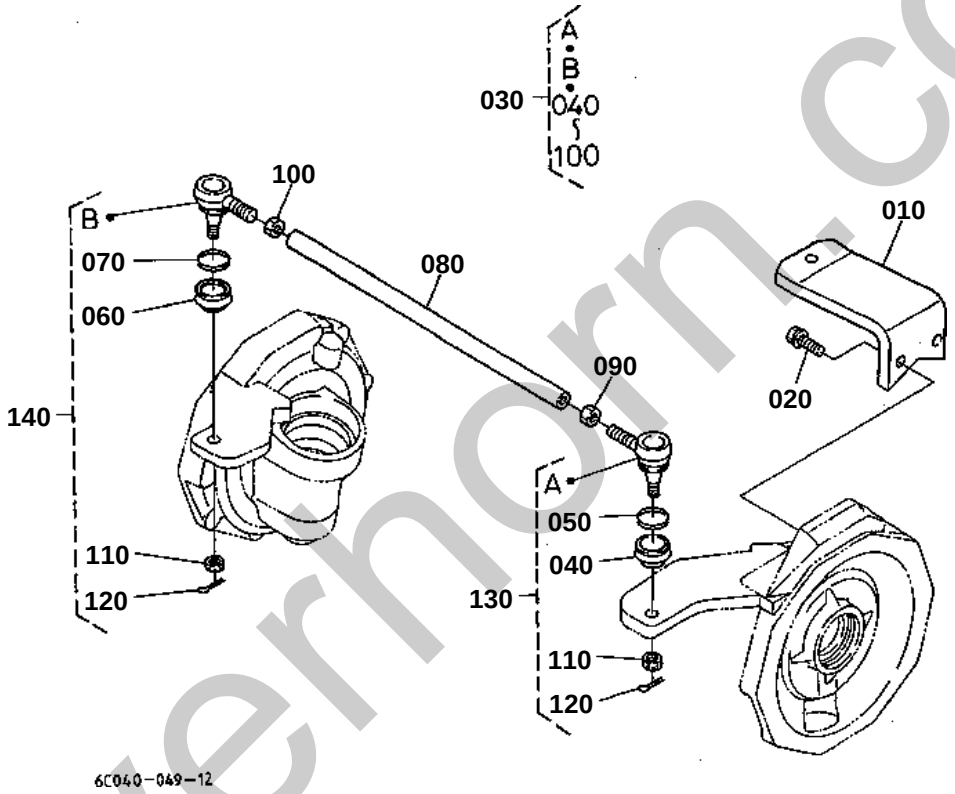

silverhorn.co.uk

010 6C040-5641-5

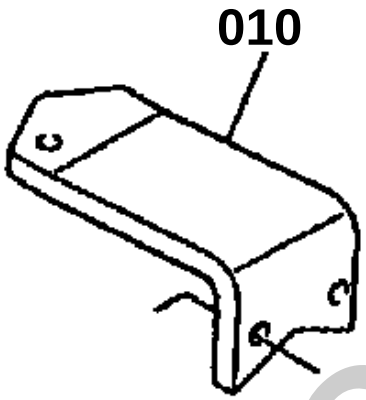

010 6C040-5641-7

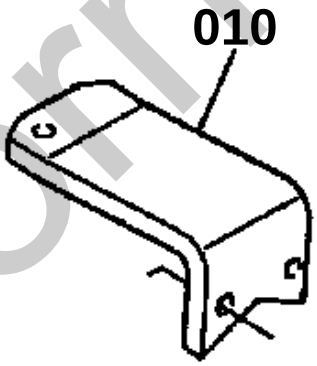

6C040-807-10

silverhorn.co.uk

TIE ROD

↔ Interchangeable; ≠ not interchangeable; ← new for old; → old for new

REF.No	Part No.	Description	Q'ty	S.No.	I/C	REMARKS	Weight (kgf)	Weight (lb)
010	6C040-56415	ARM KNUCKLE	1	<=71601		WITHOUT BI-SPEED TURN	0	0
010	6C040-56417	ARM KNUCKLE	1	>=71602	←	WITHOUT BI-SPEED TURN	1.35	2.97
010	6C040-56418	ARM KNUCKLE	1	>=72573	≠	WITHOUT BI-SPEED TURN	1.4	3.08
010	6C040-77540	ARM KNUCKLE	1	<=71322		WITH BI-SPEED TURN	0	0
010	6C040-56417	ARM KNUCKLE	1	>=71323	←	WITH BI-SPEED TURN	1.35	2.97
010	6C040-56418	ARM KNUCKLE	1	>=72573	≠	WITH BI-SPEED TURN	1.4	3.08
020	01133-51235	BOLT	2	<=71729			0.05	0.11
020	01138-61235	BOLT	2	>=71730	←		0.02	0.044
030	6C040-56420	ASSY ROD TIE	1				1.6	3.52
040	67121-56560	COVER DUST	1				0.008	0.0176
050	67121-56570	CLIP	1				0.003	0.0066
060	67121-56560	COVER DUST	1				0.008	0.0176
070	67121-56570	CLIP	1				0.003	0.0066
080	6C040-56590	ROD TIE	1				1.2	2.64
090	02172-50120	NUT	1				0.01	0.022
100	67121-56540	NUT	1				0.007	0.0154
110	66591-56780	NUT	2				0.01	0.022
120	05511-50322	PIN SPLIT	2				0.002	0.0044
130	67950-56530	ASSY END ROD RH	1				0.24	0.528
140	67950-56520	ASSY END ROD LH	1				0.24	0.528

silverhorn.co.uk

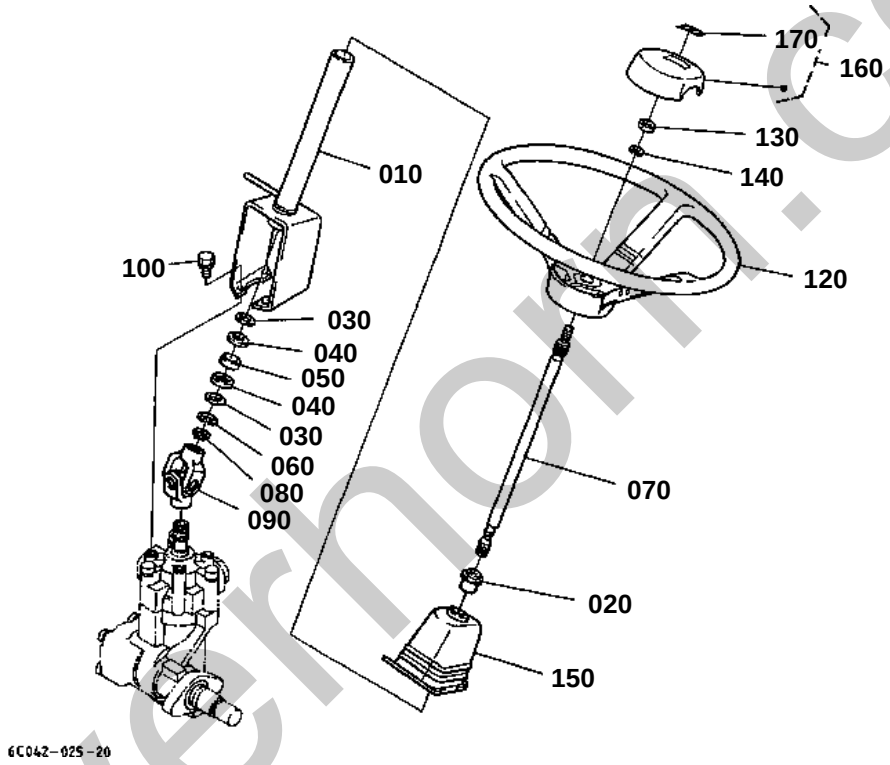

silvermoth.co.uk

090 6C040-4133-0
100 02156-50080
110 04512-60080

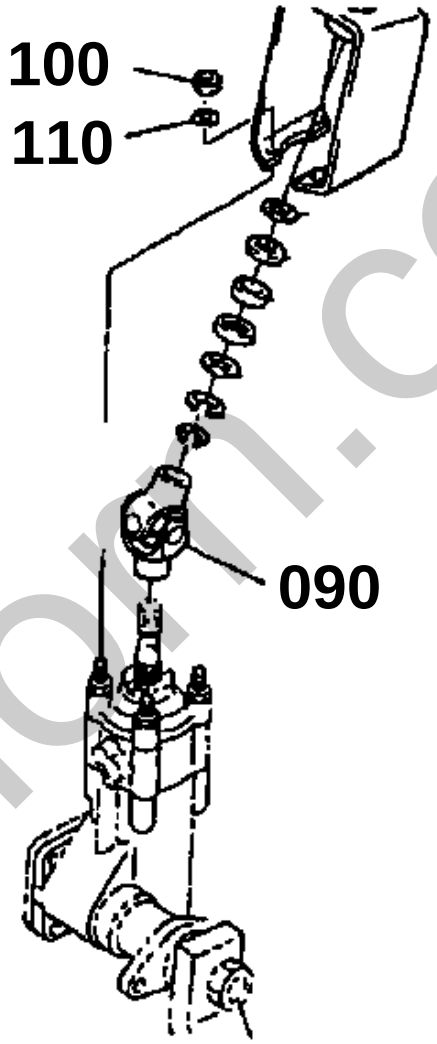

6C040-808-10

silverhorn.co.uk

STEERING HANDLE

↔ Interchangeable; ≠ not interchangeable; ← new for old; → old for new

REF.No	Part No.	Description	Q'ty	S.No.	I/C	REMARKS	Weight (kgf)	Weight (lb)
010	6C040-41323	POST STEERING	1				1.41	3.102
020	6C040-41510	BUSH	1				0.035	0.077
030	6C040-41390	COLLAR	2				0.007	0.0154
040	6C040-41523	COVER BEARING	2				0.007	0.0154
050	08121-06002	BEARING BALL	1				0.03	0.066
060	04611-00420	CIR CLIP INTERNAL	1				0.006	0.0132
070	6C040-41340	SHAFT STEERING	1				0.49	1.078
080	04612-00150	CIR CLIP EXTERNAL	1				0.001	0.0022
090	6C040-41330	JOINT UNIVERSAL	1	<=71822			0.29	0.638
090	6C042-41330	JOINT UNIVERSAL	1	>=71823	≠		0.27	0.594
100	02156-50080	NUT	4	<=71822			0.004	0.0088
100	01123-50820	BOLT	4	>=71823	≠		0.011	0.0242
110	04512-60080	WASHER SPRING	4	<=71822			0.002	0.0044
120	6C040-41410	WHEEL STEERING	1				1.41	3.102
130	02174-50120	NUT	1				0.01	0.022
140	04512-60120	WASHER SPRING	1				0.005	0.011
150	6C040-53550	BOOT STEERING	1	<=72438			0	0
150	6C040-53553	BOOT STEERING	1	>=72439	←		0.075	0.165
160	6C040-41420	ASSY PAD	1				0.041	0.0902
170	6C040-41440	MARK STEERING	1				0.001	0.0022

silverhorn.co.uk

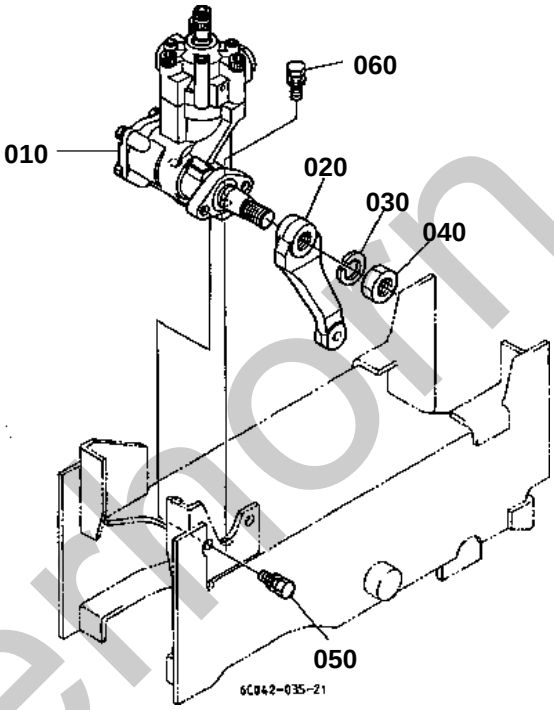

silverhorn.co.uk

010 6C040-4110-0
010 6C040-4110-3
010 6C040-4110-4
020 6C040-4121-3
020 6C040-4121-5

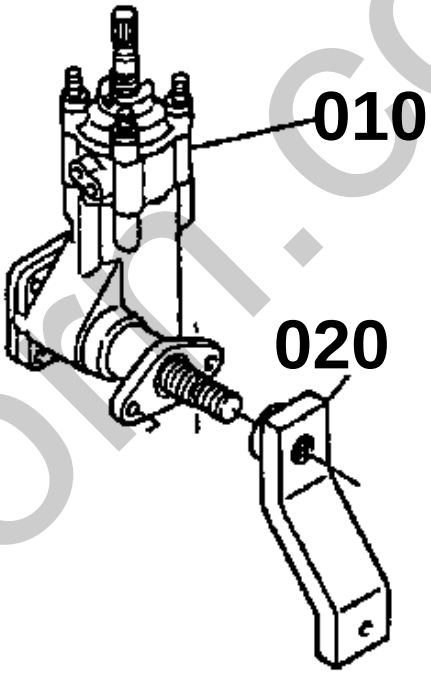

6C040-309-10

silverhorn.co.uk

↔ Interchangeable; ≠ not interchangeable; ← new for old; → old for new

REF.No	Part No.	Description	Q'ty	S.No.	I/C	REMARKS	Weight (kgf)	Weight (lb)
010	6C040-41100	ASSY STEERING POWER	1	<=71482		REFER TO L.No.E06-R FOR COMPONENTS.	0	0
010	6C040-41103	ASSY STEERING POWER	1	>=71483	←	REFER TO L.No.E06-R FOR COMPONENTS.	0	0
010	6C040-41104	ASSY STEERING POWER	1	>=71630	←	REFER TO L.No.E06-R FOR COMPONENTS.	2.5	5.5
010	6C042-41100	ASSY STEERING POWER	1	>=71823	≠	REFER TO L.No.E07-R FOR COMPONENTS.	9.6	21.12
020	6C040-41213	ARM PITMAN	1	<=71483			0	0
020	6C040-41215	ARM PITMAN	1	>=71484	←		0.98	2.156
020	6C042-41210	ARM PITMAN	1	>=71823	≠		0.774	1.7028
020	6C042-41213	ARM PITMAN	1	>=75501	←		0	0
030	04512-60220	WASHER SPRING	1				0.025	0.055
040	02176-50220	NUT	1				0.058	0.1276
050	01133-51230	BOLT	2				0.04	0.088
060	01133-51235	BOLT	2				0.05	0.11

silverhorn.co.uk

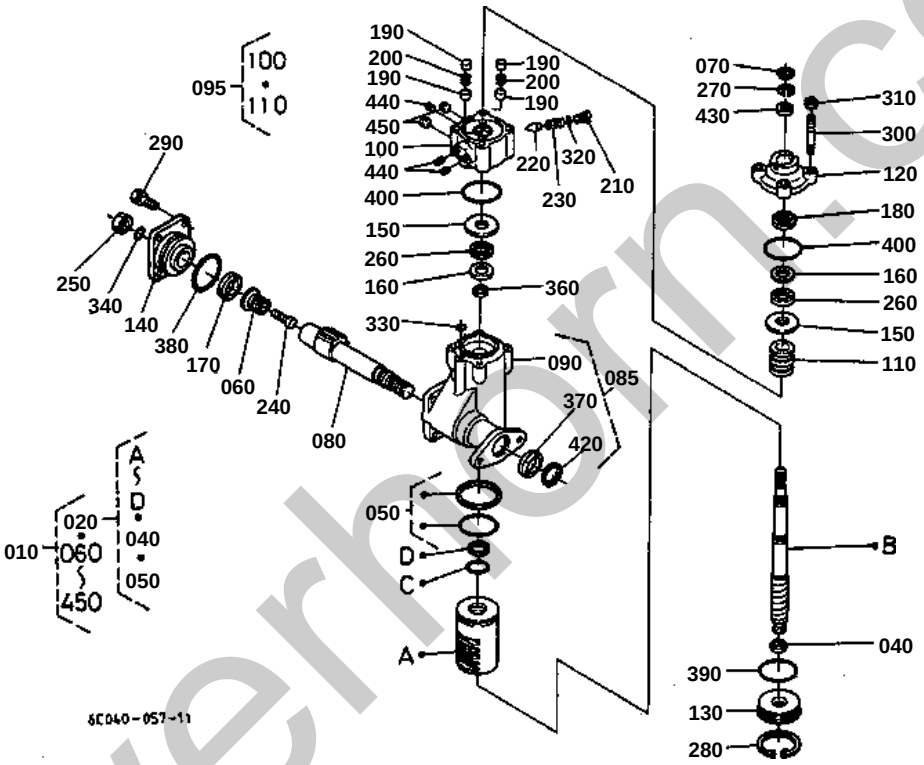

silverhorn.co.uk

030 6C040-9886-0
050 6C040-4191-0
050 6C040-9885-0
090 6C040-4111-0
350 6C040-9883-0
410 6C040-4173-0
420 37410-6613-0

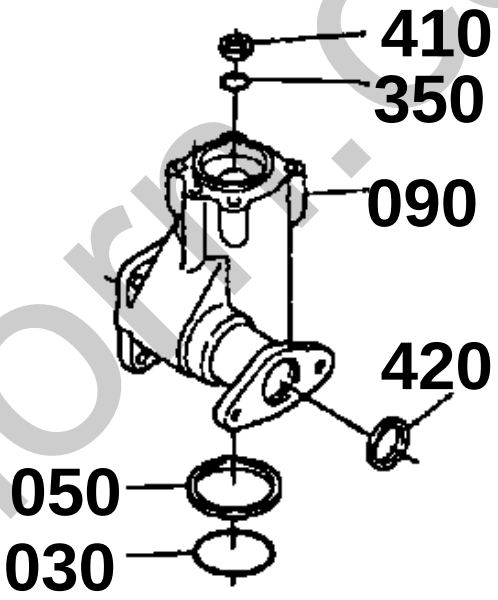

085 6C040-9870-0

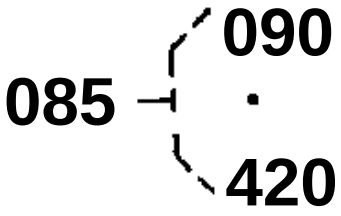

6C040-810-10

silverhorn.co.uk

↔ Interchangeable; ≠ not interchangeable; ← new for old; → old for new

REF.No	Part No.	Description	Q'ty	S.No.	I/C	REMARKS	Weight (kgf)	Weight (lb)
010	6C040-41100	ASSY STEERING POWER	1	<=71482			0	0
010	6C040-41103	ASSY STEERING POWER	1	>=71483	←		0	0
010	6C040-41104	ASSY STEERING POWER	1	>=71630	←		2.5	5.5
020	6C040-41140	ASSY NUT BALL	1	<=71482			0	0
020	6C040-41143	ASSY NUT BALL	1	>=71483	←		1.62	3.564
030	6C040-98860	O RING	1	<=71629			0.001	0.0022
040	6C040-41870	GASKET	1				0.003	0.0066
050	6C040-41910	RING BACK UP	1	<=71482			0	0
050	6C040-98850	ASSY SEAL	1	>=71483	←		0.003	0.0066
050	6C040-98910	SEAL	1	>=71630	←		0.002	0.0044
060	6C040-98710	SCREW LOCK	1				0.009	0.0198
070	6C040-98730	CIR CLIP EXTERNAL	1				0.001	0.0022
080	6C040-41150	SHAFT SECTOR	1	<=71482			1.01	2.222
080	6C040-41153	SHAFT SECTOR	1	>=71483	≠		0.99	2.178
085	6C040-98700	ASSY CASE GEAR	1	<=71482			3.25	7.15
085	6C040-98800	ASSY CASE GEAR	1	>=71483	≠		3.32	7.304
090	6C040-41110	CASE GEAR	1	<=71482			3.32	7.304
090	6C040-41113	CASE GEAR	1	>=71483	≠		0	0
095	6C040-98840	ASSY VALVE	1				1.13	2.486
100	6C040-41120	SLEEVE	1			ORDER BY REF.No.095	0	0
110	6C040-41160	SPOOL	1			ORDER BY REF.No.095	0	0
120	6C040-41130	COVER TOP	1				0.28	0.616
130	6C040-41170	COVER END	1				0.19	0.418
140	6C040-41180	COVER SIDE	1				0.54	1.188
150	6C040-41190	COLLAR THRUST	2				0.027	0.0594
160	6C040-41610	COLLAR THRUST	2				0.011	0.0242
170	6C040-41950	GASKET	1				0.002	0.0044
180	6C040-41630	NUT	1				0.018	0.0396
190	6C040-41920	PISTON	4				0.007	0.0154
200	6C040-41930	SPRING PISTON	2				0.004	0.0088
210	6C040-41640	ADJUSTER RELIEF	1				0.009	0.0198
220	6C040-41650	POPPET	1				0.001	0.0022
230	6C040-41660	SPRING RELIEF	1				0.005	0.011
240	6C040-41670	ADJUSTER SECTOR	1				0.03	0.066
250	6C040-98720	NUT	1				0.01	0.022
260	6C040-41680	BEARING THRUST	2				0.005	0.011
270	6C040-98740	CIR-CLIP INTERNAL	1				0.002	0.0044
280	6C040-98750	CIR-CLIP INTERNAL	1				0.011	0.0242
290	6C040-98760	BOLT	4				0.005	0.011
300	6C040-41690	STUD	4				0.033	0.0726
310	6C040-41940	NUT	4				0.005	0.011
320	6C040-98770	O RING	1				0.001	0.0022
330	6C040-98780	O RING	1				0.001	0.0022
340	6C040-98790	O RING	1				0.001	0.0022
350	6C040-98830	O RING	1	<=71482			0.001	0.0022
360	6C040-98880	ST SEAL	1	>=71483			0.001	0.0022
370	6C040-41950	SEAL	1	>=71483			0.002	0.0044
380	6C040-98810	O RING	1				0.001	0.0022
390	6C040-41720	O RING	1				0.002	0.0044
400	6C040-98820	O RING	2				0.001	0.0022
410	6C040-41730	RING BACK UP	1	<=71482			0.001	0.0022
420	37410-66130	SEAL	1	<=71482			0.003	0.0066
420	6C040-98890	RING BACK UP	1	>=71483	≠		0.001	0.0022
430	6C040-41750	SEAL OIL	1				0.009	0.0198
440	6C040-41760	PLUG	3				0.002	0.0044
450	6C040-41770	CAP	2				0.001	0.0022

silvermorn.co.uk

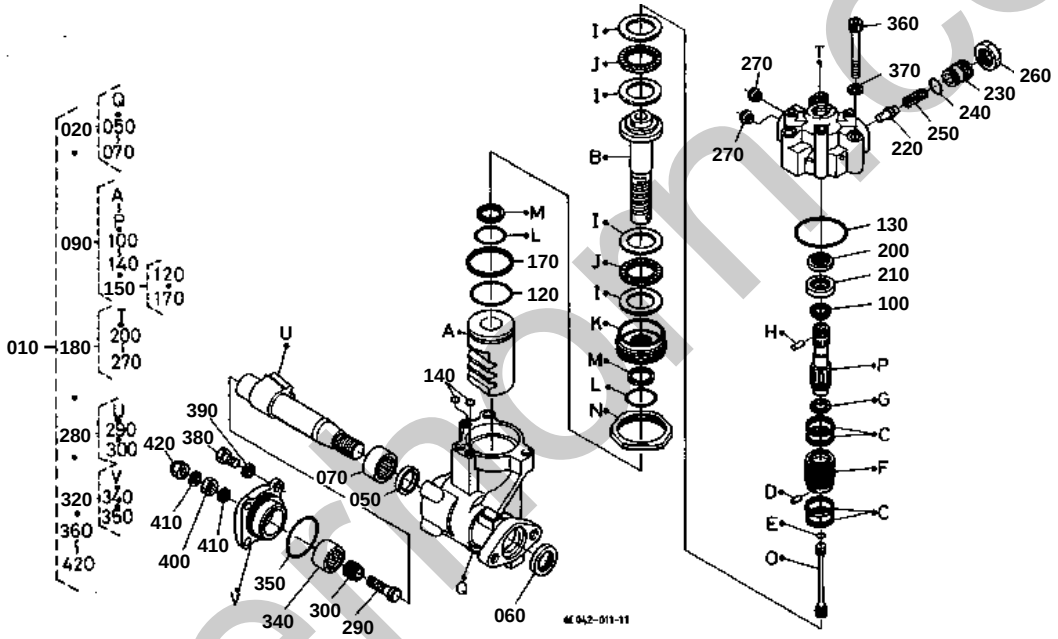

silverforms.co.uk

110 04811-10560

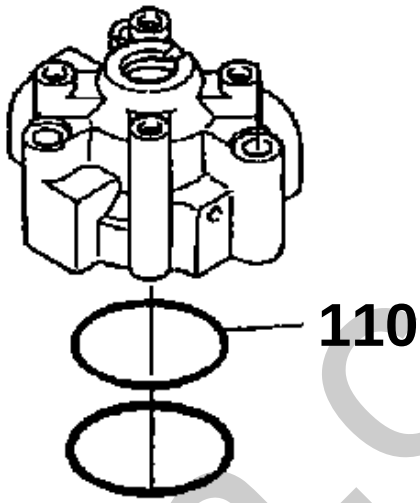

6C040-823-10

silverhorn.co.uk

STEERING CONTROLLER [COMPONENT PARTS]

S.No;<=71823

↔ Interchangeable; ≠ not interchangeable; ← new for old; → old for new

REF.No	Part No.	Description	Q'ty	S.No.	I/C	REMARKS	Weight (kgf)	Weight (lb)
010	6C042-41100	ASSY STEERING POWER	1				9.6	21.12
020	6C042-41400	ASSY CASE GEAR	1				3.66	8.052
050	6C042-41430	GASKET	1	<=72904			0.002	0.0044
050	6A100-92020	GASKET U	1	>=72905	↔		0.003	0.0066
060	6C042-41450	SEAL DUST	1	<=72904			0.006	0.0132
060	6A100-92040	SEAL DUST	1	>=72905	↔		0.006	0.0132
070	6C042-41440	BEARING NEEDLE	1	<=72904			0.045	0.099
070	6A100-92030	BEARING BALL	1	>=72905	↔		0.05	0.11
090	6C042-41300	ASSY NUT BALL	1				2.18	4.796
100	6C042-41810	CIR CLIP EXTERNAL	1	<=72904			0.001	0.0022
100	6A100-92550	RING SNAP	1	>=72905	↔		0.002	0.0044
110	04811-10560	O RING	1	<=72904			0.002	0.0044
120	04811-50450	O RING	1				0.002	0.0044
130	04811-50650	O RING	1				0.002	0.0044
140	04810-00060	O RING	2				0.001	0.0022
150	6C042-41830	ASSY SEAL BALL NUT	1				0.005	0.011
170	6A100-92630	SEAL	1	>=72905			0.002	0.0044
180	6C042-41500	ASSY VALVE	1				1.96	4.312
200	6C042-41520	SEAL OIL	1	<=72904			0.005	0.011
200	6A100-92220	SEAL OIL	1	>=72905	↔		0.006	0.0132
210	6C042-41530	BEARING ROLLER	1	<=72904			0.018	0.0396
210	6A100-92230	BEARING ROLLER	1	>=72905	↔		0.018	0.0396
220	31351-66360	POPPET	1				0.005	0.011
230	31351-66370	SCREW ADJUSTING	1				0.047	0.1034
240	31351-66390	O RING	1				0.001	0.0022
250	38430-66380	SPRING	1				0.015	0.033
260	31351-66380	NUT	1				0.022	0.0484
270	6C042-41540	FERRULE	2				0.004	0.0088
280	6C042-41600	ASSY SHAFT SECTOR	1				1.02	2.244
290	35270-16620	SCREW ADJUSTING	1				0.028	0.0616
300	35270-16630	BOLT	1				0.011	0.0242
320	6C042-41700	ASSY COVER SIDE	1	<=72904			0	0
320	6A100-92350	ASSY COVER SIDE	1	>=72905	↔		0.54	1.188
340	35270-16420	BEARING NEEDLE	1				0.045	0.099
350	04810-50500	O RING	1				0.005	0.011
360	6C042-41850	BOLT	3				0.05	0.11
370	04512-60100	WASHER SPRING	3				0.002	0.0044
380	01156-50825	BOLT	4	<=72904			0.013	0.0286
380	6A100-92650	BOLT	4	>=72905	←		0.011	0.0242
390	04512-60080	WASHER SPRING	4	<=72904			0.002	0.0044
390	6A100-92660	WASHER SPRING	4	>=72905	←		0.002	0.0044
400	66363-41250	NUT	1				0.01	0.022
410	35270-16690	GASKET	2				0.001	0.0022
420	35270-16700	NUT	1				0.11	0.242

silverthorn.co.uk

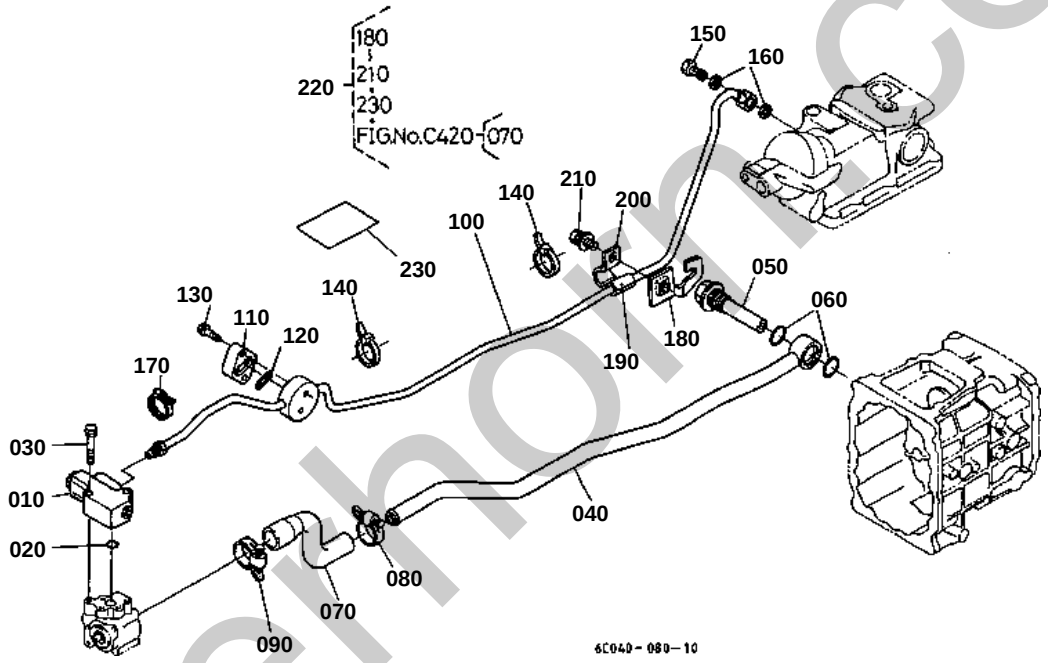

silverhoim.co.uk

HYDRAULIC OIL LINE (SUCTION)

↔ Interchangeable; ≠ not interchangeable; ← new for old; → old for new

REF.No	Part No.	Description	Q'ty	S.No.	I/C	REMARKS	Weight (kgf)	Weight (lb)
010	6C040-36100	ASSY VALVE	1			REFER TO L.No.E10-L FOR COMPONENTS.	0.95	2.09
020	04810-00160	O RING	1				0.001	0.0022
030	01123-50845	BOLT	2				0.02	0.044
040	6C040-39110	PIPE SUCTION	1	<=71194			0.7	1.54
040	6C050-39110	PIPE SUCTION	1	>=71195	↔		0	0
040	6C050-39112	PIPE SUCTION	1	>=74478	←		0.7	1.54
050	66021-36390	FILTER OIL	1				0.185	0.407
060	04811-10300	O RING	2				0.001	0.0022
070	6C040-39150	HOSE INLET	1				0.12	0.264
080	67980-58640	CLAMP HOSE	1				0.02	0.044
090	67955-58630	CLAMP HOSE	1	<=74701			0.025	0.055
090	67955-36230	CLAMP	1	>=74702	↔		0.023	0.0506
100	6C040-39210	PIPE DELIVERY	1	<=71194			0	0
100	6C040-39214	PIPE DELIVERY	1	>=71195	←		0	0
100	6C040-39215	PIPE DELIVERY	1	>=71601	←		0.6	1.32
100	6C040-39216	PIPE DELIVERY	1	>=73470	←		0.64	1.408
110	6C040-36620	CAP	1				0.022	0.0484
120	37410-36630	O RING	1				0.001	0.0022
130	01123-50830	BOLT	2				0.015	0.033
140	67955-36230	CLAMP	2				0.023	0.0506
150	6C040-39290	BOLT JOINT	1				0.045	0.099
160	04714-00200	GASKET	2				0.002	0.0044
170	67980-36250	CLAMP	1				0.021	0.0462
180	6C090-39260	BRACKET	1	>=75385			0.06	0.132
190	31351-45270	PIPE RUBBER	1	>=75385			0.005	0.011
200	6C090-39240	CLAMP	1	>=75385			0.021	0.0462
210	01025-50616	BOLT	1	>=75385			0.005	0.011
220	6C090-98600	KIT CLAMP PIPE	1			OPTION	0.1	0.22
230	6C090-98610	MANUAL CONSTRUCTION	1			OPTION	0.001	0.0022

silverhorn.co.uk

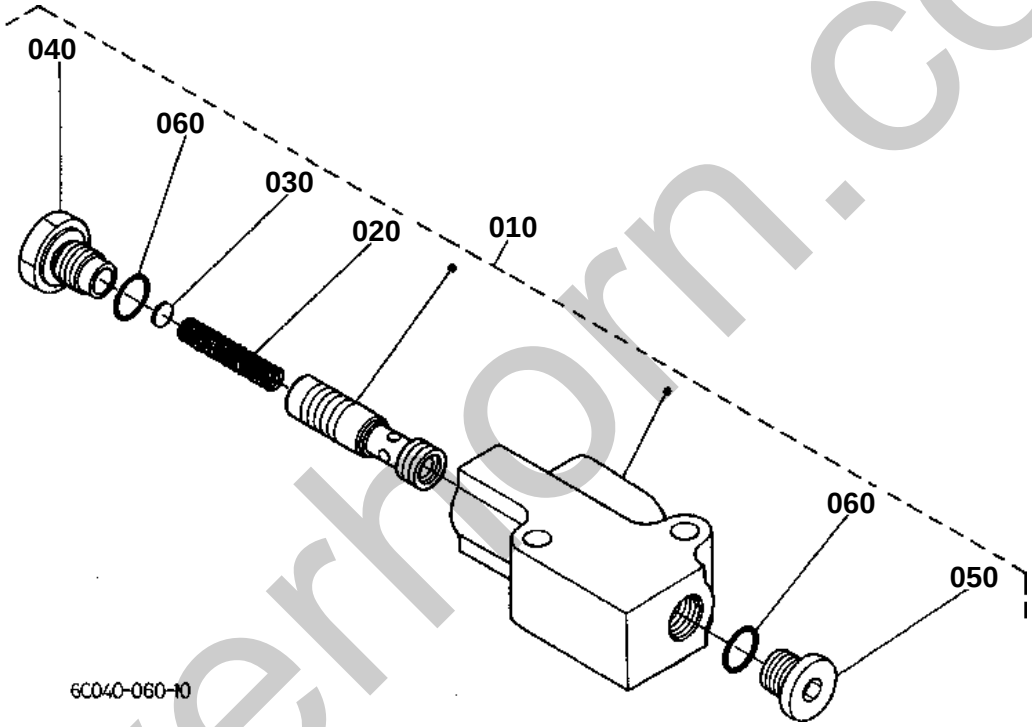

silverhorn.co.uk

FLOW DIVIDER VALVE [COMPONENT PARTS]

↔ Interchangeable; ≠ not interchangeable; ← new for old; → old for new

REF.No	Part No.	Description	Q'ty	S.No.	I/C	REMARKS	Weight (kgf)	Weight (lb)
010	6C040-36100	ASSY VALVE	1				0.95	2.09
020	6C040-36140	SPRING	1				0.005	0.011
030	6C040-36150	SHIM	1				0.001	0.0022
040	6C040-36160	PLUG	1				0.035	0.077
050	6C040-36170	PLUG	1				0.022	0.0484
060	04810-00140	O RING	2				0.001	0.0022

silverhorn.co.uk

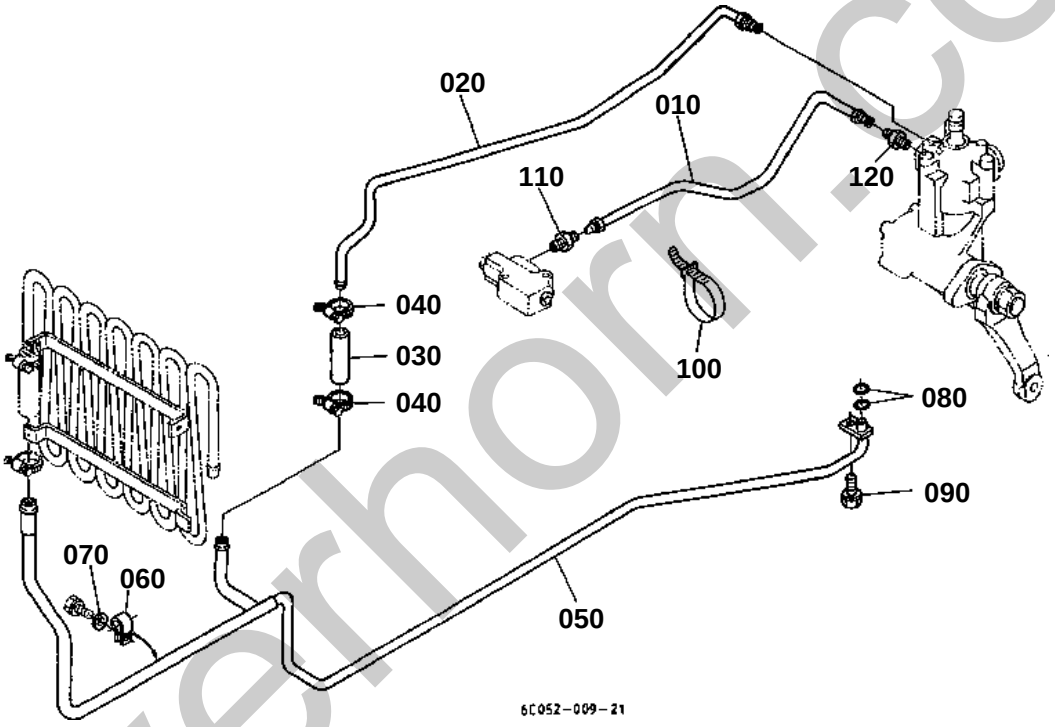

silverhorn.co.uk

010 6C040-3922-0

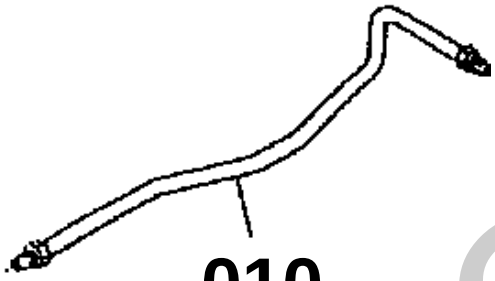

010 6C040-3922-2

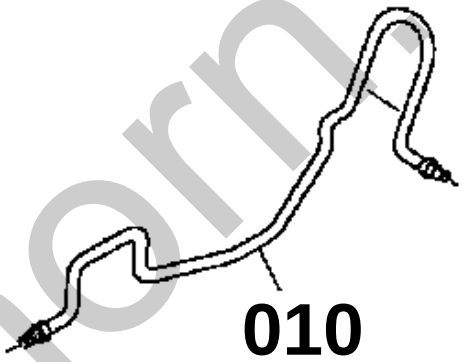

010 6C042-3922-0

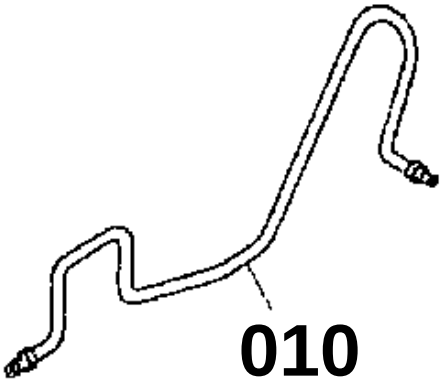

6C040-812-10

silverhorn.co.uk

HYDRAULIC OIL LINE (STEERING)

↔ Interchangeable; ≠ not interchangeable; ← new for old; → old for new

REF.No	Part No.	Description	Q'ty	S.No.	I/C	REMARKS	Weight (kgf)	Weight (lb)
010	6C040-39220	PIPE DELIVERY	1	<=70831			0	0
010	6C040-39222	PIPE DELIVERY	1	>=70832	←		0.22	0.484
010	6C042-39220	PIPE DELIVERY	1	>=71823	≠		0	0
010	6C042-39222	PIPE DELIVERY	1	>=73971	←		0.18	0.396
020	6C050-39313	PIPE	1				0.17	0.374
030	6C050-58740	HOSE	1				0.021	0.0462
040	6C050-58750	CLAMP HOSE	2				0.02	0.044
050	6C050-39353	PIPE	1				0.5	1.1
060	6C050-39410	CLAMP PIPE	1				0.013	0.0286
070	04013-60100	WASHER PLAIN	1				0.004	0.0088
080	04811-00100	O RING	2				0.001	0.0022
090	01123-60816	BOLT	1				0.01	0.022
100	67980-36250	CLAMP	1	>=71195			0.021	0.0462
110	6C042-39400	ASSY JOINT PIPE	1	>=71823			0.035	0.077
120	6C042-39430	JOINT PIPE	1	>=71823			0.04	0.088

silverhorn.co.uk

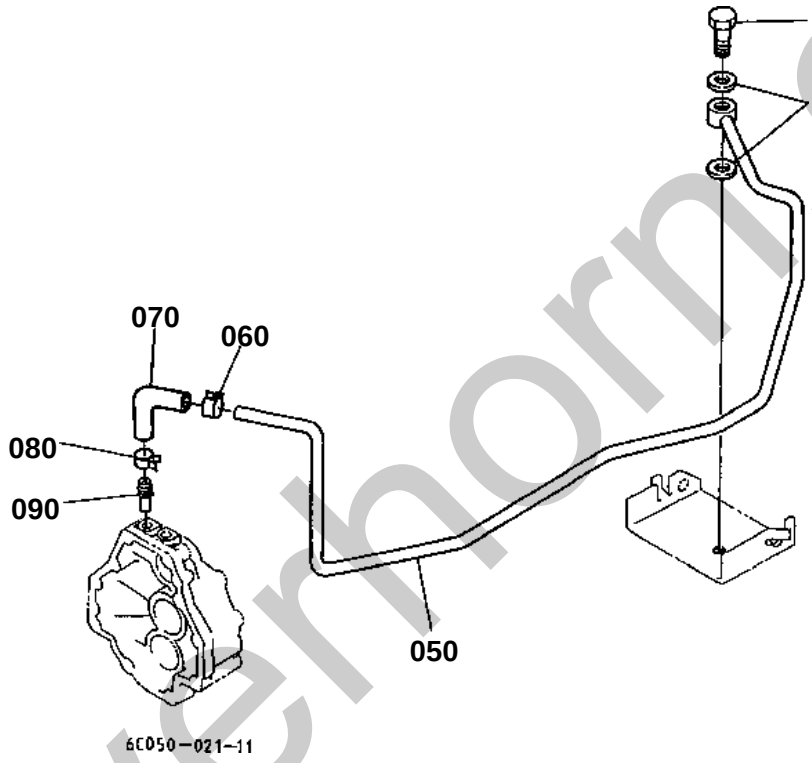

silverhorn.co.uk

HYDRAULIC OIL LINE (T/M)

↔ Interchangeable; ≠ not interchangeable; ← new for old; → old for new

REF.No	Part No.	Description	Q'ty	S.No.	I/C	REMARKS	Weight (kgf)	Weight (lb)
010	6C040-39290	BOLT JOINT	1				0.045	0.099
020	04714-00200	GASKET	2				0.002	0.0044
050	6C050-13170	PIPE HYDRAULIC	1	<=70005			0	0
050	6C050-13173	PIPE HYDRAULIC	1	>=70006	←		0.25	0.55
060	09318-88125	CLAMP HOSE	1				0.001	0.0022
070	6C050-13140	HOSE HYDRAULIC	1				0.013	0.0286
080	09318-88115	CLAMP HOSE	1				0.002	0.0044
090	6C050-13190	JOINT	1				0.006	0.0132

silverhorn.co.uk

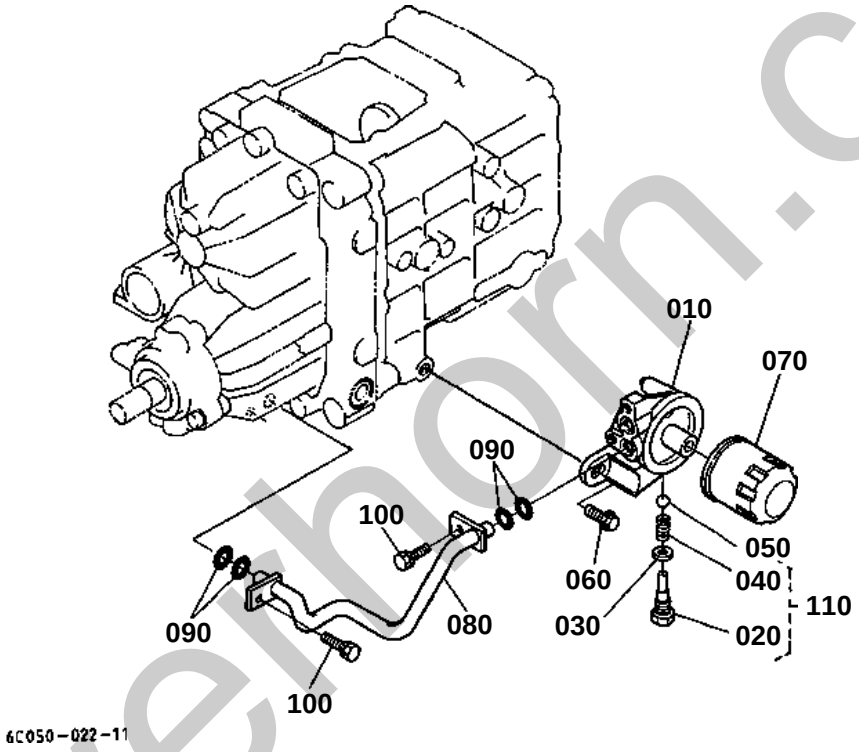

silverthorn.co.uk

HYDRAULIC OIL LINE (HST)

↔ Interchangeable; ≠ not interchangeable; ← new for old; → old for new

REF.No	Part No.	Description	Q'ty	S.No.	I/C	REMARKS	Weight (kgf)	Weight (lb)
010	6C050-39330	BRACKET FILTER	1	<=72323			0	0
010	6C050-39332	BRACKET FILTER	1	>=72324	←		0	0
010	6C050-39333	BRACKET FILTER	1	>=75471	←		0.19	0.418
020	6C050-39380	BOLT	1	<=71482		ORDER BY REF.No.110	0.032	0.0704
020	6C050-39382	BOLT	1	>=71483	≠		0.03	0.066
030	04717-01200	WASHER WITH RUBBER	1				0.002	0.0044
040	11420-36960	SPRING	1	<=71482		ORDER BY REF.No.110	0.005	0.011
040	16851-36950	SPRING	1	>=71483	≠		0.02	0.044
050	07715-01605	BALL	1				0.003	0.0066
060	01125-51030	BOLT	1				0.03	0.066
070	66021-36060	CARTRIDGE OIL FILTER	1				0.34	0.748
080	6C050-39343	PIPE	1				0.085	0.187
090	04811-00120	O RING	4				0.001	0.0022
100	01123-60816	BOLT	2				0.01	0.022
110	6C050-96990	KIT BOLT-SPRING	1				0.034	0.0748

silverhorn.co.uk

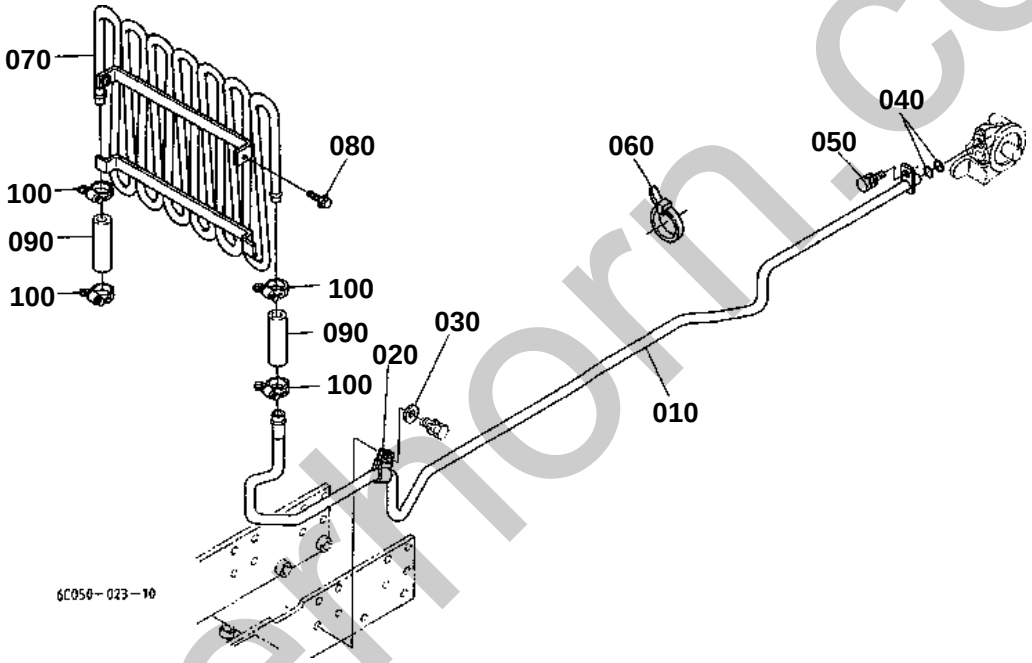

silverhorn.co.uk

HYDRAULIC OIL LINE (OIL COOLER)

↔ Interchangeable; ≠ not interchangeable; ← new for old; → old for new

REF.No	Part No.	Description	Q'ty	S.No.	I/C	REMARKS	Weight (kgf)	Weight (lb)
010	6C050-39323	PIPE RETURN	1				0.45	0.99
020	6C050-39410	CLAMP PIPE	1				0.013	0.0286
030	04013-60100	WASHER PLAIN	1				0.004	0.0088
040	04811-00120	O RING	2				0.001	0.0022
050	01123-60816	BOLT	1				0.01	0.022
060	67955-36230	CLAMP	1				0.023	0.0506
070	6C050-58712	PIPE COOLER	1				1.7	3.74
080	01125-60816	BOLT	2	<=75500			0.01	0.022
080	01125-50818	BOLT	2	>=75501	≠		0.015	0.033
090	6C050-58720	HOSE	2				0.023	0.0506
100	6C050-58750	CLAMP HOSE	4				0.02	0.044

silverhorn.co.uk

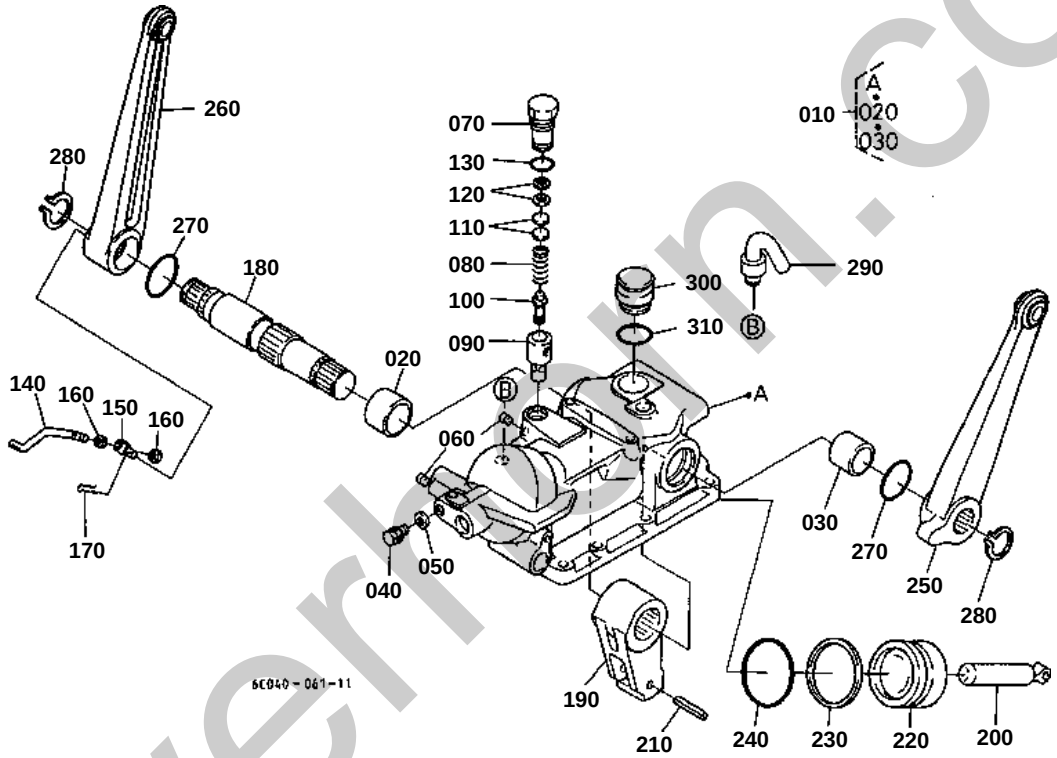

silverhorn.co.uk

260 6C040-3652-0

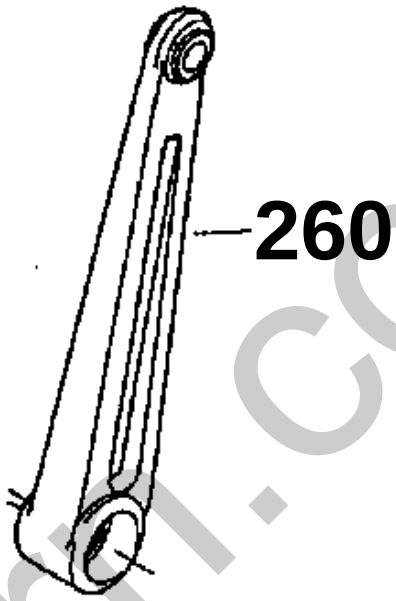

290 6C040-3607-0

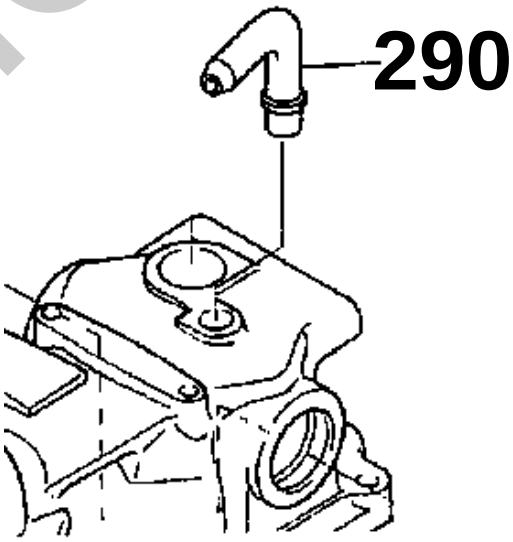

6C040-813-10

silverhorn.co.uk

HYDRAULIC CYLINDER CASE

↔ Interchangeable; ≠ not interchangeable; ← new for old; → old for new

REF.No	Part No.	Description	Q'ty	S.No.	I/C	REMARKS	Weight (kgf)	Weight (lb)
010	6C040-36030	ASSY CASE CYLINDER	1	<=74701			11	24.2
010	6C040-36035	ASSY CASE CYLINDER	1	>=74702	≠		11.2	24.64
020	6C040-36480	BUSH	1				0.02	0.044
030	6C040-36490	BUSH	1				0.05	0.11
040	37150-36730	PLUG	1				0.03	0.066
050	37150-36720	GASKET	1				0.01	0.022
060	32701-36150	PLUG	2				0.005	0.011
070	31351-37910	PLUG	1				0.06	0.132
080	31351-37920	SPRING RELIEF	1				0.02	0.044
090	31351-37930	SEAT RELIEF VALVE	1				0.02	0.044
100	31351-37940	POPPET	1				0.005	0.011
110	31351-37950	SHIM	5			0.40MM	0.001	0.0022
110	31351-37960	SHIM	2			0.20MM	0.001	0.0022
110	31351-37970	SHIM	2			0.10MM	0.001	0.0022
120	04013-60050	WASHER PLAIN	2				0.001	0.0022
130	04811-10160	O RING	1				0.001	0.0022
140	6C040-36230	ROD FEED BACK	1				0.045	0.099
150	6C040-36220	PIN FEED BACK	1				0.024	0.0528
160	02112-50080	NUT	2				0.003	0.0066
170	05525-61000	PIN SNAP	1				0.002	0.0044
180	6C040-36470	SHAFT HYD.ARM	1				1.66	3.652
190	6C040-36450	ARM HYDRAULIC	1				0.99	2.178
200	6C040-36430	ROD HYD.PISTON	1				0.36	0.792
210	05411-00640	PIN SPRING	1				0.006	0.0132
220	6C040-36410	PISTON HYD.	1				0.78	1.716
230	67111-36720	RING BACK UP	1				0.005	0.011
240	04811-00600	O RING	1				0.006	0.0132
250	6C040-36510	ARM LIFT LH	1				1.88	4.136
260	6C040-36520	ARM LIFT RH	1	<=71822			0	0
260	6C040-36524	ARM LIFT RH	1	>=71823	←		1.86	4.092
270	6C040-36550	O RING	2				0.003	0.0066
280	04612-00320	CIR CLIP EXTERNAL	2				0.004	0.0088
290	6C040-36070	PIPE BREATHER	1	<=74701			0.018	0.0396
290	6A100-36410	BREATHER	1	>=74702	≠		0.006	0.0132
300	6C040-36110	PLUG OIL FILLER	1				0.02	0.044
310	04811-00240	O RING	1				0.001	0.0022

silvernorn.co.uk

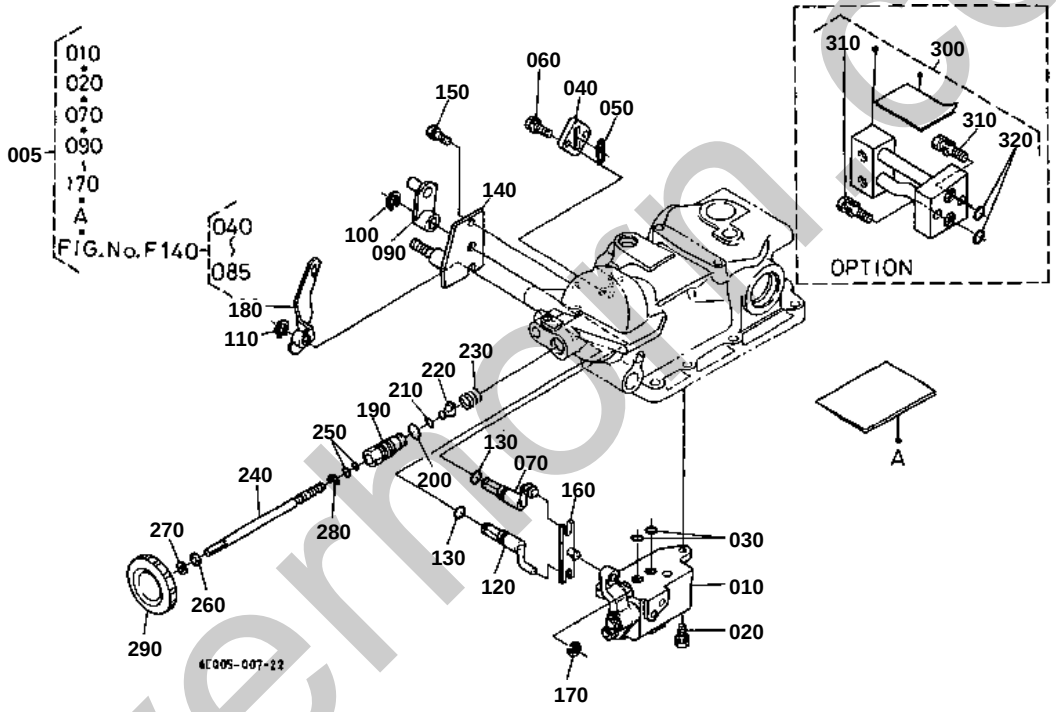

silverhorn.co.uk

010 6C040-3620-0
070 6C040-3693-0
120 6C040-3697-0

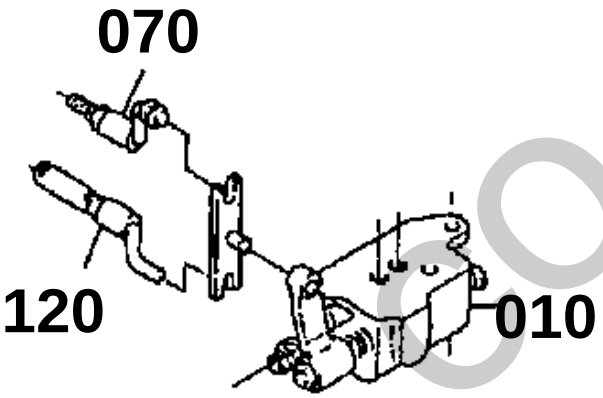

080 6C040-3688-0
090 6C040-3699-0
100 04015-50080
105 6C040-3692-0
110 67950-5914-0
140 6C040-3696-0

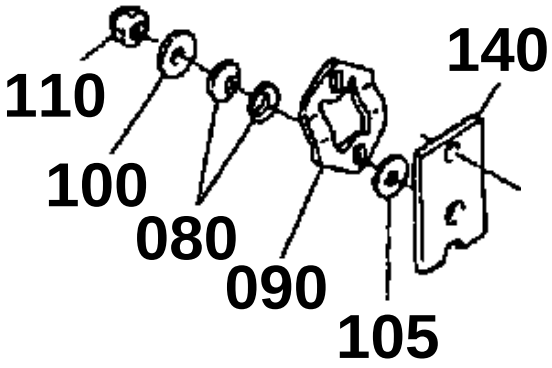

6C040-814-10

silverhorn.co.uk

CONTROL VALVE

↔ Interchangeable; ≠ not interchangeable; ← new for old; → old for new

REF.No	Part No.	Description	Q'ty	S.No.	I/C	REMARKS	Weight (kgf)	Weight (lb)
005	6C040-93300	KIT VALVE CONTROL	1				2.4	5.28
010	6C040-36200	ASSY VALVE CONTROL	1	<=71822		REFER TO L No.E14-R FOR COMPONENTS.	1.23	2.706
010	6C040-36203	ASSY VALVE CONTROL	1	>=71823	≠	REFER TO L No.E15-L FOR COMPONENTS.	0	0
010	6C040-36204	ASSY VALVE CONTROL	1	>=74199	←	REFER TO L No.E15-L FOR COMPONENTS.	1.31	2.882
020	01123-50822	BOLT	2				0.012	0.0264
030	04811-00080	O RING	2	<=74198			0.001	0.0022
030	04810-00100	O RING	2	>=74199	≠		0.001	0.0022
040	6C040-36620	CAP	1				0.022	0.0484
050	37410-36630	O RING	1				0.001	0.0022
060	01754-50820	BOLT FLANGE	2				0.015	0.033
070	6C040-36930	SHAFT CONTROL LEVER	1	<=71822			0.058	0.1276
070	6C040-36932	SHAFT CONTROL LEVER	1	>=71823	≠		0.03	0.066
080	6C040-36880	SPRING PLATE	2	<=71822			0.003	0.0066
090	6C040-36990	ARM CONTROL LEVER	1	<=71822			0.045	0.099
090	6C040-36993	ARM CONTROL LEVER	1	>=71823	≠		0.05	0.11
100	04015-50080	WASHER PLAIN	1	<=71822			0	0
100	04612-00100	CIR CLIP EXTERNAL	1	>=71823	≠		0.001	0.0022
105	6C040-36920	COLLAR	1	<=71822			0.002	0.0044
110	67950-59140	U-NUT	1	<=71822			0.01	0.022
110	04612-00120	CIR CLIP EXTERNAL	1	>=71823	≠		0.001	0.0022
120	6C040-36970	SHAFT FEED BACK	1	<=71822			0.078	0.1716
120	6C040-36972	SHAFT FEED BACK	1	>=71823	≠		0.06	0.132
130	04811-00110	O RING	2				0.001	0.0022
140	6C040-36960	PLATE	1	<=71822			0.041	0.0902
140	6C040-36962	PLATE	1	>=71823	≠		0.14	0.308
150	01123-60816	BOLT	1				0.01	0.022
160	6C040-36940	LINK	1				0.05	0.11
170	04613-50060	CIR CLIP EXTERNAL	1				0.001	0.0022
180	6C040-36950	ARM FEED BACK	1				0.092	0.2024
190	6C040-37210	BODY	1				0.077	0.1694
200	04811-00180	O RING	1				0.001	0.0022
210	04811-06120	O RING	1				0.001	0.0022
220	6C040-37250	POPPET	1				0.006	0.0132
230	6C040-37430	SPRING	1				0.002	0.0044
240	6C040-37220	SHAFT HYD.ADJUST	1				0.11	0.242
250	04810-00080	O RING	2				0.001	0.0022
260	6C040-37420	COLLAR	1				0.001	0.0022
270	04611-00170	CIR CLIP INTERNAL	1				0.001	0.0022
280	6C040-37410	STOPPER	1				0.002	0.0044
290	37410-36643	GRIP	1				0.03	0.066
300	6C040-95100	KIT COVER HYD.OUTLET	1			OPTION	0.35	0.77
310	01123-50830	BOLT	2			OPTION	0.015	0.033

silverhorn.co.uk

↔ Interchangeable; ≠ not interchangeable; ← new for old; → old for new

REF.No	Part No.	Description	Q'ty	S.No.	I/C	REMARKS	Weight (kgf)	Weight (lb)
320	04810-00070	O RING	2			OPTION	0.001	0.0022

silverhorn.co.uk

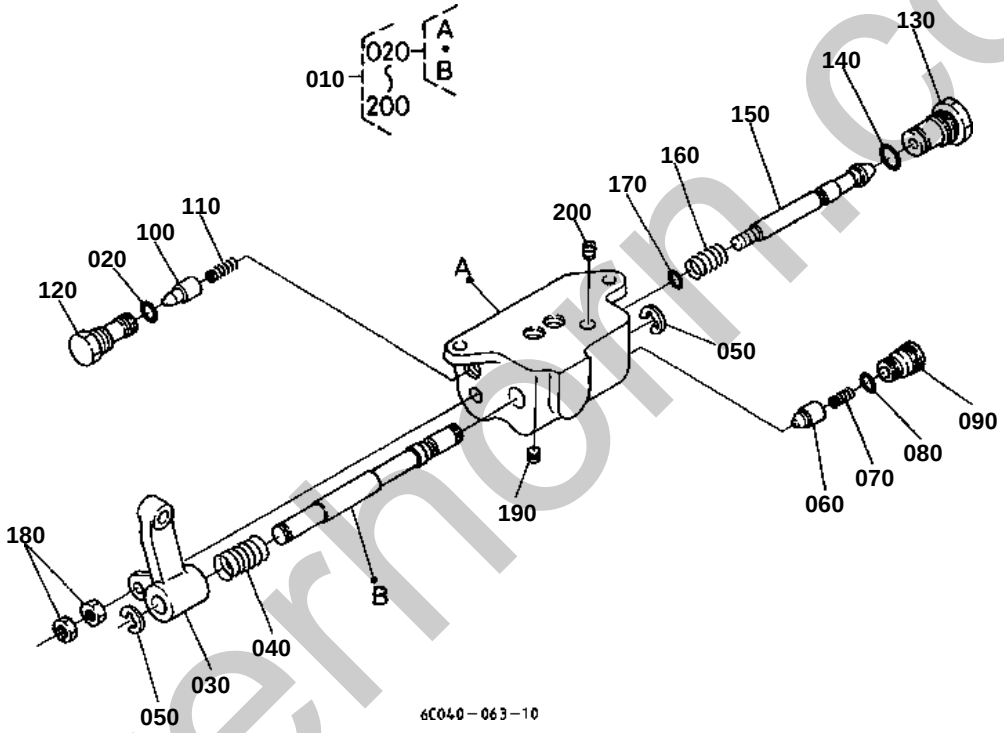

silvermorn.co.uk

CONTROL VALVE [COMPONENT PARTS]

S.No;<=71822

↔ Interchangeable; ≠ not interchangeable; ← new for old; → old for new

REF.No	Part No.	Description	Q'ty	S.No.	I/C	REMARKS	Weight (kgf)	Weight (lb)
010	6C040-36200	ASSY VALVE CONTROL	1				1.23	2.706
020	6C040-36600	ASSY BODY-SPOOL	1				1.02	2.244
030	6C040-36650	LEVER	1				0.038	0.0836
040	6C040-36660	SPRING RETURN	1				0.01	0.022
050	04613-00090	CIR CLIP EXTERNAL	2				0	0
060	6C040-36670	POPPET	1				0.011	0.0242
070	6C040-36680	SPRING	1				0.001	0.0022
080	04810-00090	O RING	2				0.001	0.0022
090	6C040-36690	PLUG	1				0.02	0.044
100	48100-38320	POPPET	1				0.014	0.0308
110	48100-38330	SPRING	1				0.005	0.011
120	6C040-36710	PLUG	1				0.036	0.0792
130	6C040-36720	PLUG	1				0.038	0.0836
140	04810-06100	O RING	1				0.001	0.0022
150	6C040-36730	POPPET	1				0.036	0.0792
160	67148-36720	SPRING	1				0.004	0.0088
170	04811-00050	O RING	1				0.001	0.0022
180	02112-50080	NUT	2				0.003	0.0066
190	32701-36150	PLUG	2				0.005	0.011
200	32420-67380	PLUG	1				0.005	0.011

silverhorn.co.uk

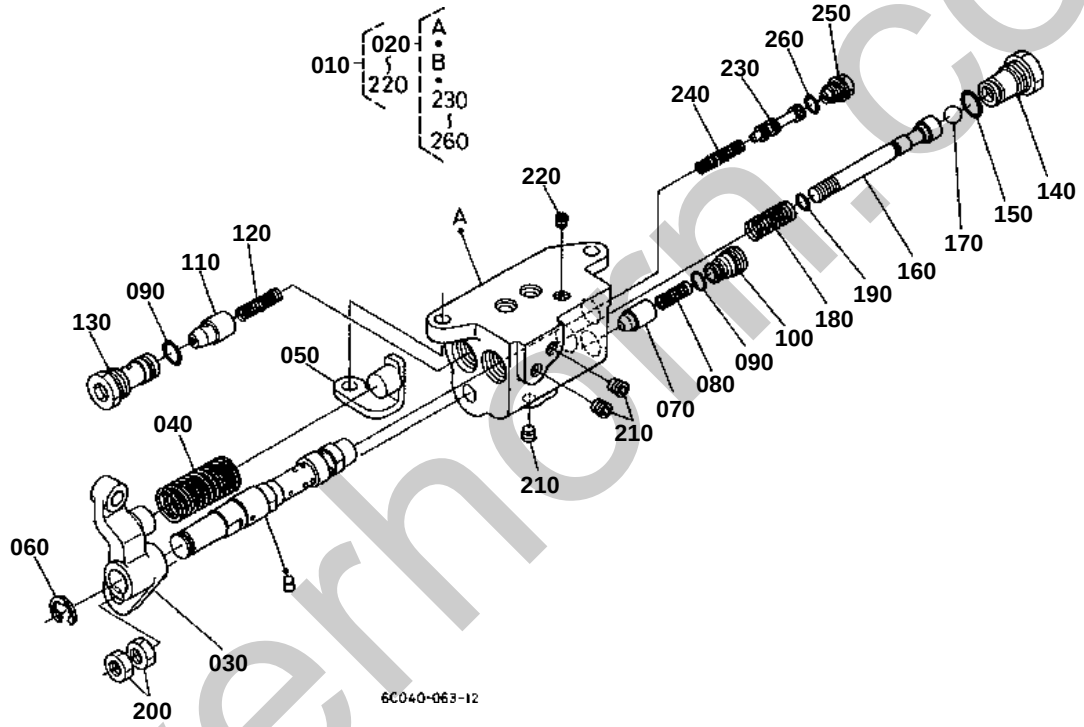

silverhorn.co.uk

CONTROL VALVE [COMPONENT PARTS]

S.No;>=71823

↔ Interchangeable; ≠ not interchangeable; ← new for old; → old for new

REF.No	Part No.	Description	Q'ty	S.No.	I/C	REMARKS	Weight (kgf)	Weight (lb)
010	6C040-36203	ASSY VALVE CONTROL	1	<=74198			0	0
010	6C040-36204	ASSY VALVE CONTROL	1	>=74199	←		1.31	2.882
020	6C040-36602	ASSY BODY-SPOOL	1	<=72172			0	0
020	6C040-36603	ASSY BODY-SPOOL	1	>=72173	←		1.1	2.42
020	6C040-36604	ASSY BODY-SPOOL	1	>=74199	←		0.96	2.112
030	6C040-36652	LEVER	1				0.039	0.0858
040	6C040-36660	SPRING RETURN	1				0.01	0.022
050	6C040-36270	HOLDER SPRING	1				0.025	0.055
060	04613-50090	CIR CLIP EXTERNAL	2				0.001	0.0022
070	6C040-36670	POPPET	1				0.011	0.0242
080	6C040-36680	SPRING	1				0.001	0.0022
090	04810-00090	O RING	2				0.001	0.0022
100	6A100-36660	PLUG	1				0.015	0.033
110	48100-38320	POPPET	1				0.014	0.0308
120	48100-38330	SPRING	1				0.005	0.011
130	6A100-36670	PLUG	1				0.027	0.0594
140	6A100-36680	PLUG	1				0.042	0.0924
150	04810-06100	O RING	1				0.001	0.0022
160	6A100-36690	POPPET	1				0.035	0.077
170	07715-00803	BALL	1				0.004	0.0088
180	6A100-36710	SPRING	1				0.01	0.022
190	04811-00050	O RING	1				0.001	0.0022
200	02052-50080	NUT	2				0.004	0.0088
210	32701-36150	PLUG	2				0.005	0.011
220	32420-67380	PLUG	1				0.005	0.011
230	6A100-36720	SPRING PLUNGER	1				0.005	0.011
240	6A100-36730	SPRING	1				0.02	0.044
250	6A100-36740	PLUG	1				0.006	0.0132
260	04811-00060	O RING	1				0.001	0.0022

silverhorn.co.uk

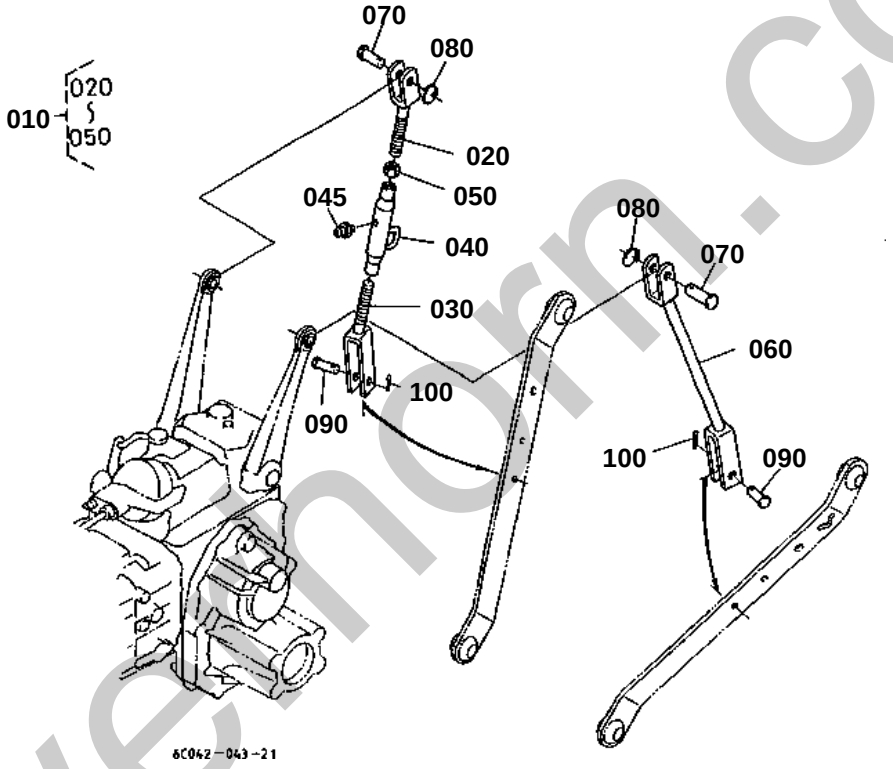

silvermorn.co.uk

LIFT ROD

↔ Interchangeable; ≠ not interchangeable; ← new for old; → old for new

REF.No	Part No.	Description	Q'ty	S.No.	I/C	REMARKS	Weight (kgf)	Weight (lb)
010	6C040-65200	ASSY ROD LIFT RH	1	<=74550			0	0
010	6C040-65202	ASSY ROD LIFT RH	1	>=74551	←		1.32	2.904
020	6C040-65230	ROD LIFT RH	1				0.36	0.792
030	6C040-65240	ROD LIFT RH	1				0.5	1.1
040	6C040-65250	ROD LIFT MIDDLE	1	<=74550			0	0
040	6C070-65250	ROD LIFT MIDDLE	1	>=74551	←		0.45	0.99
045	06613-10675	NIPPLE GREASE	1	>=74551			0.003	0.0066
050	02172-50180	NUT	1				0.021	0.0462
060	6C040-65270	ROD LIFT LH	1				1.07	2.354
070	05122-51650	PIN JOINT	2	<=73261			0.09	0.198
070	05122-51645	PIN JOINT	2	>=73262	↔		0.075	0.165
080	76550-42190	RING SNAP	2	<=72942			0.004	0.0088
080	67156-34340	RING SNAP	2	>=72943	←		0.01	0.022
090	05122-51240	PIN JOINT	2				0.039	0.0858
100	05511-50425	PIN SPLIT	2				0.003	0.0066

silverhorn.co.uk

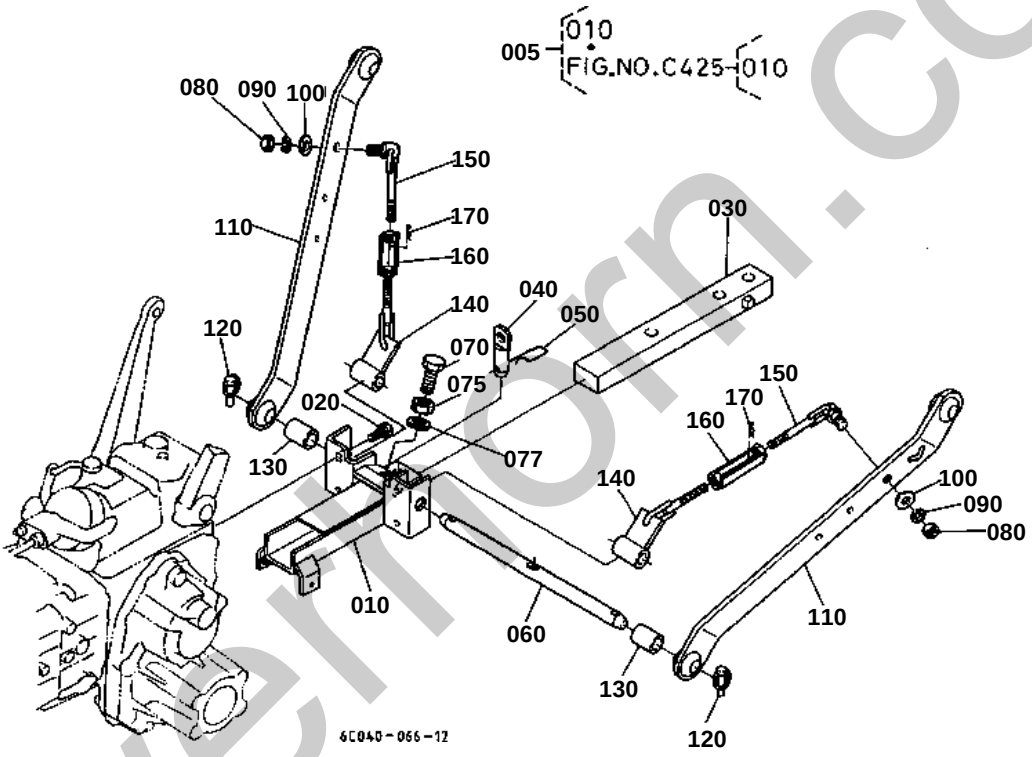

silvermorn.co.uk

LOWER LINK

↔ Interchangeable; ≠ not interchangeable; ← new for old; → old for new

REF.No	Part No.	Description	Q'ty	S.No.	I/C	REMARKS	Weight (kgf)	Weight (lb)
005	6C040-96980	SET CASE DIFF.GEAR	1				11.34	24.948
010	6C040-65600	COMP.HITCH	1	<=71830		ORDER BY REF No.005	3.24	7.128
010	6C040-65604	COMP.HITCH	1	>=71831	≠		3.35	7.37
020	01123-51230	BOLT	4				0.04	0.088
030	6C040-67110	DRAWBAR	1				4.5	9.9
040	6C040-65610	PIN HITCH	1				0.18	0.396
050	31150-29730	PIN SPRING	1				0.044	0.0968
060	6C040-66010	PIN LOWER LINK	1				1.14	2.508
070	66704-65120	BOLT SET	1	<=71015			0.023	0.0506
070	6C040-65120	BOLT	1	>=71016	←		0.02	0.044
075	02118-50100	NUT	1				0.005	0.011
077	04512-60100	WASHER SPRING	1				0.002	0.0044
080	02174-50160	NUT	2				0.022	0.0484
090	04512-60160	WASHER SPRING	2				0.01	0.022
100	04015-60160	WASHER PLAIN	2				0.058	0.1276
110	6C040-65210	COMP.LINK LOWER	2				5.24	11.528
120	34150-37640	PIN SET	4				0.06	0.132
130	66204-65350	SPACER	2				0.12	0.264
140	6C040-65290	BRACKET CHECK CHAIN	1				0.52	1.144
150	6C040-65320	BOLT TURNBUCKLE	1				0.34	0.748
160	6C040-65390	TURNBUCKLE	1				0.2	0.44
170	05515-61200	PIN SNAP	1				0.005	0.011

silverhorn.co.uk

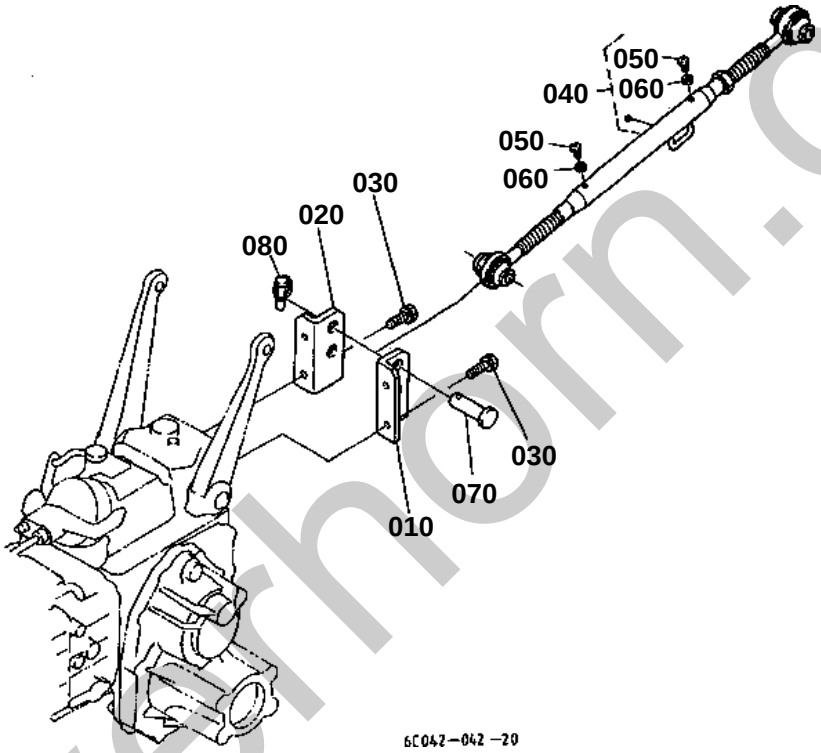

silverhorn.co.uk

TOP LINK

↔ Interchangeable; ≠ not interchangeable; ← new for old; → old for new

REF.No	Part No.	Description	Q'ty	S.No.	I/C	REMARKS	Weight (kgf)	Weight (lb)
010	6C040-65190	BRACKET TOP LINK LH	1				0.65	1.43
020	6C040-65160	BRACKET TOP LINK RH	1				0.65	1.43
030	01123-51230	BOLT	4				0.04	0.088
040	6C040-65400	ASSY LINK TOP	1				2.16	4.752
050	03014-50606	SCREW PAN-HEAD	2				0	0
060	04512-60060	WASHER SPRING	2				0.001	0.0022
070	31150-71360	PIN JOINT	2				0.166	0.3652
080	34150-37640	PIN SET	2				0.06	0.132

silverhorn.co.uk

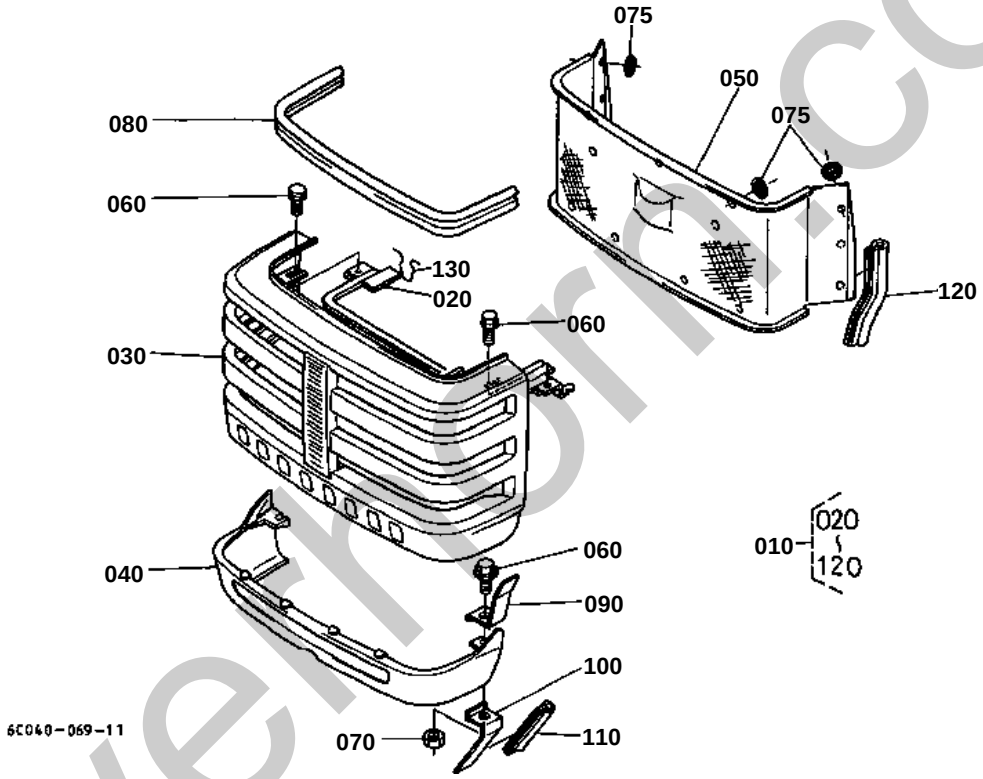

silverfordm.co.uk

FRONT GRILLE

↔ Interchangeable; ≠ not interchangeable; ← new for old; → old for new

REF.No	Part No.	Description	Q'ty	S.No.	I/C	REMARKS	Weight (kgf)	Weight (lb)
010	6C040-54404	COMP.COVER FRONT	1	<=70005			0	0
010	6C040-54405	COMP.COVER FRONT	1	>=70006	←		0	0
010	6C040-54406	COMP.COVER FRONT	1	>=70832	←		0	0
010	6C040-54407	COMP.COVER FRONT	1	>=71016	←		0	0
010	6C040-54500	COMP.COVER FRONT	1	>=72061	↔		2.4	5.28
020	6C040-54533	COMP.PLATE	1				0.38	0.836
030	6C040-54410	COVER FRONT	1				1.34	2.948
040	6C040-54420	COVER FRONT	1	<=72060			0	0
040	6C040-54423	COVER FRONT	1	>=72061	←		0.159	0.3498
050	6C040-54430	NET	1	<=70831			0	0
050	6C040-54432	NET	1	>=70832	←		0	0
050	6C040-54433	NET	1	>=71016	←		0	0
050	6C040-54434	NET	1	>=72061	←		0.25	0.55
060	01754-50820	BOLT FLANGE	4				0.015	0.033
070	02054-50080	NUT	2				0.005	0.011
075	6C040-54540	NUT	15				0.001	0.0022
080	6C040-54140	TRIM	1				0.073	0.1606
090	6C040-54910	STAY	2	>=71016			0.012	0.0264
100	6C040-54920	STAY	2	>=71016			0.014	0.0308
110	76611-53160	TRIM SHUTTER PLATE	2	>=71016			0.02	0.044
120	67980-51510	TRIM	2	>=71016			0.025	0.055
130	6C040-54360	SPRING	2	<=70005			0	0
130	6C040-54364	SPRING	2	>=70006	←		0.004	0.0088

silverhorn.co.uk

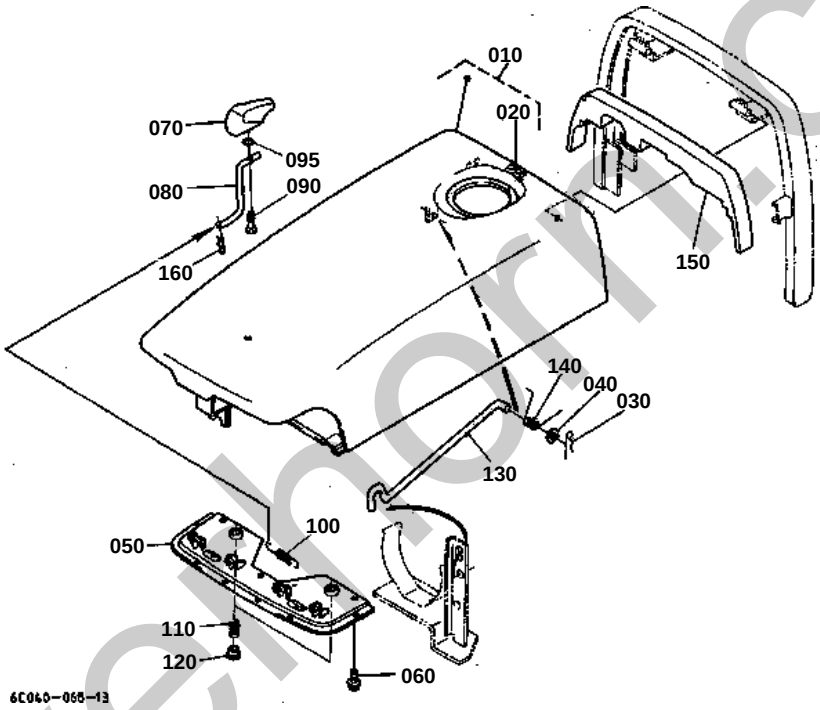

silverhorn.co.uk

HOOD (BONNET)

↔ Interchangeable; ≠ not interchangeable; ← new for old; → old for new

REF.No	Part No.	Description	Q'ty	S.No.	I/C	REMARKS	Weight (kgf)	Weight (lb)
010	6C040-54000	KIT BONNET	1				7.6	16.72
020	6C040-47410	LABEL FILLER CAUTION	1	<=72323			0	0
020	6C040-47412	LABEL FILLER CAUTION	1	>=72324	←		0.001	0.0022
030	05525-50800	PIN SNAP	1				0.001	0.0022
040	04013-60080	WASHER PLAIN	1				0.002	0.0044
050	6C040-54110	COVER BONNET	1				0.52	1.144
060	01125-60816	BOLT	3				0.01	0.022
070	6C040-54260	HANDLE MASCOT	1				0.028	0.0616
080	6C040-54270	LEVER HANDLE	1	<=71601			0.09	0.198
080	6C040-54273	LEVER HANDLE	1	>=71602	←		0	0
080	6C040-54274	LEVER HANDLE	1	>=72439	←		0.08	0.176
080	6C090-54270	LEVER HANDLE	1	>=72943	↔		0.09	0.198
090	03614-50416	SCREW TAPPING	1				0.002	0.0044
095	04811-10080	O RING	1	>=71630			0.001	0.0022
100	6C040-54150	SPRING	1				0.006	0.0132
110	6C040-54163	SPRING	2				0.022	0.0484
120	41182-61150	PLUG	2				0.003	0.0066
130	6C040-54250	ROD BONNET	1				0.16	0.352
140	6C040-54510	SPRING	1				0.002	0.0044
150	6C040-54460	TAPE BONNET	1				0.06	0.132
160	05525-50800	PIN SNAP	1	>=72943			0.001	0.0022

silverhorn.co.uk

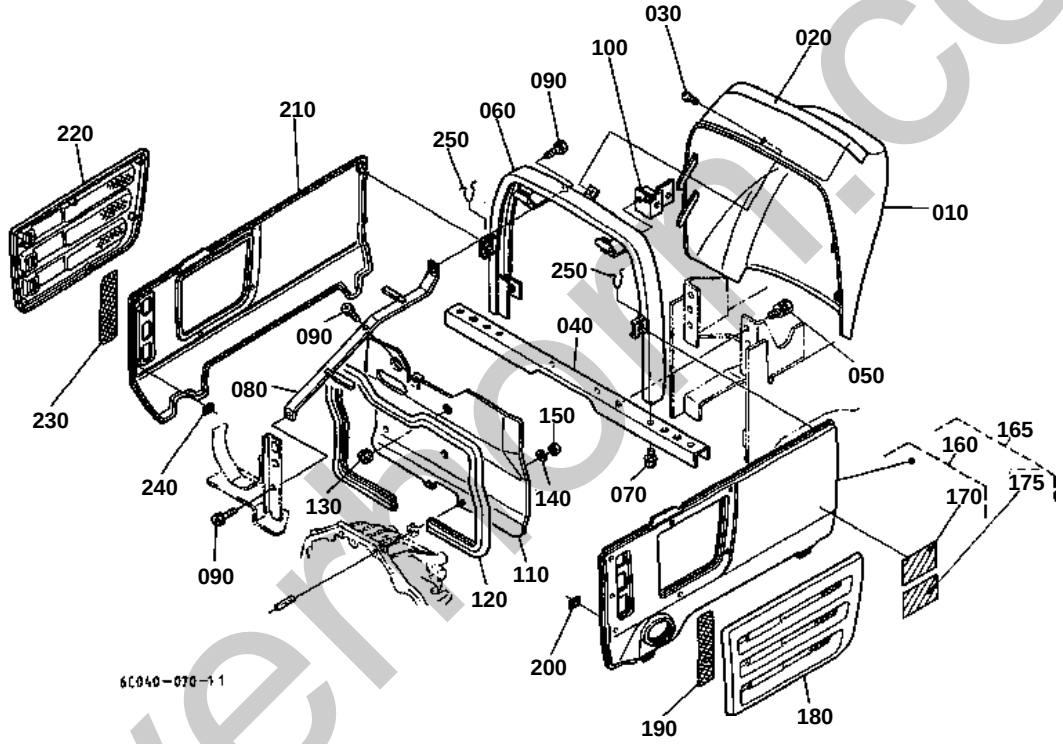

silvermoth.co.uk

SIDE COVER

↔ Interchangeable; ≠ not interchangeable; ← new for old; → old for new

REF.No	Part No.	Description	Q'ty	S.No.	I/C	REMARKS	Weight (kgf)	Weight (lb)
010	6C040-53510	COVER PANEL	1	<=71830			0	0
010	6C040-53514	COVER PANEL	1	>=71831	←		3	6.6
020	6C040-53520	COVER FRAME	1	<=72382			0	0
020	6C040-53522	COVER FRAME	1	>=72383	←		0.14	0.308
030	37410-61720	SCREW	1				0.001	0.0022
040	6C040-54210	PILLAR CENTER	1	<=74407			1.42	3.124
040	6C040-54213	PILLAR CENTER	1	>=74408	←		1.4	3.08
050	01133-51022	BOLT	2				0.025	0.055
060	6C040-54220	PILLAR CENTER	1				2.1	4.62
070	01125-60816	BOLT	2	<=71601			0.01	0.022
070	6C040-54610	BOLT	2	>=71602	↔		0.014	0.0308
080	6C040-54230	STAY PILLAR	1				0.34	0.748
090	01023-50616	BOLT	3				0.005	0.011
100	6C040-54283	BRACKET	1				0.09	0.198
110	6C040-54550	PLATE SHUTTER	1				1.24	2.728
120	6C040-54560	TRIM	1				0.2	0.44
130	54721-38340	GROMMET	1				0.003	0.0066
140	04512-60100	WASHER SPRING	2				0.002	0.0044
150	02116-50100	NUT	2				0.004	0.0088
160	6C040-54010	KIT COVER SIDE LH(A)	1				2.17	4.774
165	6C040-54022	KIT COVER SIDE LH(B)	1				0	0
170	TA040-49650	LABEL START CAUTION	1			ENGLISH	0.004	0.0088
175	TA041-49650	LABEL START CAUTION	1			FRENCH	0.004	0.0088
180	6C040-54333	COVER	1				0.24	0.528
190	6C040-54390	NET	1				0.01	0.022
200	55611-44190	NUT	7				0.004	0.0088
210	6C040-54350	COVER SIDE RH	1	<=71830			1.44	3.168
210	6C040-54355	COVER SIDE RH	1	>=71831	←		1.48	3.256
220	6C040-54383	COVER	1				0.24	0.528
230	6C040-54390	NET	1				0.01	0.022
240	55611-44190	NUT	7				0.004	0.0088
250	6C040-54360	SPRING	4	<=70005			0	0
250	6C040-54364	SPRING	4	>=70006	←		0.004	0.0088

silvernorn.co.uk

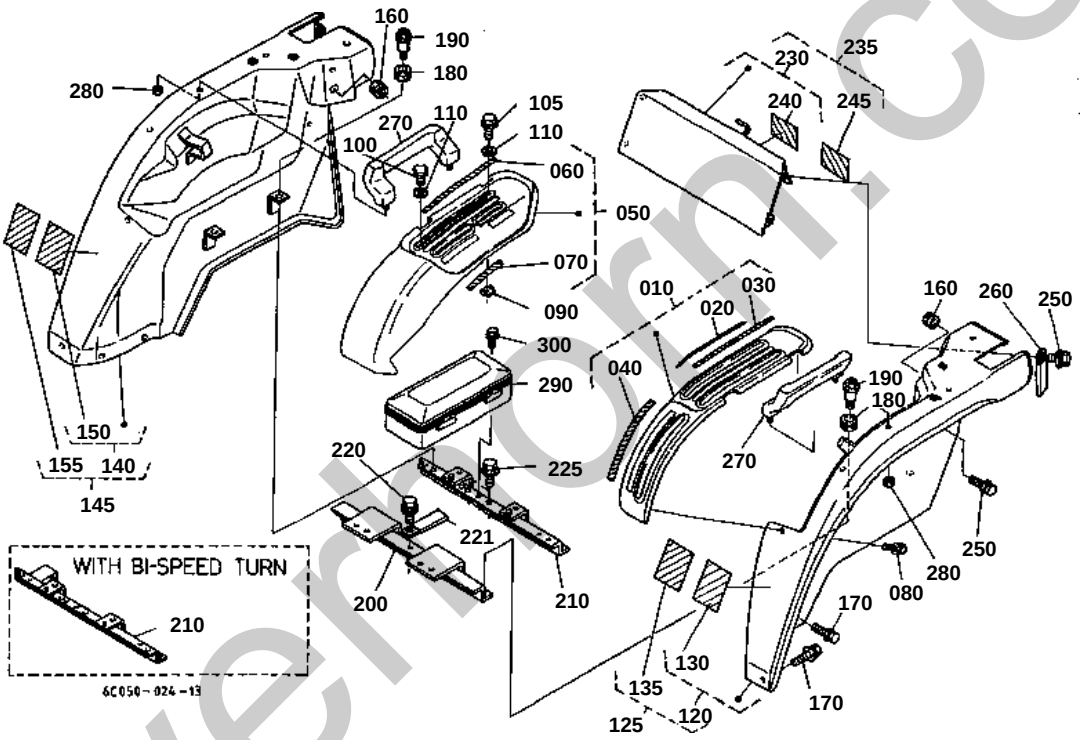

silvermorn.co.uk

↔ Interchangeable; ≠ not interchangeable; ← new for old; → old for new

REF.No	Part No.	Description	Q'ty	S.No.	I/C	REMARKS	Weight (kgf)	Weight (lb)
010	6C050-52100	ASSY GUIDE LEVER LH	1				0.37	0.814
020	6C050-47300	LABEL MID PTO	1				0.001	0.0022
030	6C040-47320	LABEL PTO	1	<=71194			0	0
030	6C040-47323	LABEL PTO	1	>=71195	←		0.001	0.0022
040	6C050-47330	LABEL RANGE SHIFT	1	<=71194			0	0
040	6C050-47332	LABEL RANGE SHIFT	1	>=71195	←		0.001	0.0022
050	6C050-52190	ASSY GUIDE LEVER RH	1	<=71322			0	0
050	6C050-52192	ASSY GUIDE LEVER RH	1	>=71323	←		0.35	0.77
060	6C040-47350	LABEL POSITION	1	<=71322			0	0
060	6C040-47352	LABEL POSITION	1	>=71323	←		0.001	0.0022
070	6C040-47360	LABEL 4WD	1	<=71322			0	0
070	6C040-47362	LABEL 4WD	1	>=71323	←		0.001	0.0022
080	01025-50612	BOLT	8				0.005	0.011
090	6C040-52140	HOLDER	2				0.007	0.0154
100	37410-52610	SCREW KNOB	1				0.015	0.033
105	31351-18790	BOLT FLANGE	1				0.007	0.0154
110	31351-18860	WASHER	2				0.002	0.0044
120	6C040-99130	KIT FENDER LH (A)	1				5.36	11.792
125	6C040-99100	KIT FENDER LH (B)	1				0	0
130	6C040-47420	LABEL SAFETY	1			ENGLISH	0.001	0.0022
135	TA041-65700	LABEL SAFETY	1			FRENCH	0.01	0.022
140	6C040-99140	KIT FENDER RH (A)	1				5.36	11.792
145	6C040-99160	KIT FENDER RH (B)	1				0	0
150	TA040-49320	LABEL ROPS WARNING	1			ENGLISH	0.001	0.0022
155	TA040-49150	LABEL ROPS WARNING	1			FRENCH	0.003	0.0066
160	32150-29180	CAP RUBBER	2				0.002	0.0044
170	01125-60816	BOLT	4				0.01	0.022
180	6C040-51380	CUSHION	4	<=72942			0	0
180	6A100-51380	CUSHION	4	>=72943	↔		0.003	0.0066
190	6C040-51342	BOLT	4				0.017	0.0374
200	6C040-52730	STAY FENDER	1	<=72323			0	0
200	6C040-52734	STAY FENDER	1	>=72324	←		1.07	2.354
210	6C040-52740	STAY FENDER	1	<=70326		WITHOUT BI-SPEED TURN	0	0
210	6C040-52743	STAY FENDER	1	>=70327	←	WITHOUT BI-SPEED TURN	0	0
210	6C040-52744	STAY FENDER	1	>=71730	←	WITHOUT BI-SPEED TURN	0	0
210	6C040-52746	STAY FENDER	1	>=72439	←	WITHOUT BI-SPEED TURN	0.45	0.99
210	6C040-77870	STAY FENDER	1	<=71729		WITH BI-SPEED TURN	0	0
210	6C040-77873	STAY FENDER	1	>=71730	←	WITH BI-SPEED TURN	0.98	2.156
220	01125-60816	BOLT	3	<=70326			0.01	0.022
220	01125-60816	BOLT	1	>=70327			0.01	0.022
221	13824-67580	CLAMP CORD	1				0.006	0.0132
225	01125-51020	BOLT	2	>=70327			0.005	0.011
230	6C040-99150	KIT STAY FENDER (A)	1				1.4	3.08
235	6C040-99170	KIT STAY FENDER (B)	1				0	0
240	TA040-49350	LABEL DRAWBAR	1			ENGLISH	0.002	0.0044
245	TA041-49350	LABEL DRAWBAR	1			FRENCH	0.003	0.0066
250	01125-60816	BOLT	4				0.01	0.022

silvehorn.co.uk

↔ Interchangeable; ≠ not interchangeable; ← new for old; → old for new

REF.No	Part No.	Description	Q'ty	S.No.	I/C	REMARKS	Weight (kgf)	Weight (lb)
260	13824-67580	CLAMP CORD	2				0.006	0.0132
270	6C040-52170	HANDRAIL	2				0.24	0.528
280	02131-50100	NUT	4				0.01	0.022
290	6C040-52790	CASE TOOLS	1				0.23	0.506
300	01025-50616	BOLT	2				0.005	0.011

silverhorn.co.uk

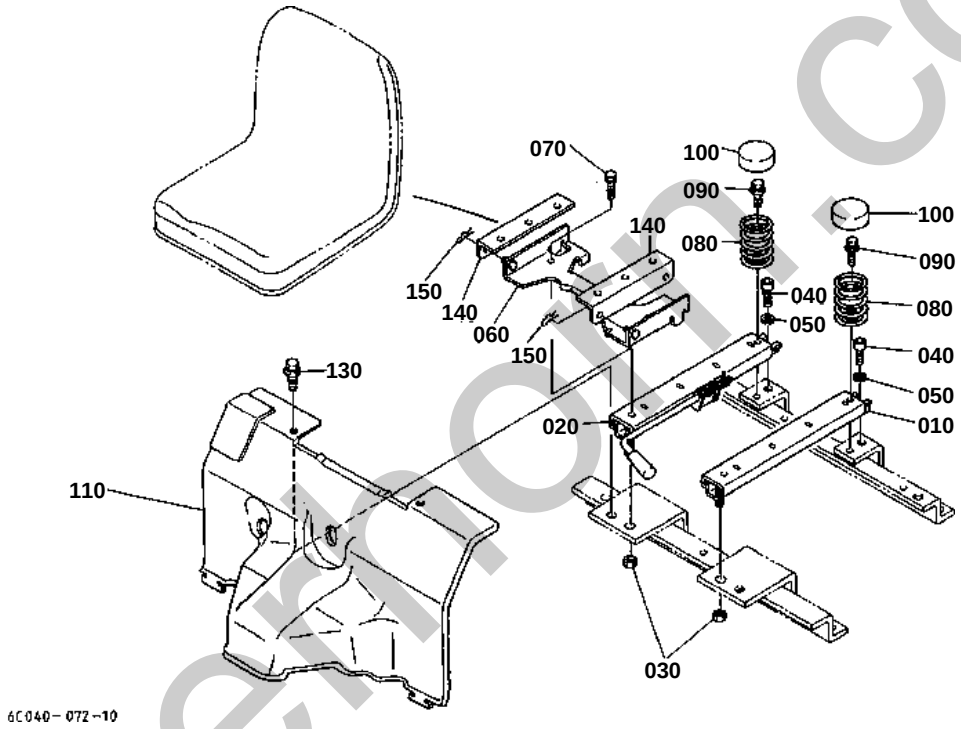

silvermoth.co.uk

SEAT SUPPORT

↔ Interchangeable; ≠ not interchangeable; ← new for old; → old for new

REF.No	Part No.	Description	Q'ty	S.No.	I/C	REMARKS	Weight (kgf)	Weight (lb)
010	6C040-45910	ADJUSTER SEAT LH	1				0.73	1.606
020	6C040-45920	ADJUSTER SEAT RH	1				0.91	2.002
030	02131-50100	NUT	2				0.01	0.022
040	01311-10820	BOLT HEX-SOC-HD	2				0.012	0.0264
050	04512-60080	WASHER SPRING	2				0.002	0.0044
060	6C040-45950	STAY SEAT RAIL	1	<=71015			0.55	1.21
060	6C040-45954	STAY SEAT RAIL	1	>=71016	≠		0.55	1.21
070	01123-60816	BOLT	2				0.01	0.022
080	6C040-45990	SPRING SEAT	2				0.2	0.44
090	01127-50830	BOLT	2				0.023	0.0506
100	66301-52820	CAP SPRING	2				0.04	0.088
110	6C040-51370	COVER SEAT UNDER	1				0.38	0.836
130	01125-60816	BOLT	2	<=71830			0.01	0.022
130	01125-60820	BOLT	2	>=71831	↔		0.015	0.033
140	6C040-45960	STAY SEAT	2	<=71015			0.15	0.33
140	6C040-45962	STAY SEAT	2	>=71016	≠		0.26	0.572
150	05525-50800	PIN SNAP	2				0.001	0.0022

silverhorn.co.uk

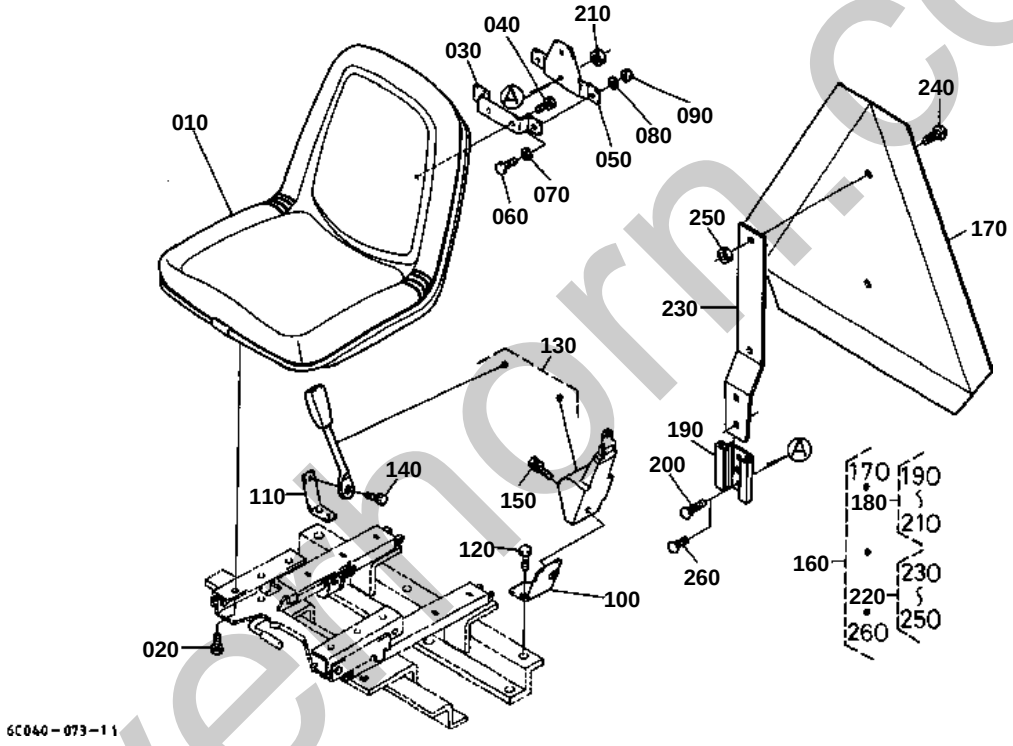

silvethorn.co.uk

SEAT

↔ Interchangeable; ≠ not interchangeable; ← new for old; → old for new

REF.No	Part No.	Description	Q'ty	S.No.	I/C	REMARKS	Weight (kgf)	Weight (lb)
010	TA040-48510	ASSY SEAT	1			OBTAINED LOCALLY	0	0
020	01123-60816	BOLT	4				0.01	0.022
030	67401-45922	STAY	1				0.08	0.176
040	01123-60816	BOLT	2				0.01	0.022
050	66704-54952	BRACKET SMV	1				0.15	0.33
060	01053-50616	BOLT	2				0.005	0.011
070	04013-60060	WASHER PLAIN	2				0.001	0.0022
080	04512-60060	WASHER SPRING	2				0.001	0.0022
090	02014-50060	NUT	2				0.003	0.0066
100	6C040-52760	STAY SEAT BELT LH	1				0.3	0.66
110	6C040-52770	STAY SEAT BELT RH	1				0.1	0.22
120	01125-60816	BOLT	2				0.01	0.022
130	6C040-72252	ASSY BELT SEAT	1				0.2	0.44
140	01135-61020	BOLT	1				0.015	0.033
150	01135-61025	BOLT	1				0.04	0.088
160	7L500-89900	SMV SIGN KIT	1	>=75286			0	0
170	7L500-89910	SIGN SMV	1	>=75286			0	0
180	7L500-89920	SOCKET SMV SIGN	1	>=75286			0	0
190	7L500-89930	SOCKET-MTG SMV	1	>=75286			0	0
200	7L500-89940	BOLT	2	>=75286			0	0
210	7L500-89950	NUT	2	>=75286			0	0
220	7L500-89960	SPADE SMV SIGN	1	>=75286			0	0
230	7L500-89970	SPADE-MTG SMV	1	>=75286			0	0
240	7L500-89980	SCREW	2	>=75286			0	0
250	7L500-89990	NUT	2	>=75286			0	0
260	7L500-89810	BOLT SQUARE NECK	2	>=75286			0	0

silverhorn.co.uk

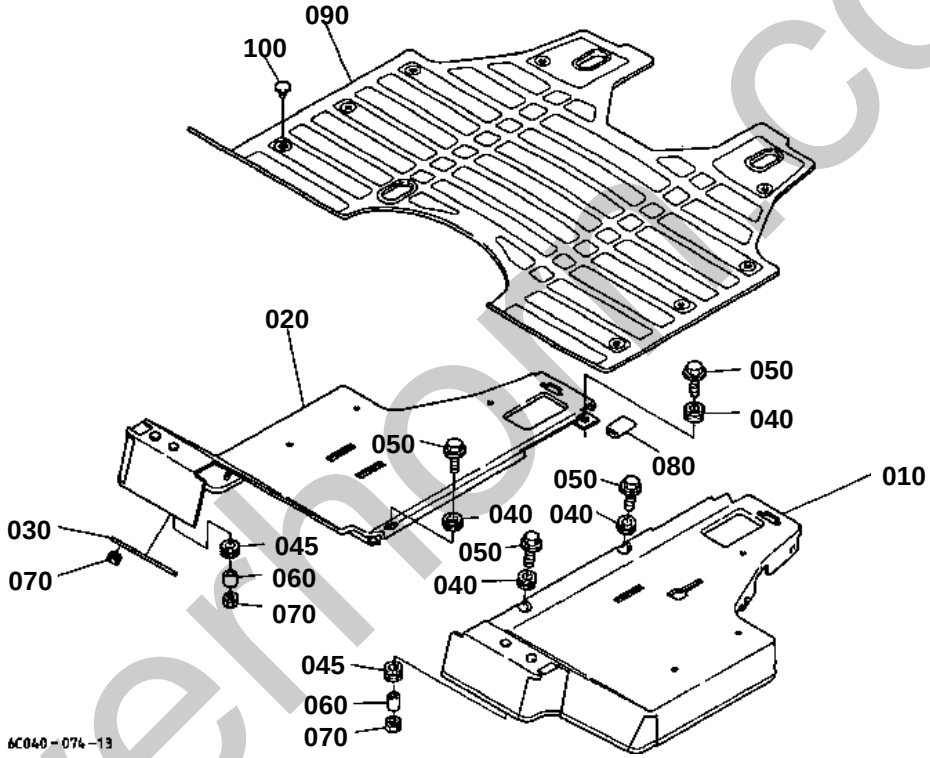

silvermoto.co.uk

STEP

↔ Interchangeable; ≠ not interchangeable; ← new for old; → old for new

REF.No	Part No.	Description	Q'ty	S.No.	I/C	REMARKS	Weight (kgf)	Weight (lb)
010	6C040-51315	STEP LH	1	<=72572			0	0
010	6C040-51318	STEP LH	1	>=72573	←		3.4	7.48
010	6C040-51319	STEP LH	1	>=74408	≠		2.22	4.884
020	6C040-51323	STEP RH	1	<=72572			0	0
020	6C040-51325	STEP RH	1	>=72573	←		3.4	7.48
020	6C040-51326	STEP RH	1	>=74408	≠		2.2	4.84
030	6C040-51330	SUPPORT STEP RH	1				0.073	0.1606
040	6C040-51380	CUSHION	6	<=72942			0	0
040	6A100-51380	CUSHION	6	>=72943	↔		0.003	0.0066
040	6A100-51380	CUSHION	4	>=74408			0.003	0.0066
045	6A100-51380	CUSHION	4	>=74408			0.003	0.0066
050	6C040-51342	BOLT	4				0.017	0.0374
060	6C040-51390	COLLAR	2	<=74407			0.003	0.0066
060	6C040-51390	COLLAR	4	>=74408			0.003	0.0066
070	02121-50080	NUT	4	<=74407			0.01	0.022
070	02121-50080	NUT	6	>=74408			0.01	0.022
080	6C040-51350	CUSHION	1				0.002	0.0044
090	6C040-51360	MAT STEP	1	<=70381			0	0
090	6C040-51364	MAT STEP	1	>=70382	≠		2.08	4.576
100	67955-51340	STOPPER	10	<=70831			0.001	0.0022
100	67955-51340	STOPPER	12	>=70832			0.001	0.0022

silverhorn.co.uk

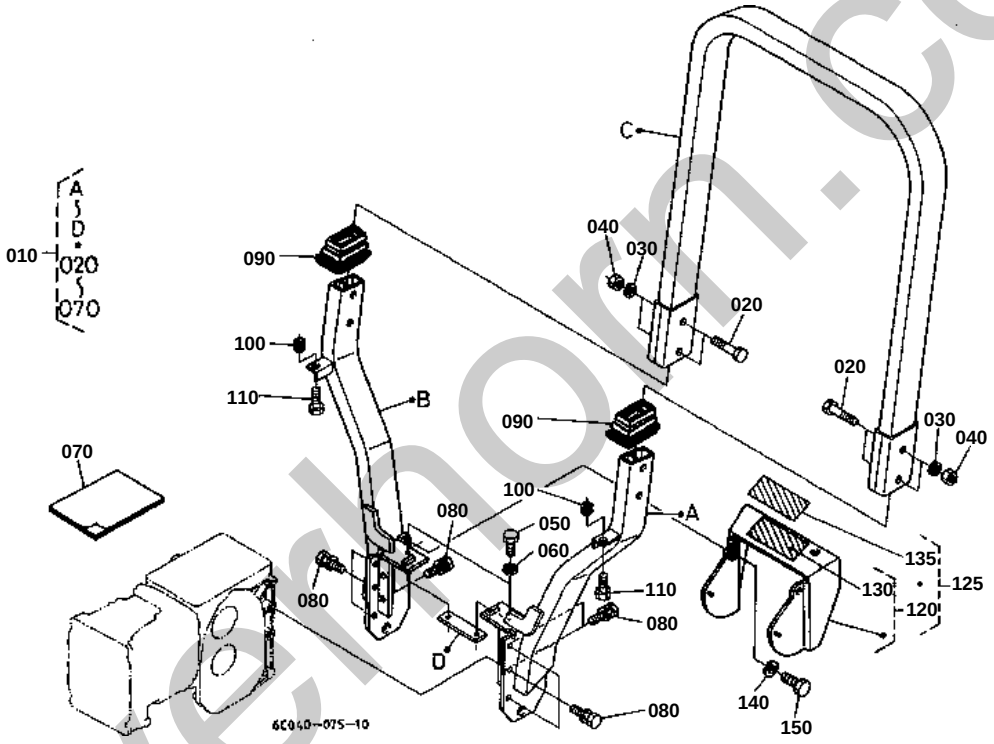

silverthorn.co.uk

↔ Interchangeable; ≠ not interchangeable; ← new for old; → old for new

REF.No	Part No.	Description	Q'ty	S.No.	I/C	REMARKS	Weight (kgf)	Weight (lb)
010	6C040-88100	ASSY ROPS	1				0	0
020	75599-04655	BOLT	4				0	0
030	75599-33016	WASHER SPRING	4				0.08	0.176
040	75599-31066	NUT LOCK	4				0	0
050	75599-04320	BOLT HEXAGON	2				0.02	0.044
060	75599-33013	WASHER SPRING	2				0	0
070	6C040-88450	MANUAL ASSEMBLY	1				0	0
080	01123-51235	BOLT	10				0.041	0.0902
090	6C040-72210	COVER ROPS	2				0.066	0.1452
100	6C040-51380	CUSHION	2	<=72942			0	0
100	6A100-51380	CUSHION	2	>=72943	↔		0.003	0.0066
110	6C040-51342	BOLT	2				0.017	0.0374
120	6C040-72100	KIT COVER PTO (A)	1				1.4	3.08
125	6C040-72000	KIT COVER PTO (B)	1				0	0
130	TA040-49590	LABEL PTO WARNING	1			ENGLISH	0.002	0.0044
135	TA041-49590	LABEL PTO WARNING	1			FRENCH	0.005	0.011
140	04512-60080	WASHER SPRING	2				0.002	0.0044
150	01153-50820	BOLT	2				0.012	0.0264

silverhorn.co.uk

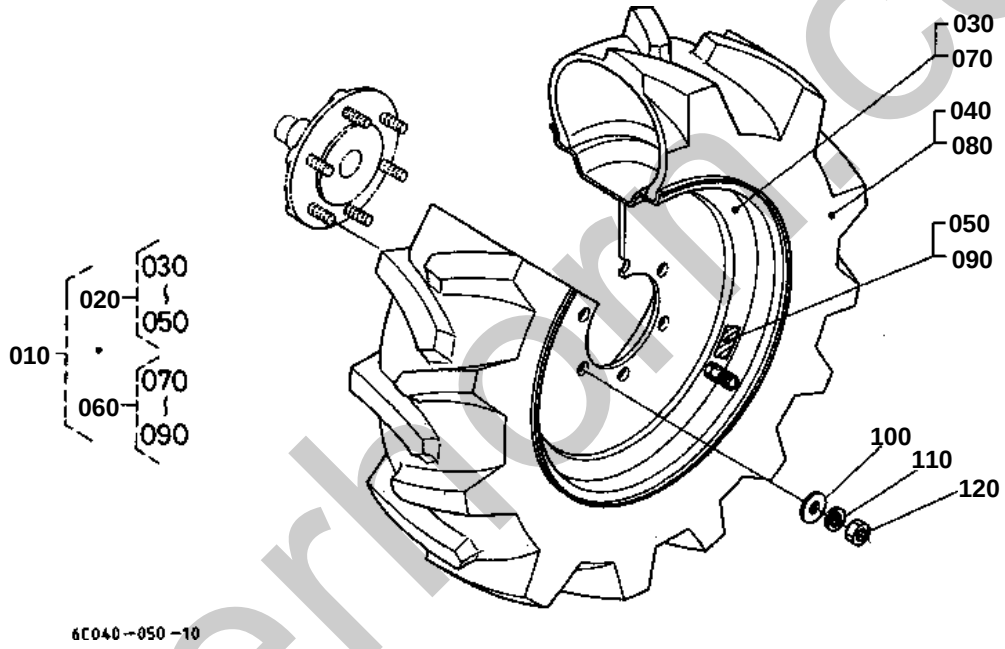

silverhorn.co.uk

FRONT WHEEL (6-12)

↔ Interchangeable; ≠ not interchangeable; ← new for old; → old for new

REF.No	Part No.	Description	Q'ty	S.No.	I/C	REMARKS	Weight (kgf)	Weight (lb)
010	6C040-50210	ASSY TIRE FRONT	1			OBTAINED LOCALLY	0	0
020	6C040-50220	ASSY TIRE LH	1			OBTAINED LOCALLY	0	0
030	6C040-50240	WHEEL	1			OBTAINED LOCALLY	0	0
040	66434-57140	TIRE	1			OBTAINED LOCALLY	0	0
050	6C040-50250	LABEL TIRE LH	1			OBTAINED LOCALLY	0	0
060	6C040-50230	ASSY TIRE RH	1			OBTAINED LOCALLY	0	0
070	6C040-50240	WHEEL	1			OBTAINED LOCALLY	0	0
080	66434-57140	TIRE	1			OBTAINED LOCALLY	0	0
090	6C040-50260	LABEL TIRE RH	1			OBTAINED LOCALLY	0	0
100	04013-60120	WASHER PLAIN	12				0.01	0.022
110	04512-60120	WASHER SPRING	12				0.005	0.011
120	02176-50120	NUT	12				0.01	0.022

silverhorn.co.uk

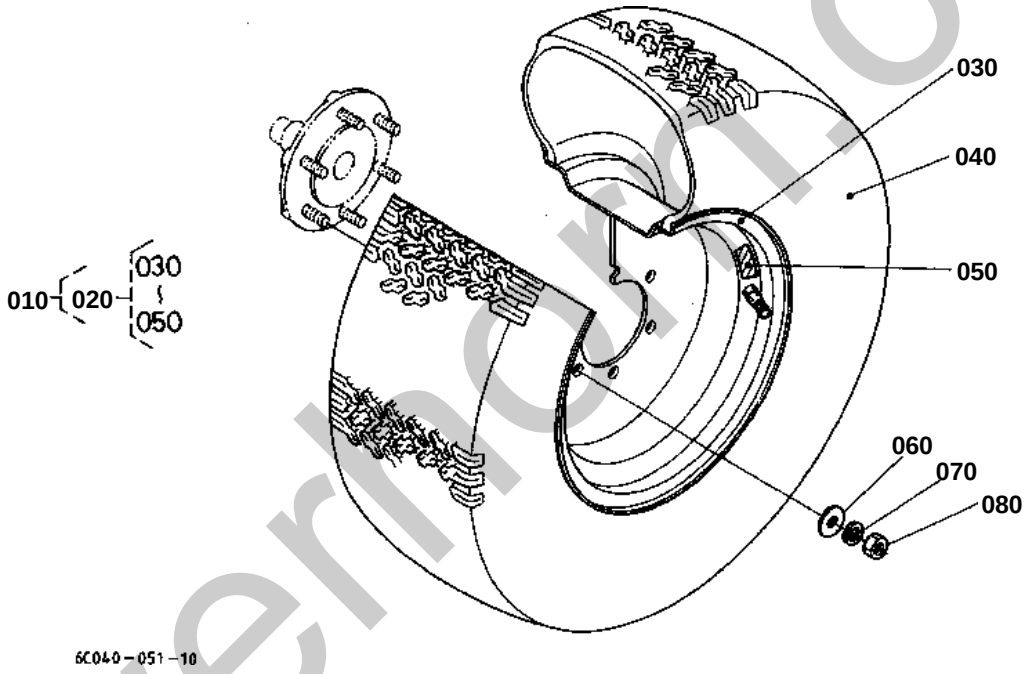

silverhart.co.uk

FRONT WHEEL (23*8.50-12)

↔ Interchangeable; ≠ not interchangeable; ← new for old; → old for new

REF.No	Part No.	Description	Q'ty	S.No.	I/C	REMARKS	Weight (kgf)	Weight (lb)
010	6C040-50410	ASSY TIRE FRONT	1			OBTAINED LOCALLY	0	0
020	6C040-50420	ASSY TIRE	2			OBTAINED LOCALLY	0	0
030	6C040-50430	WHEEL	2			OBTAINED LOCALLY	0	0
040	6C040-50440	TIRE	2			OBTAINED LOCALLY	0	0
050	6C040-50450	LABEL TIRE	2			OBTAINED LOCALLY	0	0
060	04013-60120	WASHER PLAIN	12				0.01	0.022
070	04512-60120	WASHER SPRING	12				0.005	0.011
080	02176-50120	NUT	12				0.01	0.022

silverhorn.co.uk

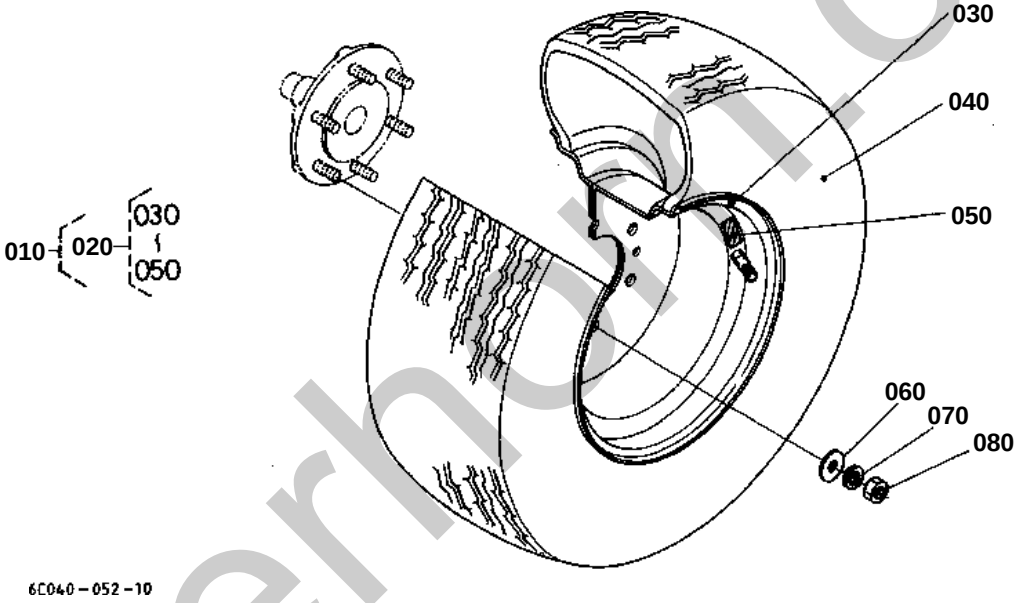

silverhart.co.uk

FRONT WHEEL (21*8.00-10)

↔ Interchangeable; ≠ not interchangeable; ← new for old; → old for new

REF.No	Part No.	Description	Q'ty	S.No.	I/C	REMARKS	Weight (kgf)	Weight (lb)
010	6C040-50510	ASSY TIRE FRONT	1			OBTAINED LOCALLY	0	0
020	6C040-50520	ASSY TIRE	2			OBTAINED LOCALLY	0	0
030	6C040-50530	WHEEL	2			OBTAINED LOCALLY	0	0
040	67404-57130	TIRE	2			OBTAINED LOCALLY	0	0
050	6C040-50540	LABEL TIRE	2			OBTAINED LOCALLY	0	0
060	04013-60120	WASHER PLAIN	12				0.01	0.022
070	04512-60120	WASHER SPRING	12				0.005	0.011
080	02176-50120	NUT	12				0.01	0.022

silverhorn.co.uk

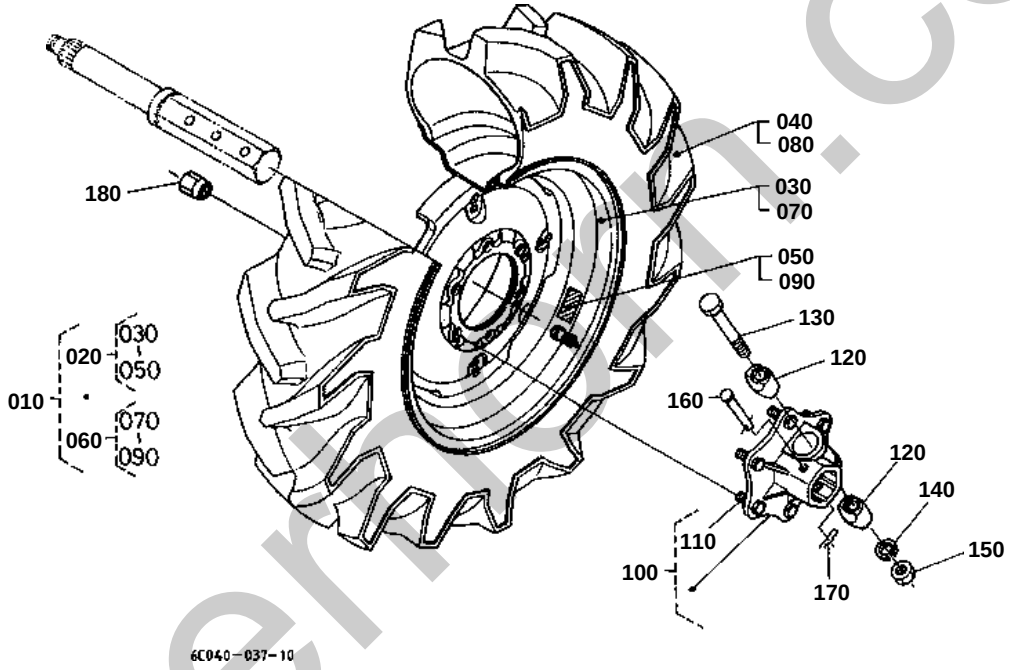

silvermoon.co.uk

REAR WHEEL (8.3-16)

↔ Interchangeable; ≠ not interchangeable; ← new for old; → old for new

REF.No	Part No.	Description	Q'ty	S.No.	I/C	REMARKS	Weight (kgf)	Weight (lb)
010	66434-17610	ASSY TIRE	1			OBTAINED LOCALLY	0	0
020	66434-17620	ASSY TIRE LH	1			OBTAINED LOCALLY	0	0
030	66434-17640	WHEEL	1			OBTAINED LOCALLY	0	0
040	66434-17650	TIRE	1			OBTAINED LOCALLY	0	0
050	66434-17660	LABEL TIRE LH	1			OBTAINED LOCALLY	0	0
060	66434-17630	ASSY TIRE RH	1			OBTAINED LOCALLY	0	0
070	66434-17640	WHEEL	1			OBTAINED LOCALLY	0	0
080	66434-17650	TIRE	1			OBTAINED LOCALLY	0	0
090	66434-17670	LABEL TIRE RH	1			OBTAINED LOCALLY	0	0
100	6C040-17410	ASSY HUB WHEEL	2				2.35	5.17
110	66704-17313	BOLT	12				0.049	0.1078
120	6C040-17460	COTTER	4				0.17	0.374
130	01173-61600	BOLT	2				0.165	0.363
140	04512-60160	WASHER SPRING	2				0.01	0.022
150	02174-50160	NUT	2				0.022	0.0484
160	63733-17270	PIN WHEEL TUBE	2				0.05	0.11
170	62131-17290	PIN	2				0.004	0.0088
180	35340-11390	NUT	12				0.03	0.066

silverhorn.co.uk

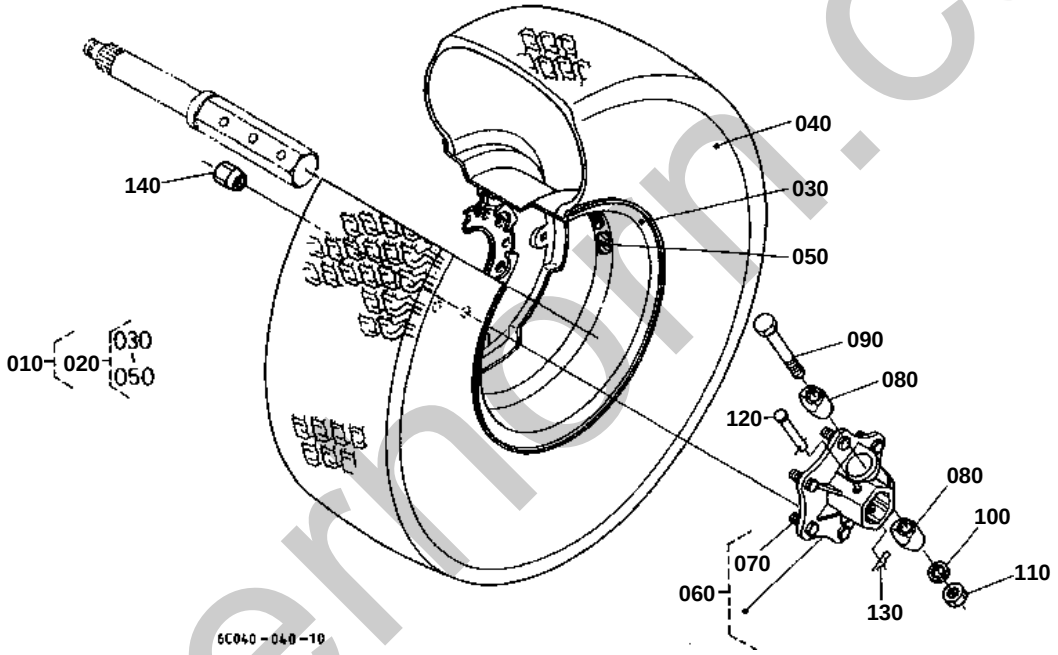

silvernorm.co.uk

REAR WHEEL (33*12.5-15)

↔ Interchangeable; ≠ not interchangeable; ← new for old; → old for new

REF.No	Part No.	Description	Q'ty	S.No.	I/C	REMARKS	Weight (kgf)	Weight (lb)
010	6C040-50110	ASSY TIRE REAR	1			OBTAINED LOCALLY	0	0
020	6C040-50120	ASSY TIRE	2			OBTAINED LOCALLY	0	0
030	6C040-50130	WHEEL	2			OBTAINED LOCALLY	0	0
040	32550-45710	TIRE	2			OBTAINED LOCALLY	0	0
050	6C040-50140	LABEL TIRE	2			OBTAINED LOCALLY	0	0
060	6C040-17410	ASSY HUB WHEEL	2				2.35	5.17
070	66704-17313	BOLT	12				0.049	0.1078
080	6C040-17460	COTTER	4				0.17	0.374
090	01173-61600	BOLT	2				0.165	0.363
100	04512-60160	WASHER SPRING	2				0.01	0.022
110	02174-50160	NUT	2				0.022	0.0484
120	63733-17270	PIN WHEEL TUBE	2				0.05	0.11
130	62131-17290	PIN	2				0.004	0.0088
140	35340-11390	NUT	12				0.03	0.066

silverhorn.co.uk

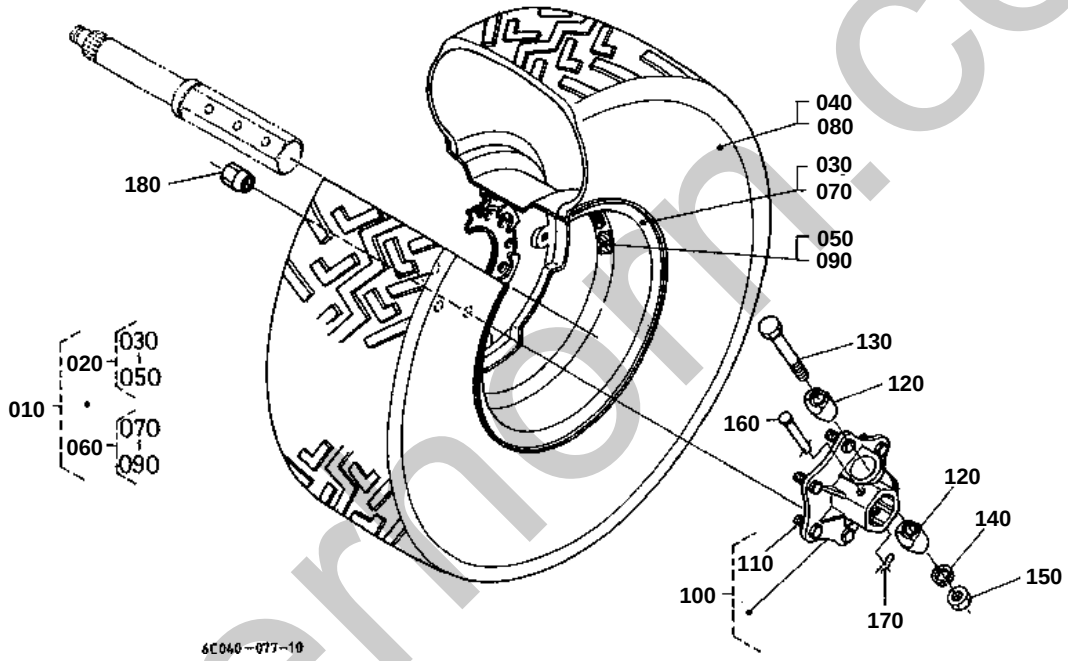

silvermm.co.uk

REAR WHEEL (31*15.5-15)

↔ Interchangeable; ≠ not interchangeable; ← new for old; → old for new

REF.No	Part No.	Description	Q'ty	S.No.	I/C	REMARKS	Weight (kgf)	Weight (lb)
010	66437-17610	ASSY TIRE REAR	1			OBTAINED LOCALLY	0	0
020	66437-17620	ASSY TIRE LH	1			OBTAINED LOCALLY	0	0
030	35080-11540	WHEEL	1			OBTAINED LOCALLY	0	0
040	66437-17630	TIRE	1			OBTAINED LOCALLY	0	0
050	66437-17660	LABEL TIRE LH	1			OBTAINED LOCALLY	0	0
060	66437-17650	ASSY TIRE RH	1			OBTAINED LOCALLY	0	0
070	35080-11540	WHEEL	1			OBTAINED LOCALLY	0	0
080	66437-17630	TIRE	1			OBTAINED LOCALLY	0	0
090	66437-17670	LABEL TIRE RH	1			OBTAINED LOCALLY	0	0
100	6C040-17410	ASSY HUB WHEEL	2				2.35	5.17
110	66704-17313	BOLT	12				0.049	0.1078
120	6C040-17460	COTTER	4				0.17	0.374
130	01173-61600	BOLT	2				0.165	0.363
140	04512-60160	WASHER SPRING	2				0.01	0.022
150	02174-50160	NUT	2				0.022	0.0484
160	63733-17270	PIN WHEEL TUBE	2				0.05	0.11
170	62131-17290	PIN	2				0.004	0.0088
180	35340-11390	NUT	12				0.03	0.066

silverhorn.co.uk

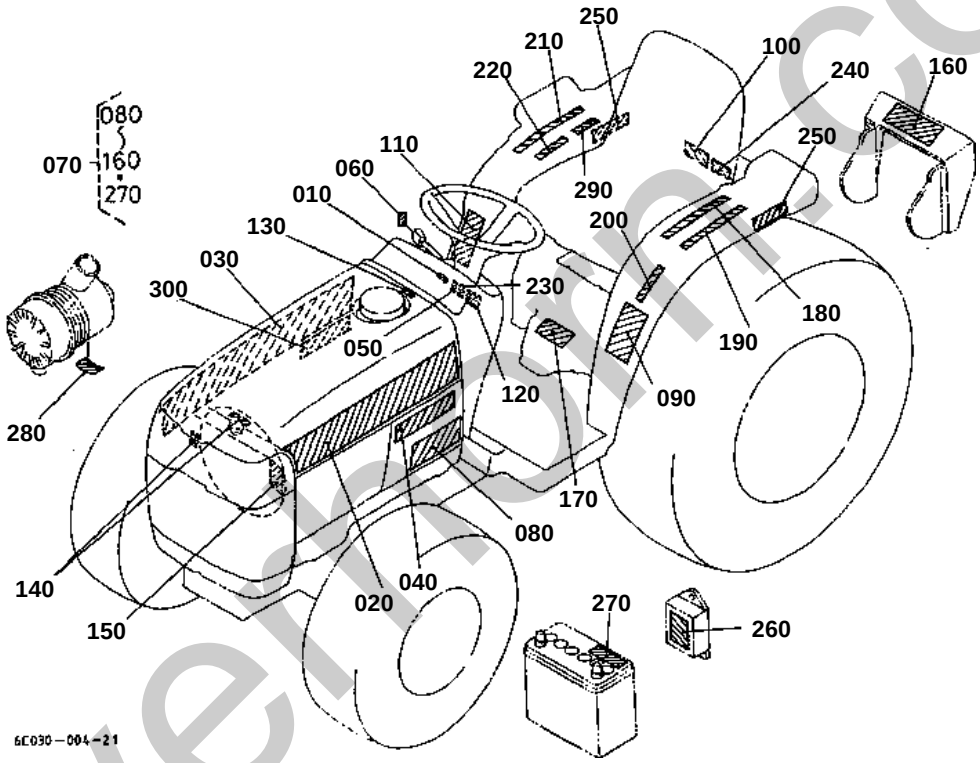

silverhorn.co.uk

↔ Interchangeable; ≠ not interchangeable; ← new for old; → old for new

REF.No	Part No.	Description	Q'ty	S.No.	I/C	REMARKS	Weight (kgf)	Weight (lb)
010	6C040-47210	MARK MAIN SWITCH	1				0.001	0.0022
020	6C000-47273	MARK MODEL LH	1				0.032	0.0704
030	6C000-47283	MARK MODEL RH	1				0.032	0.0704
040	6C040-47520	MARK PS	1				0.002	0.0044
050	6C040-47510	LABEL PARKING	1	<=75500			0.001	0.0022
050	6C040-47512	LABEL PARKING	1	>=75501	←		0	0
060	TA040-49370	MARK ACCEL.GRIP	1				0.001	0.0022
070	6C040-47400	KIT LABEL SAFETY	1			ENGLISH	0.003	0.0066
080	TA040-49650	LABEL START CAUTION	1			ENGLISH	0.004	0.0088
080	TA041-49650	LABEL START CAUTION	1			FRENCH	0.004	0.0088
090	6C040-47420	LABEL SAFETY	1			ENGLISH	0.001	0.0022
090	TA041-65700	LABEL SAFETY	1			FRENCH	0.01	0.022
100	TA040-49350	LABEL DRAWBAR	1			ENGLISH	0.002	0.0044
100	TA041-49350	LABEL DRAWBAR	1			FRENCH	0.003	0.0066
110	TA040-49320	LABEL ROPS WARNING	1			ENGLISH	0.001	0.0022
110	TA040-49150	LABEL ROPS WARNING	1			FRENCH	0.003	0.0066
120	6C050-47242	LABEL SPEED SET	1			ENGLISH	0.001	0.0022
120	6C021-92140	LABEL SPEED SET	1	<=74550		FRENCH/GERMAN	0	0
120	6C021-92142	LABEL SPEED SET	1	>=74551	←	FRENCH/GERMAN	0.001	0.0022
130	6C040-47410	LABEL FILLER CAUTION	1	<=72323			0	0
130	6C040-47412	LABEL FILLER CAUTION	1	>=72324	←		0.001	0.0022
140	32751-49580	LABEL FAN BELT	2				0.001	0.0022
150	TA040-49580	LABEL MUFFLER	1				0.001	0.0022
160	TA040-49590	LABEL PTO WARNING	1			ENGLISH	0.002	0.0044
160	TA041-49590	LABEL PTO WARNING	1			FRENCH	0.005	0.011
170	6C050-47480	LABEL PEDAL	1				0.002	0.0044
180	6C050-47300	LABEL MID PTO	1				0.001	0.0022
190	6C040-47320	LABEL PTO	1	<=71194			0	0
190	6C040-47323	LABEL PTO	1	>=71195	←		0.001	0.0022
200	6C050-47330	LABEL RANGE SHIFT	1	<=71194			0	0
200	6C050-47332	LABEL RANGE SHIFT	1	>=71195	←		0.001	0.0022
210	6C040-47350	LABEL POSITION	1	<=71322			0	0
210	6C040-47352	LABEL POSITION	1	>=71323	←		0.001	0.0022
220	6C040-47360	LABEL 4WD	1	<=71322			0	0
220	6C040-47362	LABEL 4WD	1	>=71323	←		0.001	0.0022
230	6C050-47310	LABEL HST	1	<=75500			0.001	0.0022
230	6C050-47312	LABEL HST	1	>=75501	←		0	0
240	6C040-47530	MARK 4WD	1			WITHOUT BI-SPEED TURN	0.001	0.0022
250	6C050-47550	MARK HST	2				0.001	0.0022
260	6C040-47490	LABEL FUSE BOX	1			ENGLISH	0.001	0.0022
260	6C021-92110	LABEL FUSE	1			FRENCH	0.001	0.0022
270	6C040-55590	LABEL BATTERY	1			ENGLISH	0.001	0.0022
270	6C021-92120	LABEL BATTERY	1			FRENCH	0.001	0.0022
280	67980-82620	LABEL CAUTION	1			ENGLISH	0.001	0.0022
280	6C021-92130	LABEL AIR CLEANER	1			FRENCH/GERMAN	0.001	0.0022
290	6C040-77880	LABEL BI-SPEED TURN	1			WITH BI-SPEED TURN	0.001	0.0022
300	6C040-77890	LABEL BI-SPEED TURN	1			WITH BI-SPEED TURN	0.001	0.0022

silverton.co.uk

↔ Interchangeable; ≠ not interchangeable; ← new for old; → old for new

REF.No	Part No.	Description	Q'ty	S.No.	I/C	REMARKS	Weight (kgf)	Weight (lb)
010	6C040-63110	MANUAL INSTRUCTION	1	<=70831		ENGLISH	0	0
010	6C040-63112	MANUAL INSTRUCTION	1	>=70832		ENGLISH	0.167	0.3674
010	6C021-92050	MANUAL INSTRUCTION	1			FRENCH	0	0
020	6C040-62980	MANUAL ASSEMBLY	1	<=72904			0.022	0.0484
020	6C040-62984	MANUAL ASSEMBLY	1	>=72905	←		0	0
030	15241-86612	WRENCH FILTER	1				0.115	0.253
040	1G111-65720	FUSE	1			30A [A]	0.009	0.0198
040	1G111-65720	FUSE	1			30A [CA]	0.009	0.0198
050	67401-62930	ASSY SPACER CLUTCH	1			REF.No.060 070	0.03	0.066
060	67211-62940	PIECE DISTANCE	1				0.08	0.176
070	67401-62950	LABEL CLUTCH SPACER	1				0.002	0.0044
080	66416-62920	ASSY BAG SPARE FUSE	1			REF.No.090	0.01	0.022
090	66416-62930	FUSE AUTO	2			15A	0.01	0.022
100	15248-63700	KEY STARTER	2				0.034	0.0748
110	6C040-63120	MANUAL DAMPER	1			OPTION	0.002	0.0044

silverhorn.co.uk