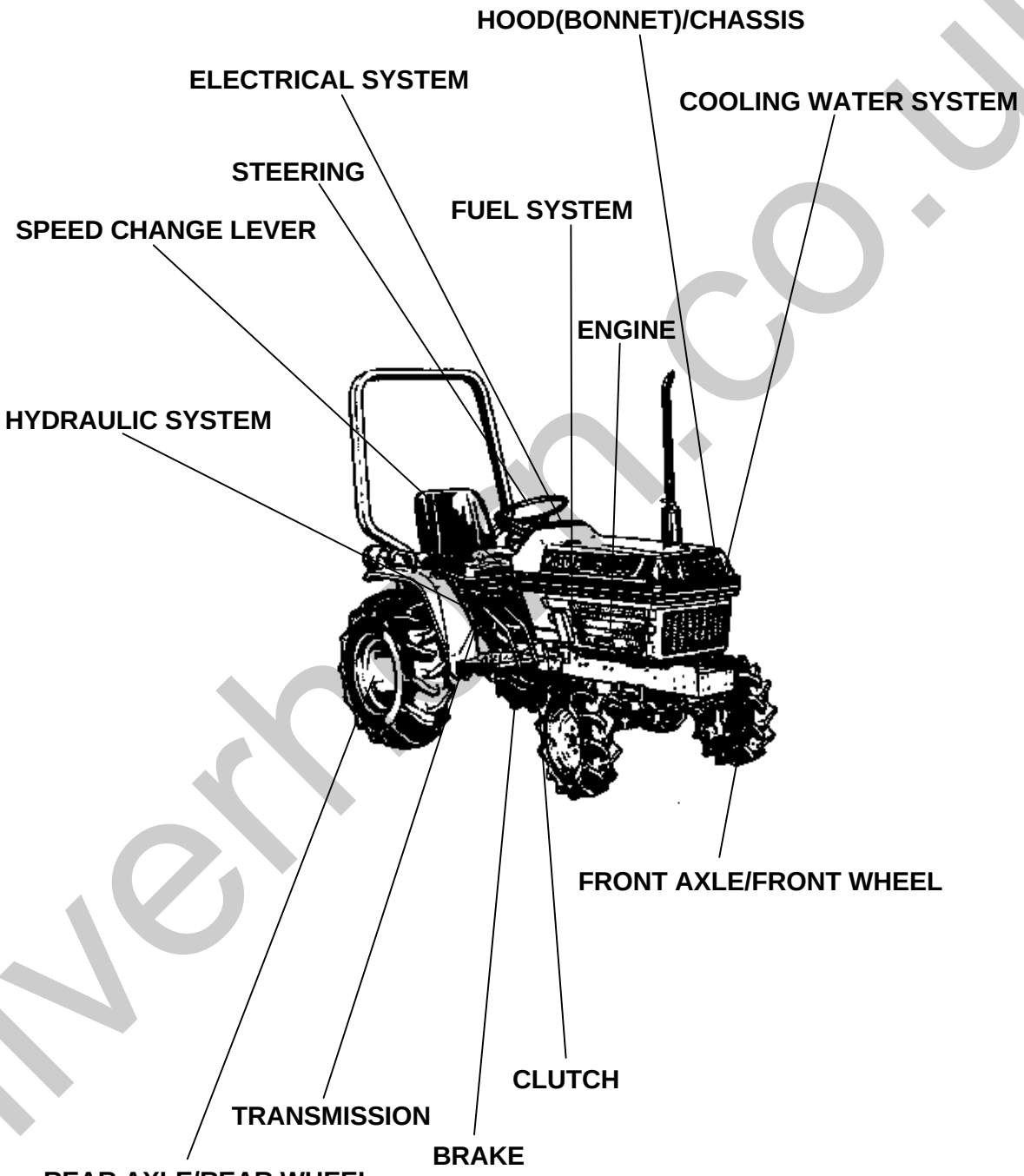

LABELS

ACCESSORIES

silverhorn.co.uk

Item	Part No.	Description	Book
ENGINE	01T001	CRANKCASE	100K0185
	01T002	OIL PAN	100K0185
	01T003	PISTON/CRANKSHAFT	100K0185
	01T004	MAIN BEARING CASE	100K0185
	01T005	FLYWHEEL	100K0185
	01T006	CYLINDER HEAD	100K0185
	01T007	VALVE/ROCKER ARM	100K0185
	01T008	NOZZLE HOLDER	100K0185
	01T009	NOZZLE HOLDER [COMPONENT PARTS]	100K0185
	01T010	CYLINDER HEAD COVER	100K0185
	01T011	INLET MANIFOLD	100K0185
	01T013	EXHAUST MANIFOLD	100K0185
	01T015	CAMSHAFT	100K0185
	01T016	GEAR CASE	100K0185
	01T017	WATER PUMP	100K0185
	01T018	TENSION PULLEY [CA]	100K0185
	01T019	WATER FLANGE	100K0185
	01T020	FUEL PUMP	100K0185
	01T021	INJECTION PUMP	100K0185
	01T022	INJECTION PUMP [COMPONENT PARTS]	100K0185
	01T023	ENGINE STOP LEVER	100K0185
	01T024	SPEED CONTROL PLATE	100K0185
	01T025	GOVERNOR	100K0185
	01T026	UPPER GASKET KIT	100K0185
	01T027	LOWER GASKET KIT	100K0185
ELECTRICAL SYSTEM	01T03501	DYNAMO [A] [AU] [NZ]	100K0185
	01T03502	ALTERNATOR [CA]	100K0185
	01T03601	DYNAMO [A] [AU] [NZ] [COMPONENT PARTS]	100K0185
	01T03602	ALTERNATOR [CA] [COMPONENT PARTS]	100K0185
CLUTCH	01T045	CLUTCH	100K0185
HYDRAULIC SYSTEM	01T096	HYDRAULIC GEAR PUMP	100K0185
	01T097	HYDRAULIC GEAR PUMP [COMPONENT PARTS]	100K0185
ENGINE	02T012	AIR CLEANER	100K0185
	02T01401	MUFFLER	100K0185
	02T01402	HORIZONTAL MUFFLER [OPTION]	100K0185
	02T028	ENGINE STOP ROD	100K0185
	02T029	ACCELERATOR LEVER	100K0185
FUEL SYSTEM	02T030	FUEL TANK	100K0185
	02T031	FUEL PIPE	100K0185
	02T032	FUEL FILTER [COMPONENT PARTS]	100K0185
COOLING WATER SYSTEM	02T03302	WATER PIPE	100K0185
	02T03402	RADIATOR	100K0185
ELECTRICAL SYSTEM	02T037	STARTER	100K0185
	02T038	STARTER [COMPONENT PARTS]	100K0185
	02T039	BATTERY	100K0185
	02T040	LIGHT	100K0185
	02T041	WORKING LIGHT [OPTION]	100K0185
	02T04201	PANEL/SWITCH [A] [AU] [NZ]	100K0185
	02T04202	PANEL/SWITCH [CA]	100K0185
	02T043	PANEL BOARD [COMPONENT PARTS]	100K0185
	02T04401	WIRE HARNESS [A] [AU] [NZ]	100K0185
	02T04402	WIRE HARNESS [CA]	100K0185
CLUTCH	02T046	CLUTCH ROD	100K0185
	02T047	CLUTCH PEDAL	100K0185
	02T048	CLUTCH HOUSING	100K0185
TRANSMISSION	02T049	TRANSMISSION CASE	100K0185
	02T050	TRANSMISSION CASE COVER	100K0185

silverkart.co.uk

Item	Part No.	Description	Book
TRANSMISSION	02T051	HST	100K0185
	02T05201	HST [COMPONENT PARTS]	100K0185
	02T05202	HST [COMPONENT PARTS]	100K0185
	02T053	PROPELLER SHAFT	100K0185
	02T054	2ND SHAFT	100K0185
	02T055	3RD SHAFT/5TH SHAFT	100K0185
	02T056	4TH SHAFT	100K0185
	02T057	FRONT WHEEL DRIVE SHAFT	100K0185
	02T058	REAR PTO	100K0185
	02T059	MID PTO	100K0185
	02T060	FRONT PTO [OPTION]	100K0185
SPEED CHANGE LEVER	02T061	NEUTRAL HOLDER	100K0185
	02T062	SPEED CONTROL PEDAL	100K0185
	02T063	SPEED CHANGE PLATE	100K0185
	02T064	SPEED SET LEVER	100K0185
	02T065	RANGE GEAR SHIFT LEVER	100K0185
	02T066	PTO GEAR SHIFT LEVER	100K0185
REAR AXLE/REAR WHEEL	02T067	REAR DIFFERENTIAL	100K0185
	02T068	DIFF. LOCK PEDAL	100K0185
	02T069	REAR AXLE	100K0185
	02T070	REAR AXLE CASE	100K0185
	02T07102	REAR WHEEL (8-16)	100K0185
	02T07103	REAR WHEEL (9.5-16)	100K0185
	02T07105	REAR WHEEL (31 X 13.5-15)	100K0185
	02T07106	REAR WHEEL (31 X 13.5-15 BAR) [A]	100K0185
BRAKE	02T072	BRAKE	100K0185
	02T073	BRAKE ROD	100K0185
	02T074	BRAKE PEDAL	100K0185
FRONT AXLE/FRONT WHEEL	02T07802	FRONT WHEEL HUB	100K0185
	02T07902	FRONT GEAR CASE	100K0185
	02T080	BEVEL GEAR CASE	100K0185
	02T08102	FRONT AXLE CASE [WITHOUT BI-SPEED TURN]	100K0185
	02T08103	FRONT AXLE CASE [WITH BI-SPEED TURN]	100K0185
	02T08202	FRONT DIFFERENTIAL [WITHOUT BI-SPEED TURN]	100K0185
	02T08203	FRONT DIFFERENTIAL [WITH BI-SPEED TURN]	100K0185
	02T083	BEVEL GEAR [WITH BI-SPEED TURN]	100K0185
	02T084	CLUTCH DISK [WITH BI-SPEED TURN]	100K0185
	02T085	FRONT DRIVE SHAFT	100K0185
	02T086	FRONT DRIVE LEVER	100K0185
	02T087	SHIFT FORK [WITH BI-SPEED TURN]	100K0185
	02T088	SHIFT LEVER [WITH BI-SPEED TURN]	100K0185
	02T089	BI-SPEED TURN ROD [WITH BI-SPEED TURN]	100K0185
	02T090	BI-SPEED TURN LEVER [WITH BI-SPEED TURN]	100K0185
	02T09101	FRONT WHEEL (6-12B)	100K0185
	02T09102	FRONT WHEEL (6-12)	100K0185
	02T09103	FRONT WHEEL (20.5 X 8.00-10)	100K0185
	02T092	FRONT AXEL FRAME	100K0185
	02T09302	KNUCKLE ARM [WITHOUT BI-SPEED TURN]	100K0185
	02T09303	KNUCKLE ARM [WITH BI-SPEED TURN]	100K0185
STEERING	02T09401	MANUAL STEERING	100K0185
	02T09402	POWER STEERING	100K0185
	02T09501	MANUAL STEERING [COMPONENT PARTS]	100K0185
	02T09502	POWER STEERING [COMPONENT PARTS]	100K0185
HYDRAULIC SYSTEM	02T098	HYDRAULIC PIPE (PS)	100K0185
	02T099	HYDRAULIC PIPE (FRONT)	100K0185
	02T100	HYDRAULIC PIPE (REAR)	100K0185

silverfarm.co.uk

Item	Part No.	Description	Book
HYDRAULIC SYSTEM	02T10101	HYDRAULIC BLOCK (MS) [COMPONENT PARTS]	100K0185
	02T10102	HYDRAULIC BLOCK (PS) [COMPONENT PARTS]	100K0185
	02T102	HYDRAULIC PIPE (HST)	100K0185
	02T103	OIL COOLER	100K0185
	02T104	LIFT ARM	100K0185
	02T10501	HYD.CYLINDER CAP [COMPONENT PARTS]	100K0185
	02T10502	HYD.CYLINDER CAP [COMPONENT PARTS]	100K0185
	02T10503	HYD.CYLINDER CAP [COMPONENT PARTS]	100K0185
	02T106	CONTROL VALVE	100K0185
	02T107	CONTROL VALVE [COMPONENT PARTS]	100K0185
	02T108	TOP LINK	100K0185
	02T109	LOWER LINK	100K0185
	02T110	LIFT ROD	100K0185
HOOD(BONNET)/CHASSIS	02T111	HOOD (BONNET)	100K0185
	02T112	LACE	100K0185
	02T113	HOOD COVER REAR	100K0185
	02T114	SKIRT (FRONT)	100K0185
	02T115	SKIRT (SIDE)	100K0185
	02T116	DUST COVER	100K0185
	02T117	TANK SUPPORT	100K0185
	02T118	FENDER	100K0185
	02T119	SEAT	100K0185
	02T120	STEP	100K0185
	02T12101	ROPS [A] [CA]	100K0185
	02T12102	ROPS [A] [CA]	100K0185
LABELS	02T122	LABEL 1	100K0185
	02T123	LABEL 2	100K0185
ACCESSORIES	02T124	ACCESSORIES AND SERVICE PARTS	100K0185

silverhorn.co.uk

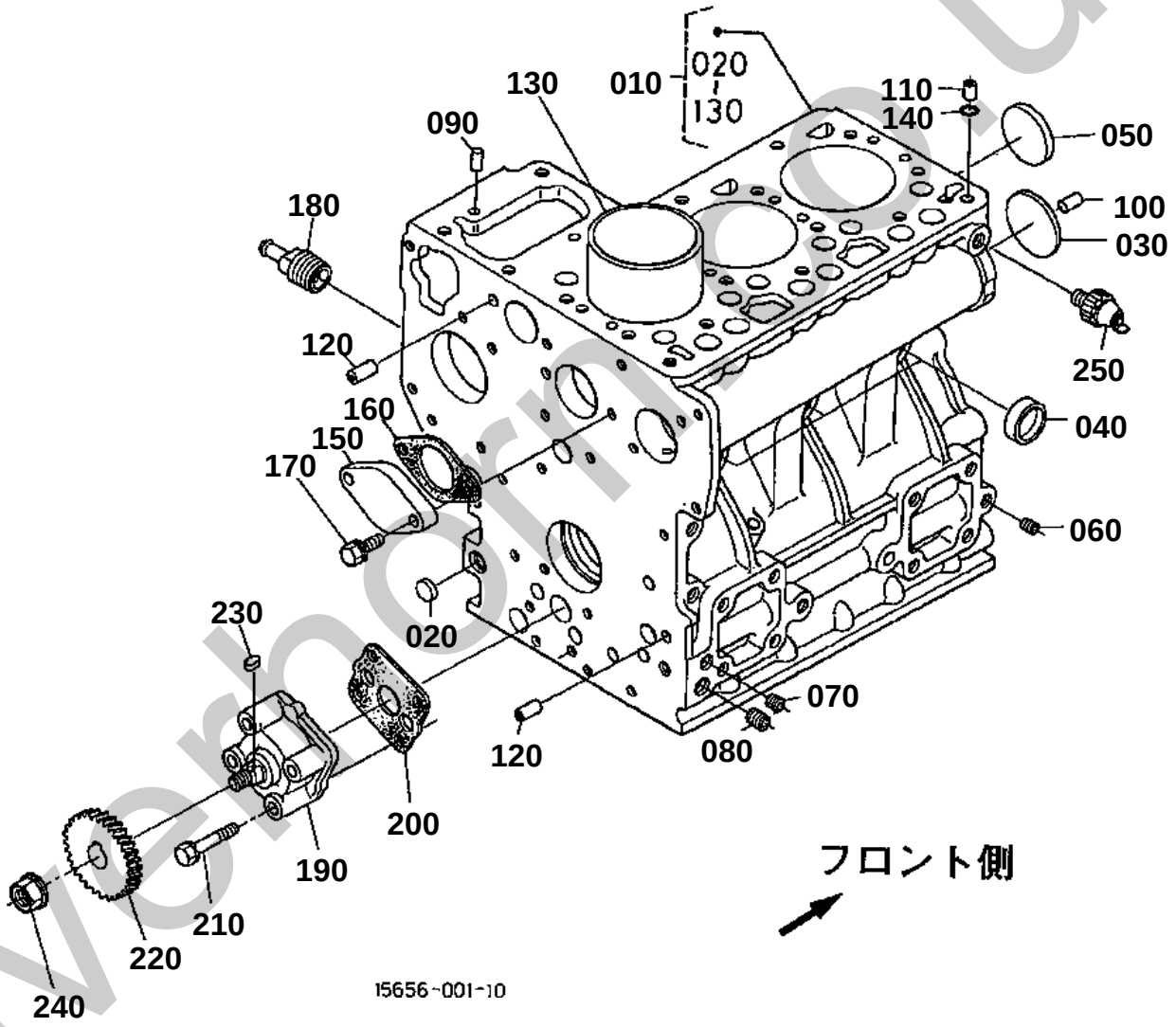

silverhorse.co.uk

Kubota **CRANKCASE**

↔ Interchangeable; ≠ not interchangeable; ← new for old; → old for new

REF.No	Part No.	Description	Q'ty	S.No.	I/C	REMARKS	Weight (kgf)	Weight (lb)
010	15656-01010	COMP.CRANKCASE	1				27	59.4
020	15261-96170	PLUG	3				0.005	0.011
030	15261-96160	PLUG	1				0.02	0.044
040	15321-96260	CAP SEALING	5				0.014	0.0308
050	15221-03490	CAP SEALING	1				0.02	0.044
060	15261-96010	PLUG	6				0.002	0.0044
070	15521-96020	PLUG	3				0.003	0.0066
080	15521-96030	PLUG	1				0.007	0.0154
090	05012-00609	PIN STRAIGHT	2				0.003	0.0066
100	05012-00814	PIN STRAIGHT	2				0.006	0.0132
110	15221-33650	PIN PIPE	1				0.004	0.0088
120	15231-33960	PIN PIPE	2				0.001	0.0022
130	15531-02310	LINER CYLINDER	3				0.42	0.924
140	15221-33700	O RING	1				0.001	0.0022
150	15261-73910	COVER WATER	1				0.13	0.286
160	15261-73920	GASKET WATER COVER	1	<=945299			0	0
160	15263-73920	GASKET WATER COVER	1	>=945300	↔		0.002	0.0044
170	01023-50618	BOLT	2				0.006	0.0132
180	15531-73170	JOINT DRAIN PIPE	1				0.145	0.319
190	15261-35010	ASSY PUMP OIL	1				0.32	0.704
200	15261-35150	GASKET OIL PUMP	1	<=945299			0	0
200	15263-35150	GASKET OIL PUMP	1	>=945300	↔		0.001	0.0022
210	15261-91022	BOLT	4				0.012	0.0264
220	15954-35662	GEAR OIL PUMP DRIVE	1				0.14	0.308
230	05712-00410	KEY FEATHER	1				0.001	0.0022
240	02771-60100	NUT FLANGE	1				0.01	0.022
250	15531-39010	SWITCH OIL	1				0.032	0.0704

silverhorn.co.uk

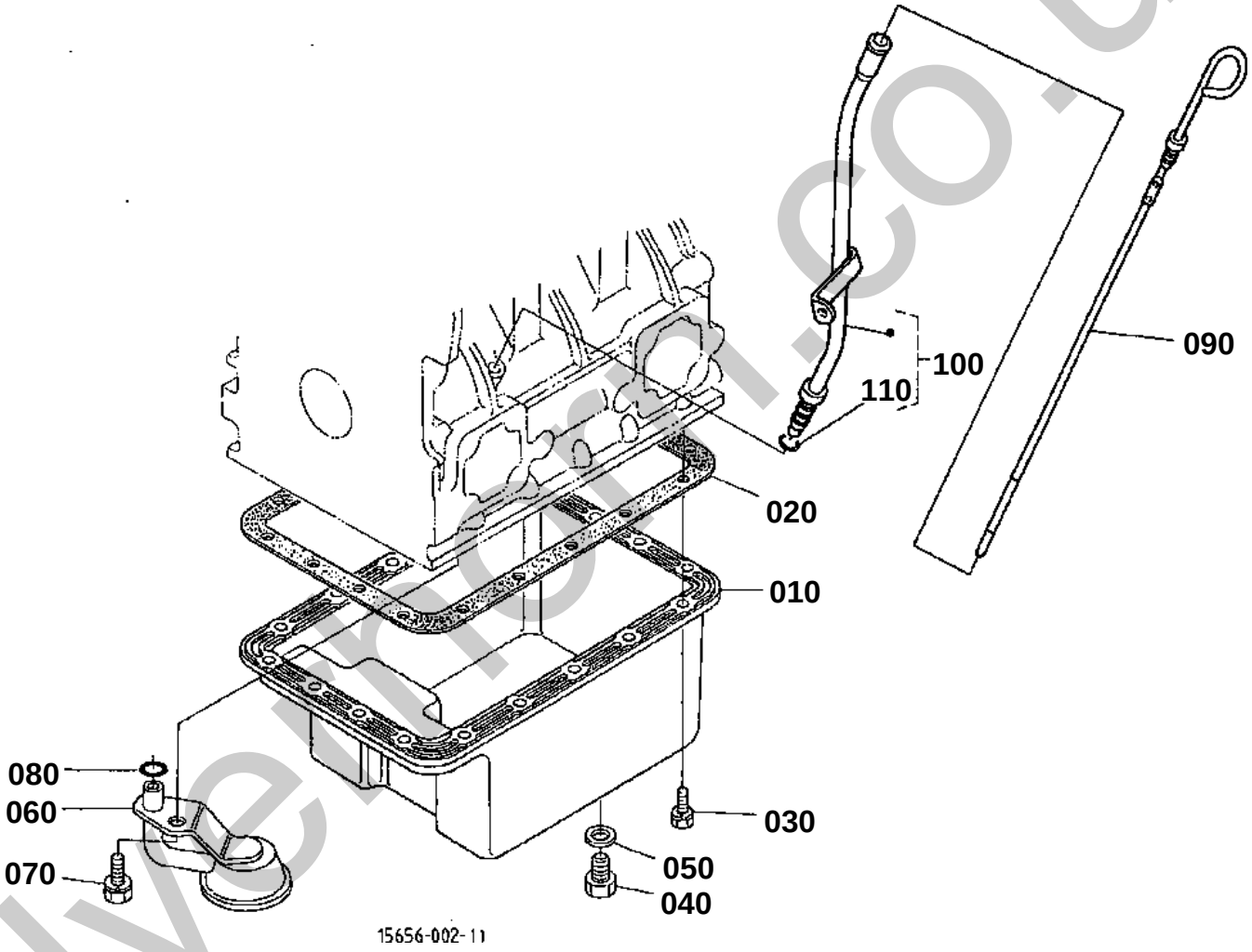

silverton.co.uk

100 15655-3642-0

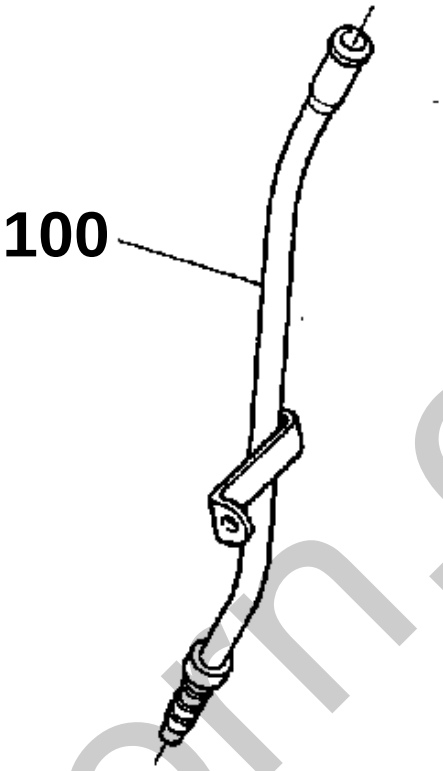

15656-803-10

silverhorn.co.uk

OIL PAN

↔ Interchangeable; ≠ not interchangeable; ← new for old; → old for new

REF.No	Part No.	Description	Q'ty	S.No.	I/C	REMARKS	Weight (kgf)	Weight (lb)
010	15371-01614	OIL PAN	1				1.1	2.42
020	15381-01620	GASKET OIL PAN	1	<=945299			0	0
020	15679-01620	GASKET OIL PAN	1	>=945300	↔		0.025	0.055
030	15381-91092	BOLT	18				0.002	0.0044
040	15221-33750	PLUG	1				0.032	0.0704
050	15109-33660	GASKET	1				0.001	0.0022
060	15531-32110	FILTER OIL	1				0.185	0.407
070	01123-60816	BOLT	1				0.01	0.022
080	04811-00140	RING	1				0.001	0.0022
090	15655-36410	GAUGE OIL	1				0.03	0.066
100	15655-36420	GUIDE OIL GAUGE	1	<=907383			0.1	0.22
100	15655-36500	ASSY GUIDE OIL GAUGE	1	>=907384	←		0.102	0.2244
110	04814-00090	O RING	1	>=907384			0.001	0.0022

silverhorn.co.uk

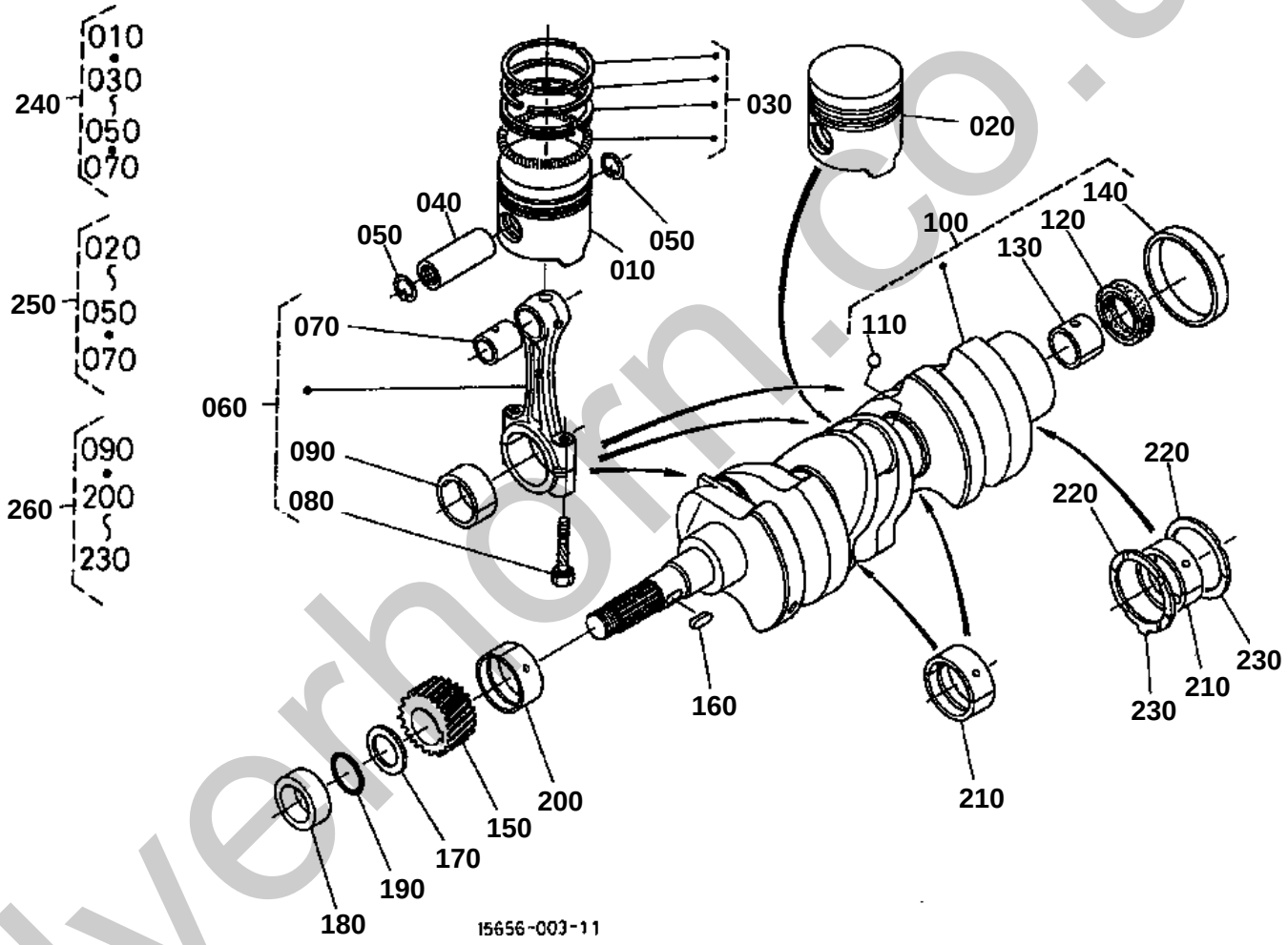

silverhorn.co.uk

Kubota **PISTON/CRANKSHAFT**

↔ Interchangeable; ≠ not interchangeable; ← new for old; → old for new

REF.No	Part No.	Description	Q'ty	S.No.	I/C	REMARKS	Weight (kgf)	Weight (lb)
010	15532-21110	PISTON	2			STD	0.365	0.803
010	15532-21910	PISTON	2			+0.5MM	0.365	0.803
020	15531-21123	PISTON	1			STD	0.35	0.77
020	15531-21922	PISTON	1			+0.5MM	0.37	0.814
030	15531-21050	ASSY PISTON RING	3			STD	0.046	0.1012
030	15531-21090	ASSY PISTON RING	3			+0.5MM	0.03	0.066
040	15261-21310	PIN PISTON	3				0.102	0.2244
050	15261-21330	CIRCLIP PISTON PIN	6				0.001	0.0022
060	15381-22010	ASSY CONNECTING ROD	3	<=755815			0	0
060	15694-22010	ASSY CONNECTING ROD	3	>=755816	↔		0.5	1.1
070	15261-21980	BUSH PISTON PIN	3				0.012	0.0264
080	15381-22140	BOLT CONNECTING ROD	6				0.02	0.044
090	15531-22310	METAL CRANKPIN	3	<=755815		STD SET	0	0
090	15694-22310	METAL CRANKPIN	3	>=755816	↔	STD SET	0.02	0.044
090	15694-22970	METAL CRANKPIN	3	<=755815		-0.2MM SET	0.025	0.055
090	15694-22970	METAL CRANKPIN	3	>=755816	↔	-0.2MM SET	0.025	0.055
090	15531-22980	METAL CRANKPIN	3	<=755815		-0.4MM SET	0	0
090	15694-22980	METAL CRANKPIN	3	>=755816	↔	-0.4MM SET	0.02	0.044
100	15752-23010	COMP.CRANKSHAFT	1				8	17.6
110	07715-00401	BALL	3				0.001	0.0022
120	09400-14247	SEAL OIL	1				0.004	0.0088
130	66621-14120	BEARING DRY	1				0.006	0.0132
140	19215-23280	SLEEVE CRANKSHAFT	1				0.05	0.11
150	15752-24110	GEAR CRANKSHAFT	1				0.046	0.1012
160	05712-00515	KEY FEATHER	1				0.003	0.0066
170	15752-23310	SLINGER OIL	1				0.002	0.0044
180	15752-23250	COLLAR CRANKSHAFT	1				0.043	0.0946
190	04811-05230	RING	1				0.001	0.0022
200	15261-23470	METAL CRANKSHAFT	1	<=755815		STD	0	0
200	15694-23470	METAL CRANKSHAFT	1	>=755816	↔	STD	0.035	0.077
200	15261-23910	METAL CRANKSHAFT	1	<=755815		-0.2MM	0	0
200	15694-23910	METAL CRANKSHAFT	1	>=755816	↔	-0.2MM	0.04	0.088
200	15261-23920	METAL CRANKSHAFT	1	<=755815		-0.4MM	0	0
200	15694-23920	METAL CRANKSHAFT	1	>=755816	↔	-0.4MM	0.045	0.099
210	15261-23480	METAL CRANKSHAFT	3	<=755815		STD SET	0	0
210	15694-23480	METAL CRANKSHAFT	3	>=755816	↔	STD SET	0.04	0.088
210	15261-23930	METAL CRANKSHAFT	3	<=755815		-0.2MM SET	0	0
210	15694-23930	METAL CRANKSHAFT	3	>=755816	↔	-0.2MM SET	0.05	0.11
210	15261-23940	METAL CRANKSHAFT	3	<=755815		-0.4MM SET	0	0
210	15694-23940	METAL CRANKSHAFT	3	>=755816	↔	-0.4MM SET	0.046	0.1012
220	15261-23530	METAL SIDE	2			STD	0.006	0.0132
220	15261-23950	METAL SIDE	2			+0.2MM	0.006	0.0132
220	15261-23960	METAL SIDE	2			+0.4MM	0.007	0.0154
230	15261-23540	METAL SIDE	2			STD	0.007	0.0154
230	15261-23970	METAL SIDE	2			+0.2MM	0.006	0.0132
230	15261-23980	METAL SIDE	2			+0.4MM	0.007	0.0154
240	07916-28270	KIT PISTON AND RING	2			STD	0.56	1.232
240	07916-26540	KIT PISTON AND RING	2			+0.5MM	0.42	0.924
250	07916-28280	KIT PISTON AND RING	1			STD	0.55	1.21
250	07616-26550	KIT PISTON AND RING	1			+0.5MM	0	0
260	07916-28090	KIT METAL ENGINE	1			STD	0.25	0.55

silvanorn.co.uk

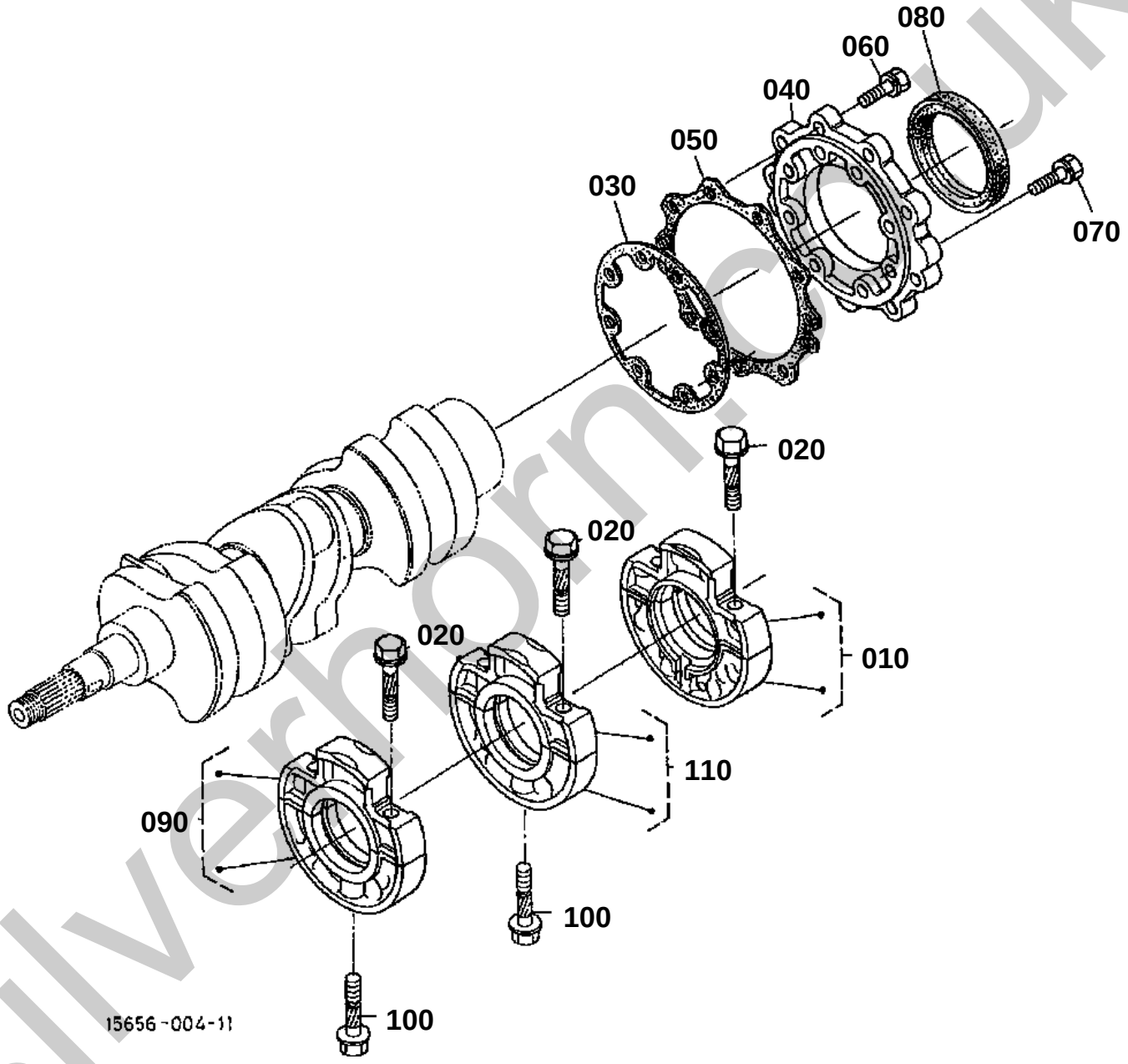

silverhorn.co.uk

MAIN BEARING CASE

↔ Interchangeable; ≠ not interchangeable; ← new for old; → old for new

REF.No	Part No.	Description	Q'ty	S.No.	I/C	REMARKS	Weight (kgf)	Weight (lb)
010	15261-04090	ASSY CASE MAIN BRG.	1				0.8	1.76
020	15381-04540	BOLT BEARING CASE	6				0.02	0.044
030	15261-04360	GASKET BRG.CASE	1	<=945299			0	0
030	15263-04360	GASKET BRG.CASE	1	>=945300	↔		0.005	0.011
040	15549-04810	COVER BEARING CASE	1				0.2	0.44
050	15261-04820	GASKET BRG.CASE COV.	1	<=945299			0	0
050	15263-04820	GASKET BRG.CASE COV.	1	>=945300	↔		0.001	0.0022
060	01023-50620	BOLT	9				0.006	0.0132
070	01023-50625	BOLT	8				0.007	0.0154
080	19215-04460	SEAL OIL	1				0.03	0.066
090	15261-04040	ASSY CASE MAIN BRG.	1				0.687	1.5114
100	15381-04560	BOLT BEARING CASE	2				0.02	0.044
110	15381-04050	ASSY CASE MAIN BRG.	1				0.688	1.5136

silverhorn.co.uk

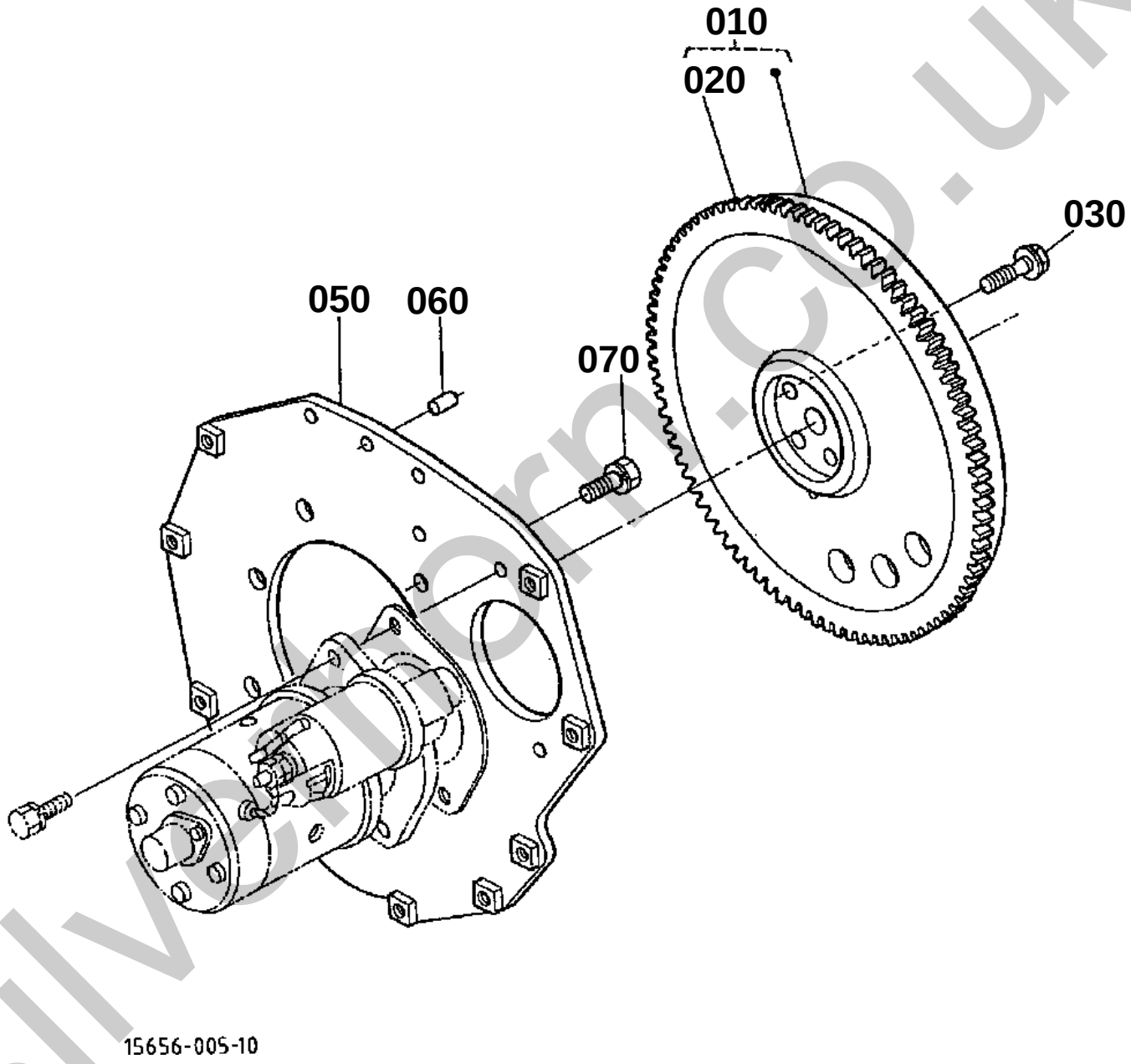

silvermern.co.uk

030 15533-2516-0

040 15531-2517-0

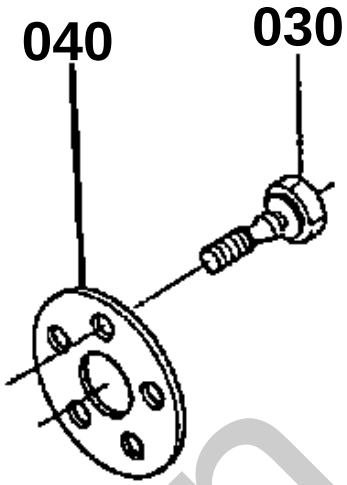

15656-800-10

silverhorn.co.uk

FLYWHEEL

↔ Interchangeable; ≠ not interchangeable; ← new for old; → old for new

REF.No	Part No.	Description	Q'ty	S.No.	I/C	REMARKS	Weight (kgf)	Weight (lb)
010	15541-25012	COMP.FLYWHEEL	1				12	26.4
020	15261-63820	GEAR RING	1	<=715532			0	0
020	15262-63820	GEAR RING	1	>=715533	↔		0.65	1.43
030	15533-25160	BOLT FLYWHEEL	5	<=682801			0	0
030	15533-25162	BOLT FLYWHEEL	5	>=682802	≠		0.03	0.066
040	15531-25170	WASHER FLYWHEEL	1	<=682801			0.04	0.088
050	15541-04620	PLATE REAR END	1				2.76	6.072
060	05012-00814	PIN STRAIGHT	1				0.006	0.0132
070	15261-91190	BOLT	8				0.03	0.066

silverhorn.co.uk

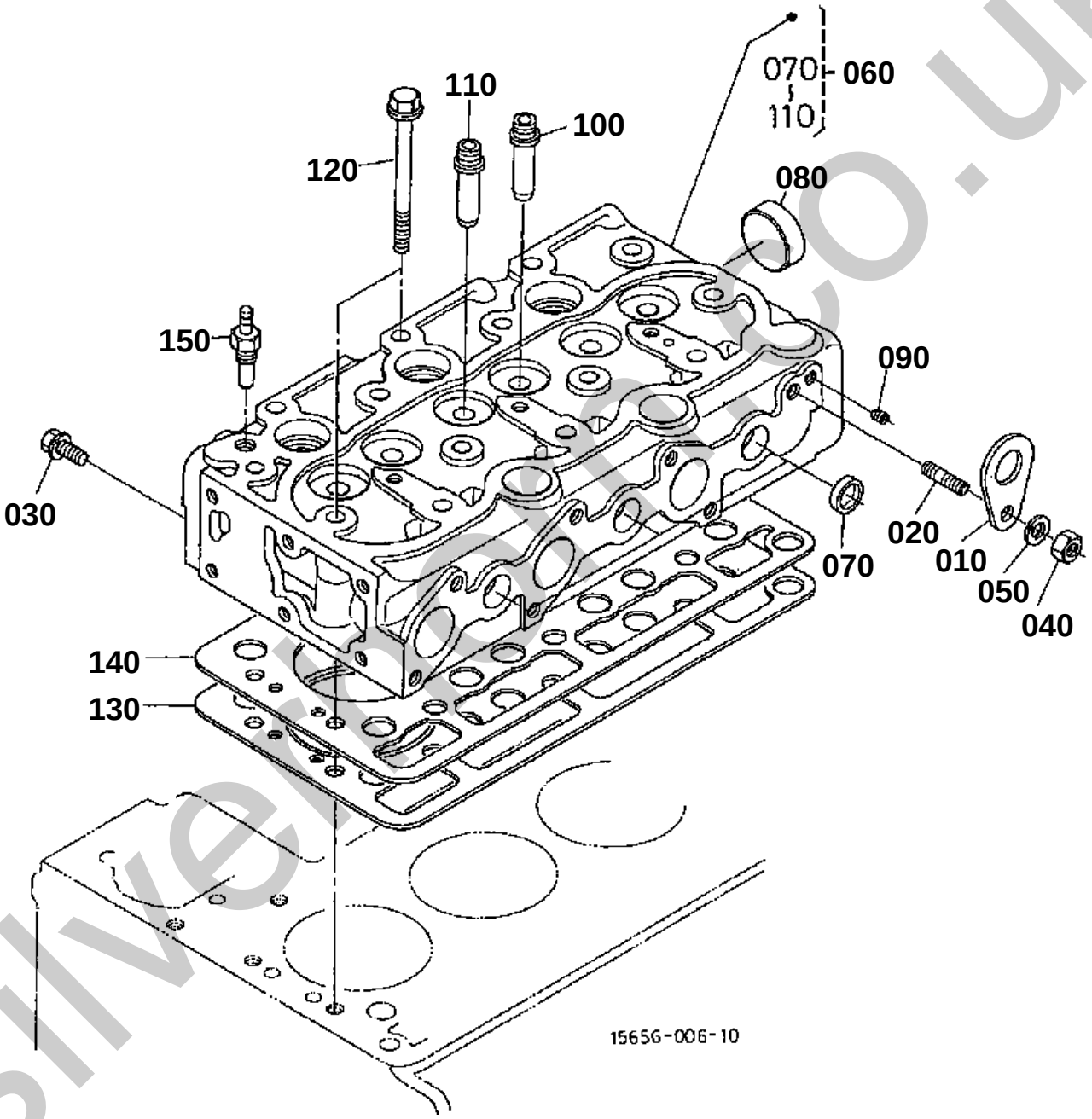

silvermuleco.uk

CYLINDER HEAD

↔ Interchangeable; ≠ not interchangeable; ← new for old; → old for new

REF.No	Part No.	Description	Q'ty	S.No.	I/C	REMARKS	Weight (kgf)	Weight (lb)
010	15221-01750	HOOK ENGINE	1				0.04	0.088
020	01513-50816	STUD	1				0.009	0.0198
030	01123-60816	BOLT	1				0.01	0.022
040	02156-50080	NUT	1				0.004	0.0088
050	04512-50080	WASHER SPRING	1				0.001	0.0022
060	15532-03040	COMP.CYLINDER HEAD	1				9	19.8
070	15261-03370	CAP SEALING	5				0.005	0.011
080	15321-96260	CAP SEALING	1				0.014	0.0308
090	15261-96010	PLUG	2				0.002	0.0044
100	15261-13540	GUIDE INLET VALVE	3				0.02	0.044
110	15261-13560	GUIDE EXHAUST VALVE	3				0.02	0.044
120	19215-03450	BOLT CYLINDER HEAD	14				0.047	0.1034
130	15978-03310	GASKET CYLINDER HEAD	1				0	0
140	15531-03320	SHIM CYL.HEAD GASKET	1				0.03	0.066
150	38240-32830	SWITCH THERMOMETER	1				0.03	0.066

silverhorn.co.uk

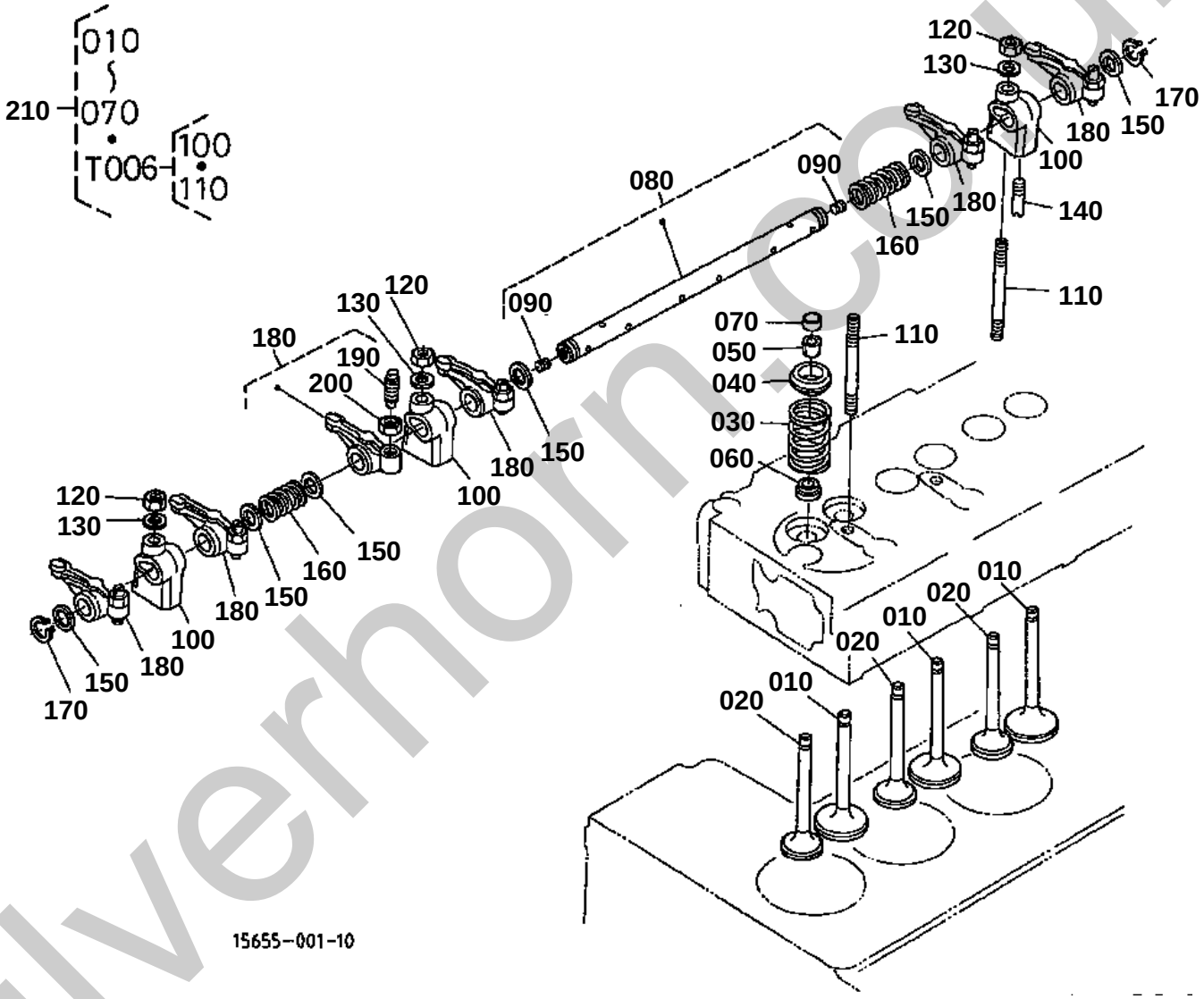

silverhorn.co.uk

VALVE/ROCKER ARM

↔ Interchangeable; ≠ not interchangeable; ← new for old; → old for new

REF.No	Part No.	Description	Q'ty	S.No.	I/C	REMARKS	Weight (kgf)	Weight (lb)
010	15393-13110	VALVE INLET	3				0.048	0.1056
020	15393-13120	VALVE EXHAUST	3				0.048	0.1056
030	15261-13240	SPRING VALVE	6				0.02	0.044
040	16241-13330	RETAINER VALVE SP.	6				0.012	0.0264
050	15261-13360	COLLET VALVE SPRING	6			SET	0.004	0.0088
060	15261-13150	SEAL VALVE STEM	6				0.001	0.0022
070	15261-13280	CAP VALVE	6	<=821125			0	0
070	16241-13280	CAP VALVE	6	>=821126	↔		0.005	0.011
080	15381-14053	ASSY SHAFT R-ARM	1				0.135	0.297
090	15381-93610	SCREW SET	2				0.001	0.0022
100	15381-14350	BRACKET ROCKER ARM	3				0.05	0.11
110	15952-14410	STUD	3				0	0
120	15261-92010	NUT	3				0.005	0.011
130	15261-94010	WASHER PLAIN	3				0.002	0.0044
140	15261-14420	SCREW SET.ROCKER ARM	1				0.002	0.0044
150	15261-14430	WASHER R-ARM.SHAFT	6				0.001	0.0022
160	15261-14310	SPRING ROCKER ARM	2				0.003	0.0066
170	04612-00110	CIRCLIP EXTERNAL	2				0.001	0.0022
180	15381-14030	ASSY ROCKER ARM	6	<=778923			0.05	0.11
180	15382-14030	ASSY ROCKER ARM	6	>=778924	→		0.05	0.11
190	15261-14232	SCREW ADJUSTING	6				0.006	0.0132
200	15261-14240	NUT	6				0.002	0.0044
210	07916-27360	KIT ENG.VALVE TRAIN	1				0.68	1.496

silverhorn.co.uk

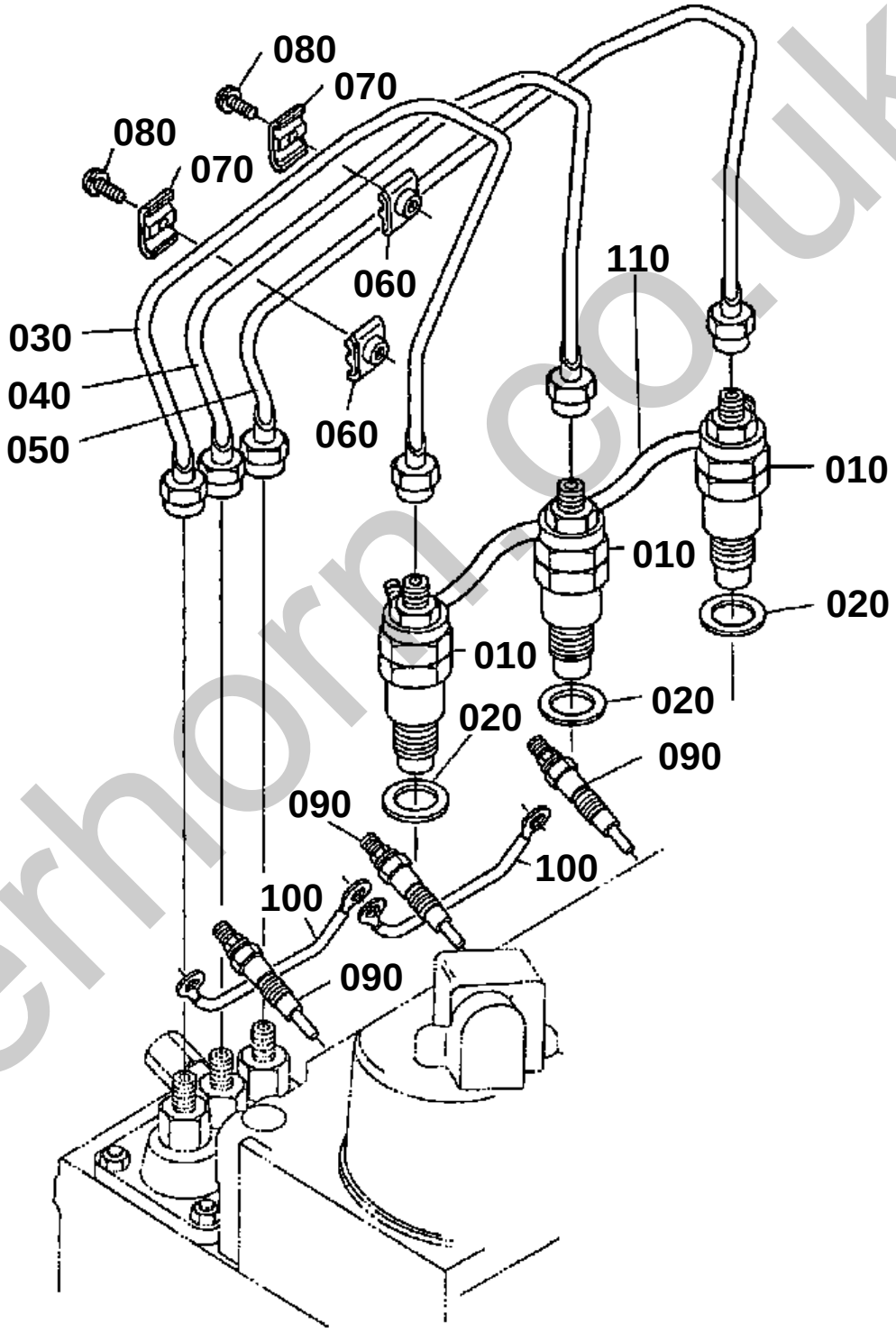

silverhorn.co.uk

NOZZLE HOLDER

↔ Interchangeable; ≠ not interchangeable; ← new for old; → old for new

REF.No	Part No.	Description	Q'ty	S.No.	I/C	REMARKS	Weight (kgf)	Weight (lb)
010	15261-53020	ASSY HOLDER NOZZLE	3	<=821125		REFER TO L.No.0B05-R0 FOR COMPONENTS.	0	0
010	19202-53020	ASSY HOLDER NOZZLE	3	>=821126	↔	REFER TO L.No.0B05-R0 FOR COMPONENTS.	0.25	0.55
020	17011-53620	GASKET	3				0.003	0.0066
030	15727-53710	PIPE INJECTION	1				0.1	0.22
040	15727-53720	PIPE INJECTION	1				0.1	0.22
050	15727-53730	PIPE INJECTION	1				0.1	0.22
060	15841-53850	CLAMP PIPE	2				0.01	0.022
070	15841-53860	CLAMP PIPE	2				0.009	0.0198
080	03024-50520	SCREW WITH WASHER	2				0.004	0.0088
090	15694-65510	PLUG GLOW	3				0.02	0.044
100	15261-65560	CORD GLOW PLUG	2				0.005	0.011
110	15531-42500	ASSY PIPE OVER FLOW	1				0.065	0.143

silverhorn.co.uk

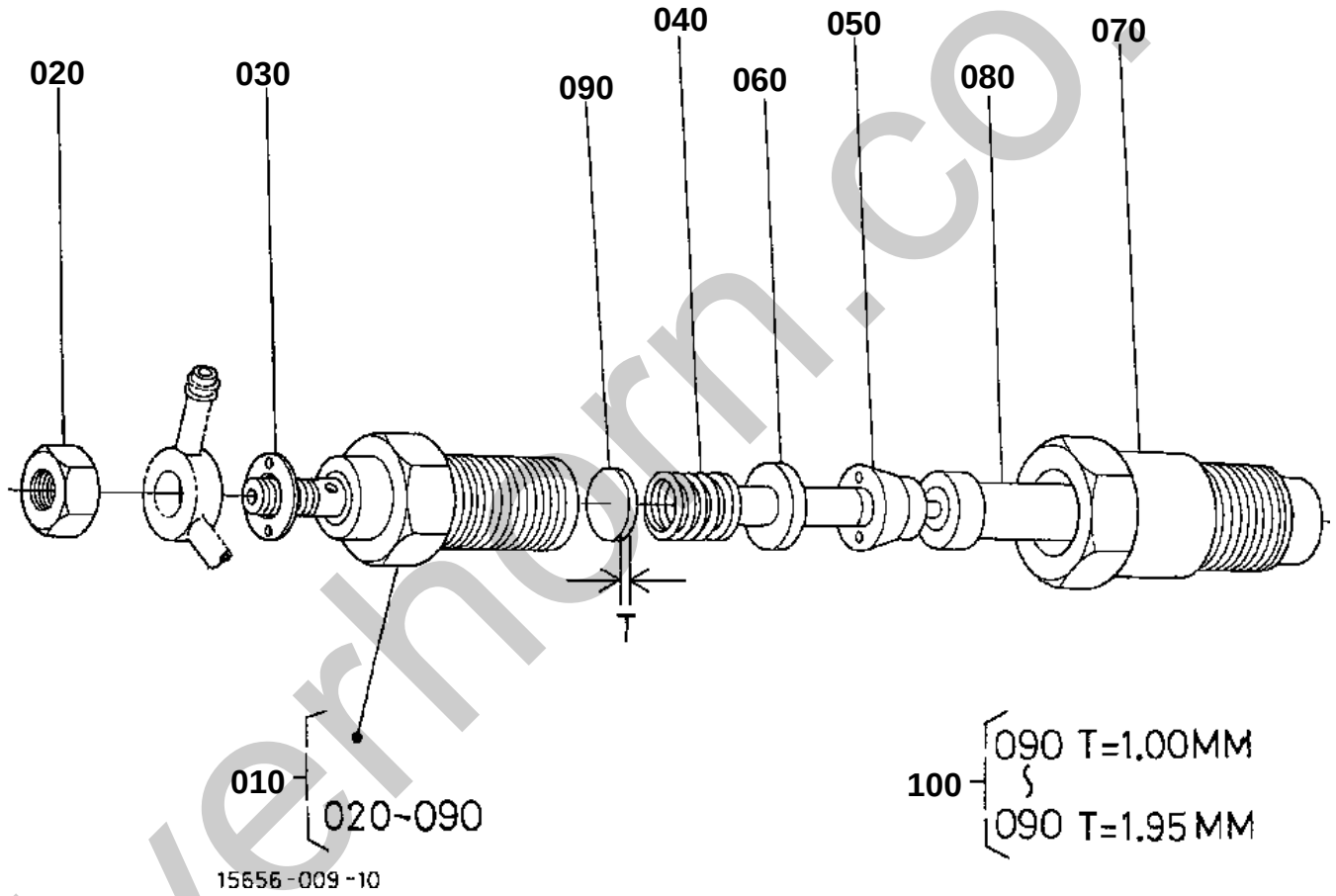

silverhorn.co.uk

NOZZLE HOLDER [COMPONENT PARTS]

↔ Interchangeable; ≠ not interchangeable; ← new for old; → old for new

REF.No	Part No.	Description	Q'ty	S.No.	I/C	REMARKS	Weight (kgf)	Weight (lb)
010	15261-53020	ASSY HOLDER NOZZLE	3	<=821125			0	0
010	19202-53020	ASSY HOLDER NOZZLE	3	>=821126	↔		0.25	0.55
020	15221-92020	NUT	3				0.011	0.0242
030	15221-94020	WASHER PLAIN	3				0.002	0.0044
040	15221-53170	SPRING NOZZLE	3				0.01	0.022
050	15221-53350	PIECE DISTANCE	3				0.016	0.0352
060	15221-53160	PUSH ROD	3				0.003	0.0066
070	15221-53280	NUT NOZZLE	3				0.068	0.1496
080	15021-53610	PIECE NOZZLE	3	<=821125			0	0
080	19202-53610	PIECE NOZZLE	3	>=821126	↔		0.045	0.099
090	15221-98110	WASHER ADJUSTING	3			1.00MM	0.001	0.0022
090	15221-98120	WASHER ADJUSTING	3			1.05MM	0.001	0.0022
090	15221-98130	WASHER ADJUSTING	3			1.10MM	0.001	0.0022
090	15221-98140	WASHER ADJUSTING	3			1.15MM	0.001	0.0022
090	15221-98150	WASHER ADJUSTING	3			1.20MM	0.001	0.0022
090	15221-98160	WASHER ADJUSTING	3			1.25MM	0.001	0.0022
090	15221-98170	WASHER ADJUSTING	3			1.30MM	0.001	0.0022
090	15221-98180	WASHER ADJUSTING	3			1.35MM	0.001	0.0022
090	15221-98190	WASHER ADJUSTING	3			1.40MM	0.002	0.0044
090	15221-98200	WASHER ADJUSTING	3			1.45MM	0.001	0.0022
090	15221-98210	WASHER ADJUSTING	3			1.50MM	0.001	0.0022
090	15221-98220	WASHER ADJUSTING	3			1.55MM	0.003	0.0066
090	15221-98230	WASHER ADJUSTING	3			1.60MM	0.003	0.0066
090	15221-98240	WASHER ADJUSTING	3			1.65MM	0.002	0.0044
090	15221-98250	WASHER ADJUSTING	3			1.70MM	0.002	0.0044
090	15221-98260	WASHER ADJUSTING	3			1.75MM	0.002	0.0044
090	15221-98270	WASHER ADJUSTING	3			1.80MM	0.002	0.0044
090	15221-98280	WASHER ADJUSTING	3			1.85MM	0.002	0.0044
090	15221-98290	WASHER ADJUSTING	3			1.90MM	0.002	0.0044
090	15221-98300	WASHER ADJUSTING	3			1.95MM	0.003	0.0066
100	15221-98100	ASSY WASHER ADJUST	3			OPTION	0.03	0.066

silverhorn.co.uk

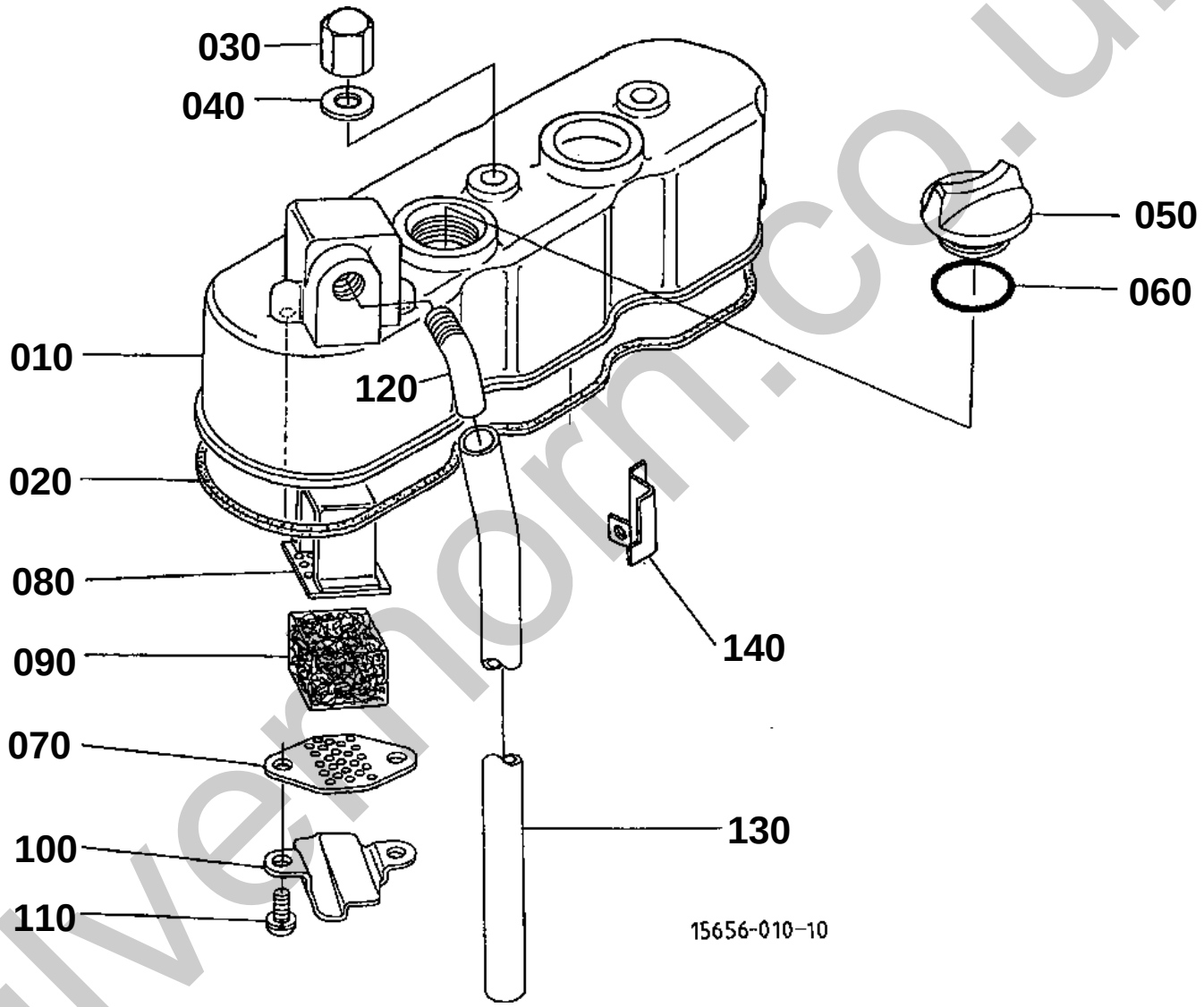

silvernorm.co.uk

010 15656-1451-0

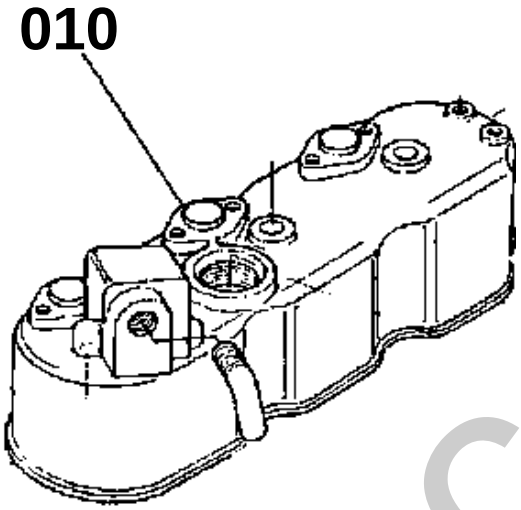

15656-802-10

silverhorn.co.uk

CYLINDER HEAD COVER

↔ Interchangeable; ≠ not interchangeable; ← new for old; → old for new

REF.No	Part No.	Description	Q'ty	S.No.	I/C	REMARKS	Weight (kgf)	Weight (lb)
010	15656-14510	COVER CYL.HEAD	1	<=682801			0.8	1.76
010	15534-14510	COVER CYL.HEAD	1	>=682802	↔		0.6	1.32
020	15381-14520	GASKET HEAD COVER	1				0.005	0.011
030	15952-92330	NUT CAP	3				0.01	0.022
040	15951-96660	GASKET	3				0.001	0.0022
050	15221-33140	PLUG OIL FILLER	1	<=834110			0.038	0.0836
050	15852-33140	PLUG OIL FILLER	1	>=834111	↔		0.038	0.0836
060	04811-50300	RING	1				0.001	0.0022
070	15951-05140	PLATE B/THER ELEMENT	1				0.005	0.011
080	15521-05150	PLATE B/THER ELEMENT	1				0.01	0.022
090	15521-05670	ELEMENT BREATHER	1				0.01	0.022
100	15951-05370	OIL SHIELD BREATHER	1				0.005	0.011
110	03024-50510	SCREW WITH WASHER	2				0.002	0.0044
120	15521-05550	JOINT BREATHER PIPE	1				0.04	0.088
130	15261-05510	PIPE BREATHER	1				0.069	0.1518
140	15531-05580	CLAMP PIPE	1				0.019	0.0418

silverhorn.co.uk

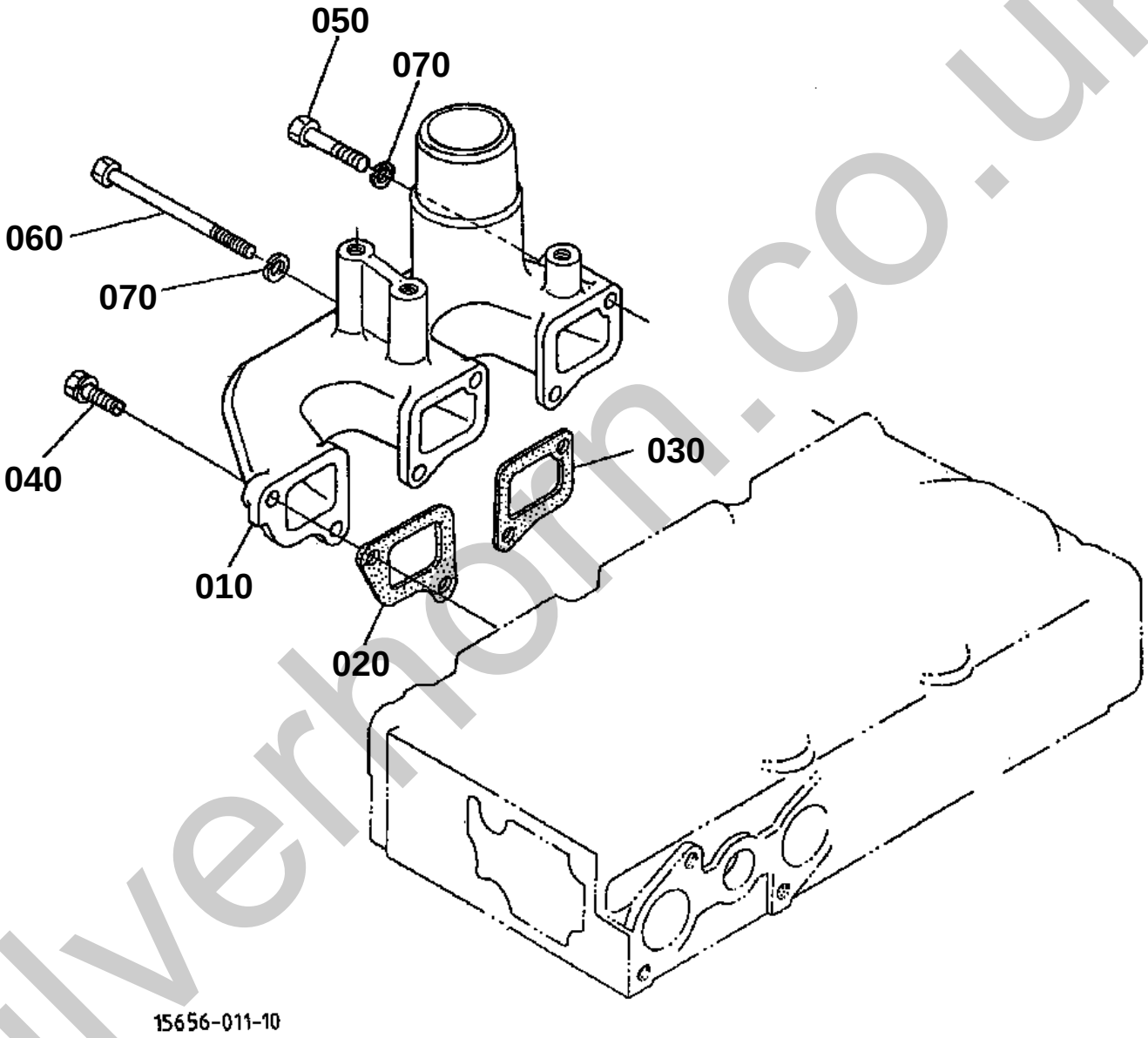

silverhorn.co.uk

INLET MANIFOLD

↔ Interchangeable; ≠ not interchangeable; ← new for old; → old for new

REF.No	Part No.	Description	Q'ty	S.No.	I/C	REMARKS	Weight (kgf)	Weight (lb)
010	15727-11760	MANIFOLD INLET	1				0.6	1.32
020	15261-11820	GASKET IN-MANIFOLD	1	<=945299			0	0
020	15263-11820	GASKET IN-MANIFOLD	1	>=945300	↔		0.001	0.0022
030	15261-11830	GASKET IN-MANIFOLD	2	<=945299			0	0
030	15263-11830	GASKET IN-MANIFOLD	2	>=945300	↔		0.001	0.0022
040	01023-50620	BOLT	4				0.006	0.0132
050	01053-50660	BOLT	1				0.014	0.0308
060	15381-91070	BOLT	1				0.016	0.0352
070	04512-50060	WASHER SPRING	2				0	0

silverhorn.co.uk

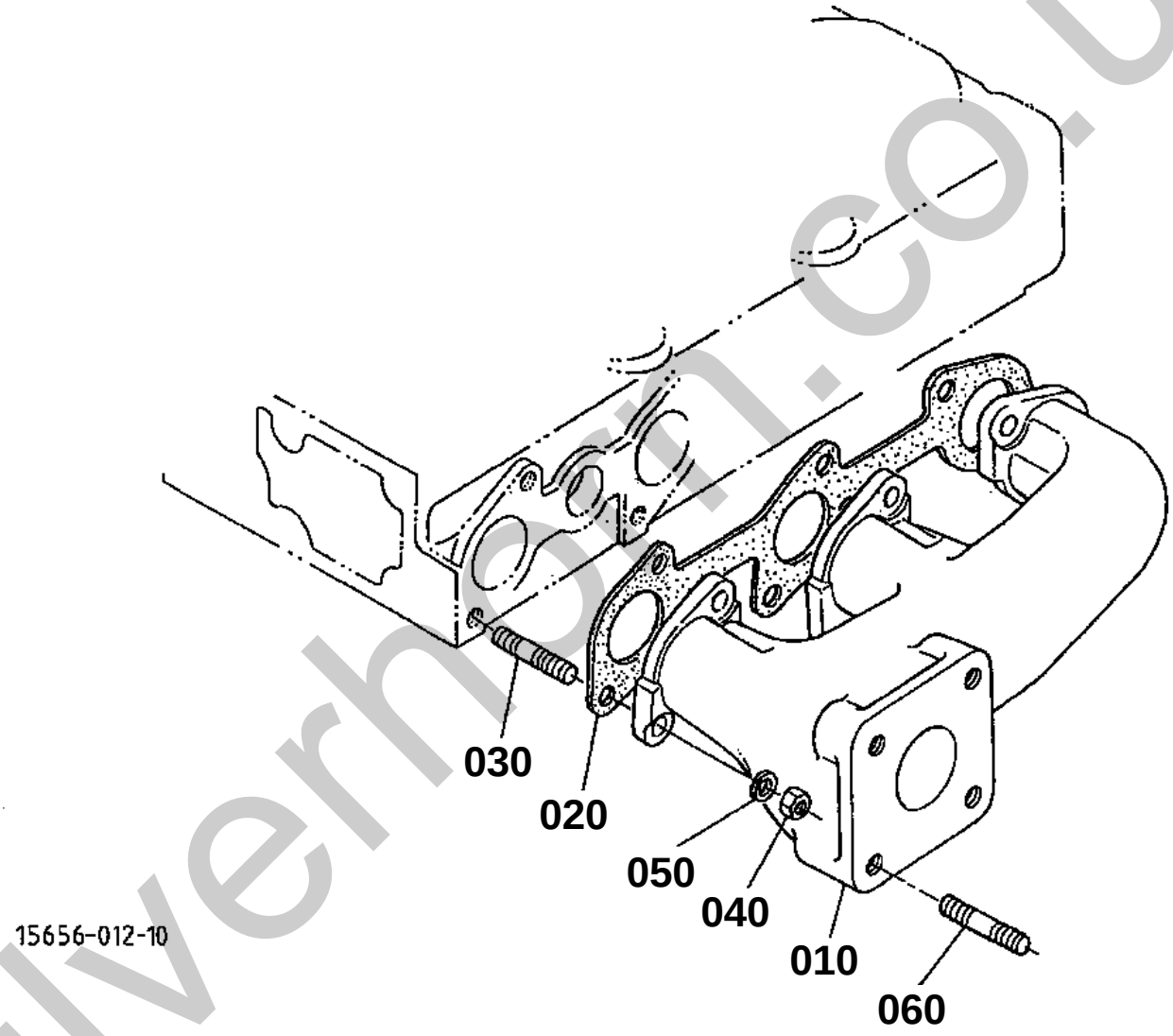

silverhorn.co.uk

EXHAUST MANIFOLD

↔ Interchangeable; ≠ not interchangeable; ← new for old; → old for new

REF.No	Part No.	Description	Q'ty	S.No.	I/C	REMARKS	Weight (kgf)	Weight (lb)
010	15532-12310	MANIFOLD EXHAUST	1				1.38	3.036
020	15381-12360	GASKET EX-MANIFOLD	1				0	0
030	15381-91532	STUD	6				0.005	0.011
040	02056-50060	NUT	6				0.002	0.0044
050	04512-50060	WASHER SPRING	6				0	0
060	01513-50822	STUD	4				0.01	0.022

silverhorn.co.uk

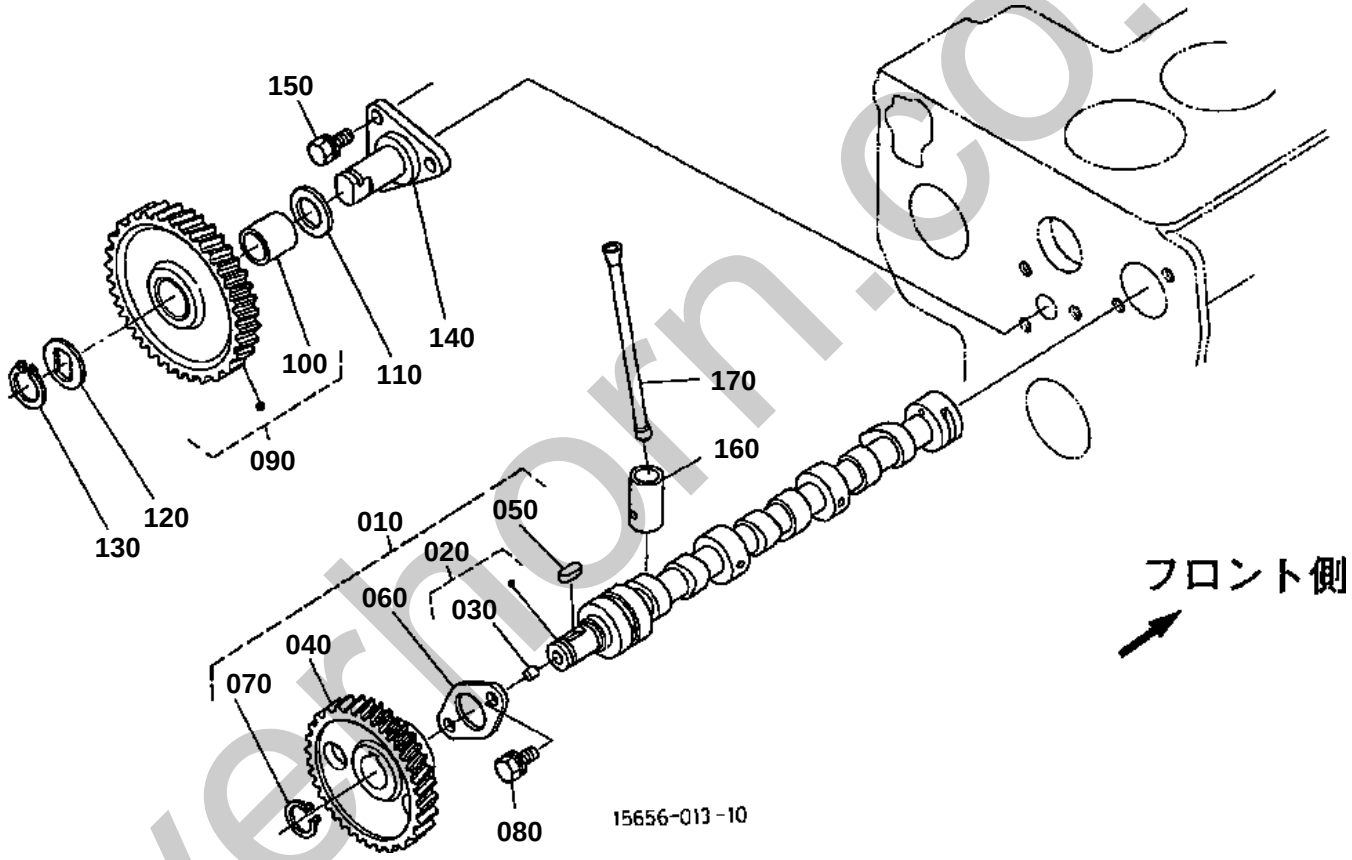

silverthorn.co.uk

CAMSHAFT

↔ Interchangeable; ≠ not interchangeable; ← new for old; → old for new

REF.No	Part No.	Description	Q'ty	S.No.	I/C	REMARKS	Weight (kgf)	Weight (lb)
010	15381-16010	ASSY CAMSHAFT	1				1.045	2.299
020	15381-16110	COMP. CAMSHAFT	1				0.965	2.123
030	15261-96880	PLUG BLIND	2				0.002	0.0044
040	15261-16510	GEAR CAMSHAFT	1				0.354	0.7788
050	05712-00515	KEY FEATHER	1				0.003	0.0066
060	15261-16270	STOPPER CAMSHAFT	1				0.034	0.0748
070	04612-00180	CIRCLIP EXTERNAL	1				0.001	0.0022
080	01023-50614	BOLT	2				0.005	0.011
090	15741-24010	COMP GEAR IDLE	1				0.64	1.408
100	15741-24980	BUSH IDLE GEAR	1				0.03	0.066
110	15741-24360	COLLAR IDLE GEAR	1				0.04	0.088
120	15741-24370	COLLAR IDLE GEAR	1				0.015	0.033
130	15741-24320	CIR CLIP IDLE GEAR	1				0.01	0.022
140	15741-24250	SHAFT IDLE GEAR	1				0.35	0.77
150	01023-50616	BOLT	3				0.005	0.011
160	15261-15550	TAPPET	6				0.03	0.066
170	15261-15110	PUSH ROD	6				0.022	0.0484

silverhorn.co.uk

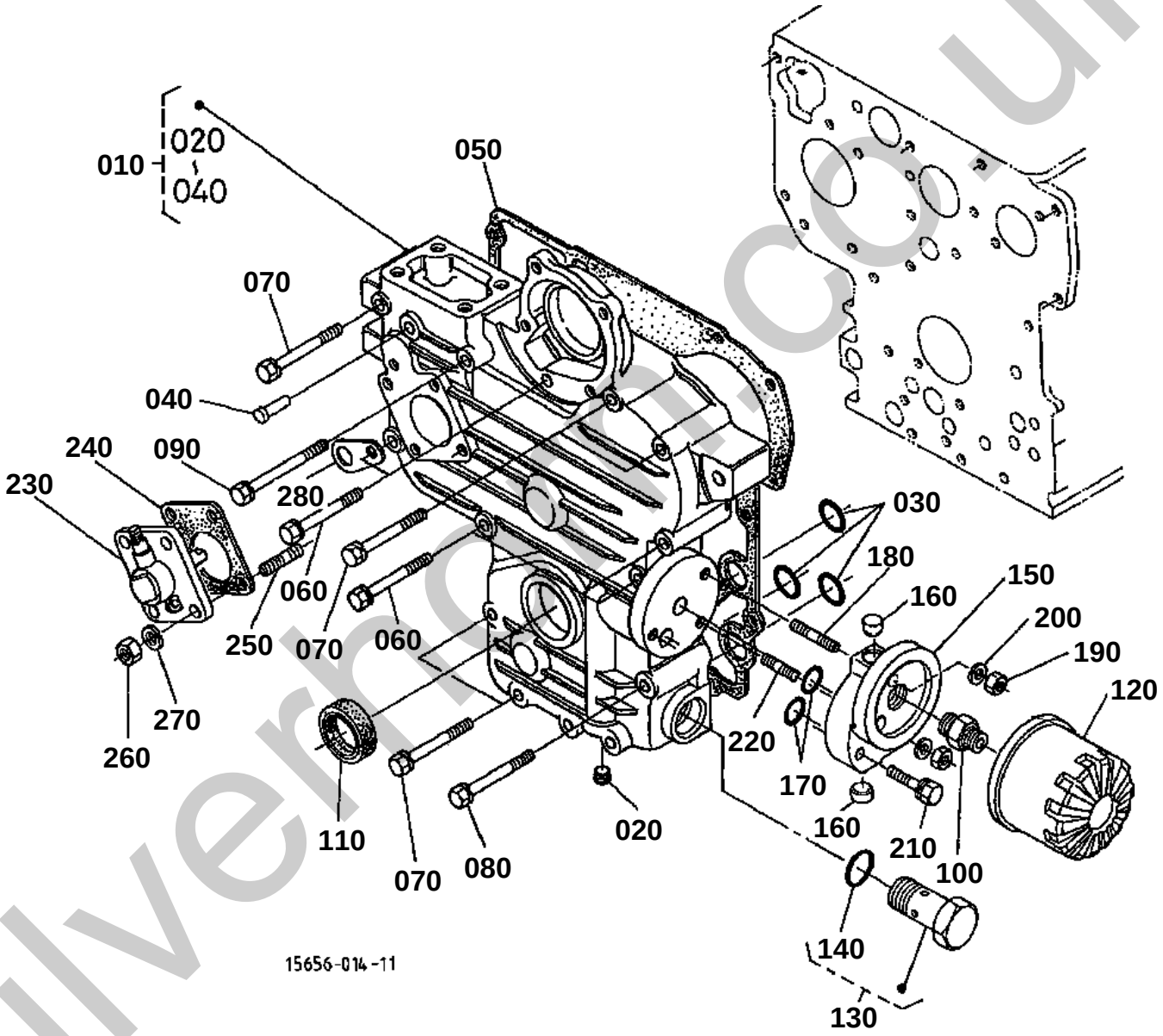

silverhome.co.uk

GEAR CASE

↔ Interchangeable; ≠ not interchangeable; ← new for old; → old for new

REF.No	Part No.	Description	Q'ty	S.No.	I/C	REMARKS	Weight (kgf)	Weight (lb)
010	15532-04022	COMP.CASE GEAR	1	<=755814			0	0
010	15532-04023	COMP.CASE GEAR	1	>=755815	←		1.9	4.18
020	15261-96020	PLUG	2	<=775308			0	0
020	16851-96010	PLUG	2	>=775309	↔		0.015	0.033
030	04811-06130	RING	3				0.001	0.0022
040	15221-56280	PIN START SPRING	1				0.006	0.0132
050	15531-04132	GASKET GEAR CASE	1	<=945299			0	0
050	15676-04130	GASKET GEAR CASE	1	>=945300	↔		0.01	0.022
060	01023-50660	BOLT	7			[A][AU][NZ]	0.01	0.022
060	01023-50660	BOLT	5			[CA]	0.01	0.022
070	01023-50665	BOLT	5			[A][AU][NZ]	0.015	0.033
070	01023-50665	BOLT	7			[CA]	0.015	0.033
080	01023-50670	BOLT	1				0	0
090	01023-50675	BOLT	1				0.01	0.022
100	15241-32290	JOINT PIPE	1				0.053	0.1166
110	15841-04140	SEAL OIL	1				0.012	0.0264
120	15241-32090	ASSY FILTER	1				0.35	0.77
130	15261-36070	ASSY VALVE RELIEF	1				0.078	0.1716
140	04810-00150	RING	1				0.001	0.0022
150	15531-32310	SUPPORT OIL FILTER	1				0.215	0.473
160	15531-33640	PLUG BLIND	2				0.006	0.0132
170	04811-05140	RING	2				0.001	0.0022
180	15221-88210	STUD	1				0.005	0.011
190	02056-50060	NUT	2				0.002	0.0044
200	04512-50060	WASHER SPRING	2				0	0
210	01023-50630	BOLT	1				0.008	0.0176
220	15531-91490	STUD	1				0.007	0.0154
230	38240-34660	ASSY GEAR CASE H/M	1				0.335	0.737
240	15221-88130	GASKET H/METER UNIT	1				0	0
250	15221-88210	STUD	4				0.005	0.011
260	02056-50060	NUT	4				0.002	0.0044
270	04512-50060	WASHER SPRING	4				0	0

silverhorn.co.uk

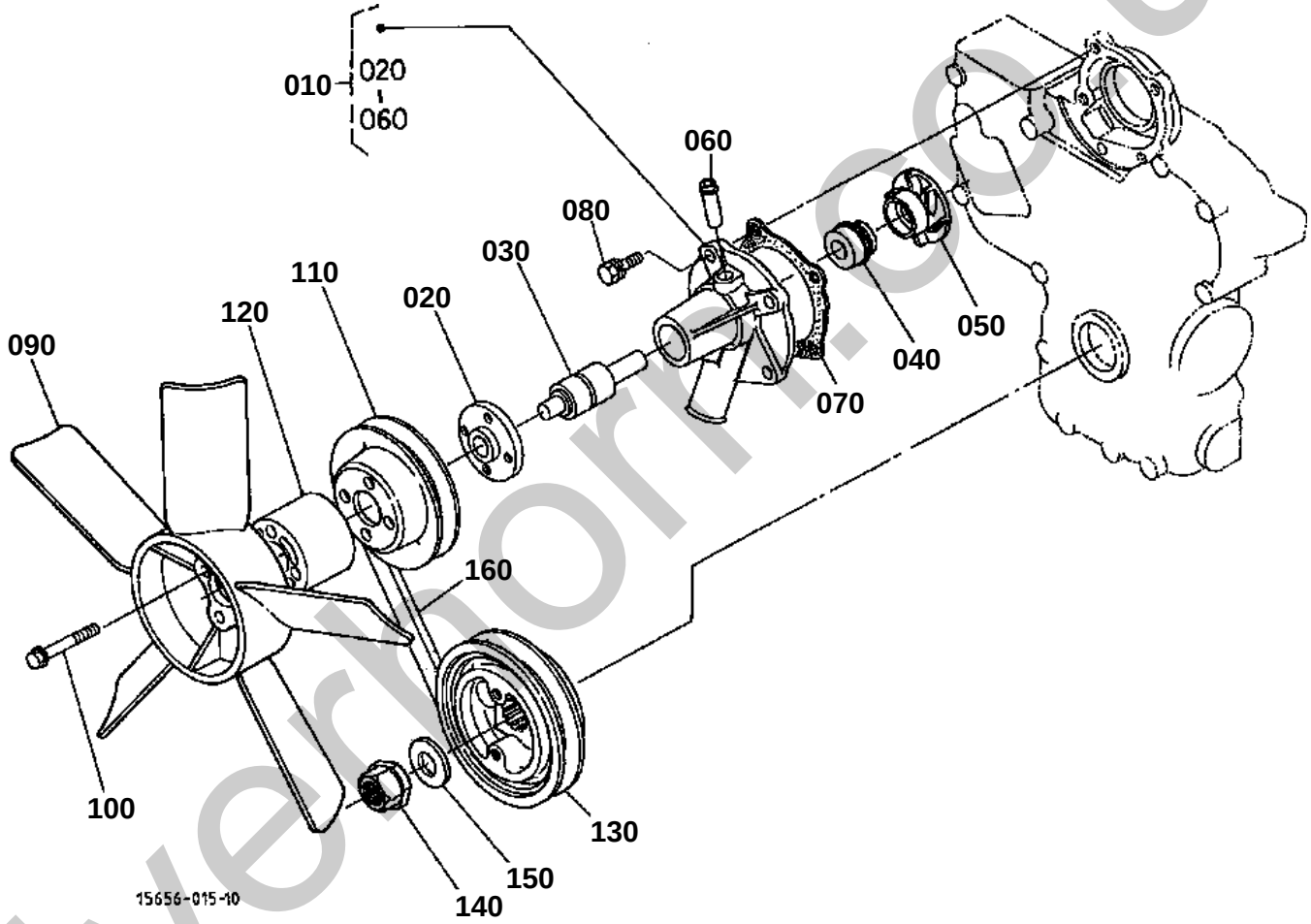

silverhorn.co.uk

WATER PUMP

↔ Interchangeable; ≠ not interchangeable; ← new for old; → old for new

REF.No	Part No.	Description	Q'ty	S.No.	I/C	REMARKS	Weight (kgf)	Weight (lb)
010	15752-73033	ASSY PUMP WATER	1	<=651889			0	0
010	15534-73030	ASSY PUMP WATER	1	>=651890	↔		0.7	1.54
020	15752-73520	FLANGE WATER PUMP	1	<=651889			0	0
020	15534-73520	FLANGE WATER PUMP	1	>=651890	≠		0.16	0.352
030	15752-73550	BEARING	1	<=651889			0	0
030	15534-73550	BEARING	1	>=651890	≠		0.15	0.33
040	19298-73050	ASSY SEAL MECHANICAL	1	<=651889			0.016	0.0352
040	15852-73050	ASSY SEAL MECHANICAL	1	>=651890	≠		0.005	0.011
050	15531-73510	IMPELLER WATER PUMP	1	<=651889			0.112	0.2464
050	15443-73510	IMPELLER WATER PUMP	1	>=651896	≠		0.12	0.264
060	16241-73340	PIPE WATER RETURN	1	<=651889			0.006	0.0132
060	15852-73340	PIPE WATER RETURN	1	>=651890	≠		0.02	0.044
070	15531-73430	GASKET WATER PUMP	1	<=945299			0	0
070	15676-73430	GASKET WATER PUMP	1	>=945300	↔		0.005	0.011
080	01023-50625	BOLT	4				0.007	0.0154
090	15694-74110	FAN	1				0.34	0.748
100	01754-50665	BOLT FLANGE	4				0.01	0.022
110	15656-74250	PULLEY FAN	1				0.24	0.528
120	15656-74152	COLLAR FAN	1				0.23	0.506
130	15752-74280	PULLEY FAN DRIVE	1				1.2	2.64
140	15752-23360	NUT CRANKSHAFT	1				0.04	0.088
150	15752-23380	WASHER CRANKSHAFT	1				0.01	0.022
160	15531-72530	BELT FAN	1			[A][AU][NZ]	0.085	0.187
160	66426-64210	V BELT	1			[CA]	0.08	0.176

silverhorn.co.uk

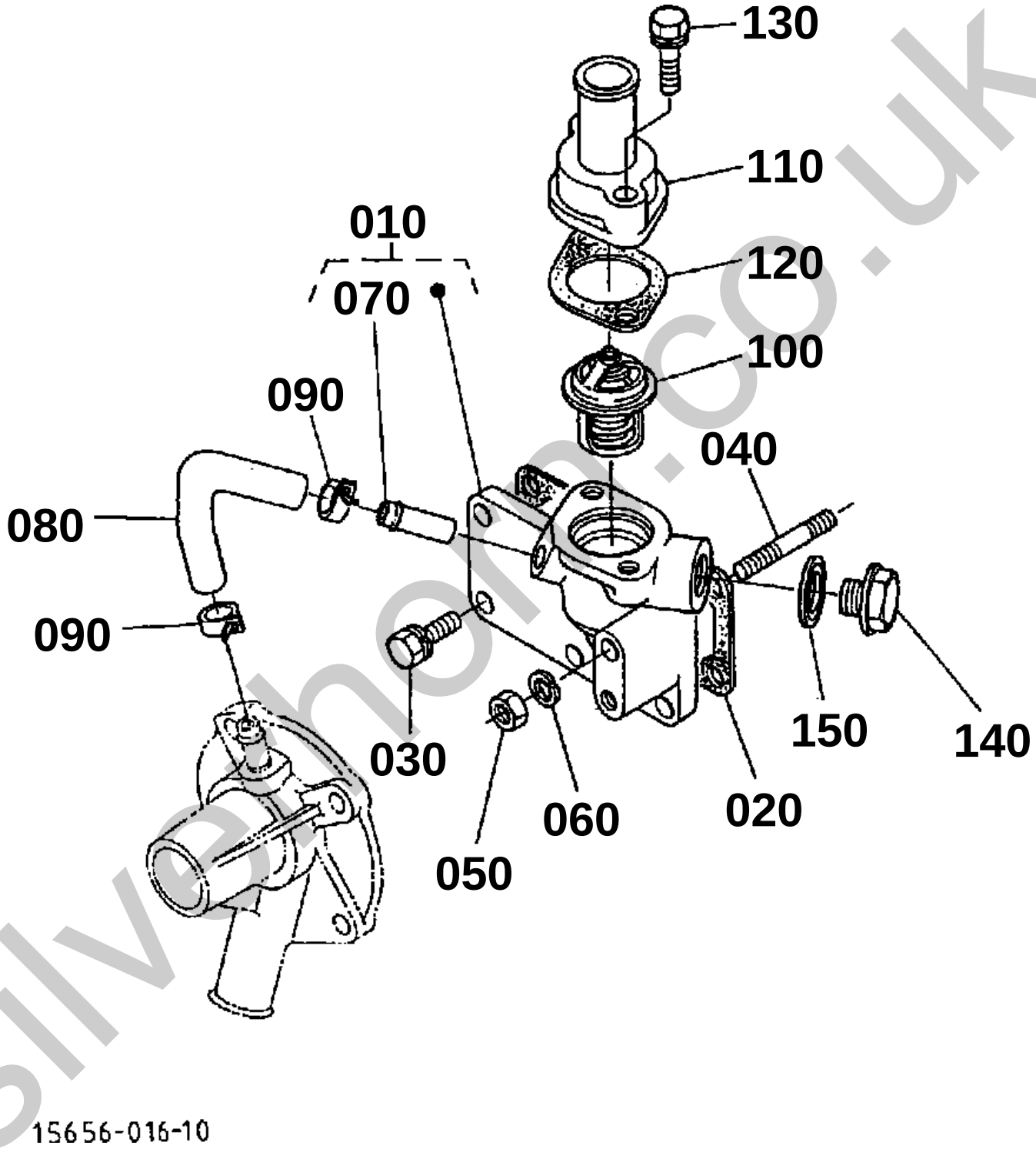

silverthorn.co.uk

WATER FLANGE

↔ Interchangeable; ≠ not interchangeable; ← new for old; → old for new

REF.No	Part No.	Description	Q'ty	S.No.	I/C	REMARKS	Weight (kgf)	Weight (lb)
010	15582-72700	COMP.FLANGE WATER	1				0.25	0.55
020	15261-72920	GASKET WATER FLANGE	1	<=945299			0	0
020	15263-72920	GASKET WATER FLANGE	1	>=945300	↔		0.003	0.0066
030	01023-50616	BOLT	5				0.005	0.011
040	01513-50655	STUD	1				0.013	0.0286
050	02056-50060	NUT	1				0.002	0.0044
060	04512-50060	WASHER SPRING	1				0	0
070	16241-73340	PIPE WATER RETURN	1	<=801709			0.006	0.0132
070	16241-73370	PIPE WATER RETURN	1	>=801710	≠		0.007	0.0154
080	15531-73350	PIPE WATER RETURN	1				0.02	0.044
090	15531-73360	BAND PIPE	2	<=669962			0.007	0.0154
090	16241-73360	BAND PIPE	2	>=669963	↔		0.003	0.0066
100	15531-73010	ASSY THERMOSTAT	1				0.07	0.154
110	15531-73260	COVER THERMOSTAT	1				0.068	0.1496
120	15531-73270	GASKET	1	<=805384			0	0
120	15676-73270	GASKET THERMOSTAT	1	>=805385	↔		0.005	0.011
130	01023-50635	BOLT	2				0.01	0.022
140	06311-25030	PLUG	1				0.051	0.1122
150	04724-00170	GASKET	1				0.005	0.011

silverhorn.co.uk

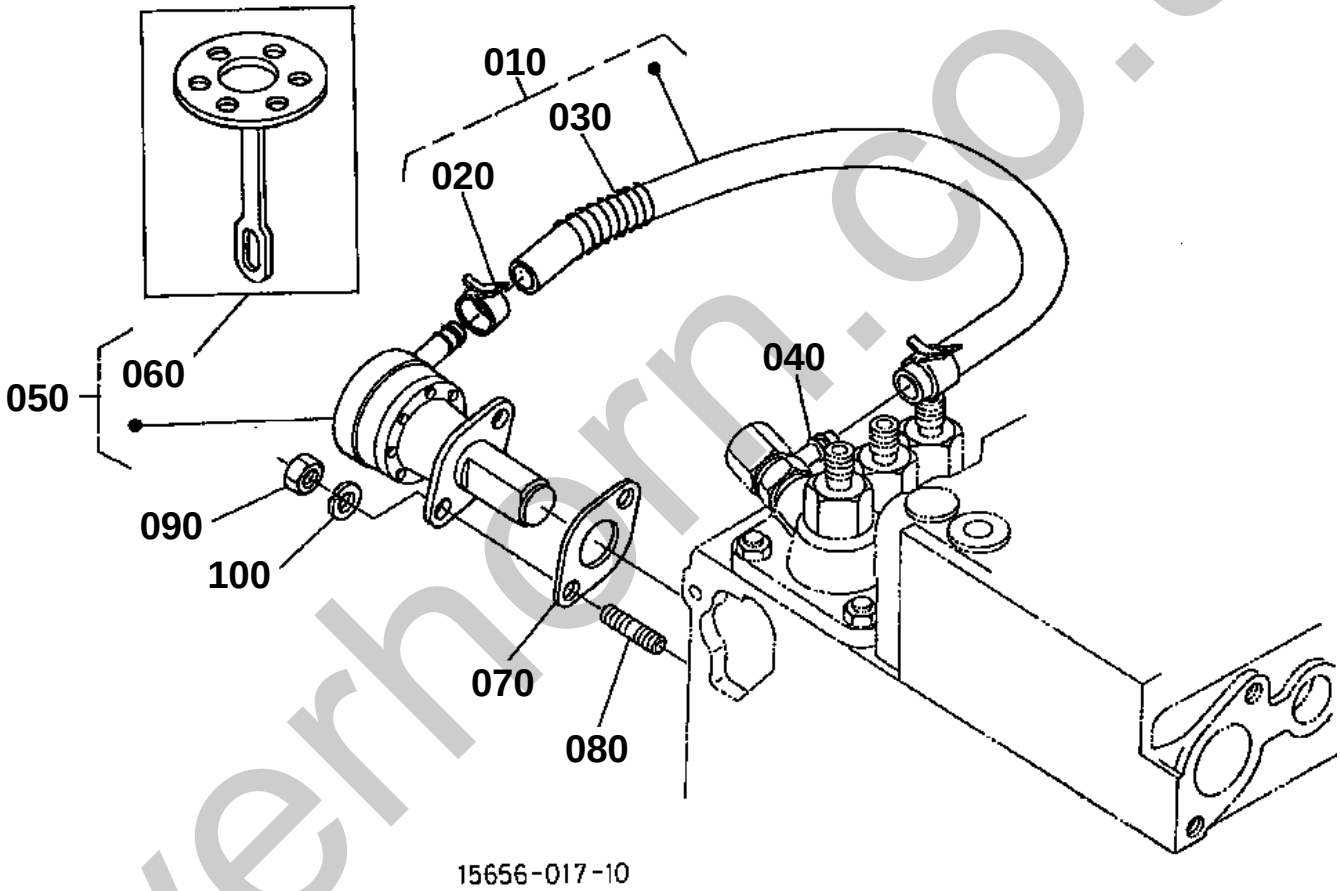

silverhorn.co.uk

FUEL PUMP

↔ Interchangeable; ≠ not interchangeable; ← new for old; → old for new

REF.No	Part No.	Description	Q'ty	S.No.	I/C	REMARKS	Weight (kgf)	Weight (lb)
010	15263-42010	ASSY PIPE FUEL	1				0.04	0.088
020	14301-42750	CLIP PIPE	2				0.005	0.011
030	66591-54250	SPRING PIPE PROTECT.	1				0.01	0.022
040	14111-42410	JOINT EYE	1				0.025	0.055
050	15381-52030	ASSY PUMP FUEL	1	<=945299			0	0
050	15263-52030	ASSY PUMP FUEL	1	>=945300	↔		0.23	0.506
060	15381-52040	COMP.DIAPHRAGM	1	<=945299			0	0
060	15263-52040	COMP.DIAPHRAGM	1	>=945300	↔		0.02	0.044
070	15241-52140	GASKET FUEL PUMP	1	<=945299			0	0
070	15263-52140	GASKET FUEL PUMP	1	>=945300	↔		0.001	0.0022
080	01513-50616	STUD	2				0.004	0.0088
090	02056-50060	NUT	2				0.002	0.0044
100	04512-50060	WASHER SPRING	2				0	0

silverhorn.co.uk

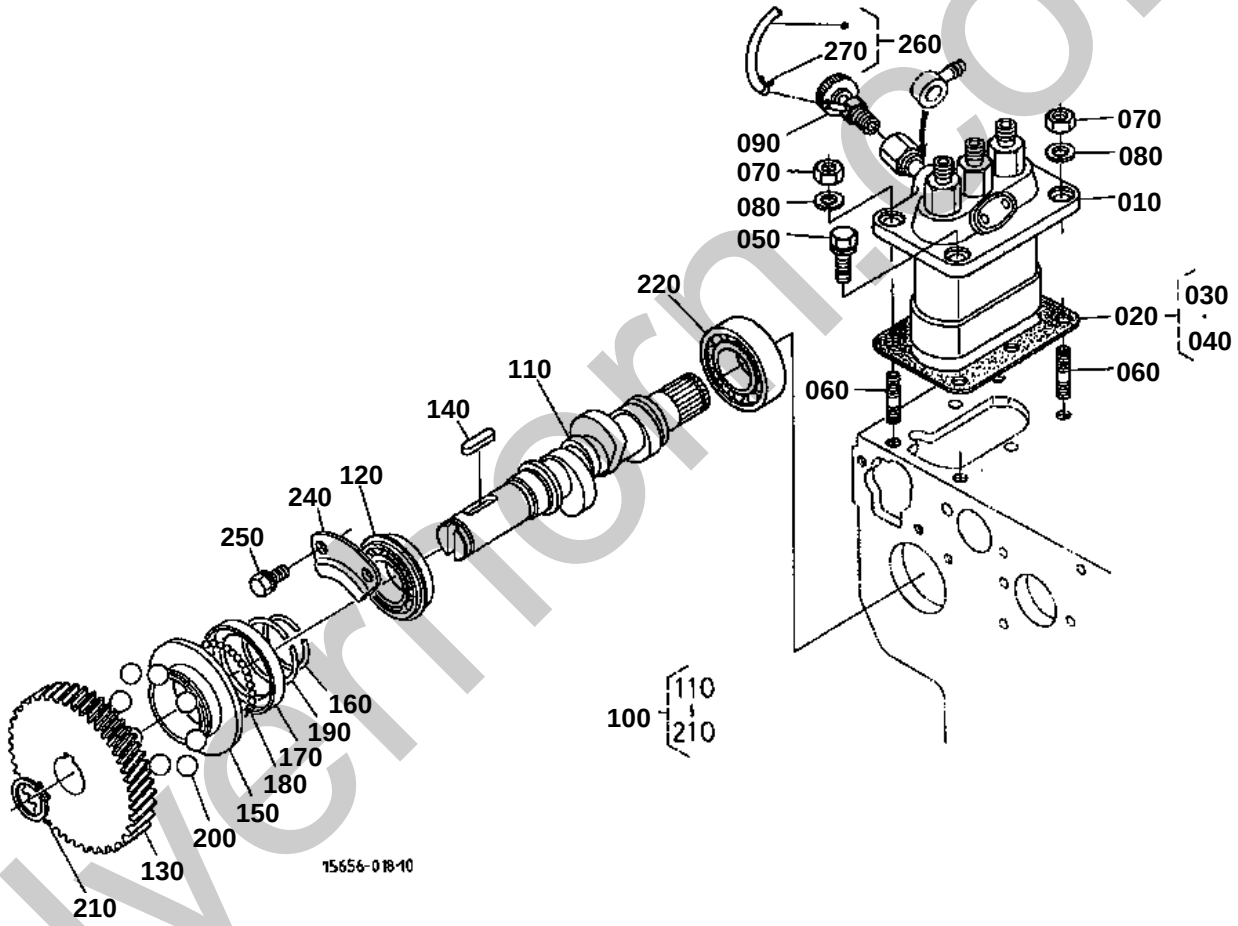

silvermorn.co.uk

↔ Interchangeable; ≠ not interchangeable; ← new for old; → old for new

REF.No	Part No.	Description	Q'ty	S.No.	I/C	REMARKS	Weight (kgf)	Weight (lb)
010	15531-51010	ASSY PUMP INJECTION	1			REFER TO L.No.0B13-R0 FOR COMPONENTS.	2.1	4.62
020	19491-52100	ASSY SHIM INJECTION	1				0.035	0.077
030	16414-52090	SHIM INJECTION PUMP	1				0.001	0.0022
040	15531-52110	SHIM INJECTION PUMP	3				0.005	0.011
050	01123-50822	BOLT	2				0.012	0.0264
060	15221-91530	STUD	2				0.011	0.0242
070	02156-50080	NUT	2				0.004	0.0088
080	04512-50080	WASHER SPRING	2				0.001	0.0022
090	14311-60504	ASSY COCK JET START	1				0.034	0.0748
100	15532-16020	ASSY CAMSHAFT FUEL	1				1.2	2.64
110	15532-16170	CAMSHAFT FUEL	1				0.53	1.166
120	08153-06004	BEARING BALL	1				0.07	0.154
130	15261-51150	GEAR INJECTION PUMP	1				0.463	1.0186
140	05712-00520	KEY FEATHER	1				0.004	0.0088
150	15261-55450	SLEEVE GOVERNOR	1				0.058	0.1276
160	15261-55470	CIR-CLIP GOV. SLEEVE	1				0.002	0.0044
170	15261-55690	CASE GOVERNOR BALL	1	<=778923			0	0
170	15549-55690	CASE GOVERNOR BALL	1	>=778924	↔		0.62	1.364
180	07715-03205	BALL	30				0.001	0.0022
190	15261-55740	CIR-CLIP	1				0.002	0.0044
200	07715-03217	BALL	8				0.01	0.022
210	04612-00180	CIRCLIP EXTERNAL	1				0.001	0.0022
220	08103-06004	BEARING BALL	1				0.066	0.1452
240	15261-16320	STOPPER FUEL.C/SHAFT	1				0.037	0.0814
250	01023-50612	BOLT	2				0.005	0.011
260	15531-42870	ASSY PIPE JET START	1				0.02	0.044
270	10244-42320	CLIP PIPE	2				0.001	0.0022

silverhorn.co.uk

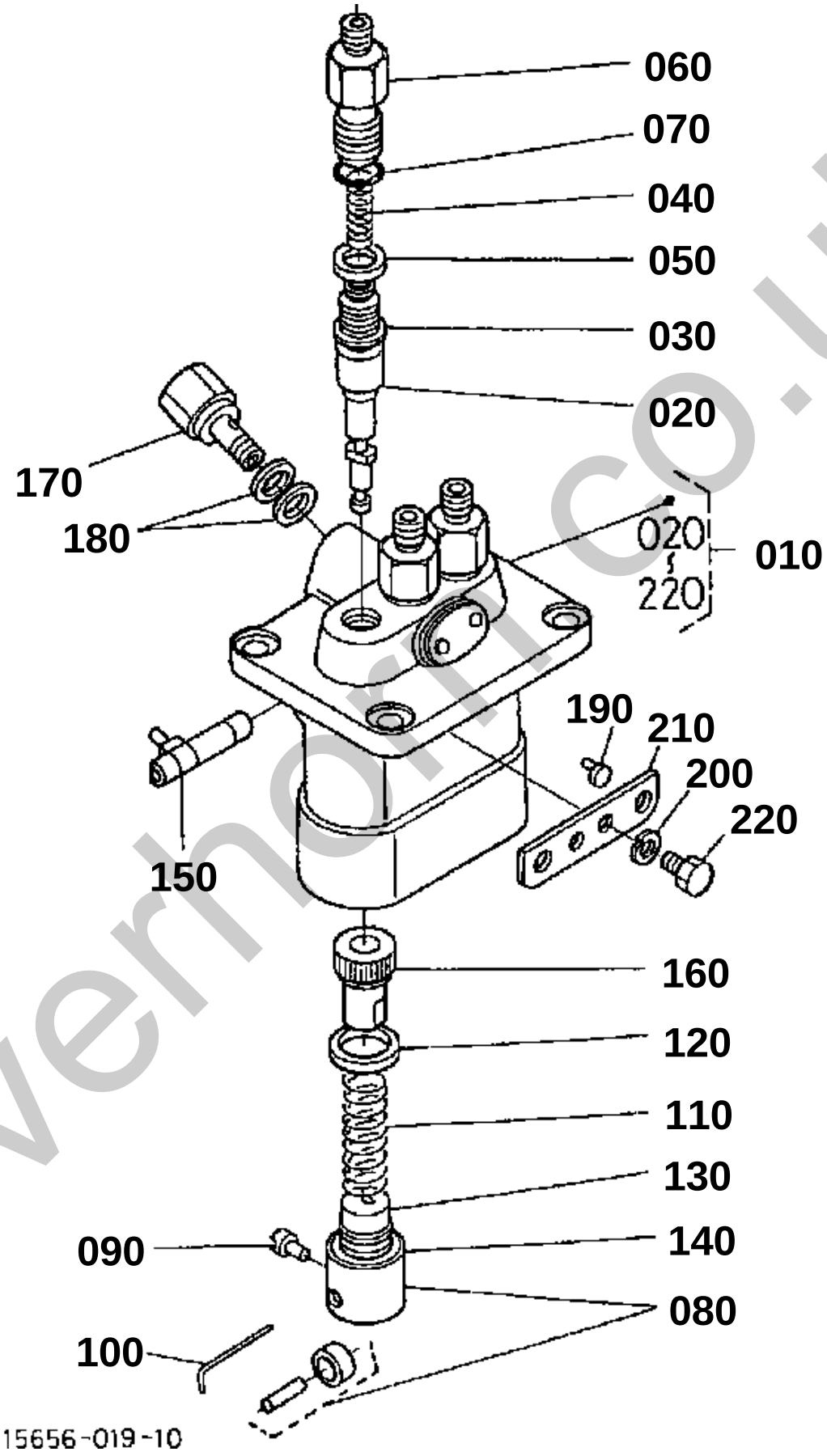

silverhorn.co.uk

↔ Interchangeable; ≠ not interchangeable; ← new for old; → old for new

REF.No	Part No.	Description	Q'ty	S.No.	I/C	REMARKS	Weight (kgf)	Weight (lb)
010	15531-51010	ASSY PUMP INJECTION	1				2.1	4.62
020	15261-51050	PLUNGER PUMP	3				0.04	0.088
030	15261-51030	VALVE DELIVERY	3				0.011	0.0242
040	15331-51230	SPRING DELIV.VALVE	3				0.001	0.0022
050	15331-51240	GASKET DELIV.VALVE	3				0.001	0.0022
060	15331-51220	HOLDER DELIV.VALVE	3				0.053	0.1166
070	15331-96760	O RING	3				0.001	0.0022
080	15331-51070	ASSY TAPPET	3				0.036	0.0792
090	15331-51250	PIN TAPPET GUIDE	3				0.001	0.0022
100	15331-51430	PIN CLAMP	1				0.001	0.0022
110	17331-51280	SPRING PLUNGER	3				0.017	0.0374
120	15331-51270	SEAT SPRING UPPER	3				0.001	0.0022
130	15331-51290	SEAT SPRING LOWER	3				0.001	0.0022
140	15381-51490	SHIM	3				0.008	0.0176
150	15331-51062	RACK CONTROL	1				0.04	0.088
160	15331-51380	SLEEVE CONTROL	3				0.012	0.0264
170	15531-51320	SCREW FOLLOW	1				0.034	0.0748
180	15331-96650	GASKET	2				0.001	0.0022
190	15331-51480	COLLAR	2				0.005	0.011
200	15381-94090	WASHER SPRING	2				0.002	0.0044
210	15381-51390	PLATE ADJUSTING	1				0.008	0.0176
220	15331-91010	BOLT	2				0.034	0.0748

silverhorn.co.uk

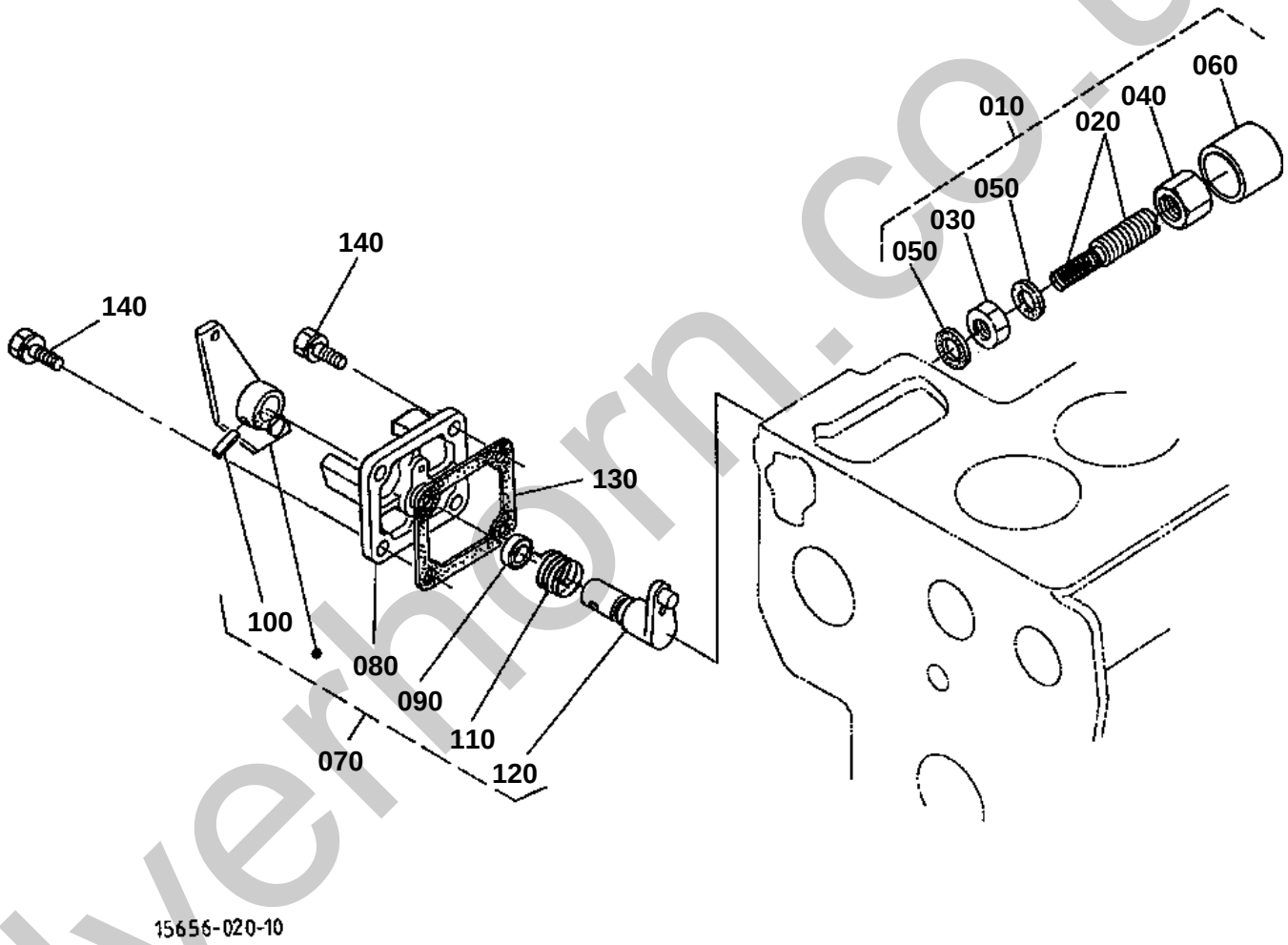

silverthorn.co.uk

ENGINE STOP LEVER

↔ Interchangeable; ≠ not interchangeable; ← new for old; → old for new

REF.No	Part No.	Description	Q'ty	S.No.	I/C	REMARKS	Weight (kgf)	Weight (lb)
010	15752-54092	ASSY APPARATUS I/D.	1				0.03	0.066
020	15752-54102	ASSY BOLT ADJUSTING	1				0.01	0.022
030	15261-92020	NUT	1				0.004	0.0088
040	15261-92330	NUT CAP	1				0.01	0.022
050	15021-33660	GASKET	2				0.001	0.0022
060	15261-54270	CAP	1				0.002	0.0044
070	15738-57702	ASSY LEVER ENG.STOP	1	<=732040			0	0
070	15738-57706	ASSY LEVER ENG.STOP	1	>=732041	←		0.15	0.33
080	15949-51650	COVER INJECTION PUMP	1	<=732040			0	0
080	15949-51654	COVER INJECTION PUMP	1	>=732041	←		0.1	0.22
090	15471-57980	SEAL OIL	1				0.001	0.0022
100	05411-00420	PIN SPRING	1				0.001	0.0022
110	15738-57920	SPRING RETURN	1				0.002	0.0044
120	15949-57740	SHAFT LEVER	1				0.04	0.088
130	15231-05130	GASKET BREATHER	1	<=945299			0	0
130	15263-05130	GASKET BREATHER	1	>=945300	↔		0.001	0.0022
140	01023-50618	BOLT	4				0.006	0.0132

silverhorn.co.uk

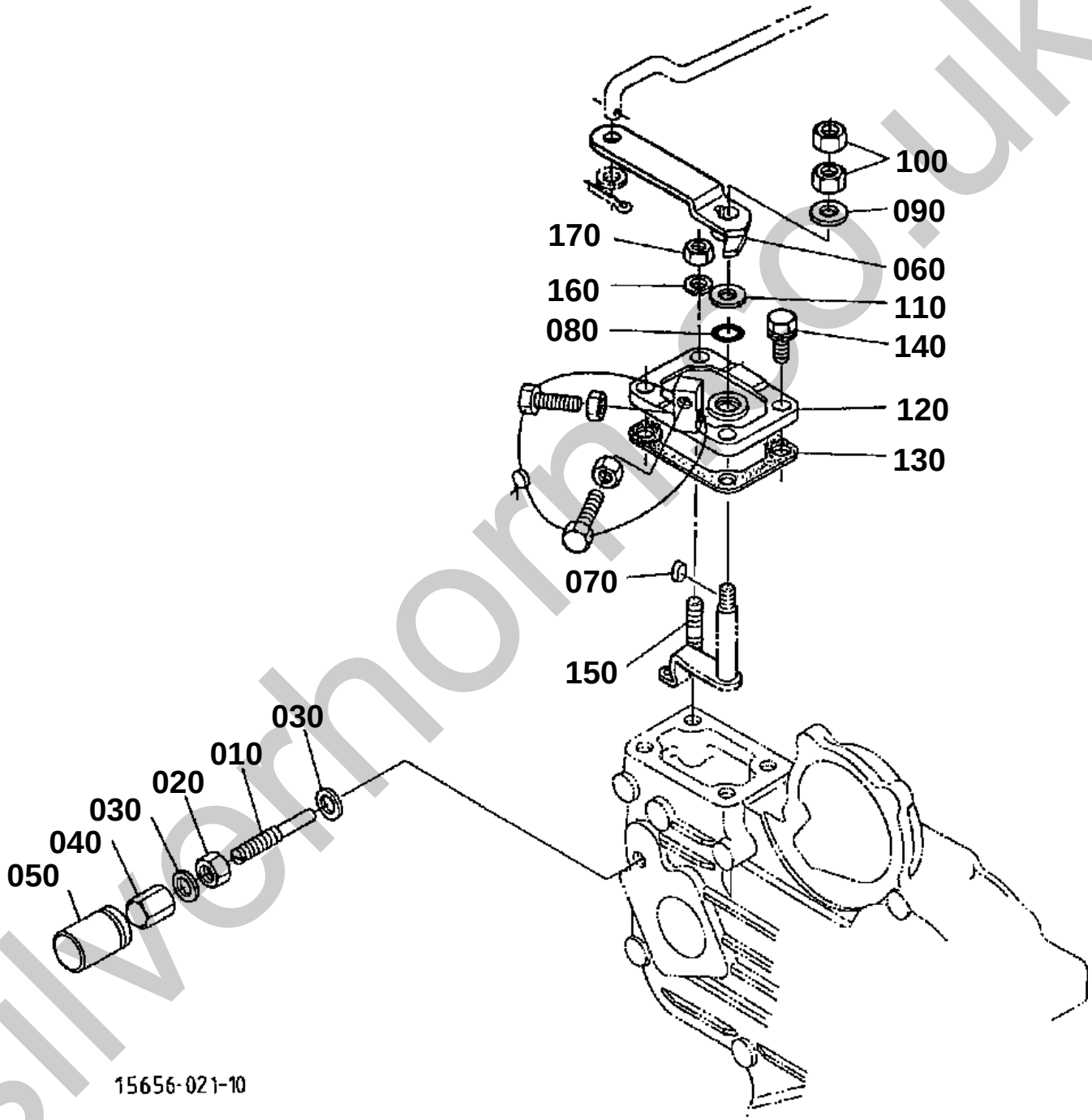

silvernorm.co.uk

SPEED CONTROL PLATE

↔ Interchangeable; ≠ not interchangeable; ← new for old; → old for new

REF.No	Part No.	Description	Q'ty	S.No.	I/C	REMARKS	Weight (kgf)	Weight (lb)
010	15531-54120	BOLT ADJUSTING	1				0.009	0.0198
020	15531-92030	NUT	1				0.005	0.011
030	15601-96650	GASKET	2				0.001	0.0022
040	15601-54220	NUT CAP	1	<=697417			0	0
040	15841-14620	NUT CAP	1	>=697418	↔		0.01	0.022
050	16241-54420	CAP	1	<=924784			0.004	0.0088
050	16221-54420	CAP	1	>=924785	↔		0.001	0.0022
060	15656-57150	LEVER SPEED CONTROL	1	<=633345			0.035	0.077
060	15656-57152	LEVER SPEED CONTROL	1	>=633346	≠		0.07	0.154
070	15261-95010	KEY FEATHER	1	<=633345			0.001	0.0022
070	05712-00410	KEY FEATHER	1	>=633346	≠		0.001	0.0022
080	04811-00070	RING	1				0.001	0.0022
090	04013-50060	WASHER PLAIN	1				0	0
100	02012-50060	NUT	2				0	0
110	15261-57380	DISK FRICTION	1	<=633345			0	0
110	15261-94010	WASHER PLAIN	1	>=633346	≠		0.002	0.0044
120	15531-57110	PLATE SPEED CONTROL	1				0.06	0.132
130	15261-57210	GASKET	1	<=945299			0	0
130	15263-57210	GASKET	1	>=945300	↔		0.001	0.0022
140	01023-50620	BOLT	3				0.006	0.0132
150	15221-88210	STUD	1				0.005	0.011
160	04512-50060	WASHER SPRING	1				0	0
170	02056-50060	NUT	1				0.002	0.0044

silverhorn.co.uk

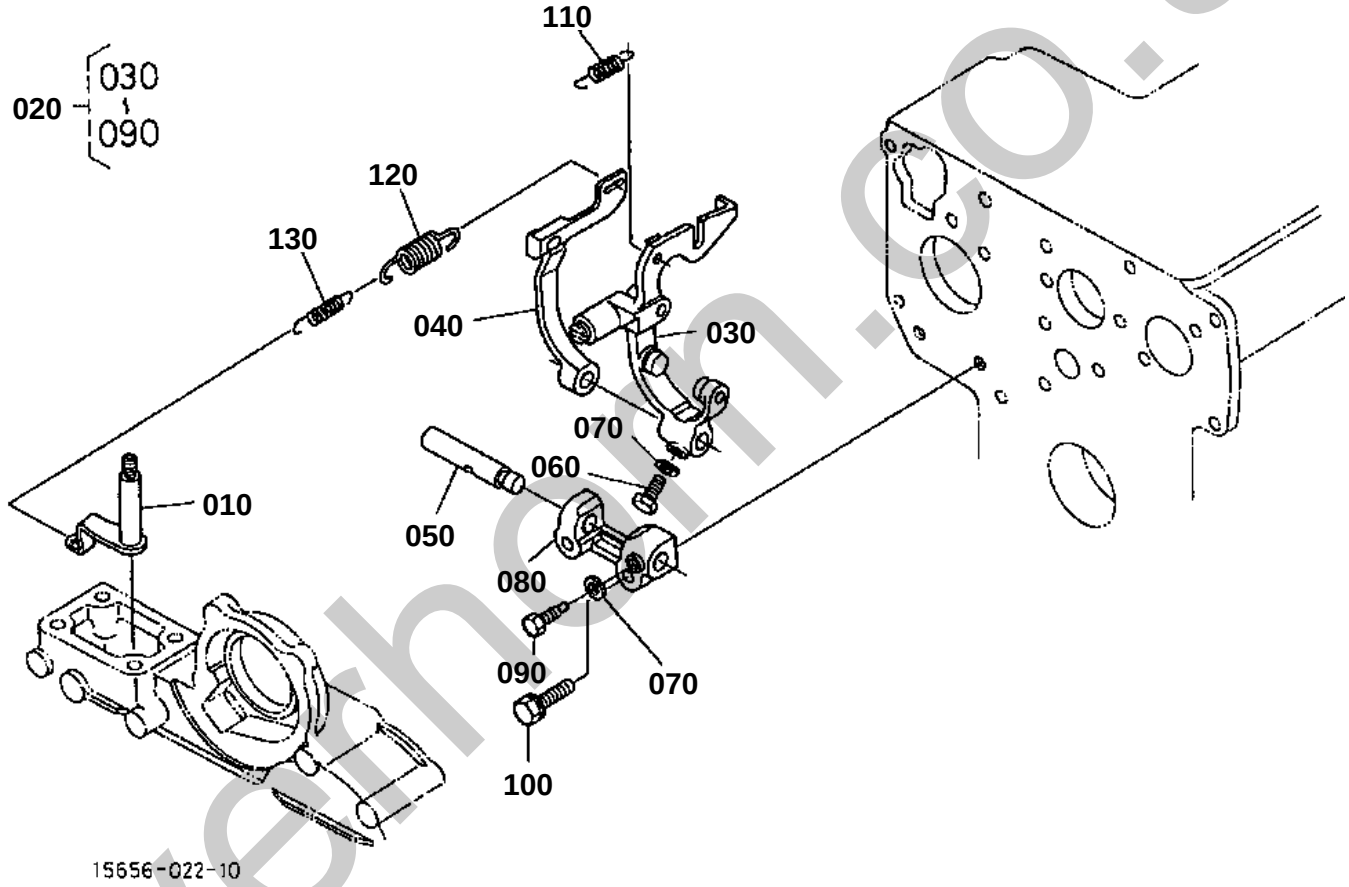

silverham.co.uk

GOVERNOR

↔ Interchangeable; ≠ not interchangeable; ← new for old; → old for new

REF.No	Part No.	Description	Q'ty	S.No.	I/C	REMARKS	Weight (kgf)	Weight (lb)
010	15531-56020	COMP.LEVER GOVERNOR	1	<=633345			0.026	0.0572
010	15531-56022	COMP.LEVER GOVERNOR	1	>=633346	≠		0.02	0.044
020	15694-56050	ASSY LEVER FORK	1				0.3	0.66
030	15694-56040	COMP.LEVER FORK	1				0.16	0.352
040	15531-56130	LEVER FORK	1				0.075	0.165
050	15261-56150	SHAFT FORK LEVER	1				0.032	0.0704
060	01053-50516	BOLT	1				0.003	0.0066
070	04512-50050	WASHER SPRING	2				0	0
080	15261-56230	HOLDER FORK LEVER	1				0.038	0.0836
090	15261-66410	BOLT	1				0.003	0.0066
100	01023-50628	BOLT	2				0.015	0.033
110	15221-56480	SPRING START	1				0.008	0.0176
120	15531-56410	SPRING GOVERNOR	1				0.007	0.0154
130	15531-56420	SPRING GOVERNOR	1				0.003	0.0066

silverhorn.co.uk

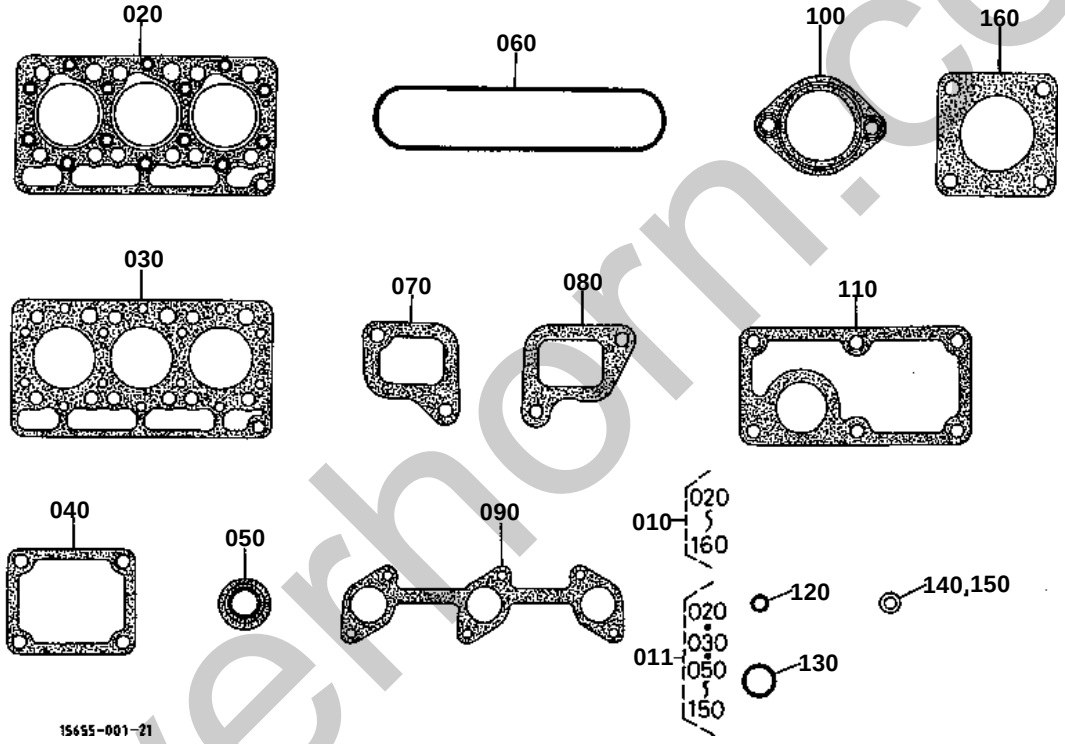

silverhorn.co.uk

UPPER GASKET KIT

↔ Interchangeable; ≠ not interchangeable; ← new for old; → old for new

REF.No	Part No.	Description	Q'ty	S.No.	I/C	REMARKS	Weight (kgf)	Weight (lb)
011	07916-24382	KIT GASKET UPPER	1	<=945299	↔	ASBESTOS	0	0
011	07916-24385	KIT GASKET UPPER	1	>=945300		NON ASBESTOS	0.26	0.572
020	15978-03310	GASKET CYLINDER HEAD	1	<=945299			0	0
020	15676-03310	GASKET CYLINDER HEAD	1	>=945300	↔		0.065	0.143
030	15531-03320	SHIM CYL.HEAD GASKET	1				0.03	0.066
050	15261-13150	SEAL VALVE STEM	6				0.001	0.0022
060	15381-14520	GASKET HEAD COVER	1				0.005	0.011
070	15261-11830	GASKET IN-MANIFOLD	2	<=945299			0	0
070	15263-11830	GASKET IN-MANIFOLD	2	>=945300	↔		0.001	0.0022
080	15261-11820	GASKET IN-MANIFOLD	1	<=945299			0	0
080	15263-11820	GASKET IN-MANIFOLD	1	>=945300	↔		0.001	0.0022
090	15381-12360	GASKET EX-MANIFOLD	1	<=945299			0	0
090	15676-12350	GASKET EX-MANIFOLD	1	>=945300	↔		0.017	0.0374
100	15676-73270	GASKET THERMOSTAT	1				0.005	0.011
110	15261-72920	GASKET WATER FLANGE	1	<=945299			0	0
110	15263-72920	GASKET WATER FLANGE	1	>=945300	↔		0.003	0.0066
120	15221-33700	O RING	1				0.001	0.0022
130	04811-50300	O RING	1				0.001	0.0022
140	17011-53620	GASKET	3				0.003	0.0066
150	15951-96660	GASKET	3				0.001	0.0022
160	15263-12370	GASKET MUFFLER	3				0.015	0.033

silverhorn.co.uk

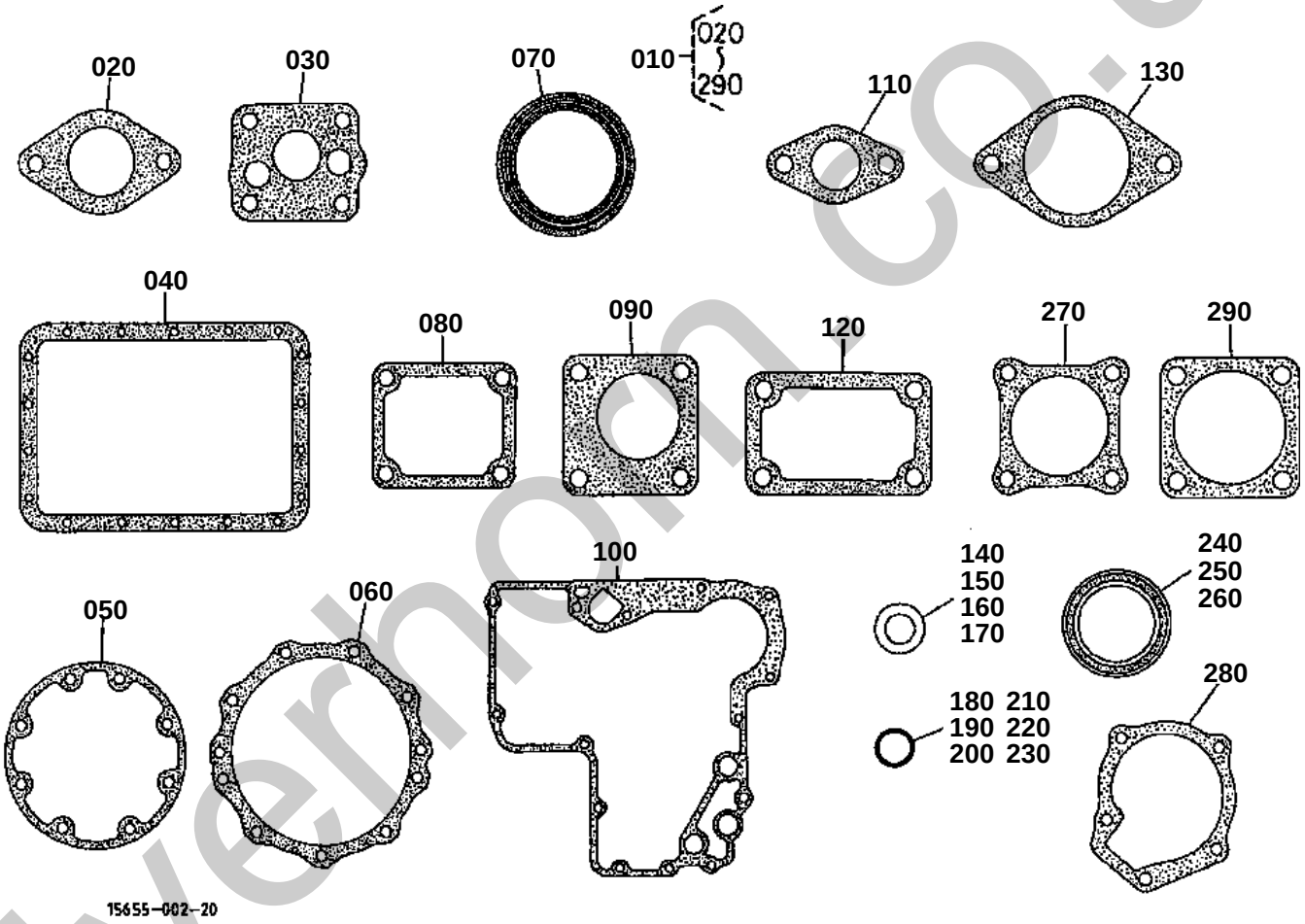

silvernorn.co.uk

LOWER GASKET KIT

↔ Interchangeable; ≠ not interchangeable; ← new for old; → old for new

REF.No	Part No.	Description	Q'ty	S.No.	I/C	REMARKS	Weight (kgf)	Weight (lb)
010	07916-29990	KIT GASKET LOWER	1	<=945299		ASBESTOS	0	0
010	07916-29995	KIT GASKET LOWER	1	>=945300	↔	NON ASBESTOS	0.22	0.484
020	15261-73920	GASKET WATER COVER	1	<=945299			0	0
020	15263-73920	GASKET WATER COVER	1	>=945300	↔		0.002	0.0044
030	15261-35150	GASKET OIL PUMP	1	<=945299			0	0
030	15263-35150	GASKET OIL PUMP	1	>=945300	↔		0.001	0.0022
040	15381-01620	GASKET OIL PAN	1	<=945299			0	0
040	15679-01620	GASKET OIL PAN	1	>=945300	↔		0.025	0.055
050	15261-04360	GASKET BRG.CASE	1	<=945299			0	0
050	15263-04360	GASKET BRG.CASE	1	>=945300	↔		0.005	0.011
060	15261-04820	GASKET BRG.CASE COV.	1	<=945299			0	0
060	15263-04820	GASKET BRG.CASE COV.	1	>=945300	↔		0.001	0.0022
070	19215-04460	SEAL OIL	1				0.03	0.066
080	15231-05130	GASKET BREATHER	1	<=945299			0	0
080	15263-05130	GASKET BREATHER	1	>=945300	↔		0.001	0.0022
090	15221-88130	GASKET H/METER UNIT	1	<=945299			0	0
090	15296-88130	GASKET H/METER UNIT	1	>=945300	↔		0.002	0.0044
100	15531-04132	GASKET GEAR CASE	1	<=945299			0	0
100	15676-04130	GASKET GEAR CASE	1	>=945300	↔		0.01	0.022
110	15241-52140	GASKET FUEL PUMP	1	<=945299			0	0
110	15263-52140	GASKET FUEL PUMP	1	>=945300	↔		0.001	0.0022
120	15261-57210	GASKET	1	<=945299			0	0
120	15263-57210	GASKET	1	>=945300	↔		0.001	0.0022
130	66591-51160	GASKET	1	<=945299			0	0
130	66905-51160	GASKET	1	>=945300	↔		0.002	0.0044
140	04714-00100	GASKET	2				0.002	0.0044
150	15109-33660	GASKET	1				0.001	0.0022
160	15601-96650	GASKET	2				0.001	0.0022
170	15021-33660	GASKET	2				0.001	0.0022
180	04811-00140	O RING	1				0.001	0.0022
190	04811-05140	O RING	2				0.001	0.0022
200	04811-06130	O RING	3				0.001	0.0022
210	04810-00150	O RING	1				0.001	0.0022
220	04811-00070	O RING	1				0.001	0.0022
230	04811-05230	O RING	1				0.001	0.0022
240	09400-14247	SEAL OIL	1				0.004	0.0088
250	15471-57980	SEAL OIL	1				0.001	0.0022
260	15841-04140	SEAL OIL	1				0.012	0.0264
270	15231-87130	GASKET HYD.PUMP	1	<=945299			0	0
270	15263-87130	GASKET HYD.PUMP	1	>=945300	↔		0.005	0.011
280	15531-73430	GASKET WATER PUMP	1	<=945299			0	0
280	15676-73430	GASKET WATER PUMP	1	>=945300	↔		0.005	0.011
290	67810-36420	GASKET	1	<=945299			0	0
290	66385-36420	GASKET	1	>=945300	↔		0.01	0.022

silverhorn.co.uk

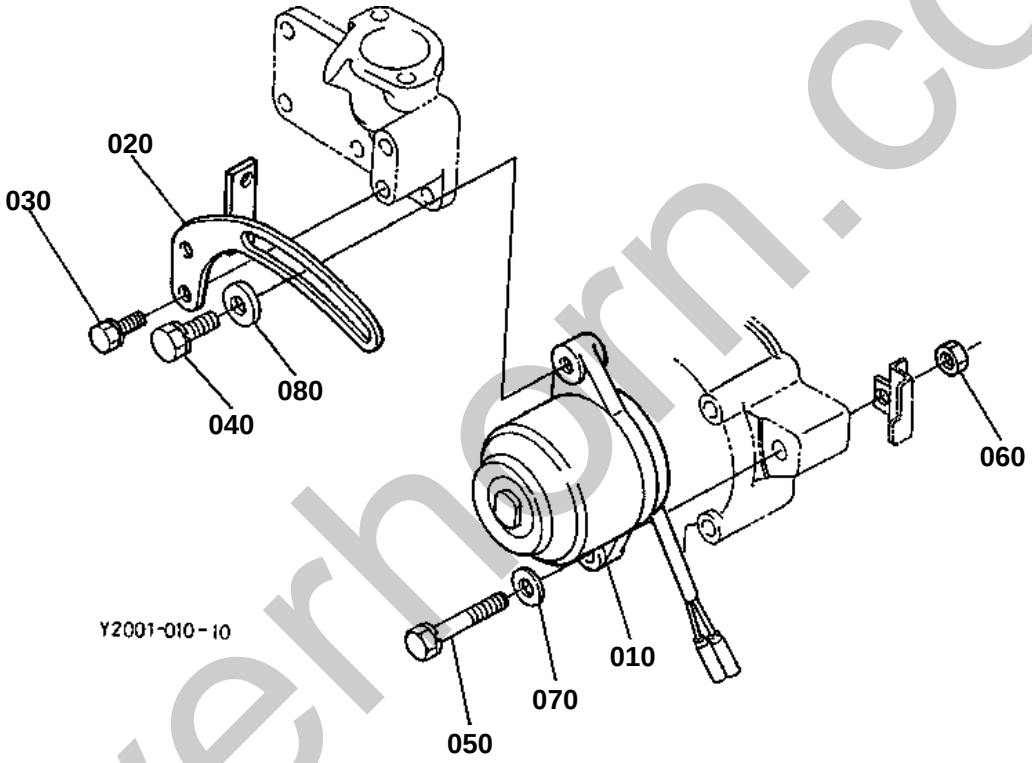

silverhorn.co.uk

↔ Interchangeable; ≠ not interchangeable; ← new for old; → old for new

REF.No	Part No.	Description	Q'ty	S.No.	I/C	REMARKS	Weight (kgf)	Weight (lb)
010	15531-64010	ASSY DYNAMO	1			REFER TO L.No.0C06-L0 FOR COMPONENTS.	1.4	3.08
020	15655-64420	STAY DYNAMO	1				0.11	0.242
030	01023-50616	BOLT	1				0.005	0.011
040	01123-50825	BOLT	1				0.013	0.0286
050	01123-50860	BOLT	1				0.026	0.0572
060	02056-50080	NUT	1				0.005	0.011
070	04013-50080	WASHER PLAIN	1				0	0
080	04015-50080	WASHER PLAIN	1				0	0

silverhorn.co.uk

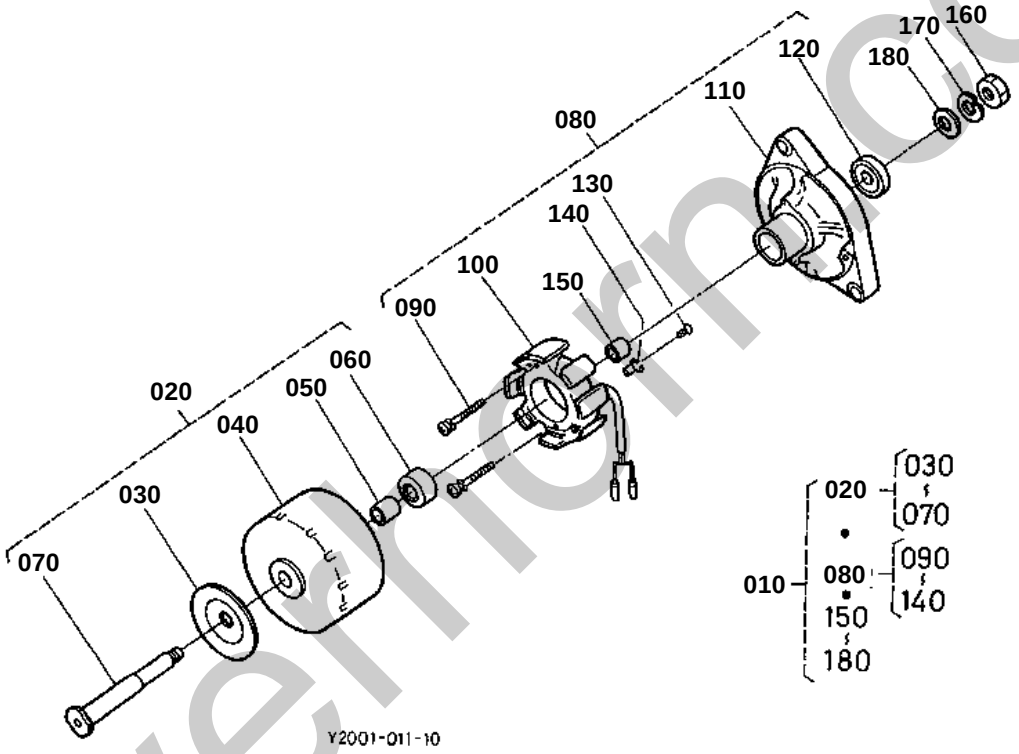

silvermoto.co.uk

↔ Interchangeable; ≠ not interchangeable; ← new for old; → old for new

REF.No	Part No.	Description	Q'ty	S.No.	I/C	REMARKS	Weight (kgf)	Weight (lb)
010	15531-64010	ASSY DYNAMO	1				1.4	3.08
020	15531-64122	COMP ROTOR	1				0.76	1.672
030	15531-64110	PULLEY	1				0.15	0.33
040	15531-64040	ROTOR	1				0.5	1.1
050	15531-64140	COLLAR	1				0.025	0.055
060	15531-74180	BEARING BALL	2				0.04	0.088
070	15531-74140	SHAFT FAN	1				0.075	0.165
080	15531-64363	COMP.STATOR	1				0.555	1.221
090	15261-93010	SCREW ROUND HEAD	2				0.003	0.0066
100	15531-64292	STATOR	1				0.29	0.638
110	15531-64072	PLATE	1				0.3	0.66
120	15531-74180	BEARING BALL	1				0.04	0.088
130	15531-93010	SCREW ROUND HEAD	1				0.002	0.0044
140	15531-64190	CLAMP CORD	1				0.005	0.011
150	15261-64150	COLLAR	1				0.02	0.044
160	15261-92030	NUT	1				0.01	0.022
170	15261-94070	WASHER SPRING	1				0.003	0.0066
180	15261-94020	WASHER PLAIN	1				0.007	0.0154

silverhorn.co.uk

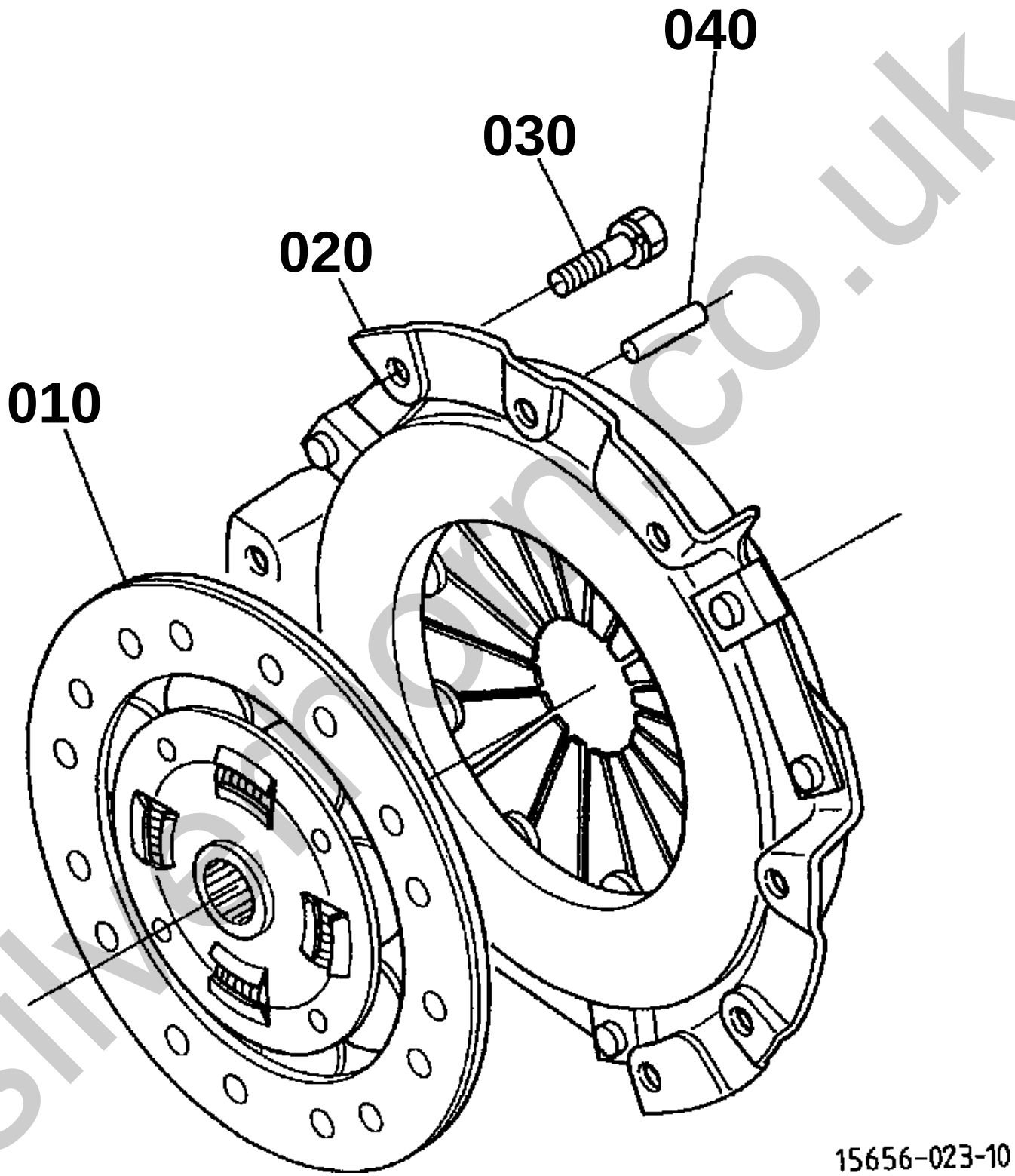

silverhomco.uk

CLUTCH

↔ Interchangeable; ≠ not interchangeable; ← new for old; → old for new

REF.No	Part No.	Description	Q'ty	S.No.	I/C	REMARKS	Weight (kgf)	Weight (lb)
010	67401-13400	ASSY DISK CLUTCH	1	<=870440			0	0
010	66436-13400	ASSY DISK CLUTCH	1	>=870441	↔		0	0
010	67980-13400	ASSY DISK CLUTCH	1	>=941203	↔		0.88	1.936
020	67211-13300	ASSY PLATE PRESSURE	1				2.7	5.94
030	01123-60816	BOLT	6				0.01	0.022
040	05012-00814	PIN STRAIGHT	3				0.006	0.0132

silverhorn.co.uk

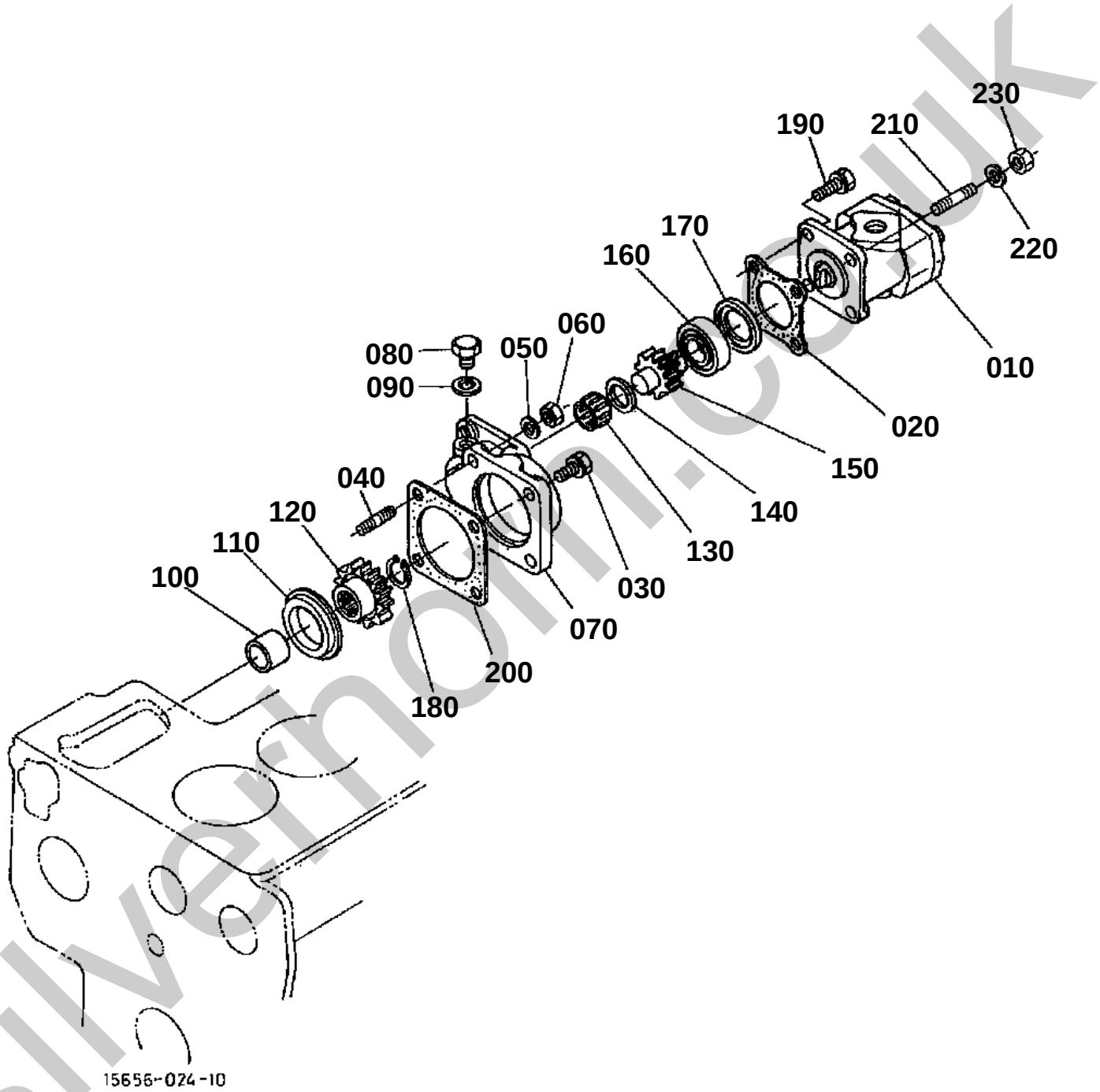

silverthorn.co.uk

HYDRAULIC GEAR PUMP

↔ Interchangeable; ≠ not interchangeable; ← new for old; → old for new

REF.No	Part No.	Description	Q'ty	S.No.	I/C	REMARKS	Weight (kgf)	Weight (lb)
010	67810-76100	ASSY PUMP HYDRAULIC	1			REFER TO L.No.0F07-R0 FOR COMPONENTS.	1.59	3.498
020	15231-87130	GASKET HYD.PUMP	1				0	0
030	01123-50825	BOLT	2				0.013	0.0286
040	01513-50825	STUD	2				0	0
050	04512-50080	WASHER SPRING	2				0.001	0.0022
060	02156-50080	NUT	2				0.004	0.0088
070	67810-36410	HOLDER GEAR PUMP	1				1.1	2.42
080	06331-35010	PLUG	2				0.012	0.0264
090	04714-00100	GASKET	2				0.002	0.0044
100	67810-36430	COLLAR	1				0.05	0.11
110	67810-36480	BUSH	1				0.1	0.22
120	66416-83510	GEAR	1			27T	0.21	0.462
130	67810-36490	BEARING NEEDLE	1	<=870440			0	0
130	67850-36490	BEARING NEEDLE	1	>=870441	↔		0.022	0.0484
140	66621-14640	COLLAR	1				0.006	0.0132
150	66416-83520	SHAFT GEAR	1			20T	0.19	0.418
160	08101-06204	BEARING BALL	1				0.102	0.2244
170	67810-36470	RETAINER	1				0.025	0.055
180	04612-00190	CIRCLIP EXTERNAL	1				0.001	0.0022
190	01123-50822	BOLT	4	<=687695			0.012	0.0264
190	01123-50822	BOLT	3	>=687696			0.012	0.0264
200	67810-36420	GASKET	1				0	0
210	01513-50822	STUD	1	>=687696			0.01	0.022
220	04512-50080	WASHER SPRING	1	>=687696			0.001	0.0022
230	02156-50080	NUT	1	>=687696			0.004	0.0088

silverhorn.co.uk

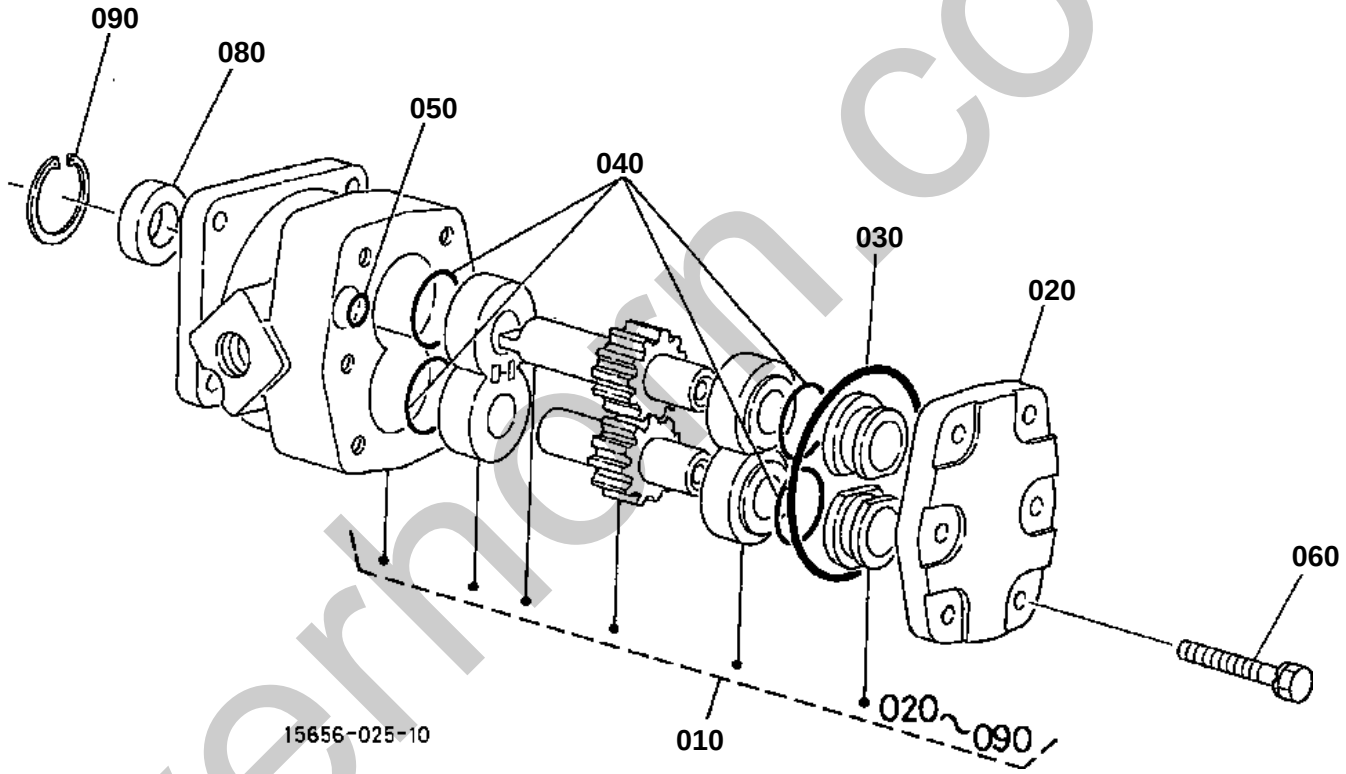

silverhorn.co.uk

060 67211-7624-0

070 04512-50080

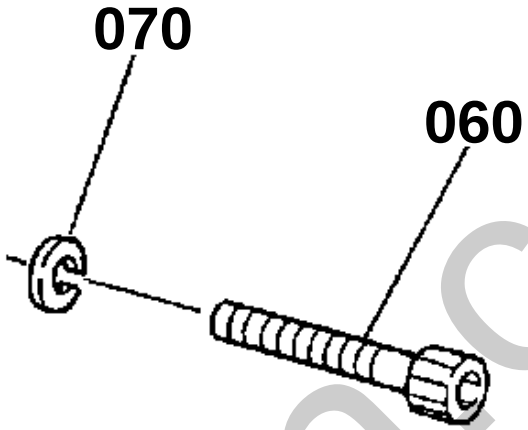

15656-801-10

silverhorn.co.uk

↔ Interchangeable; ≠ not interchangeable; ← new for old; → old for new

REF.No	Part No.	Description	Q'ty	S.No.	I/C	REMARKS	Weight (kgf)	Weight (lb)
010	67810-76100	ASSY PUMP HYDRAULIC	1				1.59	3.498
020	67211-76120	COVER HYD.PUMP	1				0.18	0.396
030	04810-50500	RING	1				0.005	0.011
040	04810-00220	RING	4				0.001	0.0022
050	04810-00050	RING	1				0.001	0.0022
060	67211-76240	BOLT	6	<=828344			0.014	0.0308
060	01123-50825	BOLT	6	>=828345	←		0.013	0.0286
070	04512-50080	WASHER SPRING	6	<=828344			0.001	0.0022
080	31381-76190	SEAL OIL	1				0.007	0.0154
090	04611-00280	CIR CLIP INTERNAL	1				0.002	0.0044

silverhorn.co.uk

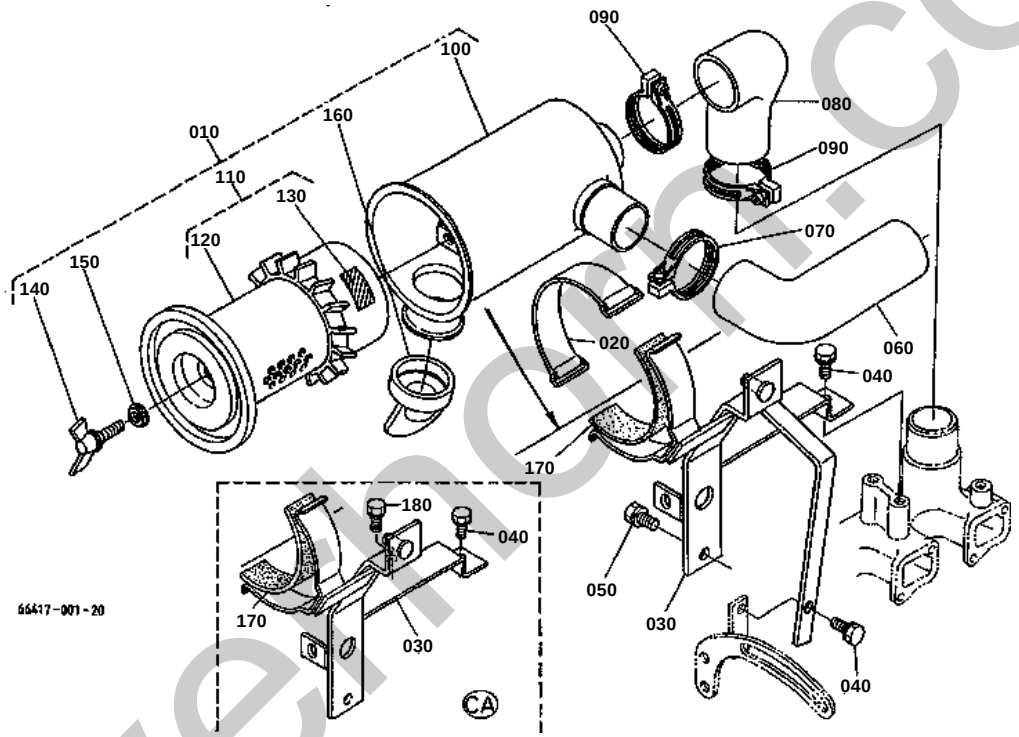

silverhome.co.uk

AIR CLEANER

↔ Interchangeable; ≠ not interchangeable; ← new for old; → old for new

REF.No	Part No.	Description	Q'ty	S.No.	I/C	REMARKS	Weight (kgf)	Weight (lb)
010	66416-58200	ASSY CLEANER AIR	1				1.15	2.53
020	67401-54290	BAND AIR CLEANER	1				0.06	0.132
030	66416-58210	SUPPORT AIR CLEANER	1			[A] [AU] [NZ]	0.83	1.826
030	66426-58210	SUPPORT AIR CLEANER	1			[CA]	0.82	1.804
040	01123-60816	BOLT	2			[A] [AU] [NZ]	0.01	0.022
040	01123-60816	BOLT	1			[CA]	0.01	0.022
050	01123-50820	BOLT	1				0.011	0.0242
060	15694-11130	PIPE INLET	1				0.18	0.396
070	15221-11720	BAND PIPE	1				0.03	0.066
080	15694-11130	PIPE INLET	1				0.18	0.396
090	15221-11720	BAND PIPE	2				0.03	0.066
100	66416-58220	ASSY CASE	1				0.74	1.628
110	15852-11080	ASSY ELEMENT CLEANER	1				0.45	0.99
120	16853-11220	ASSY ELEMENT CLEANER	1				0.44	0.968
130	15227-87480	LABEL ELEMENT A/C	1				0.004	0.0088
140	15221-92620	BOLT WING	1				0.04	0.088
150	15221-94430	WASHER WITH RUBBER	1				0.004	0.0088
160	15852-11470	VALVE	1				0.03	0.066
170	67401-54280	CUSHION	1	>=50737			0.01	0.022
180	01023-50616	BOLT	1			[CA]	0.005	0.011

silverhorn.co.uk

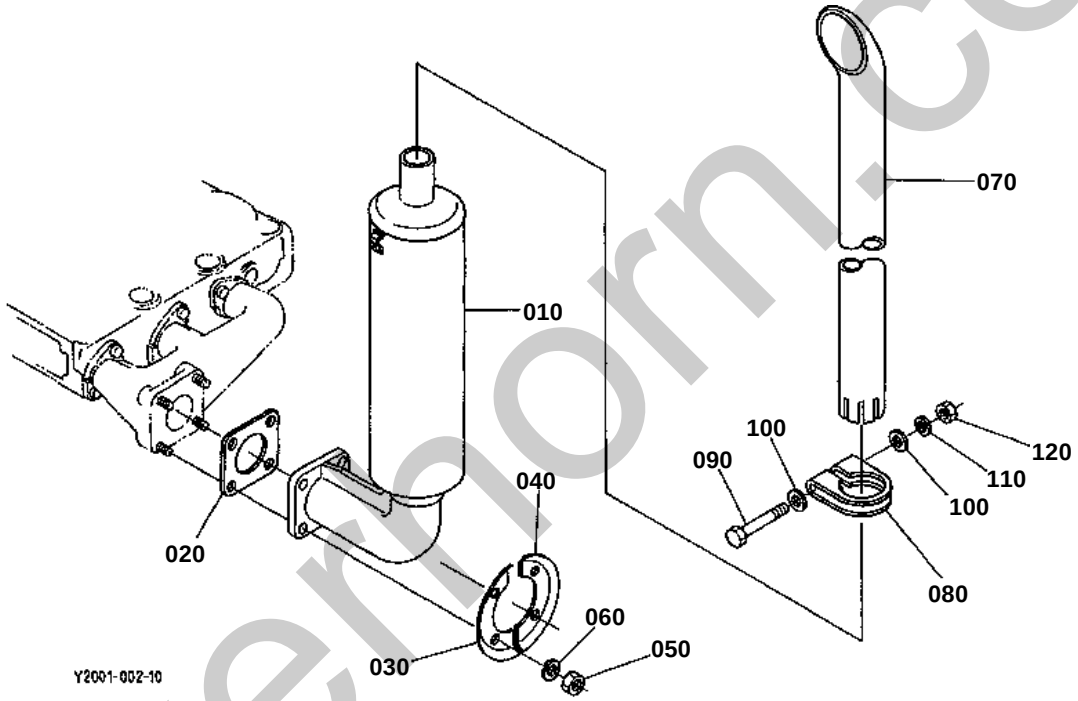

silvermorn.co.uk

MUFFLER

↔ Interchangeable; ≠ not interchangeable; ← new for old; → old for new

REF.No	Part No.	Description	Q'ty	S.No.	I/C	REMARKS	Weight (kgf)	Weight (lb)
010	15751-12010	COMP.MUFFLER	1				2.7	5.94
020	15263-12370	GASKET MUFFLER	1				0.015	0.033
030	66416-54520	COVER MUFFLER LH	1				0.02	0.044
040	66416-54530	COVER MUFFLER RH	1				0.025	0.055
050	02156-50080	NUT	4				0.004	0.0088
060	04512-50080	WASHER SPRING	4				0.001	0.0022
070	67800-53410	PIPE MUFFLER	1				0.57	1.254
080	67800-53420	BAND PIPE	1				0.04	0.088
090	01153-50865	BOLT	1				0.025	0.055
100	04013-50080	WASHER PLAIN	2				0	0
110	04512-50080	WASHER SPRING	1				0.001	0.0022
120	02114-50080	NUT	1				0.005	0.011

silverhorn.co.uk

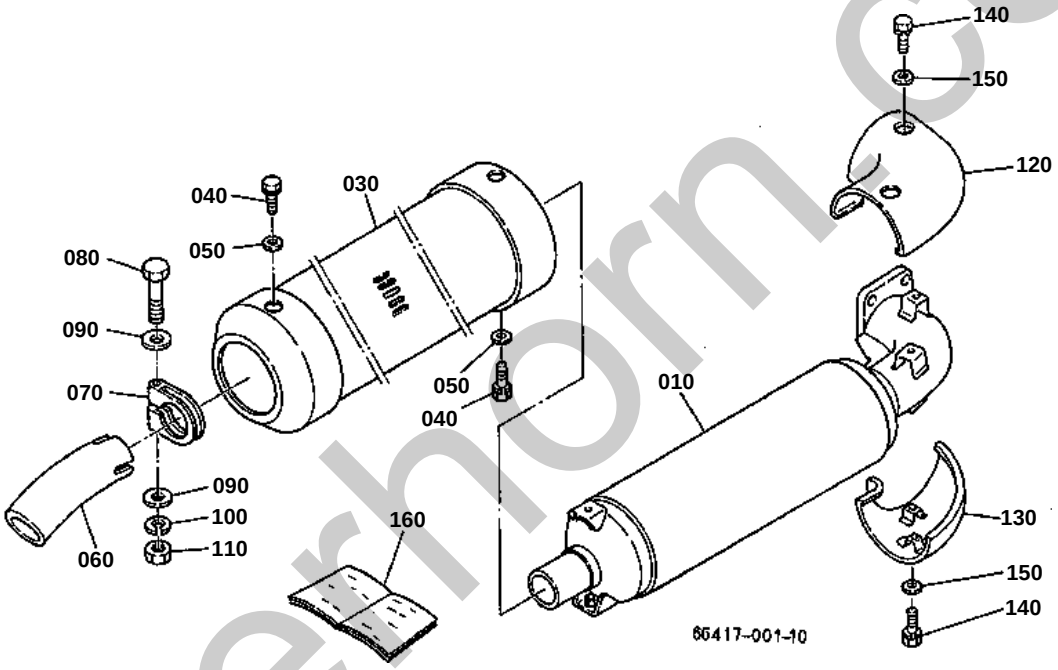

silverhorn.co.uk

HORIZONTAL MUFFLER [OPTION]

↔ Interchangeable; ≠ not interchangeable; ← new for old; → old for new

REF.No	Part No.	Description	Q'ty	S.No.	I/C	REMARKS	Weight (kgf)	Weight (lb)
010	15541-12110	MUFFLER	1				3	6.6
030	67211-54520	COVER MUFFLER	1				0.69	1.518
040	01202-50612	BOLT	4				0.005	0.011
050	04013-50060	WASHER PLAIN	4				0	0
060	66711-54410	PIPE EXHAUST	1				0.137	0.3014
070	66711-54420	BAND PIPE	1				0.038	0.0836
080	01153-50865	BOLT	1				0.025	0.055
090	04013-50080	WASHER PLAIN	2				0	0
100	04512-50080	WASHER SPRING	1				0.001	0.0022
110	02114-50080	NUT	1				0.005	0.011
120	67111-53430	COVER MUFFLER FLANGE	1				0.2	0.44
130	67111-53440	COVER MUFFLER FLANGE	1				0.185	0.407
140	01202-50612	BOLT	4				0.005	0.011
150	04013-50060	WASHER PLAIN	4				0	0
160	67401-85412	MANUAL INSTRUCTION	1				0.003	0.0066

silverhorn.co.uk

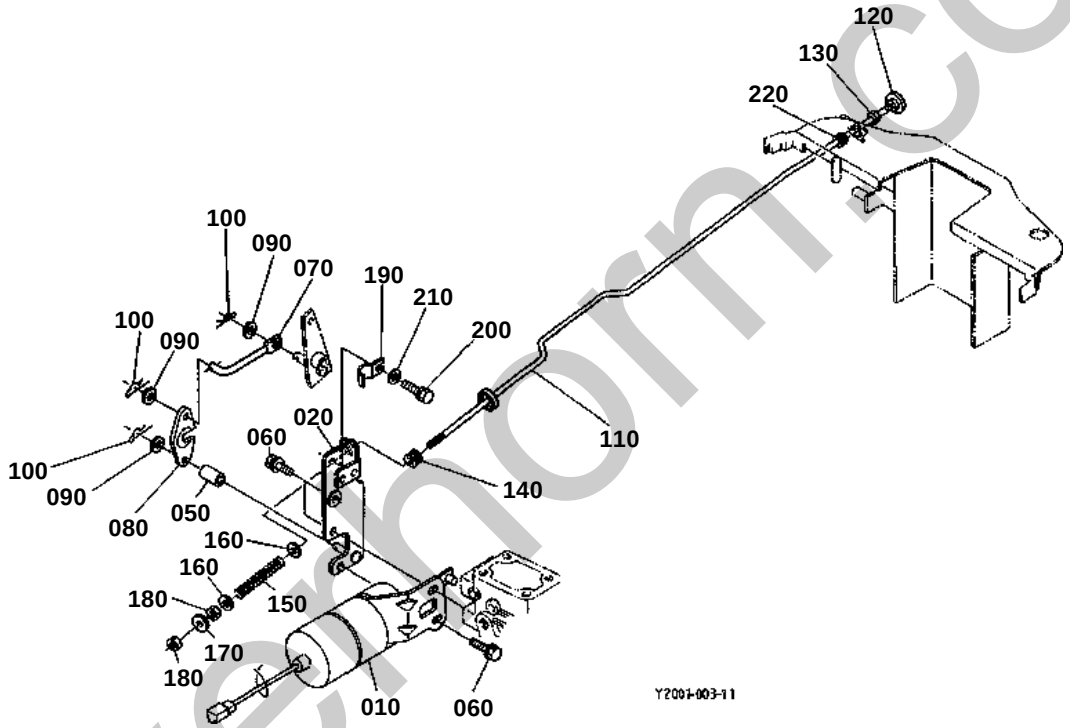

silvernorm.co.uk

020 66375-5395-0

030 66375-5397-0

040 01125-50612

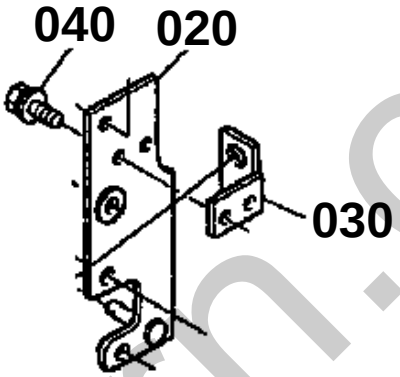

66417-800-10

silverhorn.co.uk

ENGINE STOP ROD

↔ Interchangeable; ≠ not interchangeable; ← new for old; → old for new

REF.No	Part No.	Description	Q'ty	S.No.	I/C	REMARKS	Weight (kgf)	Weight (lb)
010	15471-60010	SOLENOID STOP	1				0.415	0.913
020	66375-53950	SUPPORT SOLENOID	1	<=60044			0.13	0.286
020	66375-53953	SUPPORT SOLENOID	1	>=60045	←		0.14	0.308
030	66375-53970	SUPPORT STOP ROD	1	<=60044			0.03	0.066
040	01125-50612	BOLT	2	<=60044			0	0
050	66375-53960	COLLAR ENG.STOP	1				0.009	0.0198
060	01125-50820	BOLT	3				0	0
070	66375-53940	LEVER STOP	1				0.016	0.0352
080	15471-60162	LEVER STOP	1				0.007	0.0154
090	04013-50060	WASHER PLAIN	3				0	0
100	15471-94810	PIN SNAP	3	<=63700			0	0
100	05525-50600	PIN SNAP	3	>=63701	↔		0	0
110	66416-53920	ROD ENGINE STOP	1				0.18	0.396
120	35260-17160	KNOB	1				0.015	0.033
130	02014-50060	NUT	1				0.003	0.0066
140	66591-54580	RUBBER RELEASE ROD	2	<=64344			0.003	0.0066
140	66591-54580	RUBBER RELEASE ROD	1	>=64345			0.003	0.0066
150	15471-60250	SPRING	1				0.005	0.011
160	04012-50060	WASHER PLAIN	2				0.001	0.0022
170	04015-60060	WASHER PLAIN	1				0.005	0.011
180	02012-50060	NUT	2				0	0
190	38430-17180	SPRING	1				0.1	0.22
200	01023-50610	BOLT	1				0.005	0.011
210	04013-50060	WASHER PLAIN	1				0	0
220	66591-54580	RUBBER RELEASE ROD	1	>=64345			0.003	0.0066

silverhorn.co.uk

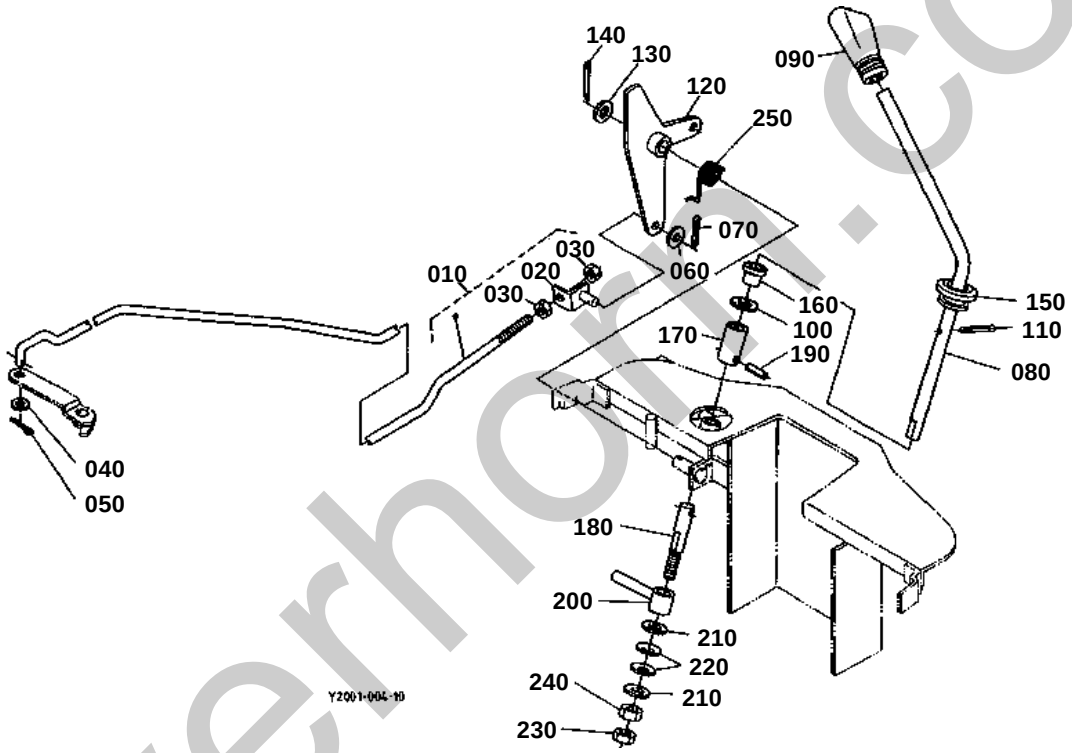

silverhorn.co.uk

ACCELERATOR LEVER

↔ Interchangeable; ≠ not interchangeable; ← new for old; → old for new

REF.No	Part No.	Description	Q'ty	S.No.	I/C	REMARKS	Weight (kgf)	Weight (lb)
010	66416-43202	ASSY ROD RELEASE	1				0.26	0.572
020	66021-43220	STAY LH	1				0.013	0.0286
030	02014-50060	NUT	2				0.003	0.0066
040	04012-50060	WASHER PLAIN	1				0.001	0.0022
050	05511-51612	PIN SPLIT	1				0.001	0.0022
060	04013-50060	WASHER PLAIN	1				0	0
070	05511-51612	PIN SPLIT	1				0.001	0.0022
080	66416-43310	LEVER RELEASE	1				0.22	0.484
090	67156-43320	GRIP	1				0.026	0.0572
100	04011-50100	WASHER PLAIN	1				0.002	0.0044
110	05511-50320	PIN SPLIT	1				0.002	0.0044
120	67156-43354	ARM RELEASE	1				0.1	0.22
130	04013-50100	WASHER PLAIN	1				0	0
140	05511-50320	PIN SPLIT	1				0.002	0.0044
150	67156-43370	CAP LEVER	1				0.006	0.0132
160	67111-54920	BUSH	1				0.01	0.022
170	67156-43382	FULCRUM LEVER	1				0.026	0.0572
180	67156-43410	SHAFT RELEASE HOLDER	1				0.032	0.0704
190	05411-00425	PIN SPRING	1				0.001	0.0022
200	67156-43422	HOLDER RELEASE	1				0.04	0.088
210	04015-50080	WASHER PLAIN	2				0	0
220	66116-51530	SPRING PLATE	2				0.004	0.0088
230	02112-50080	NUT	1				0.003	0.0066
240	02114-50080	NUT	1				0.005	0.011
250	66417-43310	SPRING RETURN	1				0.01	0.022

silverhorn.co.uk

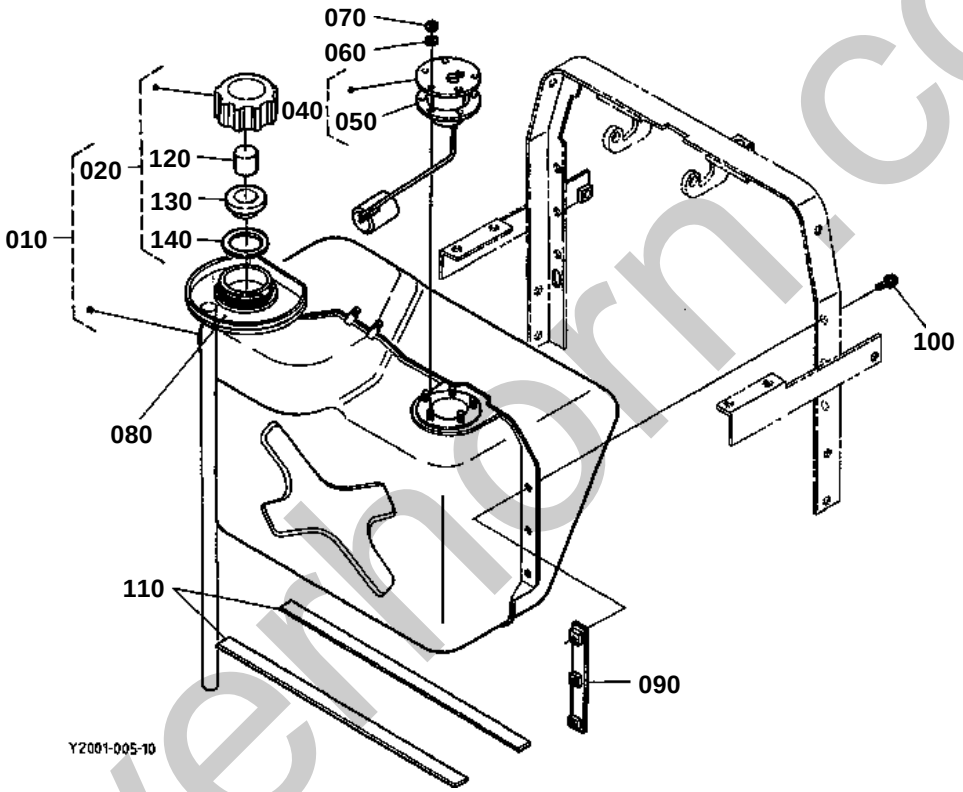

silverthorn.co.uk

FUEL TANK

↔ Interchangeable; ≠ not interchangeable; ← new for old; → old for new

REF.No	Part No.	Description	Q'ty	S.No.	I/C	REMARKS	Weight (kgf)	Weight (lb)
010	66416-54700	ASSY TANK FUEL	1				2.05	4.51
020	38240-35200	ASSY CAP FUEL TANK	1				0.06	0.132
040	66416-54730	UNIT FUEL	1				0.23	0.506
050	67401-54740	GASKET	1				0.001	0.0022
060	04013-50050	WASHER PLAIN	5				0	0
070	02054-50050	NUT	5				0.002	0.0044
080	66416-54742	DISH FUEL	1				0.07	0.154
090	66416-54750	PLATE	2				0.068	0.1496
100	01025-50620	BOLT	6				0.02	0.044
110	66416-54760	CUSHION TANK	2				0.02	0.044
120	34150-35240	SPONGE	1				0.001	0.0022
130	34150-35230	GASKET	1				0.01	0.022
140	34150-35180	GASKET	1				0.001	0.0022

silverhorn.co.uk

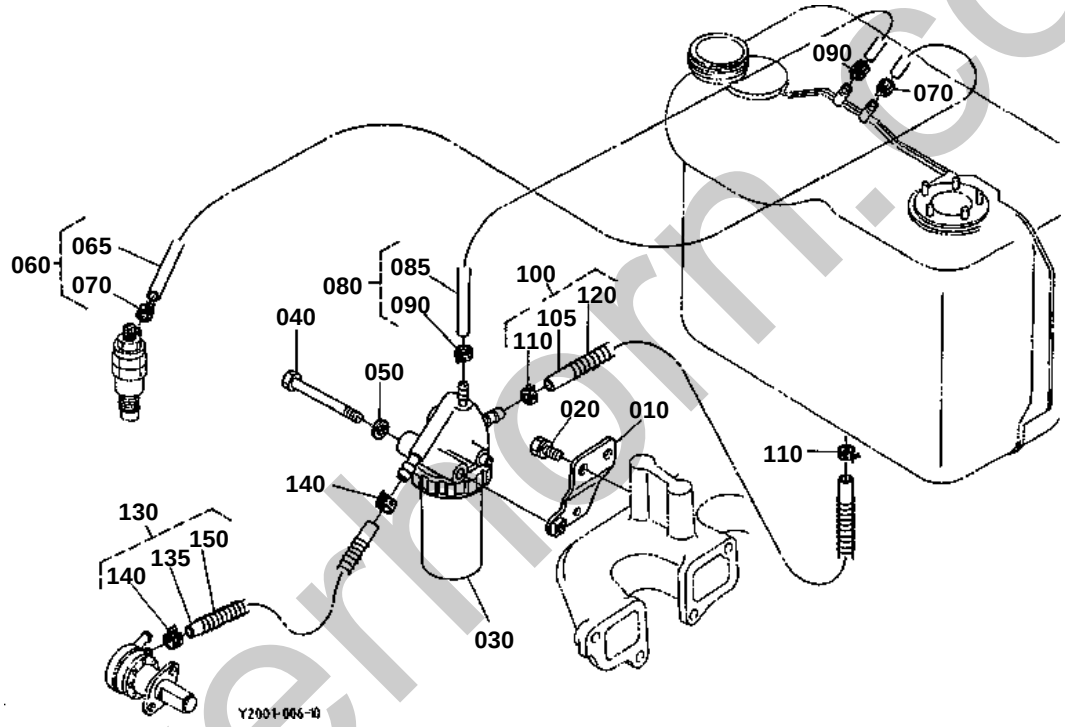

silvermorn.co.uk

FUEL PIPE

↔ Interchangeable; ≠ not interchangeable; ← new for old; → old for new

REF.No	Part No.	Description	Q'ty	S.No.	I/C	REMARKS	Weight (kgf)	Weight (lb)
010	66416-54310	BRACKET FILTER	1				0.09	0.198
020	01123-50818	BOLT	2				0.012	0.0264
030	15751-43010	ASSY FILTER FUEL	1			REFER TO L.No.0C02-R0 FOR COMPONENTS.	0.41	0.902
040	01153-50865	BOLT	1				0.025	0.055
050	04512-50080	WASHER SPRING	1				0.001	0.0022
060	66416-58300	ASSY PIPE OVER FLOW	1				0.02	0.044
065	09661-40340	TUBE FUEL	1				0.02	0.044
070	16241-42320	BAND PIPE	2				0.005	0.011
080	66416-58320	ASSY PIPE OVER FLOW	1				0.035	0.077
085	09661-40480	TUBE FUEL	1				0.02	0.044
090	14911-42750	CLIP PIPE	2				0.002	0.0044
100	67211-58342	ASSY PIPE FUEL	1				0.06	0.132
105	09661-80360	TUBE FUEL	1	<=61483			0.045	0.099
105	09661-70360	TUBE FUEL	1	>=61484	≠		0.04	0.088
110	14911-42750	CLIP PIPE	2				0.002	0.0044
120	67111-58320	SPRING PIPE PROTECT.	1				0.02	0.044
130	67061-58350	ASSY PIPE FUEL	1				0.04	0.088
135	09661-70190	TUBE FUEL	1				0.02	0.044
140	14911-42750	CLIP PIPE	2				0.002	0.0044
150	67111-53790	SPRING PIPE PROTECT.	1				0.01	0.022

silverhorn.co.uk

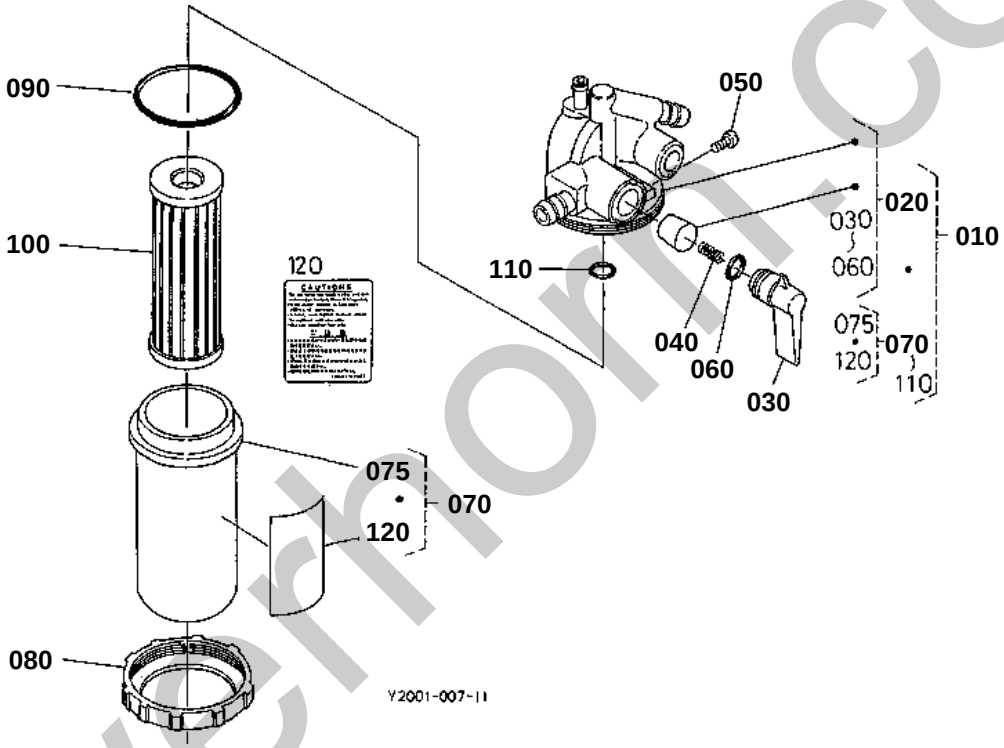

silverhorn.co.uk

FUEL FILTER [COMPONENT PARTS]

↔ Interchangeable; ≠ not interchangeable; ← new for old; → old for new

REF.No	Part No.	Description	Q'ty	S.No.	I/C	REMARKS	Weight (kgf)	Weight (lb)
010	15751-43010	ASSY FILTER FUEL	1				0.41	0.902
020	15531-43110	COMP.BODY COCK	1				0.255	0.561
030	14301-43522	LEVER COCK	1				0.024	0.0528
040	14301-43820	SPRING VALVE	1				0.001	0.0022
050	14301-43830	SCREW	1				0.001	0.0022
060	14301-43840	O RING LEVER	1				0.001	0.0022
070	19204-43100	ASSY CUP FILTER	1	>=66751			0.02	0.044
075	15000-34832	CUP FILTER	1	<=66750			0.07	0.154
075	15393-43580	CUP FILTER	1	>=66751	↔		0.01	0.022
080	14301-43590	RING RETAINING	1				0.054	0.1188
090	14301-43650	O RING FILTER	1				0.001	0.0022
100	15231-43560	ASSY ELEMENT	1				0.03	0.066
110	04811-00100	O RING FILTER	1				0.001	0.0022
120	66706-58310	LABEL FUEL FILTER	1	<=66750			0.001	0.0022
120	16689-88430	LABEL FUEL	1	>=66751	↔		0.001	0.0022

silverhorn.co.uk

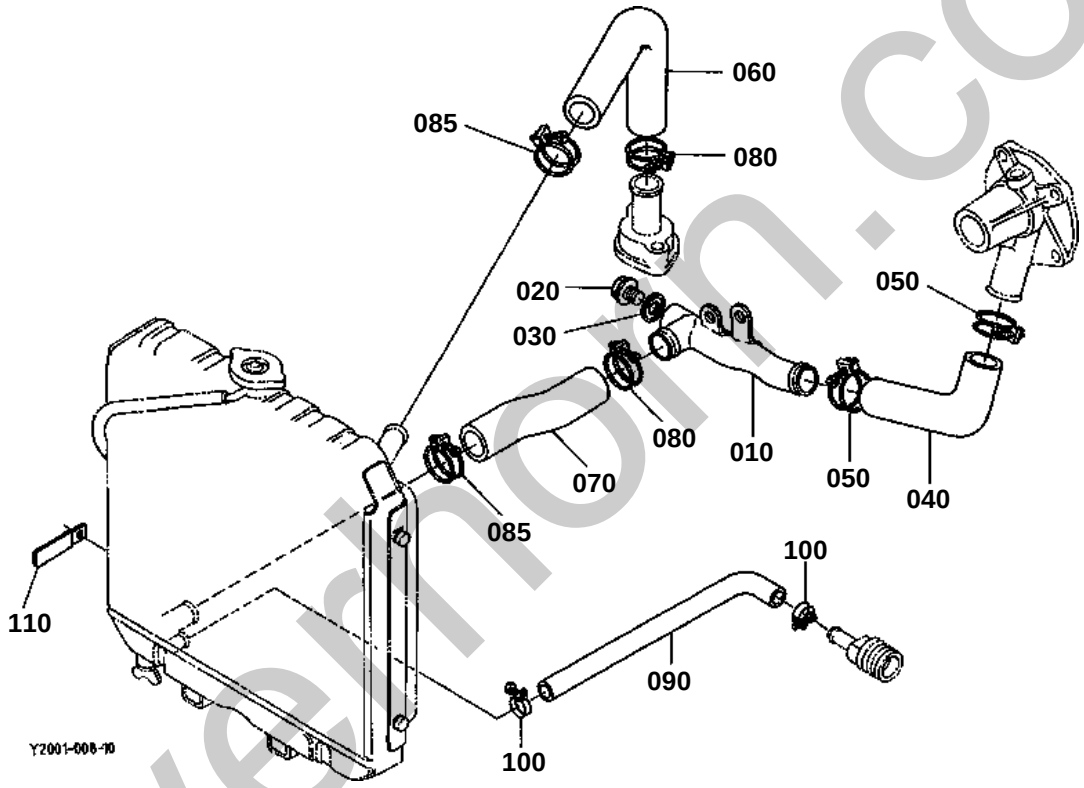

silvermoon.co.uk

WATER PIPE

↔ Interchangeable; ≠ not interchangeable; ← new for old; → old for new

REF.No	Part No.	Description	Q'ty	S.No.	I/C	REMARKS	Weight (kgf)	Weight (lb)
010	15554-72860	PIPE WATER	1				0.215	0.473
020	06311-25030	PLUG	1				0.051	0.1122
030	04724-00170	GASKET	1				0.005	0.011
040	15531-72870	PIPE WATER	1				0.052	0.1144
050	15261-72780	BAND	2				0.024	0.0528
060	66418-72940	PIPE WATER	1	<=61807			0	0
060	66418-72942	PIPE WATER	1	>=61808	←		0.16	0.352
070	66418-72850	PIPE WATER	1				0.19	0.418
080	15261-72780	BAND	4	<=62006			0.024	0.0528
080	15261-72780	BAND	3	>=62007			0.024	0.0528
080	15261-72780	BAND	2	>=66586			0.024	0.0528
085	36200-82720	CLAMP	1	>=62007			0.025	0.055
085	67955-58630	CLAMP HOSE	2	>=66586	↔		0.025	0.055
090	66418-73130	PIPE DRAIN	1				0.065	0.143
100	15109-73360	BAND PIPE	2				0.01	0.022
110	15241-67580	CLAMP CORD	1				0.004	0.0088

silverhorn.co.uk

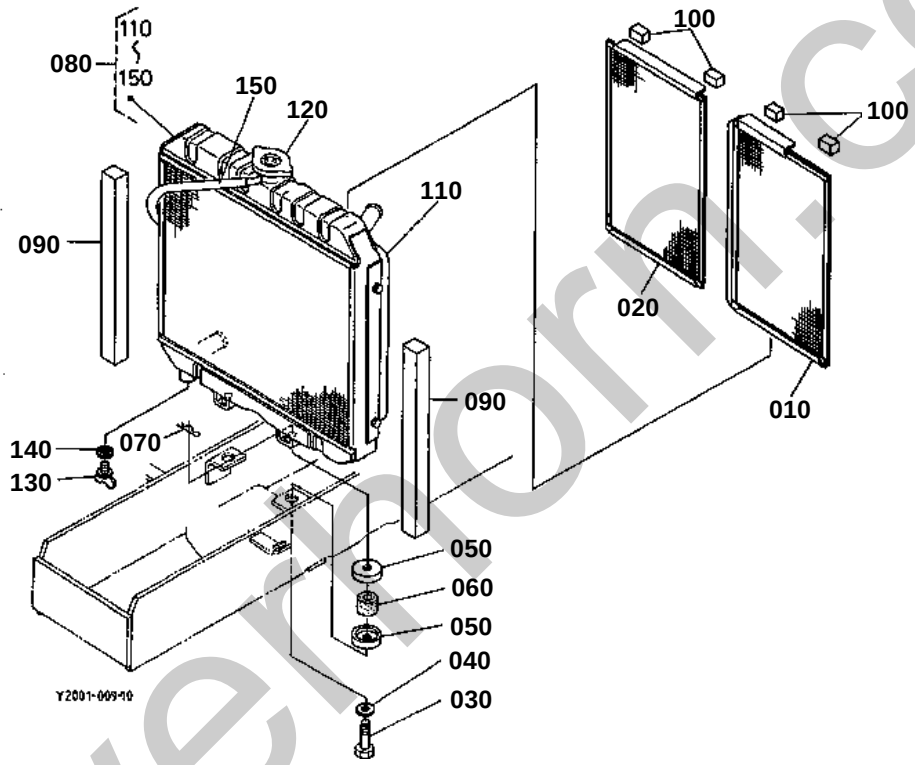

silverthorn.co.uk

RADIATOR

↔ Interchangeable; ≠ not interchangeable; ← new for old; → old for new

REF.No	Part No.	Description	Q'ty	S.No.	I/C	REMARKS	Weight (kgf)	Weight (lb)
010	66418-53510	NET DUSTPROOF	1				0.24	0.528
020	66418-53520	NET DUSTPROOF	1				0.2	0.44
030	67111-58710	BOLT RADIATOR	2				0.027	0.0594
040	04013-50100	WASHER PLAIN	2				0	0
050	15111-72200	WASHER	4				0.013	0.0286
060	15111-72180	CUSHION	2				0.015	0.033
070	05515-51000	PIN SNAP	2				0	0
080	66418-58700	ASSY RADIATOR	1				4	8.8
090	67511-54520	TAPE	2				0.004	0.0088
100	66416-51490	TAPE DUSTPROOF	4				0.001	0.0022
110	66418-58730	SHROUD FAN	1				1.32	2.904
120	15272-72020	ASSY CAP	1				0.071	0.1562
130	15231-73110	COCK DRAIN	1				0.006	0.0132
140	15231-96690	GASKET	1				0.001	0.0022
150	15302-72710	PIPE WATER OVERFLOW	1				0.06	0.132

silverhorn.co.uk

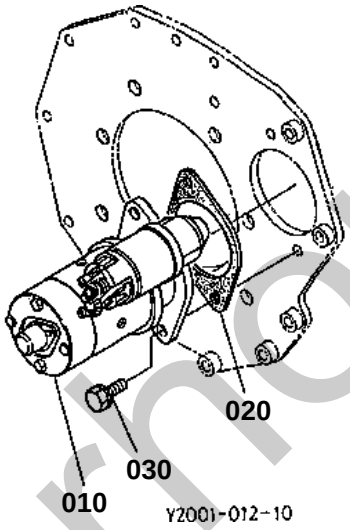

silvernorn.co.uk

↔ Interchangeable; ≠ not interchangeable; ← new for old; → old for new

REF.No	Part No.	Description	Q'ty	S.No.	I/C	REMARKS	Weight (kgf)	Weight (lb)
010	15231-63015	ASSY STARTER	1			REFER TO L.No.0C07-R0 FOR COMPONENTS.	4.7	10.34
020	66591-51160	GASKET	1				0	0
030	01123-50828	BOLT	2				0.014	0.0308

silverhorn.co.uk

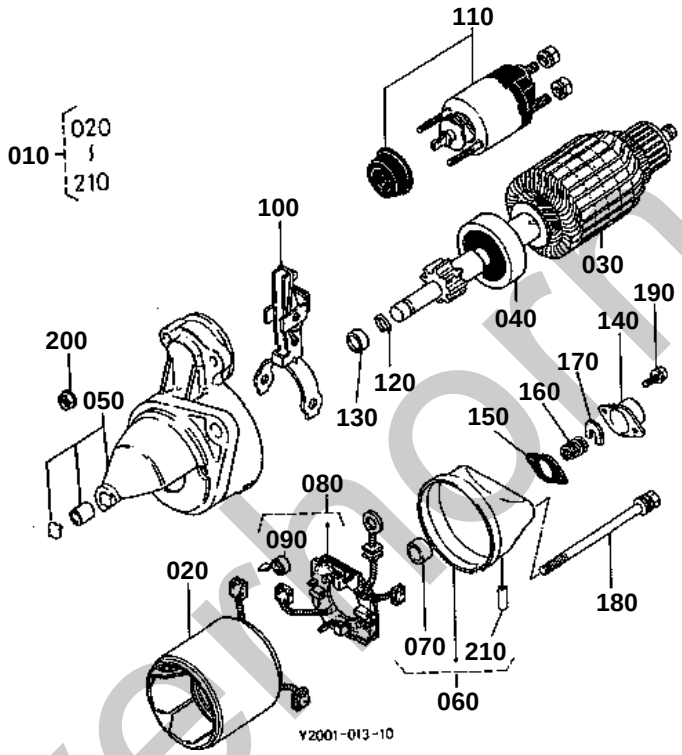

silverhorn.co.uk

↔ Interchangeable; ≠ not interchangeable; ← new for old; → old for new

REF.No	Part No.	Description	Q'ty	S.No.	I/C	REMARKS	Weight (kgf)	Weight (lb)
010	15231-63015	ASSY STARTER	1				4.7	10.34
020	14278-63080	YOKE	1				1.42	3.124
030	14278-63070	ARMATURE	1				1.25	2.75
040	14278-63040	CLUTCH OVER RUNNING	1				0.32	0.704
050	15231-63032	ASSY HOUSING	1				0.39	0.858
060	14278-63200	ASSY FRAME END	1				0.2	0.44
070	14278-63250	BUSH	1				0.002	0.0044
080	14278-63380	ASSY HOLDER BRUSH	1				0.06	0.132
090	14278-63390	SPRING BRUSH	4				0.003	0.0066
100	14278-63050	LEVER DRIVE	1				0.06	0.132
110	15231-63022	SWITCH MAGNETIC	1				0.65	1.43
120	15221-94820	PIN SNAP	1				0.001	0.0022
130	15321-63250	NUT PINION STOP	1				0.005	0.011
140	14278-63510	CAP END FRAME	1				0.015	0.033
150	14278-63520	GASKET	1				0.001	0.0022
160	14278-63190	SPRING BRAKE	1				0.01	0.022
170	14278-63180	SHOE BRAKE	1				0.005	0.011
180	14278-63320	BOLT THROUGH	2				0.02	0.044
190	03024-50414	SCREW WITH WASHER	2				0.002	0.0044
200	14278-92010	NUT	2				0.001	0.0022
210	14278-63570	PIPE BREATHER	1				0.001	0.0022

silverhorn.co.uk

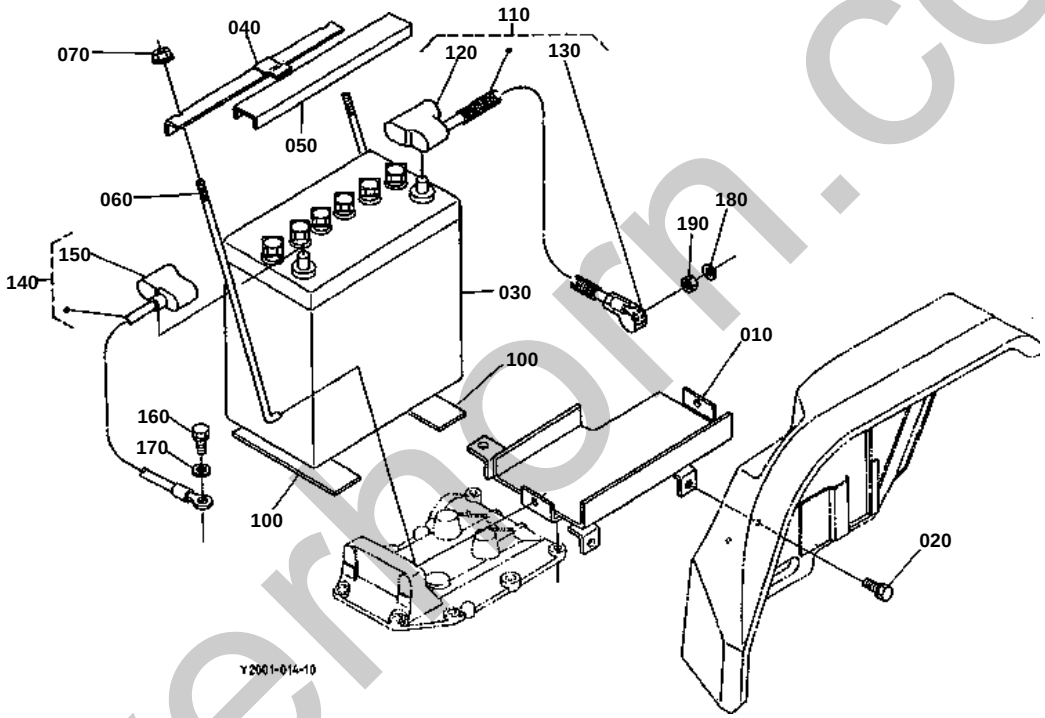

silverhorn.co.uk

070 02014-50060

080 04013-50060

090 04512-50060

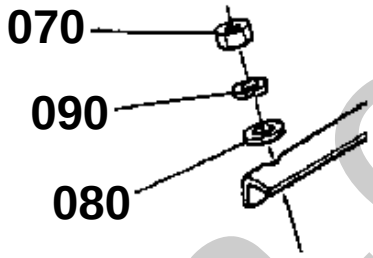

66417-801-10

silverhorn.co.uk

BATTERY

↔ Interchangeable; ≠ not interchangeable; ← new for old; → old for new

REF.No	Part No.	Description	Q'ty	S.No.	I/C	REMARKS	Weight (kgf)	Weight (lb)
010	67061-52352	SUPPORT BATTERY	1	<=61483			0	0
010	67061-52353	SUPPORT BATTERY	1	>=61484	←		0.8	1.76
020	01123-50818	BOLT	2				0.012	0.0264
030	66704-55430	ASSY BATTERY	1	<=63700		[A] [AU] [NZ]	9.3	20.46
030	66704-55433	ASSY BATTERY	1	>=63701	≠	[A] [AU] [NZ]	9.3	20.46
030	67501-55410	ASSY BATTERY	1			[CA]	10.4	22.88
040	67061-54480	RETAINER BATTERY	1	<=50078			0.18	0.396
040	67061-54484	RETAINER BATTERY	1	>=50079	≠		0.2	0.44
050	66641-55430	COVER BATTERY	1				0.07	0.154
060	67401-55390	BOLT BATTERY SET	2				0.038	0.0836
070	02014-50060	NUT	2	<=62096			0.003	0.0066
070	02751-50060	NUT FLANGE	2	>=62097	←		0.005	0.011
080	04013-50060	WASHER PLAIN	2	<=62096			0	0
090	04512-50060	WASHER SPRING	2	<=62096			0	0
100	34150-33220	CUSHION	2				0.015	0.033
110	66416-55410	ASSY CORD BATTERY(+)	1				0.2	0.44
120	67111-55740	CAP	1				0.01	0.022
130	67211-55470	CAP TERMINAL	1				0.002	0.0044
140	67061-55440	ASSY CORD BATTERY(-)	1				0.2	0.44
150	67061-55460	CAP	1				0.01	0.022
160	01123-51025	BOLT	1				0.02	0.044
170	04013-50100	WASHER PLAIN	1				0	0
180	04512-50080	WASHER SPRING	1				0.001	0.0022
190	02114-50080	NUT	1				0.005	0.011

silverhorn.co.uk

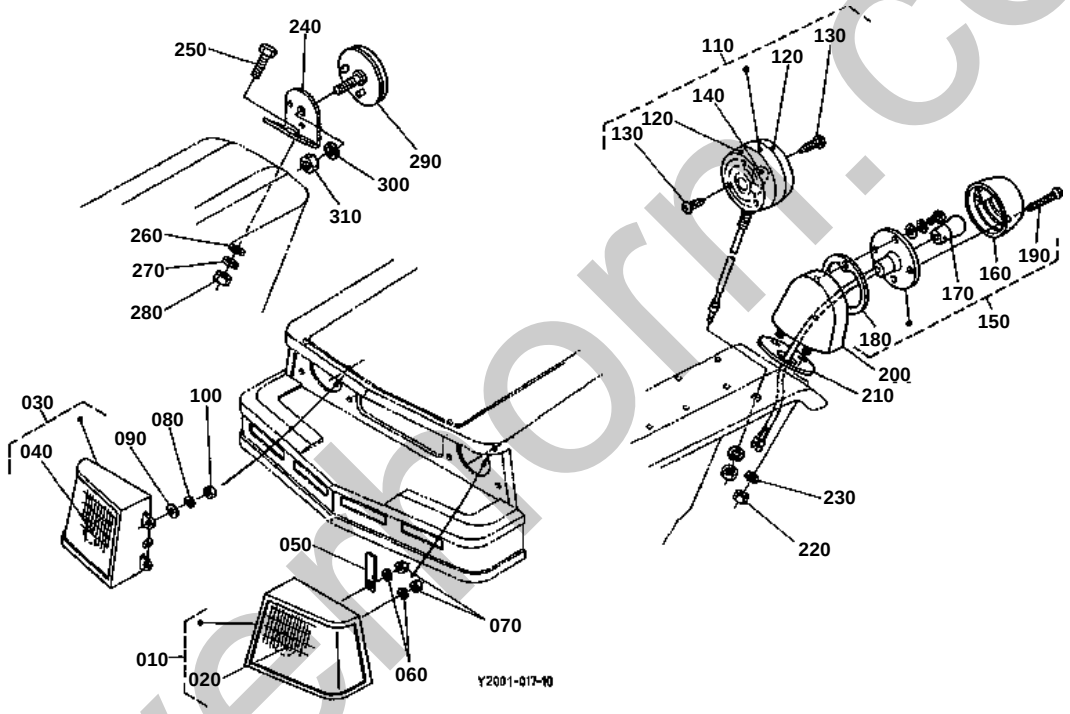

silverhorn.co.uk

110	35450-7501-0
120	35450-7511-0
121	35450-7505-0
122	35450-7506-0
123	35450-7507-0
124	35450-7509-0
130	35450-7508-0
140	35450-7502-2

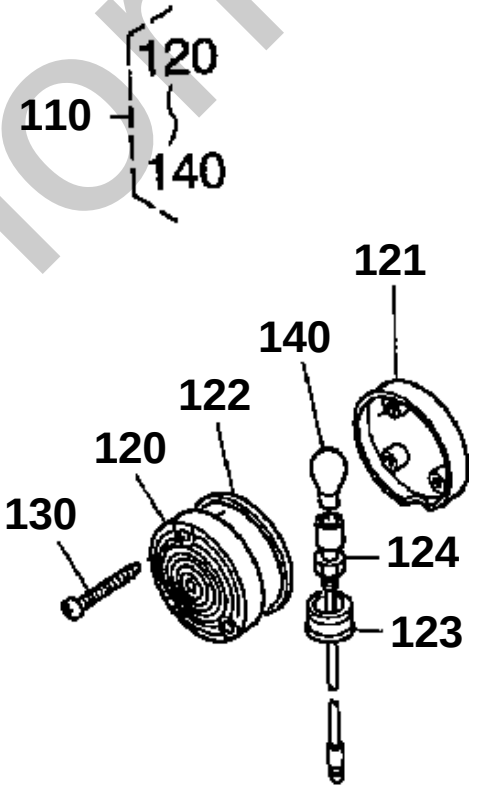

66417-802-10

silverhorn.co.uk

↔ Interchangeable; ≠ not interchangeable; ← new for old; → old for new

REF.No	Part No.	Description	Q'ty	S.No.	I/C	REMARKS	Weight (kgf)	Weight (lb)
010	66416-54350	LIGHT HEAD LH	1				0.29	0.638
020	67156-54490	BULB	1				0.02	0.044
030	66416-54360	LIGHT HEAD RH	1				0.29	0.638
040	67156-54490	BULB	1				0.02	0.044
050	15241-67580	CLAMP CORD	2				0.004	0.0088
060	04512-50060	WASHER SPRING	4				0	0
070	02014-50060	NUT	4				0.003	0.0066
080	04512-50050	WASHER SPRING	4				0	0
090	04013-50050	WASHER PLAIN	4				0	0
100	02054-50050	NUT	4				0.002	0.0044
110	35450-75010	ASSY LIGHT FLASHER	2	<=60918			0.3	0.66
110	32530-33610	ASSY LIGHT HAZARD	2	>=60919	↔		0.5	1.1
120	35450-75110	LENS	2	<=60918			0.07	0.154
120	32530-91510	LENS HAZARD LIGHT	4	>=60919	≠		0.085	0.187
121	35450-75050	LENS	2	<=60918			0.07	0.154
122	35450-75060	GASKET SEAL	2	<=60918			0.02	0.044
123	35450-75070	HOUSING	2	<=60918			0.04	0.088
124	35450-75090	ASSY SOCKET	2	<=60918			0.035	0.077
130	35450-75080	SCREW TAPPING	6	<=60918			0.005	0.011
130	32530-91520	SCREW TAPPING	12	>=60919	≠		0.001	0.0022
140	35450-75022	BULB HAZARD FLASHER	2	<=60918			0.008	0.0176
140	32530-91530	BULB LIGHT	2	>=60919	≠		0.02	0.044
150	34350-34100	ASSY LIGHT TAIL	1				0.13	0.286
160	34350-34120	LENS TAIL LIGHT	1				0.05	0.11
170	34350-34140	BULB TAIL LIGHT	1				0.008	0.0176
180	34350-99220	GASKET LENS	1				0.01	0.022
190	03056-50335	SCREW	2				0.001	0.0022
200	66416-55540	BRACKET TAIL LIGHT	1				0.11	0.242
210	67800-55530	CUSHION	1				0.015	0.033
220	02014-50060	NUT	2				0.003	0.0066
230	04512-50060	WASHER SPRING	2				0	0
240	66416-52730	STAY REFLECTOR	1				0.07	0.154
250	01053-50616	BOLT	2				0.005	0.011
260	04512-50060	WASHER SPRING	2				0	0
270	04013-50060	WASHER PLAIN	2				0	0
280	02014-50060	NUT	2				0.003	0.0066
290	67601-55730	ASSY REFLECTOR	1				0.02	0.044
300	04512-50050	WASHER SPRING	1				0	0
310	02054-50050	NUT	1				0.002	0.0044

silvermorn.co.uk

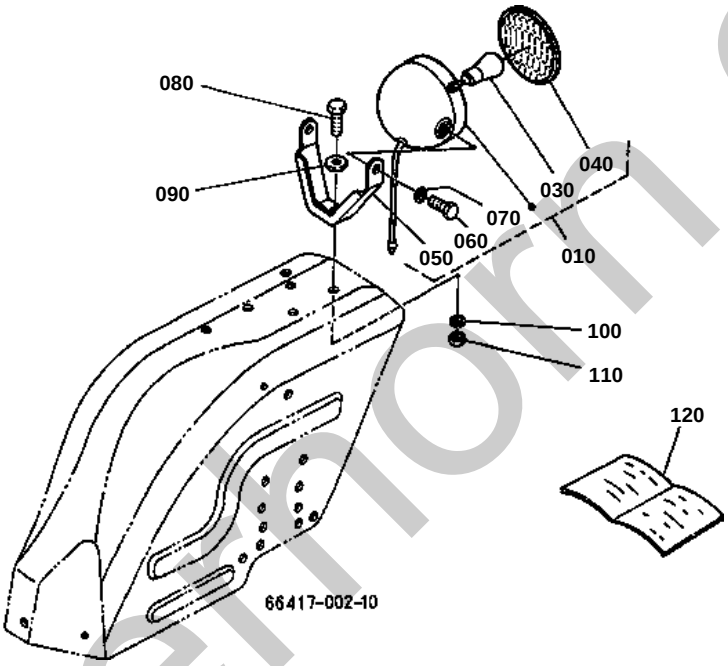

silvermorn.co.uk

WORKING LIGHT [OPTION]

↔ Interchangeable; ≠ not interchangeable; ← new for old; → old for new

REF.No	Part No.	Description	Q'ty	S.No.	I/C	REMARKS	Weight (kgf)	Weight (lb)
010	35861-75900	ASSY LIGHT WORKING	1				0.9	1.98
030	68331-53360	BULB	1				0.015	0.033
040	68331-53310	LENS	1				0.15	0.33
050	35861-75910	STAY HEAD LIGHT	1				0.25	0.55
060	01153-50820	BOLT	2				0.012	0.0264
070	04512-50080	WASHER SPRING	2				0.001	0.0022
080	01153-50818	BOLT	1				0.01	0.022
090	04013-50080	WASHER PLAIN	1				0	0
100	04512-50080	WASHER SPRING	1				0.001	0.0022
110	02114-50080	NUT	1				0.005	0.011
120	67401-85510	MANUAL INSTRUCTION	1				0.001	0.0022

silverhorn.co.uk

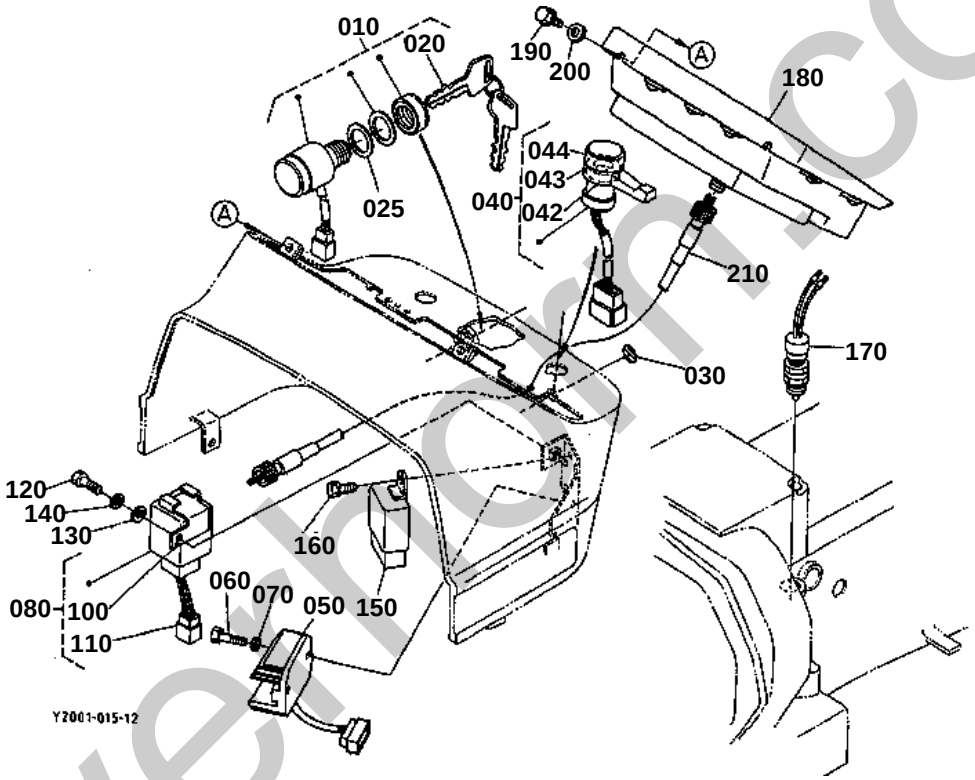

silvermoon.co.uk

050 19267-6460-2

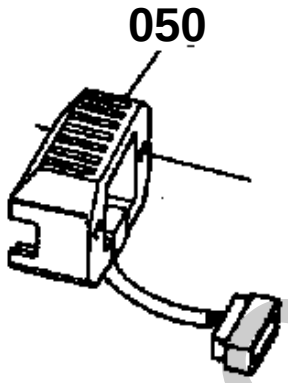

66417-819-10

silverhorn.co.uk

↔ Interchangeable; ≠ not interchangeable; ← new for old; → old for new

REF.No	Part No.	Description	Q'ty	S.No.	I/C	REMARKS	Weight (kgf)	Weight (lb)
010	37410-59110	ASSY SWITCH STARTER	1				0.32	0.704
020	37410-55150	KEY STARTER	2				0.025	0.055
025	66416-55170	WASHER	1	>=50541			0.001	0.0022
030	35110-32420	PLUG	1	<=65940			0.002	0.0044
030	66416-47170	LABEL COVER	1	>=65941	↔		0.001	0.0022
040	67156-55210	SWITCH COMBINATION	1				0.095	0.209
042	67156-55230	NUT RING	1				0.003	0.0066
043	67156-55240	LEVER FLASHER	1				0.004	0.0088
044	67156-55250	KNOB LIGHT	1				0.004	0.0088
050	19267-64600	COMP.REGULATOR	1	<=61807			0	0
050	19267-64602	ASSY REGULATOR	1	>=61808	←		0.188	0.4136
050	RP201-53710	ASSY REGULATOR	1	>=67419	↔		0.185	0.407
060	01053-50632	BOLT	2				0.005	0.011
070	04512-50060	WASHER SPRING	2				0	0
080	32430-33700	ASSY HAZARD UNIT	1				0.095	0.209
100	32430-94270	BRACKET HAZARD UNIT	1				0.015	0.033
110	32430-94280	HARNESS HAZARD UNIT	1				0.02	0.044
120	01053-50620	BOLT	1				0.006	0.0132
130	04013-50060	WASHER PLAIN	1				0	0
140	04512-50060	WASHER SPRING	1				0	0
150	31351-31410	TIMER	1	<=66405			0	0
150	T0070-31410	TIMER	1	>=66406	←		0.065	0.143
160	01023-50610	BOLT	2				0.005	0.011
170	66416-55810	ASSY SWITCH SAFETY	1				0.11	0.242
180	66416-55120	ASSY PANEL GAUGE	1	<=62006		REFER TO L.No.0C11-L0 FOR COMPONENTS.	0	0
180	66416-55122	ASSY PANEL GAUGE	1	>=62007	←	REFER TO L.No.0C11-L0 FOR COMPONENTS.	1.74	3.828
190	31351-18790	BOLT FLANGE	4				0.007	0.0154
200	31351-18860	WASHER	2	<=61783			0.002	0.0044
200	31351-18860	WASHER	4	>=61784			0.002	0.0044
210	66416-55310	CABLE HOUR METER	1				0.18	0.396

silverhorn.co.uk

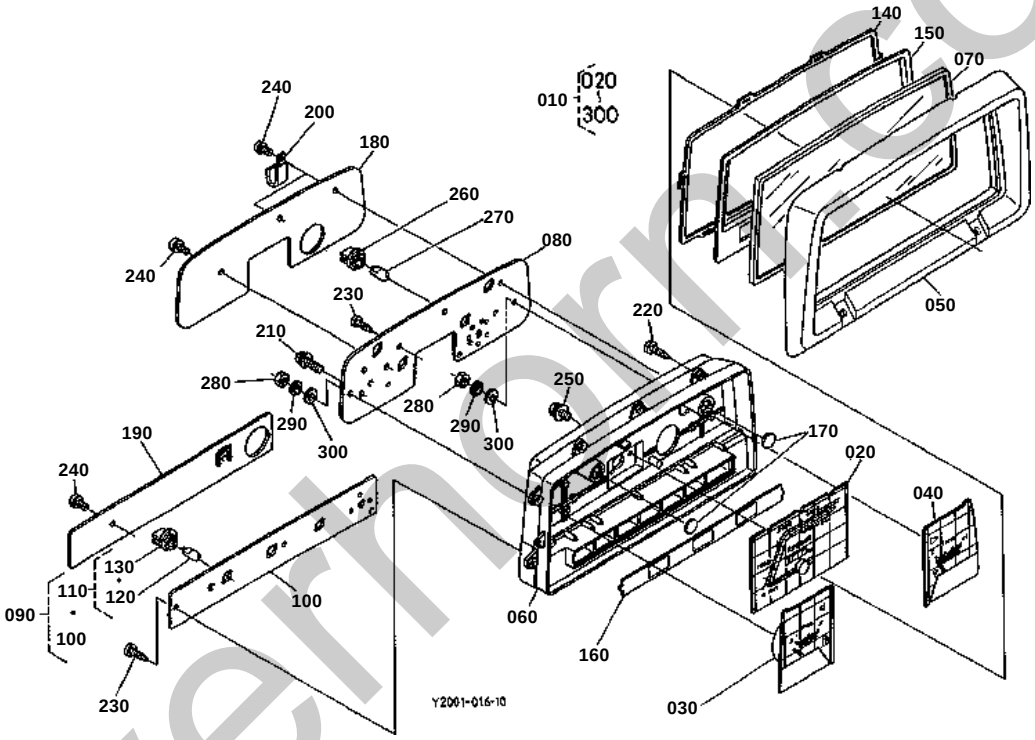

silvermorr.co.uk

↔ Interchangeable; ≠ not interchangeable; ← new for old; → old for new

REF.No	Part No.	Description	Q'ty	S.No.	I/C	REMARKS	Weight (kgf)	Weight (lb)
010	66416-55120	ASSY PANEL GAUGE	1	<=62006			0	0
010	66416-55122	ASSY PANEL GAUGE	1	>=62007	←		1.74	3.828
020	66426-81010	ASSY TACHOMETER	1				0.1	0.22
030	66426-81020	ASSY METER FUEL	1				0.12	0.264
040	66426-81030	ASSY THERMOMETER	1				0.1	0.22
050	67156-93750	HOOD	1				0.28	0.616
060	66426-81040	CASE	1				0.5	1.1
070	31351-93760	GLASS WITH GASKET	1				0.475	1.045
080	66426-81050	ASSY PLATE METER	1				0.2	0.44
090	67156-93760	ASSY PLATE	1				0.12	0.264
100	67156-93780	ASSY PLATE	1				0.03	0.066
110	38240-31460	ASSY BULB	3				0.015	0.033
120	38240-31470	BULB	3				0.01	0.022
130	38240-31480	SOCKET	3				0.001	0.0022
140	31351-93790	GASKET RUBBER	1				0.055	0.121
150	66426-81070	PLATE WIND	1				0.2	0.44
160	67156-93770	LENS	1				0.04	0.088
170	31351-93820	LENS	2				0.005	0.011
180	34670-93830	CASE	1				0.195	0.429
190	31351-93840	CASE	1				0.13	0.286
200	31351-93850	CLAMP	2				0.04	0.088
210	35533-76230	SCREW WITH WASHER	1				0.002	0.0044
220	03514-50420	SCREW	11				0.002	0.0044
230	03514-50425	SCREW TAPPING	5				0.001	0.0022
240	03514-50414	SCREW TAPPING	5				0.001	0.0022
250	32530-94900	SCREW WITH WASHER	2				0.002	0.0044
260	38240-31480	SOCKET	7				0.001	0.0022
270	38240-31470	BULB	7				0.01	0.022
280	02054-50040	NUT	5				0.001	0.0022
290	04512-50040	WASHER SPRING	5				0	0
300	66426-81100	WASHER PLAIN	5				0.001	0.0022

silverthorn.co.uk

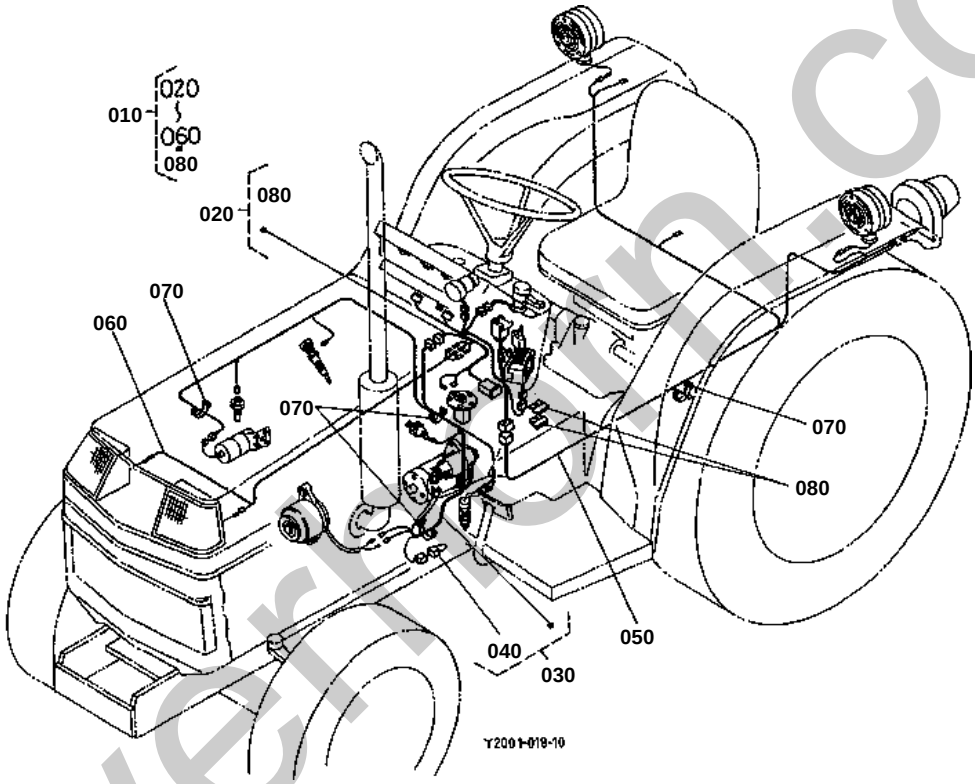

silvermoon.co.uk

↔ Interchangeable; ≠ not interchangeable; ← new for old; → old for new

REF.No	Part No.	Description	Q'ty	S.No.	I/C	REMARKS	Weight (kgf)	Weight (lb)
010	66416-55200	ASSY WIRE HARNESS	1				0.4	0.88
020	66416-55150	WIRE HARNESS	1	<=50736			0.63	1.386
020	66416-55153	WIRE HARNESS	1	>=50737	→		0.4	0.88
030	66416-55160	WIRE HARNESS	1				0.23	0.506
040	67111-55190	RING FUSIBLE	1				0.005	0.011
050	66416-55210	WIRE HARNESS	1				0.26	0.572
060	66418-55150	WIRE HARNESS	1				0.07	0.154
070	53581-64150	BAND CORD	7				0.002	0.0044
080	35820-75560	FUSE	2			15A	0.002	0.0044

silverhorn.co.uk

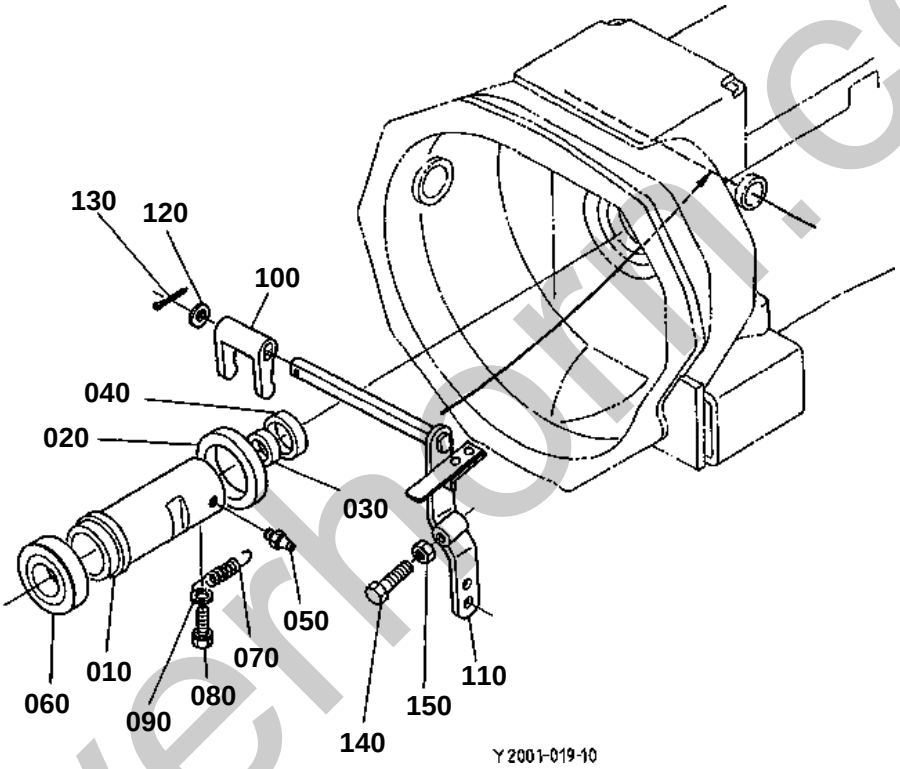

silverhorn.co.uk

CLUTCH ROD

↔ Interchangeable; ≠ not interchangeable; ← new for old; → old for new

REF.No	Part No.	Description	Q'ty	S.No.	I/C	REMARKS	Weight (kgf)	Weight (lb)
010	67311-13310	HOLDER RELEASE BRG	1				0.7	1.54
020	66621-51420	SEAL OIL	1				0.011	0.0242
030	09030-20328	SEAL OIL	1				0.009	0.0198
040	09030-20357	SEAL OIL	1				0.009	0.0198
050	06613-10675	NIPPLE GREASE	1				0.003	0.0066
060	67311-13320	BEARING BALL	1				0.21	0.462
070	66611-13340	SPRING RELEASE	1				0.006	0.0132
080	01202-50610	BOLT	1				0.004	0.0088
090	04013-50060	WASHER PLAIN	1				0	0
100	66591-13250	FORK CLUTCH RELEASE	1				0.098	0.2156
110	66417-13320	ASSY ROD CLUTCH	1				0.43	0.946
120	04011-50140	WASHER PLAIN	1				0.007	0.0154
130	05511-50320	PIN SPLIT	1				0.002	0.0044
140	66711-13320	BOLT ADJUSTING	1				0.028	0.0616
150	02116-50100	NUT	1				0.004	0.0088

silverhorn.co.uk

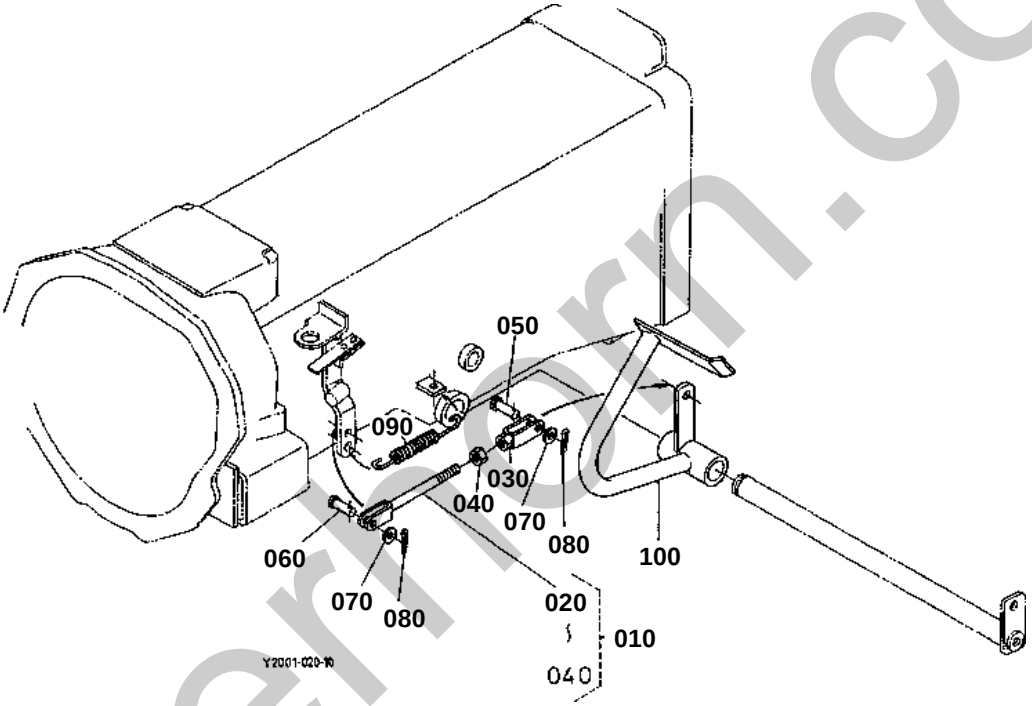

silverhorn.co.uk

CLUTCH PEDAL

↔ Interchangeable; ≠ not interchangeable; ← new for old; → old for new

REF.No	Part No.	Description	Q'ty	S.No.	I/C	REMARKS	Weight (kgf)	Weight (lb)
010	66711-42100	ASSY ROD CLUTCH	1				0.15	0.33
020	66711-42110	ROD CLUTCH	1				0.078	0.1716
030	66621-43130	HOLDER	1				0.06	0.132
040	02112-50080	NUT	1				0.003	0.0066
050	05122-50822	PIN JOINT	1				0.01	0.022
060	05122-50825	PIN JOINT	1				0.011	0.0242
070	04012-50080	WASHER PLAIN	2				0.001	0.0022
080	05511-50215	PIN SPLIT	2				0.001	0.0022
090	67061-42110	SPRING RETURN	1				0.09	0.198
100	67061-42130	PEDAL CLUTCH	1				1.53	3.366

silverhorn.co.uk

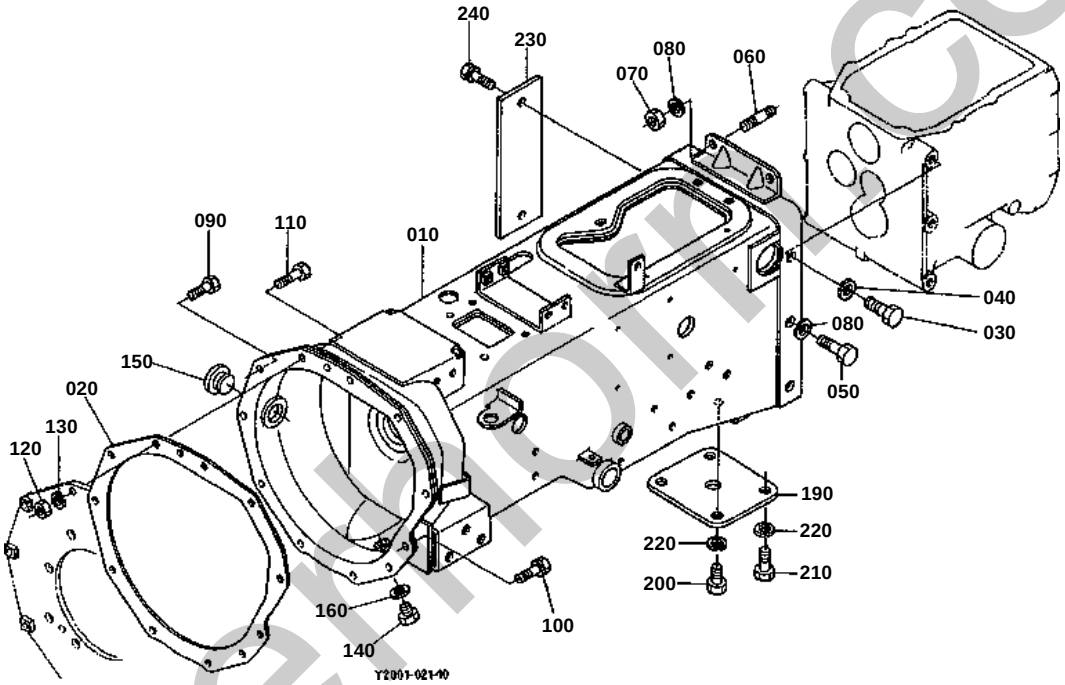

silvermoor.co.uk

170 66204-5116-0

180 67061-5127-0

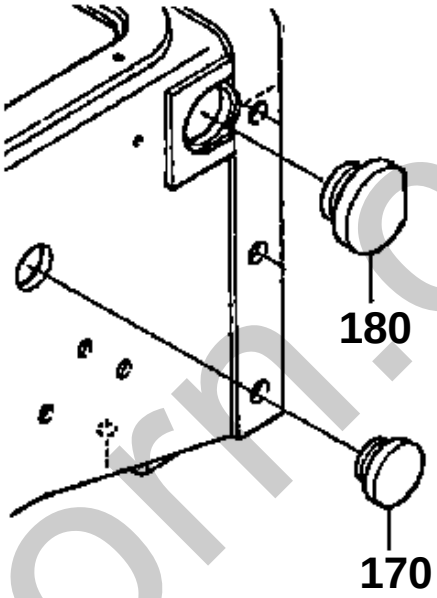

66417-803-10

silverhorn.co.uk

CLUTCH HOUSING

↔ Interchangeable; ≠ not interchangeable; ← new for old; → old for new

REF.No	Part No.	Description	Q'ty	S.No.	I/C	REMARKS	Weight (kgf)	Weight (lb)
010	66417-51110	HOUSING FRAME CLUTCH	1	<=60242			0	0
010	66417-51114	HOUSING FRAME CLUTCH	1	>=60243	←		0	0
010	66417-51115	HOUSING FRAME CLUTCH	1	>=65667	←		21	46.2
020	66621-51410	GASKET	1				0	0
030	66204-51150	BOLT REAMER	4	<=66224			0	0
030	67111-51150	BOLT REAMER	4	>=66225	↔		0.04	0.088
040	04512-50140	WASHER SPRING	4				0	0
050	01153-51230	BOLT	2				0.036	0.0792
060	01555-51220	STUD	2				0.034	0.0748
070	02174-50120	NUT	2				0.01	0.022
080	04512-50120	WASHER SPRING	4				0	0
090	01153-50825	BOLT	1				0.012	0.0264
100	01123-50825	BOLT	8				0.013	0.0286
110	01153-50828	BOLT	2				0.014	0.0308
120	02114-50080	NUT	3				0.005	0.011
130	04512-50080	WASHER SPRING	3				0.001	0.0022
140	06331-35010	PLUG	1				0.012	0.0264
150	66704-51190	COVER TIMING HOLE	1				0.009	0.0198
160	04717-01000	WASHER WITH RUBBER	1				0.001	0.0022
170	66204-51160	PLUG	1	<=60128			0.007	0.0154
180	67061-51270	CAP	2	<=60128			0.02	0.044
190	67061-51280	PLATE JOINT	1				0.6	1.32
200	01173-51225	BOLT	2				0.033	0.0726
210	01153-51230	BOLT	2				0.036	0.0792
220	04512-50120	WASHER SPRING	4				0	0
230	66204-51190	COVER	1				0.075	0.165
240	01123-50818	BOLT	2				0.012	0.0264

silverhorn.co.uk

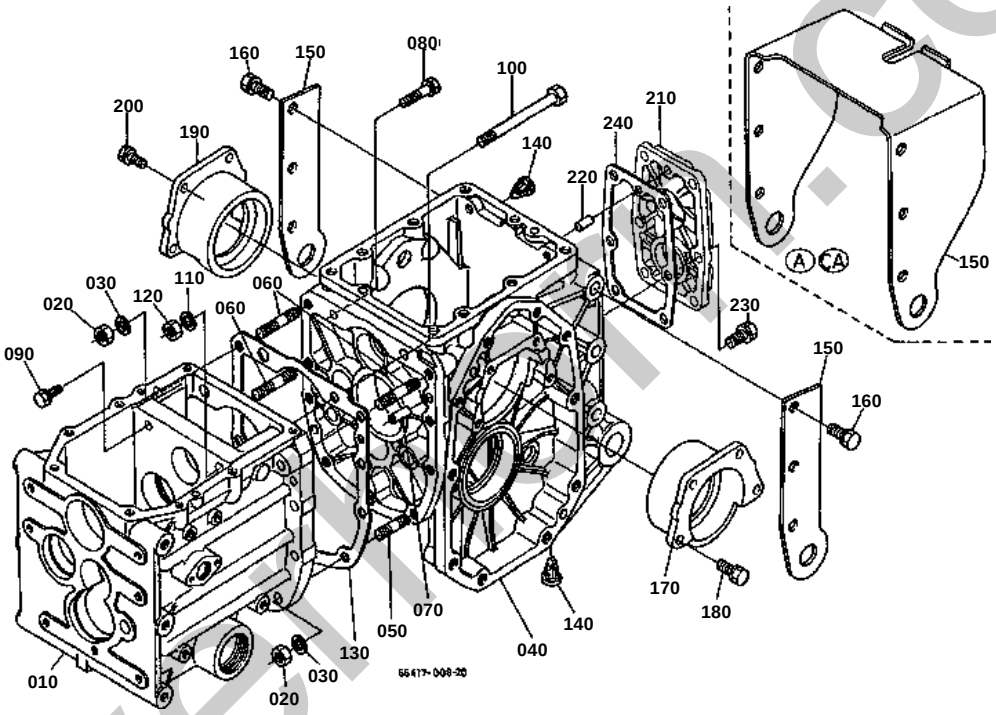

silverline.co.uk

↔ Interchangeable; ≠ not interchangeable; ← new for old; → old for new

REF.No	Part No.	Description	Q'ty	S.No.	I/C	REMARKS	Weight (kgf)	Weight (lb)
010	66204-11110	CASE TRANSMISSION	1	<=60330			0	0
010	66204-11119	CASE TRANSMISSION	1	>=60331	←		19	41.8
020	02176-50100	NUT	9				0.005	0.011
030	04512-60100	WASHER SPRING	9				0.002	0.0044
040	66611-11172	CASE DIFF.GEAR	1	<=50981			0	0
040	66611-11173	CASE DIFF.GEAR	1	>=50982	←		0	0
040	66611-11174	CASE DIFF.GEAR	1	>=64411	←		8.5	18.7
050	01555-51035	STUD	6				0.029	0.0638
060	01555-51050	STUD	3				0.038	0.0836
070	66611-11160	PIN KNOCK	2				0.01	0.022
080	01123-50838	BOLT	1				0.02	0.044
090	01123-50825	BOLT	1				0.013	0.0286
100	66204-11140	BOLT	1				0.097	0.2134
110	04512-60100	WASHER SPRING	1				0.002	0.0044
120	02118-50100	NUT	1				0.005	0.011
130	66611-11130	GASKET	1				0	0
140	67211-11140	PLUG BLIND	4				0.001	0.0022
150	66416-11210	PLATE	2	<=66106		[A] [CA]	0.44	0.968
150	66704-11214	COVER PTO	1	>=66107	↔	[A] [CA]	1.5	3.3
150	66416-11210	PLATE	2			[AU] [NZ]	0.44	0.968
160	01123-51235	BOLT	6			[AU] [NZ]	0.041	0.0902
170	66611-11510	HOLDER DIFF.BRG.LH	1				0.78	1.716
180	01123-50822	BOLT	4				0.012	0.0264
190	66611-11812	HOLDER DIFF.BRG.RH	1				0.72	1.584
200	01123-50822	BOLT	4				0.012	0.0264
210	66706-12210	COVER REAR	1	<=64236			1.21	2.662
210	67211-12212	COVER REAR	1	>=64237	←		1.45	3.19
220	05012-00816	PIN STRAIGHT	1				0.007	0.0154
230	01123-51025	BOLT	6				0.02	0.044
240	66611-12220	GASKET	1				0	0

silverhorn.co.uk

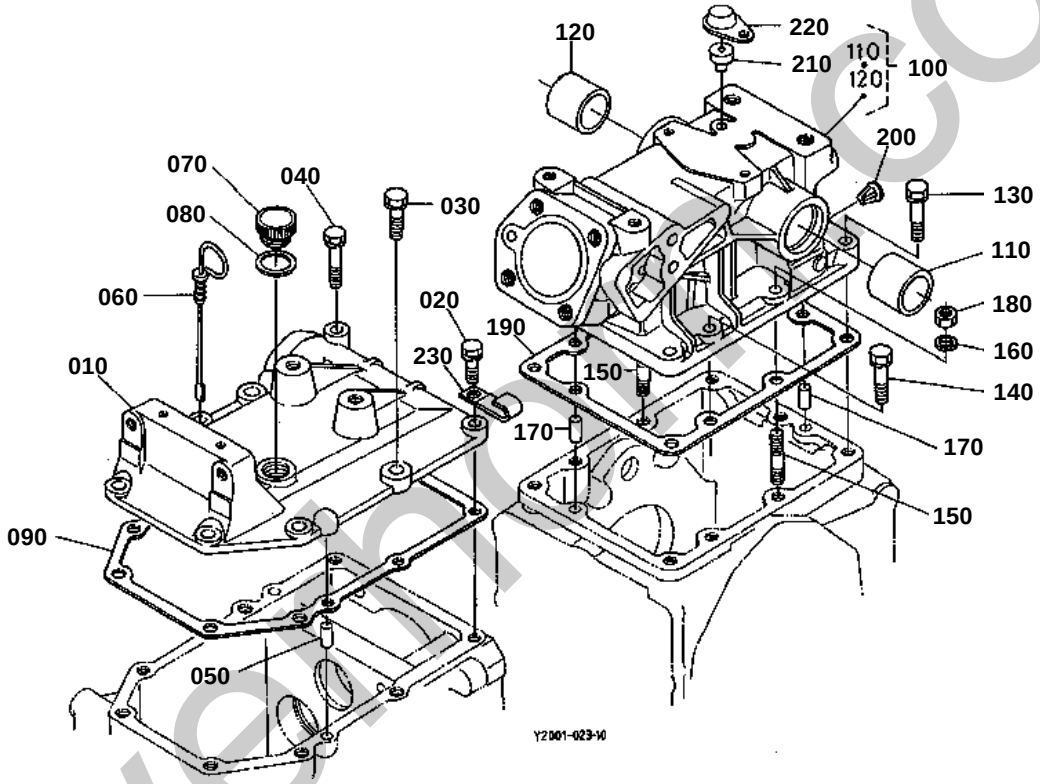

silvermoffco.uk

TRANSMISSION CASE COVER

↔ Interchangeable; ≠ not interchangeable; ← new for old; → old for new

REF.No	Part No.	Description	Q'ty	S.No.	I/C	REMARKS	Weight (kgf)	Weight (lb)
010	66204-12410	COVER UPPER FRONT	1				3.6	7.92
020	01123-50828	BOLT	1				0.014	0.0308
030	01123-51035	BOLT	6				0.025	0.055
040	01123-50845	BOLT	1				0.02	0.044
050	05012-00816	PIN STRAIGHT	2				0.007	0.0154
060	67711-12420	GAUGE OIL	1				0.014	0.0308
070	66591-11460	CAP	1				0.016	0.0352
080	04713-00400	GASKET	1				0.001	0.0022
090	66204-12450	GASKET	1				0	0
100	66416-12500	ASSY COVER REAR	1				4.14	9.108
110	34350-25380	BUSH	1				0.046	0.1012
120	67111-36320	BUSH	1				0.065	0.143
130	01123-51040	BOLT	3				0.03	0.066
140	01123-51035	BOLT	4				0.025	0.055
150	01554-51045	STUD	2				0.032	0.0704
160	04512-60100	WASHER SPRING	2				0.002	0.0044
170	05012-00816	PIN STRAIGHT	2				0.007	0.0154
180	02118-50100	NUT	2				0.005	0.011
190	66611-12520	GASKET	1				0	0
200	67211-11140	PLUG BLIND	2				0.001	0.0022
210	67156-12530	BREATHER	1	<=60128			0	0
210	67156-12532	BREATHER	1	>=60129	←		0.01	0.022
210	67156-12533	BREATHER	1	>=63343	↔		0.002	0.0044
220	67156-12540	COVER BREATHER	1				0.01	0.022
230	35340-29380	CLAMP CORD	1				0.01	0.022

silverhorn.co.uk

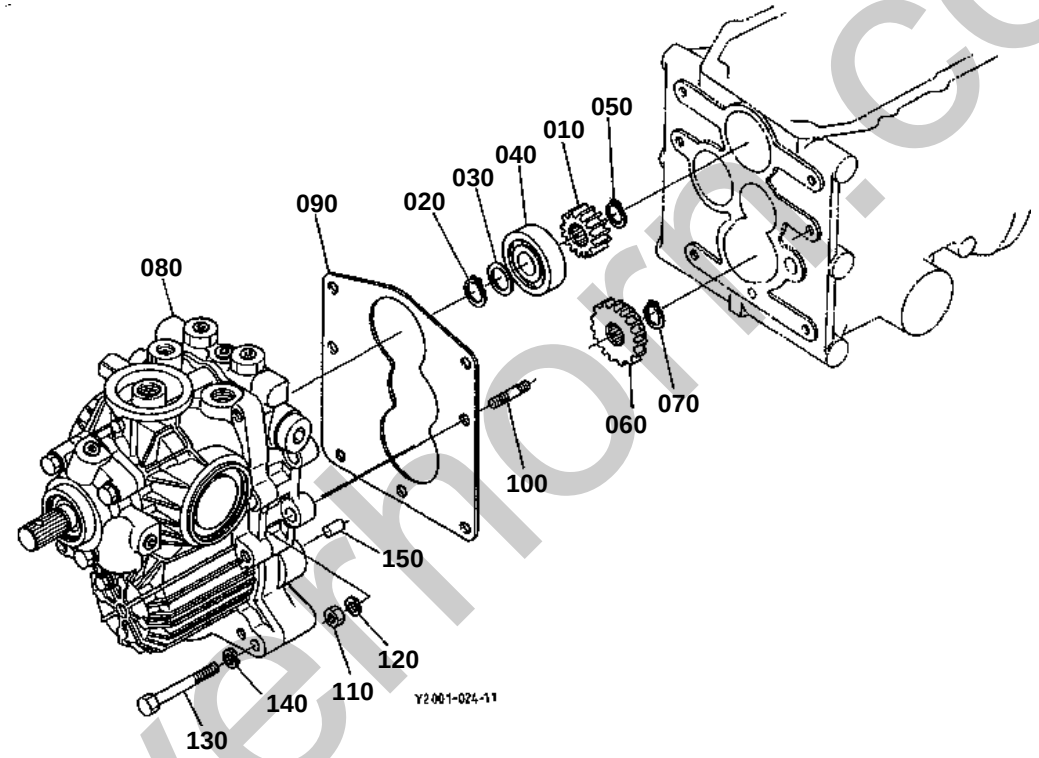

silvermore.co.uk

080 67061-3614-0

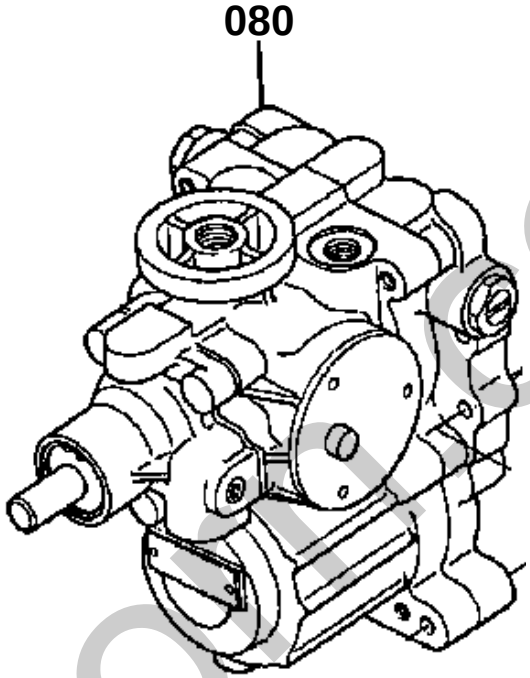

66417-804-10

silverhoe.co.uk

↔ Interchangeable; ≠ not interchangeable; ← new for old; → old for new

REF.No	Part No.	Description	Q'ty	S.No.	I/C	REMARKS	Weight (kgf)	Weight (lb)
010	67061-14120	GEAR SHAFT	1			14T	0.103	0.2266
020	04612-00200	CIRCLIP EXTERNAL	1				0.001	0.0022
030	44366-23820	COLLAR BACK SHAFT	1				0.002	0.0044
040	08101-06304	BEARING BALL	1				0.146	0.3212
050	04612-00190	CIRCLIP EXTERNAL	1				0.001	0.0022
060	66204-14152	GEAR	1			16T	0.15	0.33
070	04612-00200	CIRCLIP EXTERNAL	1				0.001	0.0022
080	67061-36140	ASSY HST	1	<=50999		REFER TO L.No.0C16-R0 FOR COMPONENTS.	14	30.8
080	66415-11600	ASSY HST	1	>=60001	↔	REFER TO L.No.0D01-R0 FOR COMPONENTS.	13.5	29.7
090	66204-36180	GASKET HST	1				0	0
100	01555-51035	STUD	4				0.029	0.0638
110	02118-50100	NUT	4				0.005	0.011
120	04512-60100	WASHER SPRING	4				0.002	0.0044
130	01153-51075	BOLT	2				0.045	0.099
140	04512-60100	WASHER SPRING	2				0.002	0.0044
150	05012-00816	PIN STRAIGHT	1				0.007	0.0154

silverhorn.co.uk

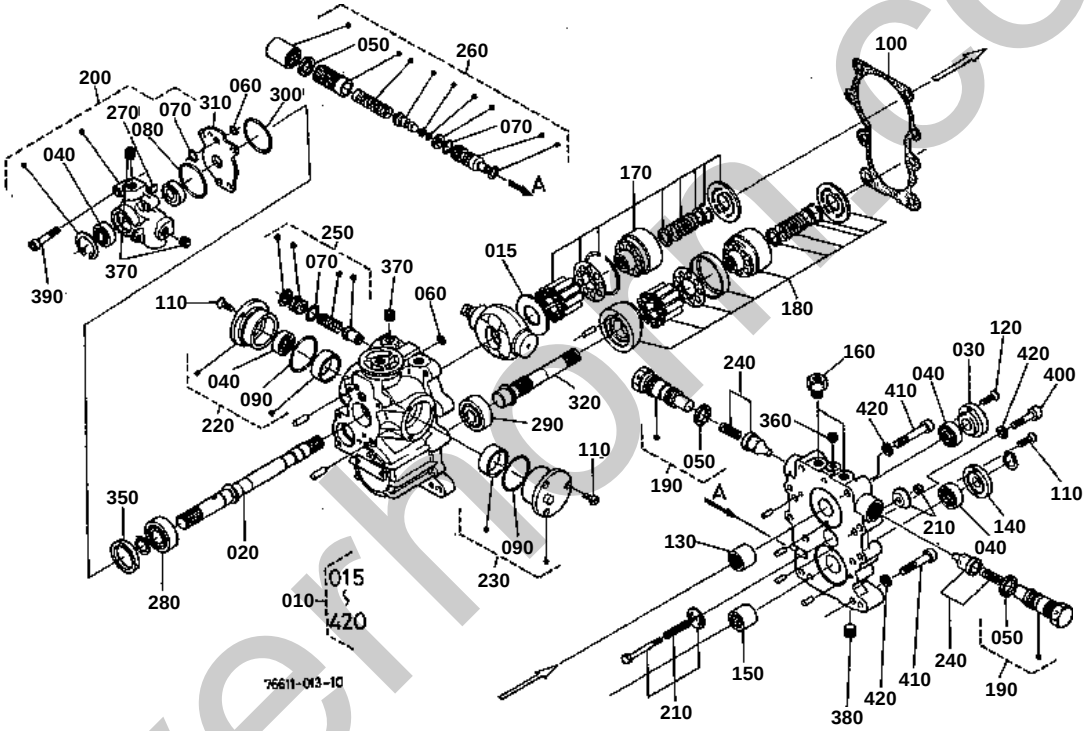

silverhorn.co.uk

↔ Interchangeable; ≠ not interchangeable; ← new for old; → old for new

REF.No	Part No.	Description	Q'ty	S.No.	I/C	REMARKS	Weight (kgf)	Weight (lb)
010	67061-36140	ASSY HST	1				14	30.8
015	66204-83350	PLATE THRUST	2				0.09	0.198
020	67061-84310	SHAFT(P)	1				0.75	1.65
030	66204-83890	FLANGE	1				0.16	0.352
040	66204-83720	SEAL OIL	4				0.011	0.0242
050	66204-83760	SEAL	3				0.003	0.0066
060	66204-83740	O RING	2				0.001	0.0022
070	66204-83780	O RING	3				0.001	0.0022
080	66204-83790	O RING	1				0.002	0.0044
090	66204-83730	O RING	2				0.002	0.0044
100	66203-83580	GASKET	1				0.007	0.0154
110	03056-50512	SCREW CSK-HD	8				0.002	0.0044
120	03056-50514	SCREW CSK-HD	2				0.003	0.0066
130	66204-83690	BEARING NEEDLE	1				0.04	0.088
140	66204-83882	COVER	1				0.096	0.2112
150	66204-83680	BEARING NEEDLE	1				0.04	0.088
160	66204-83950	ASSY PLUG	2				0.05	0.11
170	66204-84500	ASSY BLOCK CYL.(P)	1				1.2	2.64
180	66204-84600	ASSY BLOCK CYL.(M)	1				1.74	3.828
190	66204-83500	ASSY VALVE NEUTRAL	2				0.12	0.264
200	67061-84100	ASSY PUMP BOOST	1				0.9	1.98
210	66204-84400	ASSY VALVE RELIEF	1				0.02	0.044
220	66204-83470	COVER A	1				0.44	0.968
230	66204-83370	COVER B	1				0.51	1.122
240	66204-83550	ASSY VALVE CHECK	2				0.018	0.0396
250	66204-83400	ASSY VALVE RELIEF	1				0.025	0.055
260	66204-83800	ASSY VALVE	1				0.2	0.44
270	66204-84120	KEY	1				0.002	0.0044
280	08101-06304	BEARING BALL	1				0.146	0.3212
290	08103-06205	BEARING BALL	1				0.12	0.264
300	66204-83790	O RING	1				0.002	0.0044
310	67061-84110	PLATE	1				0.175	0.385
320	66204-84320	SHAFT	1				0.44	0.968
330	66204-83750	O RING	1				0.002	0.0044
350	66204-84200	COLLAR	1				0.023	0.0506
360	66204-84210	PLUG	1				0.003	0.0066
370	66204-84220	PLUG	3				0.008	0.0176
380	66204-84230	PLUG	2				0.011	0.0242
390	66204-84240	BOLT SOCKET HEAD	3				0.018	0.0396
400	66204-84250	BOLT SOCKET HEAD	2				0.042	0.0924
410	66204-84260	BOLT SOCKET HEAD	6				0.032	0.0704
420	66204-84270	WASHER SPRING	8				0.002	0.0044

silverthorn.co.uk

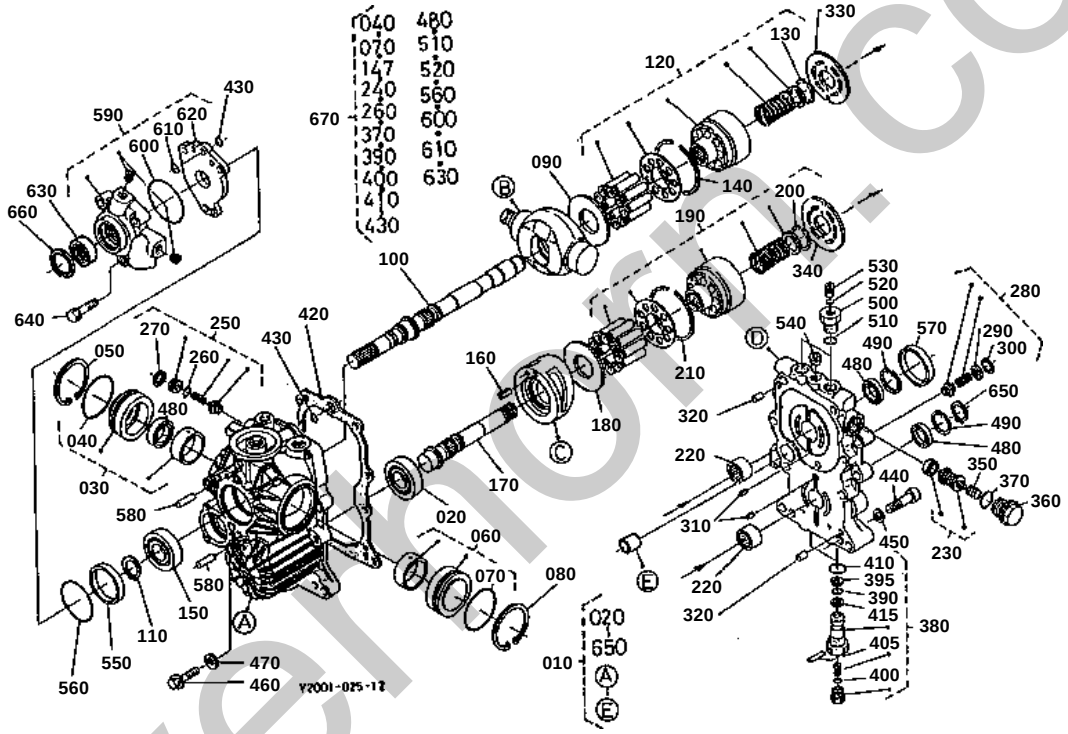

silverhorn.co.uk

146 06311-25030
147 04810-00140

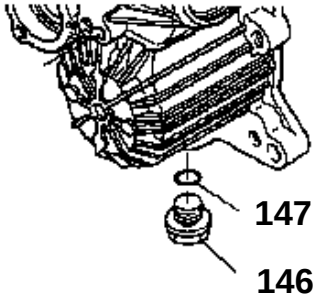

230 66415-8380-0
240 04810-00050

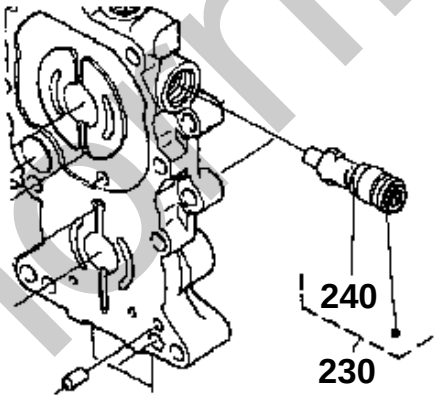

590 66415-8350-0

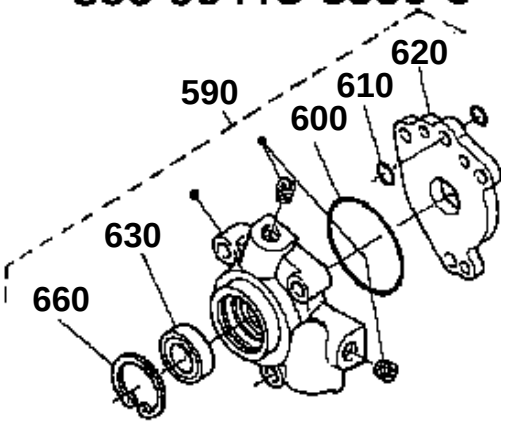

66417-805-11

silverhorn.co.uk

↔ Interchangeable; ≠ not interchangeable; ← new for old; → old for new

REF.No	Part No.	Description	Q'ty	S.No.	I/C	REMARKS	Weight (kgf)	Weight (lb)
010	66415-11600	ASSY HST	1				13.5	29.7
020	66415-39340	BEARING BALL	1				0.05	0.11
030	66415-83300	ASSY COVER A	1				0.47	1.034
040	04811-50550	O RING	1				0.002	0.0044
050	04611-00620	CIR CLIP INTERNAL	1				0.011	0.0242
060	66415-83400	ASSY COVER B	1				0.47	1.034
070	04811-50550	O RING	1				0.002	0.0044
080	04611-00620	CIR CLIP INTERNAL	1				0.011	0.0242
090	66415-39150	PLATE THRUST	1				0.05	0.11
100	66415-39310	SHAFT(P)	1	<=63889			0.5	1.1
100	66415-39315	SHAFT(P)	1	>=63890	≠		0.75	1.65
110	04612-00250	CIRCLIP EXTERNAL	1				0.002	0.0044
120	66415-83100	ASSY BLOCK CYL.(P)	1				1.13	2.486
130	66415-39470	CIR CLIP INTERNAL	1				0.02	0.044
140	66415-39270	RING SNAP	1				0.02	0.044
146	06311-25030	PLUG	1	<=63004			0.051	0.1122
147	04810-00140	O RING	1	<=63004			0.001	0.0022
150	66415-39340	BEARING BALL	1				0.05	0.11
160	05012-00616	PIN STRAIGHT	1	<=63917			0.004	0.0088
160	05411-00618	PIN SPRING	1	>=63918	↔		0.003	0.0066
160	05411-00620	PIN SPRING	1	>=64472	←		0.002	0.0044
160	05411-00825	PIN SPRING	1	>=64884	≠		0.006	0.0132
170	66415-39320	SHAFT(M)	1	<=63889			0.5	1.1
170	66415-39323	SHAFT(M)	1	>=63890	≠		0.42	0.924
180	66415-39150	PLATE THRUST	1				0.05	0.11
190	66415-83100	ASSY BLOCK CYL.(M)	1				1.13	2.486
200	66415-39470	CIR CLIP INTERNAL	1				0.02	0.044
210	66415-39270	RING SNAP	1				0.02	0.044
220	66415-39750	BEARING NEEDLE	2				0.02	0.044
230	66415-83800	ASSY VALVE RELIEF	2	<=63342			0.06	0.132
230	66415-83802	ASSY VALVE RELIEF	2	>=63343	≠		0.03	0.066
240	04810-00050	O RING	2	<=63342			0.001	0.0022
250	66415-83700	ASSY VALVE RELIEF	1				0.001	0.0022
260	04810-00120	O RING	1				0.001	0.0022
270	04611-00160	CIR CLIP INTERNAL	1	<=60918			0.001	0.0022
270	04611-00170	CIR CLIP INTERNAL	1	>=60919	≠		0.001	0.0022
280	66415-84400	ASSY VALVE RELIEF	1				0.05	0.11
290	04013-50080	WASHER PLAIN	1	<=63334			0	0
290	66363-39740	WASHER	1	>=63335	↔		0.001	0.0022
300	04611-00180	CIR CLIP INTERNAL	1				0.001	0.0022
310	05012-00408	PIN STRAIGHT	2	<=61483			0.001	0.0022
310	05012-00414	PIN STRAIGHT	2	>=61484	≠		0.002	0.0044
310	05411-00416	PIN SPRING	2	>=63918	↔		0.001	0.0022
320	05012-00612	PIN STRAIGHT	2	<=63342			0.003	0.0066
320	05012-00610	PIN STRAIGHT	2	>=63343	≠		0.003	0.0066
330	66415-39910	PLATE VALVE(P)	1				0.03	0.066
340	66415-39920	PLATE VALVE(M)	1				0.02	0.044
350	66363-39520	SPRING	2	<=63342			0.001	0.0022
350	66415-83860	SPRING	2	>=63343	≠		0.002	0.0044
360	66415-39590	PLUG	2	<=63342			0.03	0.066
360	66415-83850	PLUG	2	>=63343	≠		0.8	1.76
370	04811-00180	O RING	2				0.001	0.0022
380	66363-83600	ASSY VALVE NEUTRAL	2				0.1	0.22
390	04810-00120	O RING	2				0.001	0.0022
395	66363-39630	RING BACK UP	2				0.001	0.0022

silverthorn.co.uk

↔ Interchangeable; ≠ not interchangeable; ← new for old; → old for new

REF.No	Part No.	Description	Q'ty	S.No.	I/C	REMARKS	Weight (kgf)	Weight (lb)
400	04810-00100	O RING	2				0.001	0.0022
405	05411-00325	PIN SPRING	2				0.001	0.0022
410	04811-00180	O RING	2				0.001	0.0022
415	04013-50060	WASHER PLAIN	2				0	0
420	66415-39550	GASKET	1				0.01	0.022
430	04810-00100	O RING	2				0.001	0.0022
440	66415-39740	BOLT HEX-SOC-HD	8				0.034	0.0748
450	66415-39560	WASHER SPRING	8				0.003	0.0066
460	01754-50835	BOLT FLANGE	1	>=64884			0.019	0.0418
470	04714-00080	GASKET	1	>=64884			0.001	0.0022
480	66363-39560	SEAL OIL	4				0.01	0.022
490	04611-00350	CIR CLIP INTERNAL	2				0.003	0.0066
500	66415-39520	PLUG	2				0.033	0.0726
510	04810-00140	O RING	2				0.001	0.0022
520	04714-00040	GASKET	2				0.001	0.0022
530	66415-39530	SCREW	2				0.005	0.011
540	15521-96030	PLUG	2				0.007	0.0154
550	66415-39540	COLLAR	1				0.025	0.055
560	04811-06530	O RING	1				0.001	0.0022
570	66415-39430	COLLAR	1				0.07	0.154
580	05012-00625	PIN STRAIGHT	2	<=64883			0.006	0.0132
580	05012-00620	PIN STRAIGHT	2	>=64884	≠		0.005	0.011
590	66415-83500	ASSY PUMP CHARGE	1	<=65940			0	0
590	66415-83503	ASSY PUMP CHARGE	1	>=65941	←		0.55	1.21
600	04811-06630	O RING	1				0.001	0.0022
610	04810-00120	RING	1				0.001	0.0022
620	66415-39640	COVER CHARGE PUMP	1				0.05	0.11
630	66363-39560	SEAL OIL	4				0.01	0.022
640	01123-50840	BOLT	3				0.018	0.0396
650	04612-00200	CIRCLIP EXTERNAL	1				0.001	0.0022
660	04611-00350	CIR CLIP INTERNAL	1				0.003	0.0066
670	66415-84900	KIT SEAL	1			OPTION	0.05	0.11

silverthorn.co.uk

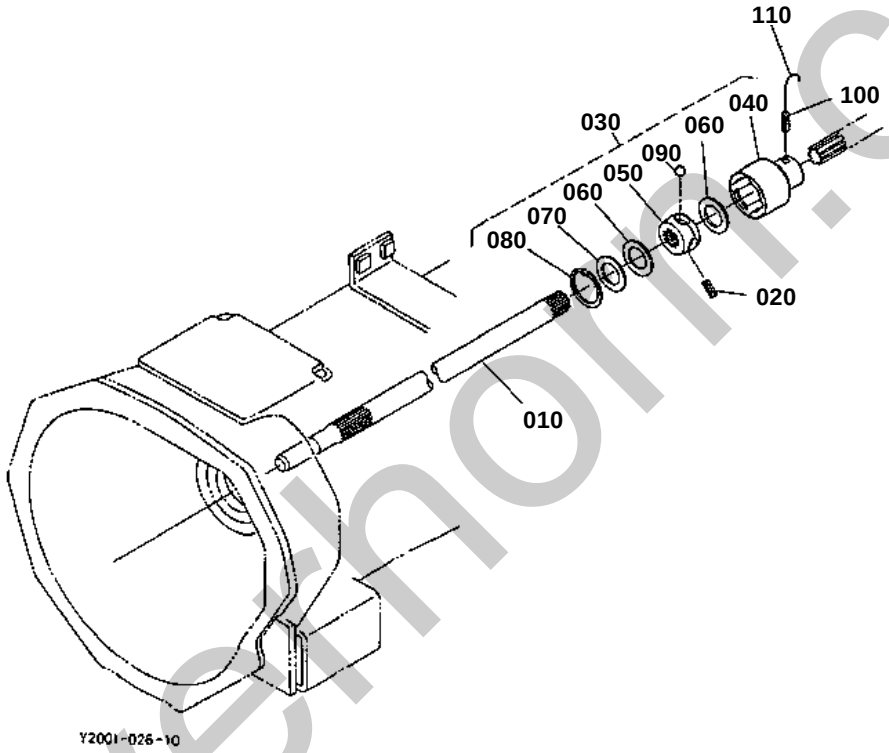

silverthorn.co.uk

↔ Interchangeable; ≠ not interchangeable; ← new for old; → old for new

REF.No	Part No.	Description	Q'ty	S.No.	I/C	REMARKS	Weight (kgf)	Weight (lb)
010	67061-14110	SHAFT PROPELLER	1				0.95	2.09
020	05411-00628	PIN SPRING	1				0.004	0.0088
030	67211-14122	ASSY JOINT BALL	1				0.3	0.66
040	67111-13710	COUPLING BALL OUTER	1				0.225	0.495
050	67211-14133	COUPLING BALL INNER	1				0.075	0.165
060	67111-13730	GASKET BALL JOINT	2				0.002	0.0044
070	67111-13740	SUPPORT GASKET	1				0.004	0.0088
080	04611-00350	CIR CLIP INTERNAL	1				0.003	0.0066
090	07715-00803	BALL	4				0.004	0.0088
100	05411-00640	PIN SPRING	1				0.006	0.0132

silverhorn.co.uk

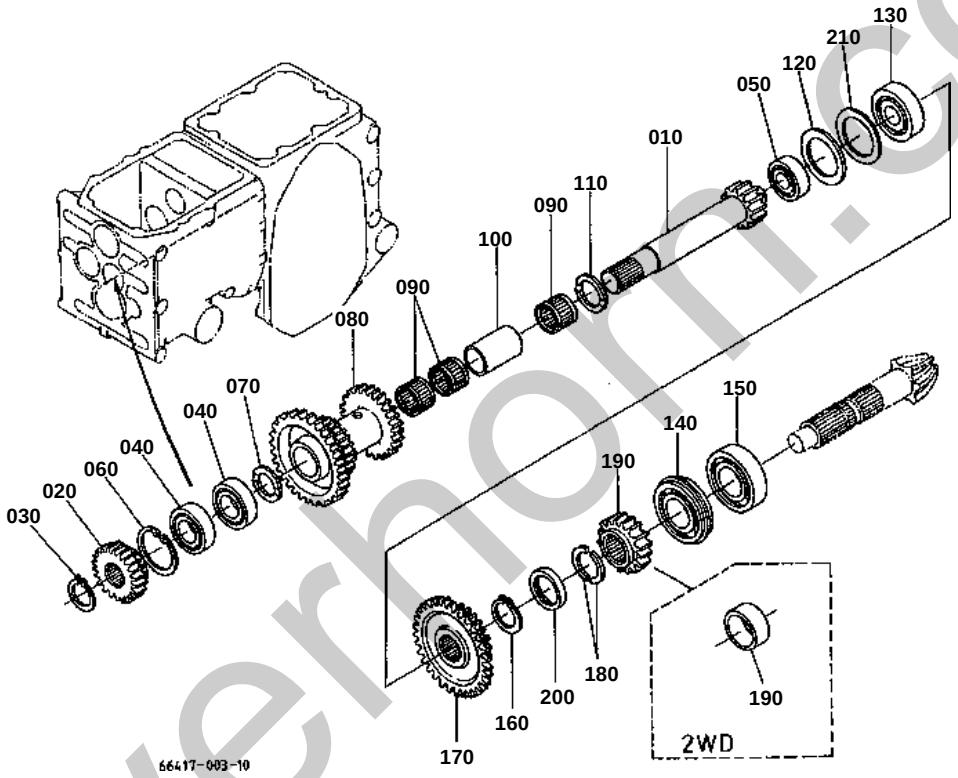

silverhorn.co.uk

2ND SHAFT

↔ Interchangeable; ≠ not interchangeable; ← new for old; → old for new

REF.No	Part No.	Description	Q'ty	S.No.	I/C	REMARKS	Weight (kgf)	Weight (lb)
010	66204-14212	SHAFT SECOND	1			11T	0.49	1.078
020	66204-14220	GEAR	1			14T	0.13	0.286
030	04612-00200	CIRCLIP EXTERNAL	1				0.001	0.0022
040	08101-06204	BEARING BALL	2				0.102	0.2244
050	67311-14270	BEARING BALL	1				0.09	0.198
060	04611-00470	CIR CLIP INTERNAL	1				0.006	0.0132
070	67061-14220	COLLAR THRUST FRONT	1				0.01	0.022
080	67061-14230	GEAR	1			29-14-18T	0.9	1.98
090	67061-14240	BEARING NEEDLE	3				0.03	0.066
100	66711-14872	COLLAR	1				0.05	0.11
110	67061-14260	COLLAR THRUST REAR	1				0.01	0.022
120	66591-14720	SPACER	1				0.002	0.0044
130	08221-07303	BEARING BALL	1				0.116	0.2552
140	67211-14620	BEARING BALL	1				0.23	0.506
150	38450-21980	BEARING BALL	1				0.225	0.495
160	04612-00250	CIRCLIP EXTERNAL	1				0.002	0.0044
170	66204-14630	GEAR	1			20-12T	0.31	0.682
180	67156-14640	COLLAR STOP	2				0.005	0.011
190	66416-14650	GEAR	1			16T	0.1	0.22
200	67156-14660	COLLAR	1				0.01	0.022
210	66611-14670	SHIM	1			1.4MM	0.008	0.0176
210	66611-14680	SHIM	1			1.8MM	0.01	0.022
210	66611-14690	SHIM	1			0.2MM	0.001	0.0022

silverhorn.co.uk

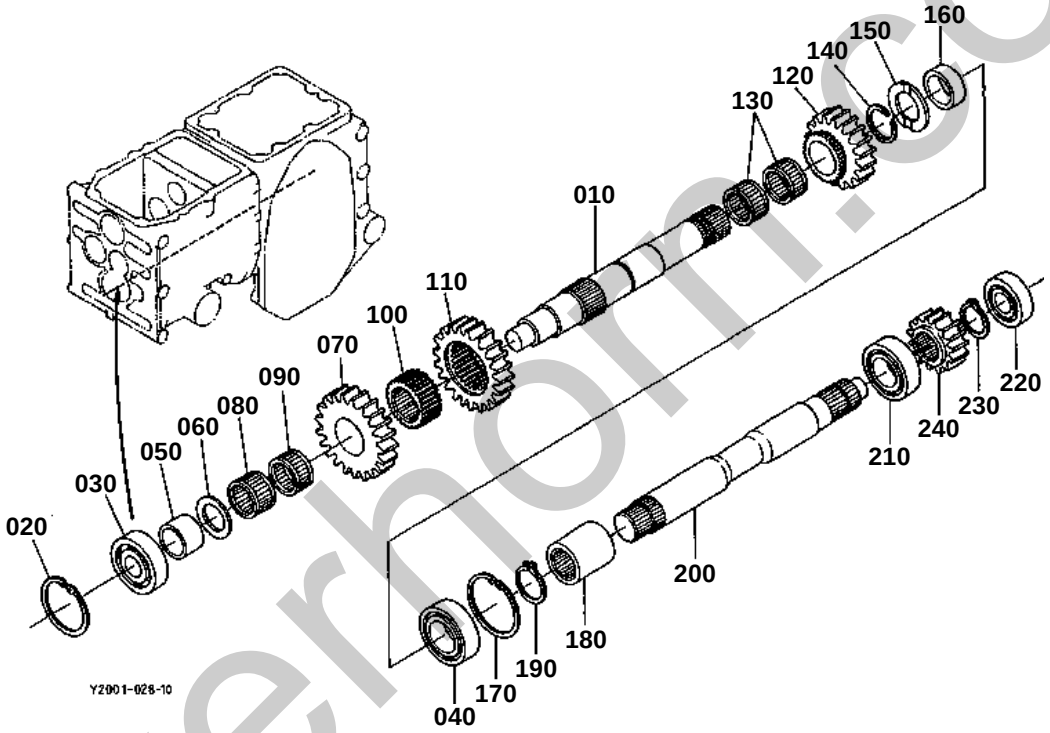

silverhorn.co.uk

3RD SHAFT/5TH SHAFT

↔ Interchangeable; ≠ not interchangeable; ← new for old; → old for new

REF.No	Part No.	Description	Q'ty	S.No.	I/C	REMARKS	Weight (kgf)	Weight (lb)
010	66417-14310	SHAFT THIRD	1				0.65	1.43
020	04611-00470	CIR CLIP INTERNAL	1				0.006	0.0132
030	08101-06303	BEARING BALL	1				0.112	0.2464
040	08101-06205	BEARING BALL	1				0.14	0.308
050	66204-14330	COLLAR SHAFT	1				0.03	0.066
060	66204-14260	COLLAR SHAFT	1				0.007	0.0154
070	67061-14320	GEAR FRONT SHAFT	1			21T	0.37	0.814
080	08822-52913	BEARING NEEDLE	1				0.02	0.044
090	08822-52913	BEARING NEEDLE	1				0.02	0.044
100	67061-14340	BOSS SPLINE	1				0.1	0.22
110	67061-14352	GEAR	1			21T	0.29	0.638
120	67061-14360	GEAR	1			17T	0.24	0.528
130	08822-52913	BEARING NEEDLE	2				0.02	0.044
140	67061-14370	CIR-CLIP	1				0.002	0.0044
150	67061-14380	COLLAR	1				0.01	0.022
160	67061-14390	SPACER	1				0.02	0.044
170	04611-00520	CIR CLIP INTERNAL	1				0.009	0.0198
180	66611-14370	BOSS SPLINE	1				0.128	0.2816
190	04612-00240	CIRCLIP EXTERNAL	1				0.002	0.0044
200	66417-14510	SHAFT FIFTH	1				1.16	2.552
210	67121-56760	BEARING BALL	1	<=63700			0	0
210	67121-56770	BEARING BALL	1	>=63701	←		0.127	0.2794
220	67311-14530	BEARING BALL	1				0.11	0.242
230	04612-00250	CIRCLIP EXTERNAL	1				0.002	0.0044
240	66204-14510	GEAR	1			14T	0.135	0.297

silverhorn.co.uk

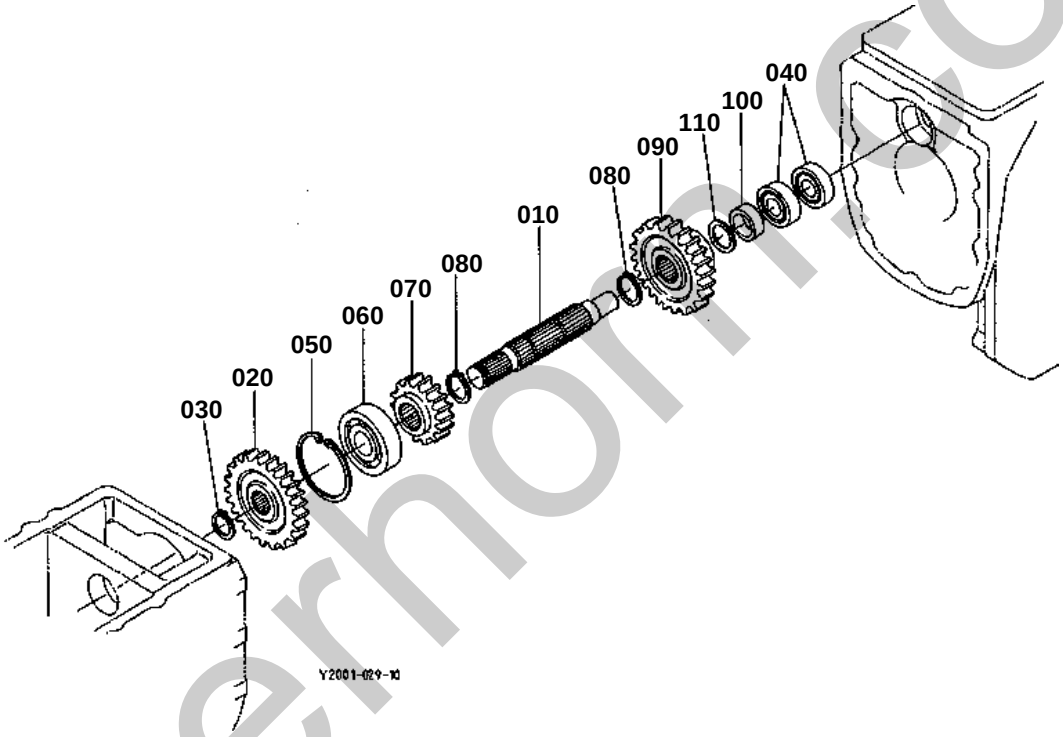

silverhomes.co.uk

4TH SHAFT

↔ Interchangeable; ≠ not interchangeable; ← new for old; → old for new

REF.No	Part No.	Description	Q'ty	S.No.	I/C	REMARKS	Weight (kgf)	Weight (lb)
010	66204-14410	SHAFT FOURTH	1				0.35	0.77
020	66204-14420	GEAR	1			24T	0.31	0.682
030	04612-00200	CIRCLIP EXTERNAL	1				0.001	0.0022
040	08101-06202	BEARING BALL	2				0.044	0.0968
050	04611-00520	CIR CLIP INTERNAL	1				0.009	0.0198
060	08101-06304	BEARING BALL	1				0.146	0.3212
070	66204-14430	GEAR	1			15T	0.145	0.319
080	04612-00220	CIRCLIP EXTERNAL	2				0.001	0.0022
090	66204-14440	GEAR REAR SHAFT	1			23T	0.35	0.77
100	66611-14470	COLLAR	1				0.019	0.0418
110	66204-81410	SHIM A	1			0.6MM	0.001	0.0022
110	66204-81420	SHIM B	1			0.3MM	0.001	0.0022

silverhorn.co.uk

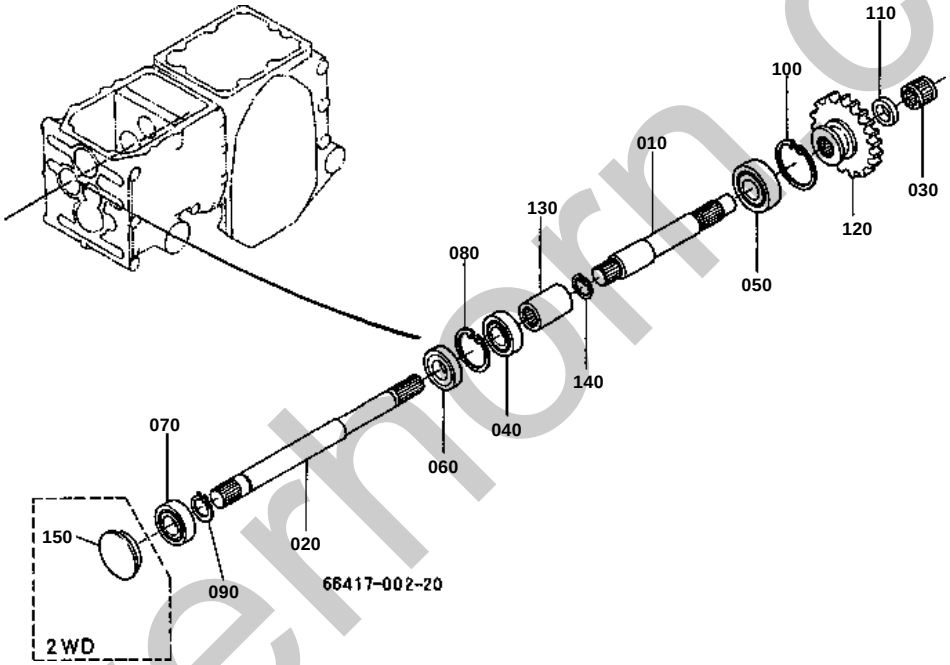

silvernorn.co.uk

FRONT WHEEL DRIVE SHAFT

↔ Interchangeable; ≠ not interchangeable; ← new for old; → old for new

REF.No	Part No.	Description	Q'ty	S.No.	I/C	REMARKS	Weight (kgf)	Weight (lb)
010	66204-14830	SHAFT FRONT DRIVE	1				0.46	1.012
020	66204-14810	SHAFT FRONT DRIVE	1				0.67	1.474
030	67955-14620	BEARING NEEDLE	1				0.005	0.011
040	67311-14820	BEARING BALL	1				0.07	0.154
050	08101-06204	BEARING BALL	1				0.102	0.2244
060	09500-20428	SEAL OIL	1				0.012	0.0264
070	08141-06004	BEARING BALL	1				0.064	0.1408
080	04611-00420	CIR CLIP INTERNAL	1				0.006	0.0132
090	04612-00200	CIRCLIP EXTERNAL	1				0.001	0.0022
100	04611-00470	CIR CLIP INTERNAL	1				0.006	0.0132
110	66611-14830	COLLAR	1				0.016	0.0352
120	66416-14840	GEAR	1			23T	0.26	0.572
130	66204-14820	JOINT FRONT DRIVE	1				0.12	0.264
140	04611-00180	CIR CLIP INTERNAL	1				0.001	0.0022

silverhorn.co.uk

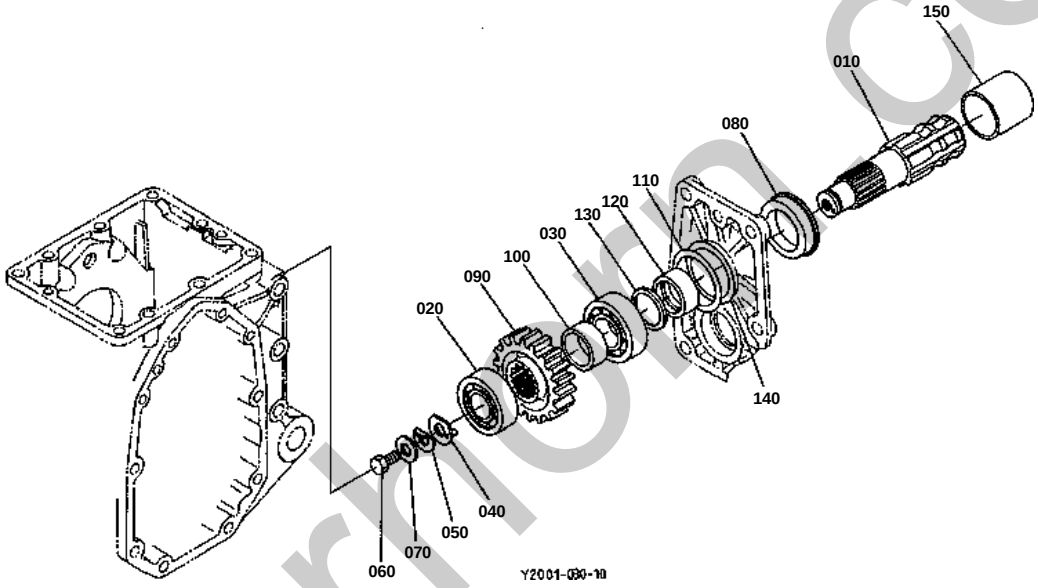

silverhorn.co.uk

010 66204-1471-0

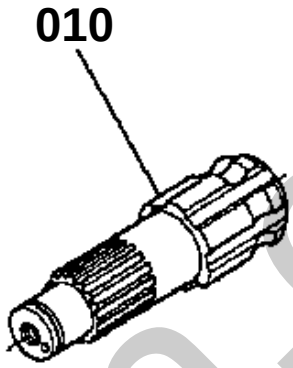

66417-806-10

silverhorn.co.uk

REAR PTO

↔ Interchangeable; ≠ not interchangeable; ← new for old; → old for new

REF.No	Part No.	Description	Q'ty	S.No.	I/C	REMARKS	Weight (kgf)	Weight (lb)
010	66204-14710	SHAFT PTO	1	<=63700			0	0
010	66706-14710	SHAFT PTO	1	>=63701	↔		0.61	1.342
020	08711-30204	BEARING TAPER-ROLLER	1				0.116	0.2552
030	08711-30205	BEARING TAPER-ROLLER	1				0.148	0.3256
040	66704-14720	WASHER	1				0.009	0.0198
050	63753-32430	WASHER LOCK	1				0.001	0.0022
060	66704-14730	BOLT	1				0.012	0.0264
070	04012-50080	WASHER PLAIN	1				0.001	0.0022
080	09180-35488	SEAL OIL	1				0.019	0.0418
090	66204-14790	GEAR	1			21T	0.465	1.023
100	66706-14740	COLLAR PTO	1				0.03	0.066
110	66706-14782	COLLAR	1				0.006	0.0132
120	66611-14730	BUSH	1				0.042	0.0924
130	66611-14740	COLLAR PTO	1				0.004	0.0088
140	66611-14750	SHIM PTO	1			0.5MM	0.002	0.0044
140	66611-14760	SHIM PTO	1			0.4MM	0.002	0.0044
140	66611-14770	SHIM PTO	1			0.3MM	0.001	0.0022
150	66706-14810	COVER PTO	1				0.024	0.0528

silverhorn.co.uk

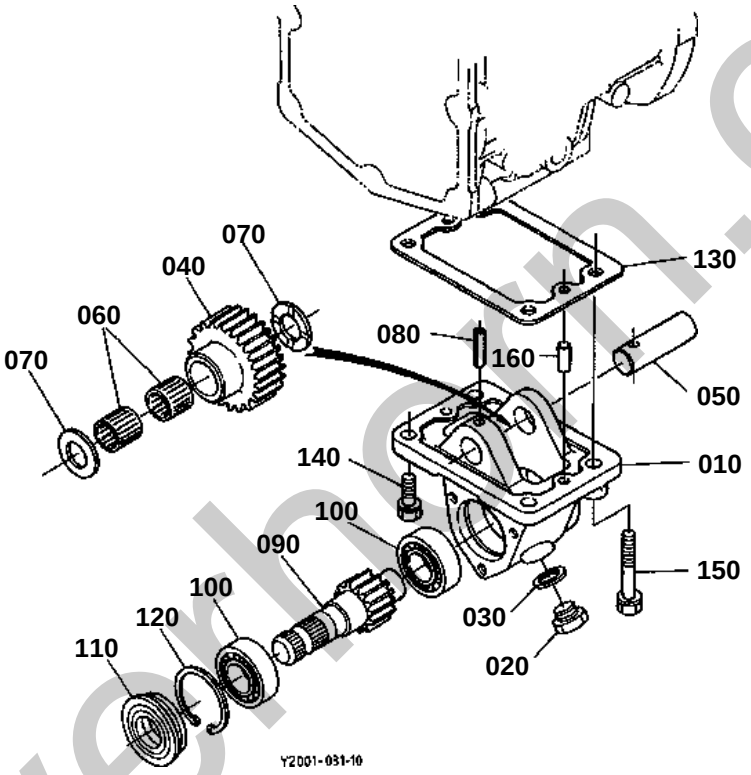

silverhorn.co.uk

↔ Interchangeable; ≠ not interchangeable; ← new for old; → old for new

REF.No	Part No.	Description	Q'ty	S.No.	I/C	REMARKS	Weight (kgf)	Weight (lb)
010	67061-21215	CASE DRIVE MID PTO	1				0.78	1.716
020	06331-35016	PLUG	1				0.04	0.088
030	04717-01600	WASHER WITH RUBBER	1				0.003	0.0066
040	67061-21223	GEAR	1			24T	0.44	0.968
050	67061-21232	SHAFT IDLE	1				0.2	0.44
060	67061-21270	BEARING NEEDLE	2				0.03	0.066
070	96380-25140	COLLAR SHAFT	2				0.014	0.0308
080	05411-00618	PIN SPRING	1				0.003	0.0066
090	66417-21240	SHAFT GEAR	1			11T	0.54	1.188
100	08101-06205	BEARING BALL	2				0.14	0.308
110	32430-25540	SEAL OIL MID PTO	1				0.04	0.088
120	04611-00520	CIR CLIP INTERNAL	1				0.009	0.0198
130	66204-21220	GASKET	1				0	0
140	01123-51028	BOLT	2				0.025	0.055
150	01123-51040	BOLT	2				0.03	0.066
160	05012-00816	PIN STRAIGHT	2				0.007	0.0154

silverhorn.co.uk

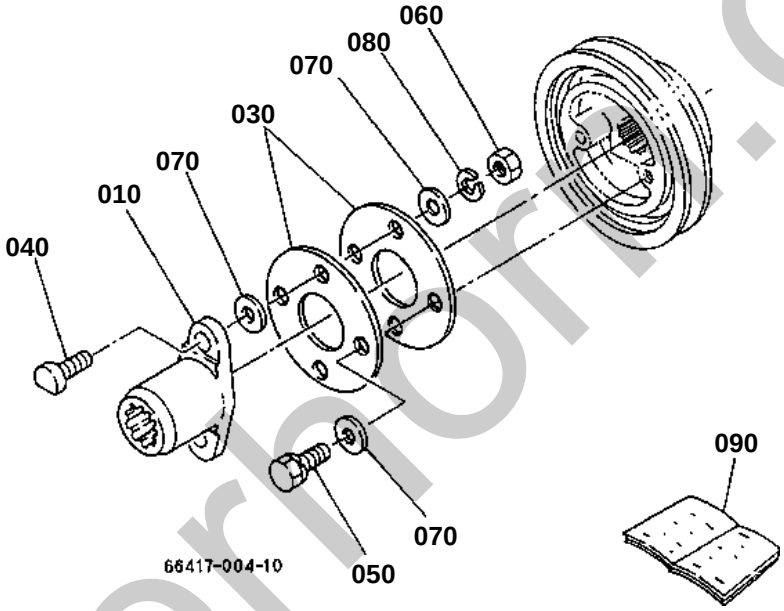

silverhorse.co.uk

↔ Interchangeable; ≠ not interchangeable; ← new for old; → old for new

REF.No	Part No.	Description	Q'ty	S.No.	I/C	REMARKS	Weight (kgf)	Weight (lb)
010	76521-31550	SHAFT COUPLING	1				0.35	0.77
030	76521-31510	PLATE COUPLING	2				0.02	0.044
040	76521-31570	BOLT	2				0.02	0.044
050	01133-51022	BOLT	2				0.025	0.055
060	02118-50100	NUT	2				0.005	0.011
070	04013-50100	WASHER PLAIN	6				0	0
080	04512-60100	WASHER SPRING	2				0.002	0.0044
090	67401-88512	MANUAL INSTRUCTION	1				0.006	0.0132

silverhorn.co.uk

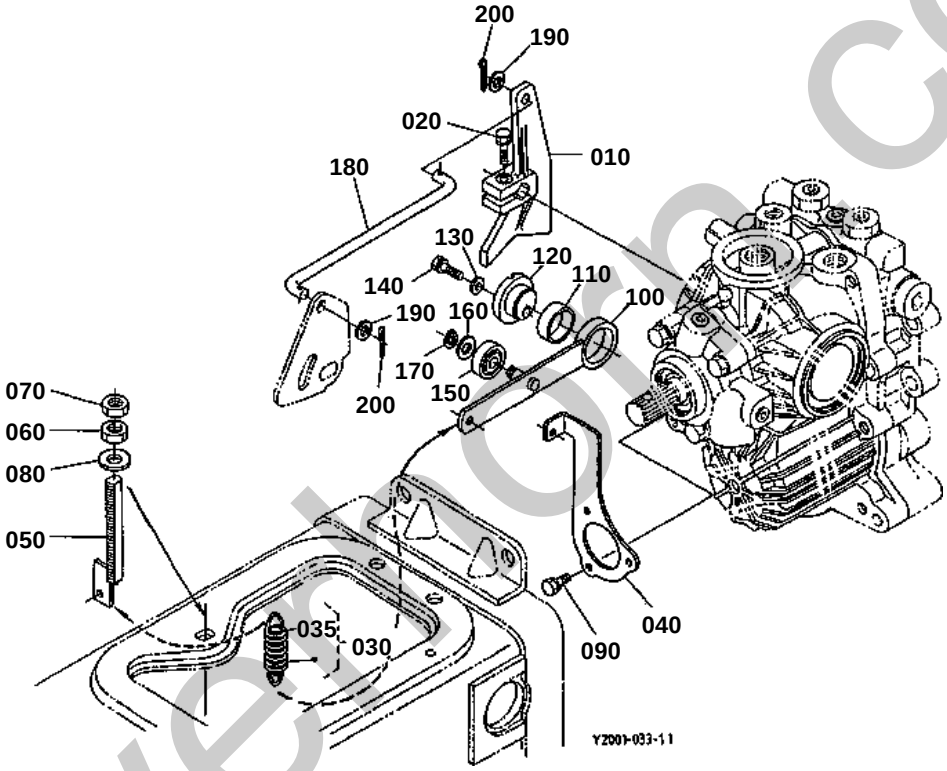

silvermoor.co.uk

030 66204-4332-3

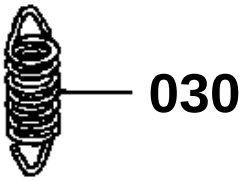

66466-811-10

silverhorn.co.uk

NEUTRAL HOLDER

↔ Interchangeable; ≠ not interchangeable; ← new for old; → old for new

REF.No	Part No.	Description	Q'ty	S.No.	I/C	REMARKS	Weight (kgf)	Weight (lb)
010	66204-43310	HOLDER NEUTRAL	1				0.28	0.616
020	01123-50828	BOLT	1				0.014	0.0308
030	66204-43323	SPRING	1	<=66750			0.055	0.121
030	76611-43320	ASSY SPRING	1	>=66751	←		0.067	0.1474
035	76611-43330	HOSE SPRING	1	>=66751			0.066	0.1452
040	66204-43330	HOLDER SPRING	1				0.095	0.209
050	66204-43650	BOLT SPRING ADJUST	1				0.07	0.154
060	02172-50120	NUT	1				0.01	0.022
070	02174-50120	NUT	1				0.01	0.022
080	04011-50120	WASHER PLAIN	1				0.005	0.011
090	01202-50614	BOLT	3				0.006	0.0132
100	66204-43343	ARM NEUTRAL HOLDER	1				0.13	0.286
110	66204-43572	BUSH	1				0.003	0.0066
120	66204-43352	SHAFT HOLDER	1				0.072	0.1584
130	04012-50080	WASHER PLAIN	1				0.001	0.0022
140	01123-50832	BOLT	1				0.016	0.0352
150	08121-06000	BEARING BALL	1				0.02	0.044
160	04011-50100	WASHER PLAIN	1				0.002	0.0044
170	04612-00100	CIRCLIP EXTERNAL	1				0.001	0.0022
180	67061-43360	ROD SPEED CHANGE	1				0.1	0.22
190	04012-50080	WASHER PLAIN	2				0.001	0.0022
200	05511-50215	PIN SPLIT	2				0.001	0.0022

silverhorn.co.uk

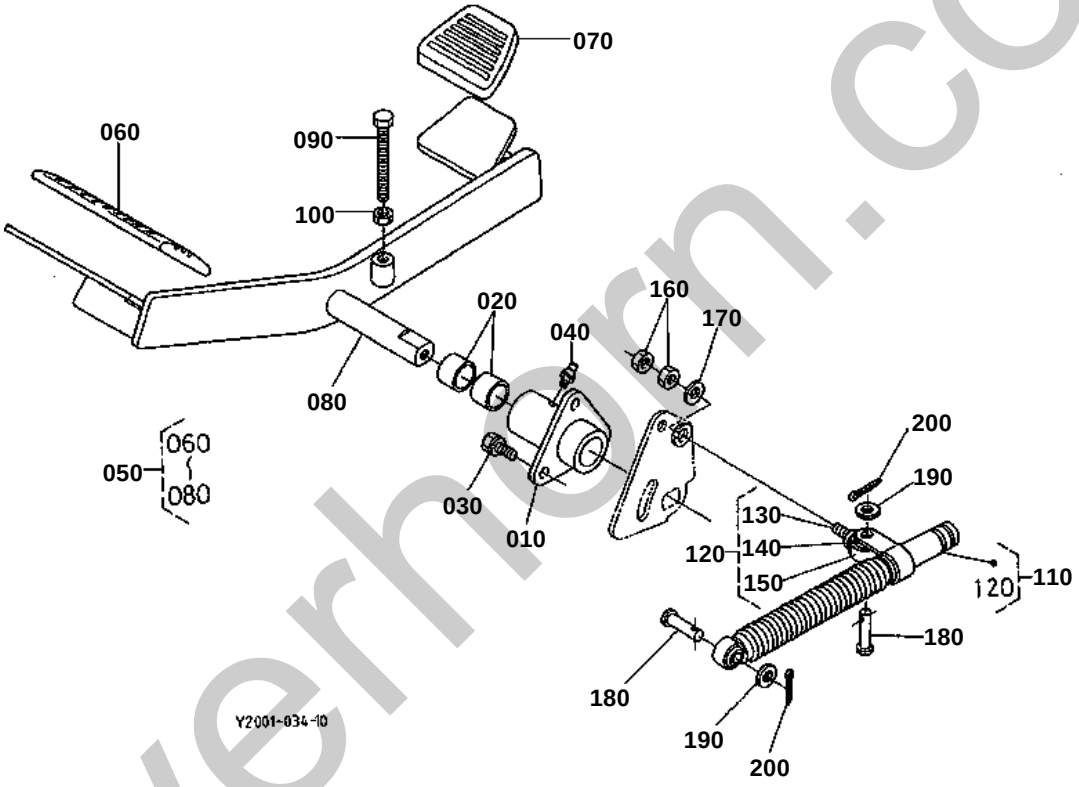

silverhorn.co.uk

SPEED CONTROL PEDAL

↔ Interchangeable; ≠ not interchangeable; ← new for old; → old for new

REF.No	Part No.	Description	Q'ty	S.No.	I/C	REMARKS	Weight (kgf)	Weight (lb)
010	66204-43370	HOLDER PEDAL	1				0.25	0.55
020	08511-01815	BUSH	2				0.007	0.0154
030	01123-50818	BOLT	3				0.012	0.0264
040	67211-42940	NIPPLE GREASE	1				0.001	0.0022
050	67061-43300	ASSY PEDAL S-CHANGE	1				1.25	2.75
060	66204-43390	COVER PEDAL FRONT	1				0.06	0.132
070	66204-43410	COVER PEDAL REAR	1				0.06	0.132
080	67061-43382	PEDAL SPEED CHANGE	1				1.14	2.508
090	01155-50875	BOLT	1				0	0
100	02114-50080	NUT	1				0.005	0.011
110	66204-43530	DAMPER	1				0.3	0.66
120	66204-43600	ASSY BOLT DAMPER	1				0.035	0.077
130	66204-43610	BOLT FULCRUM	1				0.03	0.066
140	66204-43540	BUSH RUBBER	1				0.002	0.0044
150	66204-43620	COLLAR	1				0.01	0.022
160	02112-50080	NUT	2				0.003	0.0066
170	04012-50080	WASHER PLAIN	1				0.001	0.0022
180	05122-50830	PIN JOINT	2				0.014	0.0308
190	04012-50080	WASHER PLAIN	2				0.001	0.0022
200	05511-50215	PIN SPLIT	2				0.001	0.0022

silverhorn.co.uk

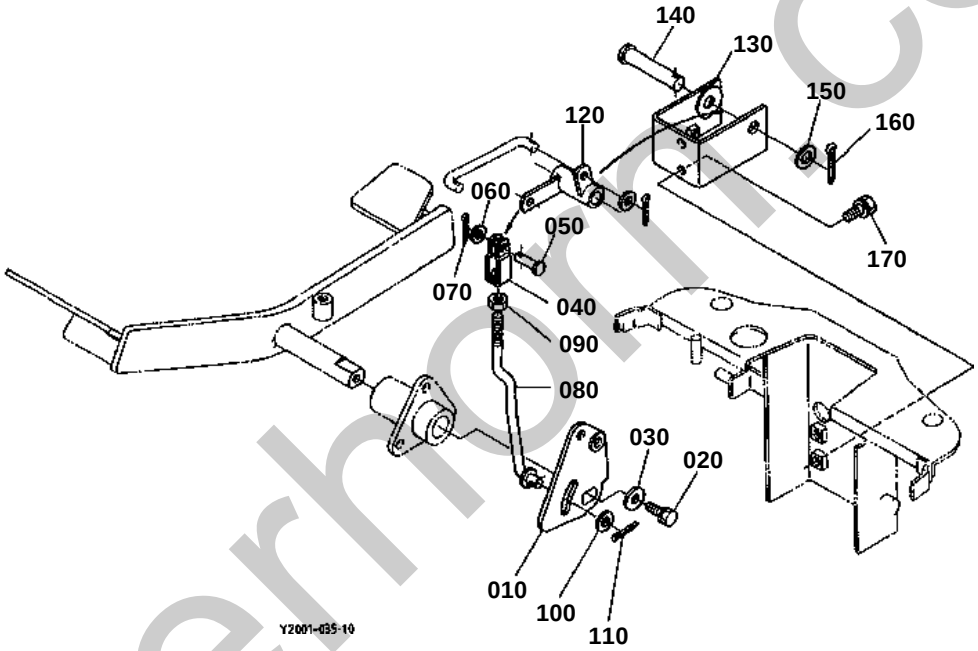

silverhorn.co.uk

SPEED CHANGE PLATE

↔ Interchangeable; ≠ not interchangeable; ← new for old; → old for new

REF.No	Part No.	Description	Q'ty	S.No.	I/C	REMARKS	Weight (kgf)	Weight (lb)
010	67061-43420	PLATE SPEED CHANGE	1				0.2	0.44
020	01123-60816	BOLT	1				0.01	0.022
030	04015-50080	WASHER PLAIN	1				0	0
040	63753-42350	U JOINT	1				0.038	0.0836
050	05122-50820	PIN JOINT	1				0.009	0.0198
060	04012-50080	WASHER PLAIN	1				0.001	0.0022
070	05511-50215	PIN SPLIT	1				0.001	0.0022
080	66417-43510	ROD CHECK UNDER	1				0.075	0.165
090	02112-50080	NUT	1				0.003	0.0066
100	04012-50080	WASHER PLAIN	1				0.001	0.0022
110	05511-50215	PIN SPLIT	1				0.001	0.0022
120	66417-43490	ARM	1				0.1	0.22
130	66417-43530	PLATE	1				0.36	0.792
140	05122-51265	PIN JOINT	1				0.06	0.132
150	04011-50120	WASHER PLAIN	1				0.005	0.011
160	05511-50425	PIN SPLIT	1				0.003	0.0066
170	01123-50820	BOLT	2				0.011	0.0242

silverhorn.co.uk

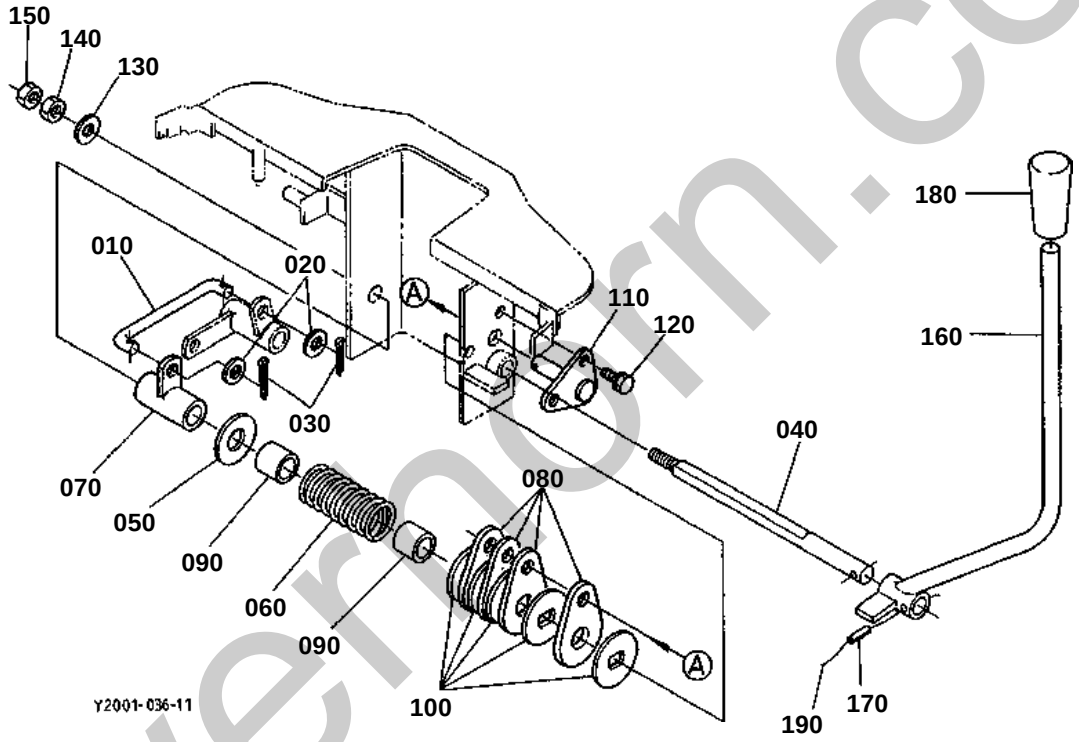

silvermorn.co.uk

SPEED SET LEVER

↔ Interchangeable; ≠ not interchangeable; ← new for old; → old for new

REF.No	Part No.	Description	Q'ty	S.No.	I/C	REMARKS	Weight (kgf)	Weight (lb)
010	67061-43550	ROD	1				0.05	0.11
020	04012-50080	WASHER PLAIN	2				0.001	0.0022
030	05511-50215	PIN SPLIT	2				0.001	0.0022
040	66417-43570	SHAFT SPEED LOCK	1				0.15	0.33
050	04013-60120	WASHER PLAIN	1				0.01	0.022
060	66301-43590	SPRING	1				0.07	0.154
070	66417-43590	ARM	1				0.07	0.154
080	66301-43610	LEVER DISK	4	<=60155			0.01	0.022
080	66419-43660	LEVER DISK	4	>=60156	↔		0	0
090	66301-43660	SEALING	2				0.003	0.0066
100	66301-43620	PLATE STEEL	5				0.02	0.044
110	66417-43540	WASHER LOCK	1				0.05	0.11
120	01023-50618	BOLT	2				0.006	0.0132
130	04015-60080	WASHER PLAIN	1				0.01	0.022
140	02114-50080	NUT	1				0.005	0.011
150	02112-50080	NUT	1				0.003	0.0066
160	66417-43470	LEVER SPEED LOCK	1				0.43	0.946
170	05411-00522	PIN SPRING	1				0.002	0.0044
180	54201-23270	GRIP	1				0.02	0.044

silverhorn.co.uk

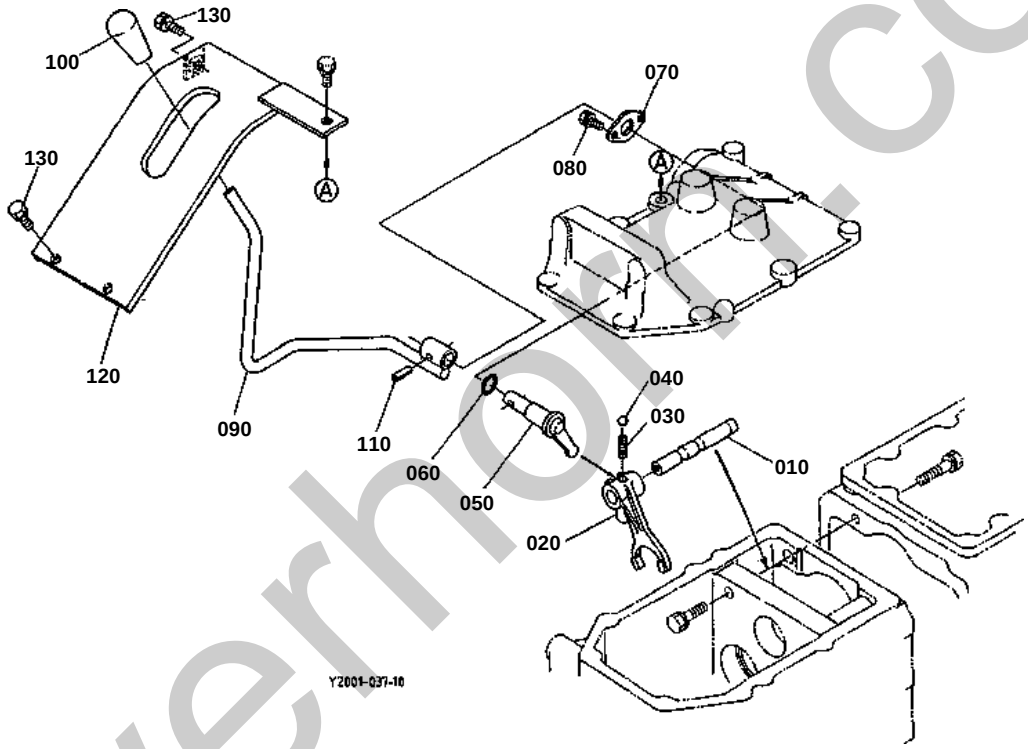

silverhorn.co.uk

RANGE GEAR SHIFT LEVER

↔ Interchangeable; ≠ not interchangeable; ← new for old; → old for new

REF.No	Part No.	Description	Q'ty	S.No.	I/C	REMARKS	Weight (kgf)	Weight (lb)
010	66204-18410	SHAFT RANGE FORK	1				0.095	0.209
020	66204-18420	FORK RANGE SHIFT	1				0.165	0.363
030	62061-18260	SPRING STOPPER	1				0.002	0.0044
040	07715-01605	BALL	1				0.003	0.0066
050	66591-18170	ARM RANGE SHIFT	1				0.106	0.2332
060	04811-00160	RING	1				0.001	0.0022
070	66591-18180	RETAINER FORK ROD	1				0.012	0.0264
080	01202-50614	BOLT	2				0.006	0.0132
090	67061-42513	LAVER RANGE SHIFT	1				0.33	0.726
100	54201-23270	GRIP	1				0.02	0.044
110	05411-00630	PIN SPRING	1				0.004	0.0088
120	66416-52770	COVER S-CHANGE RH	1				0.28	0.616
130	01123-50818	BOLT	3				0.012	0.0264

silverhorn.co.uk

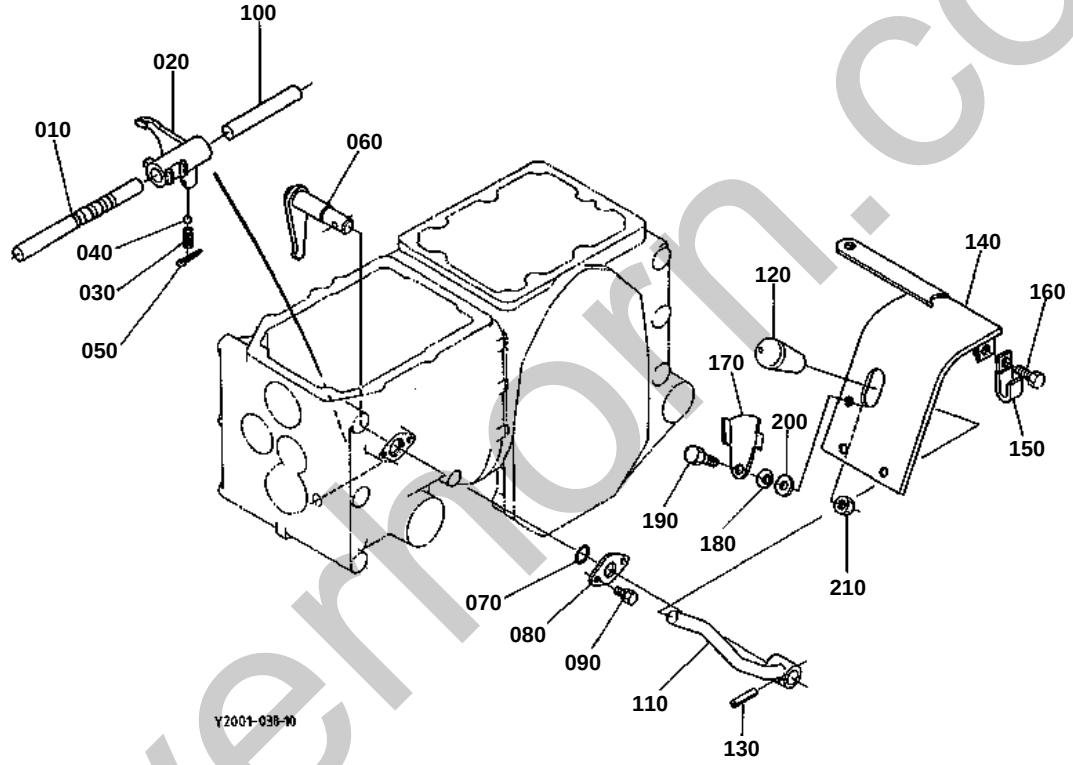

silverhorn.co.uk

PTO GEAR SHIFT LEVER

↔ Interchangeable; ≠ not interchangeable; ← new for old; → old for new

REF.No	Part No.	Description	Q'ty	S.No.	I/C	REMARKS	Weight (kgf)	Weight (lb)
010	67061-18610	SHAFT PTO FORK	1				0.2	0.44
020	67061-18620	FORK PTO SHIFT	1				0.18	0.396
030	62061-18260	SPRING STOPPER	1				0.002	0.0044
040	07715-01605	BALL	1				0.003	0.0066
050	05511-50322	PIN SPLIT	1				0.002	0.0044
060	66591-18220	ARM	1				0.12	0.264
070	04811-00160	RING	1				0.001	0.0022
080	66591-18180	RETAINER FORK ROD	1				0.012	0.0264
090	01202-50614	BOLT	2				0.006	0.0132
100	66611-19310	RETAINER ROD	1				0.129	0.2838
110	67061-42712	LEVER PTO SHIFT	1				0.5	1.1
120	54201-23270	GRIP	1				0.02	0.044
130	05411-00630	PIN SPRING	1				0.004	0.0088
140	66417-52760	COVER S-CHANGE LH	1				0.18	0.396
150	37150-34460	CLAMP CORD	1				0.03	0.066
160	01123-50818	BOLT	3				0.012	0.0264
170	66416-52780	HOLDER PTO CHECK	1	<=60044			0.03	0.066
170	67061-52782	HOLDER PTO CHECK	1	>=60045	↔		0.02	0.044
180	67401-52790	SPRING PLATE	1				0.002	0.0044
190	01153-50822	BOLT	1				0.011	0.0242
200	04013-50080	WASHER PLAIN	1				0	0
210	02114-50080	NUT	1				0.005	0.011

silverhorn.co.uk

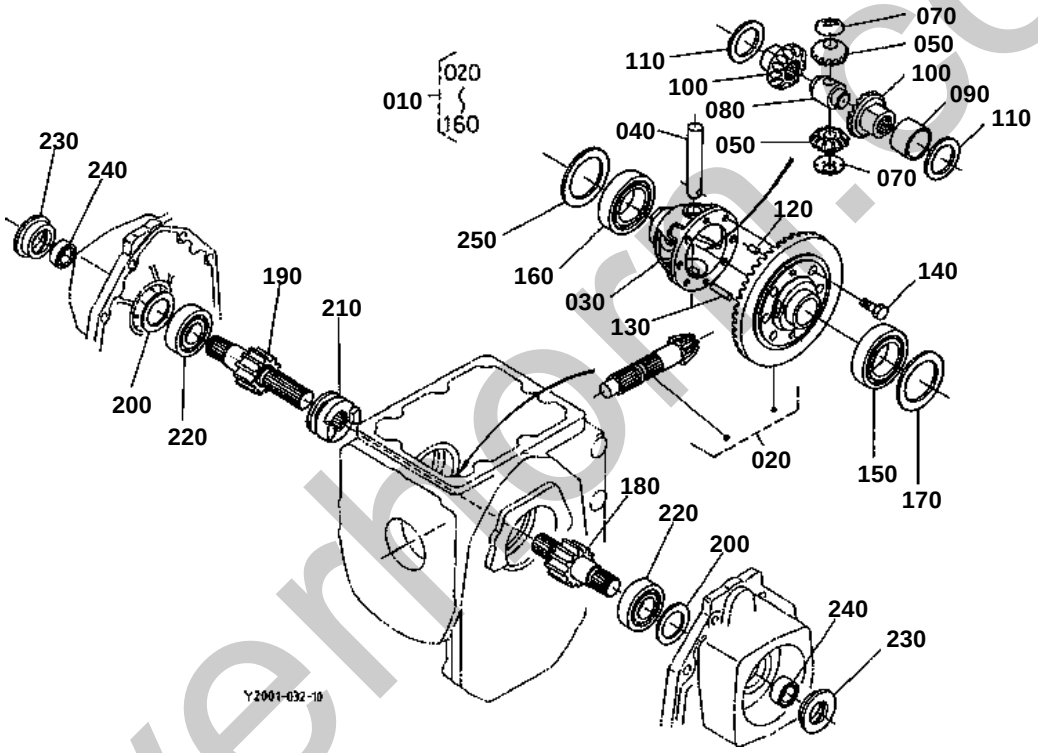

silverhorn.co.uk

↔ Interchangeable; ≠ not interchangeable; ← new for old; → old for new

REF.No	Part No.	Description	Q'ty	S.No.	I/C	REMARKS	Weight (kgf)	Weight (lb)
010	66204-81303	ASSY DIFF REAR	1				4.1	9.02
020	66204-82714	ASSY GEAR BEVEL	1			6-37T	1.5	3.3
030	67311-14973	CASE DIFFERENTIAL	1				0.7	1.54
040	67711-14912	SHAFT DIFF.PINION	1				0.14	0.308
050	67711-14920	PINION DIFF.	2			12T	0.11	0.242
070	67311-14980	COLLAR PINION THRUST	2				0.002	0.0044
080	66591-14860	COLLAR THRUST	1				0.102	0.2244
090	66611-14950	BUSH	1				0.032	0.0704
100	67211-15150	GEAR DIFF.SIDE	2			14T	0.158	0.3476
110	67211-15160	SHIM	1			1.0MM	0.01	0.022
110	67211-15170	SHIM	1			0.8MM	0.008	0.0176
110	67211-15180	SHIM	1			1.2MM	0.01	0.022
120	66591-14792	PIN KNOCK	1				0.003	0.0066
130	66591-14783	PIN STRAIGHT	1				0.01	0.022
140	67810-56680	BOLT UBS	6				0.013	0.0286
150	08101-06009	BEARING BALL	1				0.22	0.484
160	08101-06010	BEARING BALL	1				0.262	0.5764
170	66591-14980	SHIM DIFF.SIDE	1			0.5MM	0.005	0.011
170	66591-14990	SHIM DIFF.SIDE	1			0.2MM	0.002	0.0044
180	67401-14940	SHAFT DIFF.GEAR LH	1				0.6	1.32
190	67401-14950	SHAFT DIFF.GEAR RH	1				0.69	1.518
200	67211-14990	SHIM DIFF.GEAR SHAFT	1			0.3MM	0.002	0.0044
200	66621-15240	SHIM DIFF.GEAR SHAFT	1			0.2MM	0.001	0.0022
200	66621-15250	SHIM DIFF.GEAR SHAFT	1			0.5MM	0.003	0.0066
210	66611-15130	CLUTCH DIFF.LOCK	1				0.2	0.44
220	08101-06305	BEARING BALL	2				0.23	0.506
230	67401-14960	SEAL OIL	2	<=67369			0.015	0.033
230	66466-14960	SEAL OIL	2	>=67370	←		0.025	0.055
240	67401-14970	SLEEVE	2				0.015	0.033
250	66611-15140	SHIM DIFF.SIDE	1			0.5MM	0.006	0.0132
250	66611-15150	SHIM DIFF.SIDE	1			0.2MM	0.002	0.0044

silverthorn.co.uk

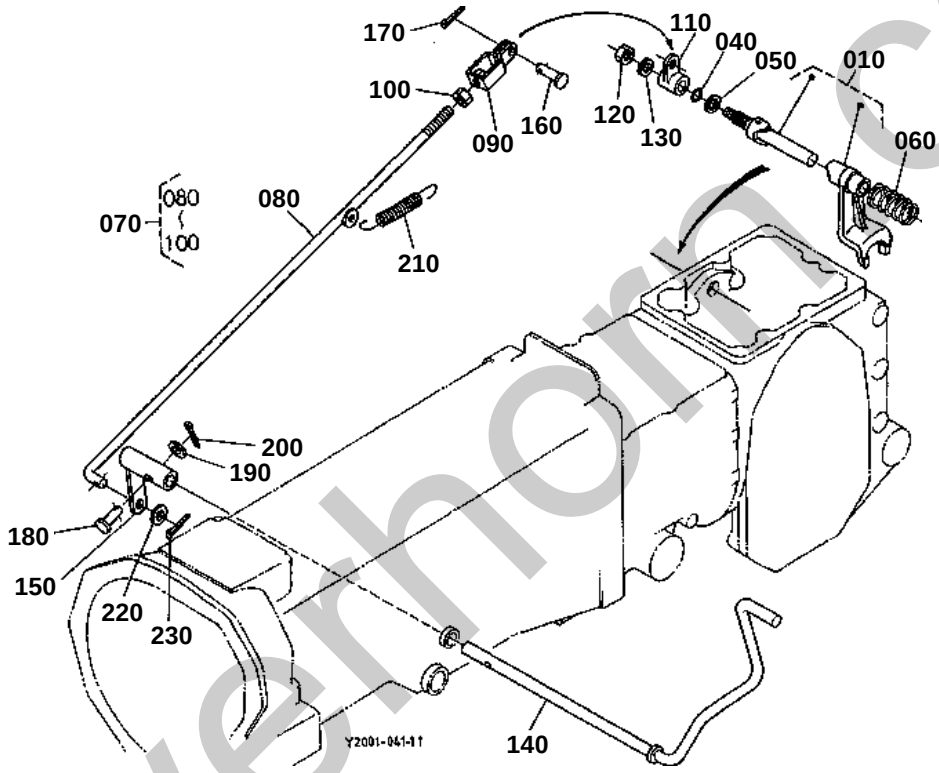

silverhorn.co.uk

DIFF. LOCK PEDAL

↔ Interchangeable; ≠ not interchangeable; ← new for old; → old for new

REF.No	Part No.	Description	Q'ty	S.No.	I/C	REMARKS	Weight (kgf)	Weight (lb)
010	66611-19100	ASSY FORK DIFF.LOCK	1				0.42	0.924
040	04811-10120	O RING	1				0.001	0.0022
050	66591-18340	SHIM	2				0.001	0.0022
060	66591-18320	SPRING	1				0.02	0.044
070	66204-42820	ASSY ROD DIFF.LOCK	1				0.312	0.6864
080	66204-42860	ROD DIFF.LOCK	1				0.29	0.638
090	63753-42350	U JOINT	1				0.038	0.0836
100	02112-50080	NUT	1				0.003	0.0066
110	66591-43170	LEVER DIFF.LOCK	1				0.041	0.0902
120	02118-50100	NUT	1				0.005	0.011
130	04512-60100	WASHER SPRING	1				0.002	0.0044
140	67061-42870	SHAFT DIFF LOCK	1				0.78	1.716
150	67061-42880	LEVER DIFF.LOCK	1				0.15	0.33
160	05122-50820	PIN JOINT	1				0.009	0.0198
170	05511-50215	PIN SPLIT	1				0.001	0.0022
180	66611-14120	PIN JOINT	1	<=67607			0	0
180	66611-14123	PIN JOINT	1	>=67608	←		0.005	0.011
190	04012-50050	WASHER PLAIN	1				0.001	0.0022
200	05511-50215	PIN SPLIT	1				0.001	0.0022
210	66591-43190	SPRING BRAKE RETURN	1				0.044	0.0968
220	04012-50080	WASHER PLAIN	1				0.001	0.0022
230	05511-50318	PIN SPLIT	1				0.001	0.0022

silverhorn.co.uk

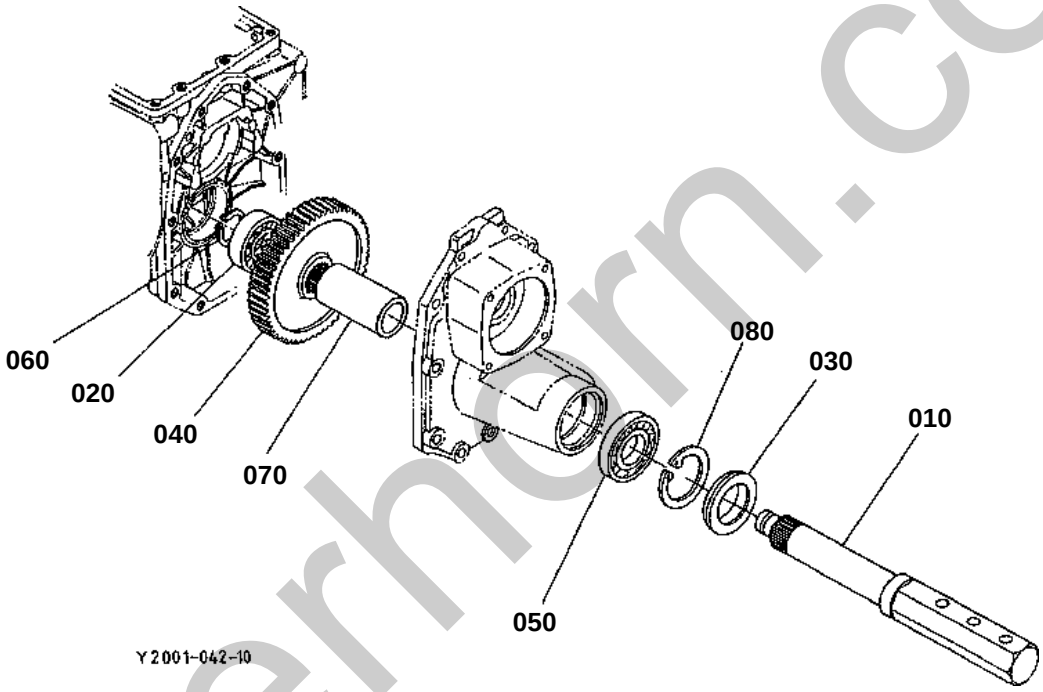

silverhorn.co.uk

REAR AXLE

↔ Interchangeable; ≠ not interchangeable; ← new for old; → old for new

REF.No	Part No.	Description	Q'ty	S.No.	I/C	REMARKS	Weight (kgf)	Weight (lb)
010	66611-17114	AXLE REAR	2				4.64	10.208
020	08101-06306	BEARING BALL	2				0.335	0.737
030	66611-17120	SEAL OIL	2				0.09	0.198
040	66611-17130	GEAR	2			55T	2.4	5.28
050	08101-06208	BEARING BALL	2				0.355	0.781
060	04612-00300	CIRCLIP EXTERNAL	2				0.003	0.0066
070	66611-17143	COLLAR	2				0.515	1.133
080	04611-00800	CIR CLIP INTERNAL	2				0.02	0.044

silverhorn.co.uk

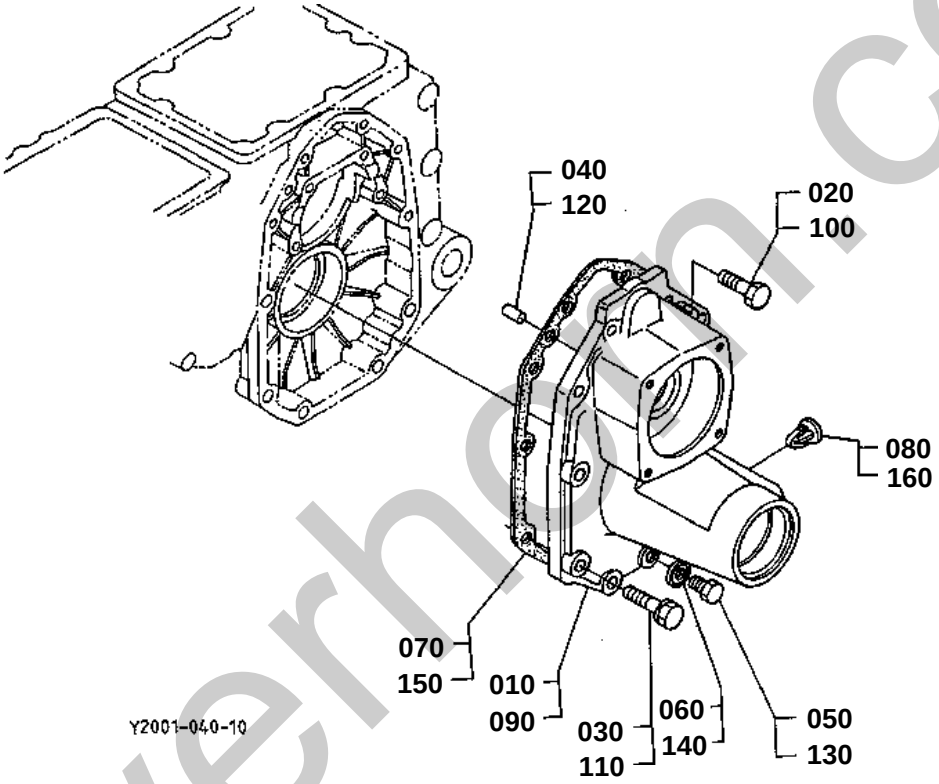

silverhorn.co.uk

REAR AXLE CASE

↔ Interchangeable; ≠ not interchangeable; ← new for old; → old for new

REF.No	Part No.	Description	Q'ty	S.No.	I/C	REMARKS	Weight (kgf)	Weight (lb)
010	67401-12613	CASE AXLE LH	1				8.7	19.14
020	01123-51035	BOLT	4				0.025	0.055
030	01123-51250	BOLT	6				0.055	0.121
040	05012-00816	PIN STRAIGHT	2				0.007	0.0154
050	06331-35012	PLUG	1				0.022	0.0484
060	04717-01200	WASHER WITH RUBBER	1				0.002	0.0044
070	66591-11240	GASKET	1				0	0
080	67211-11140	PLUG BLIND	6				0.001	0.0022
090	67401-12710	CASE AXLE RH	1				10	22
100	01123-51035	BOLT	4				0.025	0.055
110	01123-51250	BOLT	6				0.055	0.121
120	05012-00816	PIN STRAIGHT	2				0.007	0.0154
130	06331-35012	PLUG	1				0.022	0.0484
140	04717-01200	WASHER WITH RUBBER	1				0.002	0.0044
150	66591-11240	GASKET	1				0	0
160	67211-11140	PLUG BLIND	6				0.001	0.0022

silverhorn.co.uk

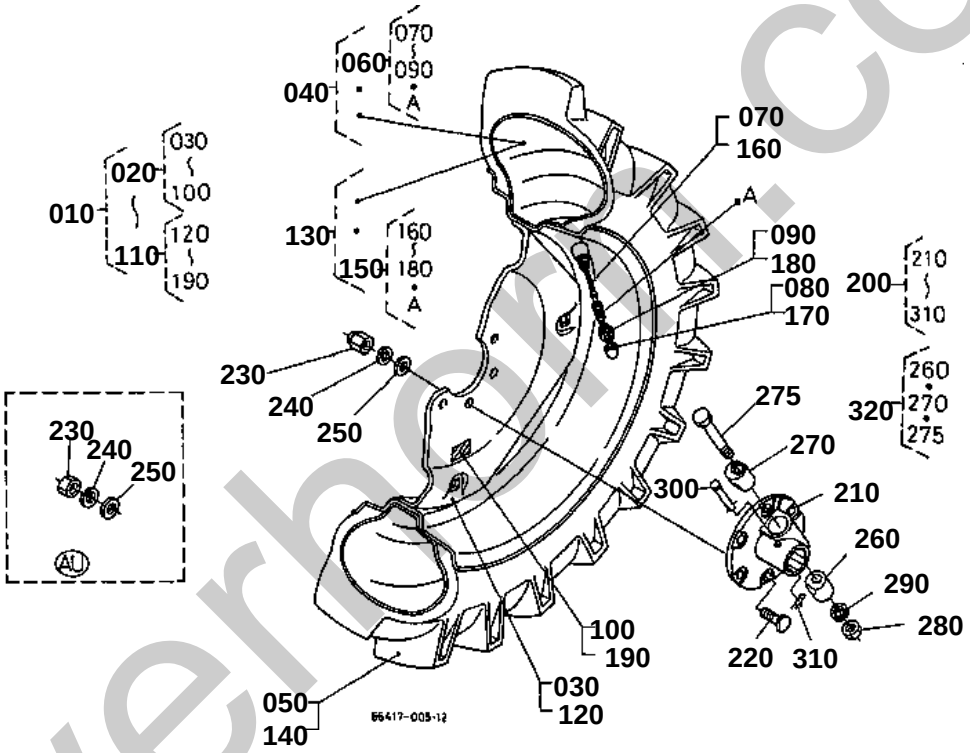

silverhorn.co.uk

210 67401-1745-0
260 67401-1746-0
270 67401-1747-0

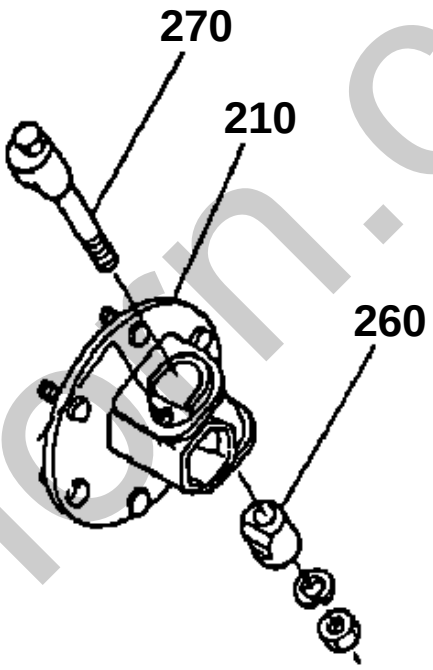

66417-807-10

silverhorn.co.uk

↔ Interchangeable; ≠ not interchangeable; ← new for old; → old for new

REF.No	Part No.	Description	Q'ty	S.No.	I/C	REMARKS	Weight (kgf)	Weight (lb)
010	66415-17500	ASSY REAR WHEEL	1				55	121
020	66415-17510	ASSY REAR WHEEL	1				0	0
030	66414-17520	WHEEL	1				11	24.2
040	96018-05120	TUBE	1				1.6	3.52
050	96018-05130	TIRE	1				15.4	33.88
060	32150-27700	ASSY VALVE	1				0.001	0.0022
070	32150-27740	CORE VALVE	1				0.003	0.0066
080	38240-11690	CAP VALVE	1				0.001	0.0022
090	32270-27710	NUT RIM	1				0.006	0.0132
100	66415-17532	LABEL TIRE LH	1				0	0
110	66415-17540	ASSY REAR WHEEL RH	1				0	0
120	66414-17520	WHEEL	1				11	24.2
130	96018-05120	TUBE	1				1.6	3.52
140	96018-05130	TIRE	1				15.4	33.88
150	32150-27700	ASSY VALVE	1				0.001	0.0022
160	32150-27740	CORE VALVE	1				0.003	0.0066
170	38240-11690	CAP VALVE	1				0.001	0.0022
180	32270-27710	NUT RIM	1				0.006	0.0132
190	66415-17552	LABEL TIRE RH	1				0	0
200	66416-17300	ASSY HUB WHEEL	2	<=61807		[A]	0	0
200	66426-17300	ASSY HUB WHEEL	2	>=61808	←	[A]	0	0
200	66426-17303	ASSY HUB WHEEL	2	>=66406	↔	[A]	4.06	8.932
200	66416-17300	ASSY HUB WHEEL	2	<=66405		[CA] [AU] [NZ]	0	0
200	66416-17303	ASSY HUB WHEEL	2	>=66406	←	[CA] [AU] [NZ]	4.2	9.24
210	67401-17450	HUB WHEEL	2	<=66405			0	0
210	67401-17453	HUB WHEEL	2	>=66406	↔		2.78	6.116
220	66704-17313	BOLT	12				0.049	0.1078
230	02074-50140	NUT	12	<=61807		[A]	0.021	0.0462
230	35340-11390	NUT	12	>=61808	←	[A]	0.03	0.066
230	02074-50140	NUT	12			[CA] [AU] [NZ]	0.021	0.0462
240	04512-50140	WASHER SPRING	12				0	0
250	04013-60140	WASHER PLAIN	12				0.01	0.022
260	67401-17460	SHOE	2	<=66405			0.256	0.5632
260	67401-17462	SHOE	2	>=66406	≠		0.22	0.484
270	67401-17470	SHOE	2	<=66405			0.476	1.0472
270	67401-17472	SHOE	2	>=66406	≠		0.21	0.462
275	01173-51604	BOLT	2	>=66406			0.195	0.429
280	02174-50160	NUT	2				0.022	0.0484
290	04512-50160	WASHER SPRING	2				0	0
300	63733-17270	PIN WHEEL TUBE	2				0.05	0.11
310	62131-17290	PIN	2				0.004	0.0088
320	66416-87400	KIT COTTER	2			SERVICE PARTS	0.62	1.364

silverhorn.co.uk

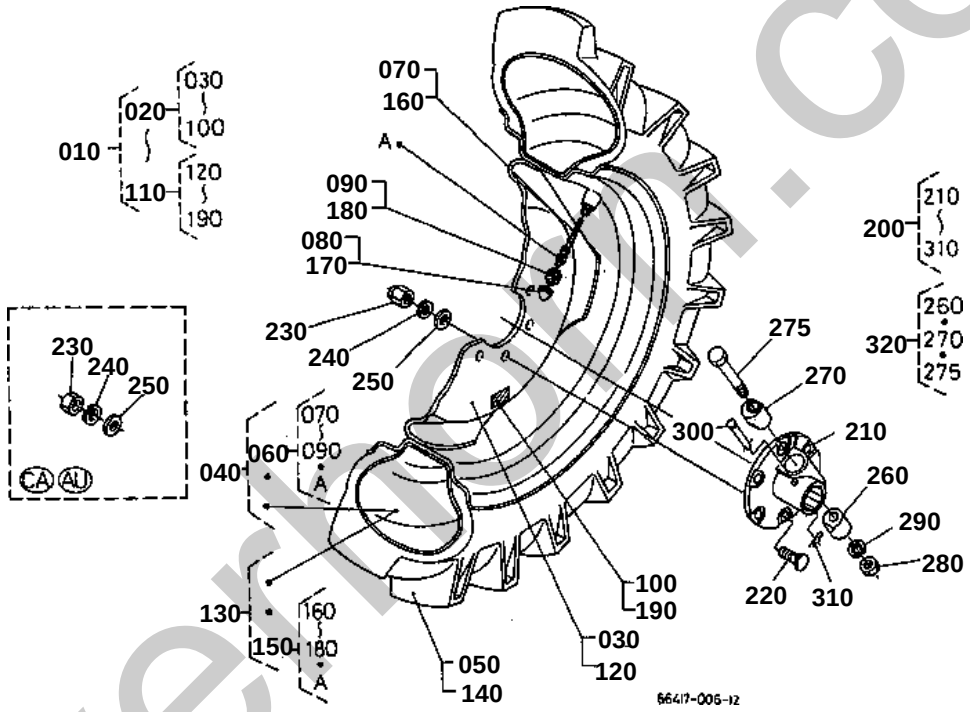

silverhorn.co.uk

210 67401-1745-0
260 67401-1746-0
270 67401-1747-0

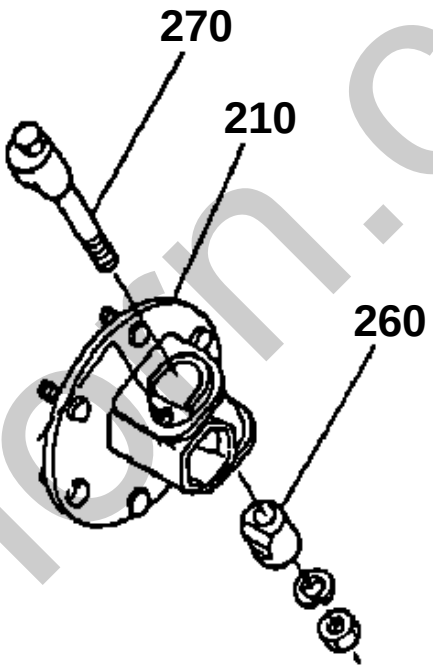

66417-807-10

silverhorn.co.uk

↔ Interchangeable; ≠ not interchangeable; ← new for old; → old for new

REF.No	Part No.	Description	Q'ty	S.No.	I/C	REMARKS	Weight (kgf)	Weight (lb)
010	66416-17500	ASSY REAR WHEEL	1				63	138.6
020	66416-17510	ASSY REAR WHEEL	1				32	70.4
030	66416-17520	WHEEL	1				12.5	27.5
040	96019-12120	TUBE	1				2.5	5.5
050	96019-12130	TIRE	1				17.4	38.28
060	32150-27700	ASSY VALVE	1				0.001	0.0022
070	32150-27740	CORE VALVE	1				0.003	0.0066
080	38240-11690	CAP VALVE	1				0.001	0.0022
090	32270-27710	NUT RIM	1				0.006	0.0132
100	66416-17530	LABEL TIRE LH	1				0.001	0.0022
110	66416-17540	ASSY REAR WHEEL RH	1				32	70.4
120	66416-17520	WHEEL	1				12.5	27.5
130	96019-12120	TUBE	1				2.5	5.5
140	96019-12130	TIRE	1				17.4	38.28
150	32150-27700	ASSY VALVE	1				0.001	0.0022
160	32150-27740	CORE VALVE	1				0.003	0.0066
170	38240-11690	CAP VALVE	1				0.001	0.0022
180	32270-27710	NUT RIM	1				0.006	0.0132
190	66416-17550	LABEL TIRE RH	1				0.001	0.0022
200	66416-17300	ASSY HUB WHEEL	2	<=61807		[A]	0	0
200	66426-17300	ASSY HUB WHEEL	2	>=61808	←	[A]	0	0
200	66426-17303	ASSY HUB WHEEL	2	>=66406	↔	[A]	4.06	8.932
200	66416-17300	ASSY HUB WHEEL	2	<=66405		[CA] [AU] [NZ]	0	0
200	66416-17303	ASSY HUB WHEEL	2	>=66406	↔	[CA] [AU] [NZ]	4.2	9.24
210	67401-17450	HUB WHEEL	2	<=66405			0	0
210	67401-17453	HUB WHEEL	2	>=66406	↔		2.78	6.116
220	66704-17313	BOLT	12				0.049	0.1078
230	02074-50140	NUT	12	<=61807		[A]	0.021	0.0462
230	35340-11390	NUT	12	>=61808	←	[A]	0.03	0.066
230	02074-50140	NUT	12			[CA] [AU] [NZ]	0.021	0.0462
240	04512-50140	WASHER SPRING	12				0	0
250	04013-60140	WASHER PLAIN	12				0.01	0.022
260	67401-17460	SHOE	2	<=66405			0.256	0.5632
260	67401-17462	SHOE	2	>=66406	≠		0.22	0.484
270	67401-17470	SHOE	2	<=66405			0.476	1.0472
270	67401-17472	SHOE	2	>=66406	≠		0.21	0.462
275	01173-51604	BOLT	2	>=66406			0.195	0.429
280	02174-50160	NUT	2				0.022	0.0484
290	04512-50160	WASHER SPRING	2				0	0
300	63733-17270	PIN WHEEL TUBE	2				0.05	0.11
310	62131-17290	PIN	2				0.004	0.0088
320	66416-87400	KIT COTTER	2			SERVICE PARTS	0.62	1.364

silverhorn.co.uk

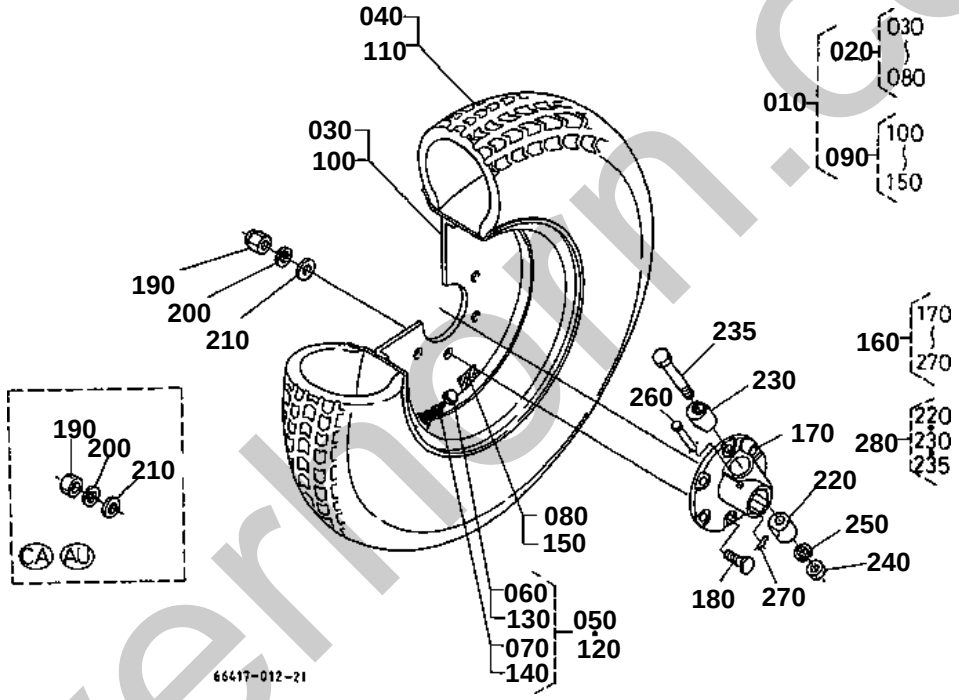

silverhorn.co.uk

170 67401-1745-0
220 67401-1746-0
230 67401-1747-0

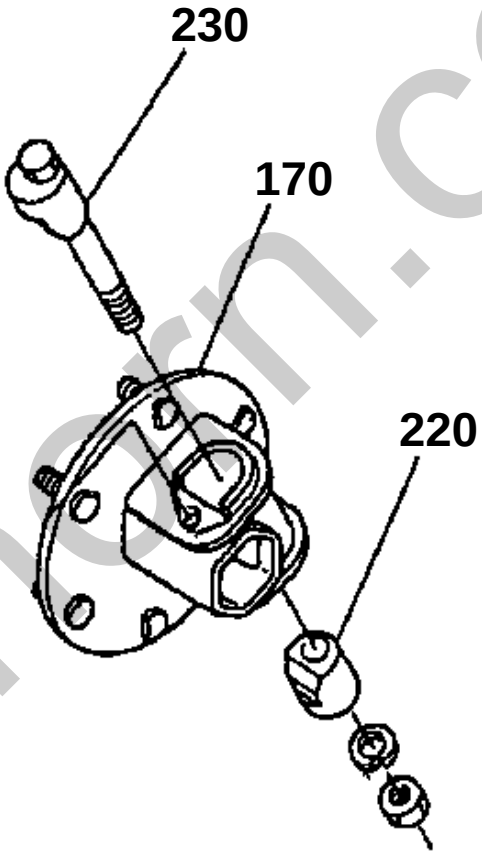

66417-808-10

silverhorn.co.uk

REAR WHEEL (31 X 13.5-15)

↔ Interchangeable; ≠ not interchangeable; ← new for old; → old for new

REF.No	Part No.	Description	Q'ty	S.No.	I/C	REMARKS	Weight (kgf)	Weight (lb)
010	66416-17700	ASSY REAR WHEEL	1				32	70.4
020	66416-17710	ASSY REAR WHEEL	1				33	72.6
030	66416-17720	WHEEL	1				13.5	29.7
040	96016-64130	TIRE	1				20	44
050	34159-11850	VALVE TIRE	1				0.013	0.0286
060	38240-11690	CAP VALVE	1				0.001	0.0022
070	32150-27740	CORE VALVE	1				0.003	0.0066
080	66416-17730	LABEL TIRE LH	1				0.001	0.0022
090	66416-17740	ASSY REAR WHEEL RH	1				33	72.6
100	66416-17720	WHEEL	1				13.5	29.7
110	96016-64130	TIRE	1				20	44
120	34159-11850	VALVE TIRE	1				0.013	0.0286
130	38240-11690	CAP VALVE	1				0.001	0.0022
140	32150-27740	CORE VALVE	1				0.003	0.0066
150	66416-17750	LABEL TIRE RH	1				0.001	0.0022
160	66416-17300	ASSY HUB WHEEL	2	<=61807		[A]	0	0
160	66426-17300	ASSY HUB WHEEL	2	>=61808	←	[A]	0	0
160	66426-17303	ASSY HUB WHEEL	2	>=66406	↔	[A]	4.06	8.932
160	66416-17300	ASSY HUB WHEEL	2	<=66405		[CA] [AU] [NZ]	0	0
160	66416-17303	ASSY HUB WHEEL	2	>=66406	↔	[CA] [AU] [NZ]	4.2	9.24
170	67401-17450	HUB WHEEL	2	<=66405			0	0
170	67401-17453	HUB WHEEL	2	>=66406	↔		2.78	6.116
180	66704-17313	BOLT	12				0.049	0.1078
190	02074-50140	NUT	12	<=61807		[A]	0.021	0.0462
190	35340-11390	NUT	12	>=61808	←	[A]	0.03	0.066
190	02074-50140	NUT	12			[CA] [AU] [NZ]	0.021	0.0462
200	04512-50140	WASHER SPRING	12				0	0
210	04013-60140	WASHER PLAIN	12				0.01	0.022
220	67401-17460	SHOE	2	<=66405			0.256	0.5632
220	67401-17462	SHOE	2	>=66406	≠		0.22	0.484
230	67401-17470	SHOE	2	<=66405			0.476	1.0472
230	67401-17472	SHOE	2	>=66406	≠		0.21	0.462
235	01173-51604	BOLT	2	>=66406			0.195	0.429
240	02174-50160	NUT	2				0.022	0.0484
250	04512-50160	WASHER SPRING	2				0	0
260	63733-17270	PIN WHEEL TUBE	2				0.05	0.11
270	62131-17290	PIN	2				0.004	0.0088
280	66416-87400	KIT COTTER	2			SERVICE PARTS	0.62	1.364

silverhorn.co.uk

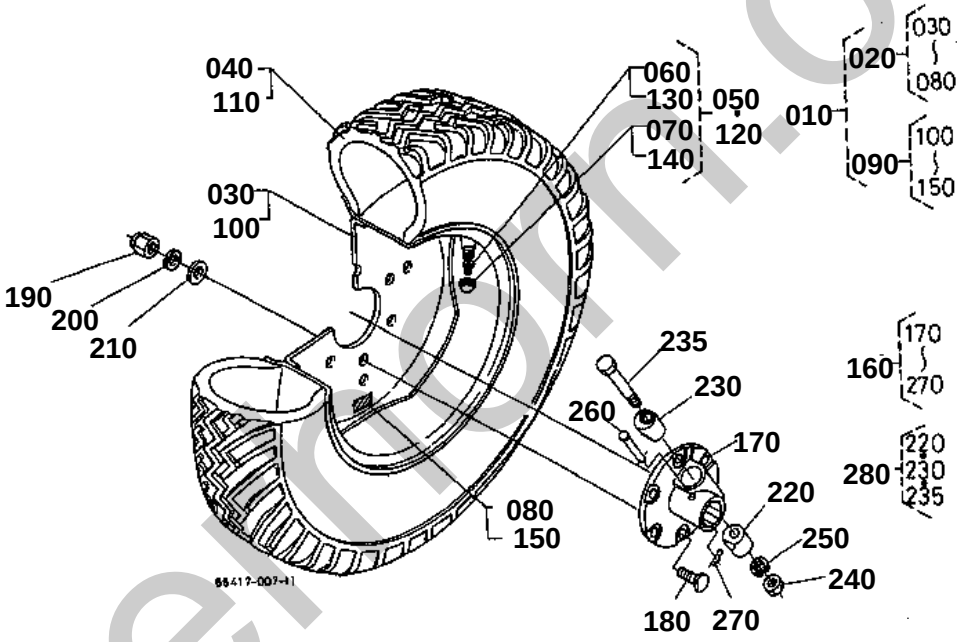

silvermoon.co.uk

170 67401-1745-0
220 67401-1746-0
230 67401-1747-0

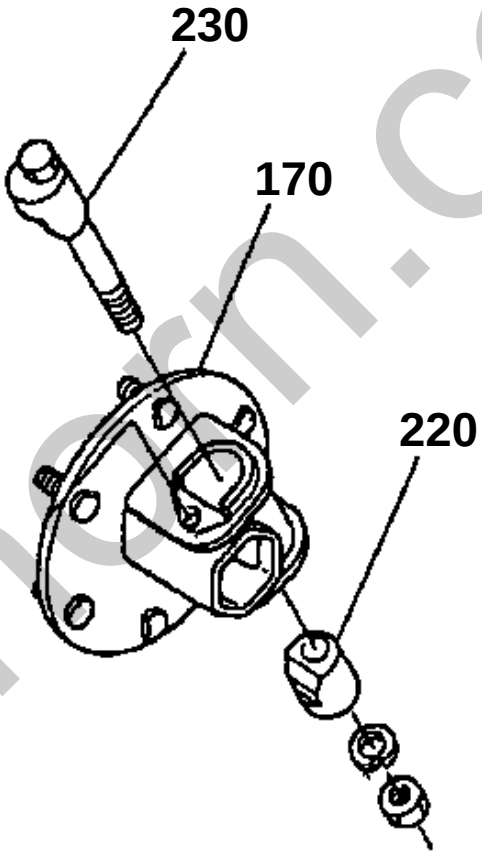

66417-808-10

silverhorn.co.uk

REAR WHEEL (31 X 13.5-15 BAR) [A]

↔ Interchangeable; ≠ not interchangeable; ← new for old; → old for new

REF.No	Part No.	Description	Q'ty	S.No.	I/C	REMARKS	Weight (kgf)	Weight (lb)
010	66415-17700	ASSY REAR WHEEL	1				0	0
020	66415-17710	ASSY REAR WHEEL	1				0	0
030	66416-17720	WHEEL	1				13.5	29.7
040	66415-17720	TIRE	1				0	0
050	34159-11850	VALVE TIRE	1				0.013	0.0286
060	32150-27740	CORE VALVE	1				0.003	0.0066
070	38240-11690	CAP VALVE	1				0.001	0.0022
080	66415-17730	LABEL TIRE LH	1				0	0
090	66415-17740	ASSY REAR WHEEL RH	1				0	0
100	66416-17720	WHEEL	1				13.5	29.7
110	66415-17720	TIRE	1				0	0
120	34159-11850	VALVE TIRE	1				0.013	0.0286
130	32150-27740	CORE VALVE	1				0.003	0.0066
140	38240-11690	CAP VALVE	1				0.001	0.0022
150	66415-17750	LABEL TIRE RH	1				0	0
160	66416-17300	ASSY HUB WHEEL	2	<=61807			0	0
160	66426-17300	ASSY HUB WHEEL	2	>=61808	←		0	0
160	66426-17303	ASSY HUB WHEEL	2	>=66406	↔		4.06	8.932
170	67401-17450	HUB WHEEL	2	<=66405			0	0
170	67401-17453	HUB WHEEL	2	>=66406	↔		2.78	6.116
180	66704-17313	BOLT	12				0.049	0.1078
190	02074-50140	NUT	12	<=61807			0.021	0.0462
190	35340-11390	NUT	12	>=61808	←		0.03	0.066
200	04512-50140	WASHER SPRING	12				0	0
210	04013-60140	WASHER PLAIN	12				0.01	0.022
220	67401-17460	SHOE	2	<=66405			0.256	0.5632
220	67401-17462	SHOE	2	>=66406	≠		0.22	0.484
230	67401-17470	SHOE	2	<=66405			0.476	1.0472
230	67401-17472	SHOE	2	>=66406	≠		0.21	0.462
235	01173-51604	BOLT	2	>=66406			0.195	0.429
240	02174-50160	NUT	2				0.022	0.0484
250	04512-50160	WASHER SPRING	2				0	0
260	63733-17270	PIN WHEEL TUBE	2				0.05	0.11
270	62131-17290	PIN	2				0.004	0.0088
280	66416-87400	KIT COTTER	2			SERVICE PARTS	0.62	1.364

silverhorn.co.uk

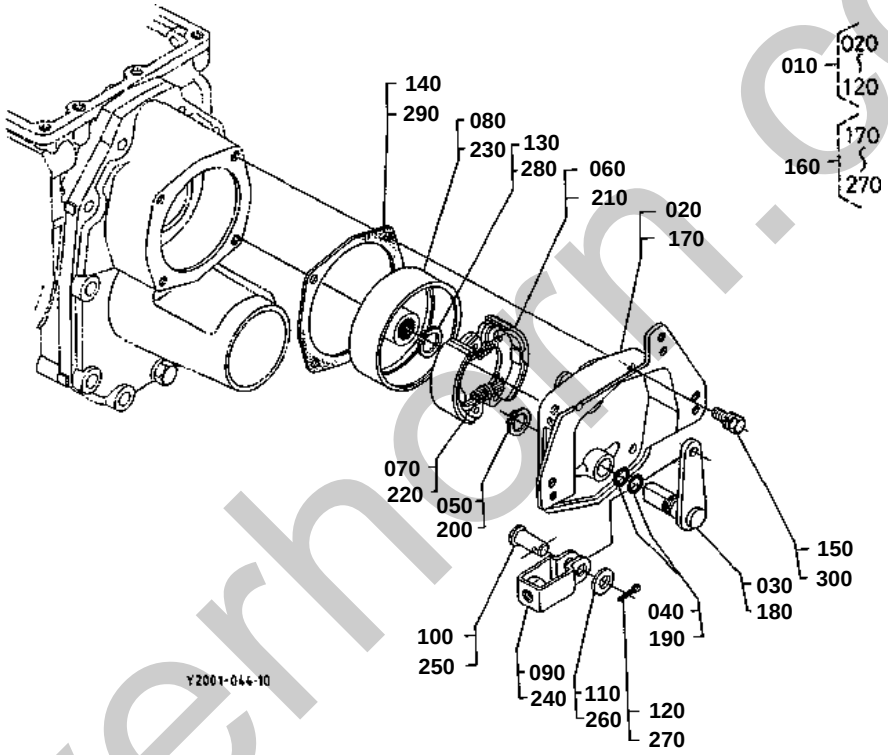

silverhorn.co.uk

BRAKE

↔ Interchangeable; ≠ not interchangeable; ← new for old; → old for new

REF.No	Part No.	Description	Q'ty	S.No.	I/C	REMARKS	Weight (kgf)	Weight (lb)
010	66426-22300	ASSY BRAKE LH	1				2.4	5.28
020	67061-22312	COVER BRAKE LH	1				0.95	2.09
030	66591-22330	CAM BRAKE LH	1				0.204	0.4488
040	04811-05170	RING	2				0.001	0.0022
050	04612-00200	CIRCLIP EXTERNAL	1				0.001	0.0022
060	66905-22390	KIT SHOE BRAKE	1				0.35	0.77
070	66591-22350	SPRING RETURN	2				0.003	0.0066
080	66611-22360	DRUM BRAKE	1	<=66511			0	0
080	66709-22360	DRUM BRAKE	1	>=66512	↔		0.95	2.09
090	63753-42350	U JOINT	1				0.038	0.0836
100	05122-50820	PIN JOINT	1				0.009	0.0198
110	04012-50080	WASHER PLAIN	1				0.001	0.0022
120	05511-50215	PIN SPLIT	1				0.001	0.0022
130	04612-00220	CIRCLIP EXTERNAL	1				0.001	0.0022
140	66591-22410	GASKET BRAKE	1				0	0
150	01123-50822	BOLT	4				0.012	0.0264
160	66905-22402	ASSY BRAKE RH	1				2.58	5.676
170	66611-22412	COVER BRAKE RH	1				1.05	2.31
180	66591-22370	CAM BRAKE RH	1				0.204	0.4488
190	04811-05170	RING	2				0.001	0.0022
200	04612-00200	CIRCLIP EXTERNAL	1				0.001	0.0022
210	66905-22390	KIT SHOE BRAKE	1				0.35	0.77
220	66591-22350	SPRING RETURN	2				0.003	0.0066
230	66611-22360	DRUM BRAKE	1	<=66511			0	0
230	66709-22360	DRUM BRAKE	1	>=66512	↔		0.95	2.09
240	63753-42350	U JOINT	1				0.038	0.0836
250	05122-50820	PIN JOINT	1				0.009	0.0198
260	04012-50080	WASHER PLAIN	1				0.001	0.0022
270	05511-50215	PIN SPLIT	1				0.001	0.0022
280	04612-00220	CIRCLIP EXTERNAL	1				0.001	0.0022
290	66591-22410	GASKET BRAKE	1				0	0
300	01123-50822	BOLT	4				0.012	0.0264

silverthorn.co.uk

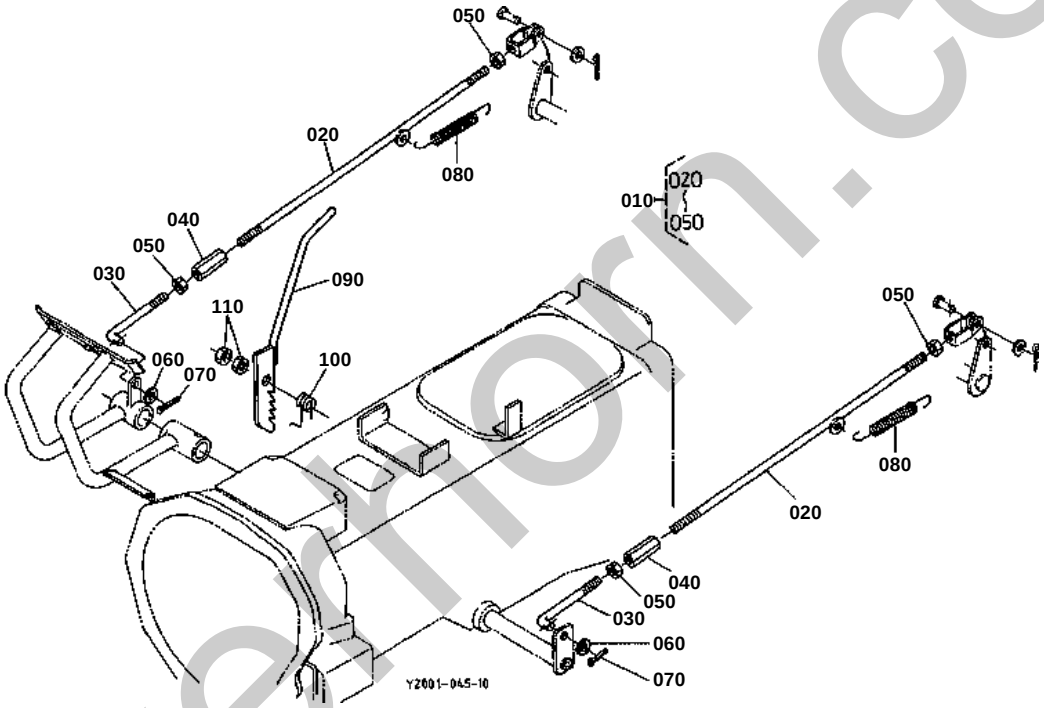

silverthorn.co.uk

BRAKE ROD

↔ Interchangeable; ≠ not interchangeable; ← new for old; → old for new

REF.No	Part No.	Description	Q'ty	S.No.	I/C	REMARKS	Weight (kgf)	Weight (lb)
010	67061-42800	ASSY ROD BRAKE	2				0.24	0.528
020	67061-42810	ROD BRAKE	2				0.17	0.374
030	67061-42820	ROD BRAKE FRONT	2				0.04	0.088
040	66591-42410	TURNBUCKLE	2				0.046	0.1012
050	02112-50080	NUT	4				0.003	0.0066
060	04012-50080	WASHER PLAIN	2				0.001	0.0022
070	05511-50318	PIN SPLIT	2				0.001	0.0022
080	66591-43190	SPRING BRAKE RETURN	2				0.044	0.0968
090	67061-42852	LEVER BRAKE LOCK	1				0.085	0.187
100	66204-42840	SPRING BRAKE LOCK	1				0.006	0.0132
110	02172-50120	NUT	2				0.01	0.022

silverhorn.co.uk

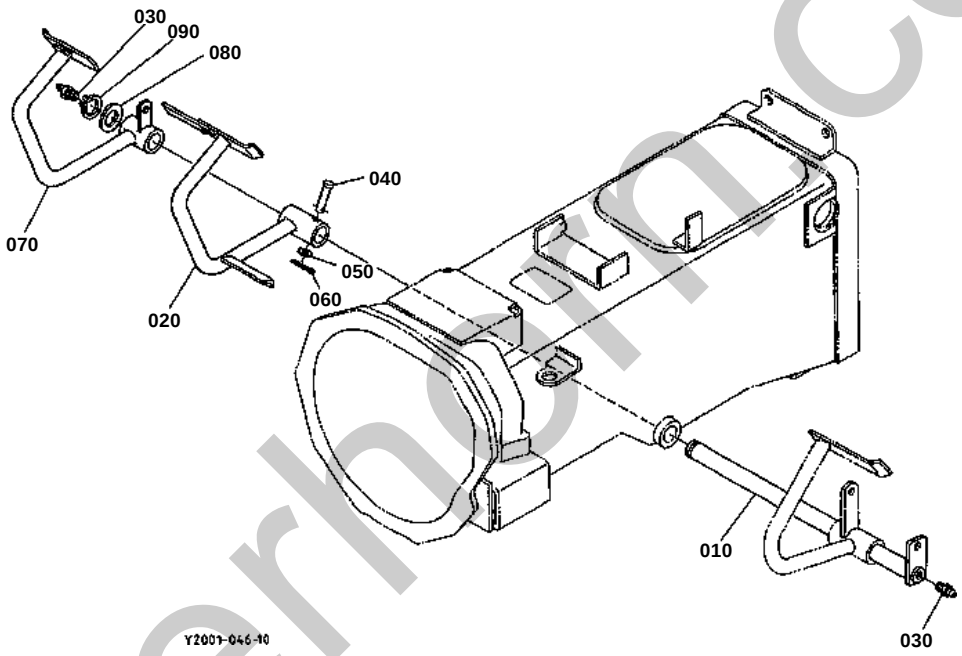

silverhorn.co.uk

BRAKE PEDAL

↔ Interchangeable; ≠ not interchangeable; ← new for old; → old for new

REF.No	Part No.	Description	Q'ty	S.No.	I/C	REMARKS	Weight (kgf)	Weight (lb)
010	66204-42910	SHAFT BRAKE PEDAL	1				1.6	3.52
020	67061-42922	PEDAL BRAKE LH	1				1.8	3.96
030	06613-10010	NIPPLE GREASE	2				0.006	0.0132
040	05112-50840	PIN JOINT	1				0.017	0.0374
050	04012-50080	WASHER PLAIN	1				0.001	0.0022
060	05511-50215	PIN SPLIT	1				0.001	0.0022
070	67061-42932	PEDAL BRAKE RH	1				1.78	3.916
080	66591-43233	COLLAR	1				0.004	0.0088
090	04612-00240	CIRCLIP EXTERNAL	1				0.002	0.0044

silverhorn.co.uk

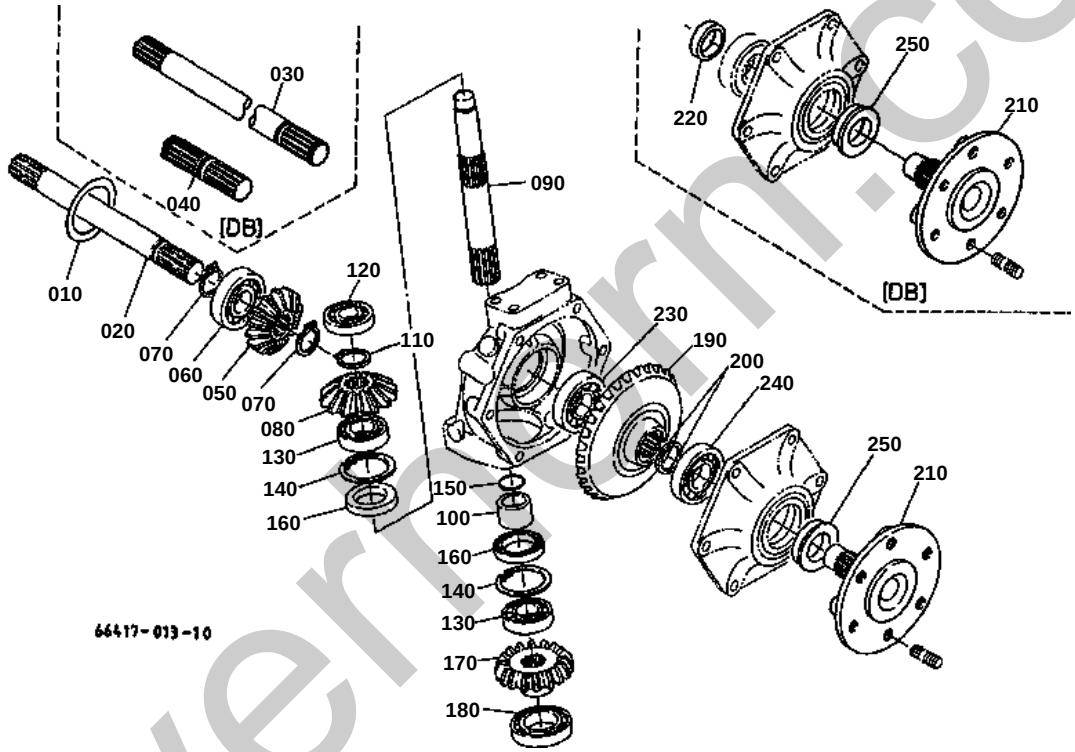

silvermorn.co.uk

FRONT WHEEL HUB

↔ Interchangeable; ≠ not interchangeable; ← new for old; → old for new

REF.No	Part No.	Description	Q'ty	S.No.	I/C	REMARKS	Weight (kgf)	Weight (lb)
010	66591-14980	SHIM DIFF.SIDE	2			0.5MM W/O BI-SPEED TURN	0.005	0.011
010	66591-14990	SHIM DIFF.SIDE	2			0.2MM W/O BI-SPEED TURN	0.002	0.0044
010	67121-56630	SHIM DIFF.SIDE	2			0.3MM W/O BI-SPEED TURN	0.005	0.011
020	67121-56640	SHAFT	2			W/O BI-SPEED TURN	0.98	2.156
030	67156-76710	SHAFT DRIVE LH	1			WITH BI-SPEED TURN	1.65	3.63
040	67156-76720	SHAFT DRIVE RH	1			WITH BI-SPEED TURN	0.322	0.7084
050	67121-56650	GEAR BEVEL	2			13T	0.38	0.836
060	08101-06305	BEARING BALL	2				0.23	0.506
070	04612-00250	CIRCLIP EXTERNAL	4				0.002	0.0044
080	67121-56710	GEAR BEVEL	2			14T	0.35	0.77
090	67121-56720	SHAFT BEVEL GEAR	2				0.73	1.606
100	67121-56730	COLLAR SUPPORT	2				0.075	0.165
110	04612-00250	CIRCLIP EXTERNAL	2				0.002	0.0044
120	08101-06303	BEARING BALL	2				0.112	0.2464
130	67121-56760	BEARING BALL	4	<=63700			0	0
130	67121-56770	BEARING BALL	4	>=63701	←		0.127	0.2794
140	04611-00520	CIR CLIP INTERNAL	4				0.009	0.0198
150	04811-10250	RING	2				0.001	0.0022
160	67121-56740	SEAL OIL	4				0.016	0.0352
170	67221-56750	GEAR BEVEL	2			16T	0.58	1.276
180	08101-06007	BEARING BALL	2				0.16	0.352
190	67121-56810	GEAR BEVEL	2			31T	2	4.4
200	67156-56820	COLLAR SET	4				0.004	0.0088
210	67401-56830	HUB FRONT WHEEL	2				1.66	3.652
220	66204-56840	COLLAR	2			WITH BI-SPEED TURN	0.02	0.044
230	08101-06305	BEARING BALL	2				0.23	0.506
240	08101-06206	BEARING BALL	2				0.196	0.4312
250	63733-17150	SEAL OIL	2				0.04	0.088

silverhorn.co.uk

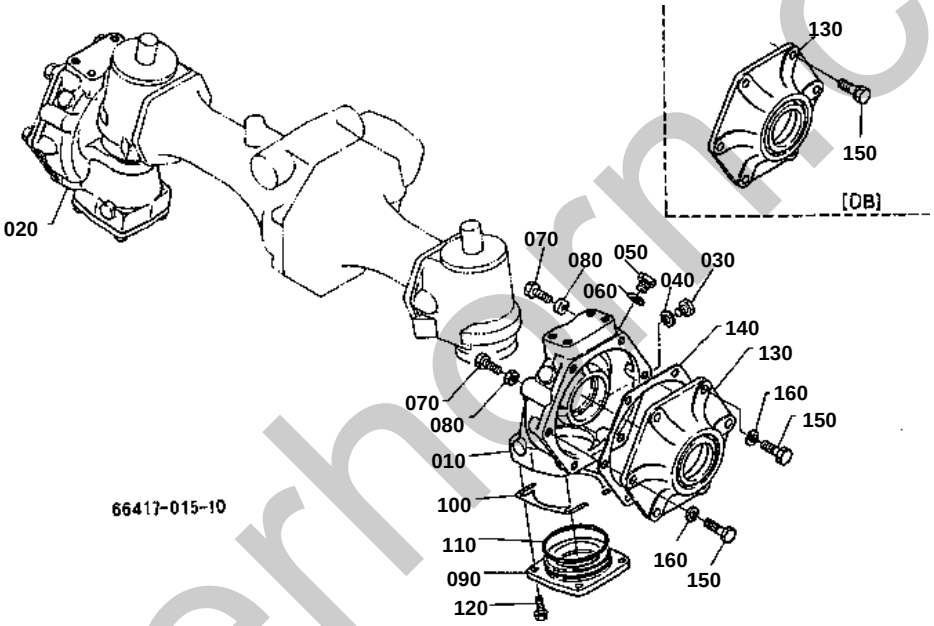

silverharm.co.uk

↔ Interchangeable; ≠ not interchangeable; ← new for old; → old for new

REF.No	Part No.	Description	Q'ty	S.No.	I/C	REMARKS	Weight (kgf)	Weight (lb)
010	67121-56310	CASE FRONT AXLE LH	1			WITHOUT BI-SPEED TURN	4.5	9.9
010	67121-56310	CASE FRONT AXLE LH	2	<=65728		WITH BI-SPEED TURN	4.5	9.9
010	67121-56310	CASE FRONT AXLE LH	1	>=65729		WITH BI-SPEED TURN	4.5	9.9
020	67121-56320	CASE FRONT AXLE RH	1	<=65728		WITHOUT BI-SPEED TURN	0	0
020	67121-56324	CASE FRONT AXLE RH	1	>=65729	←	WITHOUT BI-SPEED TURN	4.6	10.12
020	67121-56324	CASE FRONT AXLE RH	1	>=65729		WITH BI-SPEED TURN	4.6	10.12
030	06331-35010	PLUG	2				0.012	0.0264
040	04717-01000	WASHER WITH RUBBER	2				0.001	0.0022
050	06331-35012	PLUG	2				0.022	0.0484
060	04717-01200	WASHER WITH RUBBER	2				0.002	0.0044
070	66591-56440	BOLT ADJUSTING	2			WITHOUT BI-SPEED TURN	0.02	0.044
070	66591-56440	BOLT ADJUSTING	4			WITH BI-SPEED TURN	0.02	0.044
080	02112-50100	NUT	2			WITHOUT BI-SPEED TURN	0.004	0.0088
080	02112-50100	NUT	4			WITH BI-SPPED TURN	0.004	0.0088
090	67121-56330	COVER BEVEL	2				0.64	1.408
100	67121-56340	SHIM	4			0.5MM	0.004	0.0088
100	67121-56360	SHIM	4			0.2MM	0.001	0.0022
110	04811-50750	RING	2				0.002	0.0044
120	01123-50825	BOLT	8				0.013	0.0286
130	66204-56370	COVER FRONT AXLE	2				2	4.4
140	67121-56380	GASKET	2				0	0
150	01153-51028	BOLT	12			WITHOUT BI-SPEED TURN	0.02	0.044
150	01123-51030	BOLT	12	<=62628		WITH BI-SPEED TURN	0.025	0.055
150	01123-51028	BOLT	12	>=62629	←	WITH BI-SPEED TURN	0.025	0.055
160	04512-60100	WASHER SPRING	12			WITHOUT BI-SPEED TURN	0.002	0.0044

silverhorn.co.uk

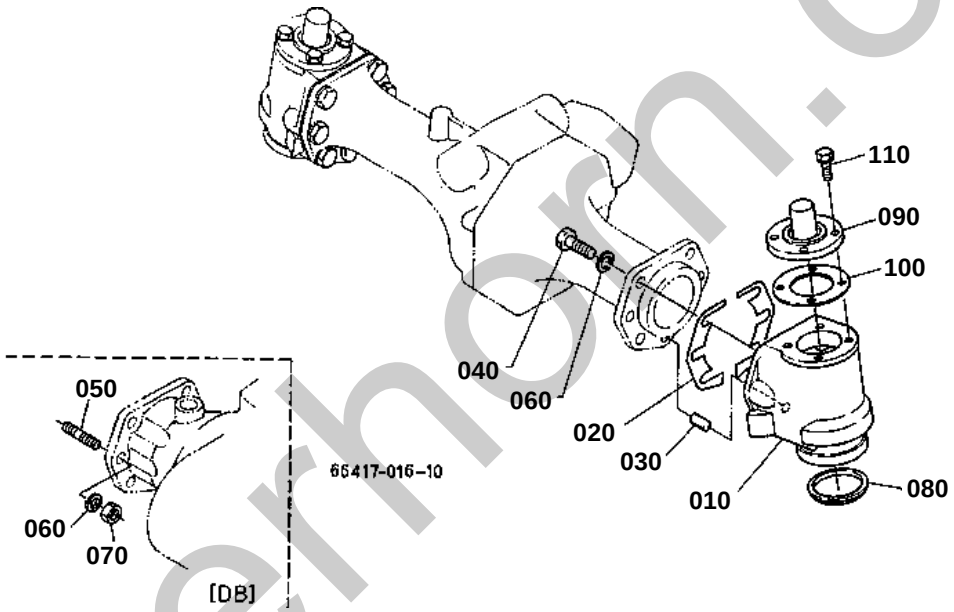

silverhorn.co.uk

BEVEL GEAR CASE

↔ Interchangeable; ≠ not interchangeable; ← new for old; → old for new

REF.No	Part No.	Description	Q'ty	S.No.	I/C	REMARKS	Weight (kgf)	Weight (lb)
010	67121-56210	CASE BEVEL GEAR	2				2.6	5.72
020	67121-56230	SHIM	4			0.3MM	0.004	0.0088
020	67121-56240	SHIM	4			0.2MM	0.003	0.0066
030	05012-01020	PIN STRAIGHT	2				0.02	0.044
040	01153-51228	BOLT	12			WITHOUT BI-SPEED TURN	0.034	0.0748
040	01153-51230	BOLT	6	<=62628		WITH BI-SPEED TURN	0.036	0.0792
040	01153-51228	BOLT	6	>=62629	←	WITH BI-SPEED TURN	0.034	0.0748
050	67156-76150	STUD	6			WITH BI-SPEED TURN	0.03	0.066
060	04512-50120	WASHER SPRING	12				0	0
070	02174-50120	NUT	6			WITH BI-SPEED TURN	0.01	0.022
080	67121-56250	SEAL DUST	2				0.001	0.0022
090	67121-56263	SUPPORT KNUCKLE ARM	2				0.4	0.88
100	67121-56270	GASKET	2				0	0
110	01123-50822	BOLT	8				0.012	0.0264

silverhorn.co.uk

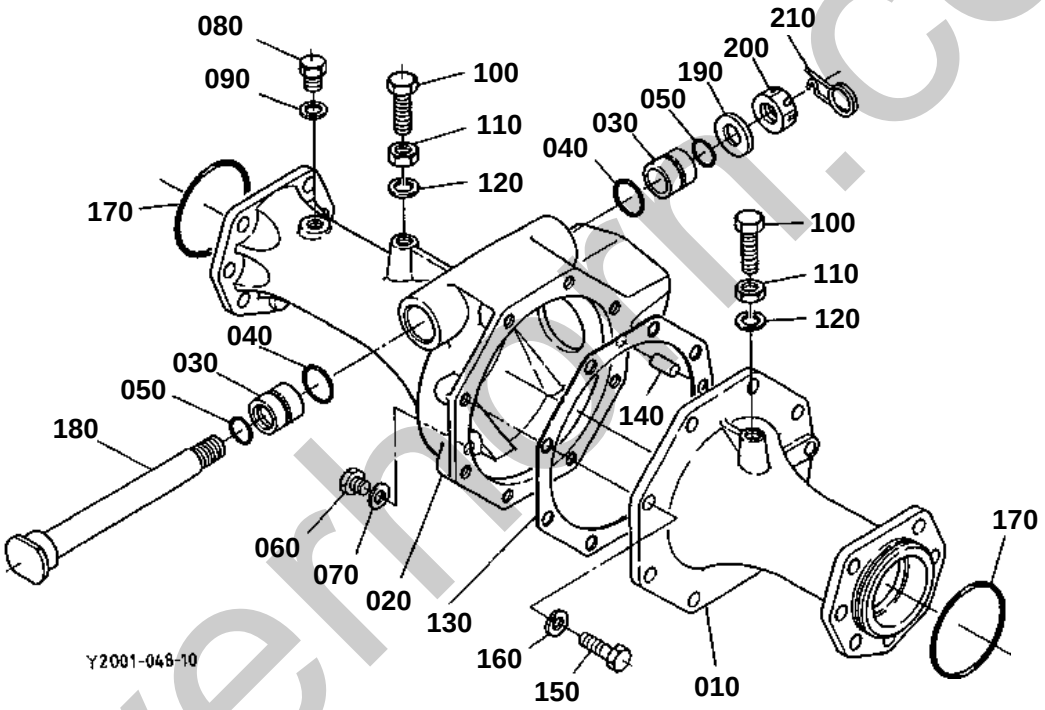

silvermart.co.uk

FRONT AXLE CASE [WITHOUT BI-SPEED TURN]

↔ Interchangeable; ≠ not interchangeable; ← new for old; → old for new

REF.No	Part No.	Description	Q'ty	S.No.	I/C	REMARKS	Weight (kgf)	Weight (lb)
010	67121-56110	ARM FRONT AXLE LH	1				5.6	12.32
020	66204-56120	ARM KNUCKLE RH	1				9	19.8
030	66591-56120	BUSH	2				0.074	0.1628
040	04811-50250	RING	2				0.001	0.0022
050	04811-00200	RING	2				0.001	0.0022
060	06331-35010	PLUG	1				0.012	0.0264
070	04717-01000	WASHER WITH RUBBER	1				0.001	0.0022
080	06331-35012	PLUG	1				0.022	0.0484
090	04717-01200	WASHER WITH RUBBER	1				0.002	0.0044
100	67401-56280	BOLT	2				0.035	0.077
110	02112-50120	NUT	2				0.007	0.0154
120	04512-50120	WASHER SPRING	2				0	0
130	67121-56130	GASKET	1				0	0
140	05012-01020	PIN STRAIGHT	1				0.02	0.044
150	01153-51028	BOLT	8				0.02	0.044
160	04512-60100	WASHER SPRING	8				0.002	0.0044
170	04811-10750	RING	2				0.001	0.0022
180	66802-56110	PIN CENTER	1				0.58	1.276
190	04011-50180	WASHER PLAIN	1				0.012	0.0264
200	02372-50180	NUT	1				0.019	0.0418
210	66611-57150	SPRING SET	1				0.02	0.044

silverhorn.co.uk

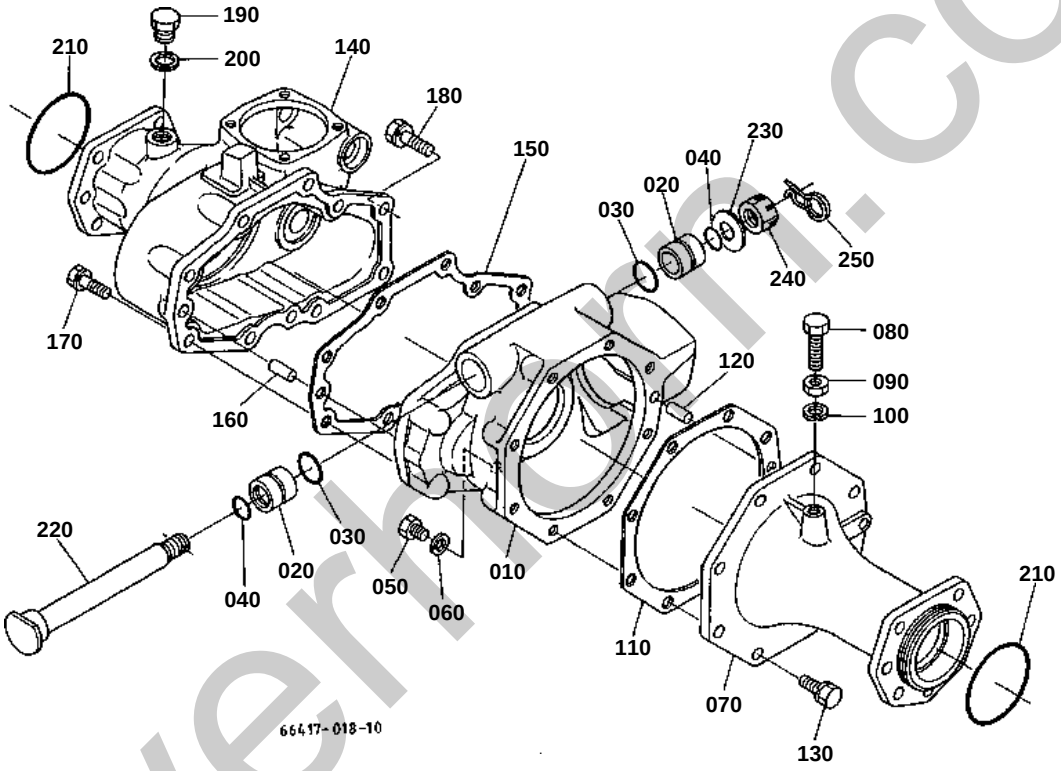

silverhorn.co.uk

FRONT AXLE CASE [WITH BI-SPEED TURN]

↔ Interchangeable; ≠ not interchangeable; ← new for old; → old for new

REF.No	Part No.	Description	Q'ty	S.No.	I/C	REMARKS	Weight (kgf)	Weight (lb)
010	67156-76110	CASE FRONT AXLE	1	<=50540			0	0
010	67156-76112	CASE F.AXLE CENTER	1	>=50541	←		8.4	18.48
020	66591-56120	BUSH	2				0.074	0.1628
030	04811-50250	RING	2				0.001	0.0022
040	04811-00200	RING	2				0.001	0.0022
050	06331-35010	PLUG	1				0.012	0.0264
060	04717-01000	WASHER WITH RUBBER	1				0.001	0.0022
070	67121-56110	ARM FRONT AXLE LH	1				5.6	12.32
080	67401-56280	BOLT	1				0.035	0.077
090	02112-50120	NUT	1				0.007	0.0154
100	04512-50120	WASHER SPRING	1				0	0
110	67121-56130	GASKET	1				0	0
120	05012-01020	PIN STRAIGHT	1				0.02	0.044
130	01123-51028	BOLT	8				0.025	0.055
140	67156-76132	CASE FRONT AXLE	1				8.8	19.36
150	67156-76140	GASKET	1				0	0
160	05012-01020	PIN STRAIGHT	2				0.02	0.044
170	01123-51028	BOLT	8				0.025	0.055
180	01123-51022	BOLT	1				0.02	0.044
190	06331-35016	PLUG	1				0.04	0.088
200	04717-01600	WASHER WITH RUBBER	1				0.003	0.0066
210	04811-10750	RING	2				0.001	0.0022
220	66802-56110	PIN CENTER	1				0.58	1.276
230	04011-50180	WASHER PLAIN	1				0.012	0.0264
240	02372-50180	NUT	1				0.019	0.0418
250	66611-57150	SPRING SET	1				0.02	0.044

silverhorn.co.uk

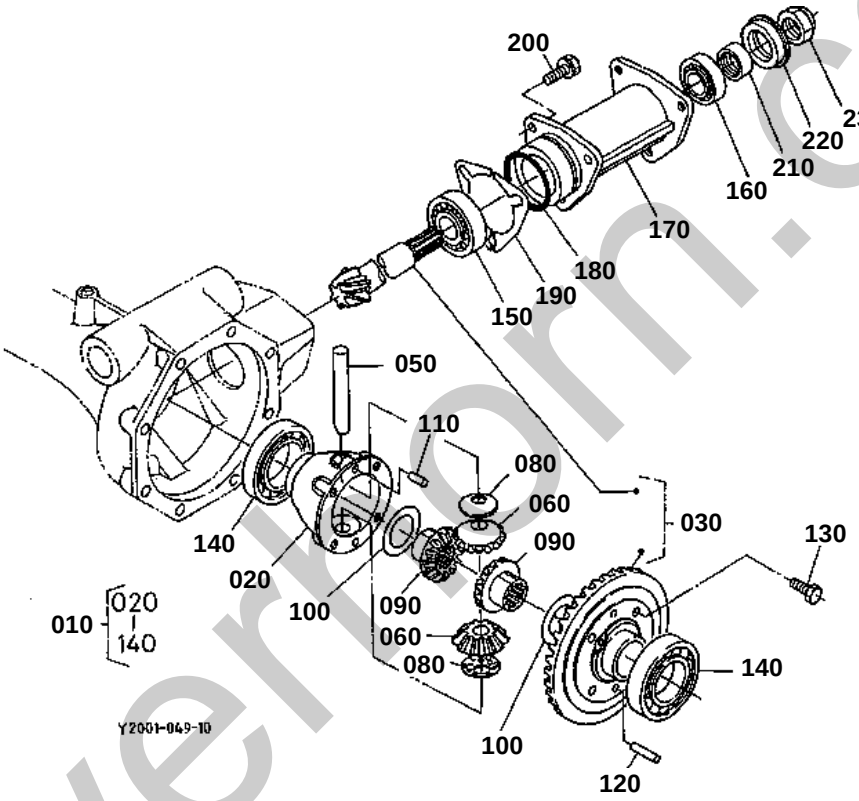

silverthorn.co.uk

040 66611-1495-0

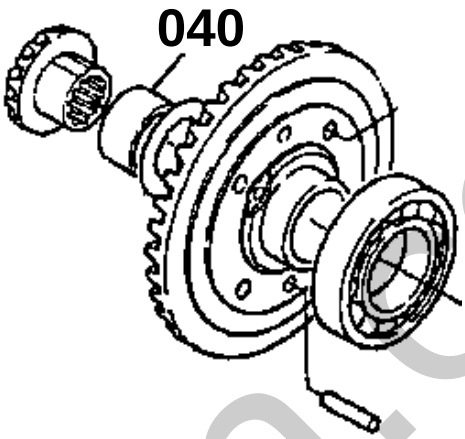

66417-809-10

silverhorn.co.uk

FRONT DIFFERENTIAL [WITHOUT BI-SPEED TURN]

↔ Interchangeable; ≠ not interchangeable; ← new for old; → old for new

REF.No	Part No.	Description	Q'ty	S.No.	I/C	REMARKS	Weight (kgf)	Weight (lb)
010	67061-82900	ASSY DIFF. FRONT	1				4.9	10.78
020	67321-56612	CASE FRONT DIFF.	1				0.61	1.342
030	67061-82800	ASSY GEAR BEVEL	1			6-37T	2.39	5.258
040	66611-14950	BUSH	1	<=63418			0.032	0.0704
050	67711-14912	SHAFT DIFF.PINION	1				0.14	0.308
060	67711-14920	PINION DIFF.	2			12T	0.11	0.242
080	67311-14980	COLLAR PINION THRUST	2				0.002	0.0044
090	67211-15150	GEAR DIFF.SIDE	2				0.158	0.3476
100	67211-15160	SHIM	2			1.0MM	0.01	0.022
100	67211-15170	SHIM	2			0.8MM	0.008	0.0176
100	67211-15180	SHIM	2			1.2MM	0.01	0.022
110	66591-14792	PIN KNOCK	1				0.003	0.0066
120	66591-14783	PIN STRAIGHT	1				0.01	0.022
130	67810-56680	BOLT UBS	6				0.013	0.0286
140	08101-06009	BEARING BALL	2				0.22	0.484
150	08711-30305	BEARING TAPER-ROLLER	1				0.266	0.5852
160	08711-32005	BEARING TAPER-ROLLER	1	<=67607			0.115	0.253
160	6A100-56680	BEARING TAPER-ROLLER	1	>=67608	↔		0.11	0.242
170	67061-56630	SPACER	1				2.1	4.62
180	04811-50550	RING	1				0.002	0.0044
190	67401-56640	SHIM	2			0.5MM	0.007	0.0154
190	67401-56650	SHIM	2			0.3MM	0.005	0.011
190	67401-56660	SHIM	2			0.2MM	0.004	0.0088
200	01123-50828	BOLT	3				0.014	0.0308
210	66591-56420	BUSH	1				0.021	0.0462
220	67211-14952	SEAL OIL	1				0.015	0.033
230	35260-23252	NUT	1				0.04	0.088

silverhorn.co.uk

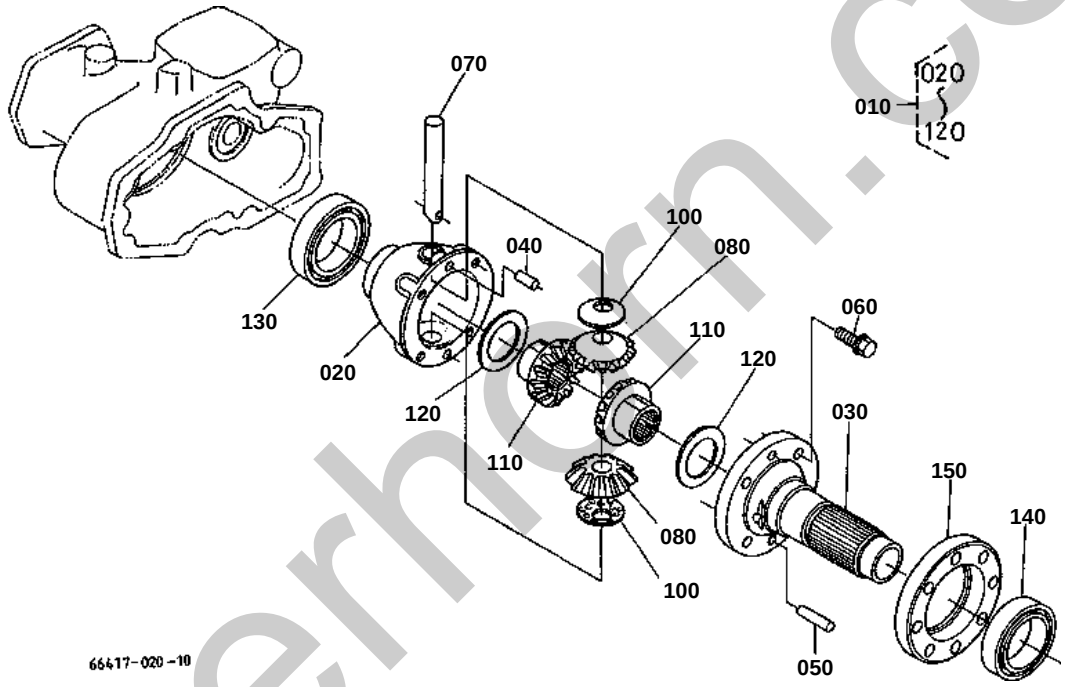

silverhorn.co.uk

↔ Interchangeable; ≠ not interchangeable; ← new for old; → old for new

REF.No	Part No.	Description	Q'ty	S.No.	I/C	REMARKS	Weight (kgf)	Weight (lb)
010	67156-76650	ASSY DIFF. FRONT	1				2.4	5.28
020	67156-76660	CASE FRONT DIFF.	1				0.6	1.32
030	67156-76670	SHAFT FRONT DIFF.	1				1.06	2.332
040	66591-14792	PIN KNOCK	1				0.003	0.0066
050	66591-14783	PIN STRAIGHT	1				0.01	0.022
060	67810-56680	BOLT UBS	4				0.013	0.0286
070	67711-14912	SHAFT DIFF.PINION	1				0.14	0.308
080	67711-14920	PINION DIFF.	2			12T	0.11	0.242
100	67311-14980	COLLAR PINION THRUST	2				0.002	0.0044
110	67211-15150	GEAR DIFF.SIDE	2			14T	0.158	0.3476
120	67211-15160	SHIM	2			1.0MM	0.01	0.022
120	67211-15170	SHIM	2			0.8MM	0.008	0.0176
120	67211-15180	SHIM	2			1.2MM	0.01	0.022
130	08101-06008	BEARING BALL	1				0.19	0.418
140	08101-06909	BEARING BALL	1				0.135	0.297
150	67156-76680	HOLDER BEARING	1				0.47	1.034

silverhorn.co.uk

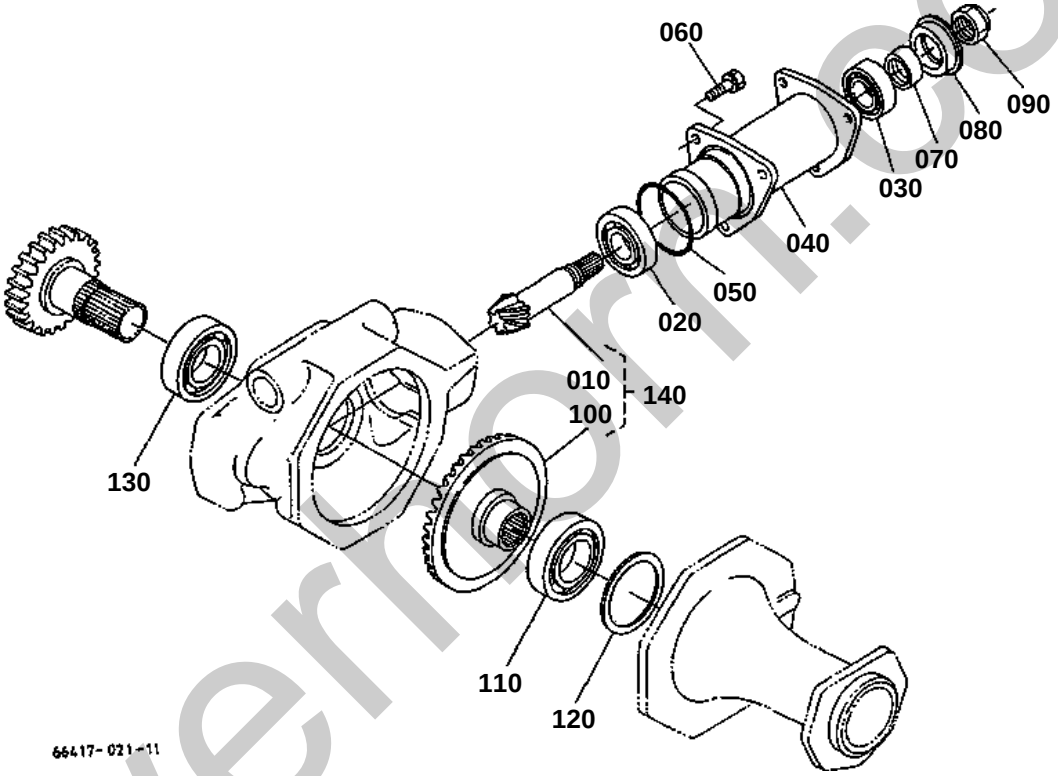

silverhorn.co.uk

BEVEL GEAR [WITH BI-SPEED TURN]

↔ Interchangeable; ≠ not interchangeable; ← new for old; → old for new

REF.No	Part No.	Description	Q'ty	S.No.	I/C	REMARKS	Weight (kgf)	Weight (lb)
010	67061-56610	PINION FRONT	1			6T	0.9	1.98
020	08711-30305	BEARING TAPER-ROLLER	1				0.266	0.5852
030	08711-32005	BEARING TAPER-ROLLER	1	<=67607			0.115	0.253
030	6A100-56680	BEARING TAPER-ROLLER	1	>=67608	↔		0.11	0.242
040	66416-56630	SPACER	1				1.71	3.762
050	04811-50600	RING	1				0.002	0.0044
060	01123-50828	BOLT	3				0.014	0.0308
070	66591-56420	BUSH	1				0.021	0.0462
080	67211-14952	SEAL OIL	1				0.015	0.033
090	35260-23252	NUT	1				0.04	0.088
100	67156-76250	GEAR SPIRAL BEVEL	1			37T	0.5	1.1
110	08101-06009	BEARING BALL	1				0.22	0.484
120	66591-14980	SHIM DIFF.SIDE	1			0.5MM	0.005	0.011
120	66591-14990	SHIM DIFF.SIDE	1			0.2MM	0.002	0.0044
120	67121-56630	SHIM DIFF.SIDE	1			0.3MM	0.005	0.011
130	08101-06008	BEARING BALL	1				0.19	0.418
140	66416-99100	ASSY GEAR BEVEL	1			SERVICE PARTS	2.46	5.412

silverhorn.co.uk

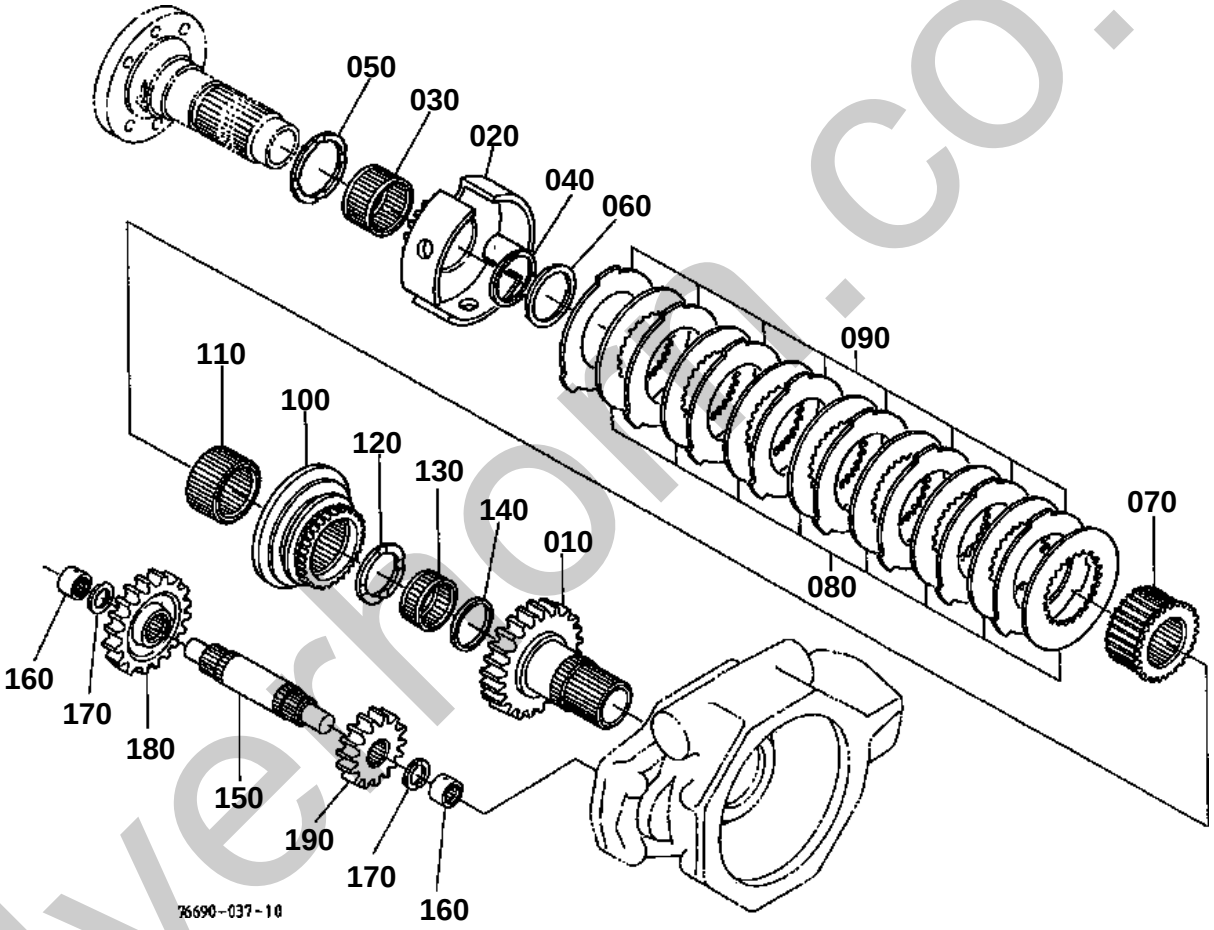

silverhorn.co.uk

CLUTCH DISK [WITH BI-SPEED TURN]

↔ Interchangeable; ≠ not interchangeable; ← new for old; → old for new

REF.No	Part No.	Description	Q'ty	S.No.	I/C	REMARKS	Weight (kgf)	Weight (lb)
010	66416-56540	GEAR-SHAFT	1			22T	0.74	1.628
020	67156-76510	GEAR CLUTCH	1			17T	0.57	1.254
030	08824-04517	BEARING NEEDLE	1				0.03	0.066
040	67156-76340	COLLAR	1				0.001	0.0022
050	67156-76520	COLLAR	1				0.019	0.0418
060	67156-76530	COLLAR	1				0.015	0.033
070	67156-76540	BOSS CLUTCH	1				0.41	0.902
080	67156-76550	DISK CLUTCH	8				0.042	0.0924
090	67156-76560	PLATE FRICTION	8				0.054	0.1188
100	66416-56520	SHIFTER	1				0.56	1.232
110	67156-76580	BOSS SHIFTER SPLINE	1				0.146	0.3212
120	67156-76590	COLLAR	1				0.01	0.022
130	08823-54013	BEARING NEEDLE	1				0.022	0.0484
140	67156-76610	COLLAR	1				0.003	0.0066
150	67156-76620	SHAFT BI-SPEED TURN	1				0.38	0.836
160	67156-76690	BEARING NEEDLE	2				0.021	0.0462
170	67910-12330	COLLAR	2				0.006	0.0132
180	67156-76630	GEAR	1			20T	0.293	0.6446
190	66416-56550	GEAR	1			15T	0.23	0.506

silverhorn.co.uk

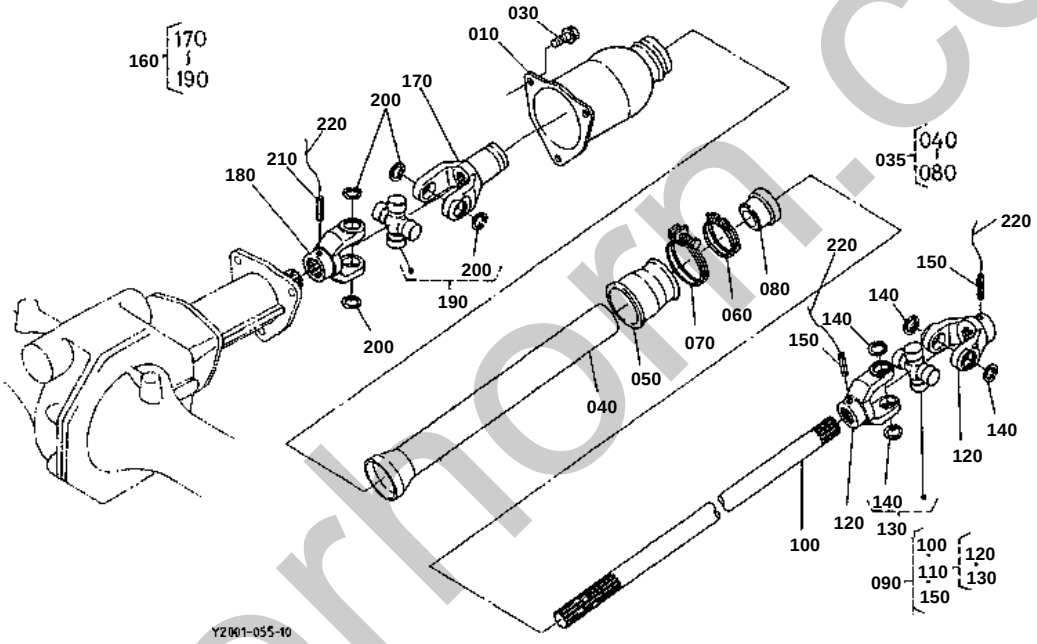

silverhorn.co.uk

020 66591-5722-0

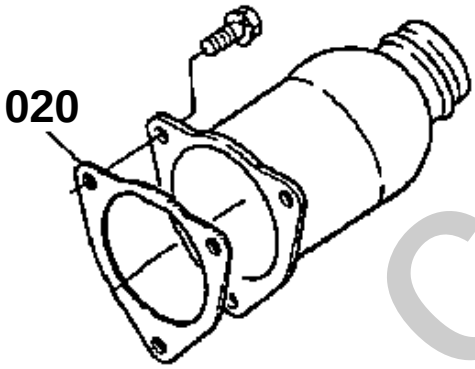

66417-810-10

silverhorn.co.uk

FRONT DRIVE SHAFT

↔ Interchangeable; ≠ not interchangeable; ← new for old; → old for new

REF.No	Part No.	Description	Q'ty	S.No.	I/C	REMARKS	Weight (kgf)	Weight (lb)
010	67221-57110	CASE JOINT	1				0.56	1.232
020	66591-57220	GASKET	1	<=63134			0	0
030	01123-50822	BOLT	3				0.012	0.0264
035	67221-57100	ASSY PIPE	1	<=66106			0	0
035	66591-57100	ASSY PIPE	1	>=66107	↔		0.62	1.364
040	66591-57164	PIPE	1				0.429	0.9438
050	66591-57170	PIPE	1				0.046	0.1012
060	15108-72870	BAND	1				0.027	0.0594
070	15221-11720	CLAMP HOSE	1				0.03	0.066
080	67121-57150	SEAL OIL	1				0.018	0.0396
090	67061-57200	ASSY SHAFT DRIVE	1				1.85	4.07
100	67061-57210	SHAFT FRONT DRIVE	1				1.2	2.64
110	67121-57230	ASSY JOINT REAR	1				0.7	1.54
120	66591-56310	JOINT	2				0.25	0.55
130	66591-56320	ASSY JOINT CROSS	1				0.185	0.407
140	04611-00200	CIR CLIP INTERNAL	4				0.001	0.0022
150	05411-00640	PIN SPRING	2				0.006	0.0132
160	67121-57250	ASSY JOINT FRONT	1				0.77	1.694
170	66591-56340	JOINT	1				0.338	0.7436
180	66591-56310	JOINT	1				0.25	0.55
190	66591-56320	ASSY JOINT CROSS	1				0.185	0.407
200	04611-00200	CIR CLIP INTERNAL	4				0.001	0.0022
210	05411-00628	PIN SPRING	1				0.004	0.0088

silverhorn.co.uk

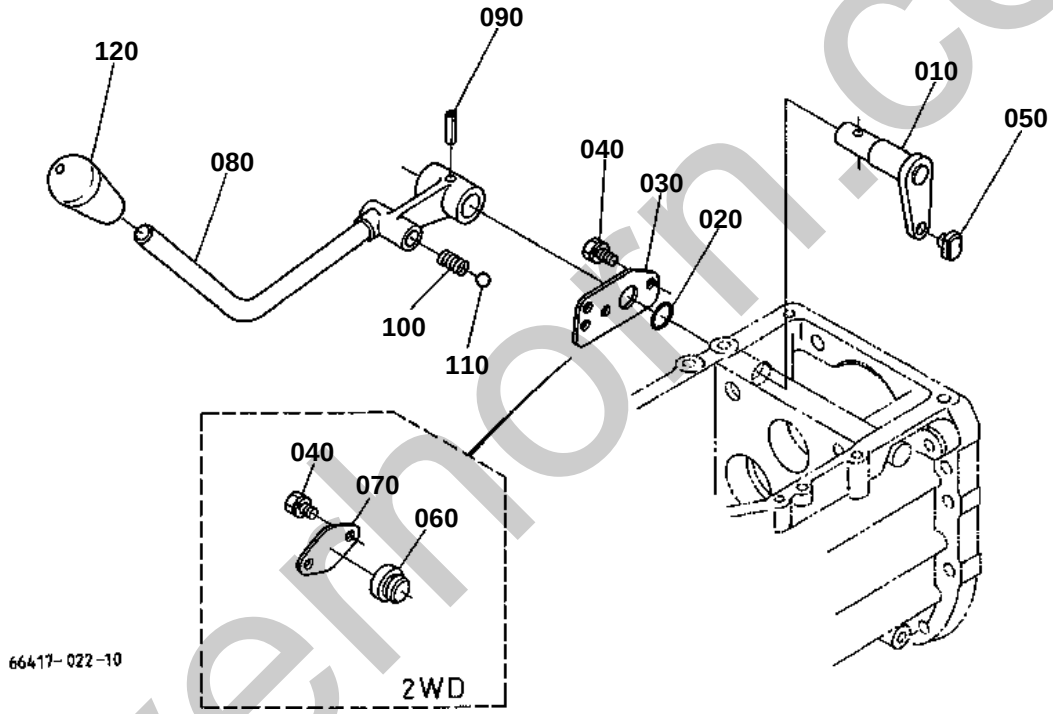

silvernorn.co.uk

FRONT DRIVE LEVER

↔ Interchangeable; ≠ not interchangeable; ← new for old; → old for new

REF.No	Part No.	Description	Q'ty	S.No.	I/C	REMARKS	Weight (kgf)	Weight (lb)
010	66611-19210	LEVER FORK	1				0.12	0.264
020	04811-00160	RING	1				0.001	0.0022
030	66204-19220	RETAINER FORK ROD	1				0.03	0.066
040	01202-50614	BOLT	2				0.006	0.0132
050	66611-19230	SHIFTER	1				0.012	0.0264
080	67061-42610	LEVER FRONT DRIVE	1				0.3	0.66
090	05411-00630	PIN SPRING	1				0.004	0.0088
100	62061-18260	SPRING STOPPER	1				0.002	0.0044
110	07715-01605	BALL	1				0.003	0.0066
120	54201-23270	GRIP	1				0.02	0.044

silverhorn.co.uk

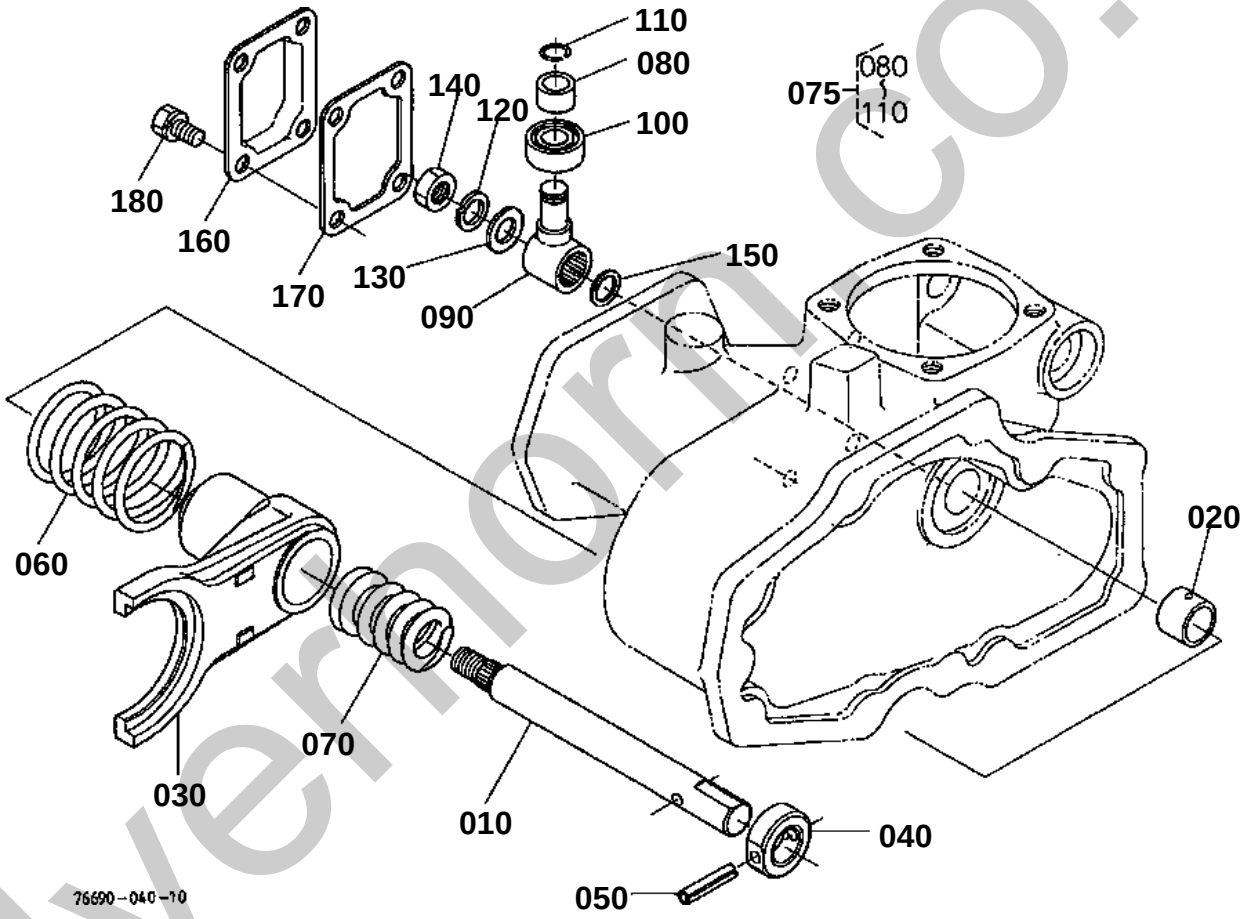

silvermoor.co.uk

080 67156-7686-0

090 67156-7676-0

110 05411-00216

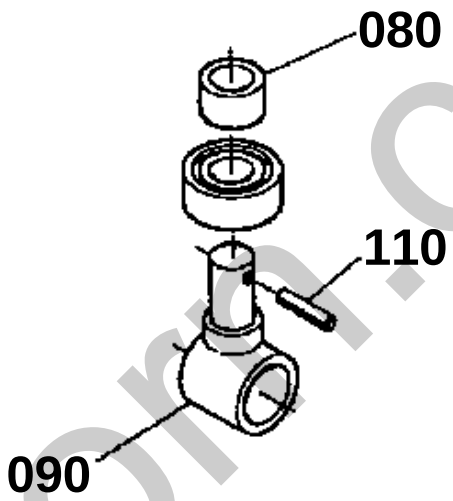

66417-811-10

silverhorn.co.uk

SHIFT FORK [WITH BI-SPEED TURN]

↔ Interchangeable; ≠ not interchangeable; ← new for old; → old for new

REF.No	Part No.	Description	Q'ty	S.No.	I/C	REMARKS	Weight (kgf)	Weight (lb)
010	67156-76810	ROD SHIFT	1				0.332	0.7304
020	67156-18230	BUSH	1				0.01	0.022
030	67156-76820	FORK SHIFT	1				0.82	1.804
040	67156-76830	COLLAR PRESSURE	1				0.06	0.132
050	05411-00632	PIN SPRING	1				0.004	0.0088
060	66416-56840	SPRING	1				0.9	1.98
070	67156-76850	SPRING B	1				0.15	0.33
075	67156-76600	ASSY SHAFT ROLLER	1				0.12	0.264
080	67156-76860	ROLLER SHIFT	1	<=62096			0.014	0.0308
080	67950-76623	ROLLER SHIFT	1	>=62097	≠		0.015	0.033
090	67156-76760	SHAFT SHIFT ROLLER	1	<=62096			0.086	0.1892
090	67156-76764	SHAFT SHIFT ROLLER	1	>=62097	≠		0	0
090	67156-76765	SHAFT SHIFT ROLLER	1	>=64768	≠		0.1	0.22
100	08101-06001	BEARING BALL	1				0.024	0.0528
110	05411-00216	PIN SPRING	1	<=62096			0.001	0.0022
110	67950-76630	STOPPER	1	>=62097	≠		0	0
110	67950-76632	STOPPER	1	>=64768	≠		0.001	0.0022
120	04512-50120	WASHER SPRING	1				0	0
130	04011-50120	WASHER PLAIN	1				0.005	0.011
140	02174-50120	NUT	1				0.01	0.022
150	67156-76770	SHIM SHIFT ROD	2			1.0MM	0.001	0.0022
150	67156-76390	SHIM SHIFT ROD	1			1.5MM	0.001	0.0022
160	67156-76970	COVER CASE	1				0.073	0.1606
170	67156-76980	GASKET	1				0	0
180	01123-60816	BOLT	4				0.01	0.022

silverhorn.co.uk

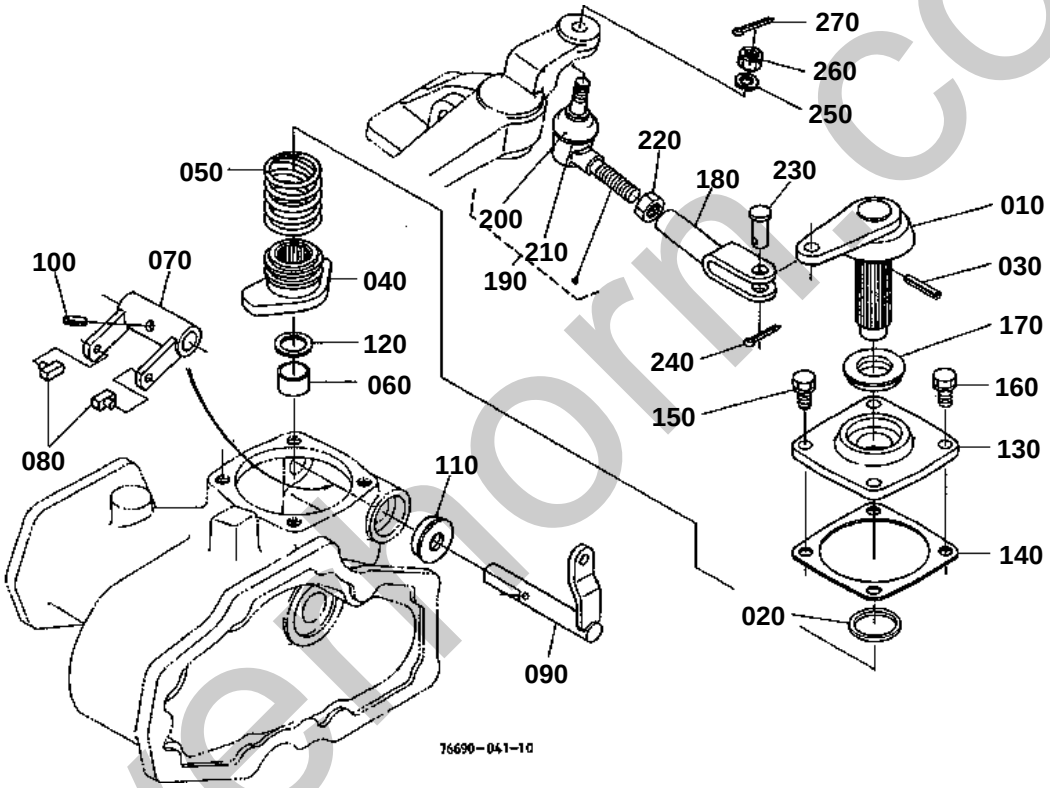

silverhorn.co.uk

SHIFT LEVER [WITH BI-SPEED TURN]

↔ Interchangeable; ≠ not interchangeable; ← new for old; → old for new

REF.No	Part No.	Description	Q'ty	S.No.	I/C	REMARKS	Weight (kgf)	Weight (lb)
010	67156-76870	LEVER SHIFT	1				0.5	1.1
020	67156-76330	COLLAR	1				0.006	0.0132
030	05411-00332	PIN SPRING	1				0.001	0.0022
040	66416-56890	CAM SHIFT	1				0.28	0.616
050	67156-76780	SPRING C	1				0.022	0.0484
060	08511-01810	BUSH	1				0.005	0.011
070	67156-76910	FORK CHANGE	1				0.14	0.308
080	67156-76920	COTTER SHIFTER	2				0.007	0.0154
090	67156-76930	LEVER CHANGE	1				0.17	0.374
100	05411-00510	PIN SPRING	1				0.001	0.0022
110	67156-76750	SEAL OIL	1				0.009	0.0198
120	67156-76740	COLLAR	1				0.004	0.0088
130	67156-76950	FULCRUM SHIFT LEVER	1				0.42	0.924
140	67156-76960	GASKET	1				0	0
150	01123-50822	BOLT	2				0.012	0.0264
160	70112-31940	BOLT COATING	2				0.012	0.0264
170	67156-76730	SEAL OIL	1				0.012	0.0264
180	67156-76310	LINK SHIFT	1				0.14	0.308
190	67121-56530	END TIE ROD RH	1				0.23	0.506
200	67121-56560	COVER DUST	1				0.008	0.0176
210	67121-56570	CLIP	1				0.003	0.0066
220	02172-50120	NUT	1				0.01	0.022
230	67156-76320	PIN JOINT	1				0.017	0.0374
240	05511-50320	PIN SPLIT	1				0.002	0.0044
250	04512-60100	WASHER SPRING	1				0.002	0.0044
260	66591-56780	NUT	1				0.01	0.022
270	05511-52520	PIN SPLIT	1				0.001	0.0022

silverhorn.co.uk

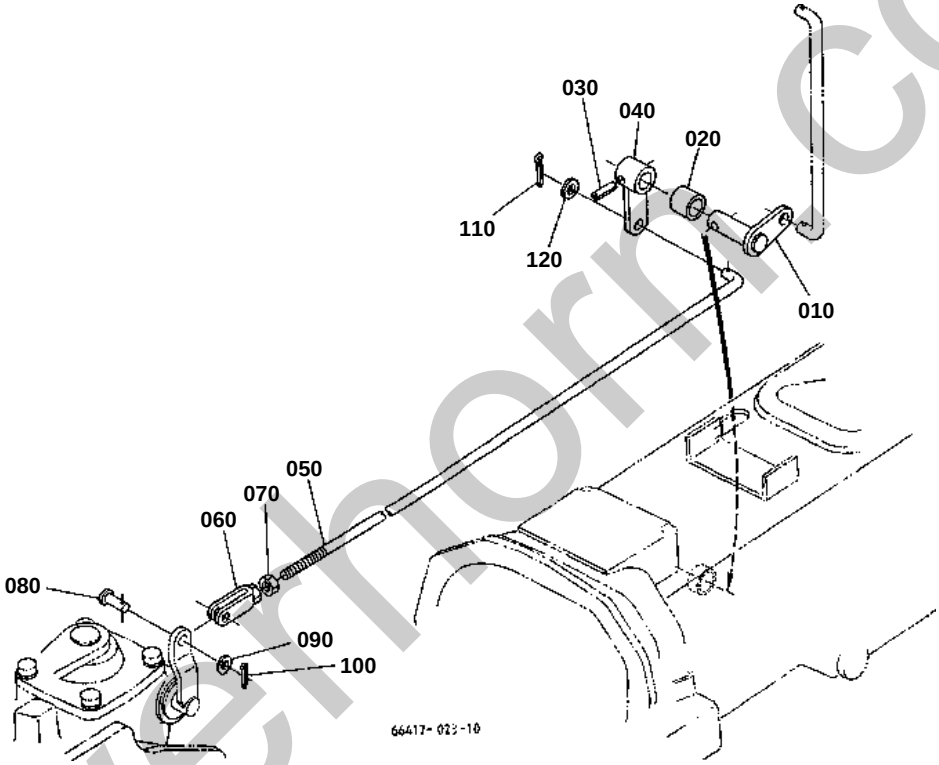

silverhorn.co.uk

BI-SPEED TURN ROD [WITH BI-SPEED TURN]

↔ Interchangeable; ≠ not interchangeable; ← new for old; → old for new

REF.No	Part No.	Description	Q'ty	S.No.	I/C	REMARKS	Weight (kgf)	Weight (lb)
010	66417-44180	SHAFT BI-S.T.ARM	1				0.08	0.176
020	08511-01420	BUSH	1				0.007	0.0154
030	05411-00630	PIN SPRING	1				0.004	0.0088
040	66417-44210	ARM BI-S.T.FULCRUM	1				0.06	0.132
050	66417-44220	ROD BI-S.T.CHANGE	1				0.18	0.396
060	67311-42830	U-JOINT	1				0.05	0.11
070	02112-50080	NUT	1				0.003	0.0066
080	05122-50822	PIN JOINT	1				0.01	0.022
090	04012-50080	WASHER PLAIN	1				0.001	0.0022
100	05511-50218	PIN SPLIT	1				0.001	0.0022
110	05511-50318	PIN SPLIT	1				0.001	0.0022
120	04012-50080	WASHER PLAIN	1				0.001	0.0022

silverhorn.co.uk

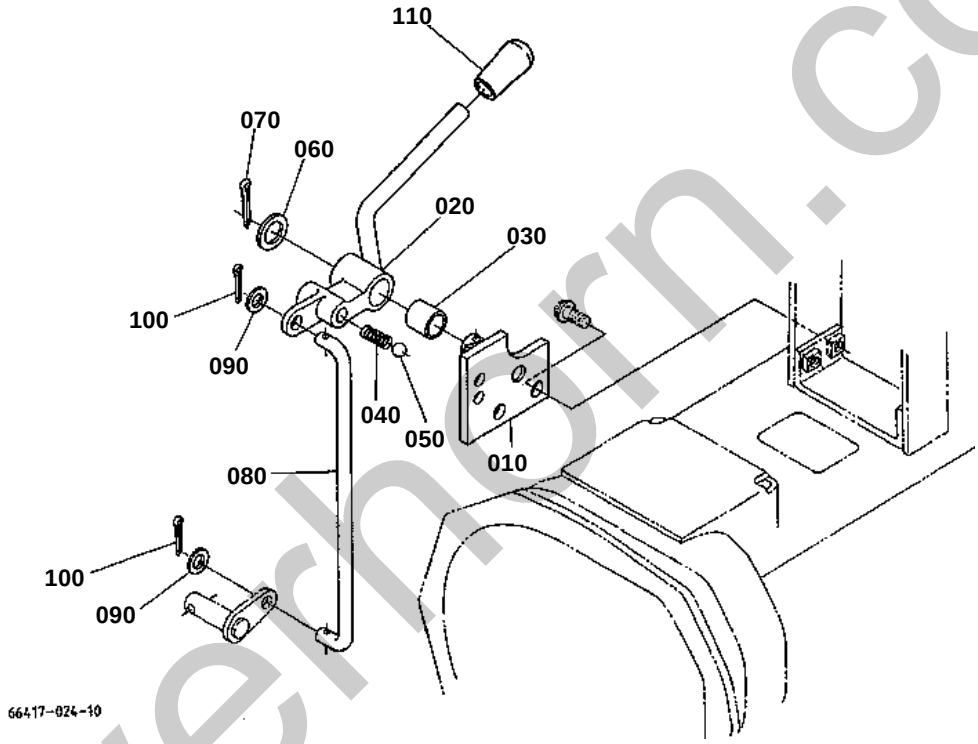

silverhorn.co.uk

BI-SPEED TURN LEVER [WITH BI-SPEED TURN]

↔ Interchangeable; ≠ not interchangeable; ← new for old; → old for new

REF.No	Part No.	Description	Q'ty	S.No.	I/C	REMARKS	Weight (kgf)	Weight (lb)
010	66416-44120	FULCRUM BI-S.T.LEVER	1				0.15	0.33
020	66417-44140	LEVER BI-S.T.CHANGE	1				0.21	0.462
030	08511-01420	BUSH	1				0.007	0.0154
040	62061-18260	SPRING STOPPER	1				0.002	0.0044
050	07715-01605	BALL	1				0.003	0.0066
060	04011-50140	WASHER PLAIN	1				0.007	0.0154
070	05511-50425	PIN SPLIT	1				0.003	0.0066
080	66417-44190	ROD BI-S.T.MIDDLE	1				0.09	0.198
090	04012-50080	WASHER PLAIN	2				0.001	0.0022
100	05511-50318	PIN SPLIT	2				0.001	0.0022
110	06914-00100	GRIP LEVER	1				0.02	0.044

silverhorn.co.uk

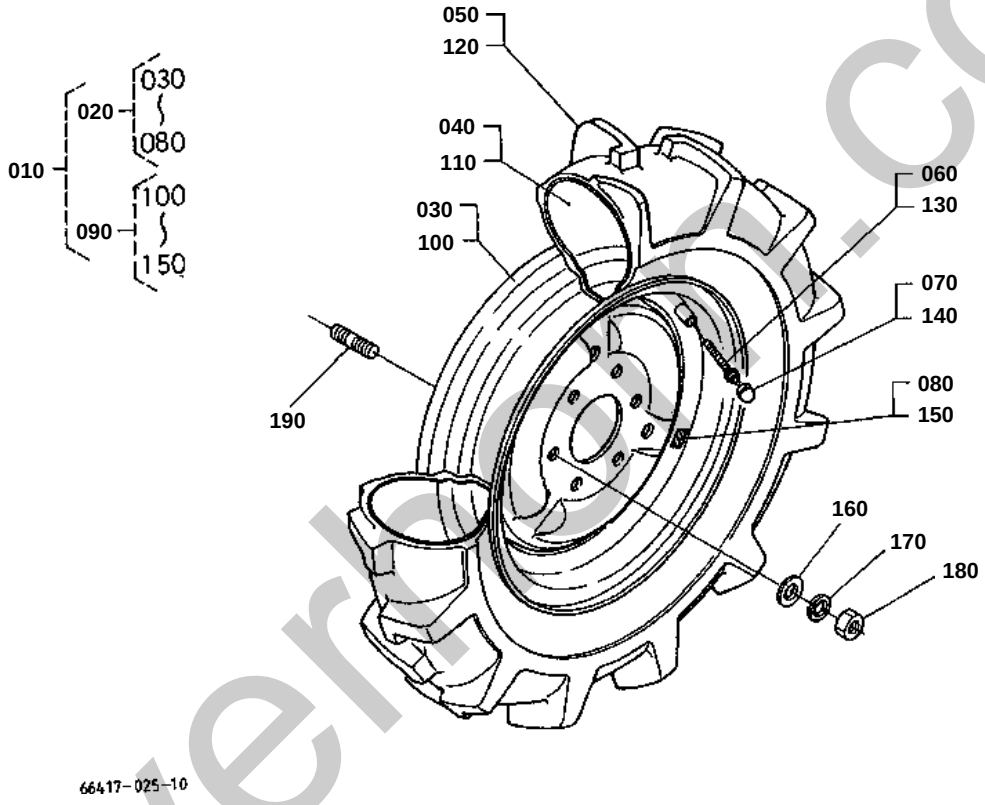

silverhorn.co.uk

FRONT WHEEL (6-12B)

↔ Interchangeable; ≠ not interchangeable; ← new for old; → old for new

REF.No	Part No.	Description	Q'ty	S.No.	I/C	REMARKS	Weight (kgf)	Weight (lb)
010	66415-57400	ASSY TIRE FRONT	1				28	61.6
020	66415-57410	ASSY TIRE LH	1				0	0
030	66419-57420	WHEEL	1				6	13.2
040	93016-01120	TUBE	1				0.7	1.54
050	96015-34130	TIRE	1				7.2	15.84
060	32150-27740	CORE VALVE	1				0.003	0.0066
070	38240-11690	CAP VALVE	1				0.001	0.0022
080	66415-57430	LABEL TIRE LH	1				0.001	0.0022
090	66415-57440	ASSY TIRE RH	1				0	0
100	66419-57420	WHEEL	1				6	13.2
110	93016-01120	TUBE	1				0.7	1.54
120	96015-34130	TIRE	1				7.2	15.84
130	32150-27740	CORE VALVE	1				0.003	0.0066
140	38240-11690	CAP VALVE	1				0.001	0.0022
150	66415-57450	LABEL TIRE RH	1				0.001	0.0022
160	04013-60120	WASHER PLAIN	12				0.01	0.022
170	04512-50120	WASHER SPRING	12				0	0
180	02174-50120	NUT	12				0.01	0.022
190	66591-56564	BOLT STUD	12				0.028	0.0616

silverhorn.co.uk

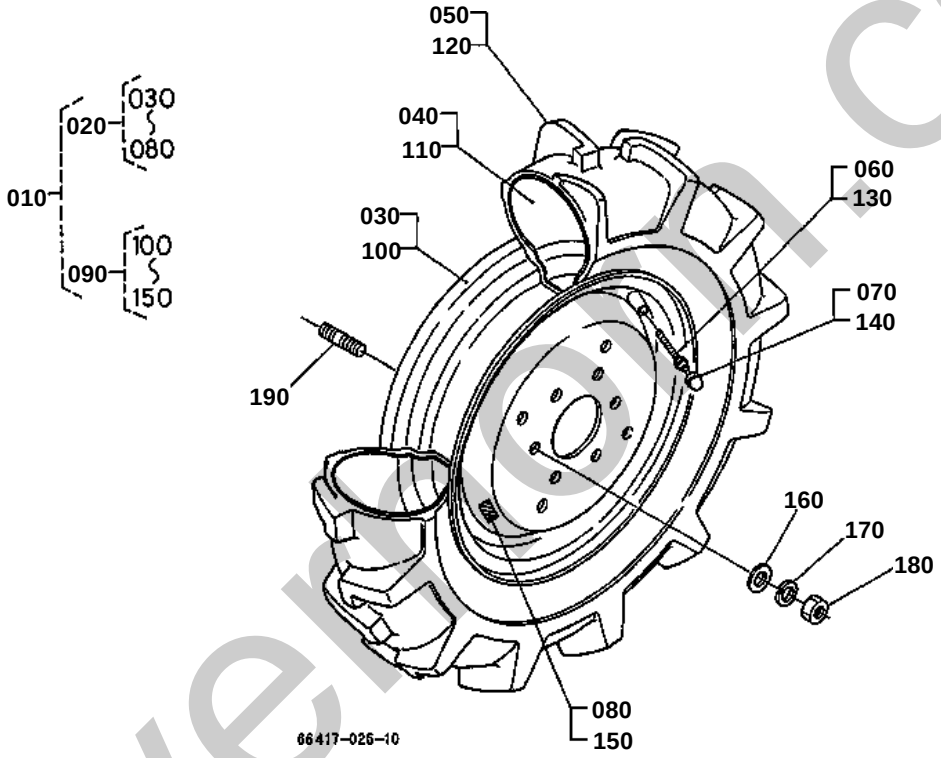

silvermoon.co.uk

↔ Interchangeable; ≠ not interchangeable; ← new for old; → old for new

REF.No	Part No.	Description	Q'ty	S.No.	I/C	REMARKS	Weight (kgf)	Weight (lb)
010	66416-57300	ASSY TIRE FRONT	1				28	61.6
020	66416-57310	ASSY TIRE LH	1				14	30.8
030	66419-57420	WHEEL	1				6	13.2
040	93016-01120	TUBE	1				0.7	1.54
050	67521-57330	TIRE	1				7	15.4
060	32150-27740	CORE VALVE	1				0.003	0.0066
070	38240-11690	CAP VALVE	1				0.001	0.0022
080	66416-57430	LABEL TIRE LH	1				0.001	0.0022
090	66416-57340	ASSY TIRE RH	1				14	30.8
100	66419-57420	WHEEL	1				6	13.2
110	93016-01120	TUBE	1				0.7	1.54
120	67521-57330	TIRE	1				7	15.4
130	32150-27740	CORE VALVE	1				0.003	0.0066
140	38240-11690	CAP VALVE	1				0.001	0.0022
150	66416-57450	LABEL TIRE RH	1				0.001	0.0022
160	04013-60120	WASHER PLAIN	12				0.01	0.022
170	04512-50120	WASHER SPRING	12				0	0
180	02174-50120	NUT	12				0.01	0.022
190	66591-56564	BOLT STUD	12				0.028	0.0616

silverhorn.co.uk

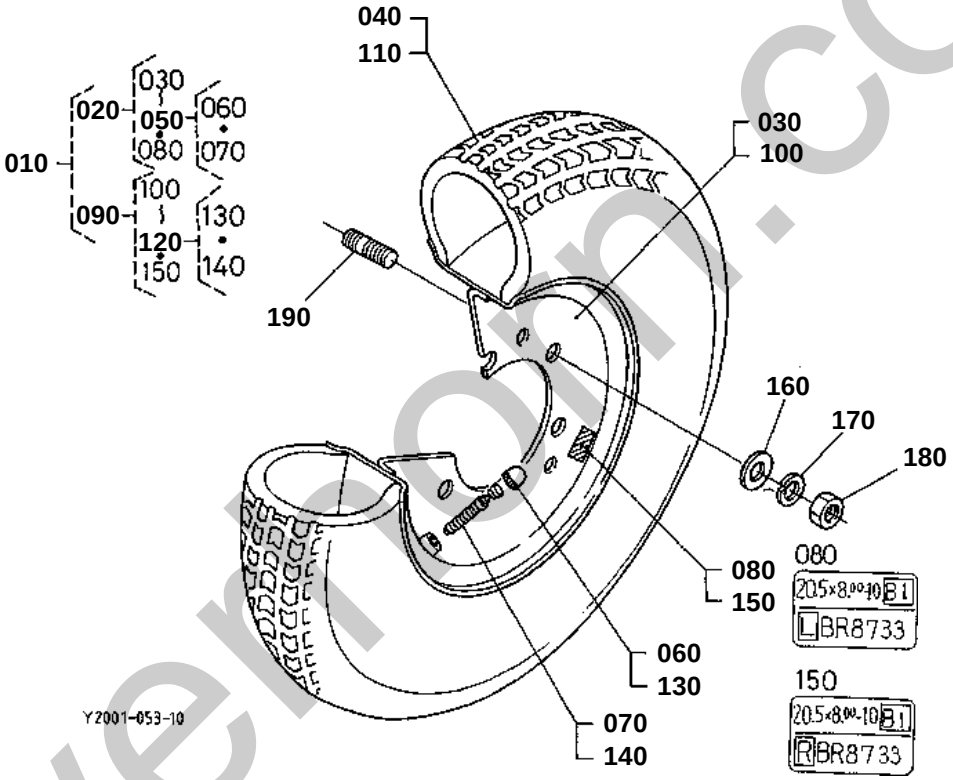

silvermoon.co.uk

FRONT WHEEL (20.5 X 8.00-10)

↔ Interchangeable; ≠ not interchangeable; ← new for old; → old for new

REF.No	Part No.	Description	Q'ty	S.No.	I/C	REMARKS	Weight (kgf)	Weight (lb)
010	66416-57600	ASSY FRONT WHEEL	1				11	24.2
020	66416-57610	ASSY FRONT WHEEL LH	1				11	24.2
030	66416-57620	WHEEL	1				5	11
040	96018-41130	TIRE	1				6.6	14.52
050	34159-11850	VALVE TIRE	1				0.013	0.0286
060	38240-11690	CAP VALVE	1				0.001	0.0022
070	32150-27740	CORE VALVE	1				0.003	0.0066
080	66416-57630	LABEL TIRE LH	1				0.001	0.0022
090	66416-57640	ASSY FRONT WHEEL RH	1				11	24.2
100	66416-57620	WHEEL	1				5	11
110	96018-41130	TIRE	1				6.6	14.52
120	34159-11850	VALVE TIRE	1				0.013	0.0286
130	38240-11690	CAP VALVE	1				0.001	0.0022
140	32150-27740	CORE VALVE	1				0.003	0.0066
150	66416-57650	LABEL TIRE RH	1				0.001	0.0022
160	04013-60120	WASHER PLAIN	12				0.01	0.022
170	04512-50120	WASHER SPRING	12				0	0
180	02174-50120	NUT	12				0.01	0.022
190	66591-56564	BOLT STUD	12				0.028	0.0616

silverhorn.co.uk

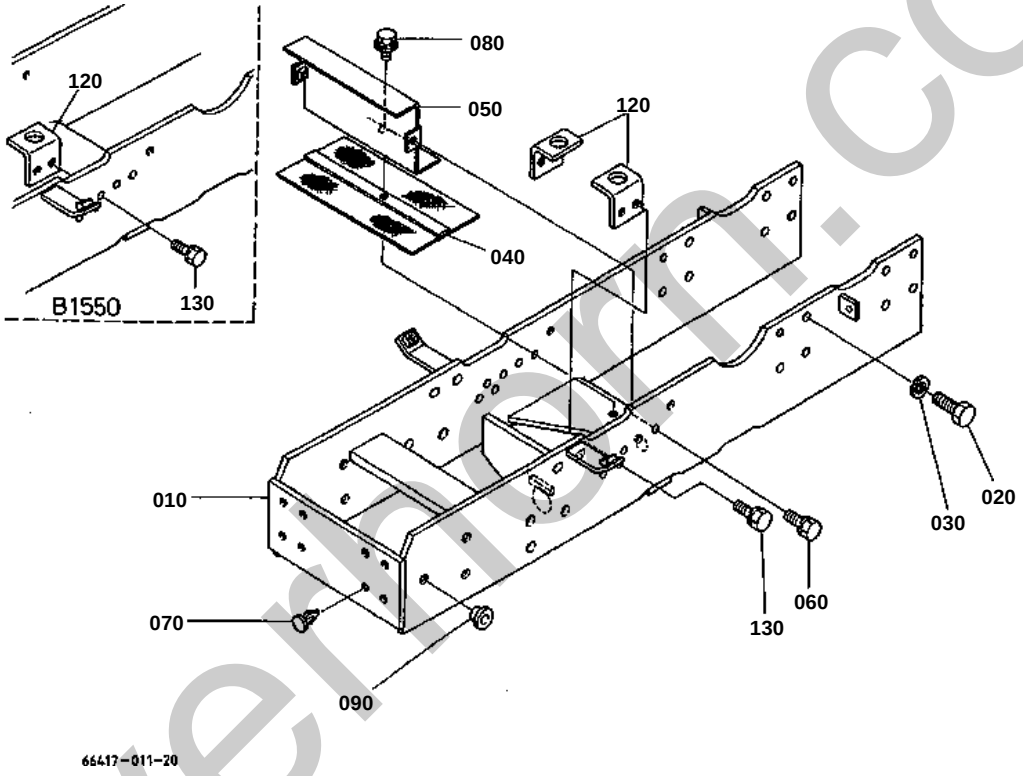

silvermorn.co.uk

100 67401-5122-0

110 01123-50825

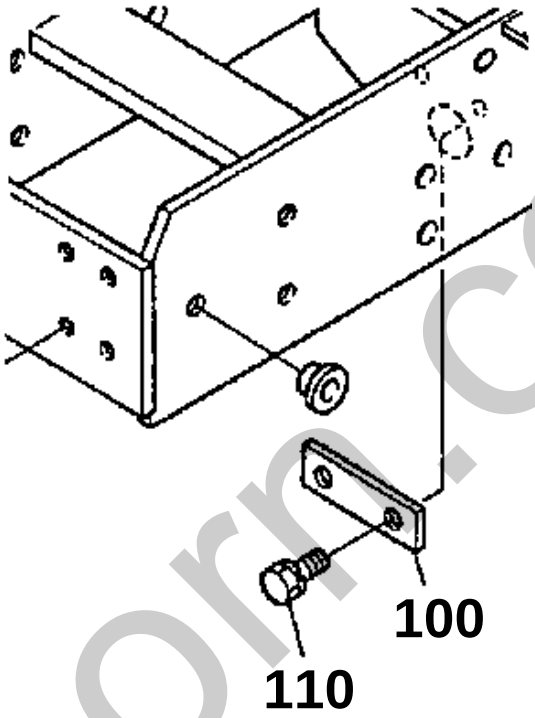

66417-612-10

silverhorn.co.uk

FRONT AXEL FRAME

↔ Interchangeable; ≠ not interchangeable; ← new for old; → old for new

REF.No	Part No.	Description	Q'ty	S.No.	I/C	REMARKS	Weight (kgf)	Weight (lb)
010	66416-51210	FRAME FRONT AXLE	1	<=63889			0	0
010	66416-51215	FRAME FRONT AXLE	1	>=63890	←		19	41.8
020	01173-51025	BOLT	16				0.021	0.0462
030	04512-60100	WASHER SPRING	16				0.002	0.0044
040	66416-51220	COVER DUSTPROOF	1				0.16	0.352
050	66416-51280	COVER F.AXLE FRAME	1				0.32	0.704
060	01123-50825	BOLT	2				0.013	0.0286
070	67211-51120	PLUG BLIND	8				0.001	0.0022
080	01125-50820	BOLT	1				0	0
090	67211-11140	PLUG BLIND	6				0.001	0.0022
100	67401-51220	WASHER LOCK	1	<=63889			0.08	0.176
110	01123-50825	BOLT	2	<=63889			0.013	0.0286
120	67800-51994	SUPPORT RADIATOR	2				0.127	0.2794
130	01123-50825	BOLT	4				0.013	0.0286

silverhorn.co.uk

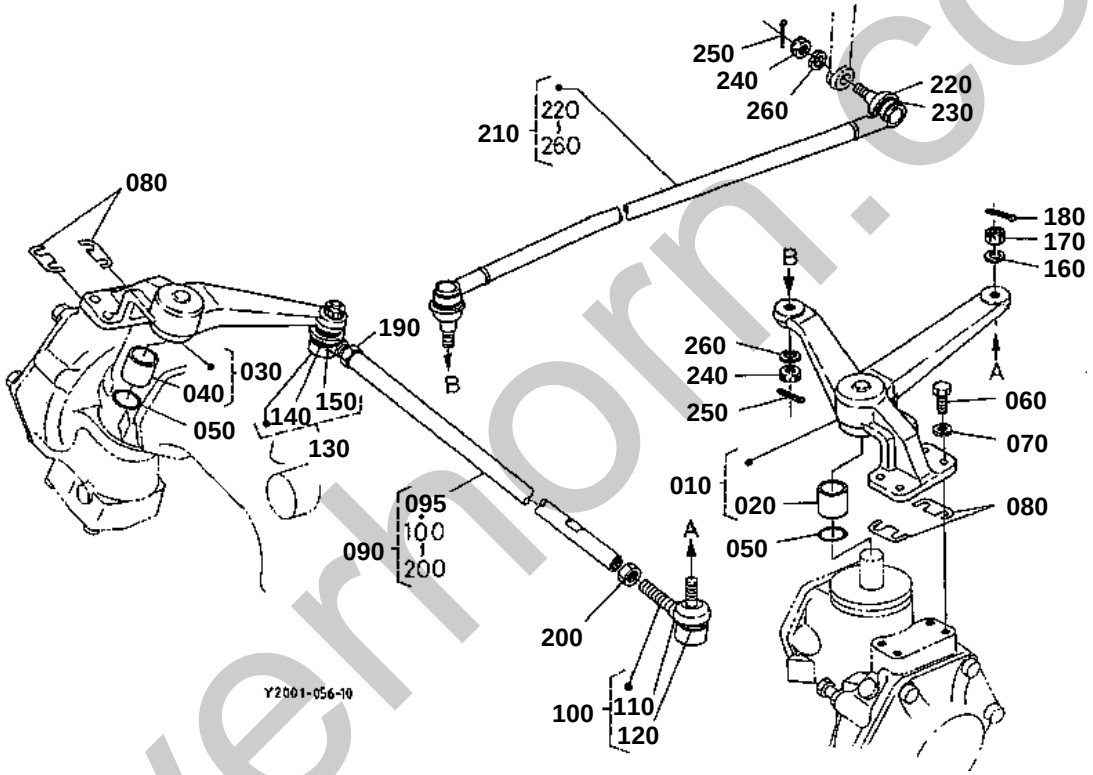

silverhorn.co.uk

KNUCKLE ARM [WITHOUT BI-SPEED TURN]

↔ Interchangeable; ≠ not interchangeable; ← new for old; → old for new

REF.No	Part No.	Description	Q'ty	S.No.	I/C	REMARKS	Weight (kgf)	Weight (lb)
010	67401-56400	ASSY ARM KNUCKLE LH	1				2.2	4.84
020	67121-56440	BUSH	1				0.02	0.044
030	67401-56500	ASSY ARM KNUCKLE RH	1				1.69	3.718
040	67121-56440	BUSH	1				0.02	0.044
050	04811-00250	RING	2				0.001	0.0022
060	01153-51028	BOLT	8				0.02	0.044
070	04512-60100	WASHER SPRING	8				0.002	0.0044
080	67121-56450	SHIM KNUCKLE ARM	4			0.5MM	0.002	0.0044
080	67121-56460	SHIM KNUCKLE ARM	4			0.3MM	0.001	0.0022
080	67121-56470	SHIM KNUCKLE ARM	4			0.2MM	0.001	0.0022
090	67211-56500	ASSY ROD TIE	1				1.2	2.64
095	67211-56530	ROD TIE	1				0.7	1.54
100	67121-56520	END TIE ROD LH	1				0.24	0.528
110	67121-56560	COVER DUST	1				0.008	0.0176
120	67121-56570	CLIP	1				0.003	0.0066
130	67121-56530	END TIE ROD RH	1				0.23	0.506
140	67121-56560	COVER DUST	1				0.008	0.0176
150	67121-56570	CLIP	1				0.003	0.0066
160	04512-60100	WASHER SPRING	2				0.002	0.0044
170	66591-56780	NUT	2				0.01	0.022
180	05511-52520	PIN SPLIT	2				0.001	0.0022
190	02172-50120	NUT	1				0.01	0.022
200	67121-56540	NUT	1				0.007	0.0154
210	66417-56900	COMP.LINK DRAG	1	<=61072			0	0
210	66416-56902	COMP.LINK DRAG	1	>=61073	↔		2.3	5.06
220	67121-56560	COVER DUST	2				0.008	0.0176
230	67121-56570	CLIP	2				0.003	0.0066
240	66591-56780	NUT	2				0.01	0.022
250	05511-52528	PIN SPLIT	2				0.001	0.0022
260	04512-60100	WASHER SPRING	2				0.002	0.0044

silverhorn.co.uk

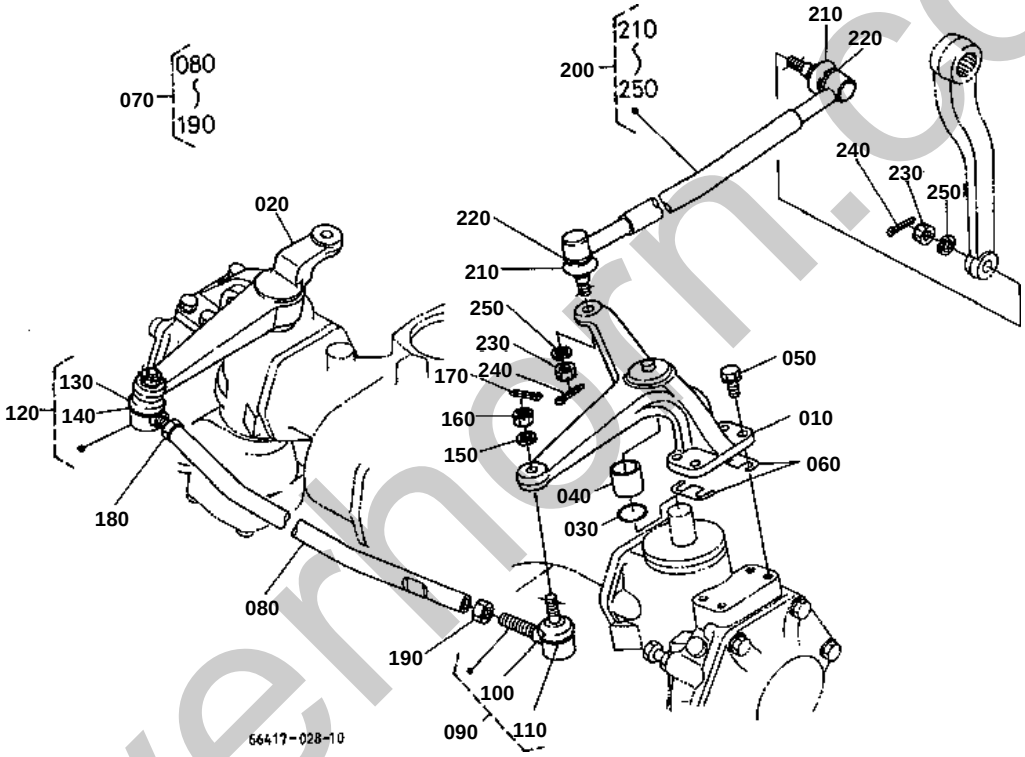

silvernorn.co.uk

KNUCKLE ARM [WITH BI-SPEED TURN]

↔ Interchangeable; ≠ not interchangeable; ← new for old; → old for new

REF.No	Part No.	Description	Q'ty	S.No.	I/C	REMARKS	Weight (kgf)	Weight (lb)
010	67221-56412	ARM KNUCKLE LH	1				2.1	4.62
020	67156-76420	ARM KNUCKLE RH	1				1.62	3.564
030	04811-00250	RING	2				0.001	0.0022
040	67121-56440	BUSH	2				0.02	0.044
050	01123-51030	BOLT	8	<=62628			0.025	0.055
050	01123-51028	BOLT	8	>=62629	←		0.025	0.055
060	67121-56450	SHIM KNUCKLE ARM	4			0.5MM	0.002	0.0044
060	67121-56460	SHIM KNUCKLE ARM	4			0.3MM	0.001	0.0022
060	67121-56470	SHIM KNUCKLE ARM	4			0.2MM	0.001	0.0022
070	67156-76430	ASSY ROD TIE	1				1.62	3.564
080	67156-76440	ROD TIE	1				1.18	2.596
090	67121-56530	END TIE ROD R	1				0.23	0.506
100	67121-56560	COVER DUST	1				0.008	0.0176
110	67121-56570	CLIP	1				0.003	0.0066
120	67121-56520	END TIE ROD L	1				0.24	0.528
130	67121-56560	COVER DUST	1				0.008	0.0176
140	67121-56570	CLIP	1				0.003	0.0066
150	04512-60100	WASHER SPRING	2				0.002	0.0044
160	66591-56780	NUT	2				0.01	0.022
170	05511-52520	PIN SPLIT	2				0.001	0.0022
180	67121-56540	NUT	1				0.007	0.0154
190	02172-50120	NUT	1				0.01	0.022
200	66417-56900	COMP.LINK DRAG	1	<=61072			0	0
200	66416-56902	COMP.LINK DRAG	1	>=61073	↔		2.3	5.06
210	67121-56560	COVER DUST	2				0.008	0.0176
220	67121-56570	CLIP	2				0.003	0.0066
230	66591-56780	NUT	2				0.01	0.022
240	05511-52528	PIN SPLIT	2				0.001	0.0022
250	04512-60100	WASHER SPRING	2				0.002	0.0044

silverhorn.co.uk

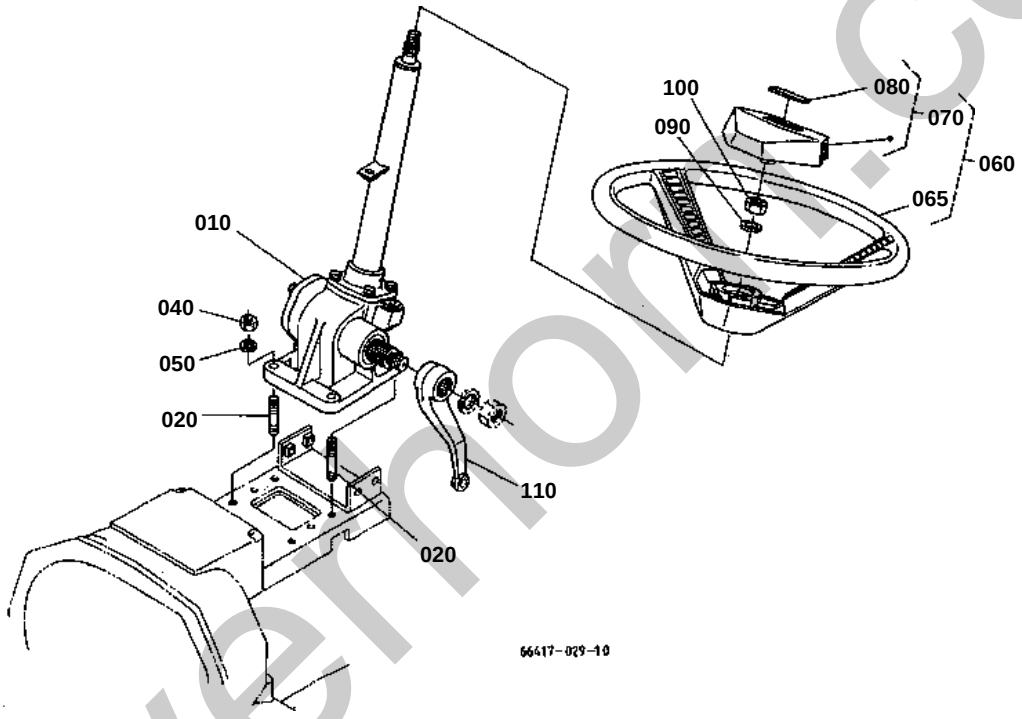

silvermont.co.uk

020 01517-51028

030 01517-51035

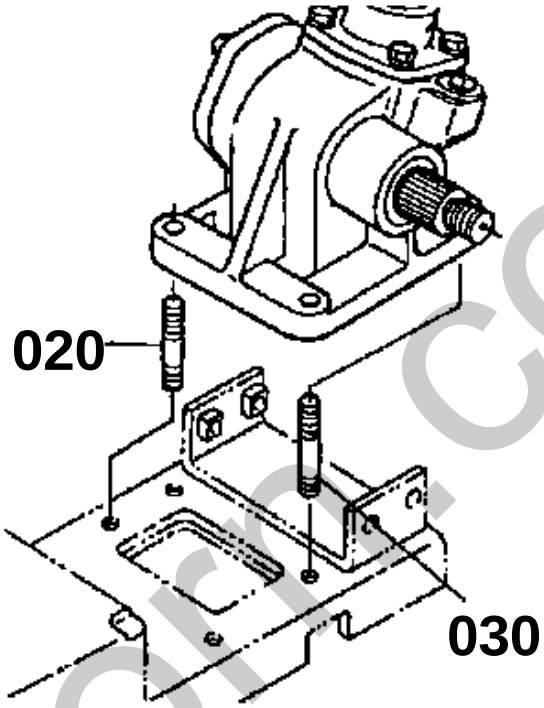

66417-813-10

silverhorn.co.uk

↔ Interchangeable; ≠ not interchangeable; ← new for old; → old for new

REF.No	Part No.	Description	Q'ty	S.No.	I/C	REMARKS	Weight (kgf)	Weight (lb)
010	66416-41100	ASSY STEERING	1			REFER TO L.No.0F05-R0 FOR COMPONENTS.	6.2	13.64
020	01517-51028	STUD	3	<=61609			0.022	0.0484
020	01517-51028	STUD	4	>=61610			0.022	0.0484
030	01517-51035	STUD	1	<=61609			0.028	0.0616
040	02118-50100	NUT	4				0.005	0.011
050	04512-60100	WASHER SPRING	4				0.002	0.0044
060	66150-41450	ASSY WHEEL STEERING	1				2.7	5.94
065	37410-41460	WHEEL STEERING	1				2	4.4
070	37410-41470	ASSY PAD	1	<=62006			0	0
070	67148-41470	ASSY PAD	1	>=62007	←		0.06	0.132
080	37410-41490	MARK	1	<=62006			0.005	0.011
080	67148-41490	MARK	1	>=62007	≠		0.005	0.011
090	04512-50120	WASHER SPRING	1				0	0
100	02172-50120	NUT	1				0.01	0.022
110	66417-41140	ARM PITMAN	1				0.75	1.65

silverhorn.co.uk

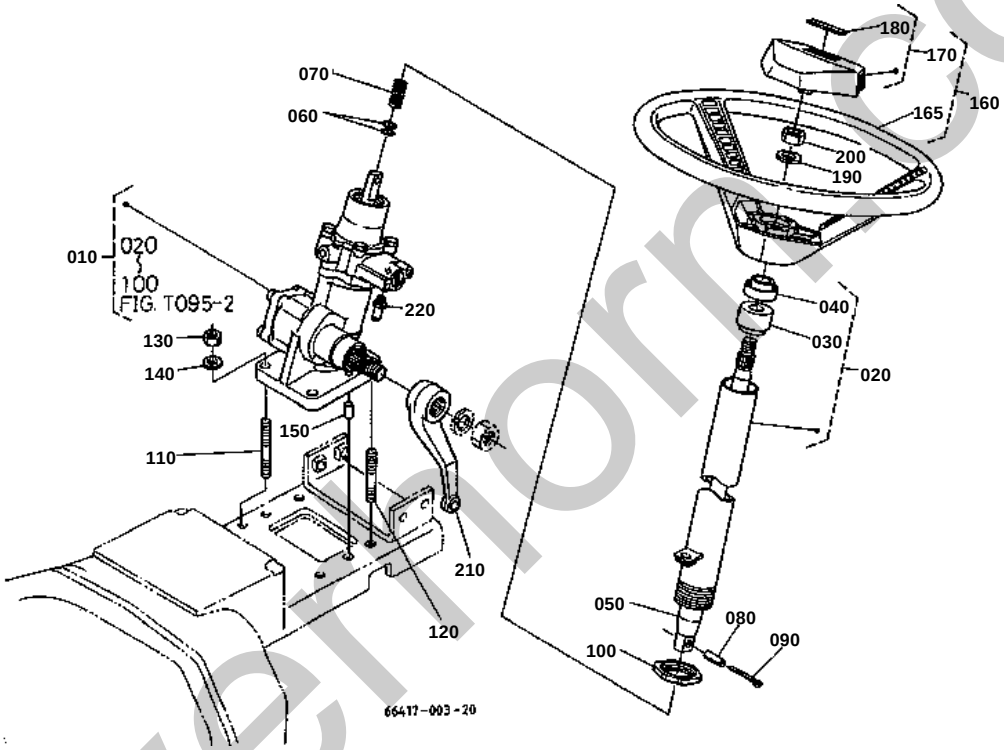

silverthorn.co.uk

↔ Interchangeable; ≠ not interchangeable; ← new for old; → old for new

REF.No	Part No.	Description	Q'ty	S.No.	I/C	REMARKS	Weight (kgf)	Weight (lb)
010	66416-66102	ASSY STEERING POWER	1			REFER TO L.No.0F06-L0 FOR COMPONENTS.	11.8	25.96
020	66416-66900	ASSY COLUMN STEERING	1	<=67025			0	0
020	66416-66902	ASSY COLUMN STEERING	1	>=67026	←		0.64	1.408
030	66301-89010	BUSH	1	<=67025			0	0
030	66416-89300	ASSY BUSH	1	>=67026	←		0.05	0.11
040	38240-16390	SEAL OIL	1				0.03	0.066
050	66416-67110	SHAFT STEERING	1				0.5	1.1
060	38240-16530	O RING	2				0.001	0.0022
070	66416-67130	SPRING	1				0.005	0.011
080	05411-00518	PIN SPRING	1				0.002	0.0044
090	05511-50322	PIN SPLIT	1				0.002	0.0044
100	66416-67140	NUT	1				0.02	0.044
110	01517-51035	STUD	2				0.028	0.0616
120	01517-51040	STUD	2				0.03	0.066
130	02118-50100	NUT	4				0.005	0.011
140	04512-60100	WASHER SPRING	4				0.002	0.0044
150	37150-27370	PIN STRAIGHT	2				0.009	0.0198
160	66150-41450	ASSY WHEEL STEERING	1				2.7	5.94
165	37410-41460	WHEEL STEERING	1				2	4.4
170	37410-41470	ASSY PAD	1	<=62006			0	0
170	67148-41470	ASSY PAD	1	>=62007	←		0.06	0.132
180	37410-41490	MARK	1	<=62006			0.005	0.011
180	67148-41490	MARK	1	>=62007	≠		0.005	0.011
190	04512-50120	WASHER SPRING	1				0	0
200	02172-50120	NUT	1				0.01	0.022
210	66417-41160	ARM PITMAN	1				0.5	1.1
220	31391-66810	JOINT	1				0.04	0.088

silverhorn.co.uk

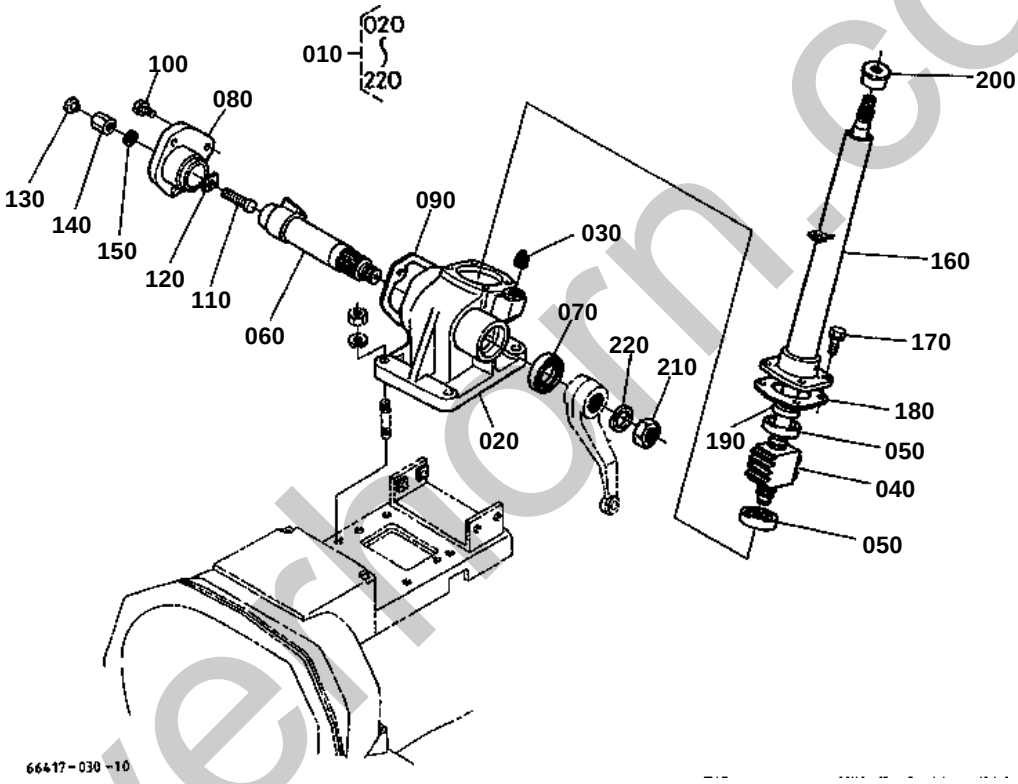

silverthorn.co.uk

↔ Interchangeable; ≠ not interchangeable; ← new for old; → old for new

REF.No	Part No.	Description	Q'ty	S.No.	I/C	REMARKS	Weight (kgf)	Weight (lb)
010	66416-41100	ASSY STEERING	1				6.2	13.64
020	66416-41110	CASE STEERING GEAR	1				2.94	6.468
030	34150-16640	PLUG	1				0.015	0.033
040	66416-41200	COMP.NUT BALL	1				0.95	2.09
050	66811-41140	BEARING THRUST BALL	2				0.045	0.099
060	66416-41250	SHAFT SECTOR	1				0.73	1.606
070	09500-26387	SEAL OIL	1				0.008	0.0176
080	66811-41160	COVER SIDE	1				0.3	0.66
090	66811-41170	GASKET	1				0	0
100	01123-50822	BOLT	3				0.012	0.0264
110	66811-41180	SCREW ADJUSTING	1				0.013	0.0286
120	66811-41190	COLLAR ADJUSTING	1			1.515 TO 1.535MM	0.002	0.0044
120	66811-41210	COLLAR ADJUSTING	1			1.545 TO 1.565MM	0.001	0.0022
120	66811-41220	COLLAR ADJUSTING	1			1.575 TO 1.595MM	0.001	0.0022
120	66811-41230	COLLAR ADJUSTING	1			1.605 TO 1.625MM	0.001	0.0022
120	66811-41240	COLLAR ADJUSTING	1			1.635 TO 1.655MM	0.001	0.0022
130	61011-18140	PLUG RUBBER	1				0.002	0.0044
140	66811-41250	NUT	1				0.027	0.0594
150	04714-00080	GASKET	1				0.001	0.0022
160	66416-41130	POST STEERING	1				1	2.2
170	01123-50820	BOLT	4				0.011	0.0242
180	66416-41320	SHIM	1			0.05MM	0.002	0.0044
180	66416-41340	SHIM	1			0.08MM	0.002	0.0044
180	66416-41350	SHIM	1			0.10MM	0.003	0.0066
180	66416-41360	SHIM	1			0.20MM	0.004	0.0088
190	09500-16287	SEAL OIL	1				0.01	0.022
200	67401-41150	BUSH POST	1				0.03	0.066
210	02172-50200	NUT	1				0.03	0.066
220	04512-50200	WASHER SPRING	1				0	0

silverhorn.co.uk

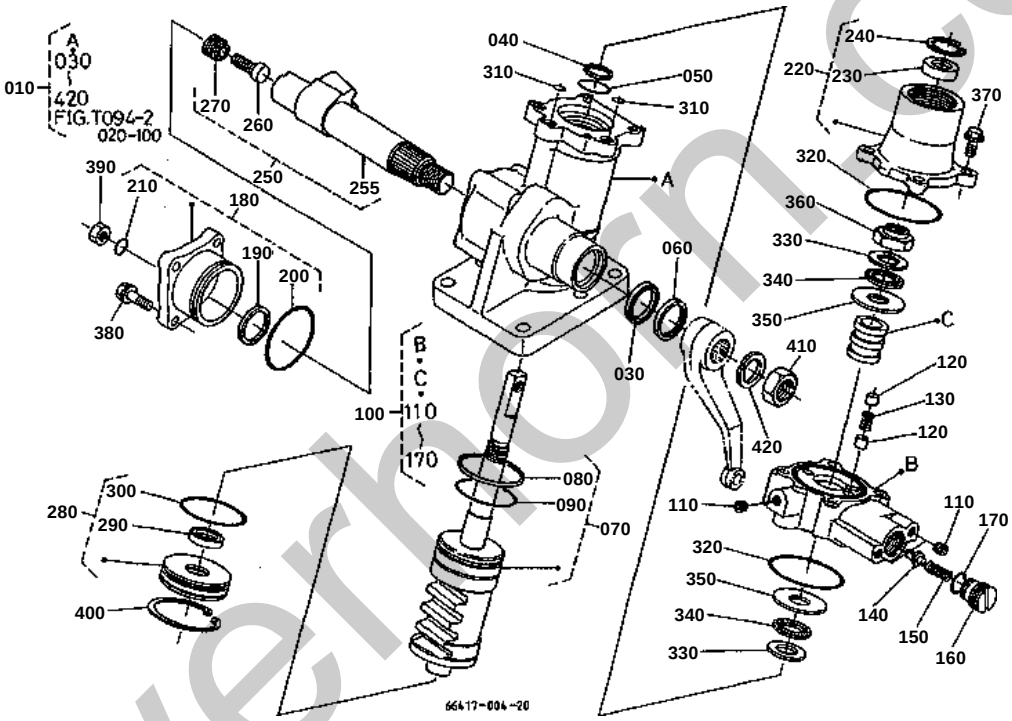

silverthorn.co.uk

↔ Interchangeable; ≠ not interchangeable; ← new for old; → old for new

REF.No	Part No.	Description	Q'ty	S.No.	I/C	REMARKS	Weight (kgf)	Weight (lb)
010	66416-66102	ASSY STEERING POWER	1				11.8	25.96
030	37410-66130	SEAL	1				0.003	0.0066
040	37410-66140	SEALING	1				0.001	0.0022
050	37410-66150	SEALING	1				0.001	0.0022
060	37410-66160	SEAL DUST	1				0.002	0.0044
070	66416-66200	ASSY NUT BALL	1				1.6	3.52
080	37410-66220	RING	1				0.005	0.011
090	37410-66230	O RING	1				0.005	0.011
100	66416-66300	ASSY VALVE	1				1.52	3.344
110	15261-96010	PLUG	4				0.002	0.0044
120	37410-66350	PISTON	4				0.01	0.022
130	37410-66360	SPRING	2				0.04	0.088
140	31391-66370	POPPET	1				0.001	0.0022
150	31391-66380	SPRING VALVE	1				0.015	0.033
160	37410-66370	SCREW ADJUSTING	1				0.04	0.088
170	37410-66380	SEALING	1				0.001	0.0022
180	37410-66400	ASSY COVER SIDE	1				0.555	1.221
190	37410-66420	SEAL	1				0.02	0.044
200	37410-66430	SEALING	1				0.005	0.011
210	37410-66440	SEALING	1				0.001	0.0022
220	66416-66500	ASSY COVER TOP	1				0.8	1.76
230	37410-66520	SEAL OIL	1				0.01	0.022
240	04611-00300	CIR CLIP INTERNAL	1				0.004	0.0088
250	37410-66600	ASSY SHAFT SECTOR	1				0.935	2.057
255	37410-66610	SHAFT SECTOR	1				0.9	1.98
260	34150-16430	SCREW ADJUSTING	1				0.026	0.0572
270	37410-66620	ADJUSTER	1				0.01	0.022
280	37410-66700	ASSY COVER END	1				0.22	0.484
290	37410-66720	SEAL	1				0.005	0.011
300	37410-66730	SEALING	1				0.005	0.011
310	37410-66810	SEALING	2				0.005	0.011
320	37410-66820	SEALING	2				0.005	0.011
330	37410-66830	RING DRIVE	2				0.01	0.022
340	37410-66840	BEARING NEEDLE	2				0.005	0.011
350	37410-66850	COLLAR THRUST	2				0.04	0.088
360	37410-66860	NUT SELF-LOCKING	1				0.027	0.0594
370	01754-50855	BOLT FLANGE	4				0.02	0.044
380	01754-50820	BOLT FLANGE	4				0.015	0.033
390	02016-50100	NUT	1				0.009	0.0198
400	04611-00580	CIR CLIP INTERNAL	1				0.005	0.011
410	02174-50220	NUT	1				0.055	0.121
420	04512-50220	WASHER SPRING	1				0	0

silvanorn.co.uk

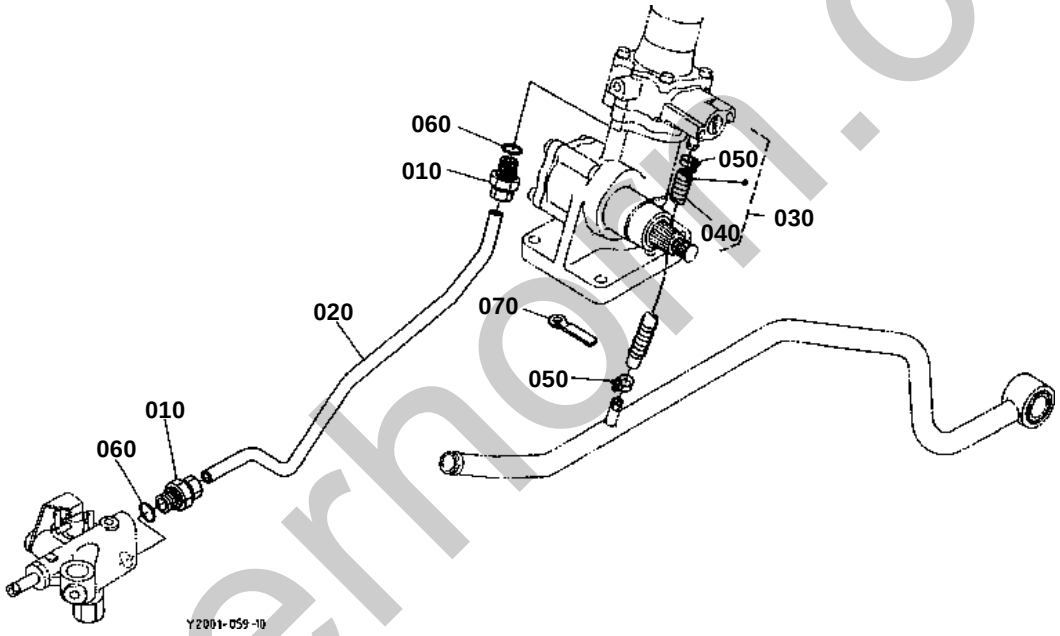

silverhorn.co.uk

HYDRAULIC PIPE (PS)

↔ Interchangeable; ≠ not interchangeable; ← new for old; → old for new

REF.No	Part No.	Description	Q'ty	S.No.	I/C	REMARKS	Weight (kgf)	Weight (lb)
010	66416-36350	NIPPLE	2				0.06	0.132
020	66417-36360	PIPE DELIVERY	1				0.09	0.198
030	66416-36370	ASSY PIPE RETURN	1				0.18	0.396
040	66416-36390	SPRING PROTECTOR	1				0.01	0.022
050	15109-73360	BAND PIPE	2				0.01	0.022
060	04810-00110	RING	2				0.001	0.0022
070	13824-67580	CLAMP CORD	1				0.006	0.0132

silverhorn.co.uk

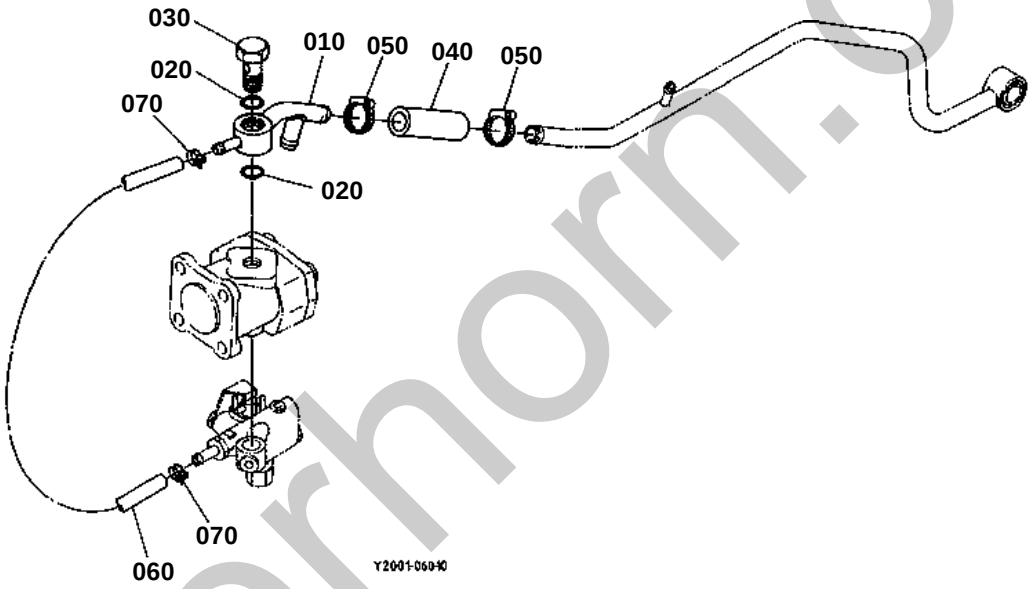

silverhorn.co.uk

HYDRAULIC PIPE (FRONT)

↔ Interchangeable; ≠ not interchangeable; ← new for old; → old for new

REF.No	Part No.	Description	Q'ty	S.No.	I/C	REMARKS	Weight (kgf)	Weight (lb)
010	66417-36110	PIPE SUCTION FRONT	1				0.28	0.616
020	04811-00220	RING	2				0.001	0.0022
030	67810-37710	BOLT JOINT	1				0.1	0.22
040	66204-36720	HOSE	1				0.04	0.088
050	66204-36230	BAND PIPE	2	<=66585			0.02	0.044
050	67955-36230	CLAMP	2	>=66586	↔		0.023	0.0506
060	66416-36340	HOSE	1				0.078	0.1716
070	15109-73360	BAND PIPE	2				0.01	0.022

silverhorn.co.uk

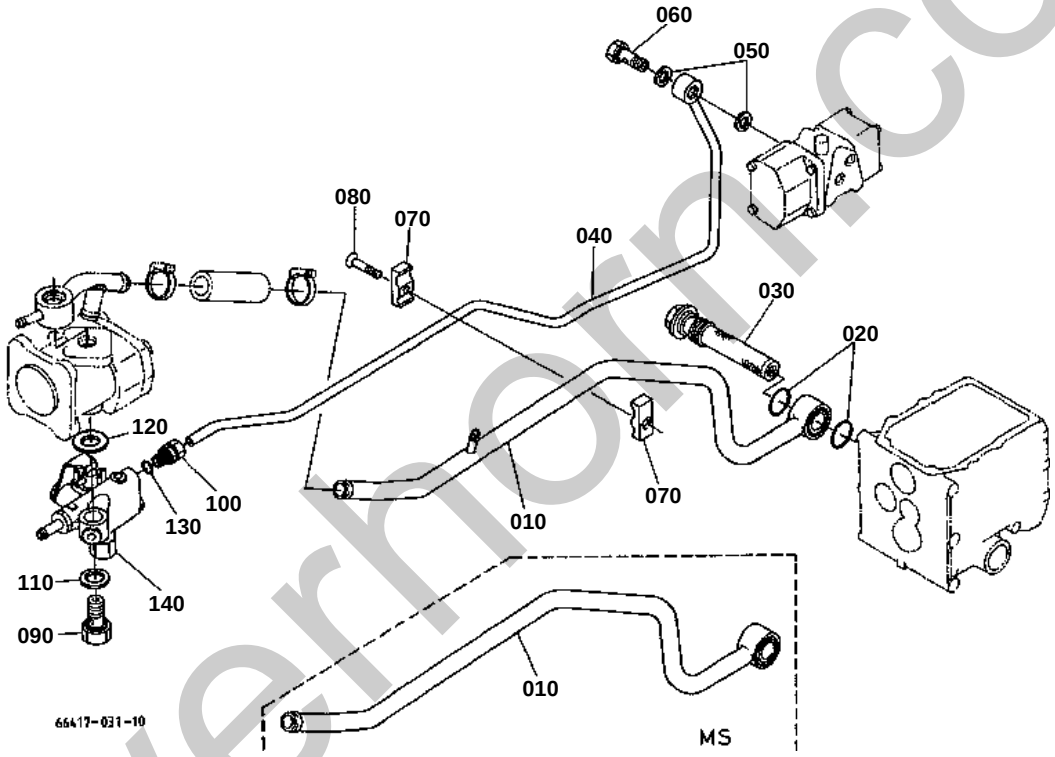

silverhorn.co.uk

HYDRAULIC PIPE (REAR)

↔ Interchangeable; ≠ not interchangeable; ← new for old; → old for new

REF.No	Part No.	Description	Q'ty	S.No.	I/C	REMARKS	Weight (kgf)	Weight (lb)
010	66417-36120	PIPE SUCTION REAR	1			POWER STRG.	0.92	2.024
010	66417-36150	PIPE SUCTION REAR	1			MANUAL STRG.	0.73	1.606
020	04811-10300	RING	2				0.001	0.0022
030	66611-36120	FILTER OIL	1	<=62364			0.2	0.44
030	66021-36390	FILTER OIL	1	>=62365	↔		0.185	0.407
040	66417-36130	PIPE DELIVERY	1				0.5	1.1
050	67111-37180	GASKET	2				0.003	0.0066
060	66591-36250	JOINT	1				0.08	0.176
070	66204-36120	CLAMP PIPE	2				0.01	0.022
080	03016-50640	SCREW CSK-HD	1	<=50736			0.008	0.0176
080	03016-50645	SCREW CSK-HD	1	>=50737	≠		0.007	0.0154
090	67401-36710	BOLT JOINT	1				0.087	0.1914
100	36330-63080	NIPPLE	1				0.07	0.154
110	67401-36720	GASKET	1				0.005	0.011
120	04714-00400	GASKET	1				0.003	0.0066
130	04811-00110	RING	1				0.001	0.0022
140	66416-36300	ASSY VALVE HYD.	1			PS REFER TO L.No.0F10-L0 FOR COMPONENTS.	2	4.4
140	66416-36600	ASSY VALVE HYD.CHANG	1			MS REFER TO L.No.0F09-R0 FOR COMPONENTS.	2	4.4

silverhorn.co.uk

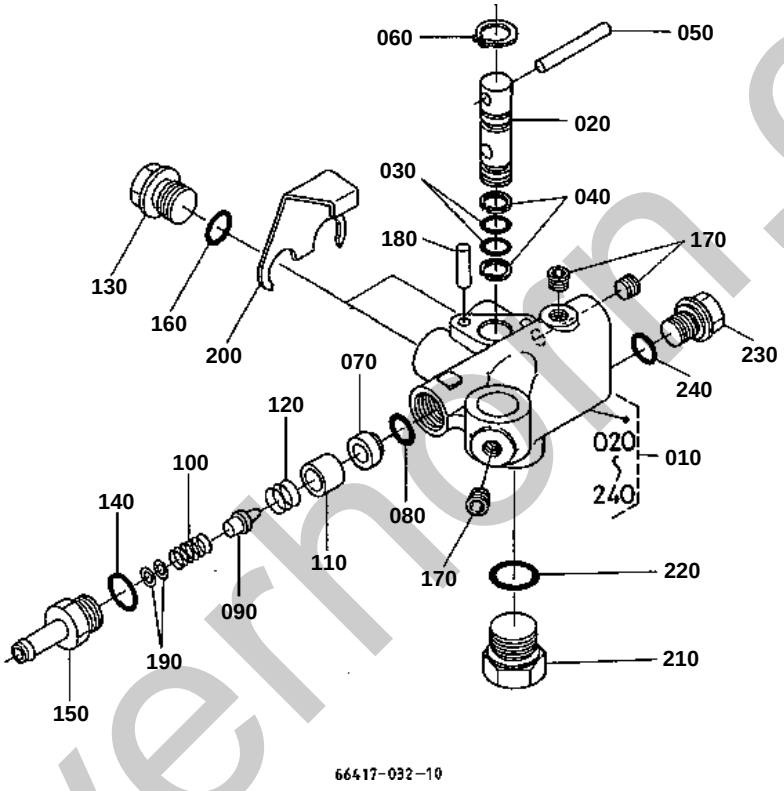

silverhorn.co.uk

↔ Interchangeable; ≠ not interchangeable; ← new for old; → old for new

REF.No	Part No.	Description	Q'ty	S.No.	I/C	REMARKS	Weight (kgf)	Weight (lb)
010	66416-36600	ASSY VALVE HYD.CHANG	1				2	4.4
020	67401-36320	VALVE CHANGE	1				0.08	0.176
030	04811-00120	RING	2				0.001	0.0022
040	68551-61420	RING BACK UP	2				0.001	0.0022
050	05012-00650	PIN STRAIGHT	1				0.01	0.022
060	04612-00160	CIRCLIP EXTERNAL	2				0.001	0.0022
070	67111-37320	SEAT VALVE	1				0.01	0.022
080	04811-00120	RING	1				0.001	0.0022
090	67111-37330	POPPET	1				0.008	0.0176
100	67111-37360	SPRING RELIEF	1				0.01	0.022
110	67401-36340	COLLAR	1				0.01	0.022
120	67401-36350	SPRING	1				0.004	0.0088
130	67401-36360	PLUG	2				0.047	0.1034
140	04811-00180	RING	1				0.001	0.0022
150	67401-36370	PLUG	1				0.047	0.1034
160	04811-00140	RING	2				0.001	0.0022
170	67511-36640	PLUG	3				0.003	0.0066
180	05012-00620	PIN STRAIGHT	2				0.005	0.011
190	67111-37530	SHIM ADJUSTING	1			0.3MM	0.001	0.0022
190	67111-37580	SHIM ADJUSTING	1			0.8MM	0.001	0.0022
200	67401-36380	INTERLOCKER	1				0.025	0.055
210	66416-36610	PLUG	1				0.1	0.22
220	04811-00220	RING	1				0.001	0.0022
230	66416-36620	PLUG	1				0.033	0.0726
240	04811-00110	RING	1				0.001	0.0022

silverhorn.co.uk

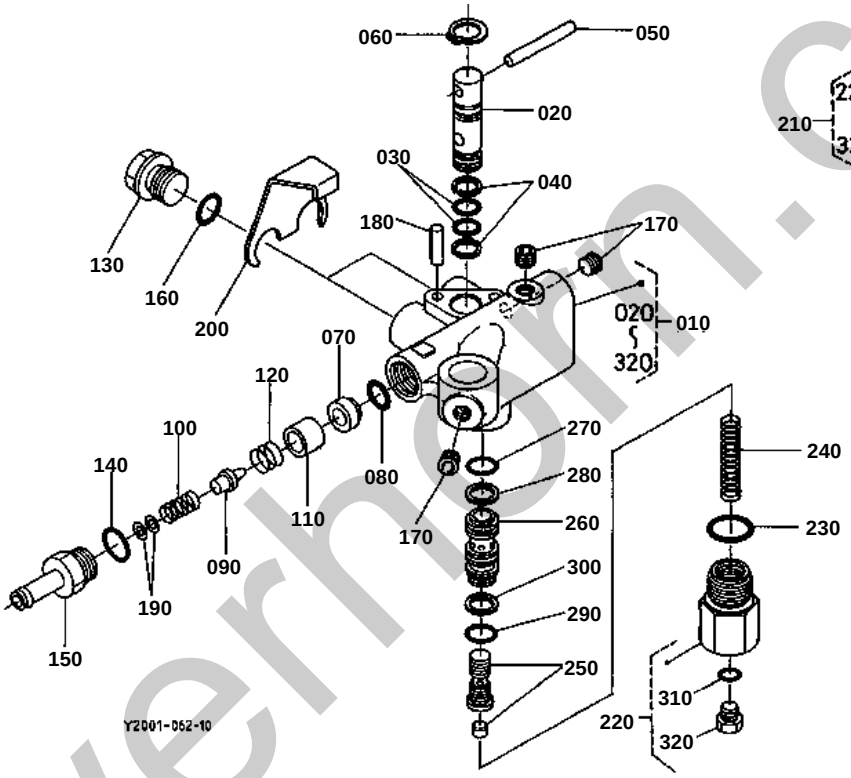

silverhorn.co.uk

HYDRAULIC BLOCK (PS) [COMPONENT PARTS]

↔ Interchangeable; ≠ not interchangeable; ← new for old; → old for new

REF.No	Part No.	Description	Q'ty	S.No.	I/C	REMARKS	Weight (kgf)	Weight (lb)
010	66416-36300	ASSY VALVE HYD.	1				2	4.4
020	67401-36320	VALVE CHANGE	1				0.08	0.176
030	04811-00120	RING	2				0.001	0.0022
040	68551-61420	RING BACK UP	2				0.001	0.0022
050	05012-00650	PIN STRAIGHT	1				0.01	0.022
060	04612-00160	CIRCLIP EXTERNAL	2				0.001	0.0022
070	67111-37320	SEAT VALVE	1				0.01	0.022
080	04811-00120	RING	1				0.001	0.0022
090	67111-37330	POPPET	1				0.008	0.0176
100	67111-37360	SPRING RELIEF	1				0.01	0.022
110	67401-36340	COLLAR	1				0.01	0.022
120	67401-36350	SPRING	1				0.004	0.0088
130	67401-36360	PLUG	2				0.047	0.1034
140	04811-00180	RING	1				0.001	0.0022
150	67401-36370	PLUG	1				0.047	0.1034
160	04811-00140	RING	2				0.001	0.0022
170	67511-36640	PLUG	3				0.003	0.0066
180	05012-00620	PIN STRAIGHT	2				0.005	0.011
190	67111-37530	SHIM ADJUSTING	1			0.3MM	0.001	0.0022
190	67111-37580	SHIM ADJUSTING	1			0.8MM	0.001	0.0022
200	67401-36380	INTERLOCKER	1				0.025	0.055
210	67817-38300	ASSY DIVIDER	1				0.2	0.44
220	67817-38390	DIVIDER	1				0.142	0.3124
230	04811-00220	RING	1				0.001	0.0022
240	67810-38320	SPRING	1				0.005	0.011
250	67810-38340	DAMPER	1				0.001	0.0022
260	67810-38350	DIVIDER	1				0.025	0.055
270	04811-05130	RING	1				0.001	0.0022
280	67810-38360	RING BACK UP	1				0.001	0.0022
290	04811-05150	RING	1				0.001	0.0022
300	67810-38370	RING BACK UP	1				0.001	0.0022
310	04811-00050	RING	1				0.001	0.0022
320	67810-38430	PLUG	1				0.005	0.011

silverhorn.co.uk

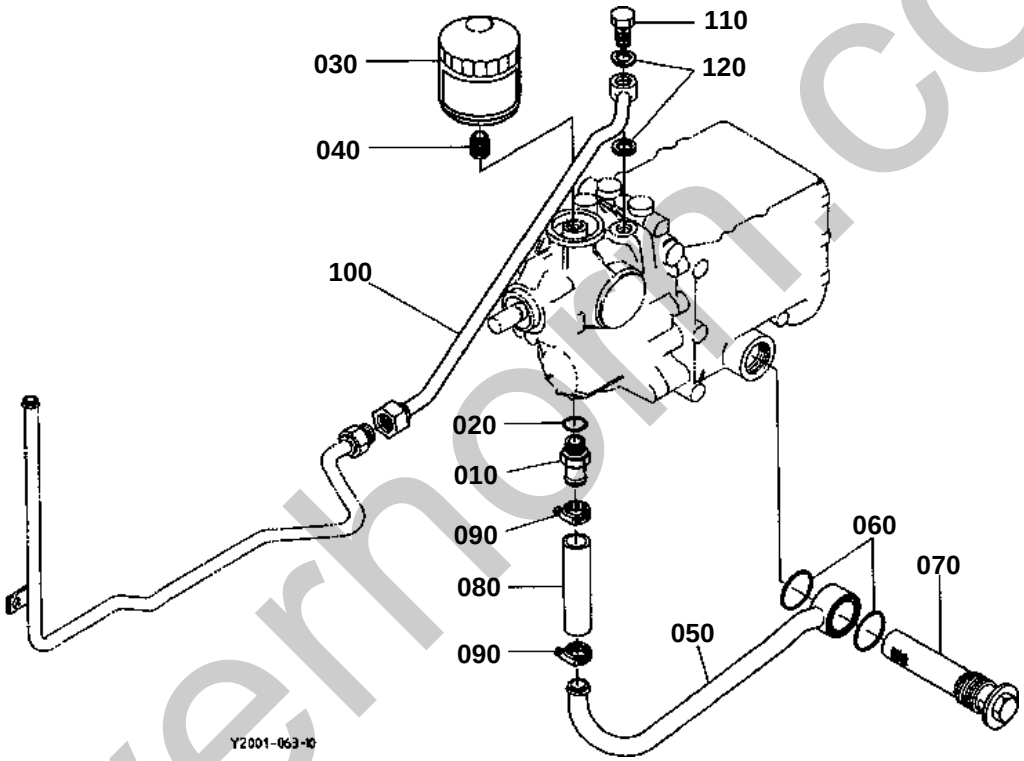

silverhorn.co.uk

HYDRAULIC PIPE (HST)

↔ Interchangeable; ≠ not interchangeable; ← new for old; → old for new

REF.No	Part No.	Description	Q'ty	S.No.	I/C	REMARKS	Weight (kgf)	Weight (lb)
010	66204-36150	JOINT INLET	1				0.07	0.154
020	04811-00180	RING	1				0.001	0.0022
030	66021-36060	CARTRIDGE OIL FILTER	1				0.34	0.748
040	66204-36170	JOINT FILTER	1				0.018	0.0396
050	66204-36192	PIPE INLET	1				0.34	0.748
060	04811-06400	RING	2				0.001	0.0022
070	66204-36210	FILTER OIL	1				0.367	0.8074
080	66204-36220	HOSE	1				0.07	0.154
090	66204-36230	BAND PIPE	2	<=66585			0.02	0.044
090	67955-36230	CLAMP	2	>=66586	↔		0.023	0.0506
100	66204-36240	PIPE SUCTION	1				0.35	0.77
110	66591-36250	JOINT	1				0.08	0.176
120	67111-37180	GASKET	2				0.003	0.0066

silverhorn.co.uk

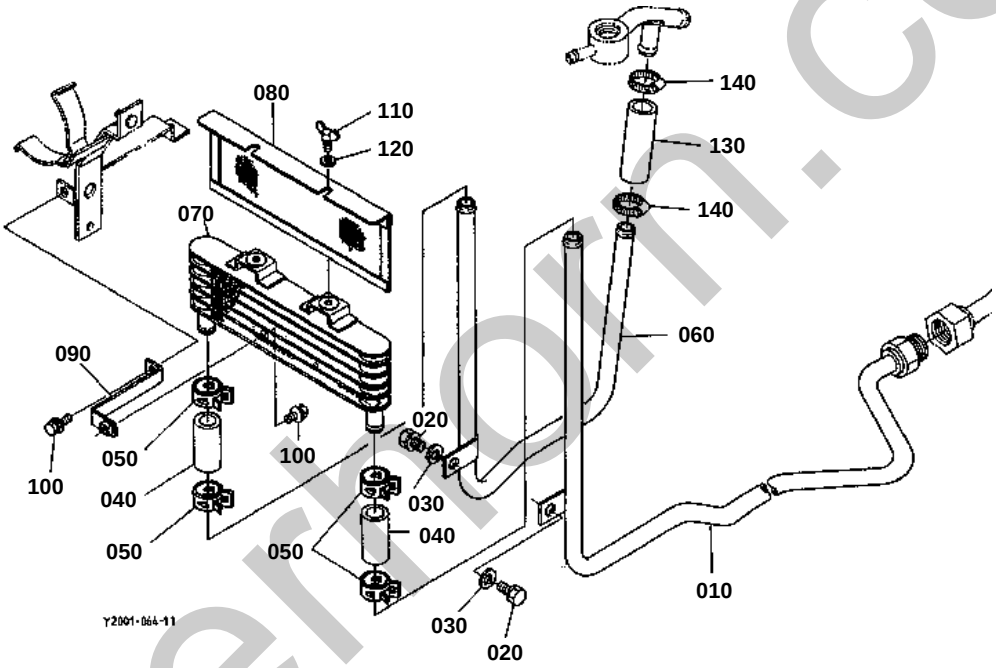

silverthorn.co.uk

OIL COOLER

↔ Interchangeable; ≠ not interchangeable; ← new for old; → old for new

REF.No	Part No.	Description	Q'ty	S.No.	I/C	REMARKS	Weight (kgf)	Weight (lb)
010	66417-36260	PIPE SUCTION	1				0.5	1.1
020	01133-51016	BOLT	2				0.015	0.033
030	04011-50100	WASHER PLAIN	2				0.002	0.0044
040	66204-36270	HOSE	2				0.038	0.0836
050	66204-36280	BAND PIPE	4	<=61950			0.02	0.044
050	09318-88230	CLAMP HOSE	4	>=61951	↔		0.008	0.0176
060	66417-36240	PIPE OIL COOLER	1				0.33	0.726
070	66417-58720	ASSY COOLER OIL	1				0.5	1.1
080	66417-58730	NET OIL COOLER	1				0.02	0.044
090	66417-58710	STAY OIL COOLER	1				0.05	0.11
100	01025-50616	BOLT	1				0.005	0.011
110	01811-50610	BOLT WING	2				0.014	0.0308
120	04013-50060	WASHER PLAIN	2				0	0
130	66417-36270	HOSE	1				0.025	0.055
140	66204-36280	BAND PIPE	2	<=66224			0.02	0.044
140	67980-36250	CLAMP	2	>=66225	↔		0.021	0.0462

silverhorn.co.uk

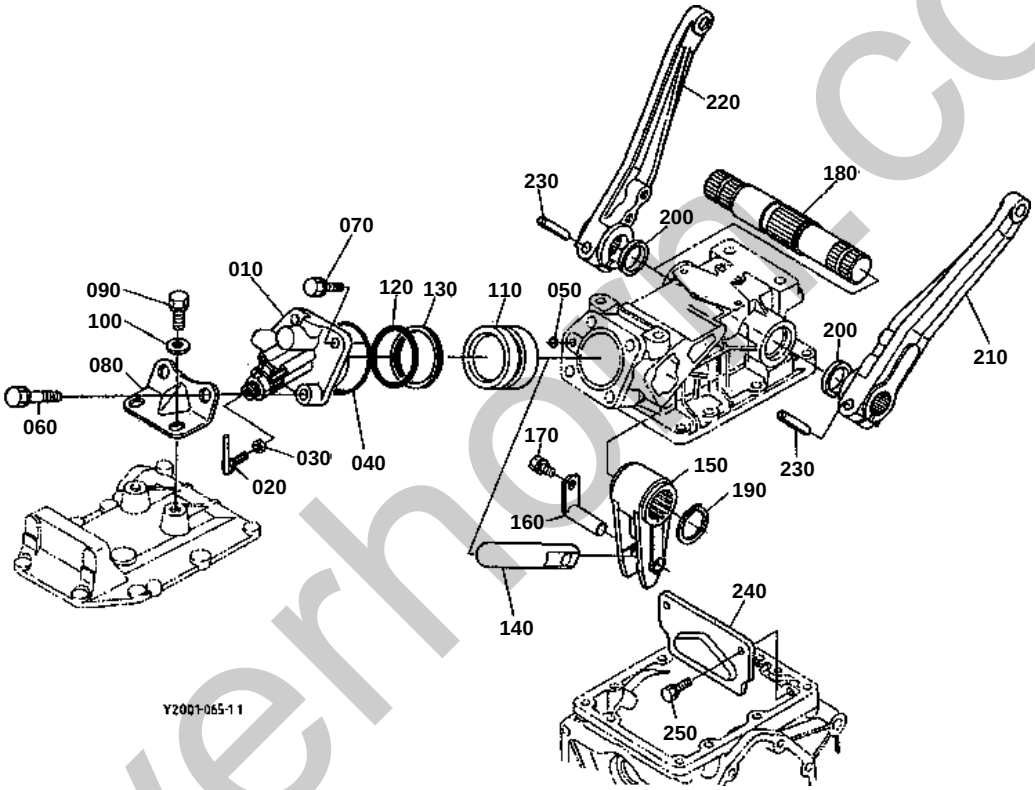

silverhorse.co.uk

010 66416-3640-0

015 01023-50610

020 66416-3622-0

020 66416-3622-2

030 05411-00440

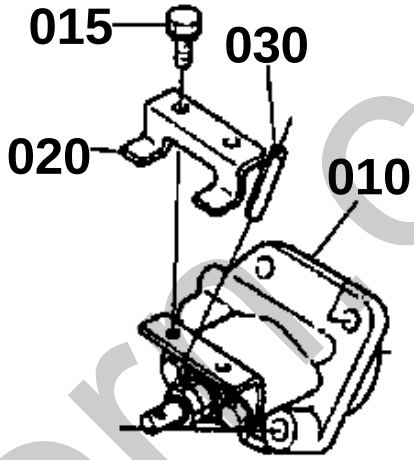

010 66416-3640-5

020 66416-3624-0

030 02114-50080

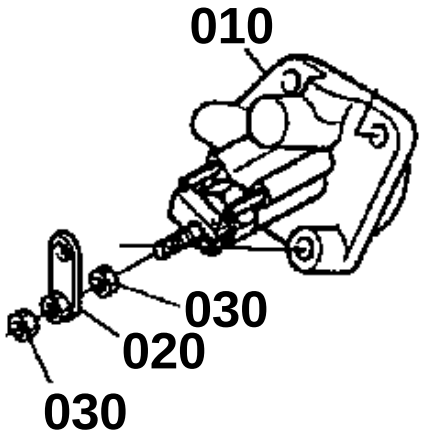

66417-814-10

silverhorse.co.uk

↔ Interchangeable; ≠ not interchangeable; ← new for old; → old for new

REF.No	Part No.	Description	Q'ty	S.No.	I/C	REMARKS	Weight (kgf)	Weight (lb)
010	66416-36400	ASSY CAP CYLINDER	1	<=62950		REFER TO L.No.0F13-L0 FOR COMPONENTS.	1.66	3.652
010	66416-36405	ASSY CAP CYLINDER	1	>=62951	≠	REFER TO L.No.0F13-R0 FOR COMPONENTS.	1.72	3.784
010	66416-36900	ASSY CAP CYLINDER	1	>=66055	≠	REFER TO L.No.0F14-L0 FOR COMPONENTS.	1.7	3.74
015	01023-50610	BOLT	2	<=62950			0.005	0.011
020	66416-36220	STOPPER	1	<=61807			0.035	0.077
020	66416-36222	STOPPER	1	>=61808	↔		0.03	0.066
020	66416-36240	LEVER HYD.LOCK	1	>=62951	≠		0.03	0.066
020	66416-36242	LEVER HYD.LOCK	1	>=66055	≠		0.04	0.088
030	05411-00440	PIN SPRING	1	<=62950			0.002	0.0044
030	02114-50080	NUT	2	>=62951	≠		0.005	0.011
030	02116-50100	NUT	1	>=66055	≠		0.004	0.0088
040	04810-50600	RING	1				0.002	0.0044
050	04810-05110	O RING	1				0.001	0.0022
060	01123-51250	BOLT	2				0.055	0.121
070	66711-36440	BOLT	2	<=62950			0.045	0.099
070	01123-51240	BOLT	2	>=62951	≠		0.048	0.1056
080	66417-36310	STAY	1	<=63334			0	0
080	66417-36312	STAY	1	>=63335	←		0.1	0.22
090	01123-51025	BOLT	2				0.02	0.044
100	04013-50100	WASHER PLAIN	2				0	0
110	67156-36410	PISTON HYD.	1				0.63	1.386
120	04810-00550	RING	1				0.008	0.0176
130	67156-36420	RING BACK UP	1	<=60918			0.004	0.0088
130	68773-21560	RING BACK UP	1	>=60919	←		0.005	0.011
140	67156-36430	ROD HYD.PISTON	1				0.46	1.012
150	66416-36450	ARM HYDRAULIC	1				0.8	1.76
160	67156-36460	PIN HYD.ARM	1				0.09	0.198
170	01123-50818	BOLT	1				0.012	0.0264
180	66416-36470	SHAFT HYD.ARM	1	<=62950			0	0
180	66416-36472	SHAFT HYD.ARM	1	>=62951	≠		1.35	2.97
190	04612-00320	CIRCLIP EXTERNAL	1				0.004	0.0088
200	09230-30456	SEAL OIL	2				0.011	0.0242
210	66416-36512	ARM LIFT LH	1	<=62950			0	0
210	67950-36515	ARM LIFT LH	1	>=62951	←		1.62	3.564
220	66416-36522	ARM LIFT RH	1	<=62950			0	0
220	67950-36525	ARM LIFT RH	1	>=62951	←		1.7	3.74
230	01123-51055	BOLT	2	<=62950			0.038	0.0836
230	05411-01050	PIN SPRING	2	>=62951	≠		0.019	0.0418
240	66621-36750	PLATE HYD.ARM	1				0.34	0.748
250	67211-36610	BOLT	2				0.015	0.033

silverfrom.co.uk

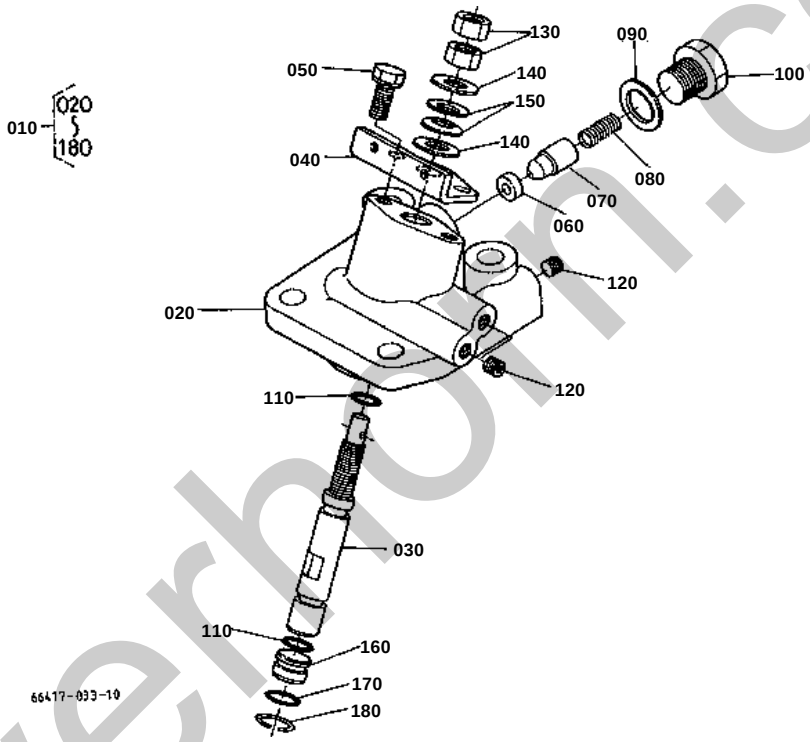

silverhorn.co.uk

HYD.CYLINDER CAP [COMPONENT PARTS]

S.No.;<=62950

↔ Interchangeable; ≠ not interchangeable; ← new for old; → old for new

REF.No	Part No.	Description	Q'ty	S.No.	I/C	REMARKS	Weight (kgf)	Weight (lb)
010	66416-36400	ASSY CAP CYLINDER	1				1.66	3.652
020	66416-36410	CAP CYLINDER	1	<=60242			1.5	3.3
020	66416-36413	CAP CYLINDER	1	>=60243	≠		1.44	3.168
030	66416-36810	ROTOR	1	<=60242			0.09	0.198
030	66416-36813	ROTOR	1	>=60243	≠		0.07	0.154
040	66416-36820	PLATE	1				0.05	0.11
050	01123-50814	BOLT	2				0	0
060	66416-36830	SEAT CHECK VALVE	1				0.003	0.0066
070	66416-36840	POPPET	1				0.01	0.022
080	66416-36850	SPRING	1				0.005	0.011
090	04724-00160	GASKET	1				0.003	0.0066
100	06331-35016	PLUG	1				0.04	0.088
110	04811-06100	O RING	1	<=60242			0.001	0.0022
110	04811-06100	O RING	2	>=60243			0.001	0.0022
120	66416-36860	PLUG SCREW	3				0.001	0.0022
130	02116-50100	NUT	2				0.004	0.0088
140	04013-50080	WASHER PLAIN	2				0	0
150	66416-36870	SPRING PLATE	2				0.001	0.0022
160	66416-36880	COVER	1				0.02	0.044
170	04810-00120	RING	1				0.001	0.0022
180	66416-36890	RING	1				0.001	0.0022

silverhorn.co.uk

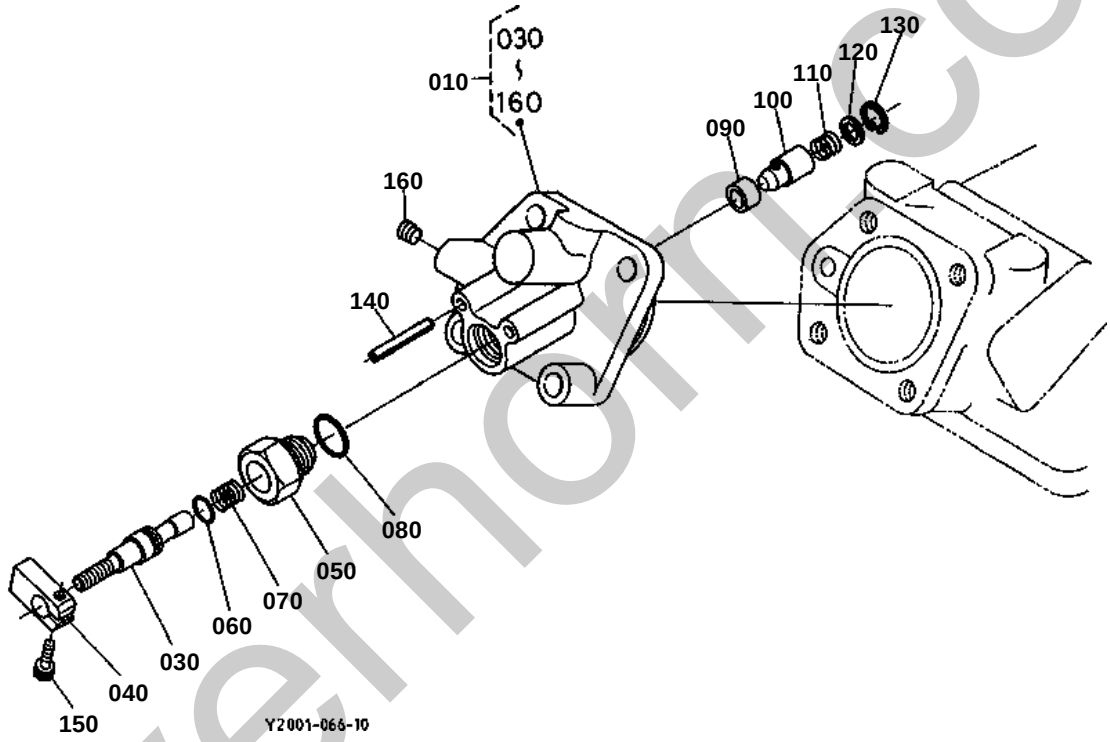

silverhorn.co.uk

HYD.CYLINDER CAP [COMPONENT PARTS]

S.No.;62951 to 65666

↔ Interchangeable; ≠ not interchangeable; ← new for old; → old for new

REF.No	Part No.	Description	Q'ty	S.No.	I/C	REMARKS	Weight (kgf)	Weight (lb)
010	66416-36405	ASSY CAP CYLINDER	1				1.72	3.784
030	67950-36240	SHAFT ADJUSTING	1				0.045	0.099
040	67950-36250	LEVER	1				0.04	0.088
050	67950-36260	PLUG	1				0.07	0.154
060	04811-00110	O RING	1				0.001	0.0022
070	67950-36270	SPRING SET	1				0.01	0.022
080	04810-00180	O RING	1				0.001	0.0022
090	67950-36280	VALVE	1				0.006	0.0132
100	67950-36290	POPPET	1				0.012	0.0264
110	67950-36320	SPRING RETURN	2				0.002	0.0044
120	04013-50060	WASHER PLAIN	1				0	0
130	04611-00140	CIR CLIP INTERNAL	1				0.001	0.0022
140	05411-00536	PIN SPRING	2				0.003	0.0066
150	01311-10614	BOLT HEX-SOC-HD	1				0.005	0.011
160	66416-36860	PLUG SCREW	1				0.001	0.0022

silverhorn.co.uk

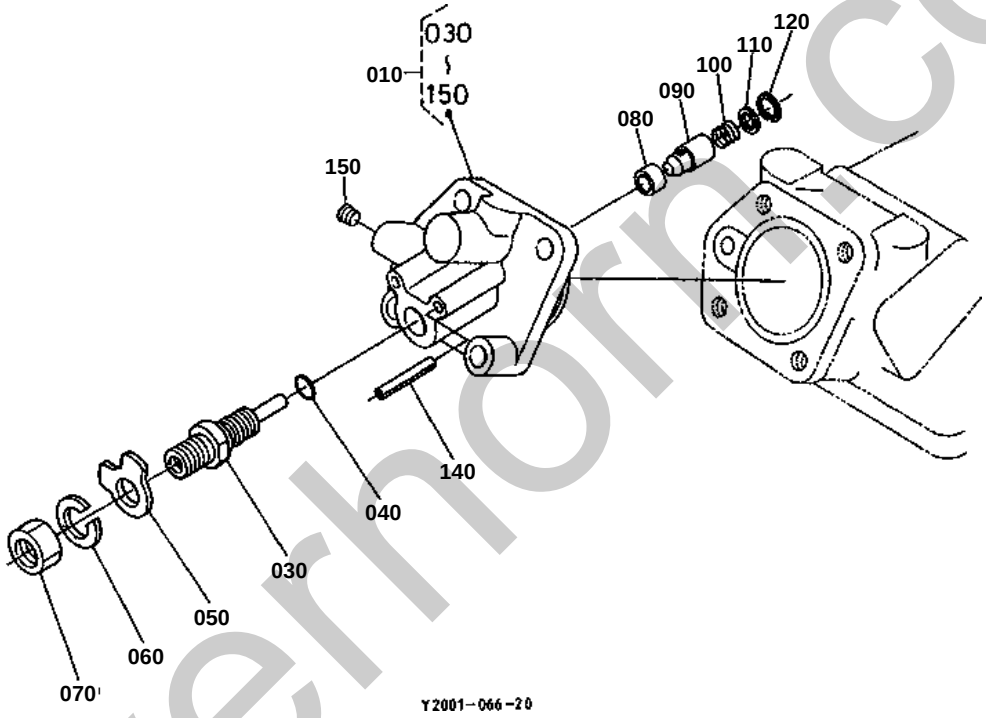

silverhorn.co.uk

HYD.CYLINDER CAP [COMPONENT PARTS]

S.No.;>=65667

↔ Interchangeable; ≠ not interchangeable; ← new for old; → old for new

REF.No	Part No.	Description	Q'ty	S.No.	I/C	REMARKS	Weight (kgf)	Weight (lb)
010	66416-36900	ASSY CAP CYLINDER	1				1.7	3.74
030	67955-36240	SHAFT ADJUSTING	1				0.06	0.132
040	04810-00110	O RING	1				0.001	0.0022
050	67955-36250	LEVER ADJUSTING	1				0.01	0.022
060	04512-50160	WASHER SPRING	1				0	0
070	02172-50160	NUT	1				0.017	0.0374
080	67950-36280	VALVE	1				0.006	0.0132
090	67950-36290	POPPET	1				0.012	0.0264
100	67950-36320	SPRING RETURN	1				0.002	0.0044
110	04013-50060	WASHER PLAIN	1				0	0
120	04611-00140	CIR CLIP INTERNAL	1				0.001	0.0022
140	05411-00528	PIN SPRING	1				0.003	0.0066
150	66416-36860	PLUG SCREW	1				0.001	0.0022

silverhorn.co.uk

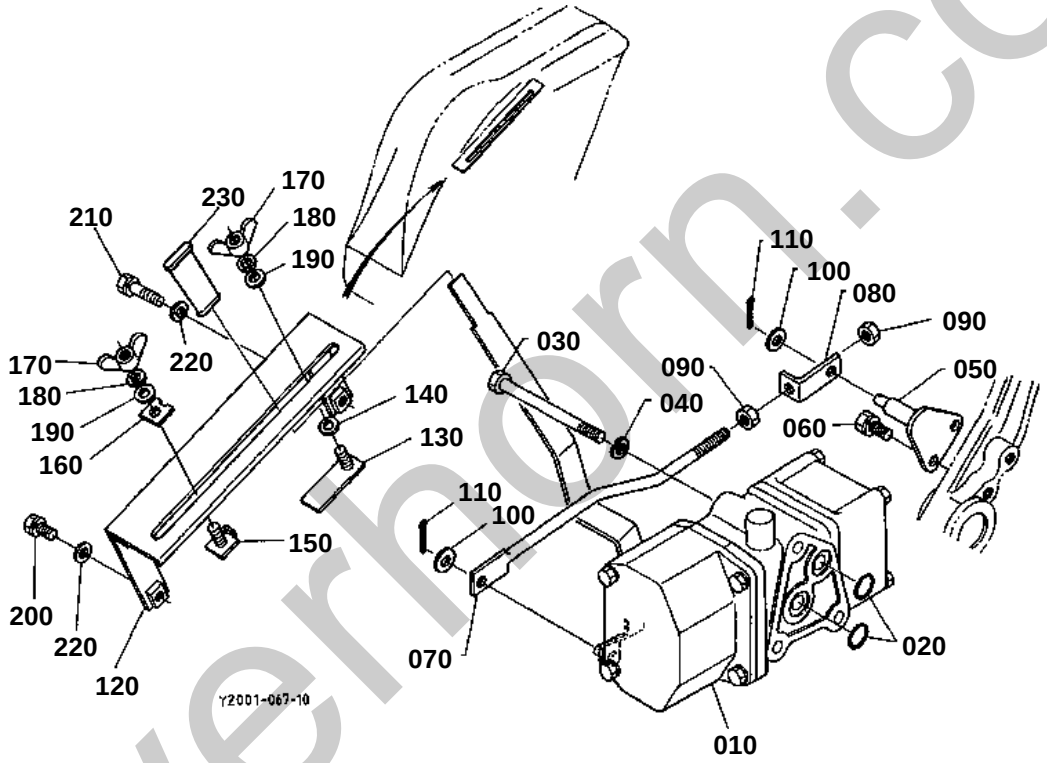

silverhorn.co.uk

↔ Interchangeable; ≠ not interchangeable; ← new for old; → old for new

REF.No	Part No.	Description	Q'ty	S.No.	I/C	REMARKS	Weight (kgf)	Weight (lb)
010	66416-36200	ASSY VALVE CONTROL	1	<=65532		REFER TO L.No.0F15-L0 FOR COMPONENTS.	0	0
010	66416-36203	ASSY VALVE CONTROL	1	>=65533	←	REFER TO L.No.0F15-L0 FOR COMPONENTS.	0	0
020	04810-00120	RING	2				0.001	0.0022
030	01153-50895	BOLT	3				0.035	0.077
040	04512-50080	WASHER SPRING	3				0.001	0.0022
050	67401-36220	HOLDER FEED BACK	1				0.11	0.242
060	01123-50822	BOLT	2				0.012	0.0264
070	67401-36230	ROD FEEDBACK	1				0.07	0.154
080	67401-36240	ROD FEEDBACK	1				0.025	0.055
090	02112-50080	NUT	2				0.003	0.0066
100	04012-50080	WASHER PLAIN	2				0.001	0.0022
110	05511-50218	PIN SPLIT	2				0.001	0.0022
120	66416-38810	GUIDE LEVER	1				0.15	0.33
130	66416-36230	STOPPER	1				0.02	0.044
140	04015-60060	WASHER PLAIN	1				0.005	0.011
150	67531-38830	STOPPER	1				0.01	0.022
160	67531-38840	STOPPER	1				0.005	0.011
170	02810-50060	NUT WING	2				0.009	0.0198
180	04512-60060	WASHER SPRING	2				0.001	0.0022
190	04013-50080	WASHER PLAIN	2				0	0
200	01123-50818	BOLT	1				0.012	0.0264
210	01123-50830	BOLT	1				0.015	0.033
220	04013-50080	WASHER PLAIN	2				0	0
230	34350-36890	GRIP LEVER	1				0.016	0.0352

silverhorn.co.uk

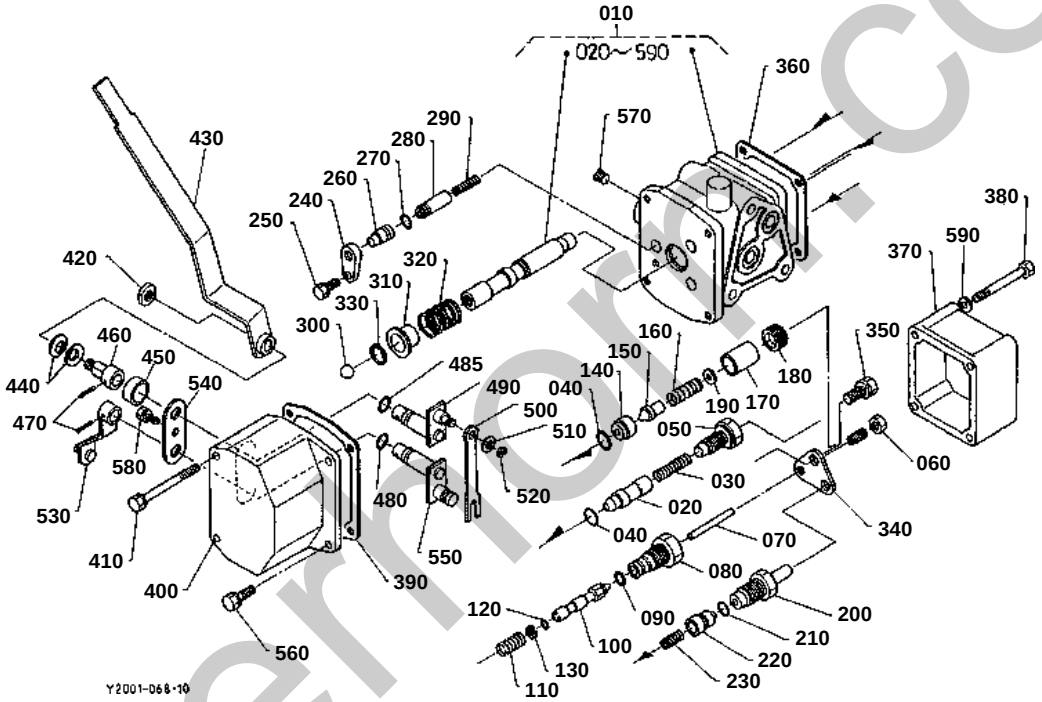

silverhorn.co.uk

↔ Interchangeable; ≠ not interchangeable; ← new for old; → old for new

REF.No	Part No.	Description	Q'ty	S.No.	I/C	REMARKS	Weight (kgf)	Weight (lb)
010	66416-36200	ASSY VALVE CONTROL	1	<=65532			0	0
010	66416-36203	ASSY VALVE CONTROL	1	>=65533	←		0	0
020	67156-36520	POPPET	1				0.022	0.0484
030	67156-36530	SPRING	1				0.005	0.011
040	04811-00120	RING	2				0.001	0.0022
050	67156-36540	PLUG	1				0.039	0.0858
060	02014-50060	NUT	1				0.003	0.0066
070	67156-36550	RETAINER ROD	1				0.001	0.0022
080	67156-36560	PLUG	1				0.001	0.0022
090	04811-06100	RING	1				0.001	0.0022
100	67156-36570	POPPET	1				0.022	0.0484
110	67156-36580	SPRING	1				0.008	0.0176
120	04811-00050	RING	1				0.001	0.0022
130	67156-36590	RING BACK UP	1				0.001	0.0022
140	67156-36610	SEAT VALVE	1				0.01	0.022
150	67156-36620	POPPET	1				0.002	0.0044
160	67156-36630	SPRING RELIEF	1				0.013	0.0286
170	67156-36640	COLLAR	1				0.02	0.044
180	67156-36650	SCREW ADJUSTING	1				0.015	0.033
190	67156-36660	SHIM ADJUSTING	1			0.3MM	0.001	0.0022
190	67156-36670	SHIM ADJUSTING	1			0.8MM	0.002	0.0044
190	67156-36680	SHIM ADJUSTING	1			0.2MM	0.001	0.0022
200	67156-36690	PLUG	1				0.055	0.121
210	04810-00090	RING	1				0.001	0.0022
220	67156-36710	POPPET	1				0.015	0.033
230	66416-36730	SPRING	1				0.045	0.099
240	67156-36730	PLATE	1				0.1	0.22
250	01202-50610	BOLT	1				0.004	0.0088
260	67156-36740	COVER	1				0.015	0.033
270	04811-00070	RING	1				0.001	0.0022
280	66361-36750	POPPET	1				0.02	0.044
290	67156-36760	SPRING	1				0.004	0.0088
300	07715-03211	BALL	1				0.003	0.0066
310	67156-36780	COLLAR	1				0.01	0.022
320	67156-36790	SPRING SPOOL	1				0.01	0.022
330	66361-36800	RING	1				0.001	0.0022
340	67156-36820	PLATE JOINT	1				0.036	0.0792
350	01123-50818	BOLT	1				0.012	0.0264
360	67156-36830	GASKET RELIEF COVER	1				0	0
370	67156-36840	COVER RELIEF	1				0.15	0.33
380	01222-50650	BOLT	4				0.011	0.0242
390	67156-36850	GASKET	1				0	0
400	67156-36862	COVER VALVE	1				0.23	0.506
410	01202-50665	BOLT	2				0.02	0.044
420	67156-36870	U-NUT	1	<=61950			0	0
420	67950-59140	U-NUT	1	>=61951	↔		0.01	0.022
430	66416-38640	LEVER CONTROL	1				0.25	0.55
440	67156-36890	WASHER SPRING	2				0	0
450	67156-36910	COLLAR	1				0.013	0.0286
460	67156-36920	SHAFT CONTROL ARM	1				0.02	0.044
470	05411-00516	PIN SPRING	2				0.002	0.0044
480	04811-00090	O RING	1				0.001	0.0022
485	04811-00110	O RING	1				0.001	0.0022
490	67156-36932	SHAFT CONTROL LEVER	1				0.065	0.143
500	66361-36940	LEVER SPOOL DRIVE	1				0.04	0.088

silverthorn.co.uk

↔ Interchangeable; ≠ not interchangeable; ← new for old; → old for new

REF.No	Part No.	Description	Q'ty	S.No.	I/C	REMARKS	Weight (kgf)	Weight (lb)
510	04012-50060	WASHER PLAIN	1				0.001	0.0022
520	04613-00050	CIRCLIP EXTERNAL	1				0	0
530	67156-36952	ARM FEED BACK	1				0.06	0.132
540	67156-36960	PLATE	1	<=65532			0	0
540	67156-36962	PLATE	1	>=65533	←		0.012	0.0264
550	67156-36970	SHAFT BACK LEVER	1				0.054	0.1188
560	01202-50620	BOLT	2				0.007	0.0154
570	67156-36980	PLUG SCREW	4				0.004	0.0088
580	03410-50616	SCREW SET	1				0.005	0.011
590	04512-50060	WASHER SPRING	4				0	0

silverhorn.co.uk

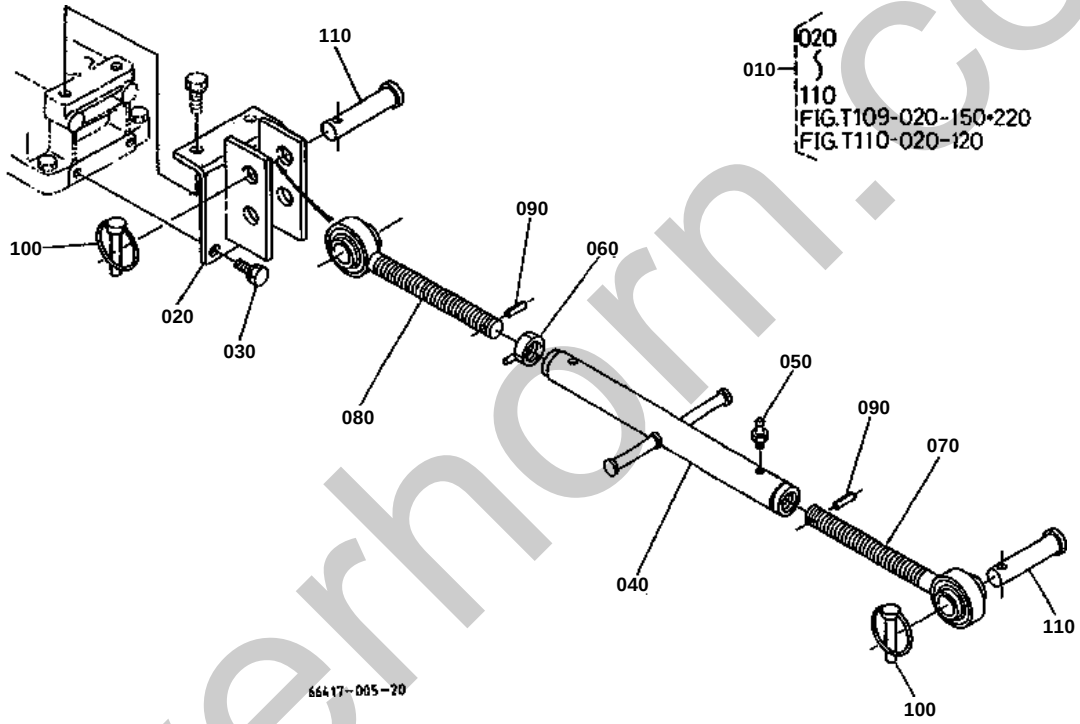

silverhorn.co.uk

TOP LINK

↔ Interchangeable; ≠ not interchangeable; ← new for old; → old for new

REF.No	Part No.	Description	Q'ty	S.No.	I/C	REMARKS	Weight (kgf)	Weight (lb)
010	66416-65200	ASSY ROD 3-P.LINK	1	<=60044		[A] [CA]	0	0
010	66416-65202	ASSY ROD 3-P.LINK	1	>=60045	←	[A] [CA]	22	48.4
010	66416-65400	ASSY ROD 3-POINT	1	>=66107	≠	[A] [CA]	23.29	51.238
010	66416-65200	ASSY ROD 3-POINT	1	<=60044		[AU] [NZ]	0	0
010	66416-65202	ASSY ROD 3-POINT	1	>=60045	←	[AU] [NZ]	22	48.4
020	66416-65210	BRACKET TOP LINK	1	<=62386			0	0
020	66416-65212	BRACKET TOP LINK	1	>=62387	←		1.2	2.64
030	01123-51230	BOLT	2				0.04	0.088
040	66706-65332	LINK TOP	1				1	2.2
050	67211-42940	NIPPLE GREASE	2				0.001	0.0022
060	66706-65340	NUT TOP LINK	1				0.05	0.11
070	66706-65352	JOINT TOP LINK LH	1				0.73	1.606
080	66706-65362	JOINT TOP LINK RH	1				0.77	1.694
090	05411-00422	PIN SPRING	2				0.001	0.0022
100	34150-37640	PIN SET	3				0.06	0.132
110	31150-71360	PIN JOINT	2				0.166	0.3652

silverhorn.co.uk

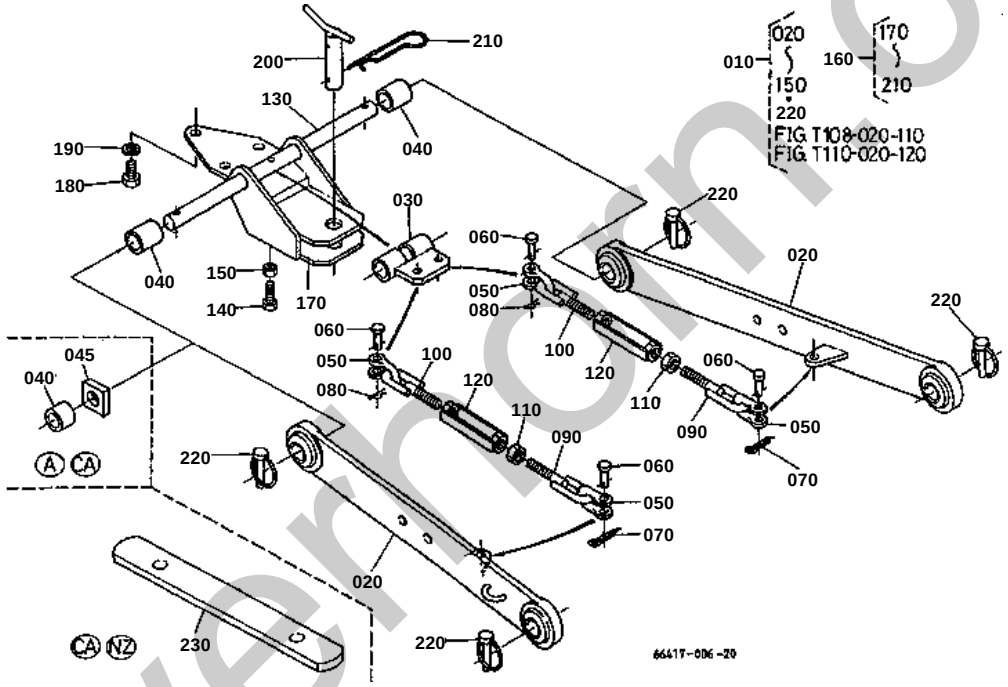

silverhorn.co.uk

LOWER LINK

↔ Interchangeable; ≠ not interchangeable; ← new for old; → old for new

REF.No	Part No.	Description	Q'ty	S.No.	I/C	REMARKS	Weight (kgf)	Weight (lb)
010	66416-65200	ASSY ROD 3-P.LINK	1	<=60044		[A] [CA]	0	0
010	66416-65202	ASSY ROD 3-P.LINK	1	>=60045	←	[A] [CA]	22	48.4
010	66416-65400	ASSY ROD 3-POINT	1	>=66107	≠	[A] [CA]	23.29	51.238
010	66416-65200	ASSY ROD 3-POINT	1	<=60044		[AU] [NZ]	0	0
010	66416-65202	ASSY ROD 3-POINT	1	>=60045	←	[AU] [NZ]	22	48.4
020	67401-65210	COMP.LINK LOWER	2	<=60044			0	0
020	67401-65213	COMP.LINK LOWER	2	>=60045	←		5.34	11.748
030	67401-65290	BRACKET CHECK CHAIN	1				0.63	1.386
040	66204-65350	SPACER	2	<=66106		[A] [CA]	0.12	0.264
040	66204-88320	SPACER	2	>=66107	≠	[A] [CA]	0.006	0.0132
040	66204-65350	SPACER	2			[AU] [NZ]	0.12	0.264
045	67800-71220	SPACER	2	>=66107		[A] [CA]	0.06	0.132
050	67401-65370	JOINT CHAIN	4				0.1	0.22
060	66706-65380	PIN SET	4				0.021	0.0462
070	05511-50318	PIN SPLIT	2				0.001	0.0022
080	05515-51000	PIN SNAP	2				0	0
090	66706-65310	BOLT TURNBUCKLE RH	2				0.153	0.3366
100	66706-65320	BOLT TURNBUCKLE LH	2				0.153	0.3366
110	02112-50120	NUT	2				0.007	0.0154
120	96316-05580	TURNBUCKLE	2				0.14	0.308
130	66704-86110	PIN LOWER LINK	1				1.19	2.618
140	66204-65120	BOLT SET	1				0.055	0.121
150	02174-50140	NUT	1				0.014	0.0308
160	66204-65502	ASSY HITCH	1				3.6	7.92
170	66204-65606	COMP.HITCH	1				3.59	7.898
180	01153-51235	BOLT	3				0.039	0.0858
190	04512-50120	WASHER SPRING	3				0	0
200	66204-65610	PIN HITCH	1	<=63334			0	0
200	67800-29320	PIN HITCH	1	>=63335	↔		0.2	0.44
210	31150-29730	PIN SPRING	1				0.044	0.0968
220	34150-37640	PIN SET	4				0.06	0.132
230	66204-86510	DRAWBAR	1			[CA] [NZ]	3.06	6.732

silvermorn.co.uk

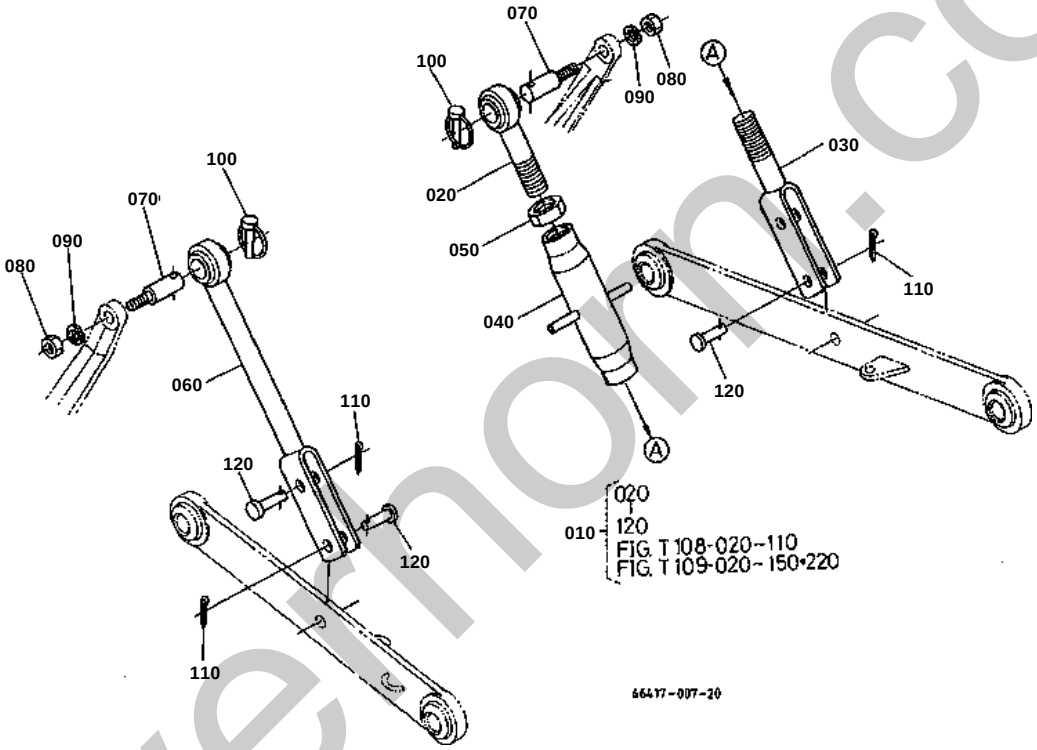

silverhorn.co.uk

LIFT ROD

↔ Interchangeable; ≠ not interchangeable; ← new for old; → old for new

REF.No	Part No.	Description	Q'ty	S.No.	I/C	REMARKS	Weight (kgf)	Weight (lb)
010	66416-65200	ASSY ROD 3-P.LINK	1	<=60044		[A] [CA]	0	0
010	66416-65202	ASSY ROD 3-P.LINK	1	>=60045	←	[A] [CA]	22	48.4
010	66416-65400	ASSY ROD 3-POINT	1	>=66107	≠	[A] [CA]	23.29	51.238
010	66416-65200	ASSY ROD 3-POINT	1	<=60044		[AU] [NZ]	0	0
010	66416-65200	ASSY ROD 3-POINT	1	>=60045	←	[AU] [NZ]	0	0
020	67401-65230	ROD LIFT UPPER RH	1				0.53	1.166
030	67401-65240	ROD LIFT LOWER RH	1				0.5	1.1
040	67401-65250	ROD LIFT MIDDLE	1				0.44	0.968
050	02172-50180	NUT	1				0.021	0.0462
060	67401-65270	ROD LIFT LH	1				1.34	2.948
070	96316-18250	PIN LINK	2	<=63917			0	0
070	67950-77420	PIN LINK	2	>=63918	↔		0.14	0.308
080	02174-50120	NUT	2				0.01	0.022
090	04512-50120	WASHER SPRING	2				0	0
100	34150-37640	PIN SET	2				0.06	0.132
110	05511-50425	PIN SPLIT	3				0.003	0.0066
120	05122-51240	PIN JOINT	3				0.039	0.0858

silverhorn.co.uk

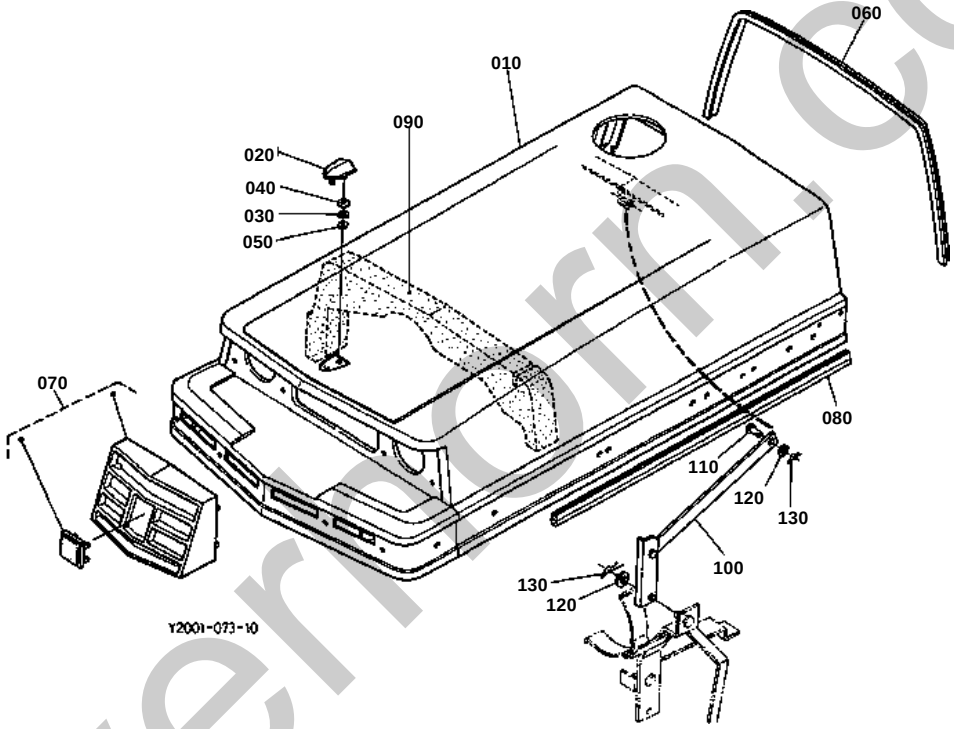

silvermorn.co.uk

HOOD (BONNET)

↔ Interchangeable; ≠ not interchangeable; ← new for old; → old for new

REF.No	Part No.	Description	Q'ty	S.No.	I/C	REMARKS	Weight (kgf)	Weight (lb)
010	66416-54103	COMP.BONNET	1	<=60128			0	0
010	66416-54105	COMP.BONNET	1	>=60129	≠		7.5	16.5
020	31351-65180	MASCOT	1				0.01	0.022
030	04512-50040	WASHER SPRING	1				0	0
040	04013-50040	WASHER PLAIN	1				0	0
050	02054-50040	NUT	1				0.001	0.0022
060	66416-54110	CUSHION BONNET	1	<=60128			0.09	0.198
060	66416-54113	CUSHION BONNET	1	>=60129	≠		0.09	0.198
070	66416-54410	MASK FRONT	1	<=62006			0	0
070	66416-54412	MASK FRONT	1	>=62007	←		0.23	0.506
080	66416-54120	TRIM BONNET SIDE	2				0.06	0.132
090	66418-54140	BLOCK	1				0.035	0.077
100	66416-54240	ASSY LINK BONNET	1				0.28	0.616
110	05122-50816	PIN JOINT	1				0.007	0.0154
120	04013-50080	WASHER PLAIN	2	<=60242			0	0
120	04717-00800	WASHER WITH RUBBER	2	>=60243	←		0.001	0.0022
130	05525-50800	PIN SNAP	2				0.001	0.0022

silverhorn.co.uk

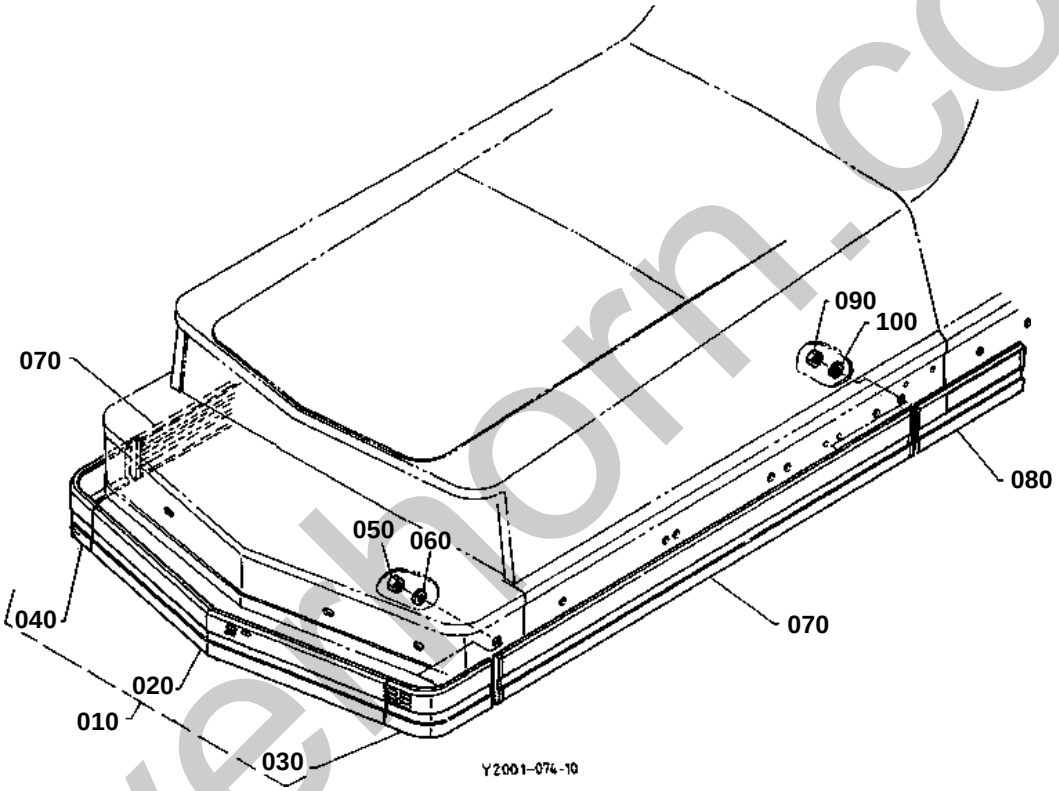

silverthorn.co.uk

LACE

↔ Interchangeable; ≠ not interchangeable; ← new for old; → old for new

REF.No	Part No.	Description	Q'ty	S.No.	I/C	REMARKS	Weight (kgf)	Weight (lb)
010	67156-47500	ASSY LACE FRONT	1				0.1	0.22
020	67156-47510	LACE FRONT	1				0.124	0.2728
030	67156-47520	LACE FRONT LH	1				0.087	0.1914
040	67156-47530	LACE FRONT RH	1				0.088	0.1936
050	02014-50060	NUT	6				0.003	0.0066
060	04512-60060	WASHER SPRING	6				0.001	0.0022
070	66416-47550	LACE SIDE FRONT	2				0.184	0.4048
080	66416-47570	LACE SIDE REAR	2				0.05	0.11
090	02014-50060	NUT	12				0.003	0.0066
100	04512-50060	WASHER SPRING	12				0	0

silverhorn.co.uk

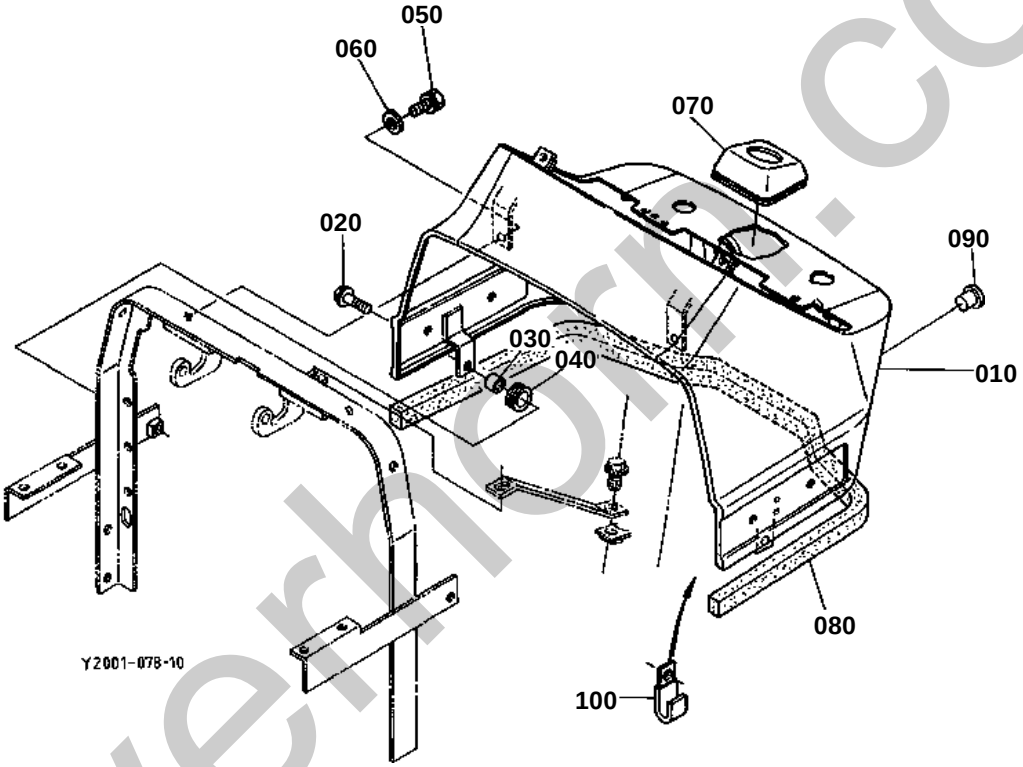

silverhorn.co.uk

HOOD COVER REAR

↔ Interchangeable; ≠ not interchangeable; ← new for old; → old for new

REF.No	Part No.	Description	Q'ty	S.No.	I/C	REMARKS	Weight (kgf)	Weight (lb)
010	66416-55113	COVER BONNET REAR	1	<=60044			0	0
010	66416-55114	COVER BONNET REAR	1	>=60045	←		3.5	7.7
020	01754-50616	BOLT FLANGE	2				0.006	0.0132
030	37300-35140	SPACER	2				0.006	0.0132
040	66361-51680	CUSHION	2				0.01	0.022
050	01153-50830	BOLT	2				0	0
060	04015-50080	WASHER PLAIN	2				0	0
070	67156-41260	CAP POST	1			MANUAL STRG.	0.036	0.0792
070	66418-54950	CAP POST	1			POWER STRG.	0.1	0.22
080	66416-54910	BLOCK DUSTPROOF	1				0.01	0.022
090	38240-29290	PLUG	2	>=60045			0.001	0.0022
100	12234-67580	CLAMP CORD	1				0.015	0.033

silverhorn.co.uk

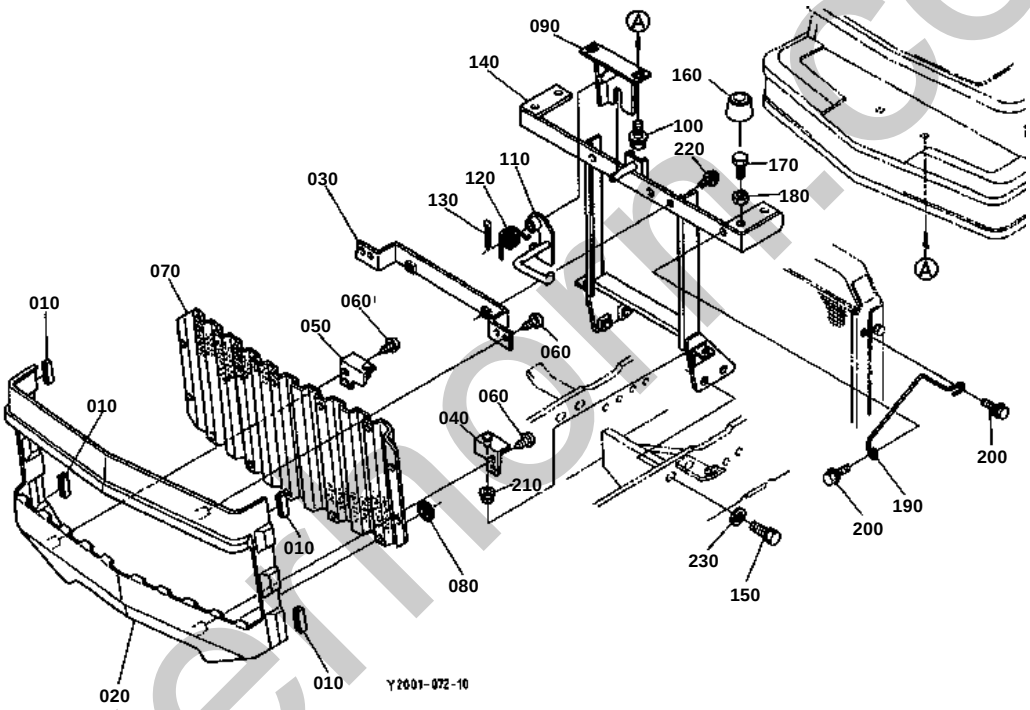

silvermoor.co.uk

SKIRT (FRONT)

↔ Interchangeable; ≠ not interchangeable; ← new for old; → old for new

REF.No	Part No.	Description	Q'ty	S.No.	I/C	REMARKS	Weight (kgf)	Weight (lb)
010	37150-13920	CUSHION	4				0.005	0.011
020	66416-51360	COVER FRONT	1				0.31	0.682
030	66416-51410	STOPPER	1				0.14	0.308
040	66416-51420	STOPPER LH	1				0.05	0.11
050	66416-51430	STOPPER RH	1				0.05	0.11
060	03514-50612	SCREW TAPPING	8				0.002	0.0044
070	66416-51370	NET DUSTPROOF FRONT	1				0.13	0.286
080	67401-51380	NUT	14				0.002	0.0044
090	66416-54210	LOCKER	1				0.18	0.396
100	01125-50820	BOLT	2				0	0
110	66416-54220	LEVER HOOK	1				0.09	0.198
120	66416-54230	SPRING	1				0.01	0.022
130	05511-50320	PIN SPLIT	1				0.002	0.0044
140	66416-54810	BRACKET BONNET	1	<=60044			0	0
140	66416-54812	BRACKET BONNET	1	>=60045	←		1.13	2.486
150	01125-51025	BOLT	4	<=60918			0.015	0.033
150	01133-51030	BOLT	4	>=60919	←		0.025	0.055
160	37410-54720	CUSHION	2				0.025	0.055
170	01153-50825	BOLT	1				0.012	0.0264
180	02112-50080	NUT	2				0.003	0.0066
190	66418-54210	SUPPORT	1				0.01	0.022
200	01025-50620	BOLT	2				0.02	0.044
210	67156-54470	CUSHION	2				0.003	0.0066
220	01754-50620	BOLT FLANGE	2				0.007	0.0154
230	04013-50100	WASHER PLAIN	4	>=60919			0	0

silverhorn.co.uk

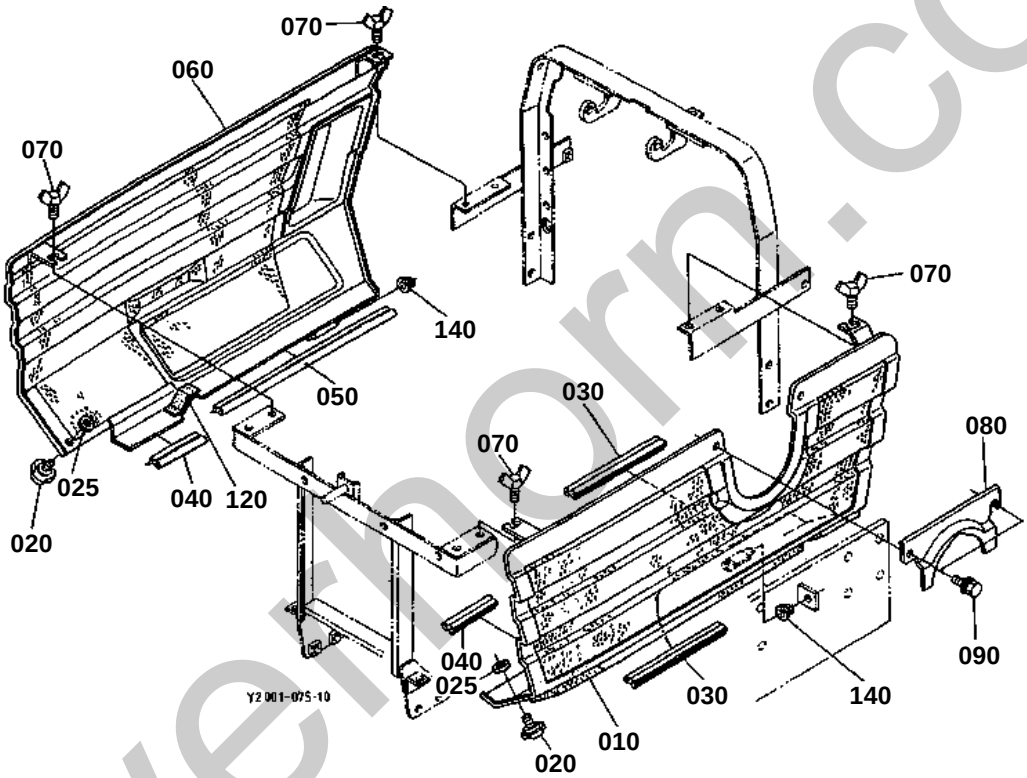

silverthorn.co.uk

100 67401-5279-0

110 01811-50615

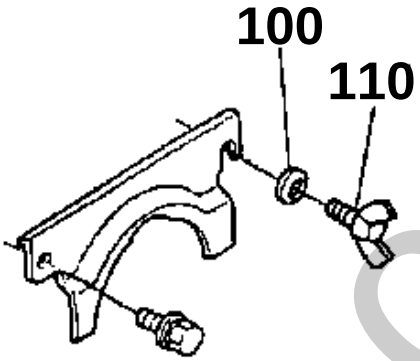

66417-815-10

silverhorn.co.uk

SKIRT (SIDE)

↔ Interchangeable; ≠ not interchangeable; ← new for old; → old for new

REF.No	Part No.	Description	Q'ty	S.No.	I/C	REMARKS	Weight (kgf)	Weight (lb)
010	66416-51310	SKIRT LH	1	<=50736			0	0
010	66416-51314	SKIRT LH	1	>=50737	←		1.1	2.42
020	01820-50615	BOLT KNOB	2				0.017	0.0374
025	67156-54480	RUBBER KNOB	2				0.001	0.0022
030	66416-51480	TRIM SKIRT LH	2				0.03	0.066
040	66417-51380	TRIM SKIRT FRONT	2				0.015	0.033
050	66417-51390	TRIM SKIRT REAR	1				0.07	0.154
060	66416-51320	SKIRT RH	1				1.33	2.926
070	01811-50615	BOLT WING	4				0.015	0.033
080	66417-51455	COVER	1				0.09	0.198
090	01125-50820	BOLT	1	<=50540			0	0
090	01125-50820	BOLT	2	>=50541			0	0
100	67401-52790	SPRING PLATE	1	<=50540			0.002	0.0044
110	01811-50615	BOLT WING	1	<=50540			0.015	0.033
120	66361-58220	CUSHION	1				0.001	0.0022
140	67156-54470	CUSHION	2				0.003	0.0066

silverhorn.co.uk

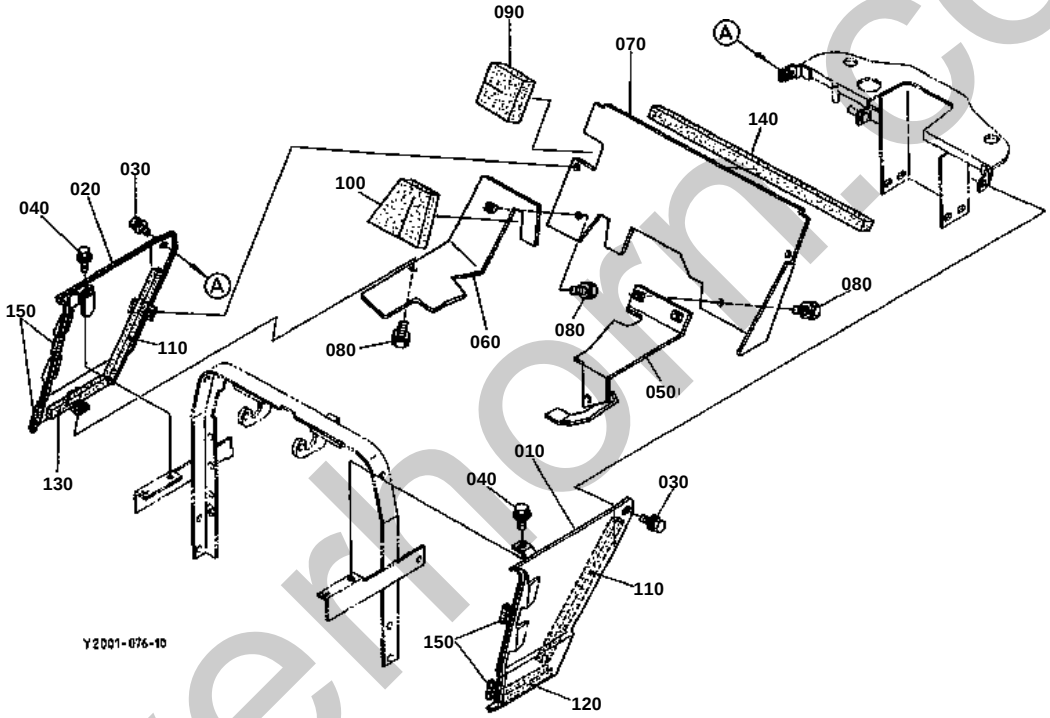

silverhorn.co.uk

DUST COVER

↔ Interchangeable; ≠ not interchangeable; ← new for old; → old for new

REF.No	Part No.	Description	Q'ty	S.No.	I/C	REMARKS	Weight (kgf)	Weight (lb)
010	66416-51333	AUX.SKIRT LH	1				0.4	0.88
020	66416-51344	AUX.SKIRT RH	1				0.47	1.034
030	01125-50820	BOLT	2				0	0
040	01025-50620	BOLT	2				0.02	0.044
050	66416-51530	COVER DUSTPROOF REAR	1				0.18	0.396
060	66416-51520	COVER DUSTPROOF REAR	1				0.18	0.396
070	66416-51510	COVER DUSTPROOF REAR	1				0.61	1.342
080	01023-50614	BOLT	5				0.005	0.011
090	66416-51540	BLOCK DUSTPROOF	1				0.002	0.0044
100	66416-51550	BLOCK DUSTPROOF	1				0.005	0.011
110	67211-54230	TAPE	2				0.01	0.022
120	66416-51560	TAPE DUSTPROOF	1				0.005	0.011
130	67511-54730	SPONGE	1				0.001	0.0022
140	67401-51490	BLOCK DUSTPROOF	1				0.018	0.0396
150	37150-13920	CUSHION	4				0.005	0.011

silverhorn.co.uk

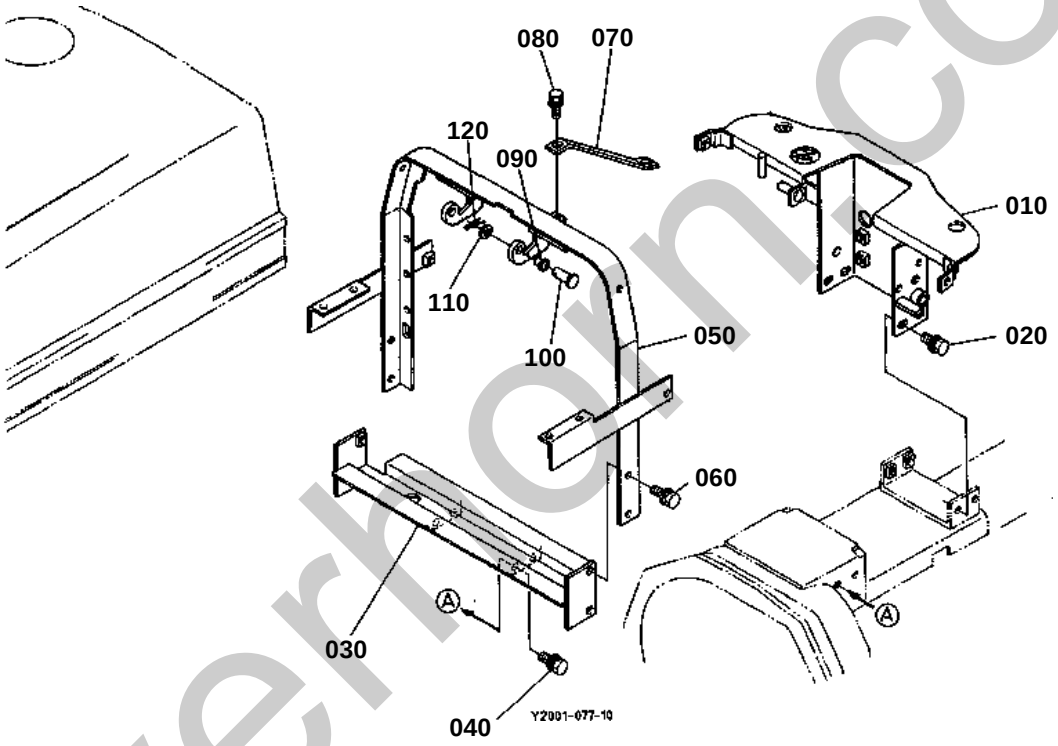

silverhorn.co.uk

TANK SUPPORT

↔ Interchangeable; ≠ not interchangeable; ← new for old; → old for new

REF.No	Part No.	Description	Q'ty	S.No.	I/C	REMARKS	Weight (kgf)	Weight (lb)
010	66417-51710	SUPPORT BONNET REAR	1				2.02	4.444
020	01125-50820	BOLT	4				0	0
030	66416-54150	SUPPORT FRAME	1				1.25	2.75
040	01125-50820	BOLT	4				0	0
050	66416-54162	SUPPORT TANK	1				1.9	4.18
060	01125-50820	BOLT	4				0	0
070	66416-54170	STAY TANK SUPPORT	1				0.013	0.0286
080	01125-50820	BOLT	2				0	0
090	37410-54150	BUSH	2				0.001	0.0022
100	05122-50822	PIN JOINT	2				0.01	0.022
110	04013-50080	WASHER PLAIN	2	<=60242			0	0
110	04717-00800	WASHER WITH RUBBER	2	>=60243	←		0.001	0.0022
120	05525-50800	PIN SNAP	2				0.001	0.0022

silverhorn.co.uk

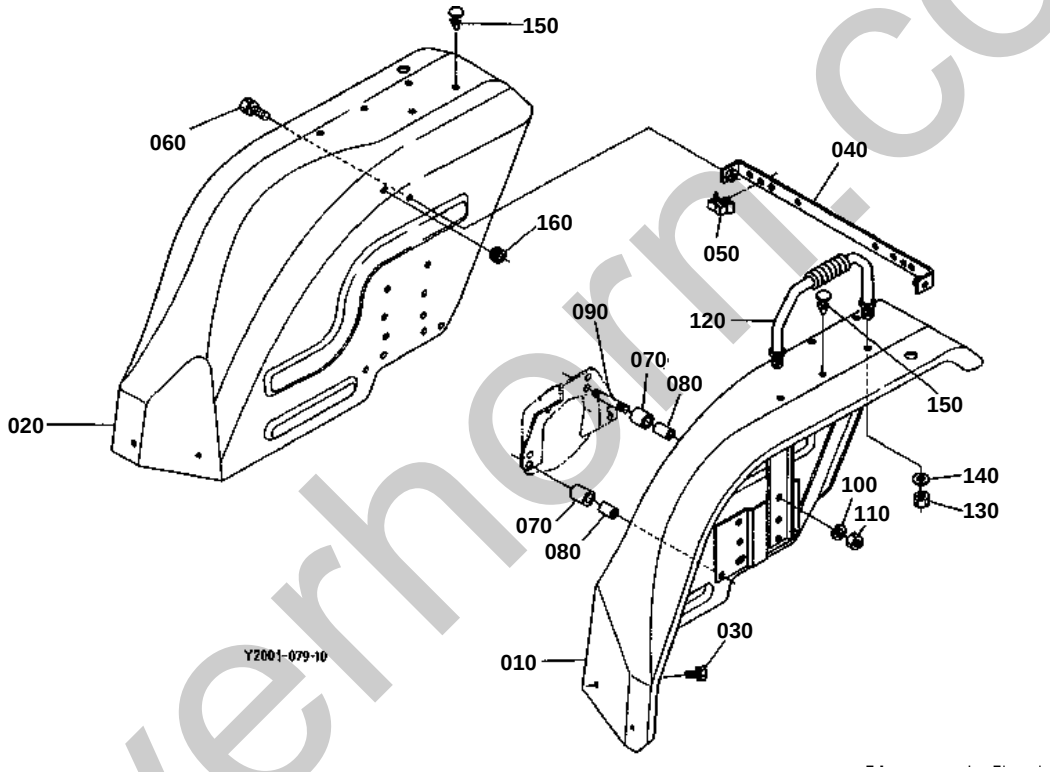

silverhorn.co.uk

120 66418-5221-0

130 01123-50818

140 04013-50080

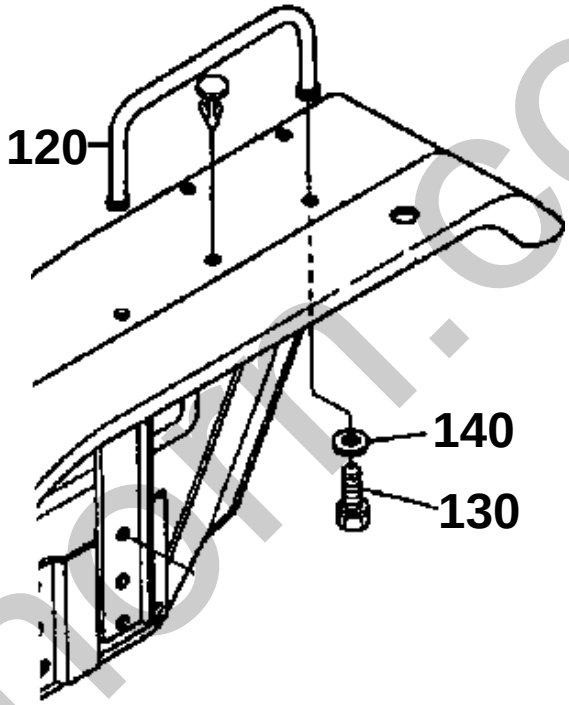

66417-816-10

silverhorn.co.uk

FENDER

↔ Interchangeable; ≠ not interchangeable; ← new for old; → old for new

REF.No	Part No.	Description	Q'ty	S.No.	I/C	REMARKS	Weight (kgf)	Weight (lb)
010	66417-52710	COMP.FENDER LH	1	<=60044			6	13.2
010	66417-52715	COMP.FENDER LH	1	>=60045	≠		5.8	12.76
020	66416-52720	COMP.FENDER RH	1	<=60044			6	13.2
020	66416-52728	COMP.FENDER RH	1	>=60045	≠		11	24.2
030	01123-50818	BOLT	4				0.012	0.0264
040	67061-52732	STAY FENDER	1				0.29	0.638
050	66021-55510	CLIP WIRE	4				0.005	0.011
060	01123-50818	BOLT	2				0.012	0.0264
070	67061-52740	CUSHION	6				0.02	0.044
080	67061-52750	COLLAR SPACER	6				0.025	0.055
090	01513-50865	STUD	6				0.026	0.0572
100	04512-50080	WASHER SPRING	6				0.001	0.0022
110	02114-50080	NUT	6				0.005	0.011
120	66418-52210	BALU STRADE	2	<=60044			0.2	0.44
120	34670-29440	HANDRAIL	2	>=60045	≠		0.1	0.22
120	31351-29440	HANDRAIL	2	>=65921	↔		0	0
130	01123-50818	BOLT	4	<=60044			0.012	0.0264
130	02174-50140	NUT	4	>=60045	≠		0.014	0.0308
140	04013-50080	WASHER PLAIN	4	<=60044			0	0
140	04013-50140	WASHER PLAIN	4	>=60045	≠		0	0
150	38240-29570	PLUG	9	<=60044			0.001	0.0022
150	38240-29570	PLUG	4	>=60045			0.001	0.0022
160	32150-29180	CAP RUBBER	2				0.002	0.0044

silverhorn.co.uk

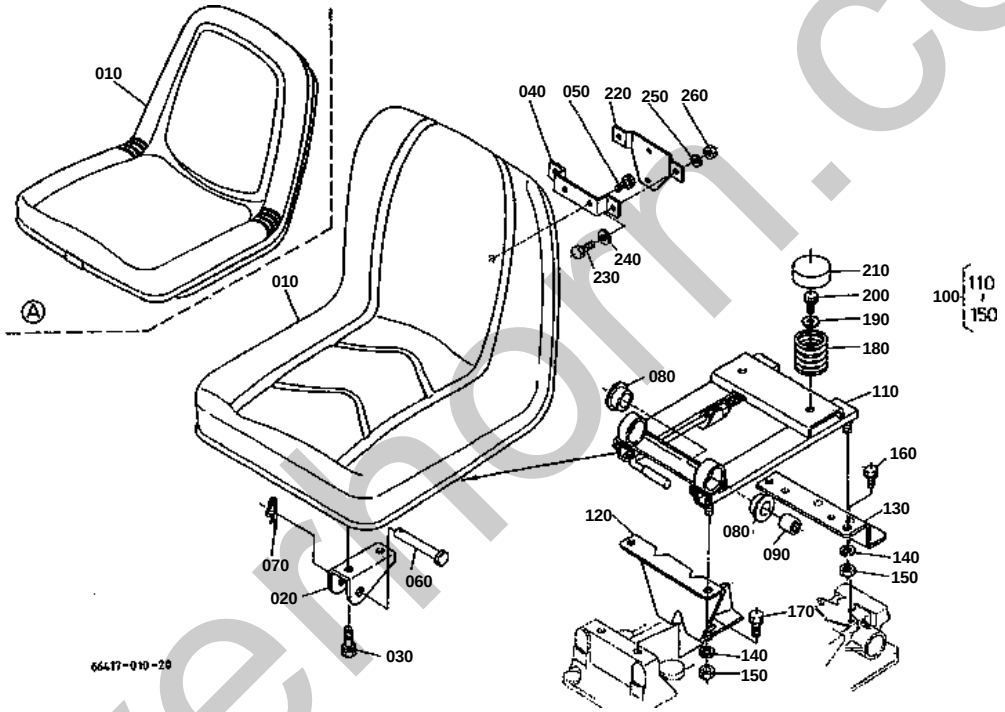

silverthorn.co.uk

↔ Interchangeable; ≠ not interchangeable; ← new for old; → old for new

REF.No	Part No.	Description	Q'ty	S.No.	I/C	REMARKS	Weight (kgf)	Weight (lb)
010	32420-72960	SEAT	1	<=61807		[A]	0	0
010	35080-18400	ASSY SEAT	1	>=61808	↔	[A] RESERVED BY KTC	0	0
010	32420-72960	SEAT	1	<=61950		[CA] [AU] [NZ]	0	0
010	32420-72962	SEAT	1	>=61951	←	[CA] [AU] [NZ]	8	17.6
020	67061-45920	BRACKET	1				0.18	0.396
030	01123-60816	BOLT	4				0.01	0.022
040	66416-45920	STAY	1	<=61807			0	0
040	67401-45922	STAY	1	>=61808	←		0.08	0.176
050	01123-60816	BOLT	2				0.01	0.022
060	05122-51045	PIN JOINT	2				0	0
070	05515-51000	PIN SNAP	2				0	0
080	66591-41540	CUSHION	4				0.01	0.022
090	66591-41550	COLLAR	2				0.02	0.044
100	66417-45930	ASSY ADJUSTER SEAT	1				3.4	7.48
110	67061-45943	COMP ADJUSTER SEAT	1				2.4	5.28
120	66417-45950	SUPPORT ADJUSTER	1				0.18	0.396
130	66416-45960	SUPPORT ADJUSTER	1				0.41	0.902
140	04512-60100	WASHER SPRING	4				0.002	0.0044
150	02018-50100	NUT	4				0.011	0.0242
160	01123-50825	BOLT	2				0.013	0.0286
170	01123-51020	BOLT	2				0.02	0.044
180	67061-45970	SPRING SEAT	2				0.13	0.286
190	04015-50080	WASHER PLAIN	2				0	0
200	01123-50820	BOLT	2				0.011	0.0242
210	66301-52820	CAP SPRING	2				0.04	0.088
220	66416-54950	BRACKET SMV	1	<=61807			0	0
220	66704-54952	BRACKET SMV	1	>=61808	←		0.15	0.33
230	01053-50616	BOLT	2				0.005	0.011
240	04013-50060	WASHER PLAIN	2				0	0
250	04512-50060	WASHER SPRING	2				0	0
260	02014-50060	NUT	2				0.003	0.0066

silverhorn.co.uk

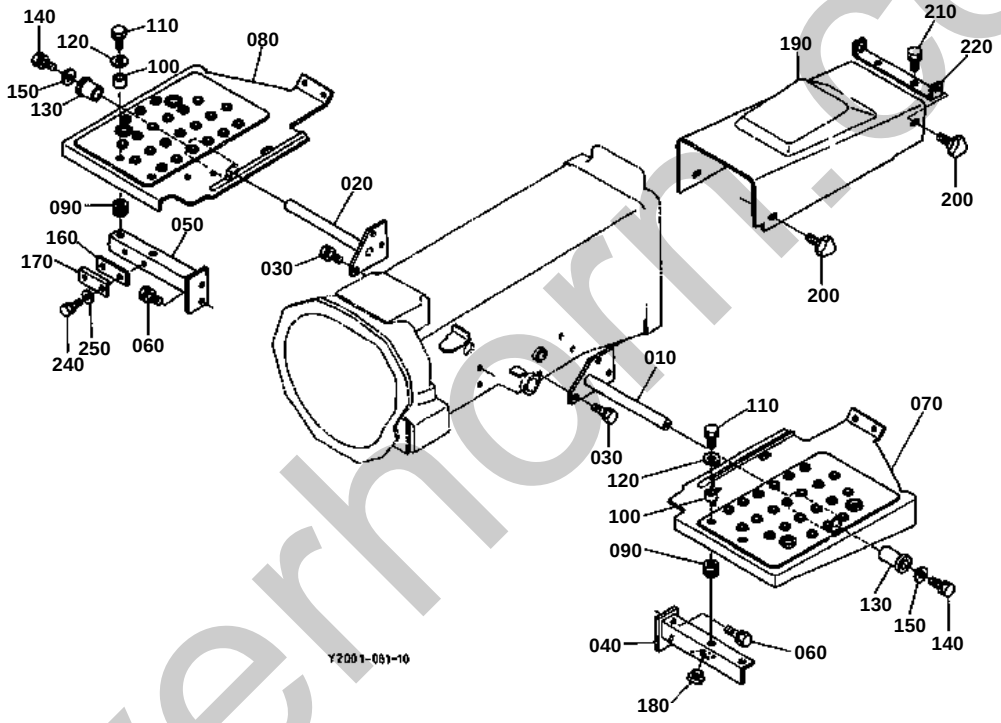

silverhorn.co.uk

↔ Interchangeable; ≠ not interchangeable; ← new for old; → old for new

REF.No	Part No.	Description	Q'ty	S.No.	I/C	REMARKS	Weight (kgf)	Weight (lb)
010	67061-51123	BRACKET STEP LH	1				0.68	1.496
020	67061-51133	BRACKET STEP RH	1				0.68	1.496
030	01123-50818	BOLT	6				0.012	0.0264
040	67061-51142	SUPPORT STEP LH	1				0.47	1.034
050	67061-51150	SUPPORT STEP RH	1				0.48	1.056
060	01123-50818	BOLT	4				0.012	0.0264
070	66417-51160	STEP LH	1				2.8	6.16
080	66417-51170	COMP.STEP RH	1				2.8	6.16
090	66361-51680	CUSHION	4				0.01	0.022
100	37300-35140	SPACER	4				0.006	0.0132
110	01123-50828	BOLT	4				0.014	0.0308
120	04015-50080	WASHER PLAIN	4				0	0
130	67401-51180	BUSH RUBBER	2				0.01	0.022
140	01123-50818	BOLT	2				0.012	0.0264
150	04013-50080	WASHER PLAIN	2				0	0
160	67111-51560	PLATE BRAKE	1				0.025	0.055
170	67111-51570	HOLDER BRAKE	1				0.025	0.055
180	38240-29870	CUSHION	1				0.004	0.0088
190	66417-53110	COVER SUB	1				0.3	0.66
200	01820-50615	BOLT KNOB	4				0.017	0.0374
210	01123-50820	BOLT	2				0.011	0.0242
220	67061-53140	STAY REAR	1				0.06	0.132
240	01123-50814	BOLT	2				0	0
250	04015-50080	WASHER PLAIN	2				0	0

silverhorn.co.uk

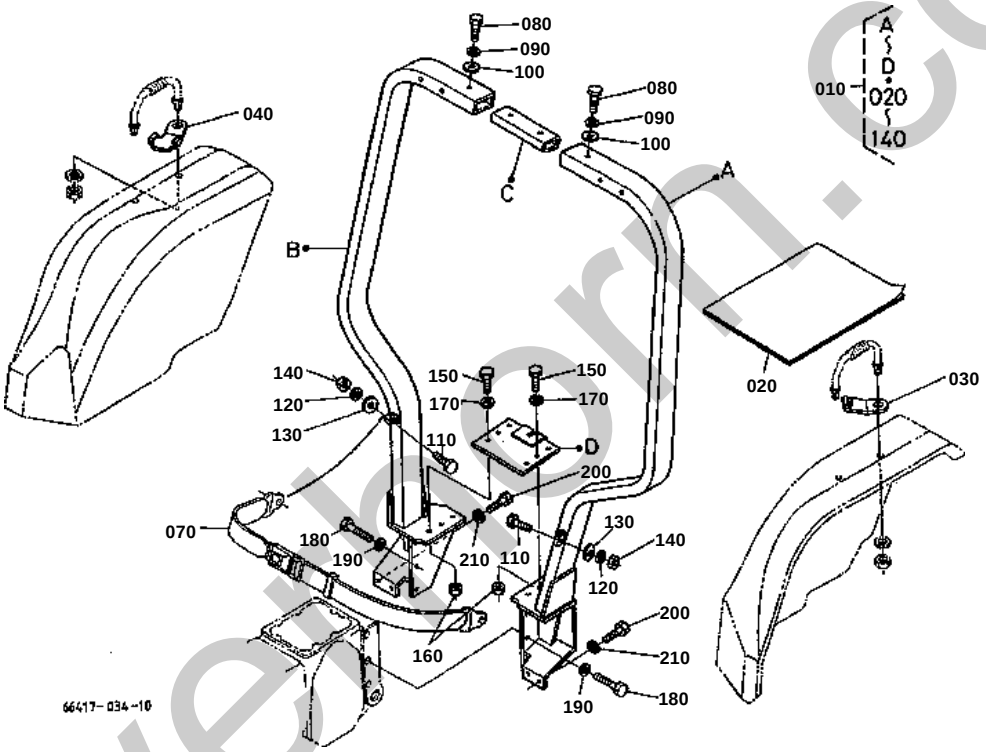

silverthorn.co.uk

↔ Interchangeable; ≠ not interchangeable; ← new for old; → old for new

REF.No	Part No.	Description	Q'ty	S.No.	I/C	REMARKS	Weight (kgf)	Weight (lb)
010	66416-72100	ASSY ROPS	1				0	0
020	66416-72170	MANUAL CONSTRUCTION	1	<=62572			0.003	0.0066
020	66416-72172	MANUAL CONSTRUCTION	1	>=62573	≠		0	0
030	66416-72200	HOLDER SEAT BELT M.	1	>=62573			0.028	0.0616
040	66416-72210	HOLDER SEAT BELT F.	1	>=62573			0.032	0.0704
070	66416-72190	ASSY BELT SEAT	1				0.34	0.748
080	01173-51428	BOLT	2				0.049	0.1078
090	04512-50140	WASHER SPRING	2				0	0
100	04013-50140	WASHER PLAIN	2				0	0
110	01173-51025	BOLT	2				0.021	0.0462
120	04512-60100	WASHER SPRING	2				0.002	0.0044
130	04013-50100	WASHER PLAIN	2				0	0
140	02176-50100	NUT	2				0.005	0.011
150	01173-51025	BOLT	6				0.021	0.0462
160	02176-50100	NUT	6				0.005	0.011
170	04512-60100	WASHER SPRING	6				0.002	0.0044
180	01156-51245	BOLT	6				0.05	0.11
190	04512-50120	WASHER SPRING	6				0	0
200	01156-51230	BOLT	4				0.037	0.0814
210	04512-50120	WASHER SPRING	4				0	0

silverhorn.co.uk

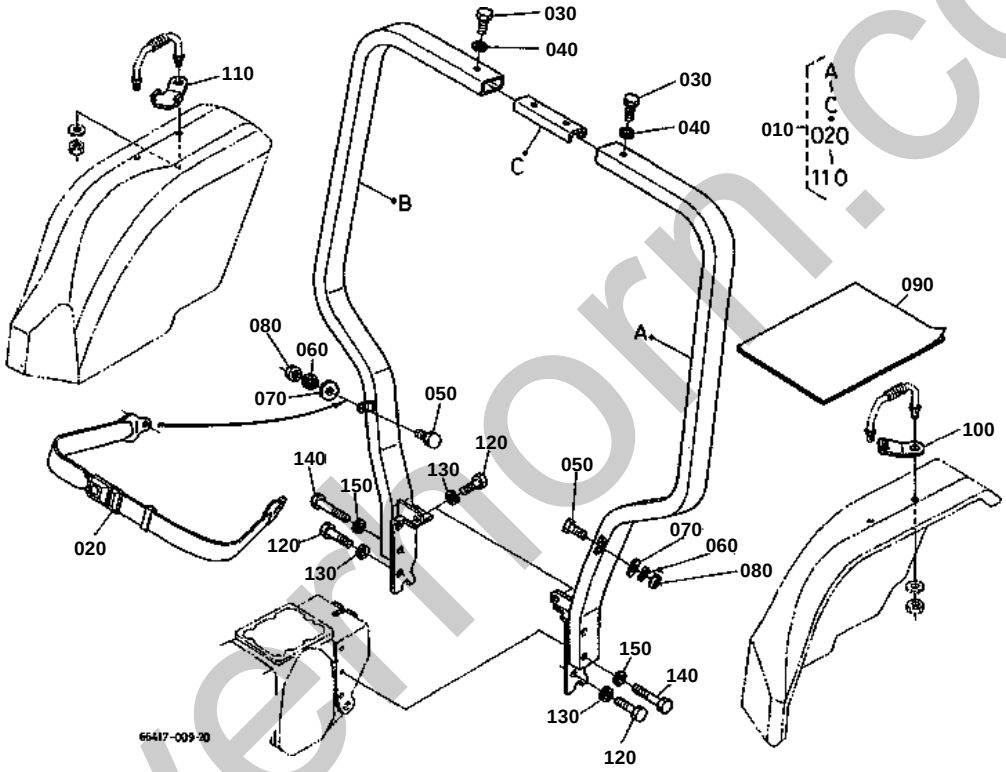

silverthorn.co.uk

↔ Interchangeable; ≠ not interchangeable; ← new for old; → old for new

REF.No	Part No.	Description	Q'ty	S.No.	I/C	REMARKS	Weight (kgf)	Weight (lb)
010	66416-73100	ASSY ROPS	1				0	0
020	66416-72190	ASSY BELT SEAT	1				0.34	0.748
030	01173-51430	BOLT	2				0.052	0.1144
040	04512-50140	WASHER SPRING	2				0	0
050	01173-51025	BOLT	2				0.021	0.0462
060	04512-60100	WASHER SPRING	2				0.002	0.0044
070	04013-50100	WASHER PLAIN	2				0	0
080	02176-50100	NUT	2				0.005	0.011
090	66416-73170	MANUAL INSTRUCTION	1				0	0
100	66416-72200	HOLDER SEAT BELT M.	1				0.028	0.0616
110	66416-72210	HOLDER SEAT BELT F.	1				0.032	0.0704
120	01156-51245	BOLT	4				0.05	0.11
130	04512-50120	WASHER SPRING	4				0	0
140	01156-51285	BOLT	4				0.074	0.1628
150	04512-50120	WASHER SPRING	4				0	0

silverhorn.co.uk

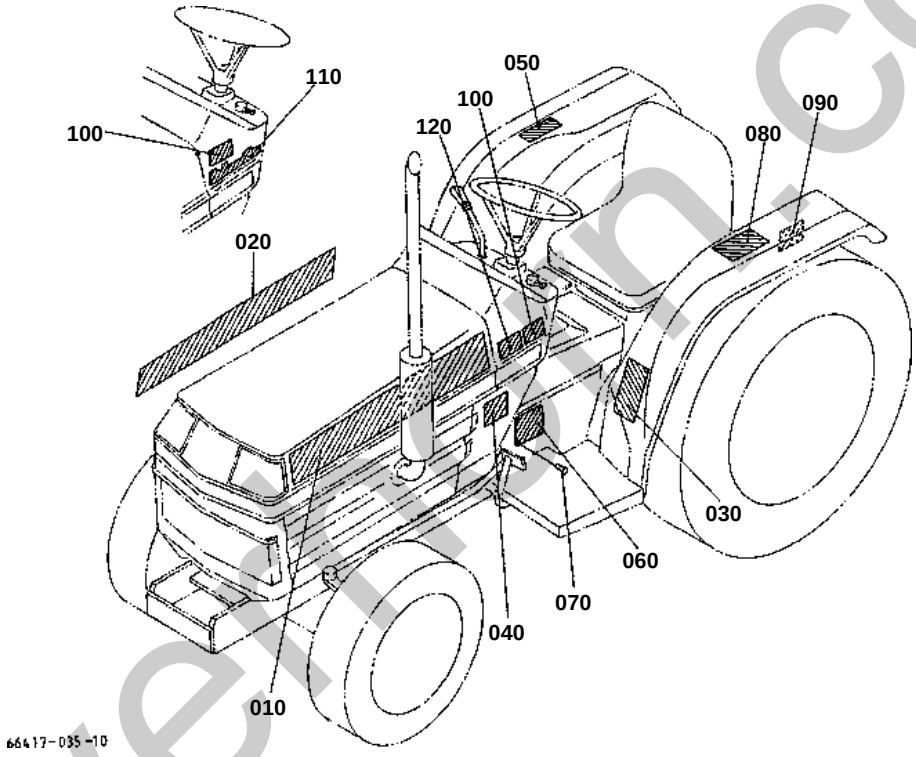

silverfern.co.uk

↔ Interchangeable; ≠ not interchangeable; ← new for old; → old for new

REF.No	Part No.	Description	Q'ty	S.No.	I/C	REMARKS	Weight (kgf)	Weight (lb)
010	66416-47110	LABEL BONNET LH	1	<=62006			0.01	0.022
010	66416-47112	LABEL BONNET LH	1	>=62007	≠		0.025	0.055
020	66416-47120	LABEL BONNET RH	1	<=62006			0.01	0.022
020	66416-47122	LABEL BONNET RH	1	>=62007	≠		0.025	0.055
030	35260-34912	LABEL SAFETY	1	<=61807		ENGLISH	0	0
030	35260-34913	LABEL SAFETY	1	>=61808	←	ENGLISH	0.005	0.011
030	35261-34910	LABEL SAFETY	1			FRENCH	0.006	0.0132
040	35820-98632	LABEL START CAUTION	1			ENGLISH	0.003	0.0066
040	32530-65930	LABEL START CAUTION	1			FRENCH	0.001	0.0022
050	66706-47140	LABEL	1	<=61807			0	0
050	66426-47140	LABEL LIFT	1	>=61808	↔		0.002	0.0044
070	54102-24410	RIVET	4				0.001	0.0022
080	35260-29782	LABEL ROPS WARNING	1			ENGLISH	0.001	0.0022
080	35871-98640	LABEL ROPS WARNING	1			FRENCH	0.002	0.0044
090	35260-29790	LABEL DRAWBAR	1			ENGLISH	0.002	0.0044
090	35871-98660	LABEL DRAWBAR	1			FRENCH	0.001	0.0022
100	66416-47230	LABEL 4WD	2				0.002	0.0044
110	66416-47240	LABEL BI-SPEED TURN	2			BI-SPEED TURN	0.001	0.0022
120	66417-47250	LABEL HST	2				0.003	0.0066

silverhorn.co.uk

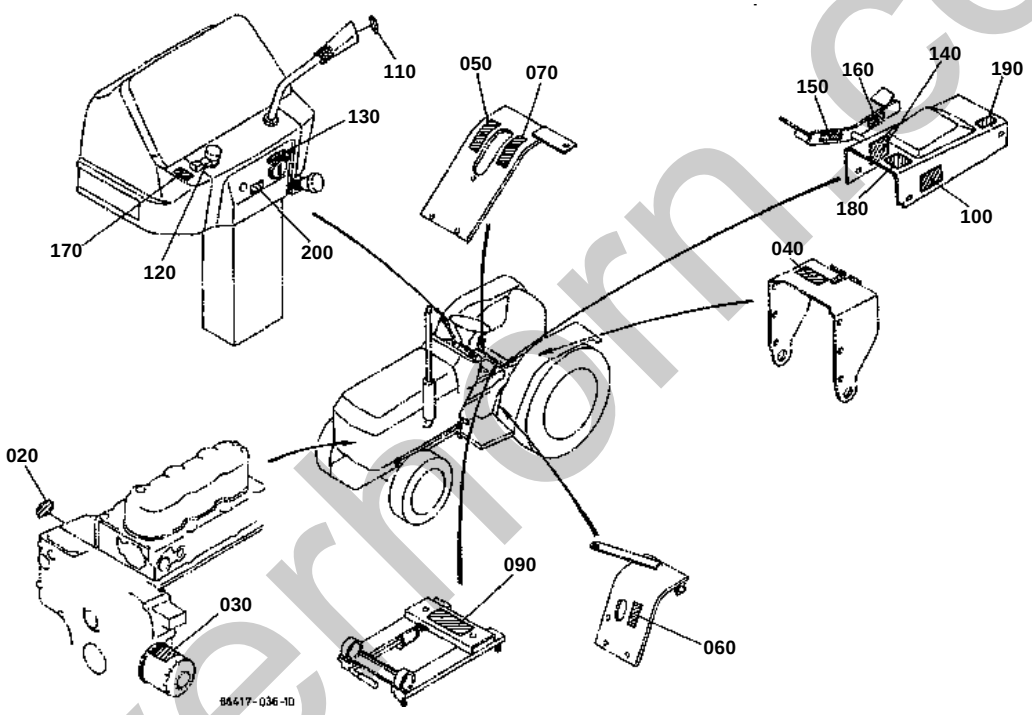

silverhorn.co.uk

010 15232-8821-0

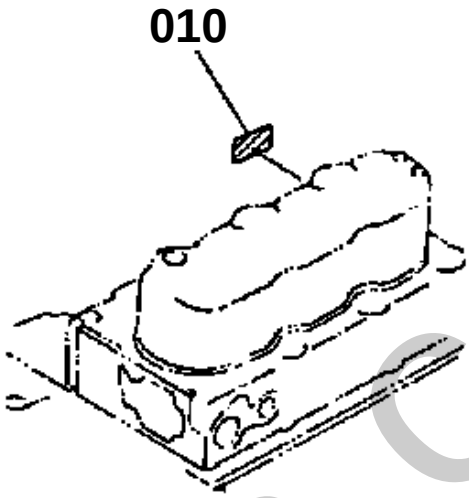

080 66706-4728-0

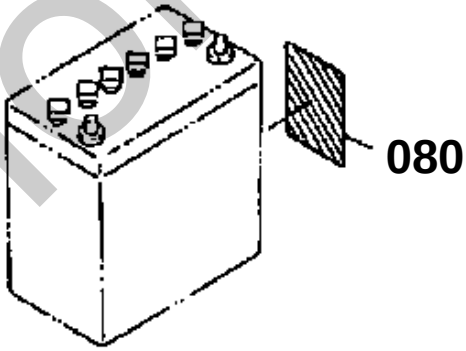

66417-817-10

silverhorn.co.uk

↔ Interchangeable; ≠ not interchangeable; ← new for old; → old for new

REF.No	Part No.	Description	Q'ty	S.No.	I/C	REMARKS	Weight (kgf)	Weight (lb)
010	15232-88210	LABEL GLOW PLUG	1	<=63334			0.001	0.0022
020	15372-87230	LABEL CAUTION	1				0.001	0.0022
030	15372-87210	LABEL CAUTION	1	<=67488			0.001	0.0022
030	15372-87213	LABEL CAUTION	1	>=67489	≠		0.001	0.0022
040	35200-25340	LABEL PTO WARNING	1			ENGLISH	0.002	0.0044
040	67840-47210	LABEL PTO	1			FRENCH	0.001	0.0022
050	66204-47120	LABEL RANGE SHIFT	1	<=61807			0	0
050	66427-47120	LABEL RANGE SHIFT	1	>=61808	↔		0.001	0.0022
060	67061-47212	LABEL PTO S-CHANGE	1	<=61807			0	0
060	66426-47200	LABEL PTO	1	>=61808	↔		0.01	0.022
070	66706-47150	LABEL	1	<=61807			0	0
070	66426-47150	LABEL 4WD	1	>=61808	↔		0.005	0.011
080	66706-47280	LABEL BATTERY	1	<=60128			0.003	0.0066
090	67061-47230	LABEL HYD.LOCK	1				0.001	0.0022
100	66204-47350	LABEL DIFF.LOCK	1	<=61807			0	0
100	66427-47350	LABEL DIFF.LOCK	1	>=61808	↔		0.001	0.0022
100	76611-47520	LABEL DIFF.LOCK	1	>=63701	↔		0.001	0.0022
110	67156-47310	LABEL ACCEL.GRIP	1				0.001	0.0022
120	32530-65530	LABEL HAZARD MARK	1	<=50981			0.001	0.0022
120	32539-65530	LABEL HAZARD MARK	1	>=50982	≠		0.001	0.0022
130	66416-47320	LABEL MAIN SWITCH	1				0.001	0.0022
140	66204-47520	LABEL S-CHANGE PEDAL	1	<=61807			0.001	0.0022
140	66427-47520	LABEL S-CHANGE PEDAL	1	>=61808	↔		0.005	0.011
150	66204-47530	LABEL ADVANCE	1	<=62264			0	0
150	66427-47530	LABEL FORWARD	1	>=62265	↔		0.001	0.0022
160	66204-47540	LABEL BACK	1	<=62264			0	0
160	66427-47540	LABEL REVERSE	1	>=62265	↔		0.005	0.011
170	66417-43240	LABEL SPEED SET	1				0.002	0.0044
180	67061-47240	LABEL SPEED LOCK	1				0.001	0.0022
190	66416-47850	LABEL BI-S.T.CHANGE	1			BI-SPEED TURN	0.002	0.0044
200	66416-47130	LABEL STEERING	1			POWER STRG.	0.001	0.0022

silverhorn.co.uk

↔ Interchangeable; ≠ not interchangeable; ← new for old; → old for new

REF.No	Part No.	Description	Q'ty	S.No.	I/C	REMARKS	Weight (kgf)	Weight (lb)
010	66417-62910	MANUAL INSTRUCTION	1	<=60044		ENGLISH	0	0
010	66417-62912	MANUAL INSTRUCTION	1	>=60045	←	ENGLISH	0.05	0.11
010	66447-62910	MANUAL INSTRUCTION	1			FRENCH	0.135	0.297
020	15241-86610	WRENCH FILTER	1	<=63418			0.133	0.2926
020	15241-86612	WRENCH FILTER	1	>=63419	↔		0.115	0.253
030	67401-62930	ASSY SPACER CLUTCH	1				0.03	0.066
040	67211-62940	PIECE DISTANCE	1				0.08	0.176
050	67401-62950	LABEL CLUTCH SPACER	1				0.002	0.0044
060	67111-55190	RING FUSIBLE	1				0.005	0.011
070	66416-62920	ASSY BAG SPARE FUSE	1				0.01	0.022
080	35820-75560	FUSE AUTO	2			15A	0.002	0.0044
090	67211-62940	PIECE DISTANCE	1				0.08	0.176
100	37410-55150	KEY STARTER	2				0.025	0.055

silverhorn.co.uk